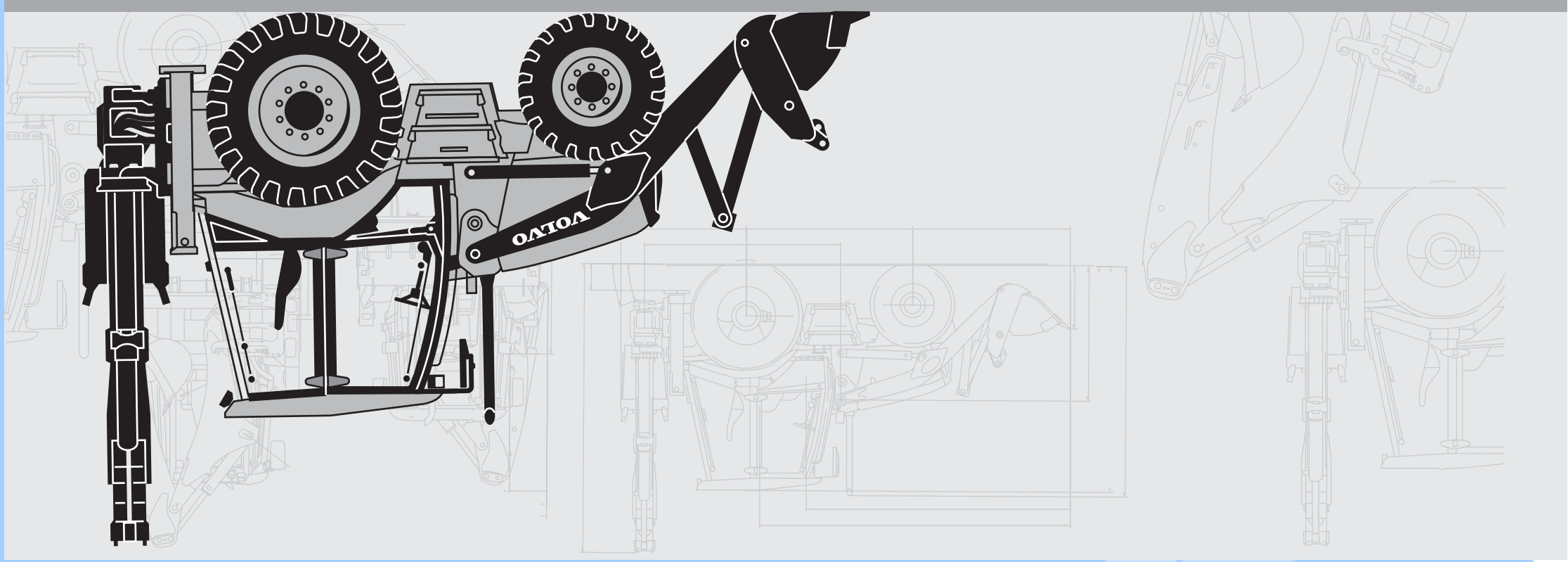

BL61

PARTS CATALOG

PARTS CATALOG VOLVO BL61

VOLVO

PARTS CATALOG

BL61

✂CUT HERE

LABEL FOR STEELBINDER

RECYCLABLE PAPER

VOLVO

Construction Equipment

Ref. No. VOE 64D9920050

RUTHZIL TRATOR COMERCIAL DE PEÇAS LTDA 11 97083-6812 ROLANDO CITRANGULO

PARTS CATALOG

BL61



Publ. No. VOE 64D9920050

VOLVO

Construction Equipment

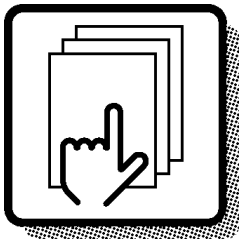

1

Preface and instructions
Préface et instructions
Vorwort und Anweisungen
Prefacio e instrucciones

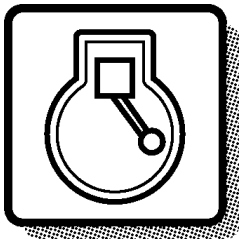

2

Engine
Moteur
Motor
Motor

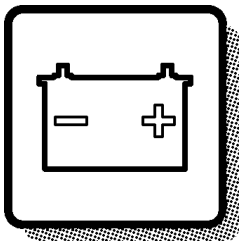

3

Electrical systems and instruments
Système électrique et instruments
Elektrisches System und Instrumente
Sistema eléctrico e instrumentos

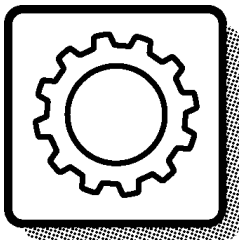

4

Power transmission
Transmission de force
Kraftübertragung
Transmisión de fuerza

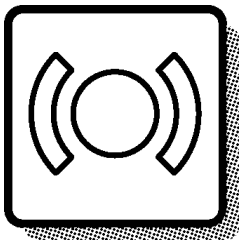

5

Brakes
Freins
Bremsen
Frenos

Steering system
Systèm de direction
Lenksystem
Sistema de dirección

6

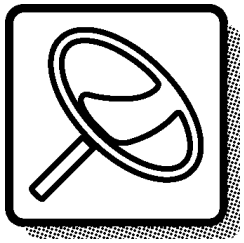

Frame and wheels
Bâti et roues
Rahmen und räder
Bastidor y ruedas

7

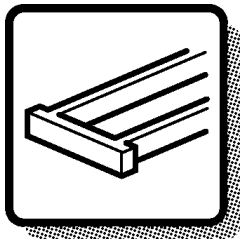

Body with associated parts
Carrosserie avec détails
Aufbau mit Zubehörteilen
Carroceria con detalles

8

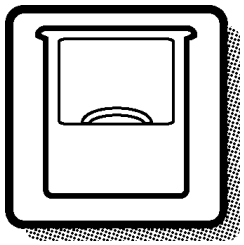

Miscellaneous equipment
Equipments divers
Übrige Ausrüstung
Equipo diverso

9

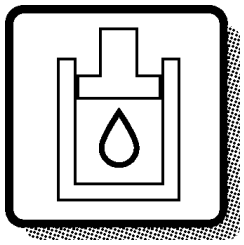

Numerical index
Répertoire numérique
Nummernverzeichnis
Indice numérico

10

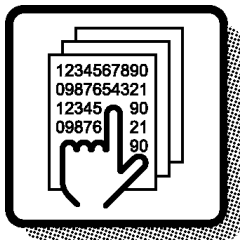

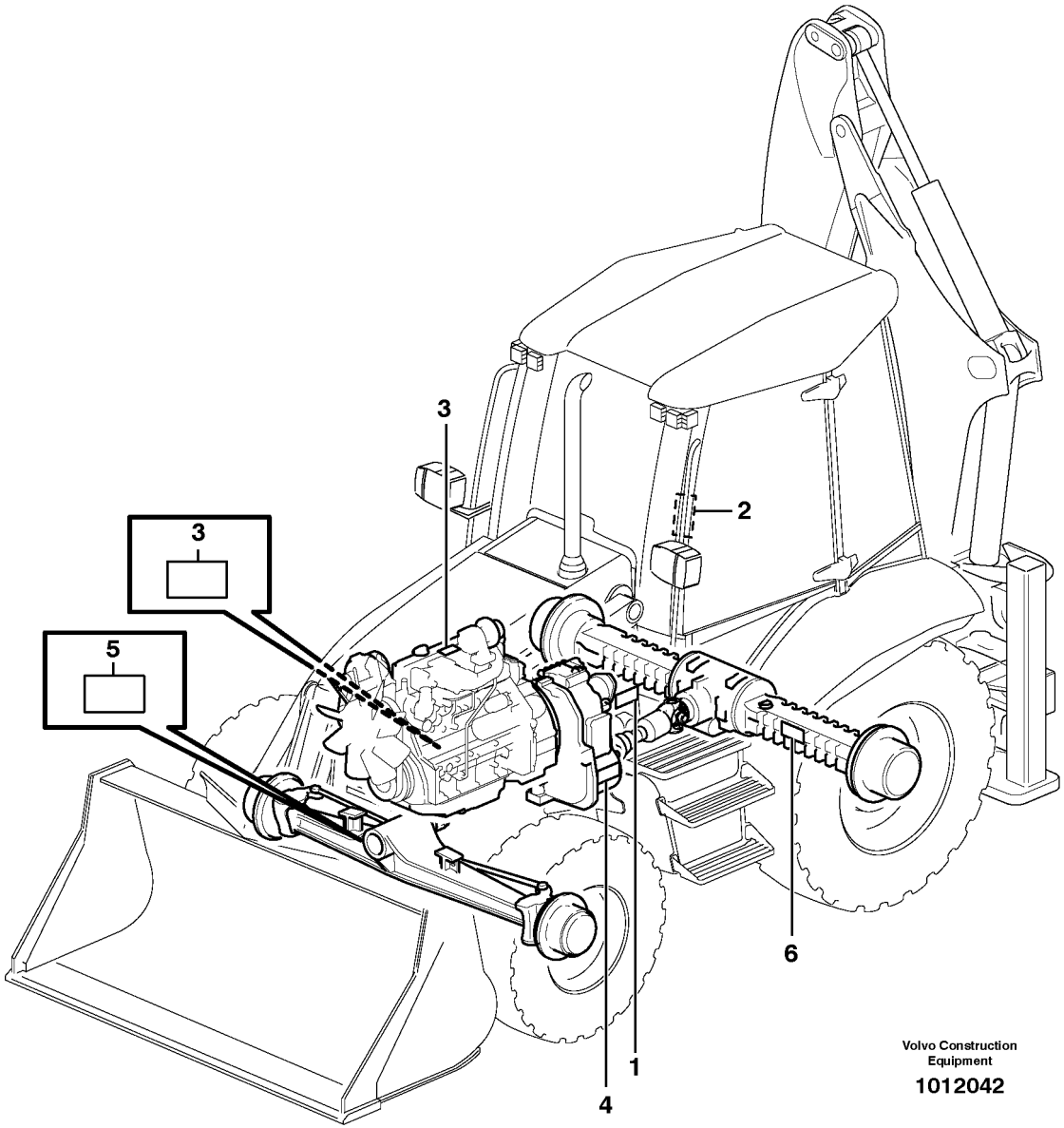
3
2
3
5
6
1
4
Volvo Construction
Equipment
1012042

GBR	FRA	DEU	ESP
1 Product sign plate	1 Enseigne de produit	1 Produktschild	1 Muestra del producto
2 Driver's cab	2 Cabine du conducteur	2 Schutzfahrerhaus	2 Cabina de proteccion
3 Engine sign plate	3 Enseigne de moteur	3 Motorschild	3 Muestra de motor
4 Power Transmission	4 Transmission De Force	4 Kraftubertragung	4 Transmision De Fuerza
5 Drive axle front sign plate	5 Enseigne du pont, AV	5 Vorderachsenschild	5 Muestra del puente, delantero
6 Drive axle rear sign plate	6 Enseigne du pont, AR	6 Hinterachsenschild	6 Muestra Del Puente, Tra

Only genuine parts are presented in this catalogue. These parts have been subjected to the necessary function and endurance tests, and they comply with the high quality and safety requirements that have been set for Volvo Construction Equipment. You should note that warranties do not cover damages that are caused or aggravated by the fact that a non-genuine part was fitted.

The illustrations shown in the catalogues should not be used as assembly or workshop instructions. Separate literature for the various specific subject areas is available for that purpose.

The owner of the machine or equipment should state the model designation, manufacturing number, part number, quantity, and the name, or description, of the part when ordering parts.

For location of the model and engine designation plates, etc, see page 4-5.

See page 11 for a ”Catalogue Guide” on how to use the parts catalogue.

See page 18 for table of abbreviations.

This catalogue has been produced by
Volvo Construction Equipment Customer Support.
If you have any point of views regarding the catalogue, or if you detect any errors in the catalogue, please take a copy of the page in question, indicate the error(s), and send it to us at the following adress:

Volvo Construction Equipment AB
Customer Support Division
Catalogue Department
S-631 85 Eskilstuna, ...Telefax: +46 16 15 29 15
E-mail: vce.parts.catalog@volvo.com

BACKHOE LOADER BL61

BASIC MACHINE
11880004 BL61, SER NO 10001 -

CAB
11298204, Cab
11298208, Canopy

TRANSMISSION
11890339, 2WD
11887379, 2WD S/N 10627-
11884310, 4WD
11887380, 4WD S/N 10627 -

DRIVING AXLE
11884373, Front, 2WD
11887359, Front, 2WD S/N 10627 -
11883201, Front, 4WD
11887361, Front, 4WD S/N 10627 -
11887362, Front, 4WD S/N 10627 -
11885677, Rear
11887363, Rear, S/N 10627 -

ENGINE
11886317, Type D4DCAE2

FRA

Seules les pièces d'origine sont présentées dans les catalogues des pièces de rechange. Toutes ces pièces ont été soumises à des tests de fonctionnement et de longévité pour être conformes aux exigences sévères de qualité et de sécurité posées par Volvo Construction Equipment. Notez que les garanties ne couvrent pas les dégâts et les dommages causés par le montage de pièces autres que des pièces d'origine.

Les illustrations dans le catalogue ne doivent pas être utilisées comme notice de montage ni comme instructions d'atelier. Pour ceci, nous vous renvoyons à la documentation spécifiquement éditée dans ce but.

Pour toute commande de pièces de rechange, indiquez la désignation du modèle, le numéro de fabrication, le numéro de référence, la quantité ainsi que la désignation del la pièce.

Le placement des plaques de designation de modèle et de moteur etc. ressort de la figure ci-contre 4-5.

Guide pour l'utilisation de catalogues de pièces de rechange, voir page 13.

Pour la liste des abréviations employées, prière de voir en page 18.

Ce catalogue est édité par Volvo Construction Equipment Customer Support. Si vous avez des commentaires ou si vous découvrez des erreurs dans ce catalogue, nous vous serions reconnaissants de bien vouloir photocopier cette page, de la remplir et de nous la renvoyer.

Volvo Construction Equipment AB
Customer Support Division
Catalogue Department
S-631 85 Eskilstuna.....Telefax: +46 16 15 29 15
E-mail: vce.parts.catalog@volvo.com

LA PELLECHARGEUSEILL BL61

MACHINE DE BASE
11880004 BL61, SER NO 10001 -

CABINE DU CONDUCTEUR
11298204, Cab
11298208, Canopy

TRANSMISSION
11890339, 2WD
11887379, 2WD S/N 10627 -
11884310, 4WD
11887380, 4WD S/N 10627 -

ESSIEU MOTEUR
11884373, AV, 2WD
11887359, AV, 2WD S/N 10627 -
11883201, AV, 4WD
11887361, AV, 4WD S/N 10627 -
11887362, AV, 4WD S/N 10627 -
11885677, AR
11887363, AR, S/N 10627 -

MOTEUR
11886317, Type D4DCAE2

DEU

DEU

In den Ersatzteilkatalogen sind nur Originalteile verzeichnet. Diese Teile haben die notwendigen Funktions- und Lebensdauertests durchlaufen und erfüllen die hohen Qualitäts- und Sicherheitsanforderungen von Volvo Construction Equipment. Beachten Sie bitte, dass die Garantien keine Schäden umfassen, die durch die Montage eines fremden Teils verursacht oder verschlimmert wurden.

Die Abbildungen in dem Katalog dürfen nicht als Montageanweisungen oder Werkstattanleitungen verwendet werden. Wir verweisen statt dessen auf die separate Literatur für diesen Zweck.

Der Maschinenbesitzer muss bei der Bestellung von Ersatzteilen die Modellbezeichnung, Fabriknummer, Artikelnummer sowie Anzahl und Bezeichnung des Teils angeben.

Die Anbringung der Schilder für Modell- und Motorbezeichnung usw. geht aus dem Bild auf Seite 4-5 hervor.

Die Anweisung auf Seite 15 hilft Ihnen sich im Ersatzteilkatalog zurechtzufinden.

Abkürzungsverzeichnis, siehe Seite 18.

Dieser Katalog wurde von
Volvo Construction Equipment Customer Support
herausgegeben. Wenn Sie Kommentare zu diesem Katalog haben oder Fehler darin finden, kopieren Sie bitte die entsprechende Seite, machen Sie eine Notiz und schicken Sie diese ein an:

Volvo Construction Equipment AB
Customer Support Division
Catalogue Department
S-631 85 Eskilstuna.....Telefax: +46 16 15 29 15
E-mail: vce.parts.catalog@volvo.com

BAGGERLADER BL61

GRUNDMASCHINE
11880004 BL61, SER NO 10001 -

FAHRERHAUS
11298204, Cab
11298208, Canopy

GETRIEBE
11890339, 2WD
11887379, 2WD S/N 10627 -
11884310, 4WD
11887380, 4WD S/N 10627 -

PLANETENWELLE
11884373, Vordere, 2WD
11887359, Vordere, 2WD S/N 10627 -
11883201, Vordere, 4WD
11887361, Vordere, 4WD S/N 10627 -
11887362, Vordere, 4WD S/N 10627 -
11885677, Hintere
11887363, Hintere, S/N 10627 -

MOTOR
11886317, Typ D4DCAE2

ESP

En los catálogos de repuestos se presentan únicamente piezas originales que han sido sometidas a las necesarias pruebas de funcionamiento y duración y que cumplen las elevadas exigencias de seguridad y calidad de Volvo Construction Equipment.
Recuerde que las garantías no cubren los daños ocasionados o agravados por no haber montado una pieza original.

Las ilustraciones del catálogo no deben utilizarse como base para el montaje ni como instrucciones de taller. Para ello recomendamos utilizar los manuales de taller editados a propósito.

Al hacer el pedido de repuestos, el propietario de la máquina debe indicar el modelo de la misma, su número de fabricación, la referencia de la pieza, la cantidad y la denominación.

La ubícación de letreros con las denominaciones de modelo y motor etc., puede verse en la página 4-5.

Guía para el uso del catálogo, puede verse en la página 17.

La tabla de abreviaturas puede verse en la página 18.

Esté catálogo ha sido editado por
Volvo Construction Equipment Customer Support.
Si tiene algún comentario que hacer sobre el catálogo, o detecta algún error, le rogamos que haga una copia de la página en cuestión y nos la remita junto con sus comentarios a:

Volvo Construction Equipment AB
Customer Support Division
Catalogue Department
S-631 85 Eskilstuna.....Telefax: +46 16 15 29 15
E-mail: vce.parts.catalog@volvo.com

RETROCARGADORA BL61

MÁQUINA BÁSICA
11880004 BL61, SER NO 10001 -

CABINA DEL CONDUCTOR
11298204, Cab
11298208, Canopy

TRANSMISIÓN
11890339, 2WD
11887379, 2WD S/N 10627 -
11884310, 4WD
11887380, 4WD S/N 10627 -

EJE PROPULSOR
11884373, Delantero, 2WD
11887359, Delantero, 2WD S/N 10627 -
11883201, Delantero, 4WD
11887361, Delantero, 4WD S/N 10627 -
11887362, Delantero, 4WD S/N 10627 -
11885677, Trasero
11887363, Trasero, S/N 10627 -

MOTOR
11886317, Type D4DCAE2

Fig.	Part No.	Quantity 1	2	3	PS	KIT	Description	Dénomination	Bezeichnung	Denominatición	Notes
1		1	2		NS		Steering Column	Colonne Volant	Lenksäule	Columna Direcci	CPL
2	**VOE 13960151**	2	3				••Washer	••Rondelle	••Scheibe	••Arandela	(ZM 2099130) BRB 34X62X
3	**ZM 2099140**	2	3				••Gasket	••Joint	••Dichtung	••Junta	G8x6
4	**ZM 2120650**	6	3		SS		•Housing	•Carter	•Gehäuse	•Carter	1) CPL
5	**ZM 2099180**	1	1				••Spring Ring	••Annea.elastique	••Federring	••Anillo Elastico	
6	**ZM 2099190**	2	2				••Needle Holder	••Porte-aiguille	••Nadelkäfig	••Portaagujas	
7	**ZM 2099650**	1	1				Steering Wheel	Volant	Lenkrad	Volante	

7 8 9 10 11 12 13

1) **GB:** Replacement version **FR:** Version piéce de rechange. **DE:** Ersatzteil-ausführung. **ES:** Versión piezas de repuesto.

1	**1800001**	**1800199**
2	**1810001**	
3		
4		
5		

Columna de dirección, montaje
Lenksäule, Einbauteilen
Colonne de direction, montage
Steering column, assembly

1 2 3 4 5 6

Catalogue id **07501**	Group **641**
Illustr. No **1000351**	Section **100**
Issue **VOE64A9907501**	Page **423**

VOLVO

In addition to part numbers, the Parts Catalogue also includes a vast amount of essential information which you, the operator, should be acquainted with.
With the ”Catalogue Guide”, we want to show clearly how the catalogues are arranged and what sort of information is presented therein.

Group 1 Preface and Instructions
Here you can find the following information:
- Title page and publication number
- Group index
- Product signs
- Preface
- List of items of equipment adapted to market requirements that have been introduced
- Catalogue Guide
- Table of abbreviations

Group 2 - 9 Text and illustration pages

- The table of contents shows the division of the main groups into sub-groups, with reference to page number and section.
- Illustration page. The position number of the illustration refers to the text page.
- Text page
  1. Heading.
  2. Additional text which limits the validity of the section. An example is information relating to manufacturing numbers and equipment adapted to market requirements.
  3. Designation for quantity columns.
  4. Illustrations.
  5. Group, section, page, which you should use when you search for information in the catalogue.
  6. Catalogue identification and issue designation.
  7. Position number of the part on the associated drawing.
  8. Part number
  9. Quantity. The column designation indicates the version which is shown in each column. The quantity stated refers to the quantity for each machine or, where appropriate, for each complete unit.
     ”REQ” refers to the required amount. See also ”Notes” column.
  10. PS (Parts Status) indicates the status code of the part.
      ”NS” means that the part is not kept in stock.
      ”OP” means that the part is no longer in stock.
      ”SE” means that an alternative part shall be used.
      ”SS” means that the part has been replaced.
      Refer to Group 10 Replaced parts for further information.
  11. KIT. Parts that are marked with a ”K” are included in a kit. The number of the kit is often indicated after other part numbers.
  12. Description. The indentations indicate if one or more parts are included in the assembled unit described above. The parts are included when a complete unit is ordered.
  13. Notes. Other information relating to a particular part is given here.
      - Footnote number (1 for example) is given at the bottom of the page.
      - Replaced parts (ZM 2099130, for example).
      - Product or manufacturing number.
      - Abbreviations and technical information.
      - Reference to page and group.

Group 10 Replaced parts / Number index

- Replaced parts. The part numbers of parts marked with ”SS” (in the PS column) are indicated here, together with their replacement numbers.
  The replacement parts may in turn be also replaced, and so on.
- Number index. All parts included in the catalogue are indicated here, together with a reference to group, section and page.

Continued improvements and successes in design could result in modifications to your equipment which are not covered by this publication. Each publication is revised when required to include these modifications in later issues. For additional information, you should contact Volvo Construction Equipment Customer Support, Catalogue Department.

Any unauthorized reproduction of any part of this document would be in violation of Volvo Construction Equipment AB, Customer Support division's rights and will be prosecuted to the fullest extent allowed by law. We reserve the right to make changes without prior notice.

Fig.	Part No.	Quantity 1	2	3	PS	KIT	Description	Dénomination	Bezeichnung	Denominatición	Notes
1		1	2		NS		Steering Column	Colonne Volant	Lenksäule	Columna Direcci	CPL
2	**VOE 13960151**	2	3				••Washer	••Rondelle	••Scheibe	••Arandela	(ZM 2099130) BRB 34X62X
3	**ZM 2099140**	2	3				••Gasket	••Joint	••Dichtung	••Junta	G8x6
4	**ZM 2120650**	6	3		SS		•Housing	•Carter	•Gehäuse	•Carter	1) CPL
5	**ZM 2099180**	1	1				••Spring Ring	••Annea.elastique	••Federring	••Anillo Elastico	
6	**ZM 2099190**	2	2				••Needle Holder	••Porte-aiguille	••Nadelkäfig	••Portaagujas	
7	**ZM 2099650**	1	1				Steering Wheel	Volant	Lenkrad	Volante	

7 8 9 10 11 12 13

1) **GB:** Replacement version **FR:** Version piéce de rechange. **DE:** Ersatzteil-ausführung. **ES:** Versión piezas de repuesto.

1	**1800001**	**1800199**
2	**1810001**	
3		
4		
5		

Columna de dirección, montaje
Lenksäule, Einbauteilen
Colonne de direction, montage
Steering column, assembly

1 2 3 4 5 6

Catalogue id **07501**	Group **641**
Illustr. No **1000351**	Section **100**
Issue **VOE64A9907501**	Page **423**

VOLVO

FRA

Le catalogue de pièces de rechange présente, non seulement les numéros de référence, mais également d'autres informations qu'un opérateur se doit de connaître. Ce guide de catalogue vous indique, d'une façon générale, comment sont conçus nos catalogues et quelles informations ils vous apportent.

Groupe 1 Avant-propos et instructions
Sous ce groupe, vous trouvez :
- La page de titre avec le numéro de publication
- Le registre des groupes
- Les plaques de produit
- Un avant-propos
- Une liste des équipements introduits suivant les pays
- Un guide de catalogue
- Un tableau des abréviations

Groupes 2 - 9 Pages de texte et d'illustration
- Le sommaire indique la division des groupes principaux en sous-groupes avec des renvois aux pages et aux sections.
- La page d'illustration. L'illustration donne les numéros de position qui renvoient à la page de texte.
- La page de texte
  1. Rubrique
  2. Texte supplémentaire qui limite la validité de la section, par exemple numéro de série et équipements adaptés aux pays
  3. Désignation des modèles pour les différentes colonnes
  4. Illustrations
  5. Groupe, section, page utilisés pour la recherche dans le catalogue
  6. Identification du catalogue et de l'édition
  7. Numéro de position de la pièce sur l'illustration afférente
  8. Numéro de référence
  9. Quantité. La désignation des colonnes indique le modèle qui se réfère à chaque colonne. La quantité indiquée correspond à la quantité par engin ou, suivant les cas, par unité complète. ”REQ” signifie quantité nécessaire, voir la colonne Notes
  10. PS (Parts Status) indique le code d'état de la pièce.
  -”NS” signifie que la pièce n'existe pas en magasin.
  ”OP” signifie que la pièce n’est plus en magasin.
  ”SE” signifie qu’une autre pièce devrait être employée. .
  ”SS” signifie que la pièce a été remplacée.
  Voir le groupe 10, pièces remplacées, pour de plus amples informations.
  11. KIT. Les pièces marquées ”K” font partie d'un kit. Le numéro du kit est le plus souvent indiqué après les autres numéros de référence.
  12. Description. Le décalage indique si une ou plusieurs pièces font partie de l'unité complète indiquée au-dessus. Ces pièces sont envoyées pour une commande d'une unité complète.
  13. Notes (Remarques). Diverses informations relatives à une pièce sont notées ici.
  - Un numéro de note de bas de page (par exemple 1) est donné au bas de la page.
  - Pièces remplacées (par exemple ZM 2099130).
  - Numéro de produit ou numéro de fabrication.
  - Abréviations et explications techniques.
  - Renvoi aux pages et aux groupes.

Groupe 10 Pièces remplacées/Registre des numéros

- Pièces remplacées. Les numéros de référence marquées ”SS” (dans la colonne PS) sont repris ici avec leur numéro de remplacement. Ces pièces remplacées peuvent, à leur tour, être remplacées par d'autres, etc.
- Registre des numéros. Tous les numéros de référence du catalogue se retrouvent ici avec un renvoi au groupe, à la section et à la page.

Les perfectionnements continus et les progrès réalisés dans la conception peuvent entraîner, sur votre engin, des modifications qui ne sont pas prises en compte dans cette publication. Chaque publication est remise à jour suivant les besoins pour inclure toutes ces modifications dans les dernières éditions. Pour plus d’informations, veuillez contacter Volvo Construction Equipment Customer Support, Catalogue Department.

La reproduction non autorisée de toute partie de ce document constitue une violation des droits d'auteur de Volvo Construction Equipment AB, Customer Support Division et entraînera des poursuites aux termes de la loi. Nous nous réservons le droit d'apporter des modifications sans préavis.

Fig.	Part No.	Quantity 1	2	3	PS	KIT	Description	Dénomination	Bezeichnung	Denominatición	Notes
1		1	2		NS		Steering Column	Colonne Volant	Lenksäule	Columna Direcci	CPL
2	**VOE 13960151**	2	3				••Washer	••Rondelle	••Scheibe	••Arandela	(ZM 2099130) BRB 34X62X
3	**ZM 2099140**	2	3				••Gasket	••Joint	••Dichtung	••Junta	G8x6
4	**ZM 2120650**	6	3		SS		•Housing	•Carter	•Gehäuse	•Carter	1) CPL
5	**ZM 2099180**	1	1				••Spring Ring	••Annea.elastique	••Federring	••Anillo Elastico	
6	**ZM 2099190**	2	2				••Needle Holder	••Porte-aiguille	••Nadelkäfig	••Portaagujas	
7	**ZM 2099650**	1	1				Steering Wheel	Volant	Lenkrad	Volante	

7 8 9 10 11 12 13

1) **GB:** Replacement version **FR:** Version piéce de rechange. **DE:** Ersatzteil-ausführung. **ES:** Versión piezas de repuesto.

1	**1800001**	**1800199**
2	**1810001**	
3		
4		
5		

Columna de dirección, montaje
Lenksäule, Einbauteilen
Colonne de direction, montage
Steering column, assembly

1 2 3 4 5 6

Catalogue id **07501**	Group **641**
Illustr. No **1000351**	Section **100**
Issue **VOE64A9907501**	Page **423**

VOLVO

DEU

Im Ersatzteilkatalog sind außer den Artikelnummern auch eine Reihe von wichtigen Informationen aufgeführt, die man unbedingt kennen sollte.
Mit der Kataloganweisung wollen wir auf eine überschaubare Art und Weise zeigen, wie unsere Kataloge aufgebaut und welche Informationen hier enthalten sind.

Gruppe 1 Vorwort und Anweisungen
Hier findet man folgendes:
- Titelseite mit Publikationsnummer
- Gruppenregister
- Produktschilder
- Vorwort
- Verzeichnis über eingeführte marktangepasste Ausrüstungen
- Kataloganweisung
- Abkürzungstabelle

Gruppe 2 - 9 Text- und Bildseiten

- Das Inhaltsverzeichnis zeigt die Einteilung der Hauptgruppe in Untergruppen mit Hinweis auf Seite und Abschnitt.
- Bildseite. Die Positionsnummer der Abbildung weist auf die Textseite hin.
- Textseite.
  1. Überschrift
  2. Zusatztext, der die Gültigkeit des Abschnitts begrenzt, z.B. Information über Herstellungsnummer und marktangepasste Ausrüstungen.
  3. Bezeichnung für die Anzahl-Spalten
  4. Abbildungen
  5. Gruppe, Abschnitt, Seite, die bei der Suche im Katalog verwendet werden.
  6. Katalogkennung und Ausgabebezeichnung
  7. Positionsnummer des Artikels mit dazugehöriger Abbildung.
  8. Artikelnummer
  9. Anzahl. Die Spaltenbezeichnung zeigt, welche Ausführung per Spalte aufgeführt ist. Die angegebene Anzahl betrifft Anzahl pro Maschine oder ggf. pro komplette Einheit. ”REQ” bezeichnet die erforderliche Menge, siehe Anmerkungsspalte.
  10. PS (Parts Status) zeigt den Statuscode des Artikels.
  -”NS” bedeutet, dass der Artikel nicht mehr auf Lager gehalten wird.
  ”OP” bedeutet, dass das Teil nicht mehr geführt wird.
  ”SE” bedeutet, dass ein alternatives Teil zu verwenden ist.
  -”SS” bedeutet, dass der Artikel ersetzt wurde.
  Siehe Gruppe 10, Ersetzte Artikel, für weitere Information.
  11. KIT. Artikel, die mit einem ”K” gekennzeichnet sind, gehören zu einem Satz. Die Nummer des Satzes wird in den meisten Fällen nach den übrigen Artikelnummern angegeben.
  12. Bezeichnung. Die Einrückung zeigt, dass ein oder mehrere Artikel in einer oben aufgeführten zusammengesetzten Einheit enthalten sind. Die Artikel sind in der Bestellung der kompletten Einheit enthalten.
  13. Notes (Anmerkungen). Hier werden übrige Informationen für einen Artikel aufgeführt:
  - Fußnotennummer, (beispielsweise 1), wird ganz unten auf der Seite angegeben.
  - Ersetzte Artikel, (beispielsweise ZM 2099130)
  - Produkt- oder Herstellungsnummer
  - Abkürzungen oder technische Informationen
  - Seiten- und Gruppenhinweis

Gruppe 10 Ersetzte Artikel / Nummernregister

- Ersetzte Artikel. Hier sind die mit ”SS” markierten (in der PS-Spalte) Artikelnummern mit ihrem Ersatz aufgeführt. Die ersetzten Artikel können wiederum ersetzt worden sein usw.
- Nummernregister. Hier sind alle im Katalog vorkommenden Artikel aufgeführt, und zwar mit Hinweis auf Gruppe, Abschnitt und Seite.

Fortlaufende Verbesserungen und Fortschritte in der Konstruktion können auch bei Ihrer Maschine zu Änderungen führen, die nicht von dieser Schrift umfasst werden. Jede Ausgabe wird bei Bedarf überarbeitet, um diese Veränderungen bei späteren Ausgaben mit zu berücksichtigen. Um weitere Informationen wenden Sie sich bitte an Volvo Construction Equipment Customer Support, Catalogue Department.

Jegliche Reproduktion dieses Dokumentes in Auszügen oder in vollem Umfang stellt eine Verletzung der Rechte von Volvo Construction Equipment AB, Customer Support dar und wird unter voller Ausschöpfung der gesetzlichen Möglichkeiten strafrechtlich verfolgt. Wir behalten uns das Recht auf Änderungen ohne vorherige Ankündigung vor.

Fig.	Part No.	Quantity 1	2	3	PS	KIT	Description	Dénomination	Bezeichnung	Denominatición	Notes
1		1	2		NS		Steering Column	Colonne Volant	Lenksäule	Columna Direcci	CPL
2	**VOE 13960151**	2	3				••Washer	••Rondelle	••Scheibe	••Arandela	(ZM 2099130) BRB 34X62X
3	**ZM 2099140**	2	3				••Gasket	••Joint	••Dichtung	••Junta	G8x6
4	**ZM 2120650**	6	3		SS		•Housing	•Carter	•Gehäuse	•Carter	1) CPL
5	**ZM 2099180**	1	1				••Spring Ring	••Annea.elastique	••Federring	••Anillo Elastico	
6	**ZM 2099190**	2	2				••Needle Holder	••Porte-aiguille	••Nadelkäfig	••Portaagujas	
7	**ZM 2099650**	1	1				Steering Wheel	Volant	Lenkrad	Volante	

7 8 9 10 11 12 13

1) **GB:** Replacement version **FR:** Version piéce de rechange. **DE:** Ersatzteil-ausführung. **ES:** Versión piezas de repuesto.

1	**1800001**	**1800199**
2	**1810001**	
3		
4		
5		

Columna de dirección, montaje
Lenksäule, Einbauteilen
Colonne de direction, montage
Steering column, assembly

1 2 3 4 5 6

Catalogue id **07501**	Group **641**
Illustr. No **1000351**	Section **100**
Issue **VOE64A9907501**	Page **423**

VOLVO

En el catálogo de repuestos se incluye, además de los números de artículo, numerosa información muy útil.
El propósito de la guía es explicar la estructura de los catálogos y la información que se ofrece en los mismos.

Grupo 1 Prefacio e instrucciones
Se encontrará aquí:
- El título y el número de publicación
- El índice de grupos
- Los letreros de producto
- El prefacio
- Una lista sobre los equipos adaptados a los mercados
- La guía al catálogo
- Una tabla de abreviaturas

Grupo 2 - 9 páginas con texto e ilustraciones

- El índice muestra la clasificación de los grupos principales en subgrupos con remisiones a páginas y secciones.
- Página de ilustraciones. Los números de posición de las ilustraciones. Remisiones a páginas de texto.
- Páginas de texto
  1. Rúbrica
  2. Texto adicional que delimita la validez de la sección, por ejemplo, información sobre números de fabricación y equipos según mercado.
  3. Designación para columnas de cantidades.
  4. Número de ilustración.
  5. Grupo, sección, página. Se utilizan al manejar el catálogo
  6. Identificación e indicación de la edición del catálogo.
  7. Números de posición en la ilustración correspondiente.
  8. Números de artículo
  9. Cantidad. Se indica en esta columna la ejecución. El número indicado se refiere a la cantidad por máquina o, si procede, por unidad completa. ”REQ” significa la cantidad necesaria, véase la columna de las notas.

  10. PS (Parts Status) indica el código de estado del artículo.
  -”NS” indica que el artículo no se tiene en stock.
  ”OP” significa que ya no se mantiene la pieza en stock.
  ”SE” significa que se puede usar una pieza alternativa.
  -”SS” indica que el artículo ha sido sustituido.
  Para más información, véase el grupo 10, artículos sustituidos.
  11. KIT. Los artículos marcados con una ”K” forman parte de un juego. El número de juego suele indicarse detrás de los demás números de artículo.
  12. Denominación. El desplazamiento indica que en la unidad indicada se incluyen uno o varios artículos. Estos se incluyen en la unidad completa pedida.
  13. Notas. Aparecen aquí diversas informaciones relativas a los artículos:
  - Números de notas de pie de página; ej. 1) aparece al final de la página.
  - Artículos sustituidos. Ej. (ZM 2099130)
  - Números de producto o fabricación.
  - Abreviaturas e información técnica.
  - Remisiones a páginas y grupos.

Grupo 10 Artículos sustituidos/Índice de números

- Artículos sustituidos. Se marcan aquí con ”SS” (en la columna PS) los números de artículo con sus sustituciones. Los artículos sustituidos, a su vez, pueden haber sido sustituidos, etc.
- Índice de números. Aparecen aquí todos los artículos existentes en el catálogo con remisión a grupo, sección y página.

En su modelo de máquina pueden haberse introducido mejoras que no aparecen en esta publicación. Las publicaciones son revisadas para incluir las mejoras en ediciones posteriores.

Toda reproducción no autorizada de cualquier parte de este documento implicaría una violación de los derechos de Volvo Construction Equipment AB, Customer Support Division, y será perseguida en la máxima extensión que permite la ley. La infracción de esta prohibición será penalizada. Reservado el derecho a introducir modificaciones.

TABLE OF ABBREVIATION **ABKÜRZUNGSVERZEICHNIS**

POUR LA LISTE DES ABRÉVIATIONS EMPLOYÉES **PABLO DE ABREVIATIONS**

ABBREVIATION	ENGLISH	FRANÇAIS	DEUTSCH	ESPAÑOL
A	ampere	ampère	Ampere	amperio
ALT	alternative	alternative	wahlweise	alternativa
AWD	All Wheel Drive	Toutes roues motrices	Allradantrieb	Tracción en las todas las ruedas
AX ####-	as from axle No.	à partir du N° d'essieu	ab Achsennr.	a partir del eje nro
AX - ####	up to and incl. axle No.	jusqu'au N° d'essieu	bis Achsennr.	hasta el eje nro
BL	black	noir	schwarz	negro
BLUE	blue	bleu	blau	azul
BR	brown	brun	braun	marrón
BRA	Brazil	Brésil	Brasilien	Brasil
CAB #### -	as from cab No.	à partir du N° de cabine	ab Kabinen-herstellnr.	a partir de la cabina
CAB - ####	up to and incl. cab No.	jusqu'au N° de cabine	bis Kabinen-herstellnr.	hasta la cabina nro
CAN	Canada	Canada	Kanada	Canadá
CENT	centre	au milieu	Mittere	central
CHN	China	Chine	China	China
CIN	component identification number	Numéro de référence de sous-ensemble	Bauteil-Identifizierungsnummer	Número de identificación del componente
CPL	complete	complet	komplett	completo
CU M	cubic metre	mètre cube	Kubikmeter	metro cúbico
DEG	numbers of degrees, C°	nombres de degré de chaleur, C°	Anzahl in Graden C°	numero de grado de calor, C°
DELETED	deleted	supprimé	Nicht mehr lieferbar	Retirado
DEU	Germany	Allemagne	Deutschland	Alemania
DNK	Denmark	Danemark	Dänemark	Dinamarca
EEC	European Economic Community (EEC)	pays du marche commun (EEC)	EU-Markt (EEC)	el mercado común (EEC)
ENG	Engine	moteur	Motor	motor
ENG #### -	as from engine No.	à partir du N° de moteur	ab Motornr.	a partir del motor nro
ENG - ####	up to and incl. engine No.	jusqu'au N° de moteur	bis Motornr.	hasta el motor nro
E PROD	early production	production antérieure	Frühere Ausführung	producción anterior
ESP	Spain	Espagne	Spanien	España
EU	European Union	Union Européenne	Europäische Union	Unión Europea
EXC ### -	as from excavator unit No.	à partir du N° d'excavateur	Ab Bagger-Aggregatnr.	a partir de agregado excavador nro
EXC - ###	up to and incl. excavator unit No.	jusqu'au N° d'excavateur	bis Bagger-Aggregatnr	hasta el agregado excavador nro
EXCL	excluding	exclus	auschliesslich	exclusivo
FIN	Finland	Finlande	Finnland	Finlandia

ABBREVIATION	ENGLISH	FRANÇAIS	DEUTSCH	ESPAÑOL
FORW	forward	avant	vordere	delante
FRA	France	France	Frankreich	Francia
GBR	Great Britain	Angleterre	England	Inglaterra
GRAM	gram	gramme	Gramm	gramo
GREEN	green	vert	grün	verde
GREY	grey	gris	grau	gris
HT #### -	as from hydraulic transmission No.	à partir du transmission hydraulique Nº	ab Hydraulikgetriebe	a partir de transmisión hidráulico nro
HT - ####	up to and incl. hydraulic transmission No.	jusqu'au transmission hydraulique Nº	bis Hydraulikgetriebe	hasta el transmisión hidráulico nro
ID	diameter, inner	diamètre, intérieur	Innendurchmesser	diámetro, interior
IN	inch(es)	pouce	Zoll	pulgada
INCL	inclusive	inclus	einschliesslich	inclusive
INCL IN	included in	inclus dans	gehört zur	forma parte de
INLET	inlet	entrée	Einlass	entrada
INNER	inner	intérieur	innen	interior
IRN	Iran	Iran	Iran	Iran
ITA	Italy	Italie	Italien	Italia
ITEM NO	see item No.	voir position	siehe Position Nr.	véase posición
K	included in parts kits	fait partie du jeu complet de réparation	gehört zur Satzverpackung	forma parte del juego por juego
KOR	Korea	Corée	Korea	Corea
L	litre, length	litre, longueur	Liter, Länge	litros, longitud
LH	left	gauche	links	izquierdo
LOAD #### -	as from loading unit No.	à partir du N° de chargeur	ab Hubaggregatnr.	a partir du unibad carga nro
LOAD - ####	up to and incl. loading unit No.	jusqu'au N° de chargeur	bis Hubaggregatnr.	hasta unidad carga nro
LOW	lower	dessous	unten	inferior
L PROD	late production	production postérieure	jetzige Ausführung	producción posterior
MARKED	marked	marque de	gekennzeichnet mit	marcado
MODEL	model designation	Désignation de modèle	Modellbezeichnung	Designación de modelo
ML	millilitre	millilitre	Milliliter	milílitro
MM	millimetre	millimètre	Millimeter	milimetros
NLD	Netherlands	Pays-Bas	Holland	Holanda
NO	number	numéro	Nummer	número
NOR	Norway	Norvège	Norwegen	Noruega

TABLE OF ABBREVIATION | **ABKÜRZUNGSVERZEICHNIS**

POUR LA LISTE DES ABRÉVIATIONS EMPLOYÉES | **PABLO DE ABREVIATIONS**

ABBREVIATION	ENGLISH	FRANÇAIS	DEUTSCH	ESPAÑOL
NS	part not stocked as spare part	n`est pas stocké comme pièce de rechange	nicht als Ersatzteil vorrätig	no disponible como repuesto pieza de repuesto
OP	The part is no longer in stock	La pièce n'est plus en stock	Der Artikel wird nicht länger geführt	El artículo no se mantiene ya en stock
O SZ	over size	côte supérieur	Übergrösse	sobredimensión
OD	diameter, outer	diamètre extérieur	Aussendurchmesser	diámetro, exterior
OR	orange	orange	orange	naranja
ORDER	order	commander	bestellen	hacer un pedido
OUTER	outer	extérieur	aussen	exterior
OUTLET	outlet	échappement	Auslass	escape
PAGE	see page	voir page	siehe Seite	véase página
PAIR	pair	paire	Paar	par
PCS	piece(s)	pièce	Stück	cada uno
PIN	product identification number	Numéro d'identification de produit	Produktidentifizierungs-Nummer	Número de identificación del producto
PINK	pink	rose	rosa	rosa
PROD NO	product No.	Nº de produit	Produktnr.	nro de producto
PRT	Portugal	Portugal	Portugal	Portugal
Q	Quantity l/min	Quantité l/min	Quantität l/min	Cantidad l/min
REAR	rear	arrière	hinten	detrás
RED	red	rouge	rot	rojo
REPL BY -	replaced by	remplacé par	ersetzt durch	substituido por
REQ#	order as required,	quantité nécessaire,	erforderliche Anzahl	cantidad necesaria,
RH	right	droite	rechts	derecha
SE	alternative spare part version exists	une version pièce de rechange existe également	Alternative Ersatzteilausführung lieferbar	Existen otras versiones de las piezas de repuesto
SEE GROUP	see group	voir groupe	siehe Gruppe	véase grupo
SEE SB	see Service Bulletin	voir bulletin de service	siehe Kundendienstmitteilung	ver boletin de servicio
SER NO # -	as from serial No.	à partir du N° de fabrication	ab Fabrikationsnr.	a partir de fabric. nro
SER NO - #	up to and incl.serial No.	jusqu'au N° de fabrication	bis Fabrikationsnr.	hasta el fabric. nro
S/N #### -	as from serial No.	à partir du N° de série	ab Fabrikationsnr.	a partir de fabricación nro.
S/N - ####	up to and incl. serial No.	jusqu'au N° de série	bis Fabrikationsnr.	hasta el fabricación nro.
SUPPL	supplementary details, no spare part	indication compléter	zuzätliche Angaben	parte completar
SPECIAL	special model	construction spéciale	Sonderausführung	modelo especial
SQ MM	square millimeters	millimètre carré	Quadratmillimeter	milimetros cuadrados
SS	superseded part	pièce remplacée	ersetztes Teil	pieza substituida
STD	standard version	version standard	Standardausführung	versión standard
STD SZ	standard size	dimension standard	Standardabmessung	dimensión standard

ABBREVIATION	ENGLISH	FRANÇAIS	DEUTSCH	ESPAÑOL
THICK	thickness	épaisseur	Dicke	espesor
TM NO # -	as from transmission No.	à partir du N° de transmission	ab Getriebenr.	a partir de transmisión nro
TM NO - #	up to and incl. transmission No.	jusqu'au N° de transmission	bis Getriebenr.	hasta el de transmisión nro
UPPER	upper	supérieur	oben	superior
USA	United States of America	États-Unis	Vereinigte Staaten	Estados Unidos
U SZ	under size	côte interieur	Untergrösse	subdimensión
V	volt	volt	Volt	voltio
VIOL	violet	violet	violett	violeta
W	Watt	watt	Watt	watio
WHITE	white	blanc	weiss	blanco
WID	width	largeur	Breite	ancho
YELL	yellow	jaune	gelb	amarillo
ZAF	South Africa	Afrique du Sud	Südafrika	Sudáfrica

Equipment	Kit No	Description
11298009		Fixed steering column Colonne de direction fixe Feste Lenksäule Columna de dirección fija
11298010		Adjustable steering column Colonne de direction réglable Verstellbare Lenksäule Columna de dirección ajustable
11298012		Front window for canopy Pare-brise, cabine ouverte Frontscheibe für Überrollbügel Ventana delantera para protección contra vuelcos
11298016	VOE 11712382	Sun shield Pare-soleil Sonnenblende Visera
11298021		Steering Wheel Knob Boule pour volant Lenkradknopf Botón del volante
11298028		Cab Cabine Fahrerhaus Cabina
11298032	VOE 11712693	Anti-vandalism kit Kit de protection antivandalisme Vandalisierungschutz Protección contra vandalismo
11298034		Licence plate Eclairage de plaque Nummernschild Chapa de matrícula
11298160		Plastic roof cover Toit plastique Kunststoff-Dachabdeckung Cubierta de plástico del techo
11298164		Rear view mirror Rétroviseur Rückspiegel Retrovisor
11298165		Floor mat mechanical exc control Tapis de sol Bodenmatte Alfombra
11298166		External mirrors Rétroviseurs extérieurs Äußere Rückspiegel Retrovisores exteriores
11298168		Cup holder Porte-gobelet Becherhalter Portavasos
11298203		Front window Pare-brise Windschutzscheibe Parabrisas

Equipment	Kit No	Description
11298204		BL61 Cab Cabine BL61 BL61 Kabine Cabina
11298208		Canopy BL61 Cabine ouverte BL61 Canopy BL61 Cabina abierta BL61
11298233		Air conditioning climatisation Klimaanlage acondicionador de air
11298239		Lock For hood Release Serrure d'ouverture de capot Motorhaubenverriegelung Bloqueo para soltar el capó
11880001		BL60 Backhoe Loader Basic Machine Chargeuse-pelleteuse BL60 , machine de base BL60 Baggerlader Grundmaschine Cargadora retroexcavadora, máquina básica *BL60*
11880004		Backhoe loader Chargeuse-pelleteuse Baggerlader Cargadora retroexcavadora *BL61*
11886317		Engine Moteur Motor Motor
11886395		Engine Moteur Motor Motor
11887321		Engine Moteur Motor Motor
11890349		Lock kit Kit serrure Sperrsatz Kit de cerradura
11891000		40 Kph Leg Germany 40 km/h - vitesse limite en Allemagne 40 km/h gesetzlich vorgeschrieben in Deutschland Versión alemana, 4 km/h
11891001		Rear Number Plate Plaque d'immatriculation AR Hinteres Nummernschild Placa de número trasera
11891002		Legals Italy Législation italienne Gesetzliche Vorschriften, Italien Normativa Italia
11891015		Tooth Guard Europe Protection de dent, Europe Zahnschutz Europa Protección de dientes Europa

Equipment	Kit No	Description
11891016		Tooth Guard Italy Protection de dent, Italie Zahnschutz Italien Protección de dientes Italia
11891017	VOE 11712669	Hammer HB 440 Marteau HB 440 Hammer HB 440 Martillo HB 440
11891018	VOE 11715299	Multi Purpose Bucket 1m3 Multi Purpose Bucket 1m3 Multi Purpose Bucket 1m3 Multi Purpose Bucket 1m3
11891043		Backhoe bucket Godet rétro Tiefräumlöffel Cuchara de retroexcavadora *18”*
11891049		Lighting (legal requirement) Europe Eclairage (obligatoire) Europe Beleuchtung (Mindestanforderungen) Europa Alumbrado (legislación) Europa
11891050		25 km/h legal requirement Germany 25 km/h - vitesse limite en Allemagne 25 km/h gesetzlich vorgeschrieben in Deutschland Límite de velocidad de 25km/h Alemania
11891061	VOE 11710775	PinKit - bucket Kit pour le montage direct du godet Satz direktbefestigte Schaufel Kit de cuchara de montaje directo
11891076		Transmission 2wd powershuttle Transmission, 2 roues motrices Kraftübertragung, Zweiradantrieb Transmisión, tracción a 2 ruedas
11891077		Transmission 4wd powershuttle Valve navette, transmission 4 roues motrices Getriebe 4-Radantrieb Power Shuttle Transmisión 4a corredera de potencia
11891091		400 mm Gp Bucket Godet universel 400 mm 400 mm Allzwecklöffel Cuchara 400mm Gp
11891092		European Bucket 450 wide Godet européen, largeur 450 Europäische Schaufel, Breite 450 mm Cuchara europea 450 de ancho
11891093		European bucket 900 wide Godet européen, largeur 900 mm Europäische Schaufel, Breite 900 mm Cuchara europea 900 de ancho
11891094		Wheel blocks Cale Unterlegkeil Cna de parar
11891099		Operator's seat, imitation leather Siège conducteur, accoudoir Fahrersitz, Armlehne Asiento de conductor, apoyabrazos

Equipment	Kit No	Description	Equipment	Kit No	Description
11891100		Operator's seat, imitation leather, armrest Siège conducteur, cuir synthétique, accoudoir Fahrersitz, Kunstleder, Armlehne Asiento de conductor, cuero artificial, apoyabrazos	11891176	VOE 11712670	GP Fork Kit Kit fourche universelle Gabelzinkensatz, GP Kit de horquilla
11891109		Double Digger Pin Kit Kit double goupille pour équipement excavateur Doppelter Grabbolzensatz Kit de pasador de excavación doble	11891192		European bucket 610 wide Godet européen, largeur 610 mm Europäische Schaufel, Breite 610 mm Cuchara europea 610 de ancho
11891150	VOE 11715248	Boom&dipper Safety Valves Valves de sécurité, flèche et balancier Ausleger- und Stielsicherheitsventile Pluma y brazo, válvulas de seguridad	11891194		General purpose bucket 2350 wide Godet universel, largeur 2 350 mm Allzweckschaufel, Breite 2350 mm Cuchara para aplicaciones generales 2350 de ancho
11891151		Loader safety valves Valves de sécurité, équipement chargeur Lader Sicherheitsventile Válvulas de seguridad de la cargadora	11891202		European Bucket 305 wide Godet européen, largeur 305 Europäische Schaufel, Breite 305 mm Cuchara europea 305 de ancho
11891152	VOE 11885079	Tool Kit Jeu d'outillage Werkzeugsatz Kit de herramientas	11891209		Transmission 4wd powershuttle Valve navette, transmission 4 roues motrices Getriebe 4-Radantrieb Power Shuttle Transmisión 4a corredera de potencia
11891162	VOE 11711206	Excavator control assembly Commande de creusement Baggersteuerausrüstung Unidad de control de excavación	11891216		Operator seat Siège de conducteur Fahrersitz Asiento de conductor
11891167	VOE 11711202	Excavator control Iso assembly Commande de creusement ISO Baggersteuerung Iso Einbau Unidad de aislamiento del control de excavación	11891217		Operator's seat, imitation leather Siège conducteur, cuir synthétique Fahrersitz, Kunstleder Asiento de conductor, cuero artificial

Equipment	Kit No	Description
11891224		Transmission 2wd powershuttle Valve navette, transmission 4 roues motrices Getriebe 2-Radantrieb Power Shuttle Transmisión 2a corredera de potencia
11891246		Rh external lightning European traffic Eclairage de route européen pour circulation à droite RH Außenbeleuchtung, europäischer Verkehr Alumbrado exterior derecho para tráfico europeo
11891247		Lh external lightning European traffic Eclairage de route européen pour circulation à gauche LH Außenbeleuchtung, europäischer Verkehr Alumbrado exterior izquierdo para tráfico europeo
11891248		Lighting (legal requirement) UK Eire Eclairage (obligatoire) Royaume-Uni/Irlande Beleuchtung (Mindestanforderungen) UK Eire Alumbrado (legislación) UK Eire
11891249		Legals Europe Législation européenne Gesetzliche Bestimmungen, Europa Normativa Europa
11891255		Transmission 4wd powershift Valve Power-Shift, transmission 4 roues motrices Getriebe 4-Radantrieb Power Shuttle Transmisión 4a marcha de potencia
11891261	VOE 11712424	One rotating beacon Un seul gyrophare Eine rotierende Warnleuchte Una luz giratoria de advertencia
11891262	VOE 11712425	Two rotating beacons Deux gyrophares Zwei rotierende Warnleuchten Dos luces giratorias de advertencia
11891264		European Blade Kit 2350mm Lame européenne 2 350 mm Europäischer Scharsatz, 2350 mm Kit de hojas europeas 2350mm
11891265		Tooth Kit Jeu de dents Zahnsatz Kit de dientes
11891269		Street Pad Patin pour chaussées Straßenstützplatte Street Pad
11891278		Instrument panel, Km/h Tableau de bord, km/h Instrumententafel, km/h Tablero de instrumentos, Km/h
11891280		Instrument panel, without speedometer Tableau de bord sans tachymètre Instrumententafel, ohne Geschwindigkeitsmesser Tablero de instrumentos, sin velocímetro
11891282	VOE 11988242	MP lifting fork kit Kit fourche de levage MP Hebegabel-Kit Juego de horquilla de elevación

Equipment	Kit No	Description
11891291		Work lamp, rear Lampe travail, aari`re Arbeitslampe, hinter Lampara de trabajo, trasero
11891292		Work lights front Phare travail Arbeitsscheinwerfer Faro de trabajo *FRONT LIGHT USE KIT NO 11988243.* *REAR LIGHT USE KIT NO 11988244.*
11891295		Grading bucket 1500mm Godet niveleur, largeur 1 500 mm Böschungslöffel 1500 mm Cuchara niveladora 1500 mm
11891296		Grading bucket 1200mm Godet niveleur, largeur 1 200 mm Böschungslöffel 1200 mm Cuchara niveladora 1200 mm
11891298		Hydraulic cap without key Bouchon hydraulique sans clé Hydraulische Kappe ohne Schlüssel Cubierta hidráulica sin llave
11891299	VOE 11710951	Attachment bracket, mechanical Fixation outil Geräteträger Fijacion herramientas
11891303	VOE 11988246	Radio with tape recorder Radio avec magnétophone Radio mit Tonbandgerät Radiocassette
11891305		Wheels and tyres 12.5/80x18 - 16.9x28 Roues et pneus 12.5/80x18 - 16.9x28 Räder und Reifen 12,5/80x18 - 16,9x28 Ruedas y neumáticos, 12.5/80x18 - 16.9x28
11891306		Wheels and tyres 10.5/80x18 - 16.9x28 Roues et pneus 10.5/80x18 - 16.9x28 Räder und Reifen 10,5/80x18 - 16,9x28 Ruedas y neumáticos 10.5/80x18 - 16.9x28
11891314		Seat belt Wide Ceinture de sécurité, large Sicherheitsgurt, breit Cinturón de seguridad, ancho
11891317		Counterweight Italy Contrepoids pour l'Italie Gegengewicht Italien Contrapeso, Italia
11891318		Backhoe bucket Godet rétro Tiefräumlöffel Cuchara de retroexcavadora *36”*
11891319		Backhoe bucket Godet rétro Tiefräumlöffel Cuchara de retroexcavadora *30”*

Equipment	Kit No	Description
11891320		Backhoe bucket Godet rétro Tiefräumlöffel Cuchara de retroexcavadora *24”*
11891321		Backhoe bucket Godet rétro Tiefräumlöffel Cuchara de retroexcavadora *12”*
11891322	VOE 11711201	Excavator Controls X Commandes pelles X Bagger Bedienorgane X Mandos de la excavadora X
11891324		Hydraulic Tank Lock Cap Bouchon de verrouillage du réservoir hydraulique Hydrauliktankverschluss Tapa de cierre del depósito hidráulico
11891325	VOE 11712419	Front Fenders Gardeboue AV Vordere Stoßstange Guardabarros delanteros
11891331	VOE 11710906	Hose kit Kit flexibles Schlauchsatz Kit de manguera
11891332	VOE 11712415	Anti-theft kit Kit alarme antivol Diebstahlalarm-Kit Dispositivo antirrobo
11891333		Hand Held Hydraulic Commande hydraulique manuelle Handhydraulik Hidráulica manual
11891345	VOE 11712723	Boom Suspension System Système de suspension des bras de levage, BSS Hubgerüst Sistema de suspensión de la pluma
11891350		Without Front Bucket Sans godet frontal Ohne Frontschaufel Sin cuchara frontal
11891358		Counterweight 335 kg Contrepoids 335 kg Gegengewicht 335 kg Contrapeso, 335 kg.
11891359		Counterweight 202 kg Contrepoids 202 kg Gegengewicht 202 kg Contrapeso 202 kg
11891369		Hand Held Hydraulic Commande hydraulique manuelle Handhydraulik Hidráulica manual
11891375	VOE 11715009	Pipe kit for hammer attachment Kit conduits, marteau Leitungssatz für Hammeranbau Kit de tubería para fijación del martillo

Equipment	Kit No	Description
11891376		Non-suspended Vinyl Seat Siège avec habillage vinyle, sans suspension Ungefederter Vinylsitz Asiento de vinilo sin suspensión
11891377		Back up alarm Avertisseur de renversement Rückfahrwarner Alarma de retrocero
11891379		Linkage with craning hook Articulation avec crochet de levage Gestänge mit Lasthaken Articulación con un gancho de grúa
11891380		Linkage without craning hook Articulation sans crochet de levage Gestänge ohne Lasthaken Articulación sin un gancho de grúa
11891391		Double Battery Deux batteries Doppelbatterie Batería doble
11891392		Single Battery Une seule batterie Einfachbatterie Batería simple
11891414		Hydraulics for GP loader bucket Commande hydraulique de godet universel (GP) Hydraulik für Mehrzweckschaufel Hidráulica de cuchara multipropósitos de cargadora
11891415		Hydraulic Loader Std Bucket Godet chargeur à commande hydraulique Hydraulik, Standardschaufel Hidráulica de cuchara estándar de cargadora
11891416		Rear Valve Distributeur AR Hinteres Ventil Válvula trasera
11891417		Excavator 4.5m extendible Équipement excavateur 4,5 m, télescopique Grabarm 4,5 m verlängerbar Excavadora 4,5 m extensible
11891418		Digger 4.5m Standard Equipement excavateur 4,5 m std Stiel 4,5 m Standard Excavadora 4,5 m tipo estándar
11891429		Engine Preheater Réchauffeur de moteur Motorvorwärmer Precalentador de motor *120 V*
11891430		Engine Preheater Réchauffeur de moteur Motorvorwärmer Precalentador de motor *240 V*
11891448		Hydraulic Quick Attach Extendo Tubing With Tool Conduits porte-outil verrouill. hydr. Extendo, avec outil Hydraulischer Schnellwechsler, Teleskoprohr mit Werk Enganche rápido hidráulico, prolongación tubería con

Equipment	Kit No	Description
11891449		Hydraulic Quick Attach Extendo Tubing Without Tool Conduits porte-outil verrouill. hydr. Extendo, sans outil Hydraulischer Schnellwechsler, Teleskoprohr ohne We Enganche rápido hidráulico, prolongación tubería sin h
11891450		Hydraulic Quick Attach Std Tubing With Tool Conduits porte-outil verrouill. hydr. standard, avec outil Hydraulischer Schnellwechsler, Standardrohr mit Werk Enganche rápido hidráulico, tubería estándar con herra
11891451		Hydraulic Quick Attach Std Tubing Without Tool Conduits porte-outil verrouill. hydr. standard, sans outil Hydraulischer Schnellwechsler, Standardrohr ohne We Enganche rápido hidráulico, tubería estándar sin herra
11891455		Hammer Hydraulic Circuit Circuit hydraulique marteau Hammerhydraulik Circuito hidráulico para martillo
11891488		Radio Pre-installation Pré-installation autoradio Radio Vorbereitung Preinstalación de radio
11891496		
11891497		Digger 4.5 Std/extending Tubing
11891531		Tire Pneu Reifen Neumatico *400/70R20 + 440/80 R28*
11891539		Pin kit for bucket Kit de pivot d'axe pour godet Schaufelbolzensatz Juego de muñones para cuchara
11891540		Bucket Gp 1m3 Without Forks Support
11891541		
11891561		Pin kit for bucket Kit de pivot d'axe pour godet Schaufelbolzensatz Juego de muñones para cuchara
11891565		Bucket Gp 1m3 With Forks Support

GROUP		Section	Page
210	Repair kits for engine	50	37
210	Engine	100	43
211	Cylinder head	100	45
212	Cylinder block	100	47
212	Crankcase ventilation	150	49
213	Pistons	100	51
214	Valve mechanism	100	53
215	Timing gear casing and gears	100	55
216	Crankshaft and related parts	100	57
216	Flywheel housing	150	61
217	Oil sump	100	63
218	Engine mounting 11891076, 11891077	100	65
218	Engine mounting	200	67
221	Lubricating oil system	100	69
222	Oil filter	100	71
223	Oil cooler	100	73
233	Fuel pump	100	75
234	Fuel tank, fuel pipes	100	77
236	Fuel injection pump with fitting parts	100	79
236	Regulator	150	85
237	Fuel lines and injectors	100	87
251	Inlet manifold and exhaust manifold	100	89
252	Exhaust system, silencer	100	93
255	Turbocharger with fitting parts	100	95
256	Air filter with fitting parts	100	97
256	Air filter	150	99
260	Cooling system	100	101
260	Cooling system incl. expansion tank	200	103
261	Radiator with fitting parts	100	105
262	Water pump and thermostat housing 11886395, 11887321	100	107
263	Fan and installation components	100	111
263	Belt transmission	150	113
269	Engine oil preheating	100	115
271	Regulator control	100	117
272	Hand throttle	100	119
273	Shutdown device	100	121

TABLE DES MATIÈRES

GROUPE		Section	Page
210	Jeu pour moteur	50	37
210	Moteur	100	43
211	Culasse	100	45
212	Bloc-cylindres	100	47
212	Ventilation de carter	150	49
213	Pistons	100	51
214	Commande des soupapes	100	53
215	Carter de distribution et engrenage	100	55
216	Axe à vilebreguintas	100	57
216	Carter de volant	150	61
217	Carter d'huile	100	63
218	Suspension du moteur 11891076, 11891077	100	65
218	Suspension du moteur	200	67
221	Système de graissage	100	69
222	Filtre à huile	100	71
223	Radiateur d 'huile	100	73
233	Pompe carburant	100	75
234	Réservoir de carburant, conduit de carburant	100	77
236	Pompe d'injection de combustible avec pièces de montage	100	79
236	Régulateur	150	85
237	Canalisation à combustible, injecteur	100	87
251	Tubulure admission et tubulure echappement	100	89
252	Système d'áspiration, silencieux	100	93
255	Turbocompresseur avec pièces de montage	100	95
256	Filtre à air avec pièces de montage	100	97
256	Purificateur d'air	150	99
260	Système de refroidissement	100	101
260	Système de refroidissement avec vase d'expansion	200	103
261	Radiateur avec pièces de montage	100	105
262	Pompe à eau et boitier thermostat 11886395, 11887321	100	107
263	Ventilateur avec pièces de montage	100	111
263	Transmission courrouie	150	113
269	Préchauffage huile moteur	100	115
271	Commande du régulateur	100	117
272	Accelerateur manual	100	119
273	Arret de moteur	100	121

GRUPPE		Abschnitt	Seite
210	Motorsätze	50	37
210	Motor	100	43
211	Zylinderkopf	100	45
212	Zylinderblock	100	47
212	Kurbelgehäusebelüftung	150	49
213	Kolben	100	51
214	Ventilmechanismus	100	53
215	Stirnradgehäuse und Nabenvorgelege	100	55
216	Kurbelbewegung	100	57
216	Schwungradgehäuse	150	61
217	Ölwanne	100	63
218	Motorbefestigung 11891076, 11891077	100	65
218	Motorbefestigung	200	67
221	Schmierölsystem	100	69
222	Ölfilter	100	71
223	Ölkühler	100	73
233	Kraftstoffpumpe	100	75
234	Kraftstofftank, kraftstoffrohr	100	77
236	Einspritzpumpe mit Anbauteilen	100	79
236	Regler	150	85
237	Brennstoffrohre	100	87
251	Ansaugrohr und Auspuffkrümmer	100	89
252	Auspuffsystem, Schalldämpfer	100	93
255	Torbolader mit Anbauteilen	100	95
256	Luftfilter mit Anbauteilen	100	97
256	Luftfilter	150	99
260	Kühlanlage	100	101
260	Kühlsystem mit Expansionstank	200	103
261	Kühler mit Anbauteilen	100	105
262	Wasserpumpe und Thermostatgehäuse 11886395, 11887321	100	107
263	Lüfter mit Anbauteilen	100	111
263	Riemenantrieb	150	113
269	Motorölvorwärmung	100	115
271	Reglersteuerung	100	117
272	Handgas	100	119
273	Motorabstellung	100	121

INDICE

GRUPO		Sección	Página
210	Juegos para el motor	50	37
210	Motor	100	43
211	Culata	100	45
212	Bloque de cilindros	100	47
212	Ventilación del cárter	150	49
213	Pistones	100	51
214	Mecanismo de vávulas	100	53
215	Caja de distribución y engranajes	100	55
216	Cigüeñal	100	57
216	Carcasa del volante	150	61
217	Cárter	100	63
218	Suspensión del motor 11891076, 11891077	100	65
218	Suspensión del motor	200	67
221	Sistema de lubricación	100	69
222	Filtro de aceite	100	71
223	Enfriador de aceite	100	73
233	Bomba de combustible	100	75
234	Depósito de combustible,tubos de combustible	100	77
236	Bomba de inyección de accesorisde montaje	100	79
236	Regulador	150	85
237	Tuberías de combustible, inyector	100	87
251	Tubo admisión y múltiple escape	100	89
252	Sistema de escape, silenciador	100	93
255	Turboalimentador con accesorios de montaje	100	95
256	Filtro de aire con accesoris de montaje	100	97
256	Filtro de aire	150	99
260	Sistema de refrigeración	100	101
260	Sistema de refrigeración con vaso expansión	200	103
261	Radiador con accesorios de montaje	100	105
262	Bomba de agua y caja de termostato 11886395, 11887321	100	107
263	Ventilador con accesorios de montaje	100	111
263	Correa distribución	150	113
269	Precalentamiento del aceite de motor	100	115
271	Mando del regulador	100	117
272	Acelerador manual	100	119
273	Parada del motor	100	121

VOLVO

Construction Equipment

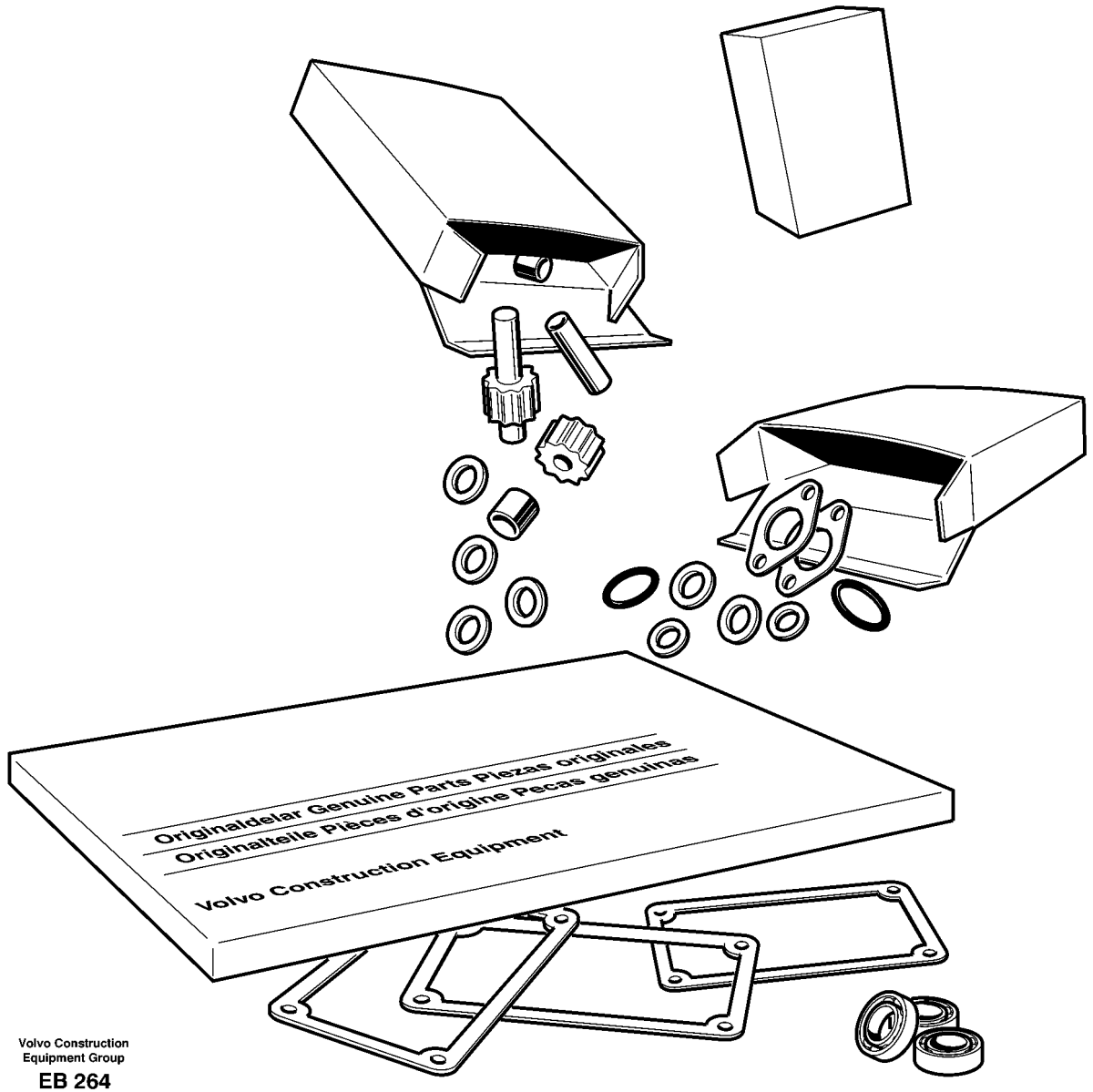

Volvo Construction
Equipment Group

EB 264

Fig.	Part No.	Quantity 1	2	3	PS	KIT	Description	Dénomination	Bezeichnung	Denominación	Notes
	VOE 11712335						Overhaul Kit	Kit Renovation	Uberholungssatz	Juego Reacondic	
	VOE 11700391	1					•Gasket	•Joint	•Dichtung	•Junta	
	VOE 11700397	4					•Shim	•Cale Reglage	•Nachstellblech	•Cuna de calzar	
	VOE 11701764	12					•O-ring	•Joint Torique	•O-Ring	•Junta torica	
	VOE 13947281	4					•Gasket	•Joint	•Dichtung	•Junta	
	VOE 13947282	2					•Gasket	•Joint	•Dichtung	•Junta	
	VOE 13947621	2					•Plane Gasket	•Joint Plan	•Flachdichtung	•Junta Plana	
	VOE 13947622	2					•Plane Gasket	•Joint Plan	•Flachdichtung	•Junta Plana	
	VOE 20405536	2					•Sealing ring	•Bague d'étanchéité	•Runddichtring	•Anillo reten	
	VOE 20405543	8					•Shim	•Cale d'épaisseur	•Passcheibe	•Arandela Ajuste	
	VOE 20405590	1					•Gasket	•Joint	•Dichtung	•Junta	
	VOE 20405627	1					•Gasket	•Joint	•Dichtung	•Junta	
	VOE 20405728	1					•Sealing ring	•Bague d'étanchéité	•Runddichtring	•Anillo reten	
	VOE 20405825	1					•Gasket	•Joint	•Dichtung	•Junta	
	VOE 20405938	1					•Connector	•Raccord	•Anschluss	•Union	
	VOE 20412318	4					•Stud	•Goujon	•Stiftschraube	•Esparrago	
	VOE 20412359	1					•Sealing ring	•Bague d'étanchéité	•Runddichtring	•Anillo reten	
	VOE 20450736	2					•Thermostat	•Thermostat	•Thermostat	•Termostato	
	VOE 20459115	1					•Crankshaft Seal	•Joint Vilebreq.	•Kurbelw Dichtg	•Reten Ciguenal	
	VOE 20459140	5					•Main Bearing	•Pal.vilebrequin	•Hauptlager	•Cojin Bancada	
	VOE 20459149	2					•Thrust Washer	•Rondelle Butee	•Druckscheibe	•Arandela Presio	
	VOE 20459168	1					•Crankshaft Seal	•Joint Vilebreq.	•Kurbelw Dichtg	•Reten Ciguenal	
	VOE 20459171	1					•Nipple	•Raccord	•Nippel	•Niple	
	VOE 20459172	1					•Sealing ring	•Bague d'étanchéité	•Runddichtring	•Anillo reten	
	VOE 20459203	1					•Gasket	•Joint	•Dichtung	•Junta	
	VOE 20459222	4					•Gasket	•Joint	•Dichtung	•Junta	
	VOE 20459236	1					•Gasket	•Joint	•Dichtung	•Junta	
	VOE 20459833	1					•Gasket	•Joint	•Dichtung	•Junta	
	VOE 20459839	2					•Bushing	•Bague	•Buchse	•Casquillo	
	VOE 20459840	1					•Cyl Head Gasket	•Joint Culasse	•Zyl Kopfdichtfg	•Junta Culata	

1	
2	
3	
4	
5	

Juegos para el motor
Motorsätze
Jeu pour moteur
Repair kits for engine

Catalogue id	Group
20050	**210**
Illustr. No	Section
EB264	**50**
Issue	Page
VOE 64D9920050	**37**

VOLVO

BL61

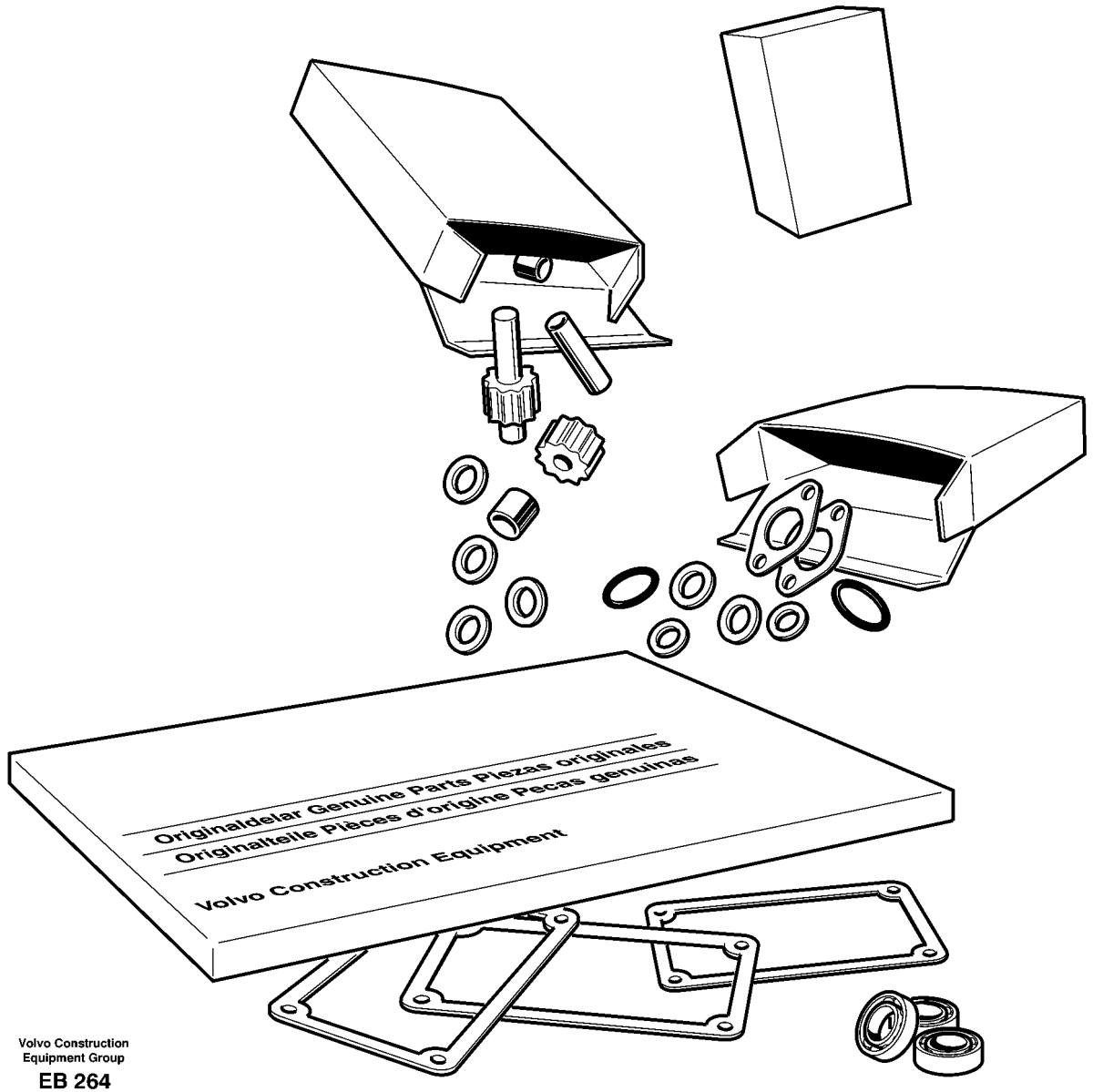

Volvo Construction
Equipment Group

EB 264

Fig.	Part No.	Quantity 1	2	3	PS	KIT	Description	Dénomination	Bezeichnung	Denominación	Notes
	VOE 20459841	1			SS		•Cyl Head Gasket	•Joint Culasse	•Zyl Kopfdichtfg	•Junta Culata	
	VOE 20459855	8					•Valve Seal	•Joint Soupape	•Ventildichtung	•Reten Valvula	
	VOE 20459904	1					•Sealing ring	•Bague d'étanchéité	•Runddichtring	•Anillo reten	
	VOE 20459953	1					•Sealing ring	•Bague d'étanchéité	•Runddichtring	•Anillo reten	
	VOE 20459954	1					•Sealing ring	•Bague d'étanchéité	•Runddichtring	•Anillo reten	
	VOE 20459955	1					•Sealing ring	•Bague d'étanchéité	•Runddichtring	•Anillo reten	
	VOE 20459961	2					•Sealing ring	•Bague d'étanchéité	•Runddichtring	•Anillo reten	
	VOE 20459998	1					•Cmshft Bushing	•Bag.arbre Cames	•Nockenw Buchse	•Casqiu Arb Lev	
	VOE 20459999	4					•Cmshft Bushing	•Bag.arbre Cames	•Nockenw Buchse	•Casqiu Arb Lev	
	VOE 20460009	4					•Piston Pin	•Axe Piston	•Kolbenbolzen	•Bulon	
	VOE 20460010	8					•Clip	•Clip	•Klemme	•Clip	
	VOE 20460013	4					•Piston	•Piston	•Kolben	•Piston	
	VOE 20460022	1					•Gasket	•Joint	•Dichtung	•Junta	
	VOE 20460095	4					•Fuel pipe	•Conduit carbura	•Kraftstoffleitung	•Tubo combustib	
	VOE 20482739	4					•Piston Ring Kit	•Jeu Segm.piston	•Kolbenringsatz	•Jg Segm Piston	
	VOE 20517048	4					•Hexagon Nut	•Ecrou Hexagonal	•Sechskantmutter	•Tuerca Hexagon	
	VOE 20531832	2					•Gasket	•Joint	•Dichtung	•Junta	
	VOE 20537029	1					•Gasket	•Joint	•Dichtung	•Junta	
	VOE 20555403	4					•Bearing	•Palier	•Lager	•Cojinete	
	VOE 20557208	4					•Gasket	•Joint	•Dichtung	•Junta	
	VOE 20570522	1					•Cyl Head Gasket	•Joint Culasse	•Zyl Kopfdichtfg	•Junta Culata	
	VOE 7011998	1					•Gasket	•Joint	•Dichtung	•Junta	
	VOE 976929	12					•Gasket	•Joint	•Dichtung	•Junta	
	VOE 11712336						Cyl Head Kit	Jeu De Culasse	Zyl.kopfsats	Juego De Culata	
	VOE 13947281	2					•Gasket	•Joint	•Dichtung	•Junta	
	VOE 13947282	2					•Gasket	•Joint	•Dichtung	•Junta	
	VOE 13947621	1					•Plane Gasket	•Joint Plan	•Flachdichtung	•Junta Plana	
	VOE 13947622	1					•Plane Gasket	•Joint Plan	•Flachdichtung	•Junta Plana	
	VOE 20405536	2					•Sealing ring	•Bague d'étanchéité	•Runddichtring	•Anillo reten	
	VOE 20405590	1					•Gasket	•Joint	•Dichtung	•Junta	

1	
2	
3	
4	
5	

Juegos para el motor
Motorsätze
Jeu pour moteur
Repair kits for engine

Catalogue id **20050**	Group **210**
Illustr. No **EB264**	Section **50**
Issue **VOE 64D9920050**	Page **39**

VOLVO

BL61

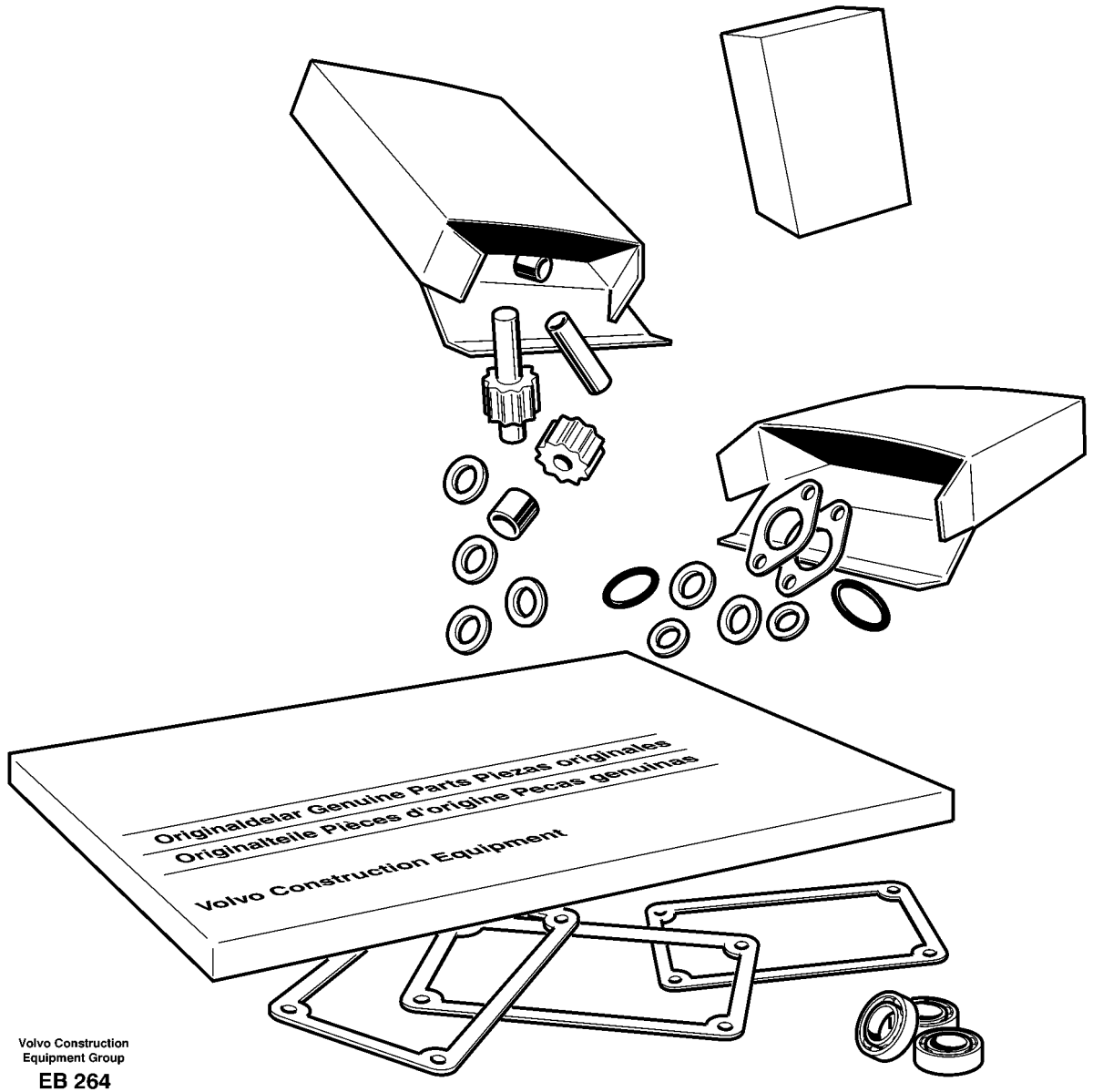

Volvo Construction
Equipment Group

EB 264

Fig.	Part No.	Quantity 1	2	3	PS	KIT	Description	Dénomination	Bezeichnung	Denominación	Notes
	VOE 20405627	1					•Gasket	•Joint	•Dichtung	•Junta	
	VOE 20405728	1					•Sealing ring	•Bague d'étanchéité	•Runddichtring	•Anillo reten	
	VOE 20405938	1					•Connector	•Raccord	•Anschluss	•Union	
	VOE 20412318	4					•Stud	•Goujon	•Stiftschraube	•Esparrago	
	VOE 20459171	1					•Nipple	•Raccord	•Nippel	•Niple	
	VOE 20459172	1					•Sealing ring	•Bague d'étanchéité	•Runddichtring	•Anillo reten	
	VOE 20459222	4					•Gasket	•Joint	•Dichtung	•Junta	
	VOE 20459236	1					•Gasket	•Joint	•Dichtung	•Junta	
	VOE 20459833	1					•Gasket	•Joint	•Dichtung	•Junta	
	VOE 20459839	2					•Bushing	•Bague	•Buchse	•Casquillo	
	VOE 20459840	1					•Cyl Head Gasket	•Joint Culasse	•Zyl Kopfdichtfg	•Junta Culata	
	VOE 20459841	1			SS		•Cyl Head Gasket	•Joint Culasse	•Zyl Kopfdichtfg	•Junta Culata	
	VOE 20459855	8					•Valve Seal	•Joint Soupape	•Ventildichtung	•Reten Valvula	
	VOE 20459953	1					•Sealing ring	•Bague d'étanchéité	•Runddichtring	•Anillo reten	
	VOE 20459955	1					•Sealing ring	•Bague d'étanchéité	•Runddichtring	•Anillo reten	
	VOE 20460095	4					•Fuel pipe	•Conduit carbura	•Kraftstoffleitung	•Tubo combustib	
	VOE 20517048	4					•Hexagon Nut	•Ecrou Hexagonal	•Sechskantmutter	•Tuerca Hexagon	
	VOE 20531832	2					•Gasket	•Joint	•Dichtung	•Junta	
	VOE 20557208	4					•Gasket	•Joint	•Dichtung	•Junta	
	VOE 20570522	1					•Cyl Head Gasket	•Joint Culasse	•Zyl Kopfdichtfg	•Junta Culata	

1		**Juegos para el motor** **Motorsätze** **Jeu pour moteur** **Repair kits for engine**	Catalogue id **20050**	Group **210**
2			Illustr. No **EB264**	Section **50**
3			Issue **VOE 64D9920050**	Page **41**
4				
5				

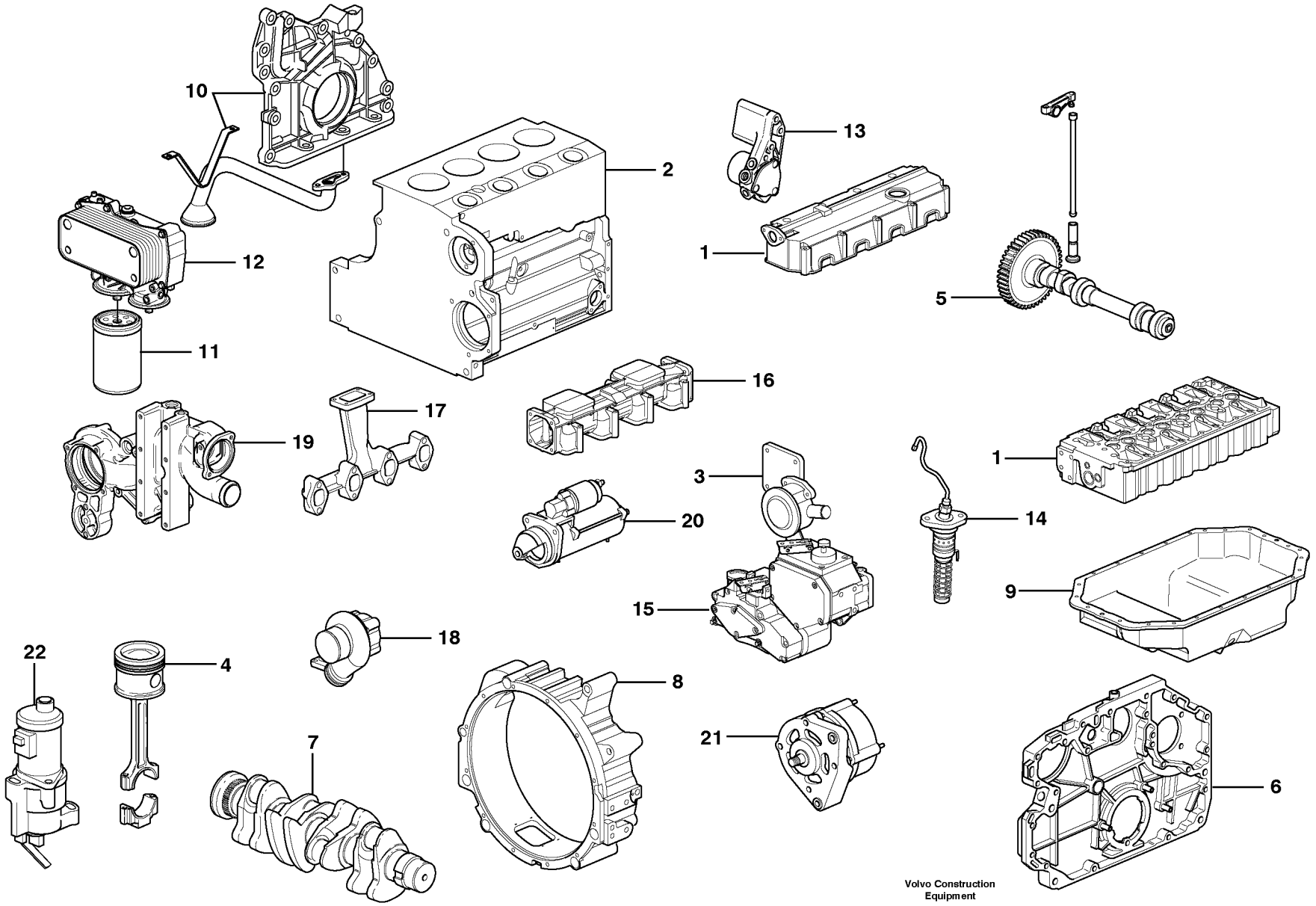

Volvo Construction Equipment

1004517

Fig.	Part No.	Quantity 1	2	3	PS	KIT	Description	Dénomination	Bezeichnung	Denominación	Notes
	VOE 11886395						Engine	Moteur	Verbrenn Motor	Motor	S/N - 10283
	VOE 11887321						Engine	Moteur	Verbrenn Motor	Motor	S/N 10284 -
1		1					•Cylinder head	•Culasse	•Zylinderkopf	•Culata	See group 211, Page 45
2		1					•Cylinder block	•Bloc-cylindres	•Zylinderblock	•Bloque cilindro	See group 212, Page 47
3		1					•Crankcase ventilation	•Aération de carter	•Kurbelgehäuse,entlü	•Ventilación del ca	See group 212, Page 49
4		4					•Piston	•Piston	•Kolben	•Piston	See group 213, Page 51
5		1					•Valve mechanism	•Commande des soupape	•Ventilmechanismus	•Mecanismo de valvulas	See group 214, Page 53
6		1					•Timing gear casing	•Carter distribution	•Steuergehäuse	•Cubierta distribucion	See group 215, Page 55
7		1					•Crankshaft	•Vilebrequin	•Räderkasten Kubelw	•Cigüeñal	See group 216, Page 57
8		1					•Flywheel Hsg	•Carter Volant	•Schwungradgeh	•Cubiert Volante	See group 216, Page 61
9		1					•Oil sump	•Carter d'huile	•Ölsumpf	•Carter de aceite	See group 217, Page 63
10		1					•Lubricating system	•Syst.de graissage	•Schmierölsystem	•Sist.lubrificante	See group 221, Page 69
11		1					•Oil filter	•Filtre huile	•Ölfilter	•Filtro aceite	See group 222, Page 71
12		1					•Oil cooler	•Radiateur huile	•Ölkühler	•Enfriador aceite	See group 223, Page 73
13		1					•Fuel pump	•Pompe Carburant	•Kraftstoffpumpe	•Bomba Combustib	See group 233, Page 75
14		4					•Injcection pump	•Pompe injection	•Einspritzpumpe	•Bomba injeccion	See group 236, Page 79
15		1					•Regulator	•Regulateur	•Regler	•Regulador	See group 236, Page 85
16		1					•Inlet pipe	•Tubulure	•Einlassrohr	•Tubo admision	See group 251, Page 89
17		1					•Exhaust pipe	•Tuyau echappem.	•Abgasschlauch	•Tubo escape	See group 251, Page 89
18		1					•Turbocharger	•Turbocompresse.	•Abgasturbolader	•Turbocompresor	See group 255, Page 95
19		1					•Water pump and thermo	•Pompe a eau et boitie	•Wasserpumpe und Ther	•Bomba de agua y caja	See group 262, Page 107
20		1					•Starter motor	•Demarreur	•Anlasser	•Motor arranque	See group 331, Page 133
21		1					•Alternator with fitti	•Dynamo avec pièces	•Lichtmaschine mit Anb	•Alternador con acceso	See group 321, Page 131
22		1					•Stop solenoid	•Aimant d'arret	•Haltemagnet	•Solenoide parad	See group 273, Page 121

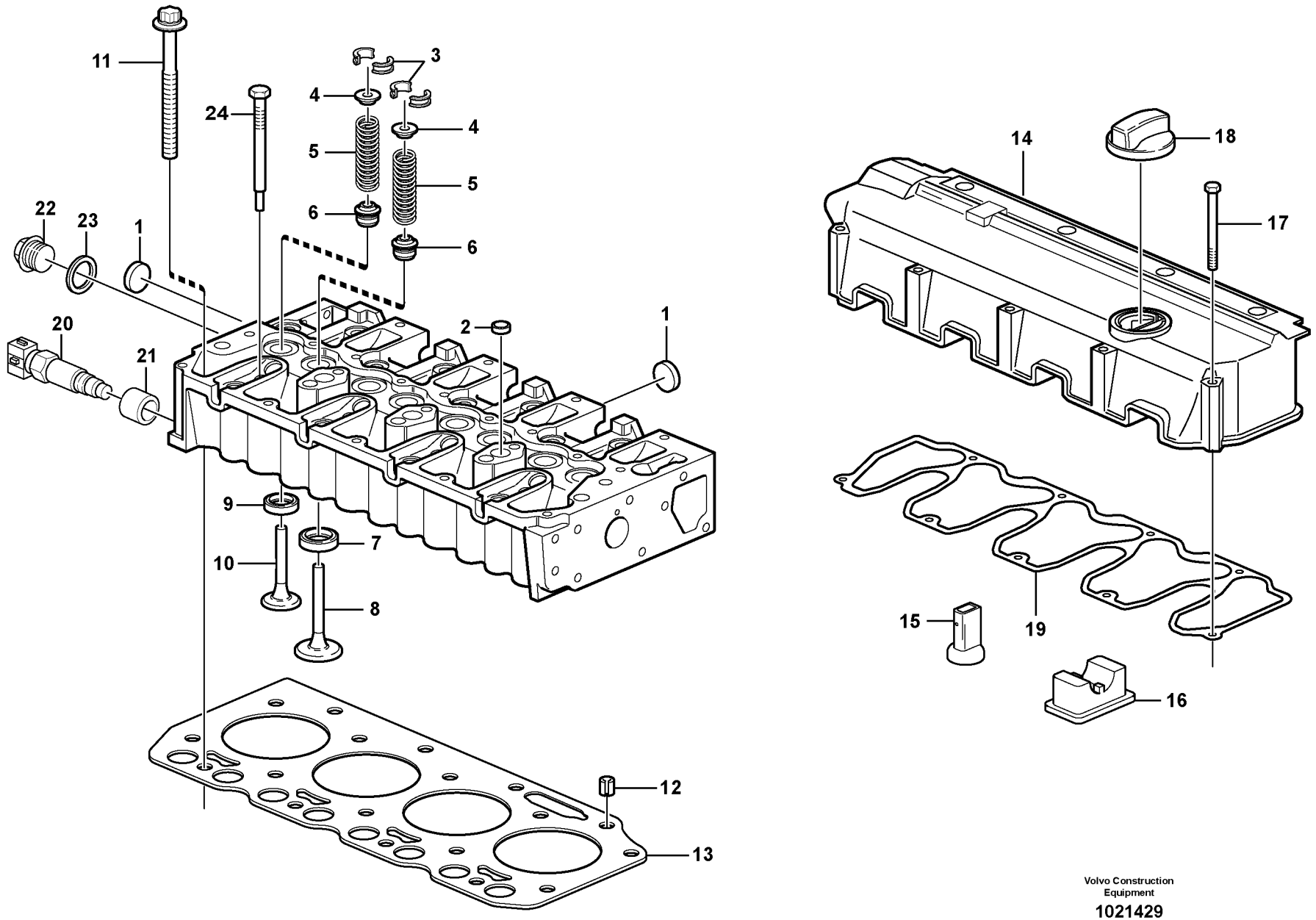

Volvo Construction Equipment

1021429

Fig.	Part No.	Quantity 1	2	3	PS	KIT	Description	Dénomination	Bezeichnung	Denominación	Notes
	VOE 20590598	1					Cylinder head	Culasse	Zylinderkopf	Culata	
1	**VOE 20412745**	3					•Core Plug	•Ronde fermeture	•Fullscheibe	•Tapon	
2	**VOE 20412733**	3					•Core Plug	•Ronde fermeture	•Fullscheibe	•Tapon	
3	**VOE 20459857**	16					•Valve Cone	•Taquet	•Ventilkegelst	•Valvula Cono	
4	**VOE 20535037**	8					•Washer	•Rondelle	•Scheibe	•Arandela	
5	**VOE 20459851**	8					•Valve Spring	•Ressort Soupape	•Ventilfeder	•Resorte Valvula	
6	**VOE 20459855**	8					•Valve Seal	•Joint Soupape	•Ventildichtung	•Reten Valvula	
7	**VOE 20459852**	4					•Valve seat	•Siege de soupape	•Ventilsitz	•Asiento de valvula	
8	**VOE 20791517**	4					•Inlet valve	•Soupape d'entrée	•Einlassventil	•Valvula de entrada	
9	**VOE 20459854**	4					•Valve seat	•Siege de soupape	•Ventilsitz	•Asiento de valvula	
10	**VOE 20791405**	4					•Exhaust Valve	•Soupape Echappement	•Auslassventil	•Valvula Escape	
11	**VOE 20459838**	13					Bolt	Boulon	Bolzen	Perno	
12	**VOE 20459839**	2					Bushing	Bague	Buchse	Casquillo	
13	**VOE 20570520**	1					Cyl Head Gasket	Joint Culasse	Zyl Kopfdichtfg	Junta Culata	1,2 MM
	VOE 20570519	1					Cyl Head Gasket	Joint Culasse	Zyl Kopfdichtfg	Junta Culata	1,3 MM
	VOE 20570522	1					Cyl Head Gasket	Joint Culasse	Zyl Kopfdichtfg	Junta Culata	1,4 MM
14	**VOE 20558934**	1					Valve Cover	Cache-soupapes	Zylkopfhaube	Cubier Valvula	EPROD
15	**VOE 20459836**	1					•Nozzle	•Gicleur	•Düse	•Difusor	
16	**VOE 20459835**	1					•Cover	•Capot	•Haube	•Cubierta	
17	**VOE 20459830**	9					Screw	Vis	Schraube	Tornillo	
18	**VOE 11700341**	1					Filler cap	Bouchon Remplissage	Tankverschluss	Tapa Llenado	
19	**VOE 20558924**	1					Gasket	Joint	Dichtung	Junta	EPROD
20	**VOE 20924084**	1					Sensor	Capteur	Geber	Captador	
21	**VOE 13947621**	1					•Plane Gasket	•Joint Plan	•Flachdichtung	•Junta Plana	
22	**VOE 20464451**	1					Plug	Bouchon	Stopfen	Tapon	
23	**VOE 13947628**	1					Plane Gasket	Joint Plan	Flachdichtung	Junta Plana	
24	**VOE 20405895**	1					Plug	Bouchon	Stopfen	Tapon	
	VOE 20460459						Glow plug	Bougie de préchauffe	Gluhkerze	Bujia	

1	**11886395**
2	**11887321**
3	
4	
5	

Culata
Zylinderkopf
Culasse
Cylinder head

Catalogue id **20050**	Group **211**
Illustr. No **1021429**	Section **100**
Issue **VOE 64D9920050**	Page **45**

VOLVO

BL61

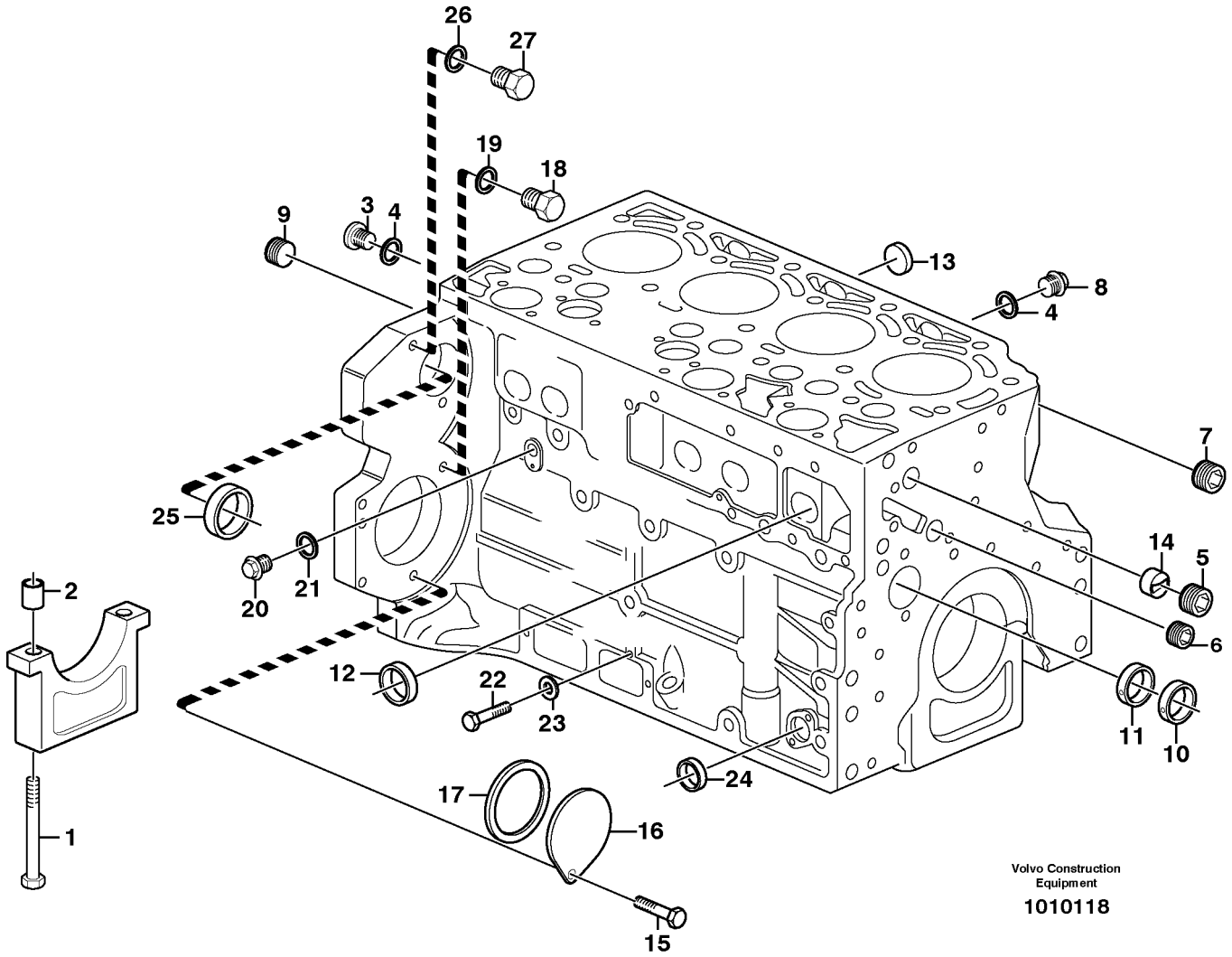
26
27
19
18
3
4
9
13
8
4
7
25
14
5
20
21
6
12
22
23
11
10
24
17
16
2
1
15
Volvo Construction Equipment
1010118

Fig.	Part No.	Quantity 1	2	3	PS	KIT	Description	Dénomination	Bezeichnung	Denominación	Notes
	VOE 24425842	1			SS		Crankcase	Carter Moteur	Kurbelgehäuse	Carter Ciguenal	ENG - 1064049
	VOE 20791246	1					Cylinder Block	Bloc-cylindres	Zylinderblock	Bloque Cilindro	ENG 1064050 -
1	**VOE 20460006**	10					•Screw	•Vis	•Schraube	•Tornillo	
2	**VOE 20460001**	10					•Bushing	•Bague	•Buchse	•Casquillo	
3	**VOE 20460000**	1					•Plug	•Bouchon	•Stopfen	•Tapon	(VOE 11700279)
4	**VOE 13969011**	3					•Gasket	•Joint	•Dichtung	•Junta	
5	**VOE 20405717**	1					•Plug	•Bouchon	•Stopfen	•Tapon	(VOE 20508585)
6	**VOE 20405719**	1					•Plug	•Bouchon	•Stopfen	•Tapon	(VOE 20508590)
7	**VOE 20508600**	2					•Plug	•Bouchon	•Stopfen	•Tapon	
8	**VOE 20405716**	2					•Plug	•Bouchon	•Stopfen	•Tapon	
9	**VOE 20508605**	1					•Plug	•Bouchon	•Stopfen	•Tapon	
10	**VOE 20459999**	4					•Cmshft Bushing	•Bag.arbre Cames	•Nockenw Buchse	•Casqiu Arb Lev	
11	**VOE 20459998**	1					•Cmshft Bushing	•Bag.arbre Cames	•Nockenw Buchse	•Casqiu Arb Lev	
12	**VOE 20405721**	6					•Hood	•Capuchon	•Verschlussdeckel	•Cubierta de tapón	
13	**VOE 20412745**	4					•Core Plug	•Ronde.fermeture	•Fullscheibe	•Tapon	
14	**VOE 20405584**	1					•Guide Sleeve	•Manchon guide	•Führungshülse	•Manguito guia	
15	**VOE 888289**	2					Hexagon screw	Vis tête hexagonale	Sechskantschraube	Tornillo hexago	
16	**VOE 24426064**	1					Cover	Capot	Haube	Capo	
17	**VOE 20412359**	1					Sealing ring	Bague d'étanchéité	Runddichtring	Anillo reten	
18	**VOE 20441859**	1					Plug	Bouchon	Stopfen	Tapon	
19	**VOE 13947281**	1					Gasket	Joint	Dichtung	Junta	
20	**VOE 20405716**	1					Plug	Bouchon	Stopfen	Tapon	
21	**VOE 13947621**	1					Plane Gasket	Joint Plan	Flachdichtung	Junta Plana	
22	**VOE 20459899**	2					Screw	Vis	Schraube	Tornillo	
23	**VOE 20459900**	2					Sealing ring	Bague d'étanchéité	Runddichtring	Anillo reten	
24	**VOE 20412745**	1					Core Plug	Ronde.fermeture	Fullscheibe	Tapon	
25	**VOE 20450778**	1					Core Plug	Ronde.fermeture	Fullscheibe	Tapon	
26	**VOE 13947281**	2					Gasket	Joint	Dichtung	Junta	
27	**VOE 20441859**	2					Plug	Bouchon	Stopfen	Tapon	(VOE 20532680)

1	
2	
3	
4	
5	

Bloque de cilindros
Zylinderblock
Bloc-cylindres
Cylinder block

Catalogue id **20050**	Group **212**
Illustr. No **1010118**	Section **100**
Issue **VOE 64D9920050**	Page **47**

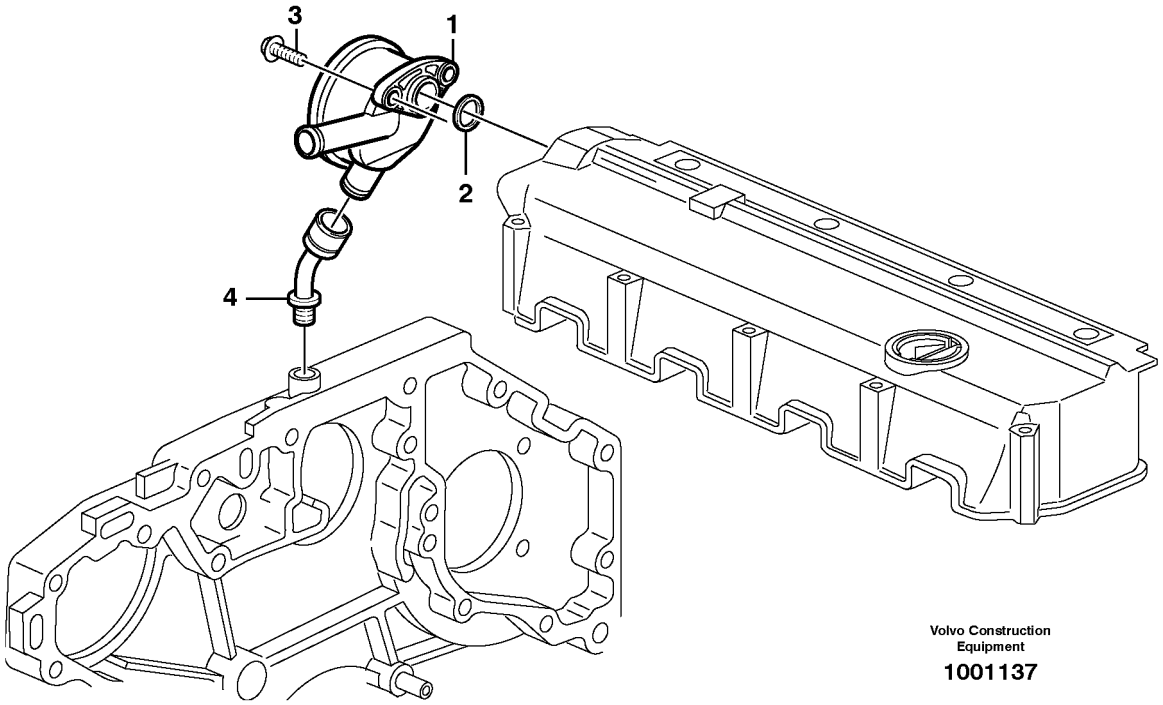

Volvo Construction Equipment

1001137

Fig.	Part No.	Quantity 1	2	3	PS	KIT	Description	Dénomination	Bezeichnung	Denominación	Notes
1	**VOE 20405626**	1					Regulator	Regulateur	Regler	Regulador	
2	**VOE 20405627**	1					•Gasket	•Joint	•Dichtung	•Junta	
3	**VOE 20450728**	2					Bolt	Boulon	Bolzen	Perno	
4	**VOE 20405938**	1					Connector	Raccord	Anschluss	Union	

1		**Ventilación del cárter** **Kurbelgehäusebelüftung** **Ventilation de carter** **Crankcase ventilation**	Catalogue id **20050**	Group **212**
2			Illustr. No **1001137**	Section **150**
3			Issue **VOE 64D9920050**	Page **49**
4				
5				

VOLVO

BL61

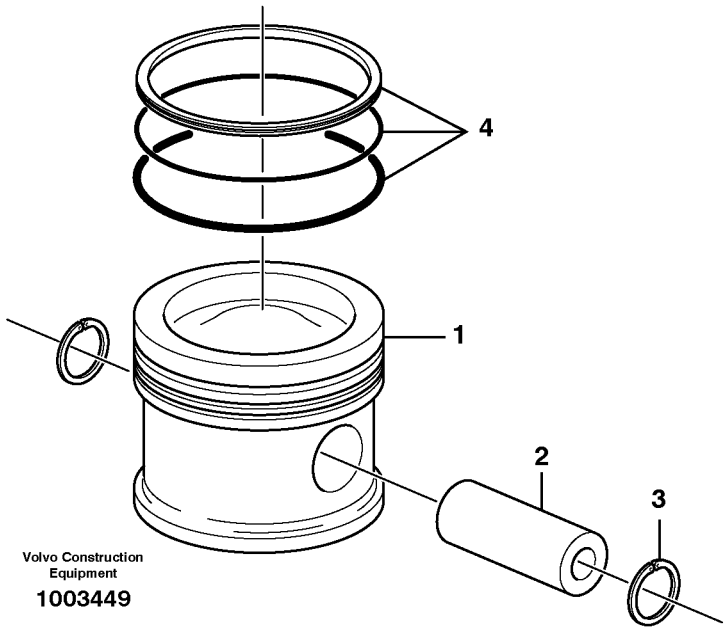
4
1
2
3
Volvo Construction
Equipment
1003449

Fig.	Part No.	Quantity 1	2	3	PS	KIT	Description	Dénomination	Bezeichnung	Denominación	Notes
1	**VOE 20460013**	4					Piston	Piston	Kolben	Piston	
2	**VOE 20460009**	4					•Piston Pin	•Axe Piston	•Kolbenbolzen	•Bulon	
3	**VOE 20460010**	8					•Clip	•Clip	•Klemme	•Clip	
4	**VOE 20482739**	4					•Piston Ring Kit	•Jeu Segm.piston	•Kolbenringsatz	•Jg Segm Piston	

1		**Pistones** **Kolben** **Pistons** **Pistons**	Catalogue id **20050**	Group **213**
2			Illustr. No **1003449**	Section **100**
3			Issue **VOE 64D9920050**	Page **51**
4				
5				

VOLVO

BL61

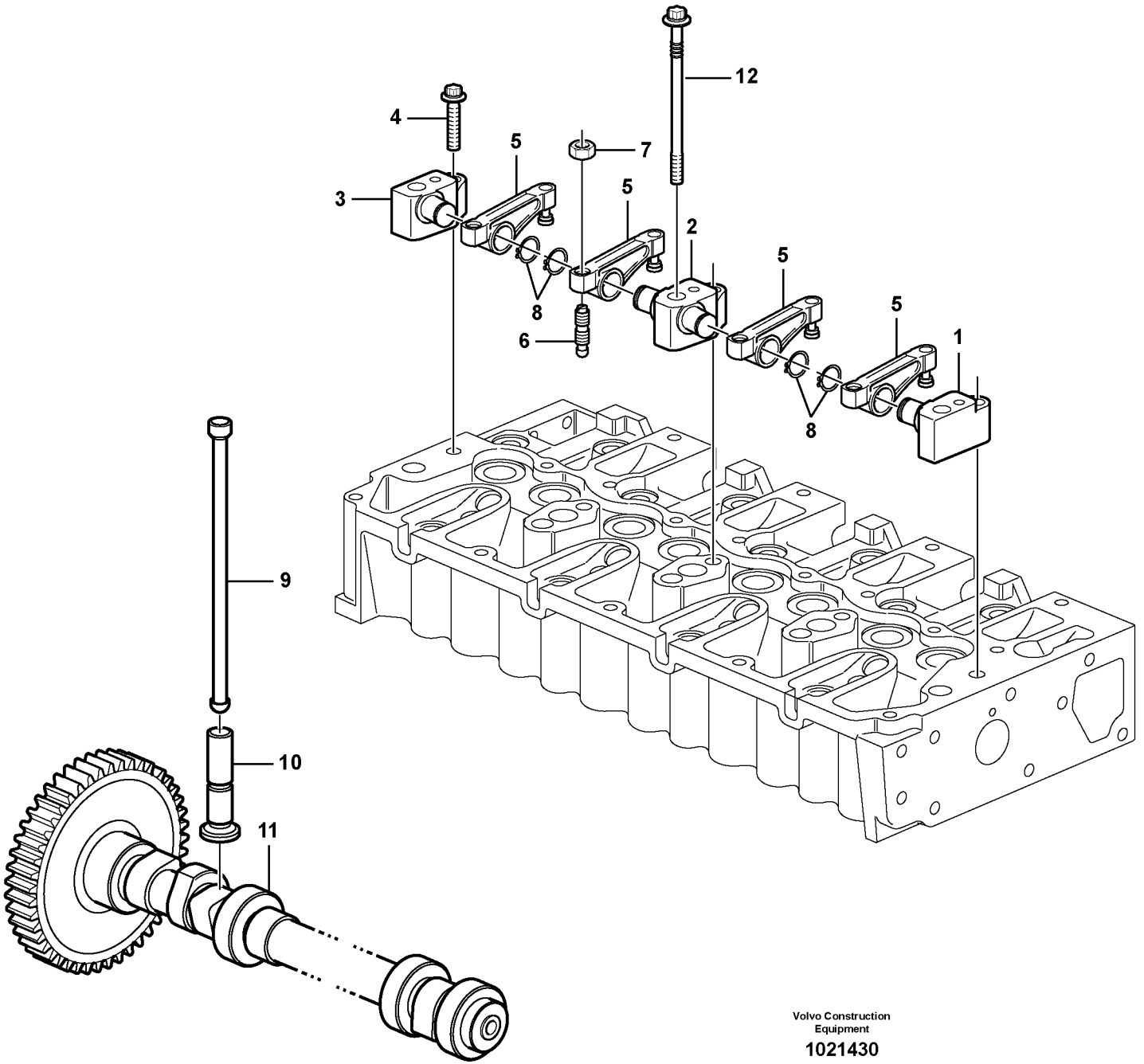

Volvo Construction Equipment

1021430

Fig.	Part No.	Quantity 1	2	3	PS	KIT	Description	Dénomination	Bezeichnung	Denominación	Notes
1	**VOE 20459848**	1					Bracket	Console	Konsole	Consola	
2	**VOE 20459847**	3					Bracket	Console	Konsole	Consola	
3	**VOE 20459849**	1					Bracket	Console	Konsole	Consola	
4	**VOE 20459853**	5					Screw	Vis	Schraube	Tornillo	
5	**VOE 20459850**	8					Rocker Arm	Culbuteur	Kipphebel	Balancin	
6	**VOE 20405524**	8					Screw	Vis	Schraube	Tornillo	
7	**VOE 11700373**	8					Nut	Ecrou	Mutter	Tuerca	
8	**VOE 945495**	8					Snap Ring	Circlip	Nutring	Circlip	(VOE 20549891)
9	**VOE 20460008**	8					Push Rod	Tige-poussoir	Druckstange	Varilla Presion	
10	**VOE 20460007**	8					Tappet	Poussoir Pompe	Pumpdrucker	Balancin	
11	**VOE 20555491**	1					Camshaft	Arbre a cames	Nockenwelle	Eje de levas	
12	**VOE 20459837**	5					Bolt	Boulon	Bolzen	Perno	

1		**Mecanismo de válvulas** **Ventilmechanismus** **Commande des soupapes** **Valve mechanism**	Catalogue id **20050**	Group **214**
2			Illustr. No **1021430**	Section **100**
3			Issue **VOE 64D9920050**	Page **53**
4				
5				

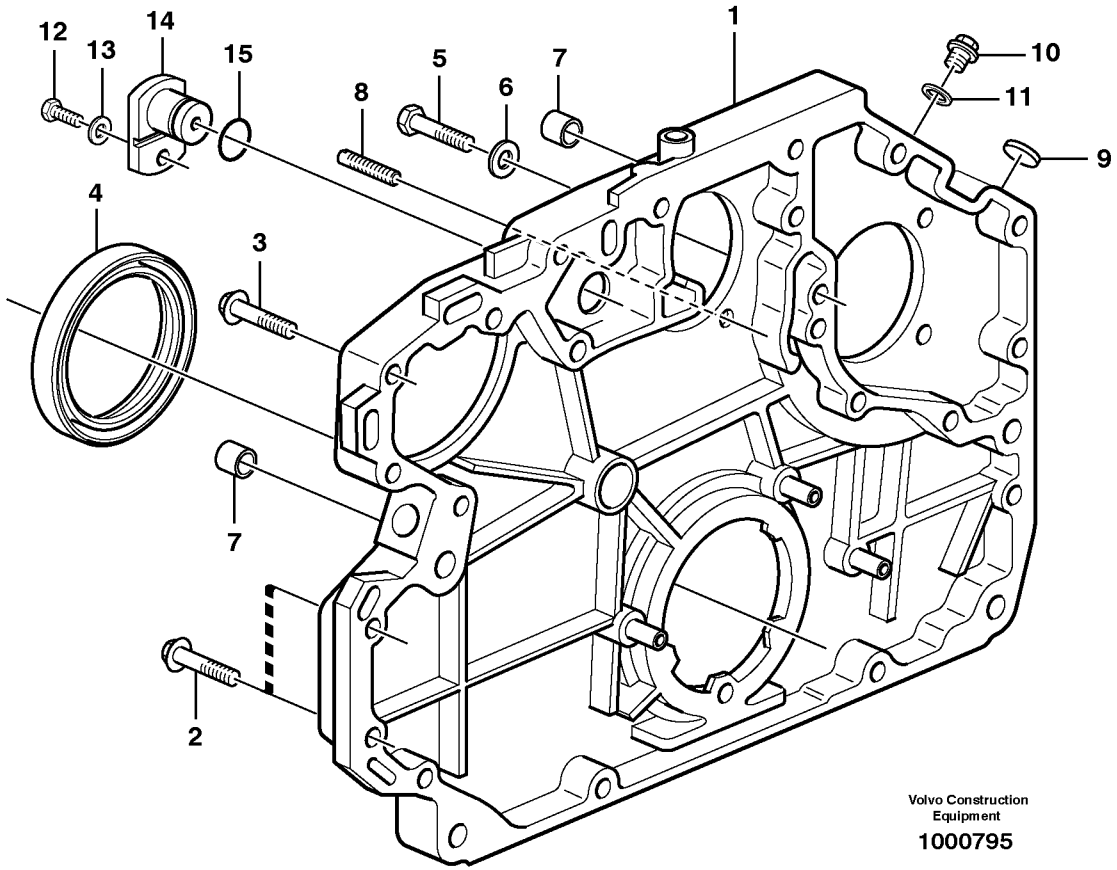
12
13
14
15
8
5
6
7
1
10
11
9
4
3
7
2
Volvo Construction Equipment
1000795

Fig.	Part No.	Quantity 1	2	3	PS	KIT	Description	Dénomination	Bezeichnung	Denominación	Notes
1	**VOE 20555502**	1					Tmg Gear Cover	Couv.distribut.	Steuergeh Deck	Tapa Distribuc	ENG - 00629848
	VOE 20592820	1					Cover	Capot	Haube	Capo	ENG 00629849 -
2	**VOE 20412324**	12					Screw	Vis	Schraube	Tornillo	
3	**VOE 20450801**	4					Screw	Vis	Schraube	Tornillo	
4	**VOE 20459115**	1					Crankshaft Seal	Joint Vilebreq.	Kurbelw Dichtg	Reten Ciguenal	
5	**VOE 20405653**	2					Screw	Vis	Schraube	Tornillo	
6	**VOE 13955900**	2					Washer	Rondelle	Scheibe	Arandela	(VOE 20539564)
7	**VOE 20585971**	2					Bushing	Bague	Buchse	Casquillo	
8	**VOE 20450795**	1					Set Screw	Vis Butee	Anschlagschraub	Tornillo Tope	
9	**VOE 20405605**	1					Cover	Capot	Haube	Capo	
10	**VOE 20451012**	1					Plug	Bouchon	Stopfen	Tapon	
11	**VOE 13947621**	1					Plane Gasket	Joint Plan	Flachdichtung	Junta Plana	
12	**VOE 20405706**	1					Screw	Vis	Schraube	Tornillo	
13	**VOE 20459183**	1					Washer	Rondelle	Scheibe	Arandela	
14	**VOE 20405553**	1					Cover	Capot	Haube	Capo	
15	**VOE 20459904**	1					Sealing ring	Bague d'étanchéité	Runddichtring	Anillo reten	

1		**Caja de distribución y engranajes** **Stirnradgehäuse und Nabenvorgelege** **Carter de distribution et engrenage** **Timing gear casing and gears**	Catalogue id **20050**	Group **215**
2			Illustr. No **1000795**	Section **100**
3			Issue **VOE 64D9920050**	Page **55**
4				
5				

VOLVO

BL61

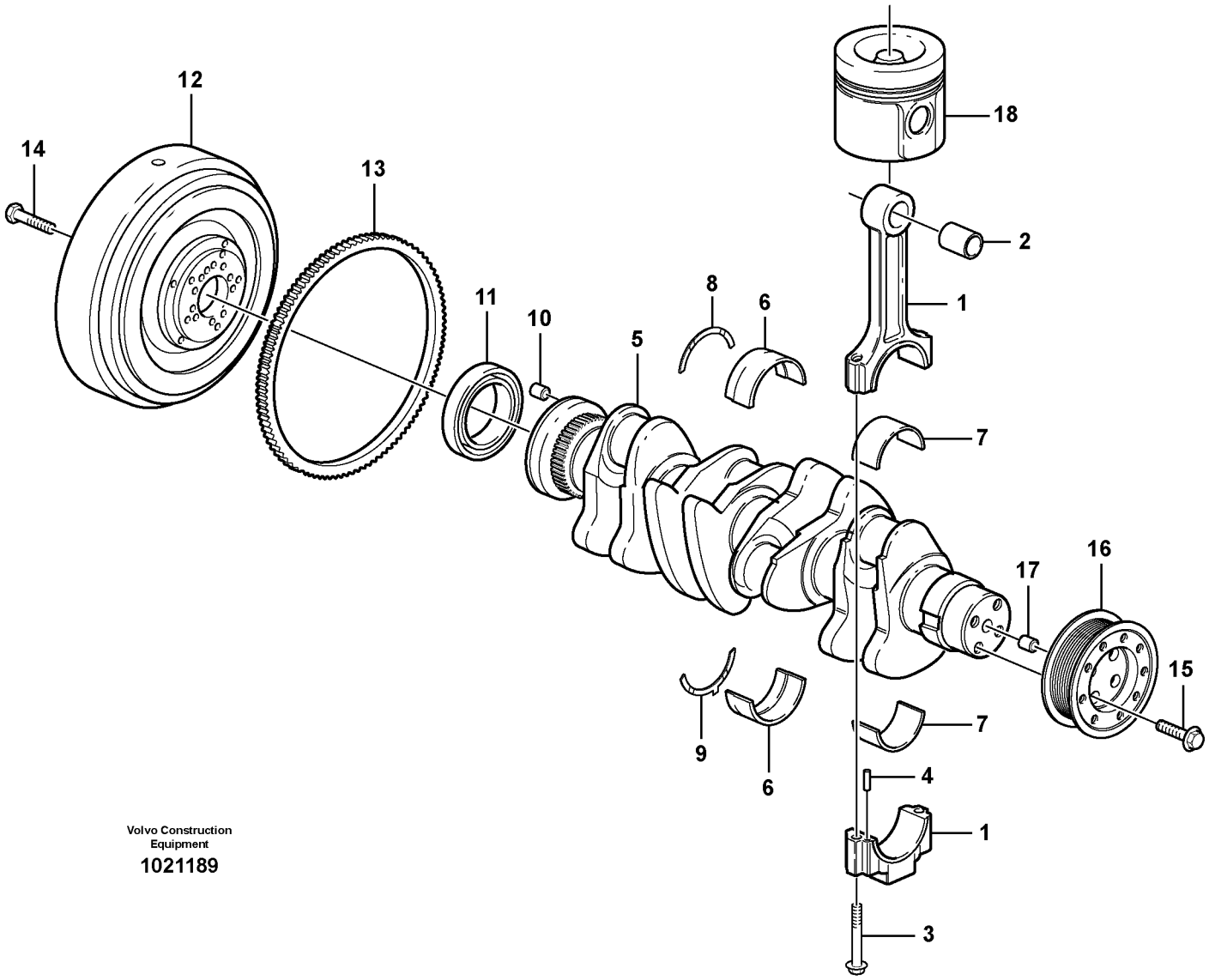

Volvo Construction Equipment

1021189

Fig.	Part No.	Quantity 1	2	3	PS	KIT	Description	Dénomination	Bezeichnung	Denominación	Notes
1	**VOE 20882905**	4					Connecting Rod	Bielle	Pleuel	Biela	
2	**VOE 20523284**	8					•Bushing	•Bague	•Buchse	•Casquillo	
3	**VOE 20459133**	8					•Bolt	•Boulon	•Bolzen	•Perno	
4	**VOE 20459134**	8					•Pin	•Goupille	•Zapfen	•Pasador	
5	**VOE 20729184**	1					Crankshaft	Vilebrequin	Kurbelwelle	Ciguenal	ENG - 1026595
	VOE 20891184	1					Crankshaft	Vilebrequin	Kurbelwelle	Ciguenal	ENG 1026596 -
6	**VOE 20459140**	5					Main Bearing	Pal.vilebrequin	Hauptlager	Cojin Bancada	STD 84,00 MM
	VOE 20459139	5					Main Bearing	Pal.vilebrequin	Hauptlager	Cojin Bancada	U SZ 83,75 MM
7	**VOE 20555403**	4					Bearing	Palier	Lager	Cojinete	ENG - 695616 STD 63,00 MM
		4			NS		Bearing	Palier	Lager	Cojinete	ENG - 695616 U SZ 62,75 MM
	VOE 20480536	4					Bearing	Palier	Lager	Cojinete	ENG 695617 - STD 63,00 MM
	VOE 20522433	4					Bearing	Palier	Lager	Cojinete	ENG 695617 - U SZ 62,75 MM
8	**VOE 20459149**	2					Thrust Washer	Rondelle Butee	Druckscheibe	Arandela Presio	STD WID 14 MM THICK 2,0 MM
	VOE 20459148	2					Thrust Washer	Rondelle Butee	Druckscheibe	Arandela Presio	WID 14 MM THICK 2,2 MM
9	**VOE 20459143**	2					Thrust Washer	Rondelle Butee	Druckscheibe	Arandela Presio	STD WID 10 MM THICK 2,0 MM
		2			NS		Thrust Washer	Rondelle Butee	Druckscheibe	Arandela Presio	WID 10 MM THICK 2,2 MM
10	**VOE 20459144**	1					Pin	Goupille	Zapfen	Pasador	
11	**VOE 20459115**	1					Crankshaft Seal	Joint Vilebreq.	Kurbelw Dichtg	Reten Ciguenal	
12	**VOE 20459124**	1					Flywheel	Volant	Schwungrad	Volante	
13	**VOE 20706915**	1					•Gear Ring	•Couronne dentee	•Zahnkranz	•Corona Dentada	

1	
2	
3	
4	
5	

Cigüeñal
Kurbelbewegung
Axe à vilebreguintas
Crankshaft and related parts

Catalogue id	Group
20050	**216**
Illustr. No	Section
1021189	**100**
Issue	Page
VOE 64D9920050	**57**

VOLVO

BL61

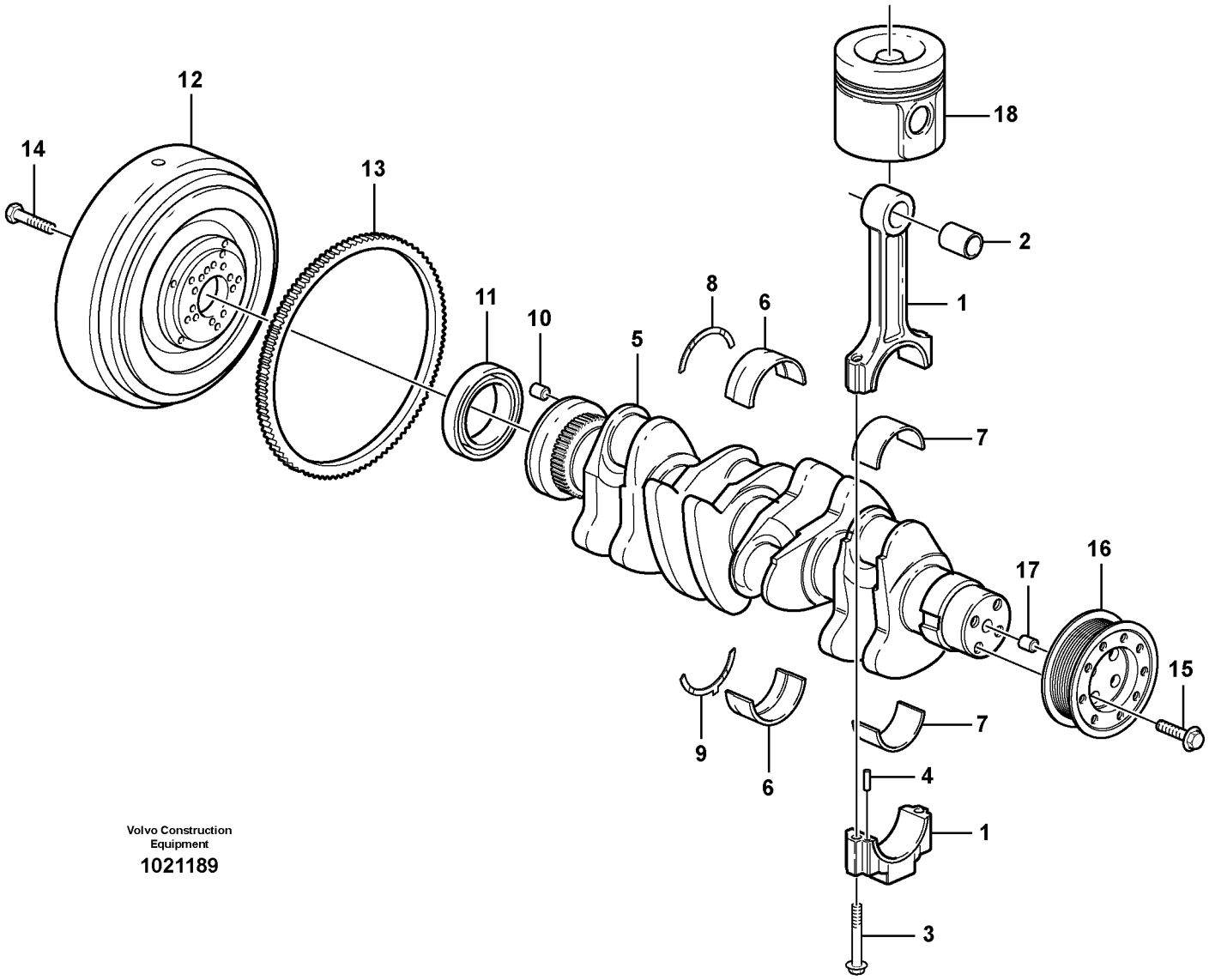

Volvo Construction Equipment

1021189

Fig.	Part No.	Quantity 1	2	3	PS	KIT	Description	Dénomination	Bezeichnung	Denominación	Notes
14	**VOE 20405654**	10					Bolt	Boulon	Bolzen	Perno	
15	**VOE 24426216**	1					Pulley	Poulie	Z-riemenscheibe	Polea Corr Dent	
16	**VOE 20405724**	4					Screw	Vis	Schraube	Tornillo	
17	**VOE 20405634**	1					Spring Pin	Axe de ressort	Federstift	Pasador Resorte	
18		1					Piston	Piston	Kolben	Piston	See group 213, Page 51

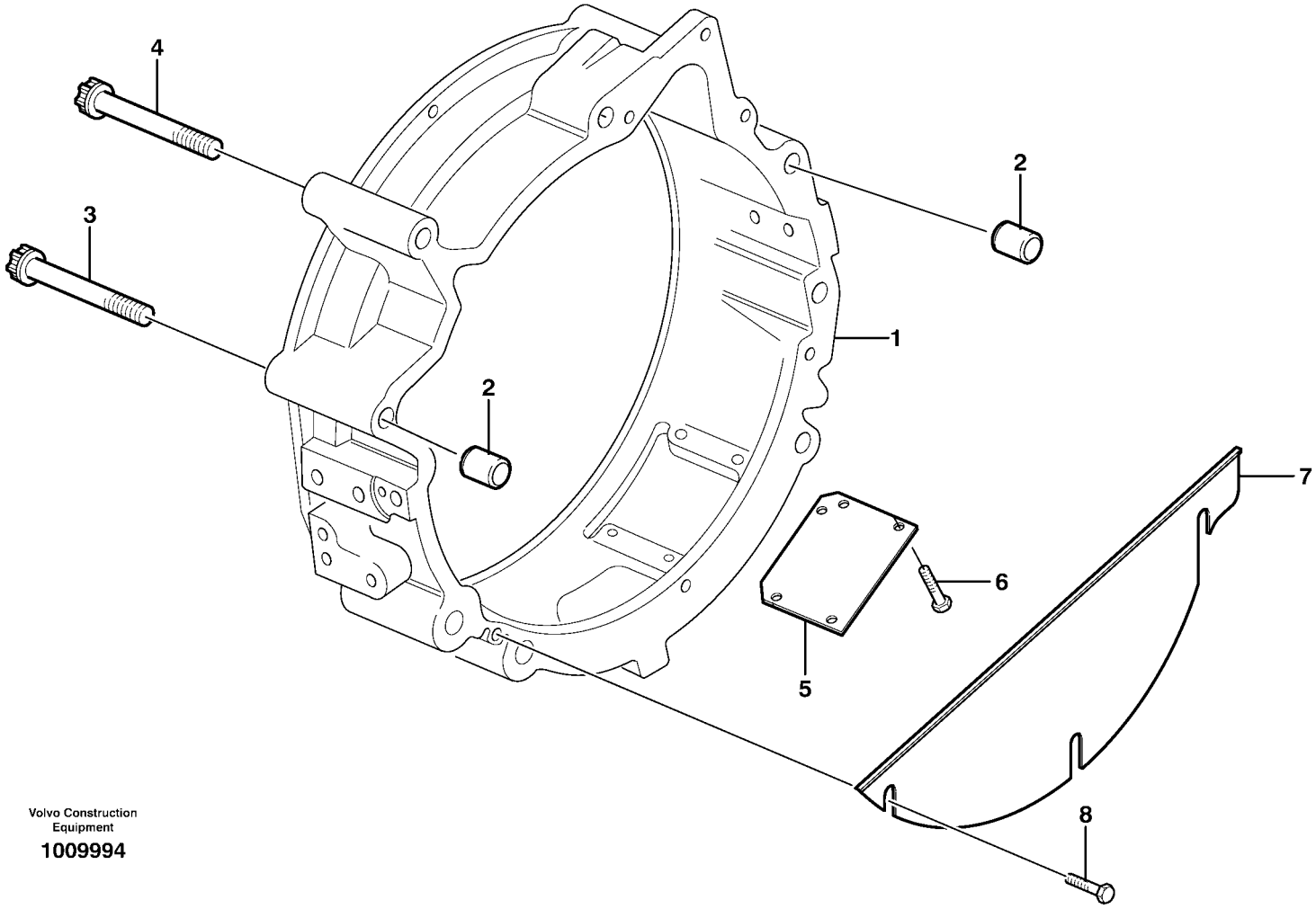

Volvo Construction Equipment

1009994

Fig.	Part No.	Quantity 1	2	3	PS	KIT	Description	Dénomination	Bezeichnung	Denominación	Notes
1	**VOE 20459990**	1					Flywheel Hsg	Carter Volant	Schwungradgeh	Cubiert Volante	(VOE 20550335)
2	**VOE 20585971**	2					Bushing	Bague	Buchse	Casquillo	
3	**VOE 20459996**	2					Screw	Vis	Schraube	Tornillo	
4	**VOE 20459995**	4					Screw	Vis	Schraube	Tornillo	
5	**VOE 20547288**	1					Cover Plate	Protection en tole	Schutzblech	Placa Tapa	
6	**VOE 20405729**	4					Screw	Vis	Schraube	Tornillo	
7	**VOE 20459989**	1					Cover	Capot	Haube	Capo	
8	**VOE 20405729**	3					Screw	Vis	Schraube	Tornillo	

1		**Carcasa del volante** **Schwungradgehäuse** **Carter de volant** **Flywheel housing**	Catalogue id **20050**	Group **216**
2			Illustr. No **1009994**	Section **150**
3			Issue **VOE 64D9920050**	Page **61**
4				
5				

VOLVO

BL61

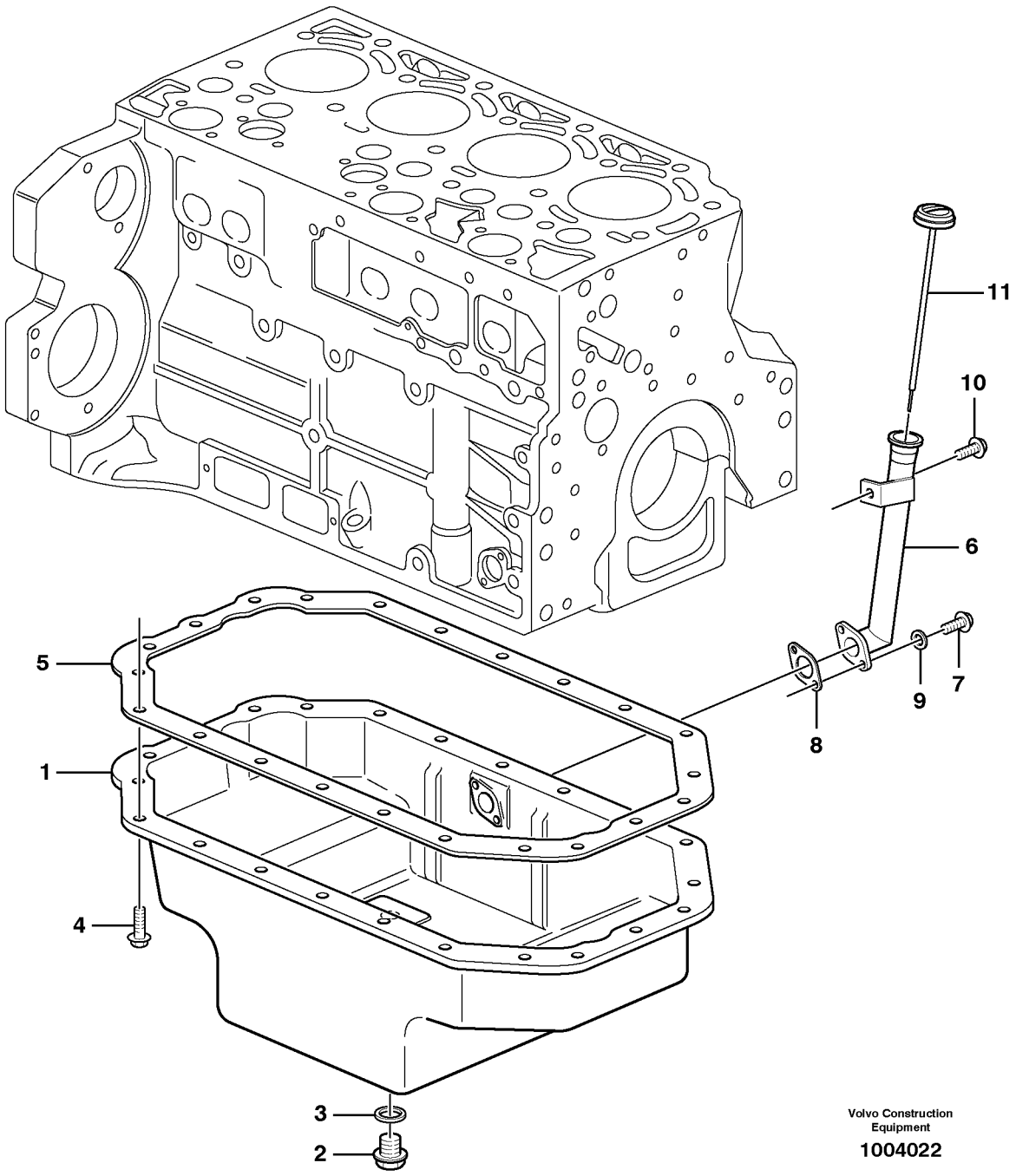

Volvo Construction Equipment

1004022

Fig.	Part No.	Quantity 1	2	3	PS	KIT	Description	Dénomination	Bezeichnung	Denominación	Notes
1	**VOE 20482006**	1					Oil Pan	Carter Huile	Ölwanne	Carter Aceite	
2	**VOE 20405506**	1					Screw plug	Bouchon à vis	Verschlussschraube	Tornillo de cierre	
3	**VOE 20542740**	1			SS		Sealing ring	Bague d'étanchéité	Runddichtring	Anillo reten	
4	**VOE 20405792**	22					Screw	Vis	Schraube	Tornillo	
5	**VOE 20460021**	1					Gasket	Joint	Dichtung	Junta	
6	**VOE 20482010**	1					Filler neck	Tuyau rempliss	Einfüllstutzen	Cuello Llenado	
7	**VOE 13949578**	2					Screw	Vis	Schraube	Tornillo	
8	**VOE 20405825**	1					Gasket	Joint	Dichtung	Junta	
9	**VOE 20482736**	2					Sealing ring	Bague d'étanchéité	Runddichtring	Anillo reten	
10	**VOE 20405792**	1					Screw	Vis	Schraube	Tornillo	
11	**VOE 20482027**	1					Filler cap	Bouch.reservoir	Tankverschluss	Tapa deposito	

1	
2	
3	
4	
5	

Cárter
Ölwanne
Carter d'huile
Oil sump

Catalogue id **20050**	Group **217**
Illustr. No **1004022**	Section **100**
Issue **VOE 64D9920050**	Page **63**

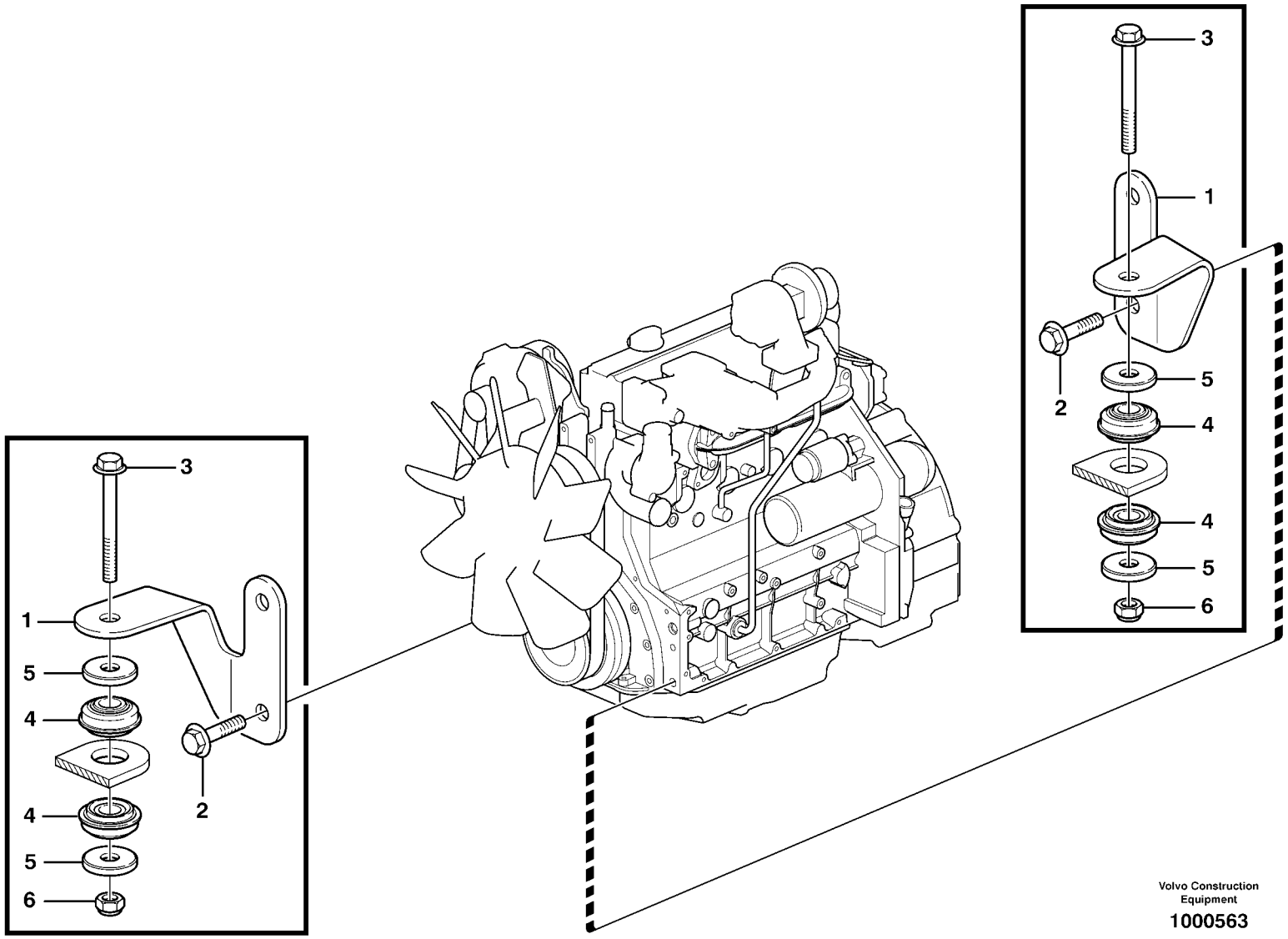

Volvo Construction Equipment

1000563

Fig.	Part No.	Quantity 1	2	3	PS	KIT	Description	Dénomination	Bezeichnung	Denominación	Notes
1	**VOE 11884716**	1					Engine Mounting	Silentbl.moteur	Motorbefestg	Fijacion Motor	LH
1	**VOE 11884719**	1					Engine Mounting	Silentbl.moteur	Motorbefestg	Fijacion Motor	RH
2	**VOE 968435**	4					Flange screw	Vis à bride	Flanschschraube	Torn embridado	
3	**VOE 968593**	2					Flange screw	Vis à bride	Flanschschraube	Torn embridado	
4	**VOE 11884790**	4					Vibration damper	Amort.vibration	Schwingdämpfer	Amortig vibrac	
5	**VOE 11884792**	4					Washer	Rondelle	Scheibe	Arandela	
6	**VOE 13963110**	2					Lock nut	Contre-ecrou	Sicherungsmutter	Contratuerca	

1		**Suspensión del motor** **Motorbefestigung** **Suspension du moteur** **Engine mounting**	Catalogue id **20050**	Group **218**
2			Illustr. No **1000563**	Section **100**
3			Issue **VOE 64D9920050**	Page **65**
4				
5		**11891076, 11891077**		

VOLVO

BL61

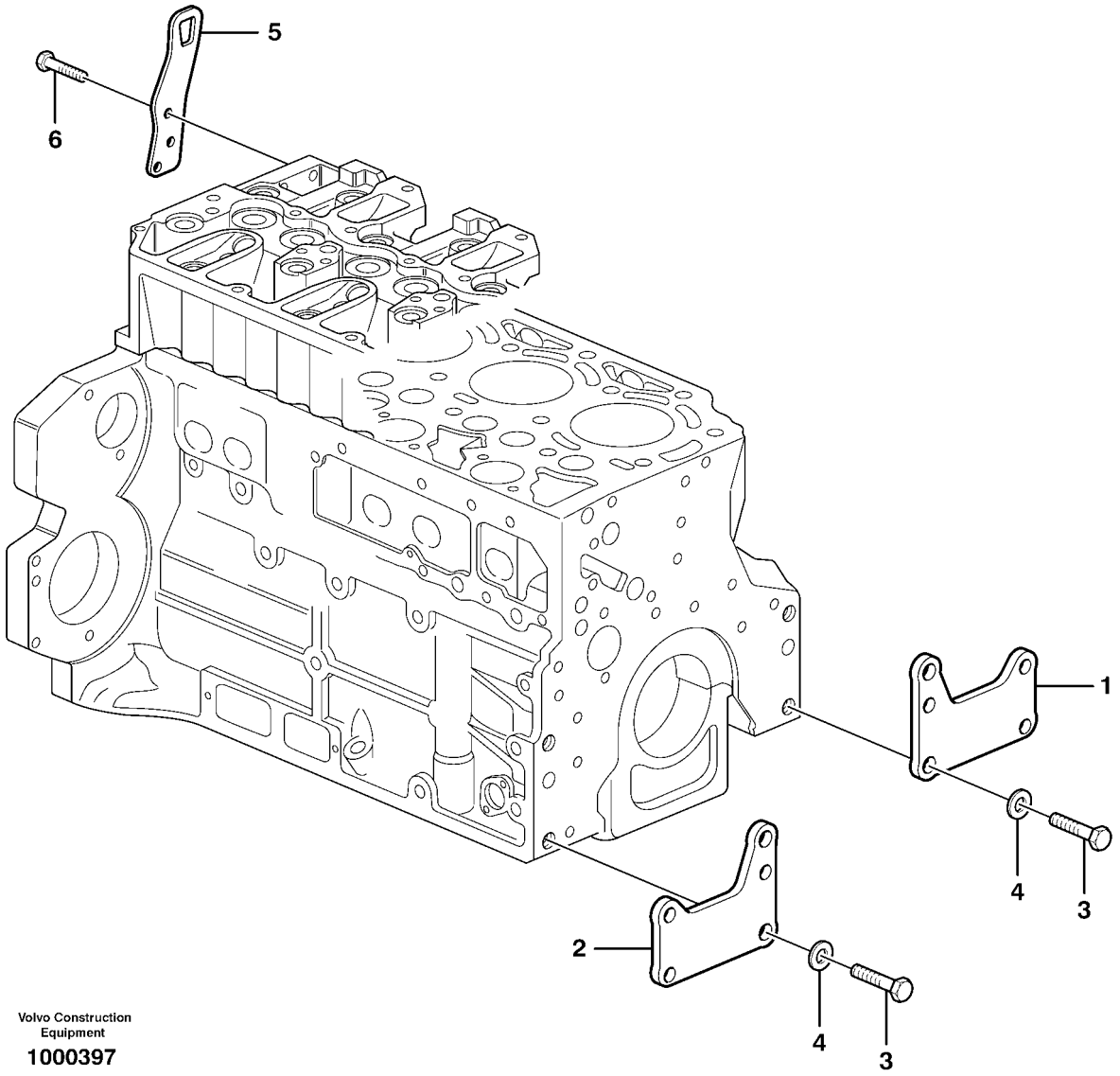

Volvo Construction Equipment

1000397

Fig.	Part No.	Quantity 1	2	3	PS	KIT	Description	Dénomination	Bezeichnung	Denominación	Notes
1	**VOE 20723978**	1					Bracket	Console	Konsole	Ménsula	
2	**VOE 20723984**	1					Bracket	Console	Konsole	Ménsula	
3	**VOE 20535027**	2					Screw	Vis	Schraube	Tornillo	
4	**VOE 20405606**	2					Washer	Rondelle	Scheibe	Arandela	
5		1			NS		Lifting eye	Oeillet levage	Hebeöse	Argoll elev	
6	**VOE 20450756**	3					Screw	Vis	Schraube	Tornillo	

1		**Suspensión del motor** **Motorbefestigung** **Suspension du moteur** **Engine mounting**	Catalogue id **20050**	Group **218**
2			Illustr. No **1000397**	Section **200**
3			Issue **VOE 64D9920050**	Page **67**
4				
5				

VOLVO

BL61

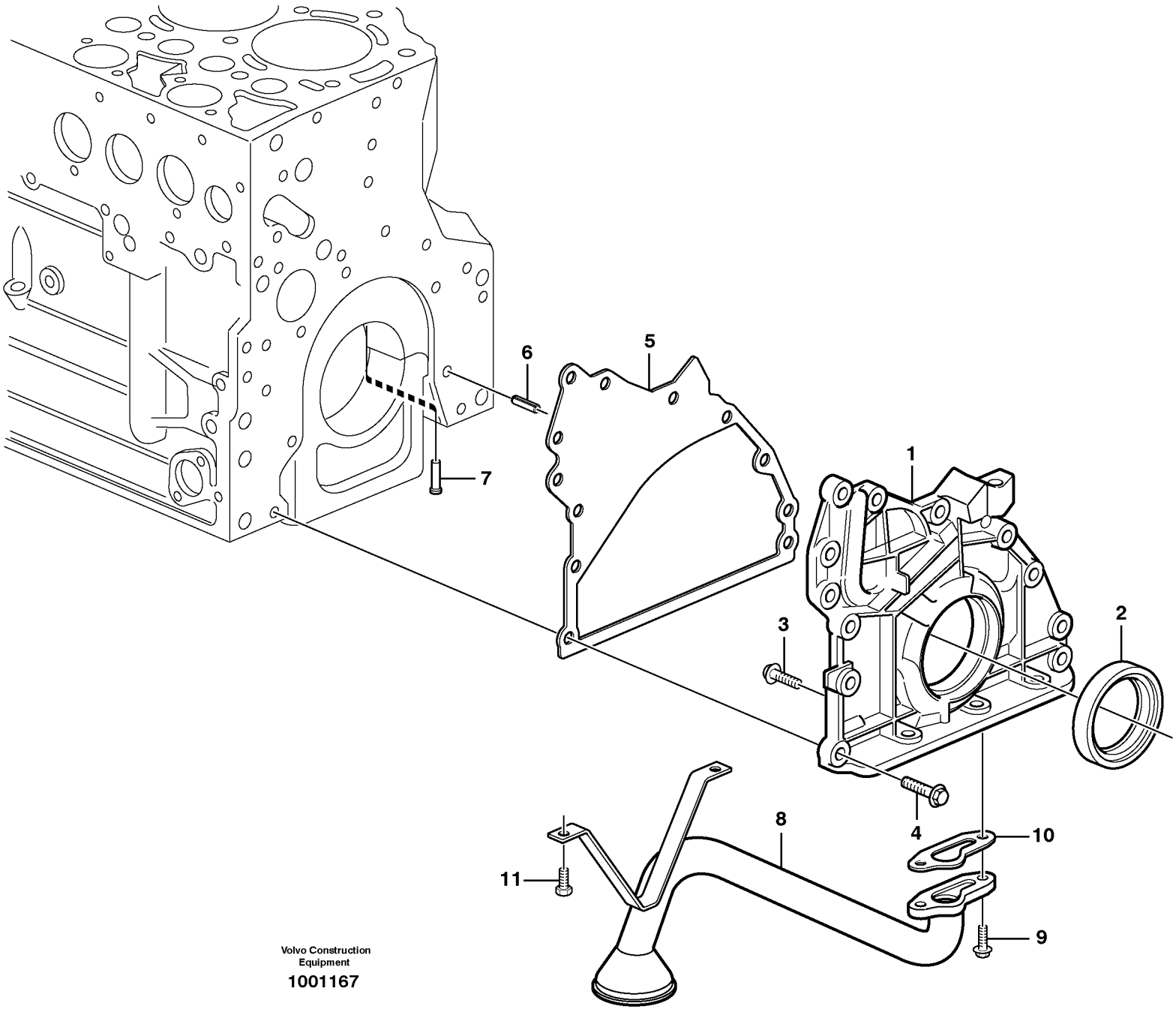

Volvo Construction Equipment

1001167

Fig.	Part No.	Quantity 1	2	3	PS	KIT	Description	Dénomination	Bezeichnung	Denominación	Notes
1	**VOE 20581867**	1					Oil Pump	Pompe a huile	Ölpumpe	Bomba de aceite	
2	**VOE 20459168**	1					•Crankshaft Seal	•Joint Vilebreq.	•Kurbelw Dichtg	•Reten Ciguenal	
3	**VOE 20451738**	8					•Screw	•Vis	•Schraube	•Tornillo	
4	**VOE 20412324**	10					Screw	Vis	Schraube	Tornillo	
5	**VOE 20537029**	1					Gasket	Joint	Dichtung	Junta	
6	**VOE 20405603**	1					Spring Pin	Axe de ressort	Federstift	Pasador Resorte	
7	**VOE 20405561**	1					Pstn Cool Jet	Buse Refr.pist	Kolbenkühldüse	Boq.enfr Piston	
8	**VOE 20481754**	1					Oil Pipe	Conduit Huile	Ölrohr	Tubo Aceite	
9	**VOE 13949578**	2					Screw	Vis	Schraube	Tornillo	
10	**VOE 11700391**	1					Gasket	Joint	Dichtung	Junta	
11	**VOE 20405792**	1					Screw	Vis	Schraube	Tornillo	

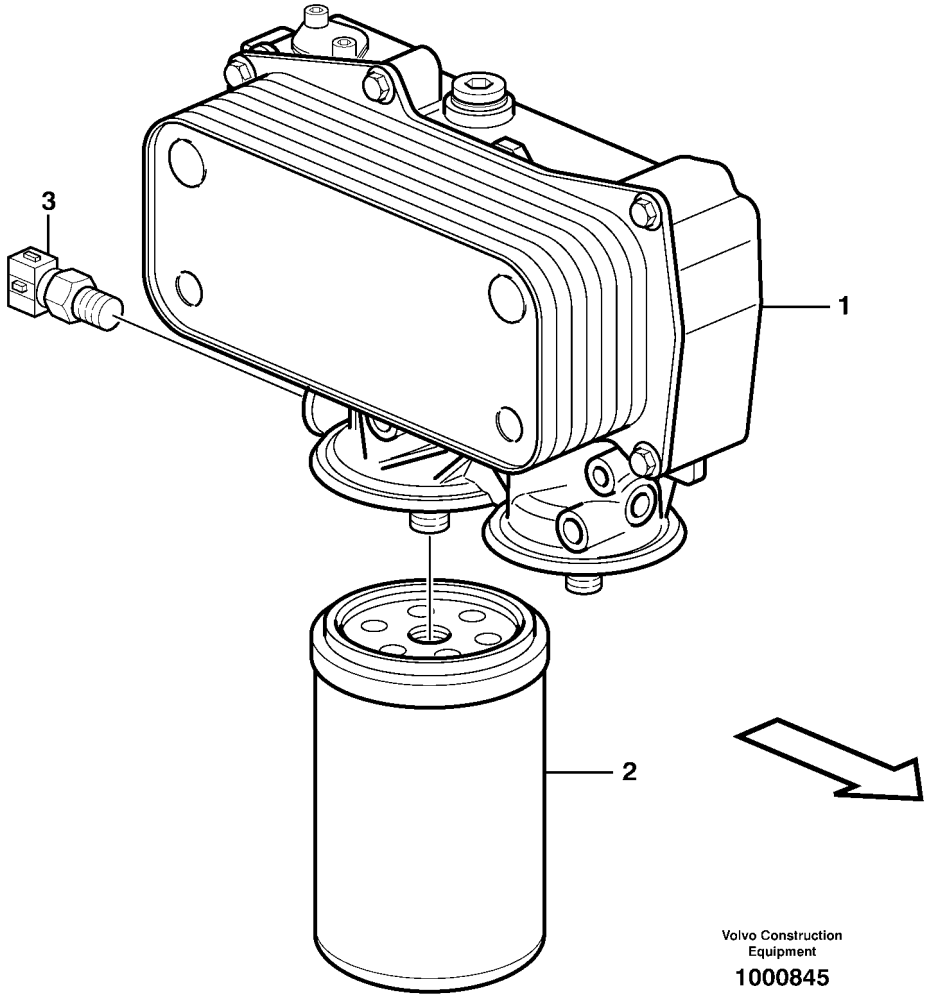
3
1
2
Volvo Construction Equipment
1000845

Fig.	Part No.	Quantity 1	2	3	PS	KIT	Description	Dénomination	Bezeichnung	Denominación	Notes
1		1					Oil Cooler	Refroidisseur huile	Ölkühler	Enfriadores aceite	See group 223, Page 73
2	**VOE 11700375**	1					Oil Filter	Filtre Huile	Ölfilter	Filtro Aceite	
3	**VOE 20555385**	1					Sensor	Capteur	Geber	Captador	

1		**Filtro de aceite** **Ölfilter** **Filtre à huile** **Oil filter**	Catalogue id **20050**	Group **222**
2			Illustr. No **1000845**	Section **100**
3			Issue **VOE 64D9920050**	Page **71**
4				
5				

VOLVO

BL61

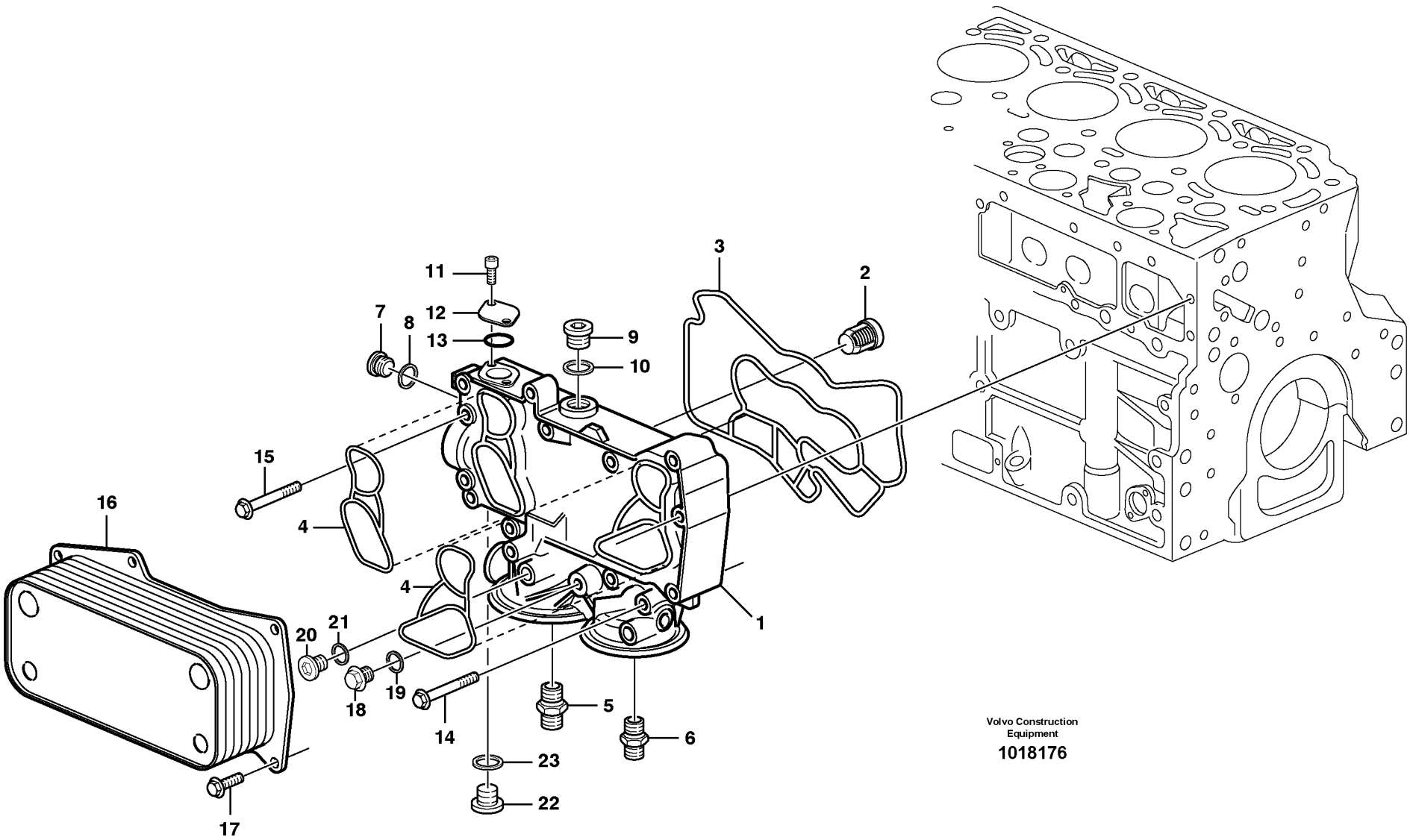

Volvo Construction Equipment

1018176

Fig.	Part No.	Quantity 1	2	3	PS	KIT	Description	Dénomination	Bezeichnung	Denominación	Notes
1	**VOE 20459205**	1					Oil Filter Hsg	Boitier Filt Hu	Ölfiltergehäuse	Caja Filt Aceit	ENG - 01099408
1	**VOE 20944091**	1					Oil Filter Hsg	Boitier Filt Hu	Ölfiltergehäuse	Caja Filt Aceit	ENG 01099409 -
2	**VOE 20459204**	1					•Valve	•Soupape	•Ventil	•Valvula	
3	**VOE 20459203**	1					•Gasket	•Joint	•Dichtung	•Junta	
4	**VOE 20459202**	2					•Gasket	•Joint	•Dichtung	•Junta	
5	**VOE 20459201**	1					•Nipple	•Raccord	•Nippel	•Niple	
6	**VOE 20459200**	1					•Nipple	•Raccord	•Nippel	•Niple	
7	**VOE 20502245**	1					•Screw plug	•Bouchon à vis	•Schraube	•Tapón roscado	
8	**VOE 20549894**	1					•Sealing ring	•Bague d'étanchéité	•Runddichtring	•Anillo reten	
9	**VOE 20459195**	2					•Plug	•Bouchon	•Stopfen	•Tapon	
10	**VOE 13947628**	2					•Plane Gasket	•Joint Plan	•Flachdichtung	•Junta Plana	(VOE 20450898)
11	**VOE 20459197**	2					•Screw	•Vis	•Schraube	•Tornillo	
12	**VOE 11700609**	1					•Cap	•Chapeau	•Kappe	•Caperuza	
13	**VOE 20405599**	1					•Sealing ring	•Bague d'étanchéité	•Runddichtring	•Anillo reten	
14	**VOE 20405917**	3					Screw	Vis	Schraube	Tornillo	
15	**VOE 20405672**	5					Screw	Vis	Schraube	Tornillo	
16	**VOE 20532396**	1					Oil Cooler	Refroidisseur huile	Ölkühler	Enfriadores aceite	
17	**VOE 20405885**	7					Screw	Vis	Schraube	Tornillo	
18	**VOE 20459941**	1					Screw plug	Bouchon à vis	Verschlussschraube	Tornillo de cierre	
19	**VOE 20459942**	1					Sealing ring	Bague d'étanchéité	Runddichtring	Anillo reten	
20	**VOE 20460239**	1					Plug	Bouchon	Stopfen	Tapon	
21	**VOE 13947281**	1					Gasket	Joint	Dichtung	Junta	
22	**VOE 20496548**	1					Plug	Tampon	Stopfen	Tapon	
23	**VOE 20450890**	1					Sealing ring	Bague d'étanchéité	Runddichtring	Anillo reten	

1	
2	
3	
4	
5	

Enfriador de aceite
Ölkühler
Radiateur d 'huile
Oil cooler

Catalogue id **20050**	Group **223**
Illustr. No **1018176**	Section **100**
Issue **VOE 64D9920050**	Page **73**

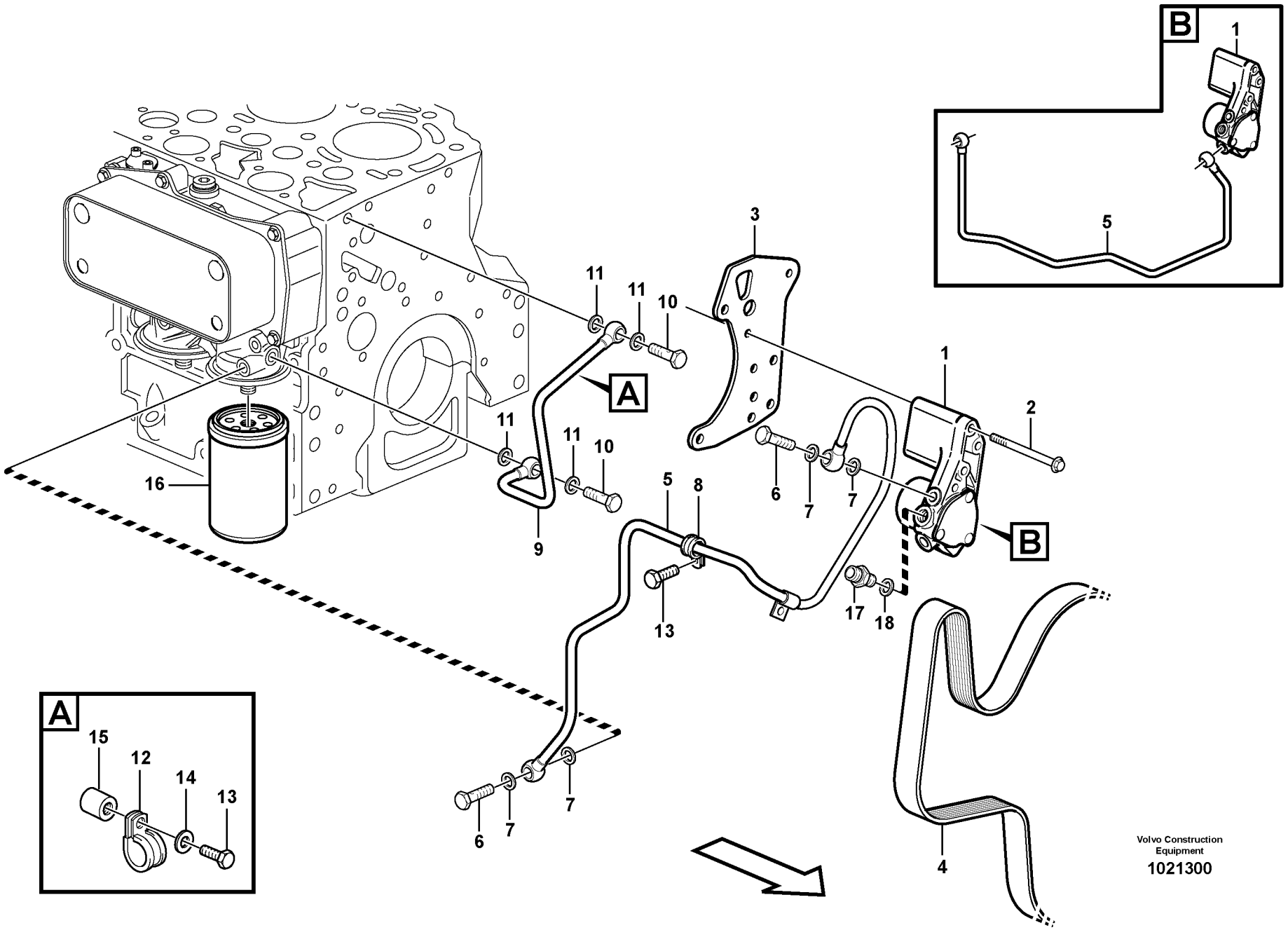
B
1
5
A
15
12
14
13
16
11
11
10
3
A
11
11
10
9
1
2
6
7
7
5
8
13
17
18
B
6
7
7
4
Volvo Construction Equipment
1021300

Fig.	Part No.	Quantity 1	2	3	PS	KIT	Description	Dénomination	Bezeichnung	Denominación	Notes
1	**VOE 20524154**	1					Fuel pump	Pompe Carburant	Kraftstoffpumpe	Bomba Combustib	ENG 00737369 -
	VOE 20518337	1			SS		Fuel pump	Pompe Carburant	Kraftstoffpumpe	Bomba Combustib	ENG - 00737368
2	**VOE 20459246**	3					Screw	Vis	Schraube	Tornillo	
3	**VOE 20567447**	1					Plate	Plaque	Platte	Placa	
4		1					V-belt	Courroie Trape.	Keilriemen	Correa Trapez	See group 263, Page 113
5	**VOE 20524626**	1					Fuel line	Flexible carburant	Kraftstoffschlauch	Manguera combustible	ENG 00737369 -
	VOE 20481785	1					Fuel pipe	Conduit carbura	Kraftstoffleitung	Tubo combustib	(VOE 20460057) ENG - 00737368
6	**VOE 7025167**	2					•Hollow Screw	•Vis Creuse	•Hohlschraube	•Tornillo hueco	
7	**VOE 13969011**	4					•Gasket	•Joint	•Dichtung	•Junta	
8	**VOE 20460045**	1					•Clamp	•Pince Serrage	•Klemme	•Abrazadera	
9	**VOE 20481768**	1					Fuel pipe	Conduit carbura	Kraftstoffleitung	Tubo combustib	(VOE 20460057)
10	**VOE 7025167**	2					•Hollow Screw	•Vis Creuse	•Hohlschraube	•Tornillo hueco	
11	**VOE 13969011**	4					•Gasket	•Joint	•Dichtung	•Junta	
12	**VOE 20460045**	1					•Clamp	•Pince Serrage	•Klemme	•Abrazadera	
13	**VOE 20405729**	2					Screw	Vis	Schraube	Tornillo	
14	**VOE 20459183**	1					Washer	Rondelle	Scheibe	Arandela	
15	**VOE 20481769**	1					Bushing	Bague	Buchse	Casquillo	
16	**VOE 11708555**	1					Fuel filter	Filtre à carburant	Kraftstofffilter	Filtro de combustible	
17	**VOE 20412596**	1					Connector	Raccord	Anschluss	Union	
18	**VOE 13947622**	1					Plane Gasket	Joint Plan	Flachdichtung	Junta Plana	

1	
2	
3	
4	
5	

Bomba de combustible
Kraftstoffpumpe
Pompe carburant
Fuel pump

Catalogue id	Group
20050	**233**
Illustr. No **1021300**	Section **100**
Issue **VOE 64D9920050**	Page **75**

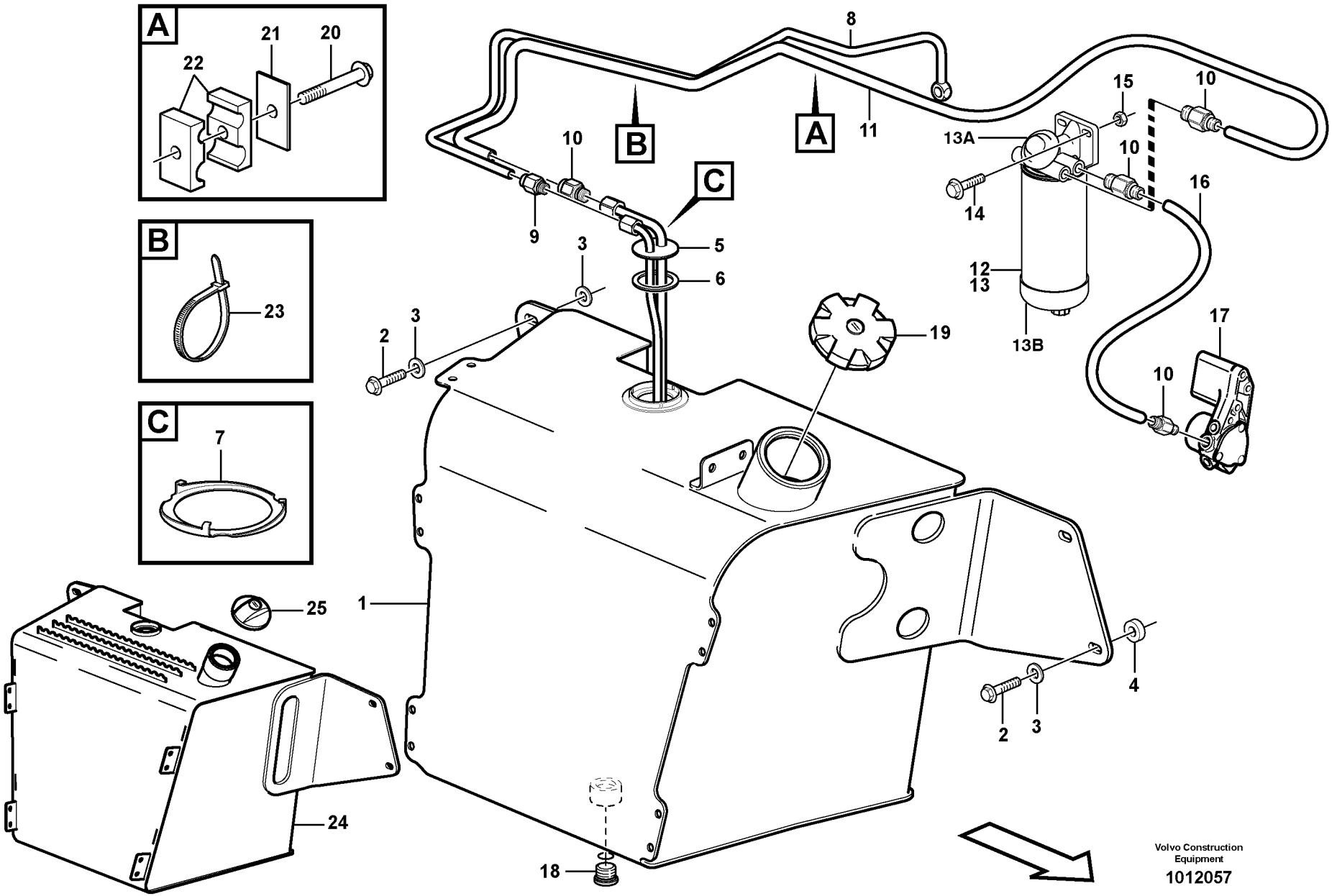
A
21
20
22
B
23
C
7
8
10
B
A
11
C
9
3
5
6
2
3
19
15
10
13A
10
14
16
12
13
13B
17
10
1
25
24
18
2
3
4
Volvo Construction Equipment
1012057

Fig.	Part No.	Quantity 1	2	3	PS	KIT	Description	Dénomination	Bezeichnung	Denominación	Notes
1	**VOE 11882112**	1					Fuel tank	Réservoir carburant	Kraftstofftank	Deposit combust	SER NO -10206
2	**VOE 13965194**	4					Flange screw	Vis à bride	Flanschschraube	Torn embridado	
3	**VOE 947558**	6					Washer	Rondelle	Scheibe	Arandela	
4	**VOE 11882457**	2					Spacer	Entretoise	Abstandkörper	Distanciador	
5	**VOE 11881914**	1					Fuel Lvl Sensor	Ind.niv.carbur.	Kraftst V-geber	Sensor Niv Comb	
6	**VOE 11881915**	1					Rubber Seal	Lèvre Caoutchouc	Gummilippe	Labio Goma	
7	**VOE 11881916**	1					Lock Ring	Anneau Verrouillage	Schlossring	Anillo Segurid	
8	**VOE 11883974**	1					Fuel hose	Flexi.carburant	Kraftstoffschlauch	Manguera comb	
9	**VOE 11882900**	1					Union	Teton Connexion	Anschlussnippel	Niple Conexcion	
10	**VOE 11883346**	4					Union	Teton Connexion	Anschlussnippel	Niple Conexcion	
11	**VOE 11884613**	1					Fuel hose	Flexi.carburant	Kraftstoffschlauch	Manguera comb	
12	**VOE 11110471**	1			SS		Water Separator	Separateur Eau	Wasserabscheidr	Separador Agua	S/N - 10339
	VOE 11110670	1					Water Separator	Separateur Eau	Wasserabscheidr	Separador Agua	S/N 10340 -
13	**VOE 11110474**	1			SS		•Filter	•Filtre	•Filter	•Filtro	S/N - 10339
	VOE 11110668	1					•Filter	•Filtre	•Filter	•Filtro	S/N 10340 -
13A	**VOE 11713138**	1					•Filter Housing	•Corps de filtre	•Filtergehäuse	•Cuerpo de filtro	
13B	**VOE 3943382**	1					•Bowl	•Coussinet	•Schale	•Taza	(VOE 3836024)
14	**VOE 13965185**	2					Flange screw	Vis à bride	Flanschschraube	Torn embridado	
15	**VOE 13971095**	2					Flange nut	Ecrou accouple.	Bundmutter	Tuerca embridad	
16	**VOE 11883973**	1					Fuel hose	Flexi.carburant	Kraftstoffschlauch	Manguera comb	
17							Fuel pump	Pompe Carburant	Kraftstoffpumpe	Bomba Combustib	See group 233, Page 75
18	**VOE 11882920**	1					Plug	Bouchon	Stopfen	Tapon	
	VOE 932042	1					•O-ring	•Joint Torique	•O-Ring	•Junta torica	
19	**VOE 11884200**	1					Filler cap	Bouchon Remplissage	Tankverschluss	Tapa Llenado	SER NO -10206
20	**VOE 13965179**	1					Flange screw	Vis à bride	Flanschschraube	Torn embridado	
21	**VOE 11881311**	1					Plate	Plaque	Platte	Placa	
22		2			NS		Bracket	Console	Konsole	Consola	
23	**VOE 4881438**	2					Strip Clamp	Ruban Serrage	Kabelbinder	Abraz Cinta	
24	**VOE 11886973**	1					Fuel tank	Réservoir carburant	Kraftstofftank	Deposit combust	SER NO 10207-
25	**VOE 11887988**	1					•Cap	•Chapeau	•Kappe	•Caperuza	SER NO 10207-

1	
2	
3	
4	
5	

Depósito de combustible,tubos de combustible
Kraftstofftank, kraftstoffrohr
Réservoir de carburant, conduit de carburant
Fuel tank, fuel pipes

Catalogue id	Group
20050	**234**
Illustr. No **1012057**	Section **100**
Issue **VOE 64D9920050**	Page **77**

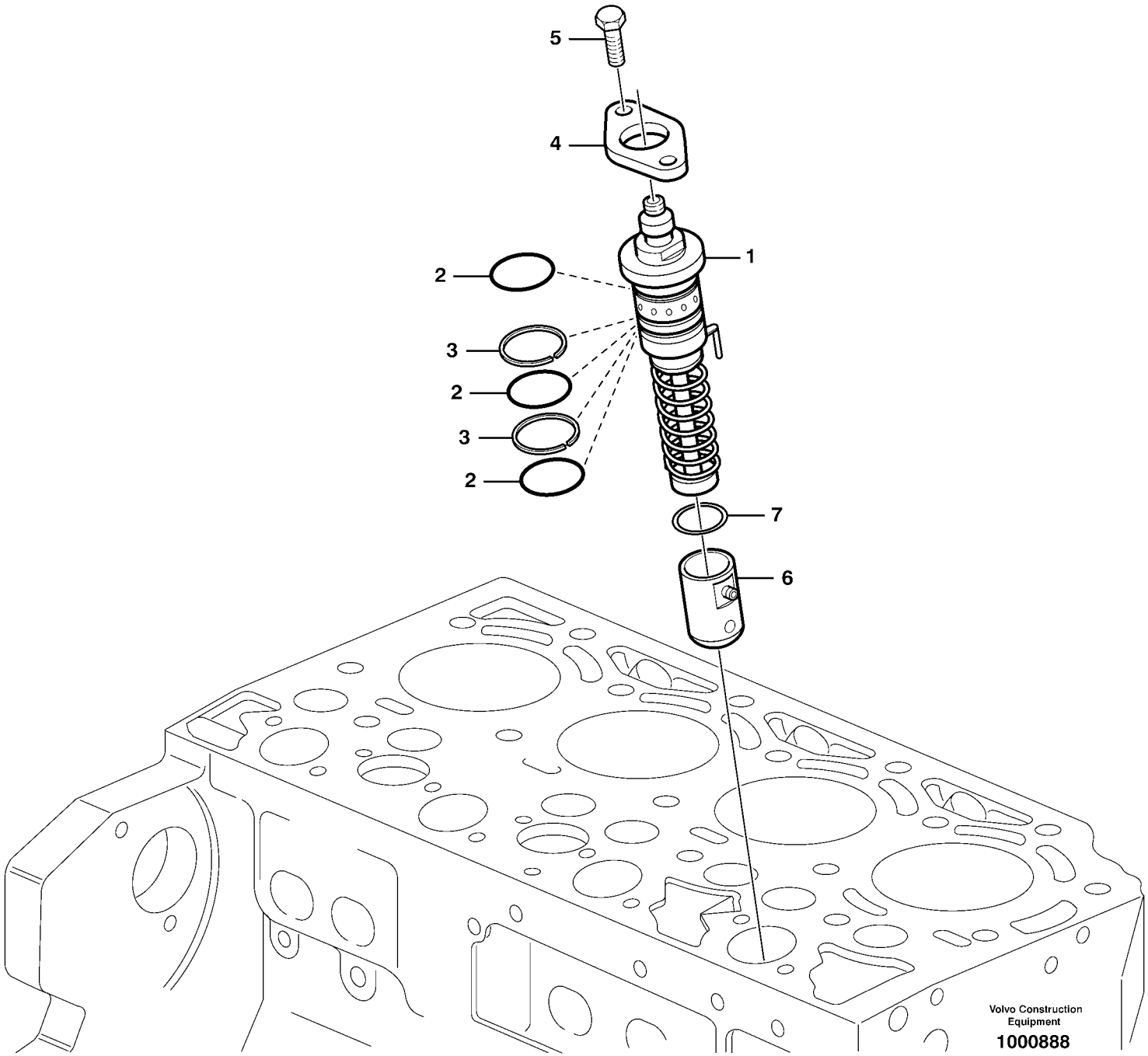
5
4
1
2
3
2
3
2
7
6
Volvo Construction Equipment
1000888

Fig.	Part No.	Quantity 1	2	3	PS	KIT	Description	Dénomination	Bezeichnung	Denominación	Notes
1	**VOE 20460072**	4					Injection Pump	Pompe Injection	Einspritzpumpe	Bomba Injeccion	
	VOE 24425954		4				Injection Pump	Pompe Injection	Einspritzpumpe	Bomba Injeccion	
2	**VOE 11701764**	12	12				•O-ring	•Joint Torique	•O-Ring	•Junta torica	
3	**VOE 20405543**	8	8				•Shim	•Cale d'épaisseur	•Passcheibe	•Arandela Ajuste	
4	**VOE 20405565**	4	4				Flange	Flasque	Flansch	Brida	
5	**VOE 20460071**	8	8				Screw	Vis	Schraube	Tornillo	
6	**VOE 11700392**	4					Roller	Galet	Rolle	Rodillo	
	VOE 20549905		4				Roller	Galet	Rolle	Rodillo	
7	**VOE 11700397**	1					Shim	Cale Reglage	Nachstellblech	Cuna de calzar	STD
	VOE 24425970		1				Shim	Cale d'épaisseur	Passcheibe	Arandela Ajuste	STD
	VOE 11700398	1					Shim	Cale Reglage	Nachstellblech	Cuna de calzar	THICK = 1,30 MM
	VOE 11700399	1					Shim	Cale Reglage	Nachstellblech	Cuna de calzar	THICK = 1,40 MM
	VOE 11700400	1					Shim	Cale Reglage	Nachstellblech	Cuna de calzar	THICK = 1,50 MM
	VOE 11700401	1					Shim	Cale Reglage	Nachstellblech	Cuna de calzar	THICK = 1,60 MM
	VOE 11700402	1					Shim	Cale Reglage	Nachstellblech	Cuna de calzar	THICK = 1,70 MM
	VOE 11700403	1					Shim	Cale Reglage	Nachstellblech	Cuna de calzar	THICK = 1,80 MM
	VOE 11700404	1					Spacer	Compensation	Ausgleichscheibe	Compensación	THICK = 1,90 MM
	VOE 11700405	1					Shim	Cale d'épaisseur	Passcheibe	Arandela Ajuste	THICK = 2,00 MM
	VOE 11700406	1					Spacer	Compensation	Ausgleichscheibe	Compensación	THICK = 2,10 MM
	VOE 11700407	1					Shim	Cale d'épaisseur	Passcheibe	Arandela Ajuste	THICK = 2,20 MM
	VOE 11700408	1					Spacer	Compensation	Ausgleichscheibe	Compensación	THICK = 2,30 MM
	VOE 11700409	1					Shim	Cale Reglage	Nachstellblech	Cuna de calzar	THICK = 2,40 MM
	VOE 11700410	1					Shim	Cale d'épaisseur	Passcheibe	Arandela Ajuste	THICK = 2,50 MM
	VOE 11700411	1					Shim	Cale d'épaisseur	Passcheibe	Arandela Ajuste	THICK = 2,60 MM
	VOE 11700412	1					Shim	Cale d'épaisseur	Passcheibe	Arandela Ajuste	THICK = 2,70 MM
	VOE 11700413	1					Shim	Cale d'épaisseur	Passcheibe	Arandela Ajuste	THICK = 2,80 MM
	VOE 11700414	1					Shim	Cale d'épaisseur	Passcheibe	Arandela Ajuste	THICK = 2,90 MM
	VOE 11700415	1					Shim	Cale d'épaisseur	Passcheibe	Arandela Ajuste	THICK = 3,00 MM
	VOE 11700416	1					Punching	Lamelle Reglage	Ausglei.scheibe	Chapa De Ajuste	THICK = 3,10 MM
	VOE 11700417	1					Shim	Cale d'épaisseur	Passcheibe	Arandela Ajuste	THICK = 3,20 MM

1	**11887321**
2	**11886395**
3	
4	
5	

Bomba de inyección de accesorisde montaje
Einspritzpumpe mit Anbauteilen
Pompe d'injection de combustible avec pièces de montage
Fuel injection pump with fitting parts

Catalogue id	Group
20050	**236**
Illustr. No	Section
1000888	**100**
Issue	Page
VOE 64D9920050	**79**

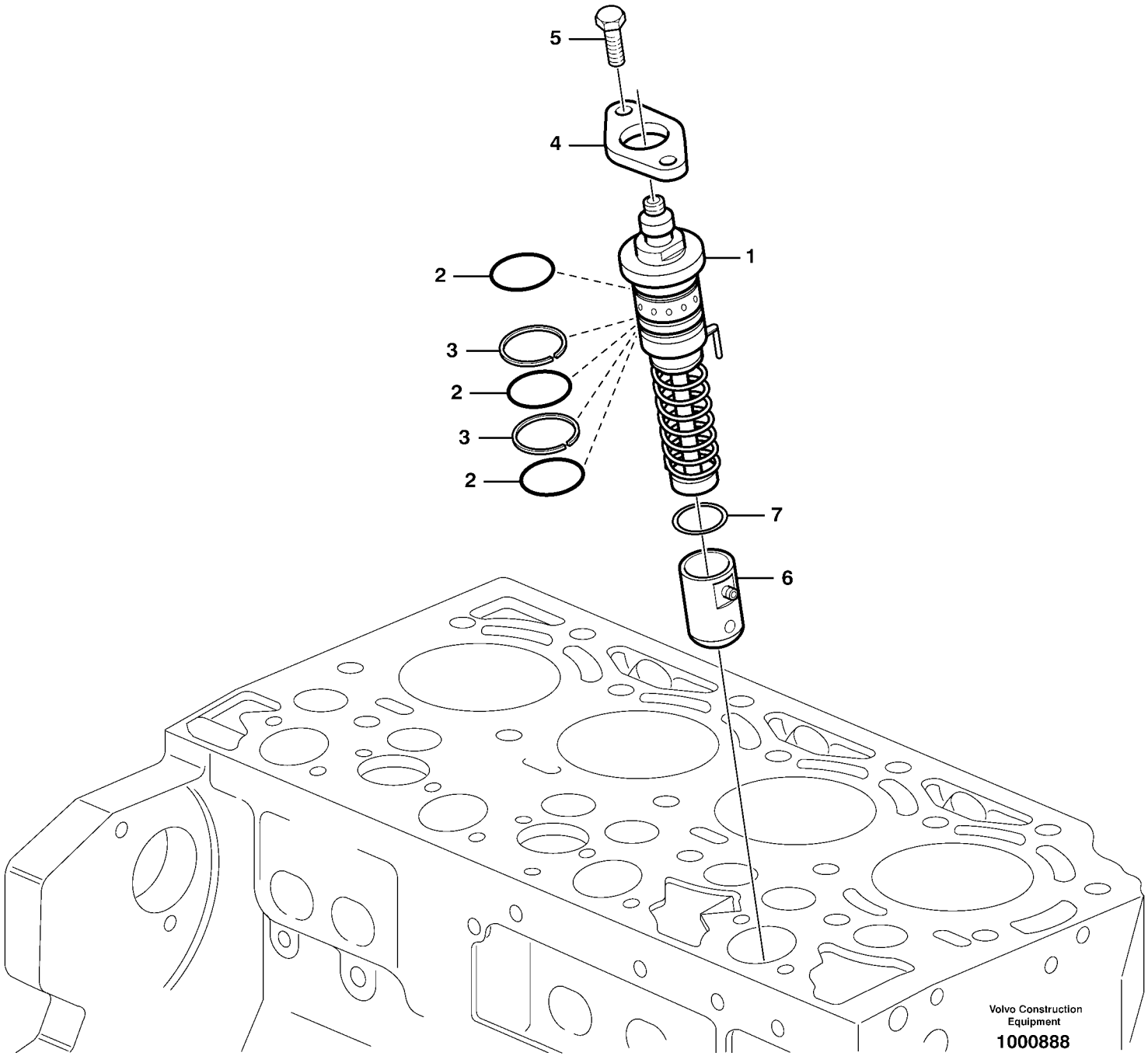
5
4
1
2
3
2
3
2
7
6
Volvo Construction Equipment
1000888

Fig.	Part No.	Quantity 1	2	3	PS	KIT	Description	Dénomination	Bezeichnung	Denominación	Notes
	VOE 11700418	1					Shim	Cale d'épaisseur	Passcheibe	Arandela Ajuste	THICK = 3,30 MM
	VOE 11700419	1					Shim	Cale d'épaisseur	Passcheibe	Arandela Ajuste	THICK = 3,40 MM
	VOE 11700420	1					Shim	Cale d'épaisseur	Passcheibe	Arandela Ajuste	THICK = 3,50 MM
	VOE 11700421	1					Shim	Cale d'épaisseur	Passcheibe	Arandela Ajuste	THICK = 3,60 MM
	VOE 11700422	1					Shim	Cale d'épaisseur	Passcheibe	Arandela Ajuste	THICK = 3,70 MM
	VOE 11700395	1					Shim	Cale Reglage	Nachstellblech	Cuna de calzar	THICK = 1,00 MM
	VOE 11700396	1					Shim	Cale Reglage	Nachstellblech	Cuna de calzar	THICK = 1,10 MM
	VOE 24425958		1				Shim	Cale d'épaisseur	Passcheibe	Arandela Ajuste	THICK = 4,70 MM
	VOE 24425969		1				Shim	Cale d'épaisseur	Passcheibe	Arandela Ajuste	THICK = 4,75 MM
	VOE 24425972		1				Shim	Cale d'épaisseur	Passcheibe	Arandela Ajuste	THICK = 4,80 MM
	VOE 24425973		1				Shim	Cale d'épaisseur	Passcheibe	Arandela Ajuste	THICK = 4,85 MM
	VOE 24425974		1				Shim	Cale d'épaisseur	Passcheibe	Arandela Ajuste	THICK = 4,90 MM
	VOE 24425982		1				Shim	Cale d'épaisseur	Passcheibe	Arandela Ajuste	THICK = 4,95 MM
	VOE 24425983		1				Shim	Cale d'épaisseur	Passcheibe	Arandela Ajuste	THICK = 5,00 MM
	VOE 24425984		1				Shim	Cale d'épaisseur	Passcheibe	Arandela Ajuste	THICK = 5,05 MM
	VOE 24425985		1				Shim	Cale d'épaisseur	Passcheibe	Arandela Ajuste	THICK = 5,10 MM
	VOE 24425986		1				Shim	Cale d'épaisseur	Passcheibe	Arandela Ajuste	THICK = 5,15 MM
	VOE 24425987		1				Shim	Cale d'épaisseur	Passcheibe	Arandela Ajuste	THICK = 5,20 MM
	VOE 24425989		1				Shim	Cale d'épaisseur	Passcheibe	Arandela Ajuste	THICK = 5,25 MM
	VOE 24425991		1				Shim	Cale d'épaisseur	Passcheibe	Arandela Ajuste	THICK = 5,30 MM
	VOE 24425992		1				Shim	Cale d'épaisseur	Passcheibe	Arandela Ajuste	THICK = 5,35 MM
	VOE 24425994		1				Shim	Cale d'épaisseur	Passcheibe	Arandela Ajuste	THICK = 5,40 MM
	VOE 24425996		1				Shim	Cale d'épaisseur	Passcheibe	Arandela Ajuste	THICK = 5,45 MM
	VOE 24425998		1				Shim	Cale d'épaisseur	Passcheibe	Arandela Ajuste	THICK = 5,50 MM
	VOE 24426002		1				Shim	Cale d'épaisseur	Passcheibe	Arandela Ajuste	THICK = 5,55 MM
	VOE 24426004		1				Shim	Cale d'épaisseur	Passcheibe	Arandela Ajuste	THICK = 5,60 MM
	VOE 24426005		1				Shim	Cale d'épaisseur	Passcheibe	Arandela Ajuste	THICK = 5,65 MM
	VOE 24426006		1				Shim	Cale d'épaisseur	Passcheibe	Arandela Ajuste	THICK = 5,70 MM
	VOE 24426007		1				Shim	Cale d'épaisseur	Passcheibe	Arandela Ajuste	THICK = 5,75 MM
	VOE 24426010		1				Shim	Cale d'épaisseur	Passcheibe	Arandela Ajuste	THICK = 5,80 MM

1	**11887321**
2	**11886395**
3	
4	
5	

Bomba de inyección de accesorisde montaje
Einspritzpumpe mit Anbauteilen
Pompe d'injection de combustible avec pièces de montage
Fuel injection pump with fitting parts

Catalogue id **20050**	Group **236**
Illustr. No **1000888**	Section **100**
Issue **VOE 64D9920050**	Page **81**

VOLVO

BL61

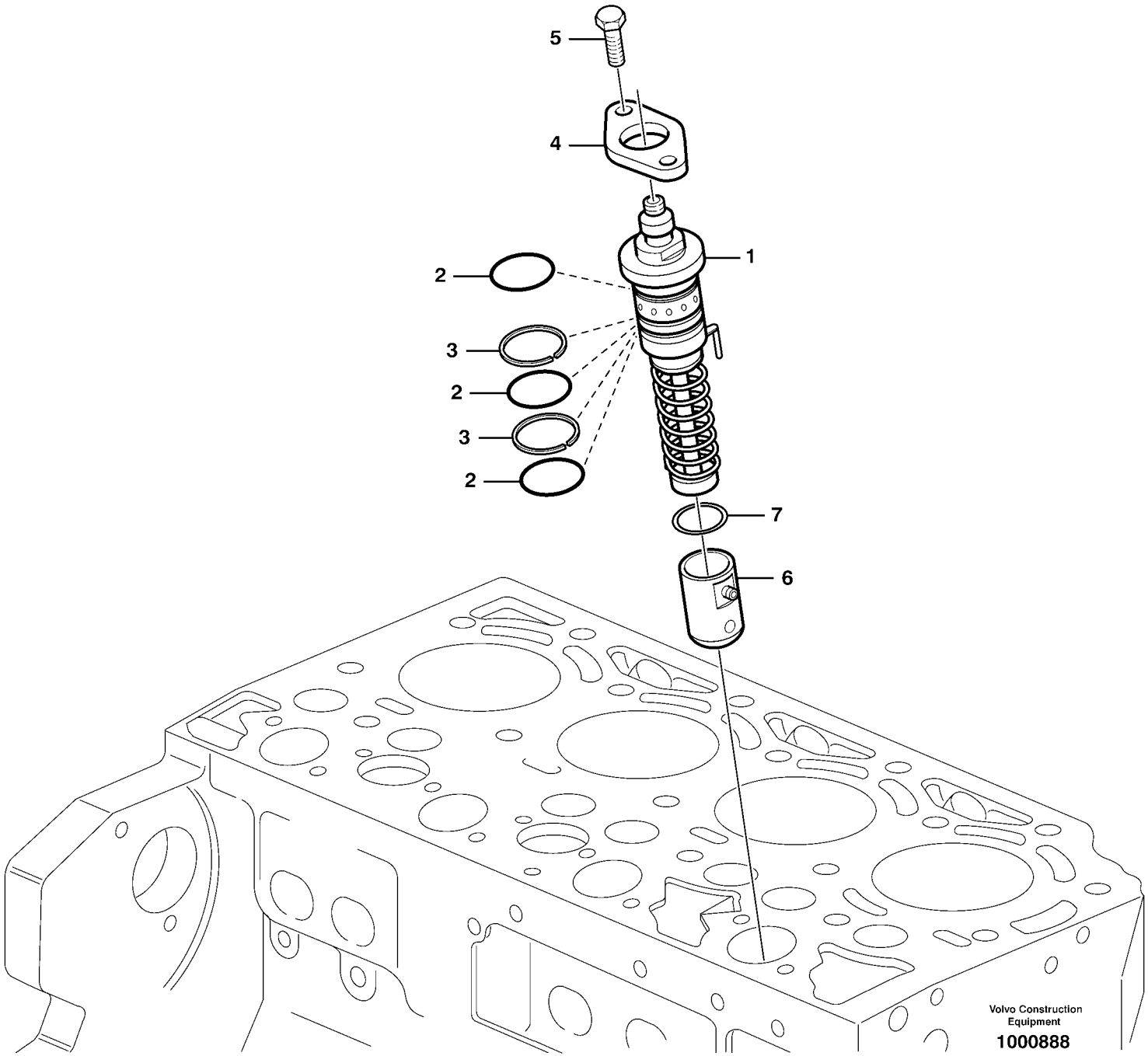
5
4
1
2
3
2
3
2
7
6
Volvo Construction Equipment
1000888

Fig.	Part No.	Quantity 1	2	3	PS	KIT	Description	Dénomination	Bezeichnung	Denominación	Notes
	VOE 24426011	1					Shim	Cale d'épaisseur	Passcheibe	Arandela Ajuste	THICK = 5,85 MM
	VOE 24426012	1					Shim	Cale d'épaisseur	Passcheibe	Arandela Ajuste	THICK = 5,90 MM
	VOE 24426013	1					Shim	Cale d'épaisseur	Passcheibe	Arandela Ajuste	THICK = 5,95 MM
	VOE 24426014	1					Shim	Cale d'épaisseur	Passcheibe	Arandela Ajuste	THICK = 6,00 MM
	VOE 24426015	1					Shim	Cale d'épaisseur	Passcheibe	Arandela Ajuste	THICK = 6,05 MM
	VOE 24426016	1					Shim	Cale d'épaisseur	Passcheibe	Arandela Ajuste	THICK = 6,10 MM
	VOE 24426017	1					Shim	Cale d'épaisseur	Passcheibe	Arandela Ajuste	THICK = 6,15 MM
	VOE 24426018	1					Shim	Cale d'épaisseur	Passcheibe	Arandela Ajuste	THICK = 6,20 MM
	VOE 24426019	1					Shim	Cale d'épaisseur	Passcheibe	Arandela Ajuste	THICK = 6,25 MM
	VOE 24426020	1					Shim	Cale d'épaisseur	Passcheibe	Arandela Ajuste	THICK = 6,30 MM
	VOE 24426021	1					Shim	Cale d'épaisseur	Passcheibe	Arandela Ajuste	THICK = 6,35 MM
	VOE 24426022	1					Shim	Cale d'épaisseur	Passcheibe	Arandela Ajuste	THICK = 6,40 MM

1	**11887321**	**Bomba de inyección de accesorisde montaje** **Einspritzpumpe mit Anbauteilen** **Pompe d'injection de combustible avec pièces de montage** **Fuel injection pump with fitting parts**	Catalogue id **20050**	Group **236**
2	**11886395**		Illustr. No **1000888**	Section **100**
3			Issue **VOE 64D9920050**	Page **83**
4				
5				

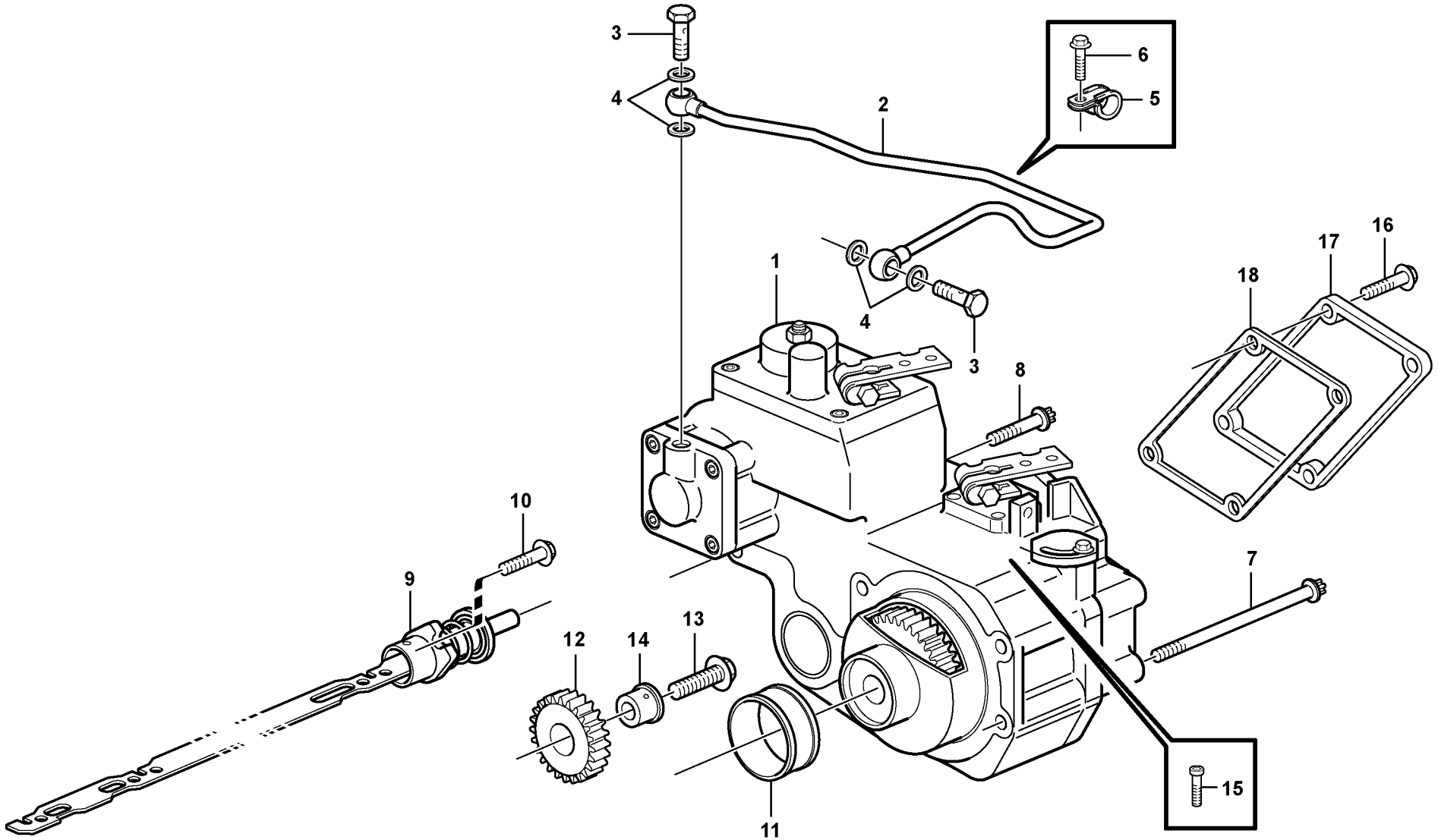

Volvo Construction Equipment

1021192

Fig.	Part No.	Quantity 1	2	3	PS	KIT	Description	Dénomination	Bezeichnung	Denominación	Notes
1	**VOE 20590555**	1					Control	Commande	Regelung	Mando	2067) ENG - 00894796
	VOE 20590582	1					Regulator	Regulateur	Regler	Regulador	ENG 00894797 -
2	**VOE 20504812**	1					Pipe	Canalisation	Rohrleitung	Canalizacion	
3	**VOE 20460289**	2					Hollow screw	Vis creuse	Hohlschraube	Racor-surtidor	
4	**VOE 13947281**	4					Gasket	Joint	Dichtung	Junta	(VOE 11700485)
5	**VOE 20405730**	1					Clamp	Pince Serrage	Klemme	Abrazadera	
6	**VOE 20405729**	1					Screw	Vis	Schraube	Tornillo	
7	**VOE 20460064**	4					Screw	Vis	Schraube	Tornillo	
8	**VOE 888760**	1					Screw	Vis	Schraube	Tornillo	
9	**VOE 20460069**	1					Control Rod	Tige Commande	Schaltstange	Barra De Mando	
10	**VOE 20405538**	1					Screw	Vis	Schraube	Tornillo	
11	**VOE 20460070**	1					Bushing	Bague	Buchse	Casquillo	
12	**VOE 20555503**	1					Gear	Pignon	Zahnradgetriebe	Engranaje	
13	**VOE 20405560**	1					Screw	Vis	Schraube	Tornillo	
14	**VOE 11700504**	1					Pivot Pin	Goupille-guide	Gelenkstift	Pasador Artic	ENG - 01047298
	VOE 20758272	1					Pin	Goupille	Zapfen	Pasador	ENG 01047299 -
15	**VOE 20460067**	1					Screw	Vis	Schraube	Tornillo	
16	**VOE 20460082**	4					Screw	Vis	Schraube	Tornillo	
17		1			NS		Hood	Capot Moteur	Motorhaube	Tapa motor	
18	**VOE 20405509**	1					Gasket	Joint	Dichtung	Junta	

2067) **GB:** Contact Volvo CE Customer Support. Individual Setting, Indicate Engine type and Engine number **FR:** Veuillez contacter Volvo CE Customer Support. Réglage individuel, indiquer le type et le numéro de moteur **DE:** Wenden Sie sich bitte an den Volvo CE Customer Support. Individuelle Einstellung, Motortyp und Motornummer angeben. **ES:** Dirigirse a Volvo CE Customer Support. Ajuste individual, indicar el tipo de motor y el número del motor

1		**Regulador** **Regler** **Régulateur** **Regulator**	Catalogue id **20050** / Group **236**
2			
3			Illustr. No **1021192** / Section **150**
4			
5			Issue **VOE 64D9920050** / Page **85**

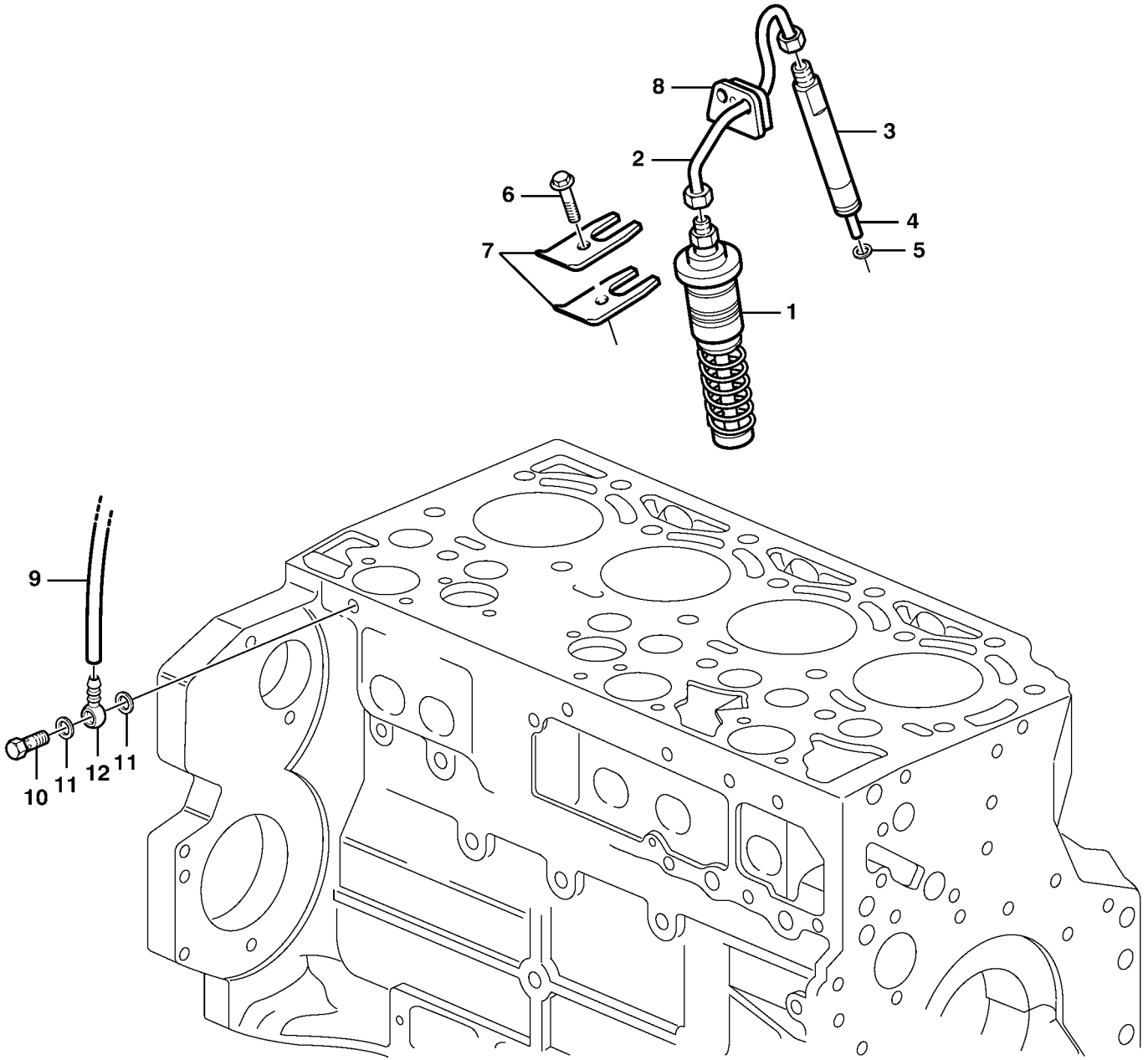

Volvo Construction Equipment

1009992

Fig.	Part No.	Quantity 1	2	3	PS	KIT	Description	Dénomination	Bezeichnung	Denominación	Notes
1		4					Injection pump	Pompe injection	Einspritzpumpe	Bomba injeccion	See group 237, Page 87
2	**VOE 20460095**	4					Fuel pipe	Conduit carbura	Kraftstoffleitung	Tubo combustib	
3	**VOE 24425916**	4					Injector	Injecteur	Einspritzdüse	Inyector	
4	**VOE 24425919**	4					•Nozzle	•Nez D'injecteur	•Einspritzduse	•Tobera	
5	**VOE 11700426**	4					Seal	Joint	Dichtring	Junta	
6	**VOE 20405559**	4					Screw	Vis	Schraube	Tornillo	
7	**VOE 11700424**	8					Retainer	Retenue	Halter	Soporte	
8	**VOE 11700487**	4					Rubber Seal	Lèvre Caoutchouc	Gummilippe	Labio Goma	
9		1					Fuel hose	Flexi.carburant	Kraftstoffschlauch	Manguera comb	See group 234, Page 77
10	**VOE 11704362**	1					Delivery Valve	Soup.refouleme.	Druckventil	Valvula Presion	
11	**VOE 20459972**	2					Sealing ring	Bague d'étanchéité	Runddichtring	Anillo reten	(VOE 11700485)
12	**VOE 20459906**	1					Nipple	Raccord	Nippel	Niple	

1	
2	
3	
4	
5	

Tuberías de combustible, inyector
Brennstoffrohre
Canalisation à combustible, injecteur
Fuel lines and injectors

Catalogue id	Group
20050	**237**
Illustr. No **1009992**	Section **100**
Issue **VOE 64D9920050**	Page **87**

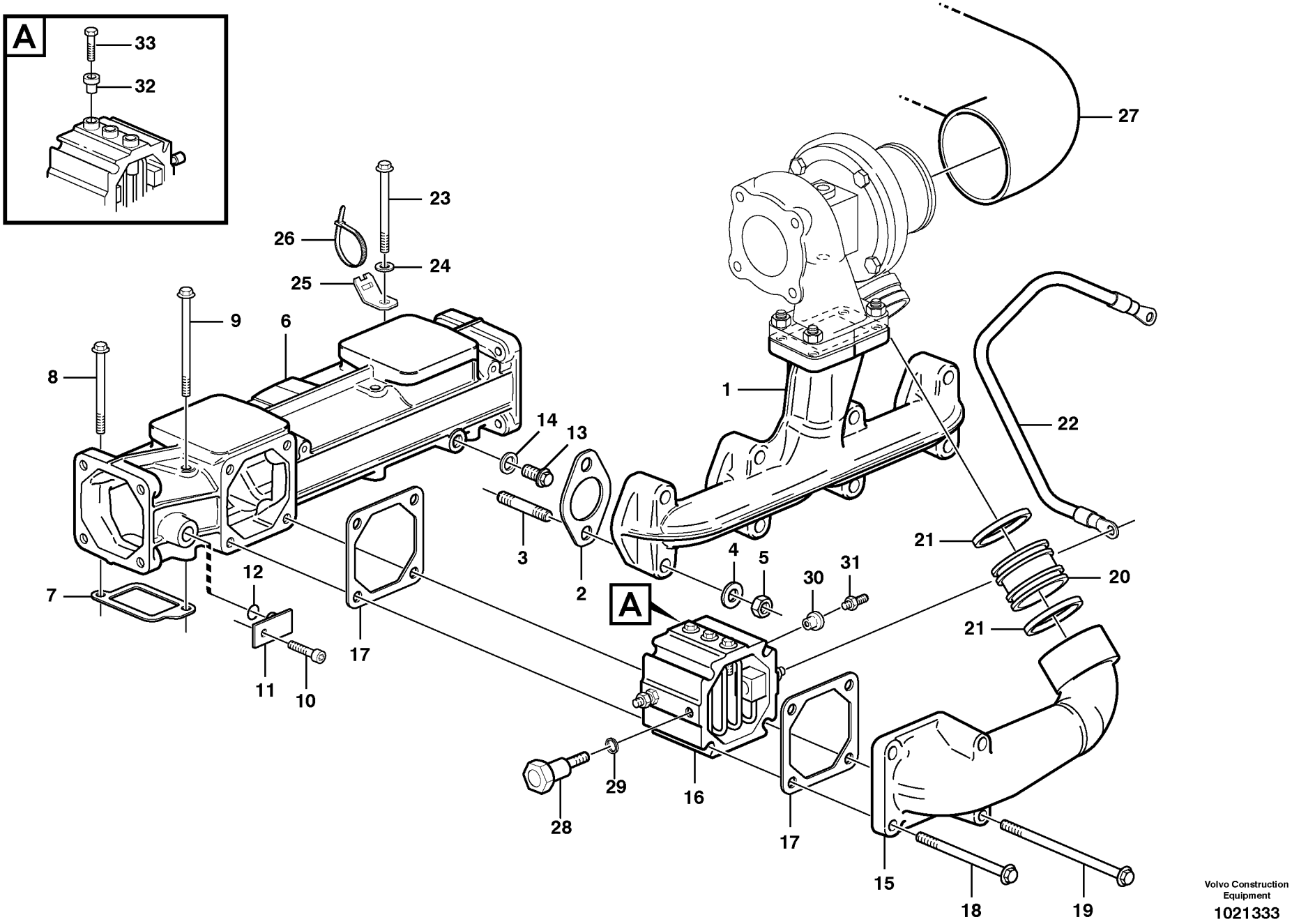

Volvo Construction Equipment

1021333

Fig.	Part No.	Quantity 1	2	3	PS	KIT	Description	Dénomination	Bezeichnung	Denominación	Notes
1	**VOE 24426230**	1	1				Exhaust Pipe	Tuyau d'échappement	Auspuffrohr	Tubo Escape	
2	**VOE 20557208**	4	4				Gasket	Joint	Dichtung	Junta	
3	**VOE 20405587**	8	8				Stud	Goujon	Stiftschraube	Esparrago	
4	**VOE 11700543**	8	8				Washer	Rondelle	Scheibe	Arandela	
5	**VOE 20505959**	8	8				Hexagon Nut	Ecrou Hexagonal	Sechskantmutter	Tuerca Hexagon	
6	**VOE 20565870**	1	1				Charge Air Pipe	Tuyau Suralimen	Ladeluftrohr	Tubo Admis Aire	
7	**VOE 20555515**	4	4				Gasket	Joint	Dichtung	Junta	
8	**VOE 20459830**	4	4				Screw	Vis	Schraube	Tornillo	
9	**VOE 20412601**	4	4				Screw	Vis	Schraube	Tornillo	
10	**VOE 20450694**	1	1				Screw	Vis	Schraube	Tornillo	
11	**VOE 20459910**	1	1				Plug	Bouchon	Stopfen	Tapon	
12	**VOE 20459909**	1	1				Sealing ring	Bague d'étanchéité	Runddichtring	Anillo reten	
13	**VOE 20451012**	1	1				Plug	Bouchon	Stopfen	Tapon	
14	**VOE 13947621**	1	1				Plane Gasket	Joint Plan	Flachdichtung	Junta Plana	
15	**VOE 20459935**	1					Elbow	Coude	Winkelstueck	Tubo acodado	ENG - 00985236
	VOE 20726057	1	1				Elbow	Coude	Winkelstueck	Tubo acodado	ENG 00985237 -
16	**VOE 20532254**	1					Heater	Elément de chauffage	Heizkörper	Calefaccion	ENG - 01047118
	VOE 20758403	1					Heater	Elément de chauffage	Heizkörper	Calefaccion	ENG 01047119 -
	VOE 20585825	1	1				Flange	Flasque	Flansch	Brida	
17	**VOE 20531832**	2	2				Gasket	Joint	Dichtung	Junta	
18	**VOE 20460123**	2	2				Screw	Vis	Schraube	Tornillo	
19	**VOE 20459933**	2	2				Screw	Vis	Schraube	Tornillo	
20	**VOE 20405616**	1	1				Adapter	Raccord Reduct.	Verbind Stutzen	Adaptador	
21	**VOE 20405536**	2	2				Sealing ring	Bague d'étanchéité	Runddichtring	Anillo reten	
22	**VOE 20726062**	1					Cable	Câble	Seil	Cable	
23	**VOE 20405898**	1					Screw	Vis	Schraube	Tornillo	
24	**VOE 20460127**	1					Washer	Rondelle	Scheibe	Arandela	
25	**VOE 20450997**	1					Bracket	Console	Konsole	Consola	
26	**VOE 4881440**	1					Strip Clamp	Ruban Serrage	Kabelbinder	Abraz Cinta	
27		1	1				Hose	Durit	Schlauch	Tubo flexible	See group 256, Page 97

1	**11886395**
2	**11887321**
3	
4	
5	

Tubo admisión y múltiple escape
Ansaugrohr und Auspuffkrümmer
Tubulure admission et tubulure echappement
Inlet manifold and exhaust manifold

Catalogue id **20050**	Group **251**
Illustr. No **1021333**	Section **100**
Issue **VOE 64D9920050**	Page **89**

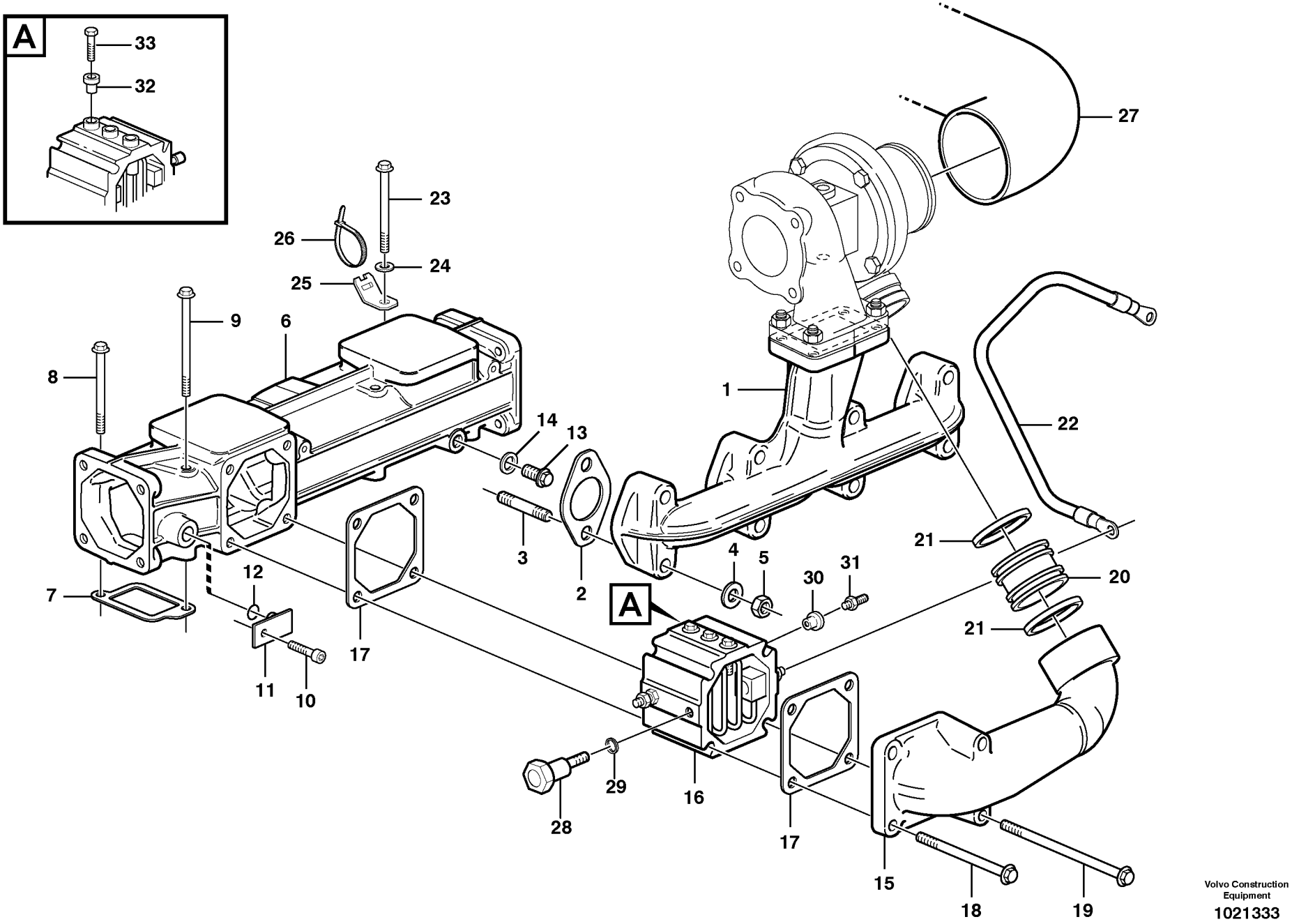

Volvo Construction Equipment

1021333

Fig.	Part No.	Quantity 1	2	3	PS	KIT	Description	Dénomination	Bezeichnung	Denominación	Notes
28	**VOE 20498498**	1					Connector	Raccord	Anschluss	Union	
29	**VOE 20498524**	1					Sealing ring	Bague d'étanchéité	Runddichtring	Anillo reten	
30	**VOE 20521558**	3					Insulator	Isolateur	Isolator	Aislador	
31	**VOE 20572787**	1					Connector	Raccord	Anschluss	Union	
32	**VOE 20550336**	1					Insulator	Isolateur	Isolator	Aislador	
33	**VOE 20550356**	1					Bolt	Boulon	Bolzen	Perno	

1	**11886395**	**Tubo admisión y múltiple escape** **Ansaugrohr und Auspuffkrümmer** **Tubulure admission et tubulure echappement** **Inlet manifold and exhaust manifold**	Catalogue id **20050**	Group **251**
2	**11887321**		Illustr. No **1021333**	Section **100**
3			Issue **VOE 64D9920050**	Page **91**
4				
5				

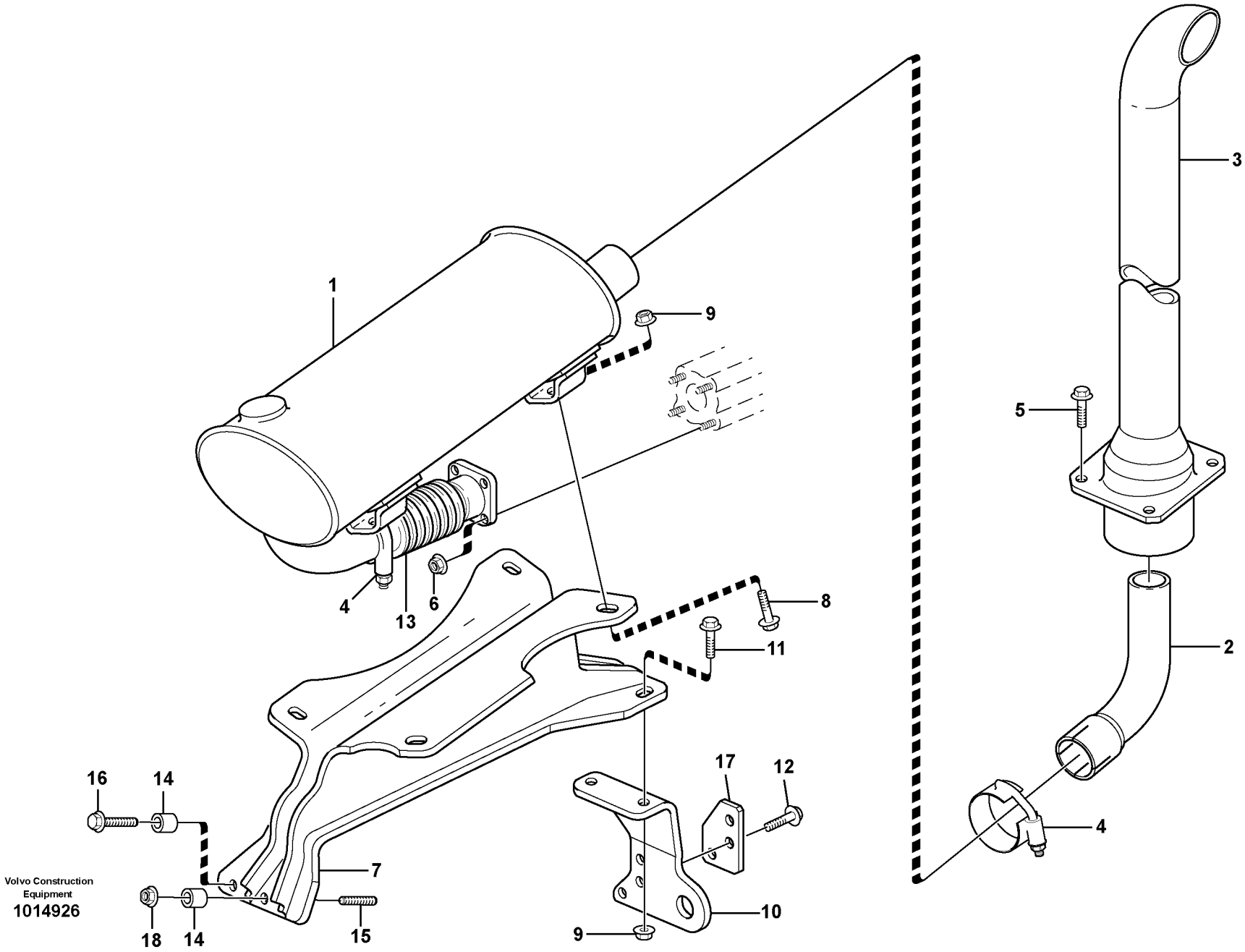

Volvo Construction Equipment
1014926

Fig.	Part No.	Quantity 1	2	3	PS	KIT	Description	Dénomination	Bezeichnung	Denominación	Notes
1	**VOE 11890338**	1					Muffler	Silencieux	Schalldämpfer	Silencioso	
2	**VOE 11881139**	1					Pipe	Canalisation	Rohrleitung	Canalizacion	
3	**VOE 11890160**	1					Exhaust Pipe	Tuyau d'échappement	Auspuffrohr	Tubo Escape	
4	**VOE 11883251**	2					Clamp	Pince Serrage	Klemme	Abrazadera	
5	**VOE 946329**	4					Flange screw	Vis à bride	Flanschschraube	Torn embridado	
6	**VOE 948645**	4					Flange Lock Nut	Contre écrou bride	Flanschmutter	Contratuer Embr	
7	**VOE 11884001**	1					Bracket	Console	Konsole	Ménsula	SER NO -10003
7	**VOE 11886387**	1					Bracket	Console	Konsole	Ménsula	SER NO 10004-
8	**VOE 946329**	4					Flange screw	Vis à bride	Flanschschraube	Torn embridado	
9	**VOE 13971095**	6					Flange nut	Ecrou accouple.	Bundmutter	Tuerca embridad	
10	**VOE 11884006**	1					Plate	Plaque	Platte	Placa	SER NO -10003
10	**VOE 11886391**	1					Bracket	Console	Konsole	Ménsula	SER NO 10004-
11	**VOE 13965185**	2					Flange screw	Vis à bride	Flanschschraube	Torn embridado	
12	**VOE 946329**	3					Flange screw	Vis à bride	Flanschschraube	Torn embridado	SER NO -10003
12	**VOE 946472**	3					Flange screw	Vis à bride	Flanschschraube	Torn embridado	SER NO 10004-
13	**VOE 11883424**	1			SS		Tube	Tube	Rohr	Tubo	
14	**VOE 11884007**	2					Spacer	Partie Intermédiaire	Zwischenstück	Espaciador	SER NO -10003
14	**VOE 11886393**	2					Spacer	Partie Intermédiaire	Zwischenstück	Espaciador	SER NO 10004-
15	**VOE 953073**	2					Stud	Goujon	Stiftschraube	Esparrago	SER NO -10003
16	**VOE 13965188**	2					Flange screw	Vis à bride	Flanschschraube	Torn embridado	SER NO 10004-
17	**VOE 11886392**	1					Plate	Plaque	Platte	Placa	SER NO 10004-
18	**VOE 13971095**	2					Flange nut	Ecrou accouple.	Bundmutter	Tuerca embridad	SER NO -10003

1	
2	
3	
4	
5	

Sistema de escape, silenciador
Auspuffsystem, Schalldämpfer
Système d'áspiration, silencieux
Exhaust system, silencer

Catalogue id	Group
20050	**252**
Illustr. No **1014926**	Section **100**
Issue **VOE 64D9920050**	Page **93**

VOLVO

BL61

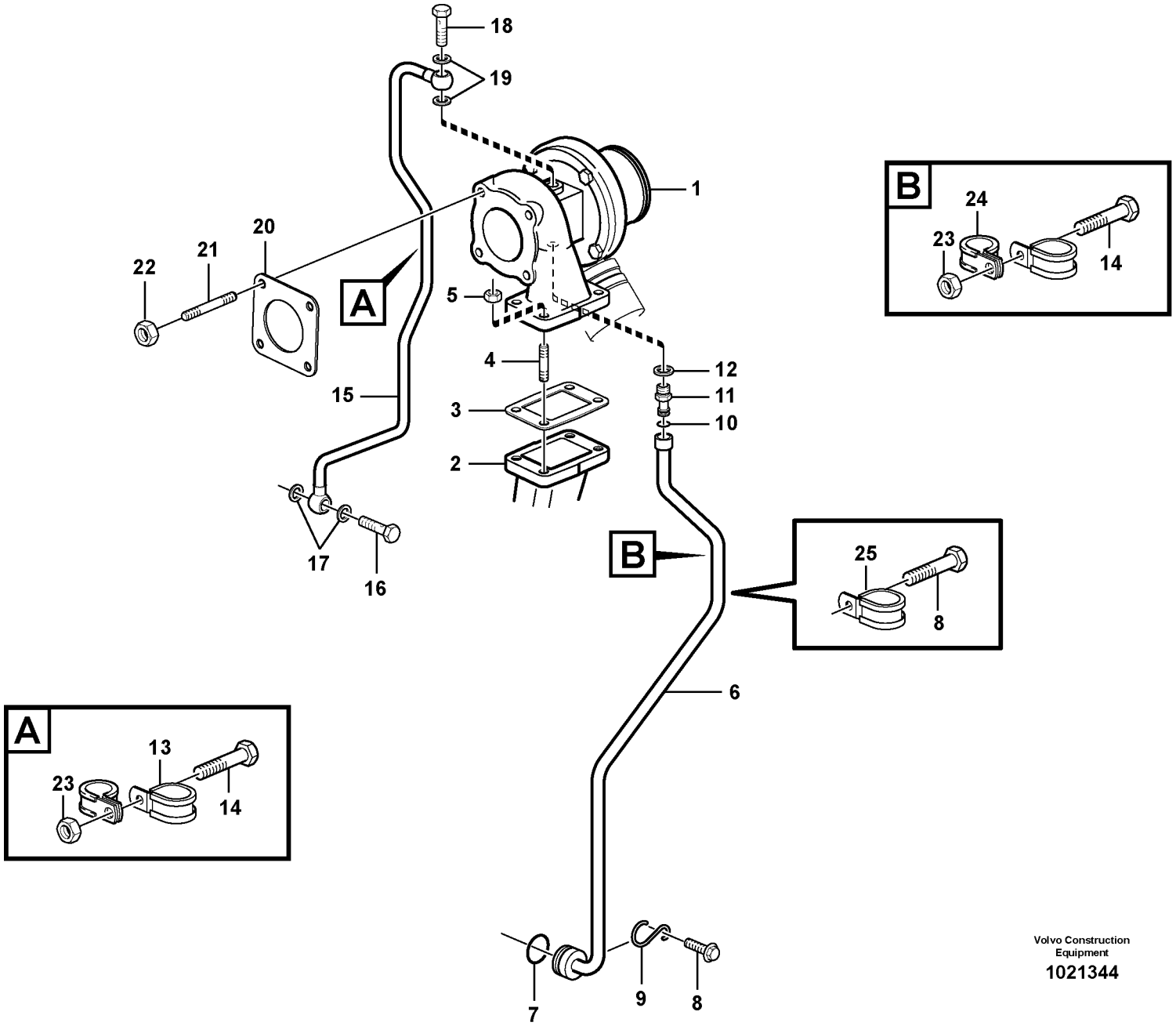

Volvo Construction Equipment

1021344

Fig.	Part No.	Quantity 1	2	3	PS	KIT	Description	Dénomination	Bezeichnung	Denominación	Notes
1	**VOE 20460945**	1					Turbocharger	Turbocompresse.	Abgasturbolader	Turbocompresor	
	VOE 20508630	1			OP		•Repair Kit	•Kit Réparation	•Reparatursatz	•Kit Reparacion	
2		1					Exhaust Pipe	Tuyau d'échappement	Auspuffrohr	Tubo Escape	See group 251, Page 89
3	**VOE 20559834**	1					Manifold	Tubulure	Verzweigung	Bifurcacion	
4	**VOE 20412318**	4					Stud	Goujon	Stiftschraube	Esparrago	
5	**VOE 20517048**	4					Hexagon Nut	Ecrou Hexagonal	Sechskantmutter	Tuerca Hexagon	
6	**VOE 20528339**	1					Return Line	Conduit Retour	Rückaufleitung	Conduct Retorn	
7	**VOE 20405822**	1					Sealing ring	Bague d'étanchéité	Runddichtring	Anillo reten	
8	**VOE 20405792**	2					Screw	Vis	Schraube	Tornillo	
9	**VOE 20405789**	1					Retainer	Retenue	Halter	Soporte	
10	**VOE 20459172**	1					Sealing ring	Bague d'étanchéité	Runddichtring	Anillo reten	
11	**VOE 20459171**	1					Nipple	Raccord	Nippel	Niple	
12	**VOE 20549894**	1					Sealing ring	Bague d'étanchéité	Runddichtring	Anillo reten	
13	**VOE 20460045**	1					Clamp	Pince Serrage	Klemme	Abrazadera	
14	**VOE 20460055**	1					Screw	Vis	Schraube	Tornillo	
15	**VOE 20555494**	1					Feed Line	Cond.alimentat.	Druckleitung	Conduct Presion	
16	**VOE 20460231**	1					Hollow screw	Vis creuse	Hohlschraube	Racor-surtidor	
17	**VOE 13947621**	2					Plane Gasket	Joint Plan	Flachdichtung	Junta Plana	
18	**VOE 20460936**	1					Hollow screw	Vis creuse	Hohlschraube	Racor-surtidor	
19	**VOE 20460061**	2					Seal	Joint	Dichtring	Junta	
20	**VOE 20459236**	1					Gasket	Joint	Dichtung	Junta	
21	**VOE 20459235**	4					Stud	Goujon	Stiftschraube	Esparrago	
22	**VOE 20517048**	4					Hexagon Nut	Ecrou Hexagonal	Sechskantmutter	Tuerca Hexagon	
23	**VOE 20460939**	1					Hexagon Nut	Ecrou Hexagonal	Sechskantmutter	Tuerca Hexagon	
24	**VOE 20459181**	1					Clamp	Pince Serrage	Klemme	Abrazadera	
25	**VOE 20450867**	1					Clamp	Pince Serrage	Klemme	Abrazadera	

1		**Turboalimentador con accesorios de montaje** **Torbolader mit Anbauteilen** **Turbocompresseur avec pièces de montage** **Turbocharger with fitting parts**	Catalogue id **20050** / Group **255**
2			Illustr. No **1021344** / Section **100**
3			Issue **VOE 64D9920050** / Page **95**
4			
5			

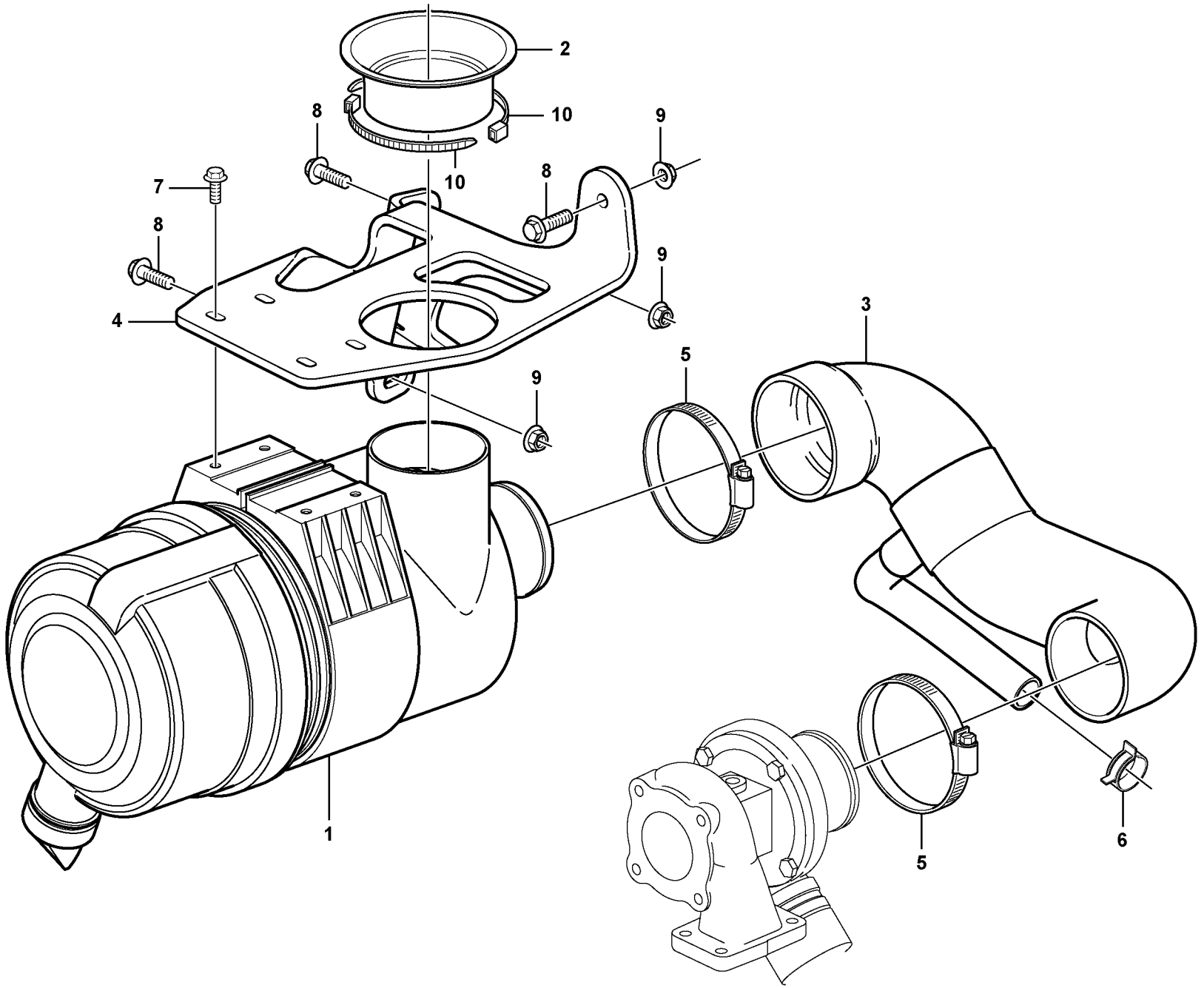

Volvo Construction Equipment
1000937

Fig.	Part No.	Quantity 1	2	3	PS	KIT	Description	Dénomination	Bezeichnung	Denominación	Notes
1		1					Air Cleaner	Filtre Air	Luftfilter	Filtro Aire	See group 256, Page 99
2	**VOE 11883145**	1					Sealing ring	Bague d'étanchéité	Runddichtring	Anillo reten	
3	**VOE 11881164**	1					Hose	Durit	Schlauch	Tubo flexible	
4		1			NS		Bracket	Console	Konsole	Ménsula	
5	**VOE 943483**	2					Hose Clamp	Collier Serrage	Schlauchschelle	Abraz Manguera	
6	**VOE 982021**	1					Hose Clamp	Collier Serrage	Schlauchschelle	Abraz Manguera	
7	**VOE 13946173**	4					Flange screw	Vis à bride	Flanschschraube	Torn embridado	
8	**VOE 946472**	2					Flange screw	Vis à bride	Flanschschraube	Torn embridado	
9	**VOE 13971095**	2					Flange nut	Ecrou accouple.	Bundmutter	Tuerca embridad	
10	**VOE 4881440**	2					Strip Clamp	Ruban Serrage	Kabelbinder	Abraz Cinta	

1		**Filtro de aire con accesoris de montaje** **Luftfilter mit Anbauteilen** **Filtre à air avec pièces de montage** **Air filter with fitting parts**	Catalogue id **20050**	Group **256**
2			Illustr. No **1000937**	Section **100**
3			Issue **VOE 64D9920050**	Page **97**
4				
5				

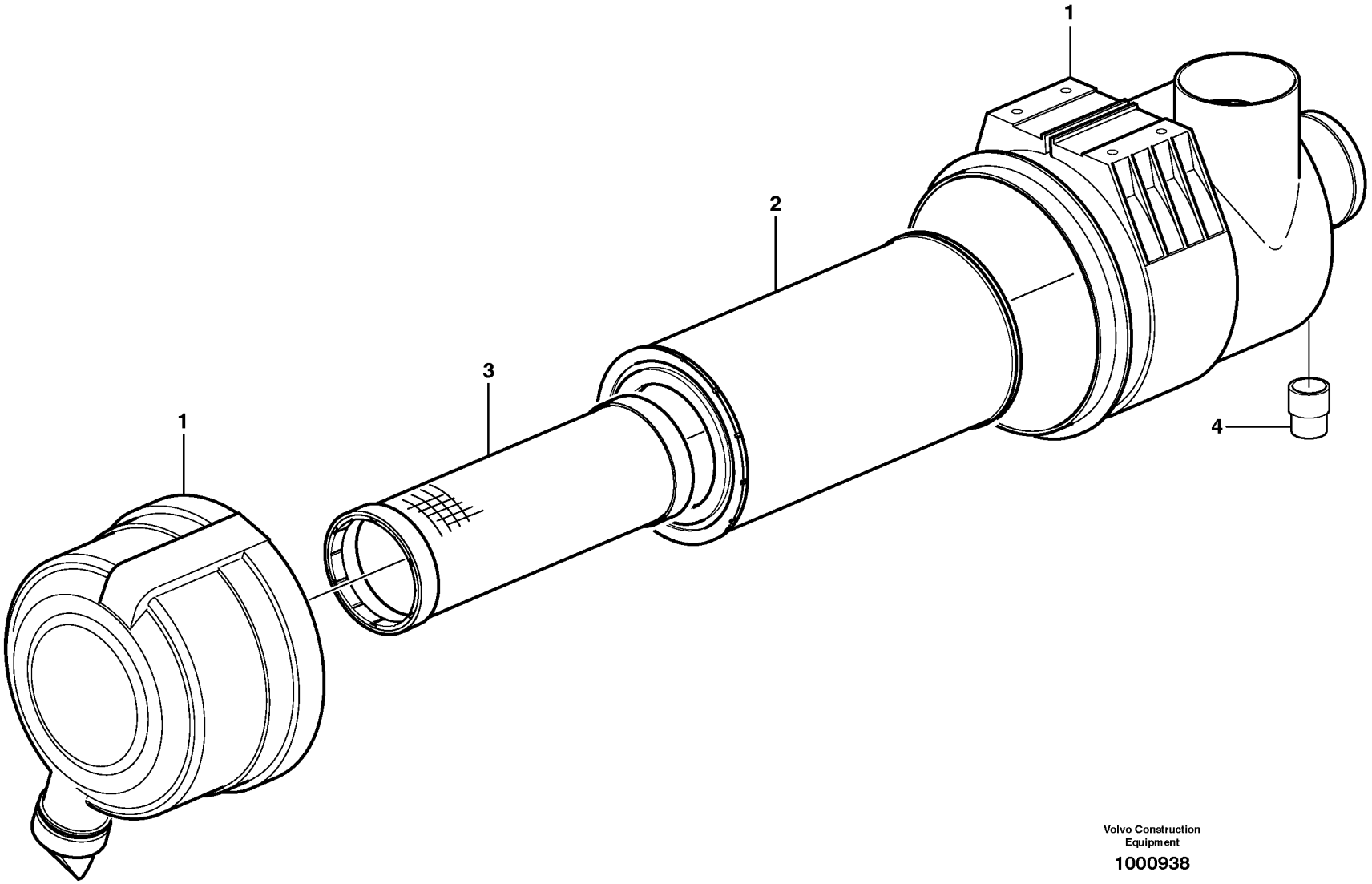

Volvo Construction Equipment

1000938

Fig.	Part No.	Quantity 1	2	3	PS	KIT	Description	Dénomination	Bezeichnung	Denominación	Notes
1	**VOE 11890335**	1					Air Cleaner	Filtre Air	Luftfilter	Filtro Aire	
2	**VOE 11883618**	1					•Primary Filter	•Prefiltre	•Vorfilter	•Prefiltro	
3	**VOE 11883619**	1					•Safety filter	•Filtre de sécurité	•Sicherheitsfilter	•Filtro de seguridad	
4	**VOE 11709746**	1					•Indicator	•Indicateur	•Indikator	•Indicador	

1		**Filtro de aire** **Luftfilter** **Purificateur d'air** **Air filter**	Catalogue id **20050**	Group **256**
2			Illustr. No **1000938**	Section **150**
3			Issue **VOE 64D9920050**	Page **99**
4				
5				

VOLVO

BL61

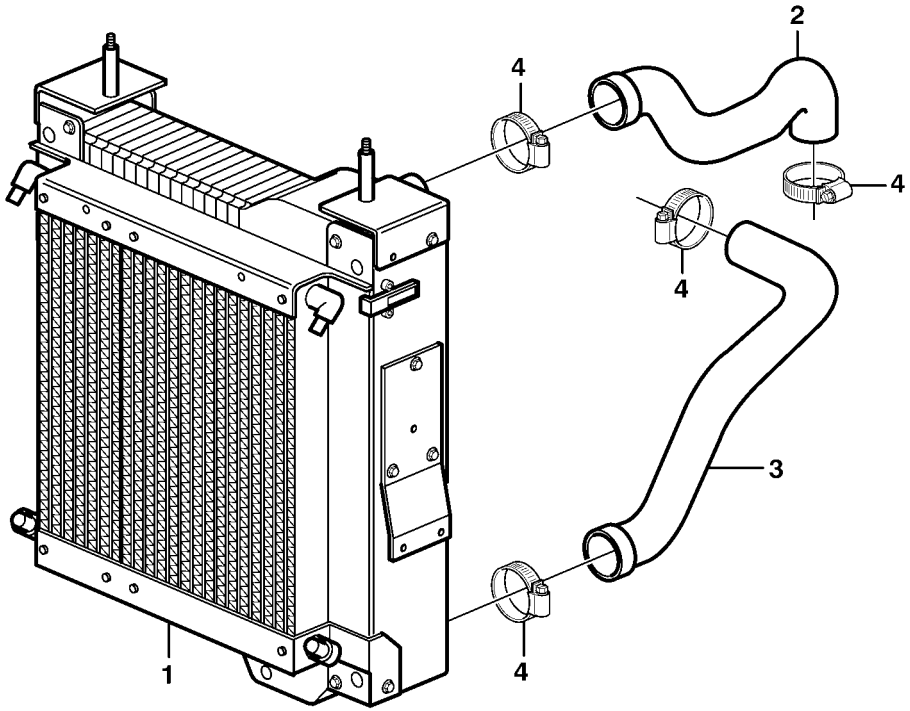
2
4
4
4
3
1
4

Fig.	Part No.	Quantity 1	2	3	PS	KIT	Description	Dénomination	Bezeichnung	Denominación	Notes
1		1					Radiator	Radiateur	Kühler	Radiador	See group 261, Page 105
2	**VOE 11881130**	1					Radiator Hose	Durit Radiateur	Kuhlerschlauch	Manguera Radiad	
3	**VOE 11881131**	1					Radiator Hose	Durit Radiateur	Kuhlerschlauch	Manguera Radiad	S/N - 10626
3	**VOE 11888695**	1					Hose	Durit	Schlauch	Tubo flexible	S/N 10627 -
4	**VOE 981604**	4					Hose Clamp	Collier Serrage	Schlauchschelle	Abraz Manguera	

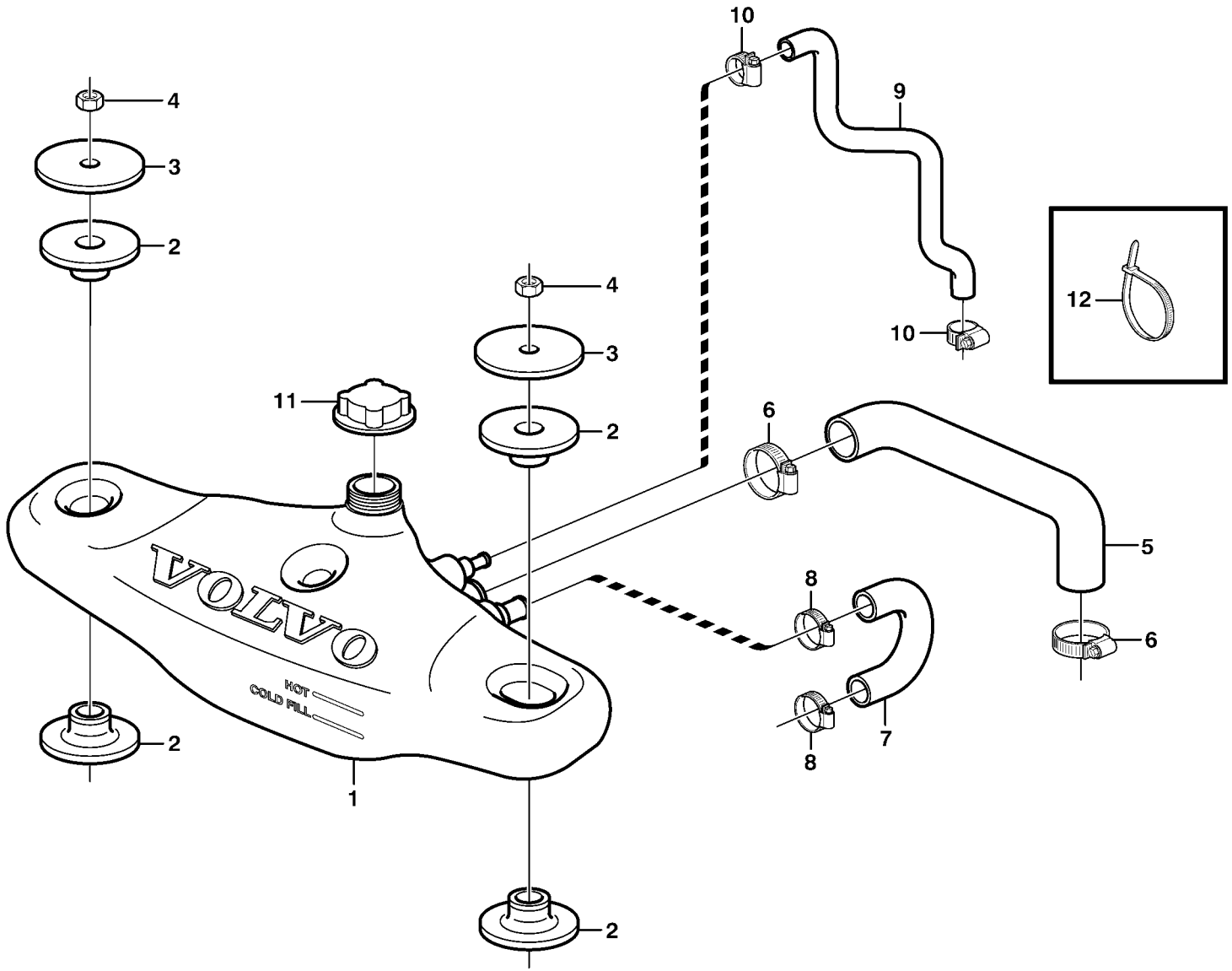

Volvo Construction Equipment

1000559

Fig.	Part No.	Quantity 1	2	3	PS	KIT	Description	Dénomination	Bezeichnung	Denominación	Notes
1	**VOE 11886455**	1					Expansion Tank	Vase Expansion	Dehngefäss	Tanque Expansio	(VOE 11884118)
2		4			NS		Spacer	Entretoise	Abstandkörper	Distanciador	
3		2			NS		Washer	Rondelle	Scheibe	Arandela	
4	**VOE 13971095**	2					Flange nut	Ecrou accouple.	Bundmutter	Tuerca embridad	
5	**VOE 11882659**	1					Hose	Durit	Schlauch	Tubo flexible	
6	**VOE 981708**	2					Hose Clamp	Collier Serrage	Schlauchschelle	Abraz Manguera	
7	**VOE 11882756**	1					Hose	Durit	Schlauch	Tubo flexible	
8	**VOE 981705**	2					Hose Clamp	Collier Serrage	Schlauchschelle	Abraz Manguera	
9	**VOE 11882757**	1					Hose	Durit	Schlauch	Tubo flexible	
10	**VOE 943469**	2					Hose Clamp	Collier Serrage	Schlauchschelle	Abraz Manguera	
11	**VOE 1542591**	1					Pressure Cap	Boucho.pression	Druckverschluss	Tapa Presion	
12	**VOE 4881438**	1					Strip Clamp	Ruban Serrage	Kabelbinder	Abraz Cinta	

1		**Sistema de refrigeración con vaso expansión** **Kühlsystem mit Expansionstank** **Système de refroidissement avec vase d'expansion** **Cooling system incl. expansion tank**	Catalogue id **20050**	Group **260**
2			Illustr. No **1000559**	Section **200**
3			Issue **VOE 64D9920050**	Page **103**
4				
5				

VOLVO

BL61

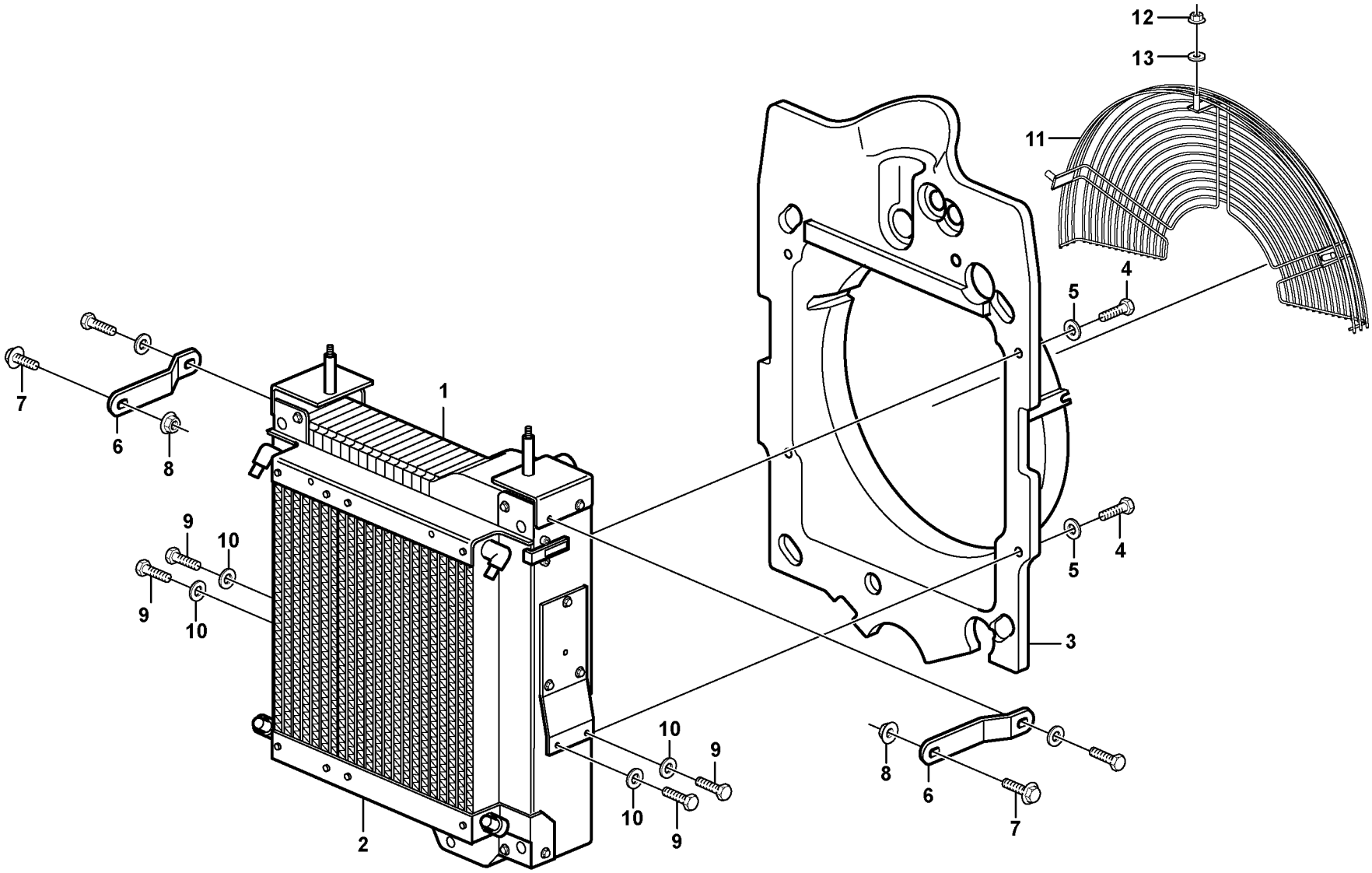

Volvo Construction Equipment
1021964

Fig.	Part No.	Quantity 1	2	3	PS	KIT	Description	Dénomination	Bezeichnung	Denominación	Notes
	VOE 11886551	1					Cooling Package	Ensemble de refroidissem...	Kühlerpaket	Paquete de refrigeración	
1	**VOE 118886549**	1					•Radiator	•Radiateur	•Radiator	•Radiador	
2	**VOE 11886550**	1					•Oil Cooler	•Refroidisseur huile	•Ölkühler	•Enfriadores aceite	
3	**VOE 11887145**	1					Fan Shroud	Boitier Ventilateur	Lufterhaube	Cubierta Ventilador	
3	**VOE 11888687**	1					Fan Shroud	Boitier Ventilateur	Lufterhaube	Cubierta Ventilador	S/N 10627 -
4	**VOE 13946173**	4					Flange screw	Vis à bride	Flanschschraube	Torn embridado	
5	**VOE 925739**	4					Washer	Rondelle	Scheibe	Arandela	
6	**VOE 11884119**	2					Plate	Plaque	Platte	Placa	
7	**VOE 13946173**	4					Flange screw	Vis à bride	Flanschschraube	Torn embridado	
8	**VOE 13945408**	2					Nut	Ecrou	Mutter	Tuerca	
9	**VOE 13945444**	4					Flange screw	Vis à bride	Flanschschraube	Torn embridado	
10	**VOE 11117464**	4					Washer	Rondelle	Scheibe	Arandela	
11	**VOE 11887369**	1					Grille	Grille	Kühlergrill	Calandra	
12	**VOE 948645**	3					Flange Lock Nut	Contre écrou bride	Flanschmutter	Contratuer Embr	
13	**VOE 925739**	3					Washer	Rondelle	Scheibe	Arandela	

1		**Radiador con accesorios de montaje** **Kühler mit Anbauteilen** **Radiateur avec pièces de montage** **Radiator with fitting parts**	Catalogue id **20050**	Group **261**
2			Illustr. No **1021964**	Section **100**
3			Issue **VOE 64D9920050**	Page **105**
4				
5				

VOLVO

BL61

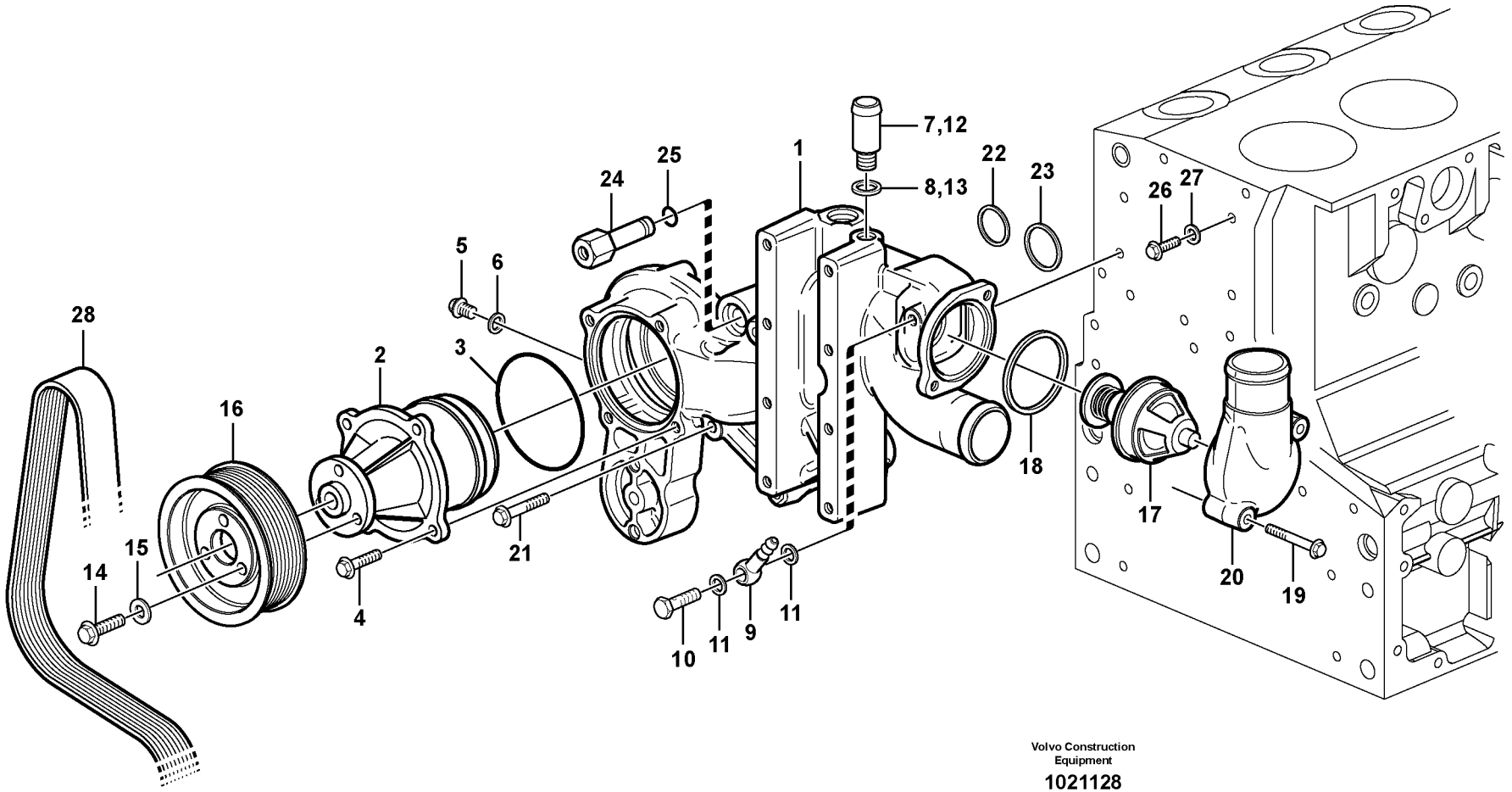

Volvo Construction Equipment

1021128

Fig.	Part No.	Quantity 1	2	3	PS	KIT	Description	Dénomination	Bezeichnung	Denominación	Notes
1	**VOE 20550117**	1			SS		Bracket	Console	Konsole	Ménsula	ENG - 01007594
	VOE 20739051	1					Bracket	Console	Konsole	Ménsula	ENG 01007595 - 10020146
	VOE 20791406	1					Bracket	Console	Konsole	Ménsula	ENG 10020147 -
2	**VOE 20502535**	1					•Coolant Pump	•Pompe a eau	•Kuhlwasserpumpe	•Bomba Ag.refr	ENG - 01007594
	VOE 20726092	1					•Coolant Pump	•Pompe a eau	•Kuhlwasserpumpe	•Bomba Ag.refr	ENG 01007595 -
3	**VOE 20502536**	1					•Sealing ring	•Bague d'étanchéité	•Runddichtring	•Anillo reten	
4	**VOE 20405885**	4					•Screw	•Vis	•Schraube	•Tornillo	
5	**VOE 888774**	1					•Plug	•Bouchon	•Stopfen	•Tapon	
6	**VOE 13947281**	1					•Gasket	•Joint	•Dichtung	•Junta	
7	**VOE 20412313**	1					•Hose Connection	•Racco.flexible	•Schlauchanschl	•Conex Manguera	ENG - 01007594
8	**VOE 20549894**	1					•Sealing ring	•Bague d'étanchéité	•Runddichtring	•Anillo reten	ENG - 01007594
9	**VOE 20551429**	1					•Fitting	•Ecrou raccord	•Verschraubung	•Racor	
10	**VOE 20460936**	1					•Hollow screw	•Vis creuse	•Hohlschraube	•Racor-surtidor	
11	**VOE 20460061**	2					•Seal	•Joint	•Dichtring	•Junta	
12	**VOE 20412313**	1					Hose Connection	Racco.flexible	Schlauchanschl	Conex Manguera	ENG 01007595 -
13	**VOE 20549894**	1					Sealing ring	Bague d'étanchéité	Runddichtring	Anillo reten	ENG 01007595 -
14	**VOE 20405792**	3					Screw	Vis	Schraube	Tornillo	
15	**VOE 20450745**	3					Washer	Rondelle	Scheibe	Arandela	
16	**VOE 20459949**	1					Pulley	Poulie	Z-riemenscheibe	Polea Corr Dent	
17	**VOE 20450736**	1					Thermostat	Thermostat	Thermostat	Termostato	
18	**VOE 20459961**	1					Sealing ring	Bague d'étanchéité	Runddichtring	Anillo reten	
19	**VOE 20405672**	2					Screw	Vis	Schraube	Tornillo	
20	**VOE 20450735**	1					Outlet	Sortie	Auslass	Salida	
21	**VOE 20405723**	5					Screw	Vis	Schraube	Tornillo	
22	**VOE 20459955**	1					Sealing ring	Bague d'étanchéité	Runddichtring	Anillo reten	ENG - 10020146
	VOE 20799838	1					Rubber Seal	Lèvre Caoutchouc	Gummilippe	Labio Goma	ENG 10020147 -
23	**VOE 20459953**	1					Sealing ring	Bague d'étanchéité	Runddichtring	Anillo reten	
24	**VOE 20459952**	1					Connector	Raccord	Anschluss	Union	
25	**VOE 20459954**	1					•Sealing ring	•Bague d'étanchéité	•Runddichtring	•Anillo reten	
26	**VOE 20405898**	1					Screw	Vis	Schraube	Tornillo	

1		**Bomba de agua y caja de termostato** **Wasserpumpe und Thermostatgehäuse** **Pompe à eau et boitier thermostat** **Water pump and thermostat housing**	Catalogue id **20050**	Group **262**
2			Illustr. No **1021128**	Section **100**
3			Issue **VOE 64D9920050**	Page **107**
4				
5		**11886395, 11887321**		

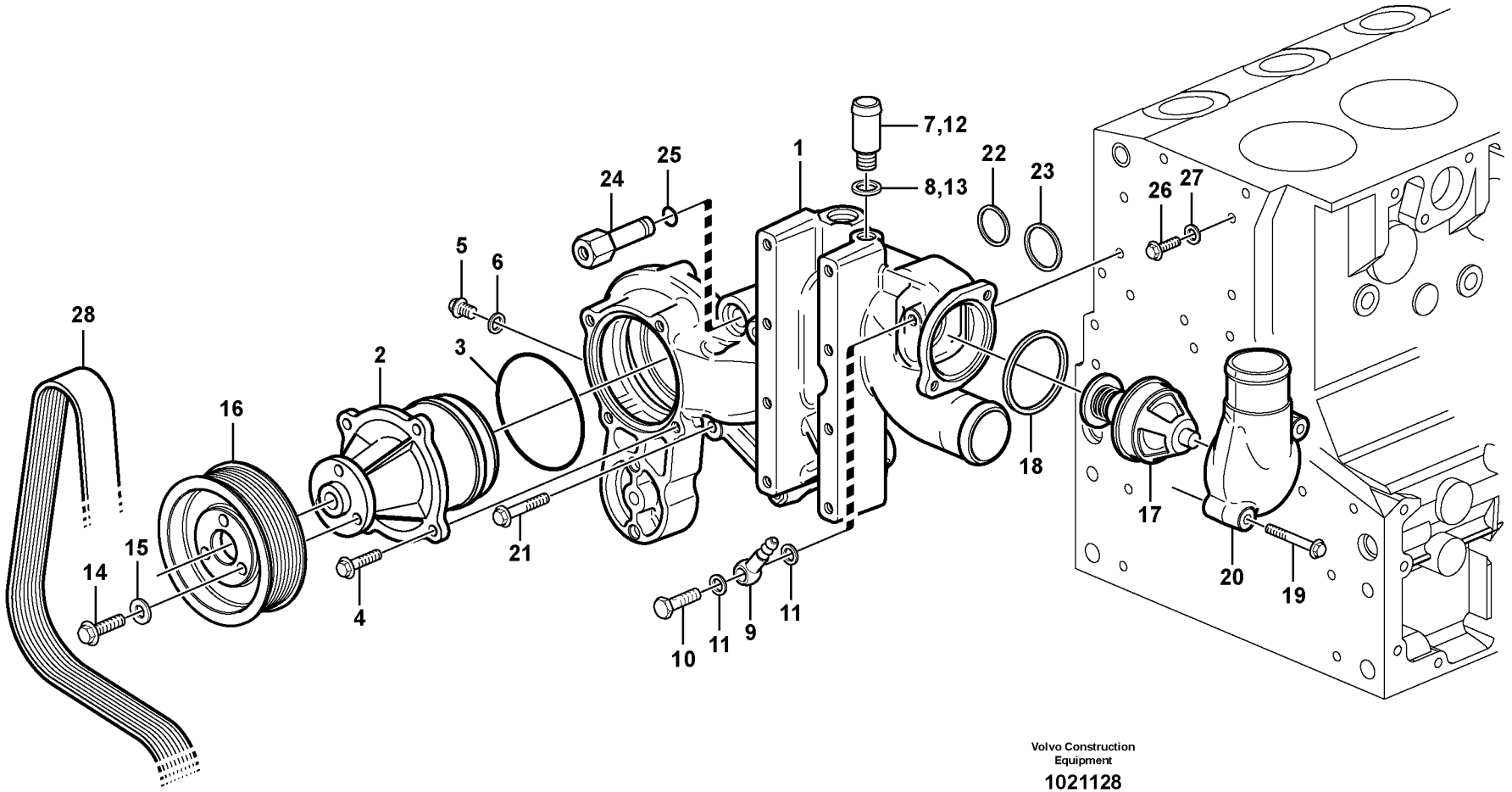

Volvo Construction Equipment

1021128

Fig.	Part No.	Quantity 1	2	3	PS	KIT	Description	Dénomination	Bezeichnung	Denominación	Notes
27	**VOE 20459900**	1					Sealing ring	Bague d'étanchéité	Runddichtring	Anillo reten	
28		1					V-belt	Courroie Trape.	Keilriemen	Correa Trapez	See group 263, Page 113

1		**Bomba de agua y caja de termostato** **Wasserpumpe und Thermostatgehäuse** **Pompe à eau et boitier thermostat** **Water pump and thermostat housing**	Catalogue id **20050**	Group **262**
2			Illustr. No **1021128**	Section **100**
3			Issue **VOE 64D9920050**	Page **109**
4				
5		**11886395, 11887321**		

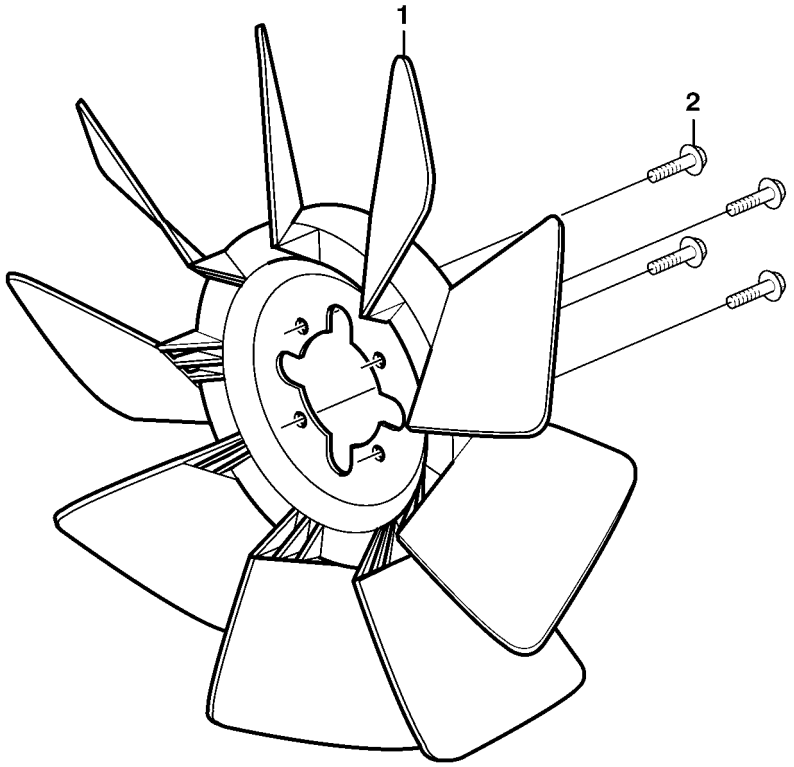
1
2

Fig.	Part No.	Quantity 1	2	3	PS	KIT	Description	Dénomination	Bezeichnung	Denominación	Notes
1	**VOE 11882519**	1					Fan	Ventilateur	Ventilator	Ventilador	
2	**VOE 13946173**	4					Flange screw	Vis à bride	Flanschschraube	Torn embridado	

1		**Ventilador con accesorios de montaje** **Lüfter mit Anbauteilen** **Ventilateur avec pièces de montage** **Fan and installation components**	Catalogue id **20050**	Group **263**
2			Illustr. No **1000585**	Section **100**
3			Issue **VOE 64D9920050**	Page **111**
4				
5				

VOLVO

BL61

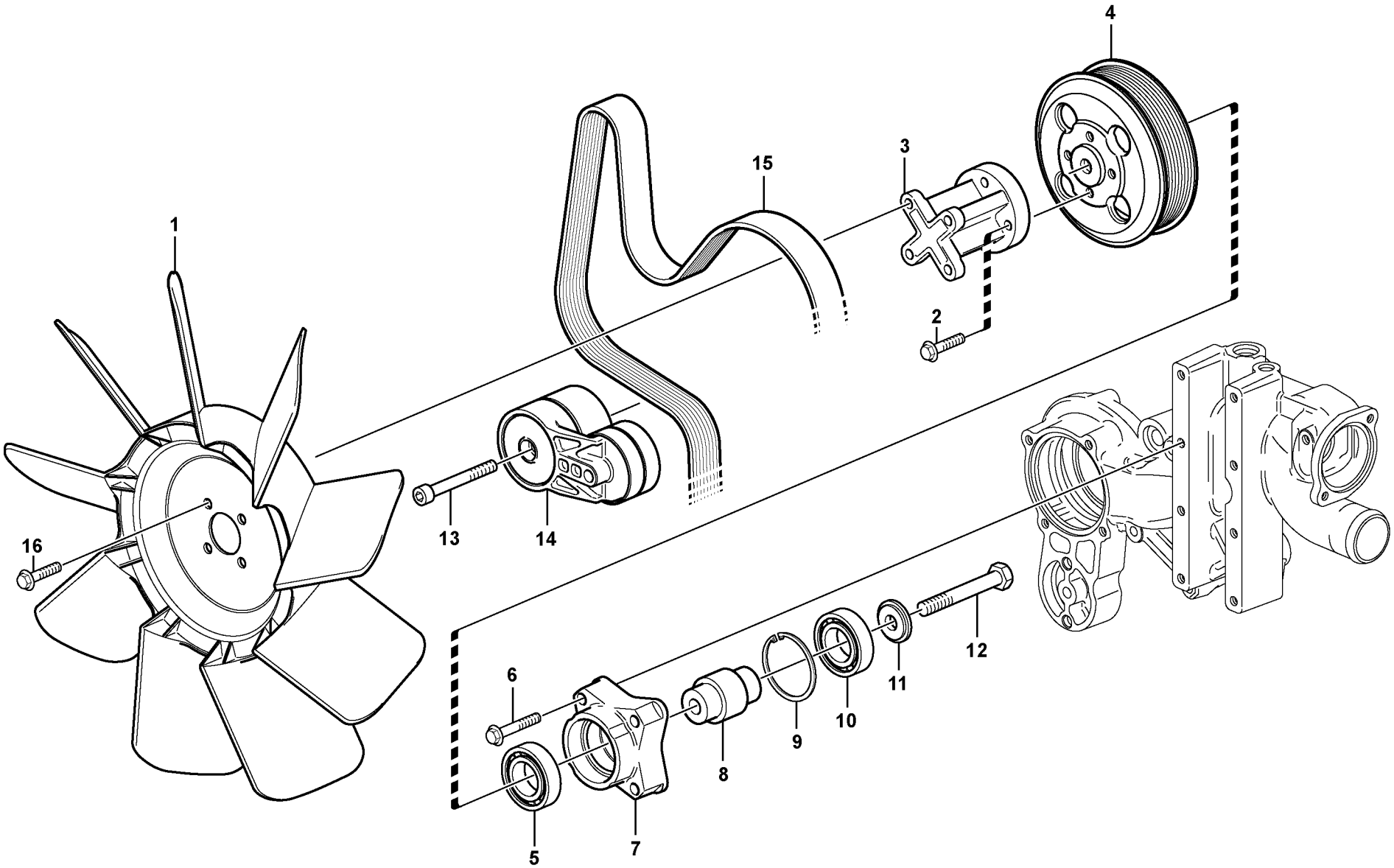

Volvo Construction Equipment

1021381

Fig.	Part No.	Quantity 1	2	3	PS	KIT	Description	Dénomination	Bezeichnung	Denominación	Notes
1		1					Fan	Ventilateur	Ventilator	Ventilador	See group 263, Page 111
2	**VOE 20405504**	4					Screw	Vis	Schraube	Tornillo	
3	**VOE 20405988**	1					Adapter	Raccord Reduct.	Verbind Stutzen	Adaptador	
	VOE 20729310	1					Kit	Jeu	Bausatz	Juego	
4	**VOE 20459864**	1					•Pulley	•Poulie	•Z-riemenscheibe	•Polea Corr Dent	
5	**VOE 20450749**	1					•Ball Bearing	•Roulemen.billes	•Kugellager	•Cojinete Bolas	
6	**VOE 20459263**	4					•Screw	•Vis	•Schraube	•Tornillo	
7	**VOE 20715795**	1					•Bearing Bracket	•Porte-palier	•Lagerbock	•Soporte Cojin	
8	**VOE 20459264**	1					•Shaft	•Arbre	•Welle	•Arbol	
9	**VOE 20459025**	1					•Retaining ring	•Bague retenue	•Haltering	•Anillo de apoyo	
10	**VOE 20450750**	1					•Ball Bearing	•Roulemen.billes	•Kugellager	•Cojinete Bolas	
11	**VOE 20459265**	1					•Washer	•Rondelle	•Scheibe	•Arandela	
12	**VOE 20450754**	1					•Screw	•Vis	•Schraube	•Tornillo	
13	**VOE 20555065**	1					Screw	Vis	Schraube	Tornillo	
14	**VOE 20554253**	1					Belt Tensioner	Tendeu.courroie	Riemenspanner	Tensor Correa	(VOE 20459947) ENG - 01099383
14	**VOE 20909227**	1					Belt Tensioner	Tendeu.courroie	Riemenspanner	Tensor Correa	ENG 01099384 -
15	**VOE 11709636**	1					V-belt	Courroie Trape.	Keilriemen	Correa Trapez	
16	**VOE 20405885**	4					Screw	Vis	Schraube	Tornillo	

1		**Correa distribución** **Riemenantrieb** **Transmission courrouie** **Belt transmission**	Catalogue id **20050**	Group **263**
2			Illustr. No **1021381**	Section **150**
3			Issue **VOE 64D9920050**	Page **113**
4				
5				

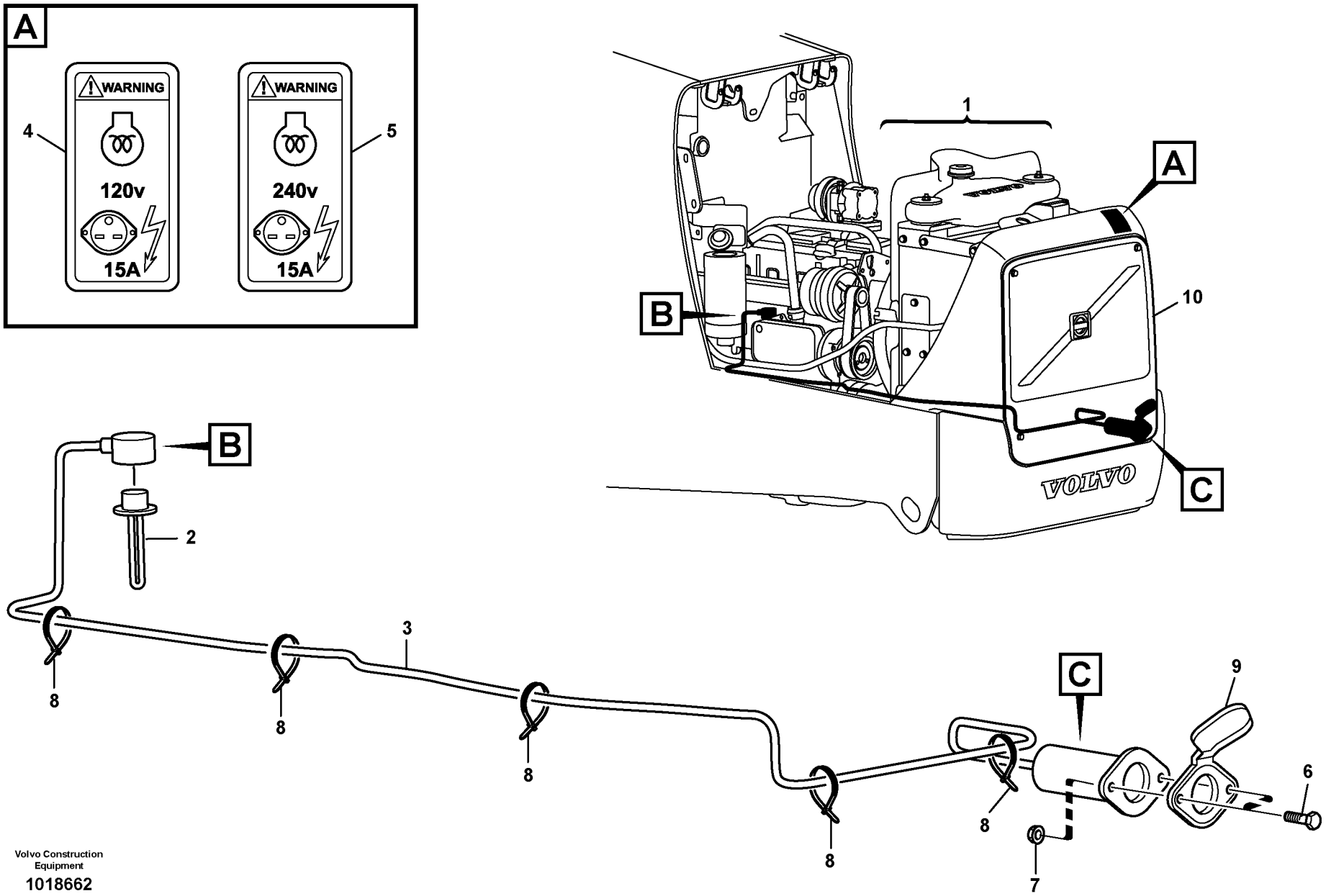

Volvo Construction Equipment

1018662

Fig.	Part No.	Quantity 1	2	3	PS	KIT	Description	Dénomination	Bezeichnung	Denominación	Notes
1		1	1				Engine	Moteur	Verbrenn Motor	Motor	See group 210, Page 43
2	**VOE 11886629**	1					Pre-heater	Prechauffeur	Vorwärmer	Precalentador	120V
2	**VOE 11886630**		1				Pre-heater	Prechauffeur	Vorwärmer	Precalentador	240V
3	**VOE 11141656**	1					Cable	Câble	Kabel	Cable	
3	**VOE 11141657**		1				Cable	Câble	Kabel	Cable	
4	**VOE 11302220**	1					Decal	Autocollant	Aufklebeschild	Calcomania	
5	**VOE 11302230**		1				Decal	Decalcomanie	Abziehbild	Decalcomania	
6	**VOE 13969516**	2	2				Screw	Vis	Schraube	Tornillo	
7	**VOE 975237**	2	2				Lock nut	Contre-ecrou	Sicherungsmutter	Contratuerca	
8	**VOE 14016673**	5	5				Strip Clamp	Ruban Serrage	Kabelbinder	Abraz Cinta	
9	**VOE 11109685**	1	1				Cover	Couvercle	Deckel	Tapa	
10		1	1				Radiator grille	Calandre radia	Kühlergrill	Rejilla radiad	See group 823, Page 421

1	**11891429**	**Precalentamiento del aceite de motor** **Motorölvorwärmung** **Préchauffage huile moteur** **Engine oil preheating**	Catalogue id **20050**	Group **269**
2	**11891430**		Illustr. No **1018662**	Section **100**
3			Issue **VOE 64D9920050**	Page **115**
4				
5				

VOLVO

BL61

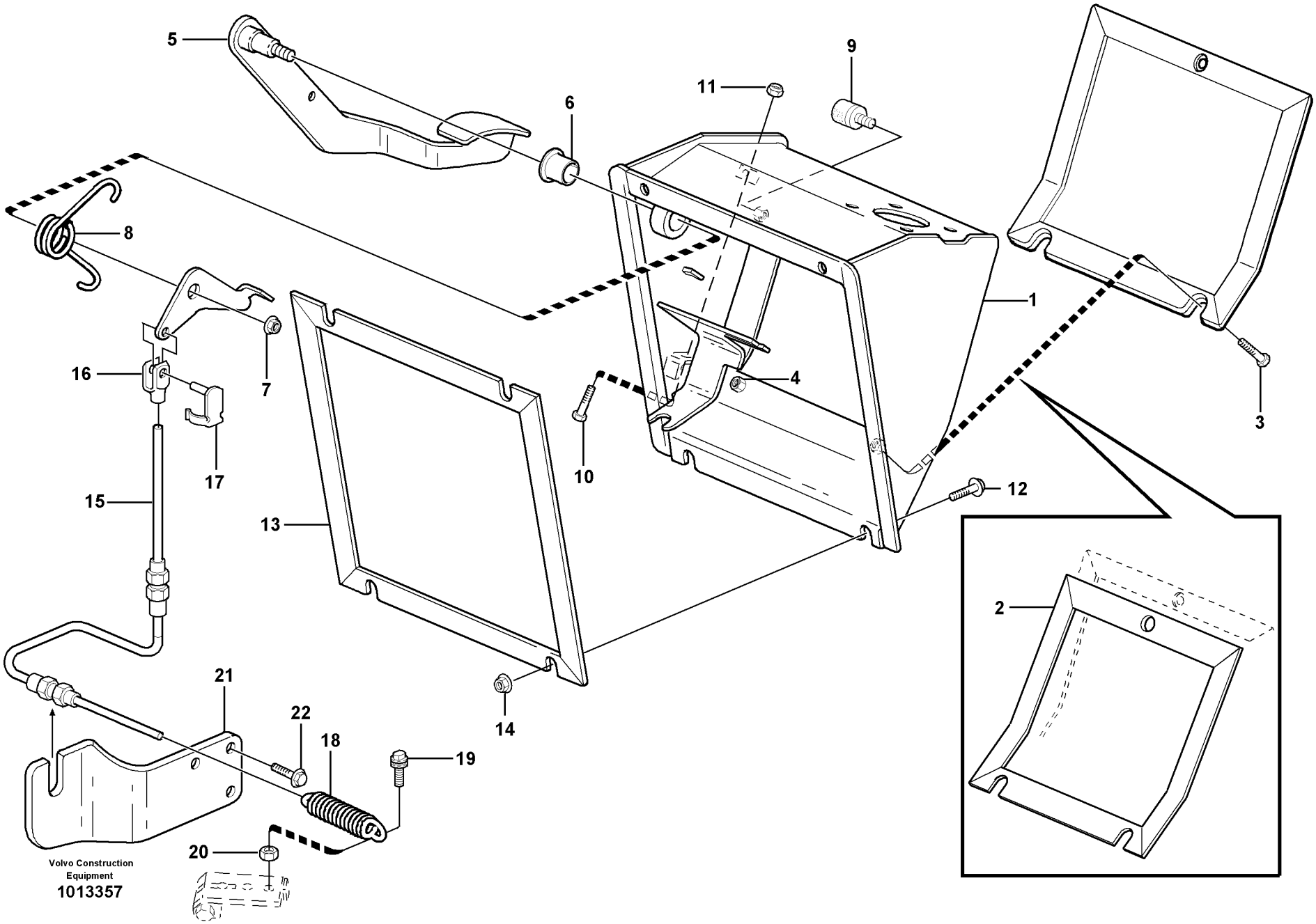
5
6
11
9
8
1
16
7
4
3
10
17
15
12
13
2
14
21
22
18
19
20
Volvo Construction Equipment
1013357

Fig.	Part No.	Quantity 1	2	3	PS	KIT	Description	Dénomination	Bezeichnung	Denominación	Notes
			1		NS		Throttle control	Comm. accelerateur	Gasregler	Mando acelerado	
1	**VOE 11202250**		1				•Box	•Boîte	•Kasten	•Caja	
2	**VOE 11202254**		1				•Gasket	•Joint	•Dichtung	•Junta	
3	**VOE 13947542**		3				•Screw	•Vis	•Schraube	•Tornillo	M6x25
4	**VOE 981269**		3				•Rivet Nut	•Ecrou Rivet	•Nietmutter	•Tuerca Remache	
5	**VOE 11202248**		1				•Accelerator Pedal	•Pédale d'accélérateur	•Gaspedal	•Pedal de acelerador	
6	**VOE 11200936**		2				•Flange Bearing	•Palier Bride	•Flanschlager	•Cojinete Brida	
7	**VOE 13971098**		1				•Flange nut	•Ecrou accouple.	•Bundmutter	•Tuerca embridad	M10
8	**VOE 11202231**		1				•Torsion Spring	•Ressort Torsion	•Drehstabfeder	•Resorte Torsion	
9	**VOE 11200579**		1				•Absorber	•Amortisseur	•Dämpfer	•Amortiguador	
10	**VOE 13946173**		1				•Flange screw	•Vis à bride	•Flanschschraube	•Torn embridado	M8x20
11	**VOE 946036**		1				•Lock nut	•Contre-ecrou	•Sicherungsmutter	•Contratuerca	M8
12	**VOE 13945444**	3	3				Flange screw	Vis à bride	Flanschschraube	Torn embridado	M8x30
13	**VOE 11202435**		1				Gasket	Joint	Dichtung	Junta	
14	**VOE 948645**		2				Flange Lock Nut	Contre écrou bride	Flanschmutter	Contratuer Embr	
15	**VOE 11888222**	1					Throt Cont Ca	Câble d'accélération	Gasregelzug	Cable Acelerad	
16	**VOE 11882487**	1					Fork	Fourche	Gabel	Horquilla	
17	**VOE 11882489**	1					Pin	Clavette	Splint	Pasador	
18	**VOE 11882485**	1					Spring	Ressort	Feder	Muelle	
19	**VOE 11882478**	1					Screw	Vis	Schraube	Tornillo	
20	**VOE 13955781**	1					Nut	Ecrou	Mutter	Tuerca	M6
21	**VOE 11882482**	1					Bracket	Console	Konsole	Consola	
22	**VOE 13946173**	3					Flange screw	Vis à bride	Flanschschraube	Torn embridado	M8x20

1	**11880004**
2	**11298204, 11298208**
3	
4	
5	

Mando del regulador
Reglersteuerung
Commande du régulateur
Regulator control

Catalogue id **20050**	Group **271**
Illustr. No **1013357**	Section **100**
Issue **VOE 64D9920050**	Page **117**

VOLVO

BL61

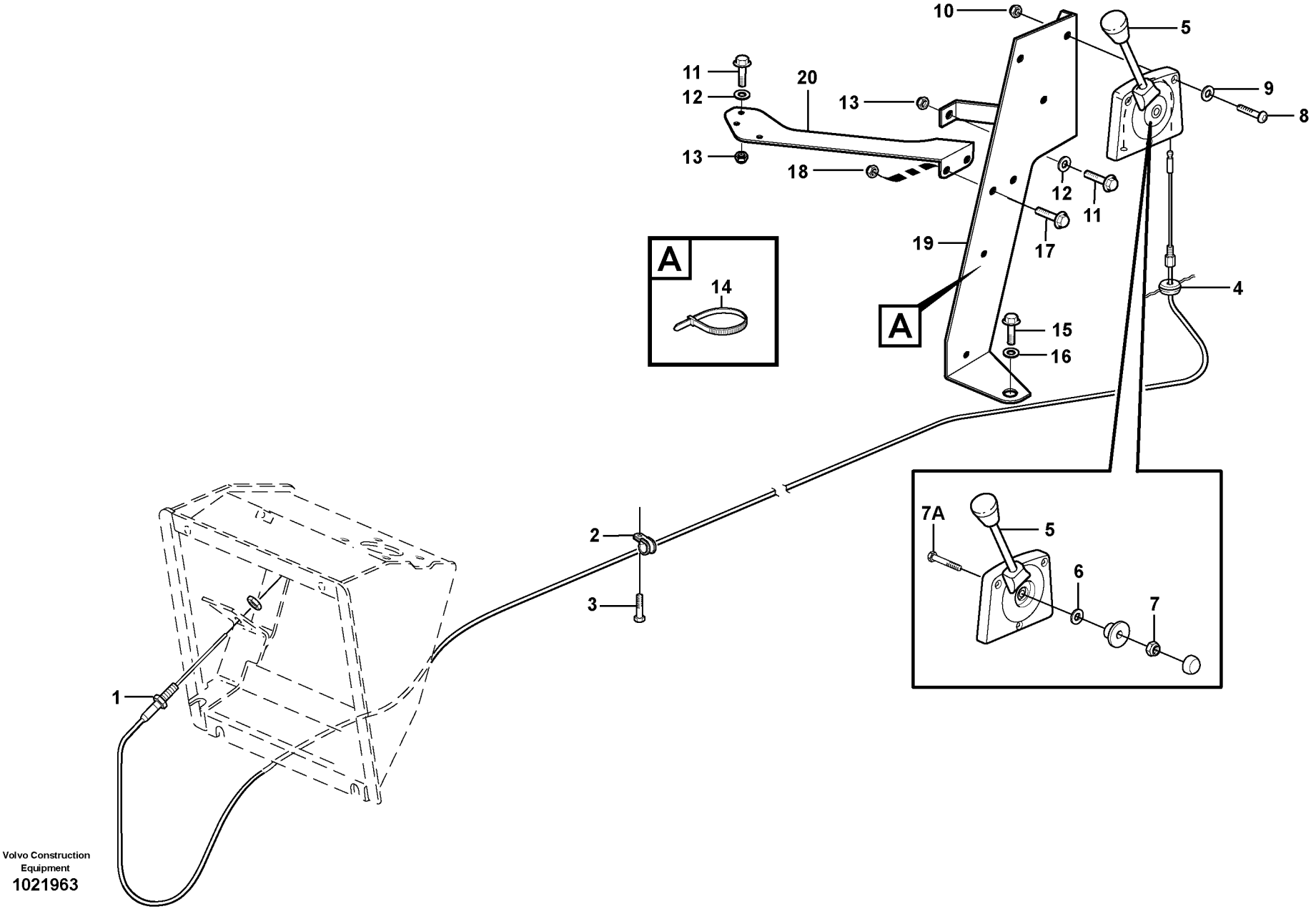

Volvo Construction Equipment
1021963

Fig.	Part No.	Quantity 1	2	3	PS	KIT	Description	Dénomination	Bezeichnung	Denominación	Notes
1	**VOE 11204468**	1	1				Throt Cont Ca	Câble d'accélération	Gasregelzug	Cable Acelerad	(VOE 11200943)
2	**VOE 952623**	1	1				Clamp	Pince Serrage	Klemme	Abrazadera	
3	**VOE 972421**	1	1				Screw	Vis	Schraube	Tornillo	M6x12
4	**VOE 941269**	1	1				Plug	Bouchon	Stopfen	Tapon	
5	**VOE 11202931**	1	1				Hand throttle control	Accélérateur a main	Handgasregler	Mando manual acelerad	
6	**VOE 11712696**	1	1				•Washer	•Rondelle	•Scheibe	•Arandela	
7	**VOE 946035**	1	1				•Lock nut	•Contre-ecrou	•Sicherungsmutter	•Contratuerca	
7A	**VOE 11715202**	1	1				•Screw	•Vis	•Schraube	•Tornillo	
8	**VOE 969793**	3	3				Screw	Vis	Schraube	Tornillo	
9	**VOE 13940090**	3	3				Washer	Rondelle	Scheibe	Arandela	
10	**VOE 13975237**	3	3				Lock nut	Contre-ecrou	Sicherungsmutter	Contratuerca	
11	**VOE 13945444**		4				Flange screw	Vis à bride	Flanschschraube	Torn embridado	
12	**VOE 13960143**		4				Washer	Rondelle	Scheibe	Arandela	
13	**VOE 13945408**		4				Nut	Ecrou	Mutter	Tuerca	
14	**VOE 11039689**		1				Strip Clamp	Ruban Serrage	Kabelbinder	Abraz Cinta	
15	**VOE 13946173**		1				Flange screw	Vis à bride	Flanschschraube	Torn embridado	
16	**VOE 13960141**		1				Washer	Rondelle	Scheibe	Arandela	
17	**VOE 946440**		2				Flange screw	Vis à bride	Flanschschraube	Torn embridado	
18	**VOE 13945408**		2				Nut	Ecrou	Mutter	Tuerca	
19			1		NS		Anchorage	Fixation	Halterung	Fijacion	
20			1		NS		Anchorage	Fixation	Halterung	Fijacion	

1	**11298204**	**Acelerador manual** **Handgas** **Accelerateur manual** **Hand throttle**	Catalogue id **20050**	Group **272**
2	**11298208**		Illustr. No **1021963**	Section **100**
3			Issue **VOE 64D9920050**	Page **119**
4				
5				

VOLVO

BL61

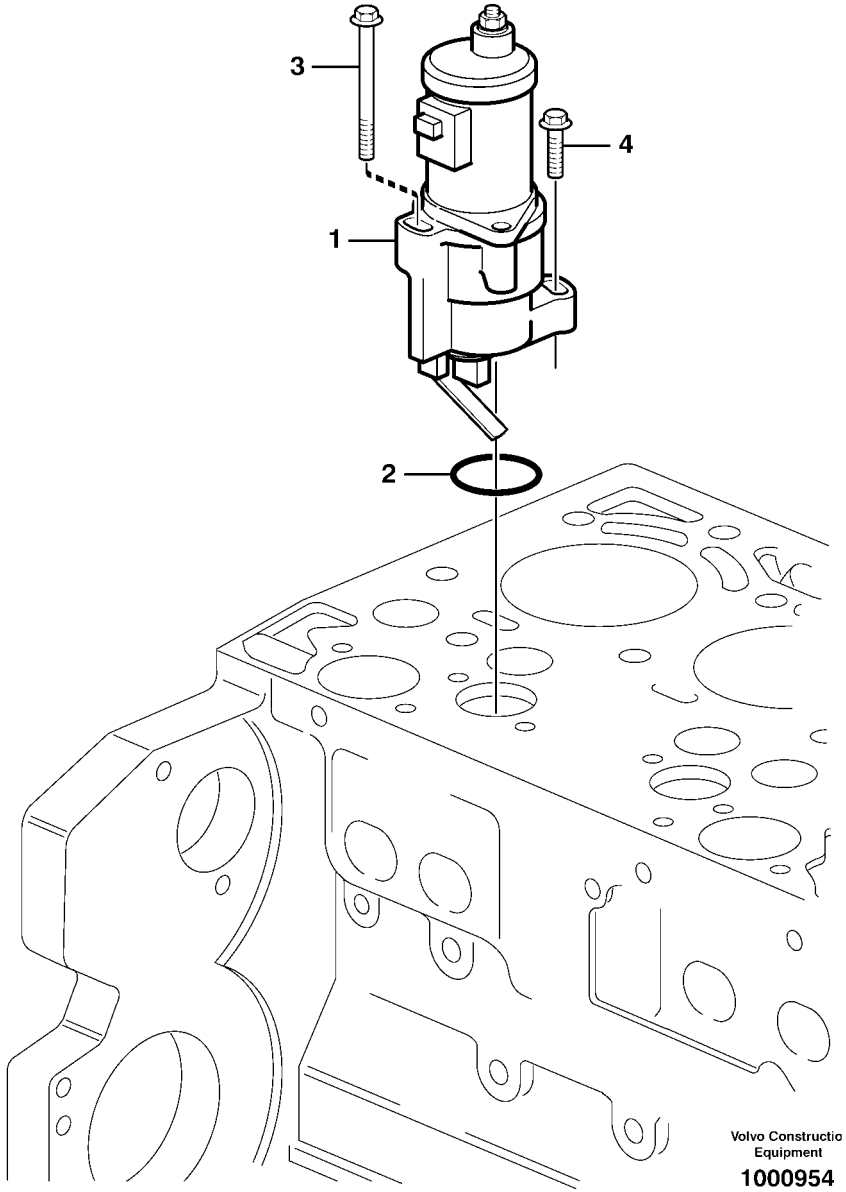
3
4
1
2
Volvo Constructio
Equipment
1000954

Fig.	Part No.	Quantity 1	2	3	PS	KIT	Description	Dénomination	Bezeichnung	Denominación	Notes
1	**VOE 20562765**	1					Stop solenoid	Aimant d'arret	Haltemagnet	Solenoide parad	
2	**VOE 20405728**	1					•Sealing ring	•Bague d'étanchéité	•Runddichtring	•Anillo reten	
3	**VOE 11700269**	1					Screw	Vis	Schraube	Tornillo	
4	**VOE 13949578**	1					Screw	Vis	Schraube	Tornillo	

1		**Parada del motor** **Motorabstellung** **Arret de moteur** **Shutdown device**	Catalogue id **20050**	Group **273**
2			Illustr. No **1000954**	Section **100**
3			Issue **VOE 64D9920050**	Page **121**
4				
5				

VOLVO

BL61

VOLVO

Construction Equipment

GROUP		Section	Page
313	Battery box with fitting parts	100	129
321	Alternator with assembling details	100	131
331	Starter motor with assembling details	100	133
352	Lighting	100	135
352	Work lights	200	137
353	Lighting, rear	100	139
353	License plate lamp 11891001	150	141
353	Position pointer and anchorage, license plate 11298034	200	143
354	Inner lamp	100	145
362	Horn	100	147
362	Rotating beacon	150	149
363	Windshield wiper, front 11298203, 11298204	100	151
363	Windshield wiper, rear 11298204	150	153
363	Windshield washer	200	155
371	Battery cable and main switch	100	157
371	Cable harness, engine	200	161
371	Cable harness, transmission. 11891076, 11891077	250	163
371	Cable Harness Lighting Cab Ext. 11298204, 11298208	300	165
371	Cable Harness cab int. roof	350	167
371	Cable harness chassis	400	169
371	Cable harness rear valve block	450	173
371	Other cables	500	177
371	Cable harness, tail light 11891000, 11891002, 11891050, 11891248, 11891249	600	179
371	Cable harness, tail light 11891246, 11891247	610	181
371	Cable harness, tail light 11891246, 11891247	620	183
371	Cable harness, tail light 11891000, 11891002, 11891050, 11891248, 11891249	630	185
371	Cable harness, panel SER NO -10020	650	187
371	Cable harness, panel	655	191
371	Cable harness, control panel right SER NO -10020	700	195
371	Cable harness, control panel right	710	197
371	Cable harness heater and air conditioning 11298204	750	199
371	Cable harness, hand tool hydraulic 11891333	800	201
372	Electrical distribut.unit and control unit	100	203
380	Instrument panel	100	205
380	Switch	200	207
380	Anti-theft Kit 11891332	250	211
380	Foot switch and electric power outlet	350	213

TABLE DES MATIÈRES

GROUPE		Section	Page
313	Cage batterie avec pièces de montage	100	129
321	Alternateur avec pieces de montage	100	131
331	Démarreur avec pieces de montage	100	133
352	Eclairage	100	135
352	Phare de travail	200	137
353	Eclairage, arriére	100	139
353	Eclairage de plaque 11891001	150	141
353	Indicateur position et fixation, plaque numéro 11298034	200	143
354	Interieure lampe	100	145
362	Avertisseur sonore	100	147
362	Gyrophare	150	149
363	Essuie-vitre, avant 11298203, 11298204	100	151
363	Essuie-vitre, arrière 11298204	150	153
363	Lave - glace	200	155
371	Cable batterie et robinet batterie	100	157
371	Faisceau de câbles, moteur	200	161
371	Faisceau de câles, transmission. 11891076, 11891077	250	163
371	Câblage, éclairage extérieur cabine 11298204, 11298208	300	165
371	Câblage, pavillon cabine	350	167
371	Faisceau de câbles, châssis	400	169
371	Faisceau de câbles, bloc-distributeur arrière	450	173
371	Autres câbles électriques	500	177
371	Faisceau câbles, eclairage, arrière 11891000, 11891002, 11891050, 11891248, 11891249	600	179
371	Faisceau câbles, eclairage, arrière 11891246, 11891247	610	181
371	Faisceau câbles, eclairage, arrière 11891246, 11891247	620	183
371	Faisceau câbles, eclairage, arrière 11891000, 11891002, 11891050, 11891248, 11891249	630	185
371	Faisceau de câbles, pupitre central SER NO -10020	650	187
371	Faisceau de câbles, pupitre central	655	191
371	Faisceau de câbles, tableau de bord côté droit SER NO -10020	700	195
371	Faisceau de câbles, tableau de bord côté droit	710	197
371	Faisceau de câbles, chauffage et refroidissement 11298204	750	199
371	Faisceau câbles, circuit hydr. outil main 11891333	800	201
372	Centrale de électrique	100	203
380	Tableau de bord	100	205
380	Interrupteur	200	207
380	Kit alarme antivol 11891332	250	211
380	Commutateur au pied et prise d'alimentation	350	213

GRUPPE		Abschnitt	Seite
313	Batteriekasten mit Anbauteilen	100	129
321	Generator mit Anbauteilen	100	131
331	Anlasser mit Anbauteilen	100	133
352	Beleuchtung	100	135
352	Arbeitsscheinwerfer	200	137
353	Beleuchtung, hinter	100	139
353	Nummernschildbeleuchtung 11891001	150	141
353	Positionszeiger und Halterung, Kennzeichentafel 11298034	200	143
354	Innen lampe	100	145
362	Signalhorn	100	147
362	Rundum-kennleuchte	150	149
363	Scheibenwischer, vorne 11298203, 11298204	100	151
363	Scheibenwischer, hinten 11298204	150	153
363	Scheibenwaschanlage	200	155
371	Batterieleitung und Batterietrennschalter	100	157
371	Kabelbündel, Motor	200	161
371	Kabelbaum, Getriebe. 11891076, 11891077	250	163
371	Leitung mit Kabinenbeleuchtung außen 11298204, 11298208	300	165
371	Leitung mit Kabine innen Decke	350	167
371	Kabelbaum, Fahrgestell	400	169
371	Kabelbaum hinterer Ventilblock	450	173
371	Übrige Leitungen	500	177
371	Kabelbaum, Beleuchtung, hinten 11891000, 11891002, 11891050, 11891248, 11891249	600	179
371	Kabelbaum, Beleuchtung, hinten 11891246, 11891247	610	181
371	Kabelbaum, Beleuchtung, hinten 11891246, 11891247	620	183
371	Kabelbaum, Beleuchtung, hinten 11891000, 11891002, 11891050, 11891248, 11891249	630	185
371	Kabelbäume, Mitteltafel SER NO -10020	650	187
371	Kabelbäume, Mitteltafel	655	191
371	Kabelbaum, rechte Bedientafel SER NO -10020	700	195
371	Kabelbaum, rechte Bedientafel	710	197
371	Kabelbaum, Heizung und Kühlung 11298204	750	199
371	Kabelbaum, Handwerkzeughydraulik 11891333	800	201
372	Elektrozentrale	100	203
380	Armaturenbrett	100	205
380	Schalter	200	207
380	Diebstahlalarm-Kit 11891332	250	211
380	Fußschalter und Stromanschluss	350	213

INDICE

GRUPO		Sección	Página
313	Caja de batería con accesorios de montaje	100	129
321	Alternador con assesorios de montage	100	131
331	Motor de arranque con assesorios de montaje	100	133
352	Alumbrado	100	135
352	Alumbrado de trabajo	200	137
353	Alumbrado, trasero	100	139
353	Alumbrado de matrícula 11891001	150	141
353	Indicador de posición y fijación, matrícula 11298034	200	143
354	Interior lampare	100	145
362	Bocina	100	147
362	Faro de advertencia giratorio	150	149
363	Limpiaparabrisas, delantero 11298203, 11298204	100	151
363	Limpiaparabrisas, trasero 11298204	150	153
363	Lavaparabrisas	200	155
371	Cable de bateria y desconectador bateria	100	157
371	Haz de cables, motor	200	161
371	Manojo de cable, transmisión. 11891076, 11891077	250	163
371	Haz de cables de alumbrado exterior de la cabina 11298204, 11298208	300	165
371	Haz de cables en el techo interior de la cabina	350	167
371	Haz de cables chasis	400	169
371	Haz de cables del bloque de ventiladores traseros	450	173
371	Otros cables	500	177
371	Manojo cables, trasero 11891000, 11891002, 11891050, 11891248, 11891249	600	179
371	Manojo cables, trasero 11891246, 11891247	610	181
371	Manojo cables, trasero 11891246, 11891247	620	183
371	Manojo cables, trasero 11891000, 11891002, 11891050, 11891248, 11891249	630	185
371	Haz de cables, panel central SER NO -10020	650	187
371	Haz de cables, panel central	655	191
371	Haz de cables, panel de mandos derecho SER NO -10020	700	195
371	Haz de cables, panel de mandos derecho	710	197
371	Cableado de equipo de calefacción y refrigeración 11298204	750	199
371	Mazo de cables, hidráulica de herramienta manual 11891333	800	201
372	Central eléctrica	100	203
380	Panel de instrumentos	100	205
380	Interruptor	200	207
380	Antirrobo 11891332	250	211
380	Interruptor de pie y toma de corriente	350	213

VOLVO

Construction Equipment

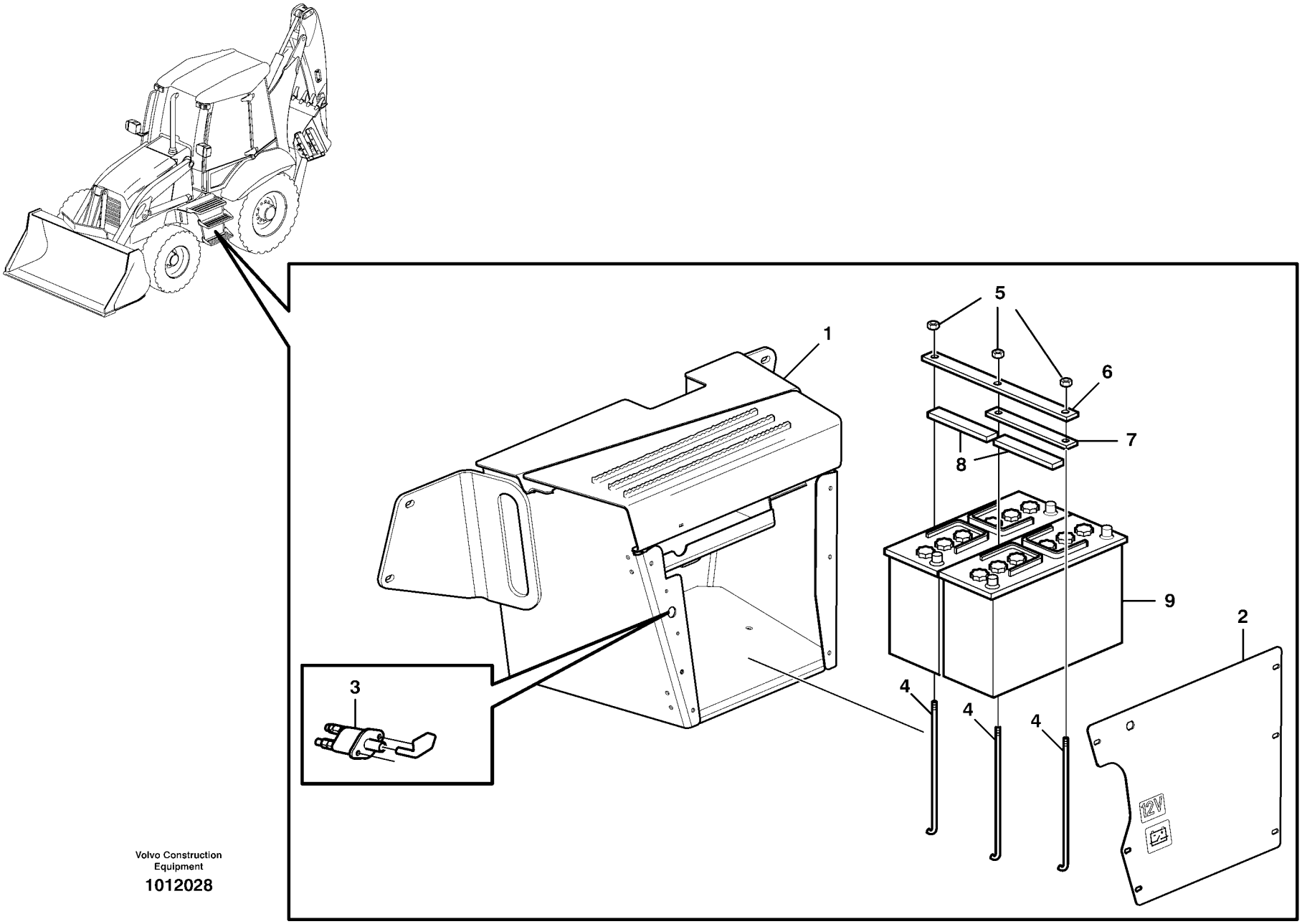

Volvo Construction Equipment

1012028

Fig.	Part No.	Quantity 1	2	3	PS	KIT	Description	Dénomination	Bezeichnung	Denominación	Notes
1		1	1				Tool Box	Boite a outils	Werkzeugkasten	Caja herramientas	See group 896, Page 487
2		1	1				Hatch	Trappe	Luke	Trampilla	See group 896, Page 487
3		1	1				Main Switch	Coupe-circuit pri.	Hauptschalter	Interr Maestro	See group 371, Page 157
4	**VOE 11883321**	2	3				Stay	Tirant	Strebe	Barra	
5	**VOE 13971098**	2	3				Flange nut	Ecrou accouple.	Bundmutter	Tuerca embridad	
6	**VOE 11883320**		1				Reinforcement	Renfort	Verstärkung	Refuerzo	
7	**VOE 11883584**	1					Reinforcement	Renfort	Verstärkung	Refuerzo	
8	**VOE 11883599**	1	2				Rubber Block	Bloc Caoutchouc	Gummiblock	Bloque Goma	
9		1	2				Battery	Batterie	Batterie	Bateria	See group 371, Page 157

1	**11891392**	**Caja de batería con accesorios de montaje** **Batteriekasten mit Anbauteilen** **Cage batterie avec pièces de montage** **Battery box with fitting parts**	Catalogue id **20050**	Group **313**
2	**11891391**		Illustr. No **1012028**	Section **100**
3			Issue **VOE 64D9920050**	Page **129**
4				
5				

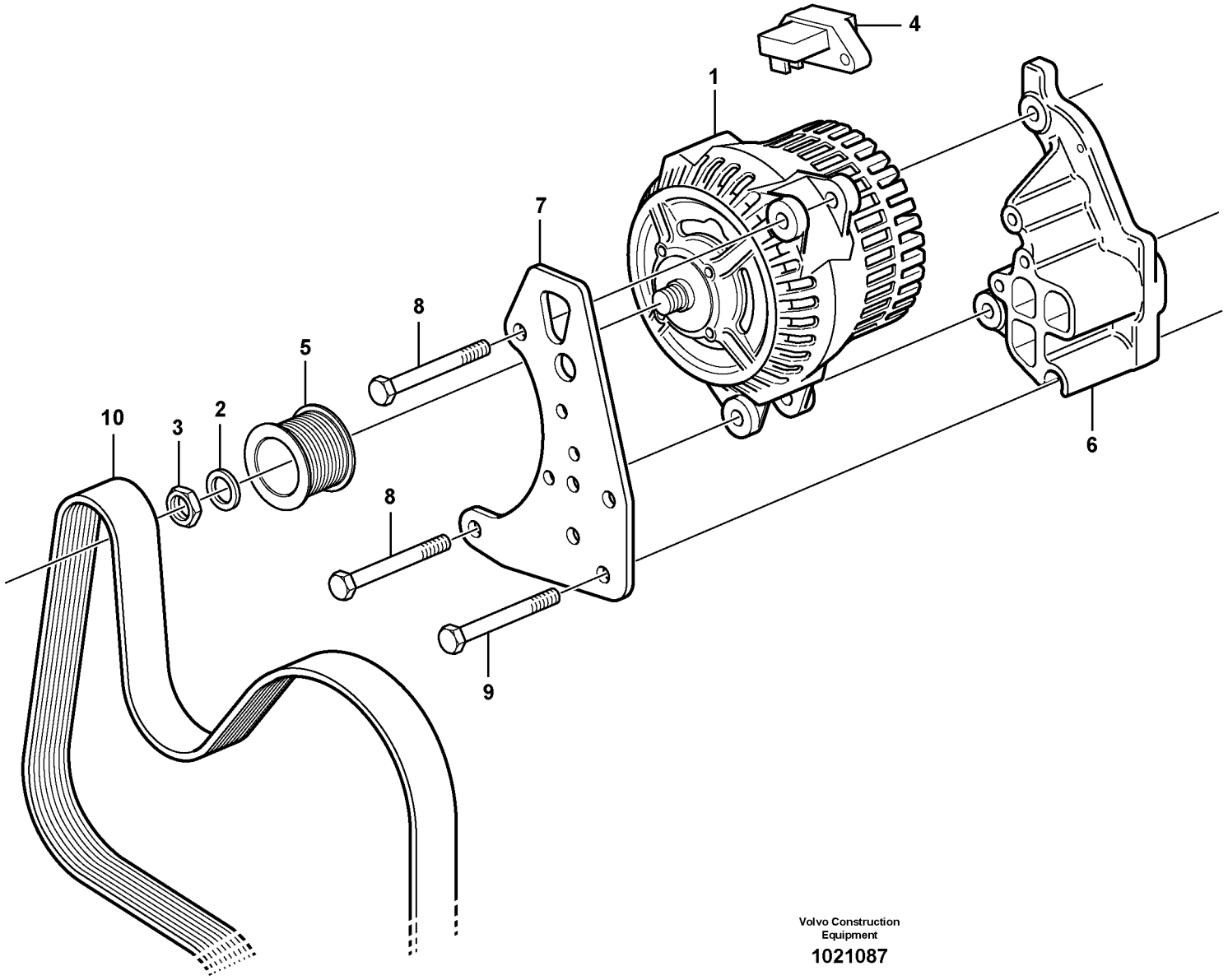

Volvo Construction Equipment

1021087

Fig.	Part No.	Quantity 1	2	3	PS	KIT	Description	Dénomination	Bezeichnung	Denominación	Notes
1	**VOE 20509446**	1					Alternator	Alternateur	Lichtmaschine	Alternador	
2	**VOE 20549886**	1					•Spring Washer	•Rondelle élastique	•Federscheibe	•Arandela flexible	
3	**VOE 20441521**	1					•Nut	•Ecrou	•Mutter	•Tuerca	
4	**VOE 20509482**	1					•Voltage regulator	•Regulateur,tension	•Spannungregler	•Regulador tension	
5	**VOE 20460102**	1					Pulley	Poulie	Z-riemenscheibe	Polea Corr Dent	
6	**VOE 20560564**	1					Bracket	Console	Konsole	Ménsula	
7	**VOE 20567447**	1					Plate	Plaque	Platte	Placa	
8	**VOE 20460106**	2					Screw	Vis	Schraube	Tornillo	
9	**VOE 20555084**	4					Screw	Vis	Schraube	Tornillo	
10		1					V-belt	Courroie Trape.	Keilriemen	Correa Trapez	See group 263, Page 113

1	
2	
3	
4	
5	

Alternador con assesorios de montage
Generator mit Anbauteilen
Alternateur avec pieces de montage
Alternator with assembling details

Catalogue id	Group
20050	**321**
Illustr. No **1021087**	Section **100**
Issue **VOE 64D9920050**	Page **131**

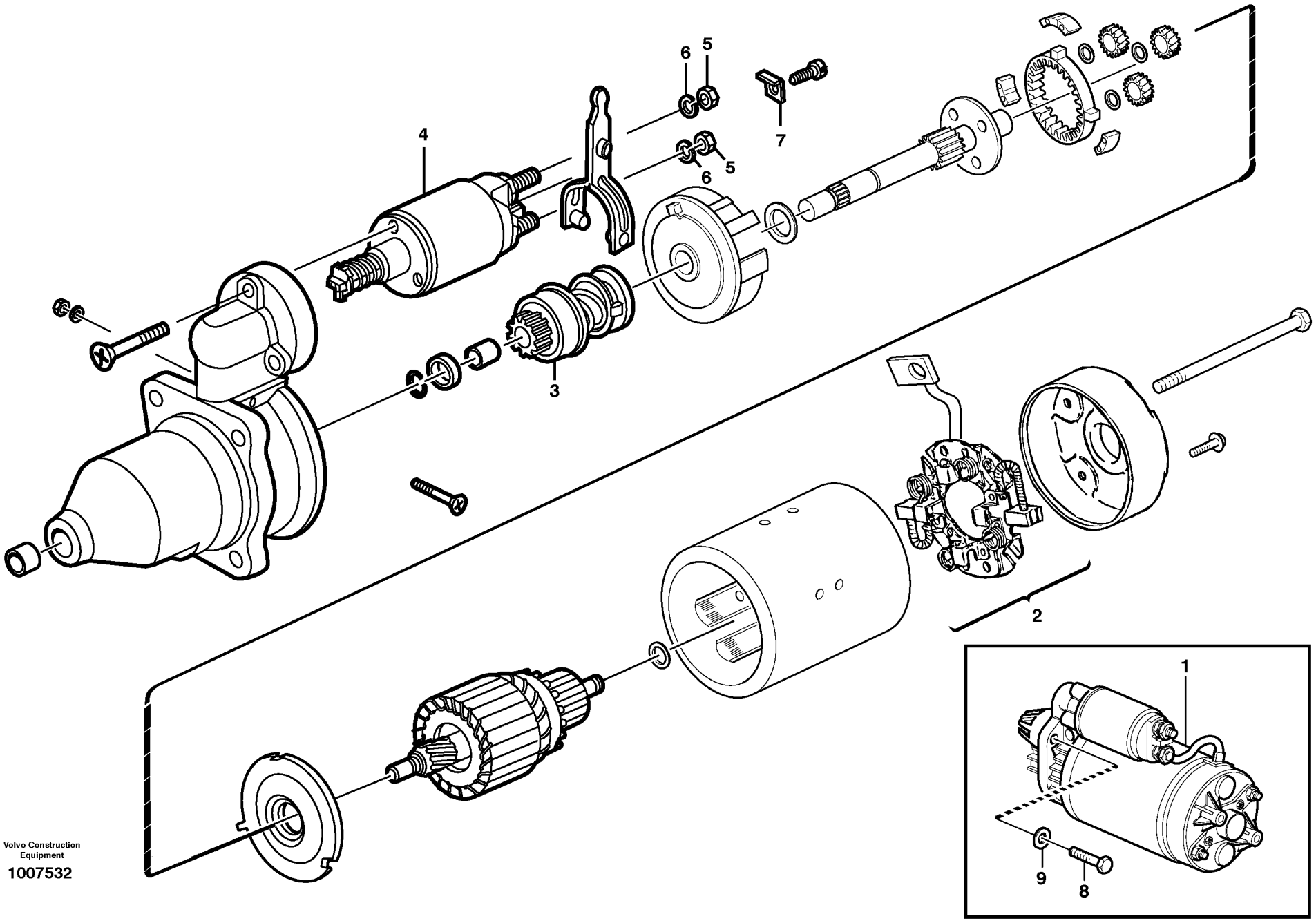

Volvo Construction Equipment

1007532

Fig.	Part No.	Quantity 1	2	3	PS	KIT	Description	Dénomination	Bezeichnung	Denominación	Notes
1	**VOE 20405828**	1					Starter Motor	Demarreur	Anlasser	Motor de arranque	
2	**VOE 20460117**	1					•Brush Retainer	•Porte-balai	•Bürstenhalter	•Portaescobilla	
3	**VOE 20460116**	1					•Starter Pinion	•Pigno.demarreur	•Anlasserritzel	•Pinon Motor Arr.	
4	**VOE 20460115**	1					•Relay	•Relais	•Relais	•Rele	
5	**VOE 20460118**	2					•Hexagon Nut	•Ecrou Hexagonal	•Sechskantmutter	•Tuerca Hexagon	
6	**VOE 20460119**	2					•Lock Washer	•Rondel.verroui.	•Sicher Scheibe	•Arandel Segurid.	
7	**VOE 20460120**	1					•Clamp	•Pince Serrage	•Klemme	•Abrazadera	
8	**VOE 20412751**	3					Screw	Vis	Schraube	Tornillo	ENG - 01099467
	VOE 20593357	3					Hexagon screw	Vis tête hexagonale	Sechskantschraube	Tornillo hexago	ENG 01099468 -
9	**VOE 973495**	3					Washer	Rondelle	Scheibe	Arandela	

1		**Motor de arranque con assesorios de montaje** **Anlasser mit Anbauteilen** **Démarreur avec pieces de montage** **Starter motor with assembling details**		Catalogue id **20050**	Group **331**
2				Illustr. No **1007532**	Section **100**
3				Issue **VOE 64D9920050**	Page **133**
4					
5					

VOLVO

BL61

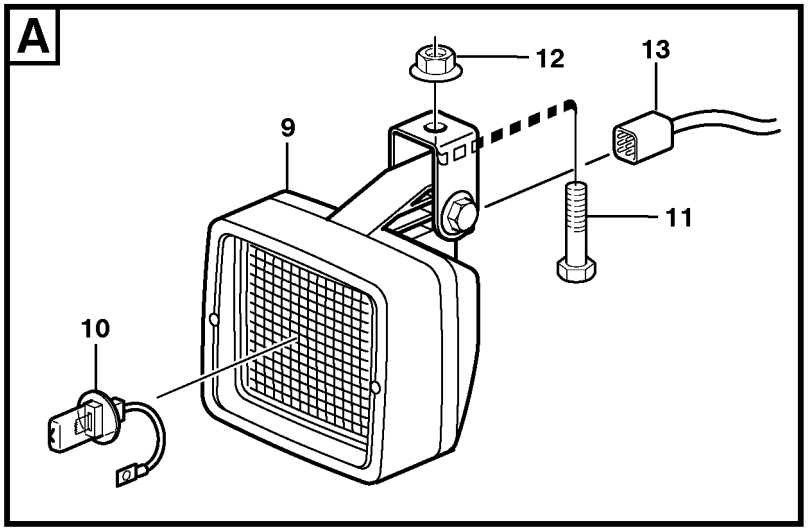

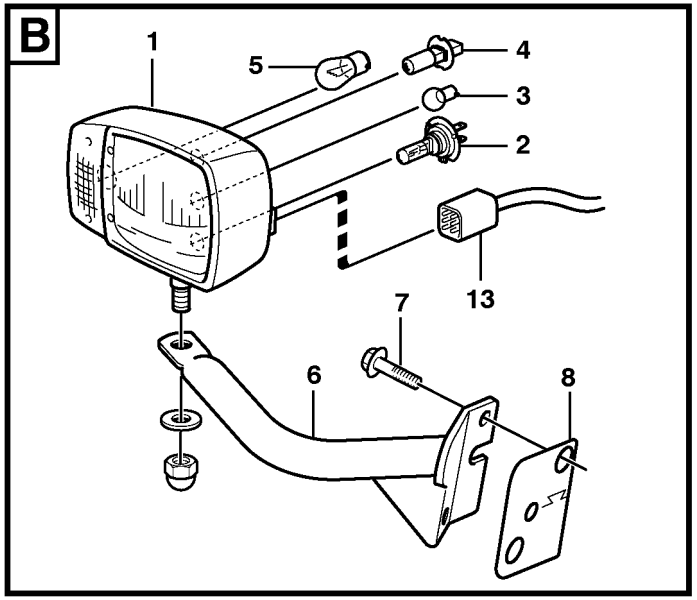

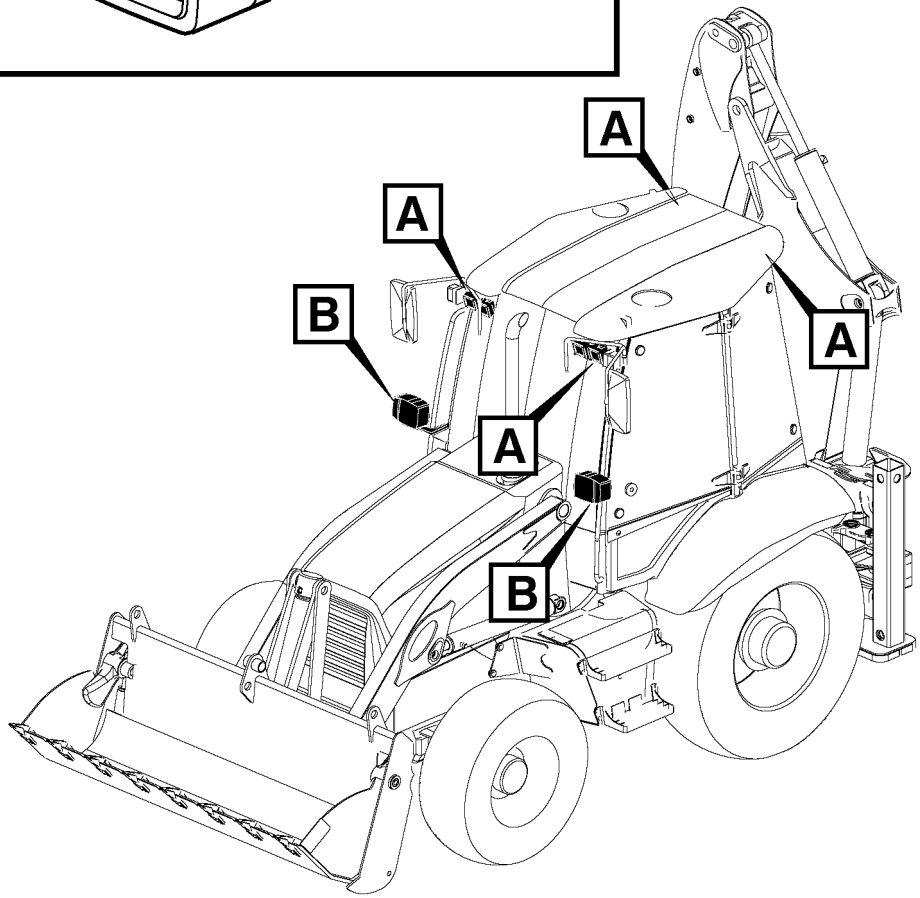

Volvo Construction Equipment

1000407

Fig.	Part No.	Quantity 1	2	3	4	5	PS	KIT	Description	Dénomination	Bezeichnung	Denominación	Notes
1	**VOE 11881088**	1		1	1				Headlamp	Phare	Scheinwerfer	Faro	LH
1	**VOE 11882263**	1		1	1				Headlamp	Phare	Scheinwerfer	Faro	RH
1	**VOE 11882265**		1						Headlamp	Phare	Scheinwerfer	Faro	LH
1	**VOE 11882266**		1						Headlamp	Phare	Scheinwerfer	Faro	RH
2	**VOE 981465**	1	1	1	1				•Bulb	•Ampoule	•Glühlampe	•Bombilla	55W
3	**VOE 965830**	1	1	1	1				•Bulb	•Ampoule	•Glühlampe	•Ampolla	4W
4	**VOE 944265**	1	1	1	1				•Bulb	•Ampoule	•Glühlampe	•Bombilla	55W
5	**VOE 965826**	1	1	1	1				•Bulb	•Ampoule	•Glühlampe	•Bombilla	(VOE 11709717)
6	**VOE 11201862**	1	1	1	1				Anchorage	Fixation	Halterung	Fijacion	LH S/N - 10336
	VOE 11204561	1	1	1	1				Anchorage	Fixation	Halterung	Fijacion	LH S/N 10337 -
6	**VOE 11201861**	1	1	1	1				Anchorage	Fixation	Halterung	Fijacion	RH S/N - 10336
	VOE 11204560	1	1	1	1				Anchorage	Fixation	Halterung	Fijacion	RH S/N 10337 -
7	**VOE 13946173**	4	4	4	4				Flange screw	Vis à bride	Flanschschraube	Torn embridado	
8	**VOE 11203861**	2	2	2	2				Gasket	Joint	Dichtung	Junta	
9	**VOE 11039856**					4			Work Lamp	Lampe Travail	Arbeitslampe	Lampara Trabajo	
10	**VOE 944265**					1			•Bulb	•Ampoule	•Glühlampe	•Bombilla	
11	**VOE 946440**					4			Flange screw	Vis à bride	Flanschschraube	Torn embridado	
12	**VOE 948645**					4			Flange Lock Nut	Contre écrou bride	Flanschmutter	Contratuer Embr	
13		1	1	1	1	1			Wire harness	Faisceau electrique	Kabelbaum	Manojo cables	See group 371, Page 179
	VOE 4881438	6	6	6	6				Strip Clamp	Ruban Serrage	Kabelbinder	Abraz Cinta	

1	**11891246, 11891002**
2	**11891247, 11891248**
3	**11891249**
4	**11891000, 11891050**
5	**11880004**

Alumbrado
Beleuchtung
Eclairage
Lighting

Catalogue id **20050**	Group **352**
Illustr. No **1000407**	Section **100**
Issue **VOE 64D9920050**	Page **135**

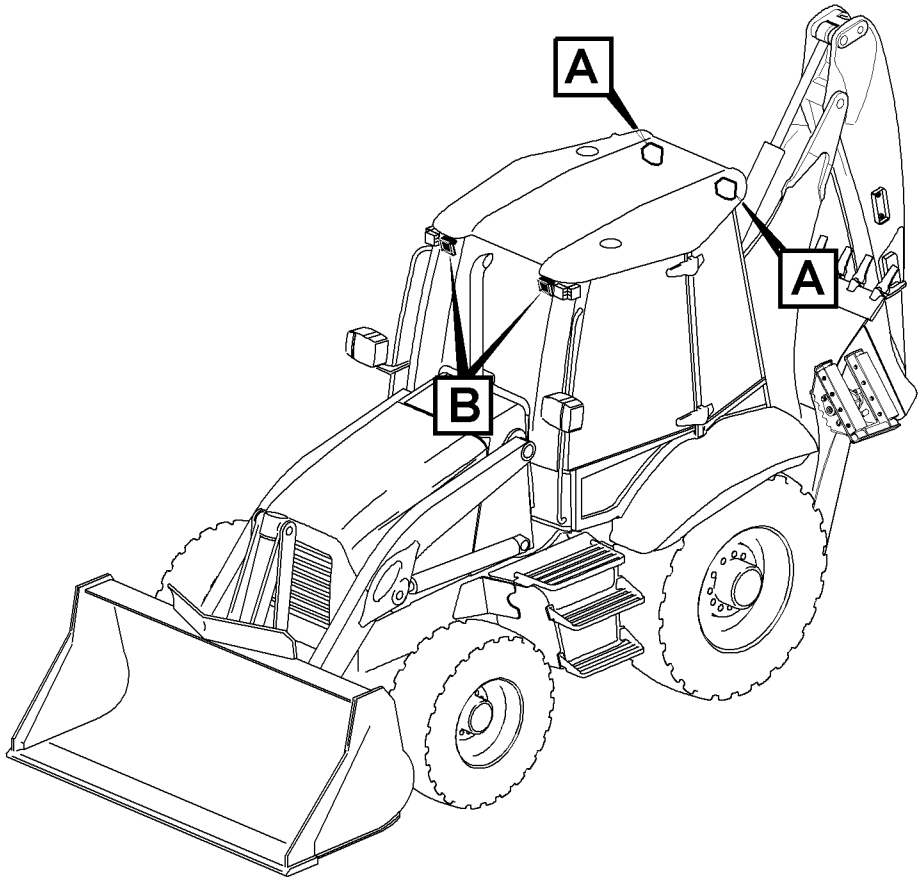

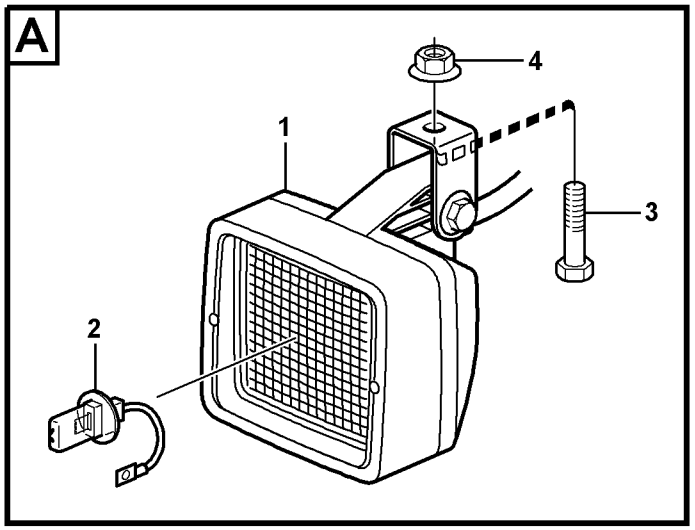

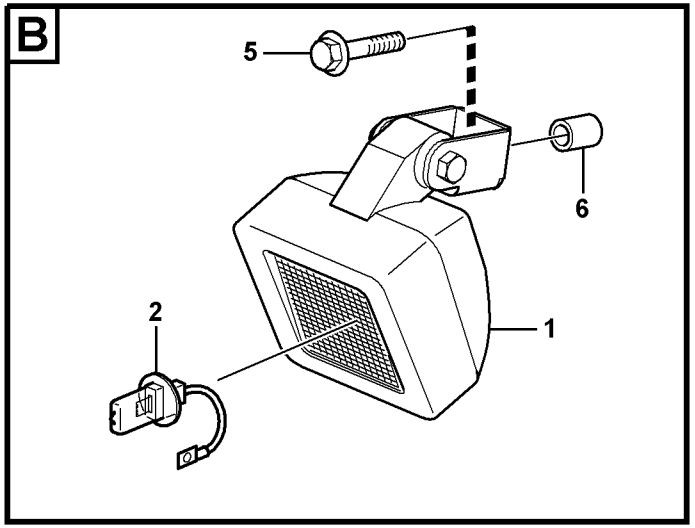

Volvo Construction Equipment
1013359

Fig.	Part No.	Quantity 1	2	3	PS	KIT	Description	Dénomination	Bezeichnung	Denominación	Notes
1	**VOE 11039856**	2	2				Work Lamp	Lampe Travail	Arbeitslampe	Lampara Trabajo	
2	**VOE 944265**	1	1				•Bulb	•Ampoule	•Glühlampe	•Bombilla	
3	**VOE 13946173**	2	2				Flange screw	Vis à bride	Flanschschraube	Torn embridado	
4	**VOE 948645**	2	2				Flange Lock Nut	Contre écrou bride	Flanschmutter	Contratuer Embr	
5	**VOE 13947760**		2				Flange screw	Vis à bride	Flanschschraube	Torn embridado	11298208
6	**VOE 930434**		2				Spacer Ring	Bagu.entretoise	Abstandring	Anillo Dist	11298208

1	**11891291(REAR)**	**Alumbrado de trabajo** **Arbeitsscheinwerfer** **Phare de travail** **Work lights**	Catalogue id **20050**	Group **352**
2	**11891292(FORW)**		Illustr. No **1013359**	Section **200**
3			Issue **VOE 64D9920050**	Page **137**
4				
5				

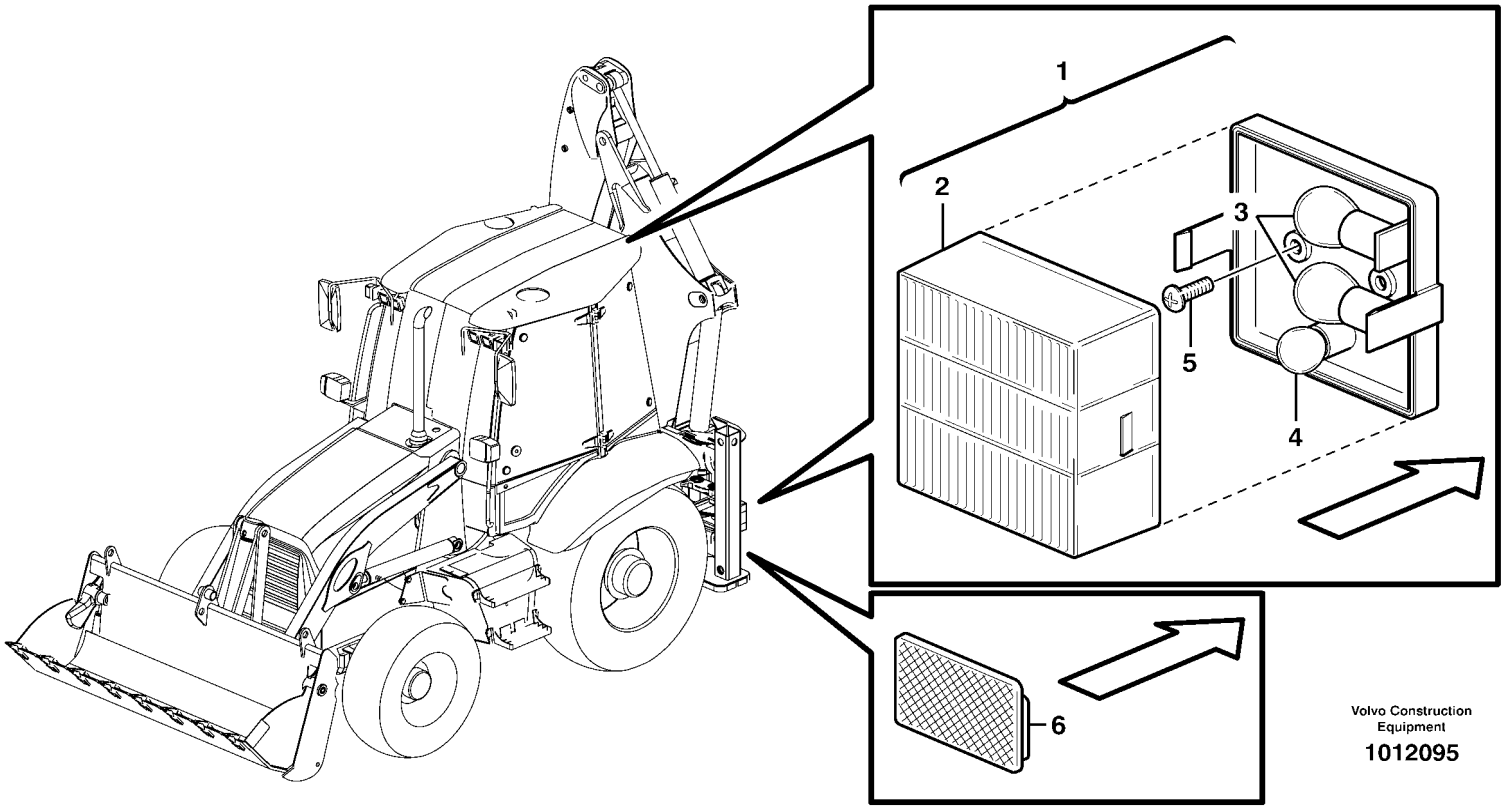

Volvo Construction Equipment

1012095

Fig.	Part No.	Quantity 1	2	3	4	5	PS	KIT	Description	Dénomination	Bezeichnung	Denominación	Notes
1	**VOE 11882270**	2	2	2	2				Tail Light	Feu Ar	Heckleuchte	Piloto Trasero	SER NO -10020
1	**VOE 11885934**					2			Tail Light	Feu Ar	Heckleuchte	Piloto Trasero	
2	**VOE 11988186**	1	1	1	1	1			•Lens	•Verre	•Lichtscheibe	•Lente	
3	**VOE 965826**	2	2	2	2	2			•Bulb	•Ampoule	•Glühlampe	•Bombilla	21W
4	**VOE 946777**	1	1	1	1	1			•Bulb	•Ampoule	•Glühlampe	•Bombilla	10W
5	**VOE 969408**	4	4	4	4				6-pt skt screw	Vis creuse de 6	Hohlschraube	Racor 6-dientes	
6	**VOE 11883216**	2	2	2	2				Reflector	Catadioptre	Reflektor	Reflector	

1	**11891000, 11891002**
2	**11891246, 11891247**
3	**11891248, 11891249**
4	**11891050**
5	**11298204, 11298208**

Alumbrado, trasero
Beleuchtung, hinter
Eclairage, arriére
Lighting, rear

Catalogue id **20050**	Group **353**
Illustr. No **1012095**	Section **100**
Issue **VOE 64D9920050**	Page **139**

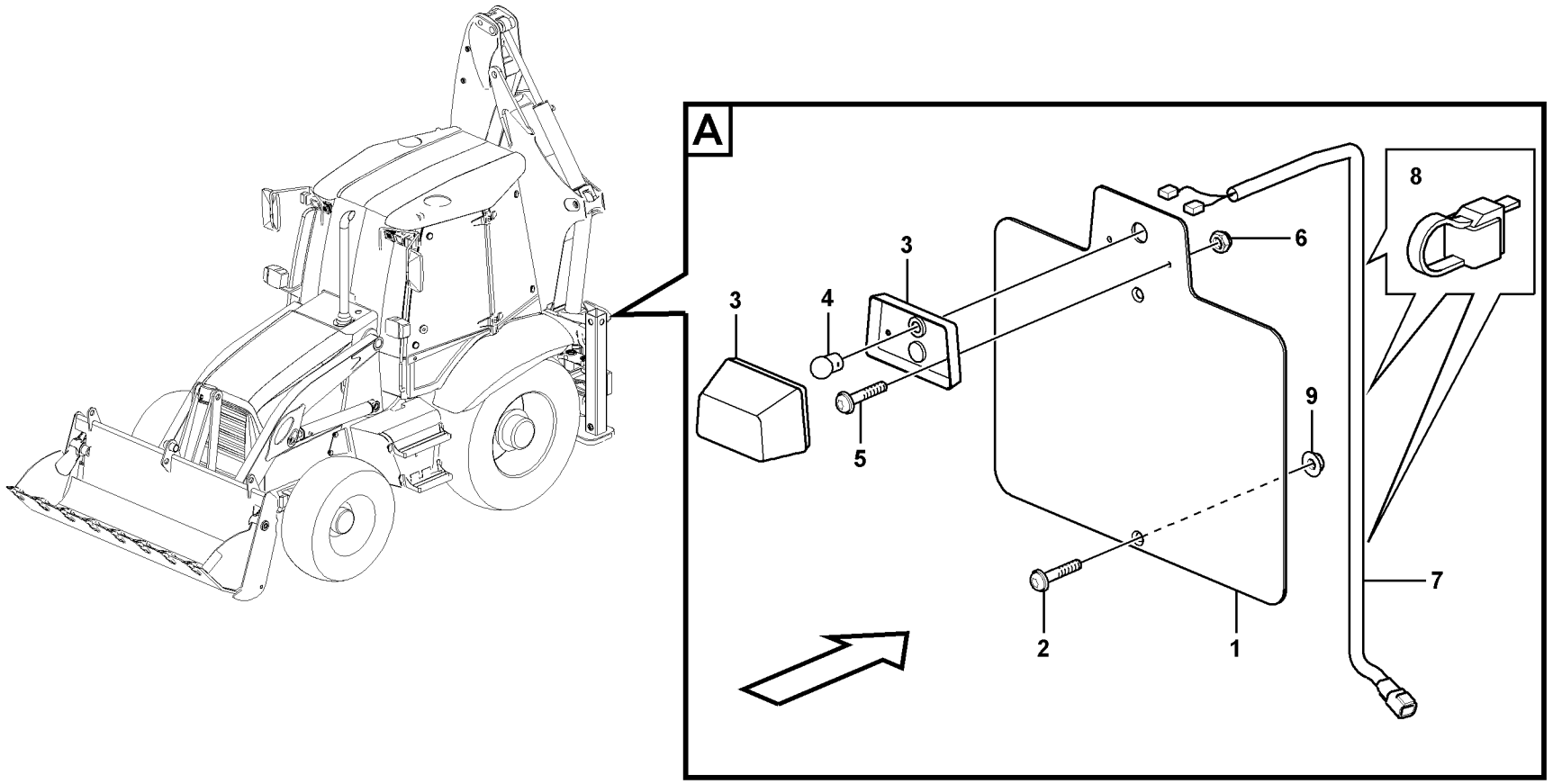

Volvo Construction Equipment
1012595

Fig.	Part No.	Quantity 1	2	3	PS	KIT	Description	Dénomination	Bezeichnung	Denominación	Notes
1	**VOE 11883322**	1					Bracket	Console	Konsole	Consola	
2	**VOE 969817**	2					Screw	Vis	Schraube	Tornillo	
3	**VOE 11147756**	1					Sign Lamp	Eclairag.plaque	Kennzeichenleuchte	Lampara Letrero	(VOE 11883342)
4	**VOE 946777**	1					Bulb	Ampoule	Glühlampe	Bombilla	
5	**VOE 969513**	2					Screw	Vis	Schraube	Tornillo	
6	**VOE 13975237**	2					Lock nut	Contre-ecrou	Sicherungsmutter	Contratuerca	
7	**VOE 11883351**	1					Wire harness	Faisceau electrique	Kabelbaum	Manojo cables	
8	**VOE 980883**	3					Strip Clamp	Ruban Serrage	Kabelbinder	Abraz Cinta	
9	**VOE 13949278**	2					Flange Lock Nut	Contre écrou bride	Flanschmutter	Contratuer Embr	

1		**Alumbrado de matrícula** **Nummernschildbeleuchtung** **Eclairage de plaque** **License plate lamp**	Catalogue id **20050**	Group **353**
2			Illustr. No **1012595**	Section **150**
3			Issue **VOE 64D9920050**	Page **141**
4				
5		**11891001**		

VOLVO

BL61

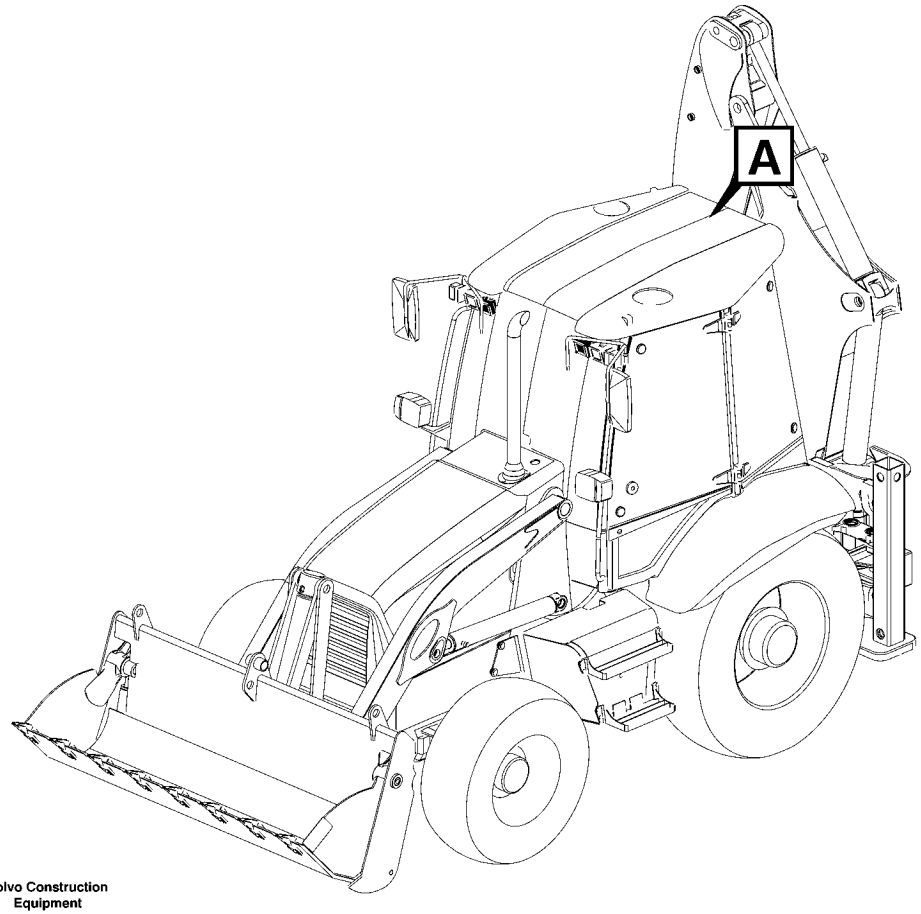

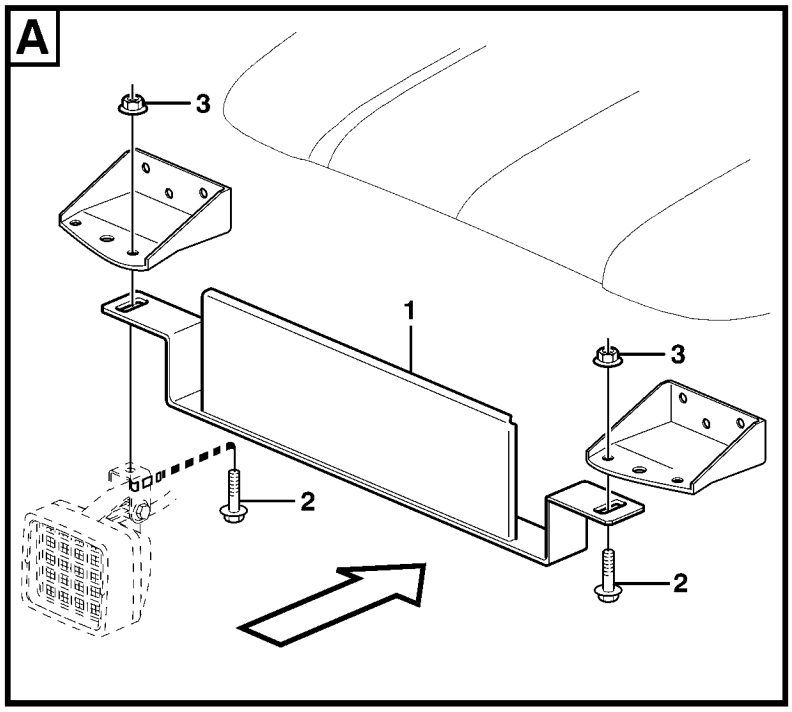

Volvo Construction Equipment

1012625

Fig.	Part No.	Quantity 1	2	3	PS	KIT	Description	Dénomination	Bezeichnung	Denominación	Notes
1	**VOE 11202709**	1					Sign Retainer	Porte-plaque	Dachschildhalt	Soporte Letrero	
2	**VOE 13946173**	2					Flange screw	Vis à bride	Flanschschraube	Torn embridado	
3	**VOE 948645**	2					Flange Lock Nut	Contre écrou bride	Flanschmutter	Contratuer Embr	

1		**Indicador de posición y fijación, matrícula** **Positionszeiger und Halterung, Kennzeichentafel** **Indicateur position et fixation, plaque numéro** **Position pointer and anchorage, license plate**	Catalogue id **20050**	Group **353**
2			Illustr. No **1012625**	Section **200**
3				
4			Issue **VOE 64D9920050**	Page **143**
5		**11298034**		

VOLVO

BL61

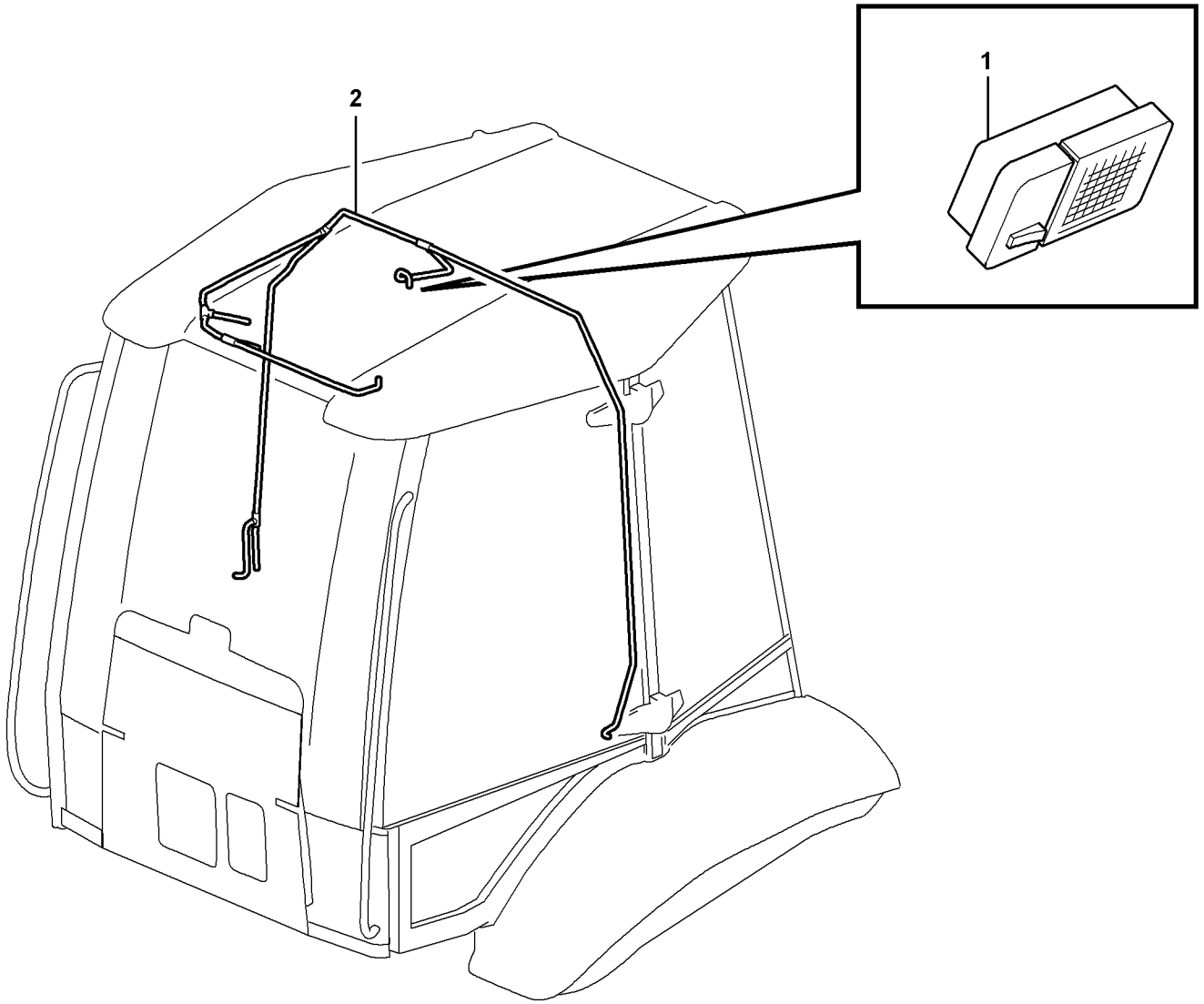

Volvo Construction Equipment
1013286

Fig.	Part No.	Quantity 1	2	3	PS	KIT	Description	Dénomination	Bezeichnung	Denominación	Notes
1	**VOE 11200915**	1					Interior Lamp	Lampe Inter.	Innenleuchte	Lamp Interior	
	VOE 11709768	1					•Bulb	•Ampoule	•Glühlampe	•Ampolla	
2		1					Wire harness	Faisceau electrique	Kabelbaum	Manojo cables	See group 371, Page 167

1		**Interior lampare** **Innen lampe** **Interieure lampe** **Inner lamp**	Catalogue id **20050**	Group **354**
2			Illustr. No **1013286**	Section **100**
3			Issue **VOE 64D9920050**	Page **145**
4				
5				

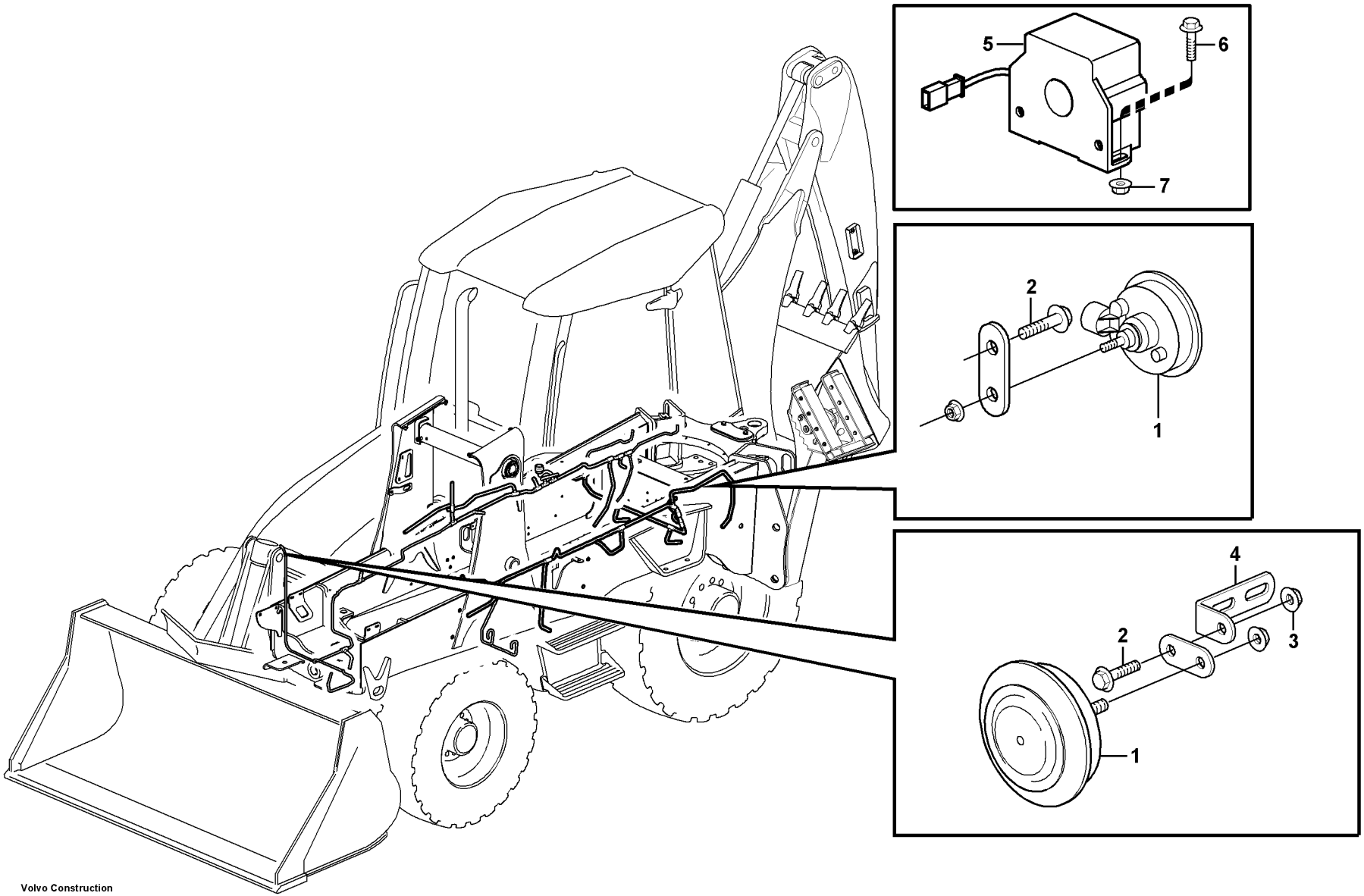

Volvo Construction Equipment

1013288

Fig.	Part No.	Quantity 1	2	3	PS	KIT	Description	Dénomination	Bezeichnung	Denominación	Notes
1	**VOE 11884428**	2					Horn	Avertisseur sonore	Signalhorn	Avisador sonoro	S/N - 10149
	VOE 11305113	2					Horn	Avertisseur	Signalhorn	Bocina	S/N 10150 -
2	**VOE 13946173**	2					Flange screw	Vis à bride	Flanschschraube	Torn embridado	
3	**VOE 948645**	2					Flange Lock Nut	Contre écrou bride	Flanschmutter	Contratuer Embr.	
4	**VOE 13965558**	1					Bracket	Console	Konsole	Consola	
5	**VOE 11886215**		1				Alarm	Alarme	Alarm Richtung	Alarma	
6	**VOE 13946934**		2				Screw	Vis	Schraube	Tornillo	
7	**VOE 13945407**		2				Nut	Ecrou	Mutter	Tuerca	

1	**11880004**	**Bocina** **Signalhorn** **Avertisseur sonore** **Horn**	Catalogue id **20050**	Group **362**
2	**11891377**		Illustr. No **1013288**	Section **100**
3			Issue **VOE 64D9920050**	Page **147**
4				
5				

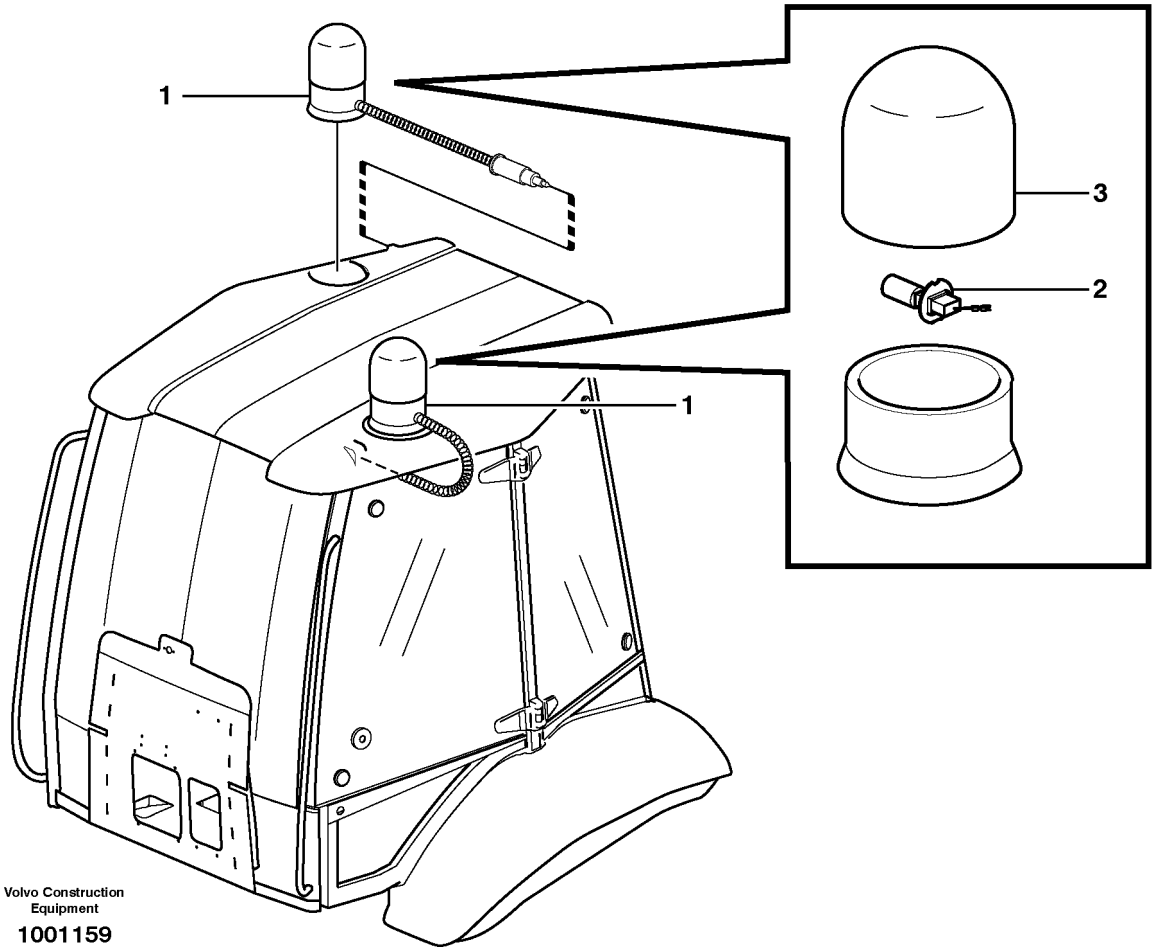
1
1
3
2
Volvo Construction Equipment
1001159

Fig.	Part No.	Quantity 1	2	3	PS	KIT	Description	Dénomination	Bezeichnung	Denominación	Notes
1	**VOE 11882303**	1	2				Rotating Beacon	Gyrophare	Rundumkennleuchte	Luz Rotativa Emergencia	
2	**VOE 944265**	1	1				•Bulb	•Ampoule	•Glühlampe	•Bombilla	55W
3	**VOE 11712340**	1	1				•Lens	•Verre	•Lichtscheibe	•Lente	

1	**11891261**	**Faro de advertencia giratorio** **Rundum-kennleuchte** **Gyrophare** **Rotating beacon**	Catalogue id **20050**	Group **362**
2	**11891262**		Illustr. No **1001159**	Section **150**
3			Issue **VOE 64D9920050**	Page **149**
4				
5				

VOLVO

BL61

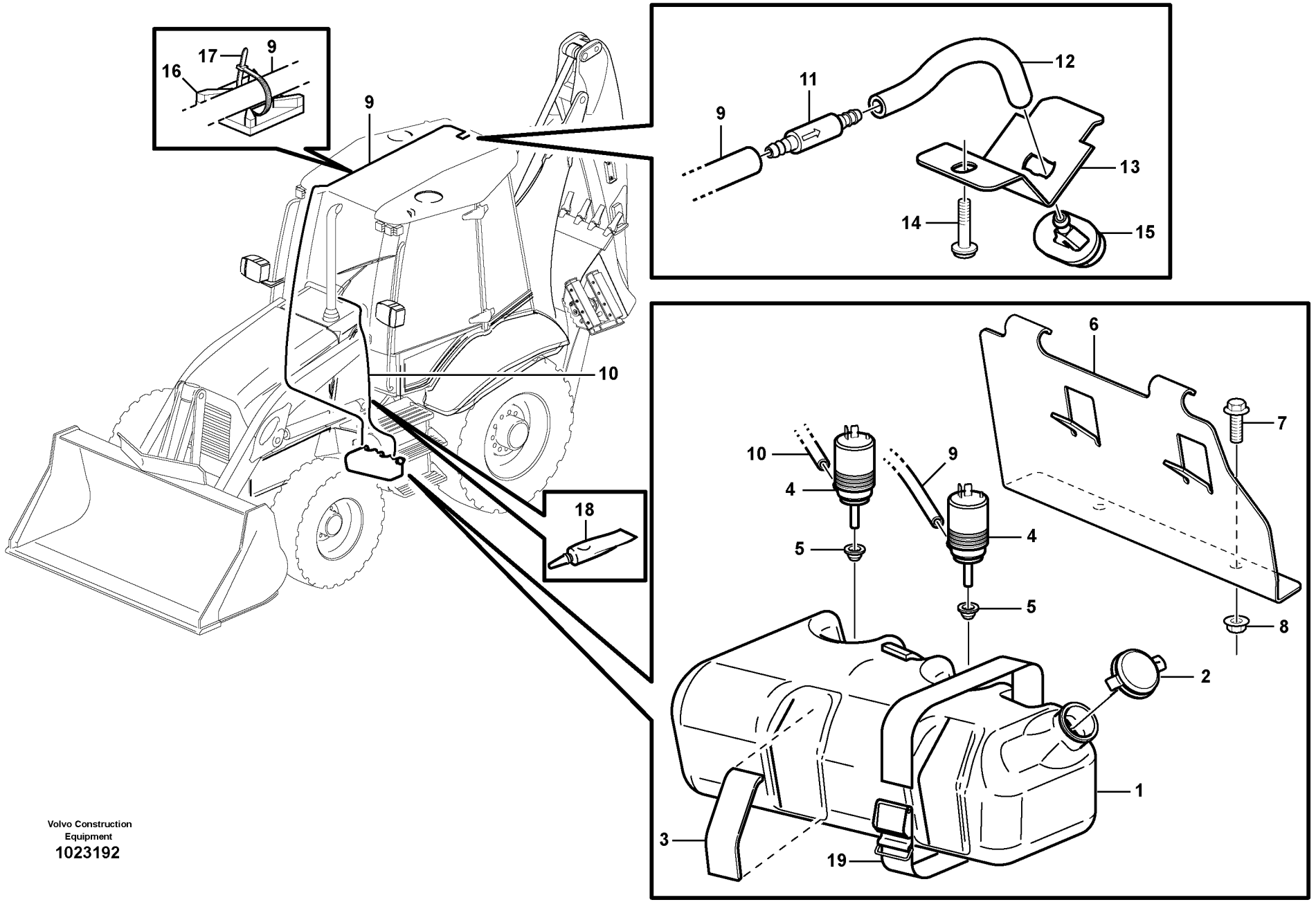

Volvo Construction Equipment
1023192

Fig.	Part No.	Quantity 1	2	3	PS	KIT	Description	Dénomination	Bezeichnung	Denominación	Notes
1	**VOE 11200669**	1					Wiper Motor	Moteur essuie glace	Wischermotor	Motor l.p	
2	**VOE 11200709**	1					Anchorage	Fixation	Halterung	Fijacion	
3	**VOE 969147**	4					Screw	Vis	Schraube	Tornillo	
4	**VOE 11200710**	1					Linkage	Articulation	Gestänge	Varillado	
5	**VOE 11200787**	1					Gasket	Joint	Dichtung	Junta	
6	**VOE 978392**	2					O-ring	Joint Torique	O-Ring	Junta torica	
7	**VOE 11200699**	1					Wiper Arm	Bras Essu.glac.	Wischerarm	Brazo Limpiapar	
8	**VOE 11200698**	1					Wiper blade	Balai essuie glace	Wischerblatt	Escobilla l.p	
9	**VOE 11200713**	1					Check valve	Valve antiretour	Rückschlagventil	Válvula de retención	
10	**VOE 960139**	4					Washer	Rondelle	Scheibe	Arandela	

1		**Limpiaparabrisas, delantero** **Scheibenwischer, vorne** **Essuie-vitre, avant** **Windshield wiper, front**	Catalogue id **20050**	Group **363**
2			Illustr. No **1023192**	Section **100**
3			Issue **VOE 64D9920050**	Page **151**
4				
5		**11298203, 11298204**		

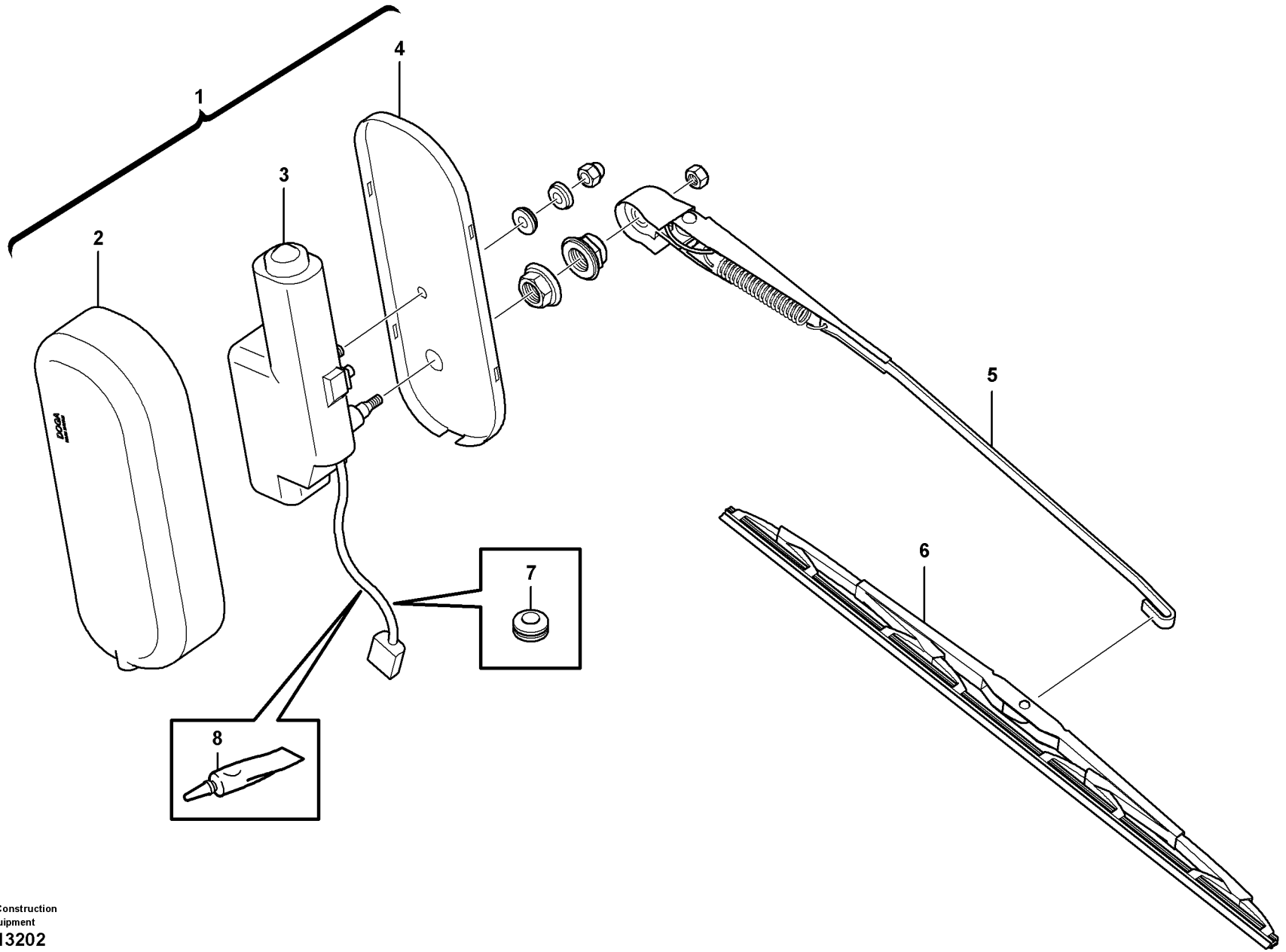

Volvo Construction Equipment
1013202

Fig.	Part No.	Quantity 1	2	3	PS	KIT	Description	Dénomination	Bezeichnung	Denominación	Notes
1	**VOE 11202201**	1					Wiper Mechanism	Mec.essui.glace	Wischermechanis	Mecanismo Limp	
2	**VOE 11200674**	1					•Cover	•Capot	•Haube	•Capo	
3	**VOE 11201418**	1			SS		•Wiper Motor	•Moteur essuie glace	•Wischermotor	•Motor l.p	
5		1			NS		•Anchorage	•Fixation	•Halterung	•Fijacion	
5	**VOE 11200706**	1					Wiper Arm	Bras Essu.glac.	Wischerarm	Brazo Limpiapar	
6	**VOE 11200705**	1					Wiper blade	Balai essuie glace	Wischerblatt	Escobilla l.p	
7	**VOE 941262**	1					Grommet	Passe fil	Durchführung	Aislador pasapanel	
8	**VOE 11708567**	REQ					Adhesive	Adhesif	Klebstoff	Adhesivo	

1		**Limpiaparabrisas, trasero** **Scheibenwischer, hinten** **Essuie-vitre, arrière** **Windshield wiper, rear**	Catalogue id **20050**	Group **363**
2			Illustr. No **1013202**	Section **150**
3			Issue **VOE 64D9920050**	Page **153**
4				
5		**11298204**		

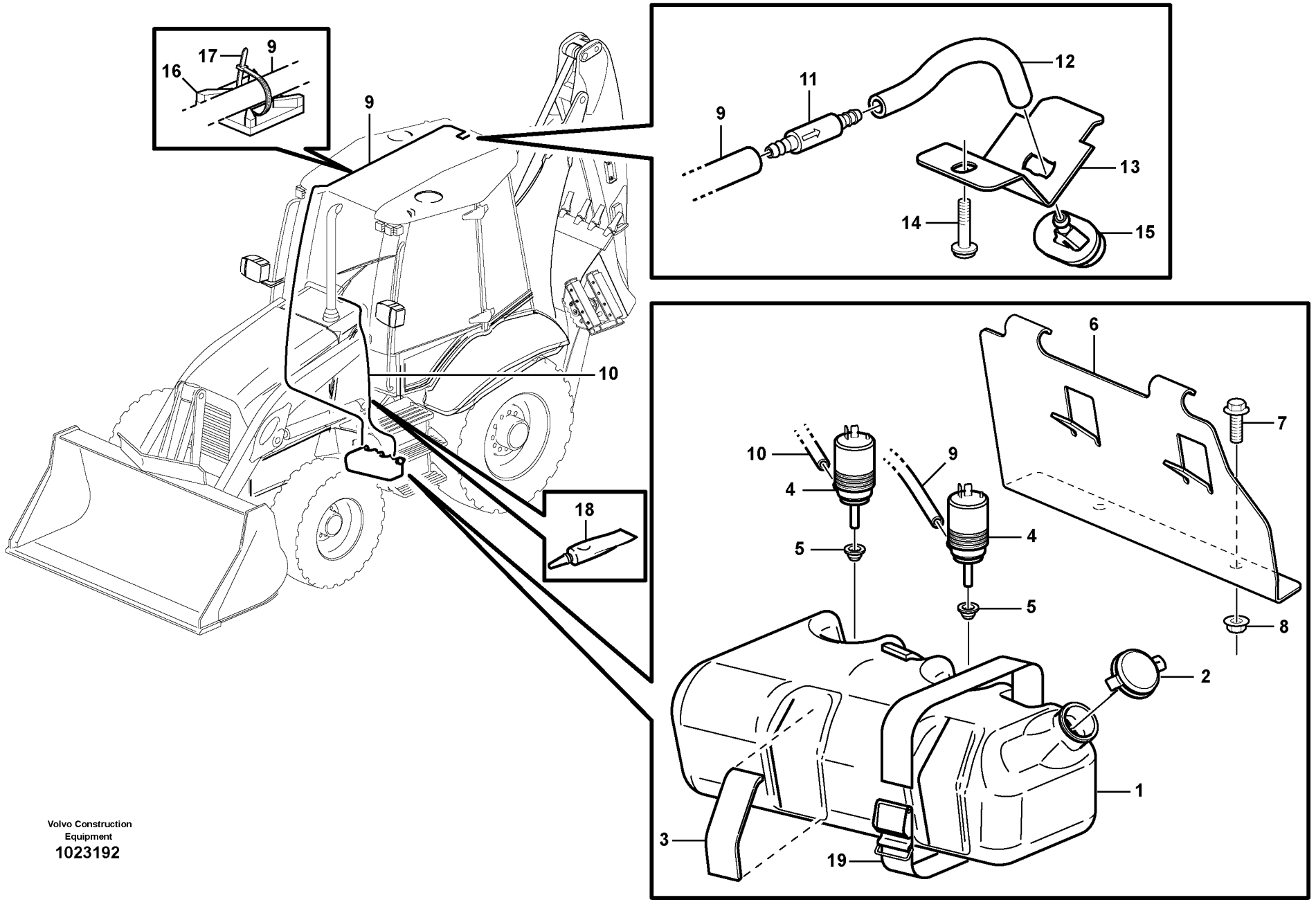

Volvo Construction Equipment
1023192

Fig.	Part No.	Quantity 1	2	3	4	5	PS	KIT	Description	Dénomination	Bezeichnung	Denominación	Notes
1	**VOE 11887150**	1		1					Tank	Resérvoir	Behälter	Depósito	
	VOE 11887149		1		1				Tank	Resérvoir	Behälter	Depósito	
2	**VOE 11883650**	1	1	1	1				Cap	Chapeau	Kappe	Caperuza	
3	**VOE 11883640**	4	4						Rubber Spacer	Cale Caoutchouc	Gummieinlage	Suplemento Goma	SER NO -10640 EXCL 10637
4	**VOE 11883646**	2	1	2	1				Pump	Pompe	Pumpe	Bomba	
5	**VOE 11883648**	2	1	2	1				Rubber Spacer	Cale Caoutchouc	Gummieinlage	Suplemento Goma	
6	**VOE 11883641**	1	1						Plate	Plaque	Platte	Placa	SER NO -10640 EXCL 10637
7	**VOE 13946173**	2	2						Flange screw	Vis à bride	Flanschschraube	Torn embridado	SER NO -10640 EXCL 10637
8	**VOE 13945408**	2	2						Nut	Ecrou	Mutter	Tuerca	SER NO -10640 EXCL 10637
9	**VOE 1304841**	REQ							Hose	Durit	Schlauch	Tubo flexible	L = 5060 MM
10	**VOE 1304841**	REQ	REQ						Hose	Durit	Schlauch	Tubo flexible	L = 1600 MM
11	**VOE 11200713**	1							Check valve	Valve antiretour	Rückschlagventil	Válvula de retención	
12	**VOE 1304841**	REQ							Hose	Durit	Schlauch	Tubo flexible	L = 50 MM
13	**VOE 11203078**	1							Anchorage	Fixation	Halterung	Fijacion	
14	**VOE 969404**	1							6-pt skt screw	Vis creuse de 6	Hohlschraube	Racor 6-dientes	
15	**VOE 11203079**	1							Washer Jet	Gicl.lave-glace	Sprühdüse	Boquill Rociad	
16	**VOE 14213026**	4							Attachment	Fixation	Halterung	Fijacion	
17	**VOE 4821292**	4							Strip Clamp	Ruban Serrage	Kabelbinder	Abraz Cinta	
18	**VOE 11708567**	REQ	REQ						Adhesive	Adhesif	Klebstoff	Adhesivo	
19	**VOE 11104606**	2	2	2	2				Retaining Strap	Courroi.serrage	Halteriemen	Correa Tensora	SER NO 10641- INCL 10637

1	**11298028**
2	**11298012**
3	**11298204**
4	**11298203**
5	

Lavaparabrisas
Scheibenwaschanlage
Lave - glace
Windshield washer

Catalogue id **20050**	Group **363**
Illustr. No **1023192**	Section **200**
Issue **VOE 64D9920050**	Page **155**

VOLVO

BL61

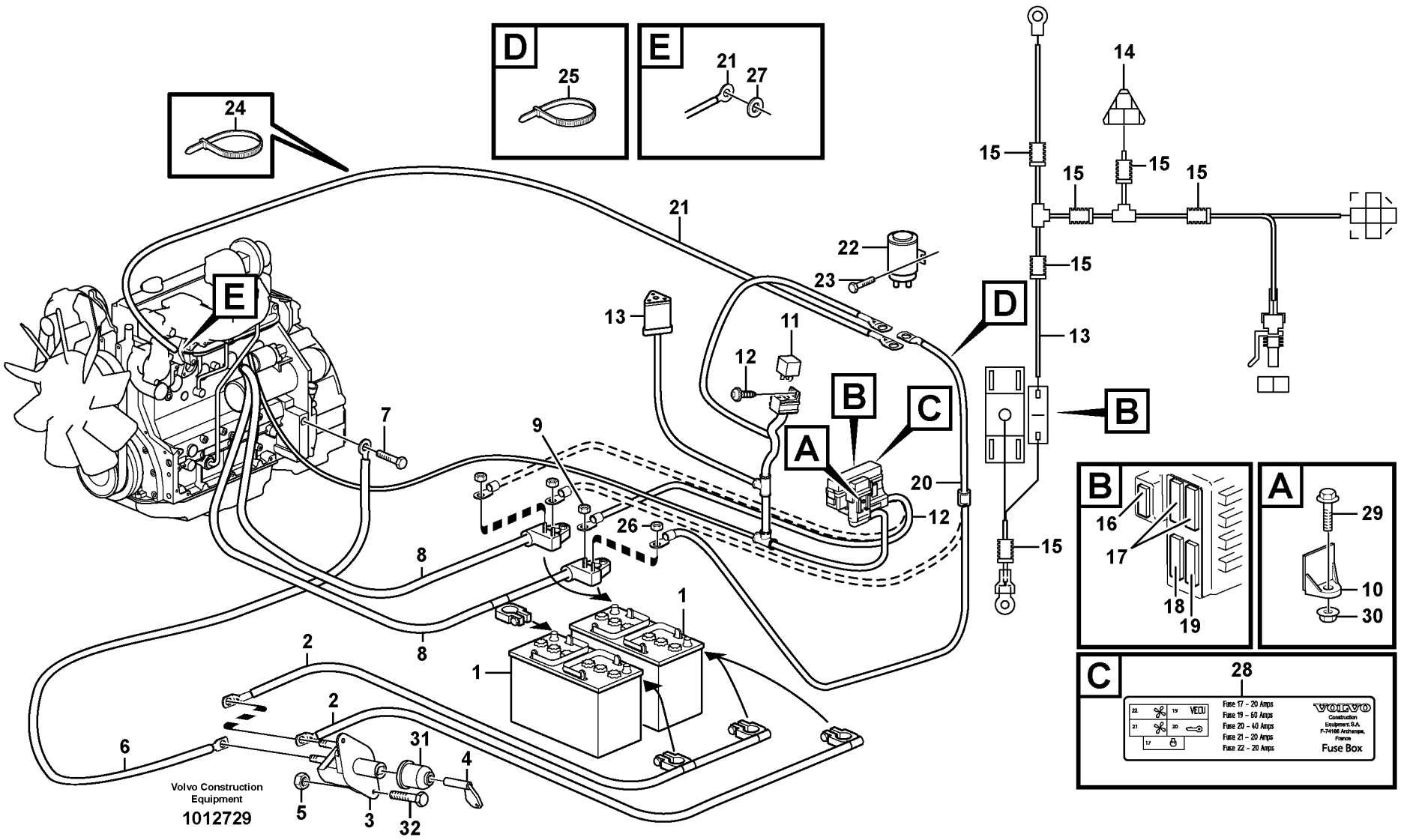
D
25
E
21
27
24
14
15
15
15
15
15
21
22
23
15
D
13
11
12
13
E
B
A
C
B
7
9
20
12
26
8
8
1
2
1
2
6
31
4
5
3
32
Volvo Construction
Equipment
1012729
B
16
17
18
19
A
29
10
30
C
28
VECU
Fuse 17 - 20 Amps
Fuse 19 - 60 Amps
Fuse 20 - 40 Amps
Fuse 21 - 20 Amps
Fuse 22 - 20 Amps
VOLVO
Construction
Equipment S.A.
F-74106 Archamps,
France
Fuse Box

Fig.	Part No.	Quantity 1	2	3	PS	KIT	Description	Dénomination	Bezeichnung	Denominación	Notes
1	**VOE 20393421**	1	2				Battery	Batterie	Batterie	Bateria	
2	**VOE 11886121**	1					Battery Cable	Câble batterie	Batterieleitung	Cable Bateria	
2	**VOE 11886126**		1				Battery Cable	Câble batterie	Batterieleitung	Cable Bateria	
	VOE 977781	1	1				•Cable terminal	•Cosse cable	•Flachsteckhülse	•Terminal cable	
	VOE 13948794		1				•Nut	•Ecrou	•Mutter	•Tuerca	
	VOE 13948795		1				•Screw	•Vis	•Schraube	•Tornillo	
3	**VOE 3987034**	1	1				Battery main switch	Robinet batterie	Batterietrennschalter	Desconectador bateria	
4	**VOE 8157766**	1	1				•Handle	•Poignee	•Drehgriff	•Mango	
5	**VOE 969587**	2	2				6-pt skt screw	Vis creuse de 6	Hohlschraube	Racor 6-dientes	
6	**VOE 11886124**	1	1				Battery Cable	Câble batterie	Batterieleitung	Cable Bateria	
	VOE 965891	1	1				•Cable terminal	•Cosse cable	•Flachsteckhülse	•Terminal cable	
7	**VOE 13965191**	1	1				Flange screw	Vis à bride	Flanschschraube	Torn embridado	
8	**VOE 11887721**	1					Cable	Câble	Seil	Cable	
8	**VOE 11887722**		1				Cable	Câble	Seil	Cable	
	VOE 13948795		1				•Screw	•Vis	•Schraube	•Tornillo	
	VOE 13948794		1				•Nut	•Ecrou	•Mutter	•Tuerca	
9	**VOE 13945408**	1	1				Nut	Ecrou	Mutter	Tuerca	
	VOE 946440	1	1				Flange screw	Vis à bride	Flanschschraube	Torn embridado	
10	**VOE 11870628**	2	2				Bracket	Console	Konsole	Ménsula	SER NO -10020
11	**VOE 11305263**	1	1				Relay	Relais	Relais	Rele	RE1
12	**VOE 969407**	1	1				6-pt skt screw	Vis creuse de 6	Hohlschraube	Racor 6-dientes	
13	**VOE 11886123**	1	1				Wire harness	Faisceau electrique	Kabelbaum	Manojo cables	SER NO -10020
13	**VOE 11886587**	1	1				Wire harness	Faisceau electrique	Kabelbaum	Manojo cables	SER NO 10021-
							•CONNECTED TO:	•CONNECTÉ A:	•ANGESCHLOSSEN:	•CONECTADO A:	
							••Cable harness Rear	••Faisceau de câbles AR	••Hinterer Kabelbaum	••Haz de cables trasero	X60
							••Starter Relay	••Relais Demarra.	••Anlassrelais	••Rele Arranque	RE1 (X209)
							••Relay,starter element	••Relais,elem.demarrage	••Relais,kaltstartelem.	••Rele,calentador arr	RE2 (X99)
							••Starter Motor	••Demarreur	••Anlasser	••Motor de arranque	MO1 (X367)
							••Battery	••Batterie	••Batterie	••Bateria	BA1 (X168)
14	**VOE 874654**	1	1				•Rcpt Housing	•Douille Isolan.	•Steckbuchse	•Aislador Mangui	X60

1	**11891392 (SINGLE)**
2	**11891391 (DOUBLE)**
3	**11880004**
4	
5	

Cable de bateria y desconectador bateria
Batterieleitung und Batterietrennschalter
Cable batterie et robinet batterie
Battery cable and main switch

Catalogue id **20050**	Group **371**
Illustr. No **1012729**	Section **100**
Issue **VOE 64D9920050**	Page **157**

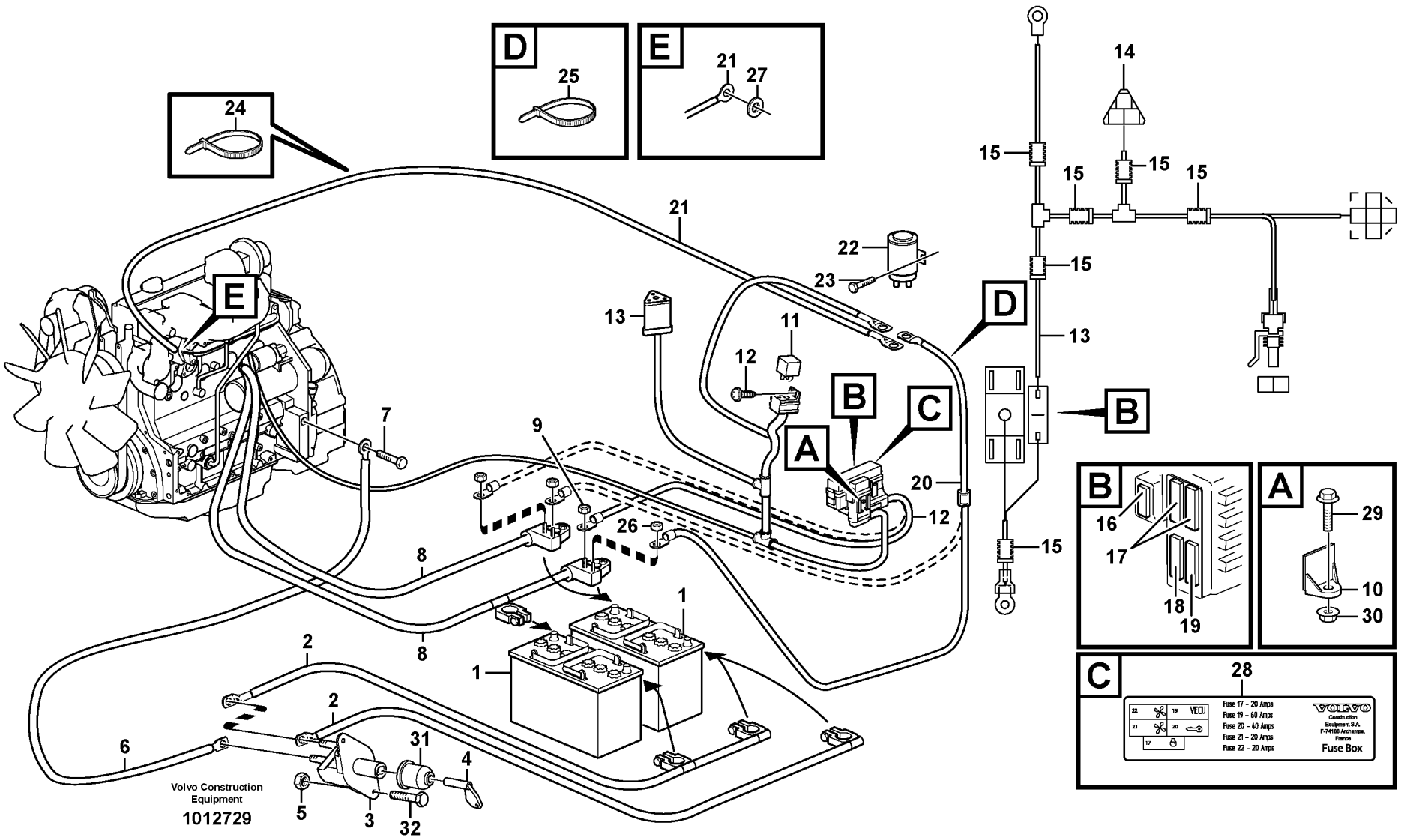
D
25
E
21
27
24
14
15
15
15
15
15
21
22
23
15
D
13
11
12
13
E
B
A
C
B
7
9
20
12
26
8
8
1
2
1
2
6
31
4
5
3
32
Volvo Construction
Equipment
1012729
B
16
17
18
19
A
29
10
30
C
28
VECU
Fuse 17 - 20 Amps
Fuse 19 - 60 Amps
Fuse 20 - 40 Amps
Fuse 21 - 20 Amps
Fuse 22 - 20 Amps
VOLVO
Construction
Equipment S.A.
F-74106 Archamps,
France
Fuse Box

Fig.	Part No.	Quantity 1	2	3	PS	KIT	Description	Dénomination	Bezeichnung	Denominación	Notes
15	**VOE 11170006**	REQ	REQ				•Hose	•Durit	•Schlauch	•Tubo flexible	
16	**VOE 11882444**	1	1				•Fuse	•Fusible	•Schmelzsicherung	•Fusible	20A
17	**VOE 11882444**	2	2				•Fuse	•Fusible	•Schmelzsicherung	•Fusible	20A
18	**VOE 11882446**	1	1				•Fuse	•Fusible	•Schmelzsicherung	•Fusible	40A
19	**VOE 11882512**	1	1				•Fuse	•Fusible	•Schmelzsicherung	•Fusible	60A
20	**VOE 11886557**			1			Cable	Câble	Kabel	Cable	
	VOE 13965886			2			•Cable terminal	•Cosse cable	•Flachsteckhülse	•Terminal cable	
	VOE 11870441			1			•Fuse Holder	•Porte fusible	•Sicherungshalter	•Porta-fusible	
	VOE 11886558			1			•Fuse	•Fusible	•Schmelzsicherung	•Fusible	175A
	VOE 4803746			REQ			•Hose	•Durit	•Schlauch	•Tubo flexible	
21	**VOE 11887633**			1			Cable	Câble	Kabel	Cable	(VOE 11886555)
22	**VOE 20715643**			1			Relay	Relais	Relais	Rele	(VOE 20552405)
23	**VOE 13946934**			2			Screw	Vis	Schraube	Tornillo	
24	**VOE 14016673**			14			Strip Clamp	Ruban Serrage	Kabelbinder	Abraz Cinta	
25	**VOE 4881440**			1			Strip Clamp	Ruban Serrage	Kabelbinder	Abraz Cinta	
26	**VOE 13945407**			1			Nut	Ecrou	Mutter	Tuerca	
27	**VOE 955920**			1			Spring Washer	Rondelle élastique	Federscheibe	Arandela flexible	
28	**VOE 11886286**	1	1				Decal	Decalcomanie	Abziehbild	Decalcomania	
29	**VOE 13946173**	2	2				Flange screw	Vis à bride	Flanschschraube	Torn embridado	
30	**VOE 13945408**	2	2				Nut	Ecrou	Mutter	Tuerca	
31	**VOE 1582293**	1	1				Bellows	Capot Caoutcho.	Gummimantel	Cubierta Goma	SER NO 10014-, INCL10009
32	**VOE 969422**	2	2				6-pt skt screw	Vis creuse de 6	Hohlschraube	Racor 6-dientes	SER NO 10021-

1	**11891392 (SINGLE)**
2	**11891391 (DOUBLE)**
3	**11880004**
4	
5	

Cable de bateria y desconectador bateria
Batterieleitung und Batterietrennschalter
Cable batterie et robinet batterie
Battery cable and main switch

Catalogue id **20050**	Group **371**
Illustr. No **1012729**	Section **100**
Issue **VOE 64D9920050**	Page **159**

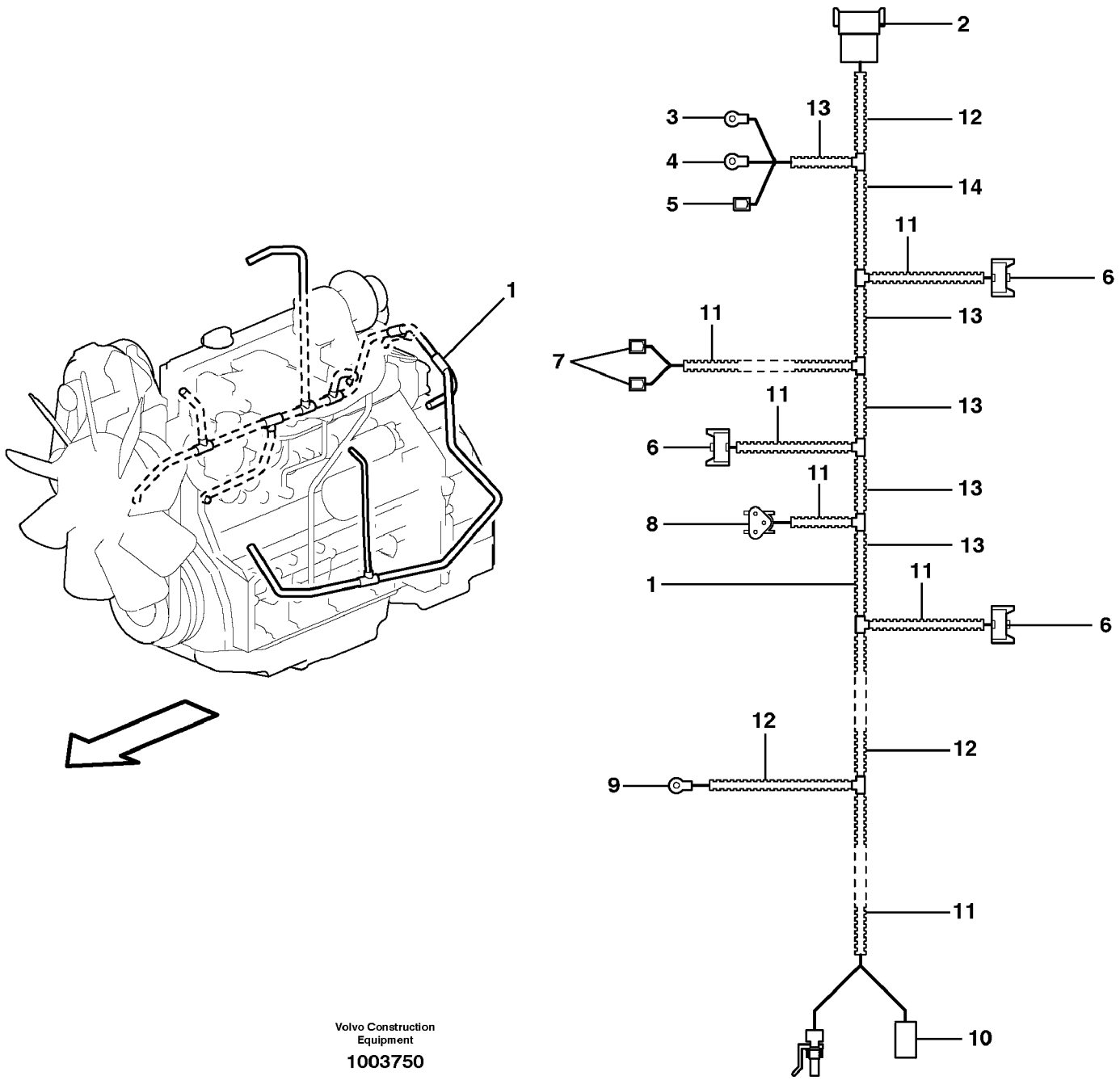

Volvo Construction Equipment

1003750

Fig.	Part No.	Quantity 1	2	3	PS	KIT	Description	Dénomination	Bezeichnung	Denominación	Notes
1	**VOE 11884504**	1					Cable harness	Faisceau cables	Kabelbaum	Manojo cables	
							••CONNECTED TO:	••CONNECTÉ A:	••ANGESCHLOSSEN:	••CONECTADO A:	
							••Cable harness Chassis	••Faisceau de câbles, châ	••Kabelbaum Fahrgestell	••Haz de cables, chasis	X13
							••Alternator	••Alternateur	••Lichtmaschine	••Alternador	AL1
							••Oil press., engine	••Pression huile moteur	••Öldruck, Motor	••Presión de aceite, motor	SE6
							••Air filter	••Filtre air	••Luftfilter	••Filtro aire	SE7
							••Key turn engine stop	••Commande stop	••Abstellvorrichtung	••Mando pare	MA7
							••Regulator	••Regulateur	••Regler	••Regulador	MA1
							••Temp.sensor, engine	••Detecteur temp,moteur	••Temperaturgeber,motor	••Sensor temperat,motor	SE2
							••Starter motor	••Demarreur	••Anlasser	••Motor arranque	MO1
							••AC Compressor	••Compresseur AC	••AC-Kompressor	••Compresor de A/C	MO10
2	**VOE 874965**	1					•Connector	•Raccord	•Anschluss	•Union	X13
2	**VOE 14370889**	1					•Spacer	•Partie Intermédiaire	•Zwischenstück	•Espaciador	
3		1			NS		•Cable terminal	•Cosse cable	•Flachsteckhülse	•Terminal cable	AL1
4	**VOE 956926**	1					•Cable terminal	•Cosse cable	•Flachsteckhülse	•Terminal cable	AL1
5	**VOE 973119**	1					•Cable terminal	•Cosse cable	•Flachsteckhülse	•Terminal cable	AL1
6	**VOE 976256**	3					•Insulator	•Isolateur	•Isolator	•Aislador	SE2, SE6, MA7
7		2			NS		•Cable terminal	•Cosse cable	•Flachsteckhülse	•Terminal cable	SE7
8		1			NS		•Switch Housing	•Boitier Contact	•Kontaktgehäuse	•Caja Contacto	MA1
9	**VOE 949587**	1					•Cable terminal	•Cosse cable	•Flachsteckhülse	•Terminal cable	MO1
10		1			NS		•Housing	•Carter	•Gehäuse	•Carter	MO10
11	**VOE 4803746**	REQ					•Hose	•Durit	•Schlauch	•Tubo flexible	
12	**VOE 4803748**	REQ					•Hose	•Durit	•Schlauch	•Tubo flexible	
13	**VOE 4803751**	REQ					•Hose	•Durit	•Schlauch	•Tubo flexible	
14	**VOE 4803752**	REQ					•Hose	•Durit	•Schlauch	•Tubo flexible	

1	
2	
3	
4	
5	

Haz de cables, motor
Kabelbündel, Motor
Faisceau de câbles, moteur
Cable harness, engine

Catalogue id	Group
20050	**371**
Illustr. No	Section
1003750	**200**
Issue	Page
VOE 64D9920050	**161**

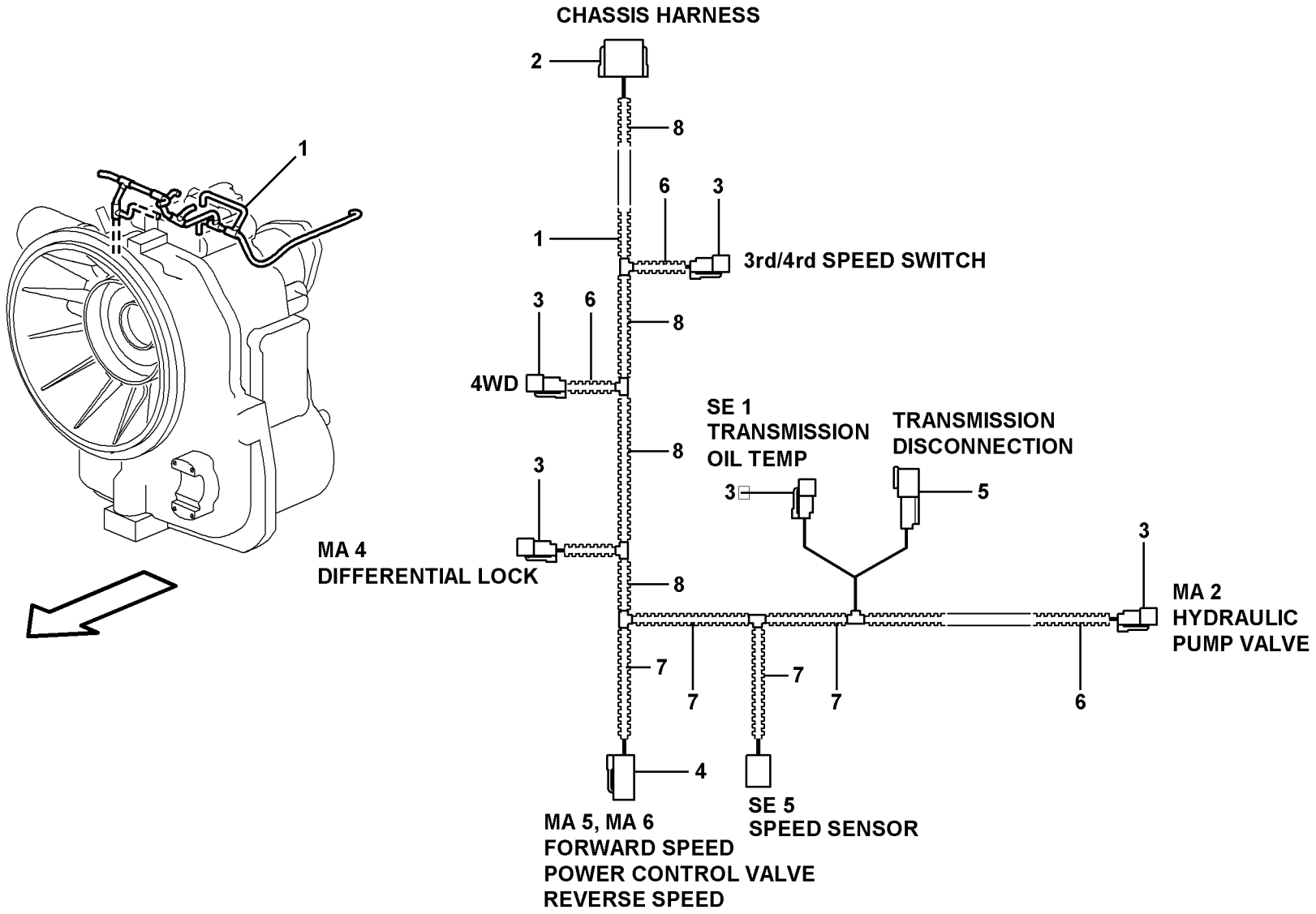
CHASSIS HARNESS
2
8
1
6
3
3rd/4rd SPEED SWITCH
3
6
8
4WD
SE 1
TRANSMISSION
OIL TEMP
TRANSMISSION
DISCONNECTION
3
5
8
3
MA 4
DIFFERENTIAL LOCK
8
3
MA 2
HYDRAULIC
PUMP VALVE
7
7
7
6
4
SE 5
SPEED SENSOR
MA 5, MA 6
FORWARD SPEED
POWER CONTROL VALVE
REVERSE SPEED
1

Fig.	Part No.	Quantity 1	2	3	PS	KIT	Description	Dénomination	Bezeichnung	Denominación	Notes
1	**VOE 11884089**	1					Cable harness	Faisceau cables	Kabelbaum	Manojo cables	S/N - 10626
1	**VOE 11888412**	1					Wire harness	Faisceau electrique	Kabelbaum	Manojo cables	S/N 10627 -
							•CONNECTED TO:	•CONNECTÉ A:	•ANGESCHLOSSEN:	•CONECTADO A:	
							••Switch 3rd/4th gear	••Contact 3ème/4ème	••Schalter 3./4. Gang	••Contacto marcha 3a/4a	
							••Four-wheel drive	••Traction sur 4 roues	••Vierradantrieb	••Tracción en cuatro rueda	SE1
							••Diff.lock switch	••Comm.bloca.different.	••Ausgleichsperrschallt	••Reglaje diferencial	MA4
							••Gear selector forward/rev	••Sélecteur de marche AV/	••Gangwähler vorwärts/rüc	••Selector de marchas del	MA5, MA6
							••Speed sensor	••Commande tachymetre	••Drehzahlschalter	••Sensor tacometro	SE5
							••Hydraulic pump valve	••Valve de pompe hydrauli	••Hydraulikpumpenventil	••Válvula de la bomba hidr	MA2
							••Disconnector transmissi	••Coupe-circuit, transmissi	••Getriebeausrückung	••Disyuntor transmisión	
							••Transmission Temp.	••Temp. De Transm.	••Getriebetemp.	••Temp. Transmisión	SE1
2	**VOE 11709766**	1					•Connector	•Raccord	•Anschluss	•Union	
2	**VOE 874967**	1					•Key	•Clavette	•Keil	•Llave (cuna)	
3	**VOE 874955**	5					•Insulator	•Isolateur	•Isolator	•Aislador	
4	**VOE 874957**	1					•Housing	•Isolant	•Isolator	•Aislador	
4	**VOE 874958**	1					•Key	•Clavette	•Keil	•Llave (cuna)	
5	**VOE 874954**	1					•Connector	•Raccord	•Anschluss	•Union	
6	**VOE 11170006**	REQ					•Hose	•Durit	•Schlauch	•Tubo flexible	
7	**VOE 4803746**	REQ					•Hose	•Durit	•Schlauch	•Tubo flexible	
8	**VOE 4803748**	REQ					•Hose	•Durit	•Schlauch	•Tubo flexible	

1		**Manojo de cable, transmisión.** **Kabelbaum, Getriebe.** **Faisceau de câles, transmission.** **Cable harness, transmission.**	Catalogue id **20050**	Group **371**
2				
3			Illustr. No **1013297**	Section **250**
4				
5		**11891076, 11891077**	Issue **VOE 64D9920050**	Page **163**

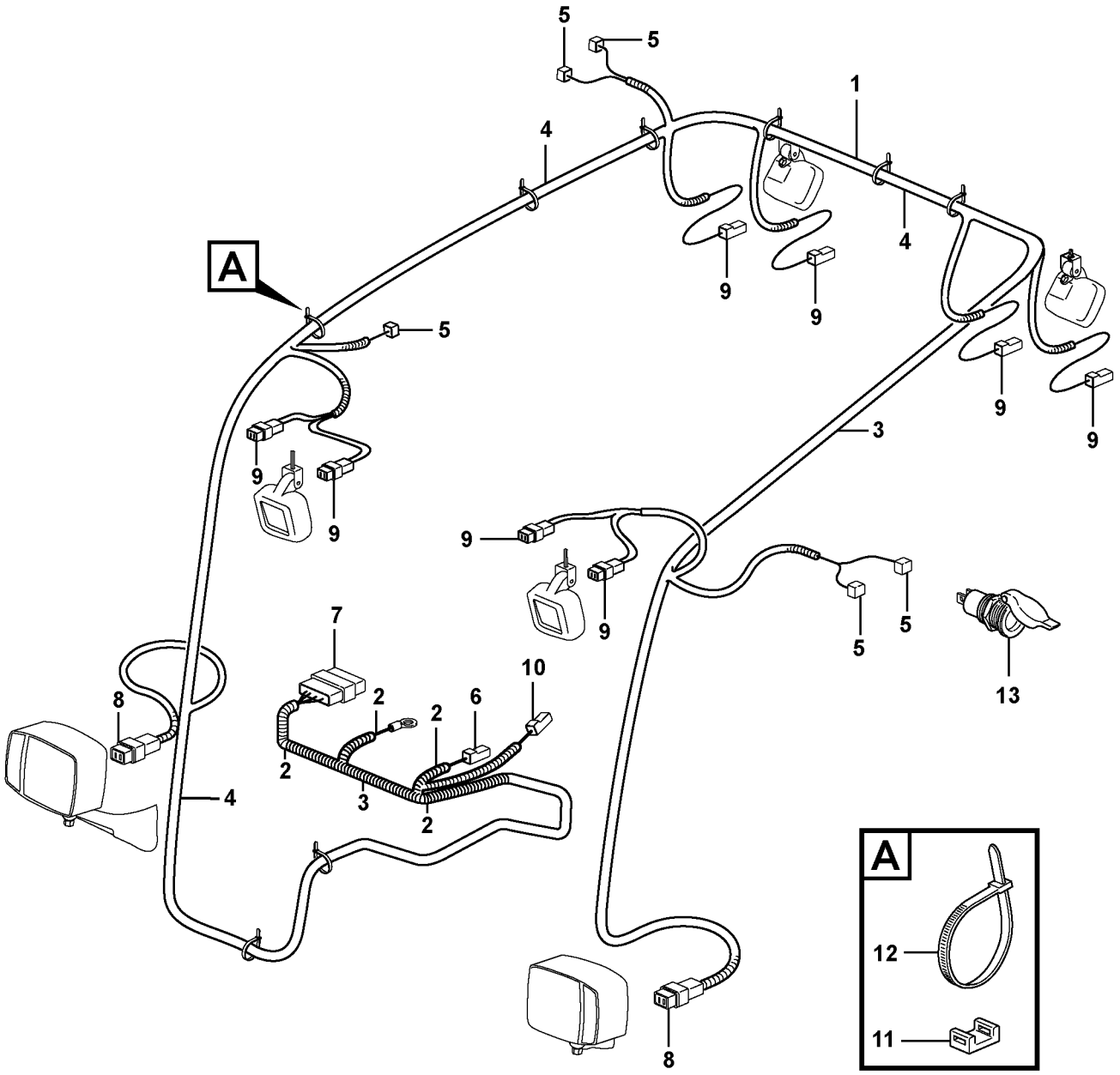

Volvo Construction Equipment
1013292

Fig.	Part No.	Quantity 1	2	3	PS	KIT	Description	Dénomination	Bezeichnung	Denominación	Notes
1	**VOE 11886189**	1					Wire harness	Faisceau electrique	Kabelbaum	Manojo cables	
							•CONNECTED TO:	•CONNECTÉ A:	•ANGESCHLOSSEN:	•CONECTADO A:	
							••Headlamp	••Phare	••Scheinwerfer	••Faro	X42, X43
							••Rear lighting	••Illuminat.arriere	••Hintere Beleuchtung	••Luz detras	X88, X89, X90, X91
							••Work lights	••Eclairage de travail	••Arbeitsbeleuchtung	••Alumbrado de trabajo	X84, X85, X86, X87
							••Antenna	••Antenne	••Antenne	••Antena	X247
							••Rotating Beacon	••Gyrophare	••Rundumkennleuchte	••Luz Rotativa Emergencia	X245, X246, X248, X249
							••Cable Harness Instrume...	••Câblage, tableau de bord ...	••Leitung mit Armaturenbre ...	••Haz cables tablero instr. ..	X36, X37
							••Earth	••Terre	••Erde	••Tierra	X165
							••Control unit, V-ECU	••Unite commande, V-ECU ...	••Steuergerät, V-ECU	••Unidad mando, V-ECU	X1
2	**VOE 11170006**	3					•Hose	•Durit	•Schlauch	•Tubo flexible	
3	**VOE 4803746**	2					•Hose	•Durit	•Schlauch	•Tubo flexible	
4	**VOE 4803748**	3					•Hose	•Durit	•Schlauch	•Tubo flexible	
5	**VOE 973119**	5					•Cable terminal	•Cosse cable	•Flachsteckhülse	•Terminal cable	X245-X249
6	**VOE 874957**	1					•Housing	•Isolant	•Isolator	•Aislador	X36
6	**VOE 874958**	1					•Key	•Clavette	•Keil	•Llave (cuna)	X36
7	**VOE 11709767**	1					•Connector	•Raccord	•Anschluss	•Union	X1
8	**VOE 874960**	2					•Housing	•Isolant	•Isolator	•Aislador	X42, X43
9	**VOE 874955**	8					•Insulator	•Isolateur	•Isolator	•Aislador	X84-X91
10	**VOE 874802**	1					•Housing	•Isolant	•Isolator	•Aislador	X37
10	**VOE 14370883**	1					•Spacer	•Partie Intermédiaire	•Zwischenstück	•Espaciador	X37
11	**VOE 14016673**	8					Strip Clamp	Ruban Serrage	Kabelbinder	Abraz Cinta	
12	**VOE 14213026**	8					Attachment	Fixation	Halterung	Fijacion	
13	**VOE 14371054**	1					Socket housing	Douille isolante	Steckdose	Aislador mangui	

1		**Haz de cables de alumbrado exterior de la cabina** **Leitung mit Kabinenbeleuchtung außen** **Câblage, éclairage extérieur cabine** **Cable Harness Lighting Cab Ext.**	Catalogue id **20050**	Group **371**
2			Illustr. No **1013292**	Section **300**
3			Issue **VOE 64D9920050**	Page **165**
4				
5		**11298204, 11298208**		



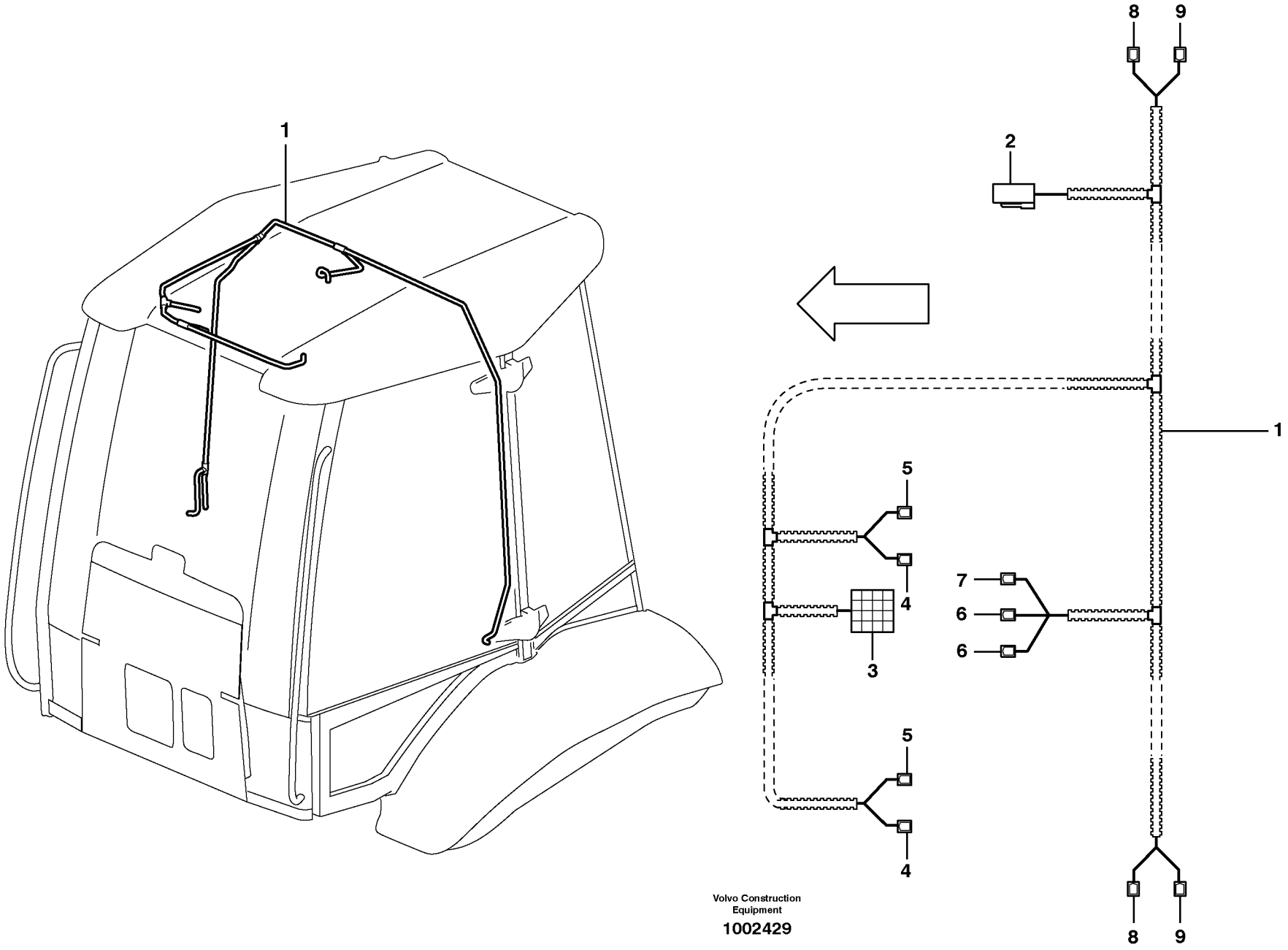

Volvo Construction Equipment

1002429

Fig.	Part No.	Quantity 1	2	3	PS	KIT	Description	Dénomination	Bezeichnung	Denominación	Notes
1	**VOE 11887632**	1					Wire harness	Faisceau electrique	Kabelbaum	Manojo cables	(VOE 11884085) S/N 10335 -
	VOE 11884654	1					Cable harness	Faisceau cables	Kabelbaum	Manojo cables	S/N - 10334
							•CONNECTED TO:	•CONNECTÉ A:	•ANGESCHLOSSEN:	•CONECTADO A:	
							••Cable harness,right	••Faisceau cables,droit	••Kabelbaum,rechts	••Manojo cables,derecha	X51
							••Radio	••Auto-radio	••Radio	••Radio	RA1 (X200)
							••Speaker	••Haut-parleur	••Lautsprecher	••Altavoz	LH RH
							••Interior light	••Lampe interieure	••Innenleuchte	••Lampara interior	X308 - 310
							••Door Switch	••Contact Porte	••Turschalter	••Contacto Puerta	LH SW28, RH SW27
2	**VOE 874957**	1					•Housing	•Isolant	•Isolator	•Aislador	X51
3		1			NS		•Insulator	•Isolateur	•Isolator	•Aislador	RA1 X200
4	**VOE 973126**	2					•Cable terminal	•Cosse cable	•Flachsteckhülse	•Terminal cable	X155, X156
5	**VOE 946787**	2					•Cable terminal	•Cosse cable	•Flachsteckhülse	•Terminal cable	X150, X151
6	**VOE 973119**	2					•Cable terminal	•Cosse cable	•Flachsteckhülse	•Terminal cable	X308, X309
7	**VOE 973120**	1					•Cable terminal	•Cosse cable	•Flachsteckhülse	•Terminal cable	X310
8		2			NS		•Cable terminal	•Cosse cable	•Flachsteckhülse	•Terminal cable	X305, X307
9		2			NS		•Cable terminal	•Cosse cable	•Flachsteckhülse	•Terminal cable	X304, X306

1		**Haz de cables en el techo interior de la cabina** **Leitung mit Kabine innen Decke** **Câblage, pavillon cabine** **Cable Harness cab int. roof**	Catalogue id **20050**	Group **371**
2			Illustr. No **1002429**	Section **350**
3			Issue **VOE 64D9920050**	Page **167**
4				
5				

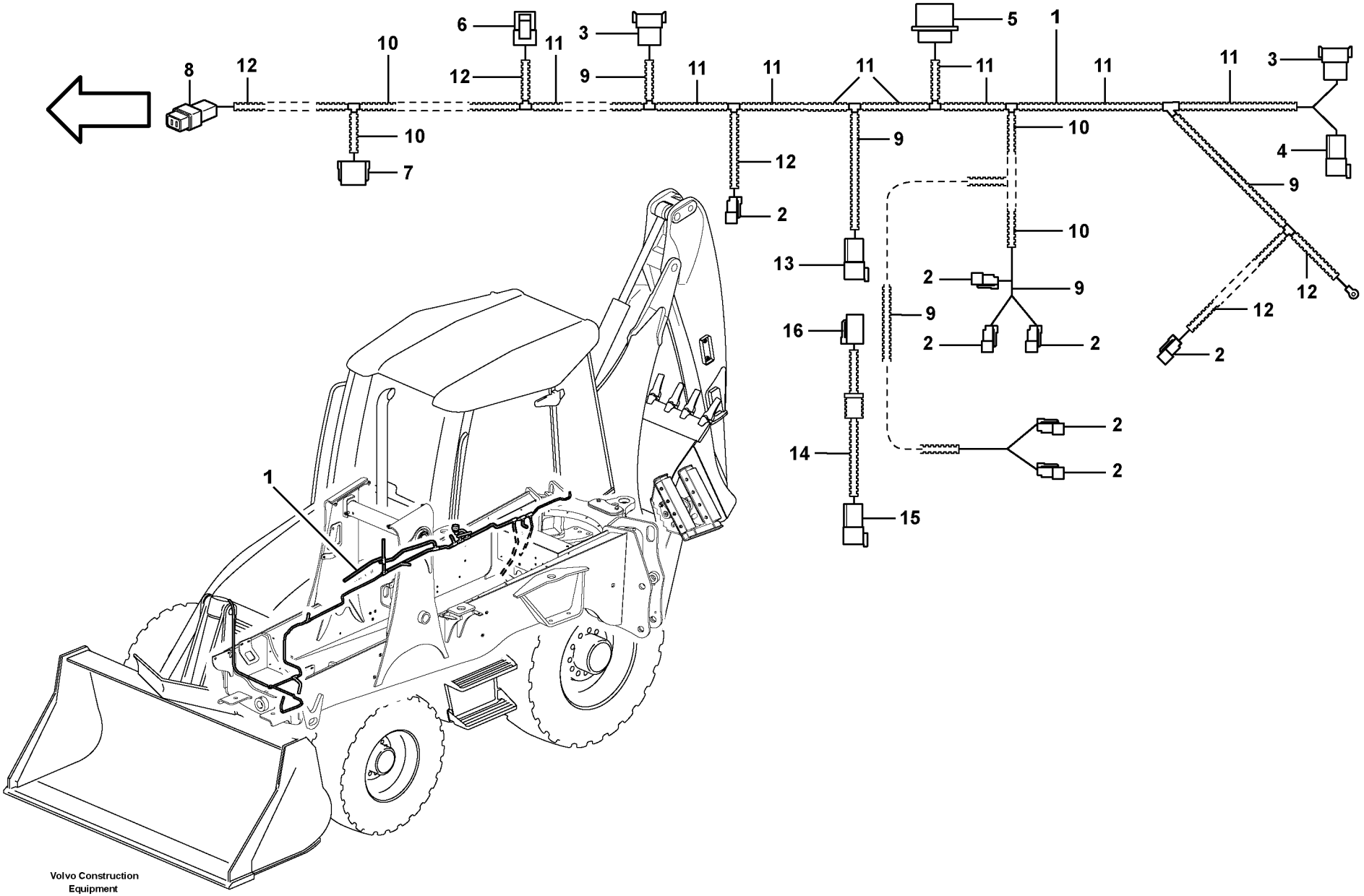
1
2
3
4
5
6
7
8
9
10
11
12
13
14
15
16
Volvo Construction Equipment
1013573

Fig.	Part No.	Quantity 1	2	3	PS	KIT	Description	Dénomination	Bezeichnung	Denominación	Notes
1	**VOE 11887382**	1					Wire harness	Faisceau electrique	Kabelbaum	Manojo cables	S/N 10150 -
	VOE 11884799	1					Wire harness	Faisceau electrique	Kabelbaum	Manojo cables	S/N - 10149
							••CONNECTED TO:	••CONNECTÉ A:	••ANGESCHLOSSEN:	••CONECTADO A:	
							••Float Position Valve	••Soupape Pos.flottante	••Schwimmventil	••Valvula Pos Flotacion	X81
							••Valve block	••Bloc-soupape	••Ventilblock	••Bloque de valvula	X11, X40
							••Valve Hydr. attachment br	••Valve, porte-outil à verroui	••Ventil hydr. Geräteträger	••Válvula, portaimplemento	X77
							••Valve Hydr. attachment br	••Valve, porte-outil à verroui	••Ventil hydr. Geräteträger	••Válvula, portaimplemento	X76
							••Hand brake	••Frein à main	••Handbremse	••Freno de mano	X80
							••Valve Boom Suspension	••Valve, suspension des br	••Ventil Hubgerüstdämpfun	••Válvula, suspensión de b	X78, X79
							••Instrument panel Right	••Tableau de bord côté droi	••Armaturenbrett rechts	••Tablero de instrumentos	X8
							••Valve Automatic Tilt	••Valve, basculement auto	••Ventil Kippautomatik	••Válvula, automatismo de	X41
							••Fuel Gauge	••Jauge Carburant	••Kraftst Messer	••Indic Combust	X82
							••Cable harness,transm.	••Faisceau cables,trans	••Kabalbaum, Getriebe	••Manojo cables,transmi	X12
							••Switch Automatic Tilt	••Contacteur, basculement	••Schalter Kippautomatik	••Contacto, automatismo d	X83
							••Cable Harness, Engine	••Faisceau De Câbles, Mot	••Kabelbündel, Motor	••Haz De Cables, Motor	X13
							••Horn	••Avertisseur sonore	••Signalhorn	••Avisador sonoro	X202
2	**VOE 874955**	7					•Insulator	•Isolateur	•Isolator	•Aislador	X76-X82
3	**VOE 874965**	2					•Connector	•Raccord	•Anschluss	•Union	X11, X12
3	**VOE 14370889**	2					•Spacer	•Partie Intermédiaire	•Zwischenstück	•Espaciador	
4	**VOE 874959**	1					•Housing	•Isolant	•Isolator	•Aislador	X40
4	**VOE 14370885**	1					•Spacer	•Partie Intermédiaire	•Zwischenstück	•Espaciador	
5	**VOE 11709788**	1					•Connector	•Raccord	•Anschluss	•Union	X8
6	**VOE 874654**	1					•Rcpt Housing	•Douille Isolan.	•Steckbuchse	•Aislador Mangui	X83
7	**VOE 11709766**	1					•Connector	•Raccord	•Anschluss	•Union	X13
8		1			NS		•Insulator	•Isolateur	•Isolator	•Aislador	X202
9	**VOE 4803748**	REQ					•Hose	•Durit	•Schlauch	•Tubo flexible	
10	**VOE 4803751**	REQ					•Hose	•Durit	•Schlauch	•Tubo flexible	
11	**VOE 4803752**	REQ					•Hose	•Durit	•Schlauch	•Tubo flexible	
12	**VOE 11170006**	REQ					•Hose	•Durit	•Schlauch	•Tubo flexible	
13	**VOE 874960**	1					•Housing	•Isolant	•Isolator	•Aislador	X41

1	
2	
3	
4	
5	

Haz de cables chasis
Kabelbaum, Fahrgestell
Faisceau de câbles, châssis
Cable harness chassis

Catalogue id	Group
20050	**371**
Illustr. No	Section
1013573	**400**
Issue	Page
VOE 64D9920050	**169**

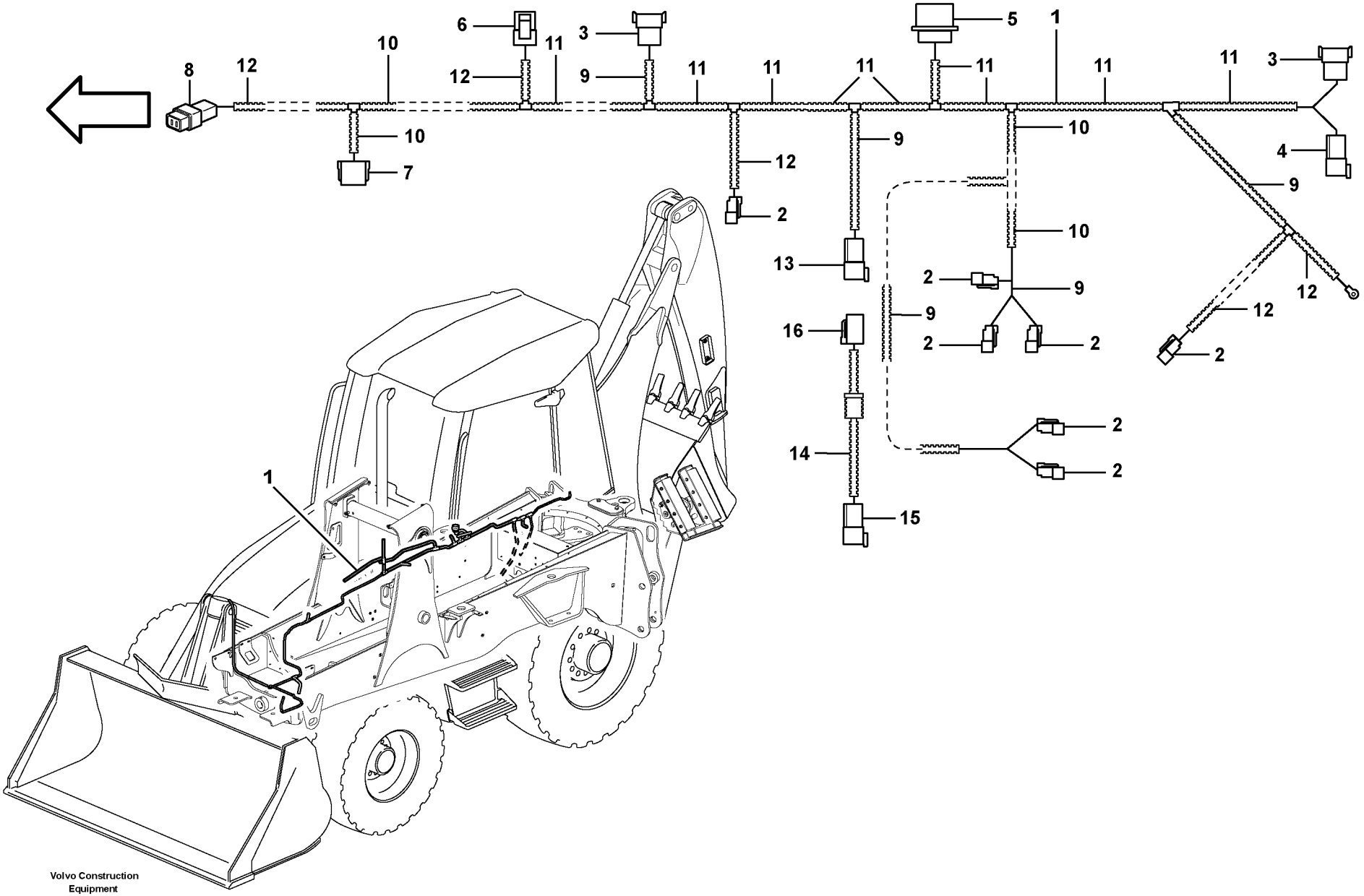
1
2
3
4
5
6
7
8
9
10
11
12
13
14
15
16
Volvo Construction Equipment
1013573

Fig.	Part No.	Quantity 1	2	3	PS	KIT	Description	Dénomination	Bezeichnung	Denominación	Notes
14	**VOE 11886560**	1					Cable	Câble	Kabel	Cable	X331 EXTANSION HARNESS
15	**VOE 874959**	1					•Housing	•Isolant	•Isolator	•Aislador	
15	**VOE 14370885**	1					•Spacer	•Partie Intermédiaire	•Zwischenstück	•Espaciador	
16	**VOE 874955**	1					•Insulator	•Isolateur	•Isolator	•Aislador	

1		**Haz de cables chasis** **Kabelbaum, Fahrgestell** **Faisceau de câbles, châssis** **Cable harness chassis**	Catalogue id **20050**	Group **371**
2			Illustr. No **1013573**	Section **400**
3			Issue **VOE 64D9920050**	Page **171**
4				
5				

VOLVO

BL61

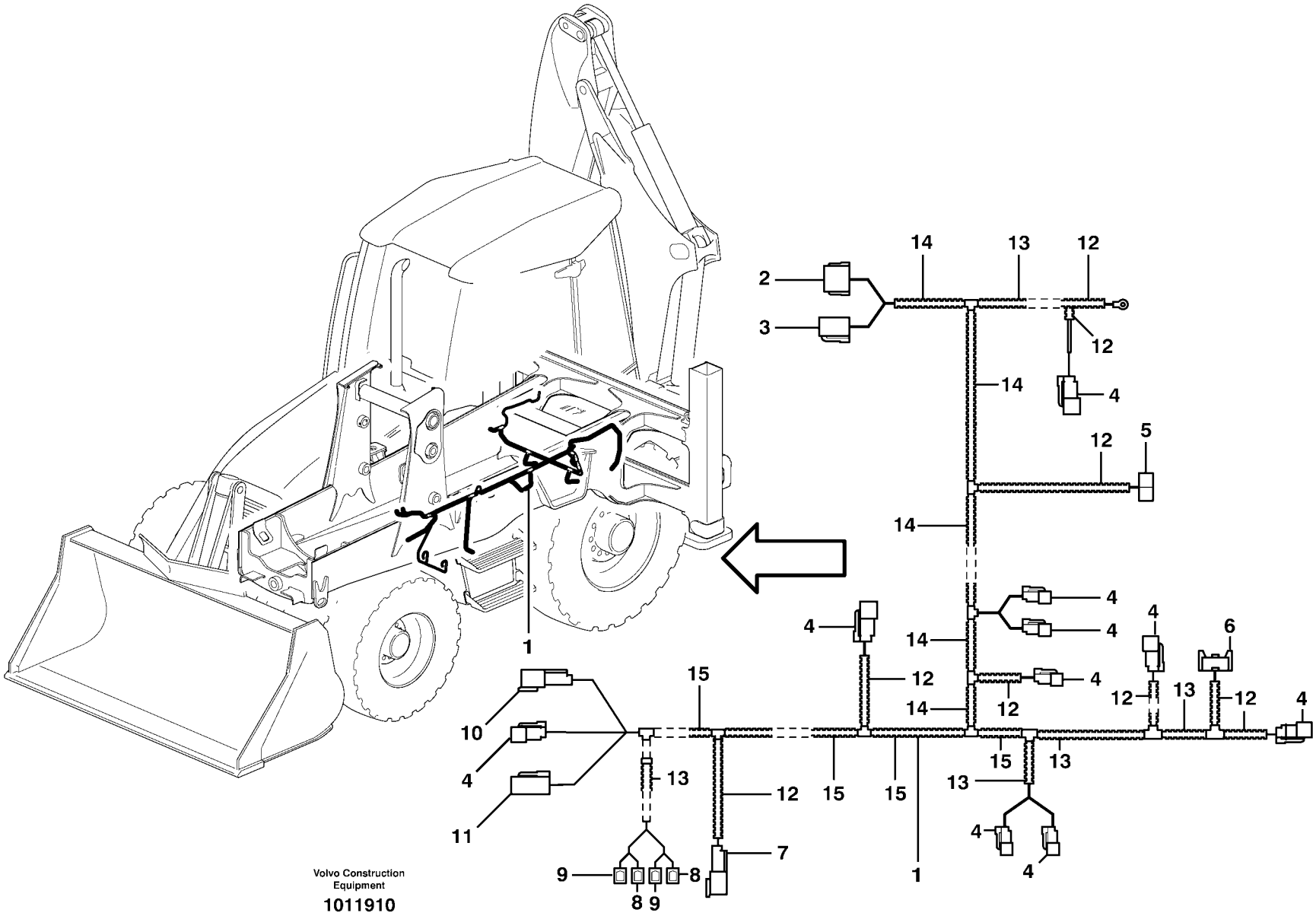
Volvo Construction Equipment
1011910

Fig.	Part No.	Quantity 1	2	3	PS	KIT	Description	Dénomination	Bezeichnung	Denominación	Notes
	VOE 11886210	1					Wire harness	Faisceau electrique	Kabelbaum	Manojo cables	S/N - 10149
1	**VOE 11887385**	1					Wire harness	Faisceau electrique	Kabelbaum	Manojo cables	S/N 10150 - 10476
1	**VOE 11888267**	1					Wire harness	Faisceau electrique	Kabelbaum	Manojo cables	S/N 10477 - 10626
1	**VOE 11888536**	1					Wire harness	Faisceau electrique	Kabelbaum	Manojo cables	S/N 10627 -
							•CONNECTED TO:	•CONNECTÉ A:	•ANGESCHLOSSEN:	•CONECTADO A:	
							••Cable harness Chassis	••Faisceau de câbles, châ	••Kabelbaum Fahrgestell	••Haz de cables, chasis	X11, X40
							••Float Position Valve	••Soupape Pos.flottante	••Schwimmventil	••Valvula Pos Flotacion	MA19, X112
							••Earth	••Terre	••Erde	••Tierra	X163
							••Horn	••Avertisseur sonore	••Signalhorn	••Avisador sonoro	X201
							••Hand brake	••Frein à main	••Handbremse	••Freno de mano	X75
							••Boom lock	••Verrouillage de flèche	••Auslegersperre	••Bloqueo de la pluma	X74
							••Hammer	••Marteau	••Hammer	••Martillo	X73
							••Valve Boom Suspension	••Valve, suspension des br	••Ventil Hubgerüstdämpfun	••Válvula, suspensión de b	X78, X79
							••Overload warning	••Avertisseur de surcharge	••Überlastwarnung	••Advertencia de sobrecarg	X109
							••Sideshift digging equipm	••Equipement excavateur à	••Seitenversch. Baggeragg	••Desplazamiento lateral, u	X72
							••Reverse-motion alarm	••Avertisseur de recul	••Ruckfahrwarner	••Senal acustica de mar	X561
							••Hydraulic oil filter	••Filtre hydraulique	••Filter hydraulik	••Filtro hidraulico	X170
							••Starter Relay	••Relais Demarra	••Anlassrelais	••Rele Arranque	X60
							••Wshld Washer	••Lave-glace	••Frontsch.spuler	••Lavaparabrisas	X311-X314
							••Flow regulator Hydr. oil	••Régulateur de débit, huil	••Förderstromregler Hydr.-	••Regulador de caudal, ac	X59
							••Temp. sensor Hydraulic	••Détecteur de température	••Temp.-Geber Hydrauliköl	••Sensor de temperatura d	X70, X71
2	**VOE 11709766**	1					•Connector	•Raccord	•Anschluss	•Union	X11
3	**VOE 874960**	1					•Housing	•Isolant	•Isolator	•Aislador	X40
4	**VOE 874955**	10					•Insulator	•Isolateur	•Isolator	•Aislador	MA8, MA12, MA13, MA15, MA18, MA19, MA22, SE8, SE10, X561, SE4
5		1			NS		•Insulator	•Isolateur	•Isolator	•Aislador	X201
6	**VOE 976256**	1					•Insulator	•Isolateur	•Isolator	•Aislador	MA14
7	**VOE 11709787**	1					•Connector	•Raccord	•Anschluss	•Union	RE1
8	**VOE 973119**	2					•Cable terminal	•Cosse cable	•Flachsteckhülse	•Terminal cable	X312, X314

1	
2	
3	
4	
5	

Haz de cables del bloque de ventiladores traseros
Kabelbaum hinterer Ventilblock
Faisceau de câbles, bloc-distributeur arrière
Cable harness rear valve block

Catalogue id	Group
20050	**371**
Illustr. No	Section
1011910	**450**
Issue	Page
VOE 64D9920050	**173**

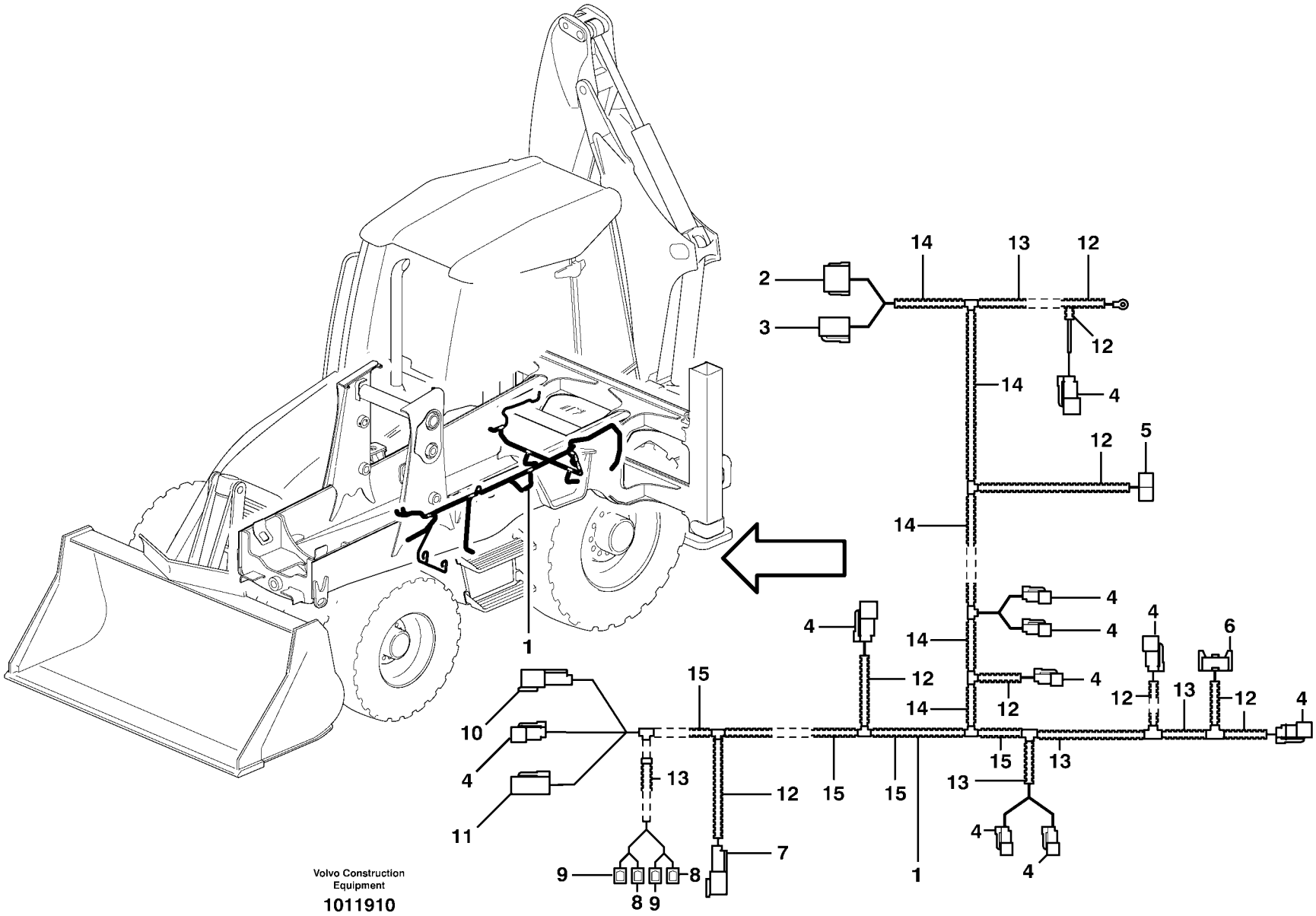
Volvo Construction Equipment
1011910

Fig.	Part No.	Quantity 1	2	3	PS	KIT	Description	Dénomination	Bezeichnung	Denominación	Notes
9	**VOE 973120**	2					•Cable terminal	•Cosse cable	•Flachsteckhülse	•Terminal cable	X311, X313
10	**VOE 874954**	2					•Connector	•Raccord	•Anschluss	•Union	SE9
11	**VOE 874654**	1					•Rcpt Housing	•Douille Isolan.	•Steckbuchse	•Aislador Mangui	SE12
12	**VOE 11170006**	REQ					•Hose	•Durit	•Schlauch	•Tubo flexible	
13	**VOE 4803746**	REQ					•Hose	•Durit	•Schlauch	•Tubo flexible	
14	**VOE 4803752**	REQ					•Hose	•Durit	•Schlauch	•Tubo flexible	
15	**VOE 4803748**	REQ					•Hose	•Durit	•Schlauch	•Tubo flexible	

1		**Haz de cables del bloque de ventiladores traseros** **Kabelbaum hinterer Ventilblock** **Faisceau de câbles, bloc-distributeur arrière** **Cable harness rear valve block**	Catalogue id **20050**	Group **371**
2			Illustr. No **1011910**	Section **450**
3			Issue **VOE 64D9920050**	Page **175**
4				
5				

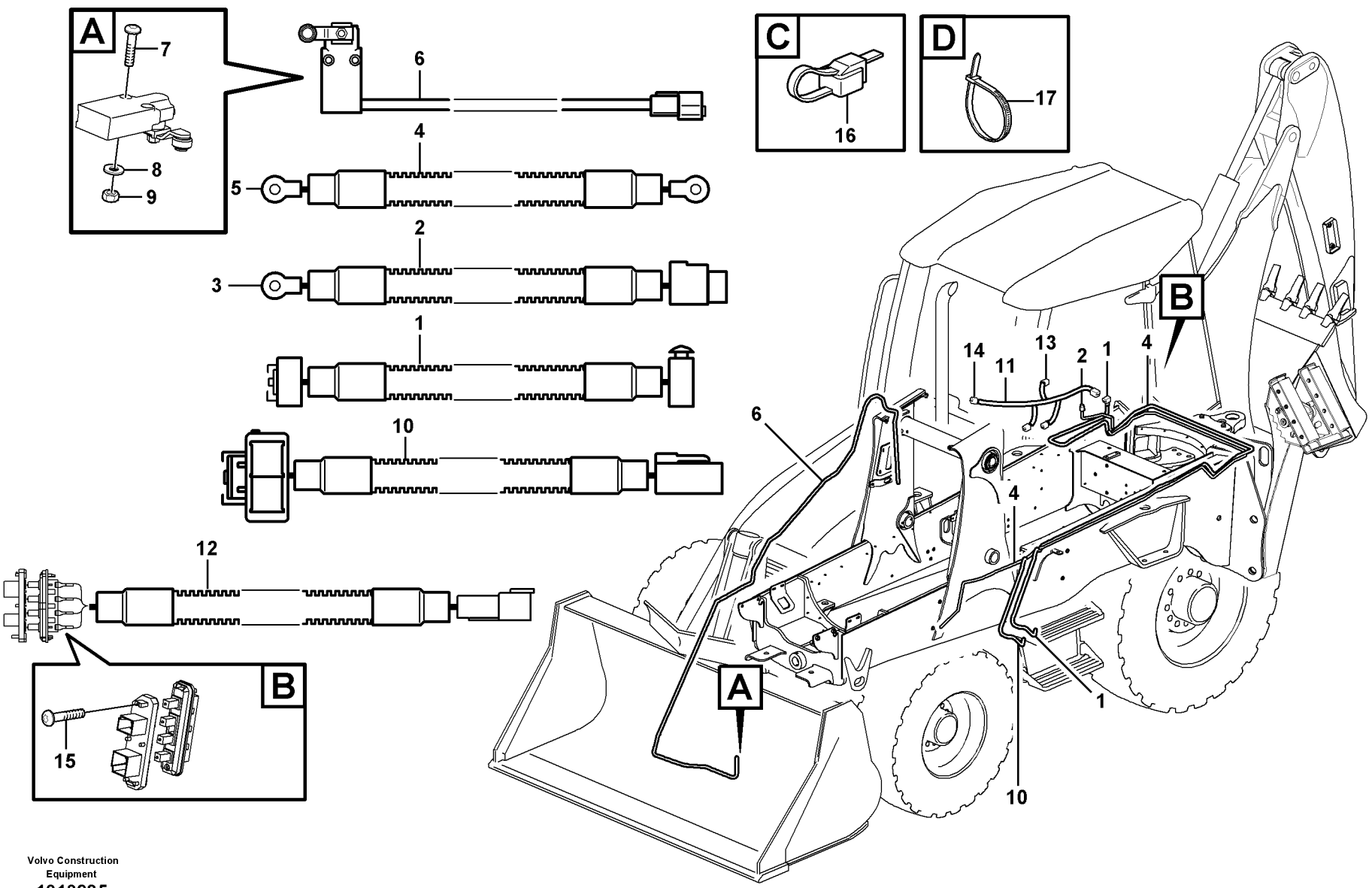

Volvo Construction Equipment

1013285

Fig.	Part No.	Quantity 1	2	3	PS	KIT	Description	Dénomination	Bezeichnung	Denominación	Notes
1	**VOE 11886120**	1					Wire harness	Faisceau electrique	Kabelbaum	Manojo cables	MAIN FUSE TO CAB FLOOR HARNESS
2	**VOE 11885812**	1					Wire Assembly	Câble	Leitung	Cable	CABLE CHASSIS GROUND T CAB
3	**VOE 11882336**	1					•Connector	•Raccord	•Anschluss	•Union	
4	**VOE 11884215**	1					Wire Assembly	Câble	Leitung	Cable	ENGINE GROUND TO CHAS GROUND CABLE
	VOE 4803746	REQ					•Hose	•Durit	•Schlauch	•Tubo flexible	
5	**VOE 944158**	1					•Cable terminal	•Cosse cable	•Flachsteckhülse	•Terminal cable	
6	**VOE 11881207**	1					Switch	Commutateur	Schalter	Contactor	
7	**VOE 969557**	2					6-pt skt screw	Vis creuse de 6	Hohlschraube	Racor 6-dientes	
8	**VOE 13940090**	2					Washer	Rondelle	Scheibe	Arandela	
9	**VOE 13975237**	2					Lock nut	Contre-ecrou	Sicherungsmutter	Contratuerca	
10	**VOE 11886139**		1				Wire harness	Faisceau electrique	Kabelbaum	Manojo cables	WIRE HARNESS A/C SUPPL
11			1				Cable harness	Faisceau cables	Kabelbaum	Manojo cables	WIRE HARNESS CAB HEATE See group 371, Page 199
12	**VOE 11884152**		1				Cable harness	Faisceau cables	Kabelbaum	Manojo cables	WINDOW SWITCH
	VOE 874802		1				•Housing	•Isolant	•Isolator	•Aislador	
13	**VOE 11890298**		1				Switch	Interrupteur	Trennschalter	Interruptor	
14	**VOE 11305263**		2				Relay	Relais	Relais	Rele	
15	**VOE 975358**		2				Screw	Vis	Schraube	Tornillo	
16	**VOE 980883**	51					Strip Clamp	Ruban Serrage	Kabelbinder	Abraz Cinta	
17	**VOE 4881438**	12					Strip Clamp	Ruban Serrage	Kabelbinder	Abraz Cinta	

1	**11880004**
2	**11298204**
3	
4	
5	

Otros cables
Übrige Leitungen
Autres câbles électriques
Other cables

Catalogue id	Group
20050	**371**
Illustr. No	Section
1013285	**500**
Issue	Page
VOE 64D9920050	**177**

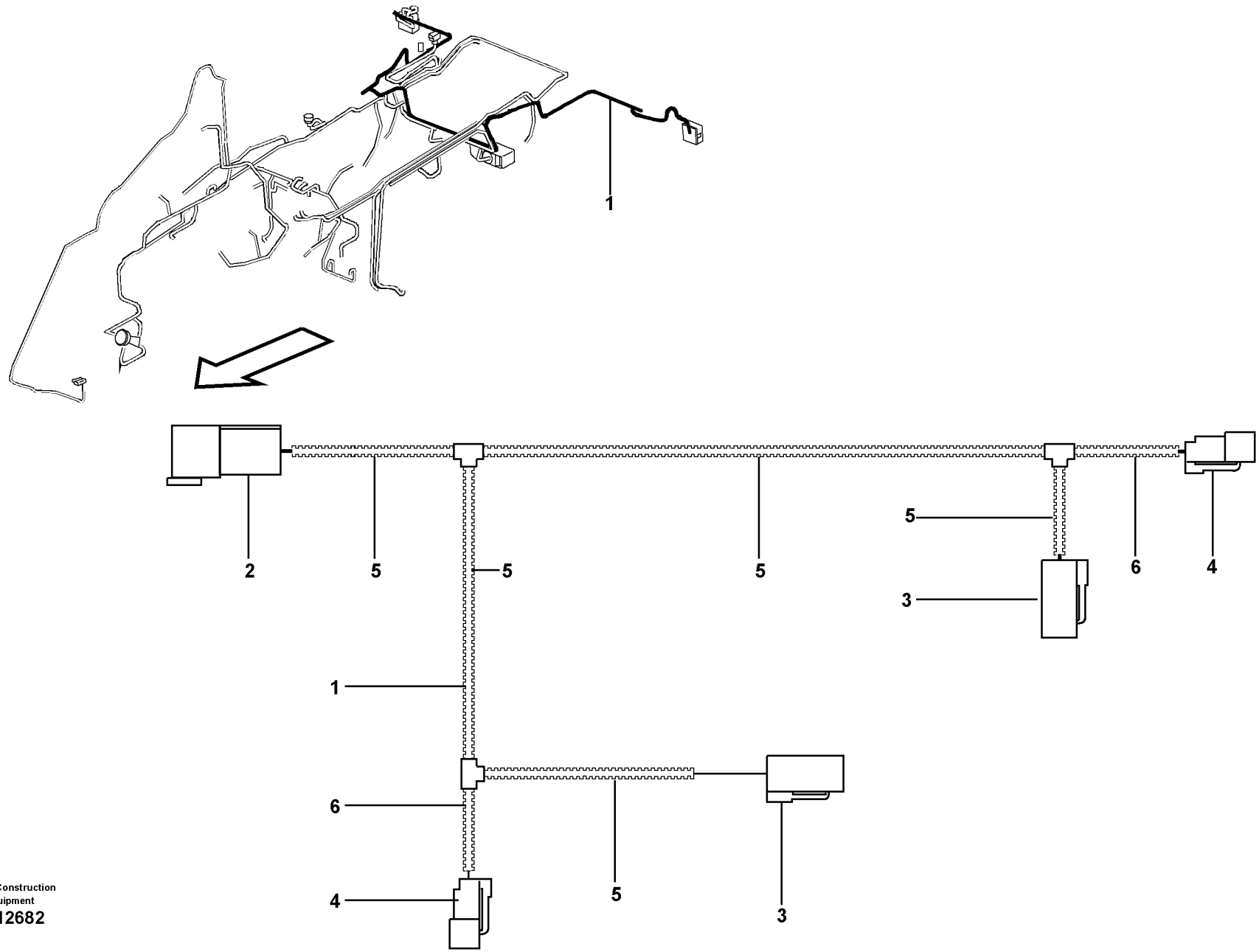

Volvo Construction Equipment
1012682

Fig.	Part No.	Quantity 1	2	3	PS	KIT	Description	Dénomination	Bezeichnung	Denominación	Notes
1	**VOE 11884512**	1					Cable harness	Faisceau cables	Kabelbaum	Manojo cables	
							••CONNECTED TO:	••CONNECTÉ A:	••ANGESCHLOSSEN:	••CONECTADO A:	
							••Cable harness	••Faisceau cables	••Kabelbaum	••Manojo cables	X42
							••Tail light	••Feu ar	••Heckleuchte	••Piloto trasero	LH X53, RHX52
							••No.plate lamp	••Eclairage plaque	••Kennzeichenleuchte	••Lampara letrero	X90, X91
2	**VOE 874959**	1					•Housing	•Isolant	•Isolator	•Aislador	X42
3	**VOE 874957**	2					•Housing	•Isolant	•Isolator	•Aislador	X52, X53
4	**VOE 874955**	2					•Insulator	•Isolateur	•Isolator	•Aislador	X90, X91
5	**VOE 4803746**	5					•Hose	•Durit	•Schlauch	•Tubo flexible	
6	**VOE 11170006**	2					•Hose	•Durit	•Schlauch	•Tubo flexible	
	VOE 11883263	20					Cable Tie	Serre-cable	Kabelbinder	Abrazadera	

1	**S/N - 10336**	**Manojo cables, trasero** **Kabelbaum, Beleuchtung, hinten** **Faisceau câbles, eclairage, arrière** **Cable harness, tail light**	Catalogue id **20050**	Group **371**
2			Illustr. No **1012682**	Section **600**
3				
4			Issue **VOE 64D9920050**	Page **179**
5		**11891000, 11891002, 11891050, 11891248, 11891249**		

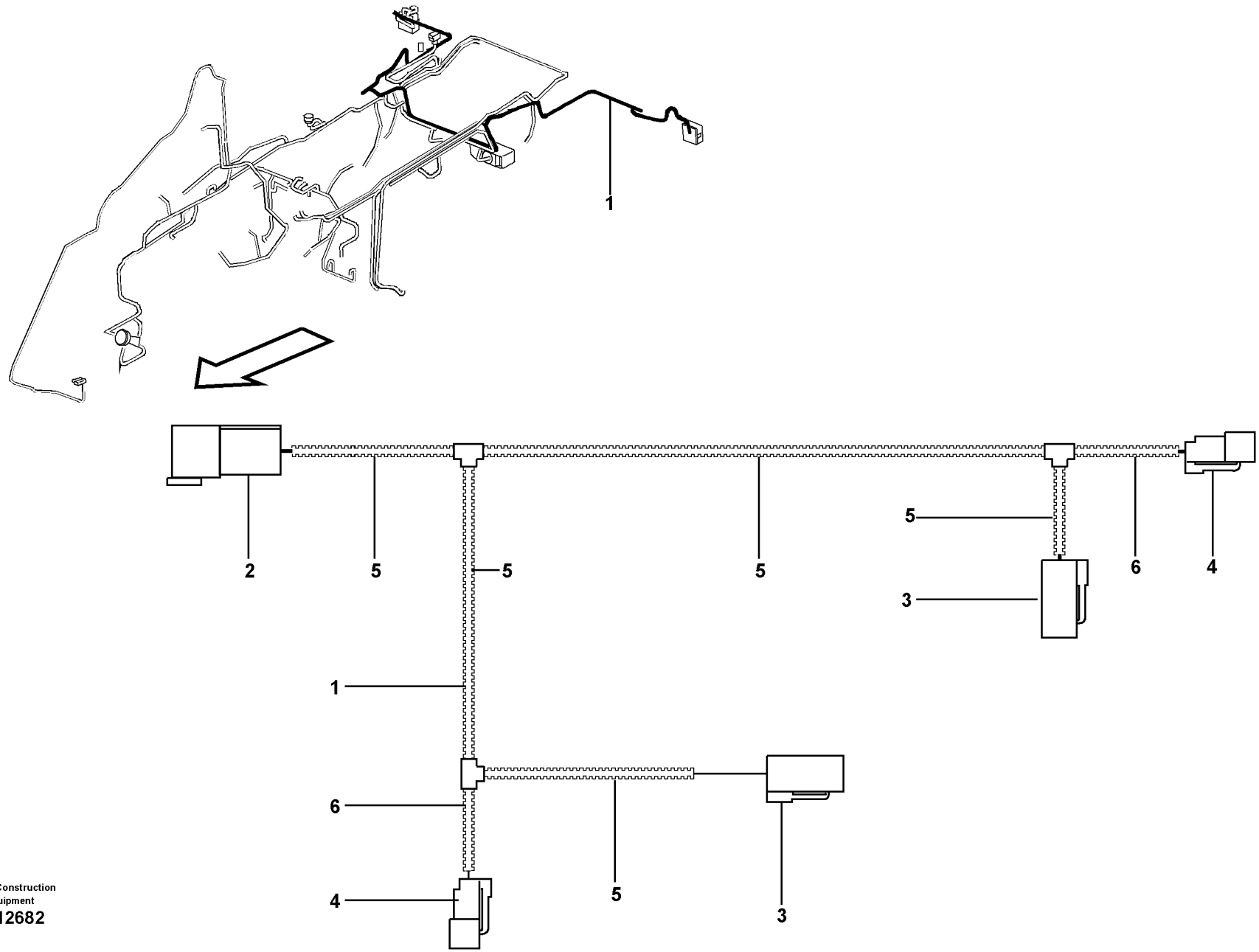

Volvo Construction Equipment
1012682

Fig.	Part No.	Quantity 1	2	3	PS	KIT	Description	Dénomination	Bezeichnung	Denominación	Notes
1	**VOE 11884512**	1					Cable harness	Faisceau cables	Kabelbaum	Manojo cables	
							••CONNECTED TO:	••CONNECTÉ A:	••ANGESCHLOSSEN:	••CONECTADO A:	
							••Cable harness	••Faisceau cables	••Kabelbaum	••Manojo cables	X42
							••Tail light	••Feu ar	••Heckleuchte	••Piloto trasero	LH X53, RHX52
							••No.plate lamp	••Eclairage plaque	••Kennzeichenleuchte	••Lampara letrero	X90, X91
2	**VOE 874959**	1					•Housing	•Isolant	•Isolator	•Aislador	X42
3	**VOE 874957**	2					•Housing	•Isolant	•Isolator	•Aislador	X52, X53
4	**VOE 874955**	2					•Insulator	•Isolateur	•Isolator	•Aislador	X90, X91
5	**VOE 4803746**	5					•Hose	•Durit	•Schlauch	•Tubo flexible	
6	**VOE 11170006**	2					•Hose	•Durit	•Schlauch	•Tubo flexible	
	VOE 11883263	20					Cable Tie	Serre-cable	Kabelbinder	Abrazadera	

1	**SER NO -10020**	**Manojo cables, trasero** **Kabelbaum, Beleuchtung, hinten** **Faisceau câbles, eclairage, arrière** **Cable harness, tail light**	Catalogue id **20050**	Group **371**
2			Illustr. No **1012682**	Section **610**
3				
4			Issue **VOE 64D9920050**	Page **181**
5		**11891246, 11891247**		

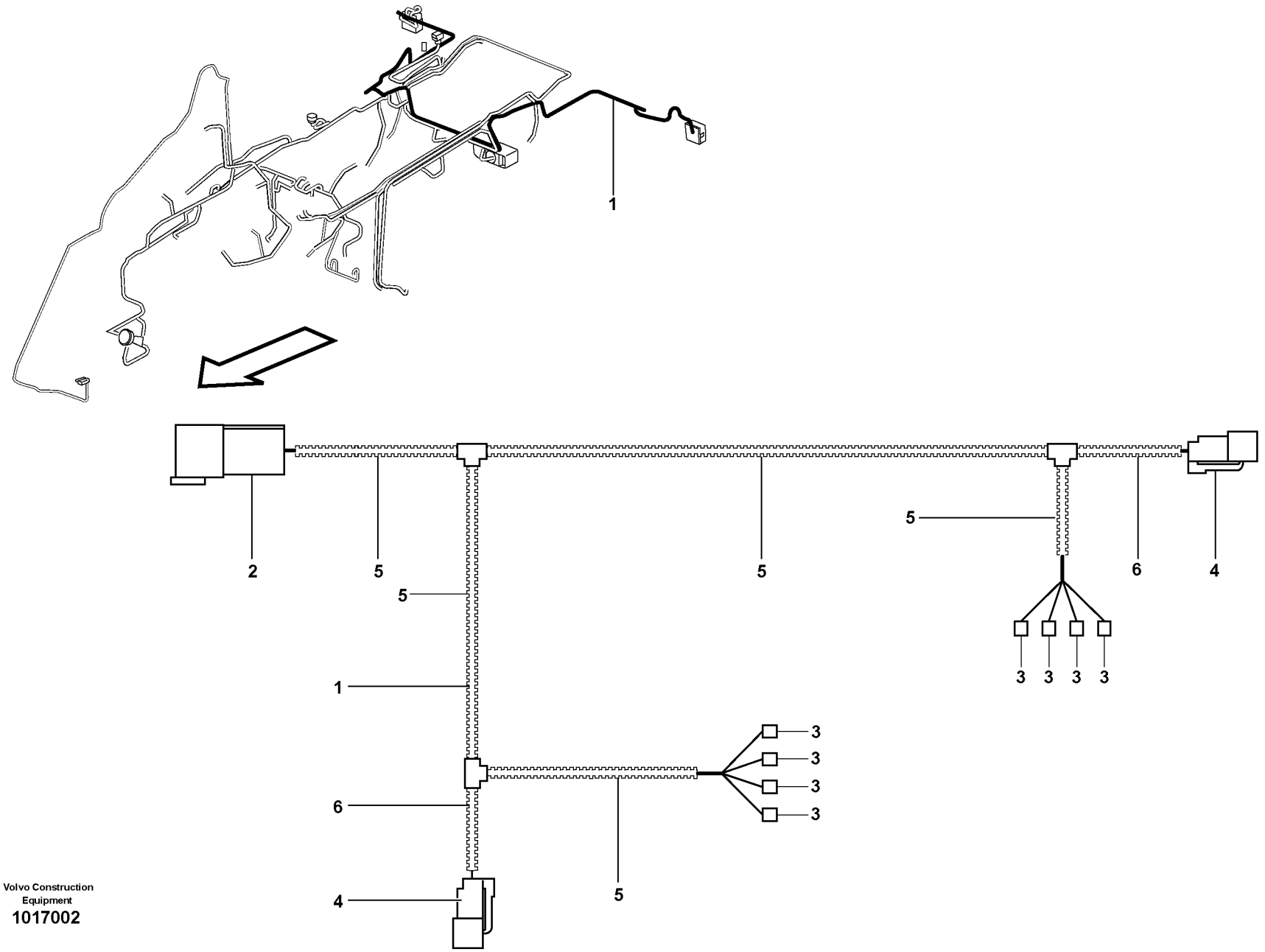

Volvo Construction Equipment

1017002

Fig.	Part No.	Quantity 1	2	3	PS	KIT	Description	Dénomination	Bezeichnung	Denominación	Notes
1	**VOE 11886386**	1					Wire harness	Faisceau electrique	Kabelbaum	Manojo cables	
							••CONNECTED TO:	••CONNECTÉ A:	••ANGESCHLOSSEN:	••CONECTADO A:	
							••Cable harness	••Faisceau cables	••Kabelbaum	••Manojo cables	X42
							••Tail light	••Feu ar	••Heckleuchte	••Piloto trasero	LH X53, RHX52
							••No.plate lamp	••Eclairage plaque	••Kennzeichenleuchte	••Lampara letrero	X90, X91
2	**VOE 874959**	1					•Housing	•Isolant	•Isolator	•Aislador	X42
3	**VOE 973119**	8					•Cable terminal	•Cosse cable	•Flachsteckhülse	•Terminal cable	X52, X53
4	**VOE 874955**	2					•Insulator	•Isolateur	•Isolator	•Aislador	X90, X91
5	**VOE 4803746**	5					•Hose	•Durit	•Schlauch	•Tubo flexible	
6	**VOE 11170006**	2					•Hose	•Durit	•Schlauch	•Tubo flexible	
	VOE 11883263	20					Cable Tie	Serre-cable	Kabelbinder	Abrazadera	

1	**SER NO 10021-**	**Manojo cables, trasero** **Kabelbaum, Beleuchtung, hinten** **Faisceau câbles, eclairage, arrière** **Cable harness, tail light**	Catalogue id **20050**	Group **371**
2			Illustr. No **1017002**	Section **620**
3				
4			Issue **VOE 64D9920050**	Page **183**
5		**11891246, 11891247**		

VOLVO

BL61

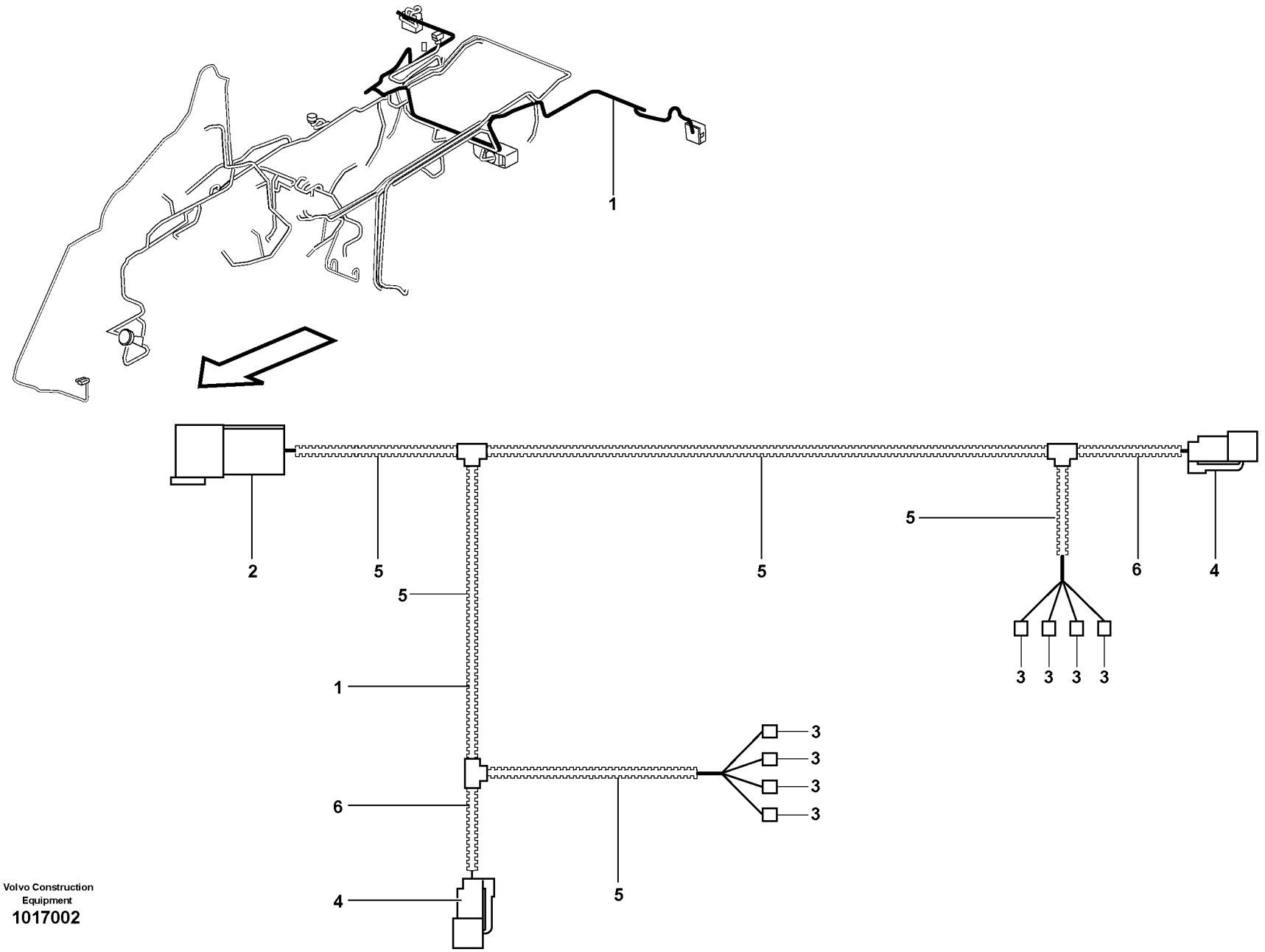

Volvo Construction Equipment

1017002

Fig.	Part No.	Quantity 1	2	3	PS	KIT	Description	Dénomination	Bezeichnung	Denominación	Notes
1	**VOE 11886386**	1					Wire harness	Faisceau electrique	Kabelbaum	Manojo cables	
							••CONNECTED TO:	••CONNECTÉ A:	••ANGESCHLOSSEN:	••CONECTADO A:	
							••Cable harness	••Faisceau cables	••Kabelbaum	••Manojo cables	X42
							••Tail light	••Feu ar	••Heckleuchte	••Piloto trasero	LH X53, RHX52
							••No.plate lamp	••Eclairage plaque	••Kennzeichenleuchte	••Lampara letrero	X90, X91
2	**VOE 874959**	1					•Housing	•Isolant	•Isolator	•Aislador	X42
3	**VOE 973119**	8					•Cable terminal	•Cosse cable	•Flachsteckhülse	•Terminal cable	X52, X53
4	**VOE 874955**	2					•Insulator	•Isolateur	•Isolator	•Aislador	X90, X91
5	**VOE 4803746**	5					•Hose	•Durit	•Schlauch	•Tubo flexible	
6	**VOE 11170006**	2					•Hose	•Durit	•Schlauch	•Tubo flexible	
	VOE 11883263	20					Cable Tie	Serre-cable	Kabelbinder	Abrazadera	

1	**S/N 10337 -**	**Manojo cables, trasero** **Kabelbaum, Beleuchtung, hinten** **Faisceau câbles, eclairage, arrière** **Cable harness, tail light**	Catalogue id **20050**	Group **371**
2			Illustr. No **1017002**	Section **630**
3				
4			Issue **VOE 64D9920050**	Page **185**
5		**11891000, 11891002, 11891050, 11891248, 11891249**		

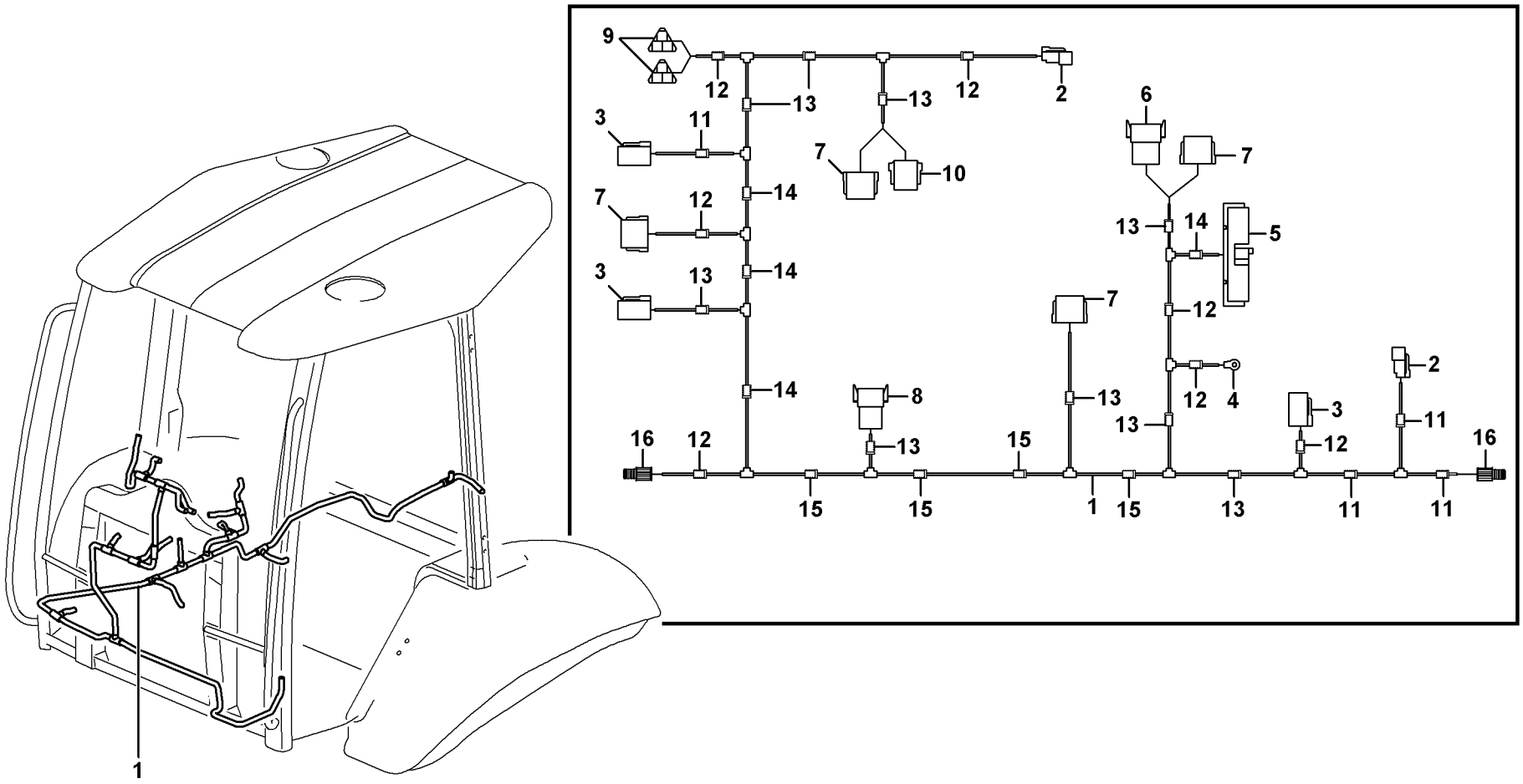

Volvo Construction Equipment

1012753

Fig.	Part No.	Quantity 1	2	3	PS	KIT	Description	Dénomination	Bezeichnung	Denominación	Notes
1	**VOE 11885470**	1					Cable harness	Faisceau cables	Kabelbaum	Manojo cables	FRONT DASHBOARD
							••CONNECTED TO:	••CONNECTÉ A:	••ANGESCHLOSSEN:	••CONECTADO A:	
							••Switch	••Commutateur	••Schalter	••Contactor	X89 HORN SWITCH
							••Cable harness	••Faisceau cables	••Kabelbaum	••Manojo cables	X46 REAR LAMPS
							••Earth	••Terre	••Erde	••Tierra	X177
							••Control Unit	••Unite Commande	••Steuergerät	••Unidad Mando	X4 VECU
							••Cable harness	••Faisceau cables	••Kabelbaum	••Manojo cables	X34, X48 RH SIDE DASHBOARD
							••Switch	••Commutateur	••Schalter	••Contactor	X14 HYDRAULIC LEVER SWITCHES
							••Cable harness	••Faisceau cables	••Kabelbaum	••Manojo cables	X32 CAB.EXTERIOR
							••Windshield wiper Front	••Essuie-glace, pare-brise	••Scheibenwischer vorn	••Limpiaparabrisas delant	X44
							••Switch	••Commutateur	••Schalter	••Commutador	X47, X16 LH, RH COMBI SWITCH
							••Stop Lt Switch	••Contacteur Stop	••Br Lichtschalt	••Cont Luz Freno	X61, X62
							••Instr Panel	••Planche de bord	••Instr Tafel	••Panel Instrum	X15, X33, FRONT
							••Four-wheel steering	••Quatre roues directrices	••Vierradlenkung	••Dirección en cuatro rued	X102
							••Switch	••Commutateur	••Schalter	••Contactor	X203 HAMMER SWITCH
							••Switch	••Commutateur	••Schalter	••Contactor	X204 DIFF LOCK
2	**VOE 874955**	2					•Insulator	•Isolateur	•Isolator	•Aislador	X89, X102
3	**VOE 874960**	3					•Housing	•Isolant	•Isolator	•Aislador	X46, X44, X47
4		1			NS		•Cable terminal	•Cosse cable	•Flachsteckhülse	•Terminal cable	X177
5		1			NS		•Connector	•Raccord	•Anschluss	•Union	X4
6	**VOE 874965**	1					•Connector	•Raccord	•Anschluss	•Union	X34
	VOE 14370889	1					•Spacer	•Partie Intermédiaire	•Zwischenstück	•Espaciador	
7	**VOE 11709766**	4					•Connector	•Raccord	•Anschluss	•Union	X14, X15, X16, X48
8	**VOE 874114**	1					•Connector	•Raccord	•Anschluss	•Conexión	X32
	VOE 14370887	1					•Key	•Clavette	•Keil	•Llave (cuna)	
9	**VOE 874654**	2					•Rcpt Housing	•Douille Isolan.	•Steckbuchse	•Aislador Mangui	X61, X62
10	**VOE 11709767**	1					•Connector	•Raccord	•Anschluss	•Union	X33

1		**Haz de cables, panel central** **Kabelbäume, Mitteltafel** **Faisceau de câbles, pupitre central** **Cable harness, panel**	Catalogue id **20050**	Group **371**
2			Illustr. No **1012753**	Section **650**
3			Issue **VOE 64D9920050**	Page **187**
4				
5		**SER NO -10020**		

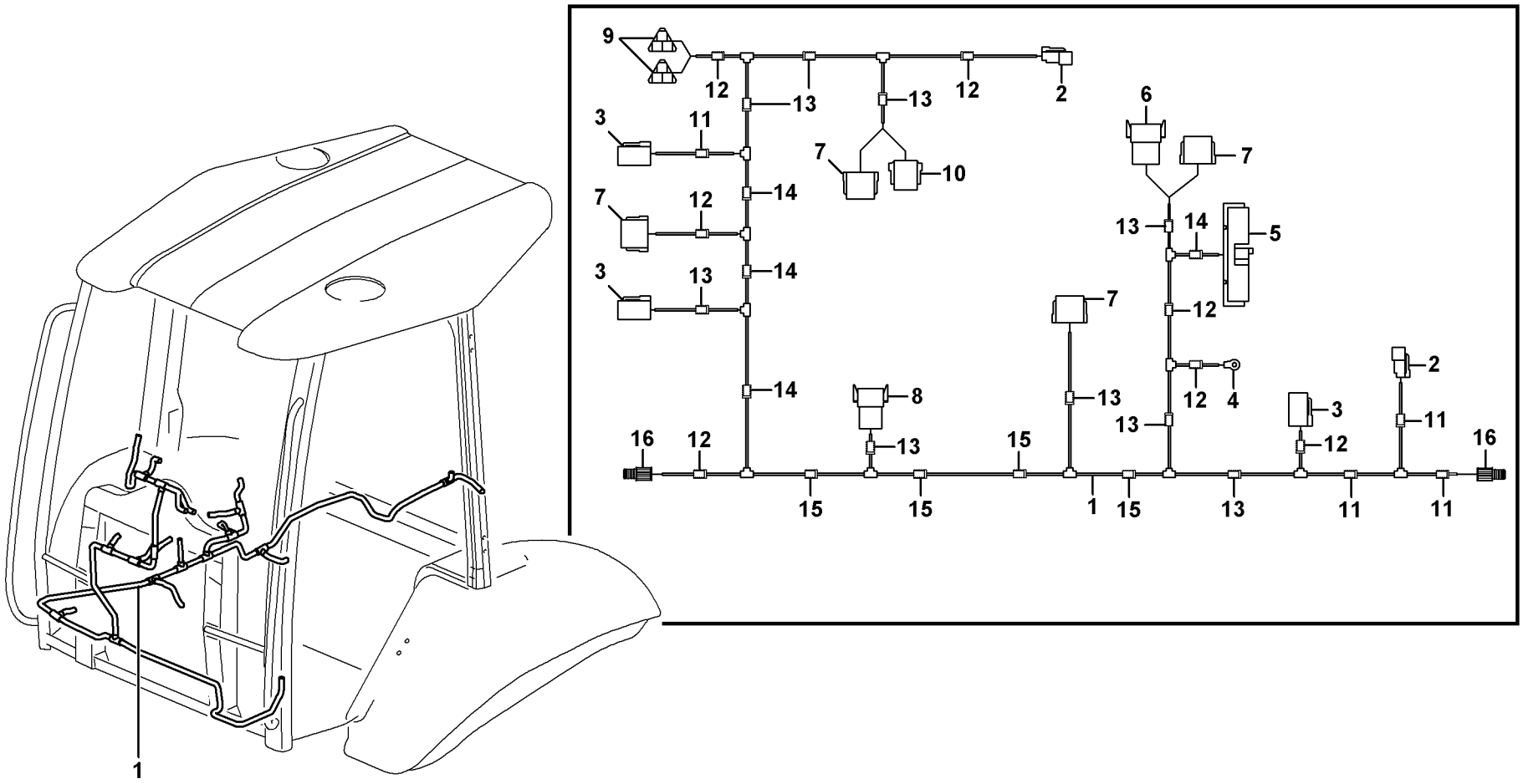

Volvo Construction Equipment

1012753

Fig.	Part No.	Quantity 1	2	3	PS	KIT	Description	Dénomination	Bezeichnung	Denominación	Notes
11	**VOE 4803745**	REQ					•Hose	•Durit	•Schlauch	•Tubo flexible	
12	**VOE 4803746**	REQ					•Hose	•Durit	•Schlauch	•Tubo flexible	
13	**VOE 4803748**	REQ					•Hose	•Durit	•Schlauch	•Tubo flexible	
14	**VOE 4803751**	REQ					•Hose	•Durit	•Schlauch	•Tubo flexible	
15	**VOE 4803752**	REQ					•Hose	•Durit	•Schlauch	•Tubo flexible	
16	**VOE 949005**	2					•Rcpt Housing	•Douille Isolan.	•Steckbuchse	•Aislador Mangui	X203,X204

1		**Haz de cables, panel central** **Kabelbäume, Mitteltafel** **Faisceau de câbles, pupitre central** **Cable harness, panel**	Catalogue id **20050**	Group **371**
2				
3			Illustr. No **1012753**	Section **650**
4			Issue **VOE 64D9920050**	Page **189**
5		**SER NO -10020**		

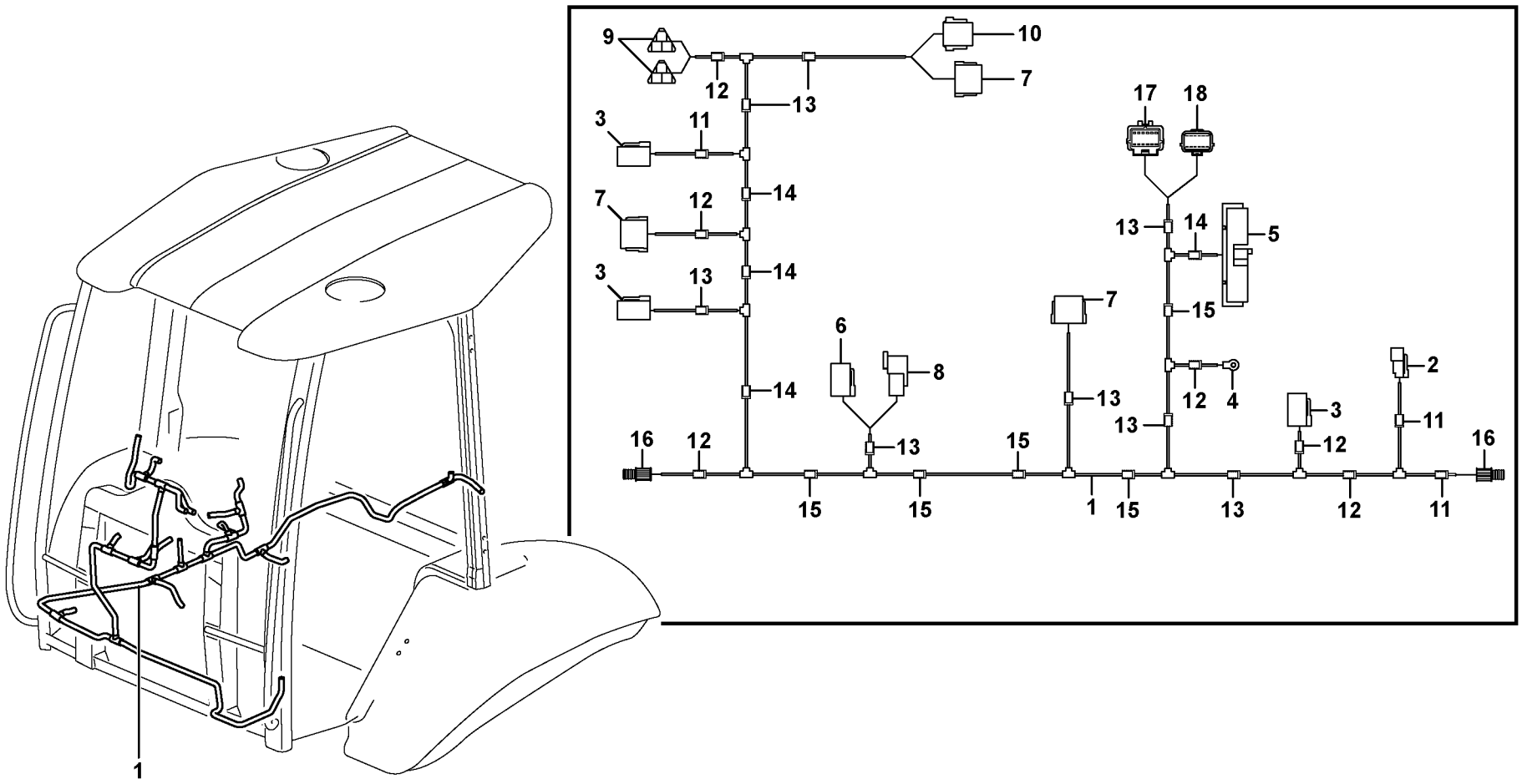

Volvo Construction Equipment

1017414

Fig.	Part No.	Quantity 1	2	3	PS	KIT	Description	Dénomination	Bezeichnung	Denominación	Notes
1	**VOE 11887022**	1			SS		Wire harness	Faisceau electrique	Kabelbaum	Manojo cables	S/N - 10273
1	**VOE 11887637**	1					Wire harness	Faisceau electrique	Kabelbaum	Manojo cables	FRONT DASHBOARD S/N 10274 - 10626
1	**VOE 11888816**	1					Wire harness	Faisceau electrique	Kabelbaum	Manojo cables	S/N 10627 -
							••CONNECTED TO:	••CONNECTÉ A:	••ANGESCHLOSSEN:	••CONECTADO A:	
							••Switch	••Commutateur	••Schalter	••Contactor	X103 HORN SWITCH
							••Cable harness	••Faisceau cables	••Kabelbaum	••Manojo cables	X46 REAR LAMPS
							••Earth	••Terre	••Erde	••Tierra	X177
							••Control Unit	••Unite Commande	••Steuergerät	••Unidad Mando	X4 VECU
							••Cable harness	••Faisceau cables	••Kabelbaum	••Manojo cables	X34, X48 RH SIDE DASHBOARD
							••Switch	••Commutateur	••Schalter	••Contactor	X14 HYDRAULIC LEVER SWITCHES
							••Cable harness	••Faisceau cables	••Kabelbaum	••Manojo cables	X36, X37 CAB.EXTERIOR
							••Windshield wiper Front	••Essuie-glace, pare-brise	••Scheibenwischer vorn	••Limpiaparabrisas delant	X44
							••Switch	••Commutateur	••Schalter	••Commutador	X47, X16 LH, RH COMBI SWITCH
							••Stop Lt Switch	••Contacteur Stop	••Br Lichtschalt	••Cont Luz Freno	X61, X62
							••Instr Panel	••Planche de bord	••Instr Tafel	••Panel Instrum	X15, X33, FRONT
							••Switch	••Commutateur	••Schalter	••Contactor	X203 HAMMER SWITCH
							••Switch	••Commutateur	••Schalter	••Contactor	X204 DIFF LOCK
2	**VOE 874955**	1					•Insulator	•Isolateur	•Isolator	•Aislador	X103
3	**VOE 874960**	3					•Housing	•Isolant	•Isolator	•Aislador	X46, X44, X47
4		1			NS		•Cable terminal	•Cosse cable	•Flachsteckhülse	•Terminal cable	X177
5		1			NS		•Connector	•Raccord	•Anschluss	•Union	X4
6	**VOE 874957**	1					•Housing	•Isolant	•Isolator	•Aislador	X36
6	**VOE 874958**	1					•Key	•Clavette	•Keil	•Llave (cuna)	
7	**VOE 11709766**	3					•Connector	•Raccord	•Anschluss	•Union	X14, X15, X16
7	**VOE 874967**	1					•Key	•Clavette	•Keil	•Llave (cuna)	
8	**VOE 874802**	1					•Housing	•Isolant	•Isolator	•Aislador	X37

1	**11891076, 11891077**
2	
3	
4	
5	

Haz de cables, panel central
Kabelbäume, Mitteltafel
Faisceau de câbles, pupitre central
Cable harness, panel

Catalogue id	Group
20050	**371**
Illustr. No	Section
1017414	**655**
Issue	Page
VOE 64D9920050	**191**

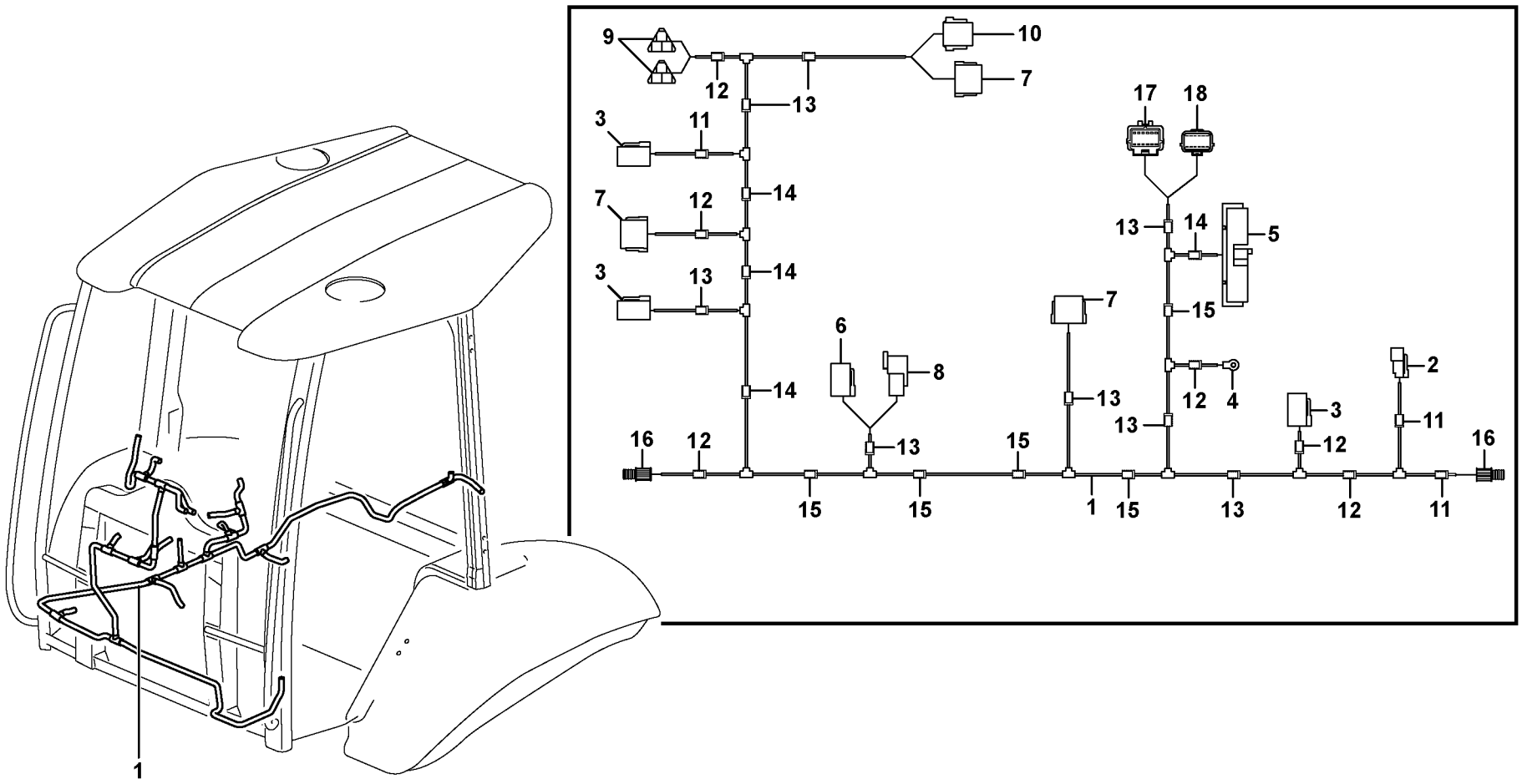

Volvo Construction Equipment

1017414

Fig.	Part No.	Quantity 1	2	3	PS	KIT	Description	Dénomination	Bezeichnung	Denominación	Notes
8	**VOE 14370883**	1					•Spacer	•Partie Intermédiaire	•Zwischenstück	•Espaciador	
9	**VOE 874654**	2					•Rcpt Housing	•Douille Isolan.	•Steckbuchse	•Aislador Mangui	X61, X62
10	**VOE 11709767**	1					•Connector	•Raccord	•Anschluss	•Union	X33
11	**VOE 4803745**	REQ					•Hose	•Durit	•Schlauch	•Tubo flexible	
12	**VOE 4803746**	REQ					•Hose	•Durit	•Schlauch	•Tubo flexible	
13	**VOE 4803748**	REQ					•Hose	•Durit	•Schlauch	•Tubo flexible	
14	**VOE 4803751**	REQ					•Hose	•Durit	•Schlauch	•Tubo flexible	
15	**VOE 4803752**	REQ					•Hose	•Durit	•Schlauch	•Tubo flexible	
16	**VOE 949005**	2					•Rcpt Housing	•Douille Isolan.	•Steckbuchse	•Aislador Mangui	X203,X204
17		1			NS		•Connector	•Raccord	•Anschluss	•Union	X34
18		1			NS		•Connector	•Raccord	•Anschluss	•Union	X48

1	**11891076, 11891077**	**Haz de cables, panel central** **Kabelbäume, Mitteltafel** **Faisceau de câbles, pupitre central** **Cable harness, panel**	Catalogue id **20050**	Group **371**
2			Illustr. No **1017414**	Section **655**
3			Issue **VOE 64D9920050**	Page **193**
4				
5				

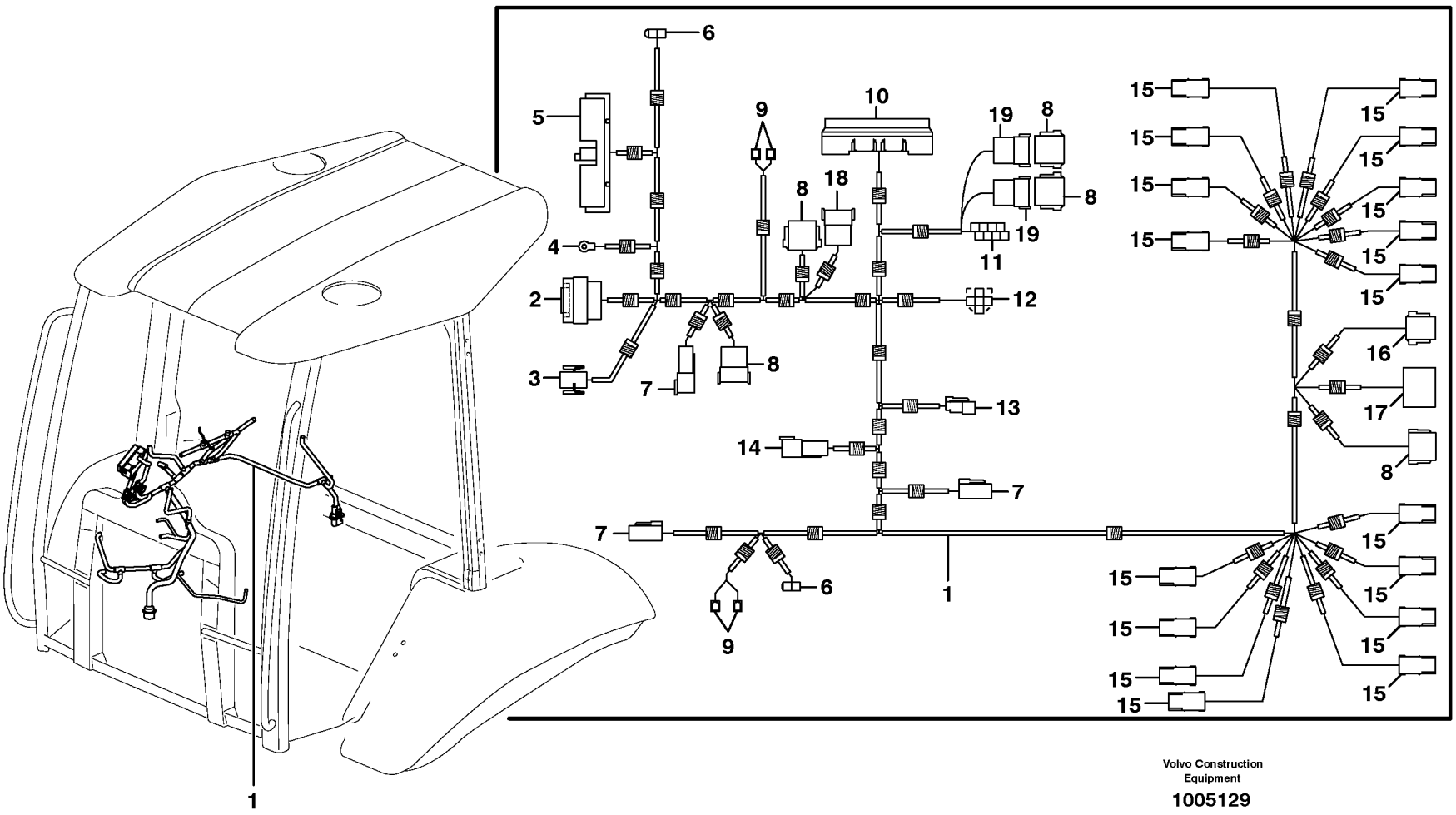

Volvo Construction Equipment

1005129

Fig.	Part No.	Quantity 1	2	3	PS	KIT	Description	Dénomination	Bezeichnung	Denominación	Notes
1	**VOE 11884511**	1					Cable harness	Faisceau cables	Kabelbaum	Manojo cables	RH SIDE DASHBOARD S/N - 10020
1	**VOE 11886104**	1					Wire harness	Faisceau electrique	Kabelbaum	Manojo cables	S/N 10021 - 10093
1	**VOE 11886639**	1					Wire harness	Faisceau electrique	Kabelbaum	Manojo cables	S/N 10094 - 10404
1	**VOE 11888002**	1					Wire harness	Faisceau electrique	Kabelbaum	Manojo cables	S/N 10405 -
2		1			NS		•Connector	•Raccord	•Anschluss	•Union	X7
3		1			NS		•Connector	•Raccord	•Anschluss	•Union	X140
4		1			NS		•Cable terminal	•Cosse cable	•Flachsteckhülse	•Terminal cable	X160
5		1			NS		•Connector	•Raccord	•Anschluss	•Union	X2
6		2			NS		•Housing	•Carter	•Gehäuse	•Carter	X6, X208
7	**VOE 874957**	3					•Housing	•Isolant	•Isolator	•Aislador	X5, X58, X50
8	**VOE 11709766**	5					•Connector	•Raccord	•Anschluss	•Union	X3,X9,X19,X20,X34
9		4			NS		•Insulator	•Isolateur	•Isolator	•Aislador	X300,X301
10		1					•Fuse box	•Boite a fusibles	•Sicherungsdose	•Caja de fusibles	See group 372, Page 203
11	**VOE 1096614**	1					•Insulator	•Isolateur	•Isolator	•Aislador	X27
12		2			NS		•Housing	•Carter	•Gehäuse	•Carter	X221
13	**VOE 874955**	1					•Insulator	•Isolateur	•Isolator	•Aislador	X139
14	**VOE 874802**	1					•Housing	•Isolant	•Isolator	•Aislador	X51
15	**VOE 11881020**	17					•Housing	•Carter	•Gehäuse	•Carter	X120 - 136
16	**VOE 11709767**	1					•Connector	•Raccord	•Anschluss	•Union	X30
17		1					•Starter Switch	•Commutat. demarreur	•Anlasschalter	•Contact Arranq	X8 See group 380, Page 207
18	**VOE 874965**	1					•Connector	•Raccord	•Anschluss	•Union	X48
19	**VOE 11988978**	2					•Connector	•Raccord	•Anschluss	•Union	

1		**Haz de cables, panel de mandos derecho** **Kabelbaum, rechte Bedientafel** **Faisceau de câbles, tableau de bord côté droit** **Cable harness, control panel right**	Catalogue id **20050**	Group **371**
2			Illustr. No **1005129**	Section **700**
3			Issue **VOE 64D9920050**	Page **195**
4				
5		**SER NO -10020**		

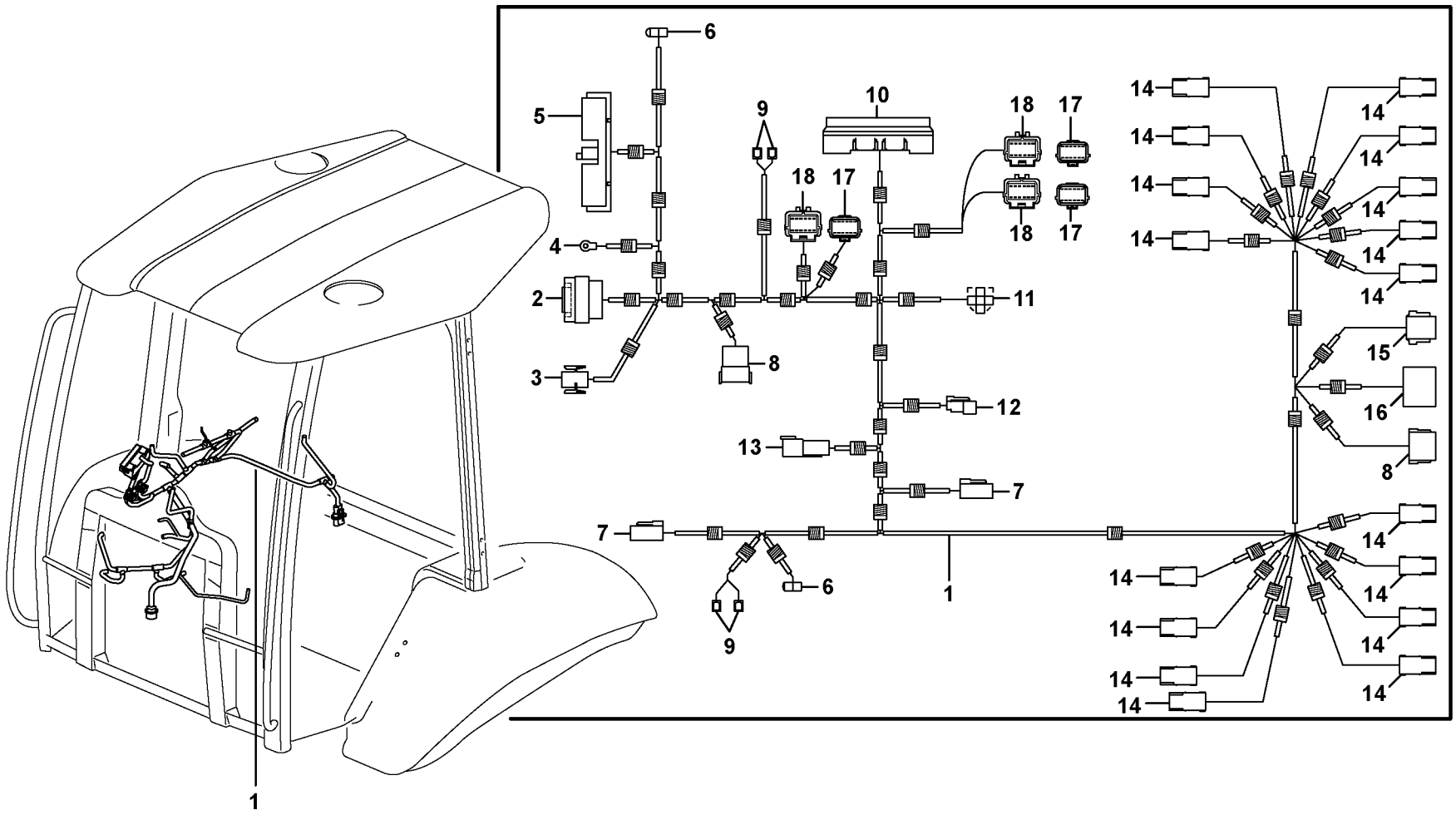

Volvo Construction Equipment

1017432

Fig.	Part No.	Quantity 1	2	3	PS	KIT	Description	Dénomination	Bezeichnung	Denominación	Notes
1	**VOE 11886639**	1	1				Wire harness	Faisceau electrique	Kabelbaum	Manojo cables	RH SIDE DASHBOARD S/N 10094 - 10404
1	**VOE 11888002**	1	1				Wire harness	Faisceau electrique	Kabelbaum	Manojo cables	S/N 10405 - 10626
1	**VOE 11888540**	1	1				Wire harness	Faisceau electrique	Kabelbaum	Manojo cables	S/N 10627 -
2		1	1		NS		•Connector	•Raccord	•Anschluss	•Union	X7
3		1	1		NS		•Connector	•Raccord	•Anschluss	•Union	X140
4		1	1		NS		•Cable terminal	•Cosse cable	•Flachsteckhülse	•Terminal cable	X160
5		1	1		NS		•Connector	•Raccord	•Anschluss	•Union	X2
6		2	2		NS		•Housing	•Carter	•Gehäuse	•Carter	X6, X208
7	**VOE 874957**	2	2				•Housing	•Isolant	•Isolator	•Aislador	X58, X50
7	**VOE 874958**	2	2				•Key	•Clavette	•Keil	•Llave (cuna)	
8	**VOE 11709766**	2	2				•Connector	•Raccord	•Anschluss	•Union	X3,X9
8	**VOE 874967**	2	2				•Key	•Clavette	•Keil	•Llave (cuna)	
9		4	4		NS		•Insulator	•Isolateur	•Isolator	•Aislador	X300,X301,X302,X303
10		1	1		NS		•Fuse box	•Boite a fusibles	•Sicherungsdose	•Caja de fusibles	See group 372, Page 203
11		2	2		NS		•Housing	•Carter	•Gehäuse	•Carter	X221
12	**VOE 874955**	1	1				•Insulator	•Isolateur	•Isolator	•Aislador	X139
13	**VOE 874802**	1	1				•Housing	•Isolant	•Isolator	•Aislador	X51
13	**VOE 14370883**	1	1				•Spacer	•Partie Intermédiaire	•Zwischenstück	•Espaciador	
14	**VOE 11881020**	17	17				•Housing	•Carter	•Gehäuse	•Carter	X120 - 136
15	**VOE 11709767**	1	1				•Connector	•Raccord	•Anschluss	•Union	X30
16		1	1				•Starter Switch	•Commutat. demarreur	•Anlasschalter	•Contact Arranq	X8 See group 380, Page 207
17		3	3		NS		•Connector	•Raccord	•Anschluss	•Union	X19,X20,X48
18		3	3		NS		•Connector	•Raccord	•Anschluss	•Union	X17,X18,X34

2188) SER NO 10021-

1	**2188) 11298204**	**Haz de cables, panel de mandos derecho** **Kabelbaum, rechte Bedientafel** **Faisceau de câbles, tableau de bord côté droit** **Cable harness, control panel right**	Catalogue id **20050**	Group **371**
2	**11298208**		Illustr. No **1017432**	Section **710**
3			Issue **VOE 64D9920050**	Page **197**
4				
5				

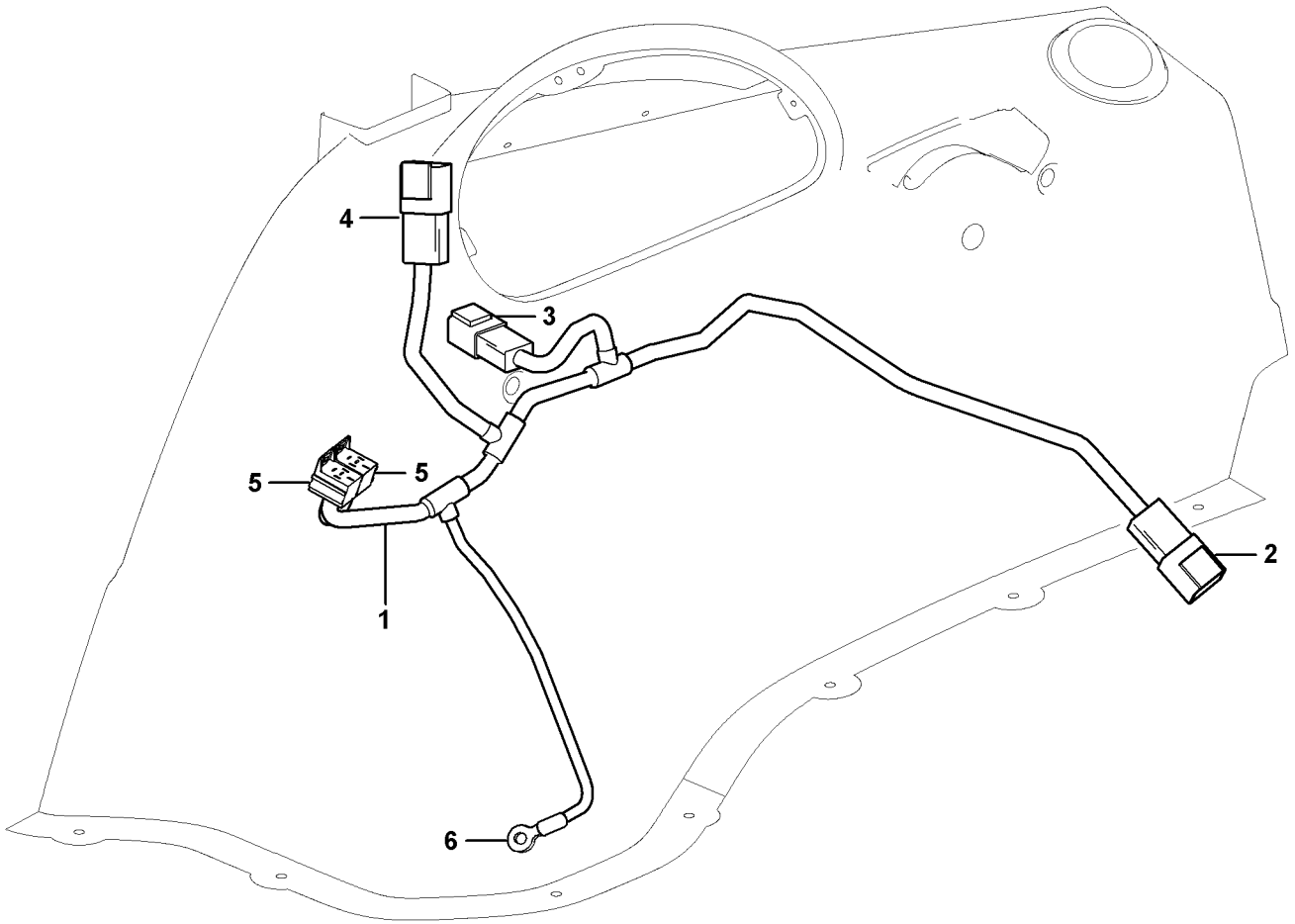
4
3
5
5
1
2
6

Fig.	Part No.	Quantity 1	2	3	P S	K I T	Description	Dénomination	Bezeichnung	Denominación	Notes
1	**VOE 11883593**	1					Cable harness	Faisceau cables	Kabelbaum	Manojo cables	
2	**VOE 874802**	1					•Housing	•Isolant	•Isolator	•Aislador	
2	**VOE 14370883**	1					•Spacer	•Partie Intermédiaire	•Zwischenstück	•Espaciador	
3	**VOE 874954**	1					•Connector	•Raccord	•Anschluss	•Union	
3	**VOE 14370881**	1					•Spacer	•Partie Intermédiaire	•Zwischenstück	•Espaciador	
4	**VOE 874959**	1					•Housing	•Isolant	•Isolator	•Aislador	
4	**VOE 14370885**	1					•Spacer	•Partie Intermédiaire	•Zwischenstück	•Espaciador	
5		2			NS		•Relay Socket	•Socle Relais	•Relaissockel	•Zocalo Rele	
6	**VOE 970795**	1					•Cable terminal	•Cosse cable	•Flachsteckhülse	•Terminal cable	

1		**Cableado de equipo de calefacción y refrigeración** **Kabelbaum, Heizung und Kühlung** **Faisceau de câbles, chauffage et refroidissement** **Cable harness heater and air conditioning**	Catalogue id **20050**	Group **371**
2			Illustr. No **1013209**	Section **750**
3			Issue **VOE 64D9920050**	Page **199**
4				
5		**11298204**		

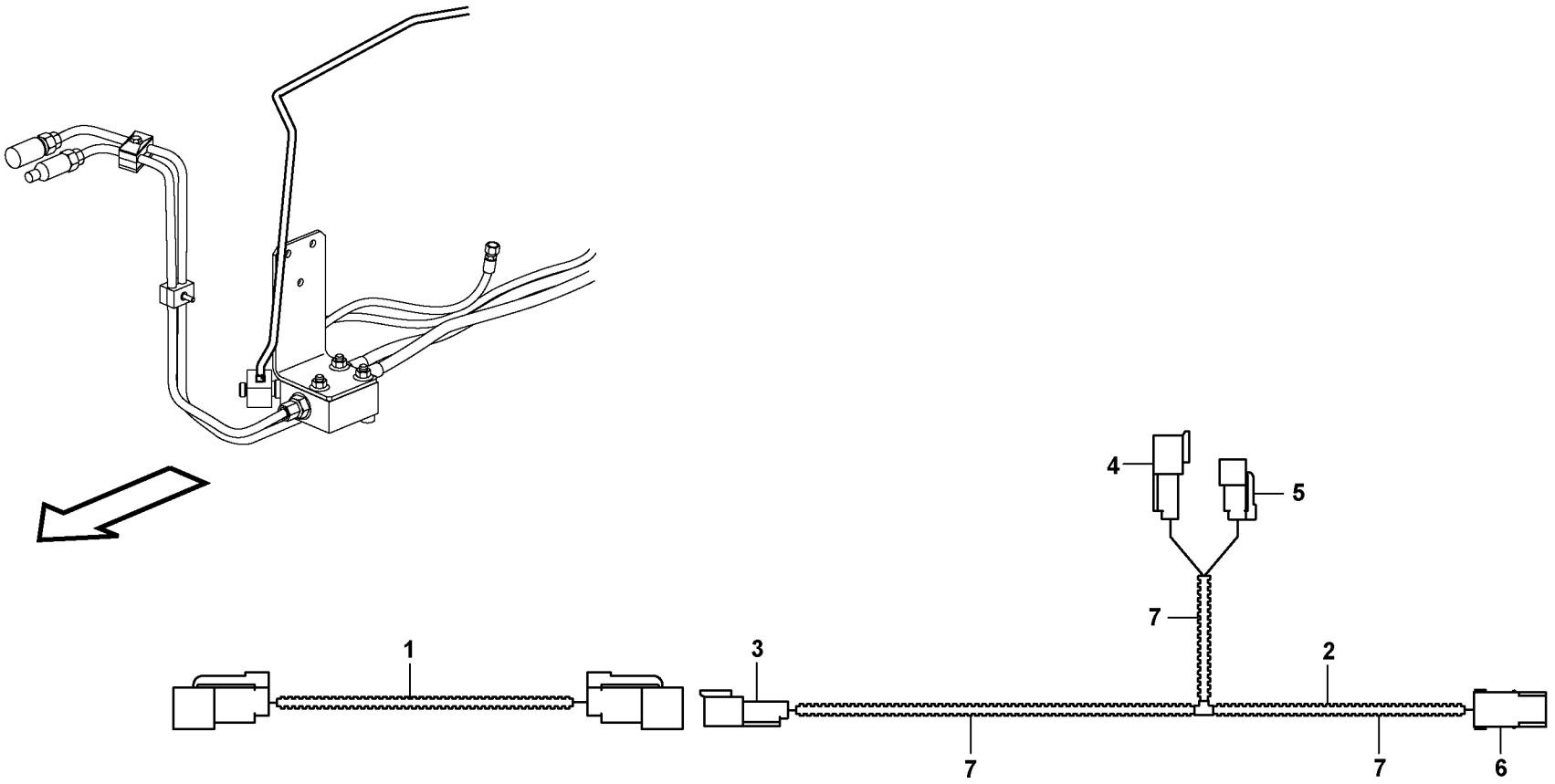

Volvo Construction Equipment
1018138

Fig.	Part No.	Quantity 1	2	3	PS	KIT	Description	Dénomination	Bezeichnung	Denominación	Notes
1	**VOE 11886626**	1					Cable	Câble	Seil	Cable	
							•CONNECTED TO:	•CONNECTÉ A:	•ANGESCHLOSSEN:	•CONECTADO A:	
							••Hand tool cab	••Câble outil main	••Handwerkzeug, Kabine	••Cabina de herramienta	X 337
							••Hand tool valve	••Distrib. outil main	••Handwerkzeugventil	••Válvula de herramienta m	X339
2	**VOE 11886627**	1					Cable	Câble	Seil	Cable	
							•CONNECTED TO:	•CONNECTÉ A:	•ANGESCHLOSSEN:	•CONECTADO A:	
							••Hand tool chassis harne	••Faisceau câbles châssis	••Handwerkzeug Fahrgest	••Mazo de chasis de herra	X337
							••Hand tool switch	••Commutateur outil main	••Handwerkzeugschalter	••Conmutador de herramie	X338
							••Code lock	••Serrure codée	••Codeschloss	••Bloqueo de código	X58
3	**VOE 874954**	1					•Connector	•Raccord	•Anschluss	•Union	
	VOE 14370881	1					•Spacer	•Partie Intermédiaire	•Zwischenstück	•Espaciador	
4	**VOE 874802**	1					•Housing	•Isolant	•Isolator	•Aislador	
	VOE 14370883	1					•Spacer	•Partie Intermédiaire	•Zwischenstück	•Espaciador	
5	**VOE 874957**	1					•Housing	•Isolant	•Isolator	•Aislador	
	VOE 874958	1					•Key	•Clavette	•Keil	•Llave (cuna)	
6	**VOE 11881020**	1					•Housing	•Carter	•Gehäuse	•Carter	
7	**VOE 4803746**	REQ					•Hose	•Durit	•Schlauch	•Tubo flexible	

1		**Mazo de cables, hidráulica de herramienta manual** **Kabelbaum, Handwerkzeughydraulik** **Faisceau câbles, circuit hydr. outil main** **Cable harness, hand tool hydraulic**	Catalogue id **20050**	Group **371**
2			Illustr. No **1018138**	Section **800**
3			Issue **VOE 64D9920050**	Page **201**
4				
5		**11891333**		

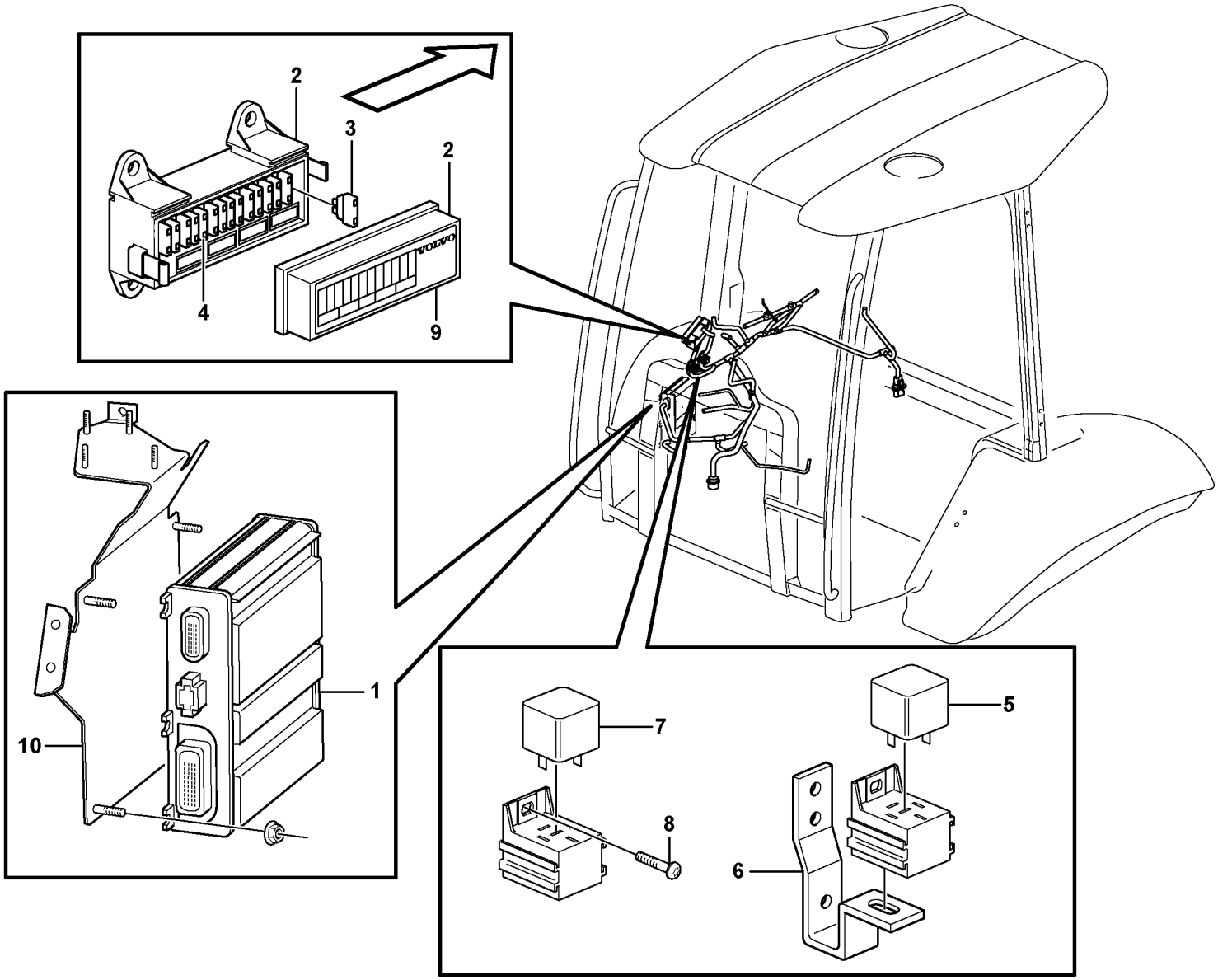

Volvo Construction Equipment
1013283

Fig.	Part No.	Quantity 1	2	3	PS	KIT	Description	Dénomination	Bezeichnung	Denominación	Notes
1	**VOE 11886347**	1					ECU	ECU	ECU	ECU	(VOE 11884008)
2	**VOE 11870026**	1					Fuse box	Boite a fusibles	Sicherungsdose	Caja de fusibles	
3	**VOE 969161**	15					•Fuse	•Fusible	•Schmelzsicherung	•Fusible	10A
4	**VOE 978999**	1					•Fuse	•Fusible	•Schmelzsicherung	•Fusible	20A
5	**VOE 11305263**	1					Relay	Relais	Relais	Rele	
6		1			NS		Attachment	Fixation	Halterung	Fijacion	
7	**VOE 11305263**	2					Relay	Relais	Relais	Rele	
8	**VOE 969278**	2					Six Point Socket Screw	Vis à six pans creux	Innensechskantschraube	Tornillo de cabeza hexago..	(VOE 13969278)
9	**VOE 11883693**	1					Decal	Decalcomanie	Abziehbild	Decalcomania	
10	**VOE 11885991**	1					Bracket	Console	Konsole	Ménsula	

1		**Central eléctrica** **Elektrozentrale** **Centrale de électrique** **Electrical distribut.unit and control unit**	Catalogue id **20050**	Group **372**
2			Illustr. No **1013283**	Section **100**
3			Issue **VOE 64D9920050**	Page **203**
4				
5				

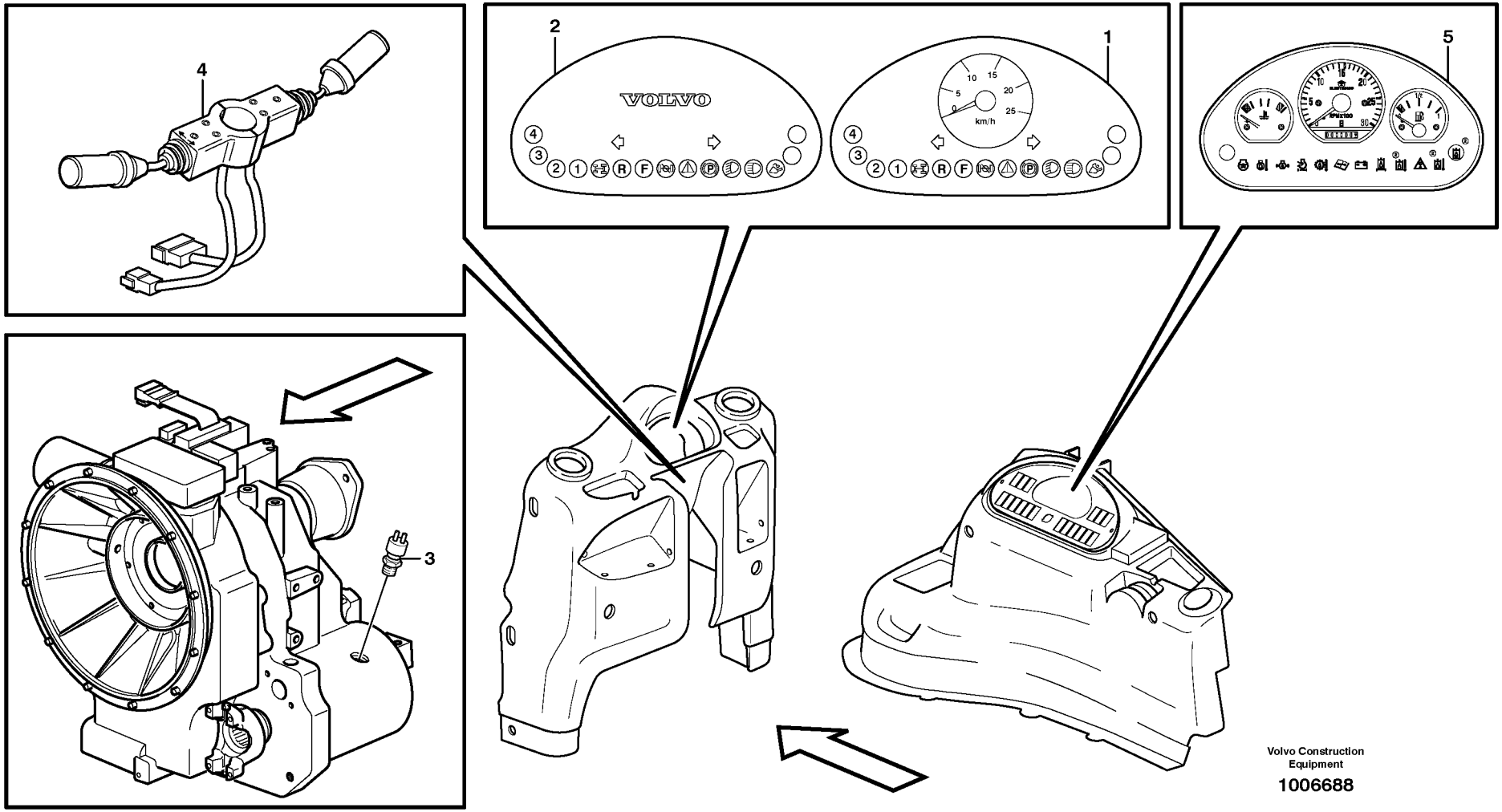

Volvo Construction Equipment

1006688

Fig.	Part No.	Quantity 1	2	3	4	5	PS	KIT	Description	Dénomination	Bezeichnung	Denominación	Notes
1	**VOE 11883051**	1							Instr Panel	Planche de bord	Instr Tafel	Panel Instrum	Speed = Km/h S/N - 10626
1	**VOE 11888769**	1							Instrument panel	Tableau de bord	Instrumententafel	Tablero de instrumento	S/N 10627 -
2	**VOE 11882535**		1						Instr Panel	Planche de bord	Instr Tafel	Panel Instrum	Without speedometer
3	**VOE 4880804**	1							Ind Sensor	Emett.induction	Induktionsgeber	Sensor Inducc	S/N - 10626
4	**VOE 11888534**	1							Induction sensor	Commande tachymetre	Drehzahlschalter	Sensor tacometro	S/N 10627 -
4	**VOE 11882493**				1				Switch	Commutateur	Schalter	Contactor	
	VOE 11709756				1				•Switch	•Commutateur	•Schalter	•Contactor	LH
	VOE 11709757				1				•Switch	•Commutateur	•Schalter	•Contactor	RH
	VOE 955245				1				•Hexagon screw	•Vis tête hexagonale	•Sechskantschraube	•Tornillo hexago	
5	**VOE 11884151**			1			SS		Instrument panel	Tableau de bord	Instrumententafel	Tablero de instrumento	S/N - 10338
5	**VOE 11887447**			1					Instrument panel	Tableau de bord	Instrumententafel	Tablero de instrumento	S/N 10339 -

1	**11891278**
2	**11891280**
3	**11880004**
4	**11891076, 11891077**
5	

Panel de instrumentos
Armaturenbrett
Tableau de bord
Instrument panel

Catalogue id	Group
20050	**380**
Illustr. No **1006688**	Section **100**
Issue **VOE 64D9920050**	Page **205**

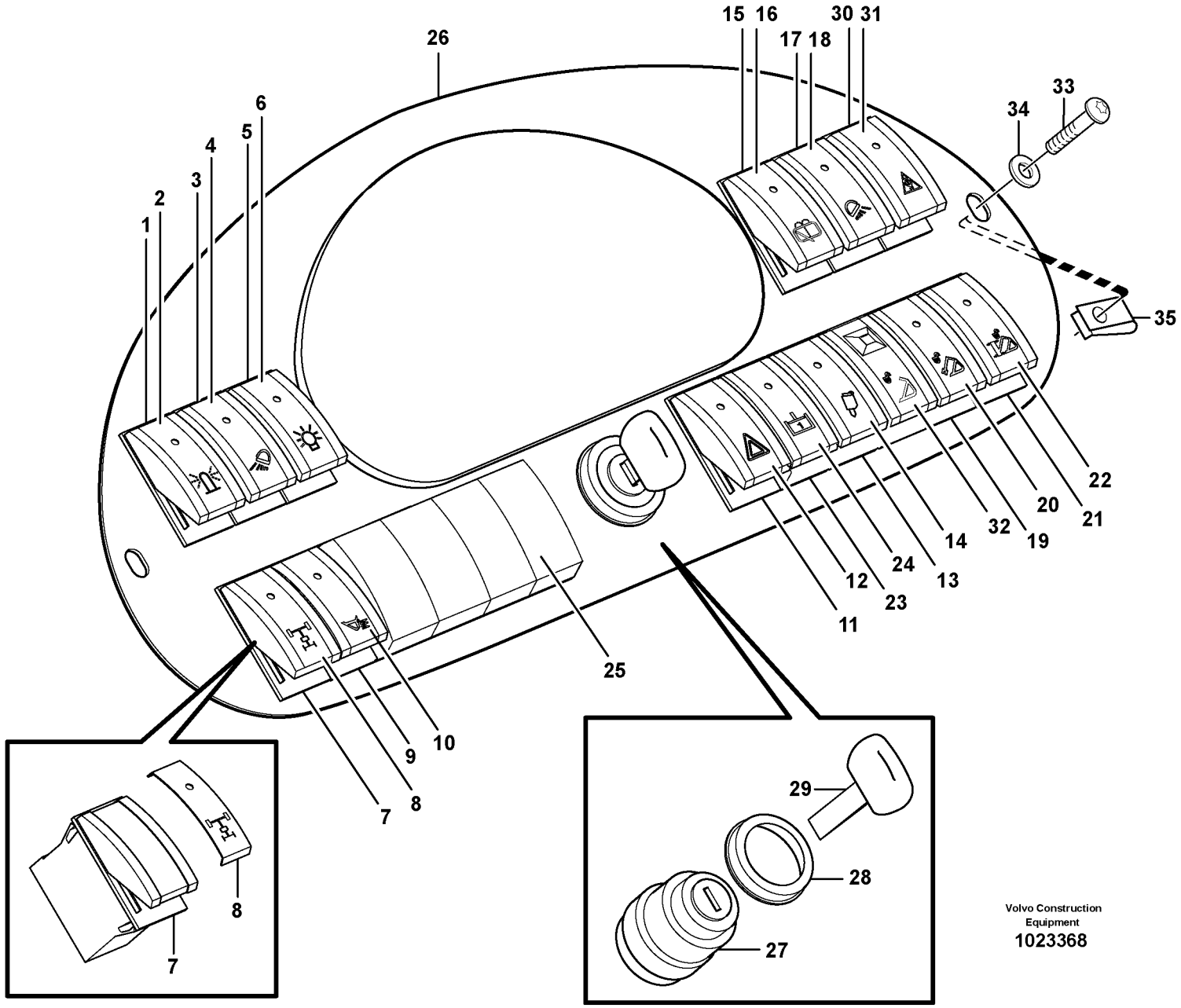
1
2
3
4
5
6
7
8
9
10
11
12
13
14
15
16
17
18
19
20
21
22
23
24
25
26
27
28
29
30
31
32
33
34
35
Volvo Construction Equipment
1023368

Fig.	Part No.	Quantity 1	2	3	PS	KIT	Description	Dénomination	Bezeichnung	Denominación	Notes
1	**VOE 11882865**	1					Rocker Switch	Commutateur à bascule	Wippschalter	Interruptor oscilante	
2	**VOE 11890076**	1					Symbol	Symbole	Symbol	Símbolo	
3	**VOE 11882275**	1					Switch	Commutateur	Schalter	Contactor	
4	**VOE 11883103**	1					Symbol	Symbole	Symbol	Símbolo	
5	**VOE 11882275**	1					Switch	Commutateur	Schalter	Contactor	
6	**VOE 11883065**	1					Symbol	Symbole	Symbol	Símbolo	
7	**VOE 11882275**	1					Switch	Commutateur	Schalter	Contactor	11891077 SER NO -10020
7	**VOE 11882865**	1					Rocker Switch	Commutateur à bascule	Wippschalter	Interruptor oscilante	11891077 SER NO 10021-
8	**VOE 11883061**	1					Symbol	Symbole	Symbol	Símbolo	11891077
9	**VOE 11882275**	1					Switch	Commutateur	Schalter	Contactor	11891345
10	**VOE 11883062**	1					Symbol	Symbole	Symbol	Símbolo	11891345
11	**VOE 11890297**	1					Switch	Commutateur	Schalter	Contactor	
12	**VOE 11883067**	1					Symbol	Symbole	Symbol	Símbolo	
13	**VOE 11882865**	1					Rocker Switch	Commutateur à bascule	Wippschalter	Interruptor oscilante	11891455
14	**VOE 11884960**	1					Symbol	Symbole	Symbol	Símbolo	11891455
15	**VOE 11890298**	1					Switch	Interrupteur	Trennschalter	Interruptor	11298204
16	**VOE 11883066**	1					Symbol	Symbole	Symbol	Símbolo	11298204
17	**VOE 11882275**	1					Switch	Commutateur	Schalter	Contactor	
18	**VOE 11890070**	1					Symbol	Symbole	Symbol	Símbolo	
19	**VOE 11882865**	1					Rocker Switch	Commutateur à bascule	Wippschalter	Interruptor oscilante	
20	**VOE 11890074**	1					Symbol	Symbole	Symbol	Símbolo	
21	**VOE 11882865**	1					Rocker Switch	Commutateur à bascule	Wippschalter	Interruptor oscilante	
22	**VOE 11890073**	1					Symbol	Symbole	Symbol	Símbolo	
23	**VOE 11882865**	1					Rocker Switch	Commutateur à bascule	Wippschalter	Interruptor oscilante	11891369
24	**VOE 11885734**	1					Symbol	Symbole	Symbol	Símbolo	11891369
25	**VOE 11883058**	REQ					Cover	Capot	Haube	Capo	
26		1					Panel	Panneau	Verkleidung	Plancha	See group 881, Page 475
27	**VOE 11881365**	1					Starter Switch	Commutat. demarreur	Anlasschalter	Contact Arranq	X8
28		1			NS		•Symbol strip	•Ruban symbole	•Symbolreihe	•Disco simbolos	

1		**Interruptor** **Schalter** **Interrupteur** **Switch**	Catalogue id **20050**	Group **380**
2			Illustr. No **1023368**	Section **200**
3			Issue **VOE 64D9920050**	Page **207**
4				
5				

VOLVO

BL61

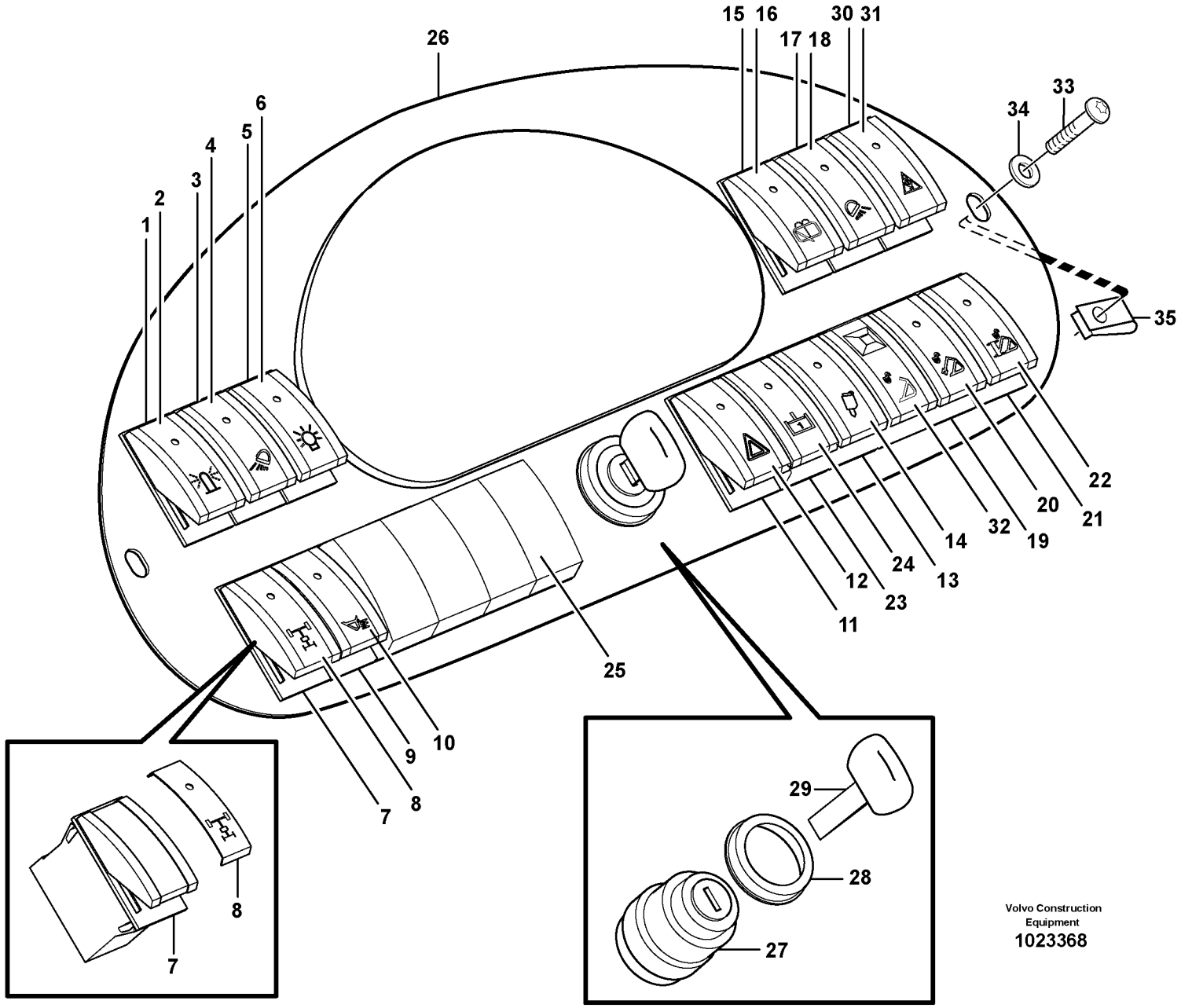
1
2
3
4
5
6
7
8
9
10
11
12
13
14
15
16
17
18
19
20
21
22
23
24
25
26
27
28
29
30
31
32
33
34
35
Volvo Construction Equipment
1023368

Fig.	Part No.	Quantity 1	2	3	PS	KIT	Description	Dénomination	Bezeichnung	Denominación	Notes
29	**VOE 11306919**	REQ				K	•Key	•Cle	•Schlüssel	•Llave	2338)
30	**VOE 11884079**	1					Switch	Commutateur	Schalter	Contactor	11891150
31	**VOE 11890075**	1					Symbol	Symbole	Symbol	Símbolo	11891150
32	**VOE 11883064**	1					Switch	Commutateur	Schalter	Contactor	
33	**VOE 969147**	2					Screw	Vis	Schraube	Tornillo	
34	**VOE 960139**	2					Washer	Rondelle	Scheibe	Arandela	
35	**VOE 949921**	2					Spring Nut	Ecrou Ressort	Fed. Schliessmutter	Tuerca Resorte	

2338) **GB:** Keys, only to be sold in pairs. **FR:** Clés, vendues uniquement par paires **DE:** Schlüssel, werden nur paarweise verkauft. **ES:** Llaves, sólo se venden por pares.

1		**Interruptor** **Schalter** **Interrupteur** **Switch**	Catalogue id **20050**	Group **380**
2			Illustr. No **1023368**	Section **200**
3			Issue **VOE 64D9920050**	Page **209**
4				
5				

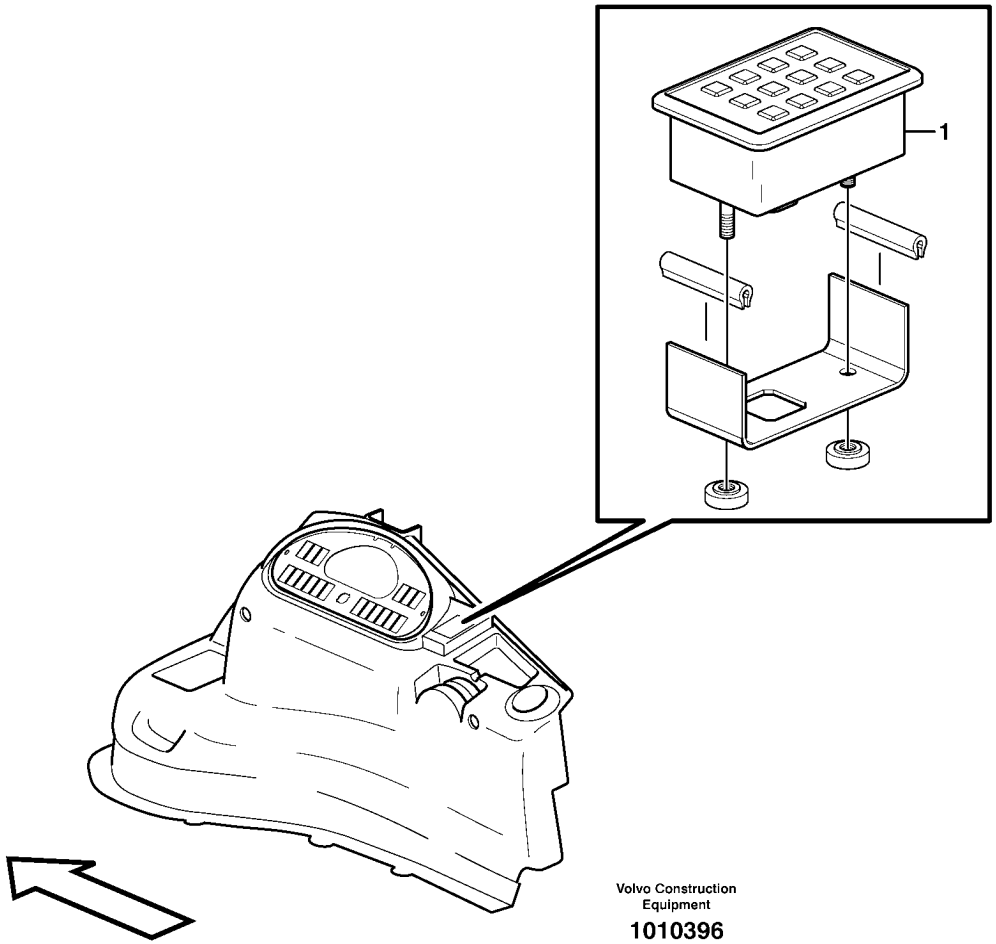
1
Volvo Construction
Equipment
1010396

Fig.	Part No.	Quantity 1	2	3	P S	K I T	Description	Dénomination	Bezeichnung	Denominación	Notes
1	**VOE 11883409**	1					Keypad	Clavier	Tastatur	Teclado	

1		**Antirrobo** **Diebstahlalarm-Kit** **Kit alarme antivol** **Anti-theft Kit**	Catalogue id **20050**	Group **380**
2			Illustr. No **1010396**	Section **250**
3			Issue **VOE 64D9920050**	Page **211**
4				
5		**11891332**		

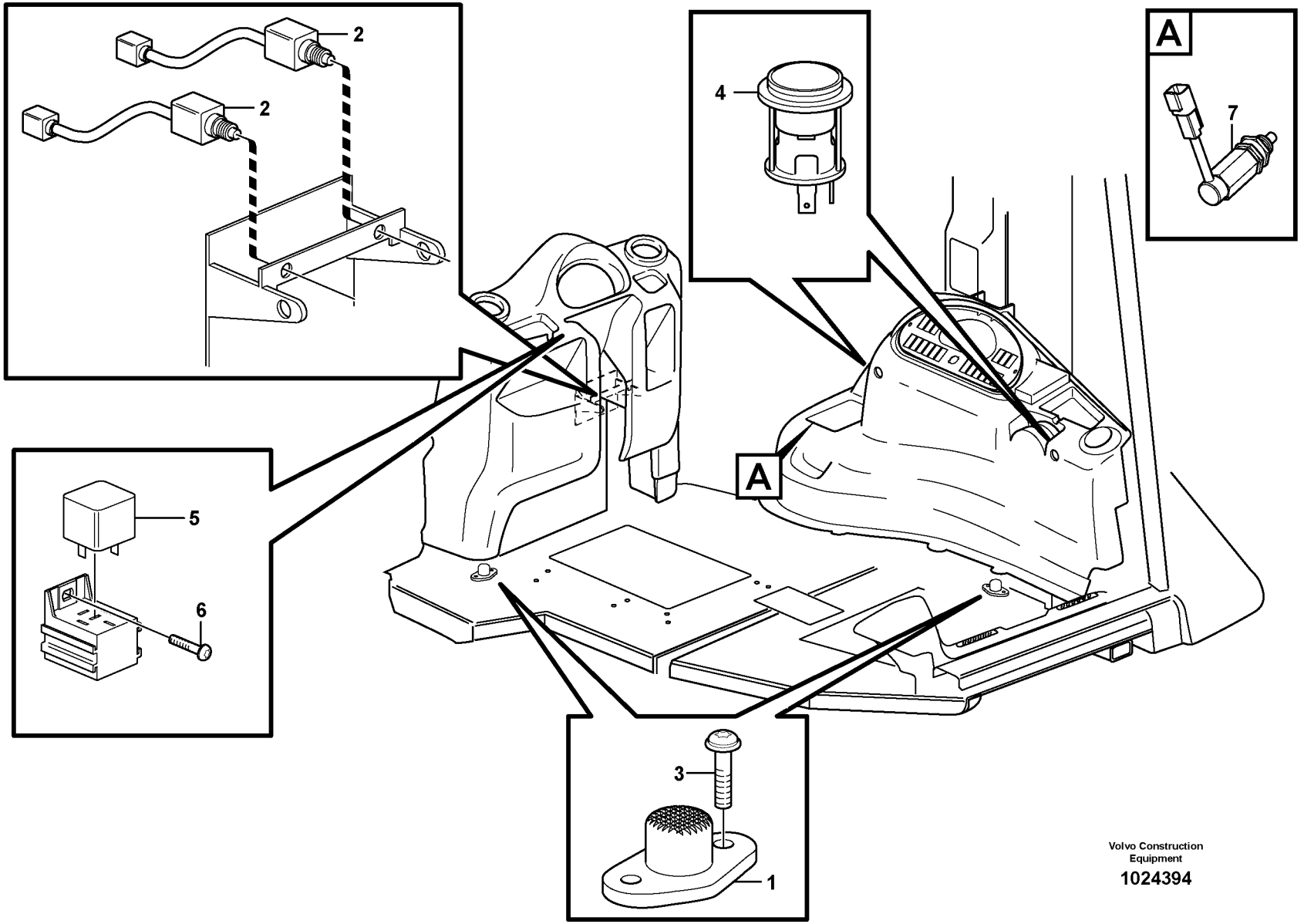

Volvo Construction Equipment

1024394

Fig.	Part No.	Quantity 1	2	3	PS	KIT	Description	Dénomination	Bezeichnung	Denominación	Notes
1	**VOE 1589502**	1					Foot Operated Switch	Contacteur Au Pied	Fusschalter	Contacto Freno	
2		2					Stop Lt Switch	Contacteur Stop	Br Lichtschalt	Cont Luz Freno	X61, X62
3	**VOE 969278**	2					Six Point Socket Screw	Vis à six pans creux	Innensechskantschraube	Tornillo de cabeza hexago..	See group 525, Page 369 (VOE 13969278)
4	**VOE 11039750**	2					Electrical plug	Fiche	Steckdose	Toma eléctrica	
5	**VOE 11305263**	1					Relay	Relais	Relais	Rele	11891209, 11891224 11891255 S/N 10627 -
6	**VOE 969278**	1					Six Point Socket Screw	Vis à six pans creux	Innensechskantschraube	Tornillo de cabeza hexago..	11891209, 11891224 11891255 S/N 10627 -
7		1					Switch	Commutateur	Schalter	Contactor	See group 551, Page 373

1	
2	
3	
4	
5	

Interruptor de pie y toma de corriente
Fußschalter und Stromanschluss
Commutateur au pied et prise d'alimentation
Foot switch and electric power outlet

Catalogue id	Group
20050	**380**
Illustr. No **1024394**	Section **350**
Issue **VOE 64D9920050**	Page **213**

VOLVO

Construction Equipment

GROUP		Section	Page
414	Torque converter with fitting parts	100	221
420	Hydraulic transmission with fitting parts 11891077	100	223
420	Hydraulic transmission with fitting parts 11891076	150	227
420	Hydraulic transmission with fitting parts 11891077 S/N 10627 -	200	231
421	Oil filler and dipstick 11891077 S/N - 10626	150	235
421	Oil filler and dipstick 11891077 S/N 10627 -	160	237
421	Oil filler and dipstick 11891076	175	239
421	Oil pump 11891077	200	241
421	Oil pump 11891076	225	243
421	Oil pump 11891077 S/N 10627 -	230	245
421	Clutch shaft forward/reverse 11891077	250	247
421	Clutch shaft forward/reverse 11891077 S/N 10939 -	260	249
421	Clutch shaft forward/reverse 11891076	275	251
421	Reverse and primary shaft 11891076, 11891077	300	253
421	Secondary shaft 11891077 S/N - 10626	350	255
421	Secondary shaft 11891077 S/N 10627 -	360	259
421	Secondary shaft 11891076	375	263
421	Hydraulic clutch, 4wd 11891077	400	267
421	Shaft, four wheel drive 11891077 S/N 10627 -	410	271
421	Gearshifting 11891077	450	273
421	Gearshifting 11891077 S/N 10627 -	460	275
421	Gearshifting 11891076	475	277
421	Range selector valve 11891076, 11891077 S/N - 10626	500	279
421	Range selector valve 11891076, 11891077 S/N 10627 -	525	283
421	Solenoid valve 4wd 11891077	550	285
424	Gear selector, 4-wheel drive 11891077	100	287
424	Gear selector, 2-wheel drive 11891076	150	289
436	Gear box housing with fitting parts	100	291
451	Propeller shaft, mounting	100	293
451	Propeller shaft	150	295
460	Planet axles with fitting parts	100	297
460	Planet axles with fitting parts S/N 10627 -	150	299
461	Planetary axle, front 11891305	100	301
461	Planetary axle, front 11891531	110	303
461	Pinion 11891305	150	305
461	Pinion 11887361	160	307
461	Differential , front axle 11891305	200	309
461	Differential , front axle 11887361	210	311
461	Drive axle 11880004,11891305,	250	313
461	Wheel hub 11891305	300	315
461	Planetary gear 11891305	350	317
461	Front axle 11891306	400	319
461	Front axle 11891306, 11891496	410	321
461	Front axle 11880004	420	323
461	Wheel hub 11891306, 11891496	450	325
463	Planet shaft, rear 11891305, 11891306	100	327
463	Planet shaft, rear S/N 10627 -	110	329
463	Pinion 11891305, 11891306	150	331
463	Pinion S/N 10627 -	160	333
463	Differential. Rear 11891305, 11891306	200	335
463	Differential. Rear	210	337
463	Wheel hub 11891305, 11891306	250	339
463	Hub reduction, rear axle S/N 10627 -	260	341
463	Planetary gear 11891305, 11891306	300	343
468	Differential lock 11891305, 11891306	100	345
468	Differential lock S/N 10627_-	110	347
468	Differential lock 11880004 S/N 10627 -	150	349
491	Oil cooler, transmission	100	351

TABLE DES MATIÈRES

GROUPE		Section	Page
414	Convertisseur de couple avec pièces de montage	100	221
420	Transmission avec pièces de montage 11891077	100	223
420	Transmission avec pièces de montage 11891076	150	227
420	Transmission avec pièces de montage 11891077 S/N 10627 -	200	231
421	Remplissage d'huile et indicateur de niveau 11891077 S/N - 10626	150	235
421	Remplissage d'huile et indicateur de niveau 11891077 S/N 10627 -	160	237
421	Remplissage d'huile et indicateur de niveau 11891076	175	239
421	Pompe à huile 11891077	200	241
421	Pompe à huile 11891076	225	243
421	Pompe à huile 11891077 S/N 10627 -	230	245
421	Arbre d'accouplement AV/AR 11891077	250	247
421	Arbre d'accouplement AV/AR 11891077 S/N 10939 -	260	249
421	Arbre d'accouplement AV/AR 11891076	275	251
421	Marche AR et arbre primaire 11891076, 11891077	300	253
421	Arbre secondaire 11891077 S/N - 10626	350	255
421	Arbre secondaire 11891077 S/N 10627 -	360	259
421	Arbre secondaire 11891076	375	263
421	Embrayages, 4 roues motrices 11891077	400	267
421	11891077 S/N 10627 -	410	271
421	Commande de changement de vitesse 11891077	450	273
421	Commande de changement de vitesse 11891077 S/N 10627 -	460	275
421	Commande de changement de vitesse 11891076	475	277
421	Soupape sélectrice vitesse 11891076, 11891077 S/N - 10626	500	279
421	Soupape sélectrice vitesse 11891076, 11891077 S/N 10627 -	525	283
421	Electrovalve 4 roues motrices 11891077	550	285
424	Sélecteur de vitesse, 4 roues motrices 11891077	100	287
424	Sélecteur de vitesse, 2 roues motrices 11891076	150	289
436	Suspension boîte vitesses	100	291
451	Arbres de transmission avec pièces de montage	100	293
451	Arbre à cardans	150	295
460	Train planétaire avec pièces de montage	100	297
460	Train planétaire avec pièces de montage S/N 10627 -	150	299
461	Axe satellite, AV 11891305	100	301
461	Axe satellite, AV 11891531	110	303
461	Pignon 11891305	150	305
461	Pignon 11887361	160	307
461	Differentiel, axe satellite, Av 11891305	200	309
461	Differentiel, axe satellite, Av 11887361	210	311
461	Arbre de roue 11880004,11891305,	250	313
461	Moyeu de roue 11891305	300	315
461	Réducteur planétaire 11891305	350	317
461	Essieu Av 11891306	400	319
461	Essieu Av 11891306, 11891496	410	321
461	Essieu Av 11880004	420	323
461	Moyeu de roue 11891306, 11891496	450	325
463	Essieu moteur, arrière 11891305, 11891306	100	327
463	Essieu moteur, arrière S/N 10627 -	110	329
463	Pignon 11891305, 11891306	150	331
463	Pignon S/N 10627 -	160	333
463	Differentiel. Arrière 11891305, 11891306	200	335
463	Differentiel. Arrière	210	337
463	Moyeu de roue 11891305, 11891306	250	339
463	Reducteur moyeu, axe satellite, Ar S/N 10627 -	260	341
463	Réducteur planétaire 11891305, 11891306	300	343
468	Blocage différentiel 11891305, 11891306	100	345
468	Blocage différentiel S/N 10627_-	110	347
468	Blocage différentiel 11880004 S/N 10627 -	150	349
491	Radiateur huile, transmission	100	351

GRUPPE		Abschnitt	Seite
414	Drehmomentwandler mit Anbauteilen	100	221
420	Transmission mit Anbauteilen 11891077	100	223
420	Transmission mit Anbauteilen 11891076	150	227
420	Transmission mit Anbauteilen 11891077 S/N 10627 -	200	231
421	Öleinfüllung und Ölmeßtab 11891077 S/N - 10626	150	235
421	Öleinfüllung und Ölmeßtab 11891077 S/N 10627 -	160	237
421	Öleinfüllung und Ölmeßtab 11891076	175	239
421	Ölpumpe 11891077	200	241
421	Ölpumpe 11891076	225	243
421	Ölpumpe 11891077 S/N 10627 -	230	245
421	Kupplungswelle vorwärts/rückwärts 11891077	250	247
421	Kupplungswelle vorwärts/rückwärts 11891077 S/N 10939 -	260	249
421	Kupplungswelle vorwärts/rückwärts 11891076	275	251
421	Rück- und Primärwelle 11891076, 11891077	300	253
421	Sekundärachse 11891077 S/N - 10626	350	255
421	Sekundärachse 11891077 S/N 10627 -	360	259
421	Sekundärachse 11891076	375	263
421	Kupplungen, 4-Radantrieb 11891077	400	267
421	11891077 S/N 10627 -	410	271
421	Schaltbedienung 11891077	450	273
421	Schaltbedienung 11891077 S/N 10627 -	460	275
421	Schaltbedienung 11891076	475	277
421	Getriebewählerventil 11891076, 11891077 S/N - 10626	500	279
421	Getriebewählerventil 11891076, 11891077 S/N 10627 -	525	283
421	Magnetventil 4-Radantrieb 11891077	550	285
424	Wählschalter, 4-Radantrieb 11891077	100	287
424	Wählschalter, 2-Radantrieb 11891076	150	289
436	Getriebeaufhängung	100	291
451	Gelenkwellen mit Anbauteilen	100	293
451	Gelenkwelle	150	295
460	Planetenwellen mit Anbauteilen	100	297
460	Planetenwellen mit Anbauteilen S/N 10627 -	150	299
461	Planetenwelle, vorne 11891305	100	301
461	Planetenwelle, vorne 11891531	110	303
461	Antriebskegelrad 11891305	150	305
461	Antriebskegelrad 11887361	160	307
461	Ausgleichgetriebe, Planetenwelle, vorne 11891305	200	309
461	Ausgleichgetriebe, Planetenwelle, vorne 11887361	210	311
461	Antriebsachse 11880004,11891305,	250	313
461	Radnabe 11891305	300	315
461	Planetenradgetriebe 11891305	350	317
461	Vorederachse 11891306	400	319
461	Vorederachse 11891306, 11891496	410	321
461	Vorederachse 11880004	420	323
461	Radnabe 11891306, 11891496	450	325
463	Planetenwelle, hintere 11891305, 11891306	100	327
463	Planetenwelle, hintere S/N 10627 -	110	329
463	Antriebskegelrad 11891305, 11891306	150	331
463	Antriebskegelrad S/N 10627 -	160	333
463	Ausgleichgetriebe. Hinten 11891305, 11891306	200	335
463	Ausgleichgetriebe. Hinten	210	337
463	Radnabe 11891305, 11891306	250	339
463	Nabenvorgelege, Plantenwelle, hinten S/N 10627 -	260	341
463	Planetenradgetriebe 11891305, 11891306	300	343
468	Ausgleichsperre 11891305, 11891306	100	345
468	Ausgleichsperre S/N 10627_-	110	347
468	Ausgleichsperre 11880004 S/N 10627 -	150	349
491	Ölkühler, getriebe	100	351

INDICE

GRUPO		Sección	Página
414	Convertidor de par con accesorios de montaje	100	221
420	Transmisión con accesorios de montaje 11891077	100	223
420	Transmisión con accesorios de montaje 11891076	150	227
420	Transmisión con accesorios de montaje 11891077 S/N 10627 -	200	231
421	Boca de llenado de aceitey varilla de nivel 11891077 S/N - 10626	150	235
421	Boca de llenado de aceitey varilla de nivel 11891077 S/N 10627 -	160	237
421	Boca de llenado de aceitey varilla de nivel 11891076	175	239
421	Bomba de aceite 11891077	200	241
421	Bomba de aceite 11891076	225	243
421	Bomba de aceite 11891077 S/N 10627 -	230	245
421	Eje de embrague delante/detrás 11891077	250	247
421	Eje de embrague delante/detrás 11891077 S/N 10939 -	260	249
421	Eje de embrague delante/detrás 11891076	275	251
421	Eje trasero y primario 11891076, 11891077	300	253
421	Eje secundario 11891077 S/N - 10626	350	255
421	Eje secundario 11891077 S/N 10627 -	360	259
421	Eje secundario 11891076	375	263
421	Embragues, tracción 4 ruedas 11891077	400	267
421	11891077 S/N 10627 -	410	271
421	Maniobra de la caja de cambios 11891077	450	273
421	Maniobra de la caja de cambios 11891077 S/N 10627 -	460	275
421	Maniobra de la caja de cambios 11891076	475	277
421	Válvula selectora de gama 11891076, 11891077 S/N - 10626	500	279
421	Válvula selectora de gama 11891076, 11891077 S/N 10627 -	525	283
421	Válvula solenoide, tracción 4 ruedas 11891077	550	285
424	Selector velocidad, tracción 4 ruedas 11891077	100	287
424	Selector velocidad, tracción 2 ruedas 11891076	150	289
436	Suspensión de la caja de cambios	100	291
451	Ejes cardán con accesorios de montaje	100	293
451	Ejes cardán	150	295
460	Ejes planetarios con accesorios de montaje	100	297
460	Ejes planetarios con accesorios de montaje S/N 10627 -	150	299
461	Eje planeta, delantera 11891305	100	301
461	Eje planeta, delantera 11891531	110	303
461	Piñón de ataque 11891305	150	305
461	Piñón de ataque 11887361	160	307
461	Diferencial, eje planeta delantero 11891305	200	309
461	Diferencial, eje planeta delantero 11887361	210	311
461	Eje propulsor 11880004,11891305,	250	313
461	Cubo de rueda 11891305	300	315
461	Engranaje planetario 11891305	350	317
461	Eje delantero 11891306	400	319
461	Eje delantero 11891306, 11891496	410	321
461	Eje delantero 11880004	420	323
461	Cubo de rueda 11891306, 11891496	450	325
463	Eje propulsor, trasero 11891305, 11891306	100	327
463	Eje propulsor, trasero S/N 10627 -	110	329
463	Piñón de ataque 11891305, 11891306	150	331
463	Piñón de ataque S/N 10627 -	160	333
463	Differencial. Detrás 11891305, 11891306	200	335
463	Differencial. Detrás	210	337
463	Cubo de rueda 11891305, 11891306	250	339
463	Reduccion cubo, eje planeta trasero S/N 10627 -	260	341
463	Engranaje planetario 11891305, 11891306	300	343
468	Bloqueo del diferencial 11891305, 11891306	100	345
468	Bloqueo del diferencial S/N 10627_-	110	347
468	Bloqueo del diferencial 11880004 S/N 10627 -	150	349
491	Enfriador aceite, transmision	100	351

VOLVO

Construction Equipment

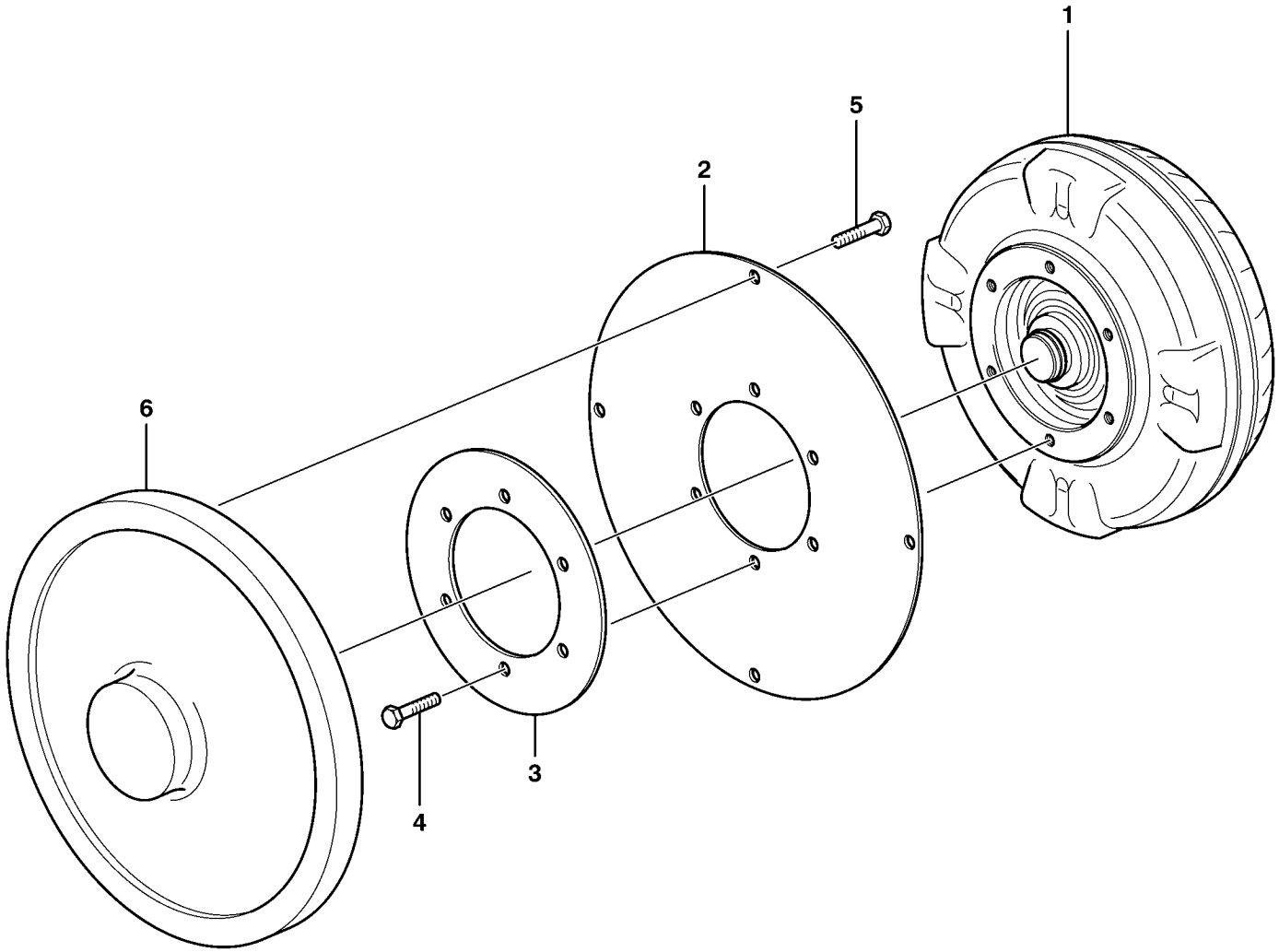

Volvo Construction Equipment

1000854

Fig.	Part No.	Quantity 1	2	3	PS	KIT	Description	Dénomination	Bezeichnung	Denominación	Notes
1	**VOE 11890327**	1					Trq Converter	Converti.couple	Drehm Wandler	Convertidor Par	
2	**VOE 11881176**	1					Flexplate	Tole Entrainem.	Mitnehmerblech	Placa De Brida	
3	**VOE 11881177**	1					Flexplate	Tole Entrainem.	Mitnehmerblech	Placa De Brida	
4	**VOE 13970944**	6					Hexagon screw	Vis a tête hexagonale	Sechskantschr.	Tornillo hexago	M10x16
5	**VOE 13970876**	4					Hexagon screw	Vis a tête hexagonale	Sechskantschr.	Tornillo hexago	M10x30
6		1					Flywheel	Volant	Schwungrad	Volante	See group 216, Page 57

1		**Convertidor de par con accesorios de montaje** **Drehmomentwandler mit Anbauteilen** **Convertisseur de couple avec pièces de montage** **Torque converter with fitting parts**	Catalogue id **20050**	Group **414**
2			Illustr. No **1000854**	Section **100**
3			Issue **VOE 64D9920050**	Page **221**
4				
5				

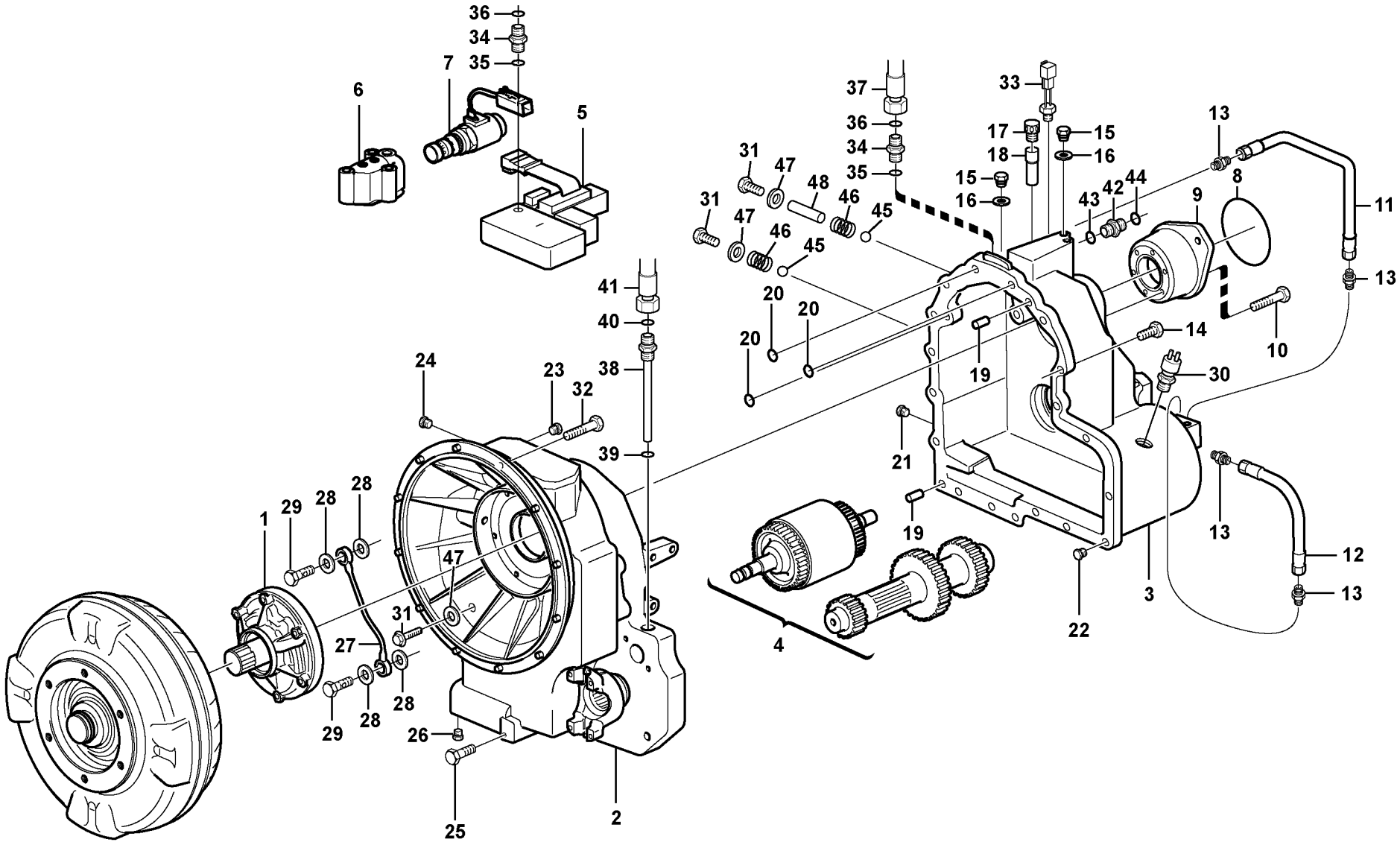

Volvo Construction Equipment
1013233

Fig.	Part No.	Quantity 1	2	3	PS	KIT	Description	Dénomination	Bezeichnung	Denominación	Notes
	VOE 11884310	1					Transmission	Transmission	Getriebe	Transmision	
1	**VOE 11709045**	1					•Oil pump	•Pompe huile	•Ölpumpe	•Bomba aceite	See group 421, Page 241
2	**VOE 11709058**	1					•Housing	•Carter	•Gehäuse	•Carter	
3	**VOE 11709059**	1					•Housing	•Carter	•Gehäuse	•Carter	
4		1					•Shaft with clutch	•Accouplement hydrauli	•Hydraulikkupplung	•Acoplamiento hidrauli	See group 421, Page 247
	VOE 11709103	1					•Reverse Shaft	•Arbre Marche Ar	•Rucklaufachse	•Eje Marcha Atr	See group 421, Page 253
	VOE 11709105	1					•Axle	•Arbre	•Welle	•Eje	See group 421, Page 253
	VOE 11709134	1					•Secondary Shaft	•Arbr.secondaire	•Sekundärwelle	•Eje Secundario	See group 421, Page 255
	VOE 11709152	1					•Axle	•Arbre	•Welle	•Eje	See group 421, Page 267
5		1					•Gear selector valve	•Valve selectr.vitesse	•Umsteurventil	•valvula select.veloci	See group 421, Page 279
6		1					•Valve housing	•Carter soupape	•Ventilgehäuse	•Cuerpo valvula	See group 421, Page 285
7		1					•Solinoid valve	•Vannr electrom.	•Magnetventil	•Electrovalvula	See group 421, Page 285
8	**VOE 11709074**	1					•O-ring	•Joint Torique	•O-Ring	•Junta torica	
9	**VOE 11709062**	1					•Flange	•Flasque	•Flansch	•Brida	
10	**VOE 13970947**	6					•Hexagon screw	•Vis a tête hexagonale	•Sechskantschr.	•Tornillo hexago	
11	**VOE 11709064**	1					•Oil Pipe	•Conduit Huile	•Ölrohr	•Tubo Aceite	
12	**VOE 11709069**	1					•Oil Pipe	•Conduit Huile	•Ölrohr	•Tubo Aceite	
13	**VOE 11709056**	4					•Nipple	•Raccord	•Nippel	•Niple	
14	**VOE 13970949**	11					•Hexagon screw	•Vis a tête hexagonale	•Sechskantschr.	•Tornillo hexago	(VOE 970807)
15	**VOE 11709061**	4					•Plug	•Bouchon	•Stopfen	•Tapon	
16	**VOE 13947281**	4					•Gasket	•Joint	•Dichtung	•Junta	
17	**VOE 11709060**	1					•Breather Cap	•Boucho.aeration	•Lüftungsdeckel	•Tapa Ventilac	
18	**VOE 11709063**	1					•Breather Pipe	•Reniflard	•Luftungsrohr	•Conduct Ventil	
19	**VOE 950588**	2					•Pin	•Goupille	•Stift	•Pasador	
20	**VOE 11709068**	5					•O-ring	•Joint Torique	•O-Ring	•Junta torica	
21	**VOE 11709057**	1					•Plug	•Bouchon	•Stopfen	•Tapon	
22	**VOE 11709075**	3					•Plug	•Bouchon	•Stopfen	•Tapon	
23	**VOE 11709054**	1					•Plug	•Bouchon	•Stopfen	•Tapon	
	VOE 11709055	2					•Plug	•Bouchon	•Stopfen	•Tapon	
24	**VOE 11709070**	1					•Plug	•Bouchon	•Stopfen	•Tapon	

1		**Transmisión con accesorios de montaje** **Transmission mit Anbauteilen** **Transmission avec pièces de montage** **Hydraulic transmission with fitting parts**		Catalogue id **20050**	Group **420**
2					
3				Illustr. No **1013233**	Section **100**
4					
5		**11891077**		Issue **VOE 64D9920050**	Page **223**

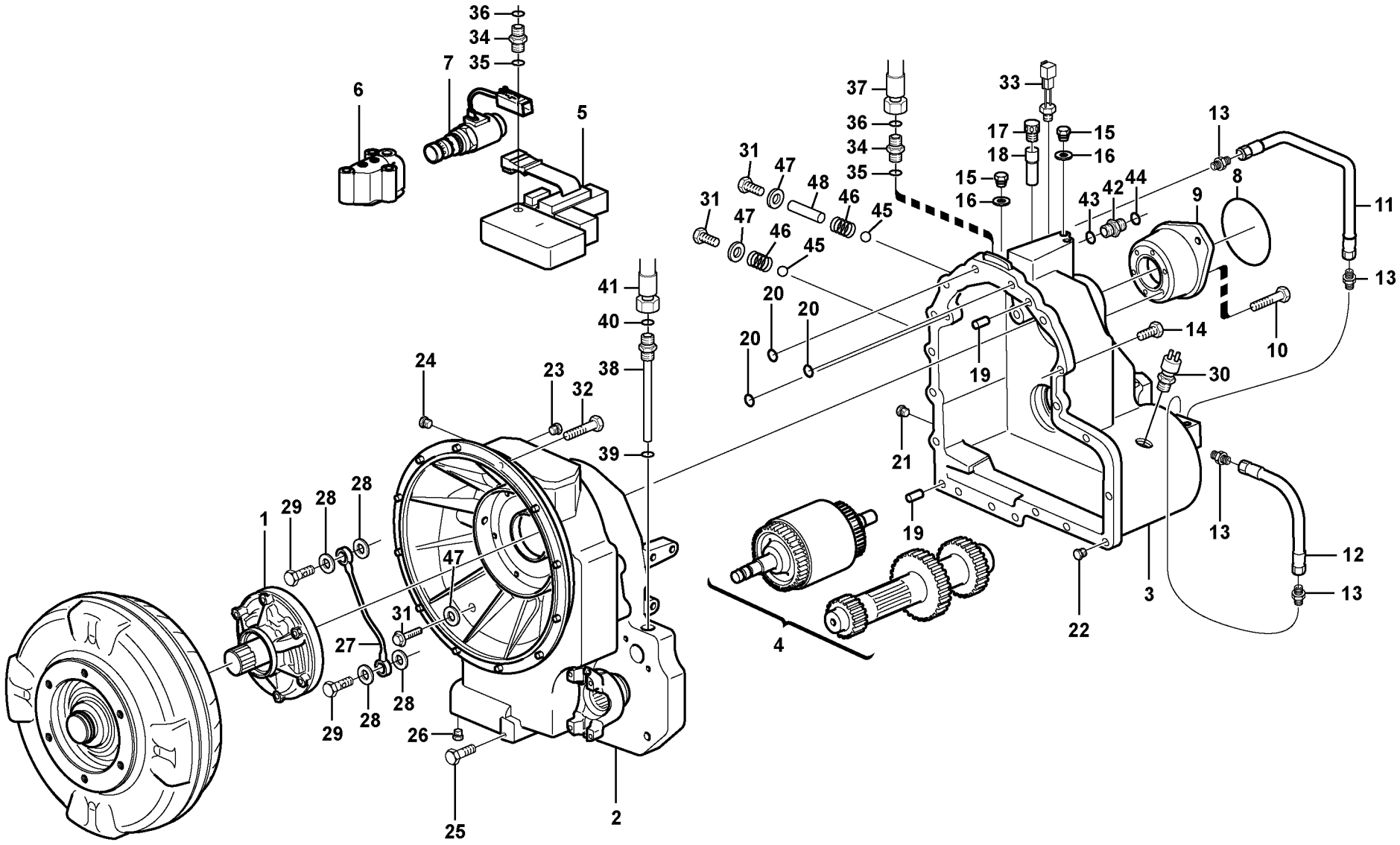

Volvo Construction Equipment
1013233

Fig.	Part No.	Quantity 1	2	3	PS	KIT	Description	Dénomination	Bezeichnung	Denominación	Notes
25	**VOE 970812**	6					•Hexagon screw	•Vis a tête hexagonale	•Sechskantschr.	•Tornillo hexago	
26	**VOE 11709071**	1					•Plug	•Bouchon	•Stopfen	•Tapon	
27	**VOE 11709067**	1					•Lubrication pipe	•Conduit de graissage	•Schmierrohr	•Tubo de lubricación	
28	**VOE 11709065**	4					•Copper Washer	•Rondelle en cuivre	•Kupferscheibe	•Arandela Cobre	
29	**VOE 11709066**	2					•Hollow screw	•Vis creuse	•Hohlschraube	•Racor-surtidor	
30		1					Ind Sensor	Emett.induction	Induktionsgeber	Sensor Inducc	See group 380, Page 205
31	**VOE 11709175**	3					Screw	Vis	Schraube	Tornillo	11890349, 11891050
32	**VOE 959238**	12					Allen Hd Screw	Vis A 6 Pans Cr	Inbusschraube	Torn Hex Embut	
33	**VOE 11881160**	1					Temp Sensor	Detecteur Temp.	Temperaturgeber	Sensor Temperat	
34	**VOE 935085**	2					Nipple	Raccord	Nippel	Niple	
35	**VOE 932039**	1					•O-ring	•Joint Torique	•O-Ring	•Junta torica	
36	**VOE 4880492**	1					•O-ring	•Joint Torique	•O-Ring	•Junta torica	
37		1					Hose	Durit	Schlauch	Tubo flexible	See group 517, Page 365
38	**VOE 11883691**	1					Connector	Raccord	Anschluss	Union	
39	**VOE 932041**	1					•O-ring	•Joint Torique	•O-Ring	•Junta torica	
40	**VOE 4880492**	1					•O-ring	•Joint Torique	•O-Ring	•Junta torica	
41		1					Hose	Durit	Schlauch	Tubo flexible	See group 517, Page 365
42	**VOE 13933858**	1					Union	Teton Connexion	Anschlussnippel	Niple Conexcion	
43	**VOE 932039**	1					•O-ring	•Joint Torique	•O-Ring	•Junta torica	
44	**VOE 4881722**	1					•O-ring	•Joint Torique	•O-Ring	•Junta torica	
45	**VOE 11709177**	2					Ball	Bille	Kugel	Bola	
46	**VOE 11709176**	2					Spring	Ressort	Feder	Muelle	
47	**VOE 11709174**	3					Washer	Rondelle	Scheibe	Arandela	
48	**VOE 11709186**	1					Gear Selector	Selecte.vitesse	Wählhebel	Select Velocid	

1		**Transmisión con accesorios de montaje** **Transmission mit Anbauteilen** **Transmission avec pièces de montage** **Hydraulic transmission with fitting parts**	Catalogue id **20050**	Group **420**
2				
3			Illustr. No **1013233**	Section **100**
4				
5		**11891077**	Issue **VOE 64D9920050**	Page **225**



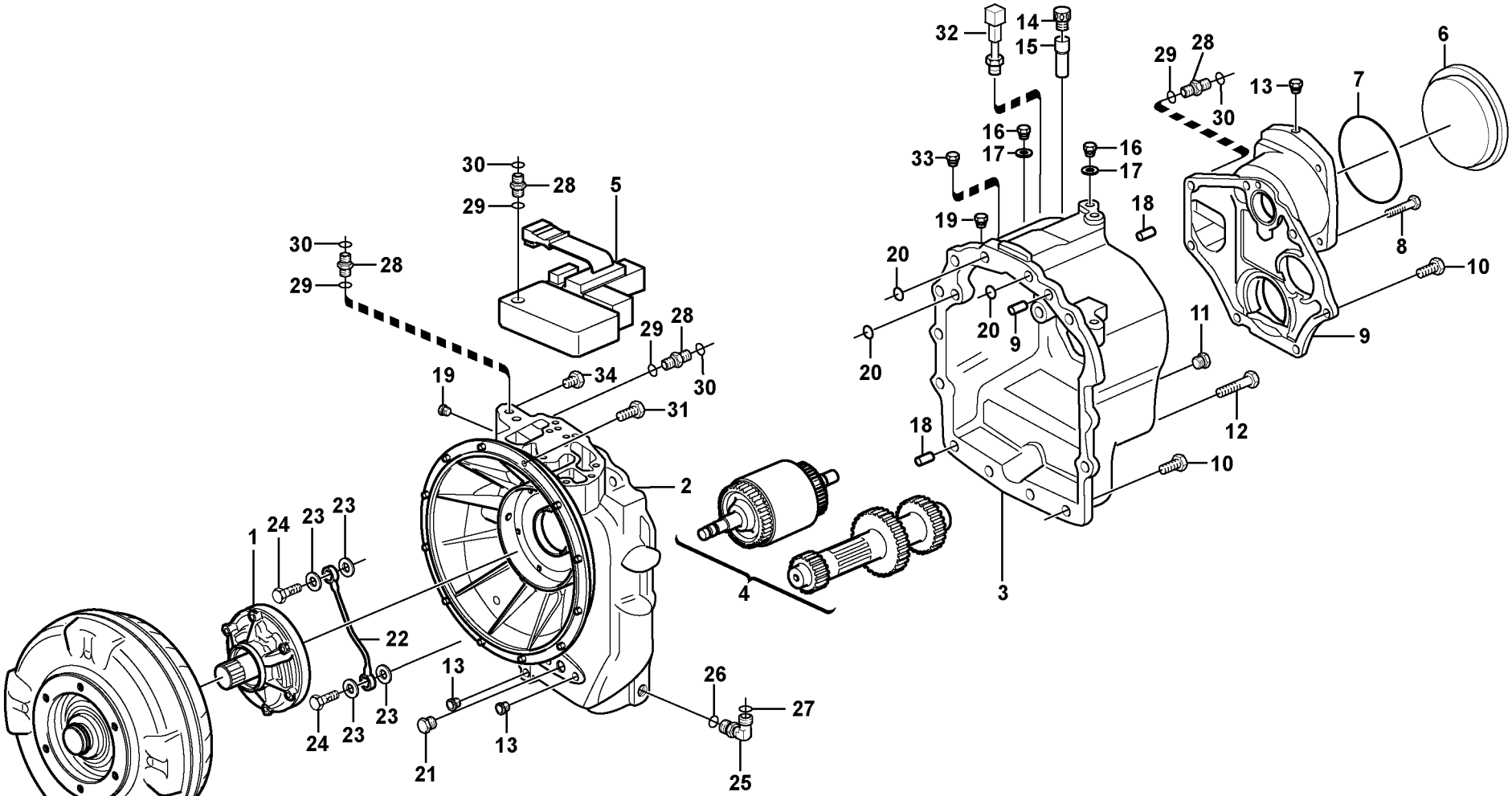

Volvo Construction Equipment

1024002

Fig.	Part No.	Quantity 1	2	3	PS	KIT	Description	Dénomination	Bezeichnung	Denominación	Notes
	VOE 11890339	1					Transmission	Transmission	Getriebe	Transmision	
	VOE 11887379		1				Transmission	Transmission	Getriebe	Transmision	
1		1	1				•Oil Pump	•Pompe a huile	•Ölpumpe	•Bomba de aceite	See group 421, Page 243
2	**VOE 11712460**	1					•Housing	•Carter	•Gehäuse	•Carter	
2	**VOE 11716665**		1				•Housing	•Carter	•Gehäuse	•Carter	
3	**VOE 11712461**	1	1				•Housing	•Carter	•Gehäuse	•Carter	
4		1	1				•Shaft with clutch	•Accouplement hydrauli	•Hydraulikkupplung	•Acoplamiento hidrauli	See group 421, Page 251
	VOE 11709103	1	1				•Reverse Shaft	•Arbre Marche Ar	•Rucklaufachse	•Eje Marcha Atr	See group 421, Page 253
	VOE 11709105	1	1				•Axle	•Arbre	•Welle	•Eje	See group 421, Page 253
	VOE 11712471	1	1				•Secondary Shaft	•Arbr.secondaire	•Sekundärwelle	•Eje Secundario	See group 421, Page 263
5		1	1				•Gear selector valve	•Valve selectr.vitesse	•Umsteuerventil	•valvula select.veloci	See group 421, Page 279
6	**VOE 11712462**	1	1				•Plug	•Bouchon	•Stopfen	•Tapon	
7	**VOE 11709074**	1	1				•O-ring	•Joint Torique	•O-Ring	•Junta torica	
8	**VOE 970809**	2	2				•Hexagon screw	•Vis tête hexagonale	•Sechskantschraube	•Tornillo hexago	
9	**VOE 11712463**	1	1				•End plate	•Flasque	•Stirnwand	•Extremo	
10	**VOE 13970948**	19	19				•Hexagon screw	•Vis a tête hexagonale	•Sechskantschr.	•Tornillo hexago	
11	**VOE 11709057**	1	1				•Plug	•Bouchon	•Stopfen	•Tapon	
12	**VOE 970823**	2	2				•Hexagon screw	•Vis tête hexagonale	•Sechskantschraube	•Tornillo hexago	
13	**VOE 11712464**	4	4				•Plug	•Bouchon	•Stopfen	•Tapon	
14	**VOE 11709060**	1	1				•Breather Cap	•Boucho.aeration	•Lüftungsdeckel	•Tapa Ventilac	
15	**VOE 11709063**	1	1				•Breather Pipe	•Reniflard	•Luftungsrohr	•Conduct Ventil	
16	**VOE 11709061**	3	3				•Plug	•Bouchon	•Stopfen	•Tapon	
17	**VOE 11709199**	3	3				•Washer	•Rondelle	•Scheibe	•Arandela	
18	**VOE 950588**	3	3				•Pin	•Goupille	•Stift	•Pasador	
19	**VOE 11709055**	2	2				•Plug	•Bouchon	•Stopfen	•Tapon	
20	**VOE 11709068**	3	3				•O-ring	•Joint Torique	•O-Ring	•Junta torica	
21	**VOE 11712466**	1	1				•Plug	•Bouchon	•Stopfen	•Tapon	
22	**VOE 11712465**	1	1				•Oil Pipe	•Conduit Huile	•Ölrohr	•Tubo Aceite	
23	**VOE 11709065**	4	4				•Copper Washer	•Rondelle en cuivre	•Kupferscheibe	•Arandela Cobre	
24	**VOE 11709066**	2	2				•Hollow screw	•Vis creuse	•Hohlschraube	•Racor-surtidor	

1	**11890339**	**Transmisión con accesorios de montaje** **Transmission mit Anbauteilen** **Transmission avec pièces de montage** **Hydraulic transmission with fitting parts**	Catalogue id **20050**	Group **420**
2	**11887379**			
3			Illustr. No **1024002**	Section **150**
4				
5		**11891076**	Issue **VOE 64D9920050**	Page **227**

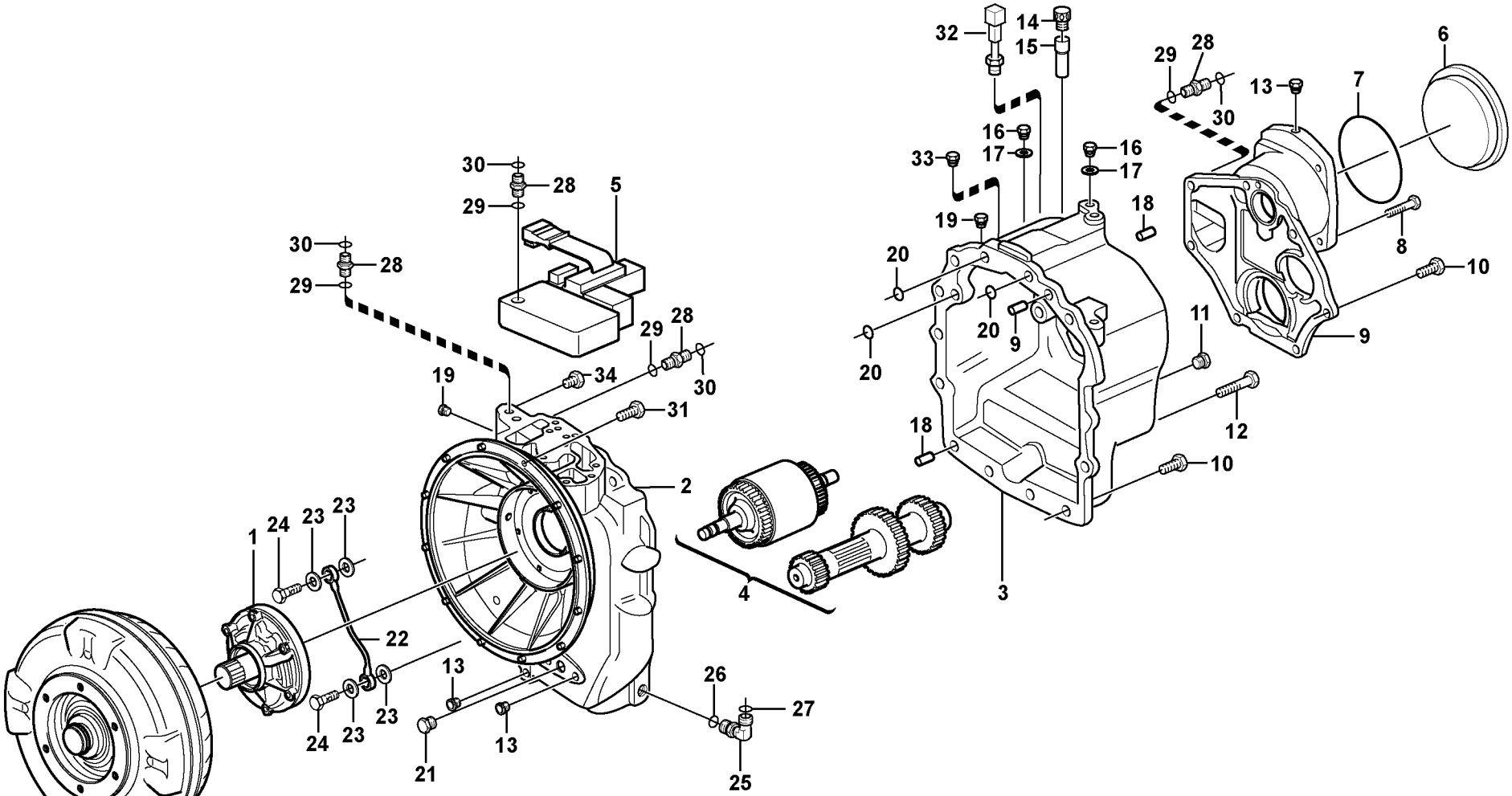

Volvo Construction Equipment

1024002

Fig.	Part No.	Quantity 1	2	3	PS	KIT	Description	Dénomination	Bezeichnung	Denominación	Notes
25	**VOE 935069**	1					•Elbow nipple	•Raccord angulaire	•Winkelnippel	•Niple angular	
26	**VOE 4880492**	1					••O-ring	••Joint Torique	••O-Ring	••Junta torica	
27	**VOE 4881722**	1					••O-ring	••Joint Torique	••O-Ring	••Junta torica	
28	**VOE 935085**	4					•Nipple	•Raccord	•Nippel	•Niple	
28	**VOE 13933858**		4				•Union	•Teton Connexion	•Anschlussnippel	•Niple Conexcion	
29	**VOE 4880492**	4	4				••O-ring	••Joint Torique	••O-Ring	••Junta torica	
30	**VOE 4881722**	4	4				••O-ring	••Joint Torique	••O-Ring	••Junta torica	
31	**VOE 959238**	12	12				Allen Hd Screw	Vis A 6 Pans Cr	Inbusschraube	Torn Hex Embut	
32	**VOE 11881160**	1	1				Temp Sensor	Detecteur Temp.	Temperaturgeber	Sensor Temperat	
33	**VOE 11716639**		1				Plug	Bouchon	Stopfen	Tapon	
34	**VOE 11709075**		1				Plug	Bouchon	Stopfen	Tapon	

1	**11890339**	**Transmisión con accesorios de montaje** **Transmission mit Anbauteilen** **Transmission avec pièces de montage** **Hydraulic transmission with fitting parts**	Catalogue id **20050**	Group **420**
2	**11887379**			
3			Illustr. No **1024002**	Section **150**
4				
5		**11891076**	Issue **VOE 64D9920050**	Page **229**



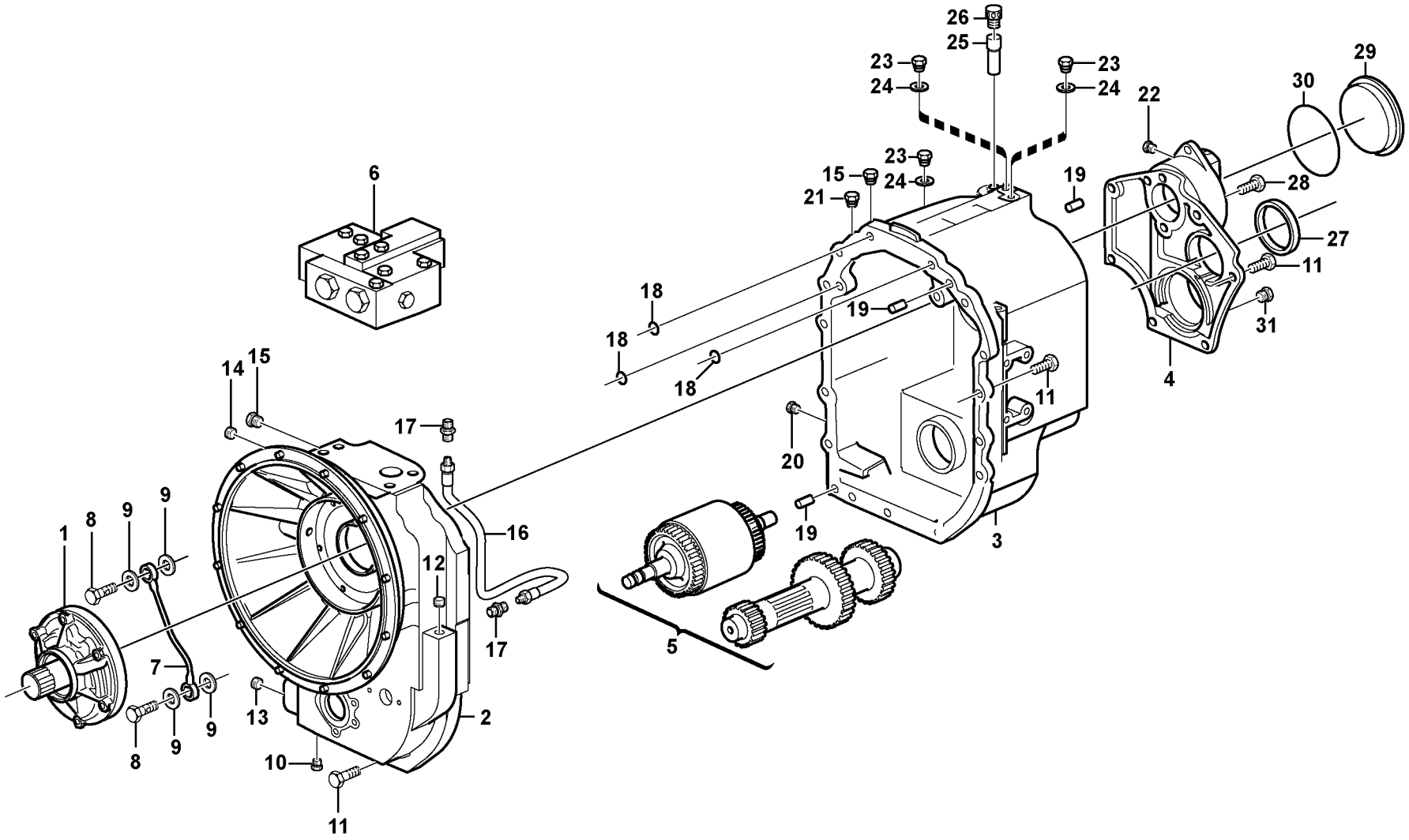

Volvo Construction Equipment

1024684

Fig.	Part No.	Quantity 1	2	3	PS	KIT	Description	Dénomination	Bezeichnung	Denominación	Notes
	VOE 11887380						Transmission	Transmission	Getriebe	Transmision	
1		1					•Oil pump	•Pompe huile	•Ölpumpe	•Bomba aceite	See group 421, Page 245
2	**VOE 11716782**	1					•Housing	•Carter	•Gehäuse	•Carter	
3	**VOE 11716783**	1					•Housing	•Carter	•Gehäuse	•Carter	
4	**VOE 11712463**	1					•End plate	•Flasque	•Stirnwand	•Extremo	
5		1					•Shaft with clutch	•Accouplement hydrauli	•Hydraulikkupplung	•Acoplamiento hidrauli	See group 421, Page 249
		1					•Reverse Shaft	•Arbre Marche Ar	•Rucklaufachse	•Eje Marcha Atr	See group 421, Page 253
		1					•Axle	•Arbre	•Welle	•Eje	See group 421, Page 271
		1					•Secondary Shaft	•Arbr.secondaire	•Sekundärwelle	•Eje Secundario	See group 421, Page 259
6		1					•Gear selector valve	•Valve selectr.vitesse	•Umsteurventil	•valvula select.veloci	See group 421, Page 283
7	**VOE 11712465**	1					•Oil Pipe	•Conduit Huile	•Ölrohr	•Tubo Aceite	
8	**VOE 11709066**	2					•Hollow screw	•Vis creuse	•Hohlschraube	•Racor-surtidor	
9	**VOE 11709065**	4					•Copper Washer	•Rondelle en cuivre	•Kupferscheibe	•Arandela Cobre	
10	**VOE 11709071**	1					•Plug	•Bouchon	•Stopfen	•Tapon	
11	**VOE 13970948**	22					•Hexagon screw	•Vis a tête hexagonale	•Sechskantschr.	•Tornillo hexago	
12	**VOE 11709200**	1					•Plug	•Bouchon	•Stopfen	•Tapon	
13	**VOE 11712960**	1					•Rivet	•Rivet	•Niet	•Remache	
14	**VOE 11709070**	1					•Plug	•Bouchon	•Stopfen	•Tapon	
15	**VOE 11709055**	2					•Plug	•Bouchon	•Stopfen	•Tapon	
16	**VOE 11716784**	1					•Lub Pipe	•Tuyau Graissage	•Schmierrohr	•Tubo Lubricante	
17	**VOE 11709056**	2					•Nipple	•Raccord	•Nippel	•Niple	
18	**VOE 11709068**	3					•O-ring	•Joint Torique	•O-Ring	•Junta torica	
19	**VOE 950588**	3					•Pin	•Goupille	•Stift	•Pasador	
20	**VOE 11709057**	1					•Plug	•Bouchon	•Stopfen	•Tapon	
21	**VOE 11716639**	1					•Plug	•Bouchon	•Stopfen	•Tapon	
22	**VOE 11709200**	1					•Plug	•Bouchon	•Stopfen	•Tapon	
23	**VOE 11709061**	3					•Plug	•Bouchon	•Stopfen	•Tapon	
24	**VOE 11709199**	3					•Washer	•Rondelle	•Scheibe	•Arandela	
25	**VOE 11709063**	1					•Breather Pipe	•Reniflard	•Luftungsrohr	•Conduct Ventil	
26	**VOE 11709060**	1					•Breather Cap	•Boucho.aeration	•Lüftungsdeckel	•Tapa Ventilac	

1	**11887380**	**Transmisión con accesorios de montaje** **Transmission mit Anbauteilen** **Transmission avec pièces de montage** **Hydraulic transmission with fitting parts**	Catalogue id **20050**	Group **420**
2			Illustr. No **1024684**	Section **200**
3			Issue **VOE 64D9920050**	Page **231**
4				
5		**11891077 S/N 10627 -**		

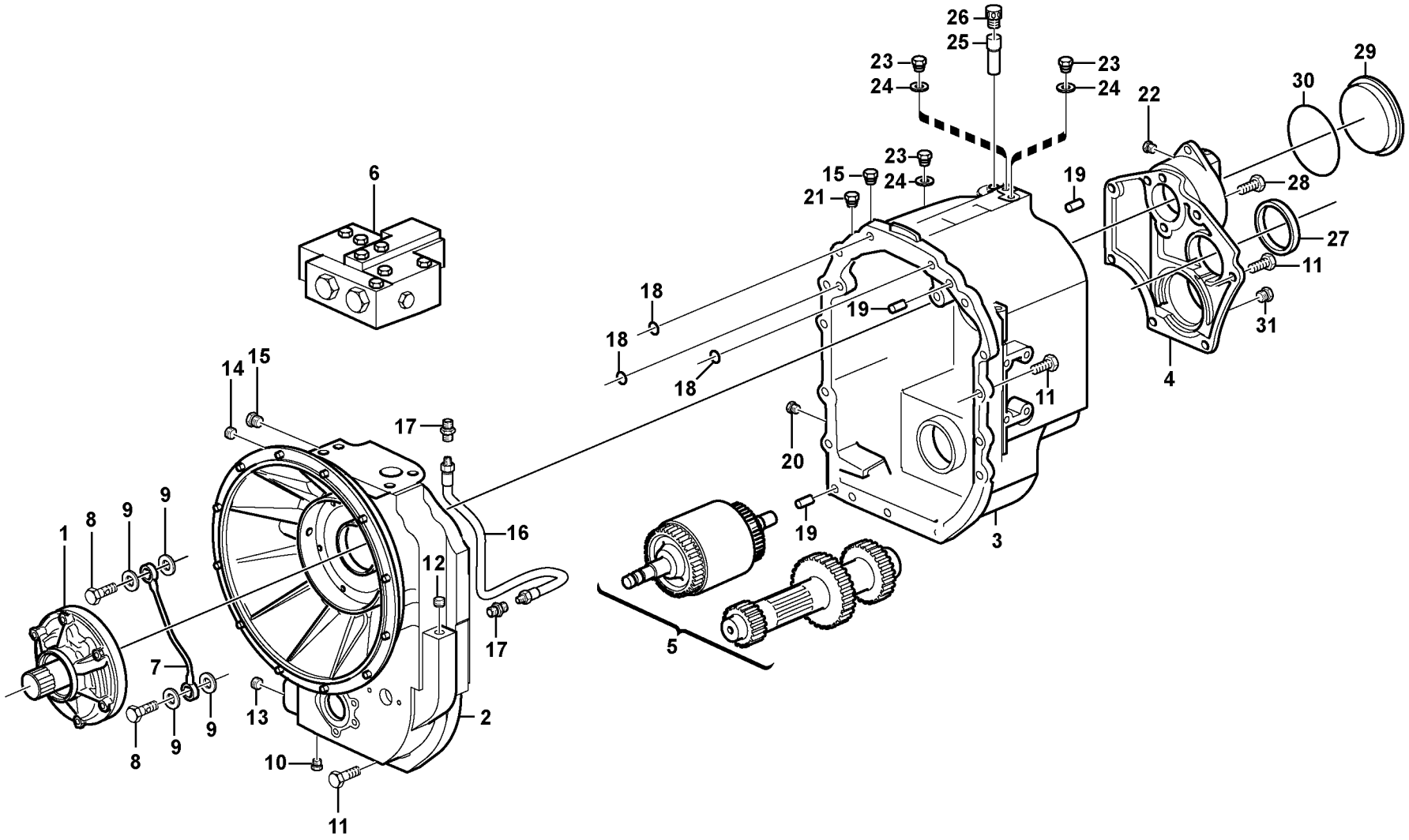

Volvo Construction Equipment

1024684

Fig.	Part No.	Quantity 1	2	3	PS	KIT	Description	Dénomination	Bezeichnung	Denominación	Notes
27	**VOE 11709133**	1					•Seal	•Joint	•Dichtring	•Junta	
28	**VOE 13970951**	2					•Hexagon screw	•Vis a tête hexagonale	•Sechskantschr.	•Tornillo hexago	
29	**VOE 11712462**	1					•Plug	•Bouchon	•Stopfen	•Tapon	
30	**VOE 11709074**	1					•O-ring	•Joint Torique	•O-Ring	•Junta torica	

1	**11887380**	**Transmisión con accesorios de montaje** **Transmission mit Anbauteilen** **Transmission avec pièces de montage** **Hydraulic transmission with fitting parts**	Catalogue id **20050**	Group **420**
2				
3			Illustr. No **1024684**	Section **200**
4				
5		**11891077 S/N 10627 -**	Issue **VOE 64D9920050**	Page **233**

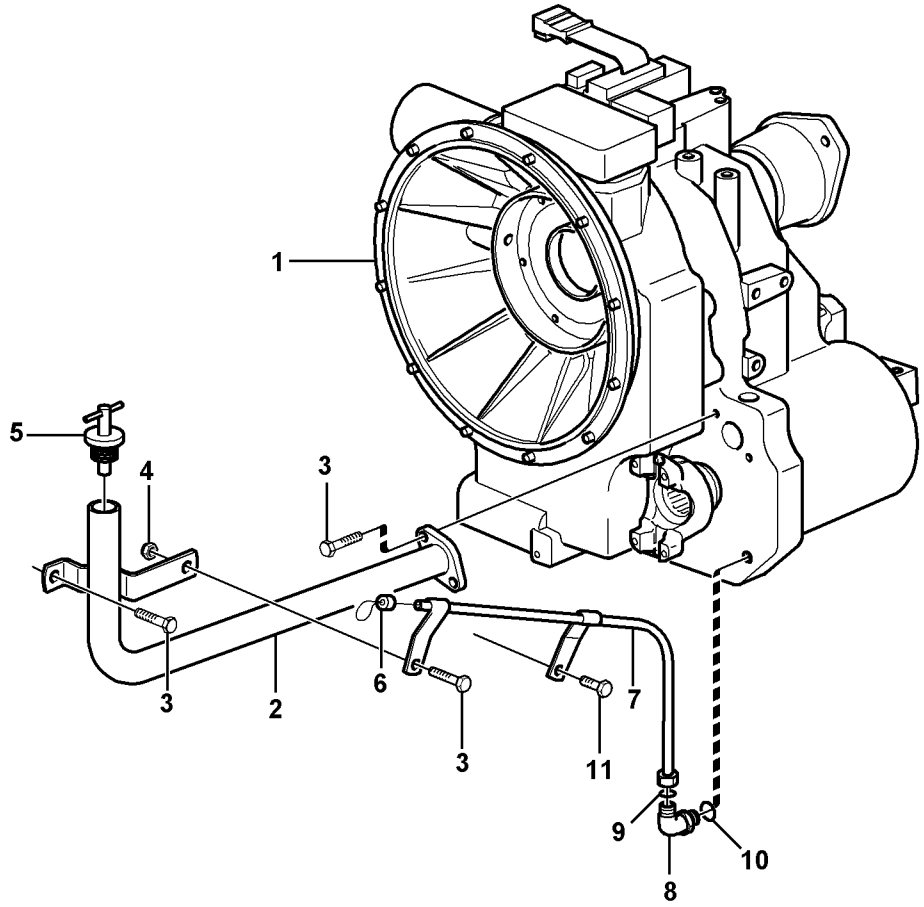
1
5
4
3
3
2
6
3
7
11
9
8
10

Fig.	Part No.	Quantity 1	2	3	PS	KIT	Description	Dénomination	Bezeichnung	Denominación	Notes
1	**VOE 11884310**	1					Transmission	Transmission	Getriebe	Transmision	
2	**VOE 11884059**	1					Tube	Tube	Rohr	Tubo	
3	**VOE 13967630**	4					Allen Hd Screw	Vis A 6 Pans Cr	Inbusschraube	Torn Hex Embut	
4	**VOE 946036**	1					Lock nut	Contre-ecrou	Sicherungsmutter	Contratuerca	
5	**VOE 11882698**	1					Filler cap	Bouchon Remplissage	Tankverschluss	Tapa Llenado	
6	**VOE 11882695**	1					Dipstick	Jauge	Messtab	Varill Medic	
7	**VOE 11882696**	1					Dipstick Tube	Tube De Jauge	Messtabrohr	Tubo Medicion	
8	**VOE 935069**	1					Elbow nipple	Raccord angulaire	Winkelnippel	Niple angular	
9	**VOE 4880492**	1					•O-ring	•Joint Torique	•O-Ring	•Junta torica	9,25X1,78 MM
10	**VOE 4881722**	1					•O-ring	•Joint Torique	•O-Ring	•Junta torica	7,65X1,78 MM
11	**VOE 946502**	1					Flange screw	Vis à bride	Flanschschraube	Torn embridado	

1		**Boca de llenado de aceitey varilla de nivel** **Öleinfüllung und Ölmeßtab** **Remplissage d'huile et indicateur de niveau** **Oil filler and dipstick**	Catalogue id **20050**	Group **421**
2			Illustr. No **1013101**	Section **150**
3			Issue **VOE 64D9920050**	Page **235**
4				
5		**11891077 S/N - 10626**		

VOLVO

BL61

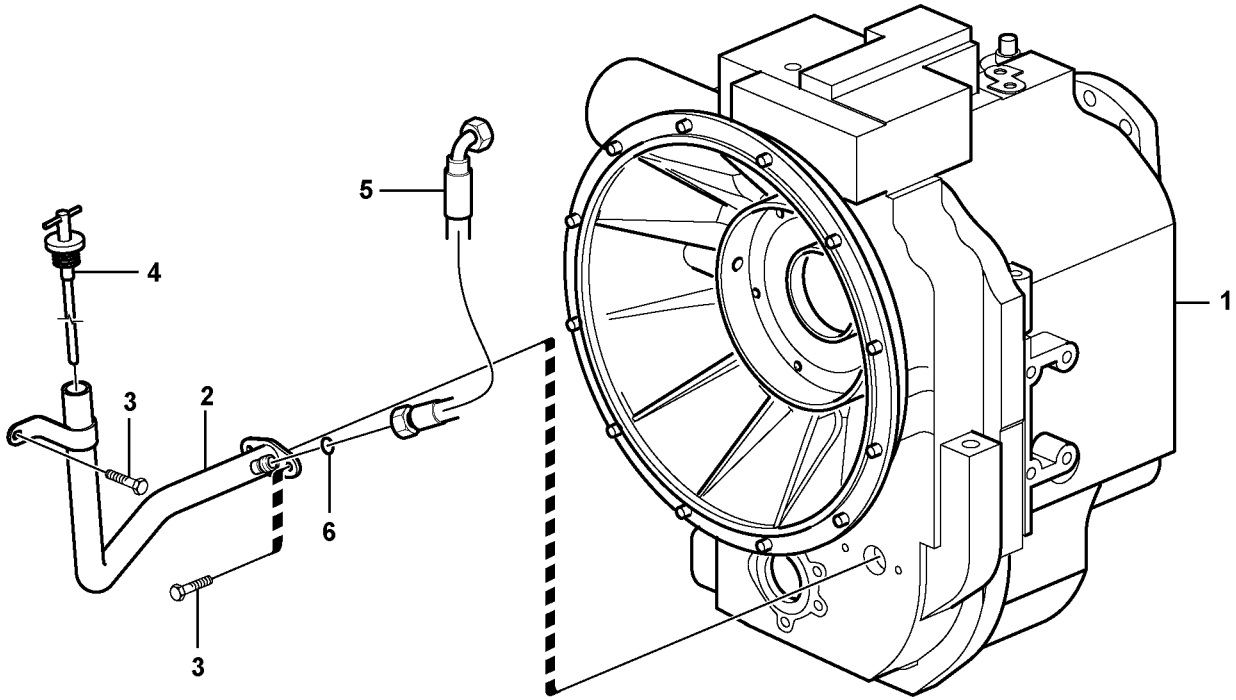

Volvo Construction Equipment

1024697

Fig.	Part No.	Quantity 1	2	3	PS	KIT	Description	Dénomination	Bezeichnung	Denominación	Notes
1		1					Transmission	Transmission	Getriebe	Transmision	See group 420, Page 227
2	**VOE 11888393**	1					Filler pipe	Tube remplissa	Fullrohr	Tubo Llenado	
3	**VOE 13967630**	3					Allen Hd Screw	Vis A 6 Pans Cr	Inbusschraube	Torn Hex Embut	
4	**VOE 11889090**	1					Dipstick	Jauge	Messtab	Varill Medic	
5	**VOE 11882192**	1					Hose assembly	Conduit flexible	Schlauchleitung	Conducto	
6	**VOE 990737**	1					O-ring	Joint Torique	O-Ring	Junta torica	

1		**Boca de llenado de aceitey varilla de nivel** **Öleinfüllung und Ölmeßtab** **Remplissage d'huile et indicateur de niveau** **Oil filler and dipstick**	Catalogue id **20050**	Group **421**
2			Illustr. No **1024697**	Section **160**
3			Issue **VOE 64D9920050**	Page **237**
4				
5		**11891077 S/N 10627 -**		

VOLVO

BL61

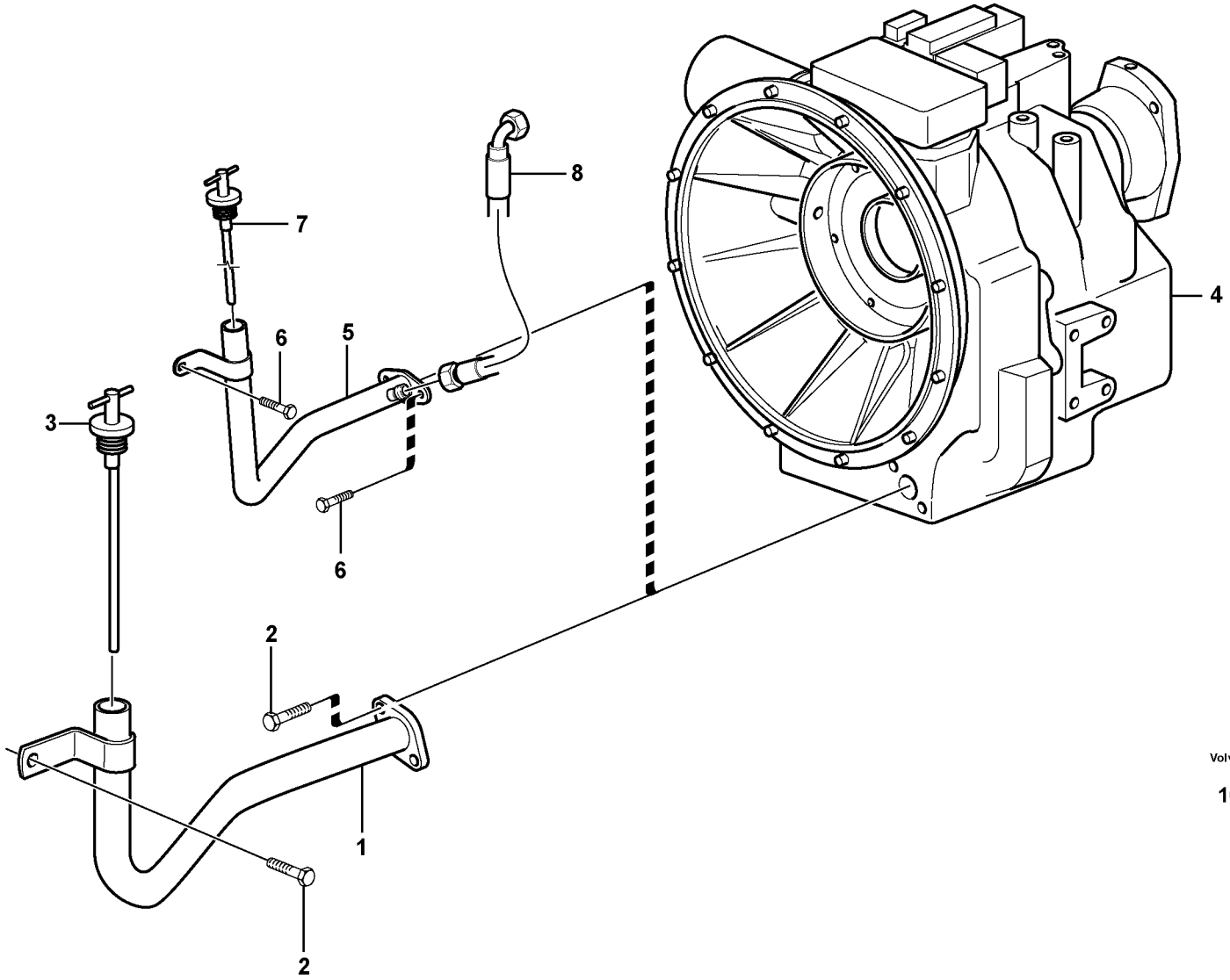

Volvo Construction Equipment

1024226

Fig.	Part No.	Quantity 1	2	3	PS	KIT	Description	Dénomination	Bezeichnung	Denominación	Notes
1	**VOE 11885030**	1					Filler pipe	Tube remplissa	Fullrohr	Tubo Llenado	
2	**VOE 13967630**	3					Allen Hd Screw	Vis A 6 Pans Cr	Inbusschraube	Torn Hex Embut	
3	**VOE 11885057**	1					Filler cap	Bouchon Remplissage	Tankverschluss	Tapa Llenado	
4	**VOE 11890339**	1					Transmission	Transmission	Getriebe	Transmision	
4	**VOE 11887379**		1				Transmission	Transmission	Getriebe	Transmision	
5	**VOE 11888393**		1				Filler pipe	Tube remplissa	Fullrohr	Tubo Llenado	
6	**VOE 13967630**		3				Allen Hd Screw	Vis A 6 Pans Cr	Inbusschraube	Torn Hex Embut	
7	**VOE 11889090**		1				Dipstick	Jauge	Messtab	Varill Medic	
8	**VOE 11882192**		1				Hose assembly	Conduit flexible	Schlauchleitung	Conducto	

1	**11880339**	**Boca de llenado de aceitey varilla de nivel** **Öleinfüllung und Ölmeßtab** **Remplissage d'huile et indicateur de niveau** **Oil filler and dipstick**	Catalogue id **20050**	Group **421**
2	**11887379**		Illustr. No **1024226**	Section **175**
3			Issue **VOE 64D9920050**	Page **239**
4				
5		**11891076**		

VOLVO

BL61

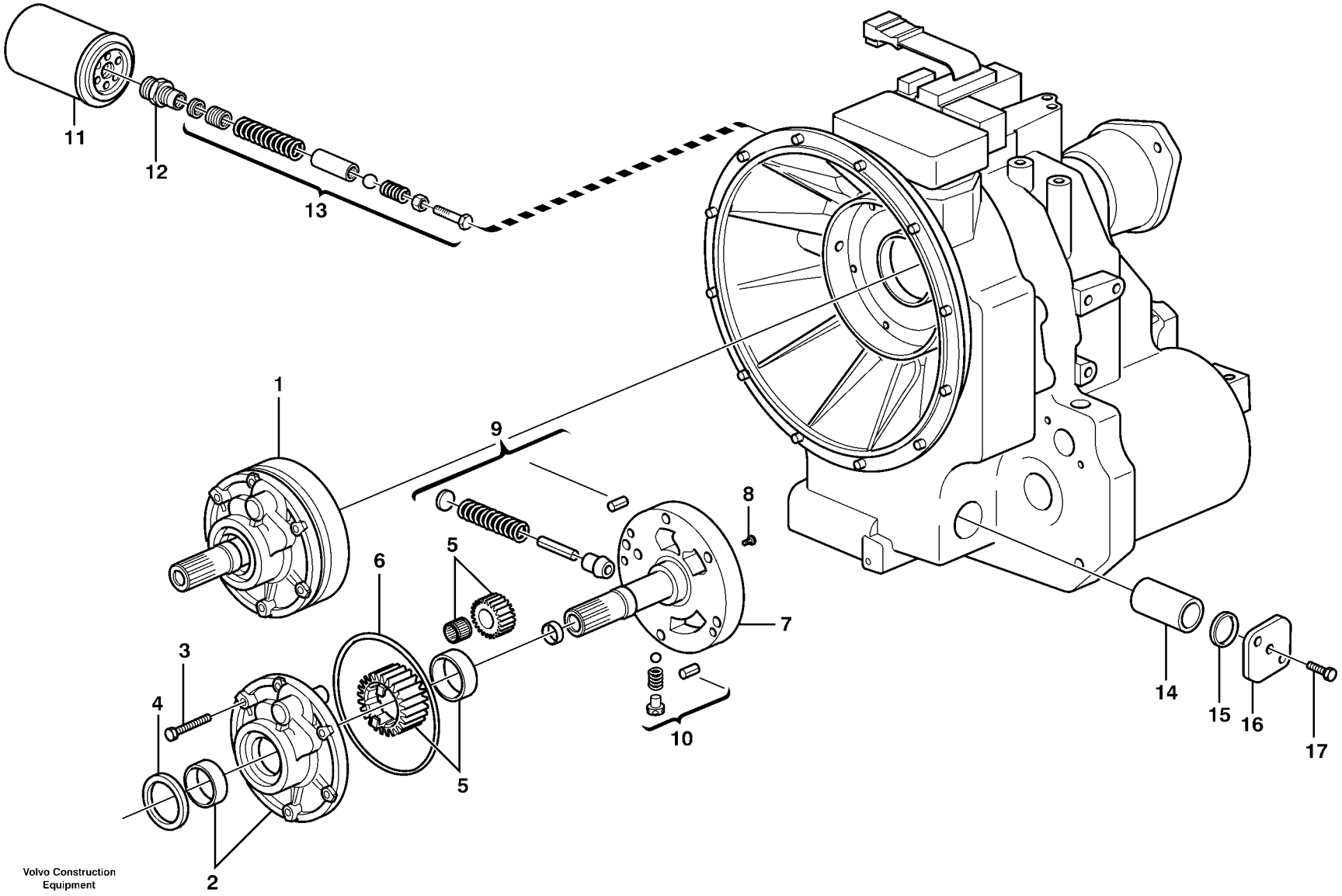

Volvo Construction Equipment

1011548

Fig.	Part No.	Quantity 1	2	3	PS	KIT	Description	Dénomination	Bezeichnung	Denominación	Notes
1	**VOE 11709045**	1					Oil pump	Pompe huile	Ölpumpe	Bomba aceite	
2		1			NS		•Pump Body	•Corps de pompe	•Pumpengehäuse	•Cuerpo Bomba	
3	**VOE 955302**	6					•Hexagon screw	•Vis tête hexagonale	•Sechskantschraube	•Tornillo hexago	
4	**VOE 11712659**	1					•Seal	•Joint	•Dichtring	•Junta	
5		1			NS		•Gear Set	•Jeu Pignons	•Zahnradsatz	•Juego Engranaje	
6	**VOE 11709047**	1					•O-ring	•Joint Torique	•O-Ring	•Junta torica	
7		1			NS		•Stator	•Stator	•Ständer	•Estator	
8	**VOE 13947542**	1					•Screw	•Vis	•Schraube	•Tornillo	
9	**VOE 11712940**	1			OP		•Relief valve	•Limiteur - pression	•Druckbegrenzer	•Limitador presion	
10	**VOE 11712941**	1			OP		•Converter Valve	•Valve Converti.	•Wandlerventil	•Valv Convertid	
11	**VOE 11709048**	1					Oil Filter	Filtre Huile	Ölfilter	Filtro Aceite	
12	**VOE 11709053**	1					Nipple	Raccord	Nippel	Niple	
13	**VOE 11709049**	1					Valve Kit	Kit valve	Ventilsatz	Juego Valvula	
14	**VOE 11709050**	1					Oil Filter	Filtre Huile	Ölfilter	Filtro Aceite	
15	**VOE 11709051**	1					O-ring	Joint Torique	O-Ring	Junta torica	
16	**VOE 11709052**	1					Cover	Couvercle	Deckel	Tapa	
17	**VOE 13955294**	2					Screw	Vis	Schraube	Tornillo	

1		**Bomba de aceite** **Ölpumpe** **Pompe à huile** **Oil pump**	Catalogue id **20050**	Group **421**
2			Illustr. No **1011548**	Section **200**
3				
4			Issue **VOE 64D9920050**	Page **241**
5		**11891077**		

VOLVO

BL61

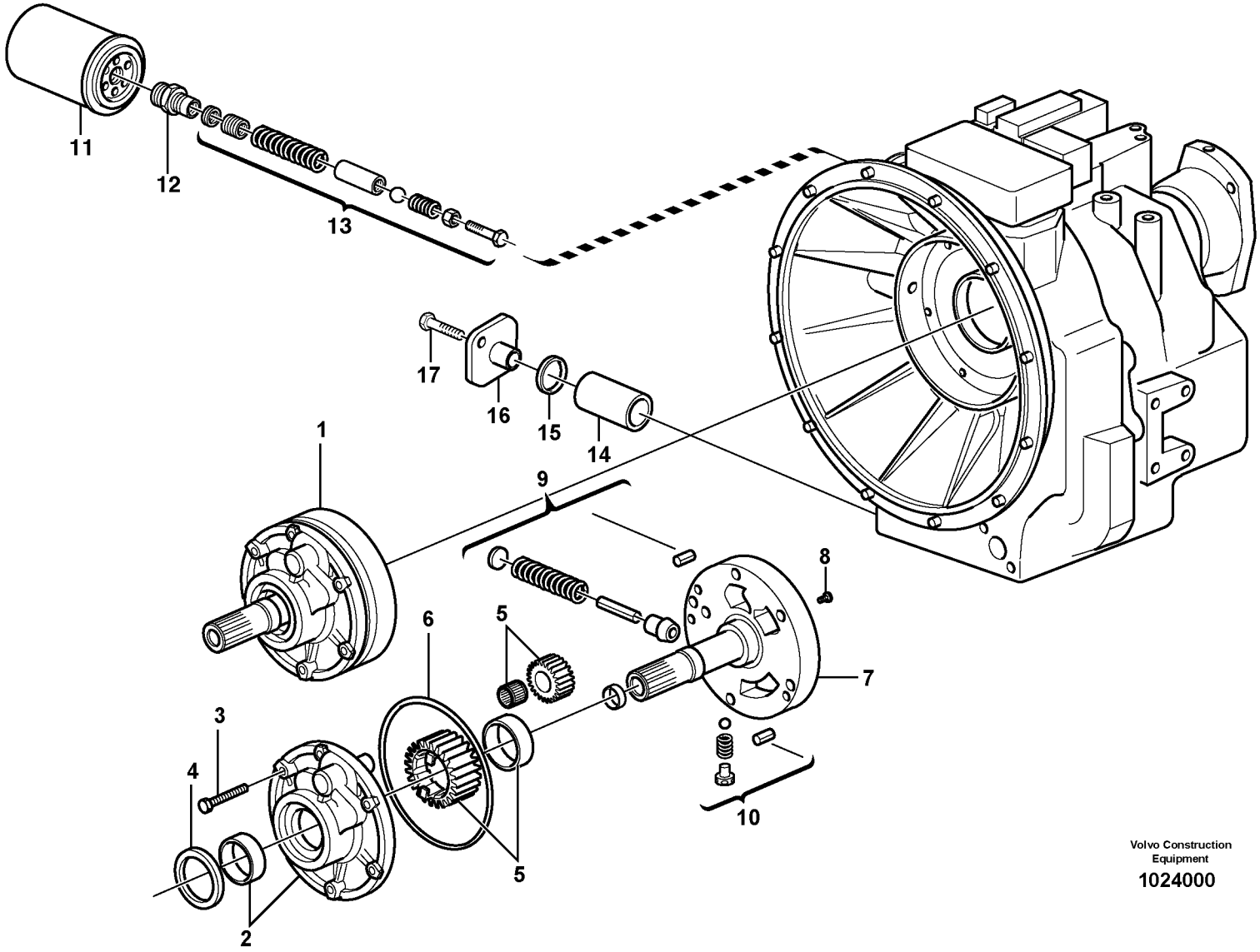

Volvo Construction Equipment

1024000

Fig.	Part No.	Quantity 1	2	3	PS	KIT	Description	Dénomination	Bezeichnung	Denominación	Notes
1	**VOE 11709045**	1					Oil pump	Pompe huile	Ölpumpe	Bomba aceite	
1	**VOE 11715039**		1				Oil Pump	Pompe a huile	Ölpumpe	Bomba de aceite	
2		1	1		NS		•Pump Body	•Corps de pompe	•Pumpengehäuse	•Cuerpo Bomba	
3	**VOE 955302**	6	6				•Hexagon screw	•Vis tête hexagonale	•Sechskantschraube	•Tornillo hexago	
4	**VOE 11712659**	1	1				•Seal	•Joint	•Dichtring	•Junta	
5		1	1		NS		•Gear Set	•Jeu Pignons	•Zahnradsatz	•Juego Engranaje	
6	**VOE 11709047**	1	1				•O-ring	•Joint Torique	•O-Ring	•Junta torica	
7		1	1		NS		•Stator	•Stator	•Ständer	•Estator	
8	**VOE 13947542**	1					•Screw	•Vis	•Schraube	•Tornillo	
9	**VOE 11712940**	1			OP		•Relief valve	•Limiteur - pression	•Druckbegrenzer	•Limitador presion	
10	**VOE 11712941**	1			OP		•Converter Valve	•Valve Converti.	•Wandlerventil	•Valv Convertid	
11	**VOE 11709048**	1	1				Oil Filter	Filtre Huile	Ölfilter	Filtro Aceite	
12	**VOE 11709053**	1	1				Nipple	Raccord	Nippel	Niple	
13	**VOE 11709049**		1				Valve Kit	Kit valve	Ventilsatz	Juego Valvula	
14	**VOE 11709050**	1	1				Oil Filter	Filtre Huile	Ölfilter	Filtro Aceite	
15	**VOE 11709051**	1	1				O-ring	Joint Torique	O-Ring	Junta torica	
16	**VOE 11709052**	1	1				Cover	Couvercle	Deckel	Tapa	
17	**VOE 13955294**	2	2				Screw	Vis	Schraube	Tornillo	

1	**11890339**	**Bomba de aceite** **Ölpumpe** **Pompe à huile** **Oil pump**	Catalogue id **20050**	Group **421**
2	**11887379**			
3			Illustr. No **1024000**	Section **225**
4				
5		**11891076**	Issue **VOE 64D9920050**	Page **243**

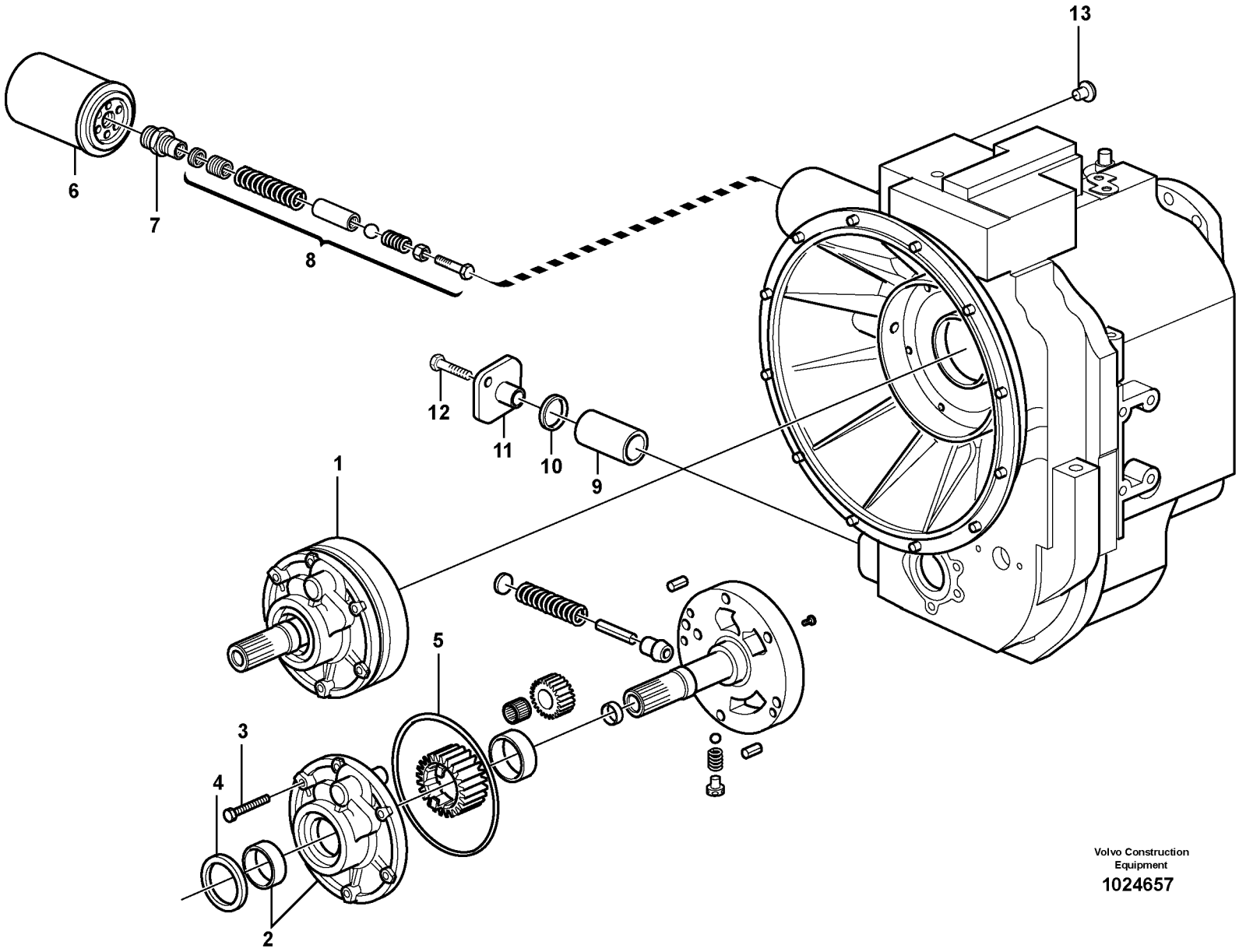

Volvo Construction Equipment

1024657

Fig.	Part No.	Quantity 1	2	3	PS	KIT	Description	Dénomination	Bezeichnung	Denominación	Notes
1	**VOE 11716780**	1					Oil Pump	Pompe a huile	Ölpumpe	Bomba de aceite	
2		1			NS		•Pump Body	•Corps de pompe	•Pumpengehäuse	•Cuerpo Bomba	
3	**VOE 955302**	6					•Hexagon screw	•Vis tête hexagonale	•Sechskantschraube	•Tornillo hexago	
4	**VOE 11712659**	1					•Seal	•Joint	•Dichtring	•Junta	
5	**VOE 11709047**	1					•O-ring	•Joint Torique	•O-Ring	•Junta torica	
6	**VOE 11716781**	1					Oil Filter	Filtre Huile	Ölfilter	Filtro Aceite	
7	**VOE 11709053**	1					Nipple	Raccord	Nippel	Niple	
8	**VOE 11709049**						Valve Kit	Kit valve	Ventilsatz	Juego Valvula	
9	**VOE 11709050**	1					Oil Filter	Filtre Huile	Ölfilter	Filtro Aceite	
10	**VOE 11709051**	1					O-ring	Joint Torique	O-Ring	Junta torica	
11	**VOE 11709052**	1					Cover	Couvercle	Deckel	Tapa	
12	**VOE 13955294**	2					Screw	Vis	Schraube	Tornillo	
13	**VOE 11709200**	1					Plug	Bouchon	Stopfen	Tapon	

1	**11887380**	**Bomba de aceite** **Ölpumpe** **Pompe à huile** **Oil pump**	Catalogue id **20050**	Group **421**
2			Illustr. No **1024657**	Section **230**
3			Issue **VOE 64D9920050**	Page **245**
4				
5		**11891077 S/N 10627 -**		

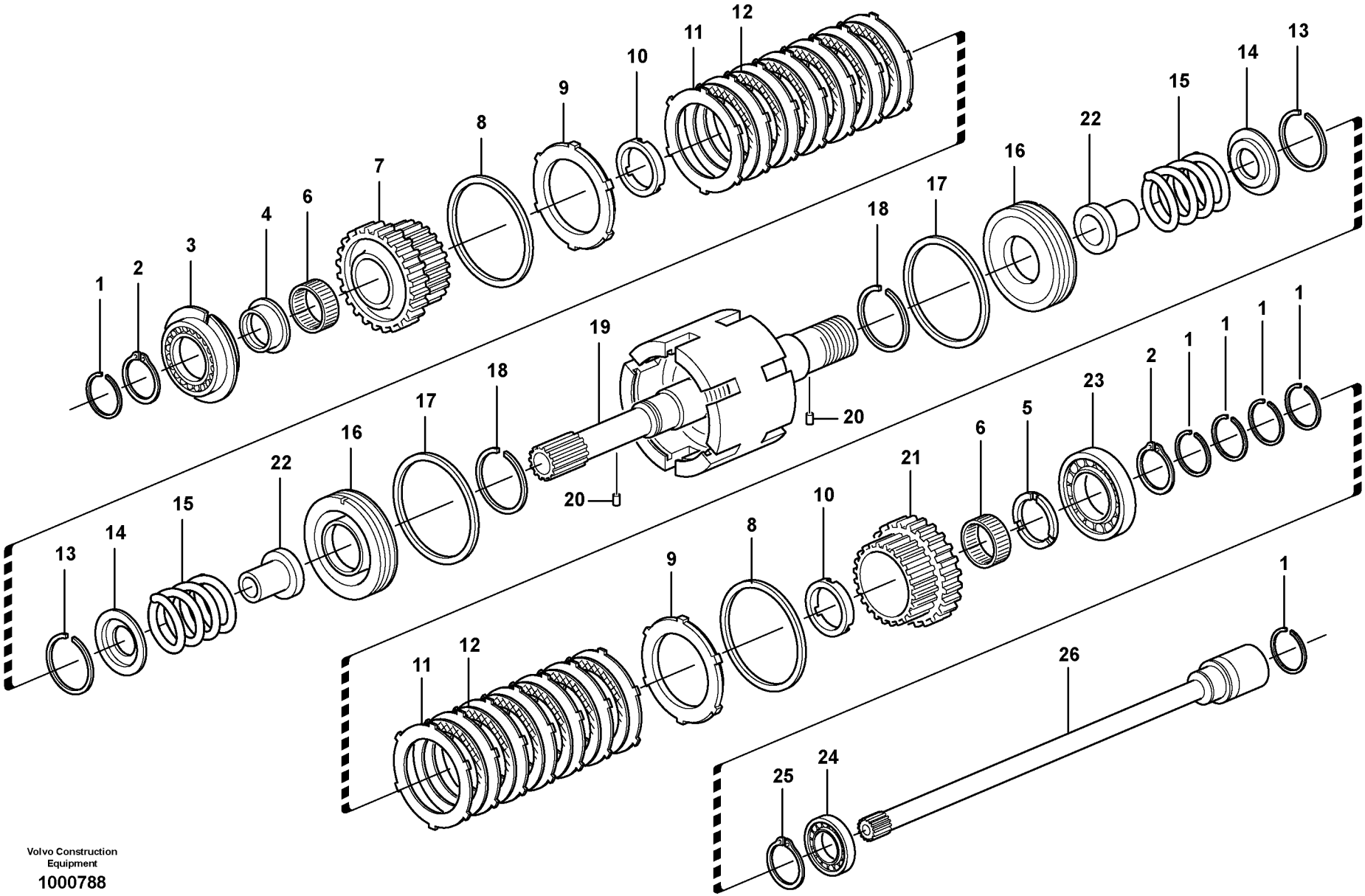

Volvo Construction Equipment

1000788

Fig.	Part No.	Quantity 1	2	3	PS	KIT	Description	Dénomination	Bezeichnung	Denominación	Notes
1	**VOE 11709076**	6					Sealing ring	Bague d'étanchéité	Runddichtring	Anillo reten	
2	**VOE 11709077**	2					Lock Ring	Anneau Verrouillage	Schlossring	Anillo Segurid	
3	**VOE 11709078**	1					Bearing	Palier	Lager	Cojinete	
4	**VOE 11709079**	1					Spacer	Entretoise	Abstandkörper	Distanciador	
5	**VOE 11709080**	1					Spacer Washer	Rond.entretoise	Abstandscheibe	Arandela Dist	
6	**VOE 11709081**	2					Needle Bearing	Roule.aiguilles	Nadellager	Cojinete Agujas	
7	**VOE 11709082**	1					Drive gear	Pignon	Triebrad	Pinon	
8	**VOE 11709083**	2					Lock Ring	Anneau Verrouillage	Schlossring	Anillo Segurid	
9	**VOE 11709084**	2					Clutch Ring	Manchon Acoup.	Kupplungsring	Anillo Embrague	
10	**VOE 11709085**	2					Spacer	Entretoise	Abstandkörper	Distanciador	
11	**VOE 11709086**	14					Clutch disc	Disque embrayage	Kupplungslamelle	Disco embrague	
12	**VOE 11709087**	12					Clutch disc	Disque embrayage	Kupplungslamelle	Disco embrague	
13	**VOE 11709088**	2					Lock Ring	Anneau Verrouillage	Schlossring	Anillo Segurid	
14	**VOE 11709089**	2					Cover	Couvercle	Deckel	Tapa	
15	**VOE 11709090**	2					Lock Spring	Ressort Verrou.	Sperrfeder	Resorte Bloqueo	
16	**VOE 11709091**	2					Piston	Piston	Kolben	Piston	
17	**VOE 11709092**	2					Seal	Joint	Dichtung	Reten	
18	**VOE 11709093**	2					Seal	Joint	Dichtung	Reten	
19	**VOE 11709094**	1					Axle	Arbre	Welle	Eje	
20	**VOE 11709095**	2					Pin	Goupille	Stift	Pasador	
21	**VOE 11709096**	1					Drive gear	Pignon	Triebrad	Pinon	
22	**VOE 11709097**	2					Flange	Bride	Flansch	Brida	
23	**VOE 11709098**	1					Bearing	Palier	Lager	Cojinete	
24	**VOE 11709099**	1					Bearing	Palier	Lager	Cojinete	
25	**VOE 11709100**	1					Snap Ring	Circlip	Nutring	Circlip	
26	**VOE 11709101**	1					Axle	Arbre	Welle	Eje	

1		**Eje de embrague delante/detrás** **Kupplungswelle vorwärts/rückwärts** **Arbre d'accouplement AV/AR** **Clutch shaft forward/reverse**	Catalogue id **20050**	Group **421**
2				
3			Illustr. No **1000788**	Section **250**
4				
5		**11891077**	Issue **VOE 64D9920050**	Page **247**

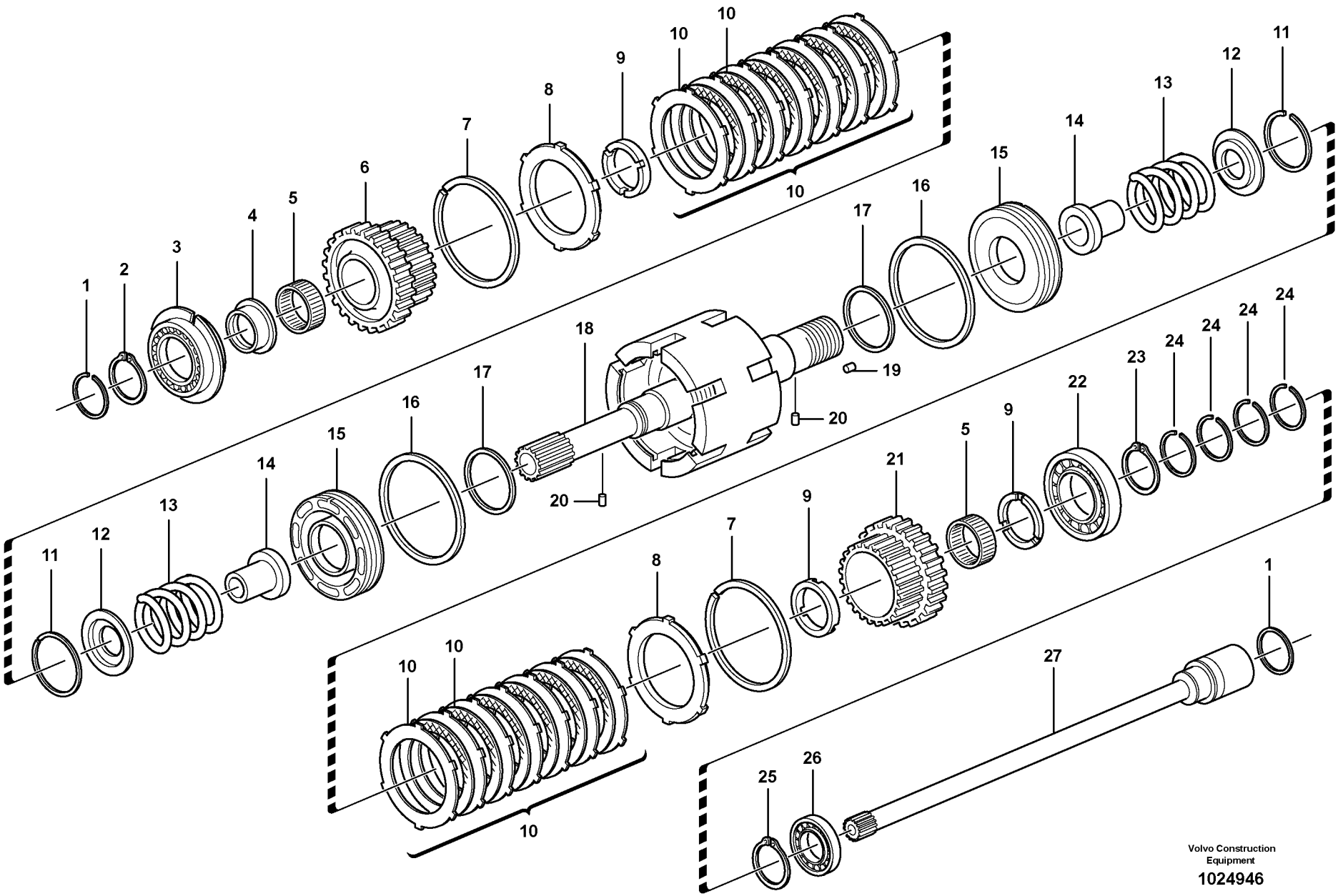
1
2
3
4
5
6
7
8
9
10
10
10
11
12
13
14
15
16
17
18
19
20
20
21
22
23
24
24
24
24
25
26
27
Volvo Construction Equipment
1024946

Fig.	Part No.	Quantity 1	2	3	PS	KIT	Description	Dénomination	Bezeichnung	Denominación	Notes
1	**VOE 11709076**	2					Sealing ring	Bague d'étanchéité	Runddichtring	Anillo reten	
2	**VOE 11709077**	1					Lock Ring	Anneau Verrouillage	Schlossring	Anillo Segurid	
3	**VOE 11709078**	1					Bearing	Palier	Lager	Cojinete	
4	**VOE 11709079**	1					Spacer	Entretoise	Abstandkörper	Distanciador	
5	**VOE 11709081**	2					Needle Bearing	Roule.aiguilles	Nadellager	Cojinete Agujas	
6	**VOE 11709082**	1					Drive gear	Pignon	Triebrad	Pinon	
7	**VOE 11709083**	2					Lock Ring	Anneau Verrouillage	Schlossring	Anillo Segurid	
8	**VOE 11709084**	2					Clutch Ring	Manchon Acoup.	Kupplungsring	Anillo Embrague	
9	**VOE 11709085**	3					Spacer	Entretoise	Abstandkörper	Distanciador	
10	**VOE 11712953**	2					Disc Kit	Jeu Disques	Lamellensatz	Juego Frenos	
11	**VOE 11709088**	2					Lock Ring	Anneau Verrouillage	Schlossring	Anillo Segurid	
12	**VOE 11709089**	2					Cover	Couvercle	Deckel	Tapa	
13	**VOE 11709090**	2					Lock Spring	Ressort Verrou.	Sperrfeder	Resorte Bloqueo	
14	**VOE 11709097**	2					Flange	Bride	Flansch	Brida	
15	**VOE 11709091**	2					Piston	Piston	Kolben	Piston	
16	**VOE 11709092**	2					Seal	Joint	Dichtung	Reten	
17	**VOE 11709093**	2					Seal	Joint	Dichtung	Reten	
18	**VOE 11716785**	1					Shaft	Arbre	Welle	Arbol	
19	**VOE 11712469**	4					•Rivet	•Rivet	•Niet	•Remache	
20	**VOE 11709095**	2					Pin	Goupille	Stift	Pasador	
21	**VOE 11709096**	1					Drive gear	Pignon	Triebrad	Pinon	
22	**VOE 11712468**	1					Bearing	Palier	Lager	Cojinete	
23	**VOE 11709151**	1					Snap Ring	Circlip	Nutring	Circlip	
24	**VOE 11712470**	4					Sealing ring	Bague d'étanchéité	Runddichtring	Anillo reten	
25	**VOE 81709100**	1					Snap Ring	Circlip	Nutring	Circlip	
26	**VOE 11709099**	1					Bearing	Palier	Lager	Cojinete	
27	**VOE 11709101**	1					Axle	Arbre	Welle	Eje	

1	**11897380**	**Eje de embrague delante/detrás** **Kupplungswelle vorwärts/rückwärts** **Arbre d'accouplement AV/AR** **Clutch shaft forward/reverse**	Catalogue id **20050**	Group **421**
2			Illustr. No **1024946**	Section **260**
3			Issue **VOE 64D9920050**	Page **249**
4				
5		**11891077 S/N 10939 -**		

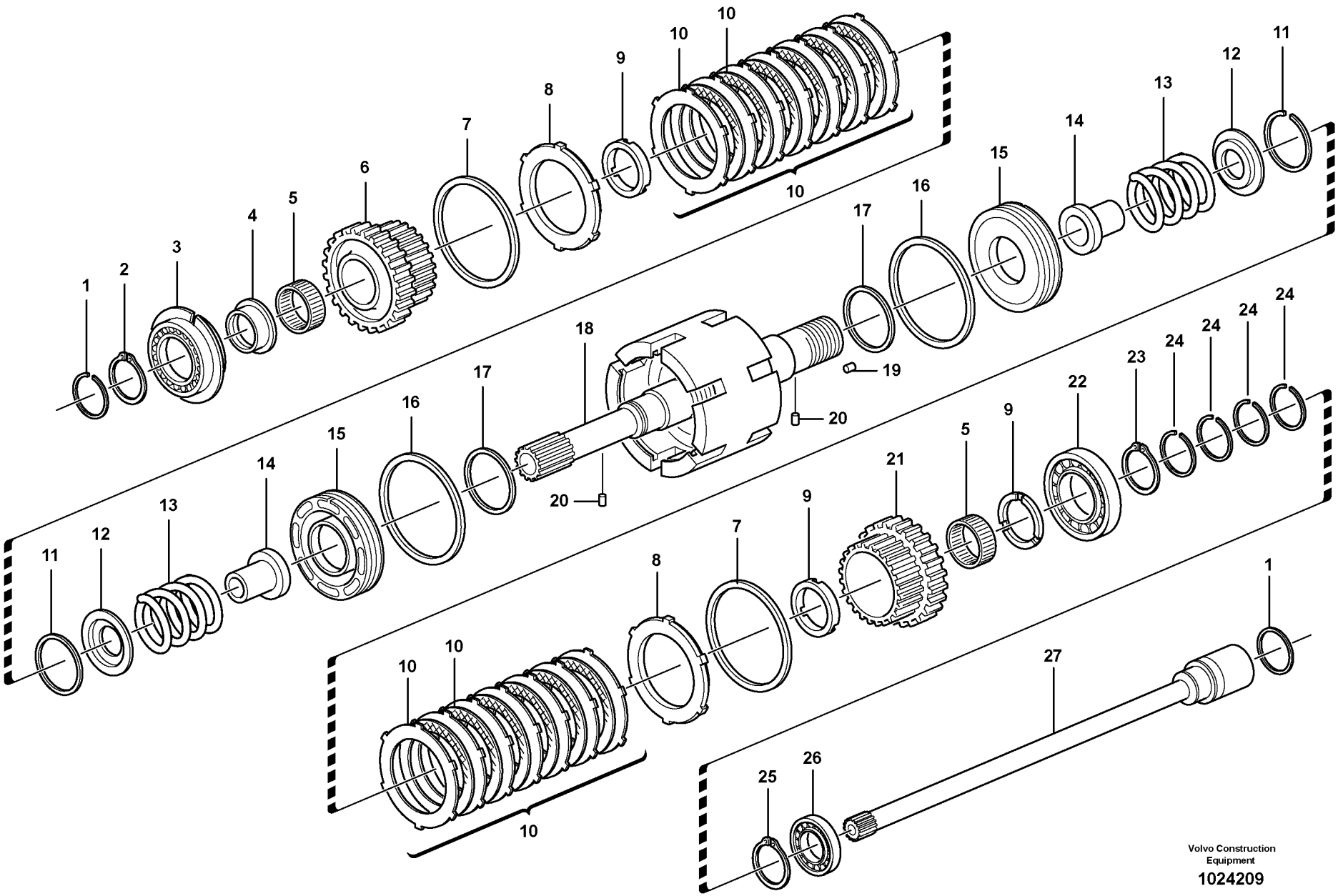
1
2
3
4
5
6
7
8
9
10
10
10
11
12
13
14
15
16
17
18
19
20
20
21
22
23
24
24
24
24
25
26
27
Volvo Construction Equipment
1024209

Fig.	Part No.	Quantity 1	2	3	PS	KIT	Description	Dénomination	Bezeichnung	Denominación	Notes
1	**VOE 11709076**	2	2				Sealing ring	Bague d'étanchéité	Runddichtring	Anillo reten	
2	**VOE 11709077**	1	1				Lock Ring	Anneau Verrouillage	Schlossring	Anillo Segurid	
3	**VOE 11709078**	1	1				Bearing	Palier	Lager	Cojinete	
4	**VOE 11709079**	1	1				Spacer	Entretoise	Abstandkörper	Distanciador	
5	**VOE 11709081**	2	2				Needle Bearing	Roule.aiguilles	Nadellager	Cojinete Agujas	
6	**VOE 11709082**	1	1				Drive gear	Pignon	Triebrad	Pinon	
7	**VOE 11709083**	2	2				Lock Ring	Anneau Verrouillage	Schlossring	Anillo Segurid	
8	**VOE 11709084**	2	2				Clutch Ring	Manchon Acoup.	Kupplungsring	Anillo Embrague	
9	**VOE 11709085**	3	3				Spacer	Entretoise	Abstandkörper	Distanciador	
10	**VOE 11712953**		2				Disc Kit	Jeu Disques	Lamellensatz	Juego Frenos	
10	**VOE 11709086**	14					Clutch disc	Disque embrayage	Kupplungslamelle	Disco embrague	
10	**VOE 11709087**	12					Clutch disc	Disque embrayage	Kupplungslamelle	Disco embrague	
11	**VOE 11709088**	2	2				Lock Ring	Anneau Verrouillage	Schlossring	Anillo Segurid	
12	**VOE 11709089**	2	2				Cover	Couvercle	Deckel	Tapa	
13	**VOE 11709090**	2	2				Lock Spring	Ressort Verrou.	Sperrfeder	Resorte Bloqueo	
14	**VOE 11709097**	2	2				Flange	Bride	Flansch	Brida	
15	**VOE 11709091**	2	2				Piston	Piston	Kolben	Piston	
16	**VOE 11709092**	2	2				Seal	Joint	Dichtung	Reten	
17	**VOE 11709093**	2	2				Seal	Joint	Dichtung	Reten	
18	**VOE 11712467**	1					Shaft	Arbre	Welle	Arbol	
18	**VOE 11716536**		1				Shaft	Arbre	Welle	Arbol	
19	**VOE 11712469**	4	4				•Rivet	•Rivet	•Niet	•Remache	
20	**VOE 11709095**	2	2				Pin	Goupille	Stift	Pasador	
21	**VOE 11709096**	1	1				Drive gear	Pignon	Triebrad	Pinon	
22	**VOE 11712468**	1	1				Bearing	Palier	Lager	Cojinete	
23	**VOE 11709151**	1	1				Snap Ring	Circlip	Nutring	Circlip	
24	**VOE 11712470**	4	4				Sealing ring	Bague d'étanchéité	Runddichtring	Anillo reten	
25	**VOE 11709100**	1	1				Snap Ring	Circlip	Nutring	Circlip	
26	**VOE 11709099**	1	1				Bearing	Palier	Lager	Cojinete	
27	**VOE 11709101**	1	1				Axle	Arbre	Welle	Eje	

1	**11880339**	**Eje de embrague delante/detrás** **Kupplungswelle vorwärts/rückwärts** **Arbre d'accouplement AV/AR** **Clutch shaft forward/reverse**	Catalogue id **20050**	Group **421**
2	**11887379**			
3			Illustr. No **1024209**	Section **275**
4				
5		**11891076**	Issue **VOE 64D9920050**	Page **251**

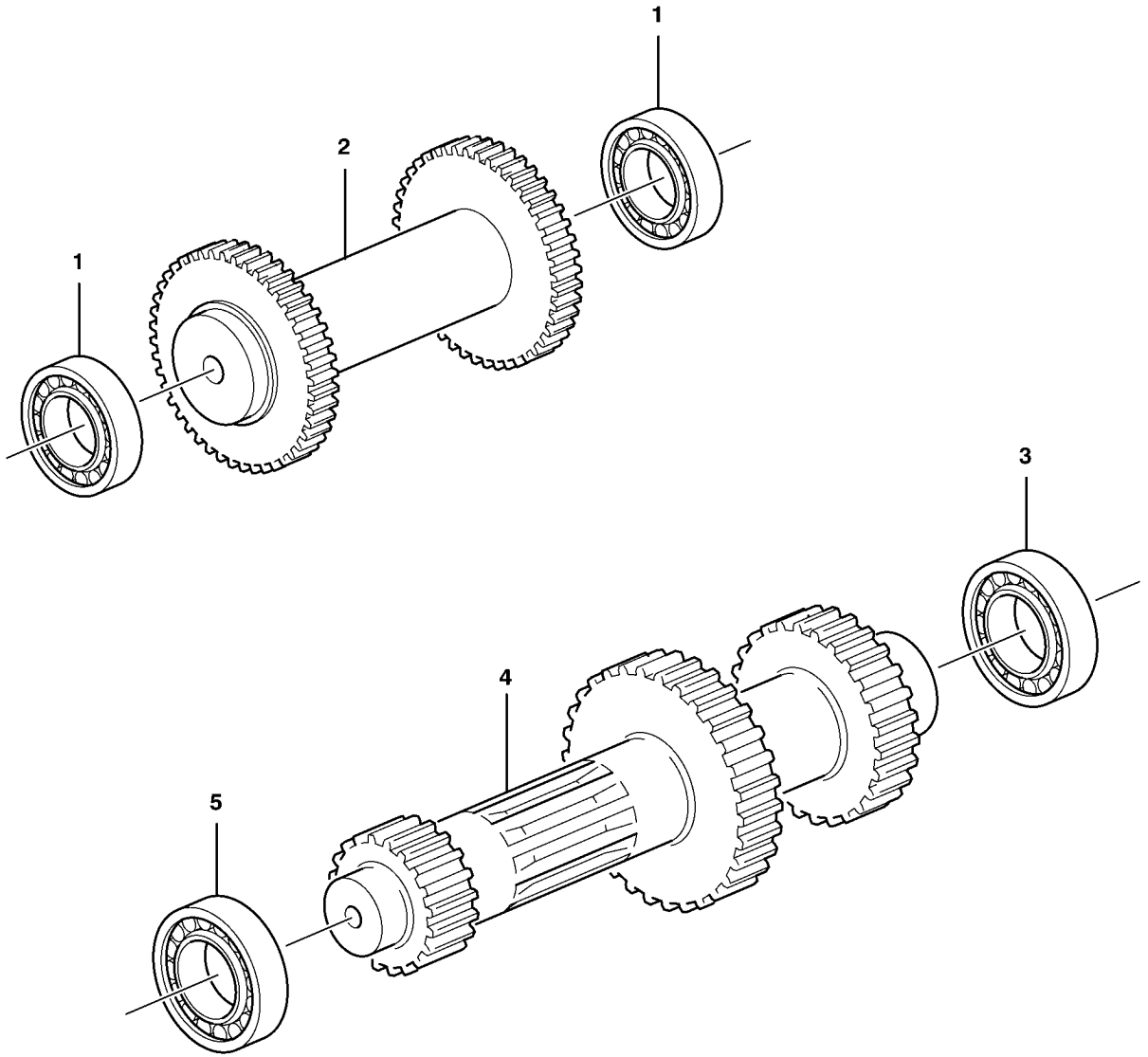

Volvo Construction Equipment

1000789

Fig.	Part No.	Quantity 1	2	3	PS	KIT	Description	Dénomination	Bezeichnung	Denominación	Notes
1	**VOE 11709102**	2					Bearing	Palier	Lager	Cojinete	
2	**VOE 11709103**	1					Reverse Shaft	Arbre Marche Ar	Rucklaufachse	Eje Marcha Atr	(REVERSE)
3	**VOE 11709104**	1					Bearing	Palier	Lager	Cojinete	
4	**VOE 11709105**	1					Axle	Arbre	Welle	Eje	(PRIMARY)
5	**VOE 11709106**	1					Bearing	Palier	Lager	Cojinete	

1		**Eje trasero y primario** **Rück- und Primärwelle** **Marche AR et arbre primaire** **Reverse and primary shaft**	Catalogue id **20050**	Group **421**
2			Illustr. No **1000789**	Section **300**
3				
4			Issue **VOE 64D9920050**	Page **253**
5		**11891076, 11891077**		

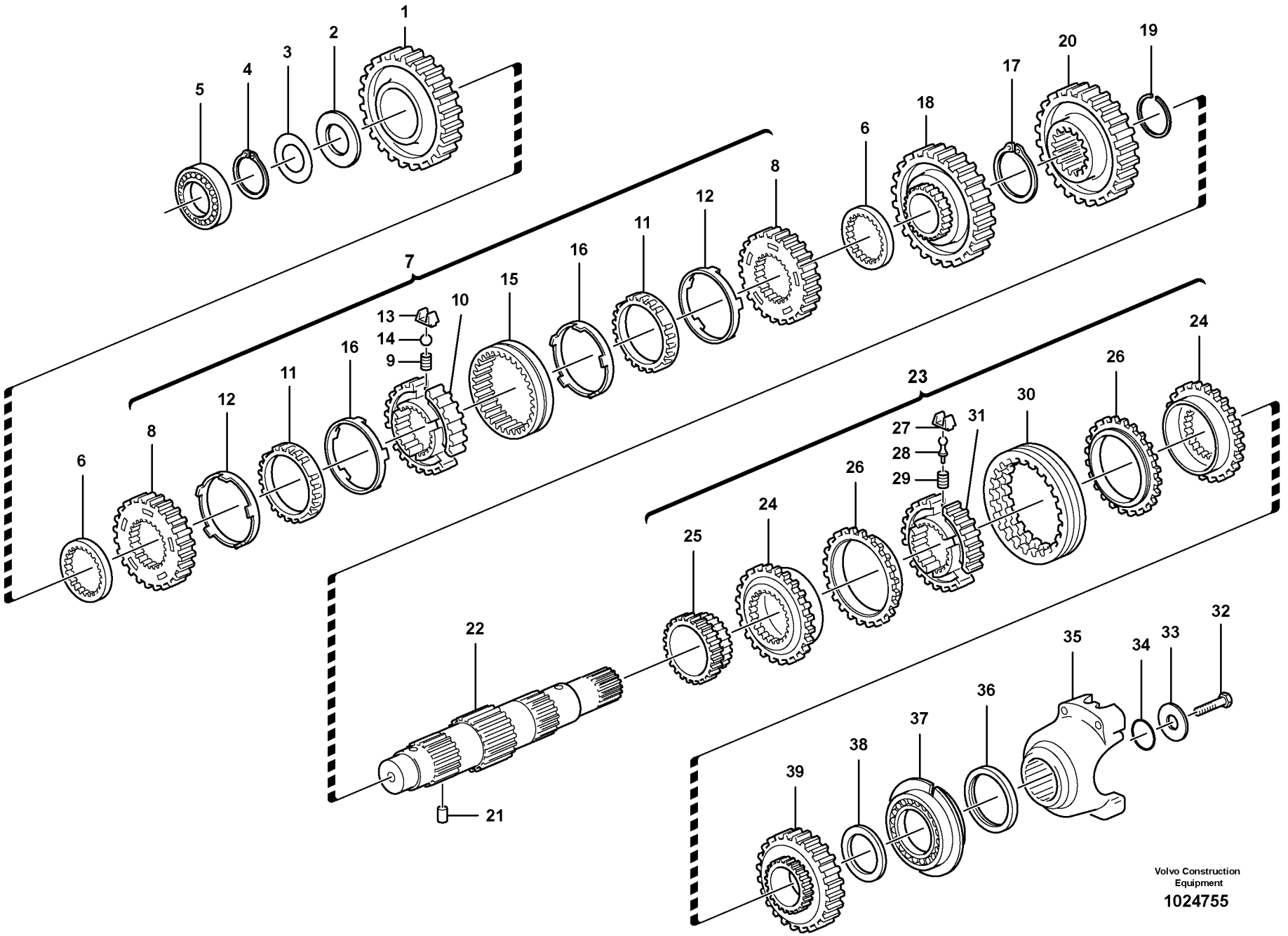

Volvo Construction Equipment

1024755

Fig.	Part No.	Quantity 1	2	3	PS	KIT	Description	Dénomination	Bezeichnung	Denominación	Notes
1	**VOE 11709107**	1					Drive gear	Pignon	Triebrad	Pinon	
2	**VOE 11709108**	1					Thrust Washer	Rondelle Butee	Druckscheibe	Arandela Presio	
3	**VOE 11709112**	REQ					Adjuster washer	Rondelle ajust.	Passcheibe	Arandela ajust	THICK 0,05 MM
3	**VOE 11709113**	REQ					Adjuster washer	Rondelle ajust.	Passcheibe	Arandela ajust	THICK 0,10 MM
3	**VOE 11709114**	REQ					Adjuster washer	Rondelle ajust.	Passcheibe	Arandela ajust	THICK 0,30 MM
3	**VOE 11709115**	REQ					Adjuster washer	Rondelle ajust.	Passcheibe	Arandela ajust	THICK 0,50 MM
4	**VOE 11709116**	1					Snap Ring	Circlip	Nutring	Circlip	
5	**VOE 11709106**	1					Bearing	Palier	Lager	Cojinete	
6	**VOE 11709118**	2					Spacer	Entretoise	Abstandkörper	Distanciador	
7	**VOE 11709128**	1					Kit	Jeu	Bausatz	Juego	
8	**VOE 11709120**	2					•Sync Cone	•Cone Synchrome.	•Synchronkegel	•Cono Sincroniz	
9	**VOE 11709121**	3					•Spring	•Ressort	•Feder	•Muelle	
10	**VOE 11709122**	1					•Hub	•Bossage	•Nabe	•Asiento	
11	**VOE 11709123**	2					•Cone	•Bague Interieu.	•Innenring	•Anillo Interior	
12	**VOE 11709124**	2					•Ring	•Anneau	•Ring	•Anillo	
13	**VOE 11709125**	3					•Spring Plate	•Plaque Ressort	•Fed Spannplatte	•Placa Resorte	
14	**VOE 11709126**	3					•Ball	•Bille	•Kugel	•Bola	
15	**VOE 11709127**	1					•Sleeve	•Douille	•Hülse	•Manguito	
16	**VOE 11709119**	2					•Cone	•Bague Interieu.	•Innenring	•Anillo Interior	
17	**VOE 11709129**	1					Snap Ring	Circlip	Nutring	Circlip	
18	**VOE 11709130**	1					Drive gear	Pignon	Triebrad	Pinon	
19	**VOE 11709131**	1					Snap Ring	Circlip	Nutring	Circlip	
20	**VOE 11709132**	1					Drive gear	Pignon	Triebrad	Pinon	
21	**VOE 11709095**	1					Pin	Goupille	Stift	Pasador	
22	**VOE 11709134**	1					Secondary Shaft	Arbr.secondaire	Sekundärwelle	Eje Secundario	
23	**VOE 11709143**	1					Kit	Jeu	Bausatz	Juego	
24	**VOE 11709136**	2					•Clutch Gear	•Pignon Embraya.	•Kuppl Treibsch	•Pinon Embrague	
25	**VOE 11709135**	1					•Drive gear	•Pignon	•Triebrad	•Pinon	
26	**VOE 11709138**	2					•Cone	•Bague Interieu.	•Innenring	•Anillo Interior	
27	**VOE 11709139**	3					•Spring Plate	•Plaque Ressort	•Fed Spannplatte	•Placa Resorte	

1		**Eje secundario** **Sekundärachse** **Arbre secondaire** **Secondary shaft**	Catalogue id **20050**	Group **421**
2			Illustr. No **1024755**	Section **350**
3			Issue **VOE 64D9920050**	Page **255**
4				
5		**11891077 S/N - 10626**		



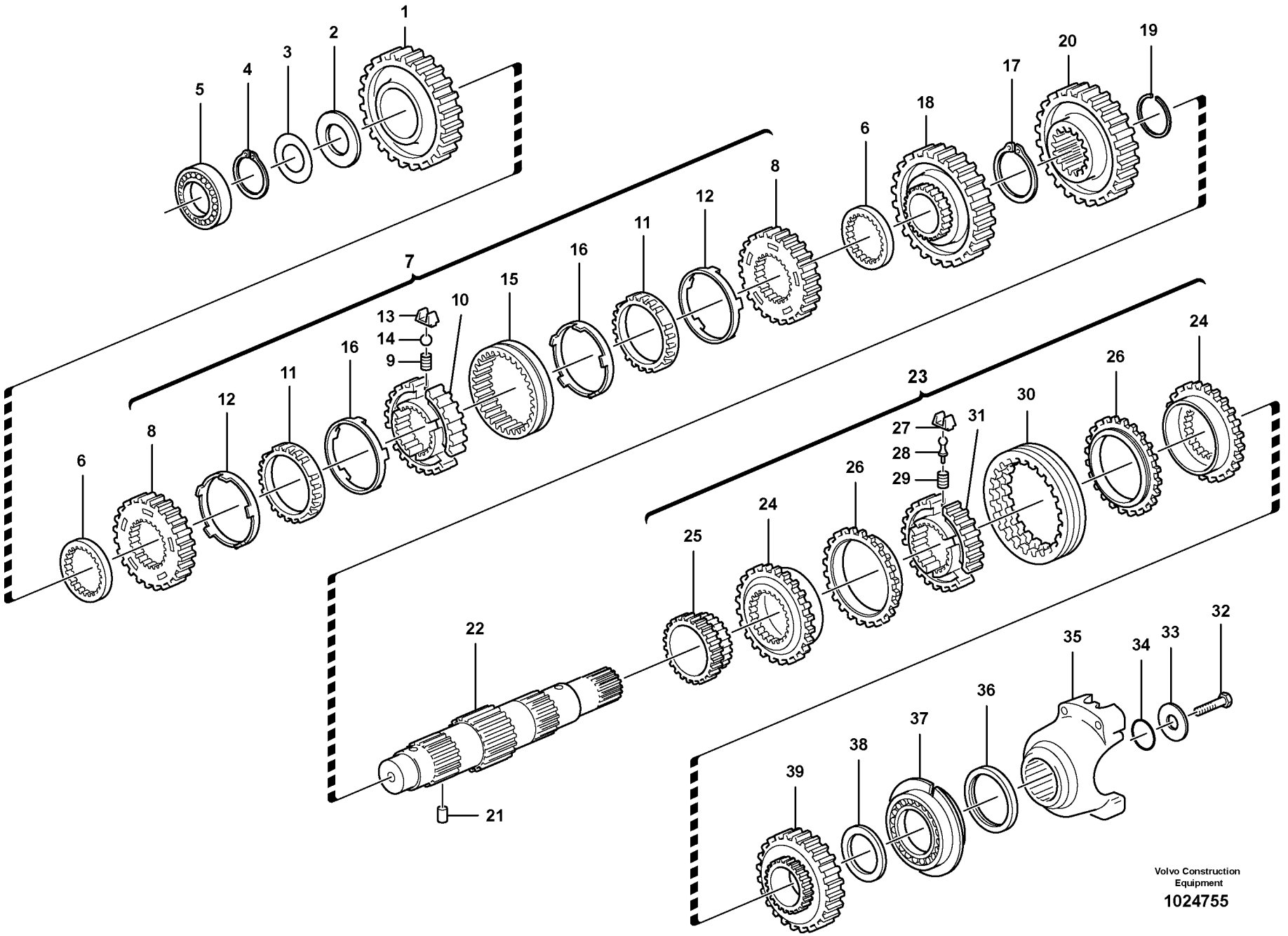

Volvo Construction Equipment

1024755

Fig.	Part No.	Quantity 1	2	3	PS	KIT	Description	Dénomination	Bezeichnung	Denominación	Notes
28	**VOE 11709140**	3					•Pin	•Goupille	•Stift	•Pasador	
29	**VOE 11709141**	3					•Spring	•Ressort	•Feder	•Muelle	
30	**VOE 11709142**	1					•Sleeve	•Douille	•Hülse	•Manguito	
31	**VOE 11709137**	1					•Hub	•Bossage	•Nabe	•Asiento	
32	**VOE 970827**	1					Hexagon screw	Vis a tête hexagonale	Sechskantschr.	Tornillo hexago	
33	**VOE 11709144**	1					Washer	Rondelle	Scheibe	Arandela	
34	**VOE 11709145**	1					O-ring	Joint Torique	O-Ring	Junta torica	
35	**VOE 11709146**	1					Flange	Bride	Flansch	Brida	
36	**VOE 11709133**	1					Seal	Joint	Dichtring	Junta	(VOE 11709147)
37	**VOE 11709148**	1					Bearing	Palier	Lager	Cojinete	
38	**VOE 11709080**	1					Spacer Washer	Rond.entretoise	Abstandscheibe	Arandela Dist	
39	**VOE 11709150**	1					Drive gear	Pignon	Triebrad	Pinon	

1		**Eje secundario** **Sekundärachse** **Arbre secondaire** **Secondary shaft**	Catalogue id **20050**	Group **421**
2			Illustr. No **1024755**	Section **350**
3				
4			Issue **VOE 64D9920050**	Page **257**
5		**11891077 S/N - 10626**		

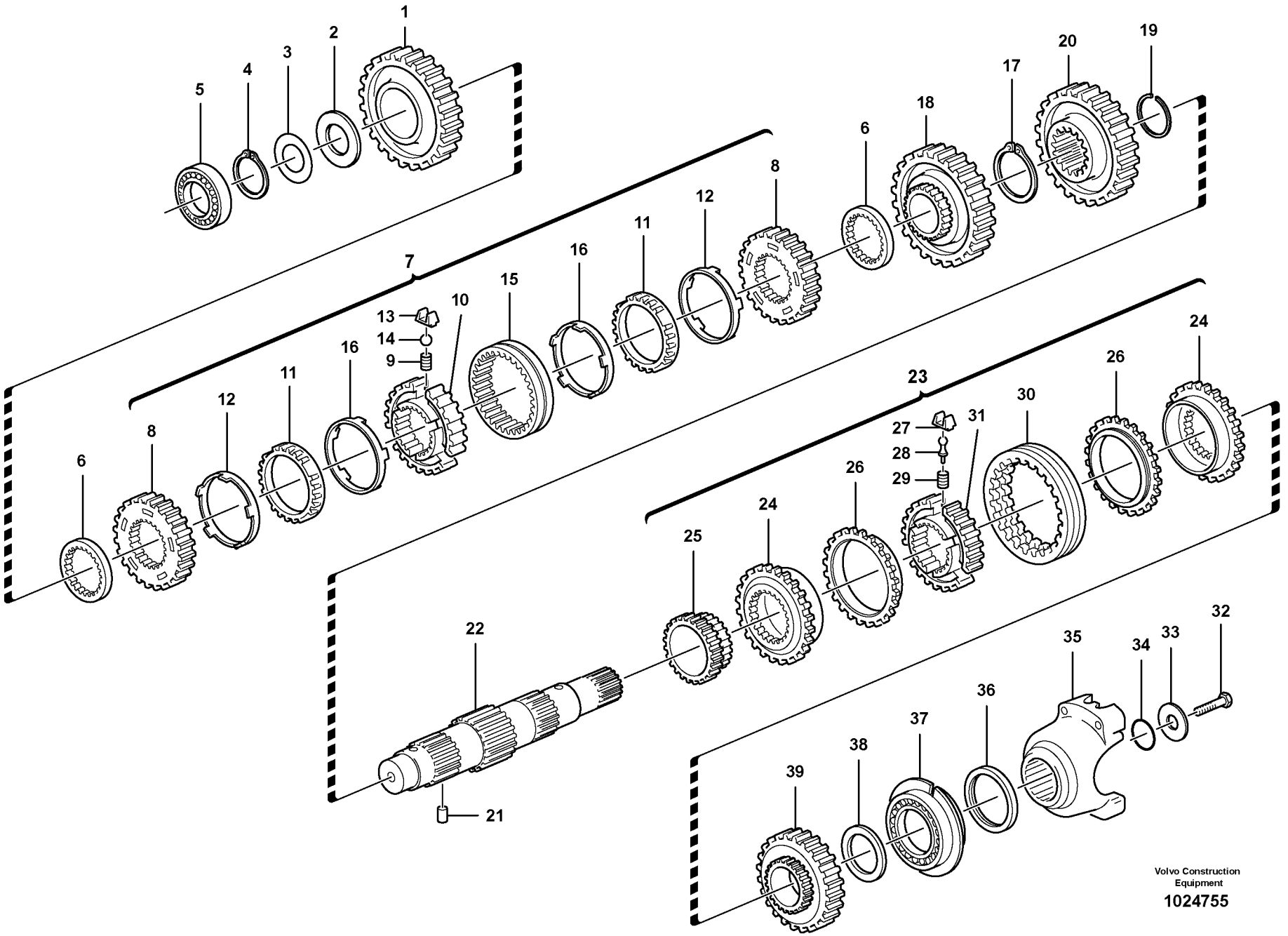

Volvo Construction Equipment

1024755

Fig.	Part No.	Quantity 1	2	3	PS	KIT	Description	Dénomination	Bezeichnung	Denominación	Notes
1	**VOE 11709107**	1					Drive gear	Pignon	Triebrad	Pinon	
2	**VOE 11709108**	1					Thrust Washer	Rondelle Butee	Druckscheibe	Arandela Presio	
3	**VOE 11709112**	REQ					Adjuster washer	Rondelle ajust.	Passcheibe	Arandela ajust	THICK 0,05 MM
3	**VOE 11709113**	REQ					Adjuster washer	Rondelle ajust.	Passcheibe	Arandela ajust	THICK 0,10 MM
3	**VOE 11709114**	REQ					Adjuster washer	Rondelle ajust.	Passcheibe	Arandela ajust	THICK 0,30 MM
3	**VOE 11709115**	REQ					Adjuster washer	Rondelle ajust.	Passcheibe	Arandela ajust	THICK 0,50 MM
4	**VOE 11709116**	1					Snap Ring	Circlip	Nutring	Circlip	
5	**VOE 11709106**	1					Bearing	Palier	Lager	Cojinete	
6	**VOE 11709118**	2					Spacer	Entretoise	Abstandkörper	Distanciador	
7	**VOE 11709128**	1					Kit	Jeu	Bausatz	Juego	
8	**VOE 11709120**	2					•Sync Cone	•Cone Synchrome.	•Synchronkegel	•Cono Sincroniz	
9	**VOE 11709121**	3					•Spring	•Ressort	•Feder	•Muelle	
10	**VOE 11709122**	1					•Hub	•Bossage	•Nabe	•Asiento	
11	**VOE 11709123**	2					•Cone	•Bague Interieu.	•Innenring	•Anillo Interior	
12	**VOE 11709124**	2					•Ring	•Anneau	•Ring	•Anillo	
13	**VOE 11709125**	3					•Spring Plate	•Plaque Ressort	•Fed Spannplatte	•Placa Resorte	
14	**VOE 11709126**	3					•Ball	•Bille	•Kugel	•Bola	
15	**VOE 11709127**	1					•Sleeve	•Douille	•Hülse	•Manguito	
16	**VOE 11709119**	2					•Cone	•Bague Interieu.	•Innenring	•Anillo Interior	
17	**VOE 11709131**	1					Snap Ring	Circlip	Nutring	Circlip	
18	**VOE 11709130**	1					Drive gear	Pignon	Triebrad	Pinon	
19	**VOE 11709129**	1					Snap Ring	Circlip	Nutring	Circlip	
20	**VOE 11716786**	1					Drive Gear	Pignon	Triebrad	Pinon	
21	**VOE 11709095**	1					Pin	Goupille	Stift	Pasador	
22	**VOE 11709134**	1					Secondary Shaft	Arbr.secondaire	Sekundärwelle	Eje Secundario	
23	**VOE 11716672**	1					Synchronizing Hub	Moyeu de synchronisation	Synchronisierungsnabe	Cubo sincronizador	
24	**VOE 11716666**	2					•Clutch Ring	•Manchon Acoup.	•Kupplungsring	•Anillo Embrague	
25	**VOE 11709135**	1					•Drive gear	•Pignon	•Triebrad	•Pinon	
26	**VOE 11716668**	2					•Synchronizing Cone	•Cone de synchronisation	•Synchronisierungskegel	•Cono sincronizador	
27	**VOE 11709139**	3					•Spring Plate	•Plaque Ressort	•Fed Spannplatte	•Placa Resorte	

1	**11887380**	**Eje secundario** **Sekundärachse** **Arbre secondaire** **Secondary shaft**	Catalogue id **20050**	Group **421**
2				
3			Illustr. No **1024755**	Section **360**
4				
5		**11891077 S/N 10627 -**	Issue **VOE 64D9920050**	Page **259**

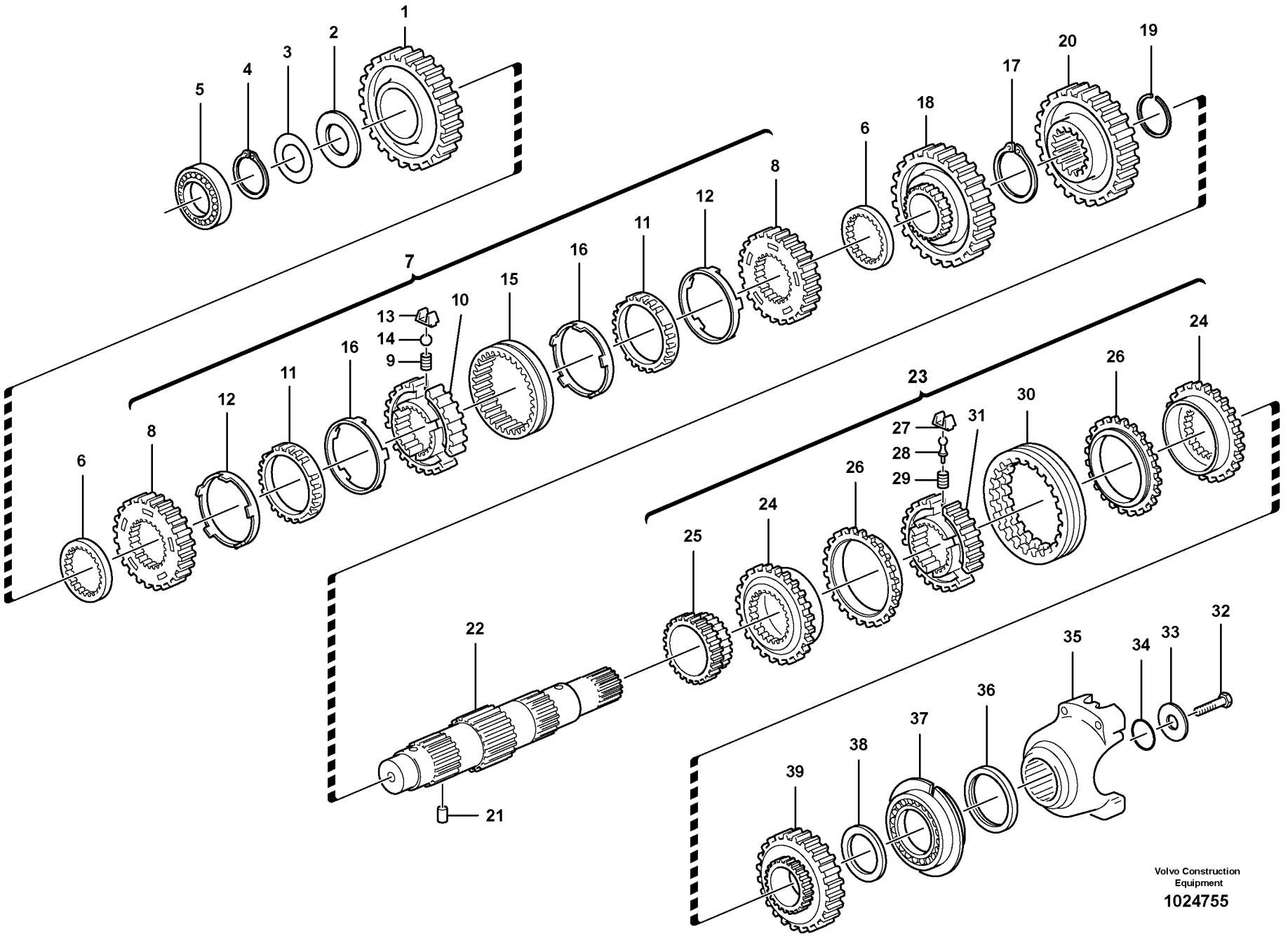

Volvo Construction Equipment

1024755

Fig.	Part No.	Quantity 1	2	3	PS	KIT	Description	Dénomination	Bezeichnung	Denominación	Notes
28	**VOE 11716669**	3					•Ball	•Bille	•Kugel	•Bola	
29	**VOE 11716670**	3					•Spring	•Ressort	•Feder	•Muelle	
30	**VOE 11716671**	1					•Sleeve	•Manchon	•Muffe	•Manguito	
31	**VOE 11716667**	1					•Hub	•Bossage	•Nabe	•Asiento	
32	**VOE 970827**	1					Hexagon screw	Vis a tête hexagonale	Sechskantschr.	Tornillo hexago	
33	**VOE 11709144**	1					Washer	Rondelle	Scheibe	Arandela	
34	**VOE 11709145**	1					O-ring	Joint Torique	O-Ring	Junta torica	
35	**VOE 11709146**	1					Flange	Bride	Flansch	Brida	
36	**VOE 11709133**	1					Seal	Joint	Dichtring	Junta	(VOE 11709147)
37	**VOE 11712472**	1					Bearing	Palier	Lager	Cojinete	
38	**VOE 11709080**	1					Spacer Washer	Rond.entretoise	Abstandscheibe	Arandela Dist	
39	**VOE 11709150**	1					Drive gear	Pignon	Triebrad	Pinon	

1	**11887380**	**Eje secundario** **Sekundärachse** **Arbre secondaire** **Secondary shaft**	Catalogue id **20050**	Group **421**
2			Illustr. No **1024755**	Section **360**
3			Issue **VOE 64D9920050**	Page **261**
4				
5		**11891077 S/N 10627 -**		

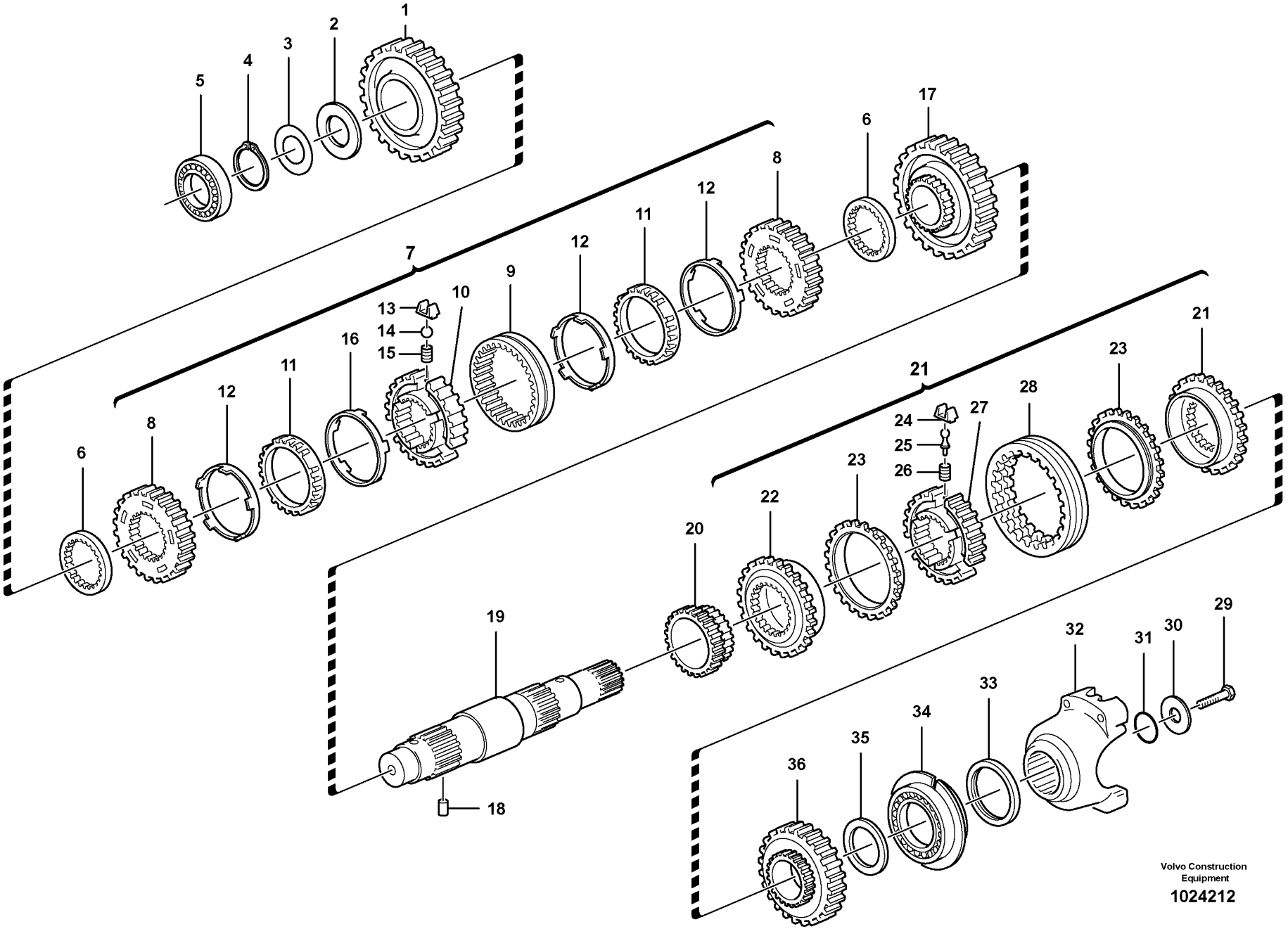

Volvo Construction Equipment

1024212

Fig.	Part No.	Quantity 1	2	3	PS	KIT	Description	Dénomination	Bezeichnung	Denominación	Notes
1	**VOE 11709107**	1	1				Drive gear	Pignon	Triebrad	Pinon	
2	**VOE 11709108**	1	1				Thrust Washer	Rondelle Butee	Druckscheibe	Arandela Presio	
3	**VOE 11709112**	REQ	REQ				Adjuster washer	Rondelle ajust.	Passcheibe	Arandela ajust	THICK 0,05 MM
3	**VOE 11709113**	REQ	REQ				Adjuster washer	Rondelle ajust.	Passcheibe	Arandela ajust	THICK 0,10 MM
3	**VOE 11709114**	REQ	REQ				Adjuster washer	Rondelle ajust.	Passcheibe	Arandela ajust	THICK 0,30 MM
3	**VOE 11709115**	REQ	REQ				Adjuster washer	Rondelle ajust.	Passcheibe	Arandela ajust	THICK 0,50 MM
4	**VOE 11709116**	1	1				Snap Ring	Circlip	Nutring	Circlip	
5	**VOE 11709106**	1	1				Bearing	Palier	Lager	Cojinete	
6	**VOE 11709118**	2	2				Spacer	Entretoise	Abstandkörper	Distanciador	
7	**VOE 11709128**	1	1				Kit	Jeu	Bausatz	Juego	
8	**VOE 11709120**	2	2				•Sync Cone	•Cone Synchrome.	•Synchronkegel	•Cono Sincroniz	
9	**VOE 11709127**	1	1				•Sleeve	•Douille	•Hülse	•Manguito	
10	**VOE 11709122**	1	1				•Hub	•Bossage	•Nabe	•Asiento	
11	**VOE 11709123**	2	2				•Cone	•Bague Interieu.	•Innenring	•Anillo Interior	
12	**VOE 11709124**	2	2				•Ring	•Anneau	•Ring	•Anillo	
13	**VOE 11709125**	3	3				•Spring Plate	•Plaque Ressort	•Fed Spannplatte	•Placa Resorte	
14	**VOE 11709126**	3	3				•Ball	•Bille	•Kugel	•Bola	
15	**VOE 11709121**	3	3				•Spring	•Ressort	•Feder	•Muelle	
16	**VOE 11709119**	2	2				•Cone	•Bague Interieu.	•Innenring	•Anillo Interior	
17	**VOE 11709130**	1	1				Drive gear	Pignon	Triebrad	Pinon	
18	**VOE 11709095**	1	1				Pin	Goupille	Stift	Pasador	
19	**VOE 11712471**	1	1				Secondary Shaft	Arbr.secondaire	Sekundärwelle	Eje Secundario	
20	**VOE 11709135**	1	1				Drive gear	Pignon	Triebrad	Pinon	
21	**VOE 11709143**	1					Kit	Jeu	Bausatz	Juego	
21	**VOE 11716672**		1				Synchronizing Hub	Moyeu de synchronisation	Synchronisierungsnabe	Cubo sincronizador	
22	**VOE 11709136**	2					•Clutch Gear	•Pignon Embraya.	•Kuppl Treibsch	•Pinon Embrague	
22	**VOE 11716666**		2				•Clutch Ring	•Manchon Acoup.	•Kupplungsring	•Anillo Embrague	
23	**VOE 11709138**	2					•Cone	•Bague Interieu.	•Innenring	•Anillo Interior	
23	**VOE 11716668**		2				•Synchronizing Cone	•Cone de synchronisation	•Synchronisierungskegel	•Cono sincronizador	
24	**VOE 11709139**	3					•Spring Plate	•Plaque Ressort	•Fed Spannplatte	•Placa Resorte	

1	**11880339**	**Eje secundario** **Sekundärachse** **Arbre secondaire** **Secondary shaft**	Catalogue id **20050** / Group **421**
2	**11887379**		
3			Illustr. No **1024212** / Section **375**
4			
5		**11891076**	Issue **VOE 64D9920050** / Page **263**

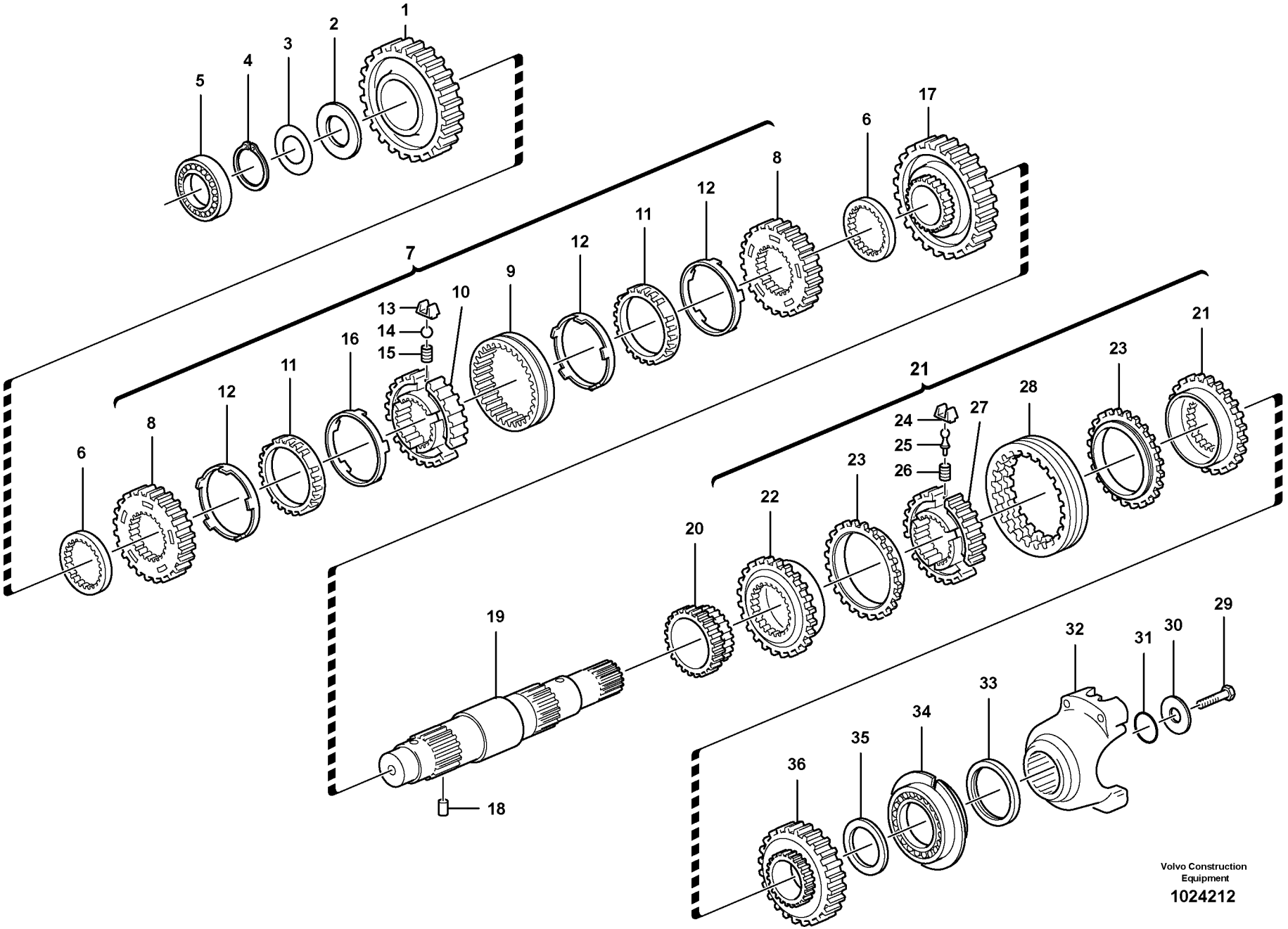

Volvo Construction Equipment

1024212

Fig.	Part No.	Quantity 1	2	3	PS	KIT	Description	Dénomination	Bezeichnung	Denominación	Notes
25	**VOE 11709140**	3					•Pin	•Goupille	•Stift	•Pasador	
25	**VOE 11716669**		3				•Ball	•Bille	•Kugel	•Bola	
26	**VOE 11709141**	3					•Spring	•Ressort	•Feder	•Muelle	
26	**VOE 11716670**		3				•Spring	•Ressort	•Feder	•Muelle	
27	**VOE 11709137**	1					•Hub	•Bossage	•Nabe	•Asiento	
27	**VOE 11716667**		1				•Hub	•Bossage	•Nabe	•Asiento	
28	**VOE 11709142**	1					•Sleeve	•Douille	•Hülse	•Manguito	
28	**VOE 11716671**		1				•Sleeve	•Manchon	•Muffe	•Manguito	
29	**VOE 970827**	1	1				Hexagon screw	Vis a tête hexagonale	Sechskantschr.	Tornillo hexago	
30	**VOE 11709144**	1	1				Washer	Rondelle	Scheibe	Arandela	
31	**VOE 11709145**	1	1				O-ring	Joint Torique	O-Ring	Junta torica	
32	**VOE 11709146**	1	1				Flange	Bride	Flansch	Brida	
33	**VOE 11709133**	1	1				Seal	Joint	Dichtring	Junta	(VOE 11709147)
34	**VOE 11712472**	1	1				Bearing	Palier	Lager	Cojinete	
35	**VOE 11709080**	1	1				Spacer Washer	Rond.entretoise	Abstandscheibe	Arandela Dist	
36	**VOE 11709150**	1	1				Drive gear	Pignon	Triebrad	Pinon	

1	**11880339**	**Eje secundario** **Sekundärachse** **Arbre secondaire** **Secondary shaft**	Catalogue id **20050**	Group **421**
2	**11887379**		Illustr. No **1024212**	Section **375**
3			Issue **VOE 64D9920050**	Page **265**
4				
5		**11891076**		

VOLVO

BL61

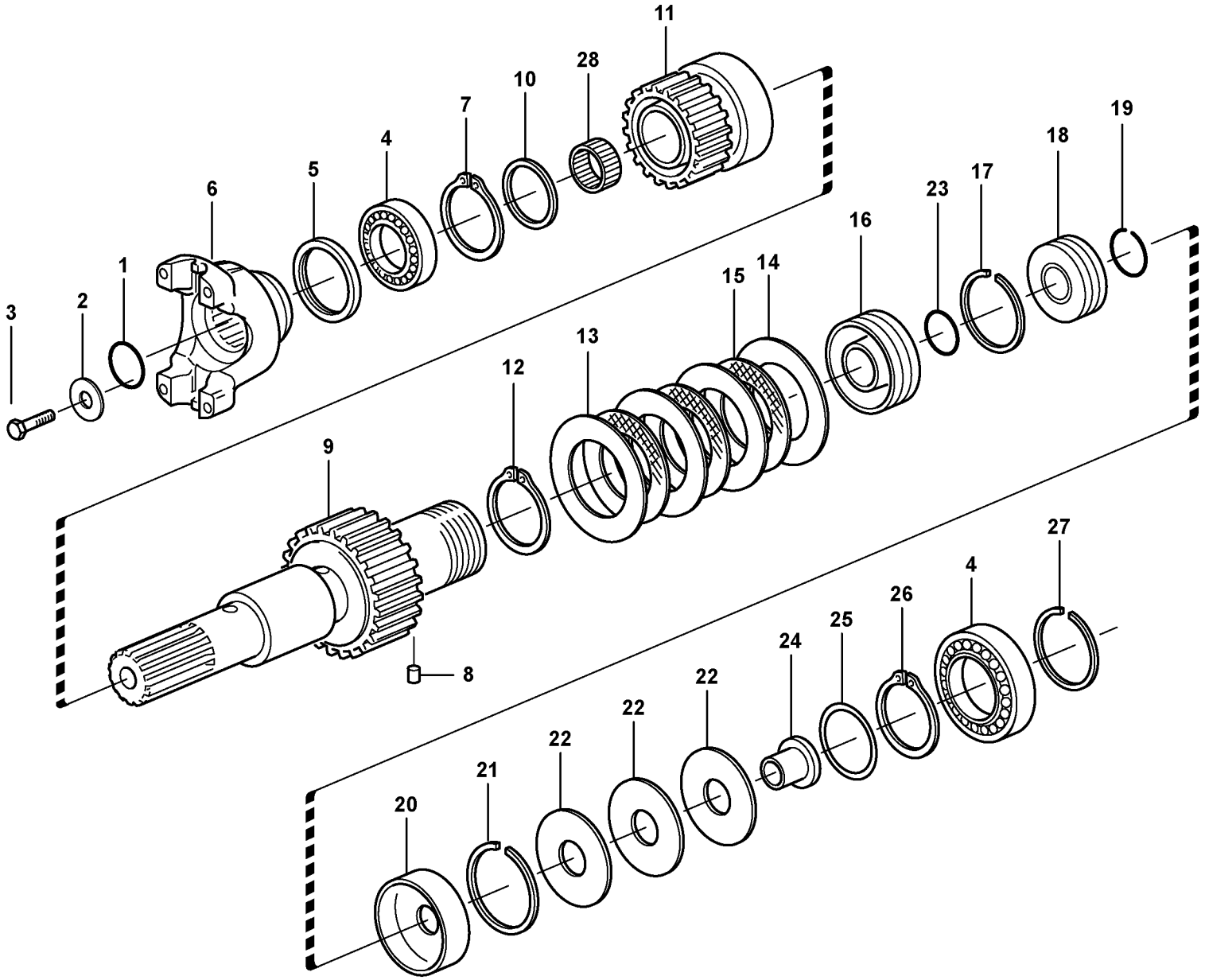

Volvo Construction Equipment

1000806

Fig.	Part No.	Quantity 1	2	3	PS	KIT	Description	Dénomination	Bezeichnung	Denominación	Notes
1	**VOE 11709145**	1					O-ring	Joint Torique	O-Ring	Junta torica	
2	**VOE 11709144**	1					Washer	Rondelle	Scheibe	Arandela	
3	**VOE 970827**	1					Hexagon screw	Vis a tête hexagonale	Sechskantschr.	Tornillo hexago	
4	**VOE 11709098**	2					Bearing	Palier	Lager	Cojinete	
5	**VOE 11709133**	1					Seal	Joint	Dichtring	Junta	
6	**VOE 11709146**	1					Flange	Bride	Flansch	Brida	
7	**VOE 11709151**	1					Snap Ring	Circlip	Nutring	Circlip	
8	**VOE 11709095**	1					Pin	Goupille	Stift	Pasador	
9	**VOE 11709152**	1					Axle	Arbre	Welle	Eje	
10	**VOE 11709085**	1					Spacer	Entretoise	Abstandkörper	Distanciador	
11	**VOE 11709153**	1					Drive gear	Pignon	Triebrad	Pinon	
12	**VOE 11709154**	1					Snap Ring	Circlip	Nutring	Circlip	
13	**VOE 11709155**	1					Flange	Bride	Flansch	Brida	
14	**VOE 11709156**	13					Clutch Drive	Bride Commande	Antriebsflansch	Brida Embrague	
15	**VOE 11709157**	12					Disc	Disque	Lamelle	Disco embrague	
16	**VOE 11709158**	1					Clutch Drive	Bride Commande	Antriebsflansch	Brida Embrague	
17	**VOE 11709159**	1					Seal	Joint	Dichtung	Reten	
18	**VOE 11709160**	1					Clutch Plate	Disque	Lamelle	Disco Embrague	
19	**VOE 11709161**	1					Seal	Joint	Dichtung	Reten	
20	**VOE 11709162**	1					Sleeve	Douille	Hülse	Manguito	
21	**VOE 11709163**	1					Disc	Disque	Scheibe	Disco	
22	**VOE 11709164**	3					Disc spring	Ressort diaphragme	Tellerfeder	Resorte disco	
23	**VOE 11709165**	1					O-ring	Joint Torique	O-Ring	Junta torica	
24	**VOE 11709166**	1					Giude	Guide	Fuhrung	Guia	
25	**VOE 11709167**	REQ					Shim	Cale reglage	Nachstellblech	Laminilla de ajuste	THICK 2,00 MM
25	**VOE 11709168**	REQ					Shim	Cale reglage	Nachstellblech	Laminilla de ajuste	THICK 0,10 MM
25	**VOE 11709169**	REQ					Shim	Cale reglage	Nachstellblech	Laminilla de ajuste	THICK 0,30 MM
25	**VOE 11709170**	REQ					Shim	Cale reglage	Nachstellblech	Laminilla de ajuste	THICK 0,50 MM
26	**VOE 11709171**	1					Snap Ring	Circlip	Nutring	Circlip	
27	**VOE 11709076**	2					Sealing ring	Bague d'étanchéité	Runddichtring	Anillo reten	

1	
2	
3	
4	
5	

Embragues, tracción 4 ruedas
Kupplungen, 4-Radantrieb
Embrayages, 4 roues motrices
Hydraulic clutch, 4wd

11891077

Catalogue id	Group
20050	**421**
Illustr. No	Section
1000806	**400**
Issue	Page
VOE 64D9920050	**267**

VOLVO

BL61

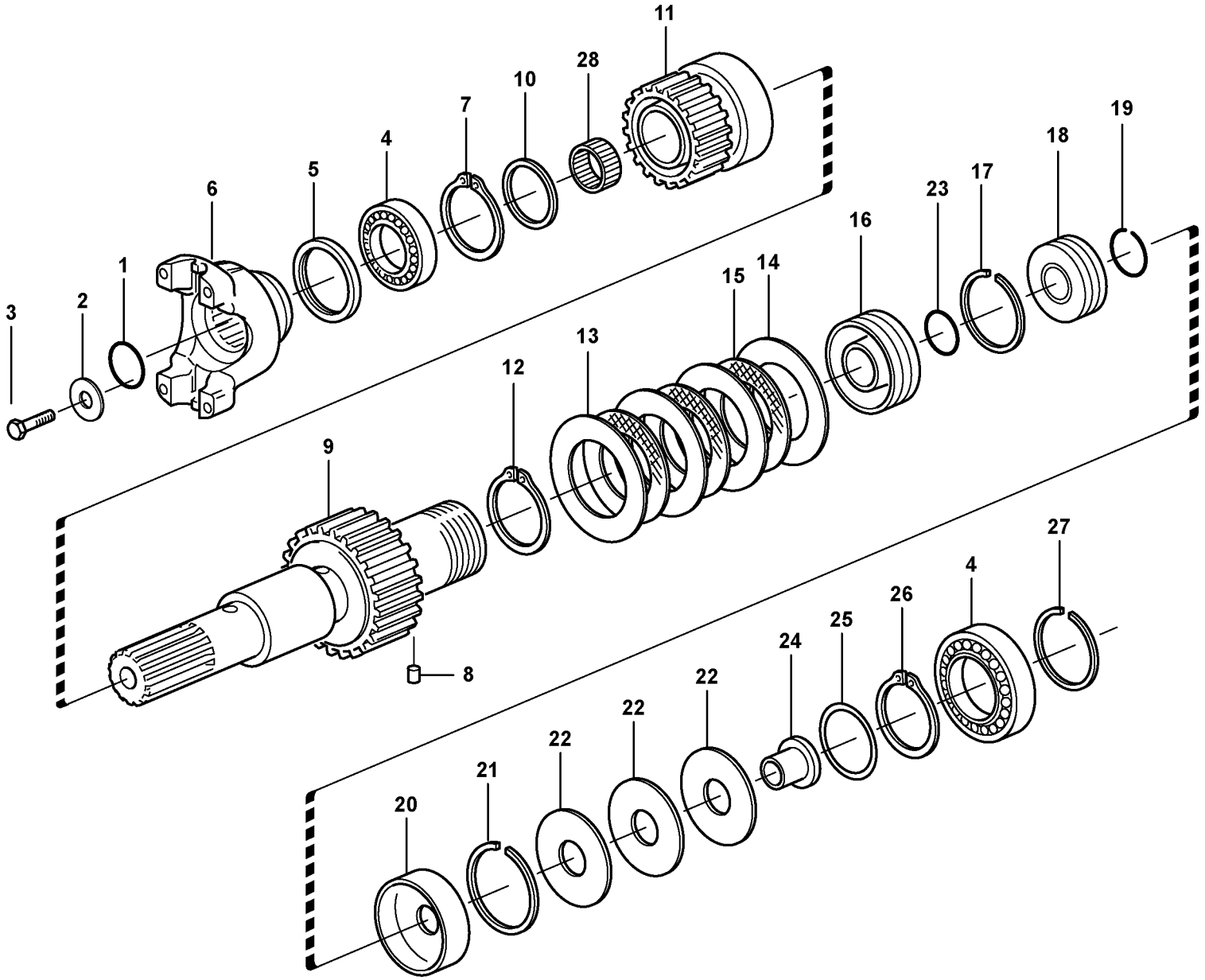

Volvo Construction Equipment

1000806

Fig.	Part No.	Quantity 1	2	3	PS	KIT	Description	Dénomination	Bezeichnung	Denominación	Notes
28	**VOE 11709081**	1					Needle Bearing	Roule.aiguilles	Nadellager	Cojinete Agujas	

1		**Embragues, tracción 4 ruedas** **Kupplungen, 4-Radantrieb** **Embrayages, 4 roues motrices** **Hydraulic clutch, 4wd**	Catalogue id **20050**	Group **421**
2			Illustr. No **1000806**	Section **400**
3			Issue **VOE 64D9920050**	Page **269**
4				
5		**11891077**		

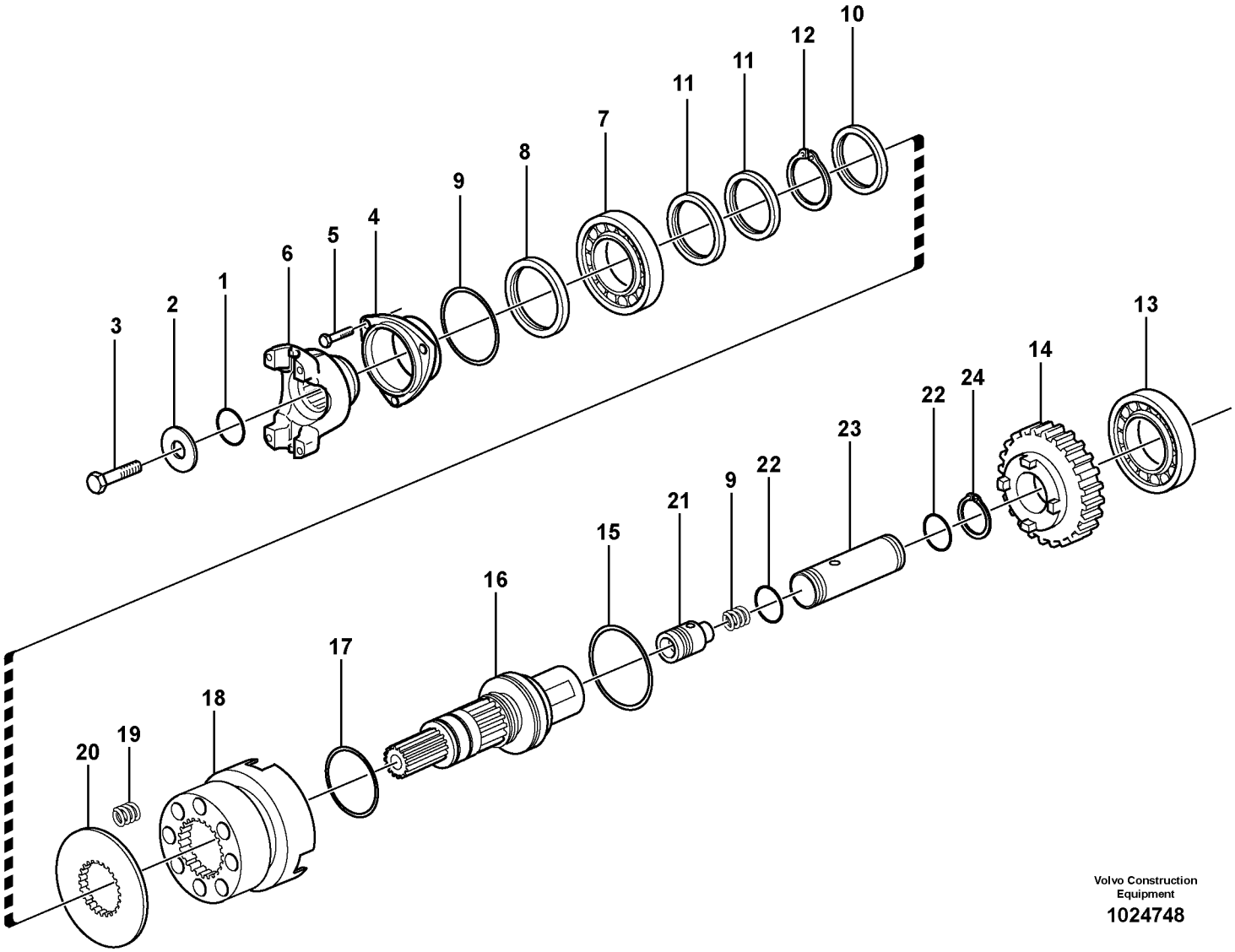

Volvo Construction Equipment

1024748

Fig.	Part No.	Quantity 1	2	3	PS	KIT	Description	Dénomination	Bezeichnung	Denominación	Notes
1	**VOE 11709321**	1					O-ring	Joint Torique	O-Ring	Junta torica	
2	**VOE 11716787**	1					Washer	Rondelle	Scheibe	Arandela	
3	**VOE 970827**	1					Hexagon screw	Vis a tête hexagonale	Sechskantschr.	Tornillo hexago	
4	**VOE 11716788**	1					End plate	Flasque	Stirnwand	Extremo	
5	**VOE 955296**	3					Hexagon screw	Vis tête hexagonale	Sechskantschraube	Tornillo hexago	
6	**VOE 11716789**	1					Flange	Flasque	Flansch	Brida	
7	**VOE 11709102**	1					Bearing	Palier	Lager	Cojinete	
8	**VOE 11716790**	1					Seal	Joint	Dichtring	Junta	
9	**VOE 11716791**	1					O-ring	Joint Torique	O-Ring	Junta torica	
10	**VOE 11709167**	1					Shim	Cale reglage	Nachstellblech	Laminilla de ajuste	
11	**VOE 11709076**	2					Sealing ring	Bague d'étanchéité	Runddichtring	Anillo reten	
12	**VOE 11709171**	1					Snap Ring	Circlip	Nutring	Circlip	
13	**VOE 11709098**	1					Bearing	Palier	Lager	Cojinete	
14	**VOE 11716792**	1					Drive Gear	Pignon	Triebrad	Pinon	
15	**VOE 11716793**	1					O-ring	Joint Torique	O-Ring	Junta torica	
16	**VOE 11716794**	1					Shaft	Arbre	Welle	Arbol	
17	**VOE 11716795**	2					O-ring	Joint Torique	O-Ring	Junta torica	
18	**VOE 11716796**	1					Sleeve	Manchon	Muffe	Manguito	
19	**VOE 11716797**	9					Spring	Ressort	Feder	Muelle	
20	**VOE 11716798**	1					Spacer Washer	Rond.entretoise	Abstandscheibe	Arandela Dist	
21	**VOE 11716799**	1					Valve	Soupape	Ventil	Valvula	
22	**VOE 11716800**	2					O-ring	Joint Torique	O-Ring	Junta torica	
23	**VOE 11716801**	1					Cylinder	Verin	Zylinder	Cilindro	
24	**VOE 11716802**	1					Lock Ring	Anneau Verrouillage	Schlossring	Anillo Segurid	

1	**11887380**		Catalogue id **20050**	Group **421**
2				
3			Illustr. No **1024748**	Section **410**
4		**Shaft, four wheel drive**		
5		**11891077 S/N 10627 -**	Issue **VOE 64D9920050**	Page **271**

VOLVO

BL61

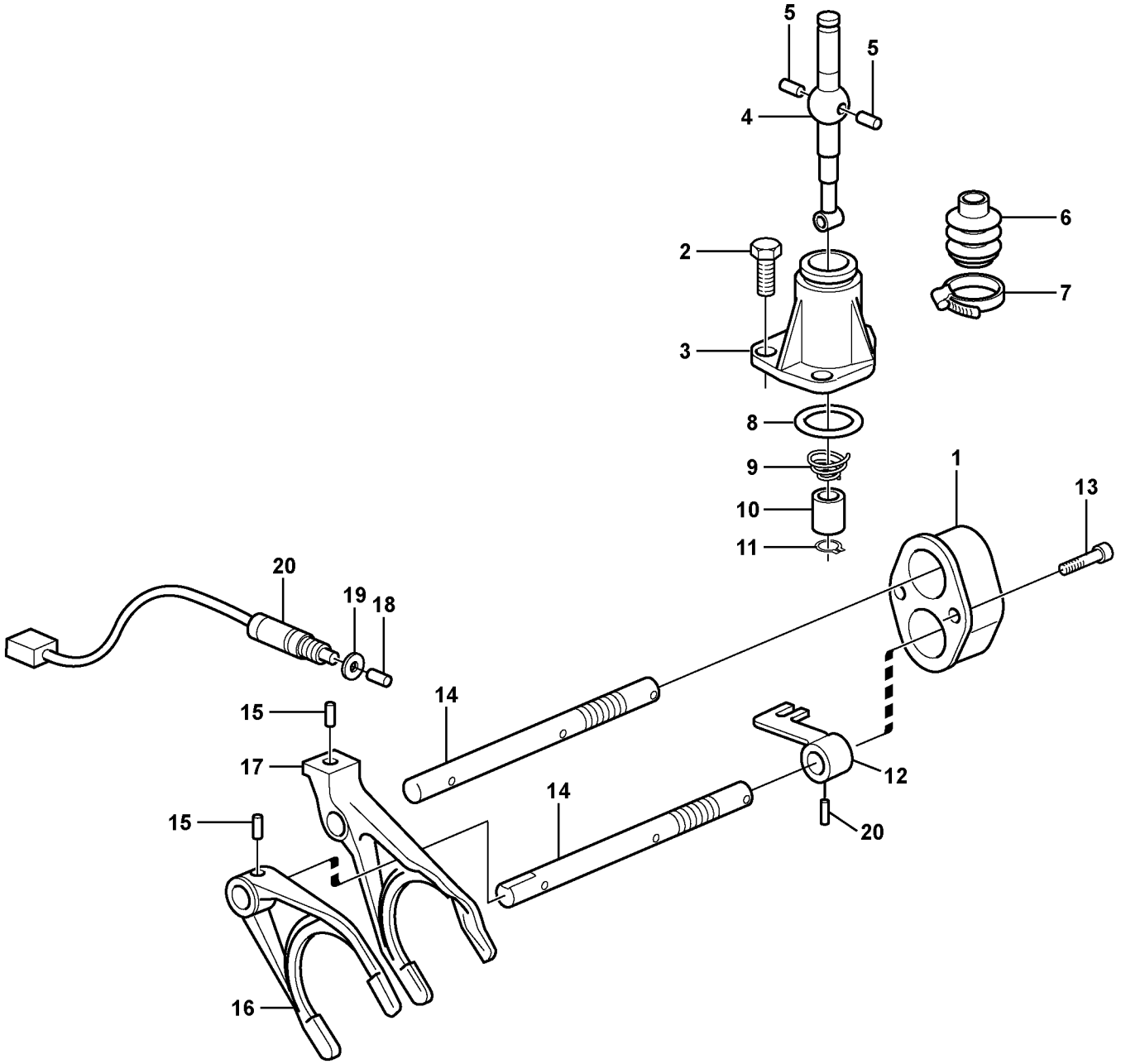

Volvo Construction Equipment

1000816

Fig.	Part No.	Quantity 1	2	3	PS	KIT	Description	Dénomination	Bezeichnung	Denominación	Notes
1	**VOE 11709173**	1					Cover	Couvercle	Deckel	Tapa	
2	**VOE 955297**	3					Hexagon screw	Vis tête hexagonale	Sechskantschraube	Tornillo hexago	
3	**VOE 11709178**	1					Gear Lvr Cover	Couv.levi.vite.	Schaltdeckel	Tapa Pal Camb	
4	**VOE 11709179**	1					Shift Lever	Levier Vitesse	Schalthebel	Palanca Cambios	
5	**VOE 11709180**	2					Pin	Goupille	Stift	Pasador	
6	**VOE 11709181**	1					Boot	Soufflet	Manschette	Proteccion	
7	**VOE 11709182**	1					Clamp	Collier serrage	Klemme	Abrazadera	
8	**VOE 11709165**	1					O-ring	Joint Torique	O-Ring	Junta torica	
9	**VOE 11709183**	1					Spring	Ressort	Feder	Muelle	
10	**VOE 11709184**	1					Bushing	Bague	Buchse	Casquillo	
11	**VOE 11709185**	1					Snap Ring	Circlip	Nutring	Circlip	
12	**VOE 11709187**	1					Gear Selector	Selecte.vitesse	Wählhebel	Select Velocid	
13	**VOE 970808**	2					Hexagon screw	Vis a tête hexagonale	Sechskantschr.	Tornillo hexago	
14	**VOE 11709188**	2					Gear Sel Rod	Tige Selec.vit	Schaltstange	Varilla Select	
15	**VOE 11709189**	3					Pin	Goupille	Stift	Pasador	
16	**VOE 11709190**	1					Shift Yoke	Fourchette	Schaltgabel	Horquill Cambio	
17	**VOE 11709191**	1					Shift Yoke	Fourchette	Schaltgabel	Horquill Cambio	
18	**VOE 11709192**	1					Pin	Goupille	Stift	Pasador	
19	**VOE 11715354**	1					O-ring	Joint Torique	O-Ring	Junta torica	
20	**VOE 11712798**	1					Sensor	Capteur	Geber	Captador	

1		**Maniobra de la caja de cambios** **Schaltbedienung** **Commande de changement de vitesse** **Gearshifting**	Catalogue id **20050**	Group **421**
2			Illustr. No **1000816**	Section **450**
3			Issue **VOE 64D9920050**	Page **273**
4				
5		**11891077**		

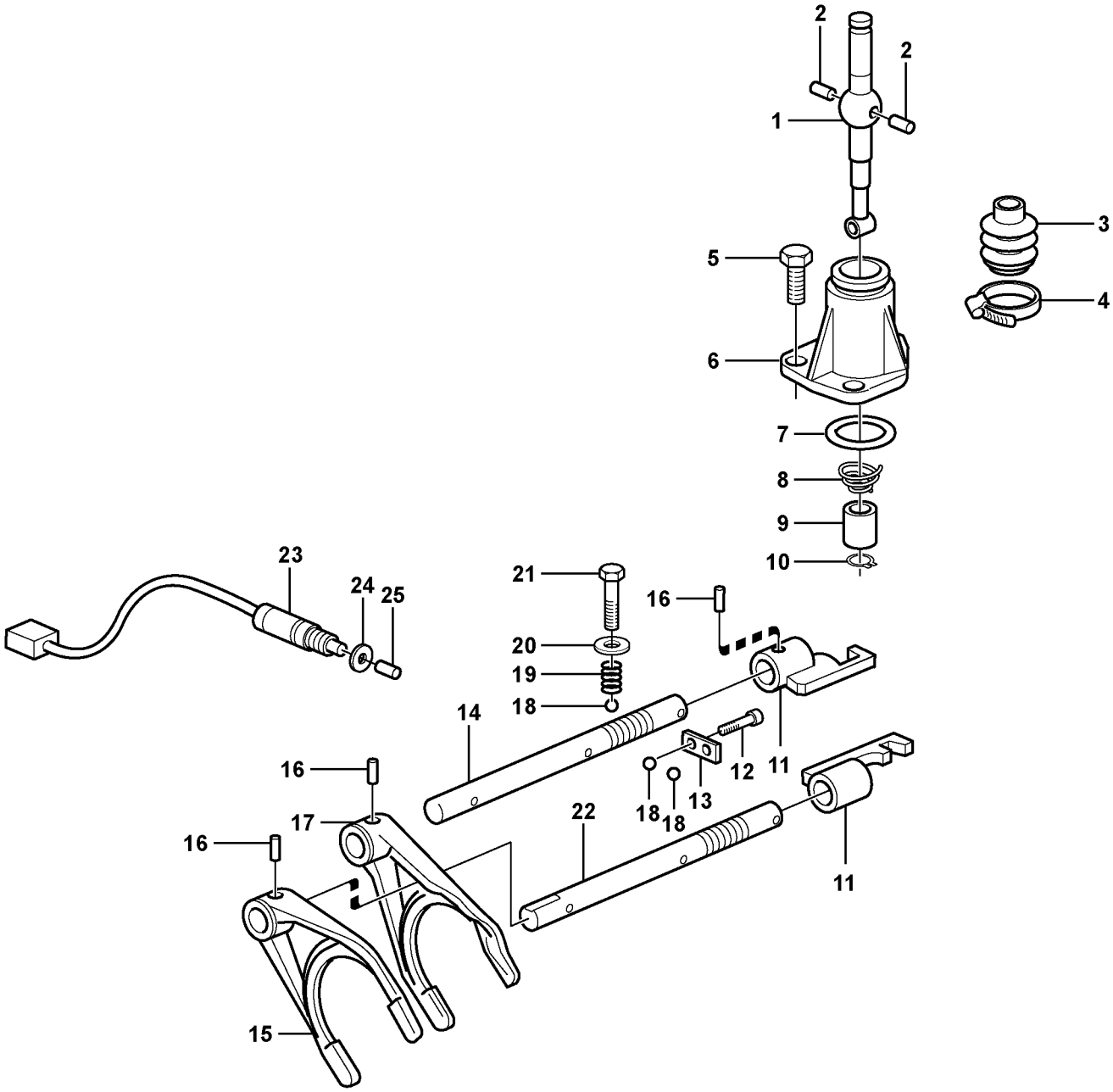

Volvo Construction Equipment

1024750

Fig.	Part No.	Quantity 1	2	3	PS	KIT	Description	Dénomination	Bezeichnung	Denominación	Notes
1	**VOE 11716673**	1					Control Lever	Levier Commande	Bedienungshebel	Palanca Mando	
2	**VOE 11709180**	2					Pin	Goupille	Stift	Pasador	
3	**VOE 11709181**	1					Boot	Soufflet	Manschette	Proteccion	
4	**VOE 11709182**	1					Clamp	Collier serrage	Klemme	Abrazadera	
5	**VOE 955297**	3					Hexagon screw	Vis tête hexagonale	Sechskantschraube	Tornillo hexago	
6	**VOE 11712473**	1					Cover	Capot	Haube	Capo	
7	**VOE 11709165**	1					O-ring	Joint Torique	O-Ring	Junta torica	
8	**VOE 11709183**	1					Spring	Ressort	Feder	Muelle	
9	**VOE 11709184**	1					Bushing	Bague	Buchse	Casquillo	
10	**VOE 11709185**	1					Snap Ring	Circlip	Nutring	Circlip	
11	**VOE 11712474**	2					Shift Yoke	Fourchette	Schaltgabel	Horquill Cambio	
12	**VOE 970803**	2					Hexagon screw	Vis tête hexagonale	Sechskantschraube	Tornillo hexago	
13	**VOE 11712475**	1					Plate	Plaque	Platte	Placa	
14	**VOE 11716803**	1					Shaft	Arbre	Welle	Arbol	
15	**VOE 11712477**	1					Shift Yoke	Fourchette	Schaltgabel	Horquill Cambio	
16	**VOE 11709189**	4					Pin	Goupille	Stift	Pasador	
17	**VOE 11716674**	1					Fork	Fourche	Gabel	Horquilla	
18	**VOE 11709177**	4					Ball	Bille	Kugel	Bola	
19	**VOE 11709176**	2					Spring	Ressort	Feder	Muelle	
20	**VOE 11709174**	3					Washer	Rondelle	Scheibe	Arandela	
21	**VOE 11709175**	3					Screw	Vis	Schraube	Tornillo	
22	**VOE 11712476**	1					Shift Rail	Coulisseau	Schaltschiene	Eje Cambio	
23	**VOE 11712798**	1					Sensor	Capteur	Geber	Captador	
24	**VOE 11715354**	1					O-ring	Joint Torique	O-Ring	Junta torica	
25	**VOE 11716804**	1					Pin	Goupille	Zapfen	Pasador	

1	**11887380**	**Maniobra de la caja de cambios** **Schaltbedienung** **Commande de changement de vitesse** **Gearshifting**	Catalogue id **20050**	Group **421**
2			Illustr. No **1024750**	Section **460**
3			Issue **VOE 64D9920050**	Page **275**
4				
5		**11891077 S/N 10627 -**		

VOLVO

BL61

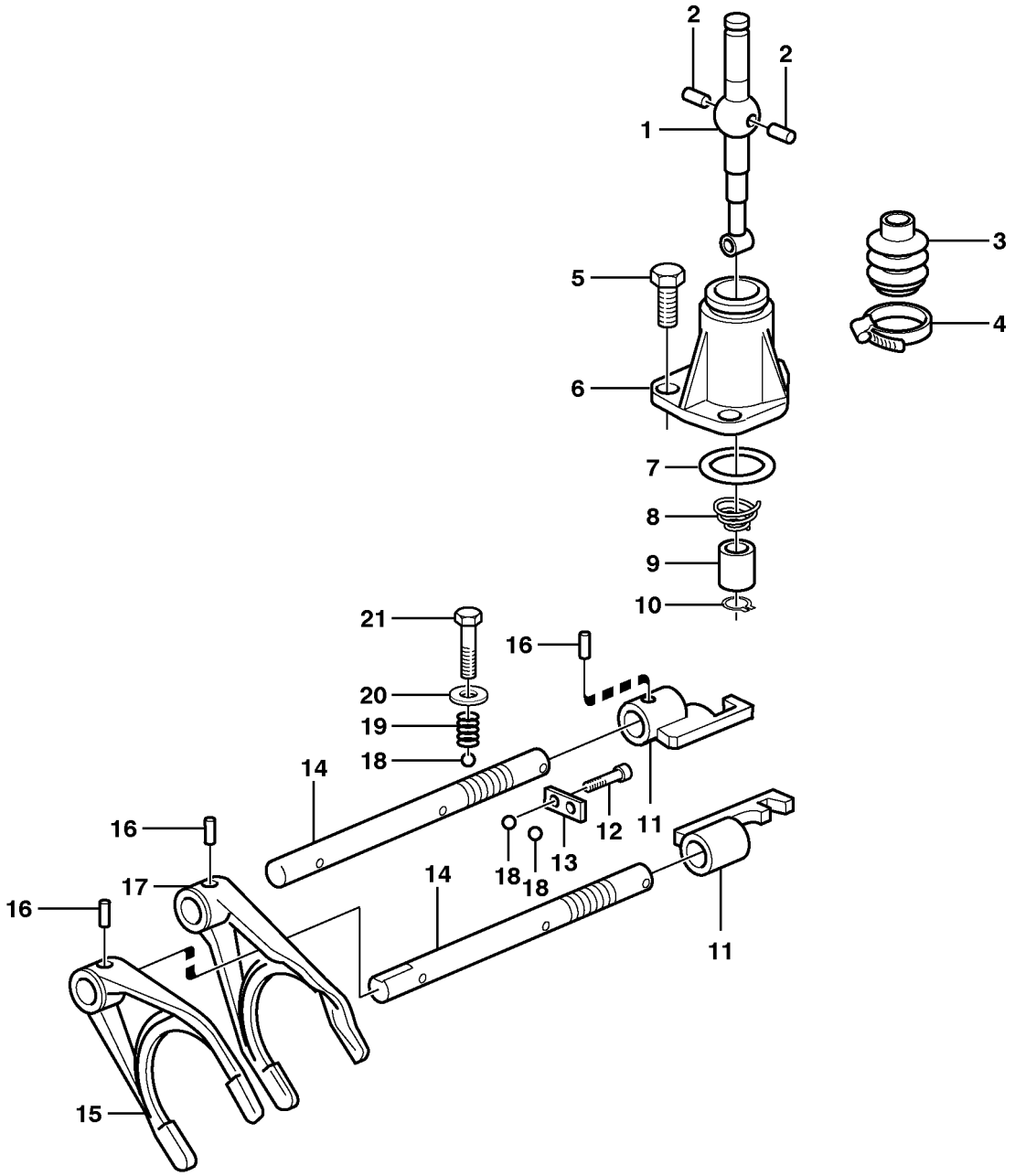

Volvo Construction Equipment

1009247

Fig.	Part No.	Quantity 1	2	3	PS	KIT	Description	Dénomination	Bezeichnung	Denominación	Notes
1	**VOE 11709179**	1					Shift Lever	Levier Vitesse	Schalthebel	Palanca Cambios	
2	**VOE 11709180**	2					Pin	Goupille	Stift	Pasador	
3	**VOE 11709181**	1					Boot	Soufflet	Manschette	Proteccion	
4	**VOE 11709182**	1					Clamp	Collier serrage	Klemme	Abrazadera	
5	**VOE 955297**	3					Hexagon screw	Vis tête hexagonale	Sechskantschraube	Tornillo hexago	
6	**VOE 11712473**	1					Cover	Capot	Haube	Capo	
7	**VOE 11709165**	1					O-ring	Joint Torique	O-Ring	Junta torica	
8	**VOE 11709183**	1					Spring	Ressort	Feder	Muelle	
9	**VOE 11709184**	1					Bushing	Bague	Buchse	Casquillo	
10	**VOE 11709185**	1					Snap Ring	Circlip	Nutring	Circlip	
11	**VOE 11712474**	2					Shift Yoke	Fourchette	Schaltgabel	Horquill Cambio	
12	**VOE 970803**	2					Hexagon screw	Vis tête hexagonale	Sechskantschraube	Tornillo hexago	
13	**VOE 11712475**	1					Plate	Plaque	Platte	Placa	
14	**VOE 11712476**	2					Shift Rail	Coulisseau	Schaltschiene	Eje Cambio	
15	**VOE 11712477**	1					Shift Yoke	Fourchette	Schaltgabel	Horquill Cambio	
16	**VOE 11709189**	4					Pin	Goupille	Stift	Pasador	
17	**VOE 11712478**	1					Shift Yoke	Fourchette	Schaltgabel	Horquill Cambio	
18	**VOE 11709177**	4					Ball	Bille	Kugel	Bola	
19	**VOE 11709176**	2					Spring	Ressort	Feder	Muelle	
20	**VOE 11709174**	3					Washer	Rondelle	Scheibe	Arandela	
21	**VOE 11709175**	3					Screw	Vis	Schraube	Tornillo	

1		**Maniobra de la caja de cambios** **Schaltbedienung** **Commande de changement de vitesse** **Gearshifting**	Catalogue id **20050**	Group **421**
2			Illustr. No **1009247**	Section **475**
3				
4			Issue **VOE 64D9920050**	Page **277**
5		**11891076**		

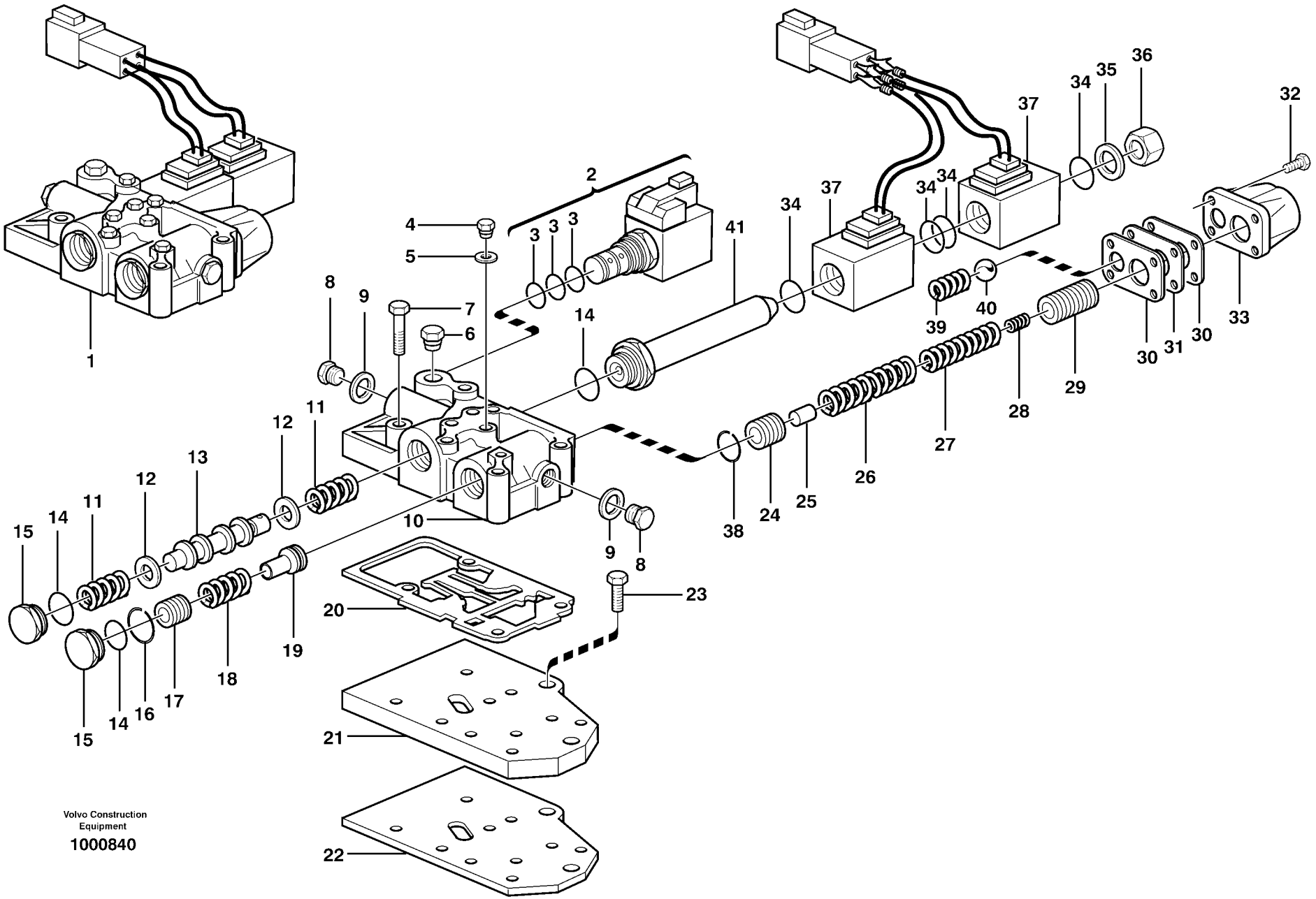

Volvo Construction Equipment

1000840

Fig.	Part No.	Quantity 1	2	3	PS	KIT	Description	Dénomination	Bezeichnung	Denominación	Notes
1	**VOE 11709195**	1					Distributor	Allumeur	Verteiler	Distribuidor	
2	**VOE 11709196**	1					•Valve	•Soupape	•Ventil	•Valvula	
3	**VOE 11712480**	1					••O-ring Kit	••Jeu Join.toriq.	••O-ringsatz	••Jueg Anil Toric	
4	**VOE 11709061**	4					•Plug	•Bouchon	•Stopfen	•Tapon	
5	**VOE 11709199**	4					•Washer	•Rondelle	•Scheibe	•Arandela	
6	**VOE 11709200**	1					•Plug	•Bouchon	•Stopfen	•Tapon	
7	**VOE 955302**	6					•Hexagon screw	•Vis tête hexagonale	•Sechskantschraube	•Tornillo hexago	
8	**VOE 11709201**	2					•Plug	•Bouchon	•Stopfen	•Tapon	
9	**VOE 11709202**	2					•Washer	•Rondelle	•Scheibe	•Arandela	
10		1			NS		•Valve housing	•Carter soupape	•Ventilgehäuse	•Cuerpo valvula	
11	**VOE 11709203**	2					•Spring	•Ressort	•Feder	•Muelle	
12	**VOE 11709204**	2					•Washer	•Rondelle	•Scheibe	•Arandela	
13	**VOE 11709205**	1					•Piston	•Piston	•Kolben	•Piston	
14	**VOE 11709206**	3					•O-ring	•Joint Torique	•O-Ring	•Junta torica	
15	**VOE 11709207**	2					•Plug	•Bouchon	•Stopfen	•Tapon	
16	**VOE 11709208**	1					•Snap Ring	•Circlip	•Nutring	•Circlip	
17	**VOE 11709209**	1					•Piston	•Piston	•Kolben	•Piston	
18	**VOE 11709210**	1					•Spring	•Ressort	•Feder	•Muelle	
19	**VOE 11709211**	1					•Bushing	•Bague	•Buchse	•Casquillo	
20	**VOE 11709212**	1					•Gasket	•Joint	•Dichtung	•Junta	
21		1			NS		•Valve plate	•Plaque soupape	•Ventilplatte	•Placa valvula	
22	**VOE 11709213**	1					•Gasket	•Joint	•Dichtung	•Junta	
23	**VOE 13955295**	3					•Screw	•Vis	•Schraube	•Tornillo	
24	**VOE 11709214**	1					•Piston	•Piston	•Kolben	•Piston	
25	**VOE 11709215**	1					•Pin	•Goupille	•Stift	•Pasador	
26	**VOE 11709216**	1					•Spring	•Ressort	•Feder	•Muelle	
27	**VOE 11709217**	1					•Spring	•Ressort	•Feder	•Muelle	
28	**VOE 11709218**	1					•Spring	•Ressort	•Feder	•Muelle	
29	**VOE 11709219**	1					•Piston	•Piston	•Kolben	•Piston	
30	**VOE 11709220**	2					•Gasket	•Joint	•Dichtung	•Junta	

1		**Válvula selectora de gama** **Getriebewählerventil** **Soupape sélectrice vitesse** **Range selector valve**	Catalogue id **20050**	Group **421**
2			Illustr. No **1000840**	Section **500**
3			Issue **VOE 64D9920050**	Page **279**
4				
5		**11891076, 11891077 S/N - 10626**		

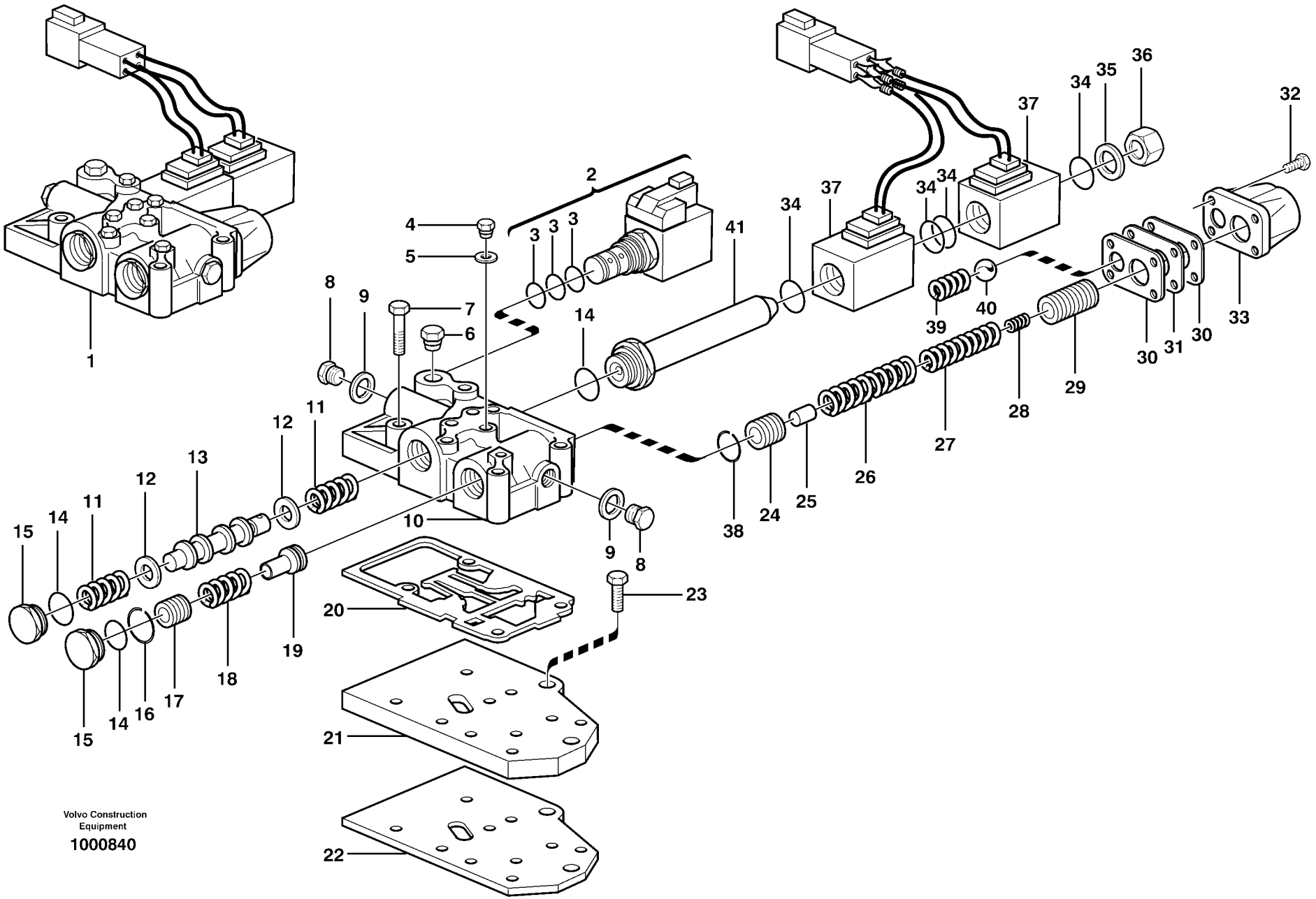

Volvo Construction Equipment

1000840

Fig.	Part No.	Quantity 1	2	3	PS	KIT	Description	Dénomination	Bezeichnung	Denominación	Notes
31	**VOE 11709221**	1					•Plate	•Plaque	•Platte	•Placa	
32	**VOE 13948356**	4					•Flange screw	•Vis à bride	•Flanschschraube	•Torn embridado	
33	**VOE 11709222**	1					•Cover	•Couvercle	•Deckel	•Tapa	
34	**VOE 11709223**	4					•O-ring	•Joint Torique	•O-Ring	•Junta torica	
35	**VOE 11709224**	1					•Washer	•Rondelle	•Scheibe	•Arandela	
36	**VOE 11709225**	1					•Plug	•Bouchon	•Stopfen	•Tapon	
37	**VOE 11712481**	2					•Solenoid valve	•Vanne electrom.	•Magnetventil	•Electrovalvula	
38	**VOE 11709228**	1					•Snap Ring	•Circlip	•Nutring	•Circlip	
39	**VOE 11709229**	1					•Spring	•Ressort	•Feder	•Muelle	
40	**VOE 11709230**	1					•Ball	•Bille	•Kugel	•Bola	
41	**VOE 11709231**	1					•Pipe	•Canalisation	•Rohrleitung	•Canalizacion	

1		**Válvula selectora de gama** **Getriebewählerventil** **Soupape sélectrice vitesse** **Range selector valve**	Catalogue id **20050**	Group **421**
2			Illustr. No **1000840**	Section **500**
3			Issue **VOE 64D9920050**	Page **281**
4				
5		**11891076, 11891077 S/N - 10626**		

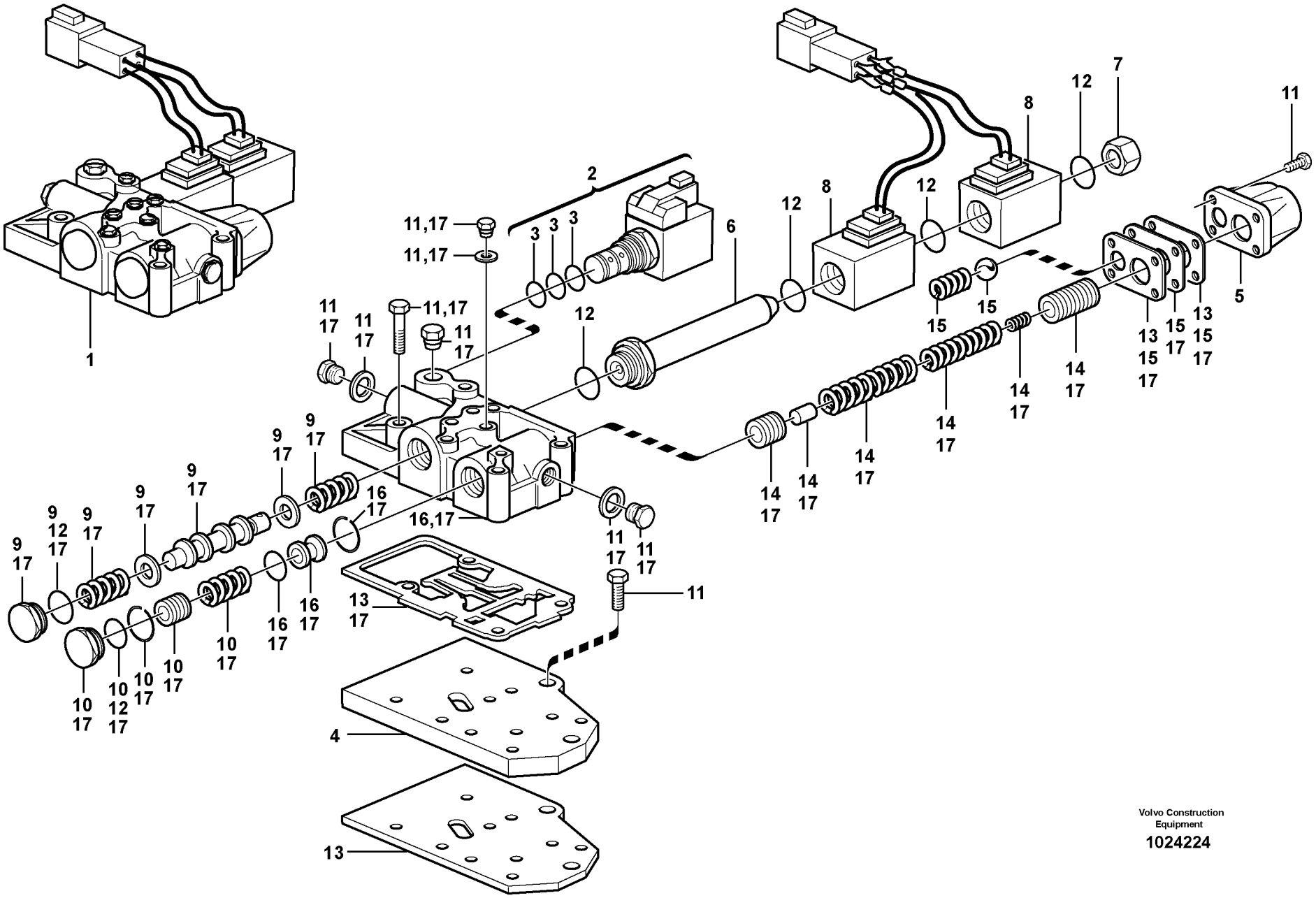
1
2
3
4
5
6
7
8
9
10
11
12
13
14
15
16
17
Volvo Construction Equipment
1024224

Fig.	Part No.	Quantity 1	2	3	PS	KIT	Description	Dénomination	Bezeichnung	Denominación	Notes
1	**VOE 11716675**	1					Control valve	Valve controle	Steuerventil	Válvula control	
2	**VOE 11709196**	1					•Valve	•Soupape	•Ventil	•Valvula	
3	**VOE 11709197**	1					••O-ring Kit	••Jeu Join.toriq.	••O-ringsatz	••Jueg Anil Toric	
4	**VOE 11716676**	1					•Plate	•Plaque	•Platte	•Placa	
5	**VOE 11709222**	1					•Cover	•Couvercle	•Deckel	•Tapa	
6	**VOE 11709231**	1					•Pipe	•Canalisation	•Rohrleitung	•Canalizacion	
7	**VOE 11716677**	1					•Plug	•Bouchon	•Stopfen	•Tapon	
8	**VOE 11716678**	2					•Valve	•Soupape	•Ventil	•Valvula	
9	**VOE 11716679**	1					•Slide	•Tiroir	•Schieber	•Corredera	
10	**VOE 11716680**	1					•Piston Kit	•Jeu Pistons	•Kolbensatz	•Juego Piston	
11	**VOE 11716681**	1					•Screw Kit	•Kit Vis	•Schraubensatz	•Juego Tornillos	
12	**VOE 11716682**	1					•Sealing Kit	•Jeu Joints	•Dichtungssatz	•Juego Retenes	
13	**VOE 11716683**	1					•Gasket Kit	•Kit Joints	•Dichtungssatz	•Juego Juntas	
14	**VOE 11716684**	1					•Valve Kit	•Kit valve	•Ventilsatz	•Juego Valvula	
15	**VOE 11716685**	1					•Plate	•Plaque	•Platte	•Placa	
16	**VOE 11716686**	1					•Valve Kit	•Kit valve	•Ventilsatz	•Juego Valvula	
17	**VOE 11716687**	1					•Valve Kit	•Kit valve	•Ventilsatz	•Juego Valvula	

1		**Válvula selectora de gama** **Getriebewählerventil** **Soupape sélectrice vitesse** **Range selector valve**	Catalogue id **20050**	Group **421**
2			Illustr. No **1024224**	Section **525**
3			Issue **VOE 64D9920050**	Page **283**
4				
5		**11891076, 11891077 S/N 10627 -**		

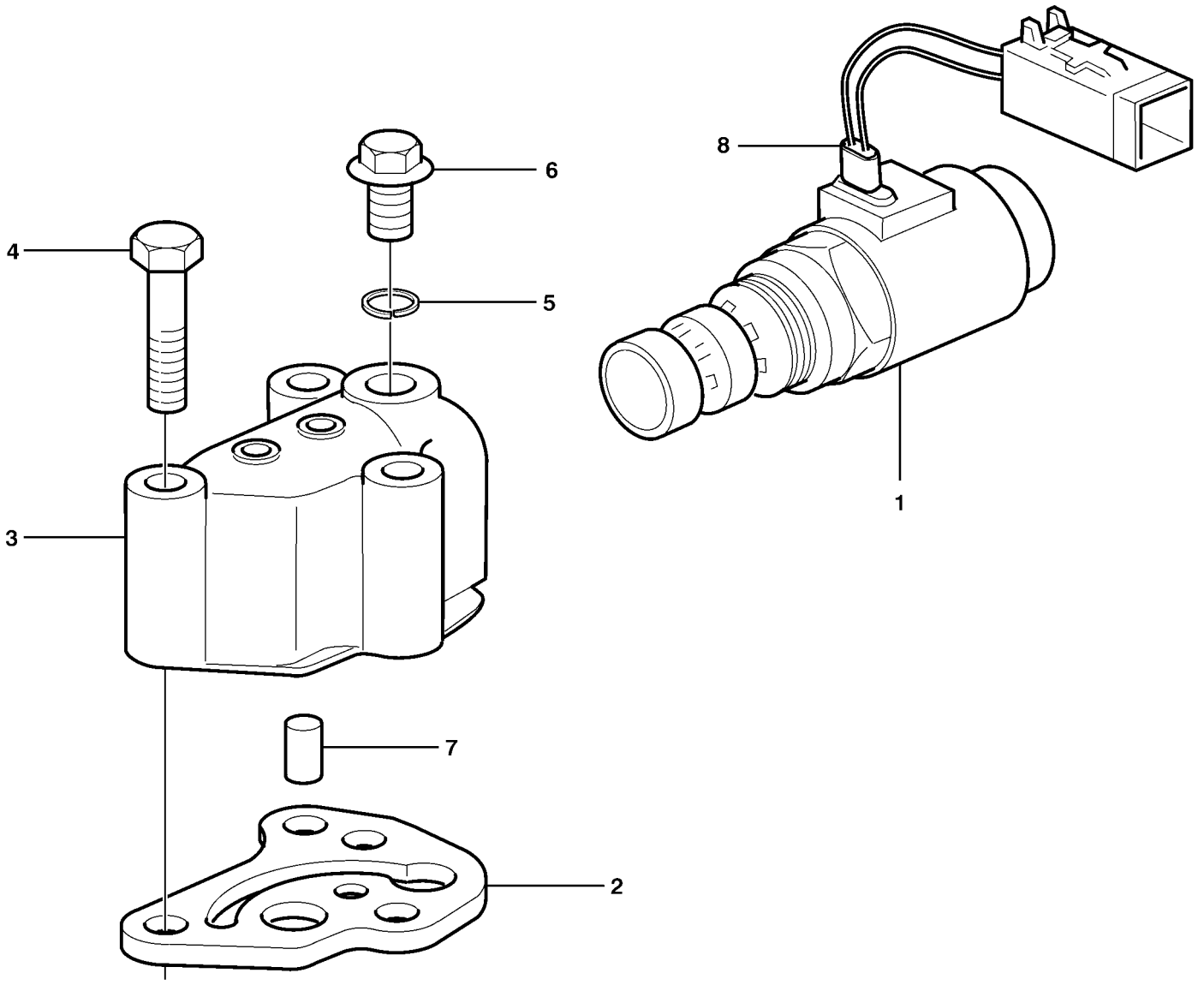

Volvo Construction Equipment

1000817

Fig.	Part No.	Quantity 1	2	3	PS	KIT	Description	Dénomination	Bezeichnung	Denominación	Notes
1	**VOE 11709232**	1					Solinoid valve	Vannr electrom.	Magnetventil	Electrovalvula	
2	**VOE 11709233**	1					Gasket	Joint	Dichtung	Junta	
3	**VOE 11709234**	1					Valve Housing	Carter Soupape	Ventilgehäuse	Cuerpo Valvula	
4	**VOE 955302**	3					Hexagon screw	Vis tête hexagonale	Sechskantschraube	Tornillo hexago	
5	**VOE 11709199**	1					Washer	Rondelle	Scheibe	Arandela	
6	**VOE 11709061**	1					Plug	Bouchon	Stopfen	Tapon	
7	**VOE 11709235**	1					Pin	Goupille	Zapfen	Pasador	
8	**VOE 11709236**	1					Protective sleeve	Manchon de protection	Schutzhülle	Manguito de protección	

1		**Válvula solenoide, tracción 4 ruedas** **Magnetventil 4-Radantrieb** **Electrovalve 4 roues motrices** **Solenoid valve 4wd**	Catalogue id **20050**	Group **421**
2			Illustr. No **1000817**	Section **550**
3				
4			Issue **VOE 64D9920050**	Page **285**
5		**11891077**		

VOLVO

BL61

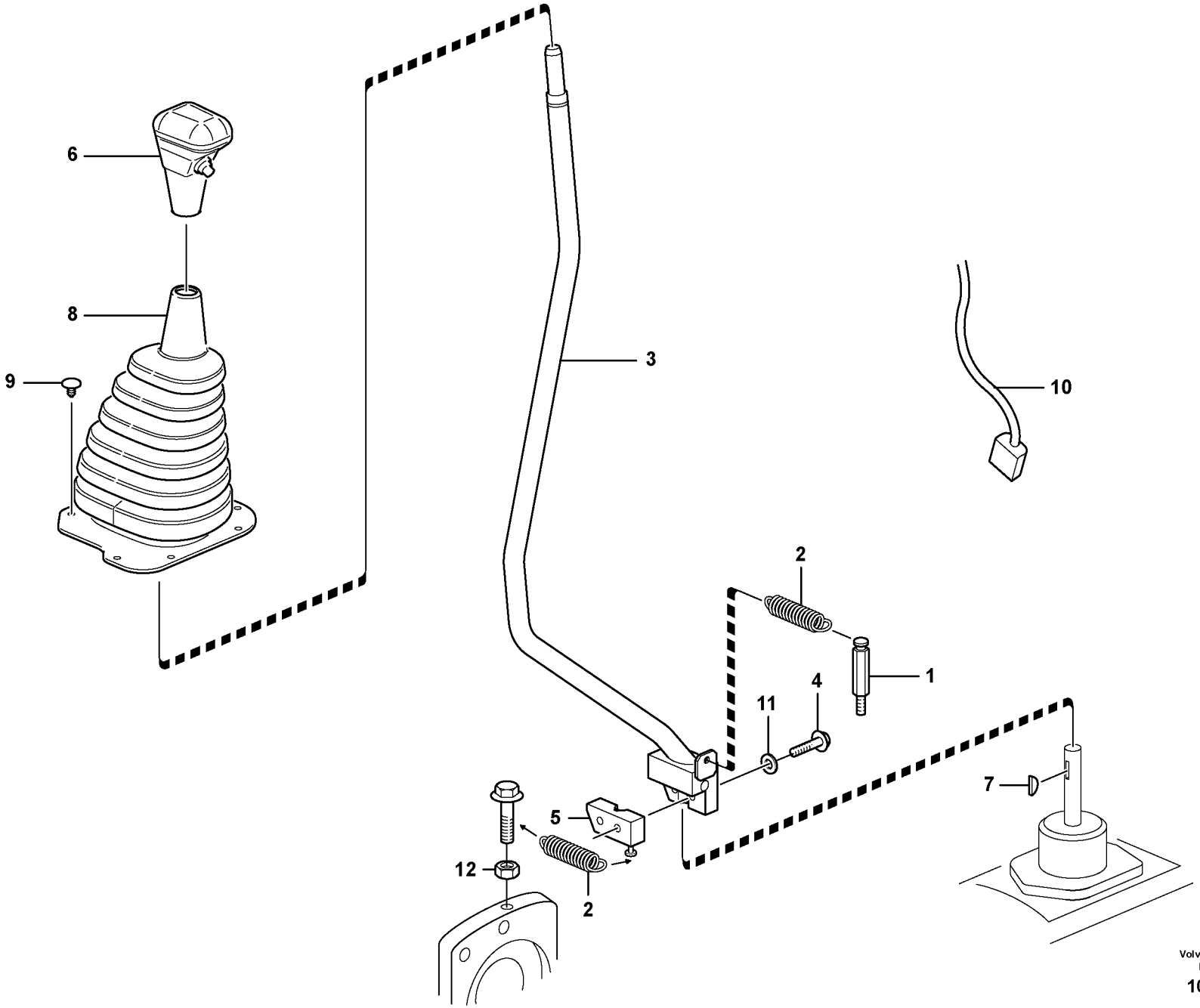

Volvo Construction Equipment

1024233

Fig.	Part No.	Quantity 1	2	3	PS	KIT	Description	Dénomination	Bezeichnung	Denominación	Notes
1	**VOE 11882559**	1					Bracket	Console	Konsole	Consola	
2	**VOE 11882592**	1					Spring	Ressort	Feder	Muelle	
3	**VOE 11882560**	1					Lever	Levier	Hebel	Palanca	
3	**VOE 11888014**		1				Lever	Levier	Hebel	Palanca	
4	**VOE 13947760**	2	3				Flange screw	Vis à bride	Flanschschraube	Torn embridado	
5	**VOE 11882564**	1					Clamp	Pince Serrage	Klemme	Abrazadera	
5	**VOE 11888694**		1				Clamp	Pince Serrage	Klemme	Abrazadera	
6	**VOE 11881034**	1	1				Knob	Bouton	Knauf	Boton	
7	**VOE 11881035**	1					Key	Clavette	Keil	Llave (cuna)	
8	**VOE 11881432**	1	1				Bellows	Soufflet	Balg	Fuelle	
9	**VOE 11884070**	7					Screw	Vis	Schraube	Tornillo	
9	**VOE 11881360**		7				Retainer	Retenue	Halter	Soporte	
10	**VOE 11884022**	1					Cable harness	Faisceau cables	Kabelbaum	Manojo cables	
10	**VOE 11884021**		1				Cable harness	Faisceau cables	Kabelbaum	Manojo cables	
11	**VOE 942767**	2					Toothed Washer	Rondelle Dentee	Zahnscheibe	Arandela Dentad	
12	**VOE 13945408**		1				Nut	Ecrou	Mutter	Tuerca	

1	**S/N - 10626**	**Selector velocidad, tracción 4 ruedas** **Wählschalter, 4-Radantrieb** **Sélecteur de vitesse, 4 roues motrices** **Gear selector, 4-wheel drive**	Catalogue id **20050**	Group **424**
2	**S/N 10627 -**		Illustr. No **1024233**	Section **100**
3				
4			Issue **VOE 64D9920050**	Page **287**
5		**11891077**		

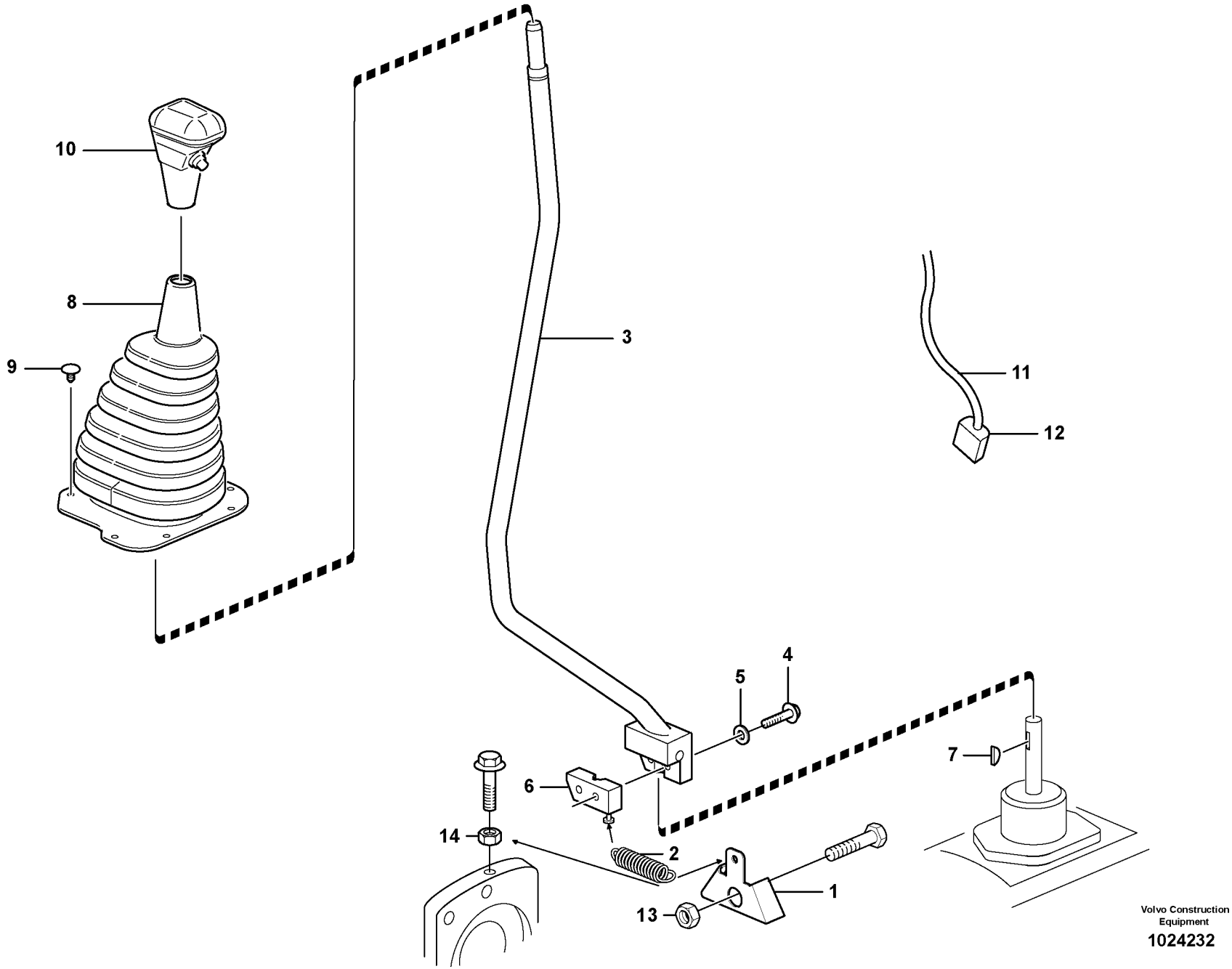

Volvo Construction Equipment

1024232

Fig.	Part No.	Quantity 1	2	3	PS	KIT	Description	Dénomination	Bezeichnung	Denominación	Notes
1	**VOE 11881126**	1					Bracket	Console	Konsole	Ménsula	
2	**VOE 11881128**	1					Spring	Ressort	Feder	Muelle	
2	**VOE 11882592**		1				Spring	Ressort	Feder	Muelle	
3	**VOE 11881115**	1					Lever	Levier	Hebel	Palanca	
3	**VOE 11888014**		1				Lever	Levier	Hebel	Palanca	
4	**VOE 13947760**	2	3				Flange screw	Vis à bride	Flanschschraube	Torn embridado	
5	**VOE 942767**	2					Toothed Washer	Rondelle Dentee	Zahnscheibe	Arandela Dentad	
6	**VOE 11881150**	1					Clamp	Pince Serrage	Klemme	Abrazadera	
6	**VOE 11888694**		1				Clamp	Pince Serrage	Klemme	Abrazadera	
	VOE 11882564	1					•Clamp	•Pince Serrage	•Klemme	•Abrazadera	
		1			NS		•Bracket	•Console	•Konsole	•Ménsula	
7	**VOE 11881035**	1					Key	Clavette	Keil	Llave (cuna)	
8	**VOE 11881432**	1	1				Bellows	Soufflet	Balg	Fuelle	
9	**VOE 11884070**	7					Screw	Vis	Schraube	Tornillo	
9	**VOE 11881360**		7				Retainer	Retenue	Halter	Soporte	
10	**VOE 11881034**	1	1				Knob	Bouton	Knauf	Boton	
11	**VOE 11884021**	1	1				Cable harness	Faisceau cables	Kabelbaum	Manojo cables	
12	**VOE 874955**	1	1				•Insulator	•Isolateur	•Isolator	•Aislador	
13	**VOE 979021**	1					Hexagon Nut	Ecrou Hexagonal	Sechskantmutter	Tuerca Hexagon	
14	**VOE 13945408**		1				Nut	Ecrou	Mutter	Tuerca	

1	**S/N - 10626**	**Selector velocidad, tracción 2 ruedas** **Wählschalter, 2-Radantrieb** **Sélecteur de vitesse, 2 roues motrices** **Gear selector, 2-wheel drive**	Catalogue id **20050**	Group **424**
2	**S/N 10617 -**		Illustr. No **1024232**	Section **150**
3				
4			Issue **VOE 64D9920050**	Page **289**
5		**11891076**		

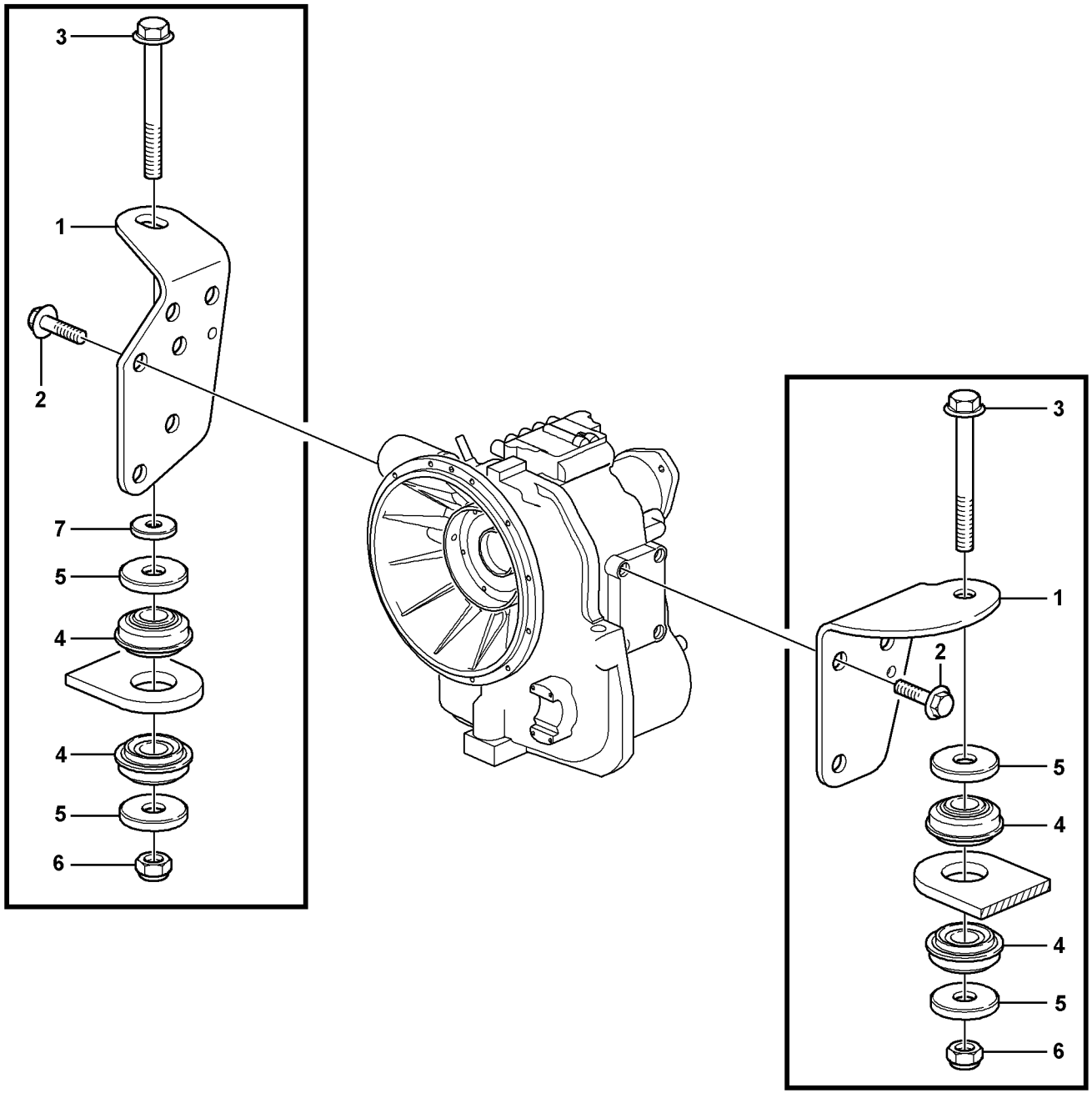
3
1
2
7
5
4
4
5
6
3
1
2
5
4
4
5
6

Fig.	Part No.	Quantity 1	2	3	PS	KIT	Description	Dénomination	Bezeichnung	Denominación	Notes
1	**VOE 11884722**	1	1				Transmission Mounting	Montage de la transmissio	Getriebe Einbau	Soporte de la transmisión	LH
1	**VOE 11885976**	1	1				Transmission Mounting	Montage de la transmissio	Getriebe Einbau	Soporte de la transmisión	RH
2	**VOE 13965191**	6	6				Flange screw	Vis à bride	Flanschschraube	Torn embridado	
3	**VOE 968593**	2	2				Flange screw	Vis à bride	Flanschschraube	Torn embridado	
4	**VOE 11884790**	4	4				Vibration damper	Amort.vibration	Schwingdämpfer	Amortig vibrac	
5	**VOE 11884792**	4	4				Washer	Rondelle	Scheibe	Arandela	
6	**VOE 13963110**	2	2				Lock nut	Contre-ecrou	Sicherungsmutter	Contratuerca	
7	**VOE 11884725**	1	1				Washer	Rondelle	Scheibe	Arandela	RH

1	**11891077**	**Suspensión de la caja de cambios** **Getriebeaufhängung** **Suspension boîte vitesses** **Gear box housing with fitting parts**	Catalogue id **20050**	Group **436**
2	**11891076**		Illustr. No **1013099**	Section **100**
3			Issue **VOE 64D9920050**	Page **291**
4				
5				

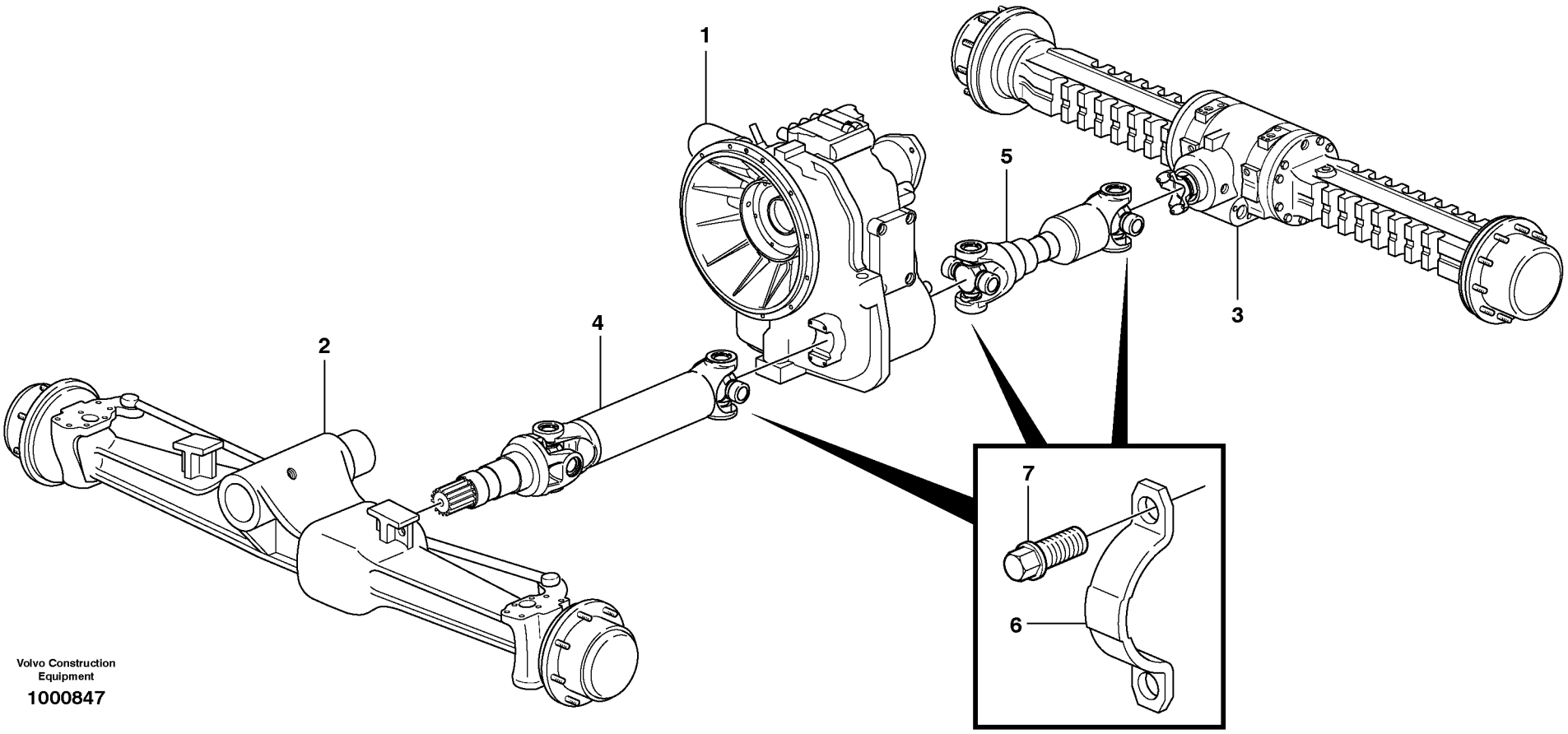
1
2
3
4
5
6
7
Volvo Construction Equipment
1000847

Fig.	Part No.	Quantity 1	2	3	PS	KIT	Description	Dénomination	Bezeichnung	Denominación	Notes
1		1	1				Transmission	Transmission	Getriebe	Transmision	See group 420, Page 223
2		1	1				Front axle	Pont avant	Vorderachse	Eje delantero	See group 460, Page 297
3		1	1				Rear axle	Essieu AR	Hinterachse	Eje posterior	See group 460, Page 297
4		1					Drive Shaft	Arbre transmission	Antriebswelle	Arbol de cde	See group 451, Page 295
5		1	1				Drive Shaft	Arbre transmission	Antriebswelle	Arbol de cde	See group 451, Page 295
6		6	4				Brace	Etrier	Bügel	Brida	See group 451, Page 295
7		12	8				Screw	Vis	Schraube	Tornillo	See group 451, Page 295

1	**11891077**	**Ejes cardán con accesorios de montaje** **Gelenkwellen mit Anbauteilen** **Arbres de transmission avec pièces de montage** **Propeller shaft, mounting**	Catalogue id **20050**	Group **451**
2	**11891076**		Illustr. No **1000847**	Section **100**
3			Issue **VOE 64D9920050**	Page **293**
4				
5				

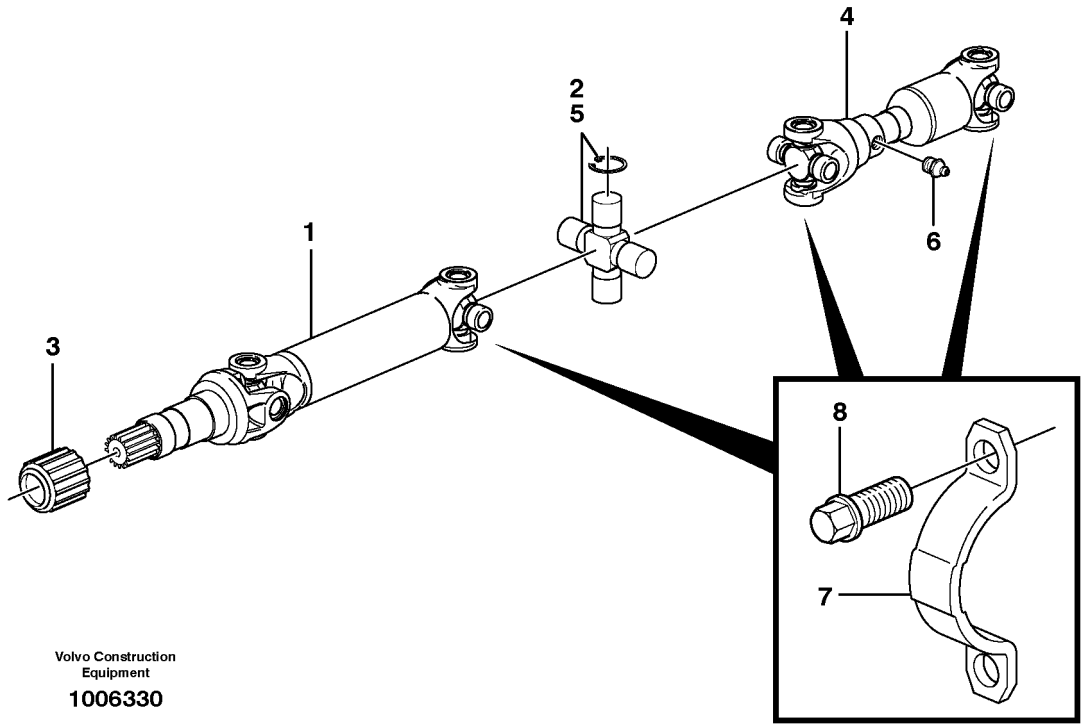

Volvo Construction Equipment

1006330

Fig.	Part No.	Quantity 1	2	3	4	5	PS	KIT	Description	Dénomination	Bezeichnung	Denominación	Notes
1	**VOE 11883171**	1							Drive Shaft	Arbre transmission	Antriebswelle	Arbol de cde	FRONT
1	**VOE 11886355**		1						Drive Shaft	Arbre transmission	Antriebswelle	Arbol de cde	FRONT
2	**VOE 11709833**	2							•Spider	•Croisillon	•Kreuzstück	•Cruceta	
2	**VOE 11716650**		2						•Spider	•Croisillon	•Kreuzstück	•Cruceta	
3	**VOE 11700105**	1							•Dust Cap	•Cache poussiere	•Staubkappe	•Guardapolvo	
4	**VOE 11883170**	1		1					Drive Shaft	Arbre transmission	Antriebswelle	Arbol de cde	REAR
4	**VOE 11888492**		1		1				Driveshaft	Arbre Helice	Propellerwelle	Arbol Transm	REAR
5	**VOE 11709833**	2		2					•Spider	•Croisillon	•Kreuzstück	•Cruceta	
5	**VOE 11716650**		2		2				•Spider	•Croisillon	•Kreuzstück	•Cruceta	
6	**VOE 11988505**	1	1	1	1				•Lub Nipple	•Graisseur	•Schmiernippel	•Engrasador	
7	**VOE 11003139**	6	6	4	4				Brace	Etrier	Bügel	Brida	
8	**VOE 11003138**	12	12	8	8				Screw	Vis	Schraube	Tornillo	

1	**11891077 S/N - 10626**
2	**11891077 S/N 10627 -**
3	**11891076 S/N - 10626**
4	**11891076 S/N 10627 -**
5	

Ejes cardán
Gelenkwelle
Arbre à cardans
Propeller shaft

Catalogue id **20050**	Group **451**
Illustr. No **1006330**	Section **150**
Issue **VOE 64D9920050**	Page **295**



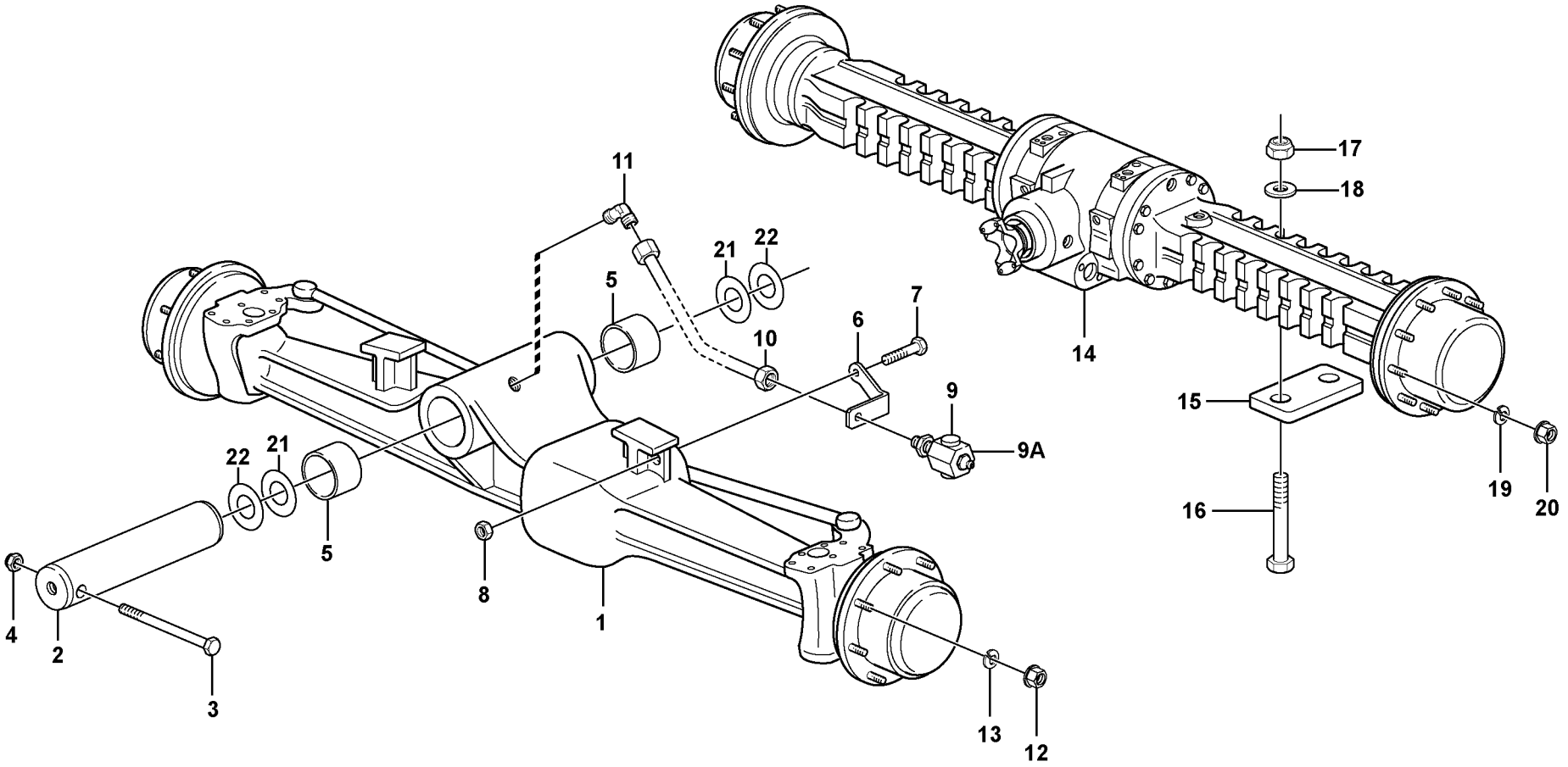

Volvo Construction Equipment

1023204

Fig.	Part No.	Quantity 1	2	3	PS	KIT	Description	Dénomination	Bezeichnung	Denominación	Notes
1	**VOE 11883201**	1					Front axle	Pont avant	Vorderachse	Eje delantero	See group 461, Page 301
1	**VOE 11884373**		1				Front axle	Pont avant	Vorderachse	Eje delantero	See group 461, Page 319
2	**VOE 11890146**	1	1				Pin	Goupille	Stift	Pasador	
3	**VOE 970890**	1	1				Hexagon screw	Vis a tête hexagonale	Sechskantschr.	Tornillo hexago	M10x120
4	**VOE 981314**	1	1				Lock nut	Contre-ecrou	Sicherungsmutter	Contratuerca	M10
5		2	2				Bushing	Bague	Buchse	Casquillo	See group 461, Page 319
6	**VOE 11882721**	1	1				Support	Support	Stütze	Apoyo	
7	**VOE 13965185**	1	1				Flange screw	Vis à bride	Flanschschraube	Torn embridado	M10x40
8	**VOE 13971095**	1	1				Flange nut	Ecrou accouple.	Bundmutter	Tuerca embridad	M10
9	**VOE 11886461**	1	1				Union	Teton Connexion	Anschlussnippel	Niple Conexcion	
9A	**VOE 914167**	1	1				Nipple	Raccord	Nippel	Niple	
10	**VOE 11882719**	1	1				Tube	Tube	Rohr	Tubo	
11	**VOE 11882718**	1	1				Elbow	Coude	Winkelstueck	Tubo acodado	
12	**VOE 11881211**	16	16				Nut	Ecrou	Mutter	Tuerca	
13	**VOE 11881213**	16	16				Washer	Rondelle	Scheibe	Arandela	
14	**VOE 11885677**	1	1				Rear axle	Essieu AR	Hinterachse	Eje posterior	See group 463, Page 327
15	**VOE 11882674**	2	2				Plate	Plaque	Platte	Placa	
16	**VOE 968852**	4	4				Hexagon screw	Vis tête hexagonale	Sechskantschraube	Tornillo hexago	M24x225
17	**VOE 948836**	4	4				Lock nut	Contre-ecrou	Sicherungsmutter	Contratuerca	M24
18	**VOE 955905**	4	4				Washer	Rondelle	Scheibe	Arandela	
19	**VOE 11881212**	20	20				Washer	Rondelle	Scheibe	Arandela	
20	**VOE 11881210**	20	20				Nut	Ecrou	Mutter	Tuerca	
21	**VOE 11886398**	2	2				Shim	Cale d'épaisseur	Passcheibe	Arandela Ajuste	3 MM, S/N 10159 -
22	**VOE 11886947**	REQ	REQ				Shim	Cale d'épaisseur	Passcheibe	Arandela Ajuste	2 MM, S/N 10150 -

1	**11891305**	**Ejes planetarios con accesorios de montaje** **Planetenwellen mit Anbauteilen** **Train planétaire avec pièces de montage** **Planet axles with fitting parts**	Catalogue id **20050**	Group **460**
2	**11891306**		Illustr. No **1023204**	Section **100**
3			Issue **VOE 64D9920050**	Page **297**
4				
5				

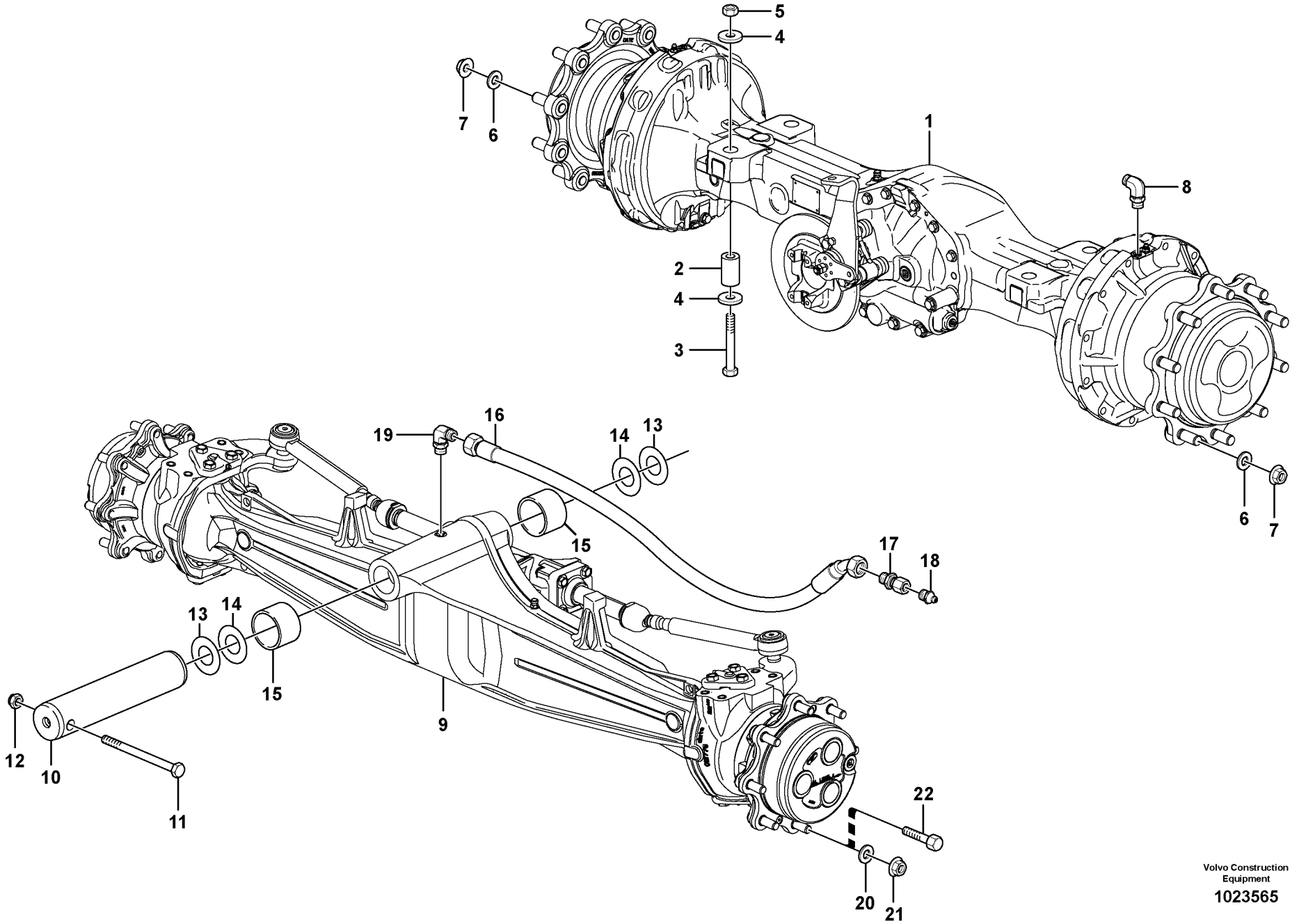

Volvo Construction Equipment

1023565

Fig.	Part No.	Quantity 1	2	3	PS	KIT	Description	Dénomination	Bezeichnung	Denominación	Notes
1	**VOE 11887363**	1					Rear axle	Essieu AR	Hinterachse	Eje posterior	See group 463, Page 329
2	**VOE 11887622**	4					Spacer	Entretoise	Abstandstueck	Casquillo distanciad	
3	**VOE 983695**	4					Hexagon screw	Vis tête hexagonale	Sechskantschraube	Tornillo hexago	
5	**VOE 980521**	4					Nut	Ecrou	Mutter	Tuerca	
4	**VOE 14376982**	4					Washer	Rondelle	Scheibe	Arandela	
6	**VOE 11881212**	20					Washer	Rondelle	Scheibe	Arandela	
7	**VOE 11881210**	20					Nut	Ecrou	Mutter	Tuerca	
8	**VOE 13933857**	2					Elbow Nipple	Raccord angulaire	Winkelnippel	Niple Angular	
	VOE 990739	1					•O-ring	•Joint Torique	•O-Ring	•Junta torica	
	VOE 932039	1					•O-ring	•Joint Torique	•O-Ring	•Junta torica	
9	**VOE 11887359**			1			Front axle	Pont avant	Vorderachse	Eje delantero	See group 461, Page 321
9	**VOE 11887362**						Front axle	Pont avant	Vorderachse	Eje delantero	See group 461, Page 303
9	**VOE 11887361**		1				Front axle	Pont avant	Vorderachse	Eje delantero	See group 461, Page 323
10	**VOE 11888493**		1				Pin	Goupille	Zapfen	Pasador	
11	**VOE 970890**		1				Hexagon screw	Vis a tête hexagonale	Sechskantschr.	Tornillo hexago	
12	**VOE 981314**		1				Lock nut	Contre-ecrou	Sicherungsmutter	Contratuerca	
13	**VOE 11888496**		2				Shim	Cale d'épaisseur	Passcheibe	Arandela Ajuste	51X110X3 MM
14	**VOE 11886947**		REQ				Shim	Cale d'épaisseur	Passcheibe	Arandela Ajuste	51X110X1 MM
15			2				Bushing	Bague	Buchse	Casquillo	See group 461, Page 321
15				2			Bushing	Bague	Buchse	Casquillo	See group 461, Page 323
16	**VOE 11888494**		1				Hose	Durit	Schlauch	Tubo flexible	
17	**VOE 11888495**		1				Union	Teton Connexion	Anschlussnippel	Niple Conexcion	
18	**VOE 914167**		1				Nipple	Raccord	Nippel	Niple	
19	**VOE 935067**		1				Elbow nipple	Raccord angulaire	Winkelnippel	Niple angular	
	VOE 991618		1		OP		•O-ring	•Joint Torique	•O-Ring	•Junta torica	
	VOE 990736		1				•O-ring	•Joint Torique	•O-Ring	•Junta torica	
20	**VOE 11881213**		16				Washer	Rondelle	Scheibe	Arandela	
21	**VOE 11881211**		16				Nut	Ecrou	Mutter	Tuerca	
22	**VOE 11884145**			16			Screw	Vis	Schraube	Tornillo	

1	**11887363**
2	**11887361**
3	**11887359**
4	
5	

Ejes planetarios con accesorios de montaje
Planetenwellen mit Anbauteilen
Train planétaire avec pièces de montage
Planet axles with fitting parts

S/N 10627 -

Catalogue id **20050**	Group **460**
Illustr. No **1023565**	Section **150**
Issue **VOE 64D9920050**	Page **299**

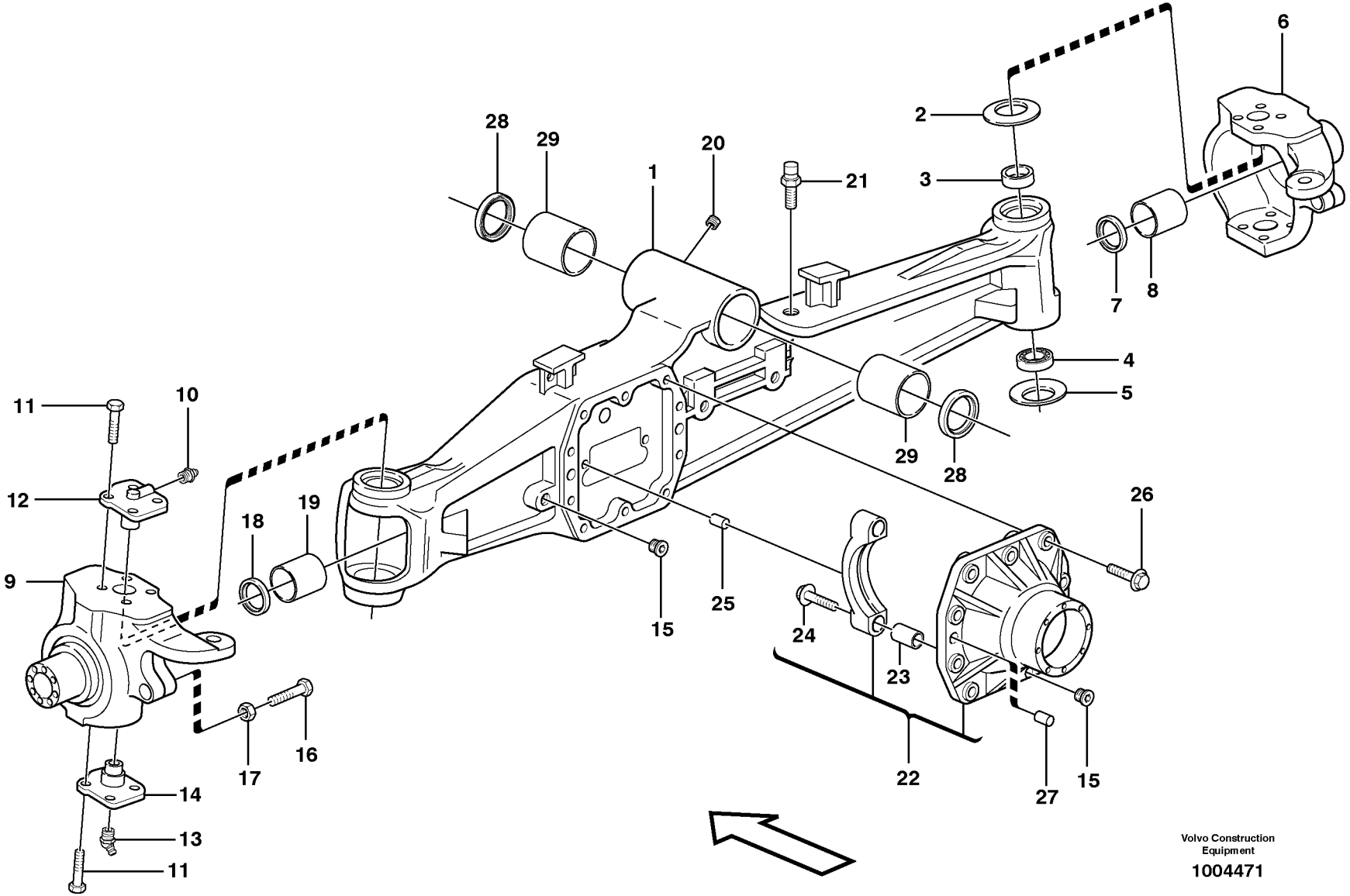

Volvo Construction Equipment

1004471

Fig.	Part No.	Quantity 1	2	3	PS	KIT	Description	Dénomination	Bezeichnung	Denominación	Notes
	VOE 11883201	1					Front axle	Pont avant	Vorderachse	Eje delantero	
1	**VOE 11988551**	1					•Axle Casing	•Boite Essieu	•Achsgehäuse	•Carter Eje	
2	**VOE 11988552**	2					•Disc Spring	•Rondel Ressort	•Scheibenfeder	•Arandela Elast	
3	**VOE 11988553**	2					•Bushing	•Bague	•Buchse	•Casquillo	
4	**VOE 11988554**	2					•Bearing	•Palier	•Lager	•Cojinete	
5	**VOE 11988555**	2					•Disc Spring	•Rondel Ressort	•Scheibenfeder	•Arandela Elast	
6	**VOE 11709463**	1					•Housing	•Carter	•Gehäuse	•Carter	RH
7	**VOE 11709462**	2					•Bushing	•Bague	•Buchse	•Casquillo	
8	**VOE 11715254**	2					•Seal	•Joint	•Dichtring	•Junta	(VOE 11709461)
9	**VOE 11988561**	1					•Housing	•Carter	•Gehäuse	•Carter	LH
10	**VOE 11709410**	2					•Lub Nipple	•Graisseur	•Schmiernippel	•Engrasador	
11	**VOE 11988559**	16					•Screw	•Vis	•Schraube	•Tornillo	
12	**VOE 11988560**	2					•King Pin	•Pivot Fusee	•Achsschenkelbolzen	•Perno Mangueta	
13	**VOE 11709464**	2					•Lub Nipple	•Graisseur	•Schmiernippel	•Engrasador	
14	**VOE 11988562**	2					•King Pin	•Pivot Fusee	•Achsschenkelbolzen	•Perno Mangueta	
15	**VOE 11709403**	2					•Plug	•Bouchon	•Stopfen	•Tapon	
16	**VOE 11709452**	2					•Screw	•Vis	•Schraube	•Tornillo	
17	**VOE 11709453**	2					•Nut	•Ecrou	•Mutter	•Tuerca	
18	**VOE 11988556**	2					•Seal	•Joint	•Dichtring	•Junta	
19	**VOE 11988557**	2					•Bushing	•Bague	•Buchse	•Casquillo	
20	**VOE 11709268**	1					•Plug	•Bouchon	•Stopfen	•Tapon	
21	**VOE 11709275**	1					•Breather Cap	•Boucho.aeration	•Lüftungsdeckel	•Tapa Ventilac	
22	**VOE 11709405**	1					•Diff Housing	•Carter differentiel	•Differentialgehäuse	•Carter diferencial	
23	**VOE 11709406**	4					••Bushing	••Bague	••Buchse	••Casquillo	
24	**VOE 11709407**	4					••Screw	••Vis	••Schraube	••Tornillo	
25	**VOE 11709413**	1					•Pin	•Goupille	•Stift	•Pasador	
26	**VOE 11709404**	10					•Screw	•Vis	•Schraube	•Tornillo	
27	**VOE 11709402**	2					•Pin	•Goupille	•Stift	•Pasador	
28	**VOE 11709412**	2					•Seal	•Joint	•Dichtung	•Reten	
29	**VOE 11709411**	2					•Bushing	•Bague	•Buchse	•Casquillo	

1		**Eje planeta, delantera** **Planetenwelle, vorne** **Axe satellite, AV** **Planetary axle, front**	Catalogue id **20050**	Group **461**
2			Illustr. No **1004471**	Section **100**
3				
4			Issue **VOE 64D9920050**	Page **301**
5		**11891305**		

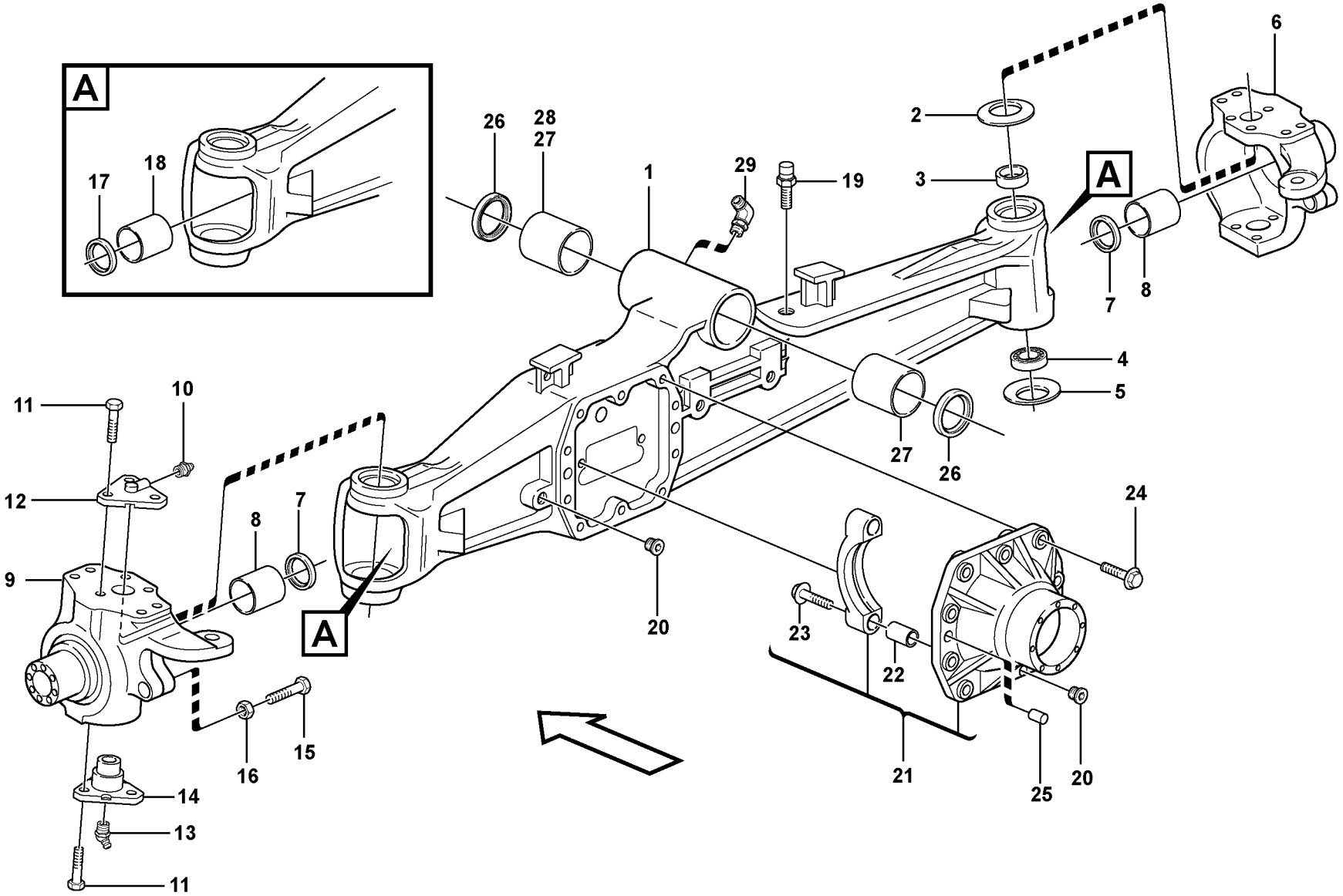

Volvo Construction Equipment

1024695

Fig.	Part No.	Quantity 1	2	3	PS	KIT	Description	Dénomination	Bezeichnung	Denominación	Notes
	VOE 11887362	1					Front axle	Pont avant	Vorderachse	Eje delantero	
1	**VOE 11716617**	1					•Axle Casing	•Boite Essieu	•Achsgehäuse	•Carter Eje	
2	**VOE 11709397**	2					•Disc Spring	•Rondel Ressort	•Scheibenfeder	•Arandela Elast	
3	**VOE 11988148**	2					•Bushing	•Bague	•Buchse	•Casquillo	
4	**VOE 11709400**	2					•Bearing	•Palier	•Lager	•Cojinete	
5	**VOE 11709401**	2					•Disc Spring	•Rondel Ressort	•Scheibenfeder	•Arandela Elast	
6	**VOE 11709463**	1					•Housing	•Carter	•Gehäuse	•Carter	RH
7	**VOE 11715254**	2					•Seal	•Joint	•Dichtring	•Junta	SEE SB BHL1K
8	**VOE 11709462**	2					•Bushing	•Bague	•Buchse	•Casquillo	
9	**VOE 11709446**	1					•Housing	•Carter	•Gehäuse	•Carter	LH
10	**VOE 11709410**	2					•Lub Nipple	•Graisseur	•Schmiernippel	•Engrasador	
11	**VOE 13970923**	12					•Hexagon screw	•Vis a tête hexagonale	•Sechskantschr.	•Tornillo hexago	
12	**VOE 11709445**	2					•King Pin	•Pivot Fusee	•Achsschenkelbolzen	•Perno Mangueta	
13	**VOE 11709464**	2					•Lub Nipple	•Graisseur	•Schmiernippel	•Engrasador	
14	**VOE 11709450**	2					•King Pin	•Pivot Fusee	•Achsschenkelbolzen	•Perno Mangueta	
15	**VOE 11709452**	2					•Screw	•Vis	•Schraube	•Tornillo	
16	**VOE 11709453**	2					•Nut	•Ecrou	•Mutter	•Tuerca	
17	**VOE 11715253**	2					•Seal	•Joint	•Dichtring	•Junta	SEE SB BHL1K
18	**VOE 11709409**	2					•Bushing	•Bague	•Buchse	•Casquillo	
19	**VOE 11709275**	1					•Breather Cap	•Boucho.aeration	•Lüftungsdeckel	•Tapa Ventilac	
20	**VOE 11709403**	2					•Plug	•Bouchon	•Stopfen	•Tapon	
21	**VOE 11716621**	1					•Differential Housing	•Carter de différentiel	•Differentialgehäuse	•Cárter de diferencial	
22	**VOE 11709406**	4					••Bushing	••Bague	••Buchse	••Casquillo	
23	**VOE 11709407**	4					••Screw	••Vis	••Schraube	••Tornillo	
24	**VOE 11709404**	10					•Screw	•Vis	•Schraube	•Tornillo	
25	**VOE 11709402**	2					•Pin	•Goupille	•Stift	•Pasador	
26	**VOE 11716620**	2					•Seal	•Joint	•Dichtring	•Junta	
27	**VOE 11709411**	1					•Bushing	•Bague	•Buchse	•Casquillo	
28	**VOE 11716618**	1					•Bushing	•Bague	•Buchse	•Casquillo	
29	**VOE 935067**	1					•Elbow nipple	•Raccord angulaire	•Winkelnippel	•Niple angular	

1	**11887362 S/N 10627 -**	**Eje planeta, delantera** **Planetenwelle, vorne** **Axe satellite, AV** **Planetary axle, front**	Catalogue id **20050**	Group **461**
2			Illustr. No **1024695**	Section **110**
3			Issue **VOE 64D9920050**	Page **303**
4				
5		**11891531**		

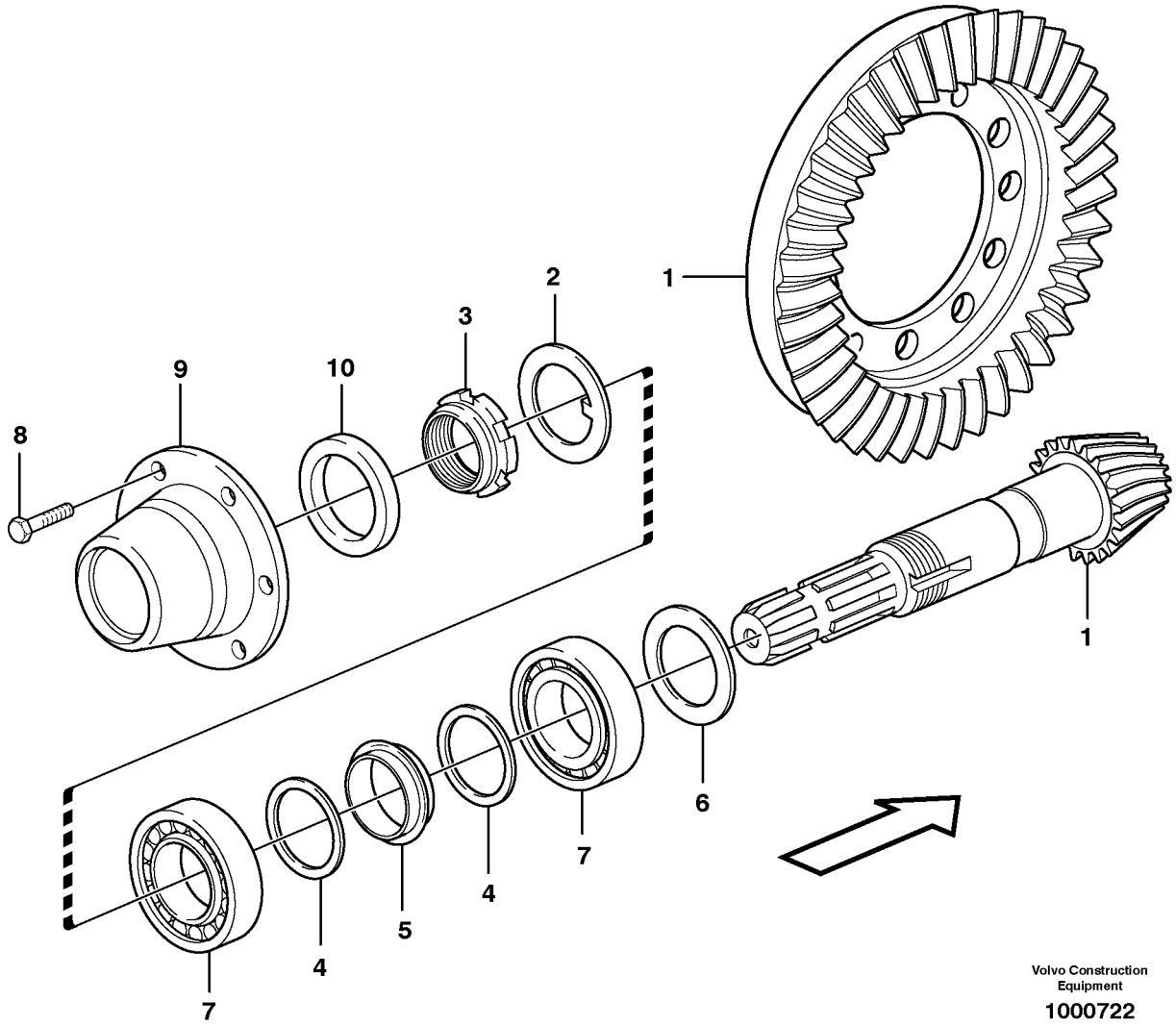

Volvo Construction Equipment

1000722

Fig.	Part No.	Quantity 1	2	3	PS	KIT	Description	Dénomination	Bezeichnung	Denominación	Notes
1	**VOE 11712502**	1					Drive Gear Set	Kit Pignon	Triebsatz	Juego Pinon	
2	**VOE 11709288**	1					•Lock Washer	•Rondel.verroui.	•Sicher Scheibe	•Arandel Segurid	
3	**VOE 11709289**	1					•Nut	•Ecrou	•Mutter	•Tuerca	
4	**VOE 11709290**	2					•Washer	•Rondelle	•Scheibe	•Arandela	
5	**VOE 11709472**	1					•Spacer	•Partie Intermédiaire	•Zwischenstück	•Espaciador	
6	**VOE 11709466**	REQ					Adjuster washer	Rondelle ajust.	Passcheibe	Arandela ajust	THICK = 2,50 MM
6	**VOE 11709467**	REQ					Adjuster washer	Rondelle ajust.	Passcheibe	Arandela ajust	THICK = 2,60 MM
6	**VOE 11709468**	REQ					Adjuster washer	Rondelle ajust.	Passcheibe	Arandela ajust	THICK = 2,70 MM
6	**VOE 11709469**	REQ					Adjuster washer	Rondelle ajust.	Passcheibe	Arandela ajust	THICK = 2,80 MM
6	**VOE 11709470**	REQ					Adjuster washer	Rondelle ajust.	Passcheibe	Arandela ajust	THICK = 2,90 MM
6	**VOE 11709471**	REQ					Adjuster washer	Rondelle ajust.	Passcheibe	Arandela ajust	THICK = 3,00 MM
7	**VOE 11709299**	2					Bearing	Palier	Lager	Cojinete	
8	**VOE 11709473**	6					Screw	Vis	Schraube	Tornillo	
9	**VOE 11988152**	1					Flange	Flasque	Flansch	Brida	
10	**VOE 11715253**	1					Seal	Joint	Dichtring	Junta	(VOE 11709408)

1		**Piñón de ataque** **Antriebskegelrad** **Pignon** **Pinion**	Catalogue id **20050**	Group **461**
2			Illustr. No **1000722**	Section **150**
3			Issue **VOE 64D9920050**	Page **305**
4				
5		**11891305**		

VOLVO

BL61

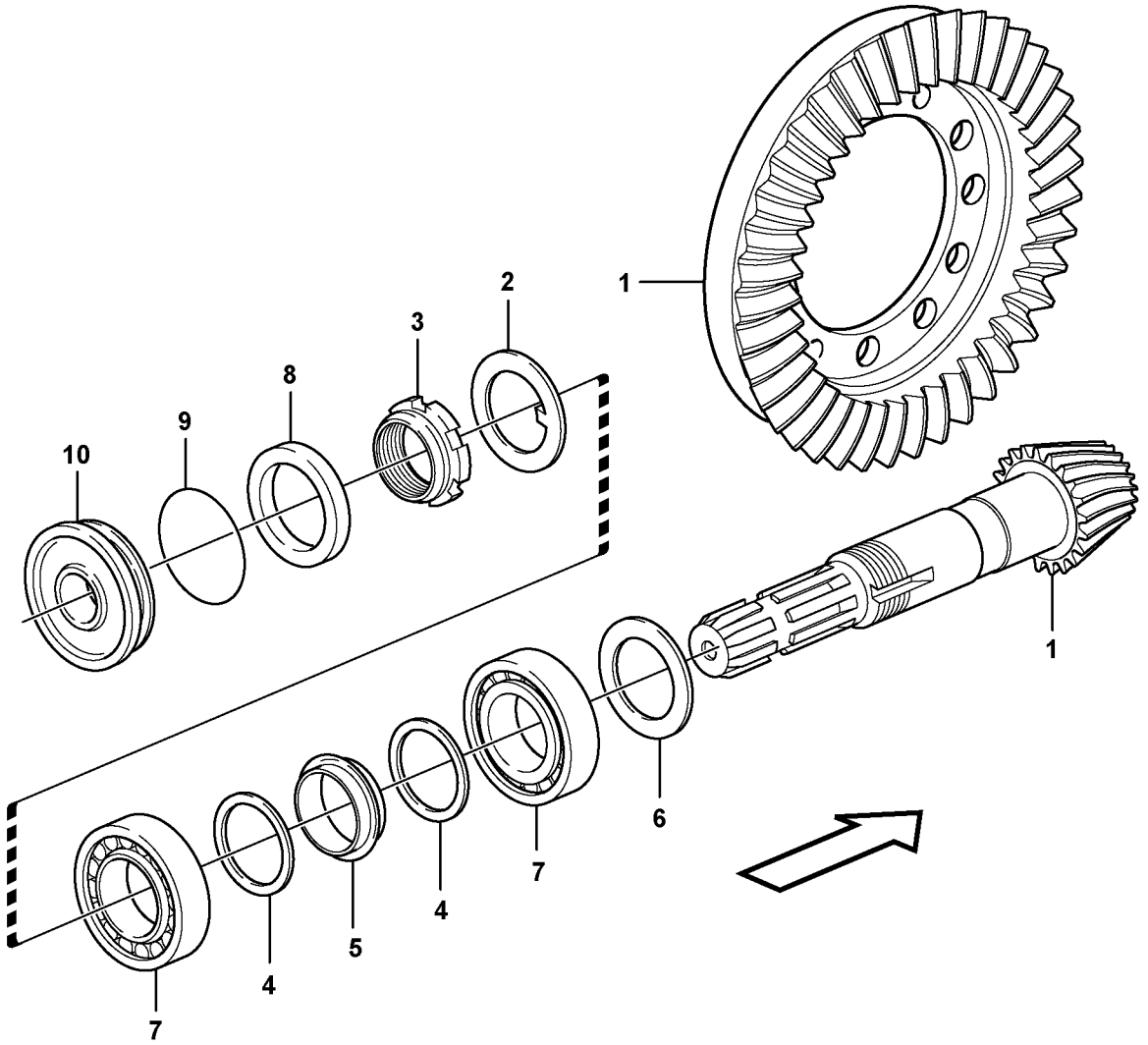

Volvo Construction Equipment

1023520

Fig.	Part No.	Quantity 1	2	3	PS	KIT	Description	Dénomination	Bezeichnung	Denominación	Notes
1	**VOE 11716728**	1					Drive Gear Set	Kit Pignon	Triebsatz	Juego Pinon	
2	**VOE 11709288**	1					•Lock Washer	•Rondel.verroui.	•Sicher Scheibe	•Arandel Segurid	
3	**VOE 11709289**	1					•Nut	•Ecrou	•Mutter	•Tuerca	
4	**VOE 11709290**	2					•Washer	•Rondelle	•Scheibe	•Arandela	
5	**VOE 11709472**	1					•Spacer	•Partie Intermédiaire	•Zwischenstück	•Espaciador	
6	**VOE 11709466**	REQ					Adjuster washer	Rondelle ajust.	Passcheibe	Arandela ajust	THINCK = 2,50 MM
	VOE 11709467	REQ					Adjuster washer	Rondelle ajust.	Passcheibe	Arandela ajust	THICK = 2,60 MM
	VOE 11709468	REQ					Adjuster washer	Rondelle ajust.	Passcheibe	Arandela ajust	THICK = 2,70 MM
	VOE 11709469	REQ					Adjuster washer	Rondelle ajust.	Passcheibe	Arandela ajust	THICK = 2,80 MM
	VOE 11709470	REQ					Adjuster washer	Rondelle ajust.	Passcheibe	Arandela ajust	THICK = 2,90 MM
	VOE 11709471	REQ					Adjuster washer	Rondelle ajust.	Passcheibe	Arandela ajust	THICK = 3,00 MM
7	**VOE 11709299**	1					Bearing	Palier	Lager	Cojinete	
8	**VOE 11715253**	1					Seal	Joint	Dichtring	Junta	(VOE 11709475)
9	**VOE 11716628**	1					O-ring	Joint Torique	O-Ring	Junta torica	
10	**VOE 11716627**	1					Cover	Capot	Haube	Capo	

1		**Piñón de ataque** **Antriebskegelrad** **Pignon** **Pinion**	Catalogue id **20050**	Group **461**
2			Illustr. No **1023520**	Section **160**
3			Issue **VOE 64D9920050**	Page **307**
4				
5		**11887361**		

VOLVO

BL61

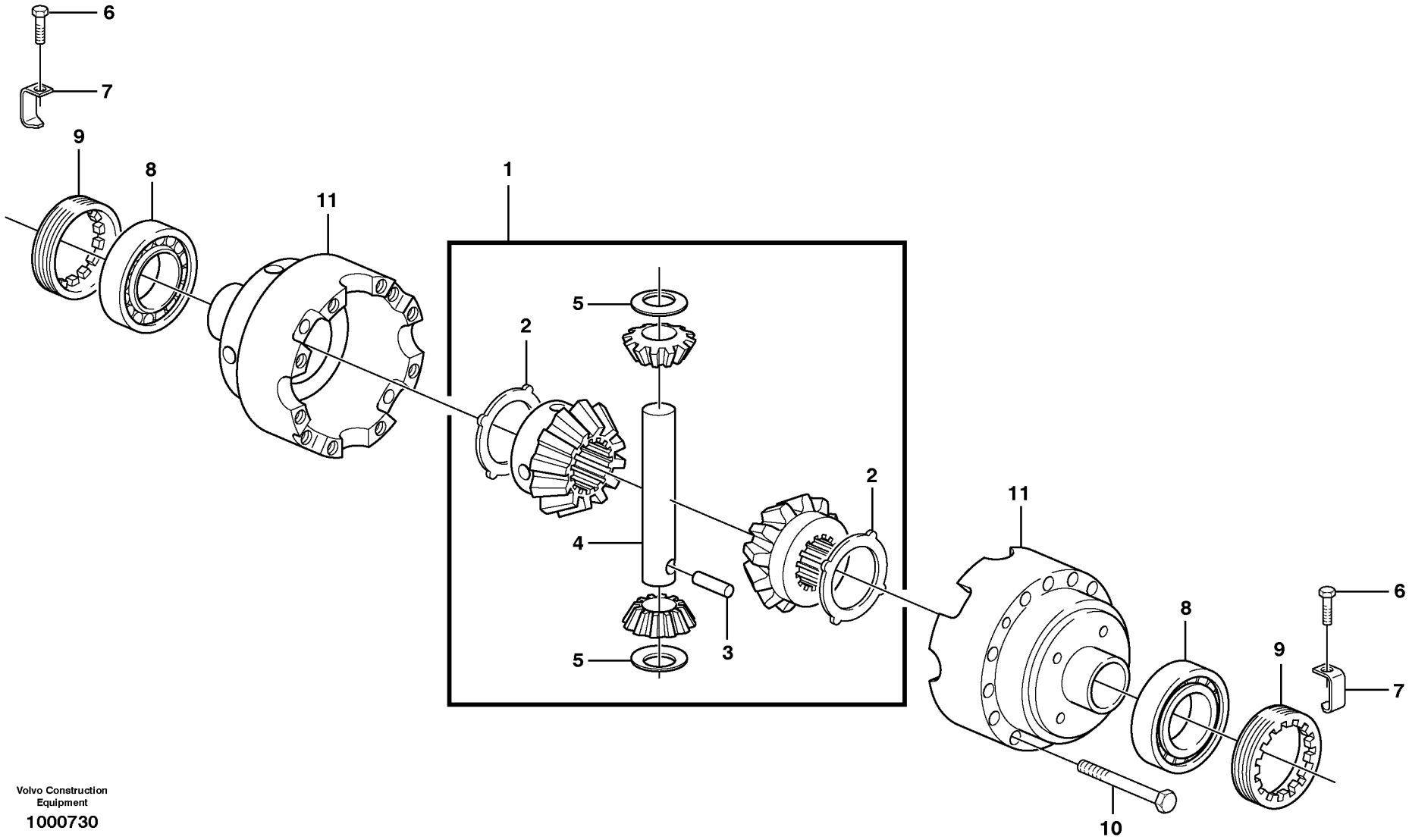

Volvo Construction Equipment

1000730

Fig.	Part No.	Quantity 1	2	3	PS	KIT	Description	Dénomination	Bezeichnung	Denominación	Notes
1	**VOE 11709476**	1					Diff Pinion Set	Jeu Pign.diffe.	Ausgl Kegsatz	Kit Engran Dif	
2	**VOE 11709477**	2					•Drive Plate	•Plaque Commande	•Treibscheibe	•Placa Motriz	
3	**VOE 11709478**	1					•Pin	•Goupille	•Stift	•Pasador	
4	**VOE 11709479**	1					•Axle	•Arbre	•Welle	•Eje	
5	**VOE 11709480**	2					•Thrust Washer	•Rondelle Butee	•Druckscheibe	•Arandela Presio	
6	**VOE 11709312**	2					Screw	Vis	Schraube	Tornillo	
7	**VOE 11709311**	2					Locking Plate	Languette de verrouillage	Sicherungsblech	Laminilla De Se	
8	**VOE 11709481**	2					Bearing	Palier	Lager	Cojinete	
9	**VOE 11709482**	2					Ring	Anneau	Ring	Anillo	
10	**VOE 11709483**	12					Screw	Vis	Schraube	Tornillo	
11	**VOE 11709484**	1					Diff Housing	Carter differentiel	Differentialgehäuse	Carter diferencial	

1		**Diferencial, eje planeta delantero** **Ausgleichgetriebe, Planetenwelle, vorne** **Differentiel, axe satellite, Av** **Differential , front axle**	Catalogue id **20050**	Group **461**
2			Illustr. No **1000730**	Section **200**
3				
4			Issue **VOE 64D9920050**	Page **309**
5		**11891305**		

VOLVO

BL61

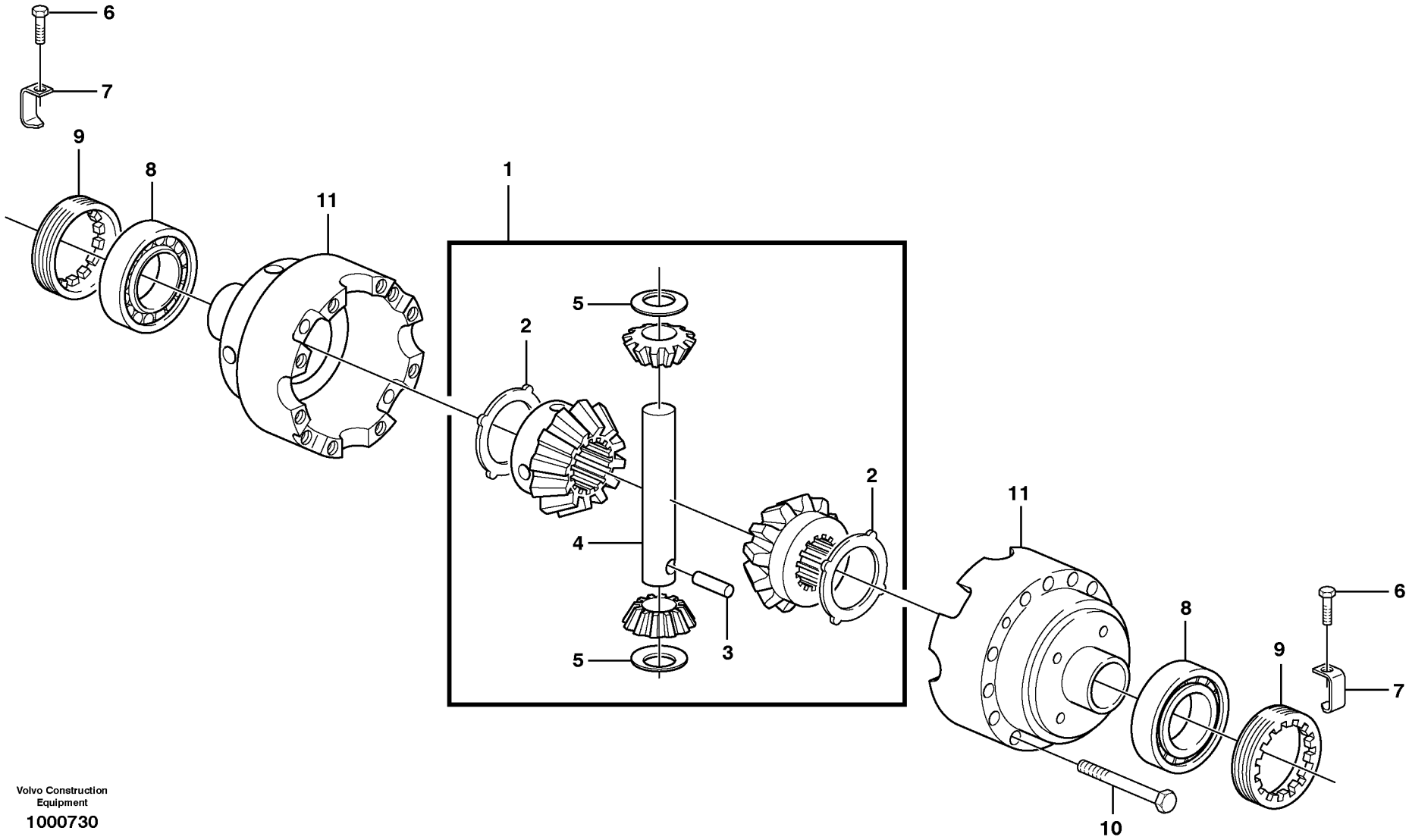

Volvo Construction Equipment

1000730

Fig.	Part No.	Quantity 1	2	3	PS	KIT	Description	Dénomination	Bezeichnung	Denominación	Notes
1	**VOE 11709476**	1					Diff Pinion Set	Jeu Pign.diffe.	Ausgl Kegsatz	Kit Engran Dif	
2	**VOE 11709477**	2					•Drive Plate	•Plaque Commande	•Treibscheibe	•Placa Motriz	
3	**VOE 11709478**	1					•Pin	•Goupille	•Stift	•Pasador	
4	**VOE 11709479**	1					•Axle	•Arbre	•Welle	•Eje	
5	**VOE 11709480**	2					•Thrust Washer	•Rondelle Butee	•Druckscheibe	•Arandela Presio	
6	**VOE 11709312**	2					Screw	Vis	Schraube	Tornillo	
7	**VOE 11716629**	2					Locking Plate	Plaque Verroui.	Sperrblech	Placa Bloqueo	
8	**VOE 11709481**	2					Bearing	Palier	Lager	Cojinete	
9	**VOE 11709482**	2					Ring	Anneau	Ring	Anillo	
10	**VOE 11709483**	12					Screw	Vis	Schraube	Tornillo	
11	**VOE 11709484**	1					Diff Housing	Carter differentiel	Differentialgehäuse	Carter diferencial	

1	**11880004**	**Diferencial, eje planeta delantero** **Ausgleichgetriebe, Planetenwelle, vorne** **Differentiel, axe satellite, Av** **Differential , front axle**	Catalogue id **20050**	Group **461**
2				
3			Illustr. No **1000730**	Section **210**
4				
5		**11887361**	Issue **VOE 64D9920050**	Page **311**

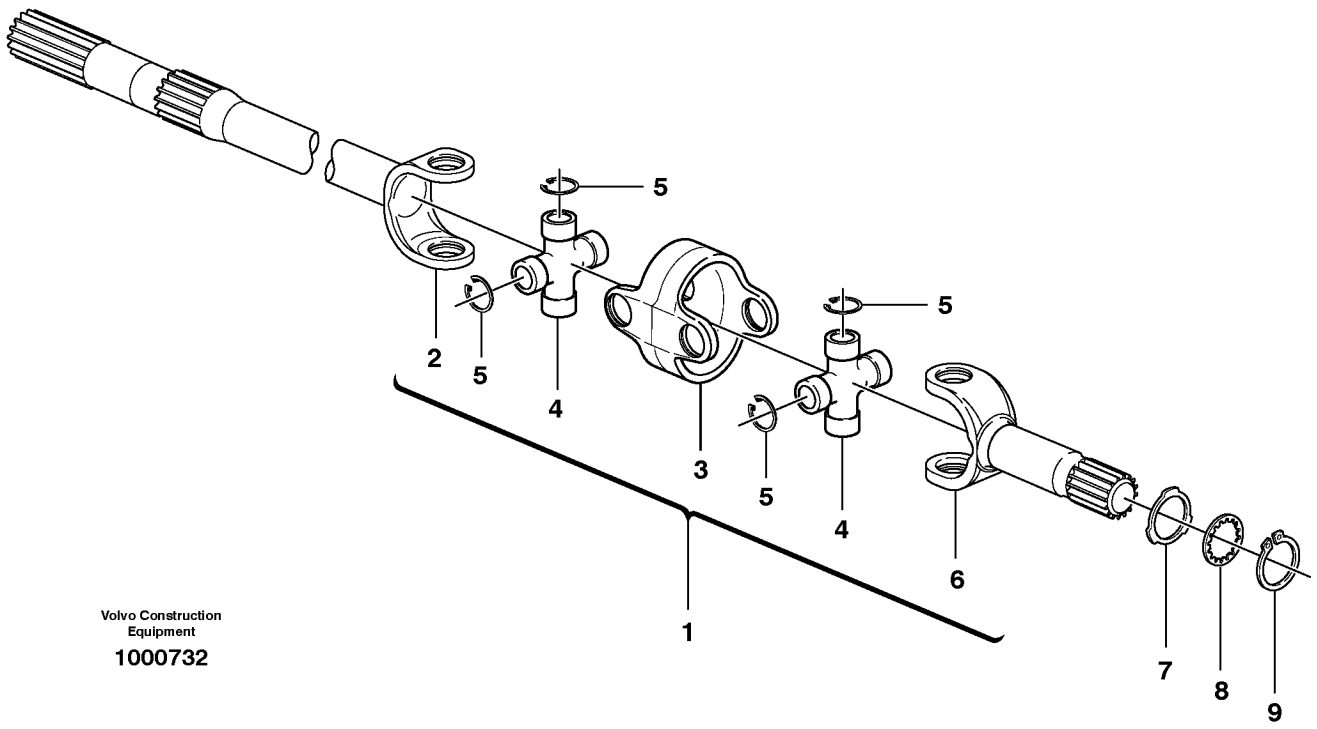

Volvo Construction Equipment

1000732

Fig.	Part No.	Quantity 1	2	3	PS	KIT	Description	Dénomination	Bezeichnung	Denominación	Notes
1	**VOE 11988569**	1					Axle Shaft	Arbre Commande	Antriebswelle	Eje Propulsor	LH
1	**VOE 11988570**	1					Axle Shaft	Arbre Commande	Antriebswelle	Eje Propulsor	RH
1	**VOE 11716724**		1				Axle Shaft	Arbre Commande	Antriebswelle	Eje Propulsor	
2		1	1		NS		•Drive shaft	•Arbre commande	•Antriebswelle	•Eje propulsor	Differential side
3		2	2		NS		•Companion flange	•Flasque entrainement	•Antriebsflansch	•Brida	
4	**VOE 11988571**	4					•Spider	•Croisillon	•Kreuzstück	•Cruceta	
5		16	16				Lock ring	Anneau verrouillage	Schlossring	Anillo seguridad	
6		2	2				Drive shaft	Arbre commande	Antriebswelle	Eje propulsor	Wheel side
7	**VOE 11988572**	2					Washer	Rondelle	Scheibe	Arandela	
7	**VOE 11716725**		2				Washer	Rondelle	Scheibe	Arandela	
8	**VOE 11988573**	2	2				Washer	Rondelle	Scheibe	Arandela	
9	**VOE 11709077**	2	2				Lock Ring	Anneau Verrouillage	Schlossring	Anillo Segurid	

1	**11988569, 11988570**	**Eje propulsor** **Antriebsachse** **Arbre de roue** **Drive axle**	Catalogue id **20050**	Group **461**
2	**11716724**		Illustr. No **1000732**	Section **250**
3			Issue **VOE 64D9920050**	Page **313**
4				
5		**11880004,11891305,**		

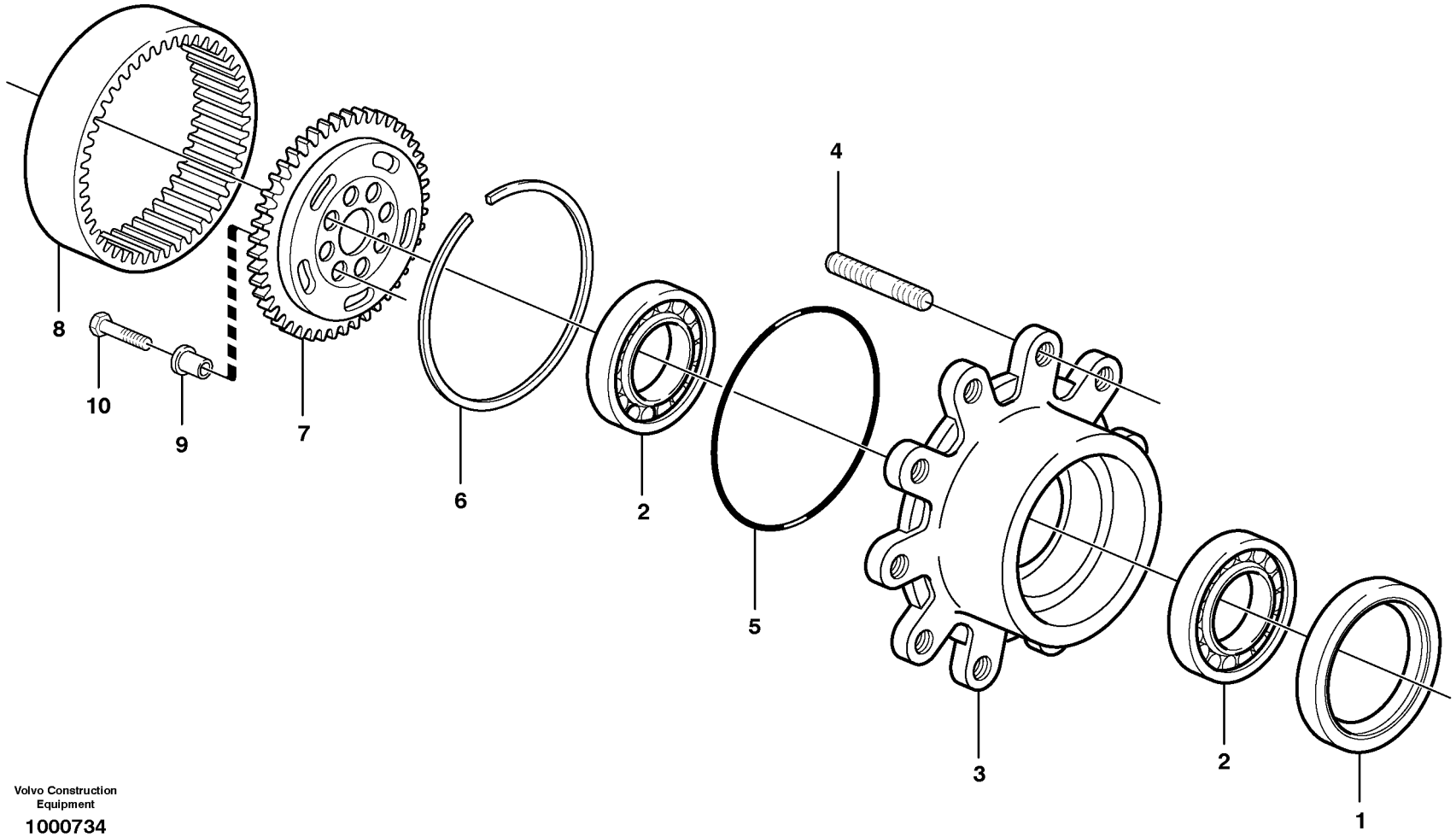

Volvo Construction Equipment

1000734

Fig.	Part No.	Quantity 1	2	3	PS	KIT	Description	Dénomination	Bezeichnung	Denominación	Notes
1	**VOE 11988582**	2	2				Seal	Joint	Dichtring	Junta	
2	**VOE 11988581**	4					Bearing	Palier	Lager	Cojinete	
2	**VOE 11715279**		4				Bearing	Palier	Lager	Cojinete	
3	**VOE 11712505**	2	2				Hub	Bossage	Nabe	Asiento	
4	**VOE 11988575**	16	16				•Stud	•Goujon	•Stiftschraube	•Esparrago	
5	**VOE 11709491**	2	2				O-ring	Joint Torique	O-Ring	Junta torica	
6	**VOE 11709492**	2	2				Ring	Anneau	Ring	Anillo	
5	**VOE 11709491**	2	2				O-ring	Joint Torique	O-Ring	Junta torica	
7	**VOE 11988577**	2					Drive Gear	Pignon	Triebrad	Pinon	
7	**VOE 11716726**		2				Drive Gear	Pignon	Triebrad	Pinon	
8	**VOE 11988580**	2	2				Gear	Pignon	Zahnradgetriebe	Engranaje	
9	**VOE 11988578**	16	12				Bushing	Bague	Buchse	Casquillo	
10	**VOE 11988579**	16	12				Screw	Vis	Schraube	Tornillo	
11	**VOE 11709300**	6	6				Lock Ring	Anneau Verrouillage	Schlossring	Anillo Segurid	
12	**VOE 11988584**	2	2				Thrust Washer	Rondelle Butee	Druckscheibe	Arandela Presio	
13	**VOE 11988587**	6	6				Thrust Washer	Rondelle Butee	Druckscheibe	Arandela Presio	
14	**VOE 11988586**	18	18				Needle Bearing	Roule.aiguilles	Nadellager	Cojinete Agujas	10pcs/Kit
15	**VOE 11988585**	6	6				Drive Gear	Pignon	Triebrad	Pinon	
16	**VOE 11988588**	2	2				Planet kit	Jeu planetaire	Planetenradsatz	Kit de planetas	
17	**VOE 11709057**	2	2				Plug	Bouchon	Stopfen	Tapon	
18	**VOE 11709370**	4	4				Screw	Vis	Schraube	Tornillo	

1	**11883201**	**Cubo de rueda** **Radnabe** **Moyeu de roue** **Wheel hub**	Catalogue id **20050**	Group **461**
2	**11887361**			
3			Illustr. No **1000734**	Section **300**
4				
5		**11891305**	Issue **VOE 64D9920050**	Page **315**

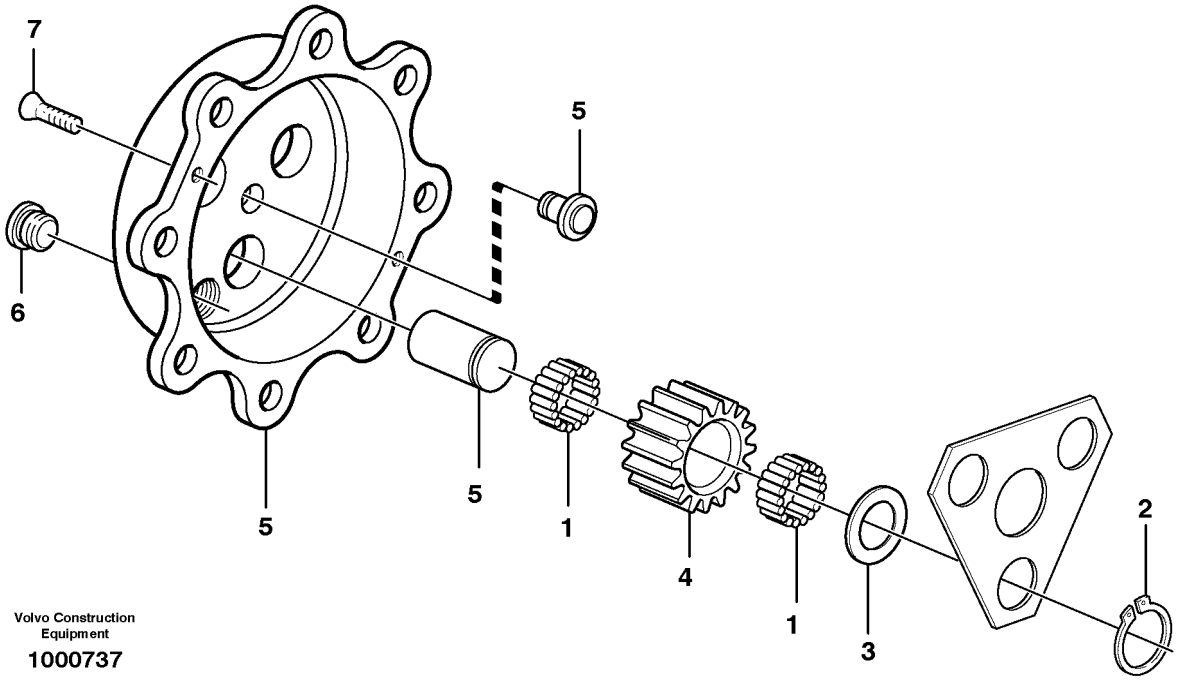

Volvo Construction Equipment

1000737

Fig.	Part No.	Quantity 1	2	3	PS	KIT	Description	Dénomination	Bezeichnung	Denominación	Notes
1	**VOE 11988586**	18					Needle Bearing	Roule.aiguilles	Nadellager	Cojinete Agujas	10pcs/Kit
2	**VOE 11709300**	6					Lock Ring	Anneau Verrouillage	Schlossring	Anillo Segurid	
3	**VOE 11988587**	6					Thrust Washer	Rondelle Butee	Druckscheibe	Arandela Presio	
4	**VOE 11988585**	6					Drive Gear	Pignon	Triebrad	Pinon	
5	**VOE 11988588**	2					Planet kit	Jeu planetaire	Planetenradsatz	Kit de planetas	
6	**VOE 11709057**	2					Plug	Bouchon	Stopfen	Tapon	
7	**VOE 11709370**	2					Screw	Vis	Schraube	Tornillo	

1		**Engranaje planetario** **Planetenradgetriebe** **Réducteur planétaire** **Planetary gear**	Catalogue id **20050**	Group **461**
2			Illustr. No **1000737**	Section **350**
3			Issue **VOE 64D9920050**	Page **317**
4				
5		**11891305**		

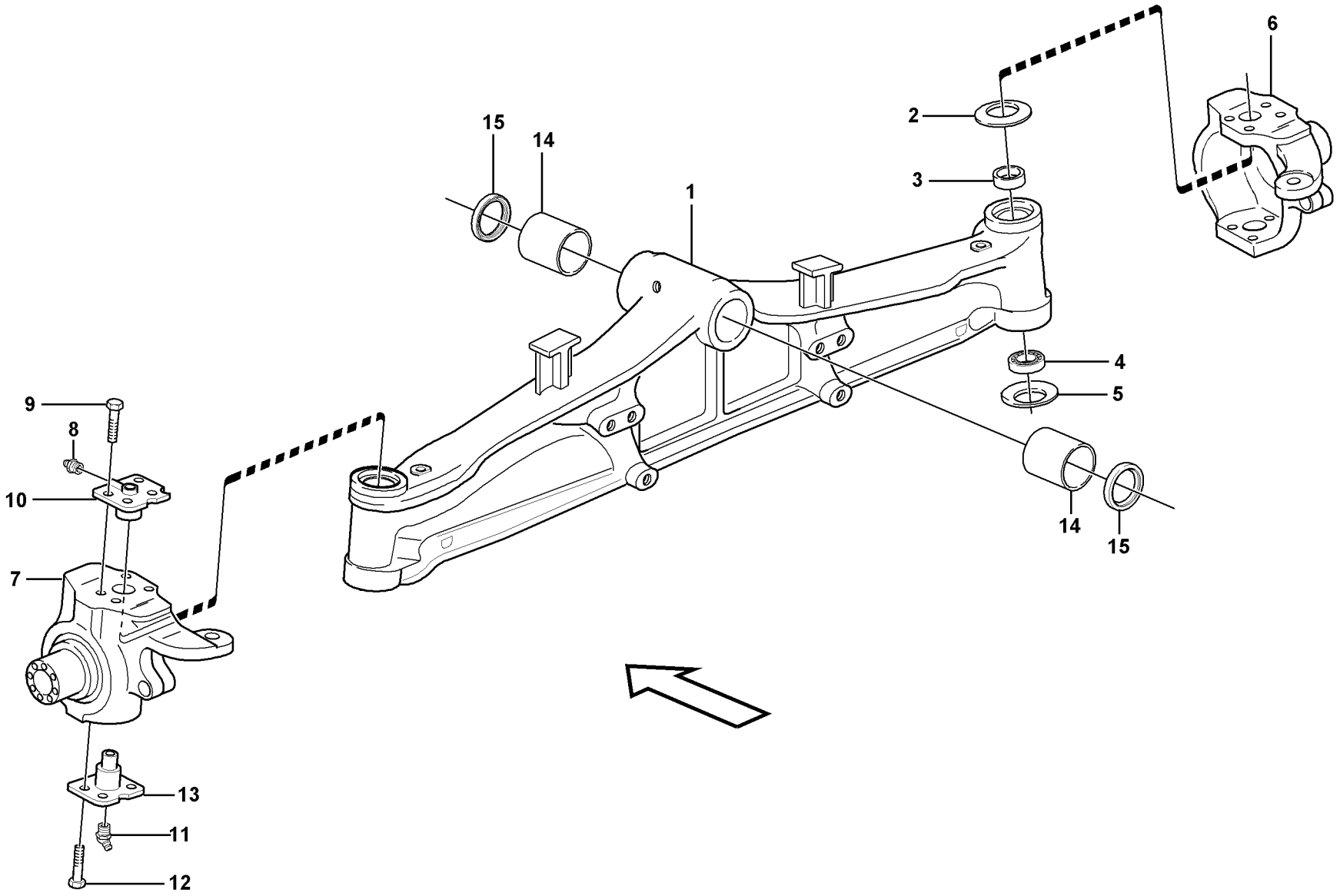

Volvo Construction Equipment
1012696

Fig.	Part No.	Quantity 1	2	3	PS	KIT	Description	Dénomination	Bezeichnung	Denominación	Notes
	VOE 11884373	1					Front axle	Pont avant	Vorderachse	Eje delantero	
1	**VOE 11712506**	1					•Axle Casing	•Boite Essieu	•Achsgehäuse	•Carter Eje	
2	**VOE 11988552**	2					•Disc Spring	•Rondel Ressort	•Scheibenfeder	•Arandela Elast	
3	**VOE 11988553**	2					•Bushing	•Bague	•Buchse	•Casquillo	
4	**VOE 11709400**	2					•Bearing	•Palier	•Lager	•Cojinete	
5	**VOE 11709401**	2					•Disc Spring	•Rondel Ressort	•Scheibenfeder	•Arandela Elast	
6	**VOE 11712526**	1					•Housing	•Carter	•Gehäuse	•Carter	RH
7	**VOE 11712501**	1					•Housing	•Carter	•Gehäuse	•Carter	LH
8	**VOE 11709410**	2					•Lub Nipple	•Graisseur	•Schmiernippel	•Engrasador	
9	**VOE 11988559**	14					•Screw	•Vis	•Schraube	•Tornillo	
10	**VOE 11988560**	2					•King Pin	•Pivot Fusee	•Achsschenkelbolzen	•Perno Mangueta	
11	**VOE 11709464**	2					•Lub Nipple	•Graisseur	•Schmiernippel	•Engrasador	
12	**VOE 11712527**	6					•Bolt	•Boulon	•Bolzen	•Perno	
13	**VOE 11709450**	2					•King Pin	•Pivot Fusee	•Achsschenkelbolzen	•Perno Mangueta	
14	**VOE 11709412**	2					•Seal	•Joint	•Dichtung	•Reten	
15	**VOE 11709411**	2					•Bushing	•Bague	•Buchse	•Casquillo	

1	**S/N - 10626**	**Eje delantero** **Vorederachse** **Essieu Av** **Front axle**	Catalogue id **20050**	Group **461**
2			Illustr. No **1012696**	Section **400**
3			Issue **VOE 64D9920050**	Page **319**
4				
5		**11891306**		

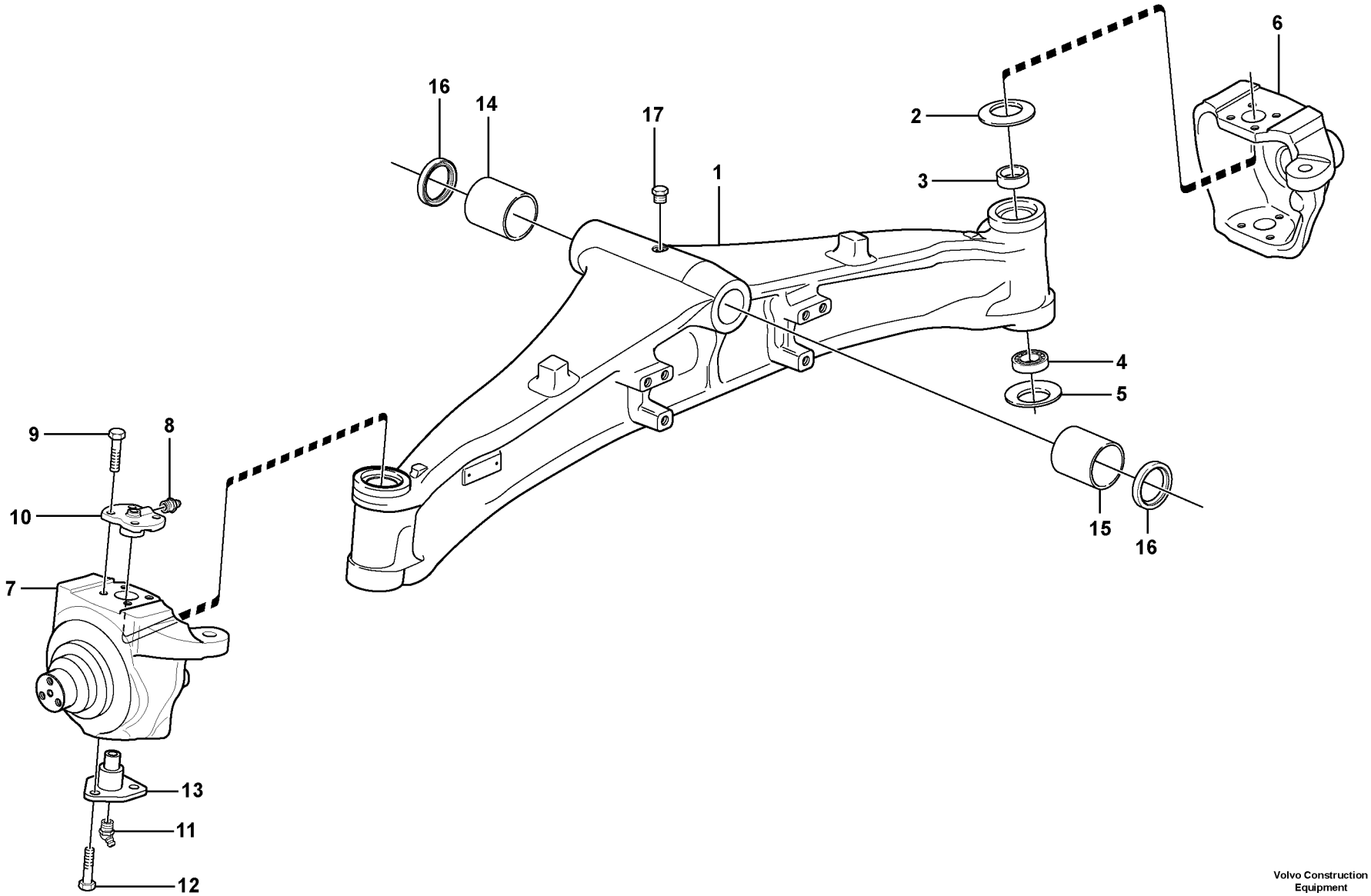

Volvo Construction Equipment

1023532

Fig.	Part No.	Quantity 1	2	3	PS	KIT	Description	Dénomination	Bezeichnung	Denominación	Notes
	VOE 11887359	1					Front axle	Pont avant	Vorderachse	Eje delantero	
1	**VOE 11716656**	1					•Axle Casing	•Boite Essieu	•Achsgehäuse	•Carter Eje	
2	**VOE 11988552**	1					•Disc Spring	•Rondel Ressort	•Scheibenfeder	•Arandela Elast	
3	**VOE 11988553**	2					•Bushing	•Bague	•Buchse	•Casquillo	
4	**VOE 11709400**	2					•Bearing	•Palier	•Lager	•Cojinete	
5	**VOE 11709401**	2					•Disc Spring	•Rondel Ressort	•Scheibenfeder	•Arandela Elast	
6	**VOE 11712526**	1					•Housing	•Carter	•Gehäuse	•Carter	RH
7	**VOE 11712501**	1					•Housing	•Carter	•Gehäuse	•Carter	LH
8	**VOE 11709410**	2					•Lub Nipple	•Graisseur	•Schmiernippel	•Engrasador	
9	**VOE 11988559**	14					•Screw	•Vis	•Schraube	•Tornillo	
10	**VOE 11988560**	2					•King Pin	•Pivot Fusee	•Achsschenkelbolzen	•Perno Mangueta	
11	**VOE 11709464**	2					•Lub Nipple	•Graisseur	•Schmiernippel	•Engrasador	
12	**VOE 11712527**	6					•Bolt	•Boulon	•Bolzen	•Perno	
13	**VOE 11709450**	2					•King Pin	•Pivot Fusee	•Achsschenkelbolzen	•Perno Mangueta	
14	**VOE 11716618**	1					•Bushing	•Bague	•Buchse	•Casquillo	FRONT
15	**VOE 11716619**	1					•Bushing	•Bague	•Buchse	•Casquillo	REAR
16	**VOE 11716620**	2					•Seal	•Joint	•Dichtring	•Junta	
17	**VOE 11709282**	1					•Plug	•Bouchon	•Stopfen	•Tapon	

1	**S/N 10627 -**	**Eje delantero** **Vorederachse** **Essieu Av** **Front axle**	Catalogue id **20050**	Group **461**
2			Illustr. No **1023532**	Section **410**
3			Issue **VOE 64D9920050**	Page **321**
4				
5		**11891306, 11891496**		

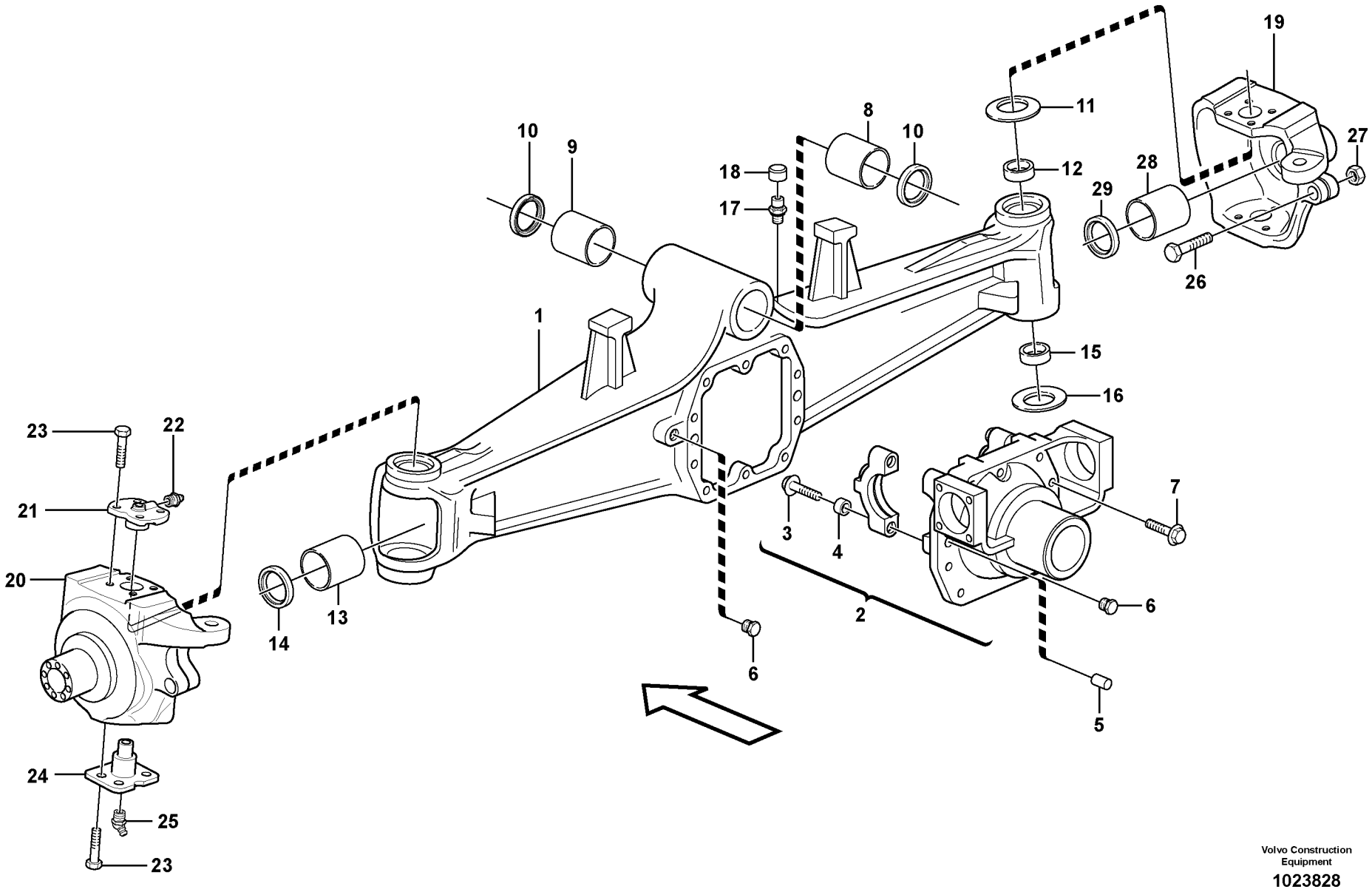

Volvo Construction Equipment

1023828

Fig.	Part No.	Quantity 1	2	3	PS	KIT	Description	Dénomination	Bezeichnung	Denominación	Notes
	VOE 11887361	1					Front axle	Pont avant	Vorderachse	Eje delantero	
1	**VOE 11716715**	1					•Axle Casing	•Boite Essieu	•Achsgehäuse	•Carter Eje	
2	**VOE 11716712**	1					••Differential Housing	••Carter de différentiel	••Differentialgehäuse	••Cárter de diferencial	
3	**VOE 11709407**	4					••Screw	••Vis	••Schraube	••Tornillo	
4	**VOE 11709406**	2					•Bushing	•Bague	•Buchse	•Casquillo	
5	**VOE 11709402**	2					•Pin	•Goupille	•Stift	•Pasador	
6	**VOE 11709403**	2					•Plug	•Bouchon	•Stopfen	•Tapon	
7	**VOE 11709404**	10					•Screw	•Vis	•Schraube	•Tornillo	
8	**VOE 11716619**	1					•Bushing	•Bague	•Buchse	•Casquillo	
9	**VOE 11716618**	1					•Bushing	•Bague	•Buchse	•Casquillo	
10	**VOE 11716620**	2					•Seal	•Joint	•Dichtring	•Junta	
11	**VOE 11988552**	2					•Disc Spring	•Rondel Ressort	•Scheibenfeder	•Arandela Elast	
12	**VOE 11988553**	2					•Bushing	•Bague	•Buchse	•Casquillo	
13	**VOE 11988557**	2					•Bushing	•Bague	•Buchse	•Casquillo	
14	**VOE 11716714**	2					•Sealing ring	•Bague d'étanchéité	•Runddichtring	•Anillo reten	
15	**VOE 11988554**	2					•Bearing	•Palier	•Lager	•Cojinete	
16	**VOE 11988555**	2					•Disc Spring	•Rondel Ressort	•Scheibenfeder	•Arandela Elast	
17	**VOE 11709275**	1					•Breather Cap	•Boucho.aeration	•Lüftungsdeckel	•Tapa Ventilac	
18	**VOE 11716713**	1					•Cover	•Capot	•Haube	•Capo	
19	**VOE 11716718**	1					•Housing	•Carter	•Gehäuse	•Carter	
20	**VOE 11716716**	1					Housing	Carter	Gehäuse	Carter	
21	**VOE 11988560**	2					•King Pin	•Pivot Fusee	•Achsschenkelbolzen	•Perno Mangueta	
22	**VOE 11709410**	2					•Lub Nipple	•Graisseur	•Schmiernippel	•Engrasador	
23	**VOE 11988559**	16					•Screw	•Vis	•Schraube	•Tornillo	
24	**VOE 11988562**	2					•King Pin	•Pivot Fusee	•Achsschenkelbolzen	•Perno Mangueta	
25	**VOE 11709464**	2					•Lub Nipple	•Graisseur	•Schmiernippel	•Engrasador	
26	**VOE 11709452**	2					•Screw	•Vis	•Schraube	•Tornillo	
27	**VOE 11709453**	2					•Nut	•Ecrou	•Mutter	•Tuerca	
28	**VOE 11709462**	2					•Bushing	•Bague	•Buchse	•Casquillo	
29	**VOE 11715254**	2					•Seal	•Joint	•Dichtring	•Junta	

1	**S/N 10627 -**	**Eje delantero** **Vorederachse** **Essieu Av** **Front axle**	Catalogue id **20050**	Group **461**
2			Illustr. No **1023828**	Section **420**
3			Issue **VOE 64D9920050**	Page **323**
4				
5		**11880004**		



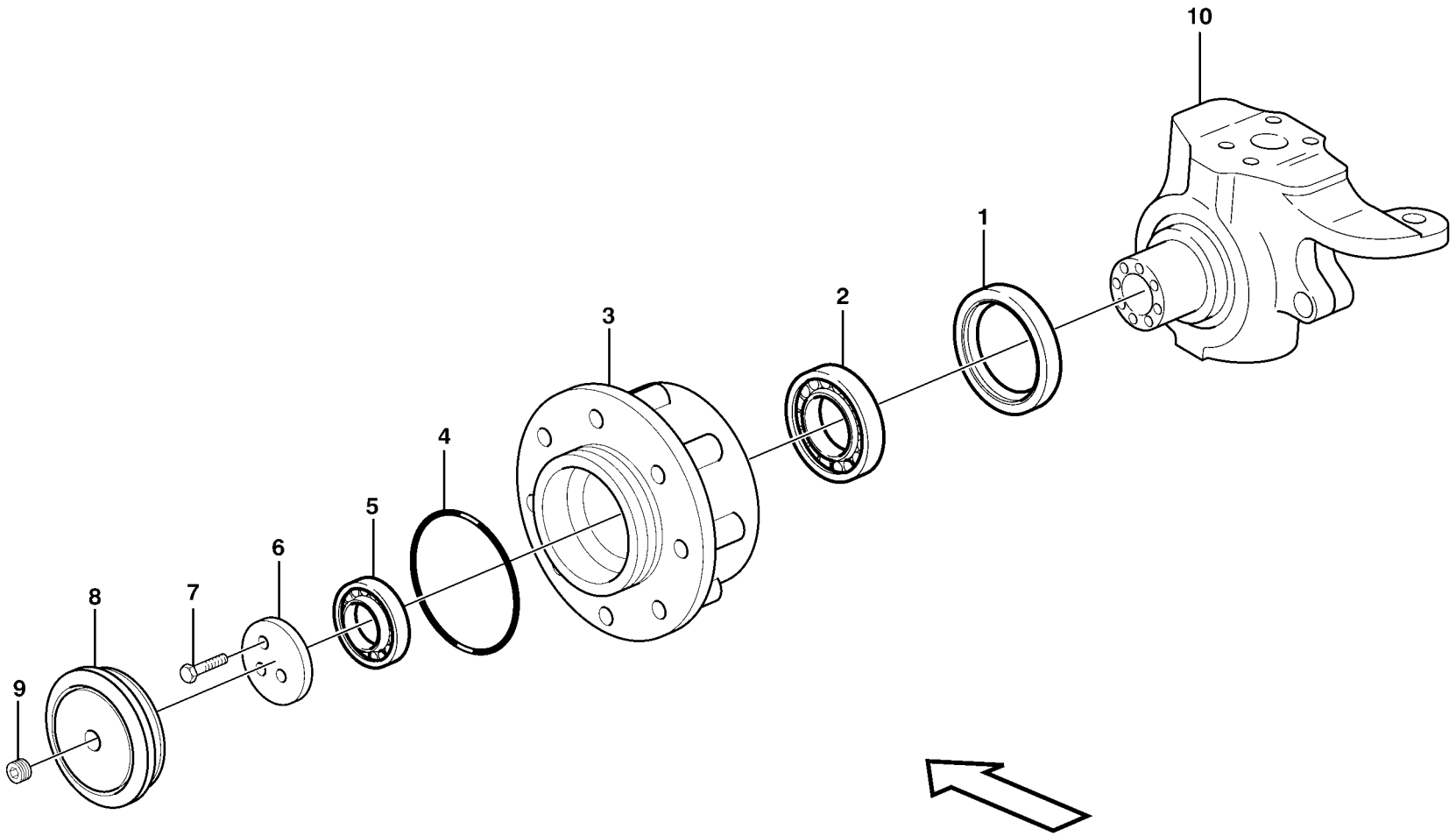

Volvo Construction Equipment

1009220

Fig.	Part No.	Quantity 1	2	3	PS	KIT	Description	Dénomination	Bezeichnung	Denominación	Notes
1	**VOE 11988582**	2	2				Seal	Joint	Dichtring	Junta	
2	**VOE 11988581**	2	2				Bearing	Palier	Lager	Cojinete	
3	**VOE 11712533**	2	2				Wheel Hub	Moyeu de roue	Radnabe	Cubo Rueda	
4	**VOE 11712534**	2	2				O-ring	Joint Torique	O-Ring	Junta torica	
5	**VOE 11712535**	2	2				Bearing	Palier	Lager	Cojinete	
6	**VOE 11712536**	2	2				Thrust Washer	Rondelle Butee	Druckscheibe	Arandela Presio	
7	**VOE 11988559**	6	6				Screw	Vis	Schraube	Tornillo	
8	**VOE 11712537**	2	2				Cover	Capot	Haube	Capo	
9	**VOE 11709268**	2	2				Plug	Bouchon	Stopfen	Tapon	
10		1					Housing	Carter	Gehäuse	Carter	See group 461, Page 319
10			1				Housing	Carter	Gehäuse	Carter	hänvisa See group 461, Page 321

1	**S/N - 10626**	**Cubo de rueda** **Radnabe** **Moyeu de roue** **Wheel hub**	Catalogue id **20050**	Group **461**
2	**S/N 10627 -**		Illustr. No **1009220**	Section **450**
3			Issue **VOE 64D9920050**	Page **325**
4				
5		**11891306, 11891496**		

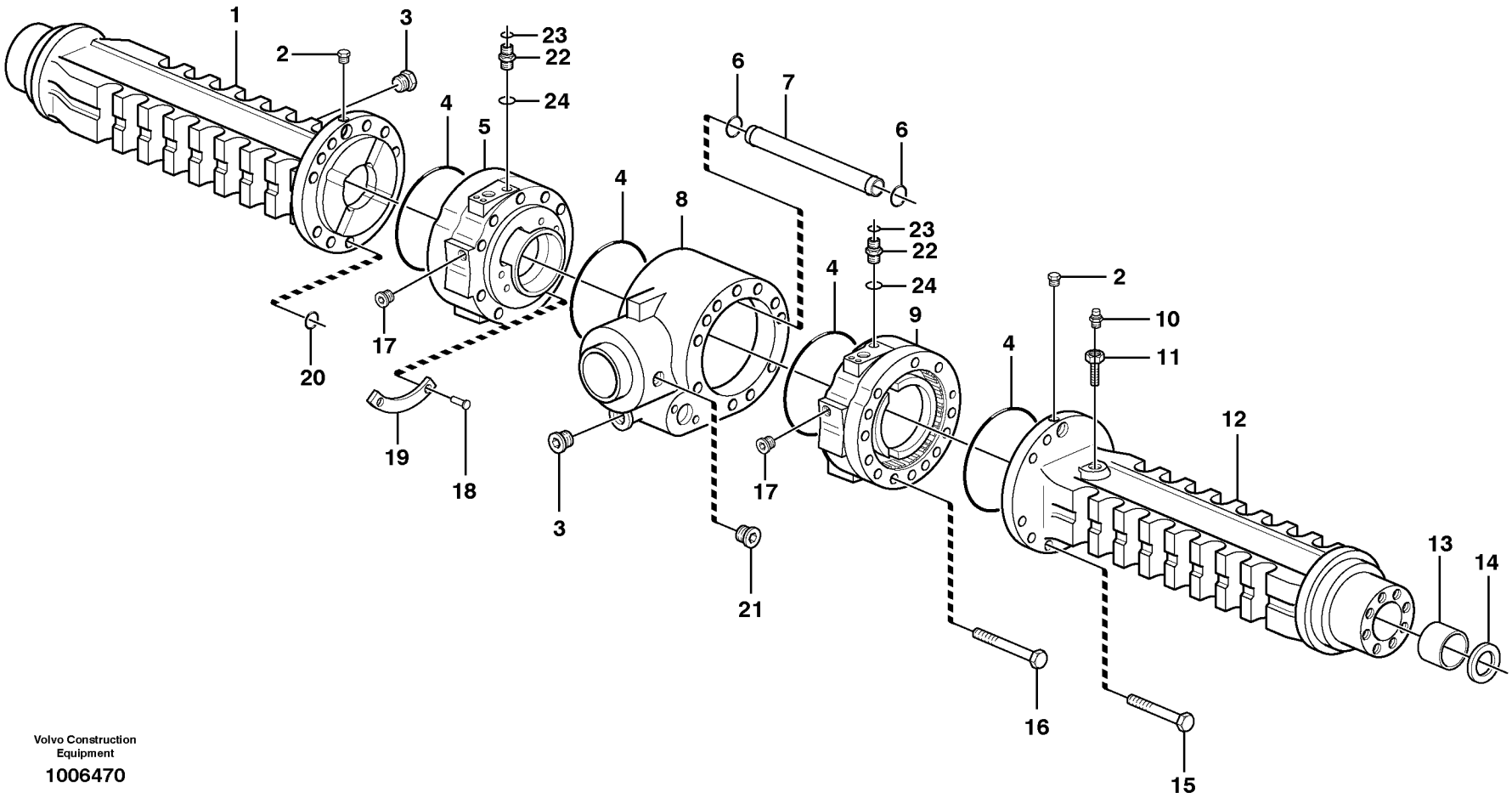

Volvo Construction Equipment

1006470

Fig.	Part No.	Quantity 1	2	3	PS	KIT	Description	Dénomination	Bezeichnung	Denominación	Notes
	VOE 11885677	1					Rear axle	Essieu AR	Hinterachse	Eje posterior	
1	**VOE 11712787**	1					•Axle Casing	•Boite Essieu	•Achsgehäuse	•Carter Eje	RH
2	**VOE 11709268**	2					•Plug	•Bouchon	•Stopfen	•Tapon	
3	**VOE 11709057**	2					•Plug	•Bouchon	•Stopfen	•Tapon	
4	**VOE 11709269**	4					•O-ring	•Joint Torique	•O-Ring	•Junta torica	
5	**VOE 11709270**	1					•Brake Cylinder	•Cylindre Frein	•Bremszylinder	•Cilindro Frenos	RH
6	**VOE 11709271**	2					•O-ring	•Joint Torique	•O-Ring	•Junta torica	
7	**VOE 11709272**	1					•Pipe	•Canalisation	•Rohrleitung	•Canalizacion	
8	**VOE 11709273**	1					•Axle Casing	•Boite Essieu	•Achsgehäuse	•Carter Eje	
9	**VOE 11709274**	1					•Brake Cylinder	•Cylindre Frein	•Bremszylinder	•Cilindro Frenos	LH
10	**VOE 11709275**	1					•Breather Cap	•Boucho.aeration	•Lüftungsdeckel	•Tapa Ventilac	
11	**VOE 11709276**	1					•Breather Pipe	•Reniflard	•Luftungsrohr	•Conduct Ventil	
12	**VOE 11712788**	1					•Axle Casing	•Boite Essieu	•Achsgehäuse	•Carter Eje	LH
13	**VOE 11709278**	2					•Bushing	•Bague	•Buchse	•Casquillo	
14	**VOE 11709279**	2					•Seal	•Joint	•Dichtung	•Reten	
15	**VOE 11709280**	22					•Screw	•Vis	•Schraube	•Tornillo	
16	**VOE 11709281**	2					•Screw	•Vis	•Schraube	•Tornillo	
17	**VOE 11709282**	2					•Plug	•Bouchon	•Stopfen	•Tapon	
18	**VOE 11709283**	4					•Rivet	•Rivet	•Niet	•Remache	
19	**VOE 11709284**	2					•Plate	•Plaque	•Platte	•Placa	
20	**VOE 11709285**	8					•O-ring	•Joint Torique	•O-Ring	•Junta torica	
21	**VOE 11709286**	1					•Plug	•Bouchon	•Stopfen	•Tapon	
22	**VOE 935082**	2					Nipple	Raccord	Nippel	Niple	
23	**VOE 4881722**	2					•O-ring	•Joint Torique	•O-Ring	•Junta torica	
24	**VOE 932037**	2					•O-ring	•Joint Torique	•O-Ring	•Junta torica	

1		**Eje propulsor, trasero** **Planetenwelle, hintere** **Essieu moteur, arrière** **Planet shaft, rear**	Catalogue id **20050**	Group **463**
2			Illustr. No **1006470**	Section **100**
3			Issue **VOE 64D9920050**	Page **327**
4				
5		**11891305, 11891306**		

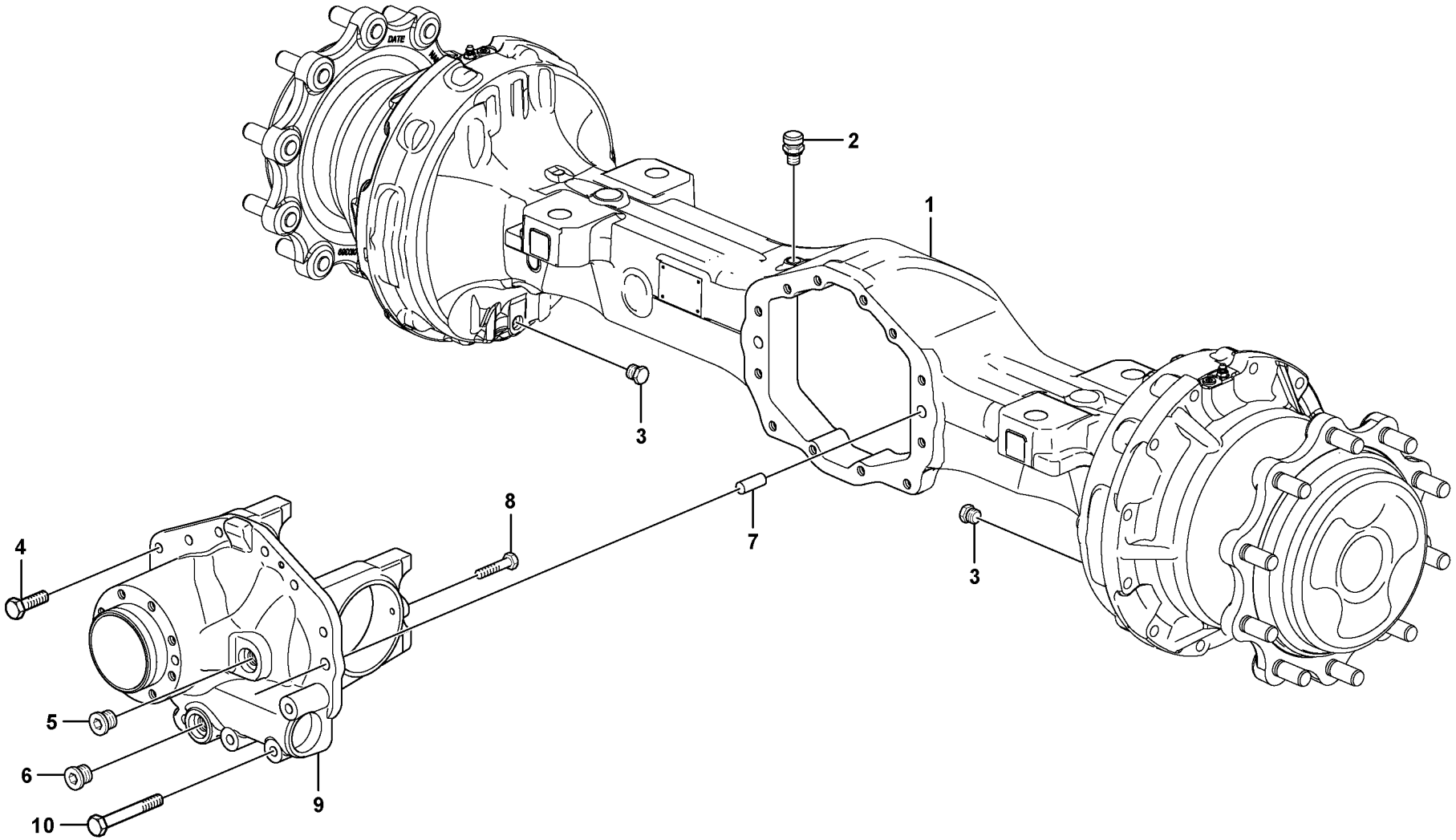

Volvo Construction Equipment

1023386

Fig.	Part No.	Quantity 1	2	3	PS	KIT	Description	Dénomination	Bezeichnung	Denominación	Notes
	VOE 11887363	1					Rear axle	Essieu AR	Hinterachse	Eje posterior	See group 460, Page 297
1	**VOE 11716543**	1					•Axle Casing	•Boite Essieu	•Achsgehäuse	•Carter Eje	
2	**VOE 11709275**	1					•Breather Cap	•Boucho.aeration	•Lüftungsdeckel	•Tapa Ventilac	
3	**VOE 11709403**	2					•Plug	•Bouchon	•Stopfen	•Tapon	
4	**VOE 11709404**	8					•Screw	•Vis	•Schraube	•Tornillo	
5	**VOE 11716544**	1					•Plug	•Bouchon	•Stopfen	•Tapon	
6	**VOE 11709057**	1					•Plug	•Bouchon	•Stopfen	•Tapon	
7	**VOE 11709402**	2					•Pin	•Goupille	•Stift	•Pasador	
8	**VOE 11716545**	2					•Screw	•Vis	•Schraube	•Tornillo	
9	**VOE 11716546**	1					•Diff Housing	•Carter differentiel	•Differentialgehäuse	•Carter diferencial	
10	**VOE 11716547**	4					•Screw	•Vis	•Schraube	•Tornillo	

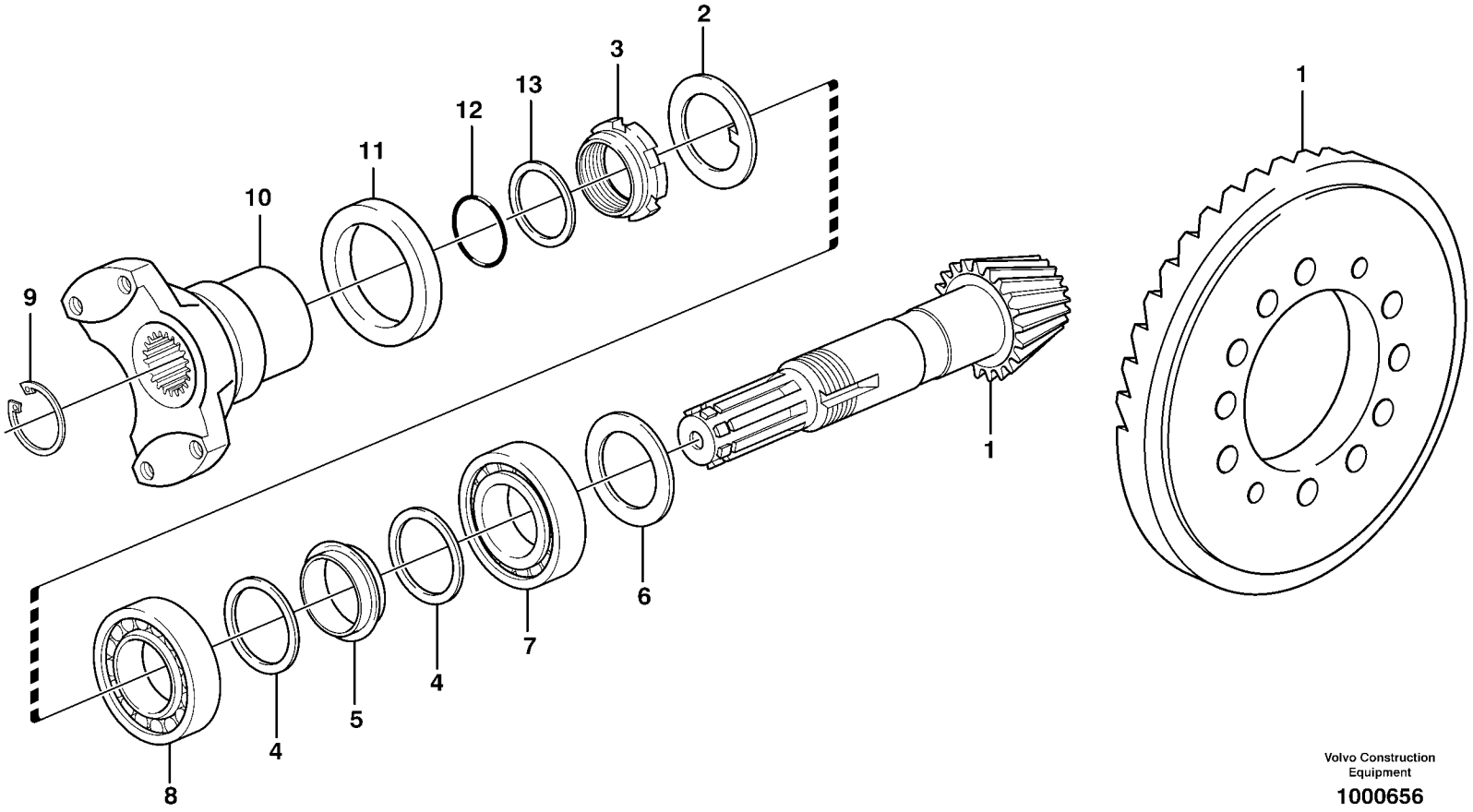

Volvo Construction Equipment

1000656

Fig.	Part No.	Quantity 1	2	3	PS	KIT	Description	Dénomination	Bezeichnung	Denominación	Notes
1	**VOE 11709287**	1					Drive Gear Set	Kit Pignon	Triebsatz	Juego Pinon	
2	**VOE 11709288**	1					•Lock Washer	•Rondel.verroui.	•Sicher Scheibe	•Arandel Segurid	
3	**VOE 11709289**	1					•Nut	•Ecrou	•Mutter	•Tuerca	
4	**VOE 11709290**	2					•Washer	•Rondelle	•Scheibe	•Arandela	
5	**VOE 11709291**	1					•Spacer	•Entretoise	•Abstandkörper	•Distanciador	
6	**VOE 11709292**	REQ					Adjuster washer	Rondelle ajust.	Passcheibe	Arandela ajust	THICK 2,50 MM
6	**VOE 11709293**	REQ					Adjuster washer	Rondelle ajust.	Passcheibe	Arandela ajust	THICK 2,60 MM
6	**VOE 11709294**	REQ					Adjuster washer	Rondelle ajust.	Passcheibe	Arandela ajust	THICK 2,70 MM
6	**VOE 11709295**	REQ					Adjuster washer	Rondelle ajust.	Passcheibe	Arandela ajust	THICK 2,80 MM
6	**VOE 11709296**	REQ					Adjuster washer	Rondelle ajust.	Passcheibe	Arandela ajust	THICK 2,90 MM
6	**VOE 11709297**	REQ					Adjuster washer	Rondelle ajust.	Passcheibe	Arandela ajust	THICK 3,00 MM
7	**VOE 11709298**	1					Bearing	Palier	Lager	Cojinete	
8	**VOE 11709299**	1					Bearing	Palier	Lager	Cojinete	
9	**VOE 11709300**	1					Lock Ring	Anneau Verrouillage	Schlossring	Anillo Segurid	
10	**VOE 11709301**	1					Comp Flange	Flasque Entrai.	Antriebsflansch	Brida	
11	**VOE 11709302**	1					Seal	Joint	Dichtung	Reten	
12	**VOE 11709303**	1					O-ring	Joint Torique	O-Ring	Junta torica	
13	**VOE 11709304**	1					Washer	Rondelle	Scheibe	Arandela	

1		**Piñón de ataque** **Antriebskegelrad** **Pignon** **Pinion**	Catalogue id **20050**	Group **463**
2			Illustr. No **1000656**	Section **150**
3				
4			Issue **VOE 64D9920050**	Page **331**
5		**11891305, 11891306**		

VOLVO

BL61

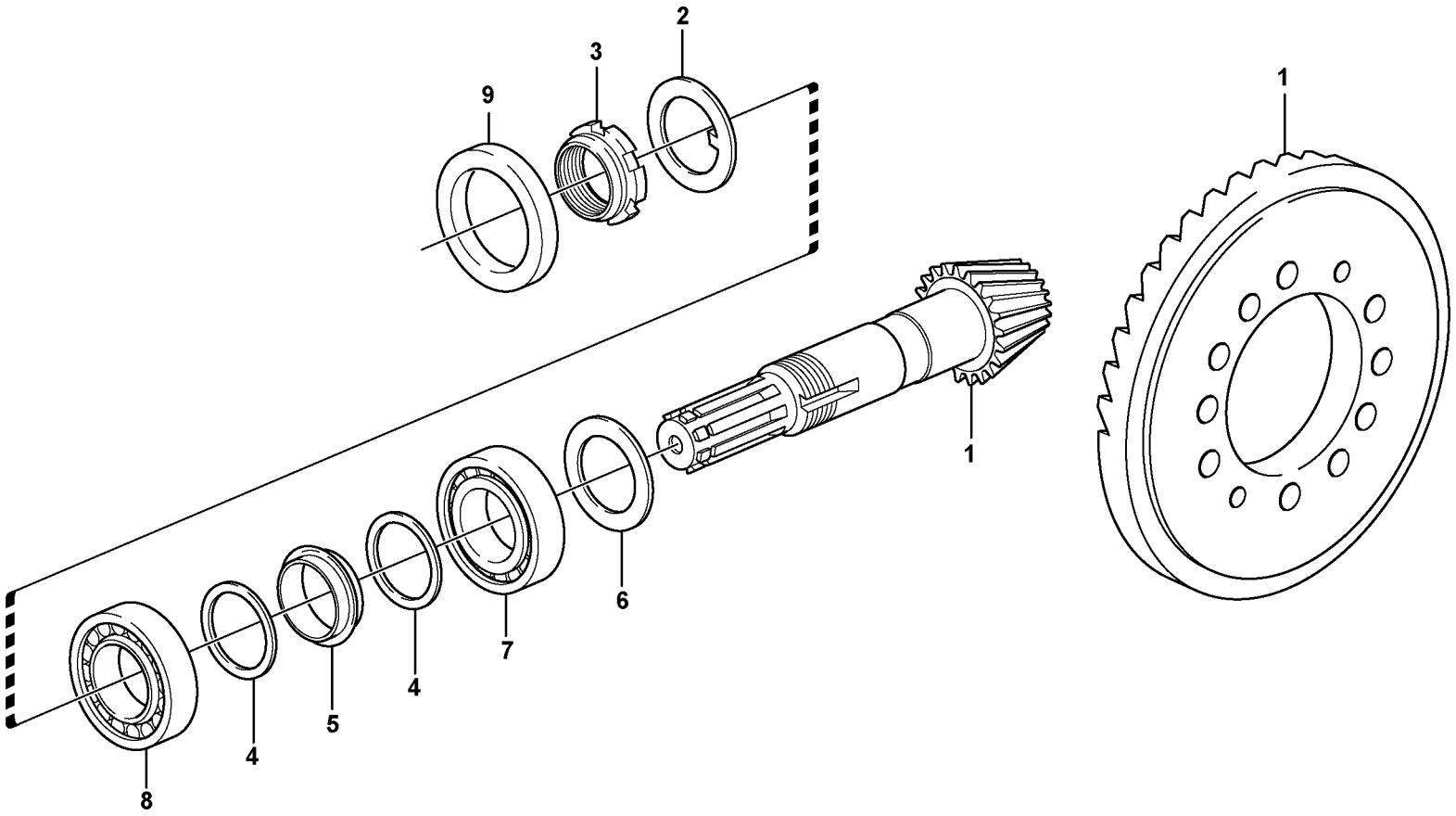

Volvo Construction Equipment

1023388

Fig.	Part No.	Quantity 1	2	3	PS	KIT	Description	Dénomination	Bezeichnung	Denominación	Notes
1	**VOE 11716550**	1					Drive Gear Set	Kit Pignon	Triebsatz	Juego Pinon	
2	**VOE 11709288**	1					•Lock Washer	•Rondel.verroui.	•Sicher Scheibe	•Arandel Segurid	
3	**VOE 11709289**	1					•Nut	•Ecrou	•Mutter	•Tuerca	
4	**VOE 11709290**	2					•Washer	•Rondelle	•Scheibe	•Arandela	
5	**VOE 11716551**	1					•Spacer	•Entretoise	•Abstandkörper	•Distanciador	
6	**VOE 11709292**	REQ					Adjuster washer	Rondelle ajust.	Passcheibe	Arandela ajust	THICK 2,50 MM
	VOE 11709293	REQ					Adjuster washer	Rondelle ajust.	Passcheibe	Arandela ajust	THICK 2,60 MM
	VOE 11709294	REQ					Adjuster washer	Rondelle ajust.	Passcheibe	Arandela ajust	THICK 2,70 MM
	VOE 11709295	REQ					Adjuster washer	Rondelle ajust.	Passcheibe	Arandela ajust	THICK 2,80 MM
	VOE 11709296	REQ					Adjuster washer	Rondelle ajust.	Passcheibe	Arandela ajust	THICK 2,90 MM
	VOE 11709297	REQ					Adjuster washer	Rondelle ajust.	Passcheibe	Arandela ajust	THICK 3,00 MM
7	**VOE 11716615**	1					Bearing	Palier	Lager	Cojinete	
8	**VOE 11709299**	1					Bearing	Palier	Lager	Cojinete	
9	**VOE 11709302**	1					Seal	Joint	Dichtung	Reten	

1		**Piñón de ataque** **Antriebskegelrad** **Pignon** **Pinion**	Catalogue id **20050**	Group **463**
2			Illustr. No **1023388**	Section **160**
3			Issue **VOE 64D9920050**	Page **333**
4				
5		**S/N 10627 -**		

VOLVO

BL61

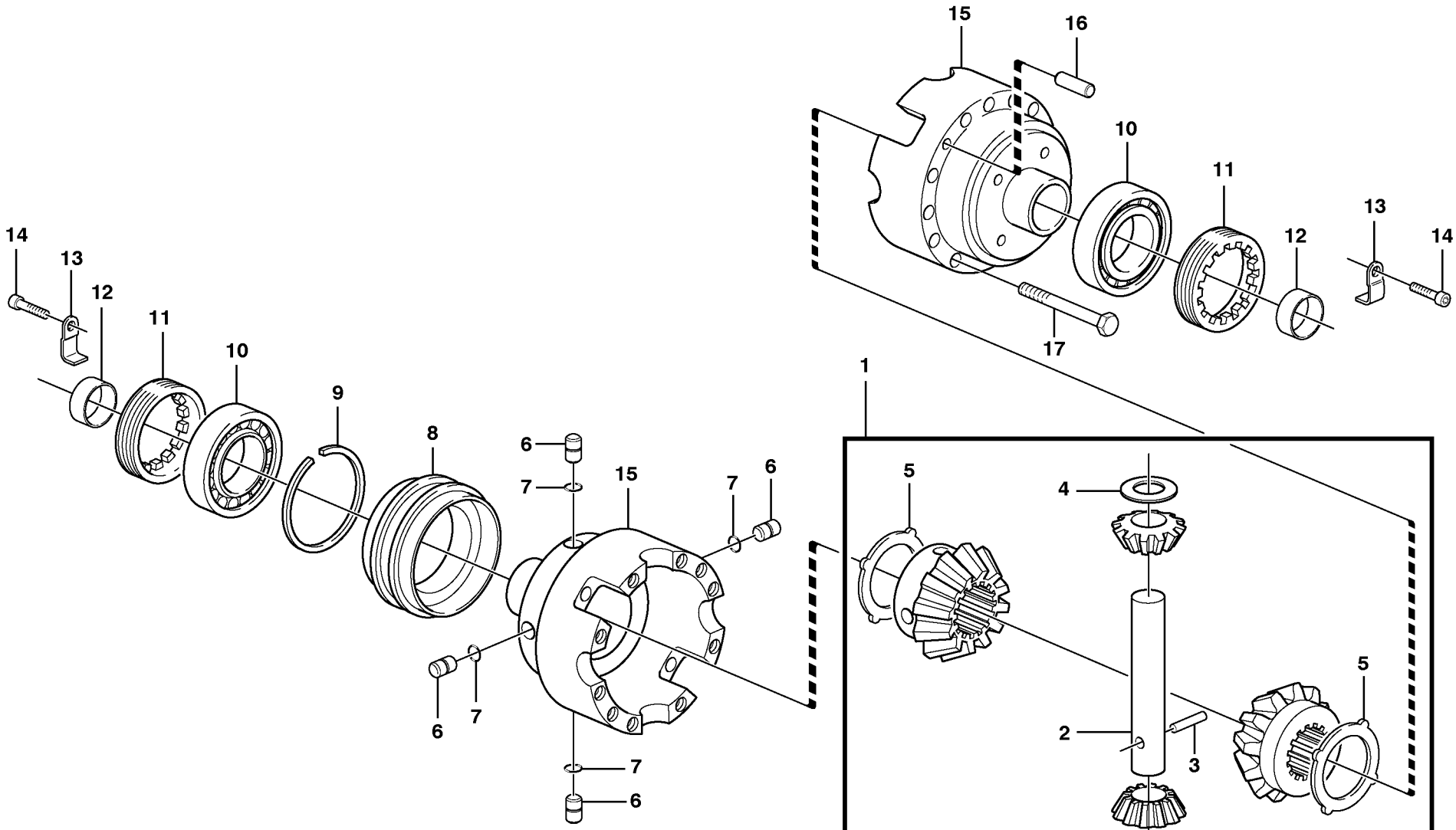

Volvo Construction Equipment

1004497

Fig.	Part No.	Quantity 1	2	3	PS	KIT	Description	Dénomination	Bezeichnung	Denominación	Notes
1	**VOE 11988596**	1					Diff Pinion Set	Jeu Pign.diffe.	Ausgl Kegsatz	Kit Engran Dif	
2	**VOE 11988598**	1					•Shaft	•Arbre	•Welle	•Arbol	
3	**VOE 11988597**	1					•Pin	•Goupille	•Stift	•Pasador	
4	**VOE 11988599**	2					•Thrust Washer	•Rondelle Butee	•Druckscheibe	•Arandela Presio	
5	**VOE 11709307**	2					•Drive Plate	•Plaque Commande	•Treibscheibe	•Placa Motriz	
6	**VOE 11709308**	4					Pin	Goupille	Stift	Pasador	
7	**VOE 11709309**	4					O-ring	Joint Torique	O-Ring	Junta torica	
8	**VOE 11709310**	1					Sleeve	Douille	Hülse	Manguito	
9	**VOE 11988603**	1					Ring	Anneau	Ring	Anillo	
10	**VOE 11709314**	2					Bearing	Palier	Lager	Cojinete	
11	**VOE 11709313**	2					Nut	Ecrou	Mutter	Tuerca	
12	**VOE 11709315**	2					Bushing	Bague	Buchse	Casquillo	
13	**VOE 11709311**	2					Locking Plate	Languette de verrouillage	Sicherungsblech	Laminilla De Se	
14	**VOE 11709312**	2					Screw	Vis	Schraube	Tornillo	
15	**VOE 11709317**	1					Diff Housing	Carter differentiel	Differentialgehäuse	Carter diferencial	
16	**VOE 11709316**	1					Pin	Goupille	Stift	Pasador	
17	**VOE 11709318**	10					Screw	Vis	Schraube	Tornillo	

1		**Differencial. Detrás** **Ausgleichgetriebe. Hinten** **Differentiel. Arrière** **Differential. Rear**	Catalogue id **20050**	Group **463**
2			Illustr. No **1004497**	Section **200**
3				
4			Issue **VOE 64D9920050**	Page **335**
5		**11891305, 11891306**		

VOLVO

BL61

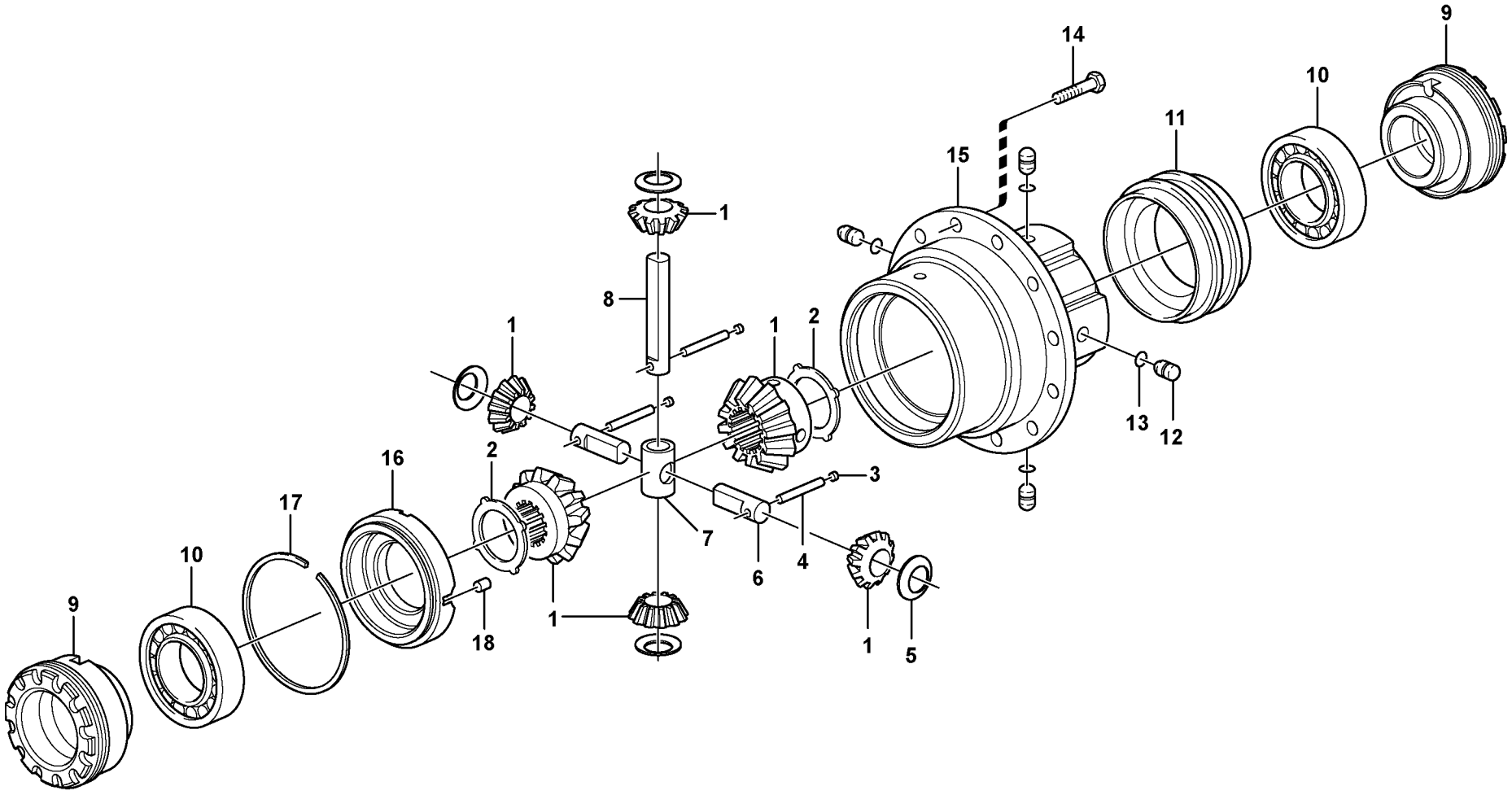

Volvo Construction Equipment

1023391

Fig.	Part No.	Quantity 1	2	3	PS	KIT	Description	Dénomination	Bezeichnung	Denominación	Notes
1	**VOE 11716556**	1					Diff Pinion Set	Jeu Pign.diffe.	Ausgl Kegsatz	Kit Engran Dif	
2	**VOE 11716557**	2					•Drive Plate	•Plaque Commande	•Treibscheibe	•Placa Motriz	
3	**VOE 11709268**	3					•Plug	•Bouchon	•Stopfen	•Tapon	
4	**VOE 11716558**	3					•Pin	•Goupille	•Zapfen	•Pasador	
5	**VOE 11709306**	4					Thrust Washer	Rondelle Butee	Druckscheibe	Arandela Presio	
6	**VOE 11716559**	2					Shaft	Arbre	Welle	Arbol	
7	**VOE 11716560**	1					Spider	Croisillon	Kreuzstück	Cruceta	
8	**VOE 11988598**	2					Shaft	Arbre	Welle	Arbol	
9	**VOE 11716561**	2					Ring	Anneau	Ring	Anillo	
10	**VOE 11709314**	2					Bearing	Palier	Lager	Cojinete	
11	**VOE 11716562**	1					Sleeve	Manchon	Muffe	Manguito	
12	**VOE 11709308**	2					Pin	Goupille	Stift	Pasador	
13	**VOE 11709309**	4					O-ring	Joint Torique	O-Ring	Junta torica	
14	**VOE 11716563**	1					Screw	Vis	Schraube	Tornillo	
15	**VOE 11716564**	10					Diff Housing	Carter differentiel	Differentialgehäuse	Carter diferencial	
16	**VOE 11716565**	1					Cover	Capot	Haube	Capo	
17	**VOE 11716566**	1					Lock Ring	Anneau Verrouillage	Schlossring	Anillo Segurid	
18	**VOE 11716567**	1					Pin	Goupille	Zapfen	Pasador	

1	
2	
3	
4	
5	

Differencial. Detrás
Ausgleichgetriebe. Hinten
Differentiel. Arrière
Differential. Rear

Catalogue id	Group
20050	**463**
Illustr. No **1023391**	Section **210**
Issue **VOE 64D9920050**	Page **337**

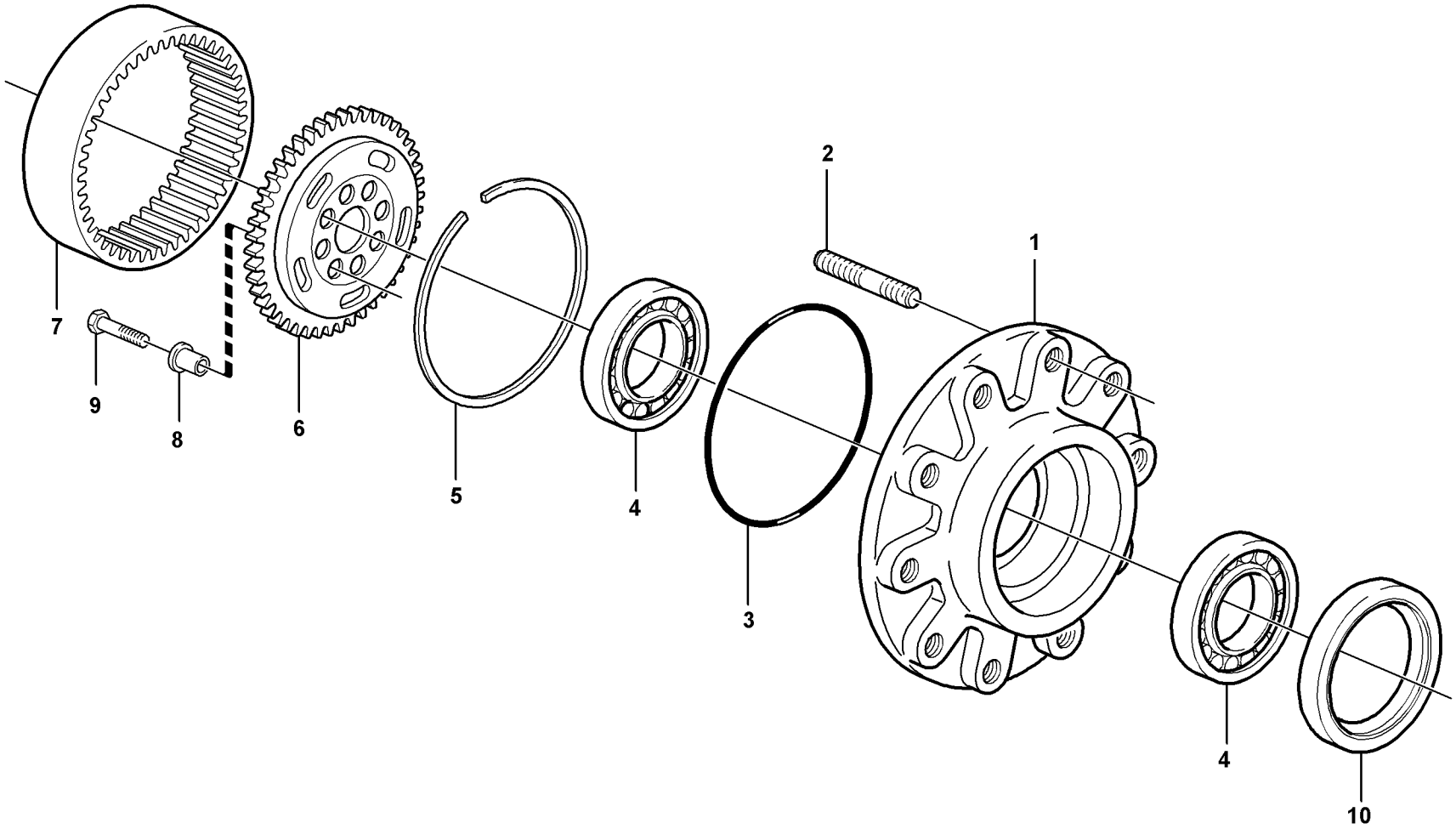

Volvo Construction Equipment
1012713

Fig.	Part No.	Quantity 1	2	3	PS	KIT	Description	Dénomination	Bezeichnung	Denominación	Notes
1	**VOE 11988622**	2					Wheel Hub	Moyeu de roue	Radnabe	Cubo Rueda	
2	**VOE 11709357**	20					•Stud	•Goujon	•Stiftschraube	•Esparrago	
3	**VOE 11709359**	2					O-ring	Joint Torique	O-Ring	Junta torica	
4	**VOE 11709360**	4					Bearing	Palier	Lager	Cojinete	
5	**VOE 11709361**	2					Lock Ring	Anneau Verrouillage	Schlossring	Anillo Segurid	
6	**VOE 11709362**	2					Drive Gear	Pignon	Triebrad	Pinon	
7	**VOE 11988623**	2					Crown Wheel	Couronne	Tellerrad	Corona	
8	**VOE 11709364**	16					Bushing	Bague	Buchse	Casquillo	
9	**VOE 11709365**	16					Screw	Vis	Schraube	Tornillo	
10	**VOE 11988156**	2					Seal	Joint	Dichtung	Reten	

1		**Cubo de rueda** **Radnabe** **Moyeu de roue** **Wheel hub**	Catalogue id **20050**	Group **463**
2			Illustr. No **1012713**	Section **250**
3			Issue **VOE 64D9920050**	Page **339**
4				
5		**11891305, 11891306**		

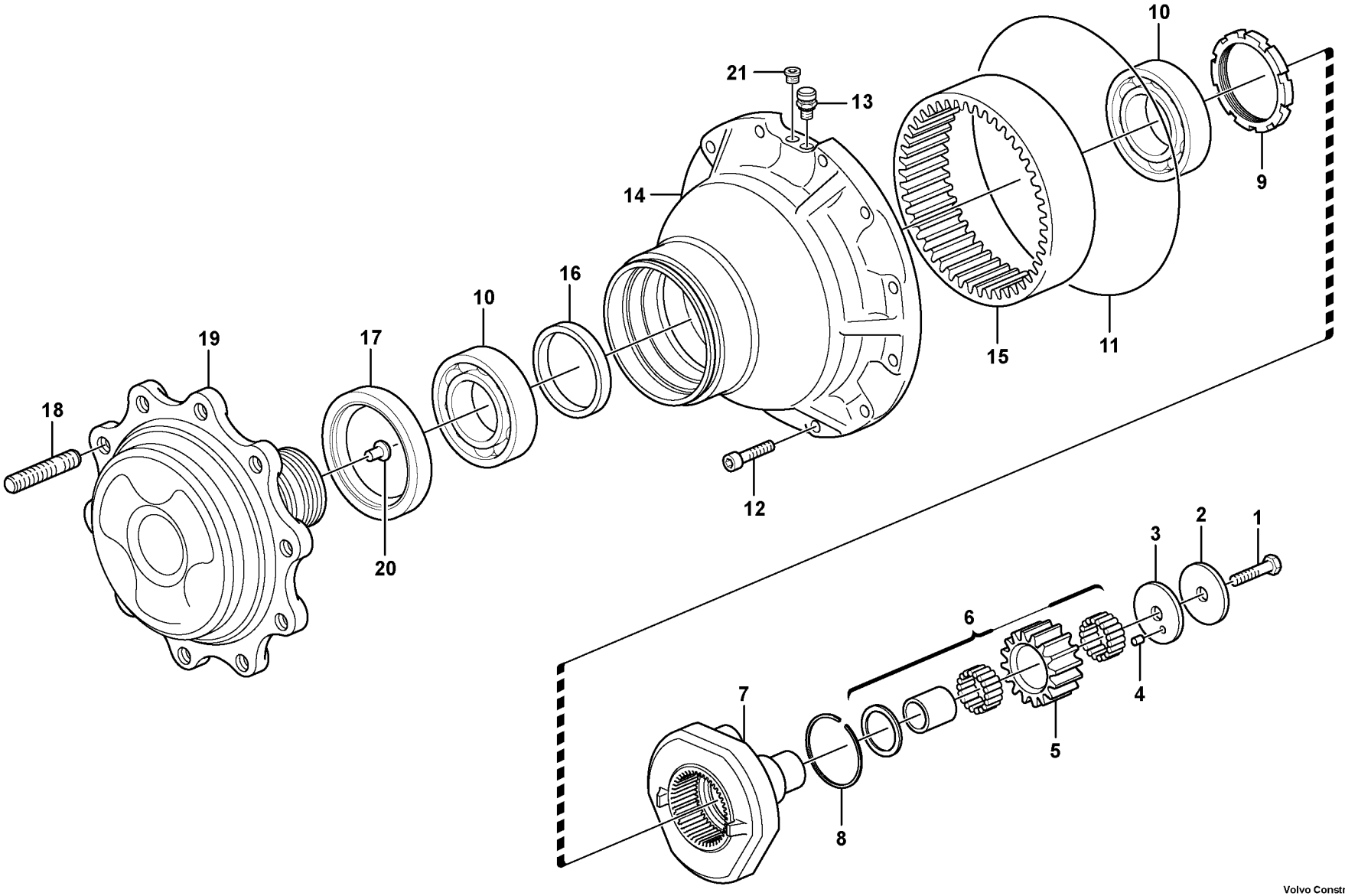

Volvo Construction Equipment

1023393

Fig.	Part No.	Quantity 1	2	3	PS	KIT	Description	Dénomination	Bezeichnung	Denominación	Notes
1	**VOE 11709377**	6					Screw	Vis	Schraube	Tornillo	
2	**VOE 11716588**	6					Thrust Washer	Rondelle Butee	Druckscheibe	Arandela Presio	
3	**VOE 11716589**	6					Thrust Washer	Rondelle Butee	Druckscheibe	Arandela Presio	
4	**VOE 11716590**	6					Pin	Goupille	Zapfen	Pasador	
5	**VOE 11716591**	6					Drive Gear	Pignon	Triebrad	Pinon	
6	**VOE 11716592**	6					Bearing Kit	Jeu Paliers	Lagersatz	Juego Cojinetes	
7	**VOE 11716593**	2					Planet kit	Jeu planetaire	Planetenradsatz	Kit de planetas	
8	**VOE 11716594**	2					Lock	Serrure	Schloß	Cierre	
9	**VOE 11716595**	2					Nut	Ecrou	Mutter	Tuerca	
10	**VOE 11709360**	4					Bearing	Palier	Lager	Cojinete	
11	**VOE 11716597**	2					O-ring	Joint Torique	O-Ring	Junta torica	
12	**VOE 11716596**	24					Screw	Vis	Schraube	Tornillo	
13	**VOE 11709350**	2					Breather Pipe	Reniflard	Luftungsrohr	Conduct Ventil	
14	**VOE 11716610**	2					Hub	Bossage	Nabe	Asiento	
15	**VOE 11716599**	2					•Gear	•Pignon	•Zahnradgetriebe	•Engranaje	
16	**VOE 11716598**	2					Spacer	Partie Intermédiaire	Zwischenstück	Espaciador	
17	**VOE 11988156**	2					Seal	Joint	Dichtung	Reten	
18	**VOE 11716612**	20					Stud	Goujon	Stiftschraube	Esparrago	
19	**VOE 11716611**	2					Flange	Flasque	Flansch	Brida	
20	**VOE 11716613**	2					Pad	Patin	Belag	Pastilla	
21	**VOE 11709075**	2					Plug	Bouchon	Stopfen	Tapon	

1		**Reduccion cubo, eje planeta trasero** **Nabenvorgelege, Plantenwelle, hinten** **Reducteur moyeu, axe satellite, Ar** **Hub reduction, rear axle**	Catalogue id **20050**	Group **463**
2			Illustr. No **1023393**	Section **260**
3			Issue **VOE 64D9920050**	Page **341**
4				
5		**S/N 10627 -**		

VOLVO

BL61

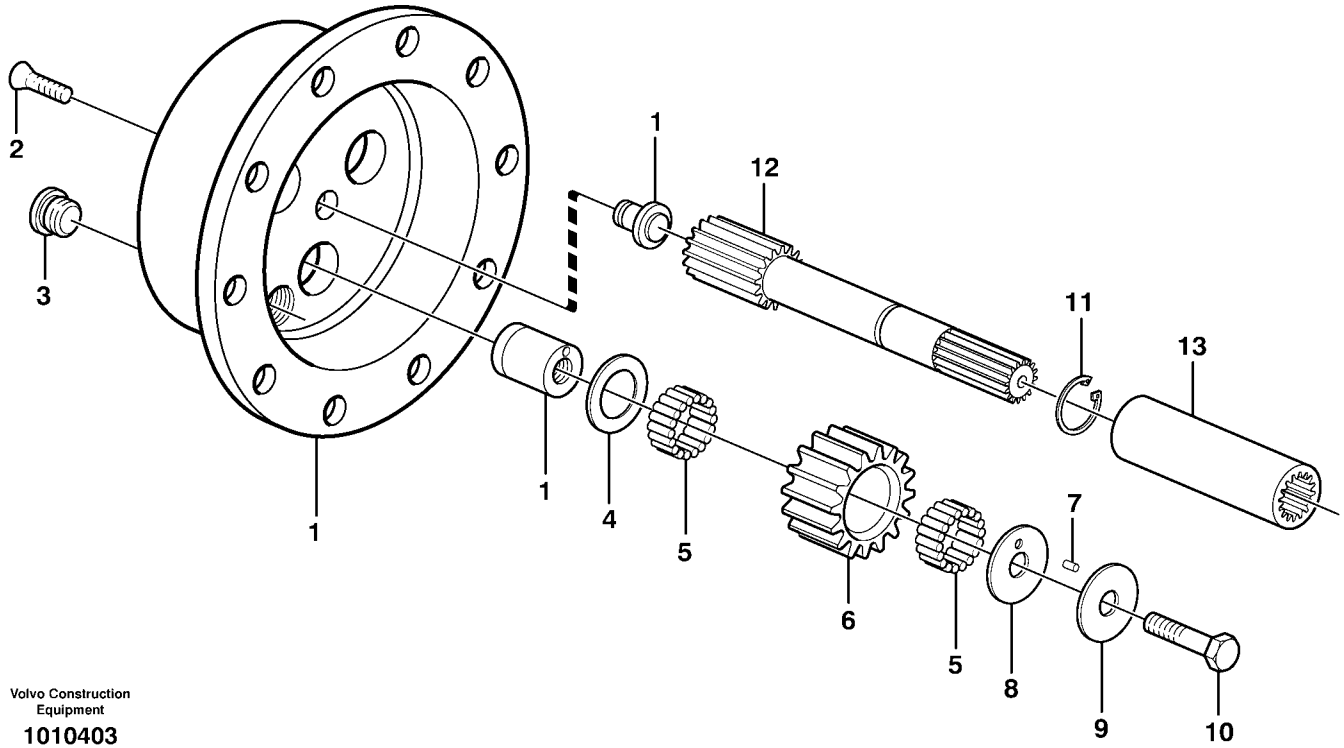

Volvo Construction Equipment

1010403

Fig.	Part No.	Quantity 1	2	3	PS	KIT	Description	Dénomination	Bezeichnung	Denominación	Notes
1	**VOE 11988624**	2					Planet Gear	Planetaire	Planetenrad	Planetario	
2	**VOE 11709370**	4					Screw	Vis	Schraube	Tornillo	
3	**VOE 11709057**	2					Plug	Bouchon	Stopfen	Tapon	
4	**VOE 11988626**	6					Thrust Washer	Rondelle Butee	Druckscheibe	Arandela Presio	
5	**VOE 11988625**	168					Needle Bearing	Roule.aiguilles	Nadellager	Cojinete Agujas	10pcs/Kit
6	**VOE 11988629**	REQ					Drive Gear	Pignon	Triebrad	Pinon	
7	**VOE 11709374**	6					Needle Bearing	Roule.aiguilles	Nadellager	Cojinete Agujas	10pcs/Kit
8	**VOE 11988628**	6					Thrust Washer	Rondelle Butee	Druckscheibe	Arandela Presio	
9	**VOE 11988627**	6					Thrust Washer	Rondelle Butee	Druckscheibe	Arandela Presio	
10	**VOE 11709377**	6					Screw	Vis	Schraube	Tornillo	
11	**VOE 11709378**	2					Lock Ring	Anneau Verrouillage	Schlossring	Anillo Segurid	
12	**VOE 11988632**	2					Shaft	Arbre	Welle	Arbol	
13	**VOE 11709380**	1					Engaging Sleeve	Manchon Accoup.	Kupplungsmuffe	Manguito Embrag	

1		**Engranaje planetario** **Planetenradgetriebe** **Réducteur planétaire** **Planetary gear**	Catalogue id **20050**	Group **463**
2			Illustr. No **1010403**	Section **300**
3			Issue **VOE 64D9920050**	Page **343**
4				
5		**11891305, 11891306**		

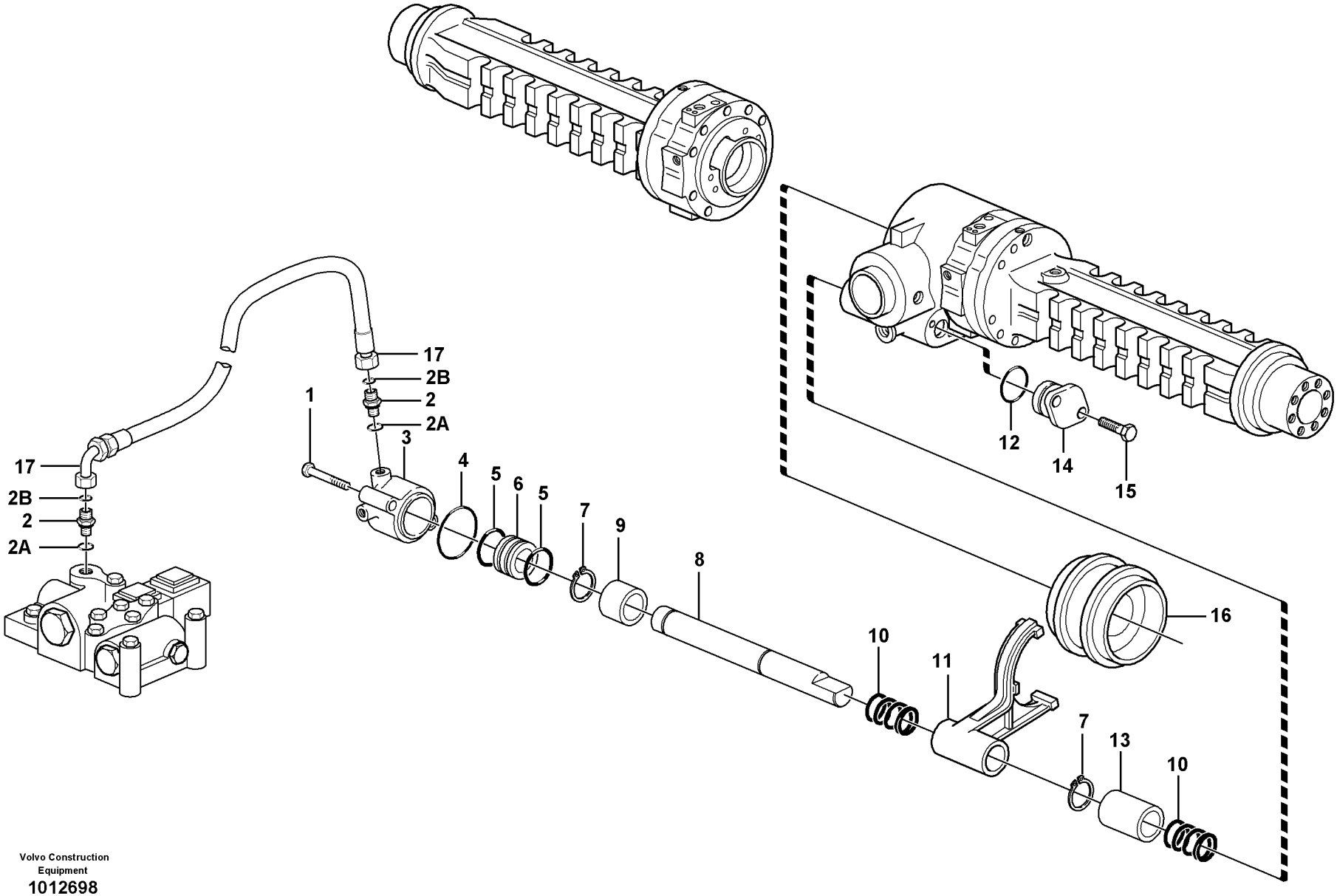

Volvo Construction Equipment

1012698

Fig.	Part No.	Quantity 1	2	3	PS	KIT	Description	Dénomination	Bezeichnung	Denominación	Notes
1	**VOE 955306**	2					Hexagon screw	Vis tête hexagonale	Sechskantschraube	Tornillo hexago	M8x80
2	**VOE 935085**	2					Nipple	Raccord	Nippel	Niple	
2A	**VOE 4880492**	1					•O-ring	•Joint Torique	•O-Ring	•Junta torica	9,25 x 1,78 mm
2B	**VOE 932039**	1					•O-ring	•Joint Torique	•O-Ring	•Junta torica	11,89 x 1,78 mm
3	**VOE 11709319**	1					Housing	Carter	Gehäuse	Carter	
4	**VOE 11709320**	1					O-ring	Joint Torique	O-Ring	Junta torica	
5	**VOE 11709321**	2					O-ring	Joint Torique	O-Ring	Junta torica	
6	**VOE 11709322**	1					Piston	Piston	Kolben	Piston	
7	**VOE 11709323**	2					Lock Ring	Anneau Verrouillage	Schlossring	Anillo Segurid	
8	**VOE 11709324**	1					Axle	Arbre	Welle	Eje	
9	**VOE 11709325**	1					Bushing	Bague	Buchse	Casquillo	
10	**VOE 11709326**	2					Spring	Ressort	Feder	Muelle	
11	**VOE 11709327**	1					Shift Yoke	Fourchette	Schaltgabel	Horquill Cambio	
12	**VOE 11709328**	2					O-ring	Joint Torique	O-Ring	Junta torica	
13	**VOE 11709329**	1					Spacer	Partie Intermédiaire	Zwischenstück	Espaciador	
14	**VOE 11709330**	1					Cover	Couvercle	Deckel	Tapa	
15	**VOE 940142**	2					Hexagon screw	Vis tête hexagonale	Sechskantschraube	Tornillo hexago	M8x30
16		1					Sleeve	Douille	Hülse	Manguito	See group 463, Page 335
17	**VOE 11885014**	1					Hose	Durit	Schlauch	Tubo flexible	

1		**Bloqueo del diferencial** **Ausgleichsperre** **Blocage différentiel** **Differential lock**	Catalogue id **20050**	Group **468**
2			Illustr. No **1012698**	Section **100**
3			Issue **VOE 64D9920050**	Page **345**
4				
5		**11891305, 11891306**		

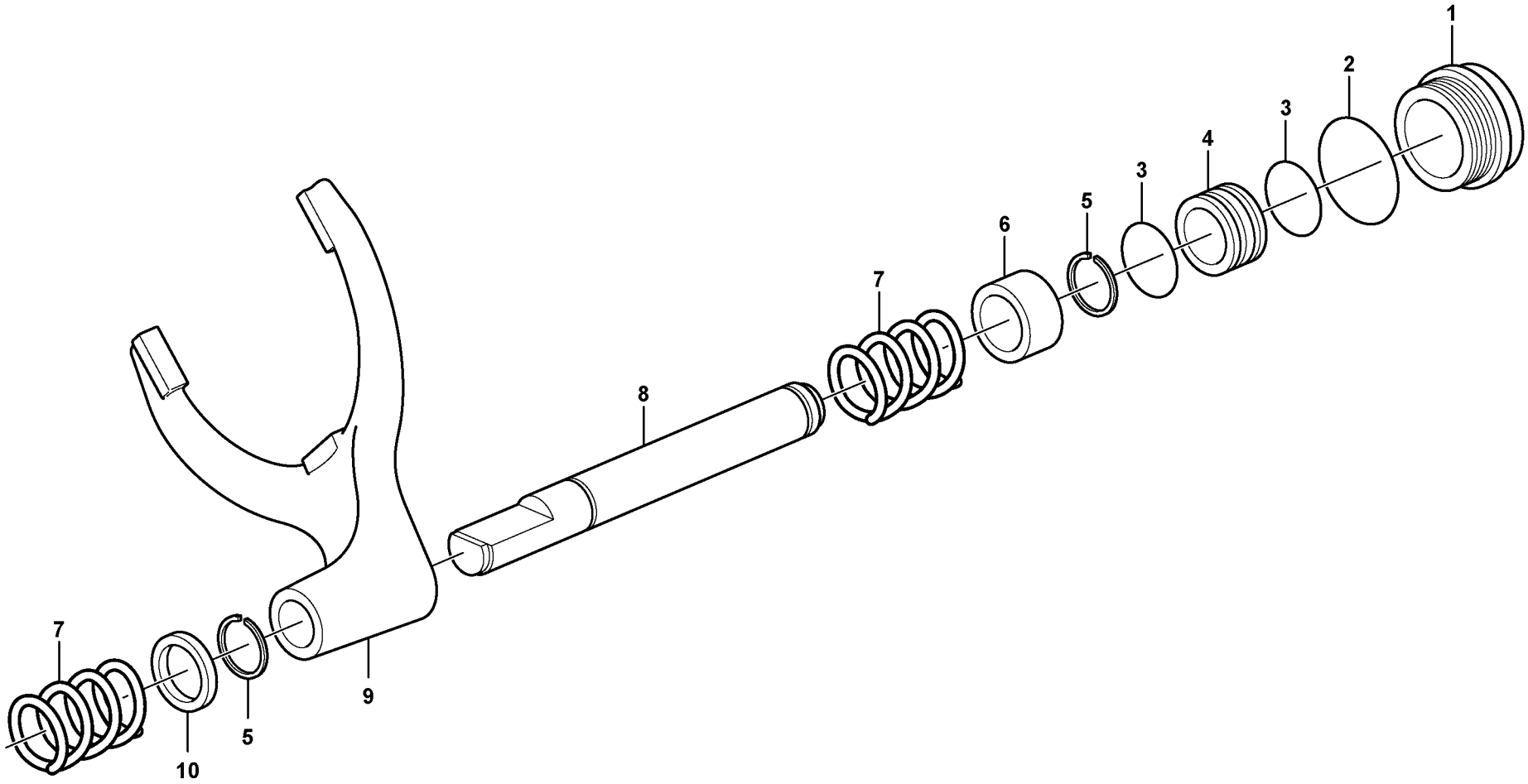

Volvo Construction Equipment

1023401

Fig.	Part No.	Quantity 1	2	3	PS	KIT	Description	Dénomination	Bezeichnung	Denominación	Notes
1	**VOE 11716578**	1					Cover	Capot	Haube	Capo	
2	**VOE 11716572**	1					O-ring	Joint Torique	O-Ring	Junta torica	
3	**VOE 11709321**	2					O-ring	Joint Torique	O-Ring	Junta torica	
4	**VOE 11709322**	1					Piston	Piston	Kolben	Piston	
5	**VOE 11716573**	2					Lock Ring	Anneau Verrouillage	Schlossring	Anillo Segurid	
6	**VOE 11716571**	1					Bushing	Bague	Buchse	Casquillo	
7	**VOE 11709326**	2					Spring	Ressort	Feder	Muelle	
8	**VOE 11716570**	1					Piston	Piston	Kolben	Piston	
9	**VOE 11716568**	1					Shift Yoke	Fourchette	Schaltgabel	Horquill Cambio	
10	**VOE 11716569**	1					Spacer Washer	Rond.entretoise	Abstandscheibe	Arandela Dist	

1		**Bloqueo del diferencial** **Ausgleichsperre** **Blocage différentiel** **Differential lock**	Catalogue id **20050**	Group **468**
2			Illustr. No **1023401**	Section **110**
3			Issue **VOE 64D9920050**	Page **347**
4				
5		**S/N 10627_-**		

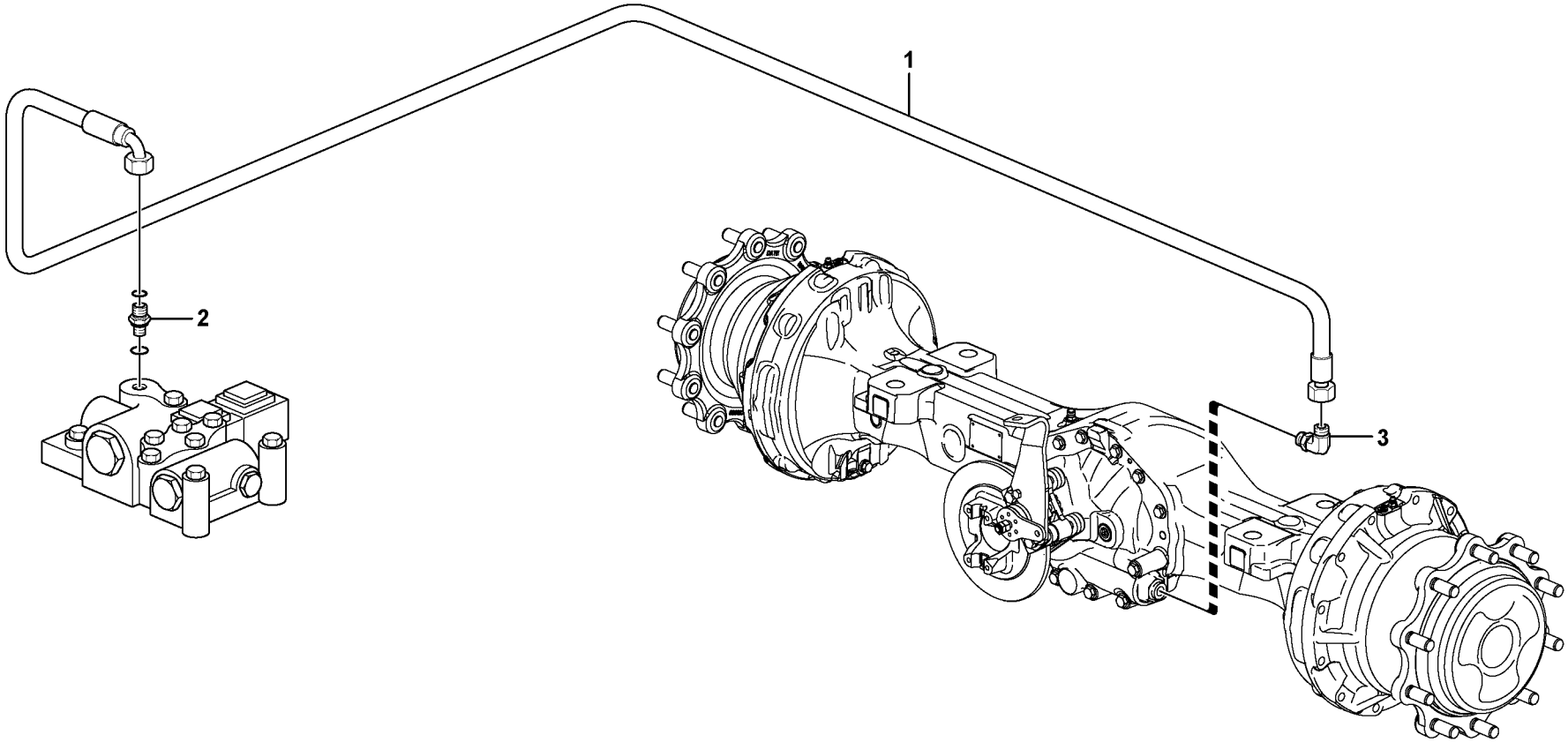

Volvo Construction Equipment

1023877

Fig.	Part No.	Quantity 1	2	3	PS	KIT	Description	Dénomination	Bezeichnung	Denominación	Notes
1	**VOE 11888607**	1					Hose	Durit	Schlauch	Tubo flexible	L = 2700 MM
2	**VOE 935085**	1					Nipple	Raccord	Nippel	Niple	
3	**VOE 13933857**	1					Elbow Nipple	Raccord angulaire	Winkelnippel	Niple Angular	

1		**Bloqueo del diferencial** **Ausgleichsperre** **Blocage différentiel** **Differential lock**	Catalogue id **20050**	Group **468**
2			Illustr. No **1023877**	Section **150**
3			Issue **VOE 64D9920050**	Page **349**
4				
5		**11880004 S/N 10627 -**		

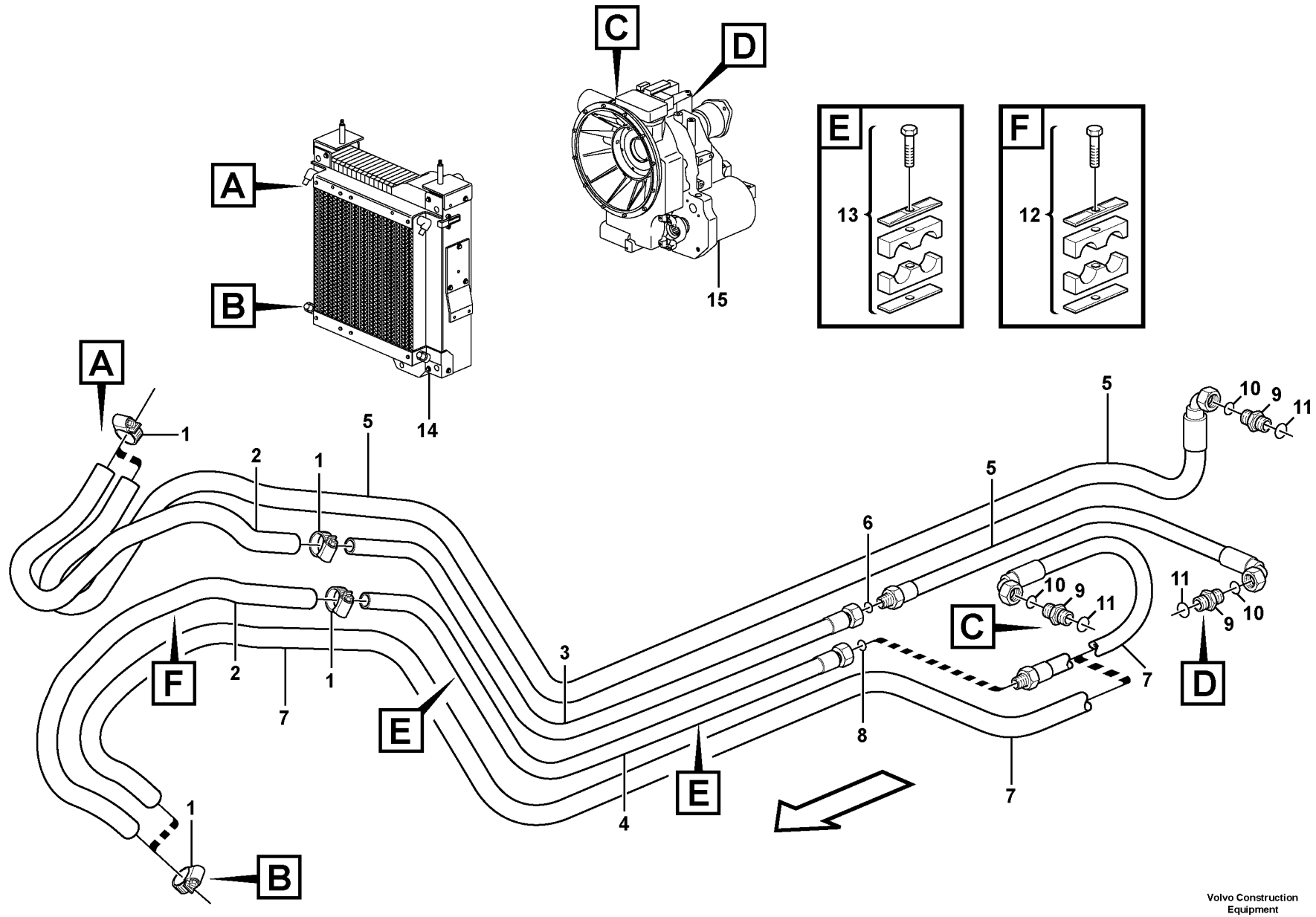

Volvo Construction Equipment

1023893

Fig.	Part No.	Quantity 1	2	3	PS	KIT	Description	Dénomination	Bezeichnung	Denominación	Notes
1	**VOE 943473**	4	2	2			Hose Clamp	Collier Serrage	Schlauchschelle	Abraz Manguera	
2	**VOE 11882743**	2					Hose	Durit	Schlauch	Tubo flexible	
3	**VOE 11884818**	1					Tube	Tube	Rohr	Tubo	
4	**VOE 11884817**	1					Tube	Tube	Rohr	Tubo	
5	**VOE 11884251**		1				Hose	Flexible	Schlauch	Manguera	(VOE 11884976)
5	**VOE 11888469**			1			Hose	Durit	Schlauch	Tubo flexible	L = 2250 MM
6	**VOE 4880663**		1				•O-ring	•Joint Torique	•O-Ring	•Junta torica	
7	**VOE 11884251**		1				Hose	Flexible	Schlauch	Manguera	
7	**VOE 11888469**			1			Hose	Durit	Schlauch	Tubo flexible	L = 2250 MM
8	**VOE 4880663**		1				•O-ring	•Joint Torique	•O-Ring	•Junta torica	
9	**VOE 935095**		2				Nipple	Raccord	Nippel	Niple	
9	**VOE 935097**			2			Nipple	Raccord	Nippel	Niple	
10	**VOE 4880663**		2				•O-ring	•Joint Torique	•O-Ring	•Junta torica	
10	**VOE 990740**			2			•O-ring	•Joint Torique	•O-Ring	•Junta torica	
11	**VOE 932041**		2	2			•O-ring	•Joint Torique	•O-Ring	•Junta torica	
12	**VOE 11885543**	1		1			Clamp	Pince Serrage	Klemme	Abrazadera	
13	**VOE 11882855**	2					Clamp	Pince Serrage	Klemme	Abrazadera	
13	**VOE 11888715**			2			Clamp	Pince Serrage	Klemme	Abrazadera	
14		1		1			Radiator	Radiateur	Kühler	Radiador	See group 261, Page 105
15		1		1			Transmission	Transmission	Getriebe	Transmision	See group 421, Page 235

1	**11880004**
2	**11891076, 11891077**
3	**11891076 S/N 10627 -**
4	
5	

Enfriador aceite, transmision
Ölkühler, getriebe
Radiateur huile, transmission
Oil cooler, transmission

Catalogue id	Group
20050	**491**
Illustr. No **1023893**	Section **100**
Issue **VOE 64D9920050**	Page **351**

VOLVO

Construction Equipment

GROUP		Section	Page
510	Brake operation rear 11891305, 11891306	100	359
517	Multi-disc brake, rear 11891305, 11891306	100	361
517	Multi-disc brake, rear S/N 10627 -	110	363
517	Wheel brake, rear S/N - 10626	200	365
517	Wheel brake, rear S/N 10627 -	250	367
525	Brake system 11298204, 11298208	100	369
551	Parking brake S/N 10627 -	150	371
551	Parking brake	250	373

GROUPE		Section	Page
510	Commande des freins AR 11891305, 11891306	100	359
517	Frein à disques, AR 11891305, 11891306	100	361
517	Frein à disques, AR S/N 10627 -	110	363
517	Frein de roue, Ar S/N - 10626	200	365
517	Frein de roue, Ar S/N 10627 -	250	367
525	Système de freinage 11298204, 11298208	100	369
551	Frein parking S/N 10627 -	150	371
551	Frein parking	250	373

GRUPPE		Abschnitt	Seite
510	Bremsbedienung hinten 11891305, 11891306	100	359
517	Lamellenbremse, hinten 11891305, 11891306	100	361
517	Lamellenbremse, hinten S/N 10627 -	110	363
517	Radbremse, Hintere S/N - 10626	200	365
517	Radbremse, Hintere S/N 10627 -	250	367
525	Bremssystem 11298204, 11298208	100	369
551	Feststellbremse S/N 10627 -	150	371
551	Feststellbremse	250	373

GRUPO		Sección	Página
510	Maniobra del freno trasero 11891305, 11891306	100	359
517	Freno de disco, trasero 11891305, 11891306	100	361
517	Freno de disco, trasero S/N 10627 -	110	363
517	Freno rueda, trasero S/N - 10626	200	365
517	Freno rueda, trasero S/N 10627 -	250	367
525	Sistema de frenos 11298204, 11298208	100	369
551	Freno estacionamiento S/N 10627 -	150	371
551	Freno estacionamiento	250	373

VOLVO

Construction Equipment

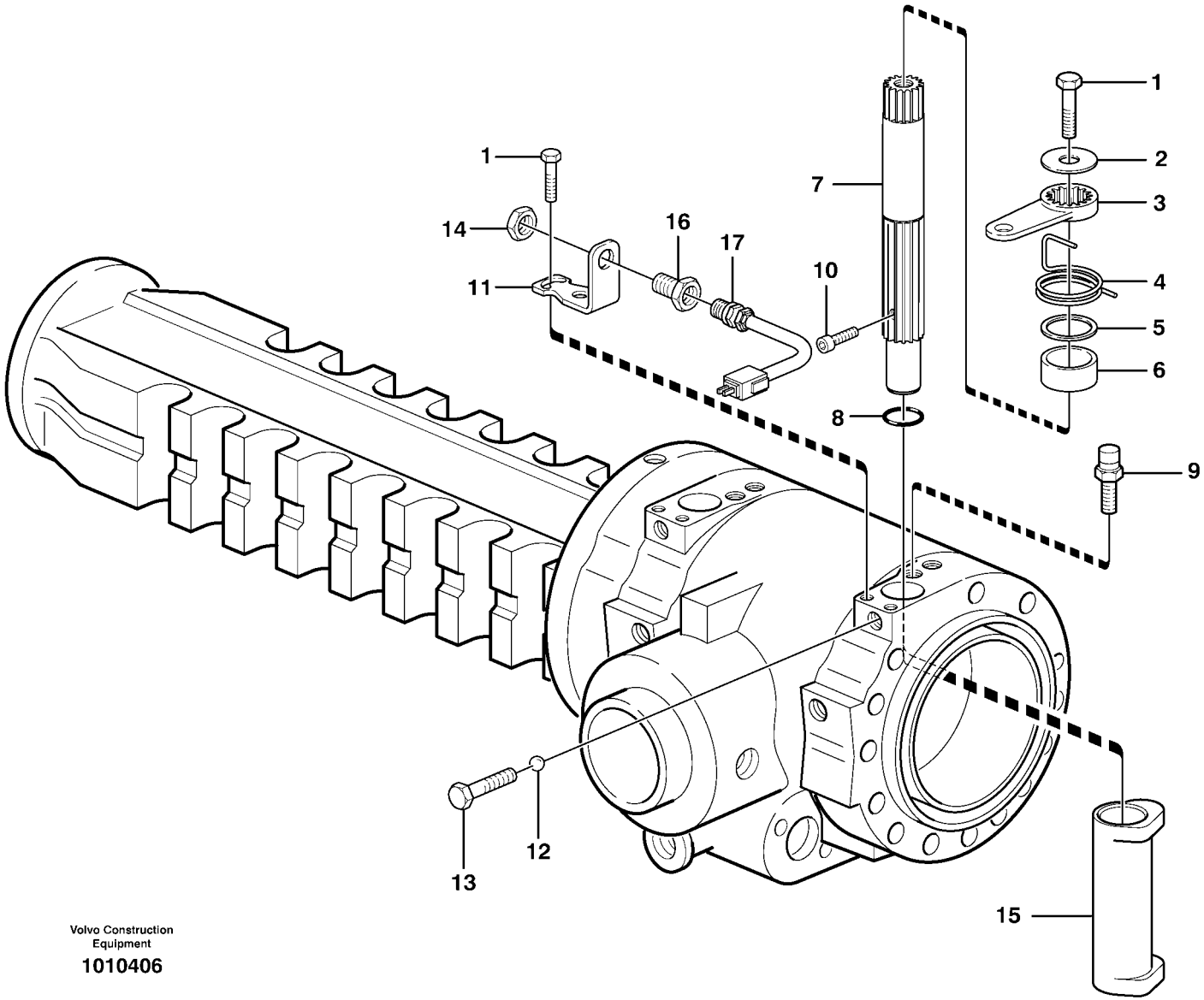

Volvo Construction Equipment

1010406

Fig.	Part No.	Quantity 1	2	3	PS	KIT	Description	Dénomination	Bezeichnung	Denominación	Notes
1	**VOE 11709341**	6					Screw	Vis	Schraube	Tornillo	
2	**VOE 11709342**	2					Washer	Rondelle	Scheibe	Arandela	
3	**VOE 11709343**	2					Lever	Levier	Hebel	Palanca	
4	**VOE 11709344**	1					Spring	Ressort	Feder	Muelle	RH
4	**VOE 11709345**	1					Spring	Ressort	Feder	Muelle	LH
5	**VOE 11709346**	2					Bushing	Bague	Buchse	Casquillo	
6	**VOE 11709347**	2					Spacer sleeve	Douille entretoise	Distanzhülse	Manguito distanciador	
7	**VOE 11709348**	2					Brake Shaft	Arbre Frein	Bremswelle	Eje De Frenos	
8	**VOE 11709349**	2					O-ring	Joint Torique	O-Ring	Junta torica	
9	**VOE 11709350**	2					Breather Pipe	Reniflard	Luftungsrohr	Conduct Ventil	
10	**VOE 11709351**	2					Screw	Vis	Schraube	Tornillo	
11	**VOE 11709352**	2					Bracket	Console	Konsole	Consola	
12	**VOE 11709353**	2					Ball	Bille	Kugel	Bola	
13	**VOE 11709354**	2					Screw	Vis	Schraube	Tornillo	
14	**VOE 11712796**	2					Nut	Ecrou	Mutter	Tuerca	
15	**VOE 11709356**	2					Cam	Came	Nocken	Leva	
16	**VOE 11712797**	2					Screw	Vis	Schraube	Tornillo	
17	**VOE 11712798**	2					Sensor	Capteur	Geber	Captador	

1		**Maniobra del freno trasero** **Bremsbedienung hinten** **Commande des freins AR** **Brake operation rear**	Catalogue id **20050**	Group **510**
2			Illustr. No **1010406**	Section **100**
3			Issue **VOE 64D9920050**	Page **359**
4				
5		**11891305, 11891306**		

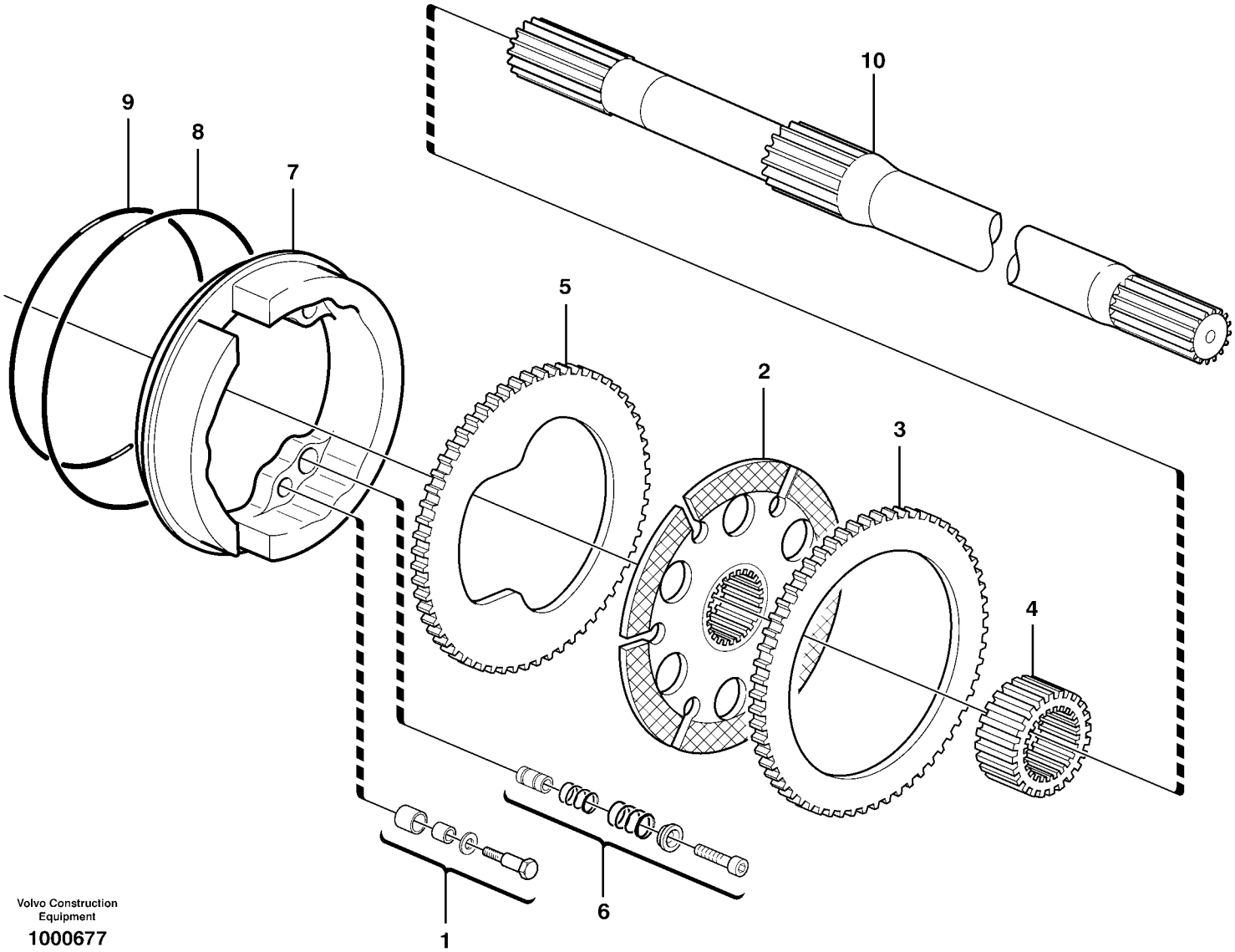

Volvo Construction Equipment

1000677

Fig.	Part No.	Quantity 1	2	3	PS	KIT	Description	Dénomination	Bezeichnung	Denominación	Notes
1	**VOE 11709331**	2					Adj Device	Disposi.reglage	Nachst Vorrtg	Disposit Ajuste	
2	**VOE 11709332**	6					Brake Plate	Plaque Frein	Bremsplatte	Placa De Freno	
3	**VOE 11709333**	6					Drive Plate	Plaque Commande	Treibscheibe	Placa Motriz	
4	**VOE 11709334**	2					Hub	Bossage	Nabe	Asiento	
5	**VOE 11709335**	2					Drive Plate	Plaque Commande	Treibscheibe	Placa Motriz	
6	**VOE 11709336**	2					Adj Device	Disposi.reglage	Nachst Vorrtg	Disposit Ajuste	
7	**VOE 11709337**	2					Brake Piston	Piston Frein	Bremskolben	Piston Frenos	
8	**VOE 11709338**	2					Sealing ring	Bague d'étanchéité	Runddichtring	Anillo reten	
9	**VOE 11709339**	2					Sealing ring	Bague d'étanchéité	Runddichtring	Anillo reten	
10	**VOE 11712789**	2					Shaft	Arbre	Welle	Arbol	

1		**Freno de disco, trasero** **Lamellenbremse, hinten** **Frein à disques, AR** **Multi-disc brake, rear**	Catalogue id **20050**	Group **517**
2			Illustr. No **1000677**	Section **100**
3				
4			Issue **VOE 64D9920050**	Page **361**
5		**11891305, 11891306**		

VOLVO

BL61

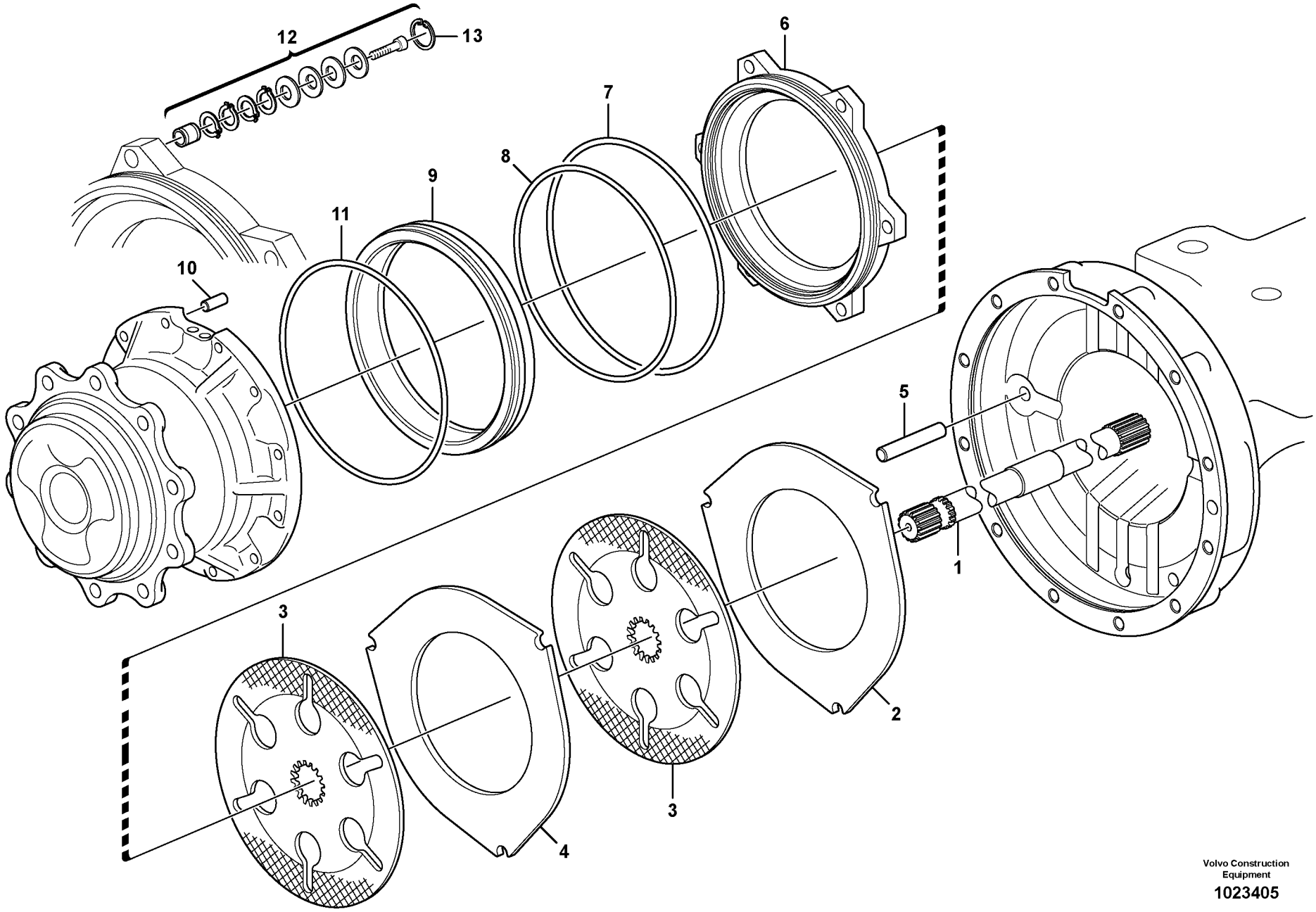

Volvo Construction Equipment

1023405

Fig.	Part No.	Quantity 1	2	3	PS	KIT	Description	Dénomination	Bezeichnung	Denominación	Notes
1	**VOE 11716574**	1					Shaft	Arbre	Welle	Arbol	LH
1	**VOE 11716575**	1					Shaft	Arbre	Welle	Arbol	RH
2	**VOE 11716580**	2					Drive Plate	Plaque Commande	Treibscheibe	Placa Motriz	
3	**VOE 11716579**	4					Brake Plate	Plaque Frein	Bremsplatte	Placa De Freno	
4	**VOE 11716581**	2					Drive Plate	Plaque Commande	Treibscheibe	Placa Motriz	
5	**VOE 11716582**	6					Pin	Goupille	Zapfen	Pasador	
6	**VOE 11716583**	2					Brake Piston	Piston Frein	Bremskolben	Piston Frenos	
7	**VOE 11716585**	2					O-ring	Joint Torique	O-Ring	Junta torica	
8	**VOE 11716586**	2					O-ring	Joint Torique	O-Ring	Junta torica	
9	**VOE 11716584**	2					Brake Piston	Piston Frein	Bremskolben	Piston Frenos	
10	**VOE 11709413**	2					Pin	Goupille	Stift	Pasador	
11	**VOE 11716587**	2					O-ring	Joint Torique	O-Ring	Junta torica	
12	**VOE 11716577**	6					Adjusting device	Dispositif reglage	Nachstellvorrichtung	Dispositivo de ajuste	
13	**VOE 11716576**	6					Lock	Serrure	Schloß	Cierre	

1		**Freno de disco, trasero** **Lamellenbremse, hinten** **Frein à disques, AR** **Multi-disc brake, rear**	Catalogue id **20050**	Group **517**
2			Illustr. No **1023405**	Section **110**
3			Issue **VOE 64D9920050**	Page **363**
4				
5		**S/N 10627 -**		

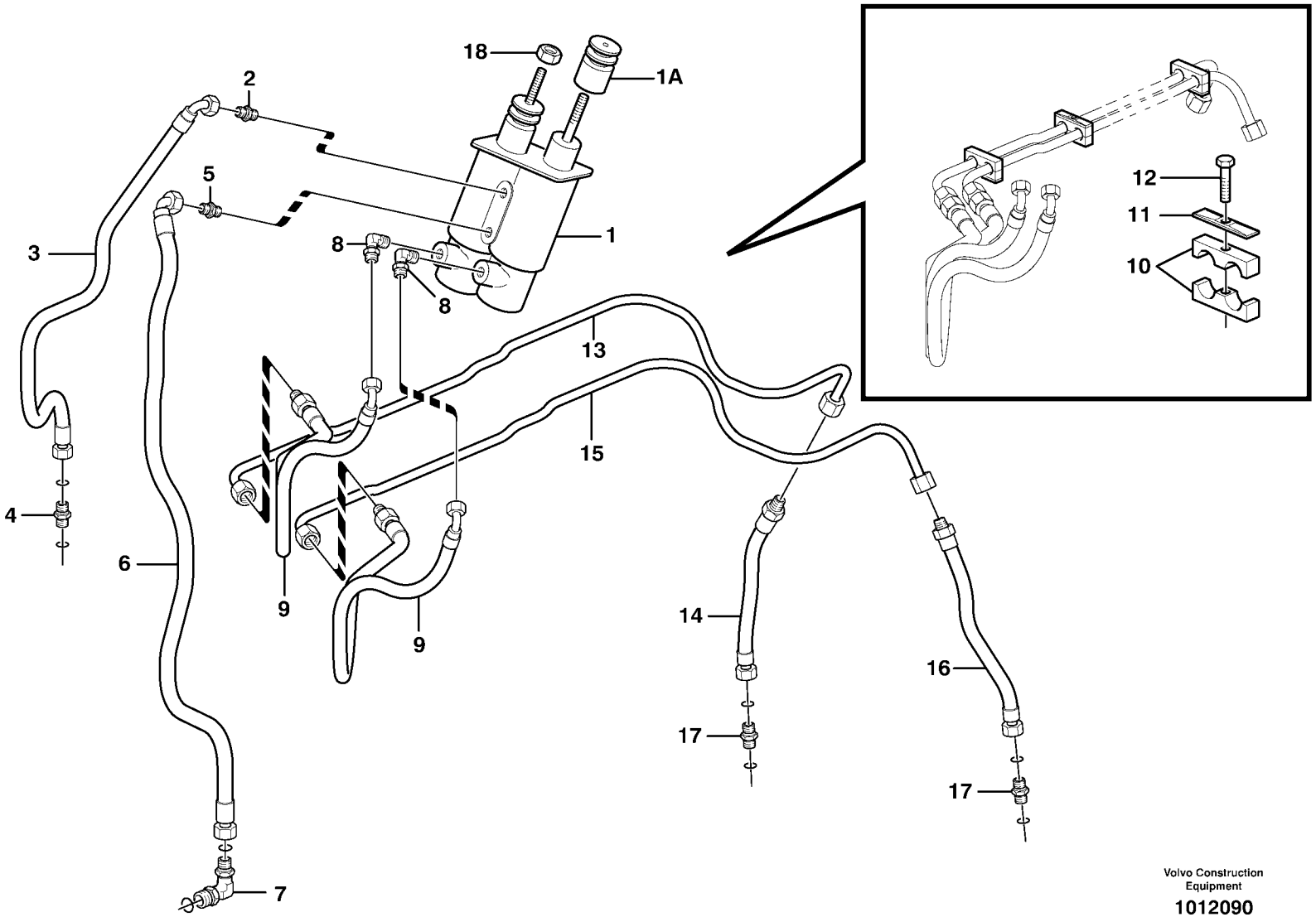

Volvo Construction Equipment

1012090

Fig.	Part No.	Quantity 1	2	3	PS	KIT	Description	Dénomination	Bezeichnung	Denominación	Notes
1	**VOE 11886053**	1			SS		Brake Servo	Servofrein	Bremsservo	Servofreno	
1A	**VOE 11709901**	1					•Dust Cover	•Pare-poussiere	•Staubschutz	•Prot Polvo	
2	**VOE 11883022**	1					Connector	Raccord	Anschluss	Union	
3	**VOE 11882741**	1					Hose	Durit	Schlauch	Tubo flexible	
4		1					Nipple	Raccord	Nippel	Niple	See group 420, Page 223
5	**VOE 11883021**	1					Connector	Raccord	Anschluss	Union	
6	**VOE 11883764**		1				Hose	Durit	Schlauch	Tubo flexible	
6	**VOE 11882192**			1			Hose assembly	Conduit flexible	Schlauchleitung	Conducto	
7		1					Connector	Raccord	Anschluss	Union	See group 420, Page 223
8	**VOE 11883020**	2					Elbow	Coude	Winkelstueck	Tubo acodado	
9	**VOE 11883019**	2					Hose	Durit	Schlauch	Tubo flexible	
10	**VOE 11883048**	4					Clamp	Pince Serrage	Klemme	Abrazadera	
11	**VOE 11883049**	2					Plate	Plaque	Platte	Placa	
12	**VOE 963196**	2					Hexagon screw	Vis tête hexagonale	Sechskantschraube	Tornillo hexago	
13	**VOE 11882992**	1					Pipe	Canalisation	Rohrleitung	Canalizacion	RH
14	**VOE 11883018**	1					Hose	Durit	Schlauch	Tubo flexible	
15	**VOE 11882993**	1					Pipe	Canalisation	Rohrleitung	Canalizacion	LH
16	**VOE 11883018**	1					Hose	Durit	Schlauch	Tubo flexible	
17		2					Nipple	Raccord	Nippel	Niple	See group 463, Page 327
18	**VOE 13971068**	2					Hexagon Nut	Ecrou Hexagonal	Sechskantmutter	Tuerca Hexagon	

1	**11880004**	**Freno rueda, trasero** **Radbremse, Hintere** **Frein de roue, Ar** **Wheel brake, rear**	Catalogue id **20050**	Group **517**
2	**11891077**		Illustr. No **1012090**	Section **200**
3	**11891076**		Issue **VOE 64D9920050**	Page **365**
4				
5		**S/N - 10626**		

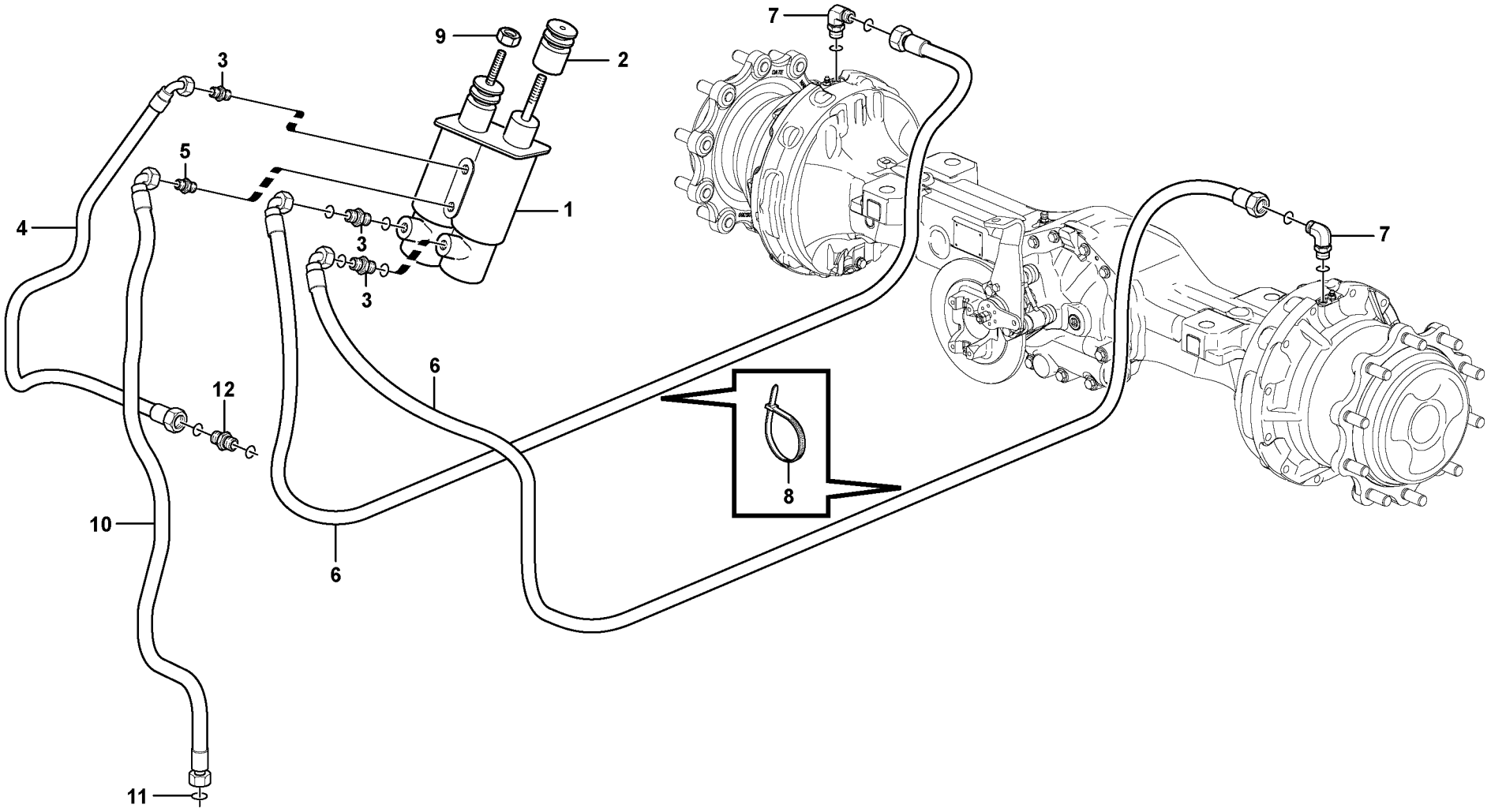

Volvo Construction Equipment

1025978

Fig.	Part No.	Quantity 1	2	3	PS	KIT	Description	Dénomination	Bezeichnung	Denominación	Notes
1	**VOE 11886865**	1					Brake Servo	Servofrein	Bremsservo	Servofreno	
2	**VOE 11709901**	2					Dust Cover	Pare-poussiere	Staubschutz	Prot Polvo	
3	**VOE 11883022**	3					Connector	Raccord	Anschluss	Union	
	VOE 968207	3					•O-ring	•Joint Torique	•O-Ring	•Junta torica	
	VOE 990737	3					•O-ring	•Joint Torique	•O-Ring	•Junta torica	
4	**VOE 11888671**	1					Hose	Durit	Schlauch	Tubo flexible	
5	**VOE 11883021**	1					Connector	Raccord	Anschluss	Union	
6	**VOE 11888669**	1					Hose	Durit	Schlauch	Tubo flexible	
7	**VOE 13933857**	2					Elbow Nipple	Raccord angulaire	Winkelnippel	Niple Angular	
	VOE 990739	2					•O-ring	•Joint Torique	•O-Ring	•Junta torica	
	VOE 932039	2					•O-ring	•Joint Torique	•O-Ring	•Junta torica	
8	**VOE 4821292**	8					Strip Clamp	Ruban Serrage	Kabelbinder	Abraz Cinta	
9	**VOE 13971068**	2					Hexagon Nut	Ecrou Hexagonal	Sechskantmutter	Tuerca Hexagon	
10	**VOE 11883764**		1				Hose	Durit	Schlauch	Tubo flexible	
10	**VOE 11882192**			1			Hose assembly	Conduit flexible	Schlauchleitung	Conducto	See group 421, Page 237
11	**VOE 990737**	1					O-ring	Joint Torique	O-Ring	Junta torica	
12	**VOE 935085**	1					Nipple	Raccord	Nippel	Niple	See group 420, Page 223
	VOE 932039	1					•O-ring	•Joint Torique	•O-Ring	•Junta torica	
	VOE 990737	1					•O-ring	•Joint Torique	•O-Ring	•Junta torica	

1	**11880004**
2	**11891077**
3	**11891076**
4	
5	

Freno rueda, trasero
Radbremse, Hintere
Frein de roue, Ar
Wheel brake, rear

S/N 10627 -

Catalogue id **20050**	Group **517**
Illustr. No **1025978**	Section **250**
Issue **VOE 64D9920050**	Page **367**

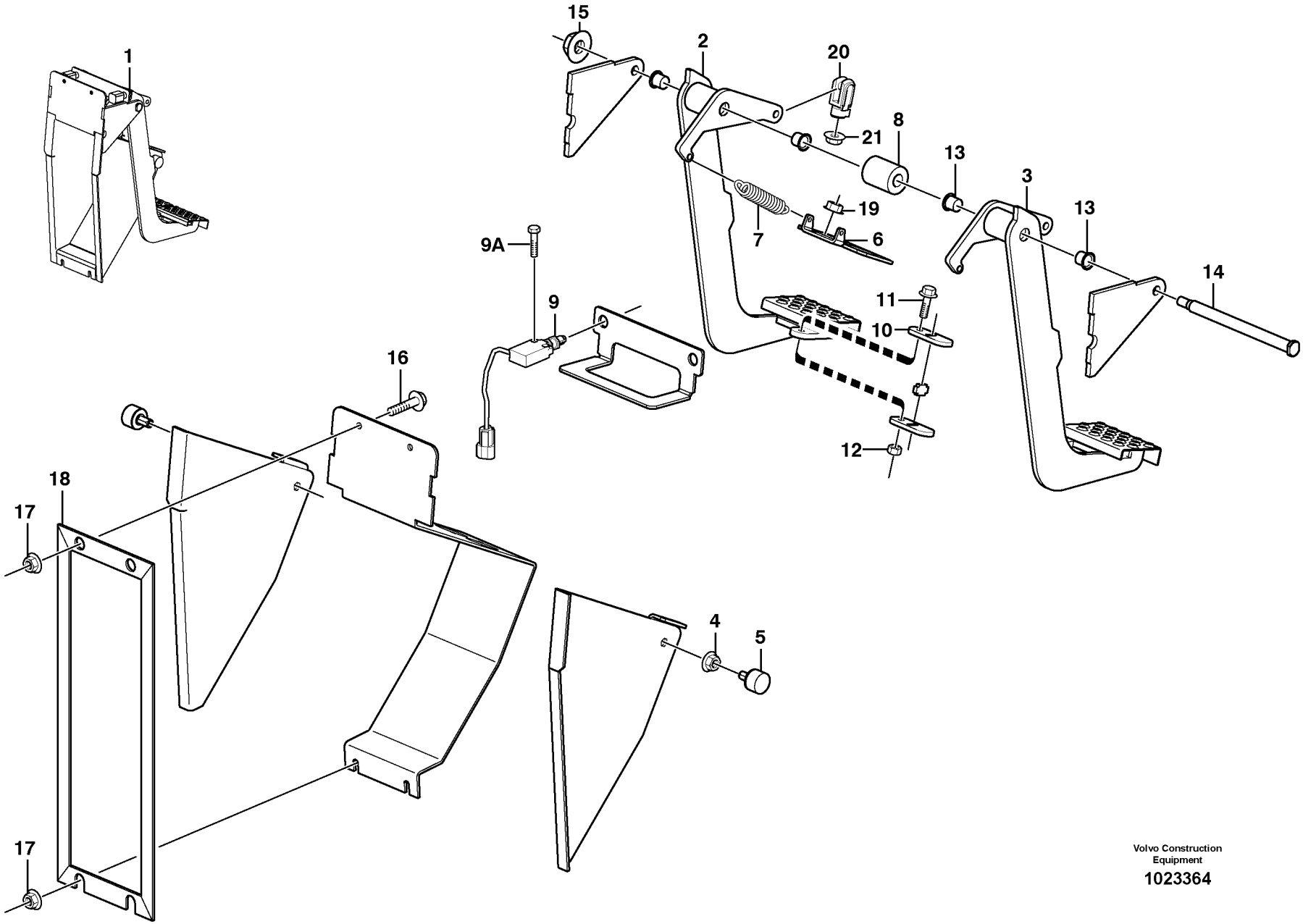

Volvo Construction Equipment

1023364

Fig.	Part No.	Quantity 1	2	3	PS	KIT	Description	Dénomination	Bezeichnung	Denominación	Notes
		1			NS		Brake Unit	Ensemble Frein	Bremsanordnung	Unidad Freno	
1		1			NS		•Box	•Boîte	•Kasten	•Caja	
2	**VOE 11200877**	1					•Brake Pedal	•Pedale Frein	•Bremspedal	•Pedal Frenos	RH
3	**VOE 11200878**	1					•Brake Pedal	•Pedale Frein	•Bremspedal	•Pedal Frenos	LH
4	**VOE 981256**	2					•Rivet Nut	•Ecrou Rivet	•Nietmutter	•Tuerca Remache	
5	**VOE 11200579**	2					•Absorber	•Amortisseur	•Dämpfer	•Amortiguador	
6	**VOE 11200430**	1					•Plate	•Tôle	•Blech	•Chapa	
7	**VOE 11200429**	2					•Tension Spring	•Ressort de traction	•Zugfeder	•Muelle traccion	
8	**VOE 11200970**	1					•Sleeve	•Douille	•Hülse	•Manguito	
9	**VOE 11887707**	2					•Switch	•Commutateur	•Schalter	•Contactor	X61, X62
9	**VOE 11888817**	2					•Switch	•Commutateur	•Schalter	•Contactor	11891076, 11891077 S/N 10627 -
9A	**VOE 969147**	2					•Screw	•Vis	•Schraube	•Tornillo	
10	**VOE 11200511**	1					•Lock Arm	•Bras Verrouill.	•Sperrhebel	•Brazo Bloqueo	
11	**VOE 13947760**	1					•Flange screw	•Vis à bride	•Flanschschraube	•Torn embridado	
12	**VOE 948645**	1					•Flange Lock Nut	•Contre écrou bride	•Flanschmutter	•Contratuer Embr	
13	**VOE 11200610**	4					•Flange Bearing	•Palier Bride	•Flanschlager	•Cojinete Brida	
14	**VOE 11149686**	1					•Pedal Shaft	•Axe Pedale	•Pedalachse	•Eje Pedal	
15	**VOE 971099**	1					•Flange Lock Nut	•Contre écrou bride	•Flanschmutter	•Contratuer Embr	(VOE 13971099)
16	**VOE 13945444**	3					Flange screw	Vis à bride	Flanschschraube	Torn embridado	
17	**VOE 981256**	3					Rivet Nut	Ecrou Rivet	Nietmutter	Tuerca Remache	
18	**VOE 11202448**	1					Gasket	Joint	Dichtung	Junta	
19	**VOE 948645**	4					Flange Lock Nut	Contre écrou bride	Flanschmutter	Contratuer Embr	
20	**VOE 11200397**	2					Link	Articulation	Gelenk	Articulacion	
21	**VOE 983304**	2					Hexagon Nut	Ecrou Hexagonal	Sechskantmutter	Tuerca Hexagon	

1		**Sistema de frenos** **Bremssystem** **Système de freinage** **Brake system**	Catalogue id **20050**	Group **525**
2			Illustr. No **1023364**	Section **100**
3				
4			Issue **VOE 64D9920050**	Page **369**
5		**11298204, 11298208**		

VOLVO

BL61

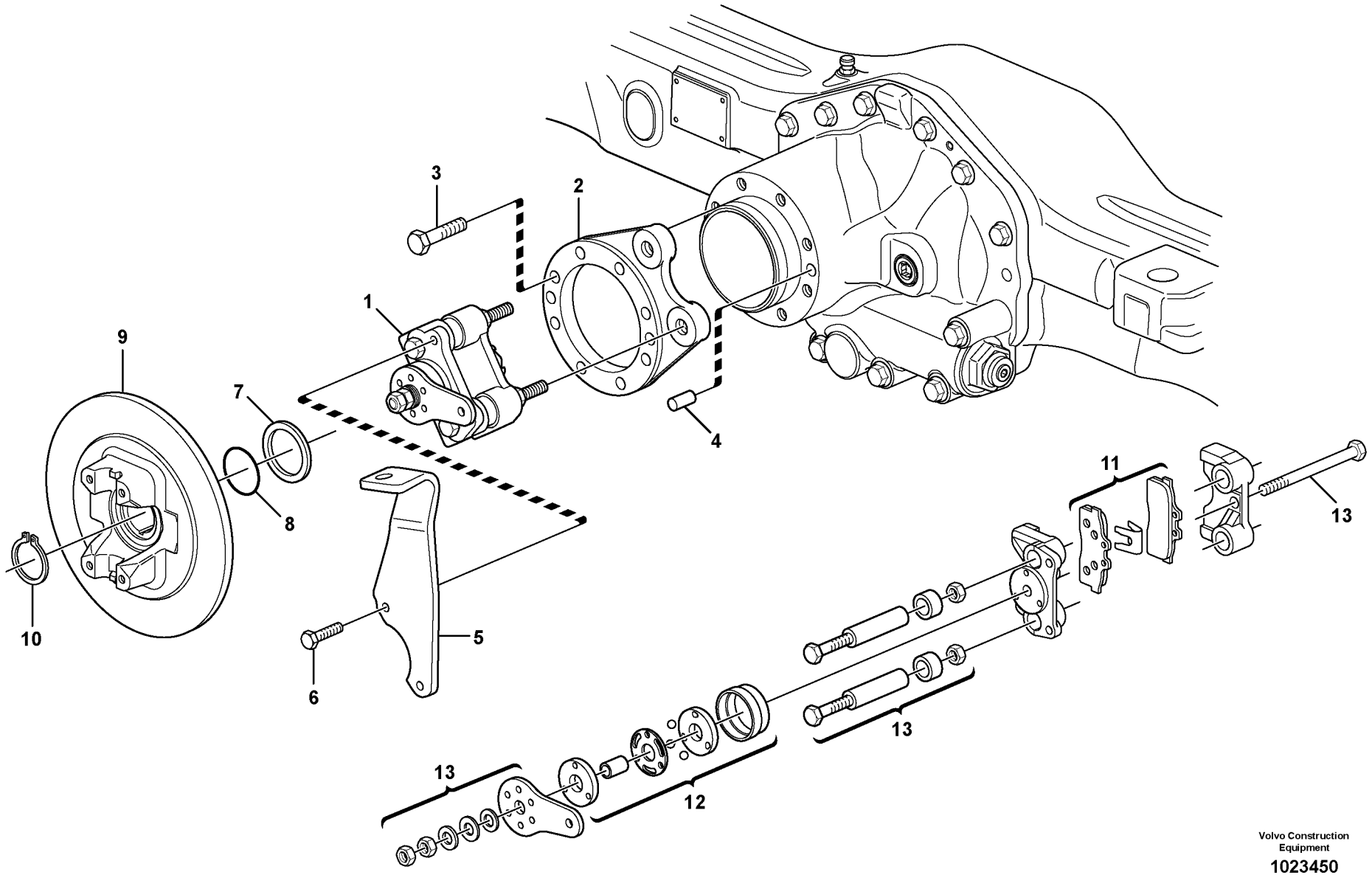

Volvo Construction Equipment

1023450

Fig.	Part No.	Quantity 1	2	3	PS	KIT	Description	Dénomination	Bezeichnung	Denominación	Notes
1	**VOE 11716606**	1					Brake Disc	Disque Frein	Bremsscheibe	Disco De Freno	
2	**VOE 11709300**	1					Lock Ring	Anneau Verrouillage	Schlossring	Anillo Segurid	
3	**VOE 11709303**	1					O-ring	Joint Torique	O-Ring	Junta torica	
4	**VOE 11709304**	1					Washer	Rondelle	Scheibe	Arandela	
5	**VOE 11716602**	8					Screw	Vis	Schraube	Tornillo	
6	**VOE 11716601**	1					Anchorage	Fixation	Halterung	Fijacion	
7	**VOE 11716603**	2					Pin	Goupille	Zapfen	Pasador	
8	**VOE 11716604**	1					Bracket	Console	Konsole	Ménsula	
9	**VOE 11716605**	2					Screw	Vis	Schraube	Tornillo	
10	**VOE 11716600**	1					Brake Caliper	Etrier Frein	Bremssattel	Mordaza	
11	**11716655**	1					•	•	•	•	
12	**11716654**	1					•	•	•	•	
13	**11716652**	1					•	•	•	•	

1		**Freno estacionamiento** **Feststellbremse** **Frein parking** **Parking brake**	Catalogue id **20050**	Group **551**
2			Illustr. No **1023450**	Section **150**
3			Issue **VOE 64D9920050**	Page **371**
4				
5		**S/N 10627 -**		

VOLVO

BL61

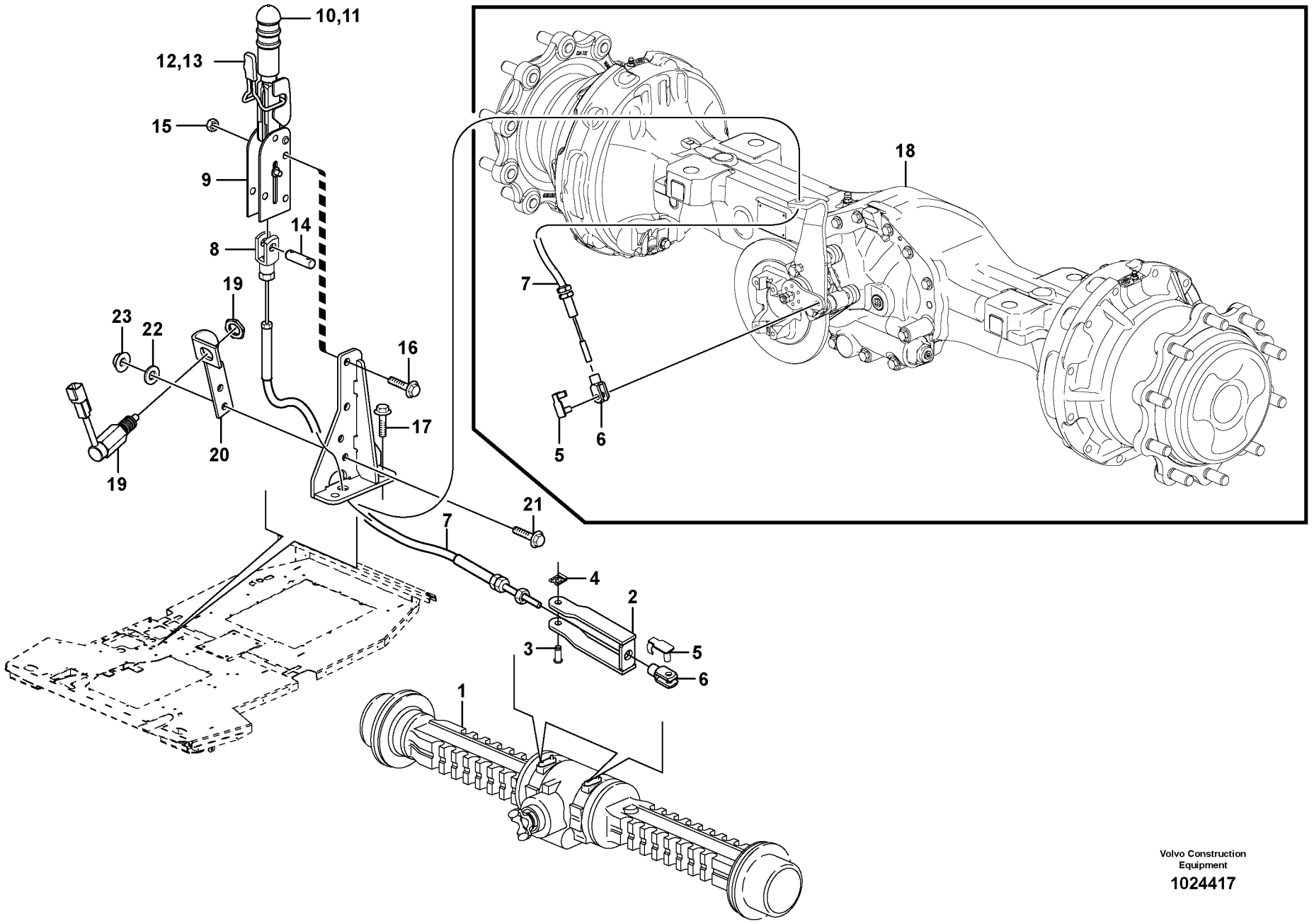

Volvo Construction Equipment

1024417

Fig.	Part No.	Quantity 1	2	3	PS	KIT	Description	Dénomination	Bezeichnung	Denominación	Notes
1		1					Planetary shaft, rear	Pont moteur, AR	Planetengetriebe, Ruc	Puente motor, trasero	See group 463, Page 327
2	**VOE 11882783**	1					Bracket	Console	Konsole	Ménsula	
3	**VOE 949755**	1					Rtng Ring Bolt	Boulon Sill Bag	Sich.bolzen	Perno Circlip	
4	**VOE 943926**	1					Lock brace	Etrier de verrouillage	Sperrklinke	Brazo Seguridad	
5	**VOE 11883323**	1		1			Clevis Pin	Vis A Oeuillet	Zylinderbolzen	Espiga	
6	**VOE 11883319**	1		1			Fork	Fourche	Gabel	Horquilla	
7	**VOE 11888468**	1		1			Cable	Câble	Seil	Cable	
8	**VOE 11882913**	1		1			Fork	Fourche	Gabel	Horquilla	
9	**VOE 11200803**		1				Parking Brake	Frein Parking	Feststellbremse	Freno Estacion	
10	**VOE 11709850**		1				•Handle	•Poignee	•Handgriff	•Manilla	
11	**VOE 11709851**		1				•Spring	•Ressort	•Feder	•Muelle	
12	**VOE 11709852**		1				•Leaf Spring	•Ressort plat	•Blattfeder	•Resorte plano	
13	**VOE 11709853**		1				•Handle	•Poignee	•Handgriff	•Manilla	
14	**VOE 11715435**		1				Clevis Pin	Vis A Oeuillet	Zylinderbolzen	Espiga	
15	**VOE 13971098**		2				Flange nut	Ecrou accouple.	Bundmutter	Tuerca embridad	M10
16	**VOE 13965186**		2				Flange screw	Vis à bride	Flanschschraube	Torn embridado	M10x50
17	**VOE 946329**		2				Flange screw	Vis à bride	Flanschschraube	Torn embridado	M10x25
18				1			Planetary shaft, rear	Pont moteur, AR	Planetengetriebe, Ruc	Puente motor, trasero	See group 460, Page 299
19	**VOE 11888649**		1	1			Switch	Commutateur	Schalter	Contactor	S/N 10627 -
20	**VOE 11205674**		1	1			Plate	Plaque	Platte	Placa	
21	**VOE 13945444**		2	2			Flange screw	Vis à bride	Flanschschraube	Torn embridado	
22	**VOE 983334**		4	4			Washer	Rondelle	Scheibe	Arandela	
23	**VOE 948645**		2	2			Flange Lock Nut	Contre écrou bride	Flanschmutter	Contratuer Embr	

1	**11880004**
2	**11298204, 11298208**
3	**11880004 S/N 10627 -**
4	
5	

Freno estacionamiento
Feststellbremse
Frein parking
Parking brake

Catalogue id **20050**	Group **551**
Illustr. No **1024417**	Section **250**
Issue **VOE 64D9920050**	Page **373**

VOLVO

Construction Equipment

GROUP		Section	Page
641	Steering column with fitting parts	100	381
645	Steering system 11891306, 11891496	100	383
645	Steering system 11880004 S/N 10627 -	150	385
645	Steering system 11891305	200	387
645	Control valve	400	389



TABLE DES MATIÈRES

GROUPE		Section	Page
641	Colonne de direction avec pièces de montage	100	381
645	Systeme de direction 11891306, 11891496	100	383
645	Systeme de direction 11880004 S/N 10627 -	150	385
645	Systeme de direction 11891305	200	387
645	Valve de contrôle	400	389

GRUPPE		Abschnitt	Seite
641	Lenksäule mit Montageteilen	100	381
645	Lenkungssystem 11891306, 11891496	100	383
645	Lenkungssystem 11880004 S/N 10627 -	150	385
645	Lenkungssystem 11891305	200	387
645	Steuerventil	400	389

GRUPO		Sección	Página
641	Columna de dirección con accesorios de montaje	100	381
645	Sistema de direccion 11891306, 11891496	100	383
645	Sistema de direccion 11880004 S/N 10627 -	150	385
645	Sistema de direccion 11891305	200	387
645	Válvula de control	400	389

VOLVO

Construction Equipment

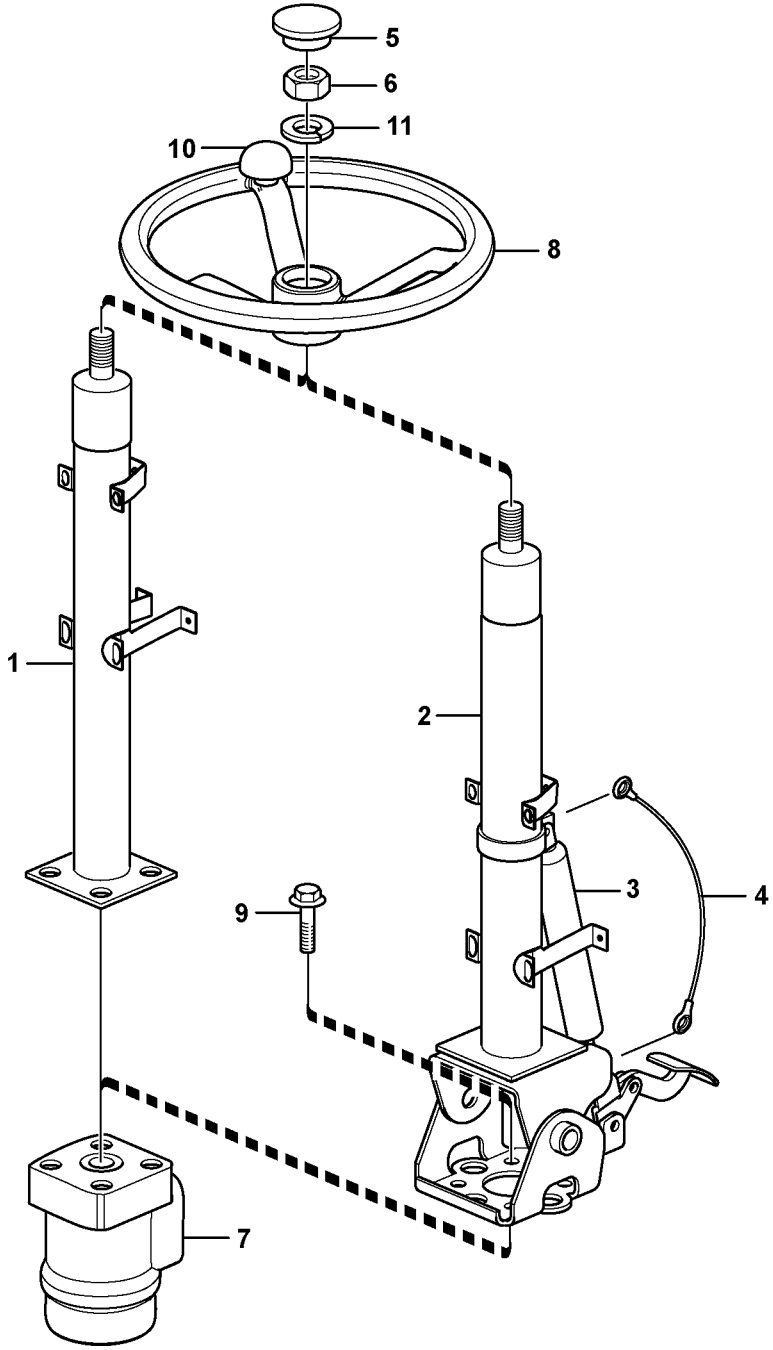

Volvo Construction Equipment
1012000

Fig.	Part No.	Quantity 1	2	3	4	5	PS	KIT	Description	Dénomination	Bezeichnung	Denominación	Notes
1	**VOE 11200527**	1							Steering Column	Colonne direction	Lenksäule	Columna direccion	
2	**VOE 11200587**		1						Steering Column	Colonne direction	Lenksäule	Columna direccion	
3	**VOE 14371493**	1	1						Cap	Chapeau	Verschlusskappe	Caperuza	
4	**VOE 955822**	1	1						Hexagon Nut	Ecrou Hexagonal	Sechskantmutter	Tuerca Hexagon	
5				1					Control valve	Valve controle	Steuerventil	Válvula control	See group 645, Page 389
6	**VOE 11200562**	1	1						Steering Wheel	Volant direction	Lenkrad	Volante de direccion	
7	**VOE 946329**	4	4						Flange screw	Vis à bride	Flanschschraube	Torn embridado	
8	**VOE 11200563**				1				Knob	Bouton	Knauf	Boton	
9	**VOE 11104898**	1	1						Lock Washer	Rondel.verroui.	Sicher Scheibe	Arandel Segurid	

1	**11298009**
2	**11298010**
3	**11880004**
4	**11298021**
5	

Columna de dirección con accesorios de montaje
Lenksäule mit Montageteilen
Colonne de direction avec pièces de montage
Steering column with fitting parts

Catalogue id **20050**	Group **641**
Illustr. No **1012000**	Section **100**
Issue **VOE 64D9920050**	Page **381**

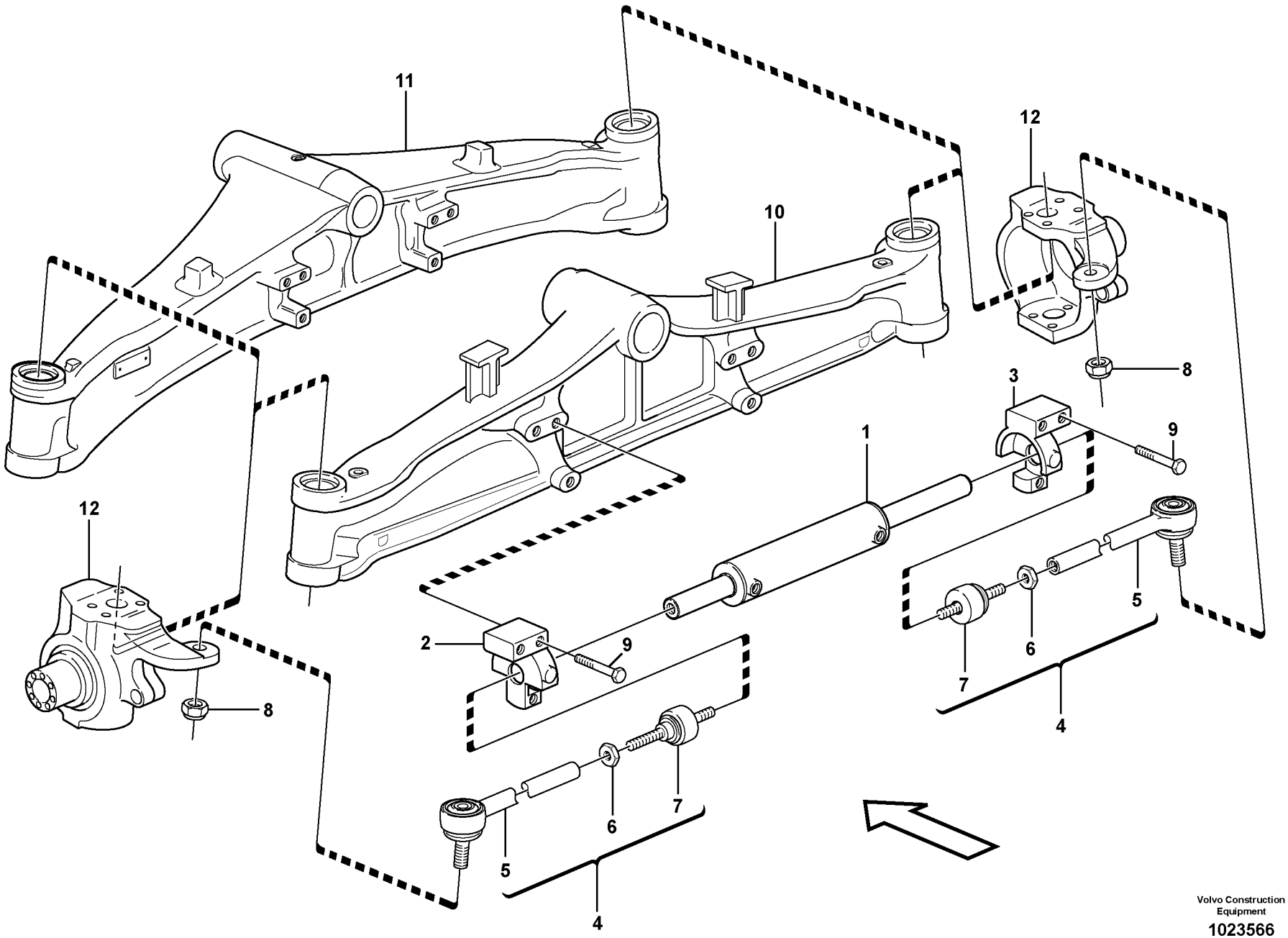

Volvo Construction Equipment

1023566

Fig.	Part No.	Quantity 1	2	3	PS	KIT	Description	Dénomination	Bezeichnung	Denominación	Notes
1	**VOE 11712522**	1					Steering cylinder	Verin direction	Lenkzylinder	Cilindro direccion	
	VOE 11712523	1					•Sealing Kit	•Jeu Joints	•Dichtungssatz	•Juego Retenes	
2	**VOE 11712524**	1					•Cylinder head	•Culasse	•Zylinderkopf	•Culata	
3	**VOE 11712525**	1					•Cylinder head	•Culasse	•Zylinderkopf	•Culata	
4	**VOE 11712459**	2					Steering Link	Biell.direction	Steuerglied	Artic Direccion	
5	**VOE 11712503**	1					•Steering Link	•Biell.direction	•Steuerglied	•Artic Direccion	
6	**VOE 11988566**	1					•Nut	•Ecrou	•Mutter	•Tuerca	
7	**VOE 11988565**	1					•Tie Rod	•Barre Accouple.	•Spurstange	•Barra Acoplam	
8	**VOE 11988563**	2					Nut	Ecrou	Mutter	Tuerca	
9	**VOE 11712504**	6					Screw	Vis	Schraube	Tornillo	
10		1					Front axle	Pont avant	Vorderachse	Eje delantero	S/N - 10626 See group 461, Page 319
10		1					Front axle	Pont avant	Vorderachse	Eje delantero	S/N 10627 - See group 461, Page 321
11		1					Housing	Carter	Gehäuse	Carter	See group 461, Page 319

1		**Sistema de direccion** **Lenkungssystem** **Systeme de direction** **Steering system**	Catalogue id **20050**	Group **645**
2			Illustr. No **1023566**	Section **100**
3			Issue **VOE 64D9920050**	Page **383**
4				
5		**11891306, 11891496**		

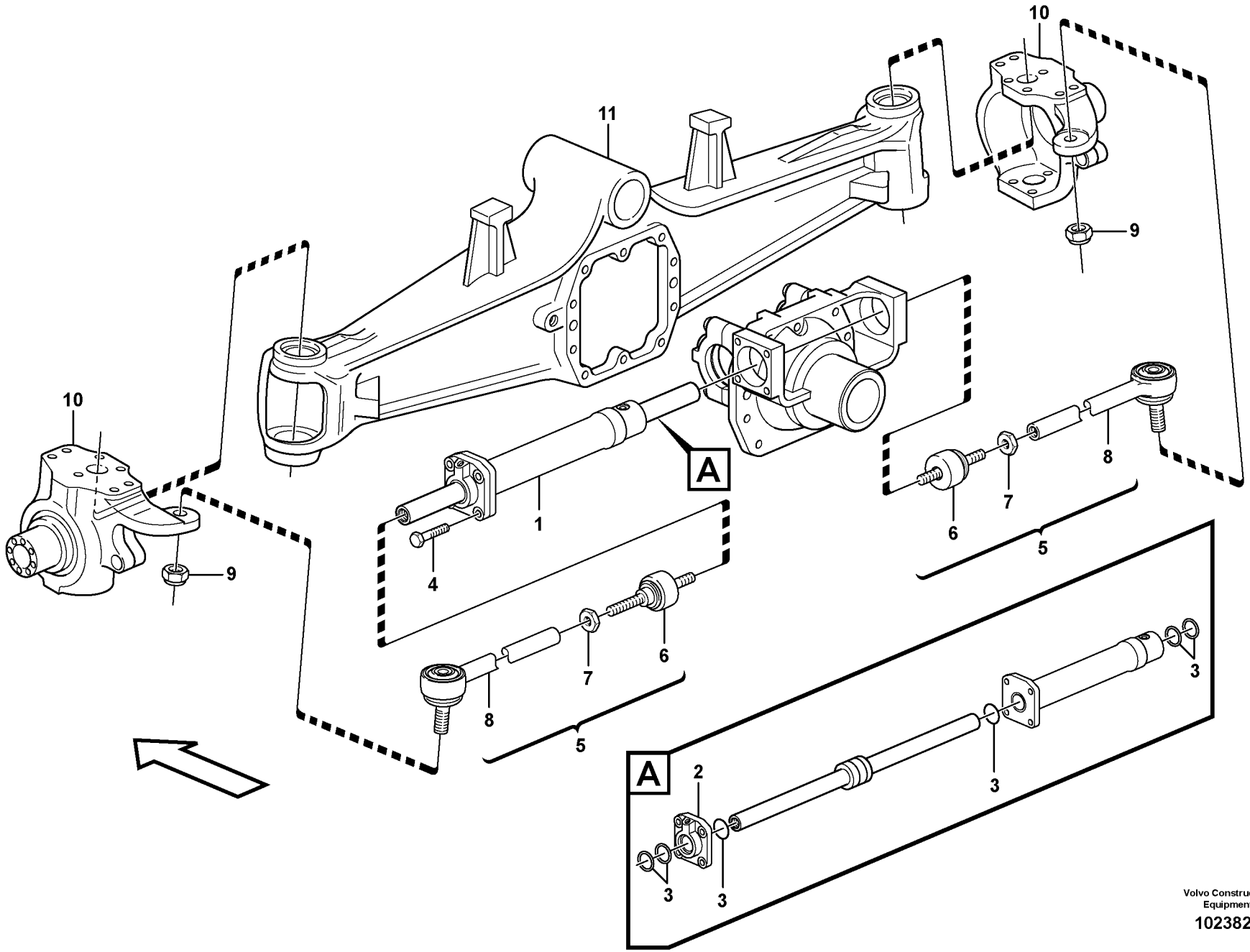

Volvo Construction Equipment

1023829

Fig.	Part No.	Quantity 1	2	3	PS	KIT	Description	Dénomination	Bezeichnung	Denominación	Notes
1	**VOE 11716717**	1					Steering cylinder	Verin direction	Lenkzylinder	Cilindro direccion	
2	**VOE 11716719**	1					•Cylinder head	•Culasse	•Zylinderkopf	•Culata	
3	**VOE 11716720**	1					•Sealing Kit	•Jeu Joints	•Dichtungssatz	•Juego Retenes	
4	**VOE 11716623**	4					•Screw	•Vis	•Schraube	•Tornillo	
5	**VOE 11988564**	2					•Steering Rod	•Bielle direction	•Lenkstange	•Biela direccion	
6	**VOE 11988567**	2					••Ball joint	••Rotule articul	••Kugelgelenk	••Rotula	
7	**VOE 11988566**	2					••Nut	••Ecrou	••Mutter	••Tuerca	
8	**VOE 11988565**	2					••Tie Rod	••Barre Accouple	••Spurstange	••Barra Acoplam	
9	**VOE 11988563**	2					•Nut	•Ecrou	•Mutter	•Tuerca	
10		2					•Housing	•Carter	•Gehäuse	•Carter	
11		1					Front axle	Pont avant	Vorderachse	Eje delantero	

1		**Sistema de direccion** **Lenkungssystem** **Systeme de direction** **Steering system**	Catalogue id **20050**	Group **645**
2			Illustr. No **1023829**	Section **150**
3				
4			Issue **VOE 64D9920050**	Page **385**
5		**11880004 S/N 10627 -**		

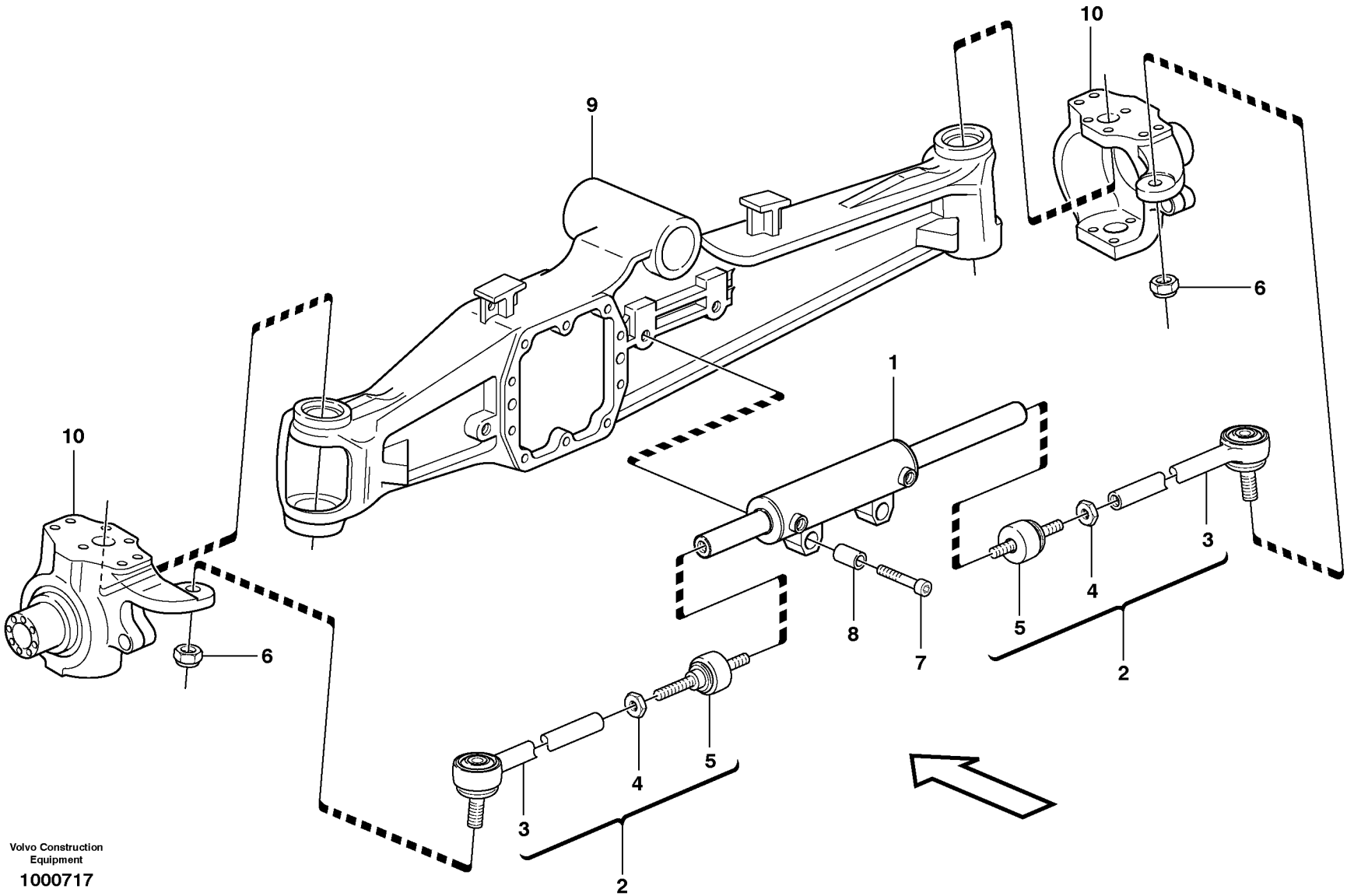

Volvo Construction Equipment

1000717

Fig.	Part No.	Quantity 1	2	3	PS	KIT	Description	Dénomination	Bezeichnung	Denominación	Notes
1	**VOE 11988151**	1					Strg Cylinder	Verin Direction	Lenkzylinder	Cil Direccion	
	VOE 11709898	1					•Sealing Kit	•Jeu Joints	•Dichtungssatz	•Juego Retenes	
	VOE 11712479	2					•Seal	•Joint	•Dichtring	•Junta	
2	**VOE 11988564**	2					Steering Rod	Bielle direction	Lenkstange	Biela direccion	
3	**VOE 11988565**	1					•Tie Rod	•Barre Accouple.	•Spurstange	•Barra Acoplam	
4	**VOE 11988566**	1					•Nut	•Ecrou	•Mutter	•Tuerca	
5	**VOE 11988567**	1					•Ball joint	•Rotule articul.	•Kugelgelenk	•Rotula	
6	**VOE 11988563**	2					Nut	Ecrou	Mutter	Tuerca	
7	**VOE 11709454**	2					Screw	Vis	Schraube	Tornillo	
8	**VOE 11709460**	2					Bushing	Bague	Buchse	Casquillo	
9		1					Front axle	Pont avant	Vorderachse	Eje delantero	See group 461, Page 301
10		1					Housing	Carter	Gehäuse	Carter	See group 461, Page 301

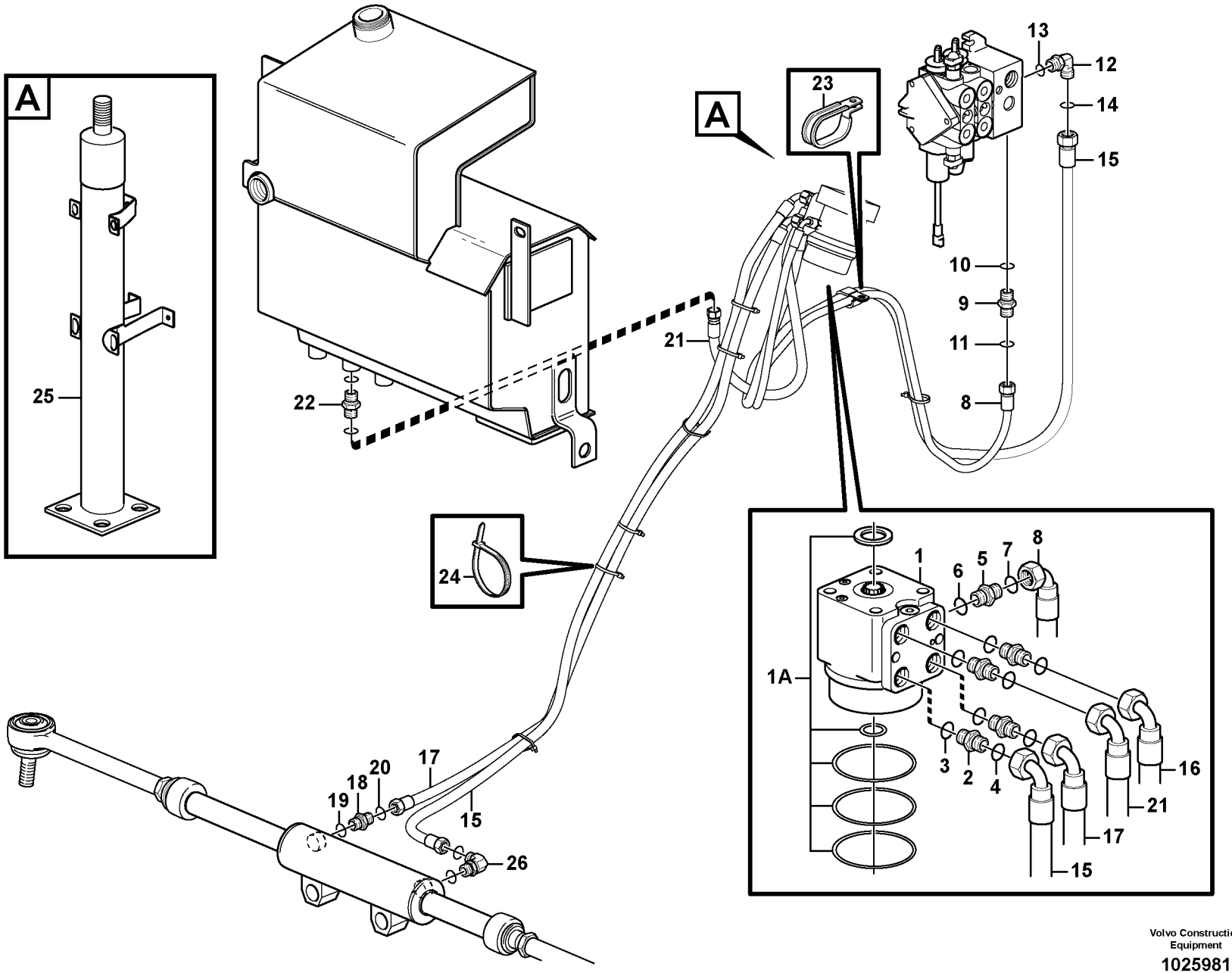

Volvo Construction Equipment

1025981

Fig.	Part No.	Quantity 1	2	3	PS	KIT	Description	Dénomination	Bezeichnung	Denominación	Notes
1	**VOE 11890016**	1					Control valve	Valve controle	Steuerventil	Válvula control	
1A	**VOE 11709888**	1					•Sealing Kit	•Jeu Joints	•Dichtungssatz	•Juego Retenes	
2	**VOE 935089**	4					Nipple	Raccord	Nippel	Niple	
3	**VOE 932040**	1					•O-ring	•Joint Torique	•O-Ring	•Junta torica	
4	**VOE 4880492**	1					•O-ring	•Joint Torique	•O-Ring	•Junta torica	
5	**VOE 935082**	1					Nipple	Raccord	Nippel	Niple	
6	**VOE 932037**	1					•O-ring	•Joint Torique	•O-Ring	•Junta torica	
7	**VOE 4881722**	1					•O-ring	•Joint Torique	•O-Ring	•Junta torica	
8	**VOE 11885684**	1					Hose assembly	Conduit flexible	Schlauchleitung	Conducto	
9	**VOE 13933858**	1					Union	Teton Connexion	Anschlussnippel	Niple Conexcion	
10	**VOE 932039**	1					•O-ring	•Joint Torique	•O-Ring	•Junta torica	
11	**VOE 4881722**	1					•O-ring	•Joint Torique	•O-Ring	•Junta torica	
12	**VOE 935070**	1					Elbow nipple	Raccord angulaire	Winkelnippel	Niple angular	
13	**VOE 932040**	1					•O-ring	•Joint Torique	•O-Ring	•Junta torica	
14	**VOE 4880492**	1					•O-ring	•Joint Torique	•O-Ring	•Junta torica	
15	**VOE 11885685**	1					Hose assembly	Conduit flexible	Schlauchleitung	Conducto	
16	**VOE 11882938**	1					Hose assembly	Conduit flexible	Schlauchleitung	Conducto	
17	**VOE 11882937**	1					Hose assembly	Conduit flexible	Schlauchleitung	Conducto	
18	**VOE 935640**	2					Nipple	Raccord	Nippel	Niple	
18	**VOE 935085**	1					Nipple	Raccord	Nippel	Niple	S/N 10627 -
19	**VOE 932039**	1					•O-ring	•Joint Torique	•O-Ring	•Junta torica	
20	**VOE 4880492**	1					•O-ring	•Joint Torique	•O-Ring	•Junta torica	
21	**VOE 1882940**	1					Hose	Durit	Schlauch	Tubo flexible	
22		1					Nipple	Raccord	Nippel	Niple	See group 911, Page 509
23	**VOE 981665**	1					Clamp	Pince Serrage	Klemme	Abrazadera	
24	**VOE 4881438**	7					Strip Clamp	Ruban Serrage	Kabelbinder	Abraz Cinta	
25		1					Steering Column	Colonne direction	Lenksäule	Columna direccion	See group 641, Page 381
26	**VOE 935069**	1					Elbow nipple	Raccord angulaire	Winkelnippel	Niple angular	S/N 10627 -
	VOE 932039	1					•O-ring	•Joint Torique	•O-Ring	•Junta torica	
	VOE 990737	1					•O-ring	•Joint Torique	•O-Ring	•Junta torica	

1	
2	
3	
4	
5	

Válvula de control
Steuerventil
Valve de contrôle
Control valve

Catalogue id	Group
20050	**645**
Illustr. No **1025981**	Section **400**
Issue **VOE 64D9920050**	Page **389**

VOLVO

Construction Equipment

GROUP		Section	Page	GROUP		Section	Page
711	Frame	100	397				
716	Counterweight	100	399				
771	Wheel 11891531	100	401				
771	Wheel 11891305, 11891306	140	403				

TABLE DES MATIÈRES	Catalogue id 20050	Group 7
	Issue VOE 64D9920050	Page 392

GROUPE	Section	Page	GROUPE	Section	Page
711 Chassis	100	397			
716 Contrepoids	100	399			
771 Roue 11891531	100	401			
771 Roue 11891305, 11891306	140	403			

GRUPPE		Abschnitt	Seite	GRUPPE		Abschnitt	Seite
711	Rahmen	100	397				
716	Gegengewicht	100	399				
771	Rad 11891531	100	401				
771	Rad 11891305, 11891306	140	403				

GRUPO		Sección	Página
711	Bastidor	100	397
716	Contrapeso	100	399
771	Rueda 11891531	100	401
771	Rueda 11891305, 11891306	140	403

VOLVO

Construction Equipment

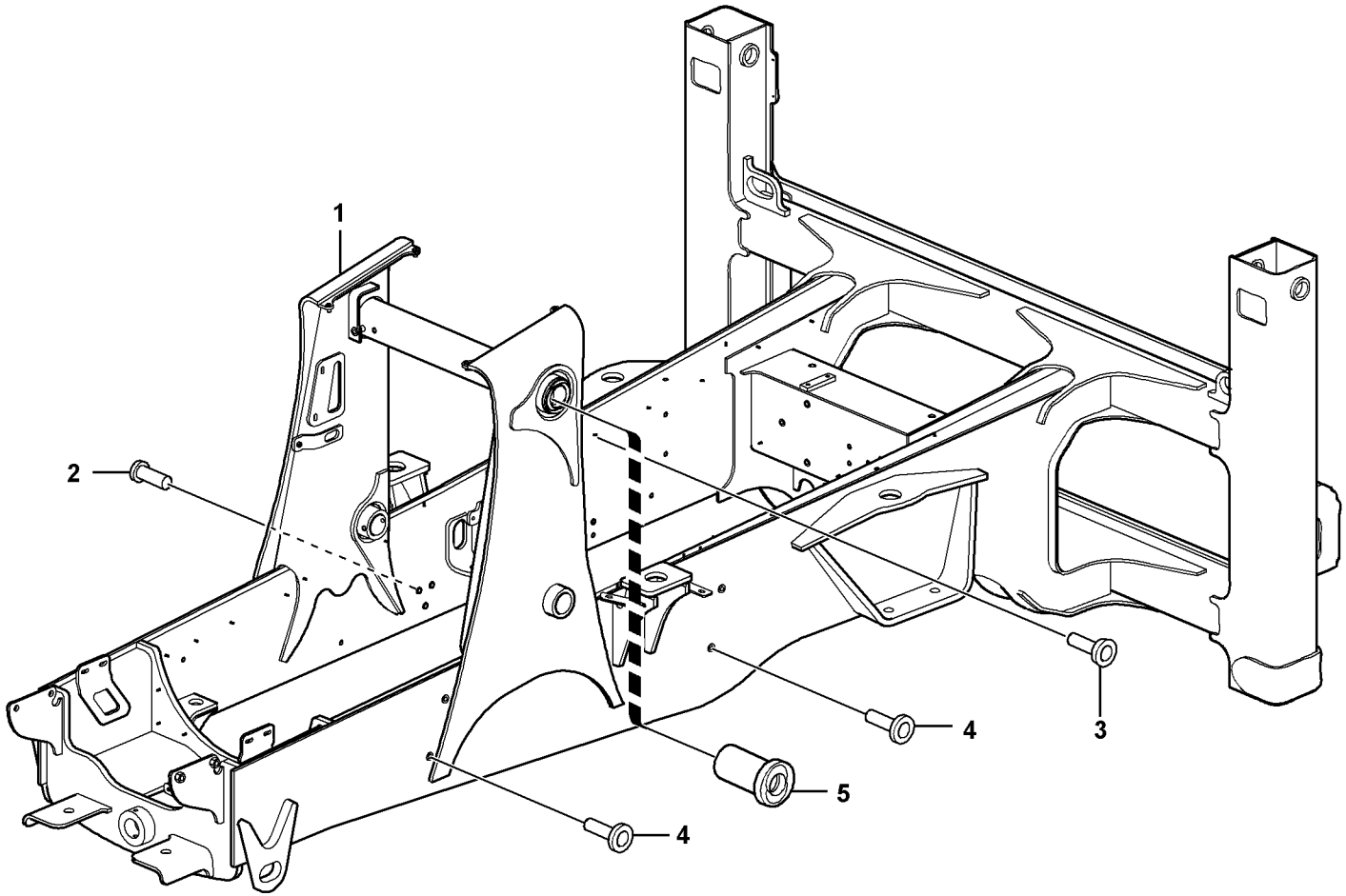

Volvo Construction Equipment
1012416

Fig.	Part No.	Quantity 1	2	3	PS	KIT	Description	Dénomination	Bezeichnung	Denominación	Notes
1	**VOE 11885978**	1					Frame	Chassis	Rahmen	Bastidor	SER NO -10003
1	**VOE 11886328**	1					Frame	Chassis	Rahmen	Bastidor	SER NO 10004-10158
1	**VOE 11886710**	1					Frame	Chassis	Rahmen	Bastidor	SER NO 10159 - 10626
1	**VOE 11888306**	1					Chassis	Chassis	Fahrgestell	Chasis	S/N 10627 -
2	**VOE 11882680**	3					•Rivet	•Rivet	•Niet	•Remache	
3	**VOE 11882026**	11					•Rivet	•Rivet	•Niet	•Remache	
4	**VOE 11881792**	11					•Blind Rivet	•Rivet Borgne	•Blindniet	•Remache Ciego	
5	**VOE 11883771**	2					•Bushing	•Bague	•Buchse	•Casquillo	

1		**Bastidor** **Rahmen** **Chassis** **Frame**	Catalogue id **20050**	Group **711**
2			Illustr. No **1012416**	Section **100**
3			Issue **VOE 64D9920050**	Page **397**
4				
5				

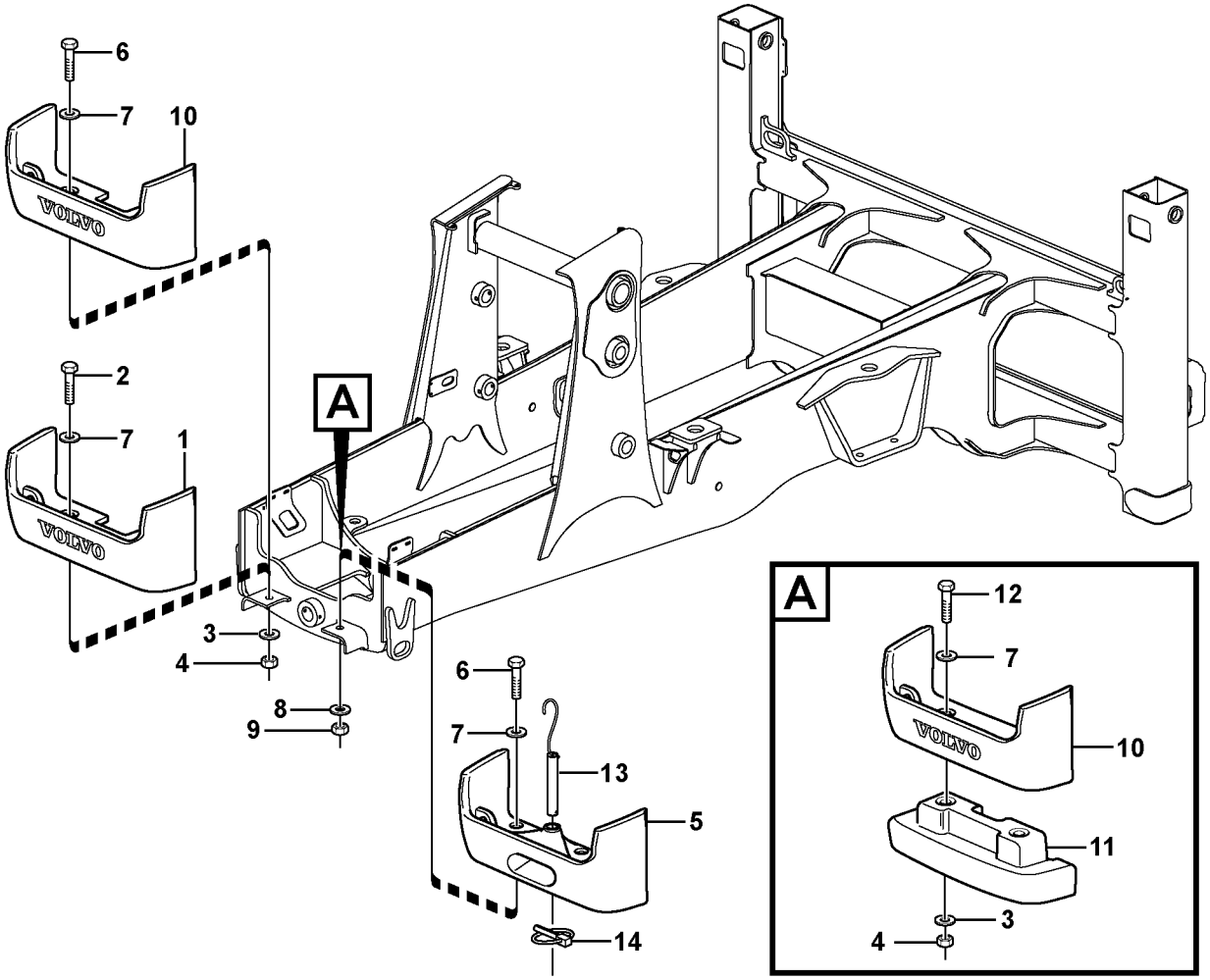

Volvo Construction Equipment
1012413

Fig.	Part No.	Quantity 1	2	3	4	5	PS	KIT	Description	Dénomination	Bezeichnung	Denominación	Notes
1	**VOE 11886741**	1							Counterweight	Contrepoids	Gegengewicht	Contrapeso	105 kg
2	**VOE 979920**	2							Hexagon screw	Vis tête hexagonale	Sechskantschraube	Tornillo hexago	M24x80 SER NO -10080
2	**VOE 13963362**	2							Hexagon screw	Vis tête hexagonale	Sechskantschraube	Tornillo hexago	M24x100 SER NO 10081-
3	**VOE 955905**	4							Washer	Rondelle	Scheibe	Arandela	SER NO -10080
3	**VOE 11055610**	2							Washer	Rondelle	Scheibe	Arandela	SER NO 10081-
3	**VOE 11055610**			2	2				Washer	Rondelle	Scheibe	Arandela	
4	**VOE 980521**	2		2	2				Nut	Ecrou	Mutter	Tuerca	M24 SER NO -10080
4	**VOE 983377**	2		2	2				Lock nut	Contre-ecrou	Sicherungsmutter	Contratuerca	M24 SER NO 10081-
5	**VOE 11886743**		1						Counterweight	Contrepoids	Gegengewicht	Contrapeso	196 kg
6	**VOE 13963365**		2		2				Hexagon screw	Vis tête hexagonale	Sechskantschraube	Tornillo hexago	M24x140
7	**VOE 983340**		2	2	2				Washer	Rondelle	Scheibe	Arandela	SER NO -10080
7	**VOE 14376982**	2	2	2	2				Washer	Rondelle	Scheibe	Arandela	SER NO 10081-
8	**VOE 11055610**		2						Washer	Rondelle	Scheibe	Arandela	
9	**VOE 980521**		2						Nut	Ecrou	Mutter	Tuerca	M24 SER NO -10080
9	**VOE 983377**		2						Lock nut	Contre-ecrou	Sicherungsmutter	Contratuerca	M24 SER NO 10081-
10	**VOE 11886742**			1	1				Counterweight	Contrepoids	Gegengewicht	Contrapeso	202 kg
11	**VOE 11886925**			1					Counterweight	Contrepoids	Gegengewicht	Contrapeso	133 kg
12	**VOE 13980100**			2					Hexagon screw	Vis tête hexagonale	Sechskantschraube	Tornillo hexago	M24x270
13	**VOE 11885588**		1						Pin	Goupille	Zapfen	Pasador	
14	**VOE 11881622**		1						Locking pin	Goupille d'arrêt	Schliessbolzen	Pasador de cierre	

1	**11880004**
2	**11891317**
3	**11891358**
4	**11891359**
5	

Contrapeso
Gegengewicht
Contrepoids
Counterweight

Catalogue id **20050**	Group **716**
Illustr. No **1012413**	Section **100**
Issue **VOE 64D9920050**	Page **399**

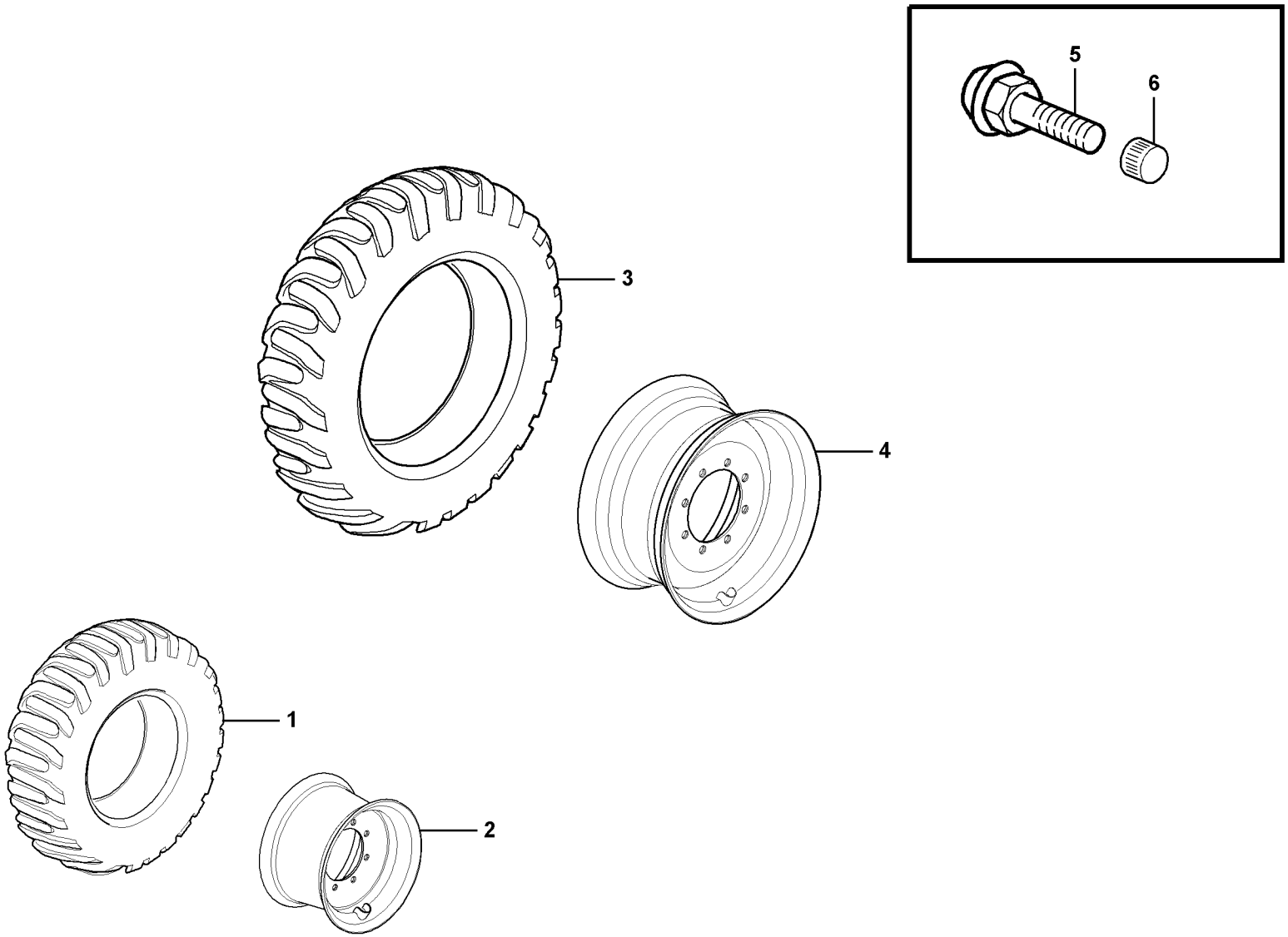

Volvo Construction Equipment
1012700

Fig.	Part No.	Quantity 1	2	3	PS	KIT	Description	Dénomination	Bezeichnung	Denominación	Notes
		1			NS		Wheel	Roue	Rad	Rueda	LH
			1		NS		Wheel	Roue	Rad	Rueda	LH
1	**VOE 11886833**	2					Tire	Pneu	Reifen	Neumatico	
2	**VOE 11881832**	2					Rim	Jante	Radfelge	Llania	
3	**VOE 11886599**		2				Tire	Pneu	Reifen	Neumatico	
4	**VOE 11885862**		2				Rim	Jante	Radfelge	Llania	
5	**VOE 784076**	2	2				Valve	Soupape	Ventil	Valvula	
6	**VOE 4789869**	2	2				Cap	Chapeau	Verschlusskappe	Caperuza	

1	**11891531 FRONT**	**Rueda** **Rad** **Roue** **Wheel**	Catalogue id **20050**	Group **771**
2	**11891531 REAR**		Illustr. No **1012700**	Section **100**
3			Issue **VOE 64D9920050**	Page **401**
4				
5		**11891531**		

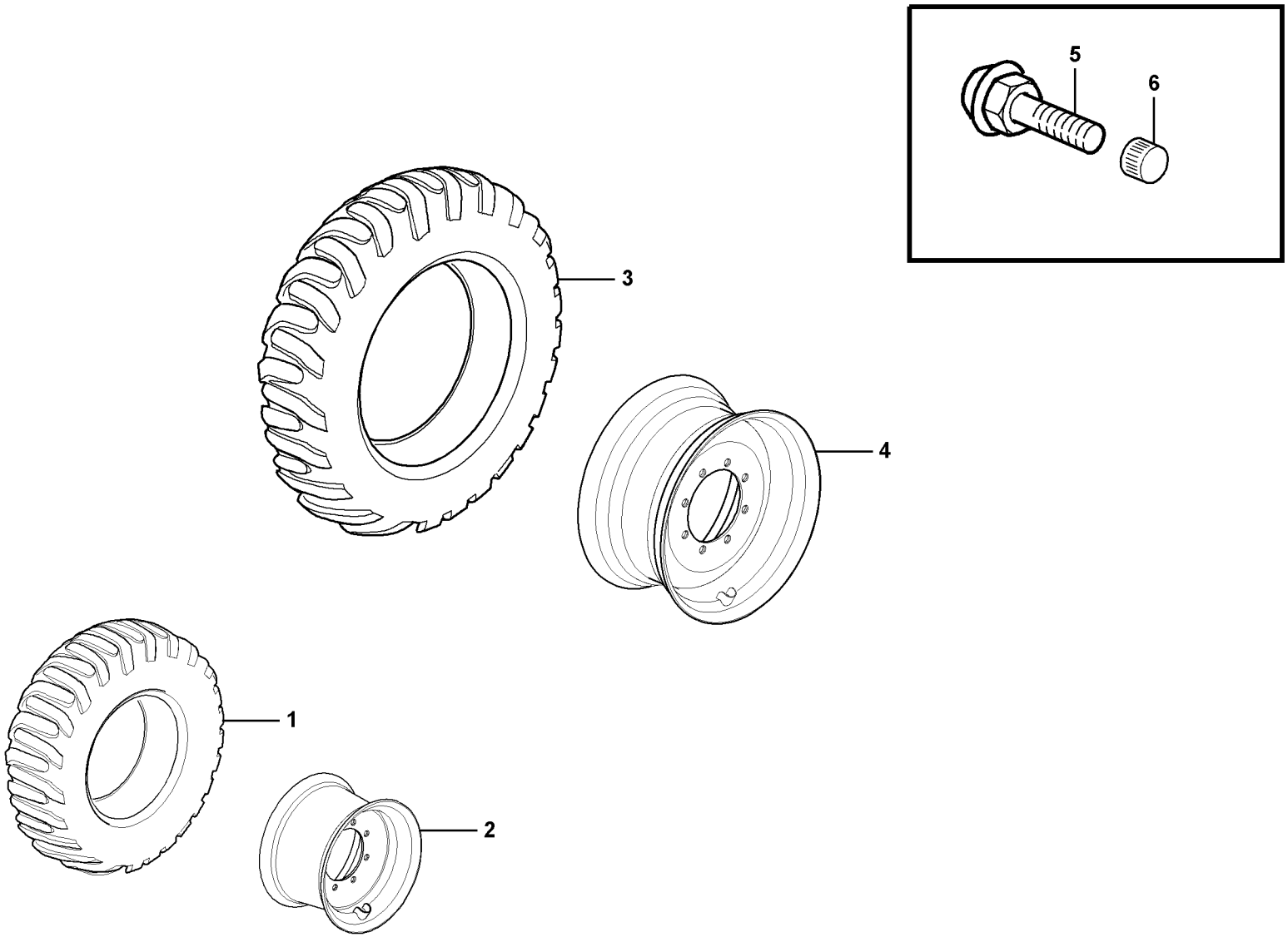

Volvo Construction Equipment
1012700

Fig.	Part No.	Quantity 1	2	3	4	5	PS	KIT	Description	Dénomination	Bezeichnung	Denominación	Notes
1	**VOE 11881819**	2							Tire	Pneu	Reifen	Neumatico	12,5/80X18”
1	**VOE 11881816**		2						Tire	Pneu	Reifen	Neumatico	11Lx16
2	**VOE 11884849**	2							Rim	Jante	Radfelge	Llania	18”
2	**VOE 11881828**		2						Rim	Jante	Radfelge	Llania	16”
3	**VOE 11881824**			2	2				Tire	Pneu	Reifen	Neumatico	16,9X28”
4	**VOE 11885862**			2	2				Rim	Jante	Radfelge	Llania	28”
5	**VOE 784076**	2	2	2	2				Valve	Soupape	Ventil	Valvula	
6	**VOE 4789869**	2	2	2	2				Cap	Chapeau	Verschlusskappe	Caperuza	

1	**11891305 FRONT**	**Rueda** **Rad** **Roue** **Wheel**	Catalogue id **20050**	Group **771**
2	**11891306 FRONT**		Illustr. No **1012700**	Section **140**
3	**11891305 REAR**		Issue **VOE 64D9920050**	Page **403**
4	**11891306 REAR**			
5		**11891305, 11891306**		

VOLVO

Construction Equipment

GROUP		Section	Page
810	Cab body: roof and floor panel	150	411
818	Cab mounting block	100	415
821	Engine hood	100	417
823	Radiator casing	100	421
825	Fenders 11298204, 11298208	100	423
825	Fender, front	150	425
825	Splashguards, protective plates	200	427
827	Step handle canopy 11298208	100	429
827	Foot step	150	431
831	Door with fitting parts 11298204	100	433
841	Rear view mirror	100	439
843	Glass panes	100	441
843	Windows 11298204	150	443
851	Interior components 11298233	150	447
852	Operator seat with fitting parts	100	449
852	Operator's seat	150	451
872	Heating system 11298204	100	453
872	Air ducts 11298233	200	455
872	Air ducts 11298204	250	457
873	Cab heater 11298204	100	461
873	Radiator and control	150	463
873	Cab heater with connectors 11298204	200	465
874	Air conditioning 11298233	100	467
874	Evaporator, assembly 11298233	350	469
874	Assembly hoses: Evaparator, receiver drier, condenser. 11298233	450	471
881	Instrument panel	100	475
881	Radio bracket	150	477
881	Vandalism kit 11298032	200	479
882	Interior components	100	481
882	Casing loader controls	300	485
896	Toolbox	100	487
896	Tool 11891152	150	489
896	Stop block holder 11891000, 11891050, 11891094	200	491
897	Sign plates and decals	100	493
897	Decals WARNING	150	497

TABLE DES MATIÈRES

GROUPE		Section	Page
810	Corps de cabine: toit et tôle plancher.	150	411
818	Suspension de cabine	100	415
821	Capot moteur	100	417
823	Boitier radiateur	100	421
825	Garde - boue 11298204, 11298208	100	423
825	Aile, AV	150	425
825	Pare-boue, tôles de protection	200	427
827	Poignée d'accès, cabine ouverte 11298208	100	429
827	Marche-pied	150	431
831	Porte avec pièces de montage 11298204	100	433
841	Retroviseur	100	439
843	Vitres	100	441
843	Fenêtres 11298204	150	443
851	Pieces d'amenagement 11298233	150	447
852	Siège conducteur avec pièces de montage	100	449
852	Siège du condecteur.	150	451
872	Système du chauffage 11298204	100	453
872	Canalisation d'air 11298233	200	455
872	Canalisation d'air 11298204	250	457
873	Chauffe-cabine 11298204	100	461
873	Radiateur et réglage	150	463
873	Chauffe-cabine avec raccords 11298204	200	465
874	Climatisation 11298233	100	467
874	Evaporateur, montage 11298233	350	469
874	Montage flexibles, evaporateur, deshydrateurcondenseur 11298233	450	471
881	Tableau de bord	100	475
881	Console radio	150	477
881	Kit de protection antivandalisme 11298032	200	479
882	Pieces d'amenagement	100	481
882	Capotage, commandes de l'équipement chargeur	300	485
896	Caisse outil	100	487
896	Outil 11891152	150	489
896	Support de rangement pour cales de blocage des roues 11891000, 11891050, 11891094	200	491
897	Enseignes et décalcomanies	100	493
897	Calcomanies WARNING	150	497

GRUPPE		Abschnitt	Seite
810	Fahrerhausgerippe: Dach und Bodenblech.	150	411
818	Kabinenaufhängung	100	415
821	Motorhaube	100	417
823	Kühlerhaube	100	421
825	Kotflügel 11298204, 11298208	100	423
825	Kotflügel, vorn	150	425
825	Spritzschutz, Schutzbleche	200	427
827	Einstieg, Überrollbügel 11298208	100	429
827	Trittleiter	150	431
831	Tür mit Anbauteilen 11298204	100	433
841	Rückspiegel	100	439
843	Fensterscheibe	100	441
843	Fenster 11298204	150	443
851	Innenausstattung 11298233	150	447
852	Fahrersitz mit Anbauteilen	100	449
852	Fahrersitz.	150	451
872	Heizsystem 11298204	100	453
872	Luftkanäle 11298233	200	455
872	Luftkanäle 11298204	250	457
873	Kabinenheizung 11298204	100	461
873	Heizkörper und Regler	150	463
873	Fahrerhausheizung mit anschlusse 11298204	200	465
874	Klimaanlage 11298233	100	467
874	Verdampfer, Anbauteilen 11298233	350	469
874	Anbauteilen schlauch, verdampfer, entfeuchter 11298233	450	471
881	Instrumententafel	100	475
881	Radioträger	150	477
881	Vandalisierungschutz 11298032	200	479
882	Innenausstattung	100	481
882	Abdeckung Ladereglage	300	485
896	Werkzeugkasten	100	487
896	Werkzeug 11891152	150	489
896	Stoppklotzhalter 11891000, 11891050, 11891094	200	491
897	Schilder und aufklebeschild	100	493
897	Aufklebeschild WARNING	150	497

INDICE

GRUPO		Sección	Página
810	Cuerpo de cabina: techo yplancha de piso.	150	411
818	Suspensión de cabina	100	415
821	Capo	100	417
823	Cubierta del radiador	100	421
825	Guardabarros 11298204, 11298208	100	423
825	Guardabarros, delantero	150	425
825	Parabarros, chapas de protección	200	427
827	Asidero de entrada protección contra vuelcos 11298208	100	429
827	Escalón de acceso	150	431
831	Puerta con accesorios de montaje 11298204	100	433
841	Retrovisor	100	439
843	Ventanillas	100	441
843	Ventanas 11298204	150	443
851	Detalles interiores 11298233	150	447
852	Asiento del conductor con piezas de montaje	100	449
852	Asiento del conductor.	150	451
872	Sistema de calefacción 11298204	100	453
872	Conductos de aire 11298233	200	455
872	Conductos de aire 11298204	250	457
873	Calefactor de cabina 11298204	100	461
873	Radiador y reglaje	150	463
873	Calefactor cabina con uniones 11298204	200	465
874	Acondicionador de aire 11298233	100	467
874	Evaporador, montaje 11298233	350	469
874	Montaje mangueras, evaporador, secador, condensador 11298233	450	471
881	Panel de instrumentos	100	475
881	Panel de radio	150	477
881	Protección contra vandalismo 11298032	200	479
882	Detalles interiores	100	481
882	Cubierta, control de cargadora	300	485
896	Caja de herramientas	100	487
896	Herramienta 11891152	150	489
896	Soporte de calzos 11891000, 11891050, 11891094	200	491
897	Muestras y decalcomanias	100	493
897	Calcomanías WARNING	150	497

VOLVO

Construction Equipment

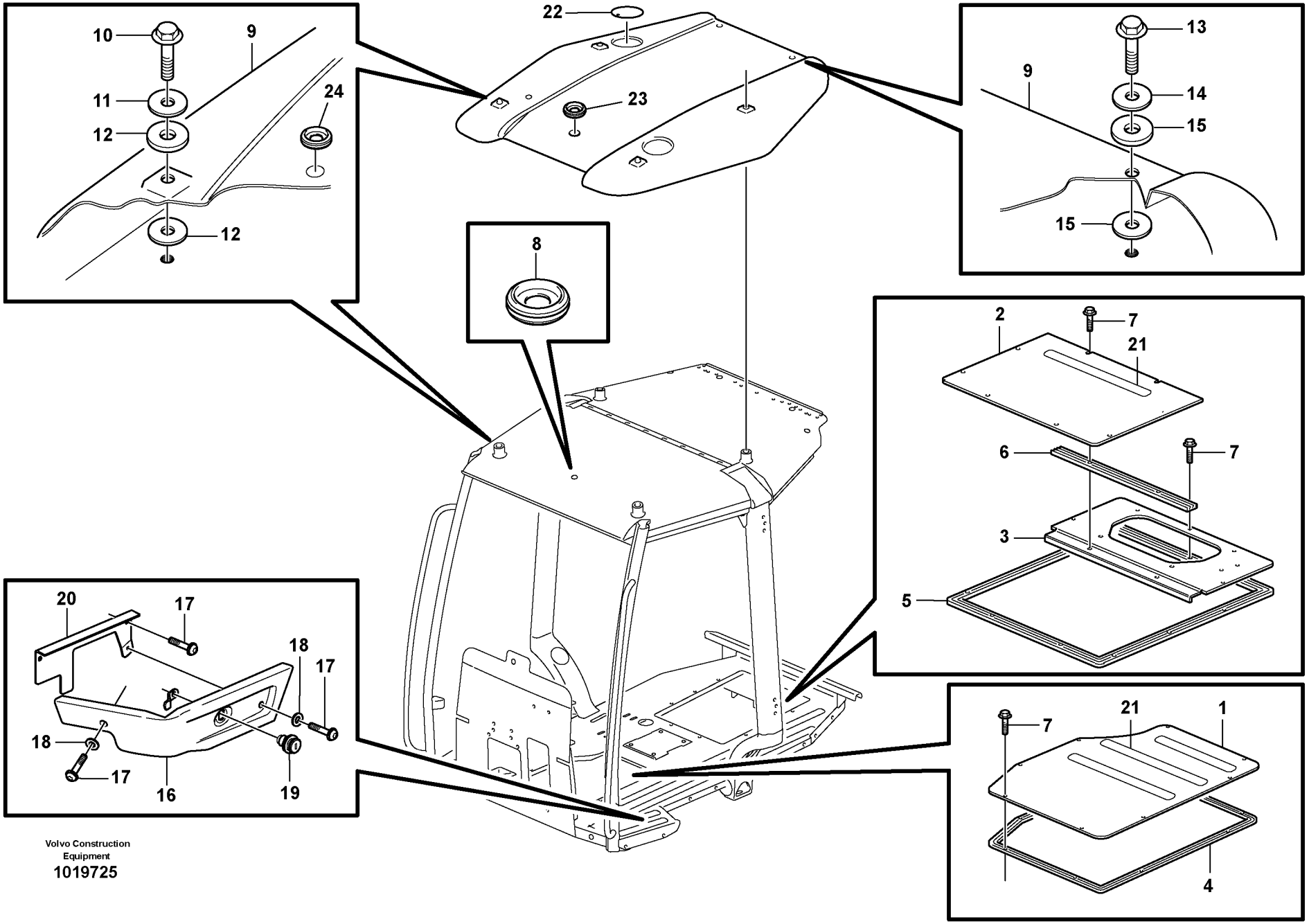

Volvo Construction Equipment
1019725

Fig.	Part No.	Quantity 1	2	3	PS	KIT	Description	Dénomination	Bezeichnung	Denominación	Notes
	VOE 11203253	1					Cab framework	Carcasse cabine	FH-Gerippe	Armazon cabina	
	VOE 11203683		1				Cab framework	Carcasse cabine	FH-Gerippe	Armazon cabina	
1	**VOE 11200797**	1					Hatch	Trappe	Luke	Tapa	SER NO -10003
1	**VOE 11203487**	1					Hatch	Trappe	Luke	Trampilla	SER NO 10004-
1	**VOE 11200797**		1				Hatch	Trappe	Luke	Tapa	
2	**VOE 11201163**	1					Hatch	Trappe	Luke	Trampilla	SER NO -10003
2	**VOE 11203491**	1					Hatch	Trappe	Luke	Trampilla	SER NO 10004-
2	**VOE 11201163**		1				Hatch	Trappe	Luke	Trampilla	
3		1	1		NS		Hatch	Trappe	Luke	Trampilla	
4	**VOE 11104947**	REQ	REQ				Sealing strip	Lisse etancheite	Dichtleiste	Moldura reten	L = 1800 MM
5	**VOE 11104947**	REQ	REQ				Sealing strip	Lisse etancheite	Dichtleiste	Moldura reten	L = 2100 MM
6	**VOE 11104947**	REQ	REQ				Sealing strip	Lisse etancheite	Dichtleiste	Moldura reten	L = 460 MM
7	**VOE 13947542**	19	19				Screw	Vis	Schraube	Tornillo	M6x25
8	**VOE 941267**	1					Plug	Bouchon	Stopfen	Tapon	
9	**VOE 11200004**	1			1		Roof	Toit	Dach	Techo	
10	**VOE 974428**	4	4				Flange screw	Vis à bride	Flanschschraube	Torn embridado	M16x30
11	**VOE 955905**	4			4		Washer	Rondelle	Scheibe	Arandela	
12	**VOE 11200002**	8			8		Spacer	Entretoise	Abstandkörper	Distanciador	
13	**VOE 946440**	2	2				Flange screw	Vis à bride	Flanschschraube	Torn embridado	M8x16
14	**VOE 13960143**	2			2		Washer	Rondelle	Scheibe	Arandela	
15	**VOE 11149399**	4			4		Seal	Joint	Dichtung	Reten	
16	**VOE 11200556**	1					Side Panel	Panneau Lateral	Seit Verkl	Panel Lateral	LH
16	**VOE 11201171**	1					Side Panel	Panneau Lateral	Seit Verkl	Panel Lateral	RH
17	**VOE 972421**	9					Screw	Vis	Schraube	Tornillo	
18	**VOE 955892**	5					Washer	Rondelle	Scheibe	Arandela	
19		1					Lock Cylinder	Barille.serrure	Schliesszyl	Cilindro Cierre	See group 821, Page 417
20	**VOE 11201172**	1					Anchorage	Fixation	Halterung	Fijacion	LH
20	**VOE 11201036**	1					Anchorage	Fixation	Halterung	Fijacion	RH
21	**VOE 11203449**		REQ				Tape	Scotch	Klebeband	Cinta	
22	**VOE 11200459**	2			2		Attaching Plate	Fer Fixation	Befestigungslasche	Plato Fijacion	

1	**11298204**
2	**11298208**
3	**11298160**
4	
5	

Cuerpo de cabina: techo yplancha de piso.
Fahrerhausgerippe: Dach und Bodenblech.
Corps de cabine: toit et tôle plancher.
Cab body: roof and floor panel.

Catalogue id **20050**	Group **810**
Illustr. No **1019725**	Section **150**
Issue **VOE 64D9920050**	Page **411**

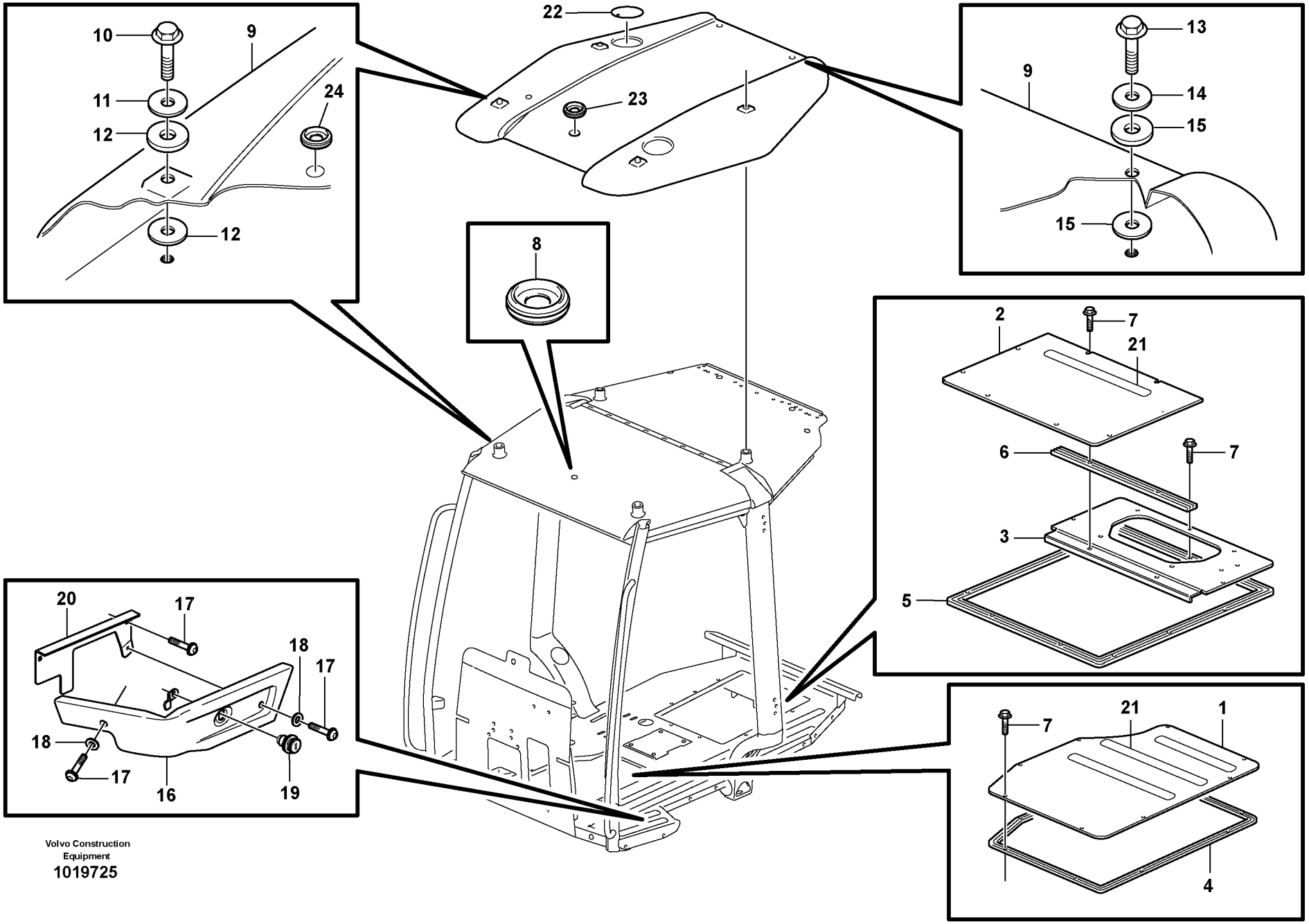

Volvo Construction Equipment
1019725

Fig.	Part No.	Quantity 1	2	3	PS	KIT	Description	Dénomination	Bezeichnung	Denominación	Notes
23	**VOE 13961965**	1	1	1			Protecting Plug	Tampon Protect	Sicher Stöpsel	Tapon Protecc	11880004 SER NO 10186-
24	**VOE 941268**	1	1	1			Plug	Bouchon	Stopfen	Tapon	11880004 SER NO 10186-

1	**11298204**	**Cuerpo de cabina: techo yplancha de piso.** **Fahrerhausgerippe: Dach und Bodenblech.** **Corps de cabine: toit et tôle plancher.** **Cab body: roof and floor panel.**	Catalogue id **20050**	Group **810**
2	**11298208**		Illustr. No **1019725**	Section **150**
3	**11298160**		Issue **VOE 64D9920050**	Page **413**
4				
5				

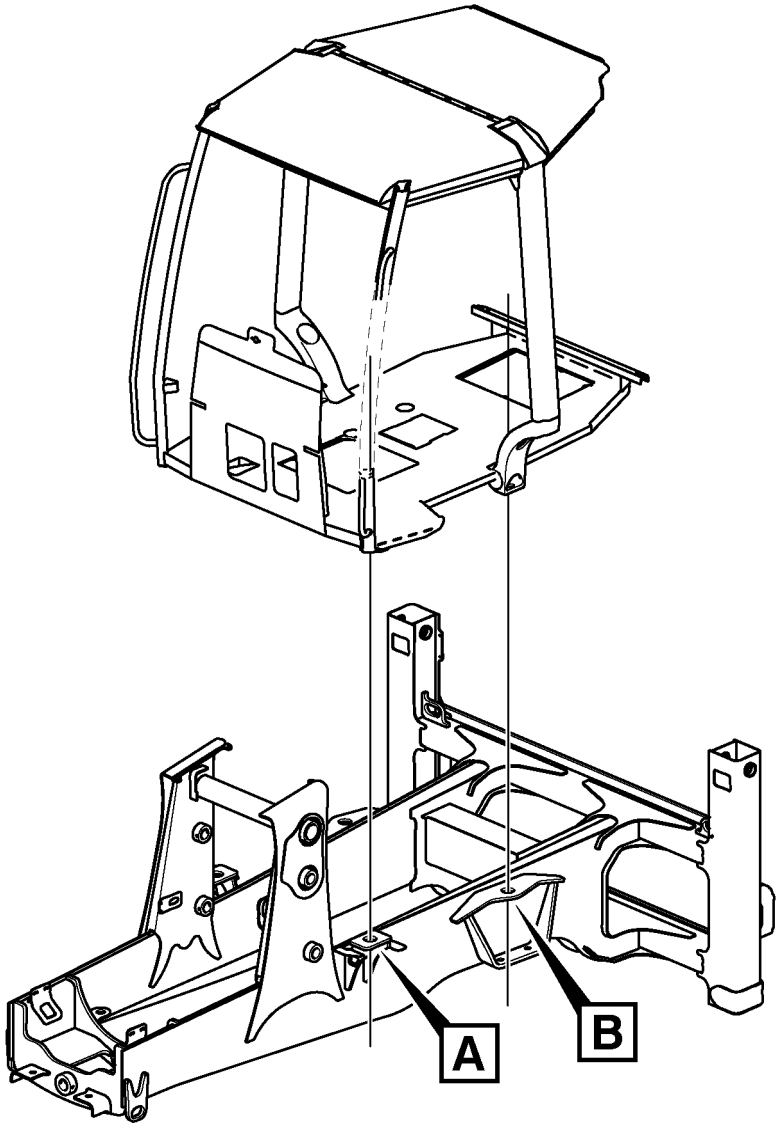

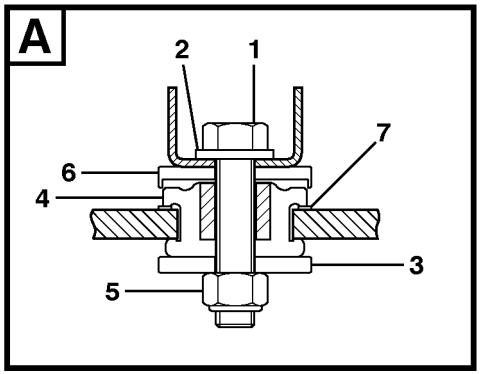

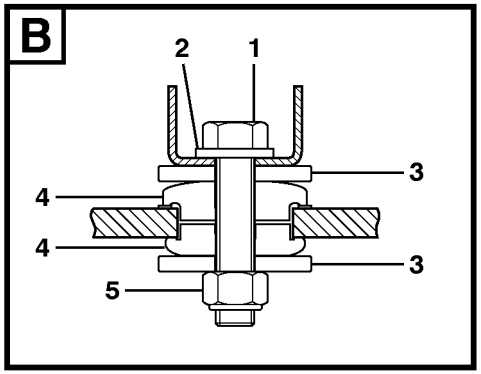

Volvo Construction Equipment

1006670

Fig.	Part No.	Quantity 1	2	3	PS	KIT	Description	Dénomination	Bezeichnung	Denominación	Notes
1	**VOE 978953**	2					Screw	Vis	Schraube	Tornillo	M20x110
1	**VOE 983299**		2				Hexagon screw	Vis a tête hexagonale	Sechskantschr.	Tornillo hexago	M20x130
2	**VOE 11055616**	2	2				Washer	Rondelle	Scheibe	Arandela	
3	**VOE 11881773**	2					Washer	Rondelle	Scheibe	Arandela	
3	**VOE 11886647**		4				Washer	Rondelle	Scheibe	Arandela	
4	**VOE 11883856**	2					Base	Pied	Fuss	Base	
4	**VOE 11884520**		4				Base	Pied	Fuss	Base	
5	**VOE 963111**	2	2				Lock nut	Contre-ecrou	Sicherungsmutter	Contratuerca	M20
6	**VOE 11886708**	2					Washer	Rondelle	Scheibe	Arandela	
7	**VOE 11885690**	2					Washer	Rondelle	Scheibe	Arandela	

1	**FRONT**
2	**REAR**
3	
4	
5	

Suspensión de cabina
Kabinenaufhängung
Suspension de cabine
Cab mounting block

Catalogue id **20050**	Group **818**
Illustr. No **1006670**	Section **100**
Issue **VOE 64D9920050**	Page **415**

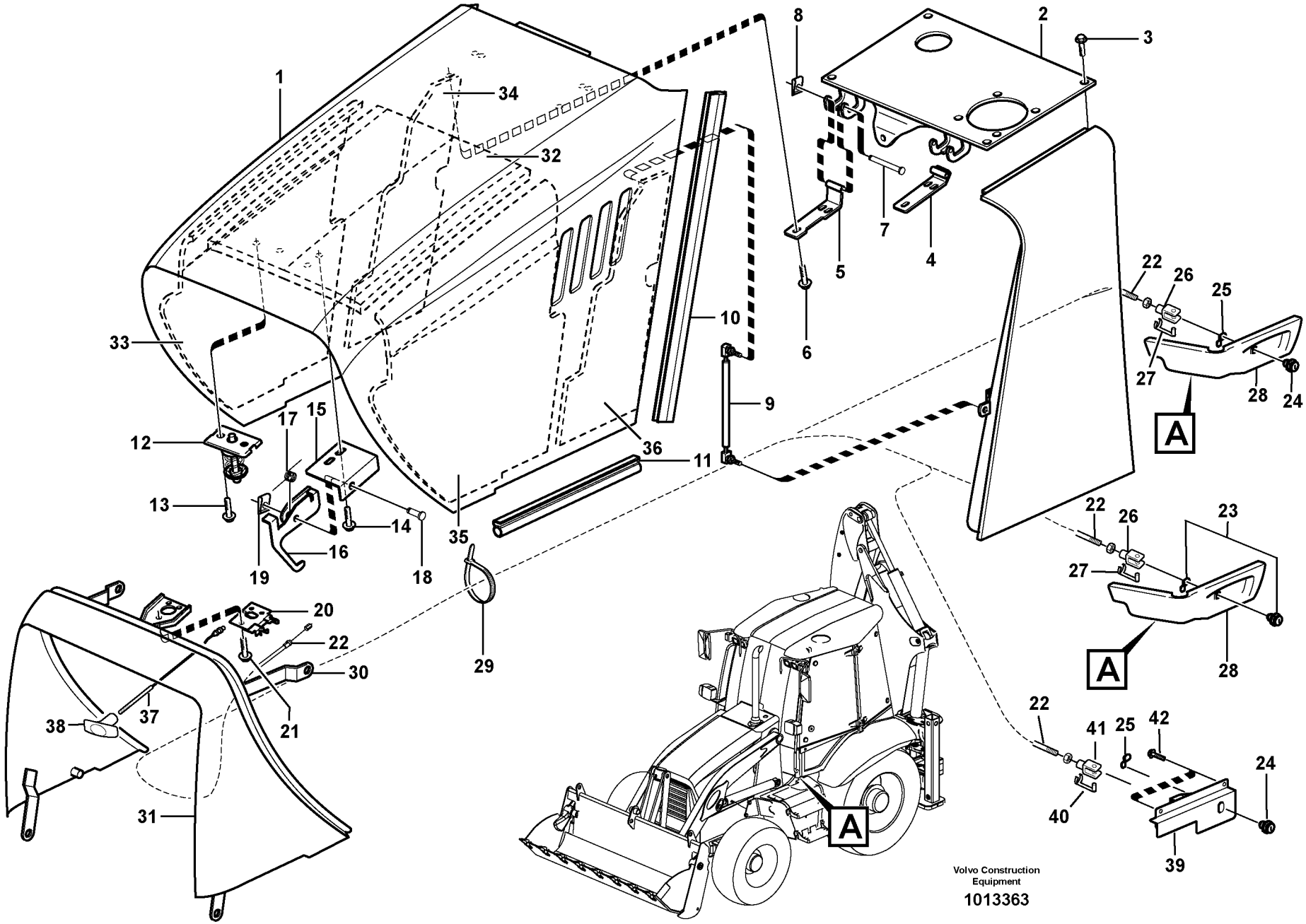
1
2
3
4
5
6
7
8
9
10
11
12
13
14
15
16
17
18
19
20
21
22
23
24
25
26
27
28
29
30
31
32
33
34
35
36
37
38
39
40
41
42
A
A
A
Volvo Construction Equipment
1013363

Fig.	Part No.	Quantity 1	2	3	4	5	PS	KIT	Description	Dénomination	Bezeichnung	Denominación	Notes
1	**VOE 11882980**	1							Hood	Capot Moteur	Motorhaube	Tapa motor	
2	**VOE 11886377**	1							Top Plate	Tole Superieure	Deckblech	Placa Superior	
	VOE 11887626	REQ							Shim	Cale d'épaisseur	Passcheibe	Arandela Ajuste	
3	**VOE 13947760**	4							Flange screw	Vis à bride	Flanschschraube	Torn embridado	
4	**VOE 11881237**	1							Hinge	Charniere	Scharnier	Bisagra	
5	**VOE 11882965**	1							Hinge	Charniere	Scharnier	Bisagra	
6	**VOE 13945444**	6							Flange screw	Vis à bride	Flanschschraube	Torn embridado	
7	**VOE 11883052**	2							Pin	Goupille	Zapfen	Pasador	
8	**VOE 943926**	2							Lock brace	Etrier de verrouillage	Sperrklinke	Brazo Seguridad	
9	**VOE 11884653**	2							Gas Spring	Ressort Gaz	Gasfeder	Resorte A Gas	
10	**VOE 11881899**	2							Seal	Joint	Dichtung	Reten	
11	**VOE 11881002**	2							Seal	Joint	Dichtung	Reten	
12	**VOE 11114940**	1							Lock Bolt	Boulon Verroui.	Sicher Bolzen	Perno Seguridad	
13	**VOE 13946173**	2							Flange screw	Vis à bride	Flanschschraube	Torn embridado	
14	**VOE 13946173**	2							Flange screw	Vis à bride	Flanschschraube	Torn embridado	
15	**VOE 11885233**	1							Bracket	Console	Konsole	Ménsula	(VOE 11884632)
16	**VOE 11885234**	1							Hook	Crochet	Haken	Gancho	
17	**VOE 11881351**	1							Spring	Ressort	Feder	Muelle	
18	**VOE 942290**	1							Rtng Ring Bolt	Boulon Sill Bag	Sich.bolzen	Perno Circlip	
19	**VOE 13942915**	1							Safety Brace	Etrier Securite	Sicherungsbugel	Brida Seguridad	
20	**VOE 11882989**	1							Catch	Disque Blocage	Sperrplatte	Disco Bloqueo	
21	**VOE 13965175**	3							Screw	Vis	Schraube	Tornillo	
22	**VOE 11886250**		1						Cable	Câble	Seil	Cable	
22	**VOE 11886789**			1					Cable	Câble	Seil	Cable	SER NO 10180-
23	**VOE 11881549**		1						Lock Cylinder	Barille.serrure	Schliesszyl	Cilindro Cierre	CPL; SER NO -10003
24	**VOE 11886138**		1						Lock	Serrure	Schloss	Cierre	SER NO 10004-
24	**VOE 11886138**				1				Lock	Serrure	Schloss	Cierre	
25	**VOE 11886474**		1						Lock Plate	Plaque Verroui.	Verschl Platte	Placa Seguridad	SER NO 10004-
25	**VOE 11886474**				1				Lock Plate	Plaque Verroui.	Verschl Platte	Placa Seguridad	
26	**VOE 11882487**		1						Fork	Fourche	Gabel	Horquilla	

1	**11880004**
2	**11298204**
3	**11298208**
4	**11298239**
5	

Capo
Motorhaube
Capot moteur
Engine hood

Catalogue id **20050**	Group **821**
Illustr. No **1013363**	Section **100**
Issue **VOE 64D9920050**	Page **417**

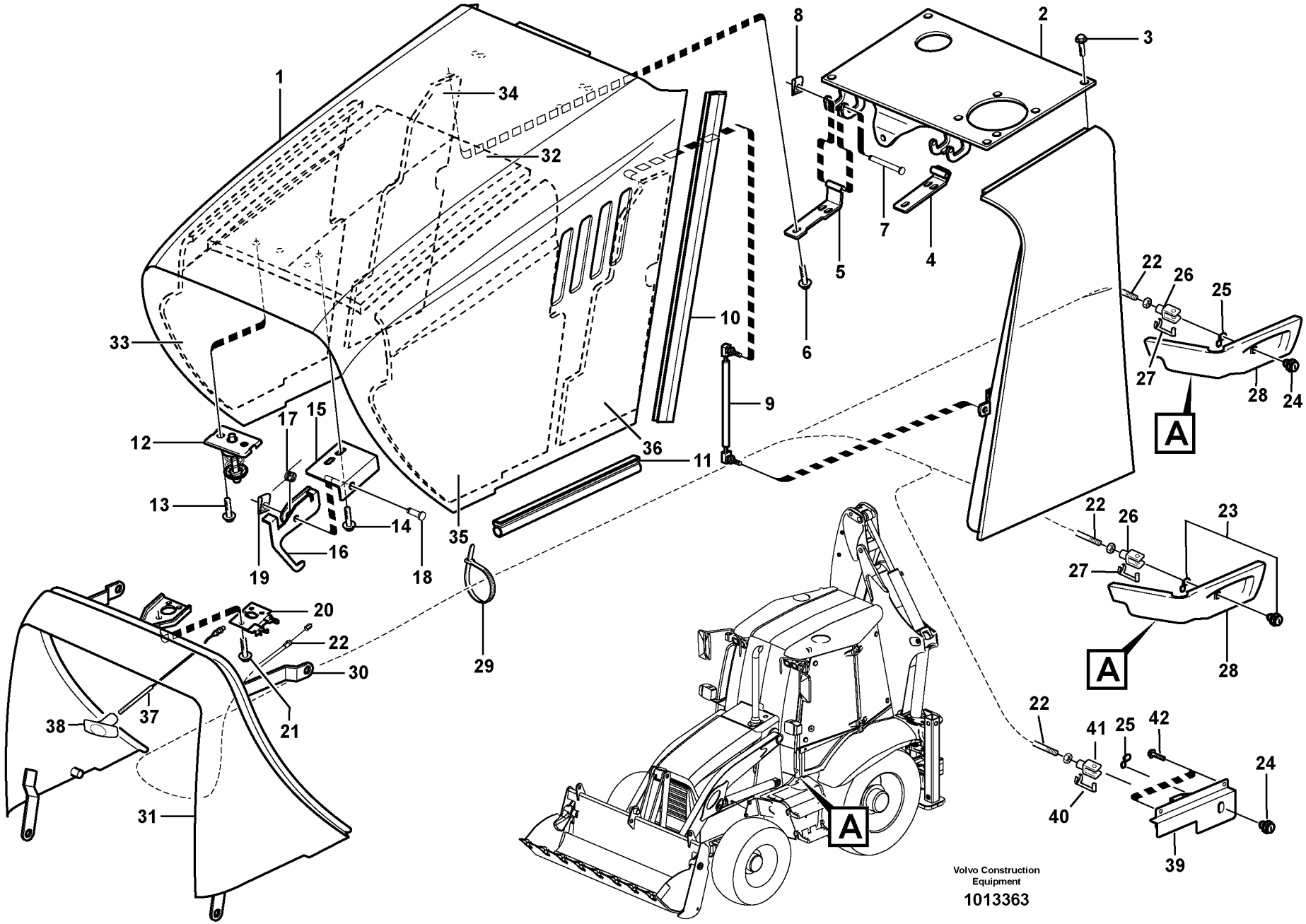
1
2
3
4
5
6
7
8
9
10
11
12
13
14
15
16
17
18
19
20
21
22
23
24
25
26
27
28
29
30
31
32
33
34
35
36
37
38
39
40
41
42
A
A
A
Volvo Construction Equipment
1013363

Fig.	Part No.	Quantity 1	2	3	4	5	PS	KIT	Description	Dénomination	Bezeichnung	Denominación	Notes
27	**VOE 11882489**		1						Pin	Clavette	Splint	Pasador	
28		1							Side Panel	Panneau Lateral	Seit Verkl	Panel Lateral	See group 810, Page 411
29	**VOE 4881438**		2						Strip Clamp	Ruban Serrage	Kabelbinder	Abraz Cinta	
30		1							Bracket	Console	Konsole	Ménsula	See group 261, Page 105
31		1							Nose Part	Partie Nez	Frontgeschirr	Parte Delantera	See group 823, Page 421
32	**VOE 11883414**	1					SS		Insulation	Isolant	Isolierung	Aislante	
33	**VOE 11883418**	1							Insulation	Isolant	Isolierung	Aislante	
34	**VOE 11886546**	1							Insulation	Isolant	Isolierung	Aislante	
35	**VOE 11886547**	1							Insulation	Isolant	Isolierung	Aislante	
36	**VOE 11886545**	1							Insulation	Isolant	Isolierung	Aislante	
37	**VOE 11886264**			1					Cable	Câble	Seil	Cable	SER NO -10179
38	**VOE 11886270**			1					Handle	Poignee	Handgriff	Manilla	SER NO -10179
39	**VOE 11887014**			1					Handle	Poignee	Handgriff	Manilla	SER NO 10180-
40	**VOE 11882489**			1					Pin	Clavette	Splint	Pasador	SER NO 10180-
41	**VOE 11882487**			1					Fork	Fourche	Gabel	Horquilla	SER NO 10180-
42	**VOE 13947949**			2					Flange screw	Vis à bride	Flanschschraube	Torn embridado	SER NO 10180-

1	**11880004**	**Capo** **Motorhaube** **Capot moteur** **Engine hood**	Catalogue id **20050**	Group **821**
2	**11298204**		Illustr. No **1013363**	Section **100**
3	**11298208**		Issue **VOE 64D9920050**	Page **419**
4	**11298239**			
5				

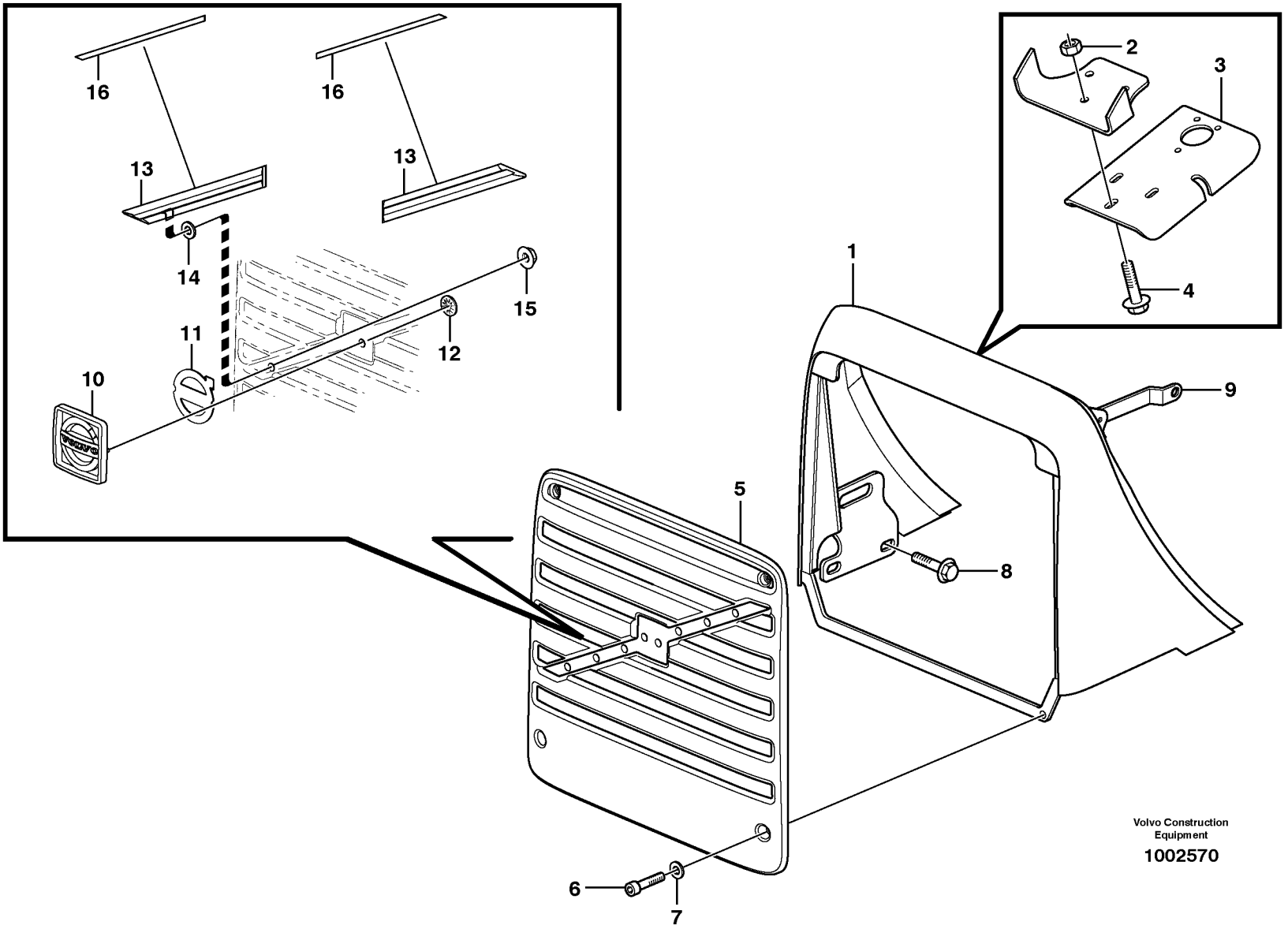
16
16
13
13
14
15
12
11
10
1
2
3
4
9
5
8
6
7
Volvo Construction Equipment
1002570

Fig.	Part No.	Quantity 1	2	3	PS	KIT	Description	Dénomination	Bezeichnung	Denominación	Notes
1	**VOE 11883132**	1					Nose Part	Partie Nez	Frontgeschirr	Parte Delantera	
2	**VOE 955782**	3					•Hexagon Nut	•Ecrou Hexagonal	•Sechskantmutter	•Tuerca Hexagon	M8
3	**VOE 11883678**	1					Bracket	Console	Konsole	Ménsula	
4	**VOE 13946173**	3					Flange screw	Vis à bride	Flanschschraube	Torn embridado	M8x20
5	**VOE 11881191**	1					Radiator grille	Calandre radia	Kühlergrill	Rejilla radiad	
6	**VOE 13969599**	4					Screw	Vis	Schraube	Tornillo	M8x20
7	**VOE 13955894**	4					Washer	Rondelle	Scheibe	Arandela	8,4
8	**VOE 968589**	4					Flange screw	Vis à bride	Flanschschraube	Torn embridado	M16x35
9		2					Bracket	Console	Konsole	Ménsula	See group 261, Page 105
10	**VOE 11884163**	1					Emblem	Monogramme	Emblem	Emblema	
11	**VOE 11884214**	1					Adhesive	Adhesif	Klebstoff	Adhesivo	
12	**VOE 945780**	2					Retainer	Retenue	Halter	Soporte	
13	**VOE 11884154**	2					Profile	Profile	Profil	Perfil	
14	**VOE 949102**	6					Washer	Rondelle	Scheibe	Arandela	
15	**VOE 13965483**	6					Flange Lock Nut	Contre écrou bride	Flanschmutter	Contratuer Embr	
16	**VOE 11884165**	2					Strip	Bande	Streifen	Cinta	

1		**Cubierta del radiador** **Kühlerhaube** **Boitier radiateur** **Radiator casing**	Catalogue id **20050**	Group **823**
2			Illustr. No **1002570**	Section **100**
3			Issue **VOE 64D9920050**	Page **421**
4				
5				

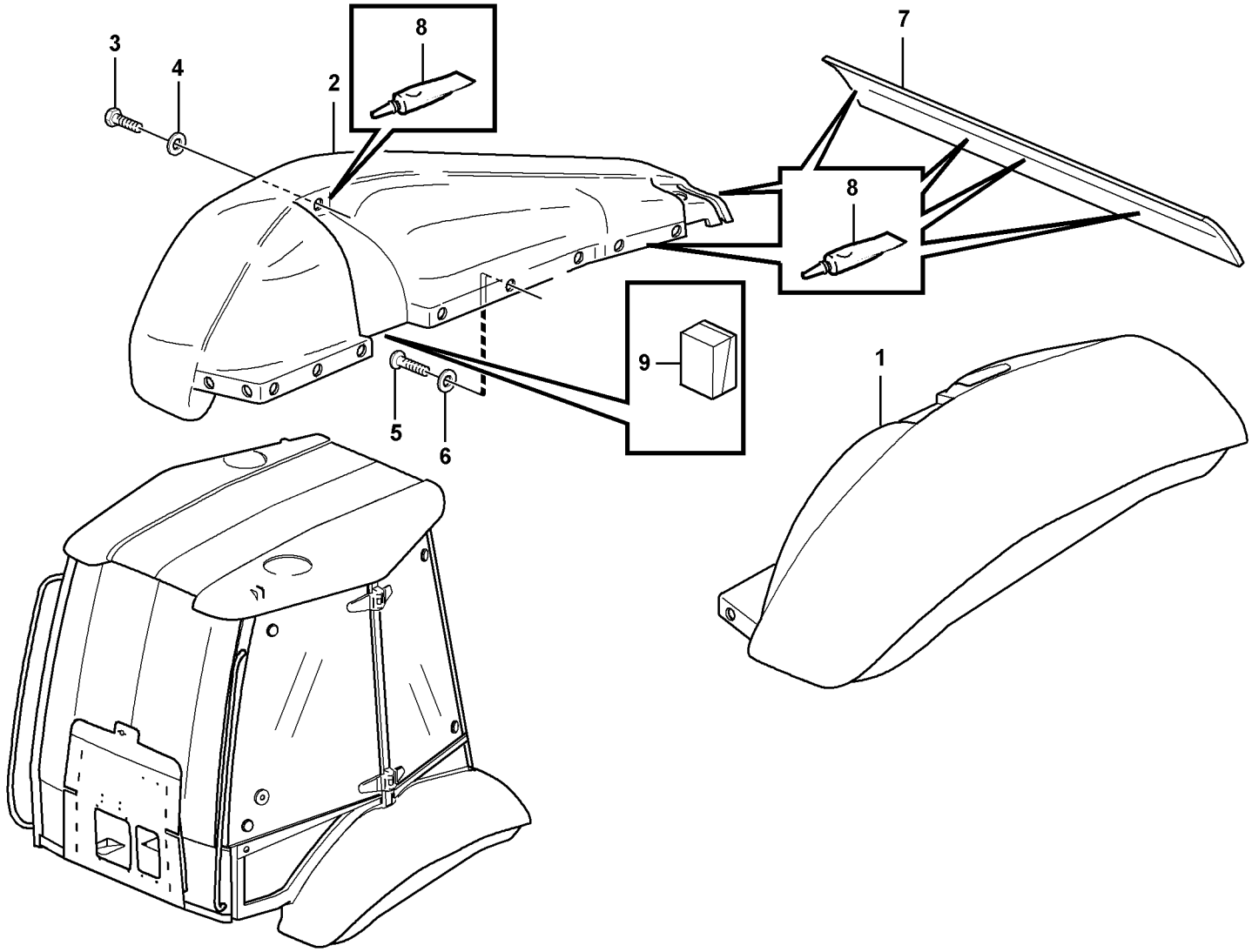

Volvo Construction Equipment
1013212

Fig.	Part No.	Quantity 1	2	3	PS	KIT	Description	Dénomination	Bezeichnung	Denominación	Notes
1	**VOE 11149785**	1					Fender	Aile	Kotflügel	Guardabarro	LH
2	**VOE 11200890**	1			SS		Fender	Aile	Kotflügel	Guardabarro	RH
3	**VOE 13945444**	2					Flange screw	Vis à bride	Flanschschraube	Torn embridado	
4	**VOE 13960141**	2					Washer	Rondelle	Scheibe	Arandela	(VOE 976944)
5	**VOE 972421**	24					Screw	Vis	Schraube	Tornillo	
6	**VOE 960139**	24					Washer	Rondelle	Scheibe	Arandela	
7	**VOE 11200222**	1					Panel	Panneau	Verkleidung	Plancha	
8	**VOE 11708567**	REQ					Adhesive	Adhesif	Klebstoff	Adhesivo	
9	**VOE 11201553**	REQ					Seal	Joint	Dichtung	Reten	Cab only

1		**Guardabarros** **Kotflügel** **Garde - boue** **Fenders**	Catalogue id **20050**	Group **825**
2			Illustr. No **1013212**	Section **100**
3			Issue **VOE 64D9920050**	Page **423**
4				
5		**11298204, 11298208**		

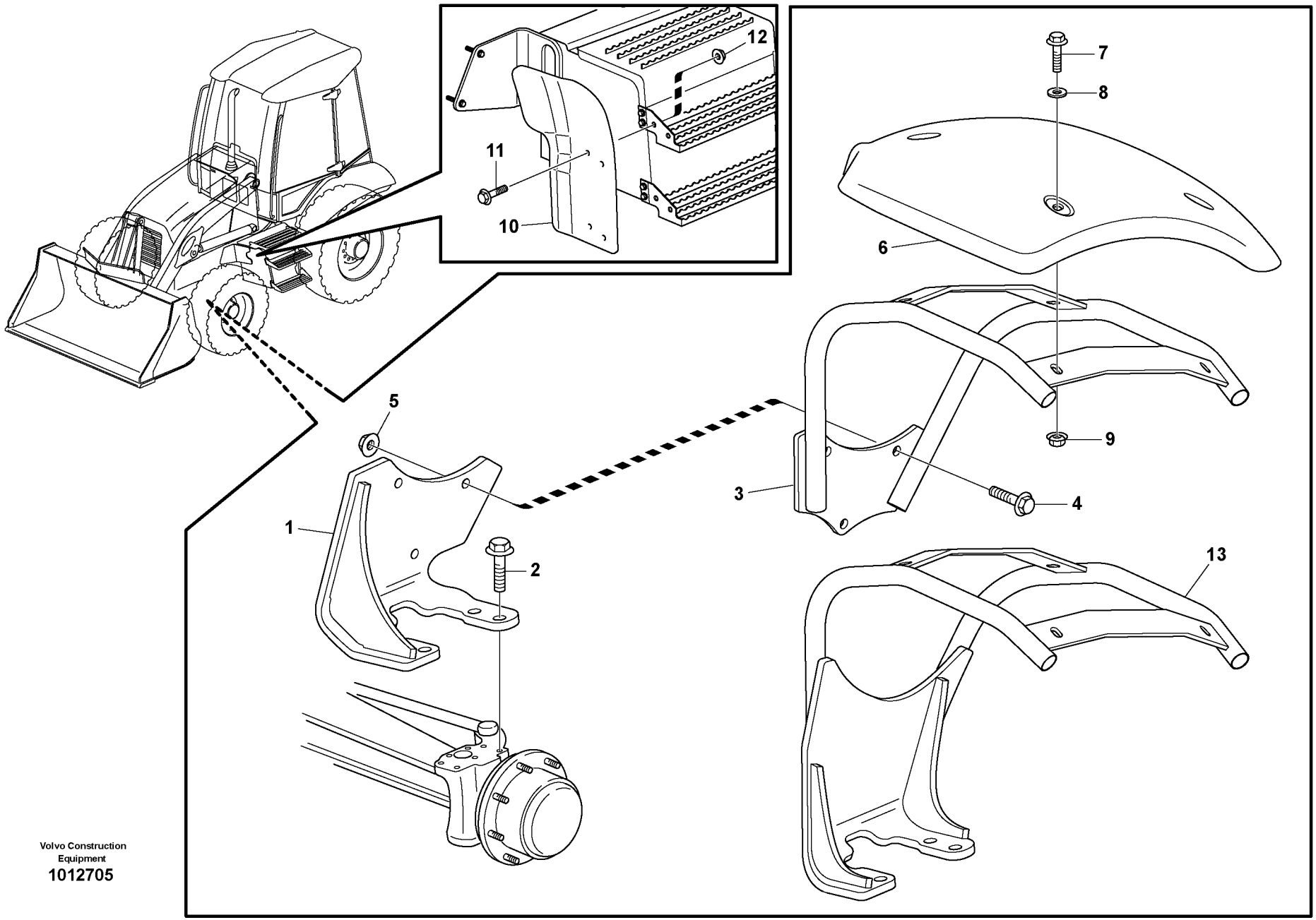

Volvo Construction Equipment
1012705

Fig.	Part No.	Quantity 1	2	3	PS	KIT	Description	Dénomination	Bezeichnung	Denominación	Notes
1	**VOE 11885350**	1	1				Bracket	Console	Konsole	Ménsula	LH; SER NO -10246
1	**VOE 11885351**	1	1				Bracket	Console	Konsole	Ménsula	RH; SER NO -10246
2	**VOE 968589**	8	8				Flange screw	Vis à bride	Flanschschraube	Torn embridado	
3	**VOE 11884365**	2	2				Bracket	Console	Konsole	Ménsula	SER NO -10246
4	**VOE 13965192**	6	6				Flange screw	Vis à bride	Flanschschraube	Torn embridado	SER NO -10246
5	**VOE 13971096**	6	6				Flange nut	Ecrou accouple.	Bundmutter	Tuerca embridad	SER NO -10246
6	**VOE 11884361**	2	2				Front fender	Aile AV	Vorderkotflügel	Guardabarro del	
7	**VOE 946329**	8	8				Flange screw	Vis à bride	Flanschschraube	Torn embridado	
8	**VOE 13960143**	8	8				Washer	Rondelle	Scheibe	Arandela	
9	**VOE 13971095**	8	8				Flange nut	Ecrou accouple.	Bundmutter	Tuerca embridad	
10	**VOE 11884409**	1			OP		Fender	Aile	Kotflügel	Guardabarro	LH
10	**VOE 11884410**	1			OP		Fender	Aile	Kotflügel	Guardabarro	RH
11	**VOE 946329**	8					Flange screw	Vis à bride	Flanschschraube	Torn embridado	
12	**VOE 13971095**	8					Flange nut	Ecrou accouple.	Bundmutter	Tuerca embridad	
13	**VOE 11887187**	1	1				Fender	Aile	Kotflügel	Guardabarro	LH; SER NO 10247-
13	**VOE 11887192**	1	1				Fender	Aile	Kotflügel	Guardabarro	RH; SER NO 10247-

1	**11891000**	**Guardabarros, delantero** **Kotflügel, vorn** **Aile, AV** **Fender, front**	Catalogue id **20050**	Group **825**
2	**11891325**		Illustr. No **1012705**	Section **150**
3			Issue **VOE 64D9920050**	Page **425**
4				
5				

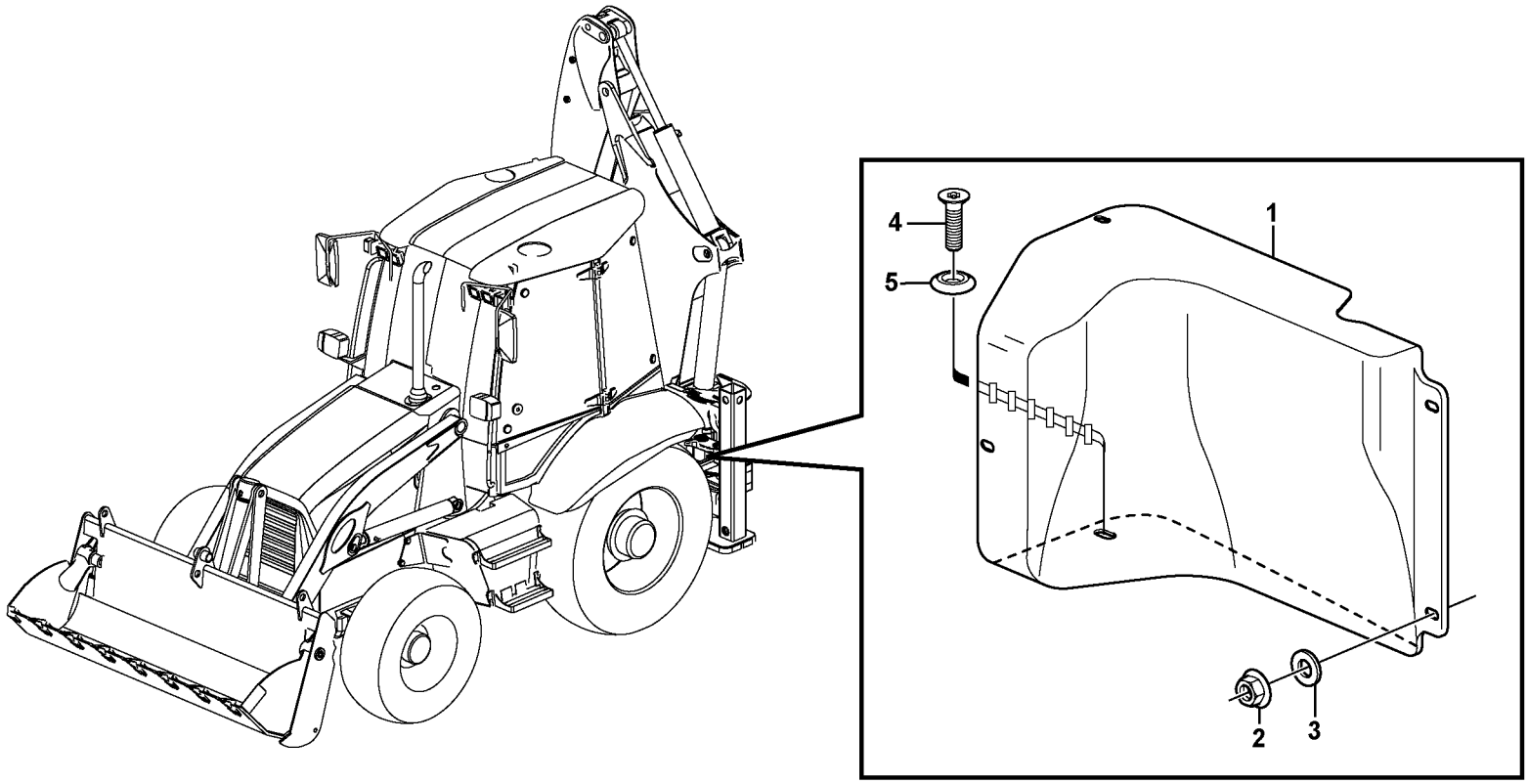
4
5
1
2
3

Fig.	Part No.	Quantity 1	2	3	PS	KIT	Description	Dénomination	Bezeichnung	Denominación	Notes
1	**VOE 11884771**	1					Fender	Aile	Kotflügel	Guardabarro	LH, SER NO -10185
1	**VOE 11888582**	1					Fender	Aile	Kotflügel	Guardabarro	(VOE 11886955) LH, SER NO 10186-
1	**VOE 11884770**	1					Fender	Aile	Kotflügel	Guardabarro	RH, SER NO -10185
1	**VOE 11888579**	1					Fender	Aile	Kotflügel	Guardabarro	(VOE 11886950) RH, SER NO 10186-
2	**VOE 948645**	8					Flange Lock Nut	Contre écrou bride	Flanschmutter	Contratuer Embr	M8
3	**VOE 13960141**	8					Washer	Rondelle	Scheibe	Arandela	8,4
4	**VOE 969373**	2					6-pt skt screw	Vis creuse de 6	Hohlschraube	Racor 6-dientes	M8x30
5	**VOE 959061**	2			OP		Body Washer	Rond.carrosser	Kaross Scheibe	Arandela Carroc	SER NO 10186-

1		**Parabarros, chapas de protección** **Spritzschutz, Schutzbleche** **Pare-boue, tôles de protection** **Splashguards, protective plates**	Catalogue id **20050**	Group **825**
2			Illustr. No **1005974**	Section **200**
3			Issue **VOE 64D9920050**	Page **427**
4				
5				

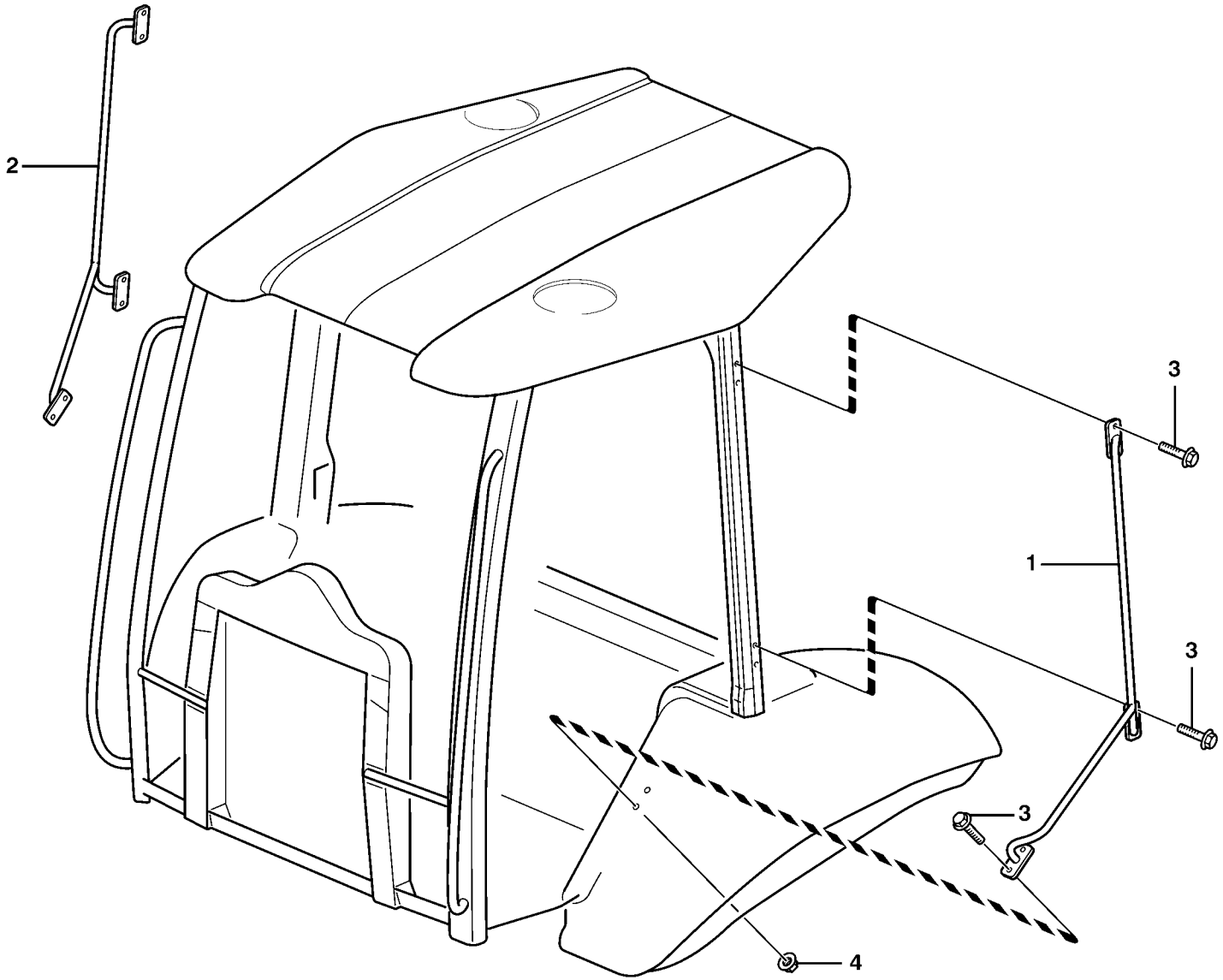

Volvo Construction Equipment

1001040

Fig.	Part No.	Quantity 1	2	3	PS	KIT	Description	Dénomination	Bezeichnung	Denominación	Notes
1	**VOE 11200658**	1					Courtesy Handle	Poignee Entree	Einstieggriff	Manilla Acceso	LH
2	**VOE 11200835**	1					Courtesy Handle	Poignee Entree	Einstieggriff	Manilla Acceso	RH
3	**VOE 946671**	12					Flange screw	Vis à bride	Flanschschraube	Torn embridado	
4	**VOE 948645**	2					Flange Lock Nut	Contre écrou bride	Flanschmutter	Contratuer Embr	LH

1		**Asidero de entrada protección contra vuelcos** **Einstieg, Überrollbügel** **Poignée d'accès, cabine ouverte** **Step handle canopy**	Catalogue id **20050**	Group **827**
2				
3			Illustr. No **1001040**	Section **100**
4				
5		**11298208**	Issue **VOE 64D9920050**	Page **429**

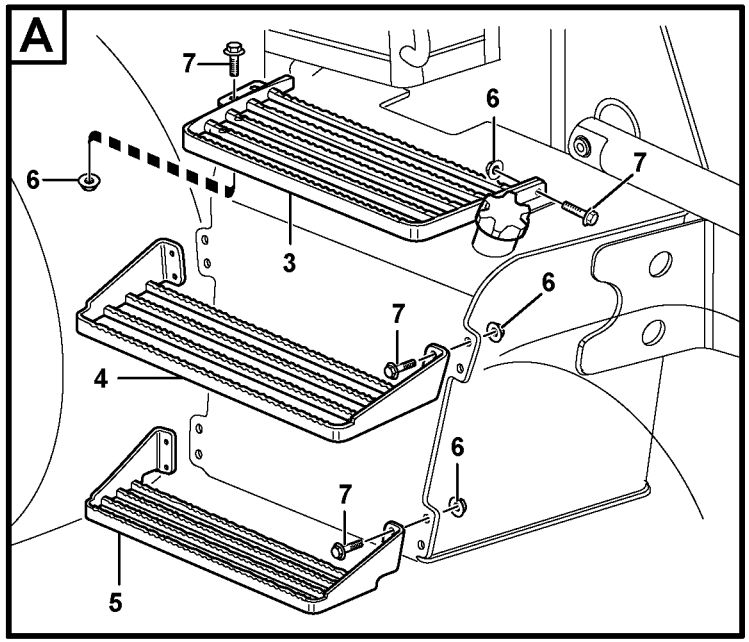
A
7
6
6
7
3
6
7
4
6
7
5

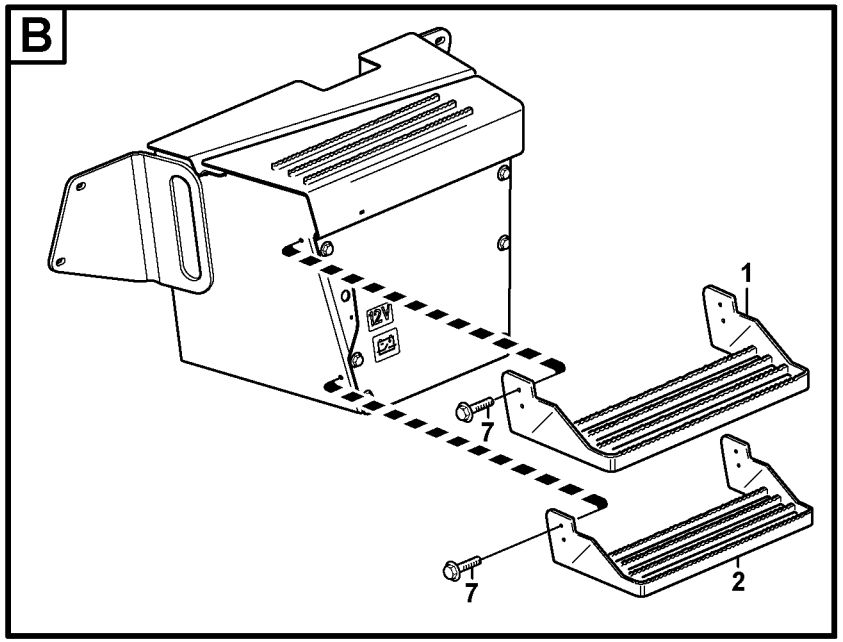
B
1
12V
7
7
2

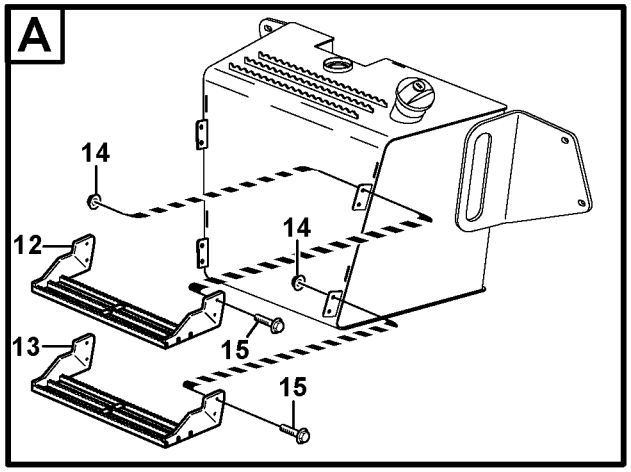
A
14
14
12
15
13
15

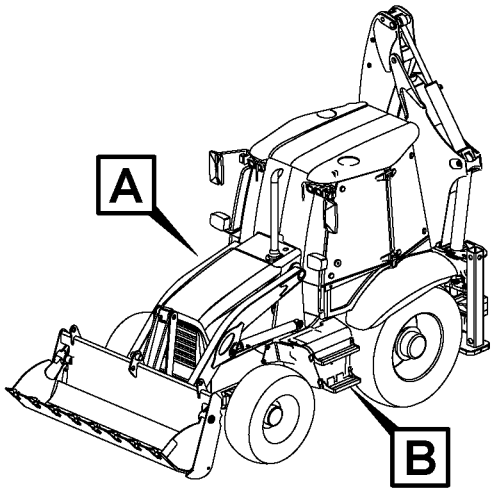
A
B

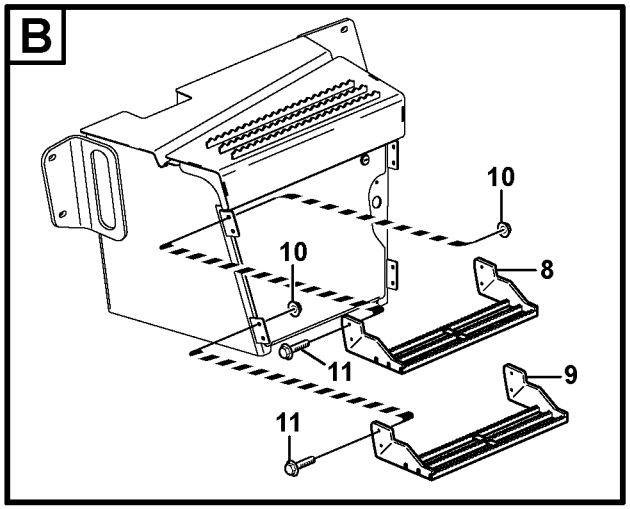
B
10
10
8
11
9
11

Fig.	Part No.	Quantity 1	2	3	PS	KIT	Description	Dénomination	Bezeichnung	Denominación	Notes
1	**VOE 11886292**	1					Step	Marche Escalier	Treppenstufe	Escalon	SER NO -10214
2	**VOE 11886293**	1					Step	Marche Escalier	Treppenstufe	Escalon	SER NO -10214
3	**VOE 11883479**	1					Step	Marche Escalier	Treppenstufe	Escalon	SER NO -10206
4	**VOE 11883232**	1					Step	Marche Escalier	Treppenstufe	Escalon	SER NO -10206
5	**VOE 11882104**	1					Step	Marche Escalier	Treppenstufe	Escalon	SER NO -10206
6	**VOE 13971098**	12					Flange nut	Ecrou accouple.	Bundmutter	Tuerca embridad	M10; SER NO -10206
7	**VOE 946329**	20					Flange screw	Vis à bride	Flanschschraube	Torn embridado	M10x25; SER NO -10206
8	**VOE 11886987**	1					Step	Marche Escalier	Treppenstufe	Escalon	SER NO 10215-
9	**VOE 11886992**	1					Step	Marche Escalier	Treppenstufe	Escalon	SER NO 10215-
10	**VOE 948645**	8					Flange Lock Nut	Contre écrou bride	Flanschmutter	Contratuer Embr.	SER NO 10215-
11	**VOE 13946173**	8					Flange screw	Vis à bride	Flanschschraube	Torn embridado	SER NO 10215-
12	**VOE 11886987**	1					Step	Marche Escalier	Treppenstufe	Escalon	SER NO 10207-
13	**VOE 11886992**	1					Step	Marche Escalier	Treppenstufe	Escalon	SER NO 10207-
14	**VOE 948645**	8					Flange Lock Nut	Contre écrou bride	Flanschmutter	Contratuer Embr.	SER NO 10207-
15	**VOE 13946173**	8					Flange screw	Vis à bride	Flanschschraube	Torn embridado	SER NO 10207-

1	
2	
3	
4	
5	

Escalón de acceso
Trittleiter
Marche-pied
Foot step

Catalogue id **20050**	Group **827**
Illustr. No **1012683**	Section **150**
Issue **VOE 64D9920050**	Page **431**



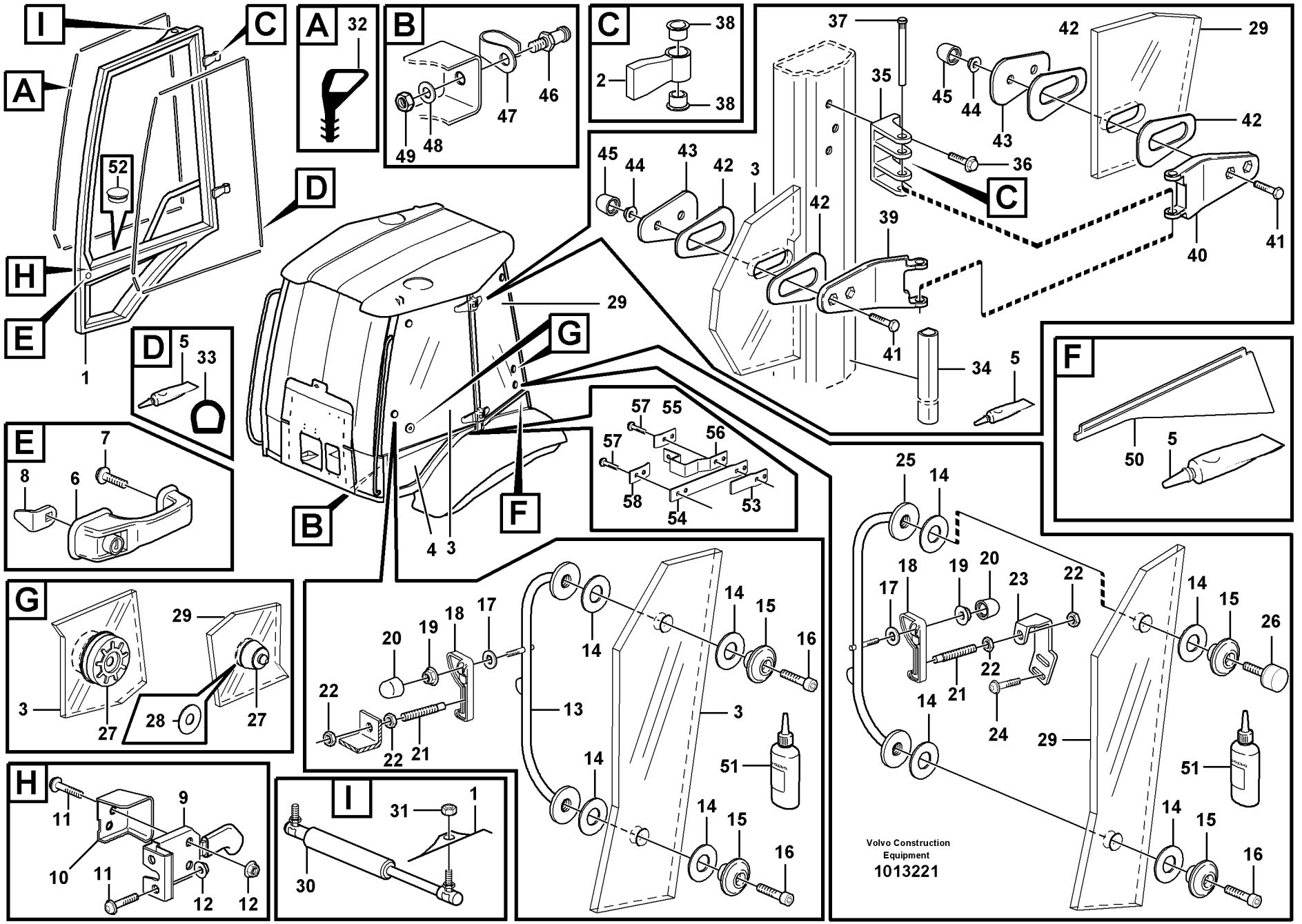
I
C
A
H
E
D
B
F
G
52
1
32
47
46
49
48
38
2
37
35
45
44
43
42
29
36
39
41
40
34
5
33
7
8
6
57
55
56
58
54
53
4
3
50
25
14
18
19
20
23
22
17
21
24
26
15
16
13
51
27
28
9
11
10
12
31
30
Volvo Construction Equipment
1013221

Fig.	Part No.	Quantity 1	2	3	PS	KIT	Description	Dénomination	Bezeichnung	Denominación	Notes
1	**VOE 11203022**	1					Door	Porte	Tür	Puerta	LH
1	**VOE 11203032**	1					Door	Porte	Tür	Puerta	RH
2	**VOE 11203027**	4					•Hinge	•Charniere	•Scharnier	•Bisagra	
3		1					Window	Vitre	Fensterscheibe	Ventana	LH See group 843, Page 441
3		1					Window	Vitre	Fensterscheibe	Ventana	RH See group 843, Page 441
4		1					Window	Vitre	Fensterscheibe	Ventana	LH See group 843, Page 441
4		1					Window	Vitre	Fensterscheibe	Ventana	RH See group 843, Page 441
5	**VOE 11708567**	REQ					•Adhesive	•Adhesif	•Klebstoff	•Adhesivo	
6	**VOE 11201846**	2					Door Handle	Poignee de porte	Türdrücker	Empunadura de puerta	
7	**VOE 969147**	2					Screw	Vis	Schraube	Tornillo	
8	**VOE 11200464**	2					Lock Lug	Talon Verrouil.	Sperrzacken	Talon Cierre	
9	**VOE 11202452**	1					Door Lock	Serrure Porte	Turschloss	Cerradura Puert	LH
9	**VOE 11202453**	1					Door Lock	Serrure Porte	Turschloss	Cerradura Puert	RH
10	**VOE 11202353**	1					Protection	Protection	Schutz	Proteccion	LH
10	**VOE 11202354**	1					Protection	Protection	Schutz	Proteccion	RH
11	**VOE 969587**	8					6-pt skt screw	Vis creuse de 6	Hohlschraube	Racor 6-dientes	
12	**VOE 13949278**	8					Flange Lock Nut	Contre écrou bride	Flanschmutter	Contratuer Embr	
13	**VOE 11202438**	1					Handle	Poignee	Handgriff	Manilla	LH
13	**VOE 11202464**	1					Handle	Poignee	Handgriff	Manilla	RH
14	**VOE 11200244**	16					Rubber Washer	Rondelle Caoutchouc	Gummischeibe	Arandela Goma	
15	**VOE 11200246**	8					Clamping Plate	Plaque Serrage	Klemmplatte	Placa Apriete	
16	**VOE 959220**	6					Allen Hd Screw	Vis A 6 Pans Cr	Inbusschraube	Torn Hex Embut	
17	**VOE 13955894**	4					Washer	Rondelle	Scheibe	Arandela	
18	**VOE 11201071**	4					Lock Handle	Poignee Verrou.	Schliessgriff	Manilla	
19	**VOE 948645**	4					Flange Lock Nut	Contre écrou bride	Flanschmutter	Contratuer Embr	
20	**VOE 11006824**	4					Protective cap	Capuchon de protection	Schutzkappe	Cubierta de protección	

1		**Puerta con accesorios de montaje** **Tür mit Anbauteilen** **Porte avec pièces de montage** **Door with fitting parts**		Catalogue id **20050**	Group **831**
2				Illustr. No **1013221**	Section **100**
3				Issue **VOE 64D9920050**	Page **433**
4					
5		**11298204**			

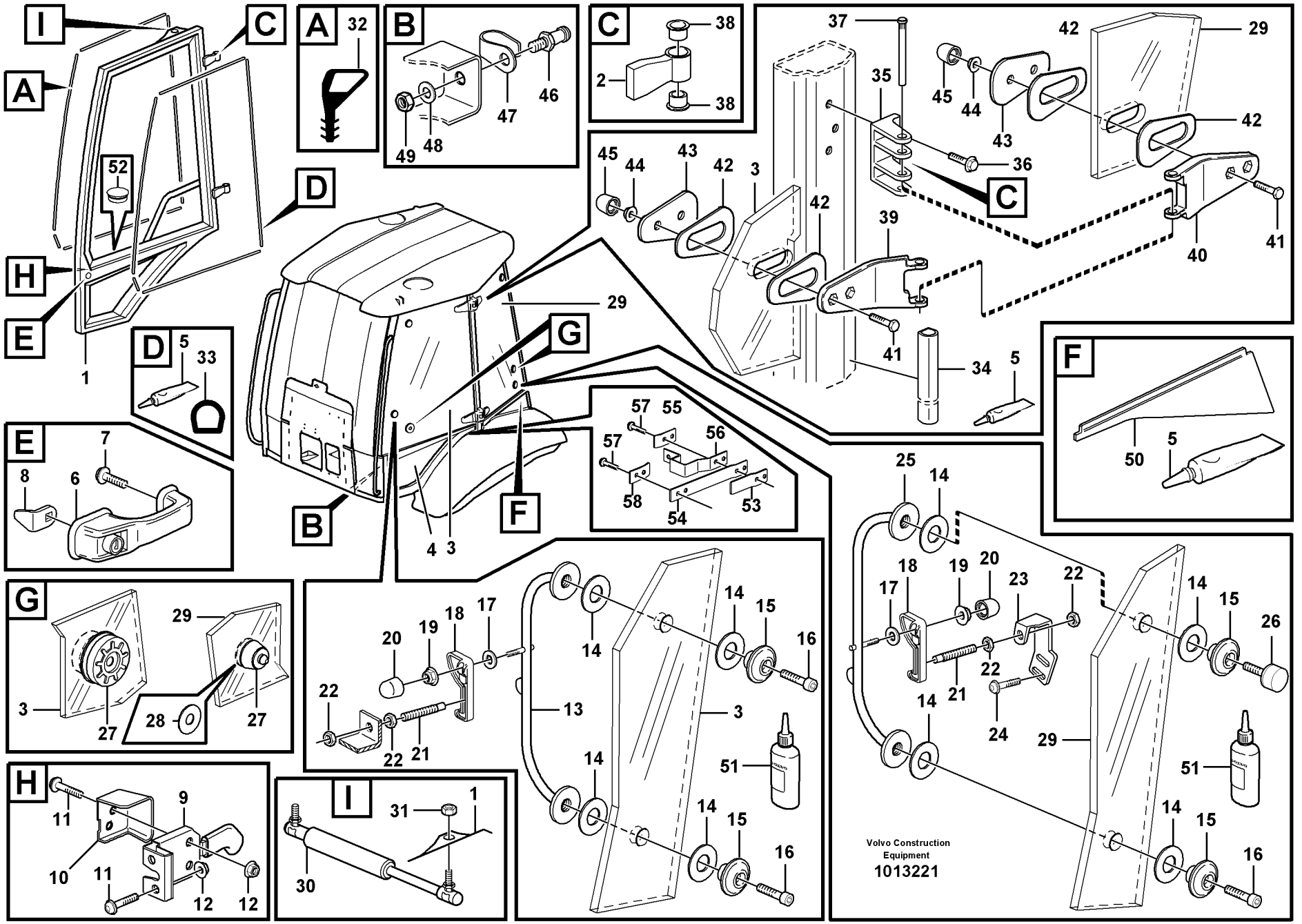
I
C
A
H
E
D
B
F
G
52
1
32
47
46
49
48
38
2
37
35
45
44
43
42
29
36
39
41
40
34
5
33
7
8
6
57
55
56
58
54
53
4
3
50
25
14
18
19
20
23
22
17
21
24
26
15
16
13
51
27
28
9
11
10
12
31
30
Volvo Construction Equipment
1013221

Fig.	Part No.	Quantity 1	2	3	PS	KIT	Description	Dénomination	Bezeichnung	Denominación	Notes
21	**VOE 11202722**	4					Shaft	Arbre	Welle	Arbol	
22	**VOE 983303**	8					Nut	Ecrou	Mutter	Tuerca	
23	**VOE 11201053**	1					Anchorage	Fixation	Halterung	Fijacion	LH
23	**VOE 11201052**	1					Anchorage	Fixation	Halterung	Fijacion	RH
24	**VOE 969147**	4					Screw	Vis	Schraube	Tornillo	
25	**VOE 11200060**	1					Handle	Poignee	Handgriff	Manilla	LH
25	**VOE 11200061**	1					Handle	Poignee	Handgriff	Manilla	RH
26	**VOE 11200579**	2					Absorber	Amortisseur	Dämpfer	Amortiguador	
27	**VOE 11200239**	2					Locking Device	Ens. verrouillage	Verriegelung	Dispos Cierre	
28	**VOE 11200054**	2					Spacer	Partie Intermédiaire	Zwischenstück	Espaciador	
29		1					Side Window	Fenetre Lat.	Seitenfenster	Ventana Lateral	LH See group 843, Page 441
29		1					Side Window	Fenetre Lat.	Seitenfenster	Ventana Lateral	RH See group 843, Page 441
30	**VOE 11200552**	2					Gas Spring	Ressort Gaz	Gasfeder	Resorte A Gas	
31	**VOE 983303**	2					Nut	Ecrou	Mutter	Tuerca	
32	**VOE 11007421**	REQ					Sealing strip	Lisse etancheite	Dichtleiste	Moldura reten	2 X L = 4250 MM
33	**VOE 11200633**	REQ					Seg moulding	Joint Etancheite	Dichtprofil	Liston reten	2 X L = 3650 MM
34	**VOE 11200633**	REQ					Seg moulding	Joint Etancheite	Dichtprofil	Liston reten	2 X L = 3600 MM
35	**VOE 11200077**	4					Hinge Anchorage	Fixat.charniere	Scharnierplatte	Fijac Bisagra	
36	**VOE 983244**	12					Hexagon screw	Vis a tête hexagonale	Sechskantschr.	Tornillo hexago	
37	**VOE 11202349**	4					Hinge Pin	Axe Charniere	Scharnierstift	Pasador Bisagra	
38	**VOE 11200634**	8					Slide Bearing	Palier Glissage	Gleitlager	Cojinete Fricci	
39	**VOE 11200072**	4					Hinge	Charniere	Scharnier	Bisagra	
40	**VOE 11200070**	4					Hinge	Charniere	Scharnier	Bisagra	
41	**VOE 955297**	16					Hexagon screw	Vis tête hexagonale	Sechskantschraube	Tornillo hexago	
42	**VOE 11200059**	16					Sealing ring	Bague d'étanchéité	Runddichtring	Anillo reten	
43	**VOE 11200081**	8					Plate	Plaque	Platte	Placa	
44	**VOE 948645**	16					Flange Lock Nut	Contre écrou bride	Flanschmutter	Contratuer Embr	
45	**VOE 11006824**	16					Protective cap	Capuchon de protection	Schutzkappe	Cubierta de protección	

1		**Puerta con accesorios de montaje** **Tür mit Anbauteilen** **Porte avec pièces de montage** **Door with fitting parts**	Catalogue id **20050**	Group **831**
2				
3			Illustr. No **1013221**	Section **100**
4				
5		**11298204**	Issue **VOE 64D9920050**	Page **435**

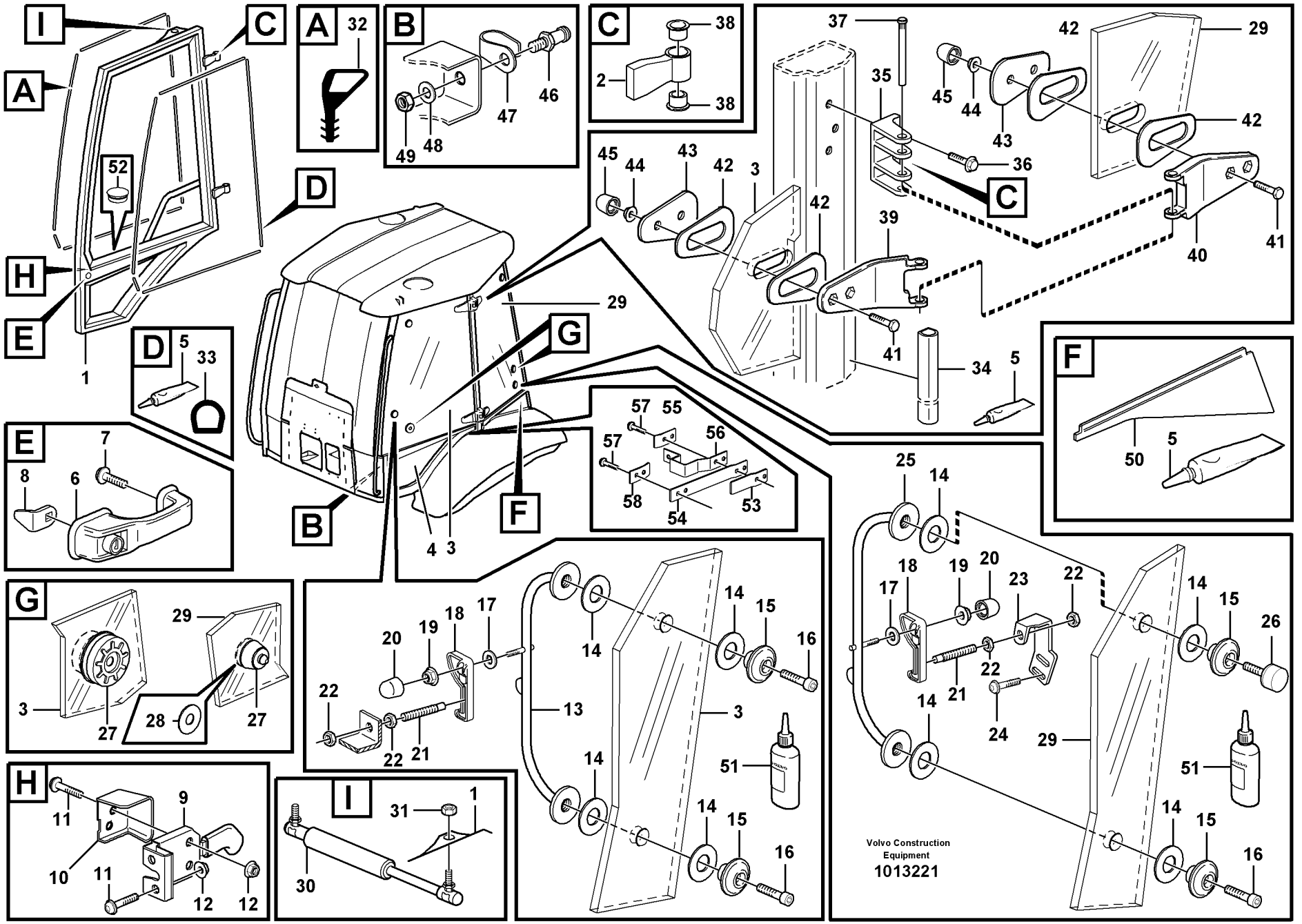
I
C
A
H
E
D
B
F
G
52
1
32
47
46
49
48
38
2
37
35
45
44
43
42
29
36
39
41
40
34
5
33
7
8
6
57
55
56
58
54
53
4
3
50
25
14
18
19
20
23
22
17
21
24
26
15
16
13
51
27
28
9
11
10
12
31
30
Volvo Construction Equipment
1013221

Fig.	Part No.	Quantity 1	2	3	PS	KIT	Description	Dénomination	Bezeichnung	Denominación	Notes
46	**VOE 14340282**	2					Lock Bolt	Boulon Verroui.	Sicher Bolzen	Perno Seguridad	
47	**VOE 14344720**	2					Brace	Etrier	Bügel	Brida	
48	**VOE 13955897**	2					Washer	Rondelle	Scheibe	Arandela	
49	**VOE 946830**	2					Hexagon Nut	Ecrou Hexagonal	Sechskantmutter	Tuerca Hexagon	
50	**VOE 11203345**	1					Side Plate	Tole Laterale	Seitenwandblech	Placa Lateral	
51	**VOE 11200847**	REQ			OP		Locking Fluid	Liquide Blocage	Sich.flussigk.	Liquido Sellad	
52	**VOE 4881293**	2					Protecting Plug	Tampon Protect	Sicher Stöpsel	Tapon Protecc	
53	**VOE 11202062**	2					Rubber Plate	Plaque Caoutchouc	Gummiplatte	Placa Goma	
54	**VOE 11200580**	2					Strip	Bande	Streifen	Cinta	
55	**VOE 11200611**	1					Anchorage	Fixation	Halterung	Fijacion	
56	**VOE 11200885**	1					Anchorage	Fixation	Halterung	Fijacion	
57	**VOE 972421**	8					Screw	Vis	Schraube	Tornillo	
58	**VOE 11200611**	2					Anchorage	Fixation	Halterung	Fijacion	

1		**Puerta con accesorios de montaje** **Tür mit Anbauteilen** **Porte avec pièces de montage** **Door with fitting parts**	Catalogue id **20050**	Group **831**
2				
3			Illustr. No **1013221**	Section **100**
4				
5		**11298204**	Issue **VOE 64D9920050**	Page **437**

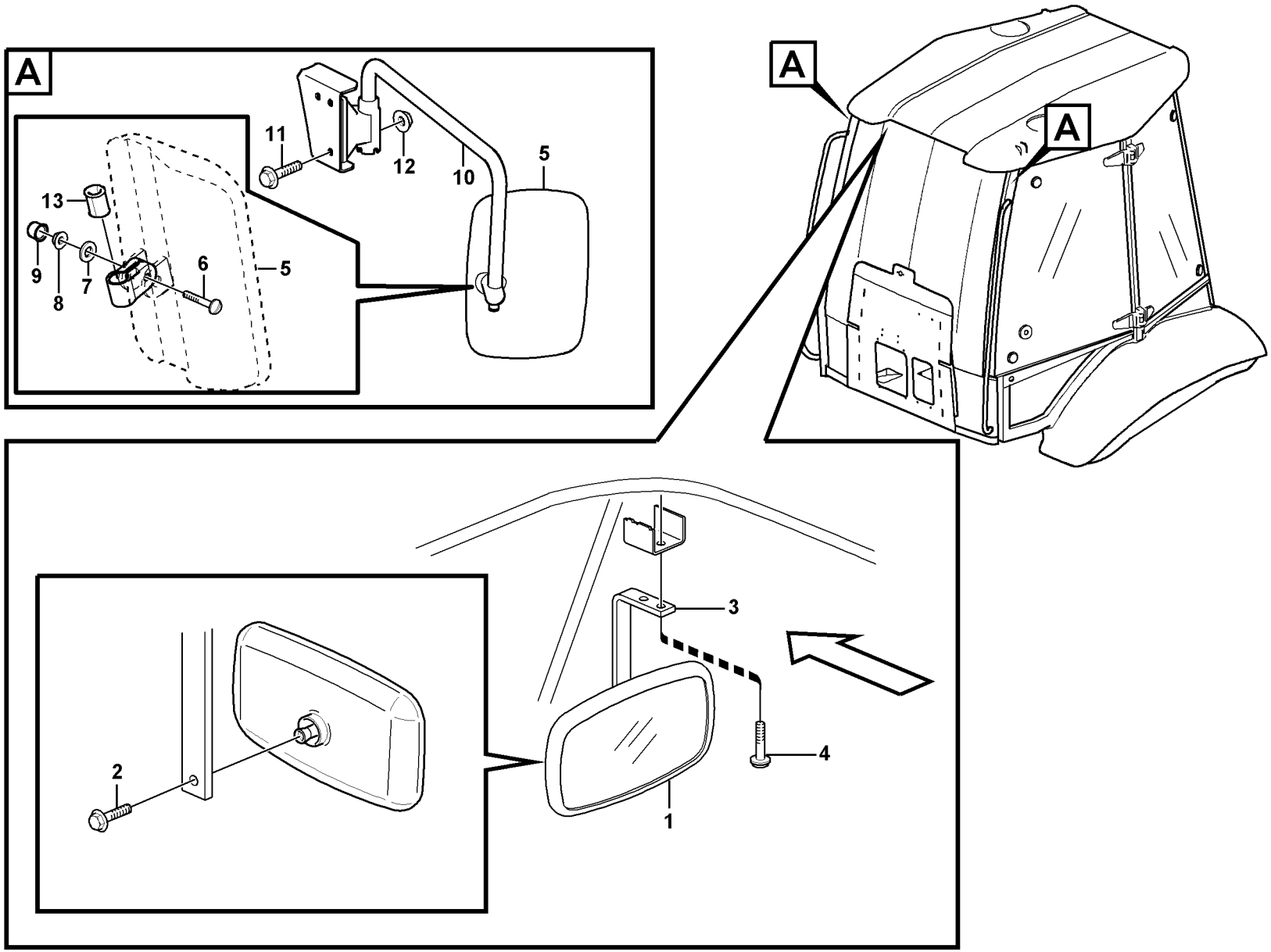
A
A
A
11
12
10
5
13
9
8
7
6
5
3
4
2
1

Fig.	Part No.	Quantity 1	2	3	4	5	PS	KIT	Description	Dénomination	Bezeichnung	Denominación	Notes
1	**VOE 11164488**	1							Mirror	Miroir	Spiegel	Espejo	
2	**VOE 13948356**	1							Flange screw	Vis à bride	Flanschschraube	Torn embridado	
3	**VOE 11200896**	1							Attachment	Fixation	Halterung	Fijacion	
4	**VOE 969587**	2							6-pt skt screw	Vis creuse de 6	Hohlschraube	Racor 6-dientes	
5	**VOE 11121366**		2	2	2	2			Kerb Obs Mirror	Miroir Vu.proc.	Nahsichtspiegel	Retrovisor	
6	**VOE 955276**		1	1	1	1			•Hexagon screw	•Vis tête hexagonale	•Sechskantschraube	•Tornillo hexago	(VOE 11710604)
7	**VOE 960139**		1	1	1	1			•Washer	•Rondelle	•Scheibe	•Arandela	6,4x18x2
8	**VOE 13963105**		1	1	1	1			•Lock nut	•Contre-ecrou	•Sicherungsmutter	•Contratuerca	M6
9	**VOE 11710605**		1	1	1	1	OP		•Protective cap	•Capuchon de protectio	•Schutzkappe	•Cubierta de protección	
10	**ZM 2907157**		1	1	1	1			Retaining rod, left	Barre de retenue à gauc	Haltestange, links	Barra de retención, izqui	LH
10	**ZM 2907158**		1	1	1	1			Retaining rod, right	Barre de retenue à droit	Haltestange, rechts	Barra de retneción, dere	RH
11	**VOE 13946173**		4	4	4	4			Flange screw	Vis à bride	Flanschschraube	Torn embridado	
12	**VOE 948645**		4	4	4	4			Flange Lock Nut	Contre écrou bride	Flanschmutter	Contratuer Embr	
13	**VOE 11203785**		2	2	2	2			Sleeve	Manchon	Muffe	Manguito	

1	**11298164**
2	**11298166, 11891000**
3	**11891049, 11891050**
4	**11891248, 11891249**
5	**11891002**

Retrovisor
Rückspiegel
Retroviseur
Rear view mirror

Catalogue id **20050**	Group **841**
Illustr. No **1013217**	Section **100**
Issue **VOE 64D9920050**	Page **439**

VOLVO

BL61

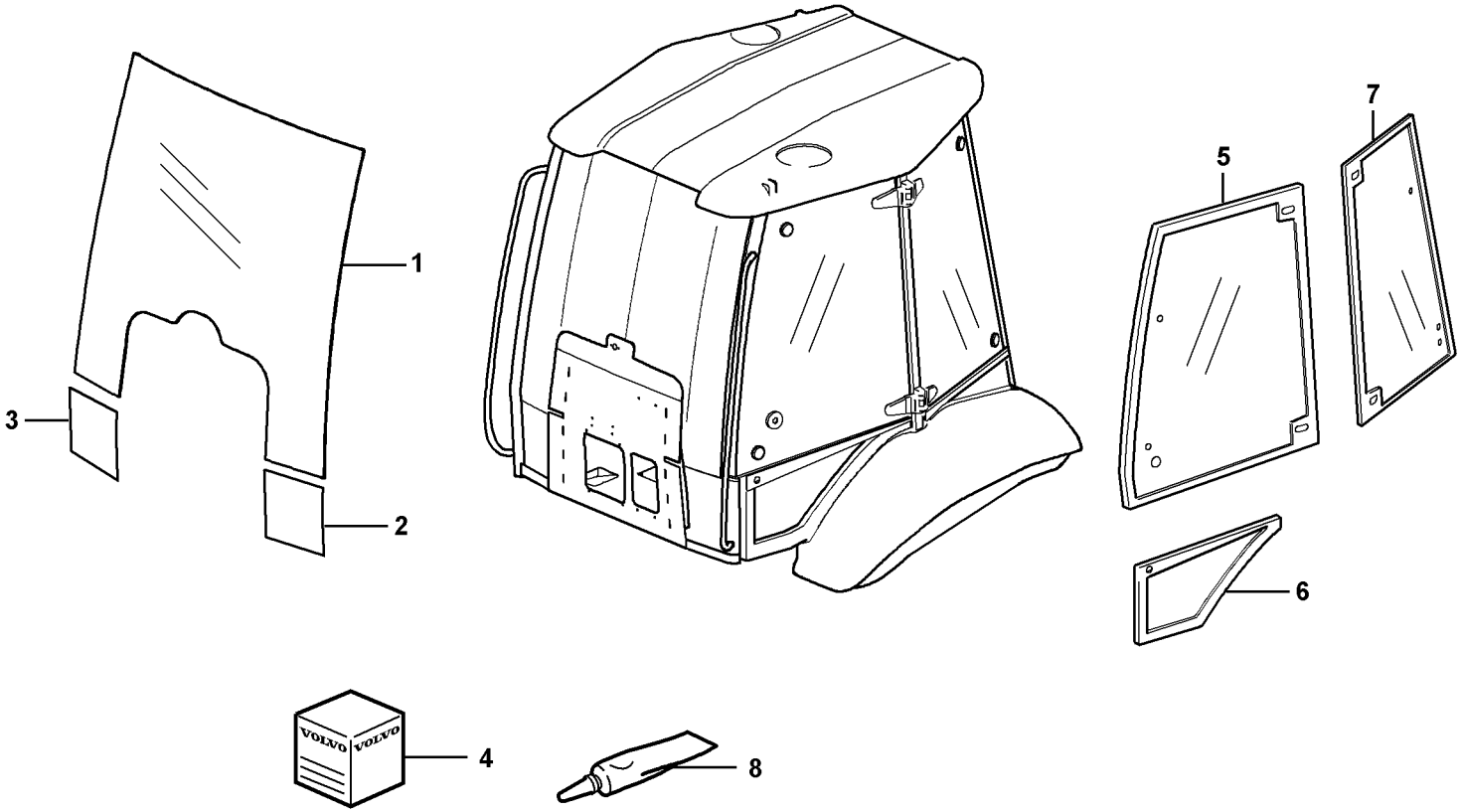

Volvo Construction Equipment
1013220

Fig.	Part No.	Quantity 1	2	3	PS	KIT	Description	Dénomination	Bezeichnung	Denominación	Notes
1	**VOE 11200910**	1	1				Windshield	Pare-brise	Frontscheibe	Parabrisas	
2	**VOE 11149730**	1	1				Window	Vitre	Fensterscheibe	Ventana	VOLVO
3	**VOE 11149731**	1	1				Window	Vitre	Fensterscheibe	Ventana	
4	**VOE 11704359**	REQ	REQ				Adhesive Kit	Kit Colle	Leimsatz	Juego Encolado	
5	**VOE 11202442**	1					Window	Vitre	Fensterscheibe	Ventana	LH
5	**VOE 11202463**	1					Window	Vitre	Fensterscheibe	Ventana	RH
6	**VOE 11149772**	1					Window	Vitre	Fensterscheibe	Ventana	LH
6	**VOE 11149774**	1					Window	Vitre	Fensterscheibe	Ventana	RH
7	**VOE 11149692**	1					Side Window	Fenetre Lat.	Seitenfenster	Ventana Lateral	LH
7	**VOE 11149693**	1					Side Window	Fenetre Lat.	Seitenfenster	Ventana Lateral	RH
8	**VOE 11708567**	REQ	REQ				Adhesive	Adhesif	Klebstoff	Adhesivo	

1	**11298204**	**Ventanillas** **Fensterscheibe** **Vitres** **Glass panes**	Catalogue id **20050**	Group **843**
2	**11298203**		Illustr. No **1013220**	Section **100**
3			Issue **VOE 64D9920050**	Page **441**
4				
5				

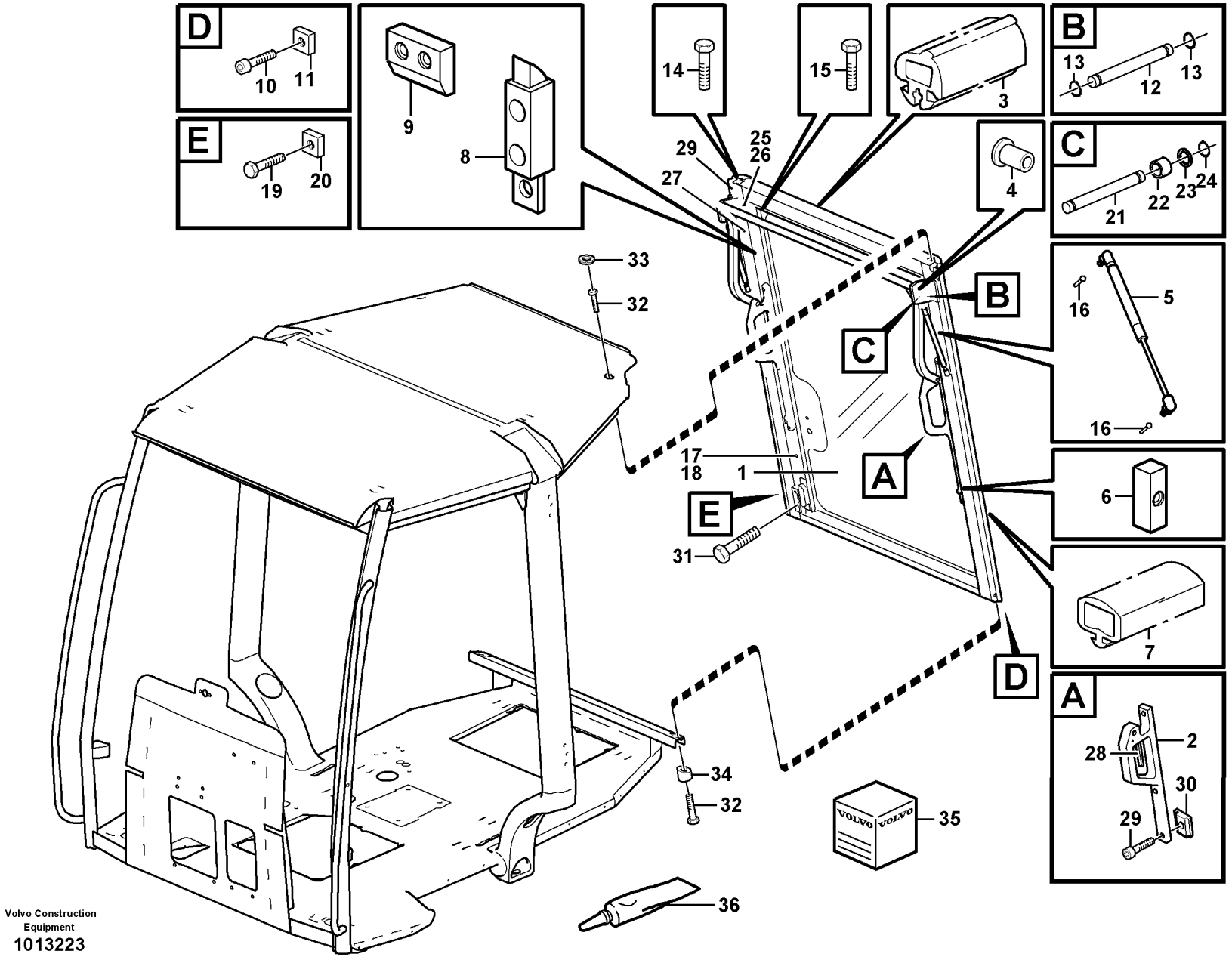

Volvo Construction Equipment

1013223

Fig.	Part No.	Quantity 1	2	3	PS	KIT	Description	Dénomination	Bezeichnung	Denominación	Notes
	VOE 11203588	1					Rear Window	Lunette Ar	Heckfenster	Luneta Post	
1	**VOE 11709834**	1			SS		•Rear Window	•Lunette Ar	•Heckfenster	•Luneta Post	
2	**VOE 11712557**	2					•Handle	•Poignee	•Handgriff	•Manilla	
3	**VOE 11709845**	REQ					•Rubber Moulding	•Joint Caoutchouc	•Gummileiste	•Liston Goma	L = 1800 MM
4	**VOE 11709836**	1					•Bushing	•Bague	•Buchse	•Casquillo	
5	**VOE 11709843**	2					•Gas Spring	•Ressort Gaz	•Gasfeder	•Resorte A Gas	
6	**VOE 11713153**	2					•Bearing Roller	•Rouleau Palier	•Lagerrolle	•Rodillo Cojinet	SEE SB BHL1K
7	**VOE 11709840**	REQ					•Rubber Moulding	•Joint Caoutchouc	•Gummileiste	•Liston Goma	
8	**VOE 11709841**	2					•Latch	•Poignee Blocage	•Knebel	•Mango Seguridad	
9	**VOE 11709844**	2					•Locating Key	•Cle Localisati.	•Fuhrungsnocke	•Llave	
10	**VOE 11712854**	2					•Screw	•Vis	•Schraube	•Tornillo	
11	**VOE 11712663**	2					•Nut	•Ecrou	•Mutter	•Tuerca	
12	**VOE 11712866**	2					•Shaft	•Arbre	•Welle	•Arbol	
13	**VOE 11712853**	4					•Retaining ring	•Bague retenue	•Haltering	•Anillo de apoyo	
14	**VOE 11712855**	8					•Screw	•Vis	•Schraube	•Tornillo	
15	**VOE 11712856**	4					•Screw	•Vis	•Schraube	•Tornillo	
16	**VOE 11712857**	4					•Ball Stud	•Axe Bille	•Kugelzapfen	•Gorron De Bola	
17	**VOE 11712858**	1					•Locking Plate	•Plaque Verroui.	•Sperrblech	•Placa Bloqueo	RH
18	**VOE 11712859**	1					•Locking Plate	•Plaque Verroui.	•Sperrblech	•Placa Bloqueo	LH
19	**VOE 11712860**	4					•Allen Head Screw	•Vis à six pans creux	•Inbusschraube	•Tornillo tipo Allen	
20	**VOE 11712663**	4					•Nut	•Ecrou	•Mutter	•Tuerca	
21	**VOE 11712876**	2					•Pin	•Goupille	•Zapfen	•Pasador	
22	**VOE 11712867**	2					•Spacer	•Partie Intermédiaire	•Zwischenstück	•Espaciador	
23	**VOE 11712862**	2					•Washer	•Rondelle	•Scheibe	•Arandela	
24	**VOE 11712861**	2					•Snap Ring	•Circlip	•Nutring	•Circlip	
25	**VOE 11712864**	1					•Ladder	•Echelle	•Leiter	•Escala	RH
26	**VOE 11712865**	1					•Ladder	•Echelle	•Leiter	•Escala	LH
27	**VOE 11712868**	2					•Slide Dog	•Talon Guidage	•Gleitrucken	•Talon Desliz	
28	**VOE 11712869**	2					•Handle	•Poignee	•Handgriff	•Manilla	
29	**VOE 11712662**	12					•Screw	•Vis	•Schraube	•Tornillo	

1		**Ventanas** **Fenster** **Fenêtres** **Windows**	Catalogue id **20050**	Group **843**
2			Illustr. No **1013223**	Section **150**
3			Issue **VOE 64D9920050**	Page **443**
4				
5		**11298204**		

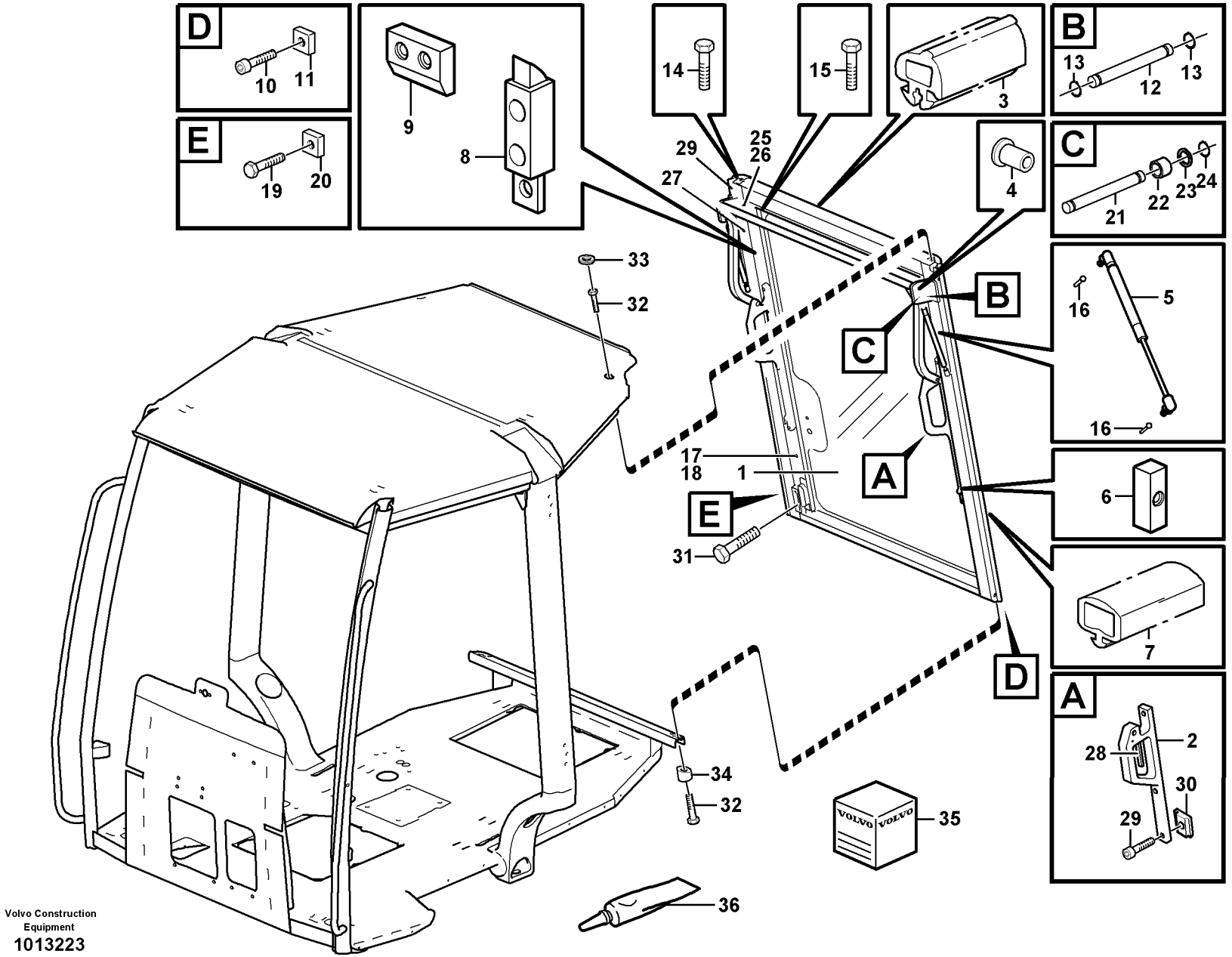

Volvo Construction Equipment

1013223

Fig.	Part No.	Quantity 1	2	3	PS	KIT	Description	Dénomination	Bezeichnung	Denominación	Notes
30	**VOE 11712663**	6					•Nut	•Ecrou	•Mutter	•Tuerca	
31	**VOE 11712174**	6					•Screw	•Vis	•Schraube	•Tornillo	
32	**VOE 13965186**	4					Flange screw	Vis à bride	Flanschschraube	Torn embridado	
33	**VOE 961970**	2					Plug	Bouchon	Stopfen	Tapon	
34	**VOE 11200600**	2					Spacer	Entretoise	Abstandstueck	Casquillo distanciad	
35	**VOE 11704359**	REQ					Adhesive Kit	Kit Colle	Leimsatz	Juego Encolado	
36	**VOE 11708567**	REQ					Adhesive	Adhesif	Klebstoff	Adhesivo	

1		**Ventanas** **Fenster** **Fenêtres** **Windows**	Catalogue id **20050**	Group **843**
2			Illustr. No **1013223**	Section **150**
3			Issue **VOE 64D9920050**	Page **445**
4				
5		**11298204**		

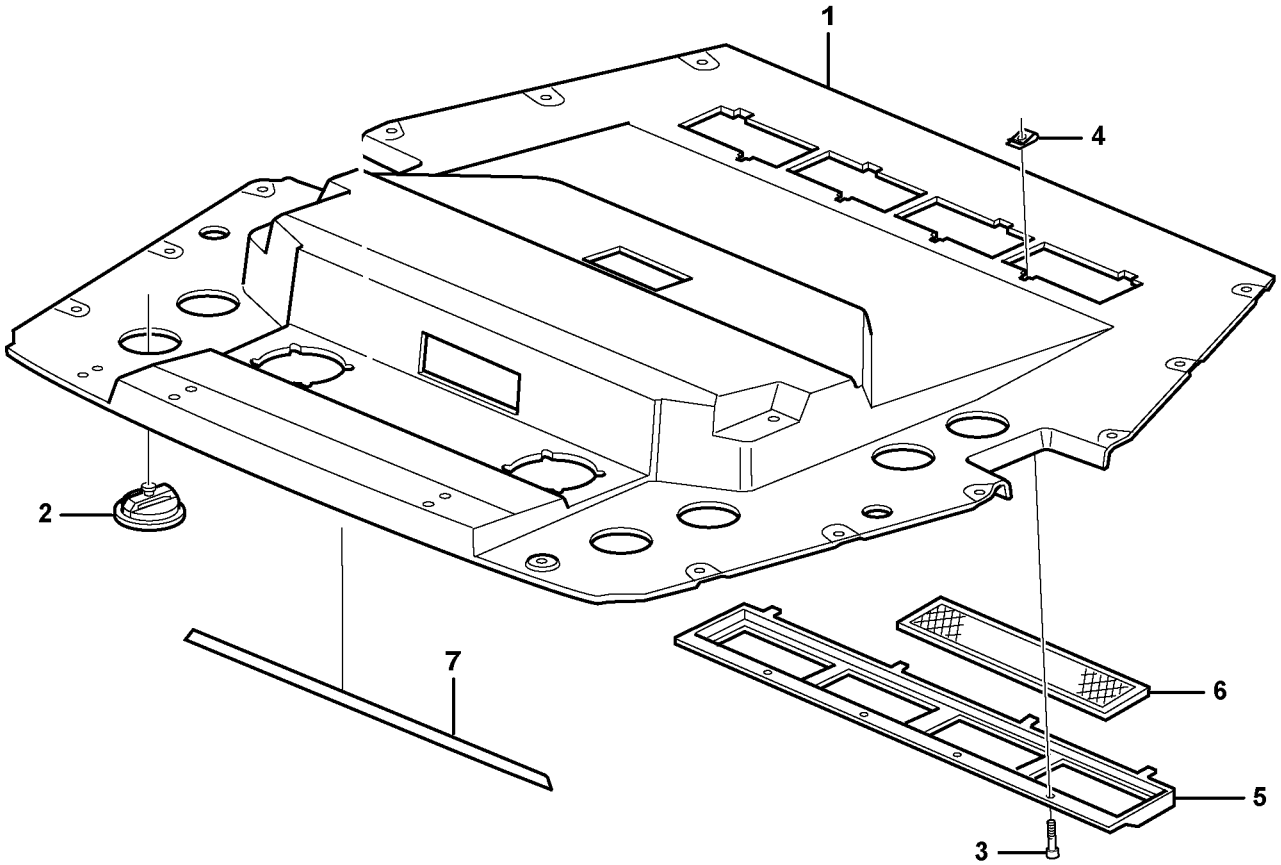
1
2
3
4
5
6
7

Fig.	Part No.	Quantity 1	2	3	PS	KIT	Description	Dénomination	Bezeichnung	Denominación	Notes
1	**VOE 11200549**	1					Headlining	Garnit.pavillon	Dachhimmel	Techo Interior	S/N - 10410
	VOE 11204540	1					Headlining	Garnit.pavillon	Dachhimmel	Techo Interior	S/N 10411 -
2	**VOE 11200838**	8					Air Outlet	Diffuseur d'air	Luftdüse	Difusor de aire	
3		4					Screw	Vis	Schraube	Tornillo	See group 872, Page 455
4		4					Spring Nut	Ecrou Ressort	Fed. Schliessmutter	Tuerca Resorte	See group 872, Page 455
5		1					Filter Retainer	Porte-filtre	Filtertopf	Soporte Filtro	See group 872, Page 455
6		2					Filter	Filtre	Filter	Filtro	See group 872, Page 455
7	**VOE 11003291**	REQ					Tape	Scotch	Klebeband	Cinta	L = 1000MM

1		**Detalles interiores** **Innenausstattung** **Pieces d'amenagement** **Interior components**	Catalogue id **20050**	Group **851**
2			Illustr. No **1015812**	Section **150**
3				
4			Issue **VOE 64D9920050**	Page **447**
5		**11298233**		

VOLVO

BL61

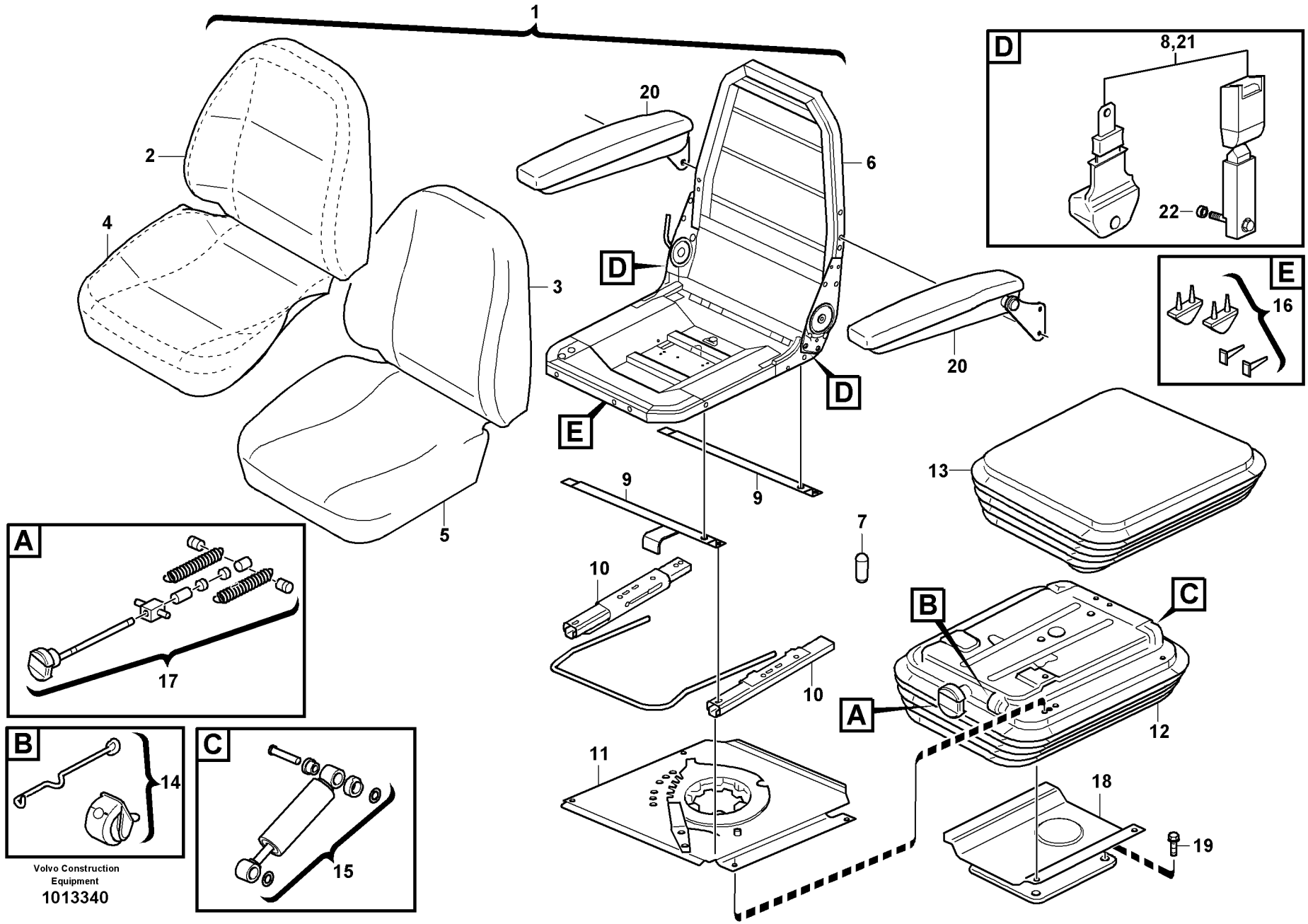

Volvo Construction Equipment
1013340

Fig.	Part No.	Quantity 1	2	3	4	5	PS	KIT	Description	Dénomination	Bezeichnung	Denominación	Notes
1	**VOE 11886222**	1	1						Seat	Siege	Sitz	Asiento	
1	**VOE 11886223**			1	1				Seat	Siege	Sitz	Asiento	
2	**VOE 11715083**	1	1						•Upholstery	•Garniture Habit	•Bezug	•Tapizado	
2	**VOE 11715081**			1	1				•Upholstery	•Garniture Habit	•Bezug	•Tapizado	
3	**VOE 11715045**	1	1	1	1				•Backrest Cushion	•Coussin de dossier	•Rückenlehnenkissen	•Cojín del respaldo	
4	**VOE 11715084**	1	1						•Upholstery	•Garniture Habit	•Bezug	•Tapizado	
4	**VOE 11715082**			1	1				•Upholstery	•Garniture Habit	•Bezug	•Tapizado	
5	**VOE 11715047**	1	1	1	1				•Seat cushion	•Coussin siege	•Sitzkissen	•Cojin asiento	
6	**VOE 11715057**	1	1	1	1				•Seat frame	•cadre Siege	•Sitzrahmen	•Marco asiento	
7	**VOE 11715058**	1	1	1	1				•Knob	•Bouton	•Knopf	•Boton	
8	**VOE 11715053**	1	1	1	1				•Hip Belt	•Ceinture Hanche	•Hüftgurt	•Cinturon Cadera	
9	**VOE 11715049**	1	1	1	1				•Cross Stay	•Etai Transvers.	•Querstrebe	•Barra Transver.	
10	**VOE 11715050**	1	1	1	1				•Seat Rail	•Rail Siege	•Sitzschiene	•Riel Asiento	
11	**VOE 11715051**	1	1	1	1				•Turntable	•Sellette Attela	•Drehscheibe	•Mesa Giratoria	
12	**VOE 11715059**	1	1	1	1				•Seat Spring Suspensio..	•Suspension Siege	•Sitzfederung	•Resorte Asiento	
13	**VOE 11715062**	1	1	1	1				•Bellows	•Capot Caoutcho.	•Gummimantel	•Cubierta Goma	
14	**VOE 11715063**	1	1	1	1				•Indicator	•Indicateur	•Indikator	•Indicador	
15	**VOE 11715064**	1	1	1	1				•Shock Absorber	•Amortis.confort	•Komf Stossdfr	•Amortiguador	
16	**VOE 11715065**	1	1	1	1				•Bump Stop	•Butee Suspensi.	•Anschlagpuffer	•Tope Pluma	
17	**VOE 11715066**	1	1	1	1				•Height Adjuster	•Reglage Hauteur	•Höhenversteller	•Ajuste Altura	
18	**VOE 11715067**	1	1	1	1				•Seat Bracket	•Etrier De Siege	•Sitzkonsole	•Consola Asiento	
19	**VOE 13965191**	4	4	4	4				Flange screw	Vis à bride	Flanschschraube	Torn embridado	
20	**VOE 11191410**		1		1				Arm Rest	Accoudoir	Armlehne	Reposabrazos	
21	**VOE 11104125**					1			Hip Belt	Ceinture Hanche	Hüftgurt	Cinturon Cadera	
22	**VOE 11886348**					2			Spacer	Partie Intermédiaire	Zwischenstück	Espaciador	

1	**11891216**
2	**11891099**
3	**11891217**
4	**11891100**
5	**11891314**

Asiento del conductor con piezas de montaje
Fahrersitz mit Anbauteilen
Siège conducteur avec pièces de montage
Operator seat with fitting parts

Catalogue id **20050**	Group **852**
Illustr. No **1013340**	Section **100**
Issue **VOE 64D9920050**	Page **449**

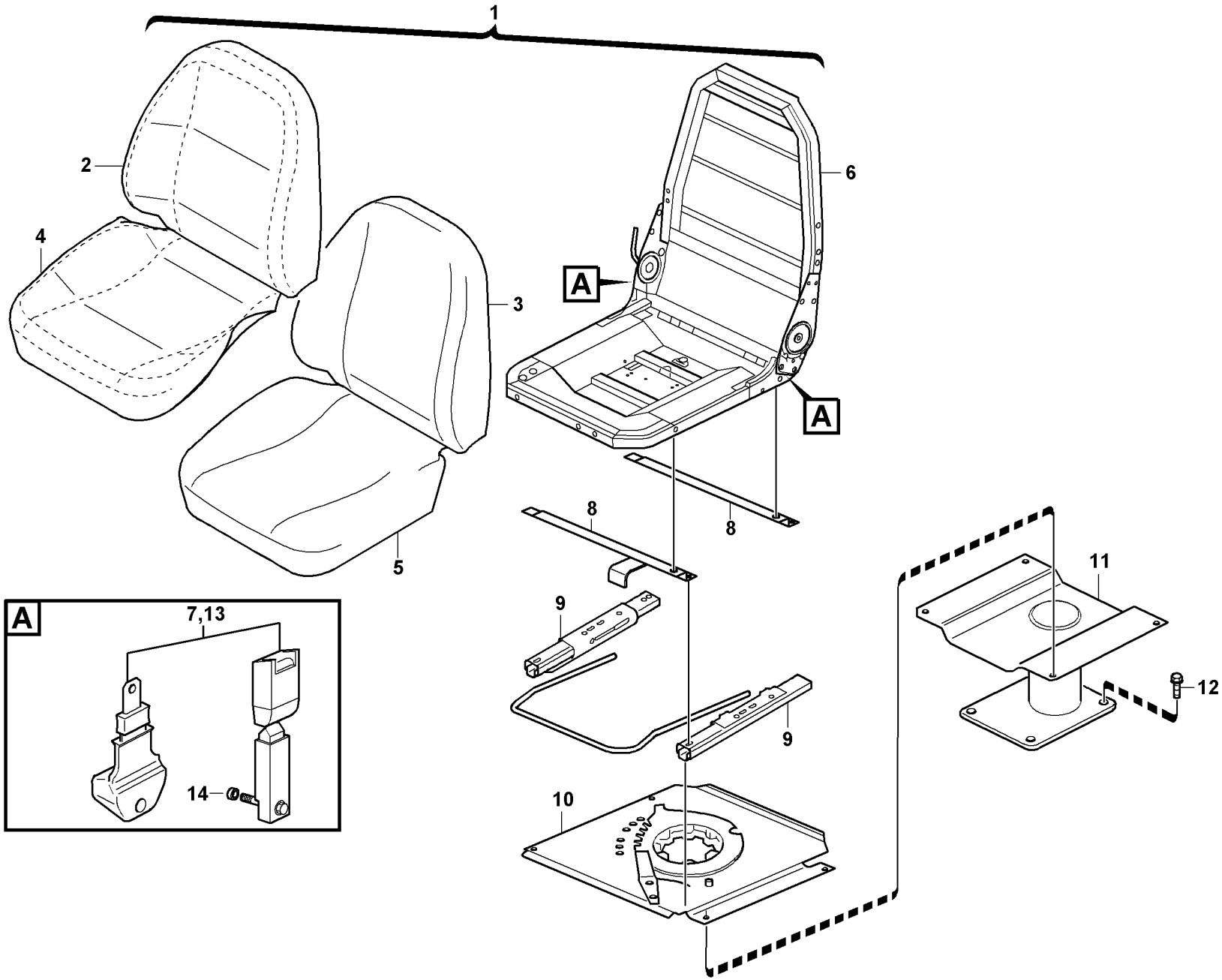

Volvo Construction Equipment
1013341

Fig.	Part No.	Quantity 1	2	3	PS	KIT	Description	Dénomination	Bezeichnung	Denominación	Notes
1	**VOE 11886065**	1					Seat	Siege	Sitz	Asiento	
2	**VOE 11715044**	1					•Upholstery	•Garniture Habit	•Bezug	•Tapizado	
3	**VOE 11715045**	1					•Backrest Cushion	•Coussin de dossier	•Rückenlehnenkissen	•Cojín del respaldo	
4	**VOE 11715046**	1					•Upholstery	•Garniture Habit	•Bezug	•Tapizado	
5	**VOE 11715047**	1					•Seat cushion	•Coussin siege	•Sitzkissen	•Cojin asiento	
6	**VOE 11715048**	1					•Seat frame	•cadre Siege	•Sitzrahmen	•Marco asiento	
7	**VOE 11715053**	1					•Hip Belt	•Ceinture Hanche	•Hüftgurt	•Cinturon Cadera	
8	**VOE 11715049**	1					•Cross Stay	•Etai Transvers	•Querstrebe	•Barra Transver	
9	**VOE 11715050**	1					•Seat Rail	•Rail Siege	•Sitzschiene	•Riel Asiento	
10	**VOE 11715051**	1					•Turntable	•Sellette Attela	•Drehscheibe	•Mesa Giratoria	
11	**VOE 11715052**	1					•Seat Bracket	•Etrier De Siege	•Sitzkonsole	•Consola Asiento	
12	**VOE 13965191**	4					Flange screw	Vis à bride	Flanschschraube	Torn embridado	
13	**VOE 11104125**		1				Hip Belt	Ceinture Hanche	Hüftgurt	Cinturon Cadera	
14	**VOE 11886348**		2				Spacer	Partie Intermédiaire	Zwischenstück	Espaciador	

1	**11891376**
2	**11891314**
3	
4	
5	

Asiento del conductor.
Fahrersitz.
Siège du condecteur.
Operator's seat.

Catalogue id **20050**	Group **852**
Illustr. No **1013341**	Section **150**
Issue **VOE 64D9920050**	Page **451**

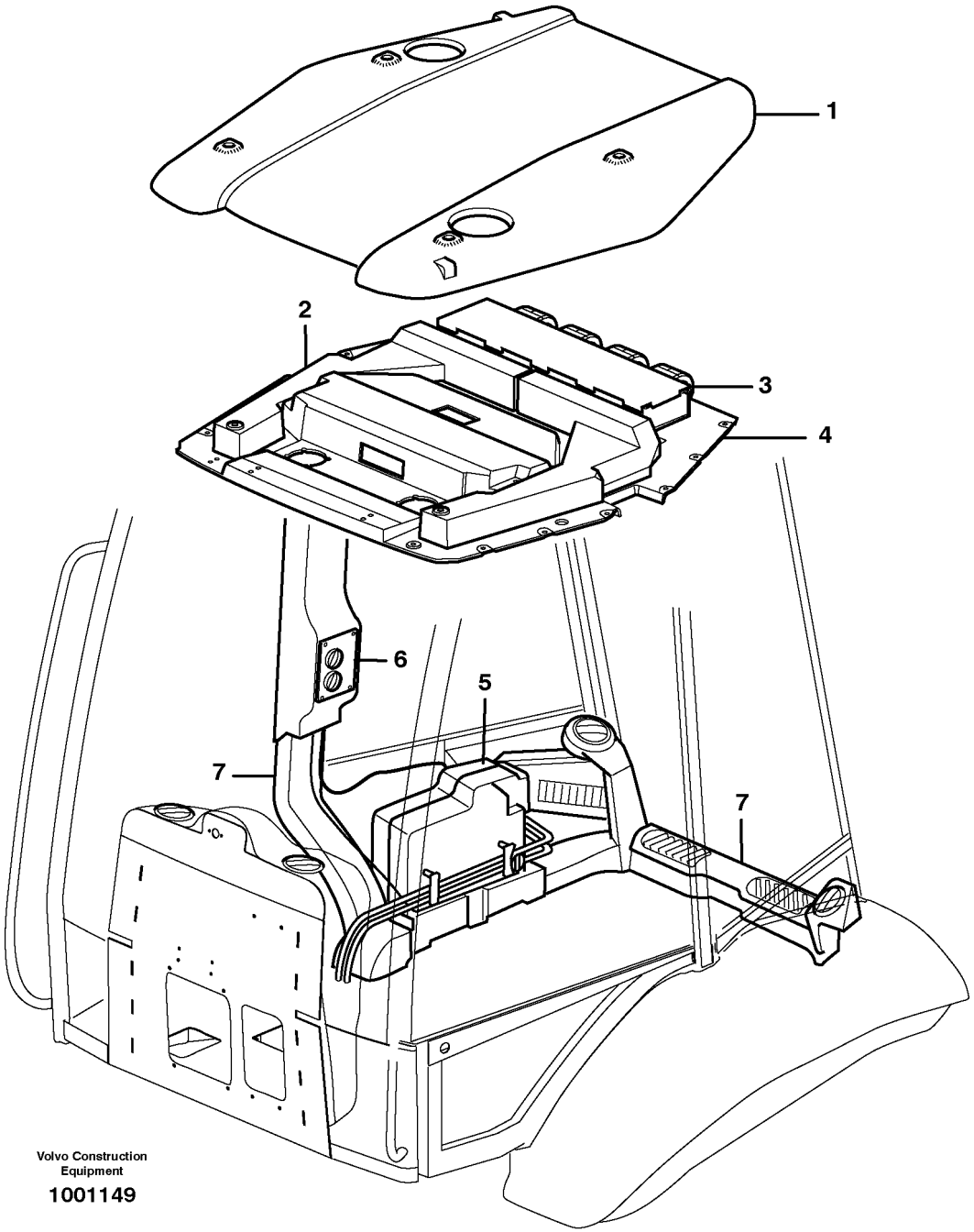
1
2
3
4
5
6
7
7
Volvo Construction Equipment
1001149

Fig.	Part No.	Quantity 1	2	3	PS	KIT	Description	Dénomination	Bezeichnung	Denominación	Notes
1		1					Roof	Toit	Dach	Techo	See group 810, Page 411
2		1					Air Duct	Tambour Air	Lufttrommel	Conducto Aire	See group 872, Page 455
3		1					Air Cond	Climatisation	Klimaanlage	Acondicion Aire	See group 874, Page 467
4		1			NS		Headlining	Garnit.pavillon	Dachhimmel	Techo Interior	See group 851, Page 447
5		1					Cab Heater	Chauffage cabine	Kabinenheizung	Calef Cabina	See group 873, Page 461
6		1					Control Panel	Panneau commande	Bedienungstafel	Panel Mando	See group 873, Page 463
7		1					Air ducts	Canalisation d'air	Luftkanäle	Canales de aire	See group 872, Page 457

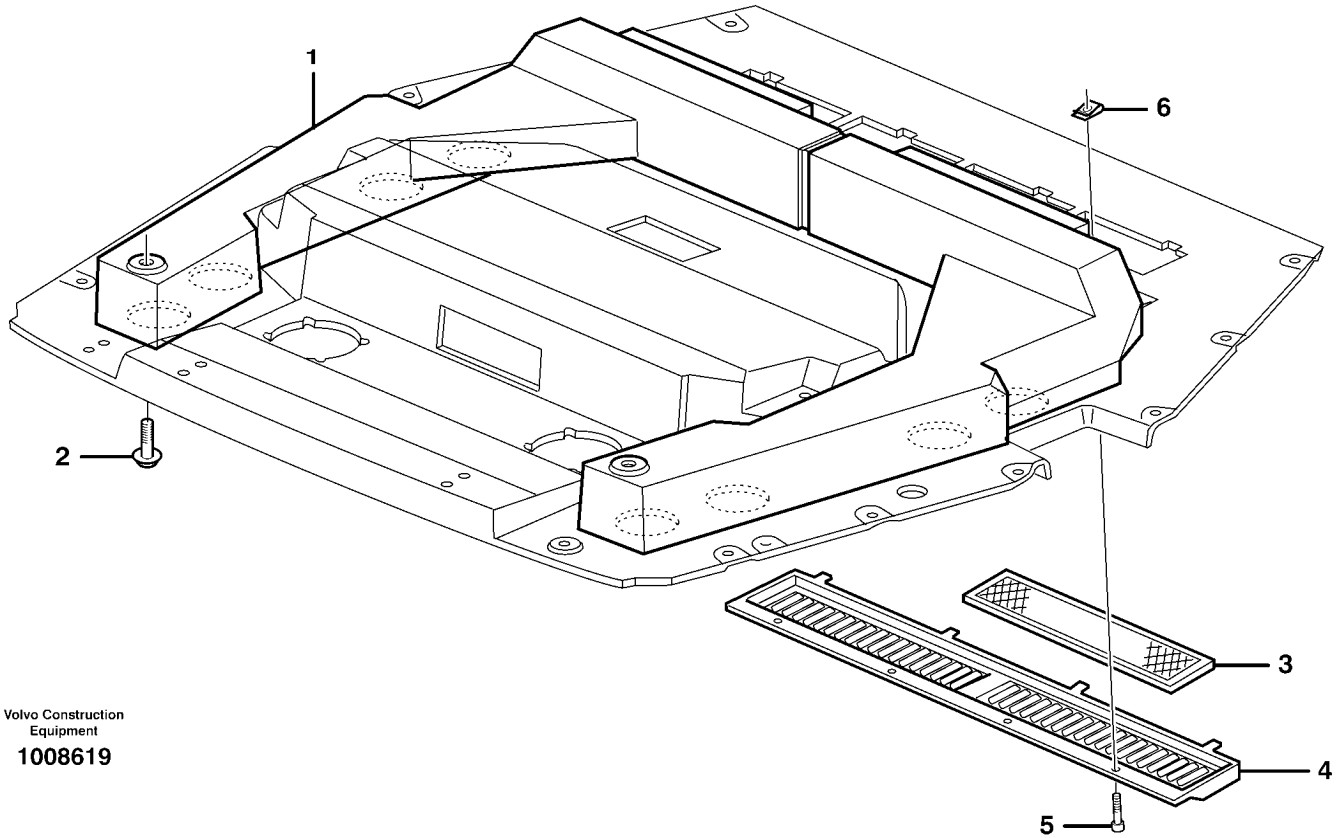

Volvo Construction Equipment

1008619

Fig.	Part No.	Quantity 1	2	3	PS	KIT	Description	Dénomination	Bezeichnung	Denominación	Notes
1	**VOE 11200530**	1					Air duct	Canal air	Luftkanal	Canal aire	
2	**VOE 13946173**	2					Flange screw	Vis à bride	Flanschschraube	Torn embridado	
3	**VOE 11200824**	2					Filter	Filtre	Filter	Filtro	
4	**VOE 11202426**	1					Filter Retainer	Porte-filtre	Filtertopf	Soporte Filtro	
5	**VOE 969405**	4					6-pt skt screw	Vis creuse de 6	Hohlschraube	Racor 6-dientes	
6	**VOE 949937**	4					Spring Nut	Ecrou Ressort	Fed. Schliessmutter	Tuerca Resorte	

1		**Conductos de aire** **Luftkanäle** **Canalisation d'air** **Air ducts**	Catalogue id **20050**	Group **872**
2			Illustr. No **1008619**	Section **200**
3				
4			Issue **VOE 64D9920050**	Page **455**
5		**11298233**		

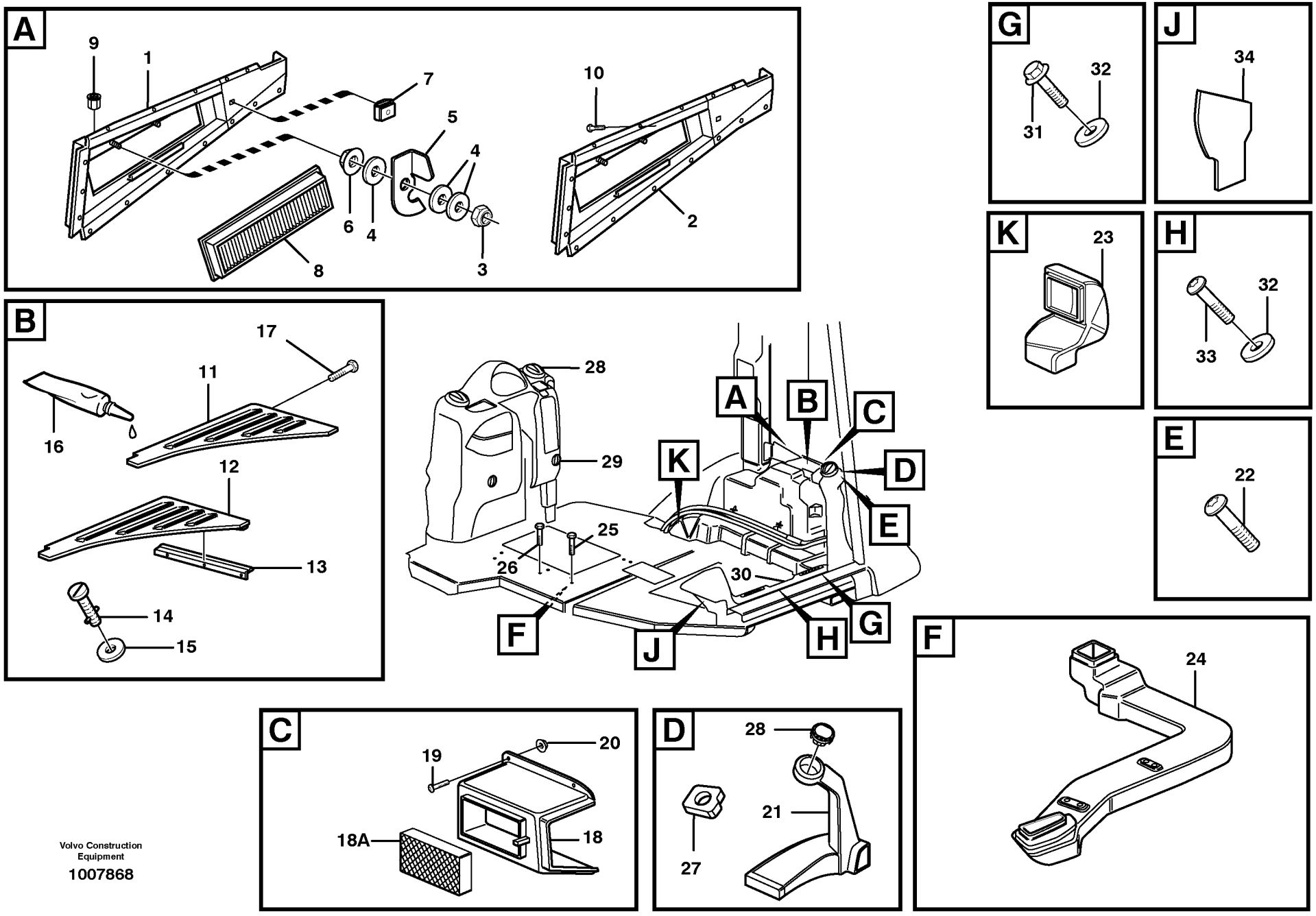

Volvo Construction Equipment

1007868

Fig.	Part No.	Quantity 1	2	3	PS	KIT	Description	Dénomination	Bezeichnung	Denominación	Notes
1		1			NS		Filter Retainer	Porte-filtre	Filtertopf	Soporte Filtro	
2	**VOE 11201308**	1					•Filter Retainer	•Porte-filtre	•Filtertopf	•Soporte Filtro	
3	**VOE 13965483**	2					•Flange Lock Nut	•Contre écrou bride	•Flanschmutter	•Contratuer Embr	
4	**VOE 13940090**	6					•Washer	•Rondelle	•Scheibe	•Arandela	
5	**VOE 11200818**	2					•Striker Plate	•Gache	•Schliesskeil	•Placa Bloqueo	
6	**VOE 13963104**	2					•Lock nut	•Contre-ecrou	•Sicherungsmutter	•Contratuerca	
7	**VOE 11201055**	1					•Buckle	•Boucle	•Schnalle	•Argolla	
8	**VOE 11703979**	1					•Primary Filter	•Prefiltre	•Vorfilter	•Prefiltro	
9	**VOE 977222**	1					•Rivet Nut	•Ecrou Rivet	•Nietmutter	•Tuerca Remache	
10	**VOE 976162**	7					Screw	Vis	Schraube	Tornillo	
11		1			NS		Air Inlet	Prise Air	Lufteinlass	Toma Aire	
12	**VOE 11201291**	1					•Air Inlet	•Prise Air	•Lufteinlass	•Toma Aire	
13	**VOE 11200794**	1					•Hinge	•Charniere	•Scharnier	•Bisagra	
14	**VOE 11201054**	1					•Buckle	•Boucle	•Schnalle	•Argolla	
15	**VOE 11201056**	1					•Lock Washer	•Rondel.verroui.	•Sicher Scheibe	•Arandel Segurid	
16	**VOE 11708567**	REQ					•Adhesive	•Adhesif	•Klebstoff	•Adhesivo	
	VOE 762681	REQ					•Rubber Moulding	•Joint Caoutchouc	•Gummileiste	•Liston Goma	L = 780 MM L = 925 MM
17	**VOE 13946544**	3					Flange screw	Vis à bride	Flanschschraube	Torn embridado	
18	**VOE 11200836**	1					Air Inlet	Prise Air	Lufteinlass	Toma Aire	
18A	**VOE 11712164**	1					•Filter	•Filtre	•Filter	•Filtro	(Recirculation)
19	**VOE 969422**	4					6-pt skt screw	Vis creuse de 6	Hohlschraube	Racor 6-dientes	(VOE 13969422)
20	**VOE 13949278**	4					Flange Lock Nut	Contre écrou bride	Flanschmutter	Contratuer Embr	
21	**VOE 11200730**	1					Air duct	Canal air	Luftkanal	Canal aire	
22	**VOE 969587**	1					6-pt skt screw	Vis creuse de 6	Hohlschraube	Racor 6-dientes	
23	**VOE 11200727**	1					Air duct	Canal air	Luftkanal	Canal aire	
24	**VOE 11200990**	1					Air duct	Canal air	Luftkanal	Canal aire	
25	**VOE 13946544**	5					Flange screw	Vis à bride	Flanschschraube	Torn embridado	
26	**VOE 13946544**	4					Flange screw	Vis à bride	Flanschschraube	Torn embridado	
27		1			NS		Insulation	Isolant	Isolierung	Aislante	

1		**Conductos de aire** **Luftkanäle** **Canalisation d'air** **Air ducts**	Catalogue id **20050**	Group **872**
2			Illustr. No **1007868**	Section **250**
3			Issue **VOE 64D9920050**	Page **457**
4				
5		**11298204**		

VOLVO

BL61

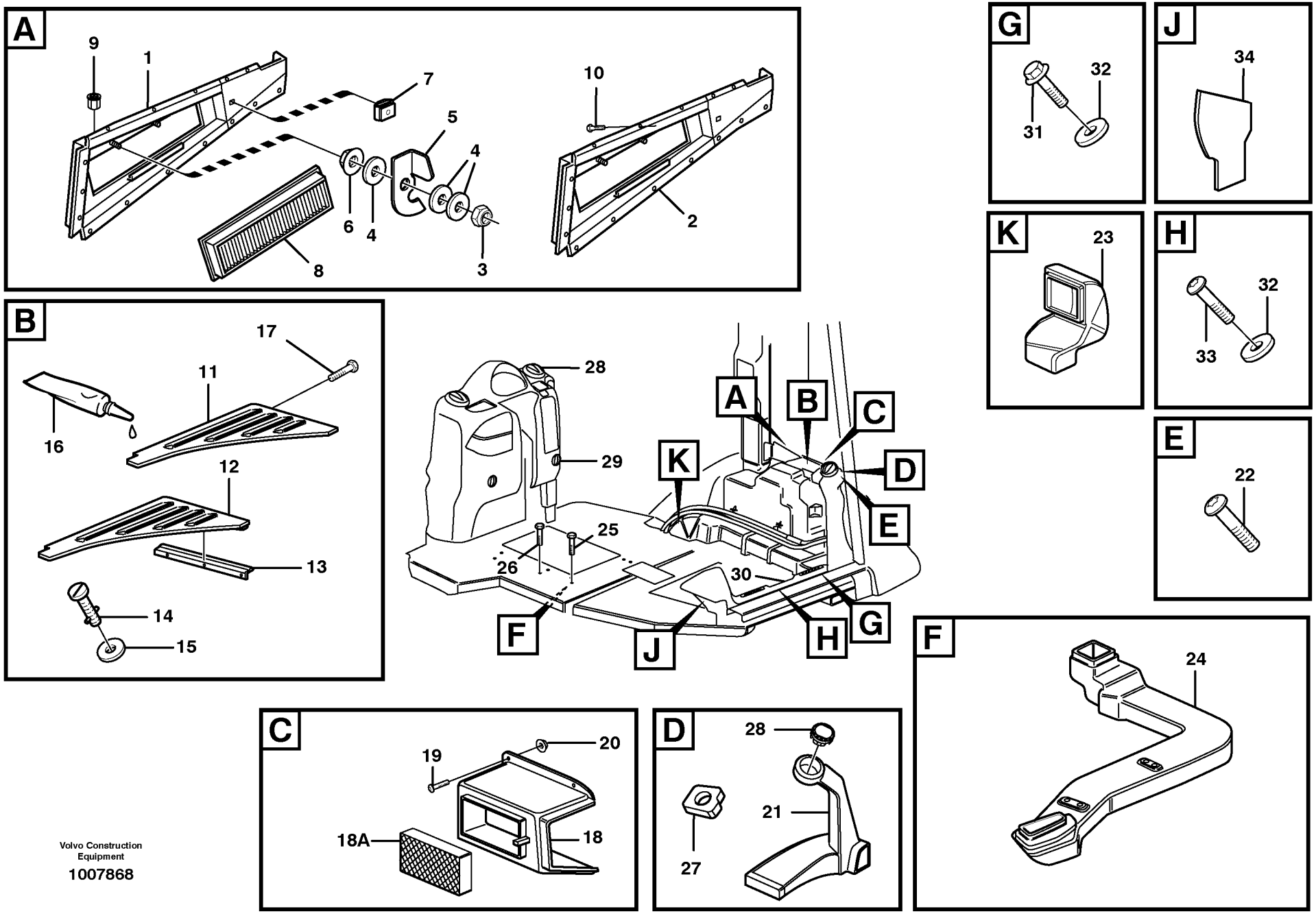

Volvo Construction Equipment

1007868

Fig.	Part No.	Quantity 1	2	3	PS	KIT	Description	Dénomination	Bezeichnung	Denominación	Notes
28	**VOE 11104372**	4					Air Outlet	Diffuseur d'air	Luftdüse	Difusor de aire	
29	**VOE 11104371**	2					Air Outlet	Diffuseur d'air	Luftdüse	Difusor de aire	
30	**VOE 11200543**	1					Air duct	Canal air	Luftkanal	Canal aire	
31	**VOE 13947542**	2					Screw	Vis	Schraube	Tornillo	
32	**VOE 13960138**	1					Washer	Rondelle	Scheibe	Arandela	
	VOE 960139	2					Washer	Rondelle	Scheibe	Arandela	
33	**VOE 972412**	1					Screw	Vis	Schraube	Tornillo	
34		REQ			NS		Insulation	Isolant	Isolierung	Aislante	

1		**Conductos de aire** **Luftkanäle** **Canalisation d'air** **Air ducts**	Catalogue id **20050**	Group **872**
2			Illustr. No **1007868**	Section **250**
3			Issue **VOE 64D9920050**	Page **459**
4				
5		**11298204**		

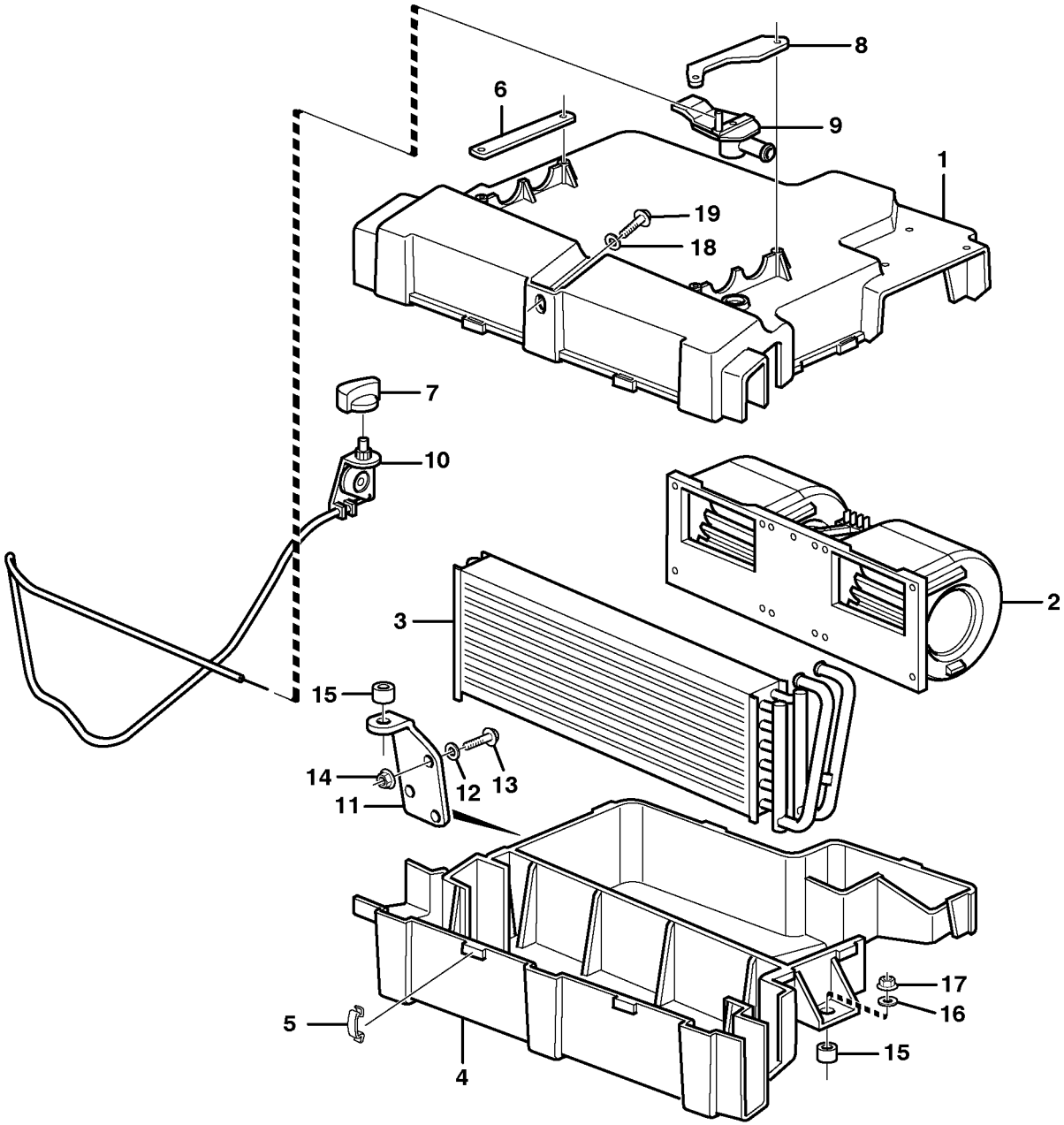
8
6
9
1
19
18
7
10
2
3
15
14
12
13
11
17
16
5
15
4

Fig.	Part No.	Quantity 1	2	3	PS	KIT	Description	Dénomination	Bezeichnung	Denominación	Notes
	VOE 11200528	1					Cab Heater	Chauffage cabine	Kabinenheizung	Calef Cabina	
1		1			NS		•Housing	•Carter	•Gehäuse	•Carter	
2	**VOE 11709685**	1					•Motor	•Moteur	•Motor	•Motor	
3	**VOE 11709684**	1					•Radiator	•Radiateur	•Radiator	•Radiador	See group 873, Page 463
4		1			NS		•Housing	•Carter	•Gehäuse	•Carter	
5	**VOE 11709691**	8					•Clip	•Clip	•Klemme	•Clip	
6	**VOE 11709688**	1					•Bracket	•Console	•Konsole	•Consola	
7	**VOE 11709689**	1					•Handle	•Poignee	•Drehgriff	•Mango	
8	**VOE 11709686**	1					•Bracket	•Console	•Konsole	•Consola	
9	**VOE 11709687**	1					•Valve	•Soupape	•Ventil	•Valvula	
10	**VOE 11709690**	1					•Converter	•Convertisseur	•Wandler	•Convertidor	
11		1			NS		Anchorage	Fixation	Halterung	Fijacion	
12	**VOE 13960141**	3					Washer	Rondelle	Scheibe	Arandela	(VOE 976944)
13	**VOE 13945444**	3					Flange screw	Vis à bride	Flanschschraube	Torn embridado	
14	**VOE 948645**	3					Flange Lock Nut	Contre écrou bride	Flanschmutter	Contratuer Embr	
15	**VOE 11200746**	2					Vib Damper	Amort.vibration	Schwingdämpfer	Amortig Vibrac	
16	**VOE 13960141**	3					Washer	Rondelle	Scheibe	Arandela	(VOE 976944)
17	**VOE 948645**	4					Flange Lock Nut	Contre écrou bride	Flanschmutter	Contratuer Embr	
18	**VOE 13960141**	1					Washer	Rondelle	Scheibe	Arandela	(VOE 976944)
19	**VOE 13945444**	1					Flange screw	Vis à bride	Flanschschraube	Torn embridado	

1		**Calefactor de cabina** **Kabinenheizung** **Chauffe-cabine** **Cab heater**	Catalogue id **20050**	Group **873**
2			Illustr. No **1001153**	Section **100**
3			Issue **VOE 64D9920050**	Page **461**
4				
5		**11298204**		

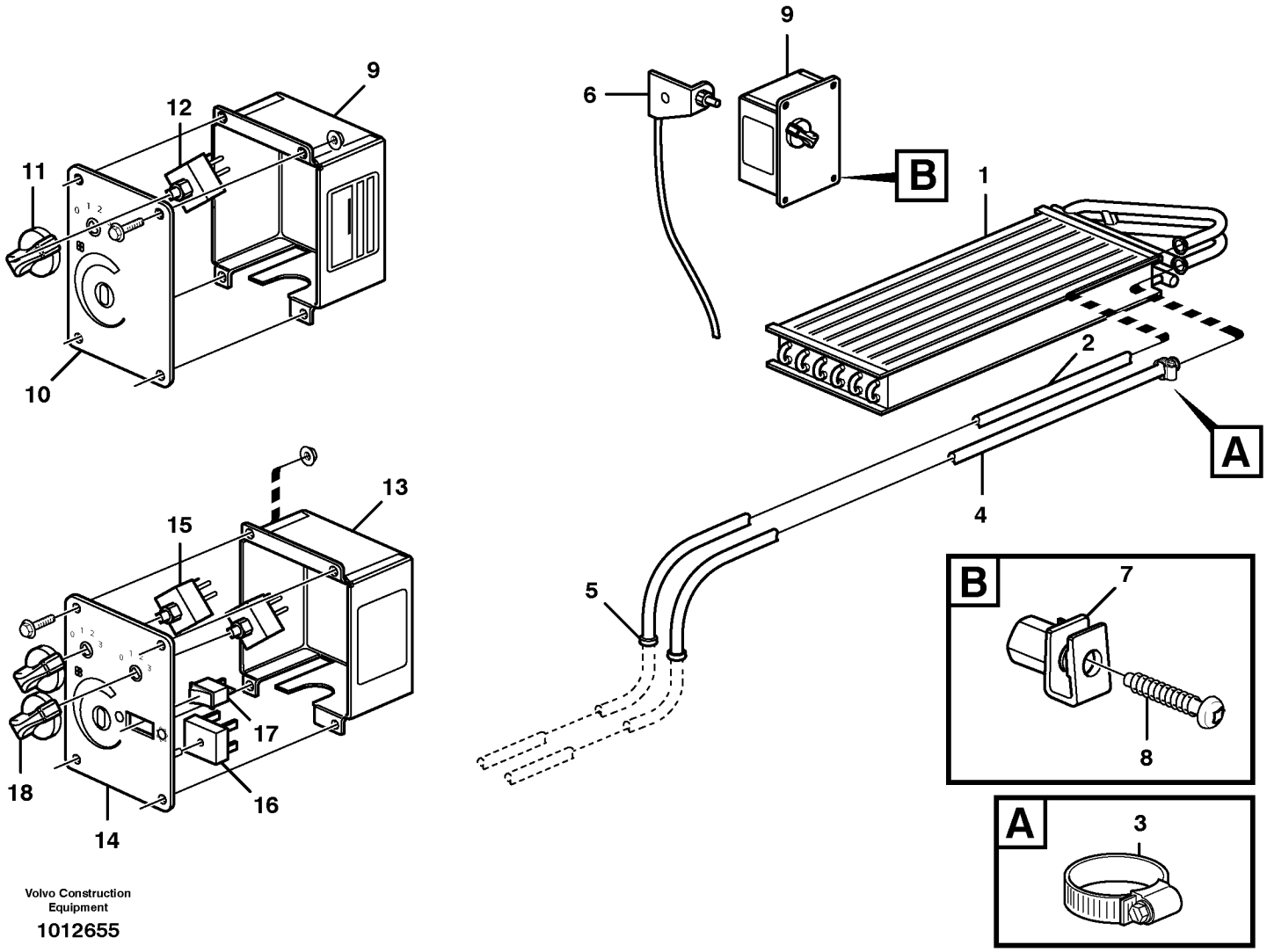

Volvo Construction Equipment

1012655

Fig.	Part No.	Quantity 1	2	3	PS	KIT	Description	Dénomination	Bezeichnung	Denominación	Notes
1	**VOE 11709684**	1					Radiator	Radiateur	Radiator	Radiador	
2	**VOE 11204029**	1					Hose	Durit	Schlauch	Tubo flexible	L = 2750MM
3	**VOE 13943472**	2					Clamp	Pince Serrage	Klemme	Abrazadera	
4	**VOE 11204029**	1					Hose	Durit	Schlauch	Tubo flexible	L = 2750MM
5	**VOE 961970**	2					Plug	Bouchon	Stopfen	Tapon	
6		1					Converter	Convertisseur	Wandler	Convertidor	See group 873, Page 461
7	**VOE 977982**	4					Spring Nut	Ecrou Ressort	Fed. Schliessmutter	Tuerca Resorte	
8	**VOE 975380**	4					Screw	Vis	Schraube	Tornillo	
9	**VOE 11200821**	1					Control Panel	Tableau de bord	Steuerpult	Panel de control	
10	**VOE 11709696**	1					•Cover	•Couvercle	•Deckel	•Tapa	
11	**VOE 11709689**	1					•Handle	•Poignee	•Drehgriff	•Mango	
12	**VOE 11709697**	1					•Switch	•Commutateur	•Schalter	•Contactor	
13	**VOE 11200533**		1				Control Panel	Tableau de bord	Steuerpult	Panel de control	
14	**VOE 11709706**		1				•Cover	•Couvercle	•Deckel	•Tapa	
15	**VOE 11709697**		1				•Switch	•Commutateur	•Schalter	•Contactor	
16	**VOE 11709707**		1				•Rectifier	•Redresseur	•Gleichrichter	•Rectificador	
17	**VOE 11709708**		1				•Switch	•Interrupteur	•Trennschalter	•Interruptor	
18	**VOE 11709689**		1				•Handle	•Poignee	•Drehgriff	•Mango	

1	**11298204**
2	**11298233**
3	
4	
5	

Radiador y reglaje
Heizkörper und Regler
Radiateur et réglage
Radiator and control

Catalogue id	Group
20050	**873**
Illustr. No **1012655**	Section **150**
Issue **VOE 64D9920050**	Page **463**

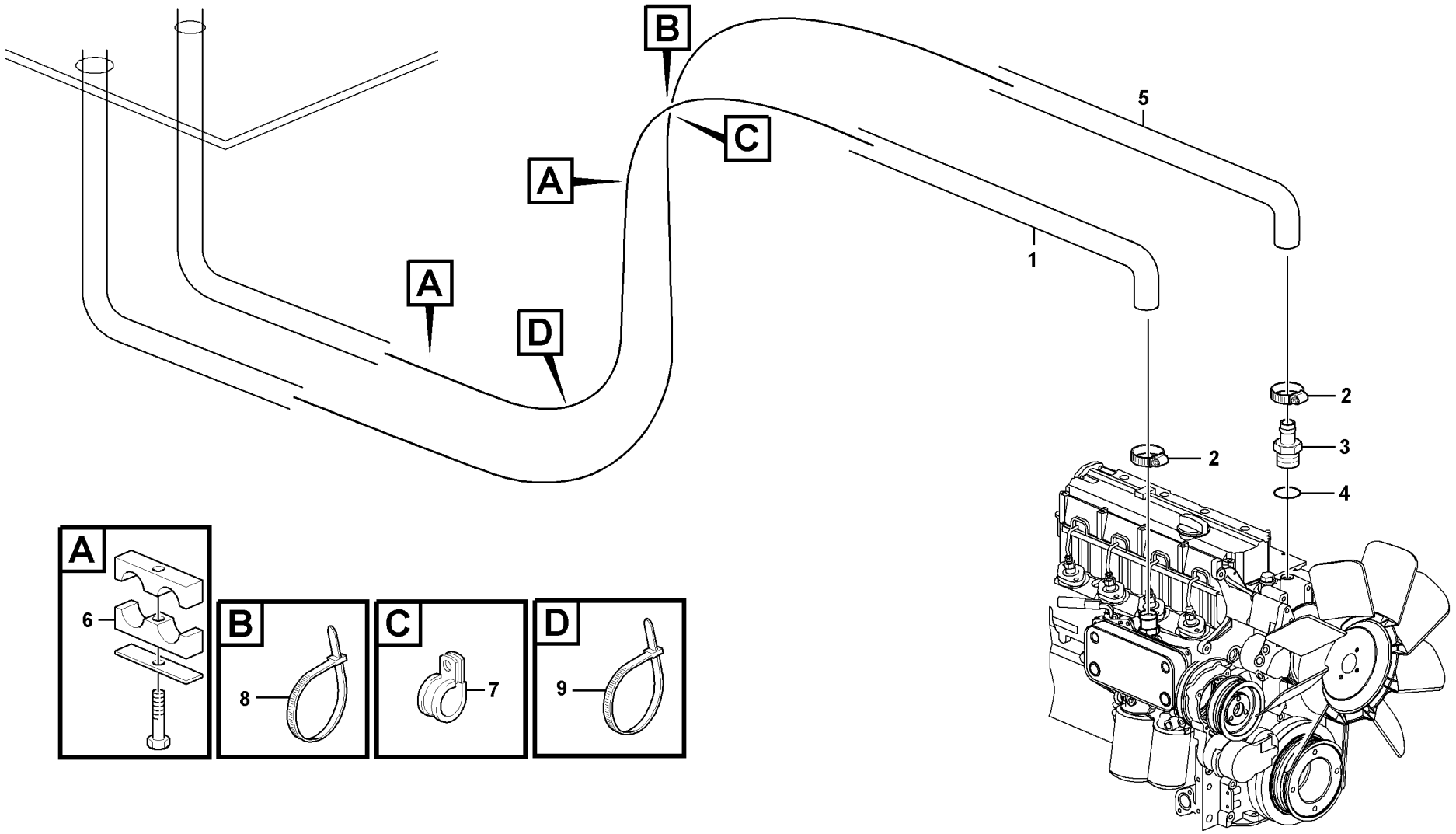
B
C
A
A
D
5
1
2
2
3
4
A
6
B
8
C
7
D
9

Fig.	Part No.	Quantity 1	2	3	PS	KIT	Description	Dénomination	Bezeichnung	Denominación	Notes
1	**VOE 11204029**	1					Hose	Durit	Schlauch	Tubo flexible	See group 873, Page 463
2	**VOE 968847**	2					Hose Clamp	Collier Serrage	Schlauchschelle	Abraz Manguera	
3	**VOE 11883933**	2					Connector	Raccord	Anschluss	Union	
4	**VOE 13947628**	2					Plane Gasket	Joint Plan	Flachdichtung	Junta Plana	
5	**VOE 11204029**	1					Hose	Durit	Schlauch	Tubo flexible	See group 873, Page 463
6	**VOE 11881443**	2					Clamp	Pince Serrage	Klemme	Abrazadera	
7	**VOE 13977600**	1					Clamp	Pince Serrage	Klemme	Abrazadera	
8	**VOE 4881440**	2					Strip Clamp	Ruban Serrage	Kabelbinder	Abraz Cinta	
9	**VOE 14016673**	1					Strip Clamp	Ruban Serrage	Kabelbinder	Abraz Cinta	

1		**Calefactor cabina con uniones** **Fahrerhausheizung mit anschlusse** **Chauffe-cabine avec raccords** **Cab heater with connectors**	Catalogue id **20050**	Group **873**
2			Illustr. No **1013222**	Section **200**
3			Issue **VOE 64D9920050**	Page **465**
4				
5		**11298204**		

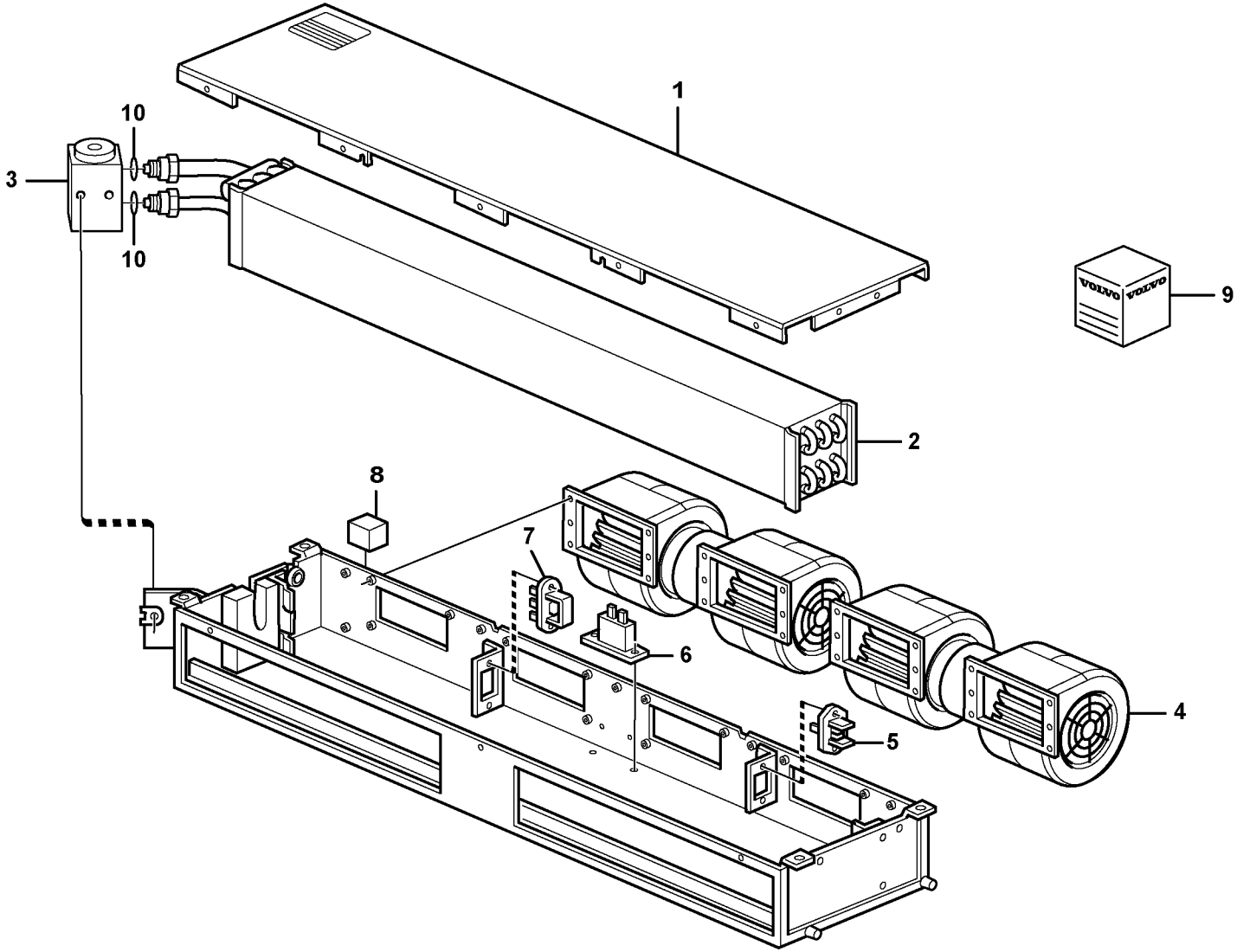
1
10
3
10
9
2
8
7
6
4
5

Fig.	Part No.	Quantity 1	2	3	PS	KIT	Description	Dénomination	Bezeichnung	Denominación	Notes
	VOE 11203150	1					Air conditioning	Climatisation	Klimaanlage	Acondicion de aire	
1		1			NS		•Cap	•Chapeau	•Kappe	•Caperuza	
2		1					•Evaporator	•Evaporateur	•Verdampfer	•Evaporador	See group 874, Page 469
3		1					•Expansion Valve	•Robin.expansion	•Exp Vent	•Valv Expansion	See group 874, Page 469
4	**VOE 11709704**	1					•Motor	•Moteur	•Motor	•Motor	
5	**VOE 11709700**	1					•Resistor	•Resistance	•Widerstand	•Resistencia	
6	**VOE 11709701**	1					•Thermostat	•Thermostat	•Thermostat	•Termostato	
7	**VOE 11709702**	1					•Resistor	•Resistance	•Widerstand	•Resistencia	
8	**VOE 11709703**	1					•Relay	•Relais	•Relais	•Rele	
9	**VOE 11715018**	1					•Sealing Kit	•Jeu Joints	•Dichtungssatz	•Juego Retenes	
10	**VOE 11715021**	2					O-ring	Joint Torique	O-Ring	Junta torica	

1		**Acondicionador de aire** **Klimaanlage** **Climatisation** **Air conditioning**	Catalogue id **20050**	Group **874**
2			Illustr. No **1001150**	Section **100**
3				
4			Issue **VOE 64D9920050**	Page **467**
5		**11298233**		

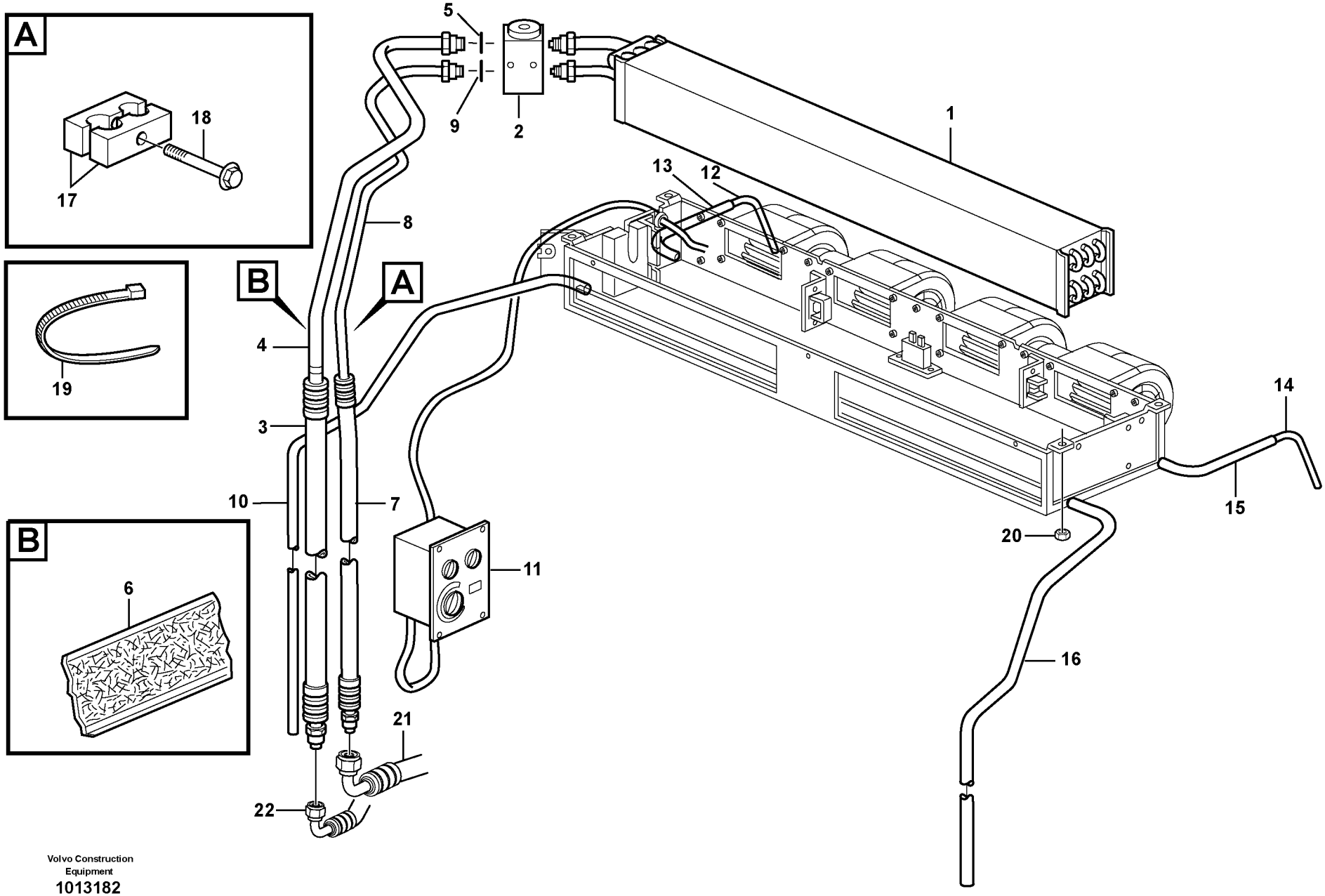

Volvo Construction Equipment
1013182

Fig.	Part No.	Quantity 1	2	3	PS	KIT	Description	Dénomination	Bezeichnung	Denominación	Notes
1	**VOE 11709698**	1					Evaporator	Evaporateur	Verdampfer	Evaporador	
2	**VOE 11709699**	1					Expansion Valve	Robin.expansion	Exp Vent	Valv Expansion	
3	**VOE 11201065**	1					Hose	Durit	Schlauch	Tubo flexible	
4	**VOE 11201063**	1					Tube	Tube	Rohr	Tubo	
5	**VOE 11715022**	1					O-ring	Joint Torique	O-Ring	Junta torica	
6	**VOE 11003291**	REQ					Tape	Scotch	Klebeband	Cinta	L=1000 MM
7	**VOE 11201064**	1					Hose	Durit	Schlauch	Tubo flexible	
8	**VOE 11201062**	1					Tube	Tube	Rohr	Tubo	
9	**VOE 11715020**	1					O-ring	Joint Torique	O-Ring	Junta torica	
10	**VOE 941507**	1					Hose	Durit	Schlauch	Tubo flexible	L = 2100MM
11		1					Control Panel	Panneau commande	Bedienungstafel	Panel Mando	See group 873, Page 463
12	**VOE 11039491**	1					Hose	Durit	Schlauch	Tubo flexible	L = 150MM
13	**VOE 941507**	1					Hose	Durit	Schlauch	Tubo flexible	L = 300MM
14	**VOE 11039491**	1					Hose	Durit	Schlauch	Tubo flexible	L = 150MM
15	**VOE 941507**	1					Hose	Durit	Schlauch	Tubo flexible	L = 300MM
16	**VOE 941507**	1					Hose	Durit	Schlauch	Tubo flexible	L = 2100MM
17	**VOE 11200928**	2					Hose retainer	Porte-flexible	Schlauchhalter	Reten manguera	
18	**VOE 946470**	1					Flange screw	Vis à bride	Flanschschraube	Torn embridado	
19	**VOE 4881440**	10					Strip Clamp	Ruban Serrage	Kabelbinder	Abraz Cinta	
20	**VOE 948645**	4					Flange Lock Nut	Contre écrou bride	Flanschmutter	Contratuer Embr	
21		1					Hose	Durit	Schlauch	Tubo flexible	See group 874, Page 471
22		1					Hose	Durit	Schlauch	Tubo flexible	See group 874, Page 471

1		**Evaporador, montaje** **Verdampfer, Anbauteilen** **Evaporateur, montage** **Evaporator, assembly**	Catalogue id **20050**	Group **874**
2			Illustr. No **1013182**	Section **350**
3			Issue **VOE 64D9920050**	Page **469**
4				
5		**11298233**		

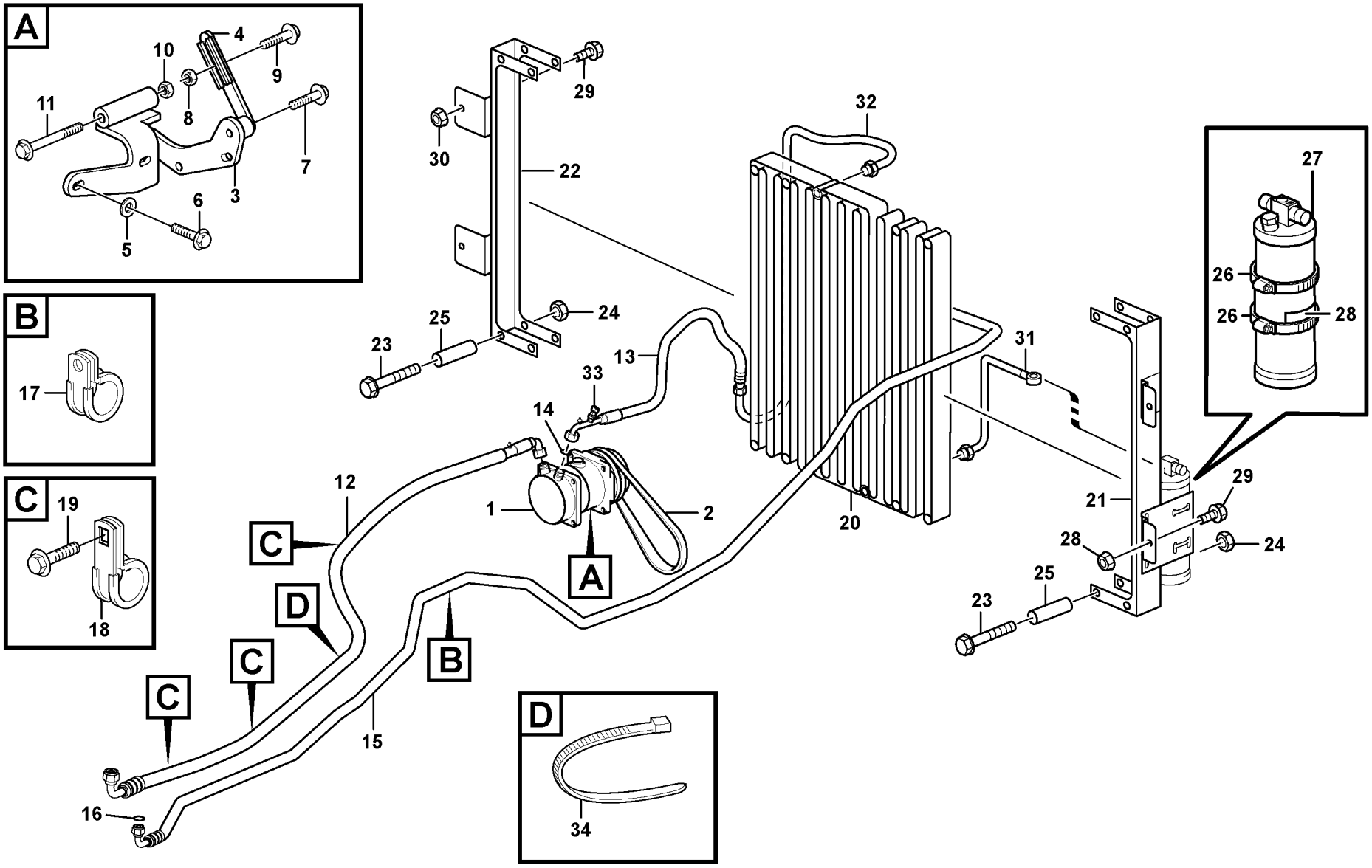

Volvo Construction Equipment
1013180

Fig.	Part No.	Quantity 1	2	3	PS	KIT	Description	Dénomination	Bezeichnung	Denominación	Notes
1	**VOE 11882069**	1					Compressor	Compresseur	Kompressor	Compresor	
2	**VOE 11883725**	1					V-belt	Courroie Trape.	Keilriemen	Correa Trapez	
3	**VOE 11888237**	1					Bracket	Console	Konsole	Ménsula	
4	**VOE 11884868**	1					Bracket	Console	Konsole	Ménsula	
5	**VOE 11117464**	4					Washer	Rondelle	Scheibe	Arandela	
6	**VOE 13967630**	4					Allen Hd Screw	Vis A 6 Pans Cr	Inbusschraube	Torn Hex Embut	
7	**VOE 13945444**	1					Flange screw	Vis à bride	Flanschschraube	Torn embridado	
8	**VOE 961991**	1					Hexagon Nut	Ecrou Hexagonal	Sechskantmutter	Tuerca Hexagon	
9	**VOE 946671**	1					Flange screw	Vis à bride	Flanschschraube	Torn embridado	
10	**VOE 981314**	1					Lock nut	Contre-ecrou	Sicherungsmutter	Contratuerca	
11	**VOE 13970963**	1					Hexagon screw	Vis a tête hexagonale	Sechskantschr.	Tornillo hexago	
12	**VOE 11883807**	1					Hose	Durit	Schlauch	Tubo flexible	
13	**VOE 11883805**	1					Hose	Durit	Schlauch	Tubo flexible	
14	**VOE 11715021**	2					O-ring	Joint Torique	O-Ring	Junta torica	
15	**VOE 11883806**	1					Hose	Durit	Schlauch	Tubo flexible	
16	**VOE 11715020**	2					O-ring	Joint Torique	O-Ring	Junta torica	
17	**VOE 967531**	1					Clamp	Pince Serrage	Klemme	Abrazadera	
18	**VOE 947457**	3					Clamp	Pince Serrage	Klemme	Abrazadera	
19	**VOE 972421**	1					Screw	Vis	Schraube	Tornillo	
20	**VOE 11886552**	1					Condenser	Condenseur	Kondensator	Condensador	
21	**VOE 11886585**	1					•Support	•Support	•Stütze	•Apoyo	
22	**VOE 11886586**	1					•Support	•Support	•Stütze	•Apoyo	
23	**VOE 13965177**	8					•Flange screw	•Vis à bride	•Flanschschraube	•Torn embridado	
24	**VOE 13949278**	8					•Flange Lock Nut	•Contre écrou bride	•Flanschmutter	•Contratuer Embr	
25	**VOE 11886620**	8					•Spacer	•Partie Intermédiaire	•Zwischenstück	•Espaciador	
26	**VOE 943480**	2					Hose Clamp	Collier Serrage	Schlauchschelle	Abraz Manguera	
27	**VOE 11709814**	1					Receiver Drier	Deshydrateur	Entfeuchter	Secador	
28	**VOE 13935003**	1					Warning Decal	Decal.avertiss	Warnaufkleber	Calcomania Adv	
29	**VOE 946440**	4					Flange screw	Vis à bride	Flanschschraube	Torn embridado	
30	**VOE 948645**	4					Flange Lock Nut	Contre écrou bride	Flanschmutter	Contratuer Embr	

1	
2	
3	
4	
5	

Montaje mangueras, evaporador, secador, condensador
Anbauteilen schlauch, verdampfer, entfeuchter
Montage flexibles, evaporateur, deshydrateurcondenseur
Assembly hoses: Evaparator, receiver drier, condenser.

11298233

Catalogue id	Group
20050	**874**
Illustr. No	Section
1013180	**450**
Issue	Page
VOE 64D9920050	**471**

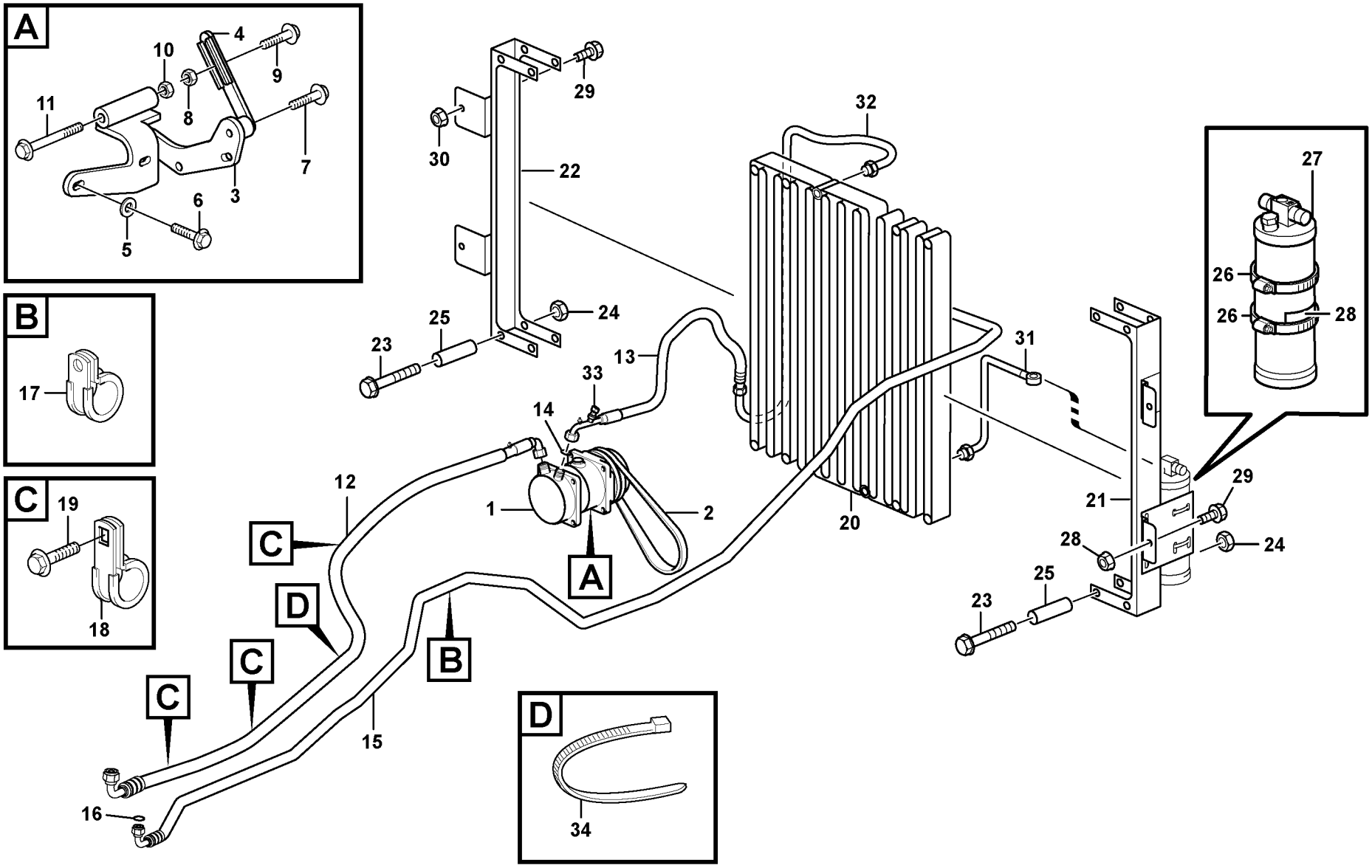

Volvo Construction Equipment
1013180

Fig.	Part No.	Quantity 1	2	3	PS	KIT	Description	Dénomination	Bezeichnung	Denominación	Notes
31	**VOE 11886617**	1					Tube	Tube	Rohr	Tubo	
32	**VOE 11886616**	1					Tube	Tube	Rohr	Tubo	
33	**VOE 11881763**	1					Pressure Switch	Mano contact	Druckschalter	Manocontacto	
34	**VOE 4881440**	2					Strip Clamp	Ruban Serrage	Kabelbinder	Abraz Cinta	

1		**Montaje mangueras, evaporador, secador, condensador** **Anbauteilen schlauch, verdampfer, entfeuchter** **Montage flexibles, evaporateur, deshydrateurcondenseur** **Assembly hoses: Evaparator, receiver drier, condenser.**	Catalogue id **20050**	Group **874**
2			Illustr. No **1013180**	Section **450**
3			Issue **VOE 64D9920050**	Page **473**
4				
5		**11298233**		

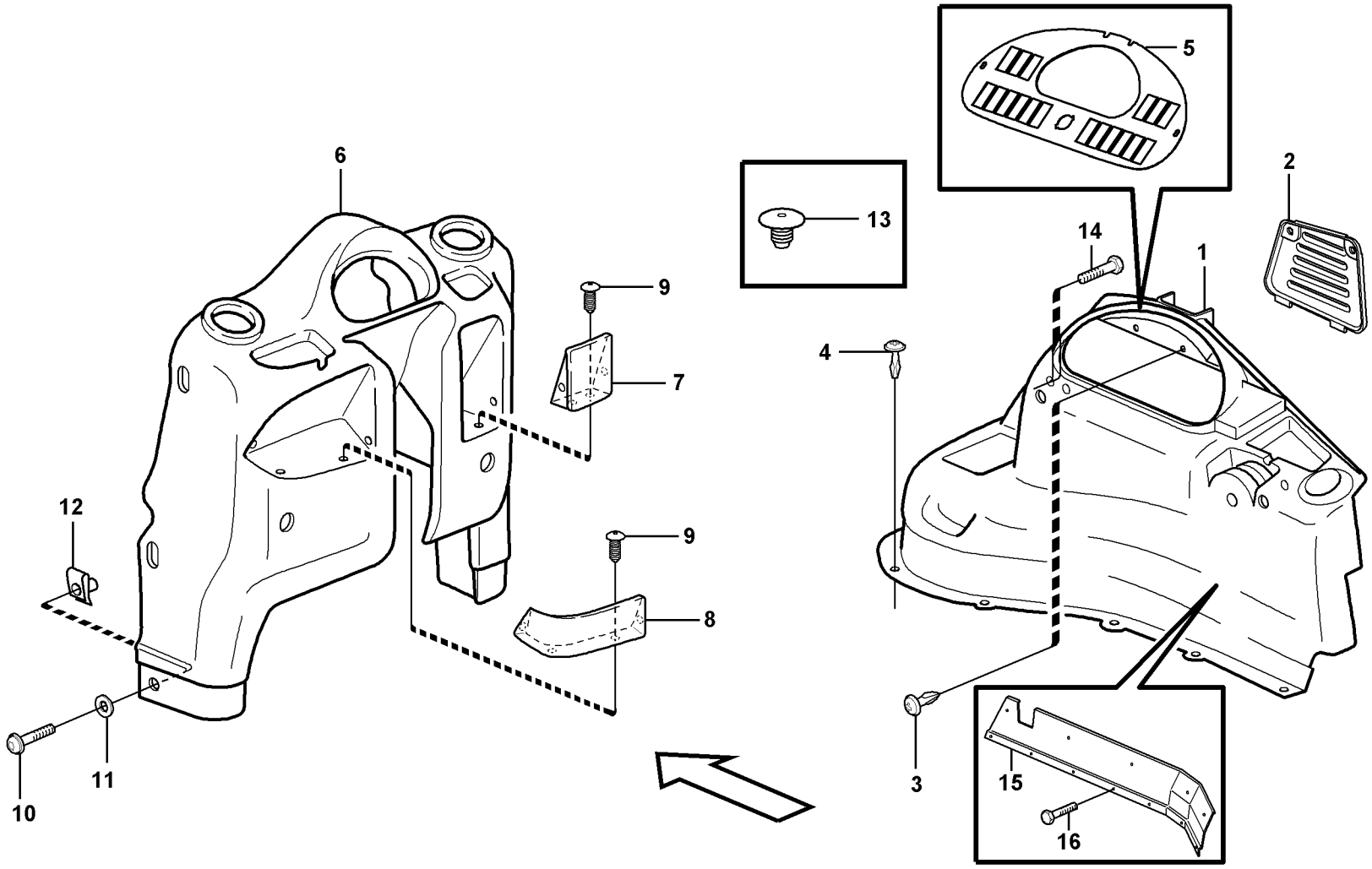

Volvo Construction Equipment
1013365

Fig.	Part No.	Quantity 1	2	3	4	5	PS	KIT	Description	Dénomination	Bezeichnung	Denominación	Notes
1	**VOE 11203560**	1							Side Panel	Panneau Lateral	Seit Verkl	Panel Lateral	
1	**VOE 11203562**		1						Side Panel	Panneau Lateral	Seit Verkl	Panel Lateral	
2	**VOE 11204407**	1	1						Cover	Capot	Haube	Capo	
3	**VOE 11201200**	5	5						Plastic Rivet	Rivet Plastique	Kunststoffniet	Remache Plast	
4	**VOE 11201200**	7	7						Plastic Rivet	Rivet Plastique	Kunststoffniet	Remache Plast	
5	**VOE 11884733**			1					Panel	Panneau	Verkleidung	Plancha	
5	**VOE 11202713**				1				Panel	Panneau	Verkleidung	Plancha	
6	**VOE 11204417**	1							Front Panel	Panneau Av	Frontbekleidung	Panel Delantero	
6	**VOE 11204415**		1						Front Panel	Panneau Av	Frontbekleidung	Panel Delantero	
7		1	1				NS		Storage Tray	Case Rangement	Ablagefach	Espac Guardaobj	
8		1	1				NS		Storage Tray	Case Rangement	Ablagefach	Espac Guardaobj	
9	**VOE 11200973**	8	8						Plug	Bouchon	Stopfen	Tapon	
10	**VOE 969589**	6	6						6-pt skt screw	Vis creuse de 6	Hohlschraube	Racor 6-dientes	
11	**VOE 960139**	6	6						Washer	Rondelle	Scheibe	Arandela	
12	**VOE 949921**	6	6						Spring Nut	Ecrou Ressort	Fed. Schliessmutter	Tuerca Resorte	
13	**VOE 11057786**	1	1						Plug	Bouchon	Stopfen	Tapon	
14	**VOE 13945444**	2							Flange screw	Vis à bride	Flanschschraube	Torn embridado	
	VOE 13960141	2							Washer	Rondelle	Scheibe	Arandela	
15	**VOE 11202229**		1						Attachment	Fixation	Halterung	Fijacion	
16	**VOE 975378**		7						Screw	Vis	Schraube	Tornillo	

1	**11298204**
2	**11298208**
3	**11880004**
4	**11298032**
5	

Panel de instrumentos
Instrumententafel
Tableau de bord
Instrument panel

Catalogue id **20050**	Group **881**
Illustr. No **1013365**	Section **100**
Issue **VOE 64D9920050**	Page **475**

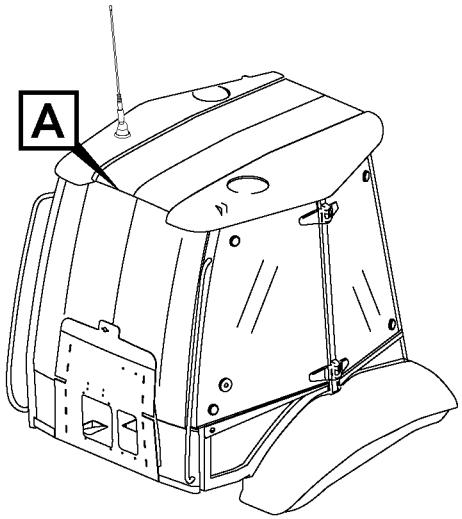
A

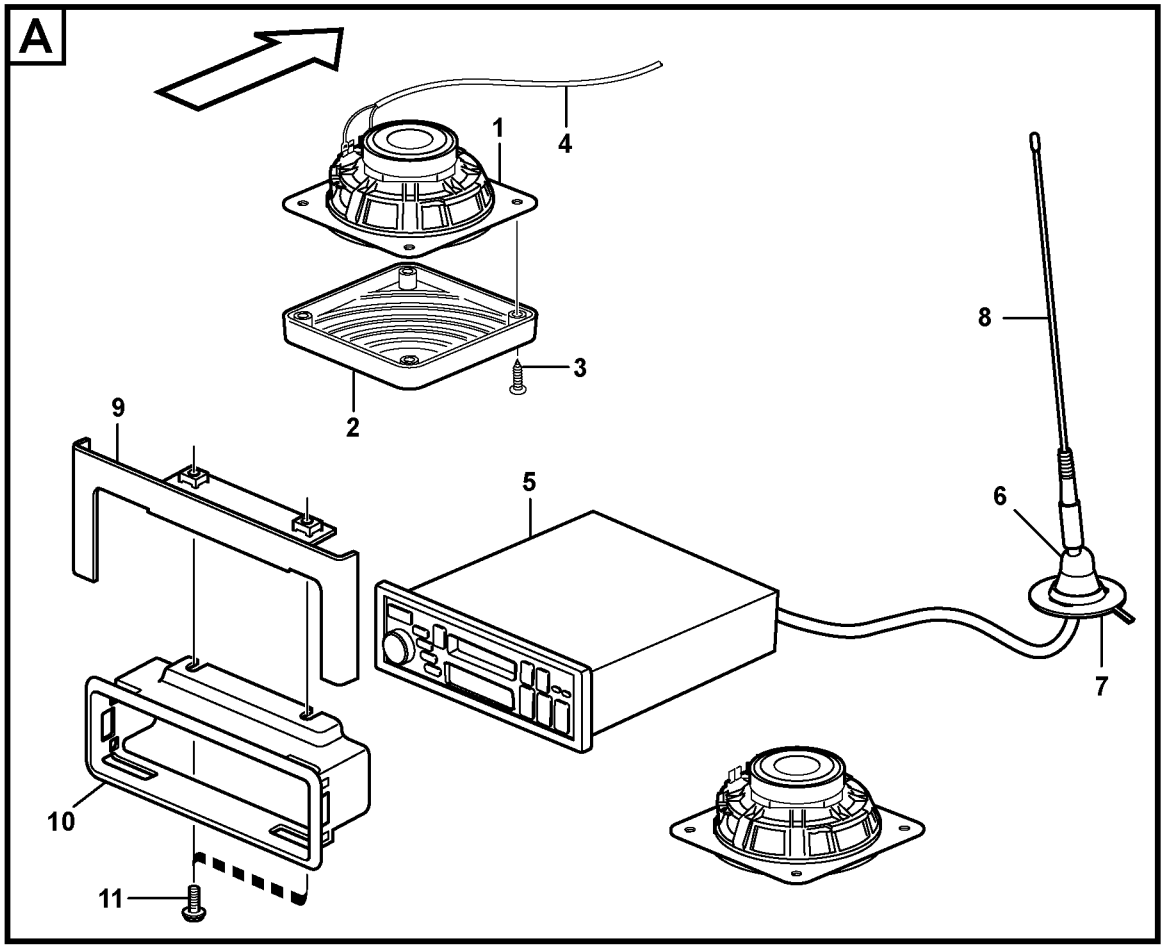
A
1
2
3
4
5
6
7
8
9
10
11

Fig.	Part No.	Quantity 1	2	3	PS	KIT	Description	Dénomination	Bezeichnung	Denominación	Notes
1	**VOE 11201898**	2	2				Speaker	Haut-parleur	Lautsprecher	Altavoz	
2	**VOE 11201899**	2	2				Speaker Grille	Grille Haut-parleur	Lautsprechergitter	Rejilla Altavoz	
3	**VOE 972007**	8	8				Screw	Vis	Schraube	Tornillo	S/N - 10410
	VOE 969478	8	8				6-pt skt screw	Vis creuse de 6	Hohlschraube	Racor 6-dientes	S/N 10411 -
	VOE 11164693	8	8				Spring Nut	Ecrou Ressort	Fed. Schliessmutter	Tuerca Resorte	S/N 10411 -
4	**VOE 11170724**	1	1				Cable harness	Faisceau cables	Kabelbaum	Manojo cables	
5	**VOE 11803635**	1					Radio	Auto-radio	Radio	Radio	(VOE 11884631)
6	**VOE 1578603**	1	1				Anchorage	Fixation	Halterung	Fijacion	
7	**VOE 11200607**	1					Ground Conn	Liaison Masse	Masseanschluss	Conexion Tierra	SER NO -10185
7	**VOE 11204085**	1					Ground Conn	Liaison Masse	Masseanschluss	Conexion Tierra	SER NO 10186-
7	**VOE 11204085**		1				Ground Conn	Liaison Masse	Masseanschluss	Conexion Tierra	
8	**VOE 1083597**	1	1				Antenna	Antenne	Antenne	Antena	
9	**VOE 11203823**		1				Anchorage	Fixation	Halterung	Fijacion	
9	**VOE 11203823**	1					Anchorage	Fixation	Halterung	Fijacion	SER NO 10281-
10	**VOE 11164554**		1				Radio Bracket	Support Radio	Radioträger	Consola Radio	
10	**VOE 11164554**	1					Radio Bracket	Support Radio	Radioträger	Consola Radio	SER NO 10281-
11	**VOE 946440**		2				Flange screw	Vis à bride	Flanschschraube	Torn embridado	
11	**VOE 946440**	2					Flange screw	Vis à bride	Flanschschraube	Torn embridado	SER NO 10281-

1	**11891303**	**Panel de radio** **Radioträger** **Console radio** **Radio bracket**	Catalogue id **20050**	Group **881**
2	**11891488**		Illustr. No **1012751**	Section **150**
3			Issue **VOE 64D9920050**	Page **477**
4				
5				

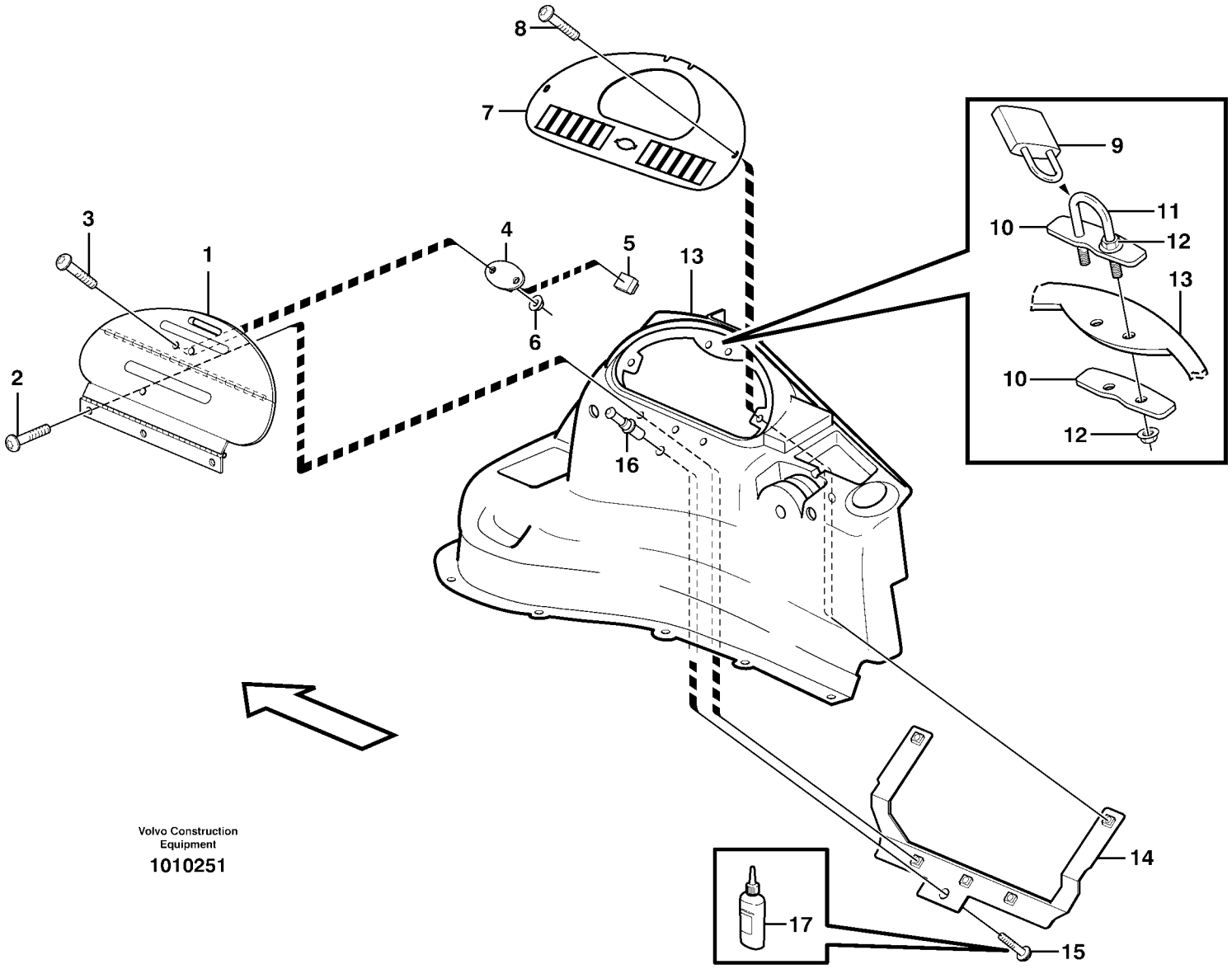

Volvo Construction Equipment

1010251

Fig.	Part No.	Quantity 1	2	3	PS	KIT	Description	Dénomination	Bezeichnung	Denominación	Notes
1	**VOE 11202166**	1					Vandal Guard	Protection antivandalisme	Wandal.schutz	Protec Antirobo	
2	**VOE 972421**	3					Screw	Vis	Schraube	Tornillo	(VOE 13969422)
3	**VOE 969513**	2					Screw	Vis	Schraube	Tornillo	
4	**VOE 11202423**	1					Door Retainer	Support Porte	Türhalter	Reten Puerta	
5	**VOE 11202422**	1					Rubber Sleeve	Douille Caoutch	Gummimanschette	Manguito Goma	
6	**VOE 13975237**	2					Lock nut	Contre-ecrou	Sicherungsmutter	Contratuerca	
7		1					Panel	Panneau	Verkleidung	Plancha	See group 881, Page 475
8	**VOE 969147**	2					Screw	Vis	Schraube	Tornillo	
	VOE 960139	2					Washer	Rondelle	Scheibe	Arandela	
9	**VOE 11885135**	1					Padlock	Cadenas	Vorhängeschloss	Cerrojo	
10	**VOE 11201422**	2					Plate	Plaque	Platte	Placa	
11	**VOE 11201421**	1					Brace	Etrier	Bügel	Brida	
12	**VOE 13949278**	4					Flange Lock Nut	Contre écrou bride	Flanschmutter	Contratuer Embr	
13		1					Side Panel	Panneau Lateral	Seit Verkl	Panel Lateral	See group 881, Page 475
14	**VOE 11202424**	1					Reinforcing plate	Tole renfort	Verstärkungsblech	Placa refuerzo	
15	**VOE 13965175**	1					Screw	Vis	Schraube	Tornillo	
16	**VOE 11202421**	1					Pin	Goupille	Zapfen	Pasador	
17	**VOE 11200847**	1			OP		Locking Fluid	Liquide Blocage	Sich.flussigk.	Liquido Sellad	

1		**Protección contra vandalismo** **Vandalisierungschutz** **Kit de protection antivandalisme** **Vandalism kit**	Catalogue id **20050**	Group **881**
2			Illustr. No **1010251**	Section **200**
3			Issue **VOE 64D9920050**	Page **479**
4				
5		**11298032**		

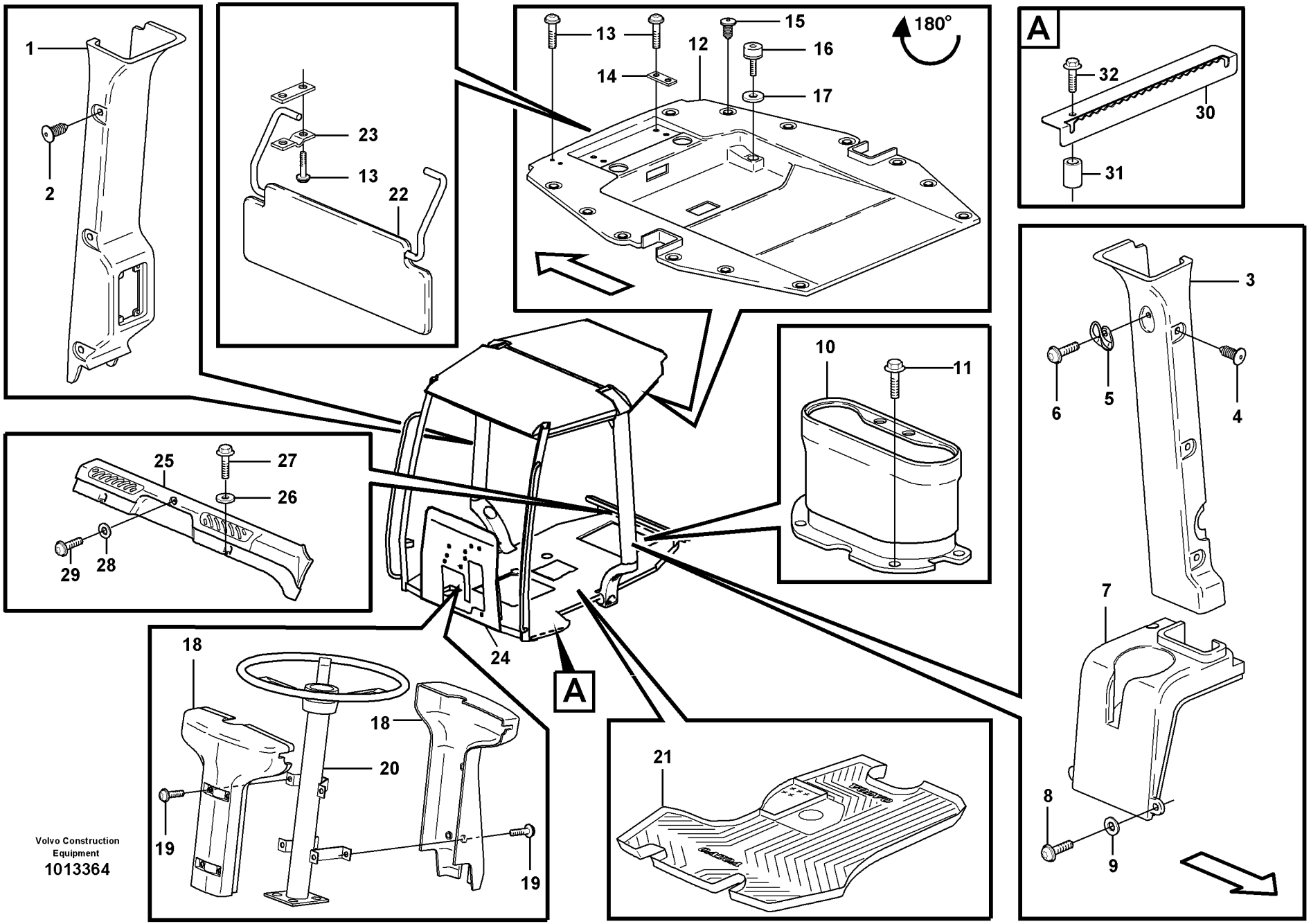

Volvo Construction Equipment
1013364

Fig.	Part No.	Quantity 1	2	3	4	5	PS	KIT	Description	Dénomination	Bezeichnung	Denominación	Notes
1	**VOE 11200546**	1							Cover	Capotage	Deckel	Cubierta	RH
2	**VOE 1613068**	6							Plug	Bouchon	Stopfen	Tapon	
3	**VOE 11203565**	1							Cover	Capot	Haube	Cubierta	LH
4	**VOE 1613068**	6							Plug	Bouchon	Stopfen	Tapon	
5	**VOE 11078015**	1							Coat hanger	Porte manteau	Kleiderhaken	Percha	
6	**VOE 972401**	2							Screw	Vis	Schraube	Tornillo	
7	**VOE 11204411**	1				1			Side Panel	Panneau Lateral	Seit Verkl	Panel Lateral	
8	**VOE 975378**	4				4			Screw	Vis	Schraube	Tornillo	
9	**VOE 13940090**	4				4			Washer	Rondelle	Scheibe	Arandela	
10	**VOE 11203356**	1		1					Cover	Capot	Haube	Capo	11891162, 11891167
11	**VOE 13946934**	4		4					Screw	Vis	Schraube	Tornillo	
12	**VOE 11200944**	1							Headlining	Garnit.pavillon	Dachhimmel	Techo Interior	S/N - 10410
	VOE 11204962	1							Headlining	Garnit.pavillon	Dachhimmel	Techo Interior	S/N 10411 -
13	**VOE 969587**	6		4					6-pt skt screw	Vis creuse de 6	Hohlschraube	Racor 6-dientes	
14	**VOE 14343207**	2		2					Spacer	Entretoise	Abstandstueck	Casquillo distanciad	
15	**VOE 1613068**	13							Plug	Bouchon	Stopfen	Tapon	
16	**VOE 11200579**	2							Absorber	Amortisseur	Dämpfer	Amortiguador	
17	**VOE 13960141**	REQ							Washer	Rondelle	Scheibe	Arandela	(VOE 976944)
18	**VOE 11204410**	1		1					Strg Col Cover	Capo.col.direc.	Lenkverkleidung	Cubiert Col Dir	CPL
19	**VOE 972410**	7		7					Screw	Vis	Schraube	Tornillo	
20		1		1					Steering Column	Colonne direction	Lenksäule	Columna direccion	See group 641, Page 381
21	**VOE 11200547**	1			1				Floor mat	Tapis sol	Bodenmatte	Alfombra piso	
22	**VOE 11006992**		1						Sun Visor	Pare soleil	Sonnenblende	Pafasol	
23	**VOE 14343206**		2						Cap	Cavalier	Überwurf	Sombrerete	
24	**VOE 11200882**	1							Insulation	Isolant	Isolierung	Aislante	
25	**VOE 11201216**			1					Foot Rest	Repose-pied	Fusstutze	Apoyo Pie	
26	**VOE 960139**			2					Washer	Rondelle	Scheibe	Arandela	
27	**VOE 13947542**			2					Screw	Vis	Schraube	Tornillo	
28	**VOE 13960138**			1					Washer	Rondelle	Scheibe	Arandela	
29	**VOE 972412**			1					Screw	Vis	Schraube	Tornillo	

1	**11298204**
2	**11298016**
3	**11298208**
4	**11298165**
5	**11298168**

Detalles interiores
Innenausstattung
Pieces d'amenagement
Interior components

Catalogue id	Group
20050	**882**
Illustr. No	Section
1013364	**100**
Issue	Page
VOE 64D9920050	**481**

VOLVO

BL61

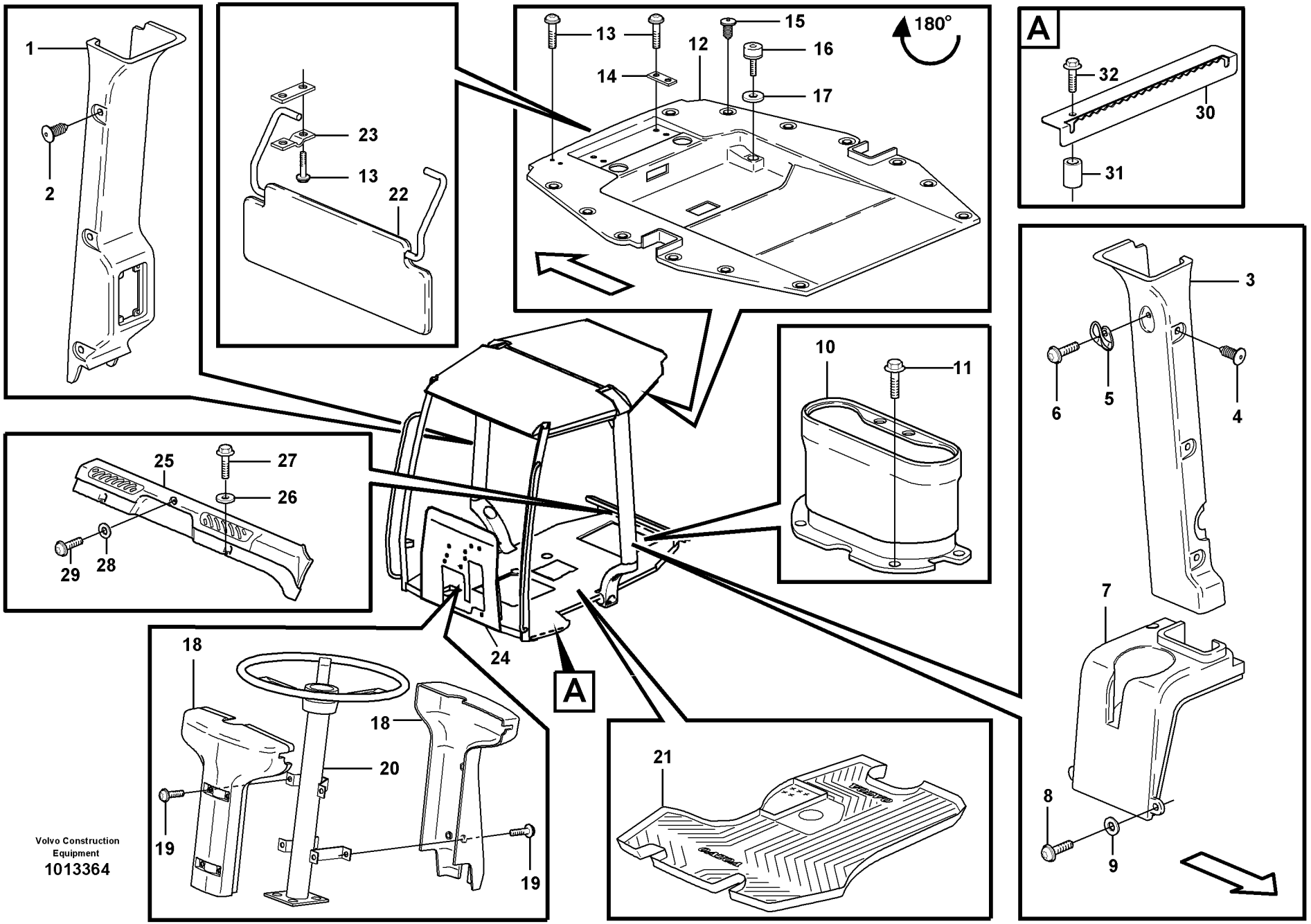

Volvo Construction Equipment
1013364

Fig.	Part No.	Quantity 1	2	3	4	5	PS	KIT	Description	Dénomination	Bezeichnung	Denominación	Notes
30					2		NS		Anchorage	Fixation	Halterung	Fijacion	
31	**VOE 930416**				4				Spacer Ring	Bagu.entretoise	Abstandring	Anillo Dist	
32	**VOE 13948356**				4				Flange screw	Vis à bride	Flanschschraube	Torn embridado	

1	**11298204**
2	**11298016**
3	**11298208**
4	**11298165**
5	**11298168**

Detalles interiores
Innenausstattung
Pieces d'amenagement
Interior components

Catalogue id **20050**	Group **882**
Illustr. No **1013364**	Section **100**
Issue **VOE 64D9920050**	Page **483**

VOLVO

BL61

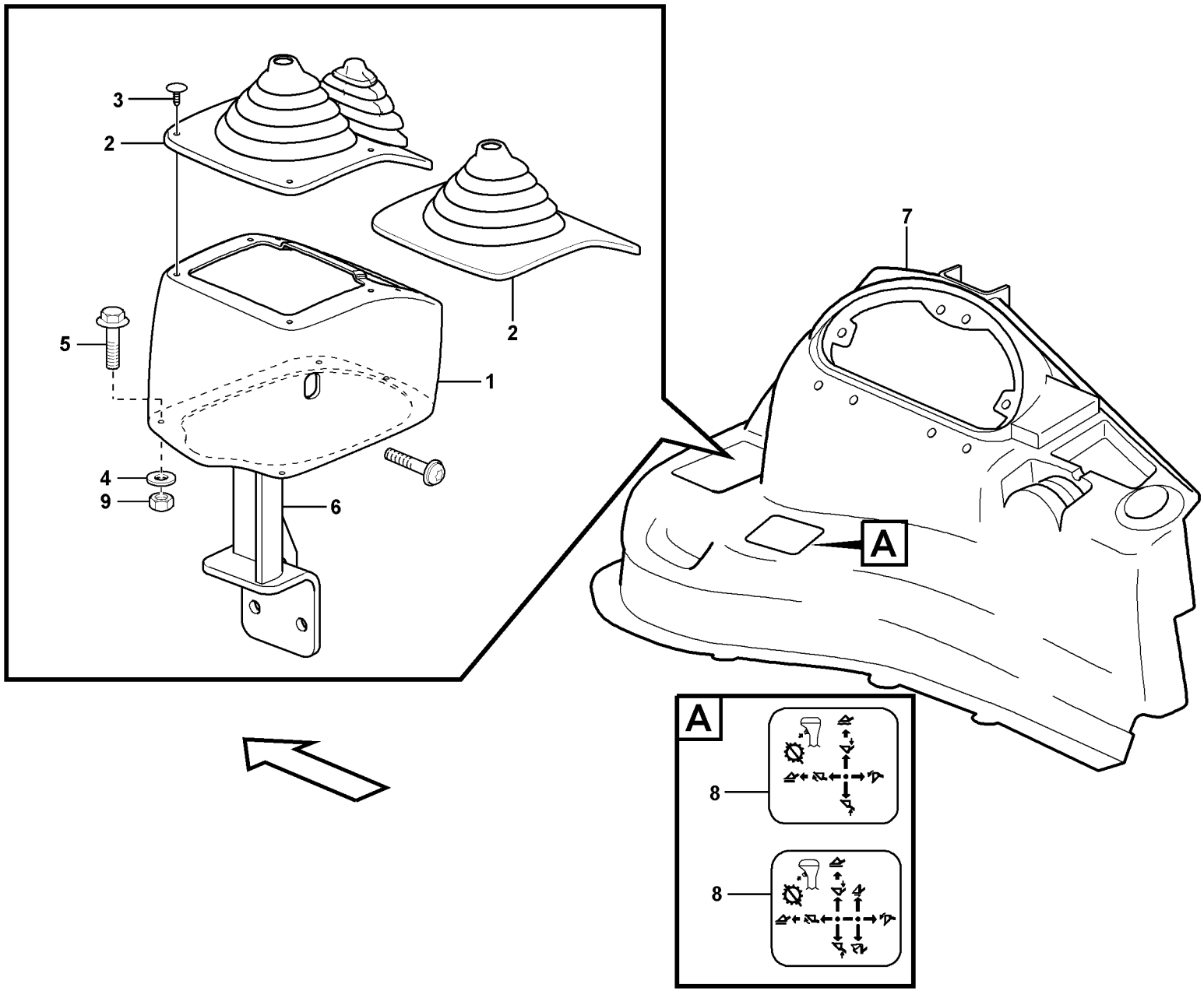
3
2
2
5
1
4
9
6
7
A
A
8
8

Fig.	Part No.	Quantity 1	2	3	PS	KIT	Description	Dénomination	Bezeichnung	Denominación	Notes
1	**VOE 11885305**	1	1				Cover	Capot	Haube	Capo	
2	**VOE 11881363**	1					Bellows	Capot Caoutcho.	Gummimantel	Cubierta Goma	
2	**VOE 11881364**		1				Bellows	Capot Caoutcho.	Gummimantel	Cubierta Goma	
3	**VOE 11884070**	8	8				Screw	Vis	Schraube	Tornillo	
4	**VOE 13940090**	4	4				Washer	Rondelle	Scheibe	Arandela	
5	**VOE 972410**	4	4				Screw	Vis	Schraube	Tornillo	
6		1	1				Bracket	Console	Konsole	Ménsula	See group 915, Page 629
7		1	1				Side Panel	Panneau Lateral	Seit Verkl	Panel Lateral	See group 881, Page 475
8		1					Decal	Decalcomanie	Abziehbild	Decalcomania	See group 897, Page 493
8			1				Decal	Decalcomanie	Abziehbild	Decalcomania	See group 897, Page 493
9	**VOE 949874**	4	4				Lock nut	Contre-ecrou	Sicherungsmutter	Contratuerca	

1	**11891414**	**Cubierta, control de cargadora** **Abdeckung Ladereglage** **Capotage, commandes de l'équipement chargeur** **Casing loader controls**	Catalogue id **20050**	Group **882**
2	**11891415**		Illustr. No **1012612**	Section **300**
3			Issue **VOE 64D9920050**	Page **485**
4				
5				

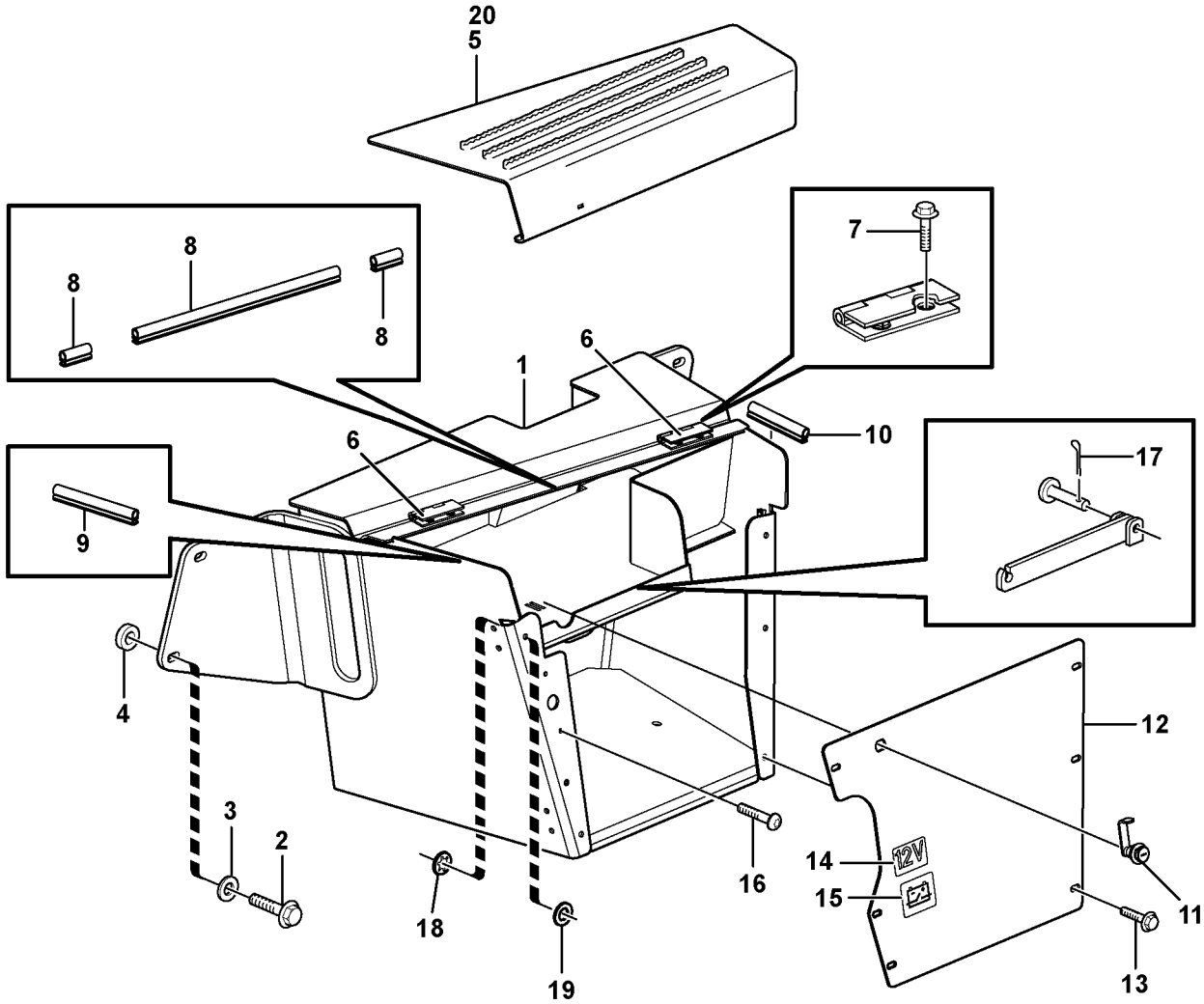

Volvo Construction Equipment
1012393

Fig.	Part No.	Quantity 1	2	3	PS	KIT	Description	Dénomination	Bezeichnung	Denominación	Notes
1	**VOE 11886127**	1					Tool Box	Boite a outils	Werkzeugkasten	Caja herramientas	SER NO -10003
1	**VOE 11886506**	1					Tool Box	Boite a outils	Werkzeugkasten	Caja herramientas	SER NO 10004-10214
1	**VOE 11887066**	1					Tool Box	Boite a outils	Werkzeugkasten	Caja herramientas	SER NO 10215-
2	**VOE 13965194**	4					Flange screw	Vis à bride	Flanschschraube	Torn embridado	
3	**VOE 947558**	6					Washer	Rondelle	Scheibe	Arandela	
4	**VOE 11882457**	2					Spacer	Entretoise	Abstandkörper	Distanciador	
5	**VOE 11886129**	1					Hatch	Trappe	Luke	Trampilla	SER NO -10003
5	**VOE 11886530**	1					Hatch	Trappe	Luke	Trampilla	SER NO 10004-10214
6	**VOE 11886132**	2					•Hinge	•Charniere	•Scharnier	•Bisagra	SER NO -10214
7	**VOE 13946544**	4					Flange screw	Vis à bride	Flanschschraube	Torn embridado	
8	**VOE 11886149**	REQ					Seal	Joint	Dichtring	Junta	
9	**VOE 11886133**	1					Seal	Joint	Dichtring	Junta	L = 200 MM;SER NO -10214
10	**VOE 11886134**	1					Seal	Joint	Dichtring	Junta	L = 98 MM; SER NO -10214
11	**VOE 11886138**	1					Lock	Serrure	Schloss	Cierre	
12	**VOE 11886097**	1					Plate	Tôle	Blech	Chapa	SER NO -10003
13	**VOE 946440**	6					Flange screw	Vis à bride	Flanschschraube	Torn embridado	SER NO -10003
14	**VOE 11883632**	1					Decal	Decalcomanie	Abziehbild	Decalcomania	
15	**VOE 14346537**	1					Sign	Enseigne	Schild	Letrero	
16	**VOE 969422**	2					6-pt skt screw	Vis creuse de 6	Hohlschraube	Racor 6-dientes	SER NO -10003
17	**VOE 907825**	1					Cotter Pin	Goupille Fendue	Splint	Pasador Hendido	
18	**VOE 13967580**	2					Retainer	Retenue	Halter	Soporte	SER NO 10004-
19	**VOE 13960141**	2					Washer	Rondelle	Scheibe	Arandela	SER NO 10004-
20	**VOE 11886999**	1					Door	Porte	Tür	Puerta	SER NO 10215-

1	
2	
3	
4	
5	

Caja de herramientas
Werkzeugkasten
Caisse outil
Toolbox

Catalogue id **20050**	Group **896**
Illustr. No **1012393**	Section **100**
Issue **VOE 64D9920050**	Page **487**

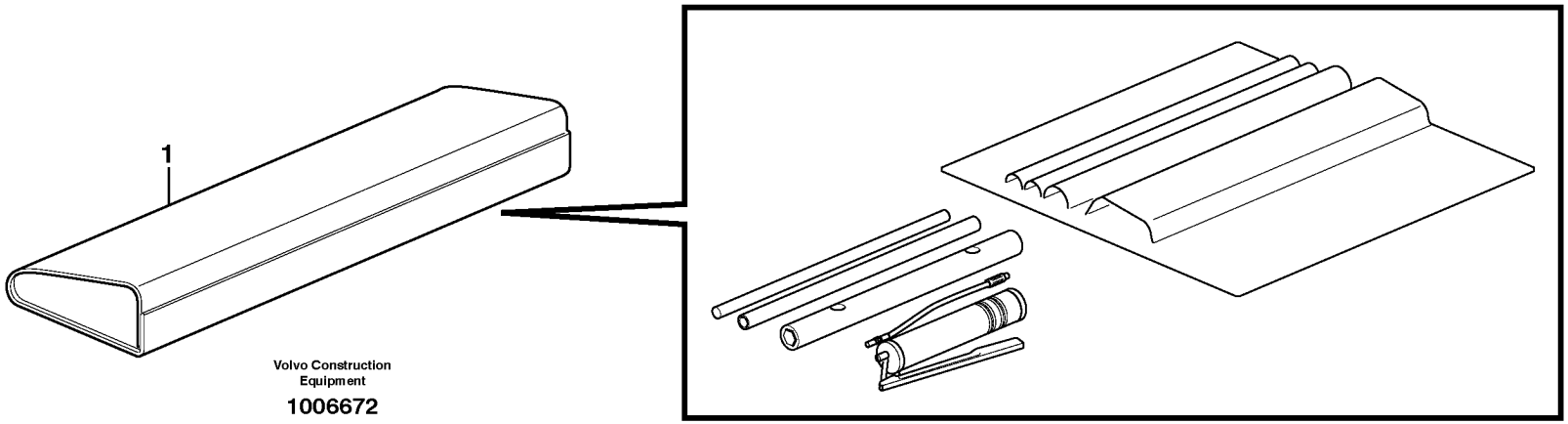
1
Volvo Construction
Equipment
1006672

Fig.	Part No.	Quantity 1	2	3	PS	KIT	Description	Dénomination	Bezeichnung	Denominación	Notes
1	**VOE 11885079**	1					Tool kit	Kit outils.....	Werkzeugsatz.....	Juego herramien.....	

1		**Herramienta** **Werkzeug** **Outil** **Tool**	Catalogue id **20050**	Group **896**
2			Illustr. No **1006672**	Section **150**
3			Issue **VOE 64D9920050**	Page **489**
4				
5		**11891152**		

VOLVO

BL61

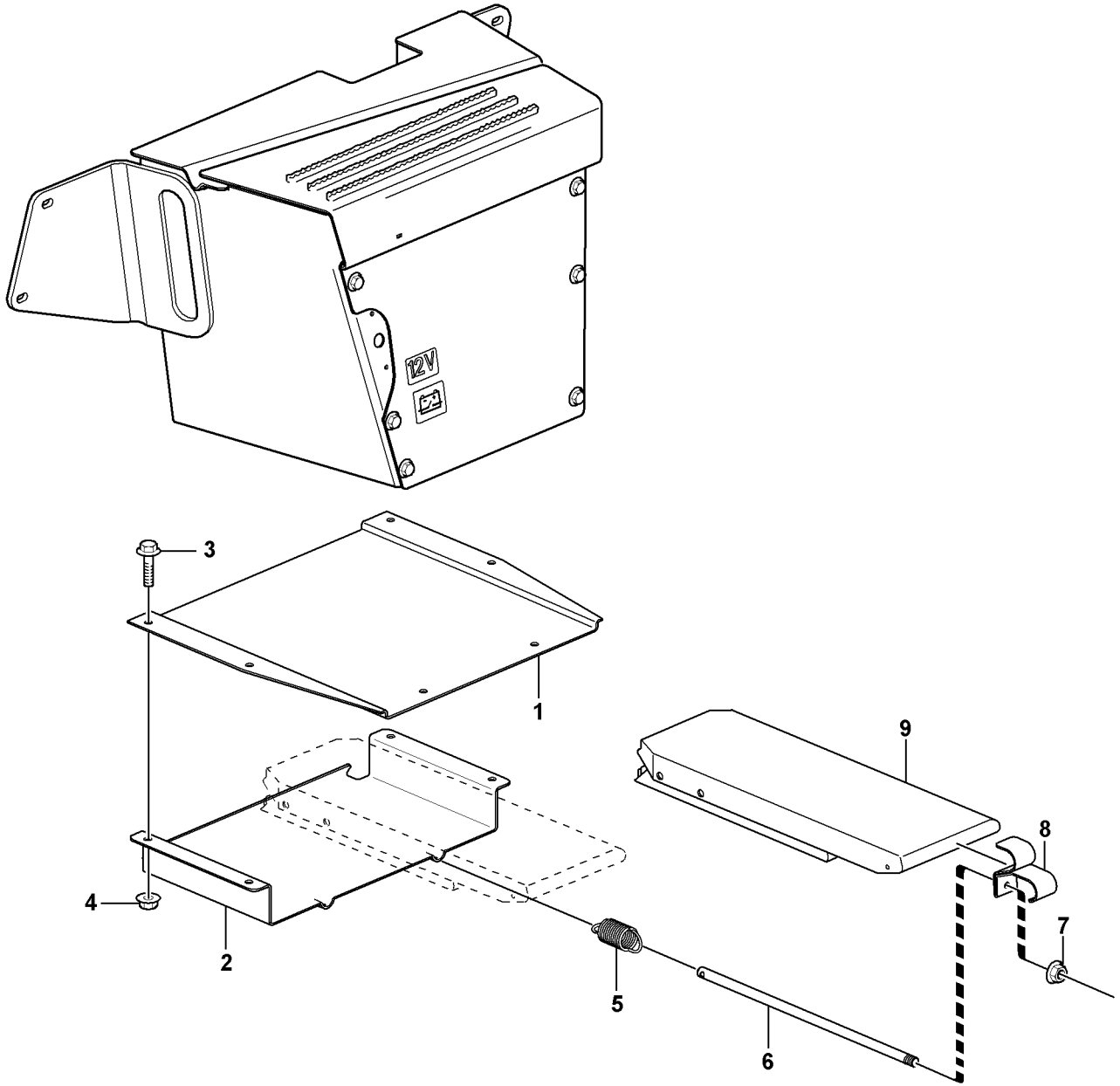

Volvo Construction Equipment
1012702

Fig.	Part No.	Quantity 1	2	3	PS	KIT	Description	Dénomination	Bezeichnung	Denominación	Notes
1	**VOE 11884942**	1					Support	Support	Stütze	Apoyo	S/N - 10339
	VOE 11886860	1					Support	Support	Stütze	Apoyo	S/N 10340 -
2	**VOE 11884943**	1					Drawer	Tireur	Abzieher	Remolcador	S/N - 10339
	VOE 11886861	1					Drawer	Tireur	Abzieher	Remolcador	S/N 10340 -
3	**VOE 946329**	4					Flange screw	Vis à bride	Flanschschraube	Torn embridado	
4	**VOE 13971098**	4					Flange nut	Ecrou accouple.	Bundmutter	Tuerca embridad	
5	**VOE 11200982**	2					Tension Spring	Ressort de traction	Zugfeder	Muelle traccion	
6	**VOE 11884945**	2					Rod	Monture	Fuhler	Varilla	
7	**VOE 945407**	4			SS		Flange nut	Ecrou accouple.	Bundmutter	Tuerca embridad	
8	**VOE 11884944**	2					Handle	Poignee	Handgriff	Manilla	
9	**ZM 2812366**	2					Wheel chock	Cale	Unterlegkeil	Calzo	(VOE 2812366)

1		**Soporte de calzos** **Stoppklotzhalter** **Support de rangement pour cales de blocage des roues** **Stop block holder**	Catalogue id **20050**	Group **896**
2			Illustr. No **1012702**	Section **200**
3				
4			Issue **VOE 64D9920050**	Page **491**
5		**11891000, 11891050, 11891094**		

VOLVO

BL61

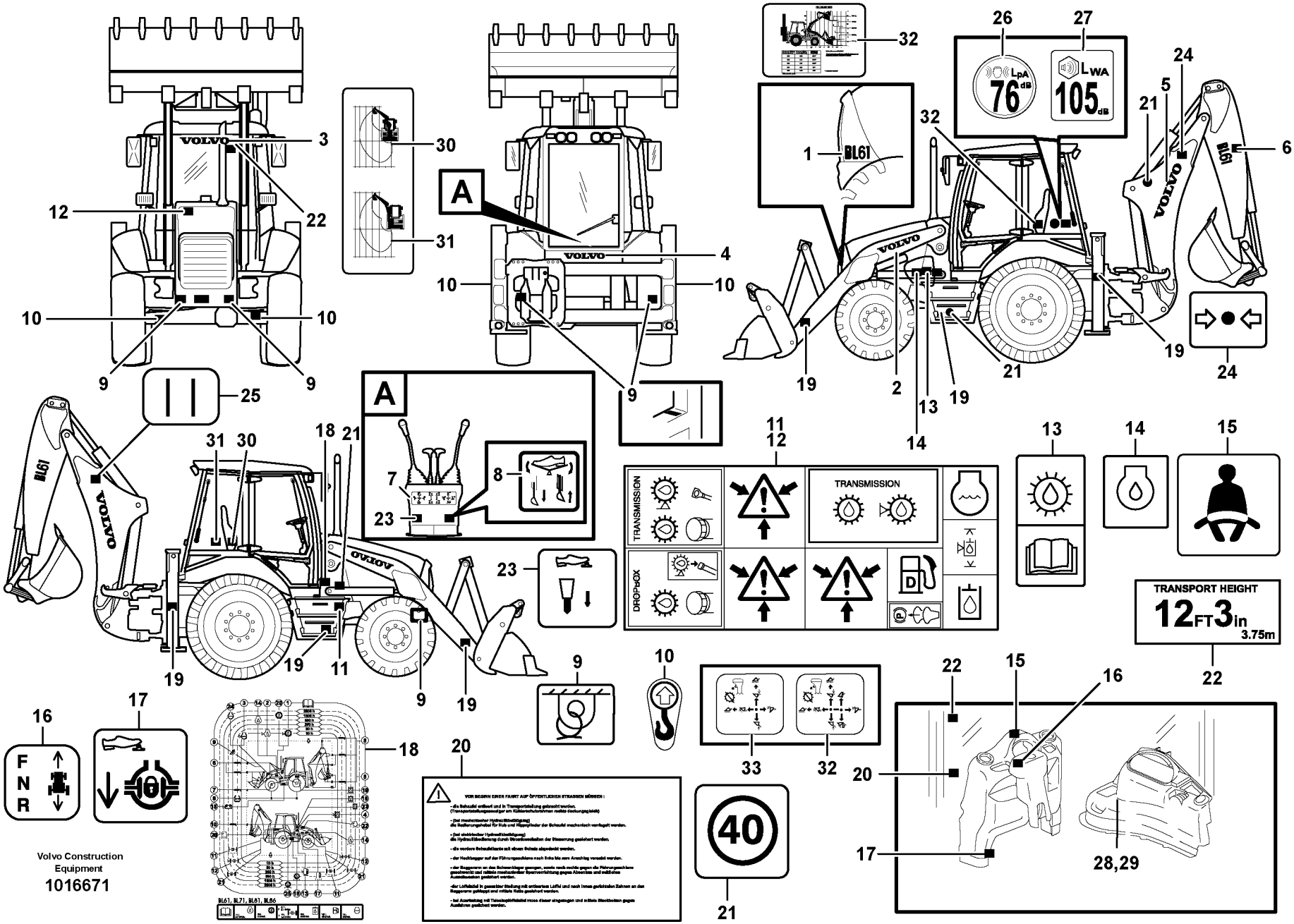
VOLVO
BL61
A
TRANSMISSION
DROPBOX
TRANSPORT HEIGHT
12FT3in
3.75m
LpA 76 dB
LWA 105dB
F
N
R
40
Volvo Construction Equipment
1016671

Fig.	Part No.	Quantity 1	2	3	4	5	PS	KIT	Description	Dénomination	Bezeichnung	Denominación	Notes
1	**VOE 11883735**					2			Label, Adhesive	Autocollant	Aufkleber	Etiqueta adhesiva	
2	**VOE 11883888**					2			Label	Etiquette	Etikett	Etiqueta	
3	**VOE 11881585**					1			Label	Etiquette	Etikett	Etiqueta	
4	**VOE 11883719**					1			Label	Etiquette	Etikett	Etiqueta	
5	**VOE 11883720**					2			Label	Etiquette	Etikett	Etiqueta	
6	**VOE 11883743**					2			Label, Adhesive	Autocollant	Aufkleber	Etiqueta adhesiva	
7	**VOE 11883297**					1			Decal	Decalcomanie	Abziehbild	Decalcomania	11891162
	VOE 11883298					1			Decal	Decalcomanie	Abziehbild	Decalcomania	11891167
	VOE 11884592					1			Decal	Decalcomanie	Abziehbild	Decalcomania	11891322
8	**VOE 11884333**					1			Decal	Autocollant	Aufklebeschild	Calcomania	11891417
9	**VOE 11026730**	4	4	4	4				Decal	Decalcomanie	Abziehbild	Decalcomania	
10	**VOE 11004094**	4	4	4	4				Decal	Decalcomanie	Abziehbild	Decalcomania	
11	**VOE 11003865**	1	1	1	1				Decal	Decalcomanie	Abziehbild	Decalcomania	
12	**VOE 11003865**	1	1	1	1				Decal	Decalcomanie	Abziehbild	Decalcomania	
13	**VOE 11883642**	1	1	1	1				Decal	Decalcomanie	Abziehbild	Decalcomania	
14	**VOE 11180010**	1	1	1	1				Decal	Decalcomanie	Abziehbild	Decalcomania	
15	**VOE 11883294**	1	1	1	1				Decal	Decalcomanie	Abziehbild	Decalcomania	
16	**VOE 11883303**	1	1	1	1				Decal	Decalcomanie	Abziehbild	Decalcomania	
17	**VOE 11883293**	1	1	1	1				Decal	Decalcomanie	Abziehbild	Decalcomania	
18	**VOE 11883292**	1	1	1	1				Decal	Decalcomanie	Abziehbild	Decalcomania	
19	**VOE 1578835**		4	6					Side Mkg Refl	Reflect.lateral	Seitenrefl Band	Captafaros Lat	
20	**VOE 11883652**		1						Decal	Decalcomanie	Abziehbild	Decalcomania	
21	**VOE 11105304**		3						Decal	Decalcomanie	Abziehbild	Decalcomania	11891000
	VOE 11105305		3						Decal	Decalcomanie	Abziehbild	Decalcomania	11891050
22	**VOE 11883291**				1				Decal	Decalcomanie	Abziehbild	Decalcomania	
23	**VOE 11883304**					1			Decal	Decalcomanie	Abziehbild	Decalcomania	11891455
24	**VOE 11884374**					1			Decal	Decalcomanie	Abziehbild	Decalcomania	11891455
25	**VOE 11884375**					1	OP		Decal	Decalcomanie	Abziehbild	Decalcomania	11891455 SER NO -10070
26	**VOE 11180153**	1	1	1	1		OP		Decal	Decalcomanie	Abziehbild	Decalcomania	
27	**VOE 11180160**	1	1	1	1		OP		Decal	Decalcomanie	Abziehbild	Decalcomania	S/N - 10307

1	**11891249**
2	**11891050, 11891000**
3	**11891002**
4	**11891248**
5	**11880004**

Muestras y decalcomanias
Schilder und aufklebeschild
Enseignes et décalcomanies
Sign plates and decals

Catalogue id **20050**	Group **897**
Illustr. No **1016671**	Section **100**
Issue **VOE 64D9920050**	Page **493**

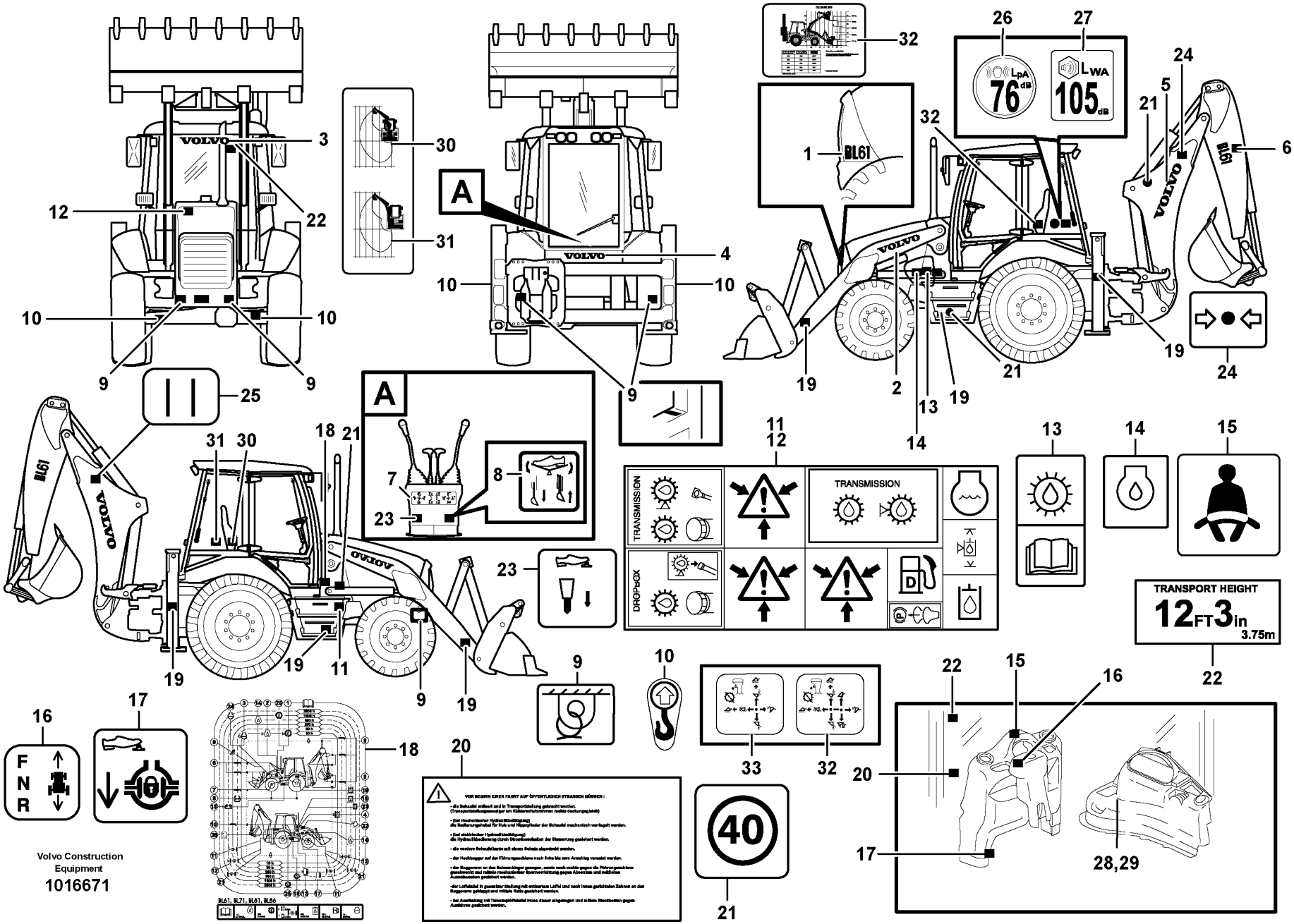
VOLVO
BL61
A
TRANSMISSION
DROPBOX
TRANSPORT HEIGHT
12FT3in
3.75m
LpA 76 dB
LWA 105dB
F
N
R
40
Volvo Construction Equipment
1016671

Fig.	Part No.	Quantity 1	2	3	4	5	PS	KIT	Description	Dénomination	Bezeichnung	Denominación	Notes
	VOE 11887639	1	1	1	1				Decal	Decalcomanie	Abziehbild	Decalcomania	S/N 10308 -
28	**VOE 11885192**					1			Decal	Decalcomanie	Abziehbild	Decalcomania	11891414 S/N - 10052
	VOE 11887201					1			Decal	Decalcomanie	Abziehbild	Decalcomania	11891414 S/N 10053 -
29	**VOE 11885420**					1			Decal	Decalcomanie	Abziehbild	Decalcomania	11891415
30	**VOE 11885003**					1			Decal	Decalcomanie	Abziehbild	Decalcomania	11891150
31	**VOE 11885004**					1			Decal	Decalcomanie	Abziehbild	Decalcomania	11891150
32	**VOE 11886841**					1			Decal	Decalcomanie	Abziehbild	Decalcomania	11891151 S/N - 10305
	VOE 11887607					1			Decal	Decalcomanie	Abziehbild	Decalcomania	11891151 S/N 10306 -

1	**11891249**
2	**11891050, 11891000**
3	**11891002**
4	**11891248**
5	**11880004**

Muestras y decalcomanias
Schilder und aufklebeschild
Enseignes et décalcomanies
Sign plates and decals

Catalogue id **20050**	Group **897**
Illustr. No **1016671**	Section **100**
Issue **VOE 64D9920050**	Page **495**

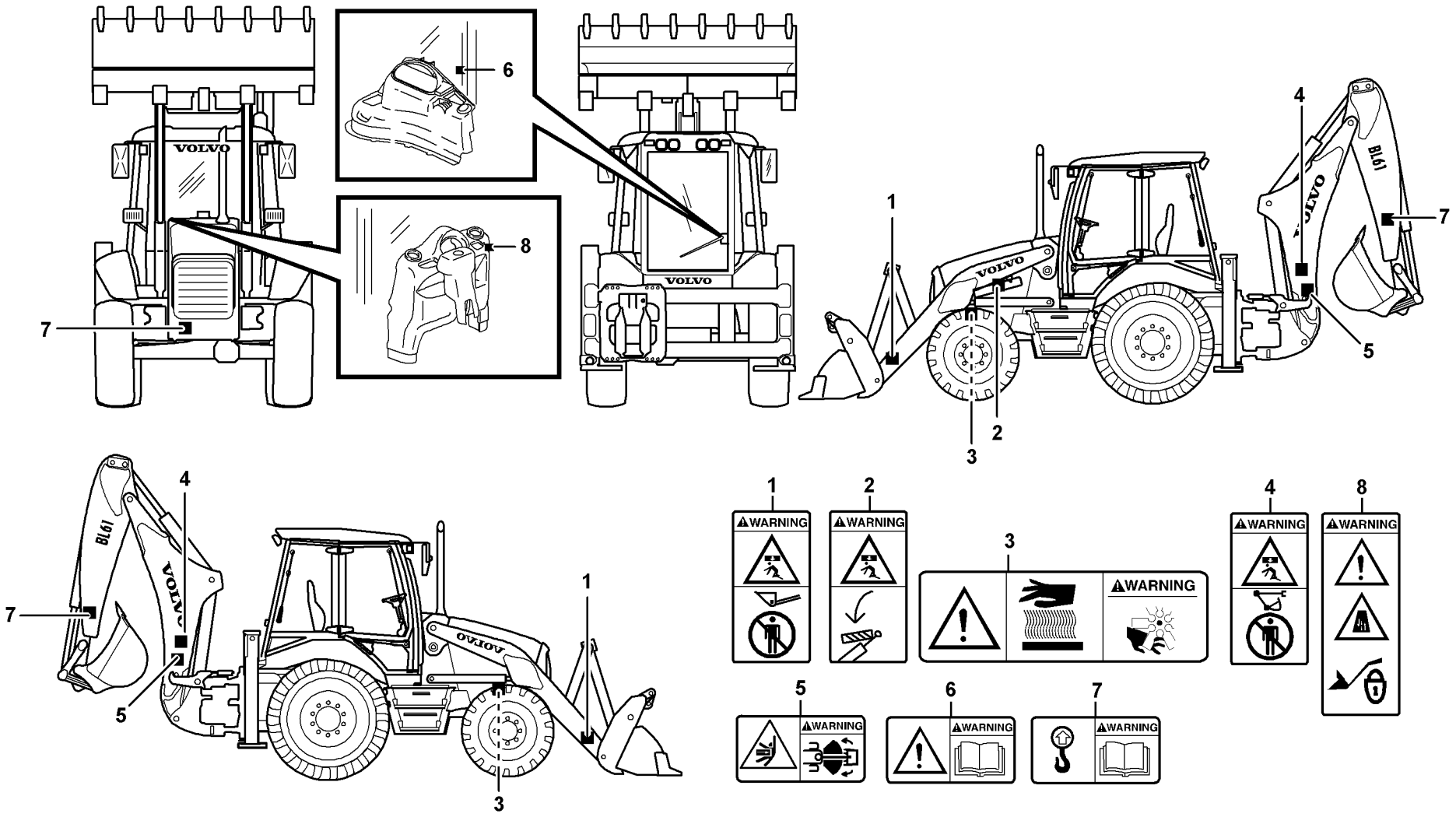

Volvo Construction Equipment

1012699

Fig.	Part No.	Quantity 1	2	3	PS	KIT	Description	Dénomination	Bezeichnung	Denominación	Notes
1	**VOE 11027566**	2					Warning Decal	Decal.avertiss	Warnaufkleber	Calcomania Adv.	
2	**VOE 13935008**	1					Warning Decal	Decal.avertiss	Warnaufkleber	Calcomania Adv.	
3	**VOE 11884027**	2					Decal	Decalcomanie	Abziehbild	Decalcomania	
4	**VOE 11883289**	2					Decal	Decalcomanie	Abziehbild	Decalcomania	
5	**VOE 11883290**	2					Decal	Decalcomanie	Abziehbild	Decalcomania	
6	**VOE 11883617**	1					Decal	Decalcomanie	Abziehbild	Decalcomania	
7	**VOE 11883533**	3					Decal	Decalcomanie	Abziehbild	Decalcomania	
8	**VOE 11885038**	1					Decal	Decalcomanie	Abziehbild	Decalcomania	

1		**Calcomanías** **Aufklebeschild** **Calcomanies** **Decals**	Catalogue id **20050**	Group **897**
2			Illustr. No **1012699**	Section **150**
3			Issue **VOE 64D9920050**	Page **497**
4				
5		**WARNING**		

VOLVO

Construction Equipment

GROUP		Section	Page
911	Hydraulic oil tank	100	509
911	Hydraulic system, suction line, filter 11891077	250	513
911	Hydraulic system, suction line, filter 11891076	275	515
911	Hydraulic system, return line S/N - 10626	300	517
911	Hydraulic system, return line S/N 10627 -	310	521
911	Hydraulic oil cooler S/N - 10626	325	525
911	Hydraulic oil cooler S/N 10627 -	330	527
911	Hydraulic system, feed line S/N - 10626	350	529
911	Hydraulic system, feed line S/N 10627 -	360	531
911	Hydraulic system, hammer	400	533
911	Pipes for hammer attachment 11891375	450	537
911	Hydraulic system, stabiliser legs	500	539
911	Hydraulics loader (lift & tilt)	550	541
911	Hydraulic system, excavator	700	545
911	Hydraulic system loader	800	551
911	Hydraulic system loader 11880004, S/N 10627 -	810	555
911	Hydraulic system loader 11891414, S/N 10627 -	820	559
911	Hydraulic system, boom 11891417, 11891418, S/N - 10626	900	561
911	Hydraulic system, boom 11880004, S/N 10627 -	910	563
911	Hydraulic system dipper arm 11891417, 11891418, S/N - 10626	1000	565
911	Hydraulic system dipper arm 11880004, S/N 10627 -	1010	567
911	Hydraulic system, bucket 11891417	1100	569
911	Hydraulic system, bucket 11891418, S/N - 10626	1150	573
911	Hydraulic system, bucket S/N 10627 -	1160	577
911	Hydraulic system extendible dipper arm 11891417	1200	579
911	Hydraulic system, lock cylinder S/N - 10626	1300	581
911	Hydraulic system, lock cylinder S/N 10627 -	1310	583
911	Hydraulic system, combi-bucket 11891414	1350	585
911	Safety valve boom and dipper arm cylinder 11891150	1400	587
911	Hydraulic system loader safety valves 11891151	1500	589
912	Valve body	150	591
912	Inlet valve	200	593
912	Valve section	225	595
912	Valve section	250	597
912	Valve section	275	599
912	Valve body	300	601
912	Inlet valve	350	603
912	Magnet valve 11891455	400	605
912	Valve section	500	607
912	Valve section	550	609
912	Exhaust valve	600	611
912	Safety valve boom and dipper arm cylinder 11891150	750	613
912	Safety valve loader 11891151	800	617
913	Hydraulic pump 11891076, 11891077	200	621
915	Controls	100	623
915	Loader controls	150	629
915	Pedal 11891417	200	631
916	Hydraulic system, sideshift	100	633
916	Optional hydraulic equipment 11891369, S/N - 10626	200	635
916	Optional hydraulic equipment 11891369, S/N 10627 -	210	639
916	Boom suspension system 11891345 S/N - 10626	350	643
916	Boom suspension system 11891345 S/N 10627 -	360	645
924	Attachment bracket, mechanical 11891299	100	647
924	Hydraulic attachment bracket digger 11891448, 11891449, 11891450, 11891451	150	649
924	Hydraulic attachment bracket digger (11891351, 11891362)	200	653
924	Hydraulic attachment bracket digger	250	655
924	Hydraulic attachment bracket 11891448, 11891450	300	657
924	Hydraulic cylinder, quick attachment 11891448, 11891450	350	659
925	Bucket, straight with teeth (BACKHOE) S/N - 10626	100	661
925	Bucket, straight with teeth (BACKHOE) S/N 10627 -	120	663
925	Bucket, straight with teeth (BACKHOE) S/N - 10626	150	665

INDEX OF CONTENTS

GROUP		Section	Page
925	Bucket, straight with teeth (BACKHOE) S/N 10627 -	160	667
925	Bucket, straight with teeth (LOADER)	200	669
925	Bucket, straight lip without teeth	250	671
925	Bucket, straight lip without teeth	260	673
925	Multi-purpose bucket	300	675
925	Multi-purpose bucket 11891541	320	679
925	Legal kit for Italy 11891002	350	681
925	Hydraulic cylinder 11891018	400	683
925	Transport bracket without front bucket 11891350	500	685
926	Fork arm	100	687
926	Retainer for hammer	200	689
926	Hammer 11891017	250	691
945	Lifting framework with assembly parts	150	693
945	Pins for mounting bucket	160	699
945	Lifting framework with assembly parts 11880004, S/N 10627 -	175	701
945	Mechanical self levelling tilt mechanism 11891414, 11891415	200	707
945	Hydraulic cylinder, lifting. 11891414, 11891415	250	709
945	Hydraulic cylinder 11891414, 11891415	300	711
971	Swing system	100	713
971	Boom swing system	200	717
971	Swing cylinder	300	721
971	Lock cylinder	400	723
972	Stabilisers	100	725
972	Stabiliser cylinder	200	727
974	Excavator boom, exendible dipper arm	100	729
974	Boom and dipper arm	150	733
974	Boom cylinder 11891417, 11891418	200	737
975	Dipper arm cylinder 11891417, 11891418	100	739
975	Bucket cylinder 11891417, 11891418	200	741
975	Extendible dipper cylinder 11891417	300	743

GROUPE		Section	Page
911	Réservoir d'huile hydraulique	100	509
911	Système hydraulique, conduit d'aspiration, filtre 11891077	250	513
911	Système hydraulique, conduit d'aspiration, filtre 11891076	275	515
911	Système hydraulique, conduit retour S/N - 10626	300	517
911	Système hydraulique, conduit retour S/N 10627 -	310	521
911	Radiateur huile S/N - 10626	325	525
911	Radiateur huile S/N 10627 -	330	527
911	Systeme Hydr. conduit alimentation S/N - 10626	350	529
911	Systeme Hydr. conduit alimentation S/N 10627 -	360	531
911	Système hydraulique, marteau	400	533
911	Conduits, marteau 11891375	450	537
911	Système hydraulique Bequilles	500	539
911	Equipement chargeur à commande hydraulique (levage et basculement)	550	541
911	Système hydralique groupe pelle	700	545
911	Hydraulic system loader	800	551
911	Hydraulic system loader 11880004, S/N 10627 -	810	555
911	Hydraulic system loader 11891414, S/N 10627 -	820	559
911	Système hydraulique, flèche 11891417, 11891418, S/N - 10626	900	561
911	Système hydraulique, flèche 11880004, S/N 10627 -	910	563
911	Système hydraulique, balancier 11891417, 11891418, S/N - 106261000		565
911	Système hydraulique, balancier 11880004, S/N 10627 -	1010	567
911	Système hydraulique, godet 11891417	1100	569
911	Système hydraulique, godet 11891418, S/N - 10626	1150	573
911	Système hydraulique, godet S/N 10627 -	1160	577
911	Système hydraulique bras de pelle telescope 11891417	1200	579
911	Système hydraulique, vérin de verrouillage S/N - 10626	1300	581
911	Système hydraulique, vérin de verrouillage S/N 10627 -	1310	583
911	Système hydraulique, godet combiné 11891414	1350	585
911	Valve de sécurité, flèche et balancier 11891150	1400	587
911	Système hydraulique équipement chargeur, valves de sécurité 11891151	1500	589
912	Bloc-soupapes	150	591
912	Soupape d'admission	200	593
912	Section de valve	225	595
912	Section de valve	250	597
912	Section de valve	275	599
912	Bloc-soupapes	300	601
912	Soupape d'admission	350	603
912	Vanne electromagnetique 11891455	400	605
912	Section de valve	500	607
912	Section de valve	550	609
912	Soupape d'échappement	600	611
912	Valve de sécurité, flèche et balancier 11891150	750	613
912	Valve de sécurité, équipement chargeur 11891151	800	617
913	Pompe hydraulique 11891076, 11891077	200	621
915	Commandes	100	623
915	Commandes de l'équipement chargeur	150	629
915	Pedale 11891417	200	631
916	Circuit hydraulique, déport latéral	100	633
916	Equipement hydraulique optionnel 11891369, S/N - 10626	200	635
916	Equipement hydraulique optionnel 11891369, S/N 10627 -	210	639
916	Amortisseur vibrations 11891345 S/N - 10626	350	643
916	Amortisseur vibrations 11891345 S/N 10627 -	360	645
924	Porte-outil, verrouillage mécanique 11891299	100	647
924	Porte-outil à verrouillage hydraulique, balancier 11891448, 11891449, 11891450, 11891451	150	649
924	Porte-outil à verrouillage hydraulique, balancier (11891351, 11891362)	200	653
924	Porte-outil à verrouillage hydraulique, balancier	250	655
924	Plaque de fixation à commande hydraulique 11891448, 11891450	300	657

TABLE DES MATIÈRES

TABLE DES MATIÈRES

GROUPE		Section	Page
924	Verin hydraulique, fixation rapide 11891448, 11891450	350	659
925	Godet, droit avec dents (BACKHOE) S/N - 10626	100	661
925	Godet, droit avec dents (BACKHOE) S/N 10627 -	120	663
925	Godet, droit avec dents (BACKHOE) S/N - 10626	150	665
925	Godet, droit avec dents (BACKHOE) S/N 10627 -	160	667
925	Godet, droit avec dents (LOADER)	200	669
925	Godet, droit sans dents	250	671
925	Godet, droit sans dents	260	673
925	Godet combiné	300	675
925	Godet combiné 11891541	320	679
925	Kit législation italienne 11891002	350	681
925	Vérins hydrauliques 11891018	400	683
925	Fixation transport sans godet frontal 11891350	500	685
926	Bras fourche	100	687
926	Support de marteau	200	689
926	Marteau 11891017	250	691
945	Chassis levage avec pièces de montage	150	693
945	Pivots d'axe pour fixation de godet	160	699
945	Chassis levage avec pièces de montage 11880004, S/N 10627 -	175	701
945	Mécanisme de basculement à autoréglage mécanique 11891414, 11891415	200	707
945	Cylindre hydraulique, levage. 11891414, 11891415	250	709
945	Vérins hydrauliques 11891414, 11891415	300	711
971	Système de pivotement	100	713
971	Système hydraulique, orientation	200	717
971	Vérin d'orientation	300	721
971	Vérin de verrouillage	400	723
972	Bequille	100	725
972	Vérin hydraulique pour jambe d'appui	200	727
974	Flèche d'équipement excavateur avec bras télescopique	100	729
974	Flèche et balancier	150	733
974	Vérin de flèche 11891417, 11891418	200	737
975	Vérin de bras 11891417, 11891418	100	739
975	Vérin de godet 11891417, 11891418	200	741
975	Cylindre telescope. 11891417	300	743

GRUPPE		Abschnitt	Seite
911	Hydrauliköltank	100	509
911	Hydraulikanlage, Saugleitung, Filter 11891077	250	513
911	Hydraulikanlage, Saugleitung, Filter 11891076	275	515
911	Druckölsystem, Rücklaufleitung S/N - 10626	300	517
911	Druckölsystem, Rücklaufleitung S/N 10627 -	310	521
911	Hydraulikölkühler S/N - 10626	325	525
911	Hydraulikölkühler S/N 10627 -	330	527
911	Hydraulikanlage, Druckleitungen S/N - 10626	350	529
911	Hydraulikanlage, Druckleitungen S/N 10627 -	360	531
911	Hydraulikanlage, Hammer	400	533
911	Leitungen für Hammeranbau 11891375	450	537
911	Hydraulikanlage Bodenstützen	500	539
911	Ladehydraulik (Heben und Kippen)	550	541
911	Hydraulikanlage ventil zum ausleger Baggeraggregat	700	545
911	Hydraulikanlage, Lader	800	551
911	Hydraulikanlage, Lader 11880004, S/N 10627 -	810	555
911	Hydraulikanlage, Lader 11891414, S/N 10627 -	820	559
911	Hydraulikanlage, Baggerausleger 11891417, 11891418, S/N - 10626	900	561
911	Hydraulikanlage, Baggerausleger 11880004, S/N 10627 -	910	563
911	Hydraulikanlage, Baggerstiel 11891417, 11891418, S/N - 10626	1000	565
911	Hydraulikanlage, Baggerstiel 11880004, S/N 10627 -	1010	567
911	Hydraulikanlage, Löffel 11891417	1100	569
911	Hydraulikanlage, Löffel 11891418, S/N - 10626	1150	573
911	Hydraulikanlage, Löffel S/N 10627 -	1160	577
911	Hydralikanlage für teleskopische baggerarm 11891417	1200	579
911	Hydraulikanlage, Sperrzylinder S/N - 10626	1300	581
911	Hydraulikanlage, Sperrzylinder S/N 10627 -	1310	583
911	Hydraulikanlage, Kombilöffel 11891414	1350	585
911	Sicherheitsventil Ausleger und Stielzylinder 11891150	1400	587
911	Hydraulikanlage Lader Sicherheitsventile 11891151	1500	589
912	Ventilgruppe	150	591
912	Einlassventil	200	593
912	Ventil	225	595
912	Ventil	250	597
912	Ventil	275	599
912	Ventilgruppe	300	601
912	Einlassventil	350	603
912	Magnetventil 11891455	400	605
912	Ventil	500	607
912	Ventil	550	609
912	Auslassventil	600	611
912	Sicherheitsventil Ausleger und Stielzylinder 11891150	750	613
912	Sicherheitsventil Lader 11891151	800	617
913	Hydraulikpumpe 11891076, 11891077	200	621
915	Regler	100	623
915	Loader controls	150	629
915	Pedal 11891417	200	631
916	Hydraulikanlage, Seitenverschiebung	100	633
916	Zusätzliche Hydraulikausrüstung 11891369, S/N - 10626	200	635
916	Zusätzliche Hydraulikausrüstung 11891369, S/N 10627 -	210	639
916	Schwingungsdämpfer 11891345 S/N - 10626	350	643
916	Schwingungsdämpfer 11891345 S/N 10627 -	360	645
924	Geräteträger, mechanisch 11891299	100	647
924	Hydraulik Geräteträger Baggerarm 11891448, 11891449, 11891450, 11891451	150	649
924	Hydraulik Geräteträger Baggerarm (11891351, 11891362)	200	653
924	Hydraulik Geräteträger Baggerarm	250	655
924	Hydraulisch betätigte Gerätebefestigung 11891448, 11891450	300	657
924	Hydraulikzylinder Schnellwechsler 11891448, 11891450	350	659
925	Schaufel, gerade mit Zähnen (BACKHOE) S/N - 10626	100	661
925	Schaufel, gerade mit Zähnen (BACKHOE) S/N 10627 -	120	663

INHALTSVERZEICHNIS

GRUPPE		Abschnitt	Seite
925	Schaufel, gerade mit Zähnen (BACKHOE) S/N - 10626	150	665
925	Schaufel, gerade mit Zähnen (BACKHOE) S/N 10627 -	160	667
925	Schaufel, gerade mit Zähnen (LOADER)	200	669
925	Schaufel, gerade, ohne Zähne	250	671
925	Schaufel, gerade, ohne Zähne	260	673
925	Kombilöffel	300	675
925	Kombilöffel 11891541	320	679
925	Für Italien vorgeschriebener Satz 11891002	350	681
925	Hydraulikzylinder 11891018	400	683
925	Transporthalterung ohne Schaufel 11891350	500	685
926	Gabelzinke	100	687
926	Halter für Hammer	200	689
926	Hammer 11891017	250	691
945	Hubgerüst mit Anbauteilen	150	693
945	Bolzen zur Befestigung der Schaufel	160	699
945	Hubgerüst mit Anbauteilen 11880004, S/N 10627 -	175	701
945	Selbstregelnder Kippmechanismus 11891414, 11891415	200	707
945	Hubzylinder. 11891414, 11891415	250	709
945	Hydraulikzylinder 11891414, 11891415	300	711
971	Schwenksystem	100	713
971	Hydraulikkreis, Schwenken	200	717
971	Schwenkzylinder	300	721
971	Sperrzylinder	400	723
972	Pratzen	100	725
972	Hydraulzylinder für Pratzen	200	727
974	Grabausleger mit Teleskopstiel	100	729
974	Ausleger und Stiel	150	733
974	Auslegerzylinder 11891417, 11891418	200	737
975	Stielzylinder 11891417, 11891418	100	739
975	Schaufelzylinder 11891417, 11891418	200	741
975	Teleskopzylinder. 11891417	300	743

GRUPO		Sección	Página
911	Depósito de aceite hidráulico	100	509
911	Sistema hidráulico, conducto de aspiración, filtro 11891077	250	513
911	Sistema hidráulico, conducto de aspiración, filtro 11891076	275	515
911	Sistema hidráulico, conducto de retorno S/N - 10626	300	517
911	Sistema hidráulico, conducto de retorno S/N 10627 -	310	521
911	Enfriador de aceite hidráulico S/N - 10626	325	525
911	Enfriador de aceite hidráulico S/N 10627 -	330	527
911	Sistema hidráulico, conducto presion S/N - 10626	350	529
911	Sistema hidráulico, conducto presion S/N 10627 -	360	531
911	Sistema hidráulico, martillo	400	533
911	Tubería para fijación del martillo 11891375	450	537
911	Sistema hidràulico patas de apoyo	500	539
911	Sistema hidráulico de cargadora (elevación y volteo)	550	541
911	Sistema hidrlico excavador	700	545
911	Hydraulic system loader	800	551
911	Hydraulic system loader 11880004, S/N 10627 -	810	555
911	Hydraulic system loader 11891414, S/N 10627 -	820	559
911	Sistema hidráulico, pluma de excavación 11891417, 11891418, S/N - 10626	900	561
911	Sistema hidráulico, pluma de excavación 11880004, S/N 10627 -	910	563
911	Sistema hidráulico, balancín 11891417, 11891418, S/N - 10626	1000	565
911	Sistema hidráulico, balancín 11880004, S/N 10627 -	1010	567
911	Sistema hidráulico, cuchara 11891417	1100	569
911	Sistema hidráulico, cuchara 11891418, S/N - 10626	1150	573
911	Sistema hidráulico, cuchara S/N 10627 -	1160	577
911	Sistema hidràulico brazo excavador telescopico 11891417	1200	579
911	Sistema hidráulico, cilindro de bloqueo S/N - 10626	1300	581
911	Sistema hidráulico, cilindro de bloqueo S/N 10627 -	1310	583
911	Sistema hidráulico, cuchara combinada 11891414	1350	585
911	Cilindros de pluma y brazo, válvulas de seguridad 11891150	1400	587
911	Sistema hidráulico, válvulas de seguridad de la cargadora 11891151	1500	589
912	Bloque de válvulas	150	591
912	Válvula de admisión	200	593
912	Sección de válvulas	225	595
912	Sección de válvulas	250	597
912	Sección de válvulas	275	599
912	Bloque de válvulas	300	601
912	Válvula de admisión	350	603
912	Electrovalvula 11891455	400	605
912	Sección de válvulas	500	607
912	Sección de válvulas	550	609
912	Válvula de escape	600	611
912	Cilindros de pluma y brazo, válvulas de seguridad 11891150	750	613
912	Válvula de seguridad, cargadora 11891151	800	617
913	Bomba hidráulica 11891076, 11891077	200	621
915	Mandos	100	623
915	Mandos de la cargadora	150	629
915	Pedal 11891417	200	631
916	Sistema hidráulico, desplazamiento lateral	100	633
916	Equipo hidráulico adicional 11891369, S/N - 10626	200	635
916	Equipo hidráulico adicional 11891369, S/N 10627 -	210	639
916	Amortiguador de vibraciónes 11891345 S/N - 10626	350	643
916	Amortiguador de vibraciónes 11891345 S/N 10627 -	360	645
924	Portaimplemento, mecánico 11891299	100	647
924	Portaimplementos hidráulico, brazo 11891448, 11891449, 11891450, 11891451	150	649
924	Portaimplementos hidráulico, brazo (11891351, 11891362)	200	653
924	Portaimplementos hidráulico, brazo	250	655
924	Soporte de implemento hidráulico 11891448, 11891450	300	657
924	Cilindro hydráulico, acoplamiento rapido 11891448, 11891450	350	659

INDICE

INDICE

GRUPO		Sección	Página
925	Cuchara, recta con dientes (BACKHOE) S/N - 10626	100	661
925	Cuchara, recta con dientes (BACKHOE) S/N 10627 -	120	663
925	Cuchara, recta con dientes (BACKHOE) S/N - 10626	150	665
925	Cuchara, recta con dientes (BACKHOE) S/N 10627 -	160	667
925	Cuchara, recta con dientes (LOADER)	200	669
925	Cuchara recta sin dientes	250	671
925	Cuchara recta sin dientes	260	673
925	Cuchara multipropósitos	300	675
925	Cuchara multipropósitos 11891541	320	679
925	Kit para la normativa italiana 11891002	350	681
925	Cilindros hidráulicos 11891018	400	683
925	Fijaciones de transporte sin cuchara frontal 11891350	500	685
926	Brazo horquille	100	687
926	Soporte para martillo	200	689
926	Martillo 11891017	250	691
945	Bastidor elevación con piezas de montaje	150	693
945	Muñones para fijación de cuchara	160	699
945	Bastidor elevación con piezas de montaje 11880004, S/N 10627 -	175	701
945	Mecanismo de basculamiento mecánico autoajustable 11891414, 11891415	200	707
945	Cilindro hidráulico, elevac. 11891414, 11891415	250	709
945	Cilindros hidráulicos 11891414, 11891415	300	711
971	Sistema de oscilación	100	713
971	Sistema hidráulico, giro	200	717
971	Cilindro de giro	300	721
971	Cilindro de bloqueo	400	723
972	Pata de apoyo	100	725
972	Cilindro hidraulico para pata de apoyo	200	727
974	Pluma de excavación con brazo telescópico	100	729
974	Pluma y brazo	150	733
974	Cilindro de pluma 11891417, 11891418	200	737
975	Cilindro de brazo 11891417, 11891418	100	739
975	Cilindro de cazo 11891417, 11891418	200	741
975	Cilindro telescopico. 11891417	300	743

VOLVO

Construction Equipment

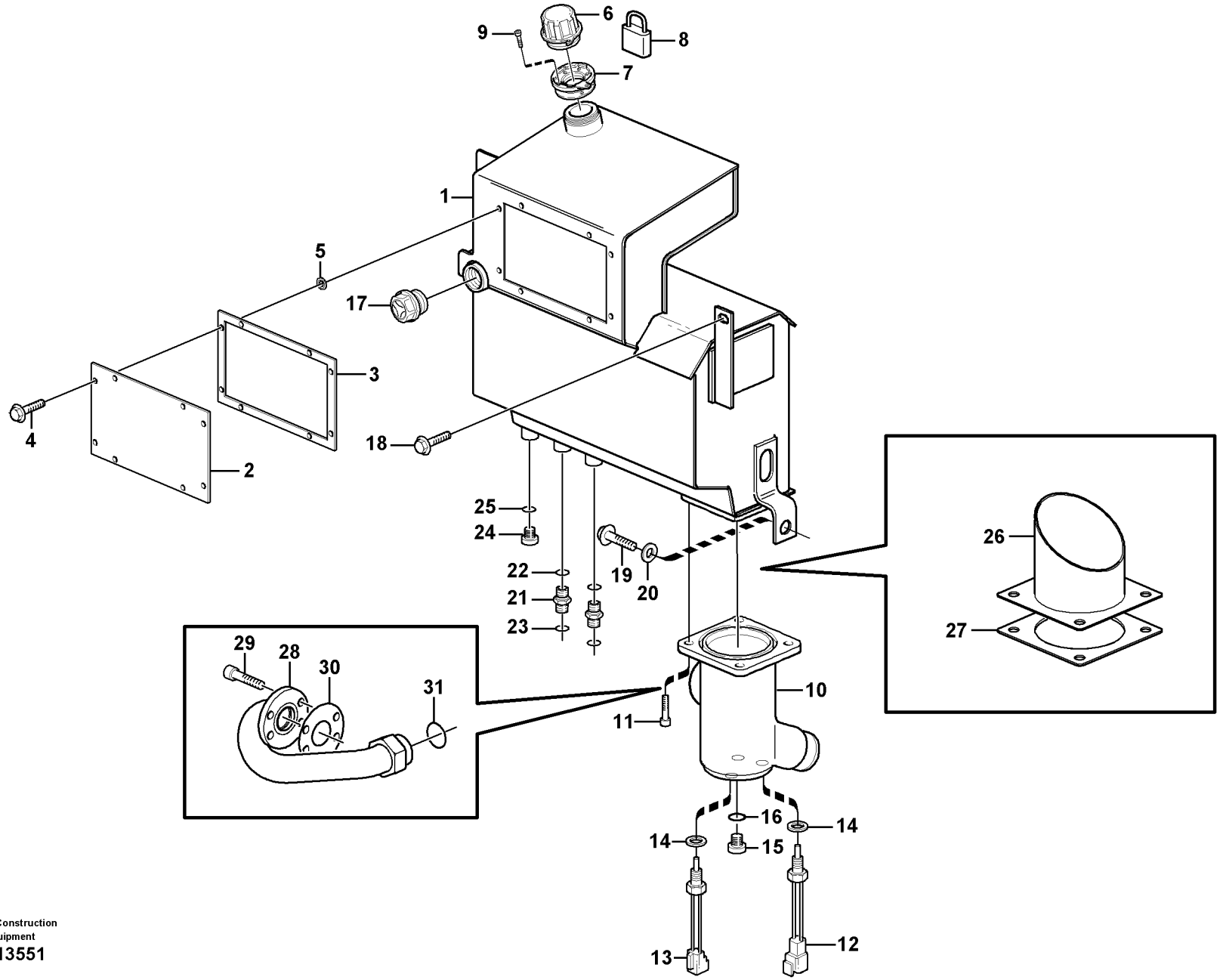

Volvo Construction Equipment
1013551

Fig.	Part No.	Quantity 1	2	3	PS	KIT	Description	Dénomination	Bezeichnung	Denominación	Notes
1	**VOE 11886273**	1					Tank	Resérvoir	Behälter	Depósito	
2	**VOE 11886272**	1					•Plate	•Plaque	•Platte	•Placa	
3	**VOE 11886707**	1					•Gasket	•Joint	•Dichtung	•Junta	
4	**VOE 13946173**	10					•Flange screw	•Vis à bride	•Flanschschraube	•Torn embridado	
5	**VOE 978254**	10					•Gasket	•Joint	•Dichtung	•Junta	
6	**VOE 11882636**		1	1			Cover	Couvercle	Deckel	Tapa	
7	**VOE 11881028**		1	1			Thread Plate	Plaque Taraud\e	Gewindeplatte	Chapa Roscada	
8	**VOE 11885135**			1			Padlock	Cadenas	Vorhängeschloss	Cerrojo	
9	**VOE 941460**		6	6			Screw	Vis	Schraube	Tornillo	
10	**VOE 11886464**	1			SS		Bowl	Coussinet	Schale	Taza	S/N - 10288
	VOE 11887207	1					Bowl	Coussinet	Schale	Taza	S/N 10289 - 10476
	VOE 11888268	1					Bowl	Coussinet	Schale	Taza	S/N 10477 -
11	**VOE 967635**	4					Allen Hd Screw	Vis A 6 Pans Cr	Inbusschraube	Torn Hex Embut	
12	**VOE 11881158**	1					Temp Sensor	Detecteur Temp.	Temperaturgeber	Sensor Temperat	10 DEG
13	**VOE 11884069**	1					Temp Sensor	Detecteur Temp.	Temperaturgeber	Sensor Temperat	97 DEG
14	**VOE 11883592**	2					Seal	Joint	Dichtring	Junta	S/N - 10288
	VOE 977934	2					Gasket	Joint	Dichtung	Junta	S/N 10289 -
15	**VOE 11885751**	1					Plug	Bouchon	Stopfen	Tapon	S/N - 10476
16	**VOE 14213676**	1					•Sealing ring	•Bague d'étanchéité	•Runddichtring	•Anillo reten	
17	**VOE 11886436**	1					Oil Level Sensor	Détecteur de niveau d'huile	Ölstandgeber	Sensor de nivel de aceite	
18	**VOE 13965191**	2					Flange screw	Vis à bride	Flanschschraube	Torn embridado	
19	**VOE 13965192**	1					Flange screw	Vis à bride	Flanschschraube	Torn embridado	
20	**VOE 13947355**	1					Washer	Rondelle	Scheibe	Arandela	
21	**VOE 935085**	2					Nipple	Raccord	Nippel	Niple	
22	**VOE 932039**	1					•O-ring	•Joint Torique	•O-Ring	•Junta torica	
23	**VOE 4880492**	1					•O-ring	•Joint Torique	•O-Ring	•Junta torica	
24	**VOE 11881384**	1					Fitting	Ecrou raccord	Verschraubung	Racor	
25	**VOE 932037**	1					•O-ring	•Joint Torique	•O-Ring	•Junta torica	
26	**VOE 11885999**	1					Tube	Tube	Rohr	Tubo	
27	**VOE 11887625**	2					Gasket	Joint	Dichtung	Junta	

1	**11891076, 11891077**
2	**11891298**
3	**11891324**
4	
5	

Depósito de aceite hidráulico
Hydrauliköltank
Réservoir d'huile hydraulique
Hydraulic oil tank

Catalogue id **20050**	Group **911**
Illustr. No **1013551**	Section **100**
Issue **VOE 64D9920050**	Page **509**

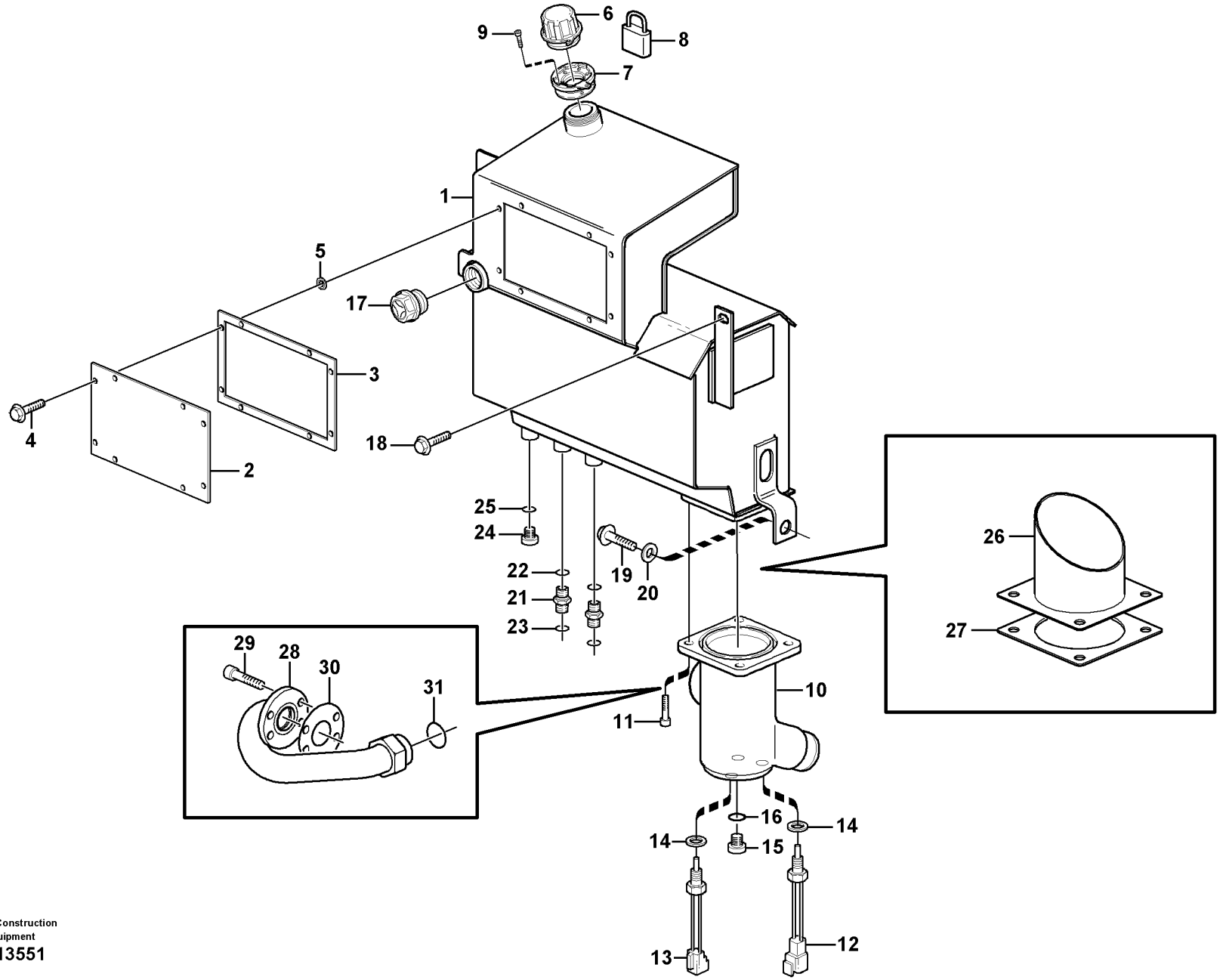

Volvo Construction Equipment
1013551

Fig.	Part No.	Quantity 1	2	3	PS	KIT	Description	Dénomination	Bezeichnung	Denominación	Notes
28	**VOE 11886421**	1					Tube	Tube	Rohr	Tubo	
29	**VOE 959236**	4					Allen Hd Screw	Vis A 6 Pans Cr	Inbusschraube	Torn Hex Embut	
30	**VOE 11886430**	1					Gasket	Joint	Dichtung	Junta	
31	**VOE 981291**	1					O-ring	Joint Torique	O-Ring	Junta torica	

1	**11891076, 11891077**	**Depósito de aceite hidráulico** **Hydrauliköltank** **Réservoir d'huile hydraulique** **Hydraulic oil tank**	Catalogue id **20050**	Group **911**
2	**11891298**		Illustr. No **1013551**	Section **100**
3	**11891324**		Issue **VOE 64D9920050**	Page **511**
4				
5				

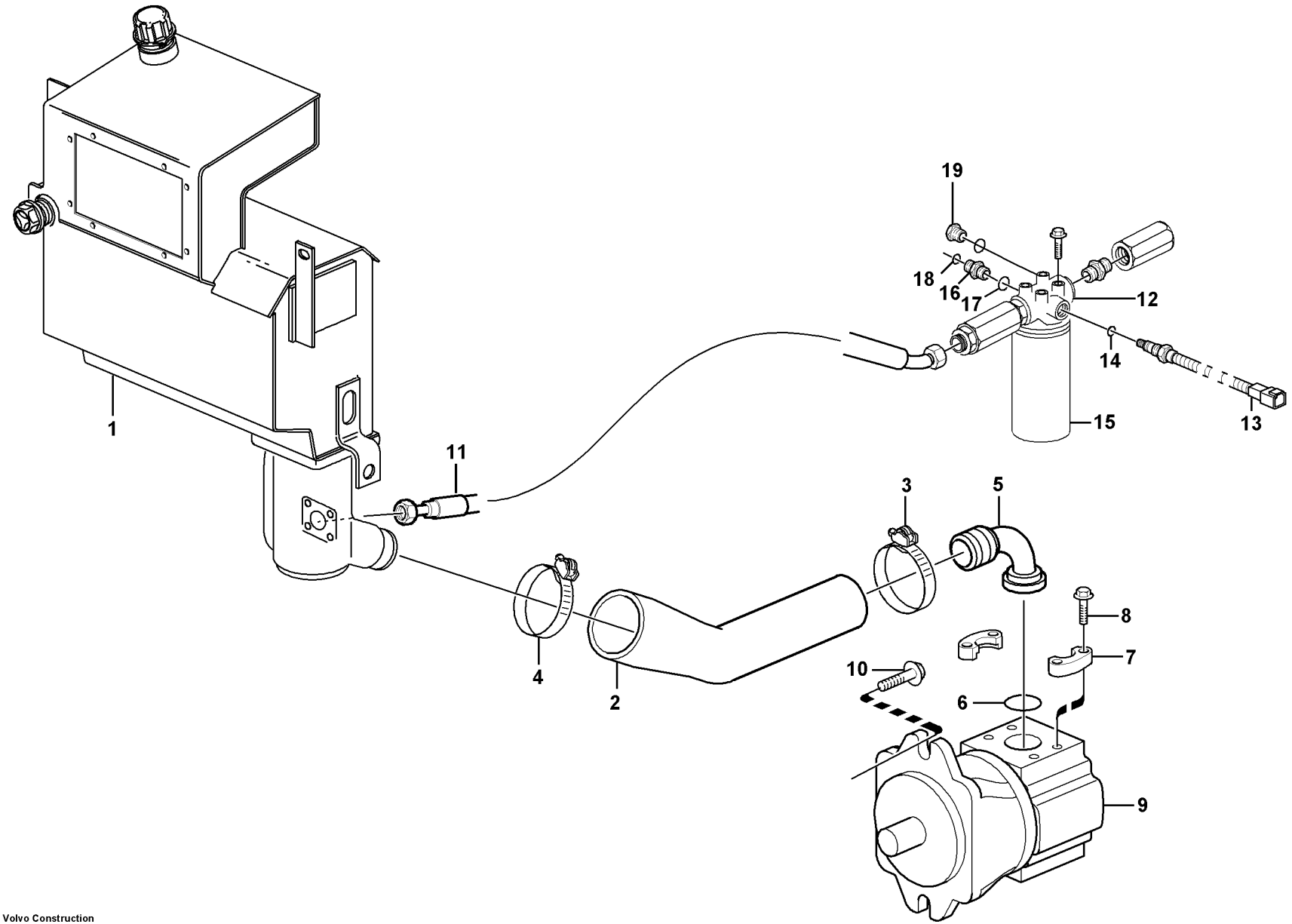

Volvo Construction Equipment
1013289

Fig.	Part No.	Quantity 1	2	3	PS	KIT	Description	Dénomination	Bezeichnung	Denominación	Notes
1		1					Hydr fluid tank	Reservoir fluid.hydr.	Druckölbehälter	Dep Aceit Hidr	See group 911, Page 509
2	**VOE 11886420**	1					Suction hose	Durit aspiration	Saugschlauch	Manguer aspirac	
3	**VOE 11059298**	1					Hose Clamp	Collier Serrage	Schlauchschelle	Abraz Manguera	ID = 86MM
4	**VOE 11059299**	1					Hose Clamp	Collier Serrage	Schlauchschelle	Abraz Manguera	ID = 86MM
5	**VOE 11885780**	1					Fitting	Ecrou raccord	Verschraubung	Racor	
6	**VOE 13949239**	1					O-ring	Joint Torique	O-Ring	Junta torica	
7	**VOE 936620**	2					Flange Half	Demi-bride	Flanschhälfte	Media brida	
8	**VOE 13965191**	4					Flange screw	Vis à bride	Flanschschraube	Torn embridado	
9		1					Pump	Pompe	Pumpe	Bomba	See group 913, Page 621
10	**VOE 968589**	2					Flange screw	Vis à bride	Flanschschraube	Torn embridado	
11		1					Hose assembly	Conduit flexible	Schlauchleitung	Conducto	See group 911, Page 517
12	**VOE 11882505**	1					Filter	Filtre	Filter	Filtro	11880004
13	**VOE 11712309**	1					•Sensor	•Capteur	•Geber	•Captador	11880004
14	**VOE 932039**	1					•O-ring	•Joint Torique	•O-Ring	•Junta torica	11880004
15	**VOE 11882353**	1					•Oil Filter	•Filtre Huile	•Ölfilter	•Filtro Aceite	11880004
16	**VOE 13933862**	1					Nipple	Raccord	Nippel	Niple	
17	**VOE 932042**	1					•O-ring	•Joint Torique	•O-Ring	•Junta torica	
18	**VOE 981289**	1					•O-ring	•Joint Torique	•O-Ring	•Junta torica	
19	**VOE 11882920**	1					Plug	Bouchon	Stopfen	Tapon	11880004
20	**VOE 932042**	1					•O-ring	•Joint Torique	•O-Ring	•Junta torica	11880004

1		**Sistema hidráulico, conducto de aspiración, filtro** **Hydraulikanlage, Saugleitung, Filter** **Système hydraulique, conduit d'aspiration, filtre** **Hydraulic system, suction line, filter**	Catalogue id **20050**	Group **911**
2			Illustr. No **1013289**	Section **250**
3				
4			Issue **VOE 64D9920050**	Page **513**
5		**11891077**		

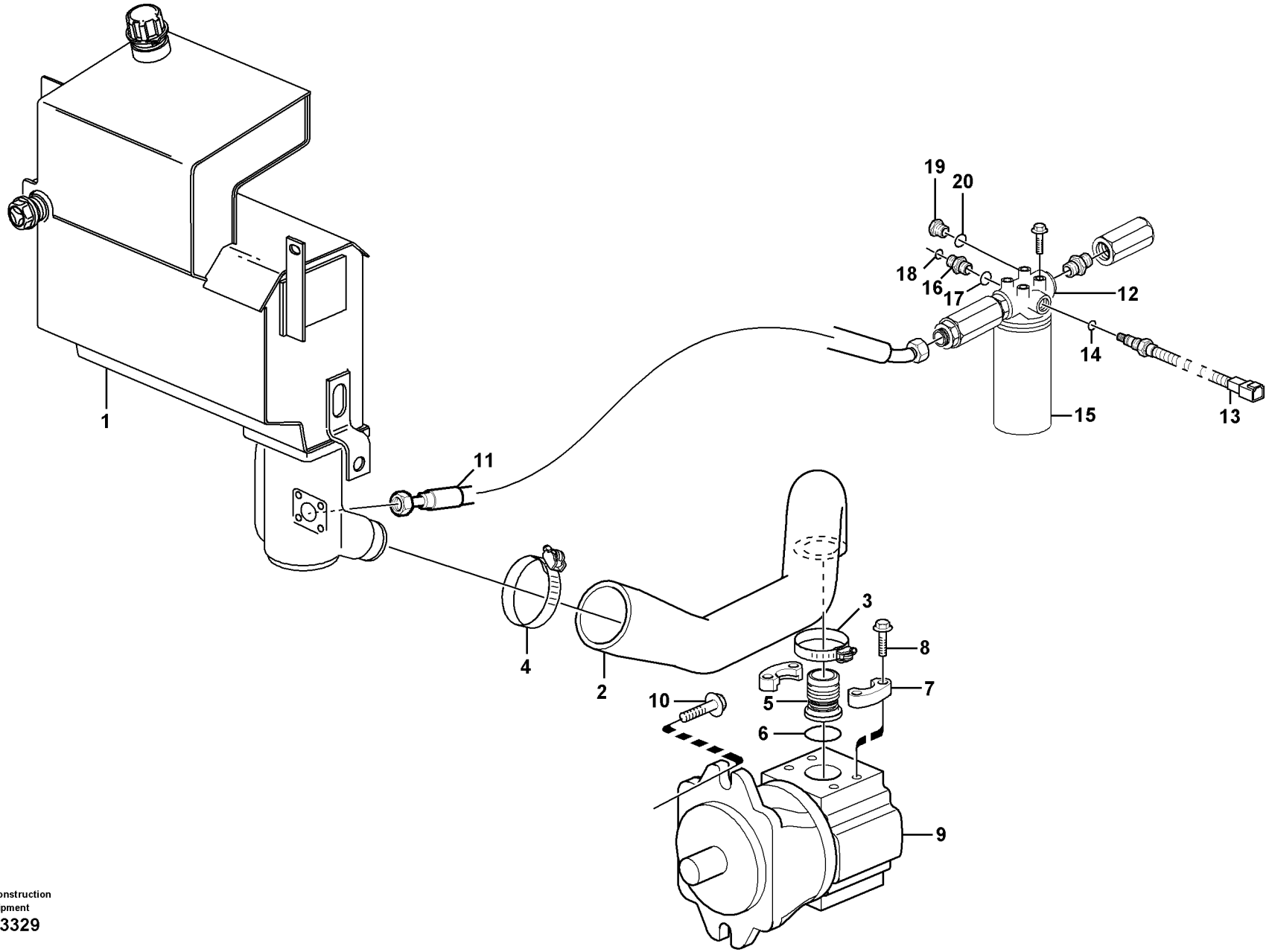

Volvo Construction Equipment
1013329

Fig.	Part No.	Quantity 1	2	3	PS	KIT	Description	Dénomination	Bezeichnung	Denominación	Notes
1		1					Hydr fluid tank	Reservoir fluid.hydr.	Druckölbehälter	Dep Aceit Hidr	See group 911, Page 509
2	**VOE 11886177**	1					Hose	Durit	Schlauch	Tubo flexible	
3	**VOE 11059298**	1					Hose Clamp	Collier Serrage	Schlauchschelle	Abraz Manguera	ID = 86MM
4	**VOE 11059300**	1					Hose Clamp	Collier Serrage	Schlauchschelle	Abraz Manguera	ID = 86MM
5	**VOE 11885308**	1					Fitting	Ecrou raccord	Verschraubung	Racor	
6	**VOE 13949239**	1					O-ring	Joint Torique	O-Ring	Junta torica	
7	**VOE 936620**	2					Flange Half	Demi-bride	Flanschhälfte	Media brida	
8	**VOE 13965191**	4					Flange screw	Vis à bride	Flanschschraube	Torn embridado	
9		1					Pump	Pompe	Pumpe	Bomba	See group 913, Page 621
10	**VOE 968589**	2					Flange screw	Vis à bride	Flanschschraube	Torn embridado	
11		1					Hose assembly	Conduit flexible	Schlauchleitung	Conducto	See group 911, Page 517
12	**VOE 11882505**	1					Filter	Filtre	Filter	Filtro	11880004
13	**VOE 11712309**	1					•Sensor	•Capteur	•Geber	•Captador	11880004
14	**VOE 932039**	1					•O-ring	•Joint Torique	•O-Ring	•Junta torica	11880004
15	**VOE 11882353**	1					•Oil Filter	•Filtre Huile	•Ölfilter	•Filtro Aceite	11880004
16	**VOE 13933862**	1					Nipple	Raccord	Nippel	Niple	
17	**VOE 932042**	1					•O-ring	•Joint Torique	•O-Ring	•Junta torica	
18	**VOE 981289**	1					•O-ring	•Joint Torique	•O-Ring	•Junta torica	
19	**VOE 11882920**	1					Plug	Bouchon	Stopfen	Tapon	11880004
20	**VOE 932042**	1					•O-ring	•Joint Torique	•O-Ring	•Junta torica	11880004

1		**Sistema hidráulico, conducto de aspiración, filtro** **Hydraulikanlage, Saugleitung, Filter** **Système hydraulique, conduit d'aspiration, filtre** **Hydraulic system, suction line, filter**	Catalogue id **20050**	Group **911**
2				
3			Illustr. No **1013329**	Section **275**
4				
5		**11891076**	Issue **VOE 64D9920050**	Page **515**

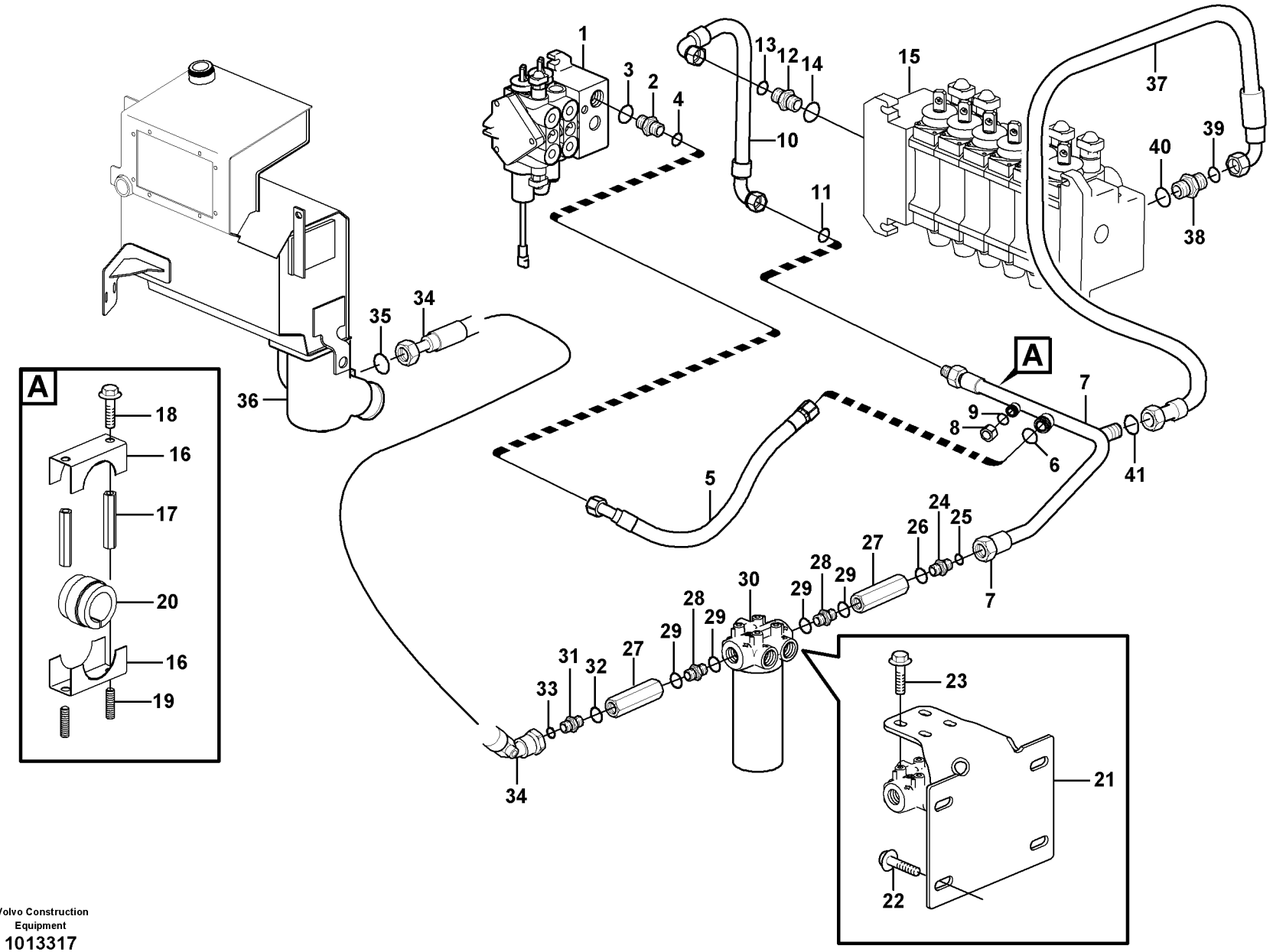

Volvo Construction Equipment
1013317

Fig.	Part No.	Quantity 1	2	3	PS	KIT	Description	Dénomination	Bezeichnung	Denominación	Notes
1		1					Valve	Soupape	Ventil	Valvula	See group 912, Page 591
2	**VOE 935229**	1					Nipple	Raccord	Nippel	Niple	
3	**VOE 981290**	1					•O-ring	•Joint Torique	•O-Ring	•Junta torica	
4	**VOE 932043**	1					•O-ring	•Joint Torique	•O-Ring	•Junta torica	
5	**VOE 11885757**	1					Hose	Durit	Schlauch	Tubo flexible	
6	**VOE 981290**	1					O-ring	Joint Torique	O-Ring	Junta torica	
7	**VOE 11886554**	1					Tube	Tube	Rohr	Tubo	
8	**VOE 935574**	1					Plug	Bouchon	Stopfen	Tapon	
9	**VOE 4880493**	1					O-ring	Joint Torique	O-Ring	Junta torica	
10	**VOE 11886553**	1					Hose	Durit	Schlauch	Tubo flexible	S/N - 10339
	VOE 11887114	1					Hose	Durit	Schlauch	Tubo flexible	S/N 10340 -
11	**VOE 981290**	1					O-ring	Joint Torique	O-Ring	Junta torica	
12	**VOE 935229**	1					Nipple	Raccord	Nippel	Niple	
13	**VOE 981290**	1					O-ring	Joint Torique	O-Ring	Junta torica	
14	**VOE 932043**	1					O-ring	Joint Torique	O-Ring	Junta torica	
15		1					Valve	Soupape	Ventil	Valvula	See group 912, Page 601
16	**VOE 11884642**	2					Support	Support	Stütze	Apoyo	
17	**VOE 11884640**	2					Spacer	Partie Intermédiaire	Zwischenstück	Espaciador	
18	**VOE 946329**	2					Flange screw	Vis à bride	Flanschschraube	Torn embridado	
19	**VOE 11884641**	2					Stud	Goujon	Stiftschraube	Esparrago	
20	**VOE 11885518**	1					Bushing	Bague	Buchse	Casquillo	
21		1			NS		Bracket	Console	Konsole	Ménsula	SER NO -10003
22	**VOE 965225**	4					Flange screw	Vis à bride	Flanschschraube	Torn embridado	SER NO -10003
23	**VOE 946441**	4					Flange screw	Vis à bride	Flanschschraube	Torn embridado	
24	**VOE 936122**	1					Nipple	Raccord	Nippel	Niple	
25	**VOE 4880492**	1					•O-ring	•Joint Torique	•O-Ring	•Junta torica	
26	**VOE 14211861**	1					•Sealing ring	•Bague d'étanchéité	•Runddichtring	•Anillo reten	
27	**VOE 11882347**	2					Check valve	Valve antiretour	Rückschlagventil	Válvula de retención	
28	**VOE 11883508**	2					Nipple	Raccord	Nippel	Niple	
29	**VOE 11883682**	4					Seal	Joint	Dichtring	Junta	

1	
2	
3	
4	
5	

Sistema hidráulico, conducto de retorno
Druckölsystem, Rücklaufleitung
Système hydraulique, conduit retour
Hydraulic system, return line

S/N - 10626

Catalogue id	Group
20050	**911**
Illustr. No	Section
1013317	**300**
Issue	Page
VOE 64D9920050	**517**

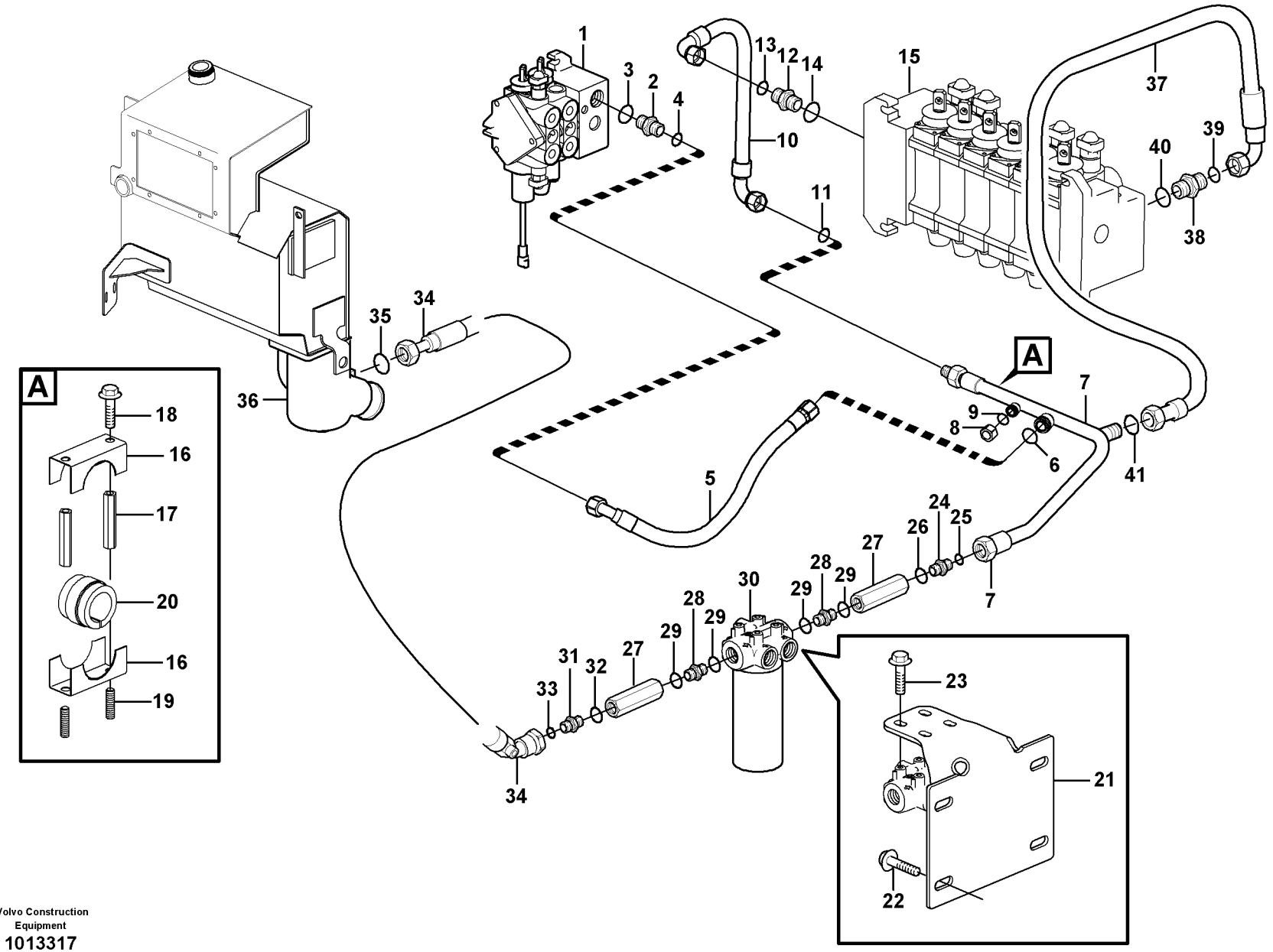

Volvo Construction Equipment
1013317

Fig.	Part No.	Quantity 1	2	3	PS	KIT	Description	Dénomination	Bezeichnung	Denominación	Notes
30		1					Filter	Filtre	Filter	Filtro	See group 911, Page 513
31	**VOE 936122**	1					Nipple	Raccord	Nippel	Niple	
32	**VOE 14211861**	1					Sealing ring	Bague d'étanchéité	Runddichtring	Anillo reten	
33	**VOE 4880492**	1					O-ring	Joint Torique	O-Ring	Junta torica	
34	**VOE 11886151**	1					Hose	Durit	Schlauch	Tubo flexible	
35	**VOE 981291**	1					O-ring	Joint Torique	O-Ring	Junta torica	
36		1					Bowl	Coussinet	Schale	Taza	See group 911, Page 509
37	**VOE 11885859**	1					Hose	Flexible	Schlauch	Manguera	
38	**VOE 935032**	1					Nipple	Raccord	Nippel	Niple	
39	**VOE 4880663**	1					•O-ring	•Joint Torique	•O-Ring	•Junta torica	
40	**VOE 932042**	1					•O-ring	•Joint Torique	•O-Ring	•Junta torica	
41	**VOE 4880663**	1					O-ring	Joint Torique	O-Ring	Junta torica	

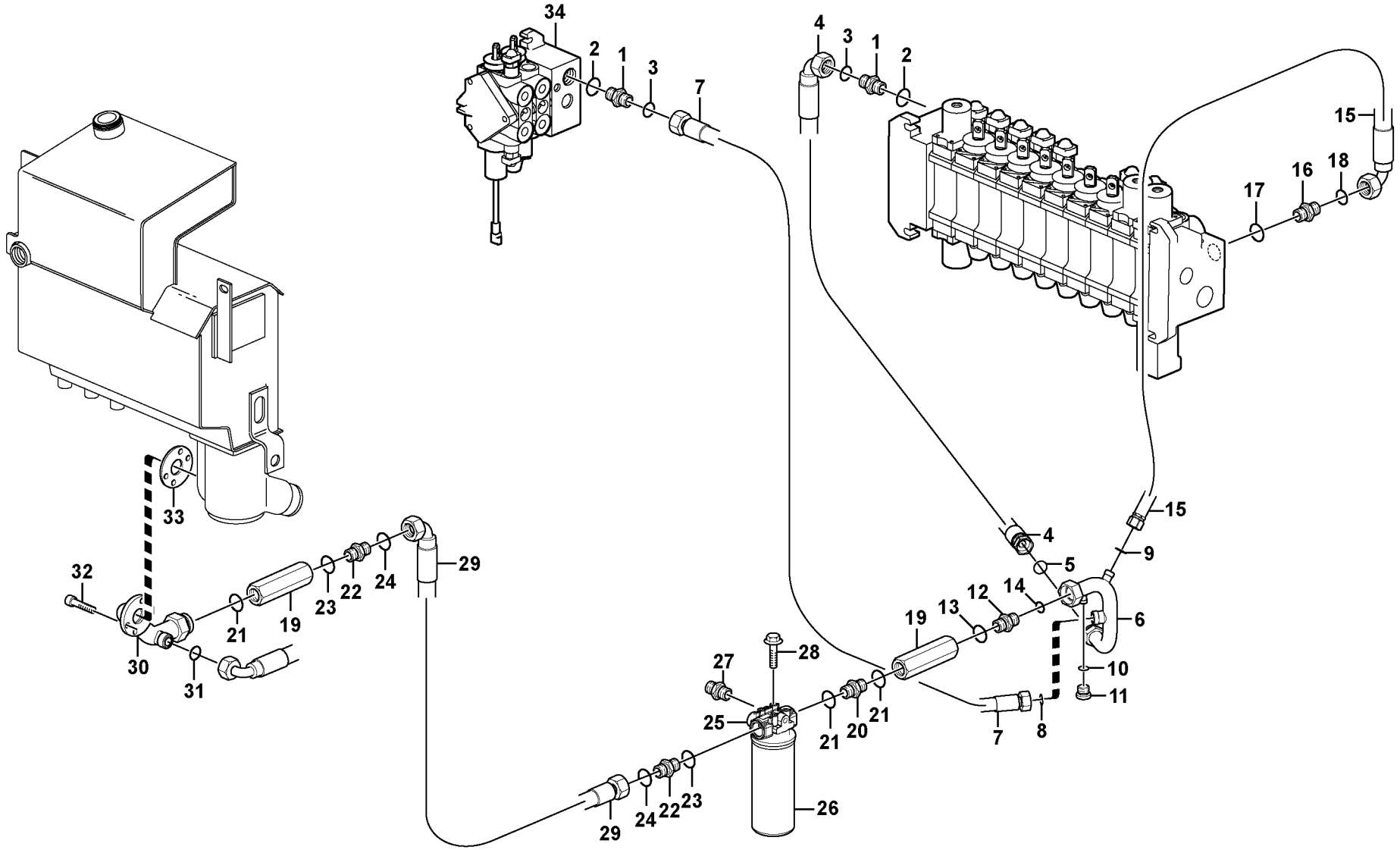

Volvo Construction Equipment

1024752

Fig.	Part No.	Quantity 1	2	3	PS	KIT	Description	Dénomination	Bezeichnung	Denominación	Notes
1	**VOE 935229**	2					Nipple	Raccord	Nippel	Niple	
2	**VOE 981290**	2					•O-ring	•Joint Torique	•O-Ring	•Junta torica	
3	**VOE 932043**	2					•O-ring	•Joint Torique	•O-Ring	•Junta torica	
4	**VOE 937377**	1					Hose assembly	Conduit flexible	Schlauchleitung	Conducto	L = 800 MM
5	**VOE 981290**	1					O-ring	Joint Torique	O-Ring	Junta torica	
6	**VOE 11888525**	1					Tube Assembly	Tuyauterie	Rohrleitung	Tuberia	
7	**VOE 937990**	1					Hose assembly	Conduit flexible	Schlauchleitung	Conducto	L = 650 MM
8	**VOE 981290**	1					O-ring	Joint Torique	O-Ring	Junta torica	
9	**VOE 990739**	1					O-ring	Joint Torique	O-Ring	Junta torica	
10	**VOE 990738**	1					O-ring	Joint Torique	O-Ring	Junta torica	
11	**VOE 935574**	1					Plug	Bouchon	Stopfen	Tapon	
12	**VOE 936122**	1					Nipple	Raccord	Nippel	Niple	
13	**VOE 14211861**	1					•Sealing ring	•Bague d'étanchéité	•Runddichtring	•Anillo reten	
14	**VOE 981291**	1					•O-ring	•Joint Torique	•O-Ring	•Junta torica	
15	**VOE 937967**	1					Hose assembly	Conduit flexible	Schlauchleitung	Conducto	L = 800 MM
16	**VOE 935032**	1					Nipple	Raccord	Nippel	Niple	
17	**VOE 990739**	1					•O-ring	•Joint Torique	•O-Ring	•Junta torica	
18	**VOE 932042**	1					•O-ring	•Joint Torique	•O-Ring	•Junta torica	
19	**VOE 11882347**	2					Check valve	Valve antiretour	Rückschlagventil	Válvula de retención	
20	**VOE 11883508**	1					Nipple	Raccord	Nippel	Niple	
21	**VOE 11883682**	3					Seal	Joint	Dichtring	Junta	
22	**VOE 11888088**	2					Fitting	Ecrou raccord	Verschraubung	Racor	
23	**VOE 14211861**	1					•Sealing ring	•Bague d'étanchéité	•Runddichtring	•Anillo reten	
24	**VOE 981290**	1					•O-ring	•Joint Torique	•O-Ring	•Junta torica	
25	**VOE 11882505**	1					Filter	Filtre	Filter	Filtro	
26		1			NS		•Filter Cartridge	•Element Filtre	•Filterpatrone	•Patron Filtrant	
27		1			NS		•Sensor	•Capteur	•Geber	•Captador	
28	**VOE 946441**	4					Flange screw	Vis à bride	Flanschschraube	Torn embridado	
29	**VOE 937966**	1					Hose assembly	Conduit flexible	Schlauchleitung	Conducto	
30	**VOE 11888080**	1					Tube	Tube	Rohr	Tubo	

1	
2	
3	
4	
5	

Sistema hidráulico, conducto de retorno
Druckölsystem, Rücklaufleitung
Système hydraulique, conduit retour
Hydraulic system, return line

S/N 10627 -

Catalogue id	Group
20050	**911**
Illustr. No	Section
1024752	**310**
Issue	Page
VOE 64D9920050	**521**

VOLVO

BL61

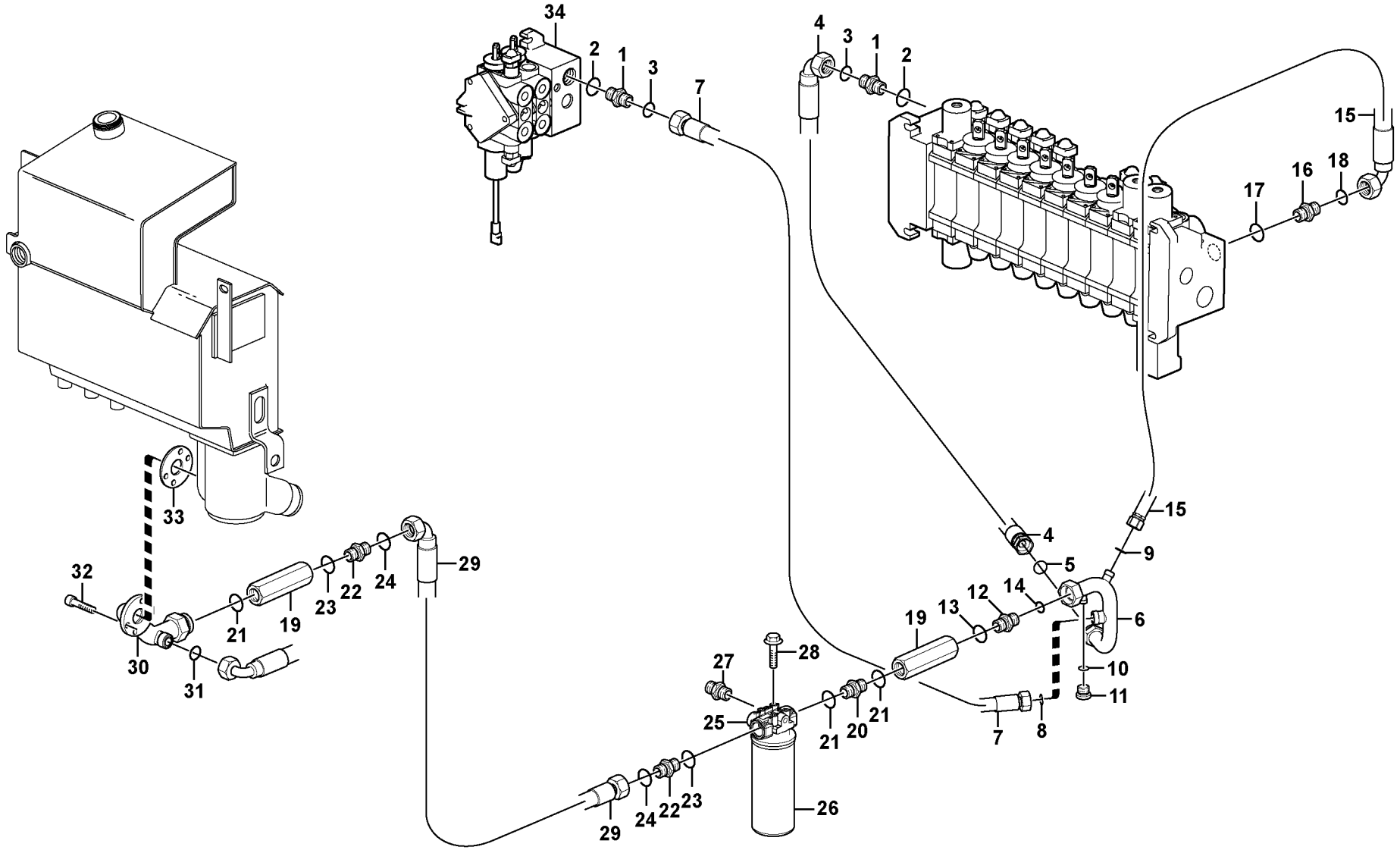

Volvo Construction Equipment

1024752

Fig.	Part No.	Quantity 1	2	3	PS	KIT	Description	Dénomination	Bezeichnung	Denominación	Notes
31	**VOE 990740**	1					O-ring	Joint Torique	O-Ring	Junta torica	
32	**VOE 959238**	4					Allen Hd Screw	Vis A 6 Pans Cr	Inbusschraube	Torn Hex Embut	
33	**VOE 11886430**	1					Gasket	Joint	Dichtung	Junta	
34		1					Valve	Soupape	Ventil	Valvula	See group 912, Page 591

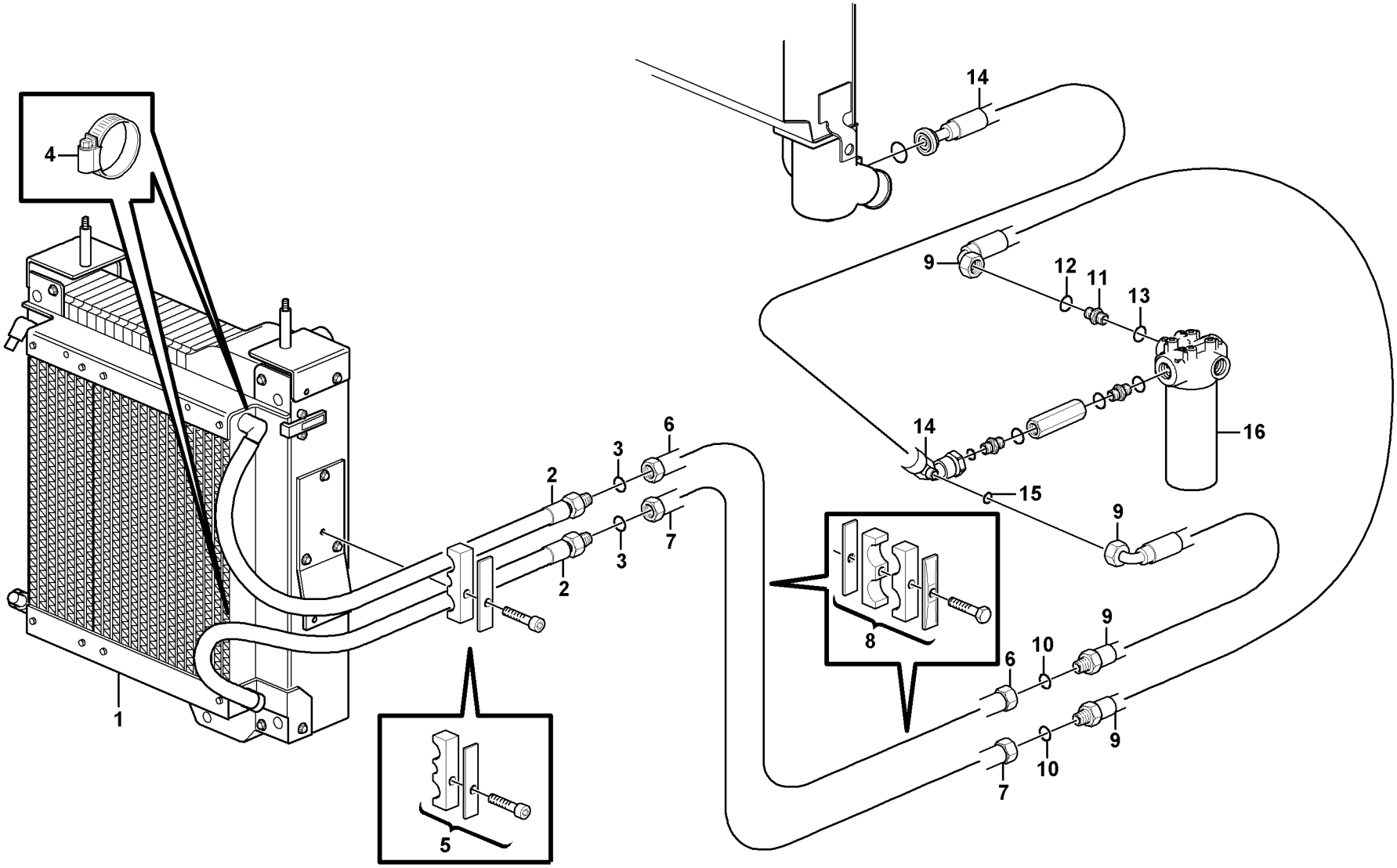

Volvo Construction Equipment
1013173

Fig.	Part No.	Quantity 1	2	3	PS	KIT	Description	Dénomination	Bezeichnung	Denominación	Notes
1		1					Oil Cooler	Refroidisseur huile	Ölkühler	Enfriadores aceite	See group 261, Page 105
2	**VOE 11882738**	2					Hose	Durit	Schlauch	Tubo flexible	
3	**VOE 981289**	1					•O-ring	•Joint Torique	•O-Ring	•Junta torica	
4	**VOE 943473**	2					Hose Clamp	Collier Serrage	Schlauchschelle	Abraz Manguera	
5	**VOE 11885543**	1					Clamp	Pince Serrage	Klemme	Abrazadera	
6	**VOE 11884808**	1					Tube	Tube	Rohr	Tubo	
7	**VOE 11882912**	1					Tube	Tube	Rohr	Tubo	
8	**VOE 11882856**	2					Clamp	Pince Serrage	Klemme	Abrazadera	
9	**VOE 11882737**	2					Hose	Durit	Schlauch	Tubo flexible	
10	**VOE 981289**	1					•O-ring	•Joint Torique	•O-Ring	•Junta torica	
11	**VOE 13933862**	1					Nipple	Raccord	Nippel	Niple	
12	**VOE 981289**	1					•O-ring	•Joint Torique	•O-Ring	•Junta torica	
13	**VOE 932042**	1					•O-ring	•Joint Torique	•O-Ring	•Junta torica	
14		1					Hose assembly	Conduit flexible	Schlauchleitung	Conducto	See group 911, Page 517
15	**VOE 981289**	1					•O-ring	•Joint Torique	•O-Ring	•Junta torica	
16		1					Filter	Filtre	Filter	Filtro	See group 911, Page 517

1		**Enfriador de aceite hidráulico** **Hydraulikölkühler** **Radiateur huile** **Hydraulic oil cooler**	Catalogue id **20050**	Group **911**
2			Illustr. No **1013173**	Section **325**
3			Issue **VOE 64D9920050**	Page **525**
4				
5		**S/N - 10626**		

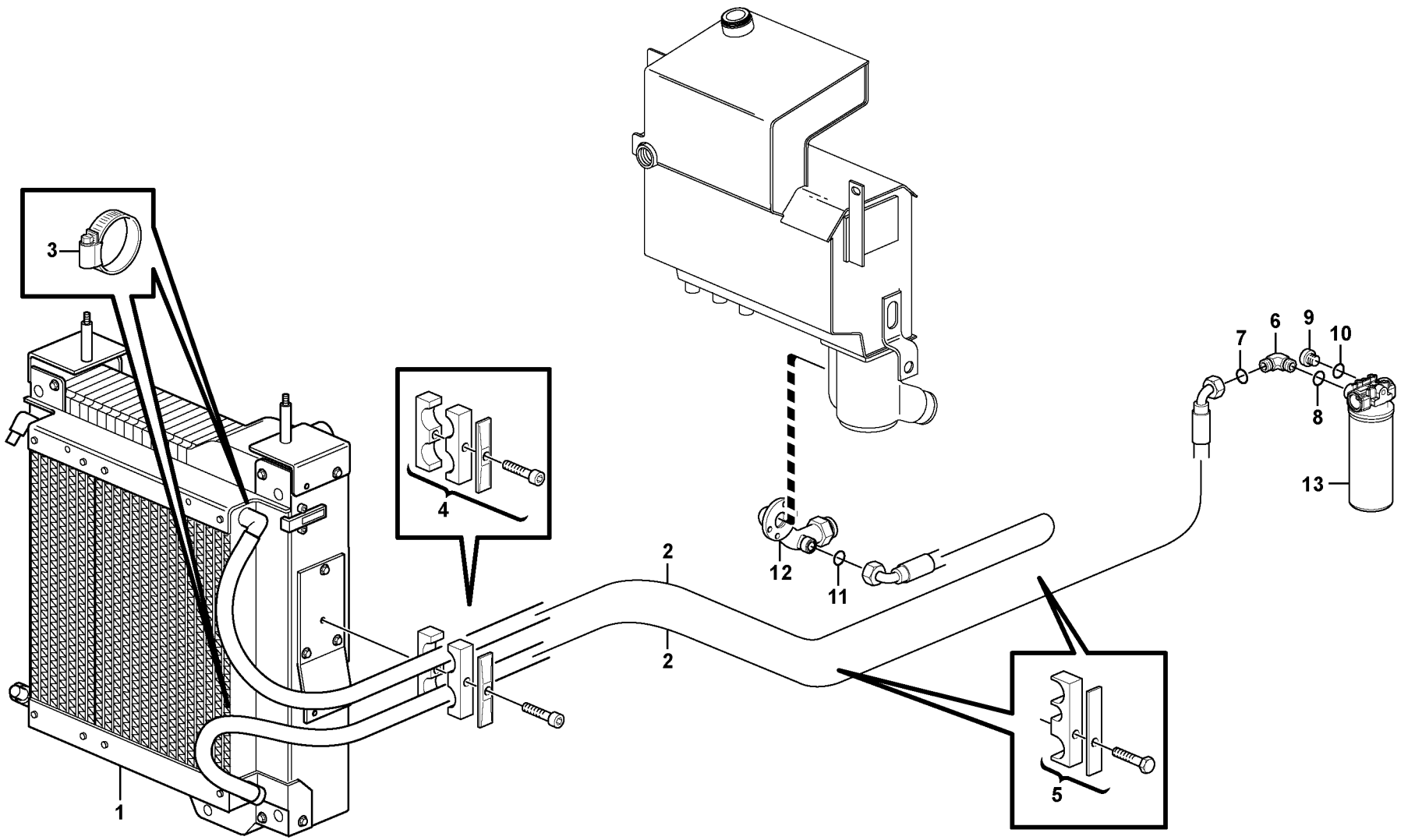

Volvo Construction Equipment

1024601

Fig.	Part No.	Quantity 1	2	3	PS	KIT	Description	Dénomination	Bezeichnung	Denominación	Notes
1		1					Oil Cooler	Refroidisseur huile	Ölkühler	Enfriadores aceite	See group 261, Page 105
2	**VOE 11888461**	2					Hose assembly	Conduit flexible	Schlauchleitung	Conducto	
3	**VOE 943473**	2					Hose Clamp	Collier Serrage	Schlauchschelle	Abraz Manguera	
4	**VOE 11885543**	1					Clamp	Pince Serrage	Klemme	Abrazadera	
5	**VOE 11888715**	2					Clamp	Pince Serrage	Klemme	Abrazadera	
6	**VOE 13933864**	1					Elbow nipple	Raccord angulaire	Winkelnippel	Niple angular	
7	**VOE 990740**	1					•O-ring	•Joint Torique	•O-Ring	•Junta torica	
8	**VOE 932042**	1					•O-ring	•Joint Torique	•O-Ring	•Junta torica	
9	**VOE 11882920**	1					Plug	Bouchon	Stopfen	Tapon	
10	**VOE 932042**	1					•O-ring	•Joint Torique	•O-Ring	•Junta torica	
11	**VOE 990740**	1					O-ring	Joint Torique	O-Ring	Junta torica	
12		1					Tube	Tube	Rohr	Tubo	See group 911, Page 521
13		1					Filter	Filtre	Filter	Filtro	See group 911, Page 521

1		**Enfriador de aceite hidráulico** **Hydraulikölkühler** **Radiateur huile** **Hydraulic oil cooler**	Catalogue id **20050**	Group **911**
2			Illustr. No **1024601**	Section **330**
3			Issue **VOE 64D9920050**	Page **527**
4				
5		**S/N 10627 -**		

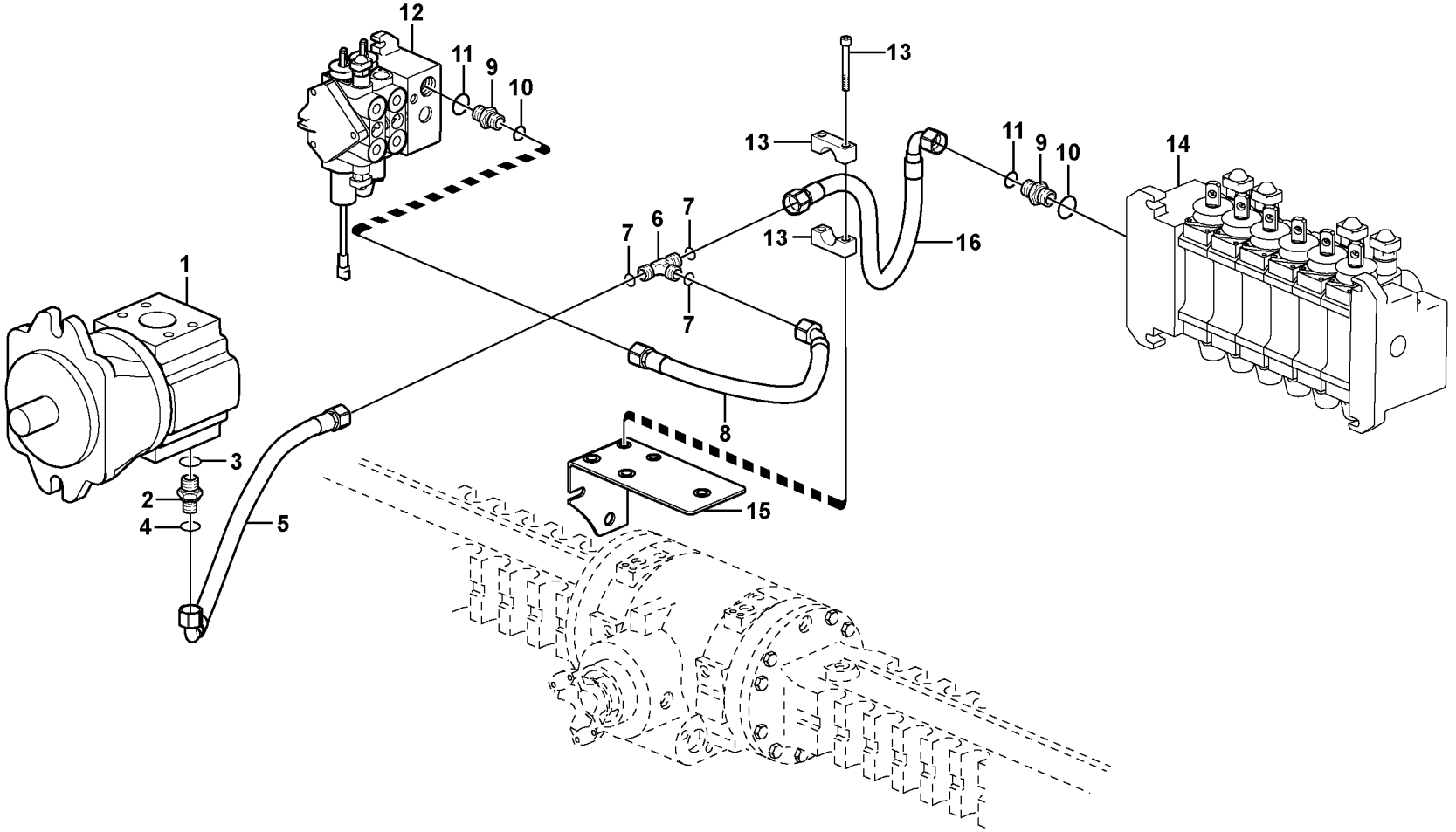

Volvo Construction Equipment
1012974

Fig.	Part No.	Quantity 1	2	3	PS	KIT	Description	Dénomination	Bezeichnung	Denominación	Notes
1		1					Pump	Pompe	Pumpe	Bomba	See group 911, Page 513
2	**VOE 936070**	1					Nipple	Raccord	Nippel	Niple	
3	**VOE 983123**	1					•O-ring	•Joint Torique	•O-Ring	•Junta torica	
4	**VOE 983024**	1					•O-ring	•Joint Torique	•O-Ring	•Junta torica	
5	**VOE 11885256**	1					Hose	Durit	Schlauch	Tubo flexible	L = 650MM; SER NO -10104
5	**VOE 11886945**	1					Hose	Durit	Schlauch	Tubo flexible	L = 700MM; SER NO 10105-
6	**VOE 11881387**	1					Fitting	Raccord tuyau	Rohrkupplung	Acoplamiento Tubo	
7	**VOE 981289**	3					•O-ring	•Joint Torique	•O-Ring	•Junta torica	
8	**VOE 11885517**	1					Hose	Durit	Schlauch	Tubo flexible	L = 640 MM
9	**VOE 13933862**	2					Nipple	Raccord	Nippel	Niple	
10	**VOE 981289**	1					•O-ring	•Joint Torique	•O-Ring	•Junta torica	
11	**VOE 932042**	1					•O-ring	•Joint Torique	•O-Ring	•Junta torica	
12		1					Valve	Soupape	Ventil	Valvula	See group 912, Page 591
13	**VOE 11885762**	1					Clamp	Pince Serrage	Klemme	Abrazadera	
14		1					Valve	Soupape	Ventil	Valvula	See group 911, Page 517
15		1			NS		Plate	Plaque	Platte	Placa	
16	**VOE 11885256**	1					Hose	Durit	Schlauch	Tubo flexible	

1		**Sistema hidráulico, conducto presion** **Hydraulikanlage, Druckleitungen** **Systeme Hydr. conduit alimentation** **Hydraulic system, feed line**	Catalogue id **20050**	Group **911**
2			Illustr. No **1012974**	Section **350**
3			Issue **VOE 64D9920050**	Page **529**
4				
5		**S/N - 10626**		

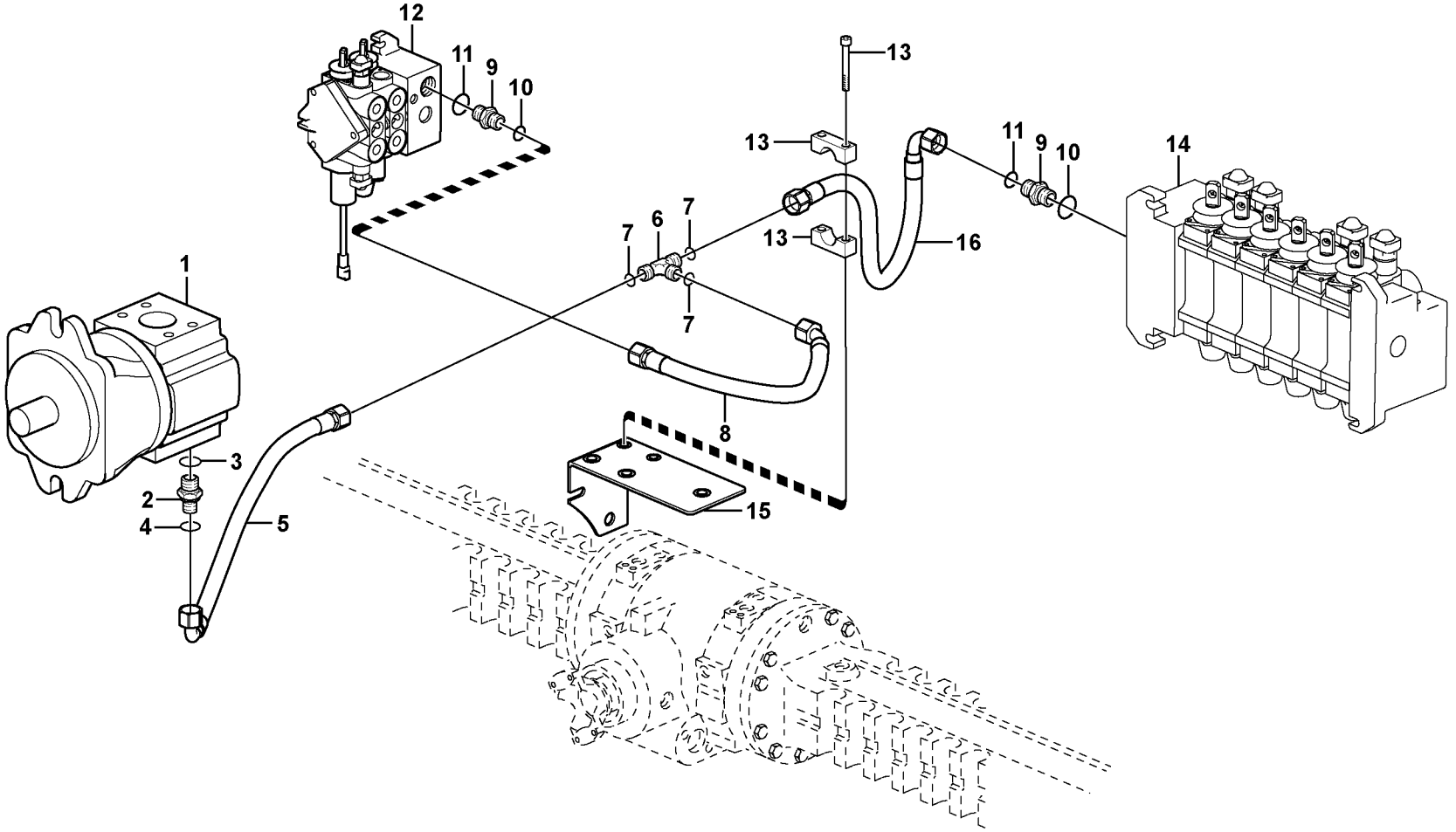

Volvo Construction Equipment
1024753

Fig.	Part No.	Quantity 1	2	3	PS	KIT	Description	Dénomination	Bezeichnung	Denominación	Notes
1		1					Pump	Pompe	Pumpe	Bomba	See group 911, Page 513
2	**VOE 936070**	1					Nipple	Raccord	Nippel	Niple	
3	**VOE 983123**	1					•O-ring	•Joint Torique	•O-Ring	•Junta torica	
4	**VOE 983024**	1					•O-ring	•Joint Torique	•O-Ring	•Junta torica	
5	**VOE 11886945**	1					Hose	Durit	Schlauch	Tubo flexible	
6	**VOE 11881387**	1					Fitting	Raccord tuyau	Rohrkupplung	Acoplamiento Tubo	
7	**VOE 981289**	3					•O-ring	•Joint Torique	•O-Ring	•Junta torica	
8	**VOE 11431003**	1					Hose assembly	Conduit flexible	Schlauchleitung	Conducto	
9	**VOE 13933862**	2					Nipple	Raccord	Nippel	Niple	
10	**VOE 981289**	1					•O-ring	•Joint Torique	•O-Ring	•Junta torica	
11	**VOE 932042**	1					•O-ring	•Joint Torique	•O-Ring	•Junta torica	
12		1					Valve	Soupape	Ventil	Valvula	See group 912, Page 591
13	**VOE 13965178**	2					Screw	Vis	Schraube	Tornillo	
14	**VOE 11885762**	1					Clamp	Pince Serrage	Klemme	Abrazadera	
15	**VOE 13949278**	1					Flange Lock Nut	Contre écrou bride	Flanschmutter	Contratuer Embr	
16	**VOE 11431014**	1					Hose assembly	Conduit flexible	Schlauchleitung	Conducto	
17		1					Valve	Soupape	Ventil	Valvula	See group 911, Page 517
18		1			NS		Plate	Plaque	Platte	Placa	

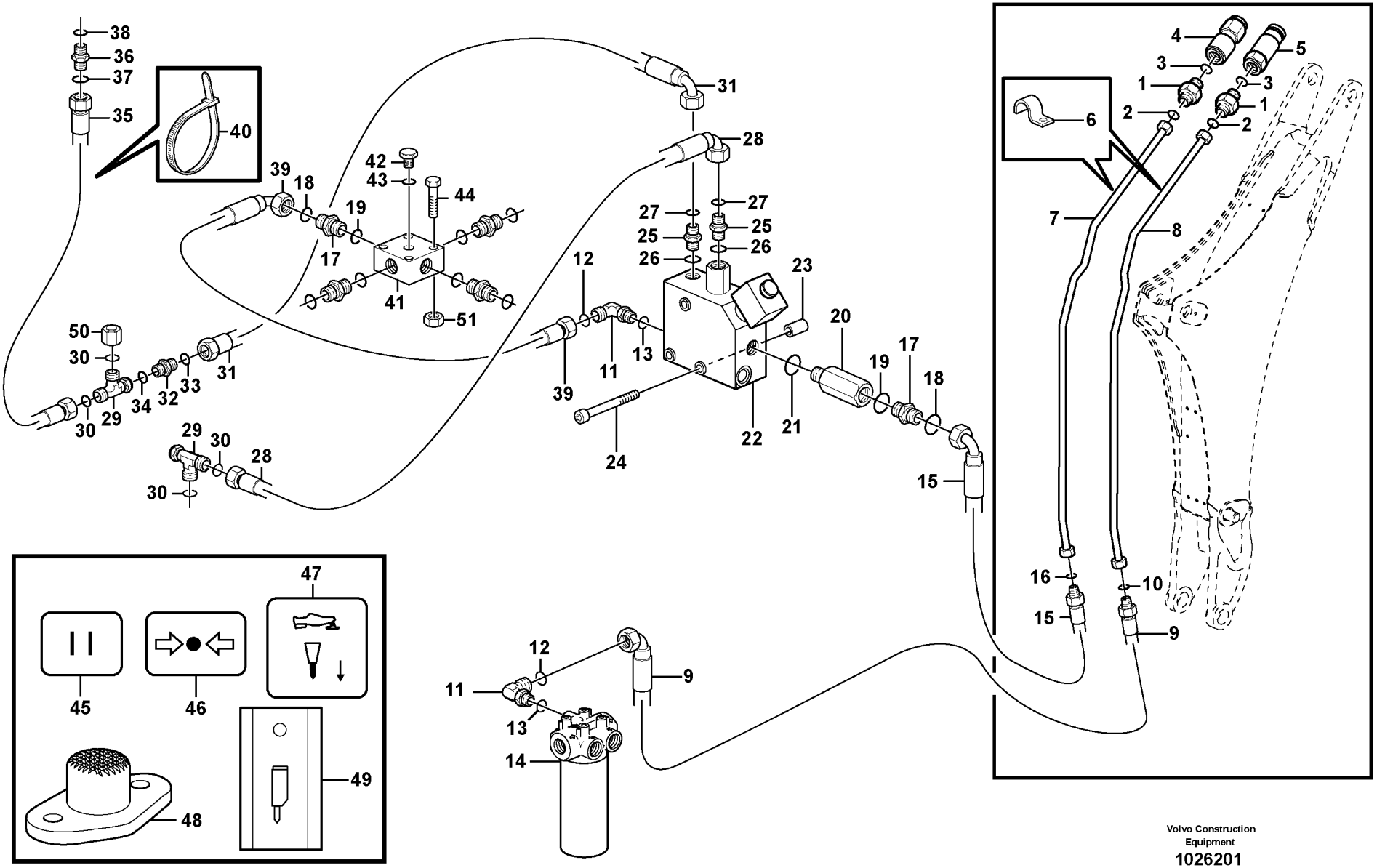

Volvo Construction Equipment

1026201

Fig.	Part No.	Quantity 1	2	3	PS	KIT	Description	Dénomination	Bezeichnung	Denominación	Notes
1	**VOE 11881382**	2					Nipple	Raccord	Nippel	Niple	
2	**VOE 981290**	1					•O-ring	•Joint Torique	•O-Ring	•Junta torica	
3	**VOE 932040**	1					•O-ring	•Joint Torique	•O-Ring	•Junta torica	
4	**VOE 11882298**	1					Fitting	Raccord tuyau	Rohrkupplung	Acoplam tubo	
5	**VOE 11882299**	1					Fitting	Raccord tuyau	Rohrkupplung	Acoplam tubo	
6	**VOE 11887319**	2					Clamp	Pince Serrage	Klemme	Abrazadera	
7	**VOE 11884833**	1					Tube	Tube	Rohr	Tubo	
8	**VOE 11884832**	1					Tube	Tube	Rohr	Tubo	
9	**VOE 11882210**	1					Hose	Flexible	Schlauch	Manguera	S/N - 10626
9	**VOE 11888854**	1					Hose assembly	Conduit flexible	Schlauchleitung	Conducto	S/N 10627 -
10	**VOE 981290**	1					O-ring	Joint Torique	O-Ring	Junta torica	
11	**VOE 13933864**	2					Elbow nipple	Raccord angulaire	Winkelnippel	Niple angular	
12	**VOE 981289**	1					•O-ring	•Joint Torique	•O-Ring	•Junta torica	
13	**VOE 932042**	1					•O-ring	•Joint Torique	•O-Ring	•Junta torica	
14		1					Filter	Filtre	Filter	Filtro	See group 911, Page 513
15	**VOE 11885006**	1					Hose	Durit	Schlauch	Tubo flexible	
16	**VOE 981290**	1					•O-ring	•Joint Torique	•O-Ring	•Junta torica	
17	**VOE 13933862**	5	4				Nipple	Raccord	Nippel	Niple	
18	**VOE 981289**	1	1				•O-ring	•Joint Torique	•O-Ring	•Junta torica	
19	**VOE 932042**	1	1				•O-ring	•Joint Torique	•O-Ring	•Junta torica	
20	**VOE 11885860**	1					Check valve	Valve antiretour	Rückschlagventil	Válvula de retención	
21	**VOE 932042**	1					•O-ring	•Joint Torique	•O-Ring	•Junta torica	
22		1					Valve	Soupape	Ventil	Valvula	See group 912, Page 605
23	**VOE 11884291**	3					Spacer Sleeve	Doui.entretoise	Distanzhülse	Manguito Dist	
24	**VOE 13965183**	3					Flange screw	Vis à bride	Flanschschraube	Torn embridado	
25	**VOE 13933858**	2					Union	Teton Connexion	Anschlussnippel	Niple Conexcion	
26	**VOE 932039**	1					•O-ring	•Joint Torique	•O-Ring	•Junta torica	
27	**VOE 4881722**	1					•O-ring	•Joint Torique	•O-Ring	•Junta torica	
28	**VOE 11885262**	1					Hose	Durit	Schlauch	Tubo flexible	
29	**VOE 13933859**	2					Nipple	Raccord	Nippel	Niple	

1	**11891455**
2	**11880004**
3	
4	
5	

Sistema hidráulico, martillo
Hydraulikanlage, Hammer
Système hydraulique, marteau
Hydraulic system, hammer

Catalogue id	Group
20050	**911**
Illustr. No **1026201**	Section **400**
Issue **VOE 64D9920050**	Page **533**

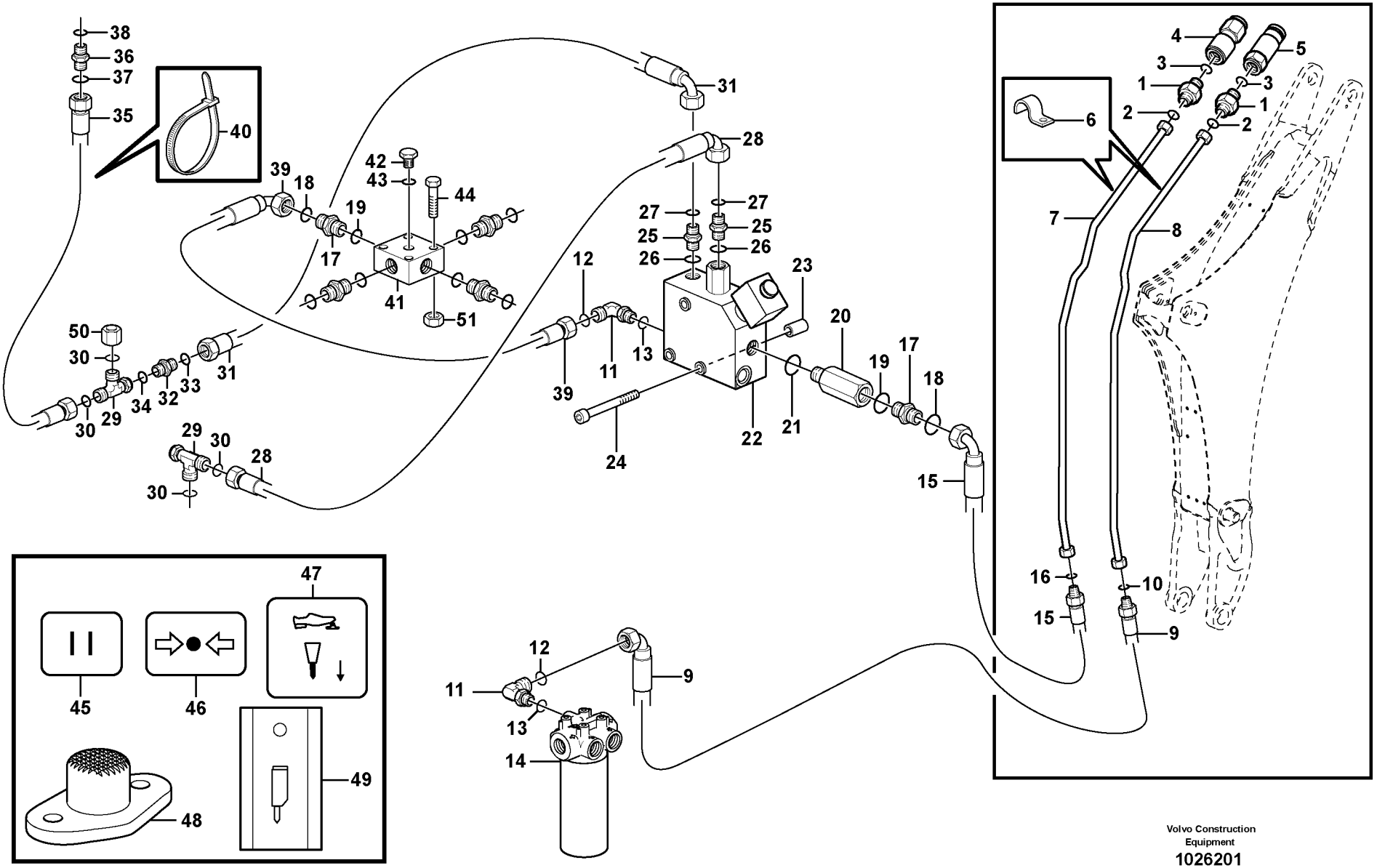

Volvo Construction Equipment

1026201

Fig.	Part No.	Quantity 1	2	3	PS	KIT	Description	Dénomination	Bezeichnung	Denominación	Notes
30	**VOE 4881722**	2					•O-ring	•Joint Torique	•O-Ring	•Junta torica	
31	**VOE 11884274**	1					Hose	Durit	Schlauch	Tubo flexible	
32	**VOE 935436**	1					Nipple	Raccord	Nippel	Niple	
33	**VOE 4881722**	1					•O-ring	•Joint Torique	•O-Ring	•Junta torica	
34	**VOE 4881722**	1					•O-ring	•Joint Torique	•O-Ring	•Junta torica	
35	**VOE 11885514**		1				Hose	Durit	Schlauch	Tubo flexible	
36	**VOE 935082**	1					Nipple	Raccord	Nippel	Niple	
37	**VOE 4881722**	1					•O-ring	•Joint Torique	•O-Ring	•Junta torica	
38	**VOE 932037**	1					•O-ring	•Joint Torique	•O-Ring	•Junta torica	
39	**VOE 11885256**	1					Hose	Durit	Schlauch	Tubo flexible	
40	**VOE 4881438**	4					Strip Clamp	Ruban Serrage	Kabelbinder	Abraz Cinta	
41	**VOE 11886192**	1	1				Valve	Soupape	Ventil	Valvula	
42	**VOE 11883510**	1	1				Plug	Bouchon	Stopfen	Tapon	
43	**VOE 932039**	1	1				•O-ring	•Joint Torique	•O-Ring	•Junta torica	
44	**VOE 983247**	2					Hexagon screw	Vis a tête hexagonale	Sechskantschr.	Tornillo hexago	
44	**VOE 967632**		2				Allen Hd Screw	Vis A 6 Pans Cr	Inbusschraube	Torn Hex Embut	S/N - 10626
44	**VOE 13965181**		2				Flange screw	Vis à bride	Flanschschraube	Torn embridado	S/N 10627 -
45		1					Decal	Decalcomanie	Abziehbild	Decalcomania	See group 897, Page 493
46		1					Decal	Decalcomanie	Abziehbild	Decalcomania	See group 897, Page 493
47		1					Decal	Decalcomanie	Abziehbild	Decalcomania	See group 897, Page 493
48	**VOE 1589502**	1					Foot Operated Switch	Contacteur Au Pied	Fusschalter	Contacto Freno	See group 380, Page 213
49	**VOE 11884960**	1					Symbol	Symbole	Symbol	Símbolo	See group 380, Page 207
50	**VOE 935756**	1					Plug	Bouchon	Stopfen	Tapon	S/N 10627 -
51	**VOE 13945408**		2				Nut	Ecrou	Mutter	Tuerca	S/N 10627 -

1	**11891455**
2	**11880004**
3	
4	
5	

Sistema hidráulico, martillo
Hydraulikanlage, Hammer
Système hydraulique, marteau
Hydraulic system, hammer

Catalogue id **20050**	Group **911**
Illustr. No **1026201**	Section **400**
Issue **VOE 64D9920050**	Page **535**

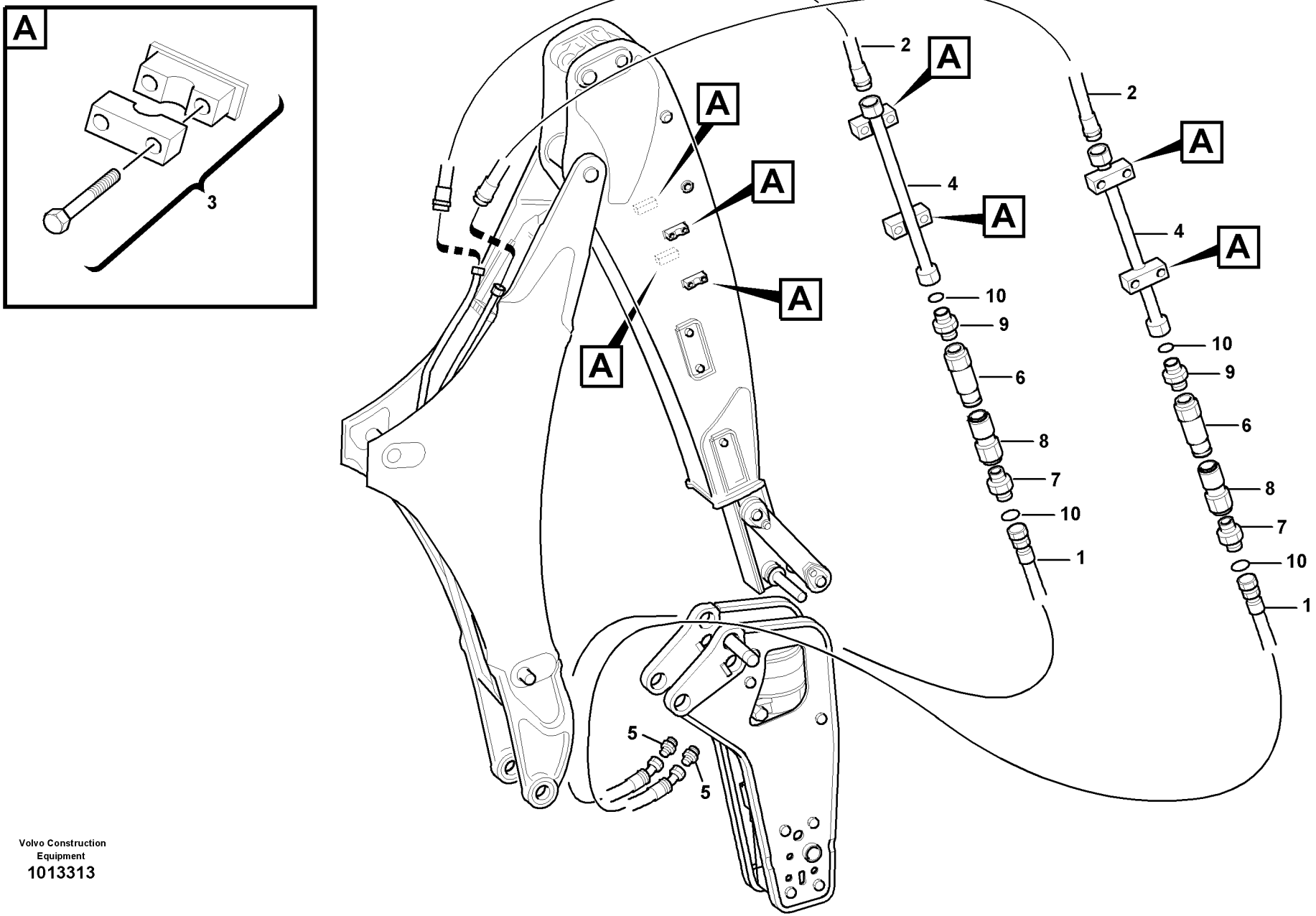

Volvo Construction Equipment
1013313

Fig.	Part No.	Quantity 1	2	3	PS	KIT	Description	Dénomination	Bezeichnung	Denominación	Notes
1	**VOE 11885789**	2					Hose	Durit	Schlauch	Tubo flexible	
2	**VOE 11885790**	2					Hose	Durit	Schlauch	Tubo flexible	
3	**VOE 11885764**	4					Clamp	Pince Serrage	Klemme	Abrazadera	
4	**VOE 11885786**	2					Tube	Tube	Rohr	Tubo	
5	**VOE 11885306**	2					Fitting	Ecrou raccord	Verschraubung	Racor	
6	**VOE 11882299**	2					Fitting	Raccord tuyau	Rohrkupplung	Acoplam tubo	
7	**VOE 11881382**	2					Nipple	Raccord	Nippel	Niple	
8	**VOE 11882298**	2					Fitting	Raccord tuyau	Rohrkupplung	Acoplam tubo	
9	**VOE 11881382**	2					Nipple	Raccord	Nippel	Niple	
10	**VOE 981290**	4					O-ring	Joint Torique	O-Ring	Junta torica	

1		**Tubería para fijación del martillo** **Leitungen für Hammeranbau** **Conduits, marteau** **Pipes for hammer attachment**	Catalogue id **20050**	Group **911**
2			Illustr. No **1013313**	Section **450**
3				
4			Issue **VOE 64D9920050**	Page **537**
5		**11891375**		

VOLVO

BL61

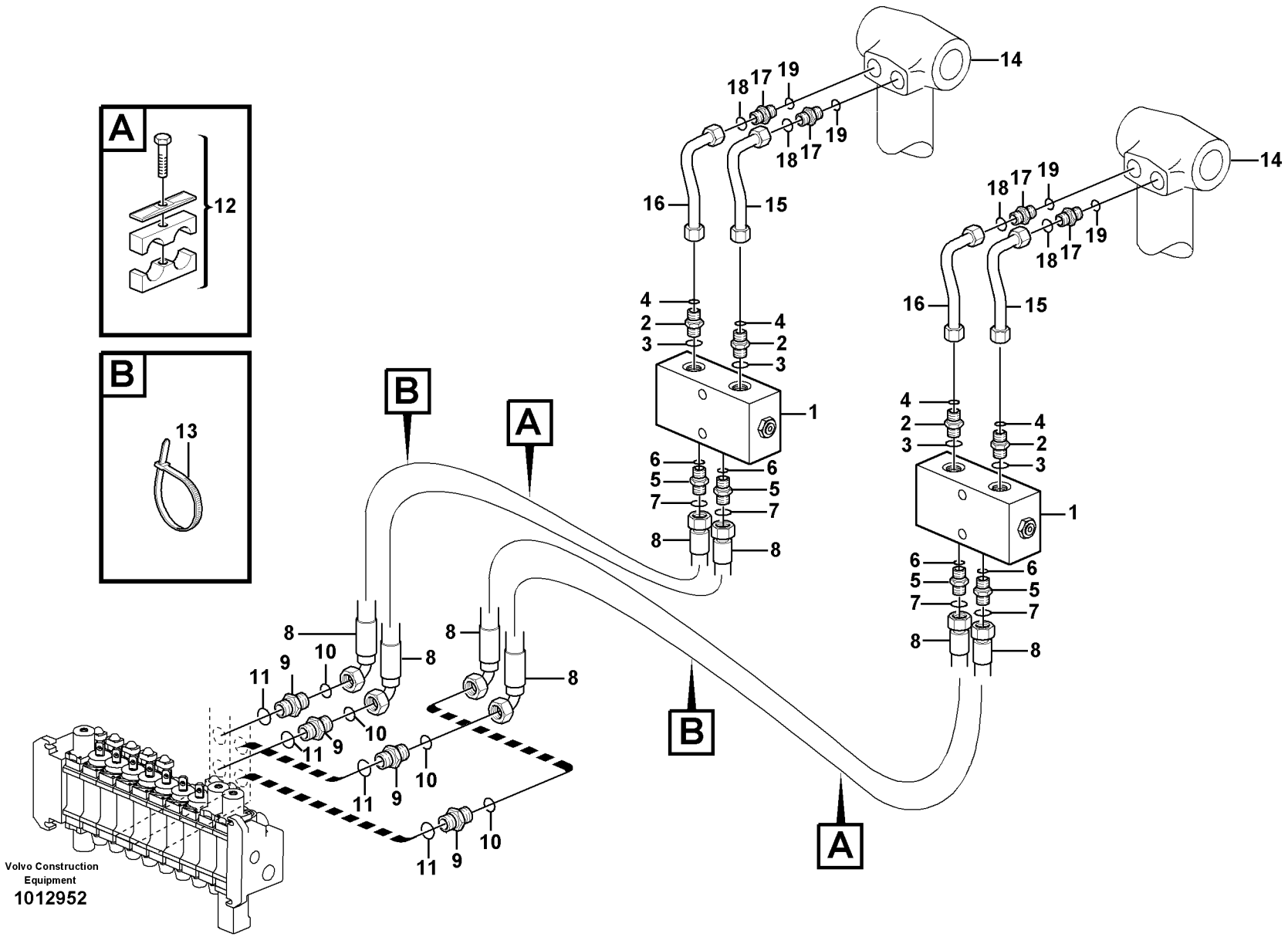
A
12
B
13
B
A
14
18
17
19
16
15
4
2
3
1
6
5
7
8
10
11
9
B
A
Volvo Construction Equipment
1012952

Fig.	Part No.	Quantity 1	2	3	PS	KIT	Description	Dénomination	Bezeichnung	Denominación	Notes
1	**VOE 11881880**	2					Check valve	Valve antiretour	Rückschlagventil	Válvula de retención	
2	**VOE 935091**	4					Nipple	Raccord	Nippel	Niple	
3	**VOE 4880493**	1					•O-ring	•Joint Torique	•O-Ring	•Junta torica	
4	**VOE 932039**	1					•O-ring	•Joint Torique	•O-Ring	•Junta torica	
5	**VOE 935085**	4					Nipple	Raccord	Nippel	Niple	
6	**VOE 4880492**	1					•O-ring	•Joint Torique	•O-Ring	•Junta torica	
7	**VOE 932039**	1					•O-ring	•Joint Torique	•O-Ring	•Junta torica	
8	**VOE 11882198**	4					Hose assembly	Conduit flexible	Schlauchleitung	Conducto	
9	**VOE 11882258**	4					Nipple	Raccord	Nippel	Niple	
10	**VOE 4880492**	1					•O-ring	•Joint Torique	•O-Ring	•Junta torica	
11	**VOE 932042**	1					•O-ring	•Joint Torique	•O-Ring	•Junta torica	
12	**VOE 11883635**	2					Clamp	Collier serrage	Klemme	Abrazadera	
13	**VOE 4881438**	2					Strip Clamp	Ruban Serrage	Kabelbinder	Abraz Cinta	
14		2					Cylinder	Verin	Zylinder	Cilindro	See group 972, Page 727
15	**VOE 11886176**	2					Tube	Tube	Rohr	Tubo	
16	**VOE 11886178**	2					Tube	Tube	Rohr	Tubo	
17	**VOE 935091**	4					Nipple	Raccord	Nippel	Niple	
18	**VOE 932039**	1					•O-ring	•Joint Torique	•O-Ring	•Junta torica	
19	**VOE 4880493**	1					•O-ring	•Joint Torique	•O-Ring	•Junta torica	

1		**Sistema hidràulico patas de apoyo** **Hydraulikanlage Bodenstützen** **Système hydraulique Bequilles** **Hydraulic system, stabiliser legs**	Catalogue id **20050**	Group **911**
2			Illustr. No **1012952**	Section **500**
3			Issue **VOE 64D9920050**	Page **539**
4				
5				

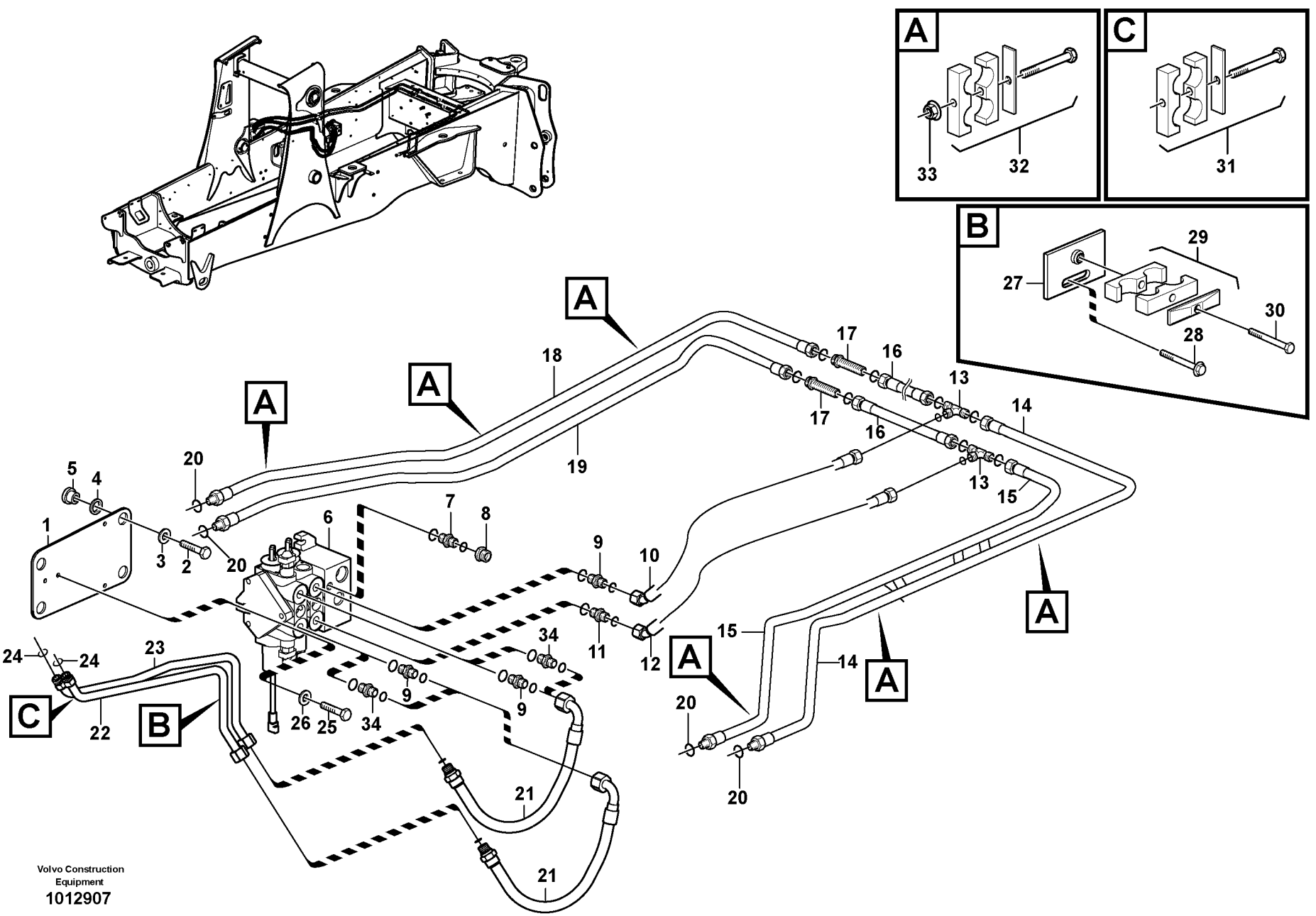
A
C
B
33
32
31
29
27
30
28
17
16
13
14
18
19
20
5
4
1
3
2
6
7
8
9
10
11
12
15
34
24
23
22
26
25
21
Volvo Construction
Equipment
1012907

Fig.	Part No.	Quantity 1	2	3	PS	KIT	Description	Dénomination	Bezeichnung	Denominación	Notes
1		1	1		NS		Valve Support	Support Soupape	Ventilstutze	Apoyo Valvula	
2	**VOE 13965194**	4	4				Flange screw	Vis à bride	Flanschschraube	Torn embridado	
3	**VOE 13947355**	4	4				Washer	Rondelle	Scheibe	Arandela	
4	**VOE 955908**	4	4				Washer	Rondelle	Scheibe	Arandela	
5	**VOE 11881720**	4	4				Rubber element	Element caoutch	Gummielement	Elemento goma	
6	**VOE 11886541**	1	1				Valve	Soupape	Ventil	Valvula	See group 912, Page 591
7	**VOE 11885699**	1	1				Check valve	Valve antiretour	Rückschlagventil	Válvula de retención	
	VOE 9907393	1	1				•O-ring	•Joint Torique	•O-Ring	•Junta torica	
	VOE 932039	1	1				•O-ring	•Joint Torique	•O-Ring	•Junta torica	
8	**VOE 11885733**	1	1				Fitting	Ecrou raccord	Verschraubung	Racor	
	VOE 990736	1	1				•O-ring	•Joint Torique	•O-Ring	•Junta torica	
9	**VOE 935032**	3	1				Nipple	Raccord	Nippel	Niple	SER NO -10148
9	**VOE 935032**	1	1				Nipple	Raccord	Nippel	Niple	SER NO 10149-
	VOE 990739	1	1				•O-ring	•Joint Torique	•O-Ring	•Junta torica	
	VOE 932042	1	1				•O-ring	•Joint Torique	•O-Ring	•Junta torica	
10	**VOE 11885759**	1					Hose	Durit	Schlauch	Tubo flexible	
10	**VOE 11888624**		1				Hose assembly	Conduit flexible	Schlauchleitung	Conducto	
11	**VOE 935093**	1	1				Union	Teton Connexion	Anschlussnippel	Niple Conexcion	
	VOE 990738	1	1				•O-ring	•Joint Torique	•O-Ring	•Junta torica	
	VOE 932042	1	1				•O-ring	•Joint Torique	•O-Ring	•Junta torica	
12	**VOE 11885516**	1					Hose	Durit	Schlauch	Tubo flexible	
12	**VOE 11888625**		1				Hose assembly	Conduit flexible	Schlauchleitung	Conducto	
13	**VOE 11884287**	2	2				Fitting	Ecrou raccord	Verschraubung	Racor	
	VOE 990739	2	2				•O-ring	•Joint Torique	•O-Ring	•Junta torica	
14	**VOE 11882768**	1	1				Tube	Tube	Rohr	Tubo	
15	**VOE 11882767**	1	1				Tube	Tube	Rohr	Tubo	
16	**VOE 11882763**	2					Tube	Tube	Rohr	Tubo	
17	**VOE 13933961**	2					Nipple	Raccord	Nippel	Niple	
	VOE 990739	2					•O-ring	•Joint Torique	•O-Ring	•Junta torica	
18	**VOE 11882766**	1					Tube	Tube	Rohr	Tubo	

1	**S/N - 10626**
2	**S/N 10627 -**
3	
4	
5	

Sistema hidráulico de cargadora (elevación y volteo)
Ladehydraulik (Heben und Kippen)
Equipement chargeur à commande hydraulique (levage et basculement)
Hydraulics loader (lift & tilt)

Catalogue id	Group
20050	**911**
Illustr. No **1012907**	Section **550**
Issue **VOE 64D9920050**	Page **541**

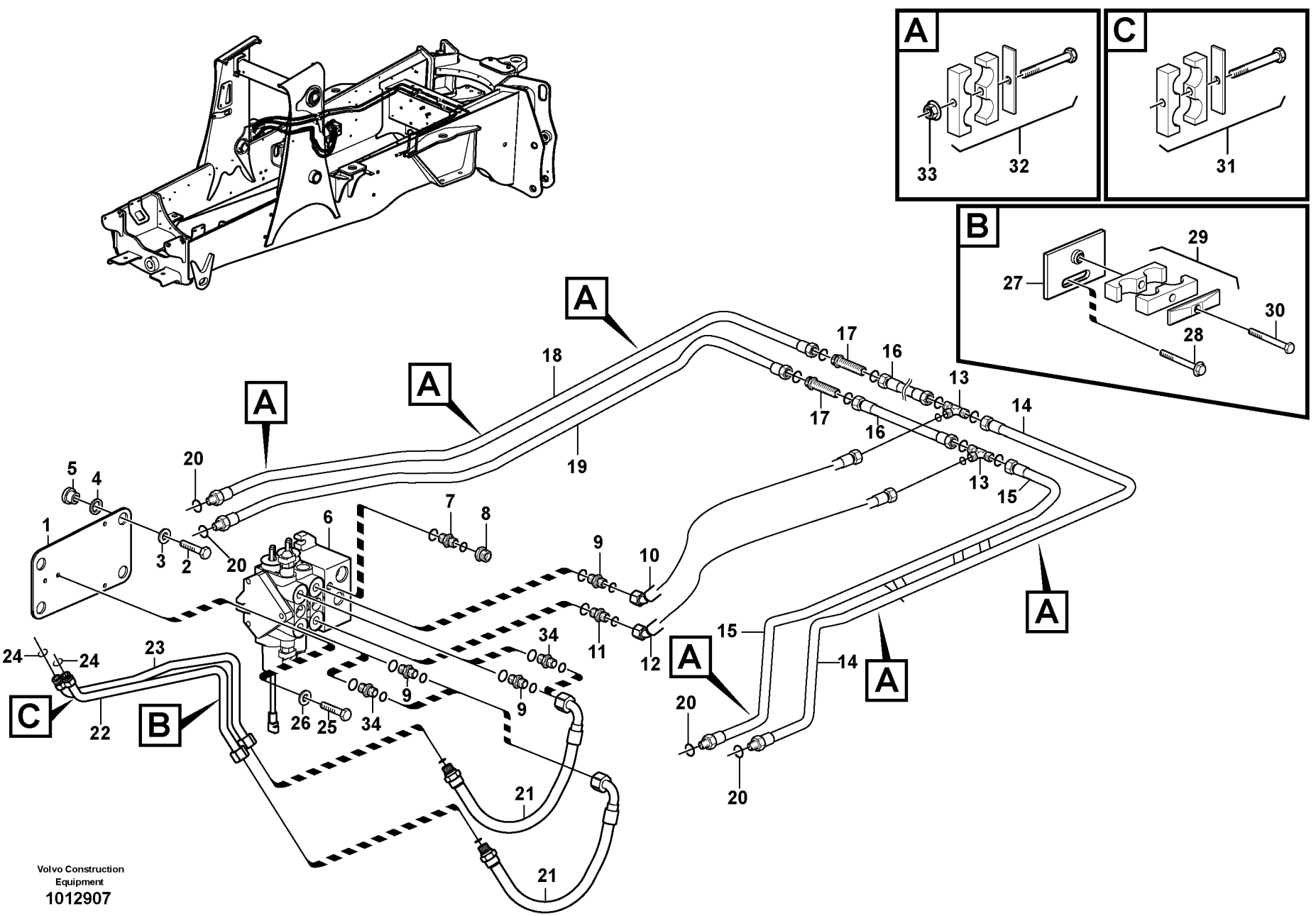
A
C
B
33
32
31
29
27
30
28
17
16
13
14
18
19
20
5
4
1
3
2
6
7
8
9
10
11
12
15
34
24
23
22
26
25
21
Volvo Construction
Equipment
1012907

Fig.	Part No.	Quantity 1	2	3	PS	KIT	Description	Dénomination	Bezeichnung	Denominación	Notes
18	**VOE 11888712**		1				Tube	Tube	Rohr	Tubo	
19	**VOE 11882765**	1					Tube	Tube	Rohr	Tubo	
19	**VOE 11888711**		1				Tube	Tube	Rohr	Tubo	
20	**VOE 990738**	4	4				O-ring	Joint Torique	O-Ring	Junta torica	
21	**VOE 11885253**	2	2				Hose	Durit	Schlauch	Tubo flexible	
	VOE 990739	1	1				O-ring	Joint Torique	O-Ring	Junta torica	
22	**VOE 11883522**	1	1				Tube	Tube	Rohr	Tubo	
23	**VOE 11883523**	1	1				Tube	Tube	Rohr	Tubo	
24	**VOE 990739**	2	2				O-ring	Joint Torique	O-Ring	Junta torica	
25	**VOE 983253**	3	3				Hexagon screw	Vis tête hexagonale	Sechskantschraube	Tornillo hexago	
26	**VOE 13930842**	3	3				Washer	Rondelle	Scheibe	Arandela	
27	**VOE 11885758**	1	1				Plate	Plaque	Platte	Placa	
28	**VOE 946671**	1	1				Flange screw	Vis à bride	Flanschschraube	Torn embridado	
29	**VOE 11881641**	1	1				Clamp	Pince Serrage	Klemme	Abrazadera	
30	**VOE 983246**	1	1				Hexagon screw	Vis a tête hexagonale	Sechskantschr.	Tornillo hexago	
31	**VOE 11881372**	1	1				Clamp	Pince Serrage	Klemme	Abrazadera	
32	**VOE 11881340**	6	6				Clamp	Pince Serrage	Klemme	Abrazadera	
33	**VOE 948645**	3	3				Flange Lock Nut	Contre écrou bride	Flanschmutter	Contratuer Embr	
34	**VOE 13933862**	2	2				Nipple	Raccord	Nippel	Niple	SER NO 10149-
	VOE 981289	1	1				•O-ring	•Joint Torique	•O-Ring	•Junta torica	
	VOE 932042	1	1				•O-ring	•Joint Torique	•O-Ring	•Junta torica	

1	**S/N - 10626**
2	**S/N 10627 -**
3	
4	
5	

Sistema hidráulico de cargadora (elevación y volteo)
Ladehydraulik (Heben und Kippen)
Equipement chargeur à commande hydraulique (levage et basculement)
Hydraulics loader (lift & tilt)

Catalogue id **20050**	Group **911**
Illustr. No **1012907**	Section **550**
Issue **VOE 64D9920050**	Page **543**

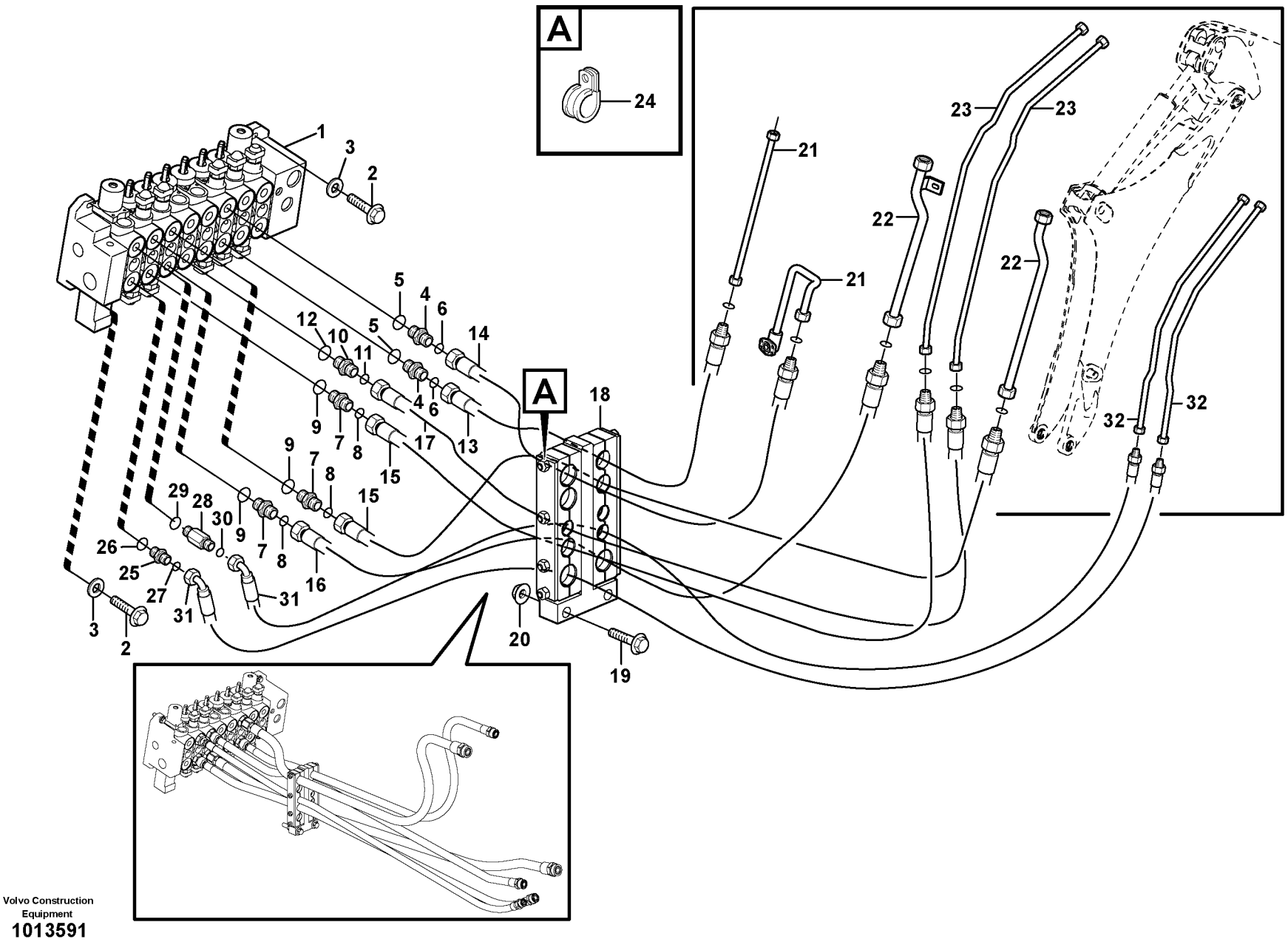

Volvo Construction Equipment

1013591

Fig.	Part No.	Quantity 1	2	3	PS	KIT	Description	Dénomination	Bezeichnung	Denominación	Notes
1		1					Valve	Soupape	Ventil	Valvula	See group 912, Page 601
1			1				Valve	Soupape	Ventil	Valvula	See group 912, Page 601
2	**VOE 983253**	3					Hexagon screw	Vis tête hexagonale	Sechskantschraube	Tornillo hexago	
3	**VOE 13930842**	3					Washer	Rondelle	Scheibe	Arandela	
4	**VOE 13933862**	2					Nipple	Raccord	Nippel	Niple	
5	**VOE 932042**	1					•O-ring	•Joint Torique	•O-Ring	•Junta torica	
6	**VOE 981289**	1					•O-ring	•Joint Torique	•O-Ring	•Junta torica	
7	**VOE 935032**	2					Nipple	Raccord	Nippel	Niple	
8	**VOE 4880663**	1					•O-ring	•Joint Torique	•O-Ring	•Junta torica	
9	**VOE 932042**	1					•O-ring	•Joint Torique	•O-Ring	•Junta torica	
10	**VOE 935093**	1					Union	Teton Connexion	Anschlussnippel	Niple Conexcion	
11	**VOE 4880493**	1					•O-ring	•Joint Torique	•O-Ring	•Junta torica	
12	**VOE 932042**	1					•O-ring	•Joint Torique	•O-Ring	•Junta torica	
13	**VOE 11883713**	1					Fitting	Ecrou raccord	Verschraubung	Racor	
14	**VOE 4880663**	1					•O-ring	•Joint Torique	•O-Ring	•Junta torica	
15	**VOE 932042**	1					•O-ring	•Joint Torique	•O-Ring	•Junta torica	
16	**VOE 11882708**	1					Hose	Durit	Schlauch	Tubo flexible	
	VOE 981289	1					•O-ring	•Joint Torique	•O-Ring	•Junta torica	
17	**VOE 11882707**	1					Hose	Durit	Schlauch	Tubo flexible	
	VOE 981290	1					•O-ring	•Joint Torique	•O-Ring	•Junta torica	
18	**VOE 11882199**	1					Hose assembly	Conduit flexible	Schlauchleitung	Conducto	
	VOE 981289	1					•O-ring	•Joint Torique	•O-Ring	•Junta torica	
19	**VOE 11882196**	1					Hose assembly	Conduit flexible	Schlauchleitung	Conducto	
	VOE 981290	1					•O-ring	•Joint Torique	•O-Ring	•Junta torica	
20	**VOE 11882202**	1					Inlet Pipe	Tubul.admission	Einlassrohr	Tubo Admision	
	VOE 4880663	1					•O-ring	•Joint Torique	•O-Ring	•Junta torica	
21	**VOE 11882197**	1					Hose assembly	Conduit flexible	Schlauchleitung	Conducto	
	VOE 981289	1					•O-ring	•Joint Torique	•O-Ring	•Junta torica	
22	**VOE 13933858**	3					Union	Teton Connexion	Anschlussnippel	Niple Conexcion	
23	**VOE 4881722**	1					•O-ring	•Joint Torique	•O-Ring	•Junta torica	

1	**11880004**
2	**11891416, 11891417**
3	
4	
5	

Sistema hidrlico excavador
Hydraulikanlage ventil zum ausleger Baggeraggregat
Système hydralique groupe pelle
Hydraulic system, excavator

Catalogue id **20050**	Group **911**
Illustr. No **1013591**	Section **700**
Issue **VOE 64D9920050**	Page **545**

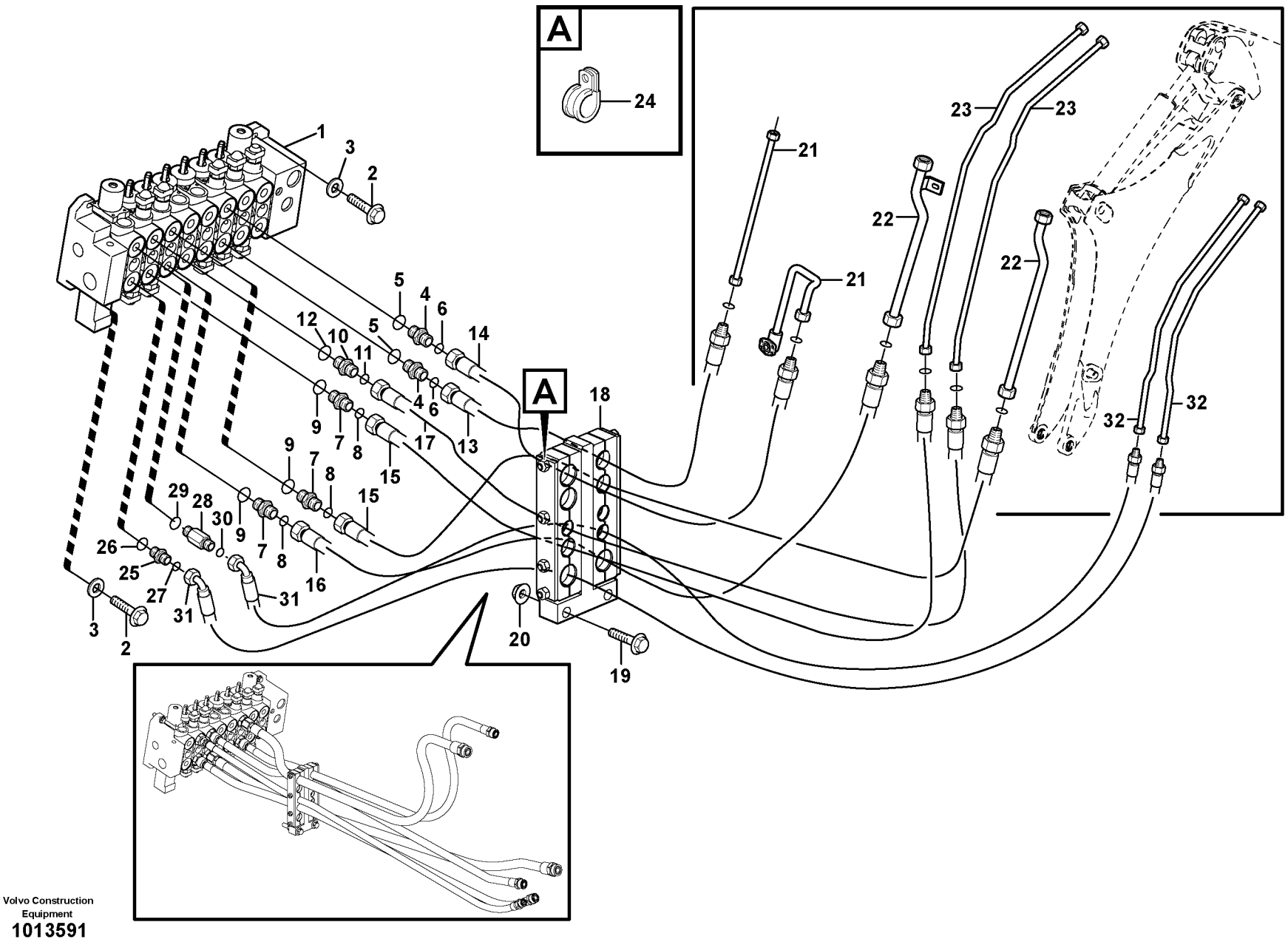

Volvo Construction Equipment

1013591

Fig.	Part No.	Quantity 1	2	3	PS	KIT	Description	Dénomination	Bezeichnung	Denominación	Notes
24	**VOE 932039**	1					•O-ring	•Joint Torique	•O-Ring	•Junta torica	
25	**VOE 11884914**	1					Clamp	Pince Serrage	Klemme	Abrazadera	
26	**VOE 13965194**	2					Flange screw	Vis à bride	Flanschschraube	Torn embridado	
27	**VOE 978869**	2					Clamp	Pince Serrage	Klemme	Abrazadera	
28	**VOE 946671**	2					Flange screw	Vis à bride	Flanschschraube	Torn embridado	
29	**VOE 11884896**	1					Clamp	Pince Serrage	Klemme	Abrazadera	
30	**VOE 965195**	2					Flange screw	Vis à bride	Flanschschraube	Torn embridado	
31	**VOE 13971096**	2					Flange nut	Ecrou accouple.	Bundmutter	Tuerca embridad	
32	**VOE 11885263**	1					Hose	Durit	Schlauch	Tubo flexible	
33	**VOE 11885261**	1					Hose	Durit	Schlauch	Tubo flexible	
34	**VOE 13933859**	2					Nipple	Raccord	Nippel	Niple	
35	**VOE 4881722**	2					•O-ring	•Joint Torique	•O-Ring	•Junta torica	
36	**VOE 11884794**	1					Fitting	Ecrou raccord	Verschraubung	Racor	
37	**VOE 936446**	1					Testing Nipple	Raccord contrôle	Prufnippel	Niple Medicion	
38	**VOE 936439**	1					Testing Nipple	Raccord contrôle	Prufnippel	Niple Medicion	
39	**VOE 935756**	1					Plug	Bouchon	Stopfen	Tapon	
40	**VOE 11885733**	1					Fitting	Ecrou raccord	Verschraubung	Racor	
41	**VOE 4881722**	1					•O-ring	•Joint Torique	•O-Ring	•Junta torica	
42	**VOE 11885699**	1					Check valve	Valve antiretour	Rückschlagventil	Válvula de retención	
43	**VOE 932039**	1					•O-ring	•Joint Torique	•O-Ring	•Junta torica	
44	**VOE 4880663**	1					•O-ring	•Joint Torique	•O-Ring	•Junta torica	
45	**VOE 14016673**	7					Strip Clamp	Ruban Serrage	Kabelbinder	Abraz Cinta	
46	**VOE 11884907**	1					Clamp	Pince Serrage	Klemme	Abrazadera	See group 916, Page 633
47	**VOE 11884908**	1					Clamp	Pince Serrage	Klemme	Abrazadera	See group 971, Page 717
48		1					Valve	Soupape	Ventil	Valvula	See group 912, Page 591
49		2					Pipe	Canalisation	Rohrleitung	Canalizacion	See group 911, Page 561
50		2					Pipe	Canalisation	Rohrleitung	Canalizacion	See group 911, Page 565
51		2					Pipe	Canalisation	Rohrleitung	Canalizacion	See group 911, Page 569
52	**VOE 935093**		1				Union	Teton Connexion	Anschlussnippel	Niple Conexcion	
53	**VOE 4880493**		1				•O-ring	•Joint Torique	•O-Ring	•Junta torica	

1	**11880004**
2	**11891416, 11891417**
3	
4	
5	

Sistema hidrlico excavador
Hydraulikanlage ventil zum ausleger Baggeraggregat
Système hydralique groupe pelle
Hydraulic system, excavator

Catalogue id **20050**	Group **911**
Illustr. No **1013591**	Section **700**
Issue **VOE 64D9920050**	Page **547**

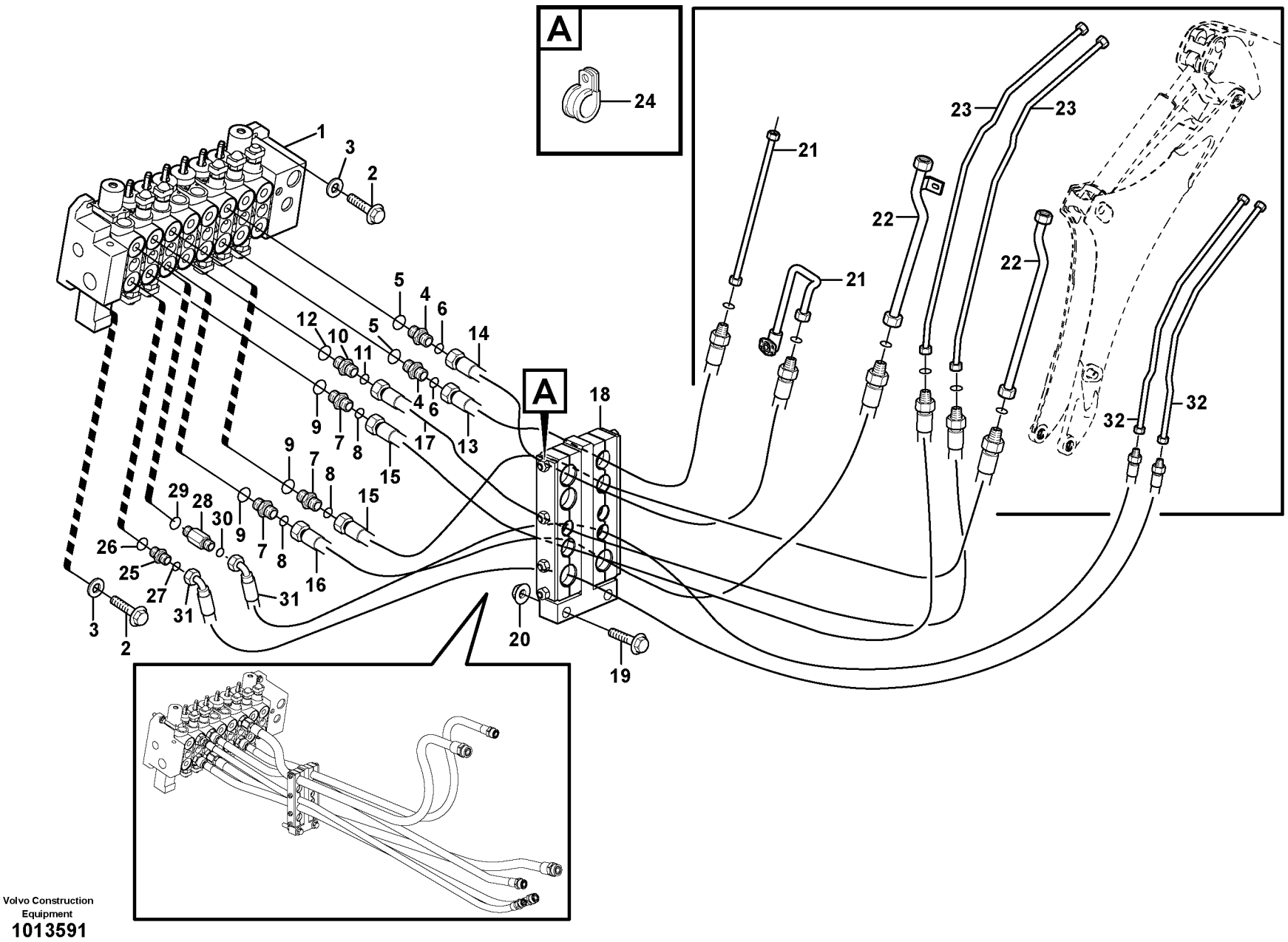

Volvo Construction Equipment

1013591

Fig.	Part No.	Quantity 1	2	3	PS	KIT	Description	Dénomination	Bezeichnung	Denominación	Notes
54	**VOE 932042**		1				•O-ring	•Joint Torique	•O-Ring	•Junta torica	
55	**VOE 11883712**		1				Fitting	Ecrou raccord	Verschraubung	Racor	
56	**VOE 4880493**		1				•O-ring	•Joint Torique	•O-Ring	•Junta torica	
57	**VOE 932042**		1				•O-ring	•Joint Torique	•O-Ring	•Junta torica	
58	**VOE 11882207**		2				Hose	Flexible	Schlauch	Manguera	
59			2				Pipe	Canalisation	Rohrleitung	Canalizacion	See group 911, Page 579

1	**11880004**
2	**11891416, 11891417**
3	
4	
5	

Sistema hidrlico excavador
Hydraulikanlage ventil zum ausleger Baggeraggregat
Système hydralique groupe pelle
Hydraulic system, excavator

Catalogue id **20050**	Group **911**
Illustr. No **1013591**	Section **700**
Issue **VOE 64D9920050**	Page **549**

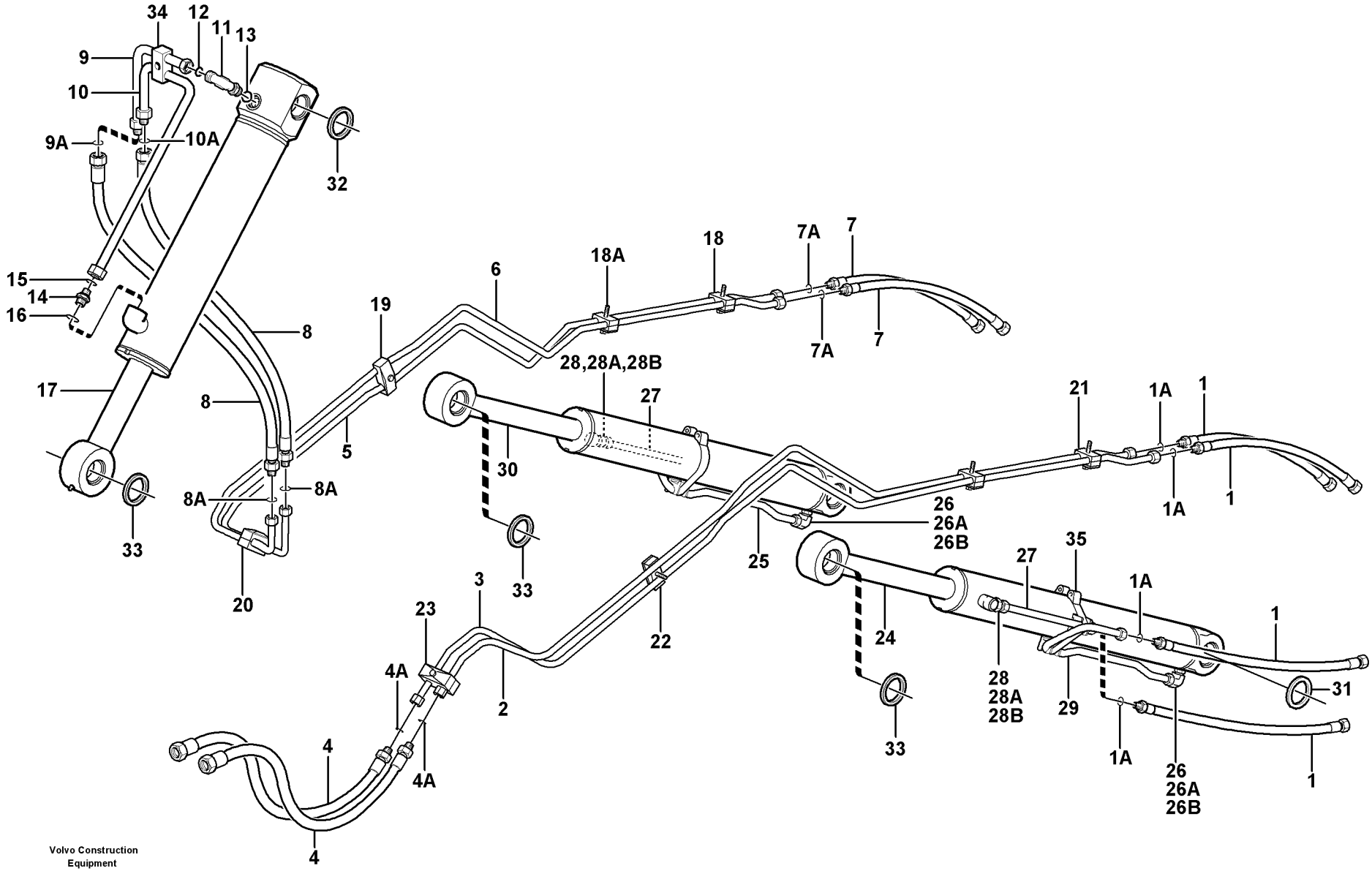

Volvo Construction Equipment
1012578

Fig.	Part No.	Quantity 1	2	3	PS	KIT	Description	Dénomination	Bezeichnung	Denominación	Notes
1	**VOE 11882204**		6				Hose	Durit	Schlauch	Tubo flexible	
1A	**VOE 4880663**		1				•O-ring	•Joint Torique	•O-Ring	•Junta torica	
2	**VOE 11885164**			1			Tube	Tube	Rohr	Tubo	
3	**VOE 11885163**			1			Tube	Tube	Rohr	Tubo	
4	**VOE 11881060**			2			Hose assembly	Conduit flexible	Schlauchleitung	Conducto	
4A	**VOE 4880663**			1			•O-ring	•Joint Torique	•O-Ring	•Junta torica	
5	**VOE 11885151**	1		1			Tube	Tube	Rohr	Tubo	
6	**VOE 11885150**	1		1			Tube	Tube	Rohr	Tubo	
7	**VOE 11882649**		2				Hose assembly	Conduit flexible	Schlauchleitung	Conducto	
7A	**VOE 981289**		1				•O-ring	•Joint Torique	•O-Ring	•Junta torica	
8	**VOE 11884228**		2				Hose	Durit	Schlauch	Tubo flexible	
8A	**VOE 981289**		1				•O-ring	•Joint Torique	•O-Ring	•Junta torica	
9	**VOE 11882801**	1		1			Tube	Tube	Rohr	Tubo	
9A	**VOE 4880663**	1		1			•O-ring	•Joint Torique	•O-Ring	•Junta torica	
10	**VOE 11882800**	1		1			Tube	Tube	Rohr	Tubo	
10A	**VOE 4880663**	1		1			•O-ring	•Joint Torique	•O-Ring	•Junta torica	
11	**VOE 935079**	1		1			Elbow nipple	Raccord angulaire	Winkelnippel	Niple angular	
12	**VOE 981289**	1		1			•O-ring	•Joint Torique	•O-Ring	•Junta torica	
13	**VOE 932041**	1		1			•O-ring	•Joint Torique	•O-Ring	•Junta torica	
14	**VOE 13933862**	1		1			Nipple	Raccord	Nippel	Niple	
15	**VOE 981289**	1		1			•O-ring	•Joint Torique	•O-Ring	•Junta torica	
16	**VOE 932042**	1		1			•O-ring	•Joint Torique	•O-Ring	•Junta torica	
17		1		1			Cylinder	Verin	Zylinder	Cilindro	See group 945, Page 711
18	**VOE 11881093**	2		2			Clamp	Pince Serrage	Klemme	Abrazadera	
18A	**VOE 983267**	1		1			•Hexagon screw	•Vis a tête hexagonale	•Sechskantschr.	•Tornillo hexago	
19	**VOE 11883229**	1		1			Clamp	Pince Serrage	Klemme	Abrazadera	
20	**VOE 11881372**	1		1			Clamp	Pince Serrage	Klemme	Abrazadera	
21	**VOE 11881340**			2			Clamp	Pince Serrage	Klemme	Abrazadera	
22	**VOE 11881054**			1			Clamp	Pince Serrage	Klemme	Abrazadera	
23	**VOE 11882854**			1			Clamp	Pince Serrage	Klemme	Abrazadera	

1	**11891415 S/N - 10626**	**Hydraulic system loader** **Hydraulikanlage, Lader** **Hydraulic system loader** **Hydraulic system loader**	Catalogue id **20050**	Group **911**
2	**11880004 S/N - 10626**		Illustr. No **1012578**	Section **800**
3	**11891414 S/N - 10626**		Issue **VOE 64D9920050**	Page **551**
4				
5				

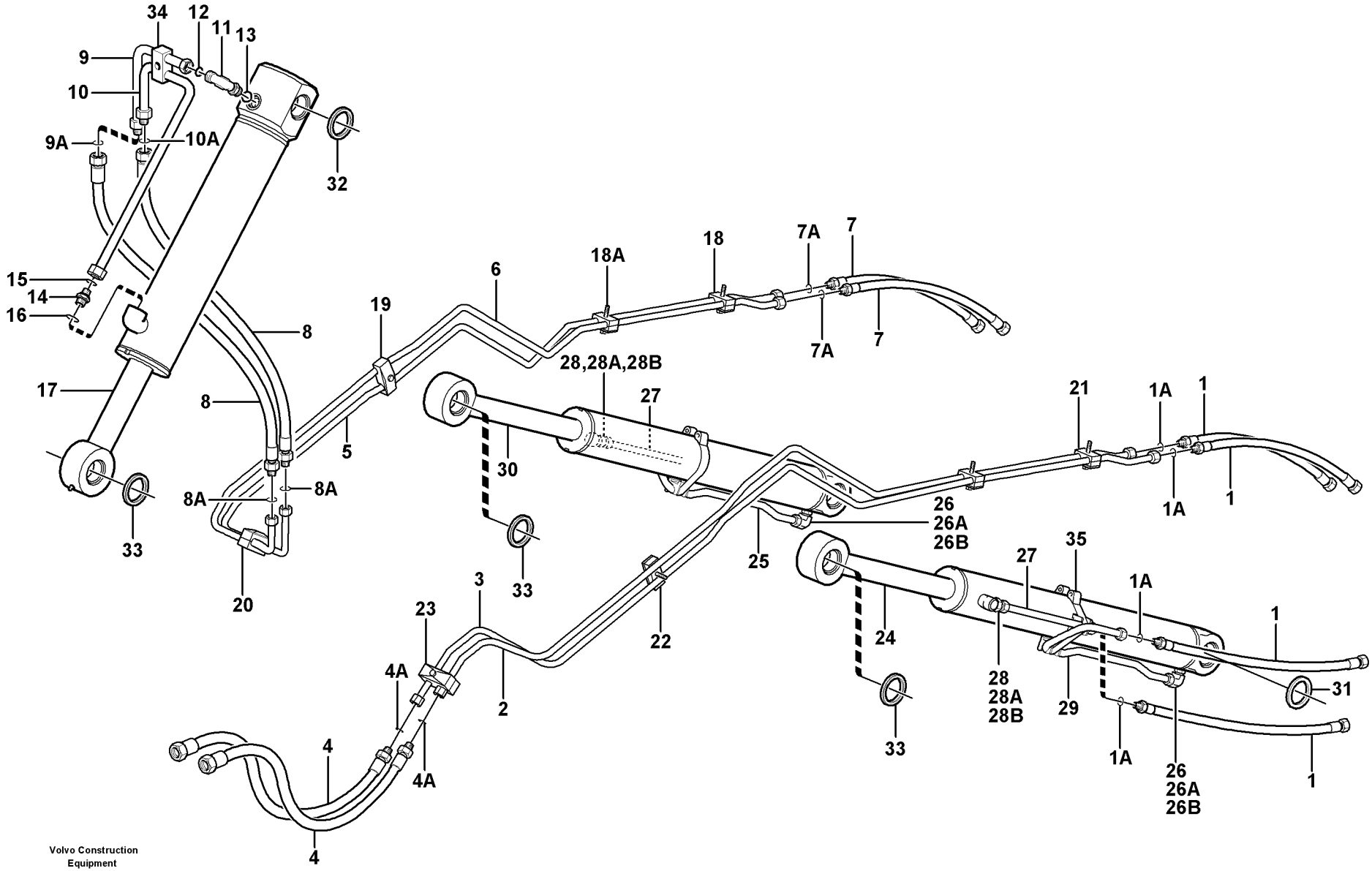

Volvo Construction Equipment
1012578

Fig.	Part No.	Quantity 1	2	3	PS	KIT	Description	Dénomination	Bezeichnung	Denominación	Notes
24		1		1			Cylinder	Verin	Zylinder	Cilindro	See group 945, Page 709
25	**VOE 11882798**	1		1			Tube	Tube	Rohr	Tubo	
26	**VOE 935076**	2		2			Elbow Nipple	Raccord angulaire	Winkelnippel	Niple Angular	
26A	**VOE 4880663**	1		1			•O-ring	•Joint Torique	•O-Ring	•Junta torica	
26B	**VOE 932040**	1		1			•O-ring	•Joint Torique	•O-Ring	•Junta torica	
27	**VOE 11882799**	2		2			Tube	Tube	Rohr	Tubo	
28	**VOE 935094**	2		2			Nipple	Raccord	Nippel	Niple	
28A	**VOE 4880663**	1		1			•O-ring	•Joint Torique	•O-Ring	•Junta torica	
28B	**VOE 932040**	1		1			•O-ring	•Joint Torique	•O-Ring	•Junta torica	
29	**VOE 11881499**	1		1			Tube	Tube	Rohr	Tubo	
30		1		1			Cylinder	Verin	Zylinder	Cilindro	See group 945, Page 709
31	**VOE 11890069**	4		4			Seal	Joint	Dichtung	Reten	
32	**VOE 11883937**	2		2			Scraper	Racloir	Abstreicher	Rascador	
33	**VOE 11883675**	6		6			Scraper	Racloir	Abstreicher	Rascador	
34	**VOE 11881092**	1		1			Clamp	Pince Serrage	Klemme	Abrazadera	
35	**VOE 11885203**	2		2			Clamp	Pince Serrage	Klemme	Abrazadera	

1	**11891415 S/N - 10626**	**Hydraulic system loader** **Hydraulikanlage, Lader** **Hydraulic system loader** **Hydraulic system loader**	Catalogue id **20050**	Group **911**
2	**11880004 S/N - 10626**		Illustr. No **1012578**	Section **800**
3	**11891414 S/N - 10626**		Issue **VOE 64D9920050**	Page **553**
4				
5				

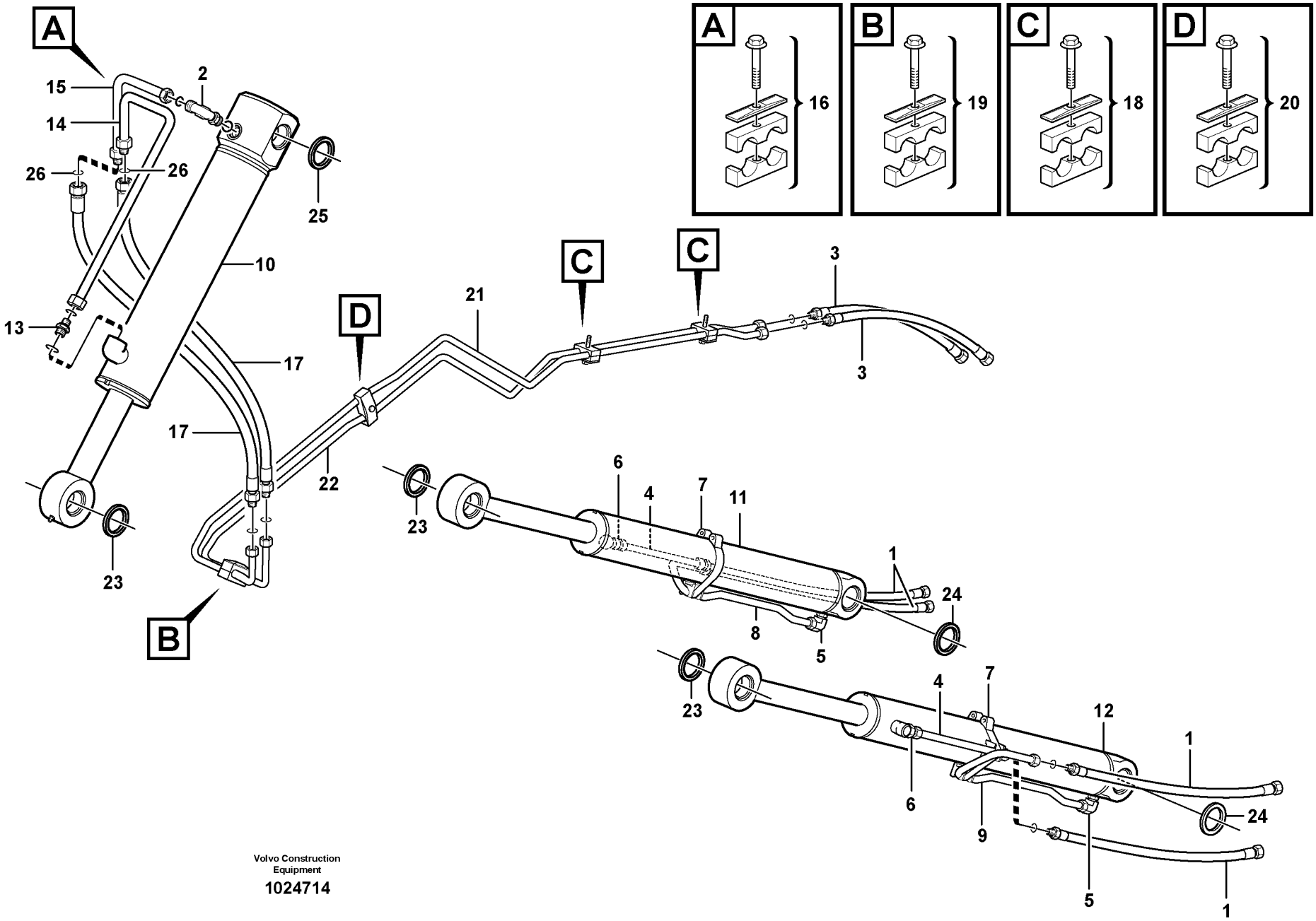

Volvo Construction Equipment

1024714

Fig.	Part No.	Quantity 1	2	3	PS	KIT	Description	Dénomination	Bezeichnung	Denominación	Notes
1	**VOE 11882204**	4					Hose	Durit	Schlauch	Tubo flexible	
2	**VOE 935079**	1					Elbow nipple	Raccord angulaire	Winkelnippel	Niple angular	
	VOE 981289	1					•O-ring	•Joint Torique	•O-Ring	•Junta torica	
	VOE 932041	1					•O-ring	•Joint Torique	•O-Ring	•Junta torica	
3	**VOE 11882649**	2					Hose assembly	Conduit flexible	Schlauchleitung	Conducto	
4	**VOE 11882799**	2					Tube	Tube	Rohr	Tubo	
5	**VOE 935076**	2					Elbow Nipple	Raccord angulaire	Winkelnippel	Niple Angular	
	VOE 4880663	2					•O-ring	•Joint Torique	•O-Ring	•Junta torica	
	VOE 932040	2					•O-ring	•Joint Torique	•O-Ring	•Junta torica	
6	**VOE 935094**	2					Nipple	Raccord	Nippel	Niple	
	VOE 4880663	2					•O-ring	•Joint Torique	•O-Ring	•Junta torica	
	VOE 932040	2					•O-ring	•Joint Torique	•O-Ring	•Junta torica	
7	**VOE 11885203**	2					Clamp	Pince Serrage	Klemme	Abrazadera	
8	**VOE 11882798**	1					Tube	Tube	Rohr	Tubo	
9	**VOE 11881499**	1					Tube	Tube	Rohr	Tubo	
10		1					Cylinder	Verin	Zylinder	Cilindro	See group 945, Page 711
11		1					Cylinder	Cylindre	Zylinder	Cilindro	See group 945, Page 709
12		1					Cylinder	Cylindre	Zylinder	Cilindro	See group 945, Page 709
13	**VOE 13933862**	1					Nipple	Raccord	Nippel	Niple	
	VOE 981289	1					•O-ring	•Joint Torique	•O-Ring	•Junta torica	
	VOE 932042	1					•O-ring	•Joint Torique	•O-Ring	•Junta torica	
14	**VOE 11882800**	1					Tube	Tube	Rohr	Tubo	
15	**VOE 11882801**	1					Tube	Tube	Rohr	Tubo	
16	**VOE 11881092**	1					Clamp	Pince Serrage	Klemme	Abrazadera	
17	**VOE 11884228**	2					Hose	Durit	Schlauch	Tubo flexible	
18	**VOE 11881093**	2					Clamp	Pince Serrage	Klemme	Abrazadera	
19	**VOE 11881372**	1					Clamp	Pince Serrage	Klemme	Abrazadera	
20	**VOE 11883229**	1					Clamp	Pince Serrage	Klemme	Abrazadera	
21	**VOE 11888396**	1					Tube	Tube	Rohr	Tubo	
22	**VOE 11888397**	1					Tube	Tube	Rohr	Tubo	

1		**Hydraulic system loader** **Hydraulikanlage, Lader** **Hydraulic system loader** **Hydraulic system loader**	Catalogue id **20050**	Group **911**
2				
3			Illustr. No **1024714**	Section **810**
4				
5		**11880004, S/N 10627 -**	Issue **VOE 64D9920050**	Page **555**

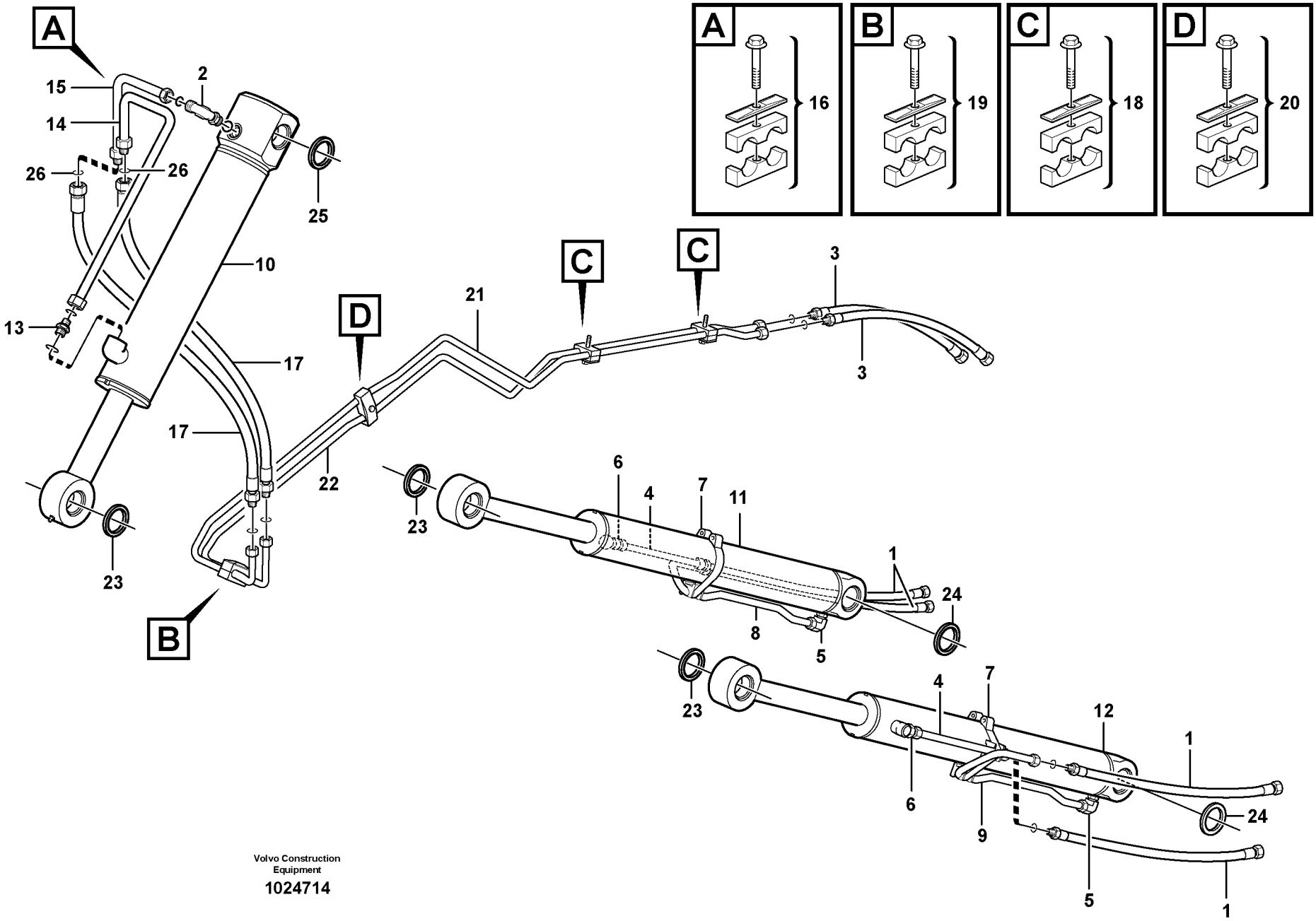

Volvo Construction Equipment

1024714

Fig.	Part No.	Quantity 1	2	3	PS	KIT	Description	Dénomination	Bezeichnung	Denominación	Notes
23	**VOE 11883675**	6					Scraper	Racloir	Abstreicher	Rascador	
24	**VOE 11890069**	4					Seal	Joint	Dichtung	Reten	
25	**VOE 11883937**	2					Scraper	Racloir	Abstreicher	Rascador	
26	**VOE 4880663**	2					O-ring	Joint Torique	O-Ring	Junta torica	

1		**Hydraulic system loader** **Hydraulikanlage, Lader** **Hydraulic system loader** **Hydraulic system loader**	Catalogue id **20050**	Group **911**
2			Illustr. No **1024714**	Section **810**
3			Issue **VOE 64D9920050**	Page **557**
4				
5		**11880004, S/N 10627 -**		

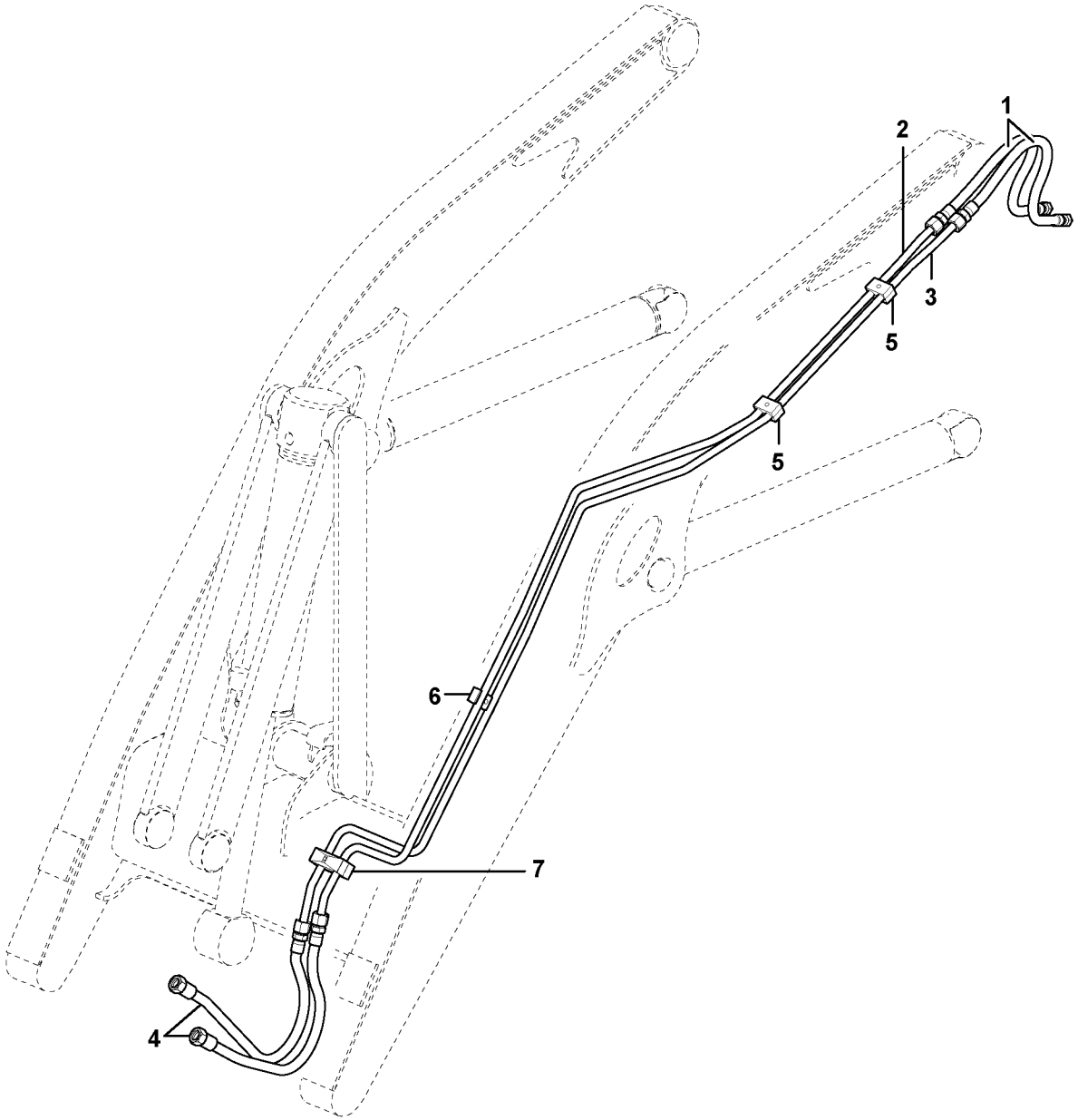

Volvo Construction Equipment

1024717

Fig.	Part No.	Quantity 1	2	3	PS	KIT	Description	Dénomination	Bezeichnung	Denominación	Notes
1	**VOE 11882204**	2					Hose	Durit	Schlauch	Tubo flexible	
2	**VOE 11888399**	1					Tube	Tube	Rohr	Tubo	
3	**VOE 11888398**	1					Tube	Tube	Rohr	Tubo	
4	**VOE 11881060**	2					Hose assembly	Conduit flexible	Schlauchleitung	Conducto	
5	**VOE 11881340**	2					Clamp	Pince Serrage	Klemme	Abrazadera	
6	**VOE 11881054**	1					Clamp	Pince Serrage	Klemme	Abrazadera	
7	**VOE 11882854**	1					Clamp	Pince Serrage	Klemme	Abrazadera	

1		**Hydraulic system loader** **Hydraulikanlage, Lader** **Hydraulic system loader** **Hydraulic system loader**	Catalogue id **20050**	Group **911**
2				
3			Illustr. No **1024717**	Section **820**
4				
5		**11891414, S/N 10627 -**	Issue **VOE 64D9920050**	Page **559**

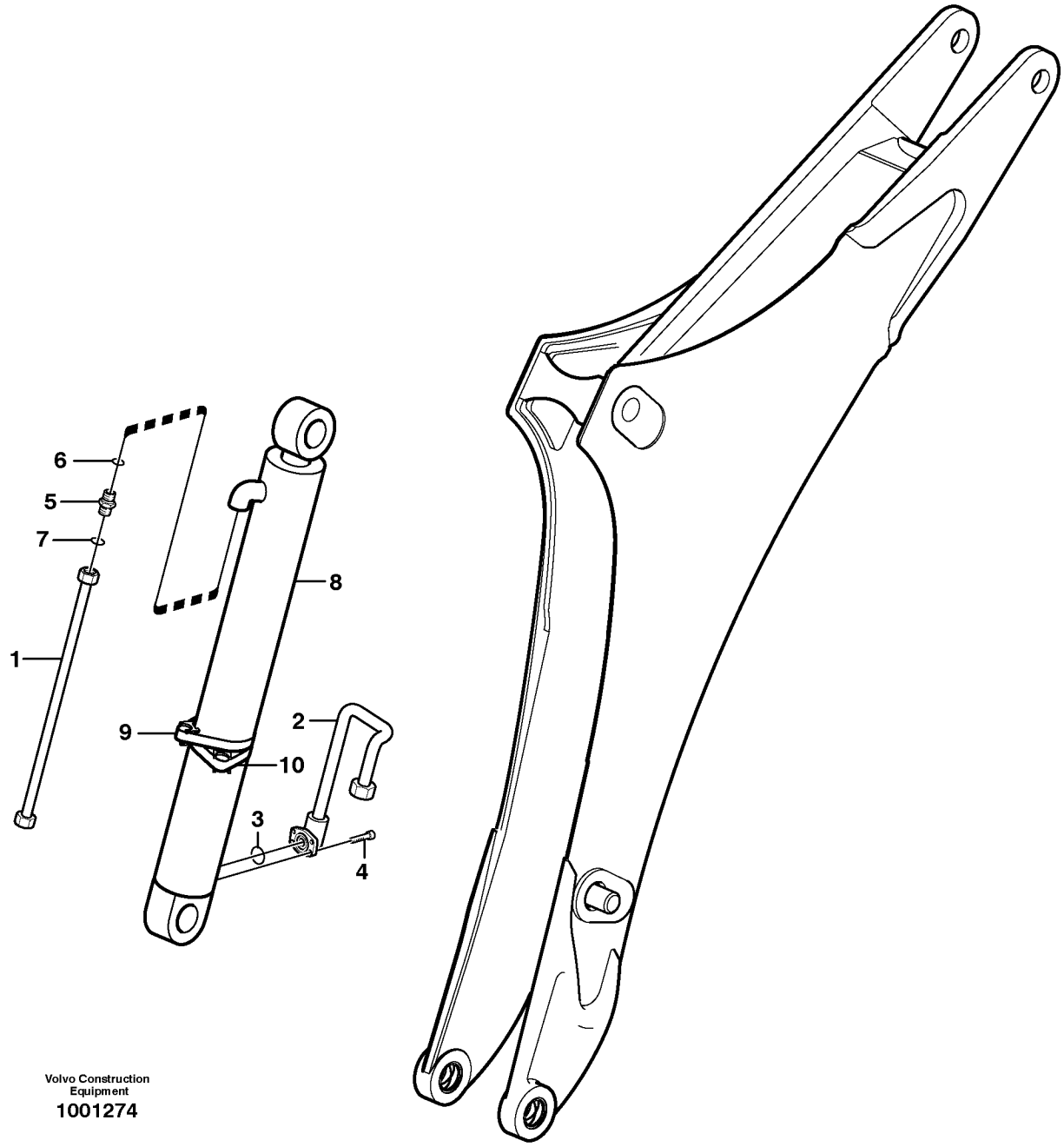

Volvo Construction Equipment

1001274

Fig.	Part No.	Quantity 1	2	3	PS	KIT	Description	Dénomination	Bezeichnung	Denominación	Notes
1	**VOE 11891063**	1					Pipe	Canalisation	Rohrleitung	Canalizacion	
2	**VOE 11891064**	1					Pipe	Canalisation	Rohrleitung	Canalizacion	
3	**VOE 13948699**	1					O-ring	Joint Torique	O-Ring	Junta torica	
4	**VOE 967635**	4					Allen Hd Screw	Vis A 6 Pans Cr	Inbusschraube	Torn Hex Embut	
5	**VOE 13933862**	1					Nipple	Raccord	Nippel	Niple	
6	**VOE 981289**	1					•O-ring	•Joint Torique	•O-Ring	•Junta torica	
7	**VOE 932042**	1					•O-ring	•Joint Torique	•O-Ring	•Junta torica	
8		1					Boom Cylinder	Verin de fleche	Auslegerzylinder	Maquina de flecha	See group 974, Page 737
9	**VOE 11881289**	1					Clamp	Pince Serrage	Klemme	Abrazadera	
10	**VOE 11881101**	1					Clamp	Pince Serrage	Klemme	Abrazadera	

1		**Sistema hidráulico, pluma de excavación** **Hydraulikanlage, Baggerausleger** **Système hydraulique, flèche** **Hydraulic system, boom**	Catalogue id **20050**	Group **911**
2			Illustr. No **1001274**	Section **900**
3			Issue **VOE 64D9920050**	Page **561**
4				
5		**11891417, 11891418, S/N - 10626**		

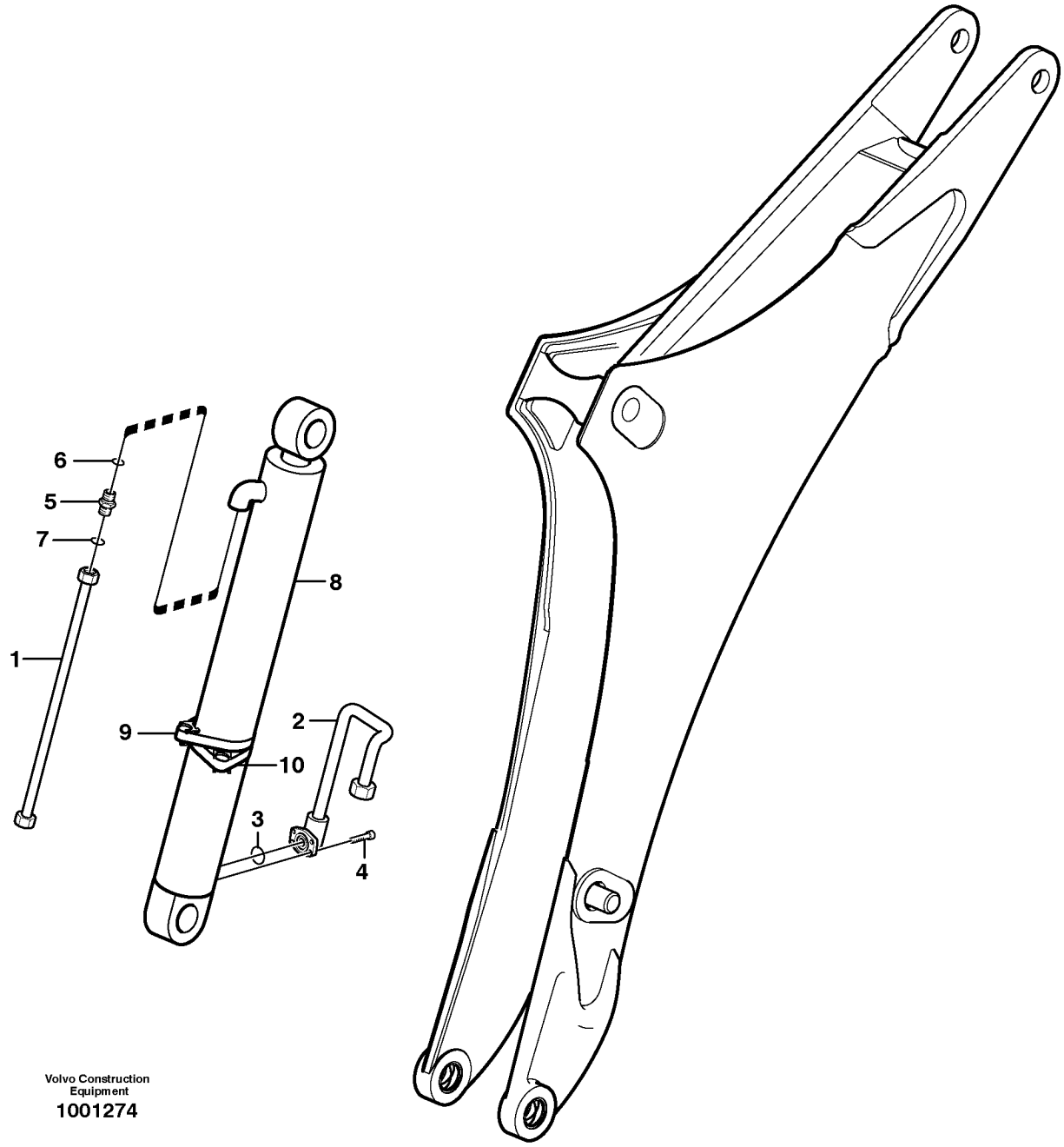

Volvo Construction Equipment

1001274

Fig.	Part No.	Quantity 1	2	3	PS	KIT	Description	Dénomination	Bezeichnung	Denominación	Notes
1	**VOE 11891063**	1					Pipe	Canalisation	Rohrleitung	Canalizacion	
2	**VOE 11891064**	1					Pipe	Canalisation	Rohrleitung	Canalizacion	
3	**VOE 13948699**	1					O-ring	Joint Torique	O-Ring	Junta torica	
4	**VOE 967635**	4					Allen Hd Screw	Vis A 6 Pans Cr	Inbusschraube	Torn Hex Embut	
5	**VOE 13933862**	1					Nipple	Raccord	Nippel	Niple	
6	**VOE 981289**	1					•O-ring	•Joint Torique	•O-Ring	•Junta torica	
7	**VOE 932042**	1					•O-ring	•Joint Torique	•O-Ring	•Junta torica	
8	**VOE 11881459**	1					Boom Cylinder	Verin de fleche	Auslegerzylinder	Maquina de flecha	See group 974, Page 737
9	**VOE 11881289**	1					Clamp	Pince Serrage	Klemme	Abrazadera	
10	**VOE 11881101**	1					Clamp	Pince Serrage	Klemme	Abrazadera	

1		**Sistema hidráulico, pluma de excavación** **Hydraulikanlage, Baggerausleger** **Système hydraulique, flèche** **Hydraulic system, boom**	Catalogue id **20050**	Group **911**
2			Illustr. No **1001274**	Section **910**
3			Issue **VOE 64D9920050**	Page **563**
4				
5		**11880004, S/N 10627 -**		

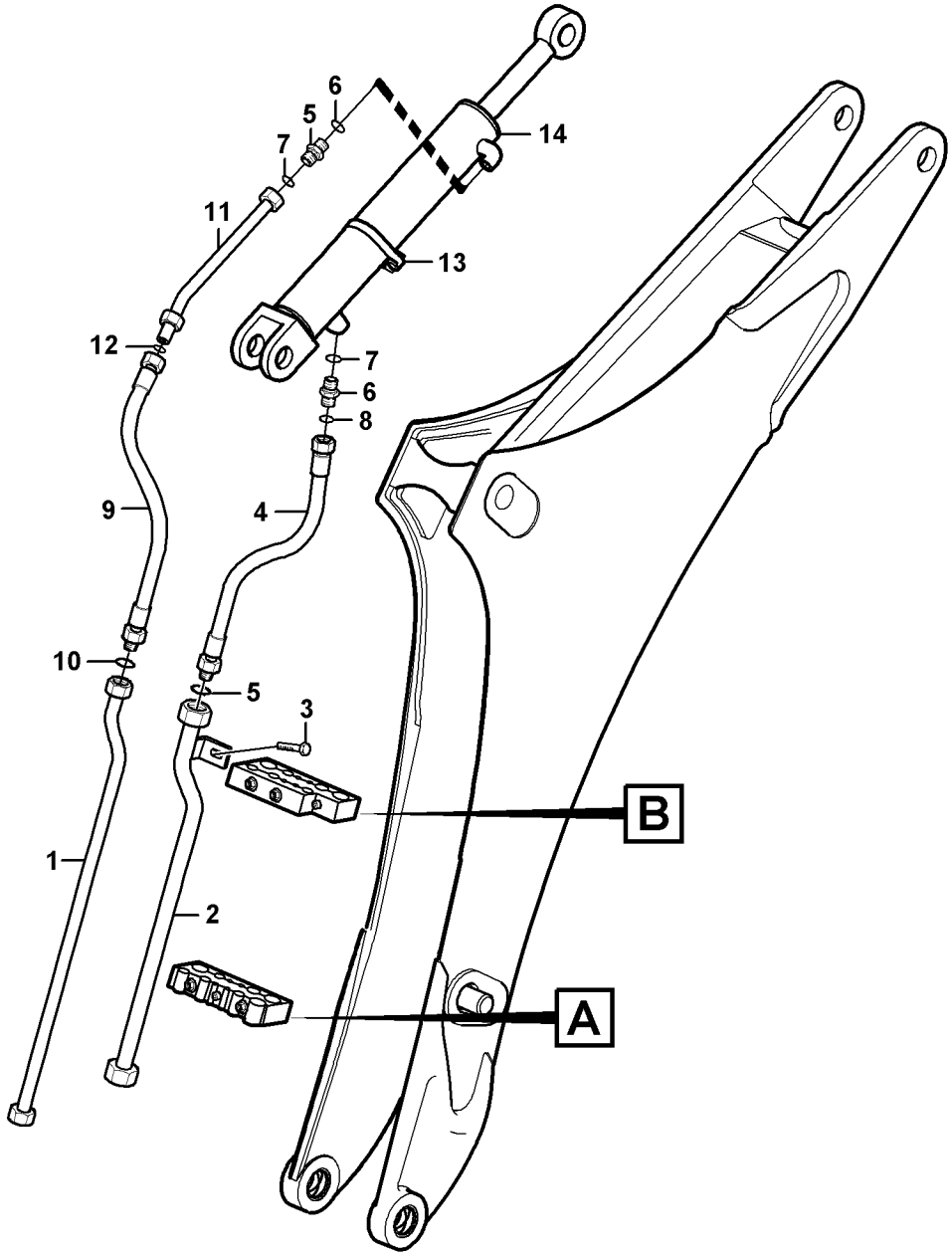

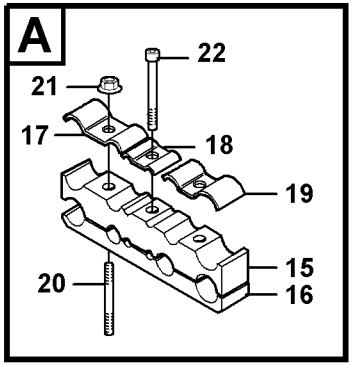

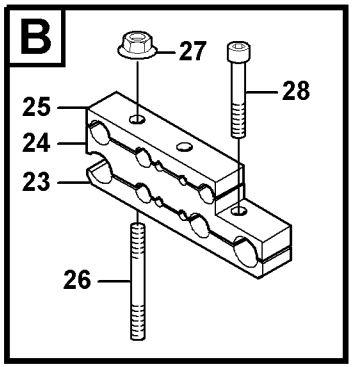

Volvo Construction Equipment
1013158

Fig.	Part No.	Quantity 1	2	3	PS	KIT	Description	Dénomination	Bezeichnung	Denominación	Notes
1	**VOE 11891058**	1					Pipe	Canalisation	Rohrleitung	Canalizacion	
2	**VOE 11891062**	1					Pipe	Canalisation	Rohrleitung	Canalizacion	
3	**VOE 13967630**	1					Allen Hd Screw	Vis A 6 Pans Cr	Inbusschraube	Torn Hex Embut	
4	**VOE 11882200**	1					Hose assembly	Conduit flexible	Schlauchleitung	Conducto	
5	**VOE 981290**	1					•O-ring	•Joint Torique	•O-Ring	•Junta torica	
6	**VOE 13933862**	2					Nipple	Raccord	Nippel	Niple	
7	**VOE 981289**	1					•O-ring	•Joint Torique	•O-Ring	•Junta torica	
8	**VOE 932042**	1					•O-ring	•Joint Torique	•O-Ring	•Junta torica	
9	**VOE 11882201**	1					Hose assembly	Conduit flexible	Schlauchleitung	Conducto	
10	**VOE 981289**	1					•O-ring	•Joint Torique	•O-Ring	•Junta torica	
11	**VOE 11881937**	1					Tube	Tube	Rohr	Tubo	
12	**VOE 981289**	1					•O-ring	•Joint Torique	•O-Ring	•Junta torica	
13	**VOE 11886454**	1					Clamp	Pince Serrage	Klemme	Abrazadera	
14		1					Dipper Arm Cylinder	Vérin de bras	Stielzylinder	Cilindro de brazo	See group 975, Page 739
15	**VOE 11881346**	1					Clamp	Pince Serrage	Klemme	Abrazadera	
16	**VOE 11881345**	1					Clamp	Pince Serrage	Klemme	Abrazadera	
17	**VOE 11881048**	1					Clamp	Pince Serrage	Klemme	Abrazadera	
18	**VOE 11881049**	1					Clamp	Pince Serrage	Klemme	Abrazadera	
19	**VOE 11882857**	1					Clamp	Pince Serrage	Klemme	Abrazadera	
20	**VOE 953059**	2					Stud	Goujon	Stiftschraube	Esparrago	
21	**VOE 961991**	2					Hexagon Nut	Ecrou Hexagonal	Sechskantmutter	Tuerca Hexagon	
22	**VOE 967633**	1					Allen Hd Screw	Vis A 6 Pans Cr	Inbusschraube	Torn Hex Embut	
23	**VOE 11886105**	1					Band	Etrier Serrage	Schelle	Cinta	(VOE 11881347)
24	**VOE 11881348**	1					Clamp	Pince Serrage	Klemme	Abrazadera	
25	**VOE 11881349**	1					Clamp	Pince Serrage	Klemme	Abrazadera	
26	**VOE 953062**	2					Stud	Goujon	Stiftschraube	Esparrago	
27	**VOE 948645**	2					Flange Lock Nut	Contre écrou bride	Flanschmutter	Contratuer Embr	
28	**VOE 13949927**	1					Allen Hd Screw	Vis A 6 Pans Cr	Inbusschraube	Torn Hex Embut	

1		**Sistema hidráulico, balancín** **Hydraulikanlage, Baggerstiel** **Système hydraulique, balancier** **Hydraulic system dipper arm**	Catalogue id **20050**	Group **911**
2				
3			Illustr. No **1013158**	Section **1000**
4				
5		**11891417, 11891418, S/N - 10626**	Issue **VOE 64D9920050**	Page **565**

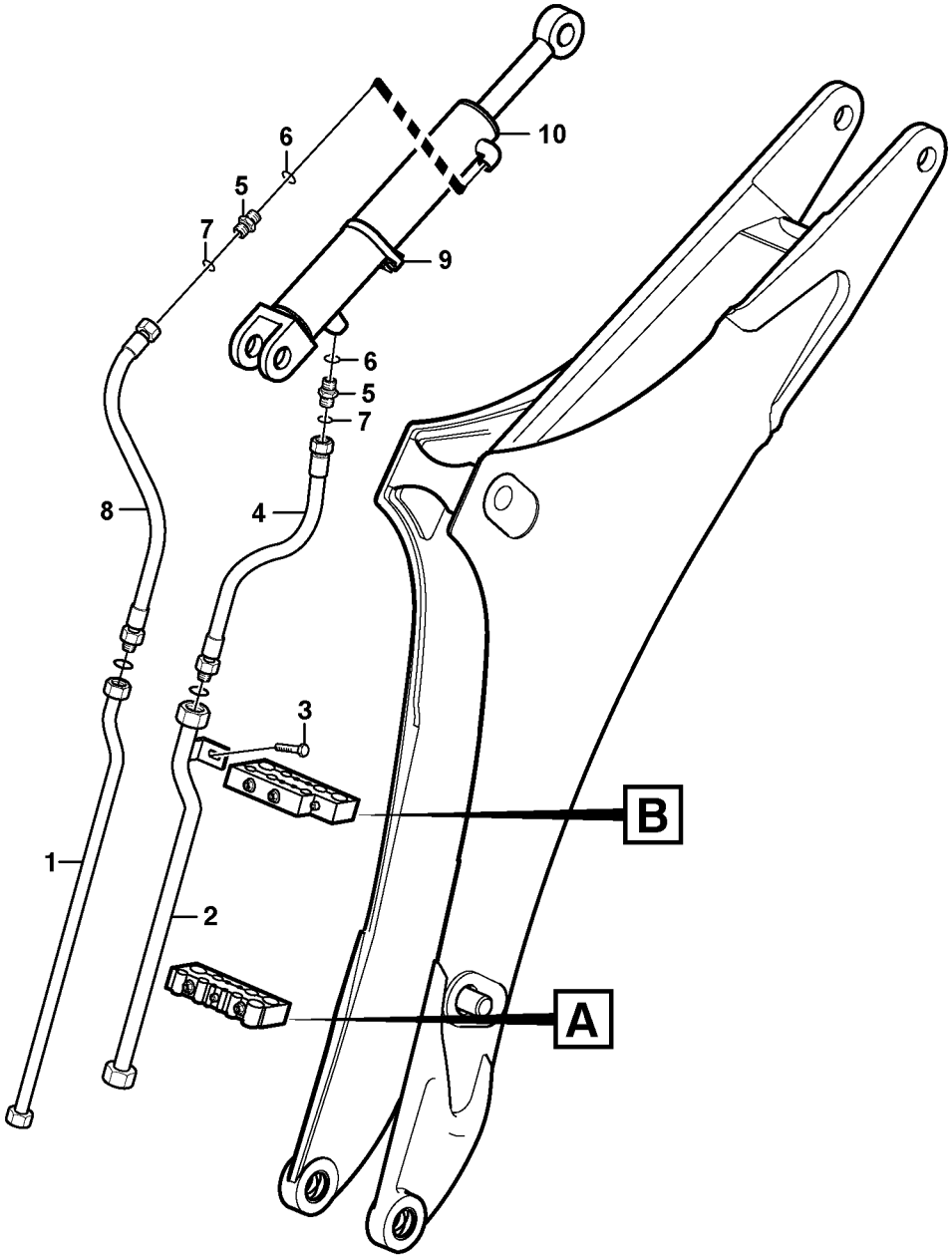
10
6
5
7
9
6
5
7
8
4
3
1
2
B
A

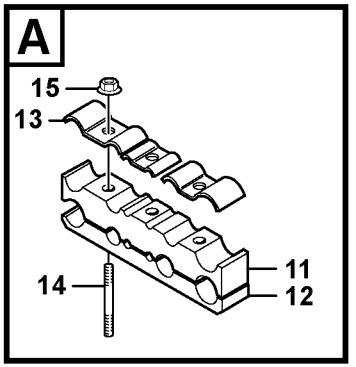
A
15
13
11
12
14

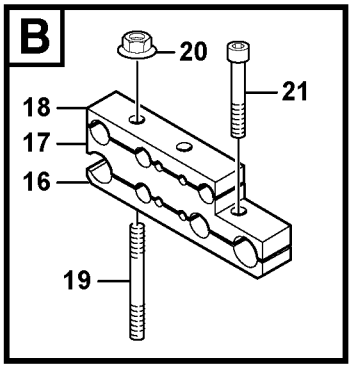
B
20
21
18
17
16
19

Fig.	Part No.	Quantity 1	2	3	PS	KIT	Description	Dénomination	Bezeichnung	Denominación	Notes
1	**VOE 11891058**	1					Pipe	Canalisation	Rohrleitung	Canalizacion	
2	**VOE 11891062**	1					Pipe	Canalisation	Rohrleitung	Canalizacion	
3	**VOE 13967630**	1					Allen Hd Screw	Vis A 6 Pans Cr	Inbusschraube	Torn Hex Embut	SER NO -12189
3	**VOE 13945444**	1					Flange screw	Vis à bride	Flanschschraube	Torn embridado	SER NO 12190-
4	**VOE 11882200**	1					Hose assembly	Conduit flexible	Schlauchleitung	Conducto	
	VOE 981290	1					•O-ring	•Joint Torique	•O-Ring	•Junta torica	
5	**VOE 13933862**	2					Nipple	Raccord	Nippel	Niple	
6	**VOE 990740**	2					•O-ring	•Joint Torique	•O-Ring	•Junta torica	
7	**VOE 932042**	2					•O-ring	•Joint Torique	•O-Ring	•Junta torica	
8	**VOE 11888543**	1					Hose assembly	Conduit flexible	Schlauchleitung	Conducto	
9	**VOE 11881101**	1					Clamp	Pince Serrage	Klemme	Abrazadera	
10	**VOE 11881810**	1					Dipper Arm Cylinder	Vérin de bras	Stielzylinder	Cilindro de brazo	See group 975, Page 739
11	**VOE 11881346**	1					Clamp	Pince Serrage	Klemme	Abrazadera	
12	**VOE 11886105**	1					Band	Etrier Serrage	Schelle	Cinta	
13	**VOE 11887870**	1					Clamp	Pince Serrage	Klemme	Abrazadera	
14	**VOE 953059**	2					Stud	Goujon	Stiftschraube	Esparrago	
15	**VOE 961991**	2					Hexagon Nut	Ecrou Hexagonal	Sechskantmutter	Tuerca Hexagon	
16	**VOE 11886105**	1					Band	Etrier Serrage	Schelle	Cinta	(VOE 11881347)
17	**VOE 11881348**	1					Clamp	Pince Serrage	Klemme	Abrazadera	
18	**VOE 11881349**	1					Clamp	Pince Serrage	Klemme	Abrazadera	
19	**VOE 11885982**	2					Stud	Goujon	Stiftschraube	Esparrago	
20	**VOE 961991**	2					Hexagon Nut	Ecrou Hexagonal	Sechskantmutter	Tuerca Hexagon	
21	**VOE 13949927**	1					Allen Hd Screw	Vis A 6 Pans Cr	Inbusschraube	Torn Hex Embut	

1		**Sistema hidráulico, balancín** **Hydraulikanlage, Baggerstiel** **Système hydraulique, balancier** **Hydraulic system dipper arm**	Catalogue id **20050**	Group **911**
2			Illustr. No **1024672**	Section **1010**
3			Issue **VOE 64D9920050**	Page **567**
4				
5		**11880004, S/N 10627 -**		

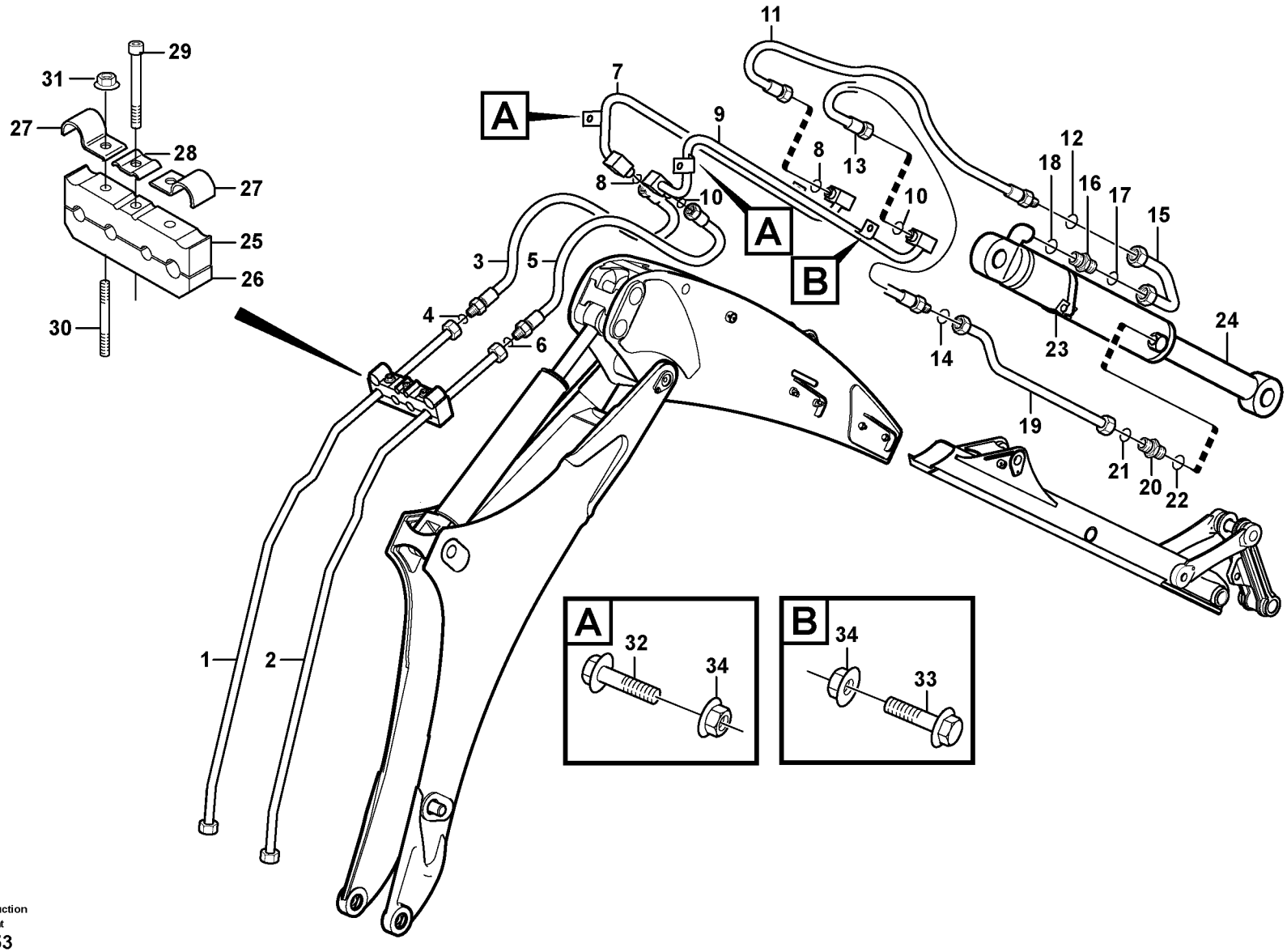

Volvo Construction Equipment
1013153

Fig.	Part No.	Quantity 1	2	3	PS	KIT	Description	Dénomination	Bezeichnung	Denominación	Notes
1	**VOE 11891056**	1					Pipe	Canalisation	Rohrleitung	Canalizacion	
2	**VOE 11891054**	1					Pipe	Canalisation	Rohrleitung	Canalizacion	
3	**VOE 11882203**	1					Hose assembly	Conduit flexible	Schlauchleitung	Conducto	
4	**VOE 981289**	1					•O-ring	•Joint Torique	•O-Ring	•Junta torica	
5	**VOE 11881638**	1					Hose assembly	Conduit flexible	Schlauchleitung	Conducto	
6	**VOE 4880663**	1					•O-ring	•Joint Torique	•O-Ring	•Junta torica	
7	**VOE 11886476**	1					Feed Pipe	Conduit Entree	Einlaufrohr	Tubo Entrada	
8	**VOE 4880663**	2					O-ring	Joint Torique	O-Ring	Junta torica	
9	**VOE 11886480**	1					Feed Pipe	Conduit Entree	Einlaufrohr	Tubo Entrada	
10	**VOE 4880493**	2					O-ring	Joint Torique	O-Ring	Junta torica	
11	**VOE 11882205**	1					Hose assembly	Conduit flexible	Schlauchleitung	Conducto	S/N - 10235
	VOE 11887018	1					Hose	Durit	Schlauch	Tubo flexible	S/N 10236 -
12	**VOE 981289**	1					•O-ring	•Joint Torique	•O-Ring	•Junta torica	S/N - 10235
13	**VOE 11882206**	1			SS		Hose assembly	Conduit flexible	Schlauchleitung	Conducto	S/N - 10235
	VOE 11887019	1					Hose	Durit	Schlauch	Tubo flexible	S/N 10236 -
14	**VOE 4880663**	1					•O-ring	•Joint Torique	•O-Ring	•Junta torica	S/N - 10235
15	**VOE 11891088**	1					Pipe	Canalisation	Rohrleitung	Canalizacion	
16	**VOE 13933862**	1					Nipple	Raccord	Nippel	Niple	
17	**VOE 981289**	1					•O-ring	•Joint Torique	•O-Ring	•Junta torica	
18	**VOE 932042**	1					•O-ring	•Joint Torique	•O-Ring	•Junta torica	
19	**VOE 11891089**	1			SS		Pipe	Canalisation	Rohrleitung	Canalizacion	
20	**VOE 935094**	1					Nipple	Raccord	Nippel	Niple	
21	**VOE 4880663**	1					•O-ring	•Joint Torique	•O-Ring	•Junta torica	
22	**VOE 932040**	1					•O-ring	•Joint Torique	•O-Ring	•Junta torica	
23	**VOE 11881292**	1					Clamp	Pince Serrage	Klemme	Abrazadera	
24		1					Bucket Cylinder	Verin de godet	Löffelzylinder	Maquina de copa	See group 975, Page 741
25	**VOE 11881344**	1					Clamp	Pince Serrage	Klemme	Abrazadera	
26	**VOE 11881343**	1					Clamp	Pince Serrage	Klemme	Abrazadera	
27	**VOE 11881053**	2					Clamp	Pince Serrage	Klemme	Abrazadera	
28	**VOE 11881049**	1					Clamp	Pince Serrage	Klemme	Abrazadera	

1		**Sistema hidráulico, cuchara** **Hydraulikanlage, Löffel** **Système hydraulique, godet** **Hydraulic system, bucket**		Catalogue id **20050**	Group **911**
2				Illustr. No **1013153**	Section **1100**
3					
4				Issue **VOE 64D9920050**	Page **569**
5		**11891417**			

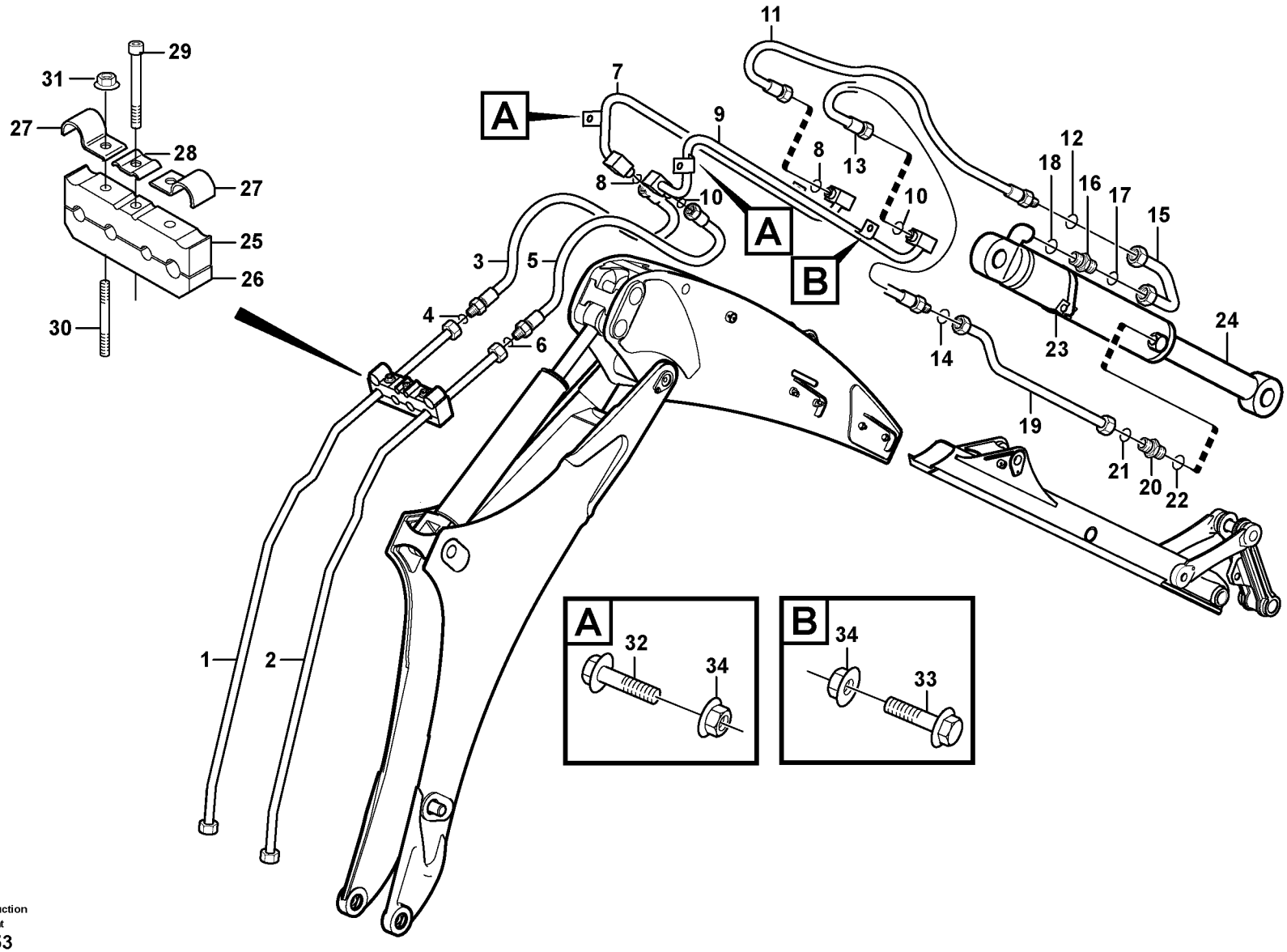

Volvo Construction Equipment
1013153

Fig.	Part No.	Quantity 1	2	3	PS	KIT	Description	Dénomination	Bezeichnung	Denominación	Notes
29	**VOE 967631**	1					Allen Hd Screw	Vis A 6 Pans Cr	Inbusschraube	Torn Hex Embut	
30	**VOE 953062**	2					Stud	Goujon	Stiftschraube	Esparrago	
31	**VOE 948645**	2					Flange Lock Nut	Contre écrou bride	Flanschmutter	Contratuer Embr	
32	**VOE 13947760**	2					Flange screw	Vis à bride	Flanschschraube	Torn embridado	
33	**VOE 13945444**	3					Flange screw	Vis à bride	Flanschschraube	Torn embridado	
34	**VOE 13945408**	4					Nut	Ecrou	Mutter	Tuerca	

1		**Sistema hidráulico, cuchara** **Hydraulikanlage, Löffel** **Système hydraulique, godet** **Hydraulic system, bucket**	Catalogue id **20050**	Group **911**
2			Illustr. No **1013153**	Section **1100**
3			Issue **VOE 64D9920050**	Page **571**
4				
5		**11891417**		

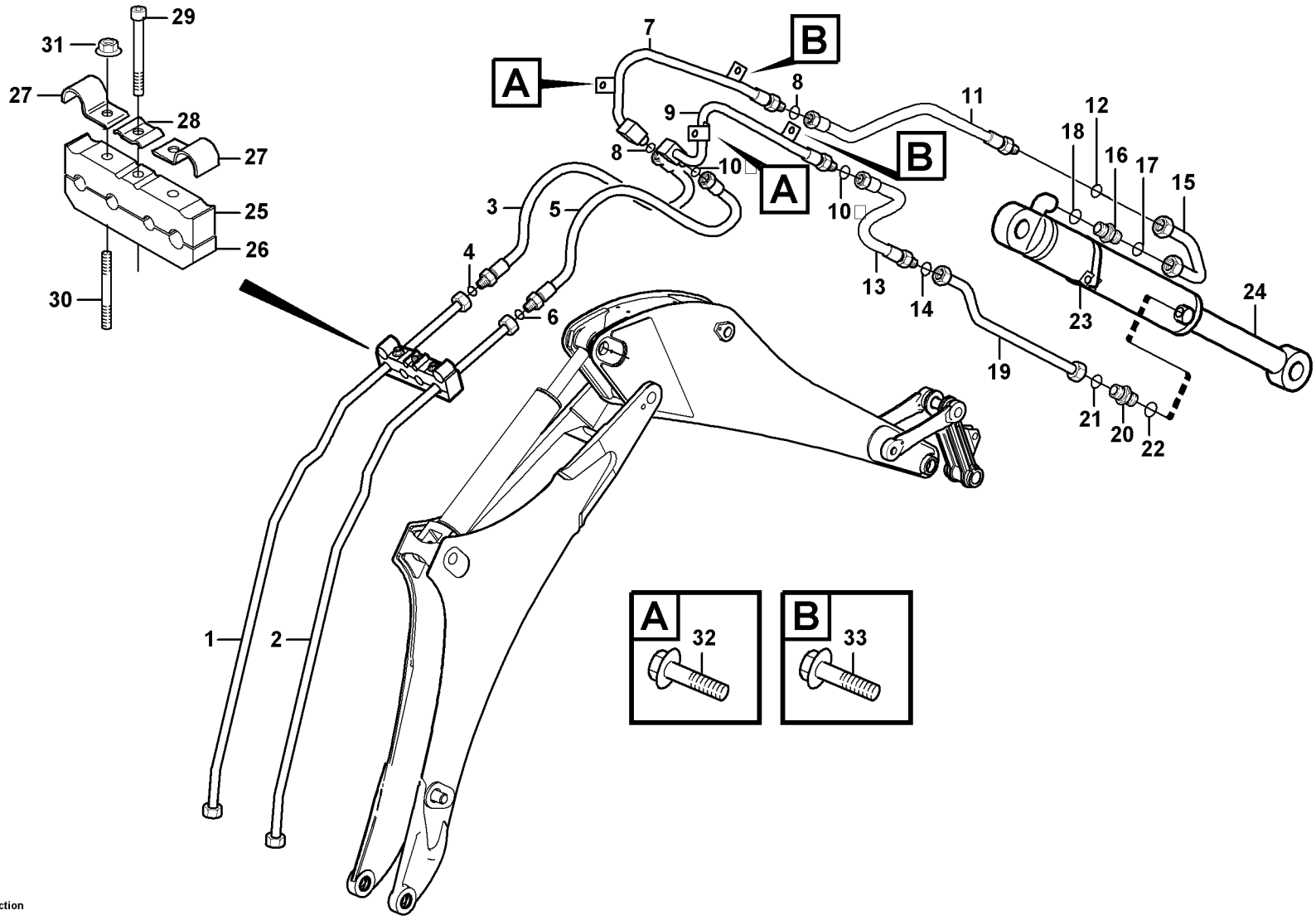

Volvo Construction Equipment
1013159

Fig.	Part No.	Quantity 1	2	3	PS	KIT	Description	Dénomination	Bezeichnung	Denominación	Notes
1	**VOE 11891056**	1					Pipe	Canalisation	Rohrleitung	Canalizacion	
2	**VOE 11891054**	1					Pipe	Canalisation	Rohrleitung	Canalizacion	
3	**VOE 11882203**	1					Hose assembly	Conduit flexible	Schlauchleitung	Conducto	
4	**VOE 981289**	1					•O-ring	•Joint Torique	•O-Ring	•Junta torica	
5	**VOE 11881638**	1					Hose assembly	Conduit flexible	Schlauchleitung	Conducto	
6	**VOE 4880663**	1					•O-ring	•Joint Torique	•O-Ring	•Junta torica	
7	**VOE 11885243**	1					Pipe	Canalisation	Rohrleitung	Canalizacion	
8	**VOE 4880663**	2					O-ring	Joint Torique	O-Ring	Junta torica	
9	**VOE 11885242**	1					Pipe	Canalisation	Rohrleitung	Canalizacion	
10	**VOE 4880493**	2					O-ring	Joint Torique	O-Ring	Junta torica	
11	**VOE 11882203**	1					Hose assembly	Conduit flexible	Schlauchleitung	Conducto	
12	**VOE 981289**	1					•O-ring	•Joint Torique	•O-Ring	•Junta torica	
13	**VOE 11881638**	1					Hose assembly	Conduit flexible	Schlauchleitung	Conducto	
14	**VOE 4880663**	1					O-ring	Joint Torique	O-Ring	Junta torica	
15	**VOE 11891088**	1					Pipe	Canalisation	Rohrleitung	Canalizacion	
16	**VOE 13933862**	1					Nipple	Raccord	Nippel	Niple	
17	**VOE 981289**	1					•O-ring	•Joint Torique	•O-Ring	•Junta torica	
18	**VOE 932042**	1					•O-ring	•Joint Torique	•O-Ring	•Junta torica	
19	**VOE 11885152**	1					Tube	Tube	Rohr	Tubo	
20	**VOE 935094**	1					Nipple	Raccord	Nippel	Niple	
21	**VOE 4880663**	1					•O-ring	•Joint Torique	•O-Ring	•Junta torica	
22	**VOE 932040**	1					•O-ring	•Joint Torique	•O-Ring	•Junta torica	
23	**VOE 11881292**	1					Clamp	Pince Serrage	Klemme	Abrazadera	
24		1					Bucket Cylinder	Verin de godet	Löffelzylinder	Maquina de copa	See group 975, Page 741
25	**VOE 11881344**	1					Clamp	Pince Serrage	Klemme	Abrazadera	
26	**VOE 11881343**	1					Clamp	Pince Serrage	Klemme	Abrazadera	
27	**VOE 11881053**	2					Clamp	Pince Serrage	Klemme	Abrazadera	
28	**VOE 11881049**	1					Clamp	Pince Serrage	Klemme	Abrazadera	
29	**VOE 967631**	1					Allen Hd Screw	Vis A 6 Pans Cr	Inbusschraube	Torn Hex Embut	
30	**VOE 953062**	2					Stud	Goujon	Stiftschraube	Esparrago	

1		**Sistema hidráulico, cuchara** **Hydraulikanlage, Löffel** **Système hydraulique, godet** **Hydraulic system, bucket**	Catalogue id **20050**	Group **911**
2				
3			Illustr. No **1013159**	Section **1150**
4				
5		**11891418, S/N - 10626**	Issue **VOE 64D9920050**	Page **573**

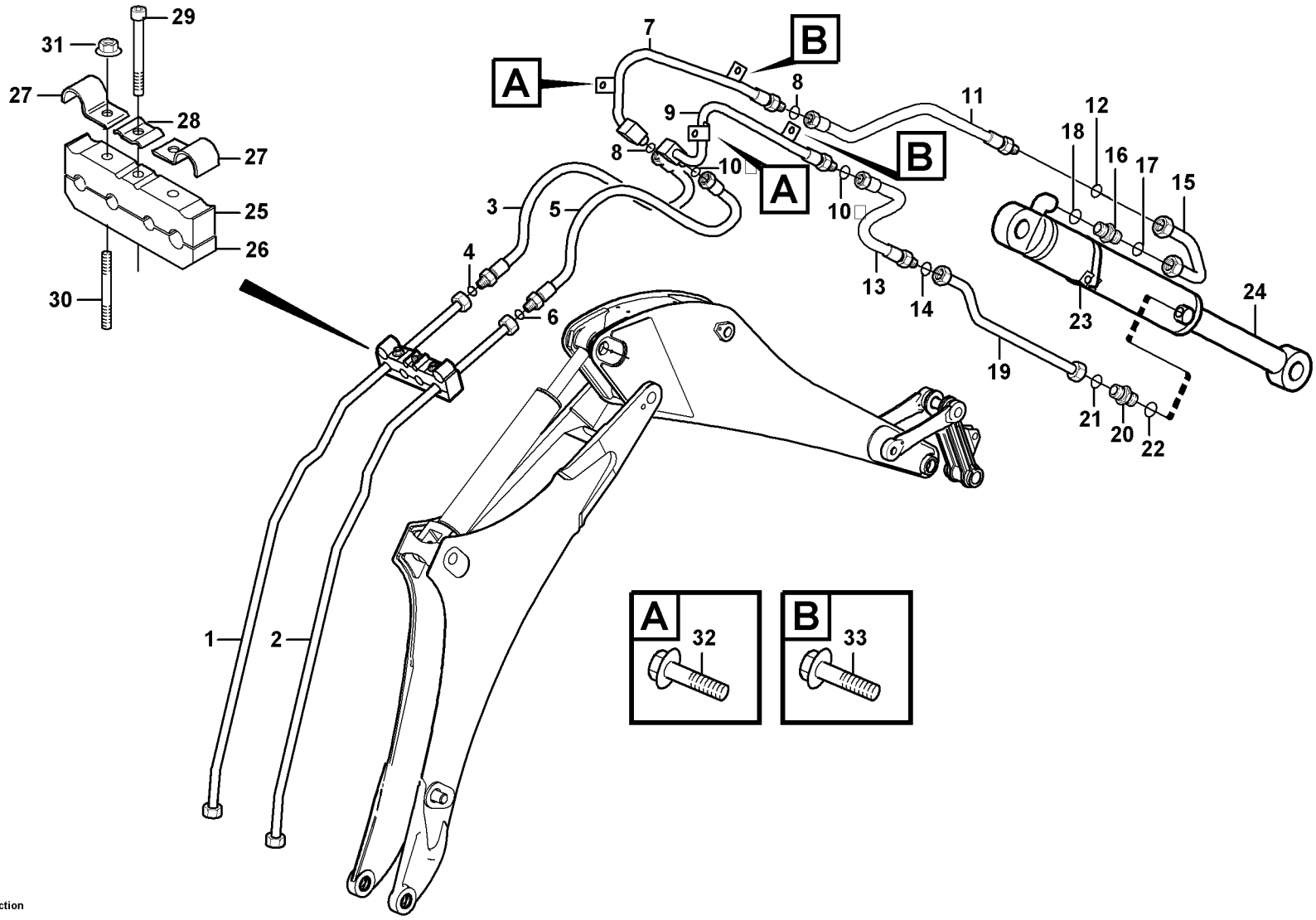

Volvo Construction Equipment
1013159

Fig.	Part No.	Quantity 1	2	3	PS	KIT	Description	Dénomination	Bezeichnung	Denominación	Notes
31	**VOE 948645**	2					Flange Lock Nut	Contre écrou bride	Flanschmutter	Contratuer Embr	
32	**VOE 946440**	2					Flange screw	Vis à bride	Flanschschraube	Torn embridado	
33	**VOE 13945444**	3					Flange screw	Vis à bride	Flanschschraube	Torn embridado	

1		**Sistema hidráulico, cuchara** **Hydraulikanlage, Löffel** **Système hydraulique, godet** **Hydraulic system, bucket**	Catalogue id **20050**	Group **911**
2			Illustr. No **1013159**	Section **1150**
3			Issue **VOE 64D9920050**	Page **575**
4				
5		**11891418, S/N - 10626**		

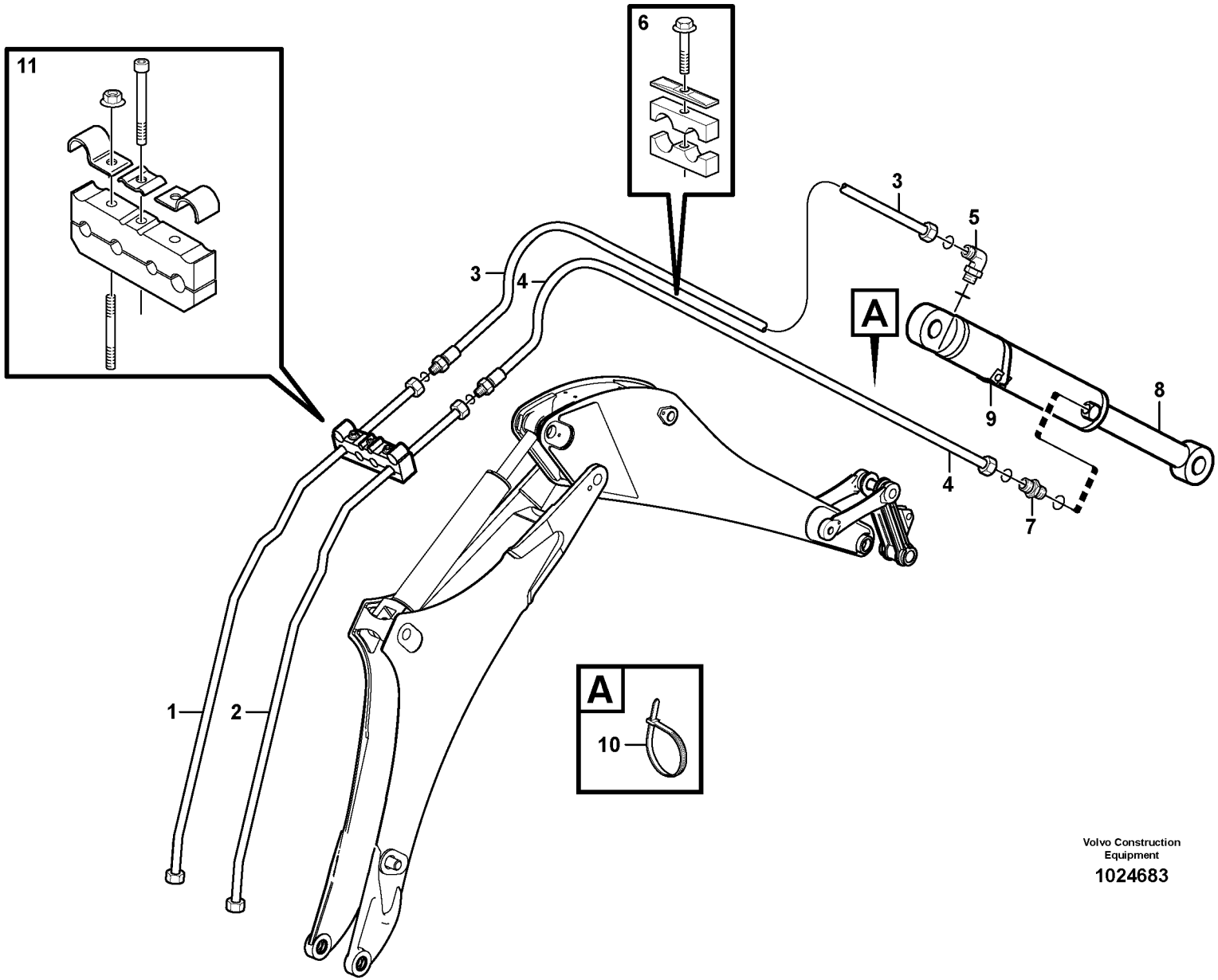

Volvo Construction Equipment

1024683

Fig.	Part No.	Quantity 1	2	3	PS	KIT	Description	Dénomination	Bezeichnung	Denominación	Notes
1	**VOE 11891056**	1					Pipe	Canalisation	Rohrleitung	Canalizacion	
2	**VOE 11891054**	1					Pipe	Canalisation	Rohrleitung	Canalizacion	
3	**VOE 11888545**		1				Hose assembly	Conduit flexible	Schlauchleitung	Conducto	
	VOE 990740		1				•O-ring	•Joint Torique	•O-Ring	•Junta torica	
4	**VOE 11888544**		1				Hose assembly	Conduit flexible	Schlauchleitung	Conducto	
	VOE 990739		1				•O-ring	•Joint Torique	•O-Ring	•Junta torica	
5	**VOE 13933864**	1					Elbow nipple	Raccord angulaire	Winkelnippel	Niple angular	
	VOE 990740	1					•O-ring	•Joint Torique	•O-Ring	•Junta torica	
	VOE 932042	1					•O-ring	•Joint Torique	•O-Ring	•Junta torica	
6	**VOE 11888547**	1					Clamp	Pince Serrage	Klemme	Abrazadera	
7	**VOE 935094**	1					Nipple	Raccord	Nippel	Niple	
	VOE 990739	1					•O-ring	•Joint Torique	•O-Ring	•Junta torica	
	VOE 932040	1					•O-ring	•Joint Torique	•O-Ring	•Junta torica	
8	**VOE 11888095**	1					Cylinder	Verin	Zylinder	Cilindro	
9	**VOE 11881292**	1					Clamp	Pince Serrage	Klemme	Abrazadera	
10	**VOE 4881440**		1				Strip Clamp	Ruban Serrage	Kabelbinder	Abraz Cinta	
11	**VOE 11888547**		1				Clamp	Pince Serrage	Klemme	Abrazadera	

1	**11880004**	**Sistema hidráulico, cuchara** **Hydraulikanlage, Löffel** **Système hydraulique, godet** **Hydraulic system, bucket**	Catalogue id **20050**	Group **911**
2	**11891497**		Illustr. No **1024683**	Section **1160**
3			Issue **VOE 64D9920050**	Page **577**
4				
5		**S/N 10627 -**		

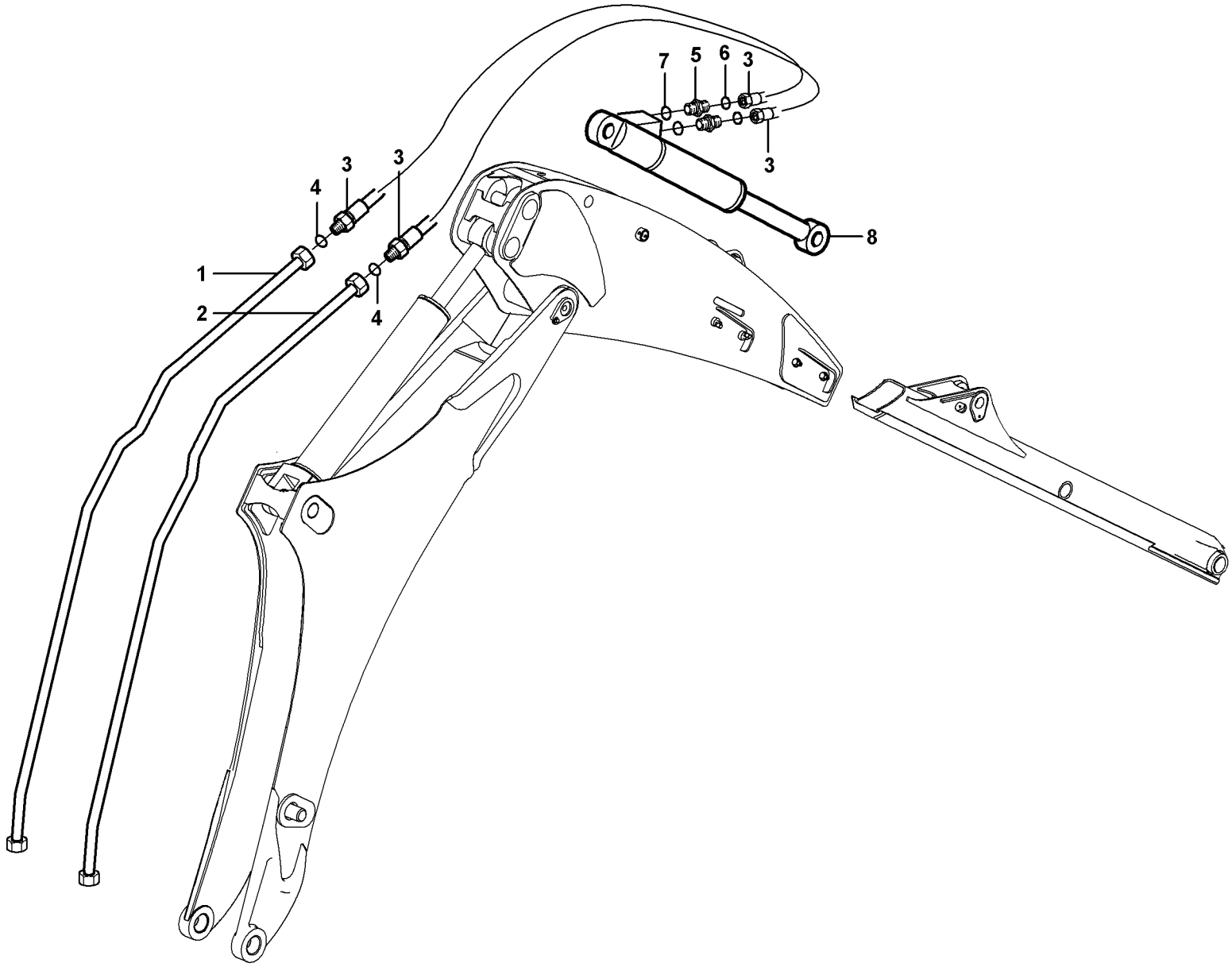

Volvo Construction Equipment

1013149

Fig.	Part No.	Quantity 1	2	3	PS	KIT	Description	Dénomination	Bezeichnung	Denominación	Notes
1	**VOE 11891060**	1					Pipe	Canalisation	Rohrleitung	Canalizacion	
2	**VOE 11891059**	1					Pipe	Canalisation	Rohrleitung	Canalizacion	
3	**VOE 11881638**	2					Hose assembly	Conduit flexible	Schlauchleitung	Conducto	
4	**VOE 4880663**	1					•O-ring	•Joint Torique	•O-Ring	•Junta torica	
5	**VOE 13933923**	2					Nipple	Raccord	Nippel	Niple	
6	**VOE 4880493**	1					•O-ring	•Joint Torique	•O-Ring	•Junta torica	
7	**VOE 932040**	1					•O-ring	•Joint Torique	•O-Ring	•Junta torica	
8		1					Extendible dipper Cylinder	Verin Telescope	Teleskopzyl	Cilin Telescop	See group 975, Page 743

1		**Sistema hidràulico brazo excavador telescopico** **Hydralikanlage für teleskopische baggerarm** **Système hydraulique bras de pelle telescope** **Hydraulic system extendible dipper arm**	Catalogue id **20050**	Group **911**
2			Illustr. No **1013149**	Section **1200**
3			Issue **VOE 64D9920050**	Page **579**
4				
5		**11891417**		

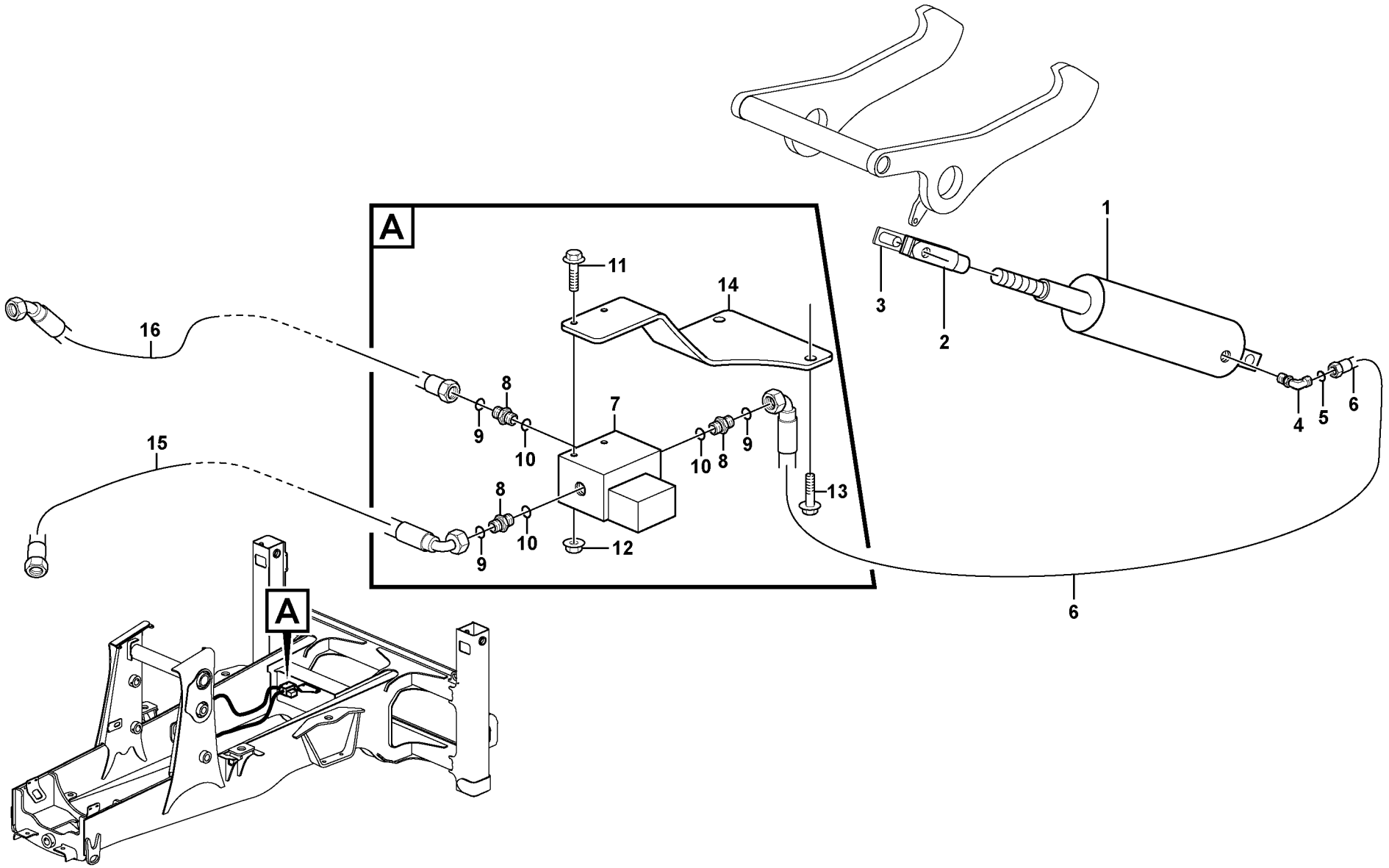

Volvo Construction Equipment

1012898

Fig.	Part No.	Quantity 1	2	3	PS	KIT	Description	Dénomination	Bezeichnung	Denominación	Notes
1		1					Locking Cyl	Cyl Verrouil	Sperrzylinder	Cil Bloqueo	See group 971, Page 723
2	**VOE 11883319**	1					Fork	Fourche	Gabel	Horquilla	
3	**VOE 11883323**	1					Clevis Pin	Vis A Oeuillet	Zylinderbolzen	Espiga	
4	**VOE 935538**	1					Elbow nipple	Raccord angulaire	Winkelnippel	Niple angular	
5	**VOE 4881722**	1					•O-ring	•Joint Torique	•O-Ring	•Junta torica	
6	**VOE 11882208**	1					Hose assembly	Conduit flexible	Schlauchleitung	Conducto	
7	**VOE 11881356**	1					Solenoid valve	Vanne electrom.	Magnetventil	Electrovalvula	
	VOE 11715259	1					•Solenoid	•Solénoide	•Magnet	•Solenoide	
8	**VOE 13933858**	3					Union	Teton Connexion	Anschlussnippel	Niple Conexcion	
9	**VOE 4881722**	3					•O-ring	•Joint Torique	•O-Ring	•Junta torica	
10	**VOE 932039**	3					•O-ring	•Joint Torique	•O-Ring	•Junta torica	
11	**VOE 13965177**	2					Flange screw	Vis à bride	Flanschschraube	Torn embridado	
12	**VOE 13949278**	2					Flange Lock Nut	Contre écrou bride	Flanschmutter	Contratuer Embr	
13	**VOE 946472**	2					Flange screw	Vis à bride	Flanschschraube	Torn embridado	
14	**VOE 11884950**	1					Bracket	Console	Konsole	Ménsula	
15	**VOE 11884546**	1					Hose	Durit	Schlauch	Tubo flexible	
16	**VOE 11884547**	1					Hose	Durit	Schlauch	Tubo flexible	

1		**Sistema hidráulico, cilindro de bloqueo** **Hydraulikanlage, Sperrzylinder** **Système hydraulique, vérin de verrouillage** **Hydraulic system, lock cylinder**	Catalogue id **20050**	Group **911**
2				
3			Illustr. No **1012898**	Section **1300**
4				
5		**S/N - 10626**	Issue **VOE 64D9920050**	Page **581**

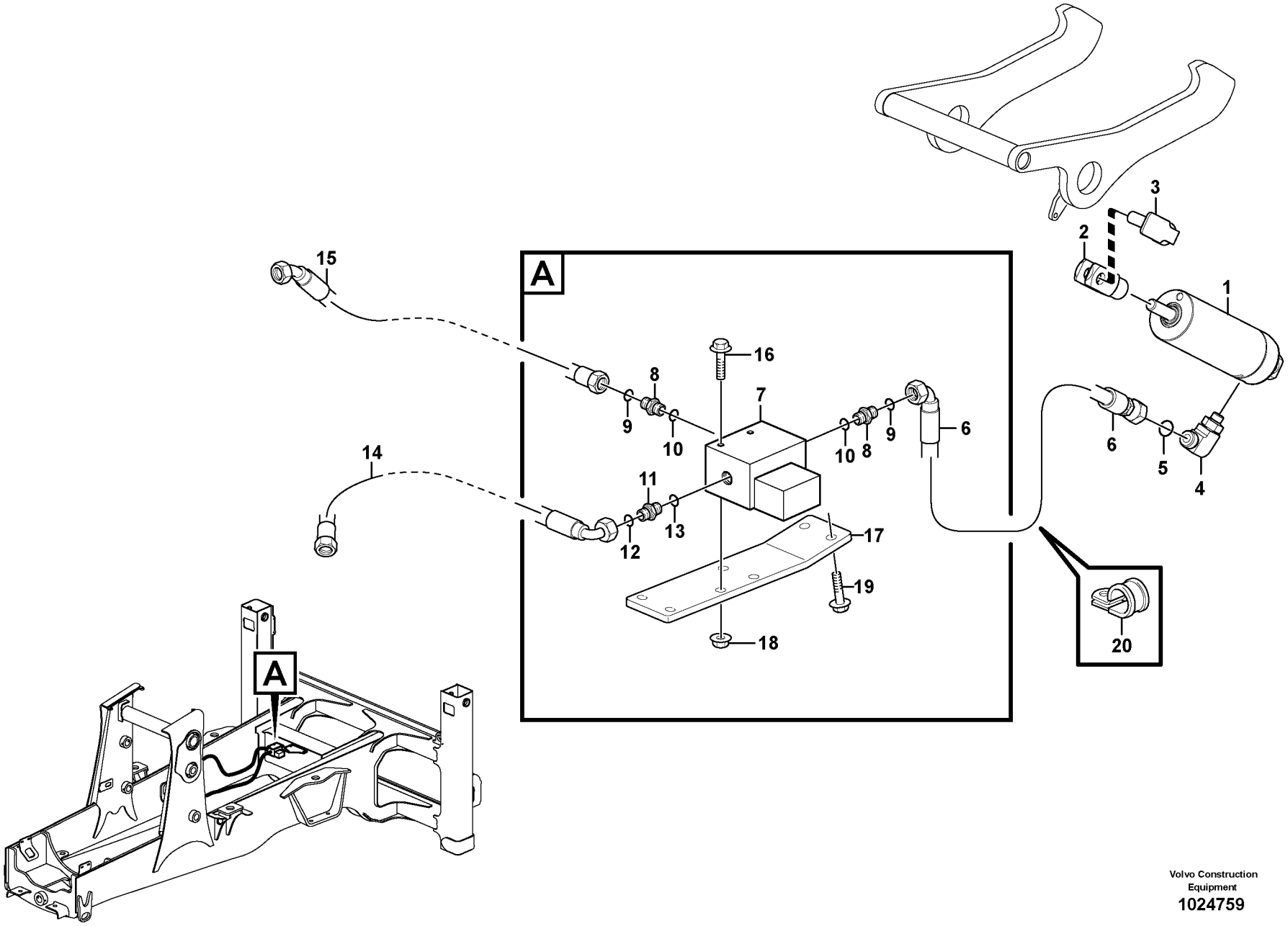

Volvo Construction Equipment
1024759

Fig.	Part No.	Quantity 1	2	3	PS	KIT	Description	Dénomination	Bezeichnung	Denominación	Notes
1		1					Locking Cyl	Cyl Verrouil	Sperrzylinder	Cil Bloqueo	See group 971, Page 723
2	**VOE 11883319**	1					Fork	Fourche	Gabel	Horquilla	
3	**VOE 11883323**	1					Clevis Pin	Vis A Oeuillet	Zylinderbolzen	Espiga	
4	**VOE 935538**	1					Elbow nipple	Raccord angulaire	Winkelnippel	Niple angular	
5	**VOE 4881722**	1					•O-ring	•Joint Torique	•O-Ring	•Junta torica	
6	**VOE 11882208**	1					Hose assembly	Conduit flexible	Schlauchleitung	Conducto	
7	**VOE 11881356**	1					Solenoid valve	Vanne electrom.	Magnetventil	Electrovalvula	
	VOE 11715259	1					•Solenoid	•Solénoide	•Magnet	•Solenoide	
8	**VOE 13933858**	2					Union	Teton Connexion	Anschlussnippel	Niple Conexcion	
9	**VOE 4881722**	2					•O-ring	•Joint Torique	•O-Ring	•Junta torica	
10	**VOE 932039**	2					•O-ring	•Joint Torique	•O-Ring	•Junta torica	
11	**VOE 935085**	1					Nipple	Raccord	Nippel	Niple	
12	**VOE 4880492**	1					•O-ring	•Joint Torique	•O-Ring	•Junta torica	
13	**VOE 932039**	1					•O-ring	•Joint Torique	•O-Ring	•Junta torica	
14	**VOE 11884546**	1					Hose	Durit	Schlauch	Tubo flexible	
15	**VOE 11884547**	1					Hose	Durit	Schlauch	Tubo flexible	
16	**VOE 13965177**	2					Flange screw	Vis à bride	Flanschschraube	Torn embridado	
17		1			NS		Bracket	Console	Konsole	Ménsula	
18	**VOE 13949278**	2					Flange Lock Nut	Contre écrou bride	Flanschmutter	Contratuer Embr	
19	**VOE 946472**	2					Flange screw	Vis à bride	Flanschschraube	Torn embridado	
20	**VOE 978869**	1					Clamp	Pince Serrage	Klemme	Abrazadera	

1		**Sistema hidráulico, cilindro de bloqueo** **Hydraulikanlage, Sperrzylinder** **Système hydraulique, vérin de verrouillage** **Hydraulic system, lock cylinder**	Catalogue id **20050**	Group **911**
2			Illustr. No **1024759**	Section **1310**
3			Issue **VOE 64D9920050**	Page **583**
4				
5		**S/N 10627 -**		

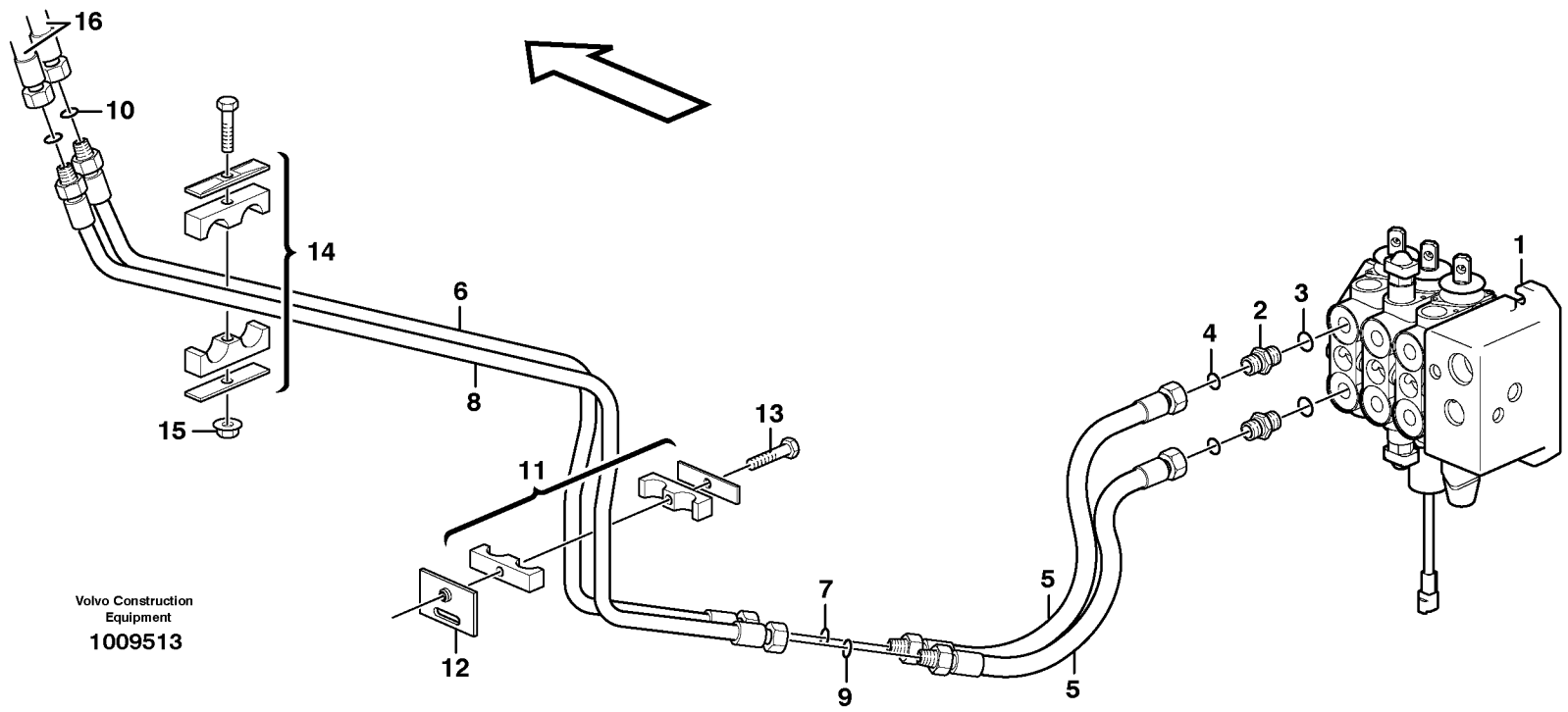

Volvo Construction Equipment

1009513

Fig.	Part No.	Quantity 1	2	3	PS	KIT	Description	Dénomination	Bezeichnung	Denominación	Notes
1		1					Valve	Soupape	Ventil	Valvula	See group 912, Page 591
2	**VOE 935093**	2					Union	Teton Connexion	Anschlussnippel	Niple Conexcion	
3	**VOE 932042**	1					•O-ring	•Joint Torique	•O-Ring	•Junta torica	
4	**VOE 4880493**	1					•O-ring	•Joint Torique	•O-Ring	•Junta torica	
5	**VOE 11885260**	2					Hose	Durit	Schlauch	Tubo flexible	
6	**VOE 11885553**	1					Tube	Tube	Rohr	Tubo	
7	**VOE 4880493**	1					O-ring	Joint Torique	O-Ring	Junta torica	
8	**VOE 11885554**	1					Tube	Tube	Rohr	Tubo	
9	**VOE 4880493**	1					O-ring	Joint Torique	O-Ring	Junta torica	
10	**VOE 4880493**	2					O-ring	Joint Torique	O-Ring	Junta torica	
11	**VOE 11882854**	1					Clamp	Pince Serrage	Klemme	Abrazadera	
12	**VOE 11885758**	1					Plate	Plaque	Platte	Placa	
13	**VOE 946671**	1					Flange screw	Vis à bride	Flanschschraube	Torn embridado	
14	**VOE 11881340**	1					Clamp	Pince Serrage	Klemme	Abrazadera	
15	**VOE 948645**	1					Flange Lock Nut	Contre écrou bride	Flanschmutter	Contratuer Embr	
16		1					Hose	Durit	Schlauch	Tubo flexible	See group 911, Page 551

1		**Sistema hidráulico, cuchara combinada** **Hydraulikanlage, Kombilöffel** **Système hydraulique, godet combiné** **Hydraulic system, combi-bucket**	Catalogue id **20050**	Group **911**
2			Illustr. No **1009513**	Section **1350**
3			Issue **VOE 64D9920050**	Page **585**
4				
5		**11891414**		

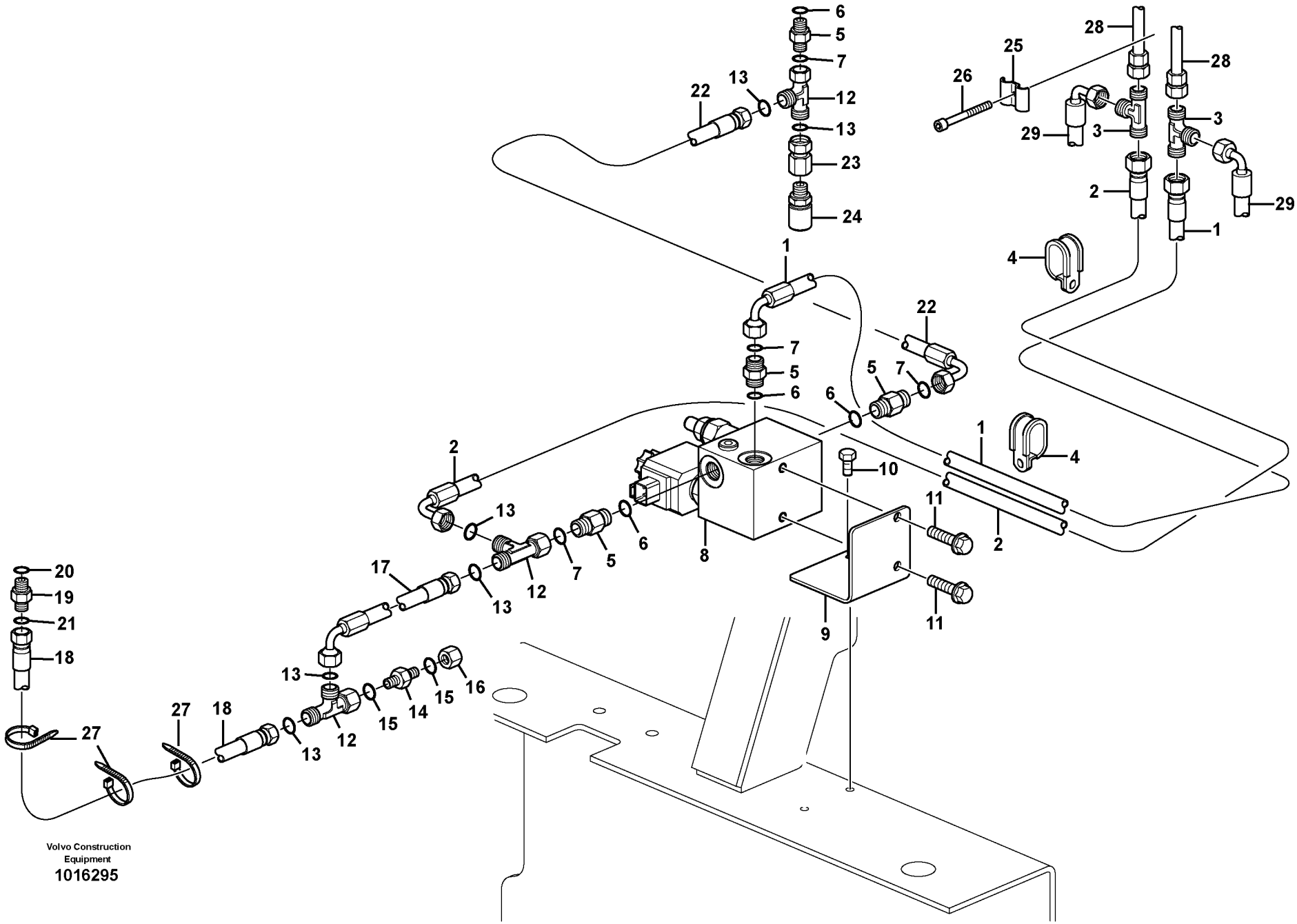
Volvo Construction Equipment
1016295

Fig.	Part No.	Quantity 1	2	3	PS	KIT	Description	Dénomination	Bezeichnung	Denominación	Notes
1	**VOE 11884834**	1					Hose	Durit	Schlauch	Tubo flexible	
2	**VOE 11884837**	1					Hose	Durit	Schlauch	Tubo flexible	
3		2					Nipple	Raccord	Nippel	Niple	See group 912, Page 613
4	**VOE 981661**	2					Clamp	Pince Serrage	Klemme	Abrazadera	
5	**VOE 13933858**	4					Union	Teton Connexion	Anschlussnippel	Niple Conexcion	
6	**VOE 4881722**	1					•O-ring	•Joint Torique	•O-Ring	•Junta torica	
7	**VOE 932039**	1					•O-ring	•Joint Torique	•O-Ring	•Junta torica	
8	**VOE 11886376**	1					Valve	Soupape	Ventil	Valvula	
9	**VOE 11886665**	1					Plate	Plaque	Platte	Placa	
10	**VOE 13946544**	1					Flange screw	Vis à bride	Flanschschraube	Torn embridado	
11	**VOE 946440**	2					Flange screw	Vis à bride	Flanschschraube	Torn embridado	
12	**VOE 13933859**	3					Nipple	Raccord	Nippel	Niple	
13	**VOE 4881722**	2					•O-ring	•Joint Torique	•O-Ring	•Junta torica	
14	**VOE 935436**	1					Nipple	Raccord	Nippel	Niple	
15	**VOE 4881722**	2					•O-ring	•Joint Torique	•O-Ring	•Junta torica	
16	**VOE 935756**	1					Plug	Bouchon	Stopfen	Tapon	
17	**VOE 11884273**	1					Hose	Flexible	Schlauch	Manguera	
18	**VOE 11885514**	1					Hose	Durit	Schlauch	Tubo flexible	
19	**VOE 935082**	1					Nipple	Raccord	Nippel	Niple	
20	**VOE 4881722**	1					•O-ring	•Joint Torique	•O-Ring	•Junta torica	
21	**VOE 932037**	1					•O-ring	•Joint Torique	•O-Ring	•Junta torica	
22	**VOE 936339**	1					Hose assembly	Condui.flexible	Schlauchleitung	Conducto	
23	**VOE 11884794**	1					Fitting	Ecrou raccord	Verschraubung	Racor	
24	**VOE 936439**	1					Testing Nipple	Raccord contrôle	Prufnippel	Niple Medicion	
25	**VOE 11881049**	1					Clamp	Pince Serrage	Klemme	Abrazadera	
26	**VOE 967633**	1					Allen Hd Screw	Vis A 6 Pans Cr	Inbusschraube	Torn Hex Embut	
27	**VOE 14016673**	3					Strip Clamp	Ruban Serrage	Kabelbinder	Abraz Cinta	
28		2					Tube	Tube	Rohr	Tubo	See group 912, Page 613
29		2					Hose	Durit	Schlauch	Tubo flexible	See group 912, Page 613

1		**Cilindros de pluma y brazo, válvulas de seguridad** **Sicherheitsventil Ausleger und Stielzylinder** **Valve de sécurité, flèche et balancier** **Safety valve boom and dipper arm cylinder**	Catalogue id **20050**	Group **911**
2			Illustr. No **1016295**	Section **1400**
3			Issue **VOE 64D9920050**	Page **587**
4				
5		**11891150**		

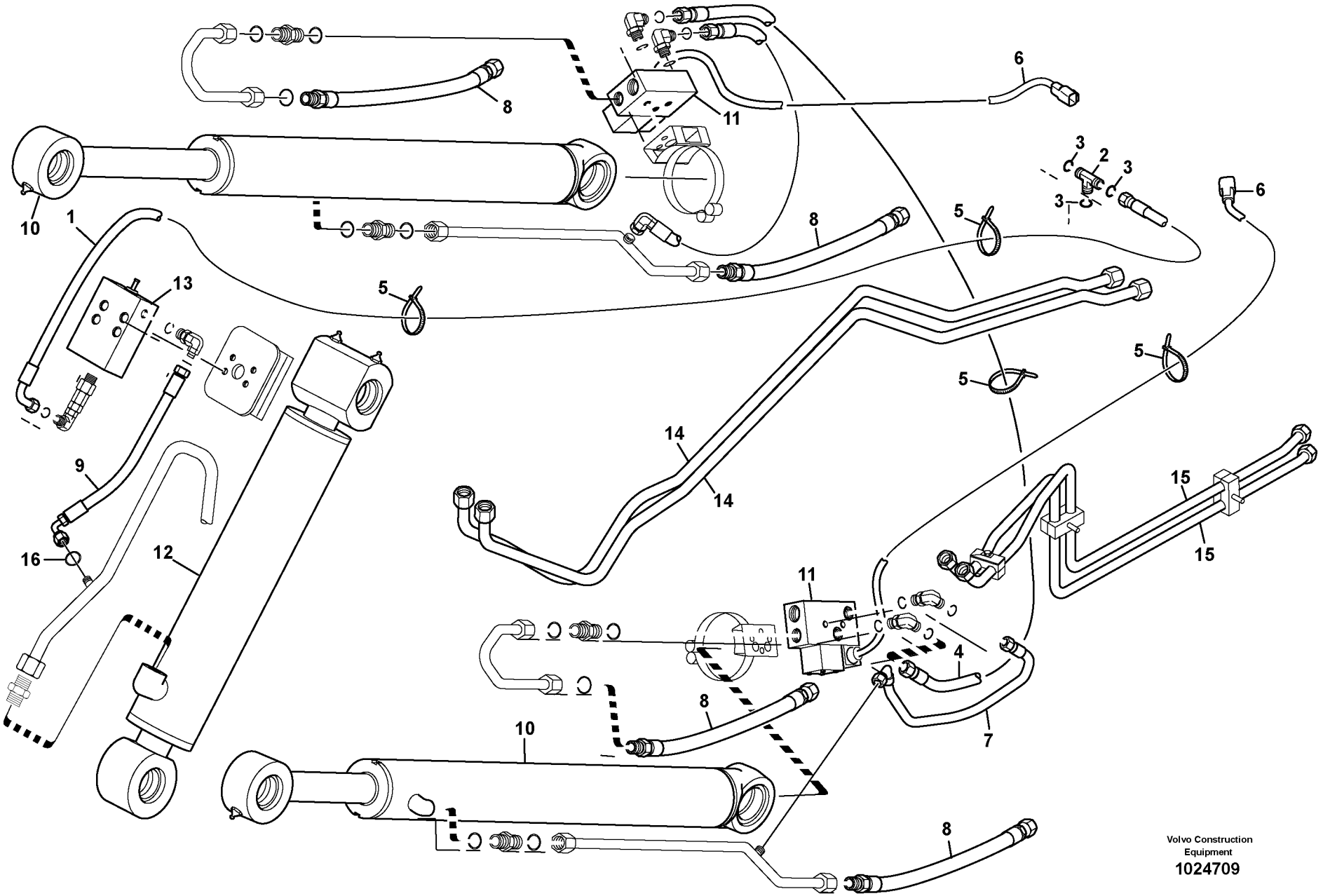

Volvo Construction Equipment
1024709

Fig.	Part No.	Quantity 1	2	3	PS	KIT	Description	Dénomination	Bezeichnung	Denominación	Notes
1	**VOE 11885214**	1					Hose	Durit	Schlauch	Tubo flexible	
2	**VOE 11884247**	1					Fitting	Ecrou raccord	Verschraubung	Racor	
3	**VOE 4881722**	3					•O-ring	•Joint Torique	•O-Ring	•Junta torica	
4	**VOE 11886733**	1					Hose assembly	Conduit flexible	Schlauchleitung	Conducto	
5	**VOE 14016673**	36					Strip Clamp	Ruban Serrage	Kabelbinder	Abraz Cinta	
6	**VOE 11886751**	2					Wire harness	Faisceau electrique	Kabelbaum	Manojo cables	
7	**VOE 11886441**	2					Hose assembly	Conduit flexible	Schlauchleitung	Conducto	
8	**VOE 11886745**	4					Hose assembly	Conduit flexible	Schlauchleitung	Conducto	
9	**VOE 11884437**	1					Hose	Durit	Schlauch	Tubo flexible	
10		2					Hydraulic cylinder	Vérin hydraulique	Hydraulzylinder	Cilindro hidráulico	See group 945, Page 709
11		2					Valve	Soupape	Ventil	Valvula	See group 912, Page 617
12		1					Hydraulic cylinder	Vérin hydraulique	Hydraulzylinder	Cilindro hidráulico	See group 945, Page 711
13		1					Valve	Soupape	Ventil	Valvula	See group 912, Page 617
14		2					Tube	Tube	Rohr	Tubo	See group 911, Page 551
15		2					Tube	Tube	Rohr	Tubo	See group 911, Page 551
16	**VOE 990738**	1					O-ring	Joint Torique	O-Ring	Junta torica	

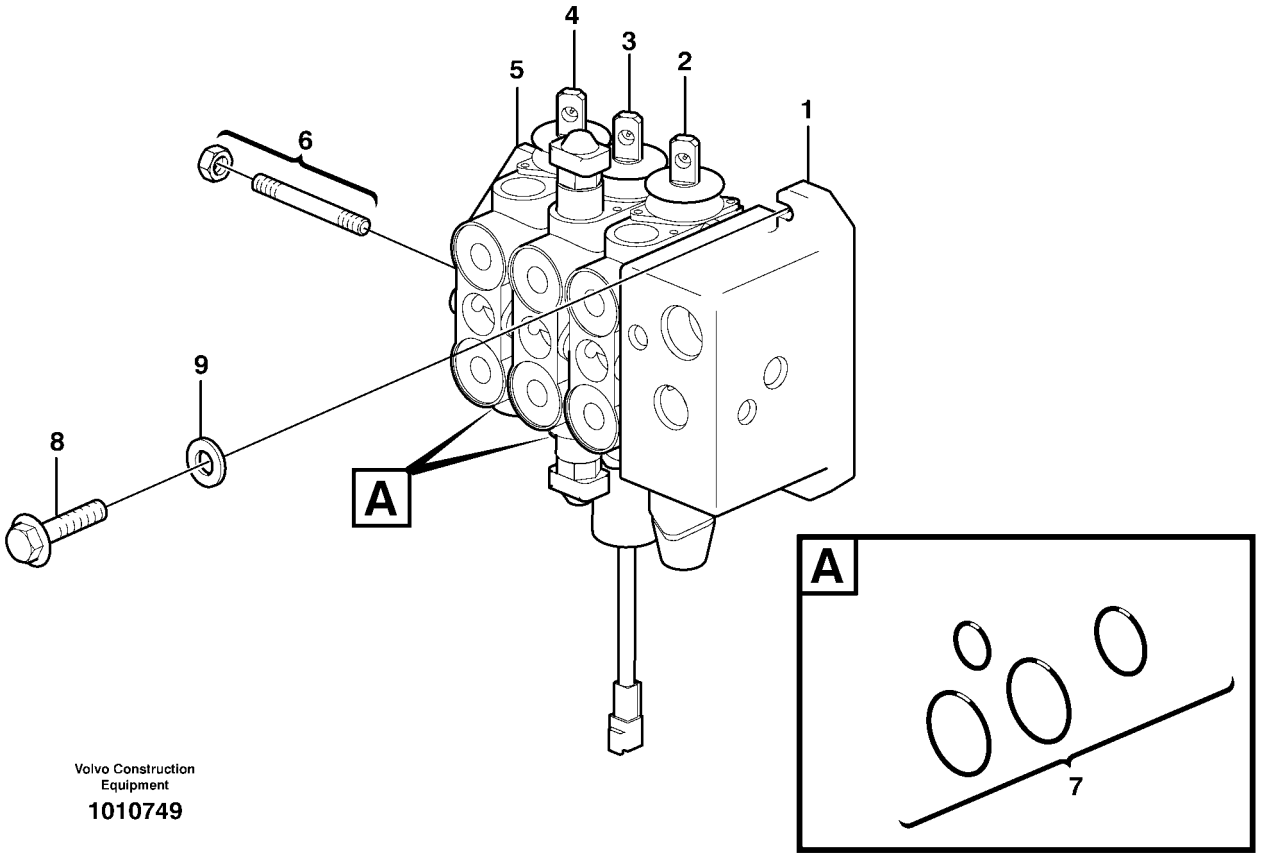

Volvo Construction Equipment

1010749

Fig.	Part No.	Quantity 1	2	3	PS	KIT	Description	Dénomination	Bezeichnung	Denominación	Notes
	VOE 11886541	1					Valve	Soupape	Ventil	Valvula	
	VOE 11886542		1				Valve	Soupape	Ventil	Valvula	
1	**VOE 11712893**	1	1				•Inlet valve	•Soupape d'entrée	•Einlassventil	•Valvula de entrada	See group 912, Page 593
2	**VOE 11712894**	1	1				•Direction Valve	•Valve Direction	•Wegeventil	•Valvula Orient	See group 912, Page 597
							••Valve, Lift cylinder	••Valve, vérin de levage	••Ventil, Hubzylinder	••Válvula, cilindro de elevac.	
3	**VOE 11712895**	1	1				•Direction Valve	•Valve Direction	•Wegeventil	•Valvula Orient	See group 912, Page 599
							••Valve, Tilt	••Valve, basculement	••Ventil, Kippzylinder	••Válvula, volteo	
4	**VOE 11712896**		1				•Direction Valve	•Valve Direction	•Wegeventil	•Valvula Orient	See group 912, Page 595
							••Valve, Bucket opening	••Valve, ouverture de godet	••Ventil, Auskippen	••Válvula, apertura de la cu.	
5	**VOE 11712897**	1	1				•Direction Valve	•Valve Direction	•Wegeventil	•Valvula Orient	
							••Exhaust valve	••Soupape d'échappement	••Auslassventil	••Válvula de escape	
6	**VOE 11712898**	1					•Screw Kit	•Kit Vis	•Schraubensatz	•Juego Tornillos	
	VOE 11712622		1				•Screw Kit	•Kit Vis	•Schraubensatz	•Juego Tornillos	
7	**VOE 11712623**	3	4				•Sealing Kit	•Jeu Joints	•Dichtungssatz	•Juego Retenes	
8	**VOE 983253**	3	3				Hexagon screw	Vis tête hexagonale	Sechskantschraube	Tornillo hexago	
9	**VOE 13930842**	3	3				Washer	Rondelle	Scheibe	Arandela	

1	**11886541**
2	**11886542**
3	
4	
5	

Bloque de válvulas
Ventilgruppe
Bloc-soupapes
Valve body

Catalogue id	Group
20050	**912**
Illustr. No **1010749**	Section **150**
Issue **VOE 64D9920050**	Page **591**

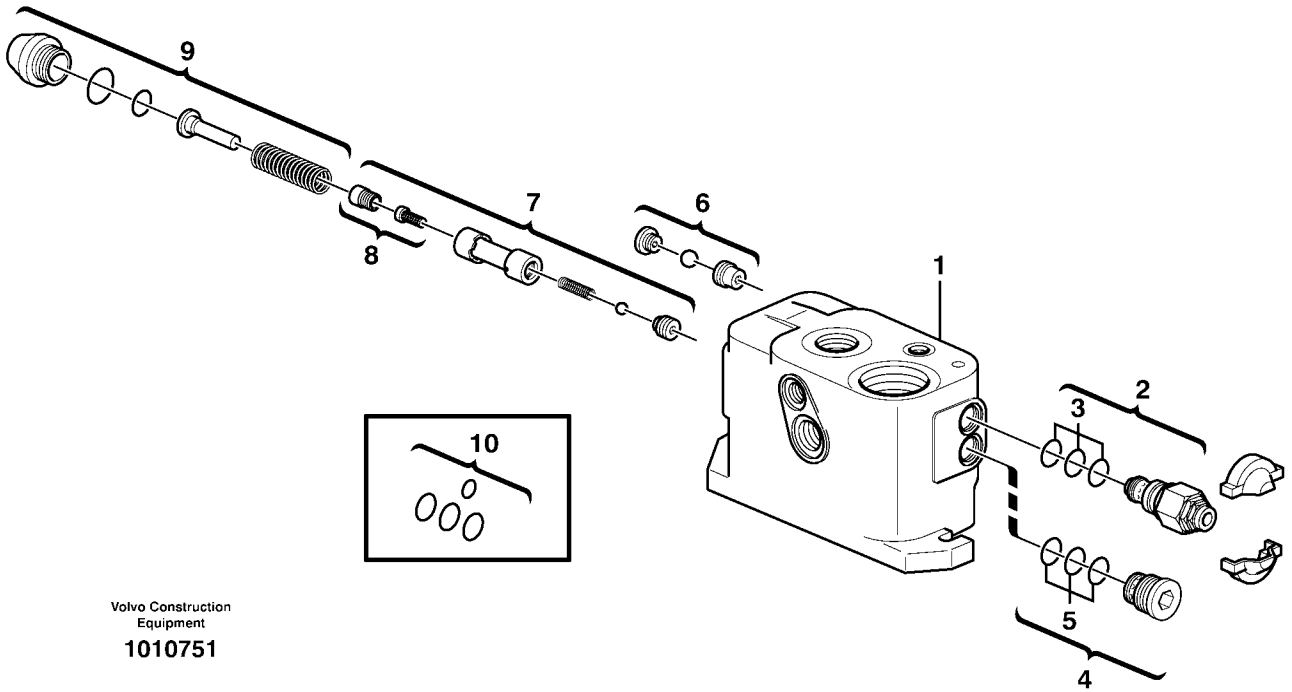

Volvo Construction Equipment

1010751

Fig.	Part No.	Quantity 1	2	3	PS	KIT	Description	Dénomination	Bezeichnung	Denominación	Notes
1	**VOE 11712893**	1					Inlet valve	Soupape d'entrée	Einlassventil	Valvula de entrada	
2	**VOE 11988524**	1					•Relief valve	•Limiteur - pression	•Druckbegrenzer	•Limitador presion	
3	**VOE 11988540**	1					••Sealing Kit	••Jeu Joints	••Dichtungssatz	••Juego Retenes	
4	**VOE 11712903**	1					•Plug	•Bouchon	•Stopfen	•Tapon	
5	**VOE 11988539**	1					••Sealing Kit	••Jeu Joints	••Dichtungssatz	••Juego Retenes	
6	**VOE 11712902**	1					•Shuttle Valve	•Valve Navette	•Wechselventil	•Valv Lanzadera	
7	**VOE 11712900**	1					•Spool	•Bobine	•Schieber	•Bobina	
8	**VOE 11712901**	1					••Filter Kit	••Lot de filtres	••Filtersatz	••Juego Filtro	
9	**VOE 11712899**	1					•Plug Kit	•Kit Tampon	•Stopfensatz	•Kit Tapones	
10	**VOE 11988537**	1					•Sealing Kit	•Jeu Joints	•Dichtungssatz	•Juego Retenes	

1	**11712893**	**Válvula de admisión** **Einlassventil** **Soupape d'admission** **Inlet valve**	Catalogue id **20050**	Group **912**
2			Illustr. No **1010751**	Section **200**
3			Issue **VOE 64D9920050**	Page **593**
4				
5				

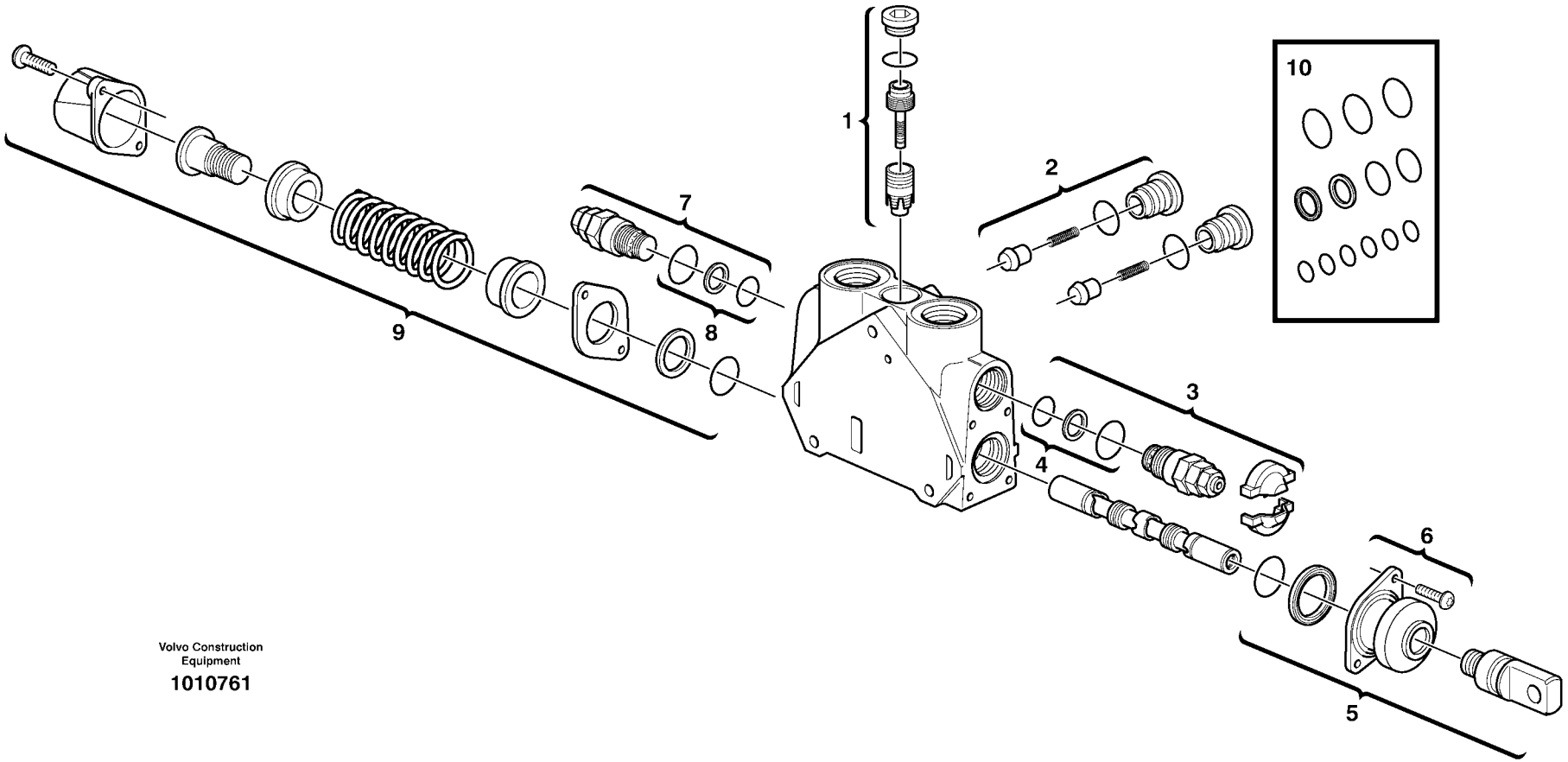

Volvo Construction Equipment

1010761

Fig.	Part No.	Quantity 1	2	3	PS	KIT	Description	Dénomination	Bezeichnung	Denominación	Notes
	VOE 11712896	1					Direction Valve	Valve Direction	Wegeventil	Valvula Orient	
							••Valve, Bucket opening	••Valve, ouverture de godet	••Ventil, Auskippen	••Válvula, apertura de la cu	
1	**VOE 11988526**	1					•Press Regulator	•Regulateu Press	•Druckregler	•Regul Presion	
2	**VOE 11988527**	1					•Check valve	•Valve antiretour	•Rückschlagventil	•Válvula de retención	
3	**VOE 11988532**	1					•Relief valve	•Limiteur - pression	•Druckbegrenzer	•Limitador presion	
4	**VOE 11988541**	1					••Sealing Kit	••Jeu Joints	••Dichtungssatz	••Juego Retenes	
5	**VOE 11715275**	1					•Control	•Commande	•Regelung	•Mando	
6	**VOE 11712580**	1					••Bellows Kit	••Kit soufflet	••Balgsatz	••Juego fuelle	
7	**VOE 11988533**	1					•Valve	•Soupape	•Ventil	•Valvula	
8	**VOE 11988541**	1					••Sealing Kit	••Jeu Joints	••Dichtungssatz	••Juego Retenes	
9	**VOE 11988529**	1					•Control	•Commande	•Regelung	•Mando	
10	**VOE 11715251**	1					•Sealing Kit	•Jeu Joints	•Dichtungssatz	•Juego Retenes	

1	**11712896**	**Sección de válvulas** **Ventil** **Section de valve** **Valve section**	Catalogue id **20050**	Group **912**
2			Illustr. No **1010761**	Section **225**
3			Issue **VOE 64D9920050**	Page **595**
4				
5				

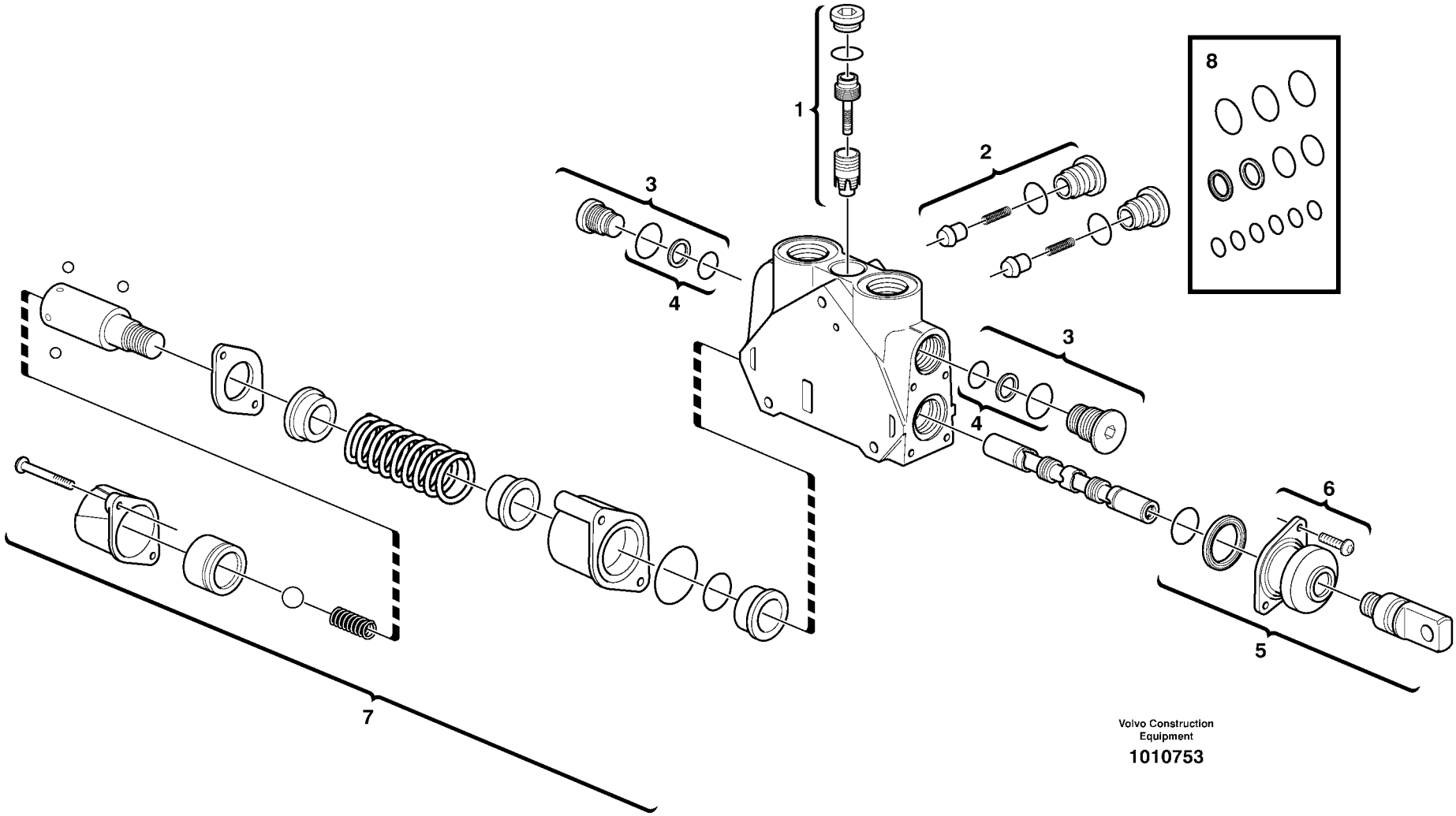

Volvo Construction Equipment

1010753

Fig.	Part No.	Quantity 1	2	3	PS	KIT	Description	Dénomination	Bezeichnung	Denominación	Notes
	VOE 11712894	1					Direction Valve	Valve Direction	Wegeventil	Valvula Orient	
							••Valve, Lift cylinder	••Valve, vérin de levage	••Ventil, Hubzylinder	••Válvula, cilindro de elevac.	
1	**VOE 11988526**	1					•Press Regulator	•Regulateu Press	•Druckregler	•Regul Presion	
2	**VOE 11988527**	1					•Check valve	•Valve antiretour	•Rückschlagventil	•Válvula de retención	
3	**VOE 11712886**	2					•Plug	•Bouchon	•Stopfen	•Tapon	
4	**VOE 11988541**	1					••Sealing Kit	••Jeu Joints	••Dichtungssatz	••Juego Retenes	
5	**VOE 11715275**	1					•Control	•Commande	•Regelung	•Mando	
6	**VOE 11712580**	1					••Bellows Kit	••Kit soufflet	••Balgsatz	••Juego fuelle	
7	**VOE 11715296**	1					•Control	•Commande	•Regelung	•Mando	
8	**VOE 11715251**	1					•Sealing Kit	•Jeu Joints	•Dichtungssatz	•Juego Retenes	

1	**11712894**	**Sección de válvulas** **Ventil** **Section de valve** **Valve section**	Catalogue id **20050**	Group **912**
2			Illustr. No **1010753**	Section **250**
3				
4			Issue **VOE 64D9920050**	Page **597**
5				

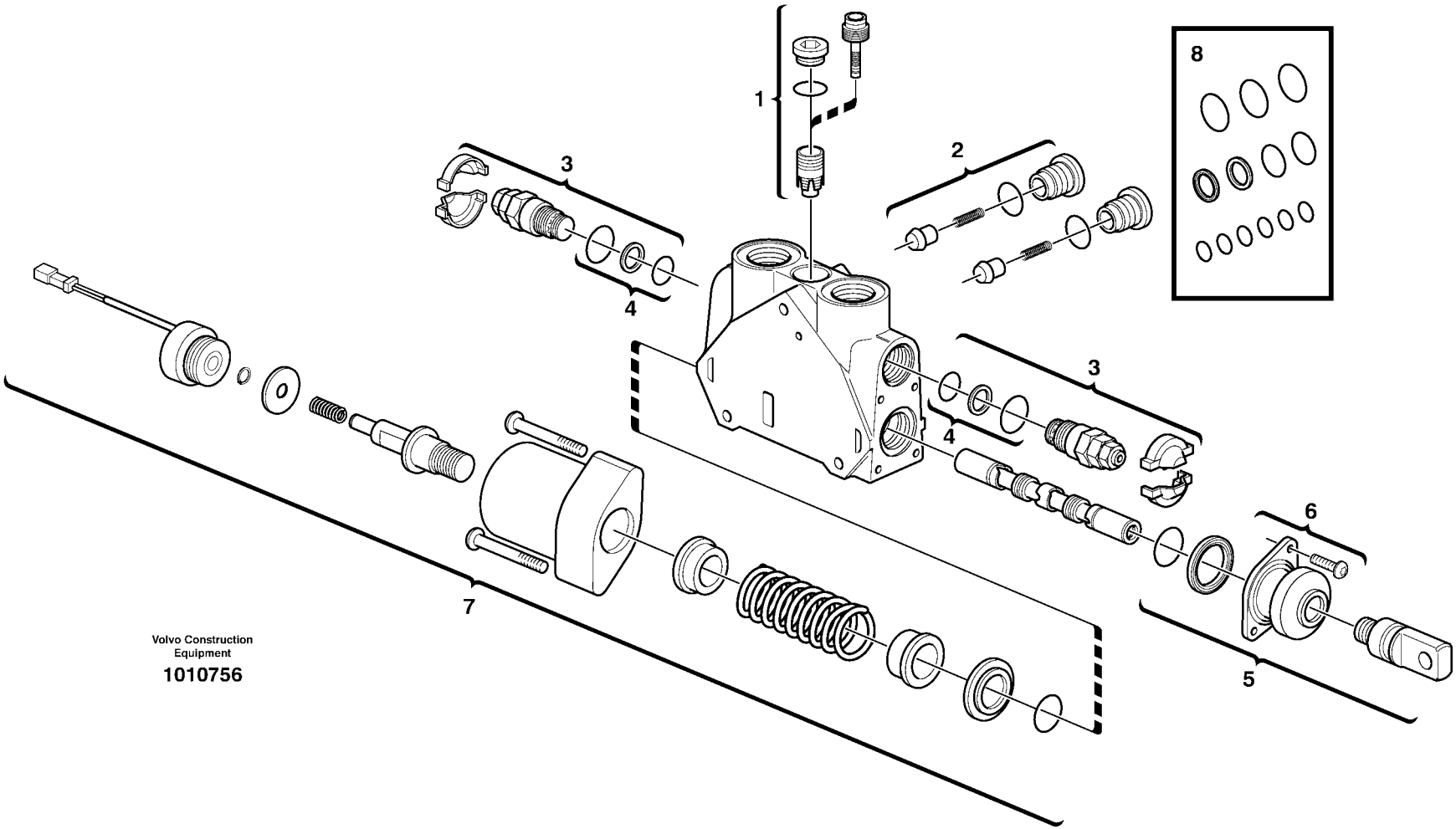

Volvo Construction Equipment

1010756

Fig.	Part No.	Quantity 1	2	3	PS	KIT	Description	Dénomination	Bezeichnung	Denominación	Notes
	VOE 11712895	1					Direction Valve	Valve Direction	Wegeventil	Valvula Orient	
							••Valve, Lift cylinder	••Valve, vérin de levage	••Ventil, Hubzylinder	••Válvula, cilindro de elevac.	
1	**VOE 11988526**	1					•Press Regulator	•Regulateu Press	•Druckregler	•Regul Presion	
2	**VOE 11988527**	1					•Check valve	•Valve antiretour	•Rückschlagventil	•Válvula de retención	
3	**VOE 11988532**	2					•Relief valve	•Limiteur - pression	•Druckbegrenzer	•Limitador presion	
4	**VOE 11988541**	1					••Sealing Kit	••Jeu Joints	••Dichtungssatz	••Juego Retenes	
5	**VOE 11715275**	1					•Control	•Commande	•Regelung	•Mando	
6	**VOE 11712580**	1					••Bellows Kit	••Kit soufflet	••Balgsatz	••Juego fuelle	
7	**VOE 11712905**	1					•Control	•Commande	•Regelung	•Mando	
8	**VOE 11715251**	1					•Sealing Kit	•Jeu Joints	•Dichtungssatz	•Juego Retenes	

1	**11712895**	**Sección de válvulas** **Ventil** **Section de valve** **Valve section**	Catalogue id **20050**	Group **912**
2			Illustr. No **1010756**	Section **275**
3				
4			Issue **VOE 64D9920050**	Page **599**
5				

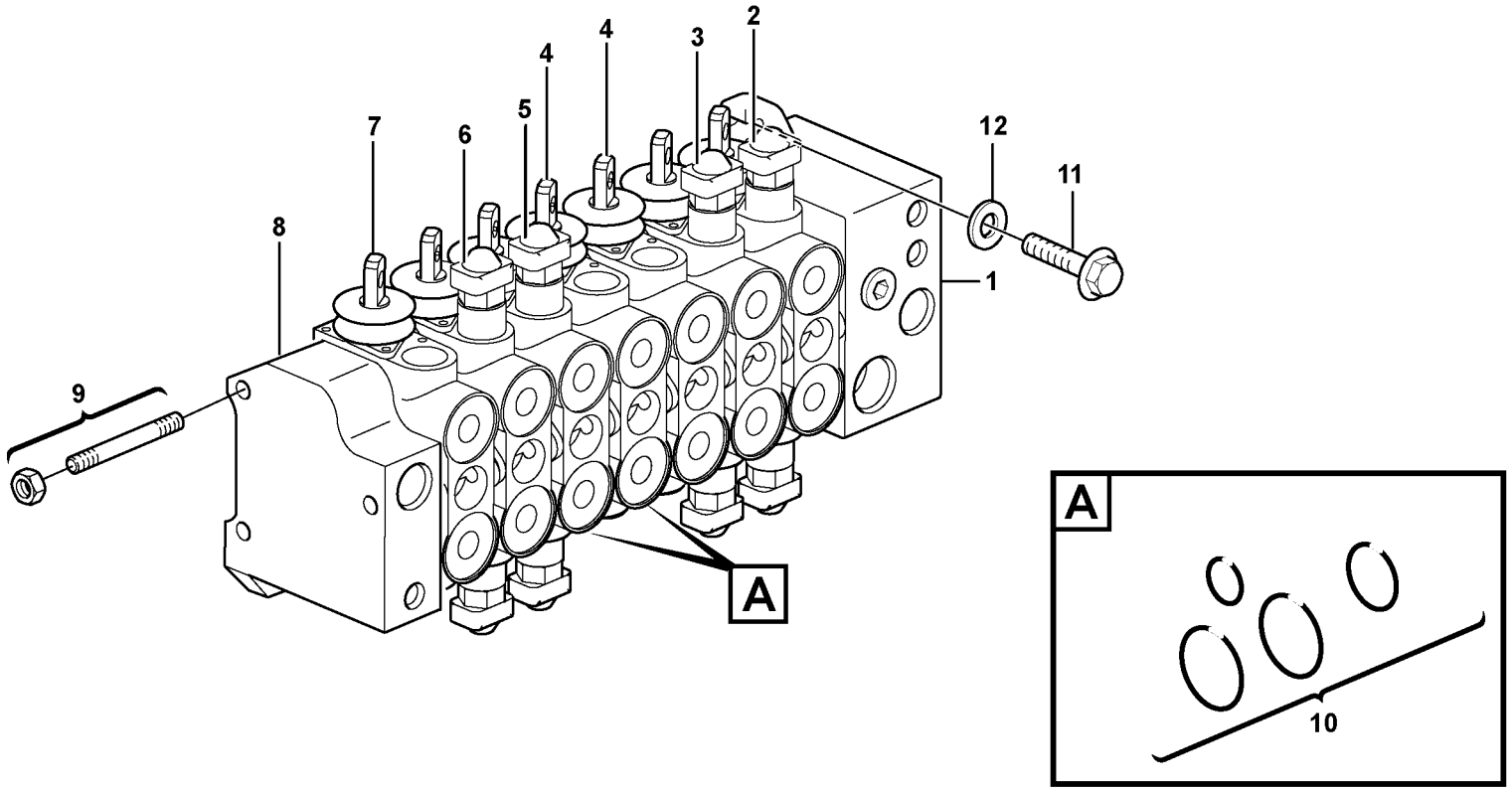
1
2
3
4
4
4
5
6
7
8
9
10
11
12
A
A

Fig.	Part No.	Quantity 1	2	3	PS	KIT	Description	Dénomination	Bezeichnung	Denominación	Notes
	VOE 11886143	1					Valve	Soupape	Ventil	Valvula	
	VOE 11886144		1				Valve	Soupape	Ventil	Valvula	
1	**VOE 11712877**	1	1				•Inlet valve	•Soupape d'entrée	•Einlassventil	•Valvula de entrada	See group 912, Page 603
2	**VOE 11712879**	1	1				•Direction Valve	•Valve Direction	•Wegeventil	•Valvula Orient	See group 912, Page 607
							••Valve, Slew	••Valve, orientation	••Ventil, Schwenk	••Válvula, giro	
3	**VOE 11715273**	1	1				•Direction Valve	•Valve Direction	•Wegeventil	•Valvula Orient	See group 912, Page 607
							••Valve, Boom cylinder	••Valve, vérin de flèche	••Ventil, Auslegerzylinder	••Válvula, cilindro de pluma	
4	**VOE 11715274**	2	2				•Direction Valve	•Valve Direction	•Wegeventil	•Valvula Orient	See group 912, Page 609
							••Valve, Stabilisers	••Valve, stabilisateur	••Ventil, Stützbeine	••Válvula, patas de apoyo	
5	**VOE 11712883**	1	1				•Direction Valve	•Valve Direction	•Wegeventil	•Valvula Orient	See group 912, Page 607
							••Valve, Dipper arm cylinde	••Valve, vérin de balancier	••Ventil, Schaftzylinder	••Válvula, cilindro del brazo	
6	**VOE 11712884**	1	1				•Direction Valve	•Valve Direction	•Wegeventil	•Valvula Orient	See group 912, Page 607
							••Valve, Bucket cylinder	••Valve, vérin de godet	••Ventil, Schaufelzylinder	••Válvula, cilindro de cucha	
7	**VOE 11712885**		1				•Direction Valve	•Valve Direction	•Wegeventil	•Valvula Orient	See group 912, Page 609
							••Valve, Telescope cylinder	••Valve, vérin de flèche téle	••Ventil, Teleskopzylinder	••Válvula, cilindro telescópi	
8	**VOE 11988522**	1	1				•Direction Valve	•Valve Direction	•Wegeventil	•Valvula Orient	See group 912, Page 611
							••Exhaust valve	••Soupape d'échappement	••Auslassventil	••Válvula de escape	
9	**VOE 11712921**	1					•Screw Kit	•Kit Vis	•Schraubensatz	•Juego Tornillos	
	VOE 11712888		1				•Screw Kit	•Kit Vis	•Schraubensatz	•Juego Tornillos	
10	**VOE 11712623**	7	8				•Sealing Kit	•Jeu Joints	•Dichtungssatz	•Juego Retenes	
11	**VOE 983253**	3	3				Hexagon screw	Vis tête hexagonale	Sechskantschraube	Tornillo hexago	
12	**VOE 13930842**	3	3				Washer	Rondelle	Scheibe	Arandela	

1	**11886143**	**Bloque de válvulas** **Ventilgruppe** **Bloc-soupapes** **Valve body**	Catalogue id **20050**	Group **912**
2	**11886144**		Illustr. No **1013552**	Section **300**
3			Issue **VOE 64D9920050**	Page **601**
4				
5				

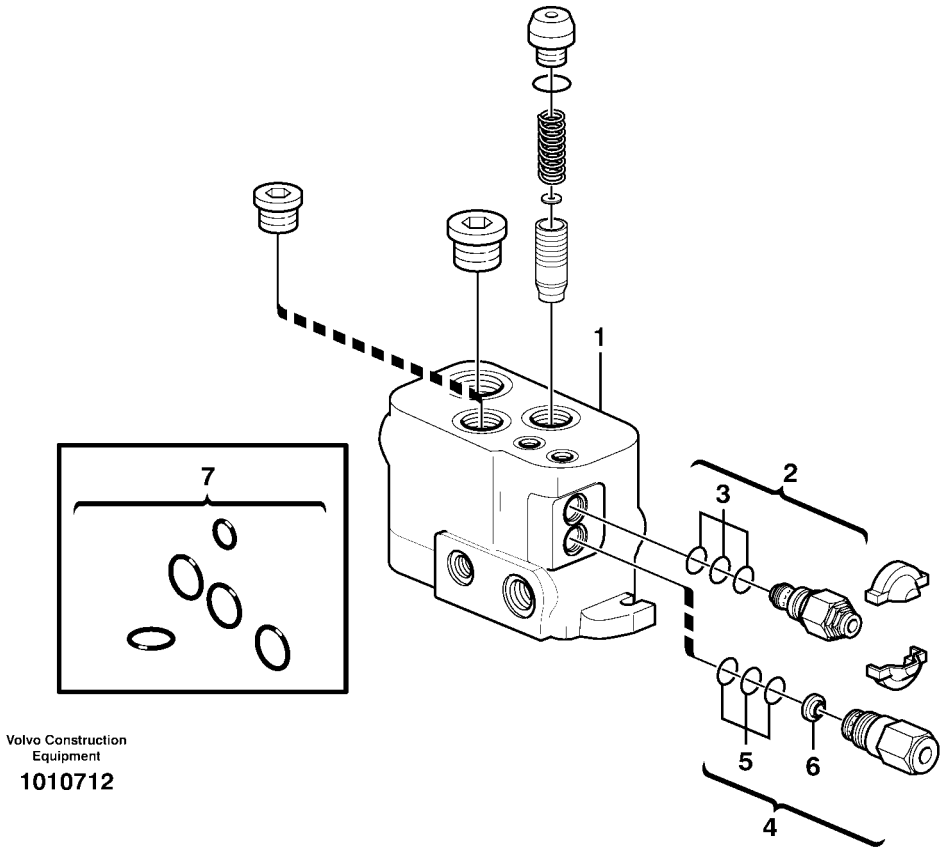

Volvo Construction Equipment

1010712

Fig.	Part No.	Quantity 1	2	3	PS	KIT	Description	Dénomination	Bezeichnung	Denominación	Notes
1	**VOE 11712877**						Inlet valve	Soupape d'entrée	Einlassventil	Valvula de entrada	
2	**VOE 11988524**	1					•Relief valve	•Limiteur - pression	•Druckbegrenzer	•Limitador presion	
3	**VOE 11988540**	1					••Sealing Kit	••Jeu Joints	••Dichtungssatz	••Juego Retenes	
4	**VOE 11988525**	1					•Flow Adj Valve	•Valve Reg.debit	•Flussregelvent	•Valv Ajust Caud	
5	**VOE 11988539**	1					••Sealing Kit	••Jeu Joints	••Dichtungssatz	••Juego Retenes	
6	**VOE 11710925**	1					••Filter	••Filtre	••Filter	••Filtro	
7	**VOE 11988537**	1					•Sealing Kit	•Jeu Joints	•Dichtungssatz	•Juego Retenes	

1	**11712877**	**Válvula de admisión** **Einlassventil** **Soupape d'admission** **Inlet valve**	Catalogue id **20050**	Group **912**
2			Illustr. No **1010712**	Section **350**
3			Issue **VOE 64D9920050**	Page **603**
4				
5				

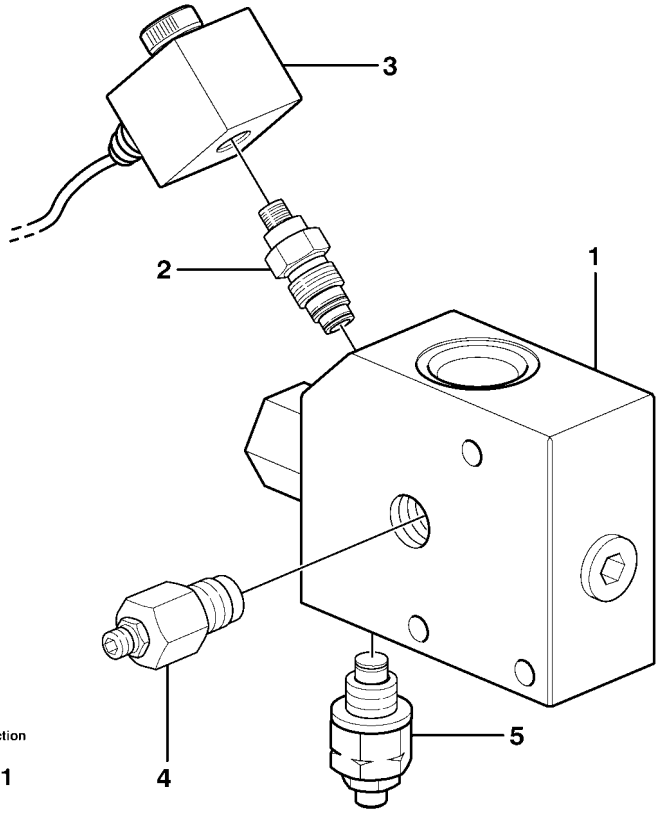

Volvo Construction Equipment

1009751

Fig.	Part No.	Quantity 1	2	3	PS	KIT	Description	Dénomination	Bezeichnung	Denominación	Notes
1	**VOE 11885771**	1					Valve	Soupape	Ventil	Valvula	
2	**VOE 11712724**	1					•Solenoid valve	•Vanne electrom.	•Magnetventil	•Electrovalvula	
	VOE 11712725	1					••Sealing Kit	••Jeu Joints	••Dichtungssatz	••Juego Retenes	
3	**VOE 11711130**	1					•Coil	•Bobine	•Zündspule	•Bobina	
4	**VOE 11712726**	1					•Flow Valve	•Robinet Debit	•Flussventil	•Valvula Caudal	
	VOE 11712727	1					••Sealing Kit	••Jeu Joints	••Dichtungssatz	••Juego Retenes	
5	**VOE 11712728**	1					•Pressure Limiting Valve	•Pressure Limiti	•Pressure Limiti	•Pressure Limiti	
	VOE 11712729	1					••Sealing Kit	••Jeu Joints	••Dichtungssatz	••Juego Retenes	

1		**Electrovalvula** **Magnetventil** **Vanne electromagnetique** **Magnet valve**	Catalogue id **20050**	Group **912**
2			Illustr. No **1009751**	Section **400**
3			Issue **VOE 64D9920050**	Page **605**
4				
5		**11891455**		

VOLVO

BL61

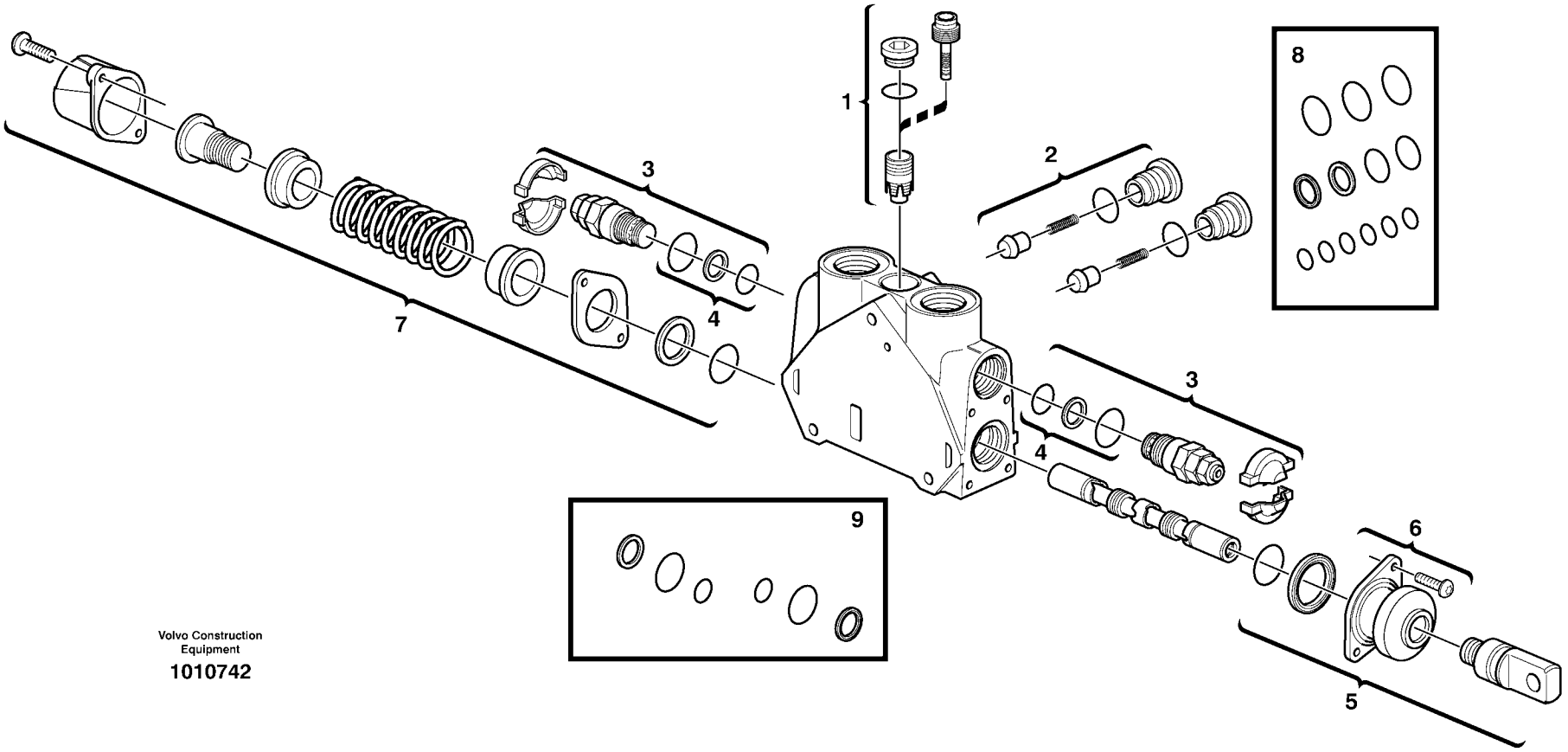

Volvo Construction Equipment

1010742

Fig.	Part No.	Quantity 1	2	3	4	5	PS	KIT	Description	Dénomination	Bezeichnung	Denominación	Notes
	VOE 11712879	1							Direction Valve	Valve Direction	Wegeventil	Valvula Orient	
									•Valve, Slew	•Valve, orientation	•Ventil, Schwenk	•Válvula, giro	
	VOE 11715273		1						Direction Valve	Valve Direction	Wegeventil	Valvula Orient	
									•Valve, Boom cylinder	•Valve, vérin de flèche	•Ventil, Auslegerzylinder	•Válvula, cilindro de plu	
	VOE 11712883			1					Direction Valve	Valve Direction	Wegeventil	Valvula Orient	
									•Valve, Dipper arm cylin	•Valve, vérin de balancie	•Ventil, Schaftzylinder	•Válvula, cilindro del bra	
	VOE 11712884				1				Direction Valve	Valve Direction	Wegeventil	Valvula Orient	
									•Valve, Bucket cylinder	•Valve, vérin de godet	•Ventil, Schaufelzylinder	•Válvula, cilindro de cuc	
1	**VOE 11988526**		1	1	1				•Press Regulator	•Regulateu Press	•Druckregler	•Regul Presion	
	VOE 11712880	1							•Compensator	•Compensateur	•Kompensator	•Compensador	
2	**VOE 11988527**	1	1	1	1				•Check valve	•Valve antiretour	•Rückschlagventil	•Válvula de retención	
3	**VOE 11988532**	2	2	2	2				•Relief valve	•Limiteur - pression	•Druckbegrenzer	•Limitador presion	
4	**VOE 11988541**	1	1	1	1				••Sealing Kit	••Jeu Joints	••Dichtungssatz	••Juego Retenes	
5	**VOE 11715275**	1	1	1	1				•Control	•Commande	•Regelung	•Mando	
6	**VOE 11712580**	1	1	1	1				••Bellows Kit	••Kit soufflet	••Balgsatz	••Juego fuelle	
7	**VOE 11988529**	1		1	1				•Control	•Commande	•Regelung	•Mando	
7	**VOE 11715276**		1						•Control	•Commande	•Regelung	•Mando	
8	**VOE 11715251**	1	1	1	1				•Sealing Kit	•Jeu Joints	•Dichtungssatz	•Juego Retenes	
9	**VOE 11715252**	1		1					•Sealing Kit	•Jeu Joints	•Dichtungssatz	•Juego Retenes	

1	**11712879**
2	**11715273**
3	**11712883**
4	**11712884**
5	

Sección de válvulas
Ventil
Section de valve
Valve section

Catalogue id **20050**	Group **912**
Illustr. No **1010742**	Section **500**
Issue **VOE 64D9920050**	Page **607**

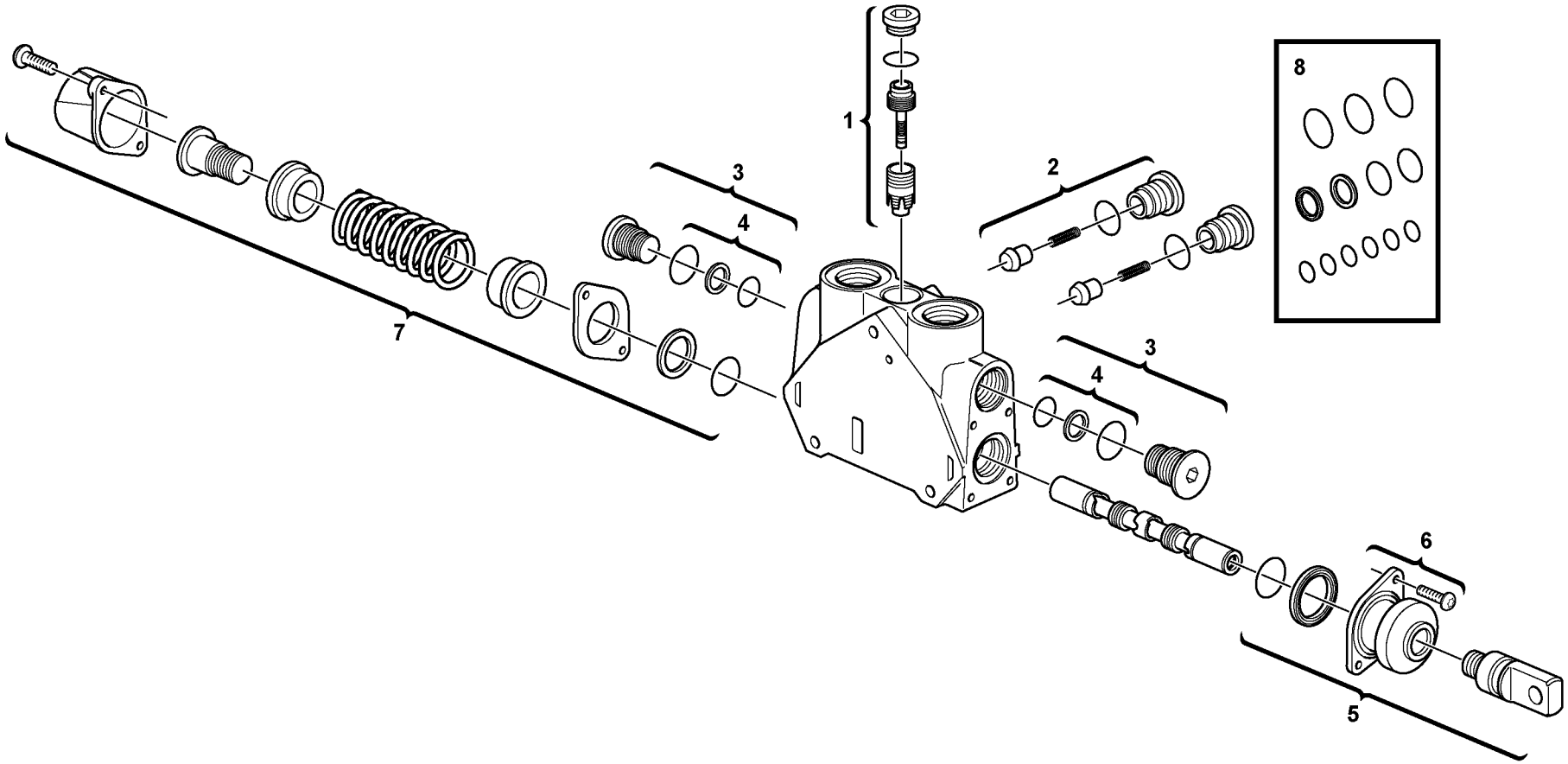
1
2
3
4
3
4
5
6
7
8

Fig.	Part No.	Quantity 1	2	3	PS	KIT	Description	Dénomination	Bezeichnung	Denominación	Notes
	VOE 11715274	1					Direction Valve	Valve Direction	Wegeventil	Valvula Orient	
							••Valve, Stabilisers	••Valve, stabilisateur	••Ventil, Stützbeine	••Válvula, patas de apoyo	
	VOE 11712885		1				Direction Valve	Valve Direction	Wegeventil	Valvula Orient	
							••Valve, Telescope cylinder	••Valve, vérin de flèche téle	••Ventil, Teleskopzylinder	••Válvula, cilindro telescópi	
1	**VOE 11988526**	1	1				•Press Regulator	•Regulateu Press	•Druckregler	•Regul Presion	
2	**VOE 11988527**	1	1				•Check valve	•Valve antiretour	•Rückschlagventil	•Válvula de retención	
3	**VOE 11712886**		2				•Plug	•Bouchon	•Stopfen	•Tapon	
4	**VOE 11988541**		1				••Sealing Kit	••Jeu Joints	••Dichtungssatz	••Juego Retenes	
5	**VOE 11715275**	1	1				•Control	•Commande	•Regelung	•Mando	
6	**VOE 11712580**	1	1				••Bellows Kit	••Kit soufflet	••Balgsatz	••Juego fuelle	
7	**VOE 11715276**	1					•Control	•Commande	•Regelung	•Mando	
7	**VOE 11988529**		1				•Control	•Commande	•Regelung	•Mando	
8	**VOE 11715251**	1	1				•Sealing Kit	•Jeu Joints	•Dichtungssatz	•Juego Retenes	

1	**11715274**	**Sección de válvulas** **Ventil** **Section de valve** **Valve section**	Catalogue id **20050** / Group **912**
2	**11712885**		Illustr. No **1017617** / Section **550**
3			Issue **VOE 64D9920050** / Page **609**
4			
5			

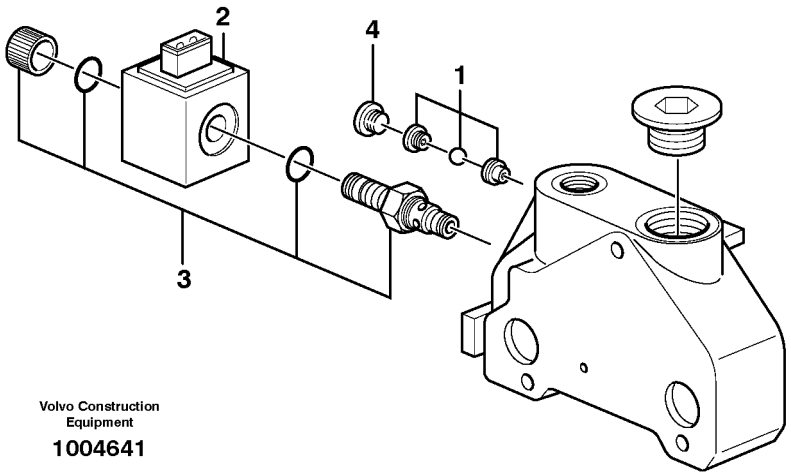

Volvo Construction Equipment

1004641

Fig.	Part No.	Quantity 1	2	3	PS	KIT	Description	Dénomination	Bezeichnung	Denominación	Notes
	VOE 11988522						Direction Valve	Valve Direction	Wegeventil	Valvula Orient	
1	**VOE 11988534**	1					•Shuttle Valve	•Valve Navette	•Wechselventil	•Valv Lanzadera	
2	**VOE 11988535**	1					•Solenoid	•Solénoide	•Magnet	•Solenoide	
3	**VOE 11988536**	1					•Two-way Valve	•Robint 2 Voies	•Zweiwegeventil	•Valvula 2 Vias	
4	**VOE 11716488**	1					•Plug	•Bouchon	•Stopfen	•Tapon	

1		**Válvula de escape** **Auslassventil** **Soupape d'échappement** **Exhaust valve**	Catalogue id **20050**	Group **912**
2			Illustr. No **1004641**	Section **600**
3				
4			Issue **VOE 64D9920050**	Page **611**
5				

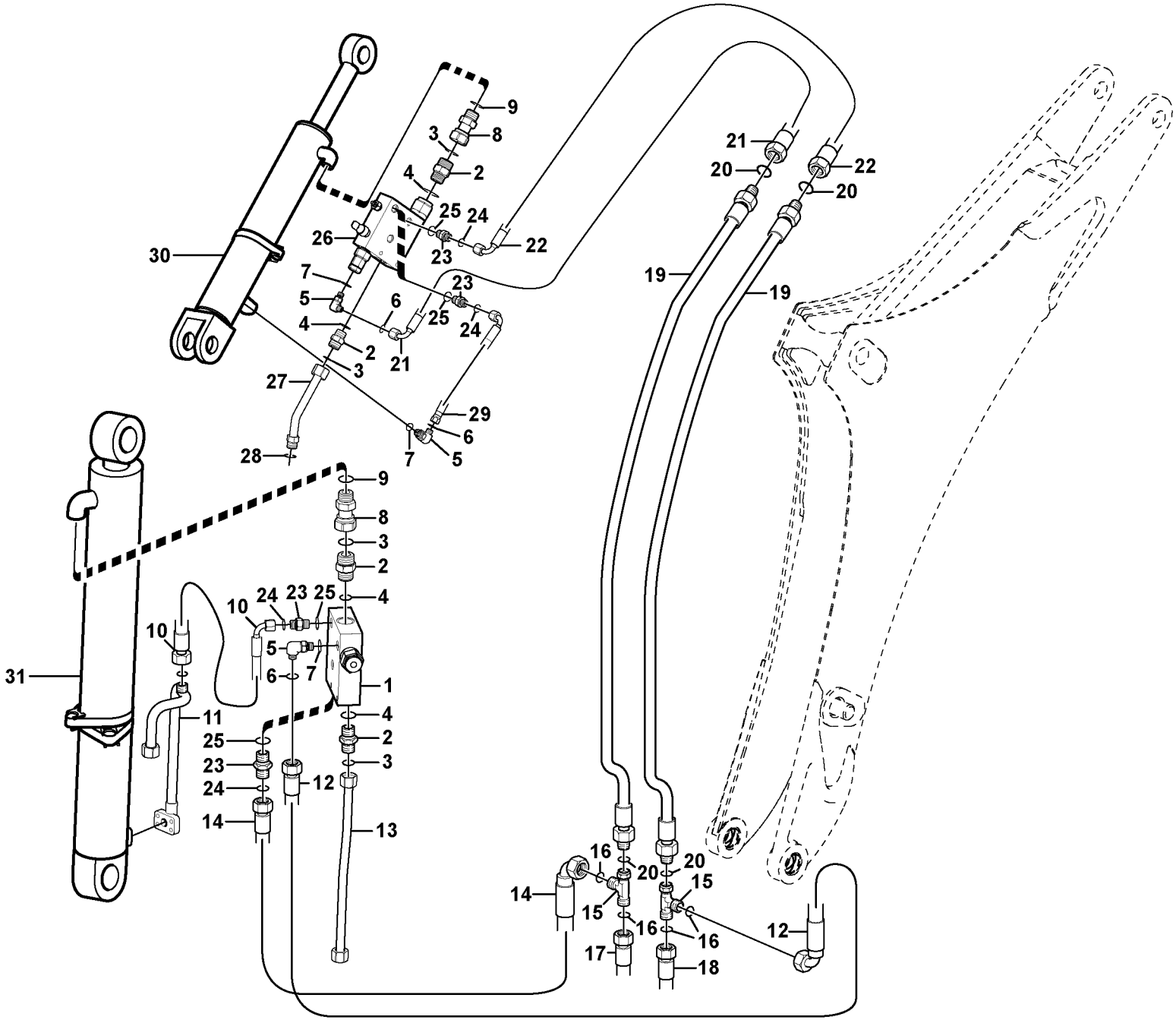

Volvo Construction Equipment
1016305

Fig.	Part No.	Quantity 1	2	3	PS	KIT	Description	Dénomination	Bezeichnung	Denominación	Notes
1	**VOE 11884060**	1					Valve	Soupape	Ventil	Valvula	
2	**VOE 13933862**	4					Nipple	Raccord	Nippel	Niple	
3	**VOE 981289**	1					•O-ring	•Joint Torique	•O-Ring	•Junta torica	
4	**VOE 932042**	1					•O-ring	•Joint Torique	•O-Ring	•Junta torica	
5	**VOE 13933857**	3					Elbow Nipple	Raccord angulaire	Winkelnippel	Niple Angular	
6	**VOE 4881722**	1					•O-ring	•Joint Torique	•O-Ring	•Junta torica	
7	**VOE 932039**	1					•O-ring	•Joint Torique	•O-Ring	•Junta torica	
8	**VOE 11884785**	2					Fitting	Ecrou raccord	Verschraubung	Racor	
9	**VOE 932042**	1					•O-ring	•Joint Torique	•O-Ring	•Junta torica	
10	**VOE 11884838**	1					Hose	Durit	Schlauch	Tubo flexible	
11	**VOE 11884315**	1					Tube	Tube	Rohr	Tubo	
12	**VOE 11884836**	1					Hose	Durit	Schlauch	Tubo flexible	
13	**VOE 11881624**	1					Tube	Tube	Rohr	Tubo	
14	**VOE 11884835**	1					Hose	Durit	Schlauch	Tubo flexible	
15	**VOE 13933859**	2					Nipple	Raccord	Nippel	Niple	
16	**VOE 4881722**	2					•O-ring	•Joint Torique	•O-Ring	•Junta torica	
17		1					Hose	Durit	Schlauch	Tubo flexible	See group 911, Page 587
18		1					Hose	Durit	Schlauch	Tubo flexible	See group 911, Page 587
19	**VOE 11884880**	2					Tube	Tube	Rohr	Tubo	
20	**VOE 4881722**	2					•O-ring	•Joint Torique	•O-Ring	•Junta torica	
21	**VOE 11882240**	1					Hose	Durit	Schlauch	Tubo flexible	
22	**VOE 11884820**	1					Hose	Durit	Schlauch	Tubo flexible	
23	**VOE 13933858**	4					Union	Teton Connexion	Anschlussnippel	Niple Conexcion	
24	**VOE 4881722**	1					•O-ring	•Joint Torique	•O-Ring	•Junta torica	
25	**VOE 932039**	1					•O-ring	•Joint Torique	•O-Ring	•Junta torica	
26	**VOE 11881437**	1					Valve	Soupape	Ventil	Valvula	
27	**VOE 11885063**	1					Tube	Tube	Rohr	Tubo	
28	**VOE 981289**	1					•O-ring	•Joint Torique	•O-Ring	•Junta torica	
29	**VOE 11884821**	1					Hose	Durit	Schlauch	Tubo flexible	
30		1					Dipper Arm Cylinder	Vérin de bras	Stielzylinder	Cilindro de brazo	See group 975, Page 739

1		**Cilindros de pluma y brazo, válvulas de seguridad** **Sicherheitsventil Ausleger und Stielzylinder** **Valve de sécurité, flèche et balancier** **Safety valve boom and dipper arm cylinder**		Catalogue id **20050**	Group **912**
2				Illustr. No **1016305**	Section **750**
3					
4				Issue **VOE 64D9920050**	Page **613**
5		**11891150**			

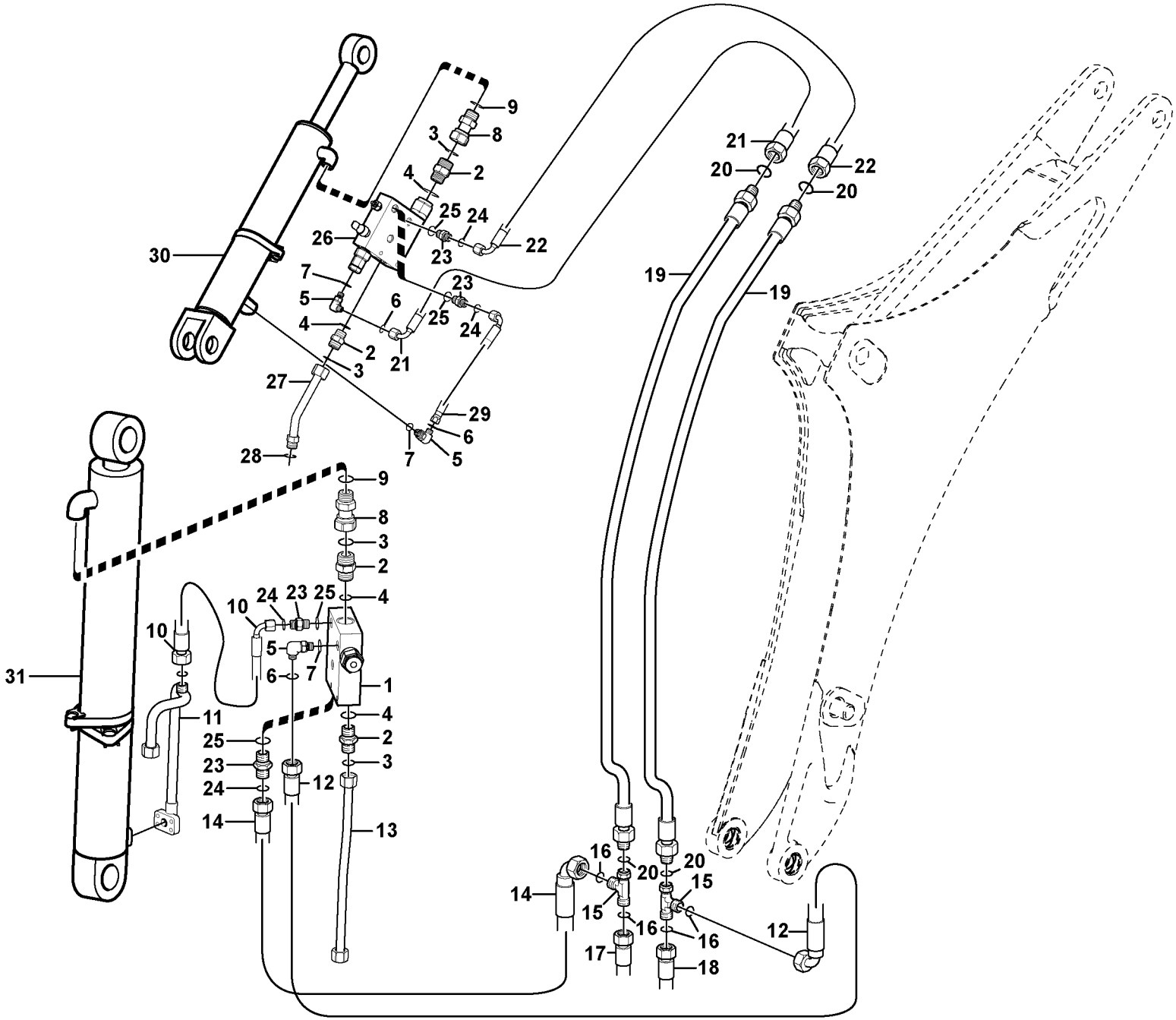

Volvo Construction Equipment
1016305

Fig.	Part No.	Quantity 1	2	3	PS	KIT	Description	Dénomination	Bezeichnung	Denominación	Notes
31		1					Boom Cylinder	Verin de fleche	Auslegerzylinder	Maquina de flecha	See group 974, Page 737

1		**Cilindros de pluma y brazo, válvulas de seguridad** **Sicherheitsventil Ausleger und Stielzylinder** **Valve de sécurité, flèche et balancier** **Safety valve boom and dipper arm cylinder**	Catalogue id **20050**	Group **912**
2				
3			Illustr. No **1016305**	Section **750**
4				
5		**11891150**	Issue **VOE 64D9920050**	Page **615**

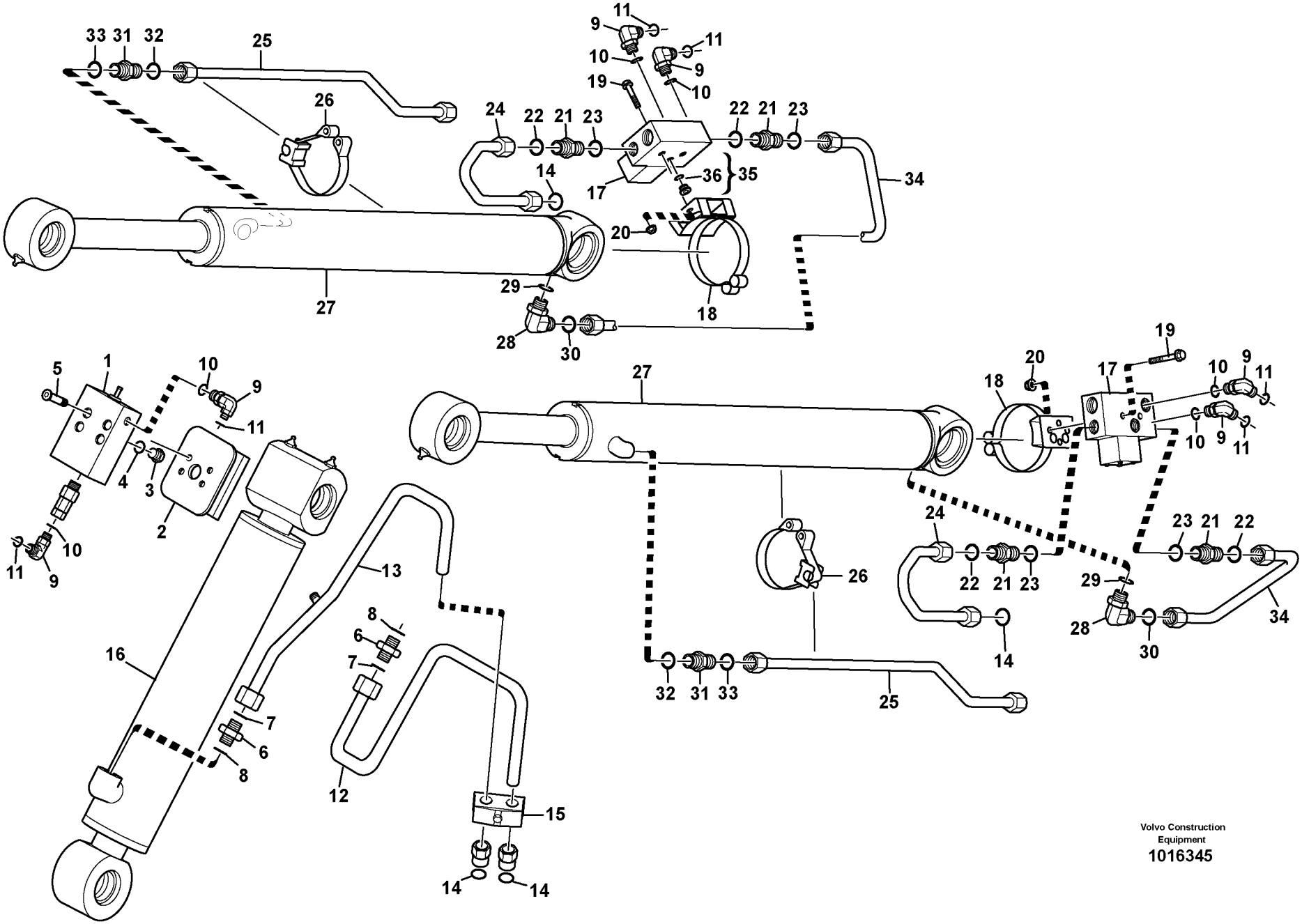

Volvo Construction Equipment
1016345

Fig.	Part No.	Quantity 1	2	3	PS	KIT	Description	Dénomination	Bezeichnung	Denominación	Notes
1	**VOE 11886371**	1					Valve	Soupape	Ventil	Valvula	
2	**VOE 11886871**	1					Bracket	Console	Konsole	Ménsula	
3	**VOE 11886868**	1					Coupling	Accouplement	Kupplung	Acoplamiento	
4	**VOE 932041**	1					O-ring	Joint Torique	O-Ring	Junta torica	
5	**VOE 947167**	4					Screw	Vis	Schraube	Tornillo	M10x50
6	**VOE 13933862**	2					Nipple	Raccord	Nippel	Niple	S/N - 10305
	VOE 13933862	1					Nipple	Raccord	Nippel	Niple	S/N 10306 -
7	**VOE 981289**	1					•O-ring	•Joint Torique	•O-Ring	•Junta torica	
8	**VOE 932042**	1					•O-ring	•Joint Torique	•O-Ring	•Junta torica	
9	**VOE 13933857**	6					Elbow Nipple	Raccord angulaire	Winkelnippel	Niple Angular	
10	**VOE 4881722**	1					•O-ring	•Joint Torique	•O-Ring	•Junta torica	
11	**VOE 932039**	1					•O-ring	•Joint Torique	•O-Ring	•Junta torica	
12	**VOE 11881542**	1					Tube Assembly	Tuyauterie	Rohrleitung	Tuberia	
13	**VOE 11886700**	1					Tube	Tube	Rohr	Tubo	
14	**VOE 4880663**	4					O-ring	Joint Torique	O-Ring	Junta torica	
15	**VOE 11881092**	1					Clamp	Pince Serrage	Klemme	Abrazadera	S/N - 10305
16		1					Hydraulic cylinder	Vérin hydraulique	Hydraulzylinder	Cilindro hidráulico	See group 945, Page 711
17	**VOE 11886370**	2					Valve	Soupape	Ventil	Valvula	
18	**VOE 11886399**	2					Clamp	Pince Serrage	Klemme	Abrazadera	
19	**VOE 13965216**	4					Screw	Vis	Schraube	Tornillo	M8x55
20	**VOE 948645**	4					Flange Lock Nut	Contre écrou bride	Flanschmutter	Contratuer Embr.	M8
21	**VOE 935095**	4					Nipple	Raccord	Nippel	Niple	
22	**VOE 4880663**	1					•O-ring	•Joint Torique	•O-Ring	•Junta torica	
23	**VOE 932041**	1					•O-ring	•Joint Torique	•O-Ring	•Junta torica	
24	**VOE 11886685**	2					Tube	Tube	Rohr	Tubo	
25	**VOE 11886686**	2					Tube	Tube	Rohr	Tubo	
26	**VOE 11885331**	2					Clamp	Pince Serrage	Klemme	Abrazadera	S/N - 10305
27		2					Hydraulic cylinder	Vérin hydraulique	Hydraulzylinder	Cilindro hidráulico	See group 945, Page 709
28	**VOE 935076**	2					Elbow Nipple	Raccord angulaire	Winkelnippel	Niple Angular	S/N - 10305
29	**VOE 4880663**	1					•O-ring	•Joint Torique	•O-Ring	•Junta torica	

1		**Válvula de seguridad, cargadora** **Sicherheitsventil Lader** **Valve de sécurité, équipement chargeur** **Safety valve loader**	Catalogue id **20050**	Group **912**
2			Illustr. No **1016345**	Section **800**
3			Issue **VOE 64D9920050**	Page **617**
4				
5		**11891151**		

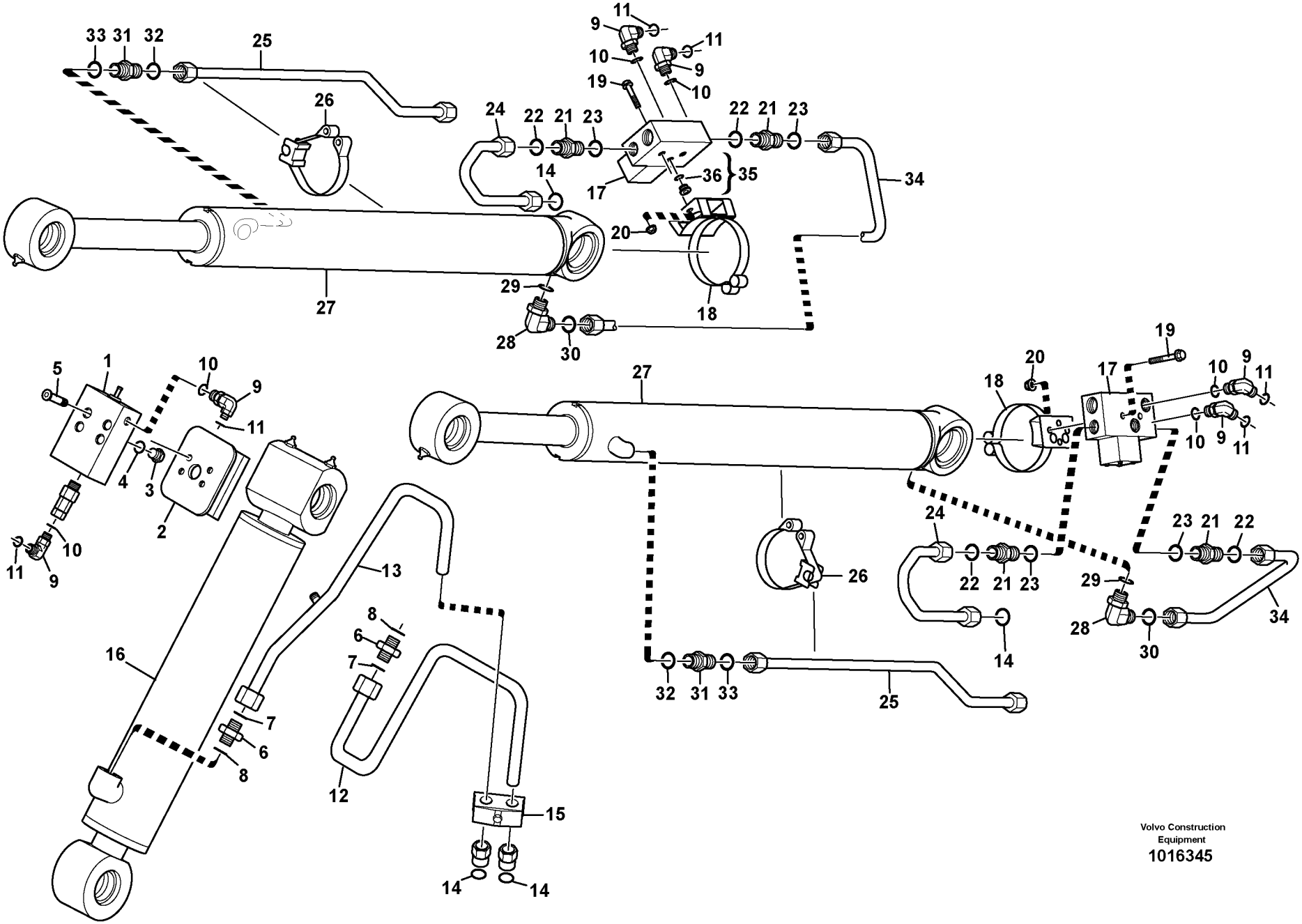

Volvo Construction Equipment
1016345

Fig.	Part No.	Quantity 1	2	3	PS	KIT	Description	Dénomination	Bezeichnung	Denominación	Notes
30	**VOE 932040**	1					•O-ring	•Joint Torique	•O-Ring	•Junta torica	
31	**VOE 935094**	1					Nipple	Raccord	Nippel	Niple	S/N - 10305
32	**VOE 4880663**	1					•O-ring	•Joint Torique	•O-Ring	•Junta torica	
33	**VOE 932040**	1					•O-ring	•Joint Torique	•O-Ring	•Junta torica	
34	**VOE 11886684**	2					Tube	Tube	Rohr	Tubo	
35	**VOE 11883510**	4					Plug	Bouchon	Stopfen	Tapon	
36	**VOE 932039**	1					•O-ring	•Joint Torique	•O-Ring	•Junta torica	

1		**Válvula de seguridad, cargadora** **Sicherheitsventil Lader** **Valve de sécurité, équipement chargeur** **Safety valve loader**	Catalogue id **20050**	Group **912**
2				
3			Illustr. No **1016345**	Section **800**
4				
5		**11891151**	Issue **VOE 64D9920050**	Page **619**

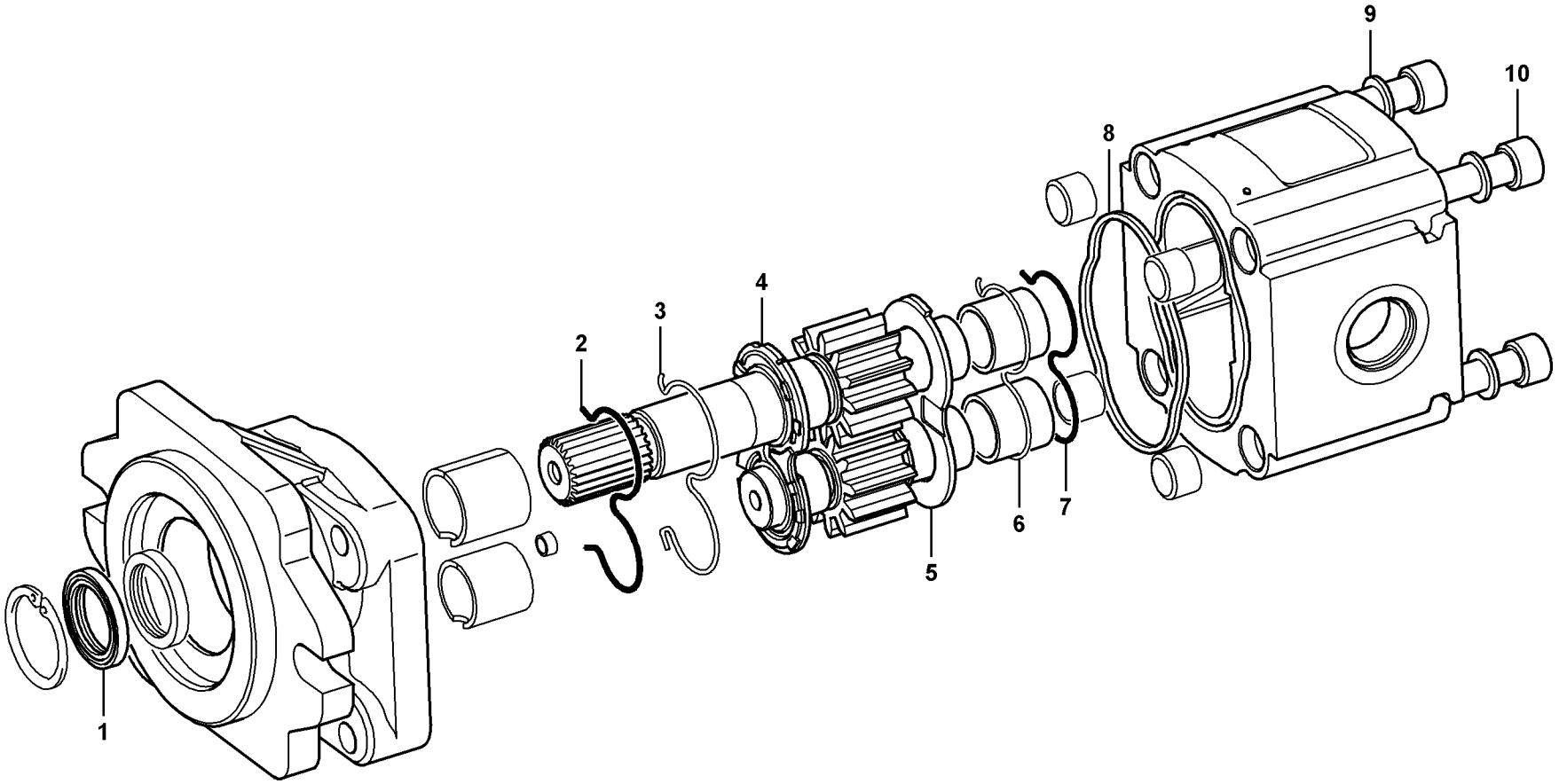
1
2
3
4
5
6
7
8
9
10

Fig.	Part No.	Quantity 1	2	3	PS	KIT	Description	Dénomination	Bezeichnung	Denominación	Notes
	VOE 11881939	1					Pump	Pompe	Pumpe	Bomba	
1	**VOE 11713046**	2					•Seal	•Joint	•Dichtring	•Junta	
2	**VOE 11713048**	1					•Lock Ring	•Anneau Verrouillage	•Schlossring	•Anillo Segurid	
3	**VOE 11713049**	1					•Seal	•Joint	•Dichtring	•Junta	
4	**VOE 11713050**	1					•Thrust Ring	•Bague Butee	•Druckring	•Anillo Presion	
5	**VOE 11713051**	1					•Thrust Ring	•Bague Butee	•Druckring	•Anillo Presion	
6	**VOE 11713052**	1					•Seal	•Joint	•Dichtring	•Junta	
7	**VOE 11713053**	1					•Lock Ring	•Anneau Verrouillage	•Schlossring	•Anillo Segurid	
8	**VOE 11713054**	1					•Sealing ring	•Bague d'étanchéité	•Runddichtring	•Anillo reten	
9	**VOE 11713055**	4					•Washer	•Rondelle	•Scheibe	•Arandela	
10	**VOE 11713056**	4					•Screw	•Vis	•Schraube	•Tornillo	

1		**Bomba hidráulica** **Hydraulikpumpe** **Pompe hydraulique** **Hydraulic pump**	Catalogue id **20050**	Group **913**
2			Illustr. No **1013095**	Section **200**
3				
4			Issue **VOE 64D9920050**	Page **621**
5		**11891076, 11891077**		

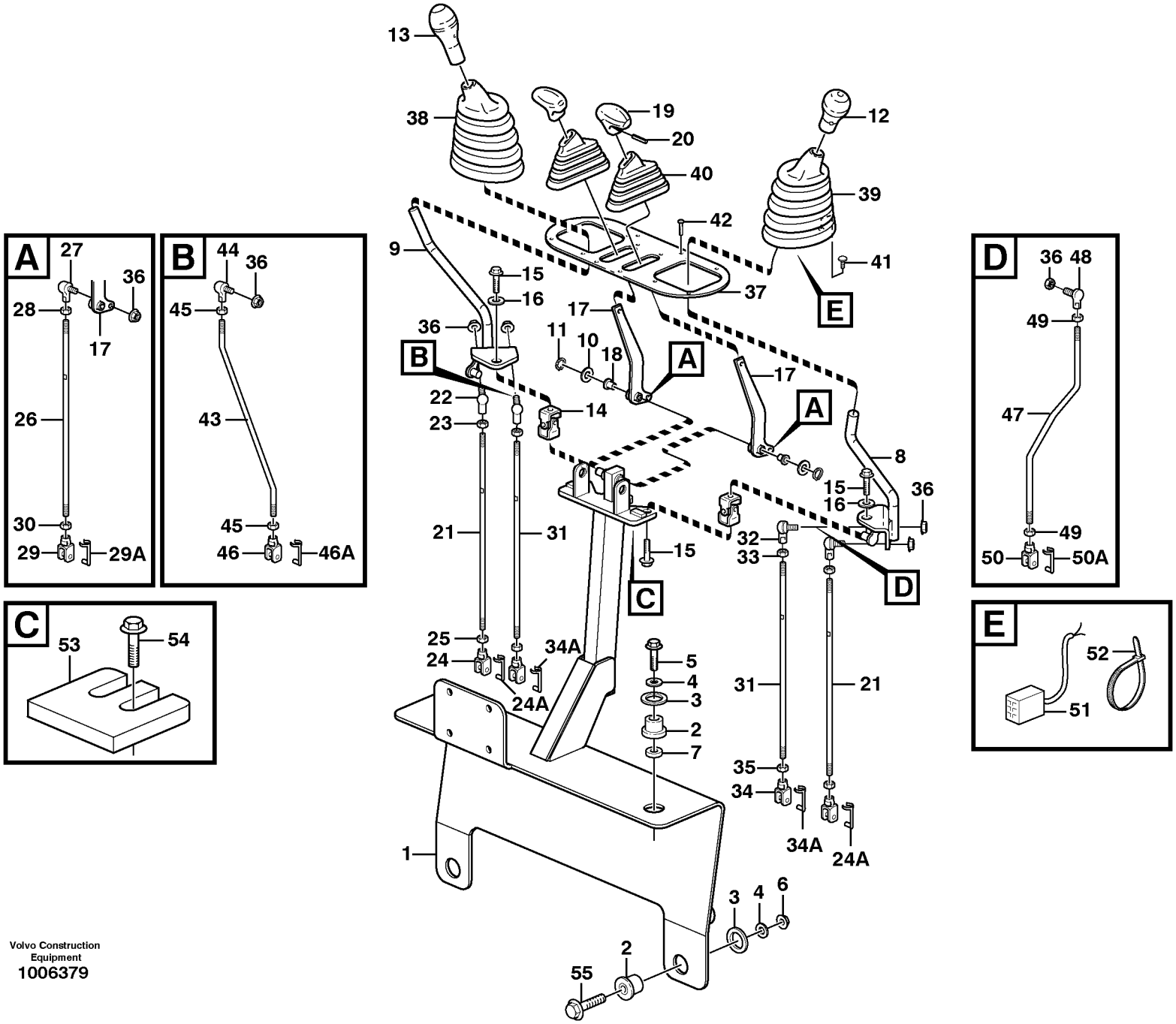

Volvo Construction Equipment
1006379

Fig.	Part No.	Quantity 1	2	3	PS	KIT	Description	Dénomination	Bezeichnung	Denominación	Notes
1	**VOE 11886563**	1	1	1			Bracket	Console	Konsole	Ménsula	
2	**VOE 11881720**	4	4	4			Rubber element	Element caoutch	Gummielement	Elemento goma	
3	**VOE 955908**	4	4	4			Washer	Rondelle	Scheibe	Arandela	
4	**VOE 13947355**	4	4	4			Washer	Rondelle	Scheibe	Arandela	
5	**VOE 965195**	2	2	2			Flange screw	Vis à bride	Flanschschraube	Torn embridado	
6	**VOE 971099**	2	2	2			Flange Lock Nut	Contre écrou bride	Flanschmutter	Contratuer Embr	(VOE 13971099)
7	**VOE 11884217**	2	2	2			Spacer	Entretoise	Abstandkörper	Distanciador	
8	**VOE 11881708**	1	1				Lever	Levier	Hebel	Palanca	LH
	VOE 11884956			1			Lever	Levier	Hebel	Palanca	
9	**VOE 11881717**	1	1				Lever	Levier	Hebel	Palanca	RH
	VOE 11884957			1			Lever	Levier	Hebel	Palanca	LH
10	**VOE 11884269**	2	2	2			Plastic Washer	Rondelle Plastique	Kunststst.scheibe	Arandela de plástico	
11	**VOE 914446**	2	2	2			Snap Ring	Circlip	Nutring	Circlip	RH
12	**VOE 11882526**	1	1	1			Lever Knob	Boule de levier	Hebelknopf	Bola de palanca	LH
	VOE 11305749	1	1	1			•Switch	•Commutateur	•Schalter	•Contactor	(VOE 11711582)
13	**VOE 11882525**	1	1	1			Lever Knob	Boule de levier	Hebelknopf	Bola de palanca	RH
14	**VOE 11881721**	2	2	2			Ball joint	Rotule articul.	Kugelgelenk	Rotula	
15	**VOE 946502**	4	4	4			Flange screw	Vis à bride	Flanschschraube	Torn embridado	
16	**VOE 967600**	4	4	4			Lock Washer	Rondel.verroui.	Sicher Scheibe	Arandel Segurid	
17	**VOE 11884431**	2	2	2			Lever	Levier	Hebel	Palanca	
	VOE 11882182	1	1	1			•Bushing	•Bague	•Buchse	•Casquillo	
18	**VOE 11882115**	2	2	2			Bushing	Bague	Buchse	Casquillo	
19	**VOE 11882604**	2	2	2			Knob	Bouton	Knauf	Boton	
20	**VOE 951952**	2	2	2			Spring Pin	Axe de ressort	Federstift	Pasador Resorte	
21	**VOE 11884223**	2	2	2			Rod	Tige	Stange	Barra	
22	**VOE 959080**	1	1	1			•Anl Ball Joint	•Rotul.angulaire	•Winkelgelenk	•Rotula Angular	
23	**VOE 961991**	1	1	1			•Hexagon Nut	•Ecrou Hexagonal	•Sechskantmutter	•Tuerca Hexagon	
24	**VOE 11881742**	1	1	1			•Fork	•Fourche	•Gabel	•Horquilla	
24A	**VOE 945634**	1	1	1			••Yoke Bolt	••Boulon Etrier	••Gabelbolzen	••Perno Horquilla	
25	**VOE 949847**	1	1	1			•Hexagon Nut	•Ecrou Hexagonal	•Sechskantmutter	•Tuerca Hexagon	

1	**11891162**
2	**11891167**
3	**11891322**
4	
5	

Mandos
Regler
Commandes
Controls

Catalogue id **20050**	Group **915**
Illustr. No **1006379**	Section **100**
Issue **VOE 64D9920050**	Page **623**

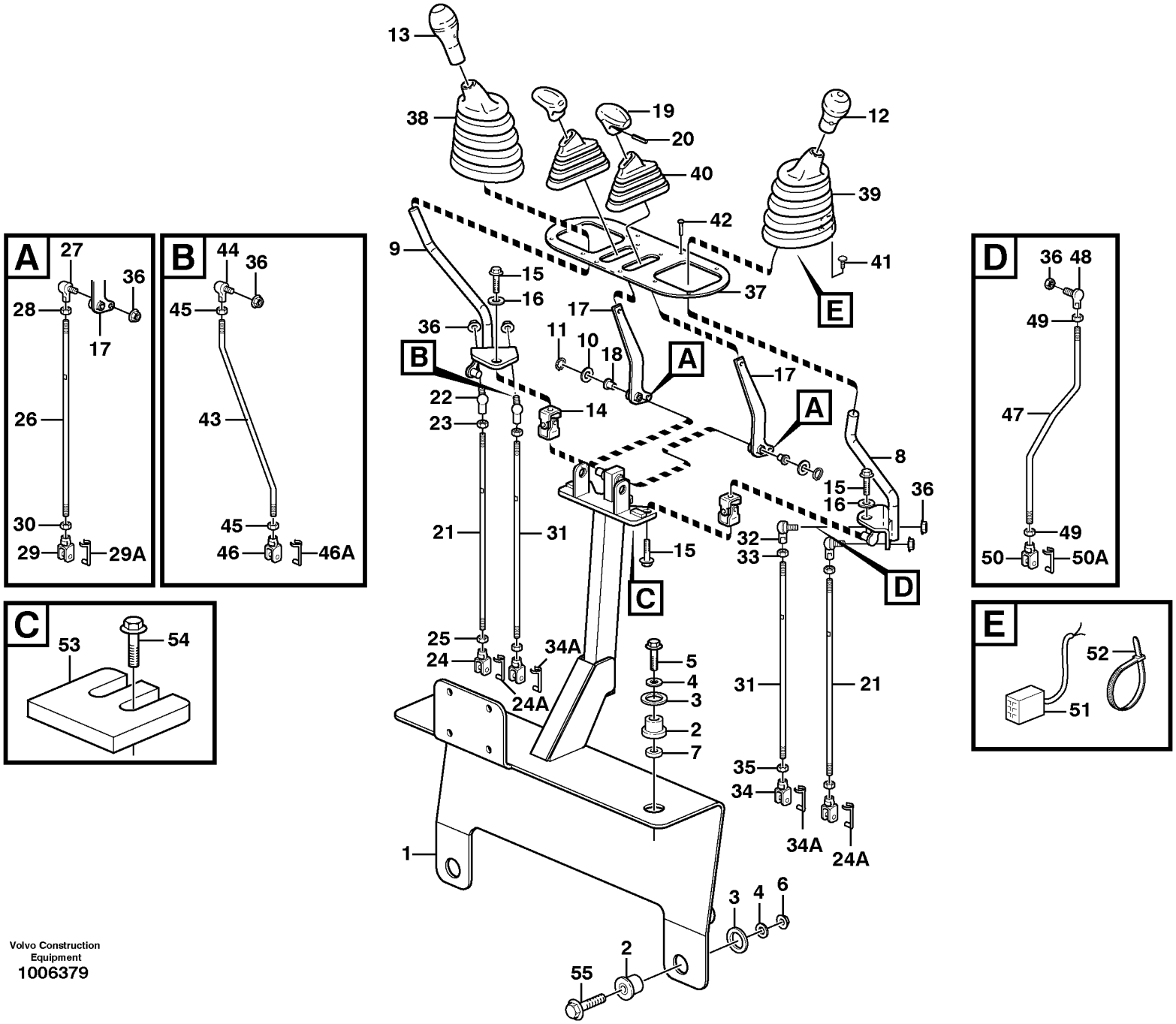

Volvo Construction Equipment
1006379

Fig.	Part No.	Quantity 1	2	3	PS	KIT	Description	Dénomination	Bezeichnung	Denominación	Notes
26	**VOE 11884603**	2	2	2			Rod	Tige	Stange	Barra	
27	**VOE 959080**	1	1				•Anl Ball Joint	•Rotul.angulaire	•Winkelgelenk	•Rotula Angular	
28	**VOE 961991**	1	1				•Hexagon Nut	•Ecrou Hexagonal	•Sechskantmutter	•Tuerca Hexagon	
29	**VOE 11881742**	1	1				•Fork	•Fourche	•Gabel	•Horquilla	
29A	**VOE 945634**	1	1				••Yoke Bolt	••Boulon Etrier	••Gabelbolzen	••Perno Horquilla	
30	**VOE 949847**	1	1				•Hexagon Nut	•Ecrou Hexagonal	•Sechskantmutter	•Tuerca Hexagon	
31	**VOE 11884223**	2		2			Rod	Tige	Stange	Barra	
32	**VOE 959080**	1		1			•Anl Ball Joint	•Rotul.angulaire	•Winkelgelenk	•Rotula Angular	
33	**VOE 961991**	1		1			•Hexagon Nut	•Ecrou Hexagonal	•Sechskantmutter	•Tuerca Hexagon	
34	**VOE 11881742**	1		1			•Fork	•Fourche	•Gabel	•Horquilla	
34A	**VOE 945634**	1		1			••Yoke Bolt	••Boulon Etrier	••Gabelbolzen	••Perno Horquilla	
35	**VOE 949847**	1		1			•Hexagon Nut	•Ecrou Hexagonal	•Sechskantmutter	•Tuerca Hexagon	
36	**VOE 948645**	6	6	6			Flange Lock Nut	Contre écrou bride	Flanschmutter	Contratuer Embr	
37		1	1	1	NS		Plate	Tôle	Blech	Chapa	
38	**VOE 11881339**	1	1	1			Bellows	Soufflet	Balg	Fuelle	RH
39	**VOE 11881338**	1	1	1			Bellows	Soufflet	Balg	Fuelle	LH
40	**VOE 11881341**	2	2	2			Bellows	Soufflet	Balg	Fuelle	
41	**VOE 11884070**	12	12	12			Screw	Vis	Schraube	Tornillo	
42	**VOE 13971307**	3	3	3			Screw	Vis	Schraube	Tornillo	
43	**VOE 11885190**		1				Rod	Tringle	Stange	Tirante	
44	**VOE 11885184**		1				•Ball joint	•Rotule articul.	•Kugelgelenk	•Rotula	
45	**VOE 13971068**		2				•Hexagon Nut	•Ecrou Hexagonal	•Sechskantmutter	•Tuerca Hexagon	
46	**VOE 11885182**		1				•Clevis	•Fourche	•Gabel	•Horquilla	
46A	**VOE 945634**		1				••Yoke Bolt	••Boulon Etrier	••Gabelbolzen	••Perno Horquilla	
47	**VOE 11885191**		1				Rod	Tringle	Stange	Tirante	
48	**VOE 11885184**		1				•Ball joint	•Rotule articul.	•Kugelgelenk	•Rotula	
49	**VOE 13971068**		2				•Hexagon Nut	•Ecrou Hexagonal	•Sechskantmutter	•Tuerca Hexagon	
50	**VOE 11885182**		1				•Clevis	•Fourche	•Gabel	•Horquilla	
50A	**VOE 945634**		1				••Yoke Bolt	••Boulon Etrier	••Gabelbolzen	••Perno Horquilla	
51	**VOE 11884023**	1	1	1			Wire Harness	Faisceau de câbles	Kabelbaum	Manojo Cables	X89, W2P - X326, X327

1	**11891162**
2	**11891167**
3	**11891322**
4	
5	

Mandos
Regler
Commandes
Controls

Catalogue id **20050**	Group **915**
Illustr. No **1006379**	Section **100**
Issue **VOE 64D9920050**	Page **625**

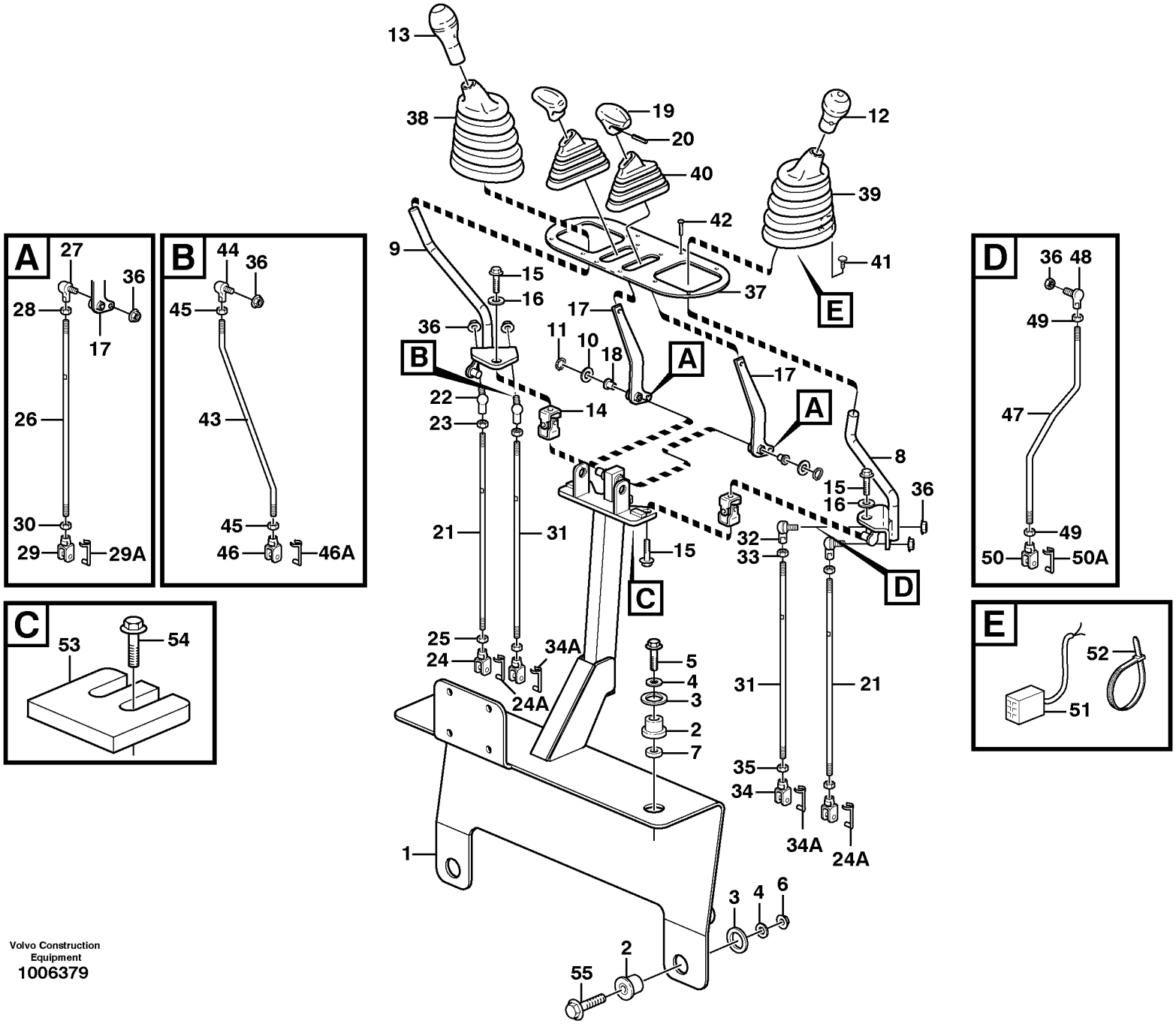

Volvo Construction Equipment
1006379

Fig.	Part No.	Quantity 1	2	3	PS	KIT	Description	Dénomination	Bezeichnung	Denominación	Notes
	VOE 874954	1	1	1			•Connector	•Raccord	•Anschluss	•Union	
	VOE 14370881	1	1	1			•Spacer	•Partie Intermédiaire	•Zwischenstück	•Espaciador	
52	**VOE 4881440**	2	2	2			Strip Clamp	Ruban Serrage	Kabelbinder	Abraz Cinta	
53	**VOE 11885168**	2	2				Plate	Plaque	Platte	Placa	
53	**VOE 11885170**			2			Plate	Plaque	Platte	Placa	
54	**VOE 13946544**	4	4	4			Flange screw	Vis à bride	Flanschschraube	Torn embridado	
55	**VOE 13965194**	2	2	2			Flange screw	Vis à bride	Flanschschraube	Torn embridado	

1	**11891162**
2	**11891167**
3	**11891322**
4	
5	

Mandos
Regler
Commandes
Controls

Catalogue id **20050**	Group **915**
Illustr. No **1006379**	Section **100**
Issue **VOE 64D9920050**	Page **627**

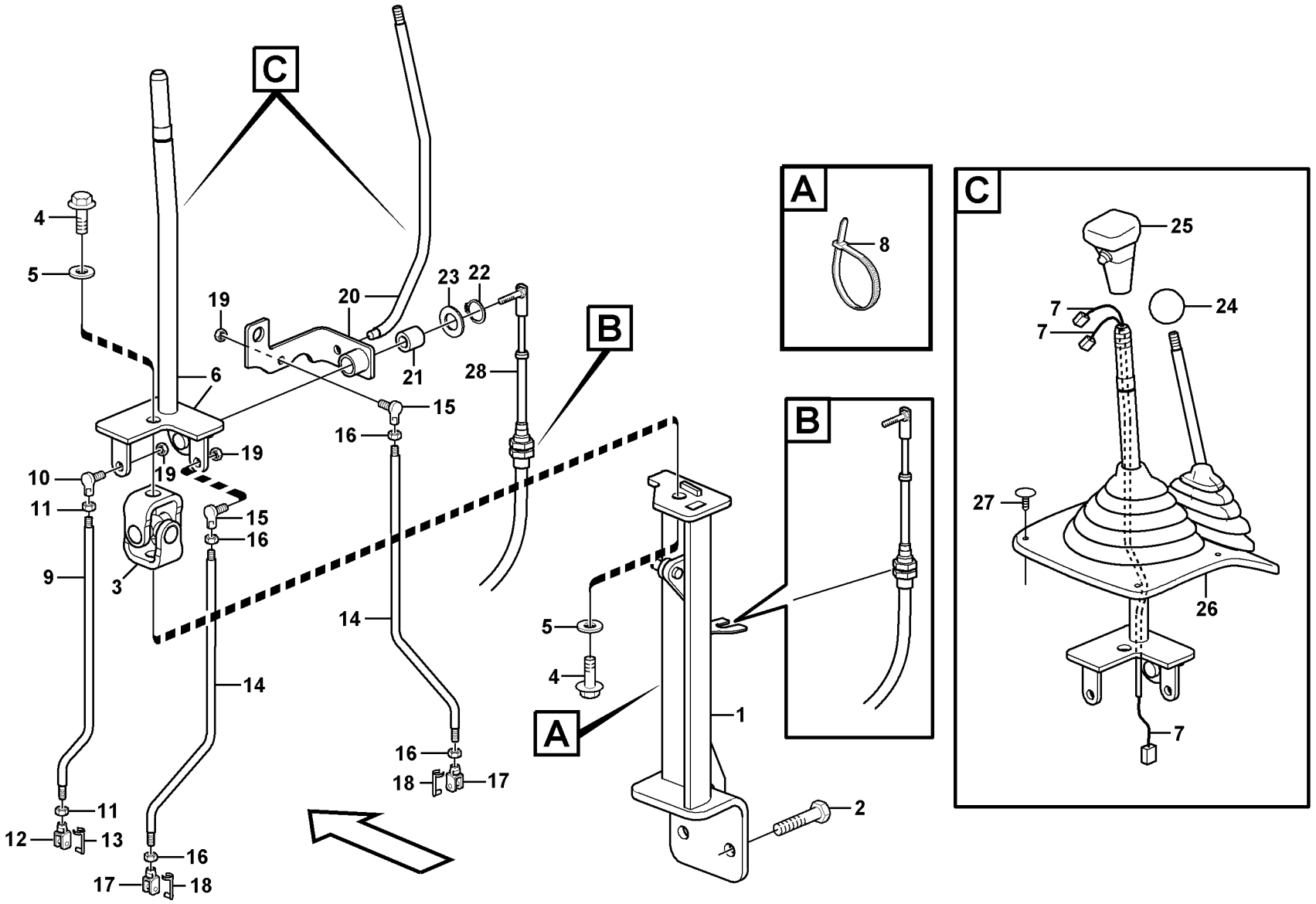

Volvo Construction Equipment
1012611

Fig.	Part No.	Quantity 1	2	3	PS	KIT	Description	Dénomination	Bezeichnung	Denominación	Notes
1	**VOE 11886196**	1	1				Bracket	Console	Konsole	Ménsula	
2	**VOE 13965192**	2	2				Flange screw	Vis à bride	Flanschschraube	Torn embridado	
3	**VOE 11881721**	1	1				Ball joint	Rotule articul.	Kugelgelenk	Rotula	
4	**VOE 946502**	2	2				Flange screw	Vis à bride	Flanschschraube	Torn embridado	
5	**VOE 967600**	2	2				Lock Washer	Rondel.verroui.	Sicher Scheibe	Arandel Segurid	
6	**VOE 11887195**	1	1				Lever	Levier	Hebel	Palanca	
7	**VOE 11885183**	1	1				Wire harness	Faisceau electrique	Kabelbaum	Manojo cables	
8	**VOE 4881440**	1	1				Strip Clamp	Ruban Serrage	Kabelbinder	Abraz Cinta	
9	**VOE 11886275**	1	1				Control Rod	Tige Commande	Schaltstange	Barra De Mando	
10	**VOE 11885184**	1	1				•Ball joint	•Rotule articul.	•Kugelgelenk	•Rotula	
11	**VOE 13971068**	2	2				•Hexagon Nut	•Ecrou Hexagonal	•Sechskantmutter	•Tuerca Hexagon	
12	**VOE 11885182**	1	1				•Clevis	•Fourche	•Gabel	•Horquilla	
13	**VOE 945634**	1	1				•Yoke Bolt	•Boulon Etrier	•Gabelbolzen	•Perno Horquilla	
14	**VOE 11886274**	2	1				Control Rod	Tige Commande	Schaltstange	Barra De Mando	
15	**VOE 11885184**	1	1				•Ball joint	•Rotule articul.	•Kugelgelenk	•Rotula	
16	**VOE 13971068**	2	2				•Hexagon Nut	•Ecrou Hexagonal	•Sechskantmutter	•Tuerca Hexagon	
17	**VOE 11885182**	1	1				•Clevis	•Fourche	•Gabel	•Horquilla	
18	**VOE 945634**	1	1				•Yoke Bolt	•Boulon Etrier	•Gabelbolzen	•Perno Horquilla	
19	**VOE 948645**	3	2				Flange Lock Nut	Contre écrou bride	Flanschmutter	Contratuer Embr	
20	**VOE 11887186**	1					Lever	Levier	Hebel	Palanca	
21	**VOE 11885968**	1					Bushing	Bague	Buchse	Casquillo	
22	**VOE 914450**	1					Snap Ring	Circlip	Nutring	Circlip	
23	**VOE 11885969**	1					Washer	Rondelle	Scheibe	Arandela	
24	**VOE 11882040**	1					Knob	Bouton	Knopf	Boton	
25	**VOE 11886188**	1	1				Knob	Bouton	Knopf	Boton	
26		1	1				Bellows	Capot Caoutcho.	Gummimantel	Cubierta Goma	See group 882, Page 485
27		8	8				Screw	Vis	Schraube	Tornillo	See group 882, Page 485
28		1	1				Cable	Câble	Kabel	Cable	See group 945, Page 707

1	**11891415**	**Mandos de la cargadora** **Loader controls** **Commandes de l'équipement chargeur** **Loader controls**	Catalogue id **20050**	Group **915**
2	**11891414**		Illustr. No **1012611**	Section **150**
3			Issue **VOE 64D9920050**	Page **629**
4				
5				

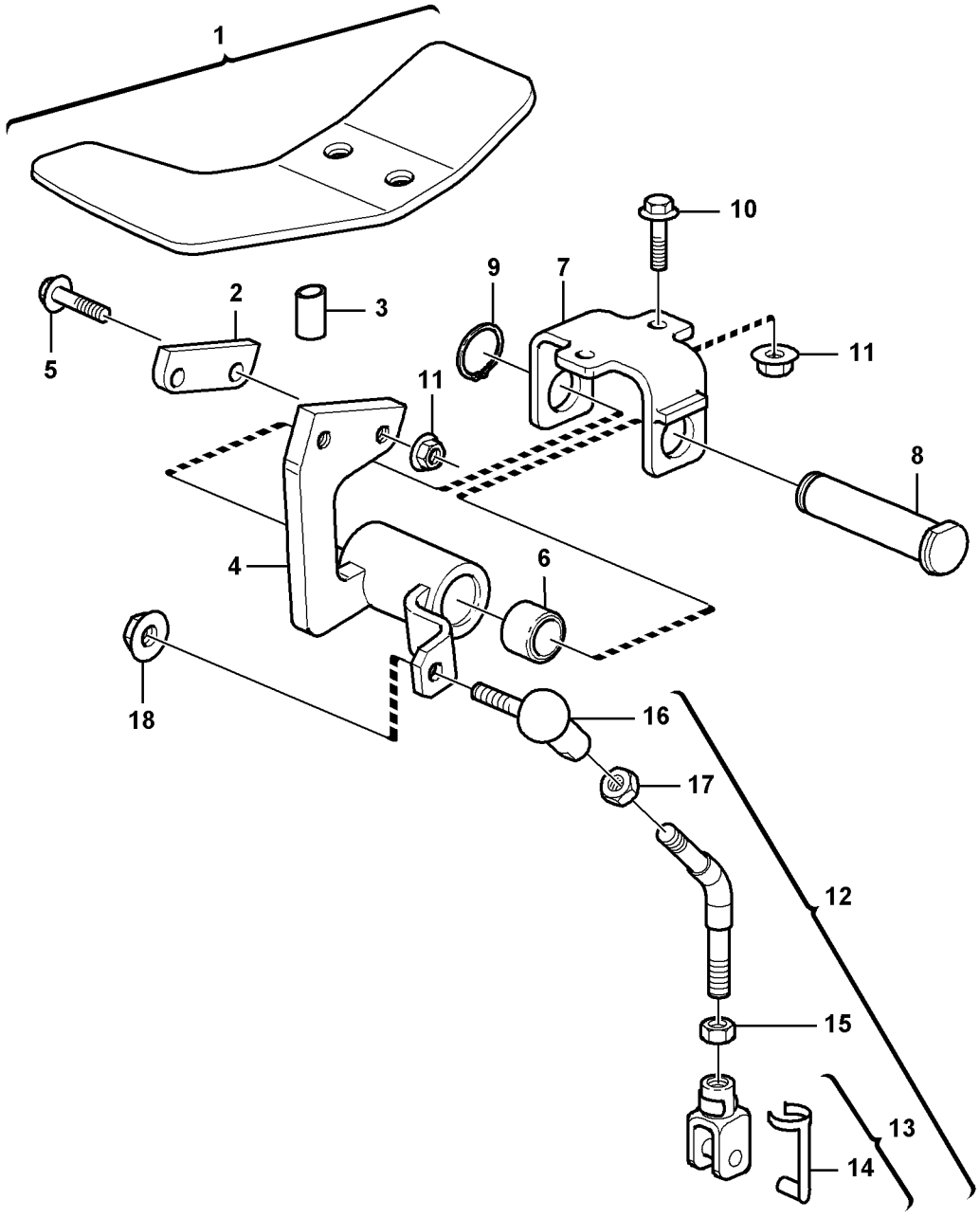
1
10
9
7
2
3
11
5
11
8
4
6
18
16
17
12
15
13
14

Fig.	Part No.	Quantity 1	2	3	PS	KIT	Description	Dénomination	Bezeichnung	Denominación	Notes
1	**VOE 11885930**	1					Pedal	Pedale	Pedal	Pedal	
2	**VOE 11885932**	1					•Bracket	•Console	•Konsole	•Ménsula	
3	**VOE 11885977**	1					•Spacer	•Partie Intermédiaire	•Zwischenstück	•Espaciador	
4	**VOE 11886331**	1					Support	Support	Stütze	Apoyo	
5	**VOE 13945444**	2					Flange screw	Vis à bride	Flanschschraube	Torn embridado	
6	**VOE 11883403**	2					Bushing	Bague	Buchse	Casquillo	
7	**VOE 11883399**	1					Support	Support	Stütze	Apoyo	
8	**VOE 11883402**	1					Pin	Goupille	Zapfen	Pasador	
9	**VOE 914454**	1					Snap Ring	Circlip	Nutring	Circlip	
10	**VOE 13946173**	2					Flange screw	Vis à bride	Flanschschraube	Torn embridado	
11	**VOE 948645**	4					Flange Lock Nut	Contre écrou bride	Flanschmutter	Contratuer Embr	
12	**VOE 11885933**	1					Rod	Tringle	Stange	Tirante	
13	**VOE 11882913**	1					•Fork	•Fourche	•Gabel	•Horquilla	
14	**VOE 945634**	1					•Yoke Bolt	•Boulon Etrier	•Gabelbolzen	•Perno Horquilla	
15	**VOE 961991**	1					•Hexagon Nut	•Ecrou Hexagonal	•Sechskantmutter	•Tuerca Hexagon	
16	**VOE 959080**	1					•Anl Ball Joint	•Rotul.angulaire	•Winkelgelenk	•Rotula Angular	
17	**VOE 961991**	1					•Hexagon Nut	•Ecrou Hexagonal	•Sechskantmutter	•Tuerca Hexagon	
18	**VOE 13945408**	1					Nut	Ecrou	Mutter	Tuerca	

1		**Pedal** **Pedal** **Pedale** **Pedal**	Catalogue id **20050**	Group **915**
2			Illustr. No **1013162**	Section **200**
3			Issue **VOE 64D9920050**	Page **631**
4				
5		**11891417**		

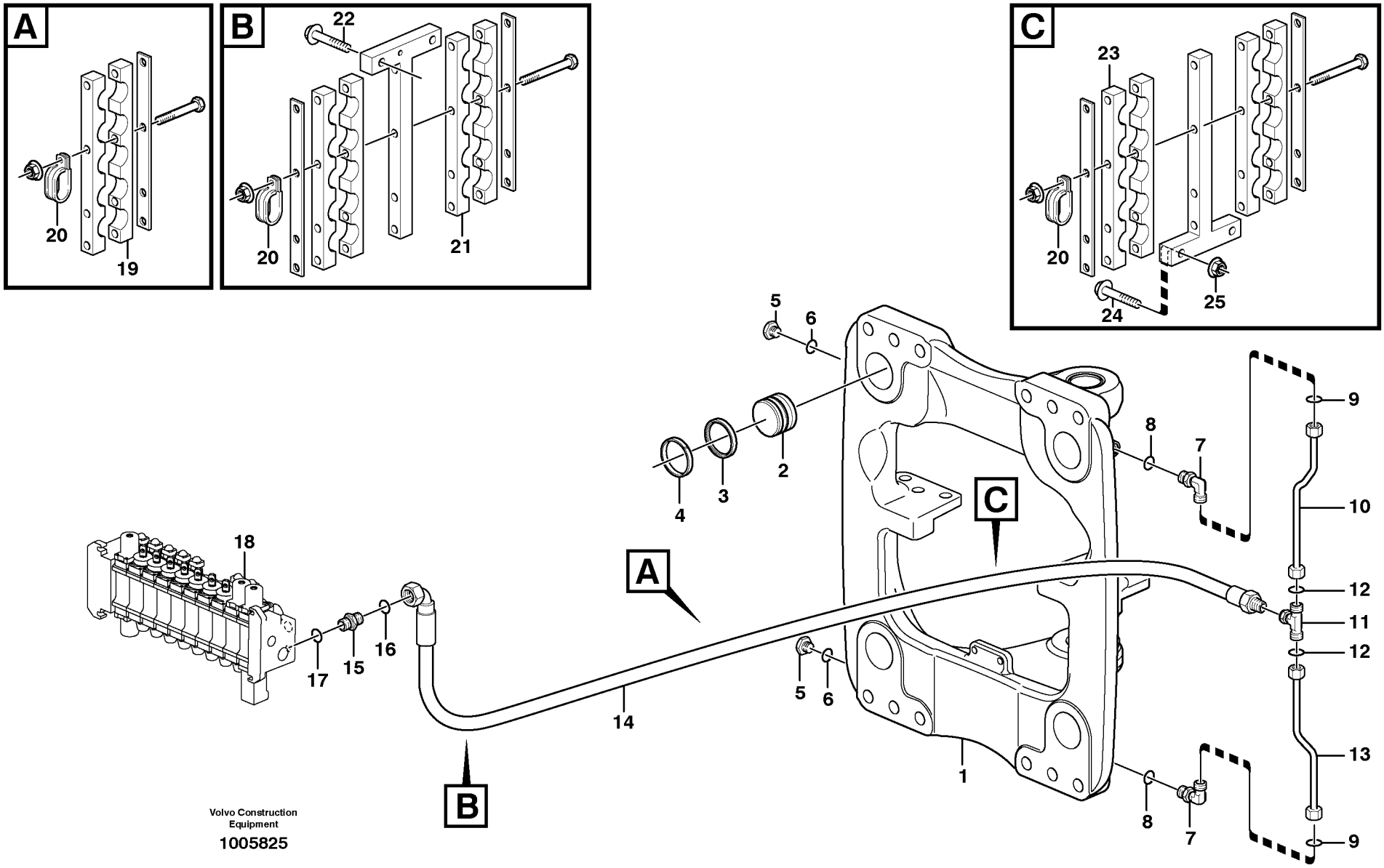

Volvo Construction Equipment

1005825

Fig.	Part No.	Quantity 1	2	3	PS	KIT	Description	Dénomination	Bezeichnung	Denominación	Notes
1		1					Attachment	Fixation	Halterung	Fijacion	See group 971, Page 713
2	**VOE 11882507**	4					Piston	Piston	Kolben	Piston	
3	**VOE 11881438**	1					•Seal	•Joint	•Dichtung	•Reten	
4	**VOE 11881439**	1					•Seal	•Joint	•Dichtung	•Reten	
5	**VOE 11883510**	2					Plug	Bouchon	Stopfen	Tapon	
6	**VOE 932039**	1					•O-ring	•Joint Torique	•O-Ring	•Junta torica	
7	**VOE 935069**	2					Elbow nipple	Raccord angulaire	Winkelnippel	Niple angular	
8	**VOE 4880492**	1					•O-ring	•Joint Torique	•O-Ring	•Junta torica	
9	**VOE 4881722**	1					•O-ring	•Joint Torique	•O-Ring	•Junta torica	
10	**VOE 11884949**	1					Tube	Tube	Rohr	Tubo	
11	**VOE 13933912**	1					T-nipple	Raccord-t	T-Nippel	Niple T	
12	**VOE 4880492**	2					•O-ring	•Joint Torique	•O-Ring	•Junta torica	
13	**VOE 11884926**	1					Tube	Tube	Rohr	Tubo	
14	**VOE 11882209**	1					Hose	Durit	Schlauch	Tubo flexible	
15	**VOE 13933858**	1					Union	Teton Connexion	Anschlussnippel	Niple Conexcion	
16	**VOE 4881722**	1					•O-ring	•Joint Torique	•O-Ring	•Junta torica	
17	**VOE 932039**	1					•O-ring	•Joint Torique	•O-Ring	•Junta torica	
18		1					Valve	Soupape	Ventil	Valvula	See group 912, Page 601
19	**VOE 11884907**	1					Clamp	Pince Serrage	Klemme	Abrazadera	
20	**VOE 981661**	3					Clamp	Pince Serrage	Klemme	Abrazadera	
21		1					Clamp	Collier serrage	Klemme	Abrazadera	See group 911, Page 545
22	**VOE 13965194**	2					Flange screw	Vis à bride	Flanschschraube	Torn embridado	
23		1					Clamp	Collier serrage	Klemme	Abrazadera	See group 911, Page 545
24	**VOE 965195**	2					Flange screw	Vis à bride	Flanschschraube	Torn embridado	
25	**VOE 13971096**	2					Flange nut	Ecrou accouple.	Bundmutter	Tuerca embridad	

1		**Sistema hidráulico, desplazamiento lateral** **Hydraulikanlage, Seitenverschiebung** **Circuit hydraulique, déport latéral** **Hydraulic system, sideshift**	Catalogue id **20050**	Group **916**
2			Illustr. No **1005825**	Section **100**
3			Issue **VOE 64D9920050**	Page **633**
4				
5				

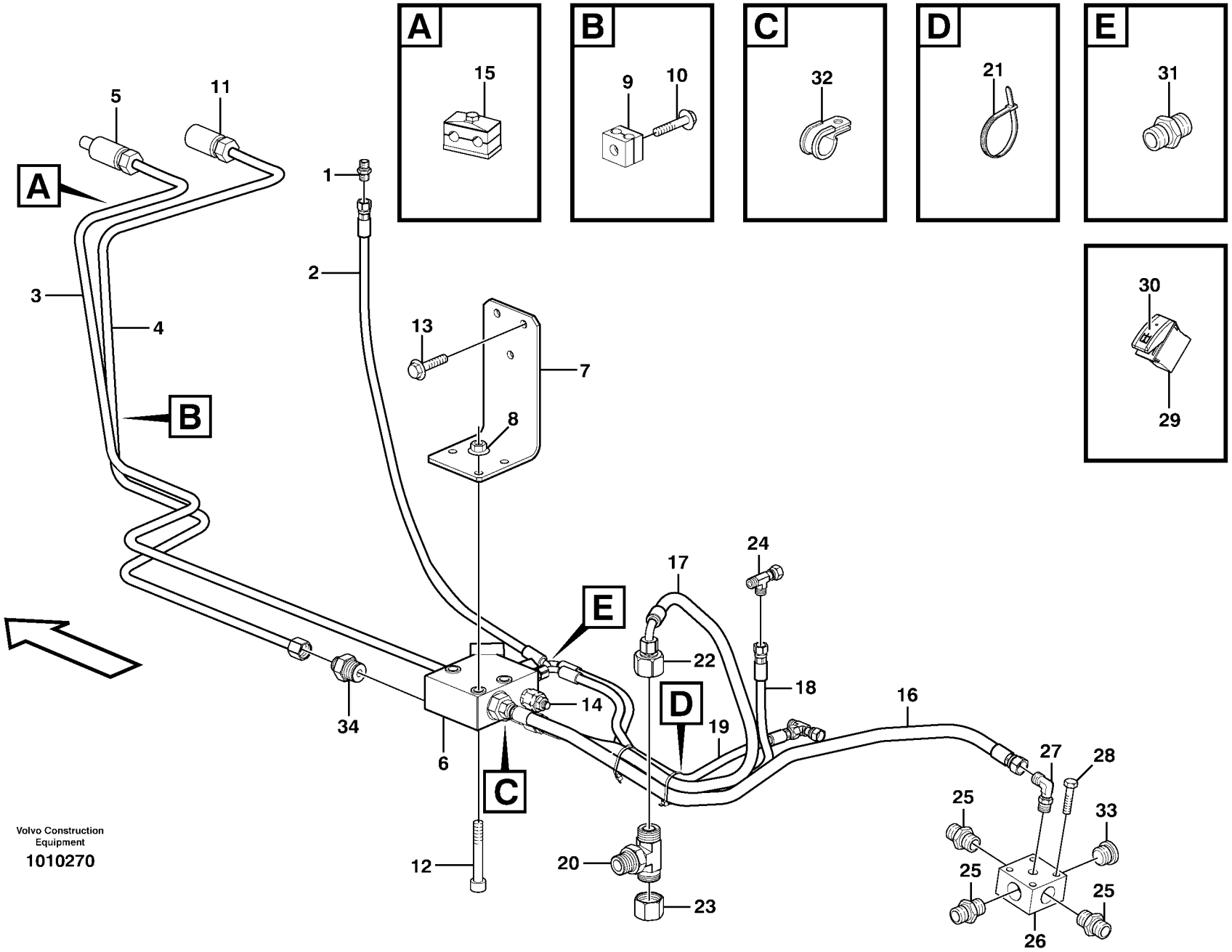

Volvo Construction Equipment

1010270

Fig.	Part No.	Quantity 1	2	3	PS	KIT	Description	Dénomination	Bezeichnung	Denominación	Notes
1	**VOE 935082**	1					Nipple	Raccord	Nippel	Niple	
1	**VOE 4881722**	1					•O-ring	•Joint Torique	•O-Ring	•Junta torica	
1	**VOE 932037**	1					•O-ring	•Joint Torique	•O-Ring	•Junta torica	
2	**VOE 11885777**	1					Hose	Durit	Schlauch	Tubo flexible	
3	**VOE 11885240**	1					Tube	Tube	Rohr	Tubo	
4	**VOE 11885241**	1					Tube	Tube	Rohr	Tubo	
5	**VOE 11885281**	1					Hydraulic clutch	Accouplement hydrauli	Hydraulikkupplung	Acoplamiento hidrauli	
6	**VOE 11881719**	1					Valve	Soupape	Ventil	Valvula	SER NO -10070
	VOE 11716875	1					•Solenoid valve	•Vanne electrom	•Magnetventil	•Electrovalvula	
	VOE 11711130	1					•Coil	•Bobine	•Zündspule	•Bobina	
6	**VOE 11885274**	1					Valve	Soupape	Ventil	Valvula	SER NO 10071-
	VOE 11716875	1					•Solenoid valve	•Vanne electrom	•Magnetventil	•Electrovalvula	
	VOE 11711130	1					•Coil	•Bobine	•Zündspule	•Bobina	
7	**VOE 11885273**	1					Plate	Plaque	Platte	Placa	
8	**VOE 13971098**	3					Flange nut	Ecrou accouple.	Bundmutter	Tuerca embridad	
9	**VOE 11884039**	1					Clamp	Pince Serrage	Klemme	Abrazadera	
10	**VOE 13965177**	1					Flange screw	Vis à bride	Flanschschraube	Torn embridado	
11	**VOE 11885282**	1					Hydraulic clutch	Accouplement hydrauli	Hydraulikkupplung	Acoplamiento hidrauli	
12	**VOE 967633**	3					Allen Hd Screw	Vis A 6 Pans Cr	Inbusschraube	Torn Hex Embut	
13	**VOE 946441**	3					Flange screw	Vis à bride	Flanschschraube	Torn embridado	
14	**VOE 11882258**	1					Nipple	Raccord	Nippel	Niple	
14	**VOE 932042**	1					•O-ring	•Joint Torique	•O-Ring	•Junta torica	
14	**VOE 4880492**	1					•O-ring	•Joint Torique	•O-Ring	•Junta torica	
15	**VOE 11885701**	1					Clamp	Pince Serrage	Klemme	Abrazadera	
16	**VOE 11886152**	1					Hose	Durit	Schlauch	Tubo flexible	
17	**VOE 11885272**	1					Hose	Durit	Schlauch	Tubo flexible	
18	**VOE 11885270**	1					Hose	Durit	Schlauch	Tubo flexible	
19	**VOE 11884279**	1					Hose	Durit	Schlauch	Tubo flexible	
20	**VOE 11884783**	1					Fitting	Ecrou raccord	Verschraubung	Racor	
20	**VOE 932042**	1					•O-ring	•Joint Torique	•O-Ring	•Junta torica	

1		**Equipo hidráulico adicional** **Zusätzliche Hydraulikausrüstung** **Equipement hydraulique optionnel** **Optional hydraulic equipment**	Catalogue id **20050**	Group **916**
2				
3			Illustr. No **1010270**	Section **200**
4				
5		**11891369, S/N - 10626**	Issue **VOE 64D9920050**	Page **635**

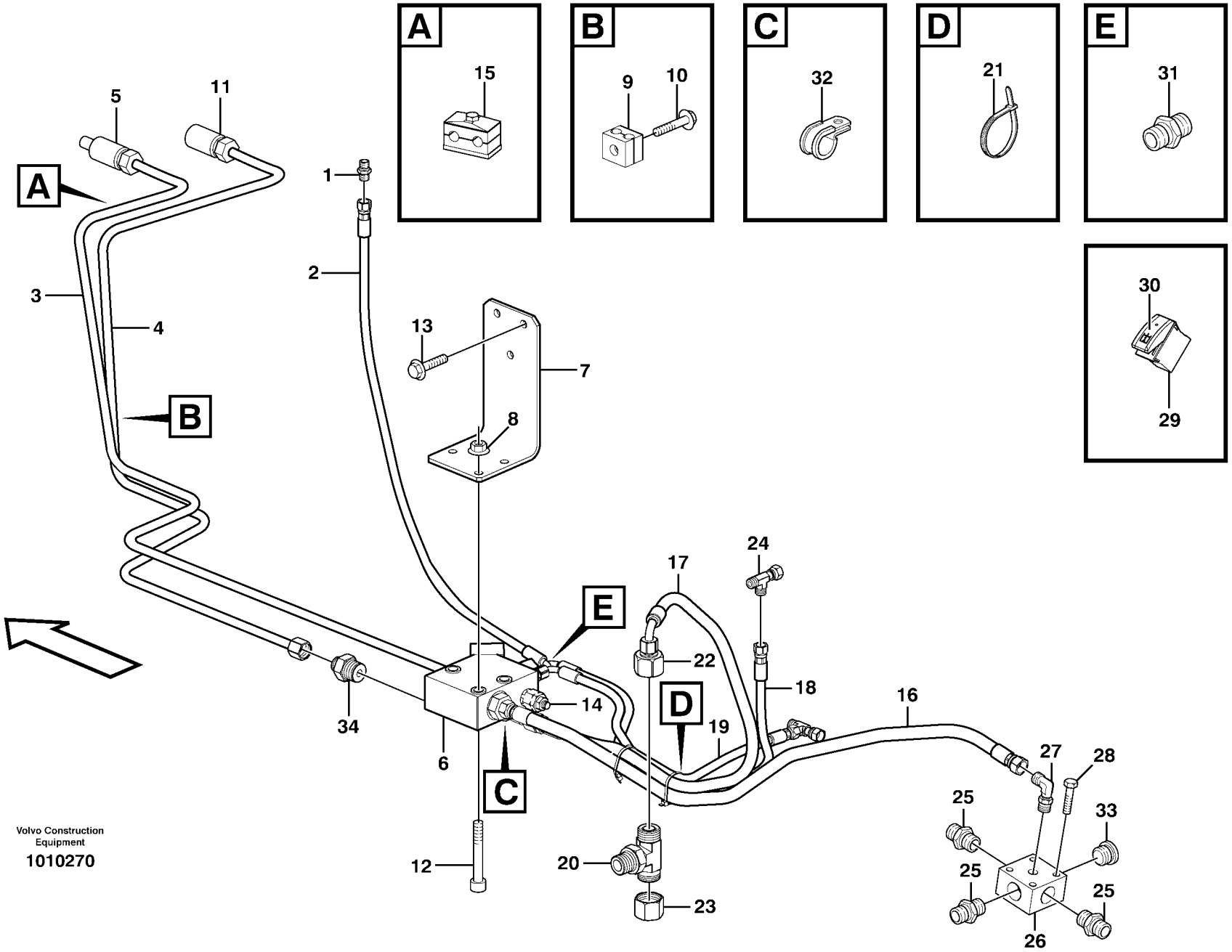

Volvo Construction Equipment

1010270

Fig.	Part No.	Quantity 1	2	3	PS	KIT	Description	Dénomination	Bezeichnung	Denominación	Notes
20	**VOE 981289**	2					•O-ring	•Joint Torique	•O-Ring	•Junta torica	
21	**VOE 14016673**	2					Strip Clamp	Ruban Serrage	Kabelbinder	Abraz Cinta	
22	**VOE 11885276**	1					Reduction	Reduction	Reduzierung	Reduccion	
23	**VOE 935576**	1					Plug	Bouchon	Stopfen	Tapon	
24	**VOE 13933859**	2					Nipple	Raccord	Nippel	Niple	
24	**VOE 4881722**	2					•O-ring	•Joint Torique	•O-Ring	•Junta torica	
25	**VOE 13933862**	3					Nipple	Raccord	Nippel	Niple	
25	**VOE 981289**	1					•O-ring	•Joint Torique	•O-Ring	•Junta torica	
25	**VOE 932042**	1					•O-ring	•Joint Torique	•O-Ring	•Junta torica	
26	**VOE 11886192**	1					Valve	Soupape	Ventil	Valvula	
27	**VOE 935069**	1					Elbow nipple	Raccord angulaire	Winkelnippel	Niple angular	
27	**VOE 4881722**	1					•O-ring	•Joint Torique	•O-Ring	•Junta torica	
27	**VOE 4880492**	1					•O-ring	•Joint Torique	•O-Ring	•Junta torica	
28	**VOE 983247**	2					Hexagon screw	Vis a tête hexagonale	Sechskantschr.	Tornillo hexago	
29	**VOE 11882865**	1					Rocker Switch	Commutateur à bascule	Wippschalter	Interruptor oscilante	See group 380, Page 207
30	**VOE 11885734**	1					Symbol	Symbole	Symbol	Símbolo	See group 380, Page 207
31	**VOE 13933858**	2					Union	Teton Connexion	Anschlussnippel	Niple Conexcion	
31	**VOE 4881722**	1					•O-ring	•Joint Torique	•O-Ring	•Junta torica	
31	**VOE 932039**	1					•O-ring	•Joint Torique	•O-Ring	•Junta torica	
32	**VOE 978869**	1					Clamp	Pince Serrage	Klemme	Abrazadera	
33	**VOE 11882920**	1					Plug	Bouchon	Stopfen	Tapon	
33	**VOE 932042**	1					•O-ring	•Joint Torique	•O-Ring	•Junta torica	
34	**VOE 935093**	1					Union	Teton Connexion	Anschlussnippel	Niple Conexcion	
34	**VOE 4880493**	1					•O-ring	•Joint Torique	•O-Ring	•Junta torica	
34	**VOE 932042**	1					•O-ring	•Joint Torique	•O-Ring	•Junta torica	

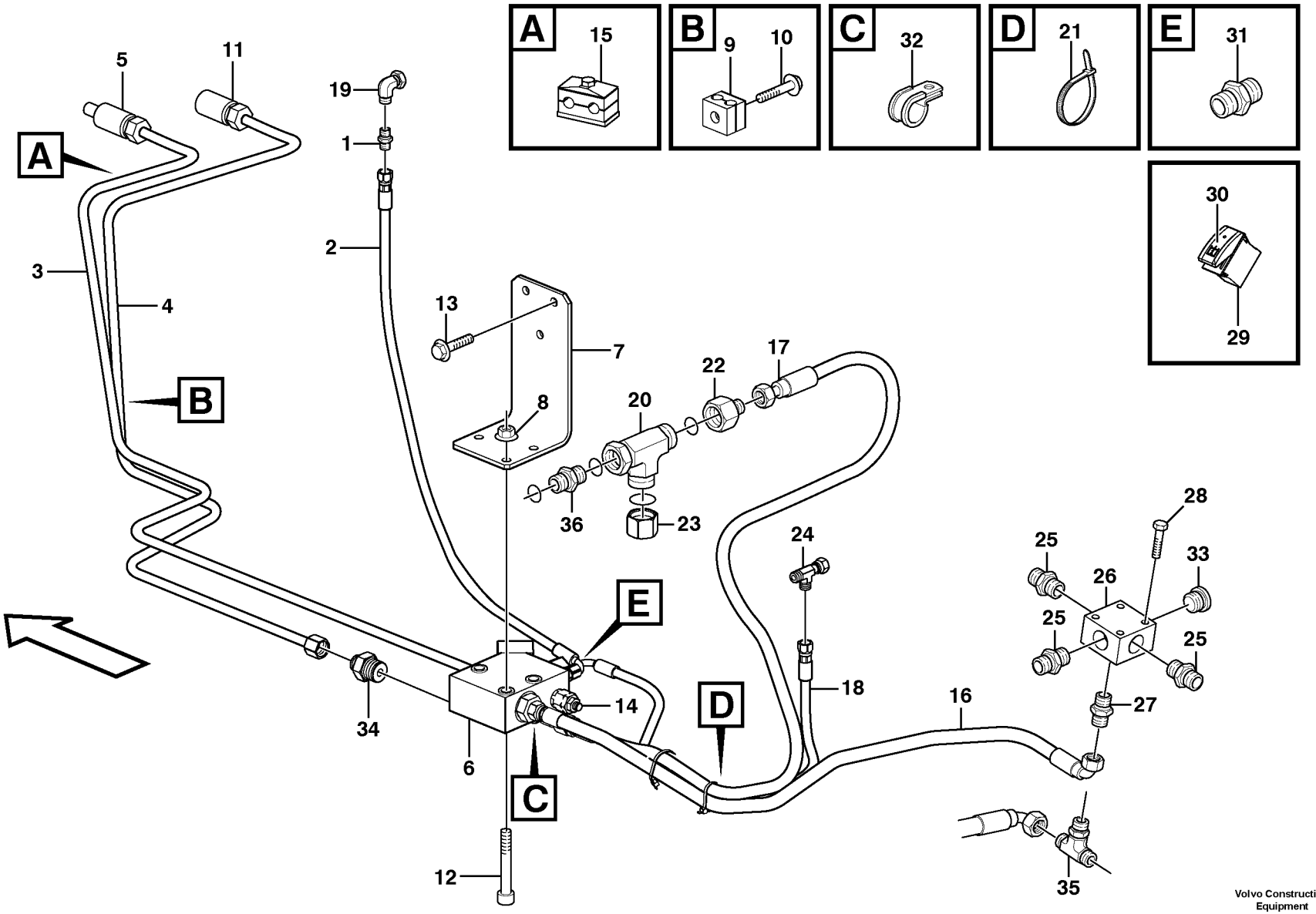

Volvo Construction Equipment

1024699

Fig.	Part No.	Quantity 1	2	3	PS	KIT	Description	Dénomination	Bezeichnung	Denominación	Notes
1	**VOE 935082**	1					Nipple	Raccord	Nippel	Niple	
1	**VOE 4881722**	1					•O-ring	•Joint Torique	•O-Ring	•Junta torica	
1	**VOE 932037**	1					•O-ring	•Joint Torique	•O-Ring	•Junta torica	
2	**VOE 938074**	1					Hose assembly	Conduit flexible	Schlauchleitung	Conducto	
3	**VOE 11885240**	1					Tube	Tube	Rohr	Tubo	
4	**VOE 11885241**	1					Tube	Tube	Rohr	Tubo	
5	**VOE 11885281**	1					Hydraulic clutch	Accouplement hydrauli	Hydraulikkupplung	Acoplamiento hidrauli	
6	**VOE 11885274**	1					Valve	Soupape	Ventil	Valvula	
7	**VOE 11885273**	1					Plate	Plaque	Platte	Placa	
8	**VOE 948645**	3					Flange Lock Nut	Contre écrou bride	Flanschmutter	Contratuer Embr	
9	**VOE 11884039**	1					Clamp	Pince Serrage	Klemme	Abrazadera	
10	**VOE 13965177**	1					Flange screw	Vis à bride	Flanschschraube	Torn embridado	
11	**VOE 11885282**	1					Hydraulic clutch	Accouplement hydrauli	Hydraulikkupplung	Acoplamiento hidrauli	
12	**VOE 967633**	3					Allen Hd Screw	Vis A 6 Pans Cr	Inbusschraube	Torn Hex Embut	
13	**VOE 946472**	3					Flange screw	Vis à bride	Flanschschraube	Torn embridado	
14	**VOE 11882258**	1					Nipple	Raccord	Nippel	Niple	
14	**VOE 932042**	1					•O-ring	•Joint Torique	•O-Ring	•Junta torica	
14	**VOE 4880492**	1					•O-ring	•Joint Torique	•O-Ring	•Junta torica	
15	**VOE 11885701**	1					Clamp	Pince Serrage	Klemme	Abrazadera	
16	**VOE 936539**	1					Hose assembly	Conduit flexible	Schlauchleitung	Conducto	
17	**VOE 11888841**	1					Hose assembly	Conduit flexible	Schlauchleitung	Conducto	
18	**VOE 11885270**	1					Hose	Durit	Schlauch	Tubo flexible	
19	**VOE 13933905**	1					Elbow nipple	Raccord angulaire	Winkelnippel	Niple angular	
19	**VOE 4881722**	1					•O-ring	•Joint Torique	•O-Ring	•Junta torica	
20	**VOE 13933874**	1					Nipple	Raccord	Nippel	Niple	
20	**VOE 990740**	2					•O-ring	•Joint Torique	•O-Ring	•Junta torica	
21	**VOE 4881440**	4					Strip Clamp	Ruban Serrage	Kabelbinder	Abraz Cinta	
22	**VOE 11885276**	1					Reduction	Reduction	Reduzierung	Reduccion	
23	**VOE 935576**	1					Plug	Bouchon	Stopfen	Tapon	
24	**VOE 13933859**	2					Nipple	Raccord	Nippel	Niple	

1		**Equipo hidráulico adicional** **Zusätzliche Hydraulikausrüstung** **Equipement hydraulique optionnel** **Optional hydraulic equipment**	Catalogue id **20050**	Group **916**
2			Illustr. No **1024699**	Section **210**
3			Issue **VOE 64D9920050**	Page **639**
4				
5		**11891369, S/N 10627 -**		

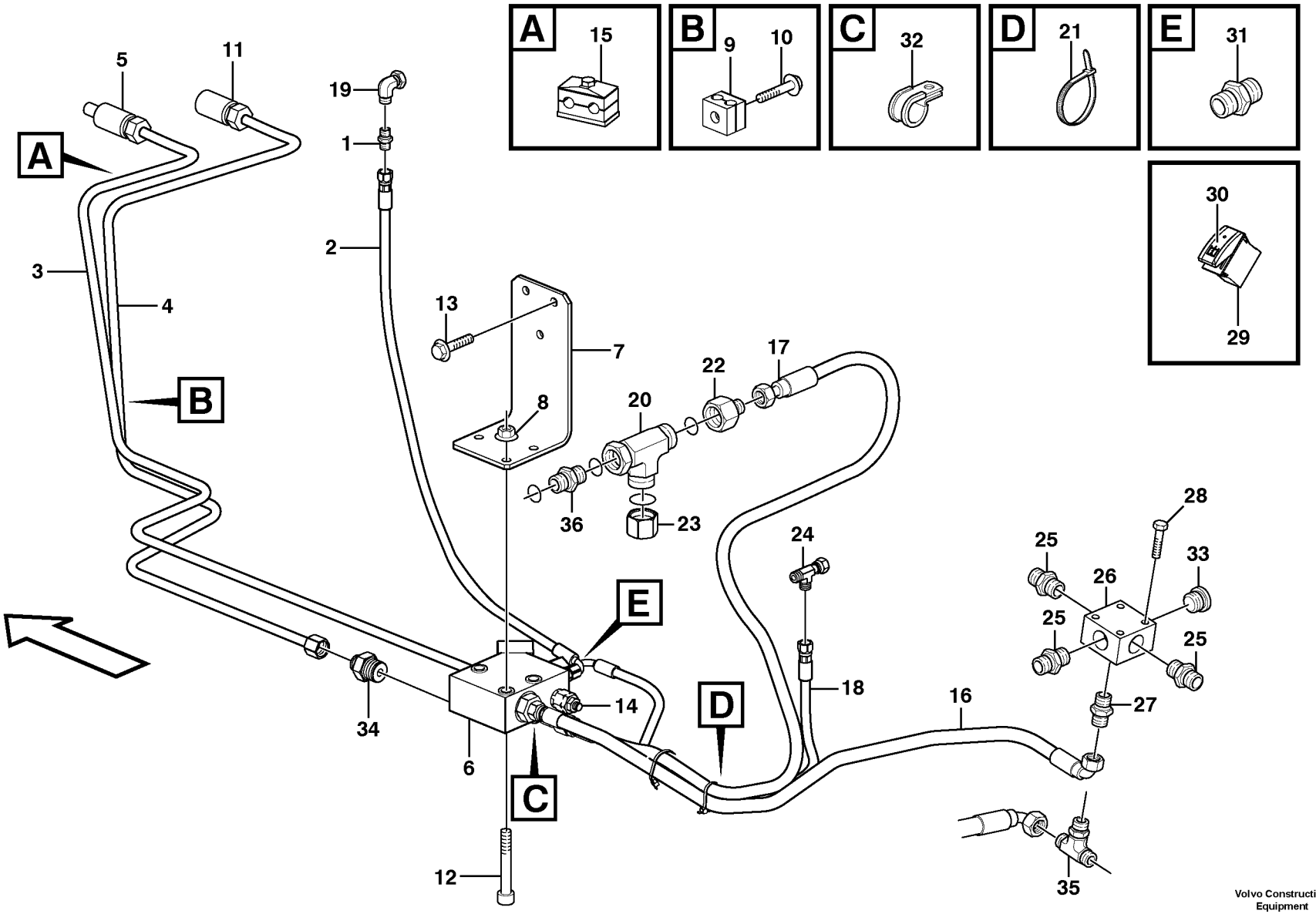

Volvo Construction Equipment

1024699

Fig.	Part No.	Quantity 1	2	3	PS	KIT	Description	Dénomination	Bezeichnung	Denominación	Notes
24	**VOE 4881722**	2					•O-ring	•Joint Torique	•O-Ring	•Junta torica	
25	**VOE 13933862**	3					Nipple	Raccord	Nippel	Niple	
25	**VOE 981289**	1					•O-ring	•Joint Torique	•O-Ring	•Junta torica	
25	**VOE 932042**	1					•O-ring	•Joint Torique	•O-Ring	•Junta torica	
26	**VOE 11886192**	1					Valve	Soupape	Ventil	Valvula	
27	**VOE 935085**	1					Nipple	Raccord	Nippel	Niple	
27	**VOE 932039**	1					•O-ring	•Joint Torique	•O-Ring	•Junta torica	
27	**VOE 4880492**	1					•O-ring	•Joint Torique	•O-Ring	•Junta torica	
28	**VOE 983247**	2					Hexagon screw	Vis a tête hexagonale	Sechskantschr.	Tornillo hexago	
29	**VOE 11882865**	1					Rocker Switch	Commutateur à bascule	Wippschalter	Interruptor oscilante	
30	**VOE 11885734**	1					Symbol	Symbole	Symbol	Símbolo	
31	**VOE 13933858**	2					Union	Teton Connexion	Anschlussnippel	Niple Conexcion	
31	**VOE 4881722**	1					•O-ring	•Joint Torique	•O-Ring	•Junta torica	
31	**VOE 932039**	1					•O-ring	•Joint Torique	•O-Ring	•Junta torica	
32	**VOE 978869**	1					Clamp	Pince Serrage	Klemme	Abrazadera	
33	**VOE 11882920**	1					Plug	Bouchon	Stopfen	Tapon	
33	**VOE 932042**	1					•O-ring	•Joint Torique	•O-Ring	•Junta torica	
34	**VOE 935093**	1					Union	Teton Connexion	Anschlussnippel	Niple Conexcion	
34	**VOE 4880493**	1					•O-ring	•Joint Torique	•O-Ring	•Junta torica	
34	**VOE 932042**	1					•O-ring	•Joint Torique	•O-Ring	•Junta torica	
35	**VOE 936606**	1					T-nipple	Raccord-t	T-Nippel	Niple T	
36	**VOE 13933862**	1					Nipple	Raccord	Nippel	Niple	
36	**VOE 990740**	1					•O-ring	•Joint Torique	•O-Ring	•Junta torica	
36	**VOE 932042**	1					•O-ring	•Joint Torique	•O-Ring	•Junta torica	

1		**Equipo hidráulico adicional** **Zusätzliche Hydraulikausrüstung** **Equipement hydraulique optionnel** **Optional hydraulic equipment**	Catalogue id **20050**	Group **916**
2				
3			Illustr. No **1024699**	Section **210**
4				
5		**11891369, S/N 10627 -**	Issue **VOE 64D9920050**	Page **641**

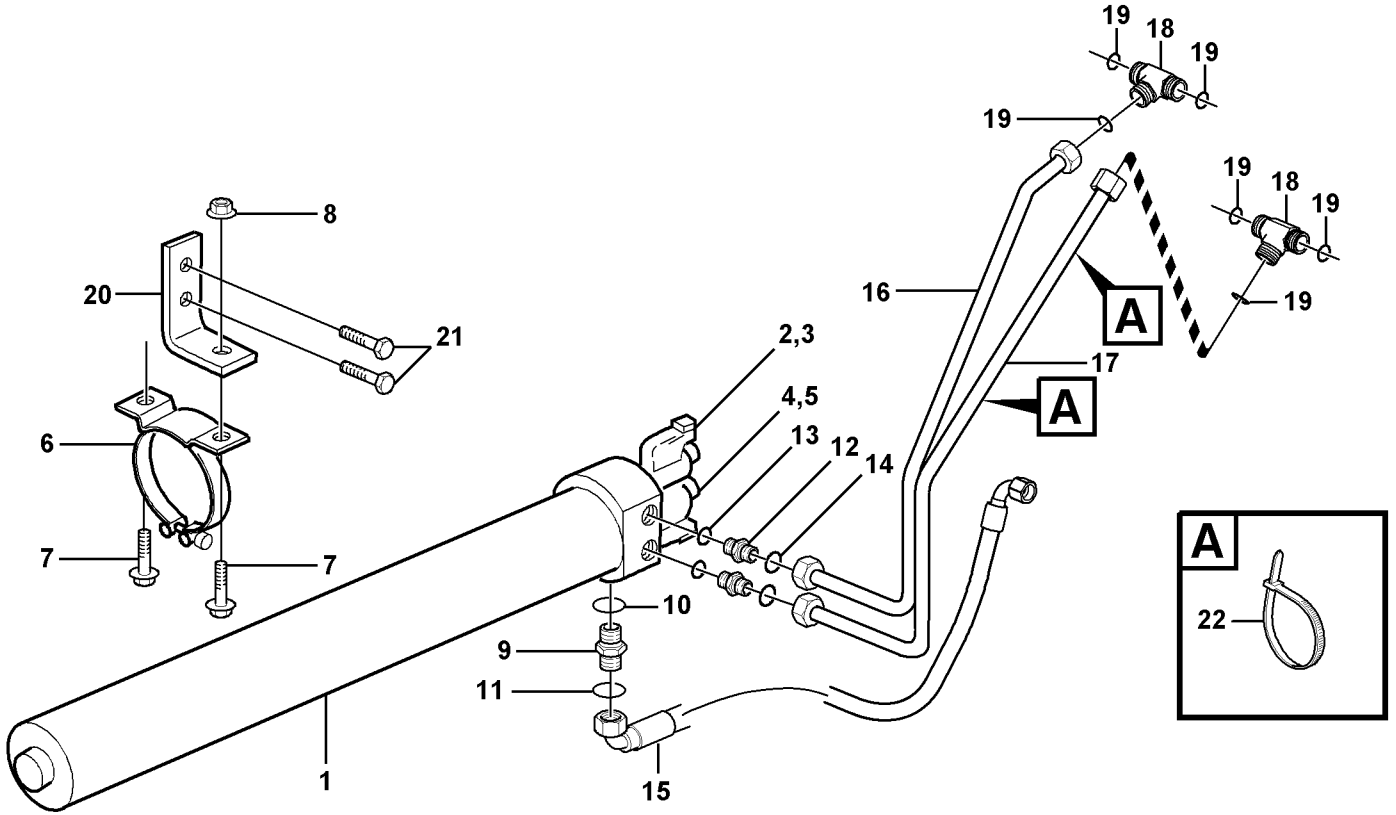
19
18
19
19
19
18
19
19
16
A
17
A
8
20
21
2,3
4,5
13
12
14
6
7
7
10
9
11
1
15
A
22

Fig.	Part No.	Quantity 1	2	3	PS	KIT	Description	Dénomination	Bezeichnung	Denominación	Notes
1	**VOE 11709780**	1					Accumulator	Accumulateur	Speicher	Acumulador	
2	**VOE 11709782**	1					•Solenoid valve	•Vanne electrom.	•Magnetventil	•Electrovalvula	
3	**VOE 11709783**	1					•Coil	•Bobine	•Wickel	•Bobina	
4	**VOE 11709781**	1					•Solenoid valve	•Vanne electrom.	•Magnetventil	•Electrovalvula	
5	**VOE 11709783**	1					•Coil	•Bobine	•Wickel	•Bobina	
6	**VOE 11882885**	2					Clamp	Pince Serrage	Klemme	Abrazadera	
7	**VOE 13965179**	4					Flange screw	Vis à bride	Flanschschraube	Torn embridado	
8	**VOE 948645**	2					Flange Lock Nut	Contre écrou bride	Flanschmutter	Contratuer Embr.	
9	**VOE 13933923**	1					Nipple	Raccord	Nippel	Niple	
10	**VOE 932040**	1					•O-ring	•Joint Torique	•O-Ring	•Junta torica	
11	**VOE 4880493**	1					•O-ring	•Joint Torique	•O-Ring	•Junta torica	
12	**VOE 935094**	2					Nipple	Raccord	Nippel	Niple	
13	**VOE 932040**	1					•O-ring	•Joint Torique	•O-Ring	•Junta torica	
14	**VOE 4880663**	1					•O-ring	•Joint Torique	•O-Ring	•Junta torica	
15	**VOE 11885515**	1					Hose	Durit	Schlauch	Tubo flexible	
16	**VOE 11884869**	1					Tube	Tuyau	Rohr	Tubo	
17	**VOE 11884870**	1					Tube	Tuyau	Rohr	Tubo	
18	**VOE 11884287**	2					Fitting	Ecrou raccord	Verschraubung	Racor	
19	**VOE 4880663**	3					•O-ring	•Joint Torique	•O-Ring	•Junta torica	
20	**VOE 11884882**	2					Plate	Plaque	Platte	Placa	
21	**VOE 946671**	4					Flange screw	Vis à bride	Flanschschraube	Torn embridado	
22	**VOE 14016673**	2					Strip Clamp	Ruban Serrage	Kabelbinder	Abraz Cinta	

1		**Amortiguador de vibraciónes** **Schwingungsdämpfer** **Amortisseur vibrations** **Boom suspension system**	Catalogue id **20050**	Group **916**
2			Illustr. No **1012803**	Section **350**
3			Issue **VOE 64D9920050**	Page **643**
4				
5		**11891345 S/N - 10626**		

VOLVO

BL61

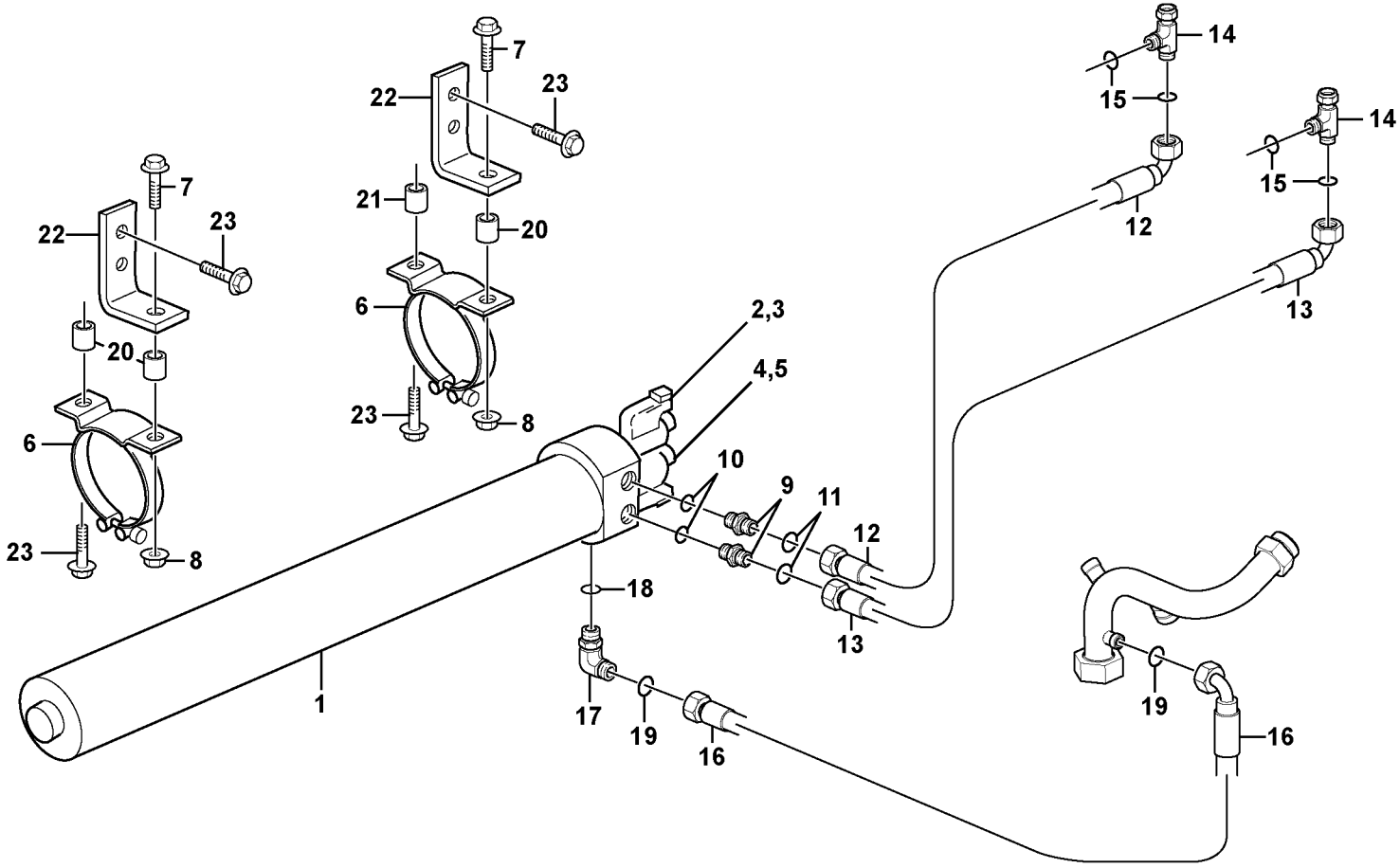

Volvo Construction Equipment

1024706

Fig.	Part No.	Quantity 1	2	3	PS	KIT	Description	Dénomination	Bezeichnung	Denominación	Notes
1	**VOE 11709780**	1					Accumulator	Accumulateur	Speicher	Acumulador	
2	**VOE 11709782**	1					•Solenoid valve	•Vanne electrom.	•Magnetventil	•Electrovalvula	
3	**VOE 11709783**	1					•Coil	•Bobine	•Wickel	•Bobina	
4	**VOE 11709781**	1					•Solenoid valve	•Vanne electrom.	•Magnetventil	•Electrovalvula	
5	**VOE 11709783**	1					•Coil	•Bobine	•Wickel	•Bobina	
6	**VOE 11888757**	2					Clamp	Pince Serrage	Klemme	Abrazadera	
7	**VOE 13965179**	2					Flange screw	Vis à bride	Flanschschraube	Torn embridado	
8	**VOE 948645**	2					Flange Lock Nut	Contre écrou bride	Flanschmutter	Contratuer Embr.	
9	**VOE 13933923**	2					Nipple	Raccord	Nippel	Niple	
10	**VOE 932040**	1					•O-ring	•Joint Torique	•O-Ring	•Junta torica	
11	**VOE 990738**	1					•O-ring	•Joint Torique	•O-Ring	•Junta torica	
12	**VOE 11888752**	1					Hose assembly	Conduit flexible	Schlauchleitung	Conducto	
13	**VOE 11888753**	1					Hose assembly	Conduit flexible	Schlauchleitung	Conducto	
14	**VOE 935028**	2					Nipple	Raccord	Nippel	Niple	
15	**VOE 990739**	4					•O-ring	•Joint Torique	•O-Ring	•Junta torica	
16	**VOE 937237**	1					Hose assembly	Conduit flexible	Schlauchleitung	Conducto	
17	**VOE 13933868**	1					Elbow Nipple	Raccord angulaire	Winkelnippel	Niple Angular	
18	**VOE 990738**	1					•O-ring	•Joint Torique	•O-Ring	•Junta torica	
19	**VOE 932040**	5					•O-ring	•Joint Torique	•O-Ring	•Junta torica	
20	**VOE 930438**	3					Spacer Ring	Bagu.entretoise	Abstandring	Anillo Dist.	
21	**VOE 930430**	1					Spacer Ring	Bagu.entretoise	Abstandring	Anillo Dist.	
22	**VOE 11888756**	2					Bracket	Console	Konsole	Ménsula	
23	**VOE 946671**	5					Flange screw	Vis à bride	Flanschschraube	Torn embridado	
24	**VOE 13965180**	1					Flange screw	Vis à bride	Flanschschraube	Torn embridado	

1		**Amortiguador de vibraciónes** **Schwingungsdämpfer** **Amortisseur vibrations** **Boom suspension system**		Catalogue id **20050**	Group **916**
2				Illustr. No **1024706**	Section **360**
3					
4				Issue **VOE 64D9920050**	Page **645**
5		**11891345 S/N 10627 -**			

VOLVO

BL61

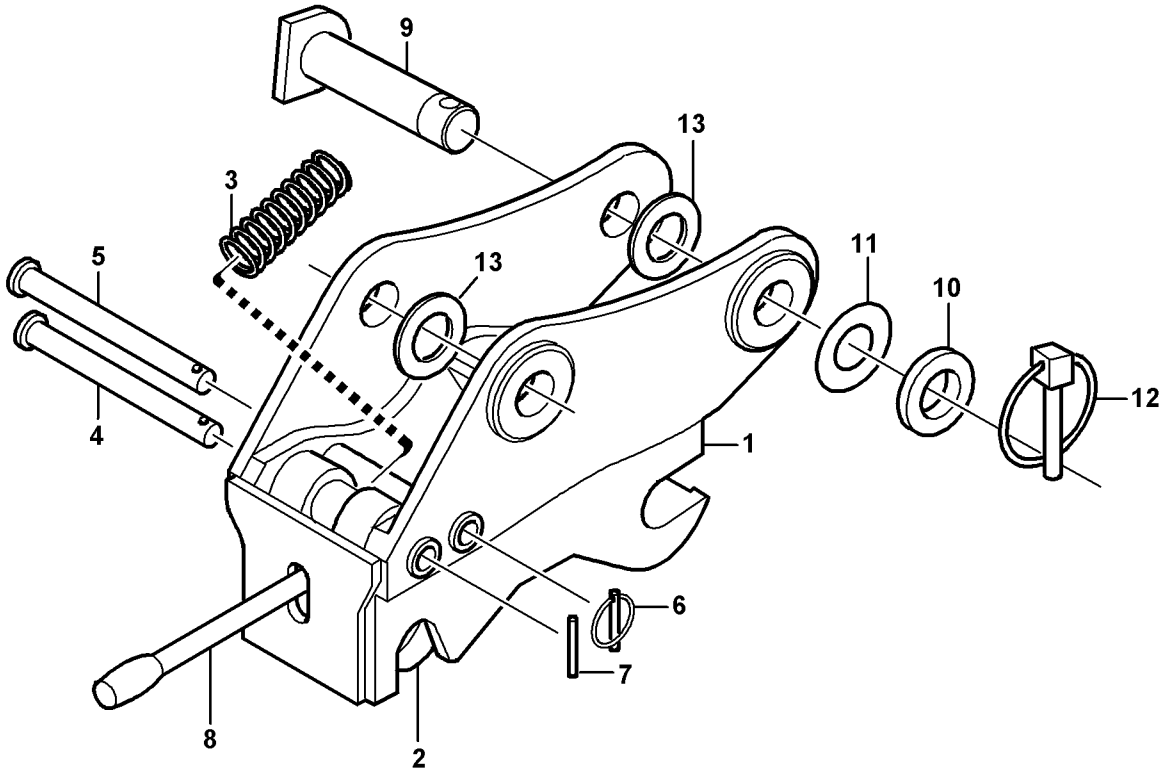
9
13
3
5
13
11
10
12
4
1
6
7
8
2

Fig.	Part No.	Quantity 1	2	3	PS	KIT	Description	Dénomination	Bezeichnung	Denominación	Notes
1	**VOE 11884311**	1					Quick Coupling	Accouplement Ra	Schnellkupplung	Acoplamiento Ra	
2	**VOE 11712602**	1					•Hook	•Crochet	•Haken	•Gancho	
3	**VOE 11712603**	1					•Spring	•Ressort	•Feder	•Muelle	
4	**VOE 11712604**	1					•Pin	•Goupille	•Zapfen	•Pasador	
5	**VOE 11712605**	1					•Pin	•Goupille	•Zapfen	•Pasador	
6	**VOE 11712606**	1					•Pin	•Goupille	•Zapfen	•Pasador	
7	**VOE 11712607**	1					•Pin	•Goupille	•Zapfen	•Pasador	
8	**VOE 11886254**	1					Handle	Poignee	Handgriff	Manilla	
9	**VOE 11883624**	2					Pin	Clavette	Splint	Pasador	
10	**VOE 955912**	2					Washer	Rondelle	Scheibe	Arandela	
11	**VOE 403078**	6					Shim	Cale Reglage	Nachstellblech	Laminill Ajuste	
12	**VOE 11881622**	2					Locking pin	Goupille d'arrêt	Schliessbolzen	Pasador de cierre	
13	**VOE 11885220**	6					Spacer	Entretoise	Abstandkörper	Distanciador	

1		**Portaimplemento, mecánico** **Geräteträger, mechanisch** **Porte-outil, verrouillage mécanique** **Attachment bracket, mechanical**	Catalogue id **20050**	Group **924**
2			Illustr. No **1013366**	Section **100**
3			Issue **VOE 64D9920050**	Page **647**
4				
5		**11891299**		

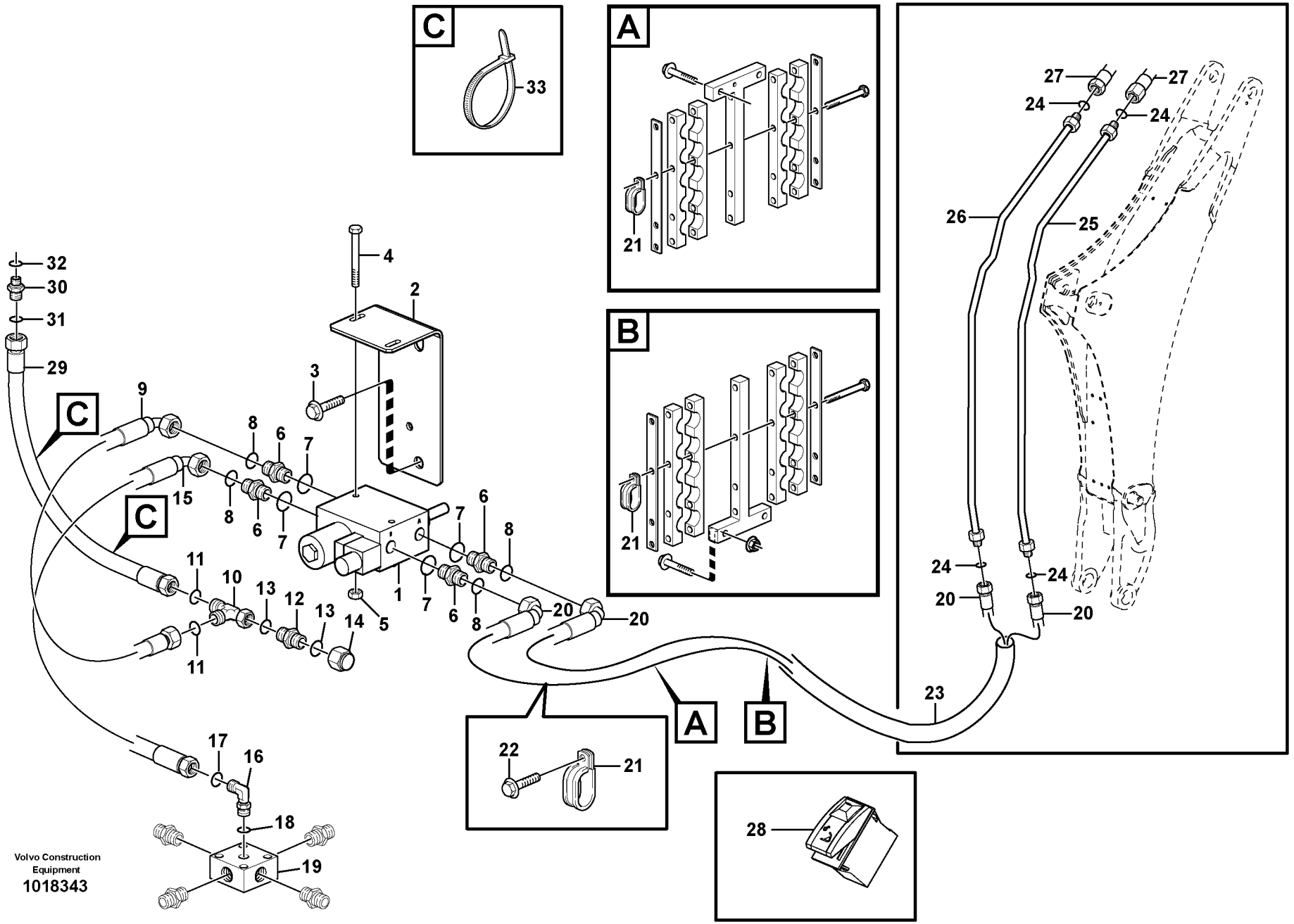
C
33
A
21
B
21
27
24
27
24
26
25
24
24
20
20
32
30
31
29
4
2
3
9
8
6
7
15
8
6
7
C
C
11
10
13
12
13
14
11
5
1
7
6
8
7
6
8
20
20
A
B
23
22
21
28
17
16
18
19
Volvo Construction
Equipment
1018343

Fig.	Part No.	Quantity 1	2	3	PS	KIT	Description	Dénomination	Bezeichnung	Denominación	Notes
1	**VOE 11883853**	1					Valve	Soupape	Ventil	Valvula	S/N - 10305
	VOE 11800853	1					Valve	Soupape	Ventil	Valvula	S/N 10306 -
2	**VOE 11885711**	1					Bracket	Console	Konsole	Ménsula	S/N - 10305
	VOE 11887392	1					Bracket	Console	Konsole	Ménsula	S/N 10306 -
3	**VOE 13945444**	4					Flange screw	Vis à bride	Flanschschraube	Torn embridado	S/N - 10305
	VOE 13945444	2					Flange screw	Vis à bride	Flanschschraube	Torn embridado	S/N 10306 -
4	**VOE 955282**	2					Hexagon screw	Vis tête hexagonale	Sechskantschraube	Tornillo hexago	S/N - 10305
	VOE 965209	2					Flange screw	Vis à bride	Flanschschraube	Torn embridado	S/N 10306 -
5	**VOE 983302**	2					Nut	Ecrou	Mutter	Tuerca	S/N - 10305
	VOE 13965483	2					Flange Lock Nut	Contre écrou bride	Flanschmutter	Contratuer Embr	S/N 10306 -
6	**VOE 13933858**	4					Union	Teton Connexion	Anschlussnippel	Niple Conexcion	
7	**VOE 932039**	1					•O-ring	•Joint Torique	•O-Ring	•Junta torica	
8	**VOE 4881722**	1					•O-ring	•Joint Torique	•O-Ring	•Junta torica	
9	**VOE 11884279**	1					Hose	Durit	Schlauch	Tubo flexible	
10	**VOE 13933859**	1					Nipple	Raccord	Nippel	Niple	
11	**VOE 4881722**	2					•O-ring	•Joint Torique	•O-Ring	•Junta torica	
12	**VOE 935436**	1					Nipple	Raccord	Nippel	Niple	
13	**VOE 4881722**	2					•O-ring	•Joint Torique	•O-Ring	•Junta torica	
14	**VOE 935756**	1					Plug	Bouchon	Stopfen	Tapon	
15	**VOE 11885433**	1					Hose	Durit	Schlauch	Tubo flexible	S/N - 10305
15	**VOE 936339**	1					Hose assembly	Condui.flexible	Schlauchleitung	Conducto	S/N 10306 - 10626
15	**VOE 11888870**	1					Hose assembly	Conduit flexible	Schlauchleitung	Conducto	S/N 10627 -
16	**VOE 935067**	1					Elbow nipple	Raccord angulaire	Winkelnippel	Niple angular	S/N - 10626
16	**VOE 935069**	1					Elbow nipple	Raccord angulaire	Winkelnippel	Niple angular	S/N 10627 -
17	**VOE 4881722**	1					•O-ring	•Joint Torique	•O-Ring	•Junta torica	
18	**VOE 932037**	1					•O-ring	•Joint Torique	•O-Ring	•Junta torica	S/N - 10626
18	**VOE 990737**	1					•O-ring	•Joint Torique	•O-Ring	•Junta torica	S/N 10627 -
19		1					Connection block	Bloc Raccord	Anschlussockel	Bloque Conector	See group 911, Page 533
20	**VOE 11885435**	2					Hose	Durit	Schlauch	Tubo flexible	
21	**VOE 981661**	3					Clamp	Pince Serrage	Klemme	Abrazadera	S/N - 10626

1		**Portaimplementos hidráulico, brazo** **Hydraulik Geräteträger Baggerarm** **Porte-outil à verrouillage hydraulique, balancier** **Hydraulic attachment bracket digger**	Catalogue id **20050**	Group **924**
2			Illustr. No **1018343**	Section **150**
3			Issue **VOE 64D9920050**	Page **649**
4				
5		**11891448, 11891449, 11891450, 11891451**		

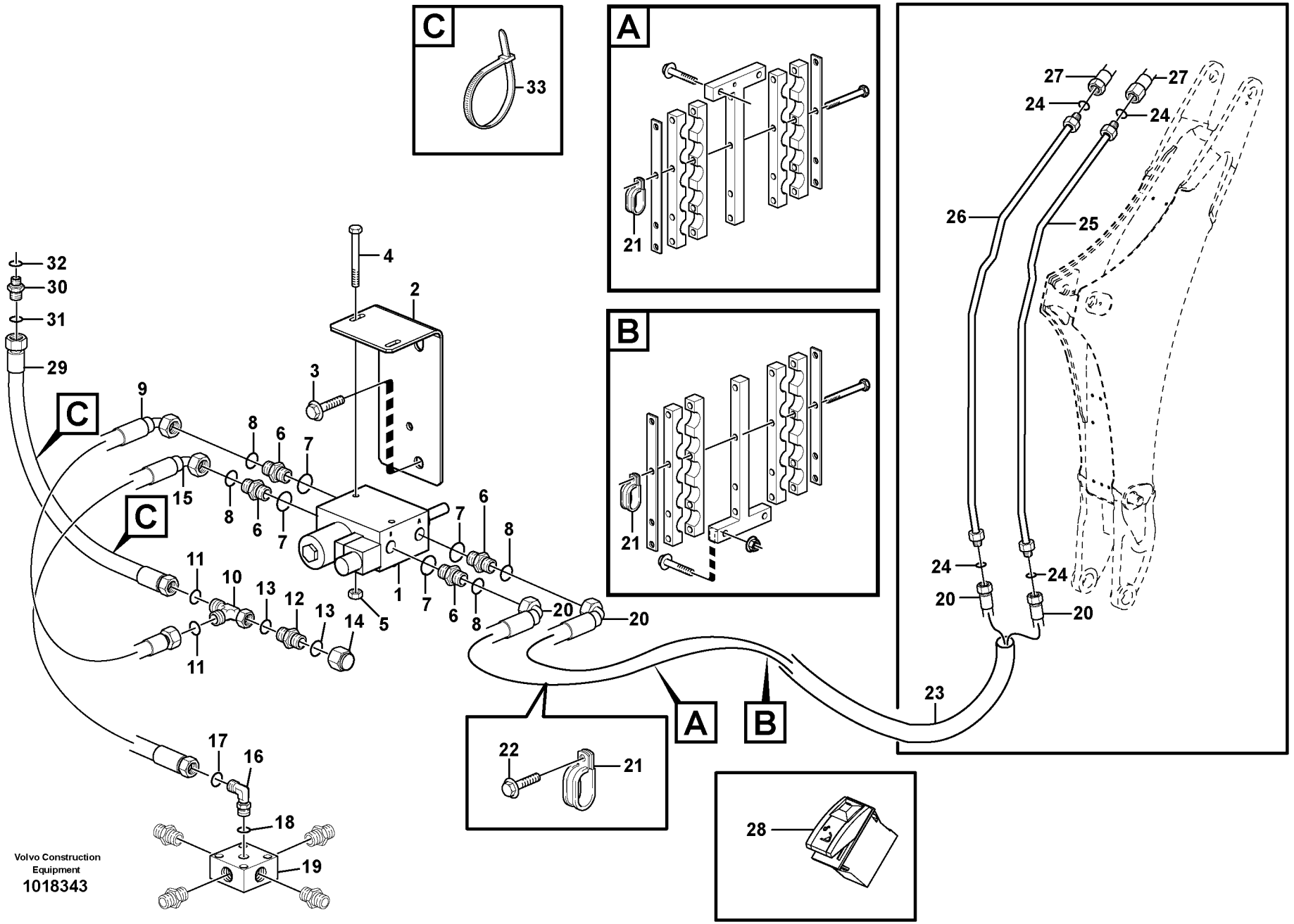
C
33
A
21
B
21
27
24
27
24
26
25
24
24
20
20
32
30
31
29
4
2
3
9
8
6
7
15
8
6
7
C
C
11
10
13
12
13
14
11
5
1
7
6
8
7
6
8
20
20
A
B
23
22
21
28
17
16
18
19
Volvo Construction
Equipment
1018343

Fig.	Part No.	Quantity 1	2	3	PS	KIT	Description	Dénomination	Bezeichnung	Denominación	Notes
	VOE 981661	2					Clamp	Pince Serrage	Klemme	Abrazadera	S/N 10627 -
22	**VOE 13946173**	1					Flange screw	Vis à bride	Flanschschraube	Torn embridado	S/N - 10626
23	**VOE 11885208**	1					Protection	Protection	Schutz	Proteccion	
24	**VOE 4881722**	4					O-ring	Joint Torique	O-Ring	Junta torica	
25	**VOE 11885218**	1					Tube	Tube	Rohr	Tubo	
26	**VOE 11885219**	1					Tube	Tube	Rohr	Tubo	
27	**VOE 11885427**	2					Hose	Durit	Schlauch	Tubo flexible	
28		1					Switch	Commutateur	Schalter	Contactor	See group 380, Page 207
29	**VOE 11885514**	1					Hose	Durit	Schlauch	Tubo flexible	
30	**VOE 935082**	1					Nipple	Raccord	Nippel	Niple	
31	**VOE 4881722**	1					•O-ring	•Joint Torique	•O-Ring	•Junta torica	
32	**VOE 932037**	1					•O-ring	•Joint Torique	•O-Ring	•Junta torica	
33	**VOE 4881438**	3					Strip Clamp	Ruban Serrage	Kabelbinder	Abraz Cinta	

1		**Portaimplementos hidráulico, brazo** **Hydraulik Geräteträger Baggerarm** **Porte-outil à verrouillage hydraulique, balancier** **Hydraulic attachment bracket digger**	Catalogue id **20050**	Group **924**
2				
3			Illustr. No **1018343**	Section **150**
4				
5		**11891448, 11891449, 11891450, 11891451**	Issue **VOE 64D9920050**	Page **651**

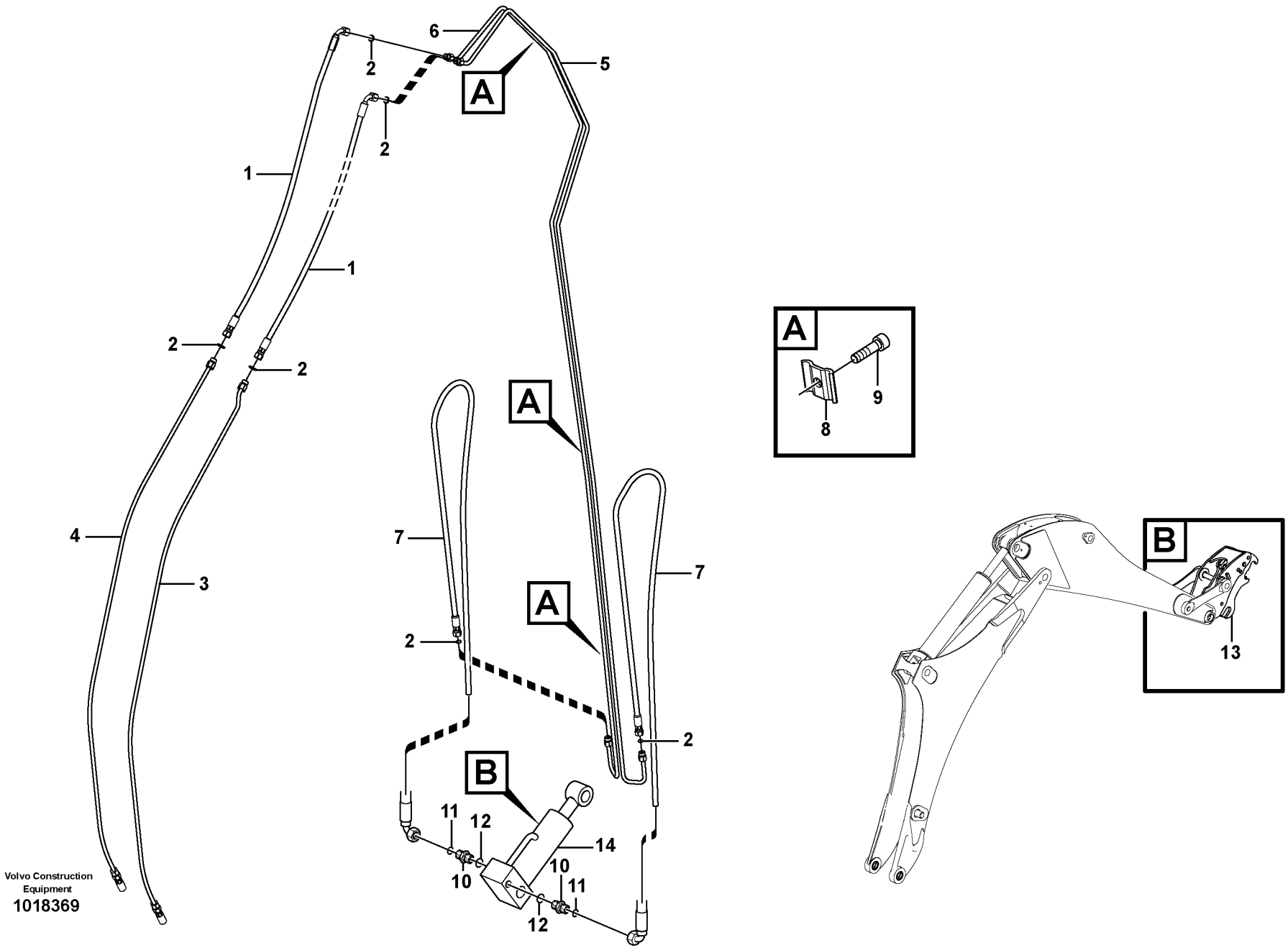

Volvo Construction Equipment
1018369

Fig.	Part No.	Quantity 1	2	3	PS	KIT	Description	Dénomination	Bezeichnung	Denominación	Notes
1	**VOE 11885427**	2	2				Hose	Durit	Schlauch	Tubo flexible	
2	**VOE 4881722**	8	8				O-ring	Joint Torique	O-Ring	Junta torica	
3		1	1				Tube	Tube	Rohr	Tubo	See group 924, Page 649
4		1	1				Tube	Tube	Rohr	Tubo	See group 924, Page 649
5	**VOE 11885442**	1	1				Pipe	Canalisation	Rohrleitung	Canalizacion	
6	**VOE 11885441**	1	1				Pipe	Canalisation	Rohrleitung	Canalizacion	
7	**VOE 11885347**	2	2				Hose	Durit	Schlauch	Tubo flexible	
8	**VOE 11881049**	5	5				Clamp	Pince Serrage	Klemme	Abrazadera	
9	**VOE 967631**	5	5				Allen Hd Screw	Vis A 6 Pans Cr	Inbusschraube	Torn Hex Embut	
10	**VOE 13933858**		2				Union	Teton Connexion	Anschlussnippel	Niple Conexcion	
11	**VOE 4881722**		1				•O-ring	•Joint Torique	•O-Ring	•Junta torica	
12	**VOE 932039**		1				•O-ring	•Joint Torique	•O-Ring	•Junta torica	
13			1				Quick attachment	Fixation rapide	Schnellkupplung	Acoplamiento rapido	See group 924, Page 657
14	**VOE 11712673**		1				Cylinder	Verin	Zylinder	Cilindro	

1	**11891451**
2	**11891450**
3	
4	
5	

Portaimplementos hidráulico, brazo (11891351, 11891362)
Hydraulik Geräteträger Baggerarm (11891351, 11891362)
Porte-outil à verrouillage hydraulique, balancier (11891351, 11891362)
Hydraulic attachment bracket digger (11891351, 11891362)

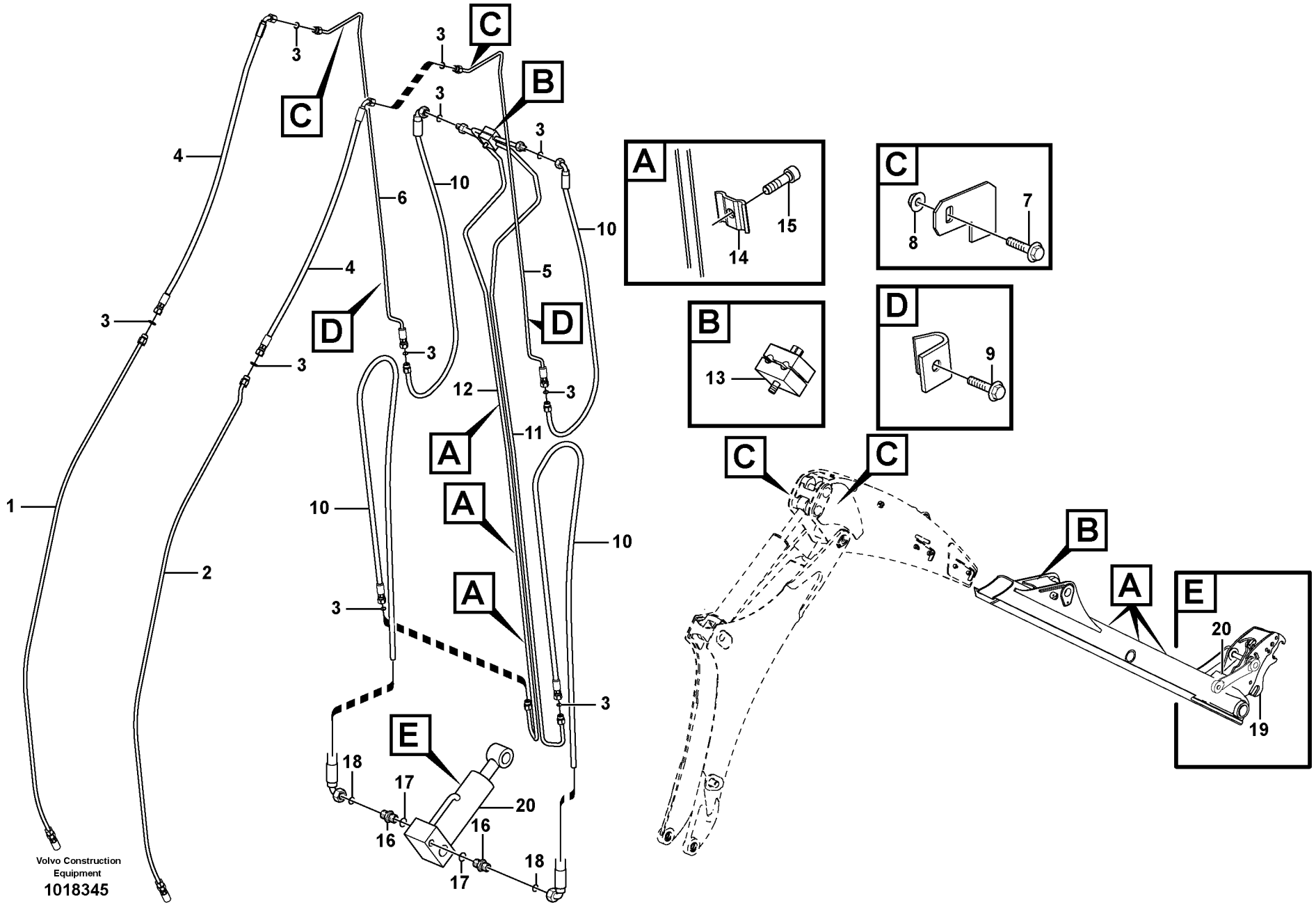
Volvo Construction Equipment
1018345

Fig.	Part No.	Quantity 1	2	3	PS	KIT	Description	Dénomination	Bezeichnung	Denominación	Notes
1		1	1				Tube	Tube	Rohr	Tubo	See group 924, Page 649
2		1	1				Tube	Tube	Rohr	Tubo	See group 924, Page 649
3	**VOE 4881722**	10	10				O-ring	Joint Torique	O-Ring	Junta torica	
4	**VOE 11885427**	2	2				Hose	Durit	Schlauch	Tubo flexible	
5	**VOE 11885230**	1	1				Tube Assembly	Tuyauterie	Rohrleitung	Tuberia	
6	**VOE 11885229**	1	1				Tube Assembly	Tuyauterie	Rohrleitung	Tuberia	
7	**VOE 13947760**	2	2				Flange screw	Vis à bride	Flanschschraube	Torn embridado	
8	**VOE 13945408**	2	2				Nut	Ecrou	Mutter	Tuerca	
9	**VOE 13945444**	2	2				Flange screw	Vis à bride	Flanschschraube	Torn embridado	
10	**VOE 11885347**	4	4				Hose	Durit	Schlauch	Tubo flexible	
11	**VOE 11887350**	1	1				Tube	Tube	Rohr	Tubo	
12	**VOE 11885344**	1	1				Tube	Tube	Rohr	Tubo	
13	**VOE 11885371**	1	1				Clamp	Pince Serrage	Klemme	Abrazadera	
14	**VOE 11881049**	3	3				Clamp	Pince Serrage	Klemme	Abrazadera	
15	**VOE 967631**	3	3				Allen Hd Screw	Vis A 6 Pans Cr	Inbusschraube	Torn Hex Embut	
16	**VOE 13933858**	2					Union	Teton Connexion	Anschlussnippel	Niple Conexcion	
17	**VOE 932039**	1					•O-ring	•Joint Torique	•O-Ring	•Junta torica	
18	**VOE 4881722**	1					•O-ring	•Joint Torique	•O-Ring	•Junta torica	
19		1					Quick attachment	Fixation rapide	Schnellkupplung	Acoplamiento rapido	See group 924, Page 657
20	**VOE 11712673**	1					•Cylinder	•Verin	•Zylinder	•Cilindro	

1	**11891448**	**Portaimplementos hidráulico, brazo** **Hydraulik Geräteträger Baggerarm** **Porte-outil à verrouillage hydraulique, balancier** **Hydraulic attachment bracket digger**	Catalogue id **20050**	Group **924**
2	**11891449**		Illustr. No **1018345**	Section **250**
3			Issue **VOE 64D9920050**	Page **655**
4				
5				

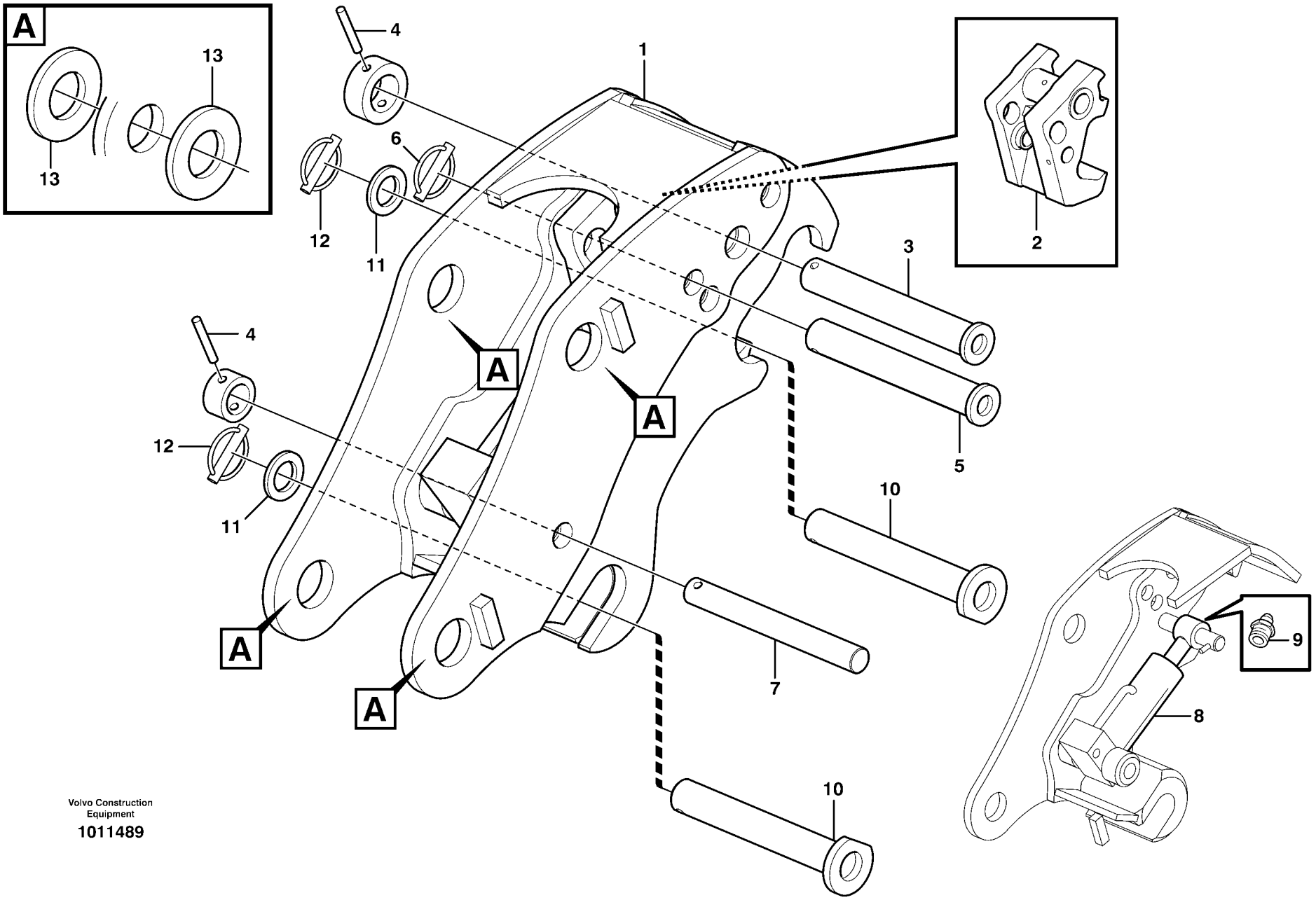

Volvo Construction Equipment

1011489

Fig.	Part No.	Quantity 1	2	3	PS	KIT	Description	Dénomination	Bezeichnung	Denominación	Notes
1	**VOE 11886515**	1					Quick attachment	Fixation rapide	Schnellkupplung	Acoplamiento rapido	S/N - 10139
1	**VOE 11887349**		1				Quick attachment	Fixation rapide	Schnellkupplung	Acoplamiento rapido	S/N 10140 -
2	**VOE 11712672**	1					•Hook	•Crochet	•Haken	•Gancho	
2	**VOE 11715541**		1				•Hook	•Crochet	•Haken	•Gancho	
	VOE 11715545		1				•Pin	•Goupille	•Zapfen	•Pasador	
	VOE 11715548		1				•Retaining ring	•Bague retenue	•Haltering	•Anillo de apoyo	
3	**VOE 11712675**	1					•Pin	•Goupille	•Zapfen	•Pasador	
3	**VOE 11715542**		1				•Pin	•Goupille	•Zapfen	•Pasador	
4	**VOE 11712678**	2					•Lock Pin	•Goupille Verro.	•Sicherungsstift	•Pasador Segurid	
4	**VOE 11715544**		2				•Retaining ring	•Bague retenue	•Haltering	•Anillo de apoyo	
5	**VOE 11712674**	1					•Pin	•Goupille	•Zapfen	•Pasador	
5	**VOE 11715549**		1				•Pin	•Goupille	•Zapfen	•Pasador	
6	**VOE 11712677**	1	1				•Lock Ring	•Anneau Verrouillage	•Schlossring	•Anillo Segurid	
7	**VOE 11712679**	1					•Shaft	•Arbre	•Welle	•Arbol	
7	**VOE 11715547**		1				•Pin	•Goupille	•Zapfen	•Pasador	
8	**VOE 11712673**	1					•Cylinder	•Verin	•Zylinder	•Cilindro	See group 924, Page 659
8	**VOE 11715546**		1				•Cylinder	•Verin	•Zylinder	•Cilindro	
	VOE 11713154	1					••Sealing Kit	••Jeu Joints	••Dichtungssatz	••Juego Retenes	
9	**VOE 11712676**	1	1				•Lubricating nipple	•Graisseur	•Schmiernippel	•Engrasador	
10	**VOE 11883624**	2	2				Pin	Clavette	Splint	Pasador	
11	**VOE 955912**	2	2				Washer	Rondelle	Scheibe	Arandela	
12	**VOE 11881622**	2	2				Locking pin	Goupille d'arrêt	Schliessbolzen	Pasador de cierre	
13	**VOE 11885220**	8	8				Spacer	Entretoise	Abstandkörper	Distanciador	

1	**11886515**
2	**11887349**
3	
4	
5	

Soporte de implemento hidráulico
Hydraulisch betätigte Gerätebefestigung
Plaque de fixation à commande hydraulique
Hydraulic attachment bracket

11891448, 11891450

Catalogue id **20050**	Group **924**
Illustr. No **1011489**	Section **300**
Issue **VOE 64D9920050**	Page **657**

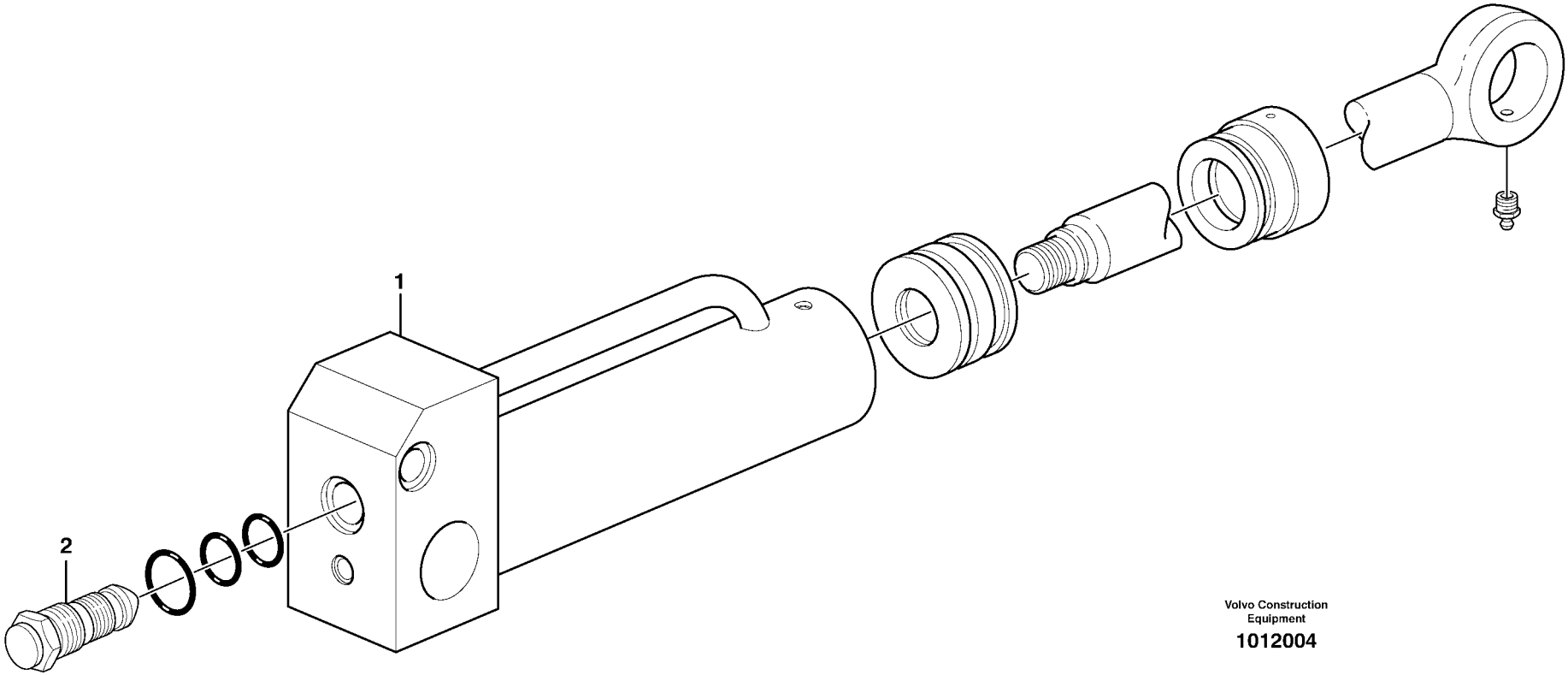

Volvo Construction Equipment

1012004

Fig.	Part No.	Quantity 1	2	3	PS	KIT	Description	Dénomination	Bezeichnung	Denominación	Notes
1	**VOE 11712673**	1					Cylinder	Verin	Zylinder	Cilindro	
	VOE 11713154	1					•Sealing Kit	•Jeu Joints	•Dichtungssatz	•Juego Retenes	
2	**VOE 11713136**	1					•Check valve	•Valve antiretour	•Rückschlagventil	•Válvula de retención	
	VOE 11713137	1					•Sealing Kit	•Jeu Joints	•Dichtungssatz	•Juego Retenes	

1		**Cilindro hydráulico, acoplamiento rapido** **Hydraulikzylinder Schnellwechsler** **Verin hydraulique, fixation rapide** **Hydraulic cylinder, quick attachment**	Catalogue id **20050**	Group **924**
2			Illustr. No **1012004**	Section **350**
3			Issue **VOE 64D9920050**	Page **659**
4				
5		**11891448, 11891450**		

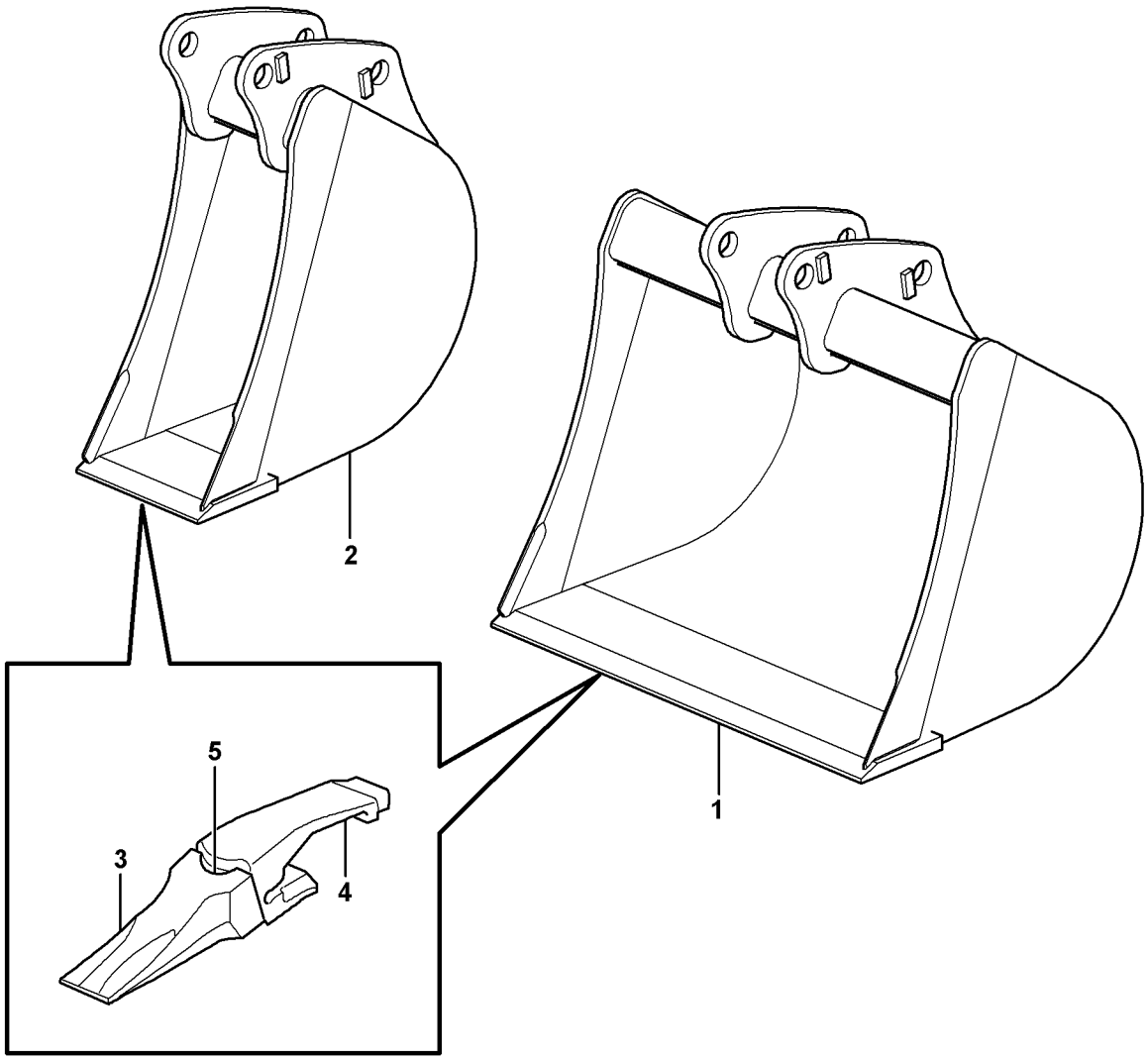
2
1
5
3
4

Fig.	Part No.	Quantity 1	2	3	4	5	PS	KIT	Description	Dénomination	Bezeichnung	Denominación	Notes
1	**VOE 11884487**	1							Bucket	Godet	Löffel	Cuchara	WID = 36”
1	**VOE 11884479**		1						Bucket	Godet	Löffel	Cuchara	WID = 30”
1	**VOE 11884471**			1					Bucket	Godet	Löffel	Cuchara	WID = 24”
2	**VOE 11884463**				1				Bucket	Godet	Löffel	Cuchara	WID = 18”
2	**VOE 11884454**					1			Bucket	Godet	Löffel	Cuchara	WID = 12”
3	**VOE 11884312**	REQ	REQ	REQ	REQ	REQ			•Bucket Tooth	•Dent de godet	•Löffelzahn	•Diente Cuchara	(VOE 11988296)
4	**VOE 11988403**	REG	REQ	REQ	REQ	REQ			•Adapter	•Raccord Reduct.	•Verbind Stutzen	•Adaptador	
5	**VOE 11988297**	REQ	REQ	REQ	REQ	REQ			•Lock Pin	•Goupille Verro.	•Sicherungsstift	•Pasador Segurid	

1	**11891318**	**Cuchara, recta con dientes** **Schaufel, gerade mit Zähnen** **Godet, droit avec dents** **Bucket, straight with teeth**	Catalogue id **20050**	Group **925**
2	**11891319**			
3	**11891320**		Illustr. No **1012910**	Section **100**
4	**11891043**			
5	**11891321**	**(BACKHOE) S/N - 10626**	Issue **VOE 64D9920050**	Page **661**

VOLVO

BL61

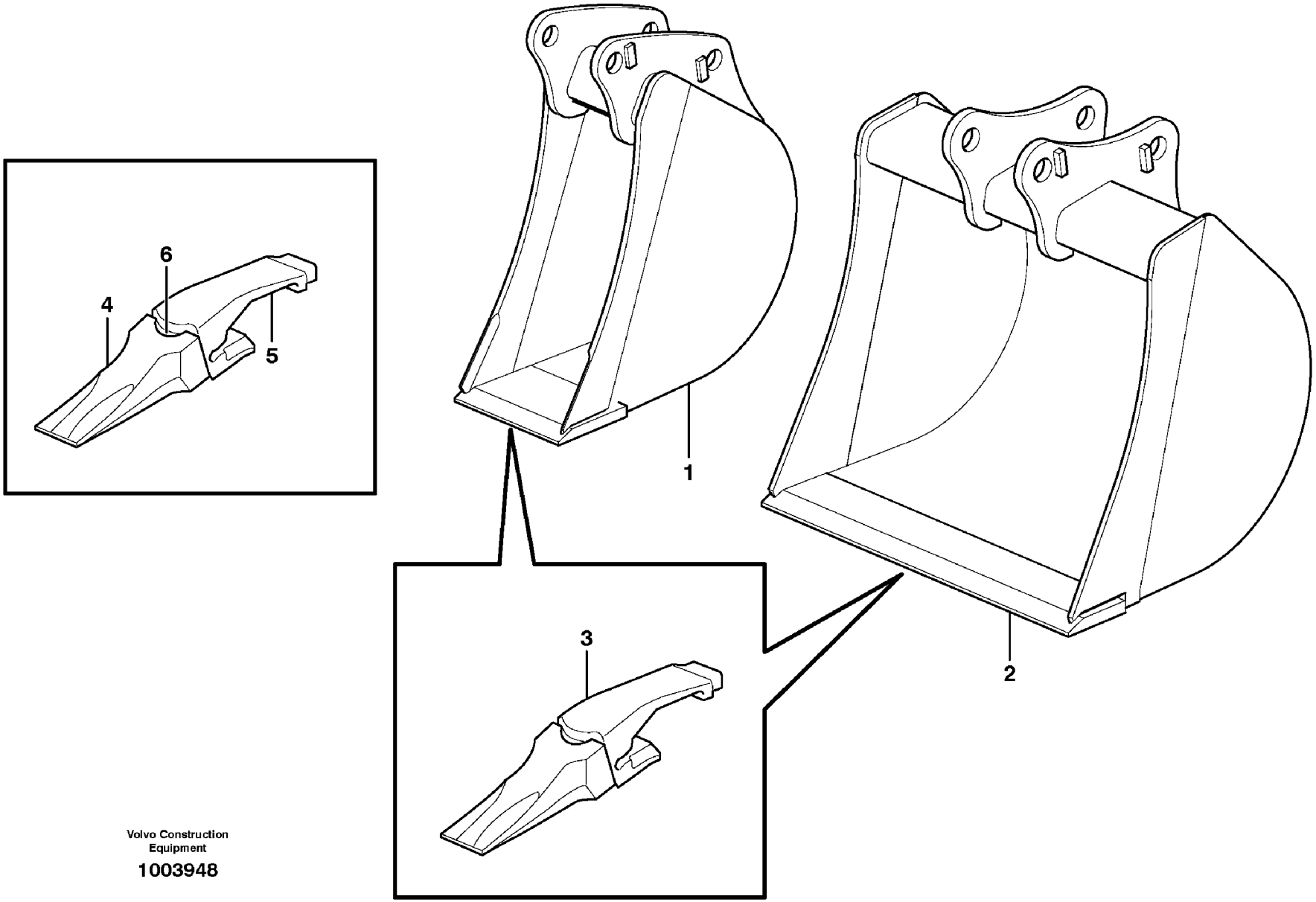

Volvo Construction Equipment

1003948

Fig.	Part No.	Quantity 1	2	3	4	5	PS	KIT	Description	Dénomination	Bezeichnung	Denominación	Notes
1	**VOE 11888440**	1							Bucket	Godet	Löffel	Cuchara	WID = 36”
1	**VOE 11888106**		1						Bucket	Godet	Löffel	Cuchara	WID = 30”
1	**VOE 11888170**			1					Bucket	Godet	Löffel	Cuchara	WID = 24”
2	**VOE 11888438**				1				Bucket	Godet	Löffel	Cuchara	WID = 18”
2	**VOE 11888437**					1			Bucket	Godet	Löffel	Cuchara	WID = 12”
3		6		5	4	3	NS		•Tooth Assembly	•	•	•	
3	**VOE 11881712**		6				SS		•Tooth	•Dent	•Zahn	•Diente	
4	**VOE 11884312**	6	6	5	4	3			••Bucket Tooth	••Dent de godet	••Löffelzahn	••Diente Cuchara	
5	**VOE 11801591**	6		5	4	3			••Tooth Holder	••Porte dent	••Zahnhalter	••Porta-diente	
5	**VOE 11884313**		6						••Tooth Bracket	••Porte-dent	••Egge	••Soporte	
6	**VOE 11884314**	6	6	5	4	3			••Key	••Clavette	••Keil	••Llave (cuna)	

1	**11891318**
2	**11891319**
3	**11891320**
4	**11891043**
5	**11891321**

Cuchara, recta con dientes
Schaufel, gerade mit Zähnen
Godet, droit avec dents
Bucket, straight with teeth

(BACKHOE) S/N 10627 -

Catalogue id **20050**	Group **925**
Illustr. No **1003948**	Section **120**
Issue **VOE 64D9920050**	Page **663**

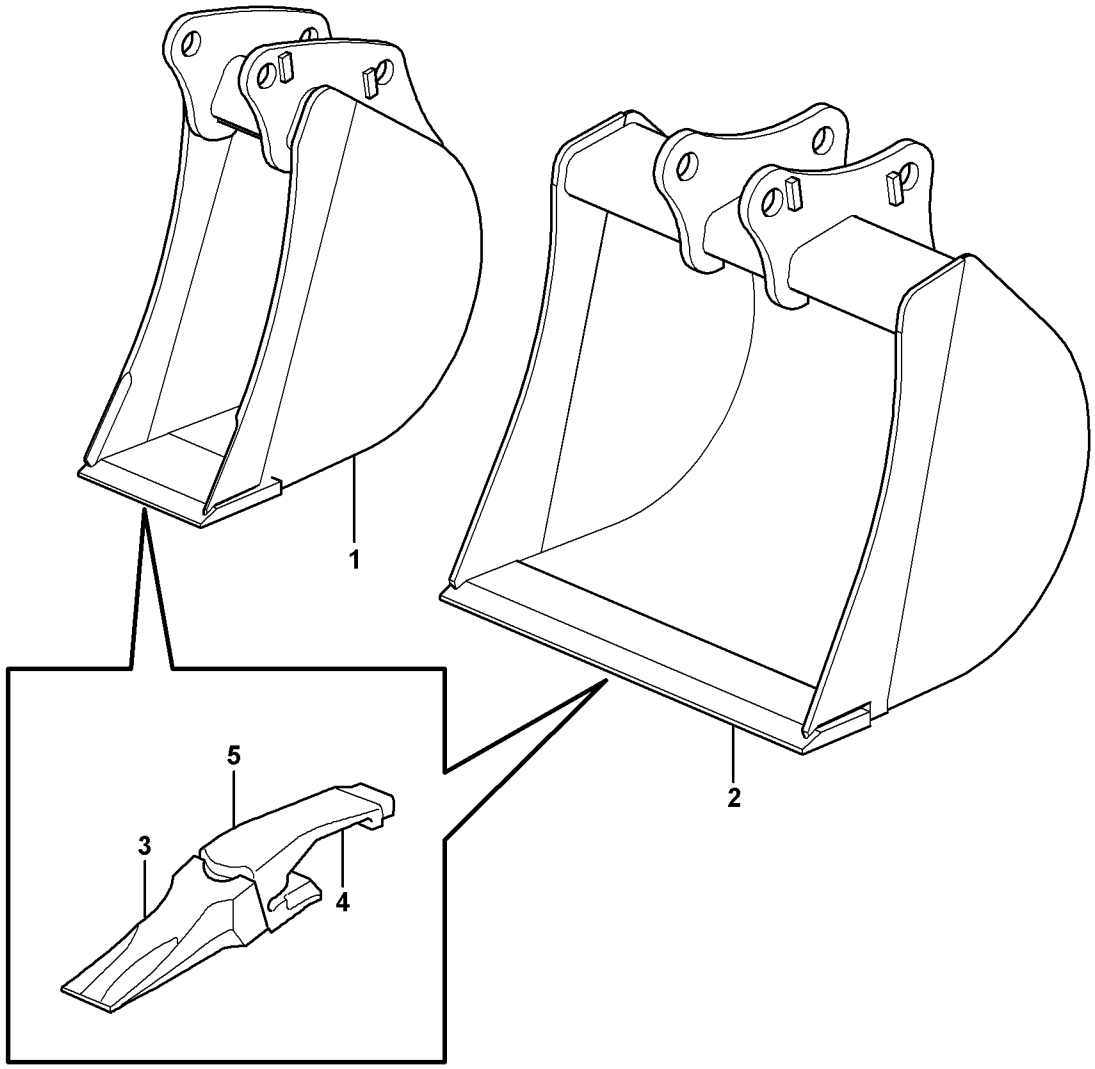
1
2
3
4
5

Fig.	Part No.	Quantity 1	2	3	4	5	PS	KIT	Description	Dénomination	Bezeichnung	Denominación	Notes
1	**VOE 11883659**	1							Bucket	Godet	Löffel	Cuchara	WIDE = 305 mm
1	**VOE 11885039**		1						Bucket	Godet	Löffel	Cuchara	WIDE = 400 mm
1	**VOE 11885047**			1					Bucket	Godet	Löffel	Cuchara	WIDE = 450 mm
2	**VOE 11883426**				1				Bucket	Godet	Löffel	Cuchara	WIDE = 610 mm
2	**VOE 11883660**					1	SS		Bucket	Godet	Löffel	Cuchara	WIDE = 910 mm
3	**VOE 11884312**	REQ	REQ	REQ	REQ	REQ			•Bucket Tooth	•Dent de godet	•Löffelzahn	•Diente Cuchara	(VOE 11988296)
4	**VOE 11988403**	REQ	REQ	REQ	REQ	REQ			•Adapter	•Raccord Reduct.	•Verbind Stutzen	•Adaptador	
5	**VOE 11988297**	REQ	REQ	REQ	REQ	REQ			•Lock Pin	•Goupille Verro.	•Sicherungsstift	•Pasador Segurid	

1	**11891202**	**Cuchara, recta con dientes** **Schaufel, gerade mit Zähnen** **Godet, droit avec dents** **Bucket, straight with teeth**	Catalogue id **20050**	Group **925**
2	**11891091**			
3	**11891092**		Illustr. No **1012913**	Section **150**
4	**11891192**			
5	**11891093**	**(BACKHOE) S/N - 10626**	Issue **VOE 64D9920050**	Page **665**

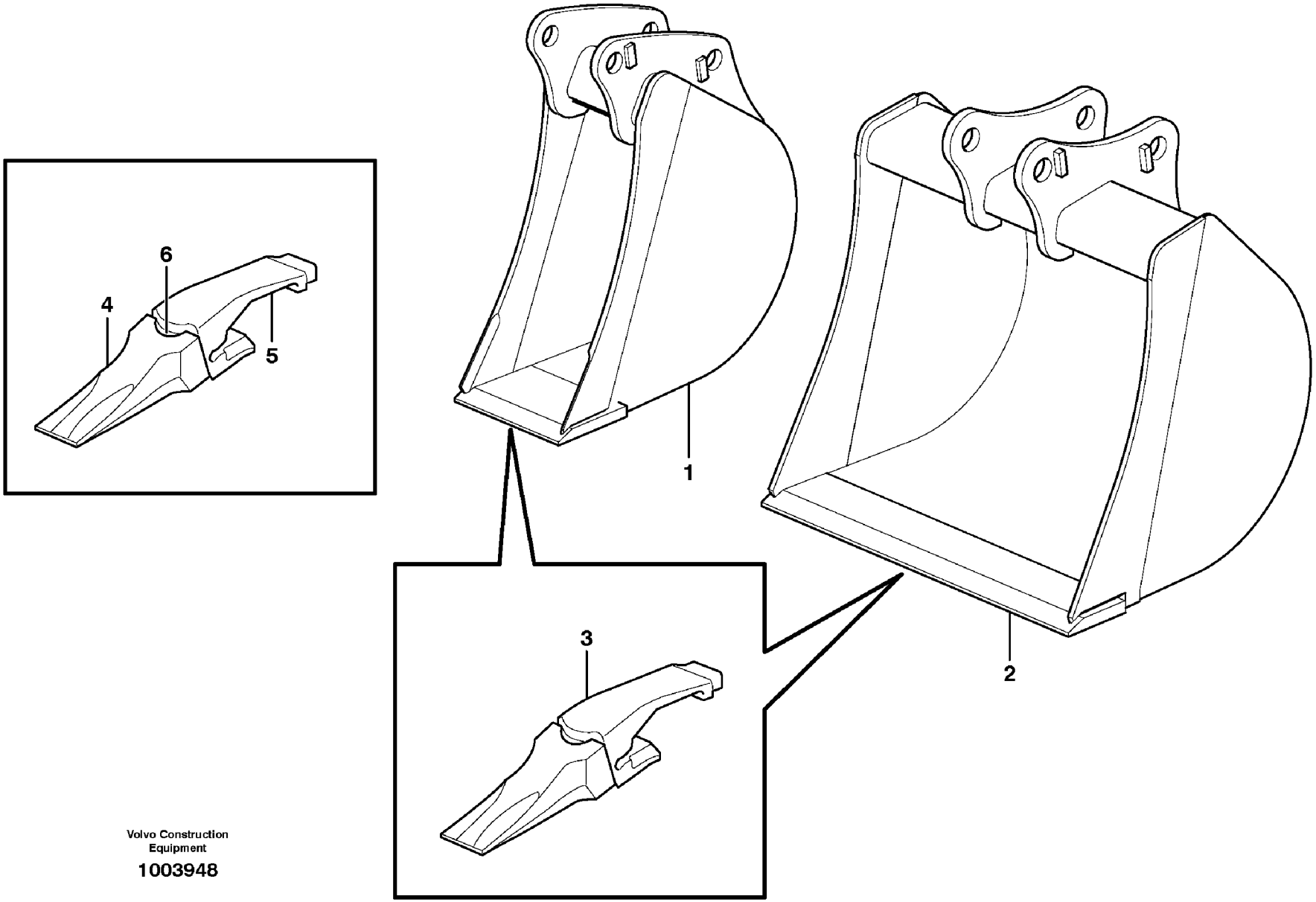

Volvo Construction Equipment

1003948

Fig.	Part No.	Quantity 1	2	3	4	5	PS	KIT	Description	Dénomination	Bezeichnung	Denominación	Notes
1	**VOE 11888420**	1							Bucket	Godet	Löffel	Cuchara	WIDE = 305 mm
1	**VOE 11888421**		1						Bucket	Godet	Löffel	Cuchara	WIDE = 400 mm
1	**VOE 11888422**			1					Bucket	Godet	Löffel	Cuchara	WIDE = 450 mm
2	**VOE 11888161**				1				Bucket	Godet	Löffel	Cuchara	WIDE = 610 mm
2	**VOE 11888423**					1			Bucket	Godet	Löffel	Cuchara	WIDE = 910 mm
3		3	3	4	4	6	NS		•Tooth Assembly	•	•	•	
4	**VOE 11884312**	3	3	4	4	6			••Bucket Tooth	••Dent de godet	••Löffelzahn	••Diente Cuchara	
5	**VOE 11801591**	3	3	4	4	6			••Tooth Holder	••Porte dent	••Zahnhalter	••Porta-diente	
6	**VOE 11884314**	3	3	4	4	6			••Key	••Clavette	••Keil	••Llave (cuna)	

1	**11891202**	**Cuchara, recta con dientes** **Schaufel, gerade mit Zähnen** **Godet, droit avec dents** **Bucket, straight with teeth**	Catalogue id **20050**	Group **925**
2	**11891091**			
3	**11891092**		Illustr. No **1003948**	Section **160**
4	**11891192**			
5	**11891093**	**(BACKHOE) S/N 10627 -**	Issue **VOE 64D9920050**	Page **667**

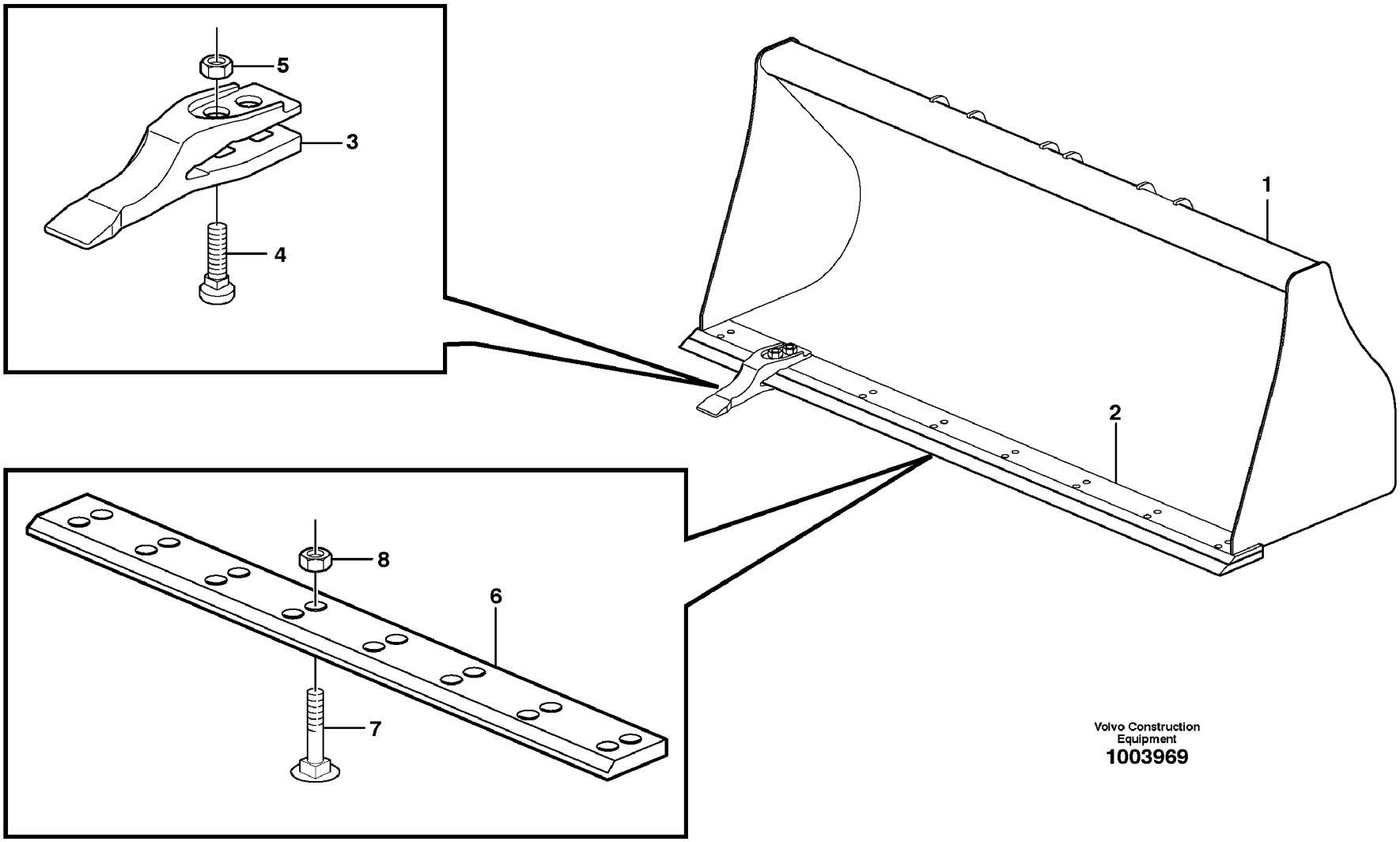

Volvo Construction Equipment
1003969

Fig.	Part No.	Quantity 1	2	3	PS	KIT	Description	Dénomination	Bezeichnung	Denominación	Notes
1	**VOE 11886653**	1					Bucket	Godet	Löffel	Cuchara	(VOE 11884026) WIDE = 2350 MM
2	**VOE 11881240**	1					•Blade	•Tôle usure	•Verschl Klinge	•Hoja	
3	**VOE 11881047**		8				Tooth	Dent	Zahn	Diente	
4	**VOE 11081028**		16				Sq Neck Screw	Vis Tete Bombee	Schr. M. 4-kant	Tornillo Rotula	
5	**VOE 979022**		16				Nut	Ecrou	Mutter	Tuerca	
6	**VOE 11883780**			1			Blade	Tôle usure	Verschl Klinge	Hoja	
7	**VOE 11081026**			16			Sq Neck Screw	Vis Tete Bombee	Schr. M. 4-kant	Tornillo Rotula	
8	**VOE 979022**			16			Nut	Ecrou	Mutter	Tuerca	

1	**11891194**	**Cuchara, recta con dientes** **Schaufel, gerade mit Zähnen** **Godet, droit avec dents** **Bucket, straight with teeth**	Catalogue id **20050**	Group **925**
2	**11891265**		Illustr. No **1003969**	Section **200**
3	**11891264**			
4			Issue **VOE 64D9920050**	Page **669**
5		**(LOADER)**		

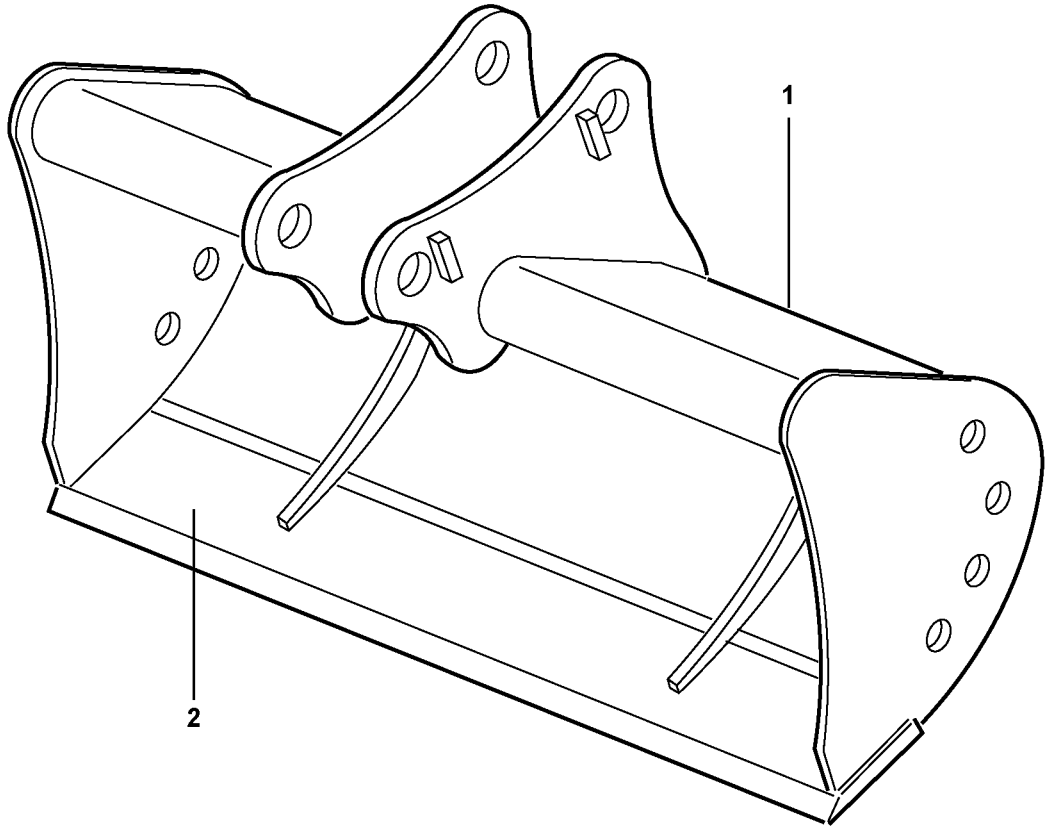
1
2

Fig.	Part No.	Quantity 1	2	3	PS	KIT	Description	Dénomination	Bezeichnung	Denominación	Notes
1	**VOE 11886418**	1					Bucket	Godet	Löffel	Cuchara	Wide = 1500MM
1	**VOE 11886424**		1				Bucket	Godet	Löffel	Cuchara	Wide = 1200MM
2	**VOE 11886425**		1				•Plate	•Plaque	•Platte	•Placa	

1	**11891295**
2	**11891296**
3	
4	
5	

Cuchara recta sin dientes
Schaufel, gerade, ohne Zähne
Godet, droit sans dents
Bucket, straight lip without teeth

Catalogue id **20050**	Group **925**
Illustr. No **1002364**	Section **250**
Issue **VOE 64D9920050**	Page **671**

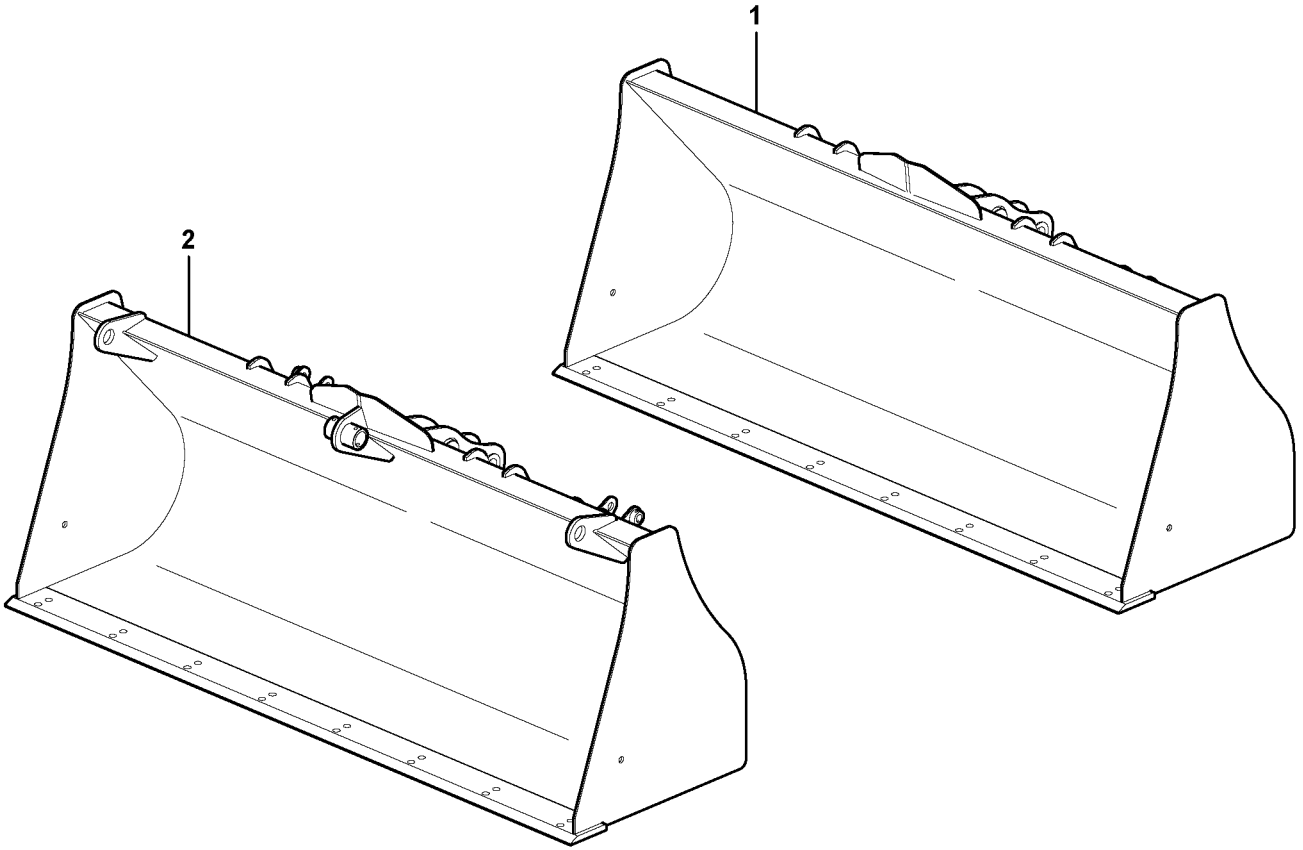

Volvo Construction Equipment

1025967

Fig.	Part No.	Quantity 1	2	3	PS	KIT	Description	Dénomination	Bezeichnung	Denominación	Notes
1	**VOE 11888238**	1					Bucket	Godet	Löffel	Cuchara	
2	**VOE 11888809**		1				Bucket	Godet	Löffel	Cuchara	

1	**11891540**	**Cuchara recta sin dientes** **Schaufel, gerade, ohne Zähne** **Godet, droit sans dents** **Bucket, straight lip without teeth**	Catalogue id **20050**	Group **925**
2	**11891565**		Illustr. No **1025967**	Section **260**
3			Issue **VOE 64D9920050**	Page **673**
4				
5				

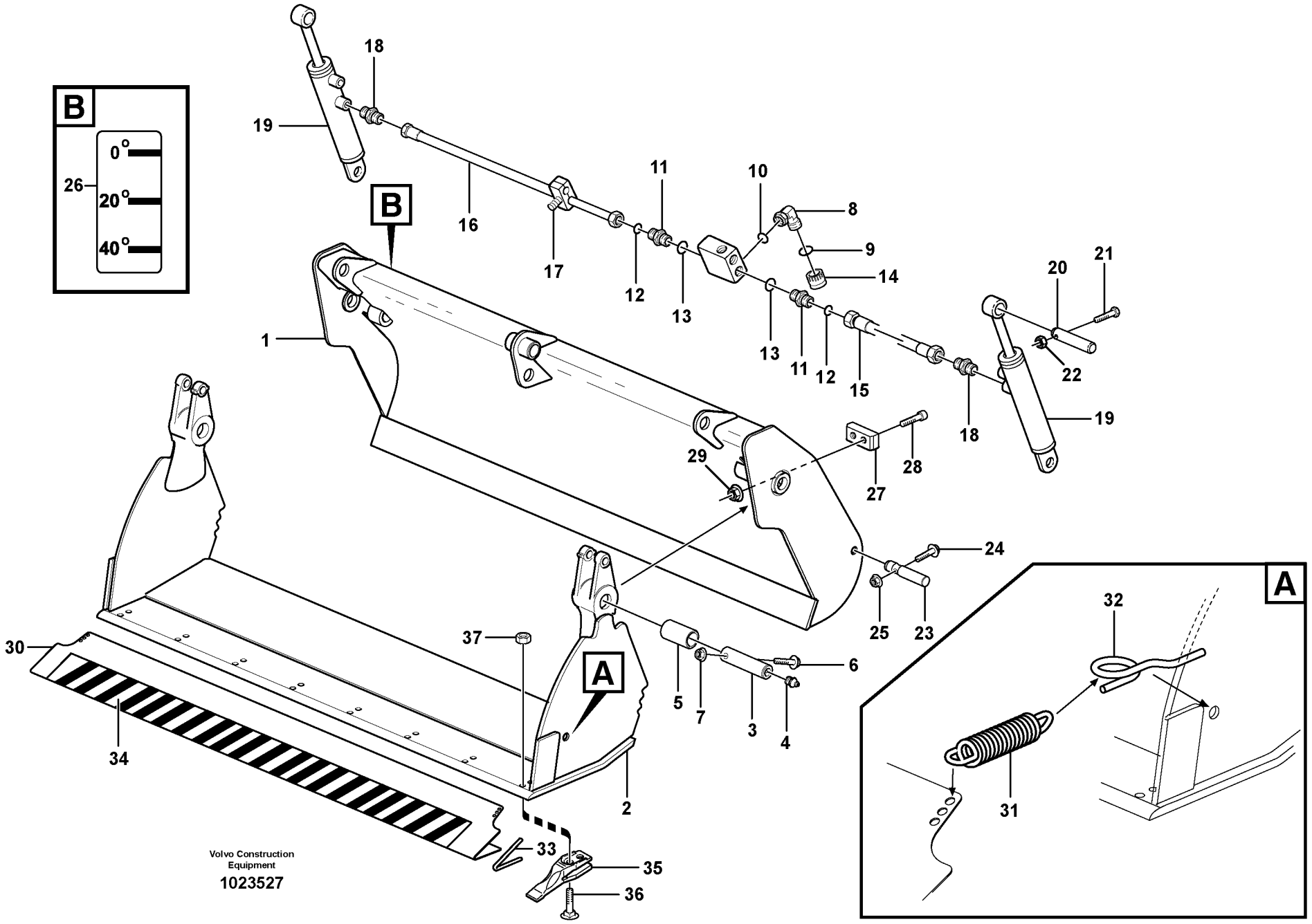
B
0°
20°
40°
26
18
19
16
17
12
13
11
10
8
9
14
20
21
22
19
18
15
13
11
12
1
29
27
28
24
25
23
37
30
34
A
5
7
3
4
6
2
33
35
36
A
32
31
Volvo Construction Equipment
1023527

Fig.	Part No.	Quantity 1	2	3	4	5	PS	KIT	Description	Dénomination	Bezeichnung	Denominación	Notes
	VOE 11885876	1							Bucket	Godet	Löffel	Cuchara	SER NO - 10400
	VOE 11887209	1							Bucket	Godet	Löffel	Cuchara	SER NO 10401 -
1		1					NS		•Backrest Frame	•Cadre Dossier	•Ruckenlehngest	•Marco Respaldo	
2		1					NS		•Plate	•Plaque	•Platte	•Placa	
3	**VOE 11881091**	2							•Pin	•Goupille	•Zapfen	•Pasador	
4	**VOE 914167**	2							•Nipple	•Raccord	•Nippel	•Niple	
5	**VOE 11881154**	2							•Bushing	•Bague	•Buchse	•Casquillo	
6	**VOE 13965190**	2							•Screw	•Vis	•Schraube	•Tornillo	
7	**VOE 13971095**	2							•Flange nut	•Ecrou accouple.	•Bundmutter	•Tuerca embridad	
8	**VOE 935073**	2							Elbow nipple	Raccord angulaire	Winkelnippel	Niple angular	
9	**VOE 990738**	1							•O-ring	•Joint Torique	•O-Ring	•Junta torica	
10	**VOE 932041**	1							•O-ring	•Joint Torique	•O-Ring	•Junta torica	
11	**VOE 935092**	4							Nipple	Raccord	Nippel	Niple	
12	**VOE 990739**	1							•O-ring	•Joint Torique	•O-Ring	•Junta torica	
13	**VOE 932041**	1							•O-ring	•Joint Torique	•O-Ring	•Junta torica	
14		2					NS		Cap Plug	Boucho.capuchon	Bundschraube	Tapon	
15	**VOE 11885738**	2							Hose assembly	Conduit flexible	Schlauchleitung	Conducto	L = 750 MM
16	**VOE 11885736**	2							Hose assembly	Conduit flexible	Schlauchleitung	Conducto	L = 750 MM
17	**VOE 11886153**	1							Clamp	Pince Serrage	Klemme	Abrazadera	
18	**VOE 935091**	4							Nipple	Raccord	Nippel	Niple	
	VOE 990738	1							•O-ring	•Joint Torique	•O-Ring	•Junta torica	
	VOE 932041	1							•O-ring	•Joint Torique	•O-Ring	•Junta torica	
19		2							Cylinder	Verin	Zylinder	Cilindro	See group 925, Page 683
20	**VOE 11881149**	2							Pin	Goupille	Zapfen	Pasador	
21	**VOE 13965182**	2							Flange screw	Vis à bride	Flanschschraube	Torn embridado	
22	**VOE 13945408**	2							Nut	Ecrou	Mutter	Tuerca	
23	**VOE 11881153**	2							Pin	Goupille	Zapfen	Pasador	
24	**VOE 13965188**	2							Flange screw	Vis à bride	Flanschschraube	Torn embridado	
25	**VOE 13971095**	2							Flange nut	Ecrou accouple.	Bundmutter	Tuerca embridad	
26	**VOE 11883252**	1							Decal	Decalcomanie	Abziehbild	Decalcomania	

1	**11891018**
2	**11891265**
3	**11891282**
4	**11891015, 11891016**
5	

Cuchara multipropósitos
Kombilöffel
Godet combiné
Multi-purpose bucket

Catalogue id **20050**	Group **925**
Illustr. No **1023527**	Section **300**
Issue **VOE 64D9920050**	Page **675**

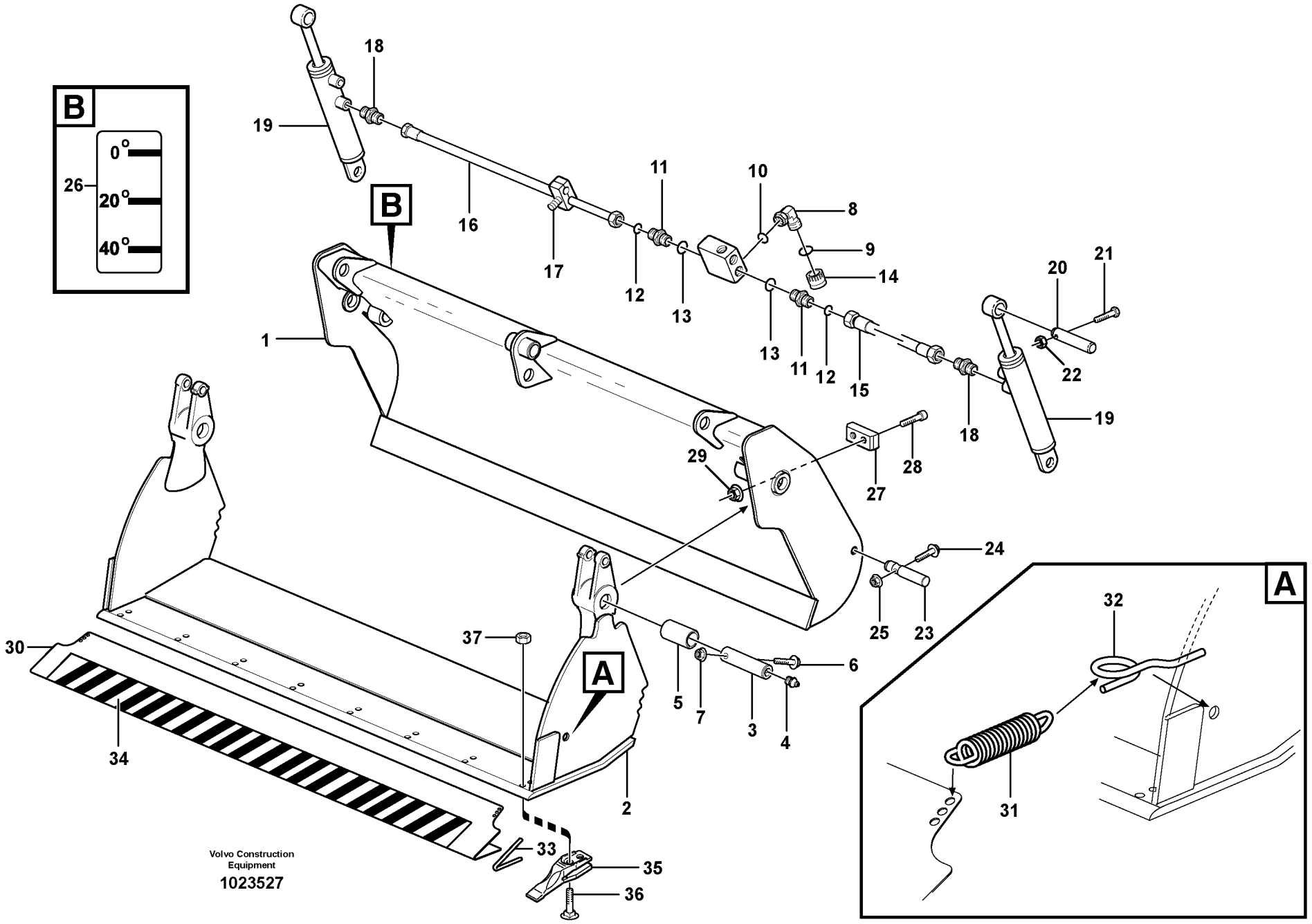
B
0°
20°
40°
26
18
19
16
17
12
13
11
10
8
9
14
20
21
22
19
18
15
13
11
12
1
29
27
28
24
25
23
37
30
34
A
5
7
3
4
6
2
33
35
36
A
32
31
Volvo Construction Equipment
1023527

Fig.	Part No.	Quantity 1	2	3	4	5	P S	K I T	Description	Dénomination	Bezeichnung	Denominación	Notes
27	**VOE 11881583**			2					Rubber Block	Bloc Caoutchouc	Gummiblock	Bloque Goma	11891282
28	**VOE 969846**			4					Screw	Vis	Schraube	Tornillo	11891282
29	**VOE 948645**			4					Flange Lock Nut	Contre écrou bride	Flanschmutter	Contratuer Embr	11891282
30	**VOE 11884094**				1	1			Guard	Protection	Schutz	Protección	11891015, 11891016
31	**VOE 11315002**				2	2			Tension spring	Ressort traction	Zugfeder	Resorte tension	11891015, 11891016
32	**ZM 2801364**				2	2			Lug	Oreille	Öse	Oreja	11891015, 11891016
33	**VOE 11305168**				1	1			Edge protection	Renfort bord	Kantbeschlag	Guarnic canto	11891015, 11891016 L = 300 MM
34	**VOE 11884095**				1	1			Decal	Decalcomanie	Abziehbild	Decalcomania	11891016 ITALY
35	**VOE 11881047**	8							Tooth	Dent	Zahn	Diente	11891265
36	**VOE 11081028**	16							Sq Neck Screw	Vis Tete Bombee	Schr. M. 4-kant	Tornillo Rotula	11891265
37	**VOE 979022**	16							Nut	Ecrou	Mutter	Tuerca	11891265

1	**11891018**
2	**11891265**
3	**11891282**
4	**11891015, 11891016**
5	

Cuchara multipropósitos
Kombilöffel
Godet combiné
Multi-purpose bucket

Catalogue id **20050**	Group **925**
Illustr. No **1023527**	Section **300**
Issue **VOE 64D9920050**	Page **677**

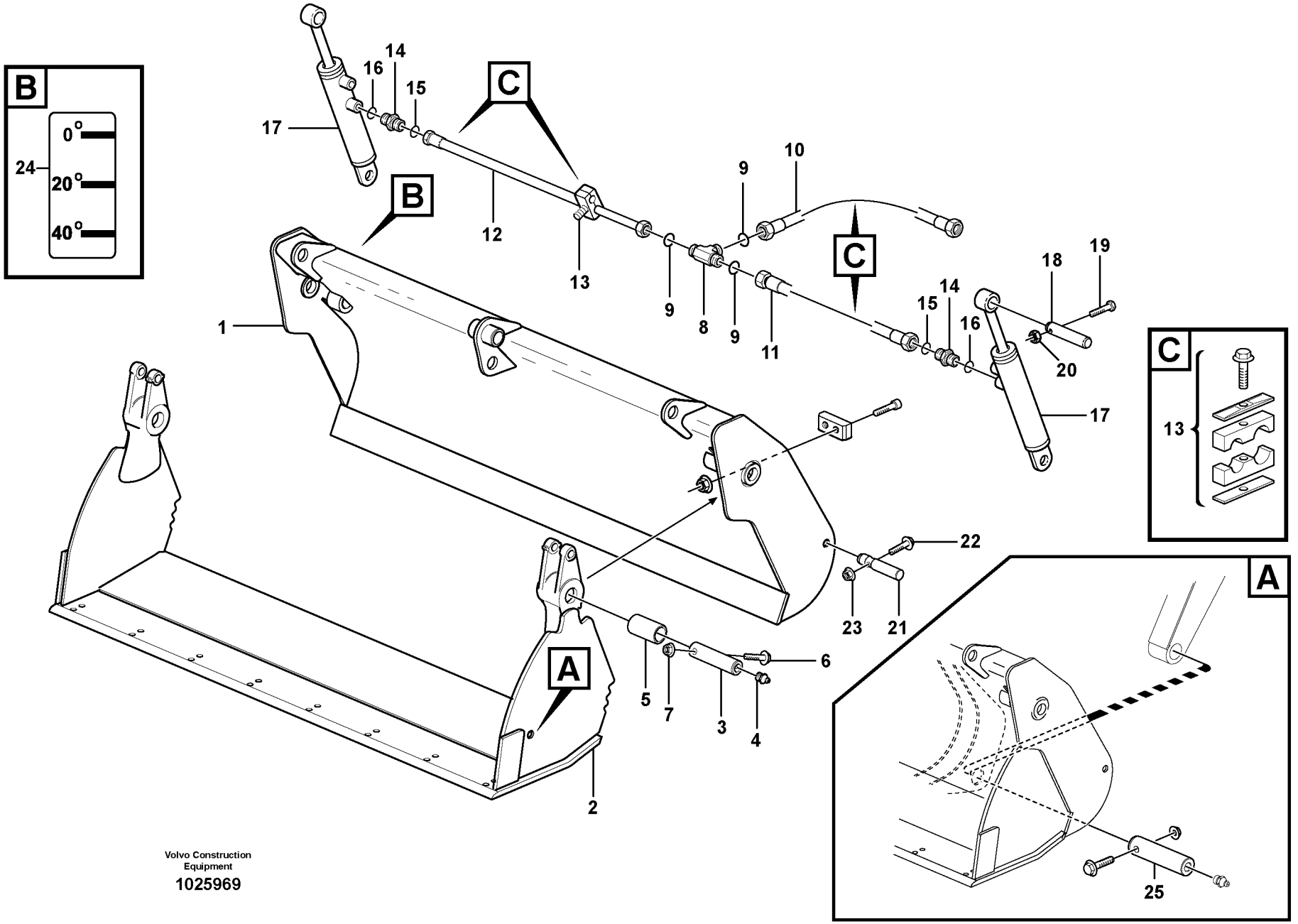

Volvo Construction Equipment

1025969

Fig.	Part No.	Quantity 1	2	3	4	5	PS	KIT	Description	Dénomination	Bezeichnung	Denominación	Notes
	VOE 11887763	1							Bucket	Godet	Löffel	Cuchara	
1		1					NS		•Backrest Frame	•Cadre Dossier	•Ruckenlehngest	•Marco Respaldo	
2		1					NS		•Plate	•Plaque	•Platte	•Placa	
3	**VOE 11881091**	2							•Pin	•Goupille	•Zapfen	•Pasador	
4	**VOE 914167**	2							•Nipple	•Raccord	•Nippel	•Niple	
5	**VOE 11881154**	2							•Bushing	•Bague	•Buchse	•Casquillo	
6	**VOE 13965190**	2							•Screw	•Vis	•Schraube	•Tornillo	
7	**VOE 13971095**	2							•Flange nut	•Ecrou accouple.	•Bundmutter	•Tuerca embridad	
8	**VOE 935453**	2							T-nipple	Raccord-t	T-Nippel	Niple T	
9	**VOE 990738**	6							•O-ring	•Joint Torique	•O-Ring	•Junta torica	
10	**VOE 11888254**	2							Hose	Durit	Schlauch	Tubo flexible	
11	**VOE 11886567**	2							Hose assembly	Conduit flexible	Schlauchleitung	Conducto	
12	**VOE 937950**	1							Hose assembly	Conduit flexible	Schlauchleitung	Conducto	
13	**VOE 11886153**	4							Clamp	Pince Serrage	Klemme	Abrazadera	
14	**VOE 935091**	4							Nipple	Raccord	Nippel	Niple	
15	**VOE 990738**	4							•O-ring	•Joint Torique	•O-Ring	•Junta torica	
16	**VOE 932039**	4							•O-ring	•Joint Torique	•O-Ring	•Junta torica	
17	**VOE 11887168**	2							Cylinder	Verin	Zylinder	Cilindro	
18	**VOE 11881149**	2							Pin	Goupille	Zapfen	Pasador	
19	**VOE 13965182**	2							Flange screw	Vis à bride	Flanschschraube	Torn embridado	
20	**VOE 13945408**	2							Nut	Ecrou	Mutter	Tuerca	
21	**VOE 11888216**	2							Pin	Goupille	Zapfen	Pasador	
22	**VOE 13965188**	2							Flange screw	Vis à bride	Flanschschraube	Torn embridado	
23	**VOE 13971095**	2							Flange nut	Ecrou accouple.	Bundmutter	Tuerca embridad	
24	**VOE 11883252**	1							Decal	Decalcomanie	Abziehbild	Decalcomania	
25		1							Attaching kit	Kit de fixation	Befestigungssatz	Juego de fijación	See group 945, Page 699

1		**Cuchara multipropósitos** **Kombilöffel** **Godet combiné** **Multi-purpose bucket**	Catalogue id **20050**	Group **925**
2				
3			Illustr. No **1025969**	Section **320**
4				
5		**11891541**	Issue **VOE 64D9920050**	Page **679**

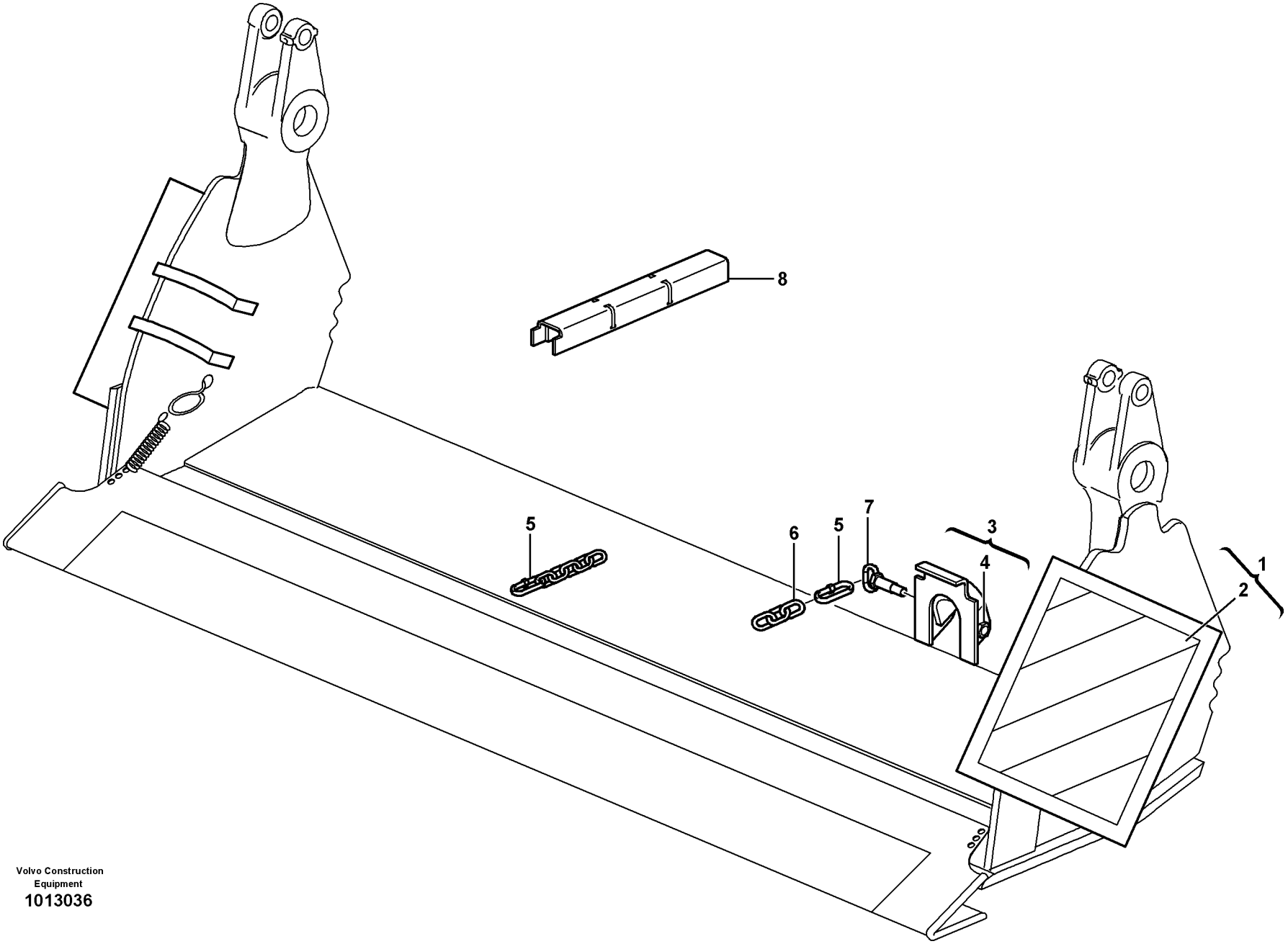

Volvo Construction Equipment
1013036

Fig.	Part No.	Quantity 1	2	3	PS	KIT	Description	Dénomination	Bezeichnung	Denominación	Notes
1	**VOE 11887225**	3					Warning Plate	Panneau Signal	Warnschild	Letrero Advert	
2	**VOE 11105303**	1					•Decal	•Decalcomanie	•Abziehbild	•Decalcomania	
3	**VOE 11887216**	1					Brace	Etrier	Bügel	Brida	
4	**VOE 979021**	1					•Hexagon Nut	•Ecrou Hexagonal	•Sechskantmutter	•Tuerca Hexagon	
5	**VOE 11884805**	2					Link	Articulation	Gelenk	Articulacion	
6	**VOE 11884806**	1					Chain	Chaine	Kette	Cadena	
7	**VOE 11884803**	1					Pin	Goupille	Zapfen	Pasador	
8	**VOE 11884781**	1					Safety Brace	Etrier Securite	Sicherungsbugel	Brida Seguridad	

1		**Kit para la normativa italiana** **Für Italien vorgeschriebener Satz** **Kit législation italienne** **Legal kit for Italy**	Catalogue id **20050**	Group **925**
2			Illustr. No **1013036**	Section **350**
3			Issue **VOE 64D9920050**	Page **681**
4				
5		**11891002**		

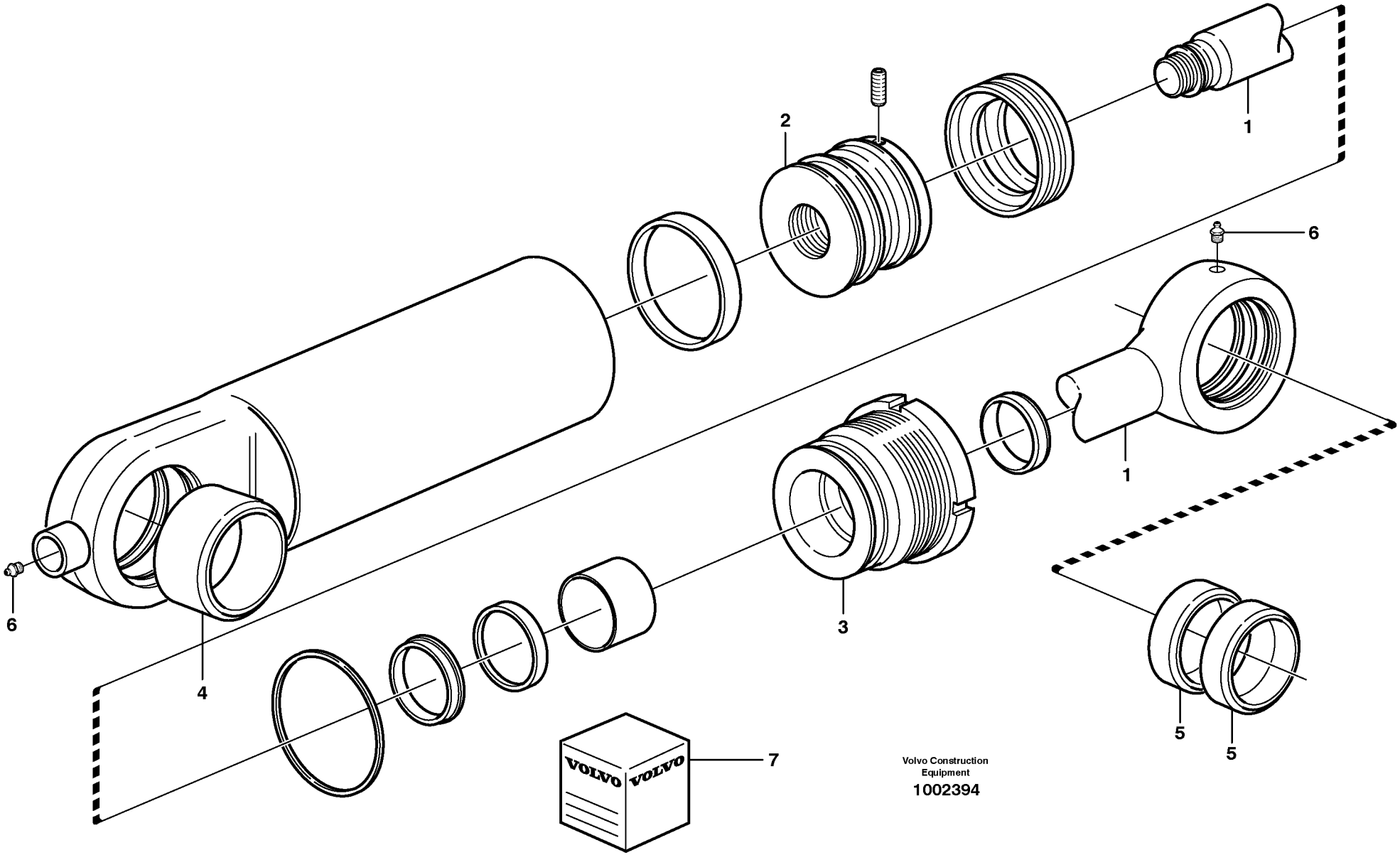

Volvo Construction Equipment

1002394

Fig.	Part No.	Quantity 1	2	3	PS	KIT	Description	Dénomination	Bezeichnung	Denominación	Notes
	VOE 11882886	1					Cylinder	Verin	Zylinder	Cilindro	
1	**VOE 11709909**	1					•Piston rod	•Bielle de piston	•Kolbenstange	•Biela de piston	
2	**VOE 11709912**	1					•Piston	•Piston	•Kolben	•Piston	
3	**VOE 11709911**	1					•Pstn Rod Guide	•Gui.tige Piston	•Ko-stang Fuhrg	•Guia Var Piston	
4	**VOE 11709908**	1					•Bushing	•Bague	•Buchse	•Casquillo	
5	**VOE 11709910**	2					•Bushing	•Bague	•Buchse	•Casquillo	
6	**VOE 11709664**	2					•Lub Nipple	•Graisseur	•Schmiernippel	•Engrasador	
7	**VOE 11709913**	1					•Sealing Kit	•Jeu Joints	•Dichtungssatz	•Juego Retenes	

1		**Cilindros hidráulicos** **Hydraulikzylinder** **Vérins hydrauliques** **Hydraulic cylinder**	Catalogue id **20050**	Group **925**
2			Illustr. No **1002394**	Section **400**
3			Issue **VOE 64D9920050**	Page **683**
4				
5		**11891018**		

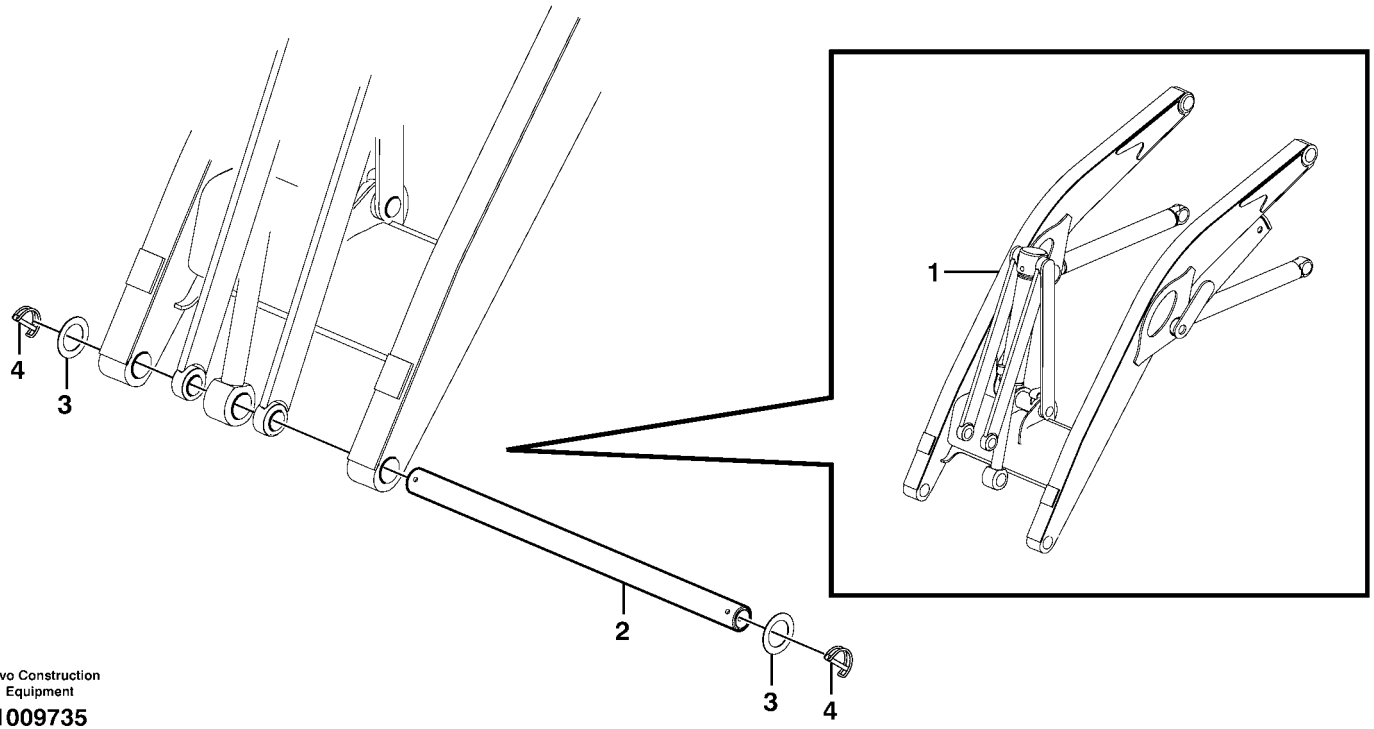

Volvo Construction Equipment

1009735

Fig.	Part No.	Quantity 1	2	3	PS	KIT	Description	Dénomination	Bezeichnung	Denominación	Notes
1		1					Loader arm	Bras de chargeur	Laderhübarm	Brazo de cargador	See group 945, Page 693
2	**VOE 11885595**	1					Pin	Goupille	Zapfen	Pasador	
3	**VOE 11890115**	2					Washer	Rondelle	Scheibe	Arandela	
4	**VOE 11885596**	2					Clip	Clip	Klemme	Clip	

1		**Fijaciones de transporte sin cuchara frontal** **Transporthalterung ohne Schaufel** **Fixation transport sans godet frontal** **Transport bracket without front bucket**	Catalogue id **20050**	Group **925**
2			Illustr. No **1009735**	Section **500**
3			Issue **VOE 64D9920050**	Page **685**
4				
5		**11891350**		

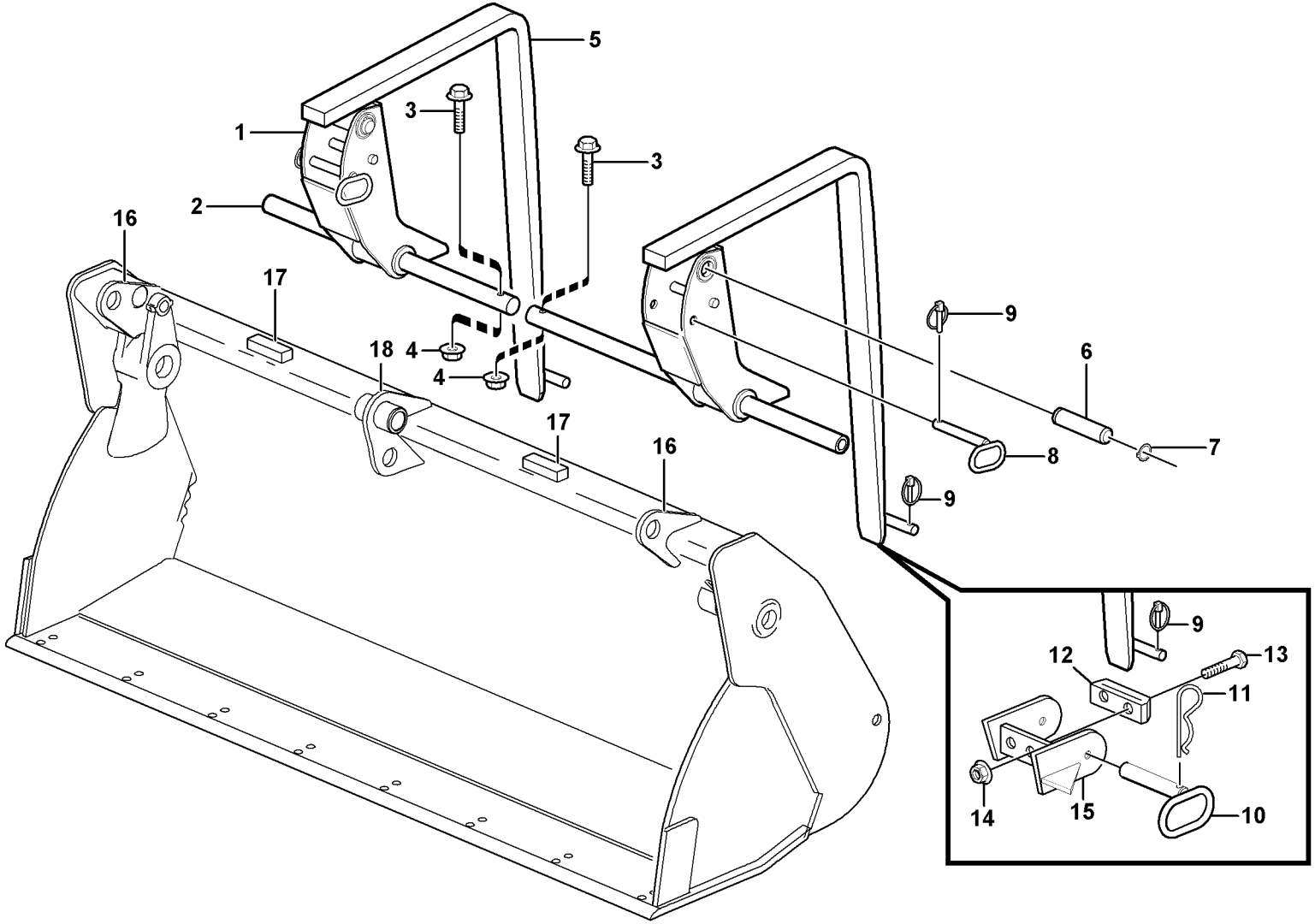

Volvo Construction Equipment
1012596

Fig.	Part No.	Quantity 1	2	3	PS	KIT	Description	Dénomination	Bezeichnung	Denominación	Notes
1	**VOE 11884125**	2	2				Bracket	Console	Konsole	Ménsula	(VOE 11881578)
2	**VOE 11881580**	2	2				Fork Attachment	Fixatio.fourche	Gabelbefestig.	Fij Horquilla	
3	**VOE 13965189**	2	2				Flange screw	Vis a bride	Flanschschraube	Torn embridado	
4	**VOE 13971095**	2	2				Flange nut	Ecrou accouple.	Bundmutter	Tuerca embridad	
5	**VOE 11881579**	2	2				Fork	Fourche	Gabel	Horquilla	
6	**VOE 11881582**	2	2				Pin	Goupille	Zapfen	Pasador	
7	**VOE 13914468**	4	4				Snap Ring	Circlip	Nutring	Circlip	
8	**VOE 11881581**	2	2				Pin	Clavette	Splint	Pasador	
9	**VOE 11881622**	2	2				Locking pin	Goupille d'arrêt	Schliessbolzen	Pasador de cierre	
10	**VOE 11884099**	2	2				Pin	Clavette	Splint	Pasador	(VOE 11883382)
11	**VOE 978997**	2	2				Retaining pin	Goupille elast	Federsplint	Pasador resorte	
12	**VOE 11881583**	2	2				Rubber Block	Bloc Caoutchouc	Gummiblock	Bloque Goma	
13	**VOE 13947760**	4	4				Flange screw	Vis à bride	Flanschschraube	Torn embridado	
14	**VOE 948645**	4	4				Flange Lock Nut	Contre écrou bride	Flanschmutter	Contratuer Embr	
15	**VOE 11884972**		1				Bracket	Console	Konsole	Ménsula	LH
	VOE 11884973		1				Fork Attachment	Fixatio.fourche	Gabelbefestig.	Fij Horquilla	RH
16	**VOE 11884971**		2				Support	Support	Stütze	Apoyo	
17	**VOE 11884928**		2				Plate	Plaque	Platte	Placa	
18	**VOE 11885010**		1				Support	Support	Stütze	Apoyo	

1	**11891282**	**Brazo horquille** **Gabelzinke** **Bras fourche** **Fork arm**	Catalogue id **20050**	Group **926**
2	**11891176**		Illustr. No **1012596**	Section **100**
3			Issue **VOE 64D9920050**	Page **687**
4				
5				

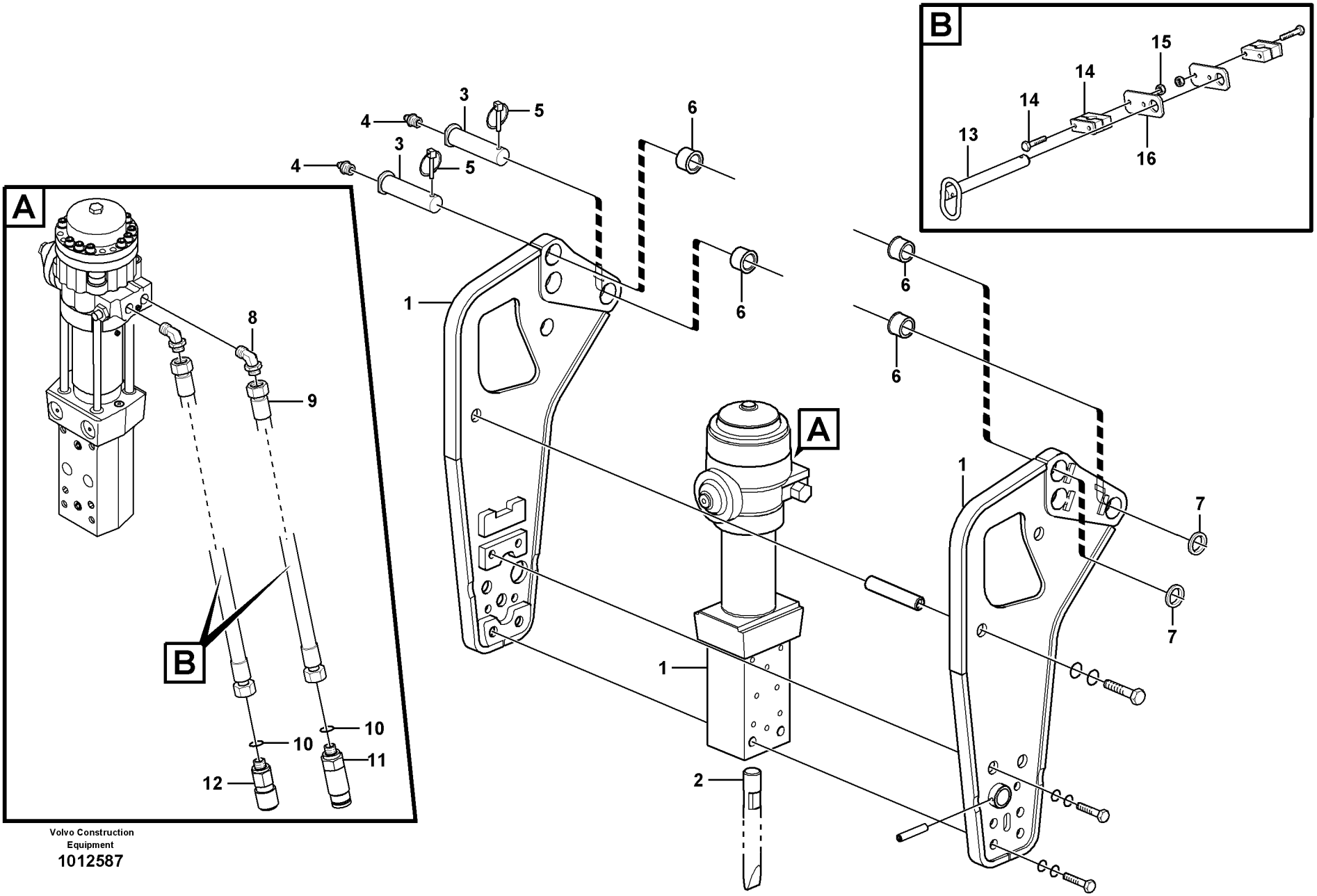

Volvo Construction Equipment

1012587

Fig.	Part No.	Quantity 1	2	3	PS	KIT	Description	Dénomination	Bezeichnung	Denominación	Notes
1	**VOE 11885267**	1					Hammer	Marteau	Hammer	Martillo	
2	**VOE 11884071**	1					Tool	Outil	Gerät	Aparejo	
3	**VOE 11884032**	2					Pin	Goupille	Zapfen	Pasador	
4	**VOE 914167**	2					Nipple	Raccord	Nippel	Niple	
5	**VOE 11881622**	2					Locking pin	Goupille d'arrêt	Schliessbolzen	Pasador de cierre	
6	**VOE 11883969**	4					Bushing	Bague	Buchse	Casquillo	
7	**VOE 955912**	2					Washer	Rondelle	Scheibe	Arandela	
8	**VOE 11885306**		2				Fitting	Ecrou raccord	Verschraubung	Racor	
9	**VOE 11885307**		2				Hose	Durit	Schlauch	Tubo flexible	
10	**VOE 981290**		2				O-ring	Joint Torique	O-Ring	Junta torica	
11	**VOE 11885918**		1		SS		Coupling	Accouplement	Kupplung	Acoplamiento	
12	**VOE 11885919**		1		SS		Coupling	Accouplement	Kupplung	Acoplamiento	
13	**VOE 11885264**		1				Pin	Goupille	Zapfen	Pasador	
14	**VOE 11885216**		2				Clamp	Pince Serrage	Klemme	Abrazadera	
15	**VOE 63971068**		4				Hexagon Nut	Ecrou Hexagonal	Sechskantmutter	Tuerca Hexagon	
16	**VOE 11885266**		2				Plate	Plaque	Platte	Placa	

1	**11891017**	**Soporte para martillo** **Halter für Hammer** **Support de marteau** **Retainer for hammer**	Catalogue id **20050**	Group **926**
2	**11891331**		Illustr. No **1012587**	Section **200**
3			Issue **VOE 64D9920050**	Page **689**
4				
5				

VOLVO

BL61

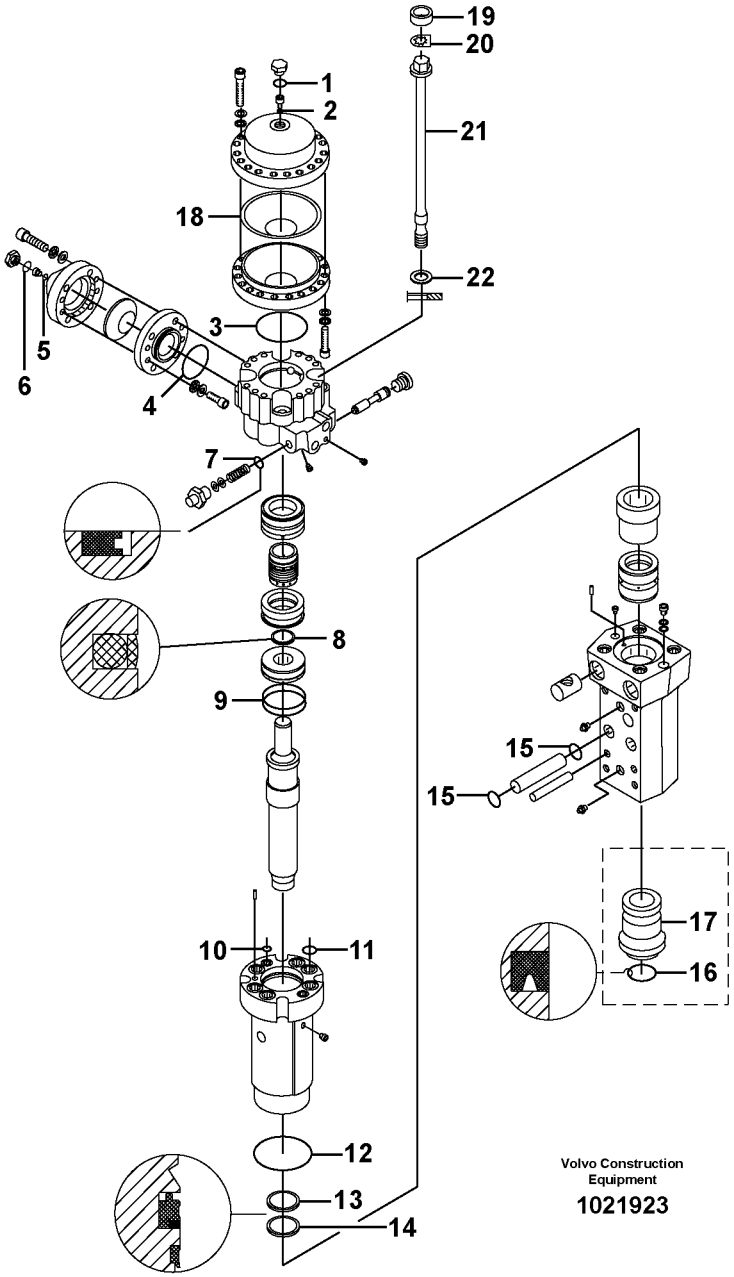

Volvo Construction Equipment

1021923

Fig.	Part No.	Quantity 1	2	3	PS	KIT	Description	Dénomination	Bezeichnung	Denominación	Notes
	VOE 11885267	1					Hammer	Marteau	Hammer	Martillo	
	VOE 11988196	1					•Sealing Kit	•Jeu Joints	•Dichtungssatz	•Juego Retenes	
1		1			NS		••O-ring	••Joint Torique	••O-Ring	••Junta torica	
2		1			NS		••Ring	••Anneau	••Ring	••Anillo	
3		1			NS		••O-ring	••Joint Torique	••O-Ring	••Junta torica	
4		1			NS		••O-ring	••Joint Torique	••O-Ring	••Junta torica	
5		1			NS		••Ring	••Anneau	••Ring	••Anillo	
6		1			NS		••O-ring	••Joint Torique	••O-Ring	••Junta torica	
7		1			NS		••Seal	••Joint	••Dichtring	••Junta	
8		1			NS		••Seal	••Joint	••Dichtring	••Junta	
9		2			NS		••O-ring	••Joint Torique	••O-Ring	••Junta torica	
10		2			NS		••O-ring	••Joint Torique	••O-Ring	••Junta torica	
11		6			NS		••O-ring	••Joint Torique	••O-Ring	••Junta torica	
12		1			NS		••O-ring	••Joint Torique	••O-Ring	••Junta torica	
13		1			NS		••Seal	••Joint	••Dichtring	••Junta	
14		1			NS		••Wiper	••Essuie-glace	••Wischer	••Limpiaparabrisa	
15		4			NS		••O-ring	••Joint Torique	••O-Ring	••Junta torica	
16		1			NS		••Seal	••Joint	••Dichtring	••Junta	
17	**VOE 11710932**	1					•Bushing	•Bague	•Buchse	•Casquillo	
18	**VOE 11710933**	1					•Diaphragm	•Diaphragme	•Membrane	•Diafragma	
19	**VOE 11716349**	4					•Rubber Ring	•Bague Caoutcho.	•Gummiring	•Aro Goma	
20	**VOE 11716348**	4					•Lock Plate	•Plaque Verroui.	•Verschl Platte	•Placa Seguridad	
21	**VOE 11716347**	4					•Tie Rod	•Barre Accouple.	•Spurstange	•Barra Acoplam	
22	**VOE 11716350**	4					•Washer	•Rondelle	•Scheibe	•Arandela	

1		**Martillo** **Hammer** **Marteau** **Hammer**	Catalogue id **20050**	Group **926**
2			Illustr. No **1021923**	Section **250**
3			Issue **VOE 64D9920050**	Page **691**
4				
5		**11891017**		

VOLVO

BL61

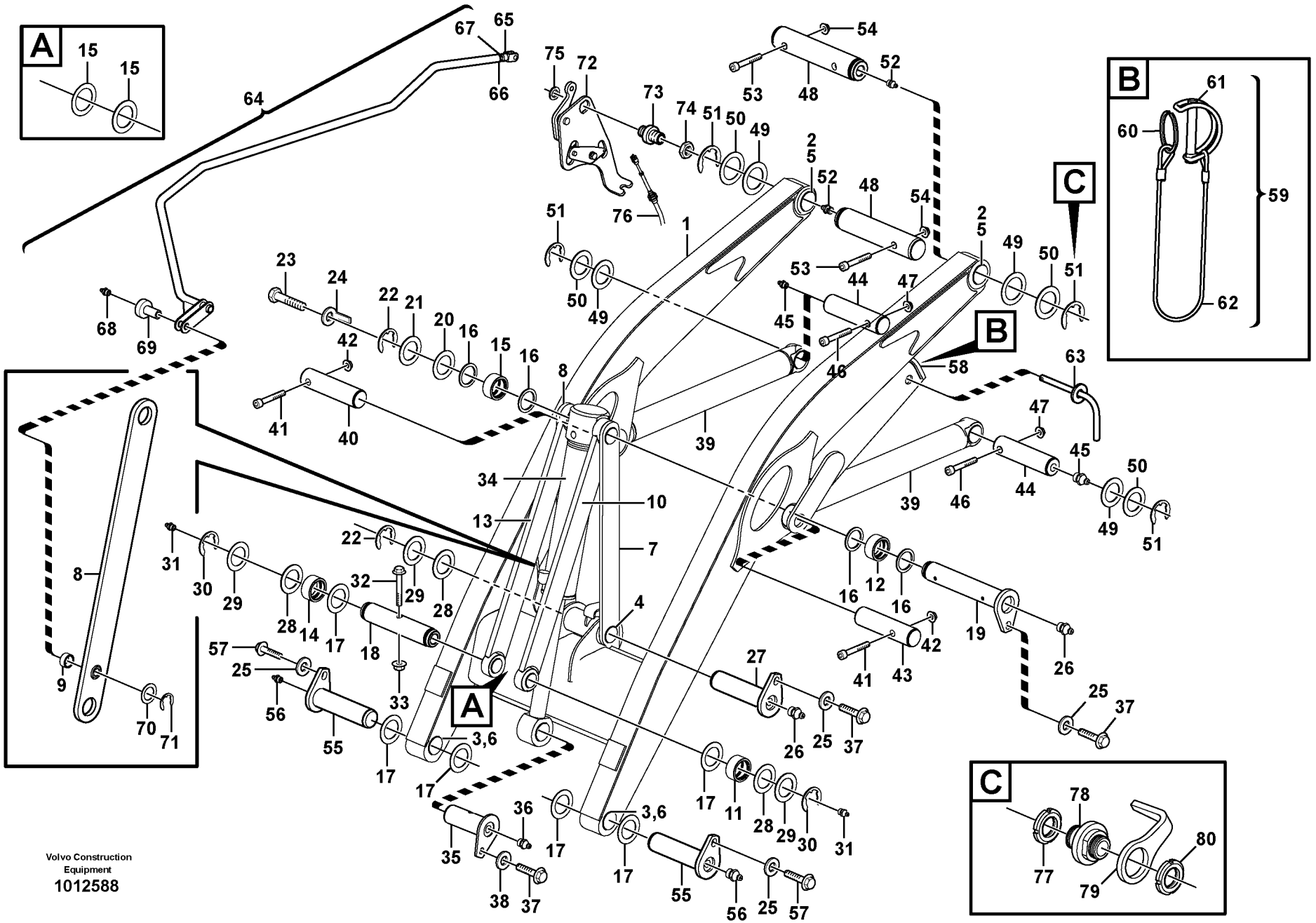
A
B
C
Volvo Construction Equipment
1012588

Fig.	Part No.	Quantity 1	2	3	4	5	PS	KIT	Description	Dénomination	Bezeichnung	Denominación	Notes
1	**VOE 11885375**	1							Loader arm	Bras de chargeur	Laderhübarm	Brazo de cargador	
2	**VOE 11883772**	2							•Bushing	•Bague	•Buchse	•Casquillo	
3	**VOE 11883802**	2							•Bushing	•Bague	•Buchse	•Casquillo	
4	**VOE 11883803**	2							•Bushing	•Bague	•Buchse	•Casquillo	
5	**VOE 11890069**	2							Seal	Joint	Dichtung	Reten	
6	**VOE 11882456**	2							Seal	Joint	Dichtung	Reten	
7	**VOE 11884638**	1							Link	Articulation	Gelenk	Articulacion	LH
8	**VOE 11884637**	1							Link	Articulation	Gelenk	Articulacion	RH
9	**VOE 11883447**	1							•Bushing	•Bague	•Buchse	•Casquillo	
10	**VOE 11884822**	1							Link	Articulation	Gelenk	Articulacion	LH
11	**VOE 11883801**	1							•Bushing	•Bague	•Buchse	•Casquillo	
12	**VOE 11883857**	1							•Bushing	•Bague	•Buchse	•Casquillo	
13	**VOE 11884815**	1							Link	Articulation	Gelenk	Articulacion	RH
14	**VOE 11883801**	1							•Bushing	•Bague	•Buchse	•Casquillo	
15	**VOE 11883857**	1							•Bushing	•Bague	•Buchse	•Casquillo	
16	**VOE 11883937**	4							Scraper	Racloir	Abstreicher	Rascador	
17	**VOE 11882456**	8							Seal	Joint	Dichtung	Reten	
18	**VOE 11882932**	1							Pin	Goupille	Zapfen	Pasador	
19	**VOE 11884823**	1							Pin	Goupille	Zapfen	Pasador	
20	**VOE 11883929**	1							Washer	Rondelle	Scheibe	Arandela	THICK = 2 MM
21	**VOE 11883930**	1							Washer	Rondelle	Scheibe	Arandela	THICK = 3 MM
22	**VOE 11890110**	2							Snap Ring	Circlip	Nutring	Circlip	
23	**VOE 13965191**	1							Flange screw	Vis à bride	Flanschschraube	Torn embridado	
24	**VOE 11884117**	1							Indicator	Indicateur	Indikator	Indicador	
25	**VOE 11884168**	4							Spacer	Entretoise	Abstandstueck	Casquillo distanciad	
26	**VOE 914167**	2							Nipple	Raccord	Nippel	Niple	
27	**VOE 11883032**	1							Pin	Goupille	Zapfen	Pasador	
28	**VOE 11890115**	3							Washer	Rondelle	Scheibe	Arandela	THICK = 2 MM
29	**VOE 11890116**	3							Washer	Rondelle	Scheibe	Arandela	THICK = 3 MM
30	**VOE 11890110**	2							Snap Ring	Circlip	Nutring	Circlip	

1	**11880004 S/N - 10626**
2	**11891415**
3	**11891414**
4	**11891000, 11891050**
5	

Bastidor elevación con piezas de montaje
Hubgerüst mit Anbauteilen
Chassis levage avec pièces de montage
Lifting framework with assembly parts

Catalogue id **20050**	Group **945**
Illustr. No **1012588**	Section **150**
Issue **VOE 64D9920050**	Page **693**

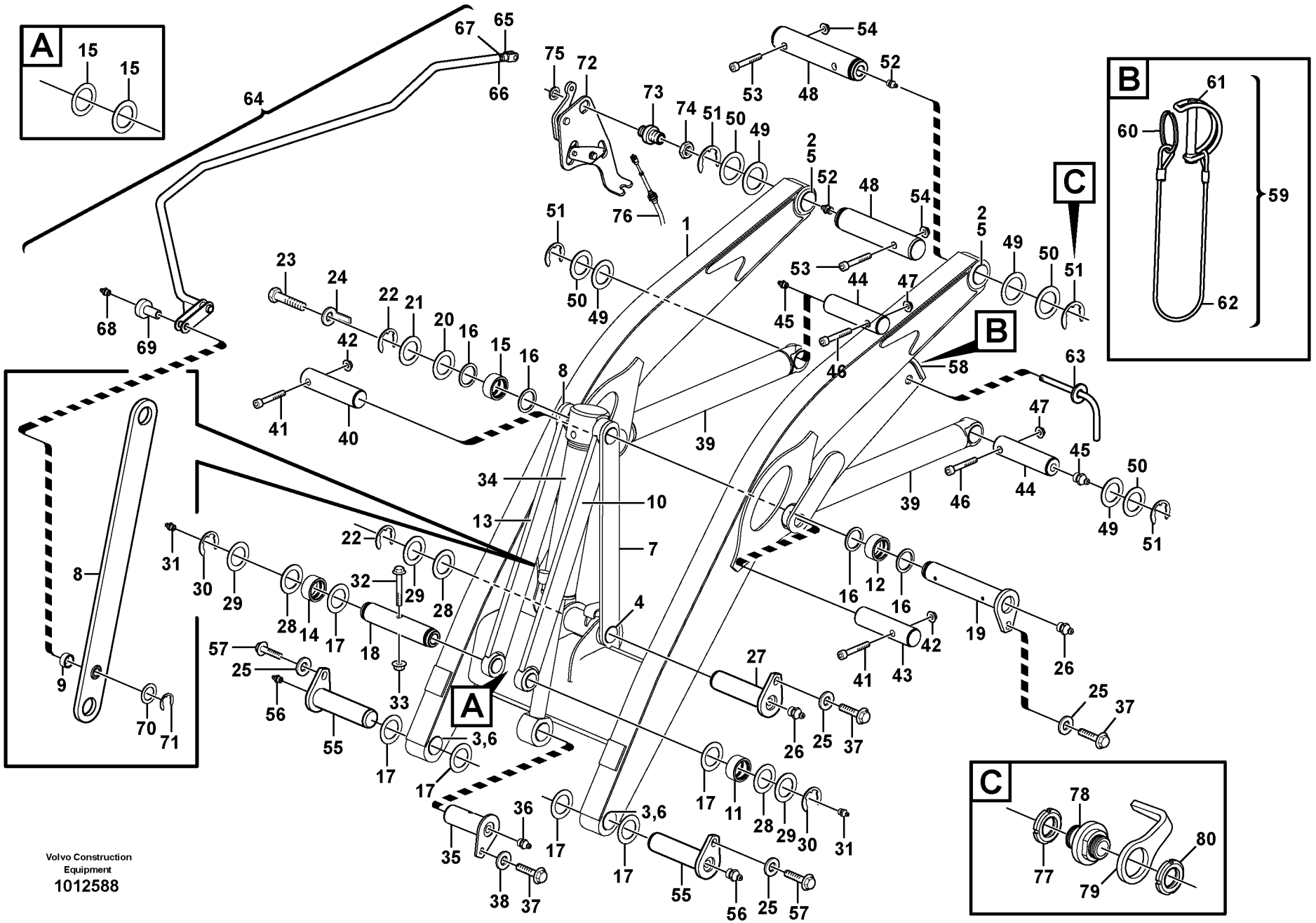
A
B
C
Volvo Construction Equipment
1012588

Fig.	Part No.	Quantity 1	2	3	4	5	PS	KIT	Description	Dénomination	Bezeichnung	Denominación	Notes
31	**VOE 914167**	2							Nipple	Raccord	Nippel	Niple	
32	**VOE 969313**	1							Flange screw	Vis à bride	Flanschschraube	Torn embridado	
33	**VOE 13971098**	1							Flange nut	Ecrou accouple.	Bundmutter	Tuerca embridad	
34		1							Tilt Cylinder	Verin inclinaison	Neigungszylinderr	Maquina inclinacion	See group 945, Page 711
35	**VOE 11884182**	1							Pin	Goupille	Zapfen	Pasador	
36	**VOE 914167**	1							Nipple	Raccord	Nippel	Niple	
37	**VOE 974428**	3							Flange screw	Vis à bride	Flanschschraube	Torn embridado	
38	**VOE 11884170**	1							Spacer	Entretoise	Abstandstueck	Casquillo distanciad	
39		2							Lifting cylinder	Verin levage	Hubzylinder	Cilindro elevacion	See group 945, Page 709
40	**VOE 11883381**	1							Pin	Goupille	Zapfen	Pasador	
41	**VOE 967640**	2							Screw	Vis	Schraube	Tornillo	
42	**VOE 983304**	2							Hexagon Nut	Ecrou Hexagonal	Sechskantmutter	Tuerca Hexagon	
43	**VOE 11882477**	1							Pin	Goupille	Zapfen	Pasador	(VOE 11882421)
44	**VOE 11883858**	2							Pin	Goupille	Zapfen	Pasador	
45	**VOE 914167**	2							Nipple	Raccord	Nippel	Niple	
46	**VOE 13965190**	2							Screw	Vis	Schraube	Tornillo	
47	**VOE 13971098**	2							Flange nut	Ecrou accouple.	Bundmutter	Tuerca embridad	
48	**VOE 11883029**	2							Pin	Goupille	Zapfen	Pasador	
49	**VOE 11890117**	4							Washer	Rondelle	Scheibe	Arandela	THICK = 2 MM
50	**VOE 11890118**	4							Washer	Rondelle	Scheibe	Arandela	THICK = 3 MM
51	**VOE 11890109**	4							Snap Ring	Circlip	Nutring	Circlip	
52	**VOE 914167**	2							Nipple	Raccord	Nippel	Niple	
53	**VOE 968237**	2							Flange screw	Vis à bride	Flanschschraube	Torn embridado	
54	**VOE 13971098**	2							Flange nut	Ecrou accouple.	Bundmutter	Tuerca embridad	
55	**VOE 11882428**	2							Pin	Goupille	Zapfen	Pasador	
56	**VOE 914167**	2							Nipple	Raccord	Nippel	Niple	
57	**VOE 968589**	2							Flange screw	Vis à bride	Flanschschraube	Torn embridado	
58	**VOE 11884758**	1							Saf Catch Kit	Kit Bloc.secur.	Sichrriegelsatz	Jueg Bloq Segur	
59	**VOE 11883476**	1							•Safety Strap	•Elingu.securite	•Zurrband	•Estrobo Segurid	
60	**VOE 11884616**	1							••Ring	••Anneau	••Ring	••Anillo	

1	**11880004 S/N - 10626**
2	**11891415**
3	**11891414**
4	**11891000, 11891050**
5	

Bastidor elevación con piezas de montaje
Hubgerüst mit Anbauteilen
Chassis levage avec pièces de montage
Lifting framework with assembly parts

Catalogue id **20050**	Group **945**
Illustr. No **1012588**	Section **150**
Issue **VOE 64D9920050**	Page **695**

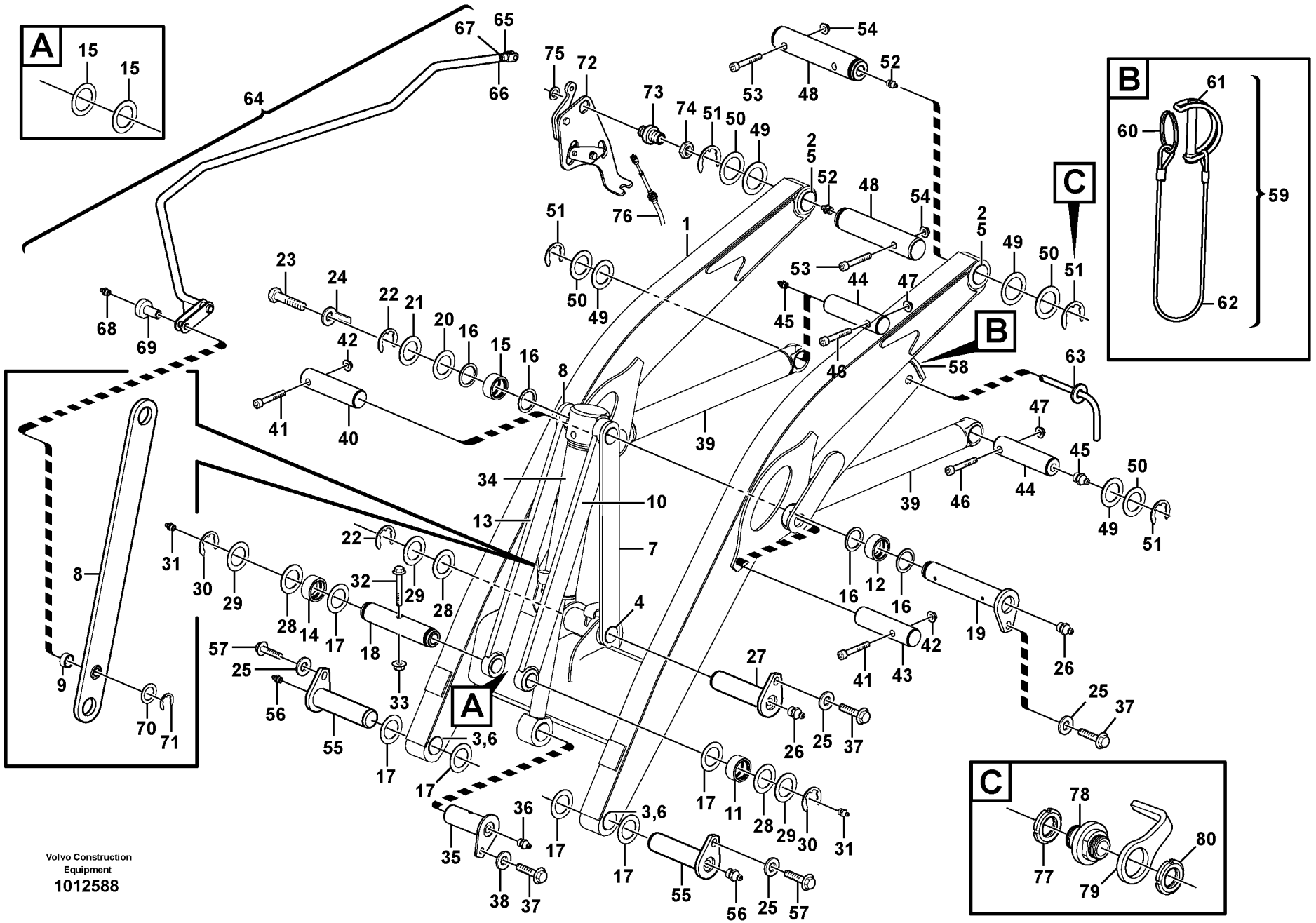
A
B
C
Volvo Construction Equipment
1012588

Fig.	Part No.	Quantity 1	2	3	4	5	PS	KIT	Description	Dénomination	Bezeichnung	Denominación	Notes
61	**VOE 11884614**	1					OP		••Spring Pin	••Axe de ressort	••Federstift	••Pasador Resorte	
62	**VOE 11881557**	1							••Steel Wire	••Fil Acier	••Stahldraht	••Alambre	
63	**VOE 11882476**	1							Pin	Goupille	Zapfen	Pasador	
64	**VOE 11884793**		1	1					Linkage	Syst.articulat.	Gelenksystem	Sistem Articul.	
65	**VOE 11881413**		1	1					•Fork	•Fourche	•Gabel	•Horquilla	
66	**VOE 13971072**		1	1					•Hexagon Nut	•Ecrou Hexagonal	•Sechskantmutter	•Tuerca Hexagon	
67	**VOE 11885207**		1	1					•Pin	•Goupille	•Zapfen	•Pasador	
68	**VOE 914167**		1	1					•Nipple	•Raccord	•Nippel	•Niple	
69	**VOE 11885429**		1	1					•Axle	•Axe Rotatif	•Wellenzapfen	•Eje	
70	**VOE 13955900**		1	1					•Washer	•Rondelle	•Scheibe	•Arandela	
71	**VOE 914450**		1	1					•Snap Ring	•Circlip	•Nutring	•Circlip	
72			1	1					Bracket	Console	Konsole	Ménsula	See group 945, Page 707
73	**VOE 11881050**		1	1					Pin	Goupille	Zapfen	Pasador	
74	**VOE 11883692**		1	1					Nut	Ecrou	Mutter	Tuerca	
75	**VOE 11881654**		1	1					Nut	Ecrou	Mutter	Tuerca	
76			1	1					Cable	Câble	Kabel	Cable	See group 945, Page 707
77	**VOE 11883692**				1				Nut	Ecrou	Mutter	Tuerca	
78	**VOE 11881050**				1				Pin	Goupille	Zapfen	Pasador	
79	**VOE 11885012**				1				Indicator	Indicateur	Indikator	Indicador	
80	**VOE 11881654**				1				Nut	Ecrou	Mutter	Tuerca	

1	**11880004 S/N - 10626**
2	**11891415**
3	**11891414**
4	**11891000, 11891050**
5	

Bastidor elevación con piezas de montaje
Hubgerüst mit Anbauteilen
Chassis levage avec pièces de montage
Lifting framework with assembly parts

Catalogue id	Group
20050	**945**
Illustr. No	Section
1012588	**150**
Issue	Page
VOE 64D9920050	**697**

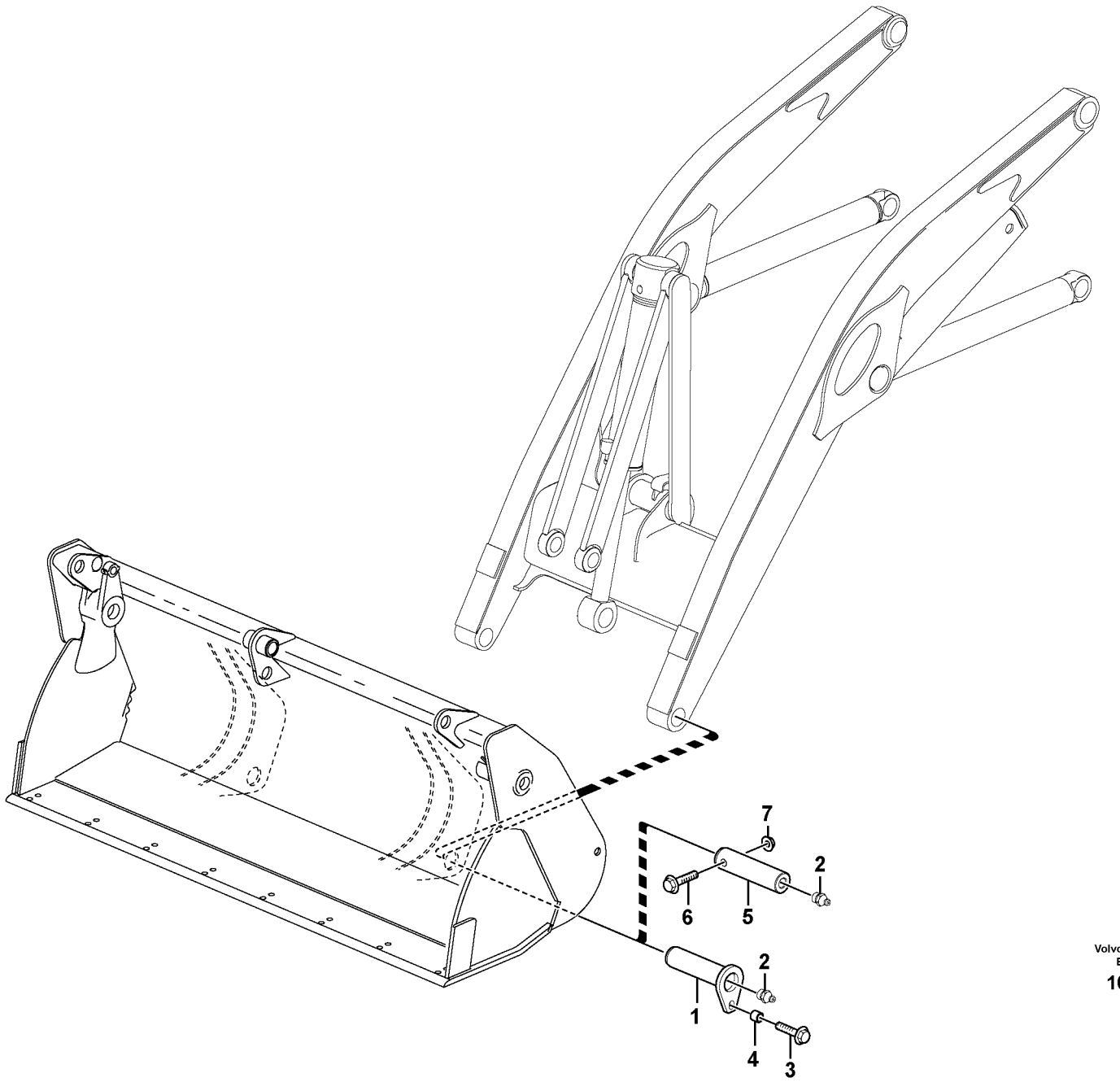

Volvo Construction Equipment

1023838

Fig.	Part No.	Quantity 1	2	3	PS	KIT	Description	Dénomination	Bezeichnung	Denominación	Notes
1	**VOE 11882428**	2					Pin	Goupille	Zapfen	Pasador	
2	**VOE 914167**	2	2				Nipple	Raccord	Nippel	Niple	
3	**VOE 968589**	2					Flange screw	Vis à bride	Flanschschraube	Torn embridado	
4	**VOE 11884168**	2					Spacer	Entretoise	Abstandstueck	Casquillo distanciad	
5	**VOE 11888037**		2				Pin	Goupille	Zapfen	Pasador	
6	**VOE 13965190**		2				Screw	Vis	Schraube	Tornillo	
7	**VOE 13971098**		2				Flange nut	Ecrou accouple.	Bundmutter	Tuerca embridad	

1	**11891561**
2	**11891539**
3	
4	
5	

Muñones para fijación de cuchara
Bolzen zur Befestigung der Schaufel
Pivots d'axe pour fixation de godet
Pins for mounting bucket

Catalogue id **20050**	Group **945**
Illustr. No **1023838**	Section **160**
Issue **VOE 64D9920050**	Page **699**

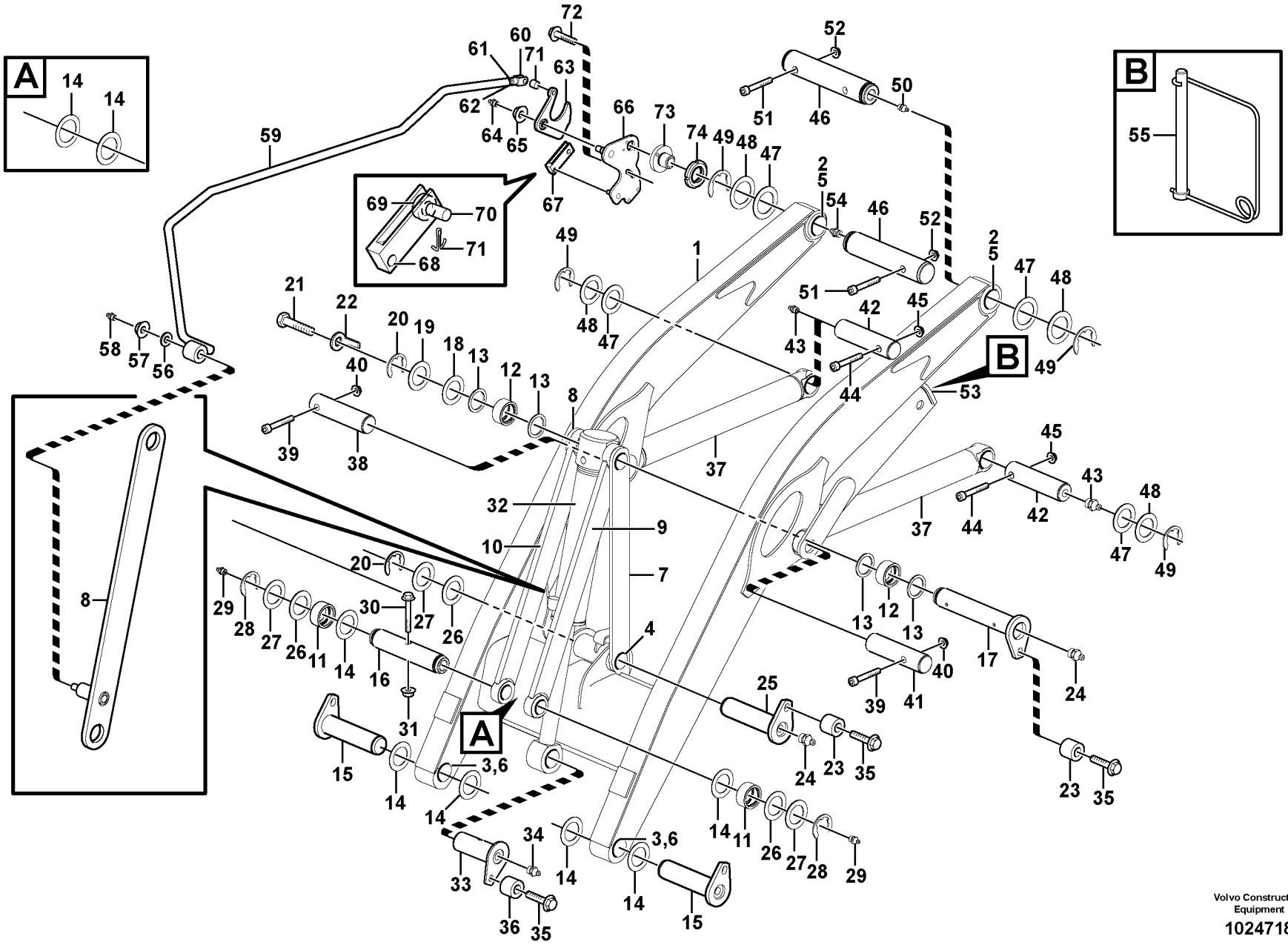

Volvo Construction Equipment

1024718

Fig.	Part No.	Quantity 1	2	3	PS	KIT	Description	Dénomination	Bezeichnung	Denominación	Notes
1	**VOE 11889130**	1					Loader arm	Bras de chargeur	Laderhübarm	Brazo de cargador	
2	**VOE 11883772**	2					•Bushing	•Bague	•Buchse	•Casquillo	
3	**VOE 11883802**	2					•Bushing	•Bague	•Buchse	•Casquillo	
4	**VOE 11883803**	2					•Bushing	•Bague	•Buchse	•Casquillo	
5	**VOE 11890069**	2					Seal	Joint	Dichtung	Reten	
6	**VOE 11882456**	2					Seal	Joint	Dichtung	Reten	
7	**VOE 11884638**	1					Link	Articulation	Gelenk	Articulacion	LH
8	**VOE 11887308**	1					Arm	Bras	Arm	Brazo	RH
9	**VOE 11884822**	1					Link	Articulation	Gelenk	Articulacion	LH
10	**VOE 11884815**	1					Link	Articulation	Gelenk	Articulacion	RH
11	**VOE 11883801**	2					•Bushing	•Bague	•Buchse	•Casquillo	
12	**VOE 11883857**	2					•Bushing	•Bague	•Buchse	•Casquillo	
13	**VOE 11883937**	4					Scraper	Racloir	Abstreicher	Rascador	
14	**VOE 11882456**	8					Seal	Joint	Dichtung	Reten	
15		2					Pin	Goupille	Zapfen	Pasador	See group 945, Page 699
16	**VOE 11882932**	1					Pin	Goupille	Zapfen	Pasador	
17	**VOE 11888280**	1					Pin	Goupille	Zapfen	Pasador	
18	**VOE 11883929**	1					Washer	Rondelle	Scheibe	Arandela	THICK = 2 MM
19	**VOE 11883930**	1					Washer	Rondelle	Scheibe	Arandela	THICK = 3 MM
20	**VOE 11890110**	2					Snap Ring	Circlip	Nutring	Circlip	
21	**VOE 13965191**	1					Flange screw	Vis à bride	Flanschschraube	Torn embridado	
22	**VOE 11884117**	1					Indicator	Indicateur	Indikator	Indicador	
23	**VOE 11884168**	2					Spacer	Entretoise	Abstandstueck	Casquillo distanciad	
24	**VOE 914167**	2					Nipple	Raccord	Nippel	Niple	
25	**VOE 11883032**	1					Pin	Goupille	Zapfen	Pasador	
26	**VOE 11890115**	REQ					Washer	Rondelle	Scheibe	Arandela	THICK = 2 MM
27	**VOE 11890116**	REQ					Washer	Rondelle	Scheibe	Arandela	THICK = 3 MM
28	**VOE 11890110**	2					Snap Ring	Circlip	Nutring	Circlip	
29	**VOE 914167**	2					Nipple	Raccord	Nippel	Niple	
30	**VOE 969313**	1					Flange screw	Vis à bride	Flanschschraube	Torn embridado	

1	
2	
3	
4	
5	

Bastidor elevación con piezas de montaje
Hubgerüst mit Anbauteilen
Chassis levage avec pièces de montage
Lifting framework with assembly parts

11880004, S/N 10627 -

Catalogue id	Group
20050	**945**
Illustr. No	Section
1024718	**175**
Issue	Page
VOE 64D9920050	**701**

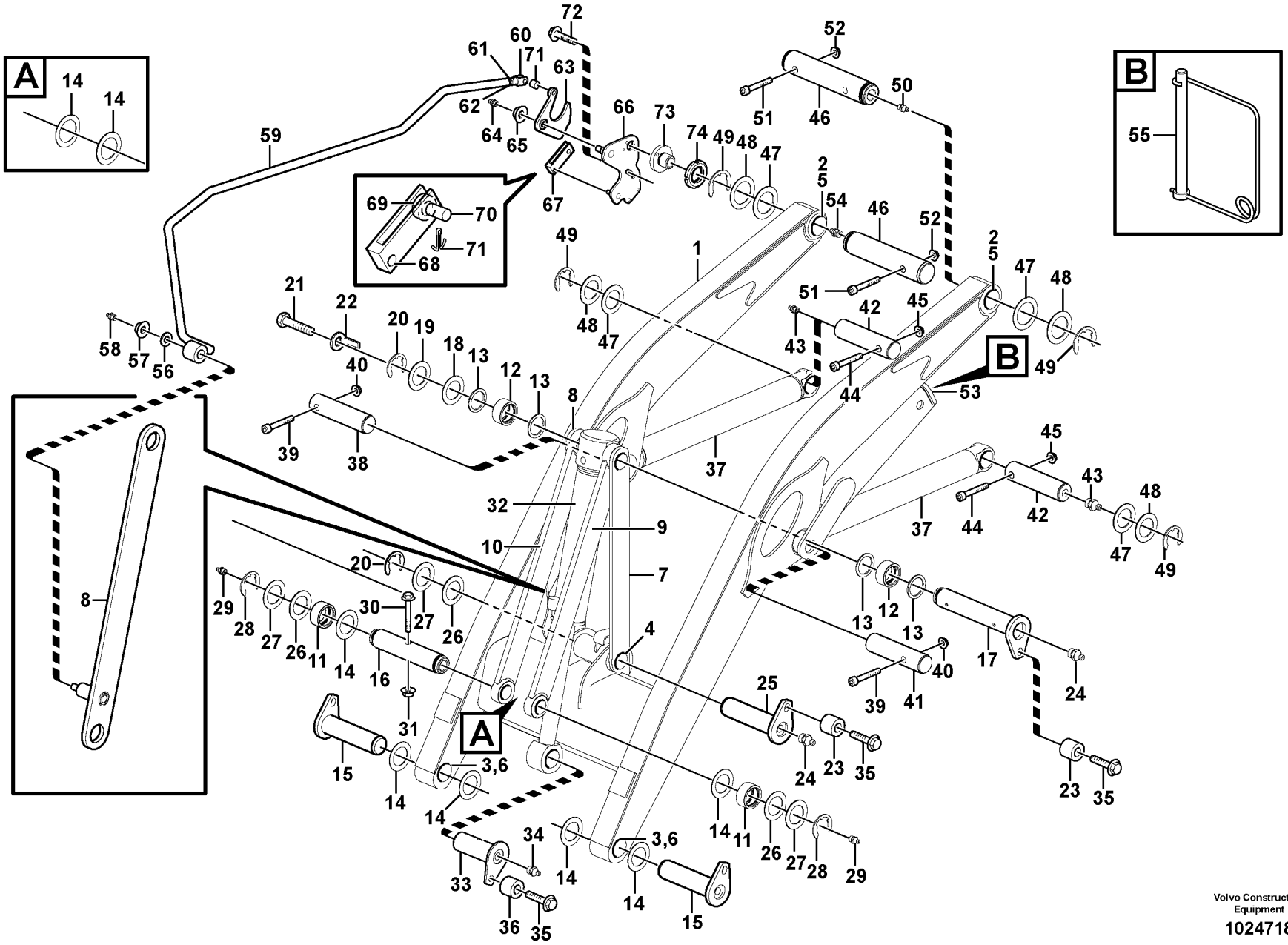

Volvo Construction Equipment

1024718

Fig.	Part No.	Quantity 1	2	3	PS	KIT	Description	Dénomination	Bezeichnung	Denominación	Notes
31	**VOE 13971098**	1					Flange nut	Ecrou accouple.	Bundmutter	Tuerca embridad	
32		1					Tilt Cylinder	Verin inclinaison	Neigungszylinderr	Maquina inclinacion	See group 945, Page 711
33	**VOE 11884182**	1					Pin	Goupille	Zapfen	Pasador	
34	**VOE 914167**	1					Nipple	Raccord	Nippel	Niple	
35	**VOE 974428**	3					Flange screw	Vis à bride	Flanschschraube	Torn embridado	
36	**VOE 11884170**	1					Spacer	Entretoise	Abstandstueck	Casquillo distanciad	
37		2					Lifting cylinder	Verin levage	Hubzylinder	Cilindro elevacion	See group 945, Page 709
38	**VOE 11888366**	1					Pin	Goupille	Zapfen	Pasador	
39	**VOE 967640**	2					Screw	Vis	Schraube	Tornillo	
40	**VOE 983304**	2					Hexagon Nut	Ecrou Hexagonal	Sechskantmutter	Tuerca Hexagon	
41	**VOE 11883381**	1					Pin	Goupille	Zapfen	Pasador	(VOE 11882421)
42	**VOE 11883858**	2					Pin	Goupille	Zapfen	Pasador	
43	**VOE 914167**	2					Nipple	Raccord	Nippel	Niple	
44	**VOE 967640**	2					Screw	Vis	Schraube	Tornillo	
45	**VOE 13971098**	2					Flange nut	Ecrou accouple.	Bundmutter	Tuerca embridad	
46	**VOE 11883029**	2					Pin	Goupille	Zapfen	Pasador	
47	**VOE 11890117**	REQ					Washer	Rondelle	Scheibe	Arandela	THICK = 2 MM
48	**VOE 11890118**	REQ					Washer	Rondelle	Scheibe	Arandela	THICK = 3 MM
49	**VOE 11890109**	4					Snap Ring	Circlip	Nutring	Circlip	
50	**VOE 914167**	1					Nipple	Raccord	Nippel	Niple	
51	**VOE 968237**	2					Flange screw	Vis à bride	Flanschschraube	Torn embridado	
52	**VOE 13971098**	2					Flange nut	Ecrou accouple.	Bundmutter	Tuerca embridad	
53	**VOE 11888616**	2					Safety Brace	Etrier Securite	Sicherungsbugel	Brida Seguridad	
54	**VOE 11887317**	1					Lubricating nipple	Graisseur	Schmiernippel	Engrasador	
55	**VOE 11888737**	1					•Lock brace	•Etrier de verrouillage	•Sperrklinke	•Brazo Seguridad	
56	**VOE 983338**	1					Washer	Rondelle	Scheibe	Arandela	
57	**VOE 13967934**	1					Flange Lock Nut	Contre écrou bride	Flanschmutter	Contratuer Embr	
58	**VOE 914167**	1					Nipple	Raccord	Nippel	Niple	
59	**VOE 11887325**	1					Tube	Tube	Rohr	Tubo	
60	**VOE 11881413**	1					Fork	Fourche	Gabel	Horquilla	

1		**Bastidor elevación con piezas de montaje** **Hubgerüst mit Anbauteilen** **Chassis levage avec pièces de montage** **Lifting framework with assembly parts**	Catalogue id **20050**	Group **945**
2			Illustr. No **1024718**	Section **175**
3			Issue **VOE 64D9920050**	Page **703**
4				
5		**11880004, S/N 10627 -**		

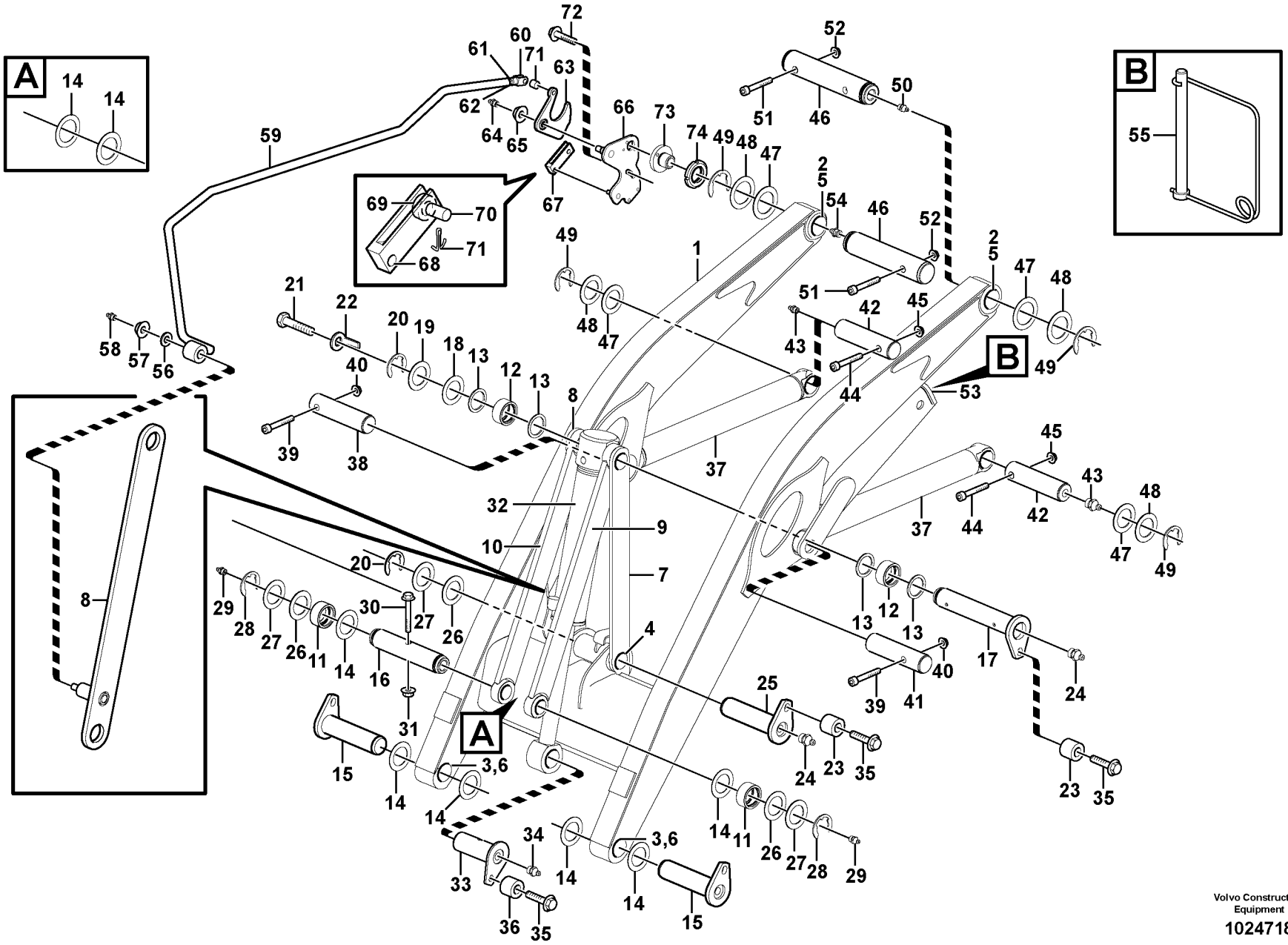

Volvo Construction Equipment

1024718

Fig.	Part No.	Quantity 1	2	3	PS	KIT	Description	Dénomination	Bezeichnung	Denominación	Notes
61	**VOE 971081**	1					Hexagon Nut	Ecrou Hexagonal	Sechskantmutter	Tuerca Hexagon	
62	**VOE 11888748**	1					Rod	Tringle	Stange	Tirante	
63	**VOE 11887303**	1					Cam	Came	Nocken	Leva	
64	**VOE 914167**	1					Nipple	Raccord	Nippel	Niple	
65	**VOE 13967934**	1					Flange Lock Nut	Contre écrou bride	Flanschmutter	Contratuer Embr	
66	**VOE 11887302**	1					Support	Support	Stütze	Apoyo	
67	**VOE 11888274**	1					Bracket	Console	Konsole	Ménsula	
68	**VOE 11887440**	1					Bushing	Bague	Buchse	Casquillo	
68	**VOE 11882999**	1					Roller	Galet	Rolle	Rodillo	
70	**VOE 11883000**	1					Pin	Goupille	Zapfen	Pasador	
71	**VOE 907838**	3					Cotter Pin	Goupille Fendue	Splint	Pasador Hendido	
72	**VOE 946440**	2					Flange screw	Vis à bride	Flanschschraube	Torn embridado	
73	**VOE 11887329**	1					Support Pin	Goupille Appui	Stützzapfen	Pasador Apoyo	
74	**VOE 11881654**	1					Nut	Ecrou	Mutter	Tuerca	

1		**Bastidor elevación con piezas de montaje** **Hubgerüst mit Anbauteilen** **Chassis levage avec pièces de montage** **Lifting framework with assembly parts**	Catalogue id **20050**	Group **945**
2			Illustr. No **1024718**	Section **175**
3			Issue **VOE 64D9920050**	Page **705**
4				
5		**11880004, S/N 10627 -**		

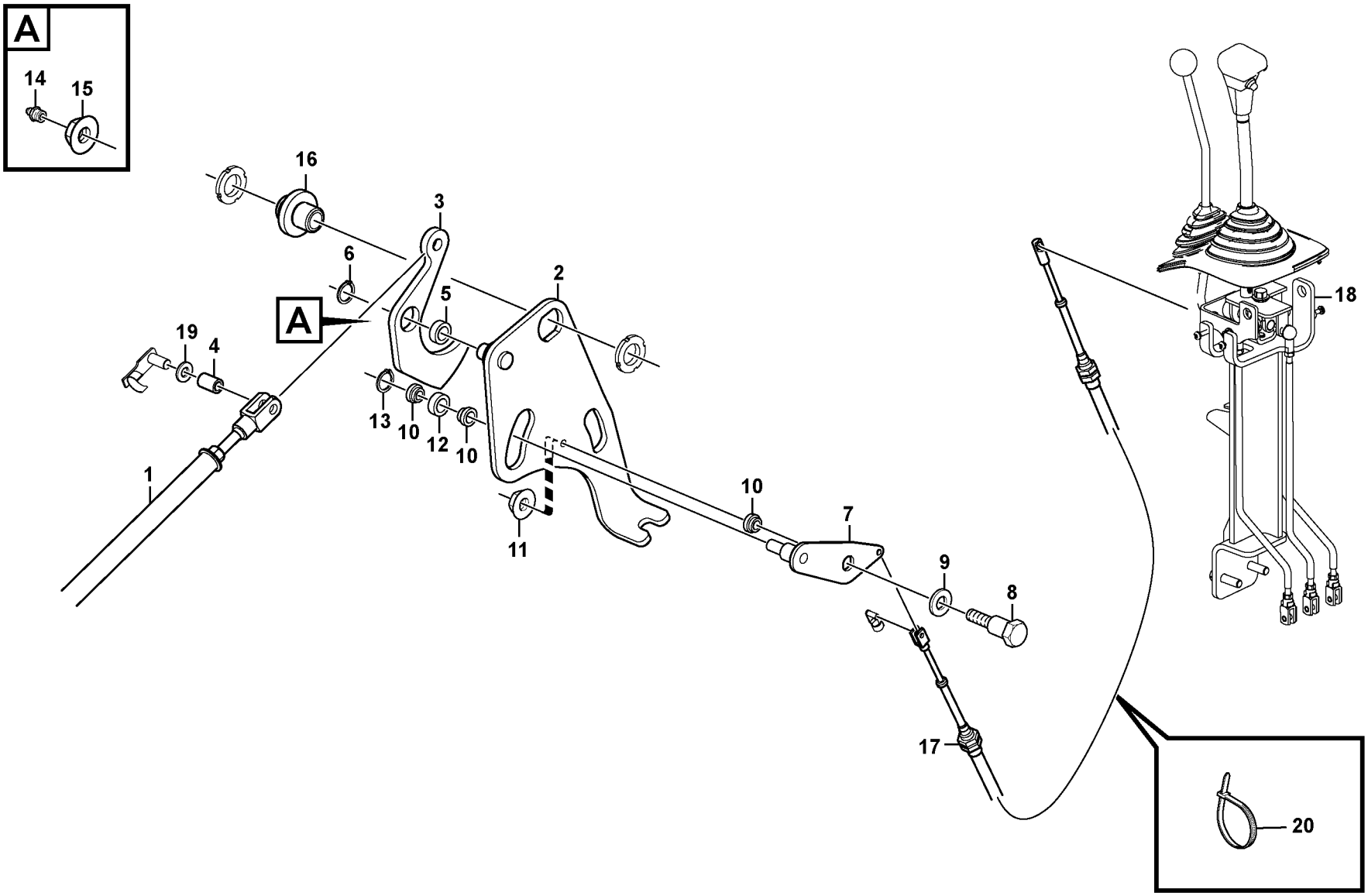

Volvo Construction Equipment

1024734

Fig.	Part No.	Quantity 1	2	3	PS	KIT	Description	Dénomination	Bezeichnung	Denominación	Notes
1		1	1				Linkage	Syst.articulat	Gelenksystem	Sistem Articul	See group 945, Page 693
2	**VOE 11886338**	1					Bracket	Console	Konsole	Ménsula	
	VOE 11887335		1				Bracket	Console	Konsole	Ménsula	
	VOE 11886482	1					•Bracket	•Console	•Konsole	•Ménsula	
			1		NS		•Bracket	•Console	•Konsole	•Ménsula	
3	**VOE 11885717**	1					•Cam	•Came	•Nocken	•Leva	
			1		NS		•Cam	•Came	•Nocken	•Leva	
4	**VOE 968942**	1	1				••Bearing Bushing	••Coussinet	••Lagerbuchse	••Casq Cojinete	
5	**VOE 966722**	1					••Bearing Bushing	••Coussinet	••Lagerbuchse	••Casq Cojinete	
	VOE 11883447		1				••Bushing	••Bague	••Buchse	••Casquillo	
6	**VOE 914450**	1					•Snap Ring	•Circlip	•Nutring	•Circlip	
7	**VOE 11885663**	1	1				•Lever	•Levier	•Hebel	•Palanca	
8	**VOE 11885774**	1	1				•Bolt	•Boulon	•Bolzen	•Perno	
9	**VOE 930872**	2	2				•Washer	•Rondelle	•Scheibe	•Arandela	
10	**VOE 11885772**	3	3				•Bushing	•Bague	•Buchse	•Casquillo	
11	**VOE 948645**	1	1				•Flange Lock Nut	•Contre écrou bride	•Flanschmutter	•Contratuer Embr	
12	**VOE 11885773**	1	1				•Spacer Bushing	•Bagu.entretoise	•Abstandbuchse	•Buje Distanciad	
13	**VOE 914446**	1	1				•Snap Ring	•Circlip	•Nutring	•Circlip	
14	**VOE 914167**		1				•Nipple	•Raccord	•Nippel	•Niple	
15	**VOE 13967934**		1				•Flange Lock Nut	•Contre écrou bride	•Flanschmutter	•Contratuer Embr	
16		1	1				Pin	Goupille	Zapfen	Pasador	See group 945, Page 693
17	**VOE 11885671**	1	1				Cable	Câble	Seil	Cable	
18		1	1				Bracket	Console	Konsole	Ménsula	See group 915, Page 629
19	**VOE 11886342**	2	2				Spacer	Partie Intermédiaire	Zwischenstück	Espaciador	SER NO 10078-
20	**VOE 4881440**	1	1				Strip Clamp	Ruban Serrage	Kabelbinder	Abraz Cinta	SER NO 10078-

1	**S/N - 10626**
2	**S/N 10627 -**
3	
4	
5	

Mecanismo de basculamiento mecánico autoajustable
Selbstregelnder Kippmechanismus
Mécanisme de basculement à autoréglage mécanique
Mechanical self levelling tilt mechanism

11891414, 11891415

Catalogue id **20050**	Group **945**
Illustr. No **1024734**	Section **200**
Issue **VOE 64D9920050**	Page **707**

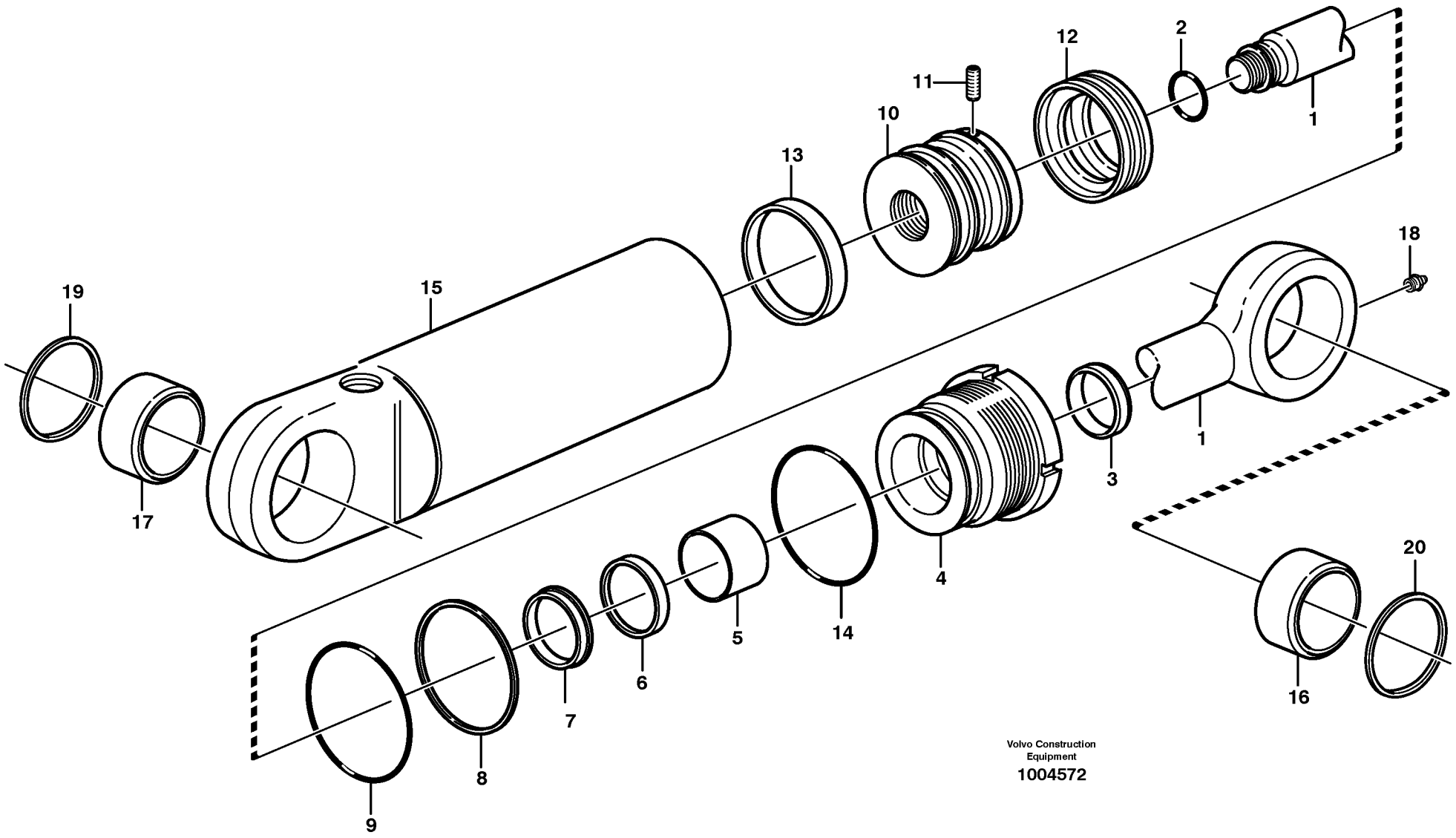

Volvo Construction Equipment

1004572

Fig.	Part No.	Quantity 1	2	3	PS	KIT	Description	Dénomination	Bezeichnung	Denominación	Notes
	VOE 11883976	1					Cylinder	Cylindre	Zylinder	Cilindro	RH See group 945, Page 693
	VOE 11883975		1				Cylinder	Cylindre	Zylinder	Cilindro	LH See group 945, Page 693
1	**VOE 11988262**	1	1				•Piston rod	•Bielle de piston	•Kolbenstange	•Biela de piston	
2		1	1		NS	K	•O-ring	•Joint Torique	•O-Ring	•Junta torica	
3		1	1		NS	K	•Scraper	•Racleur	•Abstreifring	•Aro rascador	
4	**VOE 11709613**	1	1		OP		•Pstn Rod Guide	•Gui.tige Piston	•Ko-stang Fuhrg	•Guia Var Piston	
5		1	1		NS	K	•Guide Ring	•Bague Guide	•Fuhrungsring	•Anillo Guia	
6		1	1		NS	K	•Piston Rod Seal	•Eta.tige Piston	•Ko-stang Dichtg	•Reten Var Pist	
7		1	1		NS	K	•Lock Ring	•Anneau Verrouillage	•Schlossring	•Anillo Segurid	
8		1	1		NS	K	•Back-up ring	•Rondelle anti-extrusion	•Stützring	•Anillo Apoyo	
9		1	1		NS	K	•O-ring	•Joint Torique	•O-Ring	•Junta torica	
10	**VOE 11709614**	1	1		OP		•Piston	•Piston	•Kolben	•Piston	
11		1	1		NS	K	•Screw	•Vis	•Schraube	•Tornillo	
12		1	1		NS	K	•Piston seal	•Etanchei.piston	•Kolbendichtung	•Reten piston	
13		1	1		NS	K	•Guide Ring	•Bague Guide	•Fuhrungsring	•Anillo Guia	
14		1	1		NS	K	•O-ring	•Joint Torique	•O-Ring	•Junta torica	
15		1	1		NS		•Cylinder tube	•Tube cylindre	•Zylinderrohr	•Tubo cilindro	
16	**VOE 11711136**	1	1				•Bushing	•Bague	•Buchse	•Casquillo	(VOE 11709615)
17	**VOE 11988263**	1	1				•Bushing	•Bague	•Buchse	•Casquillo	
18	**VOE 11709664**	1	1				•Lub Nipple	•Graisseur	•Schmiernippel	•Engrasador	
19	**VOE 11709602**	2	2				Scraper	Racloir	Abstreicher	Rascador	
20	**VOE 11709616**	2	2				Scraper	Racloir	Abstreicher	Rascador	
	VOE 11709617	1	1				Sealing Kit	Jeu Joints	Dichtungssatz	Juego Retenes	

1	**11883976**	**Cilindro hidráulico, elevac.** **Hubzylinder.** **Cylindre hydraulique, levage.** **Hydraulic cylinder, lifting.**	Catalogue id **20050**	Group **945**
2	**11883975**		Illustr. No **1004572**	Section **250**
3			Issue **VOE 64D9920050**	Page **709**
4				
5		**11891414, 11891415**		

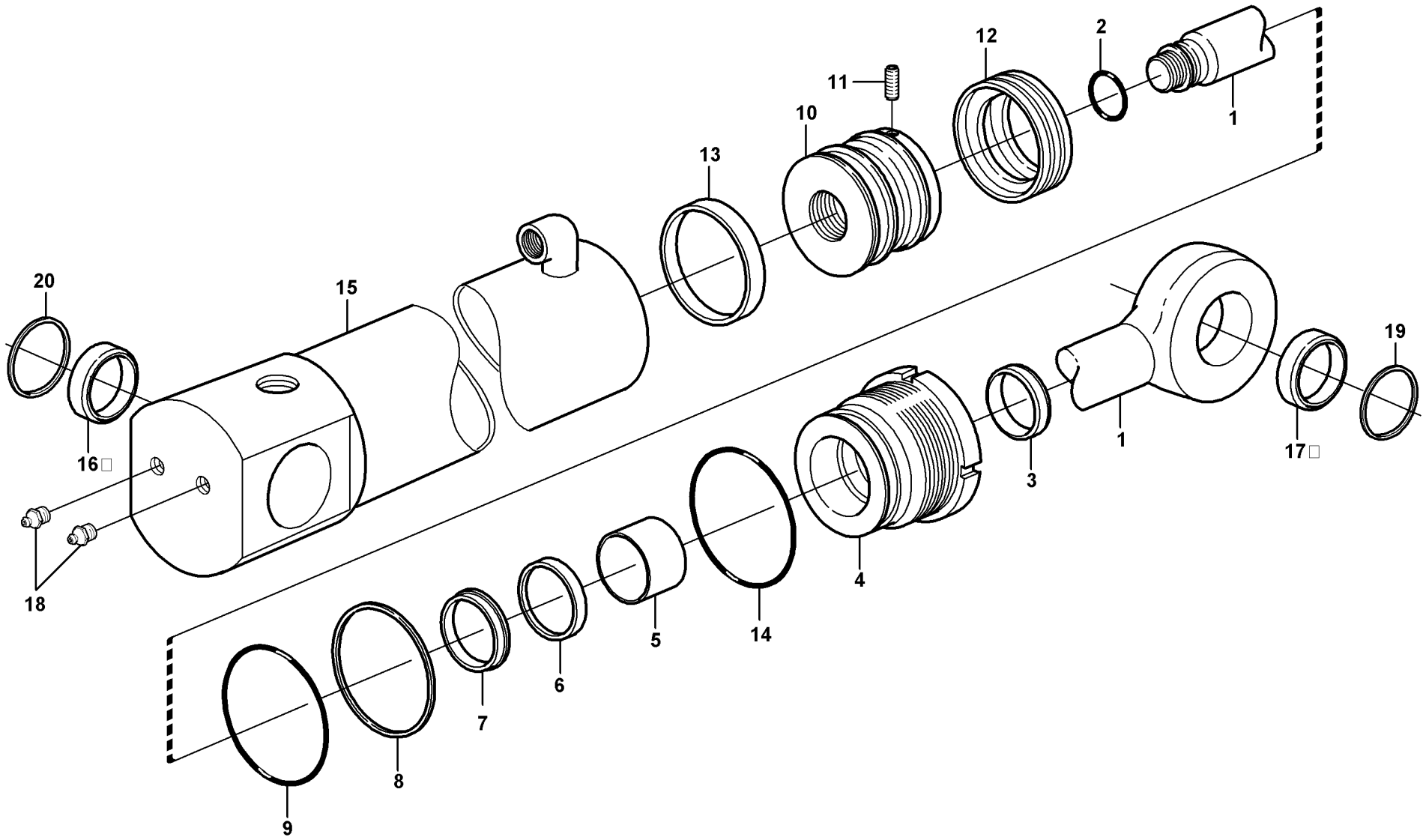

Volvo Construction Equipment
1013114

Fig.	Part No.	Quantity 1	2	3	PS	KIT	Description	Dénomination	Bezeichnung	Denominación	Notes
	VOE 11882905	1					Cylinder	Verin	Zylinder	Cilindro	See group 945, Page 693
1	**VOE 11988259**	1					•Piston rod	•Bielle de piston	•Kolbenstange	•Biela de piston	
2		1			NS	K	•O-ring	•Joint Torique	•O-Ring	•Junta torica	
3		1			NS	K	•Scraper	•Racleur	•Abstreifring	•Aro rascador	
4	**VOE 11712747**	1			OP		•Piston rod guide	•Guide tige piston	•Kolbenstangenführun	•Guia varilla piston	
5		1			NS	K	•Guide Ring	•Bague Guide	•Fuhrungsring	•Anillo Guia	
6		1			NS	K	•Piston Rod Seal	•Eta.tige Piston	•Ko-stang Dichtg	•Reten Var Pist	
7		1			NS	K	•Lock Ring	•Anneau Verrouillage	•Schlossring	•Anillo Segurid	
8		1			NS	K	•Back-up ring	•Rondelle anti-extrusion	•Stützring	•Anillo Apoyo	
9		1			NS	K	•O-ring	•Joint Torique	•O-Ring	•Junta torica	
10	**VOE 11712748**	1			OP		•Piston	•Piston	•Kolben	•Piston	
11		1			NS	K	•Screw	•Vis	•Schraube	•Tornillo	
12		1			NS	K	•Piston seal	•Etanchei.piston	•Kolbendichtung	•Reten piston	
13		1			NS	K	•Guide Ring	•Bague Guide	•Fuhrungsring	•Anillo Guia	
14		1			NS	K	•O-ring	•Joint Torique	•O-Ring	•Junta torica	
15		1			NS		•Cylinder tube	•Tube cylindre	•Zylinderrohr	•Tubo cilindro	
16	**VOE 11988260**	2					•Bushing	•Bague	•Buchse	•Casquillo	
17	**VOE 11711134**	1					•Bushing	•Bague	•Buchse	•Casquillo	
18	**VOE 11709664**	2					•Lub Nipple	•Graisseur	•Schmiernippel	•Engrasador	
19	**VOE 11883675**	2					Scraper	Racloir	Abstreicher	Rascador	
20	**VOE 11883937**	2					Scraper	Racloir	Abstreicher	Rascador	
	VOE 11712749	1					Sealing Kit	Jeu Joints	Dichtungssatz	Juego Retenes	

1		**Cilindros hidráulicos** **Hydraulikzylinder** **Vérins hydrauliques** **Hydraulic cylinder**	Catalogue id **20050**	Group **945**
2			Illustr. No **1013114**	Section **300**
3			Issue **VOE 64D9920050**	Page **711**
4				
5		**11891414, 11891415**		

VOLVO

BL61

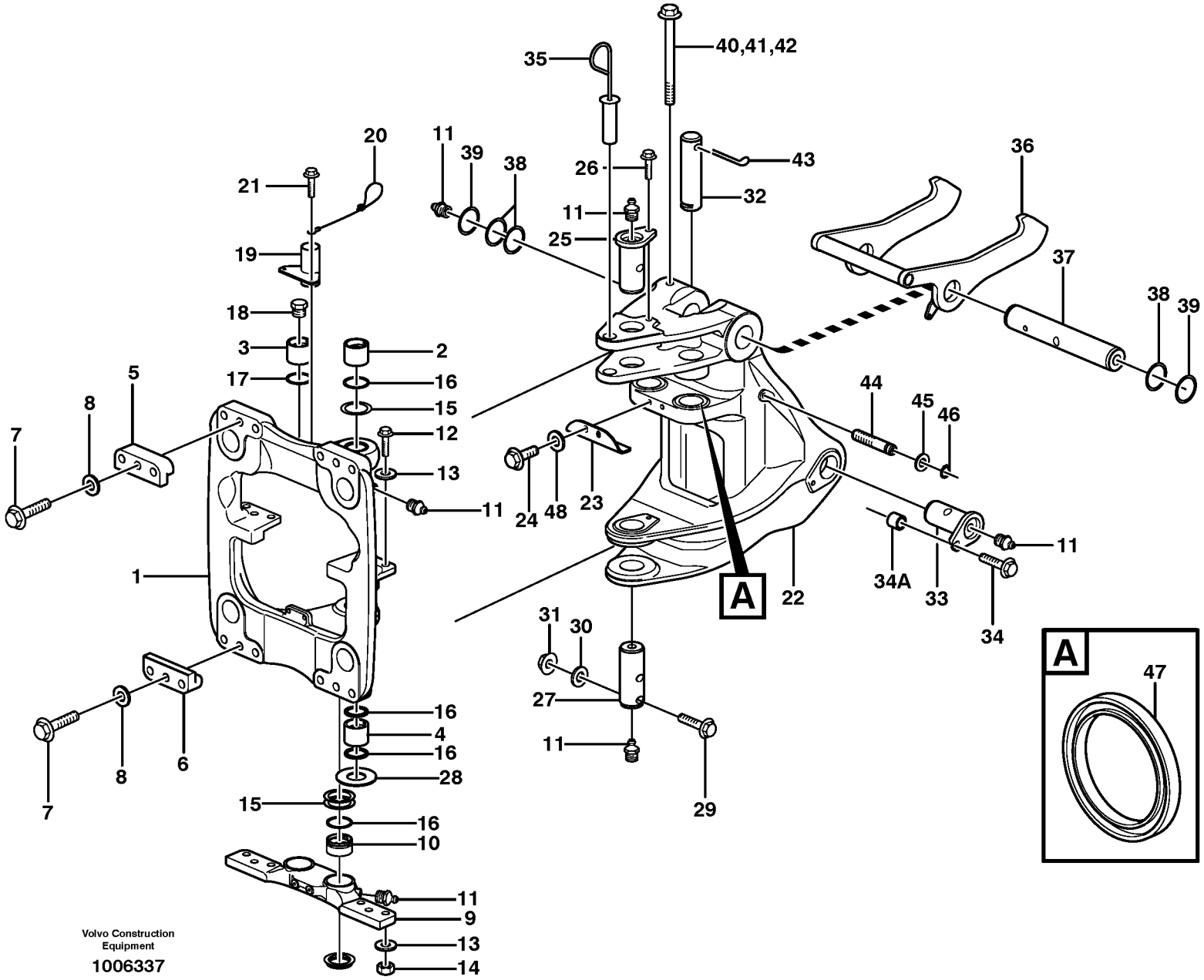

Volvo Construction Equipment

1006337

Fig.	Part No.	Quantity 1	2	3	PS	KIT	Description	Dénomination	Bezeichnung	Denominación	Notes
1	**VOE 11884584**	1					Carriage	Support de fourche	Gabelhalter	Portahorquilla	SER NO -10033
1	**VOE 11886473**	1					Carriage	Support de fourche	Gabelhalter	Portahorquilla	SER NO 10034 - 10336
	VOE 11887273	1					Carrier	Support	Träger	Soporte	S/N 10337 -
2	**VOE 11884582**	1					•Bushing	•Bague	•Buchse	•Casquillo	
3	**VOE 11883756**	2					•Bushing	•Bague	•Buchse	•Casquillo	
4	**VOE 11884714**	1					•Bushing	•Bague	•Buchse	•Casquillo	
5	**VOE 11883485**	2					Guide Plate	Plaque-guide	Kurvenscheibe	Placa Guia	
6	**VOE 11883486**	2					Guide Plate	Plaque-guide	Kurvenscheibe	Placa Guia	
7	**VOE 13963365**	12					Hexagon screw	Vis tête hexagonale	Sechskantschraube	Tornillo hexago	M24x140
8	**VOE 955905**	12					Washer	Rondelle	Scheibe	Arandela	
9	**VOE 11883439**	1					Center Plate	Plaque Centrale	Mittenblech	Placa Central	S/N - 10343
	VOE 11887300	1					Center Plate	Plaque Centrale	Mittenblech	Placa Central	S/N 10344 -
10	**VOE 11883757**	2					•Bushing	•Bague	•Buchse	•Casquillo	
11	**VOE 914167**	9					Nipple	Raccord	Nippel	Niple	
12	**VOE 13963362**	6					Hexagon screw	Vis tête hexagonale	Sechskantschraube	Tornillo hexago	M24x110
13	**VOE 955905**	12					Washer	Rondelle	Scheibe	Arandela	
14	**VOE 983312**	6					Hexagon Nut	Ecrou Hexagonal	Sechskantmutter	Tuerca Hexagon	M24
15	**VOE 11882660**	6					Shim	Cale d'épaisseur	Ausgleichscheibe	Suplementos de ajuste	
16	**VOE 11881489**	6					Scraper	Racloir	Abstreicher	Rascador	
17	**VOE 11883628**	2					Wiper	Essuie-glace	Wischer	Limpiaparabrisa	
18	**VOE 191900**	2					Plug	Bouchon	Stopfen	Tapon	
19	**VOE 11883645**	1					Bracket	Console	Konsole	Ménsula	
20	**VOE 11883651**	1					Cable	Câble	Seil	Cable	
21	**VOE 13946173**	2					Flange screw	Vis à bride	Flanschschraube	Torn embridado	M8x20
22	**VOE 11883729**	1			SS		Swing Post	Support de rotation	Drehstütze	Apoyo de giro	S/N - 10336
	VOE 11887295	1					Swing Post	Support de rotation	Drehstütze	Apoyo de giro	S/N 10337 -
23	**VOE 11883733**	1					Stop	Arrêt	Anschlag	Parada	
24	**VOE 974428**	2					Flange screw	Vis à bride	Flanschschraube	Torn embridado	M16x30
25	**VOE 11883727**	1					Pin	Goupille	Zapfen	Pasador	
26	**VOE 968435**	1					Flange screw	Vis à bride	Flanschschraube	Torn embridado	M16x40

1	
2	
3	
4	
5	

Sistema de oscilación
Schwenksystem
Système de pivotement
Swing system

Catalogue id	Group
20050	**971**
Illustr. No **1006337**	Section **100**
Issue **VOE 64D9920050**	Page **713**

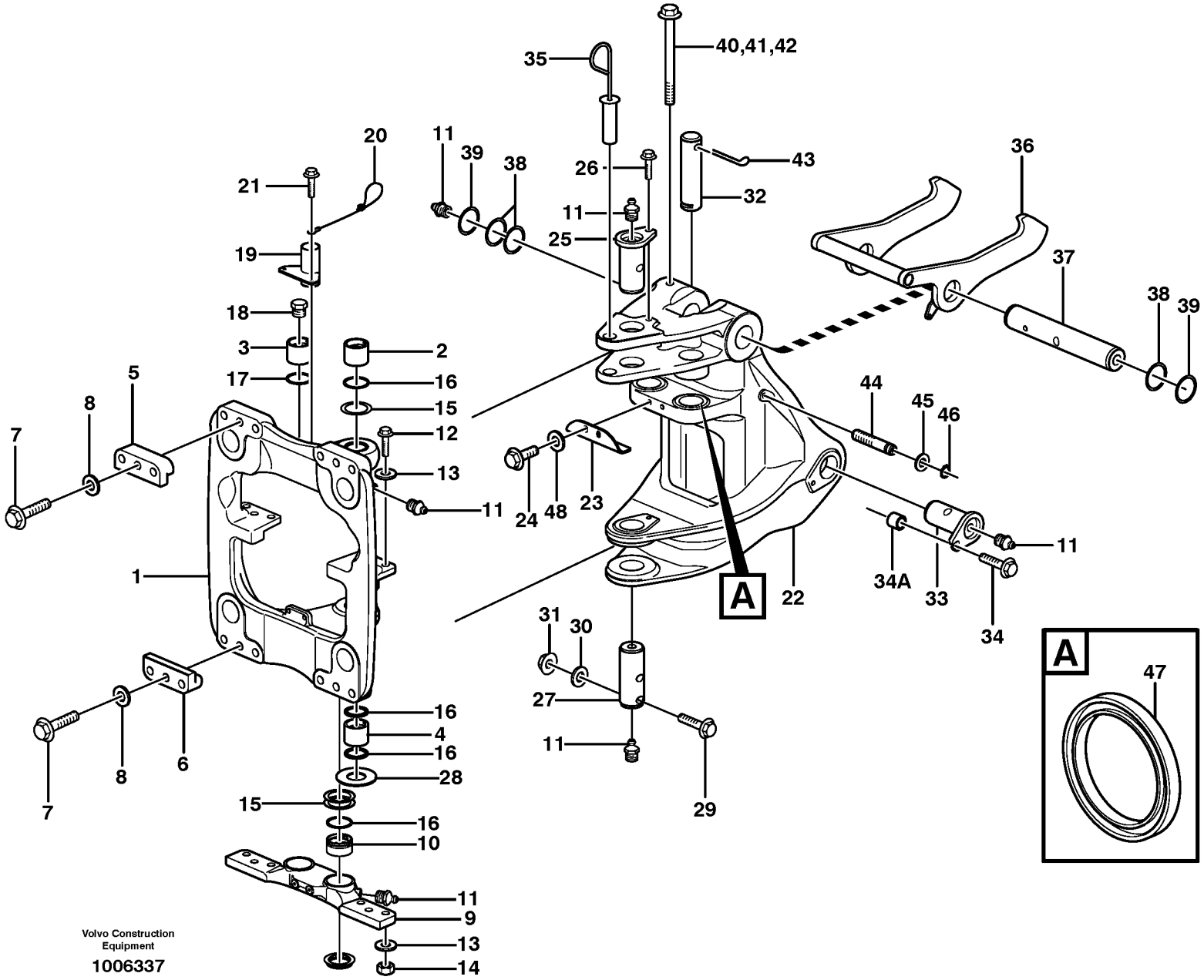

Volvo Construction Equipment

1006337

Fig.	Part No.	Quantity 1	2	3	PS	KIT	Description	Dénomination	Bezeichnung	Denominación	Notes
27	**VOE 11883728**	1					Pin	Goupille	Zapfen	Pasador	
28	**VOE 11883751**	2					Spacer	Partie Intermédiaire	Zwischenstück	Espaciador	
29	**VOE 968237**	1					Flange screw	Vis à bride	Flanschschraube	Torn embridado	M10x120
30	**VOE 13960143**	1					Washer	Rondelle	Scheibe	Arandela	
31	**VOE 13971068**	1					Hexagon Nut	Ecrou Hexagonal	Sechskantmutter	Tuerca Hexagon	M10
32	**VOE 11888681**	2					Pin	Goupille	Zapfen	Pasador	
33	**VOE 11883753**	2					Pin	Goupille	Zapfen	Pasador	
34	**VOE 968435**	2					Flange screw	Vis à bride	Flanschschraube	Torn embridado	M16x40
34A	**VOE 11884168**	3					Spacer	Entretoise	Abstandstueck	Casquillo distanciad	
35	**VOE 11884569**	1					Lock	Serrure	Schloß	Cierre	
36	**VOE 11888656**	1					Lock	Serrure	Schloß	Cierre	
37	**VOE 11883732**	1					Pin	Goupille	Zapfen	Pasador	
38	**VOE 11885224**	3					Shim	Cale d'épaisseur	Passcheibe	Arandela Ajuste	
39	**VOE 11885225**	4					Shim	Cale d'épaisseur	Passcheibe	Arandela Ajuste	
40	**VOE 949824**	1					Flange screw	Vis à bride	Flanschschraube	Torn embridado	M10x150
41	**VOE 13960143**	1					Washer	Rondelle	Scheibe	Arandela	
42	**VOE 13971068**	1					Hexagon Nut	Ecrou Hexagonal	Sechskantmutter	Tuerca Hexagon	
43	**VOE 907903**	1					Cotter Pin	Goupille Fendue	Splint	Pasador Hendido	When required
44	**VOE 11886468**	1					Stud	Goujon	Stiftschraube	Esparrago	
45	**VOE 13960143**	1					Washer	Rondelle	Scheibe	Arandela	
46	**VOE 14025792**	1					Retaining ring	Bague retenue	Haltering	Anillo de apoyo	
47		4					Scraper	Racloir	Abstreicher	Rascador	See group 971, Page 721
48	**VOE 983338**	2					Washer	Rondelle	Scheibe	Arandela	

1		**Sistema de oscilación** **Schwenksystem** **Système de pivotement** **Swing system**	Catalogue id **20050**	Group **971**
2			Illustr. No **1006337**	Section **100**
3			Issue **VOE 64D9920050**	Page **715**
4				
5				

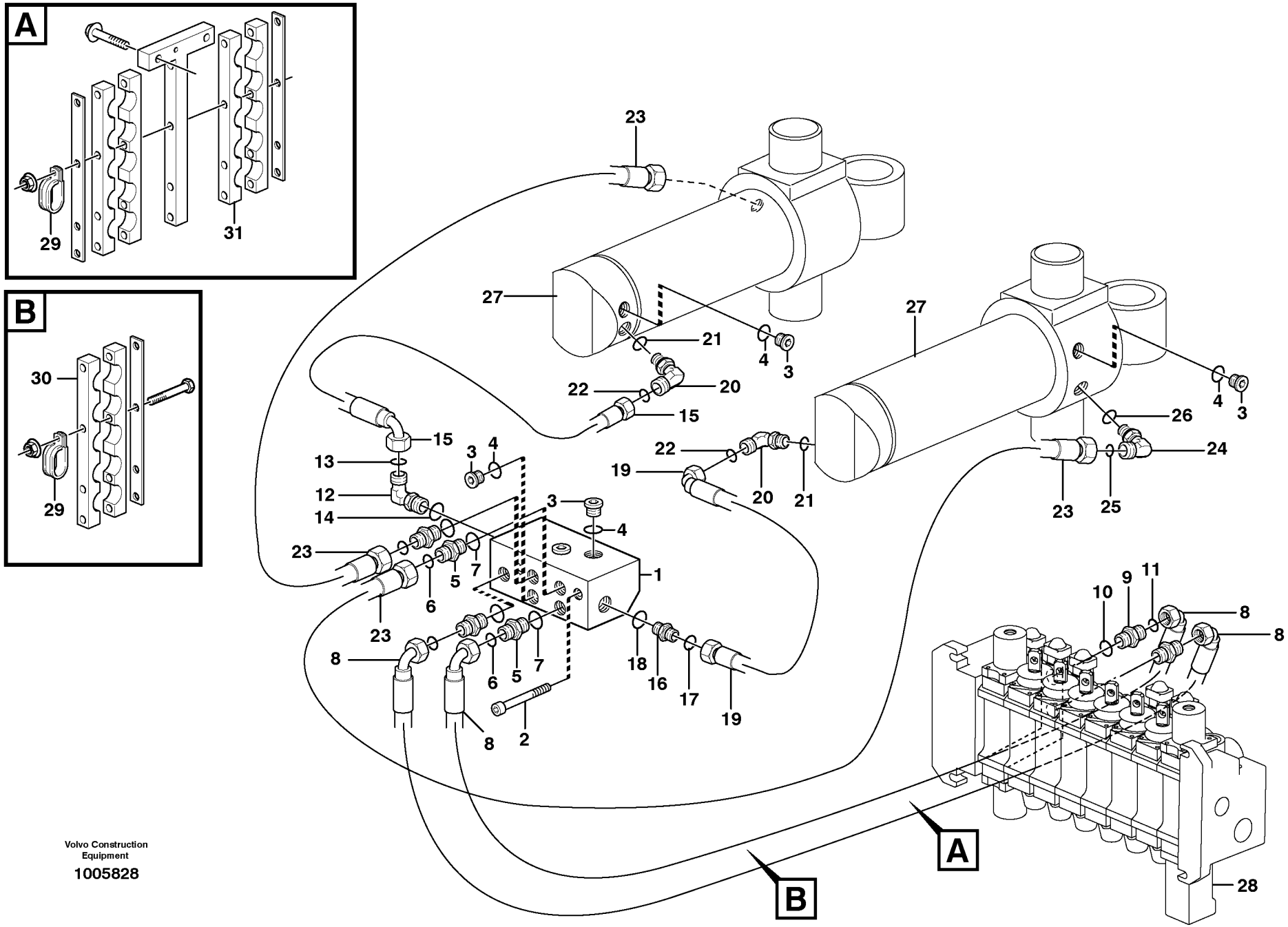

Volvo Construction Equipment

1005828

Fig.	Part No.	Quantity 1	2	3	PS	KIT	Description	Dénomination	Bezeichnung	Denominación	Notes
1	**VOE 11882500**	1					Valve Body	Corps Valve	Ventilkörper	Cuerpo Valvula	
2	**VOE 967632**	2					Allen Hd Screw	Vis A 6 Pans Cr	Inbusschraube	Torn Hex Embut	
3	**VOE 11883510**	9					Plug	Bouchon	Stopfen	Tapon	
4	**VOE 932039**	1					•O-ring	•Joint Torique	•O-Ring	•Junta torica	
5	**VOE 935085**	4					Nipple	Raccord	Nippel	Niple	
6	**VOE 4880492**	1					•O-ring	•Joint Torique	•O-Ring	•Junta torica	
7	**VOE 932039**	1					•O-ring	•Joint Torique	•O-Ring	•Junta torica	
8	**VOE 11882190**	2					Hose assembly	Conduit flexible	Schlauchleitung	Conducto	
9	**VOE 11882258**	2					Nipple	Raccord	Nippel	Niple	
10	**VOE 932042**	1					•O-ring	•Joint Torique	•O-Ring	•Junta torica	
11	**VOE 4880492**	1					•O-ring	•Joint Torique	•O-Ring	•Junta torica	
12	**VOE 935069**	1					Elbow nipple	Raccord angulaire	Winkelnippel	Niple angular	
13	**VOE 4881722**	1					•O-ring	•Joint Torique	•O-Ring	•Junta torica	
14	**VOE 4880492**	1					•O-ring	•Joint Torique	•O-Ring	•Junta torica	
15	**VOE 11882803**	1					Hose assembly	Conduit flexible	Schlauchleitung	Conducto	
16	**VOE 935085**	1					Nipple	Raccord	Nippel	Niple	
17	**VOE 4880492**	1					•O-ring	•Joint Torique	•O-Ring	•Junta torica	
18	**VOE 932039**	1					•O-ring	•Joint Torique	•O-Ring	•Junta torica	
19	**VOE 11882192**	1					Hose assembly	Conduit flexible	Schlauchleitung	Conducto	
20	**VOE 11884787**	2					Nipple	Raccord	Nippel	Niple	
21	**VOE 932040**	1					•O-ring	•Joint Torique	•O-Ring	•Junta torica	
22	**VOE 4880492**	1					•O-ring	•Joint Torique	•O-Ring	•Junta torica	
23	**VOE 11882194**	2					Hose	Flexible	Schlauch	Manguera	
24	**VOE 935069**	2					Elbow nipple	Raccord angulaire	Winkelnippel	Niple angular	
25	**VOE 4881722**	1					•O-ring	•Joint Torique	•O-Ring	•Junta torica	
26	**VOE 4880492**	1					•O-ring	•Joint Torique	•O-Ring	•Junta torica	
27		2					Swing cylinder	Vérin d'orientation	Schwenkzylinder	Cilindro de giro	See group 971, Page 721
28		1					Valve	Soupape	Ventil	Valvula	See group 912, Page 601
29	**VOE 981665**	2					Clamp	Pince Serrage	Klemme	Abrazadera	
30	**VOE 11884908**	1					Clamp	Pince Serrage	Klemme	Abrazadera	

1	
2	
3	
4	
5	

Sistema hidráulico, giro
Hydraulikkreis, Schwenken
Système hydraulique, orientation
Boom swing system

Catalogue id	Group
20050	**971**
Illustr. No	Section
1005828	**200**
Issue	Page
VOE 64D9920050	**717**

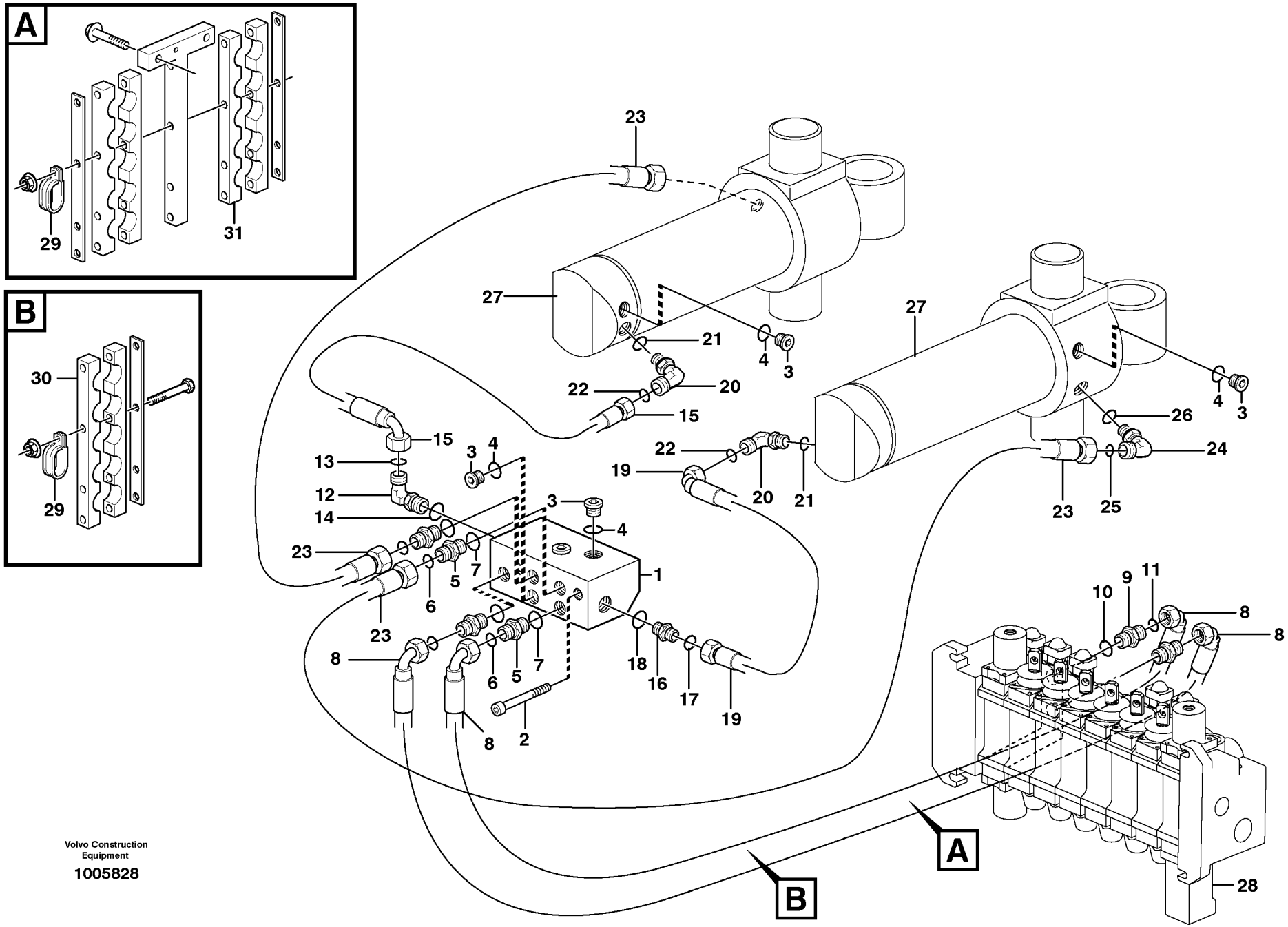

Volvo Construction Equipment

1005828

Fig.	Part No.	Quantity 1	2	3	PS	KIT	Description	Dénomination	Bezeichnung	Denominación	Notes
31		1					Clamp	Collier serrage	Klemme	Abrazadera	See group 911, Page 545

1		**Sistema hidráulico, giro** **Hydraulikkreis, Schwenken** **Système hydraulique, orientation** **Boom swing system**	Catalogue id **20050**	Group **971**
2			Illustr. No **1005828**	Section **200**
3			Issue **VOE 64D9920050**	Page **719**
4				
5				

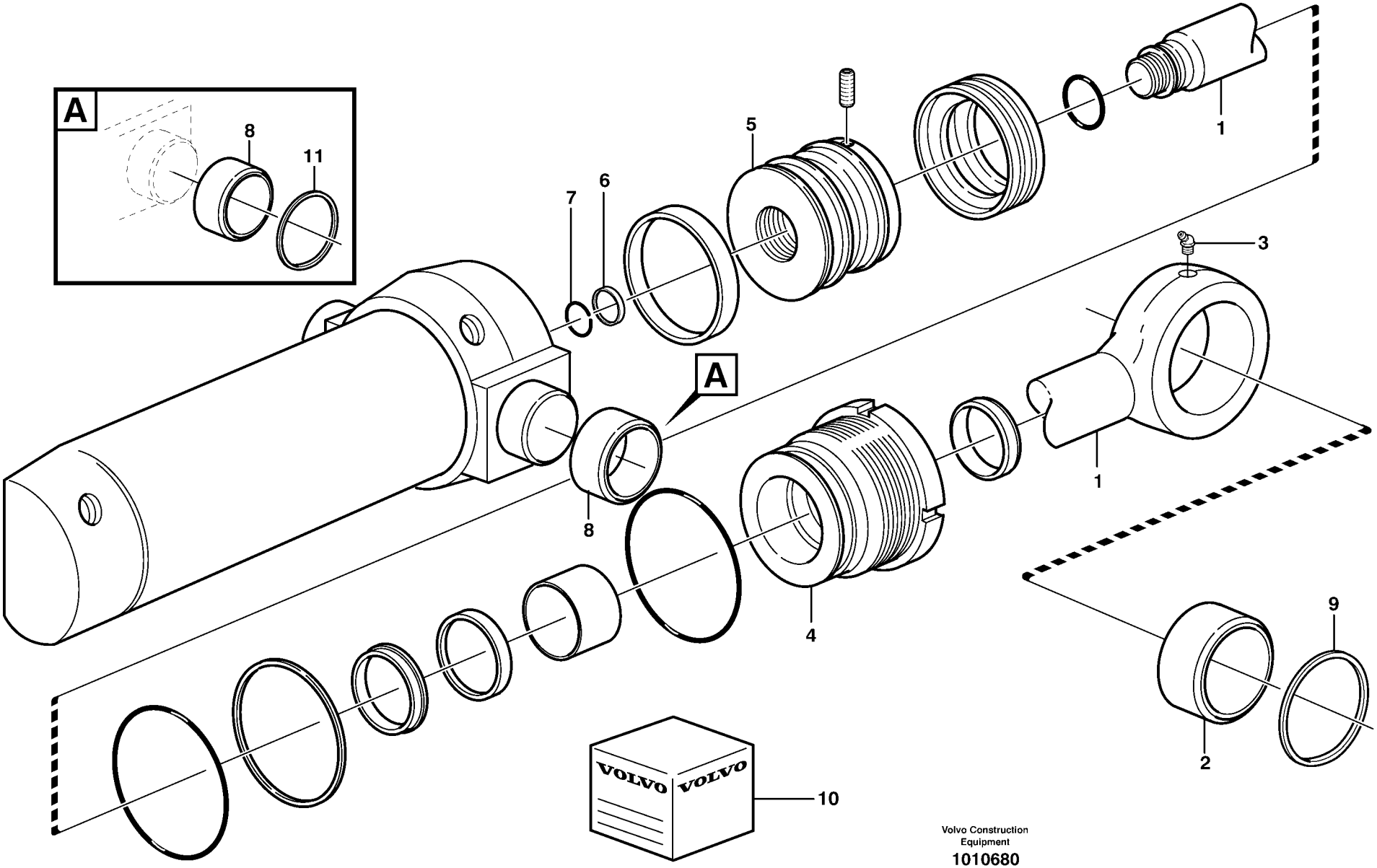
A
8
11
A
VOLVO
VOLVO
1
2
3
4
5
6
7
8
9
10
1
Volvo Construction Equipment
1010680

Fig.	Part No.	Quantity 1	2	3	PS	KIT	Description	Dénomination	Bezeichnung	Denominación	Notes
	VOE 11884052	1					Swing cylinder	Vérin d'orientation	Schwenkzylinder	Cilindro de giro	
1	**VOE 11988249**	1					•Piston rod	•Bielle de piston	•Kolbenstange	•Biela de piston	
2	**VOE 11988255**	1					•Bushing	•Bague	•Buchse	•Casquillo	
3	**VOE 11988251**	1					•Lub Nipple	•Graisseur	•Schmiernippel	•Engrasador	
4	**VOE 11988250**	1					•Pstn Rod Guide	•Gui.tige Piston	•Ko-stang Fuhrg	•Guia Var Piston	
5	**VOE 11709676**	1					•Piston	•Piston	•Kolben	•Piston	
6	**VOE 11709526**	1					•Cushion Ring	•Douille amortisseuse	•Dämpfhülse	•Manguito Amorti	
7	**VOE 11709527**	1					•Lock Ring	•Anneau Verrouillage	•Schlossring	•Anillo Segurid	
8	**VOE 11709672**	2					•Bushing	•Bague	•Buchse	•Casquillo	
9	**VOE 11883937**	2					Scraper	Racloir	Abstreicher	Rascador	
10	**VOE 11709677**	1					Sealing Kit	Jeu Joints	Dichtungssatz	Juego Retenes	
11	**VOE 11709616**	2					Scraper	Racloir	Abstreicher	Rascador	

1	
2	
3	
4	
5	

Cilindro de giro
Schwenkzylinder
Vérin d'orientation
Swing cylinder

Catalogue id **20050**	Group **971**
Illustr. No **1010680**	Section **300**
Issue **VOE 64D9920050**	Page **721**



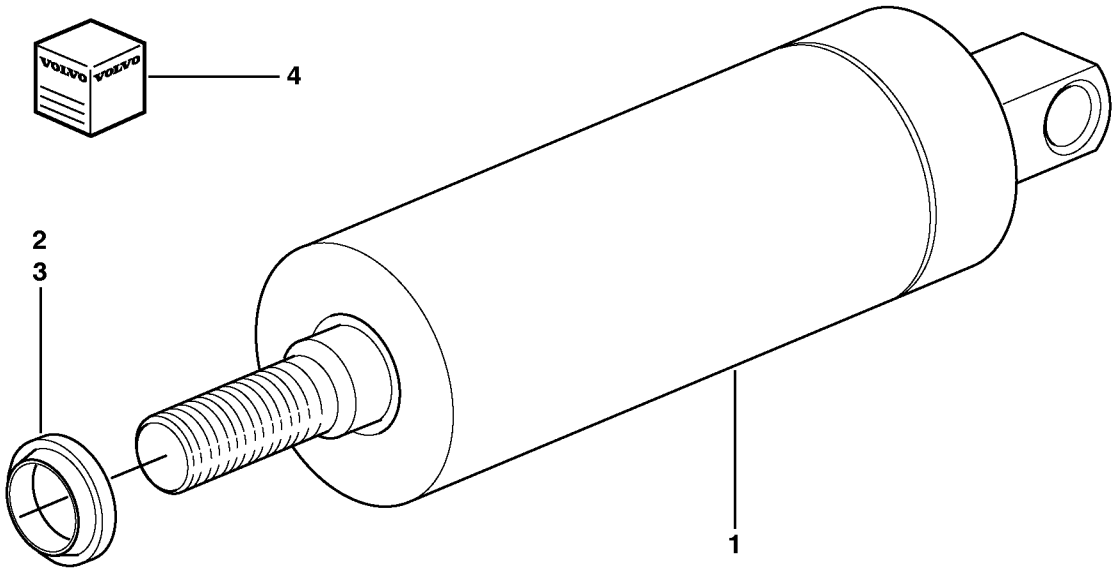

Volvo Construction Equipment

1003011

Fig.	Part No.	Quantity 1	2	3	PS	KIT	Description	Dénomination	Bezeichnung	Denominación	Notes
1	**VOE 11884579**	1					Locking Cyl	Cyl Verrouil	Sperrzylinder	Cil Bloqueo	
1	**VOE 11888096**		1				Cylinder	Verin	Zylinder	Cilindro	
2	**VOE 11709679**	1					•Scraper	•Racloir	•Abstreicher	•Rascador	
3	**VOE 11709680**	1					•Filter	•Filtre	•Filter	•Filtro	
4	**VOE 11710606**	1					•Sealing Kit	•Jeu Joints	•Dichtungssatz	•Juego Retenes	

1	**11884579**	**Cilindro de bloqueo** **Sperrzylinder** **Vérin de verrouillage** **Lock cylinder**	Catalogue id **20050**	Group **971**
2	**11888096 S/N 10627 -**		Illustr. No **1003011**	Section **400**
3			Issue **VOE 64D9920050**	Page **723**
4				
5				

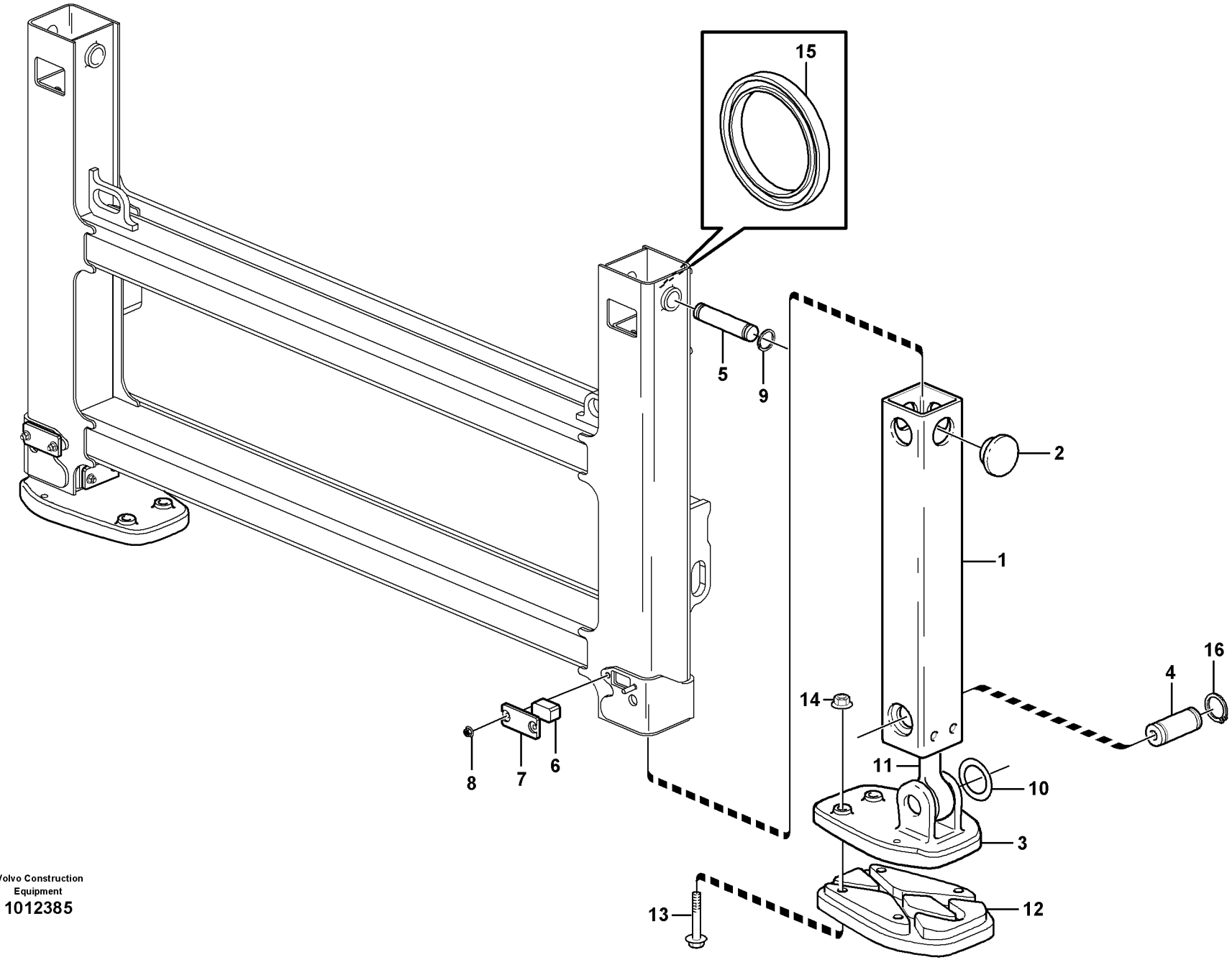

Volvo Construction Equipment
1012385

Fig.	Part No.	Quantity 1	2	3	PS	KIT	Description	Dénomination	Bezeichnung	Denominación	Notes
1	**VOE 11887060**	2					Square Tube	Tuyau Carre	Vierkantrohr	Tubo Cuadrangul	
2	**VOE 11890229**	12					Pad	Patin	Belag	Pastilla	
3	**VOE 11885475**	2					Foot Plate	Plaque Pedale	Fussplatte	Placa Pie	
4	**VOE 11885283**	2					Pin	Goupille	Zapfen	Pasador	
5	**VOE 11887730**	2					Pin	Goupille	Zapfen	Pasador	
6	**VOE 11883349**	4					Wear Part	Piece Usure	Verschleissteil	Secc Desgaste	
7	**VOE 11887740**	4					Plate	Plaque	Platte	Placa	
8	**VOE 963111**	8					Lock nut	Contre-ecrou	Sicherungsmutter	Contratuerca	
9	**VOE 967562**	4					Snap ring	Circlip	Nutring	Circlip	
10	**VOE 11890115**	REQ					Washer	Rondelle	Scheibe	Arandela	
11		2					Cylinder	Verin	Zylinder	Cilindro	See group 972, Page 727
12	**VOE 11886020**		2				Pad	Patin	Belag	Pastilla	(VOE 11883037)
13	**VOE 13965195**		8				Screw	Vis	Schraube	Tornillo	
14	**VOE 971099**		8				Flange Lock Nut	Contre écrou bride	Flanschmutter	Contratuer Embr	(VOE 13971099)
15		8					Sealing ring	Bague d'étanchéité	Runddichtring	Anillo reten	See group 972, Page 727
16	**VOE 914470**	4					Snap Ring	Circlip	Nutring	Circlip	

1	**11880004**	**Pata de apoyo** **Pratzen** **Bequille** **Stabilisers**	Catalogue id **20050**	Group **972**
2	**11891269**		Illustr. No **1012385**	Section **100**
3			Issue **VOE 64D9920050**	Page **725**
4				
5				

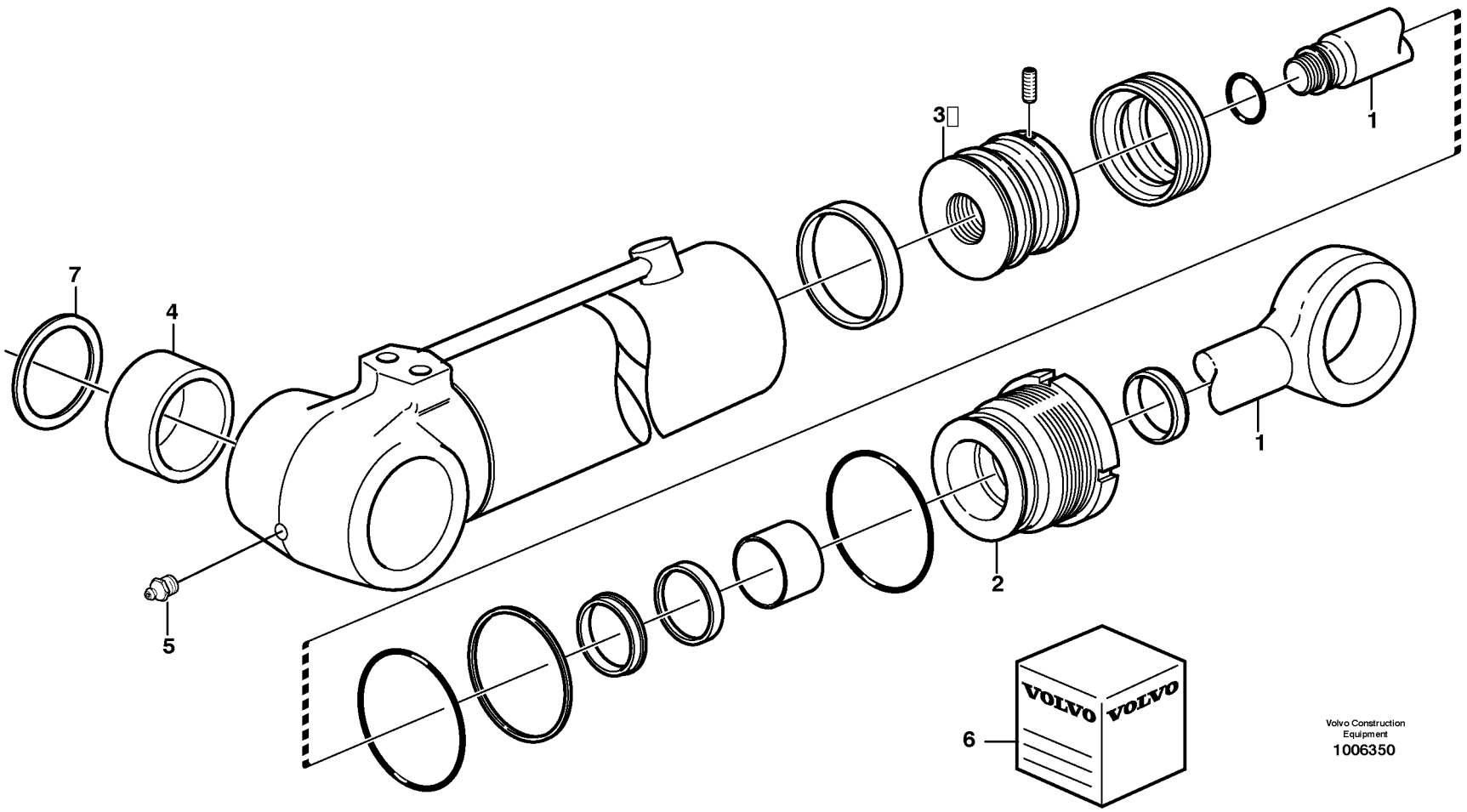

Volvo Construction Equipment
1006350

Fig.	Part No.	Quantity 1	2	3	PS	KIT	Description	Dénomination	Bezeichnung	Denominación	Notes
	VOE 11881611	1					Cylinder	Verin	Zylinder	Cilindro	
1	**VOE 11709628**	1					•Piston rod	•Bielle de piston	•Kolbenstange	•Biela de piston	
2	**VOE 11709629**	1					•Pstn Rod Guide	•Gui.tige Piston	•Ko-stang Fuhrg	•Guia Var Piston	
3	**VOE 11709630**	1					•Piston	•Piston	•Kolben	•Piston	
4	**VOE 11712635**	2					•Bushing	•Bague	•Buchse	•Casquillo	
5	**VOE 11709664**	1					•Lub Nipple	•Graisseur	•Schmiernippel	•Engrasador	
6	**VOE 11709632**	1					•Sealing Kit	•Jeu Joints	•Dichtungssatz	•Juego Retenes	
7	**VOE 11883674**	2					Sealing ring	Bague d'étanchéité	Runddichtring	Anillo reten	

1		**Cilindro hidraulico para pata de apoyo** **Hydraulzylinder für Pratzen** **Vérin hydraulique pour jambe d'appui** **Stabiliser cylinder**	Catalogue id **20050**	Group **972**
2			Illustr. No **1006350**	Section **200**
3			Issue **VOE 64D9920050**	Page **727**
4				
5				

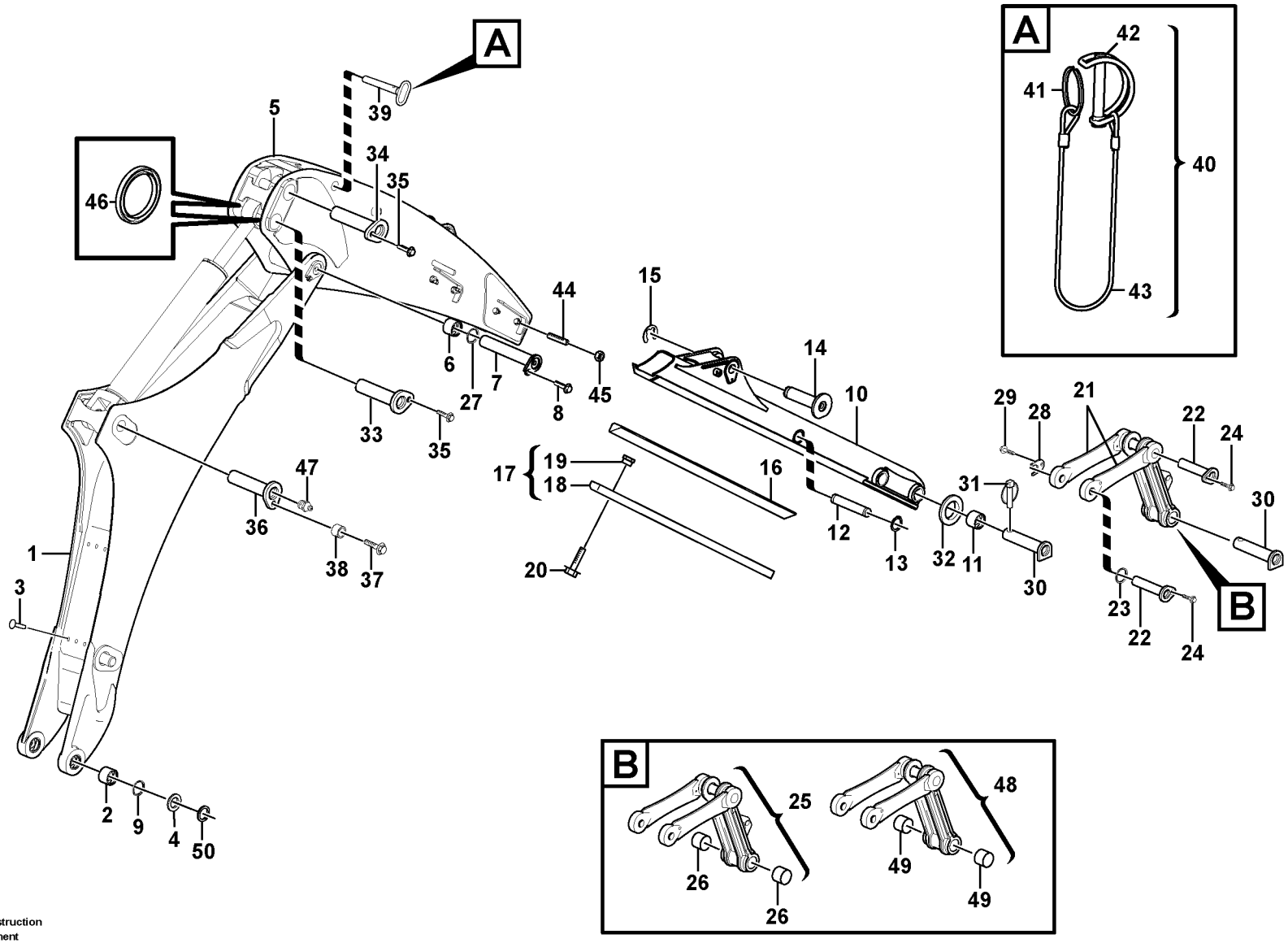

Volvo Construction Equipment
1013168

Fig.	Part No.	Quantity 1	2	3	4	5	PS	KIT	Description	Dénomination	Bezeichnung	Denominación	Notes
1	**VOE 11886266**	1							Boom	Fleche	Ausleger	Pluma	S/N - 10626
1	**VOE 11888239**	1							Boom	Fleche	Ausleger	Pluma	S/N 10627 -
2	**VOE 11885426**	2							•Bushing	•Bague	•Buchse	•Casquillo	
3	**VOE 11882943**	9							•Rivet	•Rivet	•Niet	•Remache	
4	**VOE 11885225**	REQ							Shim	Cale d'épaisseur	Passcheibe	Arandela Ajuste	
5	**VOE 11886499**	1							Arm	Bras	Arm	Brazo	(VOE 11884262)
6	**VOE 11883769**	2							•Bushing	•Bague	•Buchse	•Casquillo	
7	**VOE 11886255**	1							Pin	Goupille	Zapfen	Pasador	S/N - 10626
7	**VOE 11887962**	1							Pin	Goupille	Zapfen	Pasador	S/N 10627 -
8	**VOE 968589**	1							Flange screw	Vis à bride	Flanschschraube	Torn embridado	
9	**VOE 11890069**	6							Seal	Joint	Dichtung	Reten	
10	**VOE 11884248**	1							Arm	Bras	Arm	Brazo	
11	**VOE 11883770**	4							•Bushing	•Bague	•Buchse	•Casquillo	
12	**VOE 11883897**	1							Pin	Goupille	Zapfen	Pasador	
13	**VOE 914465**	2							Snap Ring	Circlip	Nutring	Circlip	
14	**VOE 11884259**	1							Pin	Goupille	Zapfen	Pasador	
15	**VOE 967562**	1							Snap ring	Circlip	Nutring	Circlip	
16	**VOE 11885340**	1							Wear Part	Piece Usure	Verschleissteil	Secc Desgaste	RH
16	**VOE 11885339**	1							Wear Part	Piece Usure	Verschleissteil	Secc Desgaste	LH
17	**VOE 11883863**	2							Strip	Bande	Streifen	Cinta	S/N - 10459
17	**VOE 11883863**	2							Strip	Bande	Streifen	Cinta	S/N - 10460
18	**VOE 11883862**	1					SS		•Strip	•Bande	•Streifen	•Cinta	S/N - 10459
19	**VOE 11883865**	5							•Square Nut	•Ecrou Carre	•Vierkantmutter	•Tuerca Cuadrada	
20	**VOE 946441**	10							Flange screw	Vis à bride	Flanschschraube	Torn embridado	
21	**VOE 11886174**	2							Link	Articulation	Gelenk	Articulacion	
22	**VOE 11882533**	2							Pin	Goupille	Zapfen	Pasador	
23	**VOE 11890048**	4							Seal	Joint	Dichtring	Junta	
24	**VOE 968589**	2							Flange screw	Vis à bride	Flanschschraube	Torn embridado	
25	**VOE 11885940**				1				Link	Articulation	Gelenk	Articulacion	
26	**VOE 11883768**				4				•Bushing	•Bague	•Buchse	•Casquillo	

1	**11891417**
2	**11891109**
3	**11891061**
4	**11891379**
5	**11891380**

Pluma de excavación con brazo telescópico
Grabausleger mit Teleskopstiel
Flèche d'équipement excavateur avec bras télescopique
Excavator boom, exendible dipper arm

Catalogue id **20050**	Group **974**
Illustr. No **1013168**	Section **100**
Issue **VOE 64D9920050**	Page **729**

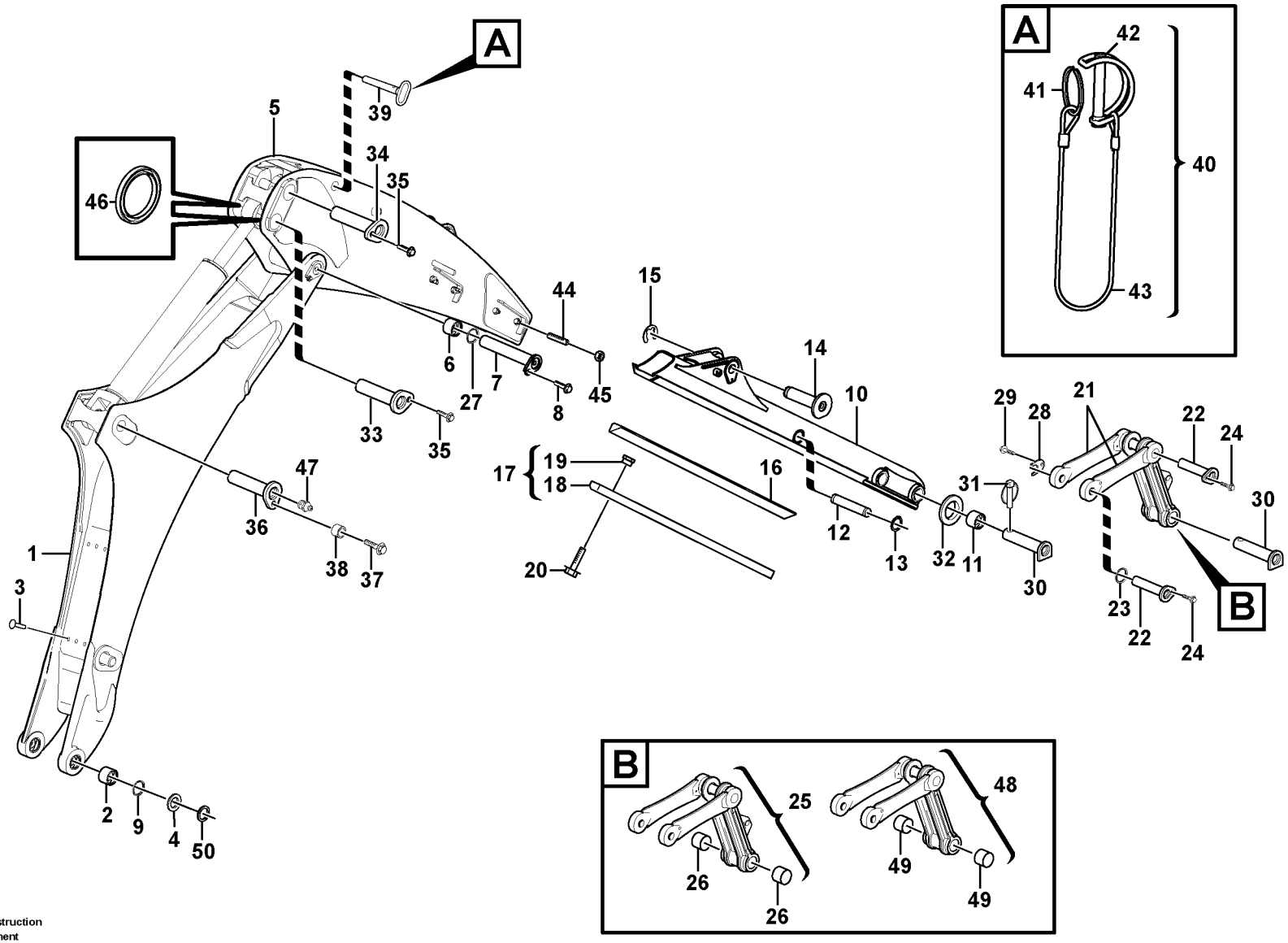

Volvo Construction Equipment
1013168

Fig.	Part No.	Quantity 1	2	3	4	5	PS	KIT	Description	Dénomination	Bezeichnung	Denominación	Notes
27	**VOE 11890117**	REQ							Washer	Rondelle	Scheibe	Arandela	
28	**VOE 11881629**	2							Clip	Clip	Klemme	Clip	
29	**VOE 968589**	2							Flange screw	Vis à bride	Flanschschraube	Torn embridado	
30	**VOE 11883275**	2	4	2					Pin	Goupille	Zapfen	Pasador	
31	**VOE 11881622**	2	4	2					Locking pin	Goupille d'arrêt	Schliessbolzen	Pasador de cierre	
32	**VOE 955912**	2	4	2					Washer	Rondelle	Scheibe	Arandela	
33	**VOE 11882677**	1							Pin	Goupille	Zapfen	Pasador	
34	**VOE 11882537**	1							Pin	Goupille	Zapfen	Pasador	
35	**VOE 968589**	2							Flange screw	Vis à bride	Flanschschraube	Torn embridado	
36	**VOE 11884607**	1							Pin	Goupille	Zapfen	Pasador	S/N - 10626
36	**VOE 11887958**	1							Pin	Goupille	Zapfen	Pasador	S/N 10627 -
37	**VOE 968435**	1							Flange screw	Vis à bride	Flanschschraube	Torn embridado	
38	**VOE 11884168**	2							Spacer	Entretoise	Abstandstueck	Casquillo distanciad	
39	**VOE 11882540**	1							Pin	Goupille	Zapfen	Pasador	
40	**VOE 11883476**	1							Safety Strap	Elingu.securite	Zurrband	Estrobo Segurid	
41	**VOE 11884616**	1							•Ring	•Anneau	•Ring	•Anillo	
42	**VOE 11884614**	1					OP		•Spring Pin	•Axe de ressort	•Federstift	•Pasador Resorte	
43	**VOE 11881557**	1							•Steel Wire	•Fil Acier	•Stahldraht	•Alambre	
44	**VOE 11882667**	8							Set Screw	Vis Butee	Anschlagschraub	Tornillo Tope	
45	**VOE 979021**	8							Hexagon Nut	Ecrou Hexagonal	Sechskantmutter	Tuerca Hexagon	
46	**VOE 11883936**	2							Seal	Joint	Dichtung	Junta	
47	**VOE 914167**	11							Nipple	Raccord	Nippel	Niple	S/N - 10626
47	**VOE 914167**	10							Nipple	Raccord	Nippel	Niple	S/N 10627 -
48	**VOE 11885783**					1			Link	Articulation	Gelenk	Articulacion	
49	**VOE 11883768**					4			•Bushing	•Bague	•Buchse	•Casquillo	
50	**VOE 11885224**	REQ							Shim	Cale d'épaisseur	Passcheibe	Arandela Ajuste	

1	**11891417**
2	**11891109**
3	**11891061**
4	**11891379**
5	**11891380**

Pluma de excavación con brazo telescópico
Grabausleger mit Teleskopstiel
Flèche d'équipement excavateur avec bras télescopique
Excavator boom, exendible dipper arm

Catalogue id **20050**	Group **974**
Illustr. No **1013168**	Section **100**
Issue **VOE 64D9920050**	Page **731**

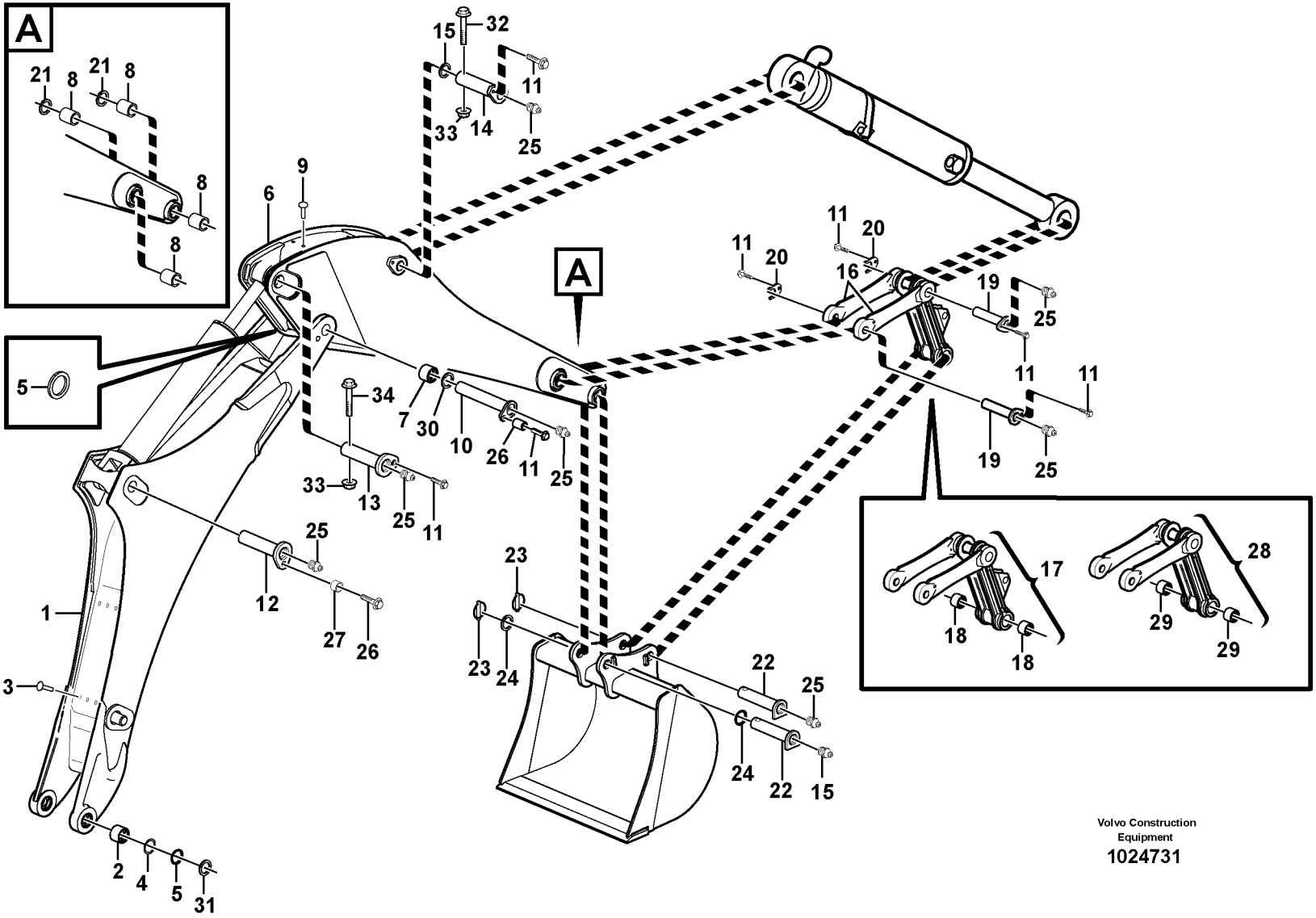

Volvo Construction Equipment

1024731

Fig.	Part No.	Quantity 1	2	3	4	5	PS	KIT	Description	Dénomination	Bezeichnung	Denominación	Notes
1	**VOE 11886266**	1							Boom	Fleche	Ausleger	Pluma	S/N - 10626
1	**VOE 11888239**	1							Boom	Fleche	Ausleger	Pluma	S/N 10627 -
2	**VOE 11885426**	2							•Bushing	•Bague	•Buchse	•Casquillo	
3	**VOE 11882943**	9							•Rivet	•Rivet	•Niet	•Remache	
4	**VOE 11885225**	REQ							Shim	Cale d'épaisseur	Passcheibe	Arandela Ajuste	
5	**VOE 11890069**	6							Seal	Joint	Dichtung	Reten	
6	**VOE 11885329**	1							Dipper Arm	Balancier	Stiel	Brazo Cuchara	S/N - 10626
6	**VOE 11888559**	1							Dipper Arm	Balancier	Stiel	Brazo Cuchara	S/N 10627 -
7	**VOE 11883769**	2							•Bushing	•Bague	•Buchse	•Casquillo	
8	**VOE 11883770**	4							•Bushing	•Bague	•Buchse	•Casquillo	
9	**VOE 11882943**	7							•Rivet	•Rivet	•Niet	•Remache	
10	**VOE 11886255**	1							Pin	Goupille	Zapfen	Pasador	S/N - 10626
10	**VOE 11887962**	1							Pin	Goupille	Zapfen	Pasador	S/N 10627 -
11	**VOE 968589**	7							Flange screw	Vis à bride	Flanschschraube	Torn embridado	S/N - 10626
11	**VOE 968589**	5							Flange screw	Vis à bride	Flanschschraube	Torn embridado	S/N 10627 -
12	**VOE 11884607**	1							Pin	Goupille	Zapfen	Pasador	S/N - 10626
12	**VOE 11887958**	1							Pin	Goupille	Zapfen	Pasador	S/N 10627 -
13	**VOE 11884016**	1							Pin	Goupille	Zapfen	Pasador	S/N - 10626
13	**VOE 11887964**	1							Pin	Goupille	Zapfen	Pasador	S/N 10627 -
14	**VOE 11884573**	1							Pin	Goupille	Zapfen	Pasador	S/N - 10626
14	**VOE 11887965**	1							Pin	Goupille	Zapfen	Pasador	S/N 10627 -
15	**VOE 11890117**	2							Washer	Rondelle	Scheibe	Arandela	
16	**VOE 11886174**	2							Link	Articulation	Gelenk	Articulacion	
17	**VOE 11885940**				1				Link	Articulation	Gelenk	Articulacion	
18	**VOE 11883768**	4			4				•Bushing	•Bague	•Buchse	•Casquillo	
19	**VOE 11882533**	2							Pin	Goupille	Zapfen	Pasador	
20	**VOE 11881629**	2							Clip	Clip	Klemme	Clip	
21	**VOE 11890048**	4							Seal	Joint	Dichtring	Junta	
22	**VOE 11883275**	2	4	2					Pin	Goupille	Zapfen	Pasador	
23	**VOE 11881622**	2	4	2					Locking pin	Goupille d'arrêt	Schliessbolzen	Pasador de cierre	

1	**11891418**
2	**11891109**
3	**11891061**
4	**11891379**
5	**11891380**

Pluma y brazo
Ausleger und Stiel
Flèche et balancier
Boom and dipper arm

Catalogue id **20050**	Group **974**
Illustr. No **1024731**	Section **150**
Issue **VOE 64D9920050**	Page **733**

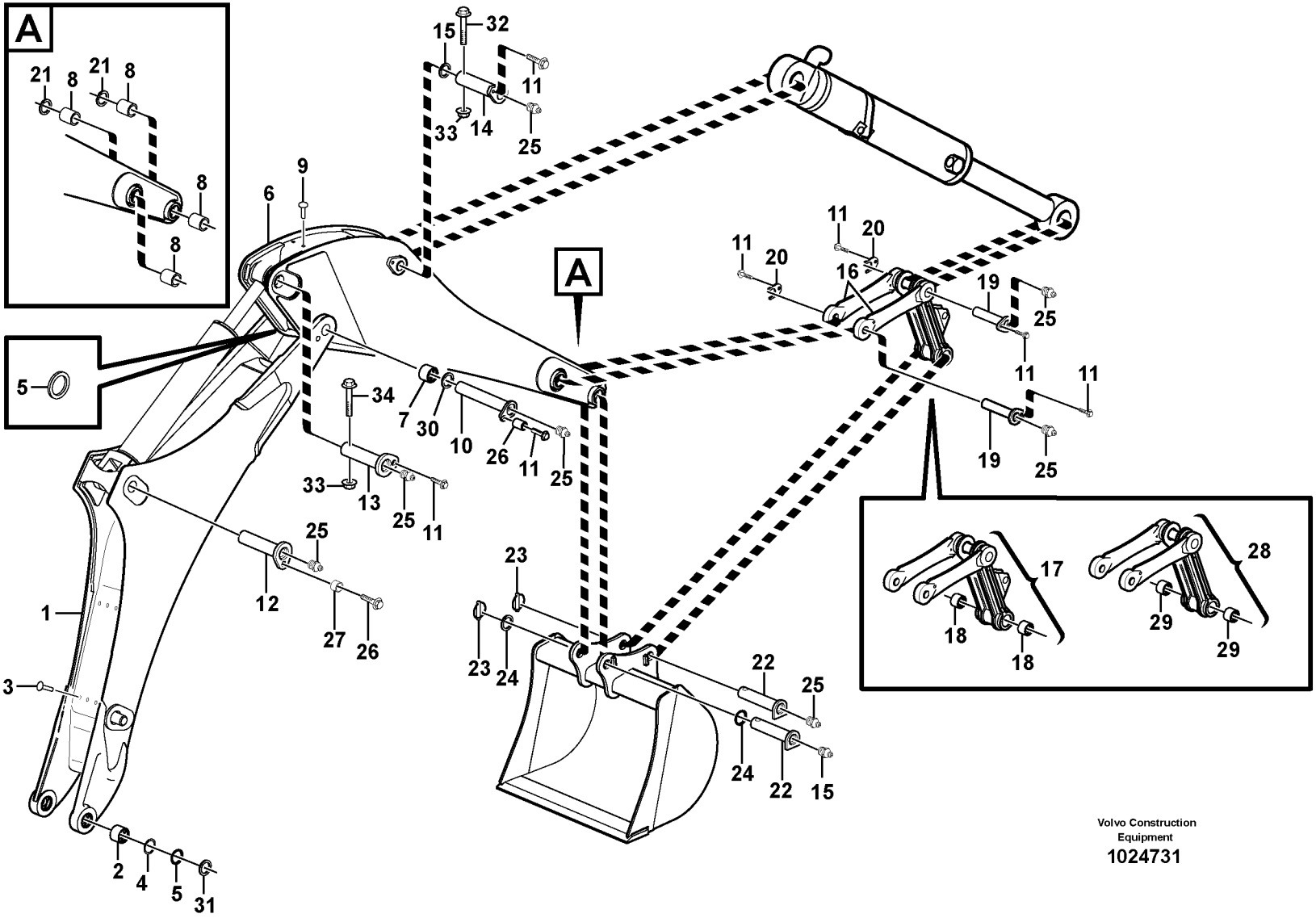

Volvo Construction Equipment

1024731

Fig.	Part No.	Quantity 1	2	3	4	5	PS	KIT	Description	Dénomination	Bezeichnung	Denominación	Notes
24	**VOE 955912**	2	4	2					Washer	Rondelle	Scheibe	Arandela	
25	**VOE 914167**	9							Nipple	Raccord	Nippel	Niple	S/N - 10626
25	**VOE 914167**	8							Nipple	Raccord	Nippel	Niple	S/N 10627 -
26	**VOE 968435**	1							Flange screw	Vis à bride	Flanschschraube	Torn embridado	
27	**VOE 11884168**	1							Spacer	Entretoise	Abstandstueck	Casquillo distanciad	
28	**VOE 11885783**					1			Link	Articulation	Gelenk	Articulacion	
29	**VOE 11883768**					4			•Bushing	•Bague	•Buchse	•Casquillo	
30	**VOE 11890117**	REQ							Washer	Rondelle	Scheibe	Arandela	
31	**VOE 11885224**	REQ							Shim	Cale d'épaisseur	Passcheibe	Arandela Ajuste	
32	**VOE 965197**	1							Screw	Vis	Schraube	Tornillo	S/N 10627 -
33	**VOE 971099**	2							Flange Lock Nut	Contre écrou bride	Flanschmutter	Contratuer Embr	S/N 10627 -
34	**VOE 13965229**	1							Flange screw	Vis à bride	Flanschschraube	Torn embridado	S/N 10627 -

1	**11891418**
2	**11891109**
3	**11891061**
4	**11891379**
5	**11891380**

Pluma y brazo
Ausleger und Stiel
Flèche et balancier
Boom and dipper arm

Catalogue id **20050**	Group **974**
Illustr. No **1024731**	Section **150**
Issue **VOE 64D9920050**	Page **735**

VOLVO

BL61

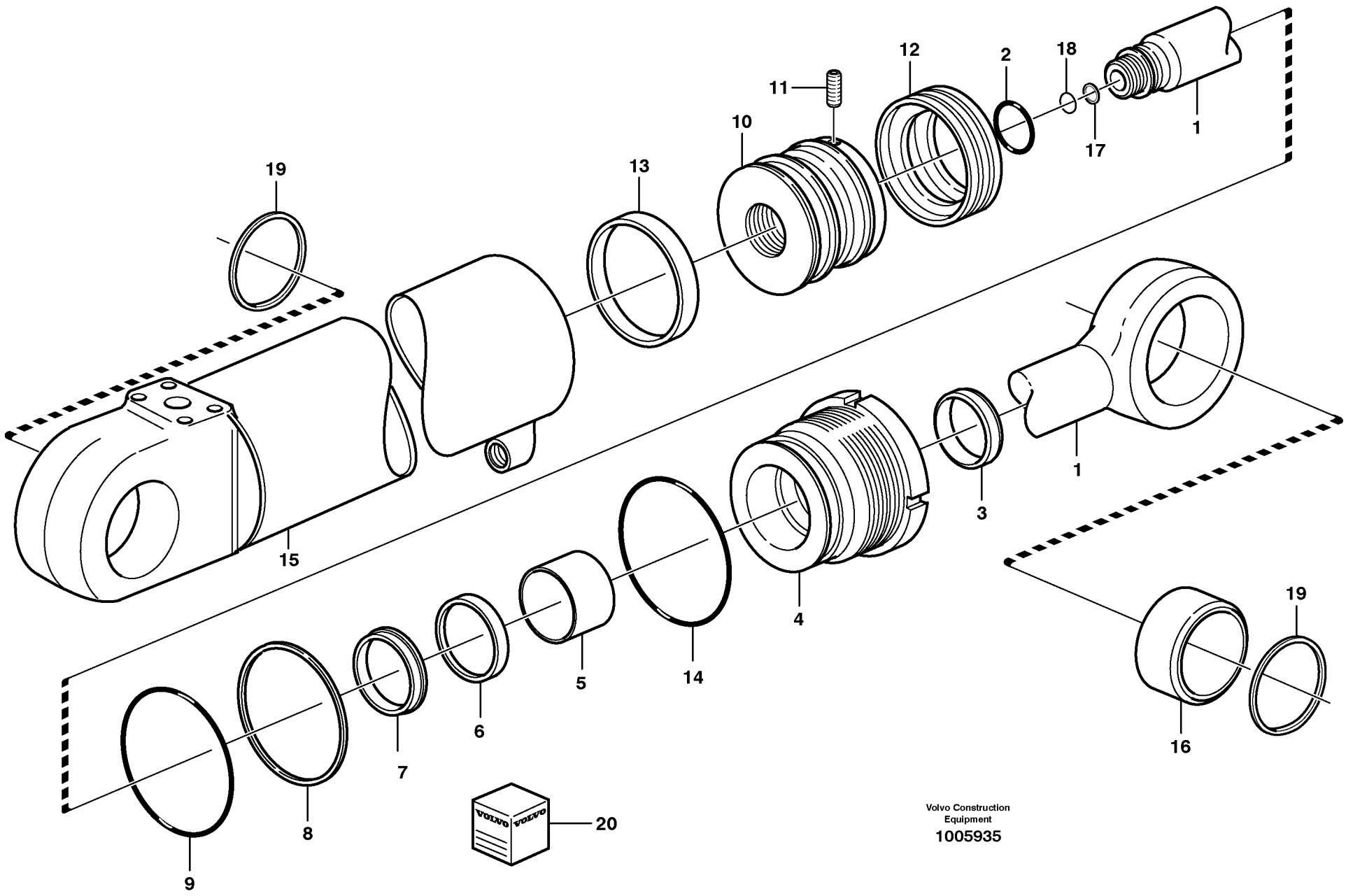

Volvo Construction Equipment

1005935

Fig.	Part No.	Quantity 1	2	3	PS	KIT	Description	Dénomination	Bezeichnung	Denominación	Notes
	VOE 11881459	1					Boom Cylinder	Verin de fleche	Auslegerzylinder	Maquina de flecha	
1	**VOE 11712451**	1					•Piston rod	•Bielle de piston	•Kolbenstange	•Biela de piston	
2		1			NS	K	•O-ring	•Joint Torique	•O-Ring	•Junta torica	
3		1			NS	K	•Scraper	•Racleur	•Abstreifring	•Aro rascador	
4	**VOE 11709524**	1			OP		•Pstn Rod Guide	•Gui.tige Piston	•Ko-stang Fuhrg	•Guia Var Piston	
5		1			NS	K	•Guide Ring	•Bague Guide	•Fuhrungsring	•Anillo Guia	
6		1			NS	K	•Piston Rod Seal	•Eta.tige Piston	•Ko-stang Dichtg	•Reten Var Pist	
7		1			NS	K	•Lock Ring	•Anneau Verrouillage	•Schlossring	•Anillo Segurid	
8		1			NS	K	•Back-up ring	•Rondelle anti-extrusion	•Stützring	•Anillo Apoyo	
9		1			NS	K	•O-ring	•Joint Torique	•O-Ring	•Junta torica	
10	**VOE 11709525**	1			OP		•Piston	•Piston	•Kolben	•Piston	
11		1			NS	K	•Screw	•Vis	•Schraube	•Tornillo	
12		1			NS	K	•Piston seal	•Etanchei.piston	•Kolbendichtung	•Reten piston	
13		1			NS	K	•Guide Ring	•Bague Guide	•Fuhrungsring	•Anillo Guia	
14		1			NS	K	•O-ring	•Joint Torique	•O-Ring	•Junta torica	
15		1			NS		•Cylinder tube	•Tube cylindre	•Zylinderrohr	•Tubo cilindro	
16	**VOE 11711135**	2					•Bushing	•Bague	•Buchse	•Casquillo	(VOE 11709599)
17	**VOE 11709526**	1					•Cushion Ring	•Douille amortisseuse	•Dämpfhülse	•Manguito Amorti	
18	**VOE 11709527**	1					•Lock Ring	•Anneau Verrouillage	•Schlossring	•Anillo Segurid	
19	**VOE 11890069**	6					Seal	Joint	Dichtung	Reten	
20	**VOE 11709528**	1					Sealing Kit	Jeu Joints	Dichtungssatz	Juego Retenes	

1		**Cilindro de pluma** **Auslegerzylinder** **Vérin de flèche** **Boom cylinder**	Catalogue id **20050**	Group **974**
2			Illustr. No **1005935**	Section **200**
3			Issue **VOE 64D9920050**	Page **737**
4				
5		**11891417, 11891418**		

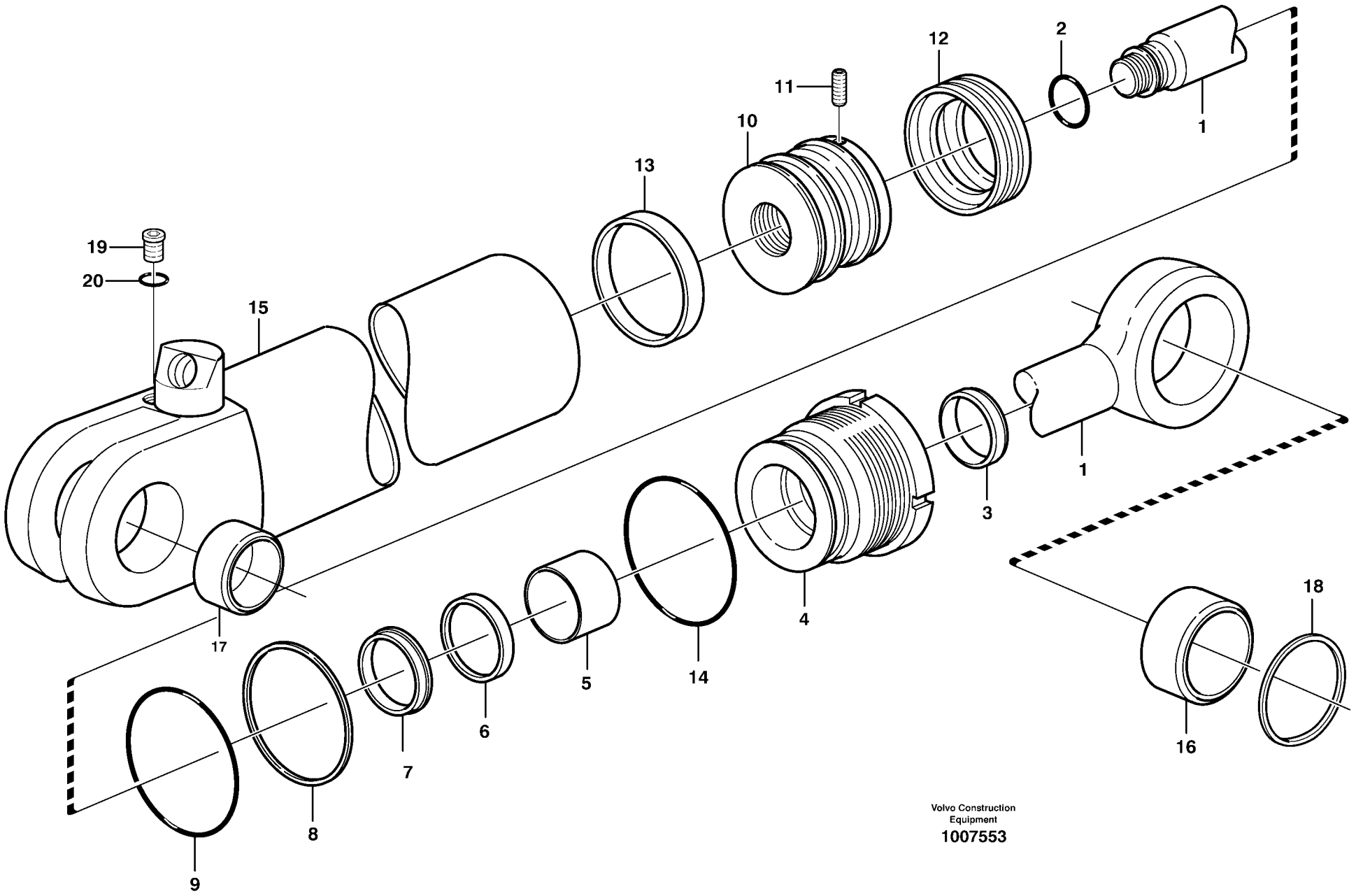

Volvo Construction Equipment

1007553

Fig.	Part No.	Quantity 1	2	3	PS	KIT	Description	Dénomination	Bezeichnung	Denominación	Notes
	VOE 11881810	1					Dipper Arm Cylinder	Vérin de bras	Stielzylinder	Cilindro de brazo	
1	**VOE 11712444**	1					•Piston rod	•Bielle de piston	•Kolbenstange	•Biela de piston	
2		1			NS	K	•O-ring	•Joint Torique	•O-Ring	•Junta torica	
3		1			NS	K	•Scraper	•Racleur	•Abstreifring	•Aro rascador	
4	**VOE 11709619**	1			OP		•Pstn Rod Guide	•Gui.tige Piston	•Ko-stang Fuhrg	•Guia Var Piston	
5		1			NS	K	•Guide Ring	•Bague Guide	•Fuhrungsring	•Anillo Guia	
6		1			NS	K	•Piston Rod Seal	•Eta.tige Piston	•Ko-stang Dichtg	•Reten Var Pist	
7		1			NS	K	•Lock Ring	•Anneau Verrouillage	•Schlossring	•Anillo Segurid	
8		1			NS	K	•Back-up ring	•Rondelle anti-extrusion	•Stützring	•Anillo Apoyo	
9		1			NS	K	•O-ring	•Joint Torique	•O-Ring	•Junta torica	
10	**VOE 11709620**	1			OP		•Piston	•Piston	•Kolben	•Piston	
11		1			NS	K	•Screw	•Vis	•Schraube	•Tornillo	
12		1			NS	K	•Piston seal	•Etanchei.piston	•Kolbendichtung	•Reten piston	
13		1			NS	K	•Guide Ring	•Bague Guide	•Fuhrungsring	•Anillo Guia	
14		1			NS	K	•O-ring	•Joint Torique	•O-Ring	•Junta torica	
15		1			NS		•Cylinder tube	•Tube cylindre	•Zylinderrohr	•Tubo cilindro	
16	**VOE 11711135**	1					•Bushing	•Bague	•Buchse	•Casquillo	(VOE 11709599)
17	**VOE 11711974**	2					•Bushing	•Bague	•Buchse	•Casquillo	
18	**VOE 11709602**	2					Scraper	Racloir	Abstreicher	Rascador	
19	**VOE 11883510**	1					Plug	Bouchon	Stopfen	Tapon	
20	**VOE 932039**	1					•O-ring	•Joint Torique	•O-Ring	•Junta torica	
	VOE 11709624	1					Sealing Kit	Jeu Joints	Dichtungssatz	Juego Retenes	

1		**Cilindro de brazo** **Stielzylinder** **Vérin de bras** **Dipper arm cylinder**	Catalogue id **20050**	Group **975**
2			Illustr. No **1007553**	Section **100**
3			Issue **VOE 64D9920050**	Page **739**
4				
5		**11891417, 11891418**		

VOLVO

BL61

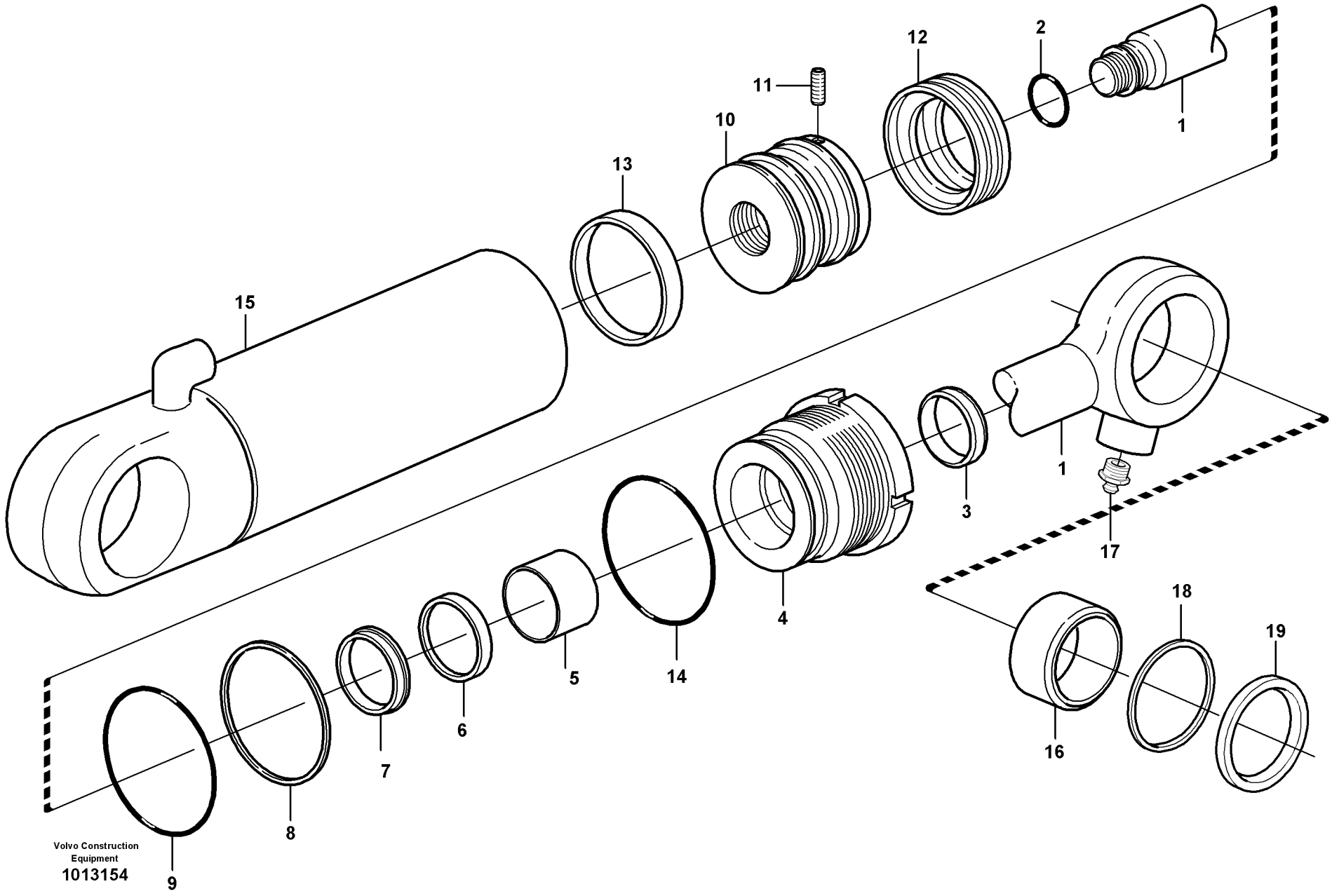
1
2
3
4
5
6
7
8
9
10
11
12
13
14
15
16
17
18
19
Volvo Construction Equipment
1013154

Fig.	Part No.	Quantity 1	2	3	PS	KIT	Description	Dénomination	Bezeichnung	Denominación	Notes
	VOE 11886501	1					Cylinder	Verin	Zylinder	Cilindro	
1	**VOE 11712446**	1					•Piston rod	•Bielle de piston	•Kolbenstange	•Biela de piston	
2		1			NS	K	•O-ring	•Joint Torique	•O-Ring	•Junta torica	
3		1			NS	K	•Scraper	•Racleur	•Abstreifring	•Aro rascador	
4	**VOE 11712447**	1			OP		•Piston rod guide	•Guide tige piston	•Kolbenstangenführun	•Guia varilla piston	
5		1			NS	K	•Guide Ring	•Bague Guide	•Fuhrungsring	•Anillo Guia	
6		1			NS	K	•Piston Rod Seal	•Eta.tige Piston	•Ko-stang Dichtg	•Reten Var Pist	
7		1			NS	K	•Lock Ring	•Anneau Verrouillage	•Schlossring	•Anillo Segurid	
8		1			NS	K	•Back-up ring	•Rondelle anti-extrusion	•Stützring	•Anillo Apoyo	
9		1			NS	K	•O-ring	•Joint Torique	•O-Ring	•Junta torica	
10	**VOE 11712448**	1			OP		•Piston	•Piston	•Kolben	•Piston	
11		1			NS	K	•Screw	•Vis	•Schraube	•Tornillo	
12		1			NS	K	•Piston seal	•Etanchei.piston	•Kolbendichtung	•Reten piston	
13		1			NS	K	•Guide Ring	•Bague Guide	•Fuhrungsring	•Anillo Guia	
14		1			NS	K	•O-ring	•Joint Torique	•O-Ring	•Junta torica	
15		1			NS		•Cylinder tube	•Tube cylindre	•Zylinderrohr	•Tubo cilindro	
16	**VOE 11710944**	2					•Bushing	•Bague	•Buchse	•Casquillo	
17	**VOE 11709664**	1					•Lub Nipple	•Graisseur	•Schmiernippel	•Engrasador	
18	**VOE 11709605**	4					Scraper	Racleur	Abstreicher	Rascador	
19	**VOE 11883674**	4					Sealing ring	Bague d'étanchéité	Runddichtring	Anillo reten	
	VOE 11712450	1					Sealing Kit	Jeu Joints	Dichtungssatz	Juego Retenes	

1		**Cilindro de cazo** **Schaufelzylinder** **Vérin de godet** **Bucket cylinder**	Catalogue id **20050**	Group **975**
2			Illustr. No **1013154**	Section **200**
3				
4			Issue **VOE 64D9920050**	Page **741**
5		**11891417, 11891418**		

VOLVO

BL61

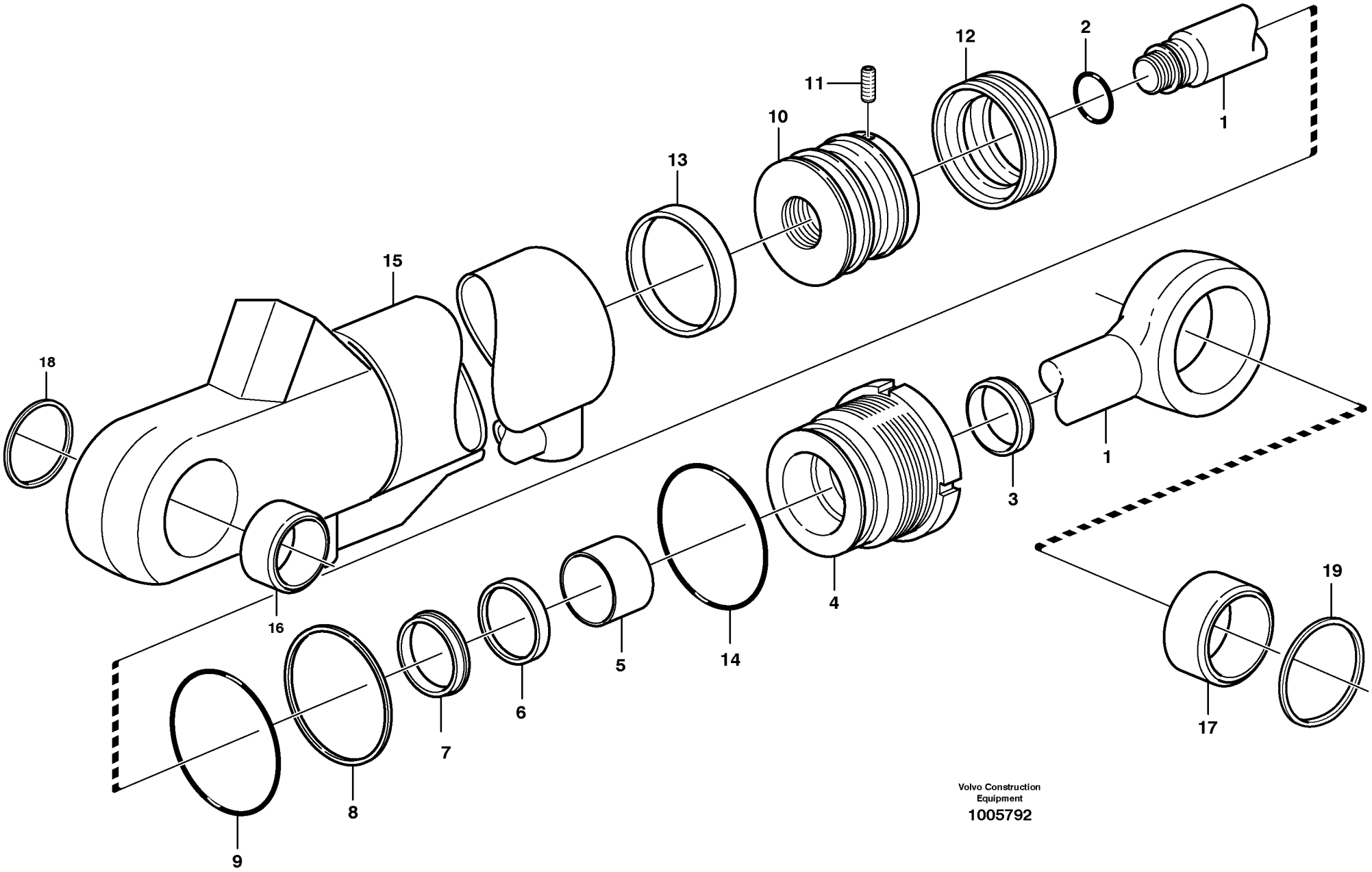

Volvo Construction Equipment

1005792

Fig.	Part No.	Quantity 1	2	3	PS	KIT	Description	Dénomination	Bezeichnung	Denominación	Notes
	VOE 11886994	1					Cylinder	Cylindre	Zylinder	Cilindro	(VOE 11885626)
1	**VOE 11988253**	1					•Piston Rod	•Tige de piston	•Kolbenstange	•Varilla Piston	
2		1			NS	K	•O-ring	•Joint Torique	•O-Ring	•Junta torica	
3		1			NS	K	•Scraper	•Racleur	•Abstreifring	•Aro rascador	
4	**VOE 11709536**	1					•Pstn Rod Guide	•Gui.tige Piston	•Ko-stang Fuhrg	•Guia Var Piston	
5		1			NS	K	•Guide Ring	•Bague Guide	•Fuhrungsring	•Anillo Guia	
6		1			NS	K	•Piston Rod Seal	•Eta.tige Piston	•Ko-stang Dichtg	•Reten Var Pist	
7		1			NS	K	•Lock Ring	•Anneau Verrouillage	•Schlossring	•Anillo Segurid	
8		1			NS	K	•Back-up ring	•Rondelle anti-extrusion	•Stützring	•Anillo Apoyo	
9		1			NS	K	•O-ring	•Joint Torique	•O-Ring	•Junta torica	
10	**VOE 11709537**	1					•Piston	•Piston	•Kolben	•Piston	
11		1			NS	K	•Screw	•Vis	•Schraube	•Tornillo	
12		1			NS	K	•Piston seal	•Etanchei.piston	•Kolbendichtung	•Reten piston	
13		1			NS	K	•Guide Ring	•Bague Guide	•Fuhrungsring	•Anillo Guia	
14		1			NS	K	•O-ring	•Joint Torique	•O-Ring	•Junta torica	
15		1			NS		•Cylinder tube	•Tube cylindre	•Zylinderrohr	•Tubo cilindro	
16	**VOE 11711485**	1					•Bushing	•Bague	•Buchse	•Casquillo	
17	**VOE 11988256**	1					•Bushing	•Bague	•Buchse	•Casquillo	
18	**VOE 11709605**	2					Scraper	Racleur	Abstreicher	Rascador	
19	**VOE 11988257**	2					Scraper	Racleur	Abstreicher	Rascador	
	VOE 11709538	1					Sealing Kit	Jeu Joints	Dichtungssatz	Juego Retenes	

1		**Cilindro telescopico.** **Teleskopzylinder.** **Cylindre telescope.** **Extendible dipper cylinder**	Catalogue id **20050**	Group **975**
2			Illustr. No **1005792**	Section **300**
3			Issue **VOE 64D9920050**	Page **743**
4				
5		**11891417**		

VOLVO

BL61

REPLACED PARTS

PIÉCES PÉRIMÉES ET REMPLACÉES

ERSETZTE ARTIKEL

PIEZAS SUBSTITUDAS

Catalogue id	Group
20050	**1000**
Issue	Page
VOE 64D9920050	**1**

Part No	Replaced by	Quantity
VOE 11110471	* * * USE	
	VOE 11110670	SS
VOE 11110474	OLD.THAN 3 YEAR	
VOE 11200890	* * * USE	
	VOE 11149786	1.00
VOE 11201418	* * * USE	
	VOE 11202201	SS
VOE 11709834	* * * USE	
	VOE 11715218	1.00
VOE 11881712	OLD.THAN 3 YEAR	
VOE 11882206	* * * USE	
	VOE 11887019	1.00
VOE 11883414	* * * USE	
	VOE 11886544	1.00
VOE 11883424	* * * USE	
	VOE 11887818	1.00
VOE 11883660	* * * USE	
	VOE 11884852	1.00
VOE 11883729	* * * USE	
	VOE 11887295	1.00
VOE 11883862	* * * USE	
	VOE 11883863	1.00
VOE 11884151	* * * USE	
	VOE 11887447	1.00
VOE 11885918	* * * USE	
	VOE 11882299	1.00
	VOE 11881382	1.00
VOE 11885919	* * * USE	
	VOE 11882298	1.00
	VOE 11881382	1.00
VOE 11886053	* * * USE	
	VOE 11886865	SS
VOE 11886464	* * * USE	
	VOE 11887207	1.00
VOE 11887022	* * * USE	
	VOE 11887637	SS
VOE 11891089	* * * USE	
	VOE 11885152	1.00
VOE 20459841	* * * USE	
	VOE 20570519	1.00
VOE 20518337	* * * USE	
	VOE 20524154	SS
	VOE 20527040	SS
VOE 20542740	OLD.THAN 3 YEAR	
VOE 20550117	* * * USE	
	VOE 20739051	SS
VOE 24425842	* * * USE	
	VOE 20791246	SS
VOE 945407	* * * USE	
	FOR VOLVO	
	VOE 13945407	1.00
	FOR MICHIGAN	
	VOE 12000434	1.00

Part No	Group	Sect	Page
11716652	551	150	371
11716654	551	150	371
11716655	551	150	371
VOE 1083597	881	150	477
VOE 1096614	371	700	195
VOE 11003138	451	150	295
VOE 11003139	451	150	295
VOE 11003291	851	150	447
VOE 11003291	874	350	469
VOE 11003865	897	100	493
VOE 11004094	897	100	493
VOE 11006824	831	100	433
VOE 11006824	831	100	435
VOE 11006992	882	100	481
VOE 11007421	831	100	435
VOE 11026730	897	100	493
VOE 11027566	897	150	497
VOE 11039491	874	350	469
VOE 11039689	272	100	119
VOE 11039750	380	350	213
VOE 11039856	352	100	135
VOE 11039856	352	200	137
VOE 11055610	716	100	399
VOE 11055616	818	100	415
VOE 11057786	881	100	475
VOE 11059298	911	250	513
VOE 11059298	911	275	515
VOE 11059299	911	250	513
VOE 11059300	911	275	515
VOE 11078015	882	100	481
VOE 11081026	925	200	669
VOE 11081028	925	200	669
VOE 11081028	925	300	677
VOE 11104125	852	100	449
VOE 11104125	852	150	451
VOE 11104371	872	250	459
VOE 11104372	872	250	459
VOE 11104606	363	200	155
VOE 11104898	641	100	381
VOE 11104947	810	150	411
VOE 11105303	925	350	681
VOE 11105304	897	100	493
VOE 11105305	897	100	493
VOE 11109685	269	100	115
VOE 11110471	234	100	77
VOE 11110474	234	100	77
VOE 11110668	234	100	77
VOE 11110670	234	100	77
VOE 11114940	821	100	417
VOE 11117464	261	100	105
VOE 11117464	874	450	471
VOE 11121366	841	100	439
VOE 11141656	269	100	115
VOE 11141657	269	100	115
VOE 11147756	353	150	141
VOE 11149399	810	150	411
VOE 11149686	525	100	369
VOE 11149692	843	100	441
VOE 11149693	843	100	441
VOE 11149730	843	100	441
VOE 11149731	843	100	441
VOE 11149772	843	100	441
VOE 11149774	843	100	441
VOE 11149785	825	100	423
VOE 11164488	841	100	439
VOE 11164554	881	150	477
VOE 11164693	881	150	477
VOE 11170006	371	100	159
VOE 11170006	371	250	163
VOE 11170006	371	300	165
VOE 11170006	371	400	169
VOE 11170006	371	450	175
VOE 11170006	371	600	179
VOE 11170006	371	610	181
VOE 11170006	371	620	183
VOE 11170006	371	630	185
VOE 11170724	881	150	477
VOE 11180010	897	100	493
VOE 11180153	897	100	493
VOE 11180160	897	100	493
VOE 11191410	852	100	449
VOE 11200002	810	150	411
VOE 11200004	810	150	411
VOE 11200054	831	100	435
VOE 11200059	831	100	435
VOE 11200060	831	100	435
VOE 11200061	831	100	435
VOE 11200070	831	100	435
VOE 11200072	831	100	435
VOE 11200077	831	100	435
VOE 11200081	831	100	435
VOE 11200222	825	100	423
VOE 11200239	831	100	435
VOE 11200244	831	100	433
VOE 11200246	831	100	433
VOE 11200397	525	100	369
VOE 11200429	525	100	369
VOE 11200430	525	100	369
VOE 11200459	810	150	411
VOE 11200464	831	100	433
VOE 11200511	525	100	369
VOE 11200527	641	100	381
VOE 11200528	873	100	461
VOE 11200530	872	200	455
VOE 11200533	873	150	463
VOE 11200543	872	250	459
VOE 11200546	882	100	481
VOE 11200547	882	100	481
VOE 11200549	851	150	447
VOE 11200552	831	100	435
VOE 11200556	810	150	411
VOE 11200562	641	100	381
VOE 11200563	641	100	381
VOE 11200579	271	100	117
VOE 11200579	525	100	369
VOE 11200579	831	100	435
VOE 11200579	882	100	481
VOE 11200580	831	100	437
VOE 11200587	641	100	381
VOE 11200600	843	150	445
VOE 11200607	881	150	477
VOE 11200610	525	100	369
VOE 11200611	831	100	437
VOE 11200633	831	100	435
VOE 11200634	831	100	435
VOE 11200658	827	100	429
VOE 11200669	363	100	151
VOE 11200674	363	150	153
VOE 11200698	363	100	151
VOE 11200699	363	100	151
VOE 11200705	363	150	153
VOE 11200706	363	150	153
VOE 11200709	363	100	151
VOE 11200710	363	100	151
VOE 11200713	363	100	151
VOE 11200713	363	200	155
VOE 11200727	872	250	457
VOE 11200730	872	250	457
VOE 11200746	873	100	461
VOE 11200787	363	100	151
VOE 11200794	872	250	457
VOE 11200797	810	150	411
VOE 11200803	551	250	373
VOE 11200818	872	250	457
VOE 11200821	873	150	463
VOE 11200824	872	200	455
VOE 11200835	827	100	429
VOE 11200836	872	250	457
VOE 11200838	851	150	447
VOE 11200847	831	100	437
VOE 11200847	881	200	479
VOE 11200877	525	100	369
VOE 11200878	525	100	369
VOE 11200882	882	100	481
VOE 11200885	831	100	437
VOE 11200890	825	100	423
VOE 11200896	841	100	439
VOE 11200910	843	100	441
VOE 11200915	354	100	145
VOE 11200928	874	350	469
VOE 11200936	271	100	117
VOE 11200944	882	100	481
VOE 11200970	525	100	369
VOE 11200973	881	100	475
VOE 11200982	896	200	491
VOE 11200990	872	250	457
VOE 11201036	810	150	411
VOE 11201052	831	100	435
VOE 11201053	831	100	435
VOE 11201054	872	250	457
VOE 11201055	872	250	457
VOE 11201056	872	250	457
VOE 11201062	874	350	469
VOE 11201063	874	350	469
VOE 11201064	874	350	469

NUMERICAL INDEX

RÉPERTOIRE DE NUMÉROS

NUMMERNREGISTER

INDICE DE NÚMERO

Catalogue id	Group
20050	**1000**
Issue	Page
VOE 64D9920050	**1**

VOLVO

BL61

NUMERICAL INDEX | **NUMMERNREGISTER**

RÉPERTOIRE DE NUMÉROS | **INDICE DE NÚMERO**

Catalogue id **20050** | Group **1000**

Issue **VOE 64D9920050** | Page **2**

Part No	Group	Sect	Page
VOE 11201065	874	350	469
VOE 11201071	831	100	433
VOE 11201163	810	150	411
VOE 11201171	810	150	411
VOE 11201172	810	150	411
VOE 11201200	881	100	475
VOE 11201216	882	100	481
VOE 11201291	872	250	457
VOE 11201308	872	250	457
VOE 11201418	363	150	153
VOE 11201421	881	200	479
VOE 11201422	881	200	479
VOE 11201553	825	100	423
VOE 11201846	831	100	433
VOE 11201861	352	100	135
VOE 11201862	352	100	135
VOE 11201898	881	150	477
VOE 11201899	881	150	477
VOE 11202062	831	100	437
VOE 11202166	881	200	479
VOE 11202201	363	150	153
VOE 11202229	881	100	475
VOE 11202231	271	100	117
VOE 11202248	271	100	117
VOE 11202250	271	100	117
VOE 11202254	271	100	117
VOE 11202349	831	100	435
VOE 11202353	831	100	433
VOE 11202354	831	100	433
VOE 11202421	881	200	479
VOE 11202422	881	200	479
VOE 11202423	881	200	479
VOE 11202424	881	200	479
VOE 11202426	872	200	455
VOE 11202435	271	100	117
VOE 11202438	831	100	433
VOE 11202442	843	100	441
VOE 11202448	525	100	369
VOE 11202452	831	100	433
VOE 11202453	831	100	433
VOE 11202463	843	100	441
VOE 11202464	831	100	433
VOE 11202709	353	200	143
VOE 11202713	881	100	475
VOE 11202722	831	100	435
VOE 11202931	272	100	119
VOE 11203022	831	100	433
VOE 11203027	831	100	433
VOE 11203032	831	100	433
VOE 11203078	363	200	155
VOE 11203079	363	200	155
VOE 11203150	874	100	467
VOE 11203253	810	150	411
VOE 11203345	831	100	437
VOE 11203356	882	100	481
VOE 11203449	810	150	411
VOE 11203487	810	150	411
VOE 11203491	810	150	411
VOE 11203560	881	100	475
VOE 11203562	881	100	475
VOE 11203565	882	100	481
VOE 11203588	843	150	443
VOE 11203683	810	150	411
VOE 11203785	841	100	439
VOE 11203823	881	150	477
VOE 11203861	352	100	135
VOE 11204029	873	150	463
VOE 11204029	873	200	465
VOE 11204085	881	150	477
VOE 11204407	881	100	475
VOE 11204410	882	100	481
VOE 11204411	882	100	481
VOE 11204415	881	100	475
VOE 11204417	881	100	475
VOE 11204468	272	100	119
VOE 11204540	851	150	447
VOE 11204560	352	100	135
VOE 11204561	352	100	135
VOE 11204962	882	100	481
VOE 11205674	551	250	373
VOE 11298009	641	100	381
VOE 11298010	641	100	381
VOE 11298012	363	100	151
VOE 11298012	363	200	155
VOE 11298016	882	100	481
VOE 11298021	641	100	381
VOE 11298028	363	100	151
VOE 11298028	363	200	155
VOE 11298032	881	100	475
VOE 11298032	881	200	479
VOE 11298034	353	200	143
VOE 11298160	810	150	411
VOE 11298164	841	100	439
VOE 11298165	882	100	481
VOE 11298166	841	100	439
VOE 11298168	882	100	481
VOE 11298203	363	100	151
VOE 11298203	363	200	155
VOE 11298203	843	100	441
VOE 11298204	271	100	117
VOE 11298204	272	100	119
VOE 11298204	363	100	151
VOE 11298204	363	150	153
VOE 11298204	363	200	155
VOE 11298204	371	300	165
VOE 11298204	371	500	177
VOE 11298204	371	710	197
VOE 11298204	371	750	199
VOE 11298204	380	200	207
VOE 11298204	525	100	369
VOE 11298204	551	250	373
VOE 11298204	810	150	411
VOE 11298204	821	100	417
VOE 11298204	825	100	423
VOE 11298204	831	100	433
VOE 11298204	843	100	441
VOE 11298204	843	150	443
VOE 11298204	872	100	453
VOE 11298204	872	250	457
VOE 11298204	873	100	461
VOE 11298204	873	150	463
VOE 11298204	873	200	465
VOE 11298204	881	100	475
VOE 11298204	882	100	481
VOE 11298208	271	100	117
VOE 11298208	272	100	119
VOE 11298208	352	200	137
VOE 11298208	353	100	139
VOE 11298208	371	300	165
VOE 11298208	371	710	197
VOE 11298208	525	100	369
VOE 11298208	551	250	373
VOE 11298208	810	150	411
VOE 11298208	821	100	417
VOE 11298208	825	100	423
VOE 11298208	827	100	429
VOE 11298208	881	100	475
VOE 11298208	882	100	481
VOE 11298233	851	150	447
VOE 11298233	872	200	455
VOE 11298233	873	150	463
VOE 11298233	874	100	467
VOE 11298233	874	350	469
VOE 11298233	874	450	471
VOE 11298239	821	100	417
VOE 11302220	269	100	115
VOE 11302230	269	100	115
VOE 11305113	362	100	147
VOE 11305168	925	300	677
VOE 11305263	371	100	157
VOE 11305263	371	500	177
VOE 11305263	372	100	203
VOE 11305263	380	350	213
VOE 11305749	915	100	623
VOE 11306919	380	200	209
VOE 11315002	925	300	677
VOE 11431003	911	360	531
VOE 11431014	911	360	531
VOE 11700105	451	150	295
VOE 11700269	273	100	121
VOE 11700341	211	100	45
VOE 11700373	214	100	53
VOE 11700375	222	100	71
VOE 11700391	210	50	37
VOE 11700391	221	100	69
VOE 11700392	236	100	79
VOE 11700395	236	100	81
VOE 11700396	236	100	81
VOE 11700397	210	50	37
VOE 11700397	236	100	79
VOE 11700398	236	100	79
VOE 11700399	236	100	79
VOE 11700400	236	100	79
VOE 11700401	236	100	79
VOE 11700402	236	100	79

Part No	Group	Sect	Page
VOE 11700403	236	100	79
VOE 11700404	236	100	79
VOE 11700405	236	100	79
VOE 11700406	236	100	79
VOE 11700407	236	100	79
VOE 11700408	236	100	79
VOE 11700409	236	100	79
VOE 11700410	236	100	79
VOE 11700411	236	100	79
VOE 11700412	236	100	79
VOE 11700413	236	100	79
VOE 11700414	236	100	79
VOE 11700415	236	100	79
VOE 11700416	236	100	79
VOE 11700417	236	100	79
VOE 11700418	236	100	81
VOE 11700419	236	100	81
VOE 11700420	236	100	81
VOE 11700421	236	100	81
VOE 11700422	236	100	81
VOE 11700424	237	100	87
VOE 11700426	237	100	87
VOE 11700487	237	100	87
VOE 11700504	236	150	85
VOE 11700543	251	100	89
VOE 11700609	223	100	73
VOE 11701764	210	50	37
VOE 11701764	236	100	79
VOE 11703979	872	250	457
VOE 11704359	843	100	441
VOE 11704359	843	150	445
VOE 11704362	237	100	87
VOE 11708555	233	100	75
VOE 11708567	363	150	153
VOE 11708567	363	200	155
VOE 11708567	825	100	423
VOE 11708567	831	100	433
VOE 11708567	843	100	441
VOE 11708567	843	150	445
VOE 11708567	872	250	457
VOE 11709045	420	100	223
VOE 11709045	421	200	241
VOE 11709045	421	225	243
VOE 11709047	421	200	241
VOE 11709047	421	225	243
VOE 11709047	421	230	245
VOE 11709048	421	200	241
VOE 11709048	421	225	243
VOE 11709049	421	200	241
VOE 11709049	421	225	243
VOE 11709049	421	230	245
VOE 11709050	421	200	241
VOE 11709050	421	225	243
VOE 11709050	421	230	245
VOE 11709051	421	200	241
VOE 11709051	421	225	243
VOE 11709051	421	230	245
VOE 11709052	421	200	241
VOE 11709052	421	225	243
VOE 11709052	421	230	245
VOE 11709053	421	200	241
VOE 11709053	421	225	243
VOE 11709053	421	230	245
VOE 11709054	420	100	223
VOE 11709055	420	100	223
VOE 11709055	420	150	227
VOE 11709055	420	200	231
VOE 11709056	420	100	223
VOE 11709056	420	200	231
VOE 11709057	420	100	223
VOE 11709057	420	150	227
VOE 11709057	420	200	231
VOE 11709057	461	300	315
VOE 11709057	461	350	317
VOE 11709057	463	100	327
VOE 11709057	463	110	329
VOE 11709057	463	300	343
VOE 11709058	420	100	223
VOE 11709059	420	100	223
VOE 11709060	420	100	223
VOE 11709060	420	150	227
VOE 11709060	420	200	231
VOE 11709061	420	100	223
VOE 11709061	420	150	227
VOE 11709061	420	200	231
VOE 11709061	421	500	279
VOE 11709061	421	550	285
VOE 11709062	420	100	223
VOE 11709063	420	100	223
VOE 11709063	420	150	227
VOE 11709063	420	200	231
VOE 11709064	420	100	223
VOE 11709065	420	100	225
VOE 11709065	420	150	227
VOE 11709065	420	200	231
VOE 11709066	420	100	225
VOE 11709066	420	150	227
VOE 11709066	420	200	231
VOE 11709067	420	100	225
VOE 11709068	420	100	223
VOE 11709068	420	150	227
VOE 11709068	420	200	231
VOE 11709069	420	100	223
VOE 11709070	420	100	223
VOE 11709070	420	200	231
VOE 11709071	420	100	225
VOE 11709071	420	200	231
VOE 11709074	420	100	223
VOE 11709074	420	150	227
VOE 11709074	420	200	233
VOE 11709075	420	100	223
VOE 11709075	420	150	229
VOE 11709075	463	260	341
VOE 11709076	421	250	247
VOE 11709076	421	260	249
VOE 11709076	421	275	251
VOE 11709076	421	400	267
VOE 11709076	421	410	271
VOE 11709077	421	250	247
VOE 11709077	421	260	249
VOE 11709077	421	275	251
VOE 11709077	461	250	313
VOE 11709078	421	250	247
VOE 11709078	421	260	249
VOE 11709078	421	275	251
VOE 11709079	421	250	247
VOE 11709079	421	260	249
VOE 11709079	421	275	251
VOE 11709080	421	250	247
VOE 11709080	421	350	257
VOE 11709080	421	360	261
VOE 11709080	421	375	265
VOE 11709081	421	250	247
VOE 11709081	421	260	249
VOE 11709081	421	275	251
VOE 11709081	421	400	269
VOE 11709082	421	250	247
VOE 11709082	421	260	249
VOE 11709082	421	275	251
VOE 11709083	421	250	247
VOE 11709083	421	260	249
VOE 11709083	421	275	251
VOE 11709084	421	250	247
VOE 11709084	421	260	249
VOE 11709084	421	275	251
VOE 11709085	421	250	247
VOE 11709085	421	260	249
VOE 11709085	421	275	251
VOE 11709085	421	400	267
VOE 11709086	421	250	247
VOE 11709086	421	275	251
VOE 11709087	421	250	247
VOE 11709087	421	275	251
VOE 11709088	421	250	247
VOE 11709088	421	260	249
VOE 11709088	421	275	251
VOE 11709089	421	250	247
VOE 11709089	421	260	249
VOE 11709089	421	275	251
VOE 11709090	421	250	247
VOE 11709090	421	260	249
VOE 11709090	421	275	251
VOE 11709091	421	250	247
VOE 11709091	421	260	249
VOE 11709091	421	275	251
VOE 11709092	421	250	247
VOE 11709092	421	260	249
VOE 11709092	421	275	251
VOE 11709093	421	250	247
VOE 11709093	421	260	249
VOE 11709093	421	275	251
VOE 11709094	421	250	247
VOE 11709095	421	250	247
VOE 11709095	421	260	249
VOE 11709095	421	275	251

NUMERICAL INDEX

RÉPERTOIRE DE NUMÉROS

NUMMERNREGISTER

INDICE DE NÚMERO

NUMERICAL INDEX

RÉPERTOIRE DE NUMÉROS

NUMMERNREGISTER

INDICE DE NÚMERO

Catalogue id **20050** | Group **1000**

Issue **VOE 64D9920050** | Page **4**

Part No	Group	Sect	Page
VOE 11709095	421	350	255
VOE 11709095	421	360	259
VOE 11709095	421	375	263
VOE 11709095	421	400	267
VOE 11709096	421	250	247
VOE 11709096	421	260	249
VOE 11709096	421	275	251
VOE 11709097	421	250	247
VOE 11709097	421	260	249
VOE 11709097	421	275	251
VOE 11709098	421	250	247
VOE 11709098	421	400	267
VOE 11709098	421	410	271
VOE 11709099	421	250	247
VOE 11709099	421	260	249
VOE 11709099	421	275	251
VOE 11709100	421	250	247
VOE 11709100	421	275	251
VOE 11709101	421	250	247
VOE 11709101	421	260	249
VOE 11709101	421	275	251
VOE 11709102	421	300	253
VOE 11709102	421	410	271
VOE 11709103	420	100	223
VOE 11709103	420	150	227
VOE 11709103	421	300	253
VOE 11709104	421	300	253
VOE 11709105	420	100	223
VOE 11709105	420	150	227
VOE 11709105	421	300	253
VOE 11709106	421	300	253
VOE 11709106	421	350	255
VOE 11709106	421	360	259
VOE 11709106	421	375	263
VOE 11709107	421	350	255
VOE 11709107	421	360	259
VOE 11709107	421	375	263
VOE 11709108	421	350	255
VOE 11709108	421	360	259
VOE 11709108	421	375	263
VOE 11709112	421	350	255
VOE 11709112	421	360	259
VOE 11709112	421	375	263
VOE 11709113	421	350	255
VOE 11709113	421	360	259
VOE 11709113	421	375	263
VOE 11709114	421	350	255
VOE 11709114	421	360	259
VOE 11709114	421	375	263
VOE 11709115	421	350	255
VOE 11709115	421	360	259
VOE 11709115	421	375	263
VOE 11709116	421	350	255
VOE 11709116	421	360	259
VOE 11709116	421	375	263
VOE 11709118	421	350	255
VOE 11709118	421	360	259
VOE 11709118	421	375	263
VOE 11709119	421	350	255
VOE 11709119	421	360	259
VOE 11709119	421	375	263
VOE 11709120	421	350	255
VOE 11709120	421	360	259
VOE 11709120	421	375	263
VOE 11709121	421	350	255
VOE 11709121	421	360	259
VOE 11709121	421	375	263
VOE 11709122	421	350	255
VOE 11709122	421	360	259
VOE 11709122	421	375	263
VOE 11709123	421	350	255
VOE 11709123	421	360	259
VOE 11709123	421	375	263
VOE 11709124	421	350	255
VOE 11709124	421	360	259
VOE 11709124	421	375	263
VOE 11709125	421	350	255
VOE 11709125	421	360	259
VOE 11709125	421	375	263
VOE 11709126	421	350	255
VOE 11709126	421	360	259
VOE 11709126	421	375	263
VOE 11709127	421	350	255
VOE 11709127	421	360	259
VOE 11709127	421	375	263
VOE 11709128	421	350	255
VOE 11709128	421	360	259
VOE 11709128	421	375	263
VOE 11709129	421	350	255
VOE 11709129	421	360	259
VOE 11709130	421	350	255
VOE 11709130	421	360	259
VOE 11709130	421	375	263
VOE 11709131	421	350	255
VOE 11709131	421	360	259
VOE 11709132	421	350	255
VOE 11709133	420	200	233
VOE 11709133	421	350	257
VOE 11709133	421	360	261
VOE 11709133	421	375	265
VOE 11709133	421	400	267
VOE 11709134	420	100	223
VOE 11709134	421	350	255
VOE 11709134	421	360	259
VOE 11709135	421	350	255
VOE 11709135	421	360	259
VOE 11709135	421	375	263
VOE 11709136	421	350	255
VOE 11709136	421	375	263
VOE 11709137	421	350	257
VOE 11709137	421	375	265
VOE 11709138	421	350	255
VOE 11709138	421	375	263
VOE 11709139	421	350	255
VOE 11709139	421	360	259
VOE 11709139	421	375	263
VOE 11709140	421	350	257
VOE 11709140	421	375	265
VOE 11709141	421	350	257
VOE 11709141	421	375	265
VOE 11709142	421	350	257
VOE 11709142	421	375	265
VOE 11709143	421	350	255
VOE 11709143	421	375	263
VOE 11709144	421	350	257
VOE 11709144	421	360	261
VOE 11709144	421	375	265
VOE 11709144	421	400	267
VOE 11709145	421	350	257
VOE 11709145	421	360	261
VOE 11709145	421	375	265
VOE 11709145	421	400	267
VOE 11709146	421	350	257
VOE 11709146	421	360	261
VOE 11709146	421	375	265
VOE 11709146	421	400	267
VOE 11709148	421	350	257
VOE 11709150	421	350	257
VOE 11709150	421	360	261
VOE 11709150	421	375	265
VOE 11709151	421	260	249
VOE 11709151	421	275	251
VOE 11709151	421	400	267
VOE 11709152	420	100	223
VOE 11709152	421	400	267
VOE 11709153	421	400	267
VOE 11709154	421	400	267
VOE 11709155	421	400	267
VOE 11709156	421	400	267
VOE 11709157	421	400	267
VOE 11709158	421	400	267
VOE 11709159	421	400	267
VOE 11709160	421	400	267
VOE 11709161	421	400	267
VOE 11709162	421	400	267
VOE 11709163	421	400	267
VOE 11709164	421	400	267
VOE 11709165	421	400	267
VOE 11709165	421	450	273
VOE 11709165	421	460	275
VOE 11709165	421	475	277
VOE 11709166	421	400	267
VOE 11709167	421	400	267
VOE 11709167	421	410	271
VOE 11709168	421	400	267
VOE 11709169	421	400	267
VOE 11709170	421	400	267
VOE 11709171	421	400	267
VOE 11709171	421	410	271
VOE 11709173	421	450	273
VOE 11709174	420	100	225
VOE 11709174	421	460	275
VOE 11709174	421	475	277
VOE 11709175	420	100	225
VOE 11709175	421	460	275

Part No	Group	Sect	Page
VOE 11709175	421	475	277
VOE 11709176	420	100	225
VOE 11709176	421	460	275
VOE 11709176	421	475	277
VOE 11709177	420	100	225
VOE 11709177	421	460	275
VOE 11709177	421	475	277
VOE 11709178	421	450	273
VOE 11709179	421	450	273
VOE 11709179	421	475	277
VOE 11709180	421	450	273
VOE 11709180	421	460	275
VOE 11709180	421	475	277
VOE 11709181	421	450	273
VOE 11709181	421	460	275
VOE 11709181	421	475	277
VOE 11709182	421	450	273
VOE 11709182	421	460	275
VOE 11709182	421	475	277
VOE 11709183	421	450	273
VOE 11709183	421	460	275
VOE 11709183	421	475	277
VOE 11709184	421	450	273
VOE 11709184	421	460	275
VOE 11709184	421	475	277
VOE 11709185	421	450	273
VOE 11709185	421	460	275
VOE 11709185	421	475	277
VOE 11709186	420	100	225
VOE 11709187	421	450	273
VOE 11709188	421	450	273
VOE 11709189	421	450	273
VOE 11709189	421	460	275
VOE 11709189	421	475	277
VOE 11709190	421	450	273
VOE 11709191	421	450	273
VOE 11709192	421	450	273
VOE 11709195	421	500	279
VOE 11709196	421	500	279
VOE 11709196	421	525	283
VOE 11709197	421	525	283
VOE 11709199	420	150	227
VOE 11709199	420	200	231
VOE 11709199	421	500	279
VOE 11709199	421	550	285
VOE 11709200	420	200	231
VOE 11709200	421	230	245
VOE 11709200	421	500	279
VOE 11709201	421	500	279
VOE 11709202	421	500	279
VOE 11709203	421	500	279
VOE 11709204	421	500	279
VOE 11709205	421	500	279
VOE 11709206	421	500	279
VOE 11709207	421	500	279
VOE 11709208	421	500	279
VOE 11709209	421	500	279
VOE 11709210	421	500	279
VOE 11709211	421	500	279
VOE 11709212	421	500	279
VOE 11709213	421	500	279
VOE 11709214	421	500	279
VOE 11709215	421	500	279
VOE 11709216	421	500	279
VOE 11709217	421	500	279
VOE 11709218	421	500	279
VOE 11709219	421	500	279
VOE 11709220	421	500	279
VOE 11709221	421	500	281
VOE 11709222	421	500	281
VOE 11709222	421	525	283
VOE 11709223	421	500	281
VOE 11709224	421	500	281
VOE 11709225	421	500	281
VOE 11709228	421	500	281
VOE 11709229	421	500	281
VOE 11709230	421	500	281
VOE 11709231	421	500	281
VOE 11709231	421	525	283
VOE 11709232	421	550	285
VOE 11709233	421	550	285
VOE 11709234	421	550	285
VOE 11709235	421	550	285
VOE 11709236	421	550	285
VOE 11709268	461	100	301
VOE 11709268	461	450	325
VOE 11709268	463	100	327
VOE 11709268	463	210	337
VOE 11709269	463	100	327
VOE 11709270	463	100	327
VOE 11709271	463	100	327
VOE 11709272	463	100	327
VOE 11709273	463	100	327
VOE 11709274	463	100	327
VOE 11709275	461	100	301
VOE 11709275	461	110	303
VOE 11709275	461	420	323
VOE 11709275	463	100	327
VOE 11709275	463	110	329
VOE 11709276	463	100	327
VOE 11709278	463	100	327
VOE 11709279	463	100	327
VOE 11709280	463	100	327
VOE 11709281	463	100	327
VOE 11709282	461	410	321
VOE 11709282	463	100	327
VOE 11709283	463	100	327
VOE 11709284	463	100	327
VOE 11709285	463	100	327
VOE 11709286	463	100	327
VOE 11709287	463	150	331
VOE 11709288	461	150	305
VOE 11709288	461	160	307
VOE 11709288	463	150	331
VOE 11709288	463	160	333
VOE 11709289	461	150	305
VOE 11709289	461	160	307
VOE 11709289	463	150	331
VOE 11709289	463	160	333
VOE 11709290	461	150	305
VOE 11709290	461	160	307
VOE 11709290	463	150	331
VOE 11709290	463	160	333
VOE 11709291	463	150	331
VOE 11709292	463	150	331
VOE 11709292	463	160	333
VOE 11709293	463	150	331
VOE 11709293	463	160	333
VOE 11709294	463	150	331
VOE 11709294	463	160	333
VOE 11709295	463	150	331
VOE 11709295	463	160	333
VOE 11709296	463	150	331
VOE 11709296	463	160	333
VOE 11709297	463	150	331
VOE 11709297	463	160	333
VOE 11709298	463	150	331
VOE 11709299	461	150	305
VOE 11709299	461	160	307
VOE 11709299	463	150	331
VOE 11709299	463	160	333
VOE 11709300	461	300	315
VOE 11709300	461	350	317
VOE 11709300	463	150	331
VOE 11709300	551	150	371
VOE 11709301	463	150	331
VOE 11709302	463	150	331
VOE 11709302	463	160	333
VOE 11709303	463	150	331
VOE 11709303	551	150	371
VOE 11709304	463	150	331
VOE 11709304	551	150	371
VOE 11709306	463	210	337
VOE 11709307	463	200	335
VOE 11709308	463	200	335
VOE 11709308	463	210	337
VOE 11709309	463	200	335
VOE 11709309	463	210	337
VOE 11709310	463	200	335
VOE 11709311	461	200	309
VOE 11709311	463	200	335
VOE 11709312	461	200	309
VOE 11709312	461	210	311
VOE 11709312	463	200	335
VOE 11709313	463	200	335
VOE 11709314	463	200	335
VOE 11709314	463	210	337
VOE 11709315	463	200	335
VOE 11709316	463	200	335
VOE 11709317	463	200	335
VOE 11709318	463	200	335
VOE 11709319	468	100	345
VOE 11709320	468	100	345
VOE 11709321	421	410	271
VOE 11709321	468	100	345

NUMERICAL INDEX

RÉPERTOIRE DE NUMÉROS

NUMMERNREGISTER

INDICE DE NÚMERO

Catalogue id	Group
20050	**1000**
Issue	Page
VOE 64D9920050	**5**

VOLVO

BL61

NUMERICAL INDEX | **NUMMERNREGISTER**

RÉPERTOIRE DE NUMÉROS | **INDICE DE NÚMERO**

Catalogue id **20050** | Group **1000**

Issue **VOE 64D9920050** | Page **6**

Part No	Group	Sect	Page
VOE 11709321	468	110	347
VOE 11709322	468	100	345
VOE 11709322	468	110	347
VOE 11709323	468	100	345
VOE 11709324	468	100	345
VOE 11709325	468	100	345
VOE 11709326	468	100	345
VOE 11709326	468	110	347
VOE 11709327	468	100	345
VOE 11709328	468	100	345
VOE 11709329	468	100	345
VOE 11709330	468	100	345
VOE 11709331	517	100	361
VOE 11709332	517	100	361
VOE 11709333	517	100	361
VOE 11709334	517	100	361
VOE 11709335	517	100	361
VOE 11709336	517	100	361
VOE 11709337	517	100	361
VOE 11709338	517	100	361
VOE 11709339	517	100	361
VOE 11709341	510	100	359
VOE 11709342	510	100	359
VOE 11709343	510	100	359
VOE 11709344	510	100	359
VOE 11709345	510	100	359
VOE 11709346	510	100	359
VOE 11709347	510	100	359
VOE 11709348	510	100	359
VOE 11709349	510	100	359
VOE 11709350	463	260	341
VOE 11709350	510	100	359
VOE 11709351	510	100	359
VOE 11709352	510	100	359
VOE 11709353	510	100	359
VOE 11709354	510	100	359
VOE 11709356	510	100	359
VOE 11709357	463	250	339
VOE 11709359	463	250	339
VOE 11709360	463	250	339
VOE 11709360	463	260	341
VOE 11709361	463	250	339
VOE 11709362	463	250	339
VOE 11709364	463	250	339
VOE 11709365	463	250	339
VOE 11709370	461	300	315
VOE 11709370	461	350	317
VOE 11709370	463	300	343
VOE 11709374	463	300	343
VOE 11709377	463	260	341
VOE 11709377	463	300	343
VOE 11709378	463	300	343
VOE 11709380	463	300	343
VOE 11709397	461	110	303
VOE 11709400	461	110	303
VOE 11709400	461	400	319
VOE 11709400	461	410	321
VOE 11709401	461	110	303
VOE 11709401	461	400	319
VOE 11709401	461	410	321
VOE 11709402	461	100	301
VOE 11709402	461	110	303
VOE 11709402	461	420	323
VOE 11709402	463	110	329
VOE 11709403	461	100	301
VOE 11709403	461	110	303
VOE 11709403	461	420	323
VOE 11709403	463	110	329
VOE 11709404	461	100	301
VOE 11709404	461	110	303
VOE 11709404	461	420	323
VOE 11709404	463	110	329
VOE 11709405	461	100	301
VOE 11709406	461	100	301
VOE 11709406	461	110	303
VOE 11709406	461	420	323
VOE 11709407	461	100	301
VOE 11709407	461	110	303
VOE 11709407	461	420	323
VOE 11709409	461	110	303
VOE 11709410	461	100	301
VOE 11709410	461	110	303
VOE 11709410	461	400	319
VOE 11709410	461	410	321
VOE 11709410	461	420	323
VOE 11709411	461	100	301
VOE 11709411	461	110	303
VOE 11709411	461	400	319
VOE 11709412	461	100	301
VOE 11709412	461	400	319
VOE 11709413	461	100	301
VOE 11709413	517	110	363
VOE 11709445	461	110	303
VOE 11709446	461	110	303
VOE 11709450	461	110	303
VOE 11709450	461	400	319
VOE 11709450	461	410	321
VOE 11709452	461	100	301
VOE 11709452	461	110	303
VOE 11709452	461	420	323
VOE 11709453	461	100	301
VOE 11709453	461	110	303
VOE 11709453	461	420	323
VOE 11709454	645	200	387
VOE 11709460	645	200	387
VOE 11709462	461	100	301
VOE 11709462	461	110	303
VOE 11709462	461	420	323
VOE 11709463	461	100	301
VOE 11709463	461	110	303
VOE 11709464	461	100	301
VOE 11709464	461	110	303
VOE 11709464	461	400	319
VOE 11709464	461	410	321
VOE 11709464	461	420	323
VOE 11709466	461	150	305
VOE 11709466	461	160	307
VOE 11709467	461	150	305
VOE 11709467	461	160	307
VOE 11709468	461	150	305
VOE 11709468	461	160	307
VOE 11709469	461	150	305
VOE 11709469	461	160	307
VOE 11709470	461	150	305
VOE 11709470	461	160	307
VOE 11709471	461	150	305
VOE 11709471	461	160	307
VOE 11709472	461	150	305
VOE 11709472	461	160	307
VOE 11709473	461	150	305
VOE 11709476	461	200	309
VOE 11709476	461	210	311
VOE 11709477	461	200	309
VOE 11709477	461	210	311
VOE 11709478	461	200	309
VOE 11709478	461	210	311
VOE 11709479	461	200	309
VOE 11709479	461	210	311
VOE 11709480	461	200	309
VOE 11709480	461	210	311
VOE 11709481	461	200	309
VOE 11709481	461	210	311
VOE 11709482	461	200	309
VOE 11709482	461	210	311
VOE 11709483	461	200	309
VOE 11709483	461	210	311
VOE 11709484	461	200	309
VOE 11709484	461	210	311
VOE 11709491	461	300	315
VOE 11709492	461	300	315
VOE 11709524	974	200	737
VOE 11709525	974	200	737
VOE 11709526	971	300	721
VOE 11709526	974	200	737
VOE 11709527	971	300	721
VOE 11709527	974	200	737
VOE 11709528	974	200	737
VOE 11709536	975	300	743
VOE 11709537	975	300	743
VOE 11709538	975	300	743
VOE 11709602	945	250	709
VOE 11709602	975	100	739
VOE 11709605	975	200	741
VOE 11709605	975	300	743
VOE 11709613	945	250	709
VOE 11709614	945	250	709
VOE 11709616	945	250	709
VOE 11709616	971	300	721
VOE 11709617	945	250	709
VOE 11709619	975	100	739
VOE 11709620	975	100	739
VOE 11709624	975	100	739
VOE 11709628	972	200	727
VOE 11709629	972	200	727
VOE 11709630	972	200	727

Part No	Group	Sect	Page
VOE 11709632	972	200	727
VOE 11709636	263	150	113
VOE 11709664	925	400	683
VOE 11709664	945	250	709
VOE 11709664	945	300	711
VOE 11709664	972	200	727
VOE 11709664	975	200	741
VOE 11709672	971	300	721
VOE 11709676	971	300	721
VOE 11709677	971	300	721
VOE 11709679	971	400	723
VOE 11709680	971	400	723
VOE 11709684	873	100	461
VOE 11709684	873	150	463
VOE 11709685	873	100	461
VOE 11709686	873	100	461
VOE 11709687	873	100	461
VOE 11709688	873	100	461
VOE 11709689	873	100	461
VOE 11709689	873	150	463
VOE 11709690	873	100	461
VOE 11709691	873	100	461
VOE 11709696	873	150	463
VOE 11709697	873	150	463
VOE 11709698	874	350	469
VOE 11709699	874	350	469
VOE 11709700	874	100	467
VOE 11709701	874	100	467
VOE 11709702	874	100	467
VOE 11709703	874	100	467
VOE 11709704	874	100	467
VOE 11709706	873	150	463
VOE 11709707	873	150	463
VOE 11709708	873	150	463
VOE 11709746	256	150	99
VOE 11709756	380	100	205
VOE 11709757	380	100	205
VOE 11709766	371	250	163
VOE 11709766	371	400	169
VOE 11709766	371	450	173
VOE 11709766	371	650	187
VOE 11709766	371	655	191
VOE 11709766	371	700	195
VOE 11709766	371	710	197
VOE 11709767	371	300	165
VOE 11709767	371	650	187
VOE 11709767	371	655	193
VOE 11709767	371	700	195
VOE 11709767	371	710	197
VOE 11709768	354	100	145
VOE 11709780	916	350	643
VOE 11709780	916	360	645
VOE 11709781	916	350	643
VOE 11709781	916	360	645
VOE 11709782	916	350	643
VOE 11709782	916	360	645
VOE 11709783	916	350	643
VOE 11709783	916	360	645
VOE 11709787	371	450	173
VOE 11709788	371	400	169
VOE 11709814	874	450	471
VOE 11709833	451	150	295
VOE 11709834	843	150	443
VOE 11709836	843	150	443
VOE 11709840	843	150	443
VOE 11709841	843	150	443
VOE 11709843	843	150	443
VOE 11709844	843	150	443
VOE 11709845	843	150	443
VOE 11709850	551	250	373
VOE 11709851	551	250	373
VOE 11709852	551	250	373
VOE 11709853	551	250	373
VOE 11709888	645	400	389
VOE 11709898	645	200	387
VOE 11709901	517	200	365
VOE 11709901	517	250	367
VOE 11709908	925	400	683
VOE 11709909	925	400	683
VOE 11709910	925	400	683
VOE 11709911	925	400	683
VOE 11709912	925	400	683
VOE 11709913	925	400	683
VOE 11710605	841	100	439
VOE 11710606	971	400	723
VOE 11710925	912	350	603
VOE 11710932	926	250	691
VOE 11710933	926	250	691
VOE 11710944	975	200	741
VOE 11711130	912	400	605
VOE 11711130	916	200	635
VOE 11711134	945	300	711
VOE 11711135	974	200	737
VOE 11711135	975	100	739
VOE 11711136	945	250	709
VOE 11711485	975	300	743
VOE 11711974	975	100	739
VOE 11712164	872	250	457
VOE 11712174	843	150	445
VOE 11712309	911	250	513
VOE 11712309	911	275	515
VOE 11712335	210	50	37
VOE 11712336	210	50	39
VOE 11712340	362	150	149
VOE 11712444	975	100	739
VOE 11712446	975	200	741
VOE 11712447	975	200	741
VOE 11712448	975	200	741
VOE 11712450	975	200	741
VOE 11712451	974	200	737
VOE 11712459	645	100	383
VOE 11712460	420	150	227
VOE 11712461	420	150	227
VOE 11712462	420	150	227
VOE 11712462	420	200	233
VOE 11712463	420	150	227
VOE 11712463	420	200	231
VOE 11712464	420	150	227
VOE 11712465	420	150	227
VOE 11712465	420	200	231
VOE 11712466	420	150	227
VOE 11712467	421	275	251
VOE 11712468	421	260	249
VOE 11712468	421	275	251
VOE 11712469	421	260	249
VOE 11712469	421	275	251
VOE 11712470	421	260	249
VOE 11712470	421	275	251
VOE 11712471	420	150	227
VOE 11712471	421	375	263
VOE 11712472	421	360	261
VOE 11712472	421	375	265
VOE 11712473	421	460	275
VOE 11712473	421	475	277
VOE 11712474	421	460	275
VOE 11712474	421	475	277
VOE 11712475	421	460	275
VOE 11712475	421	475	277
VOE 11712476	421	460	275
VOE 11712476	421	475	277
VOE 11712477	421	460	275
VOE 11712477	421	475	277
VOE 11712478	421	475	277
VOE 11712479	645	200	387
VOE 11712480	421	500	279
VOE 11712481	421	500	281
VOE 11712501	461	400	319
VOE 11712501	461	410	321
VOE 11712502	461	150	305
VOE 11712503	645	100	383
VOE 11712504	645	100	383
VOE 11712505	461	300	315
VOE 11712506	461	400	319
VOE 11712522	645	100	383
VOE 11712523	645	100	383
VOE 11712524	645	100	383
VOE 11712525	645	100	383
VOE 11712526	461	400	319
VOE 11712526	461	410	321
VOE 11712527	461	400	319
VOE 11712527	461	410	321
VOE 11712533	461	450	325
VOE 11712534	461	450	325
VOE 11712535	461	450	325
VOE 11712536	461	450	325
VOE 11712537	461	450	325
VOE 11712557	843	150	443
VOE 11712580	912	225	595
VOE 11712580	912	250	597
VOE 11712580	912	275	599
VOE 11712580	912	500	607
VOE 11712580	912	550	609
VOE 11712602	924	100	647
VOE 11712603	924	100	647
VOE 11712604	924	100	647

NUMERICAL INDEX

RÉPERTOIRE DE NUMÉROS

NUMMERNREGISTER

INDICE DE NÚMERO

Catalogue id	Group
20050	**1000**
Issue	Page
VOE 64D9920050	**7**

VOLVO

BL61

NUMERICAL INDEX

RÉPERTOIRE DE NUMÉROS

NUMMERNREGISTER

INDICE DE NÚMERO

Catalogue id **20050** | Group **1000**

Issue **VOE 64D9920050** | Page **8**

Part No	Group	Sect	Page
VOE 11712605	924	100	647
VOE 11712606	924	100	647
VOE 11712607	924	100	647
VOE 11712622	912	150	591
VOE 11712623	912	150	591
VOE 11712623	912	300	601
VOE 11712635	972	200	727
VOE 11712659	421	200	241
VOE 11712659	421	225	243
VOE 11712659	421	230	245
VOE 11712662	843	150	443
VOE 11712663	843	150	443
VOE 11712663	843	150	445
VOE 11712672	924	300	657
VOE 11712673	924	200	653
VOE 11712673	924	250	655
VOE 11712673	924	300	657
VOE 11712673	924	350	659
VOE 11712674	924	300	657
VOE 11712675	924	300	657
VOE 11712676	924	300	657
VOE 11712677	924	300	657
VOE 11712678	924	300	657
VOE 11712679	924	300	657
VOE 11712696	272	100	119
VOE 11712724	912	400	605
VOE 11712725	912	400	605
VOE 11712726	912	400	605
VOE 11712727	912	400	605
VOE 11712728	912	400	605
VOE 11712729	912	400	605
VOE 11712747	945	300	711
VOE 11712748	945	300	711
VOE 11712749	945	300	711
VOE 11712787	463	100	327
VOE 11712788	463	100	327
VOE 11712789	517	100	361
VOE 11712796	510	100	359
VOE 11712797	510	100	359
VOE 11712798	421	450	273
VOE 11712798	421	460	275
VOE 11712798	510	100	359
VOE 11712853	843	150	443
VOE 11712854	843	150	443
VOE 11712855	843	150	443
VOE 11712856	843	150	443
VOE 11712857	843	150	443
VOE 11712858	843	150	443
VOE 11712859	843	150	443
VOE 11712860	843	150	443
VOE 11712861	843	150	443
VOE 11712862	843	150	443
VOE 11712864	843	150	443
VOE 11712865	843	150	443
VOE 11712866	843	150	443
VOE 11712867	843	150	443
VOE 11712868	843	150	443
VOE 11712869	843	150	443
VOE 11712876	843	150	443
VOE 11712877	912	300	601
VOE 11712877	912	350	603
VOE 11712879	912	300	601
VOE 11712879	912	500	607
VOE 11712880	912	500	607
VOE 11712883	912	300	601
VOE 11712883	912	500	607
VOE 11712884	912	300	601
VOE 11712884	912	500	607
VOE 11712885	912	300	601
VOE 11712885	912	550	609
VOE 11712886	912	250	597
VOE 11712886	912	550	609
VOE 11712888	912	300	601
VOE 11712893	912	150	591
VOE 11712893	912	200	593
VOE 11712894	912	150	591
VOE 11712894	912	250	597
VOE 11712895	912	150	591
VOE 11712895	912	275	599
VOE 11712896	912	150	591
VOE 11712896	912	225	595
VOE 11712897	912	150	591
VOE 11712898	912	150	591
VOE 11712899	912	200	593
VOE 11712900	912	200	593
VOE 11712901	912	200	593
VOE 11712902	912	200	593
VOE 11712903	912	200	593
VOE 11712905	912	275	599
VOE 11712921	912	300	601
VOE 11712940	421	200	241
VOE 11712940	421	225	243
VOE 11712941	421	200	241
VOE 11712941	421	225	243
VOE 11712953	421	260	249
VOE 11712953	421	275	251
VOE 11712960	420	200	231
VOE 11713046	913	200	621
VOE 11713048	913	200	621
VOE 11713049	913	200	621
VOE 11713050	913	200	621
VOE 11713051	913	200	621
VOE 11713052	913	200	621
VOE 11713053	913	200	621
VOE 11713054	913	200	621
VOE 11713055	913	200	621
VOE 11713056	913	200	621
VOE 11713136	924	350	659
VOE 11713137	924	350	659
VOE 11713138	234	100	77
VOE 11713153	843	150	443
VOE 11713154	924	300	657
VOE 11713154	924	350	659
VOE 11715018	874	100	467
VOE 11715020	874	350	469
VOE 11715020	874	450	471
VOE 11715021	874	100	467
VOE 11715021	874	450	471
VOE 11715022	874	350	469
VOE 11715039	421	225	243
VOE 11715044	852	150	451
VOE 11715045	852	100	449
VOE 11715045	852	150	451
VOE 11715046	852	150	451
VOE 11715047	852	100	449
VOE 11715047	852	150	451
VOE 11715048	852	150	451
VOE 11715049	852	100	449
VOE 11715049	852	150	451
VOE 11715050	852	100	449
VOE 11715050	852	150	451
VOE 11715051	852	100	449
VOE 11715051	852	150	451
VOE 11715052	852	150	451
VOE 11715053	852	100	449
VOE 11715053	852	150	451
VOE 11715057	852	100	449
VOE 11715058	852	100	449
VOE 11715059	852	100	449
VOE 11715062	852	100	449
VOE 11715063	852	100	449
VOE 11715064	852	100	449
VOE 11715065	852	100	449
VOE 11715066	852	100	449
VOE 11715067	852	100	449
VOE 11715081	852	100	449
VOE 11715082	852	100	449
VOE 11715083	852	100	449
VOE 11715084	852	100	449
VOE 11715202	272	100	119
VOE 11715251	912	225	595
VOE 11715251	912	250	597
VOE 11715251	912	275	599
VOE 11715251	912	500	607
VOE 11715251	912	550	609
VOE 11715252	912	500	607
VOE 11715253	461	110	303
VOE 11715253	461	150	305
VOE 11715253	461	160	307
VOE 11715254	461	100	301
VOE 11715254	461	110	303
VOE 11715254	461	420	323
VOE 11715259	911	1300	581
VOE 11715259	911	1310	583
VOE 11715273	912	300	601
VOE 11715273	912	500	607
VOE 11715274	912	300	601
VOE 11715274	912	550	609
VOE 11715275	912	225	595
VOE 11715275	912	250	597
VOE 11715275	912	275	599
VOE 11715275	912	500	607
VOE 11715275	912	550	609
VOE 11715276	912	500	607
VOE 11715276	912	550	609

Part No	Group	Sect	Page
VOE 11715279	461	300	315
VOE 11715296	912	250	597
VOE 11715354	421	450	273
VOE 11715354	421	460	275
VOE 11715435	551	250	373
VOE 11715541	924	300	657
VOE 11715542	924	300	657
VOE 11715544	924	300	657
VOE 11715545	924	300	657
VOE 11715546	924	300	657
VOE 11715547	924	300	657
VOE 11715548	924	300	657
VOE 11715549	924	300	657
VOE 11716347	926	250	691
VOE 11716348	926	250	691
VOE 11716349	926	250	691
VOE 11716350	926	250	691
VOE 11716488	912	600	611
VOE 11716536	421	275	251
VOE 11716543	463	110	329
VOE 11716544	463	110	329
VOE 11716545	463	110	329
VOE 11716546	463	110	329
VOE 11716547	463	110	329
VOE 11716550	463	160	333
VOE 11716551	463	160	333
VOE 11716556	463	210	337
VOE 11716557	463	210	337
VOE 11716558	463	210	337
VOE 11716559	463	210	337
VOE 11716560	463	210	337
VOE 11716561	463	210	337
VOE 11716562	463	210	337
VOE 11716563	463	210	337
VOE 11716564	463	210	337
VOE 11716565	463	210	337
VOE 11716566	463	210	337
VOE 11716567	463	210	337
VOE 11716568	468	110	347
VOE 11716569	468	110	347
VOE 11716570	468	110	347
VOE 11716571	468	110	347
VOE 11716572	468	110	347
VOE 11716573	468	110	347
VOE 11716574	517	110	363
VOE 11716575	517	110	363
VOE 11716576	517	110	363
VOE 11716577	517	110	363
VOE 11716578	468	110	347
VOE 11716579	517	110	363
VOE 11716580	517	110	363
VOE 11716581	517	110	363
VOE 11716582	517	110	363
VOE 11716583	517	110	363
VOE 11716584	517	110	363
VOE 11716585	517	110	363
VOE 11716586	517	110	363
VOE 11716587	517	110	363
VOE 11716588	463	260	341
VOE 11716589	463	260	341
VOE 11716590	463	260	341
VOE 11716591	463	260	341
VOE 11716592	463	260	341
VOE 11716593	463	260	341
VOE 11716594	463	260	341
VOE 11716595	463	260	341
VOE 11716596	463	260	341
VOE 11716597	463	260	341
VOE 11716598	463	260	341
VOE 11716599	463	260	341
VOE 11716600	551	150	371
VOE 11716601	551	150	371
VOE 11716602	551	150	371
VOE 11716603	551	150	371
VOE 11716604	551	150	371
VOE 11716605	551	150	371
VOE 11716606	551	150	371
VOE 11716610	463	260	341
VOE 11716611	463	260	341
VOE 11716612	463	260	341
VOE 11716613	463	260	341
VOE 11716615	463	160	333
VOE 11716617	461	110	303
VOE 11716618	461	110	303
VOE 11716618	461	410	321
VOE 11716618	461	420	323
VOE 11716619	461	410	321
VOE 11716619	461	420	323
VOE 11716620	461	110	303
VOE 11716620	461	410	321
VOE 11716620	461	420	323
VOE 11716621	461	110	303
VOE 11716623	645	150	385
VOE 11716627	461	160	307
VOE 11716628	461	160	307
VOE 11716629	461	210	311
VOE 11716639	420	150	229
VOE 11716639	420	200	231
VOE 11716650	451	150	295
VOE 11716656	461	410	321
VOE 11716665	420	150	227
VOE 11716666	421	360	259
VOE 11716666	421	375	263
VOE 11716667	421	360	261
VOE 11716667	421	375	265
VOE 11716668	421	360	259
VOE 11716668	421	375	263
VOE 11716669	421	360	261
VOE 11716669	421	375	265
VOE 11716670	421	360	261
VOE 11716670	421	375	265
VOE 11716671	421	360	261
VOE 11716671	421	375	265
VOE 11716672	421	360	259
VOE 11716672	421	375	263
VOE 11716673	421	460	275
VOE 11716674	421	460	275
VOE 11716675	421	525	283
VOE 11716676	421	525	283
VOE 11716677	421	525	283
VOE 11716678	421	525	283
VOE 11716679	421	525	283
VOE 11716680	421	525	283
VOE 11716681	421	525	283
VOE 11716682	421	525	283
VOE 11716683	421	525	283
VOE 11716684	421	525	283
VOE 11716685	421	525	283
VOE 11716686	421	525	283
VOE 11716687	421	525	283
VOE 11716712	461	420	323
VOE 11716713	461	420	323
VOE 11716714	461	420	323
VOE 11716715	461	420	323
VOE 11716716	461	420	323
VOE 11716717	645	150	385
VOE 11716718	461	420	323
VOE 11716719	645	150	385
VOE 11716720	645	150	385
VOE 11716724	461	250	313
VOE 11716725	461	250	313
VOE 11716726	461	300	315
VOE 11716728	461	160	307
VOE 11716780	421	230	245
VOE 11716781	421	230	245
VOE 11716782	420	200	231
VOE 11716783	420	200	231
VOE 11716784	420	200	231
VOE 11716785	421	260	249
VOE 11716786	421	360	259
VOE 11716787	421	410	271
VOE 11716788	421	410	271
VOE 11716789	421	410	271
VOE 11716790	421	410	271
VOE 11716791	421	410	271
VOE 11716792	421	410	271
VOE 11716793	421	410	271
VOE 11716794	421	410	271
VOE 11716795	421	410	271
VOE 11716796	421	410	271
VOE 11716797	421	410	271
VOE 11716798	421	410	271
VOE 11716799	421	410	271
VOE 11716800	421	410	271
VOE 11716801	421	410	271
VOE 11716802	421	410	271
VOE 11716803	421	460	275
VOE 11716804	421	460	275
VOE 11716875	916	200	635
VOE 11800853	924	150	649
VOE 11801591	925	120	663
VOE 11801591	925	160	667
VOE 11803635	881	150	477
VOE 11870026	372	100	203
VOE 11870441	371	100	159

NUMERICAL INDEX | **NUMMERNREGISTER**

RÉPERTOIRE DE NUMÉROS | **INDICE DE NÚMERO**

Catalogue id **20050** | Group **1000**

Issue **VOE 64D9920050** | Page **10**

Part No	Group	Sect	Page
VOE 11870628	371	100	157
VOE 11880001	912	500	607
VOE 11880001	912	550	609
VOE 11880004	271	100	117
VOE 11880004	352	100	135
VOE 11880004	362	100	147
VOE 11880004	371	100	157
VOE 11880004	371	500	177
VOE 11880004	371	700	195
VOE 11880004	372	100	203
VOE 11880004	380	100	205
VOE 11880004	380	200	207
VOE 11880004	380	350	213
VOE 11880004	461	160	307
VOE 11880004	461	210	311
VOE 11880004	461	250	313
VOE 11880004	461	420	323
VOE 11880004	463	110	329
VOE 11880004	468	150	349
VOE 11880004	491	100	351
VOE 11880004	517	200	365
VOE 11880004	517	250	367
VOE 11880004	551	250	373
VOE 11880004	641	100	381
VOE 11880004	645	150	385
VOE 11880004	645	400	389
VOE 11880004	716	100	399
VOE 11880004	810	150	413
VOE 11880004	821	100	417
VOE 11880004	881	100	475
VOE 11880004	896	100	487
VOE 11880004	897	100	493
VOE 11880004	911	250	513
VOE 11880004	911	275	515
VOE 11880004	911	300	517
VOE 11880004	911	400	533
VOE 11880004	911	550	541
VOE 11880004	911	700	545
VOE 11880004	911	800	551
VOE 11880004	911	810	555
VOE 11880004	911	910	563
VOE 11880004	911	1010	567
VOE 11880004	911	1160	577
VOE 11880004	912	150	591
VOE 11880004	912	200	593
VOE 11880004	912	225	595
VOE 11880004	912	250	597
VOE 11880004	912	275	599
VOE 11880004	912	300	601
VOE 11880004	912	350	603
VOE 11880004	912	600	611
VOE 11880004	916	100	633
VOE 11880004	945	150	693
VOE 11880004	945	175	701
VOE 11880004	972	100	725
VOE 11881002	821	100	417
VOE 11881020	371	700	195
VOE 11881020	371	710	197
VOE 11881020	371	800	201
VOE 11881028	911	100	509
VOE 11881034	424	100	287
VOE 11881034	424	150	289
VOE 11881035	424	100	287
VOE 11881035	424	150	289
VOE 11881047	925	200	669
VOE 11881047	925	300	677
VOE 11881048	911	1000	565
VOE 11881049	911	1000	565
VOE 11881049	911	1100	569
VOE 11881049	911	1150	573
VOE 11881049	911	1400	587
VOE 11881049	924	200	653
VOE 11881049	924	250	655
VOE 11881050	945	150	697
VOE 11881053	911	1100	569
VOE 11881053	911	1150	573
VOE 11881054	911	800	551
VOE 11881054	911	820	559
VOE 11881060	911	800	551
VOE 11881060	911	820	559
VOE 11881088	352	100	135
VOE 11881091	925	300	675
VOE 11881091	925	320	679
VOE 11881092	911	800	553
VOE 11881092	911	810	555
VOE 11881092	912	800	617
VOE 11881093	911	800	551
VOE 11881093	911	810	555
VOE 11881101	911	900	561
VOE 11881101	911	910	563
VOE 11881101	911	1010	567
VOE 11881115	424	150	289
VOE 11881126	424	150	289
VOE 11881128	424	150	289
VOE 11881130	260	100	101
VOE 11881131	260	100	101
VOE 11881139	252	100	93
VOE 11881149	925	300	675
VOE 11881149	925	320	679
VOE 11881150	424	150	289
VOE 11881153	925	300	675
VOE 11881154	925	300	675
VOE 11881154	925	320	679
VOE 11881158	911	100	509
VOE 11881160	420	100	225
VOE 11881160	420	150	229
VOE 11881164	256	100	97
VOE 11881176	414	100	221
VOE 11881177	414	100	221
VOE 11881191	823	100	421
VOE 11881207	371	500	177
VOE 11881210	460	100	297
VOE 11881210	460	150	299
VOE 11881211	460	100	297
VOE 11881211	460	150	299
VOE 11881212	460	100	297
VOE 11881212	460	150	299
VOE 11881213	460	100	297
VOE 11881213	460	150	299
VOE 11881237	821	100	417
VOE 11881240	925	200	669
VOE 11881289	911	900	561
VOE 11881289	911	910	563
VOE 11881292	911	1100	569
VOE 11881292	911	1150	573
VOE 11881292	911	1160	577
VOE 11881311	234	100	77
VOE 11881338	915	100	625
VOE 11881339	915	100	625
VOE 11881340	911	550	543
VOE 11881340	911	800	551
VOE 11881340	911	820	559
VOE 11881340	911	1350	585
VOE 11881341	915	100	625
VOE 11881343	911	1100	569
VOE 11881343	911	1150	573
VOE 11881344	911	1100	569
VOE 11881344	911	1150	573
VOE 11881345	911	1000	565
VOE 11881346	911	1000	565
VOE 11881346	911	1010	567
VOE 11881348	911	1000	565
VOE 11881348	911	1010	567
VOE 11881349	911	1000	565
VOE 11881349	911	1010	567
VOE 11881351	821	100	417
VOE 11881356	911	1300	581
VOE 11881356	911	1310	583
VOE 11881360	424	100	287
VOE 11881360	424	150	289
VOE 11881363	882	300	485
VOE 11881364	882	300	485
VOE 11881365	380	200	207
VOE 11881372	911	550	543
VOE 11881372	911	800	551
VOE 11881372	911	810	555
VOE 11881382	911	400	533
VOE 11881382	911	450	537
VOE 11881384	911	100	509
VOE 11881387	911	350	529
VOE 11881387	911	360	531
VOE 11881413	945	150	697
VOE 11881413	945	175	703
VOE 11881432	424	100	287
VOE 11881432	424	150	289
VOE 11881437	912	750	613
VOE 11881438	916	100	633
VOE 11881439	916	100	633
VOE 11881443	873	200	465
VOE 11881459	911	910	563
VOE 11881459	974	200	737
VOE 11881489	971	100	713
VOE 11881499	911	800	553
VOE 11881499	911	810	555
VOE 11881542	912	800	617

Part No	Group	Sect	Page
VOE 11881549	821	100	417
VOE 11881557	945	150	697
VOE 11881557	974	100	731
VOE 11881579	926	100	687
VOE 11881580	926	100	687
VOE 11881581	926	100	687
VOE 11881582	926	100	687
VOE 11881583	925	300	677
VOE 11881583	926	100	687
VOE 11881585	897	100	493
VOE 11881611	972	200	727
VOE 11881622	716	100	399
VOE 11881622	924	100	647
VOE 11881622	924	300	657
VOE 11881622	926	100	687
VOE 11881622	926	200	689
VOE 11881622	974	100	731
VOE 11881622	974	150	733
VOE 11881624	912	750	613
VOE 11881629	974	100	731
VOE 11881629	974	150	733
VOE 11881638	911	1100	569
VOE 11881638	911	1150	573
VOE 11881638	911	1200	579
VOE 11881641	911	550	543
VOE 11881654	945	150	697
VOE 11881654	945	175	705
VOE 11881708	915	100	623
VOE 11881712	925	120	663
VOE 11881717	915	100	623
VOE 11881719	916	200	635
VOE 11881720	911	550	541
VOE 11881720	915	100	623
VOE 11881721	915	100	623
VOE 11881721	915	150	629
VOE 11881742	915	100	623
VOE 11881742	915	100	625
VOE 11881763	874	450	473
VOE 11881773	818	100	415
VOE 11881792	711	100	397
VOE 11881810	911	1010	567
VOE 11881810	975	100	739
VOE 11881816	771	140	403
VOE 11881819	771	140	403
VOE 11881824	771	140	403
VOE 11881828	771	140	403
VOE 11881832	771	100	401
VOE 11881880	911	500	539
VOE 11881899	821	100	417
VOE 11881914	234	100	77
VOE 11881915	234	100	77
VOE 11881916	234	100	77
VOE 11881937	911	1000	565
VOE 11881939	913	200	621
VOE 11882026	711	100	397
VOE 11882040	915	150	629
VOE 11882069	874	450	471
VOE 11882104	827	150	431
VOE 11882112	234	100	77
VOE 11882115	915	100	623
VOE 11882182	915	100	623
VOE 11882190	971	200	717
VOE 11882192	421	160	237
VOE 11882192	421	175	239
VOE 11882192	517	200	365
VOE 11882192	517	250	367
VOE 11882192	971	200	717
VOE 11882194	971	200	717
VOE 11882196	911	700	545
VOE 11882197	911	700	545
VOE 11882198	911	500	539
VOE 11882199	911	700	545
VOE 11882200	911	1000	565
VOE 11882200	911	1010	567
VOE 11882201	911	1000	565
VOE 11882202	911	700	545
VOE 11882203	911	1100	569
VOE 11882203	911	1150	573
VOE 11882204	911	800	551
VOE 11882204	911	810	555
VOE 11882204	911	820	559
VOE 11882205	911	1100	569
VOE 11882206	911	1100	569
VOE 11882207	911	700	549
VOE 11882208	911	1300	581
VOE 11882208	911	1310	583
VOE 11882209	916	100	633
VOE 11882210	911	400	533
VOE 11882240	912	750	613
VOE 11882258	911	500	539
VOE 11882258	916	200	635
VOE 11882258	916	210	639
VOE 11882258	971	200	717
VOE 11882263	352	100	135
VOE 11882265	352	100	135
VOE 11882266	352	100	135
VOE 11882270	353	100	139
VOE 11882275	380	200	207
VOE 11882298	911	400	533
VOE 11882298	911	450	537
VOE 11882299	911	400	533
VOE 11882299	911	450	537
VOE 11882303	362	150	149
VOE 11882336	371	500	177
VOE 11882347	911	300	517
VOE 11882347	911	310	521
VOE 11882353	911	250	513
VOE 11882353	911	275	515
VOE 11882428	945	150	695
VOE 11882428	945	160	699
VOE 11882444	371	100	159
VOE 11882446	371	100	159
VOE 11882456	945	150	693
VOE 11882456	945	175	701
VOE 11882457	234	100	77
VOE 11882457	896	100	487
VOE 11882476	945	150	697
VOE 11882477	945	150	695
VOE 11882478	271	100	117
VOE 11882482	271	100	117
VOE 11882485	271	100	117
VOE 11882487	271	100	117
VOE 11882487	821	100	417
VOE 11882487	821	100	419
VOE 11882489	271	100	117
VOE 11882489	821	100	419
VOE 11882493	380	100	205
VOE 11882500	971	200	717
VOE 11882505	911	250	513
VOE 11882505	911	275	515
VOE 11882505	911	310	521
VOE 11882507	916	100	633
VOE 11882512	371	100	159
VOE 11882519	263	100	111
VOE 11882525	915	100	623
VOE 11882526	915	100	623
VOE 11882533	974	100	729
VOE 11882533	974	150	733
VOE 11882535	380	100	205
VOE 11882537	974	100	731
VOE 11882540	974	100	731
VOE 11882559	424	100	287
VOE 11882560	424	100	287
VOE 11882564	424	100	287
VOE 11882564	424	150	289
VOE 11882592	424	100	287
VOE 11882592	424	150	289
VOE 11882604	915	100	623
VOE 11882636	911	100	509
VOE 11882649	911	800	551
VOE 11882649	911	810	555
VOE 11882659	260	200	103
VOE 11882660	971	100	713
VOE 11882667	974	100	731
VOE 11882674	460	100	297
VOE 11882677	974	100	731
VOE 11882680	711	100	397
VOE 11882695	421	150	235
VOE 11882696	421	150	235
VOE 11882698	421	150	235
VOE 11882707	911	700	545
VOE 11882708	911	700	545
VOE 11882718	460	100	297
VOE 11882719	460	100	297
VOE 11882721	460	100	297
VOE 11882737	911	325	525
VOE 11882738	911	325	525
VOE 11882741	517	200	365
VOE 11882743	491	100	351
VOE 11882756	260	200	103
VOE 11882757	260	200	103
VOE 11882763	911	550	541
VOE 11882765	911	550	543
VOE 11882766	911	550	541
VOE 11882767	911	550	541

NUMERICAL INDEX

RÉPERTOIRE DE NUMÉROS

NUMMERNREGISTER

INDICE DE NÚMERO

Catalogue id	Group
20050	**1000**
Issue	Page
VOE 64D9920050	**11**

VOLVO

BL61

Part No	Group	Sect	Page
VOE 11882768	911	550	541
VOE 11882783	551	250	373
VOE 11882798	911	800	553
VOE 11882798	911	810	555
VOE 11882799	911	800	553
VOE 11882799	911	810	555
VOE 11882800	911	800	551
VOE 11882800	911	810	555
VOE 11882801	911	800	551
VOE 11882801	911	810	555
VOE 11882803	971	200	717
VOE 11882854	911	800	551
VOE 11882854	911	820	559
VOE 11882854	911	1350	585
VOE 11882855	491	100	351
VOE 11882856	911	325	525
VOE 11882857	911	1000	565
VOE 11882865	380	200	207
VOE 11882865	916	200	637
VOE 11882865	916	210	641
VOE 11882885	916	350	643
VOE 11882886	925	400	683
VOE 11882900	234	100	77
VOE 11882905	945	300	711
VOE 11882912	911	325	525
VOE 11882913	551	250	373
VOE 11882913	915	200	631
VOE 11882920	234	100	77
VOE 11882920	911	250	513
VOE 11882920	911	275	515
VOE 11882920	911	330	527
VOE 11882920	916	200	637
VOE 11882920	916	210	641
VOE 11882932	945	150	693
VOE 11882932	945	175	701
VOE 11882937	645	400	389
VOE 11882938	645	400	389
VOE 11882943	974	100	729
VOE 11882943	974	150	733
VOE 11882965	821	100	417
VOE 11882980	821	100	417
VOE 11882989	821	100	417
VOE 11882992	517	200	365
VOE 11882993	517	200	365
VOE 11882999	945	175	705
VOE 11883000	945	175	705
VOE 11883018	517	200	365
VOE 11883019	517	200	365
VOE 11883020	517	200	365
VOE 11883021	517	200	365
VOE 11883021	517	250	367
VOE 11883022	517	200	365
VOE 11883022	517	250	367
VOE 11883029	945	150	695
VOE 11883029	945	175	703
VOE 11883032	945	150	693
VOE 11883032	945	175	701
VOE 11883048	517	200	365
VOE 11883049	517	200	365
VOE 11883051	380	100	205
VOE 11883052	821	100	417
VOE 11883058	380	200	207
VOE 11883061	380	200	207
VOE 11883062	380	200	207
VOE 11883064	380	200	209
VOE 11883065	380	200	207
VOE 11883066	380	200	207
VOE 11883067	380	200	207
VOE 11883103	380	200	207
VOE 11883132	823	100	421
VOE 11883145	256	100	97
VOE 11883170	451	150	295
VOE 11883171	451	150	295
VOE 11883201	460	100	297
VOE 11883201	461	100	301
VOE 11883216	353	100	139
VOE 11883229	911	800	551
VOE 11883229	911	810	555
VOE 11883232	827	150	431
VOE 11883251	252	100	93
VOE 11883252	925	300	675
VOE 11883252	925	320	679
VOE 11883263	371	600	179
VOE 11883263	371	610	181
VOE 11883263	371	620	183
VOE 11883263	371	630	185
VOE 11883275	974	100	731
VOE 11883275	974	150	733
VOE 11883289	897	150	497
VOE 11883290	897	150	497
VOE 11883291	897	100	493
VOE 11883292	897	100	493
VOE 11883293	897	100	493
VOE 11883294	897	100	493
VOE 11883297	897	100	493
VOE 11883298	897	100	493
VOE 11883303	897	100	493
VOE 11883304	897	100	493
VOE 11883319	551	250	373
VOE 11883319	911	1300	581
VOE 11883319	911	1310	583
VOE 11883320	313	100	129
VOE 11883321	313	100	129
VOE 11883322	353	150	141
VOE 11883323	551	250	373
VOE 11883323	911	1300	581
VOE 11883323	911	1310	583
VOE 11883346	234	100	77
VOE 11883349	972	100	725
VOE 11883351	353	150	141
VOE 11883381	945	150	695
VOE 11883381	945	175	703
VOE 11883399	915	200	631
VOE 11883402	915	200	631
VOE 11883403	915	200	631
VOE 11883409	380	250	211
VOE 11883414	821	100	419
VOE 11883418	821	100	419
VOE 11883424	252	100	93
VOE 11883426	925	150	665
VOE 11883439	971	100	713
VOE 11883447	945	150	693
VOE 11883447	945	200	707
VOE 11883476	945	150	695
VOE 11883476	974	100	731
VOE 11883479	827	150	431
VOE 11883485	971	100	713
VOE 11883486	971	100	713
VOE 11883508	911	300	517
VOE 11883508	911	310	521
VOE 11883510	911	400	535
VOE 11883510	912	800	619
VOE 11883510	916	100	633
VOE 11883510	971	200	717
VOE 11883510	975	100	739
VOE 11883522	911	550	543
VOE 11883523	911	550	543
VOE 11883533	897	150	497
VOE 11883584	313	100	129
VOE 11883592	911	100	509
VOE 11883593	371	750	199
VOE 11883599	313	100	129
VOE 11883617	897	150	497
VOE 11883618	256	150	99
VOE 11883619	256	150	99
VOE 11883624	924	100	647
VOE 11883624	924	300	657
VOE 11883628	971	100	713
VOE 11883632	896	100	487
VOE 11883635	911	500	539
VOE 11883640	363	200	155
VOE 11883641	363	200	155
VOE 11883642	897	100	493
VOE 11883645	971	100	713
VOE 11883646	363	200	155
VOE 11883648	363	200	155
VOE 11883650	363	200	155
VOE 11883651	971	100	713
VOE 11883652	897	100	493
VOE 11883659	925	150	665
VOE 11883660	925	150	665
VOE 11883674	972	200	727
VOE 11883674	975	200	741
VOE 11883675	911	800	553
VOE 11883675	911	810	557
VOE 11883675	945	300	711
VOE 11883678	823	100	421
VOE 11883682	911	300	517
VOE 11883682	911	310	521
VOE 11883691	420	100	225
VOE 11883692	945	150	697
VOE 11883693	372	100	203
VOE 11883712	911	700	549
VOE 11883713	911	700	545
VOE 11883719	897	100	493

Part No	Group	Sect	Page
VOE 11883720	897	100	493
VOE 11883725	874	450	471
VOE 11883727	971	100	713
VOE 11883728	971	100	715
VOE 11883729	971	100	713
VOE 11883732	971	100	715
VOE 11883733	971	100	713
VOE 11883735	897	100	493
VOE 11883743	897	100	493
VOE 11883751	971	100	715
VOE 11883753	971	100	715
VOE 11883756	971	100	713
VOE 11883757	971	100	713
VOE 11883764	517	200	365
VOE 11883764	517	250	367
VOE 11883768	974	100	729
VOE 11883768	974	100	731
VOE 11883768	974	150	733
VOE 11883768	974	150	735
VOE 11883769	974	100	729
VOE 11883769	974	150	733
VOE 11883770	974	100	729
VOE 11883770	974	150	733
VOE 11883771	711	100	397
VOE 11883772	945	150	693
VOE 11883772	945	175	701
VOE 11883780	925	200	669
VOE 11883801	945	150	693
VOE 11883801	945	175	701
VOE 11883802	945	150	693
VOE 11883802	945	175	701
VOE 11883803	945	150	693
VOE 11883803	945	175	701
VOE 11883805	874	450	471
VOE 11883806	874	450	471
VOE 11883807	874	450	471
VOE 11883853	924	150	649
VOE 11883856	818	100	415
VOE 11883857	945	150	693
VOE 11883857	945	175	701
VOE 11883858	945	150	695
VOE 11883858	945	175	703
VOE 11883862	974	100	729
VOE 11883863	974	100	729
VOE 11883865	974	100	729
VOE 11883888	897	100	493
VOE 11883897	974	100	729
VOE 11883929	945	150	693
VOE 11883929	945	175	701
VOE 11883930	945	150	693
VOE 11883930	945	175	701
VOE 11883933	873	200	465
VOE 11883936	974	100	731
VOE 11883937	911	800	553
VOE 11883937	911	810	557
VOE 11883937	945	150	693
VOE 11883937	945	175	701
VOE 11883937	945	300	711
VOE 11883937	971	300	721
VOE 11883969	926	200	689
VOE 11883973	234	100	77
VOE 11883974	234	100	77
VOE 11883975	945	250	709
VOE 11883976	945	250	709
VOE 11884001	252	100	93
VOE 11884006	252	100	93
VOE 11884007	252	100	93
VOE 11884016	974	150	733
VOE 11884021	424	100	287
VOE 11884021	424	150	289
VOE 11884022	424	100	287
VOE 11884023	915	100	625
VOE 11884027	897	150	497
VOE 11884032	926	200	689
VOE 11884039	916	200	635
VOE 11884039	916	210	639
VOE 11884052	971	300	721
VOE 11884059	421	150	235
VOE 11884060	912	750	613
VOE 11884069	911	100	509
VOE 11884070	424	100	287
VOE 11884070	424	150	289
VOE 11884070	882	300	485
VOE 11884070	915	100	625
VOE 11884071	926	200	689
VOE 11884079	380	200	209
VOE 11884089	371	250	163
VOE 11884094	925	300	677
VOE 11884095	925	300	677
VOE 11884099	926	100	687
VOE 11884117	945	150	693
VOE 11884117	945	175	701
VOE 11884119	261	100	105
VOE 11884125	926	100	687
VOE 11884145	460	150	299
VOE 11884151	380	100	205
VOE 11884152	371	500	177
VOE 11884154	823	100	421
VOE 11884163	823	100	421
VOE 11884165	823	100	421
VOE 11884168	945	150	693
VOE 11884168	945	160	699
VOE 11884168	945	175	701
VOE 11884168	971	100	715
VOE 11884168	974	100	731
VOE 11884168	974	150	735
VOE 11884170	945	150	695
VOE 11884170	945	175	703
VOE 11884182	945	150	695
VOE 11884182	945	175	703
VOE 11884200	234	100	77
VOE 11884214	823	100	421
VOE 11884215	371	500	177
VOE 11884217	915	100	623
VOE 11884223	915	100	623
VOE 11884223	915	100	625
VOE 11884228	911	800	551
VOE 11884228	911	810	555
VOE 11884247	911	1500	589
VOE 11884248	974	100	729
VOE 11884251	491	100	351
VOE 11884259	974	100	729
VOE 11884269	915	100	623
VOE 11884273	911	1400	587
VOE 11884274	911	400	535
VOE 11884279	916	200	635
VOE 11884279	924	150	649
VOE 11884287	911	550	541
VOE 11884287	916	350	643
VOE 11884291	911	400	533
VOE 11884310	420	100	223
VOE 11884310	421	150	235
VOE 11884311	924	100	647
VOE 11884312	925	100	661
VOE 11884312	925	120	663
VOE 11884312	925	150	665
VOE 11884312	925	160	667
VOE 11884313	925	120	663
VOE 11884314	925	120	663
VOE 11884314	925	160	667
VOE 11884315	912	750	613
VOE 11884333	897	100	493
VOE 11884361	825	150	425
VOE 11884365	825	150	425
VOE 11884373	460	100	297
VOE 11884373	461	400	319
VOE 11884374	897	100	493
VOE 11884375	897	100	493
VOE 11884409	825	150	425
VOE 11884410	825	150	425
VOE 11884428	362	100	147
VOE 11884431	915	100	623
VOE 11884437	911	1500	589
VOE 11884454	925	100	661
VOE 11884463	925	100	661
VOE 11884471	925	100	661
VOE 11884479	925	100	661
VOE 11884487	925	100	661
VOE 11884504	371	200	161
VOE 11884511	371	700	195
VOE 11884512	371	600	179
VOE 11884512	371	610	181
VOE 11884520	818	100	415
VOE 11884546	911	1300	581
VOE 11884546	911	1310	583
VOE 11884547	911	1300	581
VOE 11884547	911	1310	583
VOE 11884569	971	100	715
VOE 11884573	974	150	733
VOE 11884579	971	400	723
VOE 11884582	971	100	713
VOE 11884584	971	100	713
VOE 11884592	897	100	493
VOE 11884603	915	100	625
VOE 11884607	974	100	731

NUMERICAL INDEX

RÉPERTOIRE DE NUMÉROS

NUMMERNREGISTER

INDICE DE NÚMERO

Catalogue id	Group
20050	**1000**
Issue	Page
VOE 64D9920050	**13**

VOLVO

BL61

NUMERICAL INDEX | **NUMMERNREGISTER**

RÉPERTOIRE DE NUMÉROS | **INDICE DE NÚMERO**

Catalogue id **20050** | Group **1000**

Issue **VOE 64D9920050** | Page **14**

Part No	Group	Sect	Page
VOE 11884607	974	150	733
VOE 11884613	234	100	77
VOE 11884614	945	150	697
VOE 11884614	974	100	731
VOE 11884616	945	150	695
VOE 11884616	974	100	731
VOE 11884637	945	150	693
VOE 11884638	945	150	693
VOE 11884638	945	175	701
VOE 11884640	911	300	517
VOE 11884641	911	300	517
VOE 11884642	911	300	517
VOE 11884653	821	100	417
VOE 11884654	371	350	167
VOE 11884714	971	100	713
VOE 11884716	218	100	65
VOE 11884719	218	100	65
VOE 11884722	436	100	291
VOE 11884725	436	100	291
VOE 11884733	881	100	475
VOE 11884758	945	150	695
VOE 11884770	825	200	427
VOE 11884771	825	200	427
VOE 11884781	925	350	681
VOE 11884783	916	200	635
VOE 11884785	912	750	613
VOE 11884787	971	200	717
VOE 11884790	218	100	65
VOE 11884790	436	100	291
VOE 11884792	218	100	65
VOE 11884792	436	100	291
VOE 11884793	945	150	697
VOE 11884794	911	700	547
VOE 11884794	911	1400	587
VOE 11884799	371	400	169
VOE 11884803	925	350	681
VOE 11884805	925	350	681
VOE 11884806	925	350	681
VOE 11884808	911	325	525
VOE 11884815	945	150	693
VOE 11884815	945	175	701
VOE 11884817	491	100	351
VOE 11884818	491	100	351
VOE 11884820	912	750	613
VOE 11884821	912	750	613
VOE 11884822	945	150	693
VOE 11884822	945	175	701
VOE 11884823	945	150	693
VOE 11884832	911	400	533
VOE 11884833	911	400	533
VOE 11884834	911	1400	587
VOE 11884835	912	750	613
VOE 11884836	912	750	613
VOE 11884837	911	1400	587
VOE 11884838	912	750	613
VOE 11884849	771	140	403
VOE 11884868	874	450	471
VOE 11884869	916	350	643
VOE 11884870	916	350	643
VOE 11884880	912	750	613
VOE 11884882	916	350	643
VOE 11884896	911	700	547
VOE 11884907	911	700	547
VOE 11884907	916	100	633
VOE 11884908	911	700	547
VOE 11884908	971	200	717
VOE 11884914	911	700	547
VOE 11884926	916	100	633
VOE 11884928	926	100	687
VOE 11884942	896	200	491
VOE 11884943	896	200	491
VOE 11884944	896	200	491
VOE 11884945	896	200	491
VOE 11884949	916	100	633
VOE 11884950	911	1300	581
VOE 11884956	915	100	623
VOE 11884957	915	100	623
VOE 11884960	380	200	207
VOE 11884960	911	400	535
VOE 11884971	926	100	687
VOE 11884972	926	100	687
VOE 11884973	926	100	687
VOE 11885003	897	100	495
VOE 11885004	897	100	495
VOE 11885006	911	400	533
VOE 11885010	926	100	687
VOE 11885012	945	150	697
VOE 11885014	468	100	345
VOE 11885030	421	175	239
VOE 11885038	897	150	497
VOE 11885039	925	150	665
VOE 11885047	925	150	665
VOE 11885057	421	175	239
VOE 11885063	912	750	613
VOE 11885079	896	150	489
VOE 11885135	881	200	479
VOE 11885135	911	100	509
VOE 11885150	911	800	551
VOE 11885151	911	800	551
VOE 11885152	911	1150	573
VOE 11885163	911	800	551
VOE 11885164	911	800	551
VOE 11885168	915	100	627
VOE 11885170	915	100	627
VOE 11885182	915	100	625
VOE 11885182	915	150	629
VOE 11885183	915	150	629
VOE 11885184	915	100	625
VOE 11885184	915	150	629
VOE 11885190	915	100	625
VOE 11885191	915	100	625
VOE 11885192	897	100	495
VOE 11885203	911	800	553
VOE 11885203	911	810	555
VOE 11885207	945	150	697
VOE 11885208	924	150	651
VOE 11885214	911	1500	589
VOE 11885216	926	200	689
VOE 11885218	924	150	651
VOE 11885219	924	150	651
VOE 11885220	924	100	647
VOE 11885220	924	300	657
VOE 11885224	971	100	715
VOE 11885224	974	100	731
VOE 11885224	974	150	735
VOE 11885225	971	100	715
VOE 11885225	974	100	729
VOE 11885225	974	150	733
VOE 11885229	924	250	655
VOE 11885230	924	250	655
VOE 11885233	821	100	417
VOE 11885234	821	100	417
VOE 11885240	916	200	635
VOE 11885240	916	210	639
VOE 11885241	916	200	635
VOE 11885241	916	210	639
VOE 11885242	911	1150	573
VOE 11885243	911	1150	573
VOE 11885253	911	550	543
VOE 11885256	911	350	529
VOE 11885256	911	400	535
VOE 11885260	911	1350	585
VOE 11885261	911	700	547
VOE 11885262	911	400	533
VOE 11885263	911	700	547
VOE 11885264	926	200	689
VOE 11885266	926	200	689
VOE 11885267	926	200	689
VOE 11885267	926	250	691
VOE 11885270	916	200	635
VOE 11885270	916	210	639
VOE 11885272	916	200	635
VOE 11885273	916	200	635
VOE 11885273	916	210	639
VOE 11885274	916	200	635
VOE 11885274	916	210	639
VOE 11885276	916	200	637
VOE 11885276	916	210	639
VOE 11885281	916	200	635
VOE 11885281	916	210	639
VOE 11885282	916	200	635
VOE 11885282	916	210	639
VOE 11885283	972	100	725
VOE 11885305	882	300	485
VOE 11885306	911	450	537
VOE 11885306	926	200	689
VOE 11885307	926	200	689
VOE 11885308	911	275	515
VOE 11885329	974	150	733
VOE 11885331	912	800	617
VOE 11885339	974	100	729
VOE 11885340	974	100	729
VOE 11885344	924	250	655
VOE 11885347	924	200	653
VOE 11885347	924	250	655

Part No	Group	Sect	Page
VOE 11885350	825	150	425
VOE 11885351	825	150	425
VOE 11885371	924	250	655
VOE 11885375	945	150	693
VOE 11885420	897	100	495
VOE 11885426	974	100	729
VOE 11885426	974	150	733
VOE 11885427	924	150	651
VOE 11885427	924	200	653
VOE 11885427	924	250	655
VOE 11885429	945	150	697
VOE 11885433	924	150	649
VOE 11885435	924	150	649
VOE 11885441	924	200	653
VOE 11885442	924	200	653
VOE 11885470	371	650	187
VOE 11885475	972	100	725
VOE 11885514	911	400	535
VOE 11885514	911	1400	587
VOE 11885514	924	150	651
VOE 11885515	916	350	643
VOE 11885516	911	550	541
VOE 11885517	911	350	529
VOE 11885518	911	300	517
VOE 11885543	491	100	351
VOE 11885543	911	325	525
VOE 11885543	911	330	527
VOE 11885553	911	1350	585
VOE 11885554	911	1350	585
VOE 11885588	716	100	399
VOE 11885595	925	500	685
VOE 11885596	925	500	685
VOE 11885663	945	200	707
VOE 11885671	945	200	707
VOE 11885677	460	100	297
VOE 11885677	463	100	327
VOE 11885684	645	400	389
VOE 11885685	645	400	389
VOE 11885690	818	100	415
VOE 11885699	911	550	541
VOE 11885699	911	700	547
VOE 11885701	916	200	635
VOE 11885701	916	210	639
VOE 11885711	924	150	649
VOE 11885717	945	200	707
VOE 11885733	911	550	541
VOE 11885733	911	700	547
VOE 11885734	380	200	207
VOE 11885734	916	200	637
VOE 11885734	916	210	641
VOE 11885736	925	300	675
VOE 11885738	925	300	675
VOE 11885751	911	100	509
VOE 11885757	911	300	517
VOE 11885758	911	550	543
VOE 11885758	911	1350	585
VOE 11885759	911	550	541
VOE 11885762	911	350	529
VOE 11885762	911	360	531
VOE 11885764	911	450	537
VOE 11885771	912	400	605
VOE 11885772	945	200	707
VOE 11885773	945	200	707
VOE 11885774	945	200	707
VOE 11885777	916	200	635
VOE 11885780	911	250	513
VOE 11885783	974	100	731
VOE 11885783	974	150	735
VOE 11885786	911	450	537
VOE 11885789	911	450	537
VOE 11885790	911	450	537
VOE 11885812	371	500	177
VOE 11885859	911	300	519
VOE 11885860	911	400	533
VOE 11885862	771	100	401
VOE 11885862	771	140	403
VOE 11885876	925	300	675
VOE 11885918	926	200	689
VOE 11885919	926	200	689
VOE 11885930	915	200	631
VOE 11885932	915	200	631
VOE 11885933	915	200	631
VOE 11885934	353	100	139
VOE 11885940	974	100	729
VOE 11885940	974	150	733
VOE 11885968	915	150	629
VOE 11885969	915	150	629
VOE 11885976	436	100	291
VOE 11885977	915	200	631
VOE 11885978	711	100	397
VOE 11885982	911	1010	567
VOE 11885991	372	100	203
VOE 11885999	911	100	509
VOE 11886020	972	100	725
VOE 11886053	517	200	365
VOE 11886065	852	150	451
VOE 11886097	896	100	487
VOE 11886104	371	700	195
VOE 11886105	911	1000	565
VOE 11886105	911	1010	567
VOE 11886120	371	500	177
VOE 11886121	371	100	157
VOE 11886123	371	100	157
VOE 11886124	371	100	157
VOE 11886126	371	100	157
VOE 11886127	896	100	487
VOE 11886129	896	100	487
VOE 11886132	896	100	487
VOE 11886133	896	100	487
VOE 11886134	896	100	487
VOE 11886138	821	100	417
VOE 11886138	896	100	487
VOE 11886139	371	500	177
VOE 11886143	912	300	601
VOE 11886144	912	300	601
VOE 11886149	896	100	487
VOE 11886151	911	300	519
VOE 11886152	916	200	635
VOE 11886153	925	300	675
VOE 11886153	925	320	679
VOE 11886174	974	100	729
VOE 11886174	974	150	733
VOE 11886176	911	500	539
VOE 11886177	911	275	515
VOE 11886178	911	500	539
VOE 11886188	915	150	629
VOE 11886189	371	300	165
VOE 11886192	911	400	535
VOE 11886192	916	200	637
VOE 11886192	916	210	641
VOE 11886196	915	150	629
VOE 11886210	371	450	173
VOE 11886215	362	100	147
VOE 11886222	852	100	449
VOE 11886223	852	100	449
VOE 11886250	821	100	417
VOE 11886254	924	100	647
VOE 11886255	974	100	729
VOE 11886255	974	150	733
VOE 11886264	821	100	419
VOE 11886266	974	100	729
VOE 11886266	974	150	733
VOE 11886270	821	100	419
VOE 11886272	911	100	509
VOE 11886273	911	100	509
VOE 11886274	915	150	629
VOE 11886275	915	150	629
VOE 11886286	371	100	159
VOE 11886292	827	150	431
VOE 11886293	827	150	431
VOE 11886317	210	50	37
VOE 11886328	711	100	397
VOE 11886331	915	200	631
VOE 11886338	945	200	707
VOE 11886342	945	200	707
VOE 11886347	372	100	203
VOE 11886348	852	100	449
VOE 11886348	852	150	451
VOE 11886355	451	150	295
VOE 11886370	912	800	617
VOE 11886371	912	800	617
VOE 11886376	911	1400	587
VOE 11886377	821	100	417
VOE 11886386	371	620	183
VOE 11886386	371	630	185
VOE 11886387	252	100	93
VOE 11886391	252	100	93
VOE 11886392	252	100	93
VOE 11886393	252	100	93
VOE 11886395	210	100	43
VOE 11886395	211	100	45
VOE 11886395	216	100	57
VOE 11886395	236	100	79
VOE 11886395	237	100	87
VOE 11886395	251	100	89

NUMERICAL INDEX

RÉPERTOIRE DE NUMÉROS

NUMMERNREGISTER

INDICE DE NÚMERO

NUMERICAL INDEX | **NUMMERNREGISTER**

RÉPERTOIRE DE NUMÉROS | **INDICE DE NÚMERO**

Catalogue id **20050** | Group **1000**

Issue **VOE 64D9920050** | Page **16**

Part No	Group	Sect	Page
VOE 11886395	262	100	107
VOE 11886398	460	100	297
VOE 11886399	912	800	617
VOE 11886418	925	250	671
VOE 11886420	911	250	513
VOE 11886421	911	100	511
VOE 11886424	925	250	671
VOE 11886425	925	250	671
VOE 11886430	911	100	511
VOE 11886430	911	310	523
VOE 11886436	911	100	509
VOE 11886441	911	1500	589
VOE 11886454	911	1000	565
VOE 11886455	260	200	103
VOE 11886461	460	100	297
VOE 11886464	911	100	509
VOE 11886468	971	100	715
VOE 11886473	971	100	713
VOE 11886474	821	100	417
VOE 11886476	911	1100	569
VOE 11886480	911	1100	569
VOE 11886482	945	200	707
VOE 11886499	974	100	729
VOE 11886501	975	200	741
VOE 11886506	896	100	487
VOE 11886515	924	300	657
VOE 11886530	896	100	487
VOE 11886541	911	550	541
VOE 11886541	912	150	591
VOE 11886542	912	150	591
VOE 11886545	821	100	419
VOE 11886546	821	100	419
VOE 11886547	821	100	419
VOE 11886550	261	100	105
VOE 11886551	261	100	105
VOE 11886552	874	450	471
VOE 11886553	911	300	517
VOE 11886554	911	300	517
VOE 11886557	371	100	159
VOE 11886558	371	100	159
VOE 11886560	371	400	171
VOE 11886563	915	100	623
VOE 11886567	925	320	679
VOE 11886585	874	450	471
VOE 11886586	874	450	471
VOE 11886587	371	100	157
VOE 11886599	771	100	401
VOE 11886616	874	450	473
VOE 11886617	874	450	473
VOE 11886620	874	450	471
VOE 11886626	371	800	201
VOE 11886627	371	800	201
VOE 11886629	269	100	115
VOE 11886630	269	100	115
VOE 11886639	371	700	195
VOE 11886639	371	710	197
VOE 11886647	818	100	415
VOE 11886653	925	200	669
VOE 11886665	911	1400	587
VOE 11886684	912	800	619
VOE 11886685	912	800	617
VOE 11886686	912	800	617
VOE 11886700	912	800	617
VOE 11886707	911	100	509
VOE 11886708	818	100	415
VOE 11886710	711	100	397
VOE 11886733	911	1500	589
VOE 11886741	716	100	399
VOE 11886742	716	100	399
VOE 11886743	716	100	399
VOE 11886745	911	1500	589
VOE 11886751	911	1500	589
VOE 11886789	821	100	417
VOE 11886833	771	100	401
VOE 11886841	897	100	495
VOE 11886860	896	200	491
VOE 11886861	896	200	491
VOE 11886865	517	250	367
VOE 11886868	912	800	617
VOE 11886871	912	800	617
VOE 11886925	716	100	399
VOE 11886945	911	350	529
VOE 11886945	911	360	531
VOE 11886947	460	100	297
VOE 11886947	460	150	299
VOE 11886973	234	100	77
VOE 11886987	827	150	431
VOE 11886992	827	150	431
VOE 11886994	975	300	743
VOE 11886999	896	100	487
VOE 11887014	821	100	419
VOE 11887018	911	1100	569
VOE 11887019	911	1100	569
VOE 11887022	371	655	191
VOE 11887060	972	100	725
VOE 11887066	896	100	487
VOE 11887114	911	300	517
VOE 11887145	261	100	105
VOE 11887149	363	200	155
VOE 11887150	363	200	155
VOE 11887168	925	320	679
VOE 11887186	915	150	629
VOE 11887187	825	150	425
VOE 11887192	825	150	425
VOE 11887195	915	150	629
VOE 11887201	897	100	495
VOE 11887207	911	100	509
VOE 11887209	925	300	675
VOE 11887216	925	350	681
VOE 11887225	925	350	681
VOE 11887273	971	100	713
VOE 11887295	971	100	713
VOE 11887300	971	100	713
VOE 11887302	945	175	705
VOE 11887303	945	175	705
VOE 11887308	945	175	701
VOE 11887317	945	175	703
VOE 11887319	911	400	533
VOE 11887321	210	100	43
VOE 11887321	211	100	45
VOE 11887321	216	100	57
VOE 11887321	236	100	79
VOE 11887321	237	100	87
VOE 11887321	251	100	89
VOE 11887321	262	100	107
VOE 11887325	945	175	703
VOE 11887329	945	175	705
VOE 11887335	945	200	707
VOE 11887349	924	300	657
VOE 11887350	924	250	655
VOE 11887359	460	150	299
VOE 11887359	461	410	321
VOE 11887361	460	150	299
VOE 11887361	461	420	323
VOE 11887362	460	150	299
VOE 11887362	461	110	303
VOE 11887363	460	150	299
VOE 11887363	463	110	329
VOE 11887369	261	100	105
VOE 11887379	420	150	227
VOE 11887379	421	175	239
VOE 11887380	420	200	231
VOE 11887382	371	400	169
VOE 11887385	371	450	173
VOE 11887392	924	150	649
VOE 11887440	945	175	705
VOE 11887447	380	100	205
VOE 11887607	897	100	495
VOE 11887622	460	150	299
VOE 11887625	911	100	509
VOE 11887626	821	100	417
VOE 11887632	371	350	167
VOE 11887633	371	100	159
VOE 11887637	371	655	191
VOE 11887639	897	100	495
VOE 11887707	525	100	369
VOE 11887721	371	100	157
VOE 11887722	371	100	157
VOE 11887730	972	100	725
VOE 11887740	972	100	725
VOE 11887763	925	320	679
VOE 11887870	911	1010	567
VOE 11887958	974	100	731
VOE 11887958	974	150	733
VOE 11887962	974	100	729
VOE 11887962	974	150	733
VOE 11887964	974	150	733
VOE 11887965	974	150	733
VOE 11887988	234	100	77
VOE 11888002	371	700	195
VOE 11888002	371	710	197
VOE 11888014	424	100	287
VOE 11888014	424	150	289
VOE 11888037	945	160	699
VOE 11888080	911	310	521

Part No	Group	Sect	Page
VOE 11888088	911	310	521
VOE 11888095	911	1160	577
VOE 11888096	971	400	723
VOE 11888106	925	120	663
VOE 11888161	925	160	667
VOE 11888170	925	120	663
VOE 11888216	925	320	679
VOE 11888222	271	100	117
VOE 11888237	874	450	471
VOE 11888238	925	260	673
VOE 11888239	974	100	729
VOE 11888239	974	150	733
VOE 11888254	925	320	679
VOE 11888267	371	450	173
VOE 11888268	911	100	509
VOE 11888274	945	175	705
VOE 11888280	945	175	701
VOE 11888306	711	100	397
VOE 11888366	945	175	703
VOE 11888393	421	160	237
VOE 11888393	421	175	239
VOE 11888396	911	810	555
VOE 11888397	911	810	555
VOE 11888398	911	820	559
VOE 11888399	911	820	559
VOE 11888412	371	250	163
VOE 11888420	925	160	667
VOE 11888421	925	160	667
VOE 11888422	925	160	667
VOE 11888423	925	160	667
VOE 11888437	925	120	663
VOE 11888438	925	120	663
VOE 11888440	925	120	663
VOE 11888461	911	330	527
VOE 11888468	551	250	373
VOE 11888469	491	100	351
VOE 11888492	451	150	295
VOE 11888493	460	150	299
VOE 11888494	460	150	299
VOE 11888495	460	150	299
VOE 11888496	460	150	299
VOE 11888525	911	310	521
VOE 11888534	380	100	205
VOE 11888536	371	450	173
VOE 11888540	371	710	197
VOE 11888543	911	1010	567
VOE 11888544	911	1160	577
VOE 11888545	911	1160	577
VOE 11888547	911	1160	577
VOE 11888559	974	150	733
VOE 11888579	825	200	427
VOE 11888582	825	200	427
VOE 11888607	468	150	349
VOE 11888616	945	175	703
VOE 11888624	911	550	541
VOE 11888625	911	550	541
VOE 11888649	551	250	373
VOE 118886549	261	100	105
VOE 11888656	971	100	715
VOE 11888669	517	250	367
VOE 11888671	517	250	367
VOE 11888681	971	100	715
VOE 11888687	261	100	105
VOE 11888694	424	100	287
VOE 11888694	424	150	289
VOE 11888695	260	100	101
VOE 11888711	911	550	543
VOE 11888712	911	550	543
VOE 11888715	491	100	351
VOE 11888715	911	330	527
VOE 11888737	945	175	703
VOE 11888748	945	175	705
VOE 11888752	916	360	645
VOE 11888753	916	360	645
VOE 11888756	916	360	645
VOE 11888757	916	360	645
VOE 11888769	380	100	205
VOE 11888809	925	260	673
VOE 11888816	371	655	191
VOE 11888817	525	100	369
VOE 11888841	916	210	639
VOE 11888854	911	400	533
VOE 11888870	924	150	649
VOE 11889090	421	160	237
VOE 11889090	421	175	239
VOE 11889130	945	175	701
VOE 11890016	645	400	389
VOE 11890048	974	100	729
VOE 11890048	974	150	733
VOE 11890069	911	800	553
VOE 11890069	911	810	557
VOE 11890069	945	150	693
VOE 11890069	945	175	701
VOE 11890069	974	100	729
VOE 11890069	974	150	733
VOE 11890069	974	200	737
VOE 11890070	380	200	207
VOE 11890073	380	200	207
VOE 11890074	380	200	207
VOE 11890075	380	200	209
VOE 11890076	380	200	207
VOE 11890109	945	150	695
VOE 11890109	945	175	703
VOE 11890110	945	150	693
VOE 11890110	945	175	701
VOE 11890115	925	500	685
VOE 11890115	945	150	693
VOE 11890115	945	175	701
VOE 11890115	972	100	725
VOE 11890116	945	150	693
VOE 11890116	945	175	701
VOE 11890117	945	150	695
VOE 11890117	945	175	703
VOE 11890117	974	100	731
VOE 11890117	974	150	733
VOE 11890117	974	150	735
VOE 11890118	945	150	695
VOE 11890118	945	175	703
VOE 11890146	460	100	297
VOE 11890160	252	100	93
VOE 11890229	972	100	725
VOE 11890297	380	200	207
VOE 11890298	371	500	177
VOE 11890298	380	200	207
VOE 11890327	414	100	221
VOE 11890335	256	150	99
VOE 11890338	252	100	93
VOE 11890339	420	150	227
VOE 11890339	421	175	239
VOE 11890349	420	100	225
VOE 11891000	352	100	135
VOE 11891000	353	100	139
VOE 11891000	371	600	179
VOE 11891000	371	630	185
VOE 11891000	825	150	425
VOE 11891000	841	100	439
VOE 11891000	896	200	491
VOE 11891000	897	100	493
VOE 11891000	897	150	497
VOE 11891000	945	150	693
VOE 11891001	353	150	141
VOE 11891002	352	100	135
VOE 11891002	353	100	139
VOE 11891002	371	600	179
VOE 11891002	371	630	185
VOE 11891002	841	100	439
VOE 11891002	897	100	493
VOE 11891002	897	150	497
VOE 11891002	925	350	681
VOE 11891015	925	300	675
VOE 11891015	925	300	677
VOE 11891016	925	300	675
VOE 11891016	925	300	677
VOE 11891017	926	200	689
VOE 11891017	926	250	691
VOE 11891018	925	300	675
VOE 11891018	925	400	683
VOE 11891043	925	100	661
VOE 11891043	925	120	663
VOE 11891049	841	100	439
VOE 11891050	352	100	135
VOE 11891050	353	100	139
VOE 11891050	371	600	179
VOE 11891050	371	630	185
VOE 11891050	420	100	225
VOE 11891050	841	100	439
VOE 11891050	896	200	491
VOE 11891050	897	100	493
VOE 11891050	897	150	497
VOE 11891050	945	150	693
VOE 11891054	911	1100	569
VOE 11891054	911	1150	573
VOE 11891054	911	1160	577
VOE 11891056	911	1100	569
VOE 11891056	911	1150	573

NUMERICAL INDEX

RÉPERTOIRE DE NUMÉROS

NUMMERNREGISTER

INDICE DE NÚMERO

Catalogue id	Group
20050	**1000**
Issue	Page
VOE 64D9920050	**17**

VOLVO

BL61

NUMERICAL INDEX | **NUMMERNREGISTER**

RÉPERTOIRE DE NUMÉROS | **INDICE DE NÚMERO**

Catalogue id **20050** | Group **1000**

Issue **VOE 64D9920050** | Page **18**

Part No	Group	Sect	Page
VOE 11891056	911	1160	577
VOE 11891058	911	1000	565
VOE 11891058	911	1010	567
VOE 11891059	911	1200	579
VOE 11891060	911	1200	579
VOE 11891061	974	100	729
VOE 11891061	974	150	733
VOE 11891062	911	1000	565
VOE 11891062	911	1010	567
VOE 11891063	911	900	561
VOE 11891063	911	910	563
VOE 11891064	911	900	561
VOE 11891064	911	910	563
VOE 11891076	218	100	65
VOE 11891076	371	250	163
VOE 11891076	371	655	191
VOE 11891076	380	100	205
VOE 11891076	420	150	227
VOE 11891076	421	175	239
VOE 11891076	421	225	243
VOE 11891076	421	275	251
VOE 11891076	421	300	253
VOE 11891076	421	375	263
VOE 11891076	421	475	277
VOE 11891076	421	500	279
VOE 11891076	421	525	283
VOE 11891076	424	150	289
VOE 11891076	436	100	291
VOE 11891076	451	100	293
VOE 11891076	451	150	295
VOE 11891076	491	100	351
VOE 11891076	517	200	365
VOE 11891076	517	250	367
VOE 11891076	525	100	369
VOE 11891076	911	100	509
VOE 11891076	911	275	515
VOE 11891076	913	200	621
VOE 11891077	218	100	65
VOE 11891077	371	250	163
VOE 11891077	371	655	191
VOE 11891077	380	100	205
VOE 11891077	380	200	207
VOE 11891077	420	100	223
VOE 11891077	420	200	231
VOE 11891077	421	150	235
VOE 11891077	421	160	237
VOE 11891077	421	200	241
VOE 11891077	421	230	245
VOE 11891077	421	250	247
VOE 11891077	421	260	249
VOE 11891077	421	300	253
VOE 11891077	421	350	255
VOE 11891077	421	360	259
VOE 11891077	421	400	267
VOE 11891077	421	410	271
VOE 11891077	421	450	273
VOE 11891077	421	460	275
VOE 11891077	421	500	279
VOE 11891077	421	525	283
VOE 11891077	421	550	285
VOE 11891077	424	100	287
VOE 11891077	436	100	291
VOE 11891077	451	100	293
VOE 11891077	451	150	295
VOE 11891077	491	100	351
VOE 11891077	517	200	365
VOE 11891077	517	250	367
VOE 11891077	525	100	369
VOE 11891077	911	100	509
VOE 11891077	911	250	513
VOE 11891077	913	200	621
VOE 11891088	911	1100	569
VOE 11891088	911	1150	573
VOE 11891089	911	1100	569
VOE 11891091	925	150	665
VOE 11891091	925	160	667
VOE 11891092	925	150	665
VOE 11891092	925	160	667
VOE 11891093	925	150	665
VOE 11891093	925	160	667
VOE 11891094	896	200	491
VOE 11891099	852	100	449
VOE 11891100	852	100	449
VOE 11891109	974	100	729
VOE 11891109	974	150	733
VOE 11891150	380	200	209
VOE 11891150	897	100	493
VOE 11891150	897	100	495
VOE 11891150	911	1400	587
VOE 11891150	912	750	613
VOE 11891151	897	100	495
VOE 11891151	911	1500	589
VOE 11891151	912	800	617
VOE 11891152	896	150	489
VOE 11891162	882	100	481
VOE 11891162	897	100	493
VOE 11891162	915	100	623
VOE 11891167	882	100	481
VOE 11891167	897	100	493
VOE 11891167	915	100	623
VOE 11891176	926	100	687
VOE 11891192	925	150	665
VOE 11891192	925	160	667
VOE 11891194	925	200	669
VOE 11891202	925	150	665
VOE 11891202	925	160	667
VOE 11891209	380	350	213
VOE 11891216	852	100	449
VOE 11891217	852	100	449
VOE 11891224	380	350	213
VOE 11891246	352	100	135
VOE 11891246	353	100	139
VOE 11891246	371	610	181
VOE 11891246	371	620	183
VOE 11891247	352	100	135
VOE 11891247	353	100	139
VOE 11891247	371	610	181
VOE 11891247	371	620	183
VOE 11891248	352	100	135
VOE 11891248	353	100	139
VOE 11891248	371	600	179
VOE 11891248	371	630	185
VOE 11891248	841	100	439
VOE 11891248	897	100	493
VOE 11891248	897	150	497
VOE 11891249	352	100	135
VOE 11891249	353	100	139
VOE 11891249	371	600	179
VOE 11891249	371	630	185
VOE 11891249	841	100	439
VOE 11891249	897	100	493
VOE 11891249	897	150	497
VOE 11891255	380	350	213
VOE 11891261	362	150	149
VOE 11891262	362	150	149
VOE 11891264	925	200	669
VOE 11891265	925	200	669
VOE 11891265	925	300	675
VOE 11891265	925	300	677
VOE 11891269	972	100	725
VOE 11891278	380	100	205
VOE 11891280	380	100	205
VOE 11891282	925	300	675
VOE 11891282	925	300	677
VOE 11891282	926	100	687
VOE 11891291	352	200	137
VOE 11891292	352	200	137
VOE 11891295	925	250	671
VOE 11891296	925	250	671
VOE 11891298	911	100	509
VOE 11891299	924	100	647
VOE 11891303	881	150	477
VOE 11891305	460	100	297
VOE 11891305	461	100	301
VOE 11891305	461	150	305
VOE 11891305	461	200	309
VOE 11891305	461	250	313
VOE 11891305	461	300	315
VOE 11891305	461	350	317
VOE 11891305	463	100	327
VOE 11891305	463	150	331
VOE 11891305	463	200	335
VOE 11891305	463	250	339
VOE 11891305	463	300	343
VOE 11891305	468	100	345
VOE 11891305	510	100	359
VOE 11891305	517	100	361
VOE 11891305	645	200	387
VOE 11891305	771	140	403
VOE 11891306	460	100	297
VOE 11891306	461	400	319
VOE 11891306	461	410	321
VOE 11891306	461	450	325
VOE 11891306	463	100	327
VOE 11891306	463	150	331

Part No	Group	Sect	Page
VOE 11891306	463	200	335
VOE 11891306	463	250	339
VOE 11891306	463	300	343
VOE 11891306	468	100	345
VOE 11891306	510	100	359
VOE 11891306	517	100	361
VOE 11891306	645	100	383
VOE 11891306	771	140	403
VOE 11891314	852	100	449
VOE 11891314	852	150	451
VOE 11891317	716	100	399
VOE 11891318	925	100	661
VOE 11891318	925	120	663
VOE 11891319	925	100	661
VOE 11891319	925	120	663
VOE 11891320	925	100	661
VOE 11891320	925	120	663
VOE 11891321	925	100	661
VOE 11891321	925	120	663
VOE 11891322	897	100	493
VOE 11891322	915	100	623
VOE 11891324	911	100	509
VOE 11891325	825	150	425
VOE 11891331	926	200	689
VOE 11891332	380	250	211
VOE 11891333	371	800	201
VOE 11891345	380	200	207
VOE 11891345	916	350	643
VOE 11891345	916	360	645
VOE 11891350	925	500	685
VOE 11891358	716	100	399
VOE 11891359	716	100	399
VOE 11891369	380	200	207
VOE 11891369	916	200	635
VOE 11891369	916	210	639
VOE 11891375	911	450	537
VOE 11891376	852	150	451
VOE 11891377	362	100	147
VOE 11891379	974	100	729
VOE 11891379	974	150	733
VOE 11891380	974	100	729
VOE 11891380	974	150	733
VOE 11891391	313	100	129
VOE 11891391	371	100	157
VOE 11891392	313	100	129
VOE 11891392	371	100	157
VOE 11891414	882	300	485
VOE 11891414	897	100	495
VOE 11891414	911	800	551
VOE 11891414	911	820	559
VOE 11891414	911	1350	585
VOE 11891414	912	150	591
VOE 11891414	912	200	593
VOE 11891414	912	225	595
VOE 11891414	912	250	597
VOE 11891414	912	275	599
VOE 11891414	915	150	629
VOE 11891414	945	150	693
VOE 11891414	945	200	707
VOE 11891414	945	250	709
VOE 11891414	945	300	711
VOE 11891415	882	300	485
VOE 11891415	897	100	495
VOE 11891415	911	800	551
VOE 11891415	915	150	629
VOE 11891415	945	150	693
VOE 11891415	945	200	707
VOE 11891415	945	250	709
VOE 11891415	945	300	711
VOE 11891416	911	700	545
VOE 11891416	912	300	601
VOE 11891416	912	350	603
VOE 11891416	912	500	607
VOE 11891416	912	550	609
VOE 11891416	912	600	611
VOE 11891417	897	100	493
VOE 11891417	911	700	545
VOE 11891417	911	900	561
VOE 11891417	911	1000	565
VOE 11891417	911	1100	569
VOE 11891417	911	1200	579
VOE 11891417	912	300	601
VOE 11891417	912	350	603
VOE 11891417	912	500	607
VOE 11891417	912	550	609
VOE 11891417	912	600	611
VOE 11891417	915	200	631
VOE 11891417	974	100	729
VOE 11891417	974	200	737
VOE 11891417	975	100	739
VOE 11891417	975	200	741
VOE 11891417	975	300	743
VOE 11891418	911	900	561
VOE 11891418	911	1000	565
VOE 11891418	911	1150	573
VOE 11891418	974	150	733
VOE 11891418	974	200	737
VOE 11891418	975	100	739
VOE 11891418	975	200	741
VOE 11891429	269	100	115
VOE 11891430	269	100	115
VOE 11891448	924	150	649
VOE 11891448	924	250	655
VOE 11891448	924	300	657
VOE 11891448	924	350	659
VOE 11891449	924	150	649
VOE 11891449	924	250	655
VOE 11891450	924	150	649
VOE 11891450	924	200	653
VOE 11891450	924	300	657
VOE 11891450	924	350	659
VOE 11891451	924	150	649
VOE 11891451	924	200	653
VOE 11891455	380	200	207
VOE 11891455	897	100	493
VOE 11891455	911	400	533
VOE 11891455	912	400	605
VOE 11891488	881	150	477
VOE 11891496	461	410	321
VOE 11891496	461	450	325
VOE 11891496	645	100	383
VOE 11891497	911	1160	577
VOE 11891531	461	110	303
VOE 11891531	771	100	401
VOE 11891539	945	160	699
VOE 11891540	925	260	673
VOE 11891541	925	320	679
VOE 11891561	945	160	699
VOE 11891565	925	260	673
VOE 11988148	461	110	303
VOE 11988151	645	200	387
VOE 11988152	461	150	305
VOE 11988156	463	250	339
VOE 11988156	463	260	341
VOE 11988186	353	100	139
VOE 11988196	926	250	691
VOE 11988249	971	300	721
VOE 11988250	971	300	721
VOE 11988251	971	300	721
VOE 11988253	975	300	743
VOE 11988255	971	300	721
VOE 11988256	975	300	743
VOE 11988257	975	300	743
VOE 11988259	945	300	711
VOE 11988260	945	300	711
VOE 11988262	945	250	709
VOE 11988263	945	250	709
VOE 11988297	925	100	661
VOE 11988297	925	150	665
VOE 11988403	925	100	661
VOE 11988403	925	150	665
VOE 11988505	451	150	295
VOE 11988522	912	300	601
VOE 11988522	912	600	611
VOE 11988524	912	200	593
VOE 11988524	912	350	603
VOE 11988525	912	350	603
VOE 11988526	912	225	595
VOE 11988526	912	250	597
VOE 11988526	912	275	599
VOE 11988526	912	500	607
VOE 11988526	912	550	609
VOE 11988527	912	225	595
VOE 11988527	912	250	597
VOE 11988527	912	275	599
VOE 11988527	912	500	607
VOE 11988527	912	550	609
VOE 11988529	912	225	595
VOE 11988529	912	500	607
VOE 11988529	912	550	609
VOE 11988532	912	225	595
VOE 11988532	912	275	599
VOE 11988532	912	500	607
VOE 11988533	912	225	595
VOE 11988534	912	600	611

NUMERICAL INDEX

RÉPERTOIRE DE NUMÉROS

NUMMERNREGISTER

INDICE DE NÚMERO

NUMERICAL INDEX

RÉPERTOIRE DE NUMÉROS

NUMMERNREGISTER

INDICE DE NÚMERO

Catalogue id **20050** | Group **1000**

Issue **VOE 64D9920050** | Page **20**

Part No	Group	Sect	Page
VOE 11988535	912	600	611
VOE 11988536	912	600	611
VOE 11988537	912	200	593
VOE 11988537	912	350	603
VOE 11988539	912	200	593
VOE 11988539	912	350	603
VOE 11988540	912	200	593
VOE 11988540	912	350	603
VOE 11988541	912	225	595
VOE 11988541	912	250	597
VOE 11988541	912	275	599
VOE 11988541	912	500	607
VOE 11988541	912	550	609
VOE 11988551	461	100	301
VOE 11988552	461	100	301
VOE 11988552	461	400	319
VOE 11988552	461	410	321
VOE 11988552	461	420	323
VOE 11988553	461	100	301
VOE 11988553	461	400	319
VOE 11988553	461	410	321
VOE 11988553	461	420	323
VOE 11988554	461	100	301
VOE 11988554	461	420	323
VOE 11988555	461	100	301
VOE 11988555	461	420	323
VOE 11988556	461	100	301
VOE 11988557	461	100	301
VOE 11988557	461	420	323
VOE 11988559	461	100	301
VOE 11988559	461	400	319
VOE 11988559	461	410	321
VOE 11988559	461	420	323
VOE 11988559	461	450	325
VOE 11988560	461	100	301
VOE 11988560	461	400	319
VOE 11988560	461	410	321
VOE 11988560	461	420	323
VOE 11988561	461	100	301
VOE 11988562	461	100	301
VOE 11988562	461	420	323
VOE 11988563	645	100	383
VOE 11988563	645	150	385
VOE 11988563	645	200	387
VOE 11988564	645	150	385
VOE 11988564	645	200	387
VOE 11988565	645	100	383
VOE 11988565	645	150	385
VOE 11988565	645	200	387
VOE 11988566	645	100	383
VOE 11988566	645	150	385
VOE 11988566	645	200	387
VOE 11988567	645	150	385
VOE 11988567	645	200	387
VOE 11988569	461	250	313
VOE 11988570	461	250	313
VOE 11988571	461	250	313
VOE 11988572	461	250	313
VOE 11988573	461	250	313
VOE 11988575	461	300	315
VOE 11988577	461	300	315
VOE 11988578	461	300	315
VOE 11988579	461	300	315
VOE 11988580	461	300	315
VOE 11988581	461	300	315
VOE 11988581	461	450	325
VOE 11988582	461	300	315
VOE 11988582	461	450	325
VOE 11988584	461	300	315
VOE 11988585	461	300	315
VOE 11988585	461	350	317
VOE 11988586	461	300	315
VOE 11988586	461	350	317
VOE 11988587	461	300	315
VOE 11988587	461	350	317
VOE 11988588	461	300	315
VOE 11988588	461	350	317
VOE 11988596	463	200	335
VOE 11988597	463	200	335
VOE 11988598	463	200	335
VOE 11988598	463	210	337
VOE 11988599	463	200	335
VOE 11988603	463	200	335
VOE 11988622	463	250	339
VOE 11988623	463	250	339
VOE 11988624	463	300	343
VOE 11988625	463	300	343
VOE 11988626	463	300	343
VOE 11988627	463	300	343
VOE 11988628	463	300	343
VOE 11988629	463	300	343
VOE 11988632	463	300	343
VOE 11988978	371	700	195
VOE 1304841	363	200	155
VOE 13914468	926	100	687
VOE 13930842	911	550	543
VOE 13930842	911	700	545
VOE 13930842	912	150	591
VOE 13930842	912	300	601
VOE 13933857	460	150	299
VOE 13933857	468	150	349
VOE 13933857	517	250	367
VOE 13933857	912	750	613
VOE 13933857	912	800	617
VOE 13933858	420	100	225
VOE 13933858	420	150	229
VOE 13933858	645	400	389
VOE 13933858	911	400	533
VOE 13933858	911	700	545
VOE 13933858	911	1300	581
VOE 13933858	911	1310	583
VOE 13933858	911	1400	587
VOE 13933858	912	750	613
VOE 13933858	916	100	633
VOE 13933858	916	200	637
VOE 13933858	916	210	641
VOE 13933858	924	150	649
VOE 13933858	924	200	653
VOE 13933858	924	250	655
VOE 13933859	911	400	533
VOE 13933859	911	700	547
VOE 13933859	911	1400	587
VOE 13933859	912	750	613
VOE 13933859	916	200	637
VOE 13933859	916	210	639
VOE 13933859	924	150	649
VOE 13933862	911	250	513
VOE 13933862	911	275	515
VOE 13933862	911	325	525
VOE 13933862	911	350	529
VOE 13933862	911	360	531
VOE 13933862	911	400	533
VOE 13933862	911	550	543
VOE 13933862	911	700	545
VOE 13933862	911	800	551
VOE 13933862	911	810	555
VOE 13933862	911	900	561
VOE 13933862	911	910	563
VOE 13933862	911	1000	565
VOE 13933862	911	1010	567
VOE 13933862	911	1100	569
VOE 13933862	911	1150	573
VOE 13933862	912	750	613
VOE 13933862	912	800	617
VOE 13933862	916	200	637
VOE 13933862	916	210	641
VOE 13933864	911	330	527
VOE 13933864	911	400	533
VOE 13933864	911	1160	577
VOE 13933868	916	360	645
VOE 13933874	916	210	639
VOE 13933905	916	210	639
VOE 13933912	916	100	633
VOE 13933923	911	1200	579
VOE 13933923	916	350	643
VOE 13933923	916	360	645
VOE 13933961	911	550	541
VOE 13935003	874	450	471
VOE 13935008	897	150	497
VOE 13940090	272	100	119
VOE 13940090	371	500	177
VOE 13940090	872	250	457
VOE 13940090	882	100	481
VOE 13940090	882	300	485
VOE 13942915	821	100	417
VOE 13943472	873	150	463
VOE 13945407	362	100	147
VOE 13945407	371	100	159
VOE 13945408	261	100	105
VOE 13945408	272	100	119
VOE 13945408	363	200	155
VOE 13945408	371	100	157
VOE 13945408	371	100	159
VOE 13945408	424	100	287
VOE 13945408	424	150	289

Part No	Group	Sect	Page
VOE 13945408	911	400	535
VOE 13945408	911	1100	571
VOE 13945408	915	200	631
VOE 13945408	924	250	655
VOE 13945408	925	300	675
VOE 13945408	925	320	679
VOE 13945444	261	100	105
VOE 13945444	271	100	117
VOE 13945444	272	100	119
VOE 13945444	525	100	369
VOE 13945444	551	250	373
VOE 13945444	821	100	417
VOE 13945444	825	100	423
VOE 13945444	873	100	461
VOE 13945444	874	450	471
VOE 13945444	881	100	475
VOE 13945444	911	1010	567
VOE 13945444	911	1100	571
VOE 13945444	911	1150	575
VOE 13945444	915	200	631
VOE 13945444	924	150	649
VOE 13945444	924	250	655
VOE 13946173	256	100	97
VOE 13946173	261	100	105
VOE 13946173	263	100	111
VOE 13946173	271	100	117
VOE 13946173	272	100	119
VOE 13946173	352	100	135
VOE 13946173	352	200	137
VOE 13946173	353	200	143
VOE 13946173	362	100	147
VOE 13946173	363	200	155
VOE 13946173	371	100	159
VOE 13946173	821	100	417
VOE 13946173	823	100	421
VOE 13946173	827	150	431
VOE 13946173	841	100	439
VOE 13946173	872	200	455
VOE 13946173	911	100	509
VOE 13946173	915	200	631
VOE 13946173	924	150	651
VOE 13946173	971	100	713
VOE 13946544	872	250	457
VOE 13946544	896	100	487
VOE 13946544	911	1400	587
VOE 13946544	915	100	627
VOE 13946934	362	100	147
VOE 13946934	371	100	159
VOE 13946934	882	100	481
VOE 13947281	210	50	37
VOE 13947281	210	50	39
VOE 13947281	212	100	47
VOE 13947281	223	100	73
VOE 13947281	236	150	85
VOE 13947281	262	100	107
VOE 13947281	420	100	223
VOE 13947282	210	50	37
VOE 13947282	210	50	39
VOE 13947355	911	100	509
VOE 13947355	911	550	541
VOE 13947355	915	100	623
VOE 13947542	271	100	117
VOE 13947542	421	200	241
VOE 13947542	421	225	243
VOE 13947542	810	150	411
VOE 13947542	872	250	459
VOE 13947542	882	100	481
VOE 13947621	210	50	37
VOE 13947621	210	50	39
VOE 13947621	211	100	45
VOE 13947621	212	100	47
VOE 13947621	215	100	55
VOE 13947621	251	100	89
VOE 13947621	255	100	95
VOE 13947622	210	50	37
VOE 13947622	210	50	39
VOE 13947622	233	100	75
VOE 13947628	211	100	45
VOE 13947628	223	100	73
VOE 13947628	873	200	465
VOE 13947760	352	200	137
VOE 13947760	424	100	287
VOE 13947760	424	150	289
VOE 13947760	525	100	369
VOE 13947760	821	100	417
VOE 13947760	911	1100	571
VOE 13947760	924	250	655
VOE 13947760	926	100	687
VOE 13947949	821	100	419
VOE 13948356	421	500	281
VOE 13948356	841	100	439
VOE 13948356	882	100	483
VOE 13948699	911	900	561
VOE 13948699	911	910	563
VOE 13948794	371	100	157
VOE 13948795	371	100	157
VOE 13949239	911	250	513
VOE 13949239	911	275	515
VOE 13949278	353	150	141
VOE 13949278	831	100	433
VOE 13949278	872	250	457
VOE 13949278	874	450	471
VOE 13949278	881	200	479
VOE 13949278	911	360	531
VOE 13949278	911	1300	581
VOE 13949278	911	1310	583
VOE 13949578	217	100	63
VOE 13949578	221	100	69
VOE 13949578	273	100	121
VOE 13949927	911	1000	565
VOE 13949927	911	1010	567
VOE 13955294	421	200	241
VOE 13955294	421	225	243
VOE 13955294	421	230	245
VOE 13955295	421	500	279
VOE 13955781	271	100	117
VOE 13955894	823	100	421
VOE 13955894	831	100	433
VOE 13955897	831	100	437
VOE 13955900	215	100	55
VOE 13955900	945	150	697
VOE 13960138	872	250	459
VOE 13960138	882	100	481
VOE 13960141	272	100	119
VOE 13960141	825	100	423
VOE 13960141	825	200	427
VOE 13960141	873	100	461
VOE 13960141	881	100	475
VOE 13960141	882	100	481
VOE 13960141	896	100	487
VOE 13960143	272	100	119
VOE 13960143	810	150	411
VOE 13960143	825	150	425
VOE 13960143	971	100	715
VOE 13961965	810	150	413
VOE 13963104	872	250	457
VOE 13963105	841	100	439
VOE 13963110	218	100	65
VOE 13963110	436	100	291
VOE 13963362	716	100	399
VOE 13963362	971	100	713
VOE 13963365	716	100	399
VOE 13963365	971	100	713
VOE 13965175	821	100	417
VOE 13965175	881	200	479
VOE 13965177	874	450	471
VOE 13965177	911	1300	581
VOE 13965177	911	1310	583
VOE 13965177	916	200	635
VOE 13965177	916	210	639
VOE 13965178	911	360	531
VOE 13965179	234	100	77
VOE 13965179	916	350	643
VOE 13965179	916	360	645
VOE 13965180	916	360	645
VOE 13965181	911	400	535
VOE 13965182	925	300	675
VOE 13965182	925	320	679
VOE 13965183	911	400	533
VOE 13965185	234	100	77
VOE 13965185	252	100	93
VOE 13965185	460	100	297
VOE 13965186	551	250	373
VOE 13965186	843	150	445
VOE 13965188	252	100	93
VOE 13965188	925	300	675
VOE 13965188	925	320	679
VOE 13965189	926	100	687
VOE 13965190	925	300	675
VOE 13965190	925	320	679
VOE 13965190	945	150	695
VOE 13965190	945	160	699
VOE 13965191	371	100	157
VOE 13965191	436	100	291
VOE 13965191	852	100	449

NUMERICAL INDEX | **NUMMERNREGISTER**

RÉPERTOIRE DE NUMÉROS | **INDICE DE NÚMERO**

Catalogue id **20050** | Group **1000**

Issue **VOE 64D9920050** | Page **22**

Part No	Group	Sect	Page
VOE 13965191	852	150	451
VOE 13965191	911	100	509
VOE 13965191	911	250	513
VOE 13965191	911	275	515
VOE 13965191	945	150	693
VOE 13965191	945	175	701
VOE 13965192	825	150	425
VOE 13965192	911	100	509
VOE 13965192	915	150	629
VOE 13965194	234	100	77
VOE 13965194	896	100	487
VOE 13965194	911	550	541
VOE 13965194	911	700	547
VOE 13965194	915	100	627
VOE 13965194	916	100	633
VOE 13965195	972	100	725
VOE 13965216	912	800	617
VOE 13965229	974	150	735
VOE 13965483	823	100	421
VOE 13965483	872	250	457
VOE 13965483	924	150	649
VOE 13965558	362	100	147
VOE 13965886	371	100	159
VOE 13967580	896	100	487
VOE 13967630	421	150	235
VOE 13967630	421	160	237
VOE 13967630	421	175	239
VOE 13967630	874	450	471
VOE 13967630	911	1000	565
VOE 13967630	911	1010	567
VOE 13967934	945	175	703
VOE 13967934	945	175	705
VOE 13967934	945	200	707
VOE 13969011	212	100	47
VOE 13969011	233	100	75
VOE 13969516	269	100	115
VOE 13969599	823	100	421
VOE 13970876	414	100	221
VOE 13970923	461	110	303
VOE 13970944	414	100	221
VOE 13970947	420	100	223
VOE 13970948	420	150	227
VOE 13970948	420	200	231
VOE 13970949	420	100	223
VOE 13970951	420	200	233
VOE 13970963	874	450	471
VOE 13971068	517	200	365
VOE 13971068	517	250	367
VOE 13971068	915	100	625
VOE 13971068	915	150	629
VOE 13971068	971	100	715
VOE 13971072	945	150	697
VOE 13971095	234	100	77
VOE 13971095	252	100	93
VOE 13971095	256	100	97
VOE 13971095	260	200	103
VOE 13971095	460	100	297
VOE 13971095	825	150	425
VOE 13971095	925	300	675
VOE 13971095	925	320	679
VOE 13971095	926	100	687
VOE 13971096	825	150	425
VOE 13971096	911	700	547
VOE 13971096	916	100	633
VOE 13971098	271	100	117
VOE 13971098	313	100	129
VOE 13971098	551	250	373
VOE 13971098	827	150	431
VOE 13971098	896	200	491
VOE 13971098	916	200	635
VOE 13971098	945	150	695
VOE 13971098	945	160	699
VOE 13971098	945	175	703
VOE 13971307	915	100	625
VOE 13975237	272	100	119
VOE 13975237	353	150	141
VOE 13975237	371	500	177
VOE 13975237	881	200	479
VOE 13977600	873	200	465
VOE 13980100	716	100	399
VOE 14016673	269	100	115
VOE 14016673	371	100	159
VOE 14016673	371	300	165
VOE 14016673	873	200	465
VOE 14016673	911	700	547
VOE 14016673	911	1400	587
VOE 14016673	911	1500	589
VOE 14016673	916	200	637
VOE 14016673	916	350	643
VOE 14025792	971	100	715
VOE 14211861	911	300	517
VOE 14211861	911	300	519
VOE 14211861	911	310	521
VOE 14213026	363	200	155
VOE 14213026	371	300	165
VOE 14213676	911	100	509
VOE 14340282	831	100	437
VOE 14343206	882	100	481
VOE 14343207	882	100	481
VOE 14344720	831	100	437
VOE 14346537	896	100	487
VOE 14370881	371	750	199
VOE 14370881	371	800	201
VOE 14370881	915	100	627
VOE 14370883	371	300	165
VOE 14370883	371	655	193
VOE 14370883	371	710	197
VOE 14370883	371	750	199
VOE 14370883	371	800	201
VOE 14370885	371	400	169
VOE 14370885	371	400	171
VOE 14370885	371	750	199
VOE 14370887	371	650	187
VOE 14370889	371	200	161
VOE 14370889	371	400	169
VOE 14370889	371	650	187
VOE 14371054	371	300	165
VOE 14371493	641	100	381
VOE 14376982	460	150	299
VOE 14376982	716	100	399
VOE 1542591	260	200	103
VOE 1578603	881	150	477
VOE 1578835	897	100	493
VOE 1582293	371	100	159
VOE 1589502	380	350	213
VOE 1589502	911	400	535
VOE 1613068	882	100	481
VOE 1882940	645	400	389
VOE 191900	971	100	713
VOE 20393421	371	100	157
VOE 20405504	263	150	113
VOE 20405506	217	100	63
VOE 20405509	236	150	85
VOE 20405524	214	100	53
VOE 20405536	210	50	37
VOE 20405536	210	50	39
VOE 20405536	251	100	89
VOE 20405538	236	150	85
VOE 20405543	210	50	37
VOE 20405543	236	100	79
VOE 20405553	215	100	55
VOE 20405559	237	100	87
VOE 20405560	236	150	85
VOE 20405561	221	100	69
VOE 20405565	236	100	79
VOE 20405584	212	100	47
VOE 20405587	251	100	89
VOE 20405590	210	50	37
VOE 20405590	210	50	39
VOE 20405599	223	100	73
VOE 20405603	221	100	69
VOE 20405605	215	100	55
VOE 20405606	218	200	67
VOE 20405616	251	100	89
VOE 20405626	212	150	49
VOE 20405627	210	50	37
VOE 20405627	210	50	41
VOE 20405627	212	150	49
VOE 20405634	216	100	59
VOE 20405653	215	100	55
VOE 20405654	216	100	59
VOE 20405672	223	100	73
VOE 20405672	262	100	107
VOE 20405706	215	100	55
VOE 20405716	212	100	47
VOE 20405717	212	100	47
VOE 20405719	212	100	47
VOE 20405721	212	100	47
VOE 20405723	262	100	107
VOE 20405724	216	100	59
VOE 20405728	210	50	37
VOE 20405728	210	50	41
VOE 20405728	273	100	121
VOE 20405729	216	150	61
VOE 20405729	233	100	75

Part No	Group	Sect	Page
VOE 20405729	236	150	85
VOE 20405730	236	150	85
VOE 20405789	255	100	95
VOE 20405792	217	100	63
VOE 20405792	221	100	69
VOE 20405792	255	100	95
VOE 20405792	262	100	107
VOE 20405822	255	100	95
VOE 20405825	210	50	37
VOE 20405825	217	100	63
VOE 20405828	331	100	133
VOE 20405885	223	100	73
VOE 20405885	262	100	107
VOE 20405885	263	150	113
VOE 20405895	211	100	45
VOE 20405898	251	100	89
VOE 20405898	262	100	107
VOE 20405917	223	100	73
VOE 20405938	210	50	37
VOE 20405938	210	50	41
VOE 20405938	212	150	49
VOE 20405988	263	150	113
VOE 20412313	262	100	107
VOE 20412318	210	50	37
VOE 20412318	210	50	41
VOE 20412318	255	100	95
VOE 20412324	215	100	55
VOE 20412324	221	100	69
VOE 20412359	210	50	37
VOE 20412359	212	100	47
VOE 20412596	233	100	75
VOE 20412601	251	100	89
VOE 20412733	211	100	45
VOE 20412745	211	100	45
VOE 20412745	212	100	47
VOE 20412751	331	100	133
VOE 20441521	321	100	131
VOE 20441859	212	100	47
VOE 20450694	251	100	89
VOE 20450728	212	150	49
VOE 20450735	262	100	107
VOE 20450736	210	50	37
VOE 20450736	262	100	107
VOE 20450745	262	100	107
VOE 20450749	263	150	113
VOE 20450750	263	150	113
VOE 20450754	263	150	113
VOE 20450756	218	200	67
VOE 20450778	212	100	47
VOE 20450795	215	100	55
VOE 20450801	215	100	55
VOE 20450867	255	100	95
VOE 20450890	223	100	73
VOE 20450997	251	100	89
VOE 20451012	215	100	55
VOE 20451012	251	100	89
VOE 20451738	221	100	69
VOE 20459025	263	150	113
VOE 20459115	210	50	37
VOE 20459115	215	100	55
VOE 20459115	216	100	57
VOE 20459124	216	100	57
VOE 20459133	216	100	57
VOE 20459134	216	100	57
VOE 20459139	216	100	57
VOE 20459140	210	50	37
VOE 20459140	216	100	57
VOE 20459143	216	100	57
VOE 20459144	216	100	57
VOE 20459148	216	100	57
VOE 20459149	210	50	37
VOE 20459149	216	100	57
VOE 20459168	210	50	37
VOE 20459168	221	100	69
VOE 20459171	210	50	37
VOE 20459171	210	50	41
VOE 20459171	255	100	95
VOE 20459172	210	50	37
VOE 20459172	210	50	41
VOE 20459172	255	100	95
VOE 20459181	255	100	95
VOE 20459183	215	100	55
VOE 20459183	233	100	75
VOE 20459195	223	100	73
VOE 20459197	223	100	73
VOE 20459200	223	100	73
VOE 20459201	223	100	73
VOE 20459202	223	100	73
VOE 20459203	210	50	37
VOE 20459203	223	100	73
VOE 20459204	223	100	73
VOE 20459205	223	100	73
VOE 20459222	210	50	37
VOE 20459222	210	50	41
VOE 20459235	255	100	95
VOE 20459236	210	50	37
VOE 20459236	210	50	41
VOE 20459236	255	100	95
VOE 20459246	233	100	75
VOE 20459263	263	150	113
VOE 20459264	263	150	113
VOE 20459265	263	150	113
VOE 20459830	211	100	45
VOE 20459830	251	100	89
VOE 20459833	210	50	37
VOE 20459833	210	50	41
VOE 20459835	211	100	45
VOE 20459836	211	100	45
VOE 20459837	214	100	53
VOE 20459838	211	100	45
VOE 20459839	210	50	37
VOE 20459839	210	50	41
VOE 20459839	211	100	45
VOE 20459840	210	50	37
VOE 20459840	210	50	41
VOE 20459841	210	50	39
VOE 20459841	210	50	41
VOE 20459847	214	100	53
VOE 20459848	214	100	53
VOE 20459849	214	100	53
VOE 20459850	214	100	53
VOE 20459851	211	100	45
VOE 20459852	211	100	45
VOE 20459853	214	100	53
VOE 20459854	211	100	45
VOE 20459855	210	50	39
VOE 20459855	210	50	41
VOE 20459855	211	100	45
VOE 20459857	211	100	45
VOE 20459864	263	150	113
VOE 20459899	212	100	47
VOE 20459900	212	100	47
VOE 20459900	262	100	109
VOE 20459904	210	50	39
VOE 20459904	215	100	55
VOE 20459906	237	100	87
VOE 20459909	251	100	89
VOE 20459910	251	100	89
VOE 20459933	251	100	89
VOE 20459935	251	100	89
VOE 20459941	223	100	73
VOE 20459942	223	100	73
VOE 20459949	262	100	107
VOE 20459952	262	100	107
VOE 20459953	210	50	39
VOE 20459953	210	50	41
VOE 20459953	262	100	107
VOE 20459954	210	50	39
VOE 20459954	262	100	107
VOE 20459955	210	50	39
VOE 20459955	210	50	41
VOE 20459955	262	100	107
VOE 20459961	210	50	39
VOE 20459961	262	100	107
VOE 20459972	237	100	87
VOE 20459989	216	150	61
VOE 20459990	216	150	61
VOE 20459995	216	150	61
VOE 20459996	216	150	61
VOE 20459998	210	50	39
VOE 20459998	212	100	47
VOE 20459999	210	50	39
VOE 20459999	212	100	47
VOE 20460000	212	100	47
VOE 20460001	212	100	47
VOE 20460006	212	100	47
VOE 20460007	214	100	53
VOE 20460008	214	100	53
VOE 20460009	210	50	39
VOE 20460009	213	100	51
VOE 20460010	210	50	39
VOE 20460010	213	100	51
VOE 20460013	210	50	39
VOE 20460013	213	100	51
VOE 20460021	217	100	63

NUMERICAL INDEX

RÉPERTOIRE DE NUMÉROS

NUMMERNREGISTER

INDICE DE NÚMERO

Catalogue id	Group
20050	**1000**
Issue	Page
VOE 64D9920050	**23**

VOLVO

BL61

NUMERICAL INDEX | **NUMMERNREGISTER**

RÉPERTOIRE DE NUMÉROS | **INDICE DE NÚMERO**

Catalogue id **20050** | Group **1000**

Issue **VOE 64D9920050** | Page **24**

Part No	Group	Sect	Page
VOE 20460022	210	50	39
VOE 20460045	233	100	75
VOE 20460045	255	100	95
VOE 20460055	255	100	95
VOE 20460061	255	100	95
VOE 20460061	262	100	107
VOE 20460064	236	150	85
VOE 20460067	236	150	85
VOE 20460069	236	150	85
VOE 20460070	236	150	85
VOE 20460071	236	100	79
VOE 20460072	236	100	79
VOE 20460082	236	150	85
VOE 20460095	210	50	39
VOE 20460095	210	50	41
VOE 20460095	237	100	87
VOE 20460102	321	100	131
VOE 20460106	321	100	131
VOE 20460115	331	100	133
VOE 20460116	331	100	133
VOE 20460117	331	100	133
VOE 20460118	331	100	133
VOE 20460119	331	100	133
VOE 20460120	331	100	133
VOE 20460123	251	100	89
VOE 20460127	251	100	89
VOE 20460231	255	100	95
VOE 20460239	223	100	73
VOE 20460289	236	150	85
VOE 20460459	211	100	45
VOE 20460936	255	100	95
VOE 20460936	262	100	107
VOE 20460939	255	100	95
VOE 20460945	255	100	95
VOE 20464451	211	100	45
VOE 20480536	216	100	57
VOE 20481754	221	100	69
VOE 20481768	233	100	75
VOE 20481769	233	100	75
VOE 20481785	233	100	75
VOE 20482006	217	100	63
VOE 20482010	217	100	63
VOE 20482027	217	100	63
VOE 20482736	217	100	63
VOE 20482739	210	50	39
VOE 20482739	213	100	51
VOE 20496548	223	100	73
VOE 20498498	251	100	91
VOE 20498524	251	100	91
VOE 20502245	223	100	73
VOE 20502535	262	100	107
VOE 20502536	262	100	107
VOE 20504812	236	150	85
VOE 20505959	251	100	89
VOE 20508600	212	100	47
VOE 20508605	212	100	47
VOE 20508630	255	100	95
VOE 20509446	321	100	131
VOE 20509482	321	100	131
VOE 20517048	210	50	39
VOE 20517048	210	50	41
VOE 20517048	255	100	95
VOE 20518337	233	100	75
VOE 20521558	251	100	91
VOE 20522433	216	100	57
VOE 20523284	216	100	57
VOE 20524154	233	100	75
VOE 20524626	233	100	75
VOE 20528339	255	100	95
VOE 20531832	210	50	39
VOE 20531832	210	50	41
VOE 20531832	251	100	89
VOE 20532254	251	100	89
VOE 20532396	223	100	73
VOE 20535027	218	200	67
VOE 20535037	211	100	45
VOE 20537029	210	50	39
VOE 20537029	221	100	69
VOE 20542740	217	100	63
VOE 20547288	216	150	61
VOE 20549886	321	100	131
VOE 20549894	223	100	73
VOE 20549894	255	100	95
VOE 20549894	262	100	107
VOE 20549905	236	100	79
VOE 20550117	262	100	107
VOE 20550336	251	100	91
VOE 20550356	251	100	91
VOE 20551429	262	100	107
VOE 20554253	263	150	113
VOE 20555065	263	150	113
VOE 20555084	321	100	131
VOE 20555385	222	100	71
VOE 20555403	210	50	39
VOE 20555403	216	100	57
VOE 20555491	214	100	53
VOE 20555494	255	100	95
VOE 20555502	215	100	55
VOE 20555503	236	150	85
VOE 20555515	251	100	89
VOE 20557208	210	50	39
VOE 20557208	210	50	41
VOE 20557208	251	100	89
VOE 20558924	211	100	45
VOE 20558934	211	100	45
VOE 20559834	255	100	95
VOE 20560564	321	100	131
VOE 20562765	273	100	121
VOE 20565870	251	100	89
VOE 20567447	233	100	75
VOE 20567447	321	100	131
VOE 20570519	211	100	45
VOE 20570520	211	100	45
VOE 20570522	210	50	39
VOE 20570522	210	50	41
VOE 20570522	211	100	45
VOE 20572787	251	100	91
VOE 20581867	221	100	69
VOE 20585825	251	100	89
VOE 20585971	215	100	55
VOE 20585971	216	150	61
VOE 20590555	236	150	85
VOE 20590582	236	150	85
VOE 20590598	211	100	45
VOE 20592820	215	100	55
VOE 20593357	331	100	133
VOE 20706915	216	100	57
VOE 20715643	371	100	159
VOE 20715795	263	150	113
VOE 20723978	218	200	67
VOE 20723984	218	200	67
VOE 20726057	251	100	89
VOE 20726062	251	100	89
VOE 20726092	262	100	107
VOE 20729184	216	100	57
VOE 20729310	263	150	113
VOE 20739051	262	100	107
VOE 20758272	236	150	85
VOE 20758403	251	100	89
VOE 20791246	212	100	47
VOE 20791405	211	100	45
VOE 20791406	262	100	107
VOE 20791517	211	100	45
VOE 20799838	262	100	107
VOE 20882905	216	100	57
VOE 20891184	216	100	57
VOE 20909227	263	150	113
VOE 20924084	211	100	45
VOE 20944091	223	100	73
VOE 24425842	212	100	47
VOE 24425916	237	100	87
VOE 24425919	237	100	87
VOE 24425954	236	100	79
VOE 24425958	236	100	81
VOE 24425969	236	100	81
VOE 24425970	236	100	79
VOE 24425972	236	100	81
VOE 24425973	236	100	81
VOE 24425974	236	100	81
VOE 24425982	236	100	81
VOE 24425983	236	100	81
VOE 24425984	236	100	81
VOE 24425985	236	100	81
VOE 24425986	236	100	81
VOE 24425987	236	100	81
VOE 24425989	236	100	81
VOE 24425991	236	100	81
VOE 24425992	236	100	81
VOE 24425994	236	100	81
VOE 24425996	236	100	81
VOE 24425998	236	100	81
VOE 24426002	236	100	81
VOE 24426004	236	100	81
VOE 24426005	236	100	81
VOE 24426006	236	100	81

Part No	Group	Sect	Page
VOE 24426007	236	100	81
VOE 24426010	236	100	81
VOE 24426011	236	100	83
VOE 24426012	236	100	83
VOE 24426013	236	100	83
VOE 24426014	236	100	83
VOE 24426015	236	100	83
VOE 24426016	236	100	83
VOE 24426017	236	100	83
VOE 24426018	236	100	83
VOE 24426019	236	100	83
VOE 24426020	236	100	83
VOE 24426021	236	100	83
VOE 24426022	236	100	83
VOE 24426064	212	100	47
VOE 24426216	216	100	59
VOE 24426230	251	100	89
VOE 3943382	234	100	77
VOE 3987034	371	100	157
VOE 403078	924	100	647
VOE 4789869	771	100	401
VOE 4789869	771	140	403
VOE 4803745	371	650	189
VOE 4803745	371	655	193
VOE 4803746	371	100	159
VOE 4803746	371	200	161
VOE 4803746	371	250	163
VOE 4803746	371	300	165
VOE 4803746	371	450	175
VOE 4803746	371	500	177
VOE 4803746	371	600	179
VOE 4803746	371	610	181
VOE 4803746	371	620	183
VOE 4803746	371	630	185
VOE 4803746	371	650	189
VOE 4803746	371	655	193
VOE 4803746	371	800	201
VOE 4803748	371	200	161
VOE 4803748	371	250	163
VOE 4803748	371	300	165
VOE 4803748	371	400	169
VOE 4803748	371	450	175
VOE 4803748	371	650	189
VOE 4803748	371	655	193
VOE 4803751	371	200	161
VOE 4803751	371	400	169
VOE 4803751	371	650	189
VOE 4803751	371	655	193
VOE 4803752	371	200	161
VOE 4803752	371	400	169
VOE 4803752	371	450	175
VOE 4803752	371	650	189
VOE 4803752	371	655	193
VOE 4821292	363	200	155
VOE 4821292	517	250	367
VOE 4880492	420	100	225
VOE 4880492	420	150	229
VOE 4880492	421	150	235
VOE 4880492	468	100	345
VOE 4880492	645	400	389
VOE 4880492	911	100	509
VOE 4880492	911	300	517
VOE 4880492	911	300	519
VOE 4880492	911	500	539
VOE 4880492	911	1310	583
VOE 4880492	916	100	633
VOE 4880492	916	200	635
VOE 4880492	916	200	637
VOE 4880492	916	210	639
VOE 4880492	916	210	641
VOE 4880492	971	200	717
VOE 4880493	911	300	517
VOE 4880493	911	500	539
VOE 4880493	911	700	545
VOE 4880493	911	700	547
VOE 4880493	911	700	549
VOE 4880493	911	1100	569
VOE 4880493	911	1150	573
VOE 4880493	911	1200	579
VOE 4880493	911	1350	585
VOE 4880493	916	200	637
VOE 4880493	916	210	641
VOE 4880493	916	350	643
VOE 4880663	491	100	351
VOE 4880663	911	300	519
VOE 4880663	911	700	545
VOE 4880663	911	700	547
VOE 4880663	911	800	551
VOE 4880663	911	800	553
VOE 4880663	911	810	555
VOE 4880663	911	810	557
VOE 4880663	911	1100	569
VOE 4880663	911	1150	573
VOE 4880663	911	1200	579
VOE 4880663	912	800	617
VOE 4880663	912	800	619
VOE 4880663	916	350	643
VOE 4880804	380	100	205
VOE 4881293	831	100	437
VOE 4881438	234	100	77
VOE 4881438	260	200	103
VOE 4881438	352	100	135
VOE 4881438	371	500	177
VOE 4881438	645	400	389
VOE 4881438	821	100	419
VOE 4881438	911	400	535
VOE 4881438	911	500	539
VOE 4881438	924	150	651
VOE 4881440	251	100	89
VOE 4881440	256	100	97
VOE 4881440	371	100	159
VOE 4881440	873	200	465
VOE 4881440	874	350	469
VOE 4881440	874	450	473
VOE 4881440	911	1160	577
VOE 4881440	915	100	627
VOE 4881440	915	150	629
VOE 4881440	916	210	639
VOE 4881440	945	200	707
VOE 4881722	420	100	225
VOE 4881722	420	150	229
VOE 4881722	421	150	235
VOE 4881722	463	100	327
VOE 4881722	645	400	389
VOE 4881722	911	400	533
VOE 4881722	911	400	535
VOE 4881722	911	700	545
VOE 4881722	911	700	547
VOE 4881722	911	1300	581
VOE 4881722	911	1310	583
VOE 4881722	911	1400	587
VOE 4881722	911	1500	589
VOE 4881722	912	750	613
VOE 4881722	912	800	617
VOE 4881722	916	100	633
VOE 4881722	916	200	635
VOE 4881722	916	200	637
VOE 4881722	916	210	639
VOE 4881722	916	210	641
VOE 4881722	924	150	649
VOE 4881722	924	150	651
VOE 4881722	924	200	653
VOE 4881722	924	250	655
VOE 4881722	971	200	717
VOE 63971068	926	200	689
VOE 7011998	210	50	39
VOE 7025167	233	100	75
VOE 762681	872	250	457
VOE 784076	771	100	401
VOE 784076	771	140	403
VOE 8157766	371	100	157
VOE 81709100	421	260	249
VOE 874114	371	650	187
VOE 874654	371	100	157
VOE 874654	371	400	169
VOE 874654	371	450	175
VOE 874654	371	650	187
VOE 874654	371	655	193
VOE 874802	371	300	165
VOE 874802	371	500	177
VOE 874802	371	655	191
VOE 874802	371	700	195
VOE 874802	371	710	197
VOE 874802	371	750	199
VOE 874802	371	800	201
VOE 874954	371	250	163
VOE 874954	371	450	175
VOE 874954	371	750	199
VOE 874954	371	800	201
VOE 874954	915	100	627
VOE 874955	371	250	163
VOE 874955	371	300	165
VOE 874955	371	400	169
VOE 874955	371	400	171
VOE 874955	371	450	173

NUMERICAL INDEX

RÉPERTOIRE DE NUMÉROS

NUMMERNREGISTER

INDICE DE NÚMERO

NUMERICAL INDEX | **NUMMERNREGISTER**

RÉPERTOIRE DE NUMÉROS | **INDICE DE NÚMERO**

Catalogue id **20050** | Group **1000**

Issue **VOE 64D9920050** | Page **26**

Part No	Group	Sect	Page
VOE 874955	371	600	179
VOE 874955	371	610	181
VOE 874955	371	620	183
VOE 874955	371	630	185
VOE 874955	371	650	187
VOE 874955	371	655	191
VOE 874955	371	700	195
VOE 874955	371	710	197
VOE 874955	424	150	289
VOE 874957	371	250	163
VOE 874957	371	300	165
VOE 874957	371	350	167
VOE 874957	371	600	179
VOE 874957	371	610	181
VOE 874957	371	655	191
VOE 874957	371	700	195
VOE 874957	371	710	197
VOE 874957	371	800	201
VOE 874958	371	250	163
VOE 874958	371	300	165
VOE 874958	371	655	191
VOE 874958	371	710	197
VOE 874958	371	800	201
VOE 874959	371	400	169
VOE 874959	371	400	171
VOE 874959	371	600	179
VOE 874959	371	610	181
VOE 874959	371	620	183
VOE 874959	371	630	185
VOE 874959	371	750	199
VOE 874960	371	300	165
VOE 874960	371	400	169
VOE 874960	371	450	173
VOE 874960	371	650	187
VOE 874960	371	655	191
VOE 874965	371	200	161
VOE 874965	371	400	169
VOE 874965	371	650	187
VOE 874965	371	700	195
VOE 874967	371	250	163
VOE 874967	371	655	191
VOE 874967	371	710	197
VOE 888289	212	100	47
VOE 888760	236	150	85
VOE 888774	262	100	107
VOE 907825	896	100	487
VOE 907838	945	175	705
VOE 907903	971	100	715
VOE 914167	460	100	297
VOE 914167	460	150	299
VOE 914167	925	300	675
VOE 914167	925	320	679
VOE 914167	926	200	689
VOE 914167	945	150	693
VOE 914167	945	150	695
VOE 914167	945	150	697
VOE 914167	945	160	699
VOE 914167	945	175	701
VOE 914167	945	175	703
VOE 914167	945	175	705
VOE 914167	945	200	707
VOE 914167	971	100	713
VOE 914167	974	100	731
VOE 914167	974	150	735
VOE 914446	915	100	623
VOE 914446	945	200	707
VOE 914450	915	150	629
VOE 914450	945	150	697
VOE 914450	945	200	707
VOE 914454	915	200	631
VOE 914465	974	100	729
VOE 914470	972	100	725
VOE 925739	261	100	105
VOE 930416	882	100	483
VOE 930430	916	360	645
VOE 930434	352	200	137
VOE 930438	916	360	645
VOE 930872	945	200	707
VOE 932037	463	100	327
VOE 932037	645	400	389
VOE 932037	911	100	509
VOE 932037	911	400	535
VOE 932037	911	1400	587
VOE 932037	916	200	635
VOE 932037	916	210	639
VOE 932037	924	150	649
VOE 932037	924	150	651
VOE 932039	420	100	225
VOE 932039	460	150	299
VOE 932039	468	100	345
VOE 932039	517	250	367
VOE 932039	645	400	389
VOE 932039	911	100	509
VOE 932039	911	250	513
VOE 932039	911	275	515
VOE 932039	911	400	533
VOE 932039	911	400	535
VOE 932039	911	500	539
VOE 932039	911	550	541
VOE 932039	911	700	547
VOE 932039	911	1300	581
VOE 932039	911	1310	583
VOE 932039	911	1400	587
VOE 932039	912	750	613
VOE 932039	912	800	617
VOE 932039	912	800	619
VOE 932039	916	100	633
VOE 932039	916	200	637
VOE 932039	916	210	641
VOE 932039	924	150	649
VOE 932039	924	200	653
VOE 932039	924	250	655
VOE 932039	925	320	679
VOE 932039	971	200	717
VOE 932039	975	100	739
VOE 932040	645	400	389
VOE 932040	911	400	533
VOE 932040	911	800	553
VOE 932040	911	810	555
VOE 932040	911	1100	569
VOE 932040	911	1150	573
VOE 932040	911	1160	577
VOE 932040	911	1200	579
VOE 932040	912	800	619
VOE 932040	916	350	643
VOE 932040	916	360	645
VOE 932040	971	200	717
VOE 932041	420	100	225
VOE 932041	491	100	351
VOE 932041	911	800	551
VOE 932041	911	810	555
VOE 932041	912	800	617
VOE 932041	925	300	675
VOE 932042	234	100	77
VOE 932042	911	250	513
VOE 932042	911	275	515
VOE 932042	911	300	519
VOE 932042	911	310	521
VOE 932042	911	325	525
VOE 932042	911	330	527
VOE 932042	911	350	529
VOE 932042	911	360	531
VOE 932042	911	400	533
VOE 932042	911	500	539
VOE 932042	911	550	541
VOE 932042	911	550	543
VOE 932042	911	700	545
VOE 932042	911	700	549
VOE 932042	911	800	551
VOE 932042	911	810	555
VOE 932042	911	900	561
VOE 932042	911	910	563
VOE 932042	911	1000	565
VOE 932042	911	1010	567
VOE 932042	911	1100	569
VOE 932042	911	1150	573
VOE 932042	911	1160	577
VOE 932042	911	1350	585
VOE 932042	912	750	613
VOE 932042	912	800	617
VOE 932042	916	200	635
VOE 932042	916	200	637
VOE 932042	916	210	639
VOE 932042	916	210	641
VOE 932042	971	200	717
VOE 932043	911	300	517
VOE 932043	911	310	521
VOE 935028	916	360	645
VOE 935032	911	300	519
VOE 935032	911	310	521
VOE 935032	911	550	541
VOE 935032	911	700	545
VOE 935067	460	150	299
VOE 935067	461	110	303
VOE 935067	924	150	649

Part No	Group	Sect	Page
VOE 935069	420	150	229
VOE 935069	421	150	235
VOE 935069	645	400	389
VOE 935069	916	100	633
VOE 935069	916	200	637
VOE 935069	924	150	649
VOE 935069	971	200	717
VOE 935070	645	400	389
VOE 935073	925	300	675
VOE 935076	911	800	553
VOE 935076	911	810	555
VOE 935076	912	800	617
VOE 935079	911	800	551
VOE 935079	911	810	555
VOE 935082	463	100	327
VOE 935082	645	400	389
VOE 935082	911	400	535
VOE 935082	911	1400	587
VOE 935082	916	200	635
VOE 935082	916	210	639
VOE 935082	924	150	651
VOE 935085	420	100	225
VOE 935085	420	150	229
VOE 935085	468	100	345
VOE 935085	468	150	349
VOE 935085	517	250	367
VOE 935085	645	400	389
VOE 935085	911	100	509
VOE 935085	911	500	539
VOE 935085	911	1310	583
VOE 935085	916	210	641
VOE 935085	971	200	717
VOE 935089	645	400	389
VOE 935091	911	500	539
VOE 935091	925	300	675
VOE 935091	925	320	679
VOE 935092	925	300	675
VOE 935093	911	550	541
VOE 935093	911	700	545
VOE 935093	911	700	547
VOE 935093	911	1350	585
VOE 935093	916	200	637
VOE 935093	916	210	641
VOE 935094	911	800	553
VOE 935094	911	810	555
VOE 935094	911	1100	569
VOE 935094	911	1150	573
VOE 935094	911	1160	577
VOE 935094	912	800	619
VOE 935094	916	350	643
VOE 935095	491	100	351
VOE 935095	912	800	617
VOE 935097	491	100	351
VOE 935229	911	300	517
VOE 935229	911	310	521
VOE 935436	911	400	535
VOE 935436	911	1400	587
VOE 935436	924	150	649
VOE 935453	925	320	679
VOE 935538	911	1300	581
VOE 935538	911	1310	583
VOE 935574	911	300	517
VOE 935574	911	310	521
VOE 935576	916	200	637
VOE 935576	916	210	639
VOE 935640	645	400	389
VOE 935756	911	400	535
VOE 935756	911	700	547
VOE 935756	911	1400	587
VOE 935756	924	150	649
VOE 936070	911	350	529
VOE 936070	911	360	531
VOE 936122	911	300	517
VOE 936122	911	300	519
VOE 936122	911	310	521
VOE 936339	911	1400	587
VOE 936339	924	150	649
VOE 936439	911	700	547
VOE 936439	911	1400	587
VOE 936446	911	700	547
VOE 936539	916	210	639
VOE 936606	916	210	641
VOE 936620	911	250	513
VOE 936620	911	275	515
VOE 937237	916	360	645
VOE 937377	911	310	521
VOE 937950	925	320	679
VOE 937966	911	310	521
VOE 937967	911	310	521
VOE 937990	911	310	521
VOE 938074	916	210	639
VOE 940142	468	100	345
VOE 941262	363	150	153
VOE 941267	810	150	411
VOE 941268	810	150	413
VOE 941269	272	100	119
VOE 941460	911	100	509
VOE 941507	874	350	469
VOE 942290	821	100	417
VOE 942767	424	100	287
VOE 942767	424	150	289
VOE 943469	260	200	103
VOE 943473	491	100	351
VOE 943473	911	325	525
VOE 943473	911	330	527
VOE 943480	874	450	471
VOE 943483	256	100	97
VOE 943926	551	250	373
VOE 943926	821	100	417
VOE 944158	371	500	177
VOE 944265	352	100	135
VOE 944265	352	200	137
VOE 944265	362	150	149
VOE 945407	896	200	491
VOE 945495	214	100	53
VOE 945634	915	100	623
VOE 945634	915	100	625
VOE 945634	915	150	629
VOE 945634	915	200	631
VOE 945780	823	100	421
VOE 946035	272	100	119
VOE 946036	271	100	117
VOE 946036	421	150	235
VOE 946329	252	100	93
VOE 946329	551	250	373
VOE 946329	641	100	381
VOE 946329	825	150	425
VOE 946329	827	150	431
VOE 946329	896	200	491
VOE 946329	911	300	517
VOE 946440	272	100	119
VOE 946440	352	100	135
VOE 946440	371	100	157
VOE 946440	810	150	411
VOE 946440	874	450	471
VOE 946440	881	150	477
VOE 946440	896	100	487
VOE 946440	911	1150	575
VOE 946440	911	1400	587
VOE 946440	945	175	705
VOE 946441	911	300	517
VOE 946441	911	310	521
VOE 946441	916	200	635
VOE 946441	974	100	729
VOE 946470	874	350	469
VOE 946472	252	100	93
VOE 946472	256	100	97
VOE 946472	911	1300	581
VOE 946472	911	1310	583
VOE 946472	916	210	639
VOE 946502	421	150	235
VOE 946502	915	100	623
VOE 946502	915	150	629
VOE 946671	827	100	429
VOE 946671	874	450	471
VOE 946671	911	550	543
VOE 946671	911	700	547
VOE 946671	911	1350	585
VOE 946671	916	350	643
VOE 946671	916	360	645
VOE 946777	353	100	139
VOE 946777	353	150	141
VOE 946787	371	350	167
VOE 946830	831	100	437
VOE 947167	912	800	617
VOE 947457	874	450	471
VOE 947558	234	100	77
VOE 947558	896	100	487
VOE 948645	252	100	93
VOE 948645	261	100	105
VOE 948645	271	100	117
VOE 948645	352	100	135
VOE 948645	352	200	137
VOE 948645	353	200	143
VOE 948645	362	100	147

NUMERICAL INDEX | **NUMMERNREGISTER**

RÉPERTOIRE DE NUMÉROS | **INDICE DE NÚMERO**

Catalogue id **20050** | Group **1000**

Issue **VOE 64D9920050** | Page **28**

Part No	Group	Sect	Page
VOE 948645	525	100	369
VOE 948645	551	250	373
VOE 948645	825	200	427
VOE 948645	827	100	429
VOE 948645	827	150	431
VOE 948645	831	100	433
VOE 948645	831	100	435
VOE 948645	841	100	439
VOE 948645	873	100	461
VOE 948645	874	350	469
VOE 948645	874	450	471
VOE 948645	911	550	543
VOE 948645	911	1000	565
VOE 948645	911	1100	571
VOE 948645	911	1150	575
VOE 948645	911	1350	585
VOE 948645	912	800	617
VOE 948645	915	100	625
VOE 948645	915	150	629
VOE 948645	915	200	631
VOE 948645	916	210	639
VOE 948645	916	350	643
VOE 948645	916	360	645
VOE 948645	925	300	677
VOE 948645	926	100	687
VOE 948645	945	200	707
VOE 948836	460	100	297
VOE 949005	371	650	189
VOE 949005	371	655	193
VOE 949102	823	100	421
VOE 949587	371	200	161
VOE 949755	551	250	373
VOE 949824	971	100	715
VOE 949847	915	100	623
VOE 949847	915	100	625
VOE 949874	882	300	485
VOE 949921	380	200	209
VOE 949921	881	100	475
VOE 949937	872	200	455
VOE 950588	420	100	223
VOE 950588	420	150	227
VOE 950588	420	200	231
VOE 951952	915	100	623
VOE 952623	272	100	119
VOE 953059	911	1000	565
VOE 953059	911	1010	567
VOE 953062	911	1000	565
VOE 953062	911	1100	571
VOE 953062	911	1150	573
VOE 953073	252	100	93
VOE 955245	380	100	205
VOE 955276	841	100	439
VOE 955282	924	150	649
VOE 955296	421	410	271
VOE 955297	421	450	273
VOE 955297	421	460	275
VOE 955297	421	475	277
VOE 955297	831	100	435
VOE 955302	421	200	241
VOE 955302	421	225	243
VOE 955302	421	230	245
VOE 955302	421	500	279
VOE 955302	421	550	285
VOE 955306	468	100	345
VOE 955782	823	100	421
VOE 955822	641	100	381
VOE 955892	810	150	411
VOE 955905	460	100	297
VOE 955905	716	100	399
VOE 955905	810	150	411
VOE 955905	971	100	713
VOE 955908	911	550	541
VOE 955908	915	100	623
VOE 955912	924	100	647
VOE 955912	924	300	657
VOE 955912	926	200	689
VOE 955912	974	100	731
VOE 955912	974	150	735
VOE 955920	371	100	159
VOE 956926	371	200	161
VOE 959061	825	200	427
VOE 959080	915	100	623
VOE 959080	915	100	625
VOE 959080	915	200	631
VOE 959220	831	100	433
VOE 959236	911	100	511
VOE 959238	420	100	225
VOE 959238	420	150	229
VOE 959238	911	310	523
VOE 960139	363	100	151
VOE 960139	380	200	209
VOE 960139	825	100	423
VOE 960139	841	100	439
VOE 960139	872	250	459
VOE 960139	881	100	475
VOE 960139	881	200	479
VOE 960139	882	100	481
VOE 961970	843	150	445
VOE 961970	873	150	463
VOE 961991	874	450	471
VOE 961991	911	1000	565
VOE 961991	911	1010	567
VOE 961991	915	100	623
VOE 961991	915	100	625
VOE 961991	915	200	631
VOE 963111	818	100	415
VOE 963111	972	100	725
VOE 963196	517	200	365
VOE 965195	911	700	547
VOE 965195	915	100	623
VOE 965195	916	100	633
VOE 965197	974	150	735
VOE 965209	924	150	649
VOE 965225	911	300	517
VOE 965826	352	100	135
VOE 965826	353	100	139
VOE 965830	352	100	135
VOE 965891	371	100	157
VOE 966722	945	200	707
VOE 967531	874	450	471
VOE 967562	972	100	725
VOE 967562	974	100	729
VOE 967600	915	100	623
VOE 967600	915	150	629
VOE 967631	911	1100	571
VOE 967631	911	1150	573
VOE 967631	924	200	653
VOE 967631	924	250	655
VOE 967632	911	400	535
VOE 967632	971	200	717
VOE 967633	911	1000	565
VOE 967633	911	1400	587
VOE 967633	916	200	635
VOE 967633	916	210	639
VOE 967635	911	100	509
VOE 967635	911	900	561
VOE 967635	911	910	563
VOE 967640	945	150	695
VOE 967640	945	175	703
VOE 968207	517	250	367
VOE 968237	945	150	695
VOE 968237	945	175	703
VOE 968237	971	100	715
VOE 968435	218	100	65
VOE 968435	971	100	713
VOE 968435	971	100	715
VOE 968435	974	100	731
VOE 968435	974	150	735
VOE 968589	823	100	421
VOE 968589	825	150	425
VOE 968589	911	250	513
VOE 968589	911	275	515
VOE 968589	945	150	695
VOE 968589	945	160	699
VOE 968589	974	100	729
VOE 968589	974	100	731
VOE 968589	974	150	733
VOE 968593	218	100	65
VOE 968593	436	100	291
VOE 968847	873	200	465
VOE 968852	460	100	297
VOE 968942	945	200	707
VOE 969147	363	100	151
VOE 969147	380	200	209
VOE 969147	525	100	369
VOE 969147	831	100	433
VOE 969147	831	100	435
VOE 969147	881	200	479
VOE 969161	372	100	203
VOE 969278	372	100	203
VOE 969278	380	350	213
VOE 969313	945	150	695
VOE 969313	945	175	701
VOE 969373	825	200	427
VOE 969404	363	200	155

Part No	Group	Sect	Page
VOE 969405	872	200	455
VOE 969407	371	100	157
VOE 969408	353	100	139
VOE 969422	371	100	159
VOE 969422	872	250	457
VOE 969422	896	100	487
VOE 969478	881	150	477
VOE 969513	353	150	141
VOE 969513	881	200	479
VOE 969557	371	500	177
VOE 969587	371	100	157
VOE 969587	831	100	433
VOE 969587	841	100	439
VOE 969587	872	250	457
VOE 969587	882	100	481
VOE 969589	881	100	475
VOE 969793	272	100	119
VOE 969817	353	150	141
VOE 969846	925	300	677
VOE 970795	371	750	199
VOE 970803	421	460	275
VOE 970803	421	475	277
VOE 970808	421	450	273
VOE 970809	420	150	227
VOE 970812	420	100	225
VOE 970823	420	150	227
VOE 970827	421	350	257
VOE 970827	421	360	261
VOE 970827	421	375	265
VOE 970827	421	400	267
VOE 970827	421	410	271
VOE 970890	460	100	297
VOE 970890	460	150	299
VOE 971081	945	175	705
VOE 971099	525	100	369
VOE 971099	915	100	623
VOE 971099	972	100	725
VOE 971099	974	150	735
VOE 972007	881	150	477
VOE 972401	882	100	481
VOE 972410	882	100	481
VOE 972410	882	300	485
VOE 972412	872	250	459
VOE 972412	882	100	481
VOE 972421	272	100	119
VOE 972421	810	150	411
VOE 972421	825	100	423
VOE 972421	831	100	437
VOE 972421	874	450	471
VOE 972421	881	200	479
VOE 973119	371	200	161
VOE 973119	371	300	165
VOE 973119	371	350	167
VOE 973119	371	450	173
VOE 973119	371	620	183
VOE 973119	371	630	185
VOE 973120	371	350	167
VOE 973120	371	450	175
VOE 973126	371	350	167
VOE 973495	331	100	133
VOE 974428	810	150	411
VOE 974428	945	150	695
VOE 974428	945	175	703
VOE 974428	971	100	713
VOE 975237	269	100	115
VOE 975358	371	500	177
VOE 975378	881	100	475
VOE 975378	882	100	481
VOE 975380	873	150	463
VOE 976162	872	250	457
VOE 976256	371	200	161
VOE 976256	371	450	173
VOE 976929	210	50	39
VOE 977222	872	250	457
VOE 977781	371	100	157
VOE 977934	911	100	509
VOE 977982	873	150	463
VOE 978254	911	100	509
VOE 978392	363	100	151
VOE 978869	911	700	547
VOE 978869	911	1310	583
VOE 978869	916	200	637
VOE 978869	916	210	641
VOE 978953	818	100	415
VOE 978997	926	100	687
VOE 978999	372	100	203
VOE 979021	424	150	289
VOE 979021	925	350	681
VOE 979021	974	100	731
VOE 979022	925	200	669
VOE 979022	925	300	677
VOE 979920	716	100	399
VOE 980521	460	150	299
VOE 980521	716	100	399
VOE 980883	353	150	141
VOE 980883	371	500	177
VOE 981256	525	100	369
VOE 981269	271	100	117
VOE 981289	911	250	513
VOE 981289	911	275	515
VOE 981289	911	325	525
VOE 981289	911	350	529
VOE 981289	911	360	531
VOE 981289	911	400	533
VOE 981289	911	550	543
VOE 981289	911	700	545
VOE 981289	911	800	551
VOE 981289	911	810	555
VOE 981289	911	900	561
VOE 981289	911	910	563
VOE 981289	911	1000	565
VOE 981289	911	1100	569
VOE 981289	911	1150	573
VOE 981289	912	750	613
VOE 981289	912	800	617
VOE 981289	916	200	637
VOE 981289	916	210	641
VOE 981290	911	300	517
VOE 981290	911	310	521
VOE 981290	911	400	533
VOE 981290	911	450	537
VOE 981290	911	700	545
VOE 981290	911	1000	565
VOE 981290	911	1010	567
VOE 981290	926	200	689
VOE 981291	911	100	511
VOE 981291	911	300	519
VOE 981291	911	310	521
VOE 981314	460	100	297
VOE 981314	460	150	299
VOE 981314	874	450	471
VOE 981465	352	100	135
VOE 981604	260	100	101
VOE 981661	911	1400	587
VOE 981661	916	100	633
VOE 981661	924	150	649
VOE 981661	924	150	651
VOE 981665	645	400	389
VOE 981665	971	200	717
VOE 981705	260	200	103
VOE 981708	260	200	103
VOE 982021	256	100	97
VOE 983024	911	350	529
VOE 983024	911	360	531
VOE 983123	911	350	529
VOE 983123	911	360	531
VOE 983244	831	100	435
VOE 983246	911	550	543
VOE 983247	911	400	535
VOE 983247	916	200	637
VOE 983247	916	210	641
VOE 983253	911	550	543
VOE 983253	911	700	545
VOE 983253	912	150	591
VOE 983253	912	300	601
VOE 983267	911	800	551
VOE 983299	818	100	415
VOE 983302	924	150	649
VOE 983303	831	100	435
VOE 983304	525	100	369
VOE 983304	945	150	695
VOE 983304	945	175	703
VOE 983312	971	100	713
VOE 983334	551	250	373
VOE 983338	945	175	703
VOE 983338	971	100	715
VOE 983340	716	100	399
VOE 983377	716	100	399
VOE 983695	460	150	299
VOE 990736	460	150	299
VOE 990736	911	550	541
VOE 990737	421	160	237
VOE 990737	517	250	367
VOE 990737	645	400	389
VOE 990737	924	150	649

NUMERICAL INDEX

RÉPERTOIRE DE NUMÉROS

NUMMERNREGISTER

INDICE DE NÚMERO

NUMERICAL INDEX

RÉPERTOIRE DE NUMÉROS

NUMMERNREGISTER

INDICE DE NÚMERO

Catalogue id **20050** | Group **1000**

Issue **VOE 64D9920050** | Page **30**

Part No	Group	Sect	Page
VOE 990738	911	310	521
VOE 990738	911	550	541
VOE 990738	911	550	543
VOE 990738	911	1500	589
VOE 990738	916	360	645
VOE 990738	925	300	675
VOE 990738	925	320	679
VOE 990739	460	150	299
VOE 990739	517	250	367
VOE 990739	911	310	521
VOE 990739	911	550	541
VOE 990739	911	550	543
VOE 990739	911	1160	577
VOE 990739	916	360	645
VOE 990739	925	300	675
VOE 9907393	911	550	541
VOE 990740	491	100	351
VOE 990740	911	310	523
VOE 990740	911	330	527
VOE 990740	911	1010	567
VOE 990740	911	1160	577
VOE 990740	916	210	639
VOE 990740	916	210	641
VOE 991618	460	150	299
ZM 2801364	925	300	677
ZM 2812366	896	200	491
ZM 2907157	841	100	439
ZM 2907158	841	100	439