KOMATSU https://truckmanualshub.com/

# PARTS MANUAL

PM240 R1

## BX50 SERIES FORKLIFT TRUCKS

**Federal Environmental Protection Agency (EPA) Emission Control Compliant**

OUTUBRO 2006

**BX50 S/N 200001A~**

| | |
|---|---|
| **BX50 - Gasoline & LP** | **FG20/25/28/30/32/35-16** |
| **BX50 - Diesel** | **FD20/25/28/30/32/35-16** |

RUTHZIL TRATOR COMERCIAL DE PEÇAS LTDA 11 97083-6812 ROLANDO

# BX50




CLEAN AIR TECHNOLOGY TODAY AND TOMORROW

**WARNING**

Read and observe all warnings on this unit before operating it.
**DO NOT** operate this equipment unless all factory installed guards and shields are properly secured in place.

KOMATSU

**Komatsu Forklift USA, Inc.**

**REVISED OCTOBER 2006**

https://truckmanualshub.com/

The information and specifications contained herein were accurate at the time of publication, but may change without notice as required for product improvements. Neither Komatsu Forklift USA, Inc., nor its parent company nor any of its subsidiaries will be held responsible for damages due to misuse or inappropriate use of its products.

Requests for information, comments and other inquiries should be sent to:

Komatsu Forklift USA, Inc.
14481 Lochridge Blvd., Bldg. #2
Covington, Georgia 30014-4908

Voice phone: (770) 385-4815
Fax phone: (770) 385-4838

© Copyright 2006, Komatsu Forklift USA, Inc. all rights reserved. No part of this document may be photocopied or reproduced in any way without prior written consent of Komatsu Forklift USA, Inc.

https://truckmanualshub.com/

**Komatsu Forklift U.S.A., Inc**
Attn: Technical Publications
14481 Lochridge Blvd., Bldg 2
Covington, Georgia 30014
U.S.A.

# PROPOSAL FOR MANUAL REVISIONS/CORRECTIONS

| | | |
|---|---|---|
| | Date | |
| **Originator** | Individual's Name | |
| | Company Name | |
| | Department | |
| | Street Address | |
| | City, State & ZIP | |
| | Voice Phone | Fax Phone |

Book description

Truck model & S/N

Problem location and description. Attach supporting photo, sketch or other material as necessary.
Book or Tech Bulletin No. _____
Section No. and/or Name _____
Page No. _____
Item No. (if parts book) _____
Item Description (if in parts book) _____
Note made in K-Link? _____ Name of Note _____ (attach copy)

Corrective Action and Date

**Fax this completed form to: 770-385-4838**

https://truckmanualshub.com/

# This Page Intentionally Left Blank

https://truckmanualshub.com/

# CONTENTS


| | Fig. No. | Page No. |
|---|---|---|
| **COPYRIGHT STATEMENT** | | |
| **CONTENTS** | | 1 |
| **INTRODUCTION** | | 11 |
| **FORKLIFT TRUCKS COVERED IN THIS PUBLICATION (S/N 200001A~)** | | 13 |
| **CHAPTER 00 - RECOMMENDED STOCK LIST** | | |
| Fast Moving Stock List (FMSL) - | 00-0000 | 00- 01 |
| Full Recommended Stock List (FRSL) - | 00-0001 | 00- 05 |
| EPA Related Stock List (EPASL) - | 00-0002 | 00- 011 |
| Filters | 00-0003 | 00- 015 |
| **CHAPTER 01 - ENGINE AND RELATED PARTS** | | |
| Engine Units - (K21/K25 Gas/LP/Dual-Fuel) | 01-0001 | 01- 01 |
| Transmission-to-Engine Mounting Parts - (K21/K25) | 01-0002 | 01- 03 |
| Engine Mounting Parts - (K21/K25) | 01-0003 | 01- 05 |
| Air Cleaner Assy - (K21/K25) | 01-0010 | 01- 07 |
| Engine Assy & Short Block Assy (K21/K25) | 01-0200 | 01- 09 |
| Bare Engine Block & Oil Pan (K21/K25) | 01-0205 | 01- 011 |
| Cylinder Head & Rocker Cover (K21/K25) | 01-0210 | 01- 013 |
| Crankcase Ventilation (K21/K25) | 01-0215 | 01- 015 |
| Piston, Crankshaft & Flywheel (K21/K25) | 01-0220 | 01- 017 |
| Camshaft & Valve Mechanism (K21/K25) | 01-0225 | 01- 021 |
| Front Cover & Fittings (K21/K25) | 01-0230 | 01- 023 |
| Manifold Assembly (K21/K25) | 01-0235 | 01- 025 |
| Fuel Rail & Injector Assembly (K21/K25 Gasoline) | 01-0240 | 01- 027 |
| Fuel Injector Holder Assembly (K21/K25 LPG) | 01-0241 | 01- 029 |
| Fuel Rail & Injector Holder Assembly - Press. Reg. (K21/K25 Dual-Fuel) | 01-0242 | 01- 031 |
| Fuel Rail & Injector Holder Assembly - Press. Reg. (K21/K25) | 01-0242A | 01- 033 |
| Fuel Injection System (K21/K25) | 01-0242B | 01- 035 |
| Lubricating System (K21/K25) | 01-0245 | 01- 038 |
| Water Pump, Cooling Fan & Thermostat (K21/K25) | 01-0250 | 01- 039 |
| Ignition System (K21/K25) | 01-2055 | 01- 041 |
| Bracketry - Ignition / Cooling (K21/K25) | 01-0260 | 01- 043 |
| Vacuum Piping (K21/K25) | 01-0265 | 01- 045 |
| Alternator (K21/K25) | 01-0270 | 01- 047 |
| Starter Motor (K21/K25) | 01-0275 | 01- 049 |
| Gasket Kit (K21/K25) | 01-0280 | 01- 051 |
| Fuel Pump Block-Off (K21/K25) | 01-0285 | 01- 053 |
| Vaporizer (K21/K25 LP & Dual-Fuel) | 01-0290 | 01- 055 |
| Caution Plate & Label (K21/K25) | 01-0295 | 01- 057 |
| Engine - (4D94LE Diesel) | 01-1001 | 01- 059 |
| Engine Mounting Parts - (4D94LE) | 01-1001A | 01- 061 |
| Air Cleaner Assy - (4D94LE) | 01-1001B | 01- 063 |
| Cylinder Block | 01-1002 | 01- 065 |
| Gear Housing (4D94LE) | 01-1002A | 01- 067 |
| Flywheel Housing & Oil Sump (4D94LE) | 01-1002B | 01- 069 |
| Cylinder Head & Bonnet (4D94LE) | 01-1002C | 01- 071 |
| Intake Manifold (4D94LE) | 01-1002D | 01- 075 |
| Exhaust Manifold (4D94LE) | 01-1002E | 01- 077 |
| Camshaft & Driving Gear (4D94LE) | 01-1002F | 01- 079 |

https://truckmanualshub.com/

Cooling Water System (4D94LE) . . . . . .01-1002G . . . . . 01- 081
Fuel Injection Pump (4D94LE) . . . . . .01-1015 . . . . . 01- 087
Fuel Injection Valve (4D94LE). . . . . .01-1020 . . . . . 01- 089
Fuel Filter (4D94LE) . . . . . .01-1025 . . . . . 01- 091
Starting Motor (4D94LE) . . . . . .01-1030 . . . . . 01- 093
Alternator - STD (4D94LE) . . . . . .01-1035 . . . . . 01- 095
Alternator - UL-DS (4D94LE) . . . . . .01-1040 . . . . . 01- 097
Gasket Set (4D94LE) . . . . . .01-1045 . . . . . 01- 099

**CHAPTER 03 - EXHAUST SYSTEM**
Muffler & Exhaust - (K21/K25 Pneumatic) . . . . . .03-0001 . . . . . 03- 01
Muffler & Exhaust - (K21/K25 Cushion) . . . . . .03-0002 . . . . . 03- 03
Muffler & Exhaust - (4D94LE) . . . . . .03-0003 . . . . . 03- 05

**CHAPTER 04 - COOLING SYSTEM**
Radiator - (K21/K25) . . . . . .04-0001 . . . . . 04- 01
Radiator - (4D94LE) . . . . . .04-0002 . . . . . 04- 03
Radiator Shroud & Hoses - (K21/K25) . . . . . .04-0010 . . . . . 04- 05
Radiator Shroud & Hoses - All Except 3.5T Diesel - (4D94LE) . . . . . .04-0011. . . . . 04- 07
Radiator Shroud & Hoses - 3.5T Diesel (4D94LE) . . . . . .04-0012 . . . . . 04- 09
Radiator Back Cover (All Models). . . . . .04-0015 . . . . . 04- 011
Cooling System Reserve Tank - (K21/K25). . . . . .04-0020 . . . . . 04 013
Cooling System Reserve Tank - (4D94LE) . . . . . .04-0021 . . . . . 04- 015
TorCon Cooler & Piping - (K21) . . . . . .04-0050 . . . . . 04- 017
TorCon Cooler & Piping - (K25). . . . . .04-0051 . . . . . 04- 019
TorCon Cooler & Piping - All Diesel Except 3.2 & 3.5T - (4D94LE) . . . . . .04-0055 . . . . . 04- 021
TorCon Cooler & Piping - 3.2 & 3.5T Diesel - (4D94LE) . . . . . .04-0056 . . . . . 04- 023

**CHAPTER 05 - FUEL SYSTEM - GAS**
Fuel System - Gasoline - Tank - (K21/K25) . . . . . .05-0001 . . . . . 05- 01
Fuel System - Diesel - Tank - (4D94LE) . . . . . .05-0002 . . . . . 05- 03
Fuel System - Diesel - Tank Unit - (4D94LE) . . . . . .05-0003 . . . . . 05- 05

**CHAPTER 06 - FUEL SYSTEM - LPG & DUAL-FUEL**
LPG Fuel System - Overview . . . . . .06-0001 . . . . . 06- 01
LPG Fuel System - Clips & Clamps . . . . . .06-0002 . . . . . 06- 03
LPG Fuel System - LPG Gas Hose Assy . . . . . .06-0010 . . . . . 06- 05

**CHAPTER 13 - TORQUE CONVERTER**
Torque Converter - Mounting & Inner Parts . . . . . .13-0001 . . . . . 13- 01
Converter & Pump Detail - (All Models Except Export). . . . . .13-0002 . . . . . 13- 03
Converter & Pump Detail - (Export Only) . . . . . .13-0003 . . . . . 13- 07

**CHAPTER 15 - TORQFLOW TRANSMISSION**
Unit Assy & Case . . . . . .15-0001 . . . . . 15- 01
Input & Idler Assy (All Except 3.2 & 3.5T) . . . . . .15-0002 . . . . . 15- 03
Input & Idler Assy (3.2 & 3.5T) . . . . . .15-0003 . . . . . 15- 07
Valve Assy. . . . . .15-0004 . . . . . 15- 011
Valve Assy Detail . . . . . .15-0005 . . . . . 15- 013
Solenoid Valve Parts . . . . . .15-0006 . . . . . 15- 015
External Case Parts . . . . . .15-0007 . . . . . 15- 017
Universal Joint. . . . . .15-0010 . . . . . 15- 019

https://truckmanualshub.com/

**CHAPTER 21 - DRIVE AXLE**

Drive Axle Assy - (2.0 & 2.5T Pneumatic) . . . . . 21-0001 . . . . . 21- 01
Drive Axle Assy - (2.8 & 3.0T Pneumatic) . . . . . 21-0002 . . . . . 21- 03
Drive Axle Assy - (3.2 & 3.5T Pneumatic) . . . . . 21-0003 . . . . . 21- 05
Drive Axle Assy - (Cushion) . . . . . 21-0010 . . . . . 21- 07
Drive Axle Assy - Detail - (Cushion) . . . . . 21-0011 . . . . . 21- 09
Differential Gear Assy - (All) . . . . . 21-0050 . . . . . 21- 011
Differential - Coupling Shaft - (All) . . . . . 21-0100 . . . . . 21- 015

**CHAPTER 24 - STEER AXLE**

Steering Axle Assy - (Pneumatic) . . . . . 24-0001 . . . . . 24- 01
Steering Axle Assy - Detail - (Pneumatic) . . . . . 24-0002 . . . . . 24- 05
Steering Axle Assy - (Cushion) . . . . . 24-0003 . . . . . 24- 09
Steering Axle Assy - Detail - (Cushion) . . . . . 24-0004 . . . . . 24- 011
Stabilizer Assy (FG) . . . . . 24-0010 . . . . . 24- 013

**CHAPTER 27 - FRONT (DRIVE) WHEELS & TIRES**

Front Wheels & Tires - (Cushion) . . . . . 27-0001 . . . . . 27- 01
Front Wheels & Tires - (Pneumatic) . . . . . 27-0002 . . . . . 27- 03

**CHAPTER 28 - REAR (STEERING) WHEELS & TIRES**

Rear Wheels & Tires - (Cushion) . . . . . 28-0001 . . . . . 28- 01
Rear Wheels & Tires - (Pneumatic) . . . . . 28-0002 . . . . . 28- 03

**CHAPTER 30 - BRAKES, SERVICE / PARKING**

Brake System - Service - (2.0 & 2.5T Pneumatic) . . . . . 30-0001 . . . . . 30- 01
Brake System - Service - (3.0T Pneumatic) . . . . . 30-0002 . . . . . 30- 05
Brake System - Service - (3.2 & 3.5T Pneumatic) . . . . . 30-0003 . . . . . 30- 09
Brake System - Service - (Cushion) . . . . . 30-0010 . . . . . 30- 013
Brake System - Service - (Cushion - Wheel Cyl.) . . . . . 30-0010A . . . . . 30- 017
Brakes - Service - Master Cyl & Piping, Front (All Except 3.2 & 3.5T) . . . . 30-0050 . . . . . 30- 019
Brakes - Power - Booster Assy & Piping, Front (3.2 & 3.5T) . . . . . 30-0051 . . . . . 30- 021
Brakes - Master Cylinder - Exploded View (All Except 3.2 & 3.5T) . . . . . 30-0055 . . . . . 30- 023
Brakes - Booster Assy - Exploded View (3.2 & 3.5T) . . . . . 30-0056 . . . . . 30- 027
Parking Brake Lever Assy W/ Alarm . . . . . 30-0060 . . . . . 30- 029

**CHAPTER 33 - STEERING HANDWHEEL**

Steering Wheel . . . . . 33-0001 . . . . . 33- 01

**CHAPTER 34 - STEERING COLUMN & WHEEL ASSEMBLY**

Steering Column - Power Steering Valve . . . . . 34-0001 . . . . . 34- 01

**CHAPTER 36 - PEDALS, BRAKE & INCHING**

Inching & Brake Pedals - Torqflow Spec - . . . . . 36-0001 . . . . . 36- 01

**CHAPTER 37 - PEDAL, ACCELERATOR**

Accelerator Pedal - (FG Models) . . . . . 37-0001 . . . . . 37- 01
Accelerator Pedal Assy - (FD Models) . . . . . 37-0002 . . . . . 37- 03

**CHAPTER 41 - FRAME AND CHASSIS**

Frame Assy . . . . . 41-0001 . . . . . 41- 01
Frame Assy - Rear View . . . . . 41-0002 . . . . . 41- 03
Frame Assy - Tilt Accessories . . . . . 41-0003 . . . . . 41- 05

https://truckmanualshub.com/

Frame - Fuel Cover (LPG Models) . . . . . 41-0010 . . . . . 41- 07
Frame - Fuel Cap(Except UL-S) . . . . . 41-0011. . . . . 41- 09
Frame - Fuel Cap (UL-S) . . . . . 41-0012 . . . . . 41- 011
Frame - Under Cover Bracket . . . . . 41-0020 . . . . . 41- 013

**CHAPTER 43 - COUNTERWEIGHTS & SUBWEIGHTS**

Counterweights . . . . . 43-0001 . . . . . 43- 01
Sub-Weights . . . . . 43-0010 . . . . . 43- 03

**CHAPTER 50 - OUTER PANEL, OVERHEAD GUARD, OPERATOR COMPARTMENT**

Seats, Operator's . . . . . 50-0001 . . . . . 50- 01
Insulator Assy - Frame - (Pneumatic) . . . . . 50-0050 . . . . . 50- 05
Insulator Assy - Frame - (Cushion) . . . . . 50-0051 . . . . . 50- 07
Insulator Assy - Step, Sub-Bonnet, Radiator. . . . . 50-0052 . . . . . 50- 09
Dashboard. . . . . 50-0100 . . . . . 50- 011
Dashboard & Step Covers, External . . . . . 50-0101 . . . . . 50- 013
Overhead Guard . . . . . 50-0200 . . . . . 50- 015
Overhead Guard - Mounts . . . . . 50-0201 . . . . . 50- 017
Sub-Bonnet . . . . . 50-0301 . . . . . 50- 019

**CHAPTER 55 - ELECTRICAL SYSTEM**

Engine Area / Speed Sensor - (K21/K25) . . . . . 55-0001 . . . . . 55- 01
Attachments - Battery Holder - (K21/K25). . . . . 55-0002 . . . . . 55- 03
Attachments - Condenser - (K21/K25) . . . . . 55-0003 . . . . . 55- 05
Attachments - Battery - (K21/K25) . . . . . 55-0004 . . . . . 55- 07
E/G Harness / Relays / Fuse Box - (K21/K25) . . . . . 55-0010 . . . . . 55- 09
Komatsu Operator Presence System (K.O.P.S.) - Relays - (K21/K25) . . . . 55-0011. . . . . 55- 011
Bonnet Sub-Assy - Seat Switch (All Models) . . . . . 55-0020 . . . . . 55- 013
Dashboard - (K21/K25) w/o Power Brakes . . . . . 55-0030 . . . . . 55- 015
Dashboard - (K25) w/ Power Brakes. . . . . 55-0031 . . . . . 55- 017
Electrical - UL-S (GS & LPS) - (K21/K25) - Part 1 . . . . . 55-0040 . . . . . 55- 019
Electrical - UL-S (GS & LPS) - (K21/K25) - Part 2 . . . . . 55-0041 . . . . . 55- 021
Head Lamps . . . . . 55-0250 . . . . . 55- 023
Front Combination Lamps. . . . . 55-0251 . . . . . 55- 025
Rear "LED" Combination Lamp. . . . . 55-0252 . . . . . 55- 029
Engine Control Unit (ECU) - (K21/K25). . . . . 55-0400 . . . . . 55- 031
LP Driver / SSC Speed Control - (K21/K25) . . . . . 55-0410 . . . . . 55- 033
K.O.P.S. Controller - Frame . . . . . 55-0420 . . . . . 55- 035
Engine Harness - (4D94LE) . . . . . 55-0500 . . . . . 55- 037
Attachments - Battery - (4D94LE). . . . . 55-0504 . . . . . 55- 039
Dashboard - (4D94LE) . . . . . 55-0530 . . . . . 55- 041
Electrical - UL-S (DS) - (4D94LE) - Part 1 . . . . . 55-0540 . . . . . 55- 043
Electrical - UL-S (DS) - (4D94LE) - Part 2 . . . . . 55-0541 . . . . . 55- 045

**CHAPTER 56 - METER PANEL**

Meter Panel Assy & Combination Switch . . . . . 56-0001 . . . . . 56- 01
Meter Panel Display . . . . . 56-0002 . . . . . 56- 03
Meter Panel - Bulbs & Detail . . . . . 56-0003 . . . . . 56- 05

**CHAPTER 60 - HYDRAULIC PUMP**

Hydraulic Pump (FG) . . . . . 60-0001 . . . . . 60- 01
Hydraulic Pump (FG) - Detail (K21 Engine) . . . . . 60-0002 . . . . . 60- 03
Hydraulic Pump (FG) - Detail (K25 Engine) . . . . . 60-0003 . . . . . 60- 05
Hydraulic Pump (All FD Except 3.5 Ton)) . . . . . 60-0010 . . . . . 60- 07

https://truckmanualshub.com/

Hydraulic Pump (3.5 Ton FD) . . . . . 60-0011 . . . . . 60- 09

**CHAPTER 61 - HYDRAULIC CONTROL VALVE**

Hydraulic C/V & Conversion Kit . . . . . 61-0001 . . . . . 61- 01
Hydraulic C/V 3-Spool - Detail. . . . . 61-0001A . . . . . 61- 03
Hydraulic C/V 4-Spool - Detail . . . . . 61-0001B . . . . . 61- 05
Hydraulic Control Valve Lever Assy . . . . . 61-0010 . . . . . 61- 07
Hydraulic Control Valve Piping - 3-Spool (Except 3.5T) . . . . . 61-0020 . . . . . 61- 09
Hydraulic Control Valve Piping - 3-Spool (3.5T) . . . . . 61-0021 . . . . . 61- 011

**CHAPTER 64 - TILT CYLINDER**

Tilt Cylinders - (All) . . . . . 64-0001 . . . . . 64- 01
Tilt Cylinder Detail - (2.0 & 2.5T Pneumatic). . . . . 64-0001A . . . . . 64- 05
Tilt Cylinder Detail - (2.8, 3.0, 3.2 & 3.5T Pneumatic). . . . . 64-0001B . . . . . 64- 09
Tilt Cylinder Detail - (2.0 & 2.5T Cushion). . . . . 64-0001C . . . . . 64- 011
Tilt Cylinder Detail - (2.8, 3.0, 3.2T Cushion) . . . . . 64-0001D . . . . . 64- 015
Tilt Cylinder Boot Assy . . . . . 64-0010 . . . . . 64- 017

**CHAPTER 65 - POWER STEERING CYLINDER**

Power Steering Cylinder Assy - (Pneumatic) . . . . . 65-0001 . . . . . 65- 01
Power Steering Cylinder Assy - (Cushion) . . . . . 65-0002 . . . . . 65- 03

**CHAPTER 66 - HYDRAULIC SYSTEMS**

Power Steering Cyl. Piping . . . . . 66-0001 . . . . . 66- 01
Power Steering Pump Return . . . . . 66-0010 . . . . . 66- 03
Hydraulic System - Tank Cover w/o Power Brakes . . . . . 66-0020 . . . . . 66- 05
Hydraulic System - Tank Cover w/ Power Brakes - (3.5T) . . . . . 66-0021 . . . . . 66- 07
Hydraulic Piping - Return Lines . . . . . 66-0031 . . . . . 66- 09
Hydraulic Pump Piping - (Std FG w/o Power Brakes) . . . . . 66-0041 . . . . . 66- 011
Hydraulic Pump Piping - (FG Pneumatic w/ Power Brakes) . . . . . 66-0042 . . . . . 66- 013
Hydraulic Pump Piping - (Std FD w/o Power Brakes). . . . . 66-0051 . . . . . 66- 015
Hydraulic Pump Piping - (FD w/ Power Brakes). . . . . 66-0052 . . . . . 66- 017
Hydraulic Control Valve Piping . . . . . 66-0061 . . . . . 66- 019
Hydraulic Piping - Lift Piping at Control Valve (& Accumulator) . . . . . 66-0071 . . . . . 66- 021
Hydraulic Tilt Piping . . . . . 66-0081 . . . . . 66- 023
Hydraulic Power Brake Piping - Part 1 . . . . . 66-0091 . . . . . 66- 025
Hydraulic Power Brake Piping - Part 2 . . . . . 66-0092 . . . . . 66- 027
Hydraulic Power Brake Piping - Part 3 . . . . . 66-0093 . . . . . 66- 029

**CHAPTER 72 - MASTS**

Mast Bushings. . . . . 72-0000 . . . . . 72- 01

**E50-MD Dual Mast**

Safety Decals . . . . . 72-0010 . . . . . 72- 03
Main Lift Cylinder - Left Side . . . . . 72-0020 . . . . . 72- 05
Main Lift Cylinder - Right Side. . . . . 72-0021 . . . . . 72- 07
Free Lift Cylinder. . . . . 72-0025 . . . . . 72- 09
Uprights / Weldments . . . . . 72-0030 . . . . . 72- 011
Carriage - 4-Roller. . . . . 72-0040 . . . . . 72- 013
Carriage - 6-roller . . . . . 72-0045 . . . . . 72- 015
Hoist Chains . . . . . 72-0050 . . . . . 72- 017
Load Backrest . . . . . 72-0060 . . . . . 72- 019
Mounting Parts - Cushion Tire Trucks . . . . . 72-0070 . . . . . 72- 021
Mounting Parts - Pneumatic Tire Trucks . . . . . 72-0071 . . . . . 72- 023

https://truckmanualshub.com/

Lowering Control Valve . . . . . 72-0085 . . . . . 72- 025
Internal Hose Reeving - Single Function (Pneumatic) . . . . . 72-0090 . . . . . 72- 027
Internal Hose Reeving - Single Function (Cushion) . . . . . 72-0091 . . . . . 72- 031
Internal Hose Reeving - Double Function (Pneumatic). . . . . 72-0095 . . . . . 72- 035
Internal Hose Reeving - Double Function (Cushion). . . . . 72-0096 . . . . . 72- 039
Recommended Stock List (RSL). . . . . 72-0099 . . . . . 72- 043

**E50-MS 2-Stage Mast**
Safety Decals . . . . . 72-0100 . . . . . 72- 047
Main Lift Cylinders. . . . . 72-0200 . . . . . 72- 049
Outer Upright. . . . . 72-0300 . . . . . 72- 051
Inner Upright . . . . . 72-0360 . . . . . 72- 053
Carriage - 4-Roller. . . . . 72-0400 . . . . . 72- 055
Carriage - 6-roller . . . . . 72-0450 . . . . . 72- 057
Hoist Chains . . . . . 72-0500 . . . . . 72- 059
Load Backrest . . . . . 72-0600 . . . . . 72- 061
Mounting Parts - Cushion Tire Trucks. . . . . 72-0700 . . . . . 72- 063
Mounting Parts - Pneumatic Tire Trucks . . . . . 72-0701 . . . . . 72- 065
Lowering Control Valve . . . . . 72-0850 . . . . . 72- 067
Internal Hose Reeving - Single Function - 55”-66” OCL (Pneumatic). . . . . 72-0900 . . . . . 72- 069
Internal Hose Reeving - Single Function - 67” ~ (Cushion) . . . . . 72-0901 . . . . . 72- 071
Internal Hose Reeving - Double Function - (Pneumatic). . . . . 72-0950 . . . . . 72- 073
Internal Hose Reeving - Double Function - (Cushion) . . . . . 72-0951 . . . . . 72- 075
Recommended Stock List (RSL). . . . . 72-0999 . . . . . 72- 077

**E50-MT 3-Stage Mast**
Safety Decals . . . . . 72-1100. . . . . 72- 081
Main Lift Cylinders. . . . . 72-1200 . . . . . 72- 083
Free Lift Cylinder. . . . . 72-1250 . . . . . 72- 085
Outer Upright. . . . . 72-1300 . . . . . 72- 087
Intermediate Upright . . . . . 72-1330 . . . . . 72- 089
Inner Upright . . . . . 72-1360 . . . . . 72- 091
Carriage - 4-Roller. . . . . 72-1400 . . . . . 72- 093
Carriage - 6-Roller. . . . . 72-1450 . . . . . 72- 095
Hoist Chains & Free Lift Hose. . . . . 72-1500 . . . . . 72- 097
Load Backrest . . . . . 72-1600 . . . . . 72- 099
Mounting Parts - Cushion Tire Trucks. . . . . 72-1700 . . . . . 72- 101
Mounting Parts - Pneumatic Tire Trucks . . . . . 72-1701 . . . . . 72- 103
Lowering Control Valve . . . . . 72-1850 . . . . . 72- 105
Internal Hose Reeving - Single Function - 56”-66” OCL . . . . . 72-1900 . . . . . 72- 107
Internal Hose Reeving - Single Function - 67” ~. . . . . 72-1901 . . . . . 72- 109
Internal Hose Reeving - Double Function . . . . . 72-1950 . . . . . 72- 111
Recommended Stock List (RSL). . . . . 72-1999 . . . . . 72- 115

**E60-MS 2-Stage Mast**
Safety Decals . . . . . 72-2100 . . . . . 72- 119
Main Lift Cylinders. . . . . 72-2200 . . . . . 72- 121
Outer Upright. . . . . 72-2300 . . . . . 72- 123
Inner Upright . . . . . 72-2360 . . . . . 72- 125
Carriage - 6-Roller. . . . . 72-2450 . . . . . 72- 127
Hoist Chains . . . . . 72-2500 . . . . . 72- 129
Load Backrest . . . . . 72-2600 . . . . . 72- 131
Installation Components - (Pneumatic). . . . . 72-2700 . . . . . 72- 133
Installation Components - (Cushion). . . . . 72-2701 . . . . . 72- 135

https://truckmanualshub.com/

Lowering Control Valve . . . . . 72-2850 . . . . . 72- 137
Internal Hose Reeving - Single Function - (Cushion) . . . . . 72-2900 . . . . . 72- 139
Internal Hose Reeving - Double Function - (Cushion) . . . . . 72-2950 . . . . . 72- 141
Recommended Stock List (RSL) . . . . . 72-2999 . . . . . 72- 143

**E60-MT 3-Stage Mast**
Safety Decals . . . . . 72-3100 . . . . . 72- 147
Main Lift Cylinder . . . . . 72-3200 . . . . . 72- 149
Free Lift Cylinder . . . . . 72-3250 . . . . . 72- 151
Outer Upright . . . . . 72-3300 . . . . . 72- 153
Intermediate Upright . . . . . 72-3330 . . . . . 72- 155
Inner Upright . . . . . 72-3360 . . . . . 72- 157
Carriage - 4-Roller . . . . . 72-3400 . . . . . 72- 159
Carriage - 6-Roller . . . . . 72-3450 . . . . . 72- 161
Hoist Chains & Free Lift Hose . . . . . 72-3500 . . . . . 72- 163
Load Backrest . . . . . 72-3600 . . . . . 72- 167
Installation Components - (Cushion) . . . . . 72-3700 . . . . . 72- 169
Installation Components - (Pneumatic) . . . . . 72-3701 . . . . . 72- 171
Lowering Control Valve . . . . . 72-3850 . . . . . 72- 173
Internal Hose Reeving - Single Function - 56”-66” OCL . . . . . 72-3900 . . . . . 72- 175
Internal Hose Reeving - Single Function - 67” OCL ~ . . . . . 72-3901 . . . . . 72- 179
Internal Hose Reeving - Double Function . . . . . 72-3950 . . . . . 72- 183
Recommended Stock List (RSL) . . . . . 72-3999 . . . . . 72- 187

**E65-MS 2-Stage Mast**
Safety Decals . . . . . 72-4100 . . . . . 72- 191
Main Lift Cylinders . . . . . 72-4200 . . . . . 72- 193
Outer Upright . . . . . 72-4300 . . . . . 72- 195
Inner Upright . . . . . 72-4360 . . . . . 72- 197
Carriage - 6-Roller . . . . . 72-4450 . . . . . 72- 199
Hoist Chains . . . . . 72-4500 . . . . . 72- 201
Load Backrest . . . . . 72-4600 . . . . . 72- 203
Installation Components - (Cushion) . . . . . 72-4700 . . . . . 72- 205
Installation Components - (Pneumatic) . . . . . 72-4701 . . . . . 72- 207
Lowering Control Valve . . . . . 72-4850 . . . . . 72- 209
Internal Hose Reeving - Single Function . . . . . 72-4900 . . . . . 72- 211
Internal Hose Reeving - Double Function . . . . . 72-4950 . . . . . 72- 213
Recommended Stock List (RSL) . . . . . 72-4999 . . . . . 72- 215

**E65-MT 3-Stage Mast**
Safety Decals . . . . . 72-5100 . . . . . 72- 219
Main Lift Cylinder . . . . . 72-5200 . . . . . 72- 221
Free Lift Cylinder . . . . . 72-5250 . . . . . 72- 223
Outer Upright . . . . . 72-5300 . . . . . 72- 225
Intermediate Upright . . . . . 72-5330 . . . . . 72- 227
Inner Upright . . . . . 72-5360 . . . . . 72- 229
Carriage - 6-Roller . . . . . 72-5450 . . . . . 72- 231
Hoist Chains & Free Lift Hose . . . . . 72-5500 . . . . . 72- 233
Load Backrest . . . . . 72-5600 . . . . . 72- 235
Installation Components - (Pneumatic) . . . . . 72-5700 . . . . . 72- 237
Installation Components - (Cushion) . . . . . 72-5701 . . . . . 72- 239
Lowering Control Valve . . . . . 72-5850 . . . . . 72- 241
Internal Hose Reeving - Single Function . . . . . 72-5900 . . . . . 72- 243
Internal Hose Reeving - Double Function . . . . . 72-5950 . . . . . 72- 245

https://truckmanualshub.com/

Recommended Stock List (RSL) . . . . . 72-5999 . . . . . 72- 249

**45D-MQ 4-Stage Quad Mast**

Safety Decals . . . . . 72-6100 . . . . . 72- 253
Main Lift Cylinder - Right Side (See Designated PID #) . . . . . 72-6200 . . . . . 72- 255
Main Lift Cylinder - Right Side (See Designated PID #) . . . . . 72-6201 . . . . . 72- 257
Main Lift Cylinder - Right Side (PID # 45D-MQ-6359~) . . . . . 72-6202 . . . . . 72- 259
Main Lift Cylinder - Left Side (See Designated PID #) . . . . . 72-6203 . . . . . 72- 261
Main Lift Cylinder - LeftSide (See Designated PID #) . . . . . 72-6204 . . . . . 72- 263
Main Lift Cylinder - Left Side (PID # 45D-MQ-6359~) . . . . . 72-6202 . . . . . 72- 265
Free Lift Cylinder - (See Designated PID #) . . . . . 72-6250 . . . . . 72- 267
Free Lift Cylinder - (See Designated PID #) . . . . . 72-6251 . . . . . 72- 269
Free Lift Cylinder - (PID # 45D-MQ-6359~) . . . . . 72-6252 . . . . . 72- 271
Outer Upright - (PID # 45D-MQ-001~) . . . . . 72-6300 . . . . . 72- 273
Outer Intermediate Upright - (PID # 45D-MQ-001 to 6358) . . . . . 72-6330 . . . . . 72- 275
Outer Intermediate Upright - (PID # 45D-MQ-6359~) . . . . . 72-6331 . . . . . 72- 279
Inner Intermediate Upright - (PID # 45D-MQ-001~) . . . . . 72-6340 . . . . . 72- 283
Inner Upright - (PID # 45D-MQ-001 to 883) . . . . . 72-6360 . . . . . 72- 285
Inner Upright - (PID # 45D-MQ-884 to 6358) . . . . . 72-6361 . . . . . 72- 287
Inner Upright - (PID # 45D-MQ-6359~) . . . . . 72-6362 . . . . . 72- 289
Carriage - 4-Roller . . . . . 72-6400 . . . . . 72- 291
Carriage - 6-Roller . . . . . 72-6450 . . . . . 72- 293
Hoist Chains & Free Lift Hoses - (PID # 45D-MQ-001 to 6358) . . . . . 72-6500 . . . . . 72- 295
Hoist Chains & Free Lift Hoses - (PID # 45D-MQ-6359~) . . . . . 72-6501 . . . . . 72- 297
Load Backrest . . . . . 72-6600 . . . . . 72- 299
Mast Installation Parts . . . . . 72-6700 . . . . . 72- 301
Lowering Control Valve & Bracket . . . . . 72-6850 . . . . . 72- 303
Internal Hose Reeving - Single Function - StdVis -
(PID # 45D-MQ-001 to 883) . . . . . 72-6900 . . . . . 72- 305
Internal Hose Reeving - Single Function - StdVis -
(PID # 45D-MQ-884~) . . . . . 72-6901 . . . . . 72- 309
Internal Hose Reeving - Single Function - HiVis -
(PID # 45D-MQ-884~) . . . . . 72-6902 . . . . . 72- 313
Internal Hose Reeving - Single Function - HiVis - Left Side -
(PID # 45D-MQ-884~) . . . . . 72-6903 . . . . . 72- 317
Internal Hose Reeving - Double Function - StdVis -
(PID # 45D-MQ-001 to 883) . . . . . 72-6950 . . . . . 72- 321
Internal Hose Reeving - Double Function - StdVis -
(PID # 45D-MQ-884) . . . . . 72-6951 . . . . . 72- 325
Internal Hose Reeving - Double Function - HiVis -
(PID # 45D-MQ-884~) . . . . . 72-6952 . . . . . 72- 329
Internal Hose Reeving - Double Function - HiVis - Left Side -
(PID # 45D-MQ-884~) . . . . . 72-6953 . . . . . 72- 333
Recommended Stock List (RSL) . . . . . 72-6999 . . . . . 72- 337

**55D-MQ 4-Stage Quad Mast**

Safety Decals . . . . . 72-7100 . . . . . 72- 343
Main Lift Cylinder - Right Hand . . . . . 72-7200 . . . . . 72- 345
Main Lift Cylinder - Left Hand . . . . . 72-7203 . . . . . 72- 347
Free Lift Cylinder . . . . . 72-7250 . . . . . 72- 349
Weldments (Uprights) . . . . . 72-7300 . . . . . 72- 351
4-Roller Carriages . . . . . 72-7400 . . . . . 72- 355
6-Roller Carriages . . . . . 72-7450 . . . . . 72- 357
Hoist Chains & Free Lift Hoses . . . . . 72-7500 . . . . . 72- 359

https://truckmanualshub.com/

Load Backrest . . . . . 72-7600 . . . . . 72- 361
Mast Installation Parts . . . . . 72-7700 . . . . . 72- 363
Lowering Control Valve & Brackets . . . . . 72-7850 . . . . . 72- 365
Internal Hose Reeving - Single Function - Standard Mast . . . . . 72-7900 . . . . . 72- 367
Internal Hose Reeving - Double Function - Standard Mast . . . . . 72-7950 . . . . . 72- 371
Internal Hose Reeving - Single Fuction - Hi-Visibility Mast . . . . . 72-7955 . . . . . 72- 375
Internal Hose Reeving - Double Function - Hi-Visibility Mast . . . . . 72-7960 . . . . . 72- 379
Internal Hose Reeving - Single Function - Hi-Vis - Left Hand Only . . . . . 72-7970 . . . . . 72- 383
Internal Hose Reeving - Double Function - Hi-Vis - Left Hand Only . . . . . 72-7975 . . . . . 72- 387
Recommended Stock List (RSL) . . . . . 72-7999 . . . . . 72- 391

**CHAPTER 83 - OPTIONS**

Strobe Light . . . . . 83-0001 . . . . . 83- 01
Back-up Buzzer 83-0002 . . . . . 83- 03
Protector, Under-Carriage . . . . . 83-0003 . . . . . 83- 05
Protector, Under-Carriage - Detail . . . . . 83-0003A . . . . . 83- 07
Options - Misc. . . . . 83-0010 . . . . . 83- 09

**CHAPTER 93 - FORKS**

Forks . . . . . 93-0001 . . . . . 93- 01

**CHAPTER 96 - NAME PLATES AND DECALS**

Top and Side Views - . . . . . 96-0001 . . . . . 96- 01
Rear View & Detail - . . . . . 96-0002 . . . . . 96- 05
Misc. Locations (Dashboard, Counterweight, Mast) . . . . . 96-0003 . . . . . 96- 09

**CHAPTER 98 - PAINT**

Paint - . . . . . 98-0001 . . . . . 98- 01

**CHAPTER 99 - APPENDIX - NUMERICAL PARTS INDEX**

Numerical Parts Index - BX50 . . . . . 99-0000 . . . . . 99- 01

https://truckmanualshub.com/

**NOTES:**

https://truckmanualshub.com/


## GENERAL

This parts book lists engine, chassis and mast service parts for the machine shown on the title page.

We reserve the right to make changes or add improvements at any time without incurring any obligation to install such changes on products previously sold.

## ILLUSTRATIONS

Illustrated items are given item numbers which correspond to the same number in the parts list. Item numbers may point to more than one identical item. The quantity of items shipped will depend on the quantity ordered. Illustrations are of typical parts only and may not exactly match your application.

## METHOD OF LISTING

The parts list and its associated illustration is the essential content of the Parts Book. Each parts list is arranged in numeric sequence by Chapter, Figure Number and by page number.

The parts list page is divided into five columns for easy use:

1. **ITEM Column** - This column contains keys to the illustration so the part can be located on the associated illustration. If there is no key number for the part, the part is not shown and is not on the associated illustration. In this case “NS” (Not Shown), or some other key, may appear in the column.

2. **PART NUMBER Column** - This column contains the part number of each serviceable part. The part number, in conjunction with the description of the part, is the key to locating needed service parts. If “ * ” appears, the part is “NSS” (Not Sold Separately).

3. **DESCRIPTION Column** - This column contains the description of each part. It can be used to find needed parts when the part number is not known. Indentation of an item, preceded by a dot (.), indicates that it is a component part (or subassembly) of the item shown above the item indented. There may be 2 or 3 dots in some cases.

4. **QTY Column** - This column contains the total quantity of each part number listed as needed for the product.

5. **SERIAL NO. Column -** This column contains the serial number range of each part number listed. The serial number is displayed in the page heading if it applies to all parts on that page.

## PRODUCT GRAPHICS

The owner and/or operator must replace any and all safety and warning product graphics, plates or decals if they are defaced, illegible or missing from the machine, or have become inaccurate due to a change of equipment or attachments. This is an operational and a safety issue and is very important.

## ABBREVIATIONS

The following abbreviations will be used in the parts listing:

AR - As Required
F1, F2, etc. - Footnote
NS - Not Shown
K - Kit
* - Part Not Available Separately
OP - Optional Parts
O.S. - Oversize
NSS - Not Serviced Separately
L.H. - Left Hand
R.H. - Right Hand
S/N - Serial Number
(--) - Part Shown for Reference Only
Forklift Model: S = Indoor / H = High Speed

**NOTE:** Left and right sides of the machine are determined by sitting in the operator's seat and facing forward.

https://truckmanualshub.com/


## COMMON HARDWARE

Mounting hardware, including bolts, nuts, cotter pins and so forth, are illustrated in most cases.

## ORDERING PARTS

When ordering parts, always give the following information:

1. The complete part number, including prefix or suffix letters, the name of the part and the quantity required.
2. The complete model number, machine serial number and engine serial number of the machine. See PRODUCT IDENTIFICATION NUMBERS, which follows.
3. When ordering parts for items which have their own serial numbers (such as transmissions, torque converters or axles) also include the serial numbers of the transmission, torque converter and/or axle. We recommend that you write the model and machine serial numbers of your machine and all major components in the spaces provided below.

Date Received _____

Machine Model _____ Serial No. _____

Engine Model _____ Serial No. _____

Hydraulic Pump Model _____ Serial No. _____

Final Drive Model _____ Serial No. _____

_____ _____

_____ _____

_____ _____

_____ _____

## PRODUCT IDENTIFICATION NUMBERS

| Machine Model | Engine Model | Chassis Serial Number |
|---|---|---|
| | | |

https://truckmanualshub.com/

# FORKLIFT TRUCKS COVERED IN THIS PUBLICATION

## BX50 S/N 200001A~

| KOMATSU MODEL DESIGNATION | DESCRIPTION |
|---|---|
| **Gasoline, LPG and Dual-Fuel Engine Models** | |
| FG20ST-16 | 4,000 lb. capacity, K21 gasoline engine, cushion tires |
| FG20STLS-16 | 4,000 lb. capacity, K21 LPG engine, cushion tires, “LPS” |
| FG20SHT-16 | 4,000 lb. capacity, K25 gasoline engine, cushion tires |
| FG20SHTLS-16 | 4,000 lb. capacity, K25 gasoline engine, cushion tires, “LPS” |
| FG20T-16 | 4,000 lb. capacity, K21 gasoline engine, pneumatic tires |
| FG20TUS-16 | 4,000 lb. capacity, K21 gasoline engine, pneumatic tires, “GS” |
| FG20TLS-16 | 4,000 lb. capacity, K21 LPG engine, pneumatic tires, “LPS” |
| FG20HT-16 | 4,000 lb. capacity, K25 gasoline engine, pneumatic tires |
| FG20HTUS-16 | 4,000 lb. capacity, K25 gasoline engine, pneumatic tires, “GS” |
| FG20HTLS-16 | 4,000 lb. capacity, K25 LPG engine, pneumatic tires, “LPS” |
| FG25ST-16 | 5,000 lb. capacity, K21 gasoline engine, cushion tires |
| FG25STLS-16 | 5,000 lb. capacity, K21 LPG engine, cushion tires, “LPS” |
| FG25SHT-16 | 5,000 lb. capacity, K25 gasoline engine, cushion tires |
| FG25SHTLS-16 | 5,000 lb. capacity, K25 LPG engine, cushion tires, “LPS” |
| FG25T-16 | 5,000 lb. capacity, K21 gasoline engine, pneumatic tires |
| FG25TUS-16 | 5,000 lb. capacity, K21 gasoline engine, pneumatic tires, “GS” |
| FG25TLS-16 | 5,000 lb. capacity, K21 LPG engine, pneumatic tires, “LPS” |
| FG25HT-16 | 5,000 lb. capacity, K25 gasoline engine, pneumatic tires |
| FG25HTUS-16 | 5,000 lb. capacity, K25 gasoline engine, pneumatic tires, “GS” |
| FG25HTLS-16 | 5,000 lb. capacity, K25 LPG engine, pneumatic tires, “LPS” |
| FG28SHT-16 | 5,500 lb. capacity, K25 gasoline engine, cushion tires |
| FG28SHTLS-16 | 5,500 lb. capacity, K25 LPG engine, cushion tires, “LPS” |
| FG28HT-16 | 5,500 lb. capacity, K25 gasoline engine, pneumatic tires |
| FG28HTUS-16 | 5,500 lb. capacity, K25 gasoline engine, pneumatic tires, “GS” |
| Table Continued on Next Page | |

https://truckmanualshub.com/

## BX50 S/N 200001A~

| KOMATSU MODEL DESIGNATION | DESCRIPTION |
|---|---|
| FG28HTLS-16 | 5,500 lb. capacity, K25 LPG engine, pneumatic tires, “LPS” |
| FG30SHT-16 | 6,000 lb. capacity, K25 gasoline engine, cushion tires |
| FG30SHTLS-16 | 6,000 lb. capacity, K25 LPG engine, cushion tires, “LPS” |
| FG30HT-16 | 6,000 lb. capacity, K25 gasoline engine, pneumatic tires |
| FG30HTUS-16 | 6,000 lb. capacity, K25 gasoline engine, pneumatic tires, “GS” |
| FG30HTLS-16 | 6,000 lb. capacity, K25 LPG engine, pneumatic tires, “LPS” |
| FG32HT-16 | 6,500 lb. capacity, K25 gasoline engine, cushion tires |
| FG32SHTLS-16 | 6,500 lb. capacity, K25 LPG engine, cushion tires, “LPS” |
| FG32HT-16 | 6,500 lb. capacity, K25 gasoline engine, pneumatic tires |
| FG32HTUS-16 | 6,500 lb. capacity, K25 gasoline engine, pneumatic tires, “GS” |
| FG32HTLS-16 | 6,500 lb. capacity, K25 LPG engine, pneumatic tires, “LPS” |
| FG35AHT-16 | 7,000 lb. capacity, K25 gasoline engine, pneumatic tires |
| FG35AHTUS-16 | 7,000 lb. capacity, K25 gasoline engine, pneumatic tires, “GS” |
| FG35AHTLS-16 | 7,000 lb. capacity, K25 LPG engine, pneumatic tires, “LPS” |
| **Diesel Engine Models** | |
| FD20T-16 | 4,000 lb. capacity, 4D94E diesel engine, pneumatic tires |
| FD20TUS-16 | 4,000 lb. capacity, 4D94E diesel engine, pneumatic tires, “DS” |
| FD25T-16 | 5,000 lb. capacity, 4D94E diesel engine, pneumatic tires |
| FD25TUS-16 | 5,000 lb. capacity, 4D94E diesel engine, pneumatic tires, “DS” |
| FD28T-16 | 5,500 lb. capacity, 4D94E diesel engine, pneumatic tires |
| FD28TUS-16 | 5,500 lb. capacity, 4D94E diesel engine, pneumatic tires. “DS” |
| FD30T-16 | 6,000 lb. capacity, 4D94E diesel engine, pneumatic tires |
| FD30TUS-16 | 6,000 lb. capacity, 4D94E diesel engine, pneumatic tires. “DS” |
| FD32T-16 | 6,500 lb. capacity, 4D94E diesel engine, pneumatic tires |
| FD32TUS-16 | 6,500 lb. capacity, 4D94E diesel engine, pneumatic tires, “DS” |
| FD35AT-16 | 7,000 lb. capacity, 4D94E diesel engine, pneumatic tires |
| FD35ATUS-16 | 7,000 lb. capacity, 4D94E diesel engine, pneumatic tires, “DS” |

**NOTES:**

https://truckmanualshub.com/



# FAST MOVING STOCK LIST (FMSL) - S/N 200001A~

NO

ILLUSTRATION

REQUIRED

## RECOMMENDED STOCK LIST - NEW FORMAT

**THE RECOMMENDED STOCK LIST (RSL) IS NOW BROKEN INTO THREE (3) PARTS FOR EASE OF USE.**

1. **EPASL = EPA STOCK LIST - CONTAINS EPA EMISSION CONTROL RELATED PARTS.**
2. **FMSL = FAST MOVING STOCK LIST - CONTAINS TYPICALLY FAST MOVING PARTS.**
3. **FRSL = FULL RECOMMENDED STOCK LIST - CONTAINS THE BALANCE OF COMMON PARTS.**

https://truckmanualshub.com/



# FAST MOVING STOCK LIST (FMSL) - S/N 200001A~

| Item | Part Number | Description | Qty per Truck Serviced | |
|---|---|---|---|---|

**FAST MOVING STOCK LIST --**

**ENGINE**

| | | |
|---|---|---|
| 15255-1P110 | ENGINE OIL FILL CAP (K21/K25) | 1 |
| | ENGINE OIL FILL CAP (4D94LE) | 1 |
| 3EA-01-A5390 | FILTER, AIR (K21/K25) | 12 |
| 3EB-01-A5392 | FILTER, AIR (4D94LE) | 12 |
| 15208-01B02 | FILTER, OIL (K21/K25) | 12 |
| YM129150-35151 | FILTER, OIL (4D94LE) | 12 |
| NSS | FILTER, FUEL (SOCK TYPE ON FUEL PUMP - NOT SOLD SEPARATELY) (K21/K25) | N/A |
| YM129901-55860 | FILTER, FUEL (4D94LE) | 12 |

**ENGINE ELECTRICAL**

| | | |
|---|---|---|
| 23100-FU410 | ALTERNATOR (G/LP/DUAL-FUEL (50 AMP)) | 1 |
| 23100-GY360 | ALTERNATOR (GS/LS (UL SAFETY)) (MUST USE W/ ALT. BELT # 02117-22023 FOR STATIC REDUCTION) | 1 |
| YM129930-77212 | ALTERNATOR (STD) (4D94LE) | 1 |
| YM129930-77200 | ALTERNATOR (4D94LE UL-DS) | 1 |
| 3EB-55-31130 | RELAY, STARTER (K21/K25) | 2 |
| 23300-FU410 | STARTER (K21/25) | 1 |
| 3EB-55-31270 | RELAY, STARTER (4D94LE) | 1 |
| YM129900-77010 | STARTER (4D94LE) | 1 |
| 3EB-55-33150 | FUSE - 10 AMP (QTY 5) | 10 |
| 37B-1EJ-2020 | FUSE - 15 AMP | 10 |
| 3EB-55-33160 | FUSE - 5 AMP (QTY 1) | 10 |

**COOLING SYSTEM**

| | | |
|---|---|---|
| 02117-21521 | FAN BELT (K21) (ALL EXCEPT UL-GS & UL-LS) | 1 |
| 02117-23523 | FAN BELT (K25) (ALL EXCEPT UL-GS & UL-LS) | 1 |
| 02117-22023 | FAN BELT (K21/K25) (UL-GS & UL-LS MODELS) | 1 |
| YM129930-42480 | FAN BELT (4D94LE) | 1 |
| 21060-FU410 | FAN, COOLING (K21/K25) | 2 |
| YM129900-44700 | FAN, COOLING (4D94LE) | 2 |
| 21010-FU425 | WATER PUMP ASSY (K21/K25) | 1 |
| 21014-07N00 | WATER PUMP GASKET (K21/K25) | 1 |
| YM129900-42055 | WATER PUMP ASSY (4D94LE) | 1 |
| YM129900-42061 | WATER PUMP GASKET (4D94LE) | 1 |
| 3EB-04-A7510 | HOSE, LOWER (K21/K25) | 5 |
| 3EB-04-A7520 | HOSE, UPPER (K21/K25) | 5 |

https://truckmanualshub.com/



## FAST MOVING STOCK LIST (FMSL) - S/N 200001A~

| Item | Part Number | Description | Qty per Truck Serviced | |
|---|---|---|---|---|
| | 3EB-04-A7560 | HOSE, RADIATOR, LOWER (ALL 4D94LE EXC. 3.5T) | 1 | |
| | 3EB-04-A7470 | HOSE, RADIATOR, LOWER (4D94LE 3.5T) . . . | 1 | |
| | 3EB-04-A7570 | HOSE, RADIATOR, UPPER (ALL 4D94LE EXC. 3.5T) | 1 | |
| | 3EB-04-A7480 | HOSE, RADIATOR, UPPER (4D94LE 3.5T) . . . | 1 | |
| | 21200-50K00 | THERMOSTAT ASSY (K21/K25) . . . . . | 2 | |
| | 11072-50K01 | THERMOSTAT GASKET (K21/K25) . . . . . | 2 | |
| | YM121850-49810 | THERMOSTAT (4D94LE). . . . . | 2 | |
| | YM121850-49550 | THERMOSTAT GASKET (4D94LE) . . . . . | 2 | |
| | 3EB-04-21130 | RADIATOR CAP (ALL). . . . . | 2 | |
| **TRANSMISSION** | | | | |
| | 30B-13-11390 | FILTER, TRANSMISSION (ALL) . . . . . | 6 | |
| | AS35303-3601 | STRAINER, TRANSMISSION (ALL) . . . . . | 2 | |
| | 07030-00252 | BREATHER (ALL) . . . . . | 2 | |
| **BRAKES / DRIVE AXLE** | | | | |
| | 3EB-21-05070 | KIT, SEAL - HUB INNER (CUSHION) . . . . . | 2 | |
| | 3EB-21-05060 | KIT, SEAL - HUB INNER (PNEUMATIC) . . . . . | 2 | |
| | 3EB-K3-02030 | BRAKE SHOE KIT, LH (2.0, 2.5T O/D & ALL I/D) | 4 | |
| | 3EB-K3-02040 | BRAKE SHOE KIT, RH (2.0, 2.5T O/D & ALL I/D) | 4 | |
| | 3EB-K3-02050 | BRAKE SHOE KIT, LH (2.8, 3.0T O/D) . . . . . | 4 | |
| | 3EB-K3-02060 | BRAKE SHOE KIT, RH (2.8, 3.0T O/D) . . . . . | 4 | |
| | 3EB-K3-04010 | BRAKE SHOE KIT, LH (3.2, 3.5T O/D) . . . . . | 4 | |
| | 3EB-K3-04020 | BRAKE SHOE KIT, RH (3.2, 3.5T O/D) . . . . . | 4 | |
| | 3EB-30-00010 | WHEEL CYLINDER SERVICE KIT (2.0 TO 3.0T) | 4 | |
| | 3EB-30-41440 | WHEEL CYLINDER ASSY (2.0 TO 3.0T O/D & ALL I/D) . . . . . | 6 | |
| | 3EC-30-33110 | WHEEL CYLINDER ASSY (3.2, 3.5T) . . . . . | 4 | |
| **OPERATOR COMPARTMENT** | | | | |
| | 3EB-50-A5322 | SEAT ASSY - STD . . . . . | 1 | |
| | 3EB-50-A6112 | SEAT - SUSPENSION . . . . . | 1 | |
| **CHASSIS ELECTRICAL** | | | | |
| | 3EB-55-A5112 | BULB, HEADLAMP . . . . . | 10 | |
| | 08105-01220 | BULB, TURN SIGNAL - FRONT, & RR COMBI & LED | 8 | |
| | 3EB-55-11290 | BULB, PARKING LAMP (REAR COMBI & LED) | 8 | |
| | 3EB-55-41271 | HORN (ALL). . . . . | 2 | |
| | 3EB-55-A3641 | KEY (QTY 2). . . . . | 2 | |

https://truckmanualshub.com/



## FAST MOVING STOCK LIST (FMSL) - S/N 200001A~

| Item | Part Number | Description | Qty per Truck Serviced | |
|---|---|---|---|---|
| | 3EB-55-A3621 | KEY SWITCH ASSY W/ KEYS (GAS/LP) . . . . . | 1 | |
| | 3EB-55-A6260 | LAMP ASSY, HEAD (12V) . . . . . | 2 | |
| | 37B-1EH-2011 | LAMP ASSY, REAR COMBINATION (LED). . . . | 2 | |
| | **HYDRAULIC** | | | |
| | 34B-66-15180 | STRAINER, HYDRAULIC TANK . . . . . | 3 | |
| | 37B-1PB-4030 | BREATHER, HYDRAULIC TANK (W/O P/BRAKES) | 1 | |
| | 37B-1PB-4040 | BREATHER, HYDRAULIC TANK (W/ P/BRAKES) | 1 | |
| | ON43001-07502 | KIT, SEAL - POWER STEER CYLINDER . . . . . | 1 | |
| | 150N4044 | KIT, SEAL - STEER VALVE . . . . . | 1 | |
| | 3BB-64-A6310 | KIT, SEAL - TILT CYLINDER (70 MM UNITS). . | 4 | |
| | 3BB-64-A6410 | KIT, SEAL - TILT CYLINDER (80 MM UNITS) . . | 4 | |
| | **PAINT - NEW EPA COLORS** | | | |
| | 3EB-99-A6110 | PAINT, NATURAL YELLOW - SPRAY CAN . . . | 12 | |
| | 3EB-99-A6210 | PAINT, NATURAL YELLOW - GALLON . . . . . | 6 | |
| | 3EB-99-A6120 | PAINT, BLACK GRAY - SPRAY CAN . . . . . | 12 | |
| | 3EB-99-A6220 | PAINT, BLACK GRAY - GALLON . . . . . | 6 | |
| | 3EB-99-A6130 | PAINT, SUMMER GREEN - SPRAY CAN . . . . . | 12 | |
| | 3EB-99-A6230 | PAINT, SUMMER GREEN - GALLON . . . . . | 6 | |
| | **OPERATOR PRESENCE SYSTEM (K.O.P.S.)** | | | |
| | 3EB-55-51711 | CONTROLLER. . . . . | 1 | |
| | HU60955-1 | INTERLOCK, HYDRAULIC SOLENOID. . . . . | 1 | |

https://truckmanualshub.com/



## FULL RECOMMENDED STOCK LIST (FRSL) - S/N 200001A~

NO

ILLUSTRATION

REQUIRED

https://truckmanualshub.com/



## FULL RECOMMENDED STOCK LIST (FRSL) - S/N 200001A~

| Item | Part Number | Description | Qty per Truck Serviced | |
|---|---|---|---|---|

**FULL RECOMMENDED STOCK LIST --**

**ENGINE**

| | | |
|---|---|---|
| 12312-50K00 | FLYWHEEL RING GEAR | 1 |
| 10101-FY525 | GASKET SET - (K21/K25) | 1 |
| 11042-FY525 | GASKET SET, VALVE REGRIND - (K21/K25) (HEADS GASKET NOT INCLUDED) | 1 |
| 11044-FU400 | GASKET, HEAD (GAS) | 1 |
| 11044-FU460 | GASKET, HEAD (LPG & DUAL-FUEL) | 1 |
| 13270-FY50A | GASKET. VALVE COVER | 1 |
| 3EB-01-51130 | MOTOR MOUNT, RUBBER CUSHION | 4 |
| 11140-FT860 | OIL GUAGE ASSY - DIPSTICK | 1 |
| 13510-FF200 | SEAL, FRONT CRANKSHAFT | 2 |
| 13207-53F00 | SEAL, VALVE STEM | 8 |
| 25240-FJ10A | OIL PRESSURE SWITCH | 1 |

**EXHAUST SYSTEM**

| | | |
|---|---|---|
| 20692-65J00 | GASKET, CONVERTER. | 4 |
| 3EB-03-A7210 | MUFFLER - CUSHION SPEC | 1 |
| 3EB-03-A7511 | MUFFLER - CUSHION UL-SPECIAL. | 1 |
| 3EB-03-A7110 | MUFFLER - FG PNEUMATIC SPEC | 1 |
| 3EB-03-A7411 | MUFFLER - FG PNEUMATIC UL-SPECIAL | 1 |
| 3EB-03-A7120 | PIPE-TO-CONVERTER - FG PNEUMATIC | 1 |
| 3EB-03-A7130 | PIPE-TO-MANIFOLD - FG | 1 |
| 3EB-03-A7220 | PIPE-TO-CONVERTER - FG CUSHION | 1 |

**COOLING SYSTEM**

| | | |
|---|---|---|
| 3EA-04-51110 | RADIATOR ASSY - (2.0T,2.5T W/ K21) | 1 |
| 3EB-04-A7210 | RADIATOR ASSY - (2.8T, 3.0T, 3.2T, 3.5T W/ K25) | 1 |
| 3EB-04-52610 | RADIATOR ASSY - STD (2.0T > 3.0T W/ 4D94LE) | 1 |
| 3EB-04-53110 | RADIATOR ASSY - STD (3.2T, 3.5T W/ 4D94LE) | 1 |

**FUEL SYSTEM**

| | | |
|---|---|---|
| 3FD-42-21310 | FUEL CAP (STD) | 1 |
| 3EB-44-17170 | FUEL CAP (UL-S) | 1 |

**TRANSMISSION**

| | | |
|---|---|---|
| 30B-13-11120 | FLEX PLATE (EPA MODELS) | 1 |
| 3EB-15-05500 | KIT, SEAL - TRANSMISSION (ALL) | 2 |
| 30B-13-05010 | REPAIR KIT, TORQUE CONVERTER | 1 |

https://truckmanualshub.com/



## FULL RECOMMENDED STOCK LIST (FRSL) - S/N 200001A~

| Item | Part Number | Description | Qty per Truck Serviced | |
|---|---|---|---|---|
| | **DRIVE AXLE** | | | |
| | 06002-30214 | BEARING, INNER/OUTER DRIVE WHEEL (CUSHION) | 4 | |
| | 14X-14-19241 | BEARING, INNER DR. WHEEL (PNEU) (2.0T, 2.5T) | 4 | |
| | 3EB-21-52350 | BEARING, OUTER DR. WHEEL (PNEU) (2.0T, 2.5T) | 4 | |
| | 316-22-21250 | BEARING, INNER DR. WHEEL (PNEU) (2.8T > 3.5T) | 4 | |
| | 06002-32213 | BEARING, OUTER DR. WHEEL (PNEU) (2.8T, 3.0T) | 4 | |
| | 3EB-21-52750 | BEARING, OUTER DR. WHEEL (PNEU) (3.2T, 3.5T) | 4 | |
| | 3EB-21-05500 | SEAL KIT, DIFFERENTIAL GEAR | 2 | |
| | **STEER AXLE** | | | |
| | TBA | KING PIN KIT | 4 | |
| | 3EB-24-51221 | KNUCKLE ASSY - L.H. (2.0T > 3.0T)) | 1 | |
| | 3EB-24-51211 | KNUCKLE ASSY - R.H. (2.0T > 3.0T) | 1 | |
| | 3EB-24-53221 | KNUCKLE ASSY - L.H. (3.2T, 3.5T) | 1 | |
| | 3EB-24-53211 | KNUCKLE ASSY - R.H. (3.2T, 3.5T) | 1 | |
| | 3EB-24-51261 | KINGPIN, LH | 2 | |
| | 3EB-24-51271 | KINGPIN, RH | 2 | |
| | 3EB-24-32440 | BEARING (KINGPIN TOP & BOTTOM) | 8 | |
| | 3EB-24-42320 | BEARING (KINGPIN, UPPER) (2.0T, 2.5T) | 4 | |
| | 3EB-24-52460 | BEARING (KINGPIN, UPPER) (2.8T > 3.5T) | 4 | |
| | 06300-32010 | BEARING, HUB, INNER (PNEU 2.0T, 2.5T) | 4 | |
| | 3EB-24-32260 | BEARING, HUB, INNER (PNEU 2.8T > 3.5T) | 4 | |
| | 06300-32007 | BEARING, HUB, OUTER (PNEU 2.0T, 2.5T) | 4 | |
| | 06300-30207 | BEARING, HUB, OUTER (PNEU 2.8T > 3.5T) | 4 | |
| | 3EB-24-32260 | BEARING, WHEEL, INNER (CUSHION) | 4 | |
| | 06300-30207 | BEARING, WHEEL, OUTER (CUSHION) | 4 | |
| | 3EB-24-A7920 | TIE ROD ASSY, LH (ALL) | 4 | |
| | 3EB-24-A7930 | TIE ROD ASSY, RH (ALL) | 4 | |
| | **DRIVE WHEEL** | | | |
| | 34B-21-14151 | NUT, LUG - DRIVE WHEEL (ALL) | 12 | |
| | 3EB-22-21170 | STUD - DRIVE WHEEL (CUSHION) | 12 | |
| | 3EB-21-52380 | STUD - DRIVE WHEEL (2.0T, 2.5T PNEUMATIC) | 12 | |
| | 3EB-21-25170 | STUD - DRIVE WHEEL (2.8T > 3.5T PNEUMATIC) | 12 | |
| | 3EB-21-05060 | SEAL KIT, FRONT HUB | 2 | |

https://truckmanualshub.com/



## FULL RECOMMENDED STOCK LIST (FRSL) - S/N 200001A~

| Item | Part Number | Description | Qty per Truck Serviced | |
|---|---|---|---|---|
| | **STEER WHEEL** | | | |
| | 01593-13018 | NUT, SPINDLE (ALL) | 6 | |
| | 34B-24-11221 | STUD, STEER WHEEL (PNEUMATIC) | 12 | |
| | **BRAKE SYSTEM** | | | |
| | 3EB-30-51110 | BRAKE CABLE - L.H. (2.0T, 2.5T, 2.8T, 3.0T) | 2 | |
| | 3EB-30-51120 | BRAKE CABLE - R.H. (2.0T, 2.5T, 2.8T, 3.0T) | 2 | |
| | 3EB-30-51210 | BRAKE CABLE - L.H. (3.2T, 3.5T) | 2 | |
| | 3EB-30-51220 | BRAKE CABLE - R.H. (3.2T, 3.5T) | 2 | |
| | 3EB-22-45610 | BRAKE DRUM (HUB) (CUSHION) | 2 | |
| | 3EB-21-52320 | BRAKE DRUM (HUB) (PNEUMATIC 2.0T, 2.5T) | 2 | |
| | 3EB-21-42230 | BRAKE DRUM (PNEU 2.8T, 3.0T) | 2 | |
| | 3EB-21-52730 | BRAKE DRUM (PNEU 3.2T, 3.5T) | 2 | |
| | 3EB-36-51180 | BRAKE, MASTER CYLINDER (2.0T > 3.0T) | 2 | |
| | 3EB-56-51590 | BRAKE BOOSTER ASSY (3.2T, 3.5T) | 1 | |
| | 3EB-30-00010 | BRAKE KIT, WHEEL CYLINDER (CUSHION) | 2 | |
| | TBA | BRAKE KIT, WHEEL CYLINDER (PNEUMATIC) | 2 | |
| | **OPERATOR COMPARTMENT** | | | |
| | 3EB-50-41150 | BONNET STAY DAMPENER | 1 | |
| | **ELECTRICAL** | | | |
| | 37A-1CP-A710 | METER PANEL ASSY (GASOLINE) | 1 | |
| | 37A-1CP-A720 | METER PANEL ASSY (LPG) | 1 | |
| | 37A-1CP-A750 | METER PANEL ASSY (DIESEL) | 1 | |
| | 37B-1CS-A010 | SWITCH, COMBINATION | 1 | |
| | 3EB-55-A5610 | FLASHER | 1 | |
| | **HYDRAULIC SYSTEM** | | | |
| | 37B-1PB-4030 | HYDRAULIC TANK BREATHER (W/O P/BRAKES) | 4 | |
| | 37B-1PB-4040 | HYDRAULIC TANK BREATHER (W/ P/BRAKES) | 4 | |
| | 34B-66-15180 | HYDRAULIC STRAINER | 2 | |
| | 3EB-98-A31252 | HYDRAULIC VALVE CONVERSION KIT (3-TO-4) | 1 | |
| | TBA | HYDRAULIC C/V SEAL KIT (3-SPOOL) | 2 | |
| | 37B-1KA-A710 | HYDRAULIC PUMP ASSY (ALL FG 2.0T > 3.0T & FG 3.2T CUSHION) | 1 | |
| | 37B-1KC-5020 | HYDRAULIC PUMP ASSY (3.2T, 3.5T PNEUMATIC W/ K25) | 1 | |

https://truckmanualshub.com/



## FULL RECOMMENDED STOCK LIST (FRSL) - S/N 200001A~

| Item | Part Number | Description | Qty per Truck Serviced | |
|---|---|---|---|---|
| | 37B-1KB-5040 | HYDRAULIC PUMP ASSY (ALL 4D94LE EXCEPT 3.5T) | 1 | |
| | 37B-1KD-5040 | HYDRAULIC PUMP ASSY (3.5T W/ 4D94LE ) | 1 | |
| | KBB591A-20007 | HYD. PUMP REPAIR KIT (W/ K21) & (W/ 4D94LE ENGINE (EXC. 3.5T)) | 2 | |
| | KBB591B-20045 | HYD. PUMP KIT, FRONT UNIT (W/ K21 ENGINE) | 2 | |
| | KBB591B-20030 | HYD. PUMP KIT, REAR UNIT (W/ K21 ENGINE) | 2 | |
| | KBB591A-30001 | HYD. PUMP REPAIR KIT (W/ K25 ENGINE & 3.5T 4D94LE ENGINE) | 2 | |
| | KBB591B-20036 | HYD. PUMP KIT, FRONT UNIT (W/ K25 ENGINE) | 2 | |
| | KBB591B-20030 | HYD. PUMP KIT, CENTER UNIT (W/ K25 ENGINE) | 2 | |
| | KBB591B-30020 | HYD. PUMP KIT, REAR UNIT (W/ K25 ENGINE) | 2 | |
| | KBB591B-20029 | HYD. PUMP KIT, FRONT UNIT (W/ 4D94LE) | 2 | |
| | KBB591B-20030 | HYD. PUMP KIT, REAR UNIT (W/ 4D94LE) | 2 | |
| | KBB591B-20030 | HYD. PUMP KIT, CENTER UNIT (W/ 3.5T 4D94LE) | 2 | |
| | KBB591B-30020 | HYD. PUMP KIT, REAR (3.5T) (ALL) | 2 | |
| | 3EB-34-51510 | STEERING VALVE | 1 | |
| | **OPERATOR PRESENCE SYSTEM (K.O.P.S.)** | | | |
| | 3EB-55-41450 | RELAY | 5 | |
| | 3EB-55-51760 | RELAY | 1 | |

https://truckmanualshub.com/

**NOTES:**

https://truckmanualshub.com/



## EPA RELATED STOCK LIST (EPASL) - S/N 200001A~

NO

ILLUSTRATION

REQUIRED

https://truckmanualshub.com/



# EPA RELATED STOCK LIST (EPASL) - S/N 200001A~

| Item | Part Number | Description | Qty per Truck Serviced | |
|---|---|---|---|---|

**EPA RELATED STOCK LIST --**

**ENGINE ELECTRICAL**

| | | |
|---|---|---|
| 28351-89902 | CONDENSOR | 1 |
| 37B-1DD-5210 | ECU (K21 ONLY) | 1 |
| 37B-1DD-5220 | ECU (K25 ONLY) | 1 |
| 16119-FU460 | ELECTRONIC THROTTLE CONTROL | 1 |
| 22448-AR215 | IGNITION COIL PACK | 2 |
| 22680-FU460 | MASS AIR FLOW SENSOR | 1 |
| 22690-FU460 | O2 EXHAUST SENSOR | 1 |
| 3EB-55-41450 | RELAY (ENGINE RELAY BOX - QTY 6) | 6 |
| 18919-AM810 | SENSOR, ACCELERATOR (AT ACC PEDAL) | 1 |
| 23731-6N206 | SENSOR, CAMSHAFT (PHASE) | 1 |
| 23731-6J906 | SENSOR, CRANKSHAFT (POS) | 1 |
| 22401-FU412 | SPARK PLUGS | 8 |
| 37B-1DD-5320 | SPEED SIGNAL CONVERTER #2 (SSC) (OUTDOOR - TORQFLOW - 3-TON) | 1 |
| 37B-1DD-5330 | SPEED SIGNAL CONVERTER #4 (SSC) (INDOOR - ALL) | 1 |
| 37B-1DD-5320 | SPEED SIGNAL CONVERTER #5 (SSC) (OUTDOOR - TORQFLOW - 2.0/2.5-TON) | 1 |
| 22630-44B20 | WATER TEMPERATURE SENSOR - ECU | 1 |

**FUEL - GASOLINE**

| | | |
|---|---|---|
| 16600-FU460 | FUEL INJECTOR - GAS | 4 |
| 37B-1DU-3031 | FUEL PUMP ASSY - GAS (IN FUEL TANK) | 1 |

**FUEL - LPG**

| | | |
|---|---|---|
| 16197-FU461 | LPG ASSSIST INJECTOR | 1 |
| 16638-GX11A | LPG FUEL PRESSURE SENSOR | 1 |
| 17904-FT860 | LPG FUEL SOLENOID VALVE | 1 |
| 16600-FU471 | LPG INJECTOR (K21 ENGINE) | 1 |
| 16600-FU571 | LPG INJECTOR (K25 ENGINE) | 1 |
| 16310-GS40A | LPG VAPORIZER ASSY | 1 |

**ELECTRICAL**

| | | |
|---|---|---|
| 07003-12228 | SPEED SENSOR, GASKET | 1 |
| 3EC-55-37180 | SPEED SENSOR ASSY, VEHICLE | 1 |

https://truckmanualshub.com/



## FILTERS - S/N 200001A~

NO

ILLUSTRATION

REQUIRED

https://truckmanualshub.com/



## FILTERS - S/N 200001A~

| Item | Part Number | Description | Qty per Truck Serviced | |
|---|---|---|---|---|
| | 15208-01B02 | OIL FILTER - K21/K25 ENGINES . . . . . | 1 | |
| | YM129150-35151 | OIL FILTER - 4D94LE ENGINES. . . . . | 1 | |
| | 3EA-01-A5390 | AIR FILTER - K21/K25 ENGINES . . . . . | 1 | |
| | 3EB-01-A5392 | AIR FILTER - 4D94LE ENGINES. . . . . | 1 | |
| | 34B-66-15180 | HYDRAULIC TANK STRAINER. . . . . | 1 | |
| | 30B-13-11390 | TRANSMISSION FILTER (ALL). . . . . | 1 | |
| | NSS | FUEL FILTER (GASOLINE) (PART OF FUEL PUMP) | 1 | |
| | YM129901-55850 | FUEL FILTER (DIESEL). . . . . | 1 | |

https://truckmanualshub.com/



# ENGINE - K21/K25 GASOLINE / LP / DUAL-FUEL - S/N 200001A~

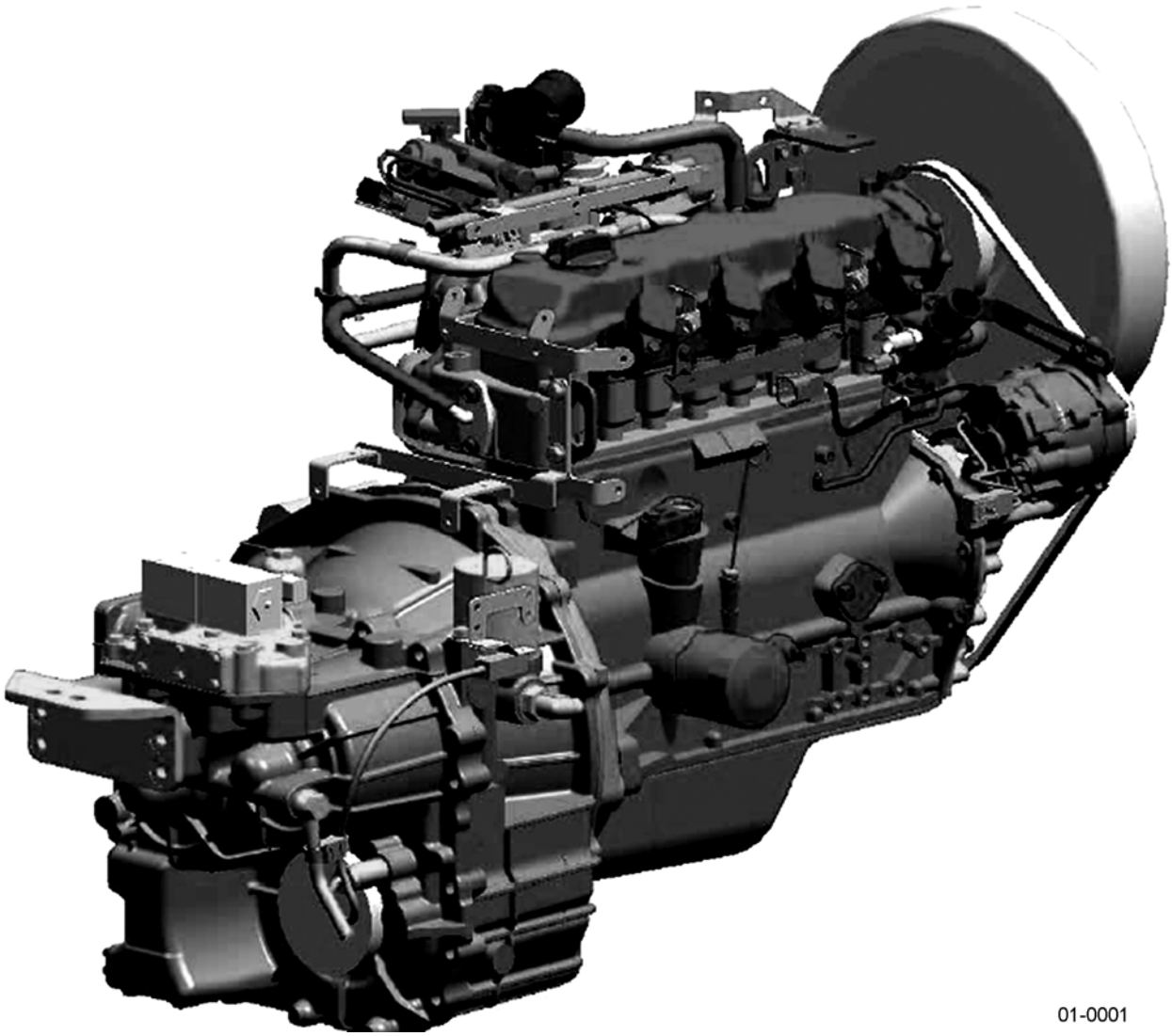

01-0001

https://truckmanualshub.com/



## ENGINE - K21/K25 GASOLINE / LP / DUAL-FUEL - S/N 200001A~

| Item | Part Number | Description | Qty | |
|---|---|---|---|---|
| | | **K21 ENGINES** | | |
| | 37B-1DD-5010 | K21 ENGINE ASSY - GASOLINE (EPA) . . . . . | 1 | |
| | 37B-1DD-5020 | K21 ENGINE ASSY - GAS AND LP (EPA) . . . . . | 1 | |
| | 37B-1DD-5030 | K21 ENGINE ASSY - LP. . . . . | 1 | |
| | 37B-1DD-5110 | K21 ENGINE ASSY - GS . . . . . | 1 | |
| | 37B-1DD-5130 | K21 ENGINE ASSY - LPS . . . . . | 1 | |
| | 37B-1DA-5320 | K21 ENGINE ASSY - GASOLINE (EXPORT) | 1 | |
| | 37B-1DA-5331 | K21 ENGINE ASSY - G/LP (EXPORT). . . . . | 1 | |
| | | **K25 ENGINES** | | |
| | 37B-1DD-5040 | K25 ENGINE ASSY - GASOLINE (EPA) . . . . . | 1 | |
| | 37B-1DD-5050 | K25 ENGINE ASSY - GAS AND LP (EPA) . . . . . | 1 | |
| | 37B-1DD-5060 | K25 ENGINE ASSY - LP. . . . . | 1 | |
| | 37B-1DD-5140 | K25 ENGINE ASSY - GS . . . . . | 1 | |
| | 37B-1DD-5160 | K25 ENGINE ASSY - LPS . . . . . | 1 | |
| | 37B-1DA-5350 | K25 ENGINE ASSY - GASOLINE (EXPORT) | 1 | |
| | 37B-1DA-5361 | K25 ENGINE ASSY - G/LP (EXPORT). . . . . | 1 | |

https://truckmanualshub.com/



# TRANSMISSION-TO-ENGINE MOUNTING PARTS - K21/K25 - S/N 200001A~

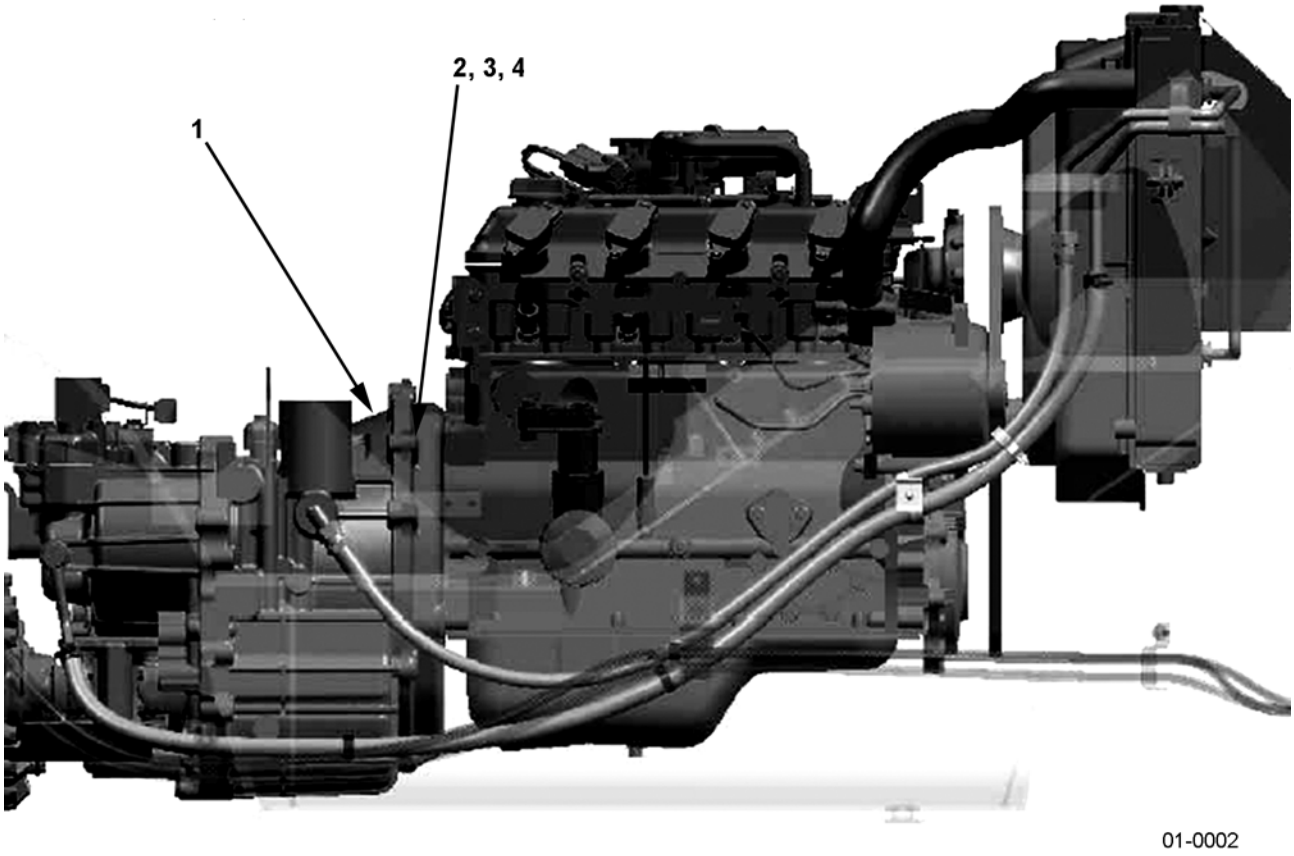

https://truckmanualshub.com/



## TRANSMISSION-TO-ENGINE MOUNTING PARTS - K21/K25 - S/N 200001A~

| Item | Part Number | Description | Qty | |
|---|---|---|---|---|
| 1 | 37B-1AZ-5030 | TRANSMISSION ASSY (2.0T, 2.5T, 2.8T, 3.0T) . | 1 | |
| | 37B-1AZ-5050 | TRANSMISSION ASSY (3.2T, 3.5T). . . . . | 1 | |
| 2 | 01010-81045 | BOLT. . . . . | 8 | |
| 3 | 01602-21030 | WASHER . . . . . | 8 | |
| 4 | 01580-11008 | NUT. . . . . | 8 | |
| NS | 01010-80816 | BOLT - TORQUE CONVERTER-TO-FLEX PLATE | 6 | |
| NS | 01643-50823 | WASHER - TORQUE CONV.-TO-FLEX PLATE . | 6 | |

https://truckmanualshub.com/



## ENGINE MOUNTING PARTS - K21/K25 - S/N 200001A~

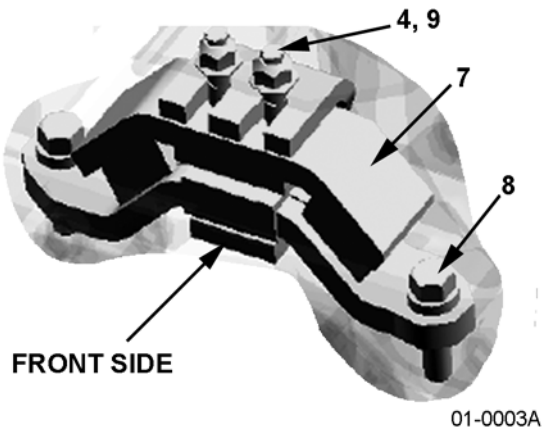


01-0003A

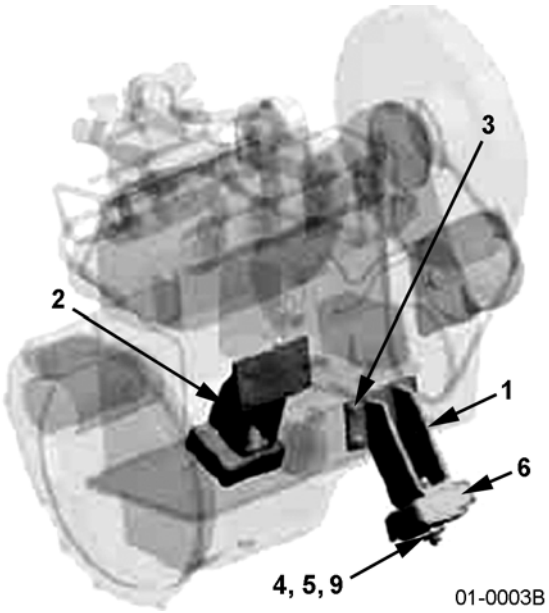


01-0003B

https://truckmanualshub.com/



## ENGINE MOUNTING PARTS - K21/K25 - S/N 200001A~

| Item | Part Number | Description | Qty | |
|---|---|---|---|---|
| 1 | 3EB-01-51110 | BRACKET, LH | 1 | |
| 2 | 3EB-01-51121 | BRACKET, RH | 1 | |
| 3 | 01024-81025 | BOLT | 6 | |
| 4 | 34A-01-35120 | U-NUT | 6 | |
| 5 | 3EB-01-51190 | WASHER | 2 | |
| 6 | 3EB-01-51130 | MOUNT | 2 | |
| 7 | 3EB-02-52130 | MOUNT | 1 | |
| 8 | 3EA-71-12790 | BOLT | 2 | |
| 9 | 01643-31232 | WASHER | 6 | |

https://truckmanualshub.com/



## AIR CLEANER ASSY - K21/K25 - S/N 200001A~

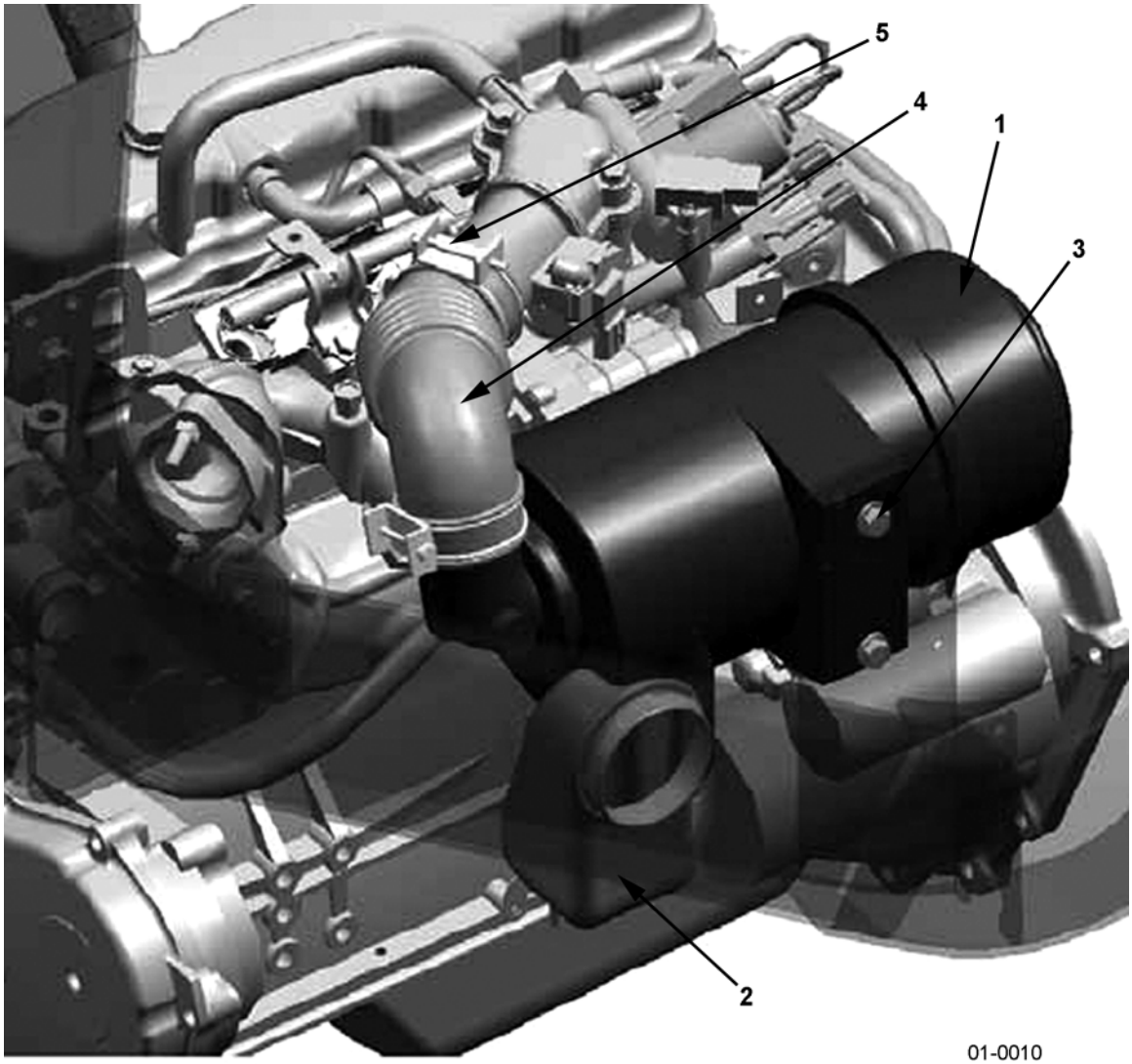


01-0010

**OVERHEAD GUARD**




01-0010A

https://truckmanualshub.com/



## AIR CLEANER ASSY - K21/K25 - S/N 200001A~

| Item | Part Number | Description | Qty | |
|---|---|---|---|---|
| 1 | 3EB-01-A7910 | AIR CLEANER ASSY | 1 | |
| 2 | 3EB-01-A7922 | CONNECTOR | 1 | |
| 3 | 01024-80816 | BOLT | 2 | |
| 4 | 3EB-01-51280 | HOSE | 1 | |
| 5 | 07280-05729 | CLAMP | 2 | |
| 6 | 3EB-01-D6110 | COVER | 1 | |
| N/S | 3EA-01-A5390 | AIR FILTER ELEMENT (GASOLINE/LP/DUAL-FUEL K21/K25 ONLY) | 1 | |

https://truckmanualshub.com/



## ENGINE ASSEMBLY & SHORT BLOCK ENGINE ASSEMBLY - K21/K25 GAS, LP & DUAL FUEL - S/N 200001A~

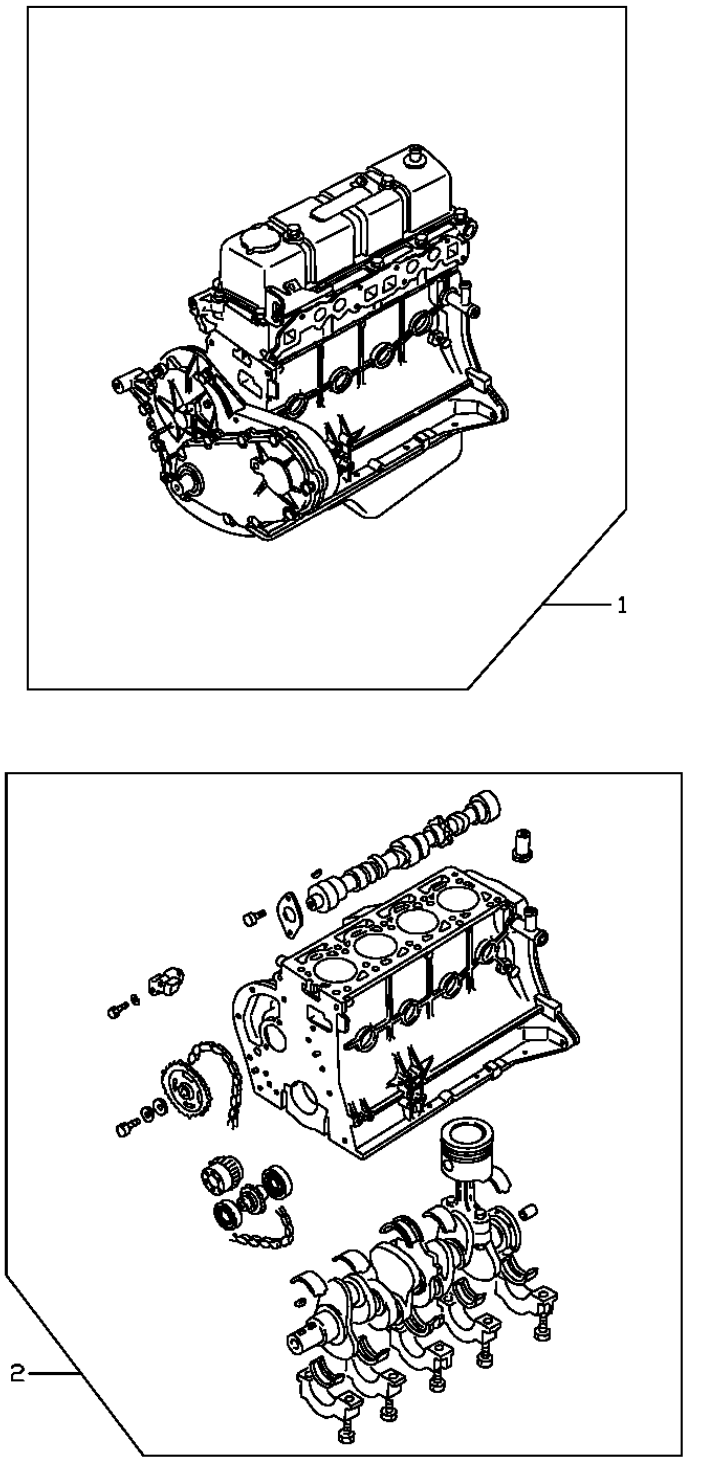


K13A101_1

https://truckmanualshub.com/



## ENGINE ASSEMBLY & SHORT BLOCK ENGINE ASSEMBLY - K21/K25 GAS, LP & DUAL FUEL - S/N 200001A~

| Item | Part Number | Description | Qty | Serial Number |
|---|---|---|---|---|
| 1 | 10102-GW460 | ENGINE ASSY (W/CYLINDER HEAD AND OIL PAN), K21, GAS, DUAL FUEL | 1 | K21 K00001X |
| | 10102-GW461 | ENGINE ASSY (W/CYLINDER HEAD AND OIL PAN), K21, LP | 1 | K21 K00001X |
| | 10102-GW560 | ENGINE ASSY (W/CYLINDER HEAD AND OIL PAN), K25, GAS, DUAL | 1 | K25 K01001X |
| | 10102-GW561 | ENGINE ASSY (W/CYLINDER HEAD AND OIL PAN), K25, LP | 1 | K25 K01001X |
| 2 | 10103-GW400 | ENGINE ASSY, SHORT BLOCK (NO CYLINDER HEAD, NO OIL PAN), K21, ALL | 1 | K21 K00001X |
| | 10103-GW500 | ENGINE ASSY, SHORT BLOCK (NO CYLINDER HEAD, NO OIL PAN), K25, ALL | 1 | K25 K01001X |

https://truckmanualshub.com/



# BARE ENGINE BLOCK & OIL PAN - K21/K25 - S/N ALL GAS, LP & DUAL FUEL

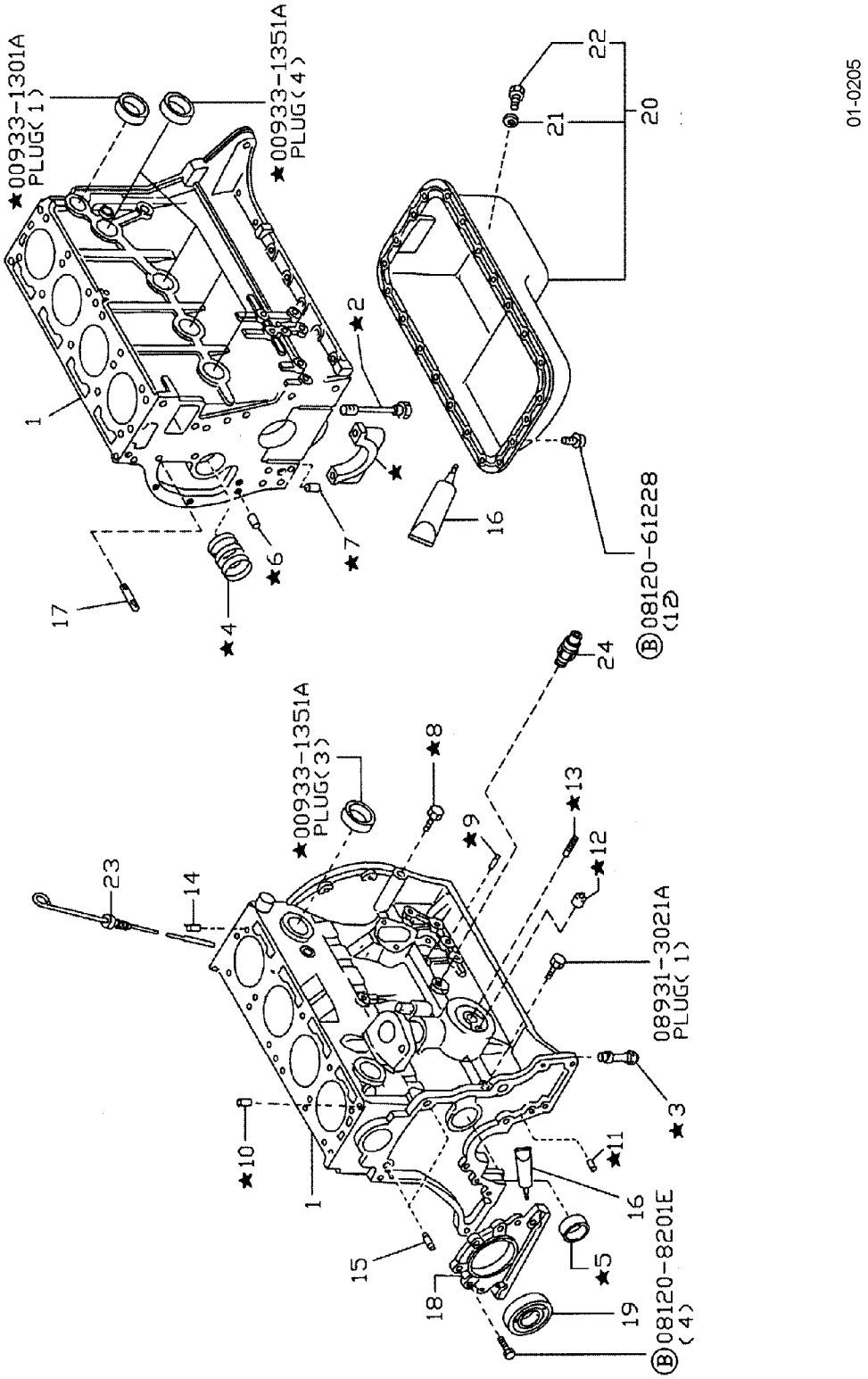

https://truckmanualshub.com/



## BARE ENGINE BLOCK & OIL PAN - K21/K25 - S/N ALL
## GAS, LP & DUAL FUEL

| Item | Part Number | Description | Qty | Serial Number |
|---|---|---|---|---|
| 1 | 11000-FU400 | ASSY, BLOCK, ENGINE, BARE, K21, ALL . . . . | 1 | K21 K00001X |
| | 11000-FY500 | ASSY, BLOCK, ENGINE, BARE, K25, ALL . . . . | 1 | K25 K01001X |
| 2 | 12293-P0500 | . BOLT, MAIN BEARING CAP . . . . . | 10 | |
| 3 | 15075-FF200 | . BUSHING, OIL PUMP DRIVE SPINDLE . . . . . | 1 | |
| 4 | 13002-71200 | . BUSHING SET . . . . . | 1 | |
| 5 | 11019-32201 | . PLUG, WELCH . . . . . | 1 | |
| 6 | 11024-K0100 | . PLUG, TAPER . . . . . | 2 | |
| 7 | 11024-78200 | . PLUG, BLIND . . . . . | 1 | |
| 8 | 11024-85G00 | . PLUG, TAPER . . . . . | 2 | |
| 9 | 11023-78200 | . PLUG, TAPER, CAMSHAFT . . . . . | 1 | |
| 10 | 11046-73402 | . DOWEL, BLOCK TO HEAD . . . . . | 4 | |
| 11 | 11024-85G01 | . PLUG, TAPER . . . . . | 4 | |
| 12 | 15213-21002 | . STUD, OIL FILTER. . . . . | 1 | |
| 13 | 15241-16A01 | . VALVE ASSY, RELIEF . . . . . | 1 | |
| 14 | 11053-73400 | DOWEL . . . . . | 2 | |
| 15 | 30412-P5100 | DOWEL . . . . . | 2 | |
| 16 | KA760-15000 | LIQUID GASKET . . . . . | AR | |
| 17 | 11392-50K00 | STUD . . . . . | 2 | |
| 18 | 12297-FU400 | RETAINER ASSY, OIL SEAL, REAR . . . . . | 1 | |
| 19 | 12279-FF200 | SEAL, OIL, CRANKSHAFT, REAR. . . . . | 1 | |
| 20 | 11110-FU400 | OIL PAN ASSY . . . . . | 1 | |
| 21 | 11026-01M02 | WASHER, DRAIN PLUG . . . . . | 1 | |
| 22 | 11128-01M00 | DRAIN PLUG . . . . . | 1 | |
| 23 | 11140-FT860 | GAUGE ASSY, OIL LEVEL (DIPSTICK) . . . . . | 1 | |
| 24 | 25240-FJ10A | SWITCH, OIL PRESSURE. . . . . | 1 | |

https://truckmanualshub.com/



## CYLINDER HEAD & ROCKER COVER - K21/K25 - S/N ALL
## GAS, LP & DUAL FUEL

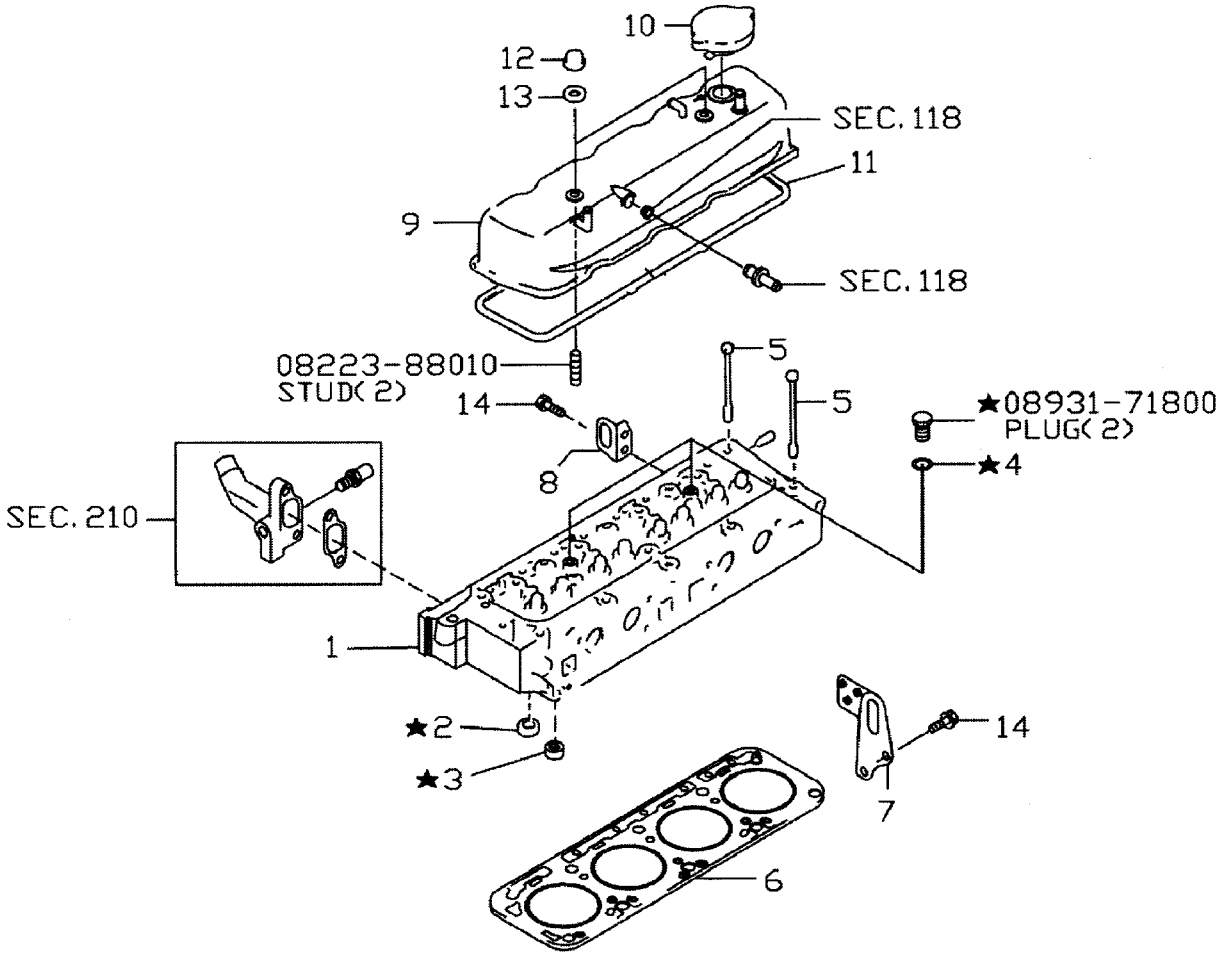


01-0210

https://truckmanualshub.com/



## CYLINDER HEAD & ROCKER COVER - K21/K25 - S/N ALL
## GAS, LP & DUAL FUEL

| Item | Part Number | Description | Qty | Serial Number |
|---|---|---|---|---|
| 1 | 11040-FY501 | ASSY, HEAD, CYLINDER, K21/K25, ALL | 1 | |
| 2 | 11099-FY500 | . SEAT, VALVE, EXHAUST | 4 | |
| 3 | 11098-FY500 | . SEAT, VALVE, INTAKE | 4 | |
| 4 | 11026-53J00 | GASKET | 2 | |
| 5 | 11056-FY500 | BOLT, CYLINDER HEAD | 10 | |
| 6 | 11044-FU400 | GASKET, CYLINDER HEAD, GAS & DUAL-FUEL | 1 | |
| | 11044-FU460 | GASKET, CYLINDER HEAD, LP | 1 | |
| 7 | 10005-FU410 | SLINGER, ENGINE, FRONT | 1 | |
| 8 | 10006-FU410 | SLINGER, ENGINE, REAR | 1 | |
| 9 | 13264-FU400 | COVER ASSY, VALVE, ROCKER | 1 | |
| 10 | 15255-1P110 | CAP ASSY, OIL FILLER | 1 | |
| 11 | 13270-FY50A | GASKET, ROCKER COVER | 1 | |
| 12 | 13274-B1101 | NUT- CAP, VALVE, ROCKER | 2 | |
| 13 | 13268-88V62 | WASHER, NUT CAP | 2 | |
| 14 | 01121-05351 | BOLT - SLINGER | 4 | |

https://truckmanualshub.com/



# CRANKCASE VENTILATION - K21/K25 - S/N ALL GAS, LP & DUAL FUEL

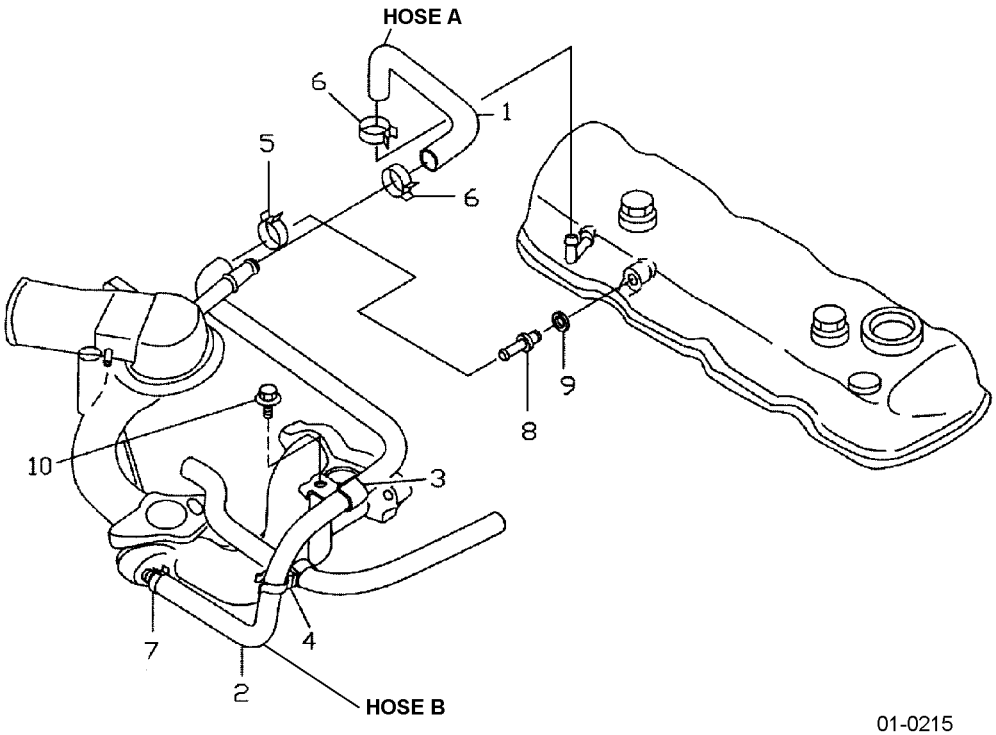

https://truckmanualshub.com/



## CRANKCASE VENTILATION - K21/K25 - S/N ALL
## GAS, LP & DUAL FUEL

| Item | Part Number | Description | Qty | Serial Number |
|---|---|---|---|---|
| 1 | 11828-FU400 | HOSE A, BLOWBY GAS | 1 | |
| 2 | 11823-FU400 | HOSE B, BLOWBY GAS | 1 | |
| 3 | 24220-FU400 | CLIP | 1 | |
| 4 | 24220-79901 | CLIP | 1 | |
| 5 | 16439-42L01 | HOSE CLAMP, HOSE B | 1 | |
| 6 | 16439-V5000 | HOSE CLAMP, HOSE A | 2 | |
| 7 | 16439-17B00 | HOSE CLAMP, HOSE B | 1 | |
| 8 | 11810-75T00 | PCV VALVE ASSY, BLOWBY GAS CONTROL | 1 | |
| 9 | 11812-41B00 | INSULATOR, PCV VALVE | 1 | |
| 10 | 08120-61633 | BOLT | 1 | |

https://truckmanualshub.com/



# PISTON, CRANKSHAFT & FLYWHEEL - K21/K25 - S/N ALL GAS, LP & DUAL FUEL

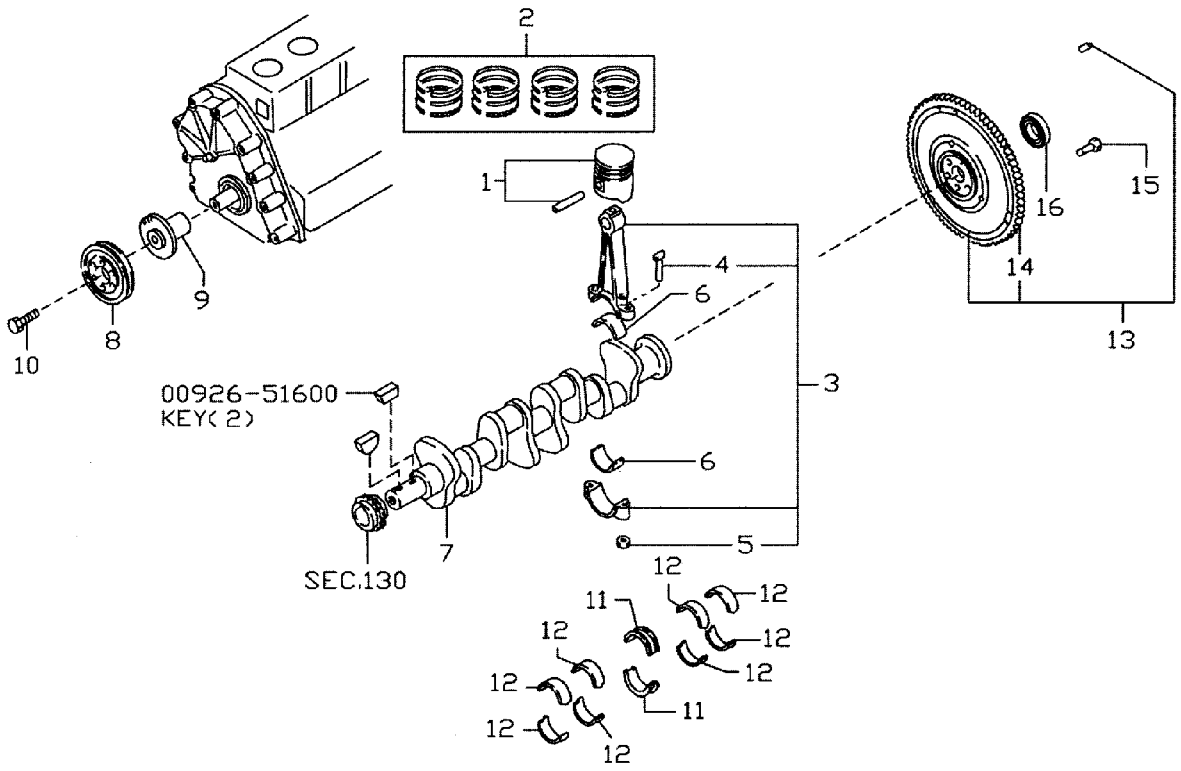


01-0220

https://truckmanualshub.com/



## PISTON, CRANKSHAFT & FLYWHEEL - K21/K25 - S/N ALL GAS, LP & DUAL FUEL

| Item | Part Number | Description | Qty | Serial Number |
|---|---|---|---|---|
| 1 | 12010-FU420 | PISTON W/ PIN, K21, ALL, STD GRADE 1 | 4 | |
| | 12010-FU421 | PISTON W/ PIN, K21, ALL, STD GRADE 2 | 4 | |
| | 12010-FU422 | PISTON W/ PIN, K21, ALL, STD GRADE 3 | 4 | |
| | 12010-FU423 | PISTON W/ PIN, K21, ALL, STD GRADE 4 | 4 | |
| | 12010-FU424 | PISTON W/ PIN, K21, ALL, STD GRADE 5 | 4 | |
| | 12010-FU470 | PISTON W/ PIN, K21, ALL, OVERSIZE = 0.5 | 4 | |
| | 12010-FU471 | PISTON W/ PIN, K21, ALL, OVERSIZE = 1.0 | 4 | |
| | 12010-FU520 | PISTON W/ PIN, K25, ALL, STD GRADE 1 | 4 | |
| | 12010-FU521 | PISTON W/ PIN, K25, ALL, STD GRADE 2 | 4 | |
| | 12010-FU522 | PISTON W/ PIN, K25, ALL, STD GRADE 3 | 4 | |
| | 12010-FU523 | PISTON W/ PIN, K25, ALL, STD GRADE 4 | 4 | |
| | 12010-FU524 | PISTON W/ PIN, K25, ALL, STD GRADE 5 | 4 | |
| | 12010-FU570 | PISTON W/ PIN, K25, ALL, OVERSIZE = 0.5 | 4 | |
| | 12010-FU571 | PISTON W/ PIN, K25, ALL, OVERSIZE = 1.0 | 4 | |
| 2 | 12033-4E110 | RING SET, PISTON, STD | 4 | |
| | 12036-4E110 | RING SET, PISTON, OS=0.5 | 4 | |
| | 12038-4E110 | RING SET, PISTON, OS=1.0 | 4 | |
| 3 | 12100-FU400 | ROD ASSY, CONNECTING, K21 | 4 | |
| | 12100-FY500 | ROD ASSY, CONNECTING, K25 | 4 | |
| 4 | 12109-D0210 | . BOLT, CONNECTING ROD | 8 | |
| 5 | 12112-H1000 | . NUT, CONNECTING ROD | 8 | |
| 6 | 12111-FY500 | . BEARING SET, CONNECTING ROD, STD | 8 | |
| | 12117-FY500 | . BEARING SET, CONNECTING ROD, US = 0.08 | 8 | |
| | 12118-FY500 | . BEARING SET, CONNECTING ROD, US = 0.12 | 8 | |
| | 12119-FY500 | . BEARING SET, CONNECTING ROD, US = 0.25 | 8 | |
| 7 | 12201-FU400 | ASSY, CRANKSHAFT, K21 | 1 | K21 K00001X |
| | 12201-FY500 | ASSY, CRANKSHAFT, K25 | 1 | K25 K01001X |
| 8 | 12303-FU400 | PULLEY, CRANKSHAFT | 1 | |
| 9 | 12307-FU460 | BUSHING | 1 | |
| 10 | 12309-FU400 | BOLT, PULLEY, CRANKSHAFT | 1 | |
| 11 | 12247-50K00 | MAIN BEARING, CTR, STD | 2 | |
| | 12248-50K00 | BEARING, CTR, US = 0.02 | 2 | |
| | 12249-50K00 | BEARING, CTR, US = 0.25 | 2 | |
| | 12250-50K00 | BEARING, CTR, US = 0.50 | 2 | |
| | 12251-50K00 | BEARING, CTR, US = 0.75 | 2 | |
| | 12252-50K00 | BEARING, CTR, US = 1.00 | 2 | |
| 12 | 12231-FY500 | BEARING MAIN, STD | 8 | |
| | 12232-FY500 | BEARING MAIN, INTERNAL, US = 0.02 | 8 | |

PARTS LIST CONTINUED ON NEXT PAGE

https://truckmanualshub.com/



## PISTON, CRANKSHAFT & FLYWHEEL - K21/K25 - S/N ALL
## GAS, LP & DUAL FUEL

| Item | Part Number | Description | Qty | Serial Number |
|---|---|---|---|---|
| | 12233-FY500 | BEARING MAIN, US=0.25 | 8 | |
| | 12234-FY500 | BEARING MAIN, US=0.50 | 8 | |
| | 12235-FY500 | BEARING MAIN, US=0.75 | 8 | |
| | 12236-FY500 | BEARING MAIN, US=1.00 | 8 | |
| 13 | 12310-K9302 | FLYWHEEL ASSY | 1 | |
| 14 | 12312-50K00 | . GEAR, RING | 1 | |
| 15 | 12315-58S00 | . BOLT, FLYWHEEL | 6 | |
| 16 | 32203-FU400 | BEARING, BALL | 1 | |

https://truckmanualshub.com/

NOTES

https://truckmanualshub.com/



# CAMSHAFT & VALVE MECHANISM - K21/K25 - S/N ALL GAS, LP & DUAL FUEL

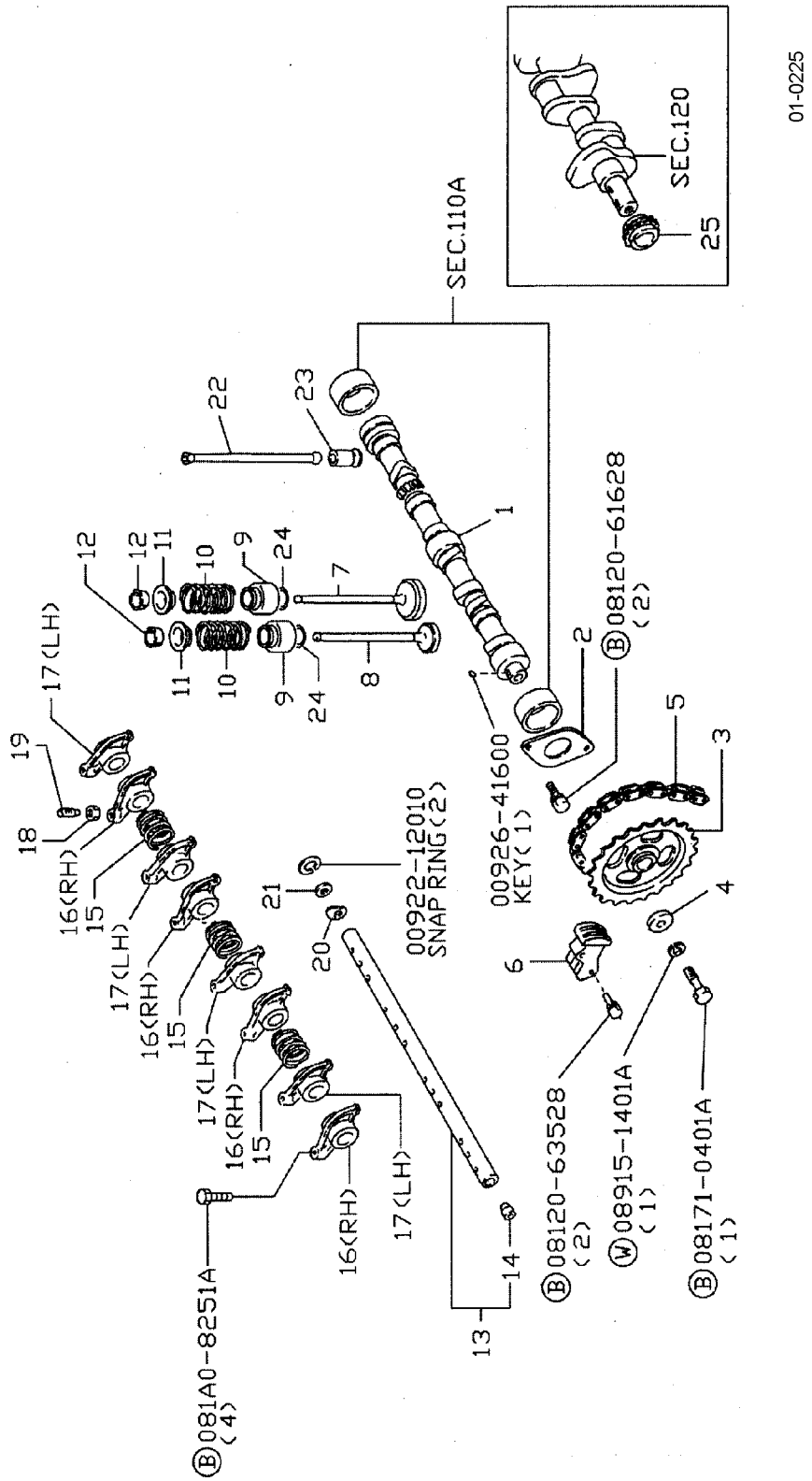

https://truckmanualshub.com/



## CAMSHAFT & VALVE MECHANISM - K21/K25 - S/N ALL
## GAS, LP & DUAL FUEL

| Item | Part Number | Description | Qty | Serial Number |
|---|---|---|---|---|
| 1 | 13001-50K00 | CAMSHAFT | 1 | |
| 2 | 13010-78201 | PLATE, LOCATING, CAMSHAFT | 1 | |
| 3 | 13024-FY500 | SPROCKET, CAMSHAFT | 1 | |
| 4 | 13013-78200 | WASHER, CAM SPROCKET | 1 | |
| 5 | 13028-FU400 | CHAIN, TIMING, CAMSHAFT | 1 | |
| 6 | 13070-50K00 | TENSION ASSY, CHAIN | 1 | |
| 7 | 13201-FY500 | VALVE, INTAKE | 4 | |
| 8 | 13202-FU400 | VALVE, EXHAUST | 4 | |
| 9 | 13207-53F00 | OIL SEAL, VALVE STEM | 8 | |
| 10 | 13203-FY50A | SPRING, VALVE | 8 | |
| 11 | 13209-V7200 | RETAINER, VALVE STEM | 8 | |
| 12 | 13210-16A00 | COLLET, VALVE SPRING | 16 | |
| 13 | 13252-FY500 | SHAFT ASSY, VALVE ROCKER | 1 | |
| 14 | 13254-02N00 | PLUG, ROCKER SHAFT | 2 | |
| 15 | 13256-W0400 | SPRING, VALVE ROCKER | 3 | |
| 16 | 13258-FY500 | ROCKER, VALVE - ARM - RH | 4 | |
| 17 | 13258-FY510 | ROCKER, VALVE - ARM - LH | 4 | |
| 18 | 13235-78200 | NUT, LOCK, ROCKER PIVOT SCREW | 8 | |
| 19 | 13234-78200 | SCREW, ADJUSTING, VALVE ROCKER | 8 | |
| 20 | 13255-58000 | SPRING - OUTSIDE, VALVE ROCKER | 2 | |
| 21 | 13289-58000 | WASHER, ROCKER SHAFT | 2 | |
| 22 | 13238-FY500 | PUSH ROD | 8 | |
| 23 | 13231-H1001 | LIFTER, VALVE | 8 | |
| 24 | 13205-40F00 | SEAT, VALVE SPRING, OUTER | 8 | |
| 25 | 13021-FY500 | SPROCKET, CAMSHAFT | 1 | |

https://truckmanualshub.com/



# FRONT COVER & FITTINGS - K21/K25 - S/N ALL
# GAS, LP & DUAL FUEL

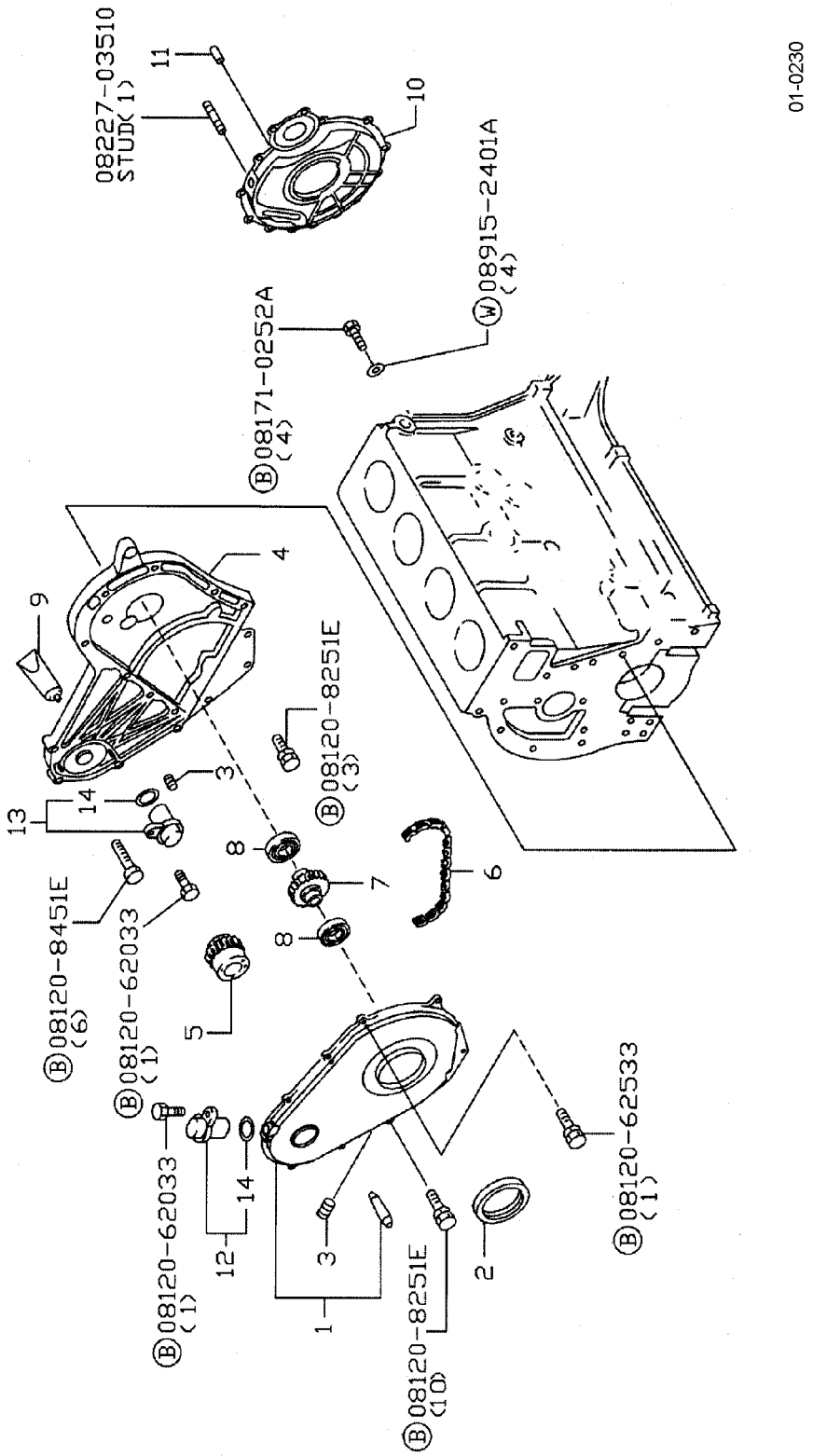

https://truckmanualshub.com/



## FRONT COVER & FITTINGS - K21/K25 - S/N ALL
## GAS, LP & DUAL FUEL

| Item | Part Number | Description | Qty | Serial Number |
|---|---|---|---|---|
| 1 | 13501-FU400 | COVER, FRONT | 1 | |
| 2 | 13510-FF200 | SEAL, OIL - FRONT COVER | 1 | |
| 3 | 11046-73402 | DOWEL PIN | 1 | |
| 4 | 13034-FU400 | HOUSING, TIMING CHAIN | 1 | |
| 5 | 12351-FU400 | SPROCKET, PTO | 1 | |
| 6 | 12352-GW300 | CHAIN, PTO | 1 | |
| 7 | 12353-GW300 | SPROCKET, PTO-DRIVEN | 1 | |
| 8 | 12354-50K00 | BEARING, SPROCKET | 2 | |
| 9 | KA760-15000 | GASKET, HOUSING, TIMING CHAIN - LIQUID. | AR | |
| 10 | 12320-K9303 | FLYWHEEL HOUSING. | 1 | |
| 11 | 30412-FY600 | DOWEL, PIN | 2 | |
| 12 | 23731-6J906 | SENSOR ASSY, CAMSHAFT | 1 | |
| 13 | 23731-6N206 | SENSOR ASSY, CAMSHAFT | 1 | |
| 14 | 22131-4M505 | SEAL, O-RING | 2 | |

https://truckmanualshub.com/



## MANIFOLD ASSEMBLY - K21/K25 - S/N ALL
## GAS, LP & DUAL FUEL

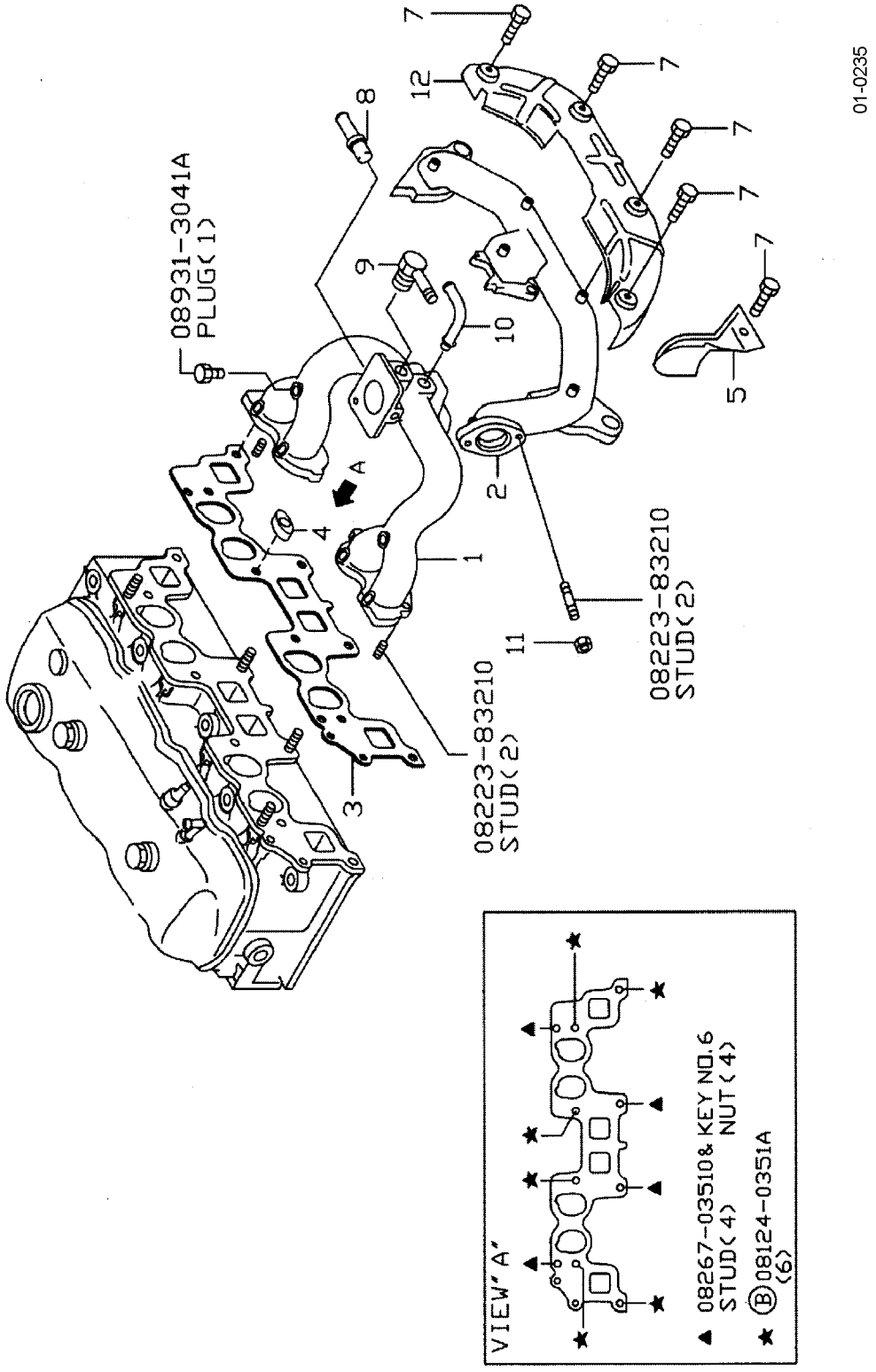

https://truckmanualshub.com/



## MANIFOLD ASSEMBLY - K21/K25 - S/N ALL
## GAS, LP & DUAL FUEL

| Item | Part Number | Description | Qty | Serial Number |
|---|---|---|---|---|
| 1 | 14003-FU460 | MANIFOLD ASSY, GAS, UL-GS, DUAL | 1 | |
| | 14003-FU461 | MANIFOLD ASSY, GAS, LP | 1 | |
| 2 | 14004-FU400 | MANIFOLD, EXHAUST, FRONT | 1 | |
| 3 | 14035-FY500 | GASKET, MANIFOLD | 1 | |
| 4 | 14037-42L01 | YOKE - FIX, MANIFOLD | 6 | |
| 5 | 16590-FU461 | COVER, MANIFOLD, EXHAUST | 1 | |
| 6 | 14094-31U00 | NUT | 4 | |
| 7 | 14069-82F00 | BOLT, HEX HEAD, SPL | 5 | |
| 8 | 14875-P6500 | CONNECTOR, WATER | 1 | |
| 9 | 14053-E0600 | CONNECTOR, WATER | 1 | |
| 10 | 11831-FU460 | CONNECTOR, BLOWBY | 1 | |
| 11 | 20602-01M00 | NUT, EXHAUST TUBE | 2 | |
| 12 | 16590-FU462 | COVER, EXHAUST MANIFOLD | 1 | |

https://truckmanualshub.com/



# FUEL RAIL & INJECTOR HOLDER ASSY - K21/K25 - S/N ALL GASOLINE

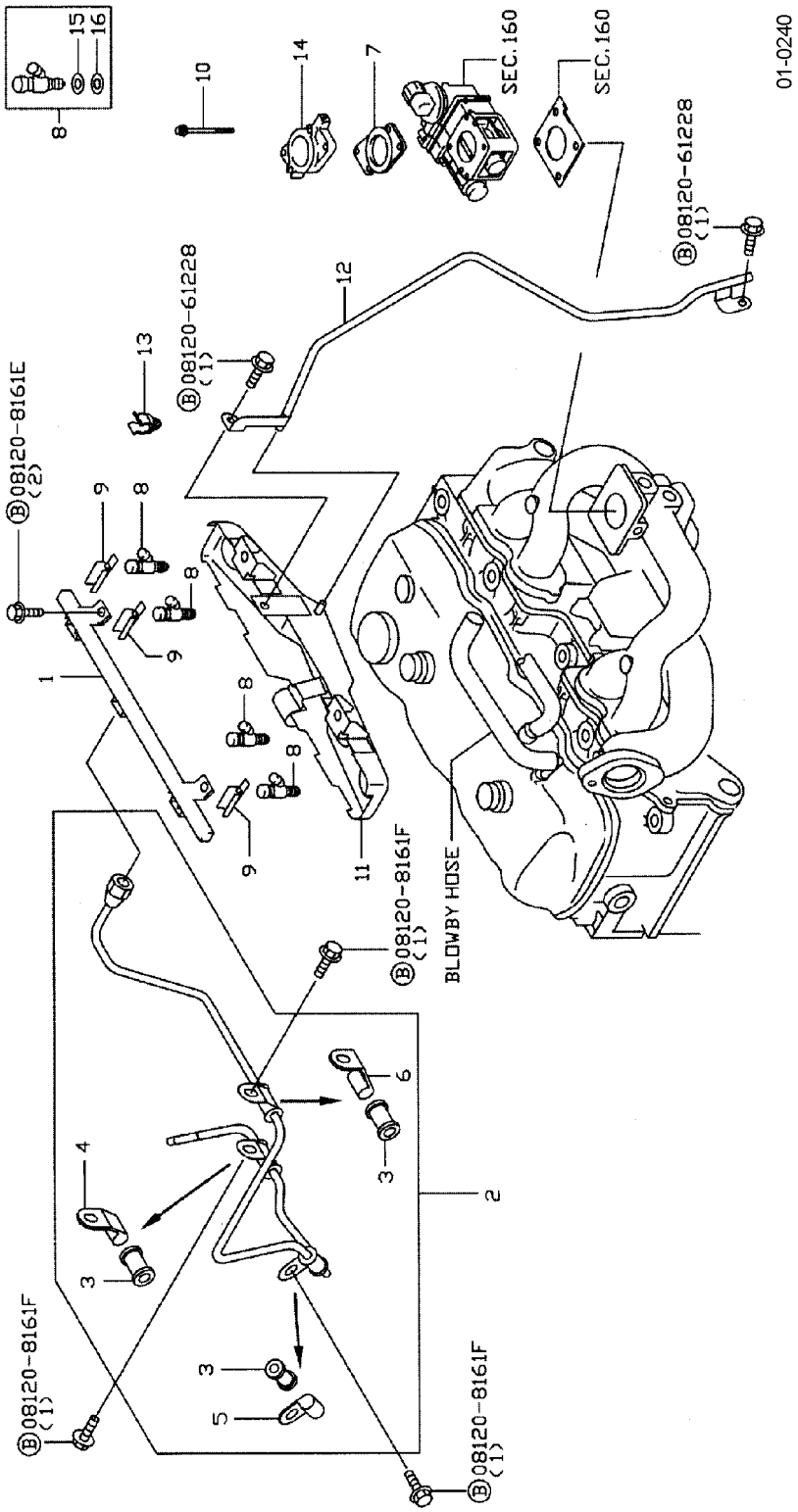

https://truckmanualshub.com/



## FUEL RAIL & INJECTOR HOLDER ASSY - K21/K25 - S/N ALL GASOLINE

| Item | Part Number | Description | Qty | Serial Number |
|---|---|---|---|---|
| 1 | 17520-GY361 | TUBE ASSY - FUEL | 1 | |
| 2 | 17522-FU463 | TUBE ASSY - FUEL | 1 | |
| 3 | 17108-K7005 | INSULATOR - FUEL TUBE | 3 | |
| 4 | 17111-50K00 | TUBE CLAMP | 1 | |
| 5 | 17111-50K60 | TUBE CLAMP | 1 | |
| 6 | 17111-FU400 | CLAMP | 1 | |
| 7 | 16175-FU470 | GASKET - INJECTOR | 1 | |
| 8 | 16600-FU460 | INJECTOR ASSY, FUEL | 4 | |
| 9 | 17571-5L300 | CLIP | 4 | |
| 10 | 16185-FU460 | BOLT | 2 | |
| 11 | 14330-GY360 | PLATE - FUEL, RECEIVER | 1 | |
| 12 | 16318-GY360 | DRAIN TUBE | 1 | |
| 13 | 17571-5V002 | CLIP | 1 | |
| 14 | 16270-FU460 | SPACER - INJECTOR | 1 | |
| 15 | 16618-5L300 | SEAL, O-RING | 4 | |
| 16 | 16618-FU460 | SEAL, O-RING | 4 | |

https://truckmanualshub.com/



# FUEL INJECTOR HOLDER ASSY - K21/K25 - S/N ALL LPG

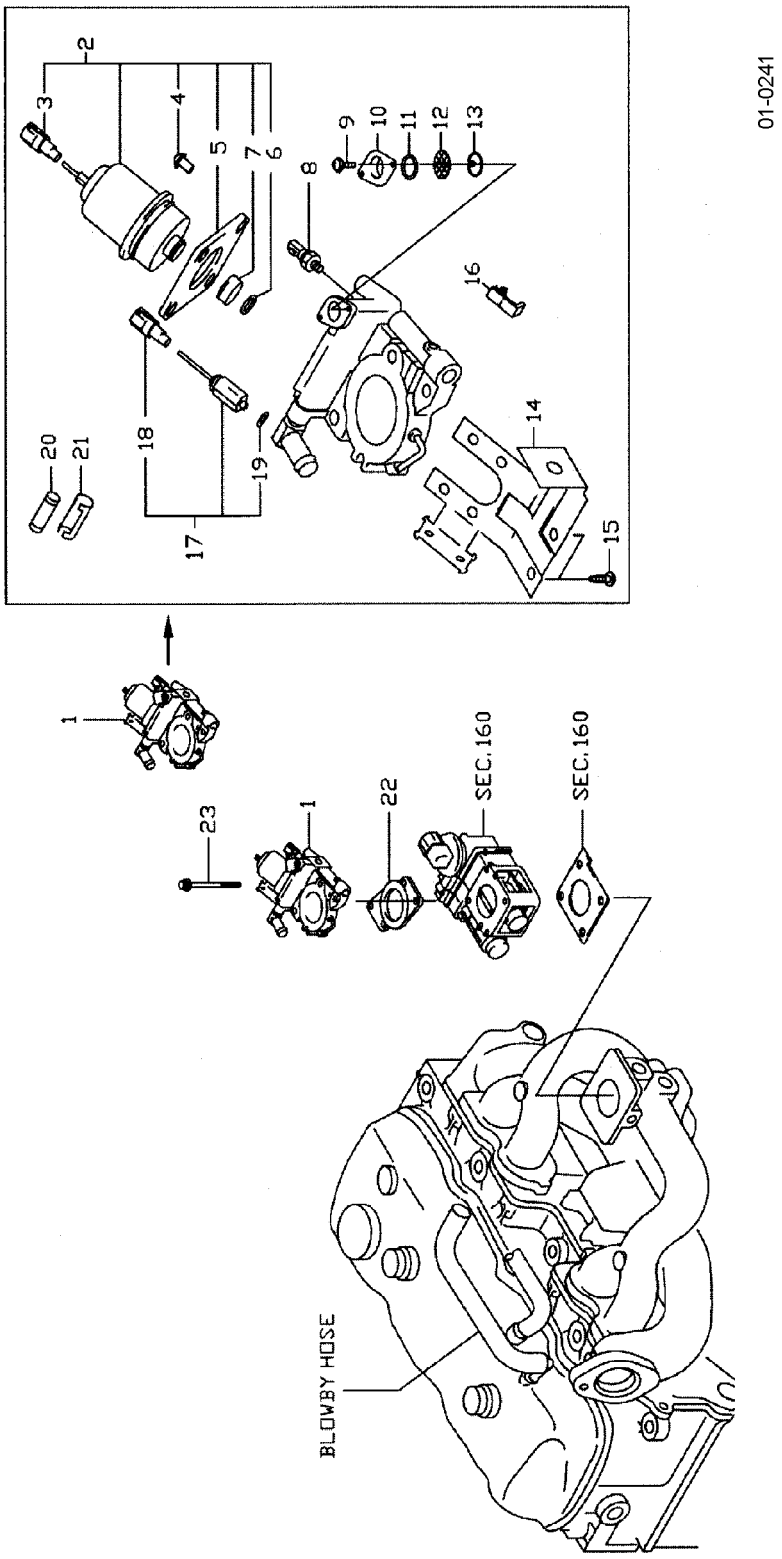

https://truckmanualshub.com/



## FUEL INJECTOR HOLDER ASSY - K21/K25 - S/N ALL
## LPG

| Item | Part Number | Description | Qty | Serial Number |
|---|---|---|---|---|
| 1 | 16610-GX11A | HOLDER ASSY - INJECTOR, LPG (K21) | 1 | |
| | 16610-GX21A | HOLDER ASSY - INJECTOR, LPG (K25) | 1 | |
| 2 | 16600-FU471 | INJECTOR ASSY, LPG (K21) | 1 | |
| | 16600-FU571 | INJECTOR ASSY, LPG (K25) | 1 | |
| 3 | 24341-10Y03 | HOUSING - CONNECTOR, MALE | 1 | |
| 4 | 16065-FU460 | SCREW | 4 | |
| 5 | 16290-FU460 | PLATE - HOLDER, LPG | 1 | |
| 6 | 16349-VS002 | SEAL, O-RING | 1 | |
| 7 | 16349-VS001 | SEAL, O-RING | 1 | |
| 8 | 16638-GX11A | SENSOR ASSY - PRESSURE CNG | 1 | |
| 9 | 16214-A8800 | SCREW | 2 | |
| 10 | 16291-GX11A | PLATE | 1 | |
| 11 | 16618-GX11A | SEAL, O-RING | 1 | |
| 12 | 16098-FU460 | FILTER | 1 | |
| 13 | 16156-FU460 | CLIP | 1 | |
| 14 | 16263-FU460 | BRACKET - CONNECTOR | 1 | |
| 15 | 16065-OH600 | SCREW | 2 | |
| 16 | 24346-VS000 | CLIP - CONNECTOR | 3 | |
| 17 | 16197-FU46A | SOLENOID ASSY | 1 | |
| 18 | 24341-10Y01 | HOUSING, CONNECTOR - MALE | 1 | |
| 19 | 16094-B8500 | PACKING - SOLENOID | 1 | |
| 20 | 24319-C9905 | FUSE | 1 | |
| 21 | 16277-FU461 | CLAMP | 1 | |
| 22 | 16175-FU470 | GASKET - INJECTOR | 1 | |
| 23 | 16185-FU460 | BOLT | 2 | |

https://truckmanualshub.com/



# FUEL RAIL & INJECTOR HOLDER ASSY - PRESS. REG. - K21/K25 - S/N ALL DUAL-FUEL (ALSO SEE FIG. 01-0242A)

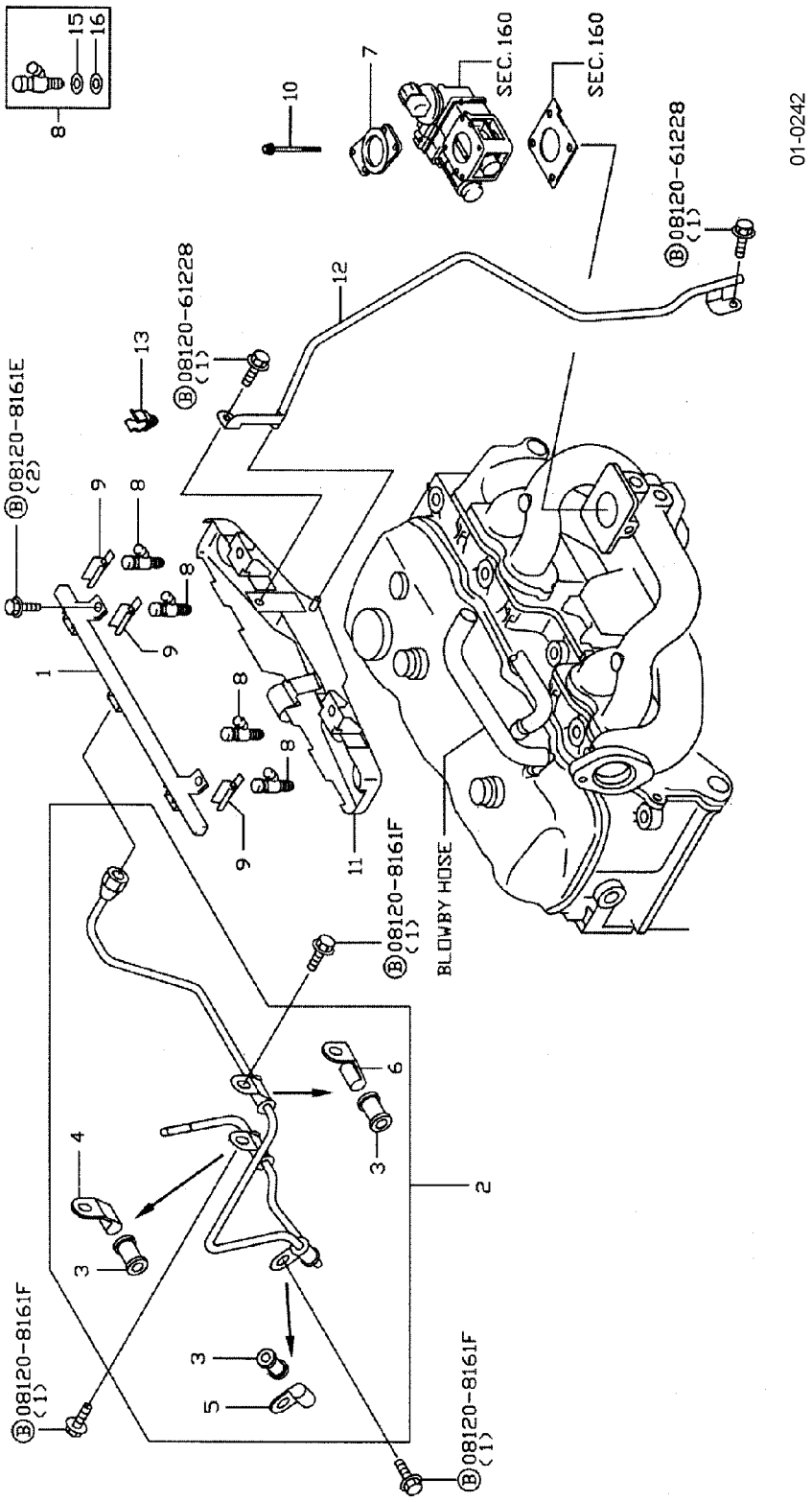

https://truckmanualshub.com/



## FUEL RAIL & INJECTOR HOLDER ASSY - PRESS. REG. - K21/K25 - S/N ALL DUAL-FUEL (ALSO SEE FIG. 01-0242A)

| Item | Part Number | Description | Qty | Serial Number |
|---|---|---|---|---|
| 1 | 17520-GY361 | TUBE ASSY - FUEL | 1 | |
| 2 | 17522-FU4634 | TUBE ASSY - FUEL | 1 | |
| 3 | 17108-K7005 | INSULATOR - FUEL TUBE | 3 | |
| 4 | 17111-50K00 | CLAMP - TUBE | 1 | |
| 5 | 17111-50K60 | CLAMP - TUBE | 1 | |
| 6 | 17111-FU400 | CLAMP | 1 | |
| 7 | 16175-FU470 | GASKET - INJECTOR | 1 | |
| 8 | 16600-FU461 | INJECTOR ASSY - FUEL | 4 | |
| 9 | 17571-5L300 | CLIP | 4 | |
| 10 | 16185-FU460 | BOLT | 2 | |
| 11 | 14330-GY360 | PLATE - FUEL, RECEIVER | 1 | |
| 12 | 16318-GY360 | DRAIN TUBE | 1 | |
| 13 | 17571-5V002 | CLIP | 1 | |
| 14 | 16610-GX11A | HOLDER ASSY - INJECTOR, LPG (K21) | 1 | |
| | 16610-GX21A | HOLDER ASSY - INJECTOR, LPG (K25) | 1 | |
| 15 | 16156-FU460 | CLIP | 1 | |
| 16 | 16600-FU471 | INJECTOR ASSY - FUEL, LPG (K21) | 1 | |
| | 16600-FU571 | INJECTOR ASSY - FUEL, LPG (K25) | 1 | |
| 17 | 16065-FU460 | SCREW | 4 | |
| 18 | 16290-FU460 | PLATE - HOLDER, LPG | 1 | |
| 19 | 16349-VS002 | SEAL, O-RING | 1 | |
| 20 | 16349-VS001 | SEAL, O-RING | 1 | |
| 21 | 24346-VS000 | CLIP - CONNECTOR | 3 | |
| 22 | 16263-FU460 | BRACKET - CONNECTOR | 1 | |
| 23 | 16065-OH600 | SCREW | 2 | |
| 24 | 16638-GX11A | SENSOR ASSY - PRESSURE CNG | 1 | |
| 25 | 24319-C9905 | FUSE | 1 | |
| 26 | 16277-FU461 | CLAMP | 1 | |
| 27 | 16197-FU46A | SOLENOID ASSY | 1 | |
| 28 | 16098-FU460 | FILTER | 1 | |
| 29 | 16618-GX11A | SEAL, O-RING | 1 | |
| 30 | 24341-10Y03 | HOUSING - CONNECTOR, MALE | 1 | |
| 31 | 24341-10Y01 | HOUSING - CONNECTOR, MALE | 1 | |
| 32 | 16214-A8800 | SCREW | 2 | |
| 33 | 16291-GX11A | PLATE | 1 | |
| 34 | 16094-B8500 | PACKING - SOLENOID | 1 | |

https://truckmanualshub.com/



## FUEL RAIL & INJECTOR HOLDER ASSY - PRESS. REG. - K21/K25 - S/N ALL DUAL-FUEL (ALSO SEE FIG. 01-0242)

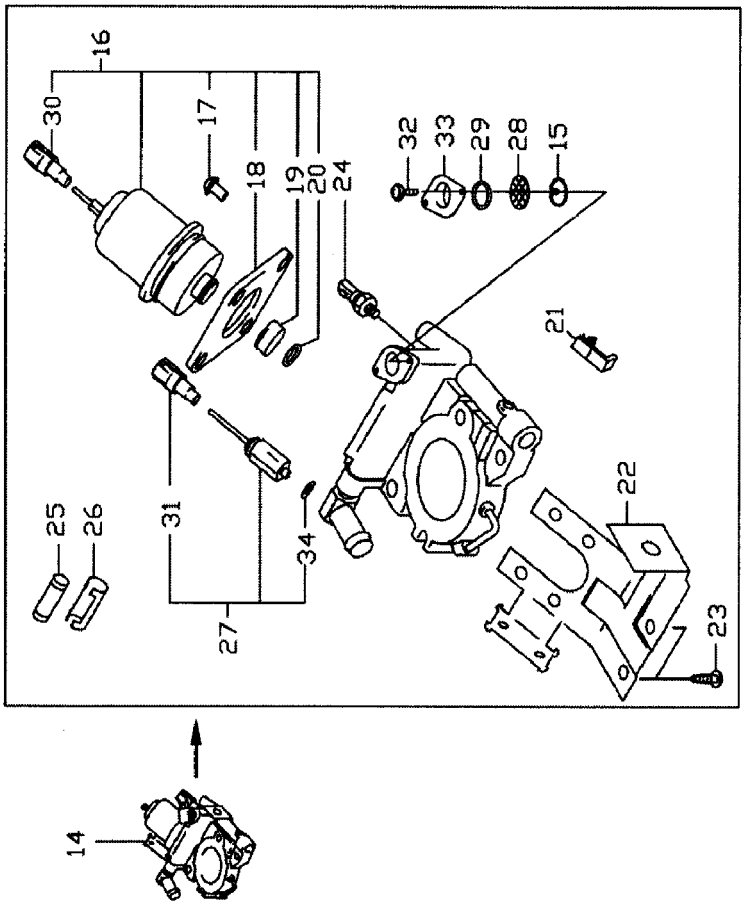


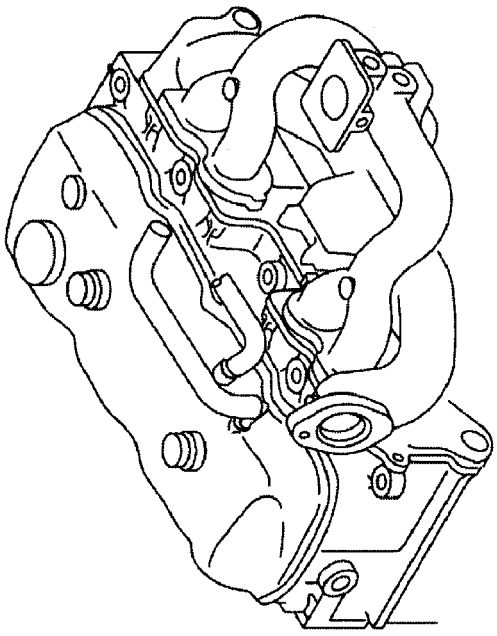

https://truckmanualshub.com/



## FUEL RAIL & INJECTOR HOLDER ASSY - PRESS. REG. - K21/K25 - S/N ALL DUAL-FUEL (ALSO SEE FIG. 01-0242)

| Item | Part Number | Description | Qty | Serial Number |
|---|---|---|---|---|
| 1 | 17520-GY361 | TUBE ASSY - FUEL | 1 | |
| 2 | 17522-FU4634 | TUBE ASSY - FUEL | 1 | |
| 3 | 17108-K7005 | INSULATOR - FUEL TUBE | 3 | |
| 4 | 17111-50K00 | CLAMP - TUBE | 1 | |
| 5 | 17111-50K60 | CLAMP - TUBE | 1 | |
| 6 | 17111-FU400 | CLAMP | 1 | |
| 7 | 16175-FU470 | GASKET - INJECTOR | 1 | |
| 8 | 16600-FU461 | INJECTOR ASSY - FUEL | 4 | |
| 9 | 17571-5L300 | CLIP | 4 | |
| 10 | 16185-FU460 | BOLT | 2 | |
| 11 | 14330-GY360 | PLATE - FUEL, RECEIVER | 1 | |
| 12 | 16318-GY360 | DRAIN TUBE | 1 | |
| 13 | 17571-5V002 | CLIP | 1 | |
| 14 | 16610-GX11A | HOLDER ASSY - INJECTOR, LPG (K21) | 1 | |
| | 16610-GX21A | HOLDER ASSY - INJECTOR, LPG (K25) | 1 | |
| 15 | 16156-FU460 | CLIP | 1 | |
| 16 | 16600-FU471 | INJECTOR ASSY - FUEL, LPG (K21) | 1 | |
| | 16600-FU571 | INJECTOR ASSY - FUEL, LPG (K25) | 1 | |
| 17 | 16065-FU460 | SCREW | 4 | |
| 18 | 16290-FU460 | PLATE - HOLDER, LPG | 1 | |
| 19 | 16349-VS002 | SEAL, O-RING | 1 | |
| 20 | 16349-VS001 | SEAL, O-RING | 1 | |
| 21 | 24346-VS000 | CLIP - CONNECTOR | 3 | |
| 22 | 16263-FU460 | BRACKET - CONNECTOR | 1 | |
| 23 | 16065-OH600 | SCREW | 2 | |
| 24 | 16638-GX11A | SENSOR ASSY - PRESSURE CNG | 1 | |
| 25 | 24319-C9905 | FUSE | 1 | |
| 26 | 16277-FU461 | CLAMP | 1 | |
| 27 | 16197-FU46A | SOLENOID ASSY | 1 | |
| 28 | 16098-FU460 | FILTER | 1 | |
| 29 | 16618-GX11A | SEAL, O-RING | 1 | |
| 30 | 24341-10Y03 | HOUSING - CONNECTOR, MALE | 1 | |
| 31 | 24341-10Y01 | HOUSING - CONNECTOR, MALE | 1 | |
| 32 | 16214-A8800 | SCREW | 2 | |
| 33 | 16291-GX11A | PLATE | 1 | |
| 34 | 16094-B8500 | PACKING - SOLENOID | 1 | |

https://truckmanualshub.com/



## FUEL INJECTION SYSTEM - K21/K25 - S/N ALL

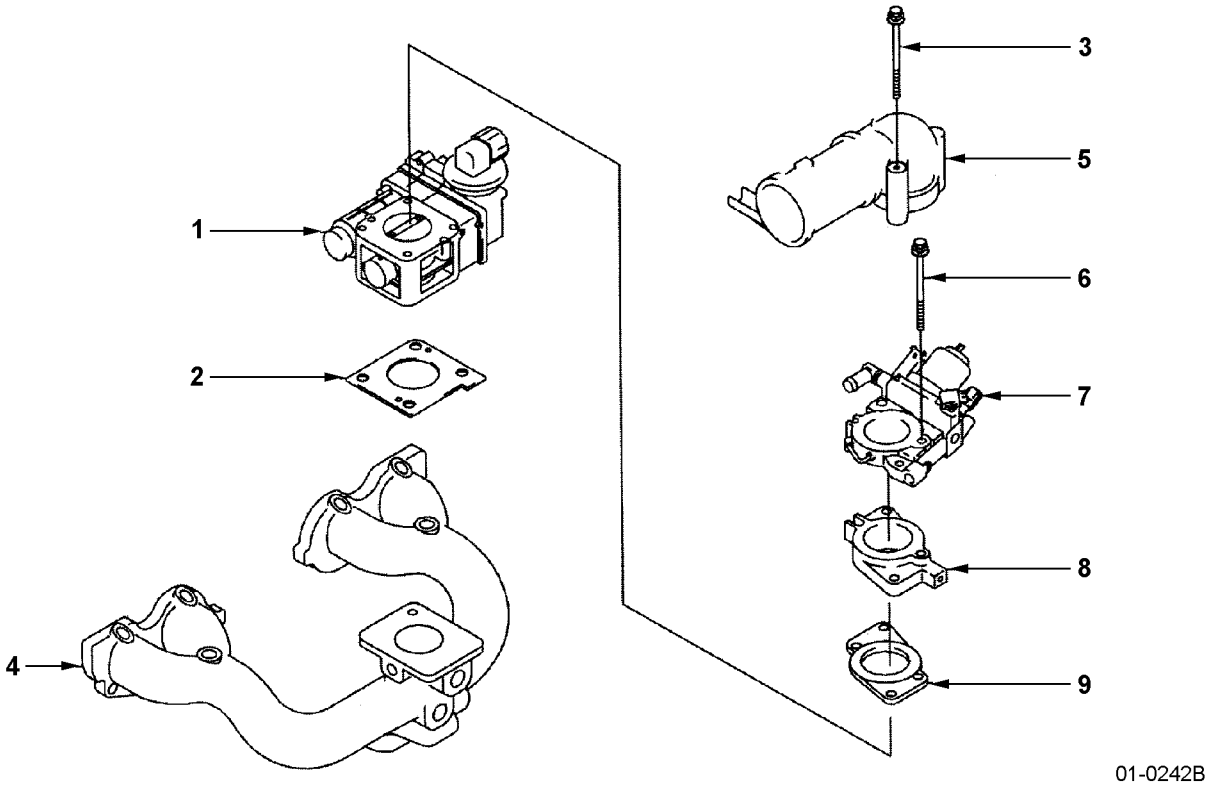

https://truckmanualshub.com/



## FUEL INJECTION SYSTEM - K21/K25 - S/N ALL

| Item | Part Number | Description | Qty | Serial Number |
|---|---|---|---|---|
| 1 | 16119-FU460 | THROTTLE CHAMBER ASSY | 1 | |
| 2 | 16175-FU460 | GASKET | 1 | |
| 3 | 01121-00082 | BOLT | 2 | |
| 4 | 14003-FU460 | INTAKE MANIFOLD | 1 | |
| 5 | 16267-FU460 | AIR HORN | 1 | |
| 6 | 16185-FU460 | BOLT | 2 | |
| 7 | 16610-GX11A | HOLDER ASSY, INJECTOR (LPG & DUAL-FUEL) | 1 | |
| 8 | 16270-FU460 | SPACER - INJECTOR (GAS) | 1 | |
| 9 | 16175-FU470 | GASKET - INJECTOR | 1 | |

https://truckmanualshub.com/



# LUBRICATING SYSTEM - K21/K25 - S/N ALL
# GAS, LP & DUAL FUEL

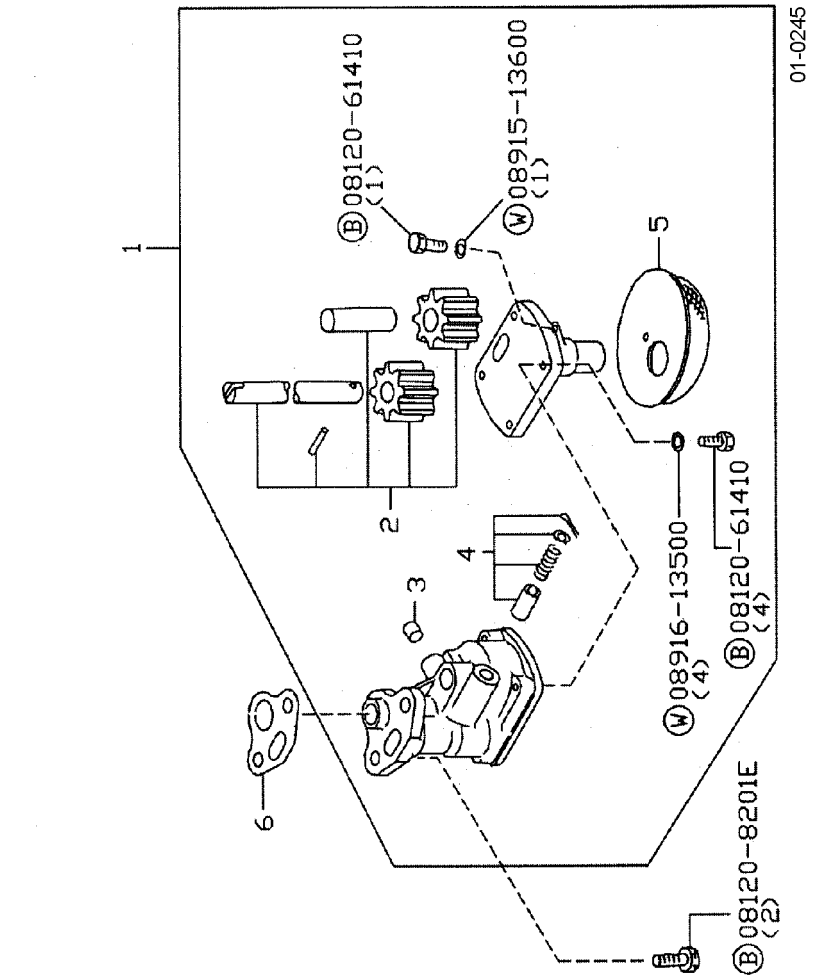


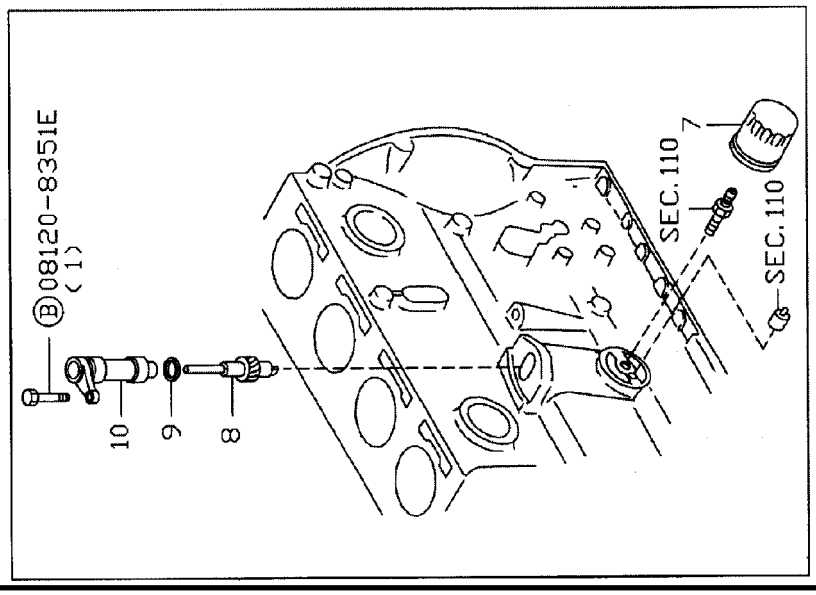

https://truckmanualshub.com/



## LUBRICATING SYSTEM - K21/K25 - S/N ALL
## GAS, LP & DUAL FUEL

| Item | Part Number | Description | Qty | Serial Number |
|---|---|---|---|---|
| 1 | 15010-66202 | PUMP ASSY, OIL | 1 | |
| 2 | 15020-78205 | SHAFT ASSY, OIL PUMP | 1 | |
| 3 | 11065-30000 | PLUG, OIL FILTER | 1 | |
| 4 | 15132-66000 | VALVE ASSY, OIL REGULATOR | 1 | |
| 5 | 15050-66201 | STRAINER ASSY, OIL | 1 | |
| 6 | 15066-78200 | GASKET, OIL PUMP-TO-CYLINDER BLOCK | 1 | |
| 7 | 15208-01B02 | FILTER, OIL | 1 | |
| 8 | 15040-FU460 | SPINDLE ASSY, DRIVE, OIL | 1 | |
| 9 | 22131-55K10 | SEAL, O-RING | 1 | |
| 10 | 22177-FU460 | SUPPORT ASSY, SPINDLE | 1 | |

https://truckmanualshub.com/



# WATER PUMP, COOLING FAN & THERMOSTAT ASSEMBLY - K21/K25 - S/N ALL GAS, LP & DUAL FUEL

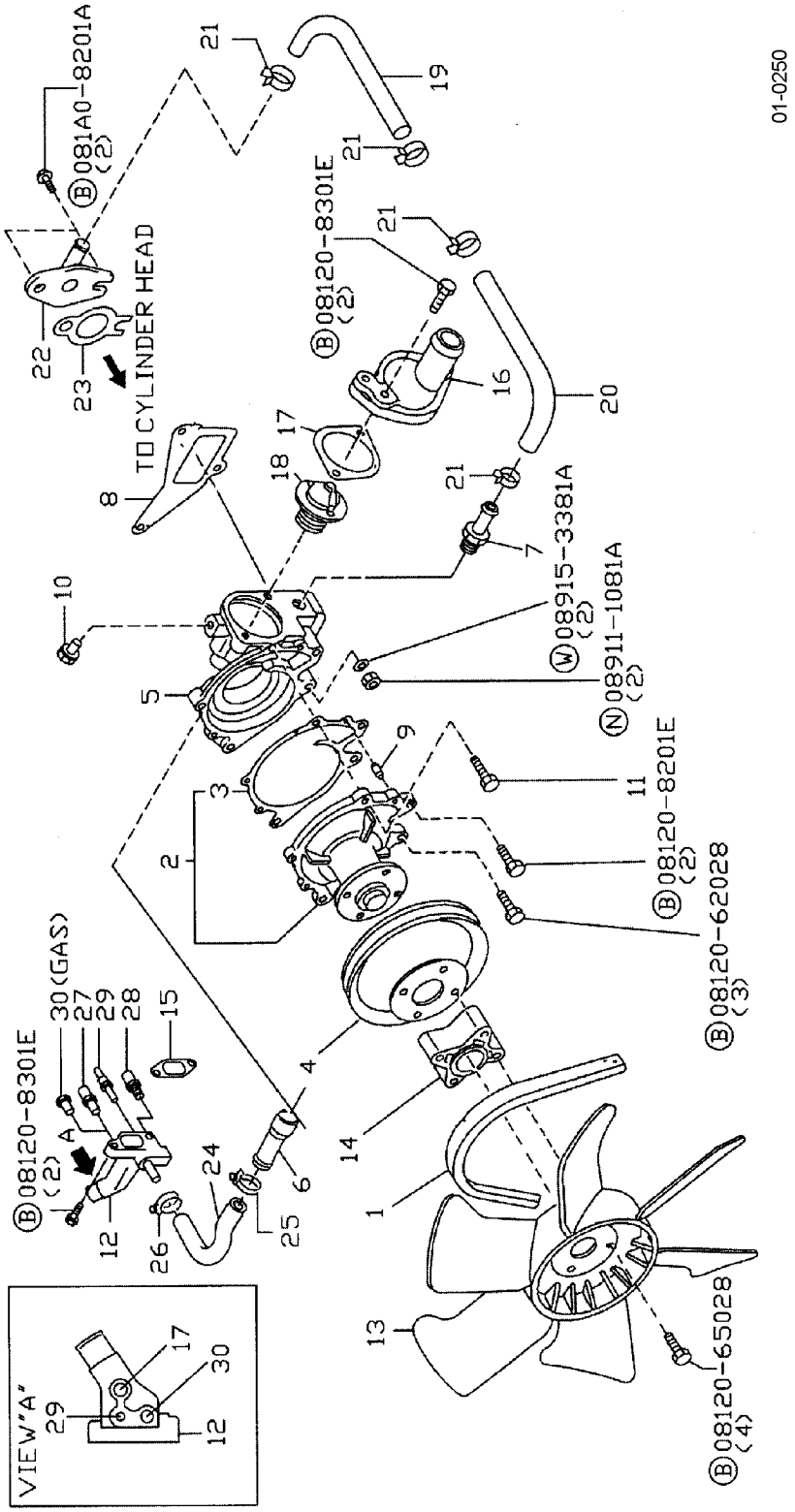

https://truckmanualshub.com/



## WATER PUMP, COOLING FAN & THERMOSTAT ASSEMBLY - K21/K25 - S/N ALL GAS, LP & DUAL FUEL

| Item | Part Number | Description | Qty | Serial Number |
|---|---|---|---|---|
| 1 | 02117-23021 | BELT, FAN (K21 G, LP, DUAL) | 1 | |
| | 02117-21521 | BELT, FAN (K25 G, LP, DUAL) | 1 | |
| | 02117-23523 | BELT, FAN (ALL UL SPEC) | 1 | |
| | 02117-20021 | BELT, FAN (COTTON CORE RADIATOR) | 1 | |
| 2 | 21010-FU425 | WATER PUMP ASSY | 1 | |
| 3 | 21014-07N00 | . GASKET, WATER PUMP | 1 | |
| 4 | 21051-FU500 | PULLEY, FAN & WATER PUMP | 1 | |
| | 21051-GY360 | PULLEY, FAN & WATER PUMP (COTTON CORE RADIATOR) | | |
| 5 | 11061-FU400 | THERMOSTAT HOUSING | 1 | |
| 6 | 14075-40F04 | CONNECTOR ASSY, WATER BYPASS | 1 | |
| 7 | 14049-76001 | CONNECTOR ASSY, HEATER, GAS & UL-GS. | 1 | |
| | 14075-FU460 | CONNECTOR ASSY, HEATER, ALL OTHERS . | 1 | |
| 8 | 11072-50K01 | GASKET, THERMOSTAT HOUSING | 1 | |
| 9 | 11046-73402 | DOWEL - WATER PUMP | 2 | |
| 10 | 14053-42L00 | PLUG, WATER PUMP | 1 | |
| 11 | 21079-K9760 | BOLT, THERMOSTAT HOUSING | 1 | |
| 12 | 11060-FU400 | WATER OUTLET | 1 | |
| 13 | 21060-FU410 | COOLING FAN | 1 | |
| 14 | 21064-GY30A | FAN SPACER | 1 | |
| 15 | 11062-FY500 | GASKET, WATER OUTLET | 1 | |
| 16 | 11060-W7001 | WATER OUTLET | 1 | |
| 17 | 11062-07N00 | GASKET | 1 | |
| 18 | 21200-50K00 | THERMOSTAT ASSY | 1 | |
| 19 | 14055-GX74A | WATER HOSE | 1 | |
| 20 | 14055-FF100 | WATER HOSE | 1 | |
| 21 | 16439-42L00 | CLAMP, HOSE | 4 | |
| 22 | 14053-FU400 | PIPE ASSY, HEATER, FEED | 1 | |
| 23 | 13050-FU400 | GASKET, HEATER CONNECTOR | 1 | |
| 24 | 14080-50K00 | HOSE, WATER BYPASS | 1 | |
| 25 | 01555-00261 | CLAMP, HOSE | 1 | |
| 26 | 16439-26E00 | CLAMP, HOSE | 1 | |
| 27 | 01691-00052 | CONNECTOR, WATER HOSE | 1 | |
| 28 | 22630-44B20 | TEMPERATURE SENSOR ASSY, GUAGE | 1 | |
| 29 | 25080-89903 | GAUGE, TEMPERATURE | 1 | |
| 30 | 11024-25N00 | PLUG - BLIND | 1 | |

https://truckmanualshub.com/



# IGNITION SYSTEM - K21/K25 - S/N ALL
# GAS, LP & DUAL FUEL

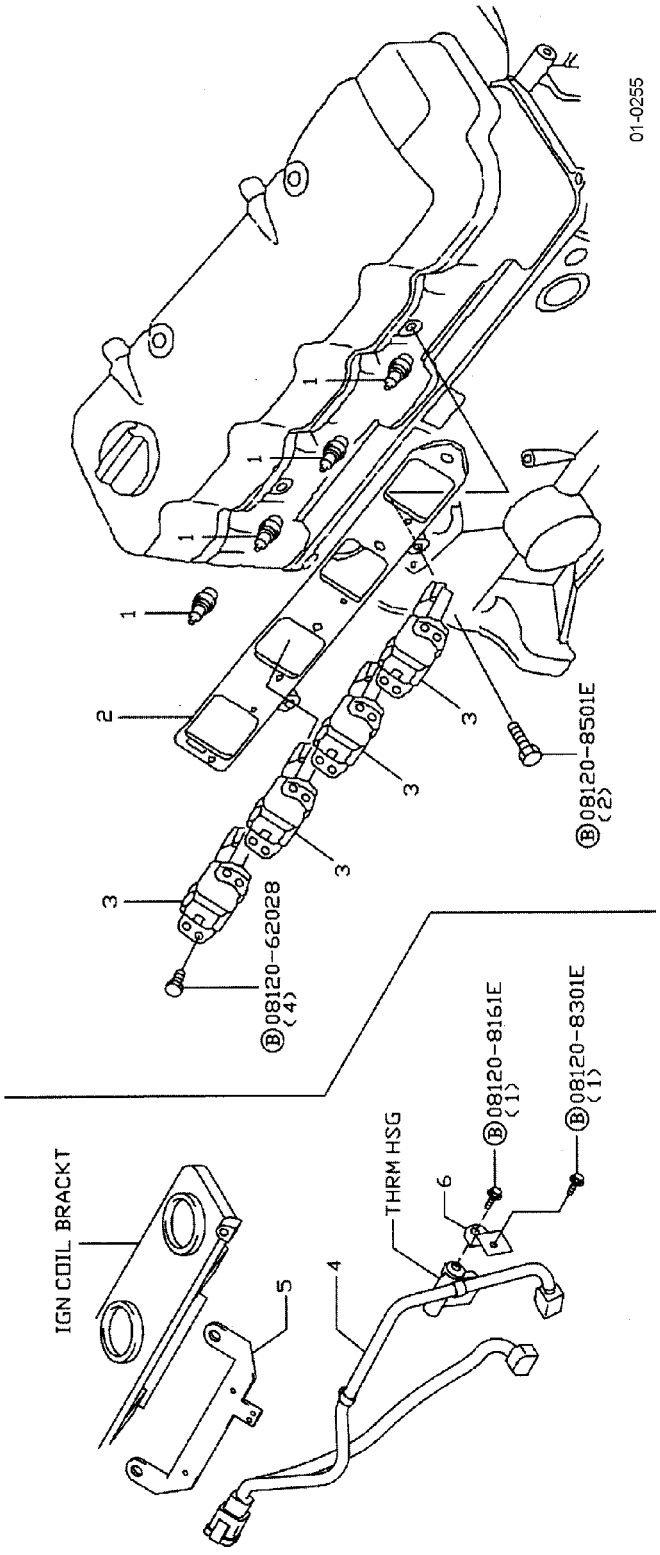

https://truckmanualshub.com/



## IGNITION SYSTEM - K21/K25 - S/N ALL
## GAS, LP & DUAL FUEL

| Item | Part Number | Description | Qty | Serial Number |
|---|---|---|---|---|
| 1 | 22401-FU412 | SPARK PLUG | 4 | |
| 2 | 22435-FU400 | BRACKET, IGNITION COIL | 1 | |
| 3 | 22448-AR215 | COIL ASSY, IGNITION | 4 | |
| 4 | 24075-GY360 | SUB-HARNESS ASSY | 1 | |
| 5 | 24136-GU21A | BRACKET, SUB-HARNESS | 1 | |
| 6 | 24136-GY360 | BRACKET, SUB-HARNESS | 1 | |

https://truckmanualshub.com/



# BRACKETRY - IGNITION / COOLING - K21/K25 - S/N ALL GAS, LP & DUAL FUEL

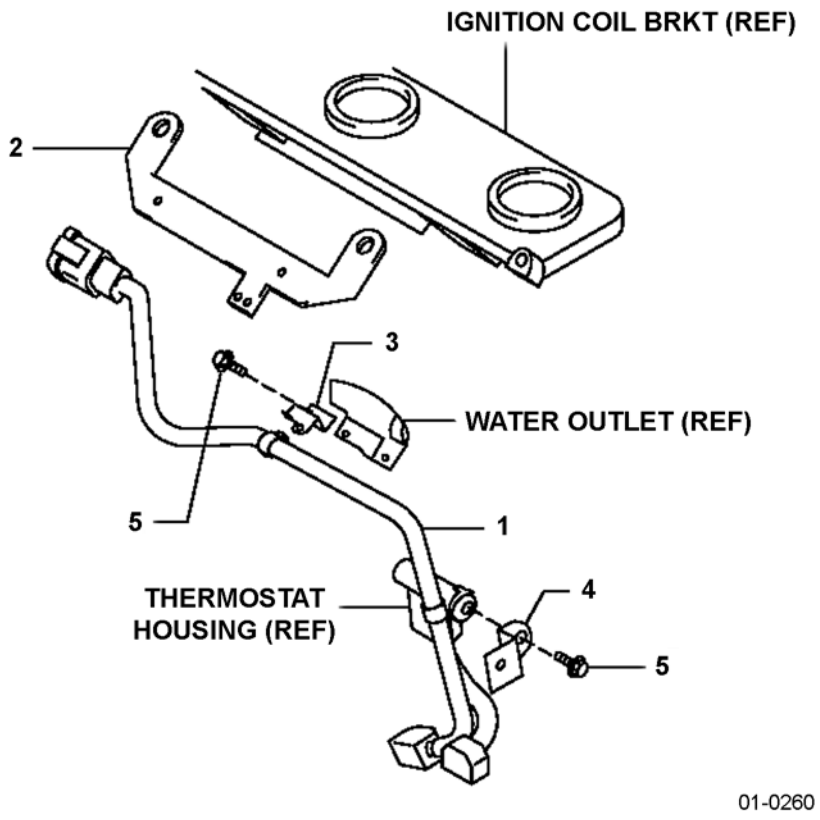

https://truckmanualshub.com/



## BRACKETRY - IGNITION / COOLING - K21/K25 - S/N ALL GAS, LP & DUAL FUEL

| Item | Part Number | Description | Qty | Serial Number |
|---|---|---|---|---|
| 1 | 24075-GY360 | SUB-HARNESS, ENGINE REVOLUTION . . . . . | 1 | |
| 2 | 24136-FU460 | BRACKET, SWITCH, SUB-HARNESS, ENGINE REVOLUTION . . . . . | 1 | |
| 3 | 24136-FU461 | BRACKET, SUB-HARNESS. . . . . | 1 | |
| 4 | 24136-FU461 | BRACKET, EGI HARNESS . . . . . | 1 | |
| 5 | 08120-8161E | BOLT . . . . . | 2 | |

https://truckmanualshub.com/



# VACUUM PIPING - K21/K25 - S/N ALL
# GAS, LP & DUAL FUEL

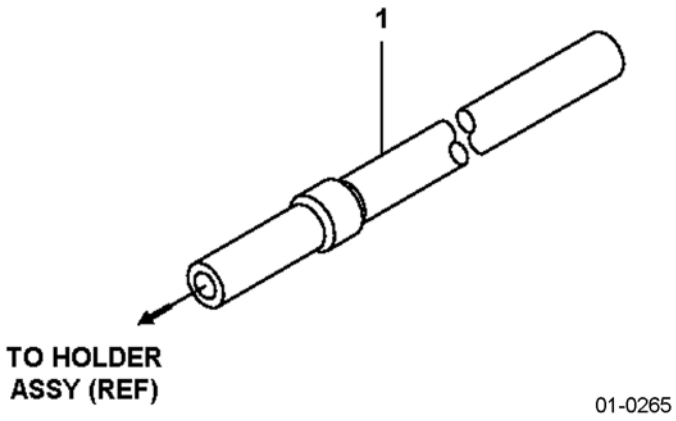

https://truckmanualshub.com/



## VACUUM PIPING - K21/K25 - S/N ALL
## GAS, LP & DUAL FUEL

| Item | Part Number | Description | Qty | Serial Number |
|---|---|---|---|---|
| 1 | 22318-FU460 | HOSE, VACUUM CONTROL (62 MM) . . . . . | 1 | |

https://truckmanualshub.com/



# ALTERNATOR - K21/K25 - S/N ALL
# GAS, LP & DUAL FUEL

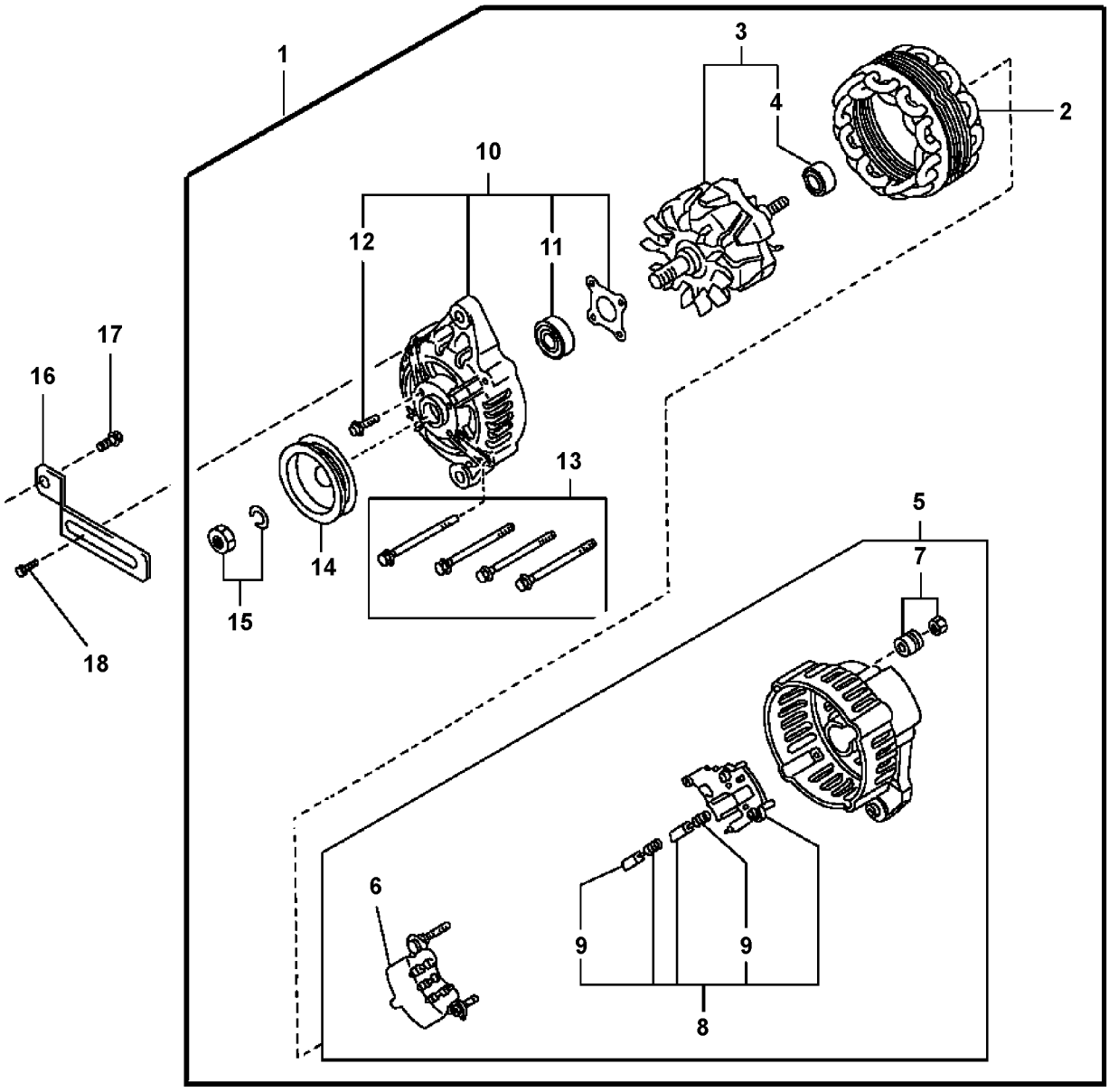


01-0270

https://truckmanualshub.com/



## ALTERNATOR - K21/K25 - S/N ALL GAS, LP & DUAL FUEL

| Item | Part Number | Description | Qty | Serial Number |
|---|---|---|---|---|
| 1 | 23100-FU410 | ALTERNATOR (K21/K25 GAS/LP & DUAL-FUEL) (50 AMP) | 1 | |
| | 23100-GY360 | ALTERNATOR (K21/K25 UL-GS, UL-LS) (35 AMP) | 1 | |
| 2 | 23102-50K15 | . STATOR ASSY (K21/K25 GAS/LP & DUAL-FUEL) | 1 | |
| | 23102-GY360 | . STATOR ASSY (K21/K25 UL-GS, UL-LS) | 1 | |
| 3 | 23108-50K15 | . ROTOR (K21/K25 GAS/LP & DUAL-FUEL) | 1 | |
| | 23108-GY360 | . ROTOR (K21/K25 UL-GS, UL-LS) | 1 | |
| 4 | 23120-30R10 | . . BEARING, BALL | 1 | |
| 5 | 23127-FF110 | . COVER ASSY, REAR (K21/K25 GAS/LP & DUAL-FUEL) | 1 | |
| | 23127-GY360 | . COVER ASSY, REAR (K21/K25 UL-GS, UL-LS) | 1 | |
| 6 | 23124-FF110 | . . RECTIFIER ASSY (K21/K25 GAS/LP & DUAL-FUEL) | 1 | |
| | 23124-GY360 | . . RECTIFIER ASSY (K21/K25 UL-GS, UL-LS) | | |
| 7 | 23156-08000 | . . NUT, SET | 1 | |
| 8 | 23215-3S416 | . . REGULATOR, IC (K21/K25 GAS/LP & DUAL-FUEL) | 1 | |
| | 23215-GY360 | . . REGULATOR, IC (K21/K25 UL-GS, UL-LS) | 1 | |
| 9 | 23142-0B000 | . . . BRUSH, F | 2 | |
| 10 | 23118-47N10 | . COVER ASSY, FRONT (K21/K25 GAS/LP & DUAL-FUEL) | 1 | |
| | 23118-GY360 | .COVER ASSY, FRONT (K21/K25 UL-GS, UL-LS) | 1 | |
| 11 | 23120-22J20 | . . BEARING, BALL | 1 | |
| 12 | 23115-47N10 | . . SCREW, SET (K21/K25 GAS/LP & DUAL-FUEL) | 1 | |
| | 23115-20P10 | . SCREW, SET (K21/K25 UL-GS, UL-LS) | 1 | |
| 13 | 23131-20P10 | . BOLT, THROUGH | 1 | |
| 14 | 23150-FU410 | . PULLEY ASSY (K21/K25 GAS/LP & DUAL-FUEL) | 1 | |
| | 23150-GY360 | . PULLEY ASSY (K21/K25 UL-GS, UL-LS) | 1 | |
| 15 | 23153-70T12 | . NUT ASSY, PULLEY | 1 | |
| 16 | 11715-FU400 | . HOLDER | 1 | |
| 17 | 08124-0201F | . BOLT | 1 | |
| 18 | 08120-8201F | . BOLT | 1 | |
| NS | 02117-21521 | FAN BELT (K21) | 1 | |
| NS | 02117-23523 | FAN BELT (K25) | 1 | |
| NS | 11715-FU400 | BAR, ADJUSTING | 1 | |

https://truckmanualshub.com/



# STARTER MOTOR - K21/K25 ENGINE - S/N ALL GAS, LP & DUAL FUEL

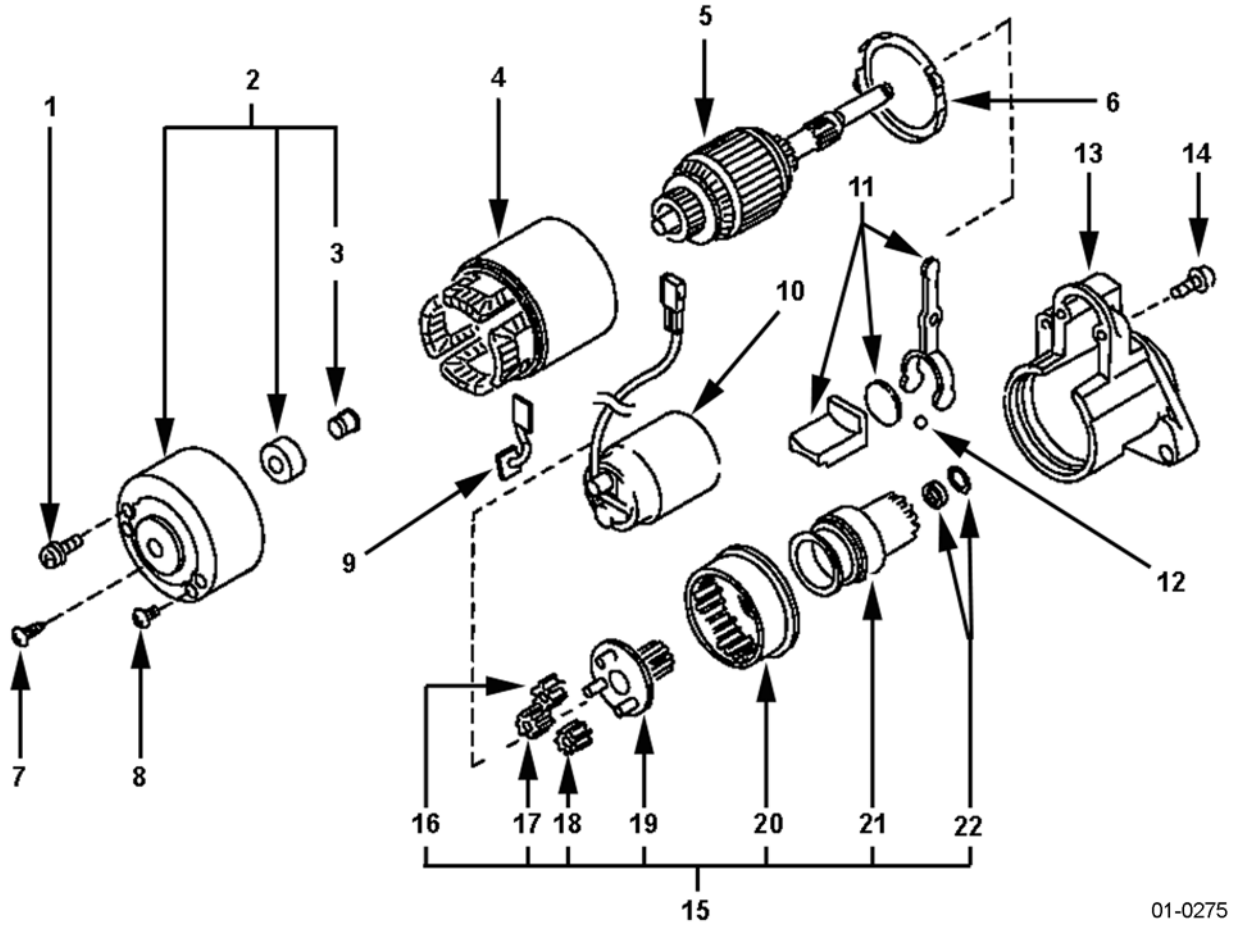

https://truckmanualshub.com/



## STARTER MOTOR - K21/K25 ENGINE - S/N ALL GAS, LP & DUAL FUEL

| Item | Part Number | Description | Qty | Serial Number |
|---|---|---|---|---|
| | 23300-FU410 | STARTER MOTOR | 1 | |
| 1 | 23340-0M210 | . BOLT, THROUGH (STARTER-TO-ENGINE) | 1 | |
| 2 | 23337-0W011 | . COVER ASSY, REAR | 1 | |
| 3 | 23338-01N10 | . COVER, METAL, REAR | 1 | |
| 4 | 23302-6J010 | . YOKE | 1 | |
| 5 | 23310-0M210 | . ARMATURE ASSY | 1 | |
| 6 | 23385-50Y12 | . PACKING | 1 | |
| 7 | 23480-M0110 | . SCREW SET, 5 X 8.5 (2 EACH) | 1 | |
| 8 | 23480-M0110 | . SCREW SET, 6 X 23 (2 EACH) | 1 | |
| 9 | 23381-FU410 | . BRUSH SET | 1 | |
| 10 | 23343-FU410 | . SWITCH ASSY, MAGNETIC | 1 | |
| 11 | 23322-50Y12 | . LEVER SET, SHIFT | 1 | |
| 12 | 23325-42L70 | . BEARING | 1 | |
| 13 | 23318-FU410 | . CASE ASSY, GEAR | 1 | |
| 14 | 23480-M0110 | . SCREW SET, 6 X 23 (2 EACH) | 1 | |
| 15 | 23312-0W010 | . PINION ASSY | 1 | |
| 16 | 23361-42L70 | . GEAR | 1 | |
| 17 | 23361-42L70 | . GEAR | 1 | |
| 18 | 23361-42L70 | . GEAR | 1 | |
| 19 | 23312-1S710 | . PINION ASSY | 1 | |
| 20 | 23360-0M210 | . GEAR & SHAFT SET | 1 | |
| 21 | 23354-W9810 | . CLUTCH ASSY | 1 | |
| 22 | 23465-W9810 | . STOPPER SET, PINION | 1 | |
| NS | 23110-GY360 | . SPACER | AR | |
| NS | 08911-1401G | NUT (WIRE AT MAGNETIC SWITCH) | 1 | |
| NS | 08124-0251F | BOLT, THROUGH (ENGINE-TO-STARTER) | 1 | |

https://truckmanualshub.com/



## GASKET KIT - K21/K25 - S/N ALL
## GAS, LP & DUAL FUEL

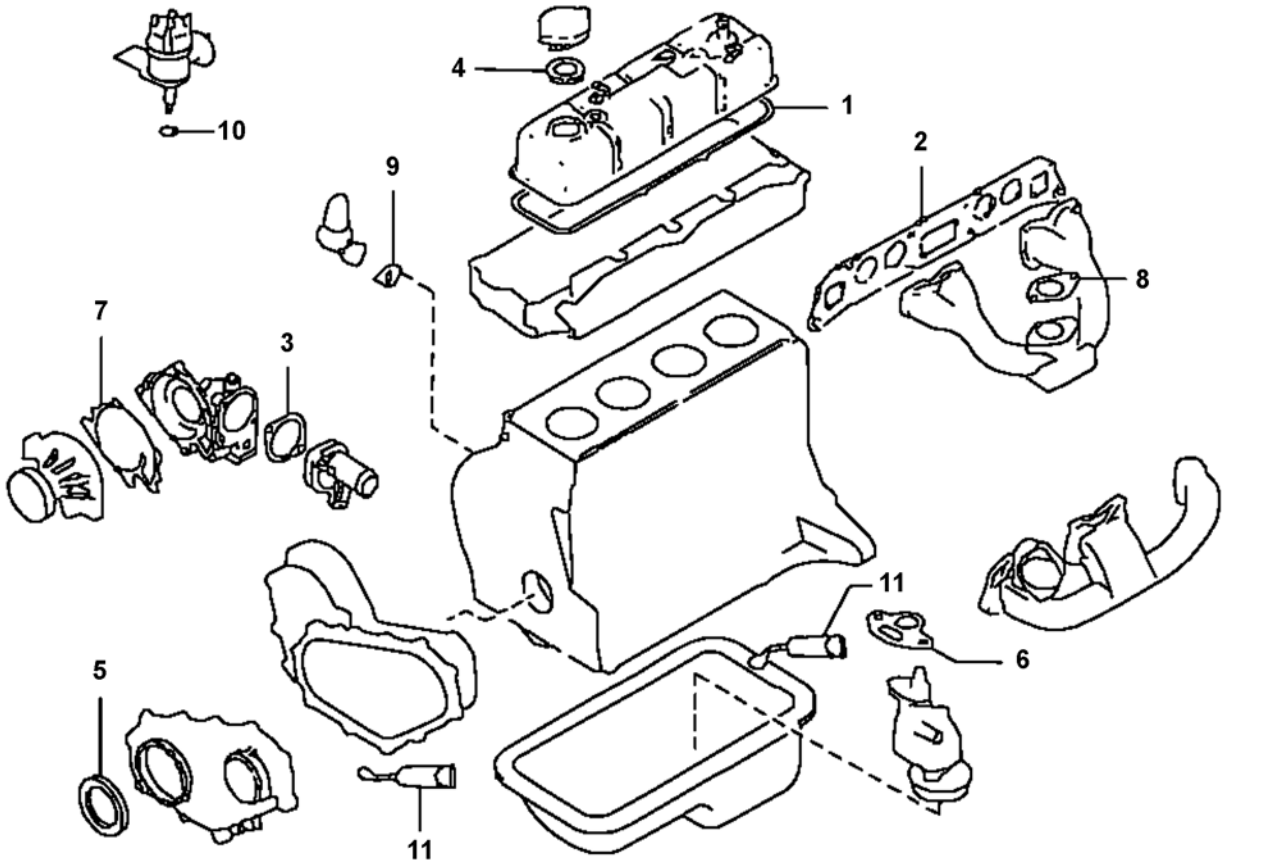

https://truckmanualshub.com/



## GASKET KIT - K21/K25 - S/N ALL
## GAS, LP & DUAL FUEL

| Item | Part Number | Description | Qty | Serial Number |
|---|---|---|---|---|
| | 10101-FY52K | KIT, GASKET, K21/K25, ENGINE REPAIR (INCLUDES ITEMS 1 THROUGH 11; HEAD GASKET SOLD SEPARATELY, SEE ASSY 01-0102) | K | |
| | 11042-FY52K | KIT, GASKET, K21/K25, ENGINE VALVE REGRIND (INCLUDES ONLY ITEMS 1, 2 AND 3; HEAD GASKET SOLD SEPARATELY, SEE ASSY 01-0102)) | K | |
| 1 | * | . GASKET, ROCKER COVER | 1 | |
| 2 | * | . GASKET, MANIFOLD | 1 | |
| 3 | * | . GASKET, WATER OUTLET | 1 | |
| 4 | * | . SEAL, OIL, CRANKSHAFT, REAR | 1 | |
| 5 | * | . SEAL, OIL | 1 | |
| 6 | * | . GASKET, OIL PUMP | 1 | |
| 7 | * | . GASKET, WATER PUMP | 1 | |
| 8 | * | . INSULATOR | 1 | |
| 9 | * | . SPACER, FUEL PUMP | 1 | |
| 10 | * | . SEAL, O-RING | 1 | |
| 11 | * | . GASKET, LIQUID | AR | |
| NS | 11044-FU400 | GASKET HEAD, GAS | 1 | |
| NS | 11044-FU460 | GASKET HEAD, LP & DUAL FUEL | 1 | |

https://truckmanualshub.com/



# FUEL PUMP BLOCK-OFF - K21/K25 - S/N ALL GAS, LP & DUAL FUEL

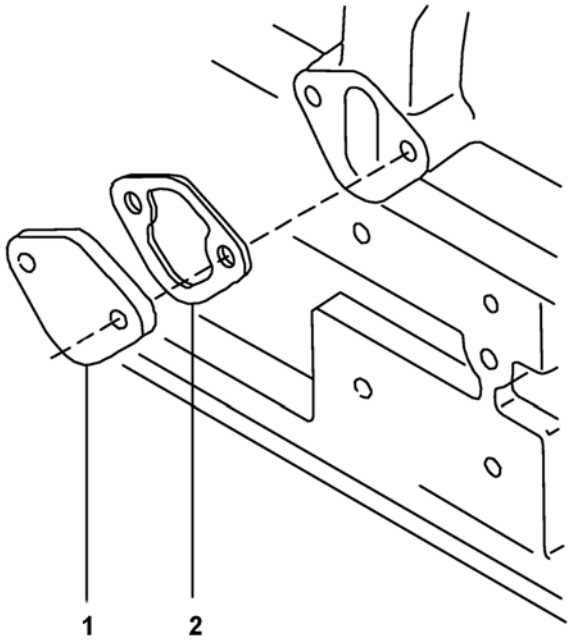


01-0285

https://truckmanualshub.com/



## FUEL PUMP BLOCK-OFF - K21/K25 - S/N ALL
## GAS, LP & DUAL FUEL

| Item | Part Number | Description | Qty | Serial Number |
|---|---|---|---|---|
| 1 | 16420-E0100 | PLATE, BLOCK-OFF, FUEL PUMP . . . . . | 1 | |
| 2 | 17099-85G00 | GASKET . . . . . | 1 | |
| NS | 08110-8201B | BOLT W/WASHER . . . . . | 2 | |

https://truckmanualshub.com/



# VAPORIZER - K21/K25 - S/N ALL
# LP & DUAL FUEL

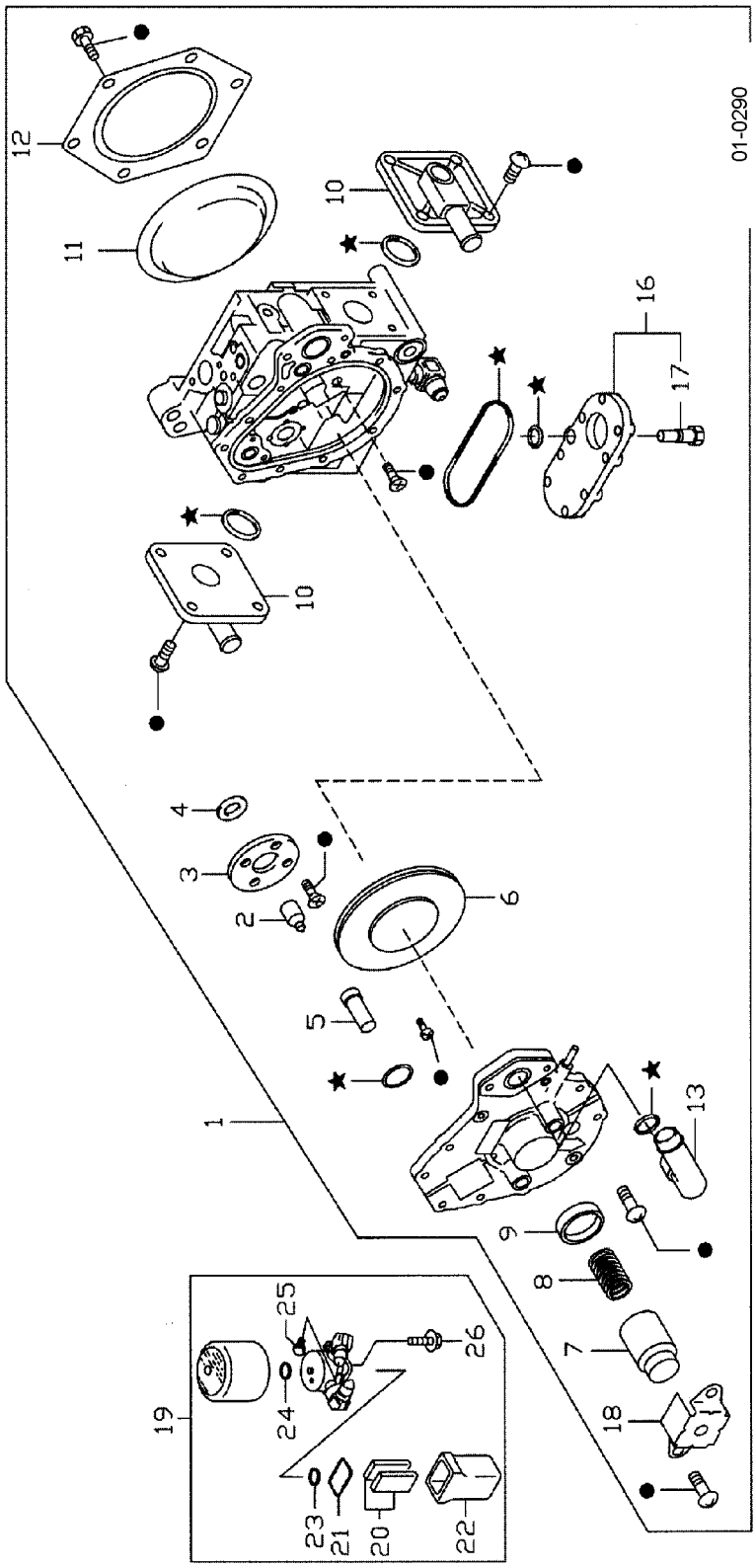

https://truckmanualshub.com/



## VAPORIZER - K21/K25 - S/N ALL
## LP & DUAL FUEL

| Item | Part Number | Description | Qty | Serial Number |
|---|---|---|---|---|
| 1 | 16310-GU20A | VAPORIZER ASSY | 1 | |
| 2 | 16388-FU460 | . ROD, BALANCE | 1 | |
| 3 | 16237-FU460 | . PLATE, BALANCE | 1 | |
| 4 | 17053-FU460 | . DIAPHRAGM ASSY | 1 | |
| 5 | 17962-FU460 | . VALVE COMPLETE - 1ST | 1 | |
| 6 | 17960-VR500 | . DIAPHRAGM ASSY | 1 | |
| 7 | 16379-FU460 | . SCREW, ADJUSTING | 1 | |
| 8 | 17052-FU460 | . SPRING - DIAPHRAGM | 1 | |
| 9 | 16214-16811 | . NUT | 1 | |
| 10 | 16389-FU460 | . COVER - THERMO | 2 | |
| 11 | 17054-FU460 | . DIAPHRAGM | 1 | |
| 12 | 16375-FU460 | . COVER - REGULATOR | 1 | |
| 13 | 16356-FU460 | . PIPE - FUEL | 1 | |
| 14 | 16328-GY010 | . SPACER - ADAPTOR | 1 | |
| 15 | 16065-GY010 | . SCREW | 1 | |
| 16 | 17959-GU20A | . COVER ASSY - VAPORIZER | 1 | |
| 17 | 17958-16811 | . PLUG | 1 | |
| 18 | 16476-GY010 | . PLATE, LOCK | 1 | |
| 19 | 17904-GU20A | SOLENOID VALVE ASSY - LPG | 1 | |
| 20 | 16919-W1602 | . FILTER ASSY - SOLENOIDVALVE | 1 | |
| 21 | 17937-Y4400 | . SEAL, O-RING | 1 | |
| 22 | 16125-Y4400 | . CHAMBER - FILTER | 1 | |
| 23 | 16349-18V00 | . SEAL, O-RING | 1 | |
| 24 | 17937-Y4410 | . SEAL, O-RING | 1 | |
| 25 | 17958-16811 | . PLUG | 1 | |
| 26 | 16163-Y4403 | . BOLT | 1 | |

**IMPORTANT NOTE! REPLACE THE VAPORIZER AS ASSEMBLY ONLY DURING WARRANTY PERIOD. DO NOT DISASSEMBLE. THE WARRANTY PERIOD IS 60 MONTHS OR 3,500 HOURS OF SERVICE (WHICHEVER OCCURS FIRST).**

https://truckmanualshub.com/



# CAUTION PLATE & LABEL - K21/K25 (LP & DUAL-FUEL)

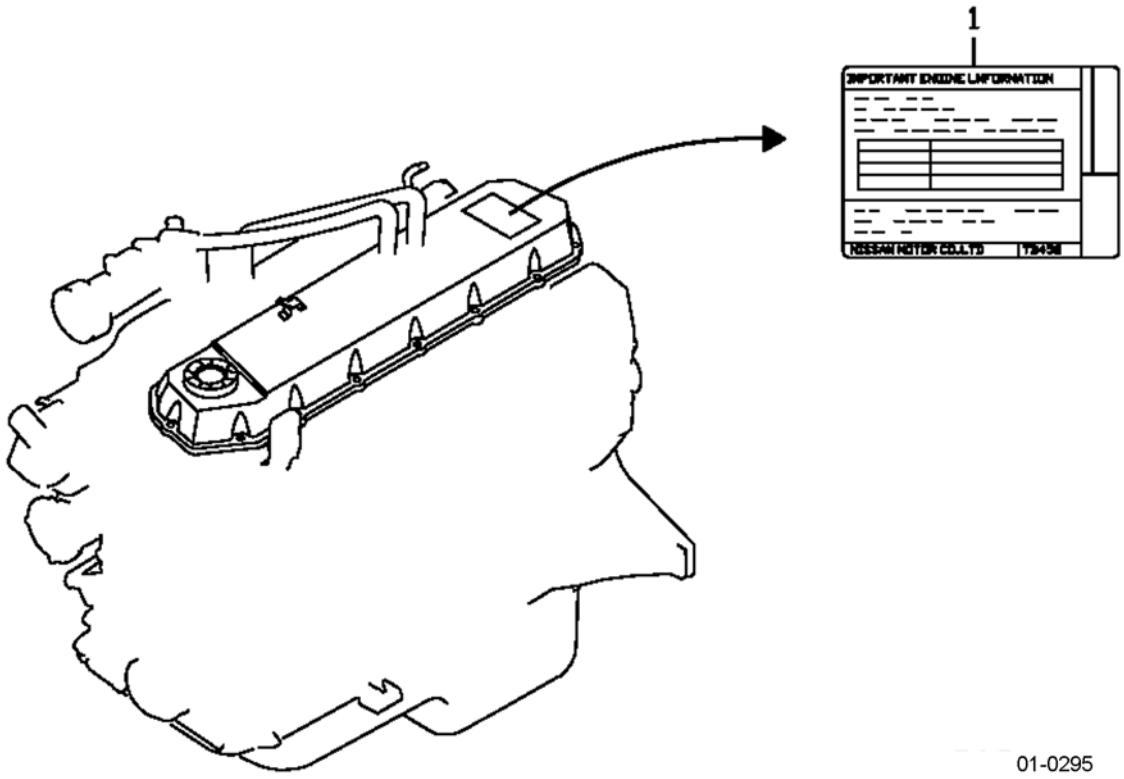

https://truckmanualshub.com/



## CAUTION PLATE & LABEL - K21/K25 (LP & DUAL-FUEL)

| Item | Part Number | Description | Qty | Serial Number |
|---|---|---|---|---|
| 1 | (CONTACT KFI) | LABEL, CERTIFICATION. . . . . | 1 | |

https://truckmanualshub.com/



# ENGINE - 4D94LE DIESEL (EPA) - S/N 200001A~

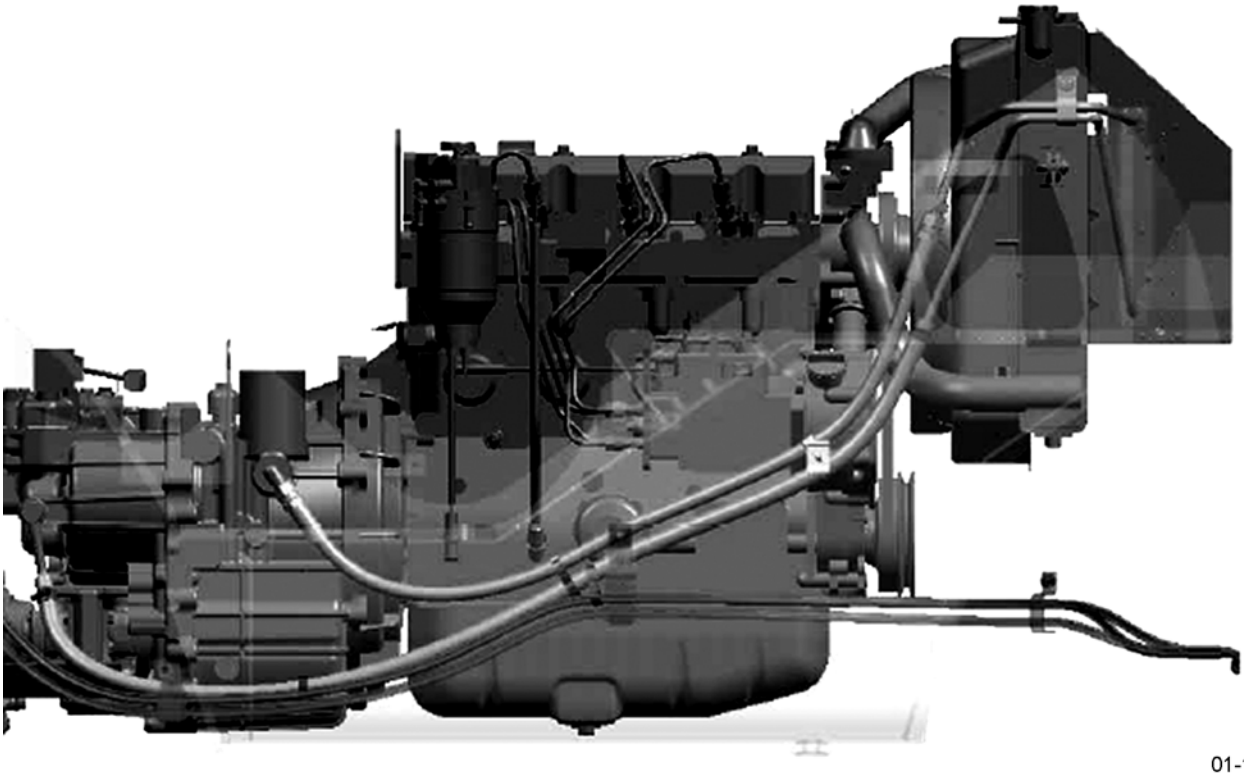

01-1001

https://truckmanualshub.com/



## ENGINE - 4D94LE DIESEL (EPA) - S/N 200001A~

| Item | Part Number | Description | Qty | |
|---|---|---|---|---|
| | 37B-1DE-5351 | ENGINE - 4D94LE (EPA) (STD) . . . . . | 1 | |
| | 37B-1DE-5361 | ENGINE - 4D94LE (EPA) (UL-DS) . . . . . | 1 | |

https://truckmanualshub.com/



## ENGINE MOUNTING PARTS - 4D94LE - S/N 200001A~

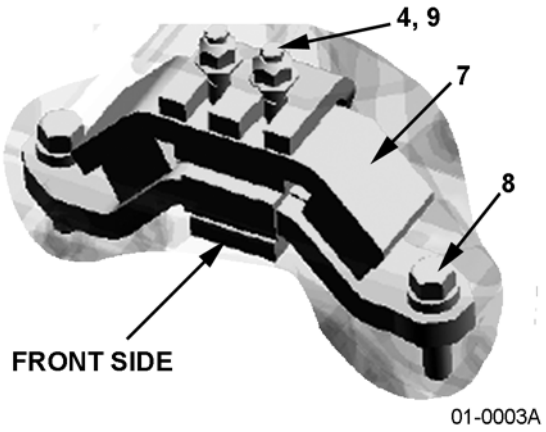


01-0003A

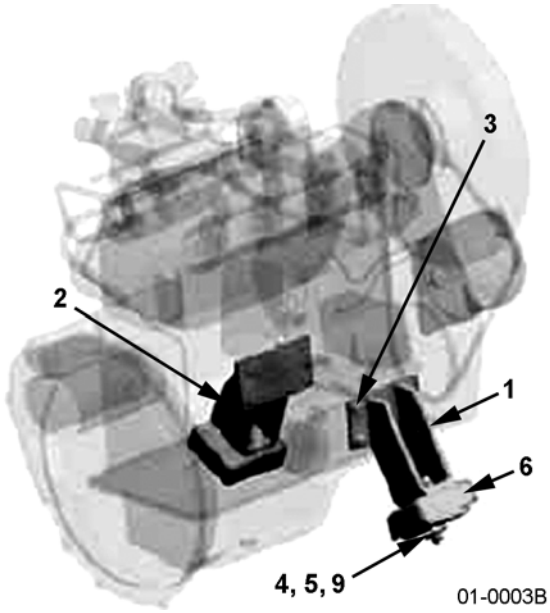


01-0003B

https://truckmanualshub.com/



## ENGINE MOUNTING PARTS - 4D94LE - S/N 200001A~

| Item | Part Number | Description | Qty | |
|---|---|---|---|---|
| 1 | 3EB-01-52110 | BRACKET, LH | 1 | |
| 2 | 3EB-01-52120 | BRACKET, RH | 1 | |
| 3 | 01024-81025 | BOLT | 8 | |
| 4 | 34A-01-35120 | U-NUT | 6 | |
| 5 | 3EB-01-51190 | WASHER | 2 | |
| 6 | 3EB-01-51130 | MOUNT | 2 | |
| 7 | 3EB-02-52130 | MOUNT | 1 | |
| 8 | 3EA-71-12790 | BOLT | 2 | |
| 9 | 01643-31232 | WASHER | 6 | |

https://truckmanualshub.com/



## AIR CLEANER ASSY - 4D94LE DIESEL (EPA) - S/N 200001A~

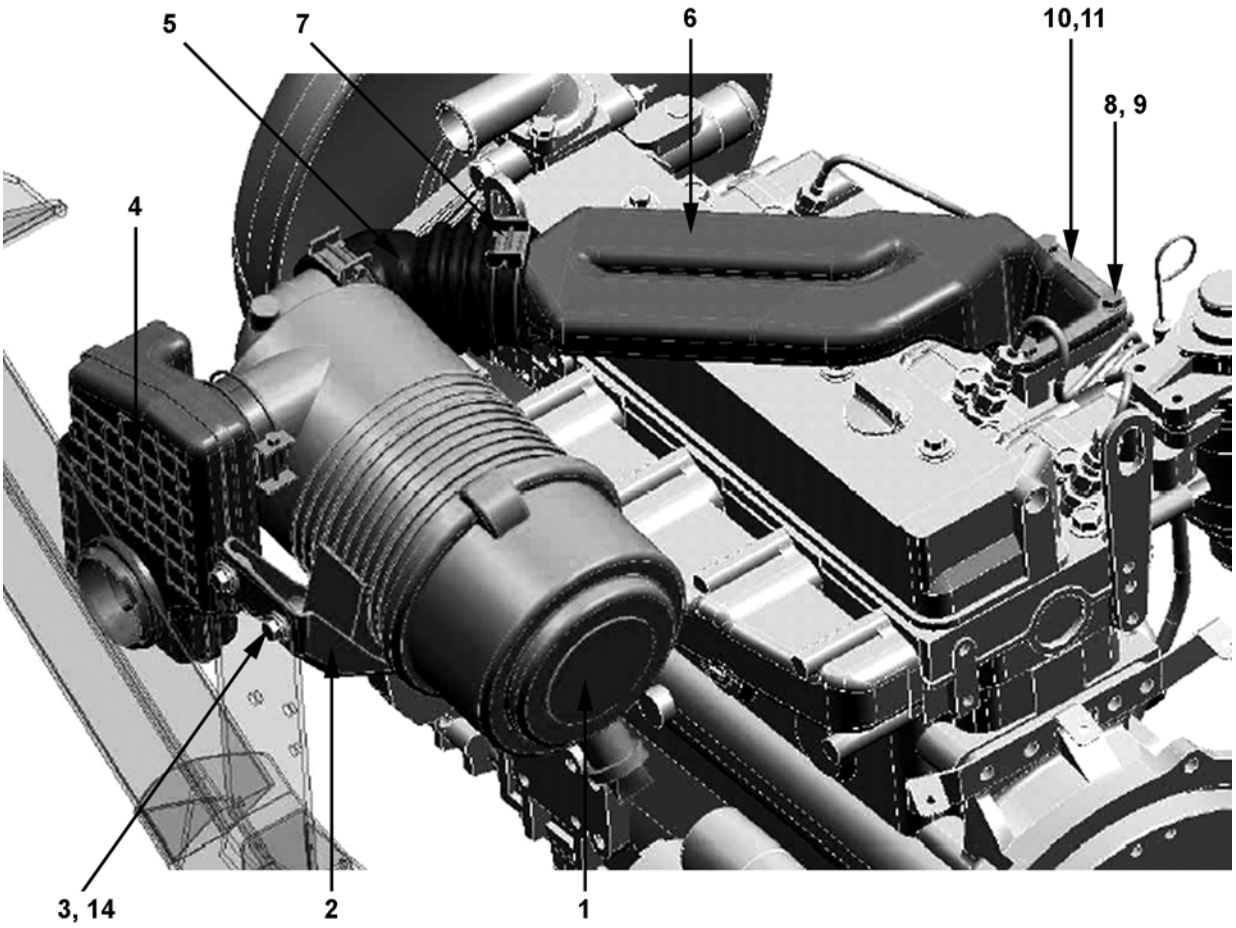


01-1010

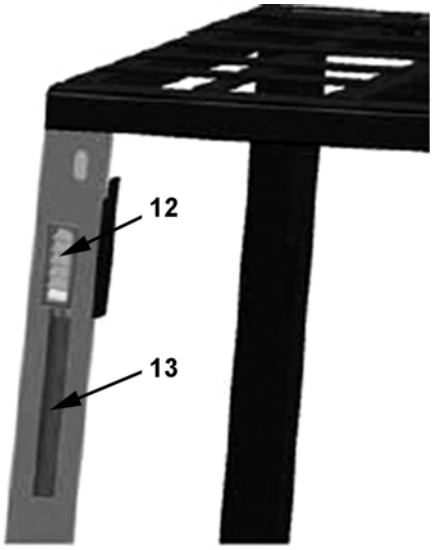


01-1010A

https://truckmanualshub.com/



## AIR CLEANER ASSY - 4D94LE DIESEL (EPA) - S/N 200001A~

| Item | Part Number | Description | Qty | |
|---|---|---|---|---|
| 1 | 3EB-02-A7910 | AIR CLEANER ASSY - 4D94LE (EPA) | 1 | |
| 2 | 3EB-02-41730 | BRACKET | 1 | |
| 3 | 01024-80816 | BOLT | 4 | |
| 4 | 3EB-02-A7921 | SILENCER | 1 | |
| 5 | 3EB-02-A7950 | HOSE | 1 | |
| 6 | 3EB-02-A7931 | CONNECTOR | 1 | |
| 7 | 07280-07429 | CLAMP | 3 | |
| 8 | 01010-80825 | BOLT | 4 | |
| 9 | 01602-20825 | WASHER, LOCK | 4 | |
| 10 | 3EB-02-34630 | PLATE | 1 | |
| 11 | 07000-72075 | O-RING | 1 | |
| 12 | 3EB-01-D6110 | COVER | 1 | |
| 13 | 3EB-01-51291 | HOSE | 1 | |
| 14 | 34A-42-41130 | WASHER | 2 | |
| N/S | 3EB-01-A5392 | AIR FILTER ELEMENT (DIESEL ONLY) | 1 | |

https://truckmanualshub.com/



## ENGINE - 4D94LE DIESEL (EPA) CYLINDER BLOCK - S/N 200001A~

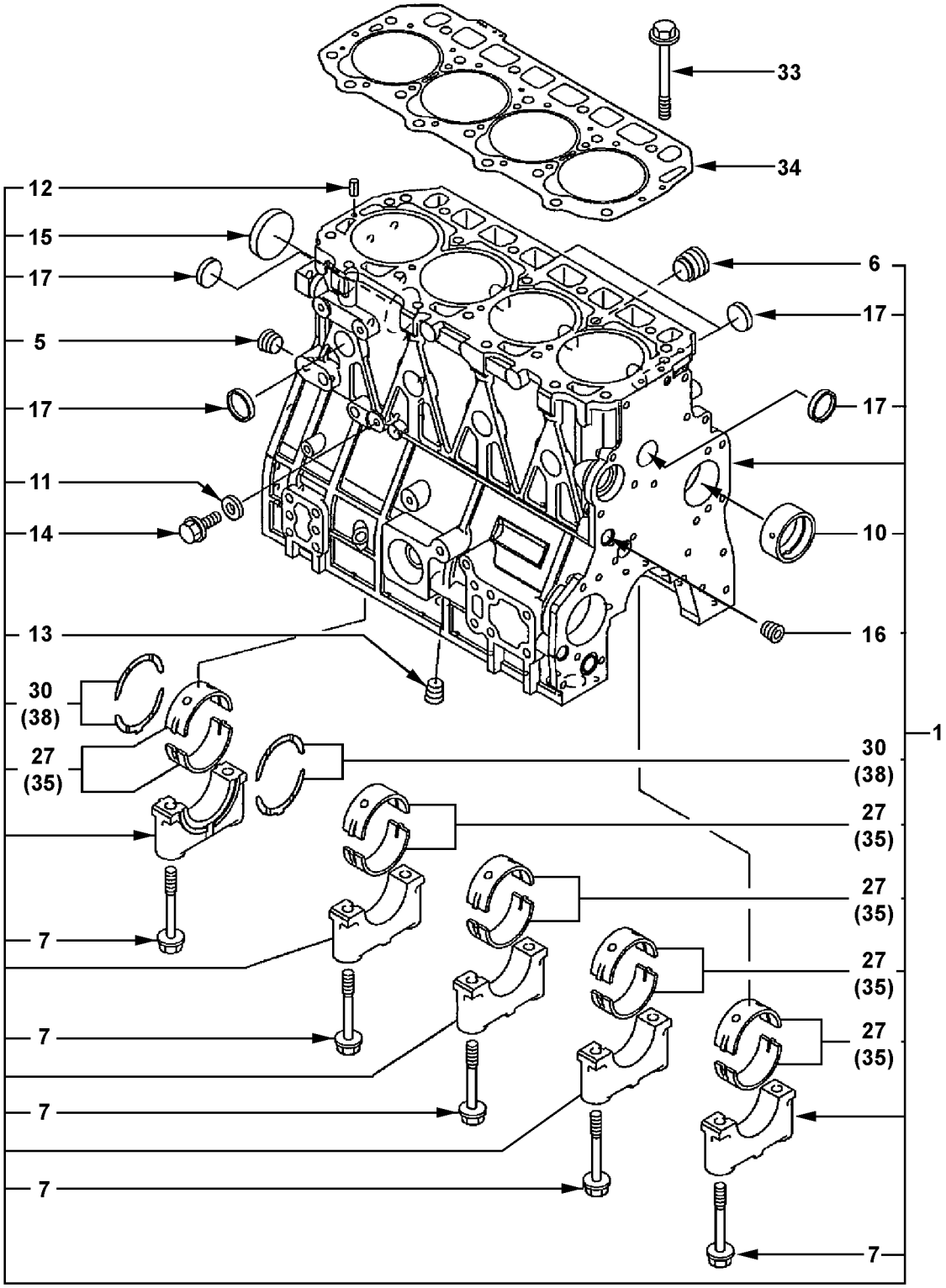

https://truckmanualshub.com/



## ENGINE - 4D94LE DIESEL (EPA) CYLINDER BLOCK - S/N 200001A~

| Item | Part Number | Description | Qty | |
|---|---|---|---|---|
| 1 | YM729901-01570 | BLOCK ASSY, CYLINDER | 1 | |
| 5 | YM23876-030000 | .PLUG PT 3/8, SCREW | 1 | |
| 6 | YM171051-01921 | .PLUG | 1 | |
| 7 | YM129900-02020 | .BOLT, METAL CAP | 10 | |
| 10 | YM129900-02410 | .BUSHING, CAMSHAFT | 1 | |
| 11 | YM22190-080002 | .SEAL WASHER, 8S | 1 | |
| 12 | YM22351-060012 | .SPRING PIN, 6 X 12 | 2 | |
| 13 | YM23876-030000 | .PLUG, PT 3/8, SCREW | 1 | |
| 14 | YM26106-080122 | .BOLT M 8X 12 PLATED | 1 | |
| 15 | YM129900-01250 | .PLUG 55 | 1 | |
| 16 | YM23876-030000 | .PLUG PT 3/8, SCREW | 1 | |
| 17 | YM27241-300000 | .PLUG 30 | 8 | |
| 27 | YM729900-02800 | .MAIN BEARING SET | 5 | |
| 30 | YM129900-02930 | .BEARING ASSY, THRUST | 2 | |
| 33 | YM129900-01200 | BOLT, HEAD | 18 | |
| 34 | YM129901-01350 | GASKET, HEAD | 1 | |
| 35 | YM129900-02340 | MAIN BEARING 0.25 US | 5 | |
| 38 | YM129900-02940 | BEARING, THRUST 0.25 OS | 2 | |

https://truckmanualshub.com/



## ENGINE - 4D94LE DIESEL (EPA) GEAR HOUSING - S/N 200001A~

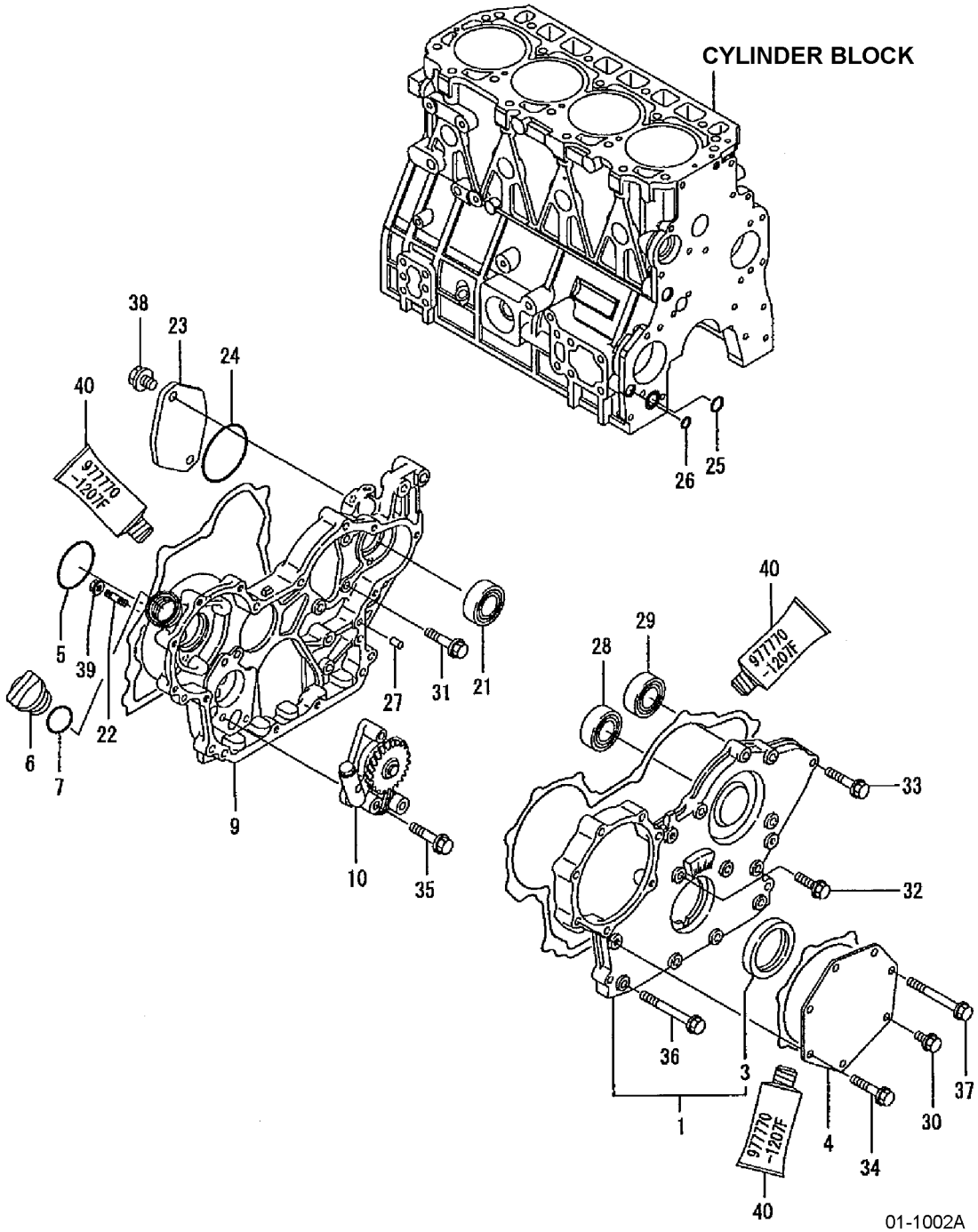

https://truckmanualshub.com/



## ENGINE - 4D94LE DIESEL (EPA) GEAR HOUSING - S/N 200001A~

| Item | Part Number | Description | Qty | |
|---|---|---|---|---|
| 1 | YM729900-01500 | COVER ASSY, GEAR CASE | 1 | |
| 3 | YM129900-01780 | SEAL, OIL | 1 | |
| 4 | YM129951-01740 | COVER, FUEL INJECTION PUMP | 1 | |
| 5 | YM24341-000500 | O-RING 1A S-50.0 | 1 | |
| 6 | YM124160-01751 | COVER, FILLER | 1 | |
| 7 | YM24311-000320 | O-RING 1A P-32.0 | 1 | |
| 9 | YM129901-01500 | HOUSING, GEAR | 1 | |
| 10 | YM129900-32001 | PUMP ASSY, LUBE OIL | 1 | |
| 21 | YM129900-26250 | BALL BEARING | 1 | |
| 22 | YM26226-080302 | STUD M 8X 30 PLATED | 3 | |
| 23 | YM129930-01870 | COVER, BRAIND | 1 | |
| 24 | YM24321-000850 | O-RING 1A GS-85.0 | 1 | |
| 25 | YM129900-32030 | O-RING P20 | 1 | |
| 26 | YM129900-32040 | O-RING P14 | 1 | |
| 27 | YM129100-01580 | PARALLEL PIN 8X16 | 4 | |
| 28 | YM129900-14140 | BEARING #6205 | 1 | |
| 29 | YM129900-26250 | BALL BEARING | 1 | |
| 30 | YM26106-080162 | BOLT M 8X 16 PLATED | 1 | |
| 31 | YM26106-080202 | BOLT M 8X 20 PLATED | 3 | |
| 32 | YM26106-080302 | BOLT M 8X 30 PLATED | 1 | |
| 33 | YM26106-080402 | BOLT M 8X 40 PLATED | 5 | |
| 34 | YM26106-080402 | BOLT M 8X 40 PLATED | 5 | |
| 35 | YM26106-080452 | BOLT M 8X 45 PLATED | 3 | |
| 36 | YM129001-91810 | BOLT M 8X 70 PLATED | 6 | |
| 37 | YM129001-91810 | BOLT M 8X 70 PLATED | 1 | |
| 38 | YM26106-100122 | BOLT M10X 12 PLATED | 2 | |
| 39 | YM26306-080002 | NUT | 3 | |
| 40 | YM977770-1207F | GASKET, LIQUID | 1 | |

https://truckmanualshub.com/



## ENGINE - 4D94LE DIESEL (EPA) FLYWHEEL HSG & OIL SUMP - S/N 200001A~

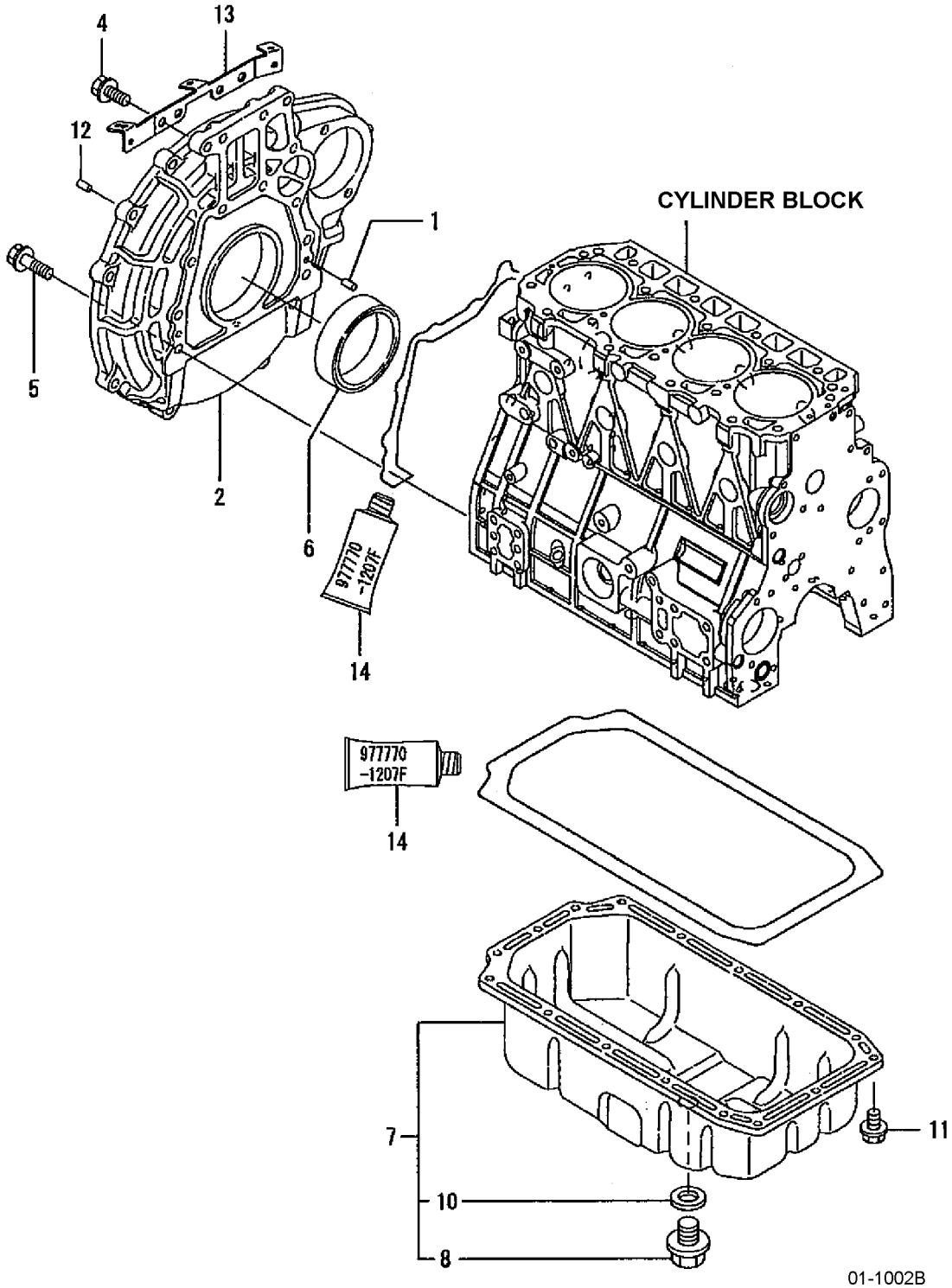

https://truckmanualshub.com/



## ENGINE - 4D94LE DIESEL (EPA) FLYWHEEL HSG & OIL SUMP - S/N 200001A~

| Item | Part Number | Description | Qty | |
|---|---|---|---|---|
| 1 | YM129100-01580 | PARALLEL PIN 8 X 16 | 2 | |
| 2 | YM129930-01620 | HOUSING, FLYWHEEL | 1 | |
| 4 | YM26206-100252 | BOLT M10 X 25 | 4 | |
| 5 | YM26206-100352 | BOLT M10 X 35 PLATED | 9 | |
| 6 | YM124411-01780 | SEAL HTC95, 115, 12 | 1 | |
| 7 | YM129931-01710 | SUMP ASSY, LUBE OIL | 1 | |
| 8 | YM105425-01690 | PLUG M16 | 1 | |
| 10 | YM22190-160002 | SEAL WASHER 16S | 1 | |
| 11 | YM26106-080122 | BOLT M 8X 12 PLATED | 16 | |
| 12 | YM22312-120200 | PARALLEL PIN 12 X 20 | 2 | |
| 13 | YM129930-91120 | BRACKET, BATTERY CORD | 1 | |
| 14 | YM977770-1207F | GASKET, LIQUID | 1 | |

https://truckmanualshub.com/



## ENGINE - 4D94LE DIESEL (EPA) CYLINDER HEAD & BONNET - S/N 200001A~

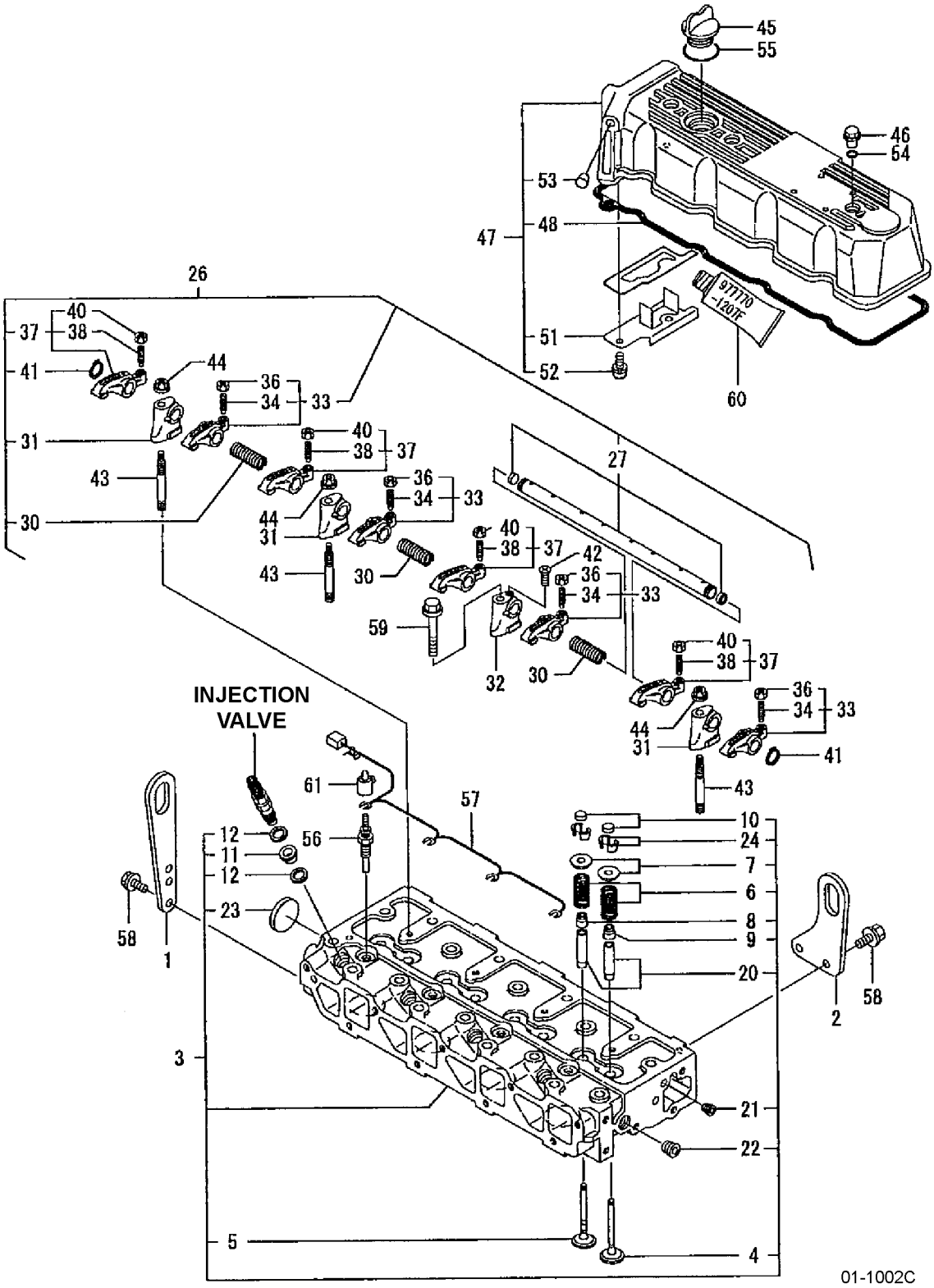

https://truckmanualshub.com/



## ENGINE - 4D94LE DIESEL (EPA) CYLINDER HEAD & BONNET - S/N 200001A~

| Item | Part Number | Description | Qty |
|---|---|---|---|
| 1 | YM129900-07900 | LIFTER, ENGINE | 1 |
| 2 | YM129910-07910 | LIFTER, ENGINE | 1 |
| 3 | YM129931-11700 | HEAD ASSY, CYLINDER | 1 |
| 4 | YM129900-11100 | .VALVE, INTAKE | 4 |
| 5 | YM129900-11110 | .VALVE, EXHAUST | 4 |
| 6 | YM129900-11120 | .VALVE SPRING | 8 |
| 7 | YM129795-11180 | .RETAINER, SPRING | 8 |
| 8 | YM121400-11340 | .SEAL, VALVE STEM | 4 |
| 9 | YM124460-11340 | .SEAL, VALVE STEM | 4 |
| 10 | YM129150-11370 | .CAP, VALVE | 8 |
| 11 | YM129901-11450 | .PROTECTOR, NOZZLE | 4 |
| 12 | YM119600-11460 | .GASKET, NOZZLE | 8 |
| 20 | YM129150-11810 | .GUIDE, VALVE | 8 |
| 21 | YM23871-005000 | .PLUG PT 1/16 | 1 |
| 22 | YM23876-030000 | .PLUG PT 3/8, SCREW | 1 |
| 23 | YM27241-400000 | .PLUG 40 | 1 |
| 24 | YM27310-080001 | .COTTER | 8 |
| 26 | YM129900-11200 | SUPPORT ASSY, ROCKER ARM | 1 |
| 27 | YM129900-11240 | .SHAFT ASSY, ROCKER ARM | 1 |
| 30 | YM129900-11280 | .SPRING | 3 |
| 31 | YM129900-11510 | .SUPPORT | 3 |
| 32 | YM129900-11520 | .SUPPORT | 1 |
| 33 | YM129900-11650 | .ARM KIT, INTAKE ROCKER | 4 |
| 34 | YM129150-11230 | ..SCREW, VALVE | 4 |
| 36 | YM129150-11750 | ..NUT M8 X P1.0 | 4 |
| 37 | YM129900-11660 | .ARM KIT, EXHAUST ROCKER | 4 |
| 38 | YM129150-11230 | ..SCREW, VALVE | 4 |
| 40 | YM129150-11750 | ..NUT M8 X P1.0 | 4 |
| 41 | YM22242-000180 | .CIRCLIP 18 | 2 |
| 42 | YM26577-040162 | .SCREW M4 X 16 | 1 |
| 43 | YM129900-11530 | STUD BOLT | 3 |
| 44 | YM26306-100002 | NUT | 3 |
| 45 | YM124160-01751 | COVER, FILLER | 1 |
| 46 | YM124160-11360 | KNOB | 3 |
| 47 | YM129900-11370 | BONNET (VALVE COVER) ASSY | 1 |
| 48 | YM129900-11310 | .GASKET, VALVE COVER | 1 |
| 51 | YM129900-11600 | .PLATE | 1 |
| 52 | YM22857-500100 | .SCREW 5 X 10, TAPPING | 2 |
| 53 | YM27225-080080 | .PLUG 8 X 8 | 1 |

PARTS LIST CONTINUED ON NEXT PAGE

https://truckmanualshub.com/



## ENGINE - 4D94LE DIESEL (EPA) CYLINDER HEAD & BONNET - S/N 200001A~

| Item | Part Number | Description | Qty | |
|---|---|---|---|---|
| 54 | YM24311-000120 | O-RING 1A P 12.0 | 3 | |
| 55 | YM24311-000320 | O-RING 1A P 32.0 | 1 | |
| 56 | YM119717-77800 | GLOW PLUG | 4 | |
| 57 | YM129931-77820 | CONNECTOR, GLOW PLUG | 1 | |
| 58 | YM26106-080162 | BOLT M8 X 16 PLATED | 4 | |
| 59 | YM26106-100652 | BOLT M10 X 65 PLATED | 1 | |
| 60 | YM977770-1207F | GASKET, LIQUID | 1 | |
| 61 | YM119326-77820 | COVER, GLOW PLUG | 4 | |

https://truckmanualshub.com/

**NOTES:**

https://truckmanualshub.com/



## ENGINE - 4D94LE DIESEL (EPA) INTAKE MANIFOLD - S/N 200001A~

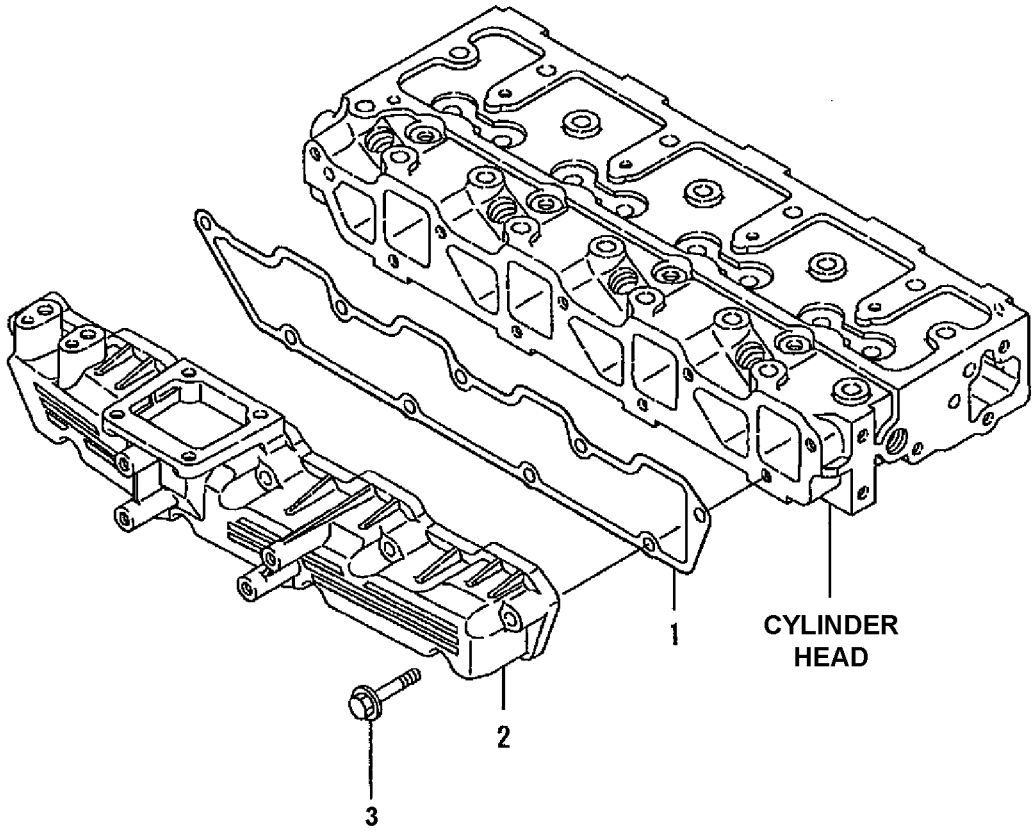


01-1002D

https://truckmanualshub.com/



## ENGINE - 4D94LE DIESEL (EPA) INTAKE MANIFOLD - S/N 200001A~

| Item | Part Number | Description | Qty | |
|---|---|---|---|---|
| 1 | YM129900-12050 | GASKET, INTAKE MANIFOLD . . . . . | 1 | |
| 2 | YM129900-12100 | INTAKE MANIFOLD . . . . . | 1 | |
| 3 | YM26106-080452 | BOLT M8 X 45 PLATED . . . . . | 9 | |

https://truckmanualshub.com/



## ENGINE - 4D94LE DIESEL (EPA) EXHAUST MANIFOLD - S/N 200001A~

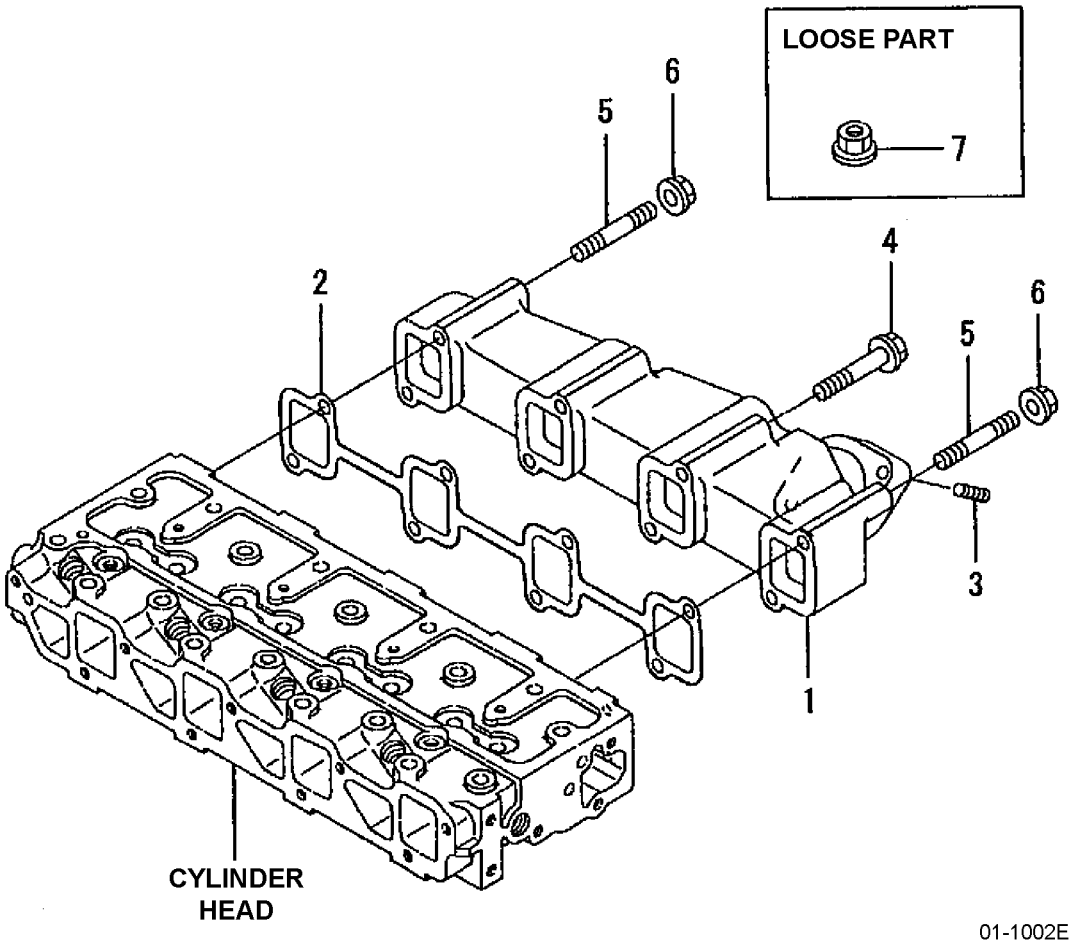

https://truckmanualshub.com/



## ENGINE - 4D94LE DIESEL (EPA) EXHAUST MANIFOLD - S/N 200001A~

| Item | Part Number | Description | Qty | |
|---|---|---|---|---|
| 1 | YM129930-13100 | MANIFOLD, EXHAUST | 1 | |
| 2 | YM129900-13251 | GASKET | 1 | |
| 3 | YM129930-13130 | STUD 8 X 30 | 2 | |
| 4 | YM123900-13630 | BOLT 8 X 80 | 6 | |
| 5 | YM123900-13610 | STUD BOLT M8 X 80 | 2 | |
| 6 | YM26306-080002 | NUT | 2 | |
| 7 | YM26306-080002 | NUT | 2 | |

https://truckmanualshub.com/



## ENGINE - 4D94LE DIESEL (EPA) CAMSHAFT & DRIVING GEAR - S/N 200001A~

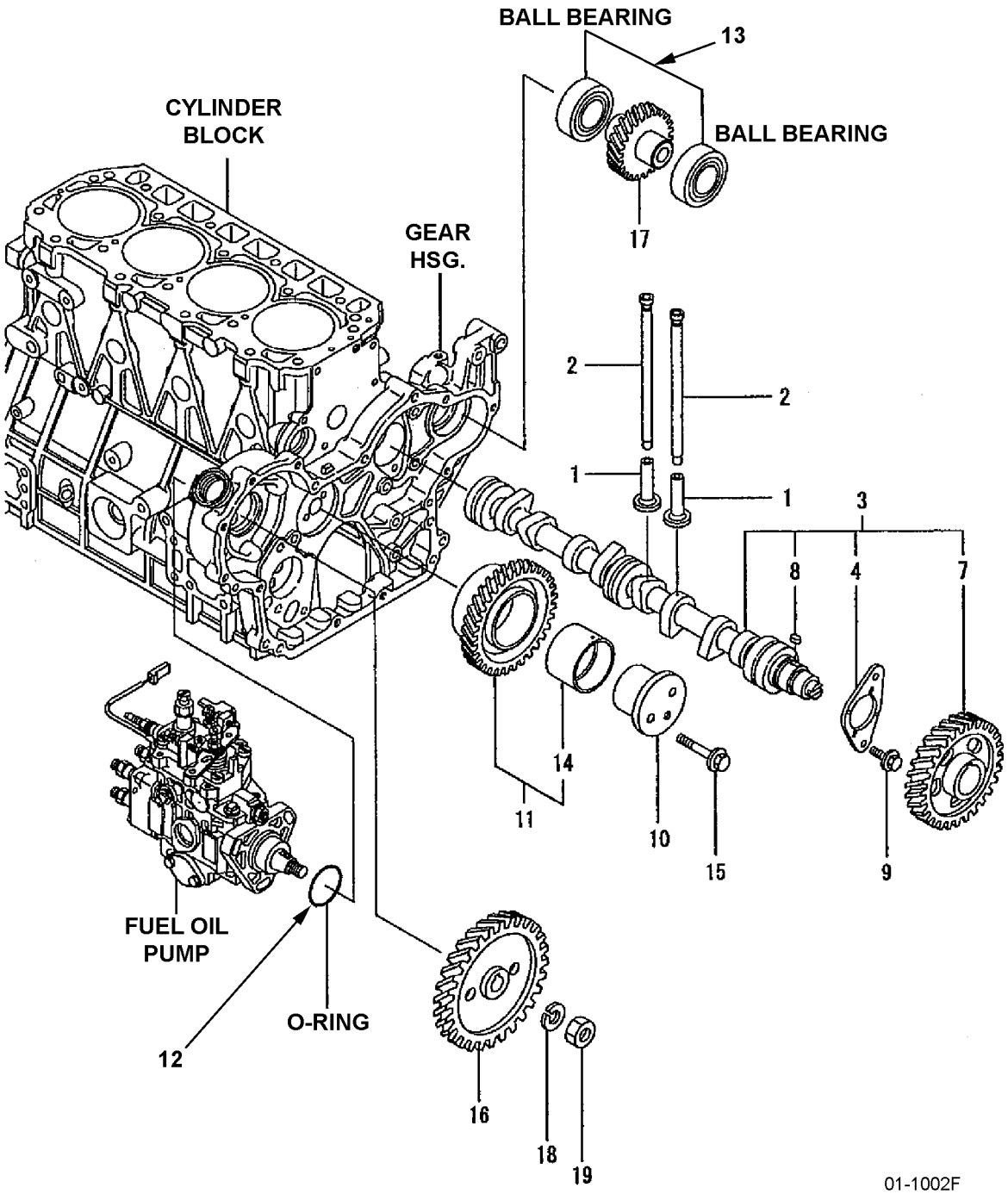

https://truckmanualshub.com/



## ENGINE - 4D94LE DIESEL (EPA) CAMSHAFT & DRIVING GEAR - S/N 200001A~

| Item | Part Number | Description | Qty |
|---|---|---|---|
| 1 | YM129150-14200 | TAPPET | 8 |
| 2 | YM129900-14400 | PUSH ROD | 8 |
| 3 | YM129900-14590 | CAMSHAFT ASSY | 1 |
| 4 | YM129150-02450 | .METAL THRUST PLATE, CAM | 1 |
| 7 | YM129900-14110 | .GEAR, CAMSHAFT | 1 |
| 8 | YM22512-070140 | .KEY 7 X 14 | 1 |
| 9 | YM26106-080142 | BOLT 8 X 14 PLATED | 2 |
| 10 | YM129900-25060 | SHAFT, IDLER | 1 |
| 11 | YM129900-25110 | GEAR ASSY, IDLER | 1 |
| 12 | YM24341-000500 | O-RING | 1 |
| 13 | YM129900-26250 | BALL BEARING | 2 |
| 14 | YM129150-25920 | BUSHING, IDLER GEAR | 1 |
| 15 | YM26106-080552 | BOLT M8 X 55 PLATED | 2 |
| 16 | YM129901-25900 | GEAR, FI-P | 1 |
| 17 | YM129970-26200 | GEAR ASSY, HYDRAULIC PUMP | 1 |
| 18 | YM22217-140000 | SPRING WASHER 14 | 1 |
| 19 | YM26776-140002 | LOCK NUT M14 PLATED | 1 |

https://truckmanualshub.com/



## ENGINE - 4D94LE DIESEL (EPA) COOLING WATER SYSTEM - S/N 200001A~

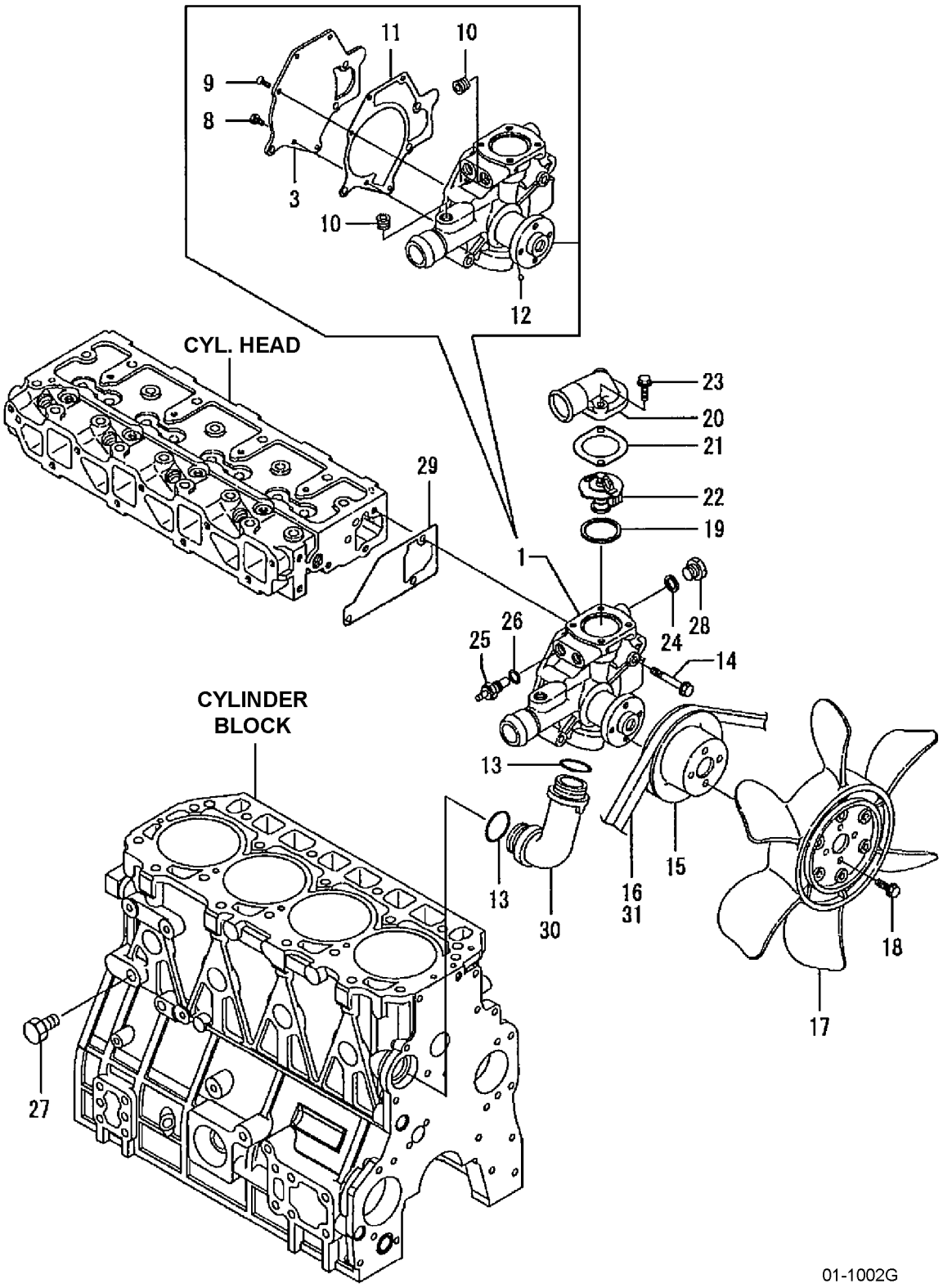

https://truckmanualshub.com/



## ENGINE - 4D94LE DIESEL (EPA) COOLING WATER SYSTEM - S/N 200001A~

| Item | Part Number | Description | Qty |
|---|---|---|---|
| 1 | YM129900-42055 | PUMP, WATER (HIGH-POSI) | 1 |
| 3 | YM129900-42161 | .COVER | 1 |
| 8 | YM26116-060162 | .BOLT 6 X 16 | 2 |
| 9 | YM26577-060152 | .SCREW M6 X 15 | 3 |
| 10 | YM23875-030000 | .PLUG PT 3/8, STEEL | 2 |
| 11 | YM129900-42170 | .GASKET | 1 |
| 12 | YM24190-080001 | .BALL 1/4, STEEL | 1 |
| 13 | YM129900-42140 | O-RING P-36 | 2 |
| 14 | YM26106-080552 | BOLT M8 X 55 PLATED | 3 |
| 15 | YM129900-42461 | PULLEY, WATER PUMP (STANDARD & UL-DS)) | 1 |
| 16 | YM25132-004500 | V-BELT (STANDARD APPLICATION) | 1 |
| | YM25132-004600 | V-BELT (UL-DS APPLICATION) | 1 |
| 17 | YM129900-44700 | FAN | 1 |
| 18 | YM26014-080162 | BOLT M8 X 16 | 4 |
| 19 | YM121850-49550 | GASKET, THERMOSTAT | 1 |
| 20 | YM129900-49551 | COVER, THERMOSTAT | 1 |
| 21 | YM129900-49560 | GASKET (NON-ASBESTOS) | 1 |
| 22 | YM121850-49810 | THERMOSTAT | 1 |
| 23 | YM26106-080252 | BOLT M8 X 25 PLATED | 2 |
| 24 | YM124465-44950 | GASKET 16 | 1 |
| 25 | YM171056-49351 | SENSOR | 1 |
| 26 | YM129150-49360 | GASKET 10 | 1 |
| 27 | YM171056-49120 | DRAIN PLUG | 1 |
| 28 | YM121450-42450 | PLUG M16 | 1 |
| 29 | YM129900-42061 | GASKET, WATER PUMP | 1 |
| 30 | YM129900-42070 | PIPE, WATER PUMP | 1 |
| 31 | YM25132-004600 | V-BELT | 1 |

https://truckmanualshub.com/



# FUEL INJECTION PUMP - 4D94LE - S/N ALL
# DIESEL

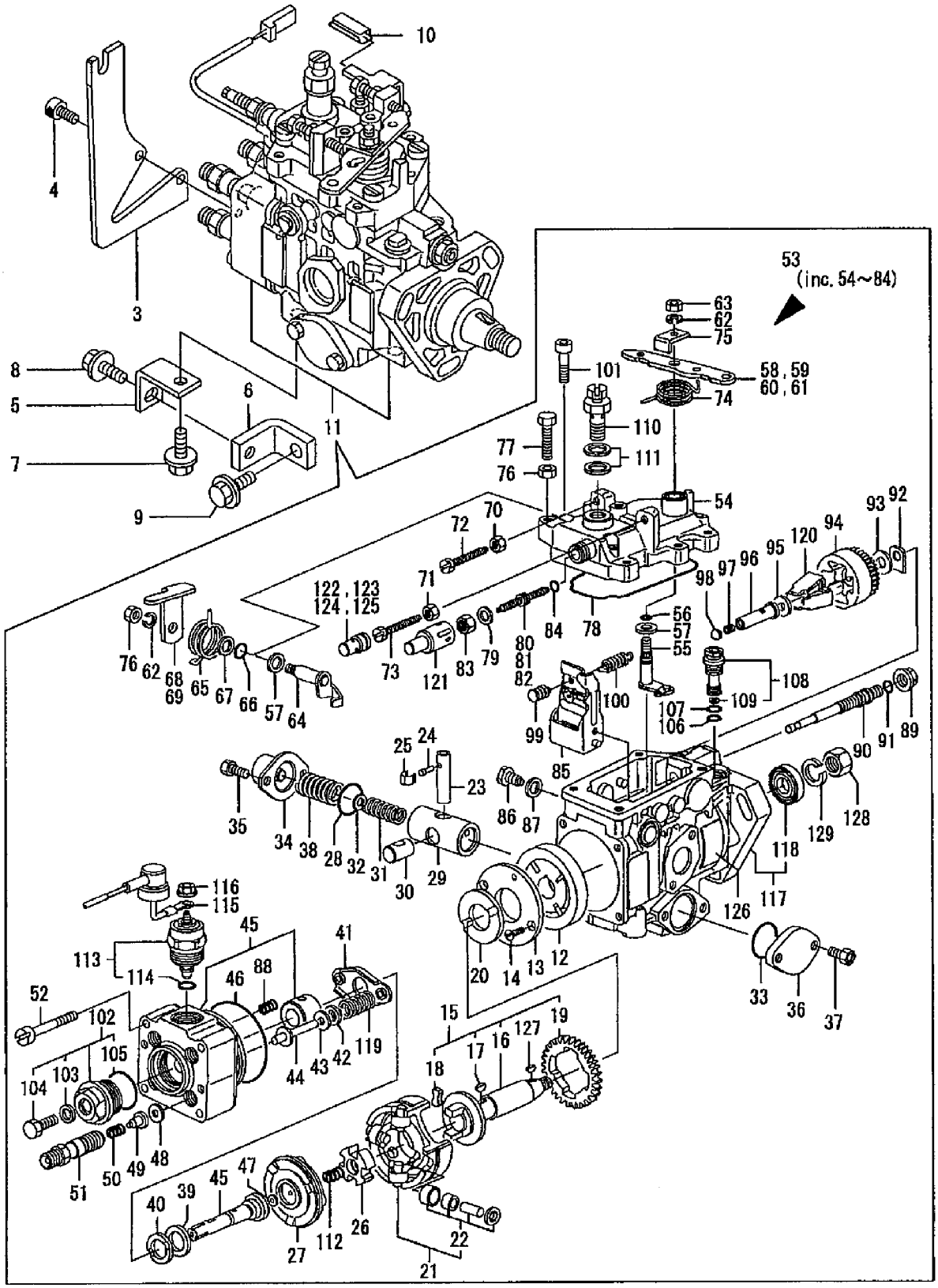

https://truckmanualshub.com/



## FUEL INJECTION PUMP - 4D94LE - S/N ALL
## DIESEL

| Item | Part Number | Description | Qty | Serial Number |
|---|---|---|---|---|
| 1 | NOT USED | | | |
| 2 | NOT USED | | | |
| 3 | YM129930-67010 | BRACKET, AXLE WIRE | 1 | |
| 4 | YM26450-060252 | BOLT M6X25 | 2 | |
| 5 | YM129901-01950 | BRACKET | 1 | |
| 6 | YM129901-01960 | STAY, BRACKET | 1 | |
| 7 | YM26106-100142 | BOLT M10X14 PLATED | 1 | |
| 8 | YM26106-100162 | BOLT M10X16 PLATED | 1 | |
| 9 | YM26106-100202 | BOLT M10X20 PLATED | 1 | |
| 10 | YM129930-61990 | SIMM | 1 | |
| 11 | YM129931-51010 | PUMP ASSY, FUEL OIL | 1 | |
| 12 | YMX1461000220 | ..FEED PUMP | 1 | |
| 13 | YMX1461030100 | ..COVER | 1 | |
| 14 | YMX1391040000 | ..SCREW | 2 | |
| 15 | YMX1462000320 | ..DRIVE SHAFT | 1 | |
| 16 | YMX1462000300 | ...DRIVE SHAFT | 1 | |
| 17 | YMX1462010000 | ...KEY | 1 | |
| 18 | YMX1462020100 | ...DAMPER | 2 | |
| 19 | YMX1462030000 | ...GEAR | 1 | |
| 20 | YMX1462040000 | ..WASHER | 1 | |
| 21 | YMX1462105320 | ..ROLLER ASSY | 1 | |
| 22 | YMX1462105820 | ...ROLLER KIT | 1 | |
| 23 | YMX1463030000 | ..PIN | 1 | |
| 24 | YMX1463040000 | ..PIN | 1 | |
| 25 | YMX1463050000 | ..CLIP | 1 | |
| 26 | YMX1462050000 | ..DISK | 1 | |
| 27 | YMX1462206620 | ..CAM DISK | 1 | |
| 28 | YMX1466000800 | ..O-RING | 1 | |
| 29 | YMX1463115420 | ..PISTON | 1 | |
| 30 | YMX1463010000 | ..SLIDER | 1 | |
| 31 | YMX1463125100 | ..SPRING | 1 | |
| 32 | YMX0299986840 | ..SHIM SET | 1 | |
| 33 | YMX1466000800 | ..O-RING | 1 | |
| 34 | YMX1463104020 | ..COVER | 1 | |
| 35 | YMX1466205000 | ..BOLT | 2 | |
| 36 | YMX1463105100 | ..COVER | 1 | |
| 37 | YMX1466205000 | ..BOLT | 2 | |
| 38 | YMX1463121900 | ..SPRING | 1 | |
| 39 | YMX1462300000 | ..SHIM | 1 | |

PARTS LIST CONTINUED ON NEXT PAGE

https://truckmanualshub.com/



## FUEL INJECTION PUMP - 4D94LE - S/N ALL
## DIESEL

| Item | Part Number | Description | Qty | Serial Number |
|---|---|---|---|---|
| 40 | YMX1462300100 | ..WASHER | 1 | |
| 41 | YMX1462310001 | ..SPRING SEAT | 1 | |
| 42 | YMX1462330000 | ..SPRING SEAT | 2 | |
| 43 | YMX0299980570 | ..SHIM SET | 1 | |
| 44 | YMX1462340500 | ..GUIDE PIN | 2 | |
| 45 | YMX1464013020 | ..HEAD | 1 | |
| 46 | YMX1466000000 | ..O-RING | 1 | |
| 47 | YMX0299980300 | ..SHIM SET | 1 | |
| 48 | YMX1464330100 | ..GASKET | 4 | |
| 49 | YMX1464303820 | ..DELIVERY VALVE | 4 | |
| 50 | YMX1464320000 | ..SPRING | 4 | |
| 51 | YMX1464400220 | ..HOLDER | 4 | |
| 52 | YMX1391060100 | ..SCREW | 4 | |
| 53 | YMX1468209620 | ..COVER | 1 | |
| 54 | YMX1468052120 | ...COVER | 1 | |
| 55 | YMX1465152520 | ...CONTROL SHAFT | 1 | |
| 56 | YMX1466000100 | ...O-RING | 1 | |
| 57 | YMX1393100200 | ...WASHER | 2 | |
| 58 | YMX1465300000 | ...LEVER | 1 | |
| 59 | YMX1465300100 | ...LEVER | 1 | |
| 60 | YMX1468321500 | ...LEVER | 1 | |
| 61 | YMX1468321600 | ...LEVER | 1 | |
| 62 | YMX0141106440 | ...SPRING WASHER | 2 | |
| 63 | YMX0130206040 | ...NUT | 1 | |
| 64 | YMX1465151820 | ...LEVER SHAFT | 1 | |
| 65 | YMX1465920400 | ...SPRING | 1 | |
| 66 | YMX1466000200 | ...O-RING | 1 | |
| 67 | YMX1466020100 | ...WASHER | 1 | |
| 68 | YMX1465404000 | ...LEVER | 1 | |
| 69 | YMX1465404100 | ...LEVER | 1 | |
| 70 | YMX1466211700 | ...NUT | 1 | |
| 71 | YMX1466211700 | ...NUT | 1 | |
| 72 | YMX1465262800 | ...BOLT | 1 | |
| 73 | YMX1465266400 | ...BOLT | 1 | |
| 74 | YMX1465927900 | ...SPRING | 1 | |
| 75 | YMX1465410000 | ...ANGLE | 1 | |
| 76 | YMX0130206040 | ...NUT | 2 | |
| 77 | YMX1390060200 | ...BOLT | 1 | |
| 78 | YMX1466004400 | ...SEAL RING | 1 | |

PARTS LIST CONTINUED ON NEXT PAGE

https://truckmanualshub.com/



## FUEL INJECTION PUMP - 4D94LE - S/N ALL
## DIESEL

| Item | Part Number | Description | Qty | Serial Number |
|---|---|---|---|---|
| 79 | YMX1393080300 | ...WASHER | 1 | |
| 80 | YMX1465453400 | ...LOAD SCREW | 1 | |
| 81 | YMX1465453500 | ...LOAD SCREW | 1 | |
| 82 | YMX1465453600 | ...LOAD SCREW | 1 | |
| 83 | YMX1392080900 | ...NUT | 1 | |
| 84 | YMX1466001200 | ...O-RING | 1 | |
| 85 | YMX1468551320 | ..GOVERNOR LEVER | 1 | |
| 86 | YMX1465680000 | ..PIVOT BOLT | 2 | |
| 87 | YMX0265081140 | ..GASKET | 2 | |
| 88 | YMX1465880500 | ..SPRING | 2 | |
| 89 | YMX1465690300 | ..NUT | 1 | |
| 90 | YMX1465700100 | ..GOVERNOR SHAFT | 1 | |
| 91 | YMX1466000400 | ..O-RING | 1 | |
| 92 | YMX0299984130 | ..SHIM SET | 1 | |
| 93 | YMX1466020600 | ..WASHER | 1 | |
| 94 | YMX1465720020 | ..HOLDER | 1 | |
| 95 | YMX1466020500 | ..WASHER | 1 | |
| 96 | YMX1469753601 | ..SLEEVE | 1 | |
| 97 | YMX1465760400 | ..CAP | 1 | |
| 98 | YMX0299985870 | ..PLUG SET | 1 | |
| 99 | YMX1468796720 | ..PIN | 1 | |
| 100 | YMX1465804100 | ..SPRING | 1 | |
| 101 | YMX1391060200 | ..SCREW | 4 | |
| 102 | YMX1464211020 | ..PLUG | 1 | |
| 103 | YMX1395080200 | ...GASKET | 1 | |
| 104 | YMX1464220300 | ...BOLT | 1 | |
| 105 | YMX1466000500 | ...O-RING | 1 | |
| 106 | YMX1466000600 | ..O-RING | 1 | |
| 107 | YMX1466000700 | ..O-RING | 1 | |
| 108 | YMX1461100220 | ..VALVE | 1 | |
| 109 | YMX1461140000 | ...SPRING RING | 1 | |
| 110 | YMX1461200120 | ..VALVE | 1 | |
| 111 | YMX1395120500 | ..GASKET | 2 | |
| 112 | YMX1462060100 | ..SPRING | 1 | |
| 113 | YMX1466501220 | ..VALVE | 1 | |
| 114 | YMX1466001700 | ...O-RING | 1 | |
| 115 | YMX1466584820 | ..WIRE | 1 | |
| 116 | YMX1466214901 | ..NUT | 1 | |
| 117 | YMX1460186820 | ..HOUSING | 1 | |

PARTS LIST CONTINUED ON NEXT PAGE

https://truckmanualshub.com/



## FUEL INJECTION PUMP - 4D94LE - S/N ALL
## DIESEL

| Item | Part Number | Description | Qty | Serial Number |
|---|---|---|---|---|
| 118 | YMX1466010700 | ...OIL SEAL | 1 | |
| 119 | YMX1462320320 | ..SPRING | 1 | |
| 120 | YMX1465740320 | ..FLYWEIGHT | 1 | |
| 121 | YMX1465981000 | ..CAP | 1 | |
| 122 | YMX1465980800 | ..CAP | 1 | |
| 123 | YMX1465980900 | ..CAP | 1 | |
| 124 | YMX1465980600 | ..CAP | 1 | |
| 125 | YMX1465980700 | ..CAP | 1 | |
| 126 | YMX1469109400 | ..NUMBER PLATE | 1 | |
| 127 | YMX0294704030 | ..WOODRUFF KEY | 1 | |
| 128 | YMX0131214140 | ..NUT | 1 | |
| 129 | YMX0293214050 | ..SPRING WASHER | 1 | |

https://truckmanualshub.com/

NOTES

https://truckmanualshub.com/



## FUEL INJECTION VALVE - 4D94LE - S/N ALL
## DIESEL

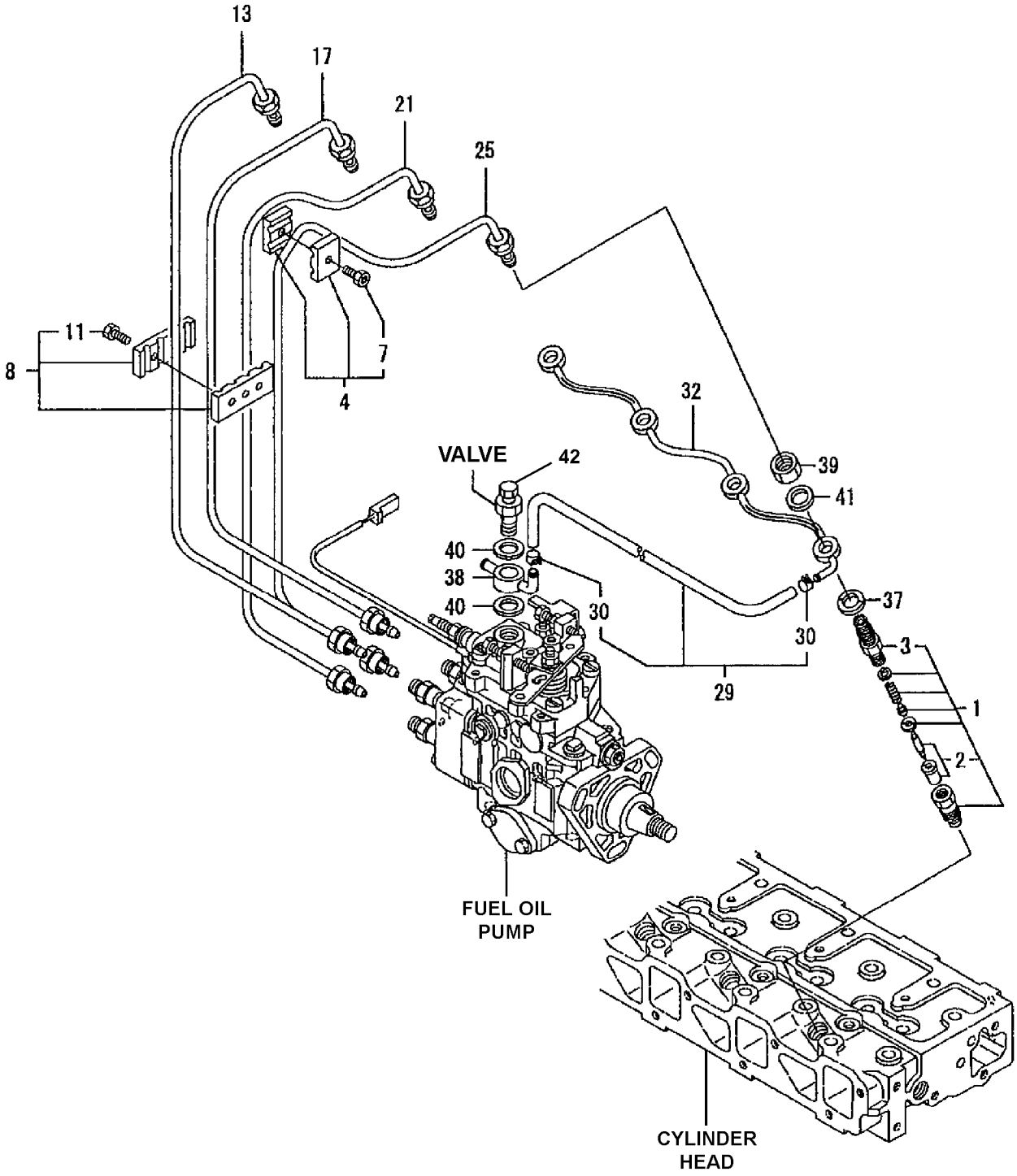

https://truckmanualshub.com/



## FUEL INJECTION VALVE - 4D94LE - S/N ALL
## DIESEL

| Item | Part Number | Description | Qty | Serial Number |
|---|---|---|---|---|
| 1 | YM129931-53000 | VALVE ASSY, INJECTION | 4 | |
| 2 | YM119717-53010 | ..NOZZLE ASSY. | 4 | |
| 3 | YM129901-53020 | ..RETAINER | 4 | |
| 4 | YM119305-59120 | RETAINER | 2 | |
| 7 | YM129150-59131 | ..BOLT M4X14, HEX SOCKET. | 2 | |
| 8 | YM129550-59120 | RETAINER | 1 | |
| 11 | YM129150-59131 | ..BOLT M4X14, HEX SOCKET. | 2 | |
| 13 | YM129901-59810 | PIPE NO.1, F. INJECT.. | 1 | |
| 17 | YM129901-59820 | PIPE NO.2, F. INJECT. | 1 | |
| 21 | YM129901-59830 | PIPE NO.3, F. INJECT. | 1 | |
| 25 | YM129901-59840 | PIPE NO.4, F. INJECT. | 1 | |
| 29 | YM129930-59520 | PIPE ASSY, F.O. RETURN | 1 | |
| 30 | YM124066-59100 | ..CLAMP 8 | 2 | |
| 32 | YM129901-59510 | PIPE, FUEL RETURN | 1 | |
| 37 | YM129901-59560 | GASKET, RETURN | 4 | |
| 38 | YM129901-59580 | JOINT, PIPE | 1 | |
| 39 | YM119620-59700 | NUT | 4 | |
| 40 | YM22190-120002 | SEAL WASHER 12 | 2 | |
| 41 | YM22190-120002 | SEAL WASHER 12 | 4 | |
| 42 | YMX1461200120 | VALVE | 1 | |

https://truckmanualshub.com/



## FUEL FILTER - 4D94LE - S/N ALL
## DIESEL

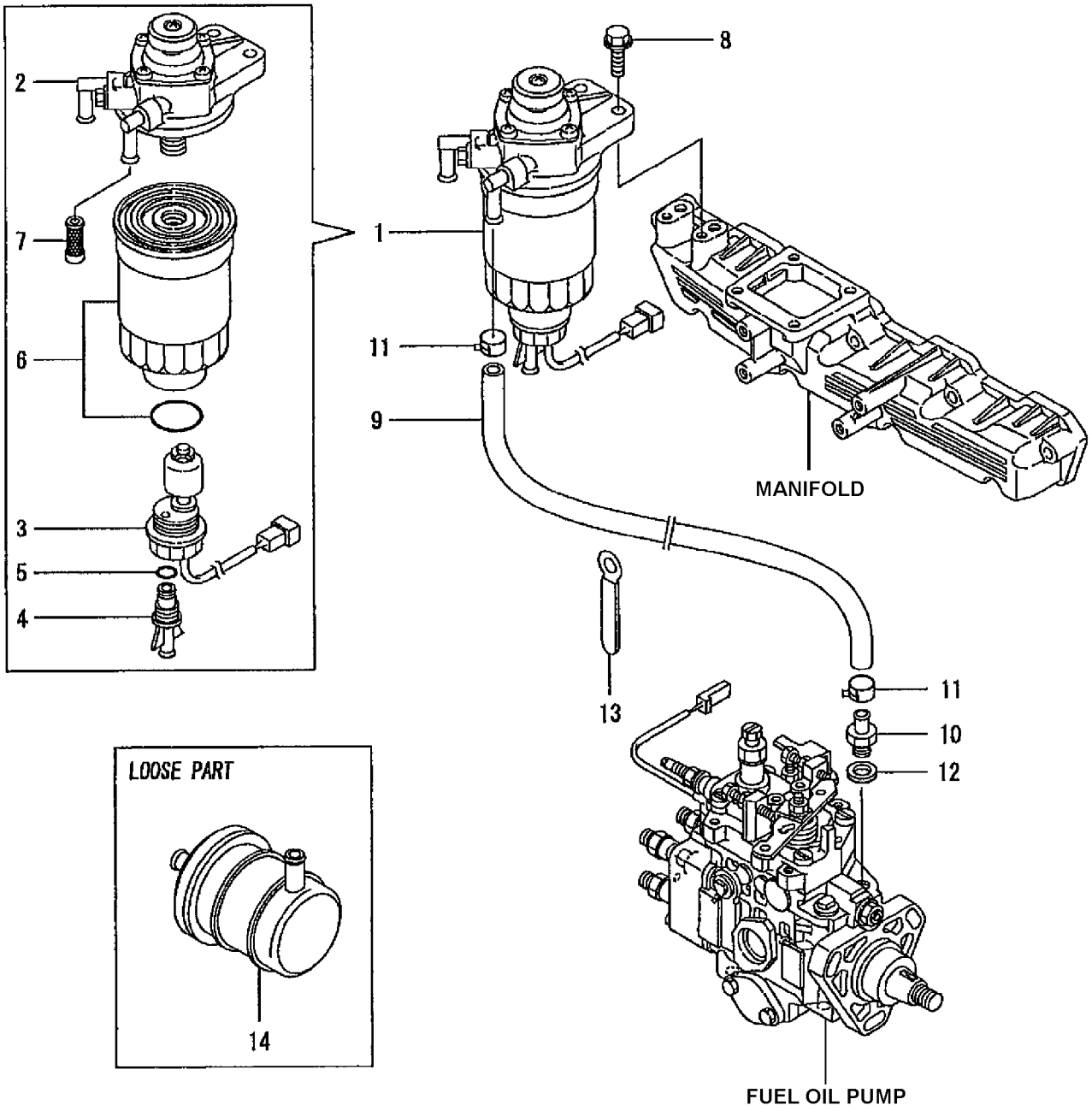

https://truckmanualshub.com/



## FUEL FILTER - 4D94LE - S/N ALL
## DIESEL

| Item | Part Number | Description | Qty | Serial Number |
|---|---|---|---|---|
| 1 | YM129901-55800 | FILTER, FUEL OIL | 1 | |
| 2 | YM129901-55810 | ..BODY, SUB. ASSY | 1 | |
| 3 | YM129901-55820 | ..SENSOR ASSY | 1 | |
| 4 | YM129901-55830 | ..PLUG, DRAIN | 1 | |
| 5 | YM129901-55840 | ..O-RING | 1 | |
| 6 | YM129901-55850 | ..ELEMENT KIT | 1 | |
| 7 | YM129901-55860 | ..FILTER | 1 | |
| 8 | YM26106-080252 | BOLT M8X25 PLATED | 2 | |
| 9 | YM129930-59500 | PIPE, FUEL | 1 | |
| 10 | YM119171-59910 | JOINT, PIPE | 1 | |
| 11 | YM23000-013000 | CLAMP 13 | 2 | |
| 12 | YM22190-120002 | SEAL WASHER 12 | 1 | |
| 13 | YM105430-67110 | CLAMP | 2 | |
| 14 | YM129052-55630 | STRAINER, FUEL OIL (IN) | 1 | |

https://truckmanualshub.com/



## STARTING MOTOR - 4D94LE - S/N ALL
## DIESEL

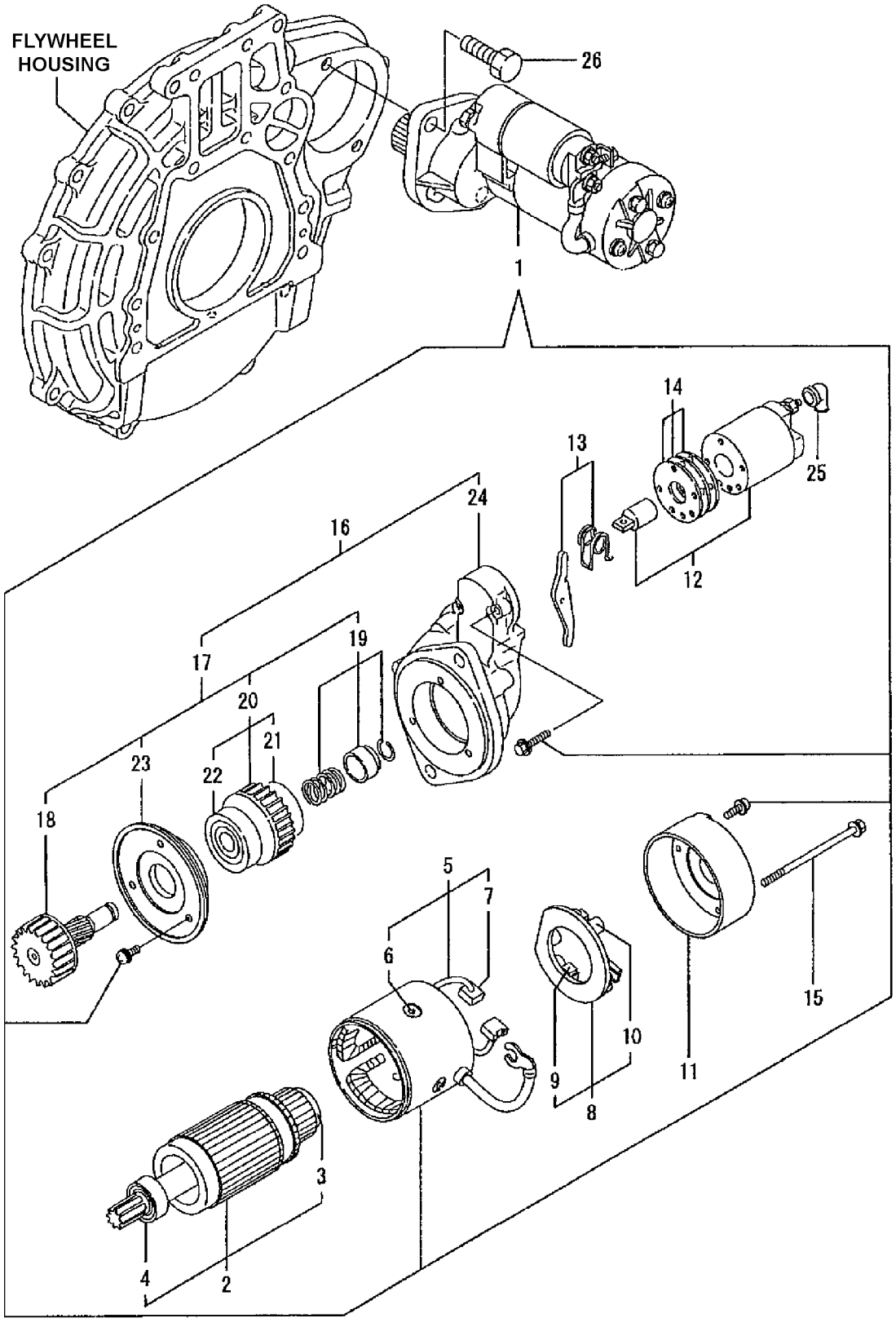

https://truckmanualshub.com/



## STARTING MOTOR - 4D94LE - S/N ALL
## DIESEL

| Item | Part Number | Description | Qty | Serial Number |
|---|---|---|---|---|
| 1 | YM129900-77010 | STARTER (2.3 KW) | 1 | |
| 2 | YM129900-77400 | ..ARMATURE ASSY | 1 | |
| 3 | YMX2114155110 | ...BALL BEARING | 1 | |
| 4 | YMX2114255110 | ...BALL BEARING | 1 | |
| 5 | YM129900-77440 | ..COIL ASSY, FIELD | 1 | |
| 6 | YM171008-77450 | ...SCREW, POLE CORE SET | 4 | |
| 7 | YM129900-77450 | ...BRUSH (+) | 2 | |
| 8 | YM129900-77480 | ..HOLDER ASSY, BRASH | 1 | |
| 9 | YM129900-77450 | ...BRUSH (+) | 2 | |
| 10 | YMX2130631300 | ...BRUSH SPRING | 4 | |
| 11 | YM129900-77460 | ..COVER, REAR | 1 | |
| 12 | YM129900-77591 | ..SWITCH ASSY, MAGNETIC | 1 | |
| 13 | YM129900-77620 | ..SHIFT LEVER SET | 1 | |
| 14 | YM129900-77650 | ..COVER ASSY, DUST | 1 | |
| 15 | YM129900-77640 | ..BOLT, THROUGH | 2 | |
| 16 | YM129900-77700 | ..GEAR CASE ASSY | 1 | |
| 17 | YM129900-77510 | ...PINION ASSY | 1 | |
| 18 | YM129900-77540 | ....SHAFT, PINION | 1 | |
| 19 | YM129900-77550 | ....STOPPER SET | 1 | |
| 20 | YM129900-77520 | ....CLUTCH ASSY | 1 | |
| 21 | YM171008-77730 | ....BALL BEARING (3) | 1 | |
| 22 | YM171008-77740 | ....BALL BEARING (4) | 1 | |
| 23 | YM129900-77610 | ....RETAINER, BEARING | 1 | |
| 24 | YM129900-77710 | ...HOUSING, GEARS | 1 | |
| 25 | YM171008-77750 | ..COVER, M TERMINAL | 1 | |
| 26 | YM26116-120302 | BOLT M12 X 30, PLATED | 2 | |

https://truckmanualshub.com/



## ALTERNATOR (STD) - 4D94LE - S/N ALL
## DIESEL

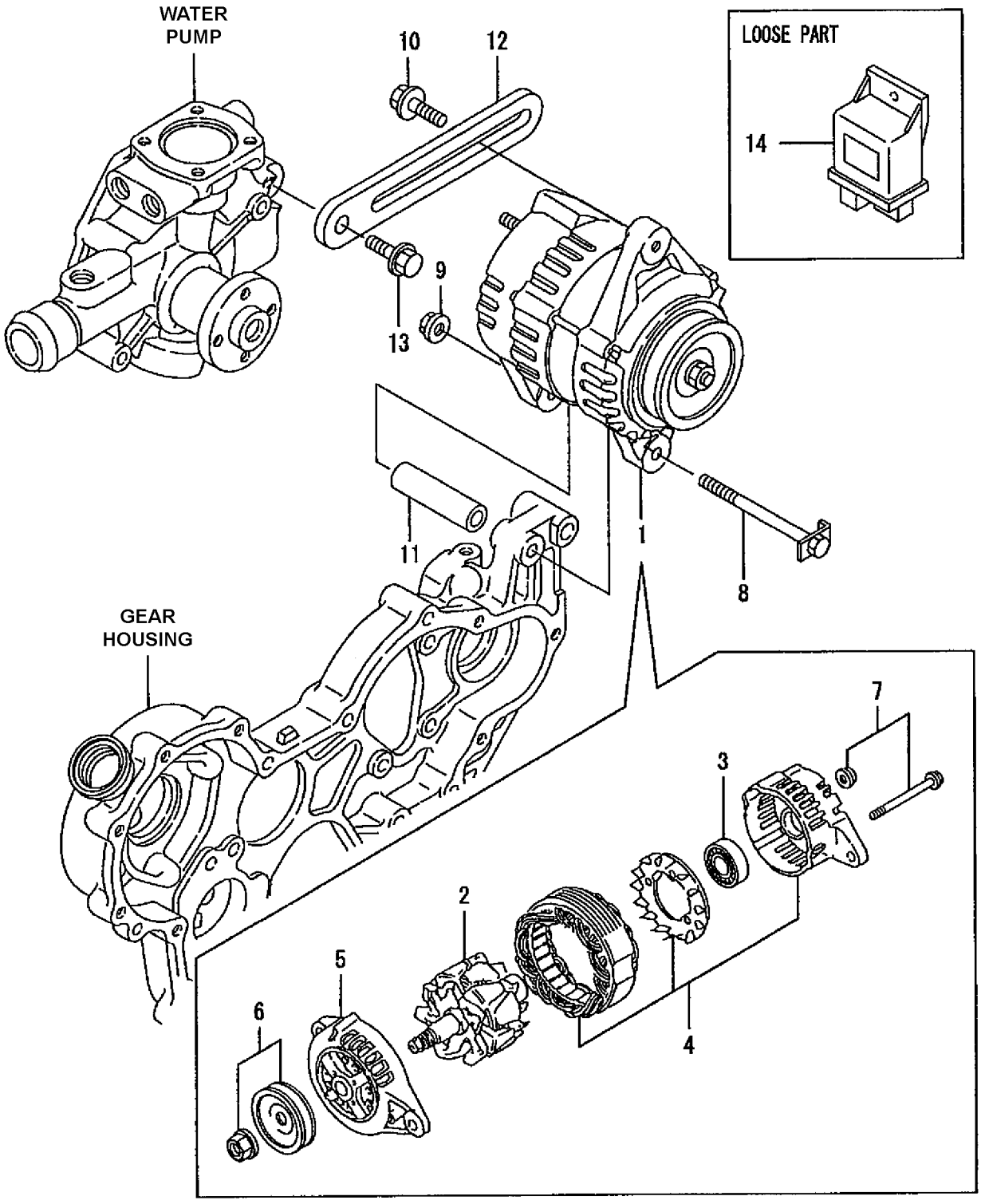

https://truckmanualshub.com/



## ALTERNATOR (STD) - 4D94LE - S/N ALL DIESEL

| Item | Part Number | Description | Qty | Serial Number |
|---|---|---|---|---|
| 1 | YM129930-77212 | ALTERNATOR | 1 | |
| 2 | YM129612-77700 | ..ROTOR ASSY | 1 | |
| 3 | YM129612-77710 | ..BALL BEARING | 1 | |
| 4 | YM129930-77930 | ..BRACKET, REAR | 1 | |
| 5 | YM129612-77730 | ..FRONT BRACKET ASSY | 1 | |
| 6 | YM129930-77740 | ..PULLEY | 1 | |
| 7 | YM129612-77750 | ..SCREW KIT | 1 | |
| 8 | YM129136-77261 | BOLT M 8X110 | 1 | |
| 9 | YM129612-77260 | NUT, ALTERNATOR | 1 | |
| 10 | YM119810-77340 | BOLT | 1 | |
| 11 | YM129150-77340 | SPACER | 1 | |
| 12 | YM129900-77330 | BELT ADJUSTER | 1 | |
| 13 | YM260140-80252 | BOLT M8 X 25 | 1 | |
| 14 | YM129930-77950 | CONTROLLER | 1 | |

https://truckmanualshub.com/



## ALTERNATOR (UL-DS) - 4D94LE - S/N ALL
## DIESEL

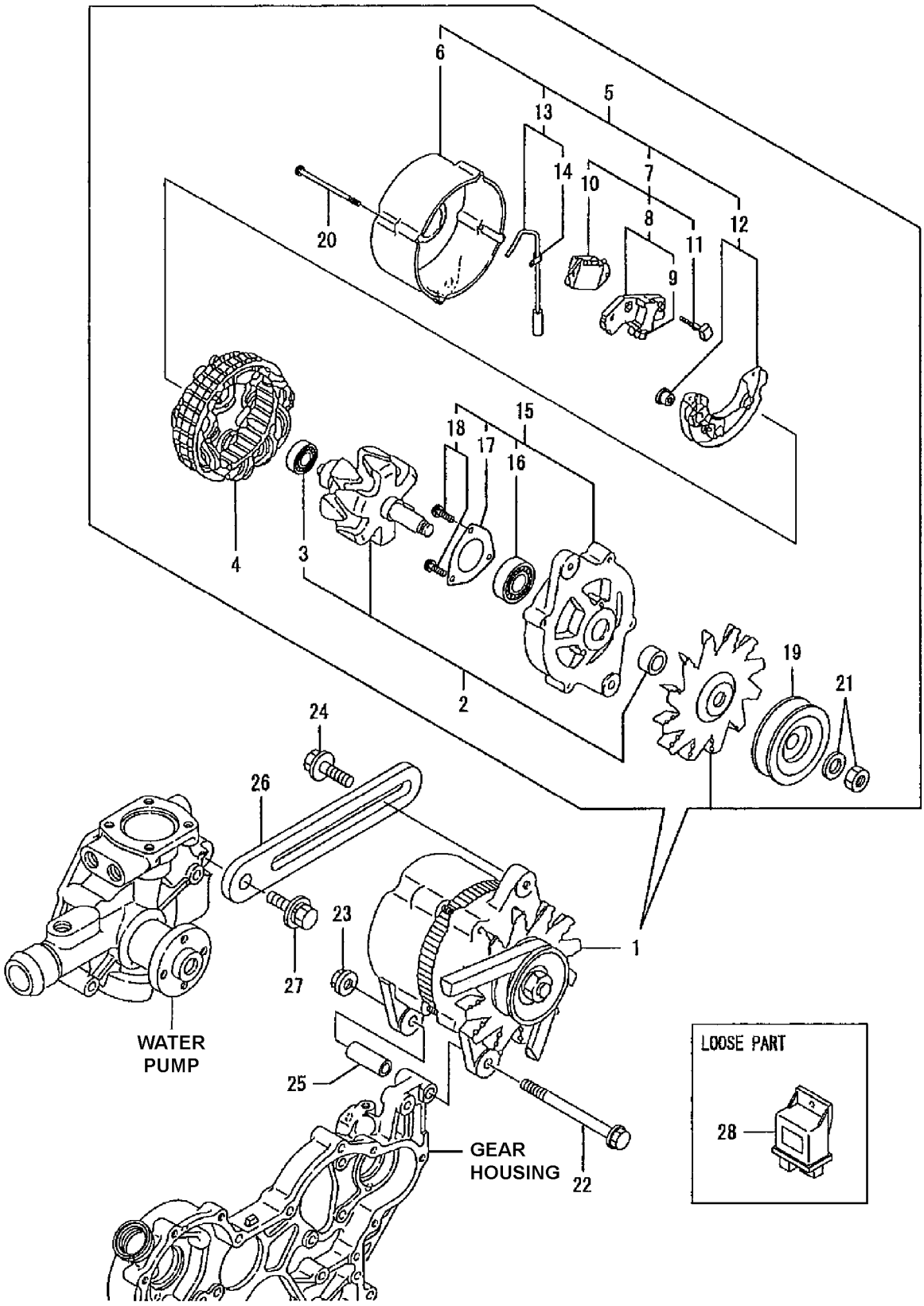

https://truckmanualshub.com/



## ALTERNATOR (UL-DS) - 4D94LE - S/N ALL DIESEL

| Item | Part Number | Description | Qty | Serial Number |
|---|---|---|---|---|
| 1 | YM129930-77200 | ALTERNATOR ASSY | 1 | |
| 2 | YMXL24OG5100 | ..ROTOR ASSY | 1 | |
| 3 | YM119129-77320 | ...BALL BEARING | 1 | |
| 4 | YMXL125G1200 | ..STATOR ASSY | 1 | |
| 5 | YMXL125G1300 | ..REAR COVER ASSY | 1 | |
| 6 | YMXL125G1301 | ...COVER, REAR | 1 | |
| 7 | YMXL125G1315 | ...BRUSH REGULATOR ASSY | 1 | |
| 8 | YMXL125G1330 | ....BRUSH ASSY | 1 | |
| 9 | YMXL15073251 | ....BRUSH SET | 2 | |
| 10 | YM124080-77390 | ....REGULATOR ASSY | 1 | |
| 11 | YM124080-77520 | ....BOLT M5 | 2 | |
| 12 | YMXL1807320 | ...DIODE ASSY | 1 | |
| 13 | YM119129-77250 | ...WIRE | 1 | |
| 14 | YM119129-77260 | ....CLAMP, LEAD WIRE | 1 | |
| 15 | YMXL125GI400 | ..COVER ASSY, FRONT | 1 | |
| 16 | YM119129-77850 | ...BALL BEARING | 1 | |
| 17 | YM119129-77870 | ...RETAINER, BEARING | 1 | |
| 18 | YM119129-77930 | ...SCREW KIT | 1 | |
| 19 | YMXL125G1500 | ..PULLEY ASSY | 1 | |
| 20 | YM119129-77890 | ..BOLT, THROUGH | 4 | |
| 21 | YM119129-77900 | ..NUT ASSY, PULLEY | 1 | |
| 22 | YM26116-101202 | BOLT M10 X 120 PLATED | 1 | |
| 23 | YM26306-100002 | NUT | 1 | |
| 24 | YM119810-77340 | BOLT | 1 | |
| 25 | YM129470-77340 | SPACER | 1 | |
| 26 | YM129900-77330 | ADJUSTER, BELT | 1 | |
| 27 | YM26014-080252 | BOLT M8 X 25 | 1 | |
| 28 | YM129930-77950 | CONTROLLER | 1 | |

https://truckmanualshub.com/



## GASKET SET - 4D94LE - S/N ALL
## DIESEL

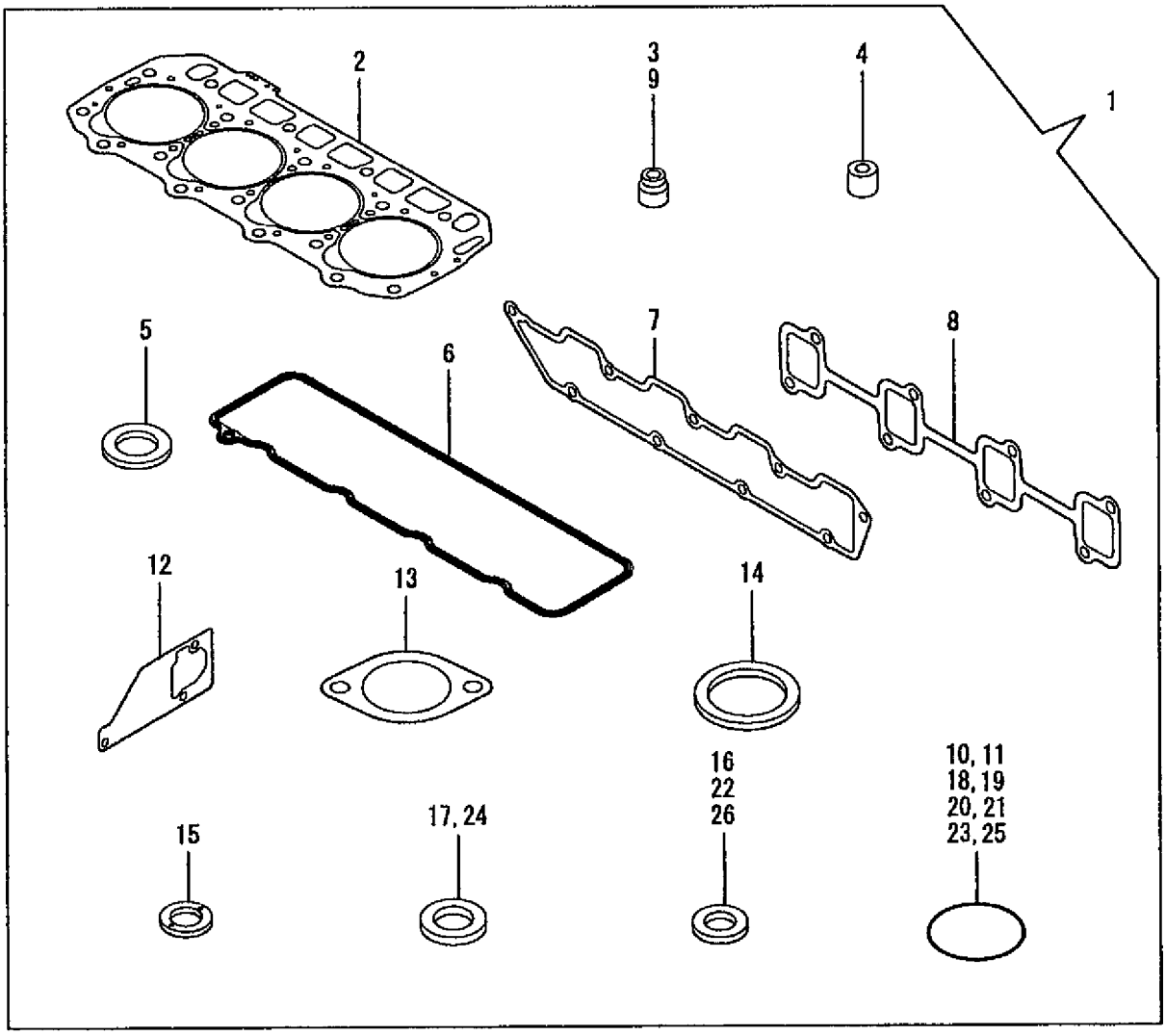


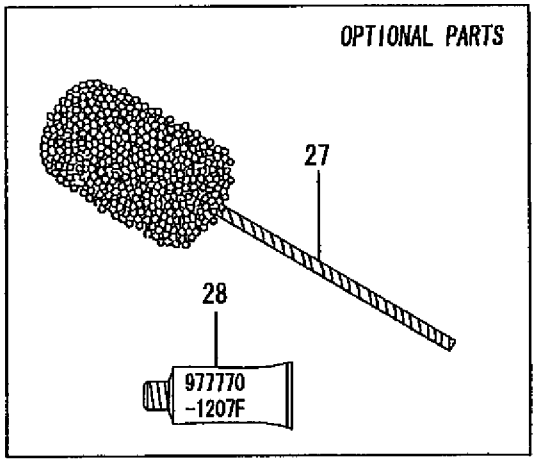

https://truckmanualshub.com/



## GASKET SET - 4D94LE - S/N ALL
## DIESEL

| Item | Part Number | Description | Qty | Serial Number |
|---|---|---|---|---|
| 1 | YM729901-92690 | GASKET SET (NON-ASBESTOS) | 1 | |
| 2 | YM129901-01350 | ..GASKET, HEAD | 1 | |
| 3 | YM124460-11340 | ..SEAL, VALVE STEM | 4 | |
| 4 | YM129901-11450 | ..PROTECTER, NOZZLE | 4 | |
| 5 | YM119600-11460 | ..GASKET, NOZZLE | 8 | |
| 6 | YM129900-11310 | ..GASKET, BONNET | 1 | |
| 7 | YM129900-12050 | ..GASKET, INTAKE MANIFOLD | 1 | |
| 8 | YM129900-13251 | ..GASKET | 1 | |
| 9 | YM121400-11340 | ..SEAL, VALVE STEM | 4 | |
| 10 | YM129900-32030 | ..O-RING P20 | 2 | |
| 11 | YM129900-32040 | ..O-RING P14 | 1 | |
| 12 | YM129900-42061 | ..GASKET, COOLING WATER PUMP | 1 | |
| 13 | YM129900-49560 | ..GASKET, (NON-ASBESTOS) | 1 | |
| 14 | YM121850-49550 | ..GASKET, THERMOSTAT | 1 | |
| 15 | YM129901-59560 | ..GASKET, RETURN | 4 | |
| 16 | YM22190-120002 | ..SEAL WASHER 12 | 7 | |
| 17 | YM124465-44950 | ..GASKET 16 | 1 | |
| 18 | YM24311-240100 | ..O-RING 1A P-10A | 1 | |
| 19 | YM24311-000120 | ..O-RING 1A P-12.0 | 3 | |
| 20 | YM24311-000320 | ..O-RING 1A P-32.0 | 2 | |
| 21 | YM24341-000500 | ..O-RING 1A S-50.0 | 1 | |
| 22 | YM22190-080002 | ..SEAL WASHER 8S | 4 | |
| 23 | YM24321-000850 | ..O-RING 1A G-85.0 | 1 | |
| 24 | YM12915049360 | ..GASKET 10 | 1 | |
| 25 | YM129900-42140 | ..O-RING P36 | 2 | |
| 26 | YM22190-160002 | ..SEAL WASHER 16S | 1 | |
| 27 | YM129400-92440 | FLEX HORN | 1 | |
| 28 | YM977770-1207F | GASKET, LIQUID | 1 | |

https://truckmanualshub.com/



## EXHAUST - K21/K25 GASOLINE / LP / DUAL-FUEL - PNEUMATIC - S/N 200001A~

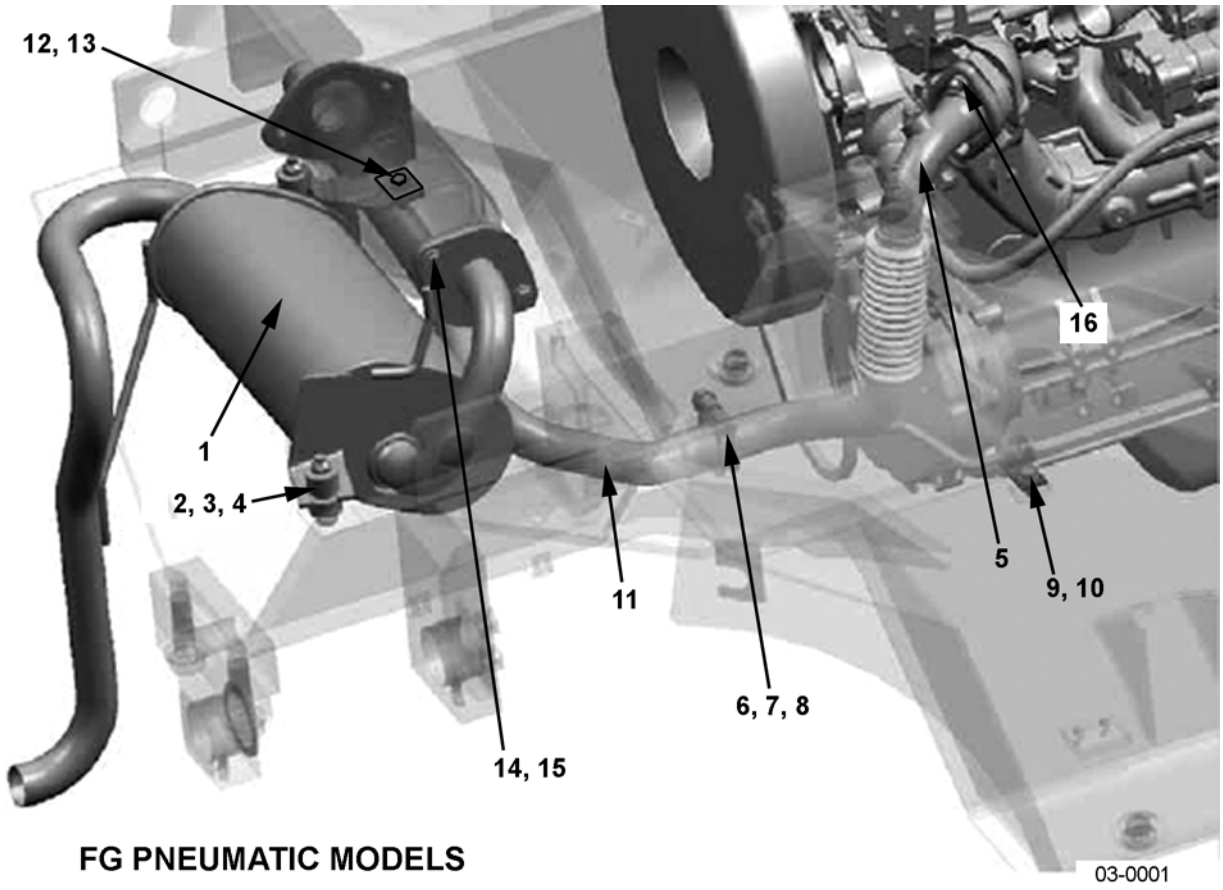


FG PNEUMATIC MODELS

https://truckmanualshub.com/



## EXHAUST - K21/K25 GASOLINE / LP / DUAL-FUEL - PNEUMATIC - S/N 200001A~

| Item | Part Number | Description | Qty | |
|---|---|---|---|---|
| 1 | 3EB-03-A7110 | MUFFLER (PNEUMATIC) | 1 | |
| | 3EB-03-A7411 | MUFFLER (UL-S, LPS) (PNEUMATIC) | 1 | |
| 2 | 3EB-03-51131 | COLLAR | 2 | |
| 3 | 01596-01009 | NUT | 2 | |
| 4 | 3EB-03-41120 | RUBBER | 2 | |
| 5 | 3EB-03-A7130 | PIPE | 1 | |
| 6 | 3EB-03-31530 | CLAMP | 1 | |
| 7 | 01643-31032 | WASHER | 4 | |
| 8 | 01582-11008 | NUT | 2 | |
| 9 | 3EB-03-51170 | BRACKET | 1 | |
| 10 | 01024-80820 | BOLT | 1 | |
| 11 | 3EB-03-A7120 | PIPE | 1 | |
| 12 | 01050-51025 | BOLT | 2 | |
| 13 | 3EB-03-A7240 | PLATE | 1 | |
| 14 | 01643-31032 | WASHER | 4 | |
| 15 | 01050-51020 | BOLT | 4 | |
| 16 | 20602-01M00 | NUT | 2 | |

https://truckmanualshub.com/



## EXHAUST - K21/K25 GASOLINE/LP/DUAL-FUEL - CUSHION - S/N 200001A~

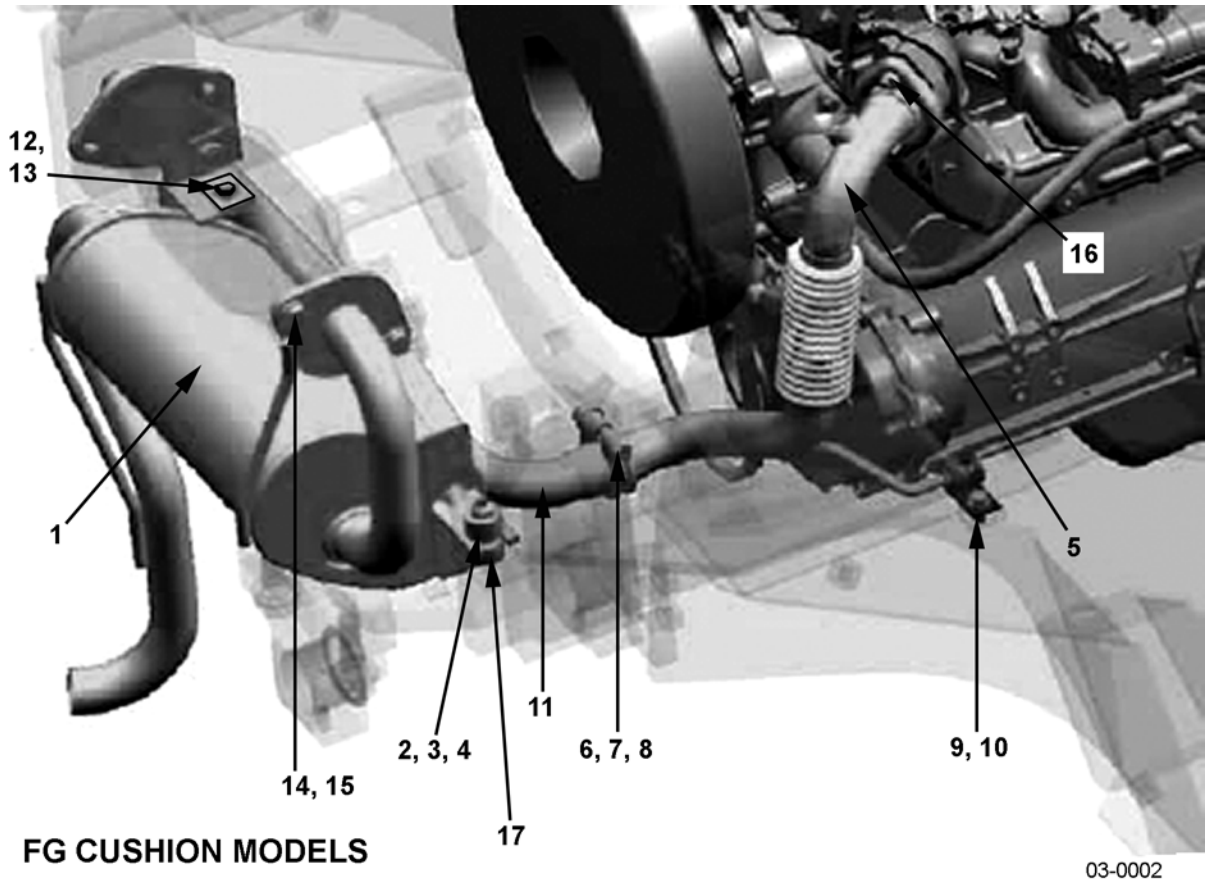


FG CUSHION MODELS

https://truckmanualshub.com/



## EXHAUST - K21/K25 GASOLINE/LP/DUAL-FUEL - CUSHION - S/N 200001A~

| Item | Part Number | Description | Qty | |
|---|---|---|---|---|
| 1 | 3EB-03-A7210 | MUFFLER (CUSHION) | 1 | |
| | 3EB-03-A7511 | MUFFLER (UL-S) (CUSHION) | 1 | |
| 2 | 3EB-03-51131 | COLLAR | 2 | |
| 3 | 01596-01009 | NUT | 2 | |
| 4 | 3EB-03-41120 | RUBBER | 2 | |
| 5 | 3EB-03-A7130 | PIPE | 1 | |
| 6 | 3EB-03-31530 | CLAMP | 1 | |
| 7 | 01643-31032 | WASHER | 4 | |
| 8 | 01582-11008 | NUT | 2 | |
| 9 | 3EB-03-51170 | BRACKET | 1 | |
| 10 | 01024-80820 | BOLT | 1 | |
| 11 | 3EB-03-A7220 | PIPE | 1 | |
| 12 | 01050-51025 | BOLT | 2 | |
| 13 | 3EB-03-A7240 | PLATE | 1 | |
| 14 | 01643-31032 | WASHER | 4 | |
| 15 | 01050-51020 | BOLT | 4 | |
| 16 | 3EB-01-34120 | NUT | 2 | |
| 17 | 3EA-51-11390 | WASHER (BETWEEN RUBBER & FRAME) | 2 | |

https://truckmanualshub.com/



## EXHAUST - 4D94LE DIESEL - S/N 200001A~

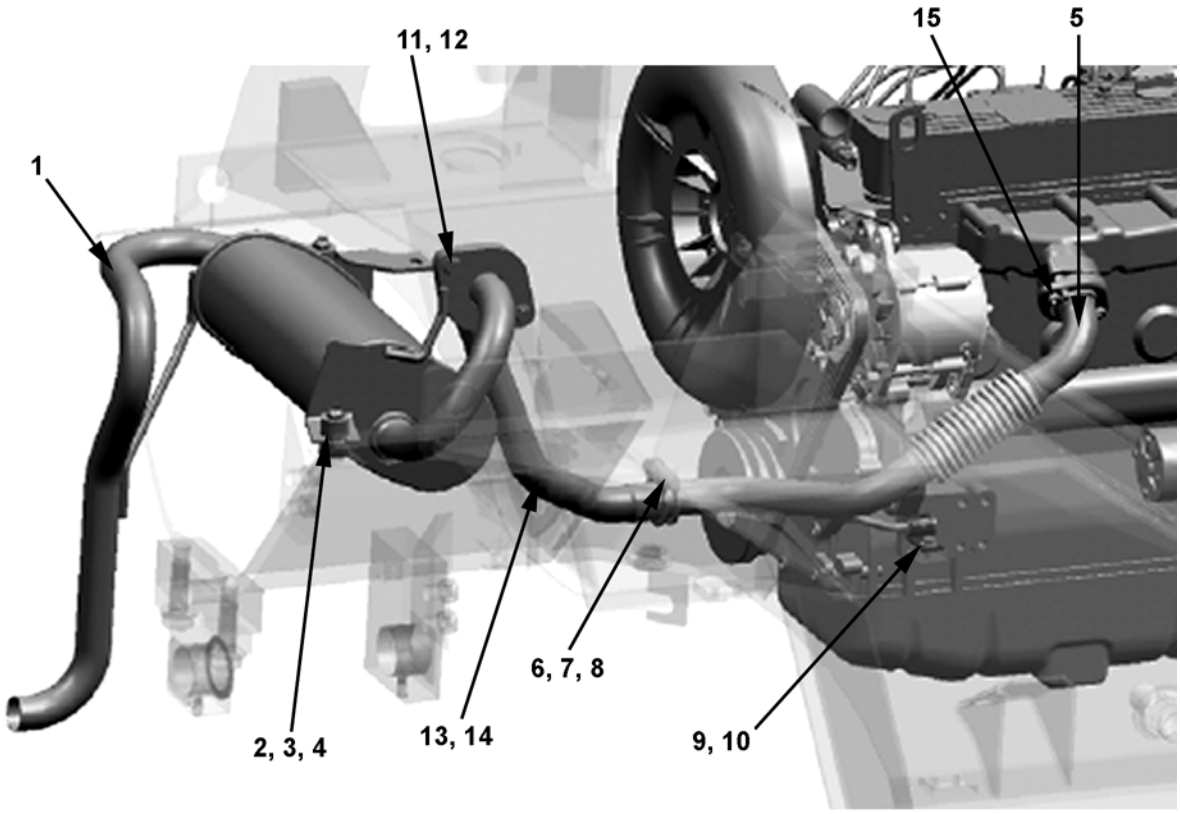


FD MODELS

03-0003

https://truckmanualshub.com/



## EXHAUST - 4D94LE DIESEL - S/N 200001A~

| Item | Part Number | Description | Qty | |
|---|---|---|---|---|
| 1 | 3EB-03-A7110 | MUFFLER (STD DIESEL) | 1 | |
| | 3EB-03-A7610 | MUFFLER (UL-S) | 1 | |
| 2 | 3EB-03-51131 | COLLAR | 2 | |
| 3 | 01596-01009 | NUT | 2 | |
| 4 | 3EB-03-41120 | RUBBER | 2 | |
| 5 | 3EB-03-A7330 | PIPE | 1 | |
| 6 | 3EB-03-31530 | CLAMP | 1 | |
| 7 | 01643-31032 | WASHER | 1 | |
| 8 | 01582-11008 | NUT | 4 | |
| 9 | 3EB-03-51170 | BRACKET | 1 | |
| 10 | 01024-80820 | BOLT | 1 | |
| 11 | 01643-31032 | WASHER | 4 | |
| 12 | 01050-51035 | BOLT | 2 | |
| 13 | 3EB-03-A7321 | PIPE (ALL EXCEPT 3.2T, 3.5T) | 1 | |
| | 3EB-03-A7810 | PIPE (3.2T, 3.5T ONLY) | 1 | |
| 14 | 20692-65J00 | EXHAUST GASKET | 2 | |
| 15 | 26366-080002 | NUT (COMES W/ ENGINE ASSY) | 2 | |

https://truckmanualshub.com/



## COOLING SYSTEM - RADIATOR - K21/K25 GASOLINE / LP / DUAL-FUEL - S/N 200001A~

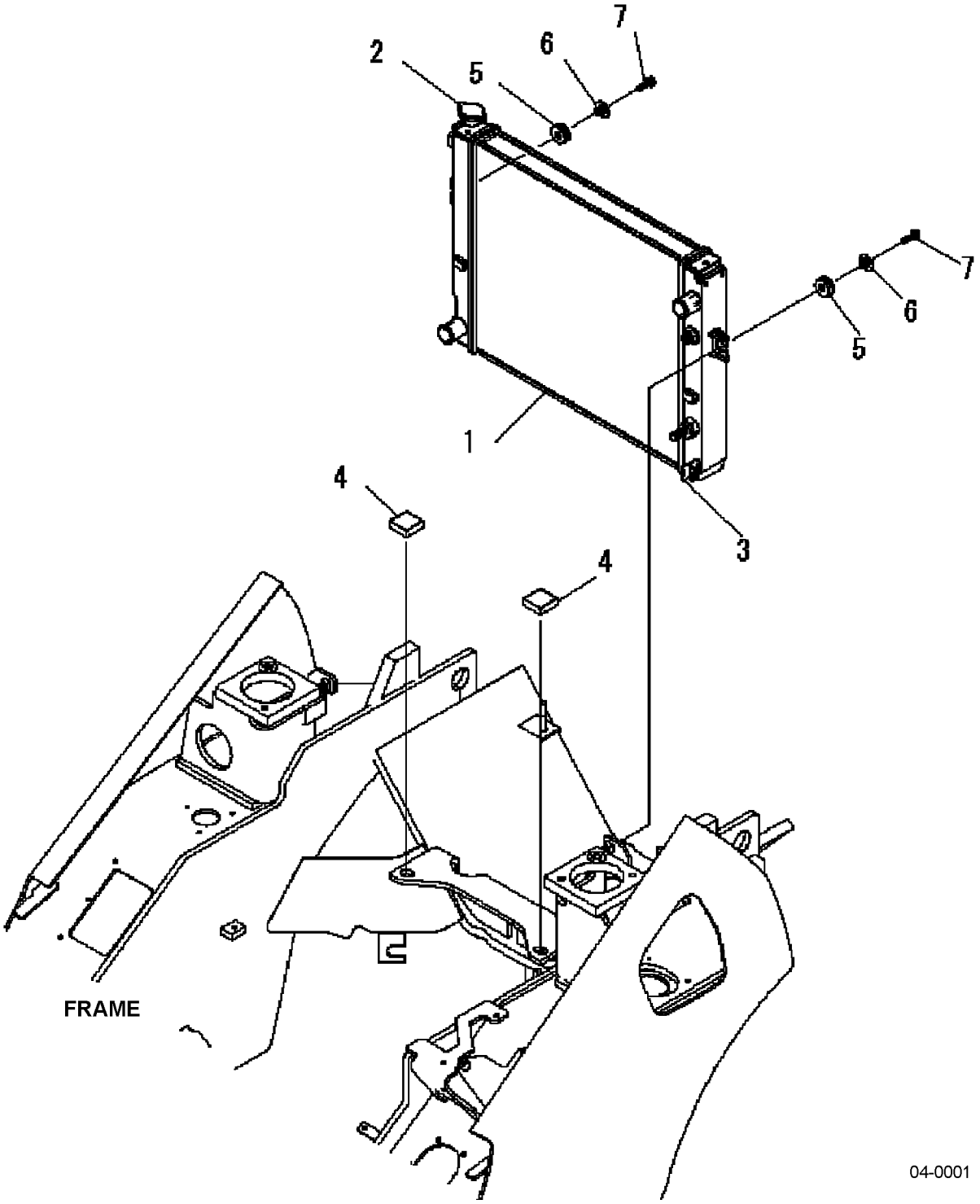

https://truckmanualshub.com/



## COOLING SYSTEM - RADIATOR - K21/K25 GASOLINE / LP / DUAL-FUEL - S/N 200001A~

| Item | Part Number | Description | Qty | |
|---|---|---|---|---|
| 1 | 3EA-04-51110 | RADIATOR (STD) (2.0T, 2.5T K21 FG) . . . . . | 1 | |
| | 3EB-04-A7210 | RADIATOR (STD) (2.8T, 3.0T, 3.2T, 3.5T K25 FG) | 1 | |
| | 3EB-04-A7110 | RADIATOR, COTTON CORE (2.0T, 2.5T K21 FG) | 1 | |
| | 3EB-04-A7120 | RADIATOR, COTTON CORE (K21 UL-S) (MUST USE W/ FAN BELT P/N 02117-22023) . . . . . | 1 | |
| | 3EB-04-A7160 | RADIATOR, COTTON CORE (ALL K25 FG) (USE W/ FAN BELT P/N 02117-20021). . . . . | 1 | |
| | 3EB-04-A7180 | RADIATOR, COTTON CORE (K25 UL-S) (MUST USE W/ FAN BELT P/N 02117-22023) . . . . . | 1 | |
| 2 | 3EB-04-21130 | .CAP . . . . . | 1 | |
| 3 | 3EB-04-31140 | .COCK ASSY . . . . . | 1 | |
| 4 | 3EB-04-41160 | RUBBER. . . . . | 2 | |
| 5 | 3EB-04-31170 | RUBBER. . . . . | 2 | |
| 6 | 3EB-04-31180 | COLLAR . . . . . | 2 | |
| 7 | 01024-80830 | BOLT. . . . . | 2 | |

https://truckmanualshub.com/



## COOLING SYSTEM - RADIATOR - 4D94E DIESEL - S/N 200001A~

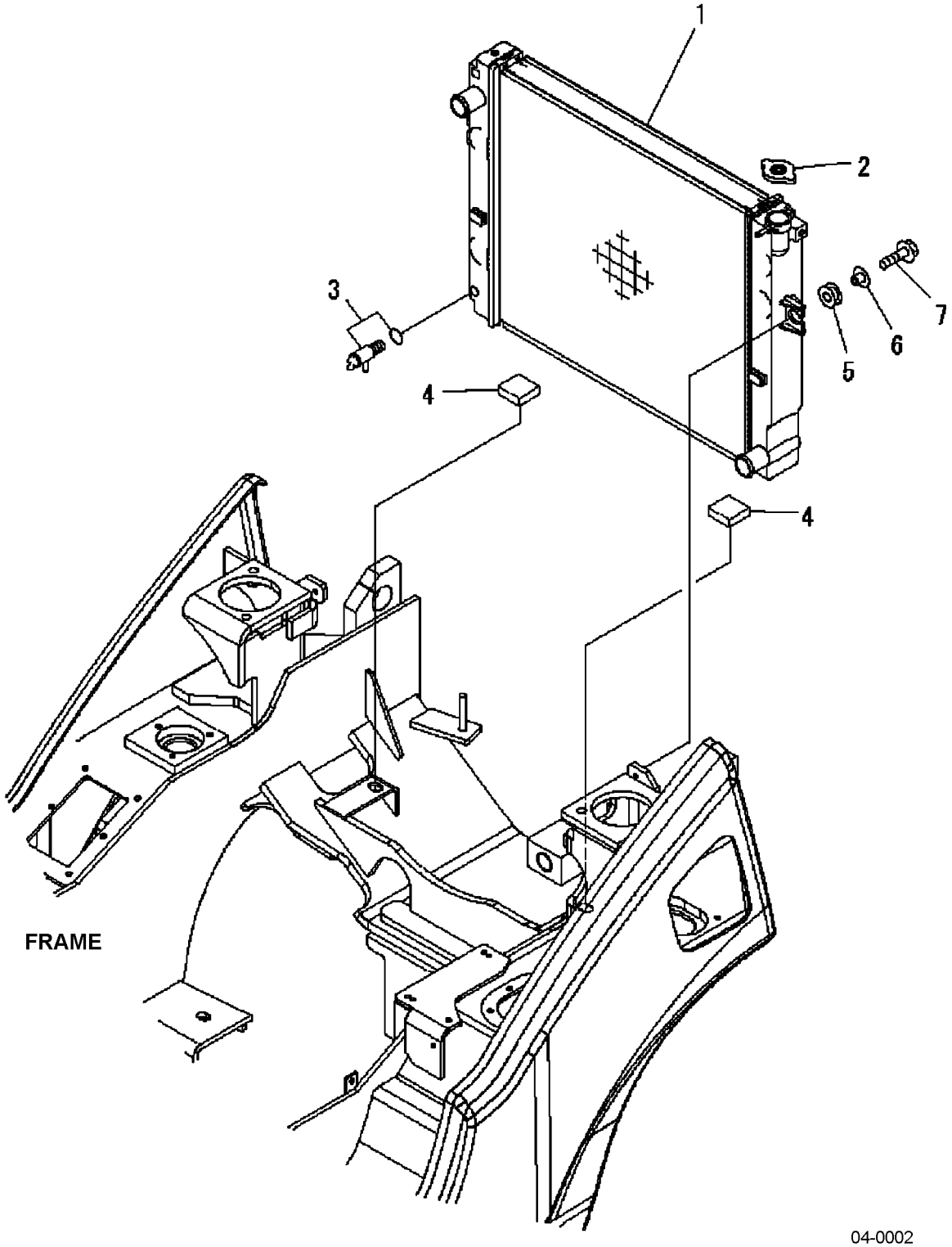

https://truckmanualshub.com/



## COOLING SYSTEM - RADIATOR - 4D94E DIESEL - S/N 200001A~

| Item | Part Number | Description | Qty | |
|---|---|---|---|---|
| 1 | 3EB-04-52610 | RADIATOR (STD) (2.0T, 2.5T, 2.8T, 3.0T FD) . . | 1 | |
| | 3EB-04-53110 | RADIATOR (STD) (3.2T, 3.5T FD) . . . . . | 1 | |
| | 3EB-04-A7310 | RADIATOR, COTTON CORE (2.0T, 2.5T, 2.8T, 3.0T FD) | 1 | |
| | 3EB-04-A7360 | RADIATOR, COTTON CORE (3.2T, 3.5T FD) . . | 1 | |
| 2 | 3EB-04-21130 | .CAP . . . . . | 1 | |
| 3 | 3EB-04-31140 | .COCK ASSY . . . . . | 1 | |
| 4 | 3EB-04-41160 | RUBBER. . . . . | 2 | |
| 5 | 3EB-04-31170 | RUBBER. . . . . | 2 | |
| 6 | 3EB-04-31180 | COLLAR . . . . . | 2 | |
| 7 | 01024-80830 | BOLT. . . . . | 2 | |

https://truckmanualshub.com/



## COOLING SYSTEM - SHROUD & HOSES - FG MODELS - S/N 200001A~

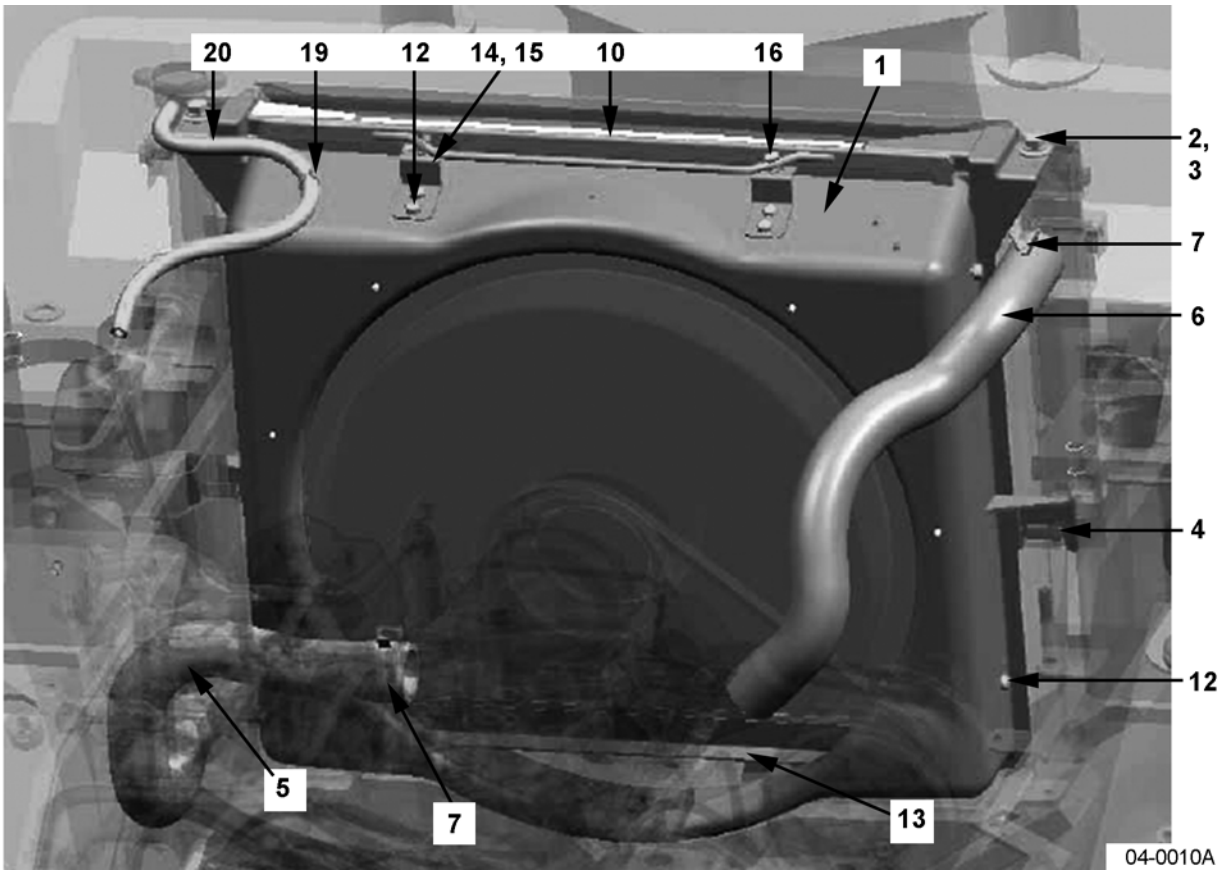


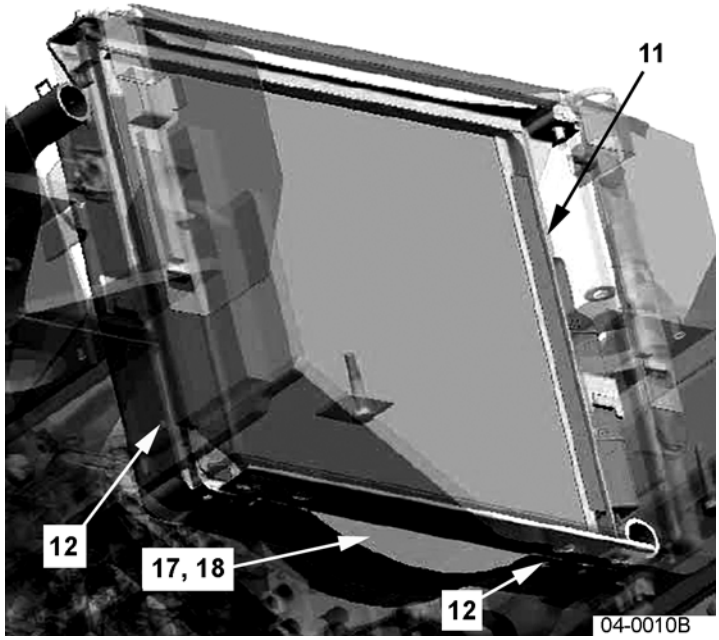

https://truckmanualshub.com/



## COOLING SYSTEM - SHROUD & HOSES - FG MODELS - S/N 200001A~

| Item | Part Number | Description | Qty | |
|---|---|---|---|---|
| 1 | 3EB-04-A7542 | SHROUD | 1 | |
| | 3EB-04-A7542 | SHROUD (LATIN AMERICAN DUAL-FUEL 2.0>3.0T) (EXPORT) | 1 | |
| 2 | 01024-80820 | BOLT | 2 | |
| 3 | 34A-42-41130 | WASHER | 2 | |
| 4 | 3EB-04-42140 | RUBBER | 2 | |
| 5 | 3EB-04-A7511 | HOSE, RADIATOR - LOWER | 1 | |
| 6 | 3EB-04-A7521 | HOSE, RADIATOR - UPPER | 1 | |
| | 3EB-04-A7261 | HOSE, UPPER (LATIN AMERICAN - DUAL-FUEL 2.0>3.0T) (EXPORT) | 1 | |
| 7 | 37B-1FH-A020 | CLAMP | 2 | |
| 8 | NOT USED | | | |
| 9 | NOT USED | | | |
| 10 | 3EB-04-56620 | SCREEN | 1 | |
| 11 | 3EB-04-46620 | BRACKET | 2 | |
| 12 | 01023-10616 | SCREW | 12 | |
| 13 | 3EB-04-56630 | BRACKET | 1 | |
| 14 | 3EB-04-56640 | BRACKET | 2 | |
| 15 | 3EB-04-56650 | PLATE | 2 | |
| 16 | 3EC-04-34130 | HOLDER | 2 | |
| 17 | 3EB-04-A7580 | RUBBER | 1 | |
| 18 | 3EB-04-A7590 | PLATE | 1 | |
| 19 | 3EB-04-A7630 | CLIP | 1 | |
| 20 | 37B-1AC-A170 | HOSE - OVERFLOW | 1 | |
| N/S | 3EB-04-A7231 | RING, COOLING (FOR SHROUD) (LATIN AMERICAN 2.0>3.0T) (EXPORT) | 1 | |
| N/S | 3EB-04-51180 | WASHER (FOR RING) | 2 | |
| N/S | 01010-B0616 | BOLT (FOR RING) | 2 | |
| N/S | 01643-30623 | WASHER (FOR RING) | 2 | |
| N/S | 3EB-04-56520 | CLIP (FOR RING) | 2 | |
| N/S | 3EB-04-56530 | CLIP (FOR RING) | 2 | |

https://truckmanualshub.com/



## COOLING SYSTEM - SHROUD & HOSES - FD MODELS - S/N 200001A~
## (ALSO SEE FIG. 04-0012)

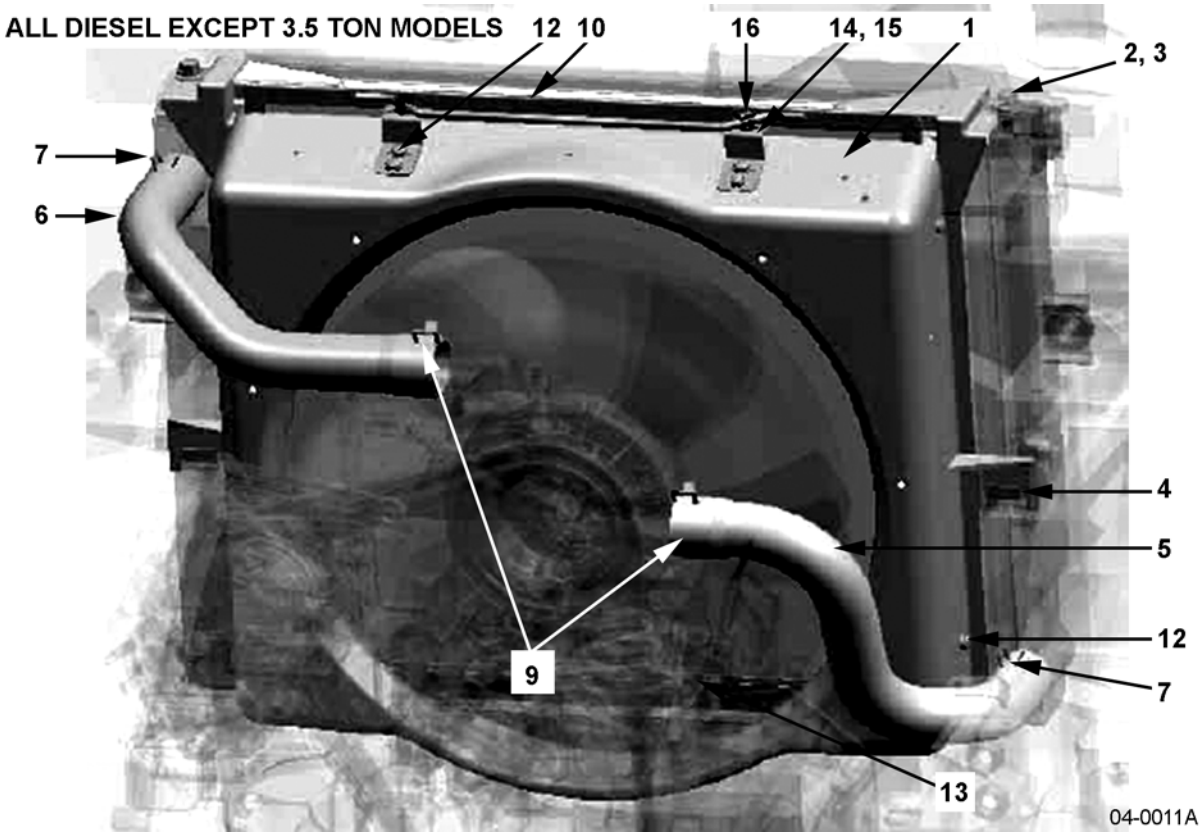


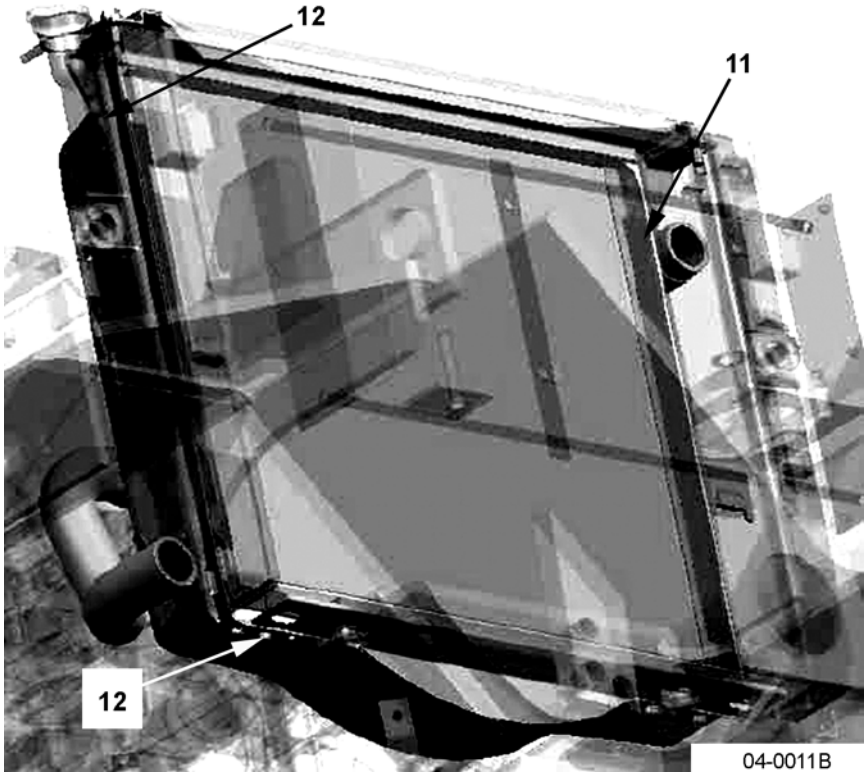

https://truckmanualshub.com/



## COOLING SYSTEM - SHROUD & HOSES - FD MODELS - S/N 200001A~
## (ALSO SEE FIG. 04-0012)

| Item | Part Number | Description | Qty | |
|---|---|---|---|---|
| 1 | 3EB-04-A7491 | SHROUD (ALL EXCEPT 3.5T) | 1 | |
| | 3EB-52-A7510 | SHROUD (3.5T) | 1 | |
| 2 | 01024-80820 | BOLT | 2 | |
| 3 | 34A-42-41130 | WASHER | 2 | |
| 4 | 3EB-04-42140 | RUBBER | 2 | |
| 5 | 3EB-04-A7561 | HOSE, RADIATOR - LOWER (ALL EXCEPT 3.5T) | 1 | |
| | 3EB-04-A7471 | HOSE, RADIATOR - LOWER (3.5T) | 1 | |
| 6 | 3EB-04-A7571 | HOSE, RADIATOR - UPPER (ALL EXCEPT 3.5T) | 1 | |
| | 3EB-04-A7481 | HOSE, RADIATOR - UPPER (3.5T) | 1 | |
| 7 | 37B-1FH-3010 | CLAMP (ALL EXCEPT 3.5T) | 2 | |
| | 37B-1FH-3010 | CLAMP (3.5T) | 1 | |
| 8 | 07280-05026 | CLAMP (3.5T) | 1 | |
| 9 | 37B-1FH-A020 | CLAMP (ALL EXCEPT 3.5T) | 2 | |
| 10 | 3EB-04-56620 | SCREEN (ALL EXCEPT 3.5T) | 1 | |
| | 3EB-04-56770 | SCREEN (3.5T) | 1 | |
| 11 | 3EB-04-46620 | BRACKET | 2 | |
| 12 | 01023-10616 | SCREW | 12 | |
| 13 | 3EB-04-56630 | BRACKET | 1 | |
| 14 | 3EB-04-56640 | BRACKET | 2 | |
| 15 | 3EB-04-56650 | PLATE | 2 | |
| 16 | 3EC-04-34130 | HOLDER | 2 | |
| 17 | 3EB-04-A7580 | RUBBER | 1 | |
| 18 | 3EB-04-A7590 | PLATE | 1 | |
| 19 | 3EB-04-A7630 | CLIP | 1 | |
| 20 | 37B-1AC-A170 | HOSE - OVERFLOW (ALL EXCEPT 3.5T) | 1 | |
| | 37B-1AC-A180 | HOSE - OVERFLOW (3.5T) | 1 | |
| N/S | 3EB-04-A7240 | RING, COOLING (FOR SHROUD) | 1 | |
| N/S | 3EB-04-51180 | WASHER (FOR RING) | 2 | |
| N/S | 01010-B0616 | BOLT (FOR RING) | 2 | |
| N/S | 01643-30623 | WASHER | 2 | |

https://truckmanualshub.com/



## COOLING SYSTEM - SHROUD & HOSES - FD MODELS - S/N 200001A~ (ALSO SEE FIG. 04-0011)

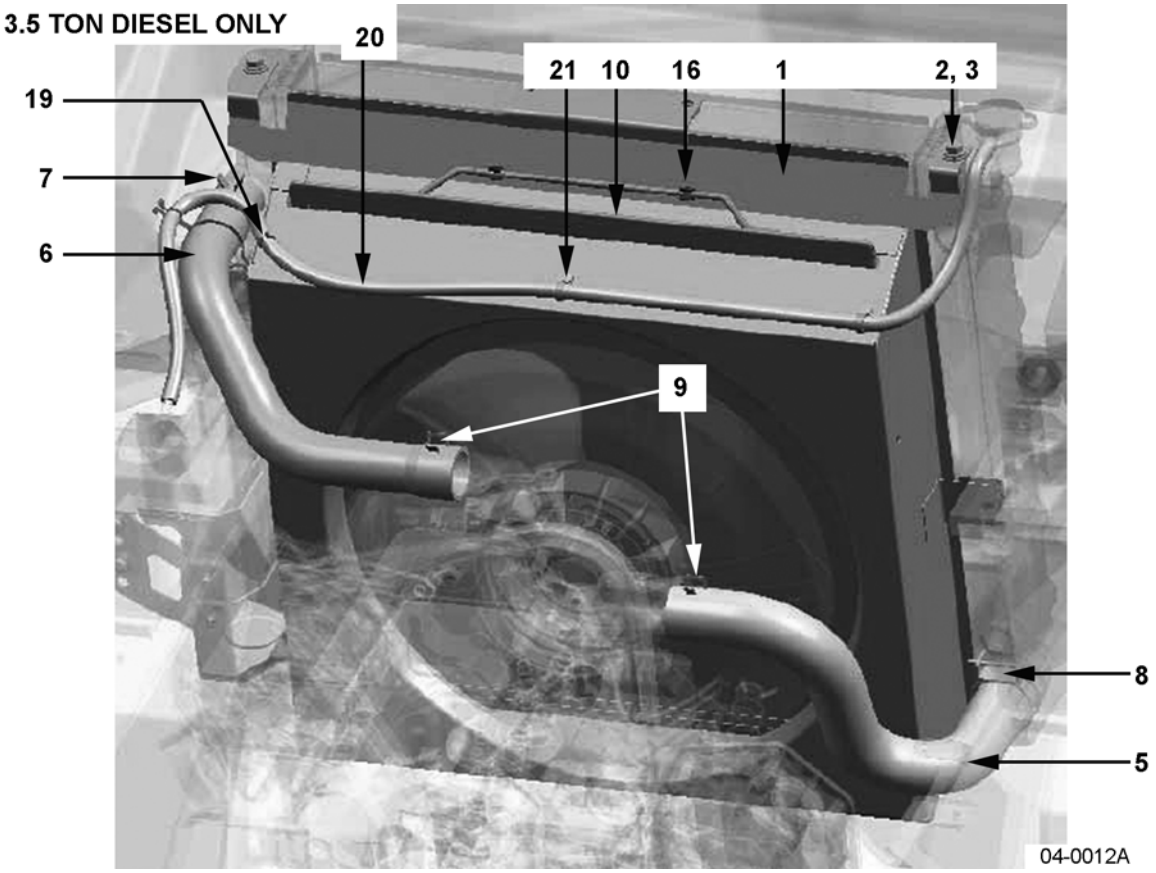


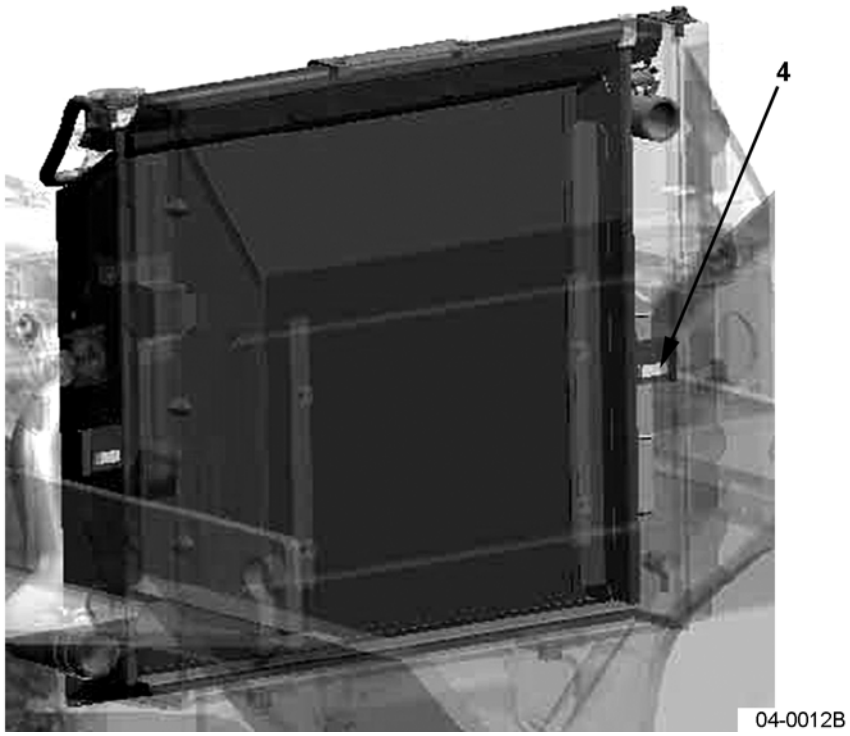

https://truckmanualshub.com/



## COOLING SYSTEM - SHROUD & HOSES - FD MODELS - S/N 200001A~ (ALSO SEE FIG. 04-0011)

| Item | Part Number | Description | Qty | |
|---|---|---|---|---|
| 1 | 3EB-04-A7491 | SHROUD (ALL EXCEPT 3.5T) | 1 | |
| | 3EB-52-A7510 | SHROUD (3.5T) | 1 | |
| 2 | 01024-80820 | BOLT | 2 | |
| 3 | 34A-42-41130 | WASHER | 2 | |
| 4 | 3EB-04-42140 | RUBBER | 2 | |
| 5 | 3EB-04-A7561 | HOSE, RADIATOR - LOWER (ALL EXCEPT 3.5T) | 1 | |
| | 3EB-04-A7471 | HOSE, RADIATOR - LOWER (3.5T) | 1 | |
| 6 | 3EB-04-A7571 | HOSE, RADIATOR - UPPER (ALL EXCEPT 3.5T) | 1 | |
| | 3EB-04-A7481 | HOSE, RADIATOR - UPPER (3.5T) | 1 | |
| 7 | 37B-1FH-3010 | CLAMP (ALL EXCEPT 3.5T) | 2 | |
| | 37B-1FH-3010 | CLAMP (3.5T) | 1 | |
| 8 | 07280-05026 | CLAMP (3.5T) | 1 | |
| 9 | 37B-1FH-3020 | CLAMP (ALL EXCEPT 3.5T) | 2 | |
| 10 | 3EB-04-56620 | SCREEN (ALL EXCEPT 3.5T) | 1 | |
| | 3EB-04-56770 | SCREEN (3.5T) | 1 | |
| 11 | 3EB-04-46620 | BRACKET | 2 | |
| 12 | 01023-10616 | SCREW | 12 | |
| 13 | 3EB-04-56630 | BRACKET | 1 | |
| 14 | 3EB-04-56640 | BRACKET | 2 | |
| 15 | 3EB-04-56650 | PLATE | 2 | |
| 16 | 3EC-04-34130 | HOLDER | 2 | |
| 17 | 3EB-04-A7580 | RUBBER | 1 | |
| 18 | 3EB-04-A7590 | PLATE | 1 | |
| 19 | 3EB-04-A7630 | CLIP | 1 | |
| 20 | 37B-1AC-A170 | HOSE - OVERFLOW (ALL EXCEPT 3.5T) | 1 | |
| | 37B-1AC-A180 | HOSE - OVERFLOW (3.5T) | 1 | |
| 21 | 3EB-04-25140 | CLAMP (3.5T) | 2 | |

https://truckmanualshub.com/



# COOLING SYSTEM - RADIATOR BACK COVER - ALL ENGINES - S/N 200001A~

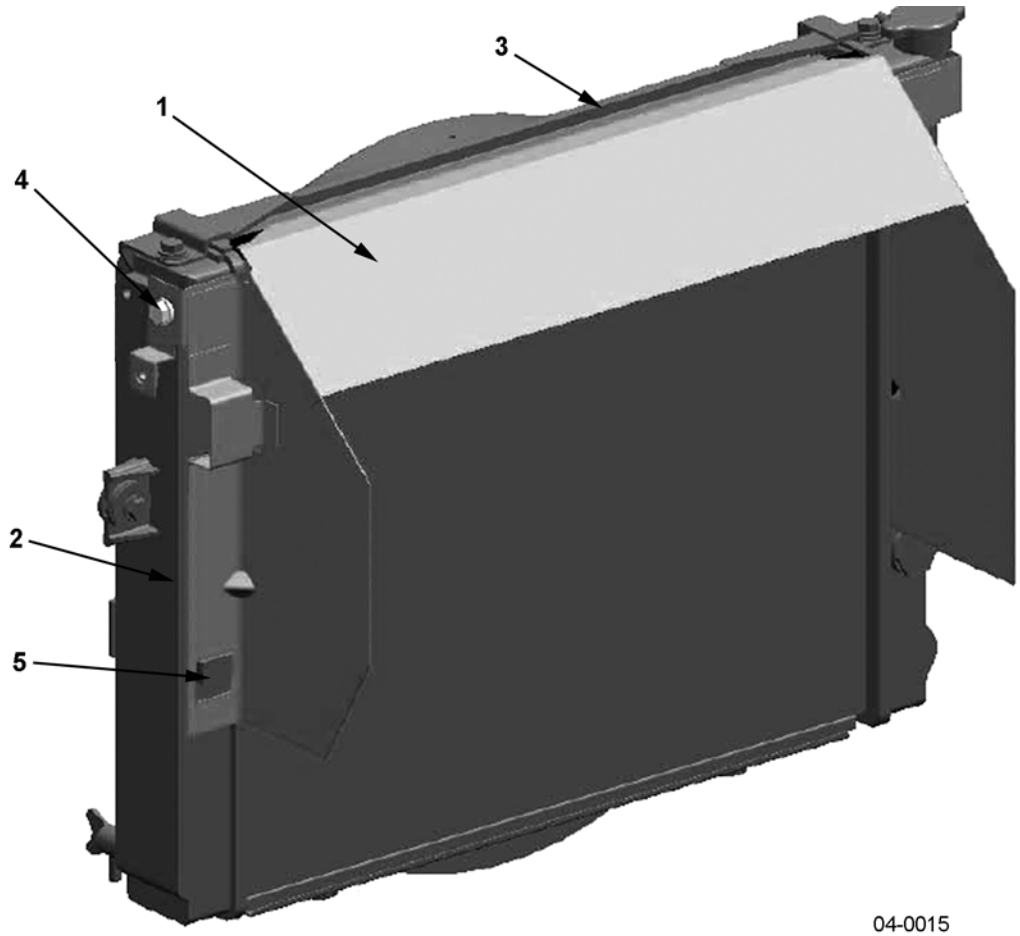

https://truckmanualshub.com/



## COOLING SYSTEM - RADIATOR BACK COVER - ALL ENGINES - S/N 200001A~

| Item | Part Number | Description | Qty | |
|---|---|---|---|---|
| 1 | 3EB-04-A7410 | BACK COVER ASSY, RADIATOR (FG) . . . . . | 1 | |
| | 3EB-04-52910 | BACK COVER ASSY, RADIATOR (FD) . . . . . | 1 | |
| 2 | 3EB-04-A7420 | SPONGE (FG) . . . . . | 2 | |
| | 3EB-04-51420 | SPONGE (FD) . . . . . | 2 | |
| 3 | 3EB-04-51430 | SPONGE, TRANSVERSE (ALL) . . . . . | 1 | |
| 4 | 01024-80816 | BOLT (COVER-TO-RADIATOR) . . . . . | 2 | |
| 5 | 3EB-04-32140 | RUBBER (COVER SIDES) . . . . . | 2 | |

https://truckmanualshub.com/



# COOLING SYSTEM - RESERVE TANK - K21/K25 ENGINES - S/N 200001A~

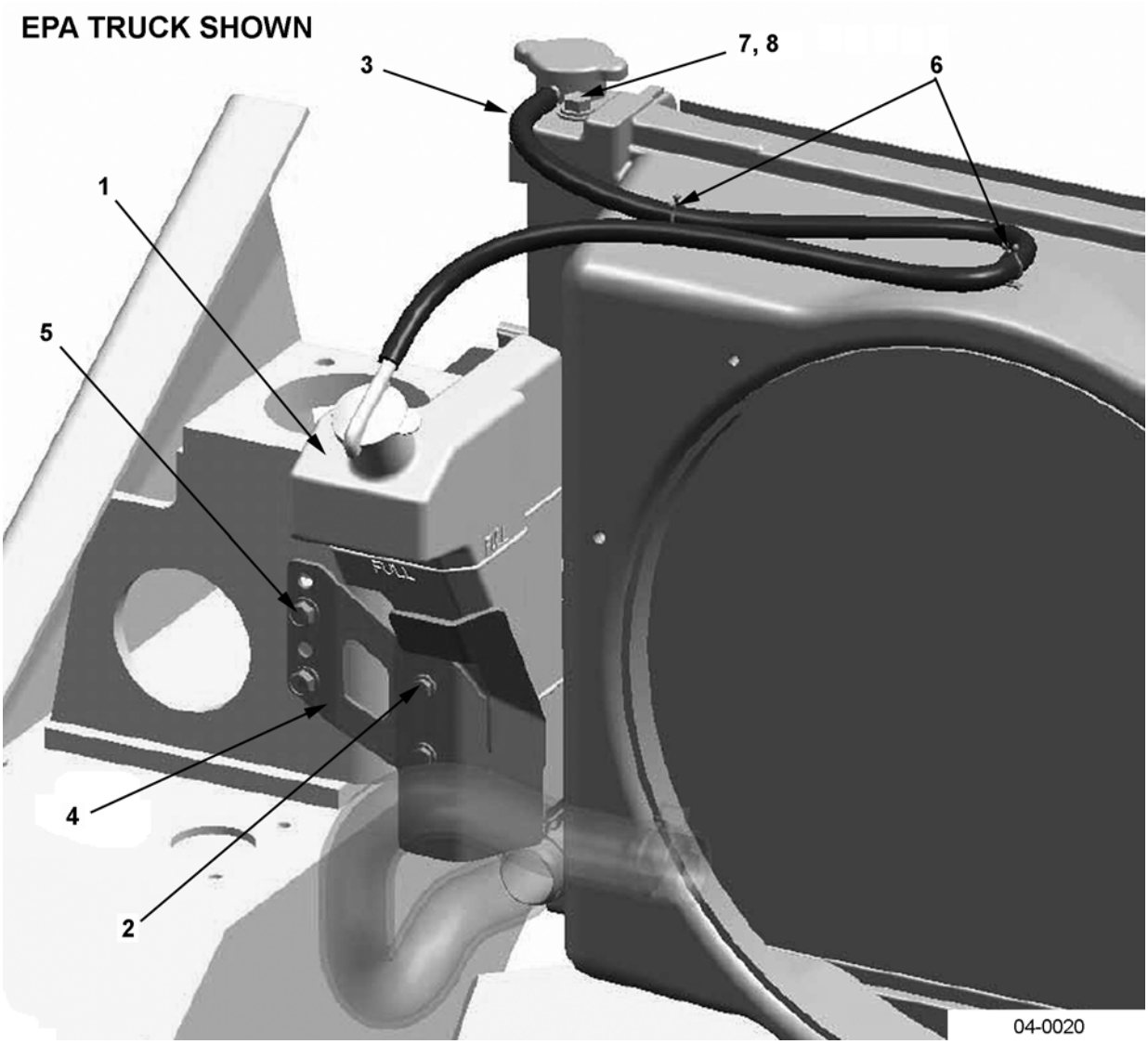

https://truckmanualshub.com/



## COOLING SYSTEM - RESERVE TANK - K21/K25 ENGINES - S/N 200001A~

| Item | Part Number | Description | Qty | |
|---|---|---|---|---|
| 1 | 3EB-04-A7640 | RESERVE TANK ASSY (FG) . . . . . | 1 | |
| 2 | 01024-80612 | BOLT (RADIATOR SIDE OF BRACKET) . . . . . | 2 | |
| 3 | 37B-1AC-A150 | HOSE, OVERFLOW (EPA) . . . . . | 1 | |
| | 37B-1AC-A110 | HOSE, OVERFLOW (FG EXPORT 3.2T, 3.5T) . | 1 | |
| 4 | 3EB-04-A7621 | BRACKET . . . . . | 1 | |
| 5 | 01435-00812 | BOLT (BRACKET-TO-FRAME)(EXPORT 3.2T, 3.5T USES 3 BOLTS) | 2 | |
| 6 | 3EB-04-A7630 | CLIP (FOR OVERFLOW HOSE) (EPA ONLY) . . | 2 | |
| 7 | 01024-80820 | BOLT . . . . . | 2 | |
| 8 | 34A-42-41130 | WASHER. . . . . | 2 | |
| N/S | 04434-51308 | CLIP (AT RADIATOR END OF OVERFLOW HOSE) (EXPORT 3.2T, 3.5T MODELS ONLY) . . . . . | 1 | |

https://truckmanualshub.com/



## COOLING SYSTEM - RESERVE TANK - 4D94E ENGINES - S/N 200001A~

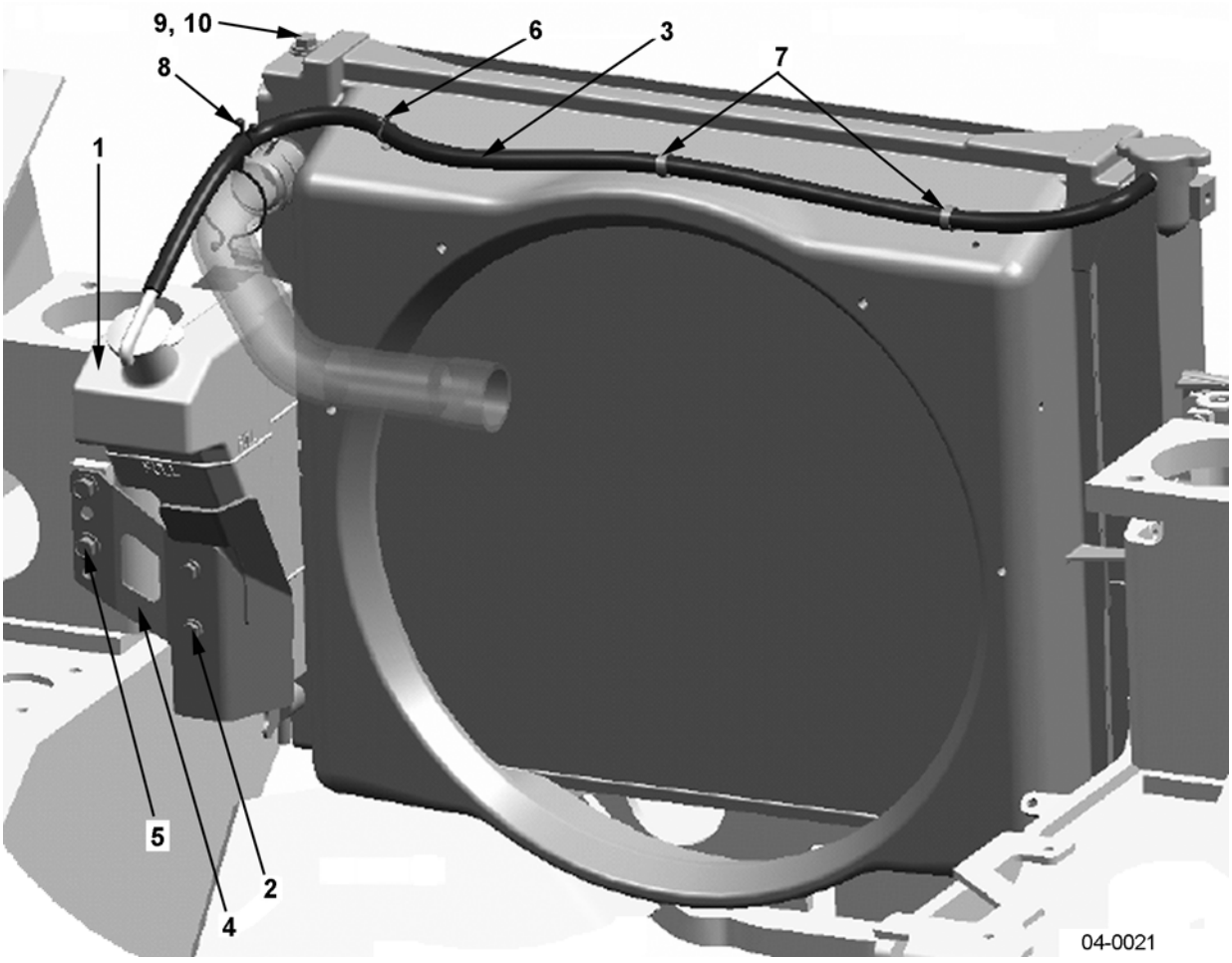

https://truckmanualshub.com/



## COOLING SYSTEM - RESERVE TANK - 4D94E ENGINES - S/N 200001A~

| Item | Part Number | Description | Qty | |
|---|---|---|---|---|
| 1 | 3EB-04-A7640 | RESERVE TANK ASSY(FD) | 1 | |
| 2 | 01024-80612 | BOLT (RADIATOR SIDE OF BRACKET) | 2 | |
| 3 | 37B-1AC-A150 | HOSE, OVERFLOW (EXC. 3.2T, 3.5T) | 1 | |
| | 37B-1AC-A160 | HOSE, OVERFLOW (3.2T, 3.5T) | 1 | |
| 4 | 3EB-04-A7621 | BRACKET | 1 | |
| 5 | 01435-00812 | BOLT (BRACKET-TO-FRAME) | 2 | |
| 6 | 3EB-04-A7630 | CLIP (FOR OVERFLOW HOSE) | 1 | |
| 7 | 3EB-04-25140 | CLAMP (FOR HOSE) | 2 | |
| 8 | 37B-1EP-4020 | LOCK (FOR HOSE) | 1 | |
| 9 | 01024-80820 | BOLT | 2 | |
| 10 | 34A-42-41130 | WASHER | 2 | |

https://truckmanualshub.com/



## COOLING SYSTEM - TORCON COOLER - K21 ENGINES - S/N 200001A~

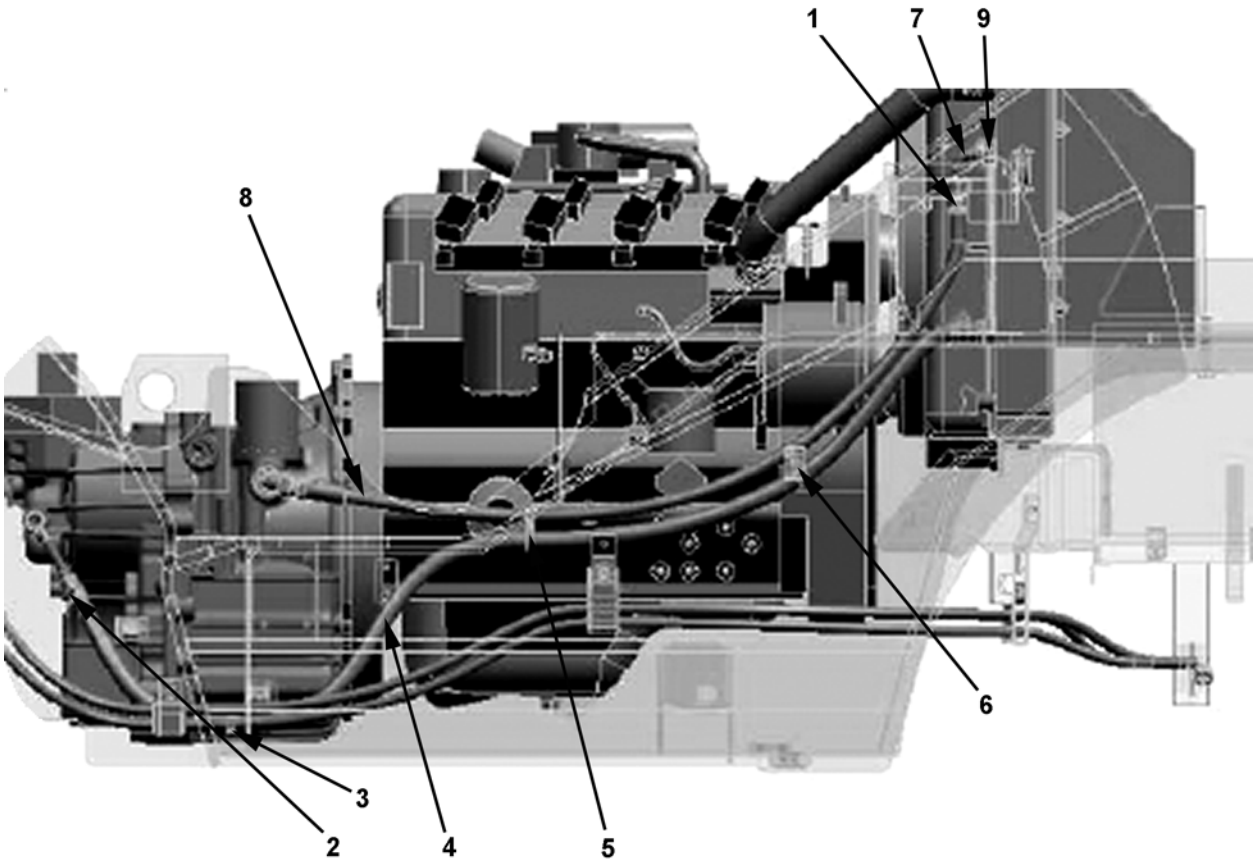


K21 ENGINES

04-0050

https://truckmanualshub.com/



## COOLING SYSTEM - TORCON COOLER - K21 ENGINES - S/N 200001A~

| Item | Part Number | Description | Qty | |
|---|---|---|---|---|
| 1 | 02896-21009 | O-RING | 1 | |
| 2 | 07281-00229 | CLAMP | 2 | |
| 3 | 37B-1PC-5060 | CLAMP (CLAMP HOSE-TO-P/S HOSE) | 1 | |
| 4 | 3EB-04-A7810 | HOSE | 1 | |
| 5 | 3EB-04-34550 | CLAMP (DOUBLE) | 1 | |
| 6 | 3EB-04-44190 | CLAMP (DOUBLE) | 1 | |
| 7 | 3EB-04-48110 | PIPE ASSY | 1 | |
| 8 | 3EB-04-A7820 | HOSE | 1 | |
| 9 | 3EB-04-48140 | O-RING | 1 | |

https://truckmanualshub.com/



# COOLING SYSTEM - TORCON COOLER - K25 ENGINES / GAS - S/N 200001A~

## K25 ENGINES

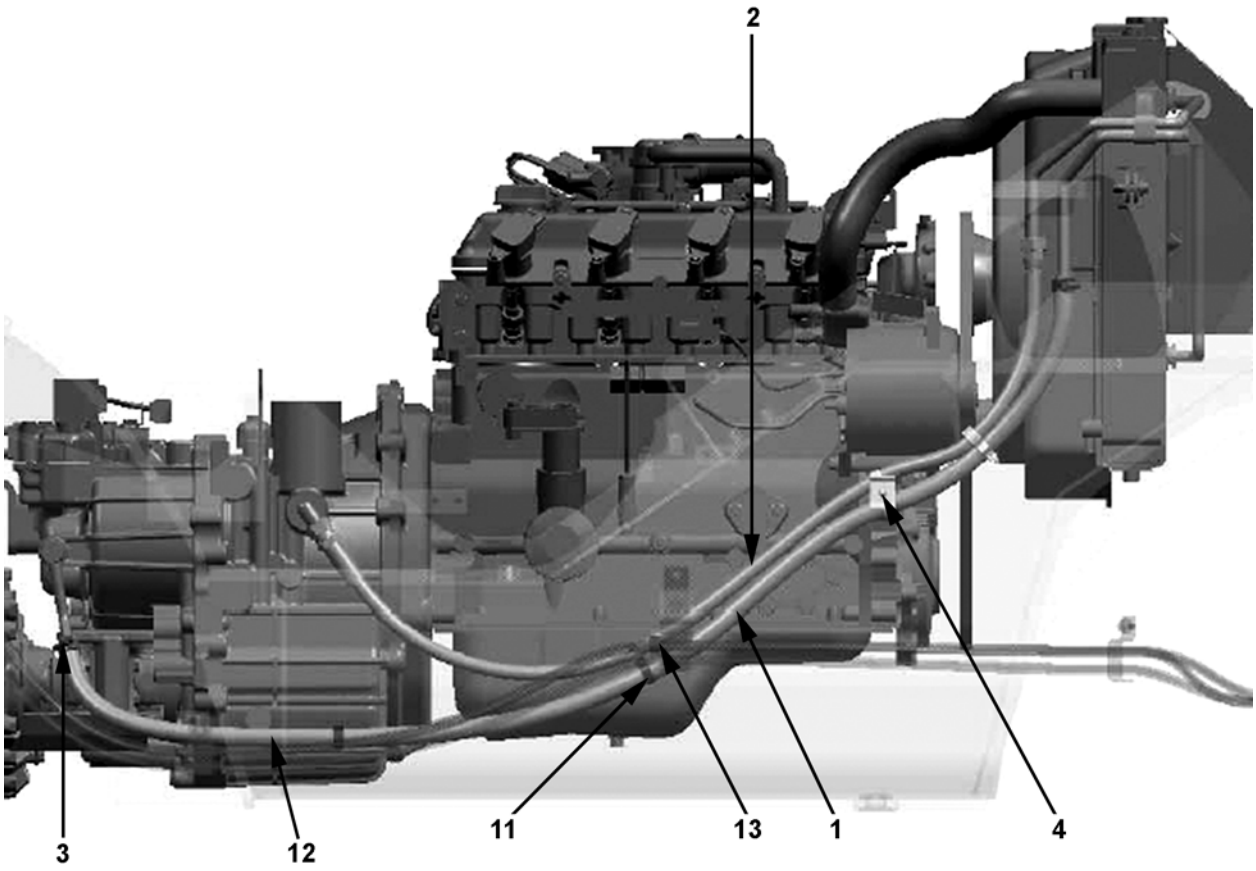


04-0051

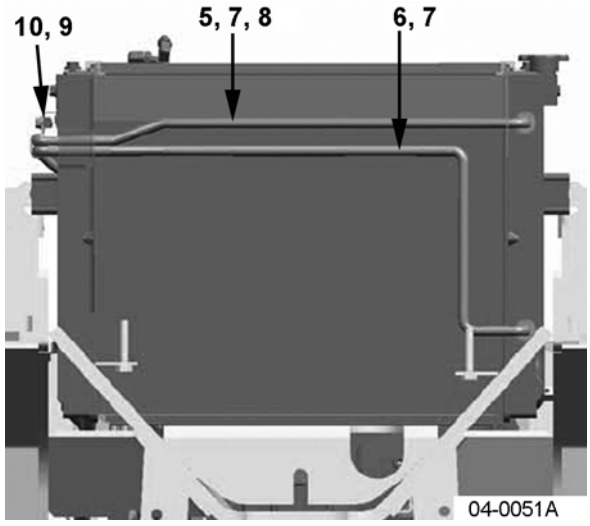


04-0051A




TOP VIEW

04-0051B

https://truckmanualshub.com/



## COOLING SYSTEM - TORCON COOLER - K25 ENGINES / GAS - S/N 200001A~

| Item | Part Number | Description | Qty | |
|---|---|---|---|---|
| 1 | 3EB-04-A7810 | HOSE | 1 | |
| 2 | 3EB-04-A7820 | HOSE | 1 | |
| 3 | 07281-00229 | CLAMP | 2 | |
| 4 | 3EB-04-44190 | CLAMP (DOUBLE) | 3 | |
| 5 | 3EB-04-A7910 | PIPE ASSY | 1 | |
| 6 | 3EB-04-A7920 | PIPE ASSY | 1 | |
| 7 | 3EB-04-48140 | O-RING | 2 | |
| 8 | 02896-21009 | O-RING | 1 | |
| 9 | 04435-51308 | CLIP | 1 | |
| 10 | 01435-00814 | BOLT | 1 | |
| 11 | 3EB-04-34550 | CLAMP | 1 | |
| 12 | 37B-1PC-5060 | CLAMP (ITEM # 1 HOSE-TO-P/S HOSE) | 1 | |
| 13 | 3EB-66-41461 | CLAMP | 1 | |

https://truckmanualshub.com/



## COOLING SYSTEM - TORCON COOLER - 4D94LE ENGINES - S/N 200001A~ ALL FD EXCEPT 3.2T & 3.5T

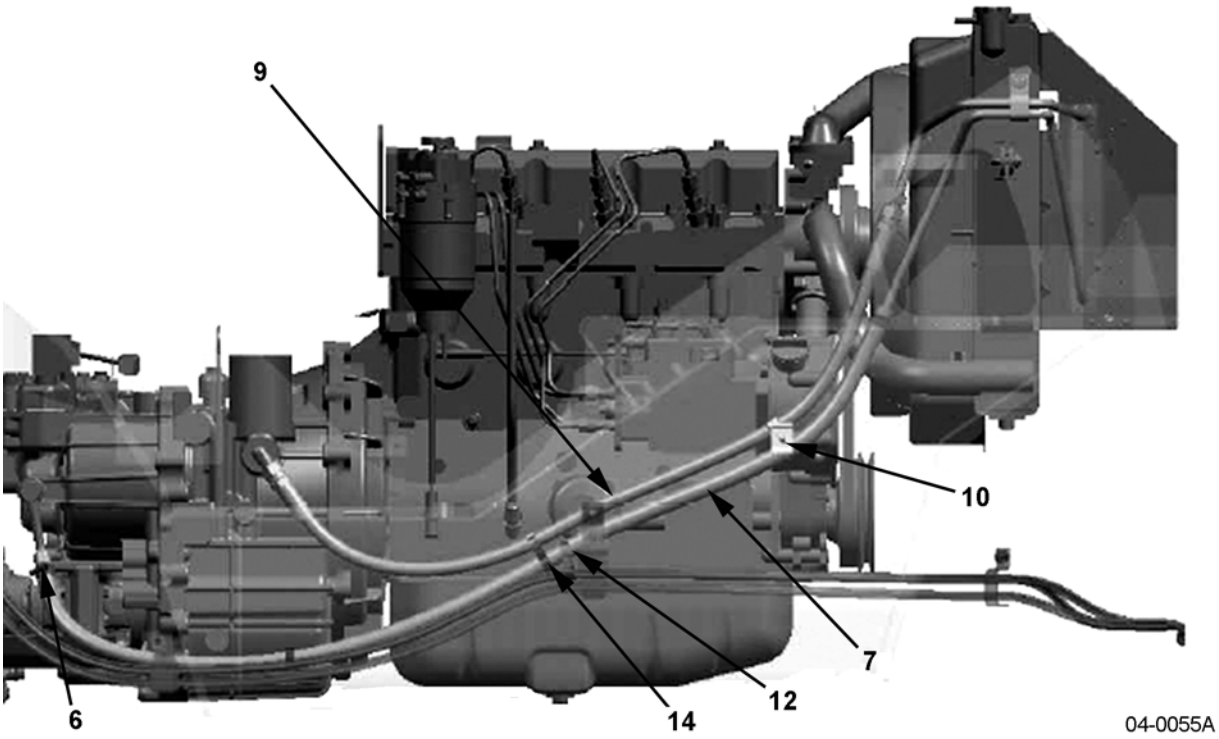


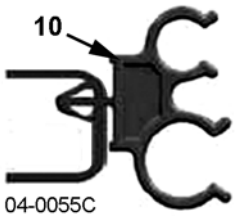

https://truckmanualshub.com/



## COOLING SYSTEM - TORCON COOLER - 4D94LE ENGINES - S/N 200001A~ ALL FD EXCEPT 3.2T & 3.5T

| Item | Part Number | Description | Qty | |
|---|---|---|---|---|
| 1 | 3EB-04-51230 | OIL COOLER | 1 | |
| 2 | 01435-00814 | BOLT | 5 | |
| 3 | 07000-A2018 | O-RING | 2 | |
| 4 | 3EA-M1-17170 | NIPPLE | 2 | |
| 5 | 3EB-04-51711 | PIPE | 1 | |
| 6 | 07281-00229 | CLAMP | 2 | |
| 7 | 3EB-04-A7870 | HOSE | 1 | |
| 8 | 3EB-04-51721 | PIPE | 1 | |
| 9 | 07102-203A9 | HOSE | 1 | |
| 10 | 3EB-04-44190 | CLAMP (DOUBLE) | 1 | |
| 11 | 04435-51208 | CLIP | 1 | |
| 12 | 3EB-66-41461 | CLAMP | 1 | |
| 13 | 37B-1PC-5060 | CLAMP (CLAMP W/ P/S HOSE) | 1 | |
| 14 | 37B-1PC-5090 | CLAMP (DOUBLE) | 1 | |

https://truckmanualshub.com/



# COOLING SYSTEM - TORCON COOLER - 4D94LE ENGINES - S/N 200001A~ ALL 3.2T & 3.5T

FD 3.2T, 3.5T

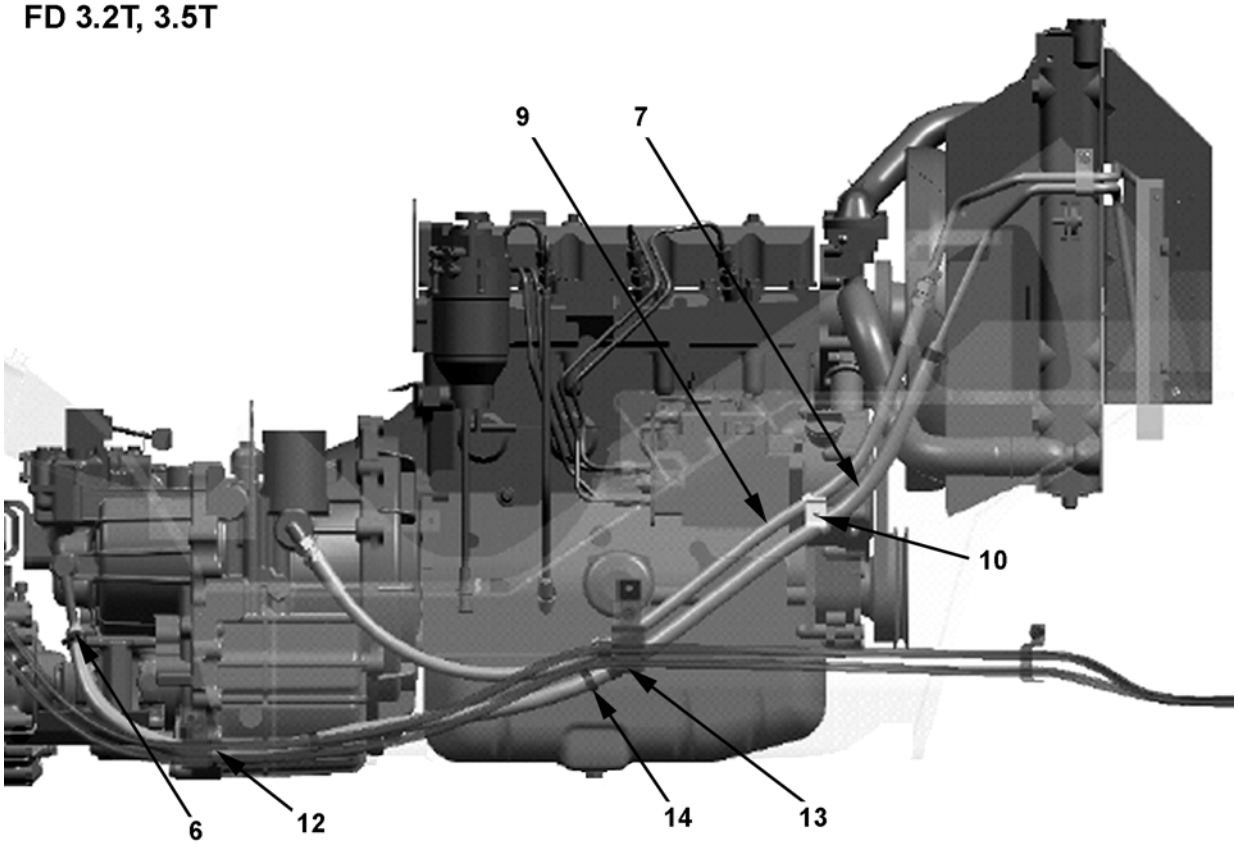


04-0056

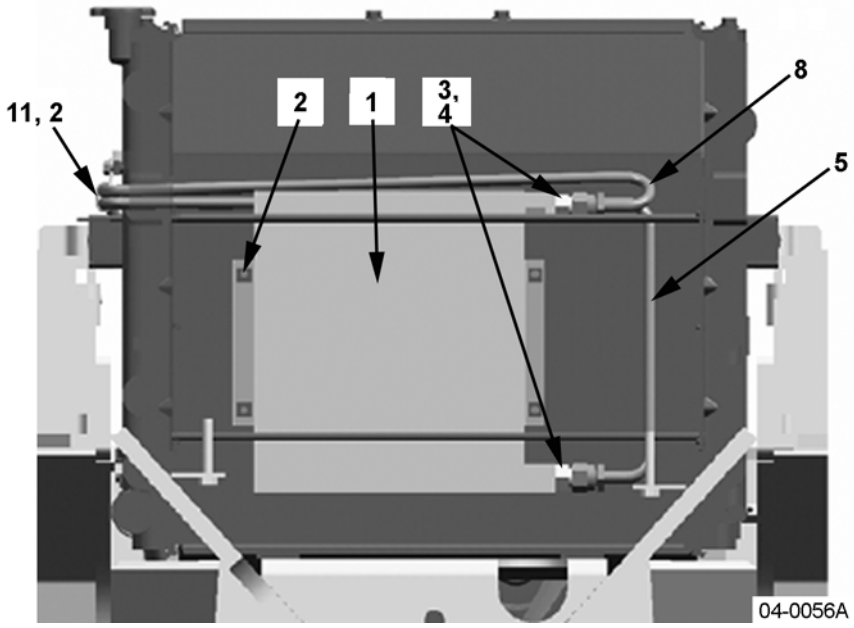


04-0056A

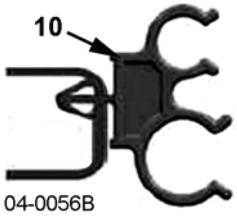


04-0056B

https://truckmanualshub.com/



## COOLING SYSTEM - TORCON COOLER - 4D94LE ENGINES - S/N 200001A~ ALL 3.2T & 3.5T

| Item | Part Number | Description | Qty | |
|---|---|---|---|---|
| 1 | 3EB-04-35510 | OIL COOLER | 1 | |
| 2 | 01435-00814 | BOLT | 5 | |
| 3 | 07000-A2018 | O-RING | 2 | |
| 4 | 3EA-M1-17170 | NIPPLE | 2 | |
| 5 | 3EB-04-53410 | PIPE | 1 | |
| 6 | 07281-00229 | CLAMP | 2 | |
| 7 | 3EB-04-A7870 | HOSE | 1 | |
| 8 | 3EB-04-53420 | PIPE | 1 | |
| 9 | 07102-203A9 | HOSE | 1 | |
| 10 | 3EB-04-44190 | CLAMP | 1 | |
| 11 | 04435-51208 | CLIP | 1 | |
| 12 | 37B-1PC-5060 | CLAMP (CLAMP TOGETHER W/ P/S HOSE) | 1 | |
| 13 | 3EB-66-41461 | CLAMP | 1 | |
| 14 | 37B-1PC-5090 | CLAMP | 1 | |

https://truckmanualshub.com/



## FUEL SYSTEM - GASOLINE - TANK - S/N 200001A~

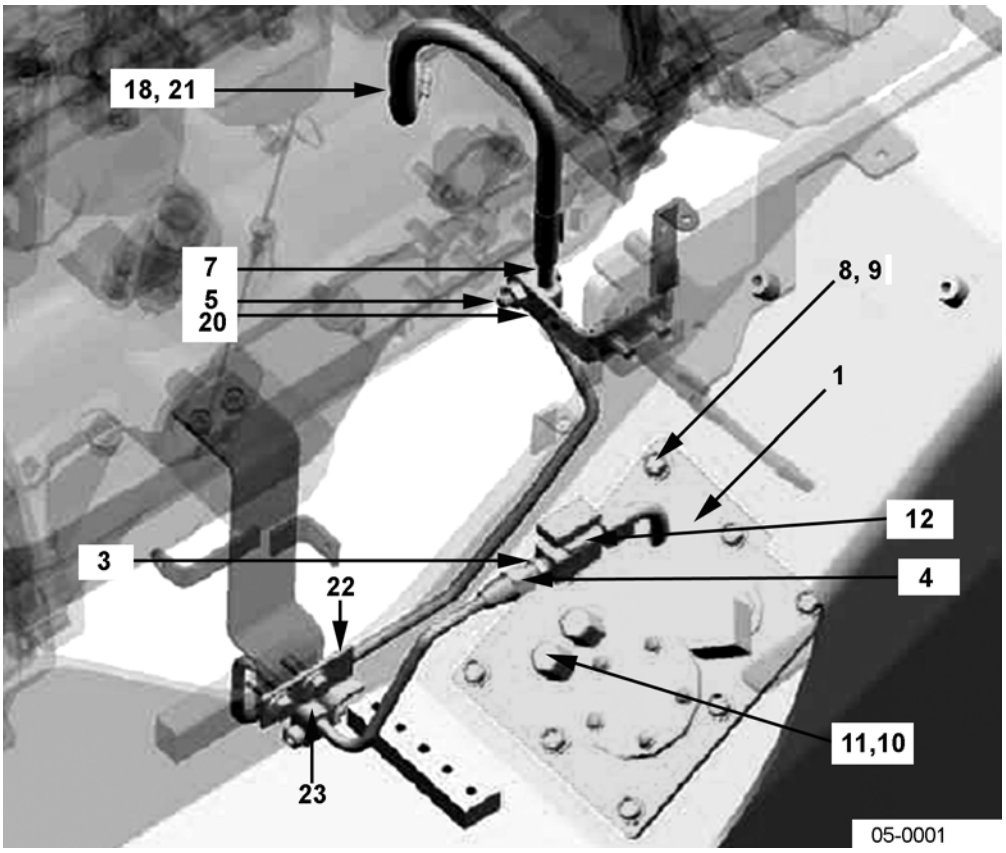


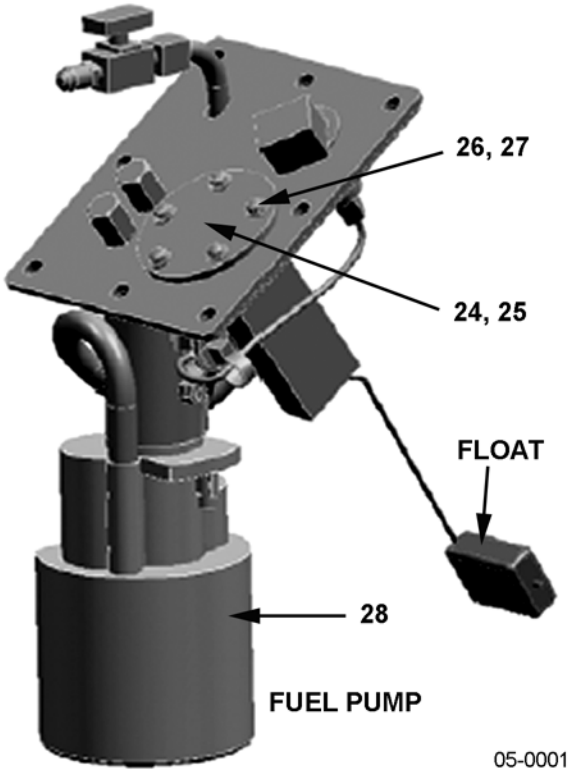

https://truckmanualshub.com/



## FUEL SYSTEM - GASOLINE - TANK - S/N 200001A~

| Item | Part Number | Description | Qty | |
|---|---|---|---|---|
| 1 | 3EB-05-A7491 | COVER ASSY. . . . . | 1 | |
| 2 | 3EB-05-A7420 | GASKET . . . . . (NOT SHOWN) | 1 | |
| 3 | 3EA-05-A6130 | NIPPLE . . . . . | 1 | |
| 4 | 3EB-05-A7451 | PIPE (PNEUMATIC) (WHITE PAINT ON SLEEVE NUT) . . . . . | 1 | |
| | 3EB-05-A7551 | PIPE (CUSHION) (NO PAINT ON SLEEVE NUT) | 1 | |
| 5 | 01252-70830 | BOLT. . . . . | 2 | |
| 6 | 3EB-05-A7460 | BRACKET. . . . . (NOT SHOWN) | 1 | |
| 7 | 3EB-05-A7480 | PIPING CLIP. . . . . | 2 | |
| 8 | 3EB-66-43670 | BOLT. . . . . | 8 | |
| 9 | 3EB-55-47130 | COLLAR . . . . . | 8 | |
| 10 | 3EB-05-A7430 | WIRE (JUMPER) . . . . . | 2 | |
| 11 | 3EA-66-33581 | SEAL WASHER . . . . . | 2 | |
| 12 | 3EA-05-A6110 | COCK . . . . . | 1 | |
| 13 | 08059-00310 | CLAMP . . . . . (NOT SHOWN) | 2 | |
| 14 | 01010-80660 | BOLT. . . . . (NOT SHOWN) | 2 | |
| 15 | 01580-10605 | NUT. . . . . (NOT SHOWN) | 4 | |
| 16 | 01640-20610 | WASHER . . . . . (NOT SHOWN) | 2 | |
| 17 | 3EB-05-A7470 | CLIP . . . . . (NOT SHOWN) | 1 | |
| 18 | 3FD-05-26130 | CLAMP . . . . . | 4 | |
| 19 | 3EB-05-A7530 | NIPPLE. . . . . (NOT SHOWN) | 1 | |
| 20 | 3EB-05-A7570 | BRACKET. . . . . | 1 | |
| 21 | 3FD-05-26140 | HOSE . . . . . | 1 | |
| 22 | 01024-80825 | BOLT. . . . . | 2 | |
| 23 | 3EB-05-A7580 | BRACKET. . . . . | 2 | |
| 24 | 3EB-55-51410 | TANK UNIT . . . . . | 1 | |
| 25 | 3EB-55-51430 | PACKING . . . . . | 1 | |
| 26 | 01220-40512 | SCREW. . . . . | 5 | |
| 27 | 3SB-55-11380 | GASKET . . . . . | 5 | |
| 28 | 37B-1DU-3031 | FUEL PUMP ASSY. . . . . | 1 | |

https://truckmanualshub.com/



## FUEL SYSTEM - DIESEL - TANK - S/N 200001A~

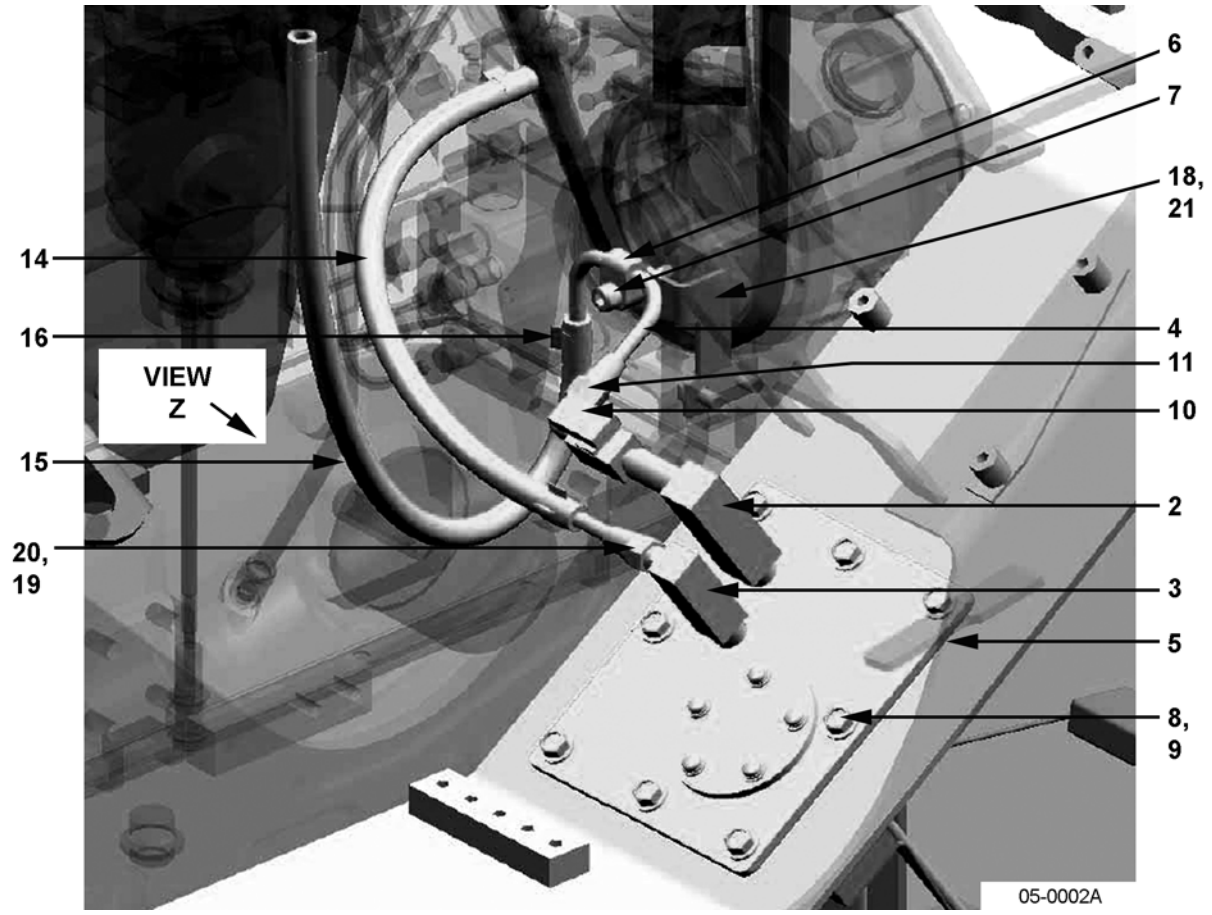


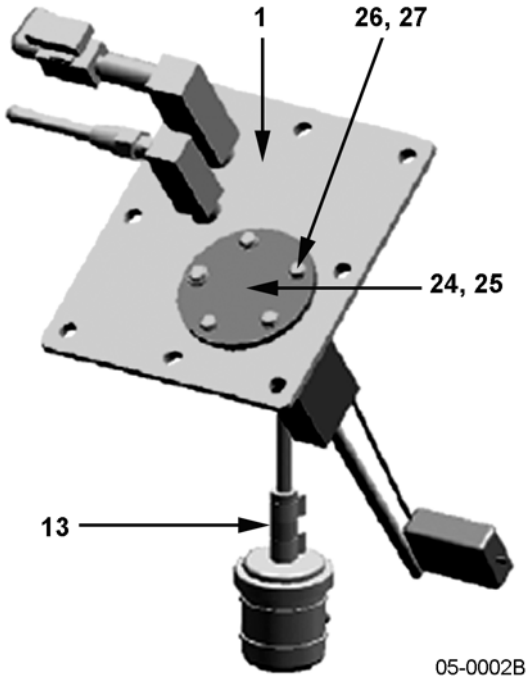


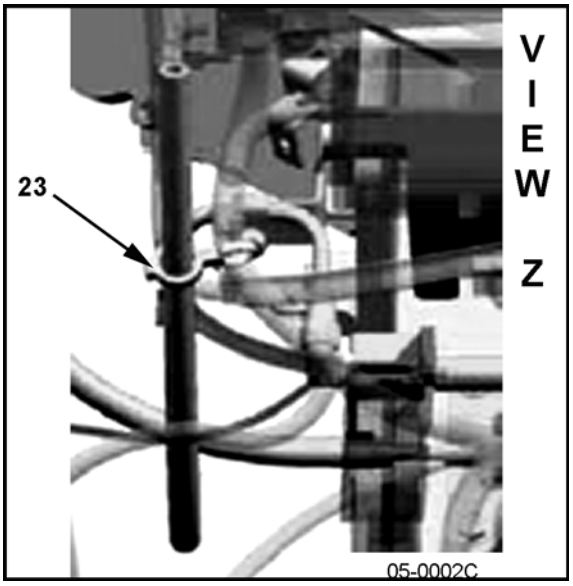

https://truckmanualshub.com/



## FUEL SYSTEM - DIESEL - TANK - S/N 200001A~

| Item | Part Number | Description | Qty | |
|---|---|---|---|---|
| 1 | 3EB-05-A7910 | COVER | 1 | |
| 2 | 3EB-05-A7921 | BLOCK | 1 | |
| 3 | 3EB-05-A7930 | BLOCK | 1 | |
| 4 | 3EB-05-A7940 | PIPE | 1 | |
| 5 | 3EB-05-A7420 | GASKET | 1 | |
| 6 | 3EB-05-A7480 | PIPING CLIP | 1 | |
| 7 | 01252-70835 | BOLT | 1 | |
| 8 | 3EB-66-43670 | BOLT | 8 | |
| 9 | 3EB-55-47130 | COLLAR | 8 | |
| 10 | 3EA-05-A6110 | COCK | 1 | |
| 11 | 3EA-05-A6120 | ELBOW | 1 | |
| 12 | NOT USED | | | |
| 13 | 3EB-05-34130 | HOSE | 1 | |
| 14 | 37B-1FA-A050 | HOSE (340 MM LONG) | 1 | |
| 15 | 37B-1FA-A070 | HOSE (500 MM LONG) | 1 | |
| 16 | 07285-00130 | CLIP | 6 | |
| 17 | NOT USED | | | |
| 18 | 01024-80816 | BOLT | 2 | |
| 19 | 3EA-05-A6130 | NIPPLE | 1 | |
| 20 | 3EB-05-A7620 | PIPE | 1 | |
| 21 | 3EB-05-A7630 | PLATE | 1 | |
| 22 | NOT USED | | | |
| 23 | 3EB-05-A7610 | CLIP | 2 | |
| 24 | 3EB-55-51410 | TANK UNIT | 1 | |
| 25 | 3EB-55-51430 | PACKING | 1 | |
| 26 | 01220-40512 | SCREW | 5 | |
| 27 | 3SB-55-11380 | GASKET | 5 | |

https://truckmanualshub.com/



# FUEL SYSTEM - DIESEL - TANK UNIT - S/N 200001A~

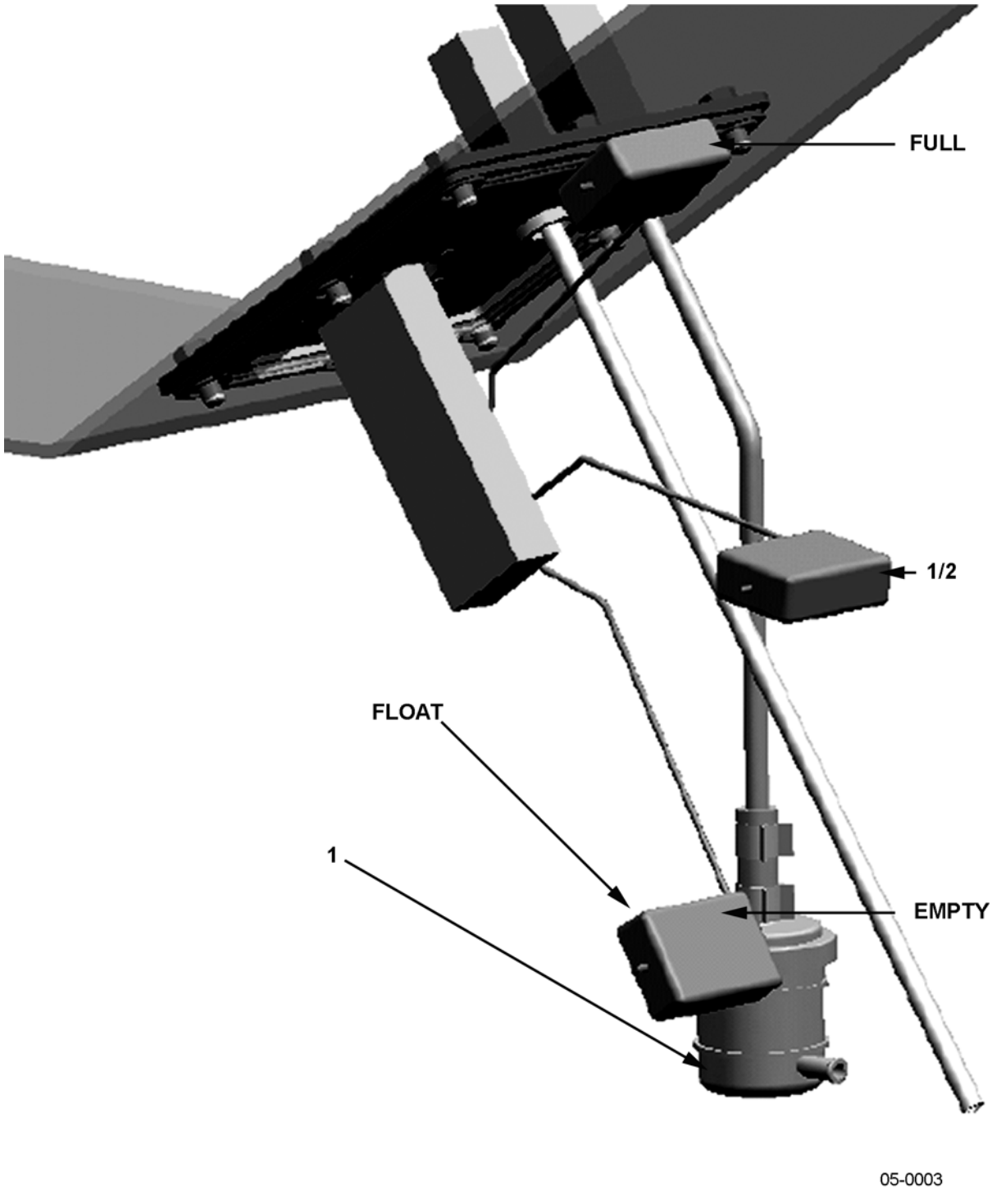

https://truckmanualshub.com/



## FUEL SYSTEM - DIESEL - TANK UNIT - S/N 200001A~

| Item | Part Number | Description | Qty | |
|---|---|---|---|---|
| 1 | 3EB-55-51410 | TANK UNIT . . . . . | 1 | |

https://truckmanualshub.com/



## LPG FUEL SYSTEM - OVERVIEW - S/N 200001A~
## (ALSO SEE FIG. 06-0002)

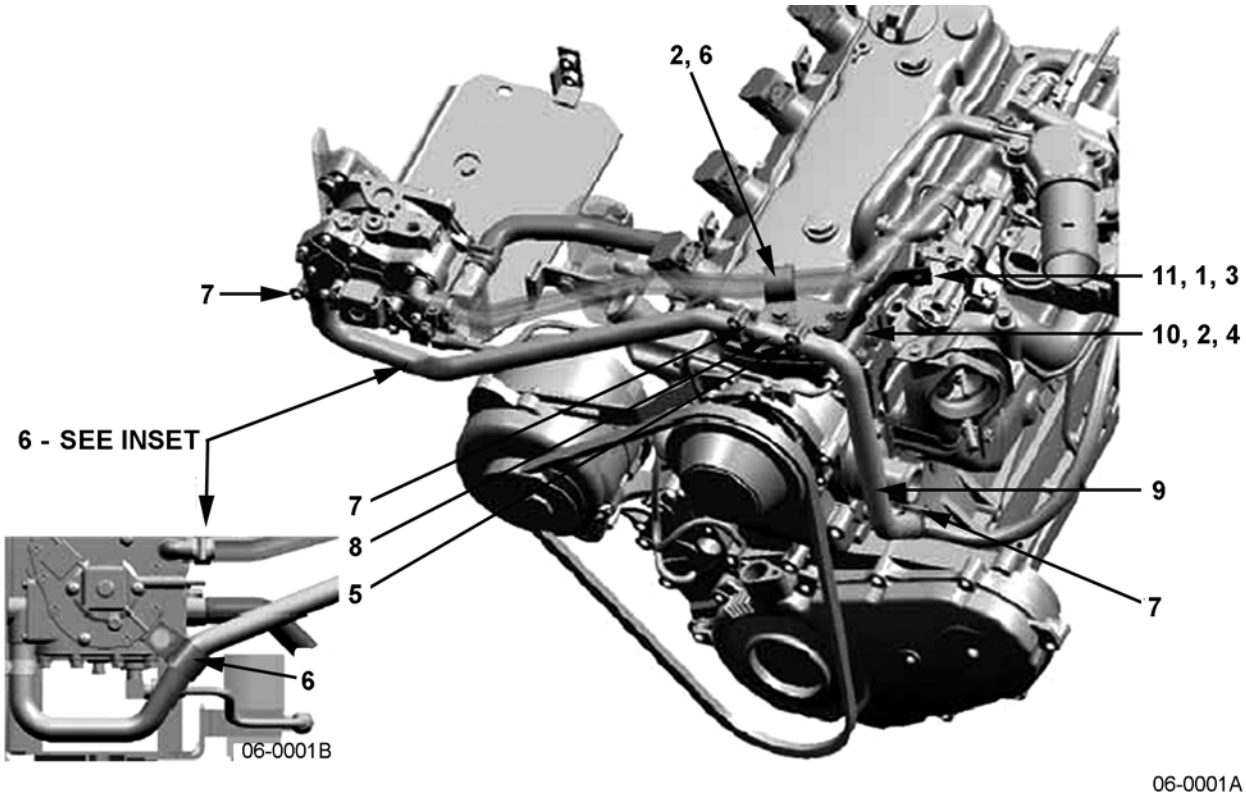


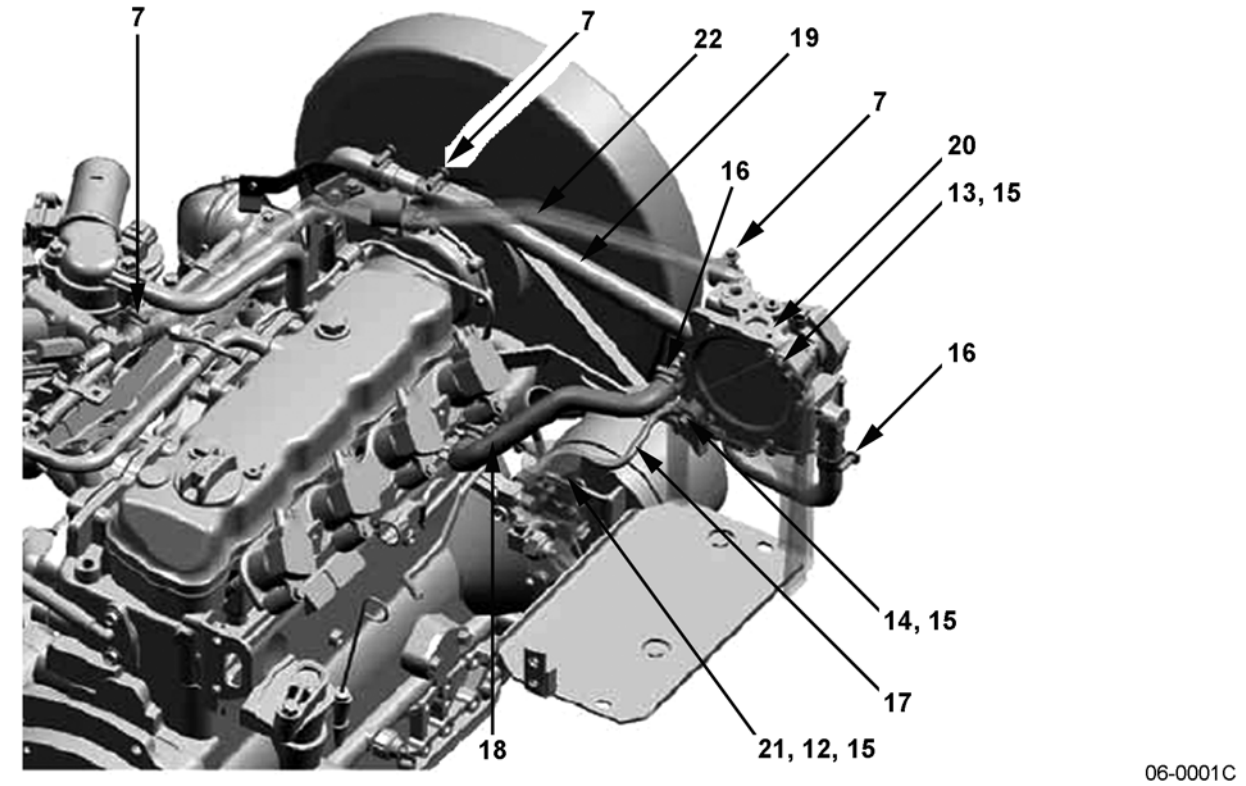

https://truckmanualshub.com/



## LPG FUEL SYSTEM - OVERVIEW - S/N 200001A~
## (ALSO SEE FIG. 06-0002)

| Item | Part Number | Description | Qty | |
|---|---|---|---|---|
| 1 | 01010-80616 | BOLT | 2 | |
| 2 | 01010-80820 | BOLT | 3 | |
| 3 | 01643-30623 | WASHER | 2 | |
| 4 | 01643-30823 | WASHER | 3 | |
| 5 | 04434-51408 | CLIP | 1 | |
| 6 | 04434-52310 | CLIP | 2 | |
| 7 | 07281-00259 | CLAMP | 5 | |
| 8 | 3EA-05-39950 | PIPE | 1 | |
| 9 | 3EB-05-A7230 | HOSE | 1 | |
| 10 | 3EB-05-A7260 | BRACKET | 1 | |
| 11 | 3EB-05-A7270 | BRACKET | 1 | |
| 12 | 01010-80816 | BOLT | 2 | |
| 13 | 01010-80835 | BOLT | 1 | |
| 14 | 01010-80890 | BOLT | 1 | |
| 15 | 01643-30823 | WASHER | 4 | |
| 16 | 07281-00259 | CLAMP | 3 | |
| 17 | 3EA-05-A7610 | PIPE | 1 | |
| 18 | 3EB-05-A7180 | HOSE (WATER SUPPLY) | 1 | |
| 19 | 3EB-05-A7290 | HOSE (WATER RETURN) | 1 | |
| 20 | 16310-GU20A | VAPORIZER (COMPLETE) | 1 | |
| 21 | 17904-GU20A | SOLENOID VALVE ASSY | 1 | |
| 22 | 17527-GU24A | HOSE | 1 | |
| 23 | 3EA-05-39680 | PURSE LOCK (NOT SHOWN) | 5 | |

https://truckmanualshub.com/



## LPG FUEL SYSTEM - CLIPS & CLAMPS - S/N 200001A~
## (ALSO SEE FIG. 06-0001)

TOP VIEW

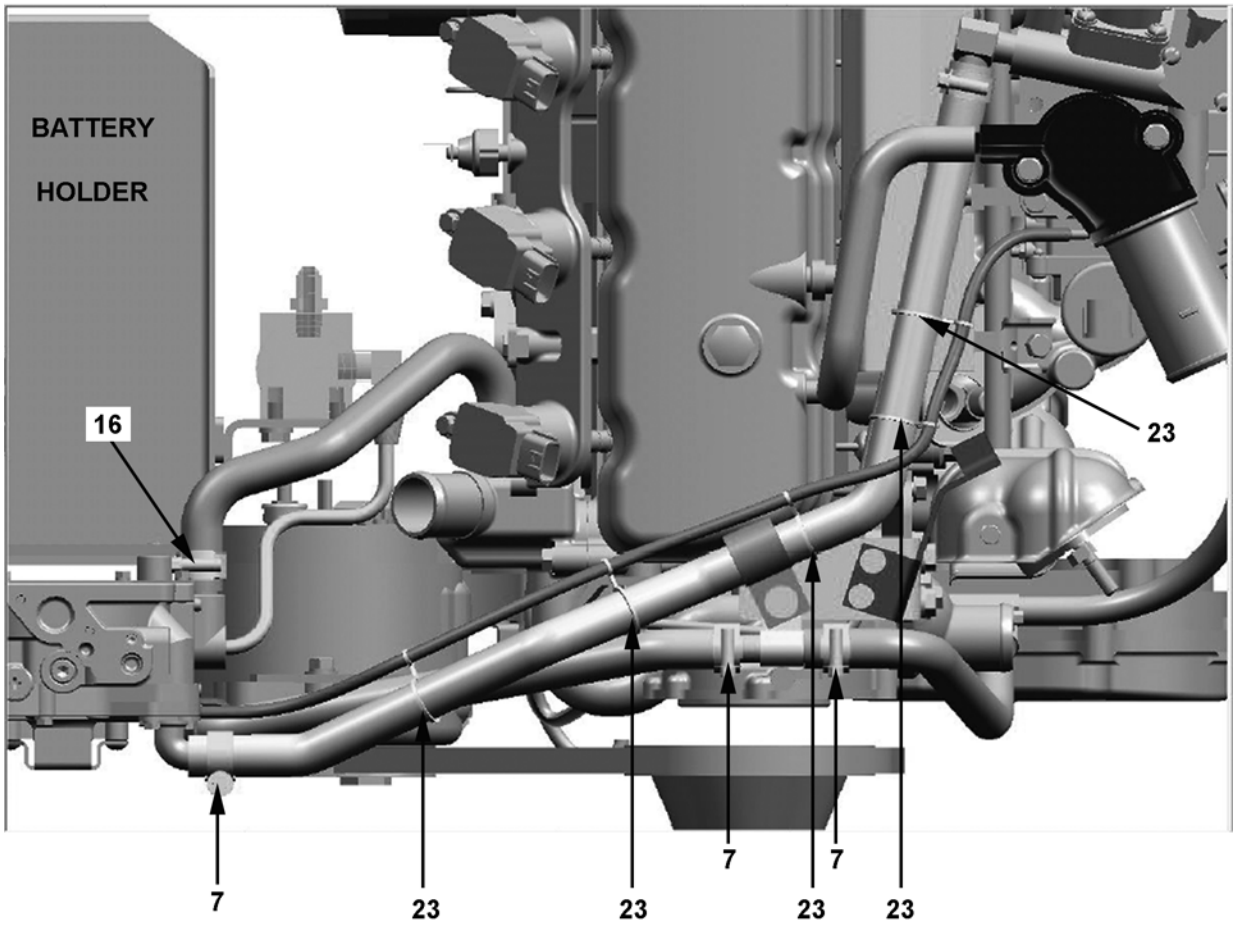


06-0002

https://truckmanualshub.com/



## LPG FUEL SYSTEM - CLIPS & CLAMPS - S/N 200001A~
## (ALSO SEE FIG. 06-0001)

| Item | Part Number | Description | Qty | |
|---|---|---|---|---|
| 1 | 01010-80616 | BOLT | 2 | |
| 2 | 01010-80820 | BOLT | 3 | |
| 3 | 01643-30623 | WASHER | 2 | |
| 4 | 01643-30823 | WASHER | 3 | |
| 5 | 04434-51408 | CLIP | 1 | |
| 6 | 04434-52310 | CLIP | 2 | |
| 7 | 07281-00259 | CLAMP | 5 | |
| 8 | 3EA-05-39950 | PIPE | 1 | |
| 9 | 3EB-05-A7230 | HOSE | 1 | |
| 10 | 3EB-05-A7260 | BRACKET | 1 | |
| 11 | 3EB-05-A7270 | BRACKET | 1 | |
| 12 | 01010-80816 | BOLT | 2 | |
| 13 | 01010-80835 | BOLT | 1 | |
| 14 | 01010-80890 | BOLT | 1 | |
| 15 | 01643-30823 | WASHER | 4 | |
| 16 | 07281-00259 | CLAMP | 3 | |
| 17 | 3EA-05-A7610 | PIPE | 1 | |
| 18 | 3EB-05-A7180 | HOSE (WATER SUPPLY) | 1 | |
| 19 | 3EB-05-A7290 | HOSE (WATER RETURN) | 1 | |
| 20 | 16310-GU20A | VAPORIZER (COMPLETE) | 1 | |
| 21 | 17904-GU20A | SOLENOID VALVE ASSY | 1 | |
| 22 | 17527-GU24A | HOSE | 1 | |
| 23 | 3EA-05-39680 | PURSE LOCK | 5 | |
| N/S | 3EB-55-A7990 | PLATE (DUAL-FUEL) (BETWEEN WATER HOSE & WIRING HARNESS) | 1 | |
| N/S | 3EB-55-39640 | CLIP (GAS & DUAL-FUEL) (BETWEEN WATER HOSE & PIPE) | 1 | |

https://truckmanualshub.com/



# LPG FUEL SYSTEM - LPG GAS HOSE ASSY - S/N 200001A~

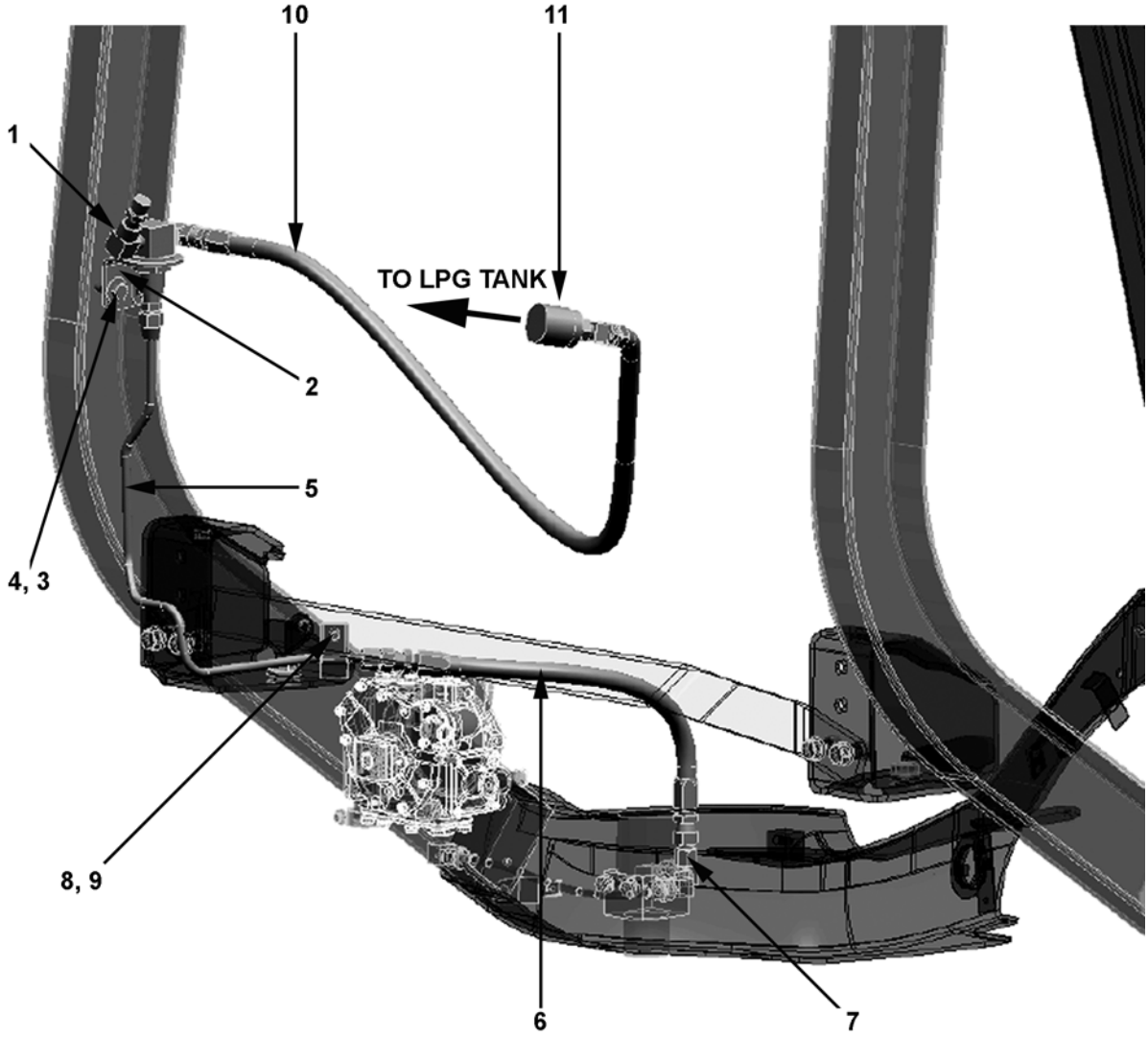

https://truckmanualshub.com/



## LPG FUEL SYSTEM - LPG GAS HOSE ASSY - S/N 200001A~

| Item | Part Number | Description | Qty | |
|---|---|---|---|---|
| 1 | 3EA-05-A7920 | VALVE ASSY | 1 | |
| 2 | 3EB-05-A7710 | BRACKET | 1 | |
| 3 | 01010-80825 | BOLT | 2 | |
| 4 | 3BA-50-69330 | WASHER | 2 | |
| 5 | 3EB-05-A7810 | PIPE | 1 | |
| 6 | 37B-1FF-A170 | HOSE (STD WHEELBASE) | 1 | |
| 7 | 3EB-06-A5141 | FITTING (RW) | 1 | |
| 8 | 01024-80812 | BOLT | 1 | |
| 9 | 04434-50808 | CLIP | 1 | |
| 10 | 37B-1FF-A150 | HOSE (LONG WHEELBASE) | 1 | |
| 11 | 3EA-05-A6630 | FITTING ASSY | 1 | |

https://truckmanualshub.com/



# TORQUE CONVERTER - MOUNTING & INNER PARTS - S/N 200001A~

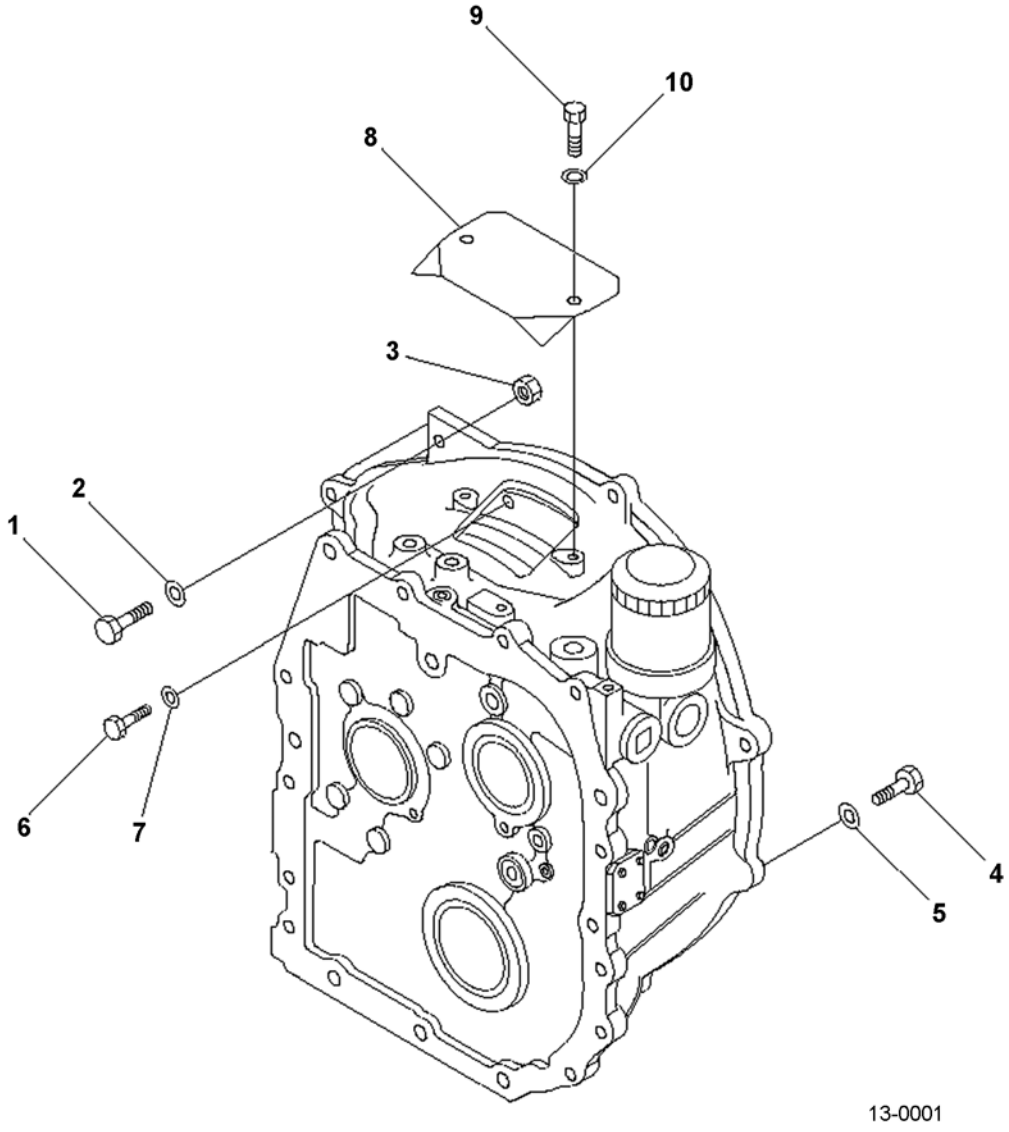

https://truckmanualshub.com/



## TORQUE CONVERTER - MOUNTING & INNER PARTS - S/N 200001A~

| Item | Part Number | Description | Qty | |
|---|---|---|---|---|
| 1 | 01010-81050 | BOLT | 3 | |
| 2 | 01643-31032 | WASHER | 3 | |
| 3 | 01580-11008 | NUT | 3 | |
| 4 | 01010-81040 | BOLT | 3 | |
| 5 | 01643-31032 | WASHER | 3 | |
| 6 | 01010-80816 | BOLT | 6 | |
| 7 | 01643-50823 | WASHER | 6 | |
| 8 | 3EB-13-51250 | PLATE | 1 | |
| 9 | 01010-80818 | BOLT | 2 | |
| 10 | 01642-20810 | WASHER | 2 | |

https://truckmanualshub.com/



# TORQUE CONVERTER - CONVERTER & PUMP DETAIL - S/N 200001A~ ALL MODELS EXCEPT EXPORT

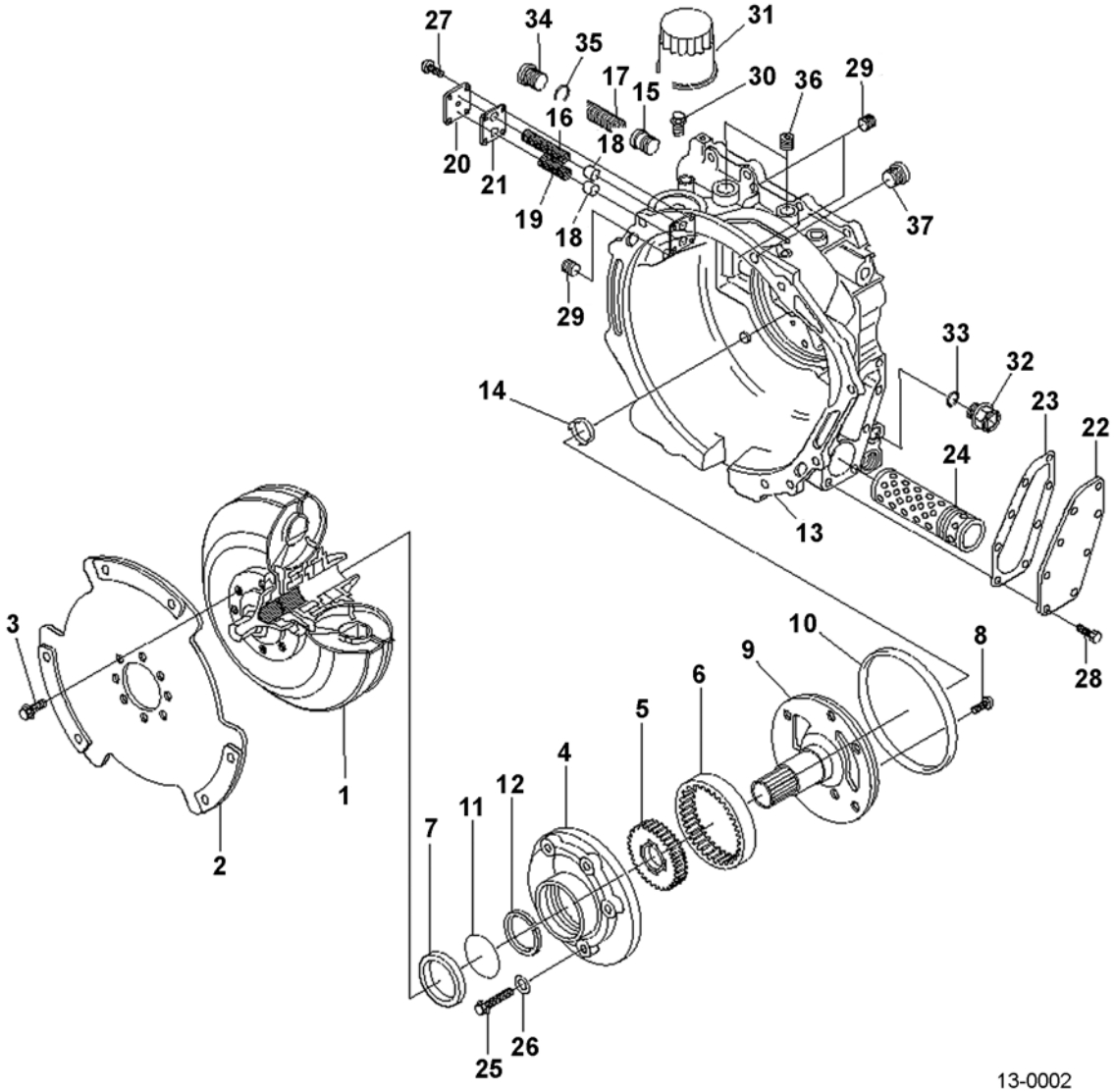

https://truckmanualshub.com/



## TORQUE CONVERTER - CONVERTER & PUMP DETAIL - S/N 200001A~ ALL MODELS EXCEPT EXPORT

| Item | Part Number | Description | Qty | |
|---|---|---|---|---|
| | 3EB-13-51200 | TORQUE CONVERTER ASSY. . . . . | 1 | |
| | 30B-13-11100 | .CONVERTER SUB-ASSY . . . . . | 1 | |
| 1 | 30B-13-11110 | ..CONVERTER . . . . . | 1 | |
| 2 | 30B-13-11120 | ..PLATE, INPUT . . . . . | 1 | |
| 3 | 30B-13-11130 | ..BOLT. . . . . | 8 | |
| | 30B-13-11200 | .GEAR PUMP ASSY. . . . . | 1 | |
| 4 | NSS | ..GEAR, CASTING . . . . . | 1 | |
| 5 | NSS | ..GEAR, DRIVE. . . . . | 1 | |
| 6 | NSS | ..GEAR, DRIVEN . . . . . | 1 | |
| 7 | 3EB-13-22422 | ..SEAL, OIL . . . . . (K32) | 1 | |
| 8 | 3EB-13-22432 | ..SCREW. . . . . | 1 | |
| 9 | 30B-13-11140 | ..SUPPORT, STATOR . . . . . | 1 | |
| 10 | 30B-13-11150 | ..O-RING . . . . . (K32) | 1 | |
| 11 | 30B-13-11160 | ..RING, INNER . . . . . | 1 | |
| 12 | 30B-13-11170 | ..RING, SEAL . . . . . (K32) | 1 | |
| | 30B-13-11300 | .HOUSING ASSY . . . . . | 1 | |
| 13 | NSS | ..HOUSING . . . . . | 1 | |
| 14 | NSS | ..COLLAR . . . . . | 1 | |
| 15 | 30B-13-11190 | .PISTON . . . . . | 1 | |
| 16 | 30B-13-11240 | .SPRING, PRESSURE . . . . . | 1 | |
| 17 | 30B-13-11250 | .SPRING, PRESSURE . . . . . | 1 | |
| 18 | 3EB-13-12730 | .PISTON . . . . . | 2 | |
| 19 | 30B-13-11260 | .SPRING, PRESSURE . . . . . | 1 | |
| 20 | 30B-13-11270 | .COVER . . . . . | 1 | |
| 21 | 30B-13-11280 | .GASKET . . . . . (K32) | 1 | |
| 22 | 30B-13-11290 | .COVER . . . . . | 1 | |
| 23 | 30B-13-11310 | .GASKET . . . . . (K32) | 1 | |
| 24 | 3EB-15-51600 | .STRAINER. . . . . (K32) | 1 | |
| 25 | 30B-13-11330 | .BOLT . . . . . | 5 | |
| 26 | 30B-13-11340 | .GASKET . . . . . (K32) | 5 | |
| 27 | 30B-13-11350 | .BOLT . . . . . | 4 | |
| 28 | 30B-13-11360 | .BOLT . . . . . | 8 | |
| 29 | 30B-13-11370 | .PLUG . . . . . | 3 | |
| 30 | 30B-13-11380 | .NIPPLE . . . . . | 1 | |
| 31 | 30B-13-11390 | .FILTER. . . . . (K32) | 1 | |
| 32 | 30B-13-11410 | .PLUG . . . . . | 1 | |
| 33 | 30B-13-11420 | .O-RING . . . . . (K32) | 1 | |
| 34 | 30B-13-11430 | .PLUG . . . . . | 1 | |
| 35 | 30B-13-11440 | .O-RING . . . . . (K32) | 1 | |

PARTS LIST CONTINUED ON NEXT PAGE

https://truckmanualshub.com/



## TORQUE CONVERTER - CONVERTER & PUMP DETAIL - S/N 200001A~ ALL MODELS EXCEPT EXPORT

| Item | Part Number | Description | Qty | |
|---|---|---|---|---|
| 36 | 30B-13-11460 | .PLUG . . . . . | 2 | |
| 37 | 30B-13-11470 | .PLUG . . . . . | 1 | |
| | | **SERVICE KIT** | | |
| K32 | 30B-13-05010 | REPAIR KIT, TORQUE CONVERTER . . . . . | 1 | |

https://truckmanualshub.com/

NOTES:

https://truckmanualshub.com/



# TORQUE CONVERTER - CONVERTER & PUMP DETAIL - S/N 200001A~ EXPORT MODELS ONLY

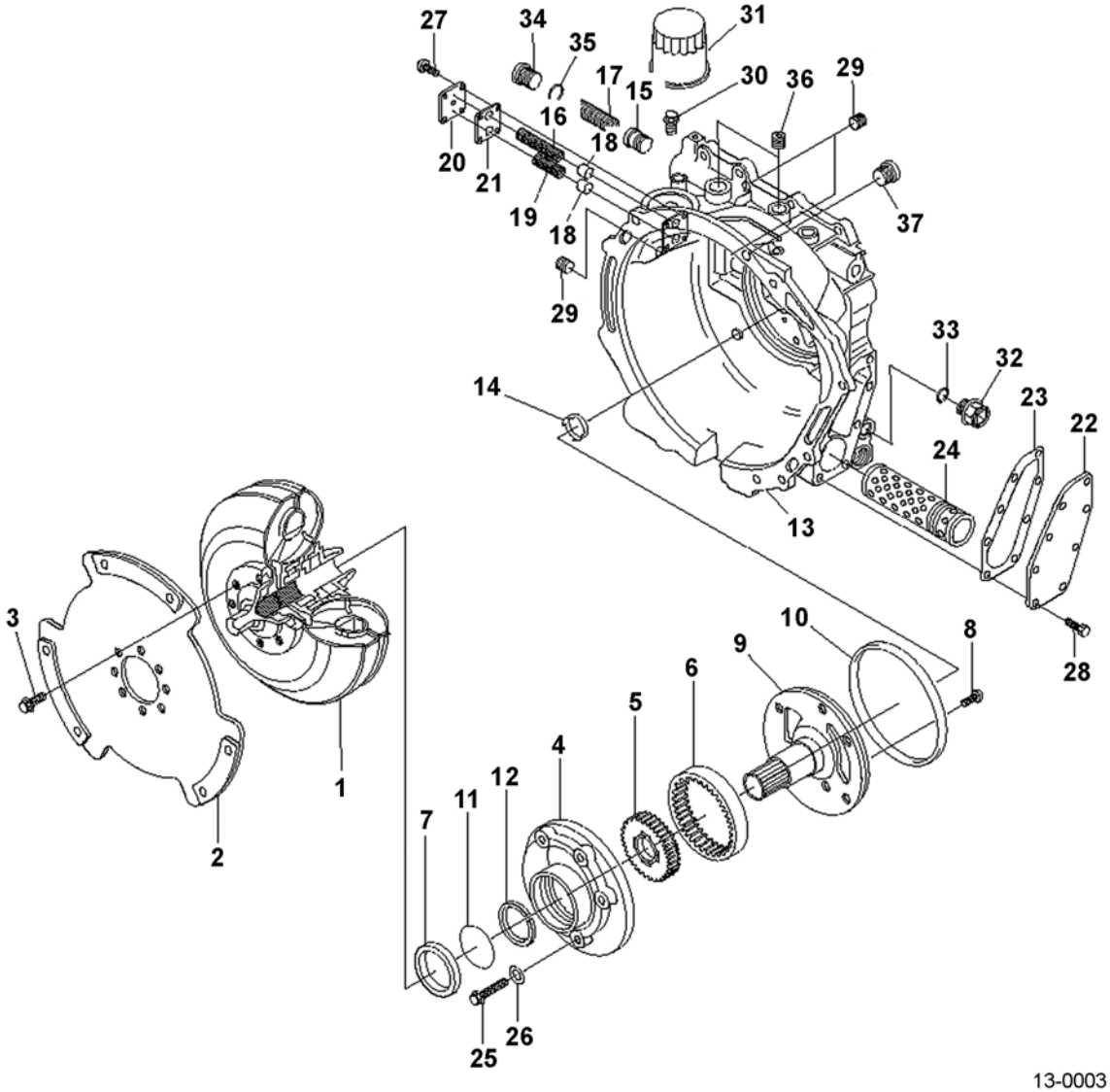


13-0003

https://truckmanualshub.com/



## TORQUE CONVERTER - CONVERTER & PUMP DETAIL - S/N 200001A~ EXPORT MODELS ONLY

| Item | Part Number | Description | Qty | |
|---|---|---|---|---|
| | 3EA-13-51200 | TORQUE CONVERTER ASSY. . . . . | 1 | |
| | 30A-13-11100 | .CONVERTER SUB-ASSY . . . . . | 1 | |
| 1 | 30A-13-11110 | ..CONVERTER . . . . . | 1 | |
| 2 | 30B-13-11120 | ..PLATE, INPUT . . . . . | 1 | |
| 3 | 30B-13-11130 | ..BOLT. . . . . | 8 | |
| | 30B-13-11200 | .GEAR PUMP ASSY. . . . . | 1 | |
| 4 | NSS | ..GEAR, CASTING . . . . . | 1 | |
| 5 | NSS | ..GEAR, DRIVE. . . . . | 1 | |
| 6 | NSS | ..GEAR, DRIVEN . . . . . | 1 | |
| 7 | 3EB-13-22422 | ..SEAL, OIL . . . . . (K32) | 1 | |
| 8 | 3EB-13-22432 | ..SCREW. . . . . | 1 | |
| 9 | 30B-13-11140 | ..SUPPORT, STATOR . . . . . | 1 | |
| 10 | 30B-13-11150 | ..O-RING . . . . . (K32) | 1 | |
| 11 | 30B-13-11160 | ..RING, INNER . . . . . | 1 | |
| 12 | 30B-13-11170 | ..RING, SEAL . . . . . (K32) | 1 | |
| | 30B-13-11300 | .HOUSING ASSY . . . . . | 1 | |
| 13 | NSS | ..HOUSING . . . . . | 1 | |
| 14 | NSS | ..COLLAR . . . . . | 1 | |
| 15 | 30B-13-11190 | .PISTON . . . . . | 1 | |
| 16 | 30B-13-11240 | .SPRING, PRESSURE . . . . . | 1 | |
| 17 | 30B-13-11250 | .SPRING, PRESSURE . . . . . | 1 | |
| 18 | 3EB-13-12730 | .PISTON . . . . . | 2 | |
| 19 | 30B-13-11260 | .SPRING, PRESSURE . . . . . | 1 | |
| 20 | 30B-13-11270 | .COVER . . . . . | 1 | |
| 21 | 30B-13-11280 | .GASKET . . . . . (K32) | 1 | |
| 22 | 30B-13-11290 | .COVER . . . . . | 1 | |
| 23 | 30B-13-11310 | .GASKET . . . . . (K32) | 1 | |
| 24 | 3EB-15-51600 | .STRAINER. . . . . (K32) | 1 | |
| 25 | 30B-13-11330 | .BOLT . . . . . | 5 | |
| 26 | 30B-13-11340 | .GASKET . . . . . (K32) | 5 | |
| 27 | 30B-13-11350 | .BOLT . . . . . | 4 | |
| 28 | 30B-13-11360 | .BOLT . . . . . | 8 | |
| 29 | 30B-13-11370 | .PLUG . . . . . | 3 | |
| 30 | 30B-13-11380 | .NIPPLE . . . . . | 1 | |
| 31 | 30B-13-11390 | .FILTER. . . . . (K32) | 1 | |
| 32 | 30B-13-11410 | .PLUG . . . . . | 1 | |
| 33 | 30B-13-11420 | .O-RING . . . . . (K32) | 1 | |
| 34 | 30B-13-11430 | .PLUG . . . . . | 1 | |
| 35 | 30B-13-11440 | .O-RING . . . . . (K32) | 1 | |

PARTS LIST CONTINUED ON NEXT PAGE

https://truckmanualshub.com/



## TORQUE CONVERTER - CONVERTER & PUMP DETAIL - S/N 200001A~ EXPORT MODELS ONLY

| Item | Part Number | Description | Qty | |
|---|---|---|---|---|
| 36 | 30B-13-11460 | .PLUG . . . . . | 2 | |
| 37 | 30B-13-11470 | .PLUG . . . . . | 1 | |
| | | **SERVICE KIT** | | |
| K32 | 30B-13-05010 | REPAIR KIT, TORQUE CONVERTER . . . . . | 1 | |

https://truckmanualshub.com/

NOTES:

https://truckmanualshub.com/



## TORQFLOW TRANSMISSION - UNIT ASSY & CASE - S/N 200001A~

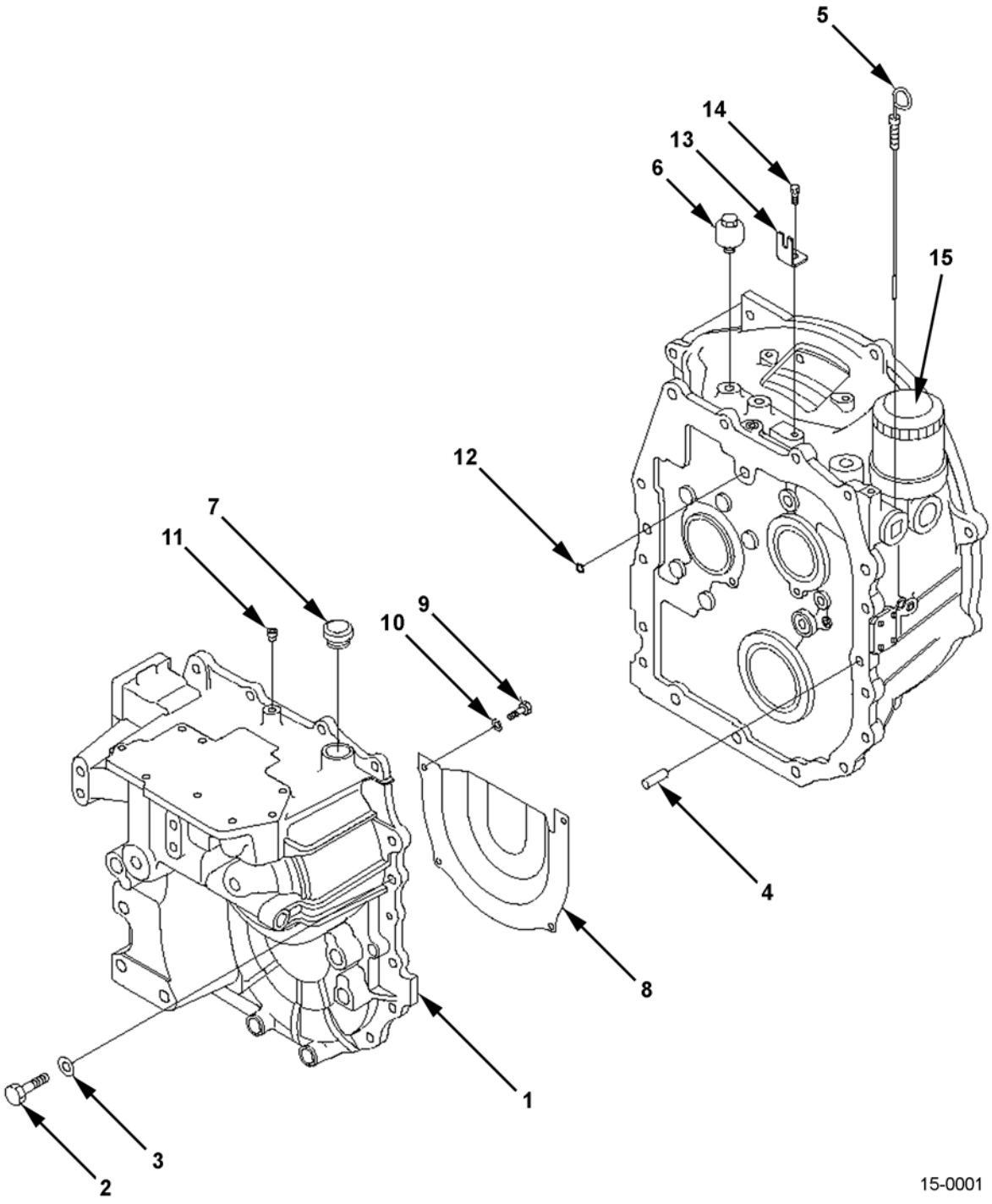

https://truckmanualshub.com/



## TORQFLOW TRANSMISSION - UNIT ASSY & CASE - S/N 200001A~

| Item | Part Number | Description | Qty | |
|---|---|---|---|---|
| | 37B-1AZ-5030 | TRANSMISSION ASSY, TORQFLOW (2.0T, 2.5T, 2.8T, 3.0T) | 1 | |
| | 37B-1AZ-5050 | TRANSMISSION ASSY, TORQFLOW (3.2T, 3.5T) | 1 | |
| 1 | 3EB-15-51111 | .CASE | 1 | |
| 2 | 01010-81040 | BOLT | 16 | |
| 3 | 01643-31032 | WASHER | 16 | |
| 4 | 04020-01024 | DOWEL PIN | 2 | |
| 5 | 3EB-15-51180 | GAUGE | 1 | |
| 6 | 07030-00252 | BREATHER | 1 | |
| 7 | 3EB-15-31271 | CAP | 1 | |
| 8 | 3EB-15-51610 | COVER | 1 | |
| 9 | 01010-80616 | BOLT | 4 | |
| 10 | 01643-30623 | WASHER | 4 | |
| 11 | 07042-80108 | PLUG | 1 | |
| 12 | 07000-72020 | O-RING | 1 | |
| 13 | 3EB-15-58410 | PLATE | 1 | |
| 14 | 01010-80818 | BOLT | 1 | |
| 15 | 30B-13-11390 | FILTER | 1 | |
| N/S | 3EB-15-51600 | STRAINER | 1 | |

https://truckmanualshub.com/



# TORQFLOW TRANSMISSION - INPUT & IDLER ASSY - S/N 200001A~
# 2.0, 2.5, 2.8 & 3.0 TON TRUCKS

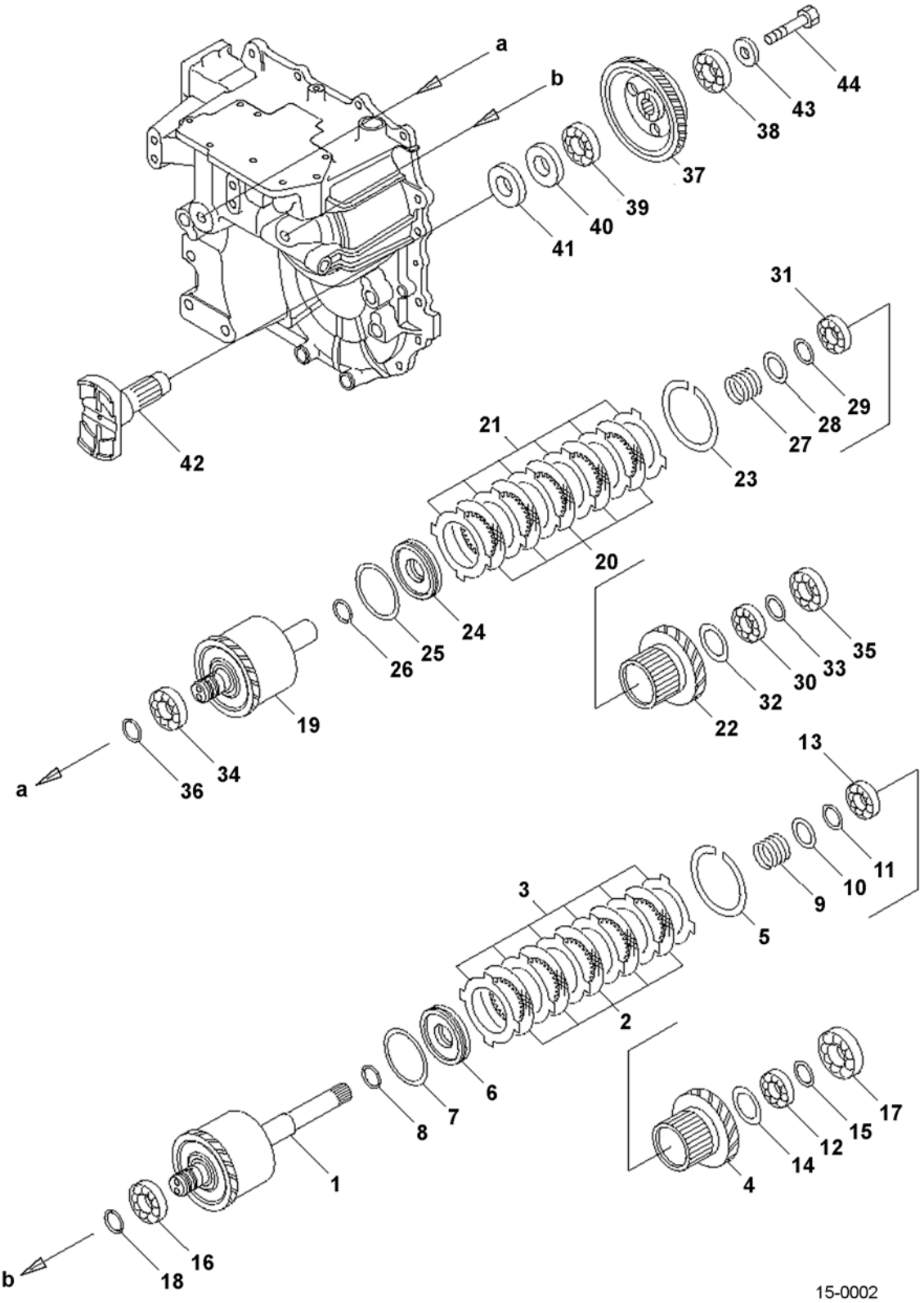

https://truckmanualshub.com/



## TORQFLOW TRANSMISSION - INPUT & IDLER ASSY - S/N 200001A~ 2.0, 2.5, 2.8 & 3.0 TON TRUCKS

| Item | Part Number | Description | Qty |
|---|---|---|---|
| | 37B-1AZ-5030 | TRANSMISSION ASSY, TORQFLOW (2.0T, 2.5T, 2.8T, 3.0T) | 1 |
| | 3EB-15-52010 | PACK ASSY, INPUT | 1 |
| 1 | 3EB-15-52110 | .SHAFT ASSY, INPUT | 1 |
| 2 | 3EB-15-51170 | .DISC | 5 |
| 3 | 3EA-15-11180 | .PLATE | 6 |
| 4 | 3EB-15-53230 | .GEAR | 1 |
| 5 | 34B-15-11360 | RING | 1 |
| 6 | 3EB-15-51230 | PISTON | 1 |
| 7 | 3EB-15-51290 | SEAL RING | 1 |
| 8 | 3EB-15-51280 | SEAL RING | 1 |
| 9 | 3EB-15-51250 | SPRING | 1 |
| 10 | 3EB-15-11260 | WASHER | 1 |
| 11 | 04064-03515 | SNAP RING | 1 |
| 12 | 06300-06006 | BEARING | 1 |
| 13 | 06301-06006 | BEARING | 1 |
| 14 | 04065-05520 | RING | 1 |
| 15 | 3EB-16-21390 | SPACER | 1 |
| 16 | 06300-06206 | BEARING | 1 |
| 17 | 06300-06306 | BEARING | 1 |
| 18 | 3EB-15-51360 | SEAL (K6) | 3 |
| | 3EB-15-52020 | PACK ASSY, IDLER | 1 |
| 19 | 3EB-15-52120 | .SHAFT ASSY, IDLER | 1 |
| 20 | 3EB-15-51170 | .DISC | 5 |
| 21 | 3EA-15-11180 | .PLATE | 6 |
| 22 | 3EB-15-53230 | .GEAR | 1 |
| 23 | 34B-15-11360 | RING | 1 |
| 24 | 3EB-15-51230 | PISTON | 1 |
| 25 | 3EB-15-51290 | SEAL RING | 1 |
| 26 | 3EB-15-51280 | SEAL RING | 1 |
| 27 | 3EB-15-51250 | SPRING | 1 |
| 28 | 3EB-15-11260 | WASHER | 1 |
| 29 | 04064-03515 | SNAP RING | 1 |
| 30 | 06300-06006 | BEARING | 1 |
| 31 | 06301-06006 | BEARING | 1 |
| 32 | 04065-05520 | RING | 1 |
| 33 | 3EB-16-21390 | SPACER | 1 |
| 34 | 06300-06206 | BEARING | 1 |
| 35 | 06300-06206 | BEARING | 1 |

PARTS LIST CONTINUED ON NEXT PAGE

https://truckmanualshub.com/



## TORQFLOW TRANSMISSION - INPUT & IDLER ASSY - S/N 200001A~
## 2.0, 2.5, 2.8 & 3.0 TON TRUCKS

| Item | Part Number | Description | Qty | |
|---|---|---|---|---|
| 36 | 3EB-15-51360 | SEAL . . . . . (K6) | 2 | |
| 37 | 3EB-15-53220 | GEAR . . . . . | 1 | |
| 38 | 06300-06306 | BEARING . . . . . | 1 | |
| 39 | 06300-06307 | BEARING . . . . . | 1 | |
| 40 | 07012-C0045 | SEAL . . . . . (K6) | 1 | |
| 41 | 3EB-15-53290 | SEAL . . . . . (K6) | 1 | |
| 42 | 3EB-15-53250 | COUPLING SHAFT . . . . . | 1 | |
| 43 | 3EB-15-53260 | HOLDER . . . . . | 1 | |
| 44 | 01010-81280 | BOLT . . . . . | 1 | |
| | | **SERVICE KIT** . . . . . | | |
| K6 | 3EB-15-05500 | SEAL KIT, TORQFLOW TRANSMISSION . . . . . | 1 | |

https://truckmanualshub.com/

NOTES:

https://truckmanualshub.com/



# TORQFLOW TRANSMISSION - INPUT & IDLER ASSY - S/N 200001A~
# 3.2 & 3.5 TON TRUCKS

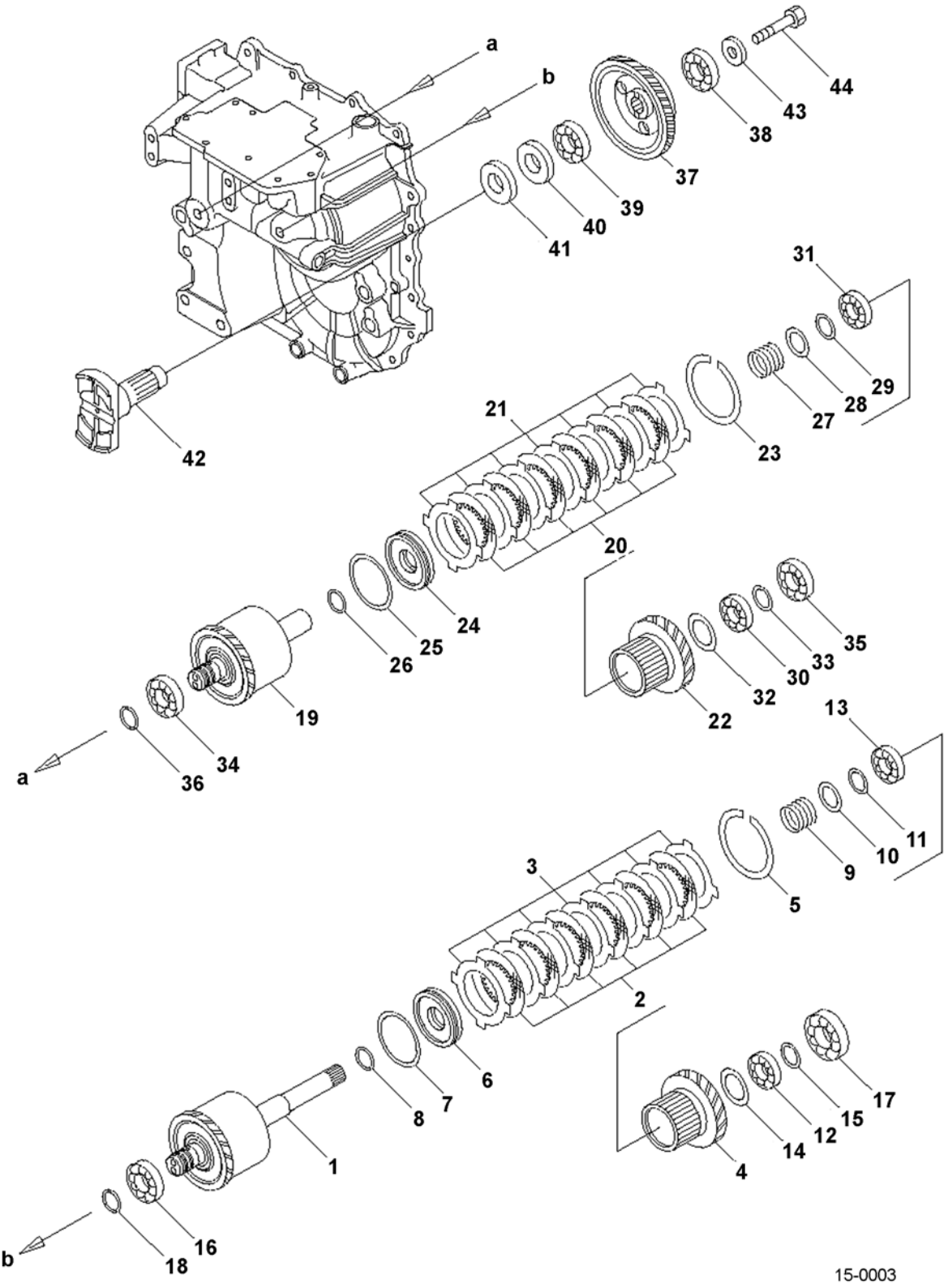

https://truckmanualshub.com/



## TORQFLOW TRANSMISSION - INPUT & IDLER ASSY - S/N 200001A~ 3.2 & 3.5 TON TRUCKS

| Item | Part Number | Description | Qty | |
|---|---|---|---|---|
| | 37B-1AZ-5050 | TRANSMISSION ASSY, TORQFLOW (3.2T, 3.5T) | 1 | |
| | 3EB-15-52030 | PACK ASSY, INPUT | 1 | |
| 1 | 3EB-15-52130 | .SHAFT ASSY, INPUT | 1 | |
| 2 | 3EB-15-51170 | .DISC | 6 | |
| 3 | 3EA-15-11180 | .PLATE | 7 | |
| 4 | 3EB-15-53210 | .GEAR | 1 | |
| 5 | 34B-15-11360 | RING | 1 | |
| 6 | 3EB-15-51230 | PISTON | 1 | |
| 7 | 3EB-15-51290 | SEAL RING | 1 | |
| 8 | 3EB-15-51280 | SEAL RING | 1 | |
| 9 | 3EB-15-51250 | SPRING | 1 | |
| 10 | 3EB-15-11260 | WASHER | 1 | |
| 11 | 04064-03515 | SNAP RING | 1 | |
| 12 | 06300-06006 | BEARING | 1 | |
| 13 | 06301-06006 | BEARING | 1 | |
| 14 | 04065-05520 | RING | 1 | |
| 15 | 3EB-16-21390 | SPACER | 1 | |
| 16 | 06300-06206 | BEARING | 1 | |
| 17 | 06300-06306 | BEARING | 1 | |
| 18 | 3EB-15-51360 | SEAL (K6) | 3 | |
| | 3EB-15-52040 | PACK ASSY, IDLER | 1 | |
| 19 | 3EB-15-52140 | .SHAFT ASSY, IDLER | 1 | |
| 20 | 3EB-15-51170 | .DISC | 6 | |
| 21 | 3EA-15-11180 | .PLATE | 7 | |
| 22 | 3EB-15-53210 | .GEAR | 1 | |
| 23 | 34B-15-11360 | RING | 1 | |
| 24 | 3EB-15-51230 | PISTON | 1 | |
| 25 | 3EB-15-51290 | SEAL RING | 1 | |
| 26 | 3EB-15-51280 | SEAL RING | 1 | |
| 27 | 3EB-15-51250 | SPRING | 1 | |
| 28 | 3EB-15-11260 | WASHER | 1 | |
| 29 | 04064-03515 | SNAP RING | 1 | |
| 30 | 06300-06006 | BEARING | 1 | |
| 31 | 06301-06006 | BEARING | 1 | |
| 32 | 04065-05520 | RING | 1 | |
| 33 | 3EB-16-21390 | SPACER | 1 | |
| 34 | 06300-06206 | BEARING | 1 | |
| 35 | 06300-06206 | BEARING | 1 | |
| 36 | 3EB-15-51360 | SEAL (K6) | 2 | |

PARTS LIST CONTINUED ON NEXT PAGE

https://truckmanualshub.com/



## TORQFLOW TRANSMISSION - INPUT & IDLER ASSY - S/N 200001A~ 3.2 & 3.5 TON TRUCKS

| Item | Part Number | Description | Qty | |
|---|---|---|---|---|
| 37 | 3EB-15-53220 | GEAR | 1 | |
| 38 | 06300-06306 | BEARING | 1 | |
| 39 | 06300-06307 | BEARING | 1 | |
| 40 | 07012-C0045 | SEAL (K6) | 1 | |
| 41 | 3EB-15-53290 | SEAL (K6) | 1 | |
| 42 | 3EB-21-53210 | COUPLING SHAFT | 1 | |
| 43 | 3EB-15-53260 | HOLDER | 1 | |
| 44 | 01010-81280 | BOLT | 1 | |
| | | **SERVICE KIT** | | |
| K6 | 3EB-15-05500 | SEAL KIT, TORQFLOW TRANSMISSION | 1 | |

https://truckmanualshub.com/

NOTES:

https://truckmanualshub.com/



## TORQFLOW TRANSMISSION - VALVE ASSY - S/N 200001A~

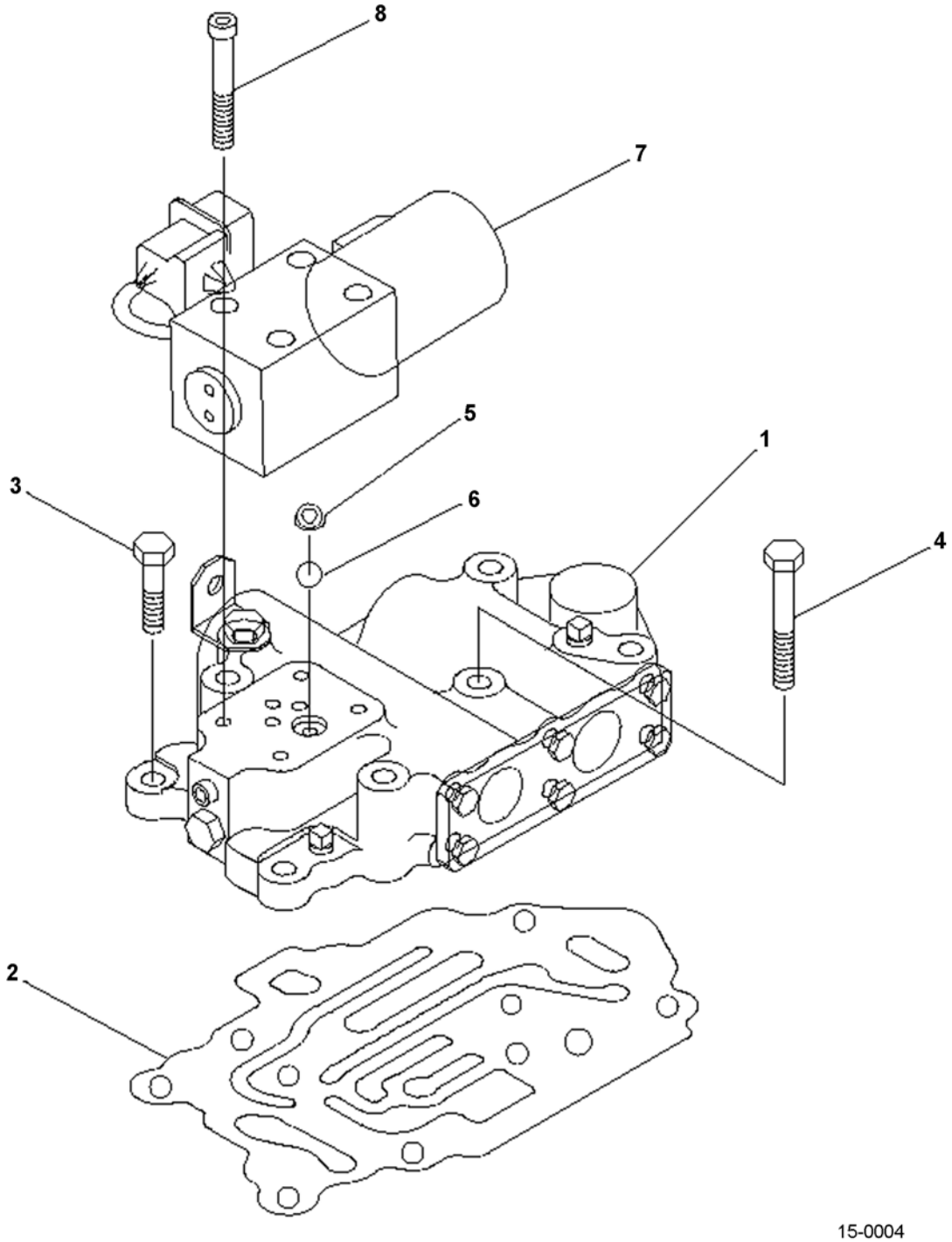

https://truckmanualshub.com/



## TORQFLOW TRANSMISSION - VALVE ASSY - S/N 200001A~

| Item | Part Number | Description | Qty | |
|---|---|---|---|---|
| 1 | 3EB-15-58010 | VALVE ASSY, TORQFLOW . . . . . | 1 | |
| 2 | 3EB-15-58210 | GASKET . . . . . (K6) | 1 | |
| 3 | 01010-80830 | BOLT. . . . . | 2 | |
| 4 | 01010-80855 | BOLT. . . . . | 5 | |
| 5 | 3EA-15-33220 | FILTER . . . . . | 1 | |
| 6 | 07000-71009 | O-RING. . . . . (K6) | 1 | |
| 7 | 3EB-15-58610 | VALVE ASSY, SOLENOID . . . . . | 1 | |
| 8 | 01252-60545 | BOLT. . . . . | 4 | |
| | | **SERVICE KIT** | | |
| K6 | 3EB-15-05500 | SEAL KIT, TORQFLOW . . . . . | 1 | |

https://truckmanualshub.com/



## TORQFLOW TRANSMISSION - VALVE ASSY DETAIL - S/N 200001A~

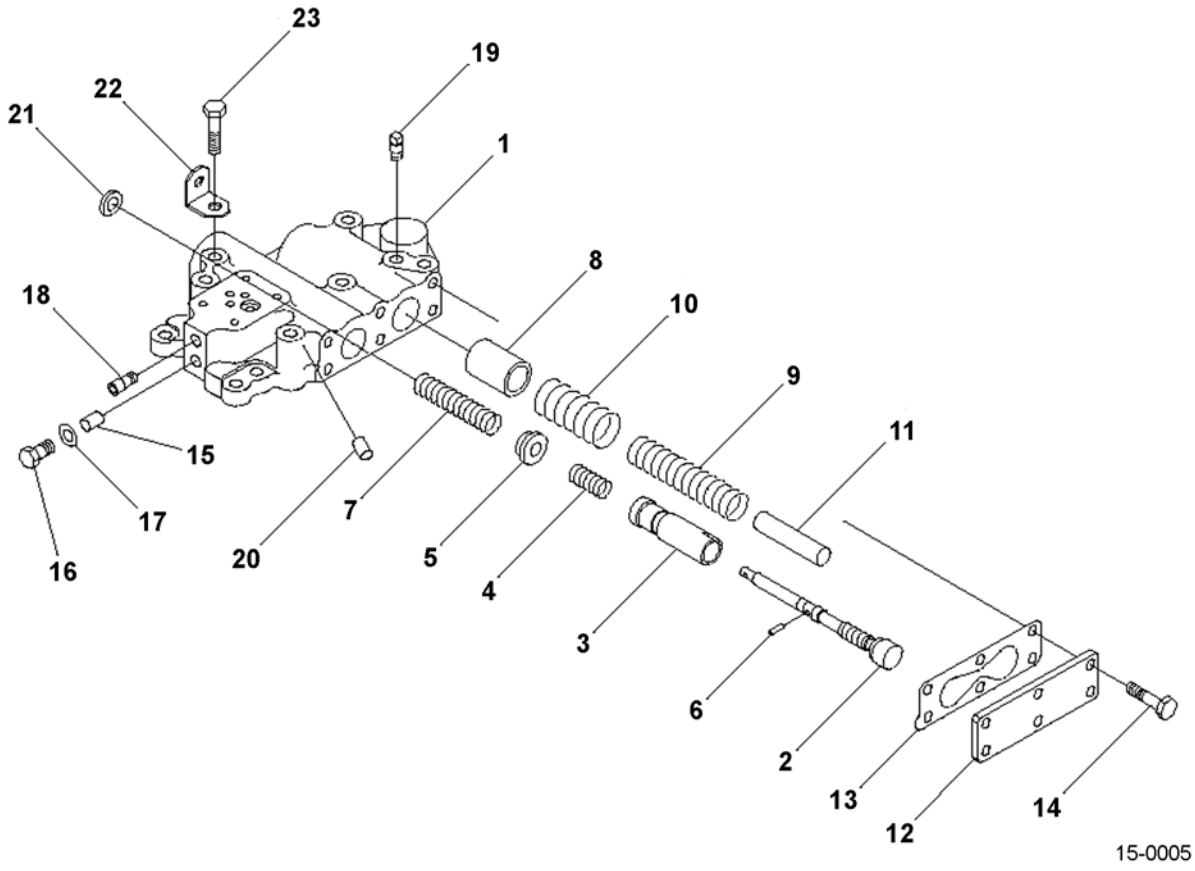

https://truckmanualshub.com/



## TORQFLOW TRANSMISSION - VALVE ASSY DETAIL - S/N 200001A~

| Item | Part Number | Description | Qty | |
|---|---|---|---|---|
| | 3EB-15-58010 | VALVE ASSY, TORQFLOW | 1 | |
| 1 | 3EB-15-58110 | .VALVE BODY | 1 | |
| 2 | 3EB-15-58310 | .SPOOL | 1 | |
| 3 | 3EB-15-58320 | .VALVE | 1 | |
| 4 | 3EB-15-58540 | .SPRING | 1 | |
| 5 | 3EB-15-58330 | .SPACER | 1 | |
| 6 | 04025-00316 | .PIN, SPRING | 1 | |
| 7 | 3EB-15-58530 | .SPRING | 1 | |
| 8 | 3EB-15-48310 | .PISTON | 1 | |
| 9 | 3EB-15-48340 | .SPRING | 1 | |
| 10 | 3EB-15-48330 | .SPRING | 1 | |
| 11 | 3EB-15-48320 | .PIN | 1 | |
| 12 | 3EB-15-58120 | .PLATE | 1 | |
| 13 | 3EB-15-58130 | .GASKET | 1 | |
| 14 | 01010-80616 | .BOLT | 6 | |
| 15 | 3EB-15-48350 | .PISTON | 1 | |
| 16 | 07040-11007 | .PLUG | 1 | |
| 17 | 07005-01012 | .GASKET | 1 | |
| 18 | 07043-70108 | .PLUG | 1 | |
| 19 | 07042-80108 | .PLUG | 2 | |
| 20 | 3EB-15-58510 | .ORIFICE | 1 | |
| 21 | 3EB-15-58520 | .OIL SEAL | 1 | |
| 22 | 3EB-15-48650 | .PLATE | 1 | |
| 23 | 01010-80810 | .BOLT | 1 | |

https://truckmanualshub.com/



## TORQFLOW TRANSMISSION - SOLENOID VALVE PARTS - S/N 200001A~

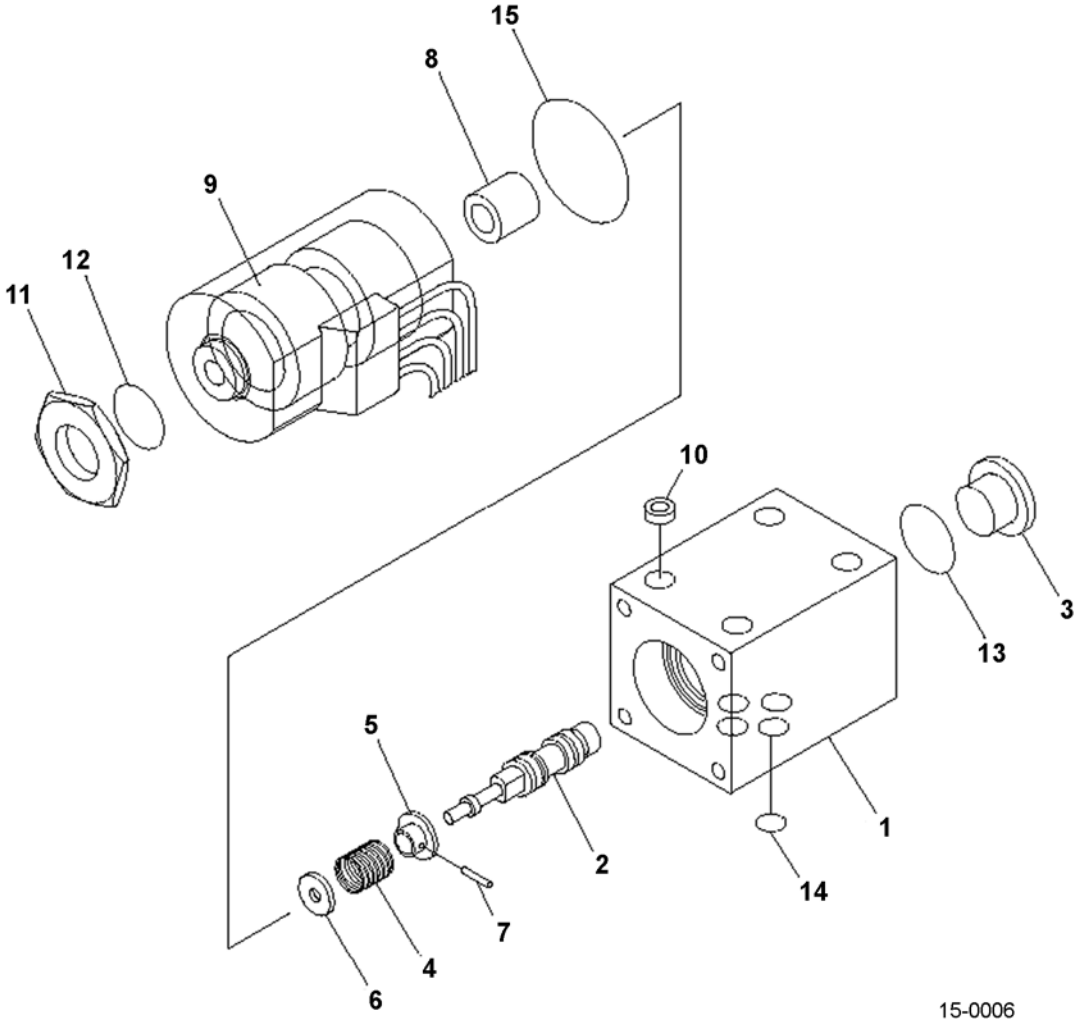

https://truckmanualshub.com/



## TORQFLOW TRANSMISSION - SOLENOID VALVE PARTS - S/N 200001A~

| Item | Part Number | Description | Qty | |
|---|---|---|---|---|
| | 3EB-15-58610 | VALVE ASSY, SOLENOID | 1 | |
| 1 | NSS | .BODY | 1 | |
| 2 | NSS | .SPOOL | 1 | |
| 3 | NSS | .PLUG | 1 | |
| 4 | NSS | .SPRING | 1 | |
| 5 | NSS | .RETAINER | 1 | |
| 6 | NSS | .RETAINER | 1 | |
| 7 | NSS | .PIN | 1 | |
| 8 | NSS | .GUIDE | 1 | |
| 9 | 30B-15-11110 | .COIL | 1 | |
| 10 | NSS | .SPACER | 4 | |
| 11 | 30B-15-11120 | .NUT | 1 | |
| 12 | 30E-15-11130 | .O-RING | 1 | |
| 13 | 30E-15-11130 | .O-RING | 2 | |
| 14 | 30B-15-11140 | .O-RING | 4 | |
| 15 | 30B-15-11150 | .O-RING, COMP. STD B1X | 2 | |

https://truckmanualshub.com/



## TORQFLOW TRANSMISSION - EXTERNAL CASE PARTS - S/N 200001A~

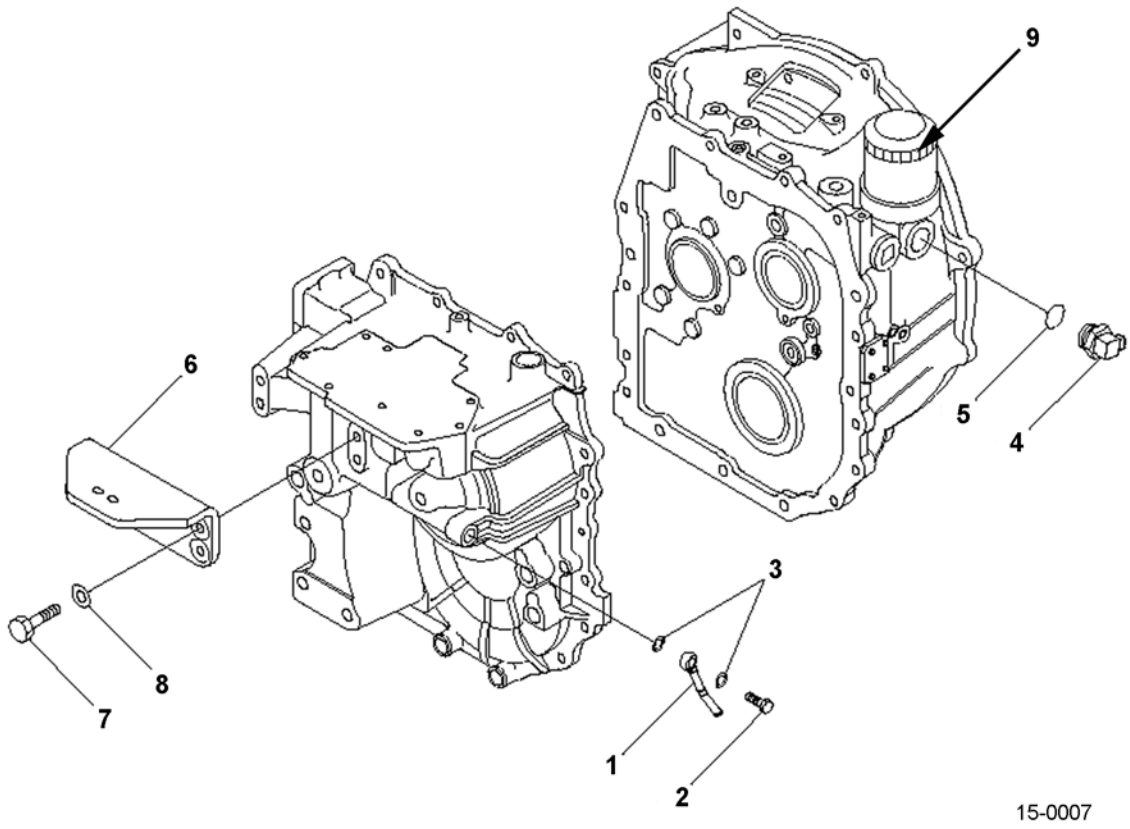

https://truckmanualshub.com/



## TORQFLOW TRANSMISSION - EXTERNAL CASE PARTS - S/N 200001A~

| Item | Part Number | Description | Qty | |
|---|---|---|---|---|
| 1 | 3EB-15-51690 | PIPE | 1 | |
| 2 | 07206-31216 | JOINT | 1 | |
| 3 | 07005-01612 | GASKET (K6) | 2 | |
| 4 | 07235-10315 | ELBOW | 1 | |
| 5 | 07002-22034 | O-RING (K6) | 1 | |
| 6 | 3EB-20-56130 | BRACKET | 1 | |
| 7 | 01010-81235 | BOLT | 4 | |
| 8 | 01643-31232 | WASHER | 4 | |
| 9 | 30B-13-11390 | FILTER | 1 | |
| | | **SERVICE KIT** | | |
| K6 | 3EB-15-05500 | SEAL KIT, TORQFLOW | 1 | |

https://truckmanualshub.com/



## TORQFLOW TRANSMISSION - UNIVERSAL JOINT - S/N 200001A~

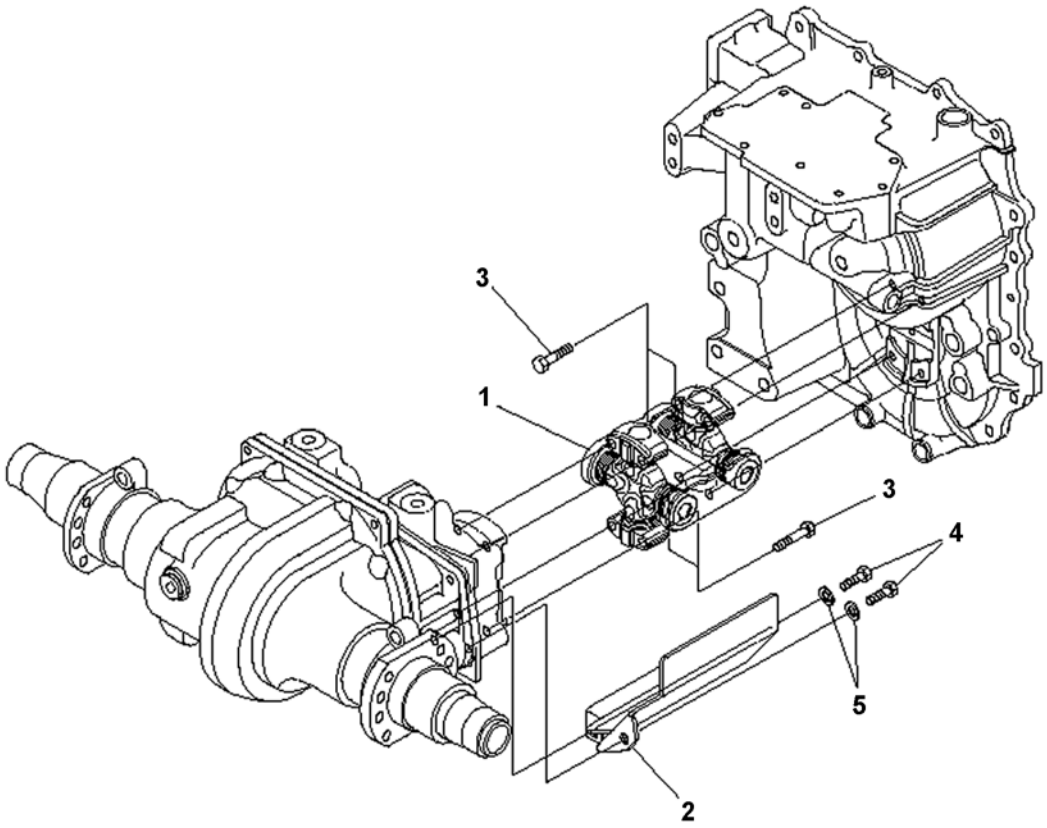

https://truckmanualshub.com/



## TORQFLOW TRANSMISSION - UNIVERSAL JOINT - S/N 200001A~

| Item | Part Number | Description | Qty | |
|---|---|---|---|---|
| 1 | 3EA-20-51210 | PROPELLER SHAFT ASSY | 1 | |
| 2 | 3EA-20-51710 | COVER | 1 | |
| 3 | 3EB-20-51810 | BOLT | 8 | |
| 4 | 01010-80820 | BOLT | 2 | |
| 5 | 01643-30823 | WASHER | 2 | |

https://truckmanualshub.com/



# DRIVE AXLE ASSEMBLY - PNEUMATIC - S/N 200001A~
# 2.0 & 2.5 TON MODELS

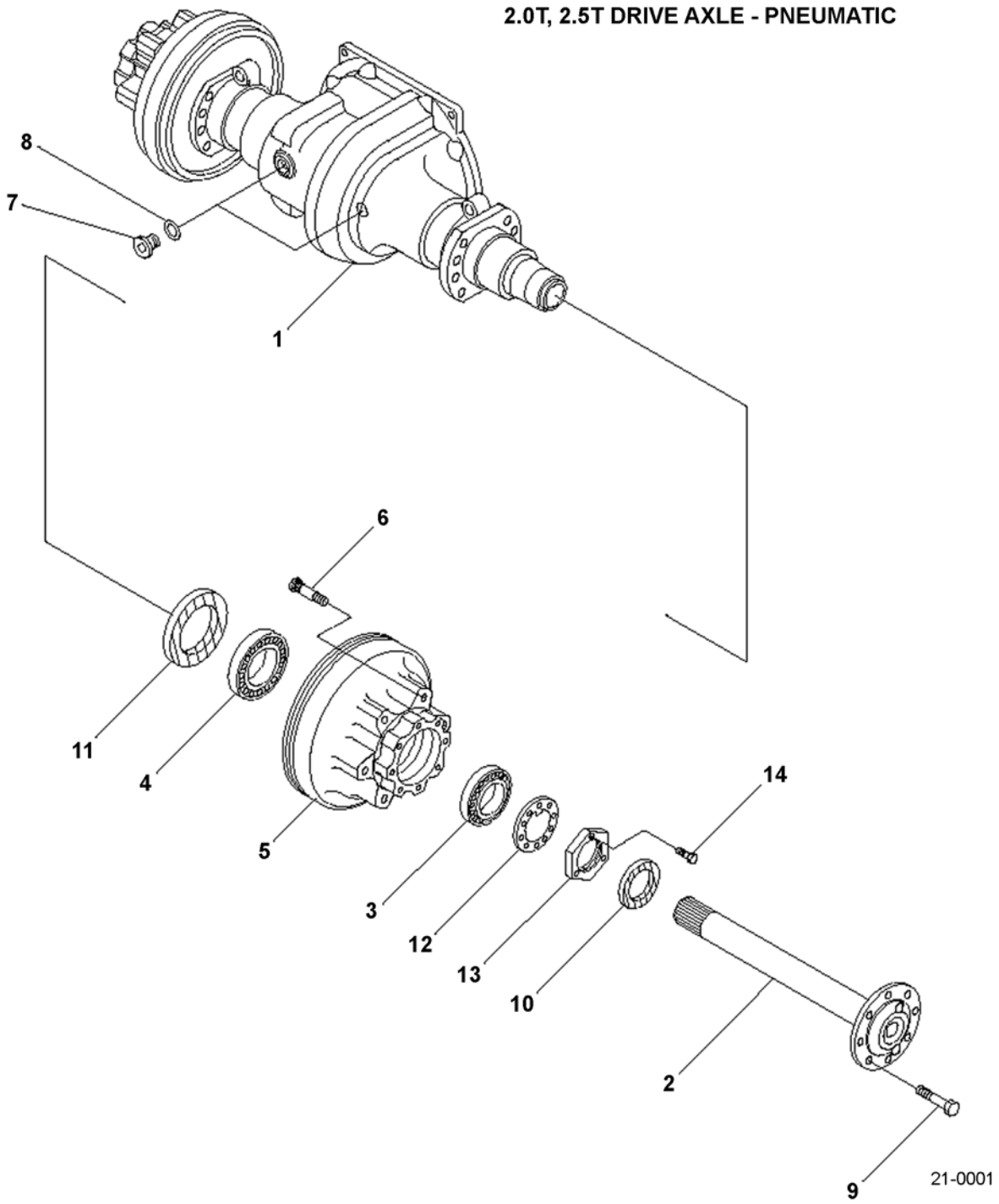

https://truckmanualshub.com/



## DRIVE AXLE ASSEMBLY - PNEUMATIC - S/N 200001A~ 2.0 & 2.5 TON MODELS

| Item | Part Number | Description | Qty | |
|---|---|---|---|---|
| | 37B-1FB-5021 | DRIVE AXLE ASSY, USA | 1 | |
| | 37B-1FB-5031 | DRIVE AXLE ASSY, EXPORT | 1 | |
| 1 | 3EB-21-52310 | HOUSING | 1 | |
| 2 | 3EB-21-32162 | SHAFT | 2 | |
| 3 | 3EB-21-52350 | BEARING | 2 | |
| 4 | 14X-14-19241 | BEARING | 2 | |
| 5 | 3EB-21-52320 | HUB | 2 | |
| 6 | 3EB-21-52380 | BOLT | 12 | |
| 7 | 34B-41-12910 | PLUG | 2 | |
| 8 | 34B-41-12920 | GASKET | 2 | |
| 9 | 01010-81235 | BOLT | 16 | |
| 10 | 3EB-21-32180 | SEAL (K1) | 2 | |
| 11 | 3EB-21-15130 | SEAL (K1) | 2 | |
| 12 | 3BB-21-31230 | PLATE | 2 | |
| 13 | 3BB-21-31240 | NUT | 2 | |
| 14 | 01010-80612 | BOLT | 2 | |
| | | **SERVICE KIT** | | |
| K1 | 3EB-21-05060 | SEAL KIT, FRONT HUB | 2 | |

https://truckmanualshub.com/



# DRIVE AXLE ASSEMBLY - PNEUMATIC - S/N 200001A~ 2.8 & 3.0 TON MODELS

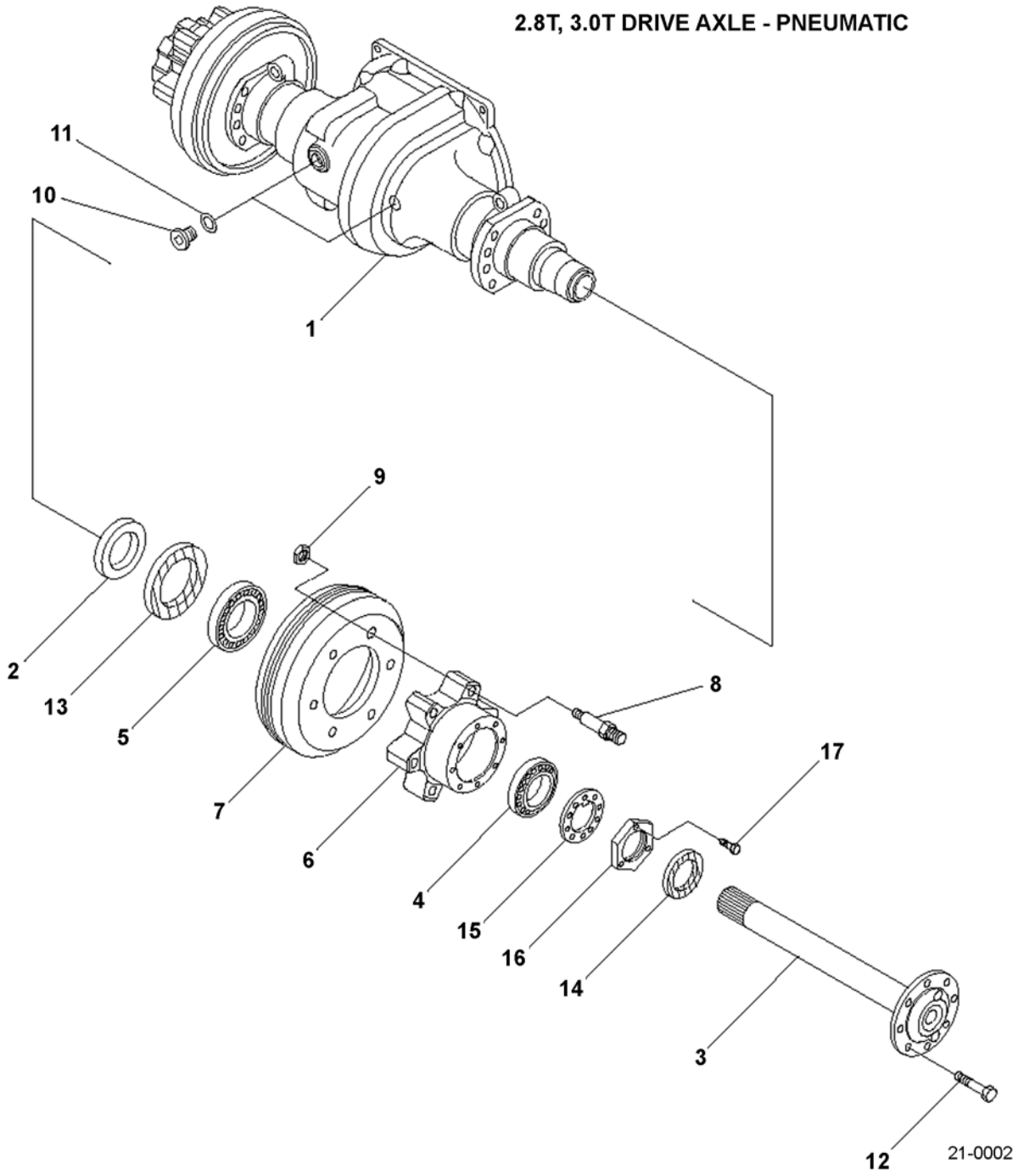

https://truckmanualshub.com/



## DRIVE AXLE ASSEMBLY - PNEUMATIC - S/N 200001A~
## 2.8 & 3.0 TON MODELS

| Item | Part Number | Description | Qty | |
|---|---|---|---|---|
| | 37B-1FC-5031 | DRIVE AXLE ASSY, USA | 1 | |
| | 37B-1FC-5041 | DRIVE AXLE ASSY, EXPORT | 1 | |
| 1 | 3EB-21-52510 | HOUSING | 1 | |
| 2 | 3EB-21-42191 | RETAINER | 2 | |
| 3 | 3EB-21-32162 | SHAFT | 2 | |
| 4 | 06002-32213 | BEARING | 2 | |
| 5 | 316-22-21250 | BEARING | 2 | |
| 6 | 3EB-21-42170 | HUB | 2 | |
| 7 | 3EB-21-42230 | DRUM | 2 | |
| 8 | 3EB-21-25170 | BOLT | 12 | |
| 9 | 01582-11815 | NUT | 12 | |
| 10 | 34B-41-12910 | PLUG | 2 | |
| 11 | 34B-41-12920 | GASKET | 2 | |
| 12 | 01010-81235 | BOLT | 16 | |
| 13 | 3EB-21-32180 | SEAL (K1) | 2 | |
| 14 | 3EB-21-15130 | SEAL (K1) | 2 | |
| 15 | 3BB-21-31230 | PLATE | 2 | |
| 16 | 3BB-21-31240 | NUT | 2 | |
| 17 | 01010-80612 | BOLT | 2 | |
| | | **SERVICE KIT** | | |
| K1 | 3EB-21-05060 | SEAL KIT, FRONT HUB | 2 | |

https://truckmanualshub.com/



# DRIVE AXLE ASSEMBLY - PNEUMATIC - S/N 200001A~
# 3.2 & 3.5 TON MODELS

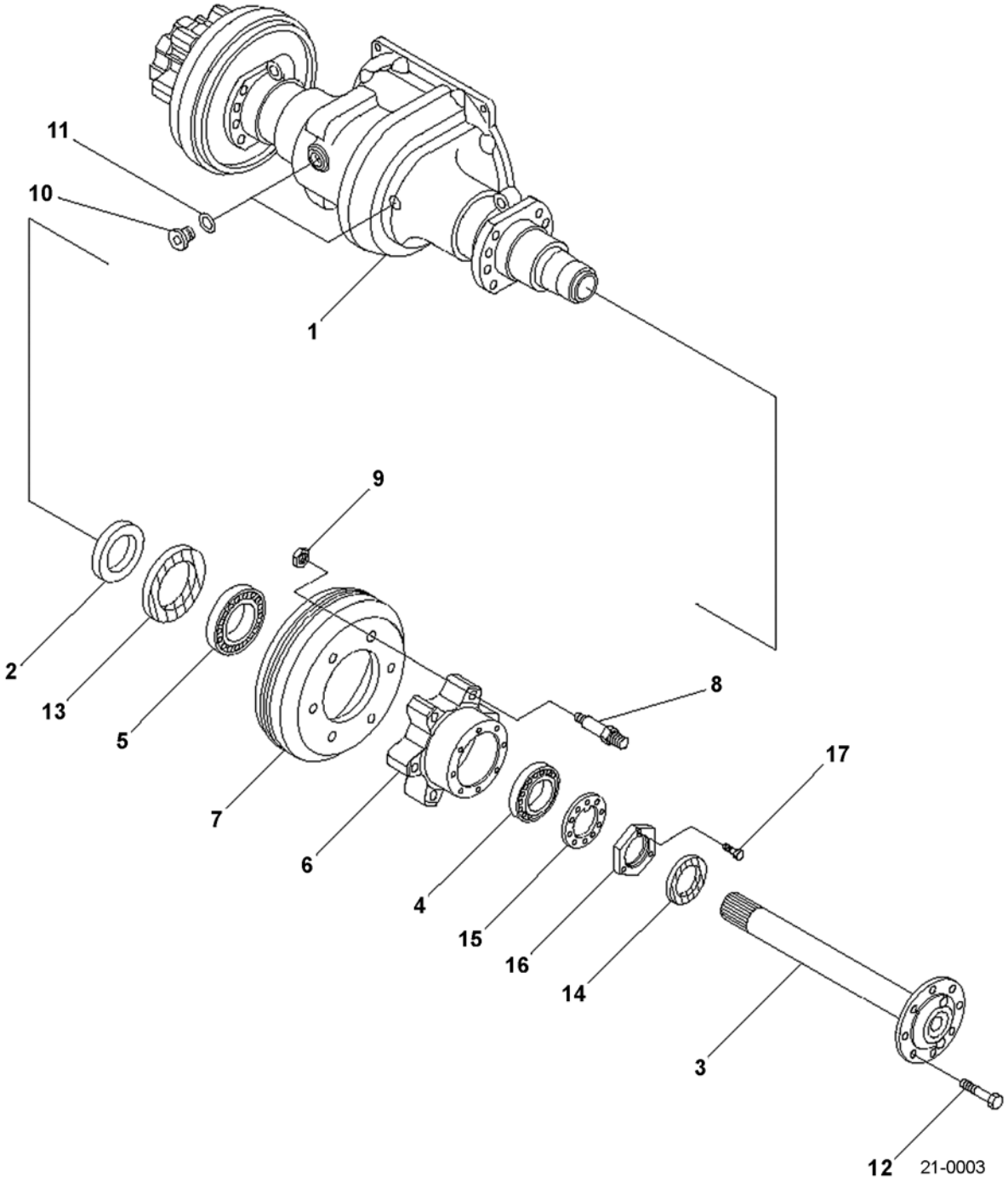

https://truckmanualshub.com/



## DRIVE AXLE ASSEMBLY - PNEUMATIC - S/N 200001A~ 3.2 & 3.5 TON MODELS

| Item | Part Number | Description | Qty |
|---|---|---|---|
| | 37B-1FD-5051 | DRIVE AXLE ASSY, USA & EXPORT | 1 |
| 1 | 3EB-21-52710 | HOUSING | 1 |
| 2 | 3EB-21-42191 | RETAINER | 2 |
| 3 | 3EB-21-52760 | SHAFT | 2 |
| 4 | 3EB-21-52750 | BEARING | 2 |
| 5 | 316-22-21250 | BEARING | 2 |
| 6 | 3EB-21-52740 | HUB | 2 |
| 7 | 3EB-21-52730 | DRUM | 2 |
| 8 | 3EB-21-25170 | BOLT | 12 |
| 9 | 01582-11815 | NUT (STANDARD) | 12 |
| | 34B-27-11340 | NUT (THREADED SPACER USED W/ NARROW DUAL-TIRE OPTION TIRES 6.00 X 15 X 10PR ONLY) | 12 |
| | 34B-27-11350 | LUG NUT (USED WITH 34B-27-11340) | 12 |
| 10 | 34B-41-12910 | PLUG | 2 |
| 11 | 34B-41-12920 | GASKET | 2 |
| 12 | 01010-81235 | BOLT | 16 |
| 13 | 3EB-21-32180 | SEAL (K1) | 2 |
| 14 | 3EB-21-15130 | SEAL (K1) | 2 |
| 15 | 3BB-21-31230 | PLATE | 2 |
| 16 | 3BB-21-31240 | NUT | 2 |
| 17 | 01010-80612 | BOLT | 2 |
| | | **SERVICE KIT** | |
| K1 | 3EB-21-05060 | SEAL KIT, FRONT HUB | 2 |

https://truckmanualshub.com/



# DRIVE AXLE ASSEMBLY - CUSHION - S/N 200001A~
# (ALSO SEE FIG. 21-0011)

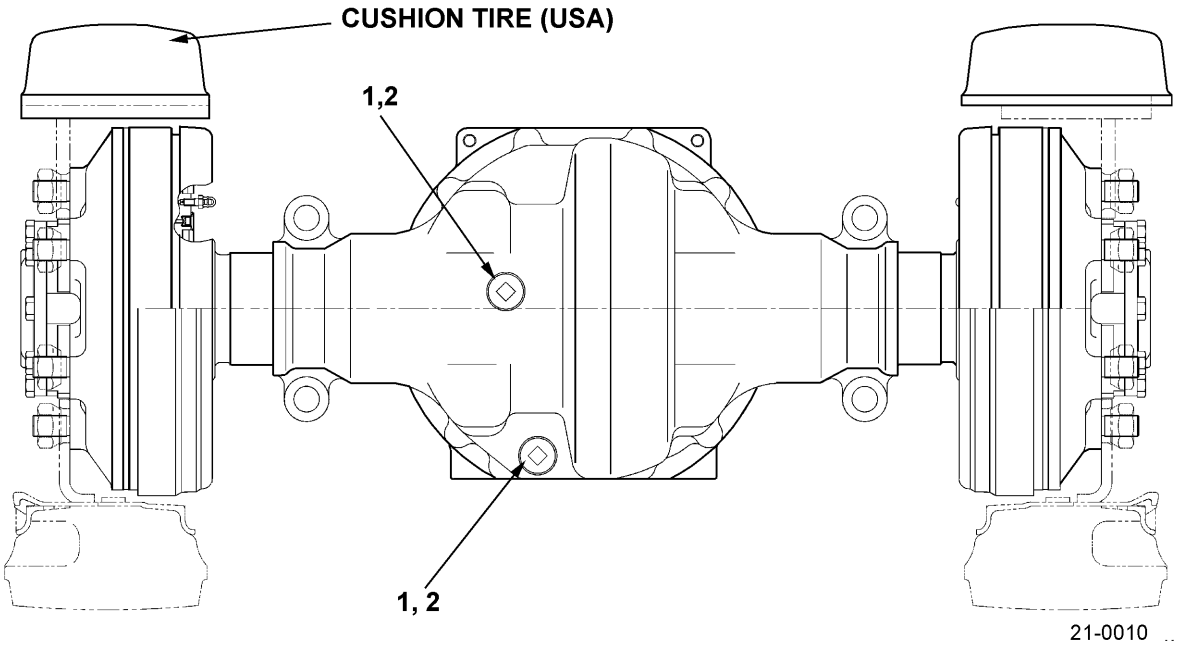

https://truckmanualshub.com/



## DRIVE AXLE ASSEMBLY - CUSHION - S/N 200001A~
## (ALSO SEE FIG. 21-0011)

| Item | Part Number | Description | Qty | |
|---|---|---|---|---|
| | 37B-1FE-5211 | DRIVE AXLE ASSY . . . . . | 1 | |
| | 3EB-21-51501 | CARRIER ASSY . . . . . | 1 | |
| 1 | 34B-41-12910 | PLUG . . . . . | 2 | |
| 2 | 34B-41-12920 | GASKET . . . . . | 2 | |

https://truckmanualshub.com/



## DRIVE AXLE ASSEMBLY - CUSHION - DETAIL - S/N 200001A~
## (ALSO SEE FIG. 21-0010)

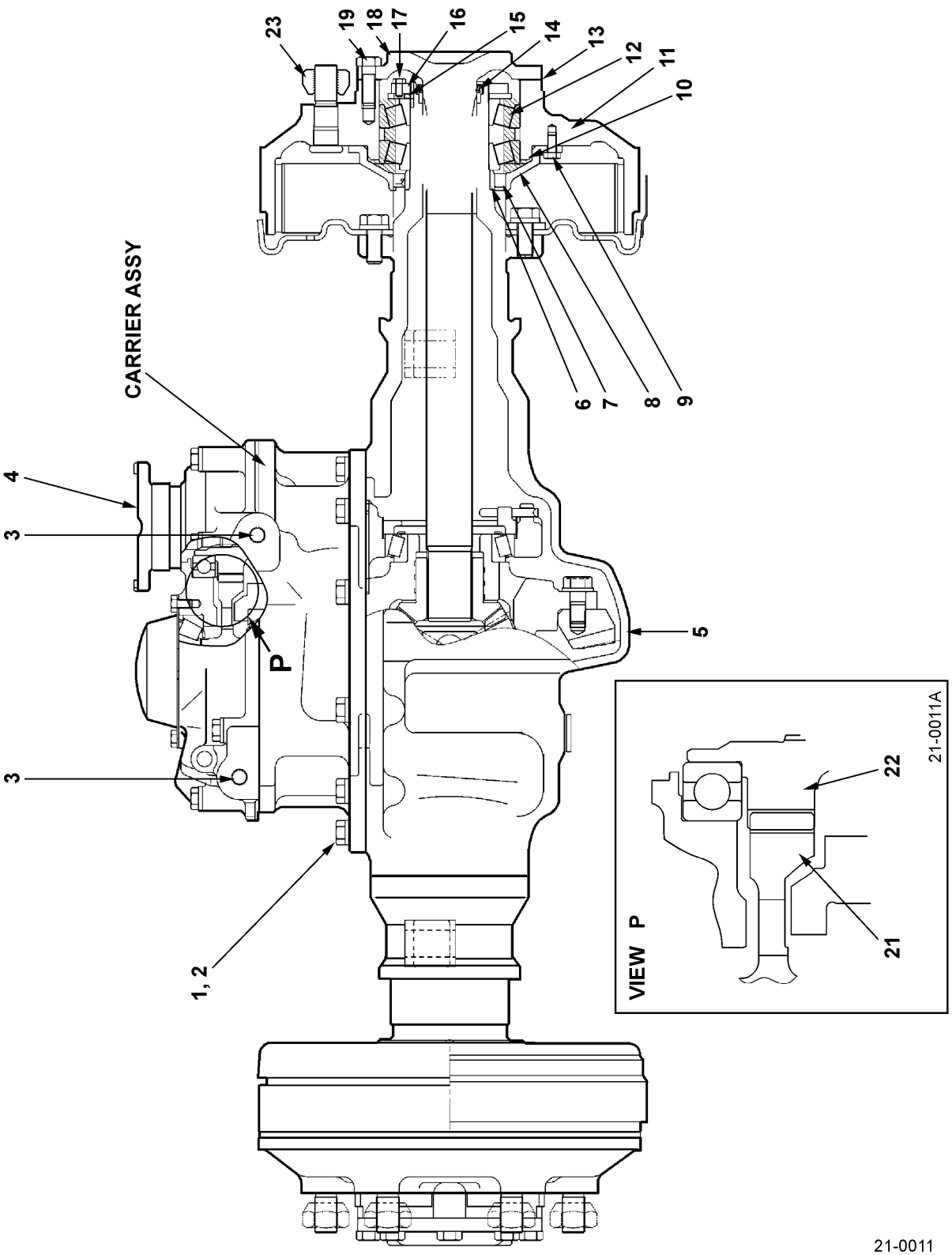

https://truckmanualshub.com/



## DRIVE AXLE ASSEMBLY - CUSHION - DETAIL - S/N 200001A~
## (ALSO SEE FIG. 21-0010)

| Item | Part Number | Description | Qty | |
|---|---|---|---|---|
| | 37B-1FE-5211 | DRIVE AXLE ASSY (CUSHION) | 1 | |
| | 3EB-21-51501 | CARRIER ASSY | 1 | |
| 1 | 01010-81235 | BOLT | 13 | |
| 2 | 01643-51232 | WASHER | 13 | |
| 3 | 3EA-71-12780 | WASHER | 1 | |
| 4 | 3EB-21-53200 | COUPLING ASSY | 1 | |
| 5 | 3EB-22-52111 | HOUSING | 1 | |
| 6 | 3EB-22-55190 | .RETAINER | 2 | |
| 7 | 3EB-22-21160 | .SEAL | 2 | |
| 8 | 3EB-22-21150 | .CAGE | 2 | |
| 9 | 01010-80816 | .BOLT | 6 | |
| 10 | 07000-02145 | .O-RING | 2 | |
| 11 | 3EB-22-45610 | .HUB | 2 | |
| 12 | 06002-30214 | .BEARING | 4 | |
| 13 | 3EB-22-45150 | .GASKET | 2 | |
| 14 | 3EB-21-15140 | .SEAL | 2 | |
| 15 | 3EB-21-25150 | .PLATE | 2 | |
| 16 | 3EB-21-25140 | .NUT | 2 | |
| 17 | 01010-80612 | .BOLT | 2 | |
| 18 | 3EB-22-35541 | .SHAFT | 2 | |
| 19 | 01010-81235 | .BOLT | 16 | |
| 20 | 3EB-22-21170 | .HUB BOLT | 12 | |
| 21 | 37B-1TH-5010 | .DRIVE GEAR | 1 | |
| 22 | 37B-1TJ-5010 | .DRIVEN GEAR | 1 | |
| 23 | 34B-21-14151 | HUB (LUG) NUT | 12 | |
| K1 | 3EB-21-05060 | SEAL KIT, FRONT HUB | 2 | |

https://truckmanualshub.com/



## DIFFERENTIAL GEAR - ALL MODELS - S/N 200001A~

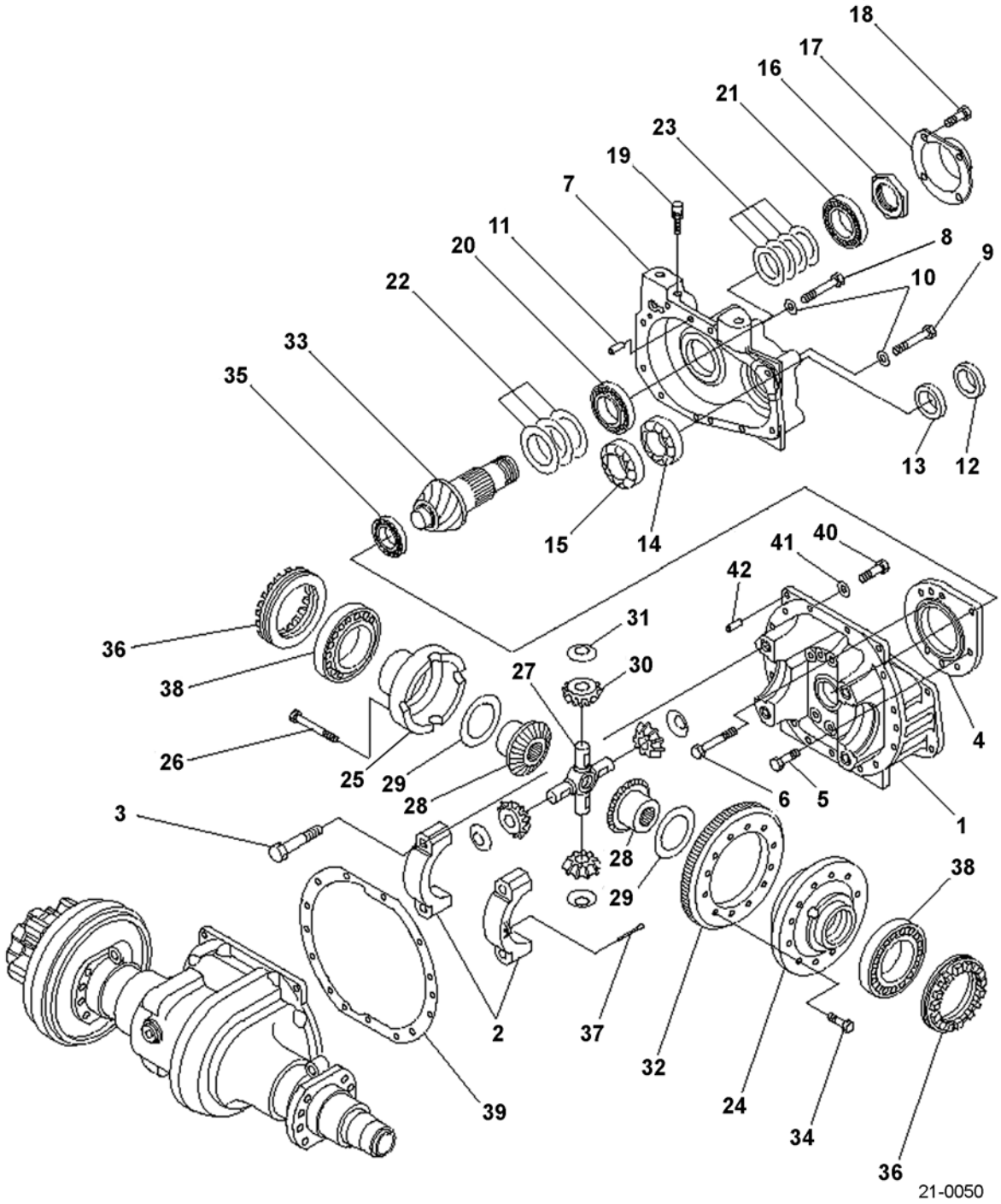

https://truckmanualshub.com/



## DIFFERENTIAL GEAR - ALL MODELS - S/N 200001A~

| Item | Part Number | Description | Qty | |
|---|---|---|---|---|
| | 3EB-21-51531 | CARRIER ASSY, PILOT | 1 | |
| 1 | NSS | .CARRIER, PILOT | 1 | |
| 2 | NSS | .CAP | 2 | |
| 3 | 3EB-21-11190 | .BOLT | 4 | |
| 4 | 3EB-21-51551 | CAGE, PINION | 1 | |
| 5 | 01010-81235 | BOLT | 3 | |
| 6 | 01010-81290 | BOLT | 5 | |
| 7 | 3EB-21-53110 | CASE, TRANSFER | 1 | |
| 8 | 01010-81050 | BOLT | 2 | |
| 9 | 01010-81070 | BOLT | 8 | |
| 10 | 01643-31032 | WASHER | 10 | |
| 11 | 04020-01228 | PIN | 2 | |
| 12 | 3EB-21-53140 | SEAL, DUST (K3) | 1 | |
| 13 | 07012-00040 | SEAL (K3) | 1 | |
| 14 | 3EB-21-53180 | BEARING | 1 | |
| 15 | 3EB-21-53170 | BEARING | 1 | |
| 16 | 3EB-21-53150 | NUT | 1 | |
| 17 | 3EB-21-53161 | COVER | 1 | |
| 18 | 01010-80812 | BOLT | 4 | |
| 19 | 07030-01030 | BREATHER | 1 | |
| 20 | 3EB-21-51720 | BEARING | 1 | |
| 21 | 3EB-21-51710 | BEARING | 1 | |
| 22 | 3EB-15-00030 | SHIM ASSY | 1 | |
| 23 | 3EB-21-00050 | SHIM ASSY | 1 | |
| | 3EB-21-51110 | DIFFERENTIAL ASSY | 1 | |
| | 3EB-21-51120 | .CASE ASSY | 1 | |
| 24 | NSS | ..CASE, FLANGE | 1 | |
| 25 | NSS | ..CASE | 1 | |
| 26 | 3EB-21-51190 | ..BOLT | 16 | |
| 27 | 3EB-21-11160 | .SPIDER | 1 | |
| 28 | 3EB-21-31141 | .GEAR | 2 | |
| 29 | 34B-21-12141 | .BUSHING | 2 | |
| 30 | 3EB-21-11340 | .GEAR | 4 | |
| 31 | 3EB-21-11370 | .BUSHING | 4 | |
| | 3EB-21-51510 | GEAR ASSY | 1 | |
| 32 | NSS | .GEAR | 1 | |
| 33 | NSS | .SHAFT, PINION | 1 | |
| 34 | 3EB-21-11230 | BOLT | 12 | |
| 35 | 3EB-14-11451 | BEARING | 1 | |

PARTS LIST CONTINUED ON NEXT PAGE

https://truckmanualshub.com/



## DIFFERENTIAL GEAR - ALL MODELS - S/N 200001A~

| Item | Part Number | Description | Qty | |
|---|---|---|---|---|
| 36 | 3EB-21-51170 | SCREW | 2 | |
| 37 | 04050-18050 | PIN, COTTER | 2 | |
| 38 | 14X-14-19241 | BEARING | 2 | |
| 39 | 3EB-21-52140 | GASKET (K3) | 1 | |
| 40 | 01010-81235 | BOLT | 13 | |
| 41 | 01643-51232 | WASHER | 13 | |
| 42 | 04020-01228 | PIN | 2 | |
| | | **SERVICE KIT** | | |
| K3 | 3EB-21-05500 | SEAL KIT, DIFFERENTIAL GEAR | 1 | |

https://truckmanualshub.com/

NOTES:

https://truckmanualshub.com/



# DIFFERENTIAL GEAR - COUPLING SHAFT - S/N 200001A~

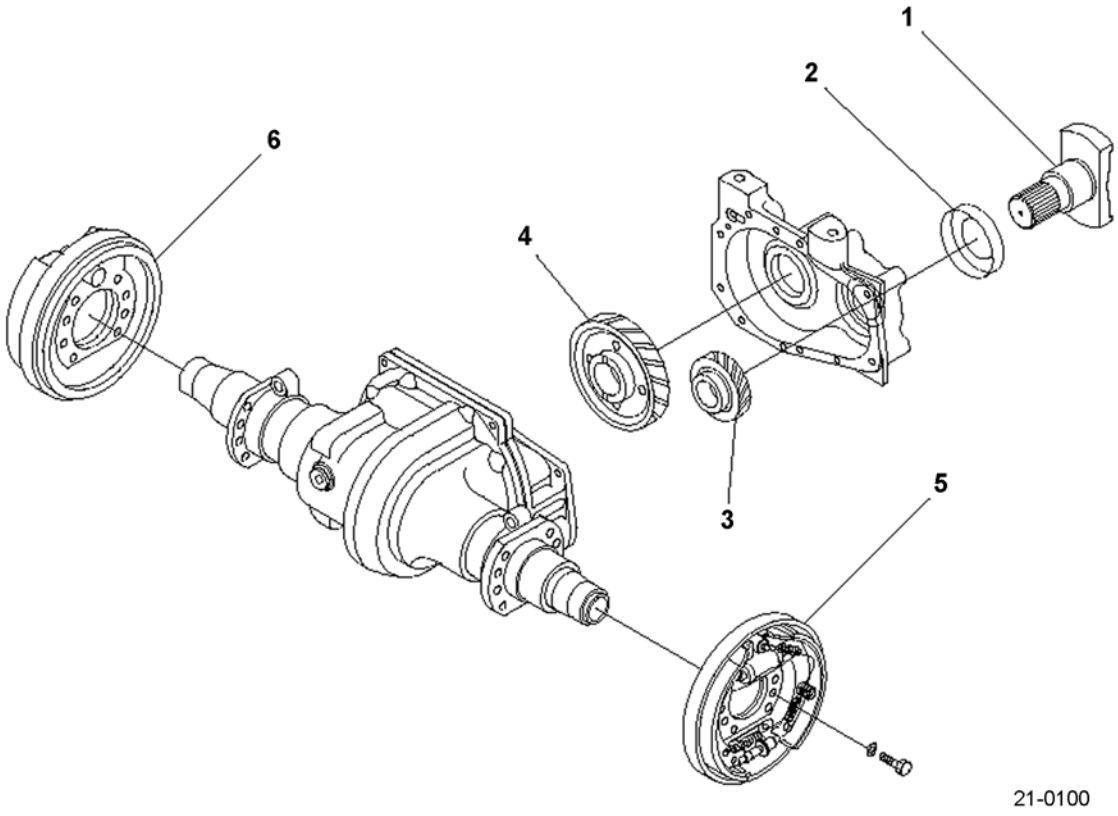

https://truckmanualshub.com/



## DIFFERENTIAL GEAR - COUPLING SHAFT - S/N 200001A~

| Item | Part Number | Description | Qty | |
|---|---|---|---|---|
| | 3EA-20-51090 | SHAFT ASSY, COUPLING . . . . . | 1 | |
| 1 | 3EA-20-51210 | .SHAFT, COUPLING (PROPELLER SHAFT) . . . | 1 | |
| 2 | 3EA-20-51710 | .COVER, PROTECTOR . . . . . | 1 | |
| 3 | 37B-1TH-5020 | GEAR, DRIVE . . . . . | 1 | |
| 4 | 37B-1TJ-5020 | GEAR, DRIVEN . . . . . | 1 | |
| 5 | (37B-1BR-5110) | BRAKE ASSY, LH . . . . . | 1 | |
| 6 | (37B-1BR-5120) | BRAKE ASSY, RH . . . . . | 1 | |

https://truckmanualshub.com/



## STEERING AXLE ASSEMBLY - PNEUMATIC - S/N 200001A~
## (ALSO SEE FIG. 24-0002)

STEERING AXLE FRONT VIEW

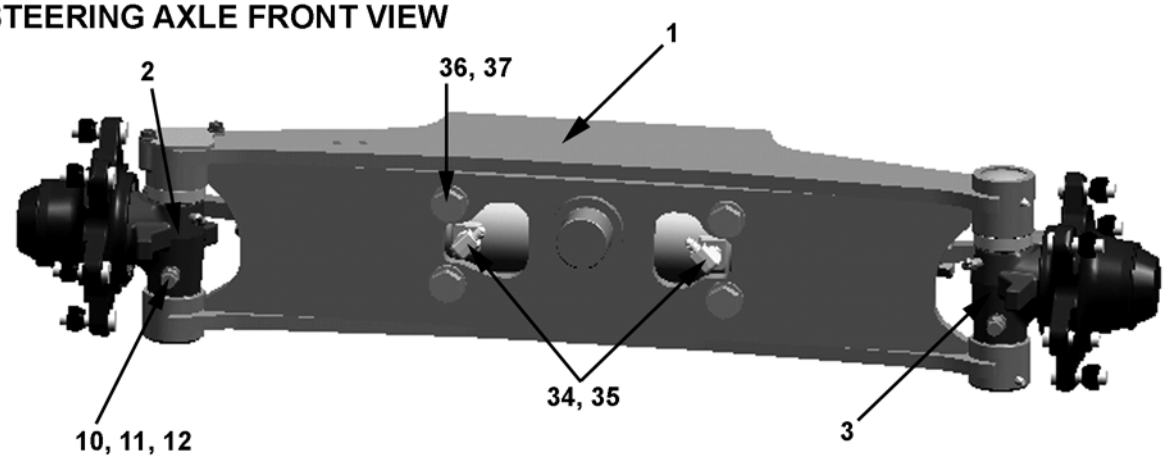


24-0001A

STEERING AXLE REAR VIEW

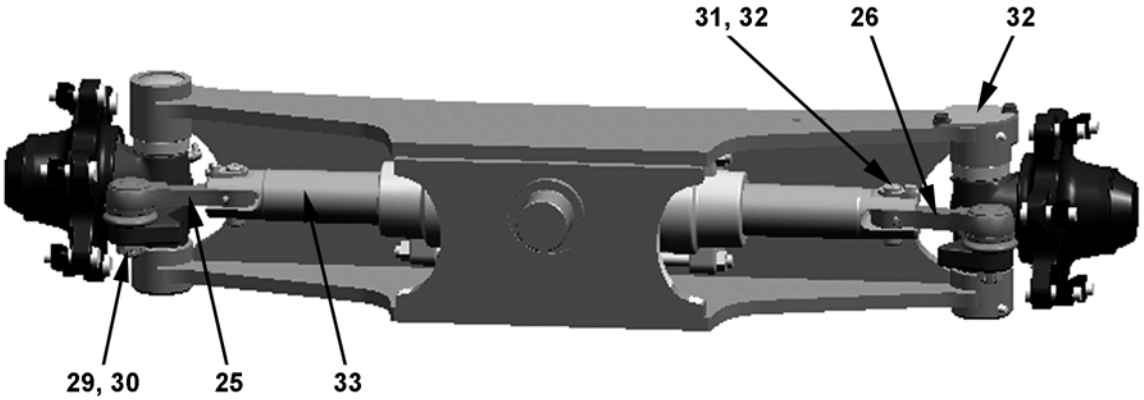


24-0001B

KNUCKLE ASSY

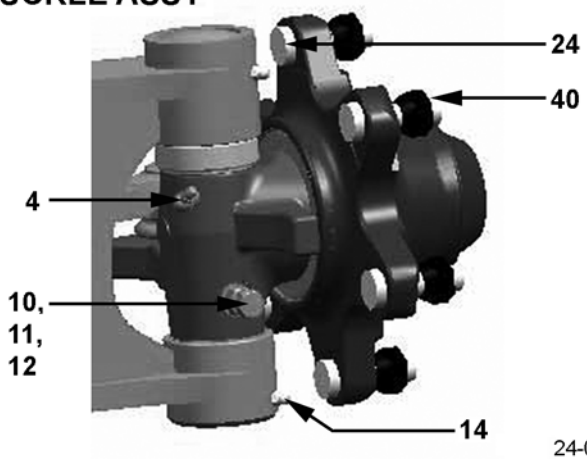


24-0001C

https://truckmanualshub.com/



## STEERING AXLE ASSEMBLY - PNEUMATIC - S/N 200001A~
## (ALSO SEE FIG. 24-0002)

| Item | Part Number | Description | Qty | |
|---|---|---|---|---|
| 1 | 3EB-24-51112 | STEERING AXLE (2.0T, 2.5T PNEUMATIC) . . . | 1 | |
| | 3EB-24-52112 | STEERING AXLE (2.8T, 3.0T PNEUMATIC) . . . | 1 | |
| | 3EB-24-53112 | STEERING AXLE (3.2T, 3.5T PNEUMATIC) . . . | 1 | |
| 2 | 3EB-24-51211 | KNUCKLE ASSY, RH (2.0T, 2.5T, 2.8T, 3.0T). . . | 1 | |
| | 3EB-24-53211 | KNUCKLE ASSY, RH (3.2T, 3.5T) . . . . . | 1 | |
| 3 | 3EB-24-51221 | KNUCKLE ASSY, LH (2.0T, 2.5T, 2.8T, 3.0T) . . . | 1 | |
| | 3EB-24-53221 | KNUCKLE ASSY, LH (3.2T, 3.5T). . . . . | 1 | |
| 4 | 07020-00675 | FITTING, GREASE . . . . . | 2 | |
| 5 | 3EB-24-51261 | KINGPIN, LH. . . . . | 1 | |
| 6 | 3EB-24-51271 | KINGPIN, RH . . . . . | 1 | |
| 7 | 3EB-24-32440 | BEARING . . . . . | 4 | |
| 8 | 3EB-24-42320 | BEARING (2.0T, 2.5T) . . . . . | 2 | |
| | 3EB-24-52460 | BEARING (2.8T, 3.0T, 3.2T, 3.5T). . . . . | 2 | |
| 9 | 360-27-11220 | SHIM. . . . . | 6 | |
| 10 | 3EB-24-51380 | BOLT. . . . . | 2 | |
| 11 | 3EB-24-51390 | NUT. . . . . | 2 | |
| 12 | 01643-51032 | WASHER . . . . . | 2 | |
| 13 | 3EB-24-41320 | SEAL. . . . . | 2 | |
| 14 | 07020-00001 | FITTING, GREASE . . . . . | 4 | |
| 15 | 07046-14520 | PLUG . . . . . | 3 | |
| 16 | 3EB-24-51230 | HUB (2.0T, 2.5T). . . . . | 2 | |
| | 3EB-24-41230 | HUB (2.8T, 3.0T, 3.2T, 3.5T) . . . . . | 2 | |
| 17 | 3EB-24-41330 | SEAL. . . . . | 2 | |
| 18 | 06300-32010 | BEARING (2.0T, 2.5T) . . . . . | 2 | |
| | 3EB-24-32260 | BEARING (2.8T, 3.0T, 3.2T, 3.5T). . . . . | 2 | |
| 19 | 06300-32007 | BEARING (2.0T, 2.5T) . . . . . | 2 | |
| | 06300-30207 | BEARING (2.8T, 3.0T, 3.2T, 3.5T). . . . . | 2 | |
| 20 | 3EB-24-32390 | WASHER . . . . . | 2 | |
| 21 | 01593-13018 | NUT. . . . . | 2 | |
| 22 | 04025-00650 | PIN . . . . . | 2 | |
| 23 | 3EB-24-11160 | CAP. . . . . | 2 | |
| 24 | 34B-24-11221 | SERRATION BOLT . . . . . | 12 | |
| 25 | 3EB-24-A7920 | TIE ROD ASSY, LH. . . . . | 1 | |
| 26 | 3EB-24-A7930 | TIE ROD ASSY, RH . . . . . | 1 | |
| 27 | 3EB-24-A7910 | BUSHING . . . . . | 2 | |
| 28 | 3EB-24-A7940 | WASHER . . . . . | 4 | |
| 29 | 3EB-24-21270 | NUT. . . . . | 2 | |
| 30 | 04050-13025 | COTTER PIN . . . . . | 2 | |
| 31 | 3EB-25-A7170 | PIN . . . . . | 2 | |

PARTS LIST CONTINUED ON NEXT PAGE

https://truckmanualshub.com/



## STEERING AXLE ASSEMBLY - PNEUMATIC - S/N 200001A~
## (ALSO SEE FIG. 24-0002)

| Item | Part Number | Description | Qty | |
|---|---|---|---|---|
| 32 | 01435-00814 | BOLT | 4 | |
| 33 | 3EB-64-A7110 | POWER STEERING CYLINDER ASSY | 1 | |
| 34 | 3EB-66-53410 | ELBOW | 2 | |
| 35 | 3EB-66-53460 | O-RING | 2 | |
| 36 | 01010-81845 | BOLT | 4 | |
| 37 | 01643-31845 | WASHER | 4 | |
| 38 | 3EB-24-51510 | PLATE | 1 | |
| 39 | 3EB-24-51520 | GASKET | 1 | |
| 40 | 300-22-31241 | HUB (LUG) NUT | 12 | |

https://truckmanualshub.com/

**NOTES:**

https://truckmanualshub.com/



## STEERING AXLE ASSEMBLY - PNEUMATIC - DETAIL - S/N 200001A~ (ALSO SEE FIG. 24-0001)

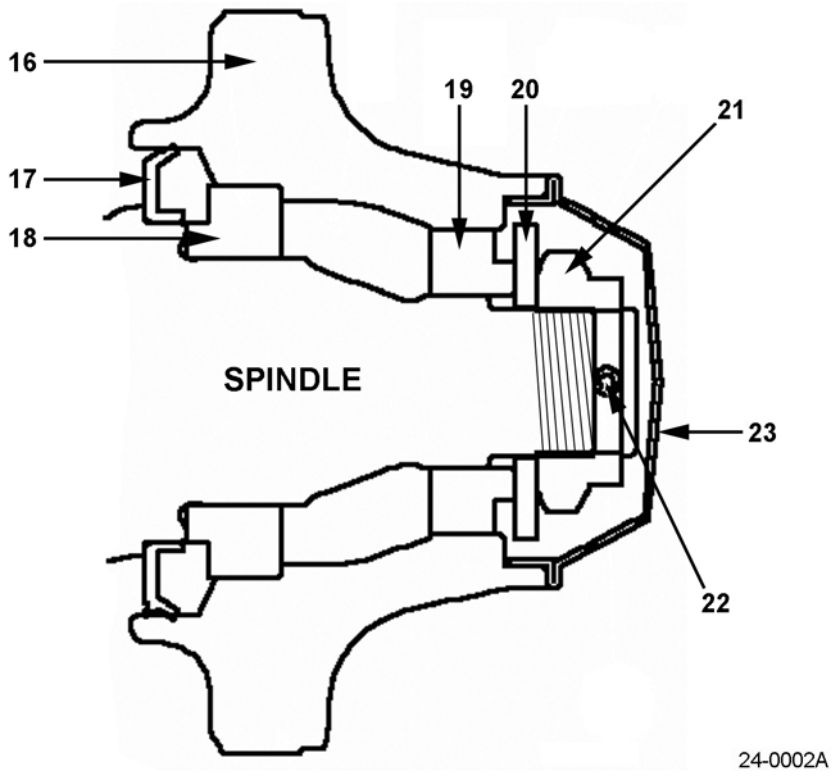


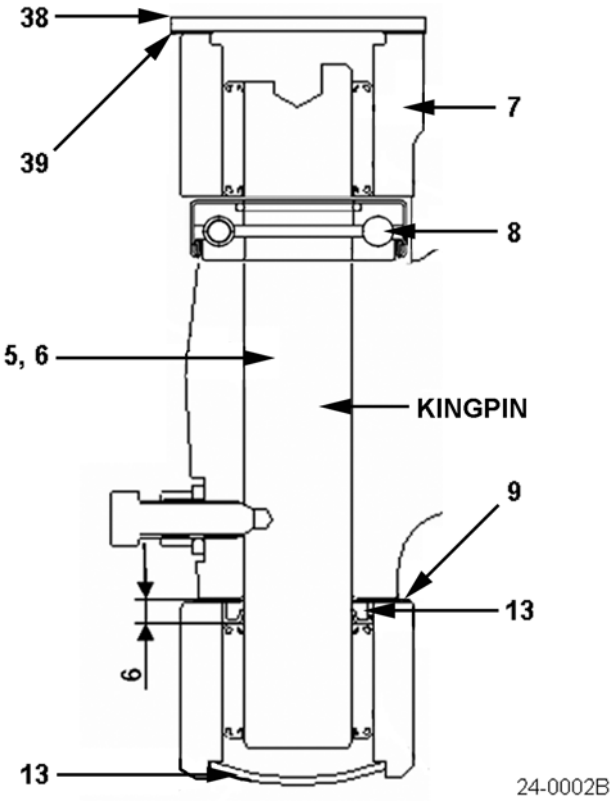


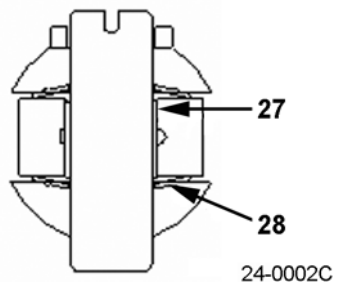


TIE ROD END

https://truckmanualshub.com/



## STEERING AXLE ASSEMBLY - PNEUMATIC - DETAIL - S/N 200001A~
## (ALSO SEE FIG. 24-0001)

| Item | Part Number | Description | Qty | |
|---|---|---|---|---|
| 1 | 3EB-24-51112 | STEERING AXLE (2.0T, 2.5T PNEUMATIC) . . . | 1 | |
| | 3EB-24-52112 | STEERING AXLE (2.8T, 3.0T PNEUMATIC) . . . | 1 | |
| | 3EB-24-53112 | STEERING AXLE (3.2T, 3.5T PNEUMATIC) . . . | 1 | |
| 2 | 3EB-24-51211 | KNUCKLE ASSY, RH (2.0T, 2.5T, 2.8T, 3.0T). . . | 1 | |
| | 3EB-24-53211 | KNUCKLE ASSY, RH (3.2T, 3.5T) . . . . . | 1 | |
| 3 | 3EB-24-51221 | KNUCKLE ASSY, LH (2.0T, 2.5T, 2.8T, 3.0T) . . . | 1 | |
| | 3EB-24-53221 | KNUCKLE ASSY, LH (3.2T, 3.5T). . . . . | 1 | |
| 4 | 07020-00675 | FITTING, GREASE . . . . . | 2 | |
| 5 | 3EB-24-51261 | PIN, LH . . . . . | 1 | |
| 6 | 3EB-24-51271 | PIN, RH. . . . . | 1 | |
| 7 | 3EB-24-32440 | BEARING . . . . . | 4 | |
| 8 | 3EB-24-42320 | BEARING (2.0T, 2.5T) . . . . . | 2 | |
| | 3EB-24-52460 | BEARING (2.8T, 3.0T, 3.2T, 3.5T). . . . . | 2 | |
| 9 | 360-27-11220 | SHIM. . . . . | 6 | |
| 10 | 3EB-24-51380 | BOLT. . . . . | 2 | |
| 11 | 3EB-24-51390 | NUT. . . . . | 2 | |
| 12 | 01643-51032 | WASHER . . . . . | 2 | |
| 13 | 3EB-24-41320 | SEAL. . . . . | 2 | |
| 14 | 07020-00001 | FITTING, GREASE . . . . . | 4 | |
| 15 | 07046-14520 | PLUG . . . . . | 3 | |
| 16 | 3EB-24-51230 | HUB (2.0T, 2.5T). . . . . | 2 | |
| | 3EB-24-41230 | HUB (2.8T, 3.0T, 3.2T, 3.5T) . . . . . | 2 | |
| 17 | 3EB-24-41330 | SEAL. . . . . | 2 | |
| 18 | 06300-32010 | BEARING (2.0T, 2.5T) . . . . . | 2 | |
| | 3EB-24-32260 | BEARING (2.8T, 3.0T, 3.2T, 3.5T). . . . . | 2 | |
| 19 | 06300-32007 | BEARING (2.0T, 2.5T) . . . . . | 2 | |
| | 06300-30207 | BEARING (2.8T, 3.0T, 3.2T, 3.5T). . . . . | 2 | |
| 20 | 3EB-24-32390 | WASHER . . . . . | 2 | |
| 21 | 01593-13018 | NUT, SPINDLE . . . . . | 2 | |
| 22 | 04025-00650 | COTTER PIN . . . . . | 2 | |
| 23 | 3EB-24-11160 | CAP. . . . . | 2 | |
| 24 | 34B-24-11221 | SERRATION BOLT . . . . . | 12 | |
| 25 | 3EB-24-A7920 | TIE ROD ASSY, LH. . . . . | 1 | |
| 26 | 3EB-24-A7930 | TIE ROD ASSY, RH . . . . . | 1 | |
| 27 | 3EB-24-A7910 | BUSHING . . . . . | 2 | |
| 28 | 3EB-24-A7940 | WASHER . . . . . | 4 | |
| 29 | 3EB-24-21270 | NUT. . . . . | 2 | |
| 30 | 04050-13025 | COTTER PIN . . . . . | 2 | |
| 31 | 3EB-25-A7170 | PIN . . . . . | 2 | |

PARTS LIST CONTINUED ON NEXT PAGE

https://truckmanualshub.com/



## STEERING AXLE ASSEMBLY - PNEUMATIC - DETAIL - S/N 200001A~ (ALSO SEE FIG. 24-0001)

| Item | Part Number | Description | Qty | |
|---|---|---|---|---|
| 32 | 01435-00814 | BOLT | 4 | |
| 33 | 3EB-64-A7110 | POWER STEERING CYLINDER ASSY | 1 | |
| 34 | 3EB-66-53410 | ELBOW | 2 | |
| 35 | 3EB-66-53460 | O-RING | 2 | |
| 36 | 01010-81845 | BOLT | 4 | |
| 37 | 01643-31845 | WASHER | 4 | |
| 38 | 3EB-24-51510 | PLATE | 1 | |
| 39 | 3EB-24-51520 | GASKET | 1 | |
| 40 | 300-22-31241 | HUB (LUG) NUT | 12 | |

https://truckmanualshub.com/

**NOTES:**

https://truckmanualshub.com/



## STEERING AXLE ASSEMBLY - CUSHION - S/N 200001A~
## (ALSO SEE FIG. 24-0004)

STEERING AXLE FRONT VIEW

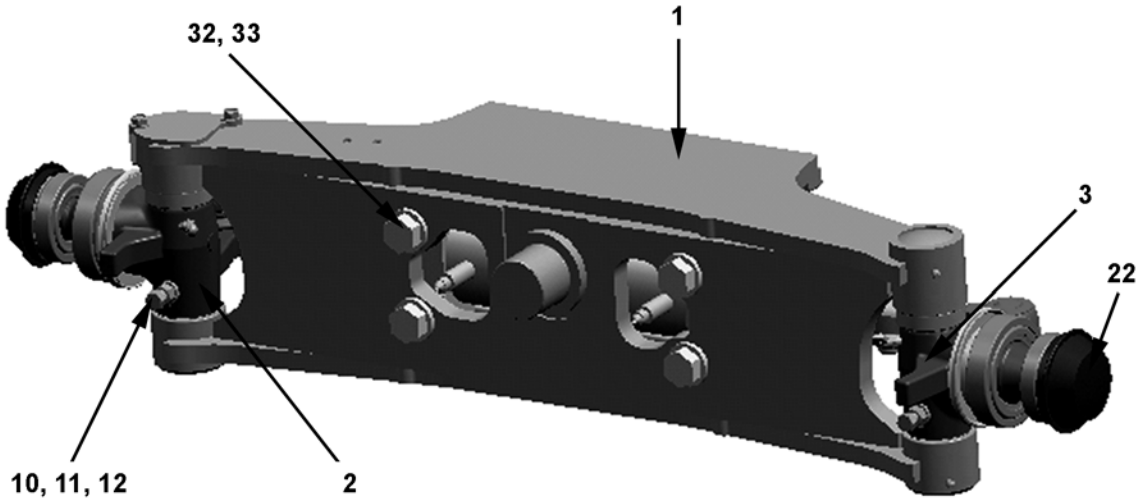


24-0003A

STEERING AXLE REAR VIEW

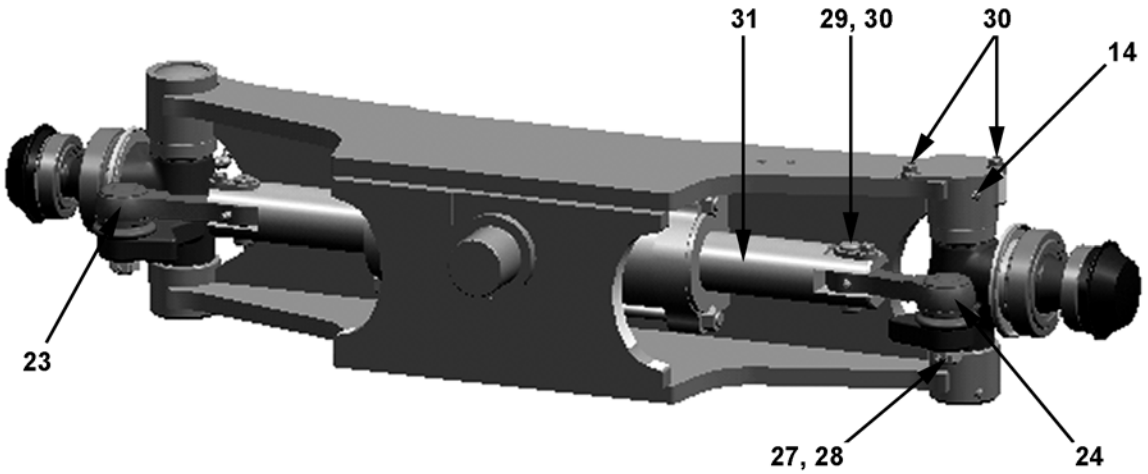


24-0003B

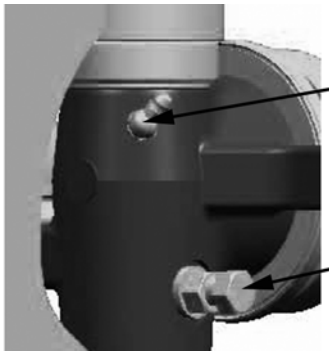


24-0003C

https://truckmanualshub.com/



## STEERING AXLE ASSEMBLY - CUSHION - S/N 200001A~
## (ALSO SEE FIG. 24-0004)

| Item | Part Number | Description | Qty | |
|---|---|---|---|---|
| 1 | 3EB-25-A7110 | STEERING AXLE (2.0T, 2.5T) | 1 | |
| | 3EB-25-A7210 | STEERING AXLE (2.8T, 3.0T, 3.2T, 3.5T) | 1 | |
| 2 | 3EB-24-51211 | KNUCKLE, RH (2.0T, 2.5T, 2.8T, 3.0T) | 1 | |
| | 3EB-24-53211 | KNUCKLE, RH (3.2T, 3.5T) | 1 | |
| 3 | 3EB-24-51221 | KNUCKLE, LH (2.0T, 2.5T, 2.8T, 3.0T) | 1 | |
| | 3EB-24-53221 | KNUCKLE, LH (3.3T, 3.5T) | 1 | |
| 4 | 07020-00675 | FITTING, GREASE | 2 | |
| 5 | 3EB-24-51261 | KINGPIN, LH | 1 | |
| 6 | 3EB-24-51271 | KINGPIN, RH | 1 | |
| 7 | 3EB-24-32440 | BEARING | 4 | |
| 8 | 3EB-24-42320 | BEARING (2.0T, 2.5T, 2.8T, 3.0T) | 2 | |
| | 3EB-24-52460 | BEARING (3.2T, 3.5T) | 2 | |
| 9 | 360-27-11220 | SHIM | 6 | |
| 10 | 3EB-24-51380 | BOLT | 2 | |
| 11 | 3EB-24-51390 | NUT | 2 | |
| 12 | 01643-51032 | WASHER | 2 | |
| 13 | 3EB-24-41320 | SEAL | 2 | |
| 14 | 07020-00001 | FITTING, GREASE | 4 | |
| 15 | 07046-14520 | PLUG | 3 | |
| 16 | 3EB-24-41330 | SEAL | 2 | |
| 17 | 3EB-24-32260 | BEARING | 2 | |
| 18 | 06300-30207 | BEARING | 2 | |
| 19 | 3EB-24-32390 | WASHER | 2 | |
| 20 | 01593-13018 | NUT | 2 | |
| 21 | 04025-00650 | PIN | 2 | |
| 22 | 3EB-24-11160 | CAP | 2 | |
| 23 | 3EB-24-A7920 | TIE ROD ASSY, LH | 1 | |
| 24 | 3EB-24-A7930 | TIE ROD ASSY, RH | 1 | |
| 25 | 3EB-24-A7910 | BUSHING | 2 | |
| 26 | 3EB-24-A7940 | WASHER | 4 | |
| 27 | 3EB-24-21270 | NUT | 2 | |
| 28 | 04050-13025 | COTTER PIN | 2 | |
| 29 | 3EB-25-A7170 | PIN | 2 | |
| 30 | 01435-00814 | BOLT | 4 | |
| 31 | 3EB-64-A7210 | POWER STEERING CYLINDER ASSY | 1 | |
| 32 | 01010-81845 | BOLT | 4 | |
| 33 | 01643-31845 | WASHER | 4 | |
| 34 | 3EB-24-51510 | PLATE | 1 | |
| 35 | 3EB-24-51520 | GASKET | 1 | |

https://truckmanualshub.com/



## STEERING AXLE ASSEMBLY - CUSHION - DETAIL - S/N 200001A~
## (ALSO SEE FIG. 24-0003)

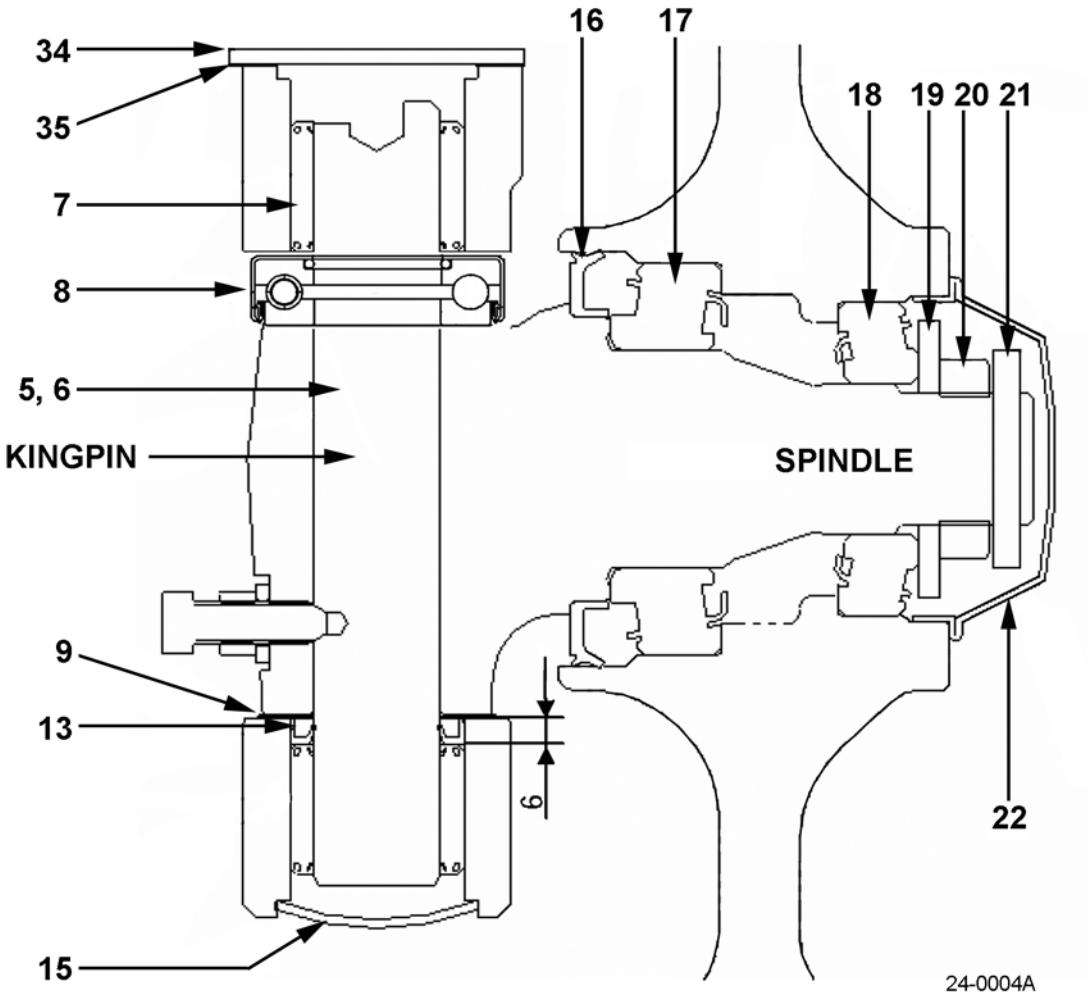


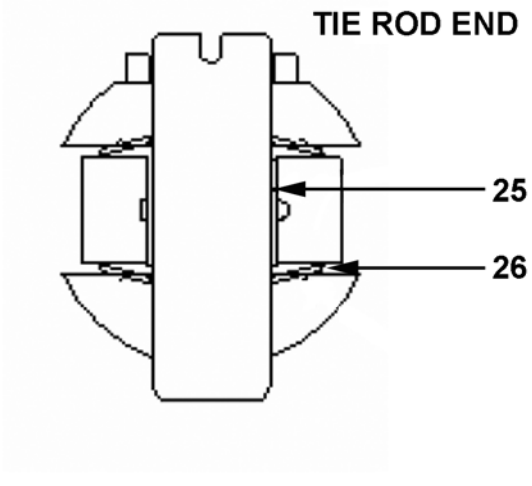

https://truckmanualshub.com/



## STEERING AXLE ASSEMBLY - CUSHION - DETAIL - S/N 200001A~ (ALSO SEE FIG. 24-0003)

| Item | Part Number | Description | Qty | |
|---|---|---|---|---|
| 1 | 3EB-25-A7110 | STEERING AXLE (2.0T, 2.5T) | 1 | |
| | 3EB-25-A7210 | STEERING AXLE (2.8T, 3.0T, 3.2T, 3.5T) | 1 | |
| 2 | 3EB-24-51211 | KNUCKLE, RH (2.0T, 2.5T, 2.8T, 3.0T) | 1 | |
| | 3EB-24-53211 | KNUCKLE, RH (3.2T, 3.5T) | 1 | |
| 3 | 3EB-24-51221 | KNUCKLE, LH (2.0T, 2.5T, 2.8T, 3.0T) | 1 | |
| | 3EB-24-53221 | KNUCKLE, LH (3.3T, 3.5T) | 1 | |
| 4 | 07020-00675 | FITTING, GREASE | 2 | |
| 5 | 3EB-24-51261 | KINGPIN, LH | 1 | |
| 6 | 3EB-24-51271 | KINGPIN, RH | 1 | |
| 7 | 3EB-24-32440 | BEARING | 4 | |
| 8 | 3EB-24-42320 | BEARING (2.0T, 2.5T, 2.8T, 3.0T) | 2 | |
| | 3EB-24-52460 | BEARING (3.2T, 3.5T) | 2 | |
| 9 | 360-27-11220 | SHIM | 6 | |
| 10 | 3EB-24-51380 | BOLT | 2 | |
| 11 | 3EB-24-51390 | NUT | 2 | |
| 12 | 01643-51032 | WASHER | 2 | |
| 13 | 3EB-24-41320 | SEAL | 2 | |
| 14 | 07020-00001 | FITTING, GREASE | 4 | |
| 15 | 07046-14520 | PLUG | 3 | |
| 16 | 3EB-24-41330 | SEAL | 2 | |
| 17 | 3EB-24-32260 | BEARING | 2 | |
| 18 | 06300-30207 | BEARING | 2 | |
| 19 | 3EB-24-32390 | WASHER | 2 | |
| 20 | 01593-13018 | NUT | 2 | |
| 21 | 04025-00650 | PIN | 2 | |
| 22 | 3EB-24-11160 | CAP | 2 | |
| 23 | 3EB-24-A7920 | TIE ROD ASSY, LH | 1 | |
| 24 | 3EB-24-A7930 | TIE ROD ASSY, RH | 1 | |
| 25 | 3EB-24-A7910 | BUSHING | 2 | |
| 26 | 3EB-24-A7940 | WASHER | 4 | |
| 27 | 3EB-24-21270 | NUT | 2 | |
| 28 | 04050-13025 | COTTER PIN | 2 | |
| 29 | 3EB-25-A7170 | PIN | 2 | |
| 30 | 01435-00814 | BOLT | 4 | |
| 31 | 3EB-64-A7210 | POWER STEERING CYLINDER ASSY | 1 | |
| 32 | 01010-81845 | BOLT | 4 | |
| 33 | 01643-31845 | WASHER | 4 | |
| 34 | 3EB-24-51510 | PLATE | 1 | |
| 35 | 3EB-24-51520 | GASKET | 1 | |

https://truckmanualshub.com/



# STEERING AXLE - STABILIZER ASSY (FG) - S/N 200001A~

## STABILIZER SYSTEM

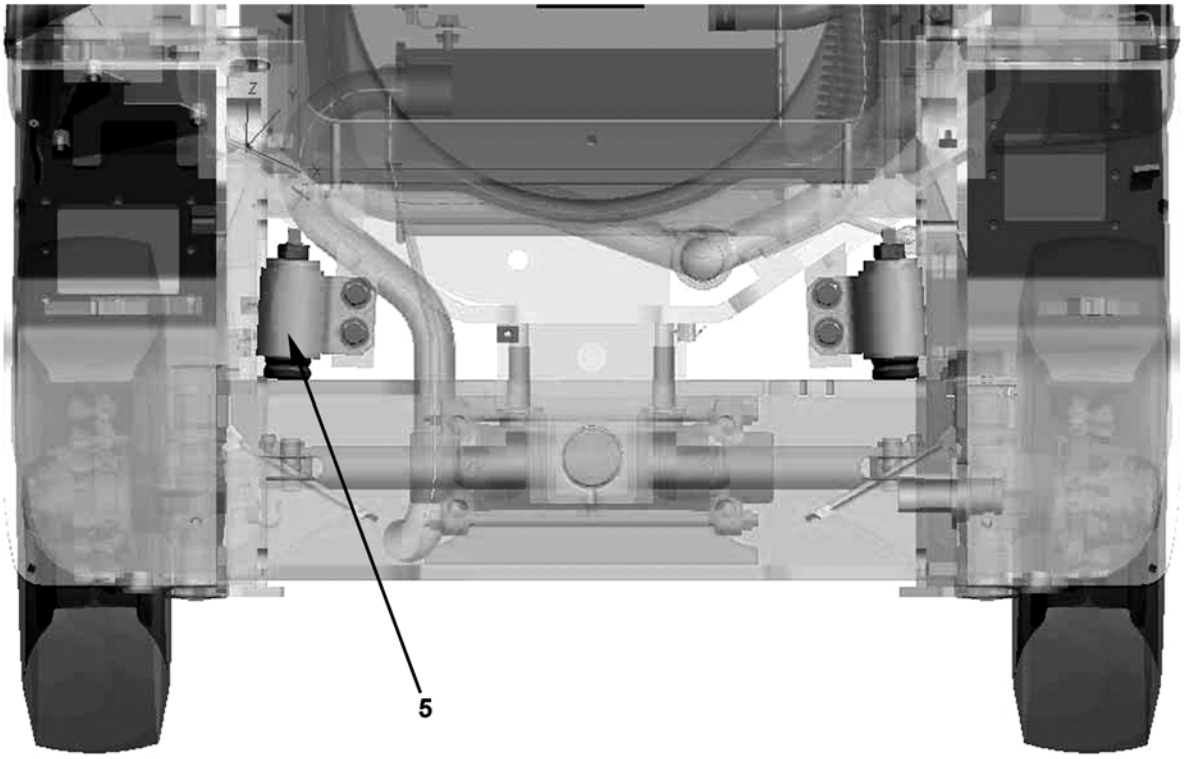


24-0010

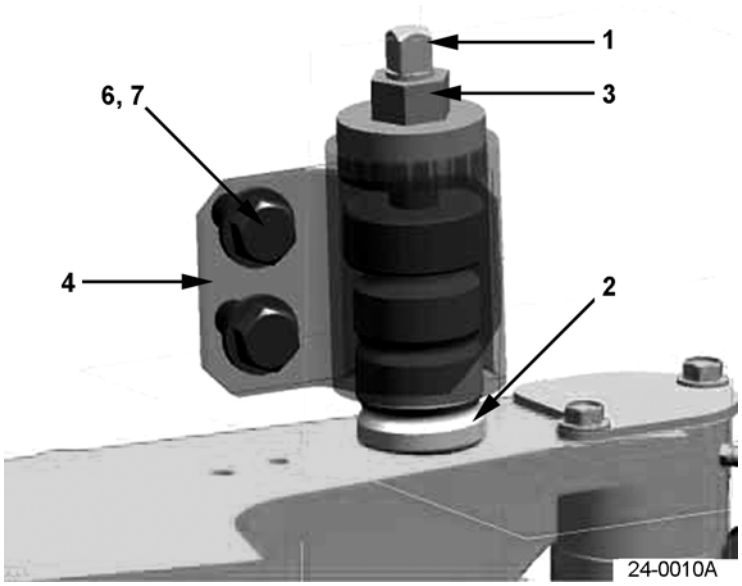

https://truckmanualshub.com/



## STEERING AXLE - STABILIZER ASSY (FG) - S/N 200001A~

| Item | Part Number | Description | Qty | |
|---|---|---|---|---|
| 1 | 3EB-25-A7570 | STUD | 2 | |
| 2 | 3EB-25-A7580 | CUSHION | 2 | |
| 3 | 01580-11613 | NUT | 2 | |
| 4 | 3EB-25-A7510 | BRACKET, RH | 1 | |
| 5 | 3EB-25-A7520 | BRACKET, LH | 1 | |
| 6 | 01643-51645 | WASHER | 4 | |
| 7 | 01010-81645 | BOLT | 4 | |

https://truckmanualshub.com/



# FRONT WHEELS & TIRES - CUSHION - S/N 200001A~

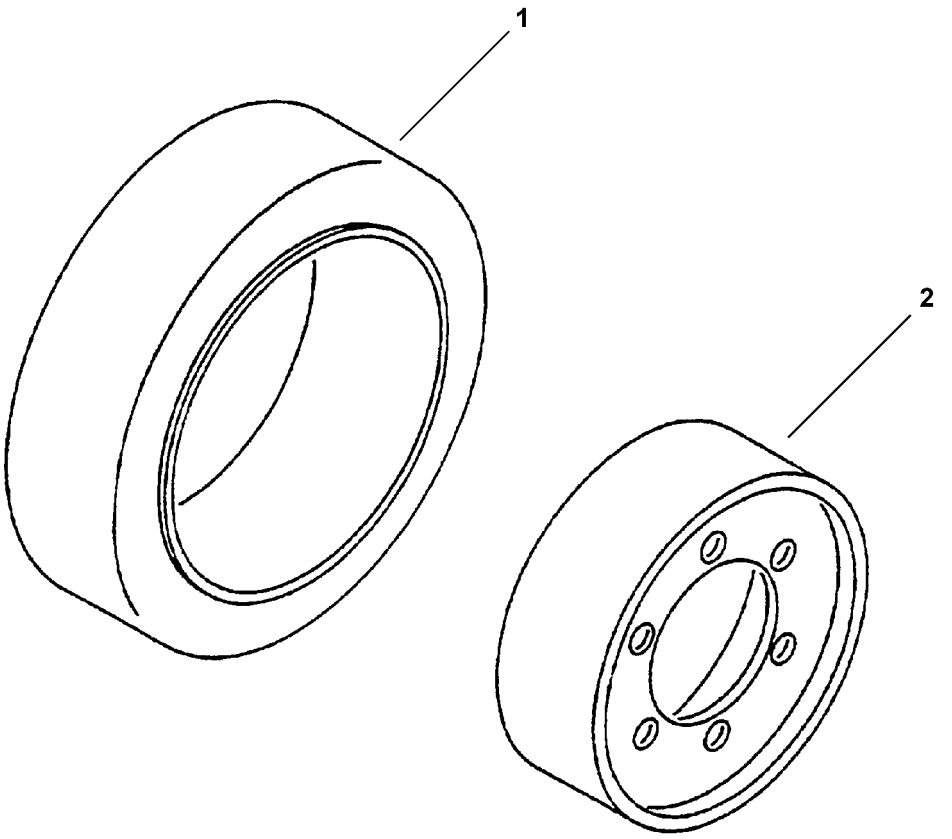


27-0001

https://truckmanualshub.com/



## FRONT WHEELS & TIRES - CUSHION - S/N 200001A~

| Item | Part Number | Description | Qty | |
|---|---|---|---|---|
| | **2.0 & 2.5 TON TRUCKS** | | | |
| 1 | MIT06605101 | TIRE, 21 X 7 X 15 - STD & WIDE | 1 | |
| | MIT06605102 | TIRE, 21 X 7 X 15 - NON-MARKING & WIDE NON-MARKING | 1 | |
| | MIT06605001 | TIRE, 21 X 7 X 15 - SMOOTH | 1 | |
| | MIT06605002 | TIRE, 21 X 7 X 15 - SMOOTH NON-MARKING | 1 | |
| | **2.8, 3.0 & 3.2 TON TRUCKS** | | | |
| | MIT06610101 | TIRE, 21 X 8 X 15 - STD & WIDE | 1 | |
| | MIT06610102 | TIRE, 21 X 8 X 15 - NON-MARKING & WIDE NON-MARKING | 1 | |
| | MIT06610001 | TIRE, 21 X 8 X 15 - SMOOTH | 1 | |
| | MIT06610002 | TIRE, 21 X 8 X 15 - SMOOTH NON-MARKING | 1 | |
| 2 | 3EB-27-A5810 | RIM | 1 | |

https://truckmanualshub.com/



# FRONT WHEELS & TIRES - PNEUMATIC - S/N 200001A~

## 2.0 & 2.5 TON TRUCKS

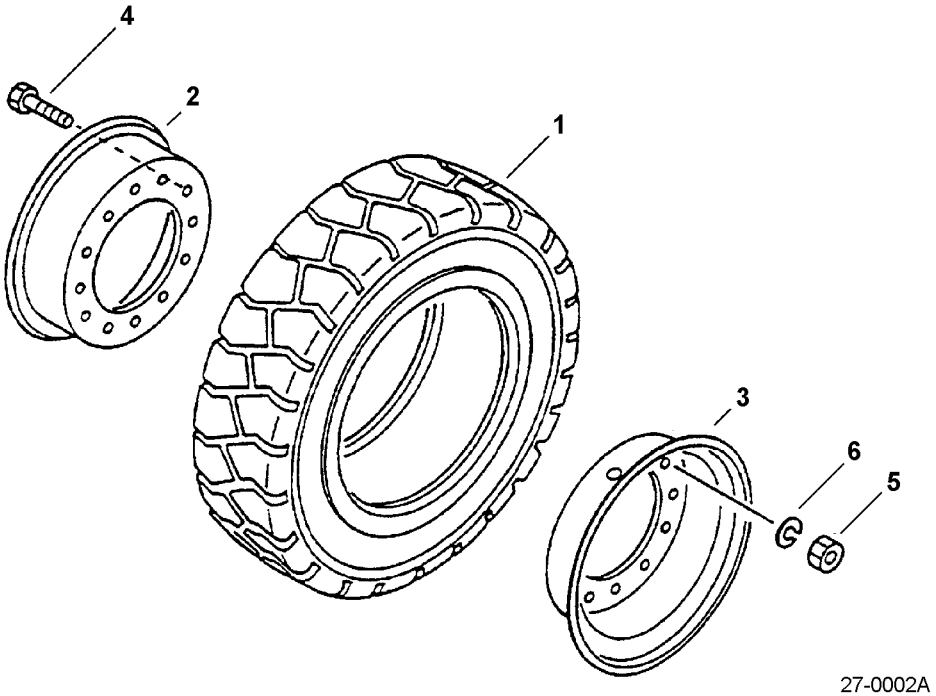


27-0002A

## 2.8, 3.0, 3.2, 3.5 TON TRUCKS

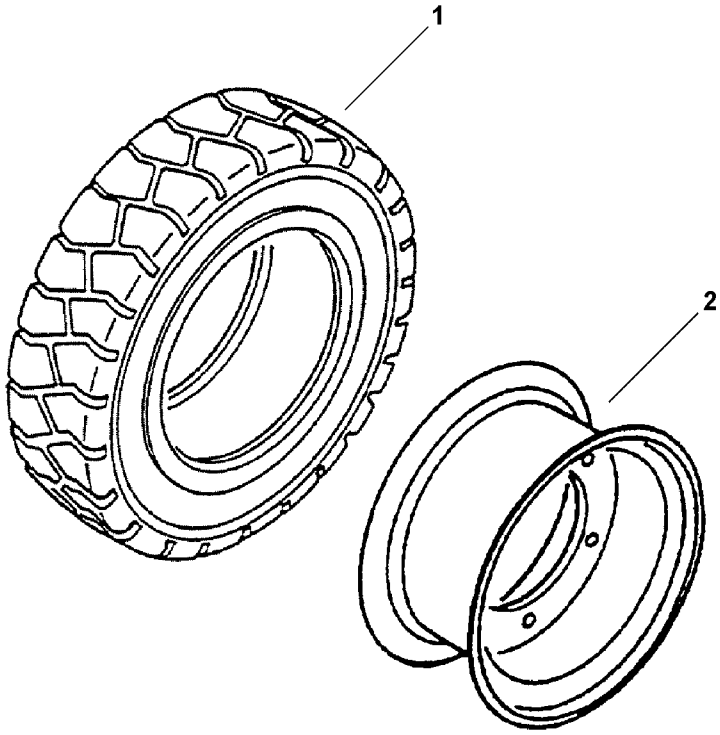


27-0002B

https://truckmanualshub.com/



## FRONT WHEELS & TIRES - PNEUMATIC - S/N 200001A~

| Item | Part Number | Description | Qty | |
|---|---|---|---|---|
| | **2.0 & 2.5 TON TRUCKS** | | | |
| 1 | MIT304000GS | TIRE, 7.00 X 12 - STD (SINGLE TIRE). . . . . | 1 | |
| | MIT27400102 | TIRE, 7.00 X 12 - SOFT NON-MARKING. . . . . | 1 | |
| | MIT24400101 | TIRE, 7.00 X 12 - SOFT SOLID (SINGLE TIRE SPEC) | 1 | |
| | OPTION | TIRE, 7.00 X 12 - FOAM FILLED . . . . . | 1 | |
| | MIT304000GS | TIRE, 7.00 X 12 - DUAL TIRE SPEC . . . . . | 1 | |
| | MIT24400101 | TIRE, 7.00 X 12 - SOFT SOLID (DUAL TIRE SPEC) | 1 | |
| N/S | MIT42400000 | TUBE. . . . . | 1 | |
| 2 | 34B-27-11131 | RIM HALF, INNER STD (ONLY AVAIL. W/ # 34B-27-11141) | 1 | |
| 3 | 34B-27-11141 | RIM HALF, OUTER STD (ONLY AVAIL. W/ # 34B-27-11131) | 1 | |
| 4 | 34B-27-32320 | BOLT, RIM. . . . . | 6 | |
| 5 | 01580-11613 | NUT, RIM. . . . . | 6 | |
| 6 | 01602-21648 | WASHER, RIM . . . . . | 6 | |
| N/S | 34B-27-00210 | RIM ASSY, DUAL-WHEEL OPTION (7.00 X 12 X 12) | 2 | |
| N/S | 34B-21-14151 | NUT, DUAL-WHEEL OPTION. . . . . | 12 | |
| N/S | 34B-27-11340 | NUT, DUAL-WHEEL OPTION. . . . . | 12 | |
| N/S | 34B-27-11350 | NUT, DUAL-WHEEL OPTION. . . . . | 12 | |
| N/S | 3EB-27-A5160 | SPACER, DUAL-WHEEL OPTION . . . . . | 2 | |
| N/S | 34B-27-32330 | SERRATION BOLT . . . . . | 12 | |
| N/S | 3EB-27-52310YL | FENDER, LH. . . . . | 1 | |
| N/S | 3EB-27-52320YL | FENDER, RH . . . . . | 1 | |
| N/S | 01010-81025 | BOLT, FENDER. . . . . | 8 | |
| N/S | 34A-50-22140 | WASHER, FENDER . . . . . | 8 | |
| | **2.8, 3.0, 3.2, 3.5 TON TRUCKS** | | | |
| 1 | MIT305800GS | TIRE, 8.15 X 15 - STD . . . . . | 1 | |
| | MIT27580102 | TIRE, 8.15 X 15 - SOFT NON-MARKING. . . . . | 1 | |
| | MIT24580101 | TIRE, 8.15 X 15 - SOFT SOLID (SINGLE TIRE SPEC) | 1 | |
| | OPTION | TIRE, 8.15 X 15 - FOAM FILLED . . . . . | 1 | |
| | MIT305800GS | TIRE, 8.15 X 15 X 14 - DUAL TIRE SPEC . . . . . | 1 | |
| | MIT24580101 | TIRE, 8.15 X 15 X 14 - SOFT SOLID (DUAL TIRE SPEC) | 1 | |
| N/S | MIT42580000 | TUBE. . . . . | 1 | |
| 2 | 3EB-27-F5710 | RIM STD . . . . . | 1 | |
| N/S | 3EB-27-F5710 | RIM ASSY, DUAL-WHEEL OPTION . . . . . | 2 | |
| N/S | 34B-21-14151 | NUT, DUAL-WHEEL OPTION. . . . . | 12 | |
| N/S | 34B-27-11340 | NUT, DUAL-WHEEL OPTION. . . . . | 12 | |
| N/S | 34B-27-11350 | NUT, DUAL-WHEEL OPTION. . . . . | 12 | |
| N/S | 300-919-9040 | CONNECTOR, DUAL-WHEEL OPTION. . . . . | 2 | |
| N/S | 34B-27-32411SA | SPACER, DUAL-WHEEL OPTION . . . . . | 2 | |

PARTS LIST CONTINUED ON NEXT PAGE

https://truckmanualshub.com/



## FRONT WHEELS & TIRES - PNEUMATIC - S/N 200001A~

| Item | Part Number | Description | Qty | |
|---|---|---|---|---|
| N/S | 34B-27-32330 | SERRATION BOLT | 12 | |
| N/S | 34B-27-32440 | HOSE | 2 | |
| N/S | 3EB-27-52310YL | COVER, LH | 1 | |
| N/S | 3EB-27-52320YL | COVER, RH | 1 | |
| N/S | 01010-81025 | BOLT FOR COVERS | 8 | |
| N/S | 34A-50-22140 | WASHER FOR COVERS | 8 | |
| N/S | 3EB-27-52910 | FENDER, LH (2.8, 3.0, 3.2T) (NARROW DUAL-TIRE OPTION) | 1 | |
| N/S | 3EB-27-52920 | FENDER, RH (2.8, 3.0, 3.2T) (NARROW DUAL-TIRE OPTION) | 1 | |
| N/S | 3EB-27-52710 | FENDER, LH (3.5T) (NARROW DUAL-TIRE OPTION) | 1 | |
| N/S | 3EB-27-52720 | FENDER, LH (3.5T) (NARROW DUAL-TIRE OPTION) | 1 | |
| | **3.2, 3.5 TON TRUCKS - DUAL TIRE STANDARD OPTION (NARROW)** | | | |
| | TBA | TIRE, 6.00 X 15 X 10PR - NARROW | 2 | |
| | 3EB-27-52620 | RIM ASSY | 1 | |
| | 3EB-27-52640 | RIM ASSY | 1 | |
| | 3EB-27-52710 | COVER, LH | 1 | |
| | 3EB-27-52720 | COVER, RH | 1 | |

https://truckmanualshub.com/

**NOTES:**

https://truckmanualshub.com/



## REAR WHEELS & TIRES - CUSHION - S/N 200001A~

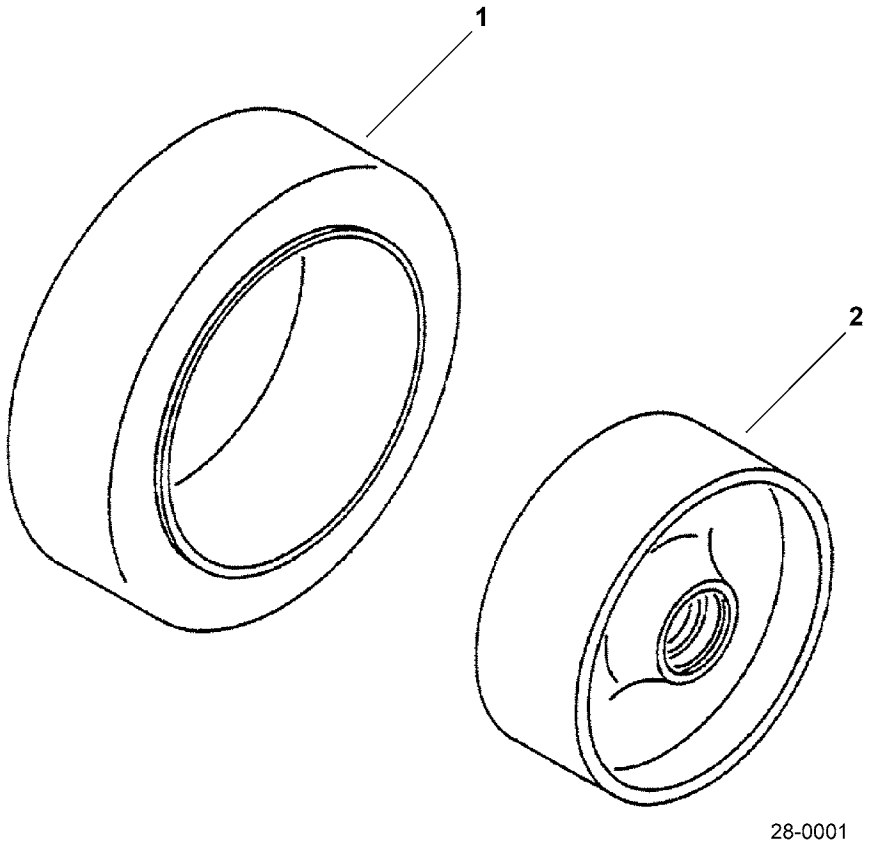

https://truckmanualshub.com/



## REAR WHEELS & TIRES - CUSHION - S/N 200001A~

| Item | Part Number | Description | Qty | |
|---|---|---|---|---|
| | | **2.0 & 2.5 TON TRUCKS** | | |
| 1 | MIT06415101 | TIRE, REAR - STD (16.25 X 5 X 11.25) . . . . . | 1 | |
| | MIT06415102 | TIRE, REAR - NON-MARKING (16.25 X 5 X 11.25) | 1 | |
| | MIT06415001 | TIRE, REAR - SMOOTH (16.25 X 5 X 11.25). . . | 1 | |
| | MIT06415002 | TIRE, REAR - SMOOTH NON-MARKING (16.25 X 5 X 11.25) . . . . . | 1 | |
| | | **2.8, 3.0, 3.2 & 3.5 TON TRUCKS** | | |
| | MIT06420101 | TIRE, REAR - STD (650 X 10 X 10) . . . . . | 1 | |
| | MIT06420102 | TIRE, REAR - NON-MARKING (650 X 10 X 10) | 1 | |
| | MIT06420001 | TIRE, REAR - SMOOTH (650 X 10 X 10). . . . . | 1 | |
| | MIT06420002 | TIRE, REAR - SMOOTH NON-MARKING (650 X 10 X 10). . . . . | 1 | |
| 2 | 3EB-24-A7410 | HUB (ALL). . . . . | 1 | |

https://truckmanualshub.com/



# REAR WHEELS & TIRES - PNEUMATIC - S/N 200001A~

## 2.0 & 2.5 TON TRUCKS

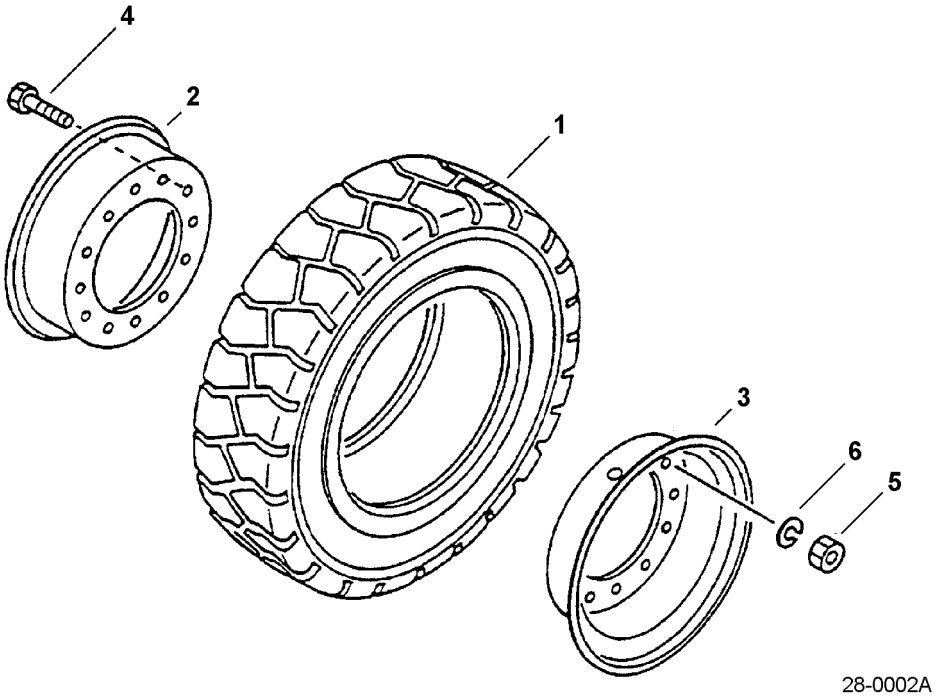


28-0002A

## 2.8, 3.0, 3.2, 3.5 TON TRUCKS

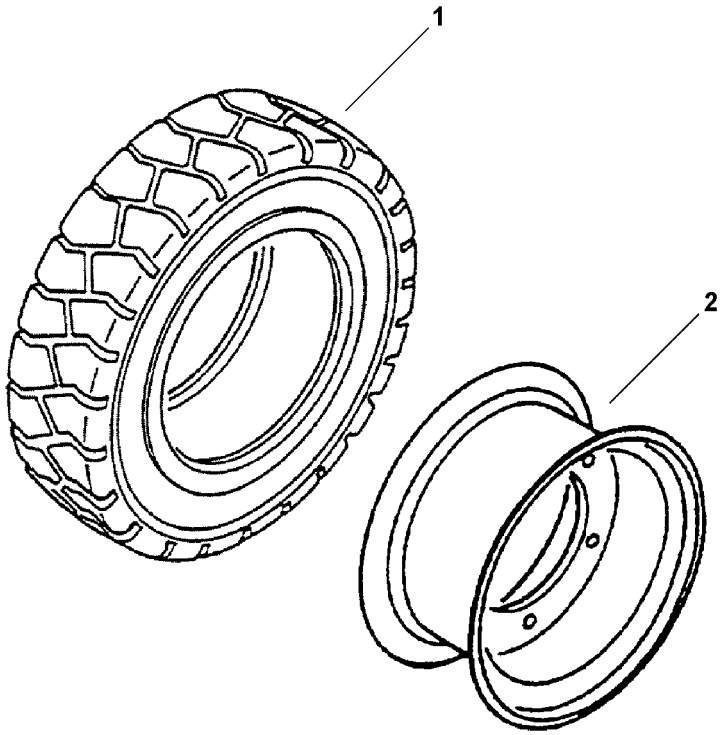


28-0002B

https://truckmanualshub.com/



## REAR WHEELS & TIRES - PNEUMATIC - S/N 200001A~

| Item | Part Number | Description | Qty | |
|---|---|---|---|---|
| | **2.0 & 2.5 TON TRUCKS** | | | |
| 1 | MIT303000GS | TIRE, REAR - STD (600 X 9) . . . . . | 1 | |
| | MIT27300101 | TIRE, REAR - SOFT SOLID (600 X 9) . . . . . | 1 | |
| | MIT27300102 | TIRE, REAR - SOFT NON-MARKING (600 X 9) | 1 | |
| | OPTION | TIRE, REAR - FOAM FILLED (600 X 9) . . . . . | 1 | |
| N/S | MIT42300000 | TUBE . . . . . | 1 | |
| 2 | 37A-27-14120 | RIM (HALF) (ONLY AVAILABLE W/ # 37A-27-14130) | 1 | |
| 3 | 37A-27-14130 | RIM (HALF) (ONLY AVAILABLE W/ # 37A-27-14120) | 1 | |
| 4 | 37A-27-18111 | BOLT. . . . . | 6 | |
| 5 | 01582-11210 | NUT. . . . . | 6 | |
| 6 | 01602-21236 | WASHER . . . . . | 6 | |
| | **2.8, 3.0 & 3.2 TON TRUCKS** | | | |
| 1 | MIT303300GS | TIRE, REAR - STD (650 X 10) . . . . . | 1 | |
| | MIT27340101 | TIRE, REAR - SOFT SOLID (650 X 10) . . . . . | 1 | |
| | MIT27340102 | TIRE, REAR - SOFT NON-MARKING (650 X 10) | 1 | |
| | OPTION | TIRE, REAR - FOAM FILLED (650 X 10) . . . . . | 1 | |
| N/S | MIT42330100 | TUBE . . . . . | 1 | |
| 2 | 3EB-28-A7520 | RIM . . . . . | 1 | |

https://truckmanualshub.com/



# BRAKES - SERVICE - PNEUMATIC 2.0 & 2.5 TON - S/N 200001A~

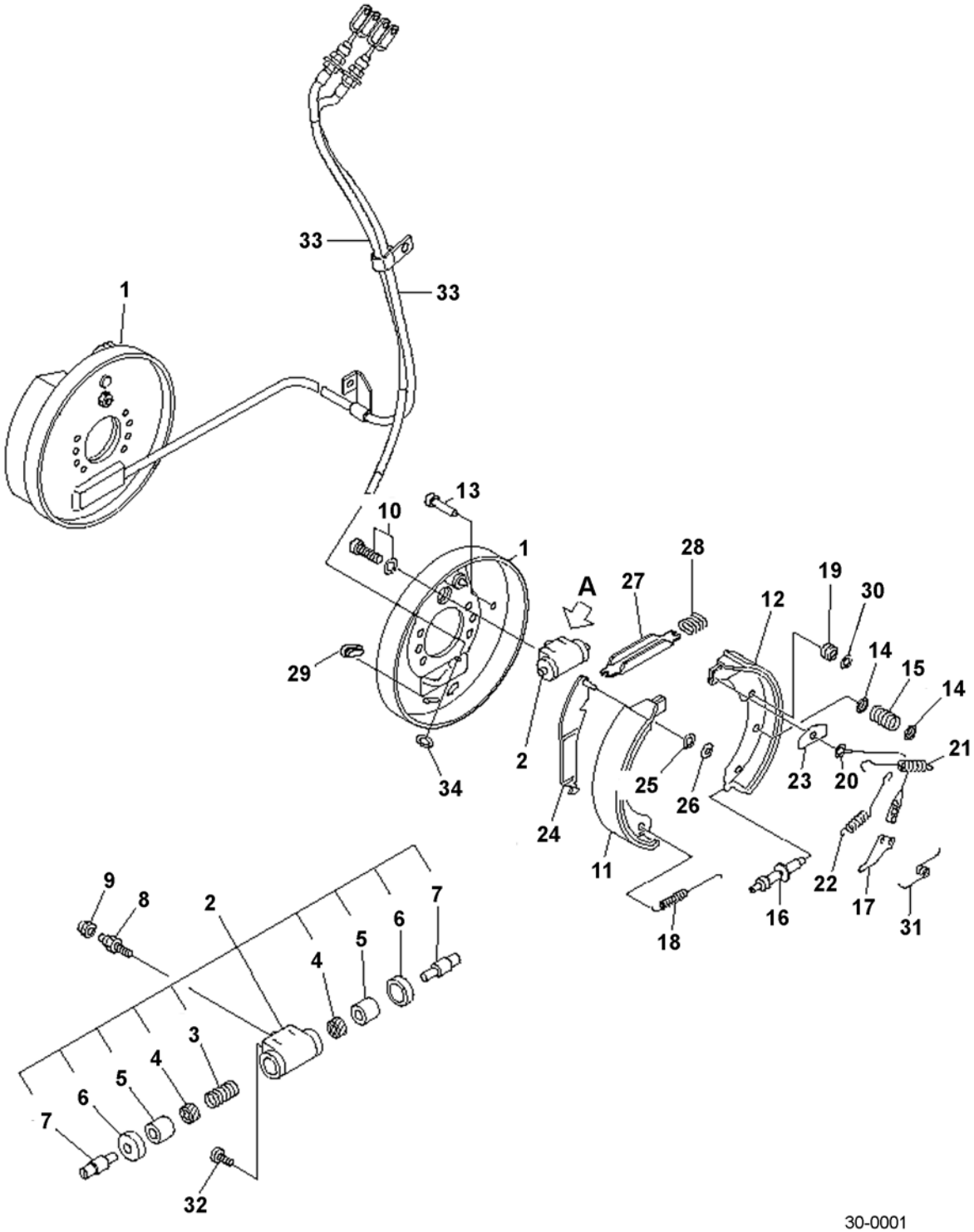

https://truckmanualshub.com/



## BRAKES - SERVICE - PNEUMATIC 2.0 & 2.5 TON - S/N 200001A~

| Item | Part Number | Description | Qty | |
|---|---|---|---|---|
| | 37B-1BR-5110 | BRAKE ASSY, LH | 1 | |
| | 37B-1BR-5120 | BRAKE ASSY, RH | 1 | |
| 1 | 3EB-30-41130 | .PLATE ASSY, LH | 1 | |
| | 3EB-30-41140 | .PLATE ASSY, RH | 1 | |
| 2 | 3EB-30-41440 | .WHEEL CYLINDER ASSY | 1 | |
| 3 | NSS | ..SPRING (K26) | 1 | |
| 4 | NSS | ..CUP (K26) | 2 | |
| 5 | NSS | ..PISTON (K26) | 2 | |
| 6 | NSS | ..BOOT (K26) | 2 | |
| 7 | 3EB-30-44570 | ..ROD | 2 | |
| 8 | 34B-30-14550 | .BLEEDER | 1 | |
| 9 | 34B-30-14560 | .CAP | 1 | |
| 10 | 3EB-30-44460 | .BOLT | 2 | |
| 11 | NSS | .LINING ASSY (SEE BRAKE SHOE KIT) | 1 | |
| 12 | NSS | .LINING ASSY, LH (SEE BRAKE SHOE KIT) | 1 | |
| | NSS | .LINING ASSY, RH (SEE BRAKE SHOE KIT) | 1 | |
| 13 | 3EC-30-11380 | .PIN | 2 | |
| 14 | 3ED-30-31240 | .CUP | 4 | |
| 15 | 3EB-30-44420 | .SPRING | 2 | |
| 16 | 3EB-30-51430 | .ADJUSTER ASSY, LH | 1 | |
| | 3EB-30-51450 | .ADJUSTER ASSY, RH | 1 | |
| 17 | 3EB-30-41540 | .LEVER, LH | 1 | |
| | 3EB-30-41550 | .LEVER, RH | 1 | |
| 18 | 3EB-30-31320 | .SPRING | 1 | |
| 19 | 3EC-30-11180 | .SHEAVE | 1 | |
| 20 | 3BB-30-12190 | .CABLE | 1 | |
| 21 | 3EC-30-11340 | .SPRING | 1 | |
| 22 | 34B-30-14351 | .SPRING | 1 | |
| 23 | 3EC-30-11170 | .PLATE | 1 | |
| 24 | 3EB-30-41650 | .PARKING LEVER ASSY, LH | 1 | |
| | 3EB-30-41660 | .PARKING LEVER ASSY, RH | 1 | |
| 25 | 34B-30-14440 | .WASHER | 1 | |
| 26 | 34B-30-14450 | .RING, RETAINER | 1 | |
| 27 | 34B-30-14160 | .STRUT, LH | 1 | |
| | 34B-30-14260 | .STRUT, RH | 1 | |
| 28 | 34B-30-14320 | .SPRING | 1 | |
| 29 | 34B-30-14480 | .COVER | 1 | |
| 30 | 3EC-30-11510 | .WASHER | 1 | |
| 31 | 3EB-30-42160 | .SPRING, LH | 1 | |

PARTS LIST CONTINUED ON NEXT PAGE

https://truckmanualshub.com/



## BRAKES - SERVICE - PNEUMATIC 2.0 & 2.5 TON - S/N 200001A~

| Item | Part Number | Description | Qty | |
|---|---|---|---|---|
| 31 | 3EB-30-42260 | .SPRING, RH | 1 | |
| 32 | 3EB-30-44590 | .PROTECTOR, THREAD | 1 | |
| 33 | 3EB-30-51110 | .CABLE, LH | 1 | |
| | 3EB-30-51120 | .CABLE, RH | 1 | |
| 34 | 34B-30-14470 | .RING, SNAP | 1 | |
| K26 | 3EB-30-00010 | SERVICE KIT (CYLINDER) | 2 | |
| KIT | 3EB-K3-02030 | BRAKE SHOE KIT, LH | 1 | |
| | 3EB-K3-02040 | BRAKE SHOE KIT, RH | 1 | |

https://truckmanualshub.com/

**NOTES:**

https://truckmanualshub.com/



# BRAKES - SERVICE - PNEUMATIC 2.8 & 3.0 TON - S/N 200001A~

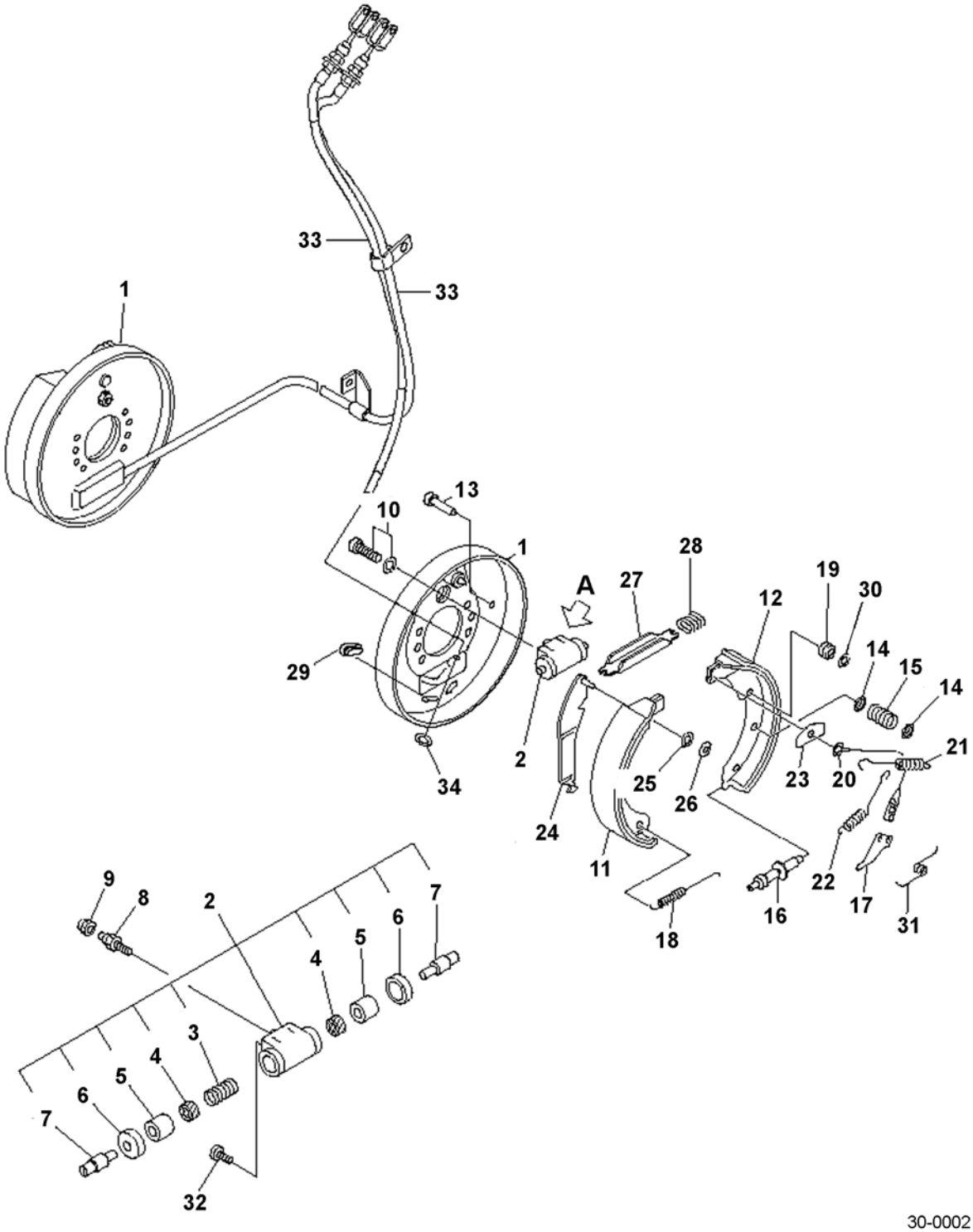

https://truckmanualshub.com/



## BRAKES - SERVICE - PNEUMATIC 2.8 & 3.0 TON - S/N 200001A~

| Item | Part Number | Description | Qty | |
|---|---|---|---|---|
| | 37B-1BR-5130 | BRAKE ASSY, LH | 1 | |
| | 37B-1BR-5140 | BRAKE ASSY, RH | 1 | |
| 1 | 3EB-30-41130 | .PLATE ASSY, LH | 1 | |
| | 3EB-30-41140 | .PLATE ASSY, RH | 1 | |
| 2 | 3EB-30-41440 | .WHEEL CYLINDER ASSY | 1 | |
| 3 | NSS | ..SPRING (K26) | 1 | |
| 4 | NSS | ..CUP (K26) | 2 | |
| 5 | NSS | ..PISTON (K26) | 2 | |
| 6 | NSS | ..BOOT (K26) | 2 | |
| 7 | 3EB-30-44570 | ..ROD | 2 | |
| 8 | 34B-30-14550 | .BLEEDER | 1 | |
| 9 | 34B-30-14560 | .CAP | 1 | |
| 10 | 3EB-30-44460 | .BOLT | 2 | |
| 11 | NSS | .LINING ASSY (SEE BRAKE SHOE KIT) | 1 | |
| 12 | NSS | .LINING ASSY, LH (SEE BRAKE SHOE KIT) | 1 | |
| | NSS | .LINING ASSY, RH (SEE BRAKE SHOE KIT) | 1 | |
| 13 | 3EC-30-11380 | .PIN | 2 | |
| 14 | 3ED-30-31240 | .CUP | 4 | |
| 15 | 3EB-30-44420 | .SPRING | 2 | |
| 16 | 3EB-30-51430 | .ADJUSTER ASSY, LH | 1 | |
| | 3EB-30-51450 | .ADJUSTER ASSY, RH | 1 | |
| 17 | 3EB-30-41540 | .LEVER, LH | 1 | |
| | 3EB-30-41550 | .LEVER, RH | 1 | |
| 18 | 3EB-30-31320 | .SPRING | 1 | |
| 19 | 3EC-30-11180 | .SHEAVE | 1 | |
| 20 | 3BB-30-12190 | .CABLE | 1 | |
| 21 | 3EC-30-11340 | .SPRING | 1 | |
| 22 | 34B-30-14351 | .SPRING | 1 | |
| 23 | 3EC-30-11170 | .PLATE | 1 | |
| 24 | 3EB-30-41650 | .PARKING LEVER ASSY, LH | 1 | |
| | 3EB-30-41660 | .PARKING LEVER ASSY, RH | 1 | |
| 25 | 34B-30-14440 | .WASHER | 1 | |
| 26 | 34B-30-14450 | .RING, RETAINER | 1 | |
| 27 | 34B-30-14160 | .STRUT, LH | 1 | |
| | 34B-30-14260 | .STRUT, RH | 1 | |
| 28 | 34B-30-14320 | .SPRING | 1 | |
| 29 | 34B-30-14480 | .COVER | 1 | |
| 30 | 3EC-30-11510 | .WASHER | 1 | |
| 31 | 3EB-30-42160 | .SPRING, LH | 1 | |

PARTS LIST CONTINUED ON NEXT PAGE

https://truckmanualshub.com/



## BRAKES - SERVICE - PNEUMATIC 2.8 & 3.0 TON - S/N 200001A~

| Item | Part Number | Description | Qty | |
|---|---|---|---|---|
| 31 | 3EB-30-42260 | .SPRING, RH | 1 | |
| 32 | 3EB-30-44590 | .PROTECTOR, THREAD | 1 | |
| 33 | 3EB-30-51110 | .CABLE, LH | 1 | |
| | 3EB-30-51120 | .CABLE, RH | 1 | |
| 34 | 34B-30-14470 | .RING, SNAP | 1 | |
| K26 | 3EB-30-00010 | SERVICE KIT (CYLINDER) | 2 | |
| KIT | 3EB-K3-02050 | BRAKE SHOE KIT, LH | | 1 |
| | 3EB-K3-02060 | BRAKE SHOE KIT, RH | | 1 |

https://truckmanualshub.com/

**NOTES:**

https://truckmanualshub.com/



# BRAKES - SERVICE - PNEUMATIC 3.2 & 3.5 TON - S/N 200001A~

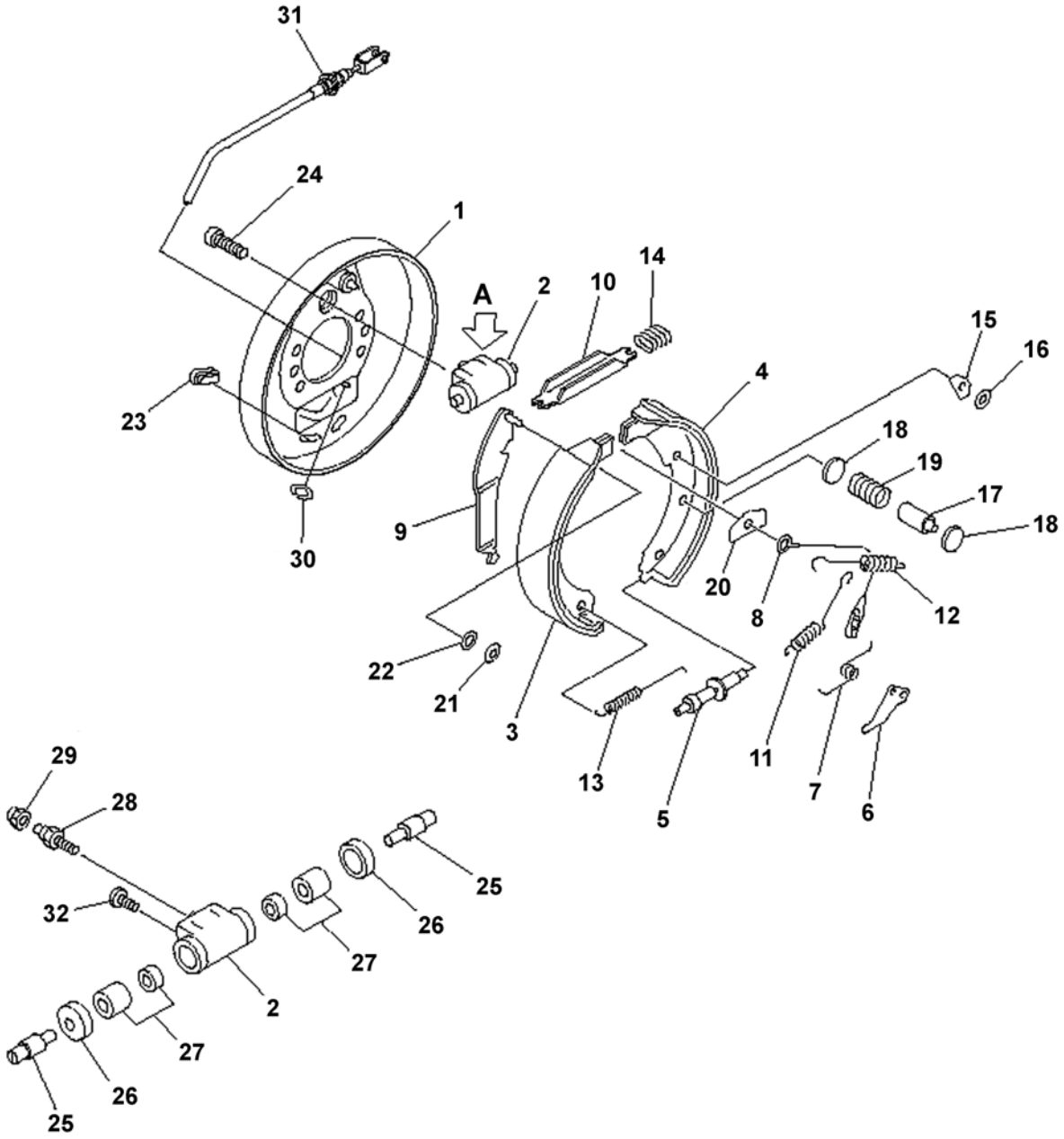


30-0003

https://truckmanualshub.com/



## BRAKES - SERVICE - PNEUMATIC 3.2 & 3.5 TON - S/N 200001A~

| Item | Part Number | Description | Qty | |
|---|---|---|---|---|
| | 37B-1BR-5310 | BRAKE ASSY, LH | 1 | |
| | 37B-1BR-5320 | BRAKE ASSY, RH | 1 | |
| 1 | 3EC-30-11110 | .PLATE ASSY, LH | 1 | |
| | 3EC-30-11210 | .PLATE ASSY, RH | 1 | |
| 2 | 3EC-30-33110 | .WHEEL CYLINDER ASSY | 1 | |
| 3 | NSS | .SHOE ASSY (SEE BRAKE SHOE KIT) | 1 | |
| 4 | NSS | .SHOE ASSY, LH (SEE BRAKE SHOE KIT) | 1 | |
| | NSS | .SHOE ASSY, RH (SEE BRAKE SHOE KIT) | 1 | |
| 5 | 3EC-30-11150 | .ADJUSTER ASSY, LH | 1 | |
| | 3EC-30-11230 | .ADJUSTER ASSY, RH | 1 | |
| 6 | 3EC-30-11190 | .LEVER, LH | 1 | |
| | 3EC-30-11240 | .LEVER, RH | 1 | |
| 7 | 3EC-30-11310 | .SPRING, LH | 1 | |
| | 3EC-30-11250 | .SPRING, RH | 1 | |
| 8 | 3EC-30-11160 | .CABLE ASSY | 1 | |
| 9 | 3EC-30-11450 | .LEVER ASSY, LH | 1 | |
| | 3EC-30-11270 | .LEVER ASSY, RH | 1 | |
| 10 | 3EC-30-11320 | .STRUT, LH | 1 | |
| | 3EC-30-11260 | .STRUT, RH | 1 | |
| 11 | 34B-30-14351 | .SPRING | 1 | |
| 12 | 3EC-30-11340 | .SPRING | 1 | |
| 13 | 3EC-30-31320 | .SPRING | 1 | |
| 14 | 34B-30-14320 | .SPRING | 1 | |
| 15 | 3EC-30-11180 | .SHEAVE | 1 | |
| 16 | 3EC-30-11510 | .WASHER | 1 | |
| 17 | 3EC-30-11380 | .PIN | 2 | |
| 18 | 3EC-30-11370 | .SEAL | 4 | |
| 19 | 3EC-30-11390 | .SPRING | 2 | |
| 20 | 3EC-30-11170 | .PLATE | 1 | |
| 21 | 34B-30-14450 | .RING, RETAINER | 1 | |
| 22 | 34B-30-14440 | .WASHER, WAVE | 1 | |
| 23 | 34B-30-14480 | .COVER | 1 | |
| 24 | 3EC-30-11430 | .BOLT | 2 | |
| 25 | 34B-30-14570 | .ROD | 2 | |
| 26 | 3EC-30-14540 | .BOOT | 2 | |
| 27 | 3EC-30-33160 | .PISTON ASSY | 2 | |
| 28 | 3EC-30-11710 | .BLEEDER | 1 | |
| 29 | 34B-30-14560 | .CAP | 1 | |
| 30 | 34B-30-14470 | .RING, SNAP | 1 | |

PARTS LIST CONTINUED ON NEXT PAGE

https://truckmanualshub.com/



## BRAKES - SERVICE - PNEUMATIC 3.2 & 3.5 TON - S/N 200001A~

| Item | Part Number | Description | Qty | |
|---|---|---|---|---|
| 31 | 3EB-30-51210 | .CABLE ASSY, LH . . . . . | 1 | |
| | 3EB-30-51220 | .CABLE ASSY, RH . . . . . | 1 | |
| 31 | 3EB-30-44590 | .PROTECTOR, THREAD . . . . . | 1 | |
| KIT | 3EB-K3-04010 | BRAKE SHOE KIT, LH . . . . . | 1 | |
| | 3EB-K3-04020 | BRAKE SHOE KIT, RH . . . . . | 1 | |

https://truckmanualshub.com/

**NOTES:**

https://truckmanualshub.com/



## BRAKES - SERVICE - CUSHION - S/N 200001A~
## (ALSO SEE FIG. 30-0010A)

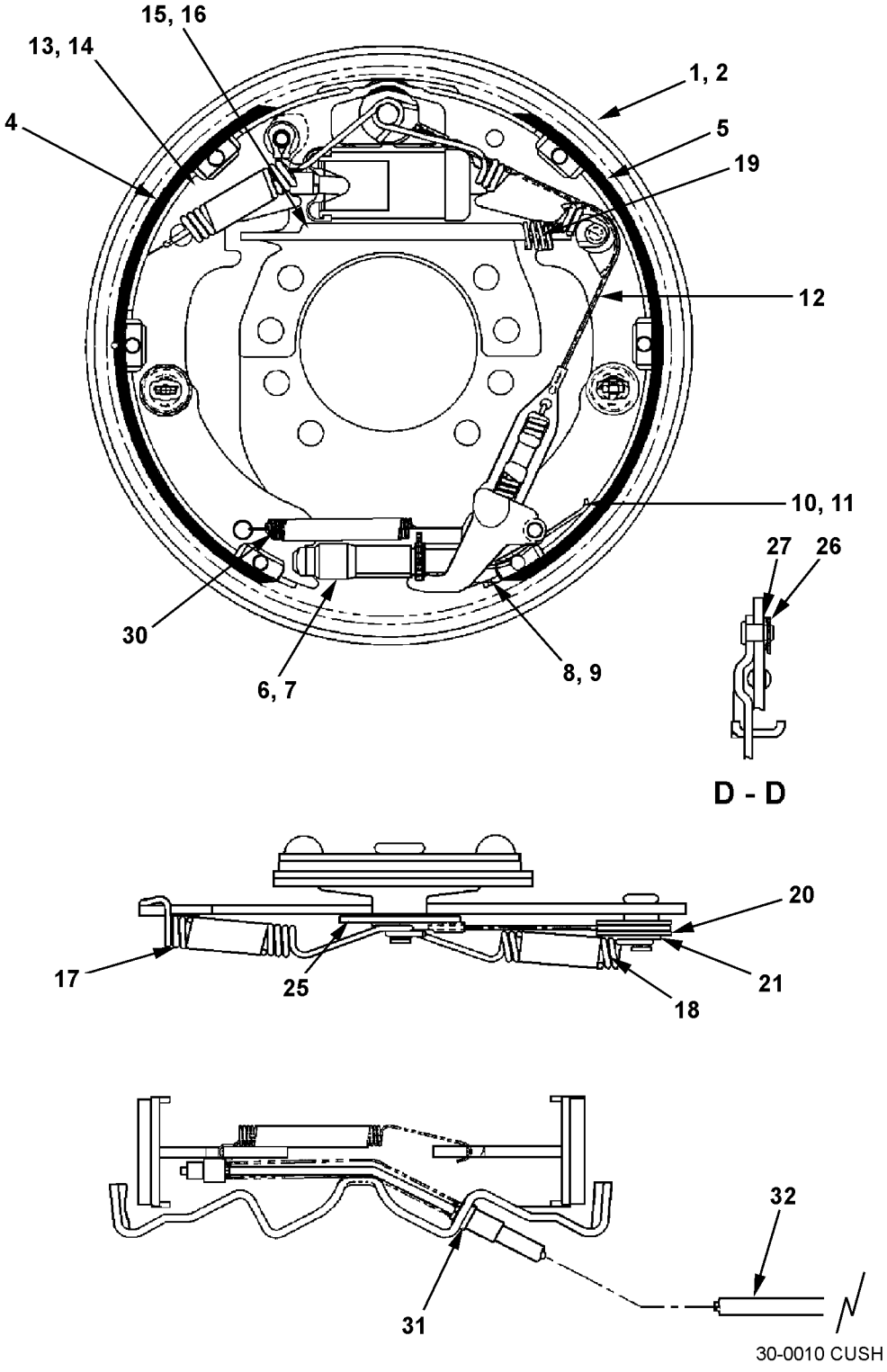

https://truckmanualshub.com/



## BRAKES - SERVICE - CUSHION - S/N 200001A~
## (ALSO SEE FIG. 30-0010A)

| Item | Part Number | Description | Qty | |
|---|---|---|---|---|
| | 37B-1BR-5210 | BRAKE ASSY - LH | 1 | |
| | 37B-1BR-5220 | BRAKE ASSY - RH | 1 | |
| 1 | 3EB-30-43130 | BACKING PLATE ASSY - LH | 1 | |
| 2 | 3EB-30-43140 | BACKING PLATE ASSY - RH | 1 | |
| 3 | 3EB-30-41440 | WHEEL CYLINDER ASSY | 2 | |
| A | 3EB-30-44560 | .BODY | 2 | |
| B | 3EB-30-44570 | .CONNECTING LINK | 4 | |
| C | 34B-30-14540 | .BOOT | 4 | |
| D | 3EC-30-12650 | .PISTON | 4 | |
| E | 34B-30-14521 | .CUP, WHEEL CYLINDER | 4 | |
| F | 3EB-30-43670 | .SPRING, WHEEL CYLINDER | 2 | |
| G | 34B-30-14550 | .BLEEDER SCREW | 2 | |
| H | 34B-30-14560 | .BLEEDER CAP | 2 | |
| I | 3EB-30-44590 | .THREAD PROTECTOR | 2 | |
| 4 | NSS | BRAKE SHOE, LINING ASSY(SEE BRAKE SHOE KIT) | 1 | |
| 5 | NSS | BRAKE SHOE, LINING & PIN ASSY(SEE BRAKE SHOE KIT) | 1 | |
| 6 | 3EB-30-41430 | ADJUSTER ASSY - LH | 1 | |
| 7 | 3EB-30-41450 | ADJUSTER ASSY - RH | 1 | |
| 8 | 3EB-30-41540 | LEVER - LH | 1 | |
| 9 | 3EB-30-41550 | LEVER - RH | 1 | |
| 10 | 3EB-30-42160 | SPRING - LH | 1 | |
| 11 | 3EB-30-42260 | SPRING - RH) | 1 | |
| 12 | 3BB-30-12190 | SPRING & CABLE ASSY | 2 | |
| 13 | 3EB-30-41210 | PARKING LEVER ASSY - LH | 1 | |
| 14 | 3EB-30-41220 | PARKING LEVER ASSY - RH | 1 | |
| 15 | 34B-30-14160 | STRUT - LH | 1 | |
| 16 | 34B-30-14260 | STRUT - RH | 1 | |
| 17 | 34B-30-14351 | SPRING | 2 | |
| 18 | 3EC-30-11340 | SPRING | 2 | |
| 19 | 34B-30-14320 | SPRING | 2 | |
| 20 | 3EC-30-11180 | SHEAVE | 2 | |
| 21 | 3EC-30-11510 | WASHER, PLAIN | 2 | |
| 22 | 3EC-30-11380 | PIN, SHOE HOLD-DOWN | 4 | |
| 23 | 3ED-30-31240 | CUP, SHOE HOLD-DOWN | 8 | |
| 24 | 3EB-30-44420 | SPRING, SHOE HOLD-DOWN | 4 | |
| 25 | 3EC-30-11170 | PLATE | 2 | |
| 26 | 34B-30-14450 | RETAINER | 2 | |

PARTS LIST CONTINUED ON NEXT PAGE

https://truckmanualshub.com/



## BRAKES - SERVICE - CUSHION - S/N 200001A~
## (ALSO SEE FIG. 30-0010A)

| Item | Part Number | Description | Qty | |
|---|---|---|---|---|
| 27 | 34B-30-14440 | WAVE WASHER | 2 | |
| 28 | 34B-30-14480 | COVER, BACKING PLATE ADJUSTING HOLE | 2 | |
| 29 | 3EB-30-44460 | BOLT, SEMS - WHEEL CYLINDER | 4 | |
| 30 | 3EB-30-31320 | SPRING | 2 | |
| 31 | 34B-30-14470 | SNAP RING, "E" TYPE | 2 | |
| 32 | 3EB-30-51110 | CABLE ASSY, PARKING - LH | 1 | |
| | 3EB-30-51120 | CABLE ASSY, PARKING - RH | 1 | |
| KIT | 3EB-K3-02030 | BRAKE SHOE KIT, LH | 1 | |
| | 3EB-K3-02040 | BRAKE SHOE KIT, RH | 1 | |

https://truckmanualshub.com/

**NOTES:**

https://truckmanualshub.com/



## BRAKES - SERVICE - CUSHION - WHEEL CYLINDER - S/N 200001A~ (ALSO SEE FIG. 30-0010)

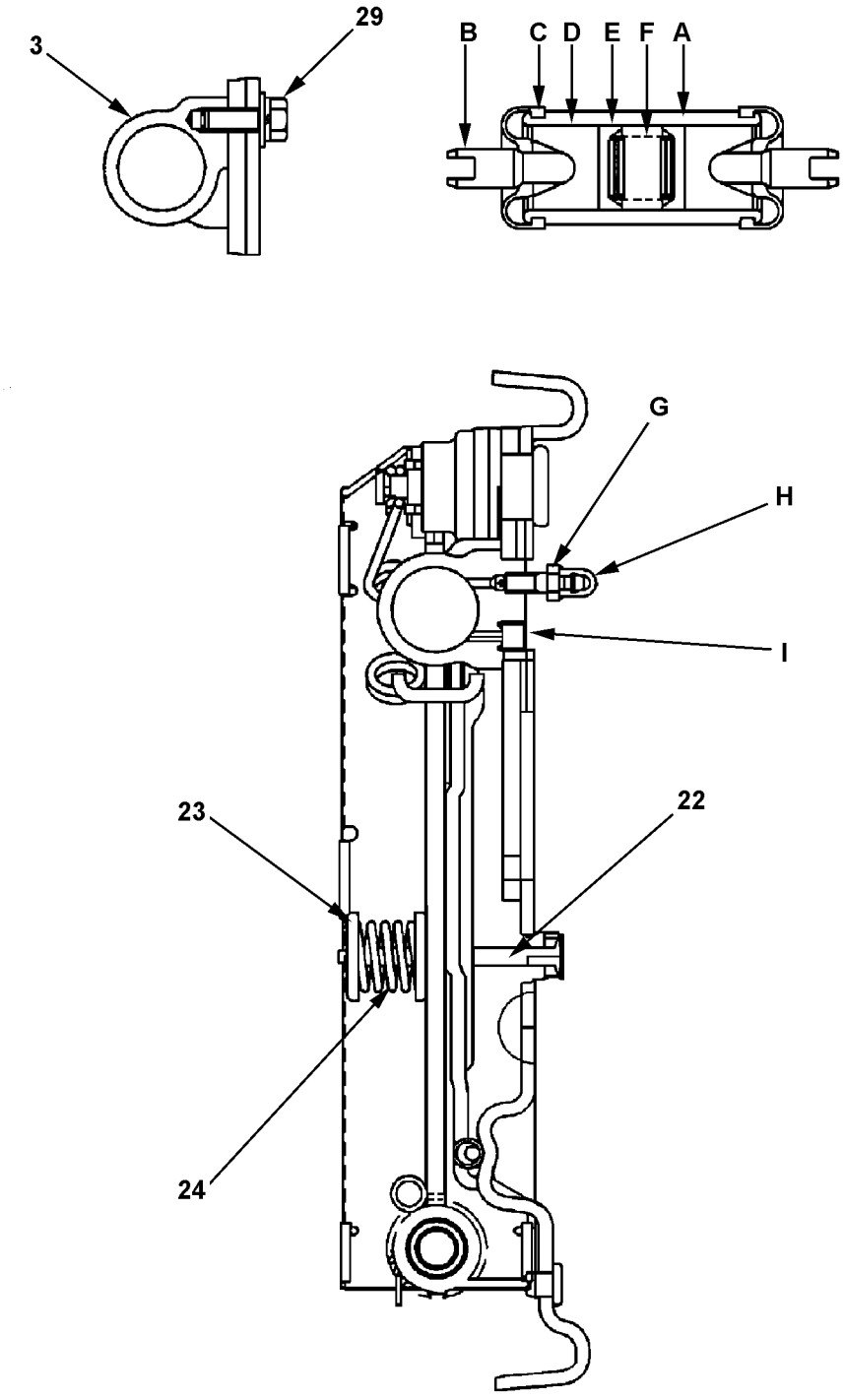


30-0010a

https://truckmanualshub.com/



## BRAKES - SERVICE - CUSHION - WHEEL CYLINDER - S/N 200001A~ (ALSO SEE FIG. 30-0010)

| Item | Part Number | Description | Qty | |
|---|---|---|---|---|
| | 37B-1BR-5210 | BRAKE ASSY - LH | 1 | |
| | 37B-1BR-5220 | BRAKE ASSY - RH | 1 | |
| 1 | 3EB-30-43130 | BACKING PLATE ASSY - LH | 1 | |
| 2 | 3EB-30-43140 | BACKING PLATE ASSY - RH | 1 | |
| 3 | 3EB-30-41440 | WHEEL CYLINDER ASSY | 2 | |
| A | 3EB-30-44560 | .BODY | 2 | |
| B | 3EB-30-44570 | .CONNECTING LINK | 4 | |
| C | 34B-30-14540 | .BOOT | 4 | |
| D | 3EC-30-12650 | .PISTON | 4 | |
| E | 34B-30-14521 | .CUP, WHEEL CYLINDER | 4 | |
| F | 3EB-30-43670 | .SPRING, WHEEL CYLINDER | 2 | |
| G | 34B-30-14550 | .BLEEDER SCREW | 2 | |
| H | 34B-30-14560 | .BLEEDER CAP | 2 | |
| I | 3EB-30-44590 | .THREAD PROTECTOR | 2 | |
| 4 | 3EB-30-41160 | BRAKE SHOE & LINING ASSY | 1 | |
| 5 | 3EB-30-41170 | BRAKE SHOE, LINING & PIN ASSY | 1 | |
| 6 | 3EB-30-41430 | ADJUSTER ASSY - LH | 1 | |
| 7 | 3EB-30-41450 | ADJUSTER ASSY - RH | 1 | |
| 8 | 3EB-30-41540 | LEVER - LH | 1 | |
| 9 | 3EB-30-41550 | LEVER - RH | 1 | |
| 10 | 3EB-30-42160 | SPRING - LH | 1 | |
| 11 | 3EB-30-42260 | SPRING - RH) | 1 | |
| 12 | 3BB-30-12190 | SPRING & CABLE ASSY | 2 | |
| 13 | 3EB-30-41210 | PARKING LEVER ASSY - LH | 1 | |
| 14 | 3EB-30-41220 | PARKING LEVER ASSY - RH | 1 | |
| 15 | 34B-30-14160 | STRUT - LH | 1 | |
| 16 | 34B-30-14260 | STRUT - RH | 1 | |
| 17 | 34B-30-14351 | SPRING | 2 | |
| 18 | 3EC-30-11340 | SPRING | 2 | |
| 19 | 34B-30-14320 | SPRING | 2 | |
| 20 | 3EC-30-11180 | SHEAVE | 2 | |
| 21 | 3EC-30-11510 | WASHER, PLAIN | 2 | |
| 22 | 3EC-30-11380 | PIN, SHOE HOLD-DOWN | 4 | |
| 23 | 3ED-30-31240 | CUP, SHOE HOLD-DOWN | 8 | |
| 24 | 3EB-30-44420 | SPRING, SHOE HOLD-DOWN | 4 | |
| 25 | 3EC-30-11170 | PLATE | 2 | |
| 26 | 34B-30-14450 | RETAINER | 2 | |
| 27 | 34B-30-14440 | WAVE WASHER | 2 | |
| 28 | 34B-30-14480 | COVER, BACKING PLATE ADJUSTING HOLE | 2 | |

PARTS LIST CONTINUED ON NEXT PAGE

https://truckmanualshub.com/



## BRAKES - SERVICE - CUSHION - WHEEL CYLINDER - S/N 200001A~ (ALSO SEE FIG. 30-0010)

| Item | Part Number | Description | Qty | |
|---|---|---|---|---|
| 29 | 3EB-30-44460 | BOLT, SEMS - WHEEL CYLINDER . . . . . | 4 | |
| 30 | 3EB-30-31320 | SPRING . . . . . | 2 | |
| 31 | 34B-30-14470 | SNAP RING, "E" TYPE . . . . . | 2 | |
| 32 | 3EB-30-51110 | CABLE ASSY, PARKING - LH . . . . . | 1 | |
| | 3EB-30-51120 | CABLE ASSY, PARKING - RH . . . . . | 1 | |

https://truckmanualshub.com/

**NOTES:**

https://truckmanualshub.com/



# BRAKES - SERVICE - MASTER CYL. & PIPING (FRONT) - S/N 200001A~ ALL MODELS EXCEPT 3.2 & 3.5 TON TRUCKS

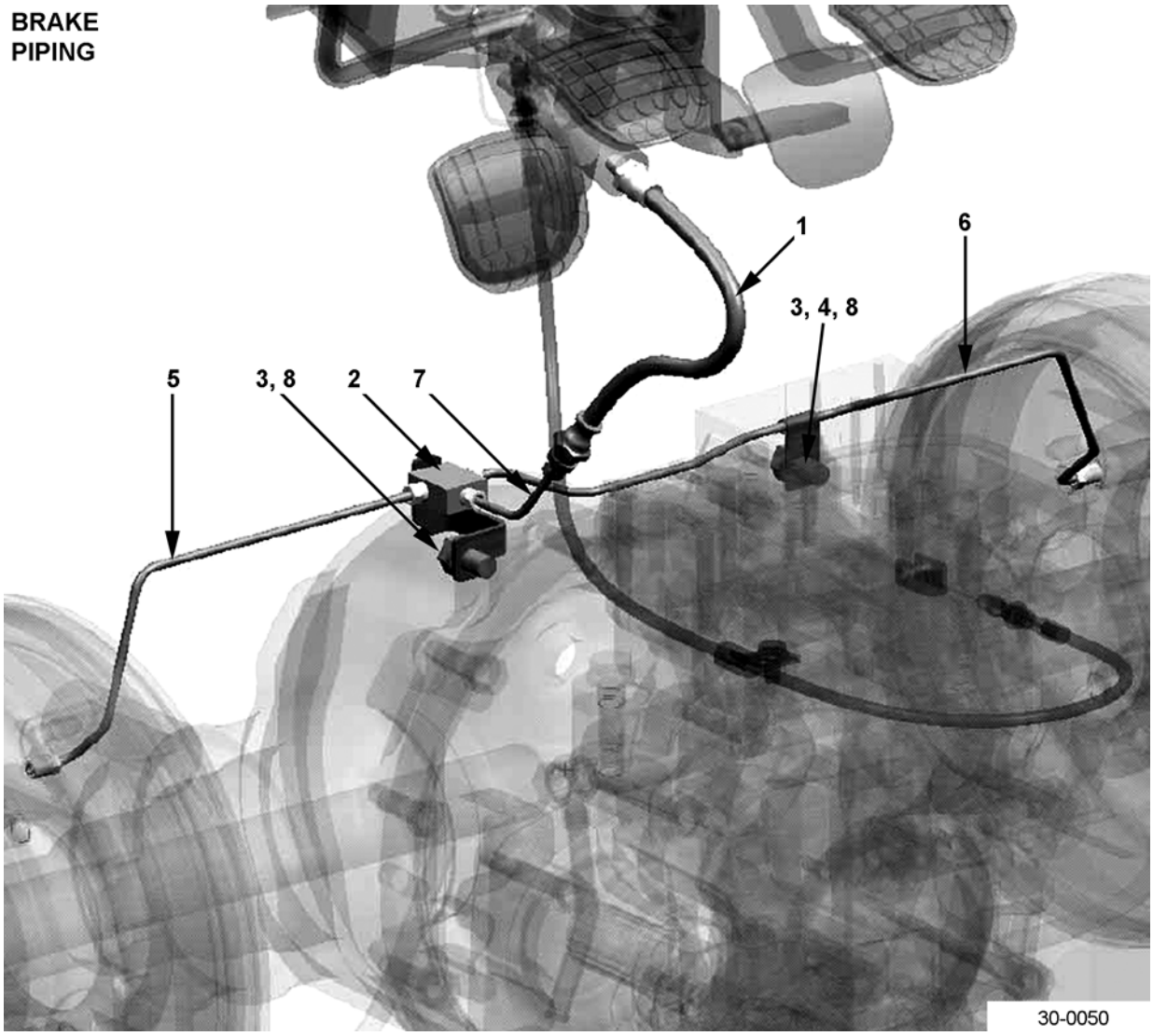

https://truckmanualshub.com/



## BRAKES - SERVICE - MASTER CYL. & PIPING (FRONT) - S/N 200001A~ ALL MODELS EXCEPT 3.2 & 3.5 TON TRUCKS

| Item | Part Number | Description | Qty | |
|---|---|---|---|---|
| | 3EB-36-51180 | MASTER CYLINDER ASSY | 1 | |
| 1 | 3EB-38-41170 | HOSE | 1 | |
| 2 | 3EB-38-41120 | TEE | 1 | |
| 3 | 01010-81220 | BOLT | 2 | |
| 4 | 04434-50612 | CLIP | 1 | |
| 5 | 3EB-38-51130 | PIPE (PNEUMATIC) | 1 | |
| | 3EB-38-51630 | PIPE (CUSHION) | 1 | |
| 6 | 3EB-38-A7610 | PIPE (PNEUMATIC) | 1 | |
| | 3EB-38-A7110 | PIPE (CUSHION) | 1 | |
| 7 | 3EB-38-51150 | PIPE | 1 | |
| 8 | 01643-51232 | WASHER | 2 | |

https://truckmanualshub.com/



# BRAKES - POWER - BOOSTER ASSY & PIPING (FRONT) - S/N 200001A~ 3.2 & 3.5 TON TRUCKS

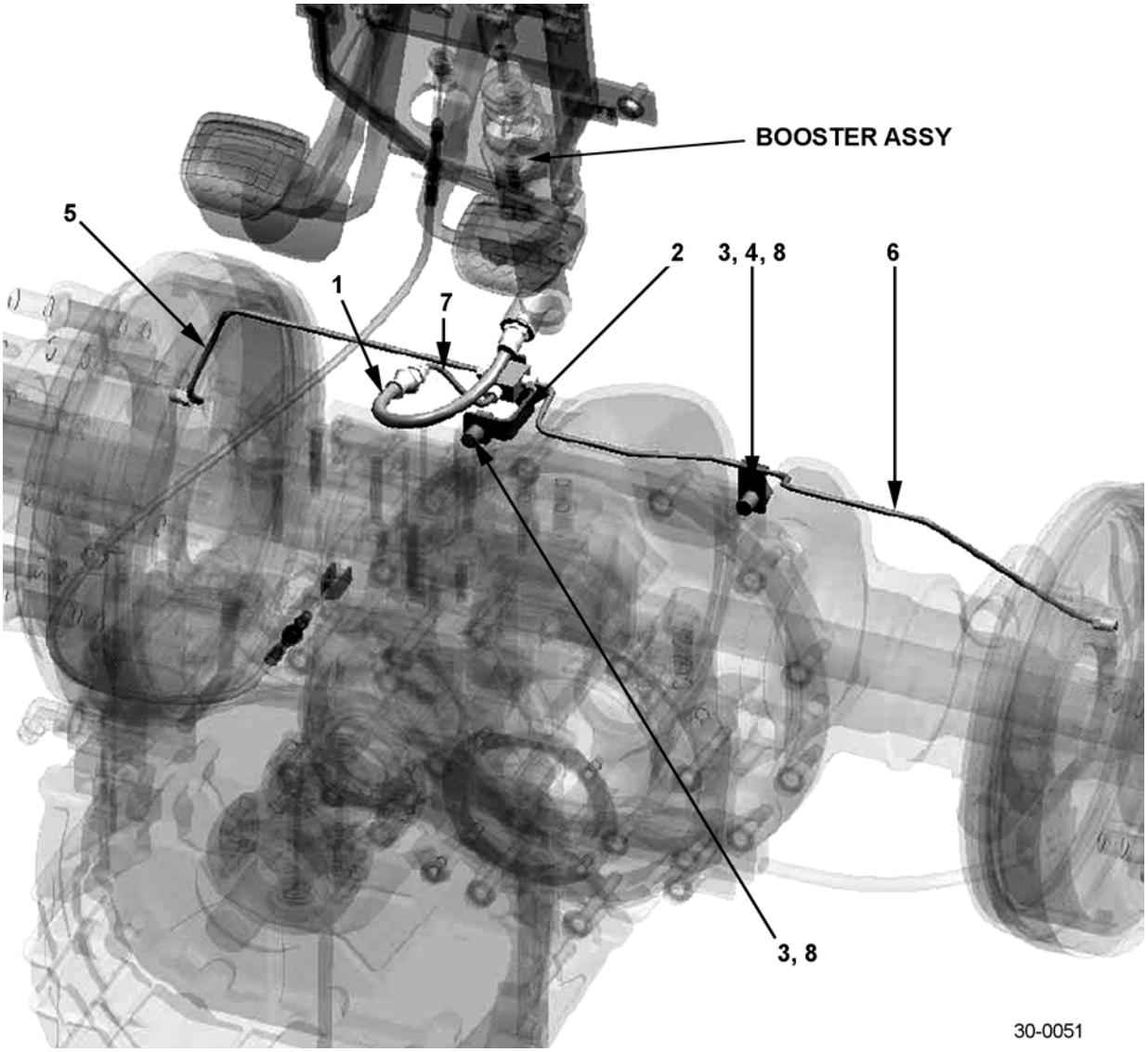

https://truckmanualshub.com/



## BRAKES - POWER - BOOSTER ASSY & PIPING (FRONT) - S/N 200001A~ 3.2 & 3.5 TON TRUCKS

| Item | Part Number | Description | Qty | |
|---|---|---|---|---|
| | 3EB-56-51590 | BOOSTER ASSY, BRAKE | 1 | |
| 1 | 3EB-38-41110 | HOSE | 1 | |
| 2 | 3EB-38-41120 | TEE | 1 | |
| 3 | 01010-81220 | BOLT | 2 | |
| 4 | 04434-50612 | CLIP | 1 | |
| 5 | 3EB-38-51430 | PIPE | 1 | |
| 6 | 3EB-38-A7710 | PIPE | 1 | |
| 7 | 3EB-38-51530 | PIPE | 1 | |
| 8 | 01643-51232 | WASHER | 2 | |
| N/S | 3EB-66-A7960 | PIPE, FRONT, DIESEL ONLY (AVOIDS INTERFERENCE W/ EXHAUST PIPE) | 1 | |
| N/S | 3EB-66-A7970 | HOSE, FRONT, DIESEL ONLY (AVOIDS INTERFERENCE W/ EXHAUST PIPE) | 1 | |

https://truckmanualshub.com/



# BRAKES - MASTER CYLINDER - S/N 200001A~
# ALL MODELS EXCEPT 3.2 & 3.5 TON

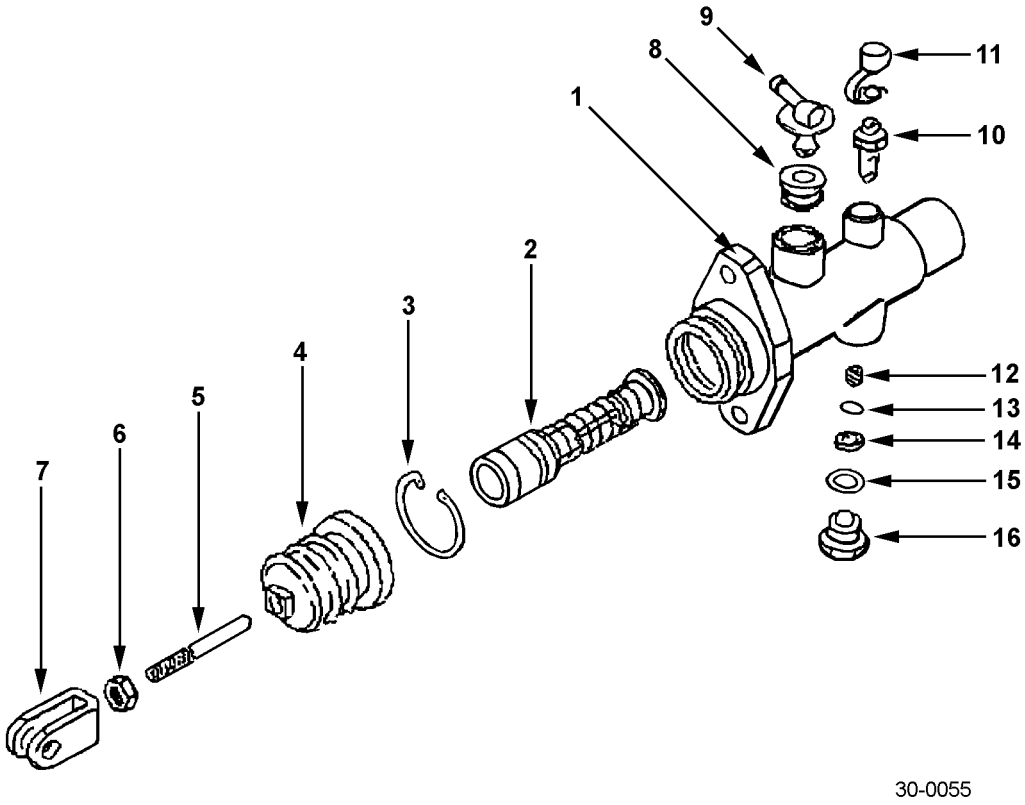

https://truckmanualshub.com/



## BRAKES - MASTER CYLINDER - S/N 200001A~ ALL MODELS EXCEPT 3.2 & 3.5 TON

| Item | Part Number | Description | Qty | |
|---|---|---|---|---|
| | 3EB-36-51180 | BRAKE MASTER CYLINDER (ALL EXCEPT 3.2 & 3.5 PNEUMATIC MODELS) | 1 | |
| 1 | NSS | .CYLINDER | 1 | |
| 2 | NSS | .PISTON ASSY (K14) | 1 | |
| 3 | NSS | .SNAP RING (K14) | 1 | |
| 4 | NSS | .BOOT (K14) | 1 | |
| 5 | 30B-36-12150 | .PUSHROD | 1 | |
| 6 | 30B-36-12160 | .NUT | 1 | |
| 7 | 30B-36-12170 | .YOKE | 1 | |
| 8 | 30B-36-12180 | .UNION | 1 | |
| 9 | 30B-36-12310 | .BUSHING | 1 | |
| 10 | 30B-36-12320 | .BLEEDER | 1 | |
| 11 | 30B-36-12330 | .CAP | 1 | |
| 12 | NSS | .SPRING (K14) | 1 | |
| | NSS | .VALVE ASSY (K14) | 1 | |
| 13 | NSS | ..SEAT | 1 | |
| 14 | NSS | ..RUBBER | | |
| 15 | NSS | .GASKET (K14) | 1 | |
| 16 | NSS | .BOLT (K14) | 1 | |
| K14 | 30B-36-05020 | REPAIR KIT, BRAKE MASTER CYLINDER | 1 | |

https://truckmanualshub.com/



# BRAKES - BOOSTER ASSY - S/N 200001A~ 3.2 & 3.5 TON MODELS W/ POWER BRAKES

## BOOSTER ASSY - 3.2, 3.5 TON MODELS W/ POWER BRAKES

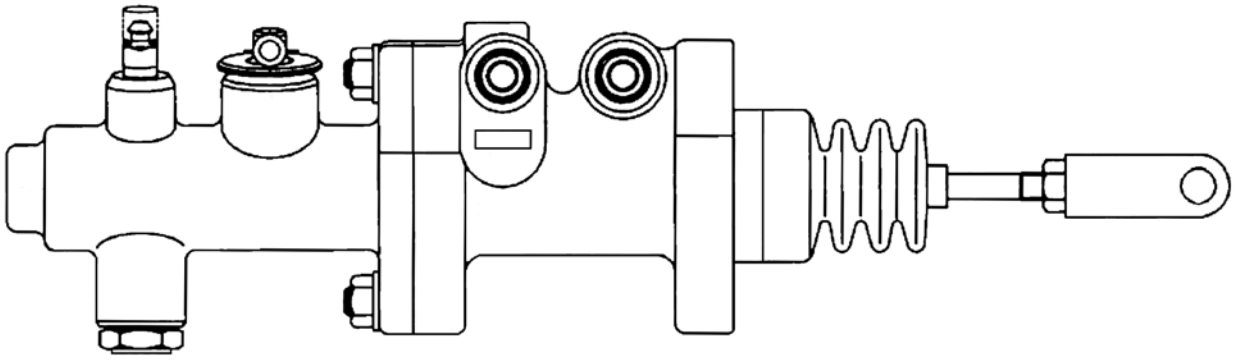

30-0056A

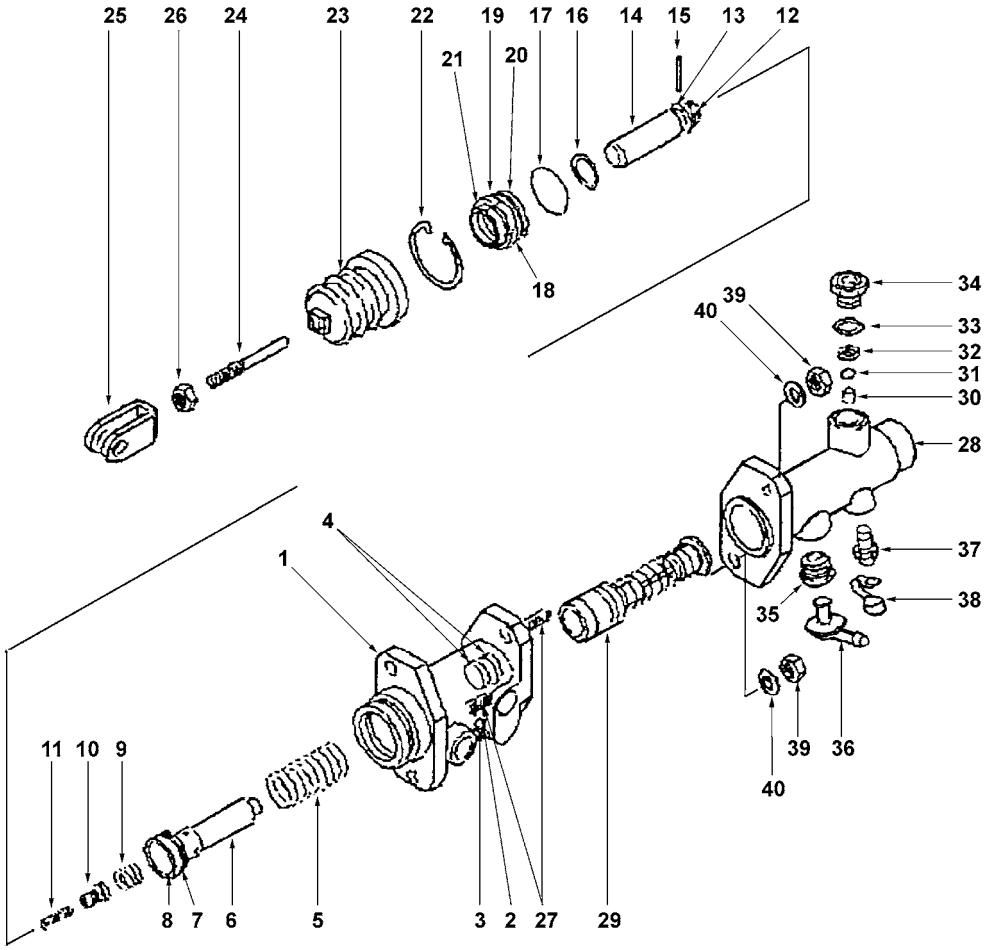


30-0056

https://truckmanualshub.com/



## BRAKES - BOOSTER ASSY - S/N 200001A~ 3.2 & 3.5 TON MODELS W/ POWER BRAKES

| Item | Part Number | Description | Qty | |
|---|---|---|---|---|
| | 3EB-36-51590 | BRAKE BOOSTER ASSY (3.2, 3.5 TON PNEUMATIC) | 1 | |
| 1 | NSS | .BODY | 1 | |
| 2 | NSS | .BALL | 1 | |
| 3 | 30B-36-12670 | .SCREW | 1 | |
| 4 | NSS | .Y-PACKING | 1 | |
| 5 | 30B-36-12450 | .SPRING (K15) | 1 | |
| 6 | 30B-36-12660 | .PISTON ASSY | 1 | |
| 7 | NSS | .SEAL | 1 | |
| 8 | NSS | .O-RING | 1 | |
| 9 | 30B-36-12590 | .SPRING (K15) | 1 | |
| 10 | 30B-36-12650 | .VALVE ASSY (K15) | 1 | |
| 11 | 30B-36-12580 | .SPRING (K15) | 1 | |
| 12 | NSS | .BACK-UP RING | 1 | |
| 13 | NSS | .O-RING (K15) | 1 | |
| 14 | 30B-36-12410 | .PISTON | 1 | |
| 15 | NSS | .PIN (K15) | 1 | |
| 16 | 30B-36-12530 | .WASHER (K15) | 1 | |
| 17 | NSS | .SNAP RING | 1 | |
| 18 | NSS | .GUIDE, CYLINDER | 1 | |
| 19 | NSS | .CUP | 1 | |
| 20 | NSS | .O-RING | 1 | |
| 21 | NSS | .Y-PACKING | 3 | |
| 22 | NSS | .SNAP RING | 1 | |
| 23 | NSS | .BOOT (K15) | 1 | |
| 24 | NSS | .PUSHROD | 1 | |
| 25 | NSS | .YOKE | 1 | |
| 26 | 30B-36-12160 | .NUT | 1 | |
| 27 | 30B-36-12620 | .STUD (K15) | 1 | |
| | 30B-36-12640 | .CYLINDER ASSY | 1 | |
| 28 | NSS | ..CYLINDER | 1 | |
| 29 | NSS | ..PISTON ASSY | 1 | |
| 30 | NSS | ..SPRING | 1 | |
| 31 | NSS | ..SEAT | 1 | |
| 32 | NSS | ..RUBBER | 1 | |
| 33 | NSS | ..GASKET | 1 | |
| 34 | NSS | ..BOLT | 1 | |
| 35 | 30B-36-12180 | ..BUSHING | 1 | |
| 36 | 30B-36-12310 | ..UNION | 1 | |
| 37 | NSS | ..BLEEDER | 1 | |

PARTS LIST CONTINUED ON NEXT PAGE

https://truckmanualshub.com/



## BRAKES - BOOSTER ASSY - S/N 200001A~
## 3.2 & 3.5 TON MODELS W/ POWER BRAKES

| Item | Part Number | Description | Qty | |
|---|---|---|---|---|
| 38 | NSS | ..CAP. . . . . | 1 | |
| 39 | 30B-36-12160 | ..NUT. . . . . | 2 | |
| 40 | NSS | ..WASHER . . . . . | 2 | |
| K15 | 30B-36-12690 | REPAIR KIT, BRAKE BOOSTER ASSY . . . . . | 1 | |

https://truckmanualshub.com/

**NOTES:**

https://truckmanualshub.com/



## PARKING BRAKE LEVER ASSEMBLY W/ ALARM - S/N 200001A~

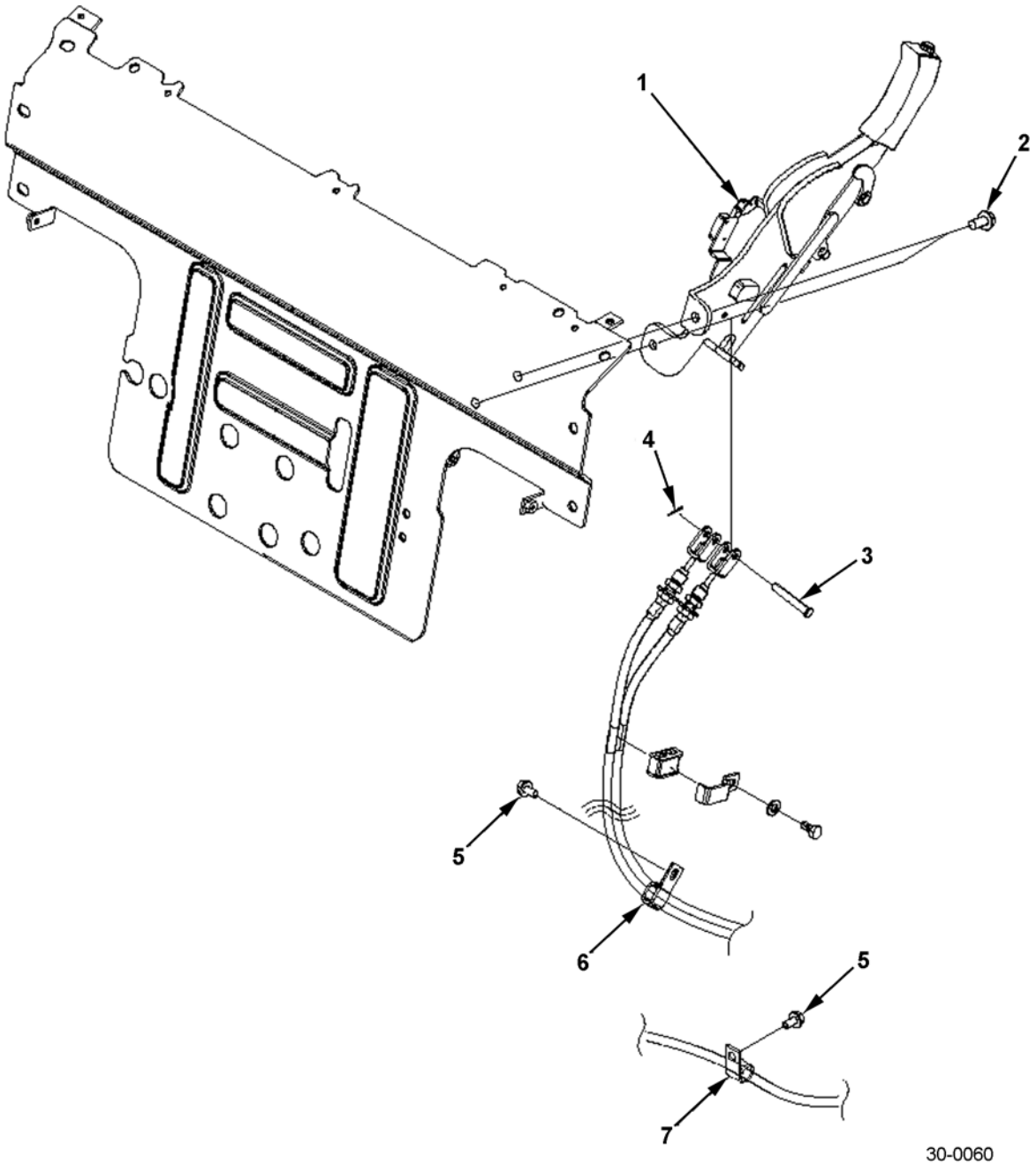

https://truckmanualshub.com/



## PARKING BRAKE LEVER ASSEMBLY W/ ALARM - S/N 200001A~

| Item | Part Number | Description | Qty | |
|---|---|---|---|---|
| 1 | 3EB-39-41112 | PARKING LEVER W/ ALARM | 1 | |
| 2 | 01435-01020 | BOLT | 2 | |
| 3 | 3EB-39-41130 | PIN | 1 | |
| 4 | 04050-12015 | PIN, COTTER | 1 | |
| 5 | 01435-00816 | BOLT | 2 | |
| 6 | 04435-51008 | CLIP | 1 | |
| 7 | 04434-51008 | CLIP | 1 | |

https://truckmanualshub.com/



## STEERING WHEEL - S/N 200001A~

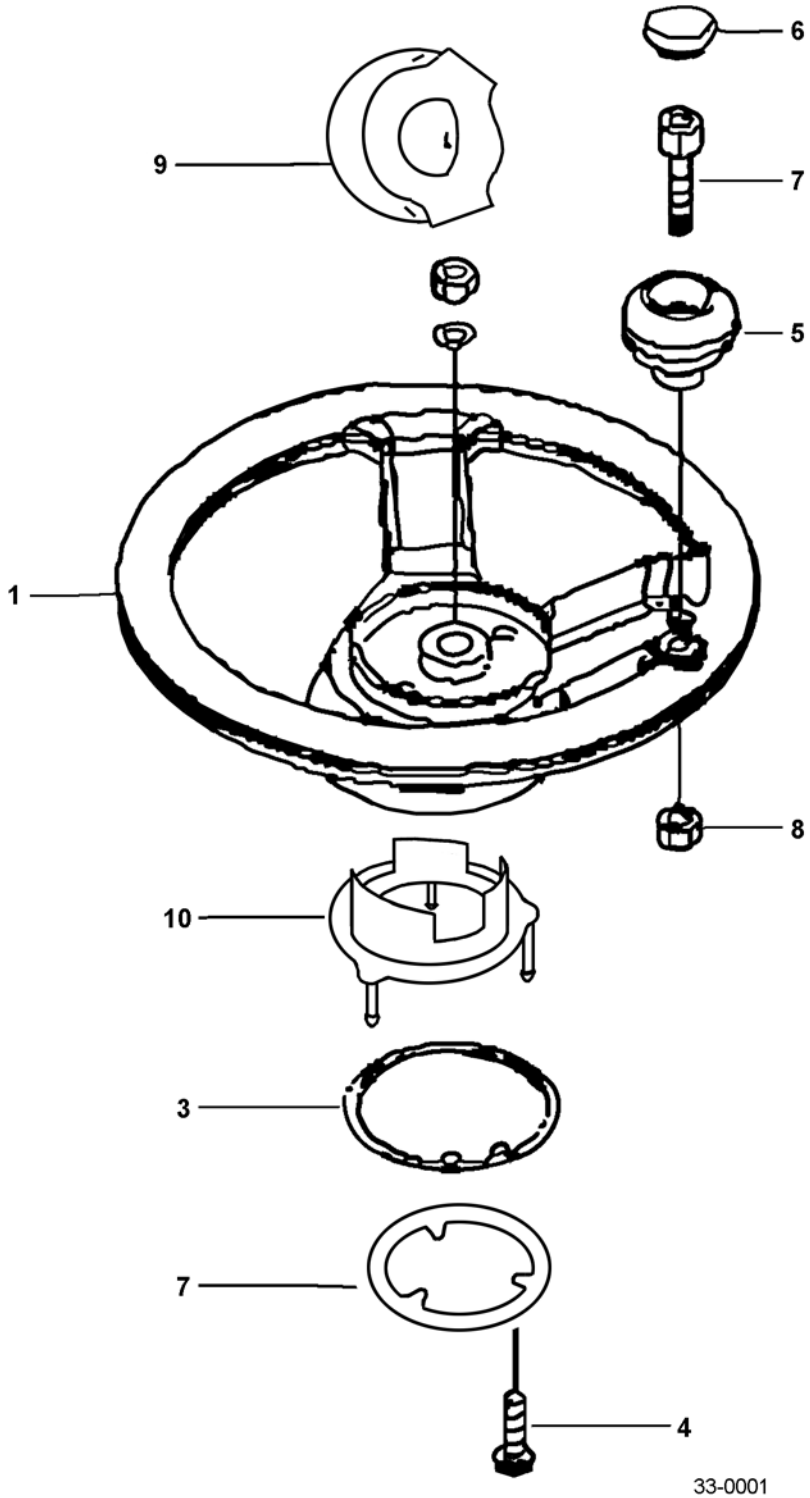

https://truckmanualshub.com/



## STEERING WHEEL - S/N 200001A~

| Item | Part Number | Description | Qty | |
|---|---|---|---|---|
| 1 | 3BB-33-57110 | STEERING WHEEL ASSY W/O KNOB . . . . . | 1 | |
| | 3EB-33-41111 | STEERING WHEEL ASSY W/ KNOB . . . . . | 1 | |
| 2 | MYGS135-00050A | .RING . . . . . | 1 | |
| 3 | MYGS242-00020B | .SPRING . . . . . | 1 | |
| 4 | MY63870-03850 | .SCREW . . . . . | 6 | |
| | MY891-6010-00 | .KNOB ASSY . . . . . | 1 | |
| 5 | NSS | ..KNOB, STEERING . . . . . | 1 | |
| 6 | NSS | ..CAP . . . . . | 1 | |
| 7 | NSS | ..BOLT . . . . . | 1 | |
| 8 | NSS | ..NUT . . . . . | 1 | |
| | 3EB-33-41130 | .PAD ASSY . . . . . | 1 | |
| 9 | NSS | ..PAD, STEERING WHEEL . . . . . | 1 | |
| 10 | NSS | ..CUP . . . . . | 1 | |

https://truckmanualshub.com/



# STEERING COLUMN - POWER STEERING VALVE - S/N 200001A~

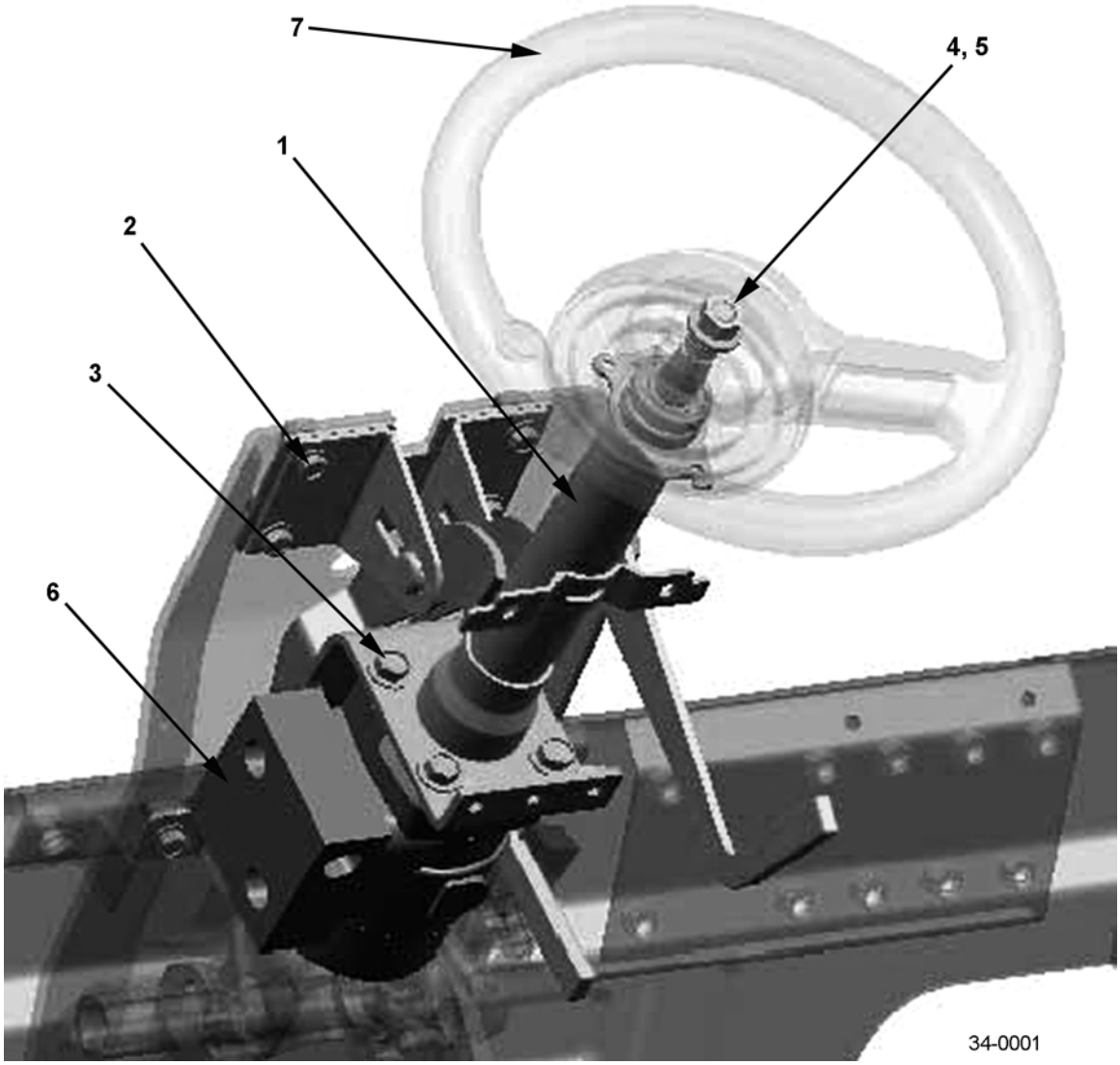

https://truckmanualshub.com/



## STEERING COLUMN - POWER STEERING VALVE - S/N 200001A~

| Item | Part Number | Description | Qty | |
|---|---|---|---|---|
| 1 | 3EB-34-53111 | SHAFT ASSY, STEERING COLUMN . . . . . | 1 | |
| 2 | 01435-00820 | BOLT. . . . . | 6 | |
| 3 | 01435-01030 | BOLT. . . . . | 4 | |
| 4 | 01643-31232 | WASHER . . . . . | 1 | |
| 5 | 34A-10-81150 | NUT. . . . . | 1 | |
| 6 | 3EB-34-51510 | STEERING VALVE . . . . . | 1 | |
| 7 | 3BB-33-57110 | STEERING WHEEL (W/O KNOB) . . . . . | 1 | |
| | 3EB-33-41111 | STEERING WHEEL (W/ KNOB) (OPTIONAL) . . | 1 | |

https://truckmanualshub.com/



# INCHING PEDAL / BRAKE PEDAL ASSEMBLY - S/N 200001A~

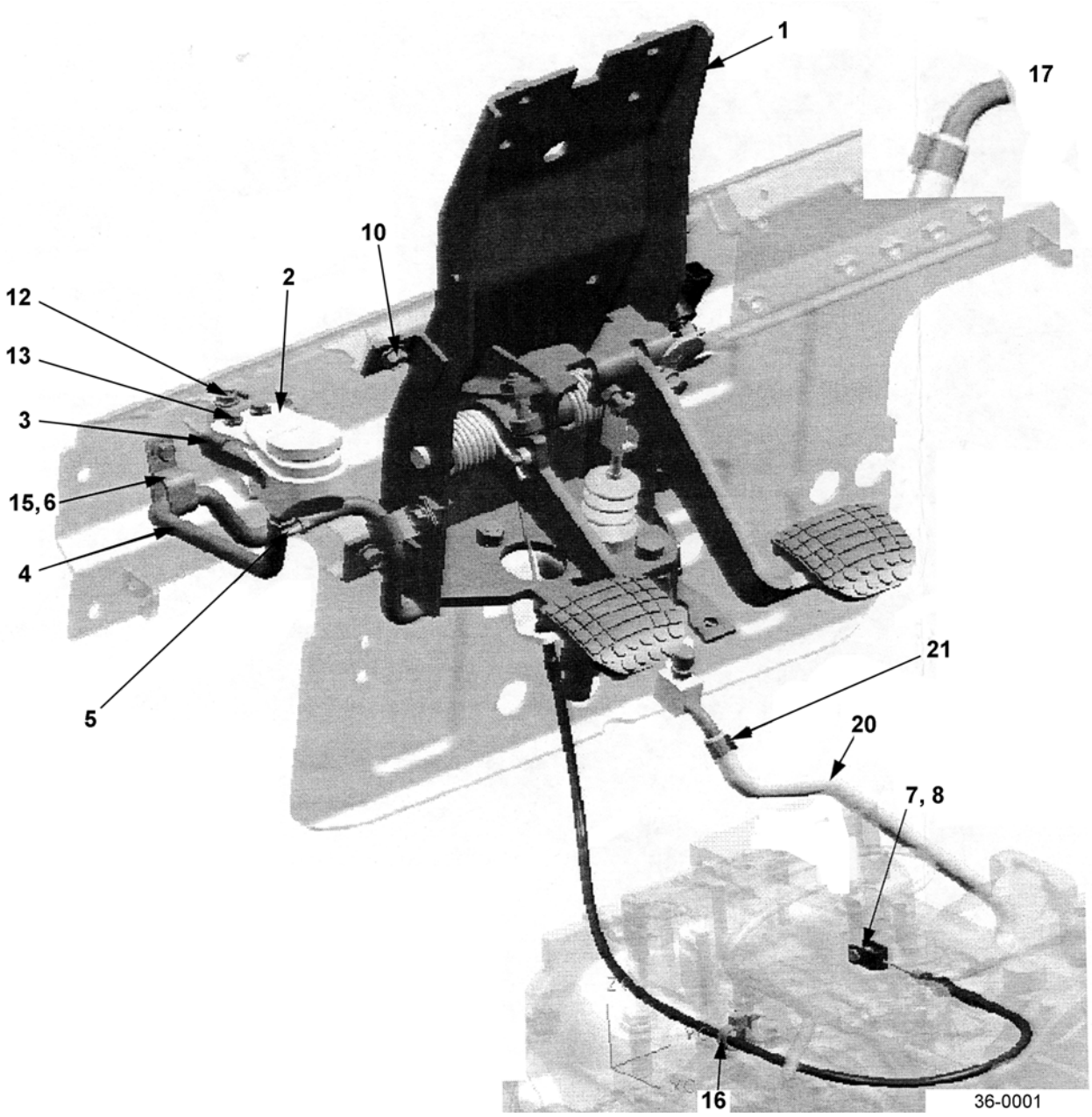

https://truckmanualshub.com/



## INCHING PEDAL / BRAKE PEDAL ASSEMBLY - S/N 200001A~

| Item | Part Number | Description | Qty | |
|---|---|---|---|---|
| 1 | 3EB-36-52133 | PEDAL SUB-ASSY, INCHING & BRAKE (2.0T, 2.2T, 2.5T, 2.8T, 3.0T (FG/FD) & 3.2T (CUSHION)) . . | 1 | |
| | 3EB-36-52400 | PEDAL SUB-ASSY, INCHING & BRAKE (3.2T, 3.5T FG/FD PNEUMATIC ONLY) . . . . . | 1 | |
| 2 | 3EB-36-51460 | RESERVOIR, BRAKE FLUID . . . . . | 1 | |
| 3 | 3EB-36-51440 | BRACKET . . . . . | 1 | |
| 4 | 3EB-36-51421 | HOSE . . . . . | 1 | |
| 5 | 07281-00167 | CLAMP . . . . . | 2 | |
| 6 | 04435-51408 | CLIP (NOT SHOWN) . . . . . | 2 | |
| 7 | 04205-10518 | PIN . . . . . | 1 | |
| 8 | 04050-11210 | COTTER PIN . . . . . | 1 | |
| 9 | NOT USED | | | |
| 10 | 01435-01020 | BOLT . . . . . | 4 | |
| 11 | 01435-00825 | BOLT (NOT SHOWN) . . . . . | 1 | |
| 12 | 01435-00816 | BOLT . . . . . | 1 | |
| 13 | 01024-80616 | BOLT . . . . . | 2 | |
| 14 | NOT USED | | | |
| 15 | 01435-00812 | BOLT . . . . . | 1 | |
| 16 | 08059-00310 | CLIP . . . . . | 1 | |
| 17 | 3EB-21-51360 | JOINT (LOCATION SHOWN) . . . . . | 1 | |
| 18 | 07030-01030 | BREATHER (NOT SHOWN) . . . . . | 1 | |
| 19 | 01435-00816 | BOLT (NOT SHOWN) . . . . . | 1 | |
| 20 | 3EB-21-51370 | HOSE . . . . . | 1 | |
| 21 | 07285-00130 | CLIP . . . . . | 2 | |
| N/S | 3EB-36-51180 | MASTER CYLINDER ASSY . . . . . | 1 | |

https://truckmanualshub.com/



# ACCELERATOR PEDAL - S/N 200001A~ FG MODELS

ACCELERATOR PEDAL - FG

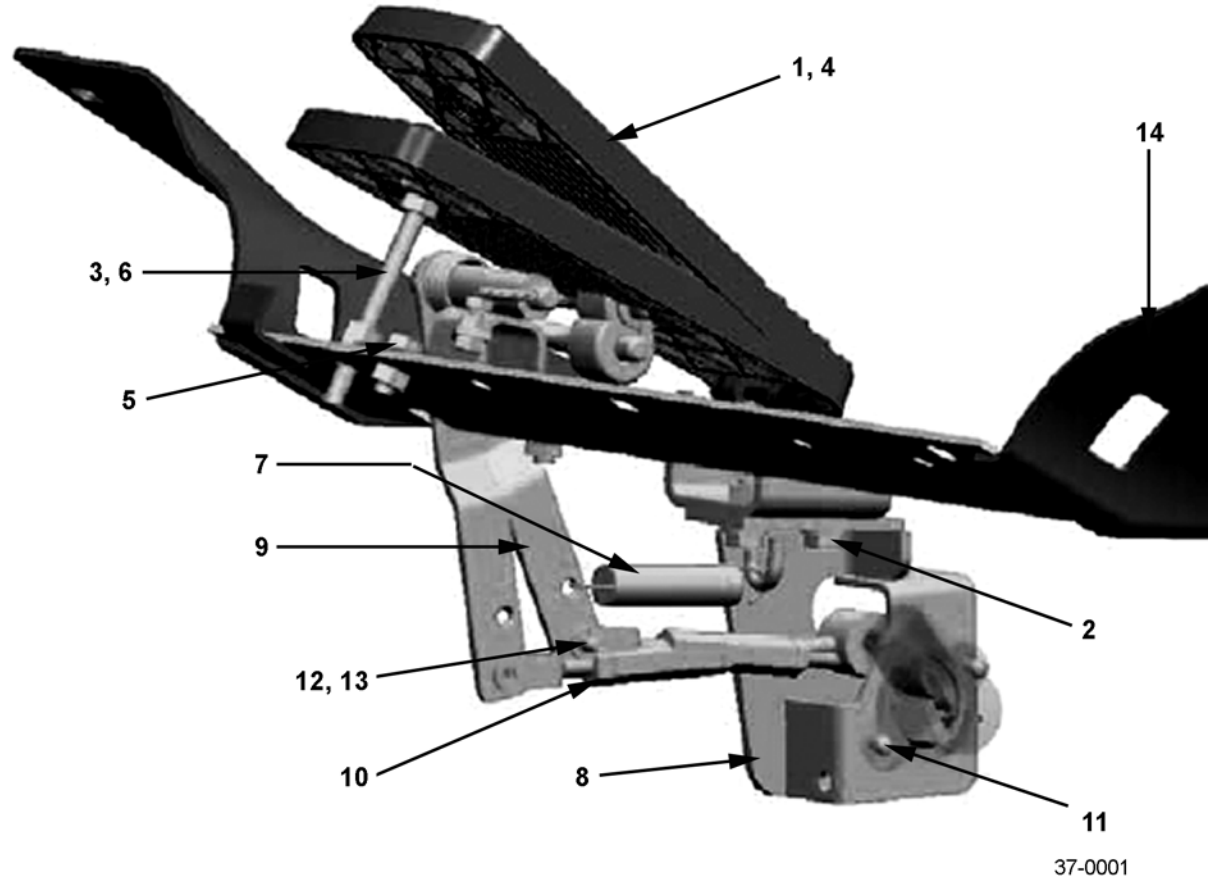


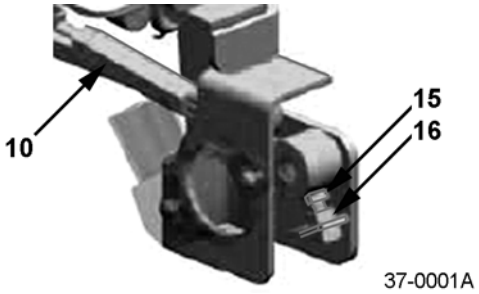

https://truckmanualshub.com/



## ACCELERATOR PEDAL - S/N 200001A~ FG MODELS

| Item | Part Number | Description | Qty | |
|---|---|---|---|---|
| 1 | 3EB-37-41160 | PEDAL ASSY, ACCELERATOR | 1 | |
| 2 | 01024-80820 | BOLT | 2 | |
| 3 | 01016-50880 | BOLT (STOPPER) | 1 | |
| 4 | 01435-00616 | BOLT | 2 | |
| 5 | 01435-00816 | BOLT | 2 | |
| 6 | 01580-10806 | NUT | 1 | |
| 7 | 3BA-37-51140 | SPRING | 1 | |
| 8 | 3EB-37-A7211 | BRACKET | 1 | |
| 9 | 3EB-37-A7290 | LEVER SUB-ASSY | 1 | |
| 10 | 3EB-37-A7251 | ROD (TURNBUCKLE) | 1 | |
| 11 | 01023-10412 | SCREW | 2 | |
| 12 | 04050-11610 | PIN, COTTER | 1 | |
| 13 | 04205-10616 | PIN, COTTER | 1 | |
| 14 | 3EB-37-A7280 | FLOOR PLATE | 1 | |
| 15 | 01010-80616 | BOLT | 1 | |
| 16 | 01580-10605 | NUT | 1 | |

https://truckmanualshub.com/



# ACCELERATOR PEDAL - S/N 200001A~
# FD MODELS

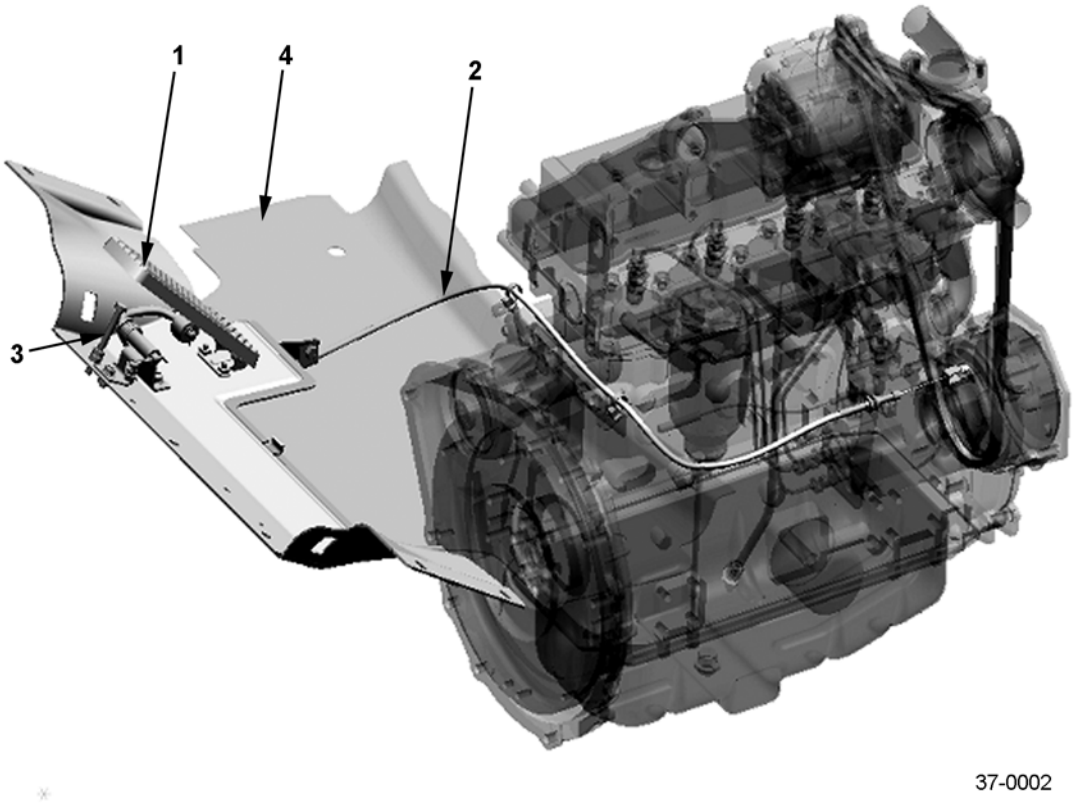

https://truckmanualshub.com/



## ACCELERATOR PEDAL - S/N 200001A~ FD MODELS

| Item | Part Number | Description | Qty | |
|---|---|---|---|---|
| 1 | 3EB-37-41160 | PEDAL ASSY, ACCELERATOR . . . . . | 1 | |
| 2 | 3EB-37-41141 | CABLE . . . . . | 1 | |
| 3 | 01016-50880 | BOLT (STOPPER) . . . . . | 1 | |
| 4 | 3EB-50-51621 | FLOOR PLATE . . . . . | 1 | |
| N/S | 3EB-37-51390 | LEVER SUB-ASSY . . . . . | 1 | |

https://truckmanualshub.com/



## FRAME ASSY - S/N 200001A~
## (ALSO SEE FIG. # 41-0002)

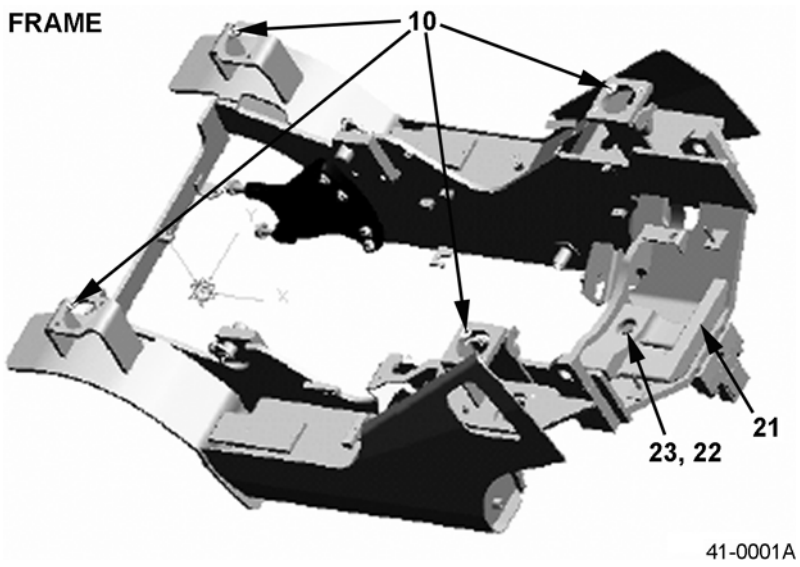


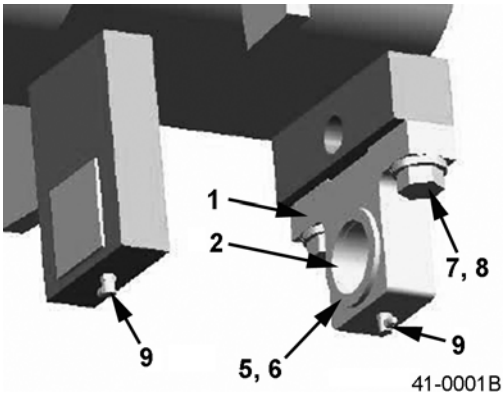


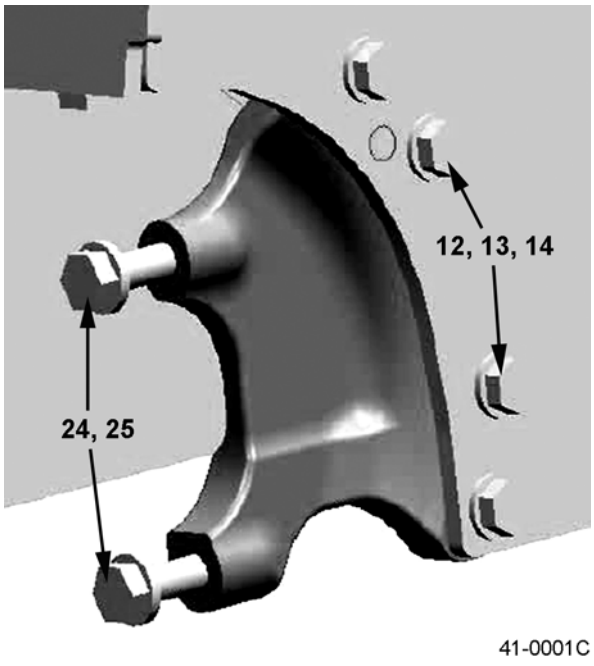


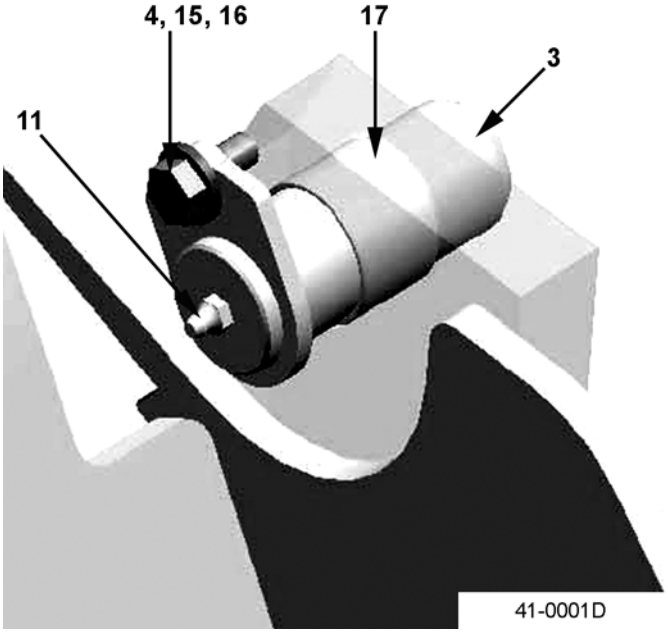

https://truckmanualshub.com/



## FRAME ASSY - S/N 200001A~
## (ALSO SEE FIG. # 41-0002)

| Item | Part Number | Description | Qty | |
|---|---|---|---|---|
| | 37B-1FZ-A810 | FRAME ASSY - FG PNEUMATIC (2.0T, 2.5T) . . | 1 | |
| | 37B-1FZ-A7820 | FRAME ASSY - FG PNEUMATIC (2.8T, 3.0T, 3.2T, 3.5T) | 1 | |
| | 37B-1FZ-A7890 | FRAME ASSY - FD PNEUMATIC (3.2T, 3.5T) . . | 1 | |
| | 37B-1FT-A711 | FRAME ASSY - FG CUSHION (2.0T, 2.5T) . . . . | 1 | |
| | 37B-1FT-A721 | FRAME ASSY - FG CUSHION (2.8T, 3.0T, 3.2T) | 1 | |
| 1 | 3EB-41-31791 | SUPPORT. . . . . | 1 | |
| 2 | 34A-42-11411 | BUSHING . . . . . | 2 | |
| 3 | 3EB-41-51750 | PIN - TILT FRAME . . . . . | 2 | |
| 4 | 01010-81025 | BOLT. . . . . | 2 | |
| 5 | 3EB-41-31950 | SHIM. . . . . | 2 | |
| 6 | 3EB-41-31960 | SHIM. . . . . | 2 | |
| 7 | 01010-82060 | BOLT. . . . . | 2 | |
| 8 | 01643-32060 | WASHER . . . . . | 2 | |
| 9 | 07020-00900 | FITTING, GREASE . . . . . | 2 | |
| 10 | 01640-21426 | WASHER . . . . . | 4 | |
| 11 | 07020-00000 | FITTING, GREASE . . . . . | 2 | |
| 12 | 01010-81865 | BOLT. . . . . | 8 | |
| 13 | 01643-31845 | WASHER . . . . . | 8 | |
| 14 | 01580-11815 | NUT. . . . . | 8 | |
| 15 | 3EB-41-41490 | BOSS . . . . . | 2 | |
| 16 | 3EB-41-44530 | WASHER . . . . . | 2 | |
| 17 | 3EB-41-41980 | BUSHING . . . . . | 2 | |
| 18 | 01024-80825 | BOLT - FD PNEUMATIC (3.2T, 3.5T ONLY). . . . | 4 | |
| 19 | 3EB-41-52550 | BRACKET, LH - FD PNEUMATIC (3.2T, 3.5T ONLY) | 1 | |
| 20 | 3EB-41-52560 | BRACKET, RH - FD PNEUMATIC (3.2T, 3.5T ONLY) | 1 | |
| 21 | 3EB-43-A7710 | SUB-WEIGHT - FG CUSHION (2.0T, 2.5T) . . . . | 1 | |
| 22 | 01010-81640 | BOLT - FG CUSHION (2.0T, 2.5T) . . . . . | 1 | |
| 23 | 01643-31645 | WASHER - FG CUSHION (2.0T, 2.5T). . . . . | 1 | |
| 24 | 01010-82075 | BOLT - FG PNEUMATIC & CUSHION (2.0T, 2.5T) | 4 | |
| | 01011-82015 | BOLT - FG PNEUMATIC (2.8T, 3.0T) . . . . . | 4 | |
| | 01011-82215 | BOLT - FG PNEUMATIC (3.2T, 3.5T) . . . . . | 4 | |
| 25 | 01643-32060 | WASHER - FG PNEUMATIC (2.0T, 2.5T, 2.8T, 3.0T) | 4 | |
| | 01643-32260 | WASHER - FG PNEUMATIC (3.2T, 3.5T). . . . . | 4 | |
| | 01643-32060 | WASHER - FG CUSHION (2.0T, 2.5T) . . . . . | 4 | |

https://truckmanualshub.com/



## FRAME ASSY - REAR VIEW - S/N 200001A~
## (ALSO SEE FIG. # 41-0001)

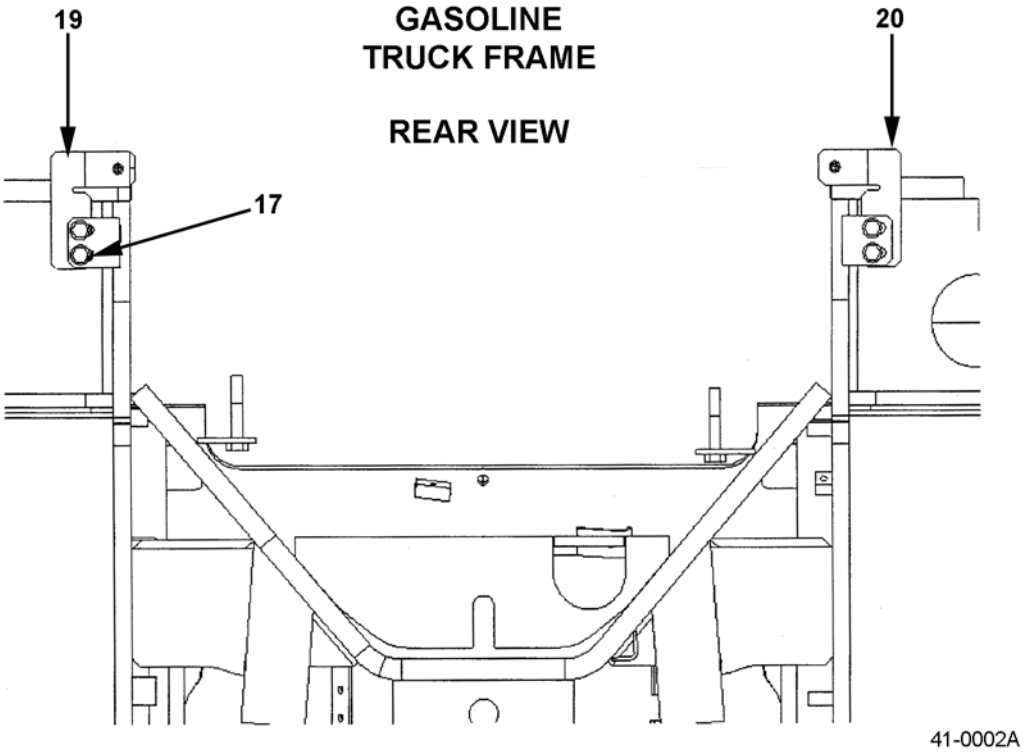


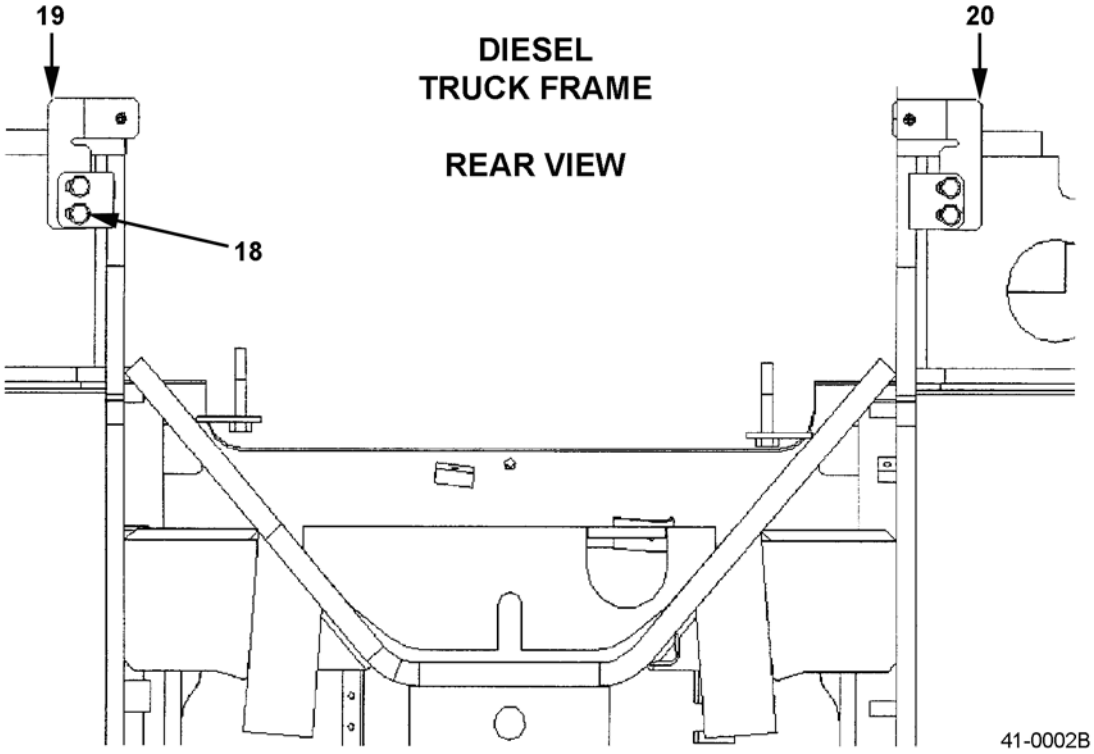

https://truckmanualshub.com/



## FRAME ASSY - REAR VIEW - S/N 200001A~
## (ALSO SEE FIG. # 41-0001)

| Item | Part Number | Description | Qty | |
|---|---|---|---|---|
| | 37B-1FZ-A810 | FRAME ASSY - FG PNEUMATIC (2.0T, 2.5T) . . | 1 | |
| | 37B-1FZ-A7820 | FRAME ASSY - FG PNEUMATIC (2.8T, 3.0T, 3.2T, 3.5T) | 1 | |
| | 37B-1FZ-A7890 | FRAME ASSY - FD PNEUMATIC (3.2T, 3.5T) . . | 1 | |
| | 37B-1FT-A711 | FRAME ASSY - FG CUSHION (2.0T, 2.5T) . . . . | 1 | |
| | 37B-1FT-A721 | FRAME ASSY - FG CUSHION (2.8T, 3.0T, 3.2T) | 1 | |
| 1 | 3EB-41-31791 | SUPPORT. . . . . | 1 | |
| 2 | 34A-42-11411 | BUSHING . . . . . | 2 | |
| 3 | 3EB-41-51750 | PIN - TILT FRAME . . . . . | 2 | |
| 4 | 01010-81025 | BOLT. . . . . | 2 | |
| 5 | 3EB-41-31950 | SHIM. . . . . | 2 | |
| 6 | 3EB-41-31960 | SHIM. . . . . | 2 | |
| 7 | 01010-82060 | BOLT. . . . . | 2 | |
| 8 | 01643-32060 | WASHER . . . . . | 2 | |
| 9 | 07020-00900 | FITTING, GREASE . . . . . | 2 | |
| 10 | 01640-21426 | WASHER . . . . . | 4 | |
| 11 | 07020-00000 | FITTING, GREASE . . . . . | 2 | |
| 12 | 01010-81865 | BOLT. . . . . | 8 | |
| 13 | 01643-31845 | WASHER . . . . . | 8 | |
| 14 | 01580-11815 | NUT. . . . . | 8 | |
| 15 | 3EB-41-41490 | BOSS . . . . . | 2 | |
| 16 | 3EB-41-44530 | WASHER . . . . . | 2 | |
| 17 | 3EB-41-41980 | BUSHING . . . . . | 2 | |
| 18 | 01024-80825 | BOLT - FD PNEUMATIC (3.2T, 3.5T ONLY). . . . | 4 | |
| 19 | 3EB-41-52550 | BRACKET, LH - FD PNEUMATIC (3.2T, 3.5T ONLY) | 1 | |
| 20 | 3EB-41-52560 | BRACKET, RH - FD PNEUMATIC (3.2T, 3.5T ONLY) | 1 | |
| 21 | 3EB-43-A7710 | SUB-WEIGHT - FG CUSHION (2.0T, 2.5T) . . . . | 1 | |
| 22 | 01010-81640 | BOLT - FG CUSHION (2.0T, 2.5T) . . . . . | 1 | |
| 23 | 01643-31645 | WASHER - FG CUSHION (2.0T, 2.5T). . . . . | 1 | |
| 24 | 01010-82075 | BOLT - FG PNEUMATIC & CUSHION (2.0T, 2.5T) | 4 | |
| | 01011-82015 | BOLT - FG PNEUMATIC (2.8T, 3.0T) . . . . . | 4 | |
| | 01011-82215 | BOLT - FG PNEUMATIC (3.2T, 3.5T) . . . . . | 4 | |
| 25 | 01643-32060 | WASHER - FG PNEUMATIC (2.0T, 2.5T, 2.8T, 3.0T) | 4 | |
| | 01643-32260 | WASHER - FG PNEUMATIC (3.2T, 3.5T). . . . . | 4 | |
| | 01643-32060 | WASHER - FG CUSHION (2.0T, 2.5T) . . . . . | 4 | |

https://truckmanualshub.com/



## FRAME ASSY - TILT ACCESSORIES - S/N 200001A~

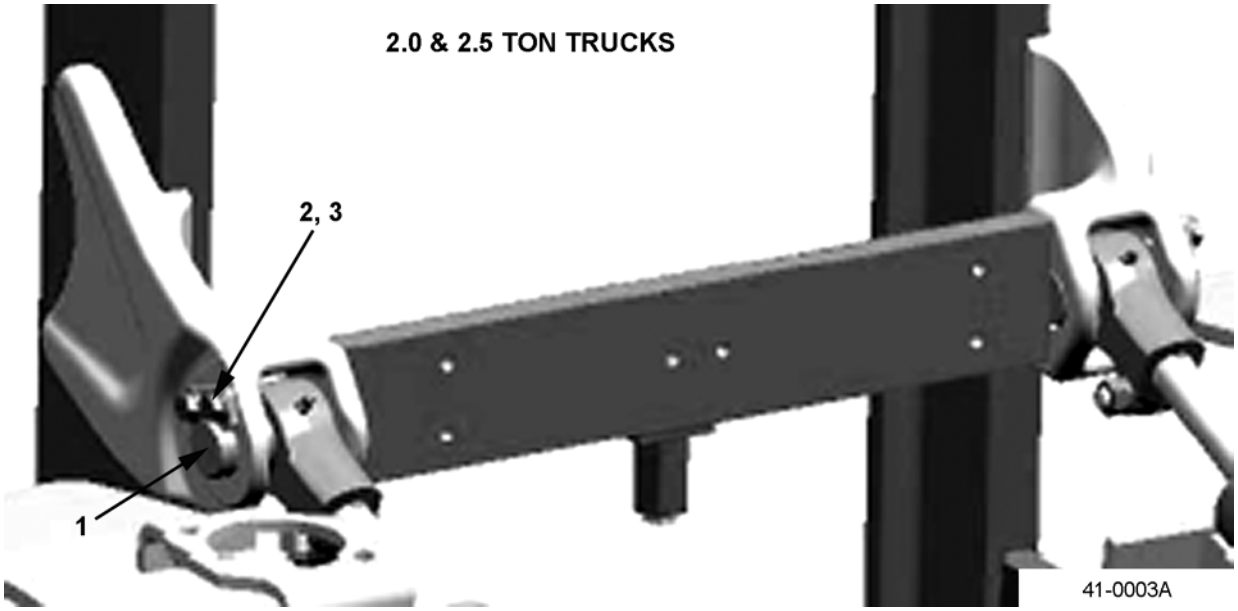


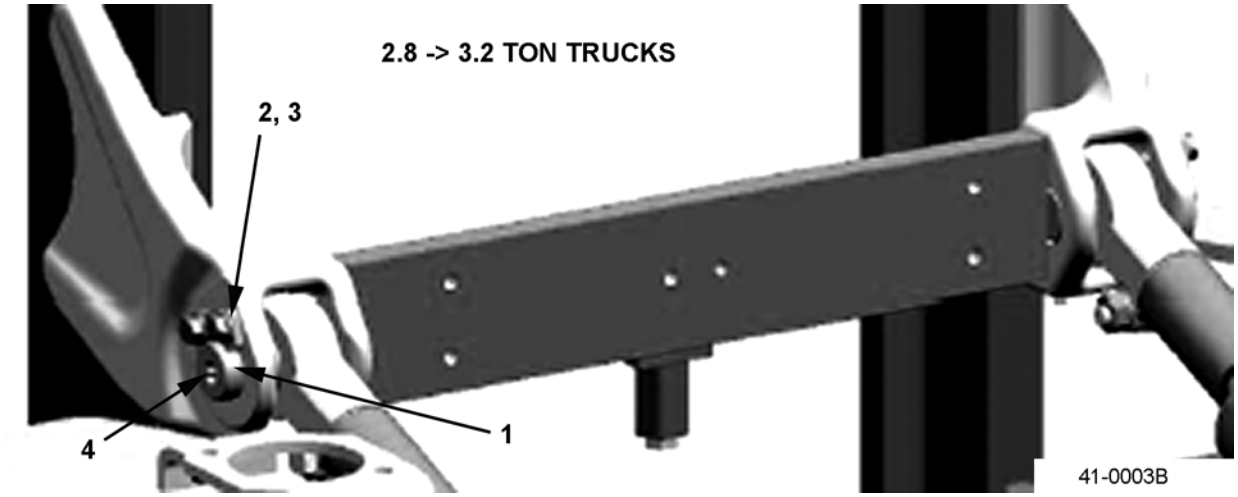


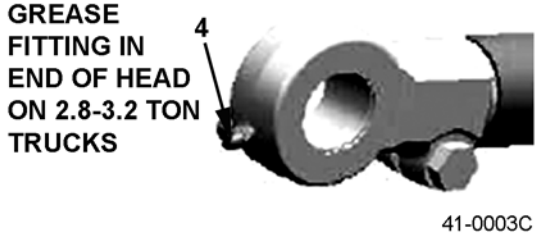

https://truckmanualshub.com/



## FRAME ASSY - TILT ACCESSORIES - S/N 200001A~

| Item | Part Number | Description | Qty | |
|---|---|---|---|---|
| | 37B-1FZ-A810 | FRAME ASSY - FG PNEUMATIC (2.0T, 2.5T) . . | 1 | |
| | 37B-1FZ-A7820 | FRAME ASSY - FG PNEUMATIC (2.8T, 3.0T, 3.2T, 3.5T) | 1 | |
| | 37B-1FZ-A7890 | FRAME ASSY - FD PNEUMATIC (3.2T, 3.5T) . . | 1 | |
| | 37B-1FT-A711 | FRAME ASSY - FG CUSHION (2.0T, 2.5T) . . . . | 1 | |
| | 37B-1FT-A721 | FRAME ASSY - FG CUSHION (2.8T, 3.0T, 3.2T) | 1 | |
| 1 | 3EB-71-61870 | PIN - TILT MAST (2.0T, 2.5T) . . . . . | 2 | |
| | 3EB-41-A7460 | PIN - TILT MAST (2.8T, 3.0T, 3.2T). . . . . | 2 | |
| | 3EB-71-51871 | PIN - TILT MAST (3.5T) . . . . . | 2 | |
| 2 | 3EB-71-51881 | PLATE (ALL) . . . . . | 2 | |
| 3 | 01024-81025 | BOLT . . . . . | 4 | |
| 4 | 07020-00001 | FITTING (GREASE) (2.8T, 3.0T, 3.2T) . . . . . | 2 | |
| | 07020-00000 | FITTING (GREASE) (3.5T) . . . . . | 2 | |

https://truckmanualshub.com/



# FRAME - FUEL COVER (LPG) - S/N 200001A~

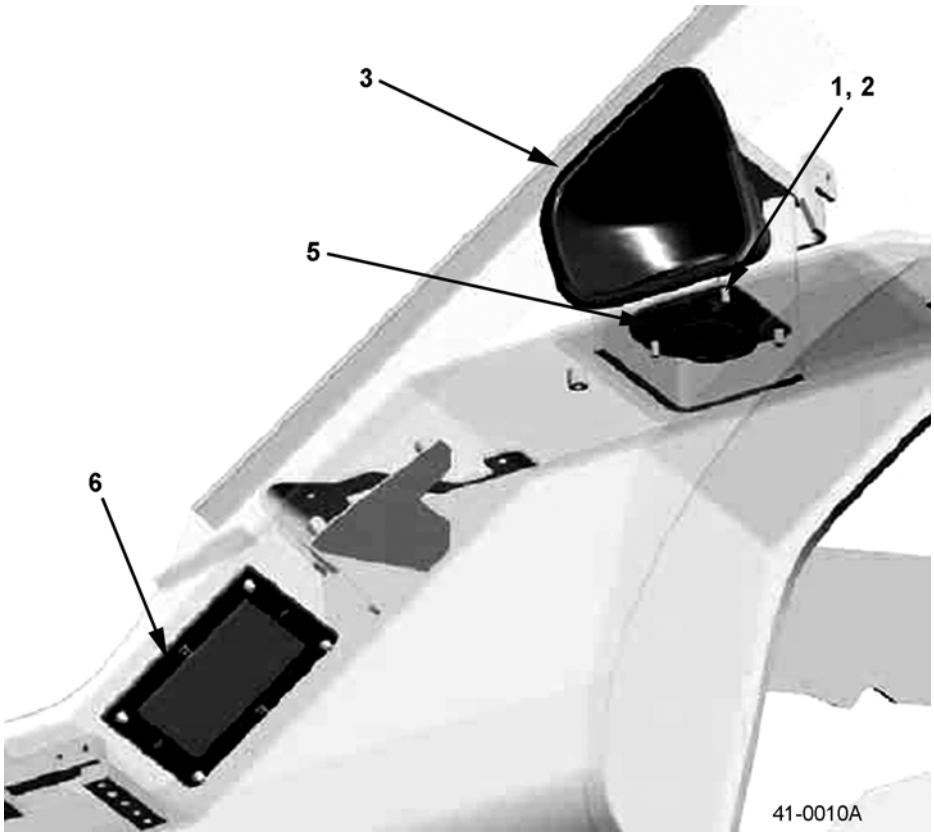


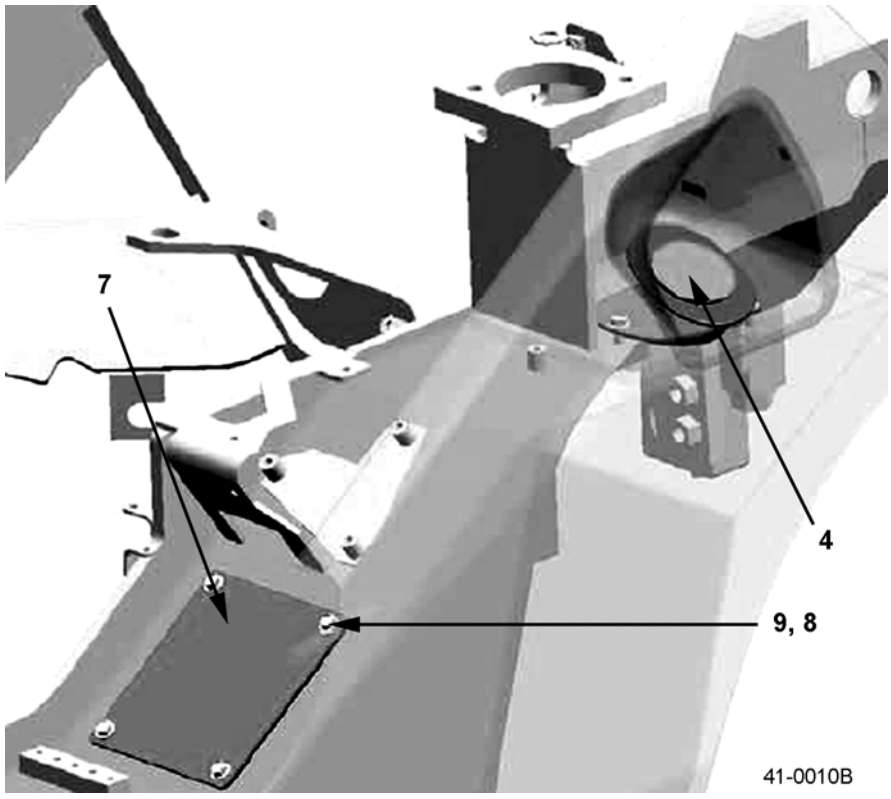

https://truckmanualshub.com/



## FRAME - FUEL COVER (LPG) - S/N 200001A~

| Item | Part Number | Description | Qty | |
|---|---|---|---|---|
| 1 | 3EB-42-56810 | PLATE | 1 | |
| 2 | 01435-00816 | BOLT | 3 | |
| 3 | 3EB-41-56120 | COVER (PNEUMATIC) | 1 | |
| | 3EB-42-56120 | COVER (CUSHION) | 1 | |
| 4 | 3EB-42-56820 | COVER | 1 | |
| 5 | 3EB-41-56130 | PACKING | 1 | |
| 6 | 3EB-05-A7420 | GASKET | 1 | |
| 7 | 3EB-41-A7690 | PLATE | 1 | |
| 8 | 3EB-55-47130 | COLLAR | 4 | |
| 9 | 3EB-66-43670 | BOLT | 4 | |

https://truckmanualshub.com/



# FRAME - FUEL CAP - S/N 200001A~

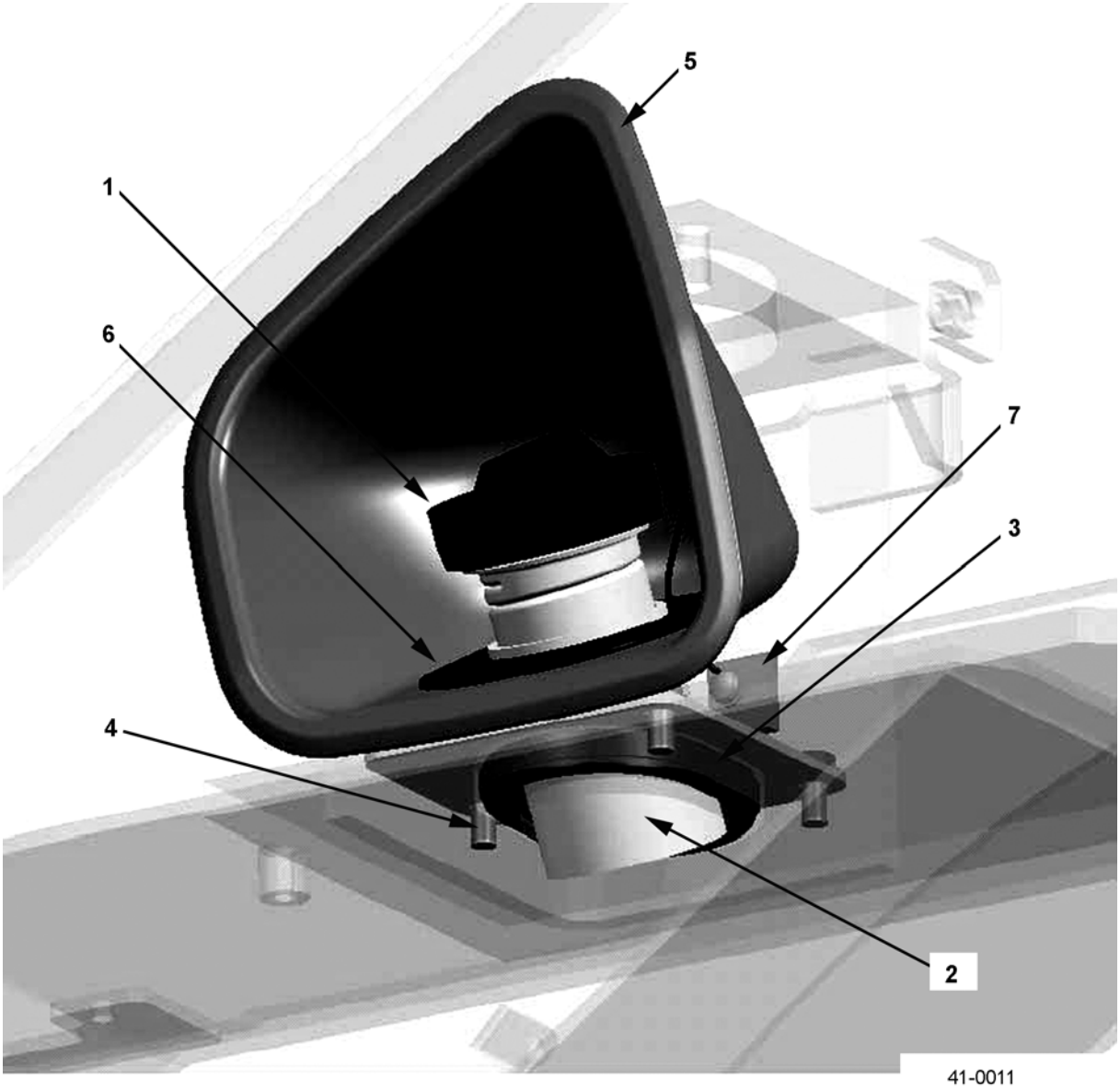

https://truckmanualshub.com/



## FRAME - FUEL CAP - S/N 200001A~

| Item | Part Number | Description | Qty | |
|---|---|---|---|---|
| 1 | 3FD-42-21310 | CAP (STRAP) | 1 | |
| 2 | 3EB-42-A7810 | PIPE | 1 | |
| 3 | 3EB-41-56130 | PACKING | 1 | |
| 4 | 01435-00816 | BOLT | 3 | |
| 5 | 3EB-41-56120 | COVER (PNEUMATIC) | 1 | |
| | 3EB-42-56120 | COVER (CUSHION) | 1 | |
| 6 | 3EB-41-56140 | COVER | 1 | |
| 7 | 01023-10614 | SCREW | 1 | |

https://truckmanualshub.com/



# FRAME - FUEL CAP (UL-S) - S/N 200001A~

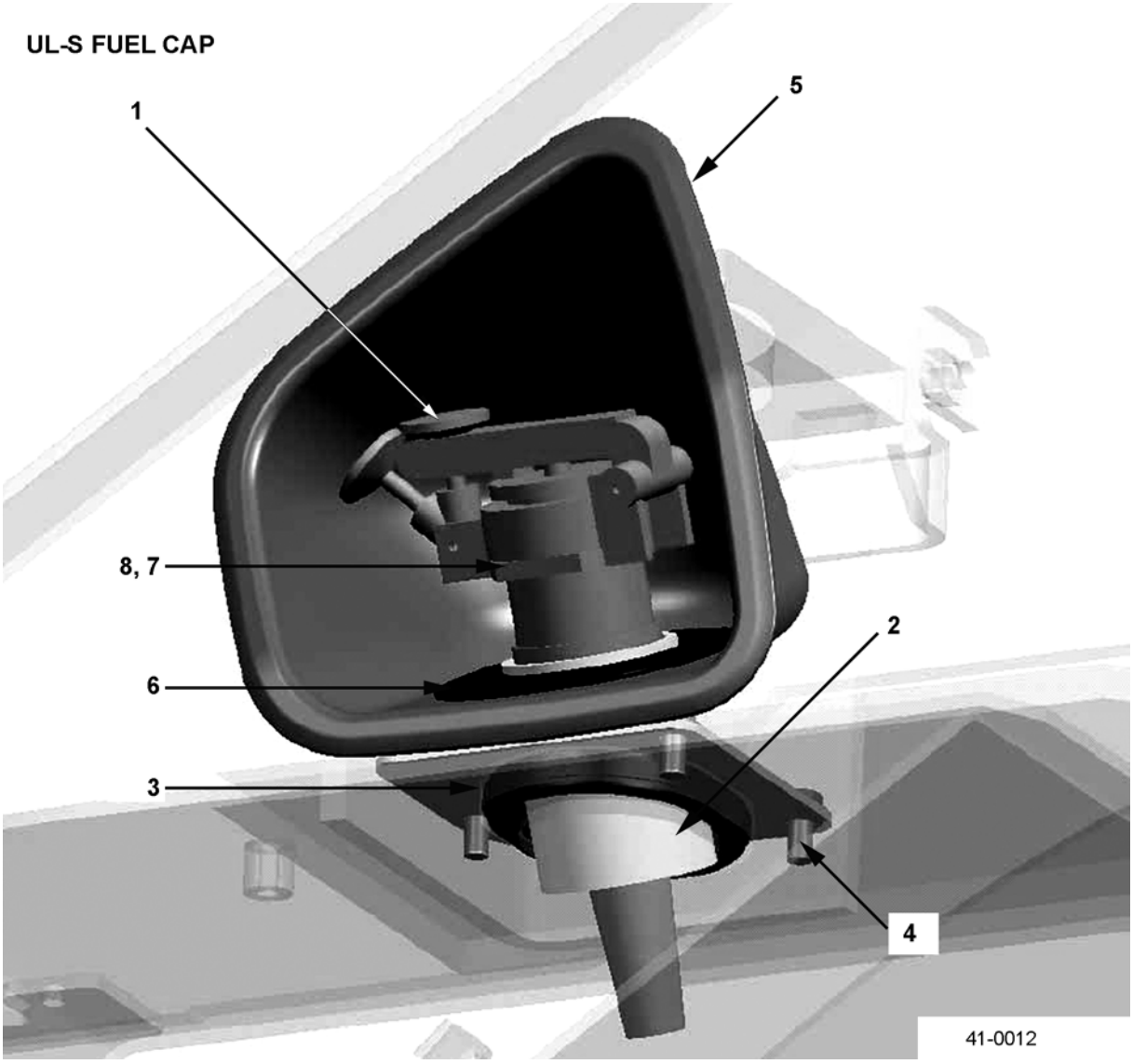

https://truckmanualshub.com/



## FRAME - FUEL CAP (UL-S) - S/N 200001A~

| Item | Part Number | Description | Qty | |
|---|---|---|---|---|
| 1 | 3EB-44-17170 | CAP (UL-S) | 1 | |
| 2 | 3EB-42-A7710 | PIPE | 1 | |
| 3 | 3EB-41-56130 | PACKING | 1 | |
| 4 | 01435-00816 | BOLT | 3 | |
| 5 | 3EB-41-56120 | COVER | 1 | |
| 6 | 3EB-41-56140 | COVER | 1 | |
| 7 | 3EB-41-35120 | NUT | 1 | |
| 8 | 3EB-44-17180 | GASKET | 1 | |

https://truckmanualshub.com/



## FRAME - UNDER COVER - S/N 200001A~

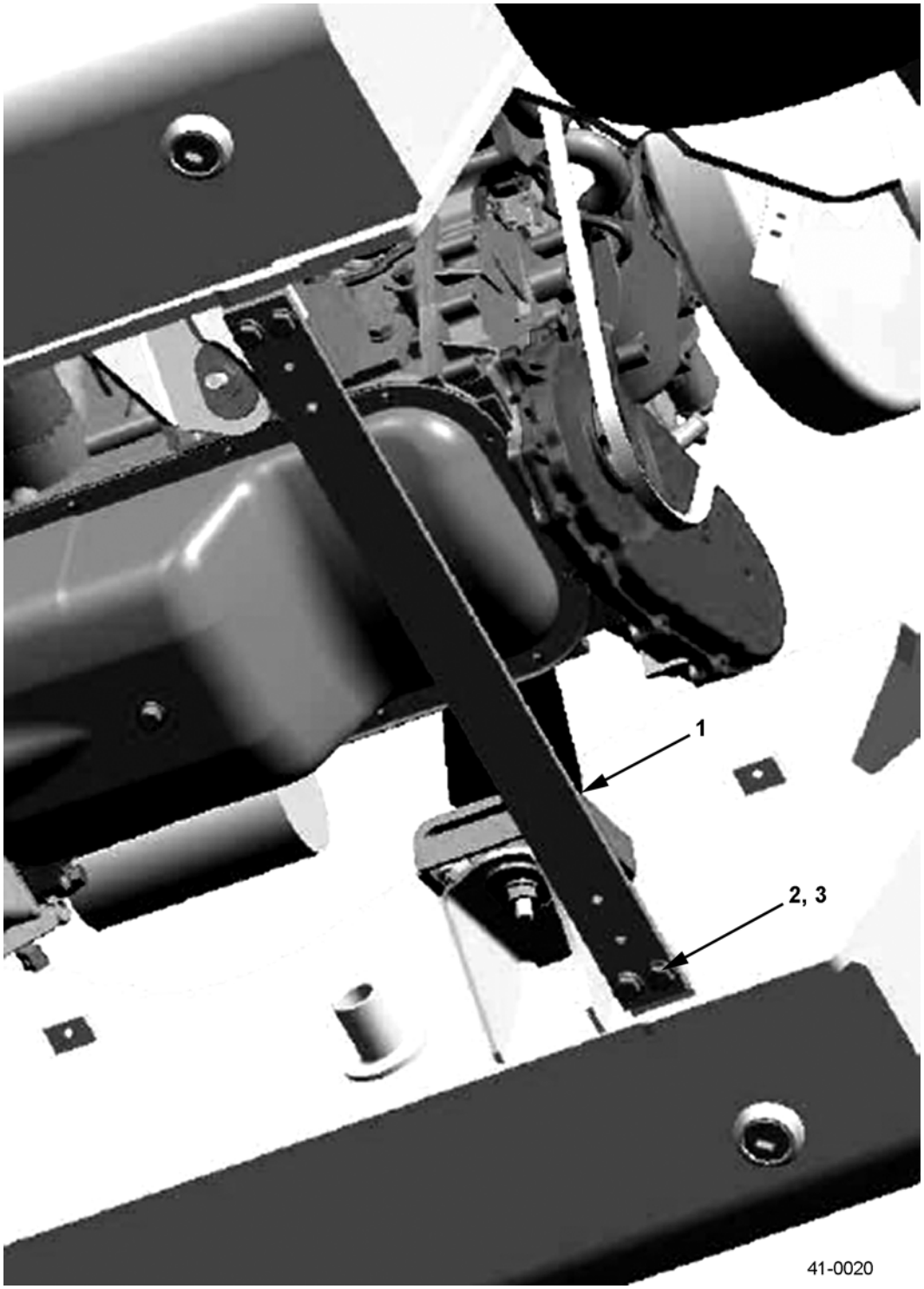

https://truckmanualshub.com/



## FRAME - UNDER COVER - S/N 200001A~

| Item | Part Number | Description | Qty | |
|---|---|---|---|---|
| 1 | 3EB-52-51611 | BRACKET (CROSSMEMBER) . . . . . | 1 | |
| 2 | 01010-81025 | BOLT . . . . . | 4 | |
| 3 | 01643-31032 | WASHER. . . . . | 4 | |

https://truckmanualshub.com/



## COUNTERWEIGHTS - S/N 200001A~

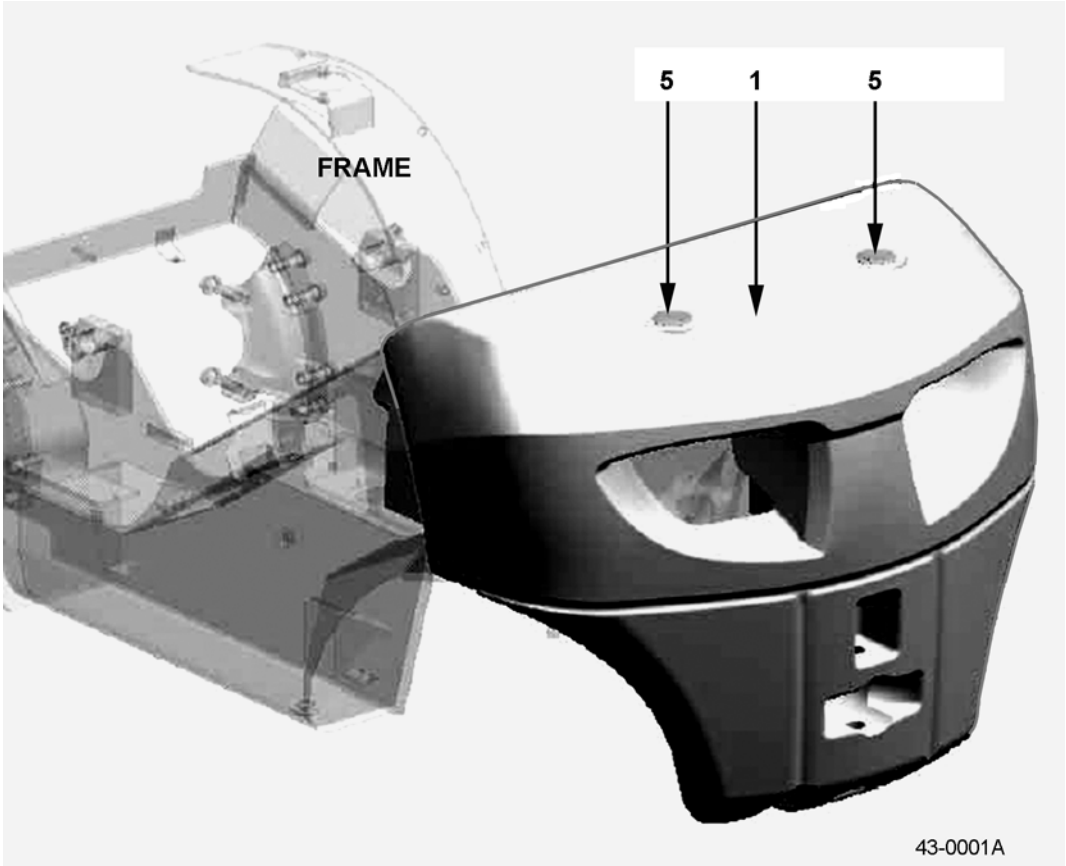


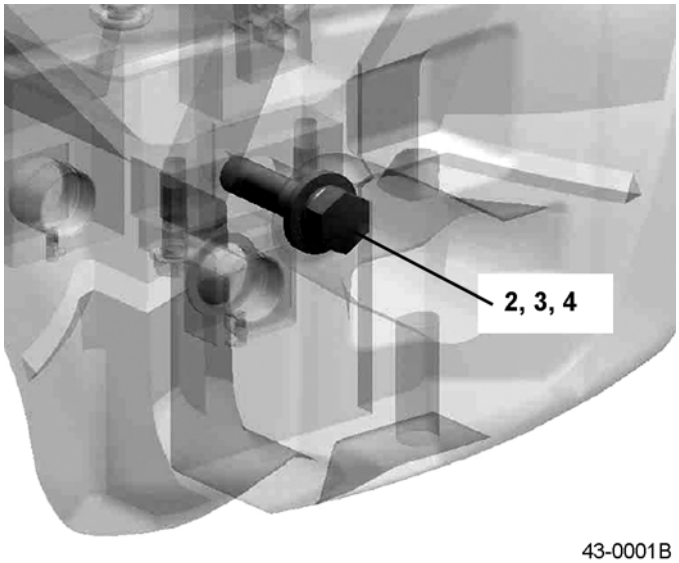

https://truckmanualshub.com/



## COUNTERWEIGHTS - S/N 200001A~

| Item | Part Number | Description | Qty | |
|---|---|---|---|---|
| | | **PNEUMATIC SPEC TRUCKS** | | |
| 1 | 3EB-43-A7160 | COUNTERWEIGHT (2.0T) | 1 | |
| | 3EB-43-A7260 | COUNTERWEIGHT (2.5T) | 1 | |
| | 3EB-43-A7360 | COUNTERWEIGHT (2.8T) | 1 | |
| | 3EB-43-A7460 | COUNTERWEIGHT (3.0T) | 1 | |
| | 3EB-43-A7560 | COUNTERWEIGHT (3.2T) | 1 | |
| | 3EB-43-A7660 | COUNTERWEIGHT (3.5T) | 1 | |
| 2 | 01011-83030 | BOLT | 1 | |
| 3 | 01601-23075 | WASHER | 1 | |
| 4 | 01643-33080 | WASHER | 1 | |
| 5 | 3EB-43-41720 | CAP | 2 | |
| N/S | 3EA-43-21160 | PIN (DRAW BAR) | 1 | |
| | | **CUSHION SPEC TRUCKS** | | |
| 1 | 3EB-43-A7110 | COUNTERWEIGHT (2.0T) | 1 | |
| | 3EB-43-A7210 | COUNTERWEIGHT (2.5T) | 1 | |
| | 3EB-43-A7310 | COUNTERWEIGHT (2.8T) | 1 | |
| | 3EB-43-A7410 | COUNTERWEIGHT (3.0T) | 1 | |
| | 3EB-43-A7510 | COUNTERWEIGHT (3.2T) | 1 | |
| 2 | 01011-83030 | BOLT | 1 | |
| 3 | 01601-23075 | WASHER | 1 | |
| 4 | 01643-33080 | WASHER | 1 | |
| 5 | 3EB-43-41720 | CAP | 2 | |
| N/S | 3EA-43-21160 | PIN (DRAW BAR) | 1 | |

https://truckmanualshub.com/



## SUB-WEIGHTS - S/N 200001A~

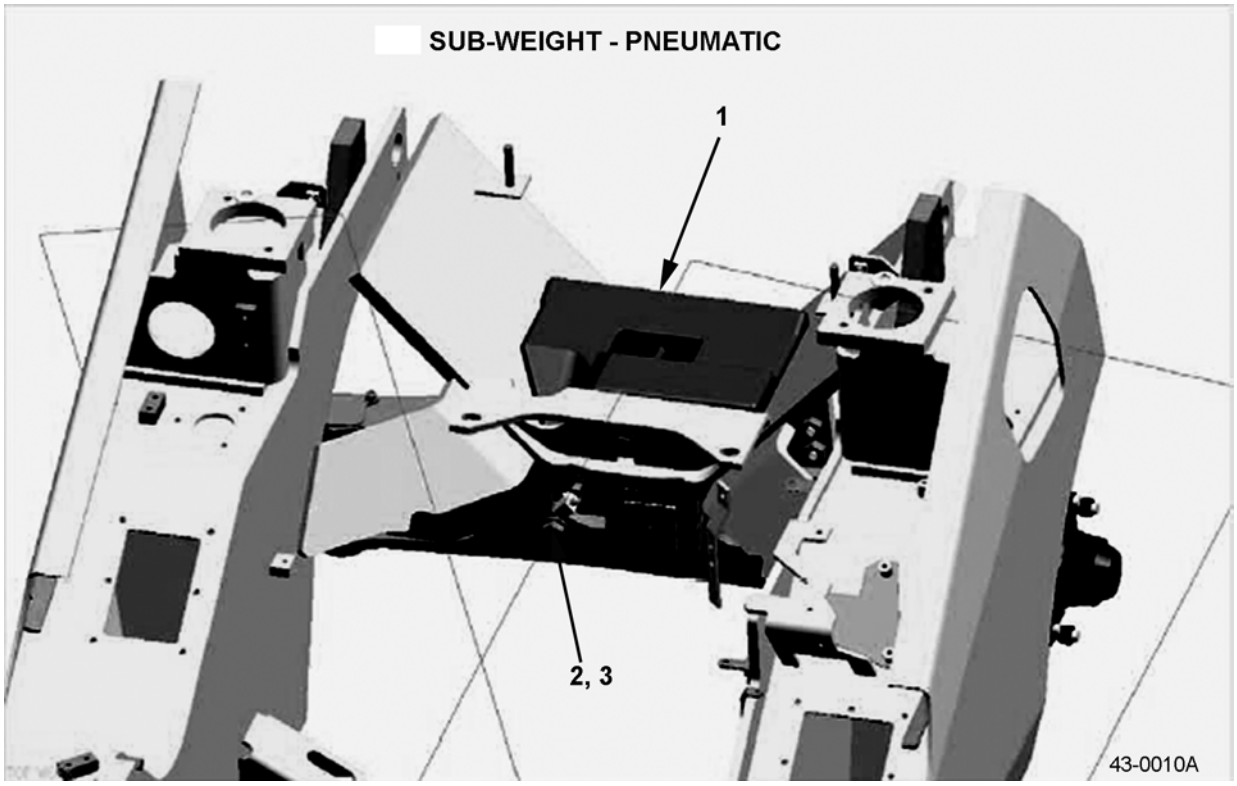


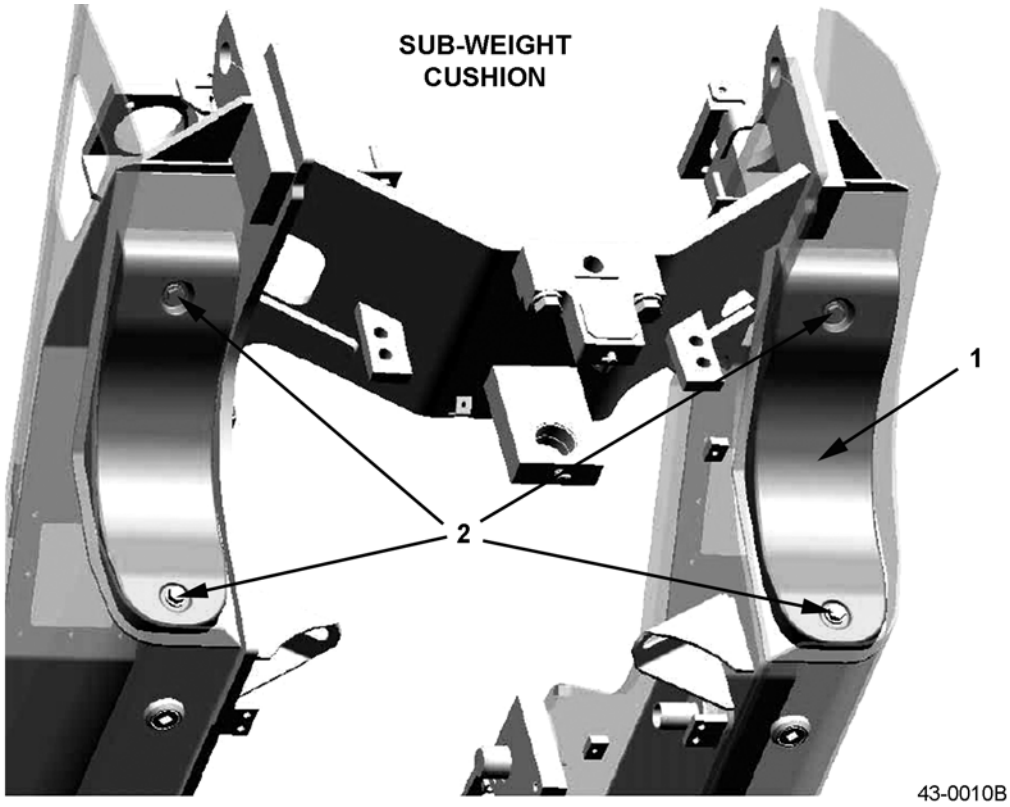

https://truckmanualshub.com/



## SUB-WEIGHTS - S/N 200001A~

| Item | Part Number | Description | Qty | |
|---|---|---|---|---|
| | | **PNEUMATIC SPEC TRUCKS** | | |
| 1 | 3EB-43-A7760 | SUB-WEIGHT | 1 | |
| 2 | 01010-51640 | BOLT | 1 | |
| 3 | 01643-31365 | WASHER | 1 | |
| | | **CUSHION SPEC TRUCKS** | | |
| 1 | 3EB-43-A7721 | SUB-WEIGHT | 2 | |
| 2 | 01024-81230 | BOLT | 4 | |

https://truckmanualshub.com/



## OPERATOR'S SEATS & K.O.P.S. SWITCH- S/N 200001A~

NO

ILLUSTRATION

AVAILABLE

https://truckmanualshub.com/



## OPERATOR'S SEATS & K.O.P.S. SWITCH- S/N 200001A~

| Item | Part Number | Description | Qty | |
|---|---|---|---|---|
| | 3EB-50-A5322 | SEAT ASSY (STD) . . . . . | 1 | |
| | 3EB-50-F5313 | SEAT ASSY (CLOTH). . . . . | 1 | |
| | 3EB-50-A6112 | SEAT ASSY (SUSPENSION) . . . . . | 1 | |
| | 3EB-50-F5442 | SEAT ASSY (SUSPENSION - CLOTH) . . . . . | 1 | |
| 1 | 3EB-50-A6331 | .SEAT SWITCH (K.O.P.S.) . . . . . | 1 | |
| 2 | 3EB-50-A6342 | .WIRE HARNESS (K.O.P.S.) . . . . . | 1 | |
| 3 | 01642-20810 | WASHER . . . . . | 4 | |
| 4 | 02205-10508 | NUT. . . . . | 4 | |

https://truckmanualshub.com/



## INSULATOR ASSEMBLY - FRAME - PNEUMATIC MODELS - S/N 200001A~

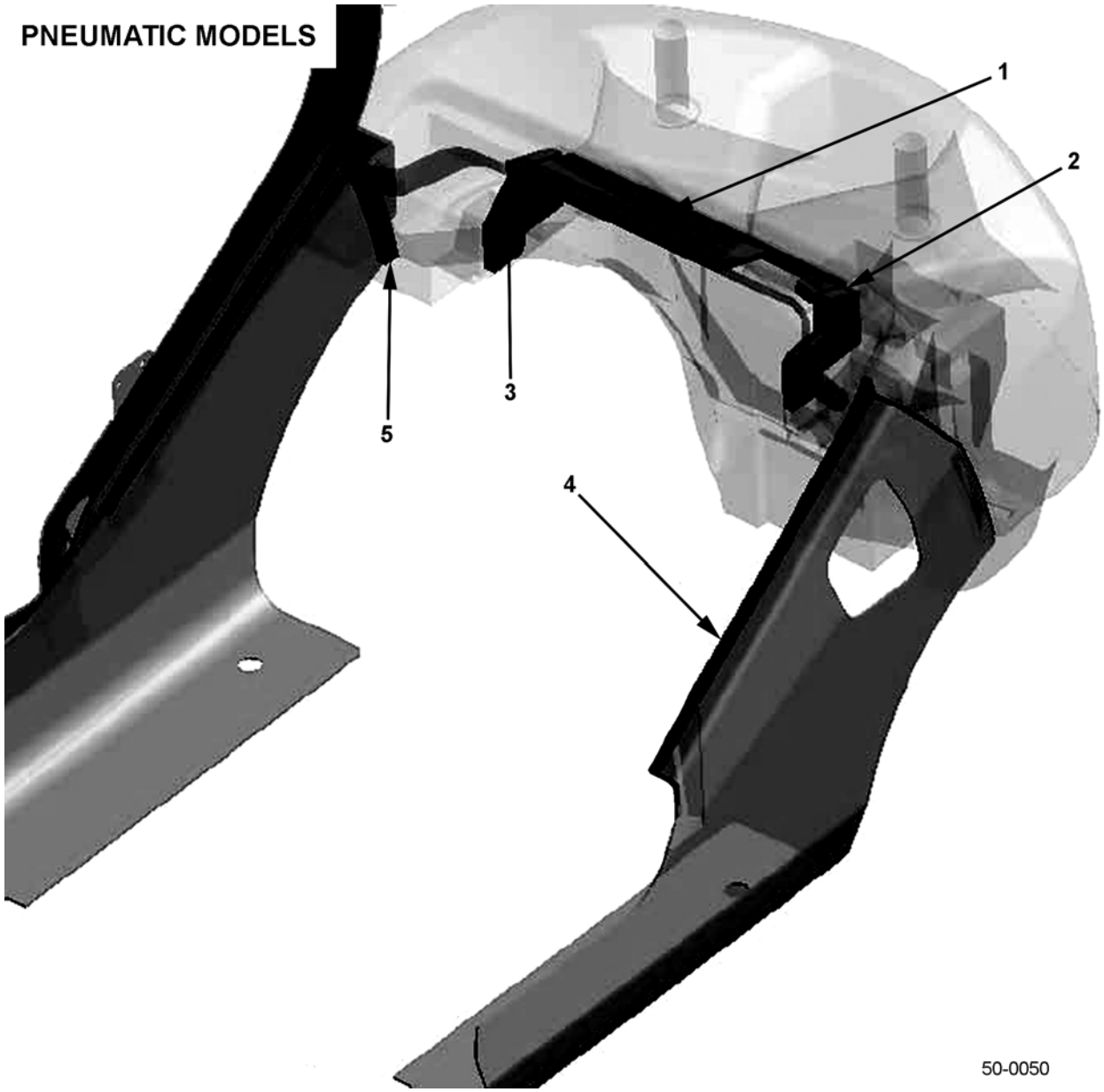

https://truckmanualshub.com/



## INSULATOR ASSEMBLY - FRAME - PNEUMATIC MODELS - S/N 200001A~

| Item | Part Number | Description | Qty | |
|---|---|---|---|---|
| 1 | 3EB-52-51130 | SPONGE (PNEUMATIC) . . . . . | 1 | |
| 2 | 3EB-52-51140 | SPONGE, LH (PNEUMATIC) . . . . . | 1 | |
| 3 | 3EB-52-51150 | SPONGE, RH (PNEUMATIC) . . . . . | 1 | |
| 4 | 3EB-52-51160 | SEAL RUBBER (PNEUMATIC) . . . . . | 2 | |
| 5 | 3EB-52-41611 | SPONGE (PNEUMATIC) . . . . . | 2 | |

https://truckmanualshub.com/



# INSULATOR ASSEMBLY - FRAME - CUSHION MODELS - S/N 200001A~

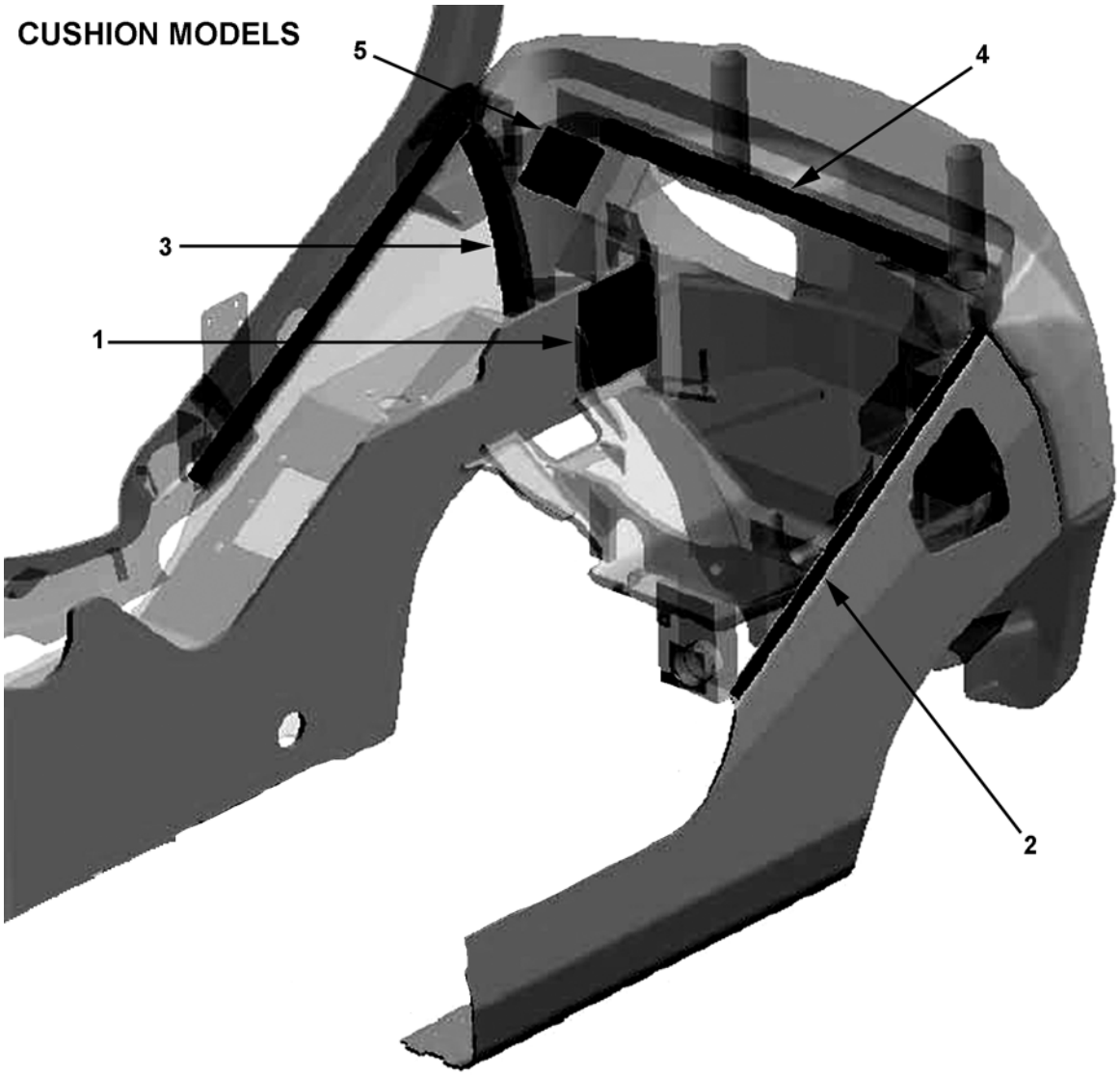


50-0051

https://truckmanualshub.com/



## INSULATOR ASSEMBLY - FRAME - CUSHION MODELS - S/N 200001A~

| Item | Part Number | Description | Qty | |
|---|---|---|---|---|
| 1 | 3EB-52-56160 | SPONGE (CUSHION). . . . . | 2 | |
| 2 | 3EB-52-56171 | SEAL RUBBER (CUSHION). . . . . | 2 | |
| 3 | 3EB-52-56180 | SPONGE (CUSHION). . . . . | 2 | |
| 4 | 3EB-52-41230 | SPONGE (CUSHION). . . . . | 1 | |
| 5 | 3EB-52-41240 | SPONGE (CUSHION). . . . . | 1 | |

https://truckmanualshub.com/



# INSULATOR ASSEMBLY - STEP, SUB-BONNET, RADIATOR - S/N 200001A~

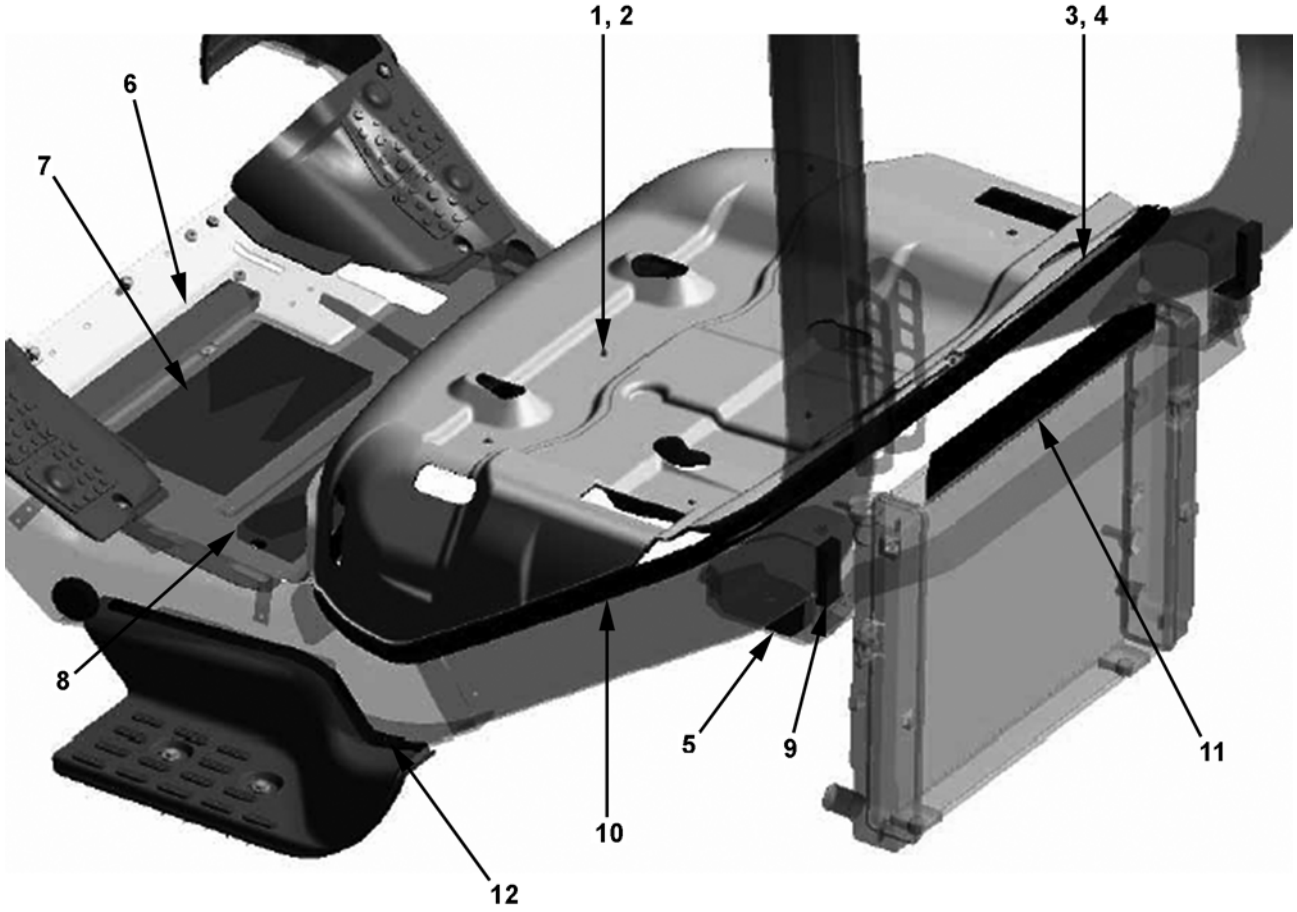


50-0052

https://truckmanualshub.com/



## INSULATOR ASSEMBLY - STEP, SUB-BONNET, RADIATOR - S/N 200001A~

| Item | Part Number | Description | Qty | |
|---|---|---|---|---|
| 1 | 3EB-52-A7210 | GLASS WOOL | 1 | |
| 2 | 34B-50-12730 | CLIP | 6 | |
| 3 | 3EB-52-51121 | PLATE | 1 | |
| 4 | 01023-60612 | SCREW | 1 | |
| 5 | 3EB-52-51540 | SPONGE | 2 | |
| 6 | 3EB-52-51710 | SPONGE | 1 | |
| 7 | 3EB-52-51720 | SPONGE | 1 | |
| 8 | 3EB-52-51730 | SPONGE | 1 | |
| 9 | 3EB-52-51770 | SPONGE | 2 | |
| 10 | 3EB-52-41510 | SEAL RUBBER | 1 | |
| 11 | 3EB-52-51740 | SPONGE | 1 | |
| 12 | 37B-1CV-2121 | SPONGE | 2 | |
| N/S | 3EB-50-51810 | FLOOR MAT | 1 | |

https://truckmanualshub.com/



## OPERATOR'S COMPARTMENT - DASHBOARD - S/N 200001A~

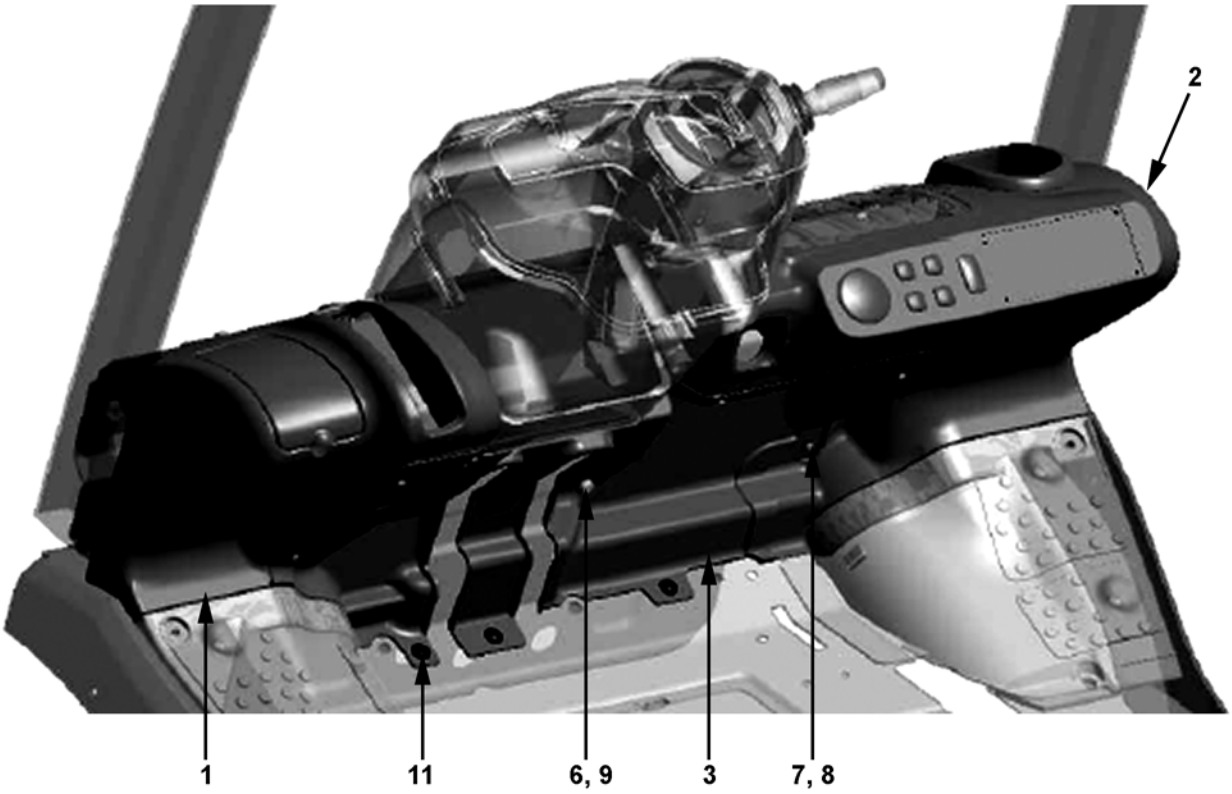


50-0100A

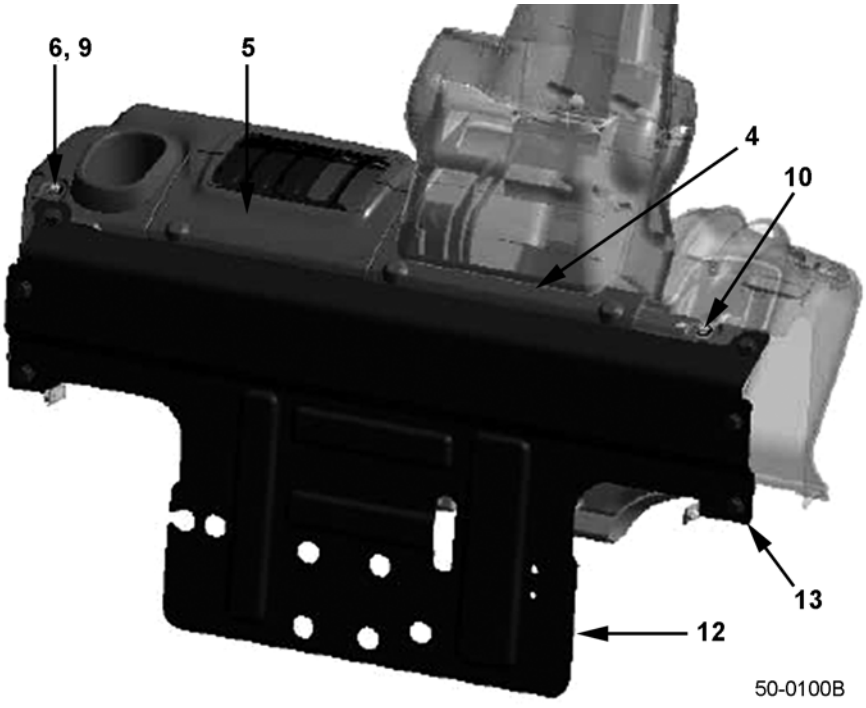


50-0100B

https://truckmanualshub.com/



## OPERATOR'S COMPARTMENT - DASHBOARD - S/N 200001A~

| Item | Part Number | Description | Qty | |
|---|---|---|---|---|
| 1 | 3EB-50-52511 | COVER, LH. . . . . | 1 | |
| 2 | 3EB-50-52520 | COVER, RH (STD) . . . . . | 1 | |
| | 3EB-50-A7810 | COVER, RH (UL-S) . . . . . | 1 | |
| | 3EB-50-A7880 | COVER, RH (DELUXE) . . . . . | 1 | |
| | 3EB-50-A7760 | COVER, RH (DELUXE / STD) . . . . . | 1 | |
| 3 | 3EB-50-52531 | COVER . . . . . | 1 | |
| 4 | 3EB-50-52540 | COVER . . . . . | 1 | |
| 5 | 3EB-50-42540 | COVER . . . . . | 1 | |
| 6 | 01435-40616 | BOLT. . . . . | 6 | |
| 7 | 01370-40416 | SCREW. . . . . | 7 | |
| 8 | 01642-40405 | WASHER . . . . . | 7 | |
| 9 | 01642-40810 | WASHER . . . . . | 6 | |
| 10 | 3EB-50-52570 | SPRING NUT . . . . . | 5 | |
| 11 | 3EB-50-51950 | CLIP . . . . . | 3 | |
| 12 | 3EB-50-A7412 | DASHBOARD . . . . . | 1 | |
| 13 | 01024-81025 | BOLT. . . . . | 6 | |
| N/S | 3EB-50-51810 | FLOOR MAT . . . . . | 1 | |

https://truckmanualshub.com/



## DASHBOARD & STEP - COVERS / EXTERNAL - S/N 200001A~

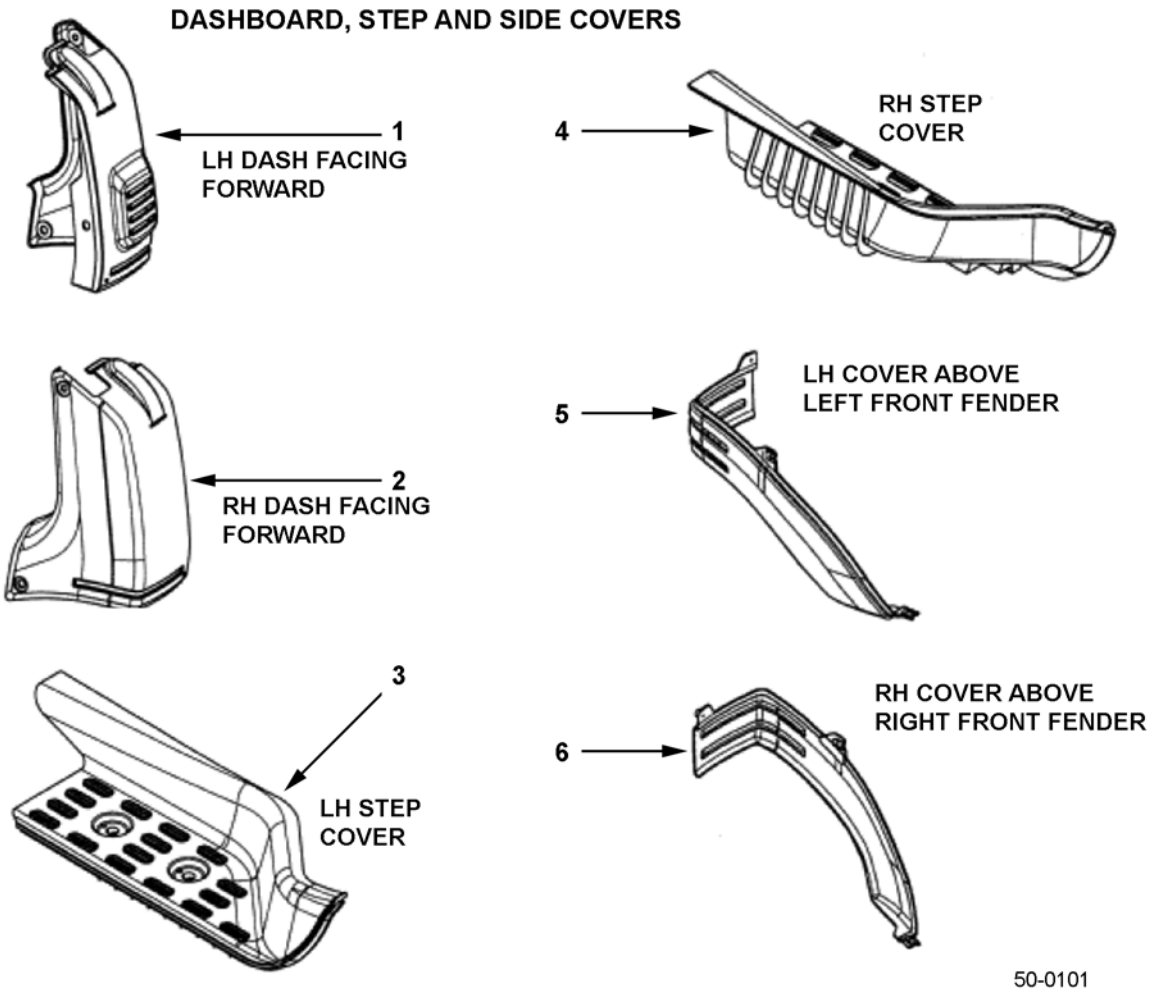

https://truckmanualshub.com/



## DASHBOARD & STEP - COVERS / EXTERNAL - S/N 200001A~

| Item | Part Number | Description | Qty | |
|---|---|---|---|---|
| 1 | 3EB-50-51932 | DASHBOARD COVER, LH - FORWARD FACING | 1 | |
| 2 | 3EB-50-51942 | DASHBOARD COVER, RH - FORWARD FACING | 1 | |
| 3 | 3EB-50-56911 | STEP COVER, LH . . . . . | 1 | |
| 4 | 3EB-50-56921 | STEP COVER, RH . . . . . | 1 | |
| 5 | 3EB-50-56930 | COVER, LH - ABOVE LEFT FRONT FENDER . | 1 | |
| 6 | 3EB-50-56940 | COVER, RH - ABOVE RIGHT FRONT FENDER | 1 | |
| N/S | 3EB-50-51810 | FLOOR MAT . . . . . | 1 | |

https://truckmanualshub.com/



## OPERATOR'S COMPARTMENT - OVERHEAD GUARD - S/N 200001A~ (ALSO SEE FIG. 50-0201)

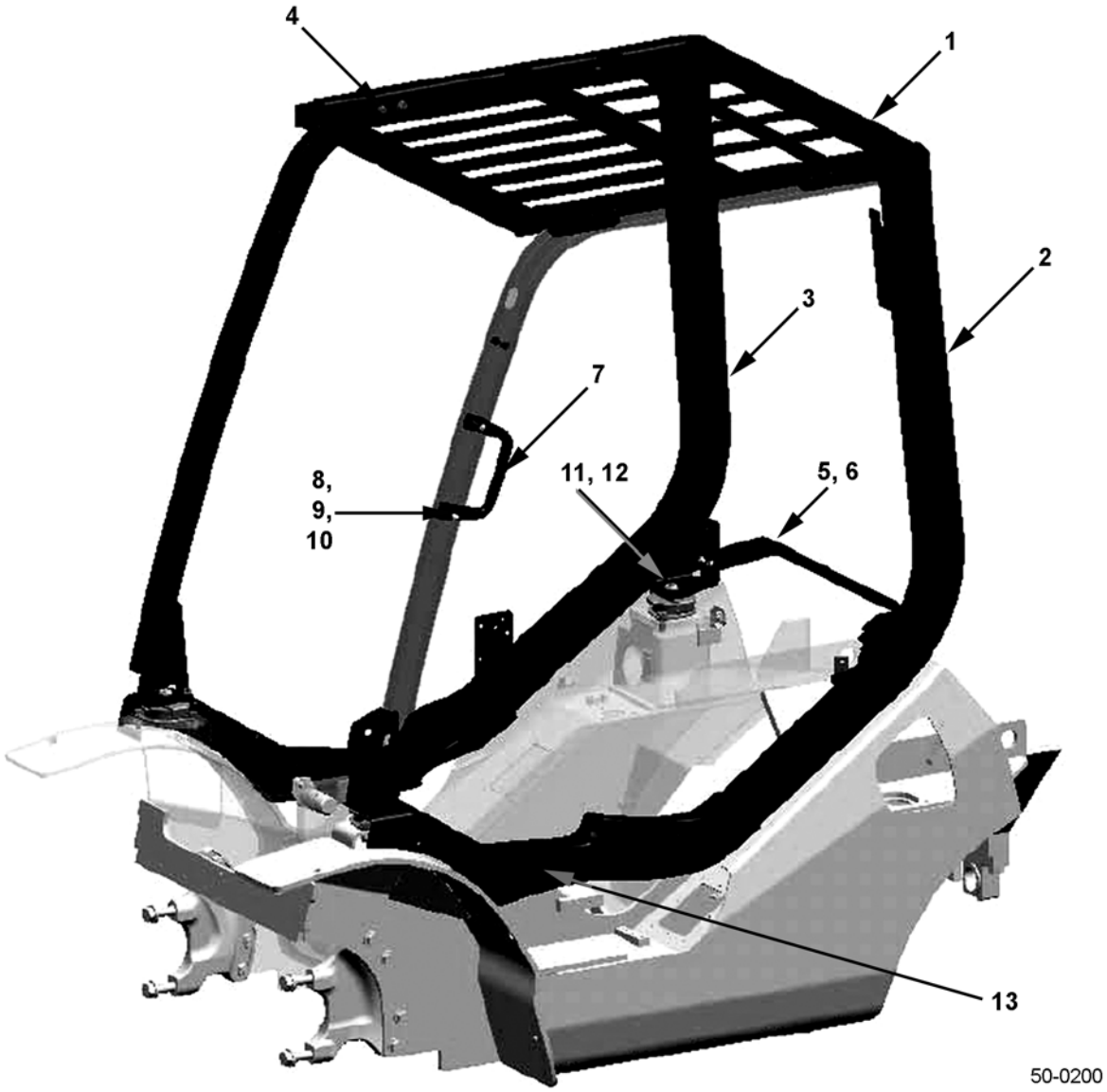

https://truckmanualshub.com/



## OPERATOR'S COMPARTMENT - OVERHEAD GUARD - S/N 200001A~ (ALSO SEE FIG. 50-0201)

| Item | Part Number | Description | Qty | |
|---|---|---|---|---|
| 1 | 3EB-51-A7110 | HEAD GUARD | 1 | |
| 2 | 3EB-51-A7312 | STAY, LH | 1 | |
| 3 | 3EB-51-A7511 | STAY, RH | 1 | |
| 4 | 01024-81235 | BOLT | 8 | |
| 5 | 3EB-51-51720 | PLATE (STD) | 1 | |
| | 3EB-51-51811 | PLATE (3.5T) | 1 | |
| 6 | 01024-81030 | BOLT | 4 | |
| 7 | 3EB-51-51731 | ASSIST GRIP | 1 | |
| 8 | 01252-80660 | BOLT | 2 | |
| 9 | 01642-40608 | WASHER | 2 | |
| 10 | 3EB-51-21380 | NUT | 2 | |
| 11 | 01643-31445 | WASHER | 4 | |
| 12 | 01583-11408 | NUT | 4 | |
| 13 | 3EB-50-42580 | COVER | 2 | |
| 14 | 01640-21426 | WASHER | 2 | |
| 15 | 3EA-51-42110 | CUSHION (STD) | 1 | |
| | 3EB-51-42110 | CUSHION (3.2T) | 1 | |
| 16 | 3EA-51-42120 | CUSHION (STD) | 1 | |
| | 3EB-51-42120 | CUSHION (3.2T) | 1 | |
| 17 | 3EA-51-42120 | CUSHION (STD) | 1 | |
| | 3EB-51-42130 | CUSHION (3.2T) | 1 | |
| 18 | 3EA-51-42110 | CUSHION (STD) | 1 | |
| | 3EB-51-42140 | CUSHION (3.2T) | 1 | |
| 19 | 01024-81235 | BOLT | 8 | |
| N/S | 3EB-27-52310 | FENDER, LH (COVER) (NARROW DUAL-TIRE OPTION) (FG20/25 ONLY) | 1 | |
| N/S | 3EB-27-52320 | FENDER, RH (COVER) (NARROW DUAL-TIRE OPTION) (FG20/25 ONLY) | 1 | |
| N/S | 3EB-27-52910 | FENDER, LH (COVER) (NARROW DUAL-TIRE OPTION) (FG(D)28/30/32 ONLY) | 1 | |
| N/S | 3EB-27-52920 | FENDER, RH (COVER) (NARROW DUAL-TIRE OPTION) (FG(D)28/30/32 ONLY) | 1 | |
| N/S | 3EB-27-52710 | FENDER, LH (COVER) (NARROW DUAL-TIRE OPTION) (FG35(D) ONLY) | 1 | |
| N/S | 3EB-27-52720 | FENDER, RH (COVER) (NARROW DUAL-TIRE OPTION) (FG(D)35 ONLY) | 1 | |

https://truckmanualshub.com/



## OPERATOR'S COMPARTMENT - OVERHEAD GUARD - MOUNTS - S/N 200001A~ (ALSO SEE FIG. 50-0200)

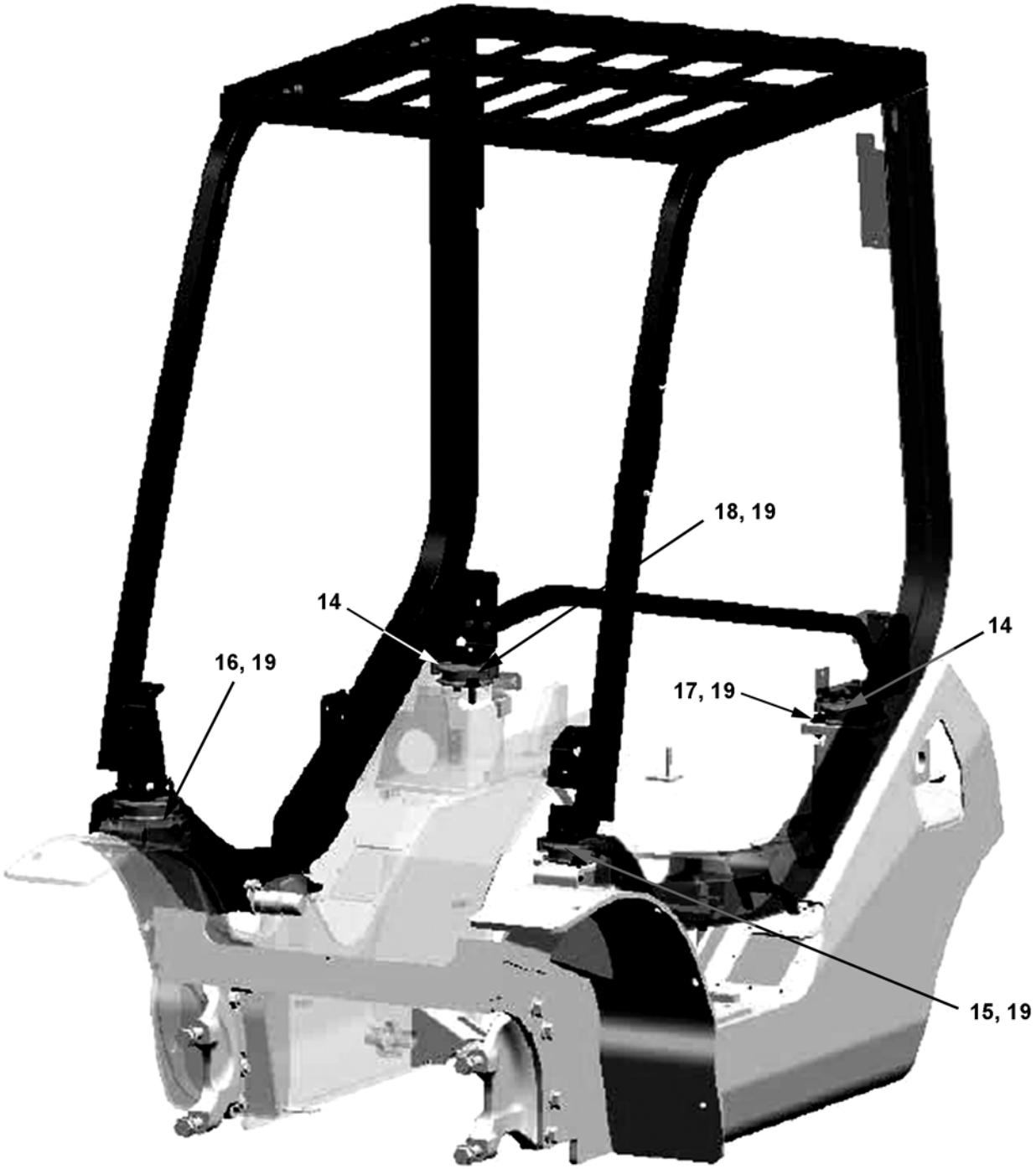

https://truckmanualshub.com/



## OPERATOR'S COMPARTMENT - OVERHEAD GUARD - MOUNTS - S/N 200001A~ (ALSO SEE FIG. 50-0200)

| Item | Part Number | Description | Qty | |
|---|---|---|---|---|
| 1 | 3EB-51-A7110 | HEAD GUARD | 1 | |
| 2 | 3EB-51-A7312 | STAY, LH | 1 | |
| 3 | 3EB-51-A7511 | STAY, RH | 1 | |
| 4 | 01024-81235 | BOLT | 8 | |
| 5 | 3EB-51-51720 | PLATE (STD) | 1 | |
| | 3EB-51-51811 | PLATE (3.5T) | 1 | |
| 6 | 01024-81030 | BOLT | 4 | |
| 7 | 3EB-51-51731 | ASSIST GRIP | 1 | |
| 8 | 01252-80660 | BOLT | 2 | |
| 9 | 01642-40608 | WASHER | 2 | |
| 10 | 3EB-51-21380 | NUT | 2 | |
| 11 | 01643-31445 | WASHER | 4 | |
| 12 | 01583-11408 | NUT | 4 | |
| 13 | 3EB-50-42580 | COVER | 2 | |
| 14 | 01640-21426 | WASHER | 2 | |
| 15 | 3EA-51-42110 | CUSHION (STD) | 1 | |
| 16 | 3EA-51-42120 | CUSHION (STD) | 1 | |
| 17 | 3EA-51-42120 | CUSHION (STD) | 1 | |
| 18 | 3EA-51-42110 | CUSHION (STD) | 1 | |
| 19 | 01024-81235 | BOLT | 8 | |

https://truckmanualshub.com/



## OPERATOR'S COMPARTMENT - SUB-BONNET - S/N 200001A~

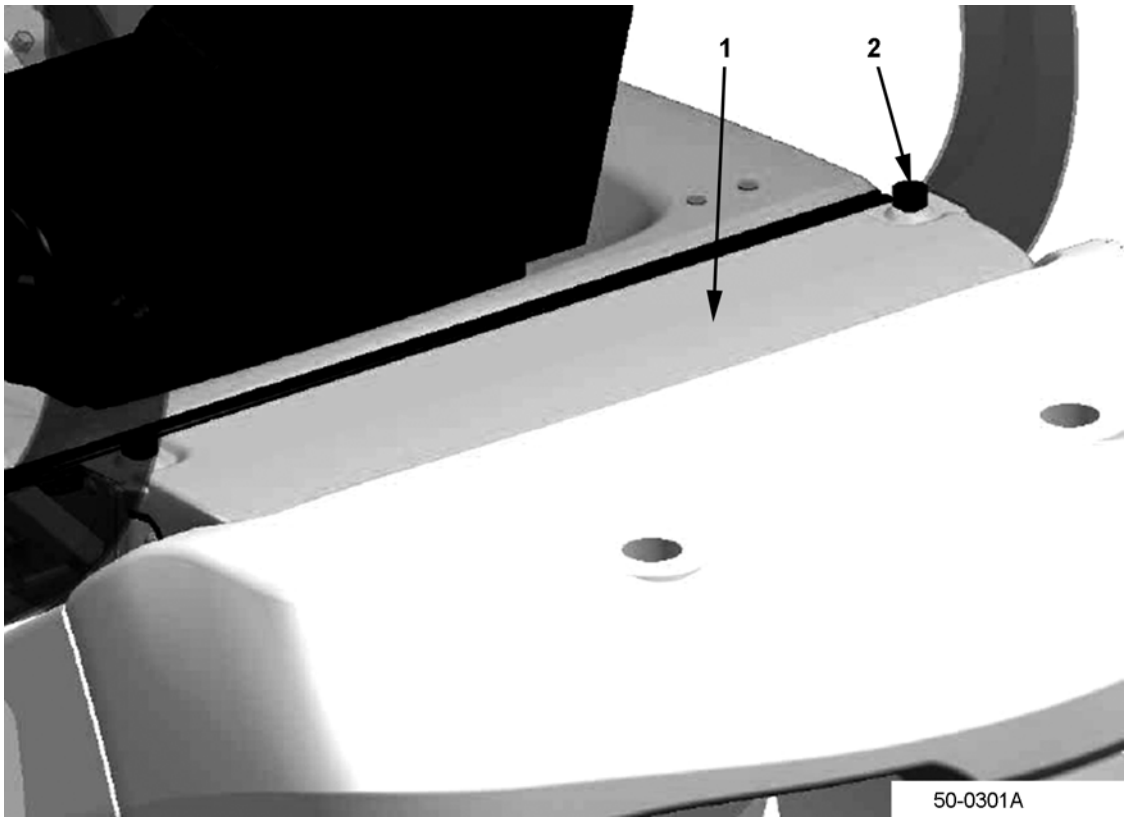


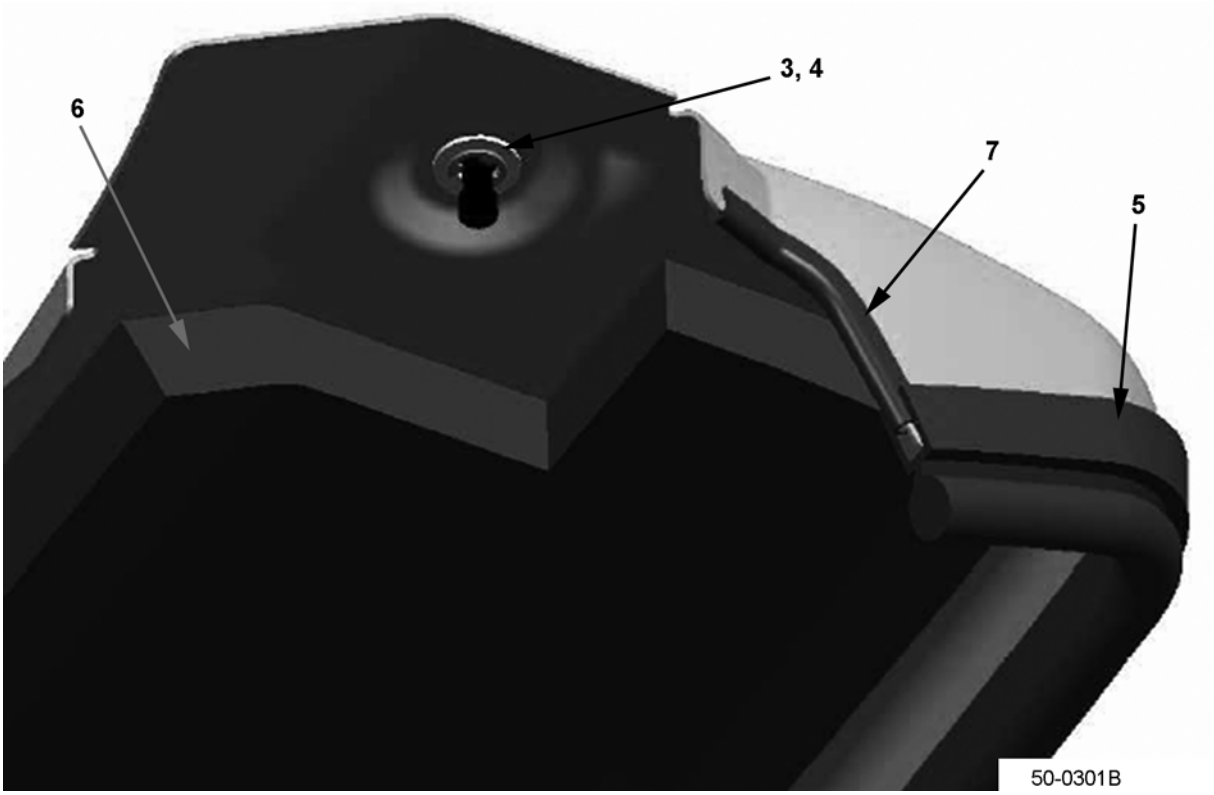

https://truckmanualshub.com/



## OPERATOR'S COMPARTMENT - SUB-BONNET - S/N 200001A~

| Item | Part Number | Description | Qty | |
|---|---|---|---|---|
| 1 | 3EB-50-A7310 | COVER REWORK (PNEUMATIC EXC. 3.2T, 3.5 TON) | 1 | |
| | 3EB-50-A7210 | COVER REWORK (CUSHION) . . . . . | 1 | |
| | 3EB-50-A7360 | COVER REWORK (PNEUMATIC 3.2T, 3.5T). . . | 1 | |
| 2 | 3EB-50-31420 | KNOB . . . . . | 2 | |
| 3 | 3EC-50-31820 | E-RING . . . . . | 2 | |
| 4 | 01640-20816 | WASHER . . . . . | 2 | |
| 5 | 37B-1CW-3100 | SEAL RUBBER (ALL EXC. 3.5T) . . . . . | 1 | |
| | 37B-1CW-3030 | SEAL RUBBER (3.5T) . . . . . | 1 | |
| 6 | 3EB-52-41750 | SPONGE. . . . . | 1 | |
| 7 | 3EB-50-A7230 | GASKET . . . . . | 1 | |

https://truckmanualshub.com/



# ELECTRICAL - ENGINE AREA / SPEED SENSOR - K21/K25 MODELS - S/N 200001A~

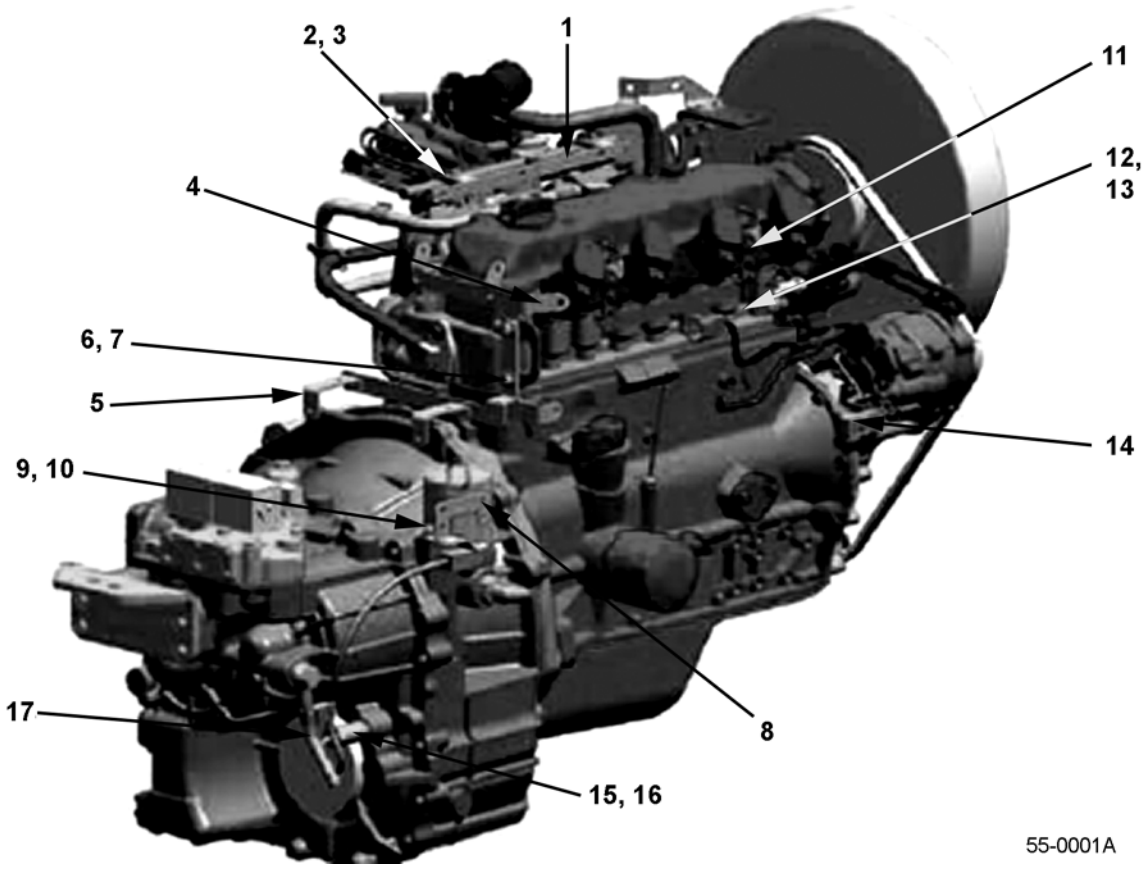


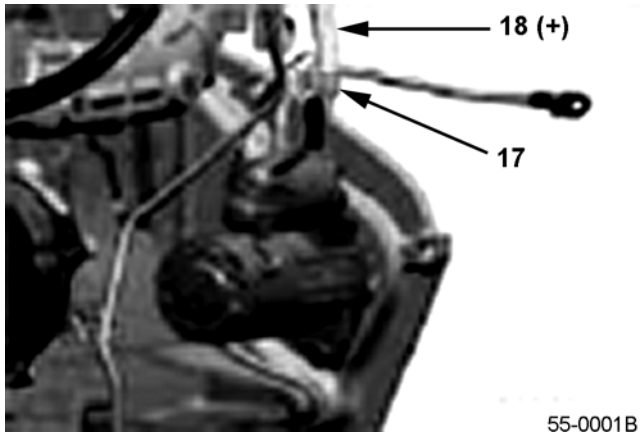


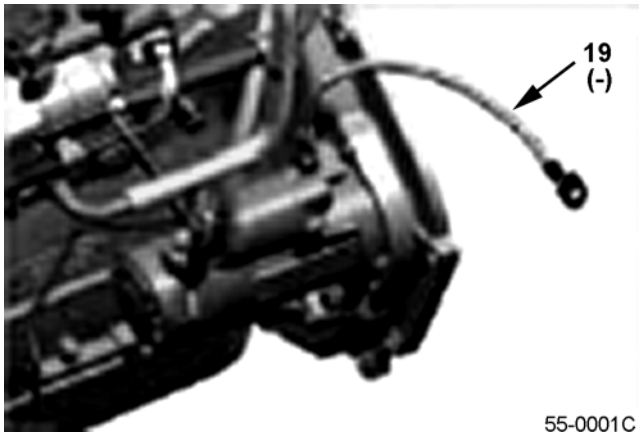

https://truckmanualshub.com/



## ELECTRICAL - ENGINE AREA / SPEED SENSOR - K21/K25 MODELS - S/N 200001A~

| Item | Part Number | Description | Qty | |
|---|---|---|---|---|
| 1 | 3EB-55-A7260 | BRACKET | 1 | |
| 2 | 01010-80616 | BOLT | 2 | |
| 3 | 01643-30623 | WASHER | 2 | |
| 4 | 3EB-55-A7130 | BRACKET | 1 | |
| 5 | 3EB-55-A7141 | BRACKET | 1 | |
| 6 | 01010-80820 | BOLT | 2 | |
| 7 | 01643-30823 | WASHER | 2 | |
| 8 | 3EB-55-A7840 | BRACKET | 1 | |
| 9 | 01010-80816 | BOLT | 1 | |
| 10 | 01643-30823 | WASHER | 1 | |
| 11 | 3EB-55-A7930 | BRACKET | 2 | |
| 12 | 01010-80816 | BOLT | 2 | |
| 13 | 01643-30823 | WASHER | 2 | |
| 14 | 3EB-55-A7230 | WIRE (ALT) | 1 | |
| 15 | 3EC-55-37180 | SPEED SENSOR ASSY | 1 | |
| 16 | 07003-12228 | GASKET | 1 | |
| 17 | 3EB-55-A7920 | CLAMP (DOUBLE) | 2 | |
| 18 | 37B-1LH-A720 | CABLE (+) | 1 | |
| 19 | 3EB-55-51390 | CABLE (-) | 1 | |

https://truckmanualshub.com/



# ELECTRICAL - ATTACHMENTS - BATTERY HOLDER - K21/K25 MODELS - S/N 200001A~

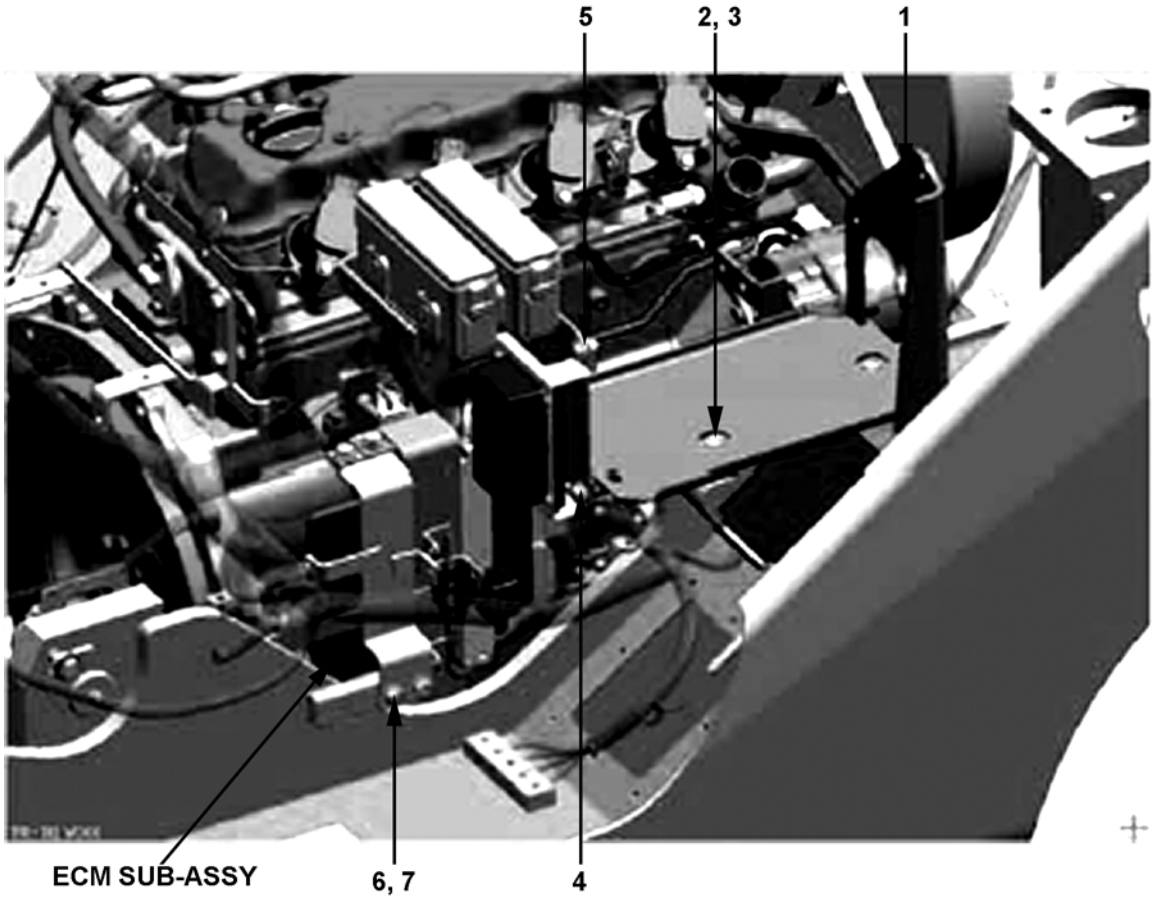


55-0002

https://truckmanualshub.com/



## ELECTRICAL - ATTACHMENTS - BATTERY HOLDER - K21/K25 MODELS - S/N 200001A~

| Item | Part Number | Description | Qty | |
|---|---|---|---|---|
| 1 | 3EB-55-A7111 | HOLDER | 1 | |
| 2 | 01010-80816 | BOLT | 2 | |
| 3 | 01643-30823 | WASHER | 2 | |
| 4 | 01024-80816 | BOLT | 2 | |
| 5 | 01024-80816 | BOLT | 2 | |
| 6 | 01010-80820 | BOLT | 2 | |
| 7 | 01643-30823 | WASHER | 2 | |

https://truckmanualshub.com/



# ELECTRICAL - ATTACHMENTS - CONDENSER - K21/K25 MODELS - S/N 200001A~

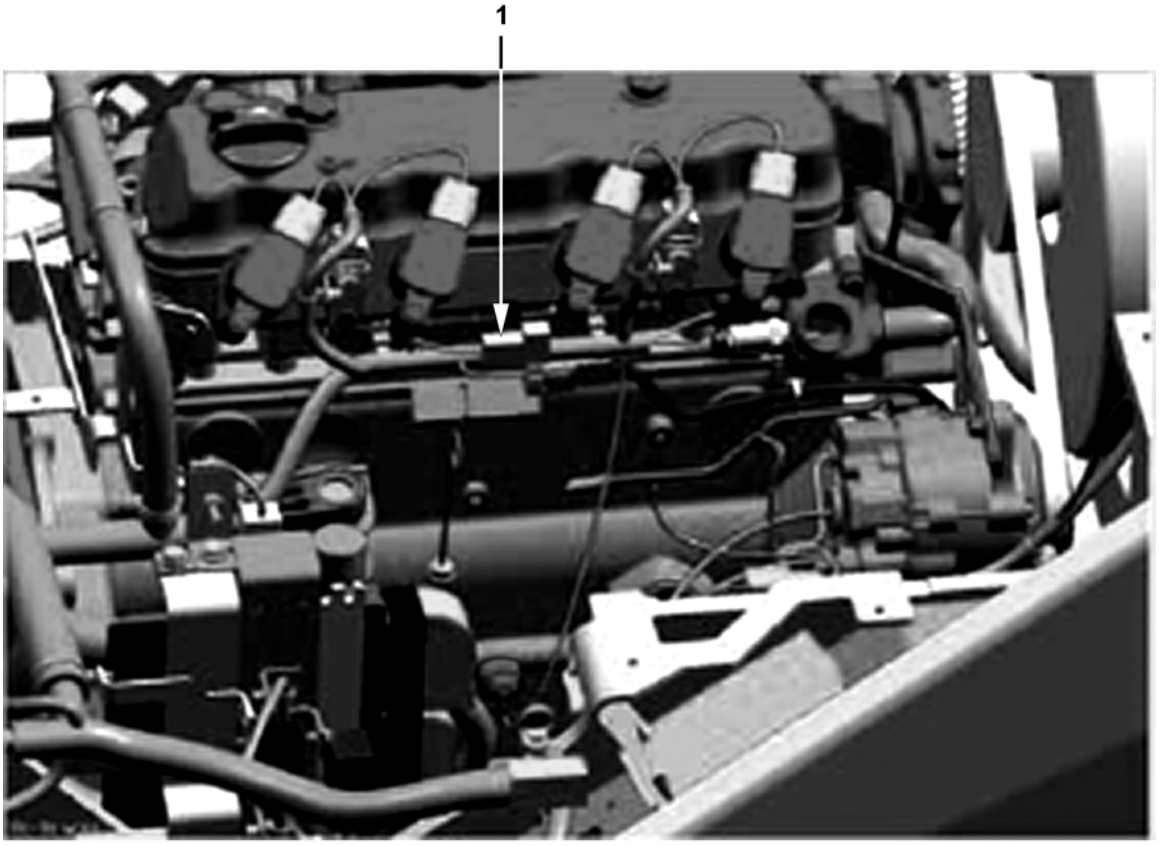


55-0003A

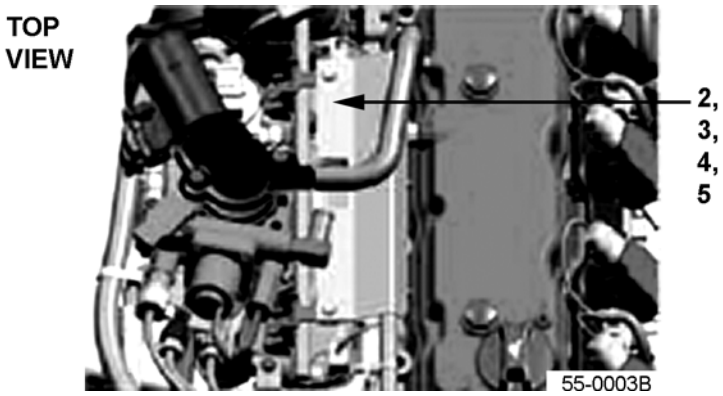

https://truckmanualshub.com/



## ELECTRICAL - ATTACHMENTS - CONDENSER - K21/K25 MODELS - S/N 200001A~

| Item | Part Number | Description | Qty | |
|---|---|---|---|---|
| 1 | 28351-89902 | CONDENSER | 1 | |
| 2 | 3EB-55-A7770 | COVER (GAS/LP ONLY) | 1 | |
| 3 | 3EB-55-A7260 | BRACKET (GAS/LP ONLY) | 1 | |
| 4 | 01010-80816 | BOLT (GAS/LP ONLY) | 2 | |
| 5 | 01643-30623 | WASHER (GAS/LP ONLY) | 2 | |

https://truckmanualshub.com/



## ELECTRICAL - ATTACHMENTS - BATTERY - K21/K25 MODELS - S/N 200001A~

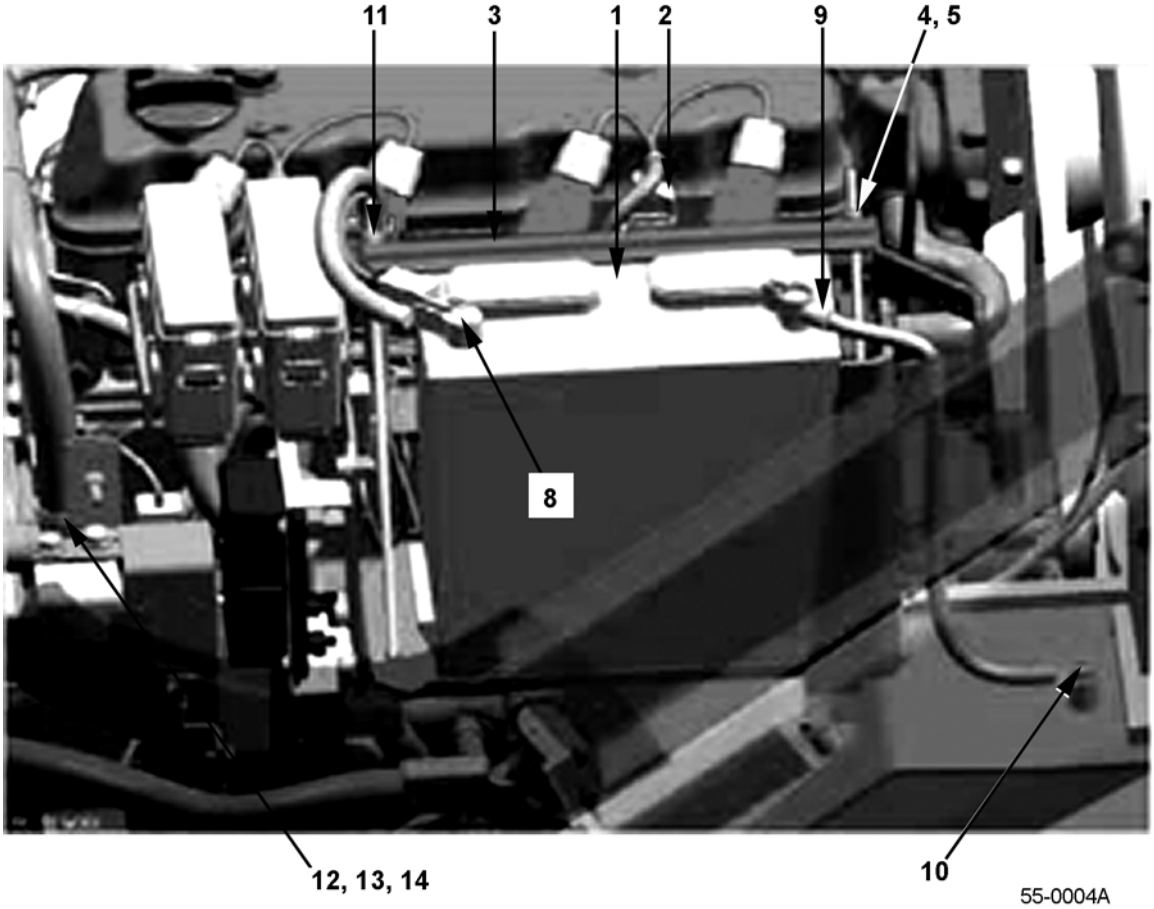


55-0004A

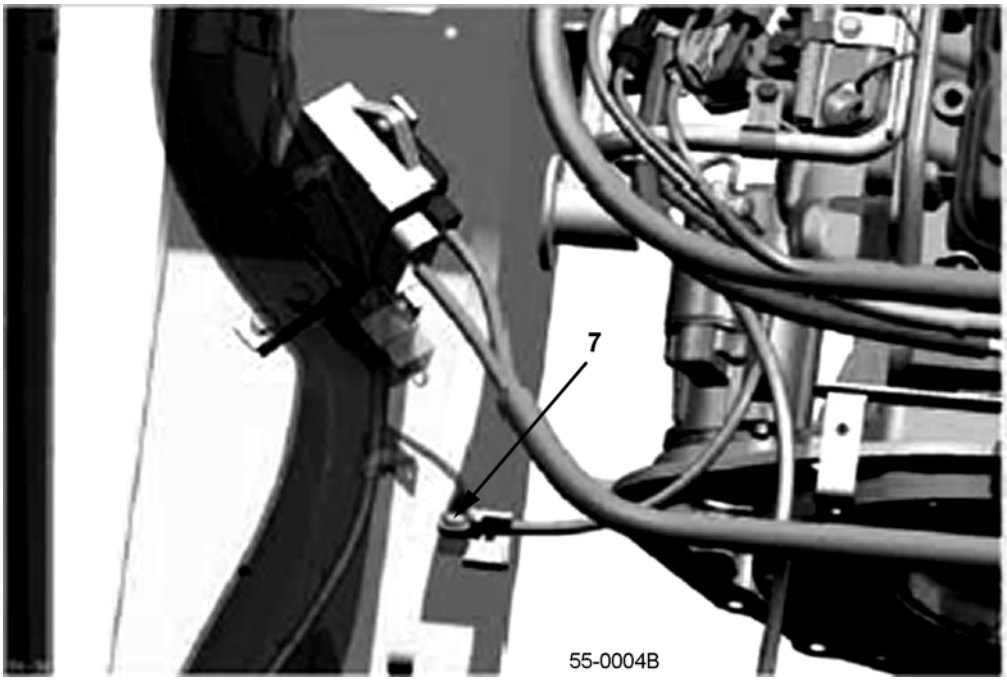


55-0004B

https://truckmanualshub.com/



## ELECTRICAL - ATTACHMENTS - BATTERY - K21/K25 MODELS - S/N 200001A~

| Item | Part Number | Description | Qty | |
|---|---|---|---|---|
| 1 | 3EA-55-A1810 | BATTERY | 1 | |
| 2 | 3EB-55-43430 | CLAMP | 2 | |
| 3 | 3EB-55-43220 | BRACKET | 1 | |
| 4 | 01580-10605 | NUT | 2 | |
| 5 | 01641-20608 | WASHER | 2 | |
| 6 | NOT USED | | | |
| 7 | 01435-00816 | BOLT | 1 | |
| 8 | 37B-1LH-A720 | CABLE (+) | 1 | |
| 9 | 37A-1LK-2210 | CABLE (-) | 1 | |
| 10 | 01435-00816 | BOLT | 1 | |
| 11 | 3EB-55-A7940 | CLAMP | 2 | |
| 12 | 3EB-56-A7390 | PLATE (GAS/LP ONLY) | 1 | |
| 13 | 3EB-55-A7980 | NAME PLATE (GAS/LP ONLY) | 1 | |
| 14 | 3EB-55-A7681 | HARNESS (GAS/LP ONLY) | 1 | |

https://truckmanualshub.com/



# ELECTRICAL - E/G HARNESS / RELAYS - K21/K25 MODELS - S/N 200001A~
# (E/G HARNESS, RELAY BOX & FUSE BOX)

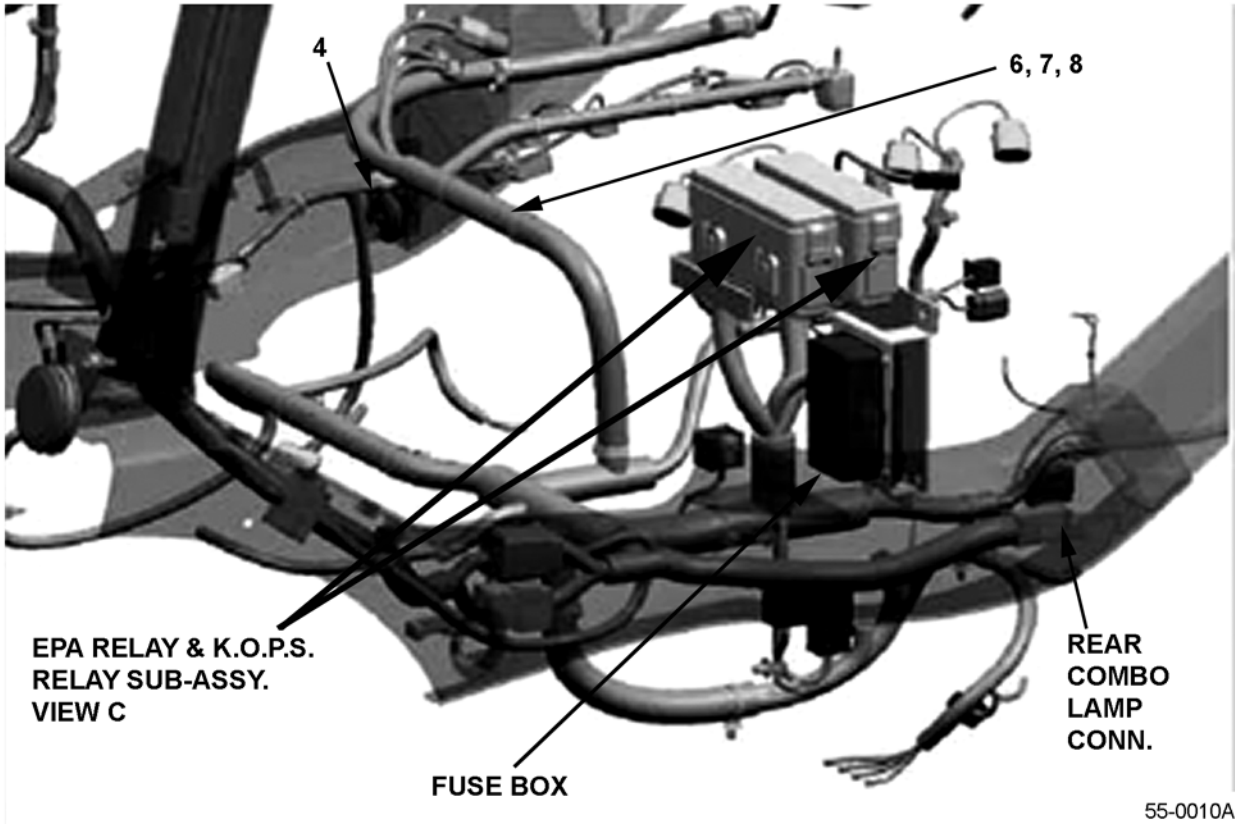


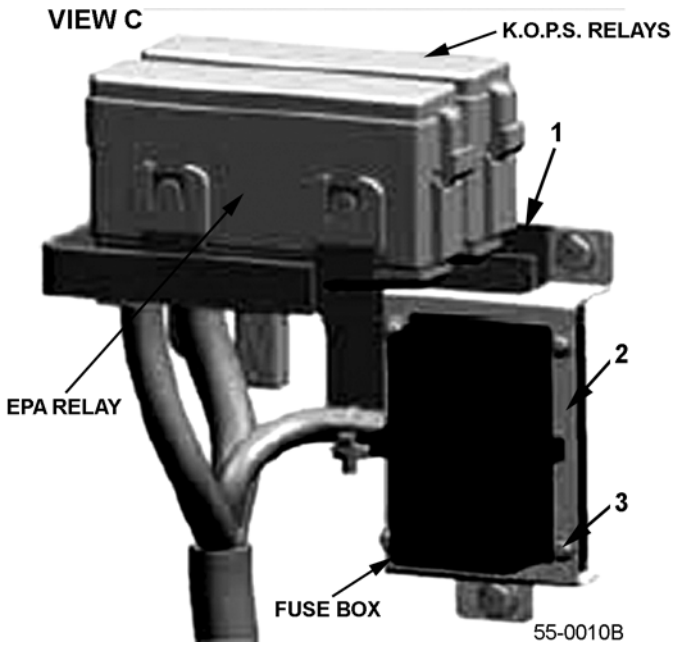


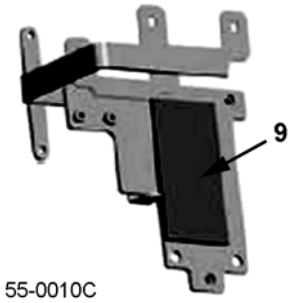




https://truckmanualshub.com/



## ELECTRICAL - E/G HARNESS / RELAYS - K21/K25 MODELS - S/N 200001A~ (E/G HARNESS, RELAY BOX & FUSE BOX)

| Item | Part Number | Description | Qty | |
|---|---|---|---|---|
| 1 | 3EB-56-A7420 | BRACKET | 1 | |
| 2 | 3EB-56-A7430 | BRACKET | 1 | |
| 3 | 3EB-55-A7270 | SCREW | 4 | |
| 4 | 3EB-55-23340 | GROMMET | 1 | |
| 5 | NOT USED | | | |
| 6 | 3EB-55-A7313 | E/G HARNESS (LP ONLY) | 1 | |
| 7 | 3EB-55-A7713 | E/G HARNESS (GAS ONLY) | 1 | |
| 8 | 3EB-55-A7913 | E/G HARNESS (DUAL-FUEL) | 1 | |
| 9 | 3EB-56-A7590 | SPONGE (SEE DETAIL) | 1 | |
| 10 | 3EB-55-31130 | RELAY (SEE DETAIL) | 1 | |
| 11 | 01023-10612 | SCREW (SEE DETAIL) | 1 | |
| 12 | 3EA-55-39670 | RELAYS (K.O.P.S.) | 6 | |

https://truckmanualshub.com/



# ELECTRICAL - K.O.P.S. RELAYS - K21/K25 MODELS - S/N 200001A~ (OPERATOR PRESENCE SYSTEM)

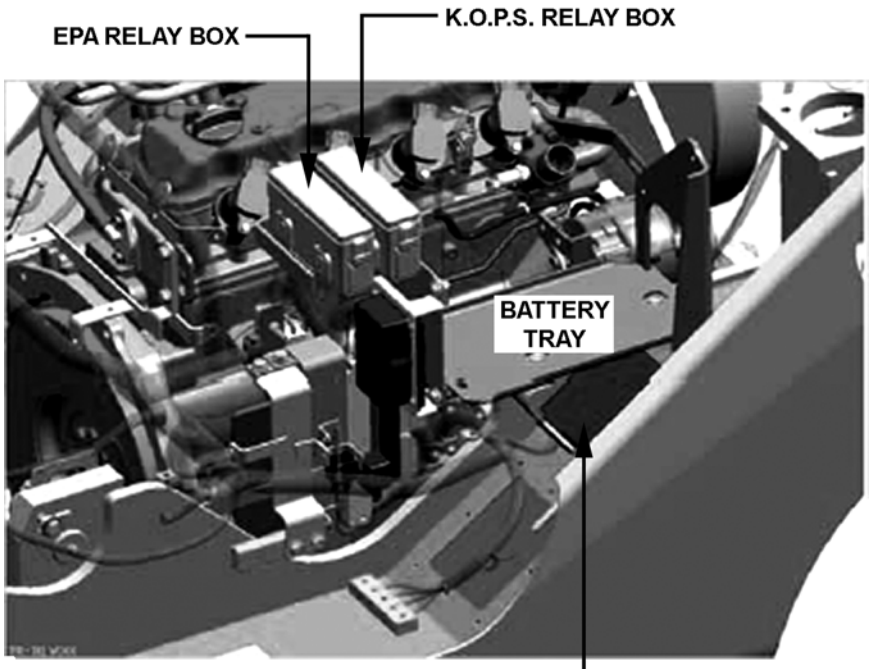


55-0011

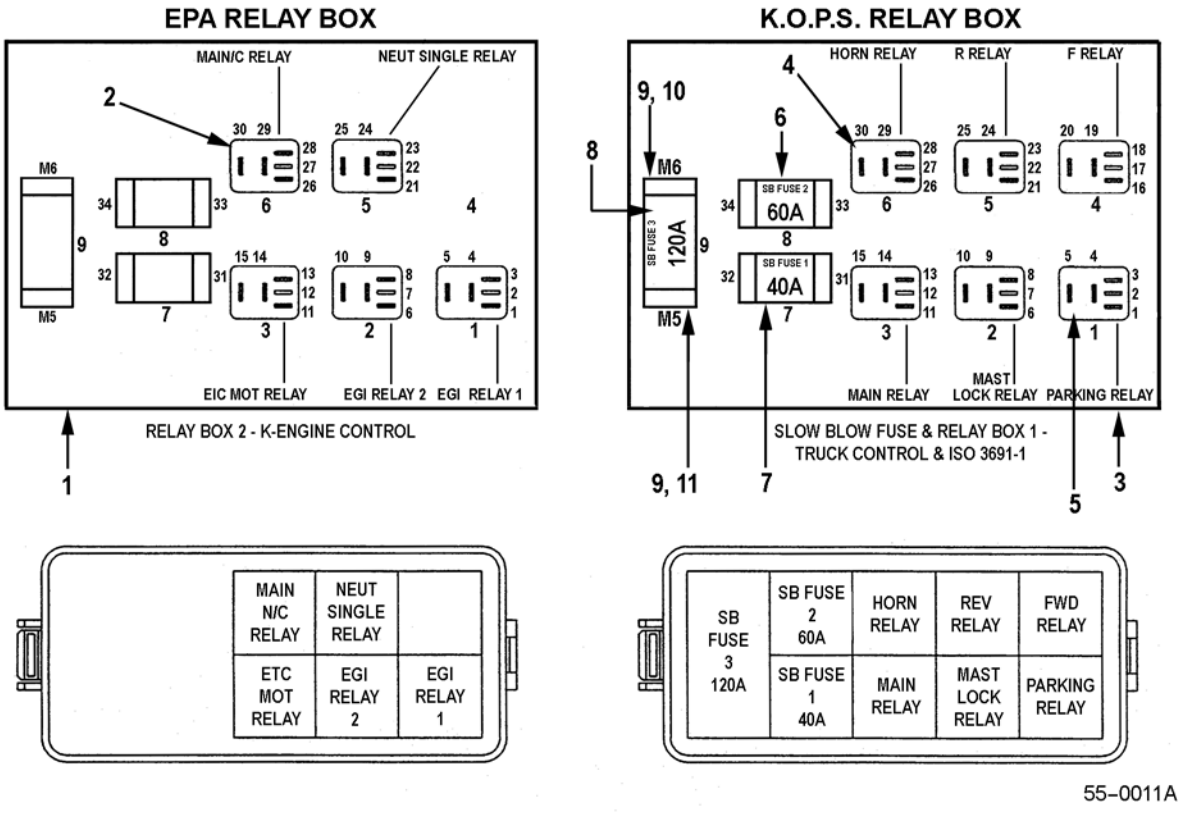


55-0011A

https://truckmanualshub.com/



## ELECTRICAL - K.O.P.S. RELAYS - K21/K25 MODELS - S/N 200001A~ (OPERATOR PRESENCE SYSTEM)

| Item | Part Number | Description | Qty | |
|---|---|---|---|---|
| 1 | 3EB-55-41230 | RELAY BOX ASSY (EPA) | 1 | |
| 2 | 3EB-55-41450 | RELAY (ALL SAME IN RELAY BOX 2) | 5 | |
| 3 | 3EB-55-41230 | RELAY BOX ASSY (K.O.P.S.) | 1 | |
| 4 | 3EB-55-41450 | RELAY | 5 | |
| 5 | 3EB-55-51760 | PARKING RELAY | 1 | |
| 6 | 37B-1EK-4030 | SB FUSE 2 (60 AMP) | 1 | |
| 7 | 37B-1EK-4010 | SB FUSE 1 (40 AMP) | 1 | |
| 8 | 37B-1EL-4020 | SB FUSE 3 (120 AMP) | 1 | |
| 9 | 01023-10508 | SCREW | 2 | |
| 10 | 01640-20610 | WASHER | 1 | |
| 11 | 01640-20508 | WASHER | 1 | |

https://truckmanualshub.com/



# ELECTRICAL - BONNET SUB-ASSY - ALL MODELS - S/N 200001A~



https://truckmanualshub.com/



## ELECTRICAL - BONNET SUB-ASSY - ALL MODELS - S/N 200001A~

| Item | Part Number | Description | Qty | |
|---|---|---|---|---|
| 1 | 3EB-55-A7671 | HARNESS, SEAT SWITCH . . . . . | 1 | |
| 2 | 3EB-55-23340 | GROMMET . . . . . | 1 | |

https://truckmanualshub.com/



# ELECTRICAL - DASHBOARD - K21/K25 MODELS - S/N 200001A~ (WITHOUT POWER BRAKES)

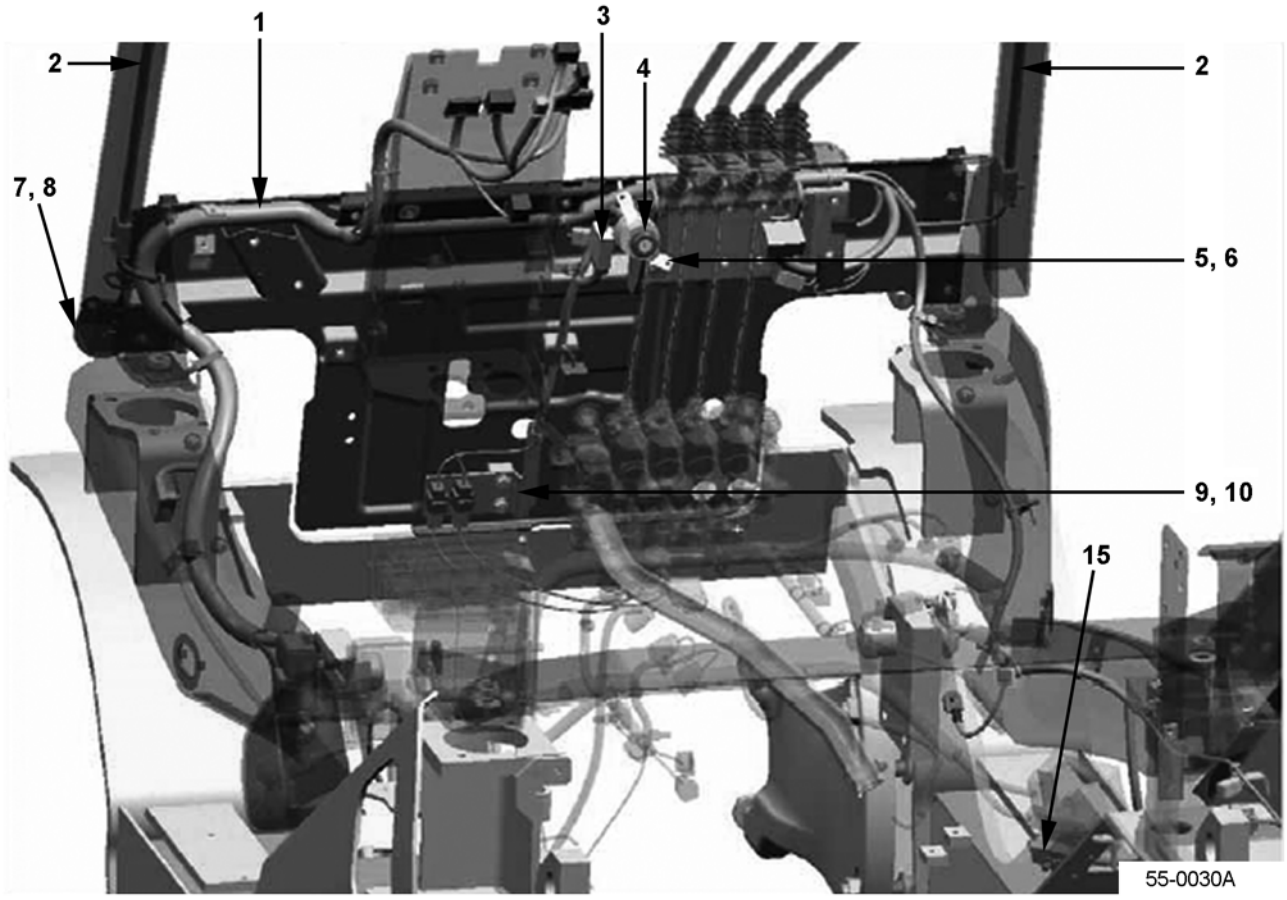


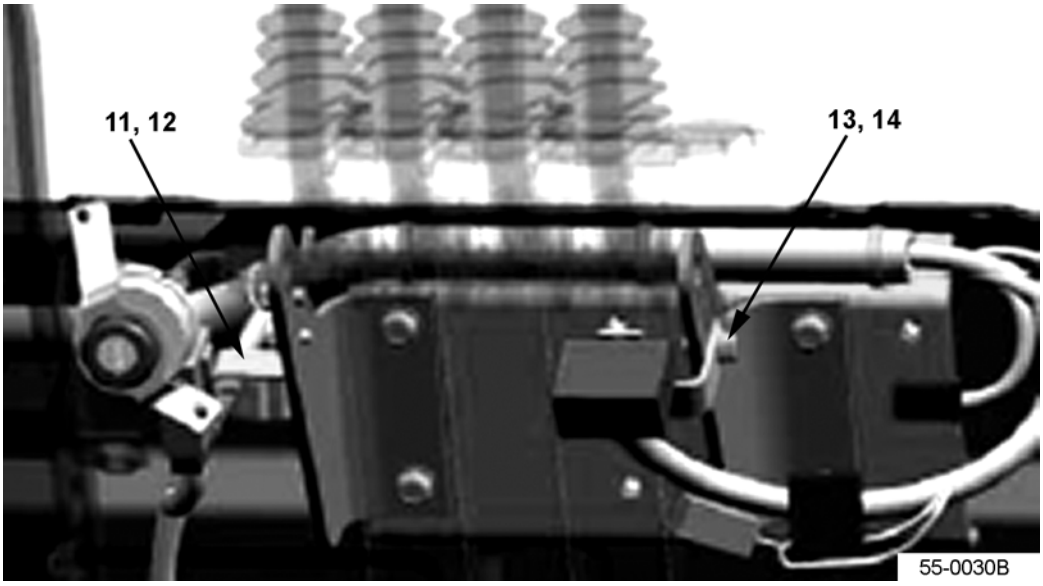

https://truckmanualshub.com/



## ELECTRICAL - DASHBOARD - K21/K25 MODELS - S/N 200001A~ (WITHOUT POWER BRAKES)

| Item | Part Number | Description | Qty | |
|---|---|---|---|---|
| 1 | 3EA-55-A7411 | DASHBOARD HARNESS | 1 | |
| 2 | 3EB-55-A7321 | HARNESS, HEAD LAMP | 2 | |
| 3 | 3EB-55-A7170 | HARNESS | 1 | |
| 4 | 3EB-55-A3621 | SWITCH SUB-ASSY | 1 | |
| 5 | 3EB-55-A7290 | PLATE | 1 | |
| 6 | 01370-00410 | SCREW | 2 | |
| 7 | 3EB-55-41271 | HORN | 1 | |
| 8 | 01435-00816 | BOLT | 1 | |
| 9 | 3EB-55-A7420 | BRACKET | 1 | |
| 10 | 01024-80816 | BOLT | 2 | |
| 11 | 3EB-55-A7480 | PLATE | 1 | |
| 12 | 01024-80612 | BOLT | 2 | |
| 13 | 3EA-55-A7440 | PLATE | 1 | |
| 14 | 01024-80616 | BOLT | 1 | |
| 15 | 3EB-55-A7430 | WIRE (JUMPER) | 1 | |

https://truckmanualshub.com/



# ELECTRICAL - DASHBOARD - K25 MODELS - S/N 200001A~ (WITH POWER BRAKES)

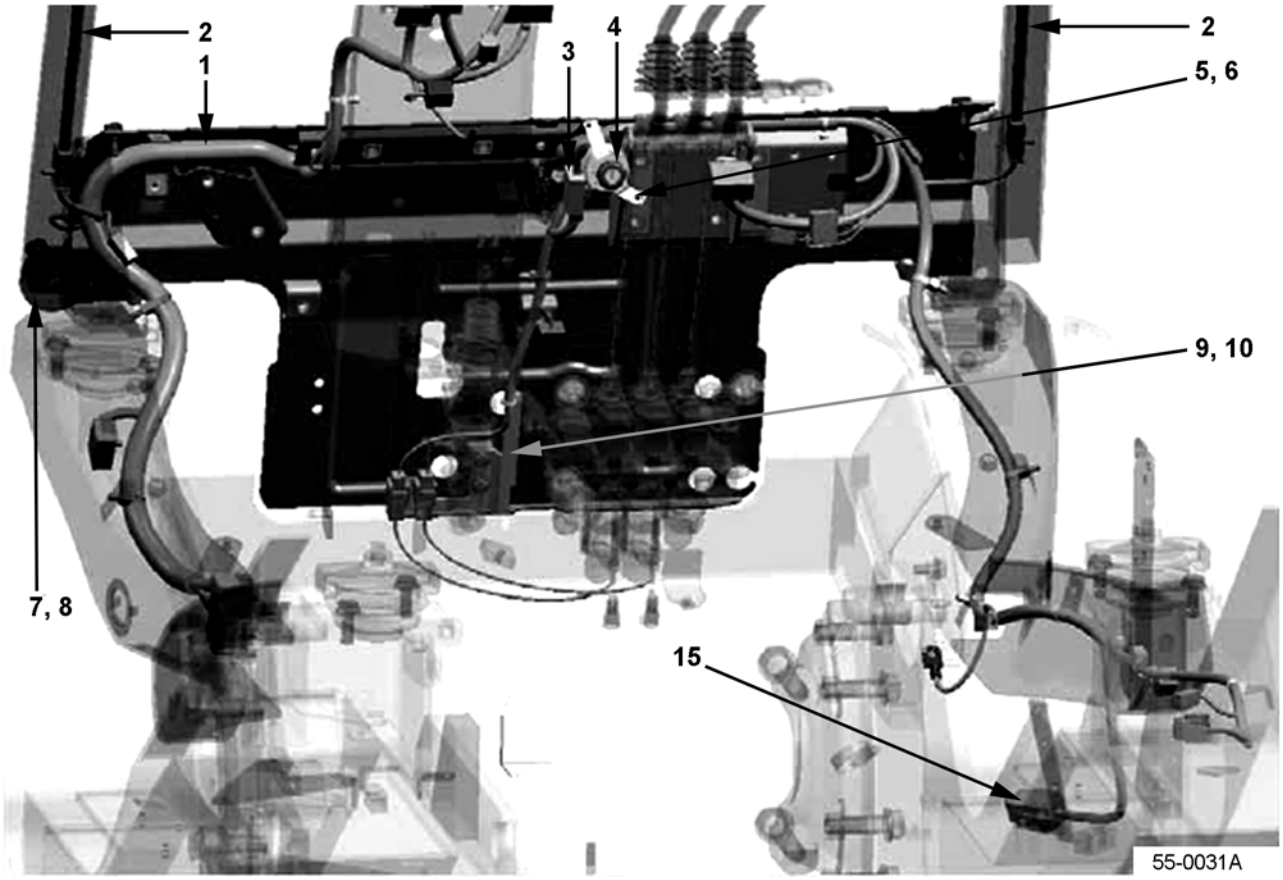


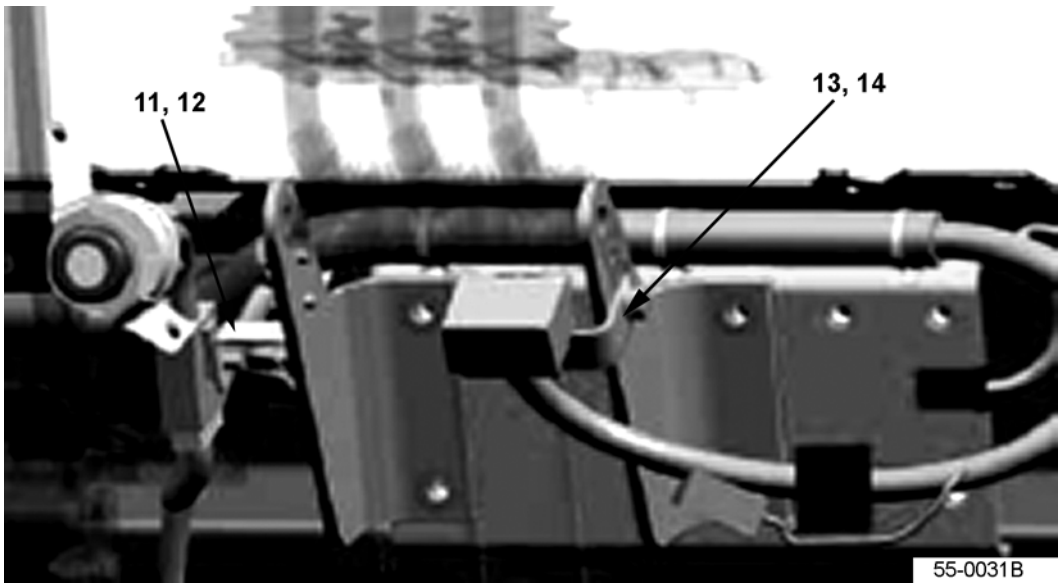

https://truckmanualshub.com/



## ELECTRICAL - DASHBOARD - K25 MODELS - S/N 200001A~ (WITH POWER BRAKES)

| Item | Part Number | Description | Qty | |
|---|---|---|---|---|
| 1 | 3EA-55-A7411 | DASHBOARD HARNESS (3.2T, 3.5T PNEUMATIC W/ POWER BRAKES) | 1 | |
| 2 | 3EB-55-A7321 | HARNESS, HEAD LAMP | 2 | |
| 3 | 3EB-55-A7170 | HARNESS | 1 | |
| 4 | 3EB-55-A3621 | SWITCH SUB-ASSY | 1 | |
| 5 | 3EB-55-A7290 | PLATE | 1 | |
| 6 | 01370-00410 | SCREW | 2 | |
| 7 | 3EB-55-41271 | HORN | 1 | |
| 8 | 01435-00816 | BOLT | 1 | |
| 9 | 3EB-55-A7440 | BRACKET | 1 | |
| 10 | 01024-80816 | BOLT | 2 | |
| 11 | 3EB-55-A7480 | PLATE | 1 | |
| 12 | 01024-80612 | BOLT | 2 | |
| 13 | 3EA-55-A7440 | PLATE | 1 | |
| 14 | 01024-80616 | BOLT | 1 | |
| 15 | 3EB-55-A7430 | WIRE (JUMPER) | 1 | |

https://truckmanualshub.com/



## ELECTRICAL - K21/K25 UL-S (GS & LPS) MODELS - S/N 200001A~
## (ALSO SEE FIG. 55-0041)

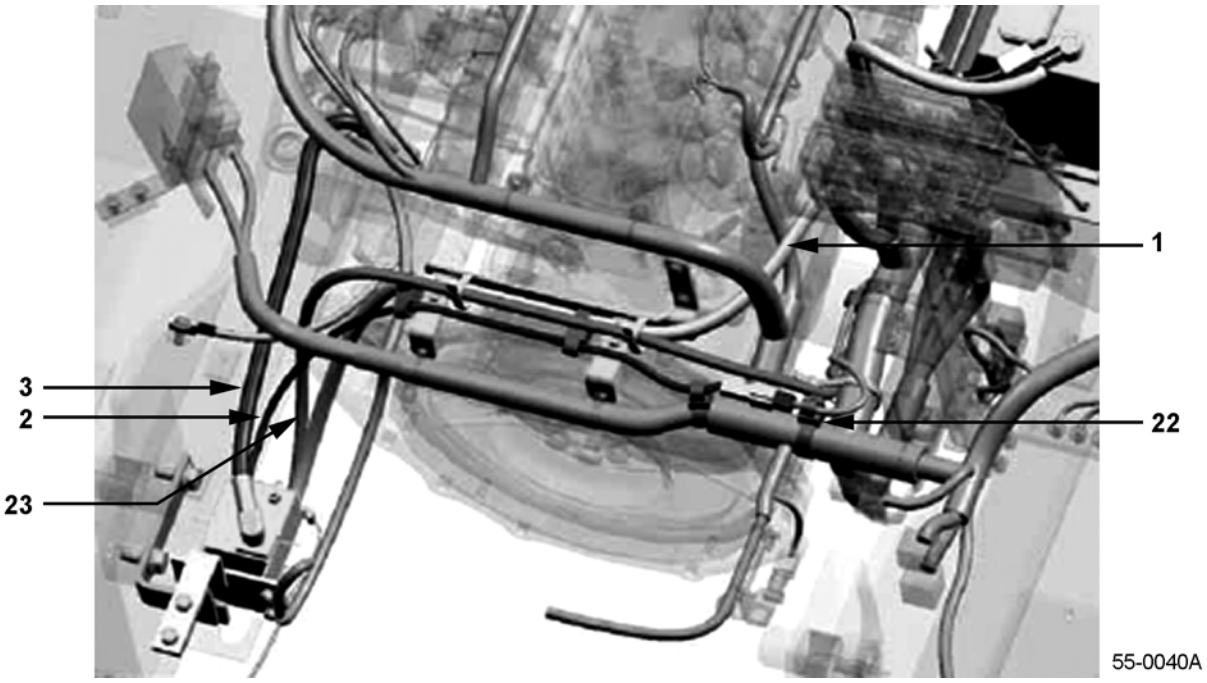


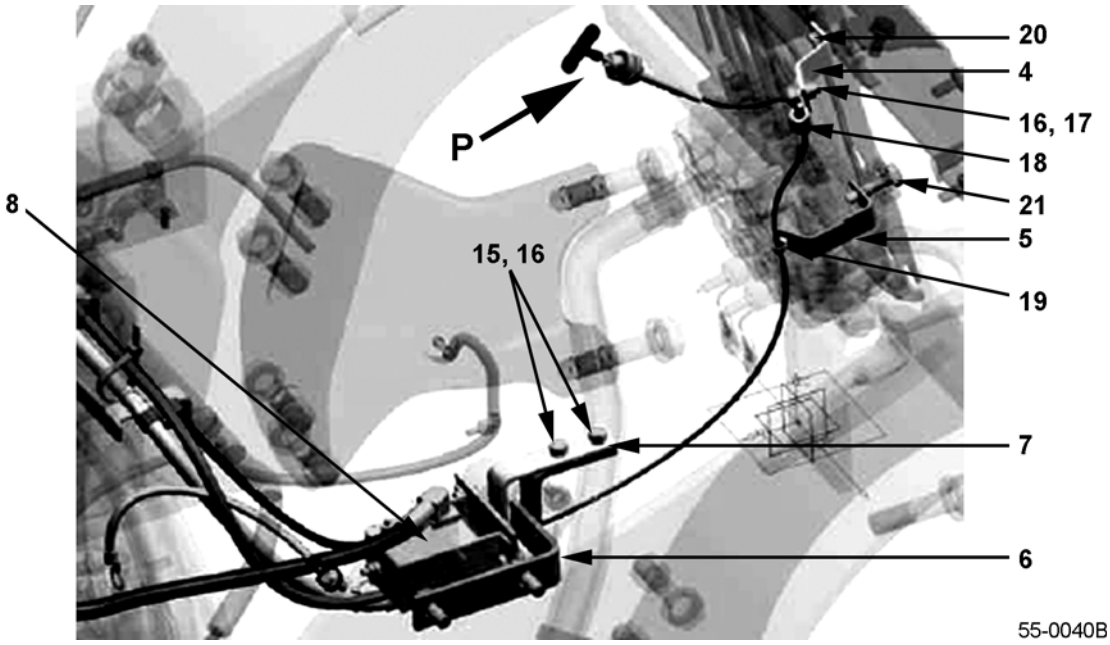


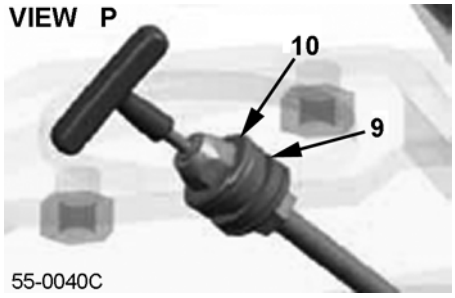

https://truckmanualshub.com/



## ELECTRICAL - K21/K25 UL-S (GS & LPS) MODELS - S/N 200001A~ (ALSO SEE FIG. 55-0041)

| Item | Part Number | Description | Qty | |
|---|---|---|---|---|
| 1 | 37A-1LH-2371 | CABLE (+) | 1 | |
| 2 | 37B-1LJ-A710 | WIRE (UL-S) | 1 | |
| 3 | 37A-1LM-2010 | CABLE | 1 | |
| 4 | 3EB-56-A7460 | BRACKET | 1 | |
| 5 | 3EB-56-A7470 | PLATE | 1 | |
| 6 | 3EB-56-A7480 | BRACKET | 1 | |
| 7 | 3EB-56-A7490 | BRACKET | 1 | |
| 8 | 3EB-56-A5210 | BATTERY CUT SWITCH | 1 | |
| 9 | 3EB-56-F5210 | GROMMET | 1 | |
| 10 | 01640-21223 | WASHER | 2 | |
| 11 | 02215-10406 | NUT | 3 | |
| 12 | 01602-20720 | WASHER | 3 | |
| 13 | 01010-81230 | BOLT | 2 | |
| 14 | 01643-31232 | WASHER | 2 | |
| 15 | 01010-80816 | BOLT | 2 | |
| 16 | 01602-20825 | WASHER | 3 | |
| 17 | 01010-80820 | BOLT | 1 | |
| 18 | 04434-51008 | CLIP | 1 | |
| 19 | 3EB-55-A7940 | CLIP | 1 | |
| 20 | 01435-00820 | BOLT | 1 | |
| 21 | 01050-51025 | BOLT | 1 | |
| 22 | 3EB-55-A7920 | CLAMP | 5 | |
| 23 | 3EA-56-38650 | WIRE | 1 | |
| 24 | 01602-20825 | WASHER | 1 | |
| 25 | 01580-10806 | NUT | 1 | |
| 26 | 37B-1AE-6030 | BAND | 5 | |
| 27 | 3EB-56-39220 | WIRE | 1 | |
| 28 | 01023-10508 | SCREW | 1 | |
| 29 | 3EB-55-31490 | WIRING CLIP | 1 | |

https://truckmanualshub.com/



## ELECTRICAL - K21/K25 UL-S (GS & LPS) MODELS - S/N 200001A~ (ALSO SEE FIG. 55-0040)

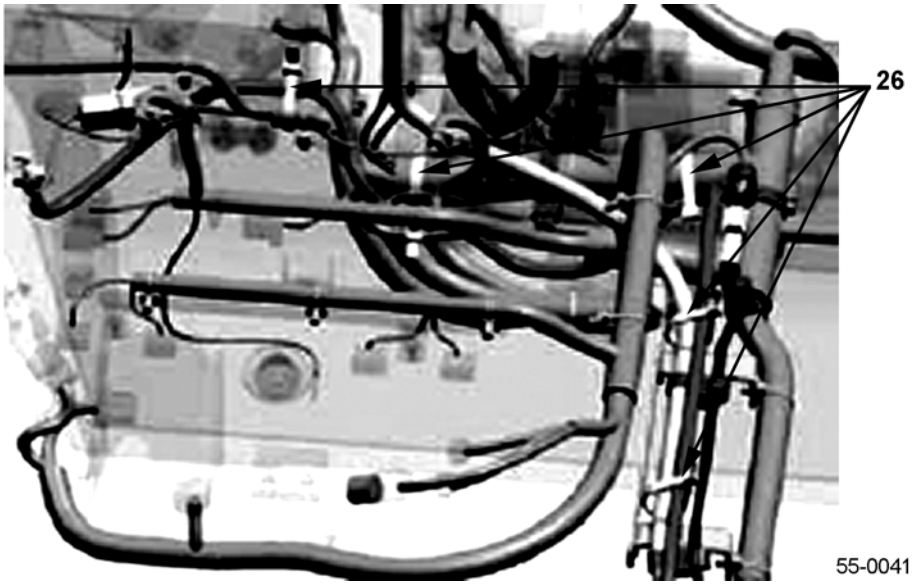


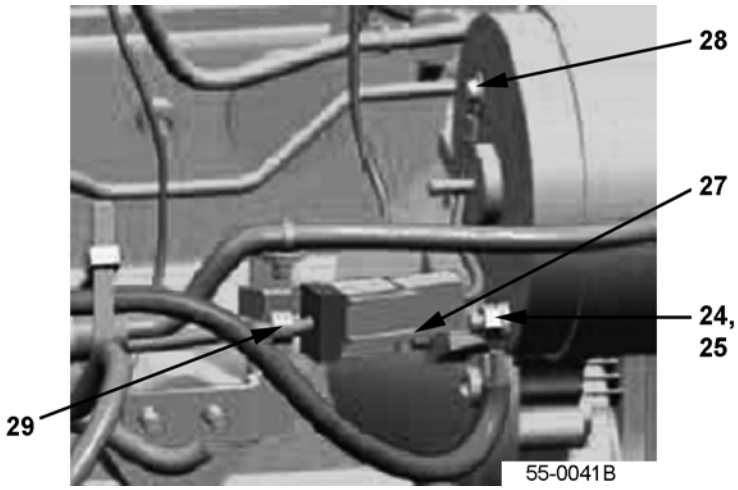


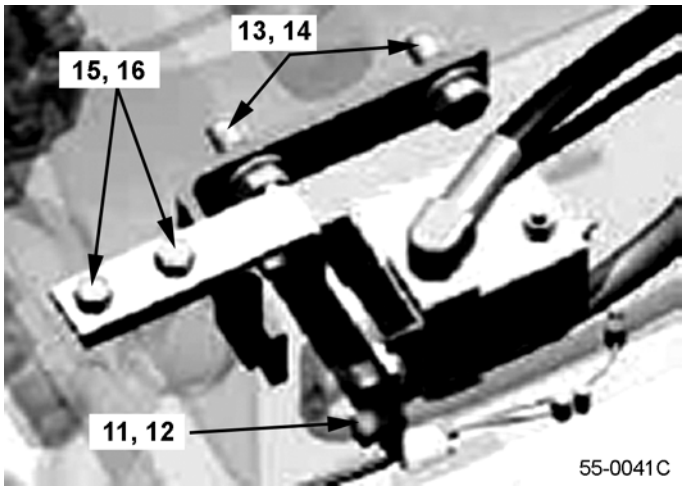

https://truckmanualshub.com/



## ELECTRICAL - K21/K25 UL-S (GS & LPS) MODELS - S/N 200001A~ (ALSO SEE FIG. 55-0040)

| Item | Part Number | Description | Qty | |
|---|---|---|---|---|
| 1 | 37A-1LH-2371 | CABLE (+) | 1 | |
| 2 | 37B-1LJ-A710 | WIRE (UL-S) | 1 | |
| 3 | 37A-1LM-2010 | CABLE | 1 | |
| 4 | 3EB-56-A7460 | BRACKET | 1 | |
| 5 | 3EB-56-A7470 | PLATE | 1 | |
| 6 | 3EB-56-A7480 | BRACKET | 1 | |
| 7 | 3EB-56-A7490 | BRACKET | 1 | |
| 8 | 3EB-56-A5210 | BATTERY CUT SWITCH | 1 | |
| 9 | 3EB-56-F5210 | GROMMET | 1 | |
| 10 | 01640-21223 | WASHER | 2 | |
| 11 | 02215-10406 | NUT | 3 | |
| 12 | 01602-20720 | WASHER | 3 | |
| 13 | 01010-81230 | BOLT | 2 | |
| 14 | 01643-31232 | WASHER | 2 | |
| 15 | 01010-80816 | BOLT | 2 | |
| 16 | 01602-20825 | WASHER | 3 | |
| 17 | 01010-80820 | BOLT | 1 | |
| 18 | 04434-51008 | CLIP | 1 | |
| 19 | 3EB-55-A7940 | CLIP | 1 | |
| 20 | 01435-00820 | BOLT | 1 | |
| 21 | 01050-51025 | BOLT | 1 | |
| 22 | 3EB-55-A7920 | CLAMP | 5 | |
| 23 | 3EA-56-38650 | WIRE | 1 | |
| 24 | 01602-20825 | WASHER | 1 | |
| 25 | 01580-10806 | NUT | 1 | |
| 26 | 37B-1AE-6030 | BAND | 5 | |
| 27 | 3EB-56-39220 | WIRE | 1 | |
| 28 | 01023-10508 | SCREW | 1 | |
| 29 | 3EB-55-31490 | WIRING CLIP | 1 | |

https://truckmanualshub.com/



## ALTERNATOR - K21/K25 MODELS - S/N 200001A~

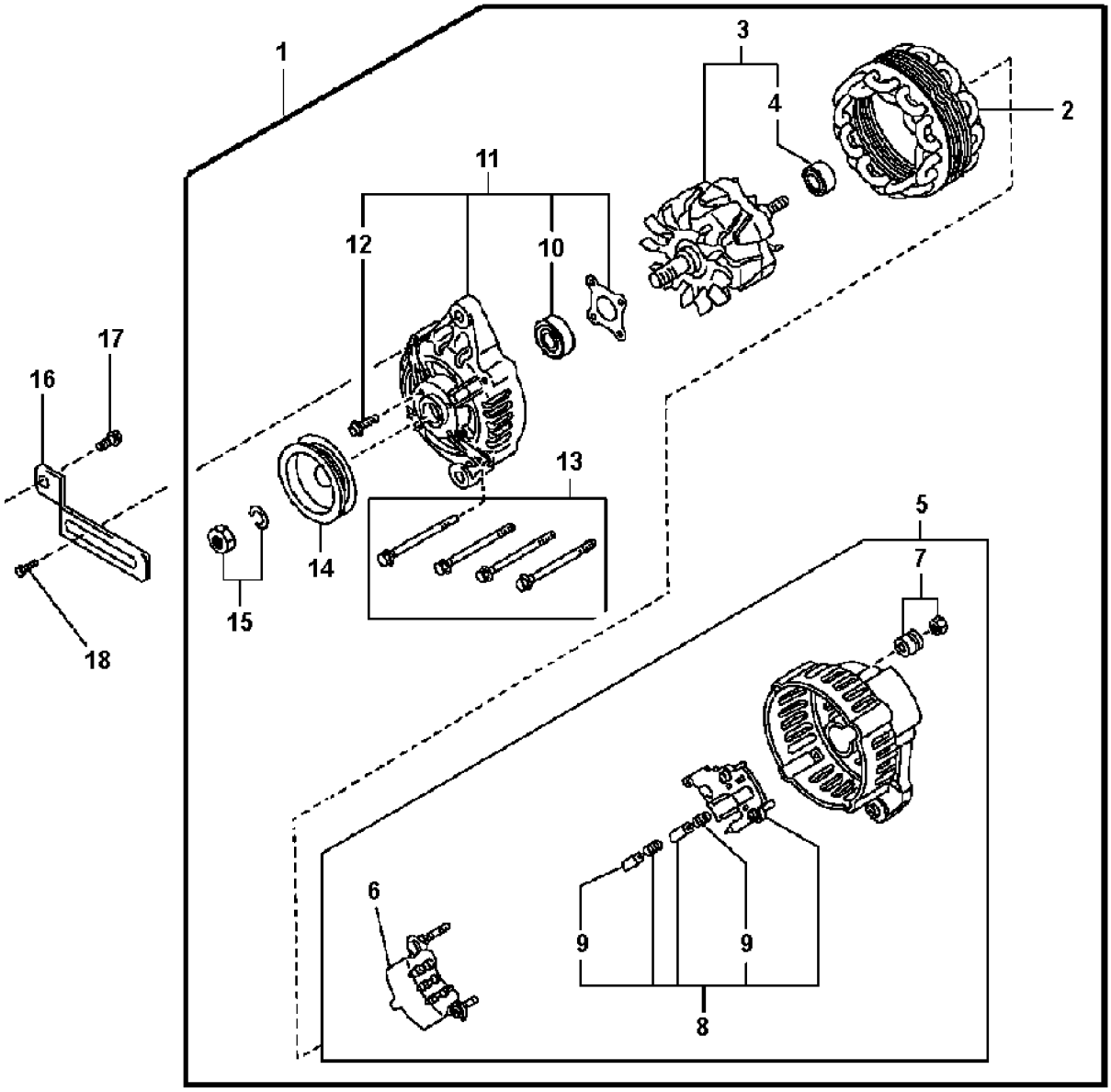


55-0100A

https://truckmanualshub.com/



## ALTERNATOR - K21/K25 MODELS - S/N 200001A~

| Item | Part Number | Description | Qty | |
|---|---|---|---|---|
| 1 | 23100-FU410 | ALTERNATOR (K21/K25 GAS/LP & DUAL-FUEL) | 1 | |
| | 23100-GY360 | ALTERNATOR (K21/K25 UL-GS, UL-LS) (**MUST** USE WITH FAN BELT 02117-22023 FOR STATIC REDUCTION) . . . . . | 1 | |
| 2 | 23102-50K15 | . STATOR ASSY (K21/K25 GAS/LP & DUAL-FUEL) | 1 | |
| | 23102-GY360 | . STATOR ASSY (K21/K25 UL-GS, UL-LS) . . . . | 1 | |
| 3 | 23108-50K15 | . ROTOR (K21/K25 GAS/LP & DUAL-FUEL) . . . | 1 | |
| | 23108-GY360 | . ROTOR (K21/K25 UL-GS, UL-LS) . . . . . | 1 | |
| 4 | 23120-30R10 | . . BEARING, BALL . . . . . | 1 | |
| 5 | 23127-FF110 | . COVER ASSY, REAR (K21/K25 GAS/LP & DUAL-FUEL) . . . . . | 1 | |
| | 23127-GY360 | . COVER ASSY, REAR (K21/K25 UL-GS, UL-LS) | 1 | |
| 6 | 23124-FF110 | . . RECTIFIER ASSY (K21/K25 GAS/LP & DUAL-FUEL) | 1 | |
| | 23124-GY360 | . . RECTIFIER ASSY (K21/K25 UL-GS, UL-LS) | 1 | |
| 7 | 23156-08000 | . . NUT, SET . . . . . | 1 | |
| 8 | 23215-3S416 | . . REGULATOR, IC (K21/K25 GAS/LP & DUAL-FUEL) | 1 | |
| | 23215-GY360 | . . REGULATOR, IC (K21/K25 UL-GS, UL-LS). | 1 | |
| 9 | 23142-0B000 | . . . BRUSH, F . . . . . | 1 | |
| 10 | 23118-47N10 | . COVER ASSY, FRONT (K21/K25 GAS/LP & DUAL-FUEL) . . . . . | 1 | |
| | 23118-GY360 | .COVER ASSY, FRONT (K21/K25 UL-GS, UL-LS) | 1 | |
| 11 | 23120-22J20 | . . BEARING, BALL . . . . . | 1 | |
| 12 | 23115-47N10 | . . SCREW, SET (K21/K25 GAS/LP & DUAL-FUEL) | 1 | |
| | 23115-20P10 | . SCREW, SET (K21/K25 UL-GS, UL-LS) . . . . . | 1 | |
| 13 | 23131-20P10 | . BOLT, THROUGH . . . . . | 4 | |
| 14 | 23150-FU410 | . PULLEY ASSY (K21/K25 GAS/LP & DUAL-FUEL) | 1 | |
| | 23150-GY360 | . PULLEY ASSY (K21/K25 UL-GS, UL-LS) . . . . | 1 | |
| 15 | 23153-70T12 | . NUT ASSY, PULLEY. . . . . | 1 | |
| 16 | 11715-FU400 | . HOLDER . . . . . | 1 | |
| 17 | 08124-0201F | . BOLT . . . . . | 1 | |
| 18 | 08120-8201F | . BOLT . . . . . | 1 | |
| N/S | 02117-23021 | FAN BELT (K21) . . . . . | 1 | |
| N/S | 02117-21521 | FAN BELT (K25) . . . . . | 1 | |
| N/S | 02117-22023 | FAN BELT (UL-GS, UL-LS) (**MUST** USE WITH ALTERNATOR 23100-GY360 FOR STATIC REDUCTION) | 1 | |
| NS | 11715-FU400 | BAR, ADJUSTING . . . . . | 1 | |

https://truckmanualshub.com/



## STARTER - K21/K25 MODELS - S/N 200001A~

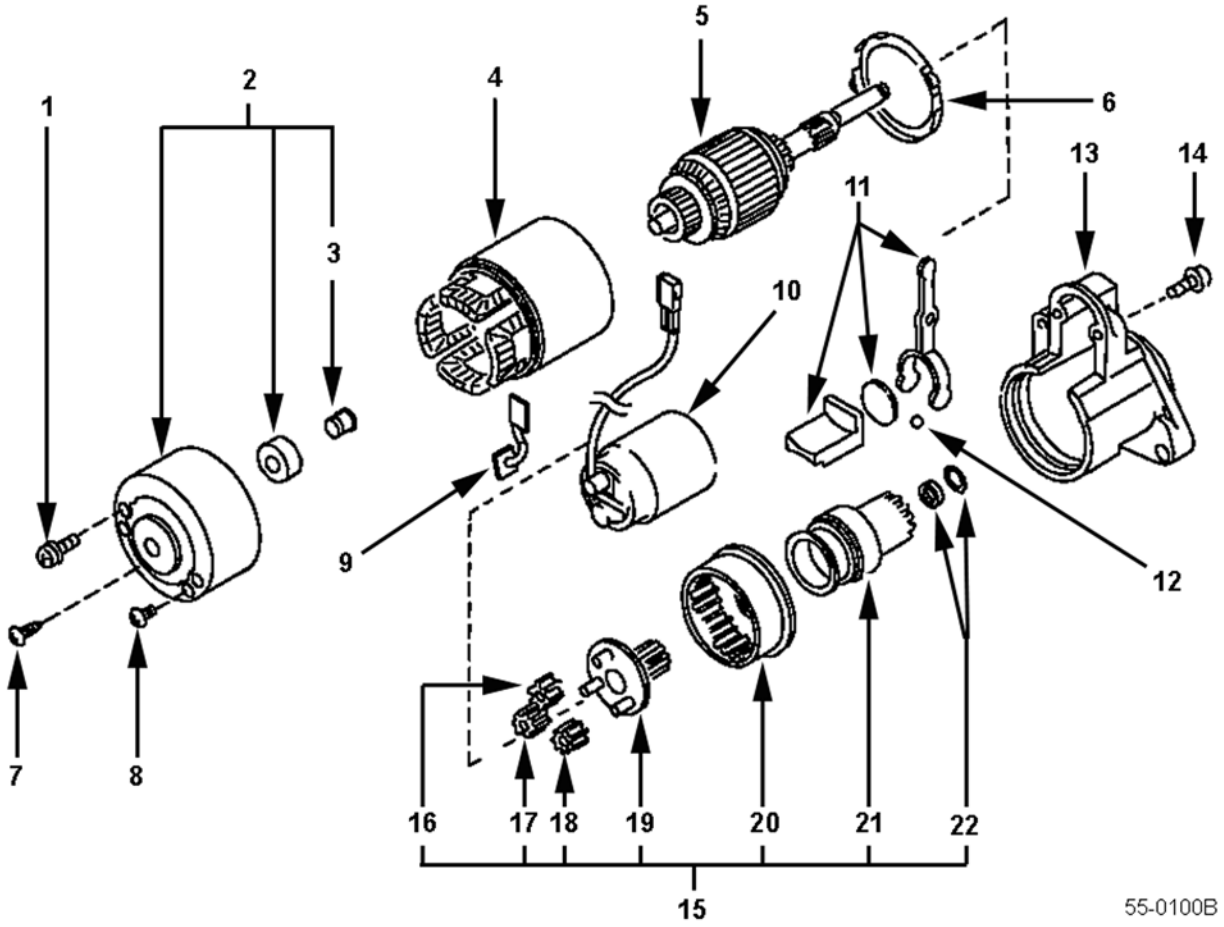

https://truckmanualshub.com/



## STARTER - K21/K25 MODELS - S/N 200001A~

| Item | Part Number | Description | Qty | |
|---|---|---|---|---|
| | 23300-FU410 | STARTER MOTOR | 1 | |
| 1 | 23340-0M210 | BOLT - THROUGH (STARTER-TO-ENGINE) | 1 | |
| 2 | 23337-0W011 | COVER ASSY - REAR | 1 | |
| 3 | 23338-01N10 | .COVER - METAL - REAR | 1 | |
| 4 | 23302-6J010 | YOKE | 1 | |
| 5 | 23310-0M210 | ARMATURE ASSY | 1 | |
| 6 | 23385-50Y12 | PACKING | 1 | |
| 7 | 23480-M0110 | SCREW SET - 5 X 8.5 (2 EACH) | 1 | |
| 8 | 23480-M0110 | SCREW SET - 6 X 23 (2 EACH) | 1 | |
| 9 | 23381-FU410 | BRUSH SET | 1 | |
| 10 | 23343-FU410 | SWITCH ASSY - MAGNETIC | 1 | |
| 11 | 23322-50Y12 | LEVER SET - SHIFT | 1 | |
| 12 | 23325-42L70 | BEARING | 1 | |
| 13 | 23318-FU410 | CASE ASSY - GEAR | 1 | |
| 14 | 23480-M0110 | SCREW SET - 6 X 23 (2 EACH) | 1 | |
| 15 | 23312-0W010 | PINION ASSY | 1 | |
| 16 | 23361-42L70 | .GEAR | 1 | |
| 17 | 23361-42L70 | .GEAR | 1 | |
| 18 | 23361-42L70 | .GEAR | 1 | |
| 19 | 23312-1S710 | .PINION ASSY | 1 | |
| 20 | 23360-0M210 | .GEAR & SHAFT SET | 1 | |
| 21 | 23354-W9810 | .CLUTCH ASSY | 1 | |
| 22 | 23465-W9810 | .STOPPER SET - PINION | 1 | |
| NS | 23110-GY360 | SPACER | AR | |
| NS | 08911-1401G | NUT (WIRE AT MAGNETIC SWITCH) | 1 | |
| NS | 08124-0251F | BOLT - THROUGH (ENGINE-TO-STARTER) | 1 | |

https://truckmanualshub.com/



## HEAD LAMP - S/N 200001A~

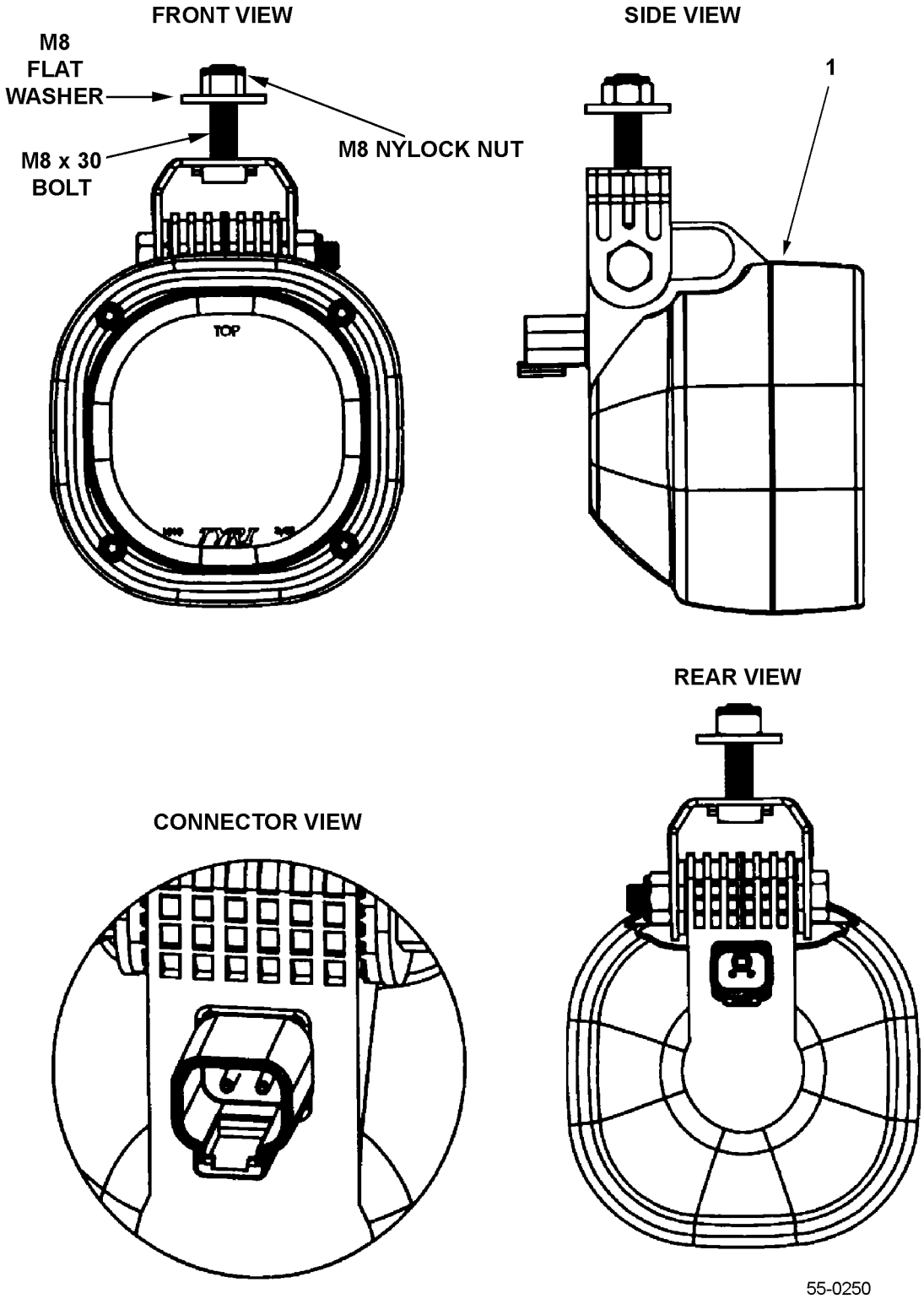

https://truckmanualshub.com/



## HEAD LAMP - S/N 200001A~

| Item | Part Number | Description | Qty | |
|---|---|---|---|---|
| 1 | 3EB-55-A6260 | HEAD LAMP (12V) . . . . . | 2 | |
| N/S | 3EB-55-38181 | COVER . . . . . | 4 | |
| N/S | 3EB-55-A5112 | BULB (12V). . . . . | 2 | |

https://truckmanualshub.com/



# REAR "LED" COMBINATION LAMP - S/N 200001A~

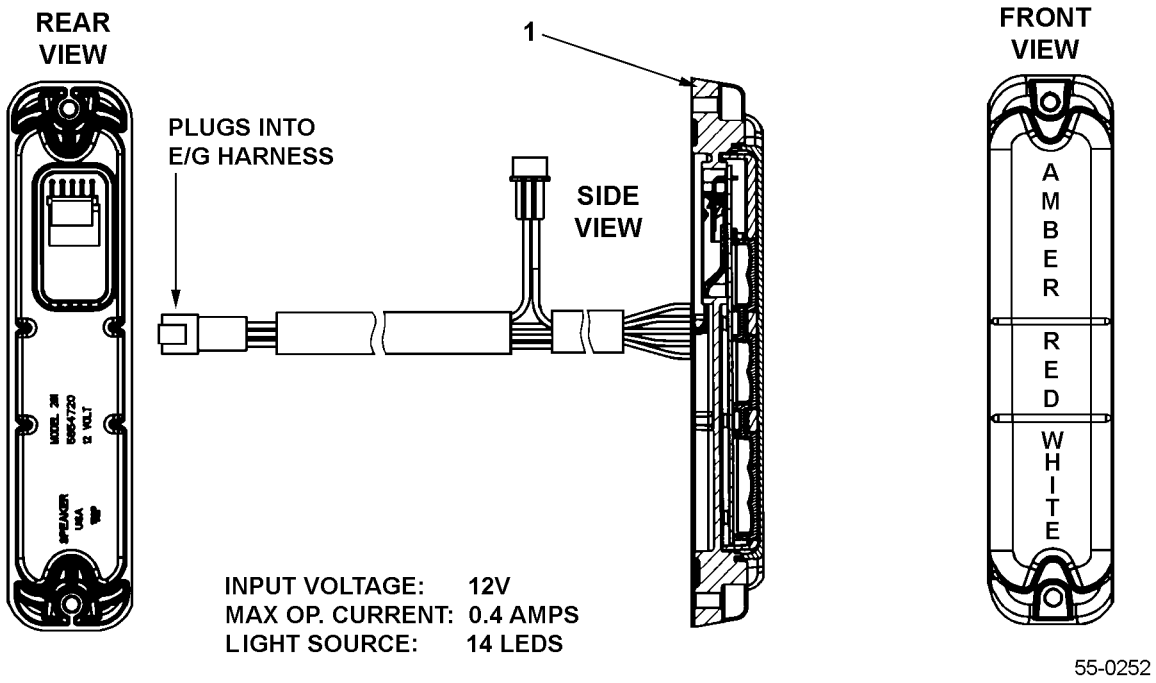

https://truckmanualshub.com/



## REAR "LED" COMBINATION LAMP - S/N 200001A~

| Item | Part Number | Description | Qty | |
|---|---|---|---|---|
| 1 | 3EB-55-A7720 | REAR LED COMB. LAMP (12V). . . . . | 2 | |

https://truckmanualshub.com/



# ELECTRICAL - ENGINE CONTROL UNIT (ECU) - K21/K25 MODELS - S/N 200001A~

ECM - K21/K25

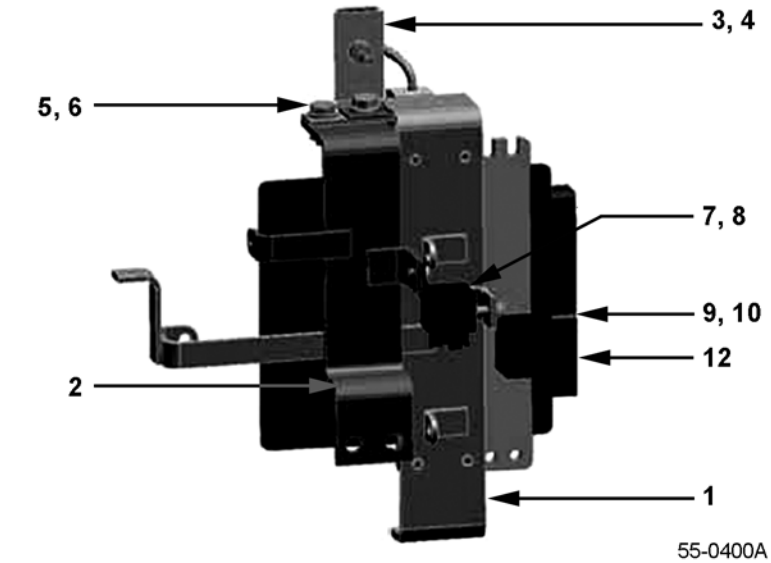


55-0400A

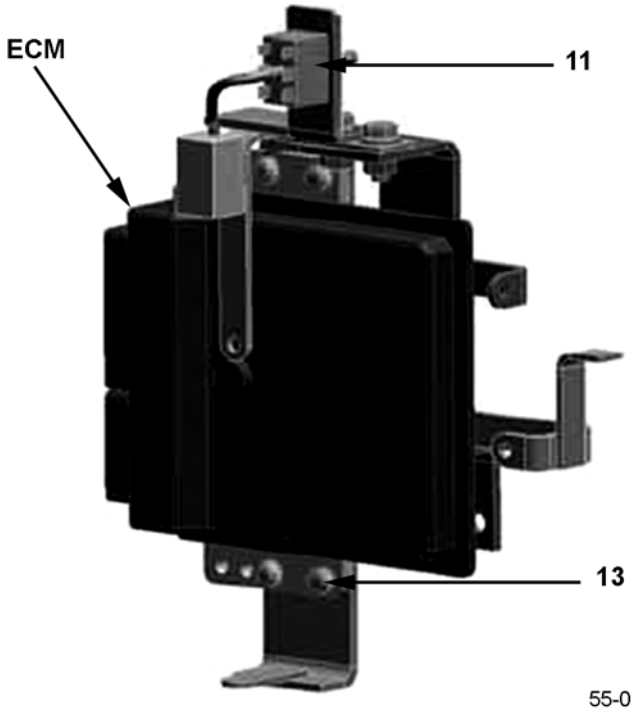


55-0400B

https://truckmanualshub.com/



## ELECTRICAL - ENGINE CONTROL UNIT (ECU) - K21/K25 MODELS - S/N 200001A~

| Item | Part Number | Description | Qty | |
|---|---|---|---|---|
| | 37B-1DD-5210 | ECU ASSY (K21 ONLY) | 1 | |
| | 37B-1DD-5220 | ECU ASSY (K25 ONLY) | 1 | |
| 1 | 3EB-55-A7121 | BRACKET | 1 | |
| 2 | 3EB-55-A7250 | BRACKET | 1 | |
| 3 | 3EB-56-A7390 | BRACKET (G / LP) | 1 | |
| 4 | 3EB-55-A7980 | NAME PLATE (G / LP) | 1 | |
| 5 | 01010-80820 | BOLT | 2 | |
| 6 | 01643-30823 | WASHER | 2 | |
| 7 | 3EB-55-31270 | RELAY | 1 | |
| 8 | 01023-10508 | SCREW | 1 | |
| 9 | 3EB-55-31260 | PLATE | 1 | |
| 10 | 01023-10612 | SCREW | 1 | |
| 11 | 3EB-55-A7681 | HARNESS | 1 | |
| 12 | 25230-C9971 | HEATER RELAY | 1 | |
| 13 | 01023-10612 | SCREW | 4 | |

https://truckmanualshub.com/



# LP DRIVER / SSC SPEED CONTROL - K21/K25 MODELS - S/N 200001A~

LPG DRIVER

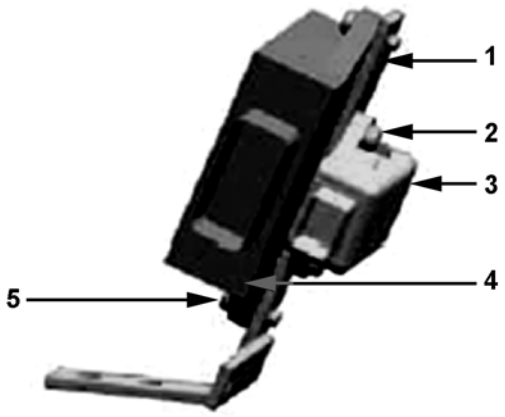


55-0410

https://truckmanualshub.com/



## LP DRIVER / SSC SPEED CONTROL - K21/K25 MODELS - S/N 200001A~

| Item | Part Number | Description | Qty | |
|---|---|---|---|---|
| 1 | 22710-FU460 | LPG SWITCHING MODULE. . . . . | 1 | |
| 2 | 01023-10612 | SCREW. . . . . | 2 | |
| 3 | 37B-1DG-5320 | SSC SPEED CONTROL MODULE (PNEUMATIC) | 1 | |
| | 37B-1DG-5330 | SSC SPEED CONTROL MODULE (CUSHION) | 1 | |
| 4 | 3EB-55-A7830 | PLATE. . . . . | 1 | |
| 5 | 01023-10620 | SCREW. . . . . | 2 | |
| N/S | 01010-80816 | BOLT (MOUNT TO FRAME - RIGHT SIDE). . . . | 2 | |
| N/S | 01643-30823 | WASHER (MOUNT TO FRAME - RIGHT SIDE) | 2 | |

https://truckmanualshub.com/



# ELECTRICAL - K.O.P. SYSTEM CONTROLLER - S/N 200001A~ (KOMATSU OPERATOR PRESENCE SYSTEM)

## MOUNTED TO FRAME - LEFT SIDE

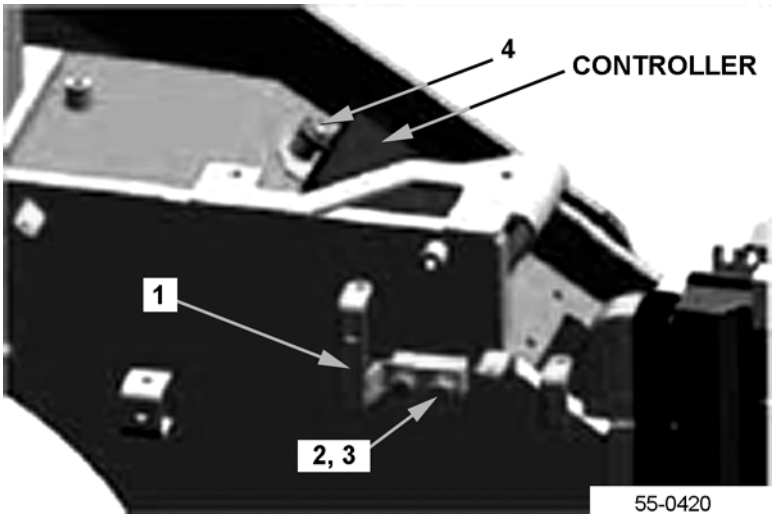

https://truckmanualshub.com/



## ELECTRICAL - K.O.P. SYSTEM CONTROLLER - S/N 200001A~ (KOMATSU OPERATOR PRESENCE SYSTEM)

| Item | Part Number | Description | Qty | |
|---|---|---|---|---|
| | 3EB-55-51711 | CONTROLLER, K.O.P. SYSTEM . . . . . | 1 | |
| 1 | 3EB-55-A7510 | BRACKET . . . . . | 1 | |
| 2 | 01010-80820 | BOLT . . . . . | 2 | |
| 3 | 01643-30823 | WASHER . . . . . | 2 | |
| 4 | 01435-00812 | BOLT . . . . . | 3 | |

https://truckmanualshub.com/



## ELECTRICAL - ENGINE HARNESS - 4D94LE MODELS - S/N 200001A~

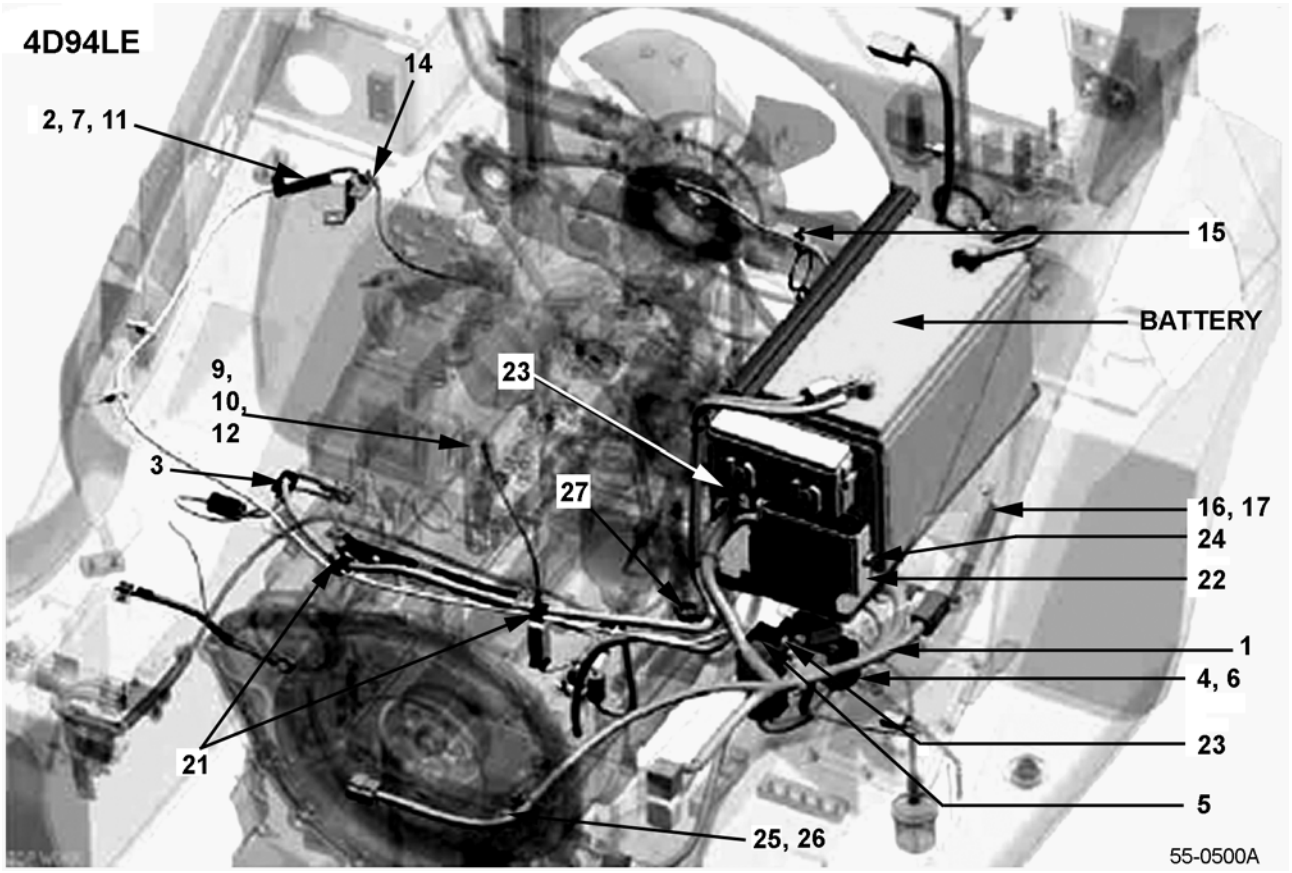


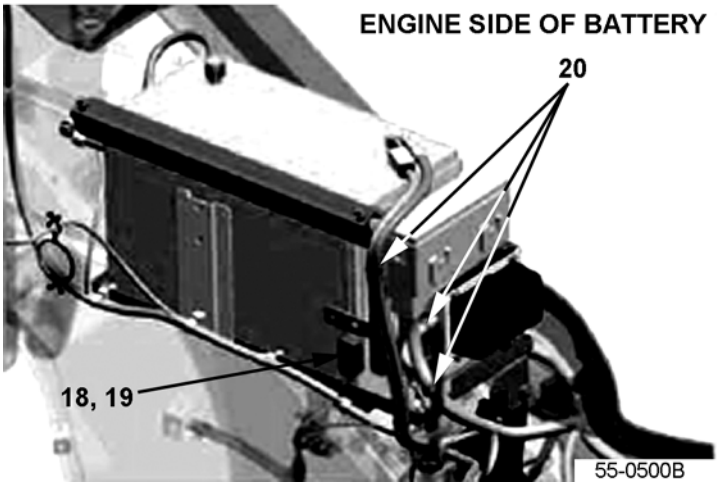


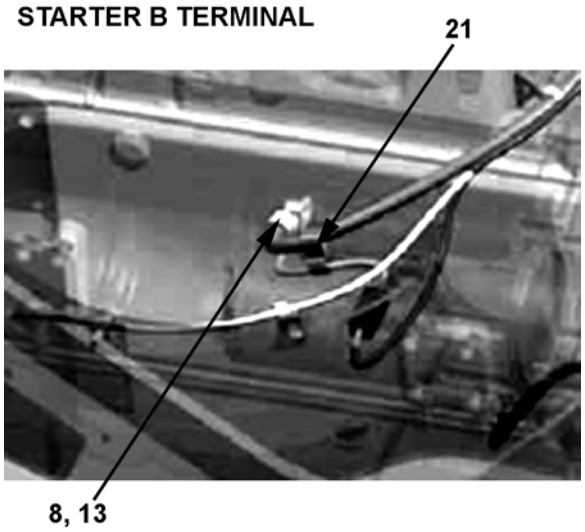

https://truckmanualshub.com/



## ELECTRICAL - ENGINE HARNESS - 4D94LE MODELS - S/N 200001A~

| Item | Part Number | Description | Qty | |
|---|---|---|---|---|
| 1 | 3EB-55-A7612 | ENGINE HARNESS | 1 | |
| 2 | 3EB-55-A7620 | WIRE | 1 | |
| 3 | 3EB-55-A7690 | WIRE | 1 | |
| 4 | 3EB-55-31270 | RELAY | 1 | |
| 5 | 01023-10614 | SCREW | 1 | |
| 6 | 01023-10514 | SCREW | 1 | |
| 7 | 01580-10504 | NUT | 1 | |
| 8 | 01580-10806 | NUT | 1 | |
| 9 | 01580-10403 | NUT | 1 | |
| 10 | | SCREW | 1 | |
| 11 | 01601-20513 | WASHER | 1 | |
| 12 | 01601-20410 | WASHER | 1 | |
| 13 | 01602-20825 | WASHER | 1 | |
| 14 | 3EB-55-41461 | PLATE | 1 | |
| 15 | 37B-1EP-4020 | LOCK | 1 | |
| 16 | 3EB-55-51710 | CONTROLLER | 1 | |
| 17 | 01435-00812 | BOLT | 3 | |
| 18 | 3EB-55-31130 | RELAY | 1 | |
| 19 | 01023-10612 | SCREW | 1 | |
| 20 | 3EB-55-A7940 | CLIP | 3 | |
| 21 | 3EB-55-A7920 | CLAMP | 3 | |
| 22 | 3EB-56-A7320 | BRACKET | 1 | |
| 23 | 3EB-55-A7270 | SCREW | 4 | |
| 24 | 01024-80812 | BOLT | 2 | |
| 25 | 3EB-55-55330 | PLATE | 1 | |
| 26 | 01435-00812 | BOLT | 1 | |
| 27 | 3EB-05-A7610 | CLIP | 1 | |

https://truckmanualshub.com/



## ELECTRICAL - ATTACHMENTS - BATTERY - 4D94LE MODELS - S/N 200001A~

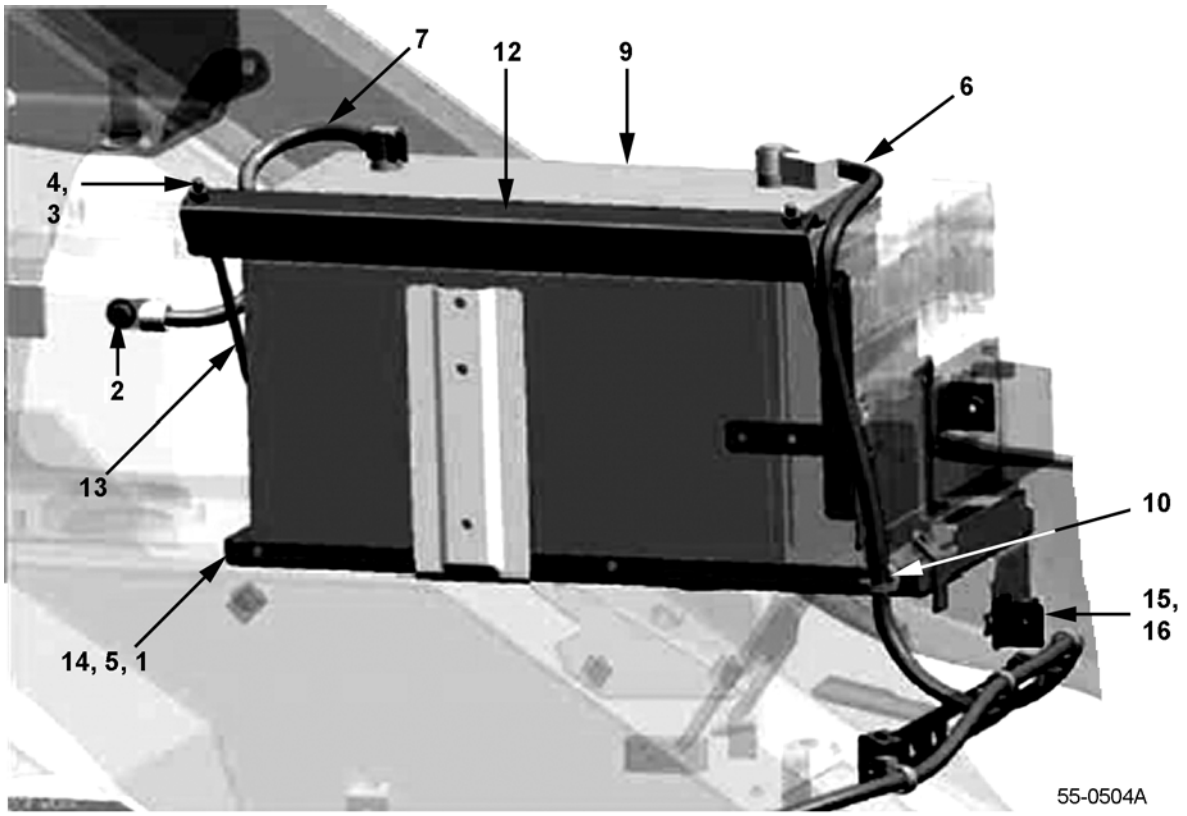




https://truckmanualshub.com/



## ELECTRICAL - ATTACHMENTS - BATTERY - 4D94LE MODELS - S/N 200001A~

| Item | Part Number | Description | Qty | |
|---|---|---|---|---|
| 1 | 01010-80812 | BOLT | 2 | |
| 2 | 01435-00816 | BOLT | 2 | |
| 3 | 01580-10605 | NUT | 2 | |
| 4 | 01641-20608 | WASHER | 2 | |
| 5 | 01643-30823 | WASHER | 2 | |
| 6 | 37B-1LH-A710 | CABLE | 1 | |
| 7 | 37B-1LK-4010 | CABLE | 1 | |
| 8 | 3EB-05-41280 | CLAMP | 2 | |
| 9 | 3EB-55-A2460 | BATTERY | 1 | |
| 10 | 3EB-55-A7940 | CLIP | 1 | |
| 11 | 3EB-55-51390 | CABLE | 1 | |
| 12 | 3EB-56-A7290 | BRACKET | 1 | |
| 13 | 3EB-55-43430 | CLAMP | 2 | |
| 14 | 3EB-56-A7310 | HOLDER | 1 | |
| 15 | 3EB-55-52320 | PLATE | 1 | |
| 16 | 01024-80612 | BOLT | 1 | |

https://truckmanualshub.com/



## ELECTRICAL - DASHBOARD - 4D94LE MODELS - S/N 200001A~

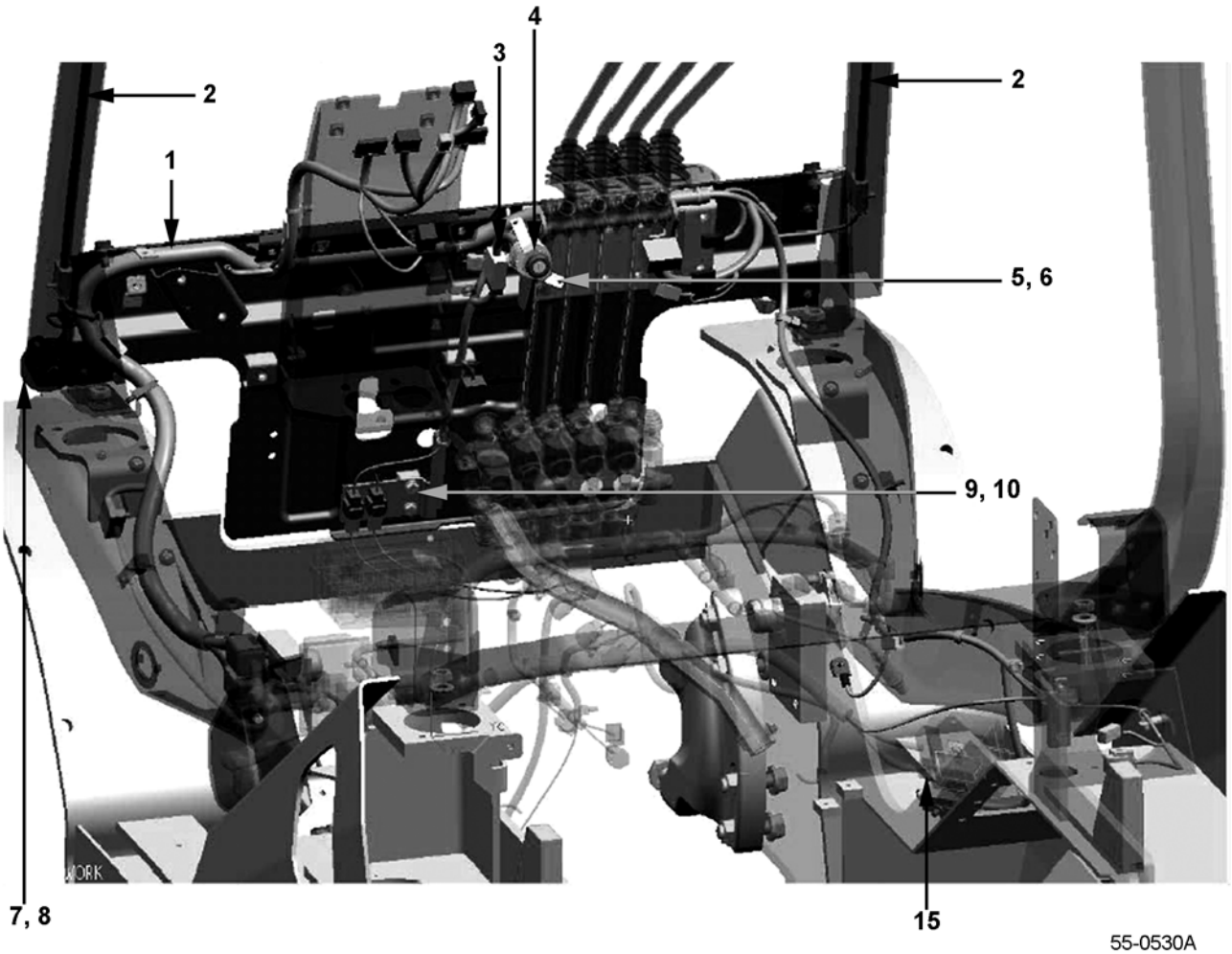


55-0530A

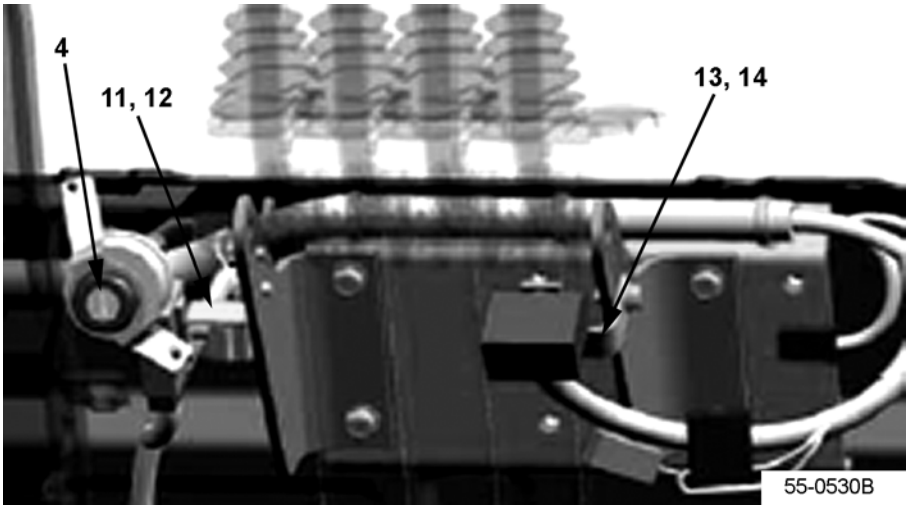


55-0530B

https://truckmanualshub.com/



## ELECTRICAL - DASHBOARD - 4D94LE MODELS - S/N 200001A~

| Item | Part Number | Description | Qty | |
|---|---|---|---|---|
| 1 | 3EA-55-A7461 | DASHBOARD HARNESS | 1 | |
| 2 | 3EB-55-A7321 | HARNESS, HEAD LAMP | 2 | |
| 3 | 3EB-55-A7170 | HARNESS | 1 | |
| 4 | 3EB-55-A3621 | KEY SWITCH SUB-ASSY | 1 | |
| 5 | 3EB-55-A7290 | PLATE | 1 | |
| 6 | 01370-00410 | SCREW | 2 | |
| 7 | 3EB-55-41271 | HORN | 1 | |
| 8 | 01435-00816 | BOLT | 1 | |
| 9 | 3EB-55-A7420 | BRACKET | 1 | |
| 10 | 01024-80816 | BOLT | 2 | |
| 11 | 3EB-55-A7480 | PLATE | 1 | |
| 12 | 01024-80612 | BOLT | 2 | |
| 13 | 3EA-55-A7440 | PLATE | 1 | |
| 14 | 01024-80616 | BOLT | 1 | |
| 15 | 3EB-55-A7430 | WIRE (JUMPER) | 1 | |

https://truckmanualshub.com/



## ELECTRICAL - 4D94LE UL-S (DS) MODELS - S/N 200001A~
## (ALSO SEE FIG. 55-0541)

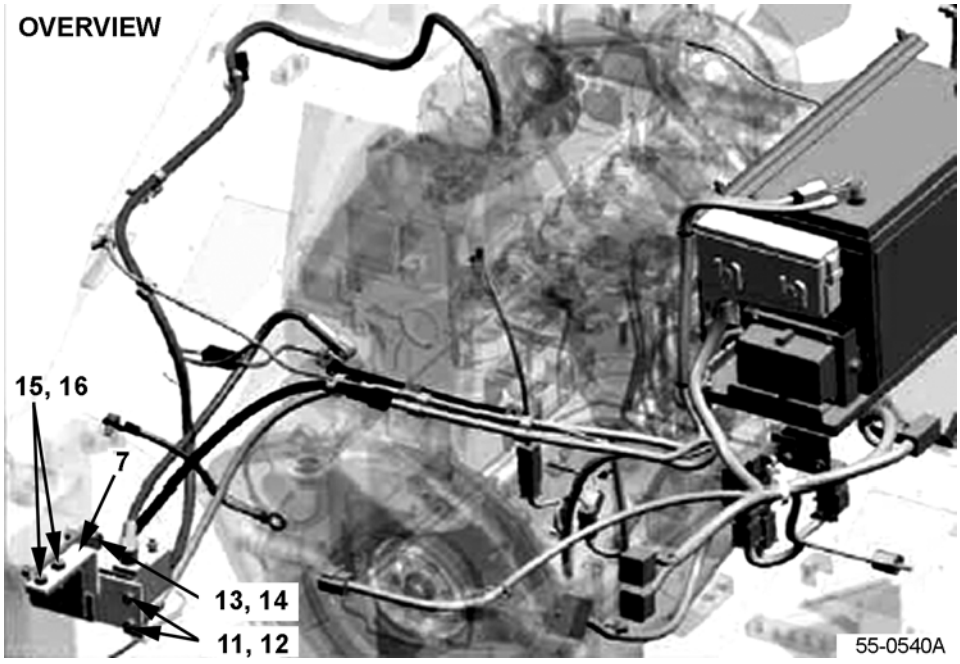


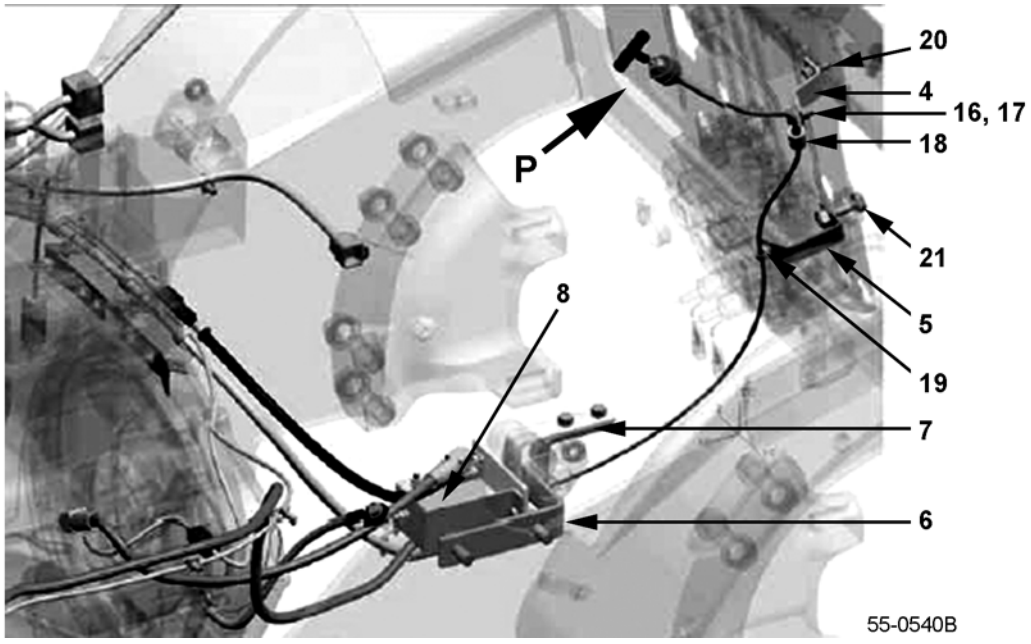


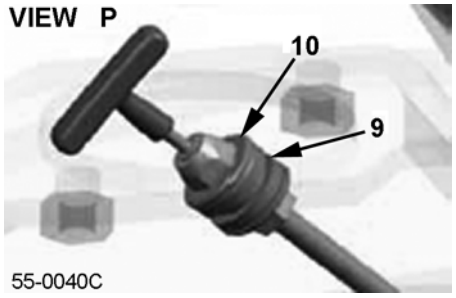

https://truckmanualshub.com/



## ELECTRICAL - 4D94LE UL-S (DS) MODELS - S/N 200001A~
## (ALSO SEE FIG. 55-0541)

| Item | Part Number | Description | Qty | |
|---|---|---|---|---|
| 1 | 37A-1LH-2361 | CABLE (+) | 1 | |
| 2 | 37B-1LJ-A720 | WIRE (UL-S) | 1 | |
| 3 | 37A-1LM-2040 | CABLE | 1 | |
| 4 | 3EB-56-A7460 | BRACKET | 1 | |
| 5 | 3EB-56-A7470 | PLATE | 1 | |
| 6 | 3EB-56-A7480 | BRACKET | 1 | |
| 7 | 3EB-56-A7490 | BRACKET | 1 | |
| 8 | 3EB-56-A5210 | BATTERY CUT SWITCH | 1 | |
| 9 | 3EB-56-F5210 | GROMMET | 1 | |
| 10 | 01640-21223 | WASHER | 2 | |
| 11 | 02215-10406 | NUT | 3 | |
| 12 | 01602-20720 | WASHER | 3 | |
| 13 | 01010-81230 | BOLT | 2 | |
| 14 | 01643-31232 | WASHER | 2 | |
| 15 | 01010-80816 | BOLT | 2 | |
| 16 | 01602-20825 | WASHER | 3 | |
| 17 | 01010-80820 | BOLT | 1 | |
| 18 | 04434-51008 | CLIP | 1 | |
| 19 | 3EB-55-A7940 | CLIP | 1 | |
| 20 | 01435-00820 | BOLT | 1 | |
| 21 | 01050-51025 | BOLT | 1 | |
| 22 | 3EB-55-A7920 | CLAMP | 6 | |
| 23 | 3EA-56-38650 | WIRE | 1 | |
| 24 | 01640-20508 | WASHER | 2 | |
| 25 | 01601-20513 | WASHER | 1 | |
| 26 | 01580-10504 | NUT | 1 | |

https://truckmanualshub.com/



## ELECTRICAL - 4D94LE UL-S (DS) MODELS - S/N 200001A~
## (ALSO SEE FIG. 55-0540)

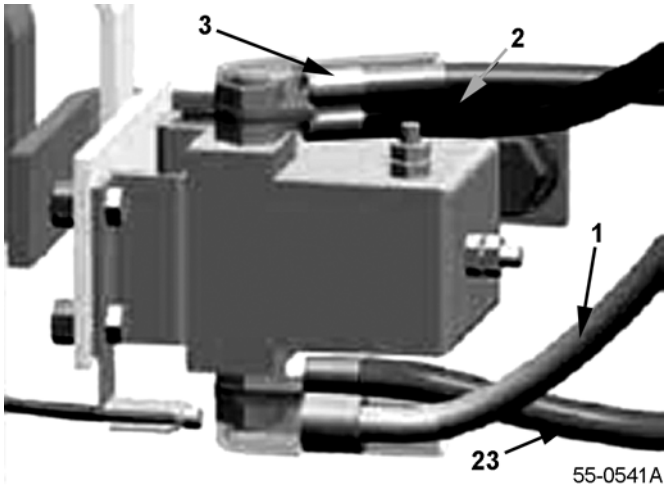


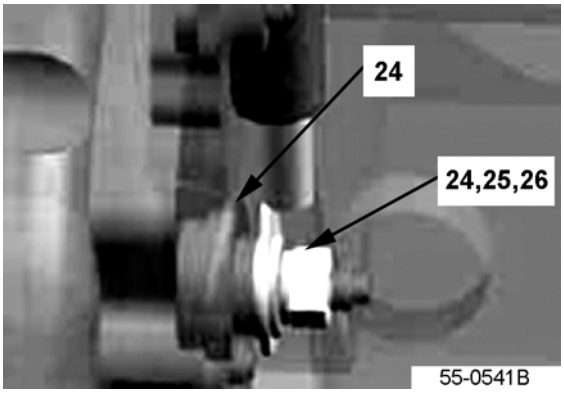


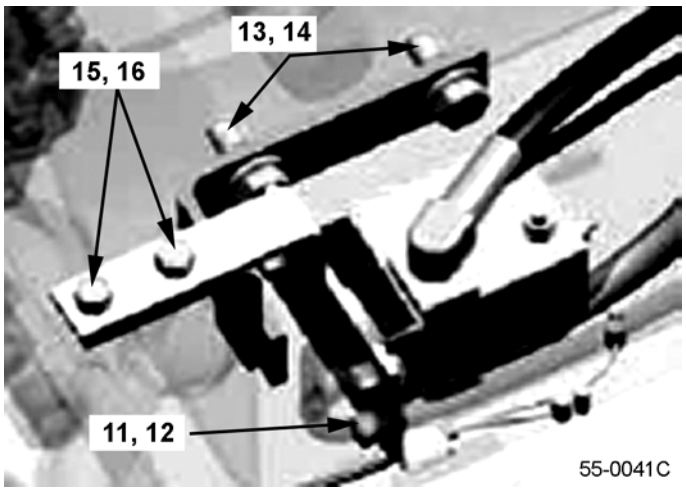

https://truckmanualshub.com/



## ELECTRICAL - 4D94LE UL-S (DS) MODELS - S/N 200001A~
## (ALSO SEE FIG. 55-0540)

| Item | Part Number | Description | Qty | |
|---|---|---|---|---|
| 1 | 37A-1LH-2361 | CABLE (+) | 1 | |
| 2 | 37B-1LJ-A720 | WIRE (UL-S) | 1 | |
| 3 | 37A-1LM-2040 | CABLE | 1 | |
| 4 | 3EB-56-A7460 | BRACKET | 1 | |
| 5 | 3EB-56-A7470 | PLATE | 1 | |
| 6 | 3EB-56-A7480 | BRACKET | 1 | |
| 7 | 3EB-56-A7490 | BRACKET | 1 | |
| 8 | 3EB-56-A5210 | BATTERY CUT SWITCH | 1 | |
| 9 | 3EB-56-F5210 | GROMMET | 1 | |
| 10 | 01640-21223 | WASHER | 2 | |
| 11 | 02215-10406 | NUT | 3 | |
| 12 | 01602-20720 | WASHER | 3 | |
| 13 | 01010-81230 | BOLT | 2 | |
| 14 | 01643-31232 | WASHER | 2 | |
| 15 | 01010-80816 | BOLT | 2 | |
| 16 | 01602-20825 | WASHER | 3 | |
| 17 | 01010-80820 | BOLT | 1 | |
| 18 | 04434-51008 | CLIP | 1 | |
| 19 | 3EB-55-A7940 | CLIP | 1 | |
| 20 | 01435-00820 | BOLT | 1 | |
| 21 | 01050-51025 | BOLT | 1 | |
| 22 | 3EB-55-A7920 | CLAMP | 6 | |
| 23 | 3EA-56-38650 | WIRE | 1 | |
| 24 | 01640-20508 | WASHER | 2 | |
| 25 | 01601-20513 | WASHER | 1 | |
| 26 | 01580-10504 | NUT | 1 | |

https://truckmanualshub.com/



## METER PANEL ASSY & COMBINATION SWITCH - S/N 200001A~




56-0001A

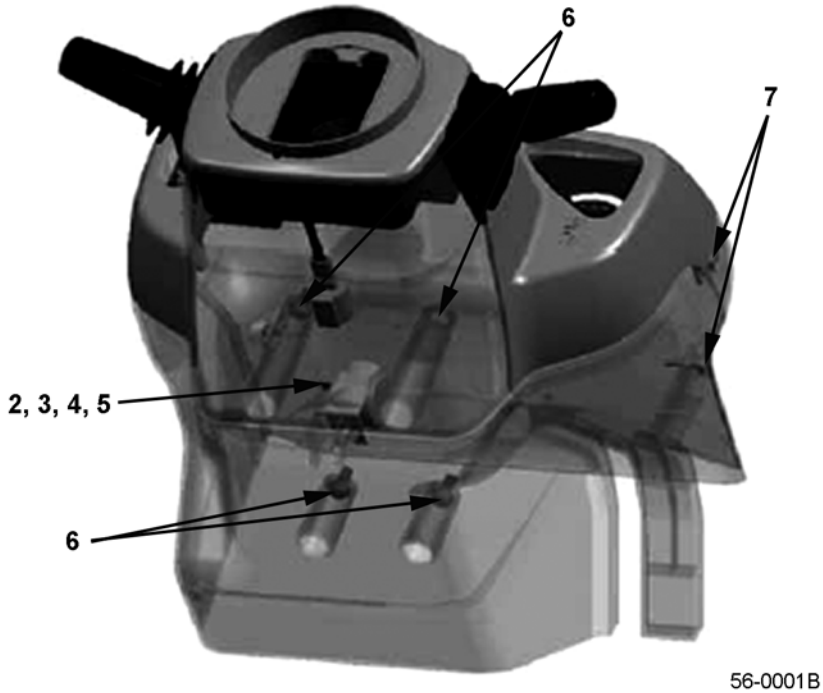


56-0001B

https://truckmanualshub.com/



## METER PANEL ASSY & COMBINATION SWITCH - S/N 200001A~

| Item | Part Number | Description | Qty | |
|---|---|---|---|---|
| 1 | 37A-1CP-A710 | METER PANEL ASSY (GAS MODELS) . . . . . | 1 | |
| | 37A-1CP-A720 | METER PANEL ASSY (LPG MODELS) . . . . . | 1 | |
| | 37A-1CP-A750 | METER PANEL ASSY (DIESEL MODELS) . . . . | 1 | |
| 1A | 37B-1CS-A010 | . COMBINATION SWITCH . . . . . | 1 | |
| 2 | 3EB-55-A5610 | FLASHER . . . . . | 1 | |
| 3 | 3EB-55-A5620 | BRACKET, FLASHER. . . . . | 1 | |
| 4 | 01370-00414 | SCREW. . . . . | 1 | |
| 5 | 01640-20408 | WASHER . . . . . | 1 | |
| 6 | 01023-20616 | SCREW. . . . . | 4 | |
| 7 | 3EB-55-54310 | SCREW. . . . . | 5 | |

https://truckmanualshub.com/



## METER PANEL DISPLAY - S/N 200001A~

1 - GASOLINE & DUAL-FUEL SPEC

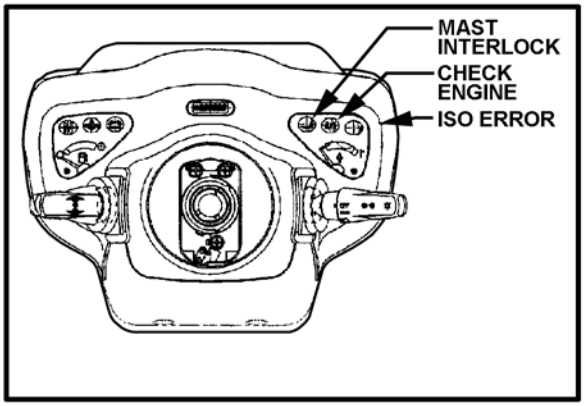


2 - DIESEL SPEC

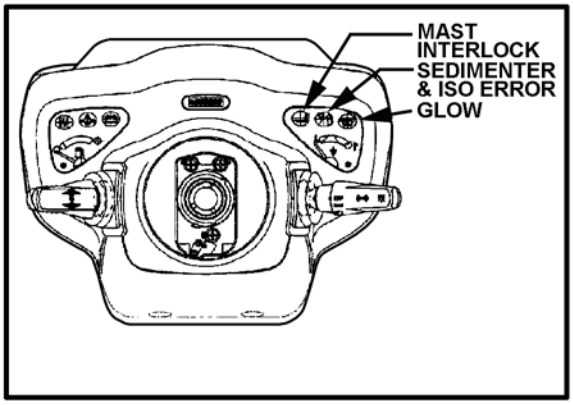


3 - LPG SPEC

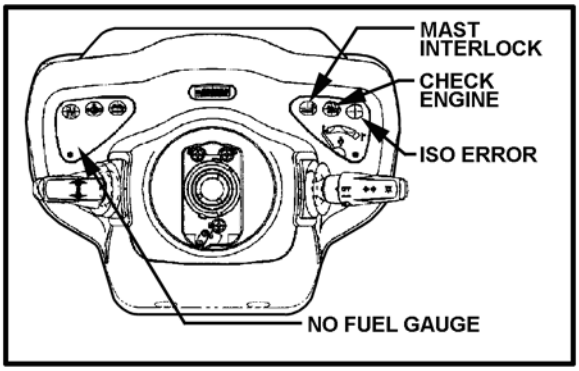


56-0002

https://truckmanualshub.com/



## METER PANEL DISPLAY - S/N 200001A~

| Item | Part Number | Description | Qty | |
|---|---|---|---|---|
| 1 | 37A-1CP-A710 | METER PANEL ASSY (GAS MODELS) . . . . . | 1 | |
| 2 | 37A-1CP-A750 | METER PANEL ASSY (DIESEL MODELS) . . . . | 1 | |
| 3 | 37A-1CP-A720 | METER PANEL ASSY (LPG MODELS) . . . . . | 1 | |
| N/S | 3EB-55-A5610 | FLASHER (FOR LED REAR COMBI LAMPS) . . | 1 | |
| N/S | 3EB-55-A5620 | BRACKET, FLASHER (FOR LED REAR COMBI LAMPS) | 1 | |

https://truckmanualshub.com/



## METER PANEL - BULBS & DETAIL - FRONT & REAR - S/N 200001A~

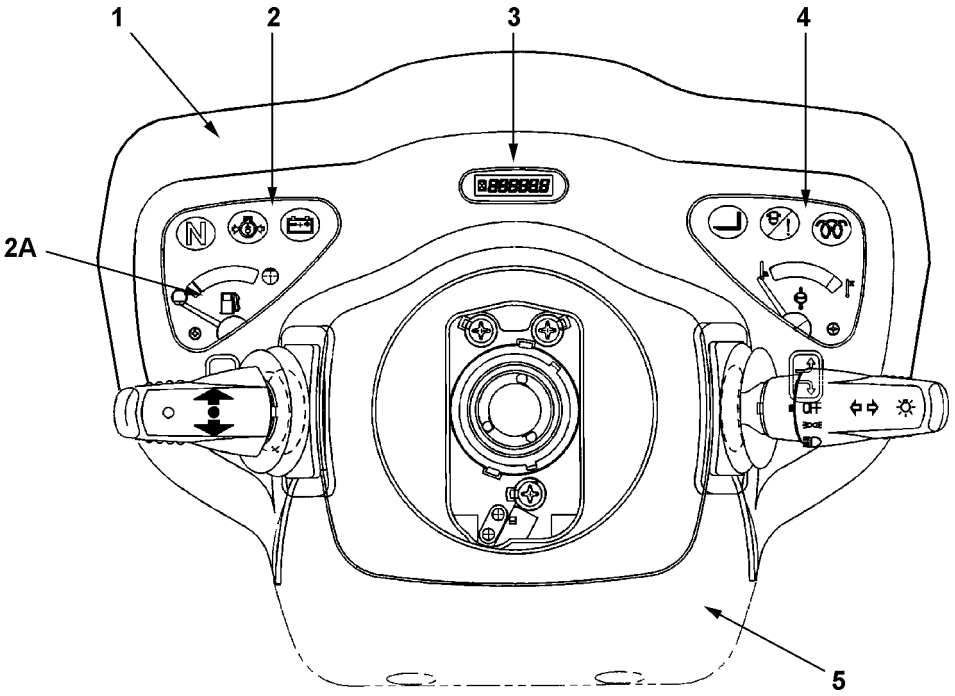


56-0003

REAR VIEW

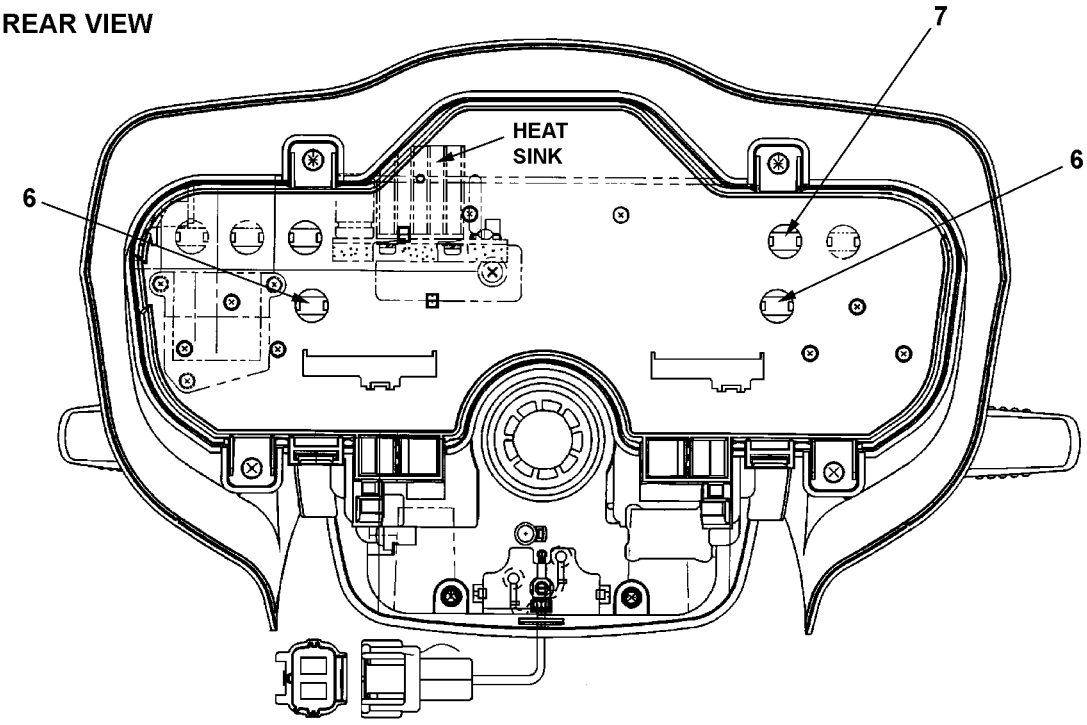


56-0003B

https://truckmanualshub.com/



## METER PANEL - BULBS & DETAIL - FRONT & REAR - S/N 200001A~

| Item | Part Number | Description | Qty | |
|---|---|---|---|---|
| 1 | 37A-1CP-A710 | METER PANEL ASSY (GAS MODELS) . . . . . | 1 | |
| | 37A-1CP-A720 | METER PANEL ASSY (LPG MODELS) . . . . . | 1 | |
| | 37A-1CP-A750 | METER PANEL ASSY (DIESEL MODELS) . . . . | 1 | |
| 2 | YZ54522--050 | FUEL GAUGE ASSY SET . . . . . | 1 | |
| 2A | YZ769298-140 | WARNING LENS (LPG ONLY W/O FUEL GAUGE) | 1 | |
| 3 | YZ68322-080 | HOUR GAUGE . . . . . | 1 | |
| 4 | NSS | WATER TEMPERATURE GAUGE (INC. W/ PANEL ASSY) . . . . . | 1 | |
| 5 | YZ769100-883 | PANEL ASSY . . . . . | 1 | |
| 6 | YZ769540-066 | BULB (12V, 4W ILLUMINATION) . . . . . | 2 | |
| 7 | YZ769540-054 | BULB (12V, 4W WARNING) . . . . . | 1 | |

https://truckmanualshub.com/



## HYDRAULIC PUMP (FG) - S/N 200001A~

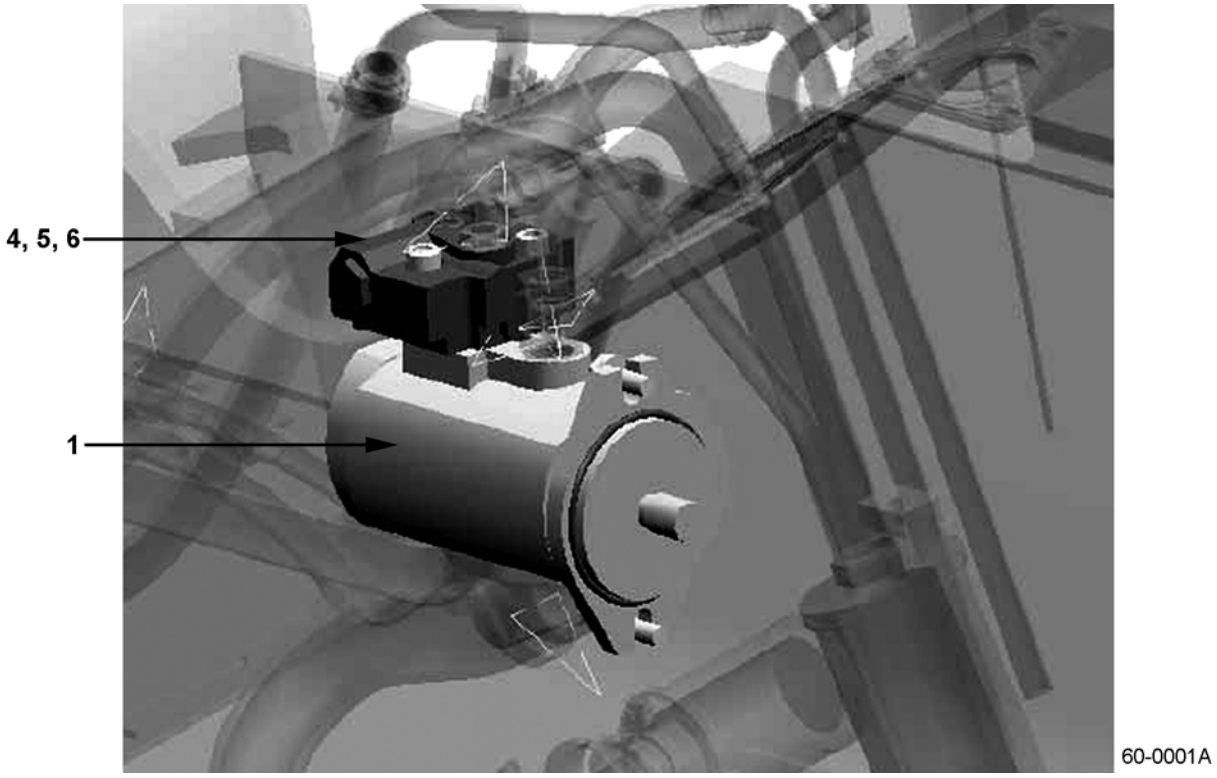


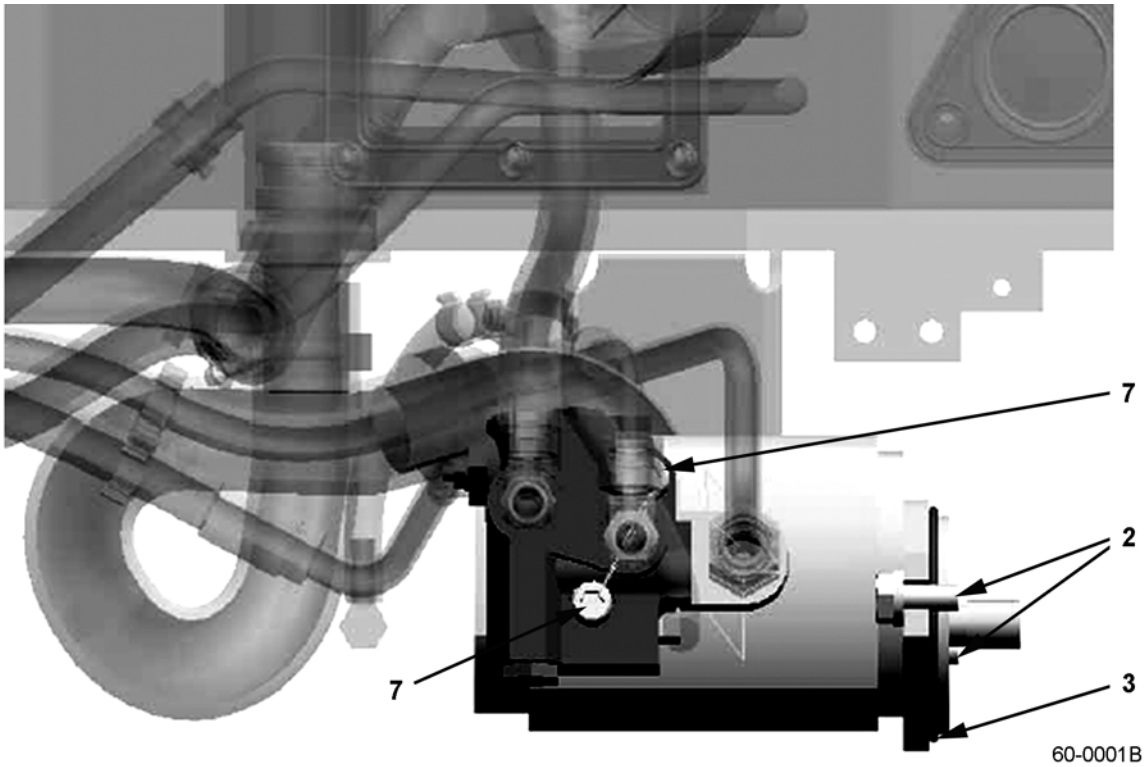

https://truckmanualshub.com/



## HYDRAULIC PUMP (FG) - S/N 200001A~

| Item | Part Number | Description | Qty | |
|---|---|---|---|---|
| 1 | 37B-1KA-A710 | PUMP ASSY, HYDRAULIC (2.0T, 2.5T, 2.8T, 3.0T ALL & 3.2T CUSHION) | 1 | |
| | 37B-1KC-5020 | PUMP ASSY, HYDRAULIC (3.2T,3.5T PNEUMATIC W/ K25 ENGINE) | 1 | |
| 2 | 01024-81030 | BOLT | 2 | |
| 3 | 02892-03081 | O-RING | 1 | |
| 4 | 37B-1KE-5030 | FLOW DIVIDER | 1 | |
| 5 | 07000-12015 | O-RING | 1 | |
| 6 | 07000-11006 | O-RING | 1 | |
| 7 | 01252-71045 | BOLT | 2 | |

https://truckmanualshub.com/



## HYDRAULIC PUMP (FG) W/ K21 ENGINE - DETAIL - S/N 200001A~

### HYD. PUMP ASSY - 2.0 > 3.2-TON FG TRUCKS

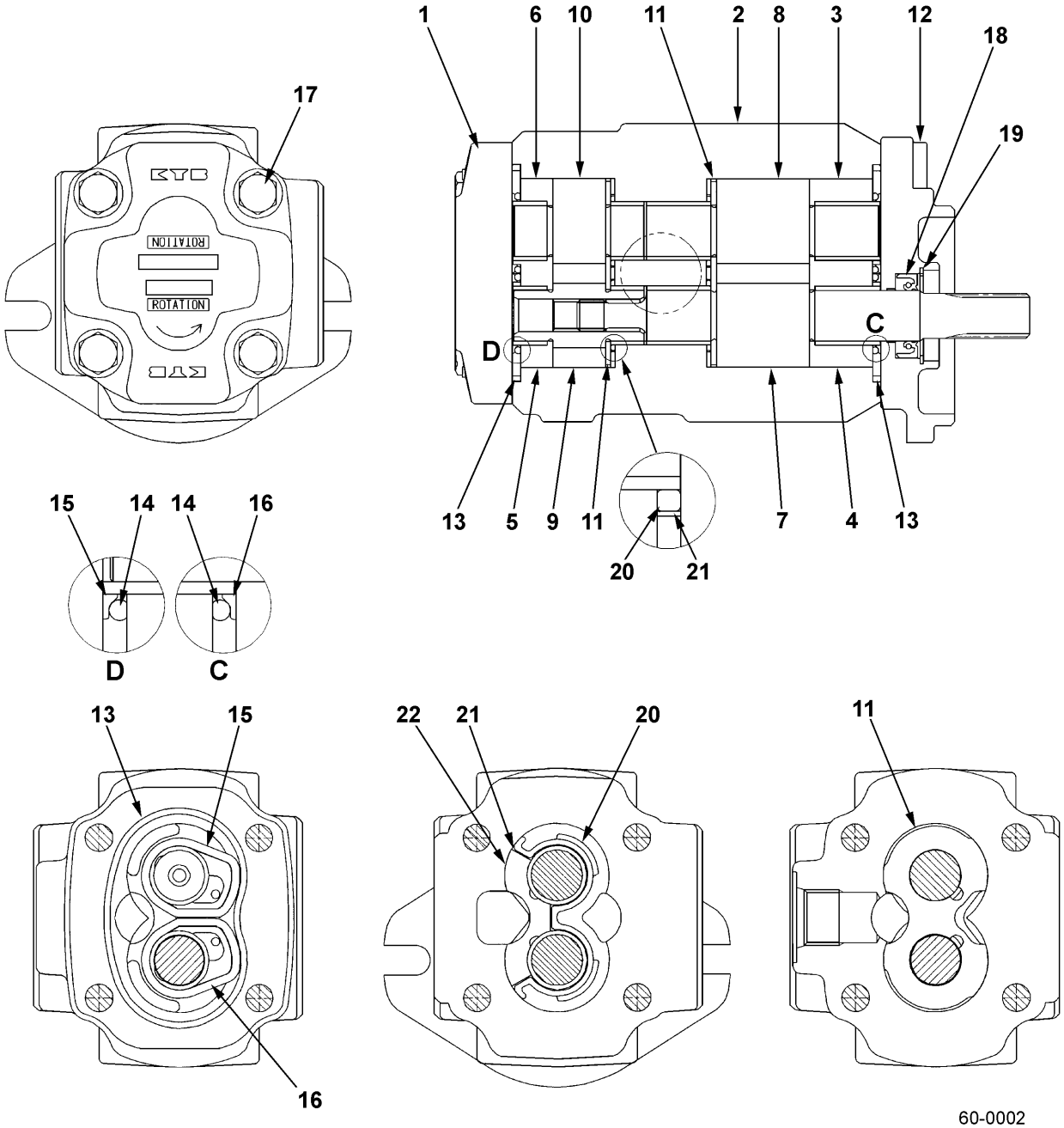


60-0002

https://truckmanualshub.com/



## HYDRAULIC PUMP (FG) W/ K21 ENGINE - DETAIL - S/N 200001A~

| Item | Part Number | Description | Qty | |
|---|---|---|---|---|
| | 37B-1KA-A710 | PUMP ASSY, HYDRAULIC (2.0T, 2.5T, 2.8T, 3.0T, 3.2T) W/ K21 ENGINE | 1 | |
| 1 | KBB5911-11101 | COVER | 1 | |
| 2 | KBB5912-22011 | BODY | 1 | |
| 3 | KB20122-30417 | BUSHING "BR" ASSY (FR. PUMP KIT) | 1 | |
| 4 | KB20122-30418 | BUSHING "BL" ASSY (FR. PUMP KIT) | 1 | |
| 5 | KBB5912-11302 | BUSHING "ER" ASSY (REAR PUMP KIT) | 1 | |
| 6 | KBB5912-11303 | BUSHING "EL" ASSY (REAR PUMP KIT) | 1 | |
| 7 | KBB5911-23266 | GEAR, DRIVE, FRONT (FR. PUMP KIT) | 1 | |
| 8 | KB20121-36407 | GEAR, DRIVEN, FRONT (FR. PUMP KIT) | 1 | |
| 9 | KBB5911-13610 | GEAR, DRIVE, REAR (REAR PUMP KIT) | 1 | |
| 10 | KB20121-38311 | GEAR, DRIVEN, REAR (REAR PUMP KIT) | 1 | |
| 11 | KBB5911-11401 | SIDE PLATE | 2 | |
| 12 | KBB5911-10902 | MOUNTING FLANGE | 1 | |
| 13 | KB20121-30801 | SEAL, BODY (REPAIR KIT) | 2 | |
| 14 | KB20121-30901 | SEAL, BUSHING (REPAIR KIT) | 2 | |
| 15 | KB20121-31001 | BACKING, RH (REPAIR KIT) | 2 | |
| 16 | KB20121-31101 | BACKING RING, LH (REPAIR KIT) | 2 | |
| 17 | KBT1112-09315 | HEX. BOLT W/ FLANGE | 4 | |
| 18 | KB20121-31406 | OIL SEAL (REPAIR KIT) | 1 | |
| 19 | KB94721-34151 | SNAP RING (REPAIR KIT) | 1 | |
| 20 | KBB5911-11501 | SEAL, PLATE (REPAIR KIT) | 2 | |
| 21 | KBB5911-11601 | SEAL, BACK-UP (REPAIR KIT) | 2 | |
| 22 | KBB5911-11901 | PLATE, ISOLATION | 2 | |
| KIT | KBB591A-20007 | REPAIR KIT | 1 | |
| KIT | KBB591B-20045 | FRONT PUMP KIT | 1 | |
| KIT | KBB591B-20030 | REAR PUMP KIT | 1 | |

https://truckmanualshub.com/



## HYDRAULIC PUMP (FG) 3.2, 3.5 TON W/ K25 ENGINE - DETAIL - S/N 200001A~

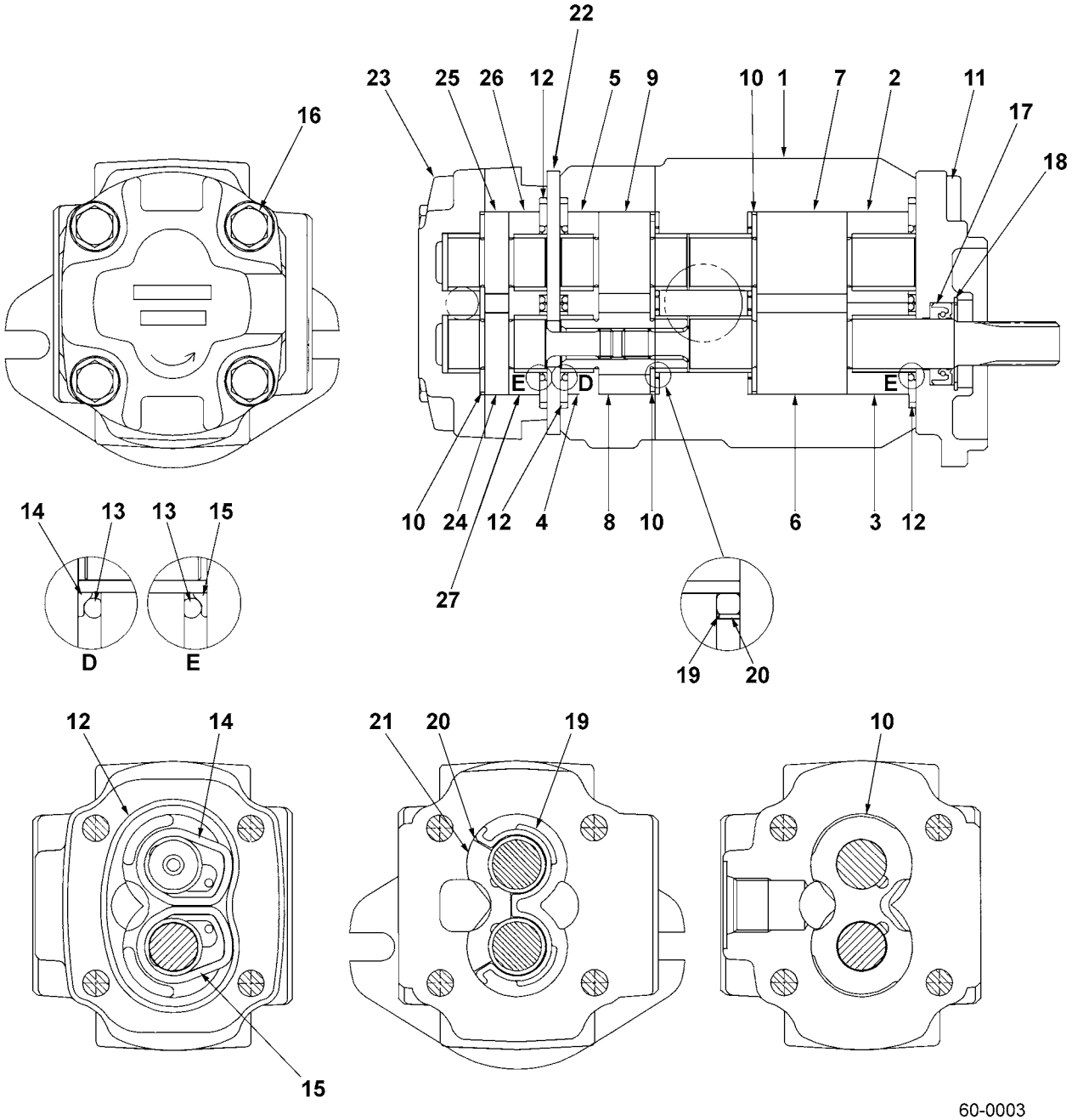

https://truckmanualshub.com/



## HYDRAULIC PUMP (FG) 3.2, 3.5 TON W/ K25 ENGINE - DETAIL - S/N 200001A~

| Item | Part Number | Description | Qty | |
|---|---|---|---|---|
| | 37B-1KC-5020 | PUMP ASSY, HYDRAULIC (3.2T, 3.5T) W/ K25 ENGINE | 1 | |
| 1 | KBB5912-23911 | BODY | 1 | |
| 2 | KB20122-30417 | BUSHING "BR" ASSY (FR. PUMP KIT) | 1 | |
| 3 | KB20122-30418 | BUSHING "BL" ASSY (FR. PUMP KIT) | 1 | |
| 4 | KBB5912-11302 | BUSHING "ER" ASSY (CTR PUMP KIT) | 1 | |
| 5 | KBB5912-11303 | BUSHING "EL" ASSY (CTR PUMP KIT) | 1 | |
| 6 | KBB5911-23261 | GEAR, DRIVE, FRONT (FR. PUMP KIT) | 1 | |
| 7 | KB20121-36414 | GEAR, DRIVEN (FR. PUMP KIT) | 1 | |
| 8 | KBB5911-13610 | GEAR, DRIVE, REAR (CTR PUMP KIT) | 1 | |
| 9 | KB20121-38311 | GEAR, DRIVEN (CTR PUMP KIT) | 1 | |
| 10 | KBB5911-11401 | SIDE PLATE | 3 | |
| 11 | KBB5911-10902 | MOUNTING FLANGE | 1 | |
| 12 | KB20121-30801 | SEAL, BODY (REPAIR KIT) | 3 | |
| 13 | KB20121-30901 | SEAL, BUSHING (REPAIR KIT) | 3 | |
| 14 | KB20121-31001 | BACKING RING, RH (REPAIR KIT) | 3 | |
| 15 | KB20121-31101 | BACKING RING, LH (REPAIR KIT) | 3 | |
| 16 | KBT1112-09313 | HEX BOLT W/ FLANGE | 4 | |
| 17 | KB20121-31406 | SEAL, OIL | 1 | |
| 18 | KB94721-34151 | SNAP RING | 1 | |
| 19 | KBB5911-11501 | SEAL, PLATE | 2 | |
| 20 | KBB5911-11601 | SEAL, BACK-UP | 2 | |
| 21 | KBB5911-11901 | PLATE, ISOLATION | 2 | |
| 22 | KBB5911-24101 | PLATE, CENTER | 1 | |
| 23 | KBB5912-24001 | BODY ASSY, REAR | 1 | |
| 24 | KBB5911-23406 | GEAR, DRIVE, REAR (REAR PUMP KIT) | 1 | |
| 25 | KB20121-38303 | GEAR, DRIVEN (REAR PUMP KIT) | 1 | |
| 26 | KBB5912-11302 | BUSHING "ER" ASSY (REAR PUMP KIT) | 1 | |
| 27 | KBB5912-11303 | BUSHING "EL" ASSY (REAR PUMP KIT) | 1 | |
| KIT | KBB591A-30001 | REPAIR KIT | 1 | |
| KIT | KBB591B-20036 | FRONT PUMP KIT | 1 | |
| KIT | KBB591B-20030 | CENTER PUMP KIT | 1 | |
| KIT | KBB591B-30020 | REAR PUMP KIT | 1 | |

https://truckmanualshub.com/



# HYDRAULIC PUMP (FD) ENGINE - DETAIL - S/N 200001A~ ALL DIESEL MODELS EXCEPT 3.5 TON

## HYD. PUMP ASSY - ALL DIESEL EXCEPT 3.5 TON MODELS

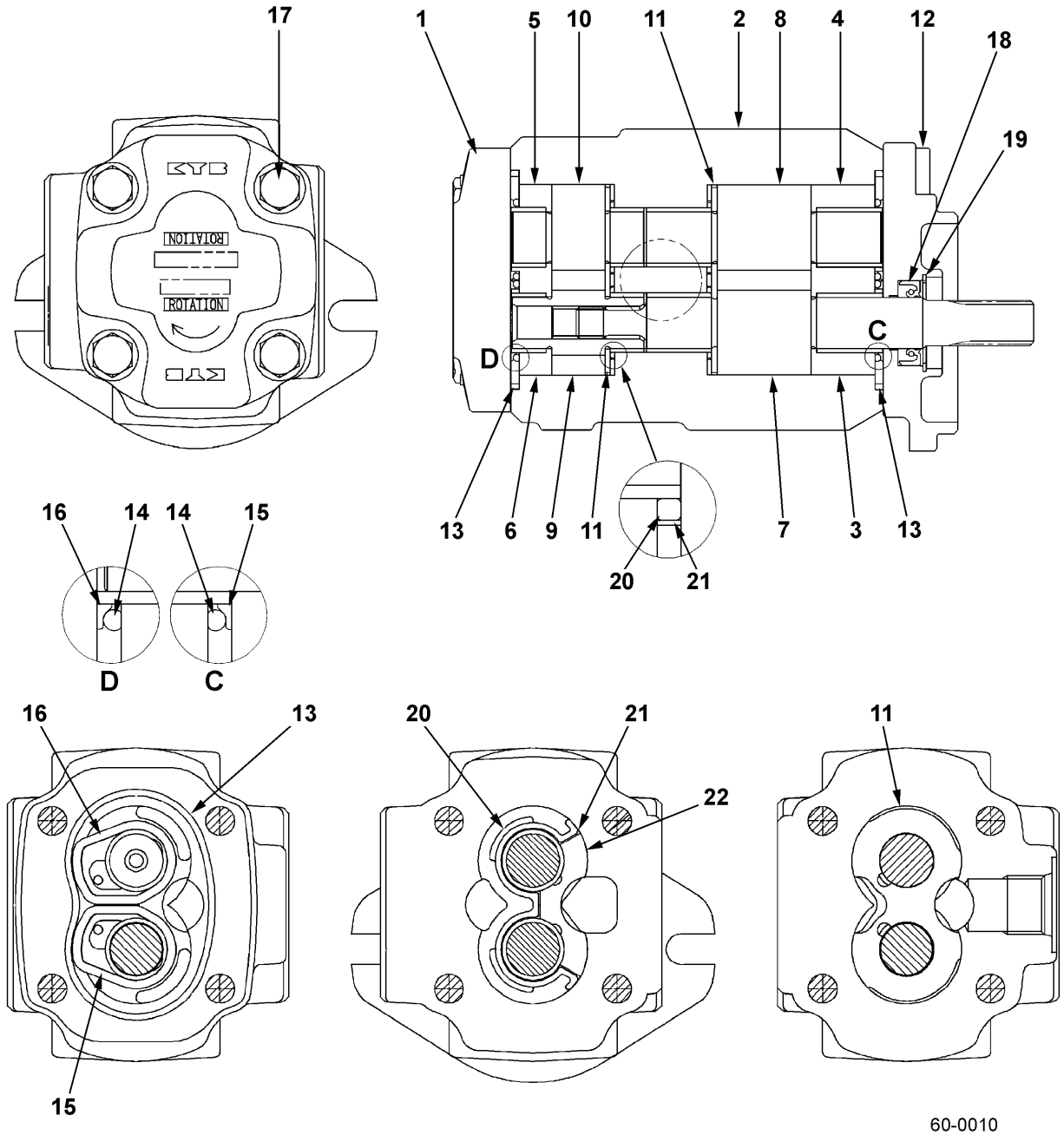

https://truckmanualshub.com/



## HYDRAULIC PUMP (FD) ENGINE - DETAIL - S/N 200001A~ ALL DIESEL MODELS EXCEPT 3.5 TON

| Item | Part Number | Description | Qty | |
|---|---|---|---|---|
| | 37B-1KB-5040 | PUMP ASSY, HYDRAULIC W/ 4D94LE ENGINE (EXCEPT 3.5 TON) | 1 | |
| 1 | KBB5911-11101 | COVER | 1 | |
| 2 | KBB5912-22007 | BODY | 1 | |
| 3 | KB20122-30417 | BUSHING "BR" ASSY (FR PUMP KIT) | 1 | |
| 4 | KB20122-30418 | BUSHING "BL" ASSY (FR PUMP KIT) | 1 | |
| 5 | KBB5912-11302 | BUSHING "ER" ASSY (REAR PUMP KIT) | 1 | |
| 6 | KBB5912-11303 | BUSHING "EL" ASSY (REAR PUMP KIT) | 1 | |
| 7 | KBB5911-23211 | GEAR, DRIVE, FRONT (FR PUMP KIT) | 1 | |
| 8 | KB20121-36414 | GEAR, DRIVEN (FR PUMP KIT) | 1 | |
| 9 | KBB5911-13610 | GEAR, DRIVE, REAR (REAR PUMP KIT) | 1 | |
| 10 | KB20121-38311 | GEAR, DRIVEN (REAR PUMP KIT) | 1 | |
| 11 | KBB5911-11401 | SIDE PLATE | 2 | |
| 12 | KBB5911-10902 | MOUNTING FLANGE | 1 | |
| 13 | KB20121-30801 | SEAL, BODY (REPAIR KIT) | 2 | |
| 14 | KB20121-30901 | SEAL, BUSHING (REPAIR KIT) | 2 | |
| 15 | KB20121-31001 | BACKING RING, RH (REPAIR KIT) | 2 | |
| 16 | KB20121-31101 | BACKING RING, LH (REPAIR KIT) | 2 | |
| 17 | KBT1112-09314 | HEX BOLT W/ FLANGE | 4 | |
| 18 | KB20121-31406 | SEAL, OIL (REPAIR KIT) | 1 | |
| 19 | KB94721-34151 | SNAP RING (REPAIR KIT) | 1 | |
| 20 | KBB5911-11501 | SEAL, PLATE (REPAIR KIT) | 2 | |
| 21 | KBB5911-11601 | SEAL, BACK-UP (REPAIR KIT) | 2 | |
| 22 | KBB5911-11901 | PLATE, ISOLATION | 2 | |
| KIT | KBB591A-20007 | REPAIR KIT | 1 | |
| KIT | KBB591B-20029 | FRONT PUMP KIT | 1 | |
| KIT | KBB591B-20030 | REAR PUMP KIT | 1 | |

https://truckmanualshub.com/



# HYDRAULIC PUMP (FD) ENGINE - DETAIL - S/N 200001A~ ALL DIESEL 3.5 TON

HYD. PUMP ASSY - 3.5 TON DIESEL MODELS

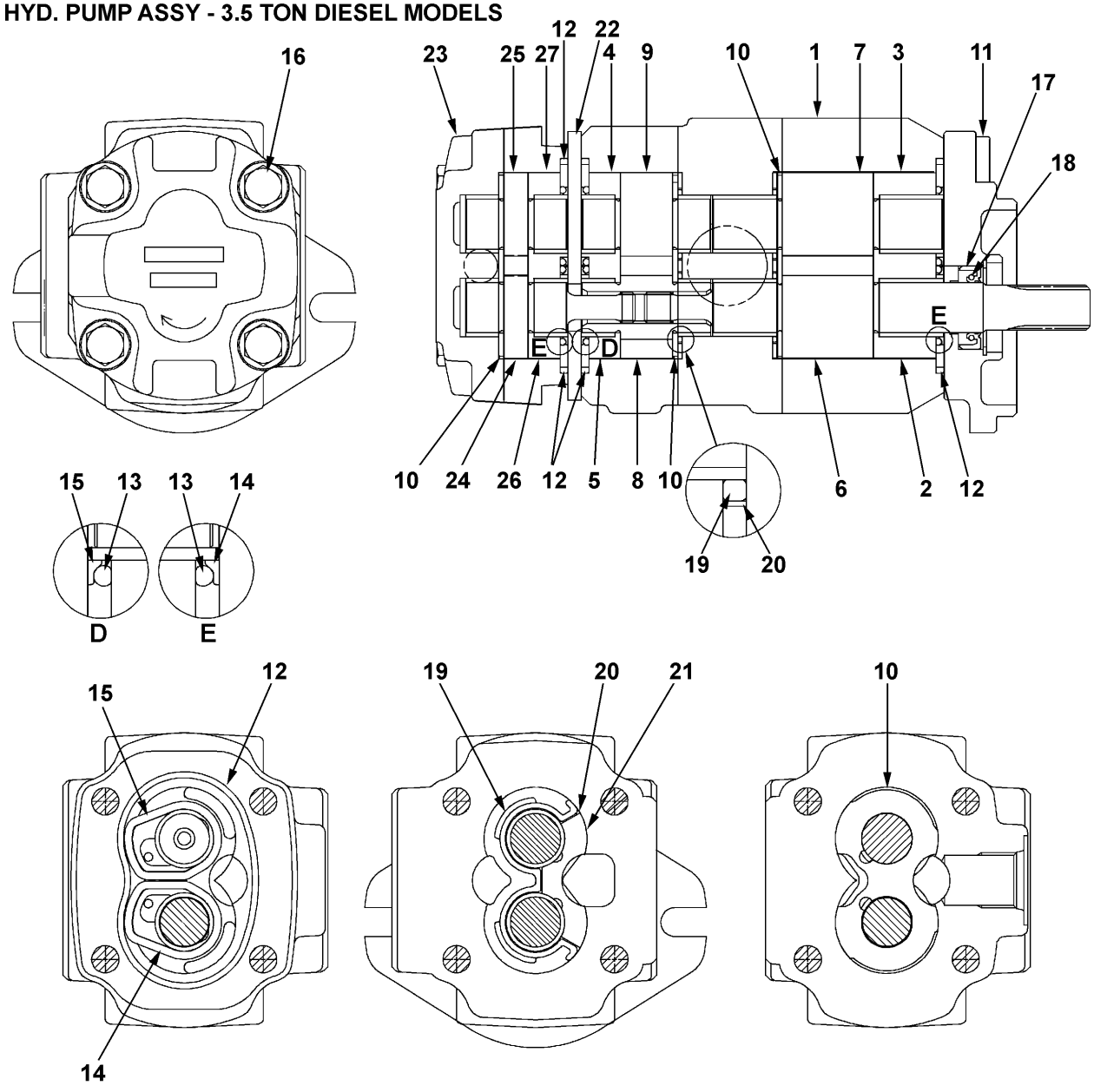


60-0011

https://truckmanualshub.com/



## HYDRAULIC PUMP (FD) ENGINE - DETAIL - S/N 200001A~
## ALL DIESEL 3.5 TON

| Item | Part Number | Description | Qty | |
|---|---|---|---|---|
| | 37B-1KD-5040 | PUMP ASSY, HYDRAULIC W/ 4D94LE ENGINE (3.5 TON ONLY) | 1 | |
| 1 | KBB5912-23911 | BODY | 1 | |
| 2 | KB20122-30417 | BUSHING "BR" ASSY (FR PUMP KIT) | 1 | |
| 3 | KB20122-30418 | BUSHING "BL" ASSY (FR PUMP KIT) | 1 | |
| 4 | KBB5912-11302 | BUSHING "ER" ASSY (CTR PUMP KIT) | 1 | |
| 5 | KBB5912-11303 | BUSHING "EL" ASSY (CTR PUMP KIT) | 1 | |
| 6 | KBB5911-23211 | GEAR, DRIVE, FRONT (FR PUMP KIT) | 1 | |
| 7 | KB20121-36414 | GEAR, DRIVEN (FR PUMP KIT) | 1 | |
| 8 | KBB5911-13610 | GEAR, DRIVE, REAR (CTR PUMP KIT) | 1 | |
| 9 | KB20121-38311 | GEAR, DRIVEN (CTR PUMP KIT) | 1 | |
| 10 | KBB5911-11401 | SIDE PLATE | 3 | |
| 11 | KBB5911-10902 | MOUNTING PLATE | 1 | |
| 12 | KB20121-30801 | SEAL, BODY. (REPAIR KIT) | 3 | |
| 13 | KB20121-30901 | SEAL, BUSHING (REPAIR KIT) | 3 | |
| 14 | KB20121-31001 | BACKING RING, RH (REPAIR KIT) | 3 | |
| 15 | KB20121-31101 | BACKING RING, LH (REPAIR KIT) | 3 | |
| 16 | KBT1112-09313 | HEX BOLT W/ FLANGE | 4 | |
| 17 | KB20121-31406 | OIL SEAL (REPAIR KIT) | 1 | |
| 18 | KB94721-34151 | SNAP RING (REPAIR KIT) | 1 | |
| 19 | KBB5911-11501 | SEAL, PLATE (REPAIR KIT) | 2 | |
| 20 | KBB5911-11601 | SEAL, BACK-UP (REPAIR KIT) | 2 | |
| 21 | KBB5911-11901 | PLATE, ISOLATION | 2 | |
| 22 | KBB5911-24101 | PLATE, CENTER | 1 | |
| 23 | KBB5912-24001 | BODY ASSY, REAR | 1 | |
| 24 | KBB5911-23406 | GEAR, DRIVE, REAR (REAR PUMP KIT) | 1 | |
| 25 | KB20121-38303 | GEAR, DRIVEN (REAR PUMP KIT) | 1 | |
| 26 | KBB5912-11302 | BUSHING "ER" ASSY (REAR PUMP KIT) | 1 | |
| 27 | KBB5912-11303 | BUSHING "EL" ASSY (REAR PUMP KIT) | 1 | |
| KIT | KBB591A-30001 | REPAIR KIT | 1 | |
| KIT | KBB591B-20029 | FRONT PUMP KIT | 1 | |
| KIT | KBB591B-20030 | CENTER PUMP KIT | 1 | |
| KIT | KBB591B-30020 | REAR PUMP KIT | 1 | |

https://truckmanualshub.com/



## HYDRAULIC CONTROL VALVE & CONVERSION KIT - S/N 200001A~

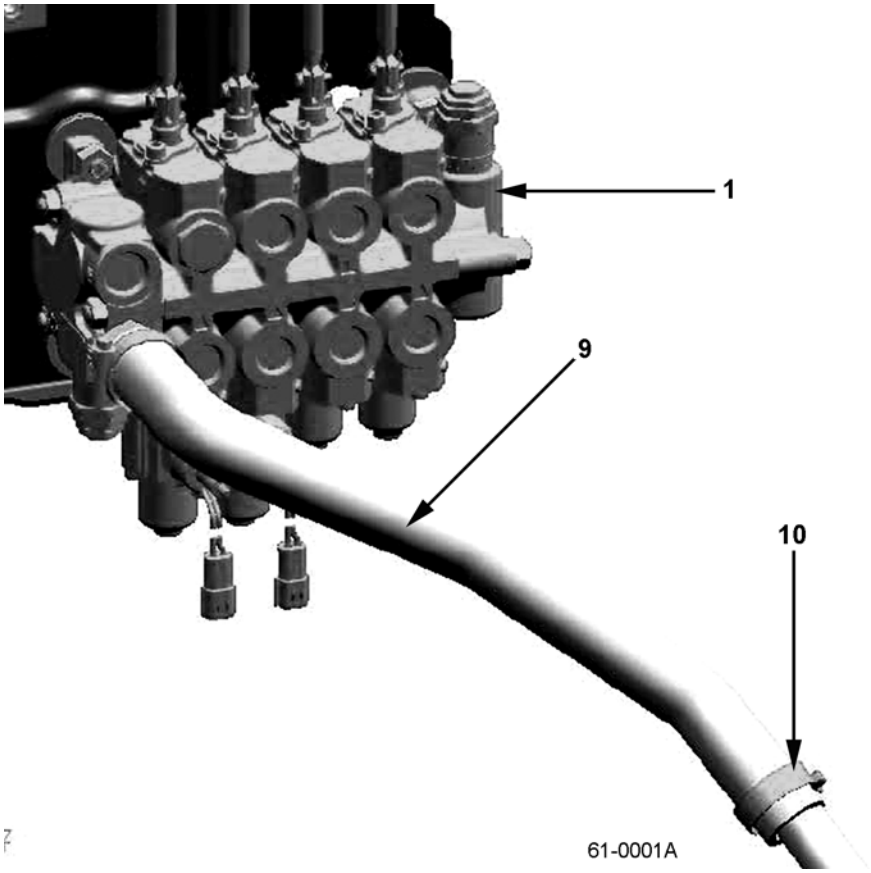


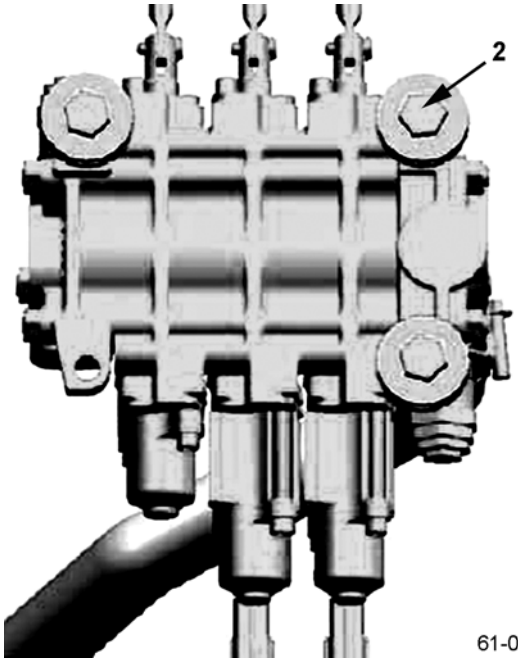


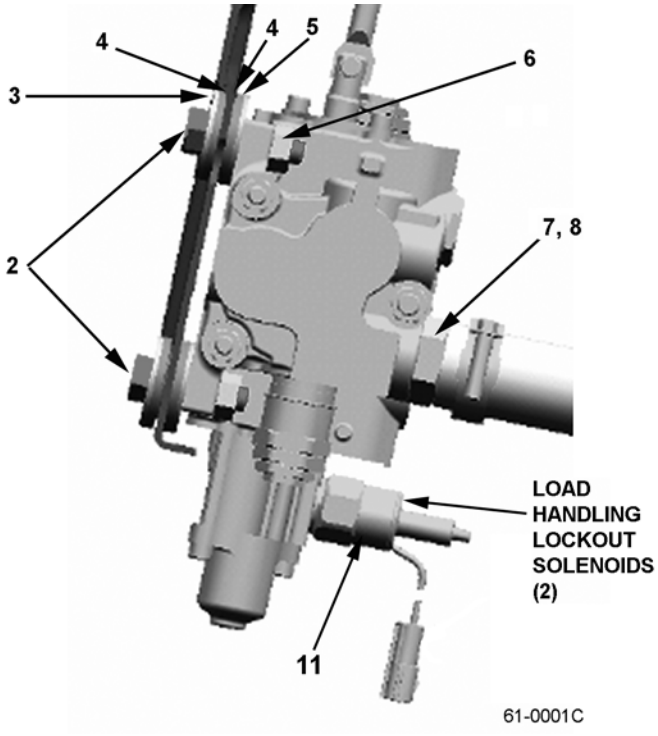

https://truckmanualshub.com/



## HYDRAULIC CONTROL VALVE & CONVERSION KIT - S/N 200001A~

| Item | Part Number | Description | Qty | |
|---|---|---|---|---|
| 1 | 3EB-61-A7110 | CONTROL VALVE, 3-WAY | 1 | |
| | 3EB-61-A7210 | CONTROL VALVE, 4-WAY | 1 | |
| 2 | 01050-51040 | BOLT | 3 | |
| 3 | 3EB-61-42140 | WASHER | 3 | |
| 4 | 3EB-61-42120 | CUSHION | 6 | |
| 5 | 3EB-61-42130 | COLLAR | 3 | |
| 6 | 01582-11008 | NUT | 3 | |
| 7 | 3EB-66-A7210 | NIPPLE | 1 | |
| 8 | 540-62-12540 | O-RING | 1 | |
| 9 | 3EB-66-A7220 | HOSE | 1 | |
| 10 | 07281-00419 | CLAMP | 2 | |
| 11 | HU60955-1 | LOAD HANDLING LOCKOUT SOLENOID (12V) | 2 | |
| KIT | 3EB-98-A31252 | 3-SPOOL TO 4-SPOOL CONVERSION KIT (INCLUDES LEVER) | 1 | |
| KIT | HU61108 | SEAL KIT | 1 | |
| N/S | 3EB-68-A7410 | HOSE - C/V TO MAST (3RD SECTION) | 1 | |
| N/S | 3EB-68-A7420 | HOSE - C/V TO MAST (4TH SECTION) | 1 | |

https://truckmanualshub.com/



## HYDRAULIC CONTROL VALVE - 3-SPOOL - DETAIL - S/N 200001A~

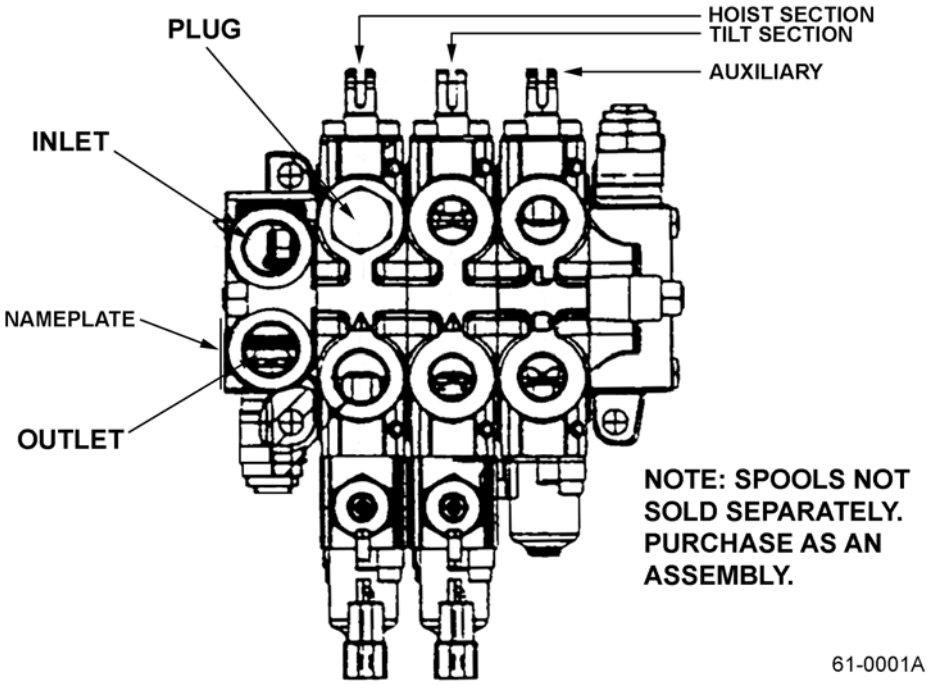


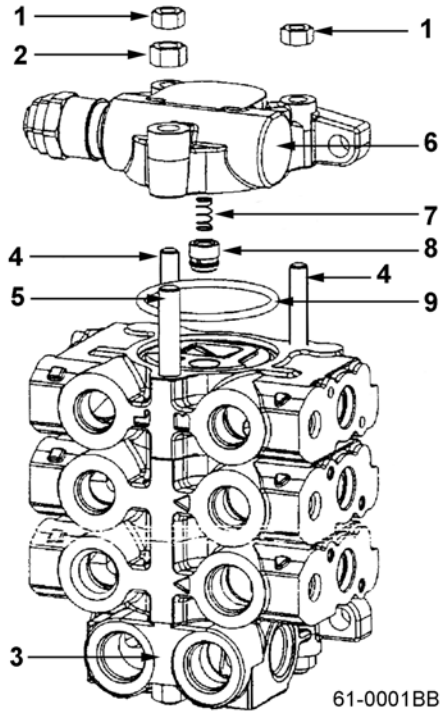

https://truckmanualshub.com/



## HYDRAULIC CONTROL VALVE - 3-SPOOL - DETAIL - S/N 200001A~

| Item | Part Number | Description | Qty | |
|---|---|---|---|---|
| | 3EB-61-A7110 | CONTROL VALVE, 3-WAY | 1 | |
| 1 | HU1861 | NUT | 4 | |
| 2 | HU1052 | NUT | 2 | |
| 3 | HU5006-JA2 | HOUSING | 1 | |
| 4 | HU5069-3 | THROUGH BOLT | 2 | |
| 5 | HU5089-3 | THROUGH BOLT | 1 | |
| 6 | HU5004-A1 | HOUSING | 1 | |
| 7 | HU5064 | SPRING | 3 | |
| 8 | HU5011 | POPPET | 3 | |
| 9 | HU564 | O-RING | 4 | |
| KIT | HU61108 | SEAL KIT | 1 | |

https://truckmanualshub.com/



## HYDRAULIC CONTROL VALVE - 4-SPOOL - DETAIL - S/N 200001A~

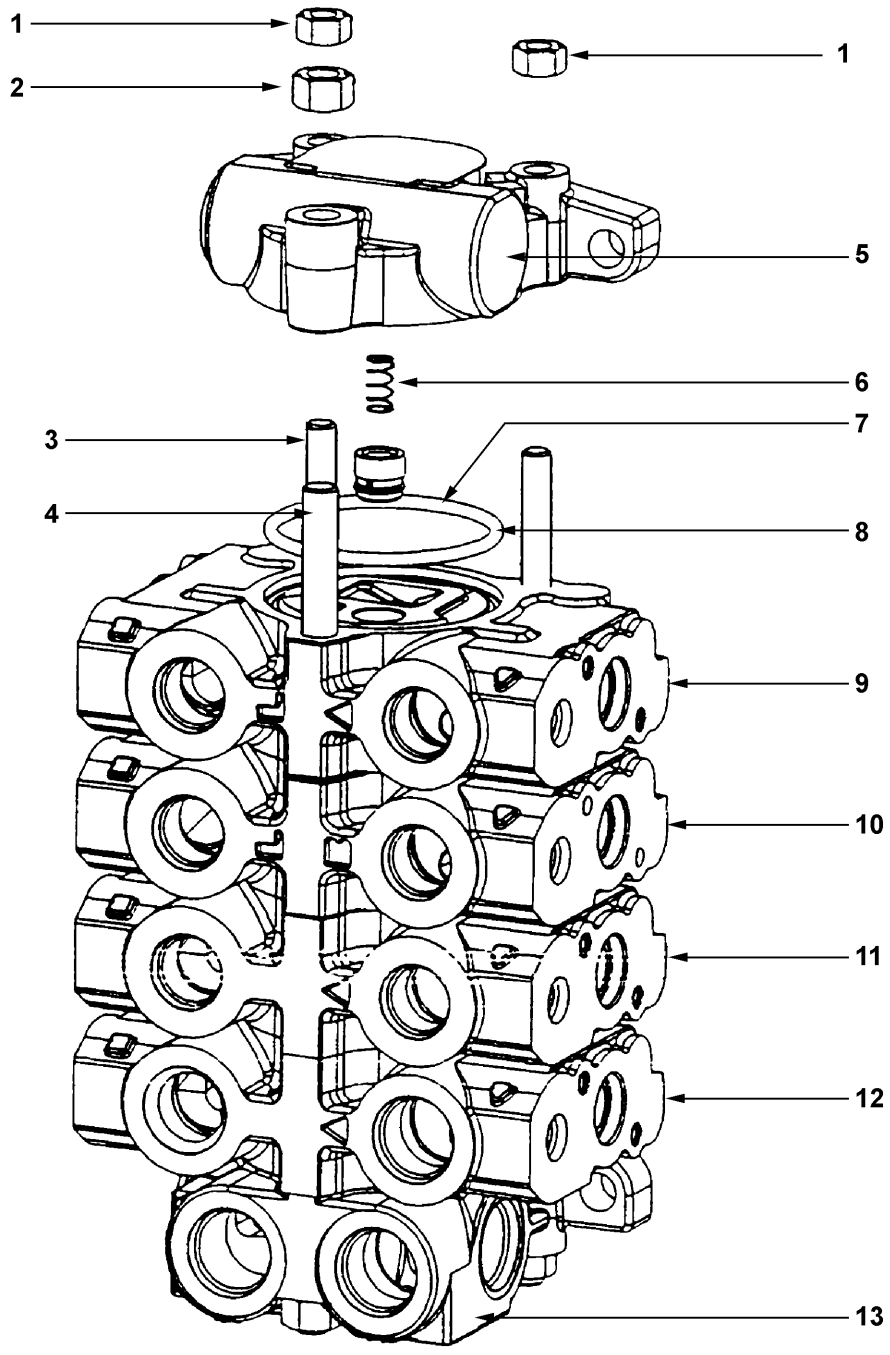


61-0001C

https://truckmanualshub.com/



## HYDRAULIC CONTROL VALVE - 4-SPOOL - DETAIL - S/N 200001A~

| Item | Part Number | Description | Qty | |
|---|---|---|---|---|
| | 3EB-61-A7210 | CONTROL VALVE, 4-WAY | 1 | |
| 1 | HU1861 | NUT | 4 | |
| 2 | HU1052 | NUT | 2 | |
| 3 | HU5069-4 | THROUGH BOLT | 2 | |
| 4 | HU5089-4 | THROUGH BOLT | 1 | |
| 5 | HU5003-JA1 | OUTLET SECTION ASSY | 1 | |
| 6 | HU5064 | SPRING | 4 | |
| 7 | HU5011 | POPPET | 4 | |
| 8 | HU564 | O-RING | 5 | |
| 9 | HU5002-V5 | SPOOL SECTION ASSY, AUXILIARY 4TH FUNCTION | 1 | |
| 10 | HU5002-W4 | SPOOL SECTION ASSY, 3RD FUNCTION | 1 | |
| 11 | HU294B1-10 | SPOOL SECTION ASSY, TILT | 1 | |
| 12 | HUAX294B1-3 | SPOOL SECTION ASSY, LIFT | 1 | |
| 13 | HU5001-A59 | INLET SECTION ASSY | 1 | |

https://truckmanualshub.com/



## HYDRAULIC CONTROL VALVE - LEVER ASSY - S/N 200001A~

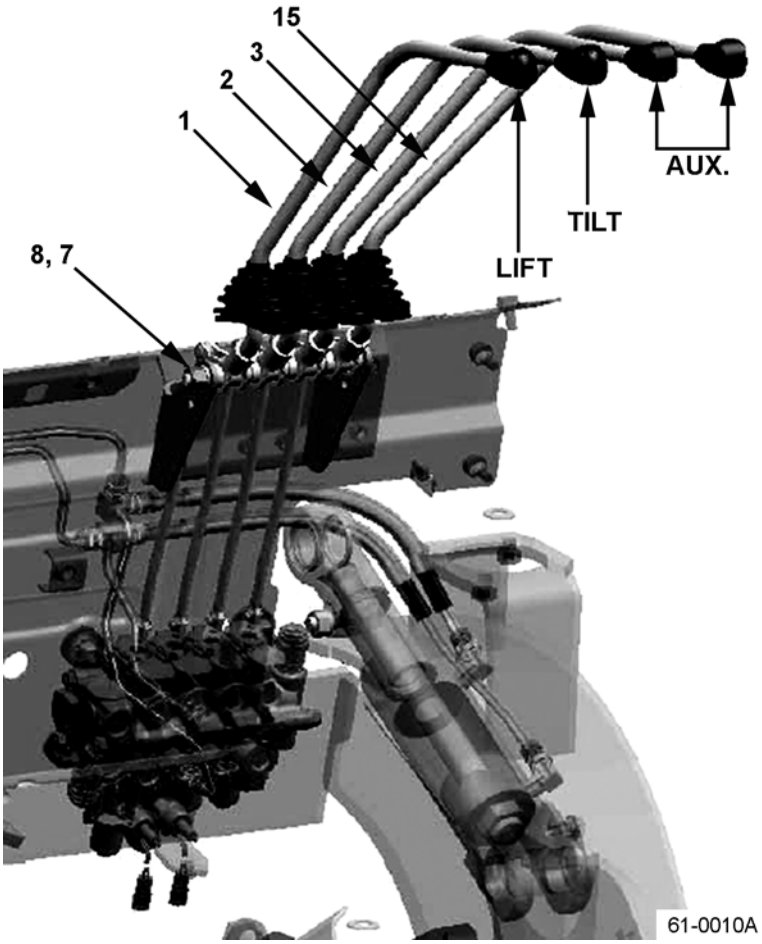


61-0010A

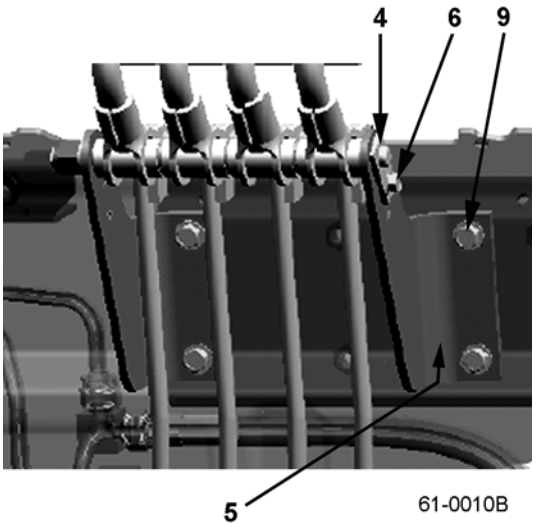


61-0010B

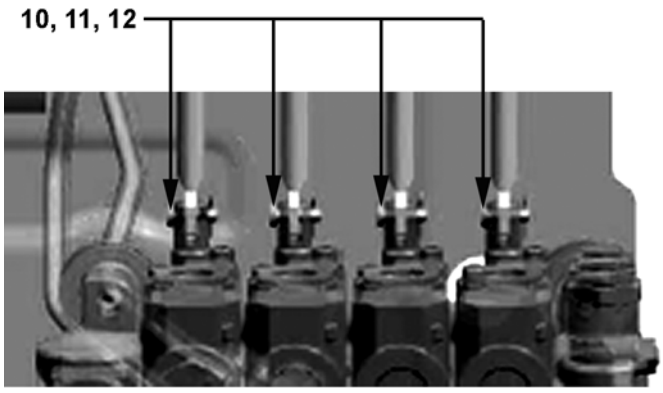


61-0010C

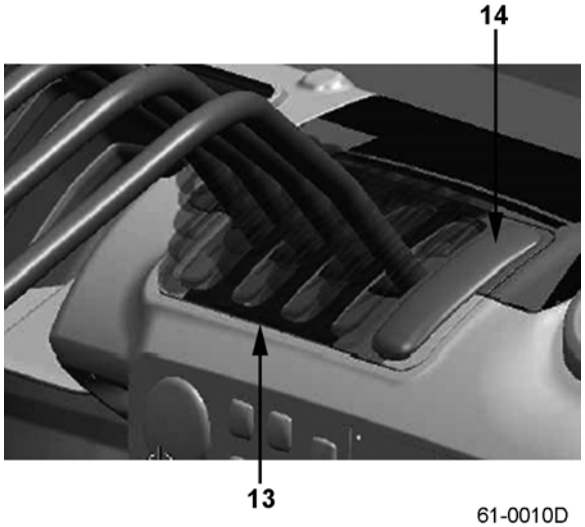


61-0010D

https://truckmanualshub.com/



## HYDRAULIC CONTROL VALVE - LEVER ASSY - S/N 200001A~

| Item | Part Number | Description | Qty | |
|---|---|---|---|---|
| 1 | 37B-1HA-A710 | LEVER SUB-ASSY | 1 | |
| 2 | 37B-1HA-A720 | LEVER SUB-ASSY | 1 | |
| 3 | 37B-1HA-A730 | LEVER SUB-ASSY | 1 | |
| 4 | 37B-1HD-5030 | SHAFT, 3-WAY C/V | 1 | |
| | 37B-1HD-5040 | SHAFT, 4-WAY C/V | 1 | |
| 5 | 3EB-61-51110 | BRACKET | 2 | |
| 6 | 01435-00612 | BOLT | 1 | |
| 7 | 01599-01214 | NUT | 1 | |
| 8 | 01643-51232 | WASHER | 1 | |
| 9 | 01435-00820 | BOLT | 4 | |
| 10 | 358-60-15250 | PIN, 3-WAY C/V | 3 | |
| | 358-60-15250 | PIN, 4-WAY C/V | 4 | |
| 11 | 01641-20508 | WASHER, 3-WAY C/V | 3 | |
| | 01641-20508 | WASHER, 4-WAY C/V | 4 | |
| 12 | 04050-11212 | COTTER PIN, 3-WAY C/V | 3 | |
| | 04050-11212 | COTTER PIN, 4-WAY C/V | 4 | |
| 13 | 3EB-50-42560 | COVER, 3-WAY C/V | 2 | |
| | 3EB-50-42560 | COVER, 4-WAY C/V | 3 | |
| 14 | 3EB-50-42570 | COVER, 3-WAY C/V | 2 | |
| | 3EB-50-42570 | COVER, 4-WAY C/V | 1 | |
| 15 | 37B-1HA-A740 | LEVER SUB-ASSY, 4-WAY C/V ONLY | 1 | |

https://truckmanualshub.com/



## HYDRAULIC CONTROL VALVE - PIPING - S/N 200001A~ 3-WAY VALVE (EXCEPT 3.5 TON TRUCKS)

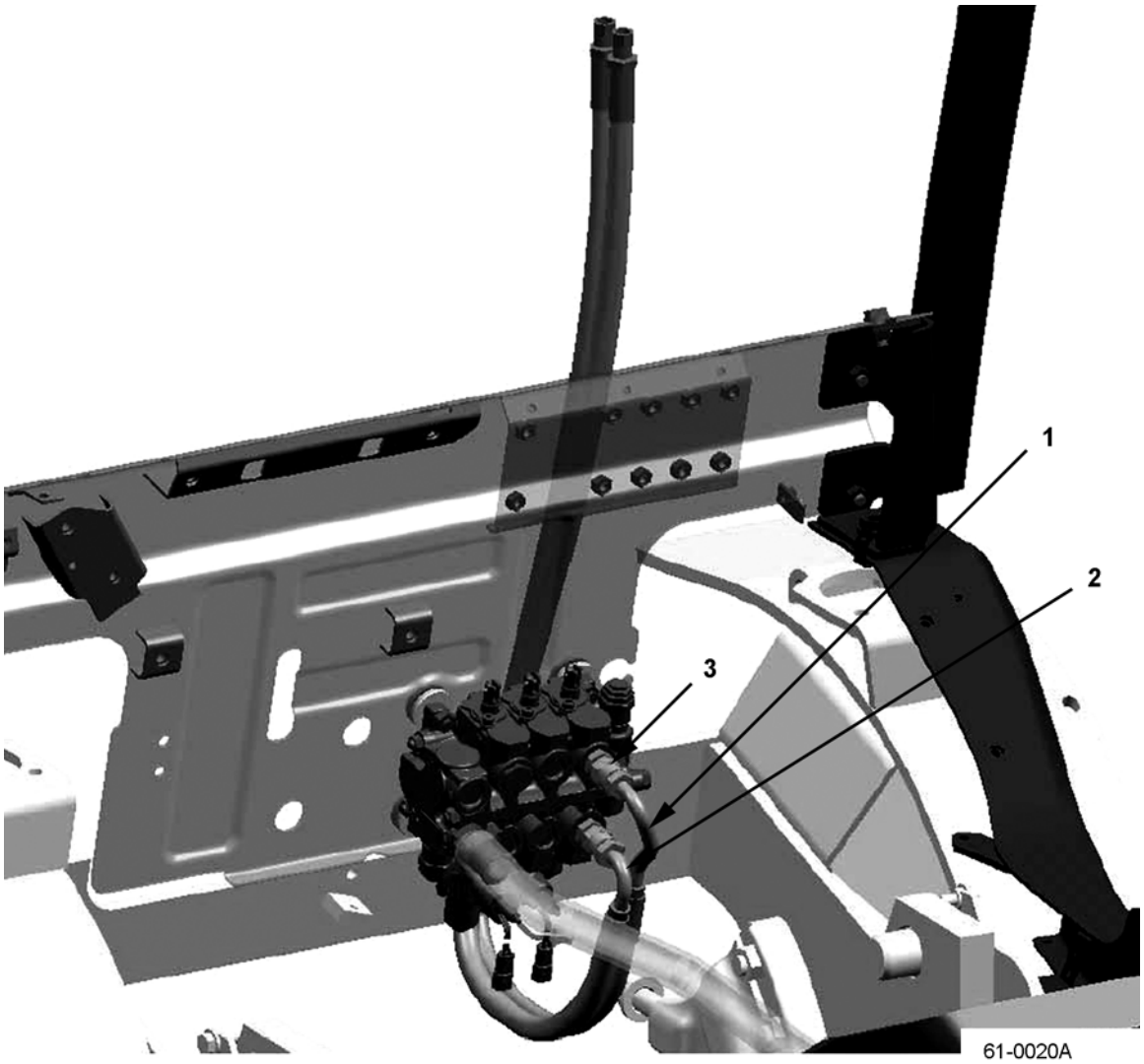

https://truckmanualshub.com/



## HYDRAULIC CONTROL VALVE - PIPING - S/N 200001A~ 3-WAY VALVE (EXCEPT 3.5 TON TRUCKS)

| Item | Part Number | Description | Qty | |
|---|---|---|---|---|
| 1 | 3EB-68-A7310 | HOSE | 1 | |
| 2 | 3EB-68-A7320 | HOSE | 1 | |
| 3 | 3EC-66-A1910 | NIPPLE | 2 | |

https://truckmanualshub.com/



# HYDRAULIC CONTROL VALVE - PIPING - S/N 200001A~ 3-WAY VALVE (3.5 TON TRUCKS)

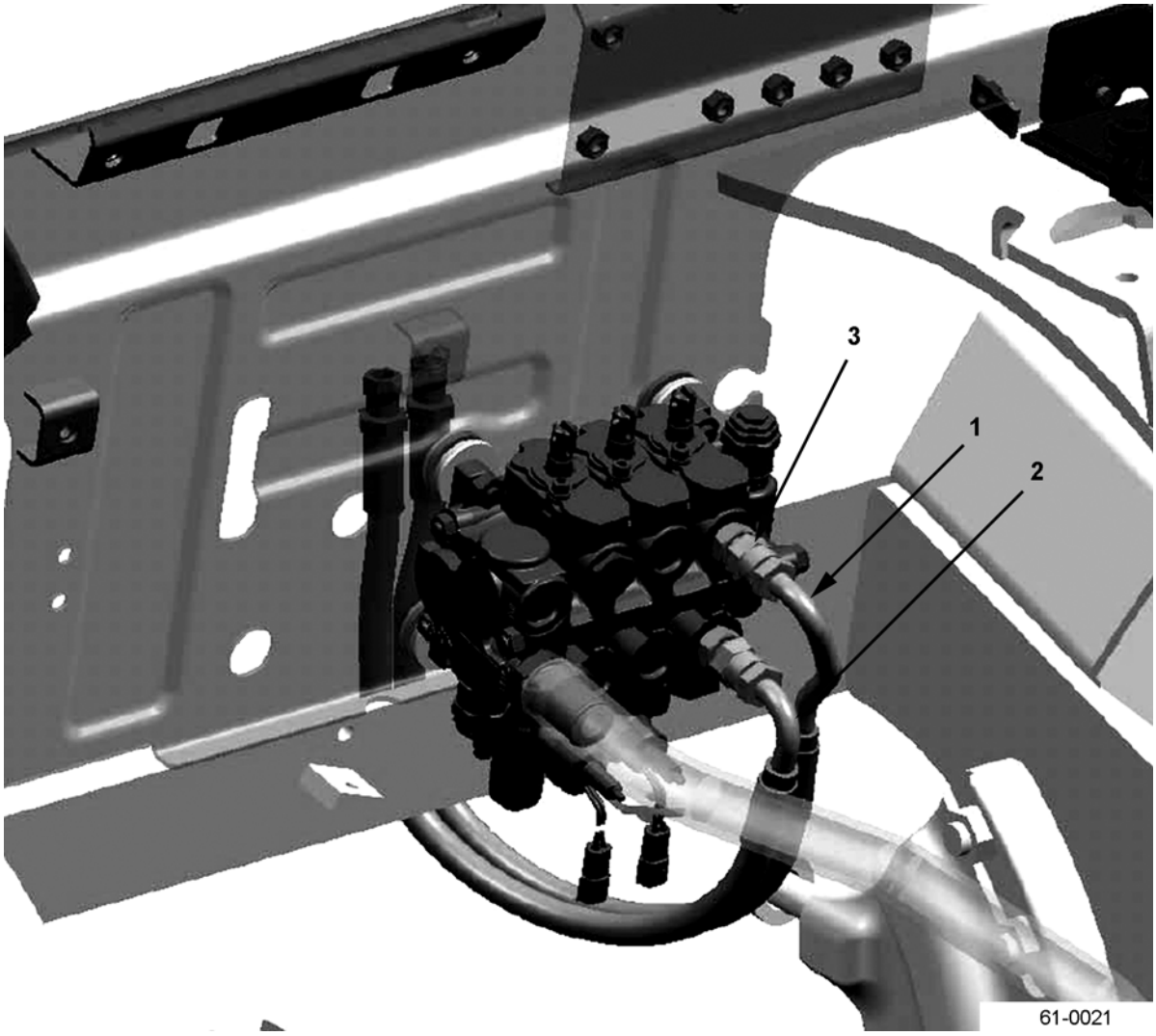

https://truckmanualshub.com/



## HYDRAULIC CONTROL VALVE - PIPING - S/N 200001A~
## 3-WAY VALVE (3.5 TON TRUCKS)

| Item | Part Number | Description | Qty | |
|---|---|---|---|---|
| 1 | 3EB-68-A7360 | HOSE (3-STAGE MAST) . . . . . | 1 | |
| | 3EB-68-A7660 | HOSE (2-STAGE MAST) . . . . . | 1 | |
| 2 | 3EB-68-A7370 | HOSE (3-STAGE MAST) . . . . . | 1 | |
| | 3EB-68-A7670 | HOSE (2-STAGE MAST) . . . . . | 1 | |
| 3 | 3EC-66-A1910 | NIPPLE . . . . . | 2 | |

https://truckmanualshub.com/



## TILT CYLINDERS - S/N 200001A~

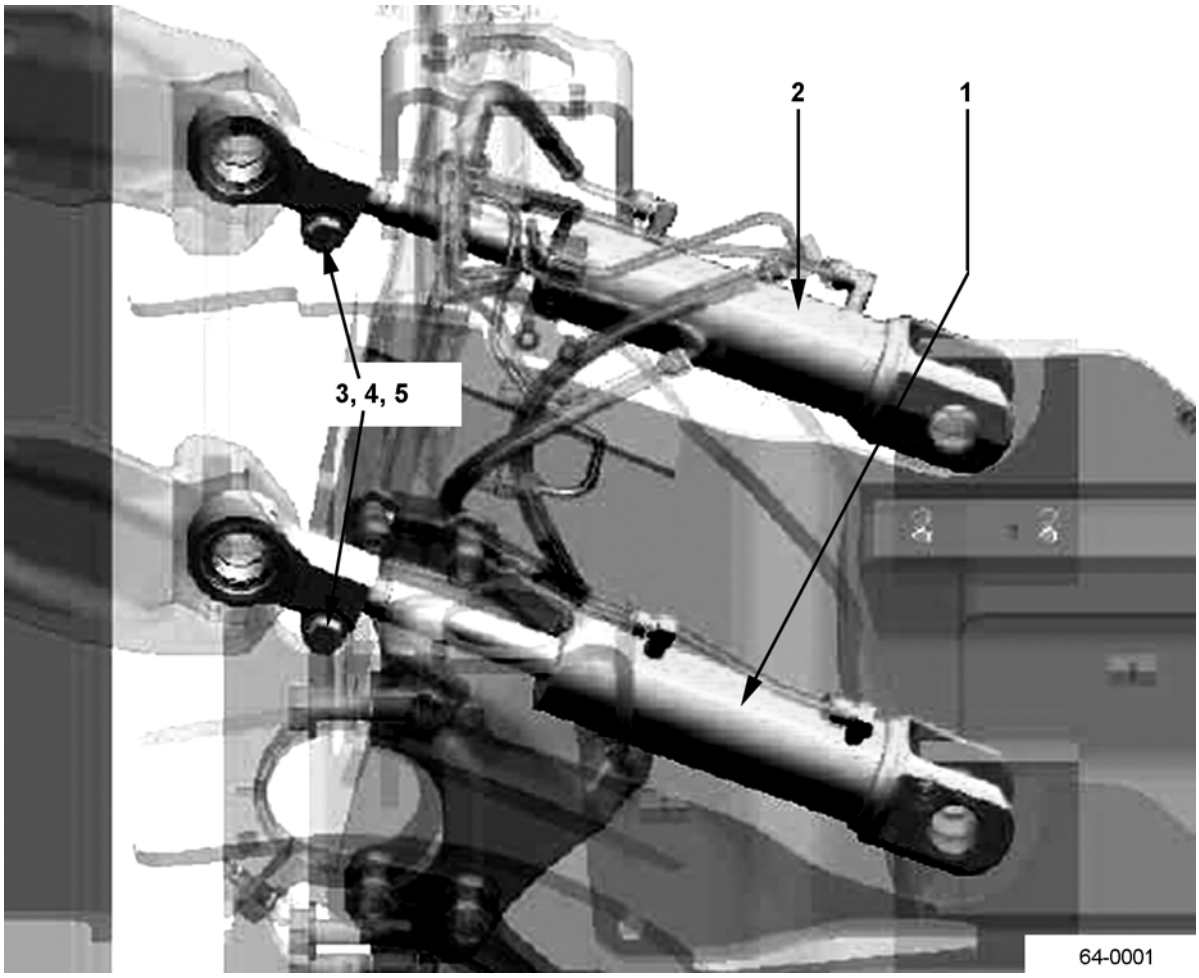

https://truckmanualshub.com/



## TILT CYLINDERS - S/N 200001A~

| Item | Part Number | Description | Qty | |
|---|---|---|---|---|
| 1 | 37B-1JV-A410 | TILT CYL, LH - 6°/5° (2.0T, 2.5T PNEU) (70 MM) (W/ SPACER) | 1 | |
| | 37B-1JV-A420 | TILT CYL, LH - 6°/12° (2.0T, 2.5T PNEU) (70 MM) (NO SPACER) | 1 | |
| | 37B-1JV-A430 | TILT CYL, LH - 10°/5° (2.0T, 2.5T PNEU) (70 MM) (W/ SPACER) | 1 | |
| | 37B-1JV-A440 | TILT CYL, LH - 3°/3° (2.0T, 2.5T PNEU) (70 MM) (W/ SPACER) | 1 | |
| | 37B-1JV-A810 | TILT CYL, LH - 6°/5° (3.5T PNEU) (80 MM) (W/ SPACER) | 1 | |
| | 37B-1JV-A820 | TILT CYL, LH - 6°/12° (3.5T PNEU) (80 MM) (NO SPACER) | 1 | |
| | 37B-1JW-A410 | TILT CYL, LH - 6°/5° (2.0T, 2.5T CUSHION) (70 MM) (W/ SPACER) | 1 | |
| | 37B-1JW-A420 | TILT CYL, LH - 6°/8° (2.0T, 2.5T CUSHION) (70 MM) (NO SPACER) | 1 | |
| | 37B-1JW-A810 | TILT CYL, LH - 6°/5° (2.8T, 3.0T, 3.2T CUSHION) (70 MM) (W/ SPACER) | 1 | |
| | 37B-1JW-A820 | TILT CYL, LH - 6°/8° (2.8T, 3.0T, 3.2T CUSHION) (70 MM) (NO SPACER) | 1 | |
| 2 | 37B-1JV-A510 | TILT CYL, RH - 6°/5° (2.0T, 2.5T PNEU) (70 MM) (W/ SPACER) | 1 | |
| | 37B-1JV-A520 | TILT CYL, RH - 6°/12° (2.0T, 2.5T PNEU) (70 MM) (NO SPACER) | 1 | |
| | 37B-1JV-A530 | TILT CYL, RH - 10°/5° (2.0T, 2.5T PNEU) (70 MM) (NO SPACER) | 1 | |
| | 37B-1JV-A540 | TILT CYL, RH - 3°/3° (2.0T, 2.5T PNEU) (70 MM) (W/ SPACER) | 1 | |
| | 37B-1JV-A910 | TILT CYL, RH - 6°/5° (3.5T PNEU) (80 MM) (W/ SPACER) | 1 | |
| | 37B-1JV-A920 | TILT CYL, RH - 6°/12° (3.5T PNEU) (80 MM) (NO SPACER) | 1 | |
| | 37B-1JW-A510 | TILT CYL, RH - 6°/5° (2.0T, 2.5T CUSHION) (70 MM) (W/ SPACER) | 1 | |
| | 37B-1JW-A520 | TILT CYL, RH - 6°/8° (2.0T, 2.5T CUSHION) (70 MM) (NO SPACER) | 1 | |
| | 37B-1JW-A910 | TILT CYL, RH - 6°/5° (2.8T, 3.0T, 3.2T CUSHION) (70 MM) (W/ SPACER) | 1 | |
| | 37B-1JW-A920 | TILT CYL, RH - 6°/8° (2.8T, 3.0T, 3.2T CUSHION) (70 MM) (NO SPACER) | 1 | |
| 3 | 01050-51460 | BOLT | 2 | |

PARTS LIST CONTINUED ON NEXT PAGE

https://truckmanualshub.com/



## TILT CYLINDERS - S/N 200001A~

| | | | |
|---|---|---|---|
| 4 | 01602-21442 | WASHER . . . . . | 2 |
| 5 | 01582-11411 | NUT. . . . . | 2 |
| KIT | 3BB-64-A6310 | SEAL KIT (70 MM UNITS) . . . . . | 1 |
| KIT | 3BB-64-A6210 | SEAL KIT (80 MM UNITS) . . . . . | 1 |

https://truckmanualshub.com/

**NOTES:**

https://truckmanualshub.com/



## TILT CYLINDERS - PNEUMATIC MODELS - DETAIL - S/N 200001A~ 2.0 & 2.5 TON TRUCKS

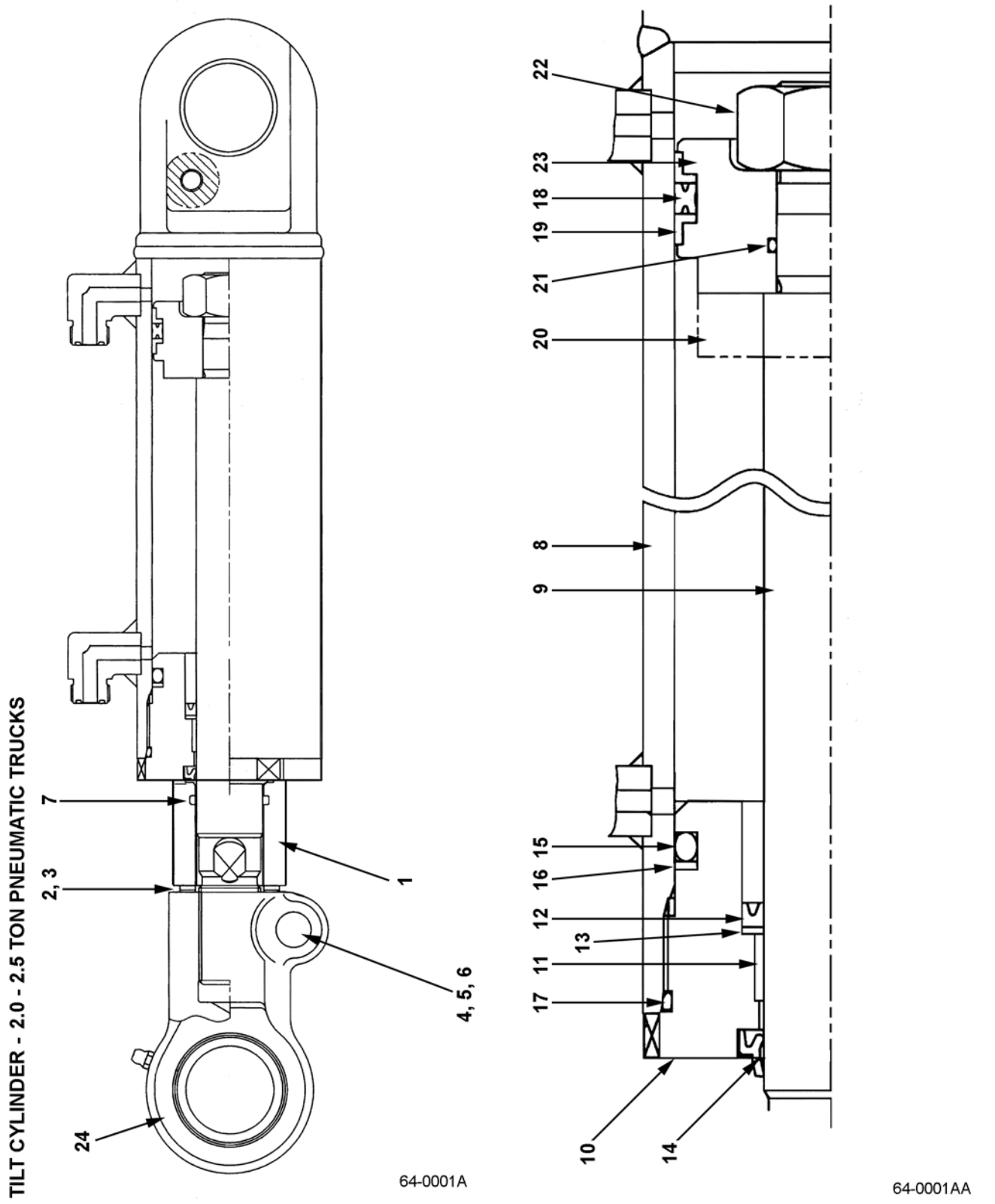

https://truckmanualshub.com/



## TILT CYLINDERS - PNEUMATIC MODELS - DETAIL - S/N 200001A~ 2.0 & 2.5 TON TRUCKS

| Item | Part Number | Description | Qty |
|---|---|---|---|
| | 37B-1JV-A410 | TILT CYL ASSY - LH (6°/5°) (3-STAGE) (70 MM) | 1 |
| | 37B-1JV-A510 | TILT CYL ASSY - RH (6°/5°) (3-STAGE) (70 MM) | 1 |
| 1 | 37B-1JE-A410 | SPACER (6°/5°) (ONE FOR EACH CYLINDER) | 1 |
| 2 | 37B-1AJ-9010 | SHIM - T1.0 (ALL) | 3 |
| 3 | 37B-1AP-1010 | SHIM - T2.0 (ALL) | 2 |
| | 37B-1JV-A420 | TILT CYL ASSY - LH (6°/12°) (2-STAGE) (70 MM) | 1 |
| | 37B-1JV-A520 | TILT CYL ASSY - RH (6°/12°) (2-STAGE) (70 MM) | 1 |
| 1 | NOT USED | SPACER | 0 |
| 2 | NOT USED | SHIM | 0 |
| 3 | NOT USED | SHIM | 0 |
| | 37B-1JV-A430 | TILT CYL ASSY - LH (10°/5°) (BOTTLER'S) (70 MM) | 1 |
| | 37B-1JV-A530 | TILT CYL ASSY - RH (10°/5°) (BOTTLER'S) (70 MM) | 1 |
| 1 | 37B-1JE-A410 | SPACER (10°/5°) (ONE FOR EACH CYLINDER) | 1 |
| 2 | 37B-1AJ-9010 | SHIM - T1.0 (ALL) | 3 |
| 3 | 37B-1AP-1010 | SHIM - T2.0 (ALL) | 2 |
| | 37B-1JV-A440 | TILT CYL ASSY - LH (3°/3°) (QUAD) (70 MM) (W/ SPACER) | 1 |
| | 37B-1JV-A540 | TILT CYL ASSY - RH (3°/3°) (QUAD) (70 MM) (W/ SPACER) | 1 |
| 1 | 37B-1JE-A420 | SPACER (3°/3°) (ONE FOR EACH CYLINDER) | 1 |
| 2 | 37B-1AJ-9010 | SHIM - T1.0 (ALL) | 3 |
| 3 | 37B-1AP-1010 | SHIM - T2.0 (ALL) | 2 |
| 4 | 01050-51460 | BOLT | 2 |
| 5 | 01602-21442 | WASHER | 2 |
| 6 | 01582-11411 | NUT | 2 |
| 7 | 07000-13030 | O-RING | 1 |
| 8 | SEE ASSY | TILT CYLINDER SUB-ASSY | 1 |
| 9 | ON65531-07057 | ROD | 1 |
| 10 | 3BB-64-A6540 | HEAD | 1 |
| 11 | 3EB-64-13280 | BUSHING | 1 |
| 12 | 3EB-64-22950 | PACKING (SEAL KIT) | 1 |
| 13 | 3EB-64-22960 | BACK-UP RING (SEAL KIT) | 1 |
| 14 | 3BB-64-A6390 | DUST SEAL (SEAL KIT) | 1 |
| 15 | 3BB-64-A6360 | O-RING (SEAL KIT) | 1 |
| 16 | 3BB-64-A6370 | BACK-UP RING (SEAL KIT) | 1 |

PARTS LIST CONTINUED ON NEXT PAGE

https://truckmanualshub.com/



## TILT CYLINDERS - PNEUMATIC MODELS - DETAIL - S/N 200001A~ 2.0 & 2.5 TON TRUCKS

| Item | Part Number | Description | Qty | |
|---|---|---|---|---|
| 17 | 3BB-64-A6350 | O-RING . . . . . (SEAL KIT) | 1 | |
| 18 | 3BB-64-A6320 | PACKING . . . . . (SEAL KIT) | 1 | |
| 19 | 3BB-64-A6330 | BACK-UP RING . . . . . (SEAL KIT) | 2 | |
| 20 | SEE ABOVE | SPACER . . . . . | 1 | |
| 21 | 3BB-64-A6340 | O-RING . . . . . (SEAL KIT) | 1 | |
| 22 | 3BB-64-A6530 | NUT . . . . . | 1 | |
| 23 | 3BB-64-A6520 | PISTON . . . . . | 1 | |
| 24 | | ROD HEAD ASSY (ORDER PARTS INDIVIDUALLY) | 1 | |
| | 3BB-64-A6560 | .ROD HEAD . . . . . | 1 | |
| | 3SB-24-51640 | .PIN SEAL . . . . . | 2 | |
| | 07020-00001 | .GREASE NIPPLE . . . . . | 1 | |
| KIT | 3BB-64-A6310 | SEAL KIT . . . . . | 1 | |

https://truckmanualshub.com/

**NOTES:**

https://truckmanualshub.com/



## TILT CYLINDERS - PNEUMATIC MODELS - DETAIL - S/N 200001A~ 2.8, 3.0, 3.2 & 3.5 TON TRUCKS

TILT CYLINDER - 2.8 - 3.5 TON PNEUMATIC TRUCKS

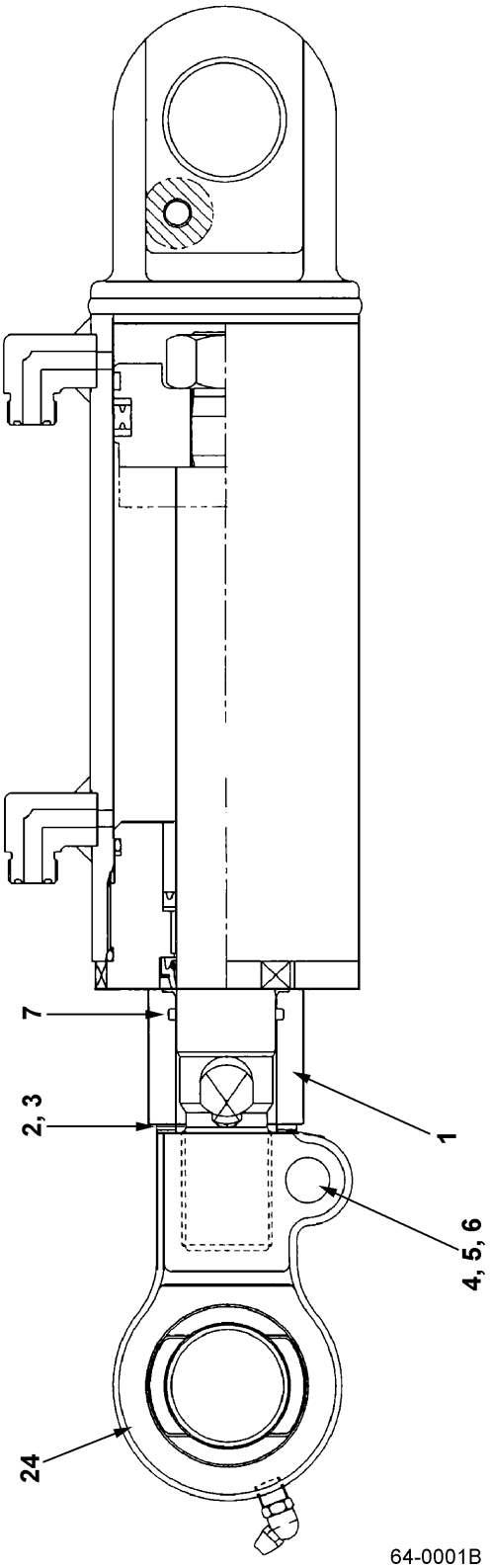


64-0001B

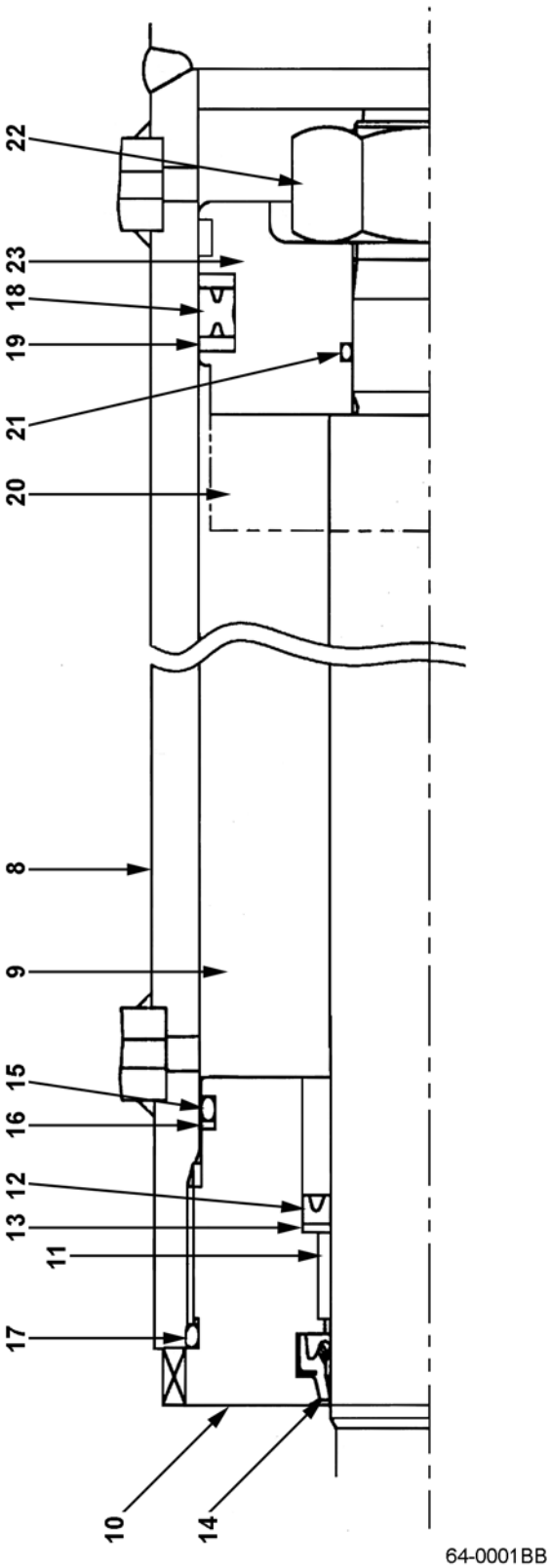


64-0001BB

https://truckmanualshub.com/



## TILT CYLINDERS - PNEUMATIC MODELS - DETAIL - S/N 200001A~ 2.8, 3.0, 3.2 & 3.5 TON TRUCKS

| Item | Part Number | Description | Qty |
|---|---|---|---|
| | 37B-1JV-A810 | TILT CYL ASSY - LH (6°/5°) (3-STAGE) (3.5T) (80 MM) | 1 |
| | 37B-1JV-A910 | TILT CYL ASSY - RH (6°/5°) (3-STAGE) (3.5T) (80 MM) | 1 |
| 1 | 37B-1JE-A610 | SPACER (6°/5°) (ONE FOR EACH CYLINDER) | 1 |
| 2 | 37B-1AJ-9020 | SHIM - T1.0 MM | 3 |
| 3 | 37B-1AP-1020 | SHIM - T2.0 MM | 2 |
| | 37B-1JV-A820 | TILT CYL ASSY - LH (6°/12°) (2-STAGE) (3.5T) (80 MM) | 1 |
| | 37B-1JV-A920 | TILT CYL ASSY - RH (6°/12°) (2-STAGE) (3.5T) (80 MM) | 1 |
| 1 | NOT USED | SPACER | 0 |
| 2 | NOT USED | SHIM | 0 |
| 3 | NOT USED | SHIM | 0 |
| 4 | 01050-51460 | BOLT | 2 |
| 5 | 01602-21442 | WASHER | 2 |
| 6 | 01582-11411 | NUT | 2 |
| 7 | 07000-13035 | O-RING | 1 |
| 8 | SEE ASSY | CYLINDER SUB-ASSY | 1 |
| 9 | NSS | ROD | 1 |
| 10 | 3BB-64-A6440 | GUIDE | 1 |
| 11 | 3EB-64-A6450 | BUSHING | 1 |
| 12 | 3BB-64-A6270 | PACKING (SEAL KIT) | 1 |
| 13 | 3BB-64-A6280 | BACK-UP RING (SEAL KIT) | 1 |
| 14 | 3BB-64-A6290 | DUST SEAL (SEAL KIT) | 1 |
| 15 | 3BB-64-A6260 | O-RING (SEAL KIT) | 1 |
| 16 | 3BB-64-A6380 | BACK-UP RING (SEAL KIT) | 1 |
| 17 | 3BB-64-A6250 | O-RING (SEAL KIT) | 1 |
| 18 | 3BB-64-A6220 | PACKING (SEAL KIT) | 1 |
| 19 | 3BB-64-A6230 | BACK-UP RING (SEAL KIT) | 2 |
| 20 | SEE ABOVE | SPACER | 1 |
| 21 | 3BB-64-A6240 | O-RING (SEAL KIT) | 1 |
| 22 | 3BB-64-A6430 | NUT | 1 |
| 23 | 3BB-64-A6420 | PISTON | 1 |
| 24 | | ROD HEAD ASSY (ORDER PARTS INDIVIDUALLY) | 1 |
| | 3EB-64-A7810 | .ROD HEAD | 1 |
| | 3EB-64-A7820 | .PIN BUSHING | 1 |
| | 3EB-64-A7830 | .GREASE NIPPLE | 1 |
| KIT | 3BB-64-A6210 | SEAL KIT | 1 |

https://truckmanualshub.com/



## TILT CYLINDERS - CUSHION MODELS - DETAIL - S/N 200001A~ 2.0 & 2.5 TON TRUCKS

TILT CYLINDER - 2.0 - 2.5 TON CUSHION TRUCKS

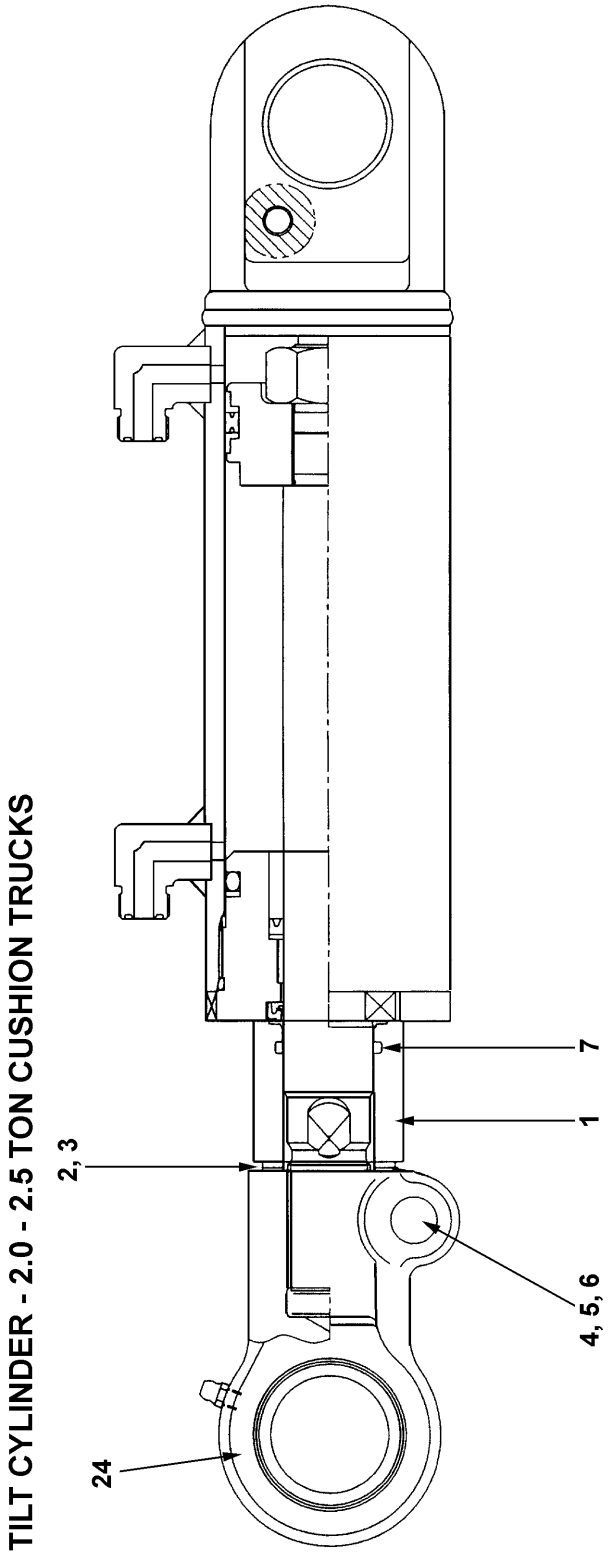


64-0001C

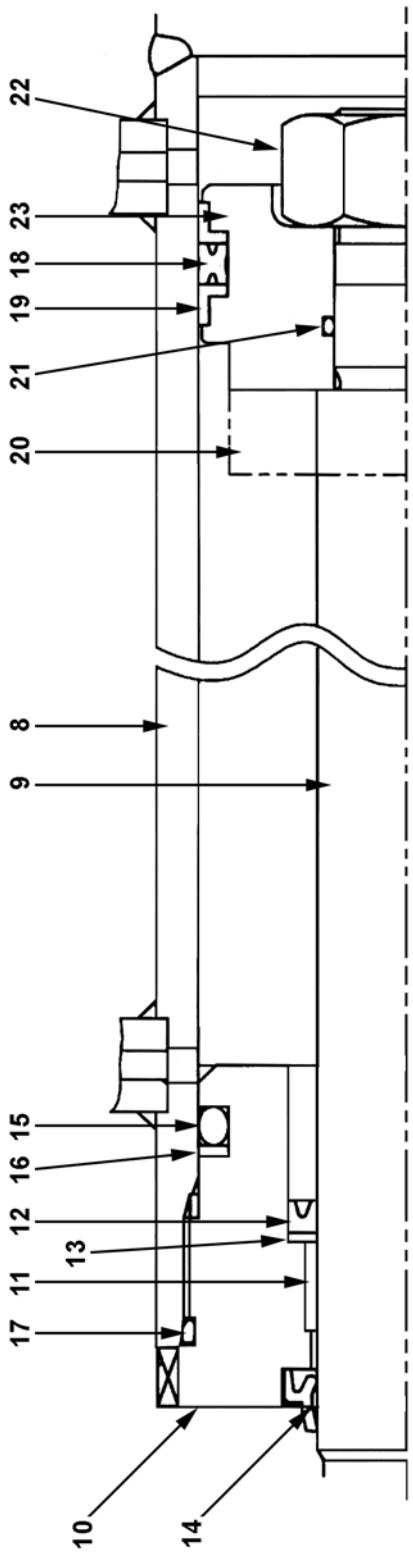


64-0001CC

https://truckmanualshub.com/



## TILT CYLINDERS - CUSHION MODELS - DETAIL - S/N 200001A~ 2.0 & 2.5 TON TRUCKS

| Item | Part Number | Description | Qty | |
|---|---|---|---|---|
| | 37B-1JW-A410 | TILT CYL ASSY - LH (6°/5°) (3-STAGE) (70 MM) | 1 | |
| | 37B-1JW-A510 | TILT CYL ASSY - RH (6°/5°) (3-STAGE) (70 MM) | 1 | |
| 1 | 37B-1JE-A410 | SPACER (6°/5°) (ONE FOR EACH CYLINDER) | 1 | |
| 2 | 37B-1AJ-9010 | SHIM - T1.0 (ALL) | 3 | |
| 3 | 37B-1AP-1010 | SHIM - T2.0 (ALL) | 2 | |
| | 37B-1JW-A420 | TILT CYL ASSY - LH (6°/8°) (2-STAGE) (70 MM) | 1 | |
| | 37B-1JW-A520 | TILT CYL ASSY - RH (6°/8°) (2-STAGE) (70 MM) | 1 | |
| 1 | NOT USED | SPACER | 0 | |
| 2 | NOT USED | SHIM | 0 | |
| 3 | NOT USED | SHIM | 0 | |
| | 37B-1JW-A440 | TILT CYL ASSY - LH (3°/3°) (QUAD) (80 MM) | 1 | |
| | 37B-1JW-A540 | TILT CYL ASSY - RH (3°/3°) (QUAD) (80 MM) | 1 | |
| 1 | 37B-1JE-A420 | SPACER (3°/3°) (ONE FOR EACH CYLINDER) | 1 | |
| 2 | 37B-1AJ-9010 | SHIM - T1.0 (ALL) | 3 | |
| 3 | 37B-1AP-1010 | SHIM - T2.0 (ALL) | 2 | |
| 4 | 01050-51460 | BOLT | 2 | |
| 5 | 01602-21442 | WASHER | 2 | |
| 6 | 01582-11411 | NUT | 2 | |
| 7 | 07000-13030 | O-RING | 1 | |
| 8 | SEE ASSY | CYLINDER SUB-ASSY | 1 | |
| 9 | ON65531-07057 | ROD | 1 | |
| 10 | 3BB-64-A6540 | HEAD | 1 | |
| 11 | 3EB-64-13280 | BUSHING | 1 | |
| 12 | 3EB-64-22950 | PACKING (SEAL KIT) | 1 | |
| 13 | 3EB-64-22960 | BACK-UP RING (SEAL KIT) | 1 | |
| 14 | 3BB-64-A6390 | DUST SEAL (SEAL KIT) | 1 | |
| 15 | 3BB-64-A6360 | O-RING (SEAL KIT) | 1 | |
| 16 | 3BB-64-A6370 | BACK-UP RING (SEAL KIT) | 1 | |
| 17 | 3BB-64-A6350 | O-RING (SEAL KIT) | 1 | |
| 18 | 3BB-64-A6320 | PACKING (SEAL KIT) | 1 | |
| 19 | 3BB-64-A6330 | BACK-UP RING (SEAL KIT) | 2 | |
| 20 | SEE ABOVE | SPACER | 1 | |
| 21 | 3BB-64-A6340 | O-RING (SEAL KIT) | 1 | |
| 22 | 3BB-64-A6530 | NUT | 1 | |
| 23 | 3BB-64-A6520 | PISTON | 1 | |
| 24 | | ROD HEAD ASSY | 1 | |

PARTS LIST CONTINUED ON NEXT PAGE

https://truckmanualshub.com/



## TILT CYLINDERS - CUSHION MODELS - DETAIL - S/N 200001A~ 2.0 & 2.5 TON TRUCKS

| Item | Part Number | Description | Qty | |
|---|---|---|---|---|
| | 3BB-64-A6560 | .HEAD . . . . . | 1 | |
| | 3SB-24-51640 | .PIN SEAL. . . . . | 2 | |
| | 07020-00001 | .GREASE NIPPLE . . . . . | 1 | |
| KIT | 3BB-64-A6310 | SEAL KIT . . . . . | 1 | |

https://truckmanualshub.com/

**NOTES:**

https://truckmanualshub.com/



## TILT CYLINDERS - CUSHION MODELS - DETAIL - S/N 200001A~ 2.8, 3.0 & 3.2 TON TRUCKS

TILT CYLINDER - 2.8 - 3.2 TON CUSHION TRUCKS

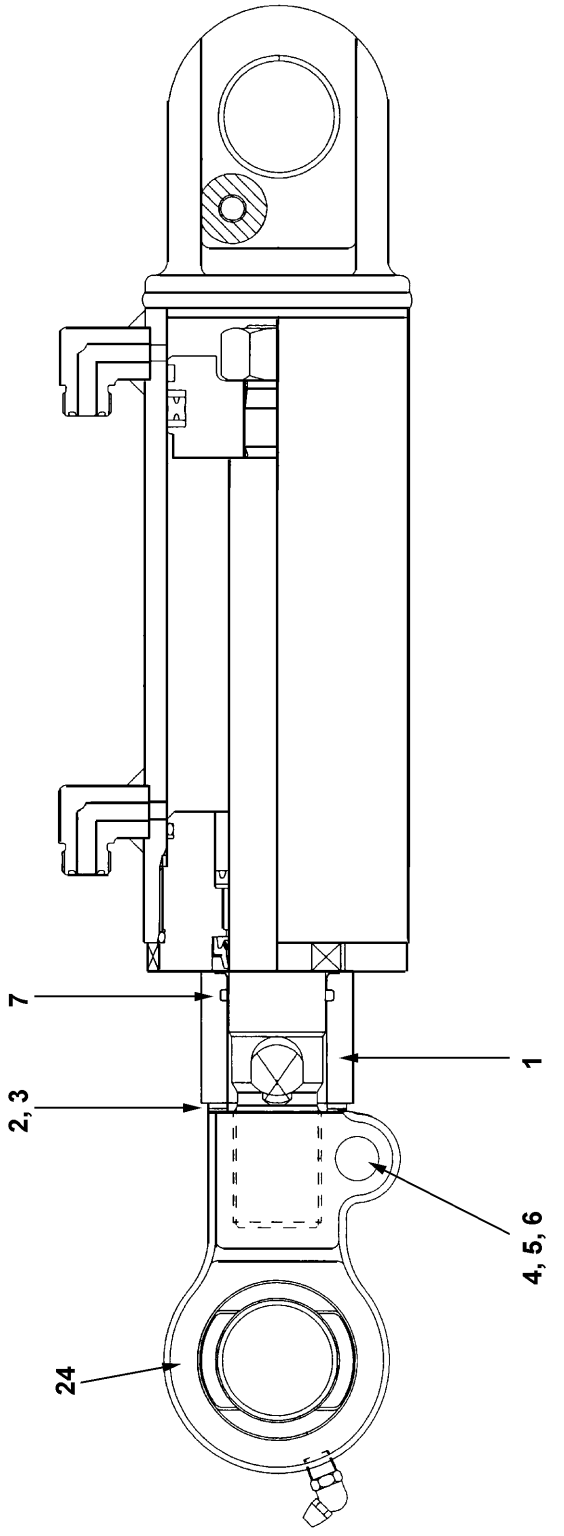


64-0001D

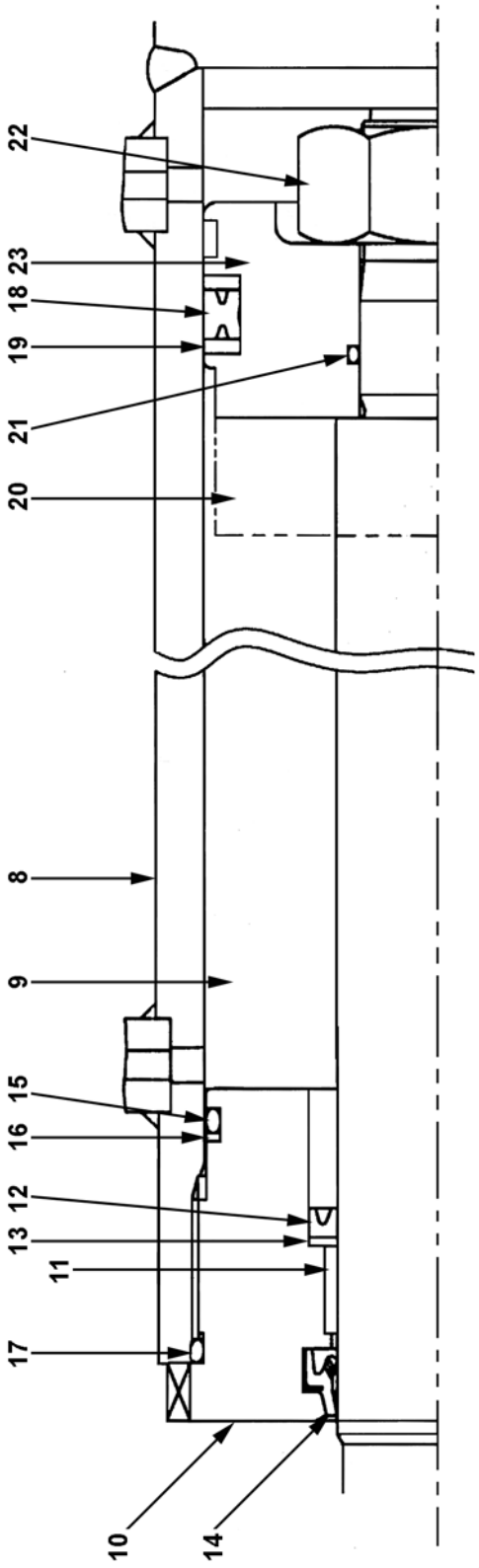


64-0001DD

https://truckmanualshub.com/



## TILT CYLINDERS - CUSHION MODELS - DETAIL - S/N 200001A~ 2.8, 3.0 & 3.2 TON TRUCKS

| Item | Part Number | Description | Qty | |
|---|---|---|---|---|
| | 37B-1JW-A810 | TILT CYL ASSY - LH (6°/5°) (3-STAGE) (70 MM) | 1 | |
| | 37B-1JW-A910 | TILT CYL ASSY - RH (6°/5°) (3-STAGE) (70 MM) | 1 | |
| 1 | 37B-1JE-A650 | SPACER (6°/5°) (ONE FOR EACH CYLINDER) | 1 | |
| 2 | 37B-1AJ-9020 | SHIM - T1.0 MM | 3 | |
| 3 | 37B-1AP-1020 | SHIM - T2.0 MM | 2 | |
| | 37B-1JW-A820 | TILT CYL ASSY - LH (6°/8°) (2-STAGE) (70 MM) | 1 | |
| | 37B-1JW-A920 | TILT CYL ASSY - RH (6°/8°) (2-STAGE) (70 MM) | 1 | |
| 1 | NOT USED | SPACER | 0 | |
| 2 | NOT USED | SHIM | 0 | |
| 3 | NOT USED | SHIM | 0 | |
| 4 | 01050-51460 | BOLT | 2 | |
| 5 | 01602-21442 | WASHER | 2 | |
| 6 | 01582-11411 | NUT | 2 | |
| 7 | 07000-13035 | O-RING | 1 | |
| 8 | SEE ASSY | CYLINDER SUB-ASSY | 1 | |
| 9 | ON65536-08035 | ROD | 1 | |
| 10 | 3BB-64-A6440 | GUIDE | 1 | |
| 11 | 3EB-64-A6450 | BUSHING | 1 | |
| 12 | 3BB-64-A6270 | PACKING (SEAL KIT) | 1 | |
| 13 | 3BB-64-A6280 | BACK-UP RING (SEAL KIT) | 1 | |
| 14 | 3BB-64-A6290 | DUST SEAL (SEAL KIT) | 1 | |
| 15 | 3BB-64-A6260 | O-RING (SEAL KIT) | 1 | |
| 16 | 3BB-64-A6380 | BACK-UP RING (SEAL KIT) | 1 | |
| 17 | 3BB-64-A6250 | O-RING (SEAL KIT) | 1 | |
| 18 | 3BB-64-A6220 | PACKING | 1 | |
| 19 | 3BB-64-A6230 | BACK-UP RING (SEAL KIT) | 2 | |
| 20 | SEE ABOVE | SPACER | 1 | |
| 21 | 3BB-64-A6240 | O-RING (SEAL KIT) | 1 | |
| 22 | 3BB-64-A6430 | NUT | 1 | |
| 23 | 3BB-64-A6420 | PISTON | 1 | |
| 24 | | ROD HEAD ASSY (ORDER PARTS INDIVIDUALLY) | 1 | |
| | 3EB-64-A7810 | .ROD HEAD | 1 | |
| | 3EB-64-A7820 | .PIN BUSHING | 1 | |
| | 3EB-64-A7830 | .GREASE NIPPLE | 1 | |
| KIT | 3BB-64-A6210 | SEAL KIT | 1 | |

https://truckmanualshub.com/



# TILT CYLINDERS - BOOT ASSY - S/N 200001A~

## TILT CYLINDER BOOTS

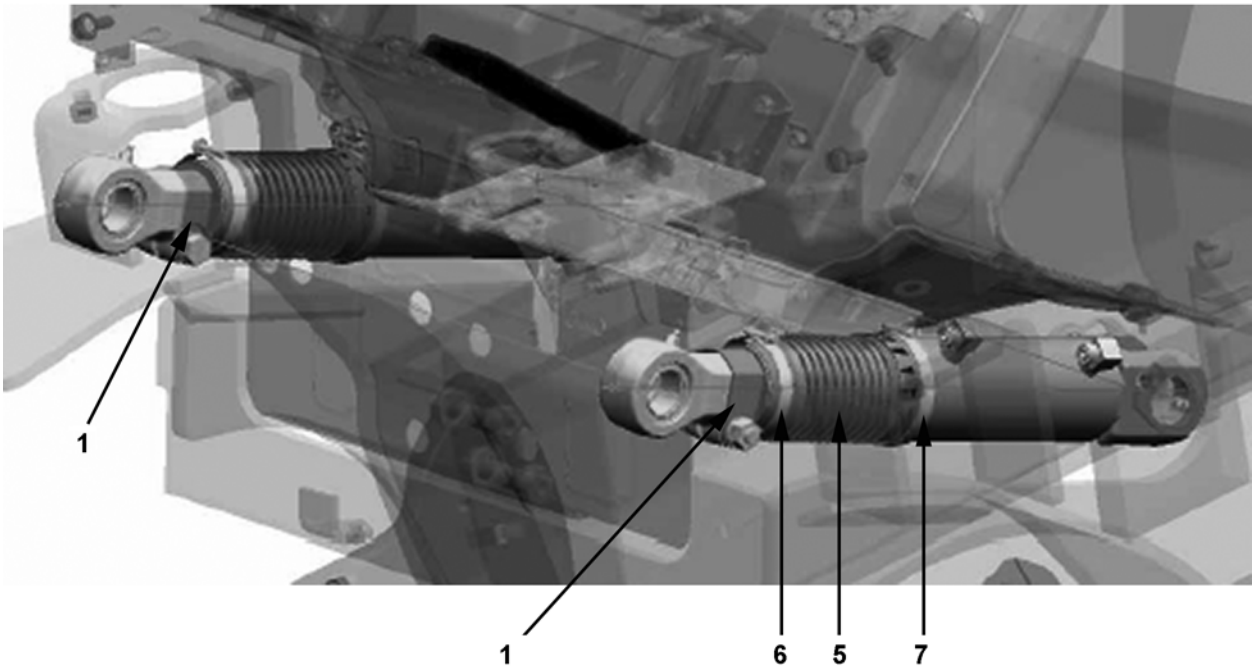


64-0010A

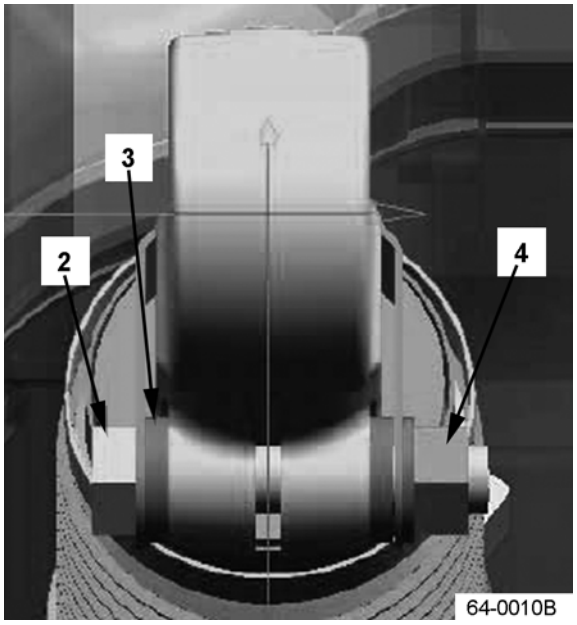


64-0010B

https://truckmanualshub.com/



## TILT CYLINDERS - BOOT ASSY - S/N 200001A~

| Item | Part Number | Description | Qty | |
|---|---|---|---|---|
| 1 | 3EB-65-A7110 | BRACKET | 2 | |
| 2 | 01050-41470 | BOLT | 2 | |
| 3 | 01641-31423 | WASHER | 10 | |
| 4 | 01582-31411 | NUT | 2 | |
| 5 | 3EB-65-A7120 | BOOT (2.0T, 2.5T) | 2 | |
| | 3EB-65-A7210 | BOOT (2.8T, 3.0T, 3.2T, 3.5T) | 2 | |
| 6 | 07281-10809 | CLAMP | 2 | |
| 7 | 07281-10909 | CLAMP (2.0T, 2.5T) | 2 | |
| | 07281-11029 | CLAMP (2.8T, 3.0T, 3.2T, 3.5T) | 2 | |

https://truckmanualshub.com/



## POWER STEERING CYLINDER - PNEUMATIC MODELS - DETAIL - S/N 200001A~

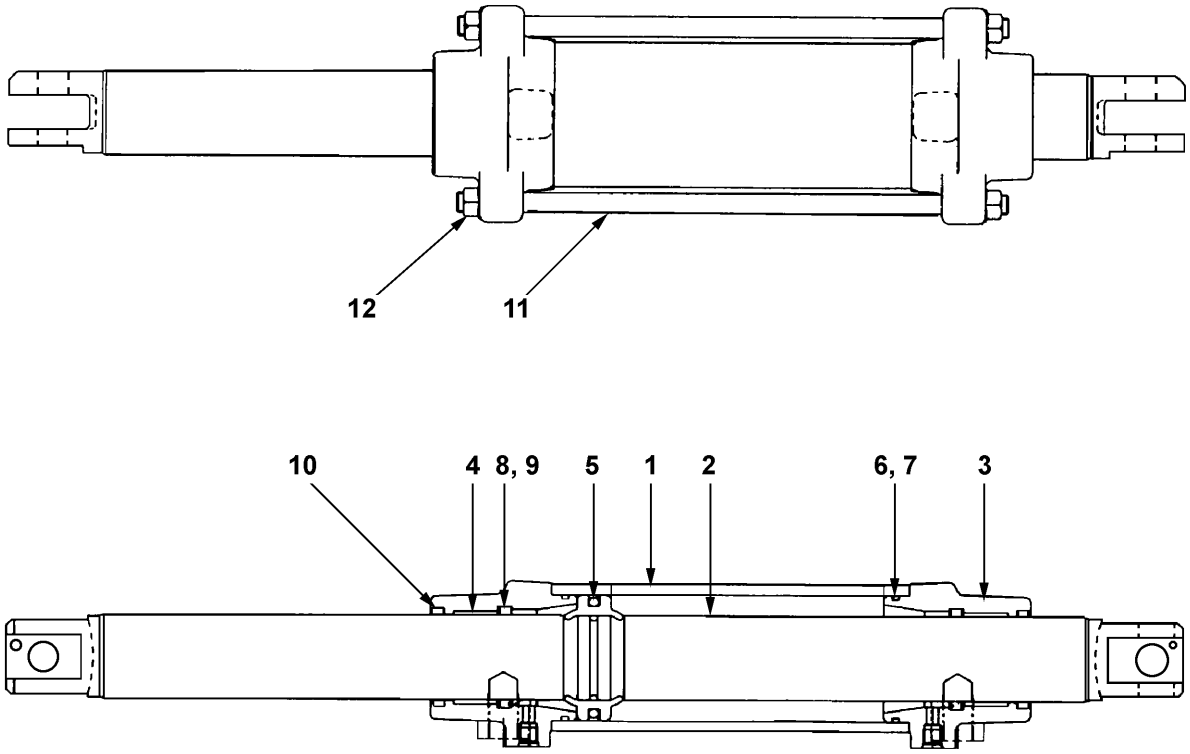


65-0001

https://truckmanualshub.com/



## POWER STEERING CYLINDER - PNEUMATIC MODELS - DETAIL - S/N 200001A~

| Item | Part Number | Description | Qty | |
|---|---|---|---|---|
| | 3EB-64-A7110 | POWER STEERING CYLINDER ASSY - PNEUMATIC | 1 | |
| 1 | ON43511-07521 | CYLINDER | 1 | |
| 2 | ON43503-07502-B | ROD SUB-ASSY | 1 | |
| 3 | ON43561-07521 | HEAD | 2 | |
| 4 | ON43566-08020 | BUSHING | 2 | |
| 5 | ON43556-07563 | PACKING (KIT) | 1 | |
| 6 | ON96751-03070 | O-RING (KIT) | 2 | |
| 7 | ON43567-07567 | BACK-UP RING (KIT) | 2 | |
| 8 | ON43564-08020 | PACKING (KIT) | 2 | |
| 9 | ON43563-07567 | BACK-UP RING (KIT) | 2 | |
| 10 | ON43565-07502 | DUST SEAL (KIT) | 2 | |
| 11 | ON43535-07502 | TIE ROD | 2 | |
| 12 | 01580-11210 | NUT | 4 | |
| KIT | ON43001-07502 | SEAL KIT (ONE SET) | 1 | |

https://truckmanualshub.com/



## POWER STEERING CYLINDER - CUSHION MODELS - DETAIL - S/N 200001A~

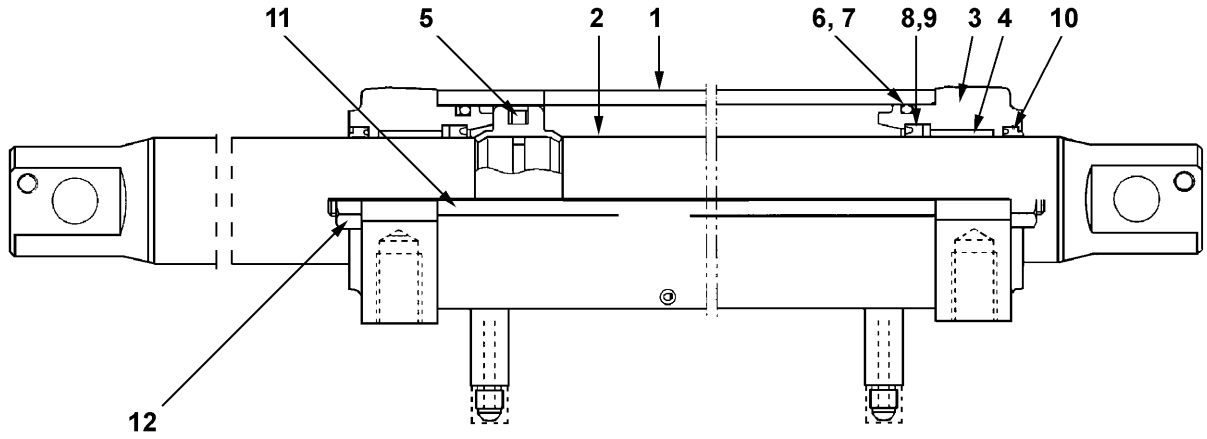


65-0002

https://truckmanualshub.com/



## POWER STEERING CYLINDER - CUSHION MODELS - DETAIL - S/N 200001A~

| Item | Part Number | Description | Qty | |
|---|---|---|---|---|
| | 3EB-64-A7210 | POWER STEERING CYLINDER ASSY - CUSHION | 1 | |
| 1 | ON43501-07526 | CYLINDER SUB-ASSY. . . . . | 1 | |
| 2 | ON43503-07520 | ROD SUB-ASSY. . . . . | 1 | |
| 3 | ON43561-07520 | HEAD . . . . . | 1 | |
| 4 | ON43566-08020 | BUSHING . . . . . | 2 | |
| 5 | ON43556-07563 | PACKING . . . . . (KIT) | 1 | |
| 6 | ON96751-03070 | O-RING. . . . . (KIT) | 2 | |
| 7 | ON43567-07567 | BACK-UP RING . . . . . (KIT) | 2 | |
| 8 | ON43564-08020 | PACKING . . . . . (KIT) | 2 | |
| 9 | ON43563-07567 | BACK-UP RING . . . . . (KIT) | 2 | |
| 10 | ON43565-07502 | DUST SEAL . . . . . (KIT) | 2 | |
| 11 | ON43535-07526 | TIE ROD . . . . . | 2 | |
| 12 | 01580-11210 | NUT. . . . . | 4 | |
| KIT | ON43001-07502 | SEAL KIT (ONE SET). . . . . | 1 | |

https://truckmanualshub.com/



## HYDRAULIC SYSTEM - POWER STEERING CYL. PIPING - S/N 200001A~

POWER STEERING CYLINDER PIPING

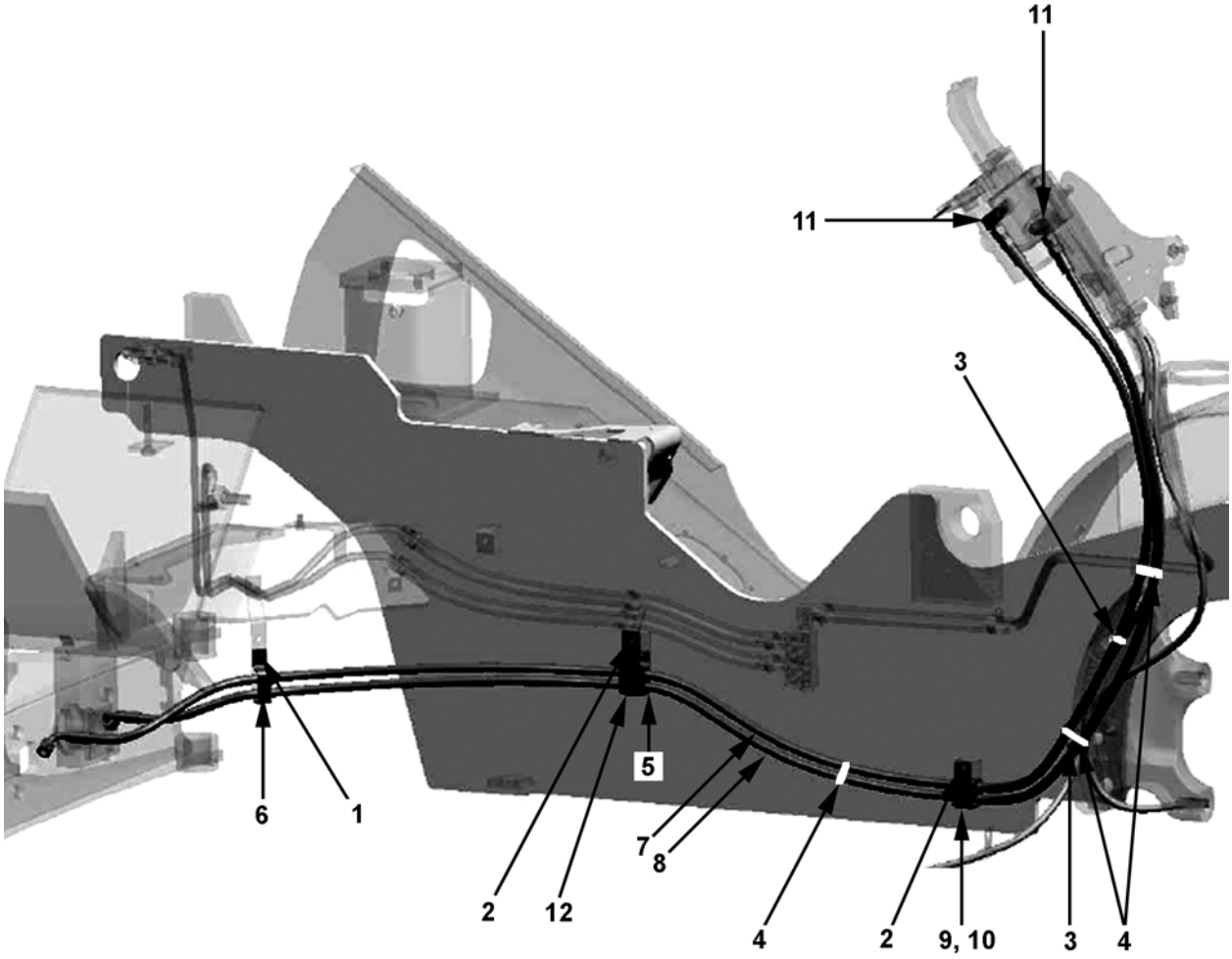


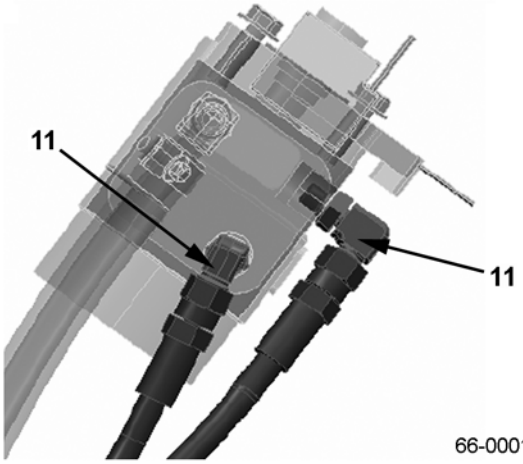


66-0001

https://truckmanualshub.com/



## HYDRAULIC SYSTEM - POWER STEERING CYL. PIPING - S/N 200001A~

| Item | Part Number | Description | Qty | |
|---|---|---|---|---|
| 1 | 01024-80812 | BOLT | 1 | |
| 2 | 01024-80816 | BOLT | 2 | |
| 3 | 37B-1PC-5010 | CLAMP | 2 | |
| 4 | 37B-1PC-5020 | CLAMP | 3 | |
| 5 | 3EB-66-43390 | CUSHION | 1 | |
| 6 | 3EB-66-43490 | CLAMP | 1 | |
| 7 | 3EB-66-53420 | HOSE | 1 | |
| 8 | 3EB-66-53430 | HOSE | 1 | |
| 9 | 3EB-66-53440 | CUSHION | 1 | |
| 10 | 3EB-66-53450 | CLAMP | 1 | |
| 11 | 37B-1RB-5060 | FITTING ASSY | 2 | |
| 12 | 3EB-66-53532 | CLAMP | 1 | |

https://truckmanualshub.com/



## HYDRAULIC SYSTEM - POWER STEERING PUMP RETURN - S/N 200001A~

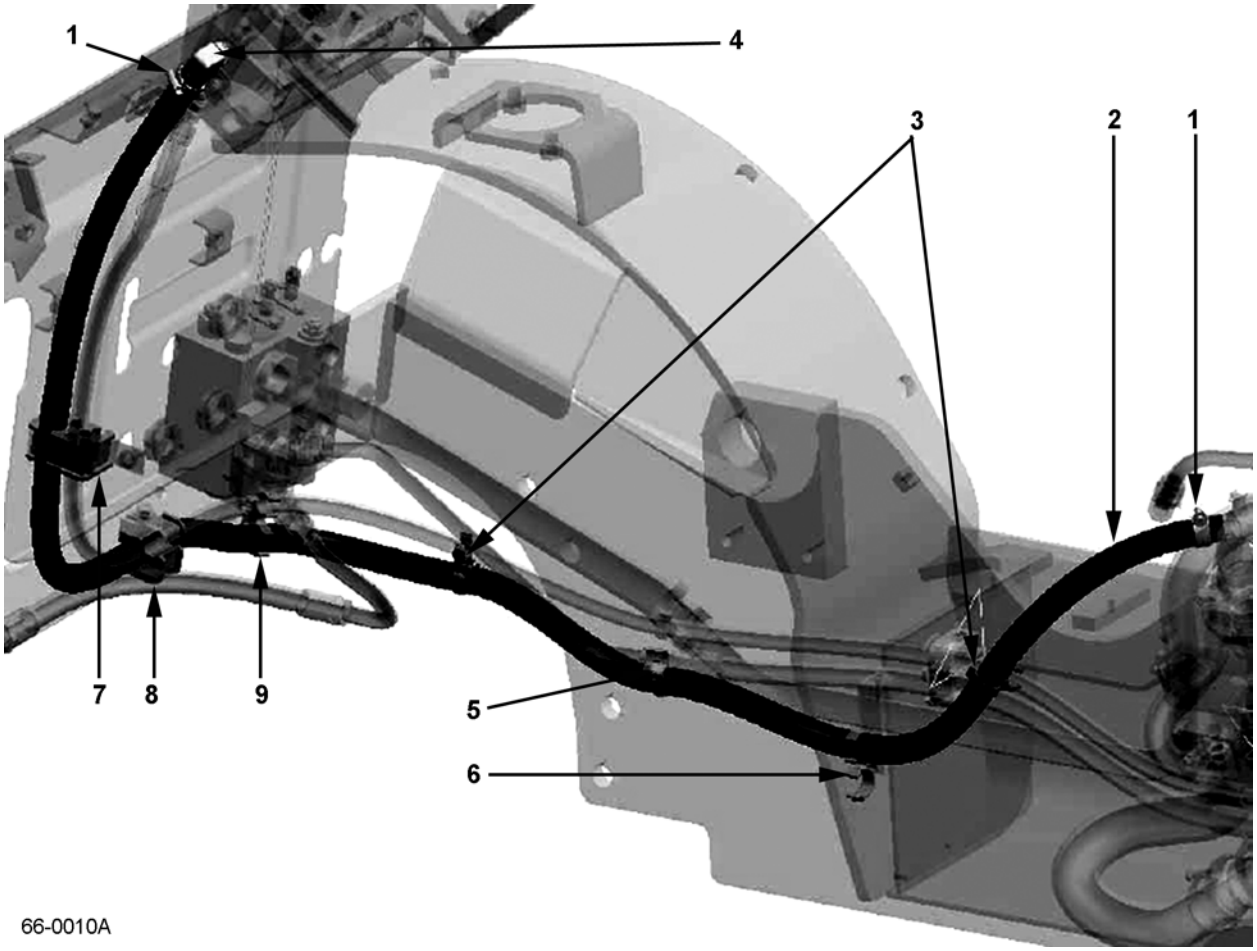


66-0010A

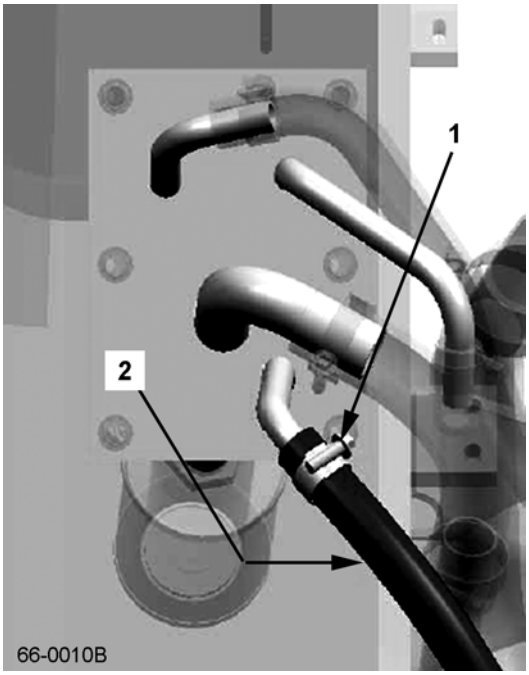


66-0010B

https://truckmanualshub.com/



## HYDRAULIC SYSTEM - POWER STEERING PUMP RETURN - S/N 200001A~

| Item | Part Number | Description | Qty | |
|---|---|---|---|---|
| 1 | 07281-00259 | CLAMP | 2 | |
| 2 | 37A-502-8130 | HOSE | 1 | |
| 3 | 37B-1PC-5030 | CLAMP | 2 | |
| 4 | 37B-1RC-5010 | FITTING ASSY | 1 | |
| 5 | 37B-1PC-5070 | CLAMP | 1 | |
| 6 | 3EB-66-54220 | CLAMP | 1 | |
| 7 | 3EB-66-52180 | CLAMP | 1 | |
| 8 | 3EB-66-51170 | CLAMP | 1 | |
| 9 | 3EB-66-52190 | CLAMP | 1 | |

https://truckmanualshub.com/



# HYDRAULIC SYSTEM - TANK COVER (W/O POWER BRAKES) - S/N 200001A~

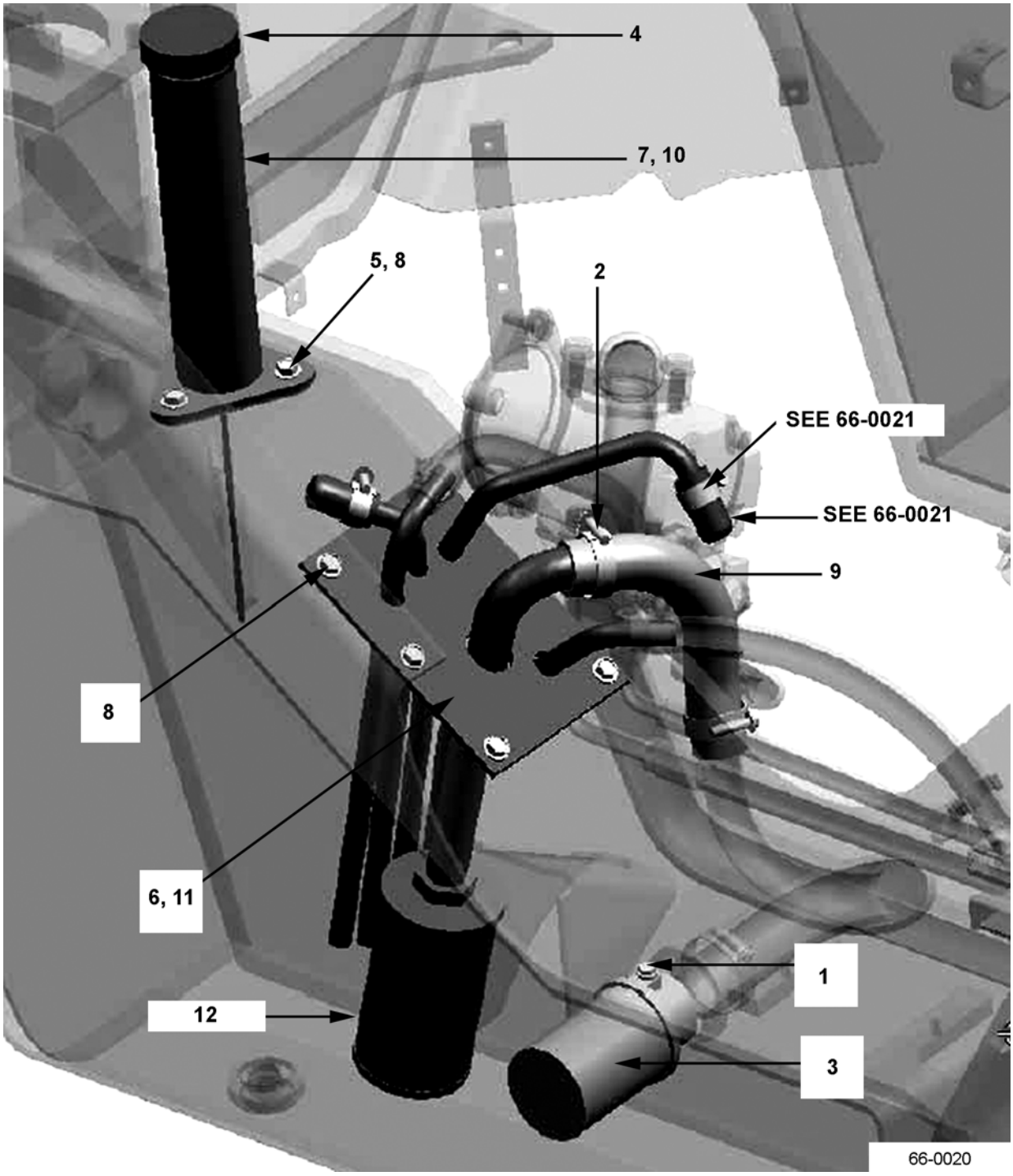

https://truckmanualshub.com/



## HYDRAULIC SYSTEM - TANK COVER (W/O POWER BRAKES) - S/N 200001A~

| Item | Part Number | Description | Qty | |
|---|---|---|---|---|
| 1 | 01024-80616 | BOLT | 1 | |
| 2 | 07281-00419 | CLAMP | 2 | |
| 3 | 34B-66-15180 | STRAINER, HYD. TANK | 1 | |
| 4 | 37B-1PB-4030 | BREATHER | 1 | |
| 5 | 3EB-55-47130 | COLLAR | 3 | |
| 6 | 3EB-66-43620 | GASKET | 1 | |
| 7 | 3EB-66-43661 | GASKET | 1 | |
| 8 | 3EB-66-43670 | BOLT | 9 | |
| 9 | 3EB-66-53830 | HOSE | 1 | |
| 10 | 3EB-66-53840 | PIPE | 1 | |
| 11 | 3EB-66-59030 | COVER | 1 | |
| 12 | 3EB-66-43630 | HYDRAULIC TANK FILTER | 1 | |

https://truckmanualshub.com/



# HYDRAULIC SYSTEM - TANK COVER (W/ POWER BRAKES) - S/N 200001A~ 3.5 TON TRUCKS

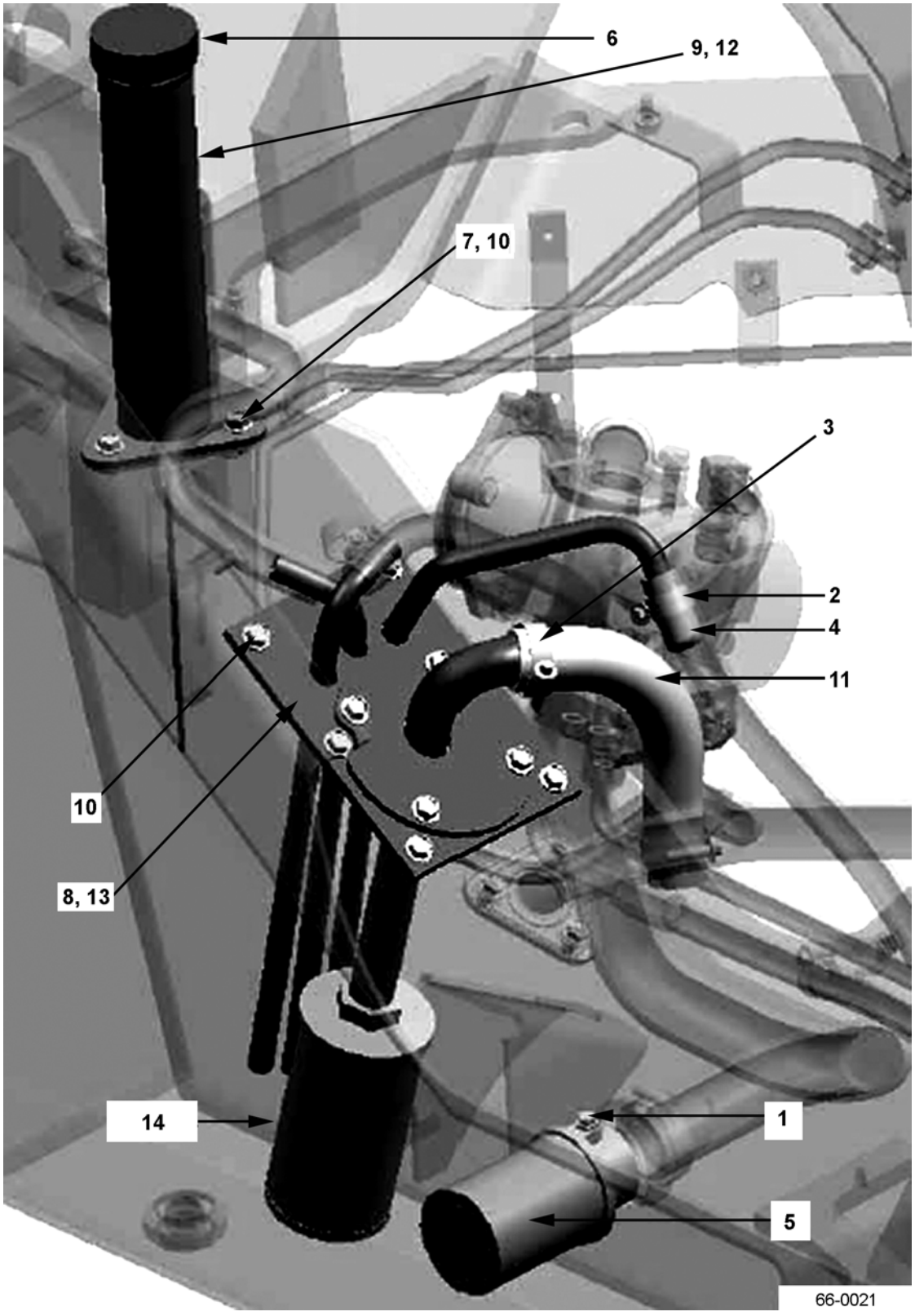

https://truckmanualshub.com/



## HYDRAULIC SYSTEM - TANK COVER (W/ POWER BRAKES) - S/N 200001A~ 3.5 TON TRUCKS

| Item | Part Number | Description | Qty | |
|---|---|---|---|---|
| 1 | 01024-80616 | BOLT | 1 | |
| 2 | 07281-00259 | CLAMP | 1 | |
| 3 | 07281-00419 | CLAMP | 2 | |
| 4 | 34A-76-42110 | CAP | 1 | |
| 5 | 34B-66-15180 | STRAINER, HYD. TANK | 1 | |
| 6 | 37B-1PB-4040 | BREATHER | 1 | |
| 7 | 3EB-55-47130 | COLLAR | 3 | |
| 8 | 3EB-66-43620 | GASKET | 1 | |
| 9 | 3EB-66-43661 | GASKET | 1 | |
| 10 | 3EB-66-43670 | BOLT | 9 | |
| 11 | 3EB-66-53830 | HOSE | 1 | |
| 12 | 3EB-66-53840 | PIPE | 1 | |
| 13 | 3EB-66-59070 | COVER | 1 | |
| 14 | 3EB-66-43630 | HYDRAULIC TANK FILTER | 1 | |

https://truckmanualshub.com/



# HYDRAULIC SYSTEM - RETURN PIPING - S/N 200001A~

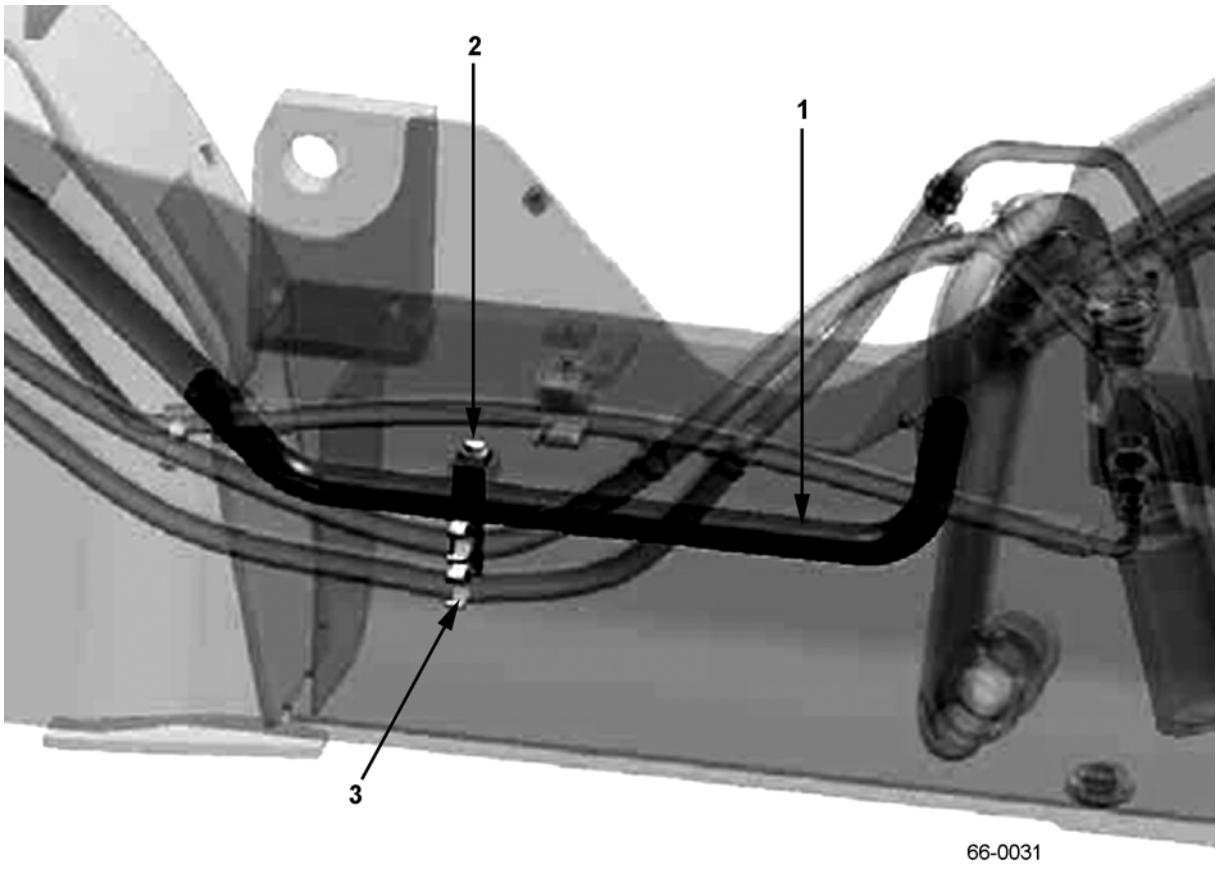

https://truckmanualshub.com/



## HYDRAULIC SYSTEM - RETURN PIPING - S/N 200001A~

| Item | Part Number | Description | Qty | |
|---|---|---|---|---|
| 1 | 3EB-66-54210 | PIPE (2.0T, 2.5T, 2.8T, 3.0T, 3.2T) . . . . . | 1 | |
| | 3EB-66-54310 | PIPE (3.5T) . . . . . | 1 | |
| 2 | 01024-80816 | BOLT . . . . . | 1 | |
| 3 | 3EB-66-54221 | CLAMP . . . . . | 1 | |

https://truckmanualshub.com/



## HYDRAULIC SYSTEM - HYD. PUMP PIPING - S/N 200001A~ FG MODELS - STD (EXCEPT POWER BRAKES)

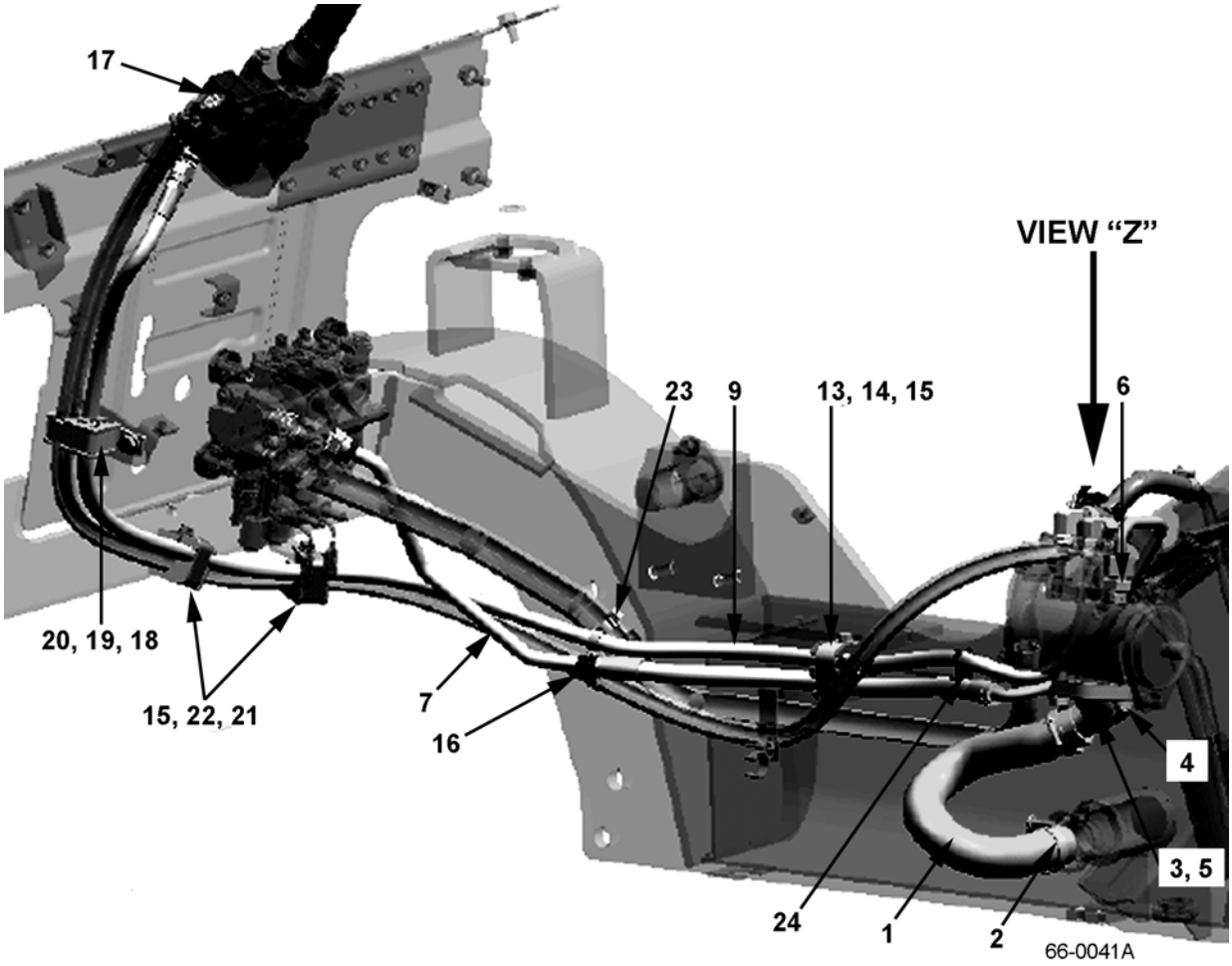


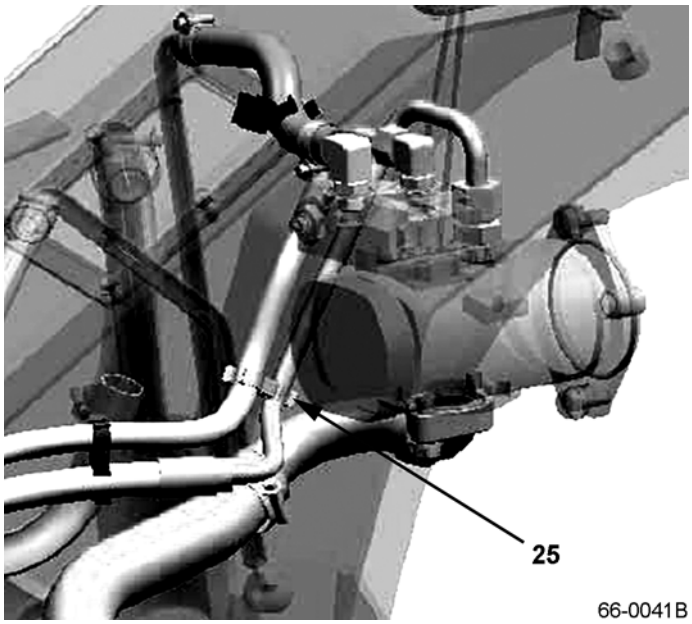


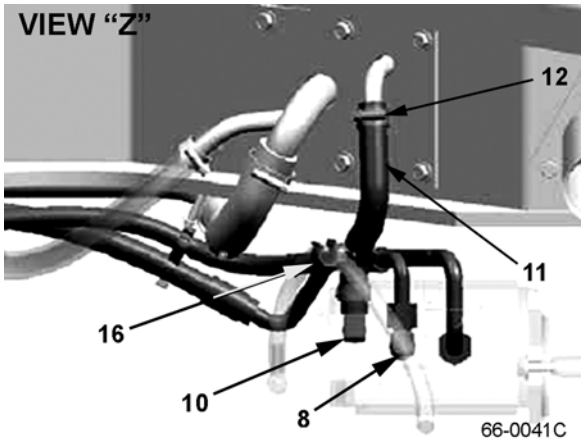

https://truckmanualshub.com/



## HYDRAULIC SYSTEM - HYD. PUMP PIPING - S/N 200001A~ FG MODELS - STD (EXCEPT POWER BRAKES)

| Item | Part Number | Description | Qty | |
|---|---|---|---|---|
| 1 | 3EB-66-51110 | HOSE | 1 | |
| 2 | 07281-00489 | CLAMP | 2 | |
| 3 | 3EB-66-41120 | PIPE | 1 | |
| 4 | 01024-81030 | BOLT | 2 | |
| 5 | 07000-13034 | O-RING | 1 | |
| 6 | 37B-1RB-5010 | FITTING ASSY | 1 | |
| 7 | 3EB-66-A7140 | HOSE | 1 | |
| 8 | 37B-1RB-5030 | FITTING ASSY | 1 | |
| 9 | 3EB-66-A7110 | HOSE | 1 | |
| 10 | 37B-1RC-5010 | FITTING ASSY | 1 | |
| 11 | 3EB-66-51150 | HOSE | 1 | |
| 12 | 07281-00259 | CLAMP | 2 | |
| 13 | 3EB-66-41180 | CLAMP | 1 | |
| 14 | 3EB-66-41191 | CUSHION | 1 | |
| 15 | 01024-80816 | BOLT | 3 | |
| 16 | 37B-1PC-5070 | CLAMP | 2 | |
| 17 | 37B-1RB-5040 | FITTING ASSY | 1 | |
| 18 | 3EB-66-52170 | CLAMP | 1 | |
| 19 | 3EB-66-52180 | CUSHION | 1 | |
| 20 | 01024-80820 | BOLT | 1 | |
| 21 | 3EB-66-51170 | CUSHION | 2 | |
| 22 | 3EB-66-51180 | CLAMP | 2 | |
| 23 | 3EB-66-41271 | CLAMP | 1 | |
| 24 | 37B-1PC-5090 | CLAMP | 1 | |
| 25 | 3EB-66-41461 | CLAMP | 1 | |

https://truckmanualshub.com/



## HYDRAULIC SYSTEM - HYD. PUMP PIPING - S/N 200001A~
## PNEUMATIC FG MODELS - 3.2 & 3.5 TON (W/ POWER BRAKES)

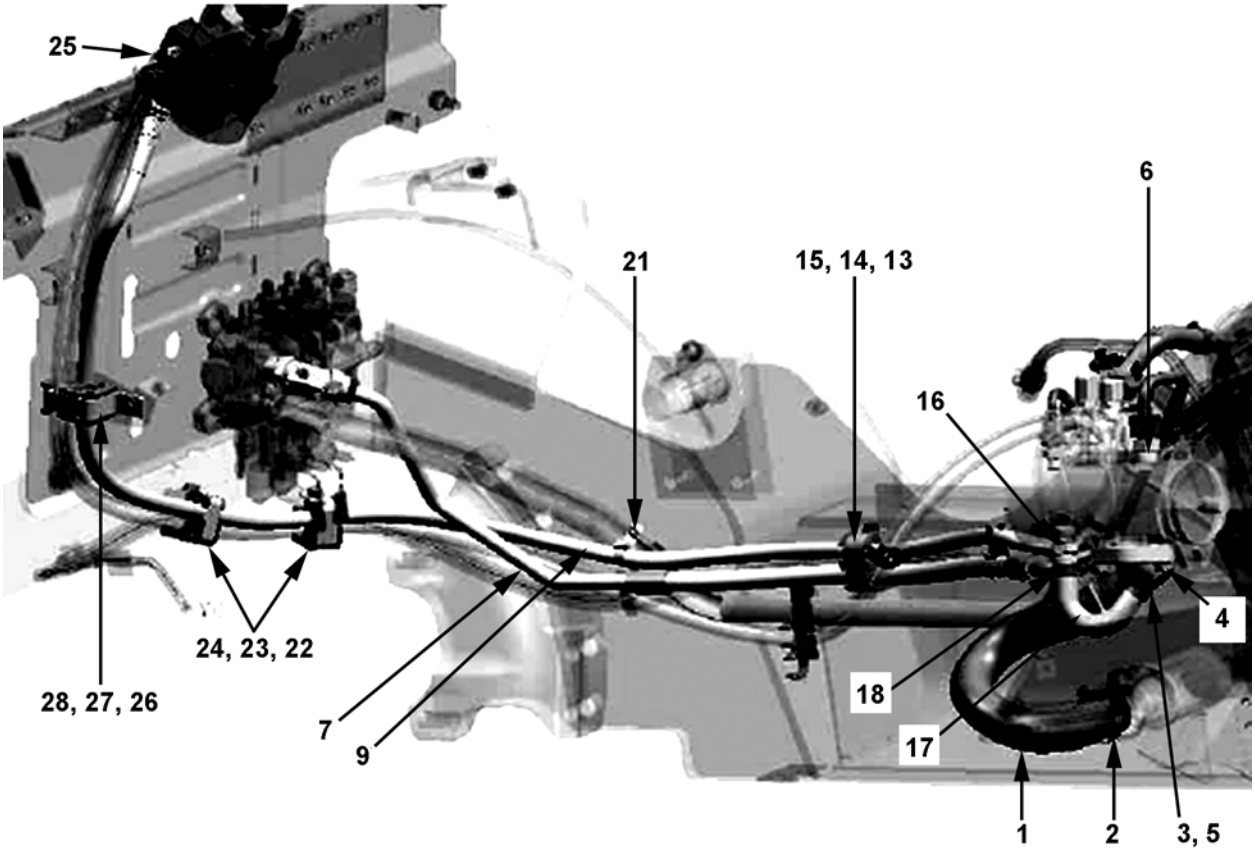


66-0042A

BACKSIDE OF PUMP

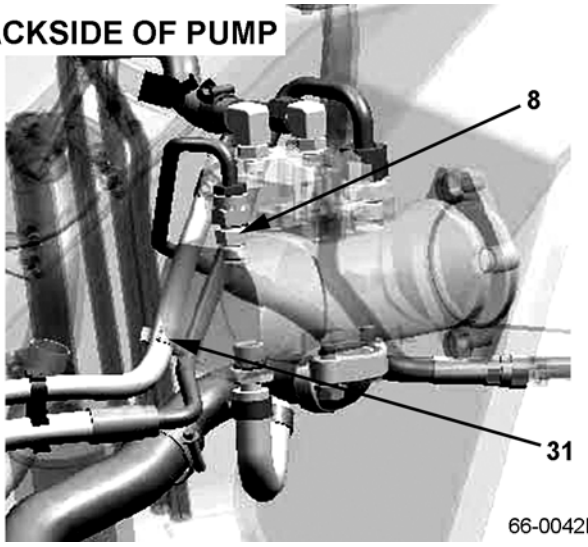


66-0042B

TOP VIEW OF PUMP

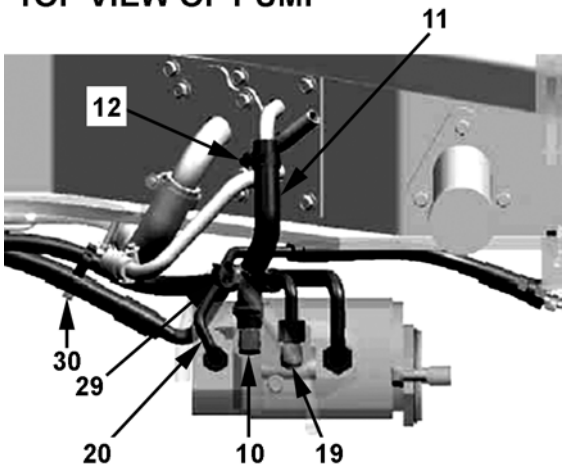


66-0042C

https://truckmanualshub.com/



## HYDRAULIC SYSTEM - HYD. PUMP PIPING - S/N 200001A~
## PNEUMATIC FG MODELS - 3.2 & 3.5 TON (W/ POWER BRAKES)

| Item | Part Number | Description | Qty | |
|---|---|---|---|---|
| 1 | 3EB-66-51110 | HOSE | 1 | |
| 2 | 07281-00489 | CLAMP | 2 | |
| 3 | 3EB-66-41220 | PIPE | 1 | |
| 4 | 01024-81030 | BOLT | 2 | |
| 5 | 07000-13034 | O-RING | 1 | |
| 6 | 37B-1RB-5010 | FITTING ASSY | 1 | |
| 7 | 3EB-66-A7140 | HOSE | 1 | |
| 8 | 37B-1RB-5020 | FITTING ASSY | 1 | |
| 9 | 3EB-66-A7110 | HOSE | 1 | |
| 10 | 37B-1RC-5010 | FITTING ASSY | 1 | |
| 11 | 3EB-66-51150 | HOSE | 1 | |
| 12 | 07281-00259 | CLAMP | 2 | |
| 13 | 3EB-66-41180 | CLAMP | 1 | |
| 14 | 3EB-66-41191 | CUSHION | 1 | |
| 15 | 01024-80816 | BOLT | 3 | |
| 16 | 37B-1PC-5070 | CLAMP | 2 | |
| 17 | 3EB-66-41210 | HOSE | 1 | |
| 18 | 07281-00259 | CLAMP | 2 | |
| 19 | 37B-1RB-5030 | FITTING ASSY | 1 | |
| 20 | 3EB-66-51411 | HOSE | 1 | |
| 21 | 3EB-66-41271 | CLAMP | 1 | |
| 22 | 3EB-66-51170 | CUSHION | 2 | |
| 23 | 3EB-66-51180 | CLAMP | 1 | |
| 24 | 01024-80816 | BOLT | 2 | |
| 25 | 37B-1RB-5040 | FITTING ASSY | 1 | |
| 26 | 3EB-66-52170 | CLAMP | 1 | |
| 27 | 01024-80820 | BOLT | 1 | |
| 28 | 3EB-66-52180 | CUSHION | 1 | |
| 29 | 37B-1PC-5070 | CLAMP | 1 | |
| 30 | 37B-1PC-5090 | CLAMP | 1 | |
| 31 | 3EB-66-41461 | CLAMP | 1 | |

https://truckmanualshub.com/



## HYDRAULIC SYSTEM - HYD. PUMP PIPING - S/N 200001A~
## FD MODELS - STD (EXCEPT POWER BRAKES)

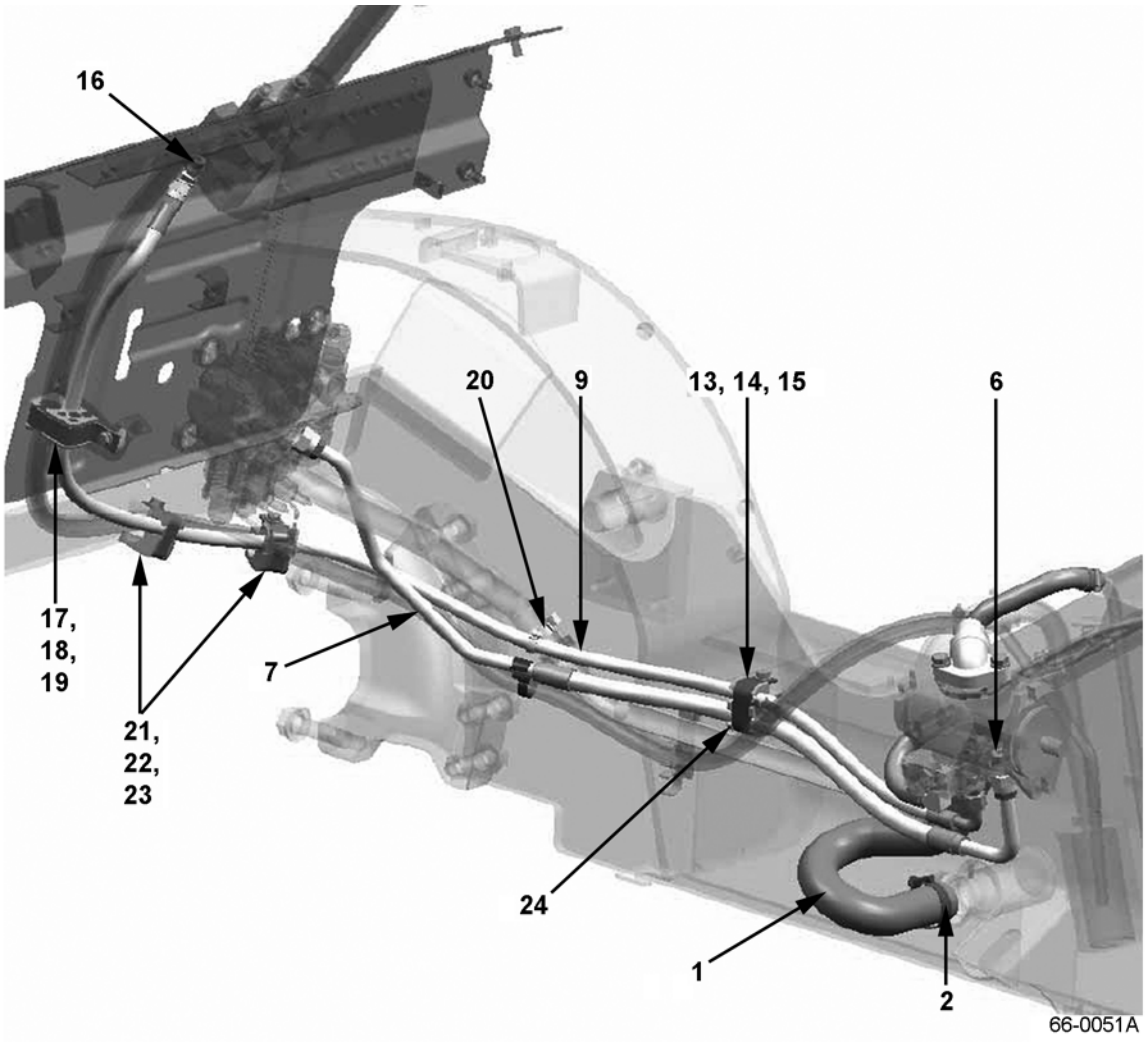


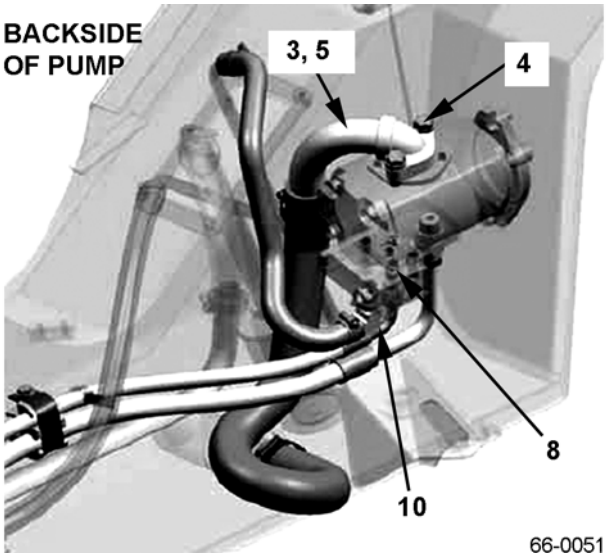


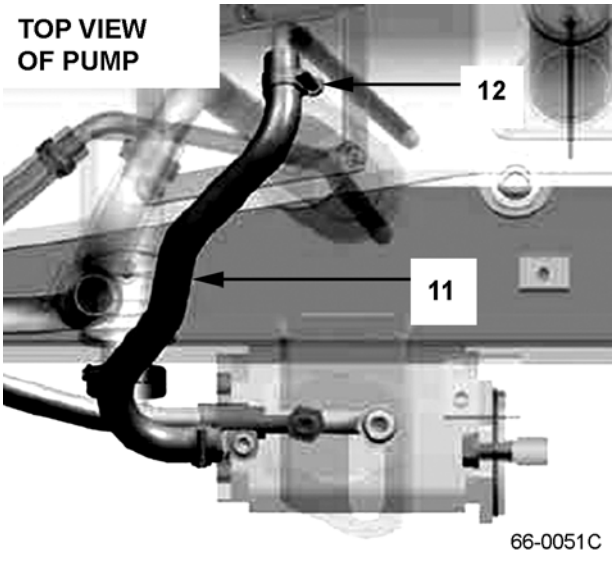

https://truckmanualshub.com/



## HYDRAULIC SYSTEM - HYD. PUMP PIPING - S/N 200001A~
## FD MODELS - STD (EXCEPT POWER BRAKES)

| Item | Part Number | Description | Qty | |
|---|---|---|---|---|
| 1 | 3EB-66-52110 | HOSE | 1 | |
| 2 | 07281-00489 | CLAMP | 2 | |
| 3 | 3EB-66-41420 | PIPE | 1 | |
| 4 | 01024-81030 | BOLT | 2 | |
| 5 | 07000-13034 | O-RING | 1 | |
| 6 | 37B-1RB-5010 | FITTING ASSY | 1 | |
| 7 | 3EB-66-A7160 | HOSE | 1 | |
| 8 | 37B-1RB-5020 | FITTING ASSY | 1 | |
| 9 | 3EB-66-52140 | HOSE | 1 | |
| 10 | 37B-1RC-5010 | FITTING ASSY | 1 | |
| 11 | 3EB-66-52150 | HOSE | 1 | |
| 12 | 07281-00259 | CLAMP | 2 | |
| 13 | 3EB-66-41180 | CLAMP | 1 | |
| 14 | 3EB-66-41191 | CUSHION | 1 | |
| 15 | 01024-80816 | BOLT | 1 | |
| 16 | 37B-1RB-5040 | FITTING ASSY | 1 | |
| 17 | 3EB-66-52170 | CLAMP | 1 | |
| 18 | 01024-80820 | BOLT | 1 | |
| 19 | 3EB-66-52180 | CUSHION | 1 | |
| 20 | 3EB-66-41271 | CLAMP | 1 | |
| 21 | 3EB-66-51170 | CLAMP | 2 | |
| 22 | 3EB-66-51180 | CLAMP | 2 | |
| 23 | 01024-80816 | BOLT | 2 | |
| 24 | 37B-1PC-5070 | CLAMP | 1 | |

https://truckmanualshub.com/



## HYDRAULIC SYSTEM - HYD. PUMP PIPING - S/N 200001A~
## FD MODELS - (W/ POWER BRAKES)

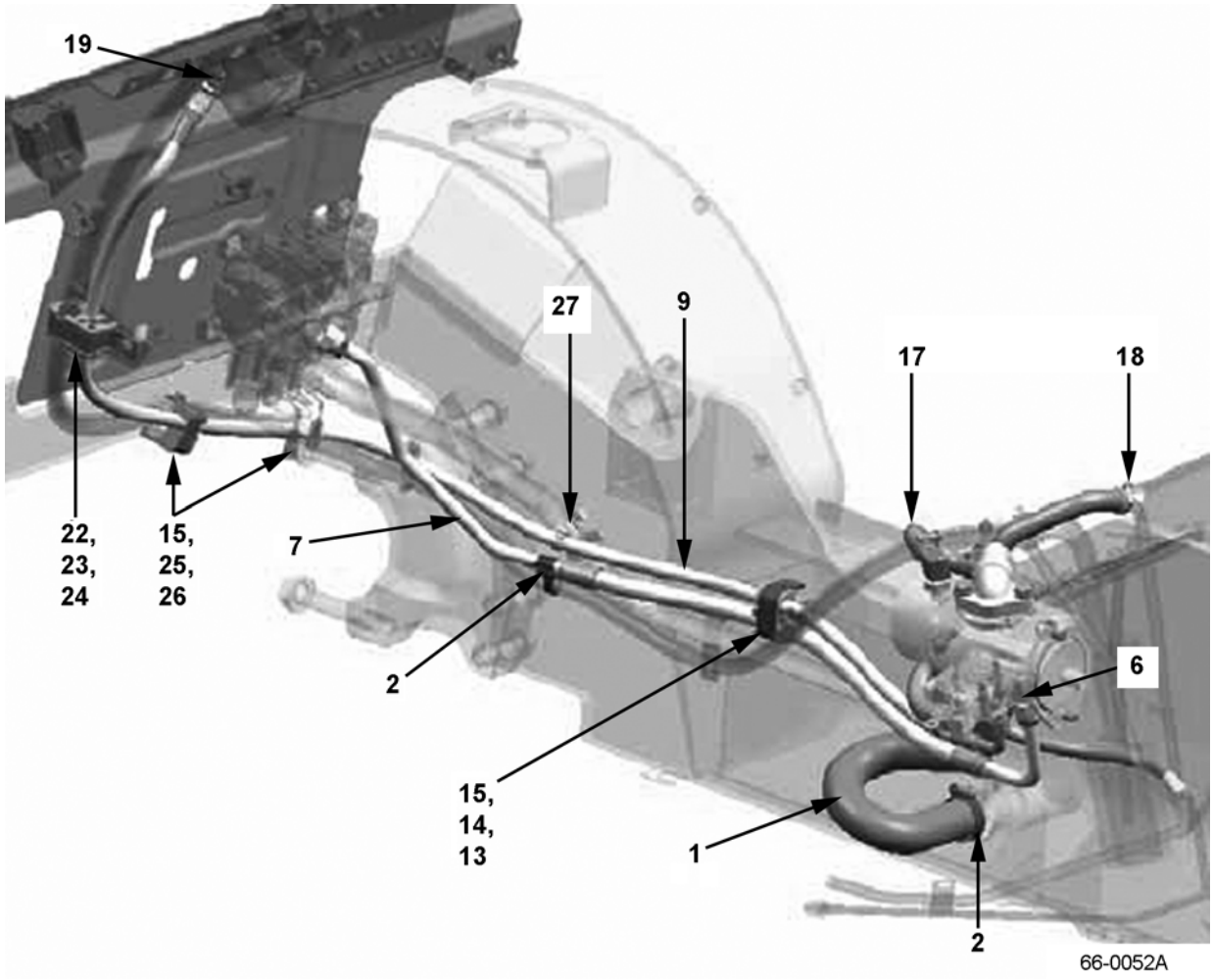


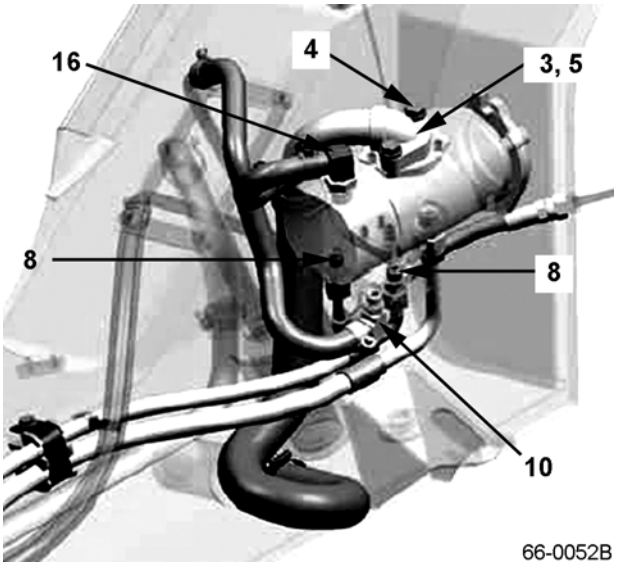


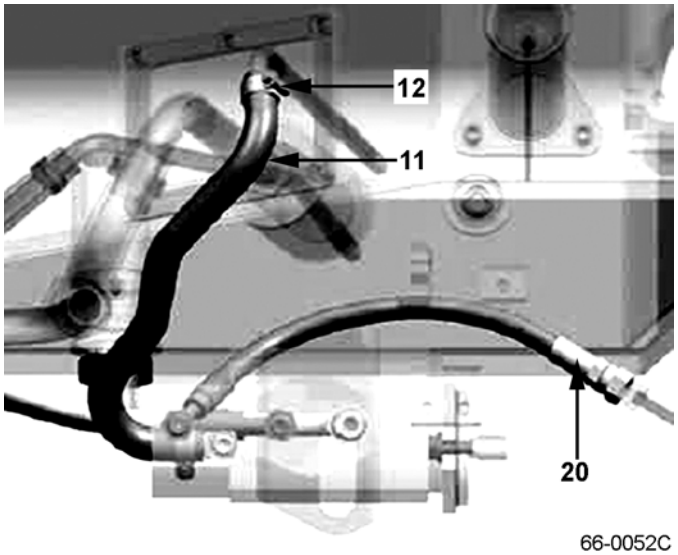

https://truckmanualshub.com/



## HYDRAULIC SYSTEM - HYD. PUMP PIPING - S/N 200001A~
## FD MODELS - (W/ POWER BRAKES)

| Item | Part Number | Description | Qty | |
|---|---|---|---|---|
| 1 | 3EB-66-52110 | HOSE | 1 | |
| 2 | 07281-00489 | CLAMP | 2 | |
| 3 | 3EB-66-41520 | PIPE | 1 | |
| 4 | 01024-81030 | BOLT | 2 | |
| 5 | 07000-13034 | O-RING | 1 | |
| 6 | 37B-1RB-5010 | FITTING ASSY | 1 | |
| 7 | 3EB-66-A7160 | HOSE | 1 | |
| 8 | 37B-1RB-5020 | FITTING ASSY | 2 | |
| 9 | 3EB-66-52140 | HOSE | 1 | |
| 10 | 37B-1RC-5010 | FITTING ASSY | 1 | |
| 11 | 3EB-66-52150 | HOSE | 1 | |
| 12 | 07281-00259 | CLAMP | 2 | |
| 13 | 3EB-66-41180 | CLAMP | 1 | |
| 14 | 3EB-66-41191 | CUSHION | 1 | |
| 15 | 01024-80816 | BOLT | 3 | |
| 16 | 37B-1RC-5030 | FITTING ASSY | 1 | |
| 17 | 3EB-66-41510 | HOSE | 1 | |
| 18 | 07281-00259 | CLAMP | 2 | |
| 19 | 37B-1RB-5040 | FITTING ASSY | 1 | |
| 20 | 3EB-66-52410 | HOSE | 1 | |
| 21 | 3EB-66-52190 | CLAMP | 1 | |
| 22 | 3EB-66-52170 | CLAMP | 1 | |
| 23 | 01024-80820 | BOLT | 1 | |
| 24 | 3EB-66-52180 | CUSHION | 1 | |
| 25 | 3EB-66-51170 | CUSHION | 2 | |
| 26 | 3EB-66-51180 | CLAMP | 2 | |
| 27 | 3EB-66-41271 | CLAMP | 1 | |
| 28 | 37B-1PC-5070 | CLAMP | 1 | |

https://truckmanualshub.com/



# HYDRAULIC SYSTEM - CONTROL VALVE PIPING - S/N 200001A~

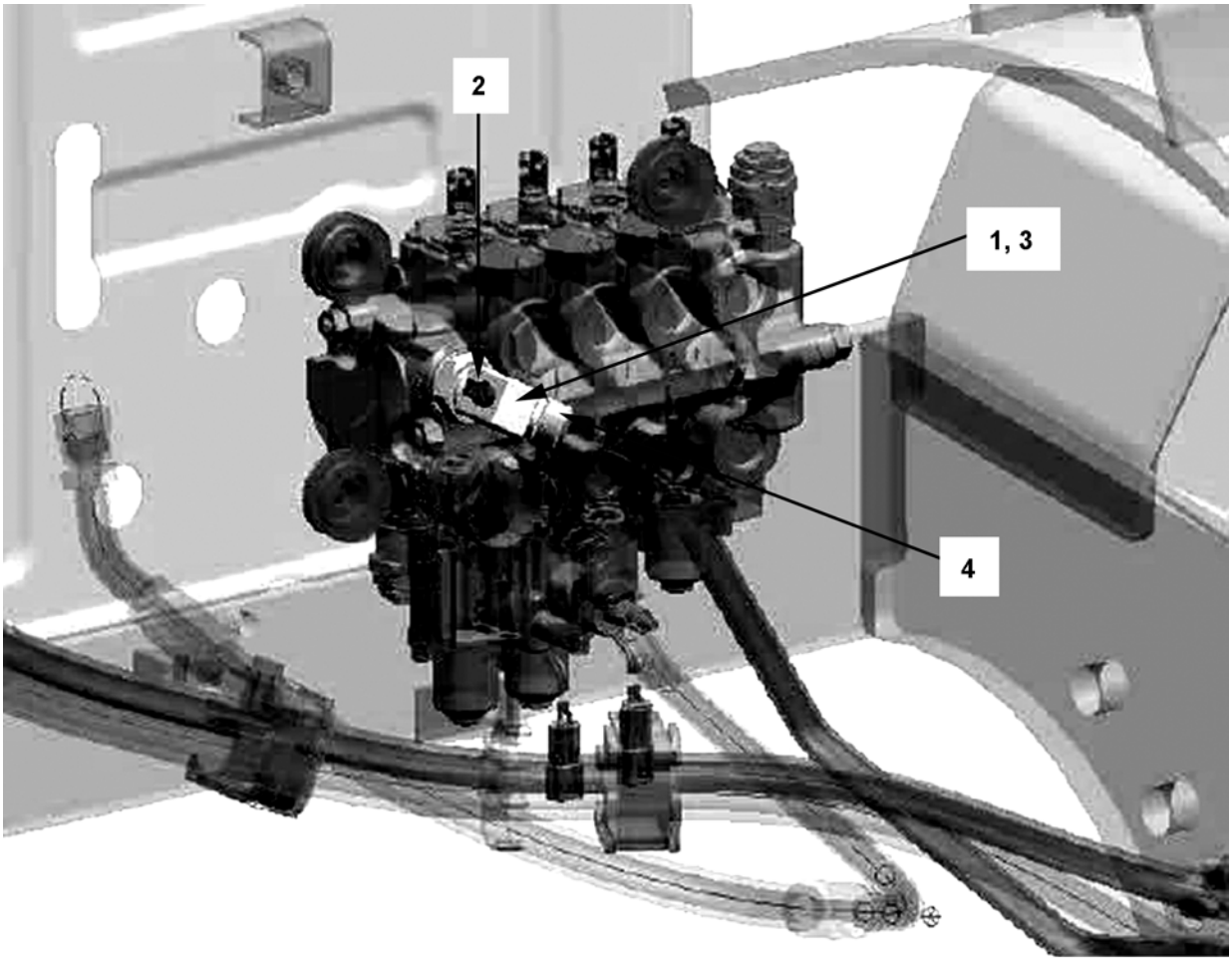


66-0061A

https://truckmanualshub.com/



## HYDRAULIC SYSTEM - CONTROL VALVE PIPING - S/N 200001A~

| Item | Part Number | Description | Qty | |
|---|---|---|---|---|
| 1 | 3EB-66-A7410 | ELBOW | 1 | |
| 2 | 07042-30108 | PLUG | 1 | |
| 3 | 540-62-12540 | O-RING | 1 | |
| 4 | 02896-11012 | O-RING | 1 | |

https://truckmanualshub.com/



# HYDRAULIC SYSTEM - LIFT PIPING AT CONTROL VALVE - S/N 200001A~ & OPTIONAL ACCUMULATOR

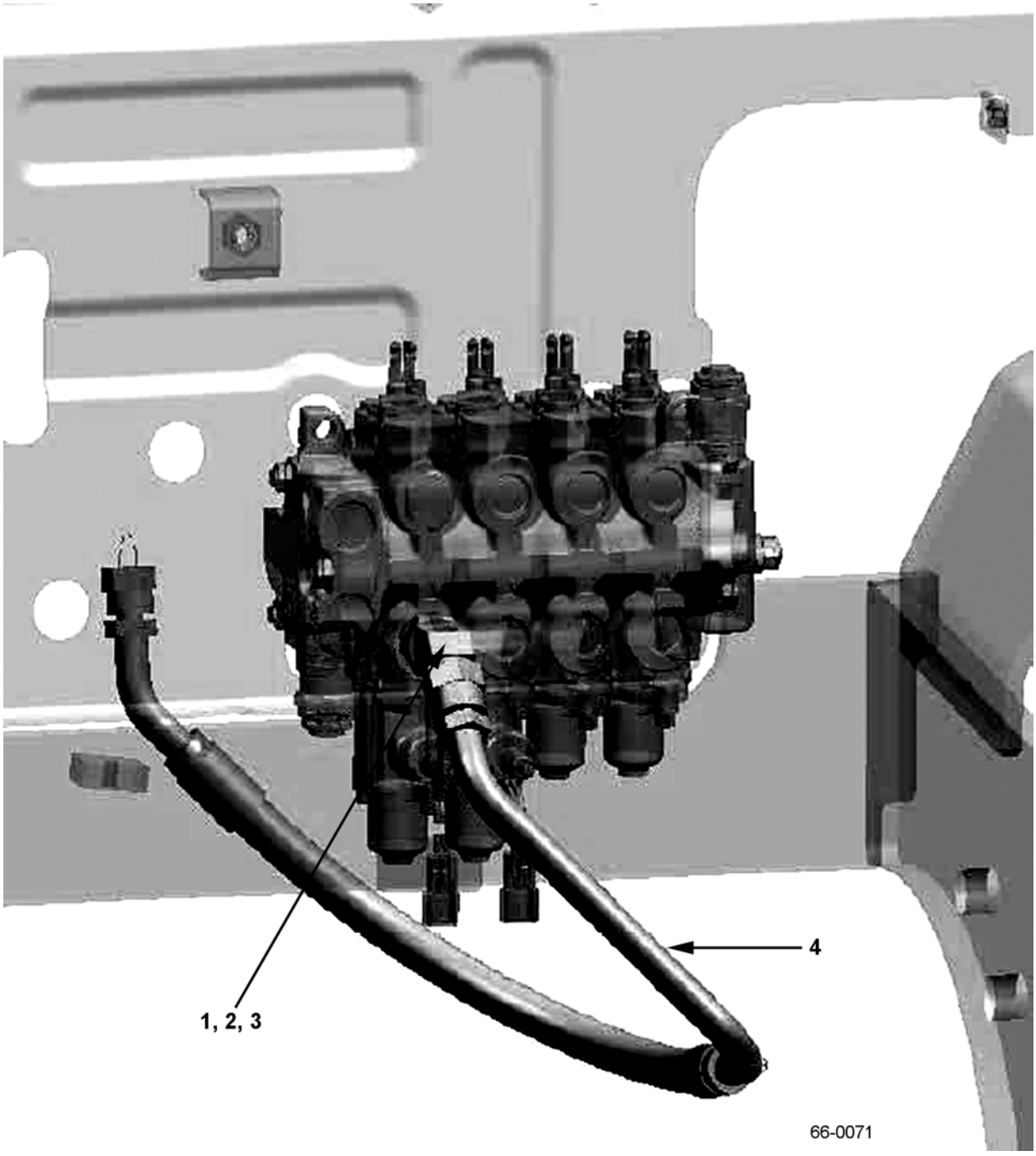

https://truckmanualshub.com/



## HYDRAULIC SYSTEM - LIFT PIPING AT CONTROL VALVE - S/N 200001A~ & OPTIONAL ACCUMULATOR

| Item | Part Number | Description | Qty | |
|---|---|---|---|---|
| 1 | 3EB-66-A7520 | ELBOW | 1 | |
| 2 | 540-62-12540 | O-RING | 1 | |
| 3 | 07042-30211 | PLUG | 1 | |
| 4 | 3EB-66-A7510 | HOSE | 1 | |
| N/S | 3EB-61-F5590 | ACCUMULATOR, 2 QT. (OPTION) | 1 | |

https://truckmanualshub.com/



## HYDRAULIC SYSTEM - TILT PIPING - S/N 200001A~

### TILT PIPING

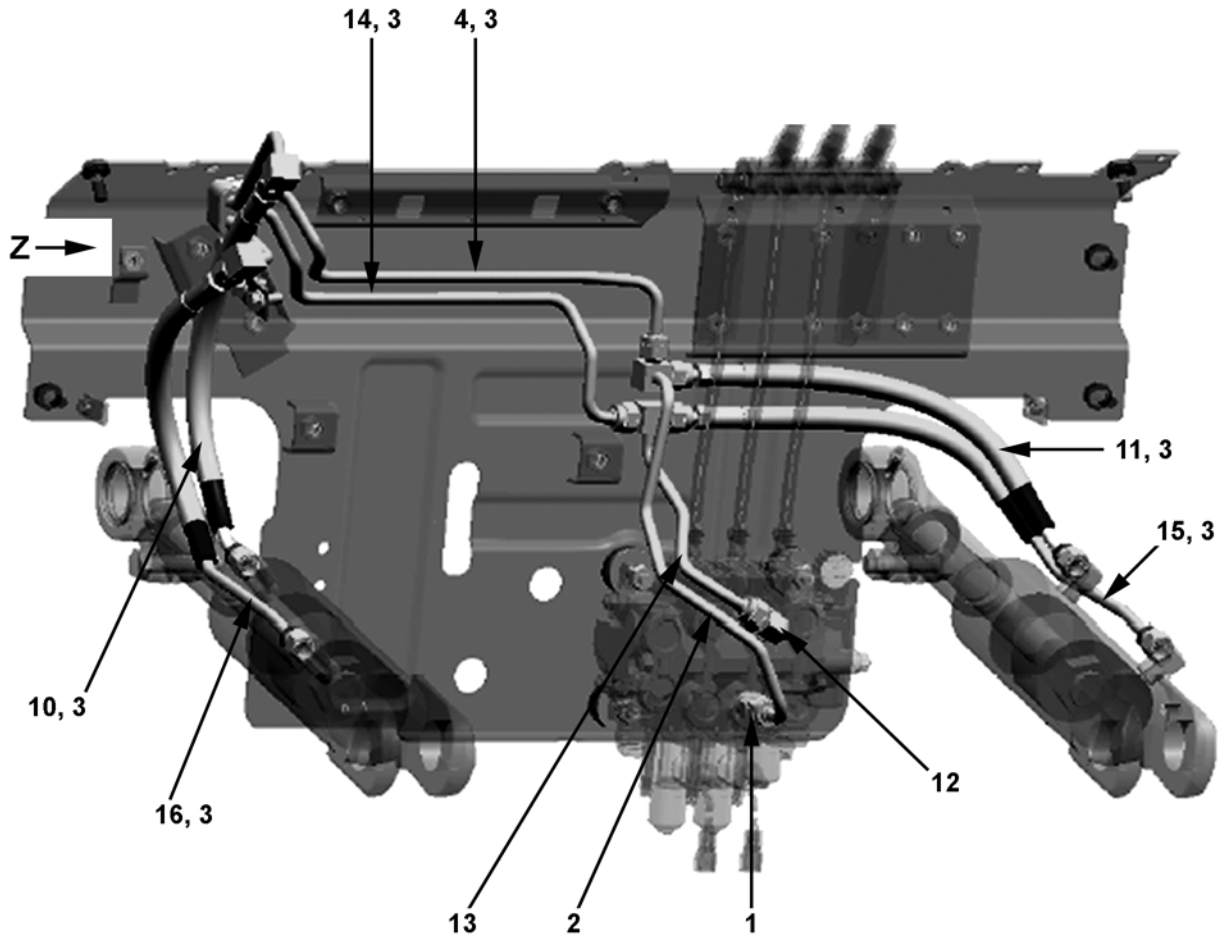


66-0081A

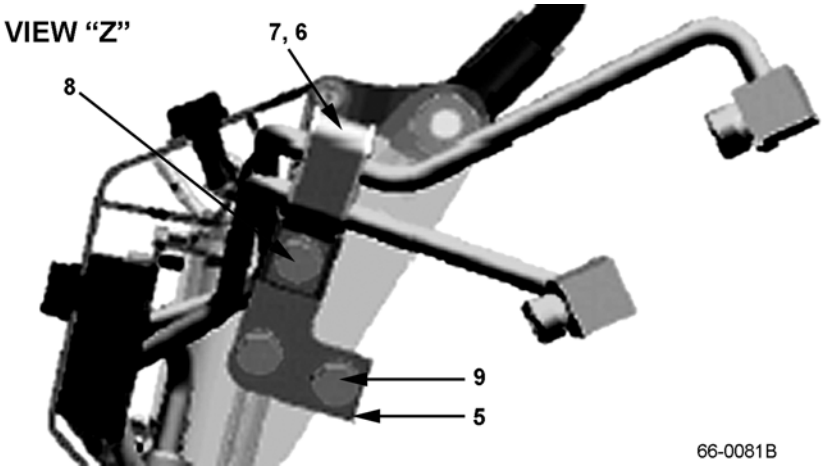


66-0081B

https://truckmanualshub.com/



## HYDRAULIC SYSTEM - TILT PIPING - S/N 200001A~

| Item | Part Number | Description | Qty | |
|---|---|---|---|---|
| 1 | 3EB-66-A7350 | FITTING | 1 | |
| 2 | 3EB-66-A7310 | PIPE | 1 | |
| 3 | 02896-11009 | O-RING | 10 | |
| 4 | 3EB-66-A7340 | PIPE | 1 | |
| 5 | 3EB-66-53181 | BRACKET | 1 | |
| 6 | 3EB-66-33170 | CLAMP | 1 | |
| 7 | 3EB-66-42180 | RUBBER | 1 | |
| 8 | 01024-80816 | BOLT | 1 | |
| 9 | 01024-80820 | BOLT | 2 | |
| 10 | 3EB-66-A7390 | HOSE | 1 | |
| 11 | 3EB-66-A7380 | HOSE | 1 | |
| 12 | 3BB-66-A6370 | ELBOW | 1 | |
| 13 | 3EB-66-A7320 | PIPE | 1 | |
| 14 | 3EB-66-A7330 | PIPE | 1 | |
| 15 | 3EB-66-A7370 | HOSE | 1 | |
| 16 | 3EB-66-A7360 | HOSE | 1 | |

https://truckmanualshub.com/



## HYDRAULIC SYSTEM - POWER BRAKE PIPING - S/N 200001A~
## (ALSO SEE FIG. 66-0092 & 66-0093)

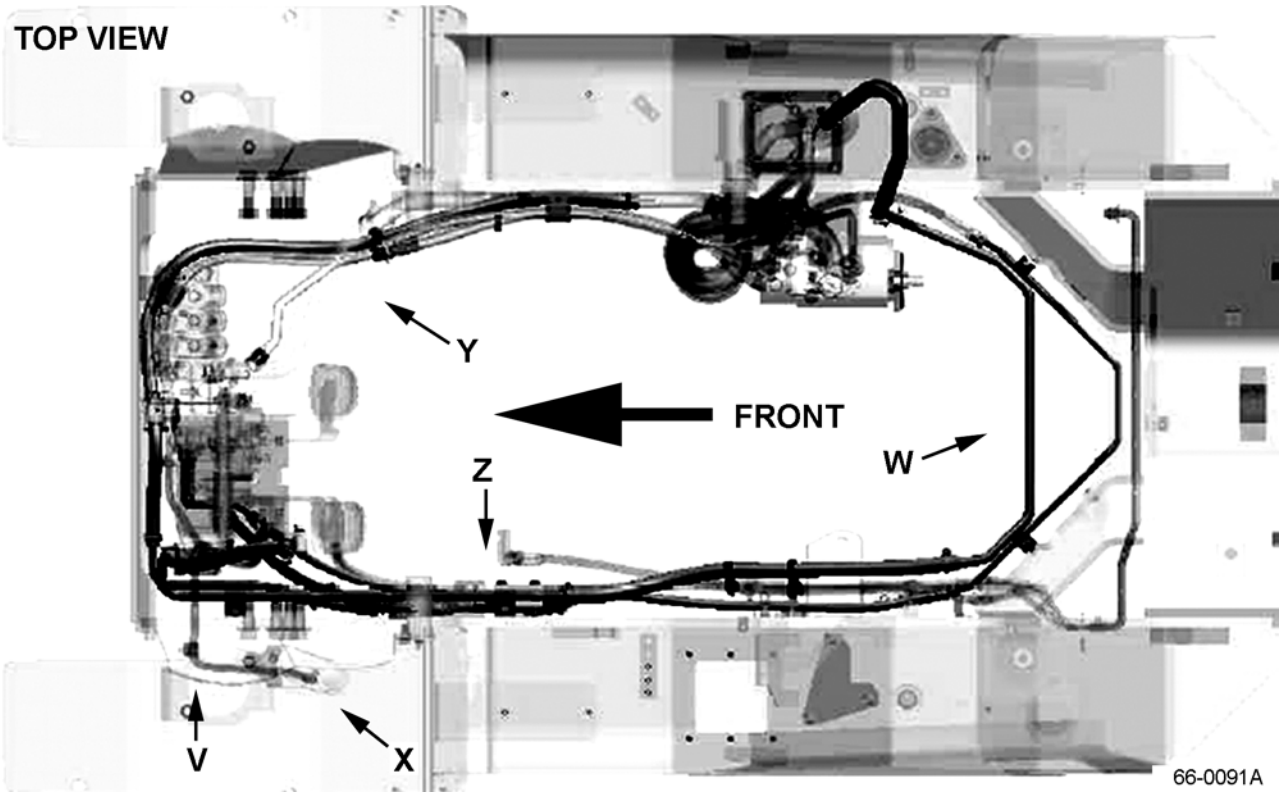


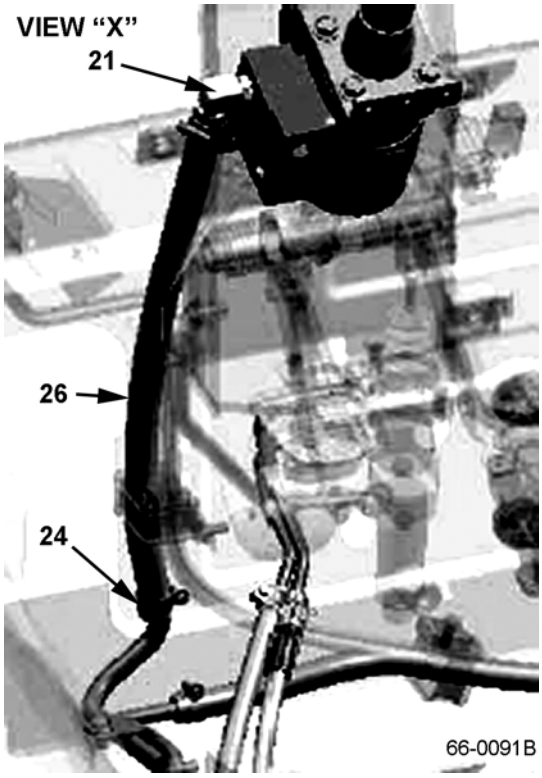


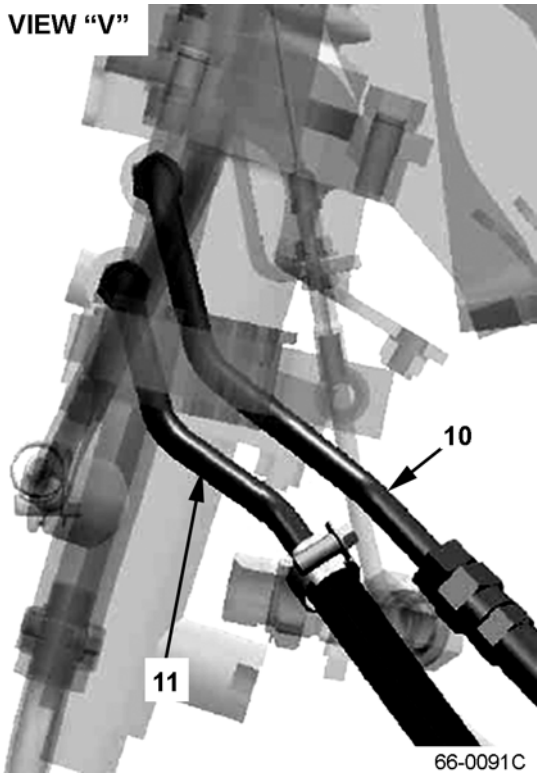

https://truckmanualshub.com/



## HYDRAULIC SYSTEM - POWER BRAKE PIPING - S/N 200001A~
## (ALSO SEE FIG. 66-0092 & 66-0093)

| Item | Part Number | Description | Qty | |
|---|---|---|---|---|
| 1 | 02896-11009 | O-RING | 1 | |
| 2 | 01024-80816 | BOLT | 5 | |
| 3 | 37B-1PW-4030 | HOSE | 1 | |
| 4 | 3EB-66-44110 | FLOW DIVIDER | 1 | |
| 5 | 01024-80850 | BOLT | 3 | |
| 6 | 3EB-66-44660 | ELBOW | 1 | |
| 7 | 3EB-66-44620 | ELBOW | 1 | |
| 8 | 540-62-13330 | O-RING | 2 | |
| 9 | 3EB-66-55180 | HOSE | 1 | |
| 10 | 3EB-66-55540 | PIPE | 1 | |
| 11 | 3EB-66-55530 | PIPE | 1 | |
| 12 | 07260-20940 | HOSE | 1 | |
| 13 | 07281-00197 | CLAMP | 2 | |
| 14 | 3EB-66-55520 | HOSE | 1 | |
| 15 | 37B-1PW-5010 | HOSE | 1 | |
| 16 | 07281-00229 | CLAMP | 6 | |
| 17 | 37B-1PW-5040 | HOSE | 1 | |
| 18 | 37B-1PC-5090 | CLAMP | 3 | |
| 19 | 3EB-94-46410 | CLAMP | 1 | |
| 20 | 3EB-66-A7920 | PIPE (FG) | 1 | |
| | 3EB-66-A7960 | PIPE (FD) | 1 | |
| 21 | 37B-1RC-5010 | FITTING ASSY | 1 | |
| 22 | 3EB-66-A7910 | PIPE | 1 | |
| 23 | 3EB-66-A7930 | HOSE (FG) | 1 | |
| | 3EB-66-A7970 | HOSE (FD) | 1 | |
| 24 | 07281-00259 | CLAMP | 6 | |
| 25 | 07260-21463 | HOSE | 1 | |
| 26 | 07260-21450 | HOSE | 1 | |
| 27 | 01024-80820 | BOLT | 1 | |
| 28 | 3EB-66-55510 | PIPE | 1 | |
| 29 | 3EA-05-46140 | CLAMP | 1 | |
| 30 | 3EA-05-46180 | CLAMP | 1 | |

https://truckmanualshub.com/



## HYDRAULIC SYSTEM - POWER BRAKE PIPING - S/N 200001A~
## (ALSO SEE FIG. 66-0091 & 66-0093)

SIDE VIEW

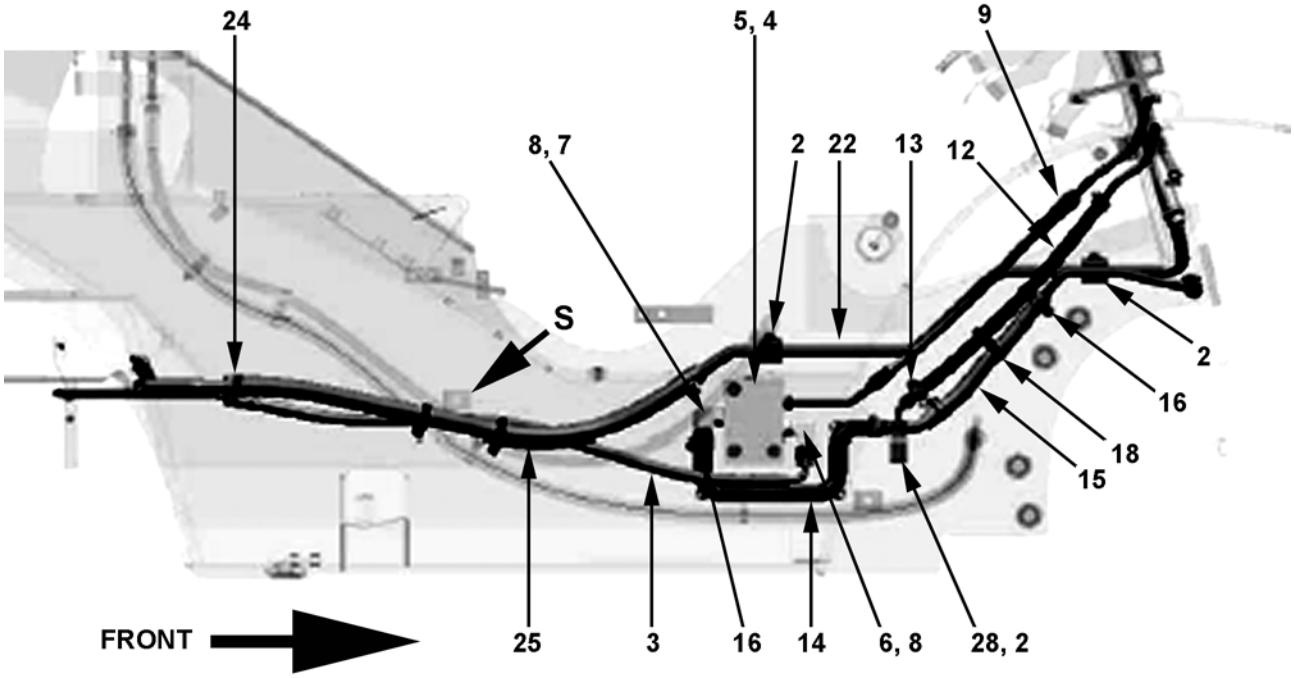


66-0092A

VIEW "S"

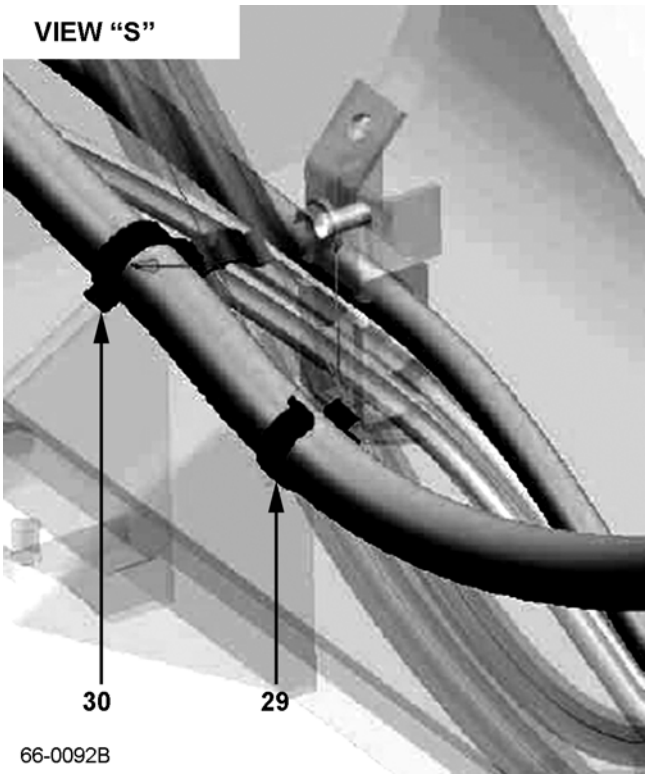


66-0092B

https://truckmanualshub.com/



## HYDRAULIC SYSTEM - POWER BRAKE PIPING - S/N 200001A~
## (ALSO SEE FIG. 66-0091 & 66-0093)

| Item | Part Number | Description | Qty | |
|---|---|---|---|---|
| 1 | 02896-11009 | O-RING | 1 | |
| 2 | 01024-80816 | BOLT | 5 | |
| 3 | 37B-1PW-4030 | HOSE | 1 | |
| 4 | 3EB-66-44110 | FLOW DIVIDER | 1 | |
| 5 | 01024-80850 | BOLT | 3 | |
| 6 | 3EB-66-44660 | ELBOW | 1 | |
| 7 | 3EB-66-44620 | ELBOW | 1 | |
| 8 | 540-62-13330 | O-RING | 2 | |
| 9 | 3EB-66-55180 | HOSE | 1 | |
| 10 | 3EB-66-55540 | PIPE | 1 | |
| 11 | 3EB-66-55530 | PIPE | 1 | |
| 12 | 07260-20940 | HOSE | 1 | |
| 13 | 07281-00197 | CLAMP | 2 | |
| 14 | 3EB-66-55520 | HOSE | 1 | |
| 15 | 37B-1PW-5010 | HOSE | 1 | |
| 16 | 07281-00229 | CLAMP | 6 | |
| 17 | 37B-1PW-5040 | HOSE | 1 | |
| 18 | 37B-1PC-5090 | CLAMP | 3 | |
| 19 | 3EB-94-46410 | CLAMP | 1 | |
| 20 | 3EB-66-A7920 | PIPE (FG) | 1 | |
| | 3EB-66-A7960 | PIPE (FD) | 1 | |
| 21 | 37B-1RC-5010 | FITTING ASSY | 1 | |
| 22 | 3EB-66-A7910 | PIPE | 1 | |
| 23 | 3EB-66-A7930 | HOSE (FG) | 1 | |
| | 3EB-66-A7970 | HOSE (FD) | 1 | |
| 24 | 07281-00259 | CLAMP | 6 | |
| 25 | 07260-21463 | HOSE | 1 | |
| 26 | 07260-21450 | HOSE | 1 | |
| 27 | 01024-80820 | BOLT | 1 | |
| 28 | 3EB-66-55510 | PIPE | 1 | |
| 29 | 3EA-05-46140 | CLAMP | 1 | |
| 30 | 3EA-05-46180 | CLAMP | 1 | |

https://truckmanualshub.com/



## HYDRAULIC SYSTEM - POWER BRAKE PIPING - S/N 200001A~
## (ALSO SEE FIG. 66-0091 & 66-0092)

VIEW “Y”

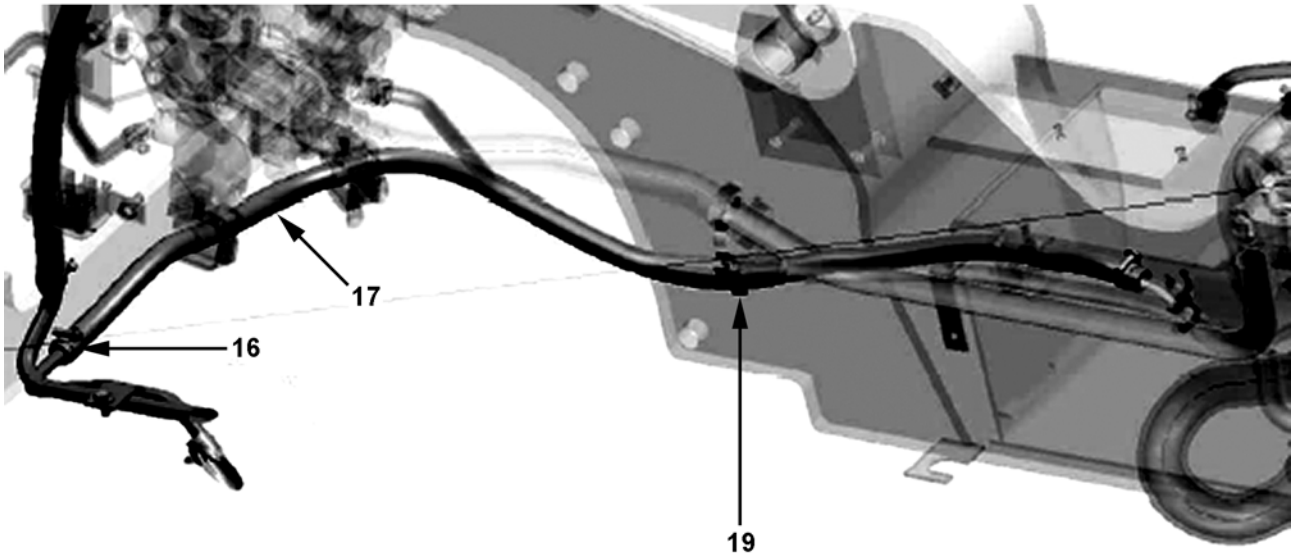


66-0093A

VIEW “W”

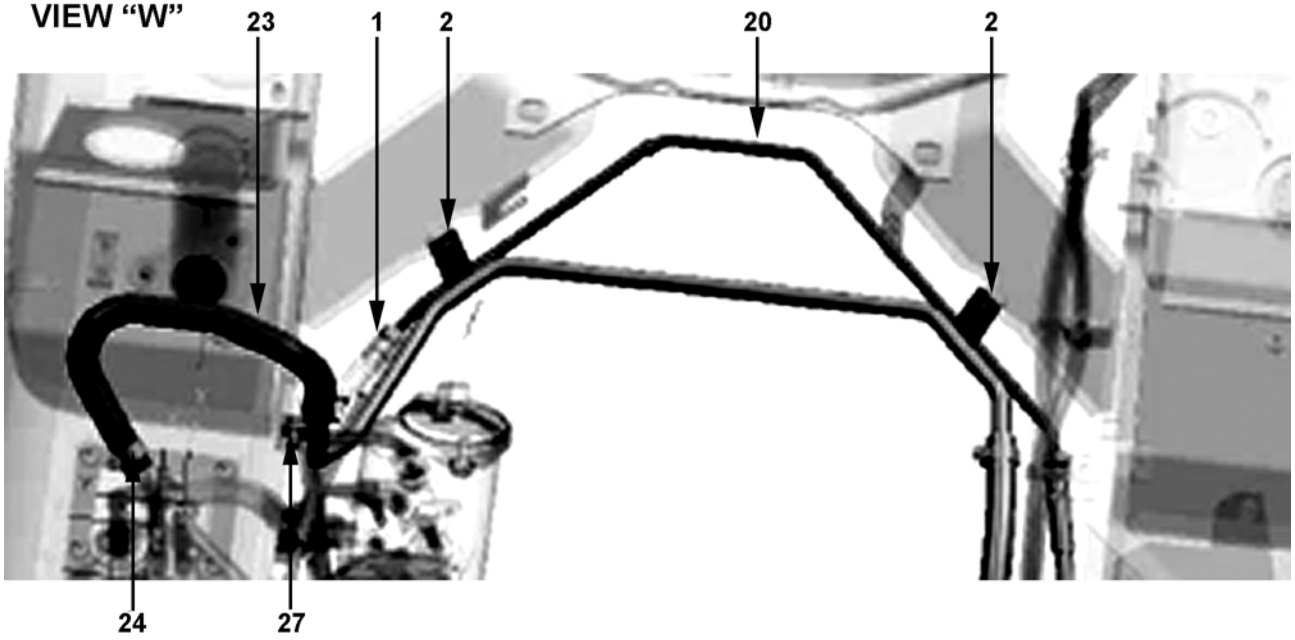


66-0093B

https://truckmanualshub.com/



## HYDRAULIC SYSTEM - POWER BRAKE PIPING - S/N 200001A~
## (ALSO SEE FIG. 66-0091 & 66-0092)

| Item | Part Number | Description | Qty | |
|---|---|---|---|---|
| 1 | 02896-11009 | O-RING | 1 | |
| 2 | 01024-80816 | BOLT | 5 | |
| 3 | 37B-1PW-4030 | HOSE | 1 | |
| 4 | 3EB-66-44110 | FLOW DIVIDER | 1 | |
| 5 | 01024-80850 | BOLT | 3 | |
| 6 | 3EB-66-44660 | ELBOW | 1 | |
| 7 | 3EB-66-44620 | ELBOW | 1 | |
| 8 | 540-62-13330 | O-RING | 2 | |
| 9 | 3EB-66-55180 | HOSE | 1 | |
| 10 | 3EB-66-55540 | PIPE | 1 | |
| 11 | 3EB-66-55530 | PIPE | 1 | |
| 12 | 07260-20940 | HOSE | 1 | |
| 13 | 07281-00197 | CLAMP | 2 | |
| 14 | 3EB-66-55520 | HOSE | 1 | |
| 15 | 37B-1PW-5010 | HOSE | 1 | |
| 16 | 07281-00229 | CLAMP | 6 | |
| 17 | 37B-1PW-5040 | HOSE | 1 | |
| 18 | 37B-1PC-5090 | CLAMP | 3 | |
| 19 | 3EB-94-46410 | CLAMP | 1 | |
| 20 | 3EB-66-A7920 | PIPE (FG) | 1 | |
| | 3EB-66-A7960 | PIPE (FD) | 1 | |
| 21 | 37B-1RC-5010 | FITTING ASSY | 1 | |
| 22 | 3EB-66-A7910 | PIPE | 1 | |
| 23 | 3EB-66-A7930 | HOSE (FG) | 1 | |
| | 3EB-66-A7970 | HOSE (FD) | 1 | |
| 24 | 07281-00259 | CLAMP | 6 | |
| 25 | 07260-21463 | HOSE | 1 | |
| 26 | 07260-21450 | HOSE | 1 | |
| 27 | 01024-80820 | BOLT | 1 | |
| 28 | 3EB-66-55510 | PIPE | 1 | |
| 29 | 3EA-05-46140 | CLAMP | 1 | |
| 30 | 3EA-05-46180 | CLAMP | 1 | |

https://truckmanualshub.com/



## MAST BUSHING
## ALL MODELS - S/N 200001A~

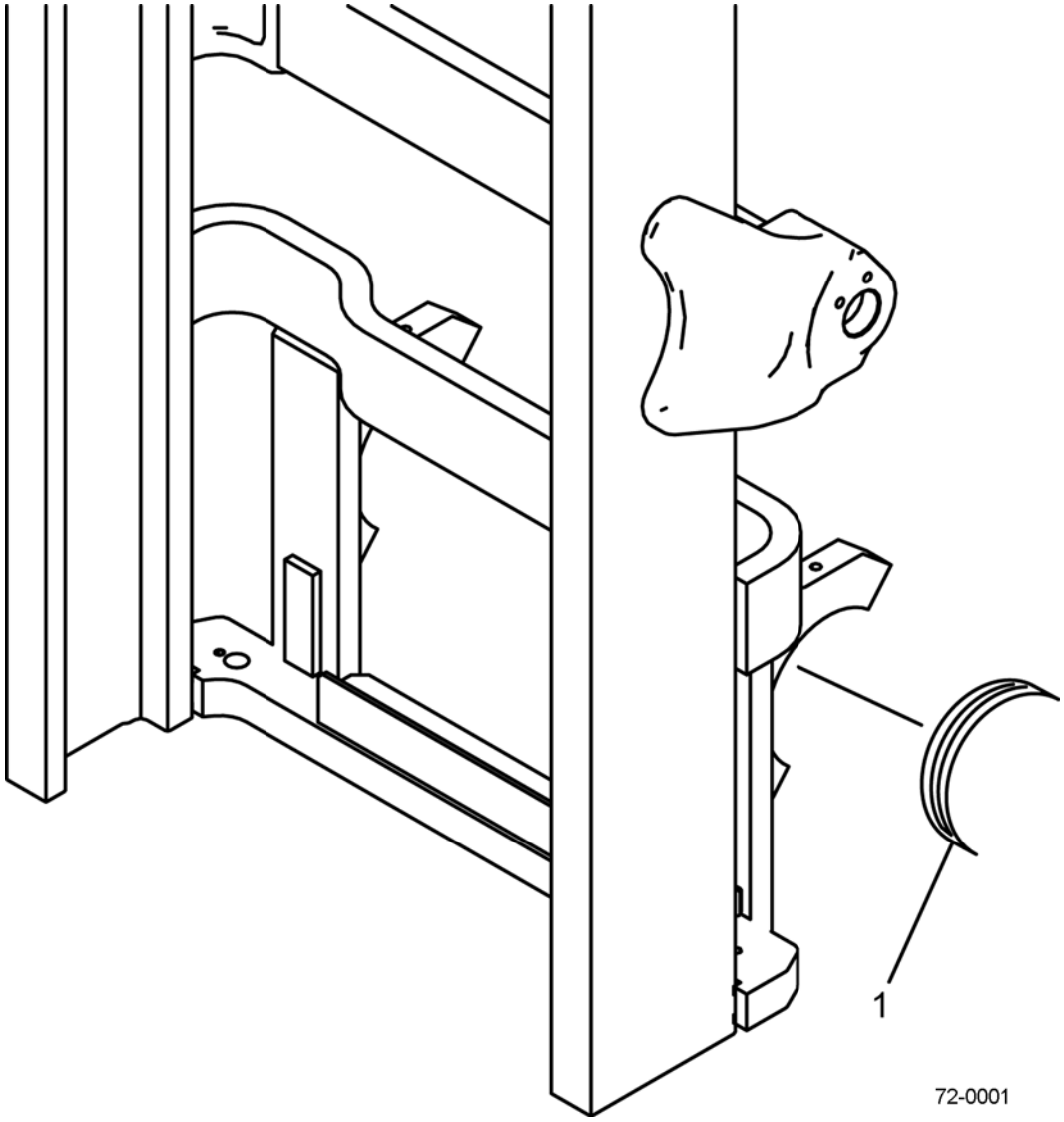

https://truckmanualshub.com/



## MAST BUSHING
## ALL MODELS - S/N 200001A~

| Item | Part Number | Description | Qty | Serial Number |
|---|---|---|---|---|
| 1 | 3EB-84-51290 | BUSHING (ALL CUSHION MODELS) . . . . . | 2 | |
| | 3EB-71-51290 | BUSHING (2.0T, 2.5T, 2.8T, 3.0T PNEUMATIC). | 2 | |
| | 3EB-71-61790 | BUSHING (3.2T, 3.5T PNEUMATIC) . . . . . | 2 | |

https://truckmanualshub.com/



## E50-MD DUAL MAST - SAFETY DECALS - S/N 200001A~

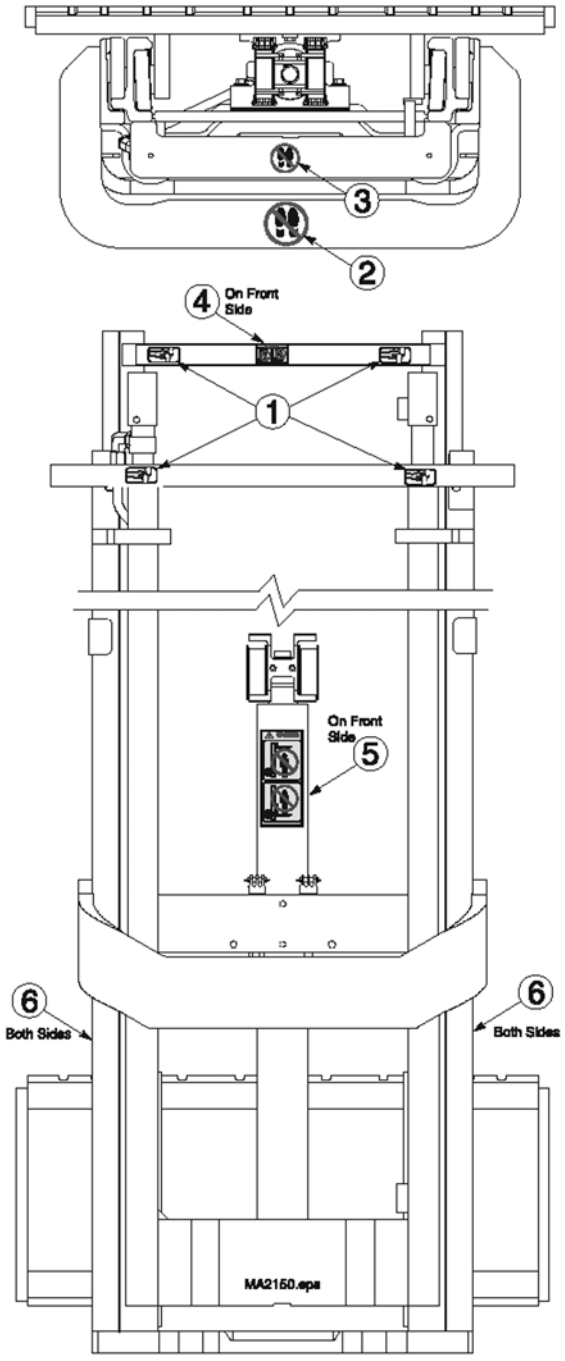


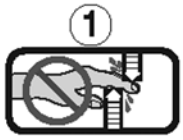

















72-0010

https://truckmanualshub.com/



## E50-MD DUAL MAST - SAFETY DECALS - S/N 200001A~

| Item | Part Number | Description | Qty | Serial Number |
|---|---|---|---|---|
| 1 | 3EB-79-A6010 | DECAL - HANDS OFF | 4 | |
| 2 | 3EB-79-A6020 | DECAL - NO STEP | 1 | |
| 3 | 3EB-79-A6030 | DECAL - NO STEP | 1 | |
| 4 | CC210850 | DECAL - WARNING | 1 | |
| 5 | 3EB-79-A5310 | DECAL - WARNING | 1 | |
| 6 | CC224053 | DECAL - FORK STOP | 2 | |

https://truckmanualshub.com/



## E50-MD DUAL MAST - LEFT HAND MAIN LIFT CYLINDER - S/N 200001A~

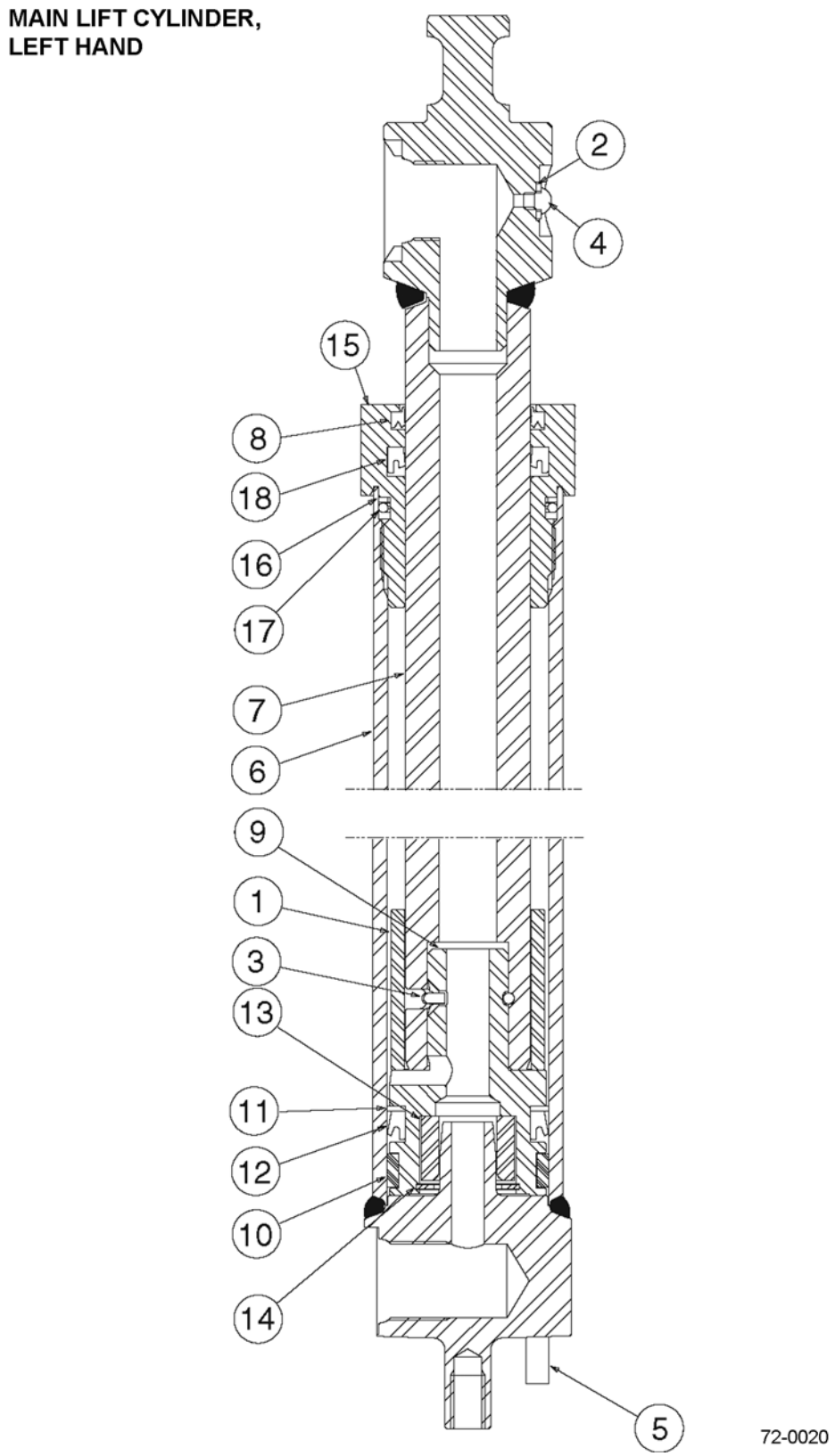

https://truckmanualshub.com/



## E50-MD DUAL MAST - LEFT HAND MAIN LIFT CYLINDER - S/N 200001A~

| Item | Part Number | Description | Qty | Serial Number |
|---|---|---|---|---|
| 1 | NSS | SPACER | 1 | |
| 2 | NSS | SEAL WASHER | 1 | |
| 3 | NSS | PULL WIRE. (SEAL KIT) | 1 | |
| 4 | NSS | BLEED SCREW | 1 | |
| 5 | NSS | PIN | 1 | |
| 6 | NSS | SHELL ASSY | 1 | |
| 7 | NSS | ROD | 1 | |
| 8 | NSS | WIPER (SEAL KIT) | 1 | |
| 9 | NSS | PISTON. | 1 | |
| 10 | NSS | WEAR RING (SEAL KIT) | 1 | |
| 11 | NSS | NYLON RING (SEAL KIT) | 1 | |
| 12 | NSS | PISTON SEAL (SEAL KIT) | 1 | |
| 13 | NSS | SLEEVE | 1 | |
| 14 | NSS | CIRCLIP | 1 | |
| 15 | CC423385 | RETAINER | 1 | |
| 16 | NSS | BACK-UP RING (SEAL KIT) | 1 | |
| 17 | NSS | O-RING (SEAL KIT) | 1 | |
| 18 | NSS | ROD SEAL (SEAL KIT) | 1 | |
| KIT | CC423412 | SEAL KIT | 1 | |
| | **OCL = OUTER CHANNEL LENGTH, MFH = MAXIMUM FORK HEIGHT** | | | |
| | CC1001256 | MAIN LIFT CYL., LH (OCL 69 IN.) (MFH = 106 IN.) | 1 | |
| | CC1001261 | MAIN LIFT CYL., LH (OCL 74 IN.) (MFH = 116 IN.) | 1 | |
| | CC1001267 | MAIN LIFT CYL., LH (OCL 80 IN.) (MFH = 128 IN.) | 1 | |

https://truckmanualshub.com/



## E50-MD DUAL MAST - RIGHT HAND MAIN LIFT CYLINDER - S/N 200001A~

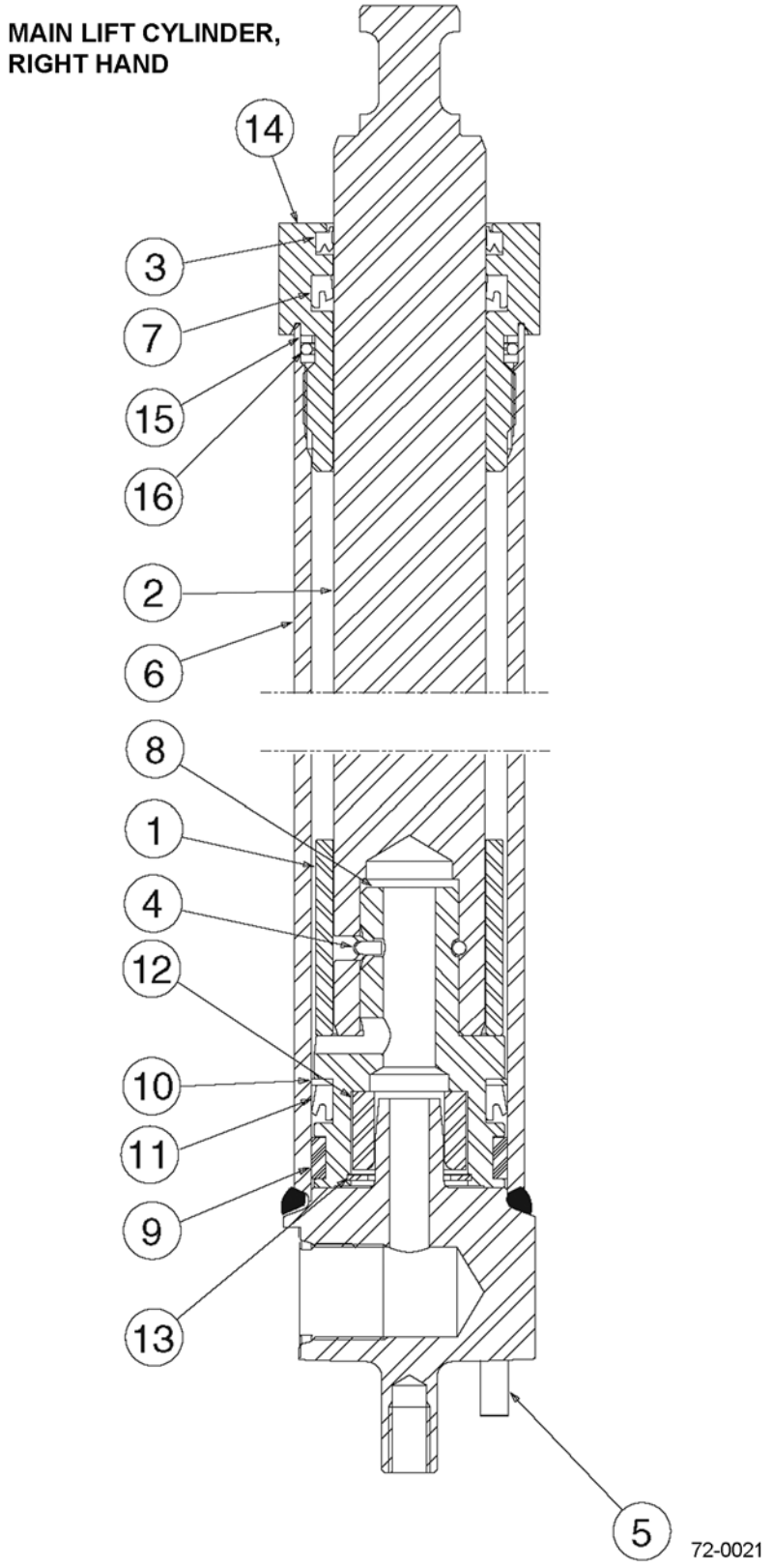

https://truckmanualshub.com/



## E50-MD DUAL MAST - RIGHT HAND MAIN LIFT CYLINDER - S/N 200001A~

| Item | Part Number | Description | Qty | Serial Number |
|---|---|---|---|---|
| 1 | NSS | SPACER | 1 | |
| 2 | NSS | ROD | 1 | |
| 3 | NSS | WIPER (SEAL KIT) | 1 | |
| 4 | NSS | PULL WIRE (SEAL KIT) | 1 | |
| 5 | NSS | PIN | 1 | |
| 6 | NSS | SHELL ASSY | 1 | |
| 7 | NSS | ROD SEAL (SEAL KIT) | 1 | |
| 8 | NSS | PISTON | 1 | |
| 9 | NSS | WEAR RING (SEAL KIT) | 1 | |
| 10 | NSS | NYLON RING (SEAL KIT) | 1 | |
| 11 | NSS | PISTON SEAL (SEAL KIT) | 1 | |
| 12 | NSS | SLEEVE | 1 | |
| 13 | NSS | RETAINING RING | 1 | |
| 14 | CC423385 | RETAINER | 1 | |
| 15 | NSS | BACK-UP RING (SEAL KIT) | 1 | |
| 16 | NSS | O-RING (SEAL KIT) | 1 | |
| KIT | CC423412 | SEAL KIT | 1 | |
| | **OCL = OUTER CHANNEL LENGTH, MFH = MAXIMUM FORK HEIGHT** | | | |
| | CC1001210 | MAIN LIFT CYL., RH (OCL 69 IN.) (MFH = 106 IN.) | 1 | |
| | CC1001215 | MAIN LIFT CYL., RH (OCL 74 IN.) (MFH = 116 IN.) | 1 | |
| | CC1001221 | MAIN LIFT CYL., RH (OCL 80 IN.) (MFH = 128 IN.) | 1 | |

https://truckmanualshub.com/



## E50-MD DUAL MAST - FREE LIFT CYLINDER - S/N 200001A~

FREE LIFT CYLINDER

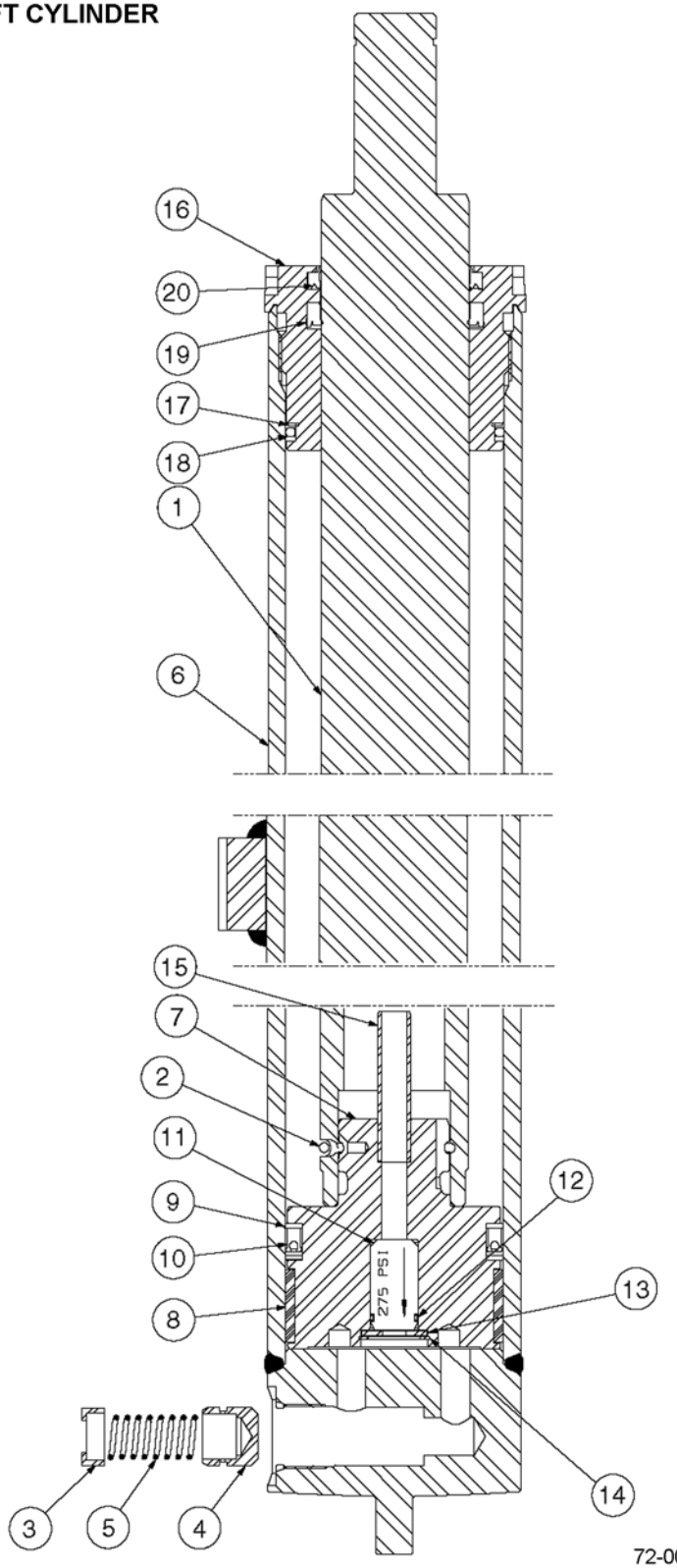

https://truckmanualshub.com/



## E50-MD DUAL MAST - FREE LIFT CYLINDER - S/N 200001A~

| Item | Part Number | Description | Qty | Serial Number |
|---|---|---|---|---|
| 1 | NSS | ROD / PLUNGER | 1 | |
| 2 | NSS | PULL WIRE. (SEAL KIT) | 1 | |
| 3 | CC564107 | FUSE SPRING GUIDE | 1 | |
| 4 | CC560470 | FUSE PISTON | 1 | |
| 5 | CC565085 | FUSE SPRING | 1 | |
| 6 | NSS | SHELL. | 1 | |
| 7 | NSS | PISTON. | 1 | |
| 8 | NSS | WEAR RING (SEAL KIT) | 1 | |
| 9 | NSS | NYLON RING (SEAL KIT) | 2 | |
| 10 | NSS | PISTON SEAL (SEAL KIT) | 1 | |
| 11 | NSS | CHECK VALVE (CHECK VALVE KIT) | 1 | |
| 12 | NSS | O-RING (SEAL KIT) | 1 | |
| 13 | NSS | WASHER (CHECK VALVE KIT) | 1 | |
| 14 | NSS | RETAINING RING. (CHECK VALVE KIT) | 1 | |
| 15 | NSS | STAND TUBE | 1 | |
| 16 | CC422817 | RETAINER | 1 | |
| 17 | NSS | BACK-UP RING (SEAL KIT) | 1 | |
| 18 | NSS | O-RING (SEAL KIT) | 1 | |
| 19 | NSS | ROD SEAL (SEAL KIT) | 1 | |
| 20 | NSS | WIPER (SEAL KIT) | 1 | |
| KIT | CC422818 | SEAL KIT | 1 | |
| KIT | CC563904 | CHECK VALVE KIT. | 1 | |

**OCL = OUTER CHANNEL LENGTH, MFH = MAXIMUM FORK HEIGHT**

| | | |
|---|---|---|
| CC1000225 | FREE LIFT CYL. (OCL = 69 IN.) (MFH = 106 IN.) | 1 |
| CC1000230 | FREE LIFT CYL. (OCL = 74 IN.) (MFH = 116 IN.) | 1 |
| CC1000236 | FREE LIFT CYL. (OCL = 80 IN.) (MFH = 128 IN.) | 1 |

https://truckmanualshub.com/



## E50-MD DUAL MAST - UPRIGHTS / WELDMENTS - S/N 200001A~

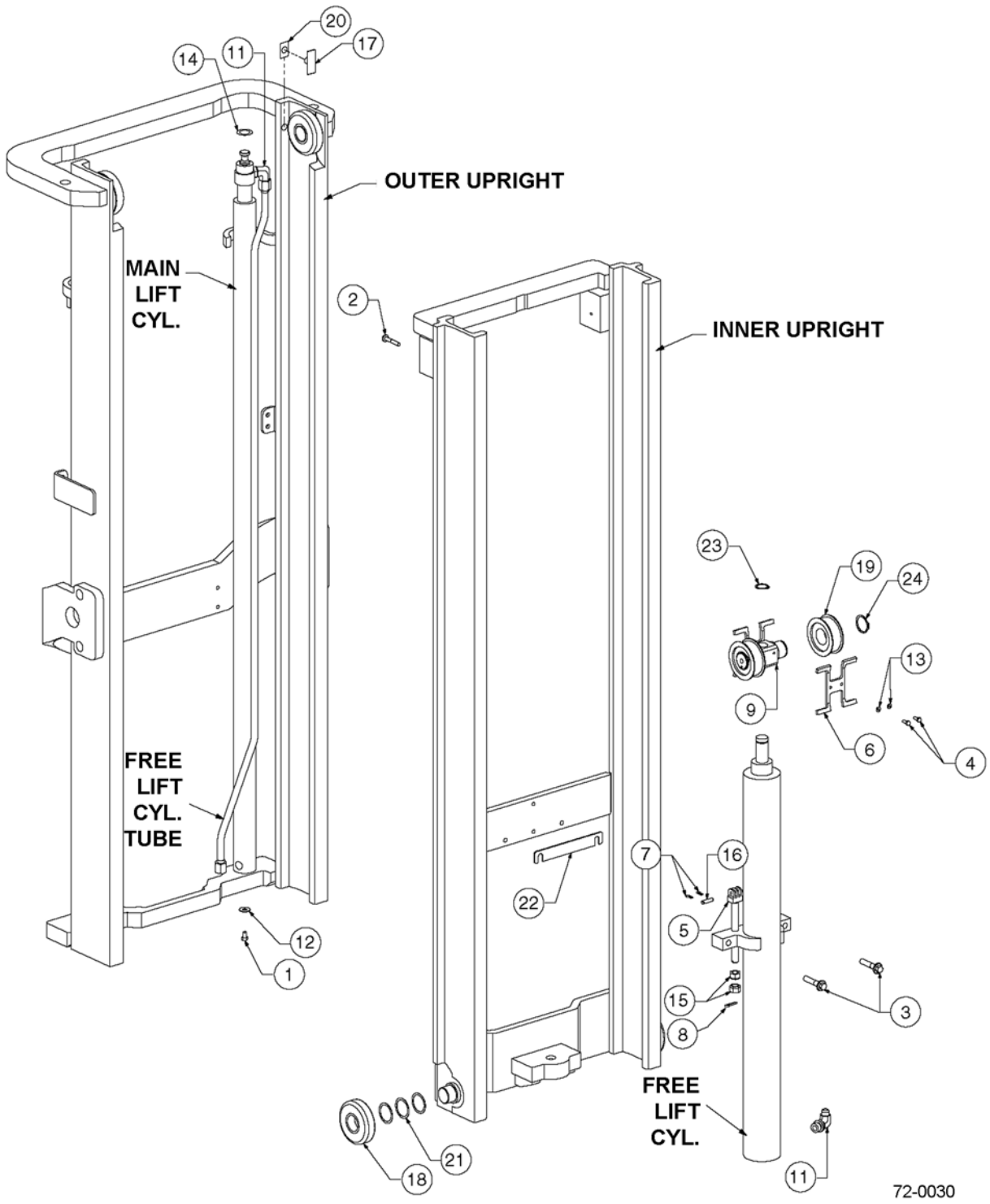

https://truckmanualshub.com/



## E50-MD DUAL MAST - UPRIGHTS / WELDMENTS - S/N 200001A~

| Item | Part Number | Description | Qty | Serial Number |
|---|---|---|---|---|
| 1 | 3EB-79-A5340 | BOLT | 2 | |
| 2 | 3EB-79-A5380 | BOLT | 2 | |
| 3 | 3EB-73-A5320 | CAPSCREW | 2 | |
| 4 | 3EB-73-A5350 | CAPSCREW, M6 X 16 LG (GUARD KIT) | 4 | |
| 5 | CC248892 | CHAIN ANCHOR | 2 | |
| 6 | 3EB-73-A5130 | CHAIN GUARD (GUARD KIT) | 2 | |
| 7 | 3EB-79-A6080 | COTTER PIN | 4 | |
| 8 | 3EB-79-A6081 | COTTER PIN | 2 | |
| 9 | 3EB-73-A5310 | CROSSHEAD | 1 | |
| 10 | CC210851 | DECAL KIT (NOT SHOWN) | 1 | |
| 11 | CC642649 | 90 DEGREE FITTING | 2 | |
| 12 | 3EB-79-A5350 | FLAT WASHER | 2 | |
| 13 | 3EB-73-A5340 | M6 LOCK WASHER (GUARD KIT) | 4 | |
| 14 | CC238137 | MAIN LIFT CYL. SHIM KIT | 1 | |
| 15 | 3EB-79-A6090 | FULL NUT | 4 | |
| 16 | 3EB-79-A5150 | CHAIN ANCHOR PIN | 2 | |
| 17 | CC215719 | WEAR PLUG (WEAR PLUG KIT) | 2 | |
| 18 | 3EB-79-A5210 | LOAD ROLLER | 4 | |
| 19 | 3EB-73-A5010 | SHEAVE | 2 | |
| 20 | CC203388 | WEAR PLUG SHIM (WEAR PLUG KIT) | 2 | |
| 21 | 3EB-79-A6050 | LOAD ROLLER SHIM | AR | |
| 22 | 3EB-79-A5390 | FREE LIFT CYL. SHIM PLATE(WEAR PLUG KIT) | 4 | |
| 23 | 3EB-73-A5330 | SNAP RING | 1 | |
| 24 | 3EB-79-A6070 | SNAP RING | 2 | |
| | **OCL = OUTER CHANNEL LENGTH, MFH = MAXIMUM FORK HEIGHT** | | | |
| | CC241569 | OUTER UPRIGHT (OCL = 69 IN.)(MFH = 106 IN.) | 1 | |
| | CC241574 | OUTER UPRIGHT (OCL = 74 IN.)(MFH = 116 IN.) | 1 | |
| | CC241580 | OUTER UPRIGHT (OCL = 80 IN.)(MFH = 128 IN.) | 1 | |
| | CC241615 | INNER UPRIGHT (OCL = 69 IN.) (MFH = 106 IN.) | 1 | |
| | CC241620 | INNER UPRIGHT (OCL = 74 IN.) (MFH = 116 IN.) | 1 | |
| | CC241626 | INNER UPRIGHT (OCL = 80 IN.) (MFH = 128 IN.) | 1 | |
| | CC238446 | TUBE (OCL = 69 IN.) (MFH = 106 IN.) | 1 | |
| | CC238451 | TUBE (OCL = 74 IN.) (MFH = 116 IN.) | 1 | |
| | CC238457 | TUBE (OCL = 80 IN.) (MFH = 128 IN.) | 1 | |
| KIT | CC212587 | WEAR PLUG KIT | 1 | |
| KIT | CC246821 | GUARD KIT, CROSSHEAD | 1 | |

https://truckmanualshub.com/



## E50-MD DUAL MAST - CARRIAGE - 4-ROLLER - S/N 200001A~

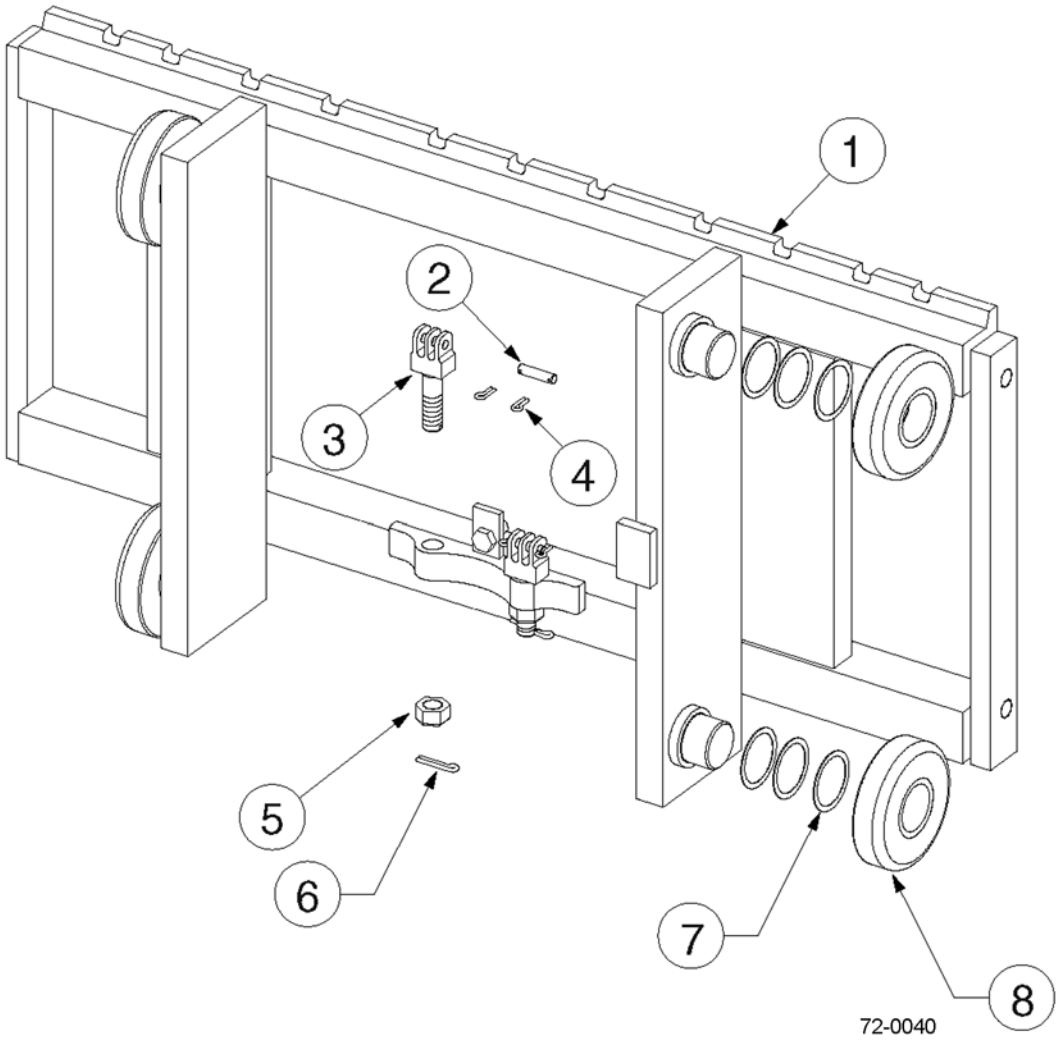

https://truckmanualshub.com/



## E50-MD DUAL MAST - CARRIAGE - 4-ROLLER - S/N 200001A~

| Item | Part Number | Description | Qty | Serial Number |
|---|---|---|---|---|
| 1 | CC238401 | CARRIAGE, 37 IN. - CUSHION MODELS | 1 | |
| | CC238402 | CARRIAGE, 41 IN. - CUSHION MODELS | 1 | |
| | CC238403 | CARRIAGE, 37 IN. - PNEUMATIC MODELS | 1 | |
| | CC238404 | CARRIAGE, 41 IN. - PNEUMATIC MODELS | 1 | |
| 2 | 3EB-79-A5150 | CHAIN ANCHOR PIN | 2 | |
| 3 | 3EB-79-A5140 | CHAIN ANCHOR | 2 | |
| 4 | 3EB-79-A6080 | COTTER PIN | 4 | |
| 5 | 3EB-73-A5450 | NUT | 2 | |
| 6 | 3EB-79-A6081 | COTTER PIN | 2 | |
| 7 | 3EB-79-A6050 | LOAD ROLLER SHIM | AR | |
| 8 | 3EB-79-A5210 | LOAD ROLLER | 4 | |

https://truckmanualshub.com/



## E50-MD DUAL MAST - CARRIAGE - 6-ROLLER - S/N 200001A~

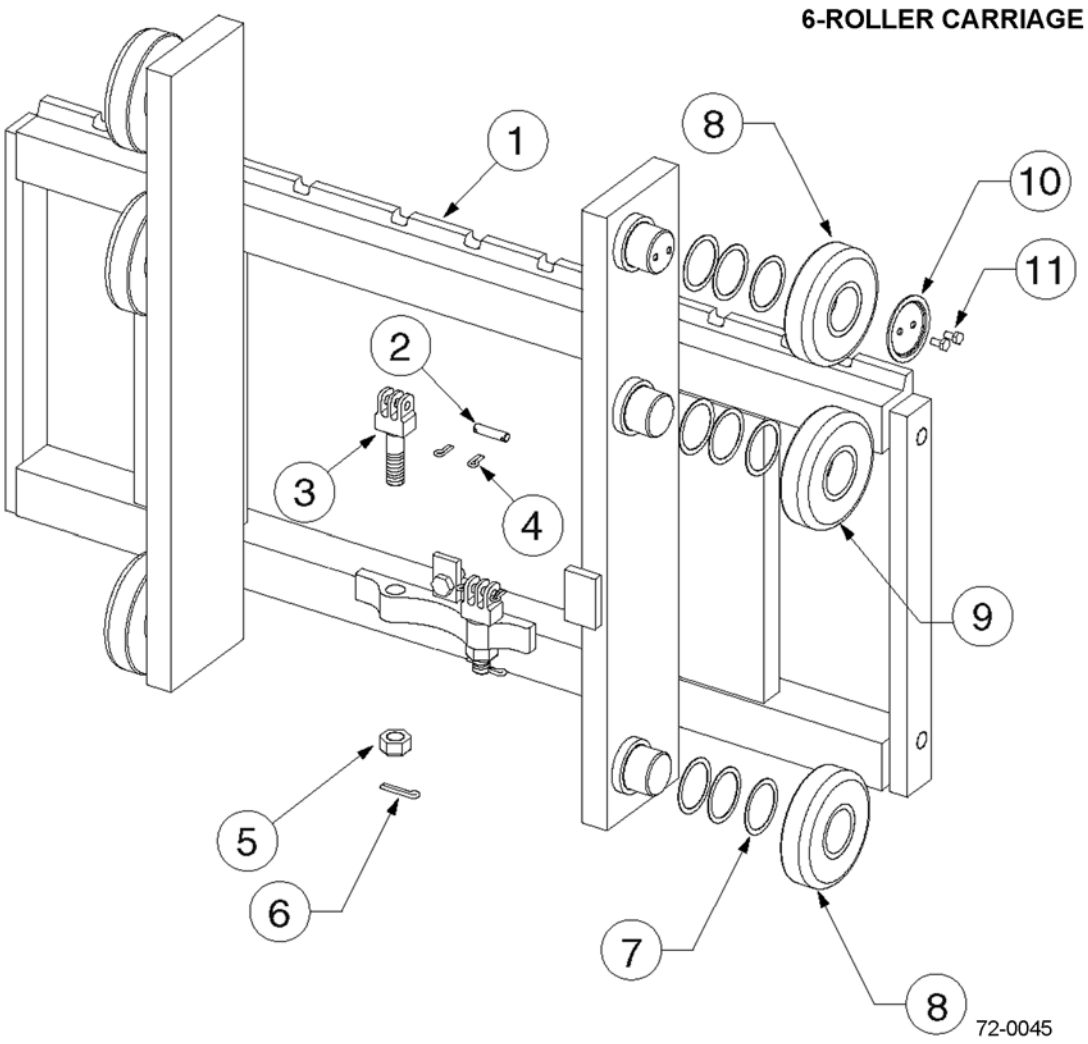

https://truckmanualshub.com/



## E50-MD DUAL MAST - CARRIAGE - 6-ROLLER - S/N 200001A~

| Item | Part Number | Description | Qty | Serial Number |
|---|---|---|---|---|
| 1 | CC238409 | CARRIAGE, 37 IN. - CUSHION MODELS | 1 | |
| | CC238410 | CARRIAGE, 41 IN. - CUSHION MODELS | 1 | |
| | CC238411 | CARRIAGE, 37 IN. - PNEUMATIC MODELS | 1 | |
| | CC238412 | CARRIAGE, 41 IN. - PNEUMATIC MODELS | 1 | |
| 2 | 3EB-79-A5150 | CHAIN ANCHOR PIN | 2 | |
| 3 | 3EB-79-A5140 | CHAIN ANCHOR | 2 | |
| 4 | 3EB-79-A6080 | COTTER PIN | 4 | |
| 5 | 3EB-73-A5450 | NUT | 2 | |
| 6 | 3EB-79-A6081 | COTTER PIN | 2 | |
| 7 | 3EB-79-A6050 | LOAD ROLLER SHIM | AR | |
| 8 | 3EB-79-A5210 | LOAD ROLLER | 4 | |
| 9 | 3EB-79-A5220 | LOAD ROLLER | 2 | |
| 10 | 3EB-73-A5460 | RETAINER | 2 | |
| 11 | 3EB-73-A5470 | CAPSCREW, M6 X 12 LG | 4 | |

https://truckmanualshub.com/



## E50-MD DUAL MAST - HOIST CHAINS - S/N 200001A~

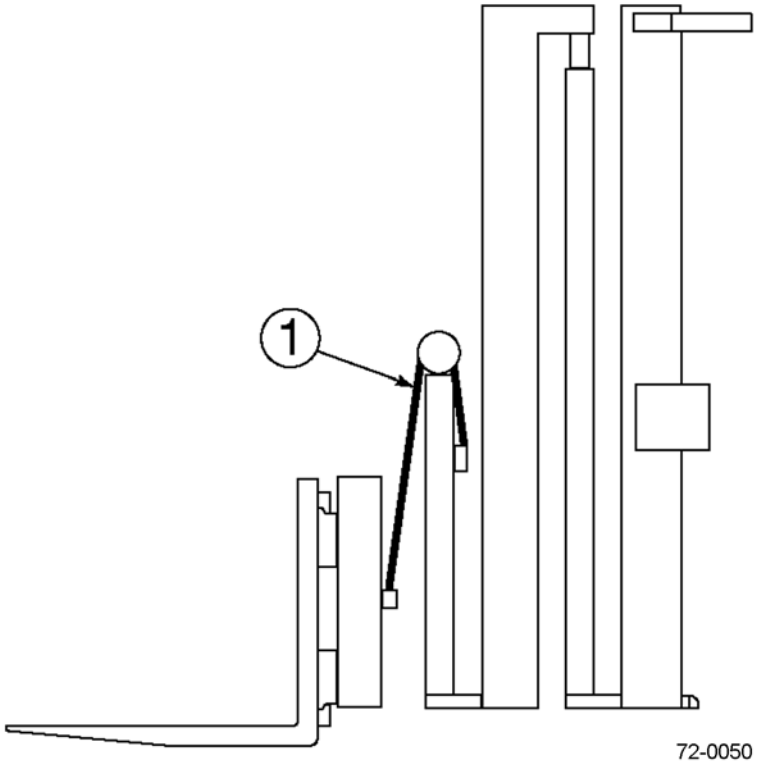

https://truckmanualshub.com/



## E50-MD DUAL MAST - HOIST CHAINS - S/N 200001A~

| Item | Part Number | Description | Qty | Serial Number |
|---|---|---|---|---|
| | | **OCL = OUTER CHANNEL LENGTH, MFH = MAXIMUM FORK HEIGHT** | | |
| 1 | CC683893 | FREE LIFT CHAINS (OCL = 69 IN.) (MFH = 106 IN.) | 2 | |
| | CC683763 | FREE LIFT CHAINS (OCL = 74 IN.) (MFH = 116 IN.) | 2 | |
| | CC683766 | FREE LIFT CHAINS (OCL = 80 IN.) (MFH = 128 IN.) | 2 | |

https://truckmanualshub.com/



## E50-MD DUAL MAST - LOAD BACKREST - S/N 200001A~

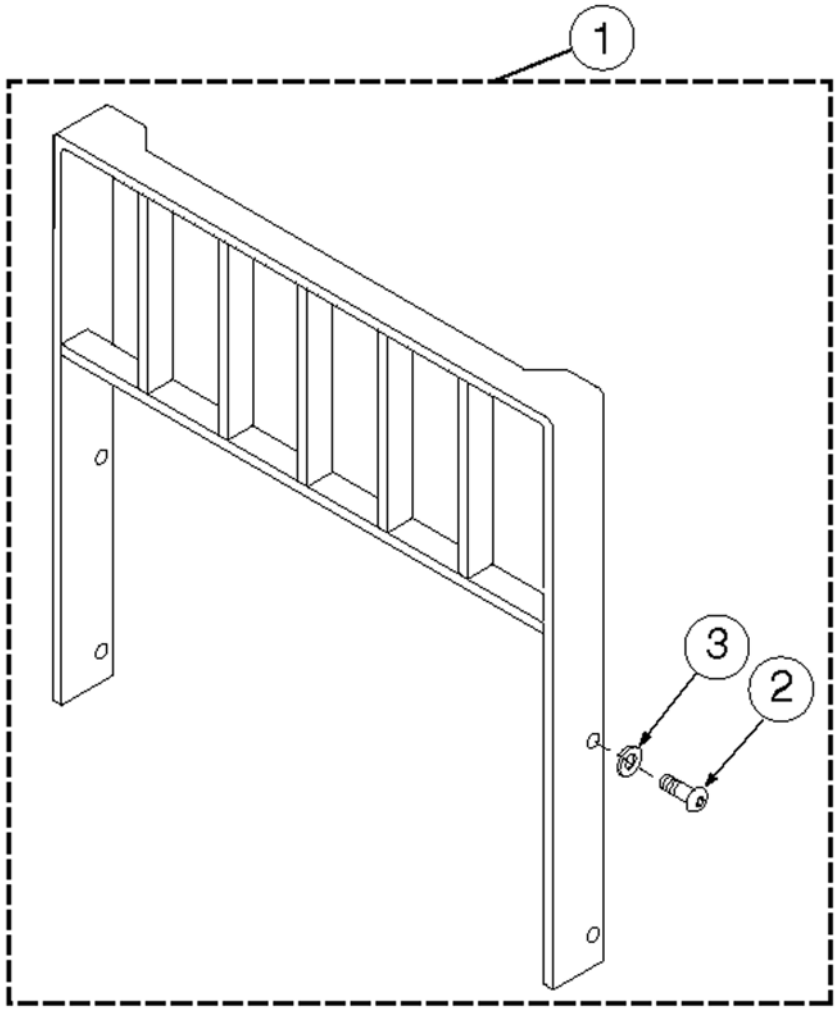


72-0060

https://truckmanualshub.com/



## E50-MD DUAL MAST - LOAD BACKREST - S/N 200001A~

| Item | Part Number | Description | Qty | Serial Number |
|---|---|---|---|---|
| 1 | CC684772 | BACKREST, 37 X 36 IN. (CLASS II). . . . . | 1 | |
| | 3EB-73-A5810 | BACKREST, 37 X 48 IN. (CLASS II). . . . . | 1 | |
| | CC684774 | BACKREST, 37 X 60 IN. (CLASS II). . . . . | 1 | |
| | CC684775 | BACKREST, 41 X 36 IN. (CLASS II). . . . . | 1 | |
| | 3EB-73-A5820 | BACKREST, 41 X 48 IN. (CLASS II). . . . . | 1 | |
| | CC684777 | BACKREST, 41 X 60 IN. (CLASS II). . . . . | 1 | |
| 2 | CC200173 | CAPSCREW, M16 X 2.0 X 35-8.8 . . . . . | 4 | |
| 3 | 3EB-71-A6030 | LOCK WASHER, M16. . . . . | 4 | |

https://truckmanualshub.com/



## E50-MD DUAL MAST - MOUNTING PARTS - CUSHION MODELS - S/N 200001A~

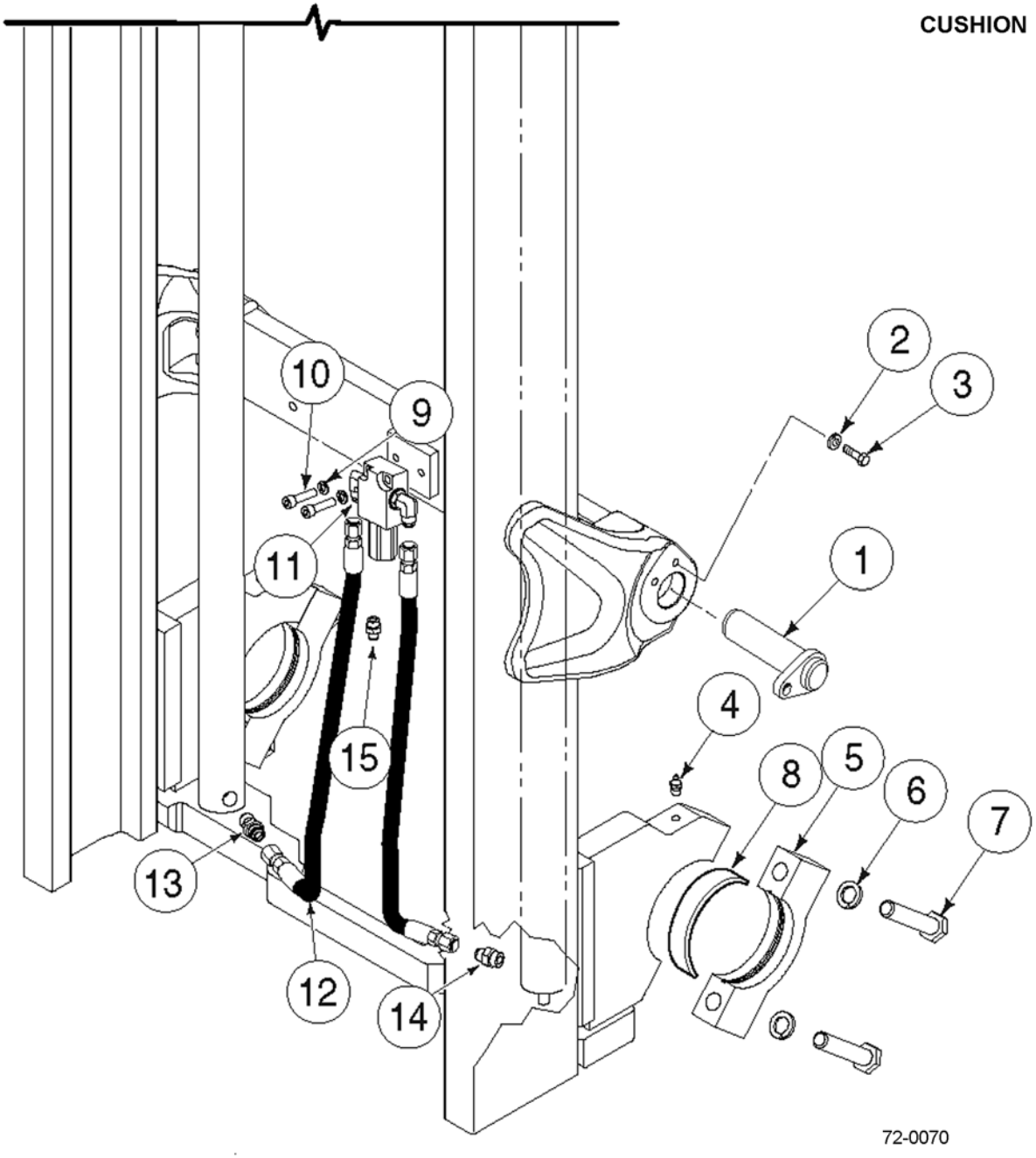

https://truckmanualshub.com/



## E50-MD DUAL MAST - MOUNTING PARTS - CUSHION MODELS - S/N 200001A~

| Item | Part Number | Description | Qty | Serial Number |
|---|---|---|---|---|
| 1 | 3EB-41-51750 | TILT PIN | 2 | |
| 2 | 3EB-79-A6040 | LOCK WASHER | 2 | |
| 3 | CC212632 | CAPSCREW | 2 | |
| 4 | CC7418 | GREASE FITTING | 2 | |
| 5 | CC251901 | CAP | 2 | |
| 6 | 3EB-71-A6030 | LOCK WASHER | 4 | |
| 7 | CC251906 | CAPSCREW | 4 | |
| 8 | 3EB-84-51290 | BUSHING (CUSHION ONLY) | 2 | |
| 9 | CC767611 | CAPSCREW | 2 | |
| 10 | 3EB-79-A6040 | LOCK WASHER | 2 | |
| 11 | CC601250 | FITTING # 8 - 90 DEGREE ELBOW | 2 | |
| 12 | CC255666 | MAIN LIFT HOSE, RH | 1 | |
| | CC255665 | MAIN LIFT HOSE, LH | 1 | |
| 13 | CC611289 | FITTING # 8-# 10 STRAIGHT | 1 | |
| 14 | CC238570 | EXTERNAL FUSE, 12 GPM | 1 | |
| 15 | CC601377 | FITTING | 1 | |
| N/S | CC255672 | MOUNTING GROUP | -- | |
| N/S | CC255596 | INSTALLATION KIT | 1 | |
| N/S | CC255770 | HYDRAULIC GROUP | -- | |

https://truckmanualshub.com/



# E50-MD DUAL MAST - MOUNTING PARTS - PNEUMATIC MODELS - S/N 200001A~

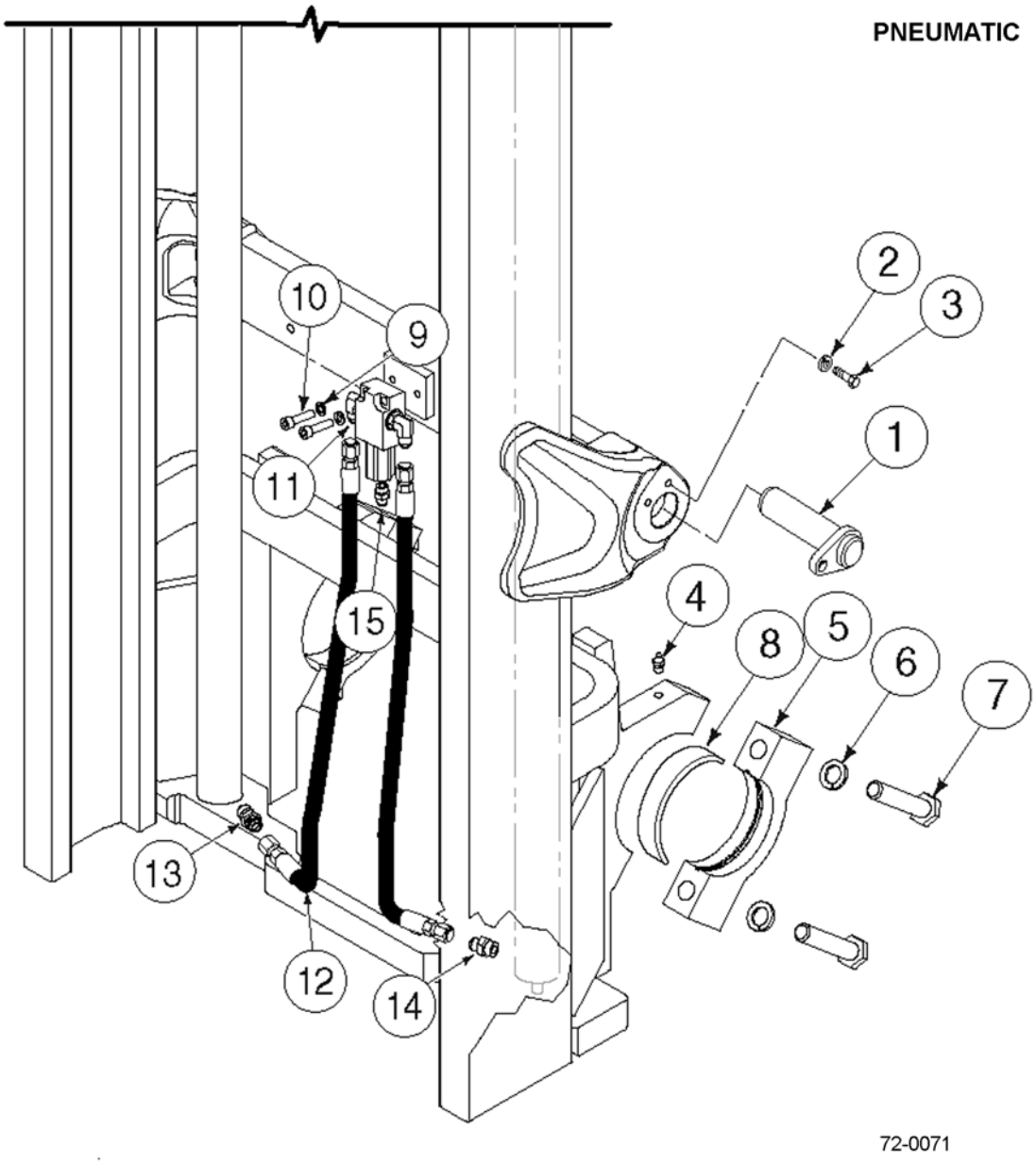

https://truckmanualshub.com/



## E50-MD DUAL MAST - MOUNTING PARTS - PNEUMATIC MODELS - S/N 200001A~

| Item | Part Number | Description | Qty | Serial Number |
|---|---|---|---|---|
| 1 | 3EB-41-51750 | TILT PIN | 2 | |
| 2 | 3EB-79-A6040 | LOCK WASHER | 2 | |
| 3 | CC212632 | CAPSCREW | 2 | |
| 4 | CC7418 | GREASE FITTING | 2 | |
| 5 | CC253118 | CAP | 2 | |
| 6 | 3EB-71-A6030 | LOCK WASHER | 4 | |
| 7 | CC253120 | CAPSCREW | 4 | |
| 8 | 3EB-71-51290 | BUSHING (PNEUMATIC 2.0-3.0 TON ONLY)) | 2 | |
| | 3EB-71-61790 | BUSHING (PNEUMATIC 3.2 & 3.5 TON ONLY) | 2 | |
| 9 | CC767611 | CAPSCREW | 2 | |
| 10 | 3EB-79-A6040 | LOCK WASHER | 2 | |
| 11 | CC601250 | FITTING # 8 - 90 DEGREE ELBOW | 2 | |
| 12 | CC255651 | MAIN LIFT HOSE, RH | 1 | |
| | CC238174 | MAIN LIFT HOSE, LH | 1 | |
| 13 | CC611289 | FITTING # 8-# 10 STRAIGHT | 1 | |
| 14 | CC238570 | EXTERNAL FUSE, 12 GPM | 1 | |
| 15 | CC601377 | FITTING | 1 | |
| N/S | CC255729 | MOUNTING GROUP | -- | |
| N/S | CC255596 | INSTALLATION KIT | 1 | |
| N/S | CC255730 | HYDRAULIC GROUP | -- | |

https://truckmanualshub.com/



## E50-MD DUAL MAST - LOWERING CONTROL VALVE - S/N 200001A~

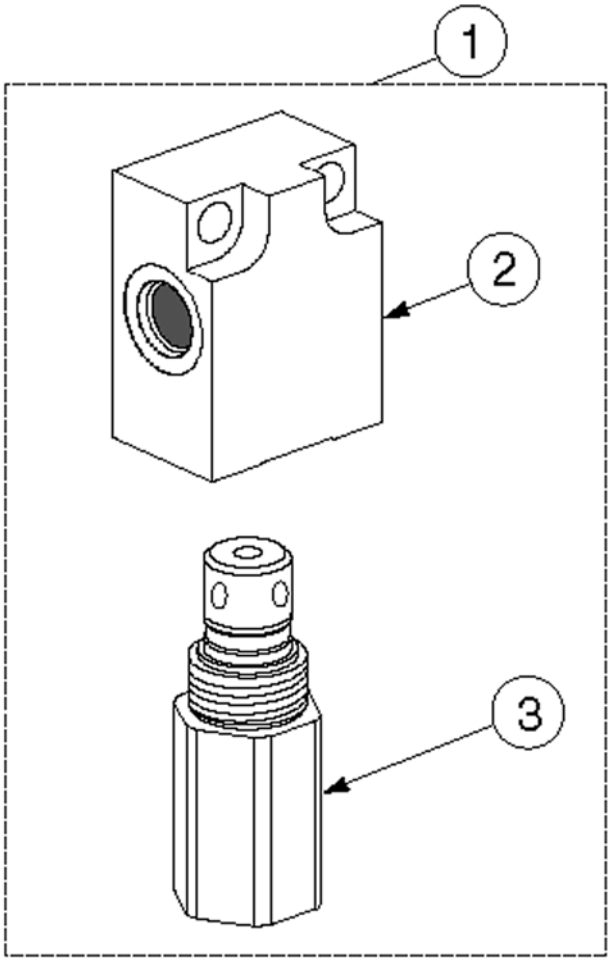


72-0085

https://truckmanualshub.com/



## E50-MD DUAL MAST - LOWERING CONTROL VALVE - S/N 200001A~

| Item | Part Number | Description | Qty | Serial Number |
|---|---|---|---|---|
| 1 | 3EB-73-A5930 | LOWERING CONTROL VALVE ASSY (17 GPM) | 1 | |
| 2 | CC214793 | .VALVE BODY. . . . . | 1 | |
| 3 | 3EB-73-A5920 | .VALVE CARTRIDGE - 17 GPM . . . . . | 1 | |

https://truckmanualshub.com/



# E50-MD DUAL MAST - INTERNAL HOSE REEVING - SINGLE - S/N 200001A~ PNEUMATIC MODELS

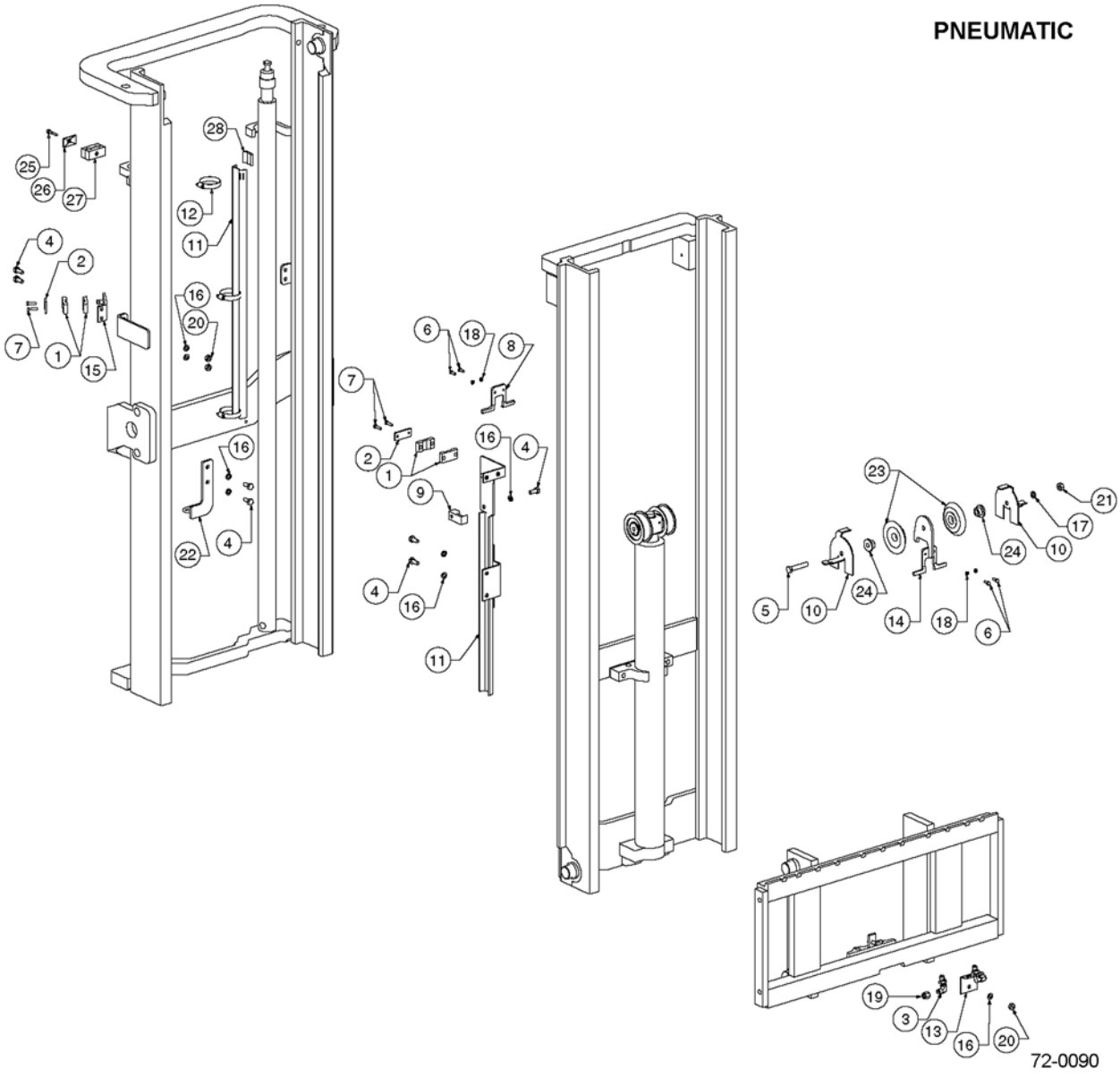

https://truckmanualshub.com/



## E50-MD DUAL MAST - INTERNAL HOSE REEVING - SINGLE - S/N 200001A~ PNEUMATIC MODELS

| Item | Part Number | Description | Qty | Serial Number |
|---|---|---|---|---|
| 1 | 3EB-73-A5150 | HOSE CLAMP | 4 | |
| 2 | 3EB-73-A5160 | HOSE CLAMP BAR | 2 | |
| 3 | 3EB-71-A6010 | BULKHEAD UNION FITTING | 2 | |
| 4 | 3EB-73-A5490 | CAPSCREW, M10 X 25 LG | 7 | |
| 5 | 3EB-79-A5230 | CAPSCREW, M12 X 65 LG | 1 | |
| 6 | 3EB-73-A5350 | CAPSCREW, M6 X 16 LG | 4 | |
| 7 | 3EB-79-A5240 | CAPSCREW, M6 X 25 LG | 4 | |
| 8 | 3EB-73-A5170 | CHAIN / HOSE GUARD | 1 | |
| 9 | CC688216 | HOSE CLAMP | 1 | |
| 10 | 3EB-73-A5180 | CHAIN / HOSE GUARD | 2 | |
| 11 | SEE BELOW | GUIDE | 2 | |
| 12 | CC238534 | HOSE CLAMP | 3 | |
| 13 | 3EB-73-A5610 | CARRIAGE BRACKET | 1 | |
| 14 | 3EB-73-A5620 | BRACKET | 1 | |
| 15 | 3EB-73-A5640 | BRACKET | 1 | |
| 16 | 3EB-79-A6040 | LOCK WASHER, M10 | 8 | |
| 17 | 3EB-79-A5360 | LOCK WASHER, M12 | 1 | |
| 18 | 3EB-73-A5340 | LOCK WASHER, M6 | 4 | |
| 19 | 3EB-79-A5250 | #6 CAP PLUG | 2 | |
| 20 | 3EB-79-A5180 | NUT, M10 | 3 | |
| 21 | 3EB-79-A5270 | NUT, M12 | 1 | |
| 22 | 3EB-73-A5650 | BRACKET, RH | 1 | |
| 23 | 3EB-73-A5030 | SHEAVE | 2 | |
| 24 | 3EB-73-A5230 | STUBSHAFT | 2 | |
| 25 | CC290465 | BOLT | 1 | |
| 26 | CC290464 | COVER PLATE | 1 | |
| 27 | CC291445 | #6 CLAMP | 1 | |
| 28 | CC250066 | #6 HOSE INSERT | 1 | |
| | **OCL = OUTER CHANNEL LENGTH, MFH = MAXIMUM FORK HEIGHT** | | | |
| | CC242169 | IHR KIT (OCL = 69 IN.) (MFH = 106 IN.) | 1 | |
| | CC242174 | IHR KIT (OCL = 74 IN.) (MFH = 116 IN.) | 1 | |
| | CC242180 | IHR KIT (OCL = 80 IN.) (MFH = 128 IN.) | 1 | |
| | CC238525 | OUTER GUIDE (OCL = 69 IN.) (MFH = 106 IN.) | 1 | |
| | CC238525 | OUTER GUIDE (OCL = 74 IN.) (MFH = 116 IN.) | 1 | |
| | CC238526 | OUTER GUIDE (OCL = 80 IN.) (MFH = 128 IN.) | 1 | |
| | CC245229 | INNER GUIDE (OCL = 69 IN.) (MFH = 106 IN.) | 1 | |
| | CC245230 | INNER GUIDE (OCL = 74 IN.) (MFH = 116 IN.) | 1 | |
| | CC245231 | INNER GUIDE (OCL = 80 IN.) (MFH = 128 IN.) | 1 | |
| | CC216928 | HOSE (OCL = 69 IN.) (MFH = 106 IN.) | 2 | |

PARTS LIST CONTINUED ON NEXT PAGE

https://truckmanualshub.com/



## E50-MD DUAL MAST - INTERNAL HOSE REEVING - SINGLE - S/N 200001A~ PNEUMATIC MODELS

| Item | Part Number | Description | Qty | Serial Number |
|---|---|---|---|---|
| | CC234987 | HOSE (OCL = 74 IN.) (MFH = 116 IN.). . . . . | 2 | |
| | CC234993 | HOSE (OCL = 80 IN.) (MFH = 128 IN.) . . . . . | 2 | |

https://truckmanualshub.com/

**NOTES:**

https://truckmanualshub.com/



# E50-MD DUAL MAST - INTERNAL HOSE REEVING - SINGLE - S/N 200001A~ CUSHION MODELS

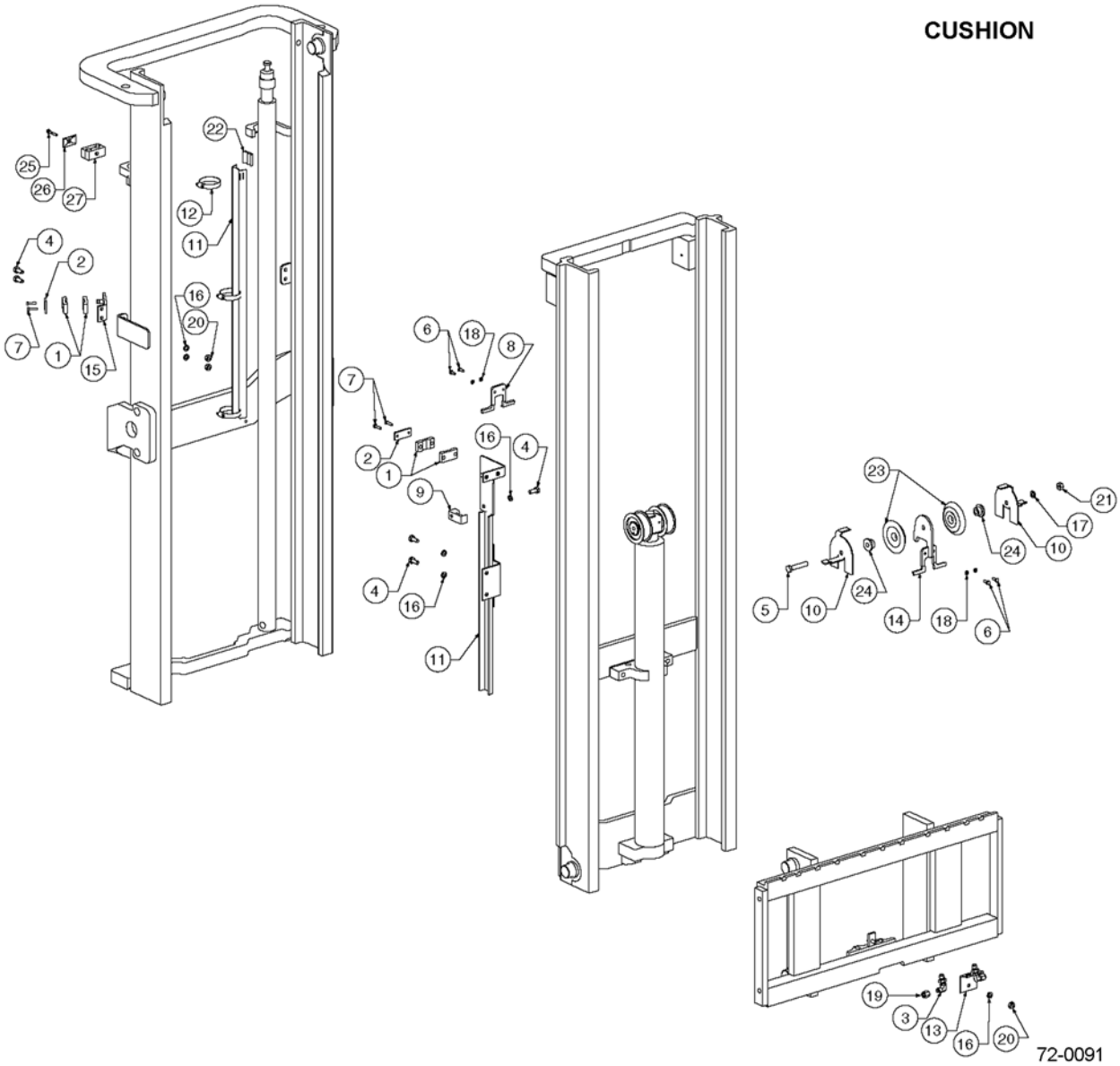

https://truckmanualshub.com/



## E50-MD DUAL MAST - INTERNAL HOSE REEVING - SINGLE - S/N 200001A~ CUSHION MODELS

| Item | Part Number | Description | Qty | Serial Number |
|---|---|---|---|---|
| 1 | 3EB-73-A5150 | HOSE CLAMP | 4 | |
| 2 | 3EB-73-A5160 | HOSE CLAMP BAR | 2 | |
| 3 | 3EB-71-A6010 | BULKHEAD UNION FITTING | 2 | |
| 4 | 3EB-73-A5490 | CAPSCREW, M10 X 25 LG | 7 | |
| 5 | 3EB-79-A5230 | CAPSCREW, M12 X 65 LG | 1 | |
| 6 | 3EB-73-A5350 | CAPSCREW, M6 X 16 LG | 4 | |
| 7 | 3EB-79-A5240 | CAPSCREW, M6 X 25 LG | 4 | |
| 8 | 3EB-73-A5170 | CHAIN / HOSE GUARD | 1 | |
| 9 | CC688216 | HOSE CLAMP | 1 | |
| 10 | 3EB-73-A5180 | CHAIN / HOSE GUARD | 2 | |
| 11 | SEE BELOW | GUIDE | 2 | |
| 12 | CC238534 | HOSE CLAMP | 3 | |
| 13 | 3EB-73-A5610 | CARRIAGE BRACKET | 1 | |
| 14 | 3EB-73-A5620 | BRACKET | 1 | |
| 15 | 3EB-73-A5640 | BRACKET | 1 | |
| 16 | 3EB-79-A6040 | LOCK WASHER, M10 | 8 | |
| 17 | 3EB-79-A5360 | LOCK WASHER, M12 | 1 | |
| 18 | 3EB-73-A5340 | LOCK WASHER, M6 | 4 | |
| 19 | 3EB-79-A5250 | #6 CAP PLUG | 2 | |
| 20 | 3EB-79-A5180 | NUT, M10 | 3 | |
| 21 | 3EB-79-A5270 | NUT, M12 | 1 | |
| 22 | CC250066 | #6 HOSE INSERT | 1 | |
| 23 | 3EB-73-A5030 | SHEAVE | 2 | |
| 24 | 3EB-73-A5230 | STUBSHAFT | 2 | |
| 25 | CC290465 | BOLT | 1 | |
| 26 | CC290464 | COVER PLATE | 1 | |
| 27 | CC291445 | #6 CLAMP | 1 | |
| | **OCL = OUTER CHANNEL LENGTH, MFH = MAXIMUM FORK HEIGHT** | | | |
| | CC255304 | IHR KIT (OCL = 69 IN.) (MFH = 106 IN.) | 1 | |
| | CC255309 | IHR KIT (OCL = 74 IN.) (MFH = 116 IN.) | 1 | |
| | CC255315 | IHR KIT (OCL = 80 IN.) (MFH = 128 IN.) | 1 | |
| | CC238525 | OUTER GUIDE (OCL = 69 IN.) (MFH = 106 IN.) | 1 | |
| | CC238525 | OUTER GUIDE (OCL = 74 IN.) (MFH = 116 IN.) | 1 | |
| | CC238526 | OUTER GUIDE (OCL = 80 IN.) (MFH = 128 IN.) | 1 | |
| | CC245229 | INNER GUIDE (OCL = 69 IN.) (MFH = 106 IN.) | 1 | |
| | CC245230 | INNER GUIDE (OCL = 74 IN.) (MFH = 116 IN.) | 1 | |
| | CC245231 | INNER GUIDE (OCL = 80 IN.) (MFH = 128 IN.) | 1 | |
| | CC210803 | HOSE (OCL = 69 IN.) (MFH = 106 IN.) | 2 | |

PARTS LIST CONTINUED ON NEXT PAGE

https://truckmanualshub.com/



## E50-MD DUAL MAST - INTERNAL HOSE REEVING - SINGLE - S/N 200001A~ CUSHION MODELS

| Item | Part Number | Description | Qty | Serial Number |
|---|---|---|---|---|
| | CC216928 | HOSE (OCL = 74 IN.) (MFH = 116 IN.). . . . . | 2 | |
| | CC234988 | HOSE (OCL = 80 IN.) (MFH = 128 IN.) . . . . . | 2 | |

https://truckmanualshub.com/

**NOTES:**

https://truckmanualshub.com/



# E50-MD DUAL MAST - INTERNAL HOSE REEVING - DOUBLE - S/N 200001A~ PNEUMATIC MODELS

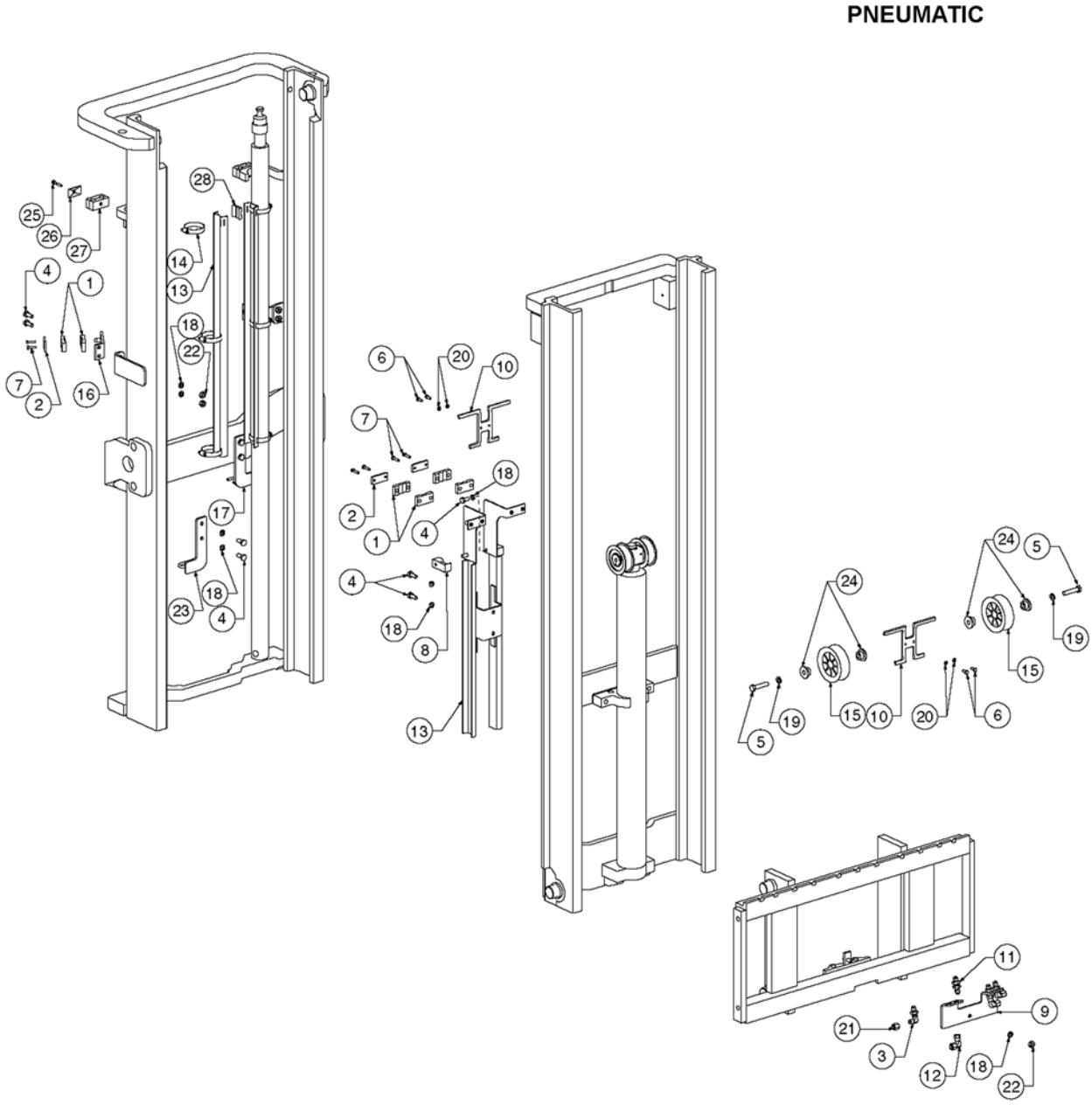

https://truckmanualshub.com/



## E50-MD DUAL MAST - INTERNAL HOSE REEVING - DOUBLE - S/N 200001A~ PNEUMATIC MODELS

| Item | Part Number | Description | Qty | Serial Number |
|---|---|---|---|---|
| 1 | 3EB-73-A5150 | HOSE CLAMP | 8 | |
| 2 | 3EB-73-A5160 | HOSE CLAMP BAR | 4 | |
| 3 | 3EB-71-A6010 | BULKHEAD UNION FITTING | 2 | |
| 4 | 3EB-73-A5490 | CAPSCREW, M10 X 25 LG | 12 | |
| 5 | CC684650 | CAPSCREW, M12 X 55 LG | 2 | |
| 6 | 3EB-73-A5350 | CAPSCREW, M6 X 16 LG | 4 | |
| 7 | 3EB-79-A5240 | CAPSCREW, M6 X 25 LG | 8 | |
| 8 | CC688216 | HOSE CLAMP | 2 | |
| 9 | CC238150 | CARRIAGE IHR BRACKET | 1 | |
| 10 | CC245262 | CHAIN / HOSE GUARD | 2 | |
| 11 | 3EB-71-A6040 | BULKHEAD FITTING | 2 | |
| 12 | CC2680 | FITTING | 2 | |
| 13 | SEE BELOW | GUIDE | 3 | |
| 14 | CC238534 | HOSE CLAMP | 6 | |
| 15 | CC677267 | SHEAVE | 2 | |
| 16 | 3EB-73-A5640 | IHR BRACKET | 2 | |
| 17 | 3EB-73-A6020 | LH BRACKET | 1 | |
| 18 | 3EB-79-A6040 | LOCK WASHER, M10 | 13 | |
| 19 | 3EB-79-A5360 | LOCKWASHER, M12 | 2 | |
| 20 | 3EB-73-A5340 | LOCK WASHER, M6 | 4 | |
| 21 | 3EB-79-A5250 | #6 CAP PLUG | 4 | |
| 22 | 3EB-79-A5180 | NUT, M10 | 5 | |
| 23 | 3EB-73-A5650 | RH BRACKET | 1 | |
| 24 | 3EB-73-A5230 | STUBSHAFT | 4 | |
| 25 | CC290465 | BOLT | 2 | |
| 26 | CC290464 | COVER PLATE | 2 | |
| 27 | CC291445 | #6 CLAMP | 2 | |
| 28 | CC250066 | #6 INSERT | 2 | |
| | **OCL = OUTER CHANNEL LENGTH, MFH = MAXIMUM FORK HEIGHT** | | | |
| | CC242215 | IHR KIT (OCL = 69 IN.) (MFH = 106 IN.) | 1 | |
| | CC242220 | IHR KIT (OCL = 74 IN.) (MFH = 116 IN.) | 1 | |
| | CC242226 | IHR KIT (OCL = 80 IN.) (MFH = 128 IN.) | 1 | |
| | CC238525 | OUTER GUIDE (OCL = 69 IN.) (MFH = 106 IN.) | 2 | |
| | CC238525 | OUTER GUIDE (OCL = 74 IN.) (MFH = 116 IN.) | 2 | |
| | CC238526 | OUTER GUIDE (OCL = 80 IN.) (MFH = 128 IN.) | 2 | |
| | CC245235 | INNER GUIDE (OCL = 69 IN.) (MFH = 106 IN.) | 1 | |
| | CC245236 | INNER GUIDE (OCL = 74 IN.) (MFH = 116 IN.) | 1 | |
| | CC245237 | INNER GUIDE (OCL = 80 IN.) (MFH = 128 IN.) | 1 | |
| | CC210803 | HOSE (OCL = 69 IN.) (MFH = 106 IN.) | 4 | |

PARTS LIST CONTINUED ON NEXT PAGE

https://truckmanualshub.com/



## E50-MD DUAL MAST - INTERNAL HOSE REEVING - DOUBLE - S/N 200001A~ PNEUMATIC MODELS

| Item | Part Number | Description | Qty | Serial Number |
|---|---|---|---|---|
| | CC216928 | HOSE (OCL = 74 IN.) (MFH = 116 IN.). . . . . | 4 | |
| | CC234988 | HOSE (OCL = 80 IN.) (MFH = 128 IN.) . . . . . | 4 | |

https://truckmanualshub.com/

**NOTES:**

https://truckmanualshub.com/



# E50-MD DUAL MAST - INTERNAL HOSE REEVING - DOUBLE - S/N 200001A~ CUSHION MODELS

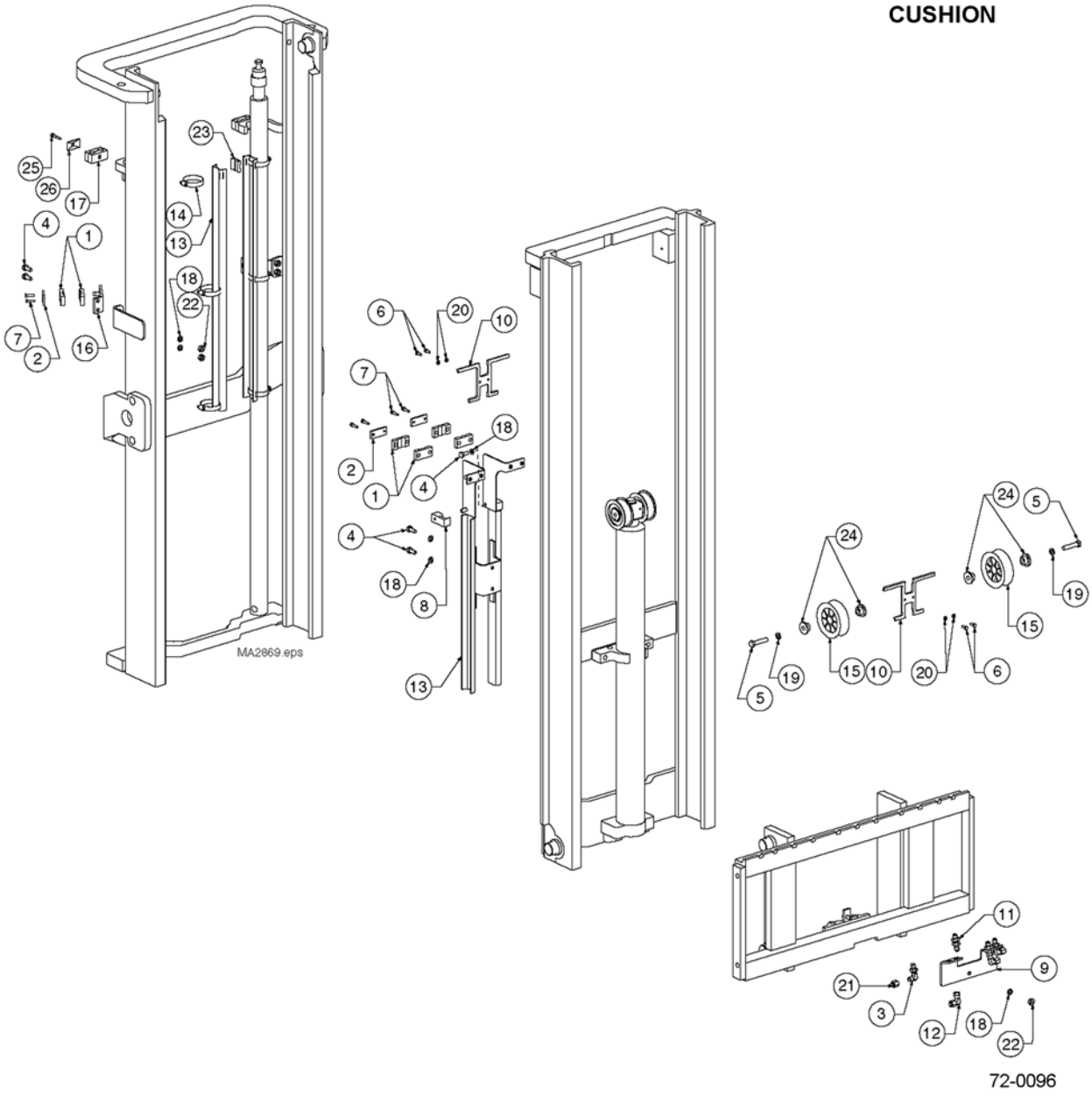

https://truckmanualshub.com/



## E50-MD DUAL MAST - INTERNAL HOSE REEVING - DOUBLE - S/N 200001A~ CUSHION MODELS

| Item | Part Number | Description | Qty | Serial Number |
|---|---|---|---|---|
| 1 | 3EB-73-A5150 | HOSE CLAMP | 8 | |
| 2 | 3EB-73-A5160 | HOSE CLAMP BAR | 4 | |
| 3 | 3EB-71-A6010 | BULKHEAD UNION FITTING | 2 | |
| 4 | 3EB-73-A5490 | CAPSCREW, M10 X 25 LG | 8 | |
| 5 | CC684650 | CAPSCREW, M12 X 55 LG | 2 | |
| 6 | 3EB-73-A5350 | CAPSCREW, M6 X 16 LG | 4 | |
| 7 | 3EB-79-A5240 | CAPSCREW, M6 X 25 LG | 8 | |
| 8 | CC688216 | HOSE CLAMP | 2 | |
| 9 | CC238150 | CARRIAGE IHR BRACKET | 1 | |
| 10 | CC245262 | CHAIN / HOSE GUARD | 2 | |
| 11 | 3EB-71-A6040 | BULKHEAD FITTING | 2 | |
| 12 | CC2680 | FITTING | 2 | |
| 13 | SEE BELOW | GUIDE | 3 | |
| 14 | CC238534 | HOSE CLAMP | 6 | |
| 15 | CC677267 | SHEAVE | 2 | |
| 16 | 3EB-73-A5640 | IHR BRACKET | 2 | |
| 17 | CC291445 | #6 CLAMP | 2 | |
| 18 | 3EB-79-A6040 | LOCK WASHER, M10 | 9 | |
| 19 | 3EB-79-A5360 | LOCKWASHER, M12 | 2 | |
| 20 | 3EB-73-A5340 | LOCK WASHER, M6 | 4 | |
| 21 | 3EB-79-A5250 | #6 CAP PLUG | 4 | |
| 22 | 3EB-79-A5180 | NUT, M10 | 5 | |
| 23 | CC250066 | #6 INSERT | 2 | |
| 24 | 3EB-73-A5230 | STUBSHAFT | 4 | |
| 25 | CC290465 | BOLT | 2 | |
| 26 | CC290464 | COVER PLATE | 2 | |

**OCL = OUTER CHANNEL LENGTH, MFH = MAXIMUM FORK HEIGHT**

| | | |
|---|---|---|
| CC255350 | IHR KIT (OCL = 69 IN.) (MFH = 106 IN.) | 1 |
| CC255355 | IHR KIT (OCL = 74 IN.) (MFH = 116 IN.) | 1 |
| CC255361 | IHR KIT (OCL = 80 IN.) (MFH = 128 IN.) | 1 |
| CC238525 | OUTER GUIDE (OCL = 69 IN.) (MFH = 106 IN.) | 2 |
| CC238525 | OUTER GUIDE (OCL = 74 IN.) (MFH = 116 IN.) | 2 |
| CC238526 | OUTER GUIDE (OCL = 80 IN.) (MFH = 128 IN.) | 2 |
| CC245235 | INNER GUIDE (OCL = 69 IN.) (MFH = 106 IN.) | 1 |
| CC245236 | INNER GUIDE (OCL = 74 IN.) (MFH = 116 IN.) | 1 |
| CC245237 | INNER GUIDE (OCL = 80 IN.) (MFH = 128 IN.) | 1 |
| CC234971 | HOSE (OCL = 69 IN.) (MFH = 106 IN.) | 4 |

PARTS LIST CONTINUED ON NEXT PAGE

https://truckmanualshub.com/



## E50-MD DUAL MAST - INTERNAL HOSE REEVING - DOUBLE - S/N 200001A~ CUSHION MODELS

| Item | Part Number | Description | Qty | Serial Number |
|---|---|---|---|---|
| | CC210803 | HOSE (OCL = 74 IN.) (MFH = 116 IN.). . . . . | 4 | |
| | CC234982 | HOSE (OCL = 80 IN.) (MFH = 128 IN.) . . . . . | 4 | |

https://truckmanualshub.com/

**NOTES:**

https://truckmanualshub.com/



## E50-MD DUAL MAST — RECOMMENDED STOCK LIST (RSL)

NO

ILLUSTRATION

REQUIRED

https://truckmanualshub.com/



## E50-MD DUAL MAST — RECOMMENDED STOCK LIST (RSL)

| Item | Part Number | Description | Qty | No. of Masts Serviced |
|---|---|---|---|---|
| | | **MAIN LIFT CYLINDERS** | | |
| | SEE PARTS PG | MAIN LIFT CYL ASSY | 0 | 1 - 19 |
| | SEE PARTS PG | MAIN LIFT CYL ASSY | 1 | 20 - 50 |
| | SEE PARTS PG | SEAL KIT | 2 | 1 - 5 |
| | SEE PARTS PG | SEAL KIT | 4 | 6 - 19 |
| | SEE PARTS PG | SEAL KIT | 8 | 20 - 50 |
| | | **FREE LIFT CYLINDER** | | |
| | SEE PARTS PG | FREE LIFT CYLINDER ASSY | 0 | 1 - 5 |
| | SEE PARTS PG | FREE LIFT CYLINDER ASSY | 1 | 6 - 19 |
| | SEE PARTS PG | FREE LIFT CYLINDER ASSY | 2 | 20 - 50 |
| | SEE PARTS PG | SEAL KIT | 2 | 1 - 5 |
| | SEE PARTS PG | SEAL KIT | 4 | 6 - 19 |
| | SEE PARTS PG | SEAL KIT | 8 | 20 - 50 |
| | | **INTERNAL REEVING** | | |
| | SEE PARTS PG | HOSE | 2 | 1 - 5 |
| | SEE PARTS PG | HOSE | 4 | 6 - 19 |
| | SEE PARTS PG | HOSE | 8 | 20 - 50 |
| | 3EB-71-A6010 | FITTING | 1 | 1 - 5 |
| | 3EB-71-A6010 | FITTING | 2 | 6 - 19 |
| | 3EB-71-A6010 | FITTING | 4 | 20 - 50 |
| | 3EB-73-A5030 | SHEAVE, IHR, SINGLE & DOUBLE IHR | 1 | 1 - 5 |
| | 3EB-73-A5030 | SHEAVE, IHR, SINGLE & DOUBLE IHR | 2 | 6 - 19 |
| | 3EB-73-A5030 | SHEAVE, IHR, SINGLE & DOUBLE IHR | 4 | 20 - 50 |
| | CC677267 | SHEAVE - DOUBLE IHR | 1 | 1 - 5 |
| | CC677267 | SHEAVE - DOUBLE IHR | 2 | 6 - 19 |
| | CC677267 | SHEAVE - DOUBLE IHR | 4 | 20 - 50 |
| | | **UPRIGHTS** | | |
| | CC248892 | CHAIN ANCHOR | 1 | 1 - 5 |
| | CC248892 | CHAIN ANCHOR | 2 | 6 - 19 |
| | CC248892 | CHAIN ANCHOR | 4 | 20 - 50 |
| | 3EB-79-A5150 | PIN, CHAIN | 6 | 1 - 5 |
| | 3EB-79-A5150 | PIN, CHAIN | 12 | 6 - 19 |
| | 3EB-79-A5150 | PIN, CHAIN | 36 | 20 - 50 |
| | 3EB-79-A6090 | NUT | 6 | 1 - 5 |
| | 3EB-79-A6090 | NUT | 12 | 6 - 19 |
| | 3EB-79-A6090 | NUT | 24 | 20 - 50 |
| | 3EB-79-A6081 | PIN, COTTER | 6 | 1 - 5 |
| | 3EB-79-A6081 | PIN, COTTER | 12 | 6 - 19 |

PARTS LIST CONTINUED ON NEXT PAGE

https://truckmanualshub.com/



## E50-MD DUAL MAST — RECOMMENDED STOCK LIST (RSL)

| Item | Part Number | Description | Qty | No. of Masts Serviced |
|---|---|---|---|---|
| | 3EB-79-A6081 | PIN, COTTER | 24 | 20 - 50 |
| | 3EB-79-A6080 | PIN, COTTER | 6 | 1 - 5 |
| | 3EB-79-A6080 | PIN, COTTER | 12 | 6 - 19 |
| | 3EB-79-A6080 | PIN, COTTER | 36 | 20 - 50 |
| | 3EB-79-A6050 | SHIM, .03 IN. | 16 | 1 - 5 |
| | 3EB-79-A6050 | SHIM, .03 IN. | 32 | 6 - 19 |
| | 3EB-79-A6050 | SHIM, .03 IN. | 64 | 20 - 50 |
| | 3EB-79-A5210 | ROLLER | 8 | 1 - 5 |
| | 3EB-79-A5210 | ROLLER | 24 | 6 - 19 |
| | 3EB-79-A5210 | ROLLER | 48 | 20 - 50 |
| | CC212587 | SERVICE KIT, WEAR PLUG | 2 | 1 - 5 |
| | CC212587 | SERVICE KIT, WEAR PLUG | 4 | 6 - 19 |
| | CC212587 | SERVICE KIT, WEAR PLUG | 8 | 20 - 50 |
| | | **CARRIAGE AND CHAINS** | | |
| | SEE PARTS PG | FREE LIFT CHAINS | 2 | 1 - 5 |
| | SEE PARTS PG | FREE LIFT CHAINS | 4 | 6 - 19 |
| | SEE PARTS PG | FREE LIFT CHAINS | 8 | 20 - 50 |
| | 3EB-79-A5210 | CARRIAGE ROLLER. | 4 | 1 - 5 |
| | 3EB-79-A5210 | CARRIAGE ROLLER. | 8 | 6 - 19 |
| | 3EB-79-A5210 | CARRIAGE ROLLER. | 16 | 20 - 50 |
| | 3EB-79-A5220 | ROLLER - 6-ROLLER CARRIAGE | 2 | 1 - 5 |
| | 3EB-79-A5220 | ROLLER - 6-ROLLER CARRIAGE | 4 | 6 - 19 |
| | 3EB-79-A5220 | ROLLER - 6-ROLLER CARRIAGE | 8 | 20 - 50 |
| | 3EB-79-A5140 | CHAIN ANCHOR | 1 | 1 - 5 |
| | 3EB-79-A5140 | CHAIN ANCHOR | 2 | 6 - 19 |
| | 3EB-79-A5140 | CHAIN ANCHOR | 4 | 20 - 50 |
| | 3EB-79-A6081 | PIN, COTTER | 2 | 1 - 5 |
| | 3EB-79-A6081 | PIN, COTTER | 4 | 6 - 19 |
| | 3EB-79-A6081 | PIN, COTTER | 8 | 20 - 50 |
| | 3EB-79-A6080 | PIN, COTTER | 4 | 1 - 5 |
| | 3EB-79-A6080 | PIN, COTTER | 8 | 6 - 19 |
| | 3EB-79-A6080 | PIN, COTTER | 16 | 20 - 50 |
| | 3EB-79-A5150 | CHAIN PIN. | 4 | 1 - 19 |
| | 3EB-79-A5150 | CHAIN PIN. | 8 | 20 - 50 |
| | 3EB-73-A5450 | NUT | 2 | 1 - 50 |

https://truckmanualshub.com/

**NOTES:**

https://truckmanualshub.com/



# E50-MS 2-STAGE MAST - SAFETY DECALS
## S/N 200001A~

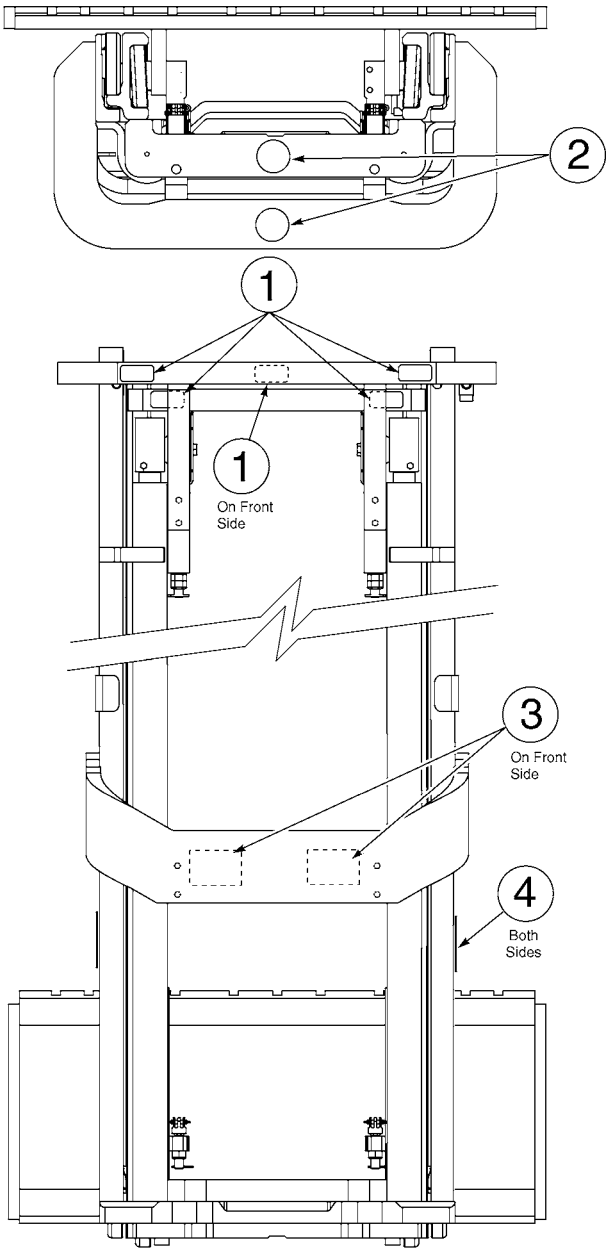


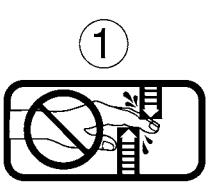


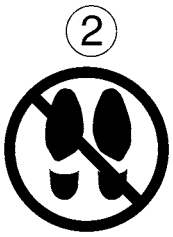


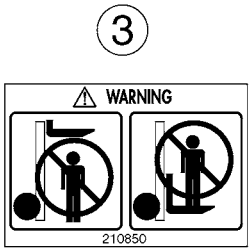





72-0100

https://truckmanualshub.com/



## E50-MS 2-STAGE MAST - SAFETY DECALS
## S/N 200001A~

| Item | Part Number | Description | Qty | Serial Number |
|---|---|---|---|---|
| 1 | 3EB-79-A6010 | DECAL - "HANDS OFF" . . . . . | 5 | |
| 2 | 3EB-79-A6020 | DECAL - "NO STEP" . . . . . | 2 | |
| 3 | CC210850 | DECAL - "WARNING" . . . . . | 2 | |
| 4 | CC224053 | DECAL - "FORK STOP" . . . . . | 2 | |

https://truckmanualshub.com/



# E50-MS 2-STAGE MAST - MAIN LIFT CYLINDERS
## S/N 200001A~

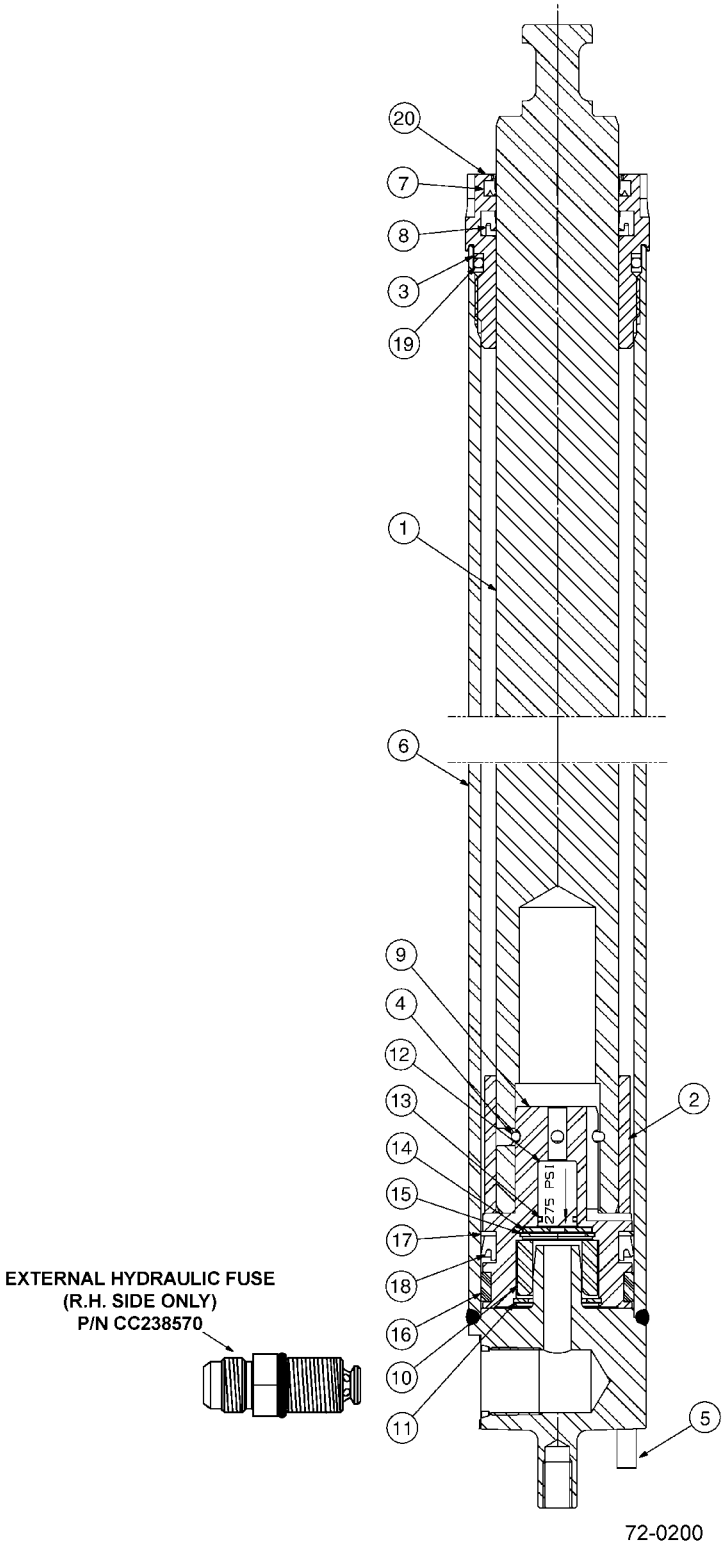

https://truckmanualshub.com/



## E50-MS 2-STAGE MAST - MAIN LIFT CYLINDERS
## S/N 200001A~

| Item | Part Number | Description | Qty | Serial Number |
|---|---|---|---|---|
| 1 | NSS | ROD/PLUNGER | 1 | |
| 2 | NSS | SPACER | 1 | |
| 3 | NSS | BACK-UP RING (SEAL KIT) | 1 | |
| 4 | NSS | PULL-IN WIRE (SEAL KIT) | 1 | |
| 5 | CC7910 | ROLL PIN | 1 | |
| 6 | NSS | SHELL | 1 | |
| 7 | NSS | WIPER (SEAL KIT) | 1 | |
| 8 | NSS | ROD SEAL (SEAL KIT) | 1 | |
| 9 | NSS | PISTON | 1 | |
| 10 | NSS | SLEEVE | 1 | |
| 11 | NSS | RETAINING RING (CHECK VALVE KIT) | 1 | |
| 12 | NSS | CHECK VALVE (CHECK VALVE KIT) | 1 | |
| 13 | NSS | O-RING (CHECK VALVE KIT) | 1 | |
| 14 | NSS | WASHER (CHECK VALVE KIT) | 1 | |
| 15 | NSS | RETAINING RING (SEAL KIT) | 1 | |
| 16 | NSS | WEAR RING (SEAL KIT) | 1 | |
| 17 | NSS | NYLON RING (SEAL KIT) | 1 | |
| 18 | NSS | PISTON SEAL (SEAL KIT) | 1 | |
| 19 | NSS | O-RING (SEAL KIT) | 1 | |
| 20 | CC422809 | RETAINER | 1 | |
| KIT | 3EB-73-A5430 | SEAL KIT | 1 | |
| KIT | CC3101894 | CHECK VALVE KIT | 1 | |
| | **OCL = OUTER CHANNEL LENGTH** | | | |
| | CC1001115 | MAIN LIFT CYLINDER - (57" OCL) (82" MFH) | 1 | |
| | CC1001127 | MAIN LIFT CYLINDER - (69" OCL) (106" MFH) | 1 | |
| | CC1001131 | MAIN LIFT CYLINDER - (73" OCL) (114" MFH) | 1 | |
| | CC1001138 | MAIN LIFT CYLINDER - (80" OCL) (128" MFH) | 1 | |
| | CC1001139 | MAIN LIFT CYLINDER - (81" OCL) (130" MFH) | 1 | |
| | CC1001147 | MAIN LIFT CYLINDER - (89" OCL) (146" MFH) | 1 | |
| | CC1001153 | MAIN LIFT CYLINDER - (95" OCL) (158" MFH) | 1 | |
| | CC1001159 | MAIN LIFT CYLINDER - (101" OCL) (170" MFH) | 1 | |

https://truckmanualshub.com/



## E50-MS 2-STAGE MAST - OUTER UPRIGHT
## S/N 200001A~

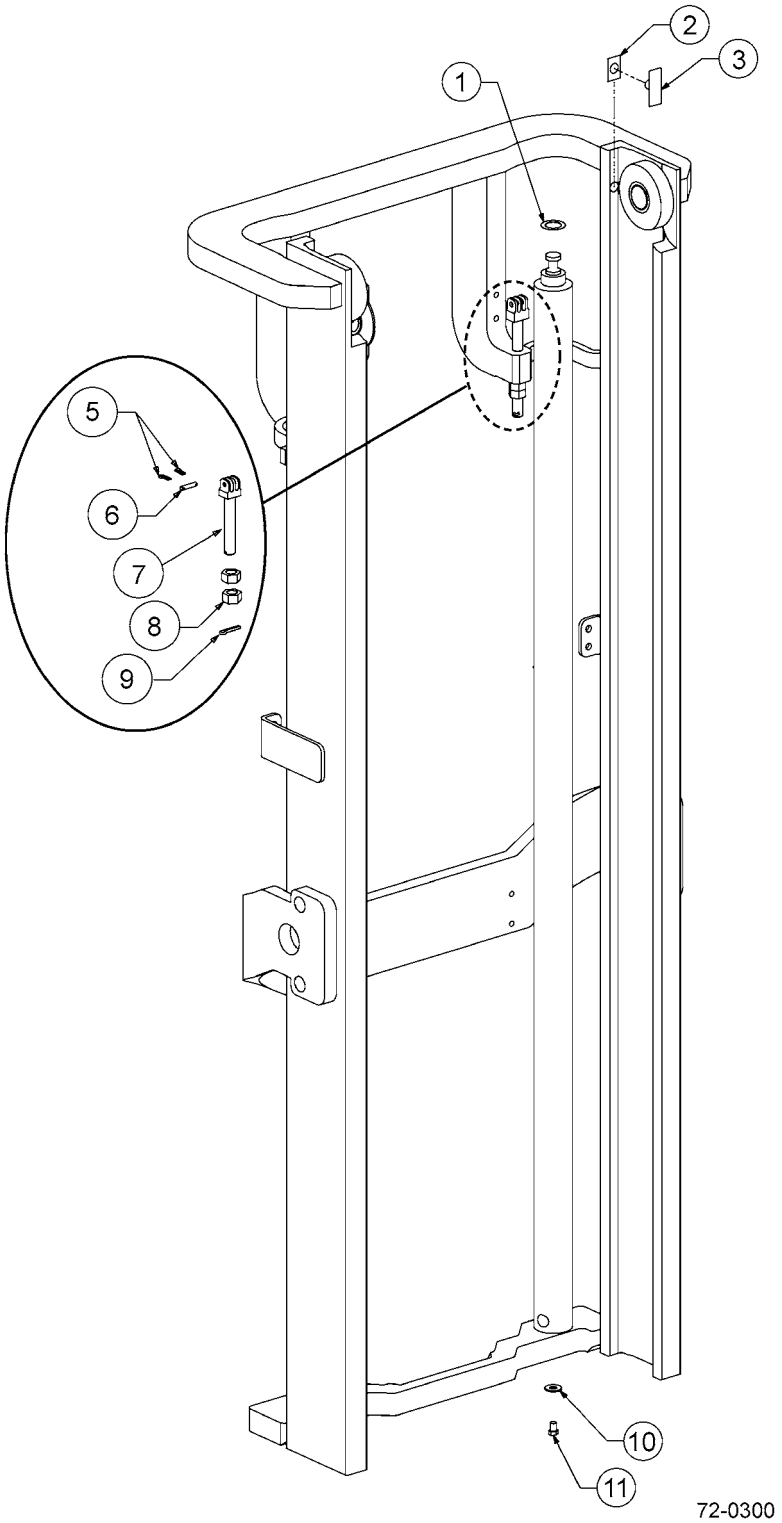

https://truckmanualshub.com/



## E50-MS 2-STAGE MAST - OUTER UPRIGHT
## S/N 200001A~

| Item | Part Number | Description | Qty | Serial Number |
|---|---|---|---|---|
| | **OCL = OUTER CHANNEL LENGTH** | | | |
| | CC235978 | OUTER UPRIGHT - (57" OCL) (82" MFH) . . . . . | 1 | |
| | CC235990 | OUTER UPRIGHT - (69" OCL) (106" MFH) . . . . | 1 | |
| | CC235994 | OUTER UPRIGHT - (73" OCL) (114" MFH) . . . . | 1 | |
| | CC236001 | OUTER UPRIGHT - (80" OCL) (128" MFH) . . . . | 1 | |
| | CC236002 | OUTER UPRIGHT - (81" OCL) (130" MFH) . . . . | 1 | |
| | CC236010 | OUTER UPRIGHT - (89" OCL) (146" MFH) . . . . | 1 | |
| | CC236016 | OUTER UPRIGHT - (95" OCL) (158" MFH) . . . . | 1 | |
| | CC236022 | OUTER UPRIGHT - (101" OCL) (170" MFH) . . . | 1 | |
| 1 | CC238137 | MAIN LIFT CYL SHIM KIT . . . . . | 2 | |
| 2 | NSS | WEAR PLUG SHIM . . . . . (WEAR PLUG KIT) | AR | |
| 3 | NSS | WEAR PLUG . . . . . (WEAR PLUG KIT) | 1 | |
| 4 | NOT USED | | | |
| 5 | 3EB079-A6080 | COTTER PIN . . . . . | 4 | |
| 6 | 3EB-79-A5150 | CHAIN ANCHOR PIN . . . . . | 2 | |
| 7 | 3EB-79-A5110 | CHAIN ANCHOR . . . . . | 2 | |
| 8 | 3EB-79-A6090 | NUT. . . . . | 4 | |
| 9 | 3EB-79-A6081 | COTTER PIN . . . . . | 2 | |
| 10 | 3EB-79-A5350 | FLAT WASHER. . . . . | 2 | |
| 11 | 3EB-79-A5340 | BOLT. . . . . | 2 | |

https://truckmanualshub.com/



# E50-MS 2-STAGE MAST - INNER UPRIGHT
## S/N 200001A~

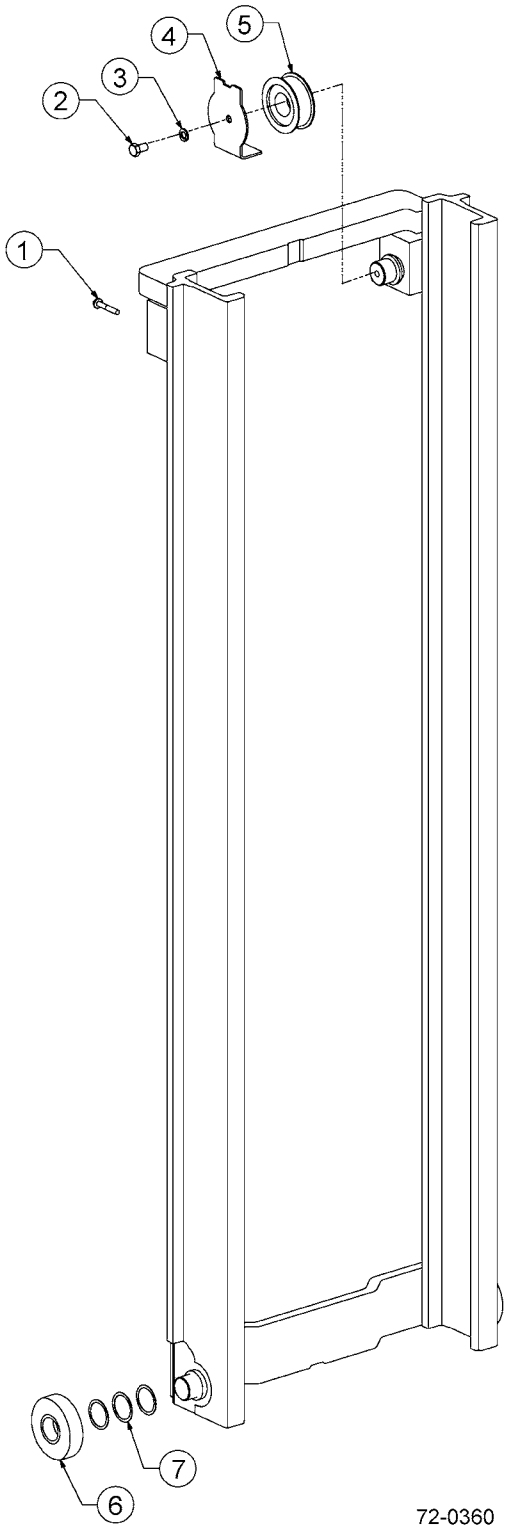

https://truckmanualshub.com/



## E50-MS 2-STAGE MAST - INNER UPRIGHT
## S/N 200001A~

| Item | Part Number | Description | Qty | Serial Number |
|---|---|---|---|---|
| | | **OCL = OUTER CHANNEL LENGTH, MFH = MAXIMUM FORK HEIGHT** | | |
| | CC236049 | INNER UPRIGHT - (57" OCL) (82" MFH) | 1 | |
| | CC236061 | INNER UPRIGHT - (69" OCL) (106" MFH) | 1 | |
| | CC236065 | INNER UPRIGHT - (73" OCL) (114" MFH) | 1 | |
| | CC236072 | INNER UPRIGHT - (80" OCL) (128" MFH) | 1 | |
| | CC236073 | INNER UPRIGHT - (81" OCL) (130" MFH) | 1 | |
| | CC236081 | INNER UPRIGHT - (89" OCL) (146" MFH) | 1 | |
| | CC236087 | INNER UPRIGHT - (95" OCL) (158" MFH) | 1 | |
| | CC236093 | INNER UPRIGHT - (101" OCL) (170" MFH) | 1 | |
| 1 | 3EB-79-A5380 | BOLT | 2 | |
| 2 | 3EB-79-A5370 | M12 X 20 LG CAPSCREW | 2 | |
| 3 | 3EB-79-A5360 | M12 WASHER, LOCK | 2 | |
| 4 | 3EB-73-A5140 | CHAIN GUARD | 2 | |
| 5 | 3EB-73-A5010 | SHEAVE | 2 | |
| 6 | 3EB-79-A5210 | LOAD ROLLER | 4 | |
| 7 | 3EB-79-A6050 | SHIM, LOAD ROLLER | AR | |

https://truckmanualshub.com/



## E50-MS 2-STAGE MAST - CARRIAGE - 4-ROLLER
## S/N 200001A~

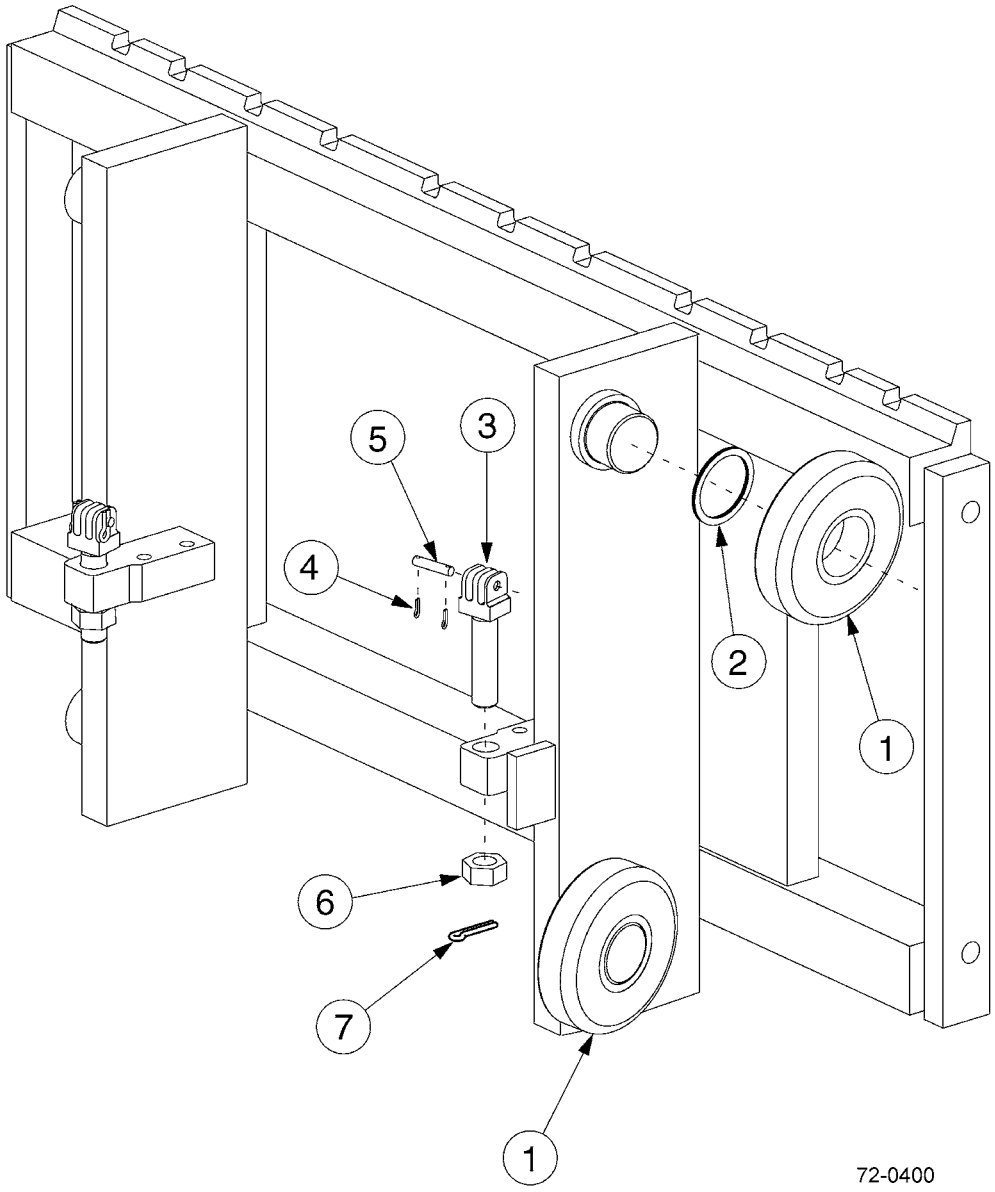

https://truckmanualshub.com/



## E50-MS 2-STAGE MAST - CARRIAGE - 4-ROLLER
## S/N 200001A~

| Item | Part Number | Description | Qty | Serial Number |
|---|---|---|---|---|
| | CC236907 | CARRIAGE - 37" - CUSHION TIRE SPEC | 1 | |
| | CC236908 | CARRIAGE - 41" - CUSHION TIRE SPEC | 1 | |
| | CC236909 | CARRIAGE - 37" - PNEUMATIC SPEC | 1 | |
| | CC236910 | CARRIAGE - 41" - PNEUMATIC SPEC | 1 | |
| 1 | 3EB-79-A5210 | LOAD ROLLER | 4 | |
| 2 | 3EB-79-A6050 | SHIM, LOAD ROLLER | AR | |
| 3 | 3EB-79-A5140 | CHAIN ANCHOR | 2 | |
| 4 | 3EB-79-A6080 | PIN, COTTER | 4 | |
| 5 | 3EB-79-A5150 | PIN, CHAIN ANCHOR | 2 | |
| 6 | 3EB-73-A5450 | NUT | 2 | |
| 7 | 3EB-79-A6081 | PIN, COTTER | 2 | |

https://truckmanualshub.com/



## E50-MS 2-STAGE MAST - CARRIAGE - 6-ROLLER
## S/N 200001A~

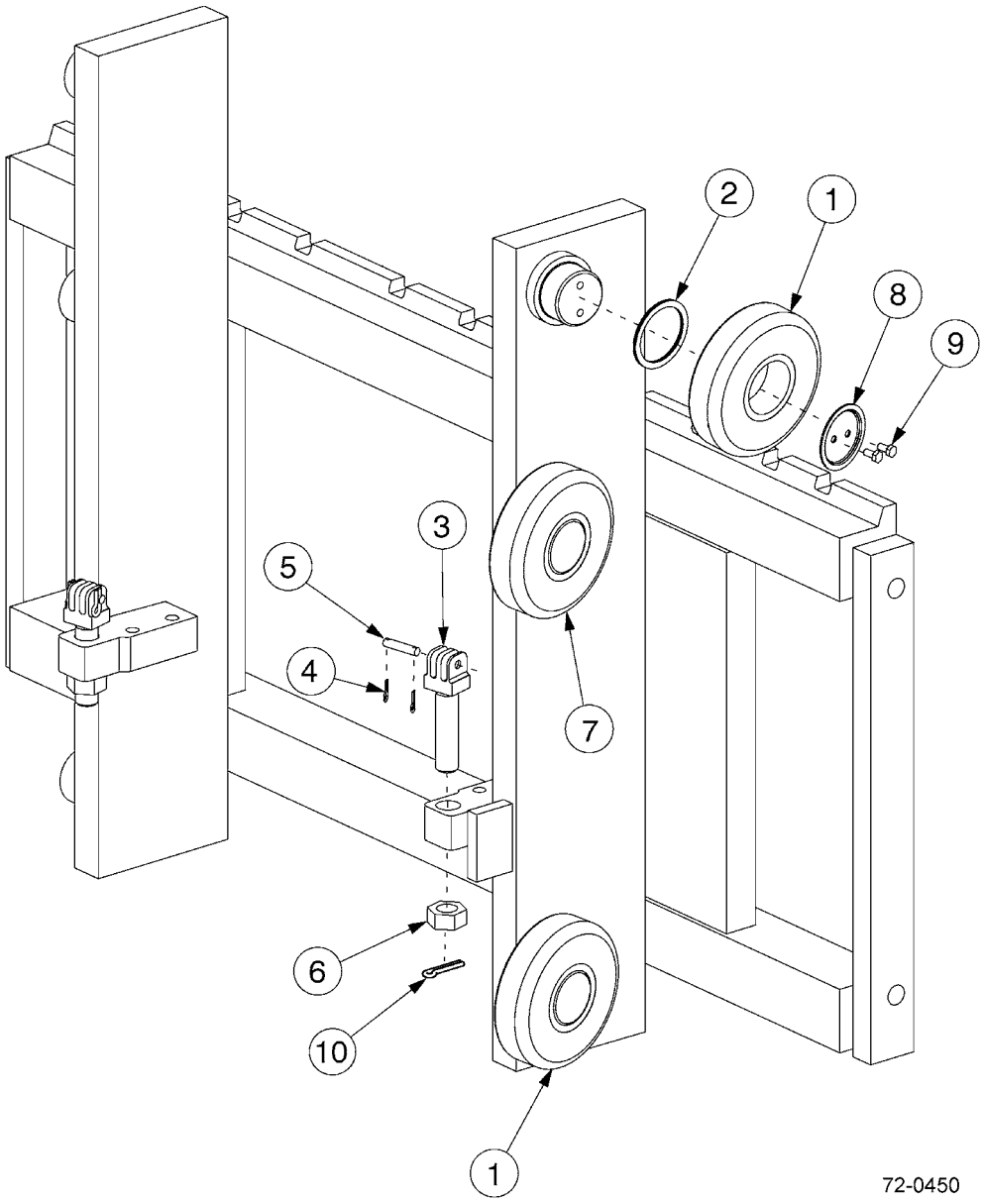

https://truckmanualshub.com/



## E50-MS 2-STAGE MAST - CARRIAGE - 6-ROLLER
## S/N 200001A~

| Item | Part Number | Description | Qty | Serial Number |
|---|---|---|---|---|
| | CC253144 | CARRIAGE - 37" - CUSHION TIRE SPEC (TRUCKER SPECIAL) | 1 | |
| | CC236915 | CARRIAGE - 37" - CUSHION TIRE SPEC | 1 | |
| | CC236916 | CARRIAGE - 41" - CUSHION TIRE SPEC | 1 | |
| | CC252857 | CARRIAGE - 31" - PNEUMATIC SPEC | 1 | |
| | CC236917 | CARRIAGE - 37" - PNEUMATIC SPEC | 1 | |
| | CC236918 | CARRIAGE - 41" - PNEUMATIC SPEC | 1 | |
| | CC251443 | CARRIAGE - 53" - PNEUMATIC SPEC | 1 | |
| 1 | 3EB-79-A5210 | LOAD ROLLER | 4 | |
| 2 | 3EB-79-A6050 | SHIM, LOAD ROLLER | AR | |
| 3 | 3EB-79-A5140 | CHAIN ANCHOR | 2 | |
| 4 | 3EB-79-A6080 | PIN, COTTER | 4 | |
| 5 | 3EB-79-A5150 | PIN, CHAIN ANCHOR | 2 | |
| 6 | 3EB-73-A5450 | NUT | 2 | |
| 7 | 3EB-79-A5220 | LOAD ROLLER | 2 | |
| 8 | 3EB-73-A5460 | RETAINER | 2 | |
| 9 | 3EB-73-A5470 | CAPSCREW - M6 X 12LG | 4 | |
| 10 | 3EB-79-A6081 | PIN, COTTER | 2 | |

https://truckmanualshub.com/



## E50-MS 2-STAGE MAST - HOIST CHAINS
## S/N 200001A~

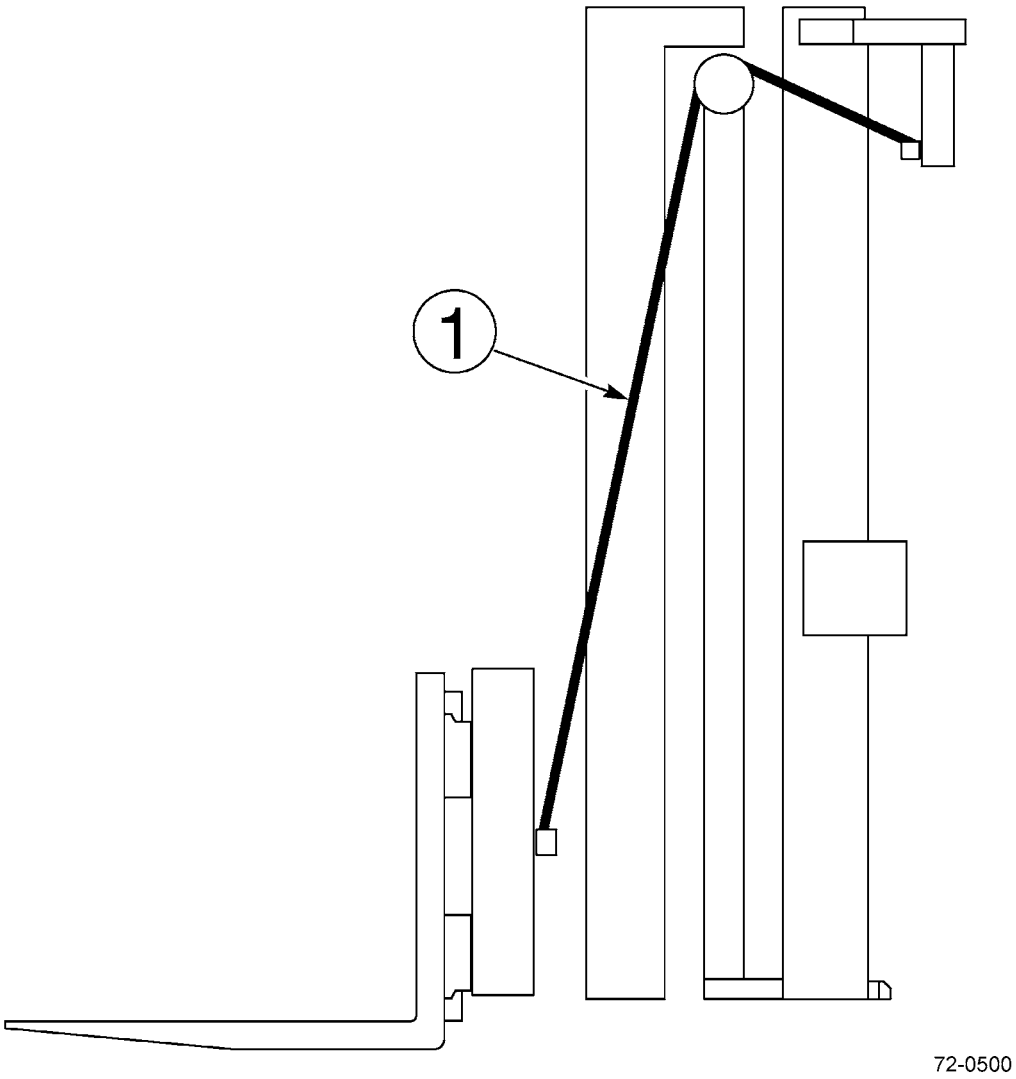

https://truckmanualshub.com/



## E50-MS 2-STAGE MAST - HOIST CHAINS
## S/N 200001A~

| Item | Part Number | Description | Qty | Serial Number |
|---|---|---|---|---|
| | **OCL = OUTER CHANNEL LENGTH** | | | |
| 1 | CC683763 | MAIN LIFT CHAIN - (57" OCL) | 2 | |
| | 3EB-74-A5390 | MAIN LIFT CHAIN - (69" OCL) | 2 | |
| | CC678658 | MAIN LIFT CHAIN - (73" OCL) | 2 | |
| | CC683775 | MAIN LIFT CHAIN - (80" OCL) | 2 | |
| | 3EB-74-A5190 | MAIN LIFT CHAIN - (81" OCL) | 2 | |
| | CC683780 | MAIN LIFT CHAIN - (89" OCL) | 2 | |
| | CC683784 | MAIN LIFT CHAIN - (95" OCL) | 2 | |
| | CC683788 | MAIN LIFT CHAIN - (101" OCL) | 2 | |

https://truckmanualshub.com/



## E50-MS 2-STAGE MAST - LOAD BACKREST
## S/N 200001A~

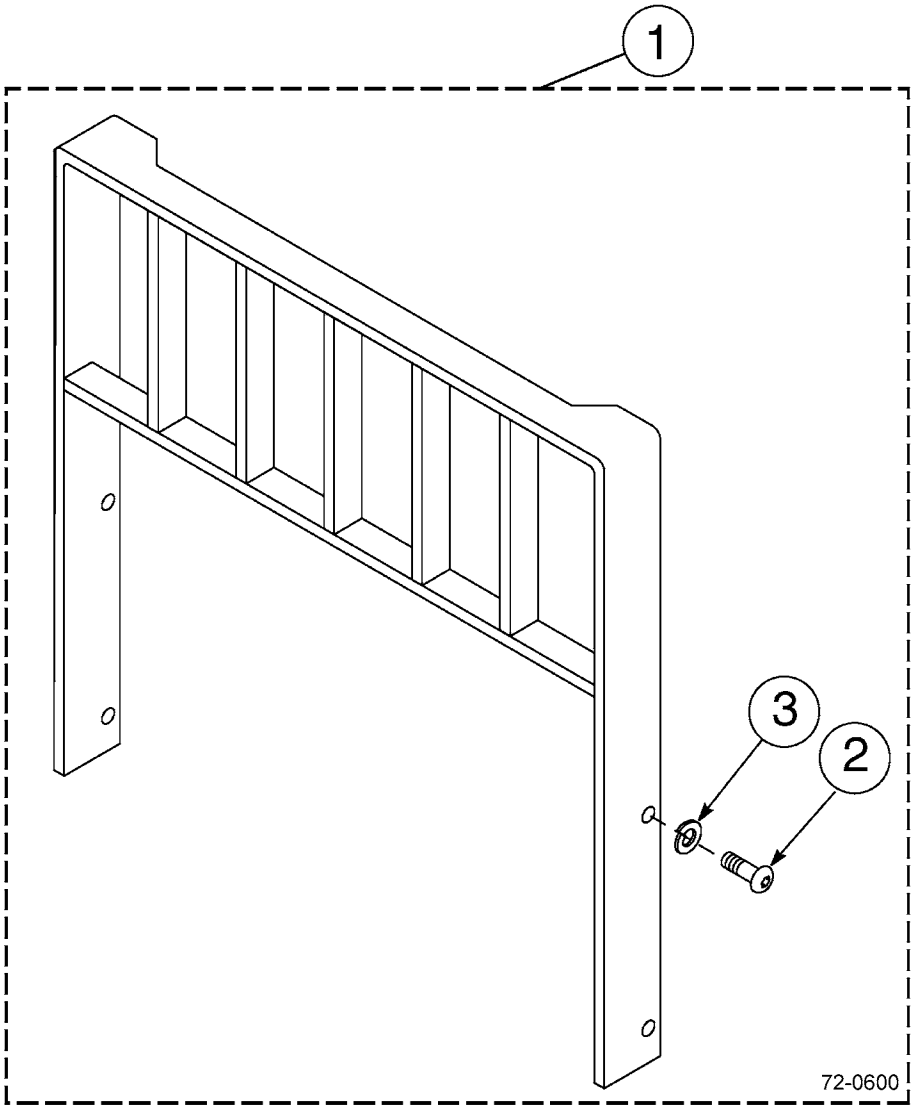

https://truckmanualshub.com/



## E50-MS 2-STAGE MAST - LOAD BACKREST
## S/N 200001A~

| Item | Part Number | Description | Qty | Serial Number |
|---|---|---|---|---|
| | | **CLASS II LOAD BACKRESTS (HEIGHT X WIDTH)** | | |
| 1 | CC209407 | BACKREST - 31" X 36" | 1 | |
| | CC684770 | BACKREST - 31" X 48" | 1 | |
| | CC209408 | BACKREST - 31" X 60" | 1 | |
| | CC684772 | BACKREST - 37" X 36" | 1 | |
| | CC226827 | BACKREST - 37" X 40" | 1 | |
| | CC225390 | BACKREST - 37" X 42" | 1 | |
| | 3EB-73-A5810 | BACKREST - 37" X 48" | 1 | |
| | CC361238 | BACKREST - 37" X 52" | 1 | |
| | CC684774 | BACKREST - 37" X 60" | 1 | |
| | CC245151 | BACKREST - 37" X 65" | 1 | |
| | CC369519 | BACKREST - 37" X 72" | 1 | |
| | CC684775 | BACKREST - 41" X 36" | 1 | |
| | 3EB-73-A5820 | BACKREST - 41" X 48" | 1 | |
| | CC684777 | BACKREST - 41" X 60" | 1 | |
| | CC248948 | BACKREST - 46" X 48" | 1 | |
| | CC684778 | BACKREST - 49" X 36" | 1 | |
| | CC684779 | BACKREST - 49" X 48" | 1 | |
| | CC684780 | BACKREST - 49" X 60" | 1 | |
| | CC231595 | BACKREST - 52" X 48" | 1 | |
| | CC684781 | BACKREST - 61" X 36" | 1 | |
| | CC684782 | BACKREST - 61" X 48" | 1 | |
| | CC684783 | BACKREST - 61" X 60" | 1 | |
| 2 | CC200173 | .CAPSCREW - M16 X 2.0 X 35-8.8 | 4 | |
| 3 | 3EB-71-A6030 | WASHER, LOCK - M16 | 4 | |

https://truckmanualshub.com/



# E50-MS 2-STAGE MAST - MOUNTING PARTS - CUSHION MODELS
## S/N 200001A~

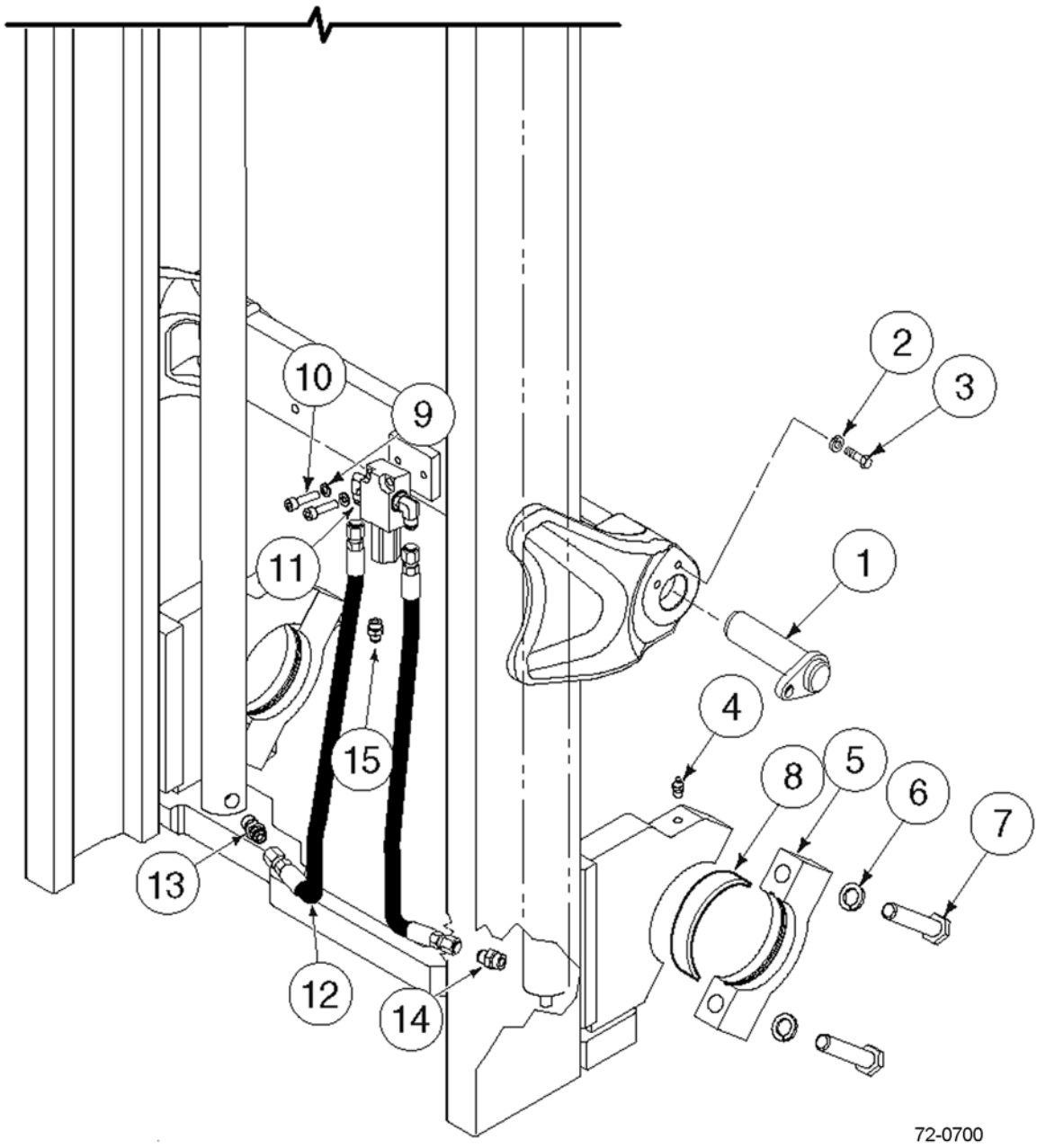

https://truckmanualshub.com/



## E50-MS 2-STAGE MAST - MOUNTING PARTS - CUSHION MODELS
## S/N 200001A~

| Item | Part Number | Description | Qty | Serial Number |
|---|---|---|---|---|
| 1 | 3EB-41-51570 | TILT PIN | 2 | |
| 2 | 3EB-79-A6040 | WASHER, LOCK. | 2 | |
| 3 | CC212632 | CAPSCREW | 2 | |
| 4 | CC7418 | FITTING, GREASE | 2 | |
| 5 | CC251901 | CAP. | 2 | |
| 6 | 3EB-71-A6030 | WASHER, LOCK. | 4 | |
| 7 | CC251906 | CAPSCREW | 4 | |
| 8 | 34A-42-11411 | BUSHING | 2 | |
| 9 | CC681238 | WASHER, LOCK. | 2 | |
| 10 | CC767611 | CAPSCREW | 2 | |
| 11 | CC601250 | FITTING # 8 - 90° ELBOW | 2 | |
| 12 | CC255666 | MAIN LIFT HOSE, RH | 1 | |
| | CC255665 | MAIN LIFT HOSE, LH. | 1 | |
| 13 | CC611289 | FITTING # 8-# 10 STR. | 1 | |
| 14 | CC238570 | 12 GPM EXTERNAL FUSE | 1 | |
| 15 | CC601377 | FITTING | 1 | |
| KIT | CC255596 | INSTALLATION KIT (& CC254411). | 1 | |

https://truckmanualshub.com/



# E50-MS 2-STAGE MAST - MOUNTING PARTS - PNEUMATIC MODELS
## S/N 200001A~

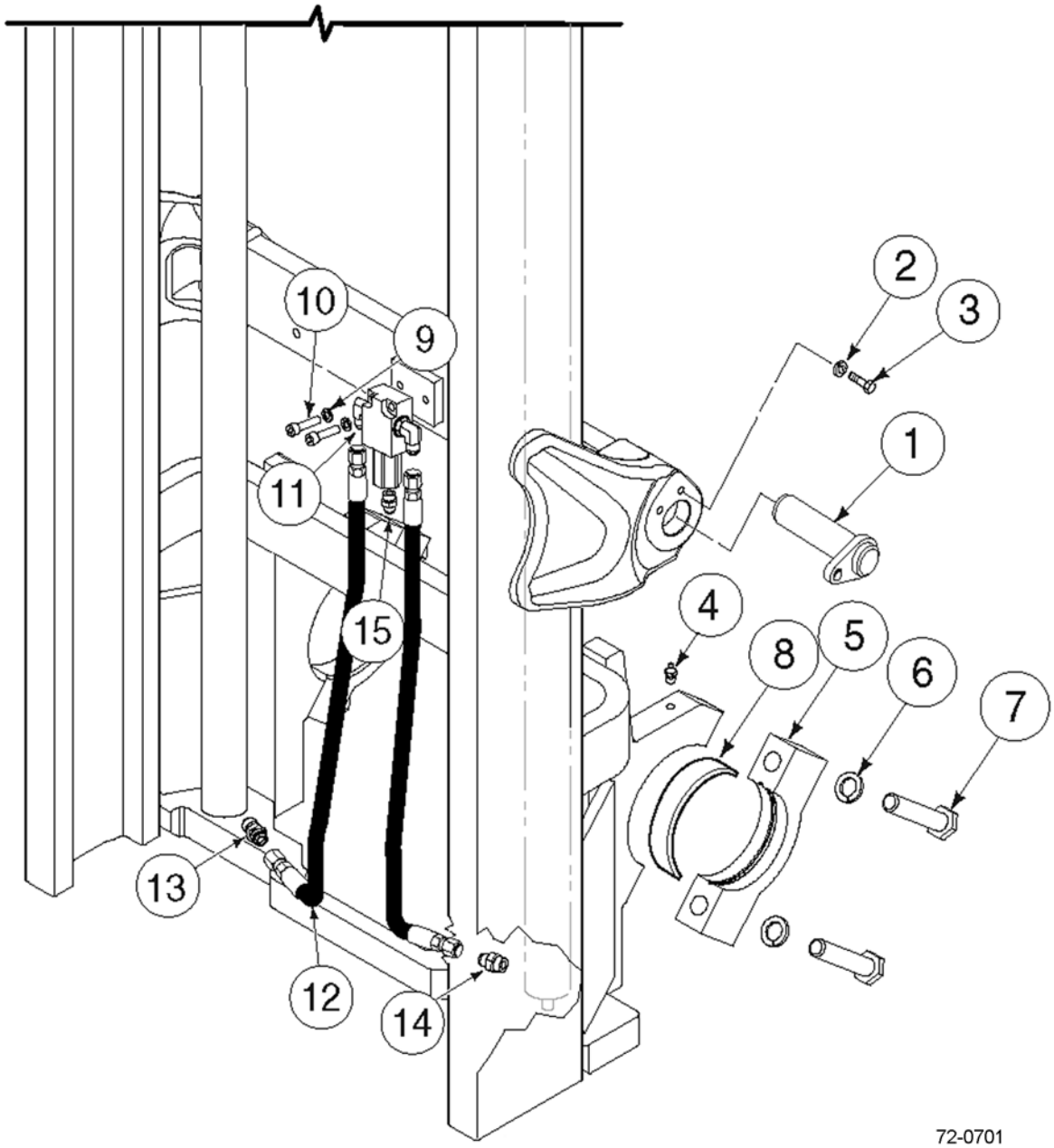

https://truckmanualshub.com/



## E50-MS 2-STAGE MAST - MOUNTING PARTS - PNEUMATIC MODELS
## S/N 200001A~

| Item | Part Number | Description | Qty | Serial Number |
|---|---|---|---|---|
| 1 | 3EB-41-51570 | TILT PIN | 2 | |
| 2 | 3EB-79-A6040 | WASHER, LOCK. | 2 | |
| 3 | CC212632 | CAPSCREW | 2 | |
| 4 | CC7418 | FITTING, GREASE | 2 | |
| 5 | CC253119 | CAP. | 2 | |
| 6 | 3EB-71-A6030 | WASHER, LOCK. | 4 | |
| 7 | CC253120 | CAPSCREW | 4 | |
| 8 | 34A-42-11411 | BUSHING | 2 | |
| 9 | CC681238 | WASHER, LOCK. | 2 | |
| 10 | CC767611 | CAPSCREW | 2 | |
| 11 | CC601250 | FITTING # 8 - 90° ELBOW | 2 | |
| 12 | CC255651 | MAIN LIFT HOSE, RH | 1 | |
| | CC238174 | MAIN LIFT HOSE, LH. | 1 | |
| 13 | CC611289 | FITTING # 8-# 10 STR. | 1 | |
| 14 | CC238570 | 12 GPM EXTERNAL FUSE | 1 | |
| 15 | CC611303 | FITTING | 1 | |
| KIT | CC255596 | INSTALLATION KIT | 1 | |

https://truckmanualshub.com/



## E50-MS 2-STAGE MAST - LOWERING CONTROL VALVE
## S/N 200001A~

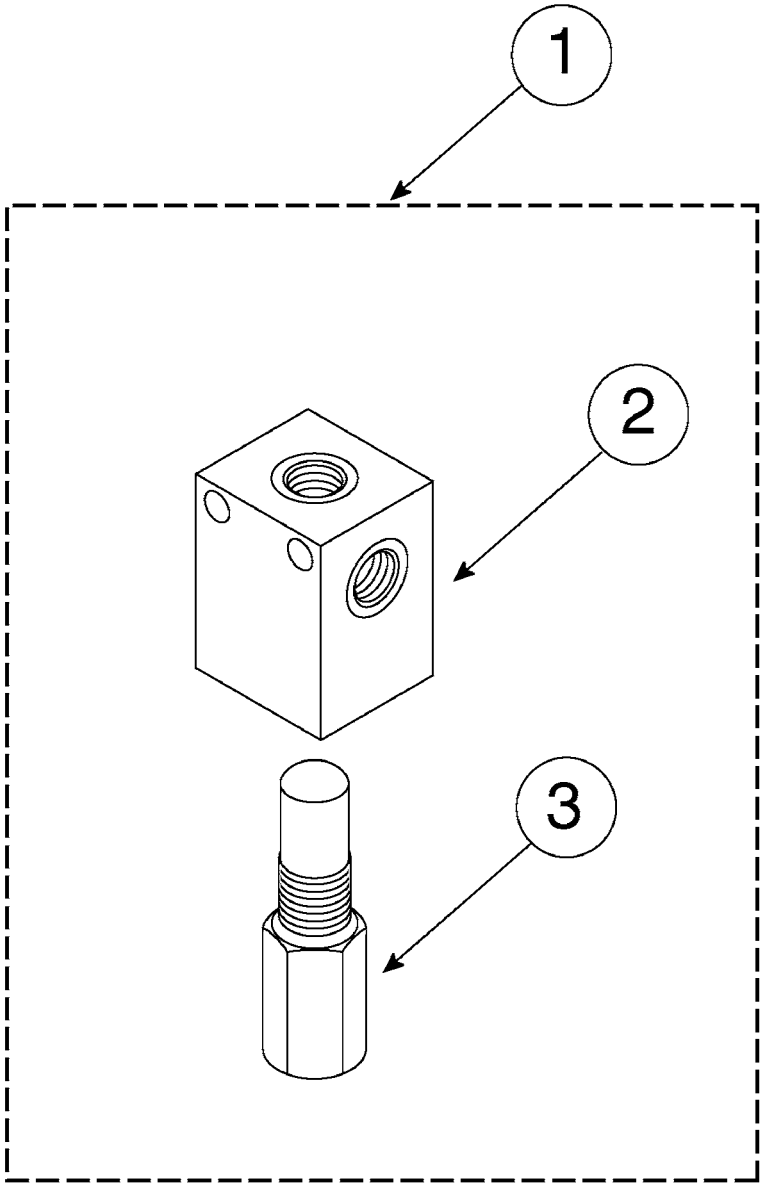


72-0850

https://truckmanualshub.com/



## E50-MS 2-STAGE MAST - LOWERING CONTROL VALVE
## S/N 200001A~

| Item | Part Number | Description | Qty | Serial Number |
|---|---|---|---|---|
| 1 | CC684810 | CONTROL VALVE - 2600 PSI - 17 GPM . . . . . | 1 | |
| 2 | CC684152 | .VALVE BODY. . . . . | 1 | |
| 3 | 3EB-73-A5920 | .VALVE CARTRIDGE . . . . . | 1 | |

https://truckmanualshub.com/



## E50-MS 2-STAGE MAST - INTERNAL HOSE REEVING - SINGLE - PNEUMATIC MODELS
## 59-66 INCH OCL ONLY - S/N 200001A~

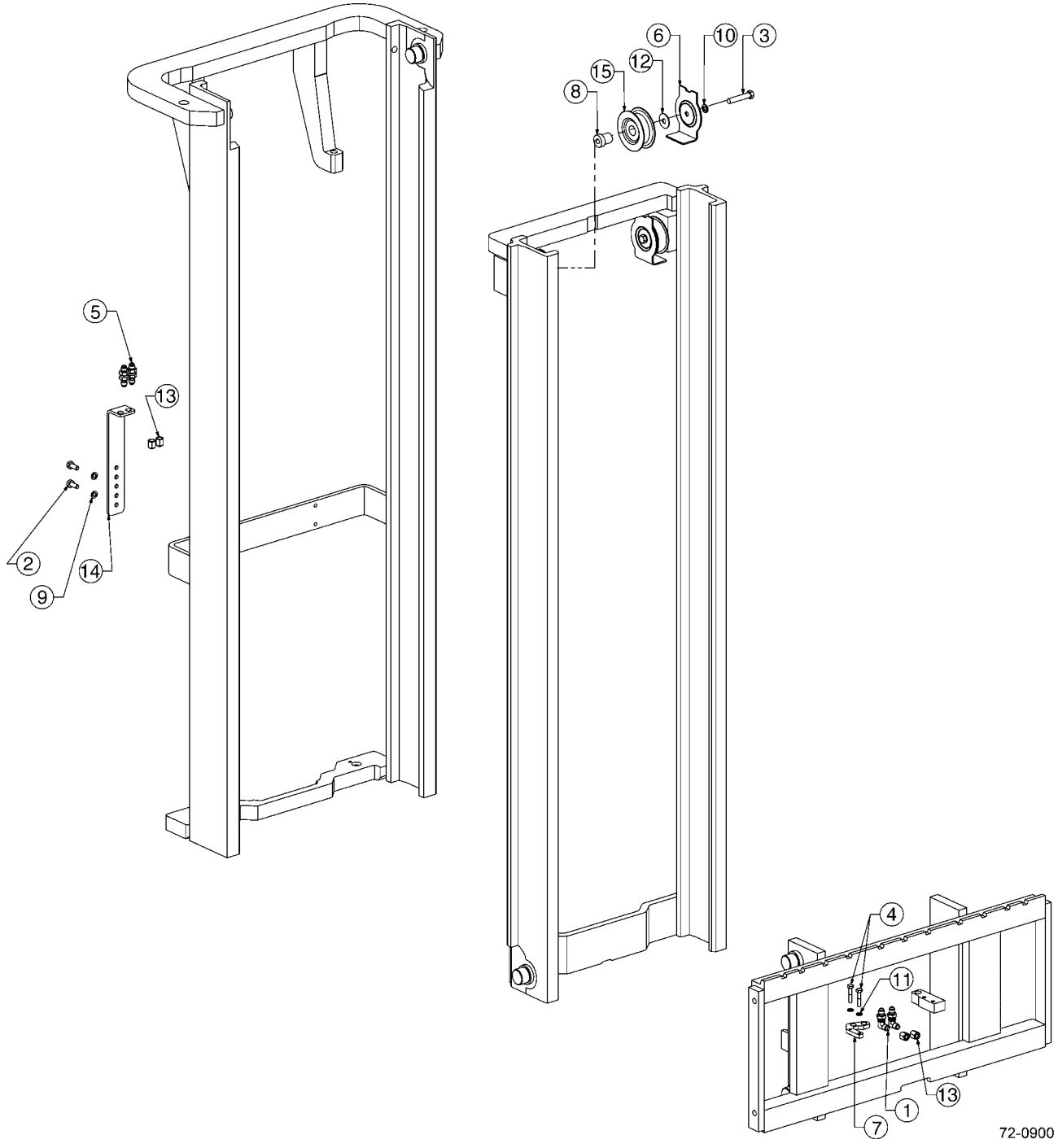

https://truckmanualshub.com/



## E50-MS 2-STAGE MAST - INTERNAL HOSE REEVING - SINGLE - PNEUMATIC MODELS 59-66 INCH OCL ONLY - S/N 200001A~

| Item | Part Number | Description | Qty | Serial Number |
|---|---|---|---|---|
| 1 | 3EB-71-A6010 | BULKHEAD UNION FITTING | 2 | |
| 2 | 3EB-73-A5490 | CAPSCREW - M10 X 25LG | 2 | |
| 3 | 3EB-79-A5230 | CAPSCREW - M12 X 60LG | 1 | |
| 4 | CC203202 | CAPSCREW - M8 X 40 LG | 2 | |
| 5 | 3EB-71-A6040 | BULKHEAD UNION FITTING | 2 | |
| 6 | 3EB-73-A5120 | HOSE GUARD | 1 | |
| 7 | CC253343 | BRACKET | 1 | |
| 8 | CC235879 | IHR STUB SHAFT | 1 | |
| 9 | 3EB-79-A6040 | WASHER, LOCK - M10 | 2 | |
| 10 | 3EB-79-A5360 | WASHER, LOCK - M12 | 1 | |
| 11 | CC206315 | WASHER, LOCK - M8 | 2 | |
| 12 | CC250035 | IHR BRACKET - R.H. | 1 | |
| 13 | 3EB-79-A5250 | CAP | 4 | |
| 14 | CC253188 | REAR TERMINATON BRACKET | 1 | |
| 15 | 3EB-73-A5020 | SHEAVE | 1 | |
| N/S | 3EB-79-A5280 | WASHER | 1 | |

**OCL = OUTER CHANNEL LENGTH, MFH = MAXIMUM FORK HEIGHT**

| | | |
|---|---|---|
| CC3550-1531 | HOSE (IHR KIT #253194) (54/56" OCL) (80" MFH) | 2 |
| CC3550-1581 | HOSE (IHR KIT #253195) (57" OCL) (82" MFH) | 2 |

**NOTE: 54" TRUCKER SPECIAL USES SAME IHR AS 56" BECAUSE OF SPECIAL CARRIAGE.**

https://truckmanualshub.com/



## E50-MS 2-STAGE MAST - INTERNAL HOSE REEVING - SINGLE - CUSHION MODELS 67 INCH OCL AND UP - S/N 200001A~

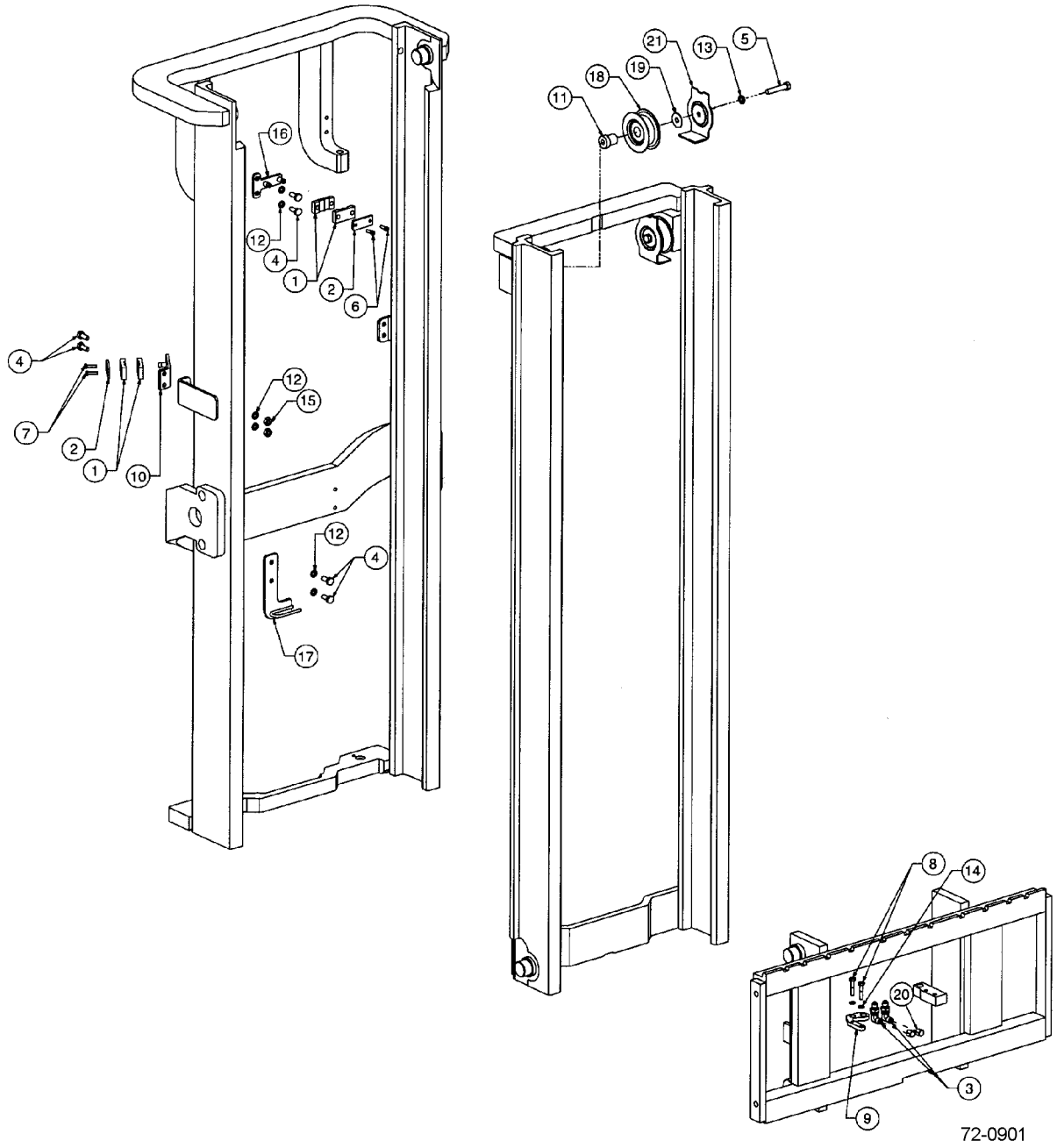

https://truckmanualshub.com/



## E50-MS 2-STAGE MAST - INTERNAL HOSE REEVING - SINGLE - CUSHION MODELS 67 INCH OCL AND UP - S/N 200001A~

| Item | Part Number | Description | Qty | Serial Number |
|---|---|---|---|---|
| 1 | 3EB-73-A5150 | CLAMP, HOSE | 4 | |
| 2 | 3EB-73-A5160 | HOSE CLAMP BAR | 2 | |
| 3 | 3EB-71-A6010 | FITTING, BULKHEAD UNION | 2 | |
| 4 | 3EB-73-A5490 | CAPSCREW - M10 X 25LG | 6 | |
| 5 | 3EB-79-A5230 | CAPSCREW - M12 X 60LG | 1 | |
| 6 | CC761170 | CAPSCREW - M6 X 20LG | 2 | |
| 7 | 3EB-79-A5240 | CAPSCREW - M6 X 25LG | 2 | |
| 8 | CC203202 | CAPSCREW - M8 X 40 LG | 2 | |
| 9 | CC235886 | BRACKET - CARRIAGE IHR | 1 | |
| 10 | 3EB-73-A5640 | IHR BRACKET | 1 | |
| 11 | CC235879 | IHR STUB SHAFT | 1 | |
| 12 | 3EB-79-A6040 | WASHER, LOCK - M10 | 6 | |
| 13 | 3EB-79-A5360 | WASHER, LOCK - M12 | 1 | |
| 14 | CC206315 | WASHER, LOCK - M8 | 2 | |
| 15 | 3EB-79-A5180 | NUT - M10 | 2 | |
| 16 | CC236902 | IHR BRACKET - OUTER | 1 | |
| 17 | CC238170 | IHR BRACKET - R.H. | 1 | |
| 18 | 3EB-73-A5020 | SHEAVE | 1 | |
| 19 | 3EB-79-A5280 | WASHER | 1 | |
| 20 | 3EB-79-A5250 | CAP | 2 | |
| 21 | CC216052 | HOSE GUARD | 1 | |
| **OCL = OUTER CHANNEL LENGTH** | | | | |
| | CC234958 | HOSE (IHR KIT #255162) (69" OCL) (106" MFH) | 2 | |
| | CC234962 | HOSE (IHR KIT #255166) (73" OCL) (114" MFH) | 2 | |
| | CC234969 | HOSE (IHR KIT #255173) (80" OCL) (128" MFH) | 2 | |
| | CC213919 | HOSE (IHR KIT #255174) (81" OCL) (130" MFH) | 2 | |
| | CC234975 | HOSE (IHR KIT #255182) (89" OCL) (146" MFH) | 2 | |
| | CC216928 | HOSE (IHR KIT #255188) (95" OCL) (158" MFH) | 2 | |
| | CC234988 | HOSE (IHR KIT #255194) (101" OCL) (170" MFH) | 2 | |

https://truckmanualshub.com/



# E50-MS 2-STAGE MAST - INTERNAL HOSE REEVING - DOUBLE - PNEUMATIC MODELS S/N 200001A~

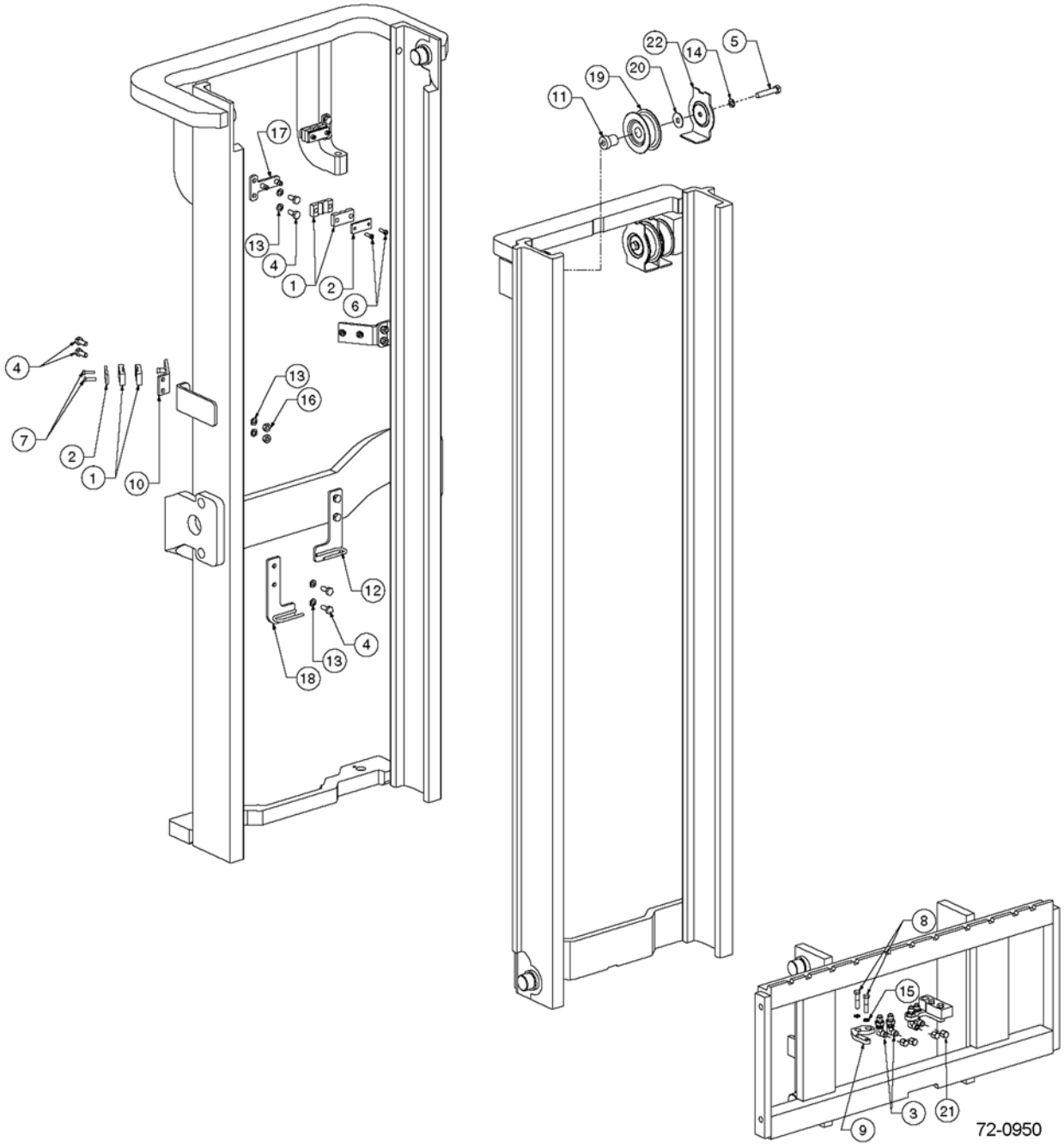

https://truckmanualshub.com/



## E50-MS 2-STAGE MAST - INTERNAL HOSE REEVING - DOUBLE - PNEUMATIC MODELS S/N 200001A~

| Item | Part Number | Description | Qty | Serial Number |
|---|---|---|---|---|
| 1 | 3EB-73-A5150 | CLAMP, HOSE | 8 | |
| 2 | 3EB-73-A5160 | HOSE CLAMP BAR | 4 | |
| 3 | 3EB-71-A6010 | FITTING, BULKHEAD UNION | 4 | |
| 4 | 3EB-73-A5490 | CAPSCREW - M10 X 25LG | 12 | |
| 5 | 3EB-79-A5230 | CAPSCREW - M12 X 60LG | 2 | |
| 6 | CC761170 | CAPSCREW - M6 X 20LG | 4 | |
| 7 | 3EB-79-A5240 | CAPSCREW - M6 X 25LG | 4 | |
| 8 | CC203202 | CAPSCREW - M8 X 40 LG | 4 | |
| 9 | CC235886 | BRACKET - CARRIAGE IHR | 2 | |
| 10 | 3EB-73-A5640 | IHR BRACKET | 2 | |
| 11 | CC235879 | IHR STUB SHAFT | 2 | |
| 12 | CC250036 | IHR BRACKET - L.H. | 1 | |
| 13 | 3EB-79-A6040 | WASHER, LOCK - M10 | 12 | |
| 14 | 3EB-79-A5360 | WASHER, LOCK - M12 | 2 | |
| 15 | CC206315 | WASHER, LOCK - M8 | 4 | |
| 16 | 3EB-79-A5180 | NUT - M10 | 4 | |
| 17 | CC236902 | IHR BRACKET - OUTER | 2 | |
| 18 | CC250035 | IHR BRACKET - R.H. | 1 | |
| 19 | 3EB-73-A5020 | SHEAVE | 2 | |
| 20 | 3EB-79-A5280 | WASHER | 2 | |
| 21 | 3EB-79-A5250 | CAP | 4 | |
| 22 | CC216052 | HOSE GUARD | 2 | |
| | **OCL = OUTER CHANNEL LENGTH, MFH = MAXMUM FORK HEIGHT** | | | |
| | CC234958 | HOSE (IHR KIT CC237757) (69" OCL) (106" MFH) | 4 | |
| | CC234962 | HOSE (IHR KIT CC237761) (73" OCL) (114" MFH) | 4 | |
| | CC234969 | HOSE (IHR KIT CC237768) (80" OCL) (128" MFH) | 4 | |
| | CC213919 | HOSE (IHR KIT CC237769) (81" OCL) (130" MFH) | 4 | |
| | CC234975 | HOSE (IHR KIT CC237777) (89" OCL) (146" MFH) | 4 | |
| | CC216928 | HOSE (IHR KIT CC237783) (95" OCL) (158" MFH) | 4 | |
| | CC234988 | HOSE (IHR KIT CC237789)(101" OCL) (170" MFH) | 4 | |

https://truckmanualshub.com/



# E50-MS 2-STAGE MAST - INTERNAL HOSE REEVING - DOUBLE - CUSHION MODELS S/N 200001A~

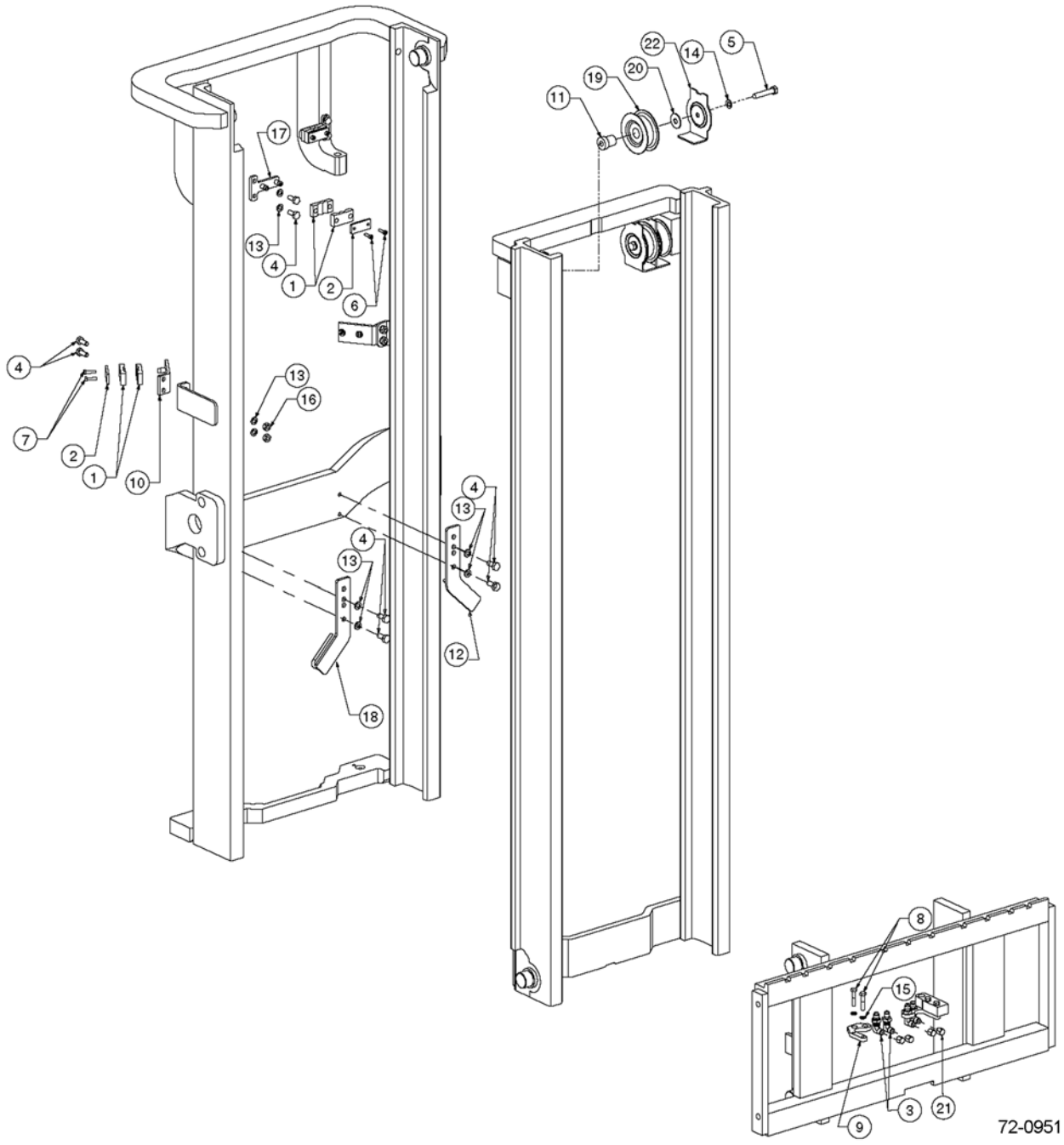

https://truckmanualshub.com/



## E50-MS 2-STAGE MAST - INTERNAL HOSE REEVING - DOUBLE - CUSHION MODELS S/N 200001A~

| Item | Part Number | Description | Qty | Serial Number |
|---|---|---|---|---|
| 1 | 3EB-73-A5150 | CLAMP, HOSE | 8 | |
| 2 | 3EB-73-A5160 | HOSE CLAMP BAR | 4 | |
| 3 | 3EB-71-A6010 | FITTING, BULKHEAD UNION | 4 | |
| 4 | 3EB-73-A5490 | CAPSCREW - M10 X 25LG | 12 | |
| 5 | 3EB-79-A5230 | CAPSCREW - M12 X 60LG | 2 | |
| 6 | CC761170 | CAPSCREW - M6 X 20LG | 4 | |
| 7 | 3EB-79-A5240 | CAPSCREW - M6 X 25LG | 4 | |
| 8 | CC203202 | CAPSCREW - M8 X 40 LG | 4 | |
| 9 | CC235886 | BRACKET - CARRIAGE IHR | 2 | |
| 10 | 3EB-73-A5640 | IHR BRACKET | 2 | |
| 11 | CC235879 | IHR STUB SHAFT | 2 | |
| 12 | 3EB-73-A6020 | IHR BRACKET - L.H. | 1 | |
| 13 | 3EB-79-A6040 | WASHER, LOCK - M10 | 12 | |
| 14 | 3EB-79-A5360 | WASHER, LOCK - M12 | 2 | |
| 15 | CC206315 | WASHER, LOCK - M8 | 4 | |
| 16 | 3EB-79-A5180 | NUT - M10 | 4 | |
| 17 | CC236902 | IHR BRACKET - OUTER | 2 | |
| 18 | 3EB-73-A5650 | IHR BRACKET - R.H. | 1 | |
| 19 | 3EB-73-A5020 | SHEAVE | 2 | |
| 20 | 3EB-79-A5280 | WASHER | 2 | |
| 21 | 3EB-79-A5250 | CAP | 4 | |
| 22 | CC216052 | HOSE GUARD | 2 | |
| **OCL = OUTER CHANNEL LENGTH** | | | | |
| | CC234936 | HOSE (IHR KIT #237745) (57" OCL) (82" MFH) | 4 | |
| | CC234958 | HOSE (IHR KIT #237757) (69" OCL) (106" MFH) | 4 | |
| | CC234962 | HOSE (IHR KIT #237761) (73" OCL) (114" MFH) | 4 | |
| | CC234969 | HOSE (IHR KIT #237768) (80" OCL) (128" MFH) | 4 | |
| | CC213919 | HOSE (IHR KIT #237769) (81" OCL) (130" MFH) | 4 | |
| | CC234975 | HOSE (IHR KIT #237777) (89" OCL) (146" MFH) | 4 | |
| | CC216928 | HOSE (IHR KIT #237783) (95" OCL) (158" MFH) | 4 | |
| | CC234988 | HOSE (IHR KIT #237789) (101" OCL) (170" MFH) | 4 | |

https://truckmanualshub.com/



## E50-MS 2-STAGE MAST — RECOMMENDED STOCK LIST (RSL)

NO

ILLUSTRATION

REQUIRED

https://truckmanualshub.com/



## E50-MS 2-STAGE MAST — RECOMMENDED STOCK LIST (RSL)

| Item | Part Number | Description | Qty | No. of Masts Serviced |
|---|---|---|---|---|
| | | **MAIN LIFT CYLINDERS** | | |
| | SEE PARTS PG | MAIN LIFT CYL ASSY | 0 | 1 - 19 |
| | SEE PARTS PG | MAIN LIFT CYL ASSY | 1 | 20 - 50 |
| | SEE PARTS PG | SEAL KIT | 2 | 1 - 5 |
| | SEE PARTS PG | SEAL KIT | 4 | 6 - 19 |
| | SEE PARTS PG | SEAL KIT | 8 | 20 - 50 |
| | | **INTERNAL REEVING** | | |
| | SEE PARTS PG | HOSE | 2 | 1 - 5 |
| | SEE PARTS PG | HOSE | 4 | 6 - 19 |
| | SEE PARTS PG | HOSE | 8 | 20 - 50 |
| | 3EB-71-A6010 | FITTING | 1 | 1 - 5 |
| | 3EB-71-A6010 | FITTING | 2 | 6 - 19 |
| | 3EB-71-A6010 | FITTING | 4 | 20 - 50 |
| | 3EB-73-A5020 | SHEAVE, IHR, SINGLE IHR | 1 | 1 - 5 |
| | 3EB-73-A5020 | SHEAVE, IHR, SINGLE IHR | 2 | 6 - 19 |
| | 3EB-73-A5020 | SHEAVE, IHR, SINGLE IHR | 4 | 20 - 50 |
| | 3EB-73-A5020 | SHEAVE, IHR, DOUBLE IHR | 2 | 1 - 5 |
| | 3EB-73-A5020 | SHEAVE, IHR, DOUBLE IHR | 4 | 6 - 19 |
| | 3EB-73-A5020 | SHEAVE, IHR, DOUBLE IHR | 8 | 20 - 50 |
| | | **UPRIGHTS** | | |
| | 3EB-79-A5110 | CHAIN ANCHOR | 1 | 1 - 5 |
| | 3EB-79-A5110 | CHAIN ANCHOR | 2 | 6 - 19 |
| | 3EB-79-A5110 | CHAIN ANCHOR | 4 | 20 - 50 |
| | 3EB-79-A5150 | PIN, CHAIN ANCHOR | 1 | 1 - 5 |
| | 3EB-79-A5150 | PIN, CHAIN ANCHOR | 2 | 6 - 19 |
| | 3EB-79-A5150 | PIN, CHAIN ANCHOR | 4 | 20 - 50 |
| | 3EB-79-A6090 | NUT | 4 | 1 - 5 |
| | 3EB-79-A6090 | NUT | 8 | 6 - 19 |
| | 3EB-79-A6090 | NUT | 32 | 20 - 50 |
| | 3EB-79-A6080 | PIN, COTTER | 6 | 1 - 5 |
| | 3EB-79-A6080 | PIN, COTTER | 12 | 6 - 19 |
| | 3EB-79-A6080 | PIN, COTTER | 36 | 20 - 50 |
| | 3EB-79-A6050 | SHIM, .03 IN. | 16 | 1 - 5 |
| | 3EB-79-A6050 | SHIM, .03 IN. | 32 | 6 - 19 |
| | 3EB-79-A6050 | SHIM, .03 IN. | 64 | 20 - 50 |
| | 3EB-79-A5210 | ROLLER | 8 | 1 - 5 |
| | 3EB-79-A5210 | ROLLER | 24 | 6 - 19 |
| | 3EB-79-A5210 | ROLLER | 48 | 20 - 50 |

PARTS LIST CONTINUED ON NEXT PAGE

https://truckmanualshub.com/



## E50-MS 2-STAGE MAST — RECOMMENDED STOCK LIST (RSL)

| Item | Part Number | Description | Qty | No. of Masts Serviced |
|---|---|---|---|---|
| | CC212587 | SERVICE KIT, WEAR PLUG | 2 | 1 - 5 |
| | CC212587 | SERVICE KIT, WEAR PLUG | 4 | 6 - 19 |
| | CC212587 | SERVICE KIT, WEAR PLUG | 8 | 20 - 50 |
| | | **CARRIAGE AND CHAINS** | | |
| | SEE PARTS PG | MAIN LIFT CHAINS | 2 | 1 - 5 |
| | SEE PARTS PG | MAIN LIFT CHAINS | 4 | 6 - 19 |
| | SEE PARTS PG | MAIN LIFT CHAINS | 8 | 20 - 50 |
| | 3EB-79-A5210 | CARRIAGE ROLLER | 4 | 1 - 5 |
| | 3EB-79-A5210 | CARRIAGE ROLLER | 8 | 6 - 19 |
| | 3EB-79-A5210 | CARRIAGE ROLLER | 16 | 20 - 50 |
| | 3EB-79-A5220 | ROLLER - 6-ROLLER CARRIAGE | 8 | 1 - 5 |
| | 3EB-79-A5220 | ROLLER - 6-ROLLER CARRIAGE | 16 | 6 - 19 |
| | 3EB-79-A5220 | ROLLER - 6-ROLLER CARRIAGE | 32 | 20 - 50 |
| | CC215719 | WEAR PLUG | 1 | 1 - 5 |
| | CC215719 | WEAR PLUG | 2 | 6 - 19 |
| | CC215719 | WEAR PLUG | 4 | 20 - 50 |
| | 3EB-79-A6081 | PIN, COTTER | 4 | 1 - 5 |
| | 3EB-79-A6081 | PIN, COTTER | 8 | 6 - 19 |
| | 3EB-79-A6081 | PIN, COTTER | 16 | 20 - 50 |
| | 3EB-79-A6080 | PIN, COTTER | 4 | 1 - 5 |
| | 3EB-79-A6080 | PIN, COTTER | 8 | 6 - 19 |
| | 3EB-79-A6080 | PIN, COTTER | 16 | 20 - 50 |
| | 3EB-79-A5150 | CHAIN PIN | 8 | 1 - 19 |
| | 3EB-79-A5150 | CHAIN PIN | 16 | 20 - 50 |
| | 3EB-73-A5450 | NUT | 2 | 1 - 50 |

https://truckmanualshub.com/

**NOTES:**

https://truckmanualshub.com/



# E50-MT 3-STAGE MAST - SAFETY DECALS
## S/N 200001A~

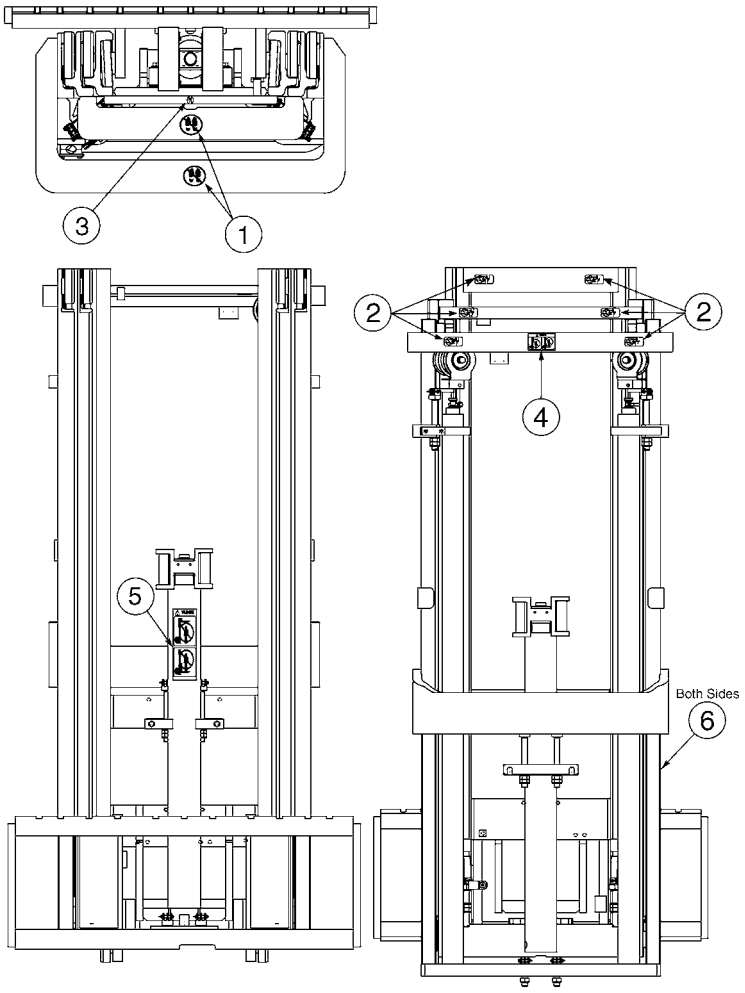


DECAL KIT P/N CC210851

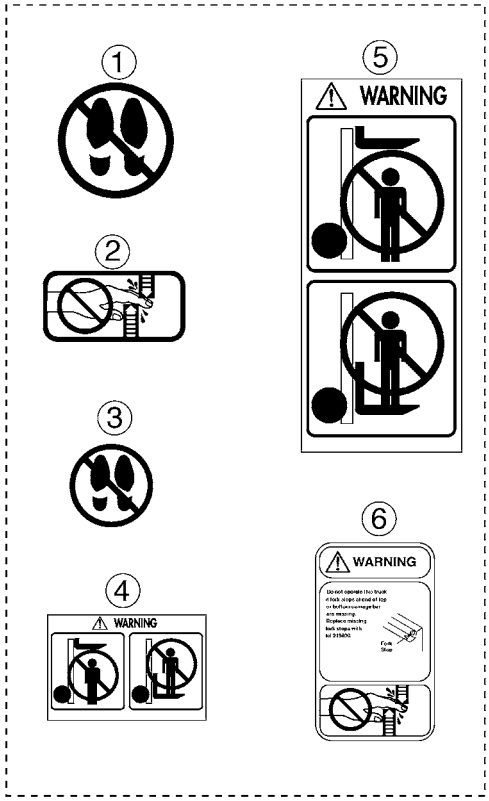


72-1100

https://truckmanualshub.com/



## E50-MT 3-STAGE MAST - SAFETY DECALS
## S/N 200001A~

| Item | Part Number | Description | Qty | Serial Number |
|---|---|---|---|---|
| 1 | 3EB-79-A6020 | DECAL - "NO STEP" | 2 | |
| 2 | 3EB-79-A6010 | DECAL - "HANDS OFF" | 6 | |
| 3 | 3EB-79-A6030 | DECAL - "NO STEP" | 1 | |
| 4 | CC210850 | DECAL - "WARNING" | 1 | |
| 5 | 3EB-79-A5310 | DECAL - "WARNING" | 1 | |
| 6 | CC224053 | DECAL - "FORK STOP" | 2 | |
| KIT | CC210851 | DECAL - KIT PACKAGE (ALL) | 1 | |

https://truckmanualshub.com/



# E50-MT 3-STAGE MAST - MAIN LIFT CYLINDERS
## S/N 200001A~

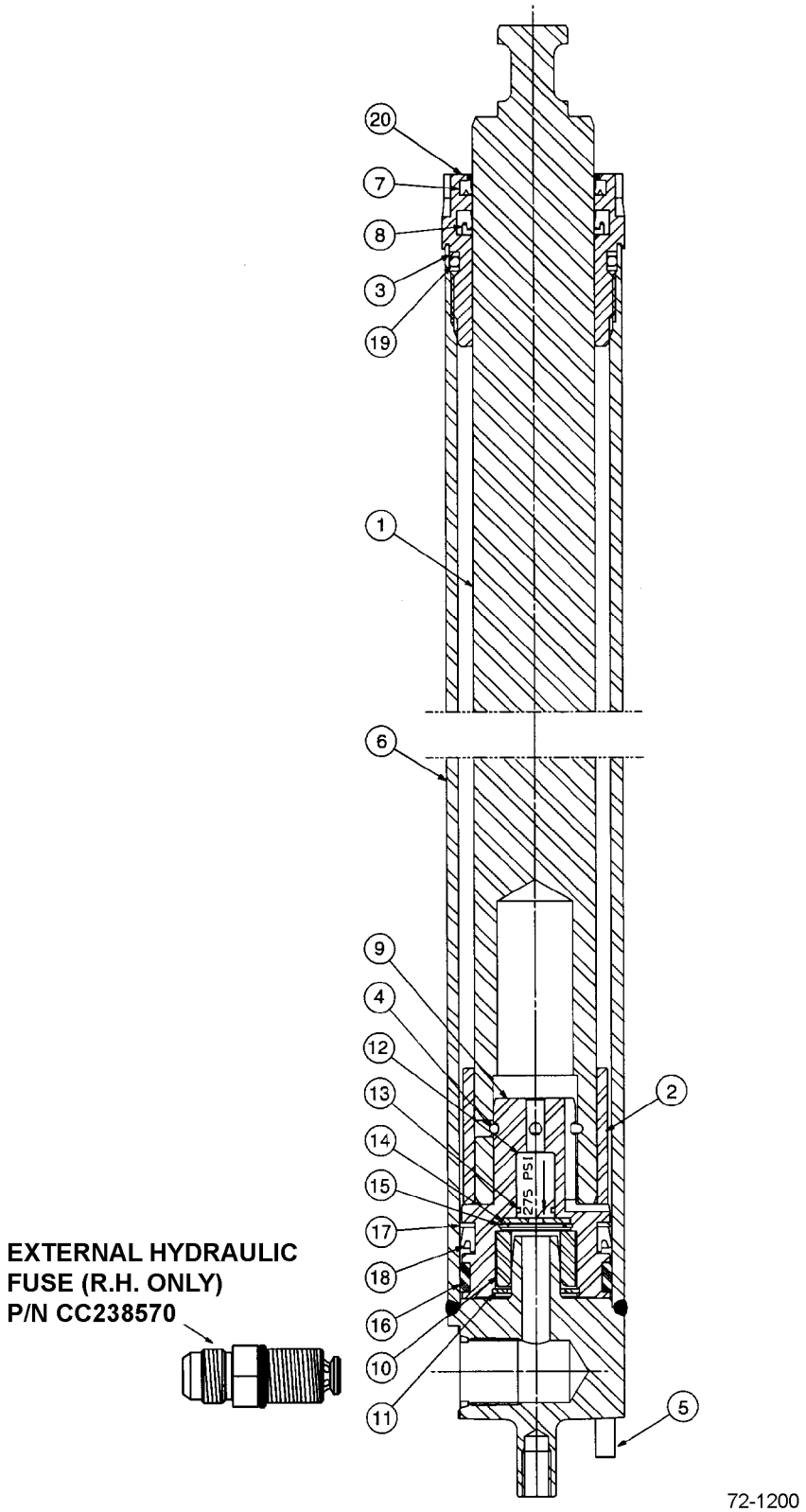

https://truckmanualshub.com/



## E50-MT 3-STAGE MAST - MAIN LIFT CYLINDERS
## S/N 200001A~

| Item | Part Number | Description | Qty | Serial Number |
|---|---|---|---|---|
| 1 | NSS | ROD/PLUNGER | 1 | |
| 2 | NSS | SPACER | 1 | |
| 3 | NSS | BACK-UP RING (SEAL KIT) | 1 | |
| 4 | NSS | PULL-IN WIRE (SEAL KIT) | 1 | |
| 5 | CC7910 | ROLL PIN | 1 | |
| 6 | NSS | SHELL | 1 | |
| 7 | NSS | WIPER (SEAL KIT) | 1 | |
| 8 | NSS | ROD SEAL (SEAL KIT) | 1 | |
| 9 | NSS | PISTON | 1 | |
| 10 | NSS | SLEEVE | 1 | |
| 11 | NSS | RETAINING RING (CHECK VALVE KIT) | 1 | |
| 12 | NSS | CHECK VALVE (CHECK VALVE KIT) | 1 | |
| 13 | NSS | O-RING (CHECK VALVE KIT) | 1 | |
| 14 | NSS | WASHER (CHECK VALVE KIT) | 1 | |
| 15 | NSS | RETAINING RING (SEAL KIT) | 1 | |
| 16 | NSS | WEAR RING (SEAL KIT) | 1 | |
| 17 | NSS | NYLON RING (SEAL KIT) | 1 | |
| 18 | NSS | PISTON SEAL (SEAL KIT) | 1 | |
| 19 | NSS | O-RING (SEAL KIT) | 1 | |
| 20 | CC422809 | RETAINER | 1 | |
| KIT | 3EB-73-A5430 | SEAL KIT | 1 | |
| KIT | CC3101894 | CHECK VALVE KIT | 1 | |
| | **OCL = OUTER CHANNEL LENGTH (BASED ON 5.5" UNDERCLEARANCE)** | | | |
| | **MFH = MAXIMUM FORK HEIGHT** | | | |
| | 3EB-78-A5120 | MAIN LIFT CYLINDER - (68" OCL) (152" MFH). | 1 | |
| | 3EB-78-A5150 | MAIN LIFT CYLINDER - (74" OCL) (170" MFH). | 1 | |
| | 3EB-78-A5150 | MAIN LIFT CYLINDER - (80" OCL) (188" MFH). | 1 | |
| | 3EB-78-A5190 | MAIN LIFT CYLINDER - (84" OCL) (198" MFH). | 1 | |
| | 3EB-78-A5210 | MAIN LIFT CYLINDER - (92" OCL) (216" MFH). | 1 | |
| | 3EB-78-A5230 | MAIN LIFT CYLINDER - (101" OCL) (235" MFH) | 1 | |
| | 3EB-78-A5240 | MAIN LIFT CYLINDER - (110" OCL) (254" MFH) | 1 | |

https://truckmanualshub.com/



## E50-MT 3-STAGE MAST - FREE LIFT CYLINDER
## S/N 200001A~

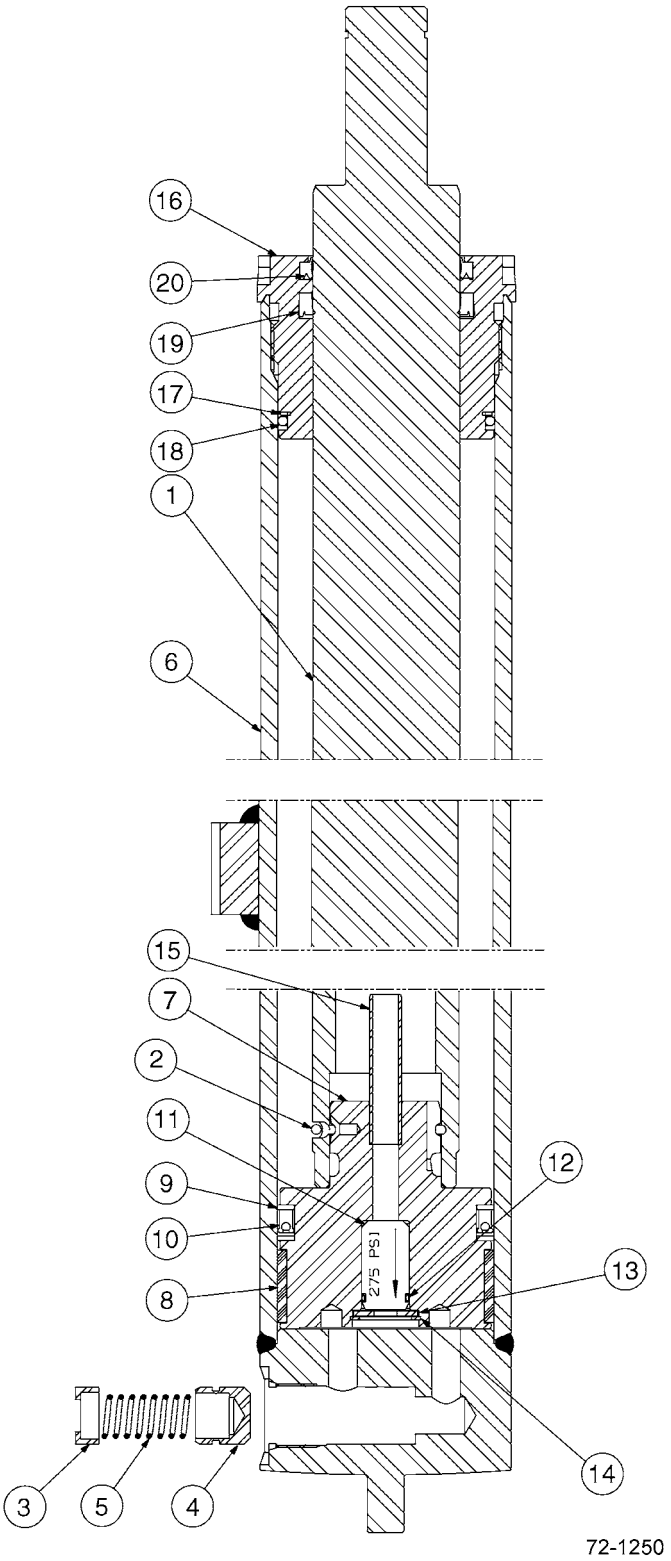

https://truckmanualshub.com/



## E50-MT 3-STAGE MAST - FREE LIFT CYLINDER
## S/N 200001A~

| Item | Part Number | Description | Qty | Serial Number |
|---|---|---|---|---|
| 1 | NSS | ROD/PLUNGER | 1 | |
| 2 | NSS | PULL WIRE. (SEAL KIT) | 1 | |
| 3 | CC564107 | FUSE SPRING GUIDE | 1 | |
| 4 | CC560470 | FUSE PISTON | 1 | |
| 5 | CC565085 | FUSE SPRING | 1 | |
| 6 | NSS | SHELL. | 1 | |
| 7 | NSS | PISTON. | 1 | |
| 8 | NSS | WEAR RING (SEAL KIT) | 1 | |
| 9 | NSS | NYLON RING (SEAL KIT) | 2 | |
| 10 | NSS | PISTON SEAL (SEAL KIT) | 1 | |
| 11 | NSS | CHECK VALVE (CHECK VALVE KIT) | 1 | |
| 12 | NSS | O-RING (SEAL KIT) | 1 | |
| 13 | NSS | WASHER (CHECK VALVE KIT) | 1 | |
| 14 | NSS | RETAINING RING. (CHECK VALVE KIT) | 1 | |
| 15 | NSS | STAND TUBE | 1 | |
| 16 | CC422817 | RETAINER | 1 | |
| 17 | NSS | BACK-UP RING (SEAL KIT) | 1 | |
| 18 | NSS | O-RING (SEAL KIT) | 1 | |
| 19 | NSS | ROD SEAL (SEAL KIT) | 1 | |
| 20 | NSS | WIPER (SEAL KIT) | 1 | |
| KIT | 3EB-73-A5440 | SEAL KIT | 1 | |
| KIT | CC1358999 | CHECK VALVE KIT. | 1 | |
| | **OCL = OUTER CHANNEL LENGTH (BASED ON 5.5" UNDERCLEARANCE)** | | | |
| | **MFH = MAXIMUM FORK HEIGHT** | | | |
| | 3EB-78-A5320 | FREE LIFT CYLINDER - (68" OCL) (152" MFH) | 1 | |
| | 3EB-78-A5350 | FREE LIFT CYLINDER - (74" OCL) (170" MFH) | 1 | |
| | 3EB-78-A5370 | FREE LIFT CYLINDER - (80" OCL) (188" MFH) | 1 | |
| | 3EB-78-A5390 | FREE LIFT CYLINDER - (84" OCL) (198" MFH) | 1 | |
| | 3EB-78-A5410 | FREE LIFT CYLINDER - (92" OCL) (216" MFH) | 1 | |
| | 3EB-78-A5430 | FREE LIFT CYLINDER - (101" OCL) (235" MFH) | 1 | |
| | 3EB-78-A5440 | FREE LIFT CYLINDER - (110" OCL) (254" MFH) | 1 | |

https://truckmanualshub.com/



## E50-MT 3-STAGE MAST - OUTER UPRIGHT
## S/N 200001A~

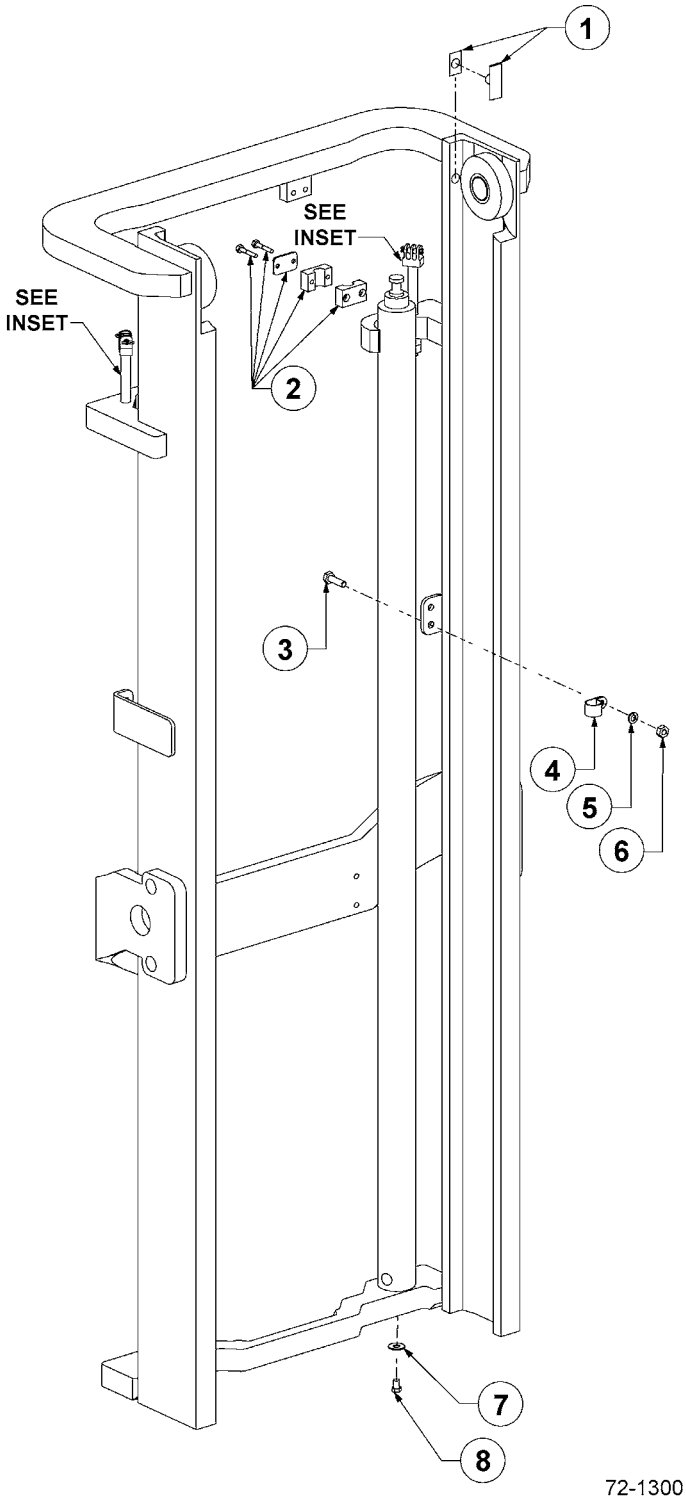


72-1300

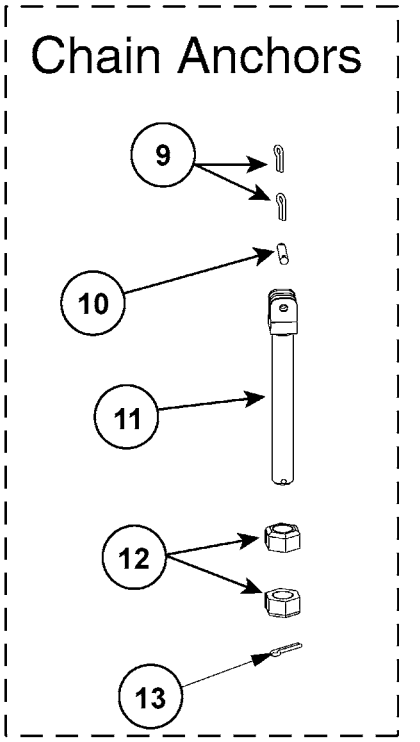


72-1300A

https://truckmanualshub.com/



## E50-MT 3-STAGE MAST - OUTER UPRIGHT
## S/N 200001A~

| Item | Part Number | Description | Qty | Serial Number |
|---|---|---|---|---|
| | | **OCL = OUTER CHANNEL LENGTH, MFH = MAXIMUM FORK HEIGHT** | | |
| | 3EB-75-A5120 | OUTER UPRIGHT - (68" OCL) (152" MFH) | 1 | |
| | 3EB-75-A5150 | OUTER UPRIGHT - (74" OCL) (170" MFH) | 1 | |
| | 3EB-75-A5170 | OUTER UPRIGHT - (80" OCL) (188" MFH) | 1 | |
| | 3EB-75-A5190 | OUTER UPRIGHT - (84" OCL) (198" MFH) | 1 | |
| | 3EB-75-A5210 | OUTER UPRIGHT - (92" OCL) (216" MFH) | 1 | |
| | 3EB-75-A5230 | OUTER UPRIGHT - (101" OCL) (235" MFH) | 1 | |
| | 3EB-75-A5240 | OUTER UPRIGHT - (110" OCL) (254" MFH) | 1 | |
| 1 | 3EB-73-A5720 | THRUST PLUG SERVICE KIT | 1 | |
| 2 | CC237555 | CLAMP KIT | 1 | |
| 3 | CC200788 | CAPSCREW - M10 X 35 | 1 | |
| 4 | CC230765 | HOSE CLAMP | 1 | |
| 5 | 3EB-79-A6040 | WASHER, LOCK - M10 | 2 | |
| 6 | 3EB-79-A6040 | WASHER, LOCK - M10 | 1 | |
| 7 | 3EB-79-A5350 | WASHER, FLAT | 2 | |
| 8 | 3EB-79-A5340 | BOLT | 2 | |
| 9 | 3EB-79-A6080 | PIN, COTTER | 12 | |
| 10 | 3EB-79-A5150 | PIN, CHAIN ANCHOR | 6 | |
| 11 | 3EB-79-A5110 | CHAIN ANCHOR | 4 | |
| 12 | 3EB-79-A6090 | NUT | 12 | |
| 13 | 3EB-79-A6081 | PIN, COTTER | 6 | |

https://truckmanualshub.com/



## E50-MT 3-STAGE MAST - INTERMEDIATE UPRIGHT
## S/N 200001A~

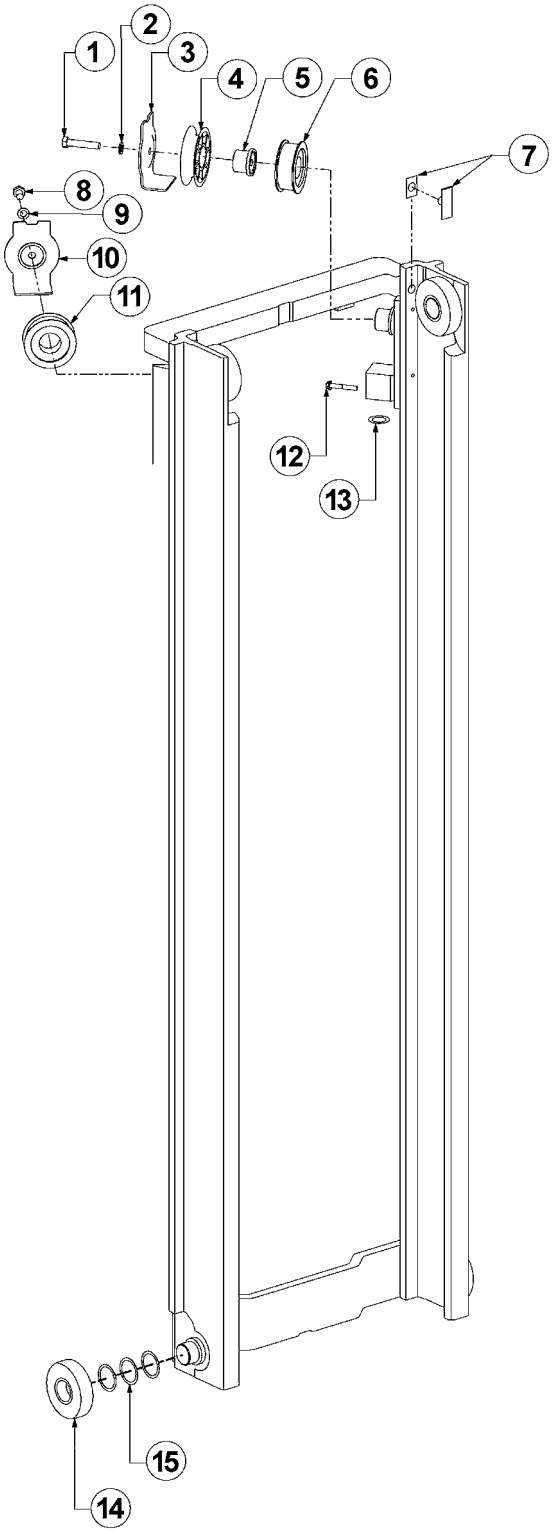


72-1330

https://truckmanualshub.com/



## E50-MT 3-STAGE MAST - INTERMEDIATE UPRIGHT
## S/N 200001A~

| Item | Part Number | Description | Qty | Serial Number |
|---|---|---|---|---|
| | | **OCL = OUTER CHANNEL LENGTH, MFH = MAXIMUM FORK HEIGHT** | | |
| | 3EB-75-A5320 | INTERMEDIATE UPRIGHT - (68" OCL) | 1 | |
| | 3EB-75-A5350 | INTERMEDIATE UPRIGHT - (74" OCL) | 1 | |
| | 3EB-75-A5370 | INTERMEDIATE UPRIGHT - (80" OCL) | 1 | |
| | 3EB-75-A5390 | INTERMEDIATE UPRIGHT - (84" OCL) | 1 | |
| | 3EB-75-A5410 | INTERMEDIATE UPRIGHT - (92" OCL) | 1 | |
| | 3EB-75-A5430 | INTERMEDIATE UPRIGHT - (101" OCL) | 1 | |
| | CC233187 | INTERMEDIATE UPRIGHT - (110" OCL) | 1 | |
| 1 | 3EB-79-A6060 | CAPSCREW - M12 X 60 | 1 | |
| 2 | 3EB-79-A5360 | WASHER, LOCK - M12 | 2 | |
| 3 | 3EB-73-A5120 | HOSE GUARD | 1 | |
| 4 | 3EB-73-A5070 | HOSE SHEAVE | 1 | |
| 5 | 3EB-73-A5210 | STUBSHAFT | 1 | |
| 6 | 3EB-73-A5010 | CHAIN SHEAVE | 4 | |
| 7 | 3EB-73-A5720 | THRUST PLUG SERVICE KIT | 1 | |
| 8 | 3EB-79-A5270 | CAPSCREW - M12 X 20 | 1 | |
| 9 | 3EB-79-A5360 | WASHER, LOCK - M12 | 2 | |
| 10 | 3EB-73-A5140 | HOSE GUARD | 1 | |
| 11 | 3EB-73-A5010 | CHAIN SHEAVE | 4 | |
| 12 | 3EB-79-A5380 | BOLT | 2 | |
| 13 | CC238137 | SHIM KIT - MAIN LIFT CYLINDER | 2 | |
| 14 | 3EB-79-A5210 | ROLLER | 8 | |
| 15 | 3EB-79-A6050 | SHIM (USE AS REQUIRED) | 24 | |

https://truckmanualshub.com/



# E50-MT 3-STAGE MAST - INNER UPRIGHT
## S/N 200001A~

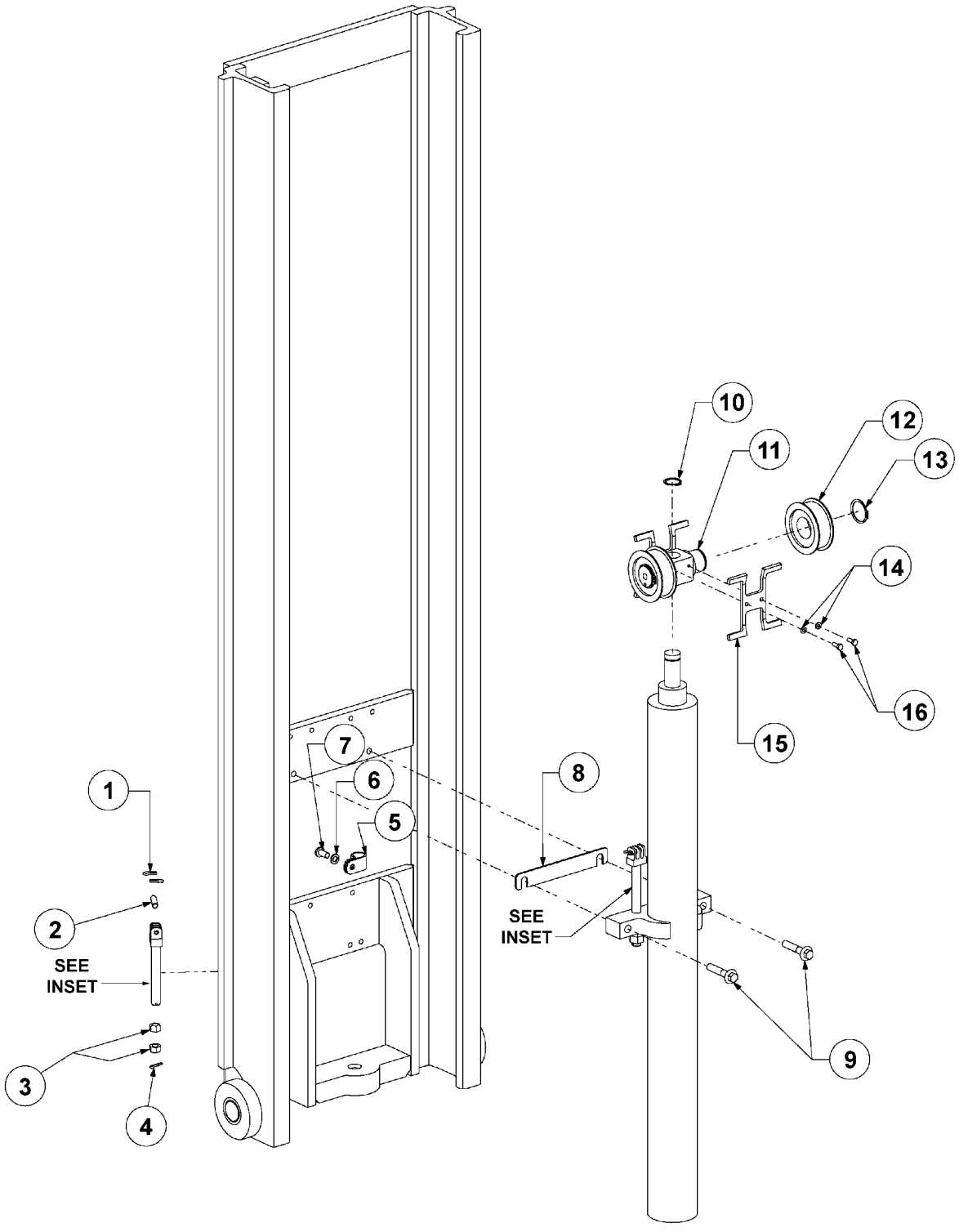

https://truckmanualshub.com/



## E50-MT 3-STAGE MAST - INNER UPRIGHT
## S/N 200001A~

| Item | Part Number | Description | Qty | Serial Number |
|---|---|---|---|---|
| | | **OCL = OUTER CHANNEL LENGTH, MAXIMUM FORK HEIGHT** | | |
| | 3EB-75-A5520 | INNER UPRIGHT - (68" OCL) (152" MFH) | 1 | |
| | 3EB-75-A5550 | INNER UPRIGHT - (74" OCL) (170" MFH) | 1 | |
| | 3EB-75-A5570 | INNER UPRIGHT - (80" OCL) (188" MFH) | 1 | |
| | 3EB-75-A5590 | INNER UPRIGHT - (84" OCL) (198" MFH) | 1 | |
| | 3EB-75-A5610 | INNER UPRIGHT - (92" OCL) (216" MFH) | 1 | |
| | 3EB-75-A5630 | INNER UPRIGHT - (101" OCL) (235" MFH) | 1 | |
| | CC233188 | INNER UPRIGHT - (110" OCL) (254" MFH) | 1 | |
| 1 | 3EB-79-A6060 | CAPSCREW - M12 X 60 | 1 | |
| 2 | 3EB-79-A5360 | WASHER, LOCK - M12 | 2 | |
| 3 | 3EB-73-A5120 | HOSE GUARD | 1 | |
| 4 | 3EB-73-A5070 | HOSE SHEAVE | 1 | |
| 5 | 3EB-73-A5210 | STUBSHAFT | 1 | |
| 6 | 3EB-73-A5010 | CHAIN SHEAVE | 4 | |
| 7 | 3EB-73-A5720 | THRUST PLUG SERVICE KIT | 1 | |
| 8 | 3EB-79-A5270 | CAPSCREW - M12 X 20 | 1 | |
| 9 | 3EB-79-A5360 | WASHER, LOCK - M12 | 2 | |
| 10 | 3EB-73-A5140 | HOSE GUARD | 1 | |
| 11 | 3EB-73-A5010 | CHAIN SHEAVE | 4 | |
| 12 | 3EB-79-A5380 | BOLT | 2 | |
| 13 | CC238137 | SHIM KIT - MAIN LIFT CYLINDER | 2 | |
| 14 | 3EB-79-A5210 | ROLLER | 8 | |
| 15 | 3EB-79-A6050 | SHIM (USE AS REQUIRED) | 24 | |

https://truckmanualshub.com/



## E50-MT 3-STAGE MAST - CARRIAGE - 4-ROLLER
## S/N 200001A~

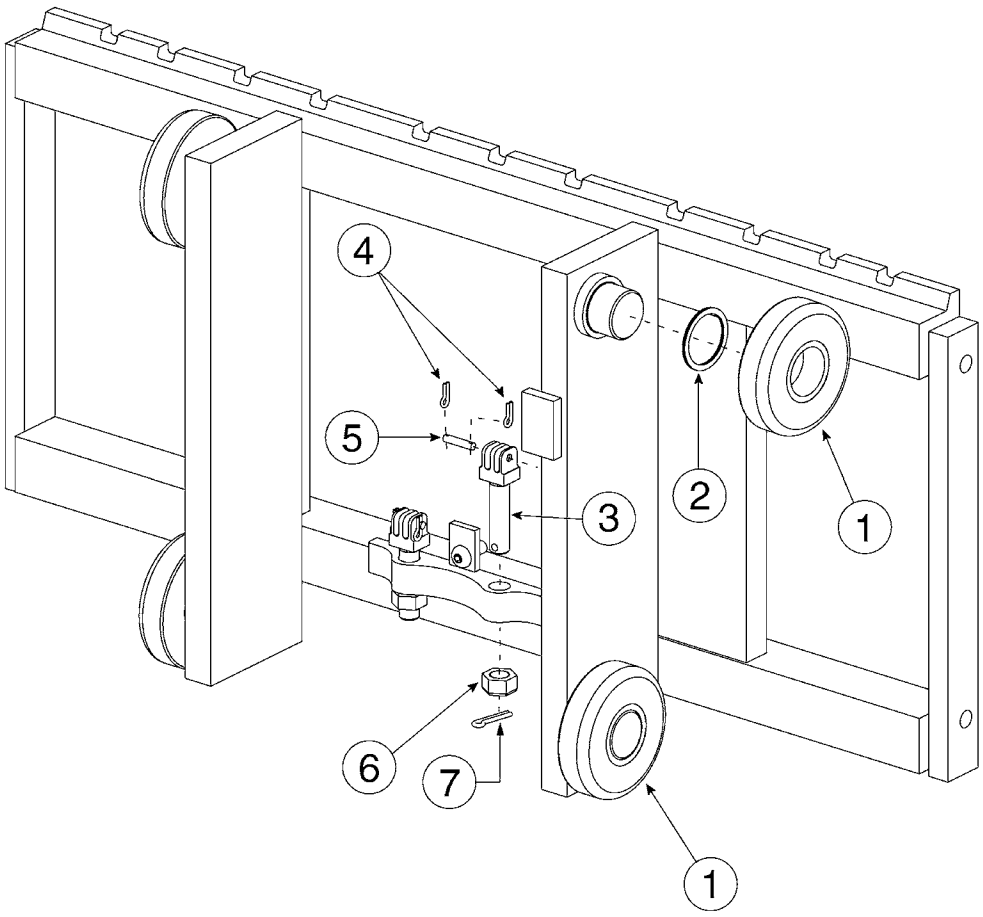


72-1400

https://truckmanualshub.com/



## E50-MT 3-STAGE MAST - CARRIAGE - 4-ROLLER
## S/N 200001A~

| Item | Part Number | Description | Qty | Serial Number |
|---|---|---|---|---|
| | 3EB-73-A5510 | CARRIAGE - 37" - CUSHION TIRE SPEC | 1 | |
| | CC248640 | CARRIAGE - 37" - CUSHION TIRE SPEC (W/ EURO NOTCH) | 1 | |
| | CC280095 | CARRIAGE - 41" - CUSHION TIRE SPEC | 1 | |
| | CC248641 | CARRIAGE - 41" - CUSHION TIRE SPEC (W/ EURO NOTCH) | 1 | |
| | CC280096 | CARRIAGE - 49" - CUSHION TIRE SPEC | 1 | |
| 1 | 3EB-79-A5210 | LOAD ROLLER | 4 | |
| 2 | 3EB-79-A6050 | SHIM, LOAD ROLLER | AR | |
| 3 | 3EB-79-A5140 | CHAIN ANCHOR | 2 | |
| 4 | 3EB-79-A6080 | PIN, COTTER | 4 | |
| 5 | 3EB-79-A5150 | PIN, CHAIN ANCHOR | 2 | |
| 6 | 3EB-73-A5450 | NUT | 2 | |
| 7 | 3EB-79-A6081 | PIN, COTTER | 2 | |

https://truckmanualshub.com/



## E50-MT 3-STAGE MAST - CARRIAGE - 6-ROLLER
## S/N 200001A~

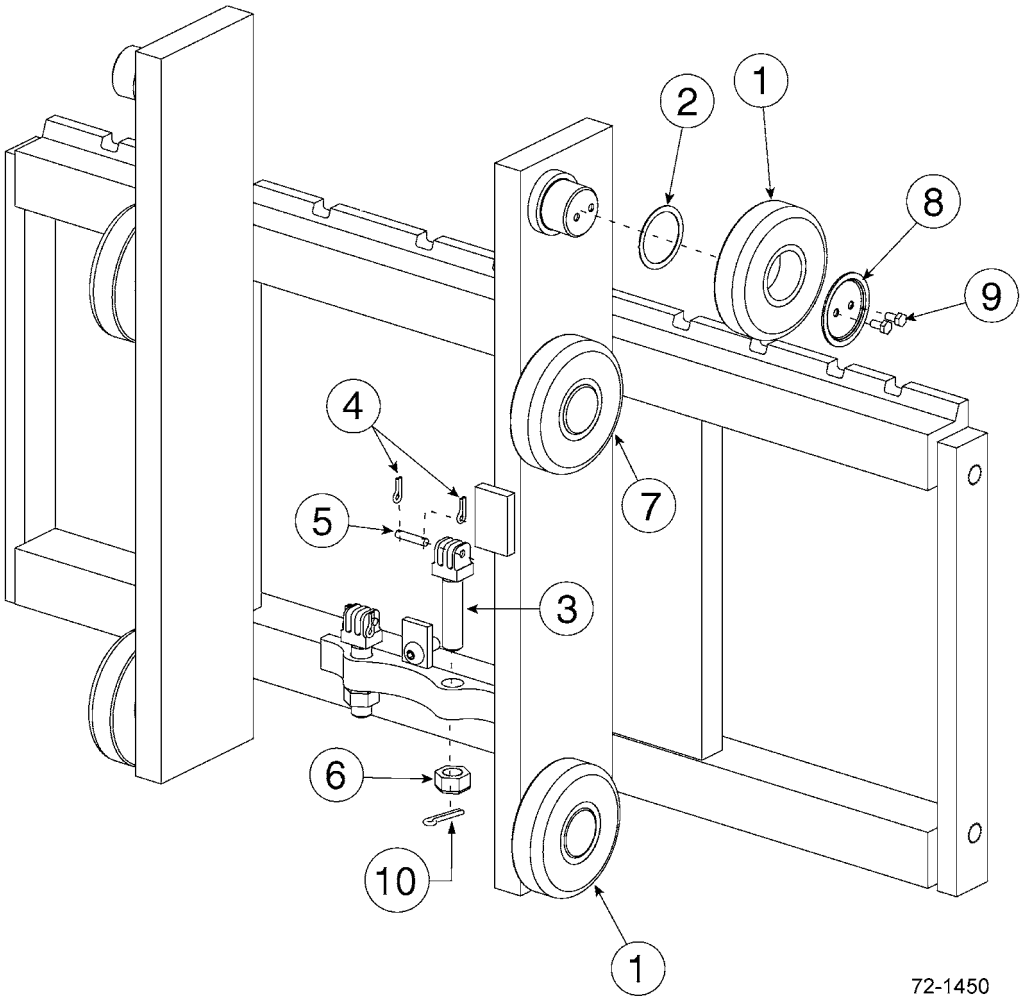

https://truckmanualshub.com/



## E50-MT 3-STAGE MAST - CARRIAGE - 6-ROLLER
## S/N 200001A~

| Item | Part Number | Description | Qty | Serial Number |
|---|---|---|---|---|
| | CC252597 | CARRIAGE - 31" - CUSHION TIRE SPEC | 1 | |
| | CC280111 | CARRIAGE - 37" - CUSHION TIRE SPEC | 1 | |
| | CC248626 | CARRIAGE - 37" - CUSHION TIRE SPEC (W/ EURO NOTCH) | 1 | |
| | CC280112 | CARRIAGE - 41" - CUSHION TIRE SPEC | 1 | |
| | CC248627 | CARRIAGE - 41" - CUSHION TIRE SPEC (W/ EURO NOTCH) | 1 | |
| | CC280113 | CARRIAGE - 49" - CUSHION TIRE SPEC | 1 | |
| | CC280127 | CARRIAGE - 53" - CUSHION TIRE SPEC | 1 | |
| 1 | 3EB-79-A5210 | LOAD ROLLER | 4 | |
| 2 | 3EB-79-A6050 | SHIM, LOAD ROLLER | AR | |
| 3 | 3EB-79-A5140 | CHAIN ANCHOR | 2 | |
| 4 | 3EB-79-A6080 | PIN, COTTER | 4 | |
| 5 | 3EB-79-A5150 | PIN, CHAIN ANCHOR | 2 | |
| 6 | 3EB-73-A5450 | NUT | 2 | |
| 7 | 3EB-79-A5220 | LOAD ROLLER | 2 | |
| 8 | 3EB-73-A5460 | RETAINER | 2 | |
| 9 | 3EB-73-A5470 | CAPSCREW - M6 X 12LG | 4 | |
| 10 | 3EB-79-A6081 | PIN, COTTER | 2 | |

https://truckmanualshub.com/



## E50-MT 3-STAGE MAST - HOIST CHAINS & FREE LIFT HOSE
## S/N 200001A~

# Hoist Chains

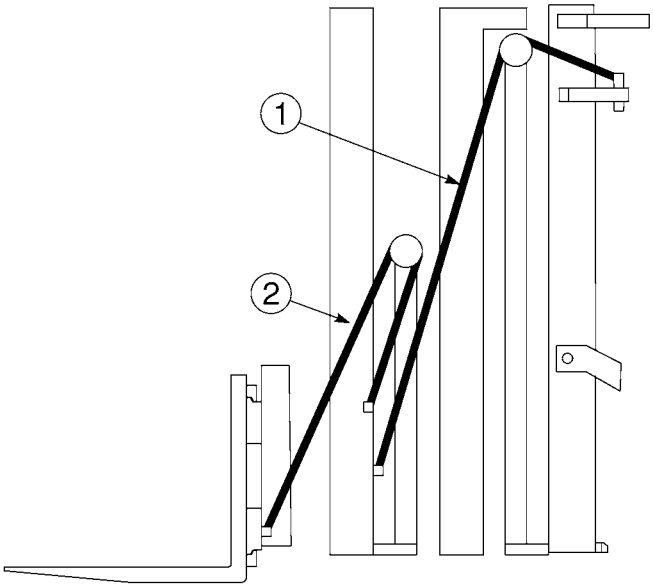


# Free Lift Hose

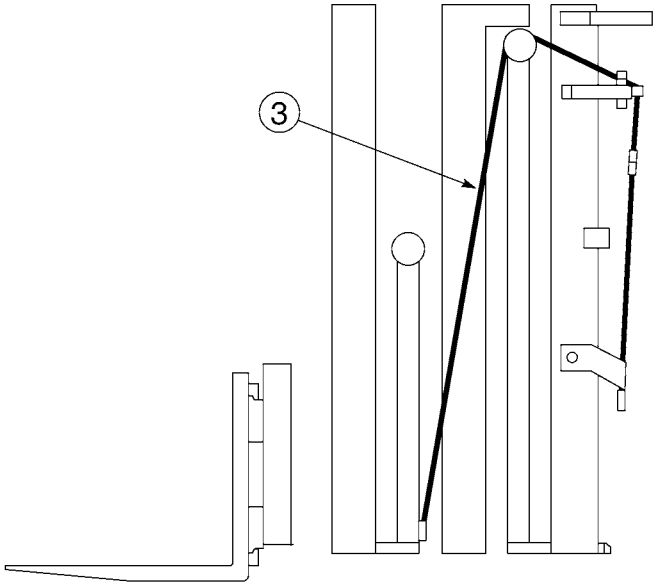


72-1500

https://truckmanualshub.com/



## E50-MT 3-STAGE MAST - HOIST CHAINS & FREE LIFT HOSE
## S/N 200001A~

| Item | Part Number | Description | Qty | Serial Number |
|---|---|---|---|---|
| | **OCL = OUTER CHANNEL LENGTH** | | | |
| 1 | CC683767 | MAIN LIFT CHAIN - (68" OCL) | 2 | |
| | 3EB-74-A5150 | MAIN LIFT CHAIN - (74" OCL) | 2 | |
| | 3EB-74-A5170 | MAIN LIFT CHAIN - (80" OCL) | 2 | |
| | 3EB-74-A5190 | MAIN LIFT CHAIN - (84" OCL) | 2 | |
| | CC683780 | MAIN LIFT CHAIN - (92" OCL) | 2 | |
| | CC683786 | MAIN LIFT CHAIN - (101" OCL) | 2 | |
| | 3EB-74-A5240 | MAIN LIFT CHAIN - (110" OCL) | 2 | |
| 2 | CC678655 | FREE LIFT CHAIN - (68" OCL) | 2 | |
| | CC678656 | FREE LIFT CHAIN - (74" OCL) | 2 | |
| | 3EB-74-A5370 | FREE LIFT CHAIN - (80" OCL) | 2 | |
| | 3EB-74-A5150 | FREE LIFT CHAIN - (84" OCL) | 2 | |
| | CC683774 | FREE LIFT CHAIN - (92" OCL) | 2 | |
| | 3EB-74-A5390 | FREE LIFT CHAIN - (101" OCL) | 2 | |
| | 3EB-74-A5440 | FREE LIFT CHAIN - (110" OCL) | 2 | |
| 3 | 3EB-74-A5520 | FREE LIFT HOSE - (68" OCL) | 1 | |
| | 3EB-74-A5550 | FREE LIFT HOSE - (74" OCL) | 1 | |
| | 3EB-74-A5570 | FREE LIFT HOSE - (80" OCL) | 1 | |
| | 3EB-74-A5590 | FREE LIFT HOSE - (84" OCL) | 1 | |
| | 3EB-74-A5610 | FREE LIFT HOSE - (92" OCL) | 1 | |
| | 3EB-74-A5630 | FREE LIFT HOSE - (101" OCL) | 1 | |
| | 3EB-74-A5640 | FREE LIFT HOSE - (110" OCL) | 1 | |

https://truckmanualshub.com/



## E50-MT 3-STAGE MAST - LOAD BACKREST
## S/N 200001A~

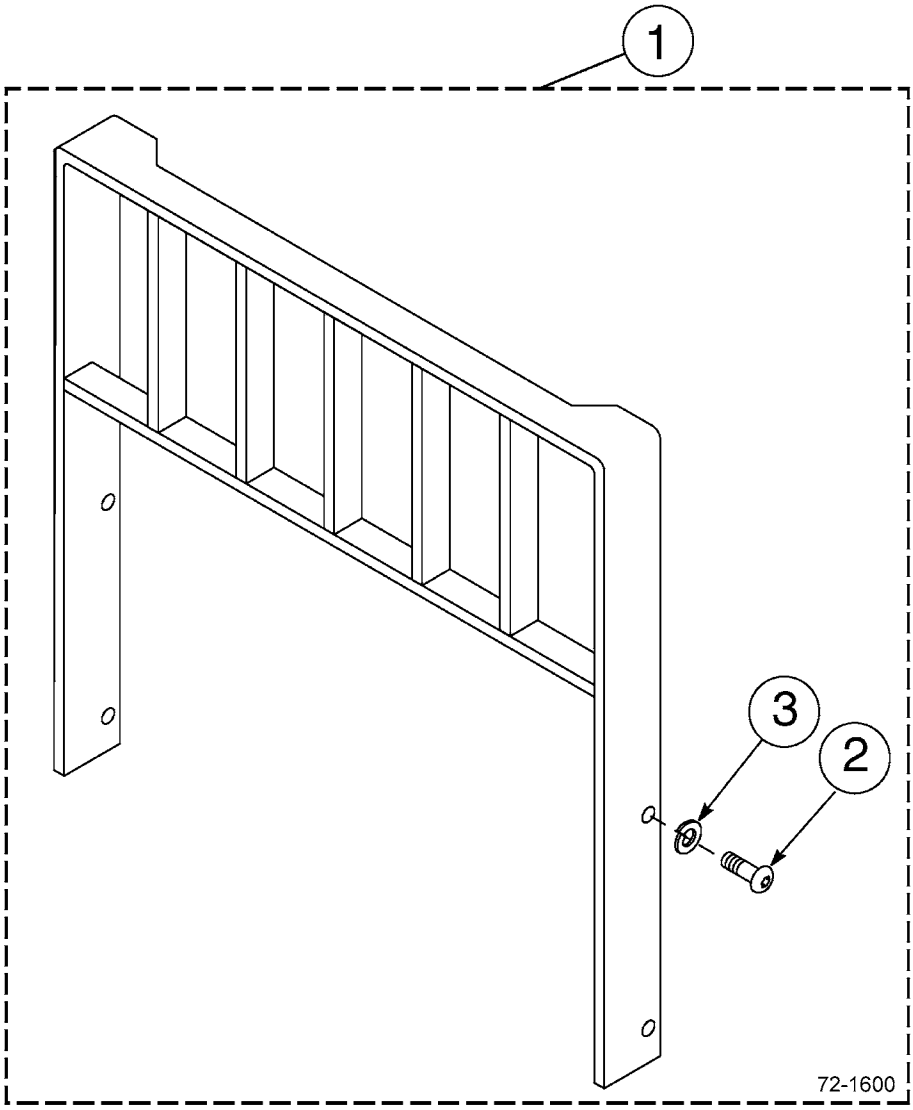

https://truckmanualshub.com/



## E50-MT 3-STAGE MAST - LOAD BACKREST
## S/N 200001A~

| Item | Part Number | Description | Qty | Serial Number |
|---|---|---|---|---|
| | | **CLASS II LOAD BACKRESTS (HEIGHT X WIDTH)** | | |
| 1 | CC209407 | BACKREST - 31" X 36" | 1 | |
| | CC684770 | BACKREST - 31" X 48" | 1 | |
| | CC209408 | BACKREST - 31" X 60" | 1 | |
| | CC684772 | BACKREST - 37" X 36" | 1 | |
| | CC226827 | BACKREST - 37" X 40" | 1 | |
| | CC225390 | BACKREST - 37" X 42" | 1 | |
| | 3EB-73-A5810 | BACKREST - 37" X 48" | 1 | |
| | CC361238 | BACKREST - 37" X 52" | 1 | |
| | CC684774 | BACKREST - 37" X 60" | 1 | |
| | CC245151 | BACKREST - 37" X 65" | 1 | |
| | CC369519 | BACKREST - 37" X 72" | 1 | |
| | CC684775 | BACKREST - 41" X 36" | 1 | |
| | 3EB-73-A5820 | BACKREST - 41" X 48" | 1 | |
| | CC684777 | BACKREST - 41" X 60" | 1 | |
| | CC248948 | BACKREST - 46" X 48" | 1 | |
| | CC684778 | BACKREST - 49" X 36" | 1 | |
| | CC684779 | BACKREST - 49" X 48" | 1 | |
| | CC684780 | BACKREST - 49" X 60" | 1 | |
| | CC231595 | BACKREST - 52" X 48" | 1 | |
| | CC684781 | BACKREST - 61" X 36" | 1 | |
| | CC684782 | BACKREST - 61" X 48" | 1 | |
| | CC684783 | BACKREST - 61" X 60" | 1 | |
| 2 | CC200173 | .CAPSCREW - M16 X 2, 0 X 35-8.8 | 4 | |
| 3 | 3EB-71-A6030 | .WASHER, LOCK - M16 | 4 | |

https://truckmanualshub.com/



# E50-MT 3-STAGE MAST - MOUNTING PARTS
# CUSHION TIRE MODELS - S/N 200001A~

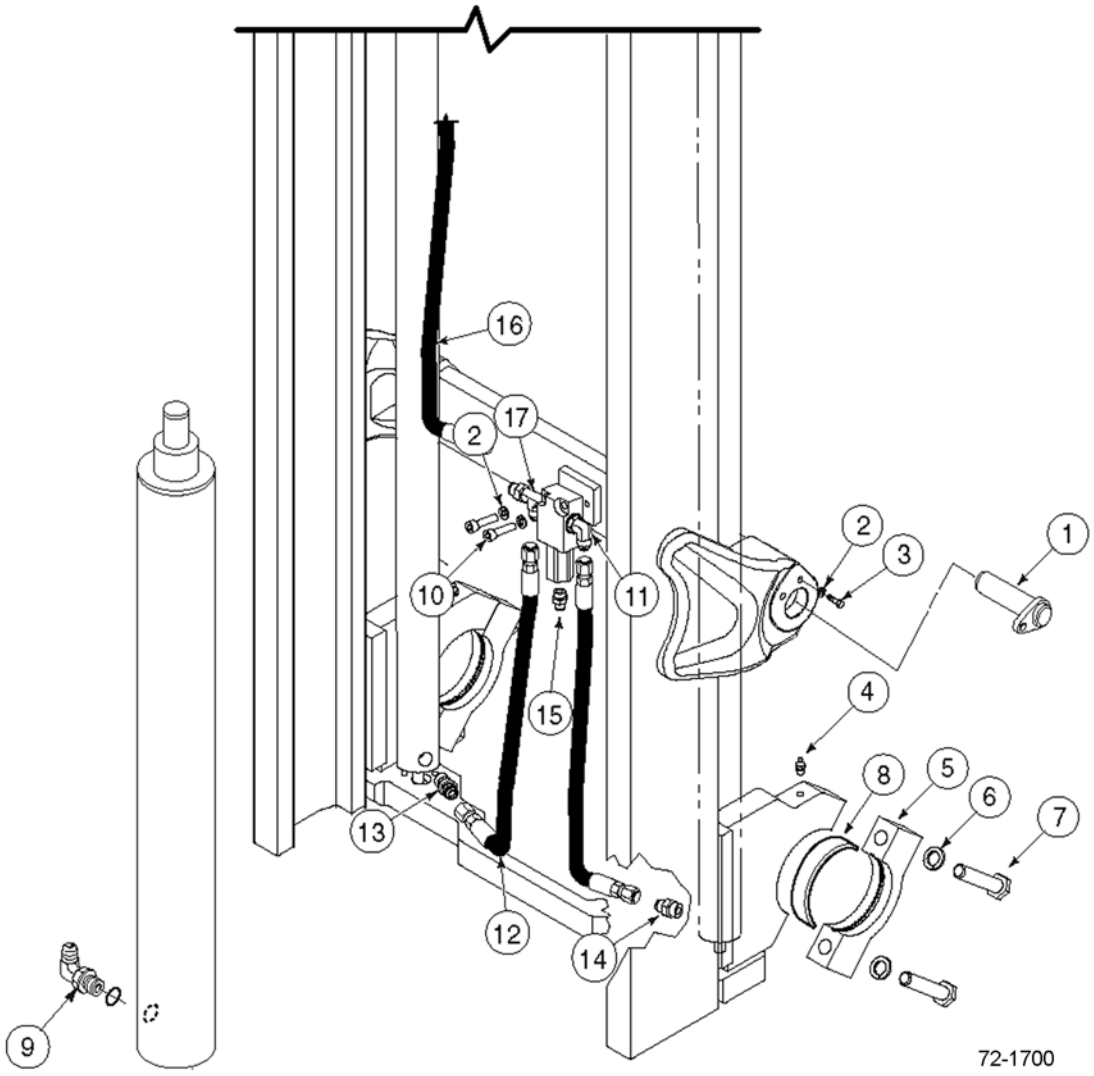

https://truckmanualshub.com/



## E50-MT 3-STAGE MAST - MOUNTING PARTS
## CUSHION TIRE MODELS - S/N 200001A~

| Item | Part Number | Description | Qty | Serial Number |
|---|---|---|---|---|
| 1 | 3EB-41-51750 | TILT PIN | 2 | |
| 2 | 3EB-79-A6040 | WASHER, LOCK. | 4 | |
| 3 | CC212632 | CAPSCREW | 2 | |
| 4 | CC7418 | FITTING, GREASE | 2 | |
| 5 | CC251901 | CAP. | 2 | |
| 6 | 3EB-71-A6030 | WASHER, LOCK. | 4 | |
| 7 | CC251906 | CAPSCREW | 4 | |
| 8 | 3EB-84-51290 | BUSHING (CUSHION ONLY) | 2 | |
| 9 | CC642649 | FITTING 90° - 8-10 | 1 | |
| 10 | CC767611 | CAPSCREW | 2 | |
| 11 | CC601250 | FITTING # 8 - 90° ELBOW | 1 | |
| 12 | CC255666 | MAIN LIFT HOSE - RH | 1 | |
| | CC255665 | MAIN LIFT HOSE - LH | 1 | |
| 13 | CC611289 | FITTING # 8 -# 10 STRAIGHT | 1 | |
| 14 | CC238570 | 12 GPM EXTERNAL FUSE | 1 | |
| 15 | CC601377 | FITTING | 1 | |
| 16 | CC234037 | FL JUMPER HOSE | 1 | |
| 17 | CC610402 | FITTING # 8 - 90° TEE | 1 | |
| KIT | CC255596 | INSTALLATION KIT | 1 | |

https://truckmanualshub.com/



## E50-MT 3-STAGE MAST - MOUNTING PARTS
## PNEUMATIC TIRE MODELS - S/N 200001A~

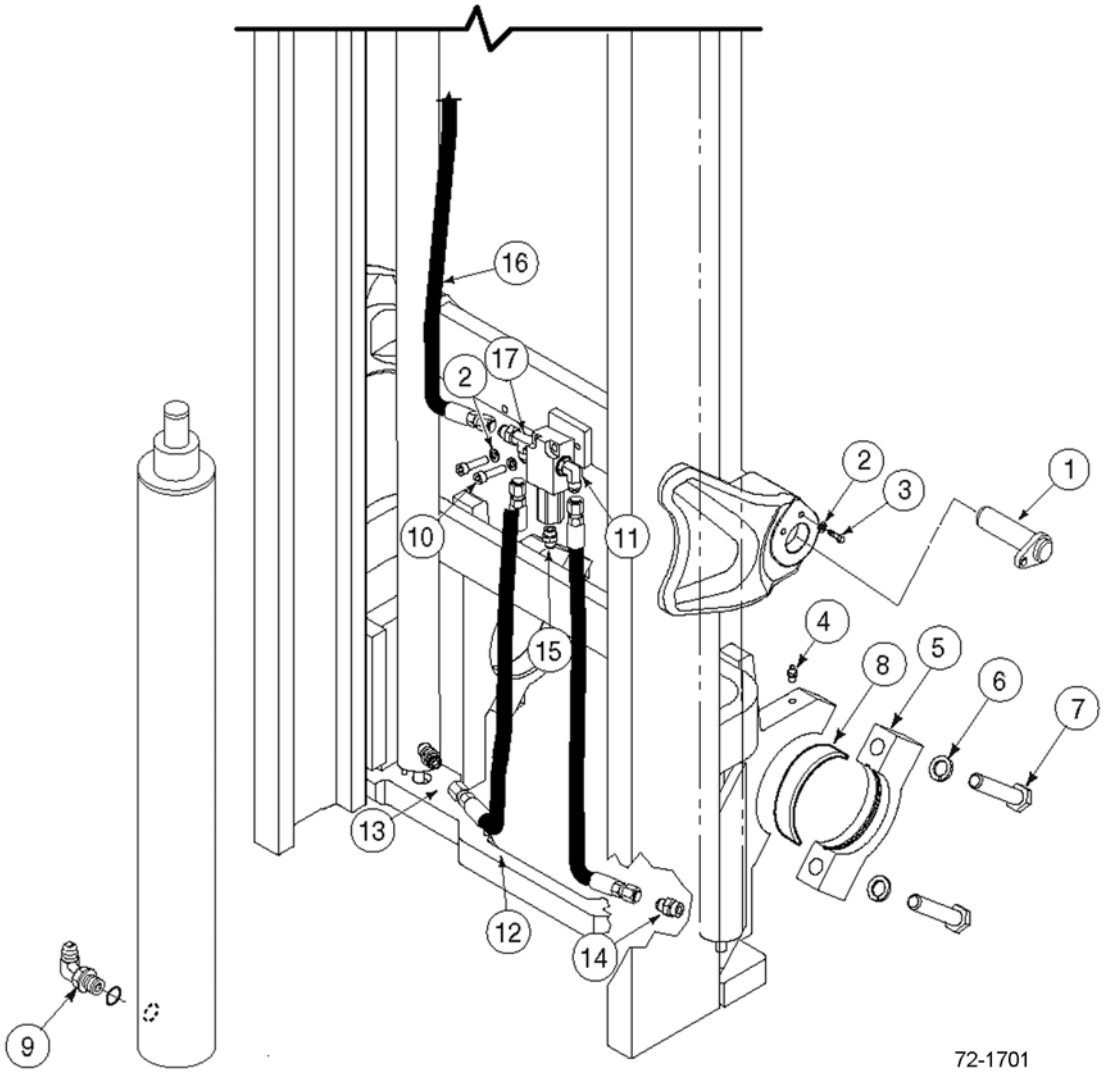

https://truckmanualshub.com/



## E50-MT 3-STAGE MAST - MOUNTING PARTS
## PNEUMATIC TIRE MODELS - S/N 200001A~

| Item | Part Number | Description | Qty | Serial Number |
|---|---|---|---|---|
| 1 | 3EB-41-51750 | TILT PIN | 2 | |
| 2 | 3EB-79-A6040 | WASHER, LOCK. | 4 | |
| 3 | CC212632 | CAPSCREW | 2 | |
| 4 | CC7418 | FITTING, GREASE | 2 | |
| 5 | CC253119 | CAP. | 2 | |
| 6 | 3EB-71-A6030 | WASHER, LOCK. | 4 | |
| 7 | CC253120 | CAPSCREW | 4 | |
| 8 | 3EB-71-51290 | BUSHING (2.0T, 2.5T, 2.8T, 3.0T). | 2 | |
| | 3EB-71-61790 | BUSHING (3.2T, 3.5T) | 2 | |
| 9 | CC642649 | FITTING 90° - 8-10 | 1 | |
| 10 | CC767611 | CAPSCREW | 2 | |
| 11 | CC601250 | FITTING # 8 - 90° ELBOW | 1 | |
| 12 | CC255651 | MAIN LIFT HOSE - RH | 1 | |
| | CC238174 | MAIN LIFT HOSE - LH | 1 | |
| 13 | CC611289 | FITTING # 8 -# 10 STRAIGHT | 1 | |
| 14 | CC238570 | 12 GPM EXTERNAL FUSE | 1 | |
| 15 | CC601377 | FITTING | 1 | |
| 16 | CC255624 | FL JUMPER HOSE. | 1 | |
| 17 | CC610402 | FITTING # 8 - 90° TEE | 1 | |
| KIT | CC255596 | INSTALLATION KIT | 1 | |

https://truckmanualshub.com/



## E50-MT 3-STAGE MAST - LOWERING CONTROL VALVE
## S/N 200001A~

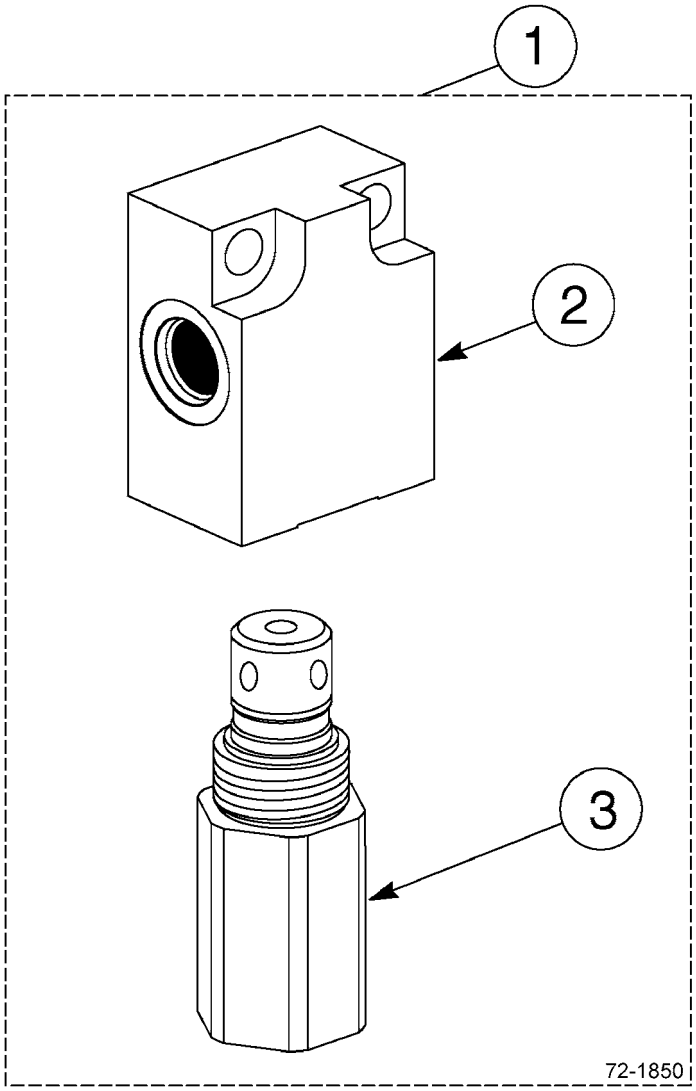

https://truckmanualshub.com/



## E50-MT 3-STAGE MAST - LOWERING CONTROL VALVE
## S/N 200001A~

| Item | Part Number | Description | Qty | Serial Number |
|---|---|---|---|---|
| 1 | 3EB-73-A5930 | CONTROL VALVE - 2600 PSI - 17 GPM . . . . . | 1 | |
| 2 | CC214793 | .VALVE BODY. . . . . | 1 | |
| 3 | 3EB-73-A5920 | .VALVE CARTRIDGE (17 GPM) . . . . . | 1 | |

https://truckmanualshub.com/



# E50-MT 3-STAGE MAST - INTERNAL HOSE REEVING - SINGLE
# 56-66 INCH OCL ONLY - S/N 200001A~

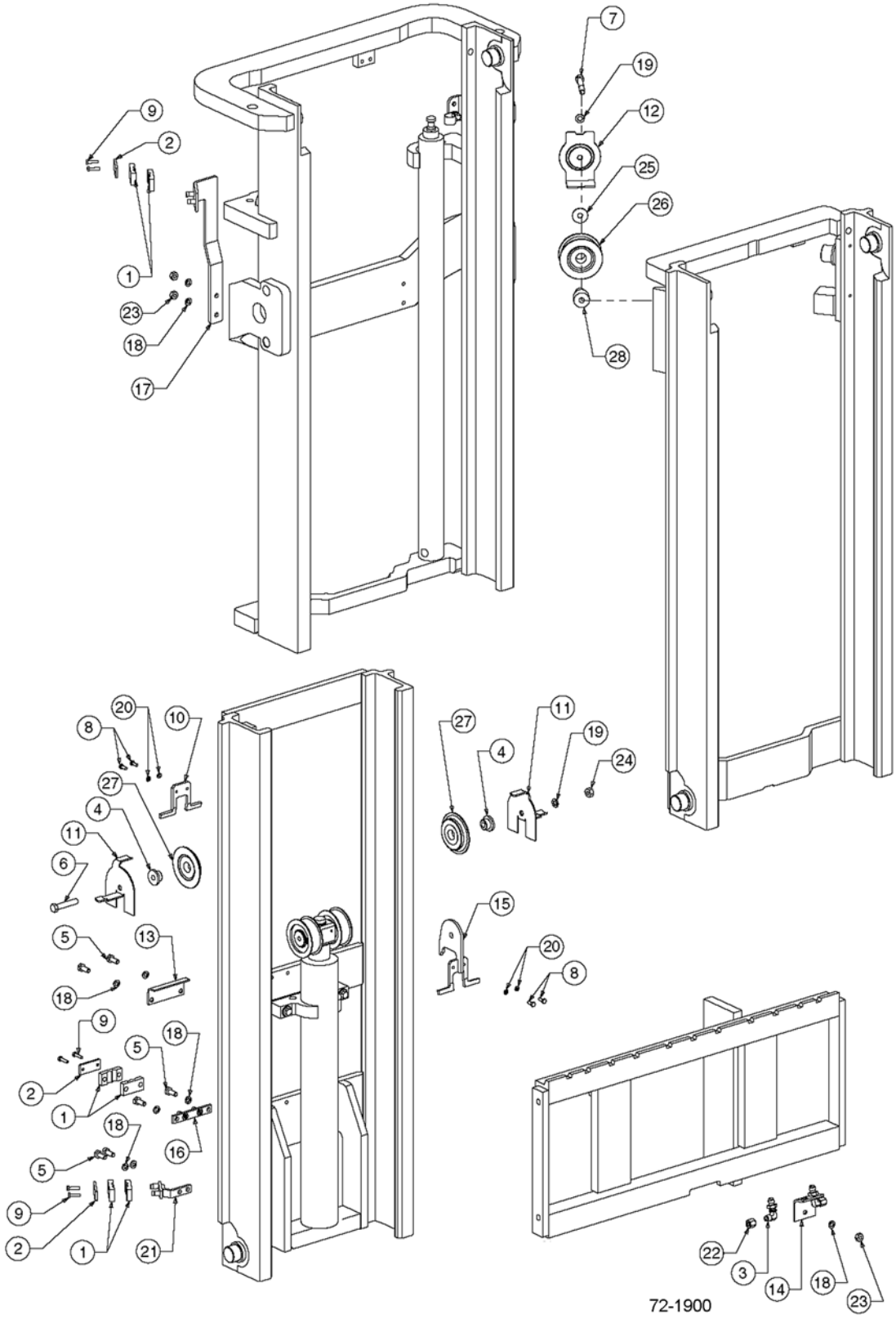

https://truckmanualshub.com/



## E50-MT 3-STAGE MAST - INTERNAL HOSE REEVING - SINGLE
## 56-66 INCH OCL ONLY - S/N 200001A~

| Item | Part Number | Description | Qty | Serial Number |
|---|---|---|---|---|
| 1 | 3EB-73-A5150 | HOSE CLAMP | 6 | |
| 2 | 3EB-73-A5160 | HOSE CLAMP BAR | 3 | |
| 3 | 3EB-71-A6010 | BULKHEAD UNION - 90° | 2 | |
| 4 | 3EB-73-A5230 | SINGLE IHR STUBSHAFT | 2 | |
| 5 | 3EB-73-A5490 | CAPSCREW - M10 X 25 | 6 | |
| 6 | 3EB-79-A5230 | CAPSCREW - M12 X 65 | 1 | |
| 7 | 3EB-79-A5190 | CAPSCREW - M12 X 80 | 1 | |
| 8 | 3EB-73-A5350 | CAPSCREW - M6 X 16 | 4 | |
| 9 | 3EB-79-A5240 | CAPSCREW - M6 X 25 | 6 | |
| 10 | 3EB-73-A5170 | CHAIN GUARD | 1 | |
| 11 | 3EB-73-A5180 | IHR AND CHAIN GUARD | 2 | |
| 12 | CC216052 | HOSE GUARD | 1 | |
| 13 | 3EB-73-A5190 | HOSE GUARD | 1 | |
| 14 | 3EB-73-A5610 | CARRIAGE IHR BRACKET | 1 | |
| 15 | 3EB-73-A5620 | IHR BRACKET | 1 | |
| 16 | 3EB-73-A5630 | IHR BRACKET | 1 | |
| 17 | CC253651 | IHR BRACKET | 1 | |
| 18 | 3EB-79-A6040 | WASHER, LOCK - M10 | 9 | |
| 19 | 3EB-79-A5360 | WASHER, LOCK - M12 | 2 | |
| 20 | 3EB-73-A5340 | WASHER, LOCK - M6 | 4 | |
| 21 | 3EB-73-A5660 | LOWER BRACKET | 1 | |
| 22 | 3EB-79-A5250 | NUT - # 6 - CAP | 2 | |
| 23 | 3EB-79-A5180 | NUT - M10 | 3 | |
| 24 | 3EB-79-A5270 | NUT - M12 DIN 934 | 1 | |
| 25 | 3EB-73-A5650 | IHR BRACKET | 1 | |
| 26 | 3EB-73-A5020 | SHEAVE | 1 | |
| 27 | 3EB-73-A5030 | IHR SHEAVE | 2 | |
| 28 | 3EB-73-A5220 | STUBSHAFT | 1 | |
| **OCL = OUTER CHANNEL LENGTH** | | | | |
| | CC216914 | HOSE (IHR KIT #233540) (56" OCL) | 2 | |
| | CC216926 | HOSE (IHR KIT #233541) (57" OCL) | 2 | |
| | CC216927 | HOSE (IHR KIT #233542) (58" OCL) | 2 | |
| | CC216928 | HOSE (IHR KIT #233543) (59" OCL) | 2 | |
| | CC230717 | HOSE (IHR KIT #233544) (60" OCL) | 2 | |
| | CC213922 | HOSE (IHR KIT #233545) (61" OCL) | 2 | |
| | CC210804 | HOSE (IHR KIT #233546) (62" OCL) | 2 | |
| | CC216930 | HOSE (IHR KIT #233547) (63" OCL) | 2 | |
| | CC223461 | HOSE (IHR KIT #233548) (64" OCL) | 2 | |
| | CC216931 | HOSE (IHR KIT #233549) (65" OCL) | 2 | |
| | CC225416 | HOSE (IHR KIT #233550) (66" OCL) | 2 | |

https://truckmanualshub.com/



# E50-MT 3-STAGE MAST - INTERNAL HOSE REEVING - SINGLE 67 INCH OCL AND UP - S/N 200001A~

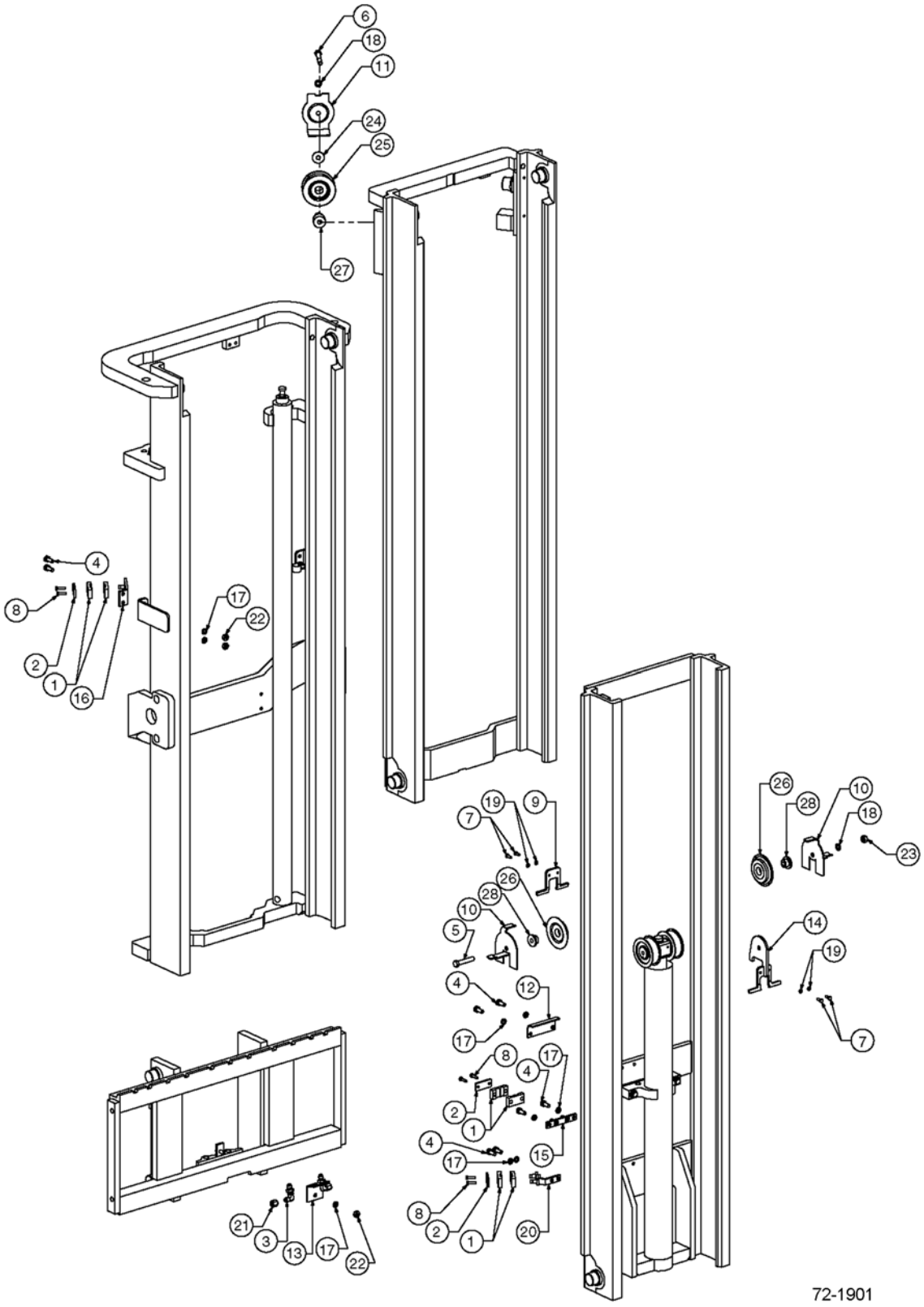

https://truckmanualshub.com/



## E50-MT 3-STAGE MAST - INTERNAL HOSE REEVING - SINGLE
## 67 INCH OCL AND UP - S/N 200001A~

| Item | Part Number | Description | Qty | Serial Number |
|---|---|---|---|---|
| 1 | 3EB-73-A5150 | CLAMP, HOSE | 6 | |
| 2 | 3EB-73-A5160 | HOSE CLAMP BAR | 3 | |
| 3 | 3EB-71-A6010 | FITTING, BULKHEAD UNION - 90° | 2 | |
| 4 | 3EB-73-A5490 | CAPSCREW - M10 X 25 | 10 | |
| 5 | 3EB-79-A5230 | CAPSCREW - M12 X 65 | 1 | |
| 6 | 3EB-79-A5190 | CAPSCREW - M12 X 80 | 1 | |
| 7 | 3EB-73-A5350 | CAPSCREW - M6 X 16 | 4 | |
| 8 | 3EB-79-A5240 | CAPSCREW - M6 X 25 | 6 | |
| 9 | 3EB-73-A5170 | CHAIN GUARD | 1 | |
| 10 | 3EB-73-A5180 | IHR & CHAIN GUARD | 2 | |
| 11 | 3EB-73-A5120 | HOSE GUARD | 1 | |
| 12 | 3EB-73-A5190 | HOSE GUARD | 1 | |
| 13 | 3EB-73-A5610 | CARRIAGE IHR BRACKET | 1 | |
| 14 | 3EB-73-A5620 | IHR BRACKET | 1 | |
| 15 | 3EB-73-A5630 | IHR BRACKET | 1 | |
| 16 | 3EB-73-A5640 | IHR BRACKET | 1 | |
| 17 | 3EB-79-A6040 | WASHER, LOCK - M10 | 11 | |
| 18 | 3EB-79-A5360 | WASHER, LOCK - M12 | 2 | |
| 19 | 3EB-73-A5340 | WASHER, LOCK - M6 | 4 | |
| 20 | 3EB-73-A5660 | BRACKET, LOWER | 1 | |
| 21 | 3EB-79-A5250 | NUT - #6 CAP | 2 | |
| 22 | 3EB-79-A5180 | NUT - M10 | 3 | |
| 23 | 3EB-79-A5270 | NUT - M12 DIN 934 | 1 | |
| 24 | 3EB-79-A5280 | WASHER | 1 | |
| 25 | 3EB-73-A5020 | SHEAVE | 1 | |
| 26 | 3EB-73-A5030 | IHR SHEAVE | 2 | |
| 27 | 3EB-73-A5220 | STUBSHAFT | 1 | |
| 28 | 3EB-73-A5230 | SINGLE IHR STUBSHAFT | 2 | |

**OCL = OUTER CHANNEL LENGTH, MFH = MAXIMUM FORK HEIGHT**

| | | |
|---|---|---|
| 3EB-74-A5720 | HOSE (IHR KIT #233552) (68" OCL) (152" MFH) | 2 |
| 3EB-74-A5750 | HOSE (IHR KIT #233558) (74" OCL) (170" MFH) | 2 |
| 3EB-74-A5770 | HOSE (IHR KIT #233564) (80" OCL) (188" MFH) | 2 |
| 3EB-74-A5790 | HOSE (IHR KIT #233568) (84" OCL) (198" MFH) | 2 |
| 3EB-74-A5810 | HOSE (IHR KIT #233576) (92" OCL) (216" MFH) | 2 |
| 3EB-74-A5830 | HOSE (IHR KIT #233585) (101" OCL) (235" MFH) | 2 |
| 3EB-74-A5840 | HOSE (IHR KIT #233594) (110" OCL) (254" MFH) | 2 |

https://truckmanualshub.com/



# E50-MT 3-STAGE MAST - INTERNAL HOSE REEVING - DOUBLE
## S/N 200001A~

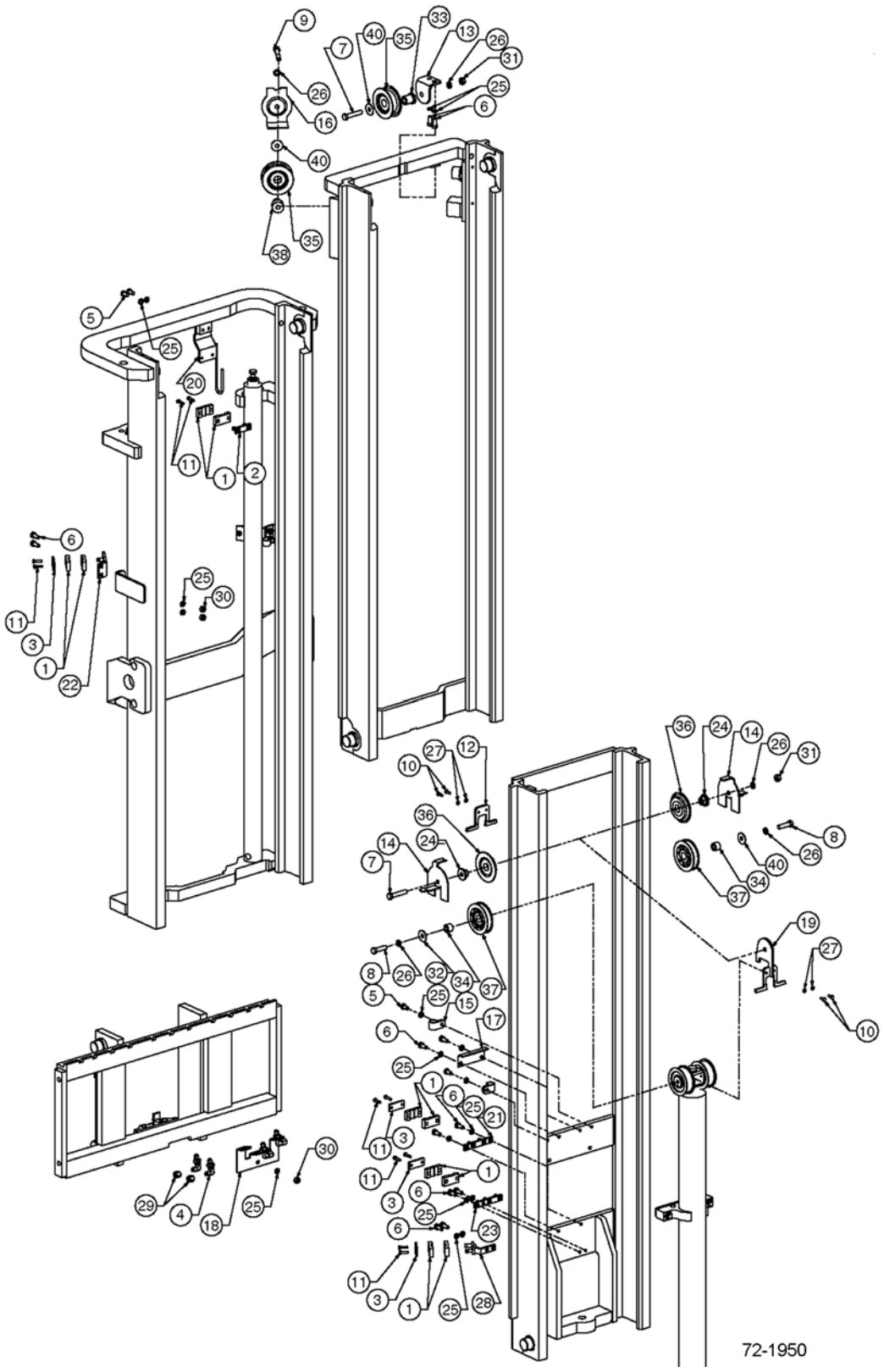

https://truckmanualshub.com/



## E50-MT 3-STAGE MAST - INTERNAL HOSE REEVING - DOUBLE
## S/N 200001A~

| Item | Part Number | Description | Qty | Serial Number |
|---|---|---|---|---|
| 1 | 3EB-73-A5150 | CLAMP, HOSE | 12 | |
| 2 | 3EB-73-A6010 | BAR ASSY | 1 | |
| 3 | 3EB-73-A5160 | HOSE CLAMP BAR | 5 | |
| 4 | 3EB-71-A6010 | BULKHEAD UNION - 90° | 4 | |
| 5 | 3EB-79-A5330 | CAPSCREW - M10 X 20 | 4 | |
| 6 | 3EB-73-A5490 | CAPSCREW - M10 X 25 | 18 | |
| 7 | 3EB-79-A5230 | CAPSCREW - M12 X 65 | 2 | |
| 8 | 3EB-79-A5290 | CAPSCREW - M12 X 45 | 2 | |
| 9 | 3EB-79-A5190 | CAPSCREW - M12 X 80 | 1 | |
| 10 | 3EB-73-A5350 | CAPSCREW - M6 X 16 | 4 | |
| 11 | 3EB-79-A5240 | CAPSCREW - M6 X 25 | 12 | |
| 12 | 3EB-73-A5170 | IHR & CHAIN GUARD | 1 | |
| 13 | 3EB-73-A5670 | DOUBLE IHR BRACKET | 1 | |
| 14 | 3EB-73-A5180 | IHR & CHAIN GUARD | 2 | |
| 15 | 3EB-79-A5160 | HOSE CLAMP | 2 | |
| 16 | 3EB-73-A5120 | HOSE GUARD | 1 | |
| 17 | 3EB-73-A5190 | HOSE GUARD | 1 | |
| 18 | 3EB-73-A5680 | CARRIAGE IHR BRACKET | 1 | |
| 19 | 3EB-73-A5620 | IHR BRACKET | 1 | |
| 20 | 3EB-73-A6030 | IHR BRACKET | 1 | |
| 21 | 3EB-73-A5630 | IHR BRACKET | 1 | |
| 22 | 3EB-73-A5640 | IHR BRACKET ASSY | 2 | |
| 23 | 3EB-73-A5690 | IHR BRACKET ASSY | 1 | |
| 24 | 3EB-73-A5230 | SHEAVE, SINGLE FUNCTION | 1 | |
| 25 | 3EB-79-A6040 | WASHER, LOCK - M10 | 23 | |
| 26 | 3EB-79-A5360 | WASHER, LOCK - M12 | 5 | |
| 27 | 3EB-73-A5340 | WASHER, LOCK - M6 | 4 | |
| 28 | 3EB-73-A5660 | BRACKET, LOWER | 1 | |
| 29 | 3EB-79-A5250 | NUT - #6 CAP | 4 | |
| 30 | 3EB-79-A5180 | NUT - M10 | 5 | |
| 31 | 3EB-79-A5270 | NUT - M12 | 2 | |
| 32 | 3EB-79-A5280 | WASHER | 4 | |
| 33 | 3EB-73-A5240 | SHAFT | 1 | |
| 34 | 3EB-73-A5250 | SHAFT | 2 | |
| 35 | 3EB-73-A5020 | SHEAVE - IHR | 2 | |
| 36 | 3EB-73-A5030 | SHEAVE - IHR | 2 | |
| 37 | 3EB-73-A5060 | SHEAVE - SINGLE | 2 | |
| 38 | 3EB-73-A5220 | STUBSHAFT | 1 | |

PARTS LIST CONTINUED ON NEXT PAGE

https://truckmanualshub.com/



## E50-MT 3-STAGE MAST - INTERNAL HOSE REEVING - DOUBLE
## S/N 200001A~

| Item | Part Number | Description | Qty | Serial Number |
|---|---|---|---|---|
| | | **OCL = OUTER CHANNEL LENGTH, MFH = MAXIMUM FORK HEIGHT** | | |
| | | **INNER HOSE - RIGHT SIDE** | | |
| | 3EB-74-A5720 | HOSE (IHR KIT #233623) (68" OCL) (152" MFH) | 1 | |
| | 3EB-74-A5750 | HOSE (IHR KIT #233629) (74" OCL) (170" MFH) | 1 | |
| | 3EB-74-A5770 | HOSE (IHR KIT #233635) (80" OCL) (188" MFH) | 1 | |
| | 3EB-74-A5790 | HOSE (IHR KIT #233639) (84" OCL) (198" MFH) | 1 | |
| | 3EB-74-A5810 | HOSE (IHR KIT #233647) (92" OCL) (216" MFH) | 1 | |
| | 3EB-74-A5830 | HOSE (IHR KIT #233656) (101" OCL) (235" MFH) | 1 | |
| | 3EB-74-A5840 | HOSE (IHR KIT #233665) (110" OCL) (254" MFH) | 1 | |
| | | **INNER HOSE - LEFT SIDE** | | |
| | CC234955 | HOSE (IHR KIT #233623) (68" OCL) (152" MFH) | 1 | |
| | CC216935 | HOSE (IHR KIT #233629) (74" OCL) (170" MFH) | 1 | |
| | CC216941 | HOSE (IHR KIT #233635) (80" OCL) (188" MFH) | 1 | |
| | CC216944 | HOSE (IHR KIT #233639) (84" OCL) (198" MFH) | 1 | |
| | CC216950 | HOSE (IHR KIT #233647) (92" OCL) (216" MFH) | 1 | |
| | CC235043 | HOSE (IHR KIT #233656) (101" OCL) (235" MFH) | 1 | |
| | CC235060 | HOSE (IHR KIT #233665) (110" OCL) (254" MFH) | 1 | |
| | | **OUTER HOSES (SHORTEST)** | | |
| | CC234991 | HOSE (IHR KIT #233623) (68" OCL) (152" MFH) | 2 | |
| | CC235001 | HOSE (IHR KIT #233629) (74" OCL) (170" MFH) | 2 | |
| | CC235010 | HOSE (IHR KIT #233635) (80" OCL) (188" MFH) | 2 | |
| | CC216942 | HOSE (IHR KIT #233639) (84" OCL) (198" MFH) | 2 | |
| | CC232707 | HOSE (IHR KIT #233647) (92" OCL) (216" MFH) | 2 | |
| | CC235038 | HOSE (IHR KIT #233656) (101" OCL) (235" MFH) | 2 | |
| | CC235055 | HOSE (IHR KIT #233665) (110" OCL) (254" MFH) | 2 | |

https://truckmanualshub.com/

**NOTES:**

https://truckmanualshub.com/



## E50-MT 3-STAGE MAST — RECOMMENDED STOCK LIST (RSL)

NO

ILLUSTRATION

REQUIRED

https://truckmanualshub.com/



## E50-MT 3-STAGE MAST — RECOMMENDED STOCK LIST (RSL)

| Item | Part Number | Description | Qty | No. of Masts Serviced |
|---|---|---|---|---|
| | | **MAIN LIFT CYLINDERS** | | |
| | SEE PARTS PG | MAIN LIFT CYL ASSY | 0 | 1 - 19 |
| | SEE PARTS PG | MAIN LIFT CYL ASSY | 1 | 20 - 50 |
| | SEE PARTS PG | SEAL KIT | 2 | 1 - 5 |
| | SEE PARTS PG | SEAL KIT | 4 | 6 - 19 |
| | SEE PARTS PG | SEAL KIT | 8 | 20 - 50 |
| | | **FREE LIFT CYLINDER** | | |
| | SEE PARTS PG | FREE LIFT CYLINDER ASSY | 0 | 1 - 5 |
| | SEE PARTS PG | FREE LIFT CYLINDER ASSY | 1 | 6 - 19 |
| | SEE PARTS PG | FREE LIFT CYLINDER ASSY | 2 | 20 - 50 |
| | SEE PARTS PG | SEAL KIT | 2 | 1 - 5 |
| | SEE PARTS PG | SEAL KIT | 4 | 6 - 19 |
| | SEE PARTS PG | SEAL KIT | 8 | 20 - 50 |
| | | **INTERNAL REEVING** | | |
| | SEE PARTS PG | HOSE | 2 | 1 - 5 |
| | SEE PARTS PG | HOSE | 4 | 6 - 19 |
| | SEE PARTS PG | HOSE | 8 | 20 - 50 |
| | 3EB-71-A6040 | FITTING | 1 | 1 - 5 |
| | 3EB-71-A6040 | FITTING | 2 | 6 - 19 |
| | 3EB-71-A6040 | FITTING | 4 | 20 - 50 |
| | 3EB-73-A5030 | SHEAVE, IHR, SINGLE & DOUBLE IHR | 1 | 1 - 5 |
| | 3EB-73-A5030 | SHEAVE, IHR, SINGLE & DOUBLE IHR | 2 | 6 - 19 |
| | 3EB-73-A5030 | SHEAVE, IHR, SINGLE & DOUBLE IHR | 4 | 20 - 50 |
| | 3EB-73-A5060 | SHEAVE - DOUBLE IHR | 1 | 1 - 5 |
| | 3EB-73-A5060 | SHEAVE - DOUBLE IHR | 2 | 6 - 19 |
| | 3EB-73-A5060 | SHEAVE - DOUBLE IHR | 4 | 20 - 50 |
| | 3EB-73-A5020 | SHEAVE - SINGLE & DOUBLE IHR | 1 | 1 - 5 |
| | 3EB-73-A5020 | SHEAVE - SINGLE & DOUBLE IHR | 2 | 6 - 19 |
| | 3EB-73-A5020 | SHEAVE - SINGLE & DOUBLE IHR | 4 | 20 - 50 |
| | | **UPRIGHTS** | | |
| | 3EB-79-A5110 | CHAIN ANCHOR | 1 | 1 - 5 |
| | 3EB-79-A5110 | CHAIN ANCHOR | 2 | 6 - 19 |
| | 3EB-79-A5110 | CHAIN ANCHOR | 4 | 20 - 50 |
| | 3EB-79-A5120 | CHAIN ANCHOR | 1 | 1 - 5 |
| | 3EB-79-A5120 | CHAIN ANCHOR | 2 | 6 - 19 |
| | 3EB-79-A5120 | CHAIN ANCHOR | 4 | 20 - 50 |
| | 3EB-79-A5150 | PIN, CHAIN | 6 | 1 - 5 |
| | 3EB-79-A5150 | PIN, CHAIN | 12 | 6 - 19 |

PARTS LIST CONTINUED ON NEXT PAGE

https://truckmanualshub.com/



## E50-MT 3-STAGE MAST — RECOMMENDED STOCK LIST (RSL)

| Item | Part Number | Description | Qty | No. of Masts Serviced |
|---|---|---|---|---|
| | 3EB-79-A5150 | PIN, CHAIN | 36 | 20 - 50 |
| | 3EB-79-A6090 | NUT | 6 | 1 - 5 |
| | 3EB-79-A6090 | NUT | 12 | 6 - 19 |
| | 3EB-79-A6090 | NUT | 24 | 20 - 50 |
| | 3EB-79-A6081 | PIN, COTTER | 6 | 1 - 5 |
| | 3EB-79-A6081 | PIN, COTTER | 12 | 6 - 19 |
| | 3EB-79-A6081 | PIN, COTTER | 24 | 20 - 50 |
| | 3EB-79-A6080 | PIN, COTTER | 6 | 1 - 5 |
| | 3EB-79-A6080 | PIN, COTTER | 12 | 6 - 19 |
| | 3EB-79-A6080 | PIN, COTTER | 36 | 20 - 50 |
| | 3EB-79-A6050 | SHIM, .03 IN. | 16 | 1 - 5 |
| | 3EB-79-A6050 | SHIM, .03 IN. | 32 | 6 - 19 |
| | 3EB-79-A6050 | SHIM, .03 IN. | 64 | 20 - 50 |
| | 3EB-79-A5210 | ROLLER | 8 | 1 - 5 |
| | 3EB-79-A5210 | ROLLER | 24 | 6 - 19 |
| | 3EB-79-A5210 | ROLLER | 48 | 20 - 50 |
| | 3EB-73-A5720 | SERVICE KIT, WEAR PLUG | 2 | 1 - 5 |
| | 3EB-73-A5720 | SERVICE KIT, WEAR PLUG | 4 | 6 - 19 |
| | 3EB-73-A5720 | SERVICE KIT, WEAR PLUG | 8 | 20 - 50 |
| | | **CROSSHEAD** | | |
| | 3EB-73-A5010 | CHAIN SHEAVE | 4 | 1 - 5 |
| | 3EB-73-A5010 | CHAIN SHEAVE | 8 | 6 - 19 |
| | 3EB-73-A5010 | CHAIN SHEAVE | 16 | 20 - 50 |
| | 3EB-73-A5330 | RETAINER CLIP | 4 | 1 - 5 |
| | 3EB-73-A5330 | RETAINER CLIP | 8 | 6 - 19 |
| | 3EB-73-A5330 | RETAINER CLIP | 16 | 20 - 50 |
| | 3EB-79-A6070 | SNAP RING | 2 | 1 - 5 |
| | 3EB-79-A6070 | SNAP RING | 4 | 6 - 19 |
| | 3EB-79-A6070 | SNAP RING | 8 | 20 - 50 |
| | | **CARRIAGE AND CHAINS** | | |
| | SEE PARTS PG | FREE LIFT CHAINS | 2 | 1 - 5 |
| | SEE PARTS PG | FREE LIFT CHAINS | 4 | 6 - 19 |
| | SEE PARTS PG | FREE LIFT CHAINS | 8 | 20 - 50 |
| | SEE PARTS PG | MAIN LIFT CHAINS | 2 | 1 - 5 |
| | SEE PARTS PG | MAIN LIFT CHAINS | 4 | 6 - 19 |
| | SEE PARTS PG | MAIN LIFT CHAINS | 8 | 20 - 50 |
| | 3EB-79-A5210 | CARRIAGE ROLLER | 4 | 1 - 5 |
| | 3EB-79-A5210 | CARRIAGE ROLLER | 8 | 6 - 19 |

PARTS LIST CONTINUED ON NEXT PAGE

https://truckmanualshub.com/



## E50-MT 3-STAGE MAST — RECOMMENDED STOCK LIST (RSL)

| Item | Part Number | Description | Qty | No. of Masts Serviced |
|---|---|---|---|---|
| | 3EB-79-A5210 | CARRIAGE ROLLER. . . . . | 16 | 20 - 50 |
| | 3EB-79-A5220 | ROLLER - 6-ROLLER CARRIAGE . . . . . | 2 | 1 - 5 |
| | 3EB-79-A5220 | ROLLER - 6-ROLLER CARRIAGE . . . . . | 4 | 6 - 19 |
| | 3EB-79-A5220 | ROLLER - 6-ROLLER CARRIAGE . . . . . | 8 | 20 - 50 |
| | 3EB-79-A5140 | CHAIN ANCHOR. . . . . | 1 | 1 - 5 |
| | 3EB-79-A5140 | CHAIN ANCHOR. . . . . | 2 | 6 - 19 |
| | 3EB-79-A5140 | CHAIN ANCHOR. . . . . | 4 | 20 - 50 |
| | 3EB-79-A6081 | PIN, COTTER . . . . . | 2 | 1 - 5 |
| | 3EB-79-A6081 | PIN, COTTER . . . . . | 4 | 6 - 19 |
| | 3EB-79-A6081 | PIN, COTTER . . . . . | 8 | 20 - 50 |
| | 3EB-79-A6080 | PIN, COTTER . . . . . | 4 | 1 - 5 |
| | 3EB-79-A6080 | PIN, COTTER . . . . . | 8 | 6 - 19 |
| | 3EB-79-A6080 | PIN, COTTER . . . . . | 16 | 20 - 50 |
| | 3EB-79-A5150 | CHAIN PIN. . . . . | 4 | 1 - 19 |
| | 3EB-79-A5150 | CHAIN PIN. . . . . | 8 | 20 - 50 |
| | 3EB-73-A5450 | NUT . . . . . | 2 | 1 - 50 |

https://truckmanualshub.com/



# E60-MS 2-STAGE MAST - SAFETY DECALS
## S/N 200001A~

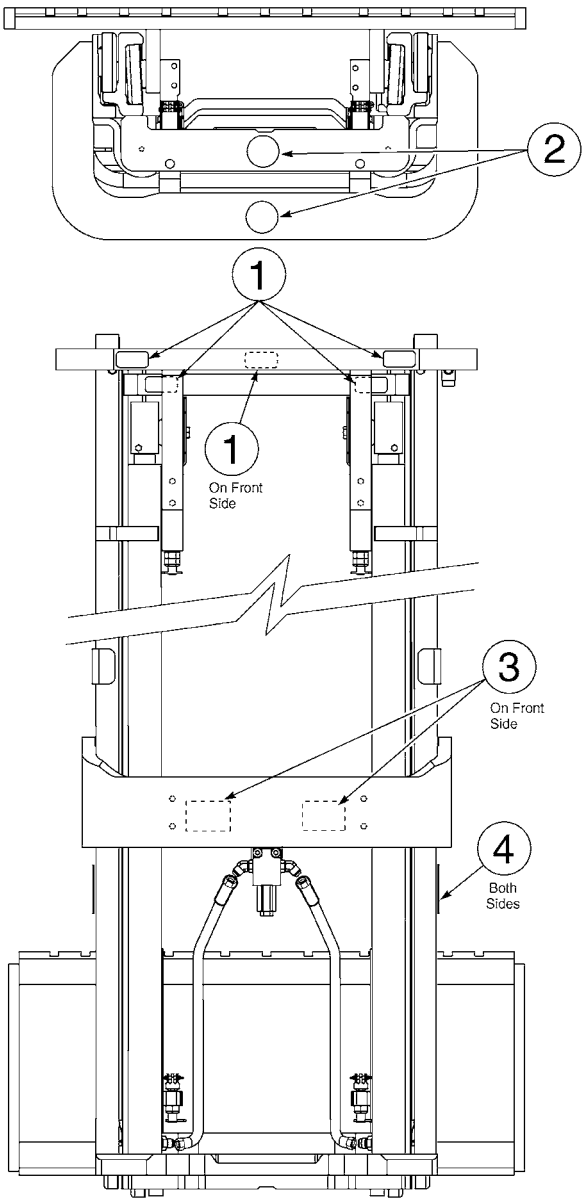


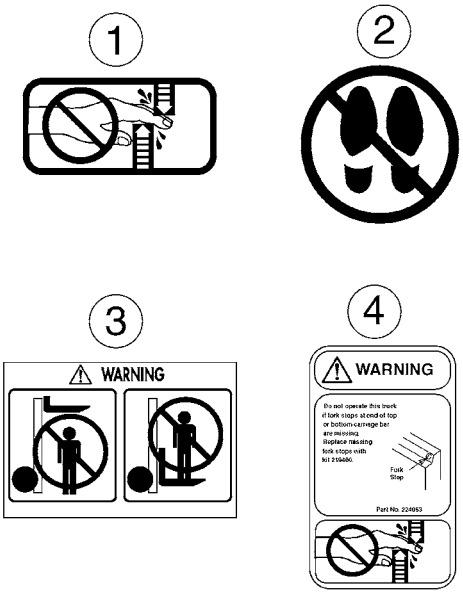


72-2100

https://truckmanualshub.com/



## E60-MS 2-STAGE MAST - SAFETY DECALS
## S/N 200001A~

| Item | Part Number | Description | Qty | Serial Number |
|---|---|---|---|---|
| 1 | 3EB-79-A6010 | DECAL - "HANDS OFF" . . . . . | 5 | |
| 2 | 3EB-79-A6020 | DECAL - "NO STEP" . . . . . | 2 | |
| 3 | CC210850 | DECAL - "WARNING" . . . . . | 2 | |
| 4 | CC224053 | DECAL - "FORK STOP" . . . . . | 2 | |

https://truckmanualshub.com/



# E60-MS 2-STAGE MAST - MAIN LIFT CYLINDERS
## S/N 200001A~

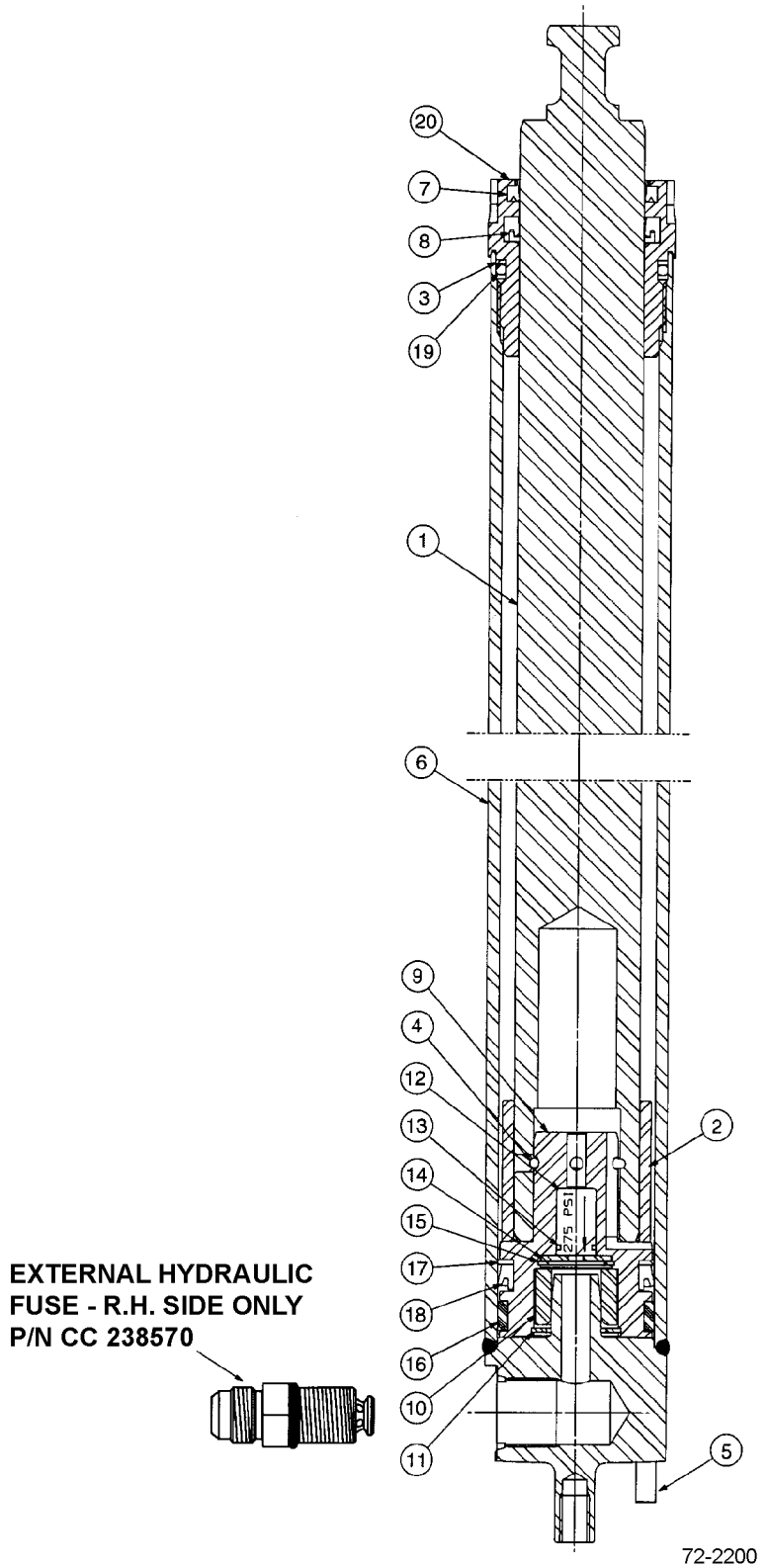

https://truckmanualshub.com/



## E60-MS 2-STAGE MAST - MAIN LIFT CYLINDERS
## S/N 200001A~

| Item | Part Number | Description | Qty | Serial Number |
|---|---|---|---|---|
| 1 | NSS | ROD/PLUNGER | 1 | |
| 2 | NSS | SPACER | 1 | |
| 3 | NSS | BACK-UP RING (SEAL KIT) | 1 | |
| 4 | NSS | PULL-IN WIRE (SEAL KIT) | 1 | |
| 5 | CC7910 | ROLL PIN | 1 | |
| 6 | NSS | SHELL | 1 | |
| 7 | NSS | WIPER (SEAL KIT) | 1 | |
| 8 | NSS | ROD SEAL (SEAL KIT) | 1 | |
| 9 | NSS | PISTON | 1 | |
| 10 | NSS | SLEEVE | 1 | |
| 11 | NSS | RETAINING RING (CHECK VALVE KIT) | 1 | |
| 12 | NSS | CHECK VALVE (CHECK VALVE KIT) | 1 | |
| 13 | NSS | O-RING (CHECK VALVE KIT) | 1 | |
| 14 | NSS | WASHER (CHECK VALVE KIT) | 1 | |
| 15 | NSS | RETAINING RING (SEAL KIT) | 1 | |
| 16 | NSS | WEAR RING (SEAL KIT) | 1 | |
| 17 | NSS | NYLON RING (SEAL KIT) | 1 | |
| 18 | NSS | PISTON SEAL (SEAL KIT) | 1 | |
| 19 | NSS | O-RING (SEAL KIT) | 1 | |
| 20 | CC422809 | RETAINER | 1 | |
| KIT | 3EB-73-A5430 | SEAL KIT | 1 | |
| KIT | CC3101894 | CHECK VALVE KIT | 1 | |
| | **OCL = OUTER CHANNEL LENGTH, MFH = MAXIMUM FORK HEIGHT** | | | |
| | CC1001115 | MAIN LIFT CYLINDER - (57" OCL) (81.5" MFH) | 1 | |
| | CC1001127 | MAIN LIFT CYLINDER - (69" OCL) (105.5" MFH) | 1 | |
| | CC1001131 | MAIN LIFT CYLINDER - (73" OCL) (113.5" MFH) | 1 | |
| | CC1001138 | MAIN LIFT CYLINDER - (80" OCL) (127.5" MFH) | 1 | |
| | CC1001139 | MAIN LIFT CYLINDER - (81" OCL) (129.5" MFH) | 1 | |
| | CC1001147 | MAIN LIFT CYLINDER - (89" OCL) (145.5" MFH) | 1 | |
| | CC1001153 | MAIN LIFT CYLINDER - (95" OCL) (157.5" MFH) | 1 | |
| | CC1001159 | MAIN LIFT CYLINDER - (101" OCL) (169.5" MFH) | 1 | |

https://truckmanualshub.com/



## E60-MS 2-STAGE MAST - OUTER UPRIGHT
## S/N 200001A~

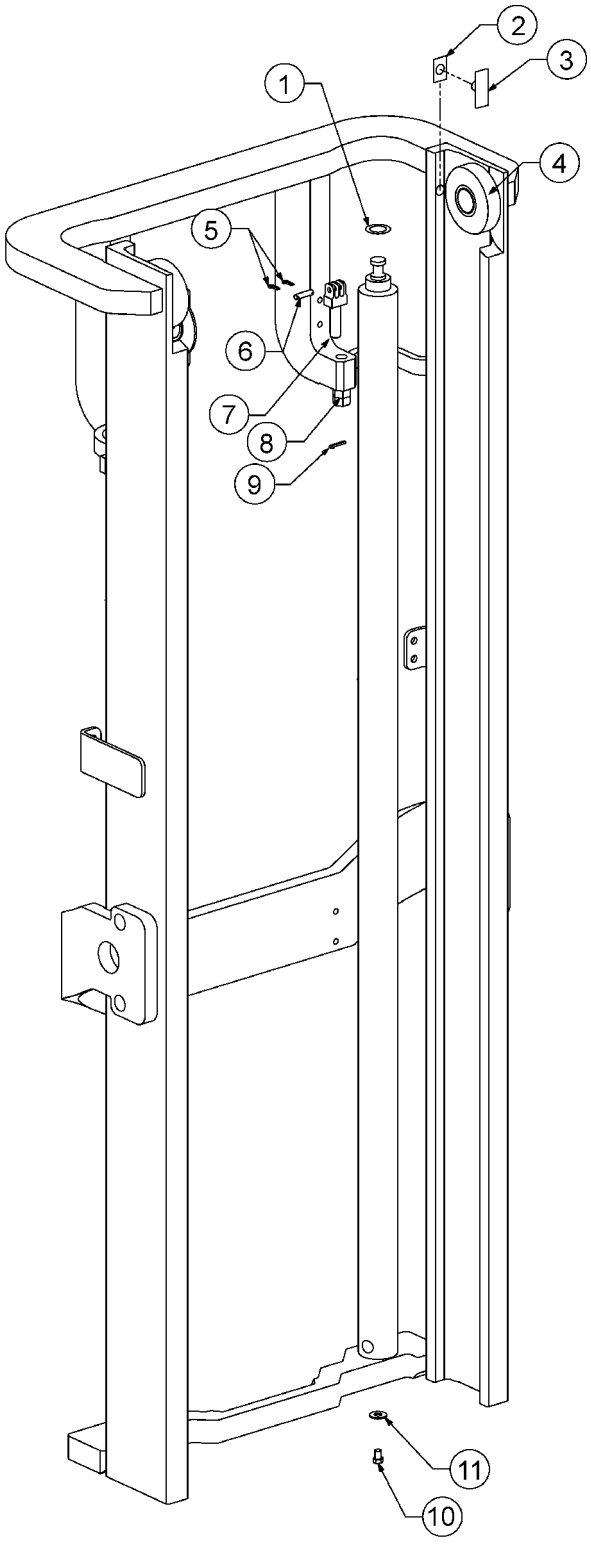

https://truckmanualshub.com/



## E60-MS 2-STAGE MAST - OUTER UPRIGHT
## S/N 200001A~

| Item | Part Number | Description | Qty | Serial Number |
|---|---|---|---|---|
| | | **OCL = OUTER CHANNEL LENGTH, MFH = MAXIMUM FORK HEIGHT** | | |
| | CC236191 | OUTER UPRIGHT - (57" OCL) (81.5" MFH) . . . | 1 | |
| | CC236203 | OUTER UPRIGHT - (69" OCL) (105.5" MFH) . . | 1 | |
| | CC236207 | OUTER UPRIGHT - (73" OCL) (113.5" MFH). . . | 1 | |
| | CC236214 | OUTER UPRIGHT - (80" OCL) (127.5" MFH) . . | 1 | |
| | CC236215 | OUTER UPRIGHT - (81" OCL) (129.5" MFH) . . | 1 | |
| | CC236223 | OUTER UPRIGHT - (89" OCL) (145.5" MFH) . . | 1 | |
| | CC236229 | OUTER UPRIGHT - (95" OCL) (157.5" MFH) . . | 1 | |
| | CC236235 | OUTER UPRIGHT - (101" OCL) (169.5" MFH) . | 1 | |
| 1 | CC238137 | SHIM KIT - MAIN LIFT CYL . . . . . | 2 | |
| 2 | CC215719 | WEAR PLUG SHIM . . . . . (WEAR PLUG KIT) | AR | |
| 3 | CC203388 | WEAR PLUG . . . . . (WEAR PLUG KIT) | 2 | |
| 4 | 3EB-79-A5210 | LOAD ROLLER. . . . . | 2 | |
| 5 | 3EB-79-A6080 | PIN, COTTER . . . . . | 2 | |
| 6 | 3EB-79-A5150 | PIN, CHAIN ANCHOR . . . . . | 2 | |
| 7 | 3EB-79-A5110 | CHAIN ANCHOR . . . . . | 2 | |
| 8 | 3EB-79-A6090 | NUT. . . . . | 4 | |
| 9 | 3EB-79-A6081 | PIN, COTTER . . . . . | 2 | |
| 10 | 3EB-79-A5340 | BOLT. . . . . | 2 | |
| 11 | 3EB-79-A5350 | WASHER, FLAT . . . . . | 2 | |

https://truckmanualshub.com/



# E60-MS 2-STAGE MAST - INNER UPRIGHT
## S/N 200001A~

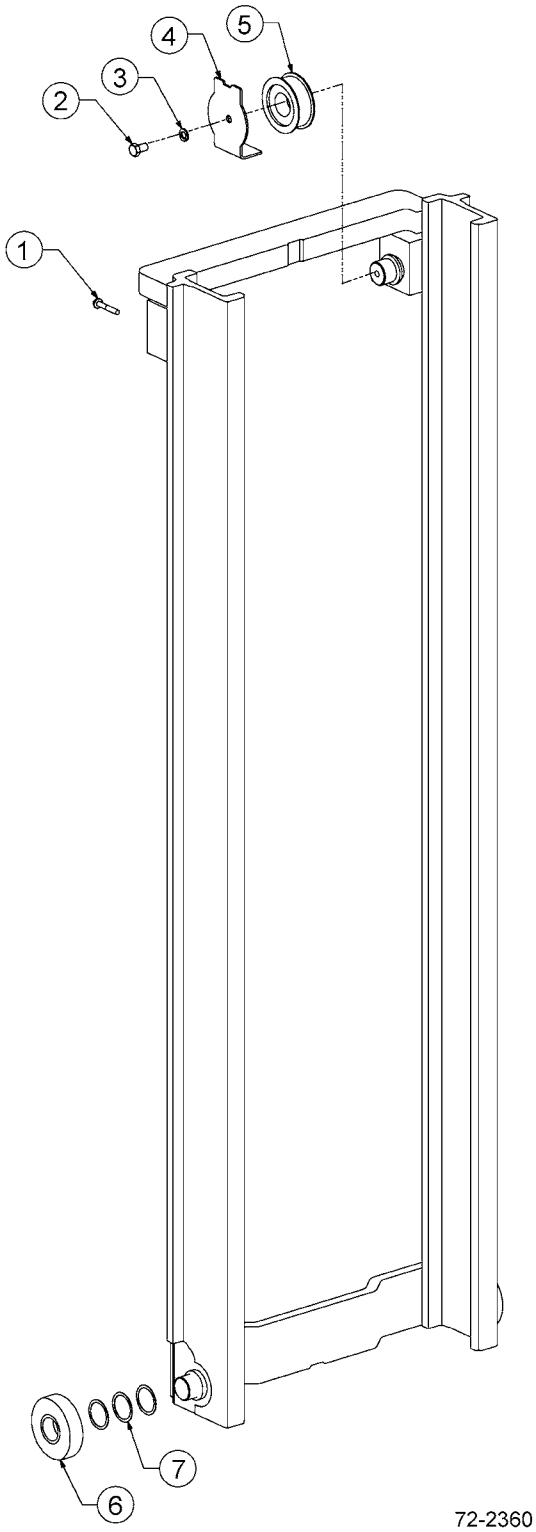

https://truckmanualshub.com/



## E60-MS 2-STAGE MAST - INNER UPRIGHT
## S/N 200001A~

| Item | Part Number | Description | Qty | Serial Number |
|---|---|---|---|---|
| | | **OCL = OUTER CHANNEL LENGTH, MFH = MAXIMUM FORK HEIGHT** | | |
| | CC236262 | INNER UPRIGHT - (57" OCL) (81.5" MFH) | 1 | |
| | CC236274 | INNER UPRIGHT - (69" OCL) (105.5" MFH) | 1 | |
| | CC236278 | INNER UPRIGHT - (73" OCL) (113.5" MFH) | 1 | |
| | CC236285 | INNER UPRIGHT - (80" OCL) (127.5" MFH) | 1 | |
| | CC236286 | INNER UPRIGHT - (81" OCL) (129.5" MFH) | 1 | |
| | CC236294 | INNER UPRIGHT - (89" OCL) (145.5" MFH) | 1 | |
| | CC236300 | INNER UPRIGHT - (95" OCL) (157.5" MFH) | 1 | |
| | CC236306 | INNER UPRIGHT - (101" OCL) (169.5" MFH) | 1 | |
| 1 | 3EB-79-A5380 | BOLT | 2 | |
| 2 | 3EB-79-A5370 | M12 X 20 LG CAPSCREW | 2 | |
| 3 | 3EB-79-A5360 | M12 WASHER, LOCK | 2 | |
| 4 | 3EB-73-A5140 | CHAIN GUARD | 2 | |
| 5 | 3EB-73-A5010 | SHEAVE | 2 | |
| 6 | 3EB-79-A5210 | LOAD ROLLER | 2 | |
| 7 | 3EB-79-A6050 | SHIM, LOAD ROLLER | AR | |

https://truckmanualshub.com/



## E60-MS 2-STAGE MAST - CARRIAGE - 6-ROLLER
## S/N 200001A~

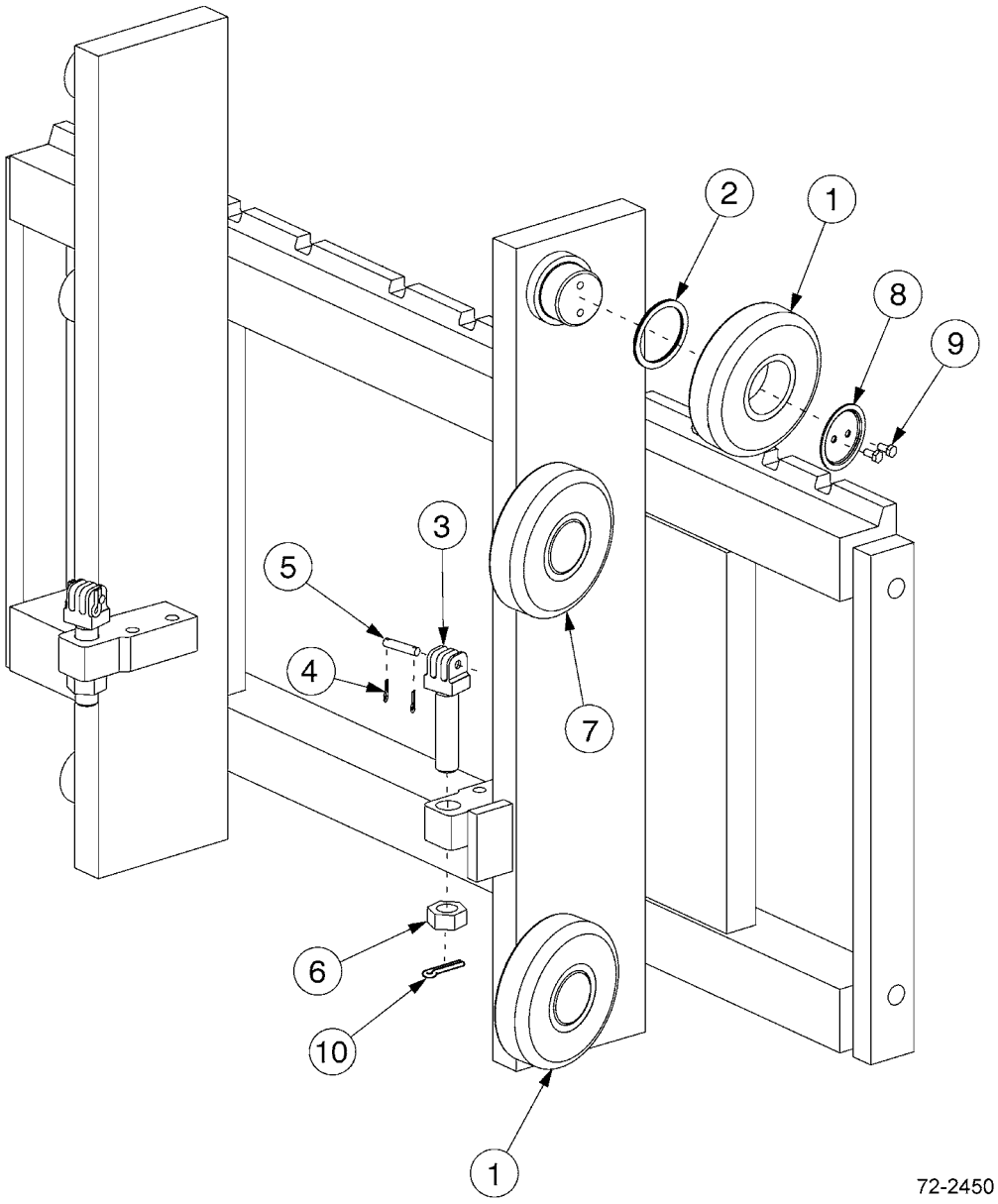

https://truckmanualshub.com/



## E60-MS 2-STAGE MAST - CARRIAGE - 6-ROLLER
## S/N 200001A~

| Item | Part Number | Description | Qty | Serial Number |
|---|---|---|---|---|
| | CC236923 | CARRIAGE - 37" - CUSHION TIRE SPEC. . . . . | 1 | |
| | CC236924 | CARRIAGE - 41" - CUSHION TIRE SPEC. . . . . | 1 | |
| | CC236925 | CARRIAGE - 37" - PNEUMATIC TIRE SPEC. . . | 1 | |
| | CC236926 | CARRIAGE - 41" - PNEUMATIC TIRE SPEC. . . | 1 | |
| | CC252613 | CARRIAGE - 49" - PNEUMATIC TIRE SPEC. . . | 1 | |
| | CC251401 | CARRIAGE - 53" - PNEUMATIC TIRE SPEC. . . | 1 | |
| 1 | 3EB-79-A5210 | LOAD ROLLER. . . . . | 4 | |
| 2 | 3EB-79-A6050 | SHIM, LOAD ROLLER . . . . . | AR | |
| 3 | 3EB-79-A5140 | CHAIN ANCHOR . . . . . | 2 | |
| 4 | 3EB-79-A6080 | PIN, COTTER . . . . . | 4 | |
| 5 | 3EB-79-A5150 | PIN, CHAIN ANCHOR . . . . . | 2 | |
| 6 | 3EB-73-A5450 | NUT. . . . . | 2 | |
| 7 | 3EB-79-A5220 | LOAD ROLLER. . . . . | 2 | |
| 8 | 3EB-73-A5460 | RETAINER . . . . . | 2 | |
| 9 | 3EB-73-A5470 | CAPSCREW - M6 X 12LG . . . . . | 4 | |
| 10 | 3EB-79-A6081 | PIN, COTTER . . . . . | 2 | |

https://truckmanualshub.com/



## E60-MS 2-STAGE MAST - HOIST CHAINS
## S/N 200001A~

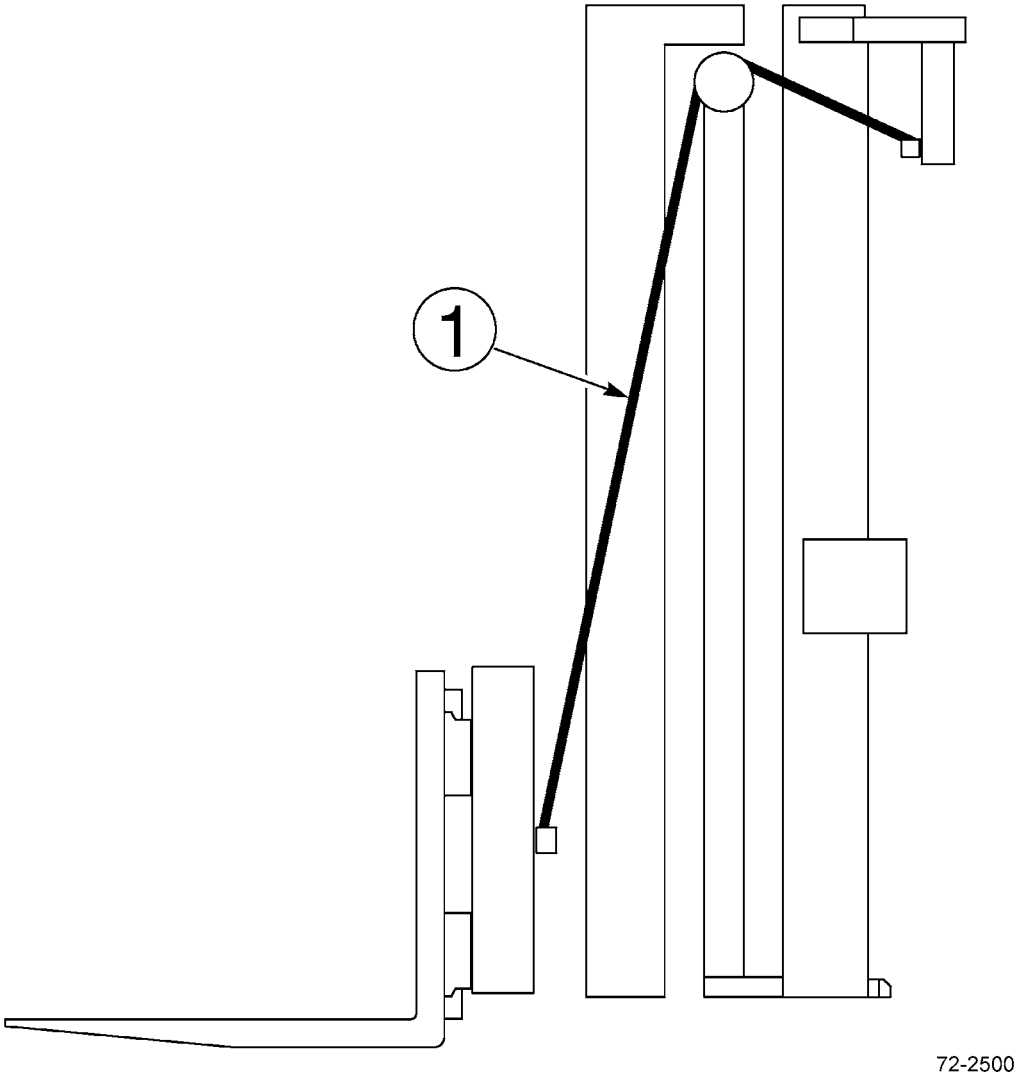

https://truckmanualshub.com/



## E60-MS 2-STAGE MAST - HOIST CHAINS
## S/N 200001A~

| Item | Part Number | Description | Qty | Serial Number |
|---|---|---|---|---|
| | | **OCL = OUTER CHANNEL LENGTH, MFH = MAXIMUM FORK HEIGHT** | | |
| 1 | CC683977 | MAIN LIFT CHAIN - (57" OCL) (81.5" MFH). . . . | 2 | |
| | CC678770 | MAIN LIFT CHAIN - (69" OCL) (105.5" MFH). . . | 2 | |
| | CC680459 | MAIN LIFT CHAIN - (73" OCL) (113.5" MFH). . . | 2 | |
| | CC678796 | MAIN LIFT CHAIN - (80" OCL) (127.5" MFH). . . | 2 | |
| | CC683990 | MAIN LIFT CHAIN - (81" OCL) (129.5" MFH). . . | 2 | |
| | CC683994 | MAIN LIFT CHAIN - (89" OCL) (145.5" MFH). . . | 2 | |
| | CC683998 | MAIN LIFT CHAIN - (95" OCL) (157.5" MFH). . . | 2 | |
| | CC678837 | MAIN LIFT CHAIN - (101" OCL) (169.5" MFH). . | 2 | |

https://truckmanualshub.com/



## E60-MS 2-STAGE MAST - LOAD BACKREST
## S/N 200001A~

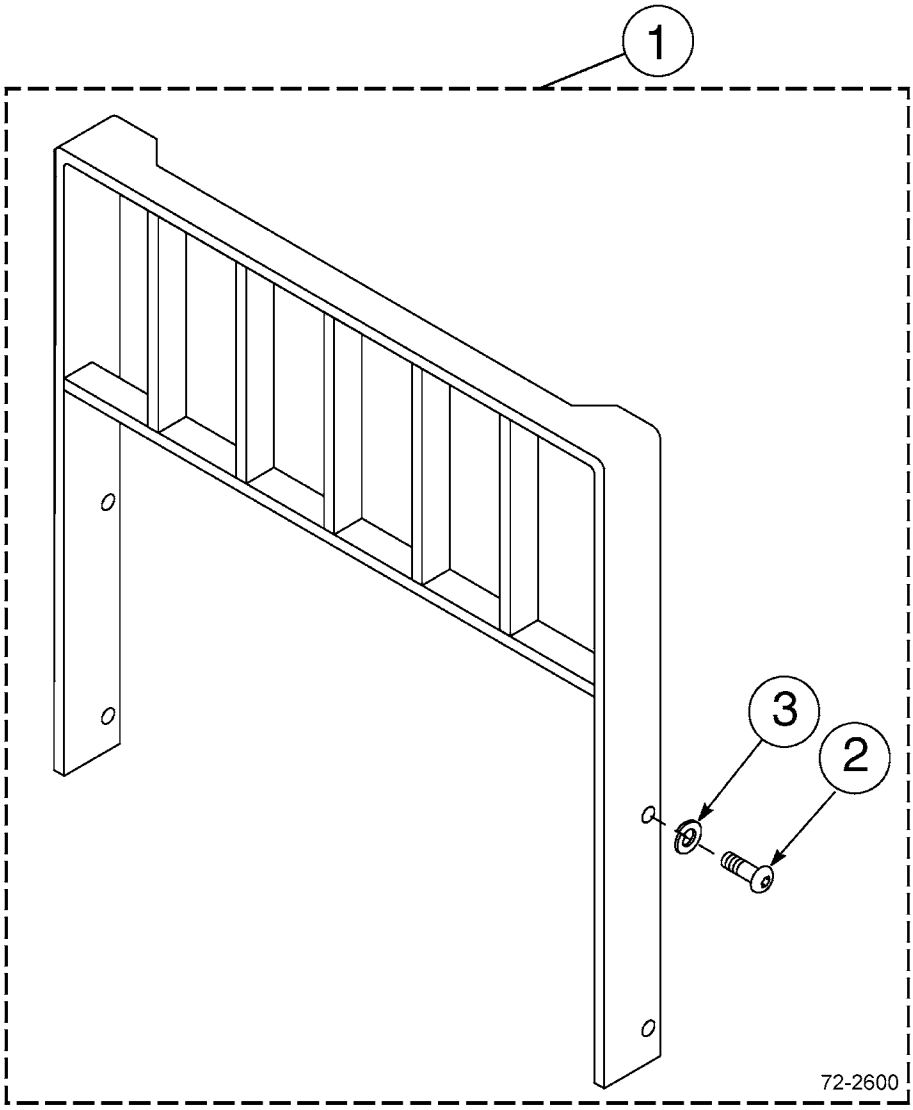

https://truckmanualshub.com/



## E60-MS 2-STAGE MAST - LOAD BACKREST
## S/N 200001A~

| Item | Part Number | Description | Qty | Serial Number |
|---|---|---|---|---|
| | | **CLASS III LOAD BACKRESTS (HEIGHT X WIDTH)** | | |
| 1 | CC684784 | BACKREST - 37" X 36" | 1 | |
| | CC684785 | BACKREST - 37" X 48" | 1 | |
| | CC684786 | BACKREST - 37" X 60" | 1 | |
| | CC684787 | BACKREST - 41" X 36" | 1 | |
| | CC684788 | BACKREST - 41" X 48" | 1 | |
| | CC684789 | BACKREST - 41" X 60" | 1 | |
| | CC684790 | BACKREST - 49" X 36" | 1 | |
| | CC684791 | BACKREST - 49" X 48" | 1 | |
| | CC684792 | BACKREST - 49" X 60" | 1 | |
| | CC357671 | BACKREST - 53" X 48" | 1 | |
| 2 | CC200173 | .CAPSCREW - M16 X 2.0 X 35-8.8 | 4 | |
| 3 | 3EB-71-A6030 | .WASHER, LOCK - M16 | 4 | |

https://truckmanualshub.com/



## E60-MS 2-STAGE MAST - INSTALLATION COMPONENTS
## PNEUMATIC TIRE MODELS - S/N 200001A~

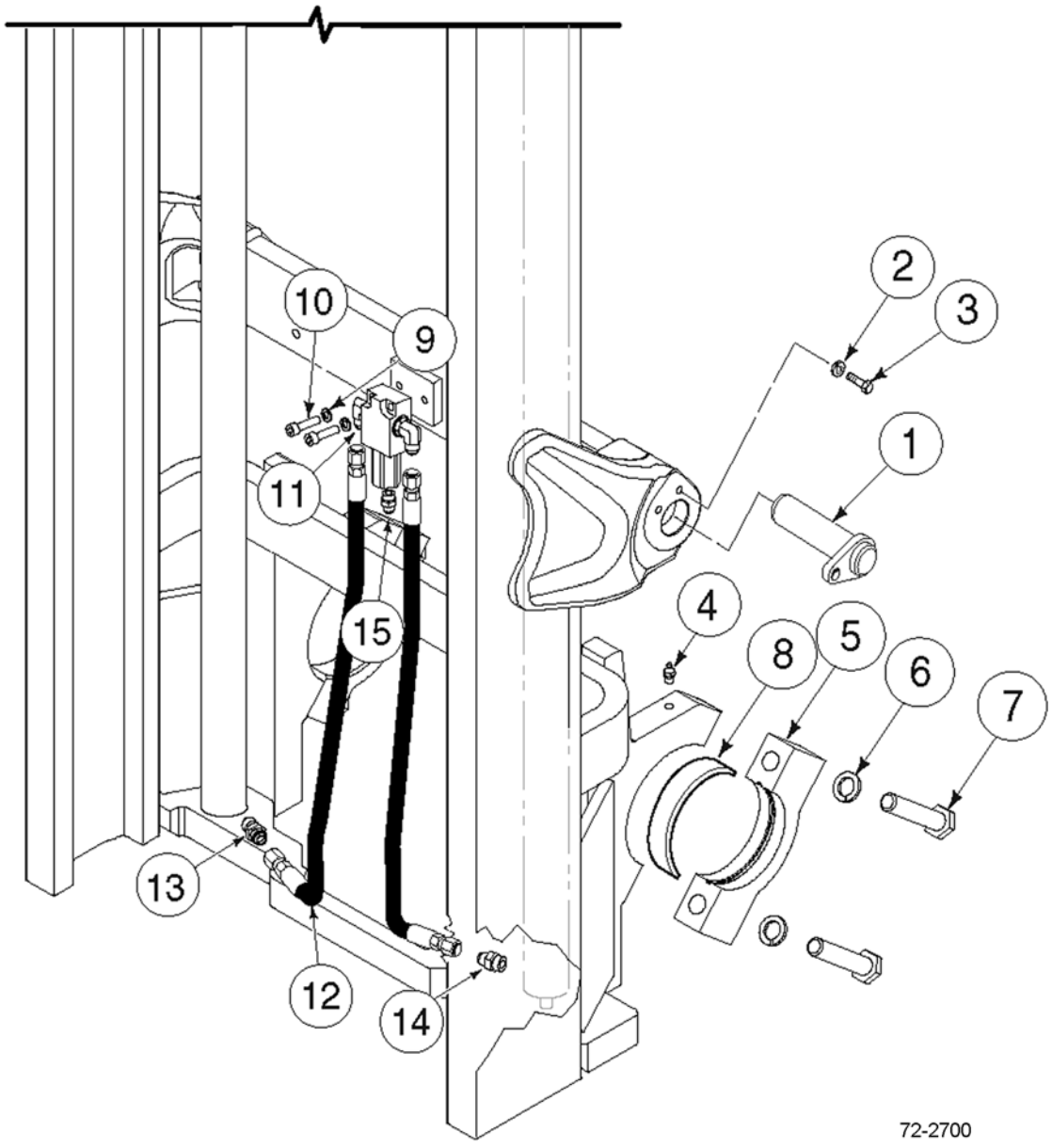

https://truckmanualshub.com/



## E60-MS 2-STAGE MAST - INSTALLATION COMPONENTS
## PNEUMATIC TIRE MODELS - S/N 200001A~

| Item | Part Number | Description | Qty | Serial Number |
|---|---|---|---|---|
| 1 | 3EB-41-51750 | TILT PIN | 2 | |
| 2 | 3EB-79-A6040 | WASHER, LOCK. | 2 | |
| 3 | CC212632 | CAPSCREW | 2 | |
| 4 | CC7418 | FITTING, GREASE | 2 | |
| 5 | CC252686 | CAP. | 2 | |
| 6 | 3EB-71-A6030 | WASHER, LOCK. | 4 | |
| 7 | CC251906 | CAPSCREW | 4 | |
| 8 | 3EB-71-51290 | BUSHING (2.0T, 2.5T, 2.8T, 3.0T). | 2 | |
| | 3EB-71-61790 | BUSHING (3.2T, 3.5T) | 2 | |
| 9 | CC767611 | CAPSCREW | 2 | |
| 10 | 3EB-79-A6040 | WASHER, LOCK. | 2 | |
| 11 | CC601250 | FITTING # 8 - 90° ELBOW | 2 | |
| 12 | CC253793 | MAIN LIFT HOSE, RH | 1 | |
| | CC255652 | MAIN LIFT HOSE, LH. | 1 | |
| 13 | CC611289 | FITTING # 8 -#10 STRAIGHT. | 1 | |
| 14 | CC238750 | 12 GPM EXTERNAL FUSE | 1 | |
| 15 | CC601377 | FITTING | 1 | |
| KIT | CC255596 | INSTALLATION KIT | 1 | |

https://truckmanualshub.com/



## E60-MS 2-STAGE MAST - INSTALLATION COMPONENTS
## CUSHION TIRE MODELS - S/N 200001A~

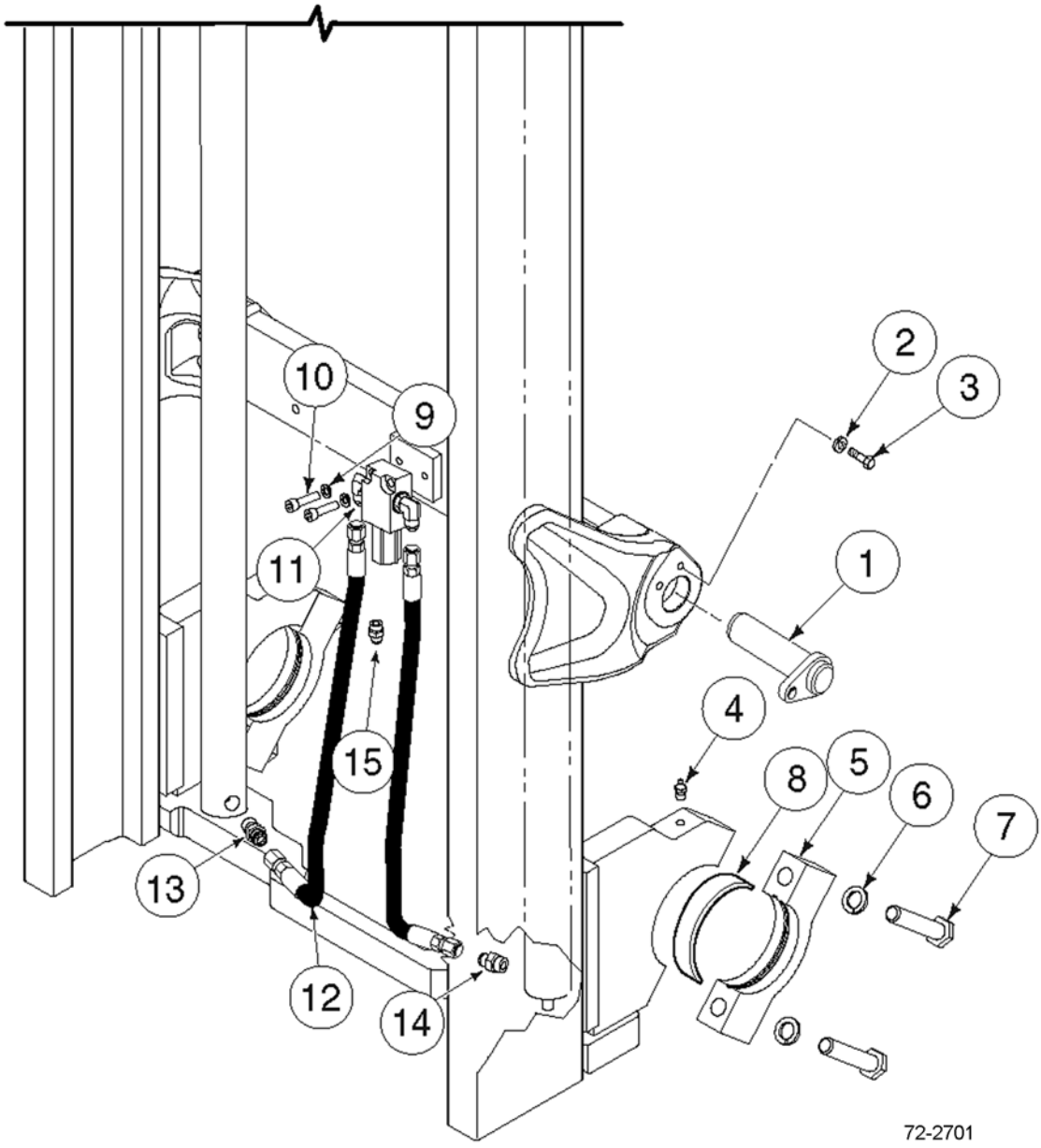

https://truckmanualshub.com/



## E60-MS 2-STAGE MAST - INSTALLATION COMPONENTS
## CUSHION TIRE MODELS - S/N 200001A~

| Item | Part Number | Description | Qty | Serial Number |
|---|---|---|---|---|
| 1 | 3EB-41-51750 | TILT PIN | 2 | |
| 2 | 3EB-79-A6040 | WASHER, LOCK. | 2 | |
| 3 | CC212632 | CAPSCREW | 2 | |
| 4 | CC7418 | FITTING, GREASE | 2 | |
| 5 | CC251901 | CAP. | 2 | |
| 6 | 3EB-71-A6030 | WASHER, LOCK. | 4 | |
| 7 | CC251906 | CAPSCREW | 4 | |
| 8 | 3EB-84-51290 | BUSHING (CUSHION ONLY) | 2 | |
| 9 | CC767611 | CAPSCREW | 2 | |
| 10 | 3EB-79-A6040 | WASHER, LOCK. | 2 | |
| 11 | CC601250 | FITTING # 8 - 90° ELBOW | 2 | |
| 12 | CC255666 | MAIN LIFT HOSE, RH | 1 | |
| | CC255665 | MAIN LIFT HOSE, LH. | 1 | |
| 13 | CC611289 | FITTING # 8 -#10 STRAIGHT. | 1 | |
| 14 | CC238750 | 12 GPM EXTERNAL FUSE | 1 | |
| 15 | CC601377 | FITTING | 1 | |
| KIT | CC255596 | INSTALLATION KIT | 1 | |

https://truckmanualshub.com/



## E60-MS 2-STAGE MAST - LOWERING CONTROL VALVE
## S/N 200001A~

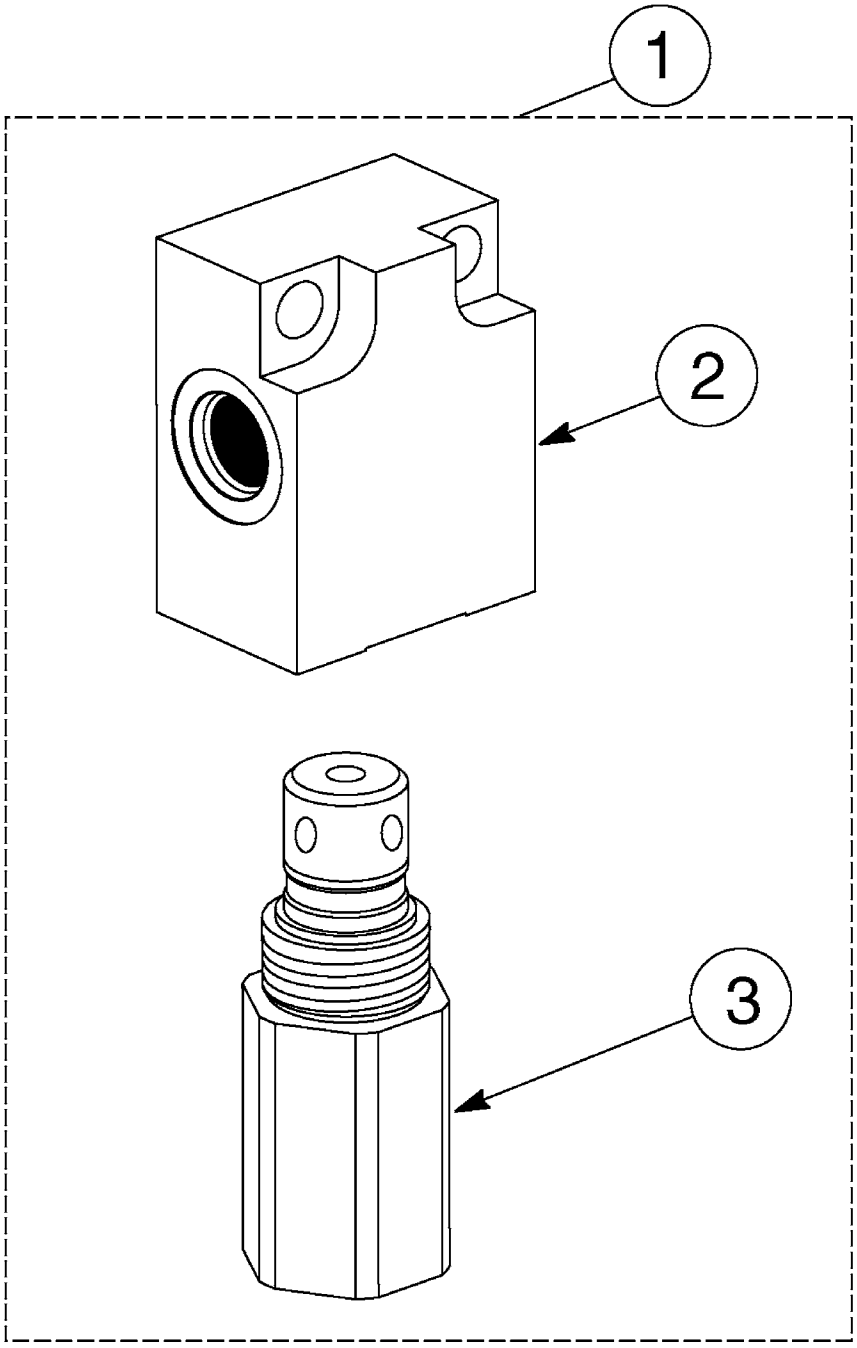


72-2850

https://truckmanualshub.com/



## E60-MS 2-STAGE MAST - LOWERING CONTROL VALVE
## S/N 200001A~

| Item | Part Number | Description | Qty | Serial Number |
|---|---|---|---|---|
| 1 | 3EB-73-A5930 | CONTROL VALVE - 2600 PSI - 17 GPM . . . . . | 1 | |
| 2 | 3EB-73-A5910 | .VALVE BODY. . . . . | 1 | |
| 3 | 3EB-73-A5920 | .VALVE CARTRIDGE (17 GPM) . . . . . | 1 | |

https://truckmanualshub.com/



# E60-MS 2-STAGE MAST - INTERNAL HOSE REEVING - SINGLE CUSHION TIRE MODELS - S/N 200001A~

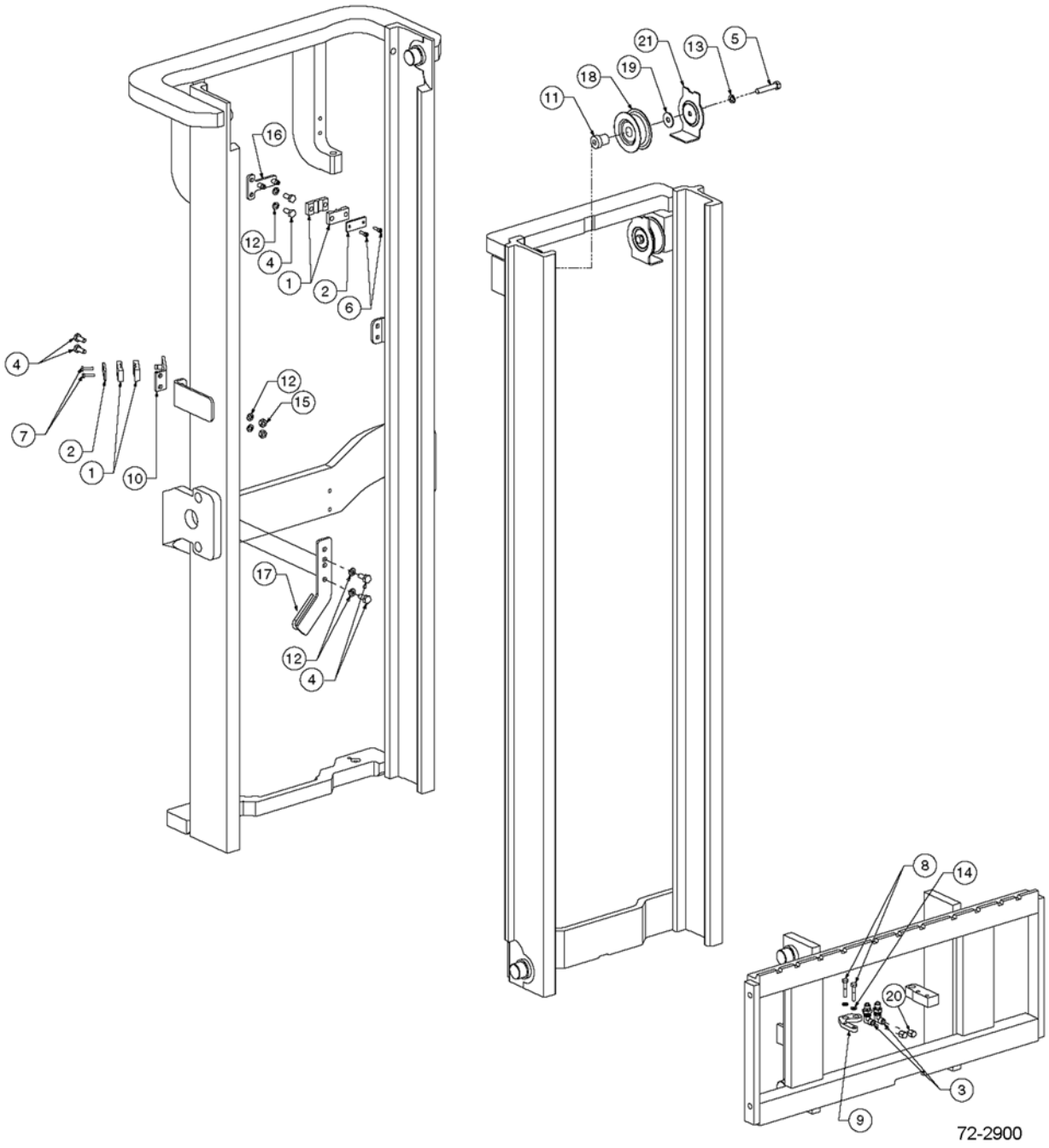

https://truckmanualshub.com/



## E60-MS 2-STAGE MAST - INTERNAL HOSE REEVING - SINGLE CUSHION TIRE MODELS - S/N 200001A~

| Item | Part Number | Description | Qty | Serial Number |
|---|---|---|---|---|
| 1 | 3EB-73-A5150 | CLAMP, HOSE | 4 | |
| 2 | 3EB-73-A5160 | HOSE CLAMP BAR | 2 | |
| 3 | 3EB-71-A6010 | FITTING, BULKHEAD UNION | 2 | |
| 4 | 3EB-73-A5490 | CAPSCREW - M10 X 25LG | 6 | |
| 5 | 3EB-79-A5230 | CAPSCREW - M12 X 60LG | 1 | |
| 6 | CC761170 | CAPSCREW - M6 X 20LG | 2 | |
| 7 | 3EB-79-A5240 | CAPSCREW - M6 X 25LG | 2 | |
| 8 | CC203202 | CAPSCREW - M8 X 40 LG | 2 | |
| 9 | CC235886 | BRACKET - CARRIAGE IHR | 1 | |
| 10 | 3EB-73-A5640 | IHR BRACKET | 1 | |
| 11 | CC235879 | IHR STUB SHAFT | 1 | |
| 12 | 3EB-79-A6040 | WASHER, LOCK - M10 | 6 | |
| 13 | 3EB-79-A5360 | WASHER, LOCK - M12 | 1 | |
| 14 | CC206315 | WASHER, LOCK - M8 | 2 | |
| 15 | 3EB-79-A5180 | NUT - M10 | 2 | |
| 16 | CC236902 | IHR BRACKET - OUTER | 1 | |
| 17 | CC238170 | IHR BRACKET - R.H. | 1 | |
| 18 | 3EB-73-A5020 | SHEAVE | 1 | |
| 19 | 3EB-79-A5280 | WASHER | 1 | |
| 20 | 3EB-79-A5250 | CAP | 2 | |
| 21 | CC216052 | HOSE GUARD | 1 | |
| | **OCL = OUTER CHANNEL LENGTH, MFH = MAXIMUM FORK HEIGHT** | | | |
| | CC234936 | HOSE (IHR KIT # N/A) (57" OCL) (81.5" MFH) | 2 | |
| | CC234958 | HOSE (IHR KIT #255162) (69" OCL) (105.5" MFH) | 2 | |
| | CC234962 | HOSE (IHR KIT #255166) (73" OCL) (113.5" MFH) | 2 | |
| | CC234969 | HOSE (IHR KIT #255173) (80" OCL) (127.5" MFH) | 2 | |
| | CC213919 | HOSE (IHR KIT #255174) (81" OCL) (129.5" MFH) | 2 | |
| | CC234975 | HOSE (IHR KIT #255182) (89" OCL) (145.5" MFH) | 2 | |
| | CC216928 | HOSE (IHR KIT #255188) (95" OCL) (157.5" MFH) | 2 | |
| | CC234988 | HOSE (IHR KIT #255194) (101" OCL) (169.5" MFH) | 2 | |

https://truckmanualshub.com/



# E60-MS 2-STAGE MAST - INTERNAL HOSE REEVING - DOUBLE CUSHION TIRE MODELS - S/N 200001A~

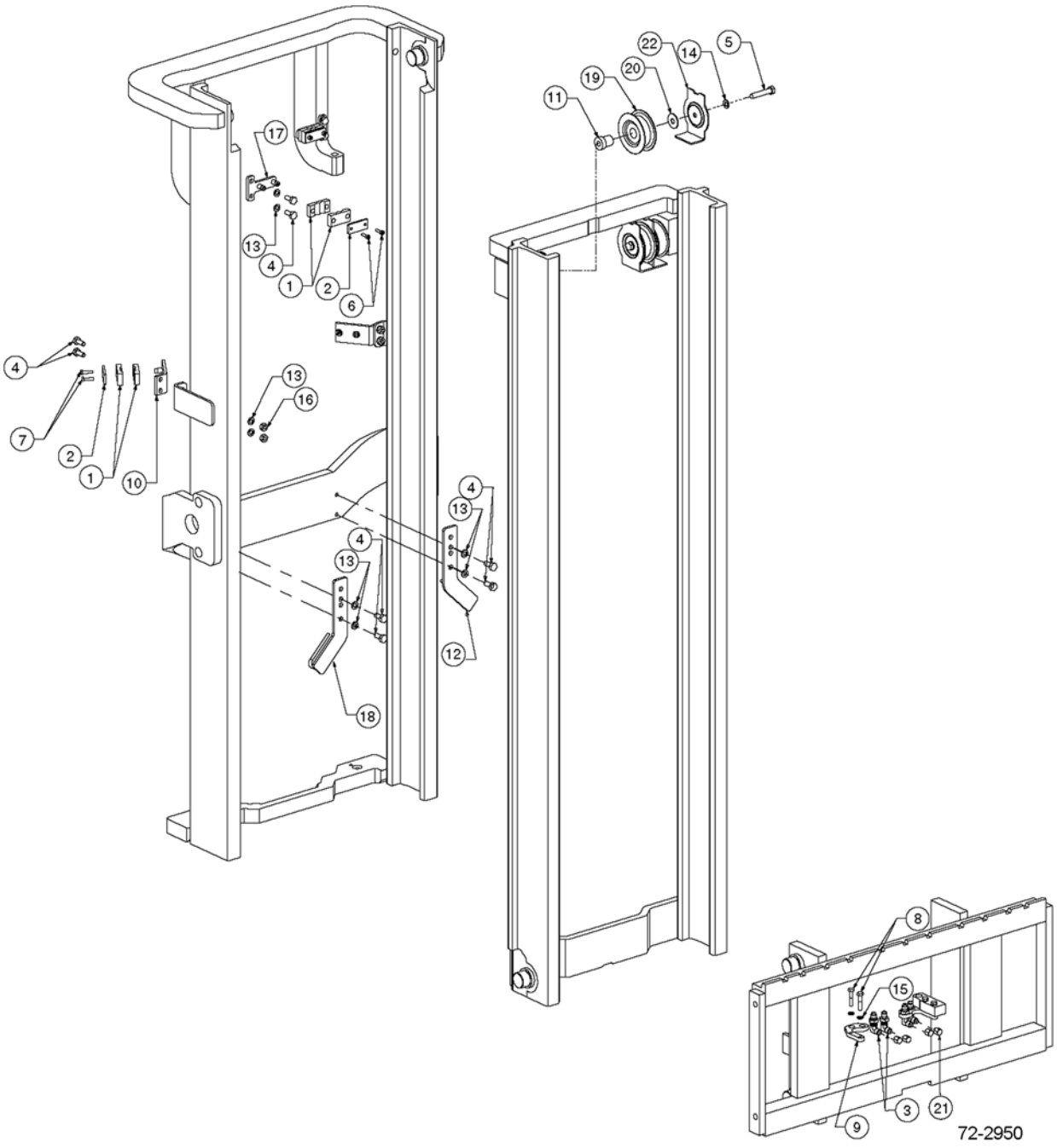

https://truckmanualshub.com/



## E60-MS 2-STAGE MAST - INTERNAL HOSE REEVING - DOUBLE CUSHION TIRE MODELS - S/N 200001A~

| Item | Part Number | Description | Qty | Serial Number |
|---|---|---|---|---|
| 1 | 3EB-73-A5150 | CLAMP, HOSE | 8 | |
| 2 | 3EB-73-A5160 | HOSE CLAMP BAR | 4 | |
| 3 | 3EB-71-A6010 | FITTING, BULKHEAD UNION | 4 | |
| 4 | 3EB-73-A5490 | CAPSCREW - M10 X 25LG | 12 | |
| 5 | 3EB-79-A6060 | CAPSCREW - M12 X 60LG | 2 | |
| 6 | CC761170 | CAPSCREW - M6 X 20LG | 4 | |
| 7 | 3EB-79-A5240 | CAPSCREW - M6 X 25LG | 4 | |
| 8 | CC203202 | CAPSCREW - M8 X 40 LG | 4 | |
| 9 | CC235886 | BRACKET - CARRIAGE IHR | 2 | |
| 10 | 3EB-73-A5640 | IHR BRACKET | 2 | |
| 11 | CC235879 | IHR STUB SHAFT | 2 | |
| 12 | CC250036 | IHR BRACKET - L.H. | 1 | |
| 13 | 3EB-79-A6040 | WASHER, LOCK - M10 | 12 | |
| 14 | 3EB-79-A5360 | WASHER, LOCK - M12 | 2 | |
| 15 | CC206315 | WASHER, LOCK - M8 | 4 | |
| 16 | 3EB-79-A5180 | NUT - M10 | 4 | |
| 17 | CC236902 | IHR BRACKET - OUTER | 2 | |
| 18 | CC250035 | IHR BRACKET - R.H. | 1 | |
| 19 | 3EB-73-A5020 | SHEAVE | 2 | |
| 20 | 3EB-79-A5280 | WASHER | 2 | |
| 21 | 3EB-79-A5250 | CAP | 4 | |
| 22 | CC216052 | HOSE GUARD | 2 | |
| | **OCL = OUTER CHANNEL LENGTH, MFH = MAXIMUM FORK HEIGHT** | | | |
| | CC234936 | HOSE (IHR KIT # N/A) (57" OCL) (81.5" MFH) | 4 | |
| | CC234958 | HOSE (IHR KIT #255333) (69" OCL) (105.5" MFH) | 4 | |
| | CC234962 | HOSE (IHR KIT #255337) (73" OCL) (113.5" MFH) | 4 | |
| | CC234969 | HOSE (IHR KIT #255344) (80" OCL) (127.5" MFH) | 4 | |
| | CC213919 | HOSE (IHR KIT #255345) (81" OCL) (129.5" MFH) | 4 | |
| | CC234975 | HOSE (IHR KIT #255353) (89" OCL) (145.5" MFH) | 4 | |
| | CC216928 | HOSE (IHR KIT #255359) (95" OCL) (157.5" MFH) | 4 | |
| | CC234988 | HOSE (IHR KIT #237789) (101" OCL) (169.5" MFH) | 4 | |

https://truckmanualshub.com/



## E60-MS 2-STAGE MAST — RECOMMENDED STOCK LIST (RSL)

NO

ILLUSTRATION

REQUIRED

https://truckmanualshub.com/



## E60-MS 2-STAGE MAST — RECOMMENDED STOCK LIST (RSL)

| Item | Part Number | Description | Qty | No. of Masts Serviced |
|---|---|---|---|---|
| | | **MAIN LIFT CYLINDERS** | | |
| | SEE PARTS PG | MAIN LIFT CYL ASSY | 0 | 1 - 19 |
| | SEE PARTS PG | MAIN LIFT CYL ASSY | 1 | 20 - 50 |
| | SEE PARTS PG | SEAL KIT | 2 | 1 - 5 |
| | SEE PARTS PG | SEAL KIT | 4 | 6 - 19 |
| | SEE PARTS PG | SEAL KIT | 8 | 20 - 50 |
| | | **INTERNAL REEVING** | | |
| | SEE PARTS PG | HOSE | 2 | 1 - 5 |
| | SEE PARTS PG | HOSE | 4 | 6 - 19 |
| | SEE PARTS PG | HOSE | 8 | 20 - 50 |
| | 3EB-71-A6010 | FITTING | 1 | 1 - 5 |
| | 3EB-71-A6010 | FITTING | 2 | 6 - 19 |
| | 3EB-71-A6010 | FITTING | 4 | 20 - 50 |
| | 3EB-73-A5020 | SHEAVE, IHR, SINGLE IHR | 1 | 1 - 5 |
| | 3EB-73-A5020 | SHEAVE, IHR, SINGLE IHR | 2 | 6 - 19 |
| | 3EB-73-A5020 | SHEAVE, IHR, SINGLE IHR | 4 | 20 - 50 |
| | 3EB-73-A5020 | SHEAVE, IHR, DOUBLE | 2 | 1 - 5 |
| | 3EB-73-A5020 | SHEAVE, IHR, DOUBLE | 4 | 6 - 19 |
| | 3EB-73-A5020 | SHEAVE, IHR, DOUBLE | 8 | 20 - 50 |
| | | **UPRIGHTS** | | |
| | 3EB-79-A5110 | CHAIN ANCHOR | 1 | 1 - 5 |
| | 3EB-79-A5110 | CHAIN ANCHOR | 2 | 6 - 19 |
| | 3EB-79-A5110 | CHAIN ANCHOR | 4 | 20 - 50 |
| | 3EB-79-A5150 | PIN, CHAIN ANCHOR | 1 | 1 - 5 |
| | 3EB-79-A5150 | PIN, CHAIN ANCHOR | 2 | 6 - 19 |
| | 3EB-79-A5150 | PIN, CHAIN ANCHOR | 4 | 20 - 50 |
| | 3EB-79-A6090 | NUT | 4 | 1 - 5 |
| | 3EB-79-A6090 | NUT | 8 | 6 - 19 |
| | 3EB-79-A6090 | NUT | 32 | 20 - 50 |
| | 3EB-79-A6080 | PIN, COTTER | 6 | 1 - 5 |
| | 3EB-79-A6080 | PIN, COTTER | 12 | 6 - 19 |
| | 3EB-79-A6080 | PIN, COTTER | 36 | 20 - 50 |
| | 3EB-79-A6081 | PIN, COTTER | 4 | 1 - 5 |
| | 3EB-79-A6081 | PIN, COTTER | 8 | 6 - 19 |
| | 3EB-79-A6081 | PIN, COTTER | 16 | 20 - 50 |
| | 3EB-79-A6050 | SHIM, .03 IN. | 16 | 1 - 5 |
| | 3EB-79-A6050 | SHIM, .03 IN. | 32 | 6 - 19 |
| | 3EB-79-A6050 | SHIM, .03 IN. | 64 | 20 - 50 |

PARTS LIST CONTINUED ON NEXT PAGE

https://truckmanualshub.com/



## E60-MS 2-STAGE MAST — RECOMMENDED STOCK LIST (RSL)

| Item | Part Number | Description | Qty | No. of Masts Serviced |
|---|---|---|---|---|
| | 3EB-79-A5210 | ROLLER | 8 | 1 - 5 |
| | 3EB-79-A5210 | ROLLER | 24 | 6 - 19 |
| | 3EB-79-A5210 | ROLLER | 48 | 20 - 50 |
| | 3EB-73-A5720 | SERVICE KIT, WEAR PLUG | 2 | 1 - 5 |
| | 3EB-73-A5720 | SERVICE KIT, WEAR PLUG | 4 | 6 - 19 |
| | 3EB-73-A5720 | SERVICE KIT, WEAR PLUG | 8 | 20 - 50 |
| | | **CARRIAGE AND CHAINS** | | |
| | SEE PARTS PG | MAIN LIFT CHAINS | 2 | 1 - 5 |
| | SEE PARTS PG | MAIN LIFT CHAINS | 4 | 6 - 19 |
| | SEE PARTS PG | MAIN LIFT CHAINS | 8 | 20 - 50 |
| | 3EB-79-A5220 | ROLLER - 6-ROLLER CARRIAGE | 8 | 1 - 5 |
| | 3EB-79-A5220 | ROLLER - 6-ROLLER CARRIAGE | 16 | 6 - 19 |
| | 3EB-79-A5220 | ROLLER - 6-ROLLER CARRIAGE | 32 | 20 - 50 |
| | CC234001 | CHAIN ANCHOR | 1 | 1 - 5 |
| | CC234001 | CHAIN ANCHOR | 2 | 6 - 19 |
| | CC234001 | CHAIN ANCHOR | 4 | 20 - 50 |
| | 3EB-79-A6081 | PIN, COTTER | 4 | 1 - 5 |
| | 3EB-79-A6081 | PIN, COTTER | 8 | 6 - 19 |
| | 3EB-79-A6081 | PIN, COTTER | 16 | 20 - 50 |
| | 3EB-79-A6080 | PIN, COTTER | 4 | 1 - 5 |
| | 3EB-79-A6080 | PIN, COTTER | 8 | 6 - 19 |
| | 3EB-79-A6080 | PIN, COTTER | 16 | 20 - 50 |
| | 3EB-79-A5150 | CHAIN PIN | 8 | 1 - 19 |
| | 3EB-79-A5150 | CHAIN PIN | 16 | 20 - 50 |
| | 3EB-73-A5450 | NUT | 2 | 1 - 50 |

https://truckmanualshub.com/

**NOTES:**

https://truckmanualshub.com/



# E60-MT 3-STAGE MAST - SAFETY DECALS
## S/N 200001A~

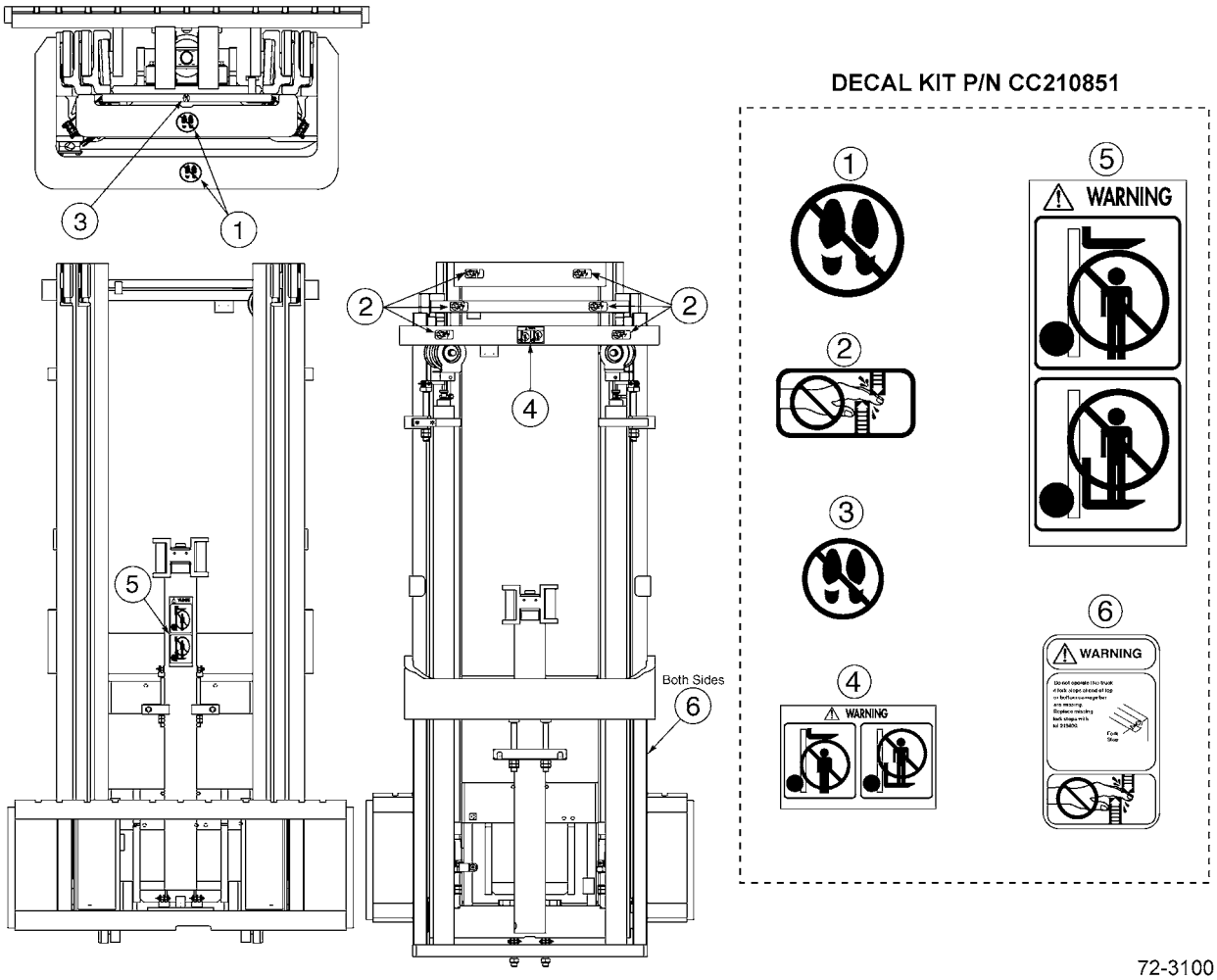

https://truckmanualshub.com/



## E60-MT 3-STAGE MAST - SAFETY DECALS
## S/N 200001A~

| Item | Part Number | Description | Qty | Serial Number |
|---|---|---|---|---|
| 1 | 3EB-79-A6020 | DECAL - "NO STEP" | 2 | |
| 2 | 3EB-79-A6010 | DECAL - "HANDS OFF" | 6 | |
| 3 | 3EB-79-A6030 | DECAL - "NO STEP" | 1 | |
| 4 | CC210850 | DECAL - "WARNING" | 1 | |
| 5 | 3EB-79-A5310 | DECAL - "WARNING" | 1 | |
| 6 | CC224053 | DECAL - "FORK STOP" | 2 | |
| KIT | CC210851 | DECAL - KIT PACKAGE (ALL) | 1 | |

https://truckmanualshub.com/



## E60-MT 3-STAGE MAST - MAIN LIFT CYLINDERS
## S/N 200001A~

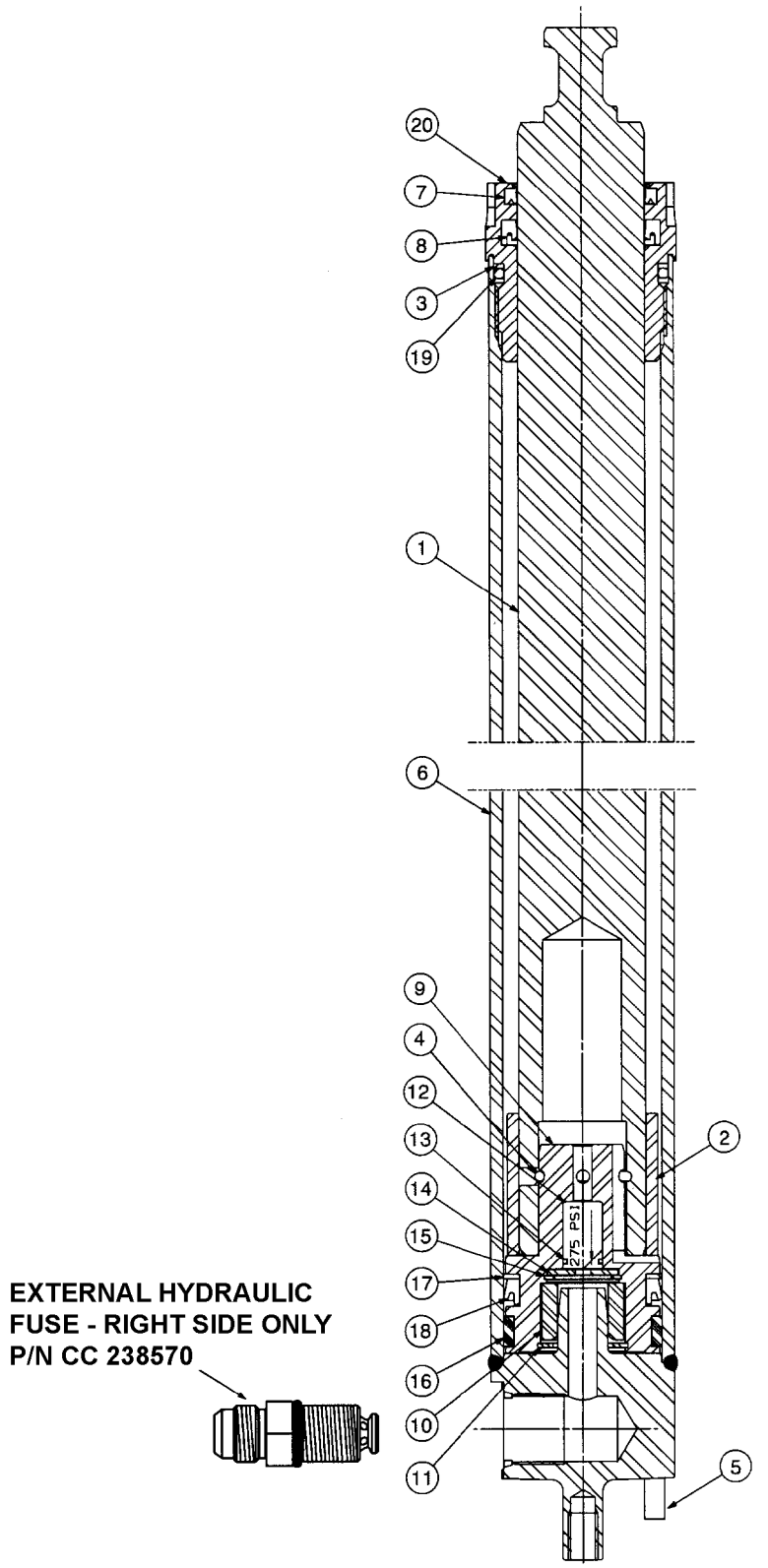

https://truckmanualshub.com/



## E60-MT 3-STAGE MAST - MAIN LIFT CYLINDERS
## S/N 200001A~

| Item | Part Number | Description | Qty | Serial Number |
|---|---|---|---|---|
| 1 | NSS | ROD/PLUNGER | 1 | |
| 2 | NSS | SPACER | 1 | |
| 3 | NSS | BACK-UP RING (SEAL KIT) | 1 | |
| 4 | NSS | PULL-IN WIRE (SEAL KIT) | 1 | |
| 5 | CC7910 | ROLL PIN | 1 | |
| 6 | NSS | SHELL | 1 | |
| 7 | NSS | WIPER (SEAL KIT) | 1 | |
| 8 | NSS | ROD SEAL (SEAL KIT) | 1 | |
| 9 | NSS | PISTON | 1 | |
| 10 | NSS | SLEEVE | 1 | |
| 11 | NSS | RETAINING RING (CHECK VALVE KIT) | 1 | |
| 12 | NSS | CHECK VALVE (CHECK VALVE KIT) | 1 | |
| 13 | NSS | O-RING (CHECK VALVE KIT) | 1 | |
| 14 | NSS | WASHER (CHECK VALVE KIT) | 1 | |
| 15 | NSS | RETAINING RING (SEAL KIT) | 1 | |
| 16 | NSS | WEAR RING (SEAL KIT) | 1 | |
| 17 | NSS | NYLON RING (SEAL KIT) | 1 | |
| 18 | NSS | PISTON SEAL (SEAL KIT) | 1 | |
| 19 | NSS | O-RING (SEAL KIT) | 1 | |
| 20 | CC422809 | RETAINER | 1 | |
| KIT | 3EB-73-A5430 | SEAL KIT | 1 | |
| KIT | CC3101894 | CHECK VALVE KIT | 1 | |
| | **OCL = OUTER CHANNEL LENGTH** | | | |
| | **MFH = MAXIMUM FORK HEIGHT** | | | |
| | CC1000470 | MAIN LIFT CYL - (69" OCL) (150" MFH) (ALL) | 1 | |
| | CC1000474 | MAIN LIFT CYL - (73" OCL) (162" MFH) (CUSHION ONLY)) | 1 | |
| | CC1000476 | MAIN LIFT CYL - (75" OCL) (168" MFH) (PNEUMATIC ONLY) | 1 | |
| | CC1000481 | MAIN LIFT CYL - (80" OCL) (183" MFH) (ALL) | 1 | |
| | CC1000484 | MAIN LIFT CYL - (83" OCL) (190" MFH) (ALL) | 1 | |
| | CC1000493 | MAIN LIFT CYL - (92" OCL) (211" MFH) (ALL) | 1 | |
| | CC1000495 | MAIN LIFT CYL - (94" OCL) (217" MFH) (CUSHION ONLY) | 1 | |
| | CC1000502 | MAIN LIFT CYL - (101" OCL) (230" MFH) (ALL) | 1 | |
| | CC1000505 | MAIN LIFT CYL - (104" OCL) (237" MFH) (PNEUMATIC ONLY) | 1 | |
| | CC1000508 | MAIN LIFT CYL - (107" OCL) (242" MFH) (PNEUMATIC ONLY) | 1 | |

https://truckmanualshub.com/



# E60-MT 3-STAGE MAST - FREE LIFT CYLINDER
## S/N 200001A~

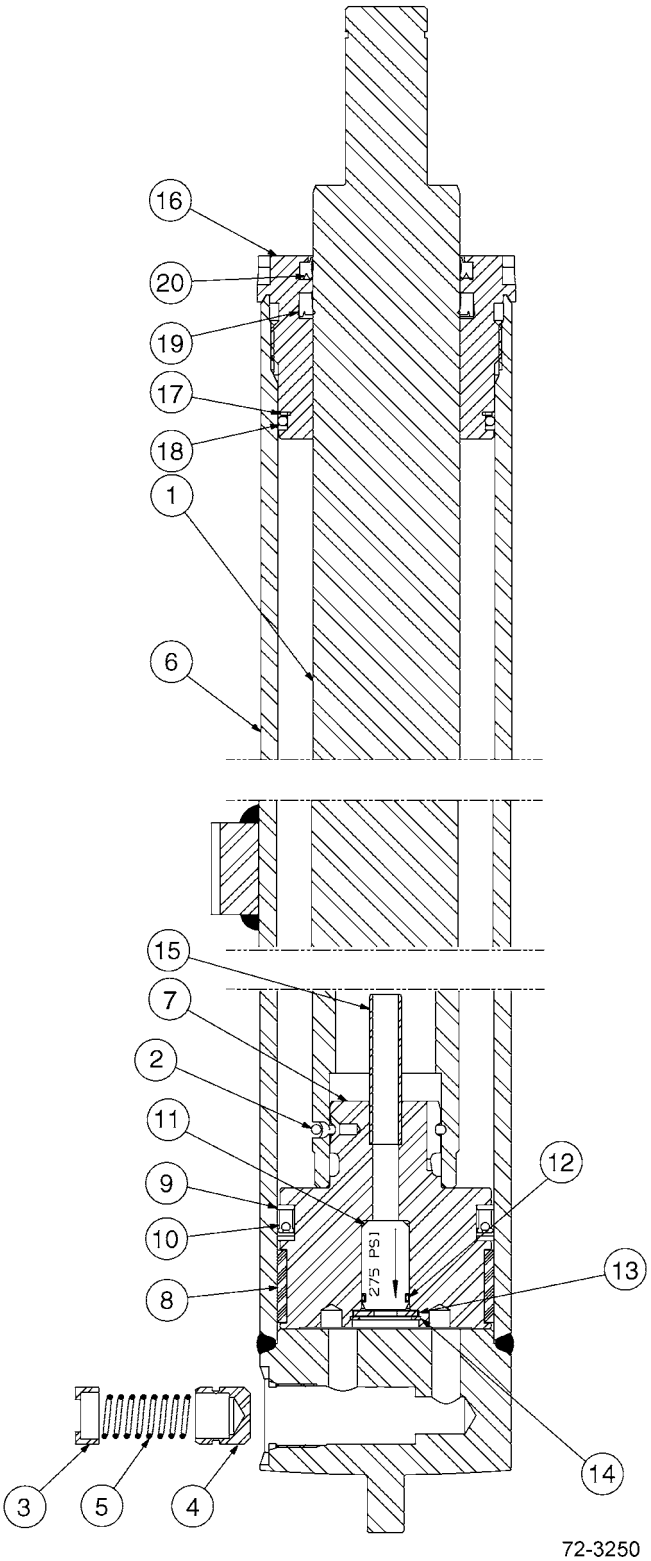

https://truckmanualshub.com/



## E60-MT 3-STAGE MAST - FREE LIFT CYLINDER
## S/N 200001A~

| Item | Part Number | Description | Qty | Serial Number |
|---|---|---|---|---|
| 1 | NSS | ROD/PLUNGER | 1 | |
| 2 | NSS | PULL WIRE. (SEAL KIT) | 1 | |
| 3 | CC564107 | FUSE SPRING GUIDE | 1 | |
| 4 | CC560470 | FUSE PISTON | 1 | |
| 5 | CC565085 | FUSE SPRING | 1 | |
| 6 | NSS | SHELL. | 1 | |
| 7 | NSS | PISTON. | 1 | |
| 8 | NSS | WEAR RING (SEAL KIT) | 1 | |
| 9 | NSS | NYLON RING (SEAL KIT) | 2 | |
| 10 | NSS | PISTON SEAL (SEAL KIT) | 1 | |
| 11 | NSS | CHECK VALVE (CHECK VALVE KIT) | 1 | |
| 12 | NSS | O-RING (SEAL KIT) | 1 | |
| 13 | NSS | WASHER (CHECK VALVE KIT) | 1 | |
| 14 | NSS | RETAINING RING. (CHECK VALVE KIT) | 1 | |
| 15 | NSS | STAND TUBE | 1 | |
| 16 | CC422817 | RETAINER | 1 | |
| 17 | NSS | BACK-UP RING (SEAL KIT) | 1 | |
| 18 | NSS | O-RING (SEAL KIT) | 1 | |
| 19 | NSS | ROD SEAL (SEAL KIT) | 1 | |
| 20 | NSS | WIPER (SEAL KIT) | 1 | |
| KIT | 3EB-73-A5440 | SEAL KIT | 1 | |
| KIT | CC563904 | CHECK VALVE KIT. | 1 | |
| | **OCL = OUTER CHANNEL LENGTH** | | | |
| | **MFH = MAXIMUM FORK HEIGHT** | | | |
| | CC1000541 | FREE LIFT CYL - (69" OCL) (150" MFH) (ALL) . | 1 | |
| | CC1000545 | FREE LIFT CYL - (73" OCL) (162" MFH) (CUSHION ONLY) | 1 | |
| | CC1000547 | FREE LIFT CYL - (75" OCL) (168" MFH) (PNEUMATIC ONLY) | 1 | |
| | CC1000552 | FREE LIFT CYL - (80" OCL) (183" MFH) (ALL) . | 1 | |
| | 3EB-78-A5122 | FREE LIFT CYL - (83" OCL) (190" MFH) (ALL) . | 1 | |
| | CC1000564 | FREE LIFT CYL - (92" OCL) (211" MFH) (ALL) . | 1 | |
| | CC1000566 | FREE LIFT CYL - (94" OCL) (217" MFH) (CUSHION ONLY) | 1 | |
| | CC1000573 | FREE LIFT CYL - (101" OCL) (230" MFH) (ALL) | 1 | |
| | CC1000576 | FREE LIFT CYL - (104" OCL) (237" MFH) (PNEUMATIC ONLY) | 1 | |
| | CC1000579 | FREE LIFT CYL - (107" OCL) (242" MFH) (PNEUMATIC ONLY) | 1 | |

https://truckmanualshub.com/



## E60-MT 3-STAGE MAST - OUTER UPRIGHT
## S/N 200001A~

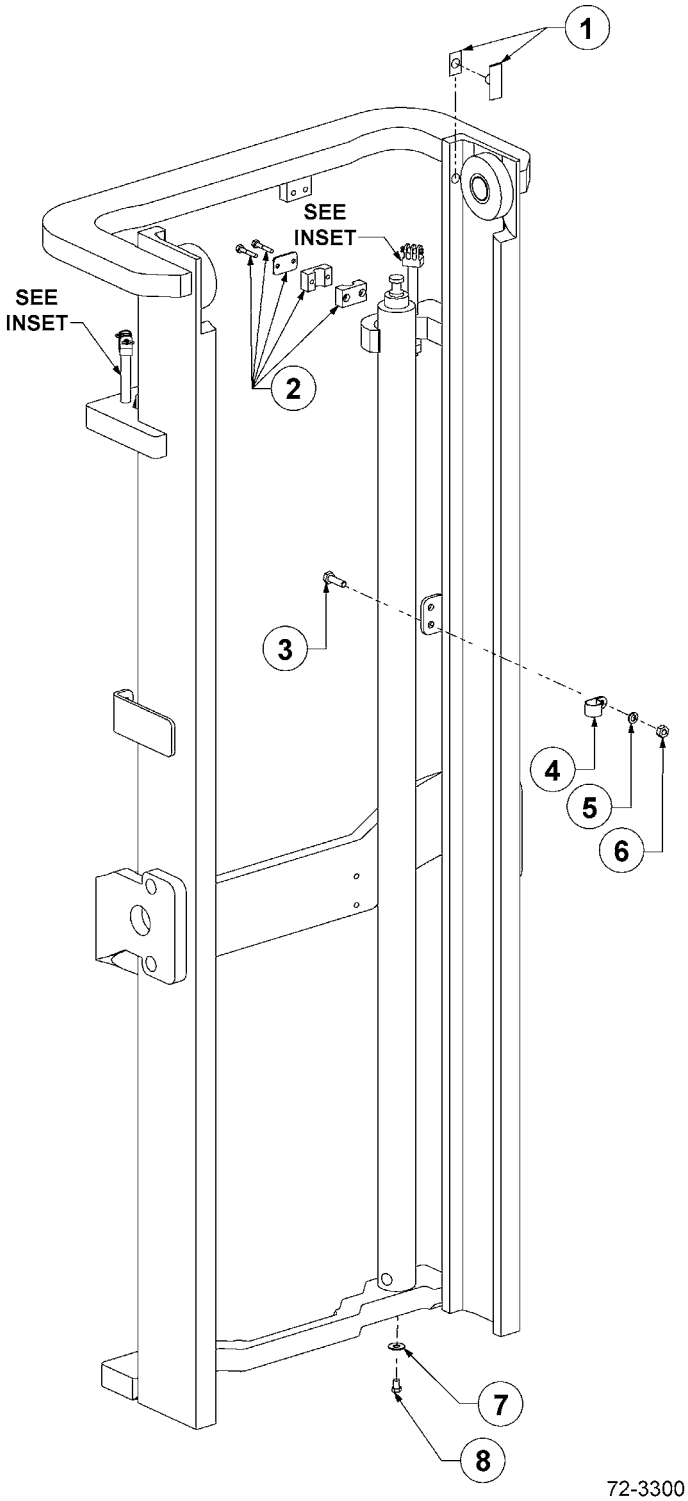


72-3300

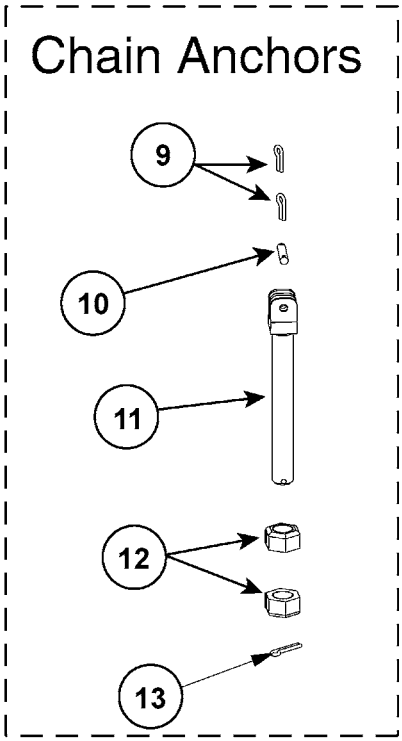


72-3300A

https://truckmanualshub.com/



## E60-MT 3-STAGE MAST - OUTER UPRIGHT
## S/N 200001A~

| Item | Part Number | Description | Qty | Serial Number |
|---|---|---|---|---|
| | | **OCL = OUTER CHANNEL LENGTH, MFH = MAXIMUM FORK HEIGHT** | | |
| | CC233366 | OUTER UPRIGHT - (69" OCL) (150" MFH) (ALL) | 1 | |
| | CC233378 | OUTER UPRIGHT - (73" OCL) (162" MFH) (CUSHION ONLY) | 1 | |
| | CC233384 | OUTER UPRIGHT - (75" OCL) (168" MFH) (PNEUMATIC ONLY) | 1 | |
| | CC233399 | OUTER UPRIGHT - (80" OCL) (183" MFH) (ALL) | 1 | |
| | CC233408 | OUTER UPRIGHT - (83" OCL) (190" MFH) (ALL) | 1 | |
| | CC233435 | OUTER UPRIGHT - (92" OCL) (211" MFH) (ALL) | 1 | |
| | CC233441 | OUTER UPRIGHT - (94" OCL) (217" MFH) (CUSHION ONLY) | 1 | |
| | CC233462 | OUTER UPRIGHT - (101" OCL) (230" MFH) (ALL) | 1 | |
| | CC233471 | OUTER UPRIGHT - (104" OCL) (237" MFH) (PNEUMATIC ONLY) | 1 | |
| | CC233480 | OUTER UPRIGHT - (107" OCL) (242" MFH) (PNEUMATIC ONLY) | 1 | |
| 1 | 3EB-73-A5720 | THRUST PLUG SERVICE KIT | 1 | |
| 2 | CC237555 | CLAMP KIT | 1 | |
| 3 | CC200788 | CAPSCREW - M10 X 35 | 1 | |
| 4 | CC230765 | HOSE CLAMP | 1 | |
| 5 | 3EB-79-A6040 | WASHER, LOCK - M10 | 2 | |
| 6 | 3EB-79-A6040 | WASHER, LOCK - M10 | 1 | |
| 7 | 3EB-79-A5350 | WASHER, FLAT | 2 | |
| 8 | 3EB-79-A5340 | BOLT | 2 | |
| 9 | 3EB-79-A6080 | PIN, COTTER | 12 | |
| 10 | 3EB-79-A5150 | PIN, CHAIN ANCHOR | 6 | |
| 11 | 3EB-79-A5110 | CHAIN ANCHOR | 4 | |
| 12 | 3EB-79-A6090 | NUT | 12 | |
| 13 | 3EB-79-A6081 | PIN, COTTER | 6 | |

https://truckmanualshub.com/



# E60-MT 3-STAGE MAST - INTERMEDIATE UPRIGHT
## S/N 200001A~

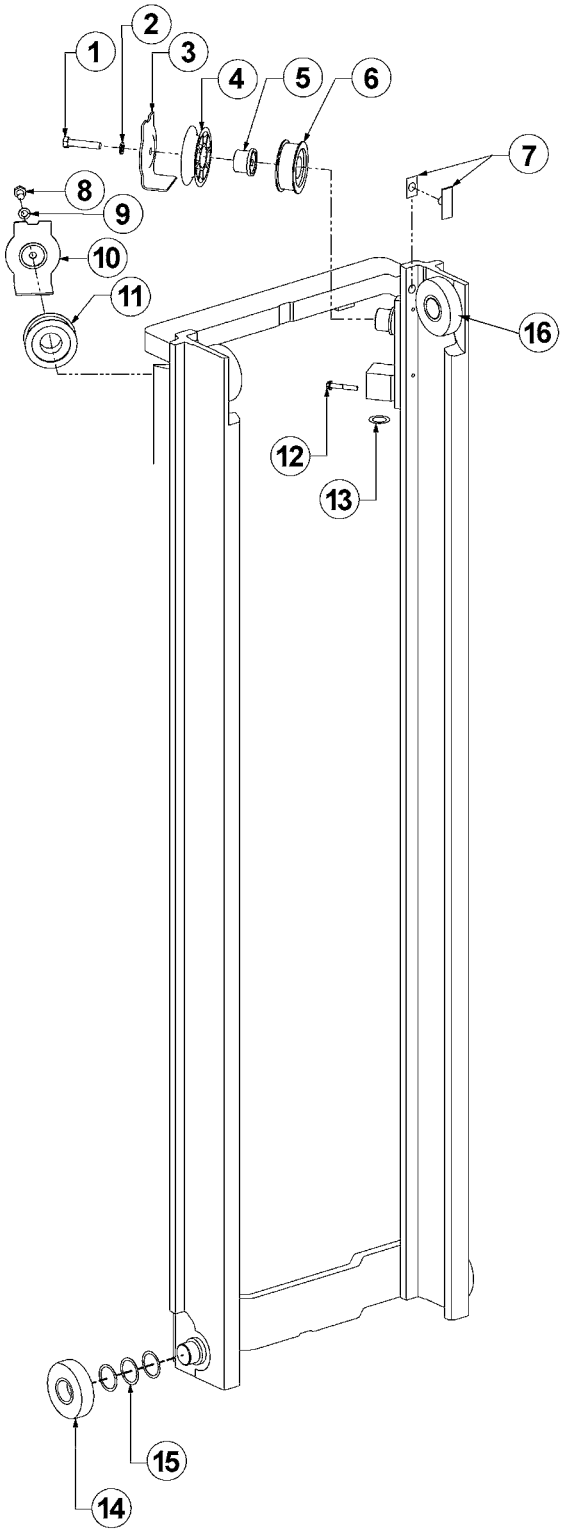


72-3330

https://truckmanualshub.com/



## E60-MT 3-STAGE MAST - INTERMEDIATE UPRIGHT
## S/N 200001A~

| Item | Part Number | Description | Qty | Serial Number |
|---|---|---|---|---|
| | | **OCL = OUTER CHANNEL LENGTH, MFH = MAXIMUM FORK HEIGHT** | | |
| | CC233367 | INTERMEDIATE UPRIGHT - (69" OCL) (150" MFH) (ALL) | 1 | |
| | CC233379 | INTERMEDIATE UPRIGHT - (73" OCL) (162" MFH) (CUSHION ONLY) | 1 | |
| | CC233385 | INTERMEDIATE UPRIGHT - (75" OCL) (168" MFH) (PNEUMATIC ONLY) | 1 | |
| | CC233400 | INTERMEDIATE UPRIGHT - (80" OCL) (183" MFH) (ALL) | 1 | |
| | CC233409 | INTERMEDIATE UPRIGHT - (83" OCL) (190" MFH) (ALL) | 1 | |
| | CC233436 | INTERMEDIATE UPRIGHT - (92" OCL) (211" MFH) (ALL) | 1 | |
| | CC233442 | INTERMEDIATE UPRIGHT - (94" OCL) (217" MFH) (CUSHION ONLY) | 1 | |
| | CC233463 | INTERMEDIATE UPRIGHT - (101" OCL) (230" MFH) (ALL) | 1 | |
| | CC233472 | INTERMEDIATE UPRIGHT - (104" OCL) (237" MFH) (PNEUMATIC ONLY) | 1 | |
| | CC233481 | INTERMEDIATE UPRIGHT - (107" OCL) (242" MFH) (PNEUMATIC ONLY) | 1 | |
| 1 | 3EB-79-A6060 | CAPSCREW - M12 X 60 | 1 | |
| 2 | 3EB-79-A5360 | WASHER, LOCK - M12 | 2 | |
| 3 | 3EB-73-A5120 | HOSE GUARD | 1 | |
| 4 | 3EB-73-A5070 | HOSE SHEAVE | 1 | |
| 5 | 3EB-73-A5210 | STUBSHAFT | 1 | |
| 6 | 3EB-73-A5010 | CHAIN SHEAVE | 4 | |
| 7 | 3EB-73-A5720 | THRUST PLUG SERVICE KIT | 1 | |
| 8 | 3EB-79-A5270 | CAPSCREW - M12 X 20 | 1 | |
| 9 | 3EB-79-A5360 | WASHER, LOCK - M12 | 2 | |
| 10 | 3EB-73-A5140 | HOSE GUARD | 1 | |
| 11 | 3EB-73-A5010 | CHAIN SHEAVE | 4 | |
| 12 | 3EB-79-A5380 | BOLT | 2 | |
| 13 | CC238137 | SHIM KIT - MAIN LIFT CYLINDER | 2 | |
| 14 | 3EB-79-A5210 | ROLLER | 8 | |
| 15 | 3EB-79-A6050 | SHIM (USE AS REQUIRED) | 24 | |
| 16 | 3EB-79-A5210 | LOAD ROLLER | 2 | |

https://truckmanualshub.com/



# E60-MT 3-STAGE MAST - INNER UPRIGHT
## S/N 200001A~

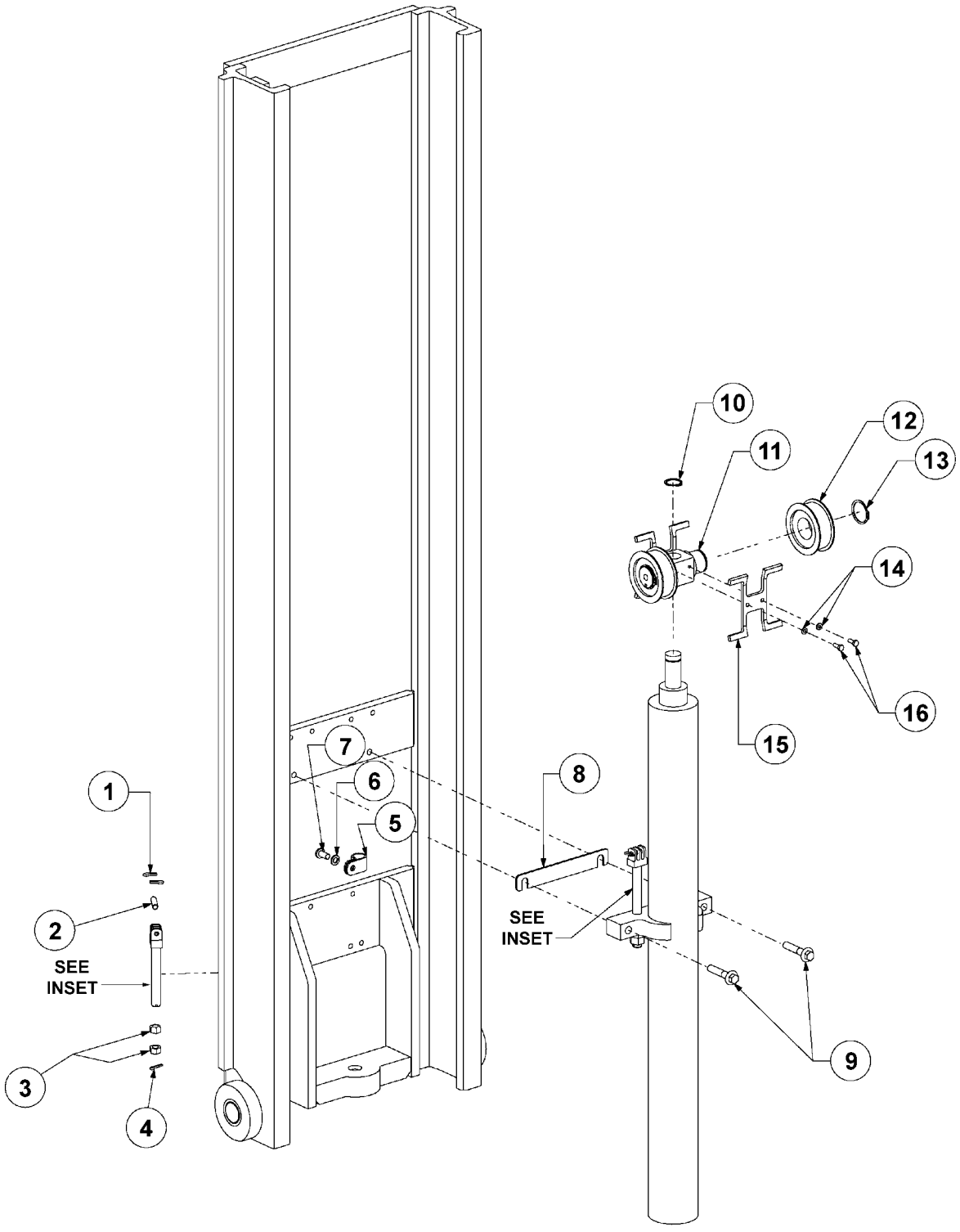

https://truckmanualshub.com/



## E60-MT 3-STAGE MAST - INNER UPRIGHT
## S/N 200001A~

| Item | Part Number | Description | Qty | Serial Number |
|---|---|---|---|---|
| | | **OCL = INNER CHANNEL LENGTH, MFH = MAXIMUM FORK HEIGHT** | | |
| | CC233368 | INNER UPRIGHT - (69" OCL) (150" MFH) (ALL) | 1 | |
| | CC233380 | INNER UPRIGHT - (73" OCL) (162" MFH) (CUSHION ONLY) | 1 | |
| | CC233386 | INNER UPRIGHT - (75" OCL) (168" MFH) (PNEUMATIC ONLY) | 1 | |
| | CC233401 | INNER UPRIGHT - (80" OCL) (183" MFH) (ALL) | 1 | |
| | CC233410 | INNER UPRIGHT - (83" OCL) (190" MFH) (ALL) | 1 | |
| | CC233437 | INNER UPRIGHT - (92" OCL) (211" MFH) (ALL) | 1 | |
| | CC233443 | INNER UPRIGHT - (94" OCL) (217" MFH) (CUSHION ONLY) | 1 | |
| | CC233464 | INNER UPRIGHT - (101" OCL) (230" MFH) (ALL) | 1 | |
| | CC233473 | INNER UPRIGHT - (104" OCL) (237" MFH) (PNEUMATIC ONLY) | 1 | |
| | CC233482 | INNER UPRIGHT - (107" OCL) (242" MFH) (PNEUMATIC ONLY) | 1 | |
| 1 | CC6508 | PIN, COTTER | 12 | |
| 2 | CC684305 | PIN, CHAIN ANCHOR | 6 | |
| 3 | CC200006 | NUT | 12 | |
| 4 | CC6518 | PIN, COTTER | 6 | |
| 5 | CC210752 | CLAMP, HOSE | 1 | |
| 6 | CC681238 | WASHER, LOCK - M10 | 1 | |
| 7 | CC200429 | CAPSCREW - M10 X 12 | 1 | |
| 8 | CC231060 | SHIM PLATE | 4 | |
| 9 | CC234868 | CAPSCREW - M12 | 2 | |
| 10 | CC3133 | SNAP RING - 29MM | 1 | |
| 11 | CC231058 | CROSSHEAD | 1 | |
| 12 | CC231427 | SHEAVE, CHAIN | 4 | |
| 13 | CC3140 | SNAP RING - 40MM | 2 | |
| KIT | CC246821 | CHAIN GUARD KIT | 1 | |
| 14 | CC206323 | .WASHER, LOCK - M6 | 4 | |
| 15 | CC231059 | .CHAIN GUARD | 2 | |
| 16 | CC206321 | .CAPSCREW - M6 | 4 | |

https://truckmanualshub.com/



# E60-MT 3-STAGE MAST - CARRIAGE - 4-ROLLER
## S/N 200001A~

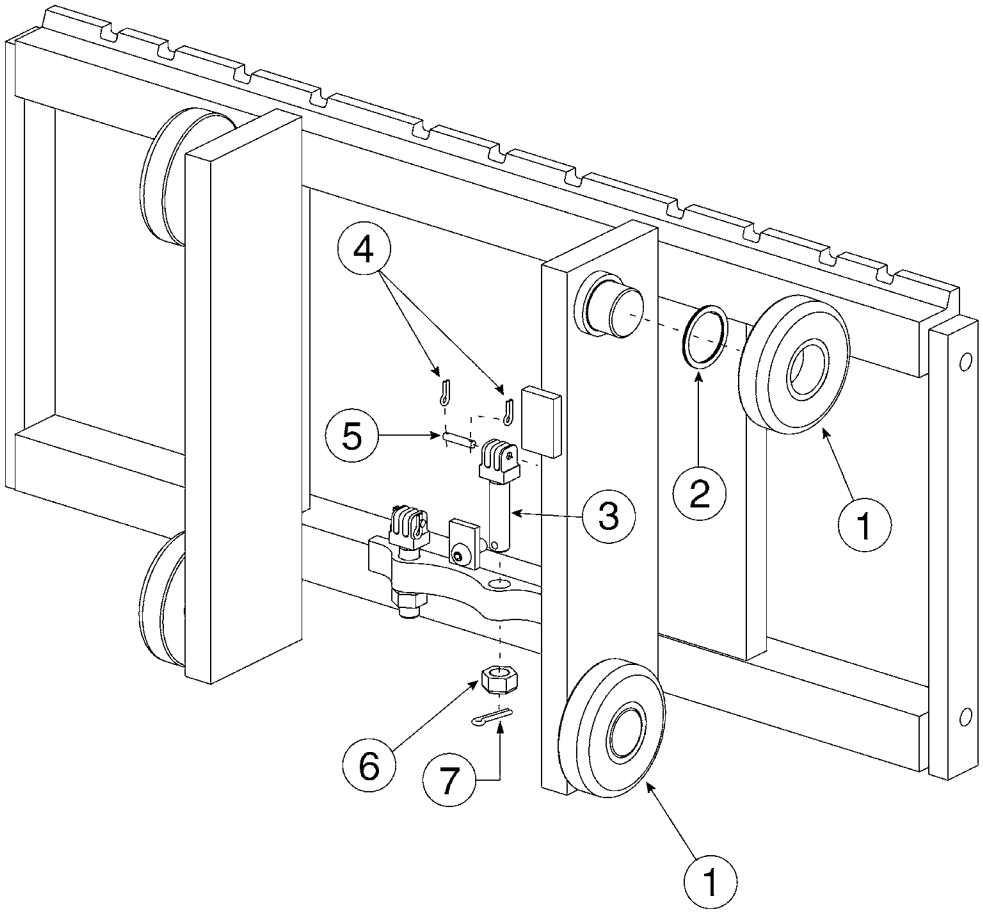


72-3400

https://truckmanualshub.com/



## E60-MT 3-STAGE MAST - CARRIAGE - 4-ROLLER
## S/N 200001A~

| Item | Part Number | Description | Qty | Serial Number |
|---|---|---|---|---|
| | CC280171 | CARRIAGE - 37" - CUSHION TIRE SPEC. . . . . | 1 | |
| | CC280172 | CARRIAGE - 41" - CUSHION TIRE SPEC. . . . . | 1 | |
| | CC231380 | CARRIAGE - 37" - PNEUMATIC TIRE SPEC. . . | 1 | |
| | CC231382 | CARRIAGE - 41" - PNEUMATIC TIRE SPEC. . . | 1 | |
| 1 | 3EB-79-A5210 | LOAD ROLLER. . . . . | 4 | |
| 2 | 3EB-79-A6050 | SHIM, LOAD ROLLER . . . . . | AR | |
| 3 | CC234001 | CHAIN ANCHOR . . . . . | 2 | |
| 4 | 3EB-79-A6080 | PIN, COTTER . . . . . | 4 | |
| 5 | CC684305 | PIN, CHAIN ANCHOR . . . . . | 2 | |
| 6 | CC234004 | NUT. . . . . | 2 | |
| 7 | 3EB-79-A6081 | PIN, COTTER . . . . . | 2 | |

https://truckmanualshub.com/



## E60-MT 3-STAGE MAST - CARRIAGE - 6-ROLLER
## S/N 200001A~

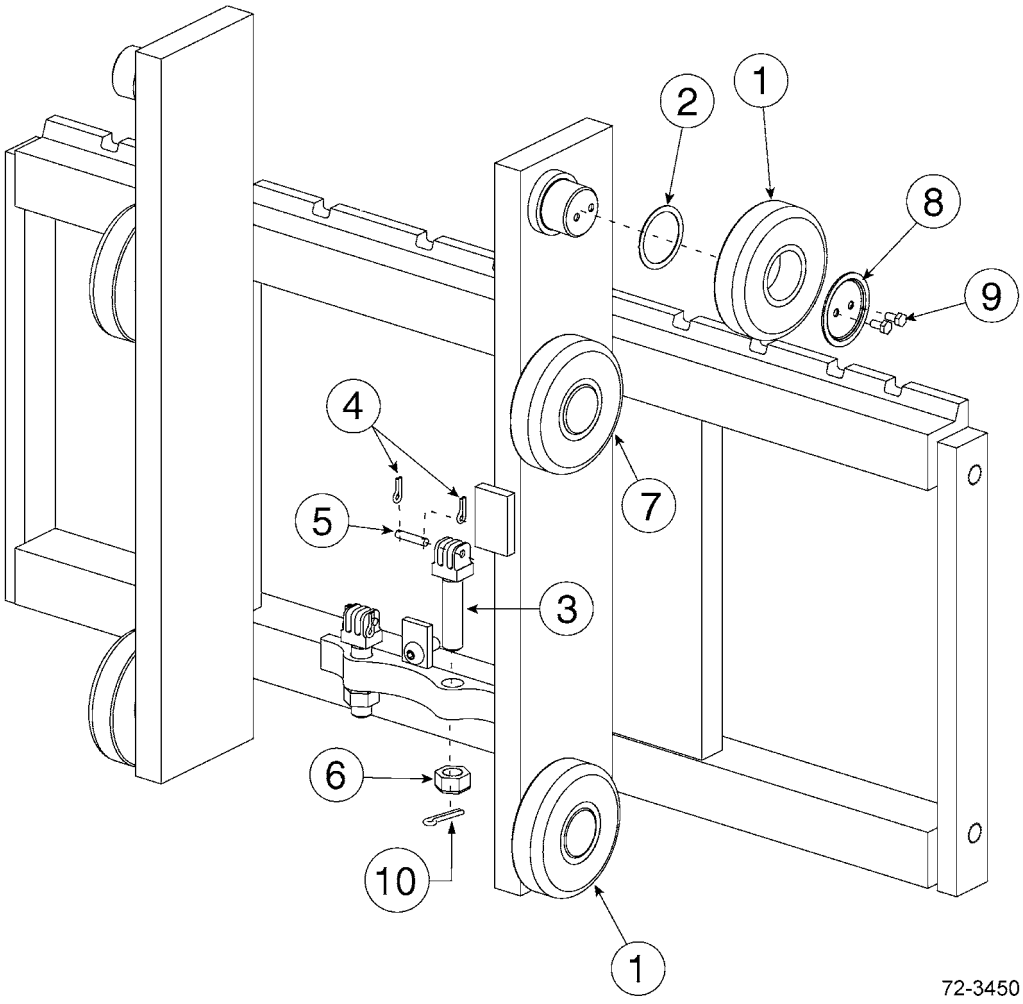

https://truckmanualshub.com/



## E60-MT 3-STAGE MAST - CARRIAGE - 6-ROLLER
## S/N 200001A~

| Item | Part Number | Description | Qty | Serial Number |
|---|---|---|---|---|
| | CC280183 | CARRIAGE - 37" - CUSHION TIRE SPEC. . . . . | 1 | |
| | CC280184 | CARRIAGE - 41" - CUSHION TIRE SPEC. . . . . | 1 | |
| | CC280115 | CARRIAGE - 53" - CUSHION TIRE SPEC. . . . . | 1 | |
| | CC253733 | CARRIAGE - 31" - PNEUMATIC TIRE SPEC. . . | 1 | |
| | CC280177 | CARRIAGE - 37" - PNEUMATIC TIRE SPEC. . . | 1 | |
| | CC280178 | CARRIAGE - 41" - PNEUMATIC TIRE SPEC. . . | 1 | |
| | CC280114 | CARRIAGE - 53" - PNEUMATIC TIRE SPEC. . . | 1 | |
| 1 | 3EB-79-A5210 | LOAD ROLLER. . . . . | 4 | |
| 2 | 3EB-79-A6050 | SHIM, LOAD ROLLER . . . . . | AR | |
| 3 | CC234001 | CHAIN ANCHOR . . . . . | 2 | |
| 4 | 3EB-79-A6080 | PIN, COTTER . . . . . | 4 | |
| 5 | CC684305 | PIN, CHAIN ANCHOR . . . . . | 2 | |
| 6 | 3EB-73-A5450 | NUT. . . . . | 2 | |
| 7 | 3EB-79-A5220 | LOAD ROLLER. . . . . | 2 | |
| 8 | 3EB-73-A5460 | RETAINER . . . . . | 2 | |
| 9 | 3EB-73-A5470 | CAPSCREW - M6 X 12LG . . . . . | 4 | |
| 10 | 3EB-79-A6081 | PIN, COTTER . . . . . | 2 | |

https://truckmanualshub.com/



## E60-MT 3-STAGE MAST - HOIST CHAINS & FREE LIFT HOSE
## S/N 200001A~

# Hoist Chains

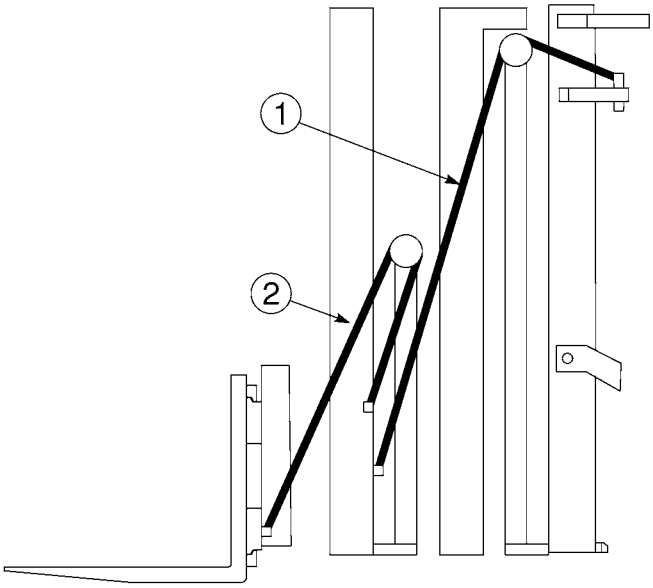


# Free Lift Hose

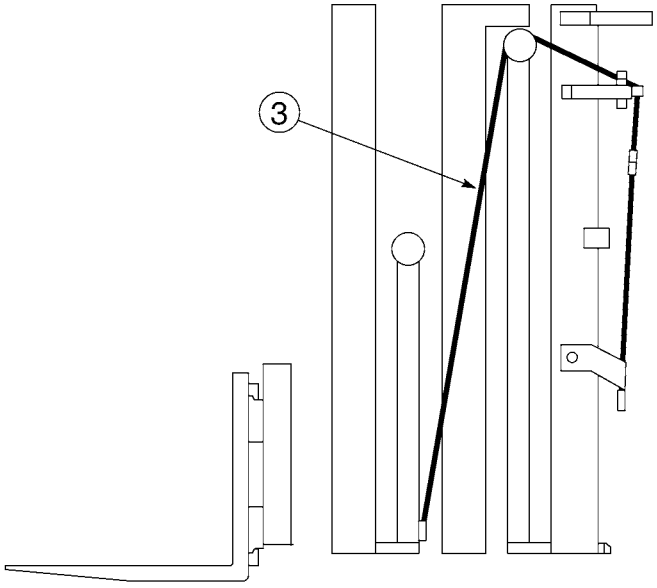


72-3500

https://truckmanualshub.com/



## E60-MT 3-STAGE MAST - HOIST CHAINS & FREE LIFT HOSE
## S/N 200001A~

| Item | Part Number | Description | Qty | Serial Number |
|---|---|---|---|---|
| | | **OCL = OUTER CHANNEL LENGTH, MFH = MAXIMUM FORK HEIGHT** | | |
| 1 | CC683982 | MAIN LIFT CHAIN - (69" OCL) (150" MFH) (ALL) | 2 | |
| | CC678770 | MAIN LIFT CHAIN - (73" OCL) (162" MFH) (CUSHION ONLY) | 2 | |
| | CC683985 | MAIN LIFT CHAIN - (75" OCL) (168" MFH) (PNEUMATIC ONLY) | 2 | |
| | CC683987 | MAIN LIFT CHAIN - (80" OCL) (183" MFH) (ALL) | 2 | |
| | CC678796 | MAIN LIFT CHAIN - (83" OCL) (190" MFH) (ALL) | 2 | |
| | CC683994 | MAIN LIFT CHAIN - (92" OCL) (211" MFH) (ALL) | 2 | |
| | CC683995 | MAIN LIFT CHAIN - (94" OCL) (217" MFH) (CUSHION ONLY) | 2 | |
| | CC684000 | MAIN LIFT CHAIN - (101" OCL) (230" MFH) (ALL) | 2 | |
| | CC678837 | MAIN LIFT CHAIN - (104" OCL) (237" MFH) (PNEUMATIC ONLY) | 2 | |
| | CC688157 | MAIN LIFT CHAIN - (107" OCL) (242" MFH) (PNEUMATIC ONLY) | 2 | |
| 2 | CC683976 | FREE LIFT CHAIN - (69" OCL) (150" MFH) (ALL) | 2 | |
| | CC683979 | FREE LIFT CHAIN - (73" OCL) (162" MFH) (CUSHION ONLY) | 2 | |
| | CC681429 | FREE LIFT CHAIN - (75" OCL) (168" MFH) (PNEUMATIC ONLY) | 2 | |
| | CC683982 | FREE LIFT CHAIN - (80" OCL) (183" MFH) (ALL) | 2 | |
| | CC678770 | FREE LIFT CHAIN - (83" OCL) (190" MFH) (ALL) | 2 | |
| | CC683988 | FREE LIFT CHAIN - (92" OCL) (211" MFH) (ALL) | 2 | |
| | CC683980 | FREE LIFT CHAIN - (94" OCL) (217" MFH) (CUSHION ONLY) | 2 | |
| | CC678770 | FREE LIFT CHAIN - (101" OCL) (230" MFH) (ALL) | 2 | |
| | CC683781 | FREE LIFT CHAIN - (104" OCL) (237" MFH) (PNEUMATIC ONLY) | 2 | |
| | CC683783 | FREE LIFT CHAIN - (107" OCL) (242" MFH) (PNEUMATIC ONLY) | 2 | |
| 3 | CC233025 | FREE LIFT HOSE - (69" OCL) (150" MFH) (ALL) | 1 | |
| | 3EB-73-A5080 | FREE LIFT HOSE - (73" OCL) (162" MFH) (CUSHION ONLY) | 1 | |
| | CC233049 | FREE LIFT HOSE - (75" OCL) (168" MFH) (PNEUMATIC ONLY) | 1 | |
| | 3EB-74-A5570 | FREE LIFT HOSE - (80" OCL) (183" MFH) (ALL) | 1 | |
| | CC233081 | FREE LIFT HOSE - (83" OCL) (190" MFH) (ALL) | 1 | |
| | 3EB-74-A5610 | FREE LIFT HOSE - (92" OCL) (211" MFH) (ALL) | 1 | |

PARTS LIST CONTINUED ON NEXT PAGE

https://truckmanualshub.com/



## E60-MT 3-STAGE MAST - HOIST CHAINS & FREE LIFT HOSE
## S/N 200001A~

| Item | Part Number | Description | Qty | Serial Number |
|---|---|---|---|---|
| | CC233125 | FREE LIFT HOSE - (94" OCL) (217" MFH) (CUSHION ONLY) . . . . . | 1 | |
| | 3EB-74-A5630 | FREE LIFT HOSE - (101" OCL) (230" MFH) (ALL) | 1 | |
| | CC233165 | FREE LIFT HOSE - (104" OCL) (237" MFH) (PNEUMATIC ONLY) . . . . . | 1 | |
| | CC233177 | FREE LIFT HOSE - (107" OCL) (242" MFH) (PNEUMATIC ONLY) . . . . . | 1 | |

https://truckmanualshub.com/
**NOTES:**

https://truckmanualshub.com/



## E60-MT 3-STAGE MAST - LOAD BACKREST
## S/N 200001A~

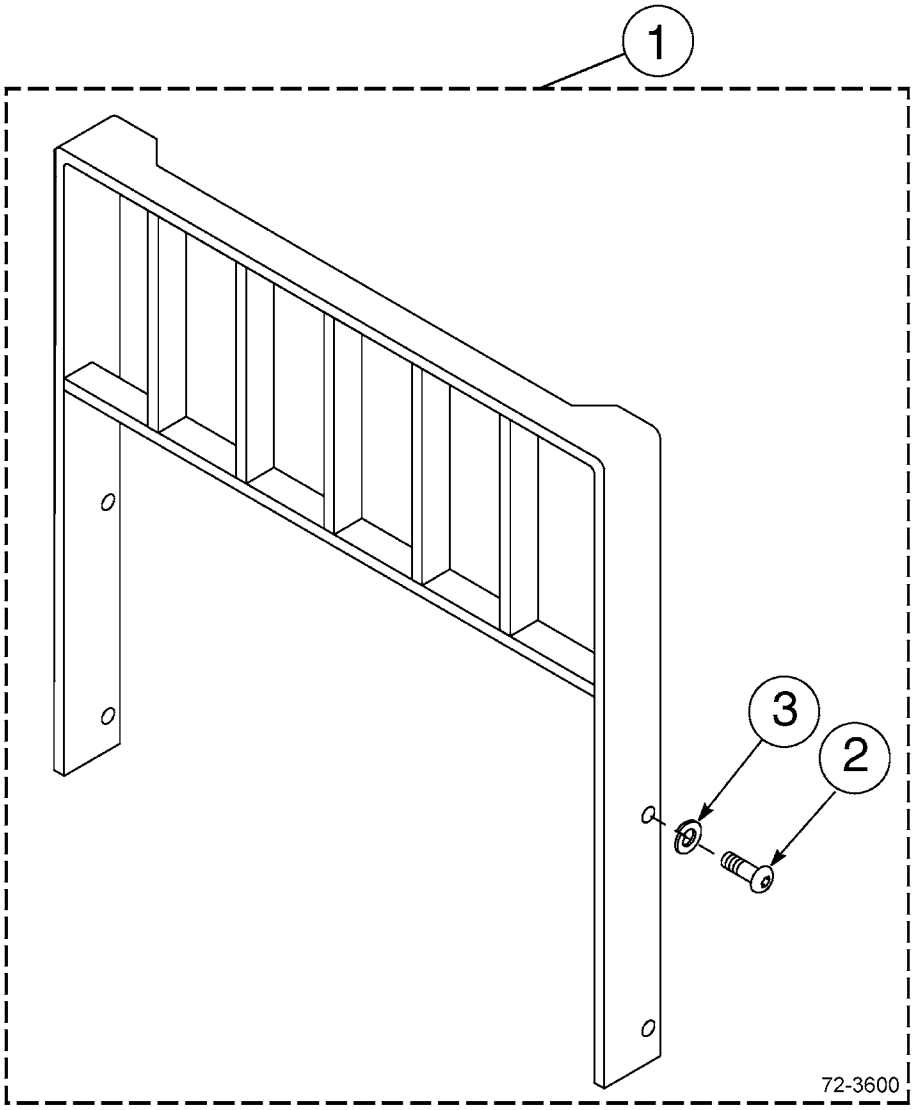

https://truckmanualshub.com/



## E60-MT 3-STAGE MAST - LOAD BACKREST
## S/N 200001A~

| Item | Part Number | Description | Qty | Serial Number |
|---|---|---|---|---|
| | | **CLASS III LOAD BACKRESTS (HEIGHT X WIDTH)** | | |
| 1 | CC684784 | BACKREST - 37" X 36" | 1 | |
| | CC684785 | BACKREST - 37" X 48" | 1 | |
| | CC226831 | BACKREST - 37" X 54" | 1 | |
| | CC684786 | BACKREST - 37" X 60" | 1 | |
| | CC684787 | BACKREST - 41" X 36" | 1 | |
| | CC684788 | BACKREST - 41" X 48" | 1 | |
| | CC684789 | BACKREST - 41" X 60" | 1 | |
| | CC362796 | BACKREST - 41" X 72" | 1 | |
| | CC246396 | BACKREST - 43.3" X 48" | 1 | |
| | CC684790 | BACKREST - 49" X 36" | 1 | |
| | CC684791 | BACKREST - 49" X 48" | 1 | |
| | CC684792 | BACKREST - 49" X 60" | 1 | |
| | CC231212 | BACKREST - 53" X 30" | 1 | |
| | CC231260 | BACKREST - 53" X 36" | 1 | |
| | CC357671 | BACKREST - 53" X 48" | 1 | |
| | CC249220 | BACKREST - 55.3" X 48" | 1 | |
| | CC235370 | BACKREST - 60" X 48" | 1 | |
| | CC684793 | BACKREST - 61" X 36" | 1 | |
| | CC226834 | BACKREST - 61" X 40" | 1 | |
| | CC684794 | BACKREST - 61" X 48" | 1 | |
| | CC684795 | BACKREST - 61" X 60" | 1 | |
| | CC226828 | BACKREST - 62" X 48" | 1 | |
| | CC225576 | BACKREST - 72" X 48" | 1 | |
| 2 | CC200173 | .CAPSCREW - M16 X 2, 0 X 35-8.8 | 4 | |
| 3 | 3EB-71-A6030 | .WASHER, LOCK - M16 | 4 | |

https://truckmanualshub.com/



## E60-MT 3-STAGE MAST - MAST INSTALLATION COMPONENTS
## CUSHION TIRE MODELS - S/N 200001A~

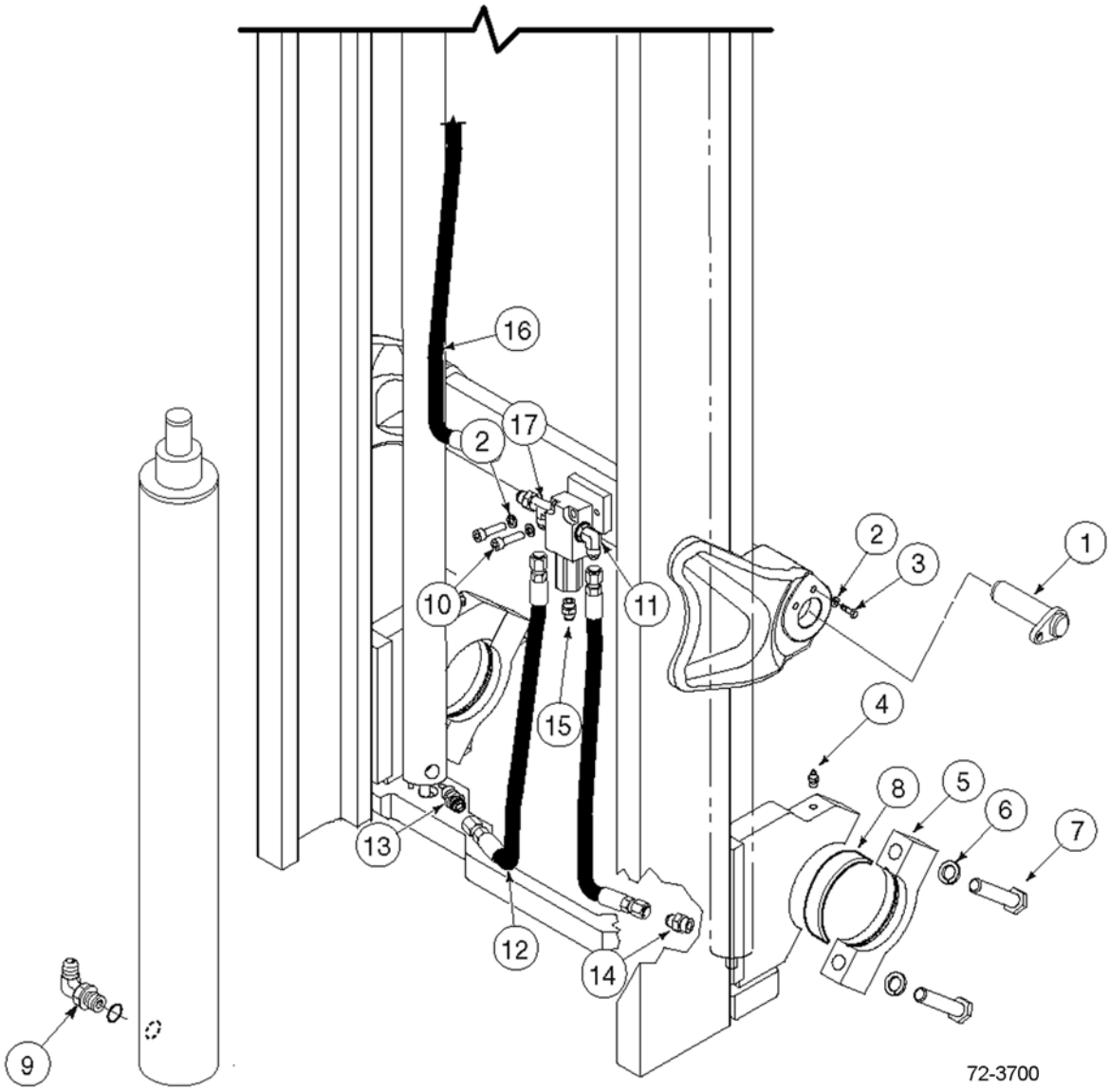

https://truckmanualshub.com/



## E60-MT 3-STAGE MAST - MAST INSTALLATION COMPONENTS
## CUSHION TIRE MODELS - S/N 200001A~

| Item | Part Number | Description | Qty | Serial Number |
|---|---|---|---|---|
| 1 | 3EB-41-51750 | TILT PIN | 2 | |
| 2 | 3EB-79-A6040 | WASHER, LOCK. | 4 | |
| 3 | CC212632 | CAPSCREW | 2 | |
| 4 | CC7418 | FITTING, GREASE | 2 | |
| 5 | CC251901 | CAP. | 2 | |
| 6 | 3EB-71-A6030 | WASHER, LOCK. | 4 | |
| 7 | CC251906 | CAPSCREW | 4 | |
| 8 | 3EB-84-51290 | BUSHING (CUSHION ONLY) | 2 | |
| 9 | CC642649 | FITTING #8 - #10 - 90° | 1 | |
| 10 | CC767611 | CAPSCREW | 2 | |
| 11 | CC601250 | FITTING # 8 - 90° ELBOW | 1 | |
| 12 | CC255666 | MAIN LIFT HOSE - RH | 1 | |
| | CC255665 | MAIN LIFT HOSE - LH | 1 | |
| 13 | CC611289 | FITTING #8 -#10 - STRAIGHT | 1 | |
| 14 | CC238570 | 12 GPM EXTERNAL FUSE | 1 | |
| 15 | CC601377 | FITTING | 1 | |
| 16 | CC234037 | FL JUMPER HOSE | 1 | |
| 17 | CC601402 | FITTING # 8 - 90° TEE | 1 | |
| KIT | CC255596 | INSTALLATION KIT | 1 | |

https://truckmanualshub.com/



# E60-MT 3-STAGE MAST - MAST INSTALLATION COMPONENTS
# PNEUMATIC TIRE MODELS - S/N 200001A~

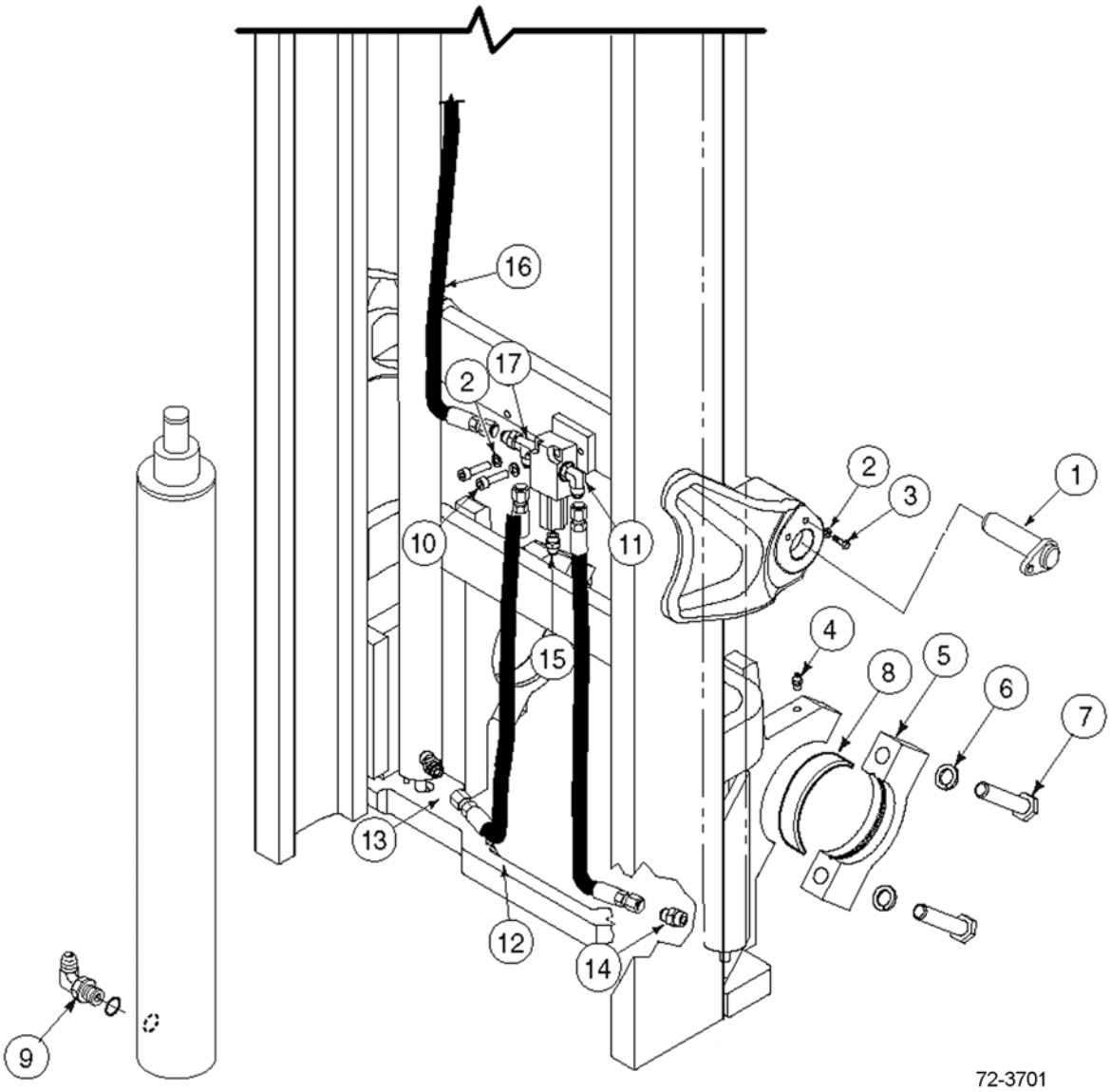

https://truckmanualshub.com/



## E60-MT 3-STAGE MAST - MAST INSTALLATION COMPONENTS
## PNEUMATIC TIRE MODELS - S/N 200001A~

| Item | Part Number | Description | Qty | Serial Number |
|---|---|---|---|---|
| 1 | 3EB-41-51750 | TILT PIN | 2 | |
| 2 | 3EB-79-A6040 | WASHER, LOCK | 4 | |
| 3 | CC212632 | CAPSCREW | 2 | |
| 4 | CC7418 | FITTING, GREASE | 2 | |
| 5 | CC252686 | CAP | 2 | |
| 6 | 3EB-71-A6030 | WASHER, LOCK | 4 | |
| 7 | CC251906 | CAPSCREW | 4 | |
| 8 | 3EB-71-51290 | BUSHING (2.0T, 2.5T, 2.8T, 3.0T) | 2 | |
| | 3EB-71-61790 | BUSHING (3.2T, 3.5T) | 2 | |
| 9 | CC642649 | FITTING #8 - #10 - 90° | 1 | |
| 10 | CC767611 | CAPSCREW | 2 | |
| 11 | CC601250 | FITTING # 8 - 90° ELBOW | 1 | |
| 12 | CC253793 | MAIN LIFT HOSE - RH | 1 | |
| | CC255652 | MAIN LIFT HOSE - LH | 1 | |
| 13 | CC611289 | FITTING #8 -#10 - STRAIGHT | 1 | |
| 14 | CC238570 | 12 GPM EXTERNAL FUSE | 1 | |
| 15 | CC601377 | FITTING | 1 | |
| 16 | CC253720 | FL JUMPER HOSE | 1 | |
| 17 | CC610402 | FITTING # 8 - 90° TEE | 1 | |
| KIT | CC255596 | INSTALLATION KIT | 1 | |

https://truckmanualshub.com/



## E60-MT 3-STAGE MAST - LOWERING CONTROL VALVE
## S/N 200001A~

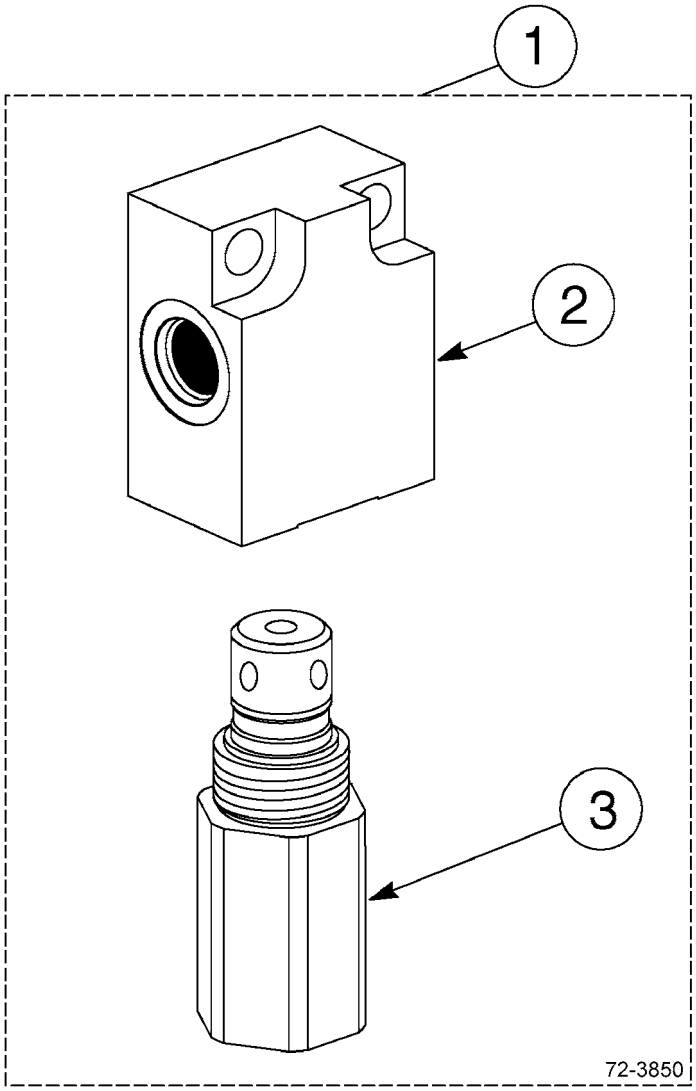

https://truckmanualshub.com/



## E60-MT 3-STAGE MAST - LOWERING CONTROL VALVE
## S/N 200001A~

| Item | Part Number | Description | Qty | Serial Number |
|---|---|---|---|---|
| 1 | 3EB-73-A5930 | CONTROL VALVE - 2600 PSI - 17 GPM . . . . . | 1 | |
| 2 | 3EB-73-A5910 | .VALVE BODY. . . . . | 1 | |
| 3 | 3EB-73-A5920 | .VALVE CARTRIDGE (17 GPM) . . . . . | 1 | |

https://truckmanualshub.com/



## E60-MT 3-STAGE MAST - INTERNAL HOSE REEVING - SINGLE
## 56" TO 66" OCL - S/N 200001A~

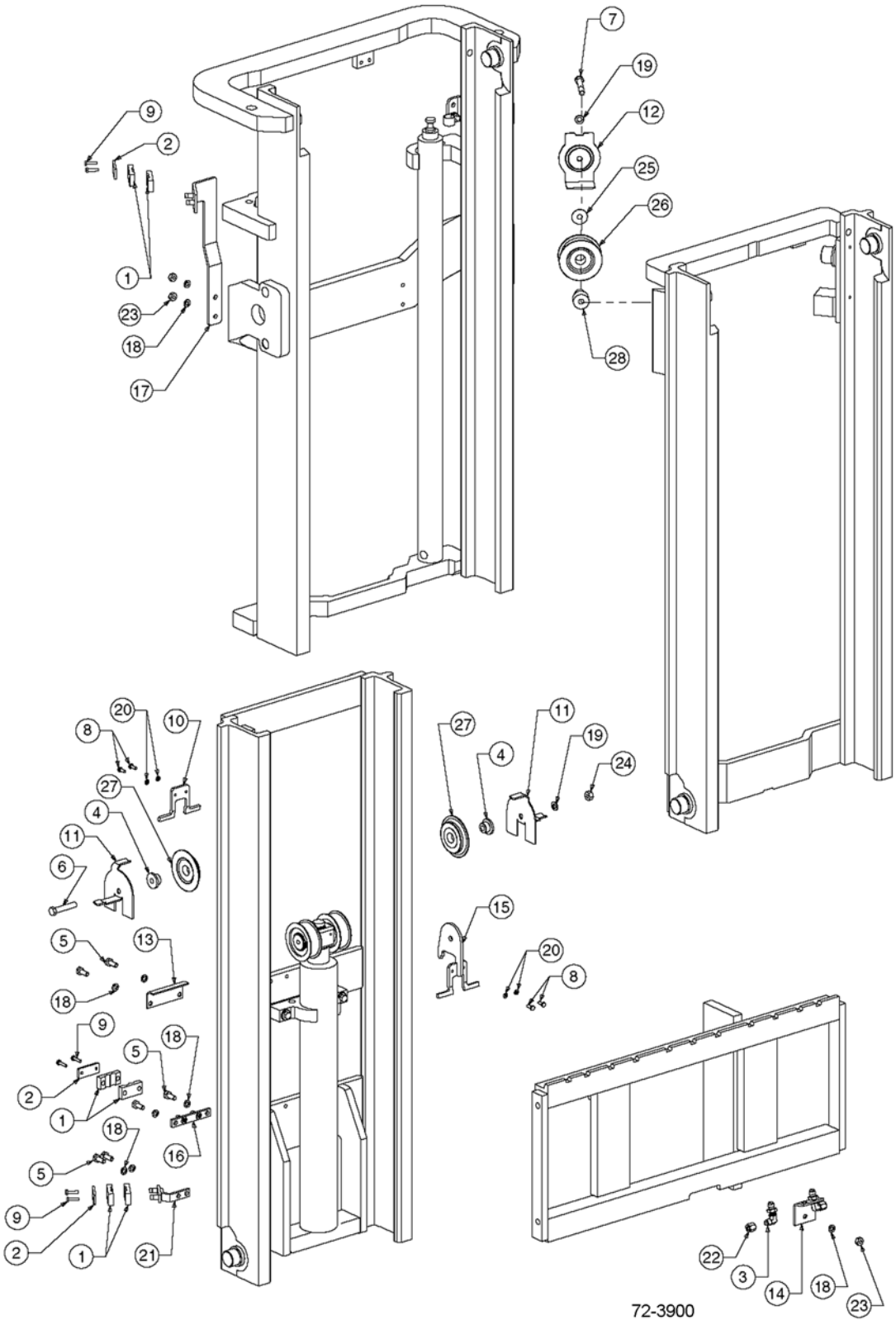

https://truckmanualshub.com/



## E60-MT 3-STAGE MAST - INTERNAL HOSE REEVING - SINGLE
## 56" TO 66" OCL - S/N 200001A~

| Item | Part Number | Description | Qty | Serial Number |
|---|---|---|---|---|
| 1 | 3EB-73-A5150 | CLAMP, HOSE | 6 | |
| 2 | 3EB-73-A5160 | HOSE CLAMP BAR | 3 | |
| 3 | 3EB-71-A6010 | FITTING, BULKHEAD UNION - 90° | 2 | |
| 4 | 3EB-73-A5230 | SINGLE IHR STUBSHAFT | 2 | |
| 5 | 3EB-73-A5490 | CAPSCREW, M10 X 25 | 6 | |
| 6 | 3EB-79-A5230 | CAPSCREW, M12 X 65 | 1 | |
| 7 | 3EB-79-A5190 | CAPSCREW. M12 X 80 | 1 | |
| 8 | 3EB-73-A5350 | CAPSCREW, M6 X 16 | 4 | |
| 9 | 3EB-79-A5240 | CAPSCREW, M6 X 25 | 6 | |
| 10 | 3EB-73-A5170 | CHAIN GUARD | 1 | |
| 11 | 3EB-73-A5180 | IHR & CHAIN GUARD | 2 | |
| 12 | CC216052 | HOSE GUARD | 1 | |
| 13 | 3EB-73-A5190 | HOSE GUARD | 1 | |
| 14 | 3EB-73-A5610 | CARRIAGE IHR BRACKET | 1 | |
| 15 | 3EB-73-A5620 | IHR BRACKET | 1 | |
| 16 | 3EB-73-A5630 | IHR BRACKET | 1 | |
| 17 | CC253651 | IHR BRACKET | 1 | |
| 18 | 3EB-79-A6040 | LOCK WASHER, M10 | 9 | |
| 19 | 3EB-79-A5360 | LOCK WASHER, M12 | 2 | |
| 20 | 3EB-73-A5340 | LOCK WASHER, M6 | 4 | |
| 21 | 3EB-73-A5660 | LOWER BRACKET | 1 | |
| 22 | 3EB-79-A5250 | NUT - #6 CAP | 2 | |
| 23 | 3EB-79-A5180 | NUT - M10 | 3 | |
| 24 | 3EB-79-A5270 | NUT - M12 - DIN 934 | 1 | |
| 25 | 3EB-79-A5280 | WASHER | 1 | |
| 26 | 3EB-73-A5020 | SHEAVE | 1 | |
| 27 | 3EB-73-A5030 | IHR SHEAVE | 2 | |
| 28 | 3EB-73-A5220 | STUBSHAFT | 1 | |

**OCL = OUTER CHANNEL LENGTH, MFH = MAXIMUM FORK HEIGHT**

| | | |
|---|---|---|
| CC216924 | HOSE (IHR KIT #255067) (56" OCL) (111" MFH) | 2 |
| CC216926 | HOSE (IHR KIT #255068) (57" OCL) (114" MFH) | 2 |
| CC216927 | HOSE (IHR KIT #255069) (58" OCL) (117" MFH) | 2 |
| CC216928 | HOSE (IHR KIT #255070) (59" OCL) (120" MFH) | 2 |
| CC230717 | HOSE (IHR KIT #255071) (60" OCL) (123" MFH) | 2 |
| CC213922 | HOSE (IHR KIT #255072) (61" OCL) (126" MFH) | 2 |
| CC210804 | HOSE (IHR KIT #255073) (62" OCL) (129" MFH) | 2 |
| CC216930 | HOSE (IHR KIT #255074) (63" OCL) (132" MFH) | 2 |
| CC223461 | HOSE (IHR KIT #255075) (64" OCL) (135" MFH) | 2 |

PARTS LIST CONTINUED ON NEXT PAGE

https://truckmanualshub.com/



## E60-MT 3-STAGE MAST - INTERNAL HOSE REEVING - SINGLE 56" TO 66" OCL - S/N 200001A~

| Item | Part Number | Description | Qty | Serial Number |
|---|---|---|---|---|
| | CC216931 | HOSE (IHR KIT #255076) (65" OCL) (138" MFH) | 2 | |
| | CC226416 | HOSE (IHR KIT #255077) (66" OCL) (141" MFH) | 2 | |

https://truckmanualshub.com/

**NOTES:**

https://truckmanualshub.com/



# E60-MT 3-STAGE MAST - INTERNAL HOSE REEVING - SINGLE
# 67" ~ OUTER CHANEL LENGTH - S/N 200001A~

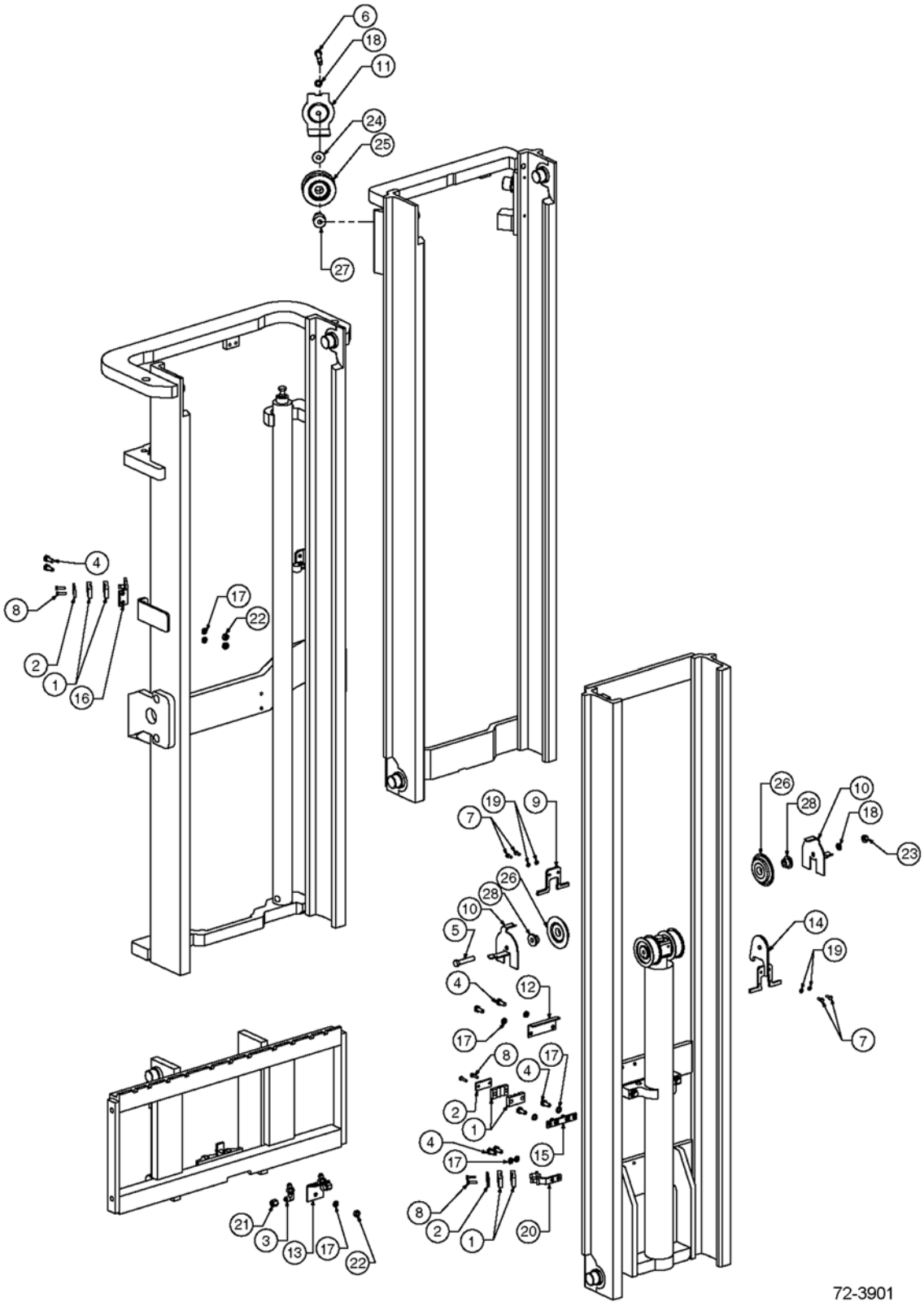

https://truckmanualshub.com/



## E60-MT 3-STAGE MAST - INTERNAL HOSE REEVING - SINGLE
## 67" ~ OUTER CHANEL LENGTH - S/N 200001A~

| Item | Part Number | Description | Qty | Serial Number |
|---|---|---|---|---|
| 1 | 3EB-73-A5150 | CLAMP, HOSE | 6 | |
| 2 | 3EB-73-A5160 | HOSE CLAMP BAR | 3 | |
| 3 | 3EB-71-A6010 | FITTING, BULKHEAD UNION - 90° | 2 | |
| 4 | 3EB-73-A5490 | CAPSCREW, M10 X 25 | 8 | |
| 5 | 3EB-79-A5230 | CAPSCREW, M12 X 65 | 1 | |
| 6 | 3EB-79-A5190 | CAPSCREW. M12 X 80 | 1 | |
| 7 | 3EB-73-A5350 | CAPSCREW, M6 X 16 | 4 | |
| 8 | 3EB-79-A5240 | CAPSCREW, M6 X 25 | 6 | |
| 9 | 3EB-73-A5170 | CHAIN GUARD | 1 | |
| 10 | 3EB-73-A5180 | IHR & CHAIN GUARD | 2 | |
| 11 | CC216052 | HOSE GUARD | 1 | |
| 12 | 3EB-73-A5190 | HOSE GUARD | 1 | |
| 13 | 3EB-73-A5610 | CARRIAGE IHR BRACKET | 1 | |
| 14 | 3EB-73-A5620 | IHR BRACKET | 1 | |
| 15 | 3EB-73-A5630 | IHR BRACKET | 1 | |
| 16 | CC253651 | IHR BRACKET | 1 | |
| 17 | 3EB-79-A6040 | LOCK WASHER, M10 | 9 | |
| 18 | 3EB-79-A5360 | LOCK WASHER, M12 | 2 | |
| 19 | 3EB-73-A5340 | LOCK WASHER, M6 | 4 | |
| 20 | 3EB-73-A5660 | LOWER BRACKET | 1 | |
| 21 | 3EB-79-A5250 | NUT - #6 CAP | 2 | |
| 22 | 3EB-79-A5180 | NUT - M10 | 3 | |
| 23 | 3EB-79-A5270 | NUT - M12 - DIN 934 | 1 | |
| 24 | 3EB-79-A5280 | WASHER | 1 | |
| 25 | 3EB-73-A5020 | SHEAVE | 1 | |
| 26 | 3EB-73-A5030 | IHR SHEAVE | 2 | |
| 27 | 3EB-73-A5220 | STUBSHAFT | 1 | |
| 28 | 3EB-73-A5230 | SINGLE IHR STUBSHAFT | 2 | |
| | **OCL = OUTER CHANNEL LENGTH, MFH = MAXIMU FORK HEIGHT** | | | |
| | CC216933 | HOSE (IHR KIT #255009) (69" OCL) (150" MFH) (ALL) | 2 | |
| | CC213923 | HOSE (IHR KIT #255013) (73" OCL) (162" MFH) (CUSHION ONLY) | 2 | |
| | CC216935 | HOSE (IHR KIT #255015) (75" OCL) (168" MFH) (PNEUMATIC ONLY) | 2 | |
| | 3EB-74-A5770 | HOSE (IHR KIT #255020) (80" OCL) (183" MFH) (ALL) | 2 | |
| | CC233971 | HOSE (IHR KIT #255023) (83" OCL) (190" MFH) (ALL) | 2 | |

PARTS LIST CONTINUED ON NEXT PAGE

https://truckmanualshub.com/



## E60-MT 3-STAGE MAST - INTERNAL HOSE REEVING - SINGLE
## 67" ~ OUTER CHANEL LENGTH - S/N 200001A~

| Item | Part Number | Description | Qty | Serial Number |
|---|---|---|---|---|
| | 3EB-74-A5810 | HOSE (IHR KIT #255032) (92" OCL) (211" MFH) (ALL) | 2 | |
| | CC231256 | HOSE (IHR KIT #255034) (94" OCL) (217" MFH) (CUSHION ONLY) | 2 | |
| | 3EB-74-A5830 | HOSE (IHR KIT #255041) (101" OCL) (230" MFH) (ALL) | 2 | |
| | CC233977 | HOSE (IHR KIT #255044) (104" OCL) (237" MFH) (PNEUMATIC ONLY) | 2 | |
| | CC210811 | HOSE (IHR KIT #255047) (107" OCL) (242" MFH) (PNEUMATIC ONLY) | 2 | |

https://truckmanualshub.com/

**NOTES:**

https://truckmanualshub.com/



## E60-MT 3-STAGE MAST - INTERNAL HOSE REEVING - DOUBLE
## S/N 200001A~

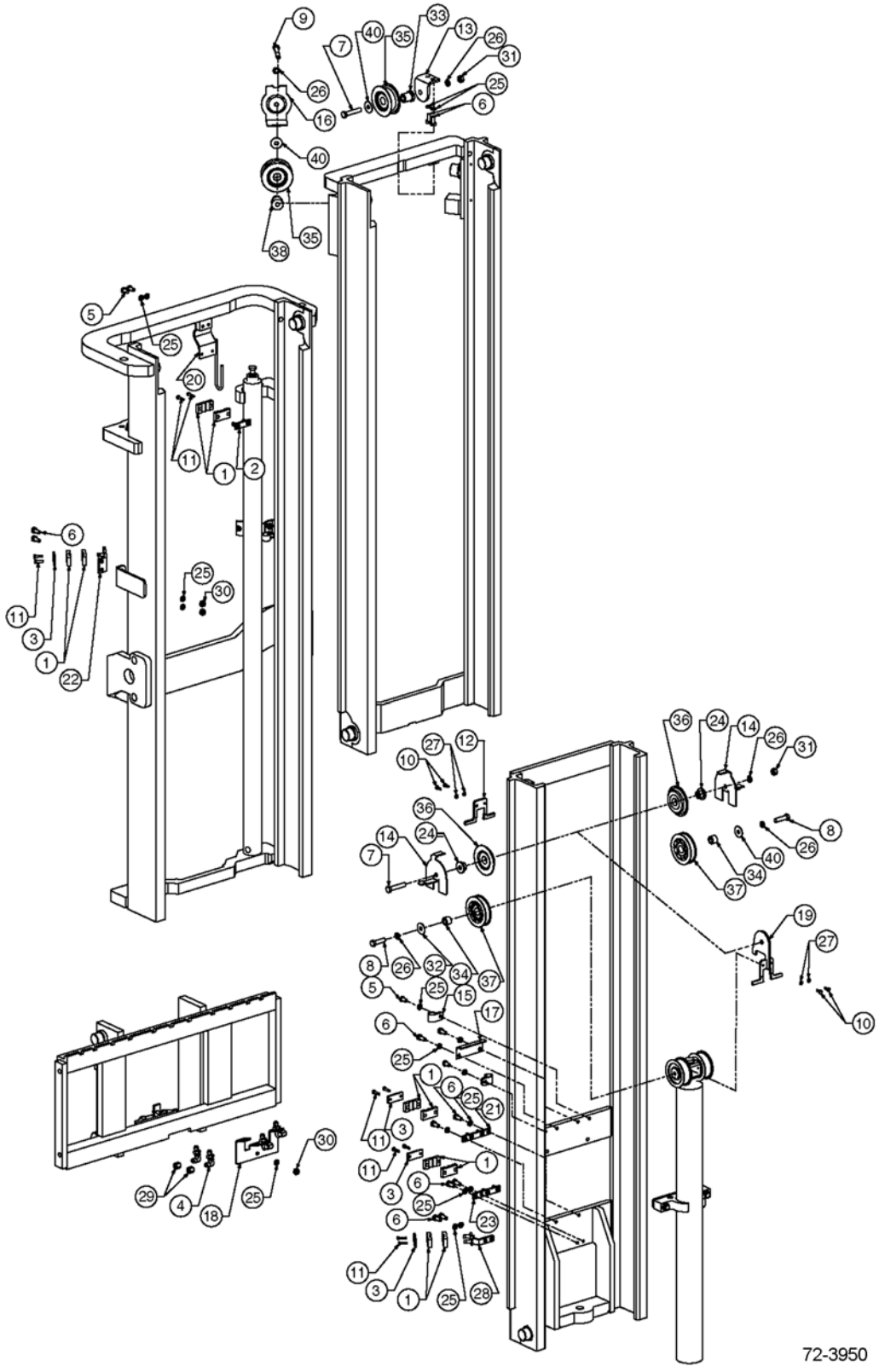

https://truckmanualshub.com/



## E60-MT 3-STAGE MAST - INTERNAL HOSE REEVING - DOUBLE
## S/N 200001A~

| Item | Part Number | Description | Qty | Serial Number |
|---|---|---|---|---|
| 1 | 3EB-73-A5150 | CLAMP, HOSE | 12 | |
| 2 | 3EB-73-A6010 | BAR ASSY | 1 | |
| 3 | 3EB-73-A5160 | HOSE CLAMP BAR | 5 | |
| 4 | 3EB-71-A6010 | BULKHEAD UNION - 90° | 4 | |
| 5 | 3EB-79-A5330 | CAPSCREW - M10 X 20 | 4 | |
| 6 | 3EB-73-A5490 | CAPSCREW - M10 X 25 | 18 | |
| 7 | 3EB-79-A5230 | CAPSCREW - M12 X 65 | 2 | |
| 8 | 3EB-79-A5290 | CAPSCREW - M12 X 45 | 2 | |
| 9 | 3EB-79-A5190 | CAPSCREW - M12 X 80 | 1 | |
| 10 | 3EB-73-A5350 | CAPSCREW - M6 X 16 | 4 | |
| 11 | 3EB-79-A5240 | CAPSCREW - M6 X 25 | 12 | |
| 12 | 3EB-73-A5170 | IHR & CHAIN GUARD | 1 | |
| 13 | 3EB-73-A5670 | DOUBLE IHR BRACKET | 1 | |
| 14 | 3EB-73-A5180 | IHR & CHAIN GUARD | 2 | |
| 15 | 3EB-79-A5160 | HOSE CLAMP | 2 | |
| 16 | 3EB-73-A5120 | HOSE GUARD | 1 | |
| 17 | 3EB-73-A5190 | HOSE GUARD | 1 | |
| 18 | 3EB-73-A5680 | CARRIAGE IHR BRACKET | 1 | |
| 19 | 3EB-73-A5620 | IHR BRACKET | 1 | |
| 20 | 3EB-73-A6030 | IHR BRACKET | 1 | |
| 21 | 3EB-73-A5630 | IHR BRACKET | 1 | |
| 22 | 3EB-73-A5640 | IHR BRACKET ASSY | 2 | |
| 23 | 3EB-73-A5690 | IHR BRACKET ASSY | 1 | |
| 24 | 3EB-73-A5230 | SINGLE FUNCTION SHEAVE | 2 | |
| 25 | 3EB-79-A6040 | WASHER, LOCK - M10 | 23 | |
| 26 | 3EB-79-A5360 | WASHER, LOCK - M12 | 5 | |
| 27 | 3EB-73-A5340 | WASHER, LOCK - M6 | 4 | |
| 28 | 3EB-73-A5660 | BRACKET, LOWER | 1 | |
| 29 | 3EB-79-A5250 | NUT - #6 CAP | 4 | |
| 30 | 3EB-79-A5180 | NUT - M10 | 5 | |
| 31 | 3EB-79-A5270 | NUT - M12 | 2 | |
| 32 | 3EB-79-A5280 | WASHER | 4 | |
| 33 | 3EB-73-A5240 | SHAFT | 1 | |
| 34 | 3EB-73-A5250 | SHAFT | 2 | |
| 35 | 3EB-73-A5020 | SHEAVE - IHR | 2 | |
| 36 | 3EB-73-A5030 | SHEAVE - IHR | 2 | |
| 37 | 3EB-73-A5060 | SHEAVE - SINGLE | 2 | |
| 38 | 3EB-73-A5220 | STUBSHAFT | 1 | |

PARTS LIST CONTINUED ON NEXT PAGE

https://truckmanualshub.com/



## E60-MT 3-STAGE MAST - INTERNAL HOSE REEVING - DOUBLE
## S/N 200001A~

| Item | Part Number | Description | Qty | Serial Number |
|---|---|---|---|---|
| | | **OCL = OUTER CHANNEL LENGTH, MFH = MAXIMUM FORK HEIGHT** | | |
| | | **INNER HOSE - RIGHT SIDE** | | |
| | CC216933 | HOSE (IHR KIT #255091) (69" OCL) (150" MFH) | 1 | |
| | CC213923 | HOSE (IHR KIT #255095) (73" OCL) (162" MFH) | 1 | |
| | CC216935 | HOSE (IHR KIT #255097) (75" OCL) (168" MFH) | 1 | |
| | 3EB-74-A5770 | HOSE (IHR KIT #255102) (80" OCL) (183" MFH) | 1 | |
| | CC233971 | HOSE (IHR KIT #255105) (83" OCL) (190" MFH) | 1 | |
| | 3EB-74-A5810 | HOSE (IHR KIT #255114) (92" OCL) (211" MFH) | 1 | |
| | CC231256 | HOSE (IHR KIT #255116) (94" OCL) (217" MFH) | 1 | |
| | 3EB-74-A5830 | HOSE (IHR KIT #255123) (101" OCL) (230" MFH) | 1 | |
| | CC233977 | HOSE (IHR KIT #255126) (104" OCL) (237" MFH) | 1 | |
| | CC210811 | HOSE (IHR KIT #255129) (107" OCL) (242" MFH) | 1 | |
| | | **INNER HOSE - LEFT SIDE** | | |
| | CC234997 | HOSE (IHR KIT #255091) (69" OCL) (150" MFH) | 1 | |
| | CC216938 | HOSE (IHR KIT #255095) (73" OCL) (162" MFH) | 1 | |
| | CC235007 | HOSE (IHR KIT #255097) (75" OCL) (168" MFH) | 1 | |
| | CC216941 | HOSE (IHR KIT #255102) (80" OCL) (183" MFH) | 1 | |
| | CC235018 | HOSE (IHR KIT #255105) (83" OCL) (190" MFH) | 1 | |
| | CC216950 | HOSE (IHR KIT #255114) (92" OCL) (211" MFH) | 1 | |
| | CC233975 | HOSE (IHR KIT #255116) (94" OCL) (217" MFH) | 1 | |
| | CC235043 | HOSE (IHR KIT #255123) (101" OCL) (230" MFH) | 1 | |
| | CC233978 | HOSE (IHR KIT #255126) (104" OCL) (237" MFH) | 1 | |
| | CC235055 | HOSE (IHR KIT #255129) (107" OCL) (242" MFH) | 1 | |
| | | **OUTER HOSES (SHORTEST)** | | |
| | CC234992 | HOSE (IHR KIT #255091) (69" OCL) (150" MFH) | 2 | |
| | CC235000 | HOSE (IHR KIT #255095) (73" OCL) (162" MFH) | 2 | |
| | CC213923 | HOSE (IHR KIT #255097) (75" OCL) (168" MFH) | 2 | |
| | CC235010 | HOSE (IHR KIT #255102) (80" OCL) (183" MFH) | 2 | |
| | CC233970 | HOSE (IHR KIT #255105) (83" OCL) (190" MFH) | 2 | |
| | CC232707 | HOSE (IHR KIT #255114 (92" OCL) (211" MFH) | 2 | |
| | CC235027 | HOSE (IHR KIT #255116) (94" OCL) (217" MFH) | 2 | |
| | CC235038 | HOSE (IHR KIT #255123) (101" OCL) (230" MFH) | 2 | |
| | CC235044 | HOSE (IHR KIT #255126) (104" OCL) (237" MFH) | 2 | |
| | CC235050 | HOSE (IHR KIT #255129) (107" OCL) (242" MFH) | 2 | |

https://truckmanualshub.com/

**NOTES:**

https://truckmanualshub.com/



# E60-MT 3-STAGE MAST — RECOMMENDED STOCK LIST (RSL)

NO

ILLUSTRATION

REQUIRED

https://truckmanualshub.com/



## E60-MT 3-STAGE MAST — RECOMMENDED STOCK LIST (RSL)

| Item | Part Number | Description | Qty | No. of Masts Serviced |
|---|---|---|---|---|
| | | **MAIN LIFT CYLINDERS** | | |
| | SEE PARTS PG | MAIN LIFT CYL ASSY | 0 | 1 - 19 |
| | SEE PARTS PG | MAIN LIFT CYL ASSY | 1 | 20 - 50 |
| | SEE PARTS PG | SEAL KIT | 2 | 1 - 5 |
| | SEE PARTS PG | SEAL KIT | 4 | 6 - 19 |
| | SEE PARTS PG | SEAL KIT | 8 | 20 - 50 |
| | | **FREE LIFT CYLINDER** | | |
| | SEE PARTS PG | FREE LIFT CYLINDER ASSY | 0 | 1 - 5 |
| | SEE PARTS PG | FREE LIFT CYLINDER ASSY | 1 | 6 - 19 |
| | SEE PARTS PG | FREE LIFT CYLINDER ASSY | 2 | 20 - 50 |
| | SEE PARTS PG | SEAL KIT | 2 | 1 - 5 |
| | SEE PARTS PG | SEAL KIT | 4 | 6 - 19 |
| | SEE PARTS PG | SEAL KIT | 8 | 20 - 50 |
| | | **INTERNAL REEVING** | | |
| | SEE PARTS PG | HOSE | 2 | 1 - 5 |
| | SEE PARTS PG | HOSE | 4 | 6 - 19 |
| | SEE PARTS PG | HOSE | 8 | 20 - 50 |
| | 3EB-71-A6040 | FITTING | 1 | 1 - 5 |
| | 3EB-71-A6040 | FITTING | 2 | 6 - 19 |
| | 3EB-71-A6040 | FITTING | 4 | 20 - 50 |
| | 3EB-73-A5030 | SHEAVE, IHR, SINGLE & DOUBLE IHR | 1 | 1 - 5 |
| | 3EB-73-A5030 | SHEAVE, IHR, SINGLE & DOUBLE IHR | 2 | 6 - 19 |
| | 3EB-73-A5030 | SHEAVE, IHR, SINGLE & DOUBLE IHR | 4 | 20 - 50 |
| | 3EB-73-A5060 | SHEAVE - DOUBLE IHR | 1 | 1 - 5 |
| | 3EB-73-A5060 | SHEAVE - DOUBLE IHR | 2 | 6 - 19 |
| | 3EB-73-A5060 | SHEAVE - DOUBLE IHR | 4 | 20 - 50 |
| | 3EB-73-A5020 | SHEAVE - SINGLE & DOUBLE IHR | 1 | 1 - 5 |
| | 3EB-73-A5020 | SHEAVE - SINGLE & DOUBLE IHR | 2 | 6 - 19 |
| | 3EB-73-A5020 | SHEAVE - SINGLE & DOUBLE IHR | 4 | 20 - 50 |
| | | **UPRIGHTS** | | |
| | CC201435 | CHAIN ANCHOR | 2 | 1 - 5 |
| | CC201435 | CHAIN ANCHOR | 4 | 6 - 19 |
| | CC201435 | CHAIN ANCHOR | 8 | 20 - 50 |
| | CC684242 | CHAIN ANCHOR | 1 | 1 - 5 |
| | CC684242 | CHAIN ANCHOR | 2 | 6 - 19 |
| | CC684242 | CHAIN ANCHOR | 4 | 20 - 50 |
| | CC684305 | PIN, CHAIN | 8 | 1 - 5 |
| | CC684305 | PIN, CHAIN | 8 | 6 - 19 |

PARTS LIST CONTINUED ON NEXT PAGE

https://truckmanualshub.com/



## E60-MT 3-STAGE MAST — RECOMMENDED STOCK LIST (RSL)

| Item | Part Number | Description | Qty | No. of Masts Serviced |
|---|---|---|---|---|
| | CC684305 | PIN, CHAIN | 16 | 20 - 50 |
| | 3EB-79-A6090 | NUT | 6 | 1 - 5 |
| | 3EB-79-A6090 | NUT | 12 | 6 - 19 |
| | 3EB-79-A6090 | NUT | 24 | 20 - 50 |
| | 3EB-79-A6081 | PIN, COTTER | 6 | 1 - 5 |
| | 3EB-79-A6081 | PIN, COTTER | 12 | 6 - 19 |
| | 3EB-79-A6081 | PIN, COTTER | 24 | 20 - 50 |
| | 3EB-79-A6080 | PIN, COTTER | 6 | 1 - 5 |
| | 3EB-79-A6080 | PIN, COTTER | 12 | 6 - 19 |
| | 3EB-79-A6080 | PIN, COTTER | 36 | 20 - 50 |
| | 3EB-79-A6050 | SHIM, .03 IN. | 16 | 1 - 5 |
| | 3EB-79-A6050 | SHIM, .03 IN. | 32 | 6 - 19 |
| | 3EB-79-A6050 | SHIM, .03 IN. | 64 | 20 - 50 |
| | 3EB-79-A5210 | ROLLER | 8 | 1 - 5 |
| | 3EB-79-A5210 | ROLLER | 24 | 6 - 19 |
| | 3EB-79-A5210 | ROLLER | 48 | 20 - 50 |
| | CC662145 | ROLLER | 2 | 1 - 5 |
| | CC662145 | ROLLER | 4 | 6 - 19 |
| | CC662145 | ROLLER | 16 | 20 - 50 |
| | 3EB-73-A5720 | SERVICE KIT, WEAR PLUG | 2 | 1 - 5 |
| | 3EB-73-A5720 | SERVICE KIT, WEAR PLUG | 4 | 6 - 19 |
| | 3EB-73-A5720 | SERVICE KIT, WEAR PLUG | 8 | 20 - 50 |
| | | **CROSSHEAD** | | |
| | 3EB-73-A5010 | CHAIN SHEAVE | 4 | 1 - 5 |
| | 3EB-73-A5010 | CHAIN SHEAVE | 8 | 6 - 19 |
| | 3EB-73-A5010 | CHAIN SHEAVE | 16 | 20 - 50 |
| | 3EB-73-A5330 | RETAINER CLIP | 4 | 1 - 5 |
| | 3EB-73-A5330 | RETAINER CLIP | 8 | 6 - 19 |
| | 3EB-73-A5330 | RETAINER CLIP | 16 | 20 - 50 |
| | 3EB-79-A6070 | SNAP RING | 2 | 1 - 5 |
| | 3EB-79-A6070 | SNAP RING | 4 | 6 - 19 |
| | 3EB-79-A6070 | SNAP RING | 8 | 20 - 50 |
| | | **CARRIAGE AND CHAINS** | | |
| | SEE PARTS PG | FREE LIFT CHAINS | 2 | 1 - 5 |
| | SEE PARTS PG | FREE LIFT CHAINS | 4 | 6 - 19 |
| | SEE PARTS PG | FREE LIFT CHAINS | 8 | 20 - 50 |
| | SEE PARTS PG | MAIN LIFT CHAINS | 2 | 1 - 5 |
| | SEE PARTS PG | MAIN LIFT CHAINS | 4 | 6 - 19 |

PARTS LIST CONTINUED ON NEXT PAGE

https://truckmanualshub.com/



## E60-MT 3-STAGE MAST — RECOMMENDED STOCK LIST (RSL)

| Item | Part Number | Description | Qty | No. of Masts Serviced |
|---|---|---|---|---|
| | SEE PARTS PG | MAIN LIFT CHAINS | 8 | 20 - 50 |
| | 3EB-79-A5210 | CARRIAGE ROLLER | 4 | 1 - 5 |
| | 3EB-79-A5210 | CARRIAGE ROLLER | 8 | 6 - 19 |
| | 3EB-79-A5210 | CARRIAGE ROLLER | 16 | 20 - 50 |
| | 3EB-79-A5220 | ROLLER - 6-ROLLER CARRIAGE | 2 | 1 - 5 |
| | 3EB-79-A5220 | ROLLER - 6-ROLLER CARRIAGE | 4 | 6 - 19 |
| | 3EB-79-A5220 | ROLLER - 6-ROLLER CARRIAGE | 8 | 20 - 50 |
| | CC234001 | CHAIN ANCHOR | 1 | 1 - 5 |
| | CC234001 | CHAIN ANCHOR | 2 | 6 - 19 |
| | CC234001 | CHAIN ANCHOR | 4 | 20 - 50 |
| | 3EB-79-A6081 | PIN, COTTER | 2 | 1 - 5 |
| | 3EB-79-A6081 | PIN, COTTER | 4 | 6 - 19 |
| | 3EB-79-A6081 | PIN, COTTER | 8 | 20 - 50 |
| | 3EB-79-A6080 | PIN, COTTER | 4 | 1 - 5 |
| | 3EB-79-A6080 | PIN, COTTER | 8 | 6 - 19 |
| | 3EB-79-A6080 | PIN, COTTER | 16 | 20 - 50 |
| | CC684305 | CHAIN PIN | 4 | 1 - 19 |
| | CC684305 | CHAIN PIN | 8 | 20 - 50 |
| | 3EB-73-A5450 | NUT | 2 | 1 - 50 |

https://truckmanualshub.com/



# E65-MS 2-STAGE MAST - SAFETY DECALS
## S/N 200001A~

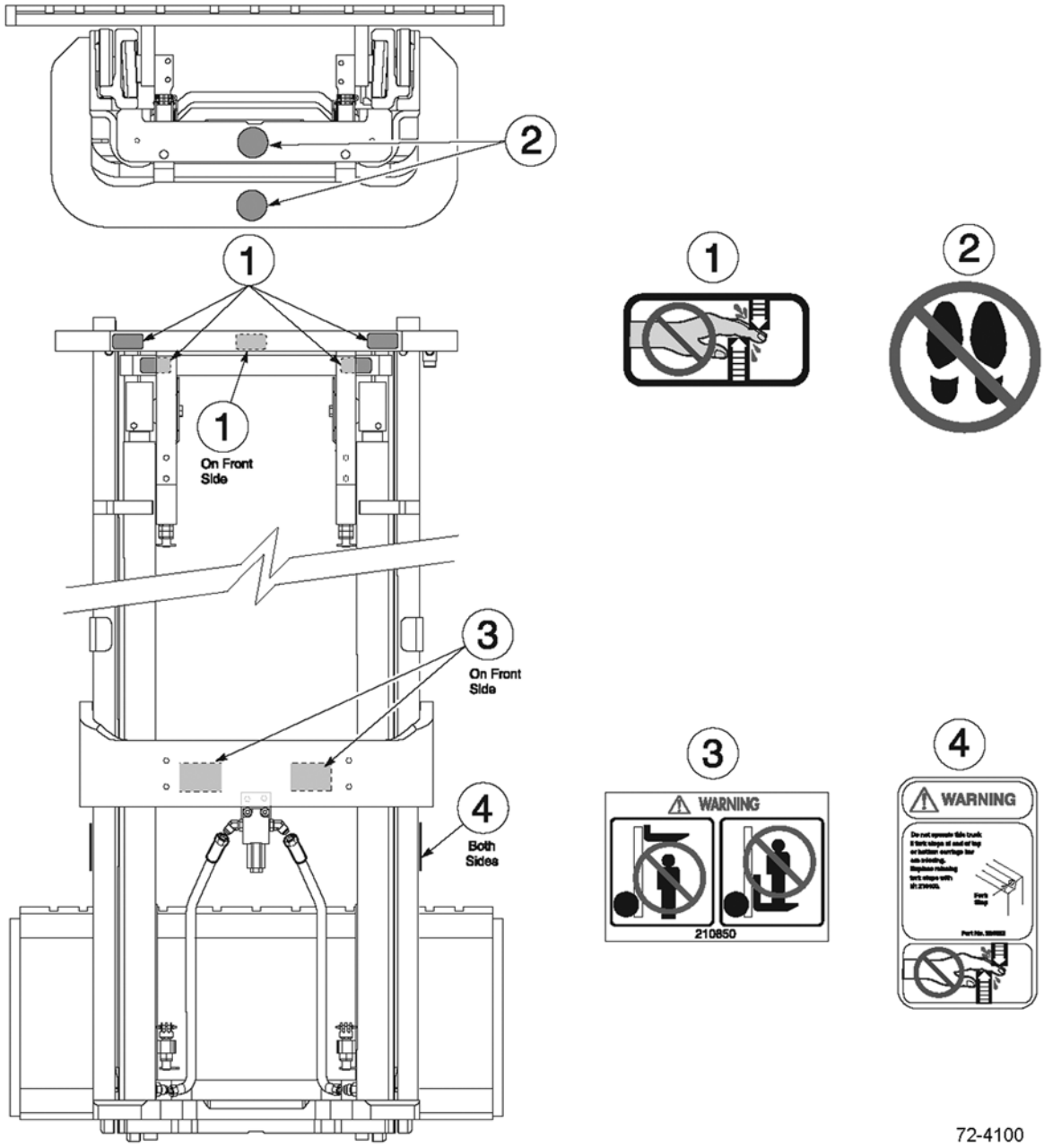


72-4100

https://truckmanualshub.com/



## E65-MS 2-STAGE MAST - SAFETY DECALS
## S/N 200001A~

| Item | Part Number | Description | Qty | Serial Number |
|---|---|---|---|---|
| 1 | 3EB-79-A6010 | DECAL - "HANDS OFF" . . . . . | 5 | |
| 2 | 3EB-79-A6020 | DECAL - "NO STEP" . . . . . | 2 | |
| 3 | CC210850 | DECAL - "WARNING" . . . . . | 2 | |
| 4 | CC224053 | DECAL - "FORK STOP" . . . . . | 2 | |

https://truckmanualshub.com/



# E65-MS 2-STAGE MAST - MAIN LIFT CYLINDERS
## S/N 200001A~

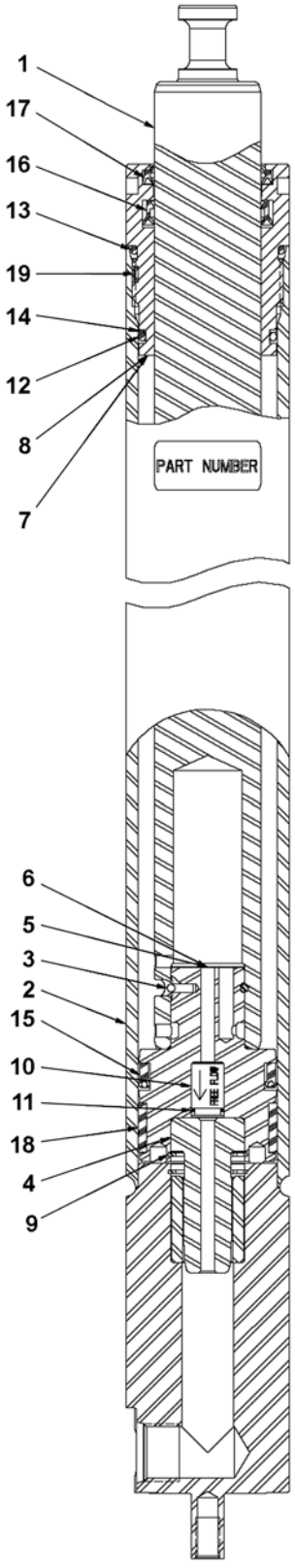


72-4100

https://truckmanualshub.com/



## E65-MS 2-STAGE MAST - MAIN LIFT CYLINDERS
## S/N 200001A~

| Item | Part Number | Description | Qty | Serial Number |
|---|---|---|---|---|
| 1 | NSS | ROD | 1 | |
| 2 | NSS | SHELL | 1 | |
| 3 | NSS | WRAP-IN WIRE (SEAL KIT) | 1 | |
| 4 | NSS | CUSHION PLUNGER | 1 | |
| 5 | NSS | PISTON (PISTON KIT) | 1 | |
| 6 | NSS | PISTON ASSY (PISTON KIT) | 1 | |
| 7 | NSS | RETAINER GLAND (RETAINER KIT) | 1 | |
| 8 | NSS | RETAINER ASSY (RETAINER KIT) | 1 | |
| 9 | NSS | SNAP RING (CHECK VALVE KIT) | 1 | |
| 10 | NSS | CHECK VALVE (CHECK VALVE KIT) | 1 | |
| 11 | NSS | O-RING (SEAL KIT) | 1 | |
| 12 | NSS | O-RING (SEAL KIT) | 1 | |
| 13 | NSS | O-RING (SEAL KIT) | 1 | |
| 14 | NSS | BACKUP RING (SEAL KIT) | 1 | |
| 15 | NSS | POLYPAK (SEAL KIT) | 1 | |
| 16 | NSS | UBR SEAL (SEAL KIT) | 1 | |
| 17 | NSS | ROD WIPER (SEAL KIT) | 1 | |
| 18 | NSS | WEARBAND (SEAL KIT) | 1 | |
| 19 | NSS | LOCKING INSERT (SEAL KIT) | 1 | |
| KIT | CC1004775 | SEAL KIT | 1 | |
| KIT | CC1004774 | PISTON KIT | 1 | |
| KIT | CC1004776 | RETAINER KIT | 1 | |
| KIT | CC1004777 | CHECK VALVE KIT | 1 | |

**OCL = OUTER CHANNEL LENGTH, MFH = MAXIMUM FORK HEIGHT**

| | | |
|---|---|---|
| CC1003428 | MAIN LIFT CYLINDER - (72" OCL) (106" MFH). | 1 |
| CC1003433 | MAIN LIFT CYLINDER - (77" OCL) (116" MFH). | 1 |
| CC1003439 | MAIN LIFT CYLINDER - (83" OCL) (128" MFH). | 1 |
| CC1003448 | MAIN LIFT CYLINDER - (92" OCL) (146" MFH). | 1 |
| CC1003451 | MAIN LIFT CYLINDER - (95" OCL) (152" MFH). | 1 |
| CC1003454 | MAIN LIFT CYLINDER - (98" OCL) (158" MFH). | 1 |
| CC1003460 | MAIN LIFT CYLINDER - (104" OCL) (170" MFH) | 1 |

https://truckmanualshub.com/



## E65-MS 2-STAGE MAST - OUTER UPRIGHT
## S/N 200001A~

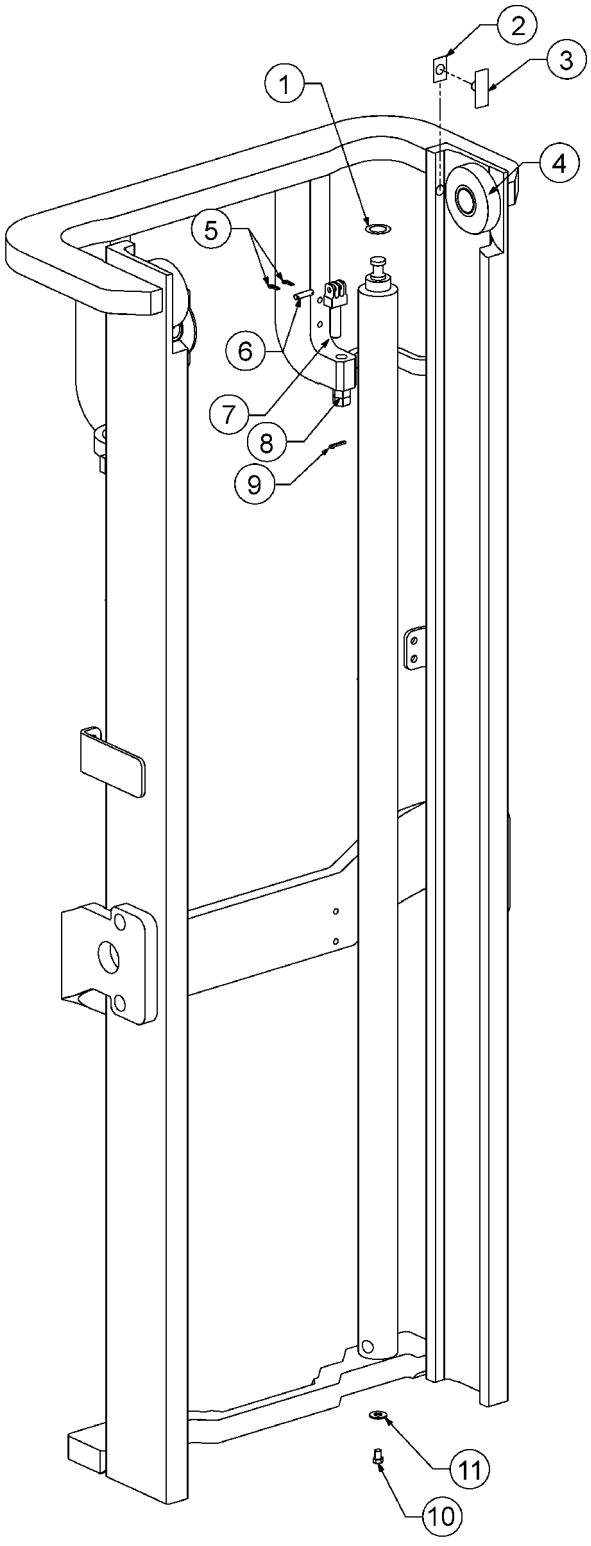

https://truckmanualshub.com/



## E65-MS 2-STAGE MAST - OUTER UPRIGHT
## S/N 200001A~

| Item | Part Number | Description | Qty | Serial Number |
|---|---|---|---|---|
| | | **OCL = OUTER CHANNEL LENGTH, MFH = MAXIMUM FORK HEIGHT** | | |
| | CC236206 | OUTER UPRIGHT - (72" OCL) (106" MFH) . . . . | 1 | |
| | CC236211 | OUTER UPRIGHT - (77" OCL) (116" MFH) . . . . | 1 | |
| | CC236217 | OUTER UPRIGHT - (83" OCL) (128" MFH) . . . . | 1 | |
| | CC236226 | OUTER UPRIGHT - (92" OCL) (146" MFH) . . . . | 1 | |
| | CC236229 | OUTER UPRIGHT - (95" OCL) (152" MFH) . . . . | 1 | |
| | CC236232 | OUTER UPRIGHT - (98" OCL) (158" MFH) . . . . | 1 | |
| | CC236238 | OUTER UPRIGHT - (104" OCL) (170" MFH) . . . | 1 | |
| 1 | CC238137 | SHIM KIT - MAIN LIFT CYL . . . . . | 2 | |
| 2 | CC203388 | WEAR PLUG SHIM . . . . . (WEAR PLUG KIT) | AR | |
| 3 | CC215719 | WEAR PLUG . . . . . (WEAR PLUG KIT) | 2 | |
| 4 | 3EB-79-A5210 | LOAD ROLLER. . . . . | 2 | |
| 5 | 3EB-79-A6080 | PIN, COTTER . . . . . | 4 | |
| 6 | 3EB-79-A5150 | PIN, CHAIN ANCHOR . . . . . | 2 | |
| 7 | 3EB-79-A5110 | CHAIN ANCHOR . . . . . | 2 | |
| 8 | 3EB-79-A6090 | NUT. . . . . | 4 | |
| 9 | 3EB-79-A6081 | PIN, COTTER . . . . . | 2 | |
| 10 | 3EB-79-A5340 | BOLT. . . . . | 2 | |
| 11 | 3EB-79-A5350 | WASHER, FLAT . . . . . | 2 | |
| KIT | CC212587 | WEAR PLUG KIT . . . . . | 1 | |

https://truckmanualshub.com/



# E65-MS 2-STAGE MAST - INNER UPRIGHT
## S/N 200001A~

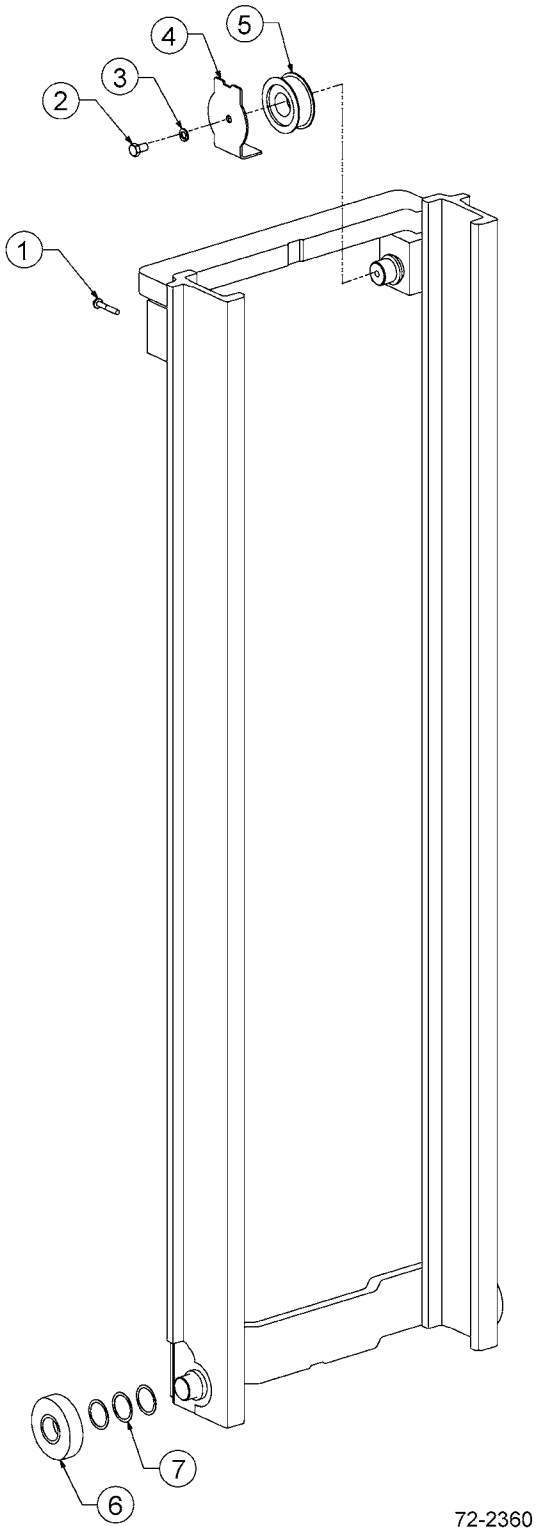

https://truckmanualshub.com/



## E65-MS 2-STAGE MAST - INNER UPRIGHT
## S/N 200001A~

| Item | Part Number | Description | Qty | Serial Number |
|---|---|---|---|---|
| | | **OCL = OUTER CHANNEL LENGTH, MFH = MAXIMUM FORK HEIGHT** | | |
| | CC236277 | INNER UPRIGHT - (72" OCL) (106" MFH) | 1 | |
| | CC236282 | INNER UPRIGHT - (77" OCL) (116" MFH) | 1 | |
| | CC236288 | INNER UPRIGHT - (83" OCL) (128" MFH) | 1 | |
| | CC236297 | INNER UPRIGHT - (92" OCL) (146" MFH) | 1 | |
| | CC236300 | INNER UPRIGHT - (95" OCL) (152" MFH) | 1 | |
| | CC236303 | INNER UPRIGHT - (98" OCL) (158" MFH) | 1 | |
| | CC236309 | INNER UPRIGHT - (104" OCL) (170" MFH) | 1 | |
| 1 | 3EB-79-A5380 | BOLT | 2 | |
| 2 | 3EB-79-A5370 | M12 X 20 LG CAPSCREW | 2 | |
| 3 | 3EB-79-A5360 | M12 WASHER, LOCK | 2 | |
| 4 | CC201435 | CHAIN GUARD | 2 | |
| 5 | 3EB-73-A5010 | SHEAVE | 2 | |
| 6 | CC662145 | LOAD ROLLER | 2 | |
| 7 | 3EB-79-A6050 | SHIM, LOAD ROLLER | AR | |

https://truckmanualshub.com/



## E65-MS 2-STAGE MAST - CARRIAGE - 6-ROLLER
## S/N 200001A~

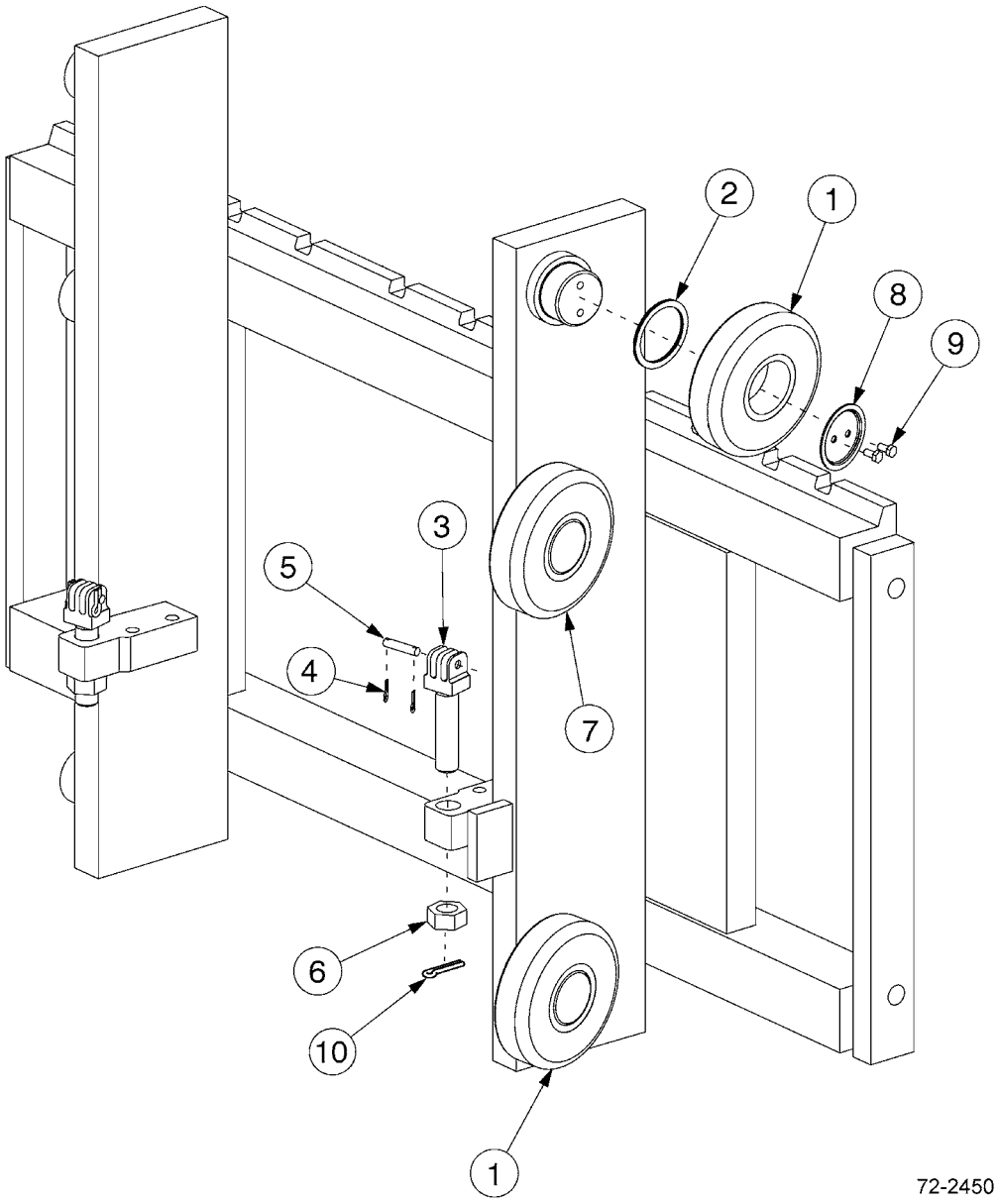

https://truckmanualshub.com/



## E65-MS 2-STAGE MAST - CARRIAGE - 6-ROLLER
## S/N 200001A~

| Item | Part Number | Description | Qty | Serial Number |
|---|---|---|---|---|
| | CC251820 | CARRIAGE - 37" - CUSHION TIRE SPEC. . . . . | 1 | |
| | CC251821 | CARRIAGE - 41" - CUSHION TIRE SPEC. . . . . | 1 | |
| | CC251822 | CARRIAGE - 37" - PNEUMATIC TIRE SPEC. . . | 1 | |
| | CC251823 | CARRIAGE - 41" - PNEUMATIC TIRE SPEC. . . | 1 | |
| 1 | 3EB-79-A5210 | LOAD ROLLER. . . . . | 4 | |
| 2 | 3EB-79-A6050 | SHIM, LOAD ROLLER . . . . . | AR | |
| 3 | 3EB-79-A5140 | CHAIN ANCHOR . . . . . | 2 | |
| 4 | 3EB-79-A6080 | PIN, COTTER . . . . . | 4 | |
| 5 | 3EB-79-A5150 | PIN, CHAIN ANCHOR . . . . . | 2 | |
| 6 | 3EB-73-A5450 | NUT. . . . . | 2 | |
| 7 | 3EB-79-A5220 | LOAD ROLLER. . . . . | 2 | |
| 8 | 3EB-73-A5460 | RETAINER . . . . . | 2 | |
| 9 | 3EB-73-A5470 | CAPSCREW - M6 X 12LG . . . . . | 4 | |
| 10 | 3EB-79-A6081 | PIN, COTTER . . . . . | 2 | |

https://truckmanualshub.com/



## E65-MS 2-STAGE MAST - HOIST CHAINS
## S/N 200001A~

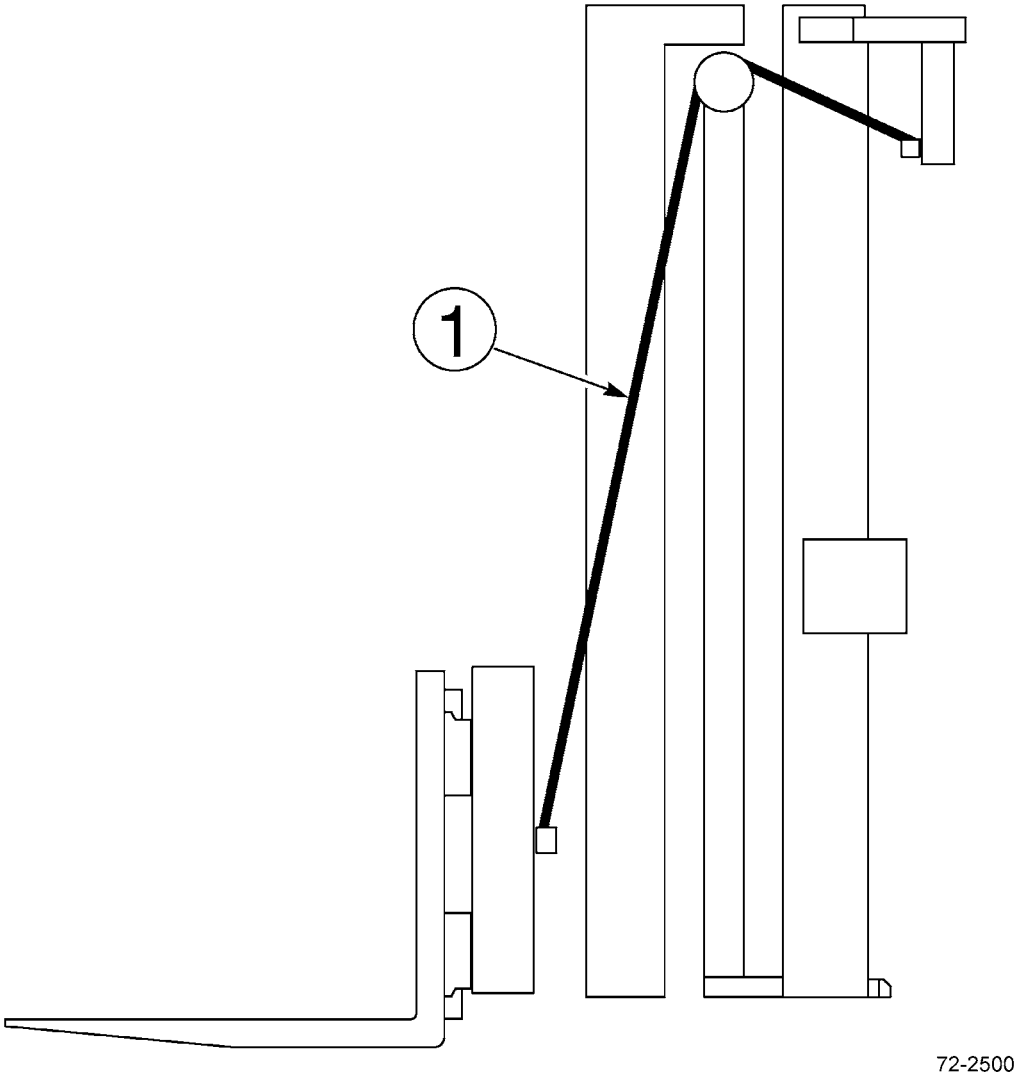

https://truckmanualshub.com/



## E65-MS 2-STAGE MAST - HOIST CHAINS
## S/N 200001A~

| Item | Part Number | Description | Qty | Serial Number |
|---|---|---|---|---|
| | | **OCL = OUTER CHANNEL LENGTH, MFH = MAXIMUM FORK HEIGHT** | | |
| 1 | CC683895 | MAIN LIFT CHAIN - (72" OCL) (106" MFH) . . . . | 2 | |
| | CC683987 | MAIN LIFT CHAIN - (77" OCL) (116" MFH) . . . . | 2 | |
| | CC678797 | MAIN LIFT CHAIN - (83" OCL) (128" MFH) . . . . | 2 | |
| | CC678800 | MAIN LIFT CHAIN - (92" OCL) (146" MFH) . . . . | 2 | |
| | CC683998 | MAIN LIFT CHAIN - (95" OCL) (152" MFH) . . . . | 2 | |
| | CC684000 | MAIN LIFT CHAIN - (98" OCL) (158" MFH) . . . . | 2 | |
| | CC688157 | MAIN LIFT CHAIN - (104" OCL) (170" MFH) . . . | 2 | |

https://truckmanualshub.com/



## E65-MS 2-STAGE MAST - LOAD BACKREST
## S/N 200001A~

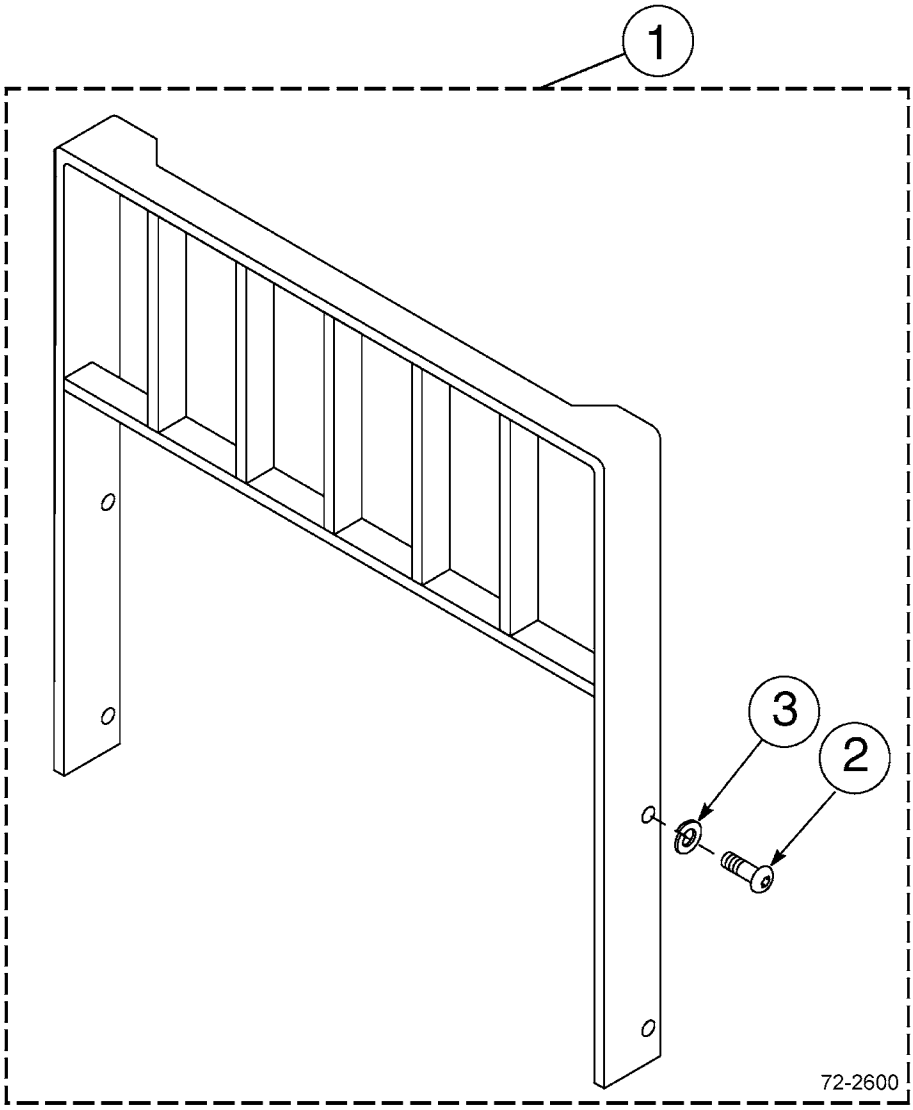

https://truckmanualshub.com/



## E65-MS 2-STAGE MAST - LOAD BACKREST
## S/N 200001A~

| Item | Part Number | Description | Qty | Serial Number |
|---|---|---|---|---|
| | | **CLASS III LOAD BACKRESTS (HEIGHT X WIDTH)** | | |
| 1 | CC684784 | BACKREST - 37" X 36" . . . . . | 1 | |
| | CC684785 | BACKREST - 37" X 48" . . . . . | 1 | |
| | CC684786 | BACKREST - 37" X 60" . . . . . | 1 | |
| | CC684787 | BACKREST - 41" X 36" . . . . . | 1 | |
| | CC684788 | BACKREST - 41" X 48" . . . . . | 1 | |
| | CC684789 | BACKREST - 41" X 60" . . . . . | 1 | |
| 2 | CC200173 | .CAPSCREW - M16 X 2.0 X 35-8.8 . . . . . | 4 | |
| 3 | 3EB-71-A6030 | .WASHER, LOCK - M16 . . . . . | 4 | |

https://truckmanualshub.com/



## E65-MS 2-STAGE MAST - INSTALLATION COMPONENTS
## CUSHION TIRE MODELS - S/N 200001A~

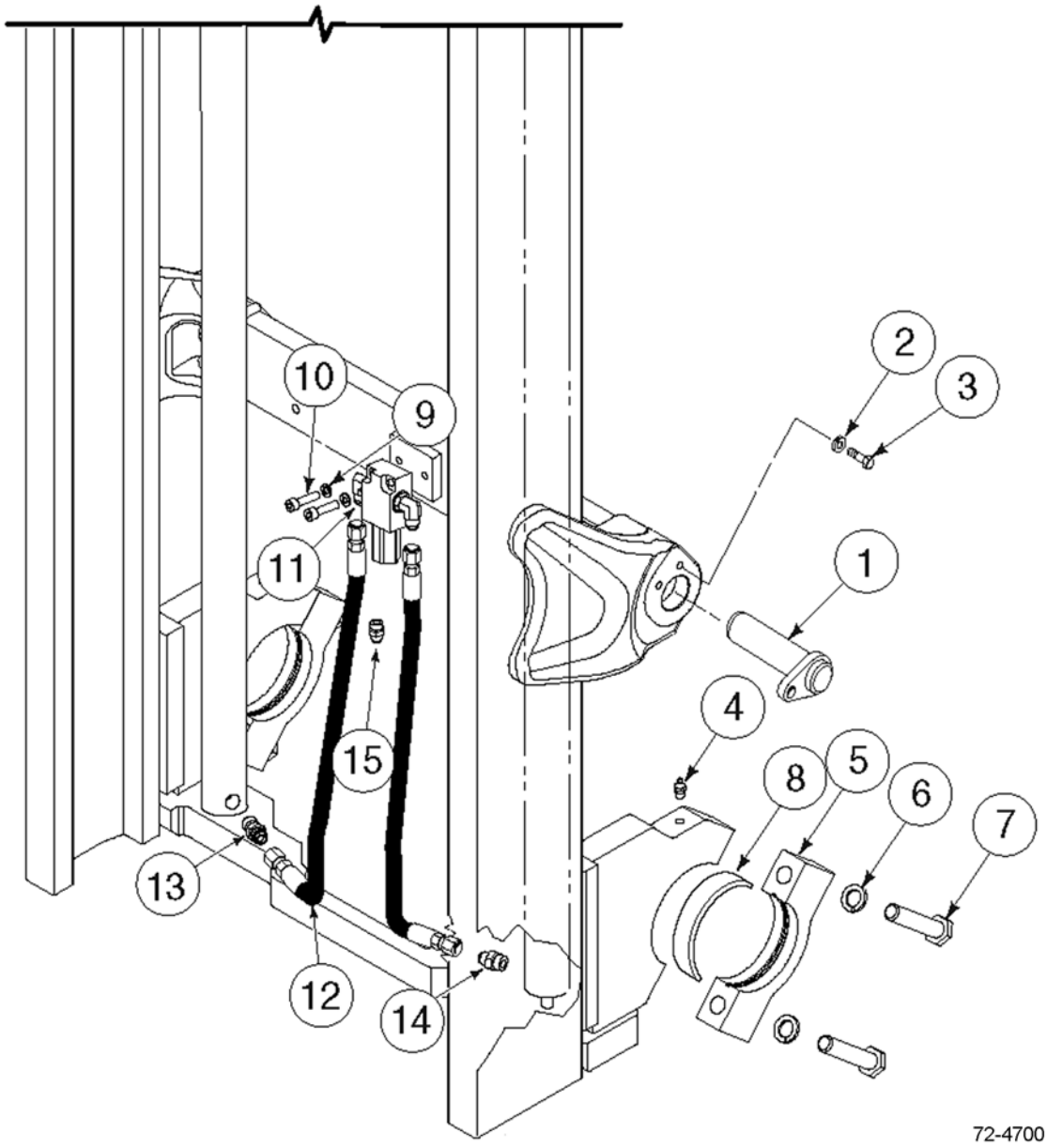

https://truckmanualshub.com/



## E65-MS 2-STAGE MAST - INSTALLATION COMPONENTS
## CUSHION TIRE MODELS - S/N 200001A~

| Item | Part Number | Description | Qty | Serial Number |
|---|---|---|---|---|
| 1 | 3EB-41-51750 | TILT PIN | 2 | |
| 2 | 3EB-79-A6040 | WASHER, LOCK. | 2 | |
| 3 | CC212632 | CAPSCREW | 2 | |
| 4 | CC7418 | FITTING, GREASE | 2 | |
| 5 | CC251901 | CAP. | 2 | |
| 6 | 3EB-71-A6030 | WASHER, LOCK. | 4 | |
| 7 | CC251906 | CAPSCREW | 4 | |
| 8 | 3EB-84-51290 | BUSHING | 2 | |
| 9 | CC767611 | CAPSCREW | 2 | |
| 10 | 3EB-79-A6040 | WASHER, LOCK. | 2 | |
| 11 | CC601250 | FITTING # 8 - 90° ELBOW | 2 | |
| 12 | CC255666 | MAIN LIFT HOSE - RH | 1 | |
| | CC255665 | MAIN LEFT HOSE - LH | 1 | |
| 13 | CC611289 | FITTING # 8 -#10 STRAIGHT. | 1 | |
| 14 | CC238750 | 12 GPM EXTERNAL FUSE | 1 | |
| 15 | CC601377 | FITTING | 1 | |
| KIT | CC255596 | INSTALLATION KIT | 1 | |

https://truckmanualshub.com/



## E65-MS 2-STAGE MAST - INSTALLATION COMPONENTS
## PNEUMATIC TIRE MODELS - S/N 200001A~

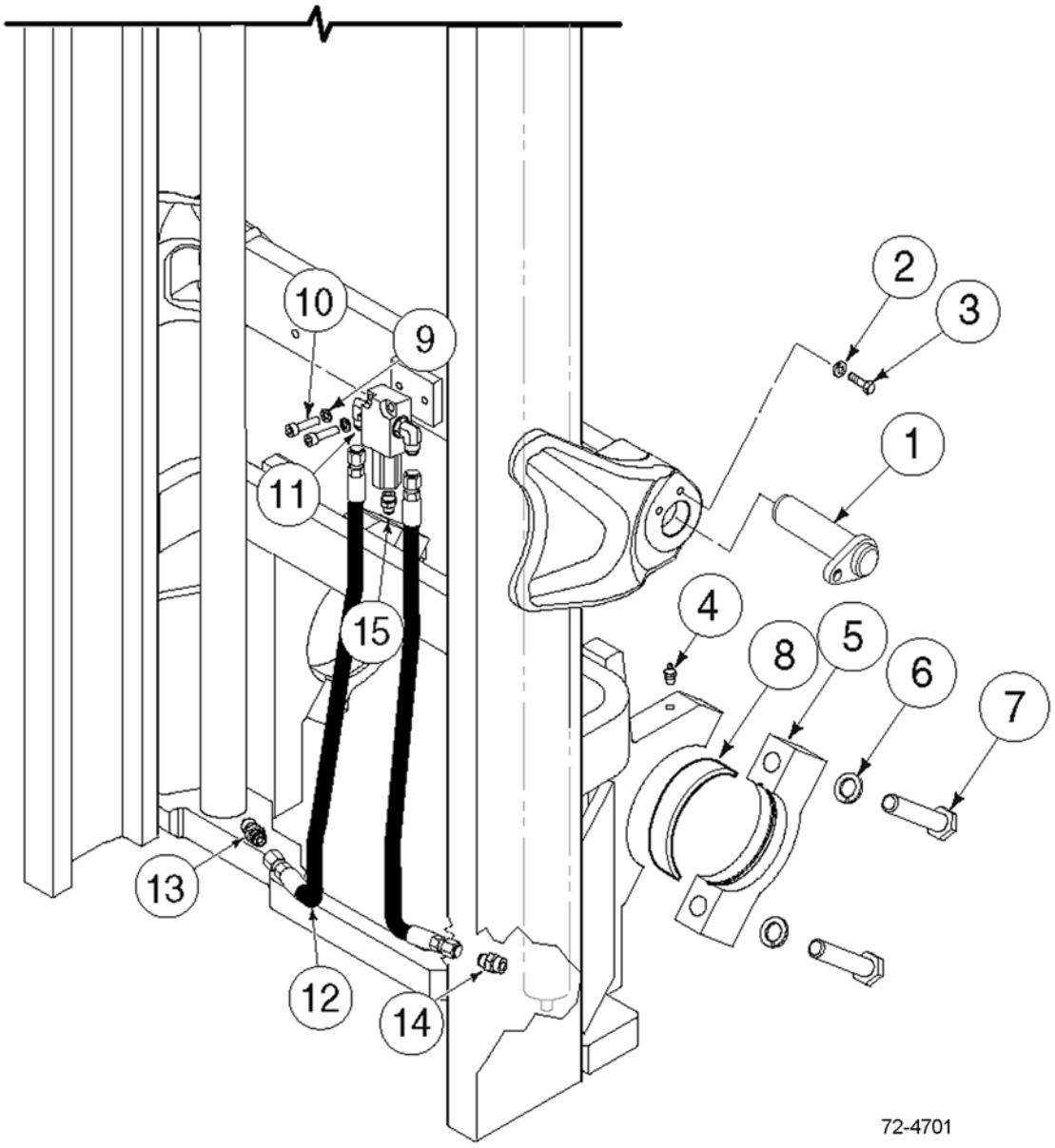

https://truckmanualshub.com/



## E65-MS 2-STAGE MAST - INSTALLATION COMPONENTS
## PNEUMATIC TIRE MODELS - S/N 200001A~

| Item | Part Number | Description | Qty | Serial Number |
|---|---|---|---|---|
| 1 | 3EB-41-51750 | TILT PIN | 2 | |
| 2 | 3EB-79-A6040 | WASHER, LOCK. | 2 | |
| 3 | CC212632 | CAPSCREW | 2 | |
| 4 | CC7418 | FITTING, GREASE | 2 | |
| 5 | CC252686 | CAP. | 2 | |
| 6 | 3EB-71-A6030 | WASHER, LOCK. | 4 | |
| 7 | CC251906 | CAPSCREW | 4 | |
| 8 | 3EB-71-51290 | BUSHING (ALL) | 2 | |
| 9 | CC767611 | CAPSCREW | 2 | |
| 10 | 3EB-79-A6040 | WASHER, LOCK. | 2 | |
| 11 | CC601250 | FITTING # 8 - 90° ELBOW | 2 | |
| 12 | CC253793 | MAIN LIFT HOSE - RH | 1 | |
| | CC255652 | MAIN LEFT HOSE - LH | 1 | |
| 13 | CC611289 | FITTING # 8 -#10 STRAIGHT. | 1 | |
| 14 | CC238750 | 12 GPM EXTERNAL FUSE | 1 | |
| 15 | CC601377 | FITTING | 1 | |
| KIT | CC255596 | INSTALLATION KIT | 1 | |

https://truckmanualshub.com/



## E65-MS 2-STAGE MAST - LOWERING CONTROL VALVE
## S/N 200001A~

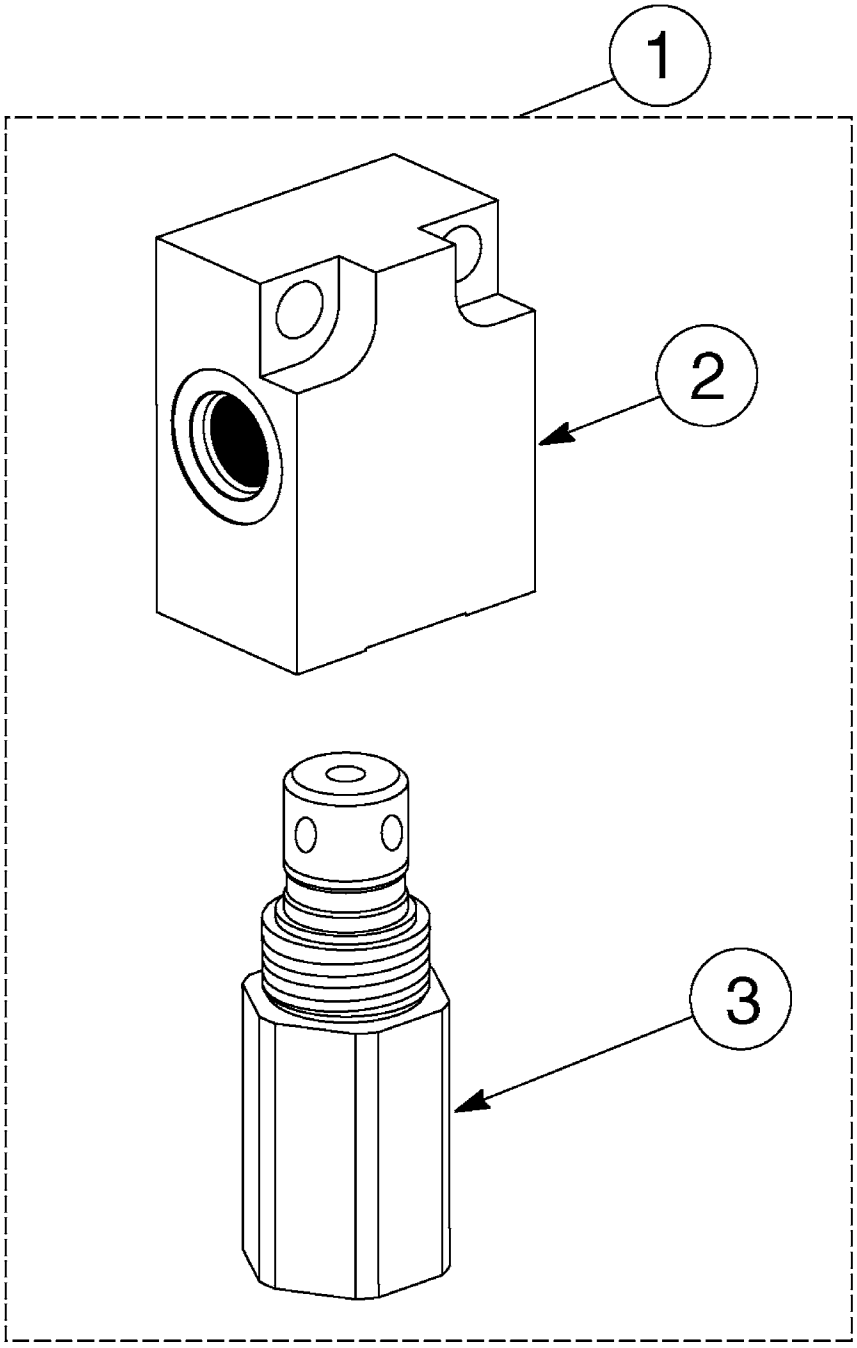


72-2850

https://truckmanualshub.com/



## E65-MS 2-STAGE MAST - LOWERING CONTROL VALVE
## S/N 200001A~

| Item | Part Number | Description | Qty | Serial Number |
|---|---|---|---|---|
| 1 | CC253243 | CONTROL VALVE - 20 GPM . . . . . | 1 | |
| 2 | CC214793 | .VALVE BODY. . . . . | 1 | |
| 3 | CC253242 | .VALVE CARTRIDGE - 20 GPM . . . . . | 1 | |

https://truckmanualshub.com/



# E65-MS 2-STAGE MAST - INTERNAL HOSE REEVING - SINGLE
## S/N 200001A~

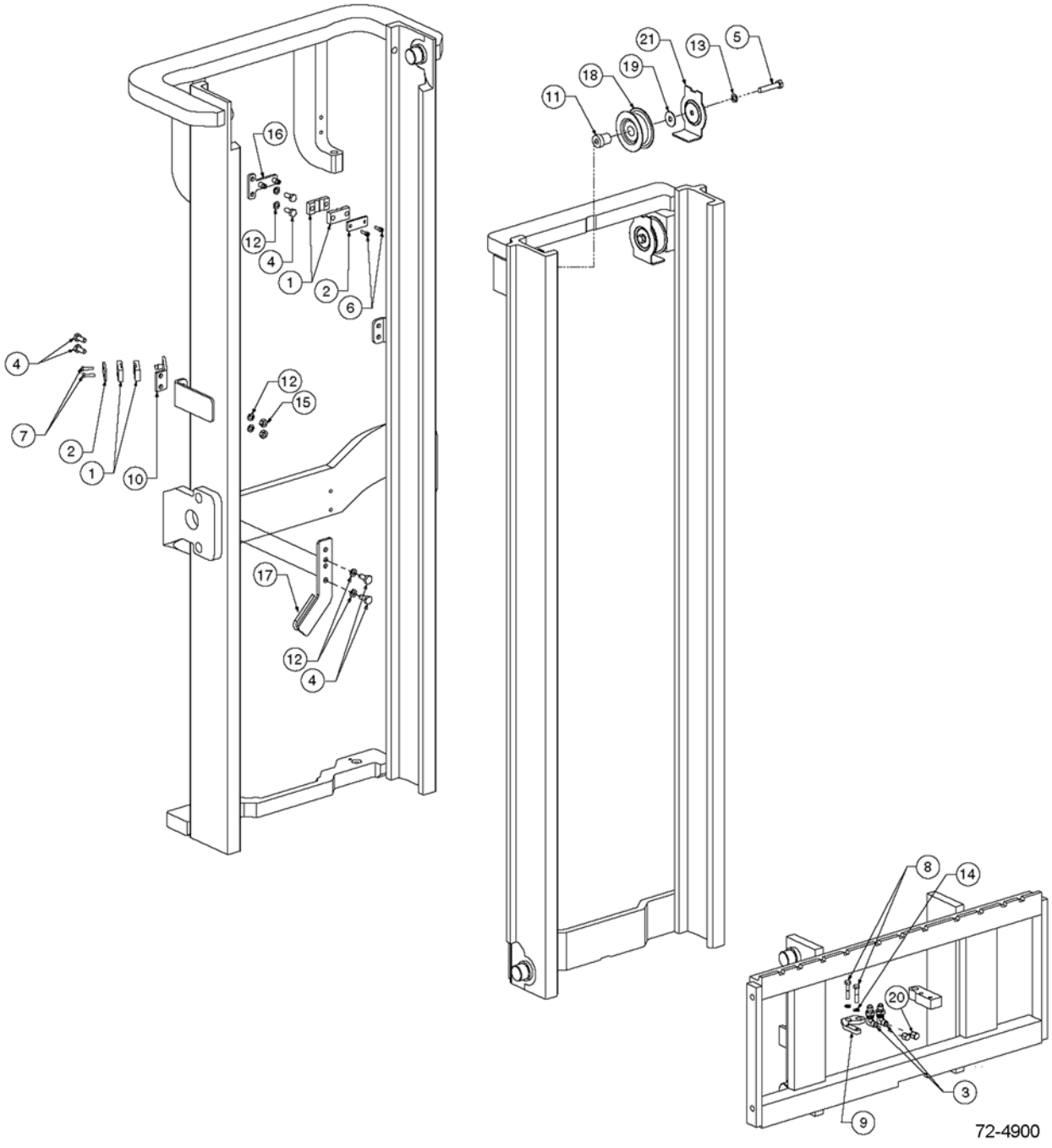

https://truckmanualshub.com/



## E65-MS 2-STAGE MAST - INTERNAL HOSE REEVING - SINGLE
## S/N 200001A~

| Item | Part Number | Description | Qty | Serial Number |
|---|---|---|---|---|
| 1 | 3EB-73-A5150 | CLAMP, HOSE | 4 | |
| 2 | 3EB-73-A5160 | HOSE CLAMP BAR | 2 | |
| 3 | 3EB-71-A6010 | FITTING, BULKHEAD UNION | 2 | |
| 4 | 3EB-73-A5490 | CAPSCREW - M10 X 25LG | 6 | |
| 5 | 3EB-79-A5230 | CAPSCREW - M12 X 60LG | 1 | |
| 6 | CC761170 | CAPSCREW - M6 X 20LG | 2 | |
| 7 | 3EB-79-A5240 | CAPSCREW - M6 X 25LG | 2 | |
| 8 | CC203202 | CAPSCREW - M8 X 40 LG | 2 | |
| 9 | CC235886 | BRACKET - CARRIAGE IHR | 1 | |
| 10 | 3EB-73-A5640 | IHR BRACKET | 1 | |
| 11 | CC235879 | IHR STUB SHAFT | 1 | |
| 12 | 3EB-79-A6040 | WASHER, LOCK - M10 | 6 | |
| 13 | 3EB-79-A5360 | WASHER, LOCK - M12 | 1 | |
| 14 | CC206315 | WASHER, LOCK - M8 | 2 | |
| 15 | 3EB-79-A5180 | NUT - M10 | 2 | |
| 16 | CC236902 | IHR BRACKET - OUTER | 1 | |
| 17 | CC238170 | IHR BRACKET - R.H. | 1 | |
| 18 | 3EB-73-A5020 | SHEAVE | 1 | |
| 19 | 3EB-79-A5280 | WASHER | 1 | |
| 20 | 3EB-79-A5250 | CAP | 2 | |
| 21 | CC216052 | HOSE GUARD | 1 | |
| | **OCL = OUTER CHANNEL LENGTH, MFH = MAXIMUM FORK HEIGHT** | | | |
| | CC213003 | HOSE (IHR KIT #255165) (72" OCL) (106" MFH) | 2 | |
| | CC213918 | HOSE (IHR KIT #255170) (77" OCL) (116" MFH) | 2 | |
| | CC216918 | HOSE (IHR KIT #255176) (83" OCL) (128" MFH) | 2 | |
| | CC234978 | HOSE (IHR KIT #255185) (92" OCL) (146" MFH) | 2 | |
| | CC216928 | HOSE (IHR KIT #255188) (95" OCL) (152" MFH) | 2 | |
| | CC213922 | HOSE (IHR KIT #255191) (98" OCL) (158" MFH) | 2 | |
| | CC234991 | HOSE (IHR KIT #255197) (104" OCL) (170" MFH) | 2 | |

https://truckmanualshub.com/



# E60-MS 2-STAGE MAST - INTERNAL HOSE REEVING - DOUBLE
## S/N 200001A~

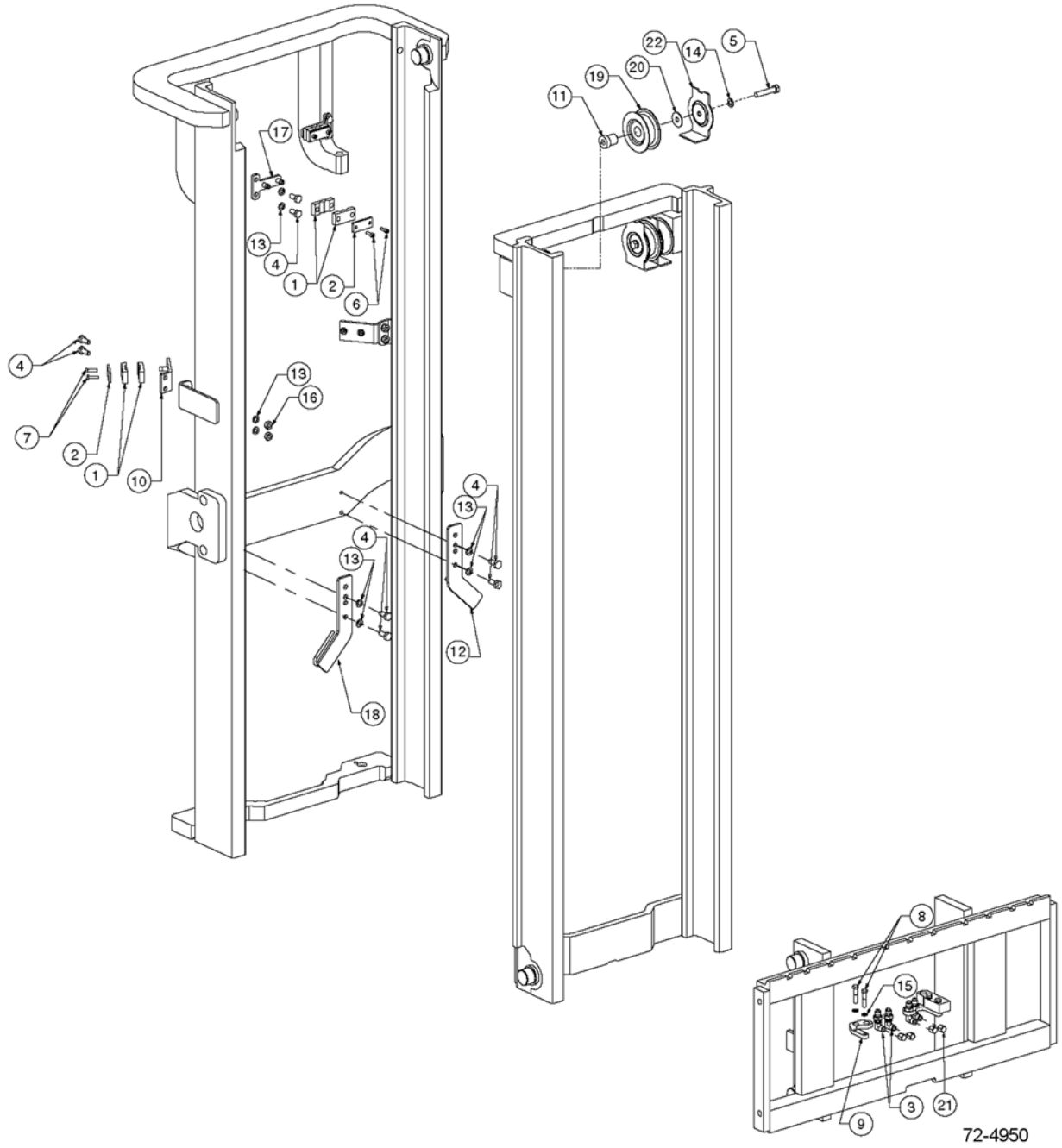

https://truckmanualshub.com/



## E60-MS 2-STAGE MAST - INTERNAL HOSE REEVING - DOUBLE
## S/N 200001A~

| Item | Part Number | Description | Qty | Serial Number |
|---|---|---|---|---|
| 1 | 3EB-73-A5150 | CLAMP, HOSE | 8 | |
| 2 | 3EB-73-A5160 | HOSE CLAMP BAR | 4 | |
| 3 | 3EB-71-A6010 | FITTING, BULKHEAD UNION | 4 | |
| 4 | 3EB-73-A5490 | CAPSCREW - M10 X 25LG | 12 | |
| 5 | 3EB-79-A6060 | CAPSCREW - M12 X 60LG | 2 | |
| 6 | CC761170 | CAPSCREW - M6 X 20LG | 4 | |
| 7 | 3EB-79-A5240 | CAPSCREW - M6 X 25LG | 4 | |
| 8 | CC203202 | CAPSCREW - M8 X 40 LG | 4 | |
| 9 | CC235886 | BRACKET - CARRIAGE IHR | 2 | |
| 10 | 3EB-73-A5640 | IHR BRACKET | 2 | |
| 11 | CC235879 | IHR STUB SHAFT | 2 | |
| 12 | CC238171 | IHR BRACKET - L.H. | 1 | |
| 13 | 3EB-79-A6040 | WASHER, LOCK - M10 | 12 | |
| 14 | 3EB-79-A5360 | WASHER, LOCK - M12 | 2 | |
| 15 | CC206315 | WASHER, LOCK - M8 | 4 | |
| 16 | 3EB-79-A5180 | NUT - M10 | 4 | |
| 17 | CC236902 | IHR BRACKET - OUTER | 2 | |
| 18 | CC238170 | IHR BRACKET - R.H. | 1 | |
| 19 | 3EB-73-A5020 | SHEAVE | 2 | |
| 20 | 3EB-79-A5280 | WASHER | 2 | |
| 21 | 3EB-79-A5250 | CAP | 4 | |
| 22 | CC216052 | HOSE GUARD | 1 | |
| | **OCL = OUTER CHANNEL LENGTH, MFH = MAXIMUM FORK HEIGHT** | | | |
| | CC213003 | HOSE (IHR KIT #255336) (72" OCL) (106" MFH) | 4 | |
| | CC213918 | HOSE (IHR KIT #255341) (77" OCL) (116" MFH) | 4 | |
| | CC216918 | HOSE (IHR KIT #255347) (83" OCL) (128" MFH) | 4 | |
| | CC234978 | HOSE (IHR KIT #255356) (92" OCL) (146" MFH) | 4 | |
| | CC216928 | HOSE (IHR KIT #255359) (95" OCL) (152" MFH) | 4 | |
| | CC213922 | HOSE (IHR KIT #255362) (98" OCL) (158" MFH) | 4 | |
| | CC234991 | HOSE (IHR KIT #255368) (104" OCL) (170" MFH) | 4 | |

https://truckmanualshub.com/



# E65-MS 2-STAGE MAST — RECOMMENDED STOCK LIST (RSL)

NO

ILLUSTRATION

REQUIRED

https://truckmanualshub.com/



## E65-MS 2-STAGE MAST — RECOMMENDED STOCK LIST (RSL)

| Item | Part Number | Description | Qty | No. of Masts Serviced |
|---|---|---|---|---|
| | | **MAIN LIFT CYLINDERS** | | |
| | SEE PARTS PG | MAIN LIFT CYL ASSY | 0 | 1 - 19 |
| | SEE PARTS PG | MAIN LIFT CYL ASSY | 1 | 20 - 50 |
| | SEE PARTS PG | SEAL KIT | 2 | 1 - 5 |
| | SEE PARTS PG | SEAL KIT | 4 | 6 - 19 |
| | SEE PARTS PG | SEAL KIT | 8 | 20 - 50 |
| | | **INTERNAL REEVING** | | |
| | SEE PARTS PG | HOSE | 2 | 1 - 5 |
| | SEE PARTS PG | HOSE | 4 | 6 - 19 |
| | SEE PARTS PG | HOSE | 8 | 20 - 50 |
| | 3EB-71-A6010 | FITTING | 1 | 1 - 5 |
| | 3EB-71-A6010 | FITTING | 2 | 6 - 19 |
| | 3EB-71-A6010 | FITTING | 4 | 20 - 50 |
| | 3EB-73-A5020 | SHEAVE, IHR, SINGLE IHR | 1 | 1 - 5 |
| | 3EB-73-A5020 | SHEAVE, IHR, SINGLE IHR | 2 | 6 - 19 |
| | 3EB-73-A5020 | SHEAVE, IHR, SINGLE IHR | 4 | 20 - 50 |
| | 3EB-73-A5020 | SHEAVE, IHR, DOUBLE | 2 | 1 - 5 |
| | 3EB-73-A5020 | SHEAVE, IHR, DOUBLE | 4 | 6 - 19 |
| | 3EB-73-A5020 | SHEAVE, IHR, DOUBLE | 8 | 20 - 50 |
| | | **UPRIGHTS** | | |
| | 3EB-79-A5110 | CHAIN ANCHOR | 1 | 1 - 5 |
| | 3EB-79-A5110 | CHAIN ANCHOR | 2 | 6 - 19 |
| | 3EB-79-A5110 | CHAIN ANCHOR | 4 | 20 - 50 |
| | 3EB-79-A5150 | PIN, CHAIN ANCHOR | 1 | 1 - 5 |
| | 3EB-79-A5150 | PIN, CHAIN ANCHOR | 2 | 6 - 19 |
| | 3EB-79-A5150 | PIN, CHAIN ANCHOR | 4 | 20 - 50 |
| | 3EB-79-A6090 | NUT | 4 | 1 - 5 |
| | 3EB-79-A6090 | NUT | 8 | 6 - 19 |
| | 3EB-79-A6090 | NUT | 32 | 20 - 50 |
| | 3EB-79-A6080 | PIN, COTTER | 6 | 1 - 5 |
| | 3EB-79-A6080 | PIN, COTTER | 12 | 6 - 19 |
| | 3EB-79-A6080 | PIN, COTTER | 36 | 20 - 50 |
| | 3EB-79-A6081 | PIN, COTTER | 4 | 1 - 5 |
| | 3EB-79-A6081 | PIN, COTTER | 8 | 6 - 19 |
| | 3EB-79-A6081 | PIN, COTTER | 16 | 20 - 50 |
| | 3EB-79-A6050 | SHIM, .03 IN. | 16 | 1 - 5 |
| | 3EB-79-A6050 | SHIM, .03 IN. | 32 | 6 - 19 |
| | 3EB-79-A6050 | SHIM, .03 IN. | 64 | 20 - 50 |

PARTS LIST CONTINUED ON NEXT PAGE

https://truckmanualshub.com/



## E65-MS 2-STAGE MAST — RECOMMENDED STOCK LIST (RSL)

| Item | Part Number | Description | Qty | No. of Masts Serviced |
|---|---|---|---|---|
| | 3EB-79-A5210 | ROLLER | 8 | 1 - 5 |
| | 3EB-79-A5210 | ROLLER | 24 | 6 - 19 |
| | 3EB-79-A5210 | ROLLER | 48 | 20 - 50 |
| | 3EB-73-A5720 | SERVICE KIT, WEAR PLUG | 2 | 1 - 5 |
| | 3EB-73-A5720 | SERVICE KIT, WEAR PLUG | 4 | 6 - 19 |
| | 3EB-73-A5720 | SERVICE KIT, WEAR PLUG | 8 | 20 - 50 |
| | | **CARRIAGE AND CHAINS** | | |
| | SEE PARTS PG | MAIN LIFT CHAINS | 2 | 1 - 5 |
| | SEE PARTS PG | MAIN LIFT CHAINS | 4 | 6 - 19 |
| | SEE PARTS PG | MAIN LIFT CHAINS | 8 | 20 - 50 |
| | 3EB-79-A5220 | ROLLER - 6-ROLLER CARRIAGE | 8 | 1 - 5 |
| | 3EB-79-A5220 | ROLLER - 6-ROLLER CARRIAGE | 16 | 6 - 19 |
| | 3EB-79-A5220 | ROLLER - 6-ROLLER CARRIAGE | 32 | 20 - 50 |
| | 3EB-79-A5140 | CHAIN ANCHOR | 1 | 1 - 5 |
| | 3EB-79-A5140 | CHAIN ANCHOR | 2 | 6 - 19 |
| | 3EB-79-A5140 | CHAIN ANCHOR | 4 | 20 - 50 |
| | 3EB-79-A6081 | PIN, COTTER | 4 | 1 - 5 |
| | 3EB-79-A6081 | PIN, COTTER | 8 | 6 - 19 |
| | 3EB-79-A6081 | PIN, COTTER | 16 | 20 - 50 |
| | 3EB-79-A6080 | PIN, COTTER | 4 | 1 - 5 |
| | 3EB-79-A6080 | PIN, COTTER | 8 | 6 - 19 |
| | 3EB-79-A6080 | PIN, COTTER | 16 | 20 - 50 |
| | 3EB-79-A5150 | CHAIN PIN | 8 | 1 - 19 |
| | 3EB-79-A5150 | CHAIN PIN | 16 | 20 - 50 |
| | 3EB-73-A5450 | NUT | 2 | 1 - 50 |

https://truckmanualshub.com/

**NOTES:**

https://truckmanualshub.com/



# E65-MT 3-STAGE MAST - SAFETY DECALS
## S/N 200001A~

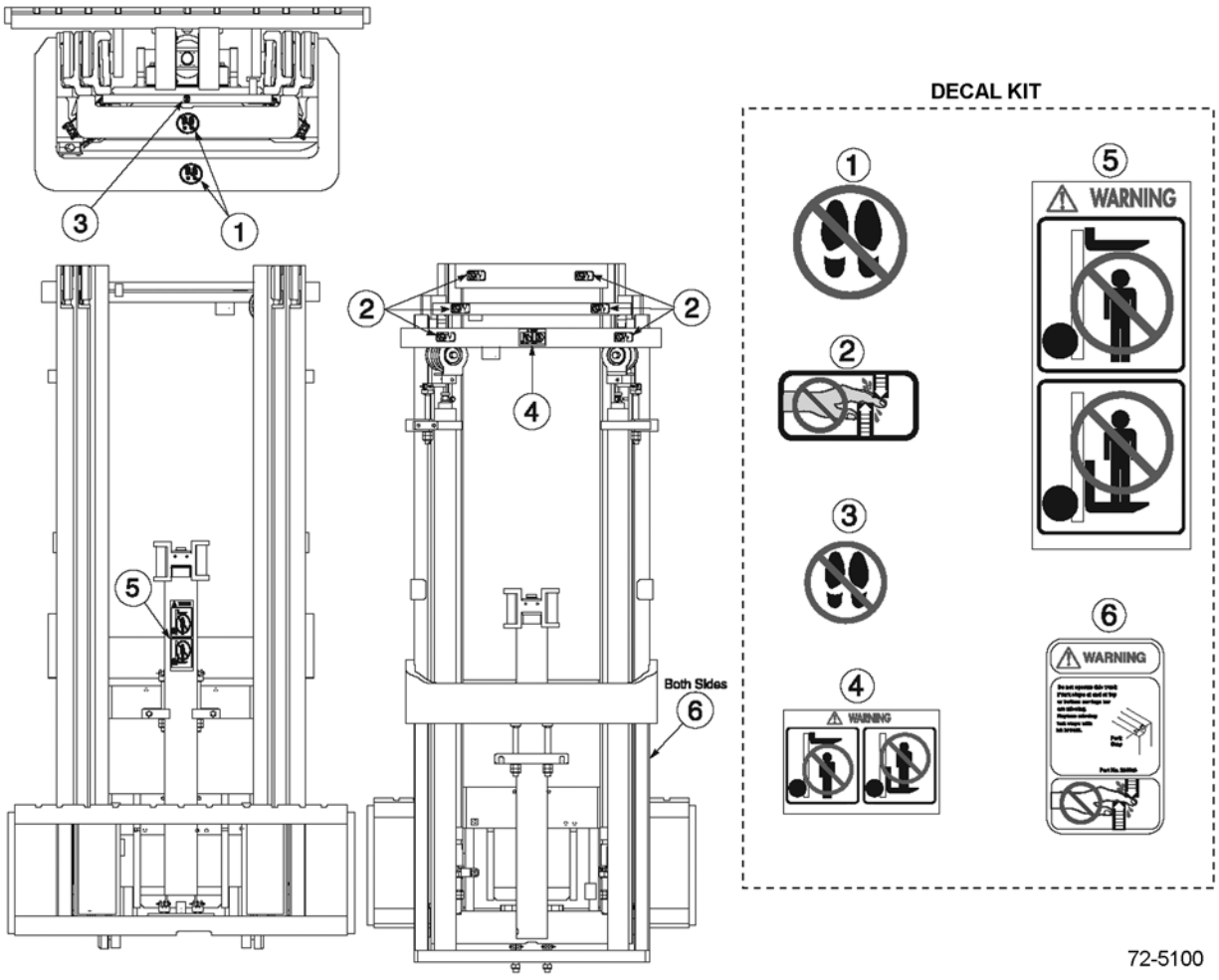

https://truckmanualshub.com/



## E65-MT 3-STAGE MAST - SAFETY DECALS
## S/N 200001A~

| Item | Part Number | Description | Qty | Serial Number |
|---|---|---|---|---|
| 1 | 3EB-79-A6020 | DECAL - "NO STEP" | 2 | |
| 2 | 3EB-79-A6010 | DECAL - "HANDS OFF" | 6 | |
| 3 | 3EB-79-A6030 | DECAL - "NO STEP" | 1 | |
| 4 | CC210850 | DECAL - "WARNING" | 1 | |
| 5 | 3EB-79-A5310 | DECAL - "WARNING: | 1 | |
| 6 | CC224053 | DECAL - "FORK STOP" | 2 | |
| KIT | CC210851 | DECAL KIT | 1 | |

https://truckmanualshub.com/



# E65-MT 3-STAGE MAST - MAIN LIFT CYLINDERS
## S/N 200001A~

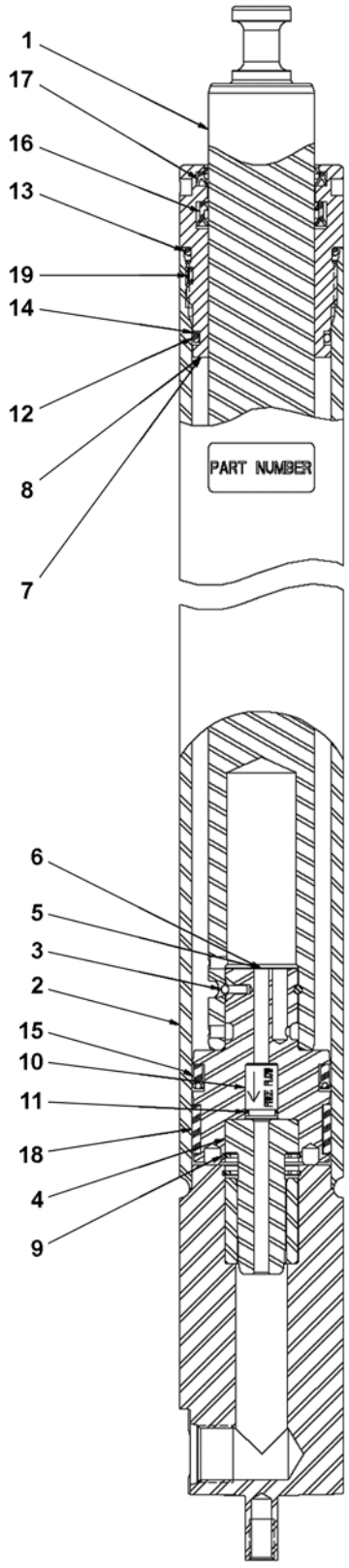


72-5200

https://truckmanualshub.com/



## E65-MT 3-STAGE MAST - MAIN LIFT CYLINDERS
## S/N 200001A~

| Item | Part Number | Description | Qty | Serial Number |
|---|---|---|---|---|
| 1 | NSS | ROD | 1 | |
| 2 | NSS | SHELL | 1 | |
| 3 | NSS | WRAP-IN WIRE (SEAL KIT) | 1 | |
| 4 | NSS | CUSHION PLUNGER | 1 | |
| 5 | NSS | PISTON (PISTON KIT) | 1 | |
| 6 | NSS | PISTON ASSY (PISTON KIT) | 1 | |
| 7 | NSS | RETAINER GLAND (RETAINER KIT) | 1 | |
| 8 | NSS | RETAINER ASSY (RETAINER KIT) | 1 | |
| 9 | NSS | SNAP RING (CHECK VALVE KIT) | 1 | |
| 10 | NSS | CHECK VALVE (CHECK VALVE KIT) | 1 | |
| 11 | NSS | O-RING (SEAL KIT) | 1 | |
| 12 | NSS | O-RING (SEAL KIT) | 1 | |
| 13 | NSS | O-RING (SEAL KIT) | 1 | |
| 14 | NSS | BACKUP RING (SEAL KIT) | 1 | |
| 15 | NSS | POLYPAK (SEAL KIT) | 1 | |
| 16 | NSS | UBR SEAL (SEAL KIT) | 1 | |
| 17 | NSS | ROD WIPER (SEAL KIT) | 1 | |
| 18 | NSS | WEAR BAND (SEAL KIT) | 1 | |
| 19 | NSS | LOCKING INSERT (SEAL KIT) | 1 | |
| KIT | CC1004776 | RETAINER KIT | 1 | |
| KIT | CC1004775 | SEAL KIT | 1 | |
| KIT | CC1004774 | PISTON KIT | 1 | |
| KIT | CC1004777 | CHECK VALVE KIT | 1 | |
| | **OCL = OUTER CHANNEL LENGTH, MFH = MAXIMUM FORK HEIGHT** | | | |
| | CC1003245 | MAIN LIFT CYLINDER - (71" OCL) (150" MFH). | 1 | |
| | CC1003251 | MAIN LIFT CYLINDER - (77" OCL) (168" MFH). | 1 | |
| | CC1003256 | MAIN LIFT CYLINDER - (82" OCL) (183" MFH). | 1 | |
| | CC1003260 | MAIN LIFT CYLINDER - (86" OCL) (189" MFH). | 1 | |
| | CC1003272 | MAIN LIFT CYLINDER - (98" OCL) (217" MFH). | 1 | |
| | CC1003279 | MAIN LIFT CYLINDER - (105" OCL) (230" MFH) | 1 | |
| | CC1003283 | MAIN LIFT CYLINDER - (109" OCL) (238" MFH) | 1 | |

https://truckmanualshub.com/



# E65-MT 3-STAGE MAST - FREE LIFT CYLINDER
## S/N 200001A~

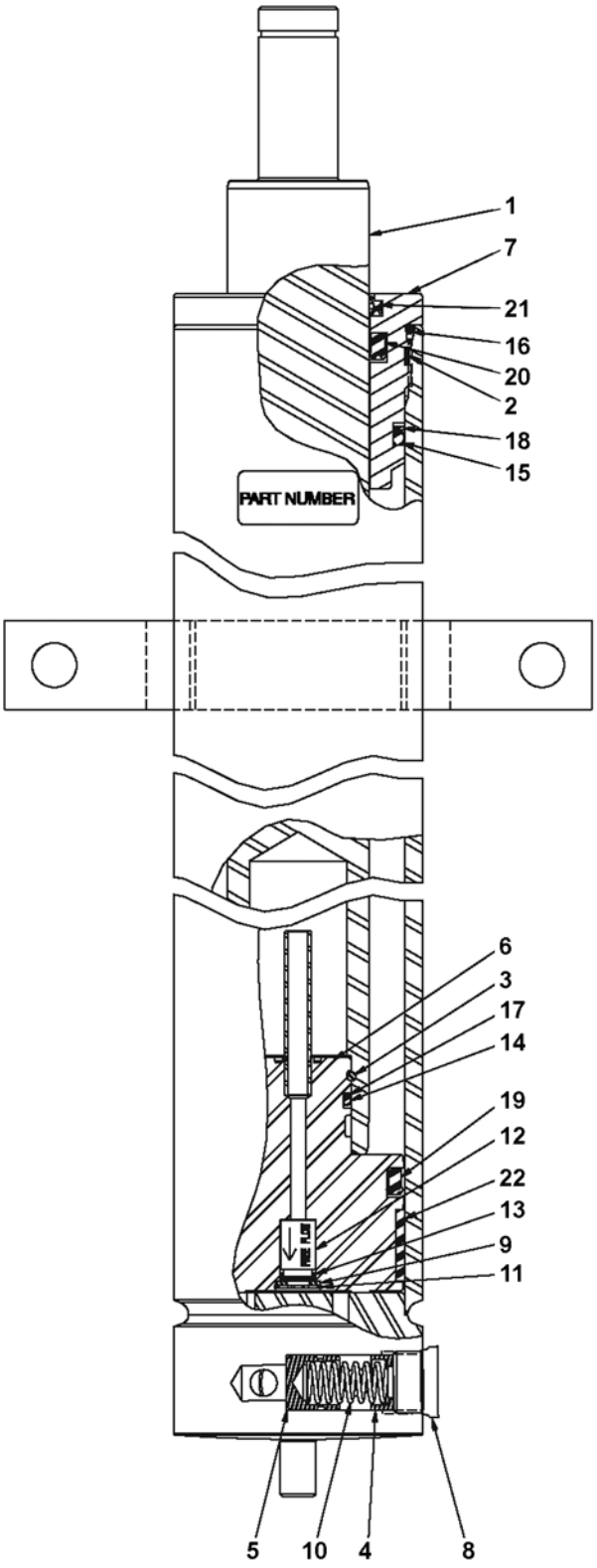

https://truckmanualshub.com/



## E65-MT 3-STAGE MAST - FREE LIFT CYLINDER
## S/N 200001A~

| Item | Part Number | Description | Qty | Serial Number |
|---|---|---|---|---|
| 1 | NSS | FREE LIFT ROD | 1 | |
| 2 | NSS | LOCKING INSERT (SEAL KIT) | 1 | |
| 3 | NSS | WRAP-IN WIRE (SEAL KIT) | 1 | |
| 4 | CC1004783 | SPRING GUIDE (CHECK VALVE KIT) | 1 | |
| 5 | CC1004782 | FUSE PISTON (CHECK VALVE KIT) | 1 | |
| 6 | NSS | FREE LIFT PISTON ASSY (PISTON KIT) | 1 | |
| 7 | CC1004780 | RETAINER | 1 | |
| 8 | NSS | PLUG | 1 | |
| 9 | NSS | WASHER | 2 | |
| 10 | CC1004781 | COMPRESSION SPRING (CHECK VALVE KIT) | 1 | |
| 11 | NSS | SNAP RING (PISTON KIT) | 1 | |
| 12 | NSS | CHECK VALVE (PISTON KIT) | 1 | |
| 13 | NSS | O-RING (SEAL KIT) | 1 | |
| 14 | NSS | O-RING (SEAL KIT) | 1 | |
| 15 | NSS | O-RING (SEAL KIT) | 1 | |
| 16 | NSS | O-RING (SEAL KIT) | 1 | |
| 17 | NSS | BACK-UP RING (SEAL KIT) | 1 | |
| 18 | NSS | BACKUP RING (SEAL KIT) | 1 | |
| 19 | NSS | BACKUP U-CUP (SEAL KIT) | 1 | |
| 20 | NSS | U-CUP (SEAL KIT) | 1 | |
| 21 | NSS | ROD WIPER (SEAL KIT) | 1 | |
| 22 | NSS | WEARBAND (SEAL KIT) | 1 | |
| KIT | CC1004779 | SEAL KIT | 1 | |
| KIT | CC1004777 | CHECK VALVE KIT | 1 | |
| KIT | CC1004778 | PISTON KIT | 1 | |
| | **OCL = OUTER CHANNEL LENGTH, MFH = MAXIMUM FORK HEIGHT** | | | |
| | CC1003305 | FREE LIFT CYLINDER - (71" OCL) (150" MFH) | 1 | |
| | CC1003311 | FREE LIFT CYLINDER - (77" OCL) (168" MFH) | 1 | |
| | CC1003316 | FREE LIFT CYLINDER - (82" OCL) (183" MFH) | 1 | |
| | CC1003320 | FREE LIFT CYLINDER - (86" OCL) (189" MFH) | 1 | |
| | CC1003332 | FREE LIFT CYLINDER - (98" OCL) (217" MFH) | 1 | |
| | CC1003339 | FREE LIFT CYLINDER - (105" OCL) (230" MFH) | 1 | |
| | CC1003343 | FREE LIFT CYLINDER - (109" OCL) (238" MFH) | 1 | |

https://truckmanualshub.com/



## E65-MT 3-STAGE MAST - OUTER UPRIGHT
## S/N 200001A~

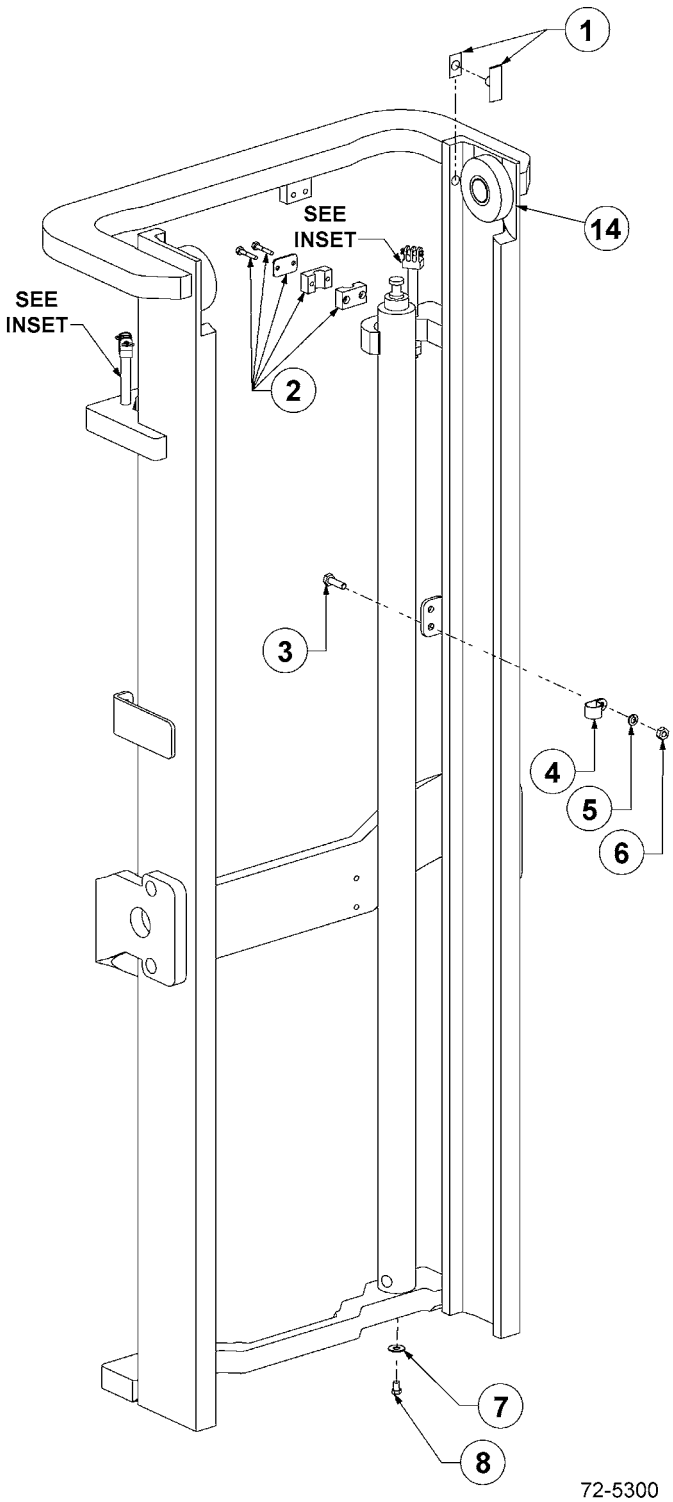


72-5300

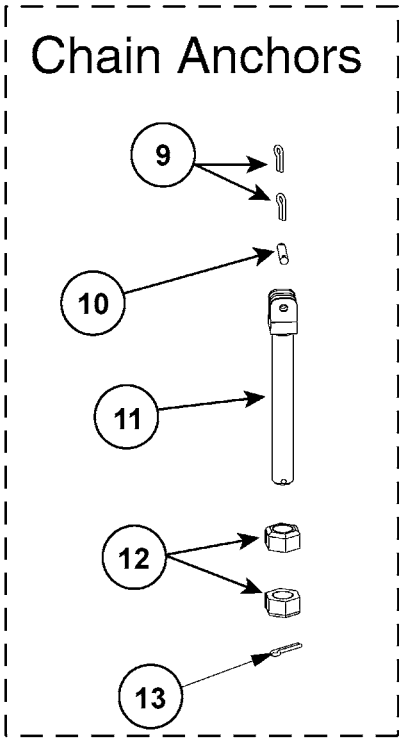


72-3300A

https://truckmanualshub.com/



## E65-MT 3-STAGE MAST - OUTER UPRIGHT
## S/N 200001A~

| Item | Part Number | Description | Qty | Serial Number |
|---|---|---|---|---|
| | | **OCL = OUTER CHANNEL LENGTH, MFH = MAXIMUM FORK HEIGHT** | | |
| | CC233372 | OUTER UPRIGHT - (71" OCL) (150" MFH) | 1 | |
| | CC233390 | OUTER UPRIGHT - (77" OCL) (168" MFH) | 1 | |
| | CC233405 | OUTER UPRIGHT - (82" OCL) (183" MFH) | 1 | |
| | CC233417 | OUTER UPRIGHT - (86" OCL) (189" MFH) | 1 | |
| | CC233453 | OUTER UPRIGHT - (98" OCL) (217" MFH) | 1 | |
| | CC233474 | OUTER UPRIGHT - (105" OCL) (230" MFH) | 1 | |
| | CC233486 | OUTER UPRIGHT - (109" OCL) (238" MFH) | 1 | |
| 1 | 3EB-73-A5720 | THRUST PLUG SERVICE KIT | 1 | |
| 2 | CC237555 | CLAMP KIT | 1 | |
| 3 | CC200788 | CAPSCREW - M10 X 35 | 1 | |
| 4 | CC230765 | HOSE CLAMP | 1 | |
| 5 | 3EB-79-A6040 | WASHER, LOCK - M10 | 2 | |
| 6 | 3EB-79-A6040 | WASHER, LOCK - M10 | 1 | |
| 7 | 3EB-79-A5350 | WASHER, FLAT | 2 | |
| 8 | 3EB-79-A5340 | BOLT | 2 | |
| 9 | 3EB-79-A6080 | PIN, COTTER | 12 | |
| 10 | CC684305 | PIN, CHAIN ANCHOR | 6 | |
| 11 | CC201435 | CHAIN ANCHOR | 4 | |
| 12 | 3EB-79-A6090 | NUT | 12 | |
| 13 | 3EB-79-A6081 | PIN, COTTER | 6 | |
| 14 | 3EB-79-A5210 | LOAD ROLLER | 2 | |

https://truckmanualshub.com/



# E65-MT 3-STAGE MAST - INTERMEDIATE UPRIGHT
## S/N 200001A~

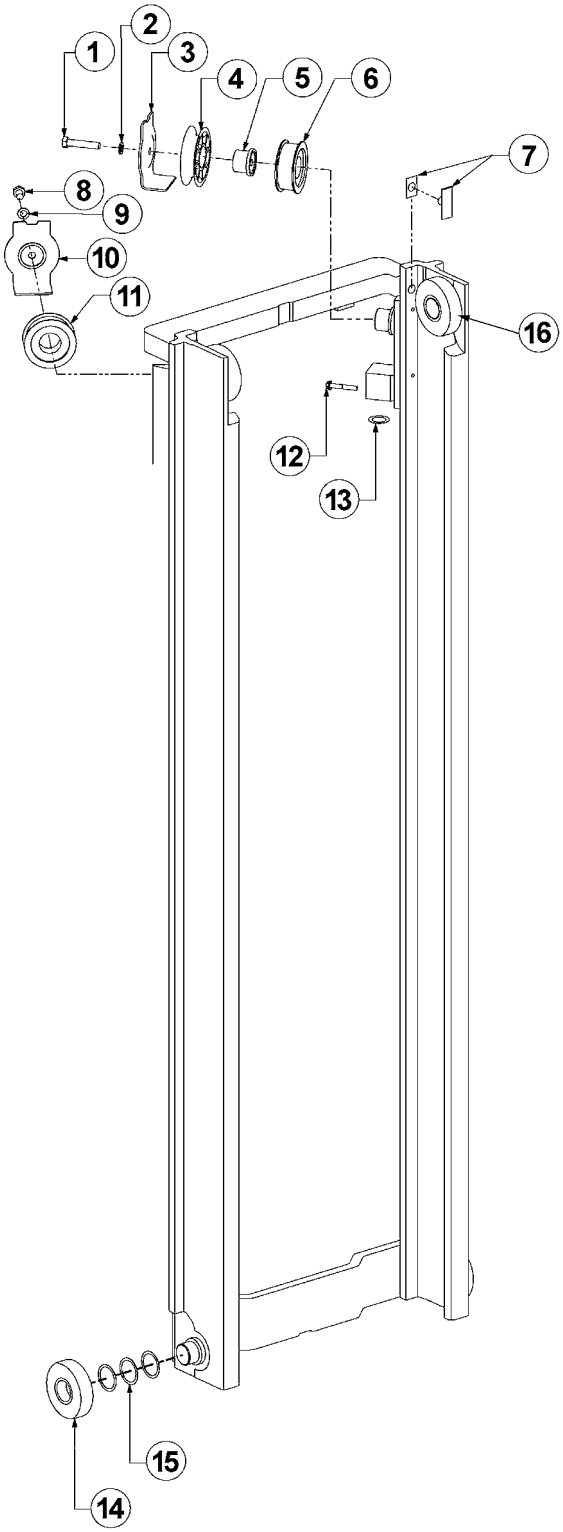


72-5330

https://truckmanualshub.com/



## E65-MT 3-STAGE MAST - INTERMEDIATE UPRIGHT
## S/N 200001A~

| Item | Part Number | Description | Qty | Serial Number |
|---|---|---|---|---|
| | | **OCL = OUTER CHANNEL LENGTH, MFH = MAXIMUM FORK HEIGHT** | | |
| | CC253962 | INTERMEDIATE UPRIGHT - (71" OCL) (150" MFH) | 1 | |
| | CC253968 | INTERMEDIATE UPRIGHT - (77" OCL) (168" MFH) | 1 | |
| | CC253973 | INTERMEDIATE UPRIGHT - (82" OCL) (183" MFH) | 1 | |
| | CC253977 | INTERMEDIATE UPRIGHT - (86" OCL) (189" MFH) | 1 | |
| | CC253989 | INTERMEDIATE UPRIGHT - (98" OCL) (217" MFH) | 1 | |
| | CC253996 | INTERMEDIATE UPRIGHT - (105" OCL) (230" MFH). . . . . | 1 | |
| | CC254000 | INTERMEDIATE UPRIGHT - (109" OCL) (238" MFH) . . . . . | 1 | |
| 1 | 3EB-79-A6060 | CAPSCREW - M12 X 60. . . . . | 1 | |
| 2 | 3EB-79-A5360 | WASHER, LOCK - M12 . . . . . | 2 | |
| 3 | 3EB-73-A5120 | HOSE GUARD . . . . . | 1 | |
| 4 | 3EB-73-A5070 | HOSE SHEAVE . . . . . | 1 | |
| 5 | 3EB-73-A5210 | STUBSHAFT. . . . . | 1 | |
| 6 | 3EB-73-A5010 | CHAIN SHEAVE . . . . . | 4 | |
| 7 | 3EB-73-A5720 | THRUST PLUG SERVICE KIT . . . . . | 1 | |
| 8 | 3EB-79-A5270 | CAPSCREW - M12 X 20. . . . . | 1 | |
| 9 | 3EB-79-A5360 | WASHER, LOCK - M12 . . . . . | 2 | |
| 10 | 3EB-73-A5140 | HOSE GUARD . . . . . | 1 | |
| 11 | 3EB-73-A5010 | CHAIN SHEAVE . . . . . | 4 | |
| 12 | 3EB-79-A5380 | BOLT. . . . . | 2 | |
| 13 | CC238137 | SHIM KIT - MAIN LIFT CYLINDER. . . . . | 2 | |
| 14 | 3EB-79-A5210 | ROLLER . . . . . | 8 | |
| 15 | 3EB-79-A6050 | SHIM (USE AS REQUIRED) . . . . . | 24 | |
| 16 | 3EB-79-A5210 | LOAD ROLLER. . . . . | 2 | |

https://truckmanualshub.com/



# E65-MT 3-STAGE MAST - INNER UPRIGHT
## S/N 200001A~

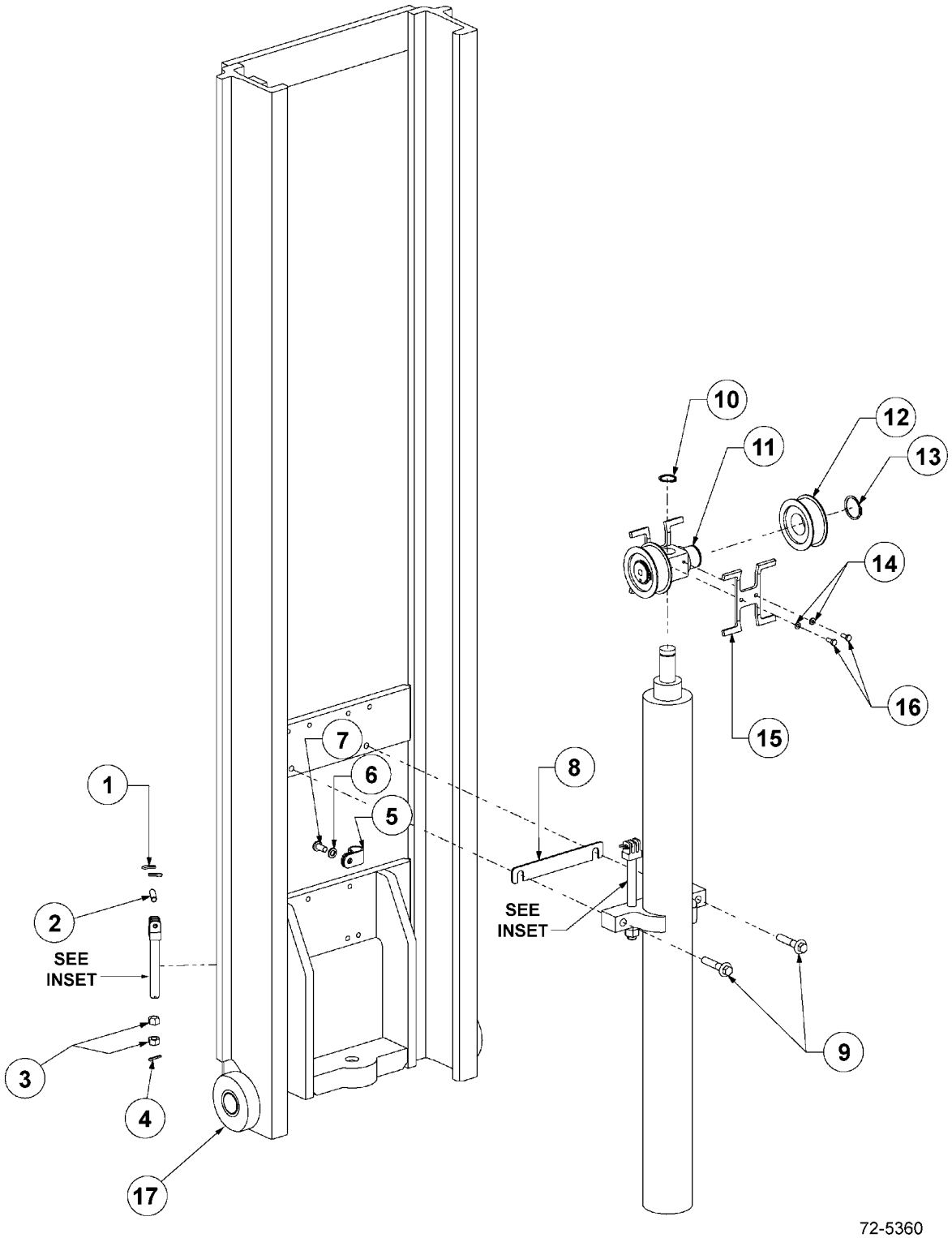

https://truckmanualshub.com/



## E65-MT 3-STAGE MAST - INNER UPRIGHT
## S/N 200001A~

| Item | Part Number | Description | Qty | Serial Number |
|---|---|---|---|---|
| | | **OCL = INNER CHANNEL LENGTH, MFH = MAXIMUM FORK HEIGHT** | | |
| | CC233374 | INNER UPRIGHT - (71" OCL) (150" MFH) | 1 | |
| | CC233392 | INNER UPRIGHT - (77" OCL) (168" MFH) | 1 | |
| | CC233407 | INNER UPRIGHT - (82" OCL) (183" MFH) | 1 | |
| | CC233419 | INNER UPRIGHT - (86" OCL) (189" MFH) | 1 | |
| | CC233455 | INNER UPRIGHT - (98" OCL) (217" MFH) | 1 | |
| | CC233476 | INNER UPRIGHT - (105" OCL) (230" MFH) | 1 | |
| | CC233488 | INNER UPRIGHT - (109" OCL) (238" MFH) | 1 | |
| 1 | 3EB-79-A6080 | PIN, COTTER | 12 | |
| 2 | CC684305 | PIN, CHAIN ANCHOR | 6 | |
| 3 | 3EB-79-A6090 | NUT | 12 | |
| 4 | 3EB-79-A6081 | PIN, COTTER | 6 | |
| 5 | 3EB-73-A5110 | CLAMP, HOSE | 1 | |
| 6 | 3EB-79-A6040 | WASHER, LOCK - M10 | 1 | |
| 7 | 3EB-79-A5330 | CAPSCREW - M10 X 12 | 1 | |
| 8 | 3EB-79-A5390 | SHIM PLATE | 4 | |
| 9 | 3EB-73-A5320 | CAPSCREW - M12 | 2 | |
| 10 | 3EB-73-A5330 | SNAP RING - 29MM | 1 | |
| 11 | 3EB-73-A5310 | CROSSHEAD | 1 | |
| 12 | 3EB-73-A5010 | SHEAVE, CHAIN | 4 | |
| 13 | 3EB-79-A6070 | SNAP RING - 40MM | 2 | |
| 14 | 3EB-73-A5340 | .WASHER, LOCK - M6 | 4 | |
| 15 | 3EB-73-A5140 | .CHAIN GUARD | 2 | |
| 16 | 3EB-73-A5350 | .CAPSCREW - M6 | 4 | |
| 17 | 3EB-79-A5210 | LOAD ROLLER | 2 | |
| KIT | CC246821 | CHAIN GUARD KIT | 1 | |

https://truckmanualshub.com/



## E65-MT 3-STAGE MAST - CARRIAGE - 6-ROLLER
## S/N 200001A~

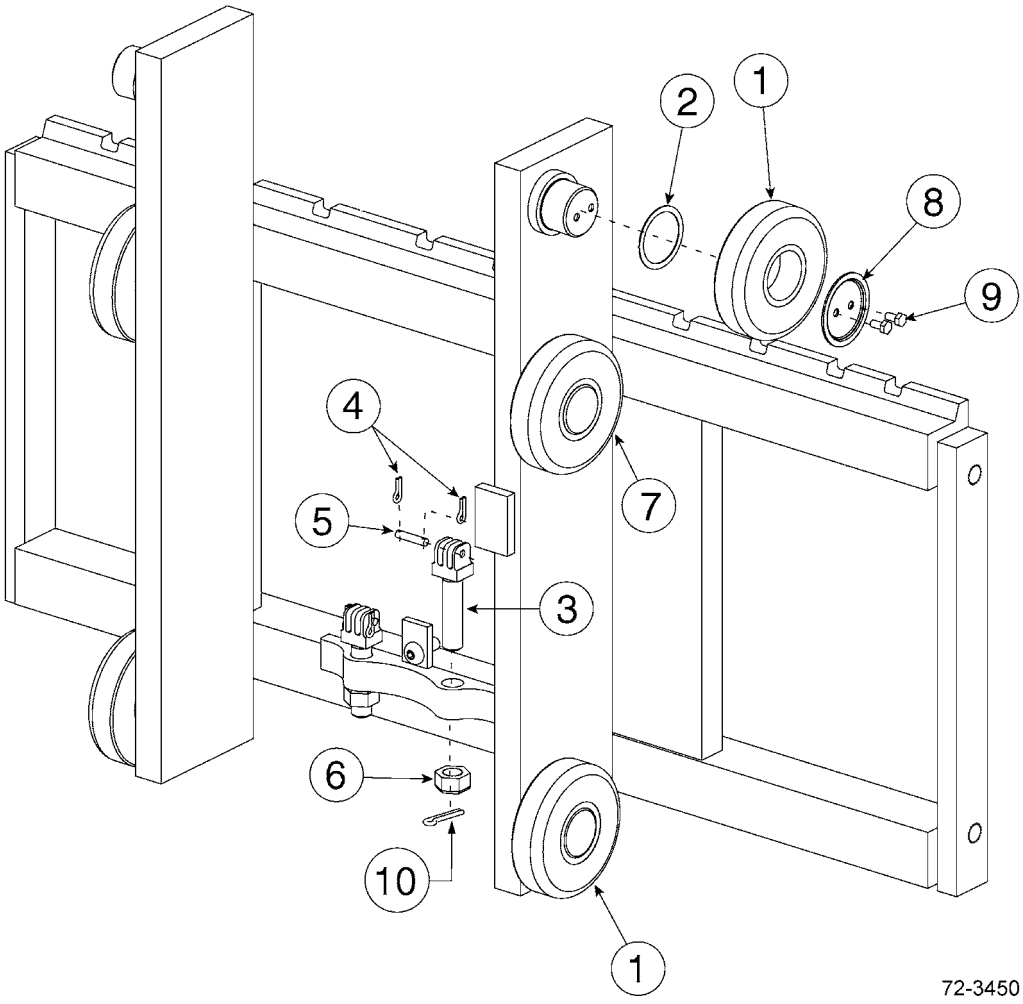

https://truckmanualshub.com/



## E65-MT 3-STAGE MAST - CARRIAGE - 6-ROLLER
## S/N 200001A~

| Item | Part Number | Description | Qty | Serial Number |
|---|---|---|---|---|
| | CC251519 | CARRIAGE - 37" - CUSHION TIRE SPEC | 1 | |
| | CC251520 | CARRIAGE - 41" - CUSHION TIRE SPEC | 1 | |
| | CC251521 | CARRIAGE - 37" - PNEUMATIC TIRE SPEC | 1 | |
| | CC251522 | CARRIAGE - 41" - PNEUMATIC TIRE SPEC | 1 | |
| 1 | 3EB-79-A5210 | LOAD ROLLER | 4 | |
| 2 | 3EB-79-A6050 | SHIM, LOAD ROLLER | AR | |
| 3 | CC234001 | CHAIN ANCHOR | 2 | |
| 4 | 3EB-79-A6080 | PIN, COTTER | 4 | |
| 5 | 3EB-79-A6080 | PIN, CHAIN ANCHOR | 2 | |
| 6 | 3EB-73-A5450 | NUT | 2 | |
| 7 | 3EB-79-A5220 | LOAD ROLLER (TOP ROLLER KIT) | 2 | |
| 8 | 3EB-73-A5460 | RETAINER (TOP ROLLER KIT) | 2 | |
| 9 | 3EB-73-A5470 | CAPSCREW - M6 X 12LG (TOP ROLLER KIT) | 4 | |
| 10 | 3EB-79-A6081 | PIN, COTTER | 2 | |
| KIT | CC234005 | TOP ROLLER KIT | 1 | |

https://truckmanualshub.com/



## E65-MT 3-STAGE MAST - HOIST CHAINS & FREE LIFT HOSE
## S/N 200001A~

# Hoist Chains

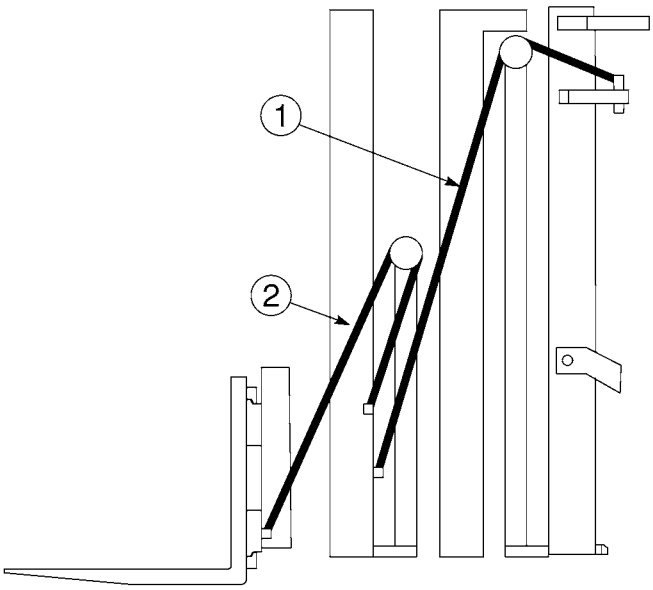


# Free Lift Hose

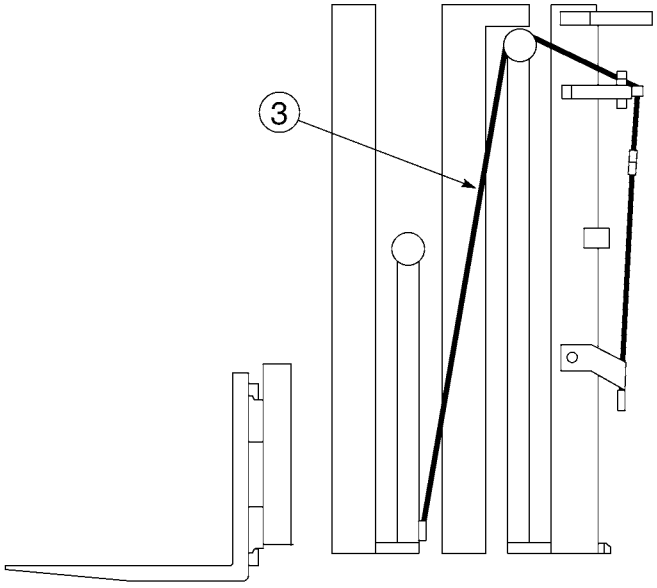


72-3500

https://truckmanualshub.com/



## E65-MT 3-STAGE MAST - HOIST CHAINS & FREE LIFT HOSE
## S/N 200001A~

| Item | Part Number | Description | Qty | Serial Number |
|---|---|---|---|---|
| | | **OCL = OUTER CHANNEL LENGTH, MFH = MAXIMUM FORK HEIGHT** | | |
| 1 | CC681430 | MAIN LIFT CHAIN - (71" OCL) (150" MFH) . . . . | 2 | |
| | CC680459 | MAIN LIFT CHAIN - (77" OCL) (168" MFH) . . . . | 2 | |
| | CC683988 | MAIN LIFT CHAIN - (82" OCL) (183" MFH) . . . . | 2 | |
| | CC678797 | MAIN LIFT CHAIN - (86" OCL) (189" MFH) . . . . | 2 | |
| | CC683996 | MAIN LIFT CHAIN - (98" OCL) (217" MFH) . . . . | 2 | |
| | CC678777 | MAIN LIFT CHAIN - (105" OCL) (230" MFH) . . . | 2 | |
| | CC683958 | MAIN LIFT CHAIN - (109" OCL) (238" MFH) . . . | 2 | |
| 2 | CC683977 | FREE LIFT CHAIN - (71" OCL) (150" MFH). . . . | 2 | |
| | CC683980 | FREE LIFT CHAIN - (77" OCL) (168" MFH). . . . | 2 | |
| | CC678770 | FREE LIFT CHAIN - (82" OCL) (183" MFH). . . . | 2 | |
| | CC683985 | FREE LIFT CHAIN - (86" OCL) (189" MFH). . . . | 2 | |
| | CC683982 | FREE LIFT CHAIN - (98" OCL) (217" MFH). . . . | 2 | |
| | CC683782 | FREE LIFT CHAIN - (105" OCL) (230" MFH). . . | 2 | |
| | CC683785 | FREE LIFT CHAIN - (109" OCL) (238" MFH). . . | 2 | |
| 3 | CC233033 | FREE LIFT HOSE - (71" OCL) (150" MFH) . . . . | 1 | |
| | CC233057 | FREE LIFT HOSE - (77" OCL) (168" MFH) . . . . | 1 | |
| | CC233077 | FREE LIFT HOSE - (82" OCL) (183" MFH) . . . . | 1 | |
| | CC233093 | FREE LIFT HOSE - (86" OCL) (189" MFH) . . . . | 1 | |
| | CC233141 | FREE LIFT HOSE - (98" OCL) (217" MFH) . . . . | 1 | |
| | CC233169 | FREE LIFT HOSE - (105" OCL) (230" MFH) . . . | 1 | |
| | CC233185 | FREE LIFT HOSE - (109" OCL) (238" MFH) . . . | 1 | |

https://truckmanualshub.com/



## E65-MT 3-STAGE MAST - LOAD BACKREST
## S/N 200001A~

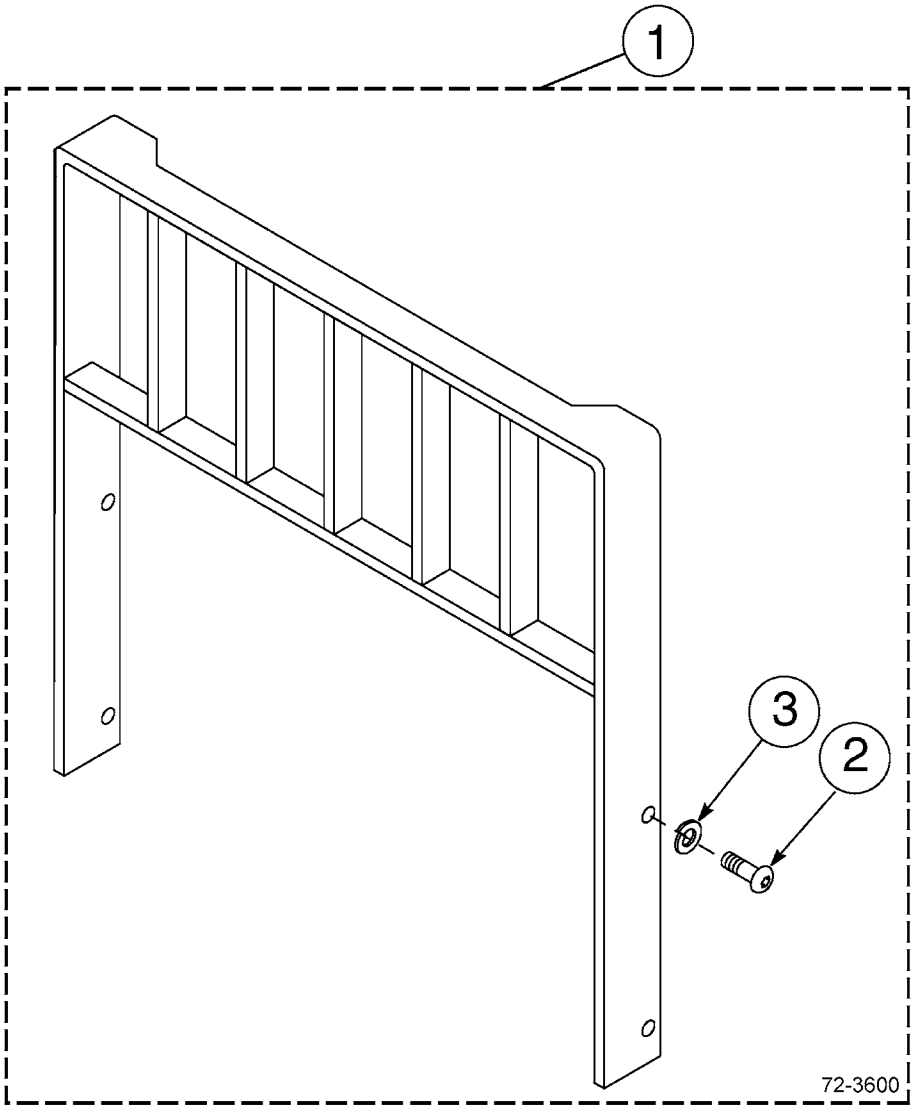

https://truckmanualshub.com/



## E65-MT 3-STAGE MAST - LOAD BACKREST
## S/N 200001A~

| Item | Part Number | Description | Qty | Serial Number |
|---|---|---|---|---|
| | | **CLASS III LOAD BACKRESTS (HEIGHT X WIDTH)** | | |
| 1 | CC684784 | BACKREST - 37" X 36" | 1 | |
| | CC684785 | BACKREST - 37" X 48" | 1 | |
| | CC226831 | BACKREST - 37" X 54" | 1 | |
| | CC684786 | BACKREST - 37" X 60" | 1 | |
| | CC684787 | BACKREST - 41" X 36" | 1 | |
| | CC684788 | BACKREST - 41" X 48" | 1 | |
| | CC684789 | BACKREST - 41" X 60" | 1 | |
| | CC362796 | BACKREST - 41" X 72" | 1 | |
| | CC246396 | BACKREST - 43.3" X 48" | 1 | |
| | CC684790 | BACKREST - 49" X 36" | 1 | |
| | CC684791 | BACKREST - 49" X 48" | 1 | |
| | CC684792 | BACKREST - 49" X 60" | 1 | |
| | CC226825 | BACKREST - 51" X 48" | 1 | |
| | CC231212 | BACKREST - 53" X 30" | 1 | |
| | CC231260 | BACKREST - 53" X 36" | 1 | |
| | CC357671 | BACKREST - 53" X 48" | 1 | |
| | CC249220 | BACKREST - 55.3" X 48" | 1 | |
| | CC235370 | BACKREST - 60" X 48" | 1 | |
| | CC684793 | BACKREST - 61" X 36" | 1 | |
| | CC226834 | BACKREST - 61" X 40" | 1 | |
| | CC684794 | BACKREST - 61" X 48" | 1 | |
| | CC684795 | BACKREST - 61" X 60" | 1 | |
| | CC226828 | BACKREST - 62" X 48" | 1 | |
| | CC225576 | BACKREST - 72" X 48" | 1 | |
| 2 | CC200173 | .CAPSCREW - M16 X 2, 0 X 35-8.8 | 4 | |
| 3 | 3EB-71-A6030 | .WASHER, LOCK - M16 | 4 | |

https://truckmanualshub.com/



# E65-MT 3-STAGE MAST - INSTALLATION COMPONENTS
# PNEUMATIC TIRE MODELS - S/N 200001A~

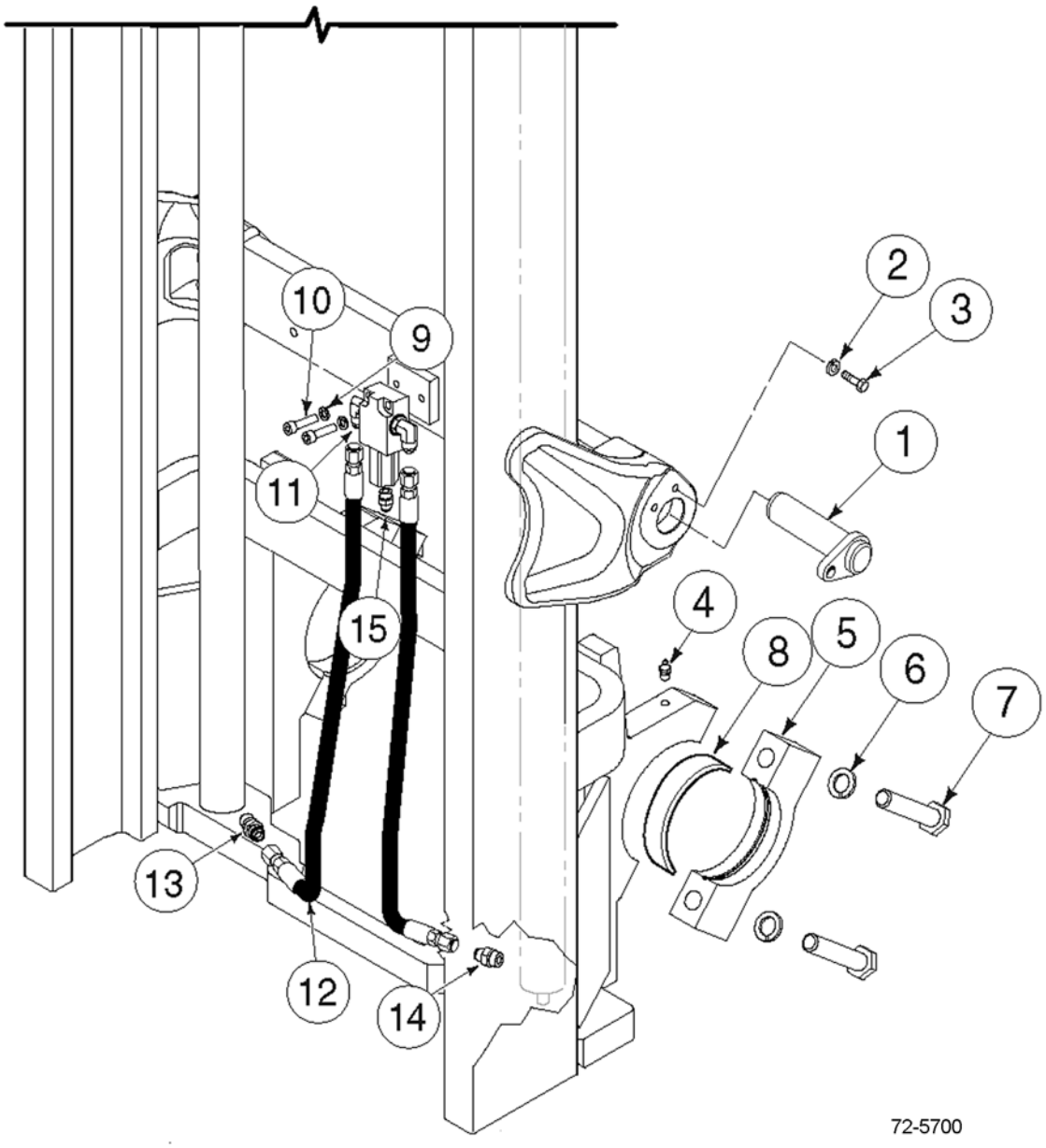

https://truckmanualshub.com/



## E65-MT 3-STAGE MAST - INSTALLATION COMPONENTS
## PNEUMATIC TIRE MODELS - S/N 200001A~

| Item | Part Number | Description | Qty | Serial Number |
|---|---|---|---|---|
| 1 | 3EB-41-51750 | TILT PIN | 2 | |
| 2 | 3EB-79-A6040 | WASHER, LOCK. | 4 | |
| 3 | CC212632 | CAPSCREW | 2 | |
| 4 | CC7418 | FITTING, GREASE | 2 | |
| 5 | CC252686 | CAP. | 2 | |
| 6 | 3EB-71-A6030 | WASHER, LOCK. | 4 | |
| 7 | CC251906 | CAPSCREW | 4 | |
| 8 | 3EB-71-51290 | BUSHING (2.0T, 2.5T, 2.8T, 3.0T). | 2 | |
| | 3EB-71-61790 | BUSHING (3.2T, 3.5T) | 2 | |
| 9 | CC642649 | FITTING #8 - #10 - 90° | 1 | |
| 10 | CC767611 | CAPSCREW | 2 | |
| 11 | CC601250 | FITTING # 8 - 90° ELBOW | 1 | |
| 12 | CC252793 | MAIN LIFT HOSE - RH | 1 | |
| | CC255652 | MAIN LIFT HOSE - LH | 1 | |
| 13 | CC611289 | FITTING #8 -#10 - STRAIGHT | 1 | |
| 14 | CC251997 | 14 GPM EXTERNAL FUSE | 1 | |
| 15 | CC601377 | FITTING | 1 | |
| KIT | CC255596 | INSTALLATION KIT | 1 | |

https://truckmanualshub.com/



# E65-MT 3-STAGE MAST - INSTALLATION COMPONENTS
# CUSHION TIRE MODELS - S/N 200001A~

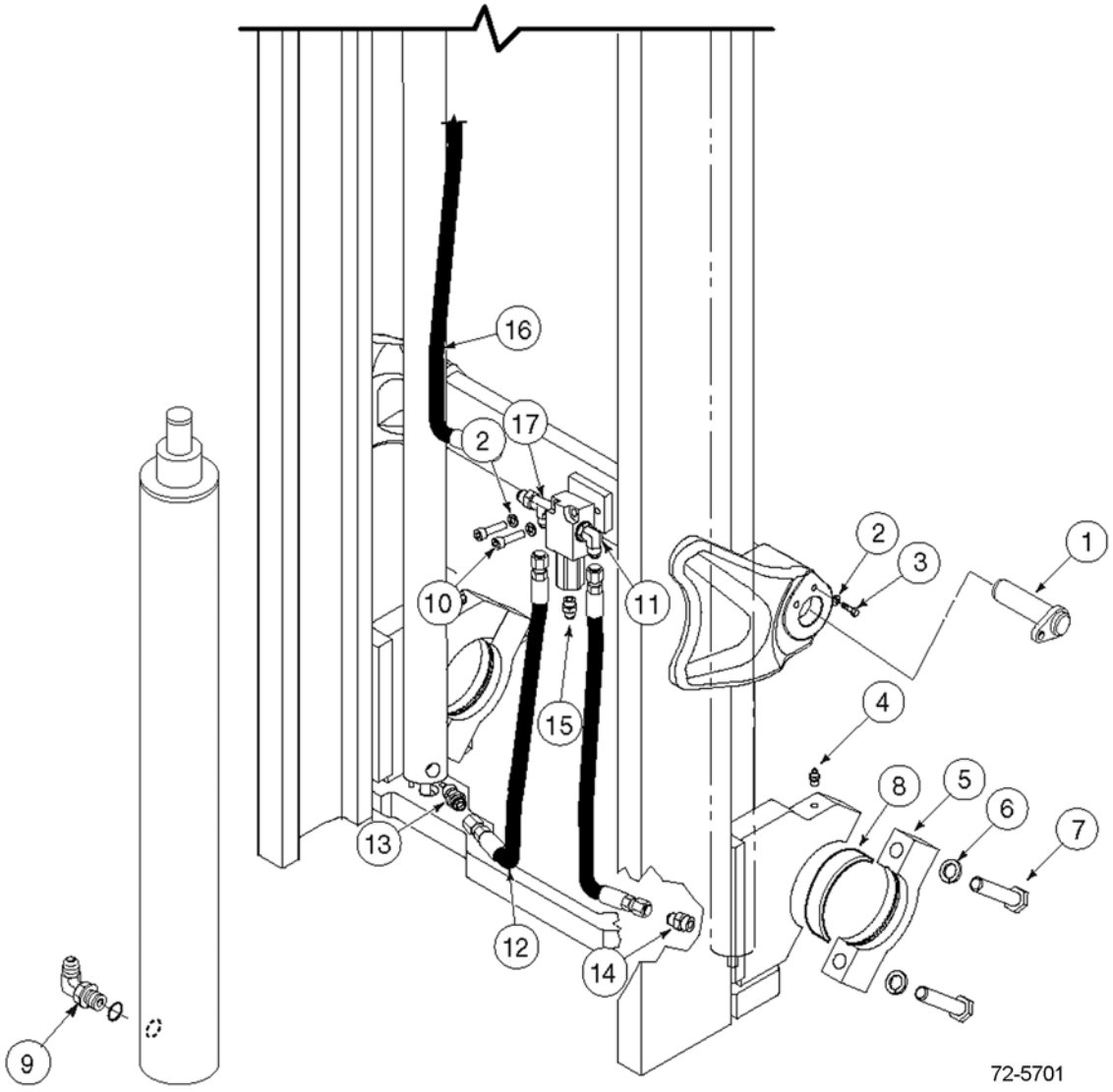

https://truckmanualshub.com/



## E65-MT 3-STAGE MAST - INSTALLATION COMPONENTS
## CUSHION TIRE MODELS - S/N 200001A~

| Item | Part Number | Description | Qty | Serial Number |
|---|---|---|---|---|
| 1 | 3EB-41-51750 | TILT PIN | 2 | |
| 2 | 3EB-79-A6040 | WASHER, LOCK. | 4 | |
| 3 | CC212632 | CAPSCREW | 2 | |
| 4 | CC7418 | FITTING, GREASE | 2 | |
| 5 | CC251901 | CAP. | 2 | |
| 6 | 3EB-71-A6030 | WASHER, LOCK. | 4 | |
| 7 | CC251906 | CAPSCREW | 4 | |
| 8 | 3EB-84-51290 | BUSHING (CUSHION ONLY) | 2 | |
| 9 | CC642649 | FITTING #8 - #10 - 90° | 1 | |
| 10 | CC767611 | CAPSCREW | 2 | |
| 11 | CC601250 | FITTING # 8 - 90° ELBOW | 1 | |
| 12 | CC255666 | MAIN LIFT HOSE - RH | 1 | |
| | CC255665 | MAIN LIFT HOSE - LH | 1 | |
| 13 | CC611289 | FITTING #8 -#10 - STRAIGHT | 1 | |
| 14 | CC251997 | 14 GPM EXTERNAL FUSE | 1 | |
| 15 | CC601377 | FITTING | 1 | |
| 16 | CC234037 | FREE LIFT JUMPER HOSE | 1 | |
| 17 | CC610402 | FITTING # 8 - 90° TEE | 1 | |
| KIT | CC255596 | INSTALLATION KIT | 1 | |

https://truckmanualshub.com/



## E65-MT 3-STAGE MAST - LOWERING CONTROL VALVE
## S/N 200001A~

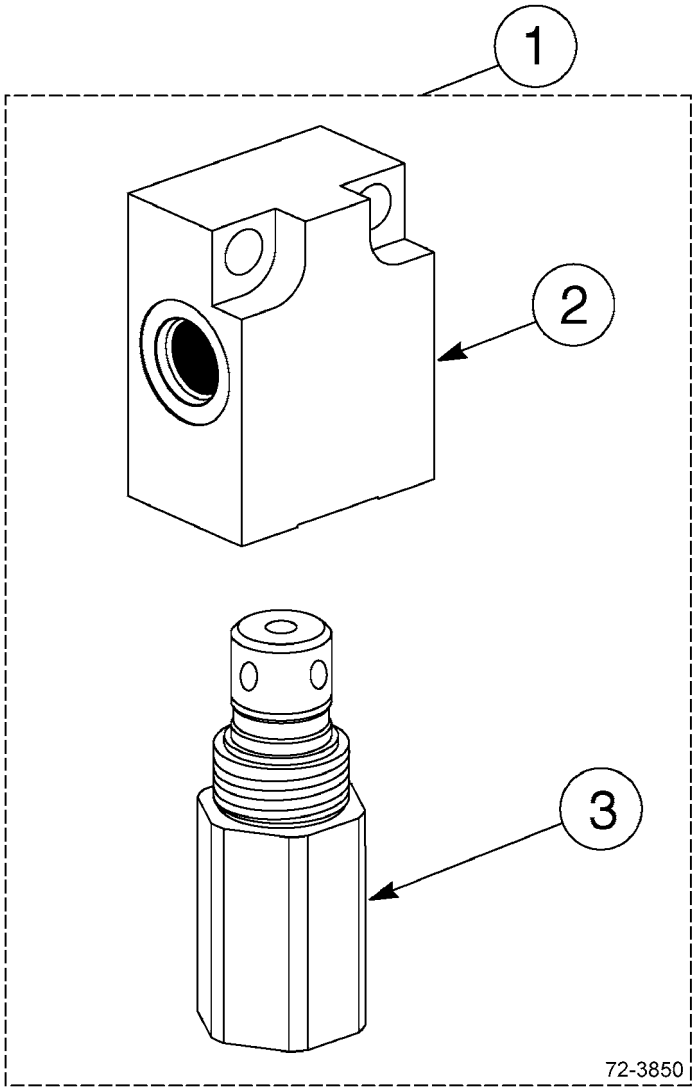

https://truckmanualshub.com/



## E65-MT 3-STAGE MAST - LOWERING CONTROL VALVE
## S/N 200001A~

| Item | Part Number | Description | Qty | Serial Number |
|---|---|---|---|---|
| 1 | CC253243 | CONTROL VALVE - 20 GPM . . . . . | 1 | |
| 2 | CC214793 | .VALVE BODY. . . . . | 1 | |
| 3 | CC253242 | .VALVE CARTRIDGE - 20 GPM . . . . . | 1 | |

https://truckmanualshub.com/



# E65-MT 3-STAGE MAST - INTERNAL HOSE REEVING - SINGLE
## S/N 200001A~

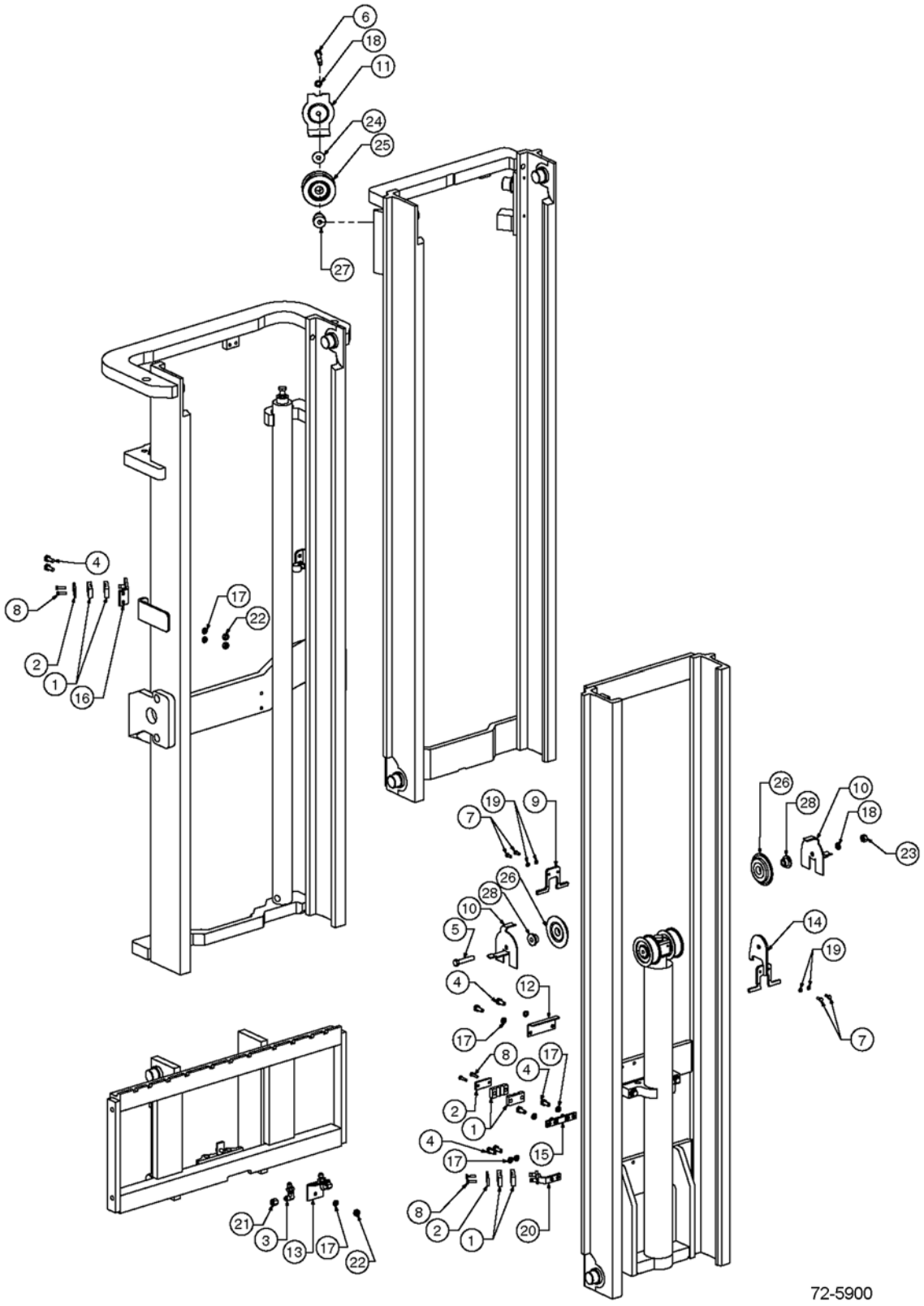

https://truckmanualshub.com/



## E65-MT 3-STAGE MAST - INTERNAL HOSE REEVING - SINGLE
## S/N 200001A~

| Item | Part Number | Description | Qty | Serial Number |
|---|---|---|---|---|
| 1 | 3EB-73-A5150 | CLAMP, HOSE | 6 | |
| 2 | 3EB-73-A5160 | HOSE CLAMP BAR | 3 | |
| 3 | 3EB-71-A6010 | FITTING, BULKHEAD UNION - 90° | 2 | |
| 4 | 3EB-73-A5490 | CAPSCREW - M10 X 25 | 8 | |
| 5 | 3EB-79-A5230 | CAPSCREW - M12 X 65 | 1 | |
| 6 | 3EB-79-A5190 | CAPSCREW - M12 X 80 | 1 | |
| 7 | 3EB-73-A5350 | CAPSCREW - M6 X 16 | 4 | |
| 8 | 3EB-79-A5240 | CAPSCREW - M6 X 25 | 6 | |
| 9 | 3EB-73-A5170 | CHAIN GUARD | 1 | |
| 10 | 3EB-73-A5180 | IHR & CHAIN GUARD | 2 | |
| 11 | 3EB-73-A5120 | HOSE GUARD | 1 | |
| 12 | 3EB-73-A5190 | HOSE GUARD | 1 | |
| 13 | 3EB-73-A5610 | CARRIAGE IHR BRACKET | 1 | |
| 14 | 3EB-73-A5620 | IHR BRACKET | 1 | |
| 15 | 3EB-73-A5630 | IHR BRACKET | 1 | |
| 16 | 3EB-73-A5640 | IHR BRACKET | 1 | |
| 17 | 3EB-79-A6040 | WASHER, LOCK - M10 | 9 | |
| 18 | 3EB-79-A5360 | WASHER, LOCK - M12 | 2 | |
| 19 | 3EB-73-A5340 | WASHER, LOCK - M6 | 4 | |
| 20 | 3EB-73-A5660 | BRACKET, LOWER | 1 | |
| 21 | 3EB-79-A5150 | NUT - #6 CAP | 2 | |
| 22 | 3EB-79-A5180 | NUT - M10 | 3 | |
| 23 | 3EB-79-A5270 | NUT - M12 DIN 934 | 1 | |
| 24 | 3EB-79-A5280 | WASHER | 1 | |
| 25 | 3EB-73-A5020 | SHEAVE | 1 | |
| 26 | 3EB-73-A5030 | IHR SHEAVE | 2 | |
| 27 | 3EB-73-A5220 | STUBSHAFT | 1 | |
| 28 | 3EB-73-A5230 | SINGLE IHR STUBSHAFT | 2 | |

**OCL = OUTER CHANNEL LENGTH, MFH = MAXIMUM FORK HEIGHT**

| | | |
|---|---|---|
| CC223462 | HOSE (IHR KIT #255011) (71" OCL) (150" MFH) | 2 |
| CC210807 | HOSE (IHR KIT #255017) (77" OCL) (168" MFH) | 2 |
| CC216942 | HOSE (IHR KIT #255022) (82" OCL) (183" MFH) | 2 |
| CC233972 | HOSE (IHR KIT #255026) (86" OCL) (189" MFH) | 2 |
| CC210810 | HOSE (IHR KIT #255038) (98" OCL) (217" MFH) | 2 |
| CC233978 | HOSE (IHR KIT #255045) (105" OCL) (230" MFH) | 2 |
| CC233980 | HOSE (IHR KIT #255049) (109" OCL) (238" MFH) | 2 |

https://truckmanualshub.com/



# E65-MT 3-STAGE MAST - INTERNAL HOSE REEVING - DOUBLE
## S/N 200001A~

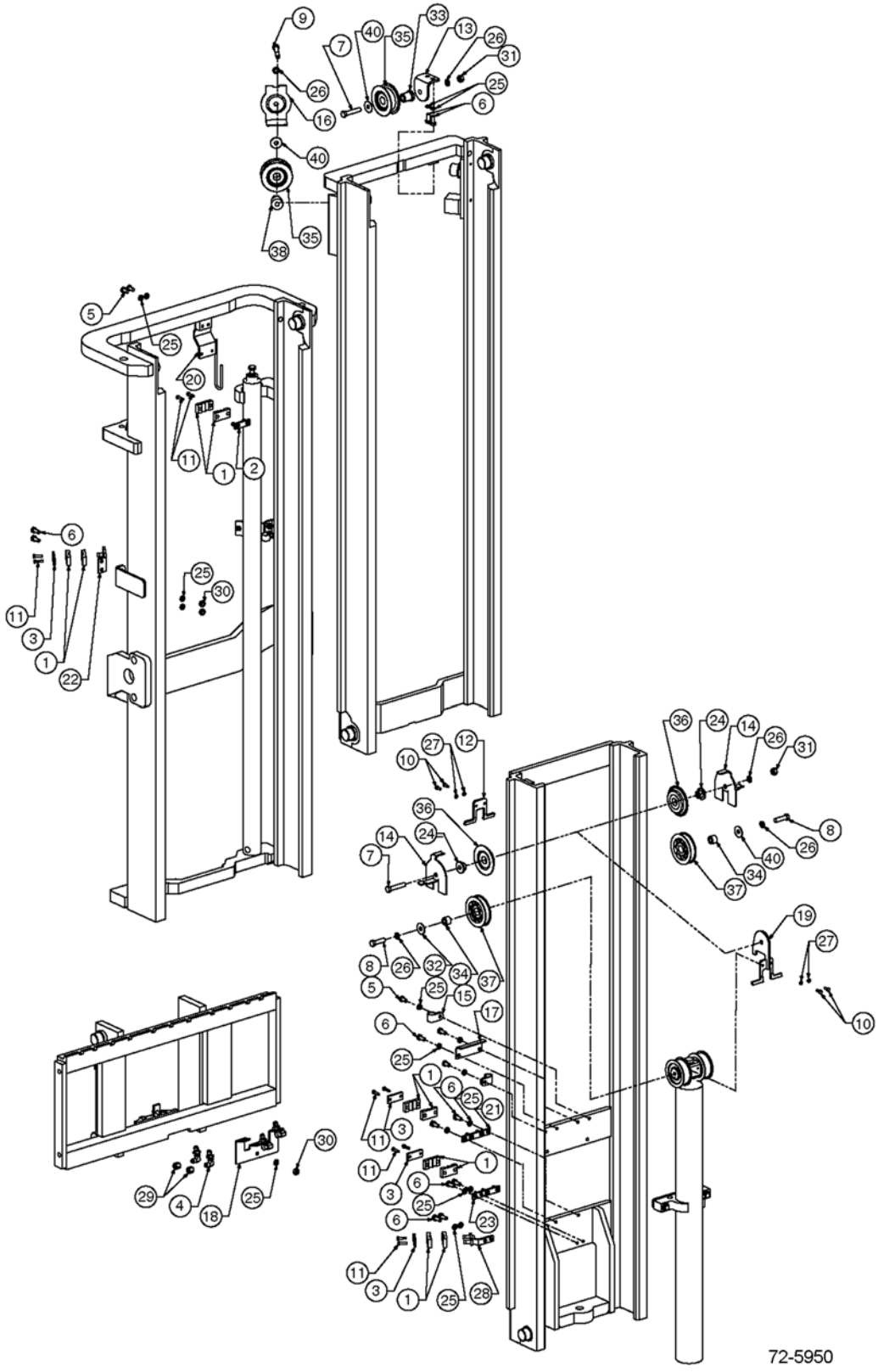

https://truckmanualshub.com/



## E65-MT 3-STAGE MAST - INTERNAL HOSE REEVING - DOUBLE
## S/N 200001A~

| Item | Part Number | Description | Qty | Serial Number |
|---|---|---|---|---|
| 1 | 3EB-73-A5150 | CLAMP, HOSE | 12 | |
| 2 | 3EB-73-A6010 | BAR ASSY | 1 | |
| 3 | 3EB-73-A5160 | HOSE CLAMP BAR | 5 | |
| 4 | 3EB-71-A6010 | BULKHEAD UNION - 90° | 4 | |
| 5 | 3EB-79-A5330 | CAPSCREW - M10 X 20 | 4 | |
| 6 | 3EB-73-A5490 | CAPSCREW - M10 X 25 | 18 | |
| 7 | 3EB-79-A5230 | CAPSCREW - M12 X 65 | 2 | |
| 8 | 3EB-79-A5290 | CAPSCREW - M12 X 45 | 2 | |
| 9 | 3EB-79-A5190 | CAPSCREW - M12 X 80 | 1 | |
| 10 | 3EB-73-A5350 | CAPSCREW - M6 X 16 | 4 | |
| 11 | 3EB-79-A5240 | CAPSCREW - M6 X 25 | 12 | |
| 12 | 3EB-73-A5170 | IHR & CHAIN GUARD | 1 | |
| 13 | 3EB-73-A5670 | DOUBLE IHR BRACKET | 1 | |
| 14 | 3EB-73-A5180 | IHR & CHAIN GUARD | 2 | |
| 15 | 3EB-79-A5160 | HOSE CLAMP | 2 | |
| 16 | 3EB-73-A5120 | HOSE GUARD | 1 | |
| 17 | 3EB-73-A5190 | HOSE GUARD | 1 | |
| 18 | 3EB-73-A5680 | CARRIAGE IHR BRACKET | 1 | |
| 19 | 3EB-73-A5620 | IHR BRACKET | 1 | |
| 20 | 3EB-73-A6030 | IHR BRACKET | 1 | |
| 21 | 3EB-73-A5630 | IHR BRACKET | 1 | |
| 22 | 3EB-73-A5640 | IHR BRACKET ASSY | 2 | |
| 23 | 3EB-73-A5690 | IHR BRACKET ASSY | 1 | |
| 24 | 3EB-73-A5230 | SINGLE FUNCTION SHEAVE | 2 | |
| 25 | 3EB-79-A6040 | WASHER, LOCK - M10 | 23 | |
| 26 | 3EB-79-A5360 | WASHER, LOCK - M12 | 5 | |
| 27 | 3EB-73-A5340 | WASHER, LOCK - M6 | 4 | |
| 28 | 3EB-73-A5660 | BRACKET, LOWER | 1 | |
| 29 | 3EB-79-A5250 | NUT - #6 CAP | 4 | |
| 30 | 3EB-79-A5180 | NUT - M10 | 5 | |
| 31 | 3EB-79-A5270 | NUT - M12 | 2 | |
| 32 | 3EB-79-A5280 | WASHER | 4 | |
| 33 | 3EB-73-A5240 | SHAFT | 1 | |
| 34 | 3EB-73-A5250 | SHAFT | 2 | |
| 35 | 3EB-73-A5020 | SHEAVE - IHR | 2 | |
| 36 | 3EB-73-A5030 | SHEAVE - IHR | 2 | |
| 37 | 3EB-73-A5060 | SHEAVE - SINGLE | 2 | |
| 38 | 3EB-73-A5220 | STUBSHAFT | 1 | |
| 39 | 3EB-73-A5230 | SHEAVE, SINGLE FUNCTION ONLY | 2 | |

PARTS LIST CONTINUED ON NEXT PAGE

https://truckmanualshub.com/



## E65-MT 3-STAGE MAST - INTERNAL HOSE REEVING - DOUBLE
## S/N 200001A~

| Item | Part Number | Description | Qty | Serial Number |
|---|---|---|---|---|
| 40 | 3EB-79-A5280 | WASHER . . . . . | 4 | |
| | **OCL = OUTER CHANNEL LENGTH, MFH = MAXIMUM FORK HEIGHT** | | | |
| | **INNER HOSE - RIGHT SIDE** | | | |
| | CC223462 | HOSE (IHR KIT #255093) (71" OCL) (150" MFH) | 1 | |
| | CC210807 | HOSE (IHR KIT #255099) (77" OCL) (168" MFH) | 1 | |
| | CC216942 | HOSE (IHR KIT #255104) (82" OCL) (183" MFH) | 1 | |
| | CC233972 | HOSE (IHR KIT #255108) (86" OCL) (189" MFH) | 1 | |
| | CC210810 | HOSE (IHR KIT #255120) (98" OCL) (217" MFH) | 1 | |
| | CC233978 | HOSE (IHR KIT #255127) (105" OCL) (230" MFH) | 1 | |
| | CC233980 | HOSE (IHR KIT #255131) (109" OCL) (238" MFH) | 1 | |
| | **INNER HOSE - LEFT SIDE** | | | |
| | CC235001 | HOSE (IHR KIT #255093) (71" OCL) (150" MFH) | 1 | |
| | CC216939 | HOSE (IHR KIT #255099) (77" OCL) (168" MFH) | 1 | |
| | CC216943 | HOSE (IHR KIT #255104) (82" OCL) (183" MFH) | 1 | |
| | CC233973 | HOSE (IHR KIT #255108) (86" OCL) (189" MFH) | 1 | |
| | CC216953 | HOSE (IHR KIT #255120) (98" OCL) (217" MFH) | 1 | |
| | CC235051 | HOSE (IHR KIT #255127) (105" OCL) (230" MFH) | 1 | |
| | 3EB-74-A5840 | HOSE (IHR KIT #255131) (109" OCL) (238" MFH) | 1 | |
| | **OUTER HOSES (SHORTEST)** | | | |
| | CC234996 | HOSE (IHR KIT #255093) (71" OCL) (150" MFH) | 2 | |
| | CC235006 | HOSE (IHR KIT #255099) (77" OCL) (168" MFH) | 2 | |
| | CC235014 | HOSE (IHR KIT #255104) (82" OCL) (183" MFH) | 2 | |
| | 3EB-74-A5790 | HOSE (IHR KIT #255108) (86" OCL) (189" MFH) | 2 | |
| | CC233976 | HOSE (IHR KIT #255120) (98" OCL) (217" MFH) | 2 | |
| | CC235046 | HOSE (IHR KIT #255127) (105" OCL) (230" MFH) | 2 | |
| | CC210811 | HOSE (IHR KIT #255131) (109" OCL) (238" MFH) | 2 | |

https://truckmanualshub.com/

**NOTES:**

https://truckmanualshub.com/



# E65-MT 3-STAGE MAST — RECOMMENDED STOCK LIST (RSL)

NO

ILLUSTRATION

REQUIRED

https://truckmanualshub.com/



## E65-MT 3-STAGE MAST — RECOMMENDED STOCK LIST (RSL)

| Item | Part Number | Description | Qty | No. of Masts Serviced |
|---|---|---|---|---|
| | | **MAIN LIFT CYLINDERS** | | |
| | SEE PARTS PG | MAIN LIFT CYL ASSY | 0 | 1 - 19 |
| | SEE PARTS PG | MAIN LIFT CYL ASSY | 1 | 20 - 50 |
| | SEE PARTS PG | SEAL KIT | 2 | 1 - 5 |
| | SEE PARTS PG | SEAL KIT | 4 | 6 - 19 |
| | SEE PARTS PG | SEAL KIT | 8 | 20 - 50 |
| | | **FREE LIFT CYLINDER** | | |
| | SEE PARTS PG | FREE LIFT CYLINDER ASSY | 0 | 1 - 5 |
| | SEE PARTS PG | FREE LIFT CYLINDER ASSY | 1 | 6 - 19 |
| | SEE PARTS PG | FREE LIFT CYLINDER ASSY | 2 | 20 - 50 |
| | SEE PARTS PG | SEAL KIT | 2 | 1 - 5 |
| | SEE PARTS PG | SEAL KIT | 4 | 6 - 19 |
| | SEE PARTS PG | SEAL KIT | 8 | 20 - 50 |
| | | **INTERNAL REEVING** | | |
| | SEE PARTS PG | HOSE | 2 | 1 - 5 |
| | SEE PARTS PG | HOSE | 4 | 6 - 19 |
| | SEE PARTS PG | HOSE | 8 | 20 - 50 |
| | 3EB-71-A6040 | FITTING | 1 | 1 - 5 |
| | 3EB-71-A6040 | FITTING | 2 | 6 - 19 |
| | 3EB-71-A6040 | FITTING | 4 | 20 - 50 |
| | 3EB-73-A5030 | SHEAVE, IHR, SINGLE & DOUBLE IHR | 1 | 1 - 5 |
| | 3EB-73-A5030 | SHEAVE, IHR, SINGLE & DOUBLE IHR | 2 | 6 - 19 |
| | 3EB-73-A5030 | SHEAVE, IHR, SINGLE & DOUBLE IHR | 4 | 20 - 50 |
| | 3EB-73-A5060 | SHEAVE - DOUBLE IHR | 1 | 1 - 5 |
| | 3EB-73-A5060 | SHEAVE - DOUBLE IHR | 2 | 6 - 19 |
| | 3EB-73-A5060 | SHEAVE - DOUBLE IHR | 4 | 20 - 50 |
| | 3EB-73-A5020 | SHEAVE - SINGLE & DOUBLE IHR | 1 | 1 - 5 |
| | 3EB-73-A5020 | SHEAVE - SINGLE & DOUBLE IHR | 2 | 6 - 19 |
| | 3EB-73-A5020 | SHEAVE - SINGLE & DOUBLE IHR | 4 | 20 - 50 |
| | | **UPRIGHTS** | | |
| | CC201435 | CHAIN ANCHOR | 2 | 1 - 5 |
| | CC201435 | CHAIN ANCHOR | 4 | 6 - 19 |
| | CC201435 | CHAIN ANCHOR | 8 | 20 - 50 |
| | CC680242 | CHAIN ANCHOR | 1 | 1 - 5 |
| | CC680242 | CHAIN ANCHOR | 2 | 6 - 19 |
| | CC680242 | CHAIN ANCHOR | 4 | 20 - 50 |
| | CC684305 | PIN, CHAIN | 8 | 1 - 5 |
| | CC684305 | PIN, CHAIN | 8 | 6 - 19 |

PARTS LIST CONTINUED ON NEXT PAGE

https://truckmanualshub.com/



## E65-MT 3-STAGE MAST — RECOMMENDED STOCK LIST (RSL)

| Item | Part Number | Description | Qty | No. of Masts Serviced |
|---|---|---|---|---|
| | CC684305 | PIN, CHAIN | 16 | 20 - 50 |
| | 3EB-79-A6090 | NUT | 6 | 1 - 5 |
| | 3EB-79-A6090 | NUT | 12 | 6 - 19 |
| | 3EB-79-A6090 | NUT | 24 | 20 - 50 |
| | 3EB-79-A6081 | PIN, COTTER | 6 | 1 - 5 |
| | 3EB-79-A6081 | PIN, COTTER | 12 | 6 - 19 |
| | 3EB-79-A6081 | PIN, COTTER | 24 | 20 - 50 |
| | 3EB-79-A6080 | PIN, COTTER | 6 | 1 - 5 |
| | 3EB-79-A6080 | PIN, COTTER | 12 | 6 - 19 |
| | 3EB-79-A6080 | PIN, COTTER | 36 | 20 - 50 |
| | 3EB-79-A6050 | SHIM, .03 IN. | 16 | 1 - 5 |
| | 3EB-79-A6050 | SHIM, .03 IN. | 32 | 6 - 19 |
| | 3EB-79-A6050 | SHIM, .03 IN. | 64 | 20 - 50 |
| | 3EB-79-A5210 | ROLLER | 8 | 1 - 5 |
| | 3EB-79-A5210 | ROLLER | 24 | 6 - 19 |
| | 3EB-79-A5210 | ROLLER | 48 | 20 - 50 |
| | CC662145 | ROLLER | 2 | 1 - 5 |
| | CC662145 | ROLLER | 4 | 6 - 19 |
| | CC662145 | ROLLER | 16 | 20 - 50 |
| | 3EB-73-A5720 | SERVICE KIT, WEAR PLUG | 2 | 1 - 5 |
| | 3EB-73-A5720 | SERVICE KIT, WEAR PLUG | 4 | 6 - 19 |
| | 3EB-73-A5720 | SERVICE KIT, WEAR PLUG | 8 | 20 - 50 |
| | | **CROSSHEAD** | | |
| | 3EB-73-A5010 | CHAIN SHEAVE | 4 | 1 - 5 |
| | 3EB-73-A5010 | CHAIN SHEAVE | 8 | 6 - 19 |
| | 3EB-73-A5010 | CHAIN SHEAVE | 16 | 20 - 50 |
| | 3EB-73-A5330 | RETAINER CLIP | 4 | 1 - 5 |
| | 3EB-73-A5330 | RETAINER CLIP | 8 | 6 - 19 |
| | 3EB-73-A5330 | RETAINER CLIP | 16 | 20 - 50 |
| | 3EB-79-A6070 | SNAP RING | 2 | 1 - 5 |
| | 3EB-79-A6070 | SNAP RING | 4 | 6 - 19 |
| | 3EB-79-A6070 | SNAP RING | 8 | 20 - 50 |
| | | **CARRIAGE AND CHAINS** | | |
| | SEE PARTS PG | FREE LIFT CHAINS | 2 | 1 - 5 |
| | SEE PARTS PG | FREE LIFT CHAINS | 4 | 6 - 19 |
| | SEE PARTS PG | FREE LIFT CHAINS | 8 | 20 - 50 |
| | SEE PARTS PG | MAIN LIFT CHAINS | 2 | 1 - 5 |
| | SEE PARTS PG | MAIN LIFT CHAINS | 4 | 6 - 19 |

PARTS LIST CONTINUED ON NEXT PAGE

https://truckmanualshub.com/



## E65-MT 3-STAGE MAST — RECOMMENDED STOCK LIST (RSL)

| Item | Part Number | Description | Qty | No. of Masts Serviced |
|---|---|---|---|---|
| | SEE PARTS PG | MAIN LIFT CHAINS | 8 | 20 - 50 |
| | 3EB-79-A5210 | CARRIAGE ROLLER | 4 | 1 - 5 |
| | 3EB-79-A5210 | CARRIAGE ROLLER | 8 | 6 - 19 |
| | 3EB-79-A5210 | CARRIAGE ROLLER | 16 | 20 - 50 |
| | 3EB-79-A5220 | ROLLER - 6-ROLLER CARRIAGE | 2 | 1 - 5 |
| | 3EB-79-A5220 | ROLLER - 6-ROLLER CARRIAGE | 4 | 6 - 19 |
| | 3EB-79-A5220 | ROLLER - 6-ROLLER CARRIAGE | 8 | 20 - 50 |
| | CC234001 | CHAIN ANCHOR | 1 | 1 - 5 |
| | CC234001 | CHAIN ANCHOR | 2 | 6 - 19 |
| | CC234001 | CHAIN ANCHOR | 4 | 20 - 50 |
| | 3EB-79-A6081 | PIN, COTTER | 2 | 1 - 5 |
| | 3EB-79-A6081 | PIN, COTTER | 4 | 6 - 19 |
| | 3EB-79-A6081 | PIN, COTTER | 8 | 20 - 50 |
| | 3EB-79-A6080 | PIN, COTTER | 4 | 1 - 5 |
| | 3EB-79-A6080 | PIN, COTTER | 8 | 6 - 19 |
| | 3EB-79-A6080 | PIN, COTTER | 16 | 20 - 50 |
| | CC684305 | CHAIN PIN | 4 | 1 - 19 |
| | CC684305 | CHAIN PIN | 8 | 20 - 50 |
| | 3EB-73-A5450 | NUT | 2 | 1 - 50 |

https://truckmanualshub.com/



# 45D-MQ 4-STAGE MAST (QUAD) - SAFETY DECALS
# S/N 200001A~

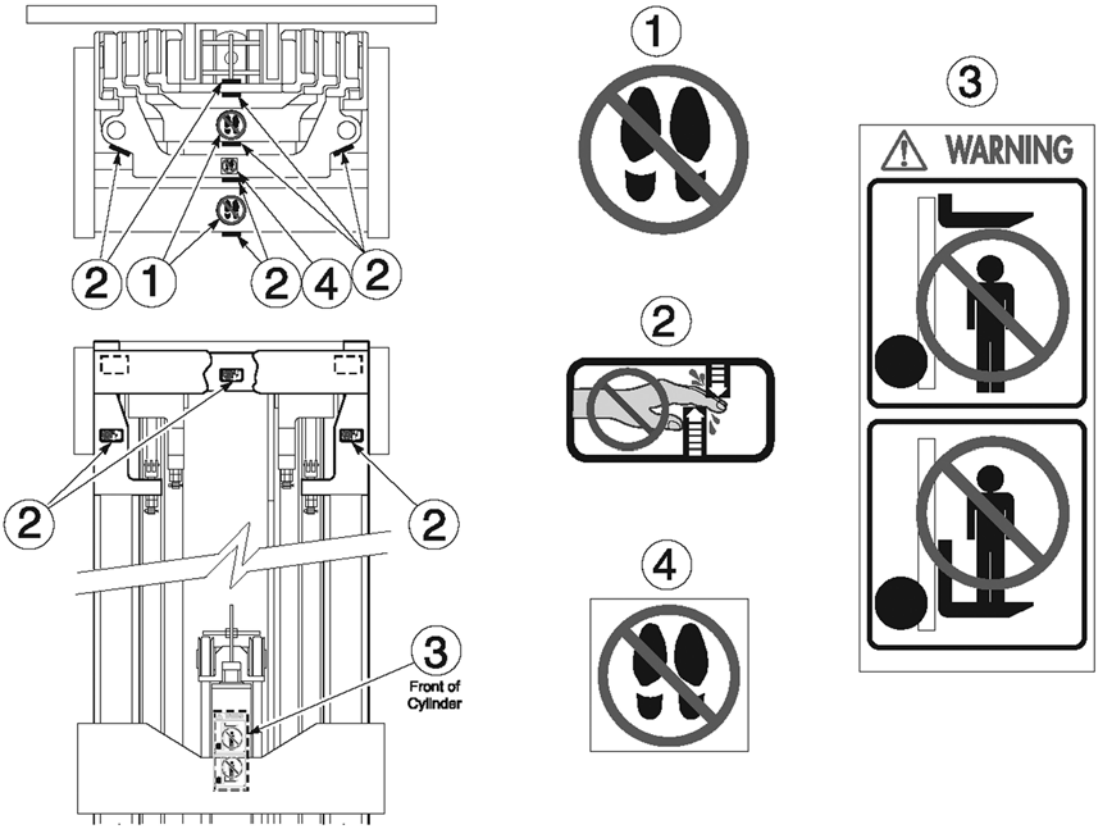


72-6100

https://truckmanualshub.com/



## 45D-MQ 4-STAGE MAST (QUAD) - SAFETY DECALS
## S/N 200001A~

| Item | Part Number | Description | Qty | Serial Number |
|---|---|---|---|---|
| 1 | 3EB-79-A6020 | DECAL - "NO STEP" . . . . . | 2 | |
| 2 | 3EB-79-A6010 | DECAL - "HANDS OFF" . . . . . | 9 | |
| 3 | 3EB-79-A5310 | DECAL - "WARNING" . . . . . | 1 | |
| 4 | 3EB-79-A6030 | DECAL - "NO STEP" . . . . . | 2 | |

https://truckmanualshub.com/



# 45D-MQ 4-STAGE MAST (QUAD) - MAIN LIFT CYLINDER - RIGHT SIDE
# PID AS DESIGNATED - S/N 200001A~

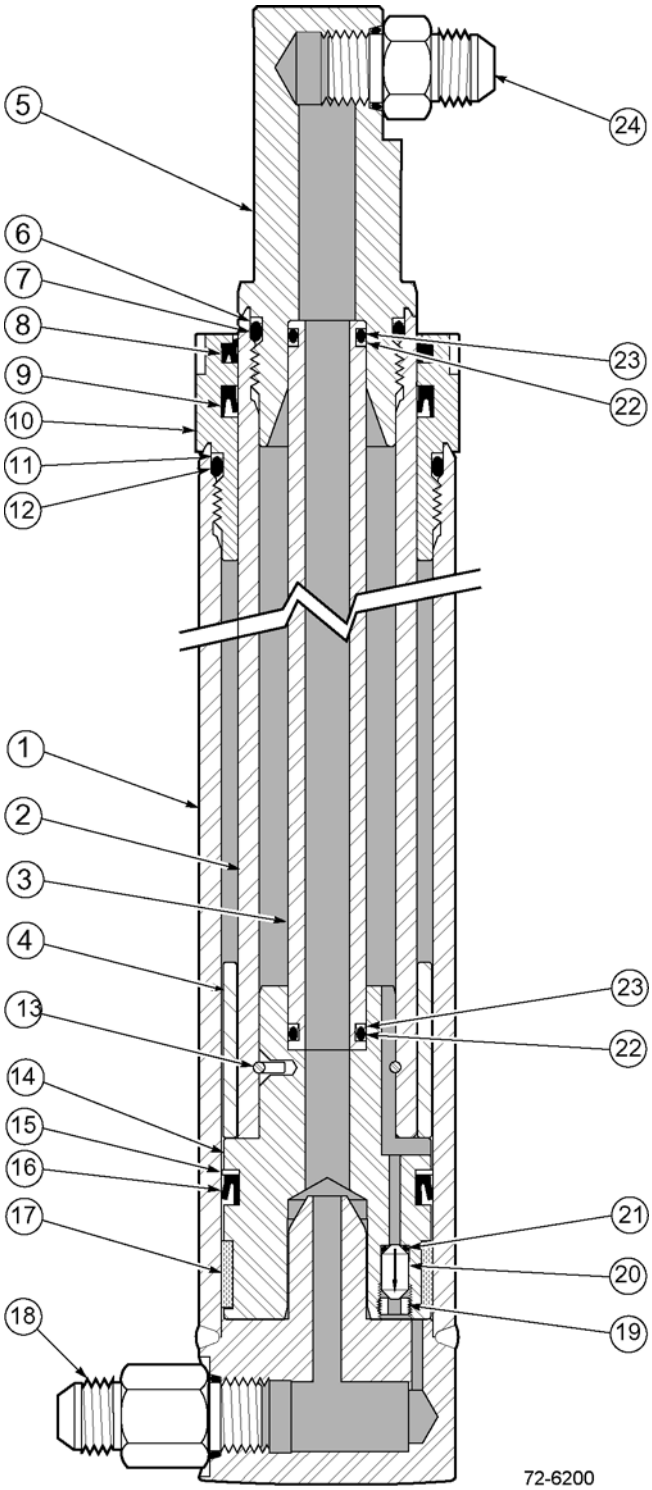


**THIS CYLINDER APPLIES TO THE FOLLOWING MAST PIDS:**

45D-MQ-001 THROUGH 45D-MQ-4724
45D-MQ-4726
45D-MQ-4727
45D-MQ-4736
45D-MQ-4741
45D-MQ-4751
45D-MQ-4757
45D-MQ-4760
45D-MQ-4761
45D-MQ-4762
45D-MQ-4763
45D-MQ-4769
45D-MQ-4770
45D-MQ-4771
45D-MQ-4772
45D-MQ-4776
45D-MQ-4778
45D-MQ-4780
45D-MQ-4781
45D-MQ-4782
45D-MQ-4783
45D-MQ-4788
45D-MQ-4789
45D-MQ-4790
45D-MQ-4792
45D-MQ-4793
45D-MQ-4795
45D-MQ-4797
45D-MQ-4801
45D-MQ-4803
45D-MQ-4804
45D-MQ-4805
45D-MQ-4816
45D-MQ-4817
45D-MQ-4822
45D-MQ-4825
45D-MQ-4826
45D-MQ-4829
45D-MQ-4835
45D-MQ-4837
45D-MQ-4843
45D-MQ-4844
45D-MQ-4845
45D-MQ-4846
45D-MQ-4848
45D-MQ-4850
45D-MQ-4853
45D-MQ-4856
45D-MQ-4857
45D-MQ-4858
45D-MQ-4860
45D-MQ-4864
45D-MQ-4869
45D-MQ-4872
45D-MQ-4873
45D-MQ-4874
45D-MQ-4875
45D-MQ-4876
45D-MQ-4879
45D-MQ-4881
45D-MQ-4882
45D-MQ-4885
45D-MQ-4886
45D-MQ-4893
45D-MQ-4896
45D-MQ-4897
45D-MQ-4899
45D-MQ-4905
45D-MQ-4906
45D-MQ-4924
45D-MQ-4925
45D-MQ-4927
45D-MQ-4930
45D-MQ-4931
45D-MQ-4932
45D-MQ-4936
45D-MQ-4939
45D-MQ-4940
45D-MQ-5207
45D-MQ-5368

https://truckmanualshub.com/



## 45D-MQ 4-STAGE MAST (QUAD) - MAIN LIFT CYLINDER - RIGHT SIDE
## PID AS DESIGNATED - S/N 200001A~

| Item | Part Number | Description | Qty | Serial Number |
|---|---|---|---|---|
| 1 | NSS | SHELL | 1 | |
| 2 | NSS | ROD | 1 | |
| 3 | NSS | PIPE | 1 | |
| 4 | NSS | SPACER | 1 | |
| 5 | NSS | PLUG | 1 | |
| 6 | NSS | BACK-UP RING (CYL SERVICE KIT) | 1 | |
| 7 | NSS | O-RING (CYL SERVICE KIT) | 1 | |
| 8 | NSS | WIPER (CYL SERVICE KIT) | 1 | |
| 9 | NSS | ROD SEAL (CYL SERVICE KIT) | 1 | |
| 10 | CC562630 | RETAINER | 1 | |
| 11 | NSS | BACK-UP RING (CYL SERVICE KIT) | 1 | |
| 12 | NSS | O-RING (CYL SERVICE KIT) | 1 | |
| 13 | NSS | PULL WIRE (BOTH KITS) | 1 | |
| 14 | NSS | PISTON (BOTH KITS) | 1 | |
| 15 | NSS | BACK-UP RING (CYL SERVICE KIT) | 1 | |
| 16 | NSS | PISTON SEAL (CYL SERVICE KIT) | 1 | |
| 17 | NSS | WEAR RING (CYL SERVICE KIT) | 1 | |
| 18 | CC611289 | FITTING | 1 | |
| 19 | NSS | SCREW | 1 | |
| 20 | CC667586 | CHECK VALVE | 1 | |
| 21 | NSS | O-RING (CYL SERVICE KIT) | 1 | |
| 22 | NSS | O-RING (CYL SERVICE KIT) | 1 | |
| 23 | NSS | BACK-UP RING (CYL SERVICE KIT) | 1 | |
| 24 | CC611291 | FITTING | 1 | |
| KIT | CC564051 | PISTON SERVICE KIT | 1 | |
| KIT | CC564050 | CYLINDER SERVICE KIT | 1 | |
| **OCL = OUTER CHANNEL LENGTH , MFH = MAXIMUM FORK HEIGHT** | | | | |
| | CC583931 | MAIN LIFT CYLINDER - (68" OCL) (193" MFH). | 1 | |
| | CC583932 | MAIN LIFT CYLINDER - (74" OCL) (217" MFH). | 1 | |
| | CC583933 | MAIN LIFT CYLINDER - (80" OCL) (241" MFH). | 1 | |
| | CC583934 | MAIN LIFT CYLINDER - (86" OCL) (259" MFH). | 1 | |
| | CC583935 | MAIN LIFT CYLINDER - (92" OCL) (277" MFH). | 1 | |
| | CC583936 | MAIN LIFT CYLINDER - (98" OCL) (295" MFH). | 1 | |

https://truckmanualshub.com/



# 45D-MQ 4-STAGE MAST (QUAD) - MAIN LIFT CYLINDER - RIGHT SIDE
# PID AS DESIGNATED - S/N 200001A~

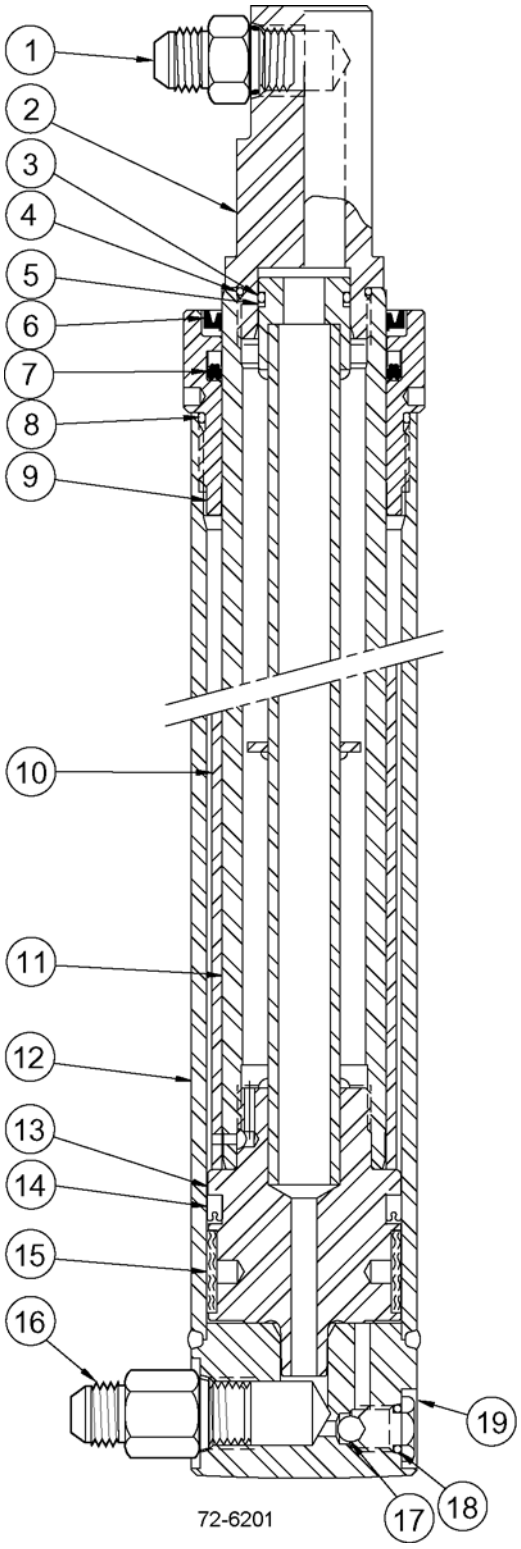


**THIS CYLINDER APPLIES TO THE FOLLOWING MAST PIDS:**

45D-MQ-4725
45D-MQ-4728 - 4740
45D-MQ-4742 - 4750
45D-MQ-4752 - 4759
45D-MQ-4764 - 4768
45D-MQ-4773
45D-MQ-4774
45D-MQ-4775
45D-MQ-4779
45D-MQ-4794
45D-MQ-4785
45D-MQ-4786
45D-MQ-4787
45D-MQ-4791
45D-MQ-4794
45D-MQ-4796
45D-MQ-4798
45D-MQ-4799
45D-MQ-4800
45D-MQ-4802
45D-MQ-4806 - 4813
45D-MQ-4815
45D-MQ-4818 - 4821
45D-MQ-4823
45D-MQ-4824
45D-MQ-4827
45D-MQ-4827
45D-MQ-4828
45D-MQ-4830 - 4834
45D-MQ-4836
45D-MQ-4838 - 4842
45D-MQ-4847
45D-MQ-4849
45D-MQ-4851
45D-MQ-4852
45D-MQ-4854
45D-MQ-4855
45D-MQ-4859
45D-MQ-4861
45D-MQ-4862
45D-MQ-4863
45D-MQ-4865 - 4867
45D-MQ-4868
45D-MQ-4870
45D-MQ-4871
45D-MQ-4878
45D-MQ-4880
45D-MQ-4883
45D-MQ-4884
45D-MQ-4887 - 4892
45D-MQ-4994
45D-MQ-4895
45D-MQ-4898
45D-MQ-4900 - 4904
45D-MQ-4907 - 4923
45D-MQ-4926
45D-MQ-4928
45D-MQ-4928
45D-MQ-4929
45D-MQ-4933
45D-MQ-4934
45D-MQ-4935
45D-MQ-4937
45D-MQ-4938
45D-MQ-4941 - 5206
45D-MQ-5208 - 5367
45D-MQ-5369 - 6358

https://truckmanualshub.com/



## 45D-MQ 4-STAGE MAST (QUAD) - MAIN LIFT CYLINDER - RIGHT SIDE
## PID AS DESIGNATED - S/N 200001A~

| Item | Part Number | Description | Qty | Serial Number |
|---|---|---|---|---|
| 1 | CC611291 | FITTING | 1 | |
| 2 | CC1349732 | ROD END | 1 | |
| 3 | NSS | O-RING (KIT) | 1 | |
| 4 | NSS | O-RING (KIT) | 1 | |
| 5 | NSS | BACK-UP RING (KIT) | 1 | |
| 6 | NSS | WIPER (KIT) | 1 | |
| 7 | NSS | ROD SEAL (KIT) | 1 | |
| 8 | NSS | O-RING (KIT) | 1 | |
| 9 | CC1356992 | RETAINER | 1 | |
| 10 | NSS | SPACER | 1 | |
| 11 | NSS | ROD | 1 | |
| 12 | NSS | SHELL | 1 | |
| 13 | NSS | PISTON (KIT) | 1 | |
| 14 | NSS | PISTON SEAL (KIT) | 1 | |
| 15 | NSS | WEAR RING (KIT) | 1 | |
| 16 | CC611289 | FITTING | 1 | |
| 17 | CC17010R1 | BALL | 1 | |
| 18 | NSS | O-RING (KIT) | 1 | |
| 19 | CC1348729 | PLUG | 1 | |
| KIT | CC564050 | CYLINDER SERVICE KIT | 1 | |
| | **OCL = OUTER CHANNEL LENGTH, MFH = MAXIMUM FORK HEIGHT** | | | |
| | CC1000649 | MAIN LIFT CYLINDER - (68" OCL) (193" MFH). | 1 | |
| | CC1000650 | MAIN LIFT CYLINDER - (74" OCL) (217" MFH). | 1 | |
| | CC1000666 | MAIN LIFT CYLINDER - (75" OCL) (221" MFH). | 1 | |
| | CC1000651 | MAIN LIFT CYLINDER - (80" OCL) (241" MFH). | 1 | |
| | CC1000652 | MAIN LIFT CYLINDER - (86" OCL) (259" MFH). | 1 | |
| | CC1000653 | MAIN LIFT CYLINDER - (92" OCL) (277" MFH). | 1 | |
| | CC1000654 | MAIN LIFT CYLINDER - (98" OCL) (295" MFH). | 1 | |
| | CC1000655 | MAIN LIFT CYLINDER - (104" OCL) (313" MFH) | 1 | |

https://truckmanualshub.com/



## 45D-MQ 4-STAGE MAST (QUAD) - MAIN LIFT CYLINDER - RIGHT SIDE
## PID # 45D-MQ-6359~ - S/N 200001A~

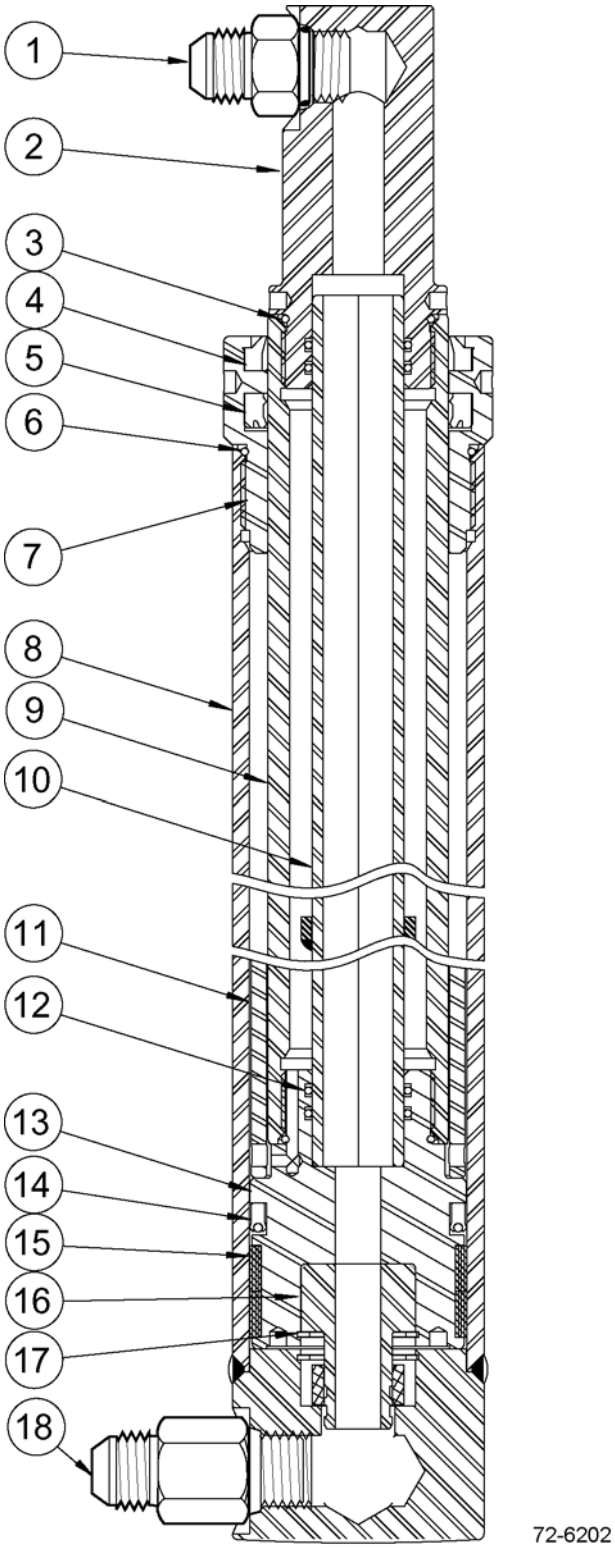

https://truckmanualshub.com/



## 45D-MQ 4-STAGE MAST (QUAD) - MAIN LIFT CYLINDER - RIGHT SIDE
## PID # 45D-MQ-6359~ - S/N 200001A~

| Item | Part Number | Description | Qty | Serial Number |
|---|---|---|---|---|
| 1 | CC611291 | FITTING | 1 | |
| 2 | NSS | ROD END | 1 | |
| 3 | NSS | O-RING (KIT) | 1 | |
| 4 | NSS | WIPER (KIT) | 1 | |
| 5 | NSS | ROD SEAL (KIT) | 1 | |
| 6 | NSS | O-RING (KIT) | 1 | |
| 7 | CC78481 | RETAINER | 1 | |
| 8 | NSS | SHELL | 1 | |
| 9 | NSS | ROD | 1 | |
| 10 | NSS | STAND TUBE | 1 | |
| 11 | NSS | SPACER | 1 | |
| 12 | NSS | O-RING (KIT) | 1 | |
| 13 | NSS | PISTON (KIT) | 1 | |
| 14 | NSS | PISTON SEAL (KIT) | 1 | |
| 15 | NSS | WEAR RING (KIT) | 1 | |
| 16 | NSS | PLUG | 1 | |
| 17 | NSS | RETAINING RING (KIT) | 1 | |
| 18 | CC611289 | FITTING | 1 | |
| KIT | CC1002525 | CYLINDER SERVICE KIT | 1 | |
| | **OCL = OUTER CHANNEL LENGTH , MFH = MAXIMUM FORK HEIGHT** | | | |
| | CC1002002 | MAIN LIFT CYLINDER - (68" OCL) (193" MFH). | 1 | |
| | CC1002003 | MAIN LIFT CYLINDER - (69" OCL) (197" MFH). | 1 | |
| | CC1002008 | MAIN LIFT CYLINDER - (74" OCL) (217" MFH). | 1 | |
| | CC1002014 | MAIN LIFT CYLINDER - (80" OCL) (241" MFH). | 1 | |
| | CC1002020 | MAIN LIFT CYLINDER - (86" OCL) (259" MFH). | 1 | |
| | CC1002026 | MAIN LIFT CYLINDER - (92" OCL) (277" MFH). | 1 | |
| | CC1002032 | MAIN LIFT CYLINDER - (98" OCL) (295" MFH). | 1 | |
| | CC1002038 | MAIN LIFT CYLINDER - (104" OCL) (313" MFH) | 1 | |

https://truckmanualshub.com/



# 45D-MQ 4-STAGE MAST (QUAD) - MAIN LIFT CYLINDER - LEFT SIDE
# PID AS DESIGNATED - S/N 200001A~

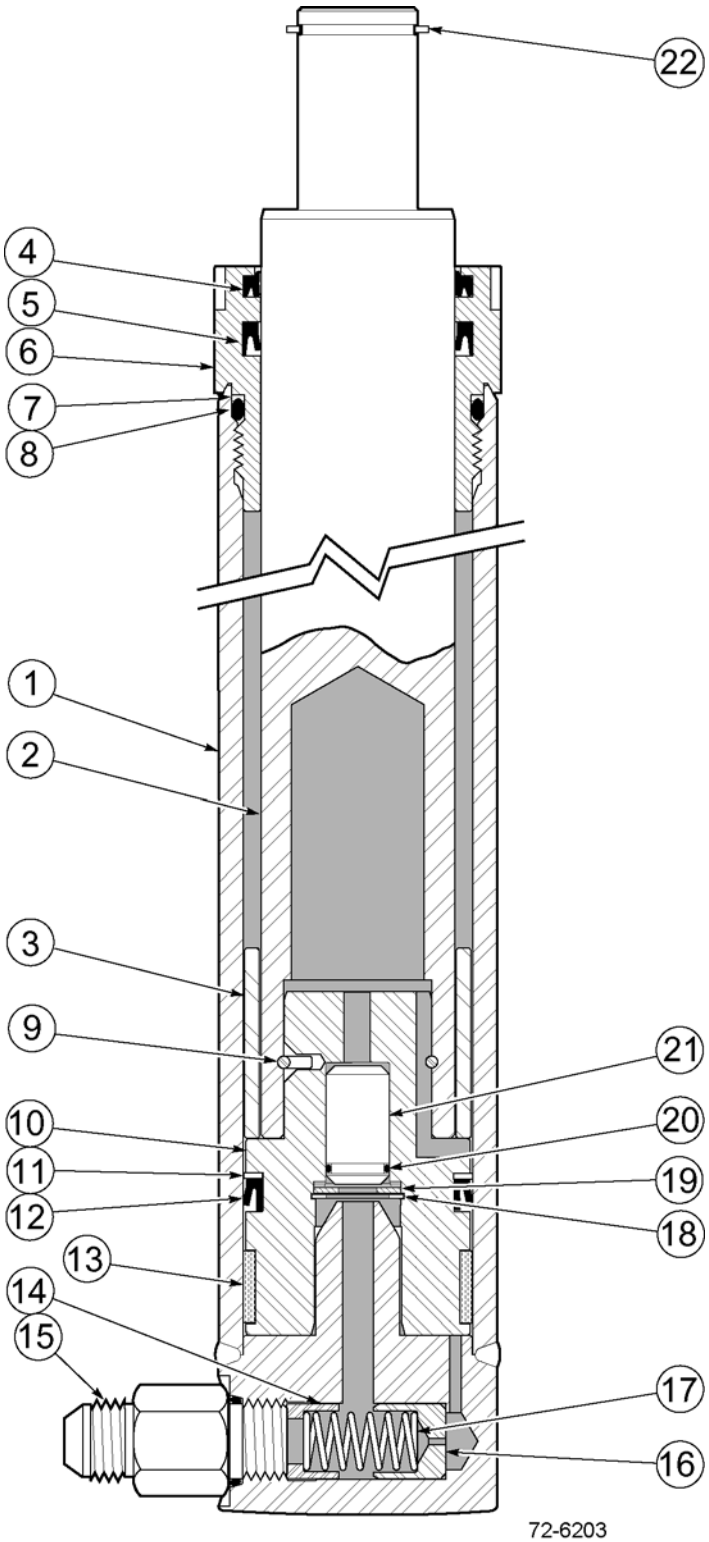


**THIS CYLINDER APPLIES TO THE FOLLOWING MAST PIDS:**

45D-MQ-001 THROUGH 45D-MQ-4724
45D-MQ-4726
45D-MQ-4727
45D-MQ-4736
45D-MQ-4741
45D-MQ-4751
45D-MQ-4757
45D-MQ-4760
45D-MQ-4761
45D-MQ-4762
45D-MQ-4763
45D-MQ-4769
45D-MQ-4770
45D-MQ-4771
45D-MQ-4772
45D-MQ-4776
45D-MQ-4778
45D-MQ-4780
45D-MQ-4781
45D-MQ-4782
45D-MQ-4783
45D-MQ-4788
45D-MQ-4789
45D-MQ-4790
45D-MQ-4792
45D-MQ-4793
45D-MQ-4795
45D-MQ-4797
45D-MQ-4801
45D-MQ-4803
45D-MQ-4804
45D-MQ-4805
45D-MQ-4816
45D-MQ-4817
45D-MQ-4822
45D-MQ-4825
45D-MQ-4826
45D-MQ-4829
45D-MQ-4835
45D-MQ-4837
45D-MQ-4843
45D-MQ-4844
45D-MQ-4845
45D-MQ-4846
45D-MQ-4848
45D-MQ-4850
45D-MQ-4853
45D-MQ-4856
45D-MQ-4857
45D-MQ-4858
45D-MQ-4860
45D-MQ-4864
45D-MQ-4869
45D-MQ-4872
45D-MQ-4873
45D-MQ-4874
45D-MQ-4875
45D-MQ-4876
45D-MQ-4879
45D-MQ-4881
45D-MQ-4882
45D-MQ-4885
45D-MQ-4886
45D-MQ-4893
45D-MQ-4896
45D-MQ-4897
45D-MQ-4899
45D-MQ-4905
45D-MQ-4906
45D-MQ-4924
45D-MQ-4925
45D-MQ-4927
45D-MQ-4930
45D-MQ-4931
45D-MQ-4932
45D-MQ-4936
45D-MQ-4939
45D-MQ-4940
45D-MQ-5207
45D-MQ-5368

https://truckmanualshub.com/



## 45D-MQ 4-STAGE MAST (QUAD) - MAIN LIFT CYLINDER - LEFT SIDE
## PID AS DESIGNATED - S/N 200001A~

| Item | Part Number | Description | Qty | Serial Number |
|---|---|---|---|---|
| 1 | NSS | SHELL | 1 | |
| 2 | NSS | ROD | 1 | |
| 3 | NSS | SPACER | 1 | |
| 4 | NSS | WIPER (CYL SERVICE KIT) | 1 | |
| 5 | NSS | ROD SEAL (CYL SERVICE KIT) | 1 | |
| 6 | CC562630 | RETAINER | 1 | |
| 7 | NSS | BACK-UP RING (CYL SERVICE KIT) | 1 | |
| 8 | NSS | O-RING (CYL SERVICE KIT) | 1 | |
| 9 | NSS | PULL WIRE (BOTH KITS) | 1 | |
| 10 | NSS | PISTON (PISTON SERVICE KIT) | 1 | |
| 11 | NSS | BACK-UP RING (CYL SERVICE KIT) | 1 | |
| 12 | NSS | PISTON SEAL (CYL SERVICE KIT) | 1 | |
| 13 | NSS | WEAR RING (CYL SERVICE KIT) | 1 | |
| 14 | CC564054 | SPRING GUIDE | 1 | |
| 15 | CC611289 | FITTING | 1 | |
| 16 | CC563782 | FUSE PISTON | 1 | |
| 17 | CC562847 | SPRING | 1 | |
| 18 | CC3015 | RETAINING RING | 1 | |
| 19 | CC5508 | SPACER | 1 | |
| 20 | CC689937 | O-RING | 1 | |
| 21 | CC626664 | CHECK VALVE | 1 | |
| 22 | CC3135 | SNAP RING | 1 | |
| KIT | CC564050 | PISTON SERVICE KIT | 1 | |
| KIT | CC564052 | CYLINDER SERVICE KIT | 1 | |
| | **OCL = OUTER CHANNEL LENGTH, MFH = MAXIMUM FORK HEIGHT** | | | |
| | CC583924 | MAIN LIFT CYLINDER - (68" OCL) (193" MFH). | 1 | |
| | CC583925 | MAIN LIFT CYLINDER - (74" OCL) (217" MFH). | 1 | |
| | CC583926 | MAIN LIFT CYLINDER - (80" OCL) (241" MFH). | 1 | |
| | CC583927 | MAIN LIFT CYLINDER - (86" OCL) (259" MFH). | 1 | |
| | CC583928 | MAIN LIFT CYLINDER - (92" OCL) (277" MFH). | 1 | |
| | CC583929 | MAIN LIFT CYLINDER - (98" OCL) (295" MFH). | 1 | |
| | CC583930 | MAIN LIFT CYLINDER - (104" OCL) (313" MFH) | 1 | |

https://truckmanualshub.com/



# 45D-MQ 4-STAGE MAST (QUAD) - MAIN LIFT CYLINDER - LEFT SIDE
# PID AS DESIGNATED - S/N 200001A~

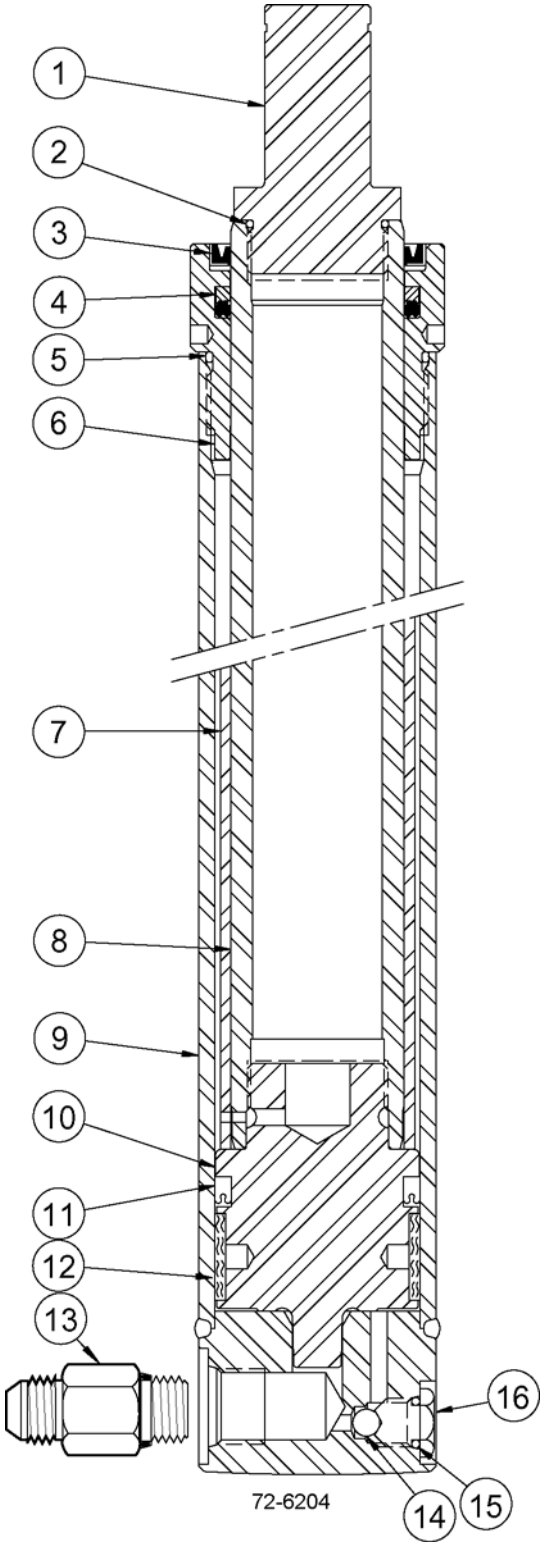


**THIS CYLINDER APPLIES TO THE FOLLOWING MAST PIDS:**

45D-MQ-4725
45D-MQ-4728 - 4740
45D-MQ-4742 - 4750
45D-MQ-4752 - 4759
45D-MQ-4764 - 4768
45D-MQ-4773
45D-MQ-4774
45D-MQ-4775
45D-MQ-4779
45D-MQ-4794
45D-MQ-4785
45D-MQ-4786
45D-MQ-4787
45D-MQ-4791
45D-MQ-4794
45D-MQ-4796
45D-MQ-4798
45D-MQ-4799
45D-MQ-4800
45D-MQ-4802
45D-MQ-4806 - 4813
45D-MQ-4815
45D-MQ-4818 - 4821
45D-MQ-4823
45D-MQ-4824
45D-MQ-4827
45D-MQ-4827
45D-MQ-4828
45D-MQ-4830 - 4834
45D-MQ-4836
45D-MQ-4838 - 4842
45D-MQ-4847
45D-MQ-4849
45D-MQ-4851
45D-MQ-4852
45D-MQ-4854
45D-MQ-4855
45D-MQ-4859
45D-MQ-4861
45D-MQ-4862
45D-MQ-4863
45D-MQ-4865 - 4867
45D-MQ-4868
45D-MQ-4870
45D-MQ-4871
45D-MQ-4878
45D-MQ-4880
45D-MQ-4883
45D-MQ-4884
45D-MQ-4887 - 4892
45D-MQ-4994
45D-MQ-4895
45D-MQ-4898
45D-MQ-4900 - 4904
45D-MQ-4907 - 4923
45D-MQ-4926
45D-MQ-4928
45D-MQ-4928
45D-MQ-4929
45D-MQ-4933
45D-MQ-4934
45D-MQ-4935
45D-MQ-4937
45D-MQ-4938
45D-MQ-4941 - 5206
45D-MQ-5208 - 5367
45D-MQ-5369 - 6358

https://truckmanualshub.com/



## 45D-MQ 4-STAGE MAST (QUAD) - MAIN LIFT CYLINDER - LEFT SIDE
## PID AS DESIGNATED - S/N 200001A~

| Item | Part Number | Description | Qty | Serial Number |
|---|---|---|---|---|
| 1 | CC1349747 | ROD END | 1 | |
| 2 | NSS | O-RING (KIT) | 1 | |
| 3 | NSS | WIPER (KIT) | 1 | |
| 4 | NSS | ROD SEAL (KIT) | 1 | |
| 5 | NSS | O-RING (KIT) | 1 | |
| 6 | CC1356992 | RETAINER | 1 | |
| 7 | NSS | SPACER | 1 | |
| 8 | NSS | ROD | 1 | |
| 9 | NSS | SHELL | 1 | |
| 10 | CC1349748 | PISTON | 1 | |
| 11 | NSS | PISTON SEAL (KIT) | 1 | |
| 12 | NSS | WEAR RING (KIT) | 1 | |
| 13 | CC231325 | EXTERNAL FUSE | 1 | |
| 14 | CC17010R1 | BALL | 1 | |
| 15 | NSS | O-RING (KIT) | 1 | |
| 16 | CC1348729 | PLUG | 1 | |
| KIT | CC1000785 | CYLINDER SERVICE KIT | 1 | |
| | **OCL = OUTER CHANNEL LENGTH, MFH = MAXIMUM FORK HEIGHT** | | | |
| | CC1000698 | MAIN LIFT CYLINDER - (68" OCL) (193" MFH). | 1 | |
| | CC1000699 | MAIN LIFT CYLINDER - (74" OCL) (217" MFH). | 1 | |
| | CC1000700 | MAIN LIFT CYLINDER - (80" OCL) (241" MFH). | 1 | |
| | CC1000701 | MAIN LIFT CYLINDER - (86" OCL) (259" MFH). | 1 | |
| | CC1000702 | MAIN LIFT CYLINDER - (92" OCL) (277" MFH). | 1 | |
| | CC1000703 | MAIN LIFT CYLINDER - (98" OCL) (295" MFH). | 1 | |
| | CC1000704 | MAIN LIFT CYLINDER - (104" OCL) (313" MFH) | 1 | |

https://truckmanualshub.com/



## 45D-MQ 4-STAGE MAST (QUAD) - MAIN LIFT CYLINDER - LEFT SIDE
## PID # 45D-MQ-6359~ - S/N 200001A~

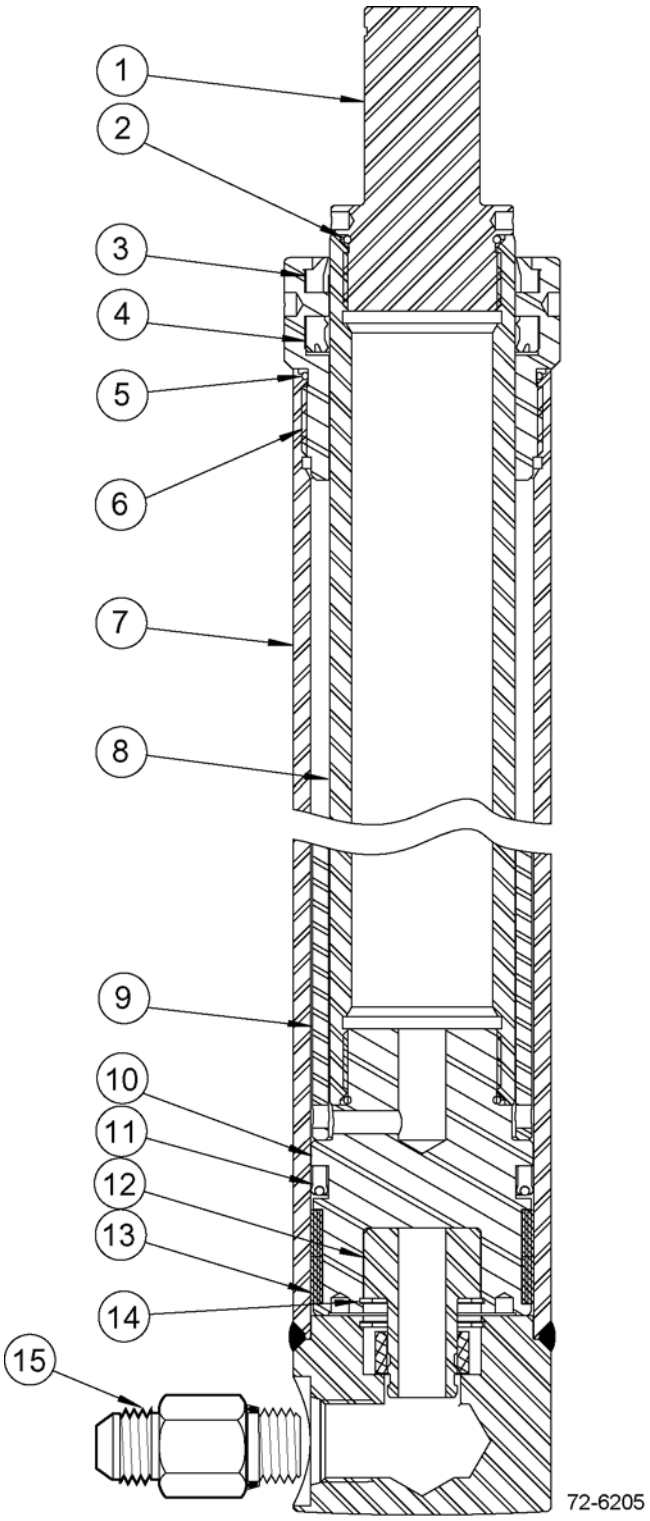

https://truckmanualshub.com/



## 45D-MQ 4-STAGE MAST (QUAD) - MAIN LIFT CYLINDER - LEFT SIDE
## PID # 45D-MQ-6359~ - S/N 200001A~

| Item | Part Number | Description | Qty | Serial Number |
|---|---|---|---|---|
| 1 | NSS | ROD END | 1 | |
| 2 | NSS | O-RING (KIT) | 1 | |
| 3 | NSS | WIPER (KIT) | 1 | |
| 4 | NSS | ROD SEAL (KIT) | 1 | |
| 5 | NSS | O-RING (KIT) | 1 | |
| 6 | NSS | RETAINER | 1 | |
| 7 | NSS | SHELL | 1 | |
| 8 | NSS | ROD | 1 | |
| 9 | NSS | SPACER | 1 | |
| 10 | NSS | PISTON | 1 | |
| 11 | NSS | PISTON SEAL (KIT) | 1 | |
| 12 | NSS | PLUG | 1 | |
| 13 | NSS | WEAR RING (KIT) | 1 | |
| 14 | NSS | RETAINING RING | 1 | |
| 15 | CC231325 | EXTERNAL FUSE | 1 | |
| KIT | CC1002526 | CYLINDER SERVICE KIT | 1 | |
| | **OCL = OUTER CHANNEL LENGTH, MFH = MAXIMUM FORK HEIGHT** | | | |
| | CC1002044 | MAIN LIFT CYLINDER - (68" OCL) (193" MFH). | 1 | |
| | CC1002045 | MAIN LIFT CYLINDER - (69" OCL) (197"MFH) . | 1 | |
| | CC1002050 | MAIN LIFT CYLINDER - (74" OCL) (217" MFH). | 1 | |
| | CC1002056 | MAIN LIFT CYLINDER - (80" OCL) (241" MFH). | 1 | |
| | CC1002062 | MAIN LIFT CYLINDER - (86" OCL) (259" MFH). | 1 | |
| | CC1002068 | MAIN LIFT CYLINDER - (92" OCL) (277" MFH). | 1 | |
| | CC1002074 | MAIN LIFT CYLINDER - (98" OCL) (295" MFH). | 1 | |
| | CC1002080 | MAIN LIFT CYLINDER - (104" OCL) (313" MFH) | 1 | |

https://truckmanualshub.com/



# 45D-MQ 4-STAGE MAST (QUAD) - FREE LIFT CYLINDER
# PID AS DESIGNATED - S/N 200001A~

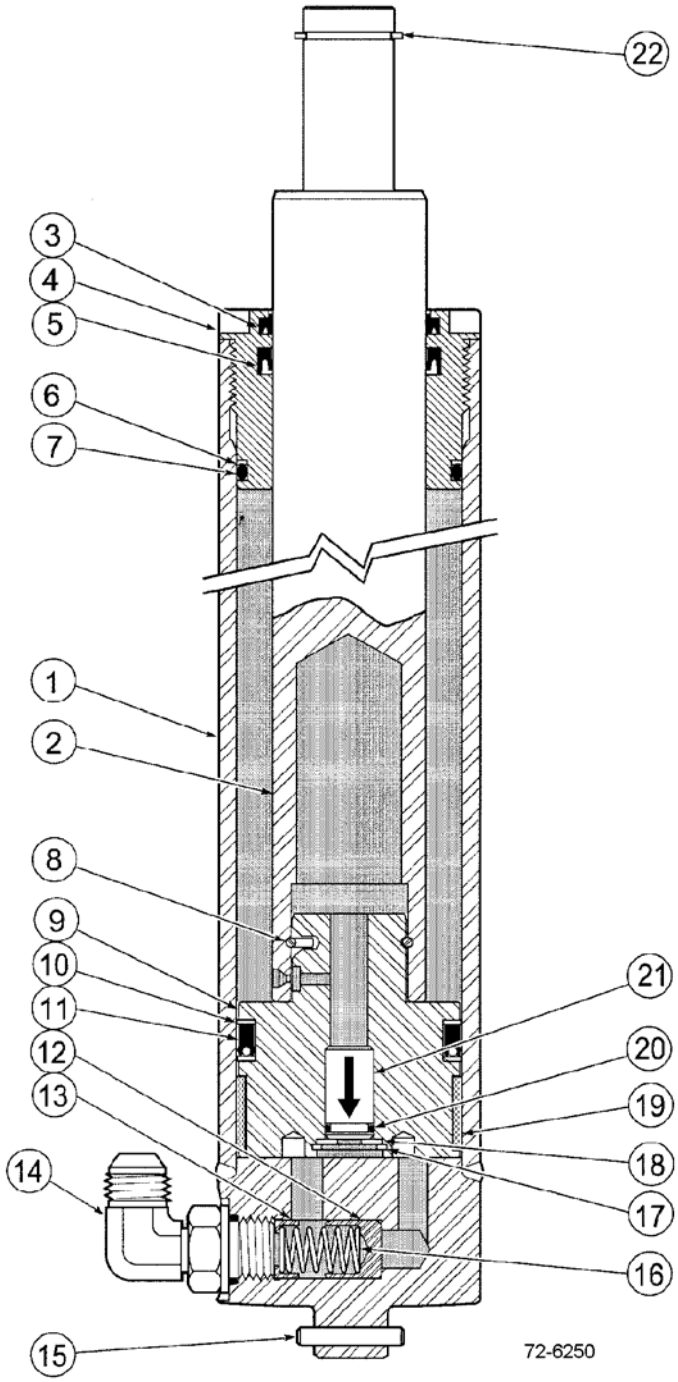


**THIS CYLINDER APPLIES TO THE FOLLOWING MAST PIDS:**

45D-MQ-001 THROUGH 45D-MQ-4724
45D-MQ-4726
45D-MQ-4727
45D-MQ-4736
45D-MQ-4741
45D-MQ-4751
45D-MQ-4757
45D-MQ-4760
45D-MQ-4761
45D-MQ-4762
45D-MQ-4763
45D-MQ-4769
45D-MQ-4770
45D-MQ-4771
45D-MQ-4772
45D-MQ-4776
45D-MQ-4778
45D-MQ-4780
45D-MQ-4781
45D-MQ-4782
45D-MQ-4783
45D-MQ-4788
45D-MQ-4789
45D-MQ-4790
45D-MQ-4792
45D-MQ-4793
45D-MQ-4795
45D-MQ-4797
45D-MQ-4801
45D-MQ-4803
45D-MQ-4804
45D-MQ-4805
45D-MQ-4816
45D-MQ-4817
45D-MQ-4822
45D-MQ-4825
45D-MQ-4826
45D-MQ-4829
45D-MQ-4835
45D-MQ-4837
45D-MQ-4843
45D-MQ-4844
45D-MQ-4845
45D-MQ-4846
45D-MQ-4848
45D-MQ-4850
45D-MQ-4853
45D-MQ-4856
45D-MQ-4857
45D-MQ-4858
45D-MQ-4860
45D-MQ-4864
45D-MQ-4869
45D-MQ-4872
45D-MQ-4873
45D-MQ-4874
45D-MQ-4875
45D-MQ-4876
45D-MQ-4879
45D-MQ-4881
45D-MQ-4882
45D-MQ-4885
45D-MQ-4886
45D-MQ-4893
45D-MQ-4896
45D-MQ-4897
45D-MQ-4899
45D-MQ-4905
45D-MQ-4906
45D-MQ-4924
45D-MQ-4925
45D-MQ-4927
45D-MQ-4930
45D-MQ-4931
45D-MQ-4932
45D-MQ-4936
45D-MQ-4939
45D-MQ-4940
45D-MQ-5207
45D-MQ-5368

https://truckmanualshub.com/



## 45D-MQ 4-STAGE MAST (QUAD) - FREE LIFT CYLINDER
## PID AS DESIGNATED - S/N 200001A~

| Item | Part Number | Description | Qty | Serial Number |
|---|---|---|---|---|
| 1 | NSS | SHELL | 1 | |
| 2 | NSS | ROD | 1 | |
| 3 | NSS | WIPER (CYL SERVICE KIT) | 1 | |
| 4 | CC559982 | RETAINER | 1 | |
| 5 | NSS | ROD SEAL (CYL SERVICE KIT) | 1 | |
| 6 | NSS | BACK-UP RING (CYL SERVICE KIT) | 1 | |
| 7 | NSS | O-RING (CYL SERVICE KIT) | 1 | |
| 8 | NSS | PULL WIRE (PISTON SERVICE KIT) | 1 | |
| 9 | NSS | PISTON (PISTON SERVICE KIT) | 1 | |
| 10 | NSS | BACK-UP RING (CYL SERVICE KIT) | 1 | |
| 11 | NSS | PISTON SEAL (CYL SERVICE KIT) | 1 | |
| 12 | CC560470 | FUSE PISTON | 1 | |
| 13 | CC564107 | SPRING GUIDE | 1 | |
| 14 | CC611299 | FITTING | 1 | |
| 15 | CC769018 | PIN | 1 | |
| 16 | CC564108 | FUSE SPRING | 1 | |
| 17 | NSS | RETAINING RING (CHECK VALVE KIT) | 1 | |
| 18 | NSS | WASHER (CHECK VALVE KIT) | 1 | |
| 19 | NSS | WEAR RING (CYL SERVICE KIT) | 1 | |
| 20 | NSS | O-RING (CYL SERVICE & CHECK VALVE KITS) | 1 | |
| 21 | NSS | CHECK VALVE (CHECK VALVE KIT) | 1 | |
| 22 | 3EB-73-A5330 | SNAP RING | 1 | |
| KIT | CC561242 | PISTON SERVICE KIT | 1 | |
| KIT | CC560349 | CYLINDER SERVICE KIT | 1 | |
| KIT | CC563904 | CHECK VALVE KIT | 1 | |
| | **OCL = OUTER CHANNEL LENGTH, MFH = MAXIMUM FORK HEIGHT** | | | |
| | CC582668 | MAIN LIFT CYLINDER - (68" OCL) (193" MFH). | 1 | |
| | CC582680 | MAIN LIFT CYLINDER - (74" OCL) (217" MFH). | 1 | |
| | CC582692 | MAIN LIFT CYLINDER - (80" OCL) (241" MFH). | 1 | |
| | CC582704 | MAIN LIFT CYLINDER - (86" OCL) (259" MFH). | 1 | |
| | CC582716 | MAIN LIFT CYLINDER - (92" OCL) (277" MFH). | 1 | |
| | CC582728 | MAIN LIFT CYLINDER - (98" OCL) (295" MFH). | 1 | |
| | CC582740 | MAIN LIFT CYLINDER - (104" OCL) (313" MFH) | 1 | |

https://truckmanualshub.com/



# 45D-MQ 4-STAGE MAST (QUAD) - FREE LIFT CYLINDER
# PID AS DESIGNATED - S/N 200001A~

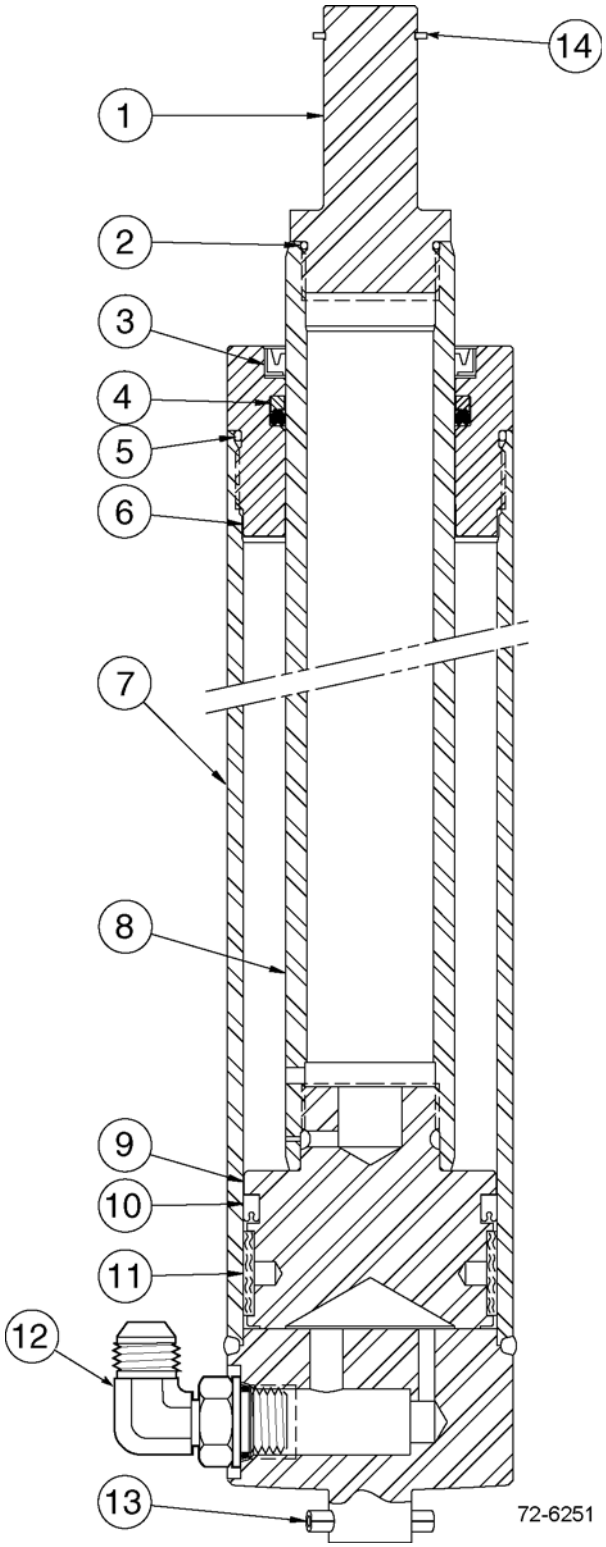


**THIS CYLINDER APPLIES TO THE FOLLOWING MAST PIDS:**

45D-MQ-4725
45D-MQ-4728 - 4740
45D-MQ-4742 - 4750
45D-MQ-4752 - 4759
45D-MQ-4764 - 4768
45D-MQ-4773
45D-MQ-4774
45D-MQ-4775
45D-MQ-4779
45D-MQ-4794
45D-MQ-4785
45D-MQ-4786
45D-MQ-4787
45D-MQ-4791
45D-MQ-4794
45D-MQ-4796
45D-MQ-4798
45D-MQ-4799
45D-MQ-4800
45D-MQ-4802
45D-MQ-4806 - 4813
45D-MQ-4815
45D-MQ-4818 - 4821
45D-MQ-4823
45D-MQ-4824
45D-MQ-4827
45D-MQ-4827
45D-MQ-4828
45D-MQ-4830 - 4834
45D-MQ-4836
45D-MQ-4838 - 4842
45D-MQ-4847
45D-MQ-4849
45D-MQ-4851
45D-MQ-4852
45D-MQ-4854
45D-MQ-4855
45D-MQ-4859
45D-MQ-4861
45D-MQ-4862
45D-MQ-4863
45D-MQ-4865 - 4867
45D-MQ-4868
45D-MQ-4870
45D-MQ-4871
45D-MQ-4878
45D-MQ-4880
45D-MQ-4883
45D-MQ-4884
45D-MQ-4887 - 4892
45D-MQ-4994
45D-MQ-4895
45D-MQ-4898
45D-MQ-4900 - 4904
45D-MQ-4907 - 4923
45D-MQ-4926
45D-MQ-4928
45D-MQ-4928
45D-MQ-4929
45D-MQ-4933
45D-MQ-4934
45D-MQ-4935
45D-MQ-4937
45D-MQ-4938
45D-MQ-4941 - 5206
45D-MQ-5208 - 5367
45D-MQ-5369 - 6358

https://truckmanualshub.com/



## 45D-MQ 4-STAGE MAST (QUAD) - FREE LIFT CYLINDER
## PID AS DESIGNATED - S/N 200001A~

| Item | Part Number | Description | Qty | Serial Number |
|---|---|---|---|---|
| 1 | NSS | ROD END | 1 | |
| 2 | NSS | O-RING (KIT) | 1 | |
| 3 | NSS | WIPER (KIT) | 1 | |
| 4 | NSS | ROD SEAL (KIT) | 1 | |
| 5 | NSS | O-RING (KIT) | 1 | |
| 6 | CC1350241 | RETAINER | 1 | |
| 7 | NSS | SHELL | 1 | |
| 8 | NSS | ROD | 1 | |
| 9 | CC1350240 | PISTON | 1 | |
| 10 | NSS | PISTON SEAL (KIT) | 1 | |
| 11 | NSS | WEAR RING (KIT) | 1 | |
| 12 | CC611299 | FITTING | 1 | |
| 13 | CC769018 | PIN | 1 | |
| 14 | 3EB-73-A5330 | SNAP RING | 1 | |
| KIT | CC1000786 | CYLINDER SERVICE KIT | 1 | |
| | **OCL = OUTER CHANNEL LENGTH, MFH = MAXIMUM FORK HEIGHT** | | | |
| | CC1000748 | MAIN LIFT CYLINDER - (68" OCL) (193" MFH). | 1 | |
| | CC1000751 | MAIN LIFT CYLINDER - (74" OCL) (217" MFH). | 1 | |
| | CC1000757 | MAIN LIFT CYLINDER - (80" OCL) (241" MFH). | 1 | |
| | CC1000762 | MAIN LIFT CYLINDER - (86" OCL) (259" MFH). | 1 | |
| | CC1000768 | MAIN LIFT CYLINDER - (92" OCL) (277" MFH). | 1 | |
| | CC1000772 | MAIN LIFT CYLINDER - (98" OCL) (295" MFH). | 1 | |
| | CC1000776 | MAIN LIFT CYLINDER - (104" OCL) (313" MFH) | 1 | |

https://truckmanualshub.com/



## 45D-MQ 4-STAGE MAST (QUAD) - FREE LIFT CYLINDER
## PID # 45D-MQ-6359~ - S/N 200001A~

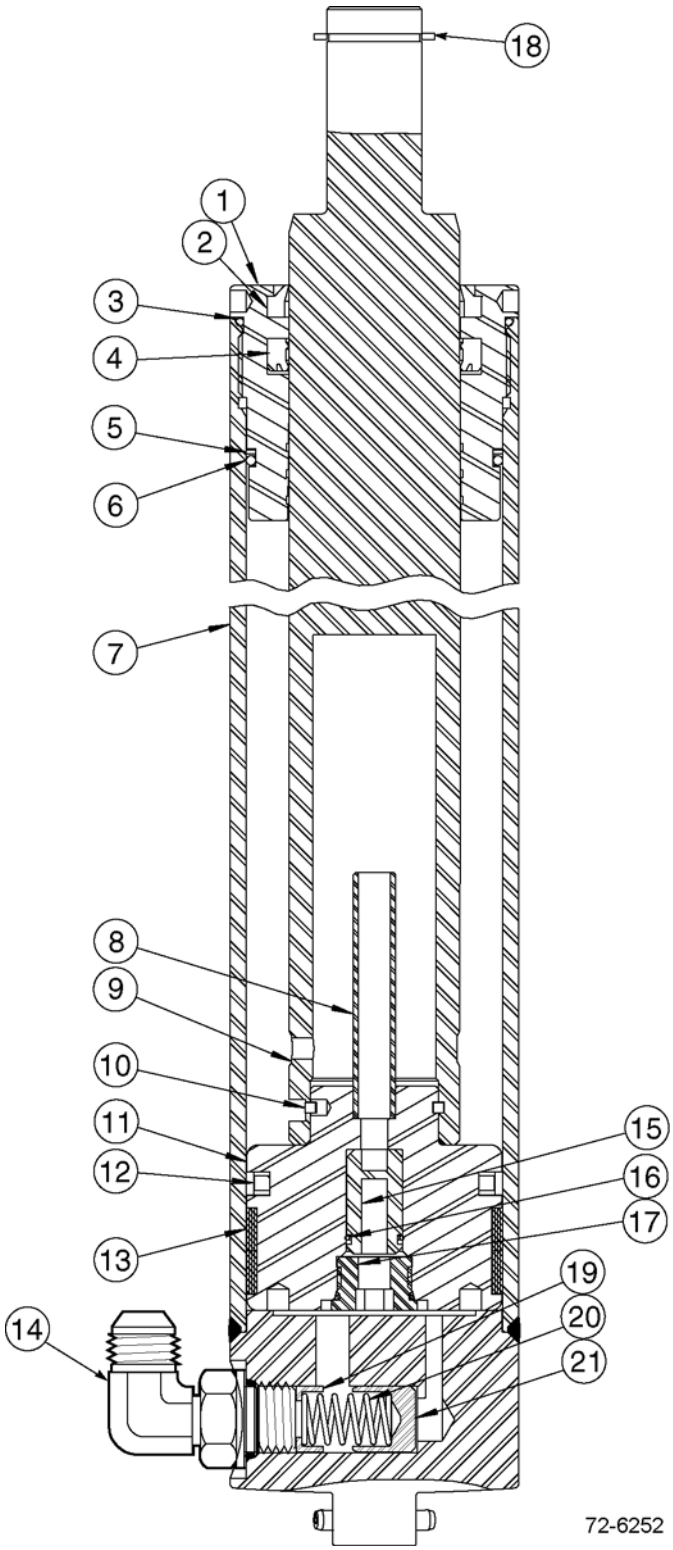

https://truckmanualshub.com/



## 45D-MQ 4-STAGE MAST (QUAD) - FREE LIFT CYLINDER
## PID # 45D-MQ-6359~ - S/N 200001A~

| Item | Part Number | Description | Qty | Serial Number |
|---|---|---|---|---|
| 1 | CC78476 | RETAINER | 1 | |
| 2 | NSS | WIPER (CYL SERVICE KIT) | 1 | |
| 3 | NSS | O-RING (CYL SERVICE KIT) | 1 | |
| 4 | NSS | ROD SEAL (CYL SERVICE KIT) | 1 | |
| 5 | NSS | BACK-UP RING (CYL SERVICE KIT) | 1 | |
| 6 | NSS | O-RING (CYL SERVICE KIT) | 1 | |
| 7 | NSS | SHELL | 1 | |
| 8 | NSS | STAND TUBE | 1 | |
| 9 | NSS | ROD | 1 | |
| 10 | NSS | PULL-IN WIRE (DO NOT REMOVE) | 1 | |
| 11 | NSS | PISTON | 1 | |
| 12 | NSS | PISTON SEAL (CYL SERVICE KIT) | 1 | |
| 13 | NSS | WEAR RING (CYL SERVICE KIT) | 1 | |
| 14 | CC611299 | FITTING | 1 | |
| 15 | NSS | CHECK VALVE (CHECK VALVE KIT) | 1 | |
| 16 | NSS | O-RING (BOTH KITS) | 1 | |
| 17 | NSS | PLUG | 1 | |
| 18 | 3EB-73-A5330 | SNAP RING | 1 | |
| 19 | CC564107 | SPRING GUIDE | 1 | |
| 20 | CC565085 | SPRING | 1 | |
| 21 | CC252678 | FUSE PISTON | 1 | |
| KIT | CC1002525 | CYLINDER SERVICE KIT | 1 | |
| KIT | CC1358999 | CHECK VALVE KIT | 1 | |
| | **OCL = OUTER CHANNEL LENGTH, MFH = MAXIMUM FORK HEIGHT** | | | |
| | CC1001746 | MAIN LIFT CYLINDER - (68" OCL) (193" OCL) | 1 | |
| | CC1001747 | MAIN LIFT CYLINDER - (69" OCL) (197" MFH) | 1 | |
| | CC1001752 | MAIN LIFT CYLINDER - (74" OCL) (217" MFH) | 1 | |
| | CC1001758 | MAIN LIFT CYLINDER - (80" OCL) (241" MFH) | 1 | |
| | CC1001764 | MAIN LIFT CYLINDER - (86" OCL) (259" MFH) | 1 | |
| | CC1001770 | MAIN LIFT CYLINDER - (92" OCL) (277" MFH) | 1 | |
| | CC1001776 | MAIN LIFT CYLINDER - (98" OCL) (295" MFH) | 1 | |
| | CC1001782 | MAIN LIFT CYLINDER - (104" OCL) (313" MFH) | 1 | |

https://truckmanualshub.com/



## 45D-MQ 4-STAGE MAST (QUAD) - OUTER UPRIGHT (WELDMENT)
## PID # 45D-MQ-001~ - S/N 200001A~

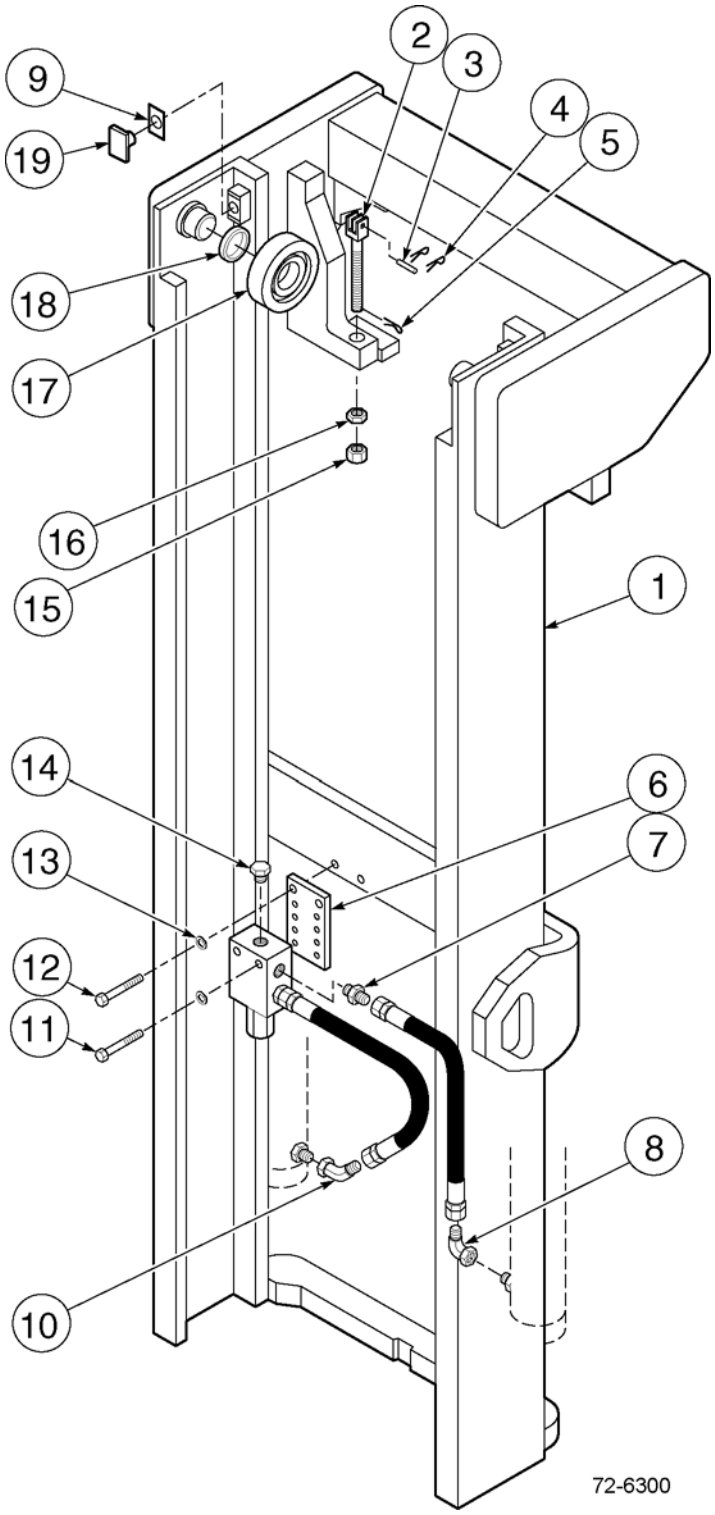

https://truckmanualshub.com/



## 45D-MQ 4-STAGE MAST (QUAD) - OUTER UPRIGHT (WELDMENT)
## PID # 45D-MQ-001~ - S/N 200001A~

| Item | Part Number | Description | Qty | Serial Number |
|---|---|---|---|---|
| | | **OCL = OUTER CHANNEL LENGTH, MFH = MAXIMUM FORK HEIGHT** | | |
| 1 | CC203277 | OUTER UPRIGHT (68" OCL) (193" MFH) | 1 | |
| | CC203278 | OUTER UPRIGHT (74" OCL) (217" MFH) | 1 | |
| | CC203279 | OUTER UPRIGHT (80" OCL) (241" MFH) | 1 | |
| | CC203280 | OUTER UPRIGHT (86" OCL) (259" MFH) | 1 | |
| | CC203281 | OUTER UPRIGHT (92" OCL) (277" MFH) | 1 | |
| | CC203282 | OUTER UPRIGHT (98" OCL) (295" MFH) | 1 | |
| | CC203283 | OUTER UPRIGHT (104" OCL) (313" MFH) | 1 | |
| 2 | CC679144 | CHAIN ANCHOR | 2 | |
| 3 | CC679149 | PIN | 2 | |
| 4 | 3EB-79-A6080 | COTTER PIN | 4 | |
| 5 | 3EB-79-A6081 | COTTER PIN | 2 | |
| 6 | NSS | LCV MOUNTING BRACKET (SEE LOWERING CONTROL VALVE FOR PART NUMBERS) | 1 | |
| 7 | CC601377 | FITTING | 2 | |
| 8 | CC605761 | FITTING | 2 | |
| 9 | CC203388 | SHIM | AR | |
| 10 | CC605948 | FITTING | 1 | |
| 11 | CC683823 | CAPSCREW, M10 X 50 LONG | 2 | |
| 12 | 3EB-73-A5490 | CAPSCREW, M10 X 25 LONG | 2 | |
| 13 | 3EB-79-A6040 | LOCKWASHER, M10 | 4 | |
| 14 | CC601378 | FITTING | 1 | |
| 15 | CC200242 | FULL HEX NUT | 2 | |
| 16 | CC200244 | JAM HEX NUT | 2 | |
| 17 | CC201493 | ROLLER ASSY | 2 | |
| 18 | CC637536 | SHIM (16 EACH) | AR | |
| 19 | CC201494 | WEAR PLUG | 2 | |

https://truckmanualshub.com/



## 45D-MQ 4-STAGE MAST (QUAD) - OUTER INTERMEDIATE UPRIGHT (WELDMENT)
## PID # 45D-MQ-001 TO 6358 - S/N 200001A~

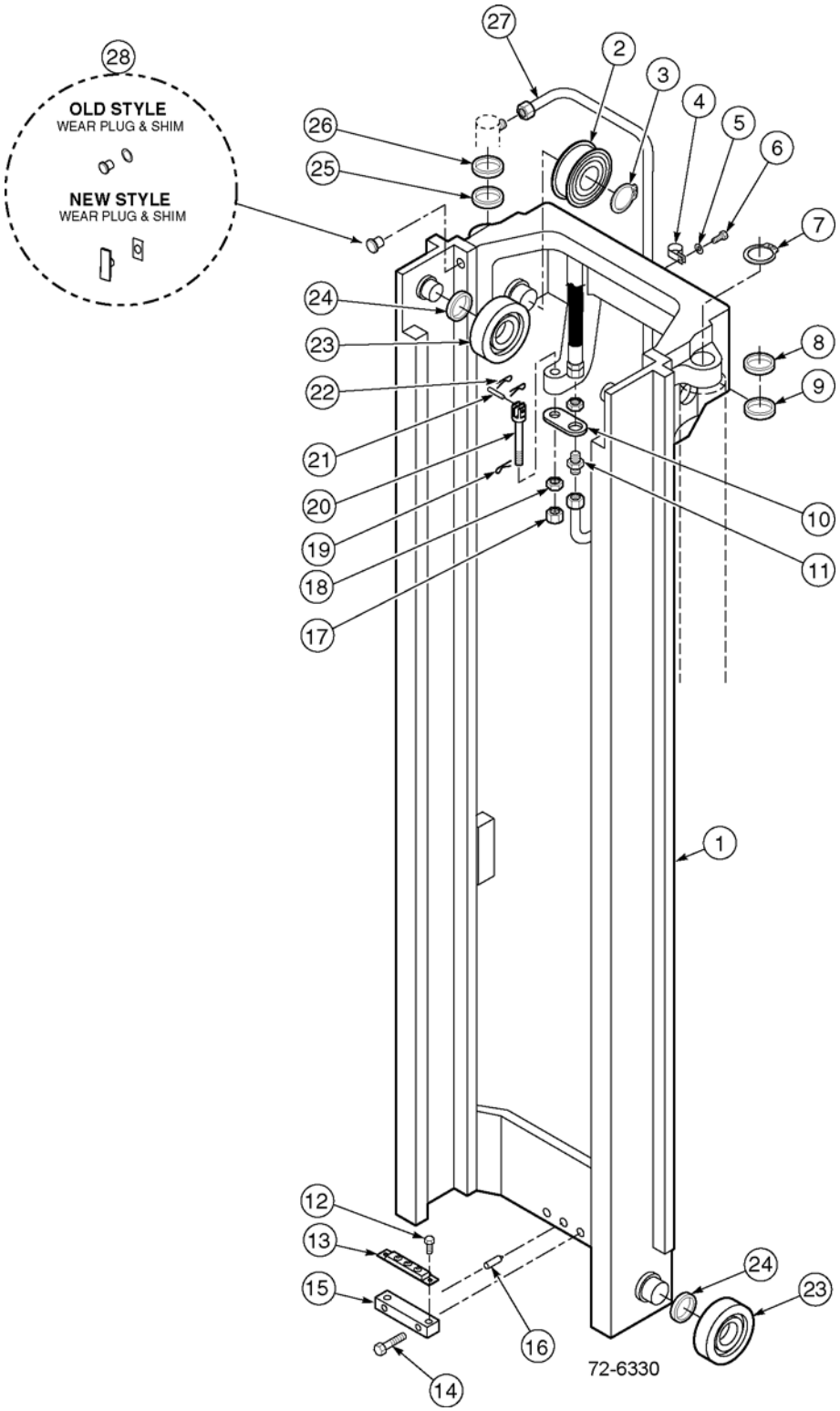

https://truckmanualshub.com/



## 45D-MQ 4-STAGE MAST (QUAD) - OUTER INTERMEDIATE UPRIGHT (WELDMENT)
## PID # 45D-MQ-001 TO 6358 - S/N 200001A~

| Item | Part Number | Description | Qty | Serial Number |
|---|---|---|---|---|
| | | **OCL = OUTER CHANNEL LENGTH, MFH = MAXIMUM FORK HEIGHT** | | |
| 1 | CC203284 | OUTER INTERMEDIATE UPRIGHT (68" OCL) (193" MFH) | 1 | |
| | CC203285 | OUTER INTERMEDIATE UPRIGHT (74" OCL) (217" MFH) | 1 | |
| | CC203286 | OUTER INTERMEDIATE UPRIGHT (80" OCL) (241" MFH) | 1 | |
| | CC203287 | OUTER INTERMEDIATE UPRIGHT (86" OCL) (259" MFH) | 1 | |
| | CC203288 | OUTER INTERMEDIATE UPRIGHT (92" OCL) (277" MFH) | 1 | |
| | CC203289 | OUTER INTERMEDIATE UPRIGHT (98" OCL) (295" MFH) | 1 | |
| | CC203290 | OUTER INTERMEDIATE UPRIGHT (104" OCL) (313" MFH) | 1 | |
| 2 | CC657852 | SHEAVE | 2 | |
| 3 | CC3147 | SNAP RING | 2 | |
| 4 | 3EB-79-A5160 | CLAMP | 1 | |
| 5 | 3EB-79-A6040 | LOCKWASHER, M10 | 1 | |
| 6 | 3EB-79-A5330 | CAPSCREW, M10 X 1.5 X 20-10.9 | 1 | |
| 7 | CC3135 | SNAP RING | 1 | |
| 8 | CC203404 | WASHER (KIT) | AR | |
| 9 | CC205198 | SHIM, .01" (0.3MM) (KIT) | AR | |
| | CC205199 | SHIM, .03" (0.7MM) (KIT) | AR | |
| | CC205196 | SHIM, .06" (1.5MM) (KIT) | AR | |
| | CC205197 | SHIM, .09" (2.3MM) (KIT) | AR | |
| 10 | CC203263 | BRACKET (HI-VIS) (NOT SHOWN) | 1 | |
| | CC683831 | BRACKET (STANDARD) | 1 | |
| 11 | CC2377 | FITTING, 10-10 | 1 | |
| 12 | 3EB-73-A5470 | CAPSCREW, M6 X 12-8.8 | 2 | |
| 13 | CC661786 | PAD | 1 | |
| 14 | CC769572 | CAPSCREW, M12 X 35-12.9 | 2 | |
| 15 | CC203291 | BAR | 1 | |
| 16 | CC606212 | DOWEL PIN | 1 | |
| 17 | 3EB-79-A6090 | NUT | 2 | |
| 18 | CC200007 | JAM NUT | 2 | |
| 19 | 3EB-79-A6081 | COTTER PIN | 2 | |
| 20 | CC680242 | CHAIN ANCHOR | 2 | |
| 21 | CC684305 | PIN | 2 | |

PARTS LIST CONTINUED ON NEXT PAGE

https://truckmanualshub.com/



## 45D-MQ 4-STAGE MAST (QUAD) - OUTER INTERMEDIATE UPRIGHT (WELDMENT)
## PID # 45D-MQ-001 TO 6358 - S/N 200001A~

| Item | Part Number | Description | Qty | Serial Number |
|---|---|---|---|---|
| 22 | 3EB-79-A6080 | COTTER PIN | 4 | |
| 23 | CC662145 | ROLLER | 4 | |
| 24 | 3EB-79-A6050 | SHIM, .03" (0.7MM) (16 EACH) | AR | |
| 25 | CC203403 | WASHER, .08" (2.0MM) (2 EACH) | AR | |
| 26 | CC203314 | WASHER, .09" (2.2MM) (2 EACH) | AR | |
| 27 | CC203386 | TUBE | 1 | |
| 28 | CC215720 | WEAR PLUG (4.2MM) (KIT) | 2 | |
| | CC215721 | WEAR PLUG (6.2MM) (KIT) | 2 | |
| 29 | CC215722 | .WEAR PLUG SHIM (KIT) | 2 | |
| KIT | CC210767 | SERVICE KIT | 1 | |

https://truckmanualshub.com/

**NOTES:**

https://truckmanualshub.com/



## 45D-MQ 4-STAGE MAST(QUAD) - OUTER INTERMEDIATE UPRIGHT (WELDMENT)
## PID # 45D-MQ-6359~ - S/N 200001A~

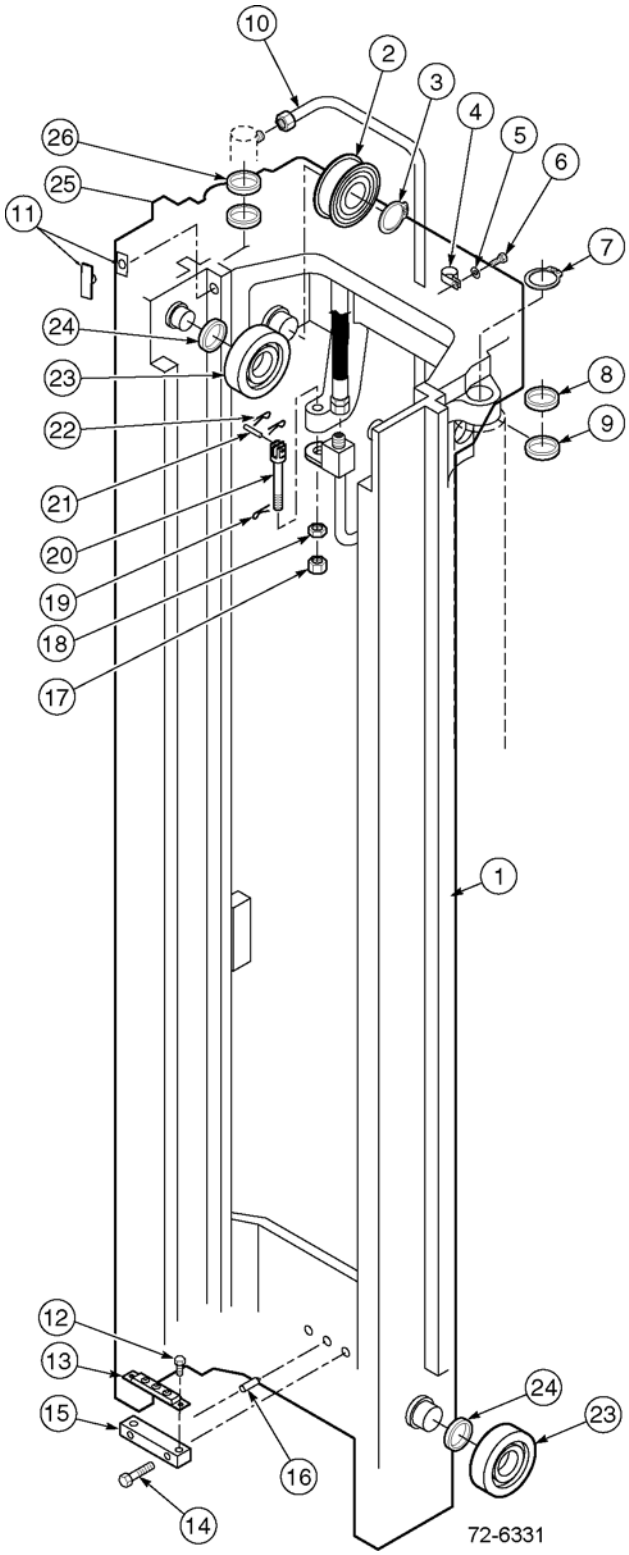

https://truckmanualshub.com/



## 45D-MQ 4-STAGE MAST(QUAD) - OUTER INTERMEDIATE UPRIGHT (WELDMENT)
## PID # 45D-MQ-6359~ - S/N 200001A~

| Item | Part Number | Description | Qty | Serial Number |
|---|---|---|---|---|
| | | **OCL = OUTER CHANNEL LENGTH, MFH = MAXIMUM FORK HEIGHT** | | |
| 1 | CC203284 | OUTER INTERMEDIATE UPRIGHT (68" OCL) (193" MFH) | 1 | |
| | CC203285 | OUTER INTERMEDIATE UPRIGHT (74" OCL) | 1 | |
| | CC203286 | OUTER INTERMEDIATE UPRIGHT (80" OCL) (241" MFH) | 1 | |
| | CC203287 | OUTER INTERMEDIATE UPRIGHT (86" OCL) (259" MFH) | 1 | |
| | CC203288 | OUTER INTERMEDIATE UPRIGHT (92" OCL) (277" MFH) | 1 | |
| | CC203289 | OUTER INTERMEDIATE UPRIGHT (98" OCL) (295" MFH) | 1 | |
| | CC203290 | OUTER INTERMEDIATE UPRIGHT (104" OCL) (313" MFH) | 1 | |
| 2 | CC657852 | SHEAVE | 2 | |
| 3 | CC3147 | SNAP RING | 2 | |
| 4 | 3EB-79-A5160 | CLAMP | 1 | |
| 5 | 3EB-79-A6040 | LOCKWASHER, M10 | 1 | |
| 6 | 3EB-79-A5330 | CAPSCREW, M10 X 1.5 X 20-10.9 | 1 | |
| 7 | CC3135 | SNAP RING | 1 | |
| 8 | CC203404 | WASHER (KIT) | AR | |
| 9 | CC205198 | SHIM, .01" (0.3MM) (KIT) | AR | |
| | CC205199 | SHIM, .03" (0.7MM) (KIT) | AR | |
| | CC205196 | SHIM, .06" (1.5MM) (KIT) | AR | |
| | CC205197 | SHIM, .09" (2.3MM) (KIT) | AR | |
| 10 | CC248902 | TUBE | 1 | |
| 11 | CC215720 | WEAR PLUG (4.2MM) (2 EACH) (KIT) | AR | |
| | CC215721 | WEAR PLUG (6.2MM) (2 EACH) (KIT) | AR | |
| | CC215722 | WEAR PLUG SHIM (2 EACH) (KIT) | AR | |
| 12 | 3EB-73-A5470 | CAPSCREW, M6 X 12-8.8 | 2 | |
| 13 | CC661786 | PAD | 1 | |
| 14 | CC769572 | CAPSCREW, M12 X 35-12.9 | 2 | |
| 15 | CC203291 | BAR | 1 | |
| 16 | CC606212 | DOWEL PIN | 1 | |
| 17 | CC200006 | NUT | 2 | |
| 18 | CC200007 | JAM NUT | 2 | |
| 19 | CC6518 | COTTER PIN | 2 | |
| 20 | CC680242 | CHAIN ANCHOR | 2 | |

PARTS LIST CONTINUED ON NEXT PAGE

https://truckmanualshub.com/



## 45D-MQ 4-STAGE MAST(QUAD) - OUTER INTERMEDIATE UPRIGHT (WELDMENT)
## PID # 45D-MQ-6359~ - S/N 200001A~

| Item | Part Number | Description | Qty | Serial Number |
|---|---|---|---|---|
| 21 | CC684305 | PIN | 2 | |
| 22 | 3EB-79-A6080 | COTTER PIN | 4 | |
| 23 | CC662145 | ROLLER | 4 | |
| 24 | 3EB-79-A6050 | SHIM, .03" (0.7MM) (16 EACH) (KIT) | AR | |
| 25 | CC203403 | WASHER, .08" (2.0MM) (2 EACH) (KIT) | AR | |
| 26 | CC203314 | WASHER, .09" (2.2MM) (2 EACH) (KIT) | AR | |
| KIT | CC210767 | SERVICE KIT | 1 | |

https://truckmanualshub.com/

**NOTES:**

https://truckmanualshub.com/



## 45D-MQ 4-STAGE MAST (QUAD) - INNER INTERMEDIATE UPRIGHT (WELDMENT)
## PID # 45D-MQ-001~ - S/N 200001A~

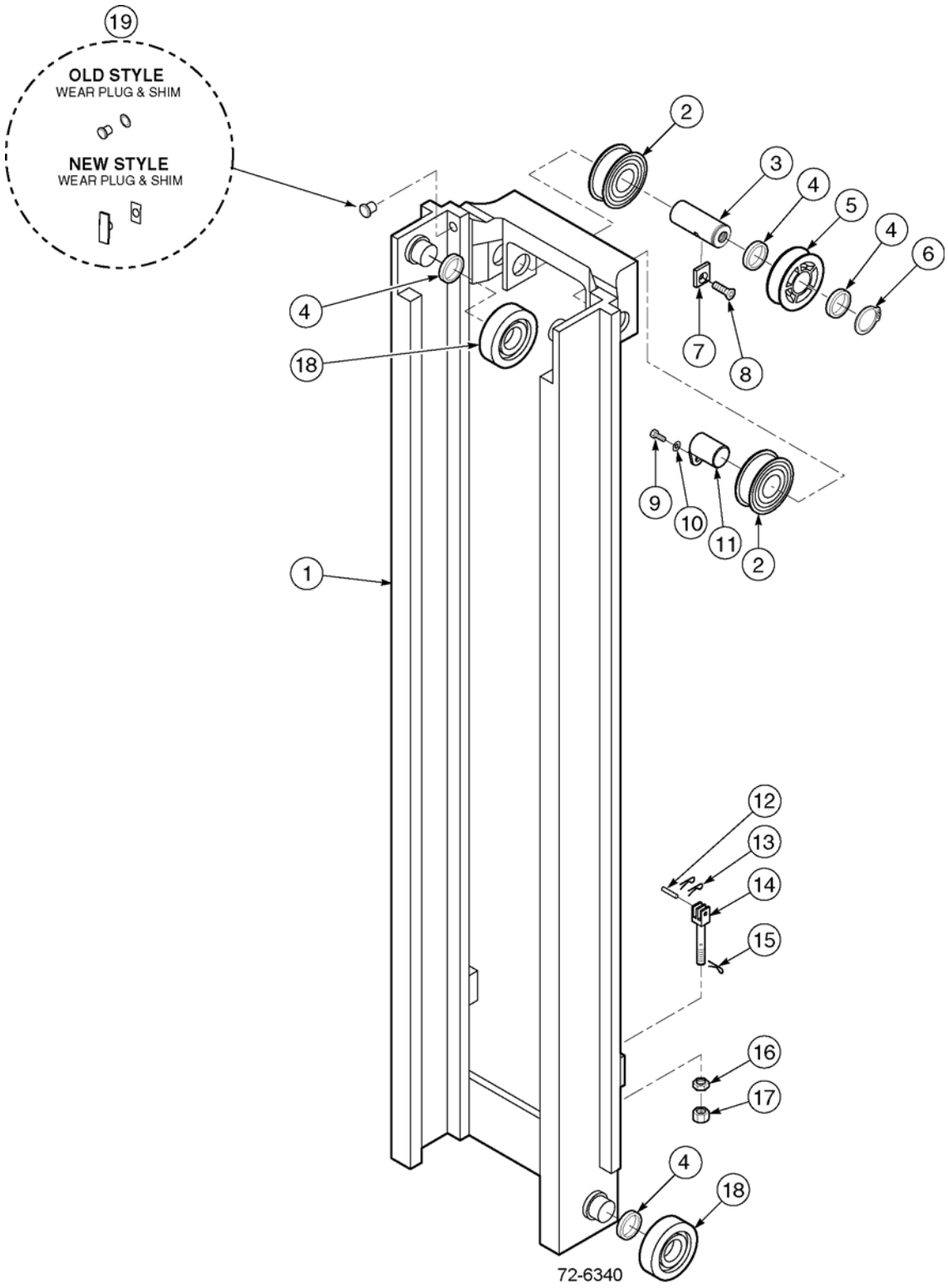

https://truckmanualshub.com/



## 45D-MQ 4-STAGE MAST (QUAD) - INNER INTERMEDIATE UPRIGHT (WELDMENT)
## PID # 45D-MQ-001~ - S/N 200001A~

| Item | Part Number | Description | Qty | Serial Number |
|---|---|---|---|---|
| | | **OCL = OUTER CHANNEL LENGTH, MFH = MAXIMUM FORK HEIGHT** | | |
| 1 | CC249045 | INNER INTERMEDIATE UPRIGHT (68" OCL) (193" MFH) | 1 | |
| | CC249048 | INNER INTERMEDIATE UPRIGHT (74" OCL) (217" MFH) | 1 | |
| | CC249052 | INNER INTERMEDIATE UPRIGHT (80" OCL) (241" MFH) | 1 | |
| | CC249058 | INNER INTERMEDIATE UPRIGHT (86" OCL) (259" MFH) | 1 | |
| | CC249064 | INNER INTERMEDIATE UPRIGHT (92" OCL) (277" MFH) | 1 | |
| | CC249070 | INNER INTERMEDIATE UPRIGHT (98" OCL) (295" MFH) | 1 | |
| | CC249075 | INNER INTERMEDIATE UPRIGHT (104" OCL) (313" MFH) | 1 | |
| 2 | CC660051 | SHEAVE | 2 | |
| 3 | CC203267 | SHAFT | 1 | |
| 4 | 3EB-79-A6050 | SHIM, .03" (0.7MM) (16 EACH) (KIT) | AR | |
| 5 | CC203385 | SHEAVE | 1 | |
| 6 | 3EB-79-A6070 | SNAP RING | 1 | |
| 7 | CC203266 | RETAINER | 1 | |
| 8 | CC768690 | CAPSCREW, M18 X 12-8.8 | 1 | |
| 9 | CC683820 | CAPSCREW, M10 X 1.5 X 16-8.8 | 1 | |
| 10 | 3EB-79-A6040 | LOCKWASHER, M10 | 1 | |
| 11 | CC203269 | SHAFT | 1 | |
| 12 | CC679149 | PIN | 2 | |
| 13 | 3EB-79-A6080 | COTTER PIN | 4 | |
| 14 | CC679146 | CHAIN ANCHOR | 2 | |
| 15 | 3EB-79-A6081 | COTTER PIN | 2 | |
| 16 | CC200244 | JAM NUT | 2 | |
| 17 | CC200242 | NUT. | 2 | |
| 18 | CC662145 | ROLLER | 4 | |
| 19 | CC215720 | WEAR PLUG (4.2MM) (2 EACH) (KIT) | AR | |
| | CC215721 | WEAR PLUG (6.2MM) (2 EACH) (KIT) | AR | |
| | CC215722 | .WEAR PLUG SHIM (2 EACH) | AR | |
| KIT | CC210767 | SERVICE KIT | 1 | |

https://truckmanualshub.com/



## 45D-MQ 4-STAGE MAST (QUAD) - INNER UPRIGHT (WELDMENT)
## PID # 45D-MQ-001 TO 883 - S/N 200001A~

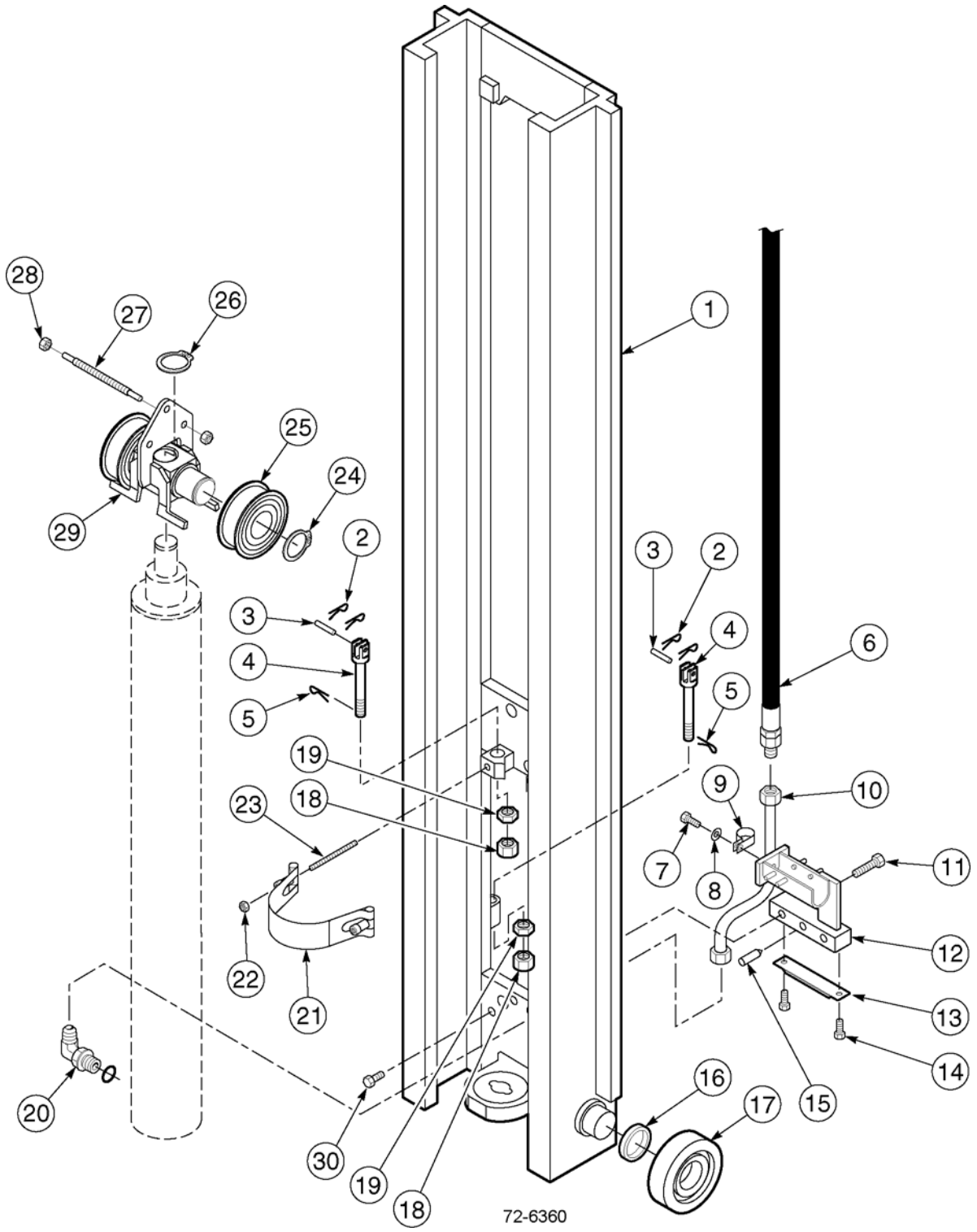

https://truckmanualshub.com/



## 45D-MQ 4-STAGE MAST (QUAD) - INNER UPRIGHT (WELDMENT)
## PID # 45D-MQ-001 TO 883 - S/N 200001A~

| Item | Part Number | Description | Qty | Serial Number |
|---|---|---|---|---|
| | | **OCL = OUTER CHANNEL LENGTH, MFH = MAXIMUM FORK HEIGHT** | | |
| 1 | CC203377 | INNER UPRIGHT (68" OCL) (193" MFH) | 1 | |
| | CC203378 | INNER UPRIGHT (74" OCL) (217" MFH) | 1 | |
| | CC203379 | INNER UPRIGHT (80" OCL) (241" MFH) | 1 | |
| | CC203380 | INNER UPRIGHT (86" OCL) (259" MFH) | 1 | |
| | CC203381 | INNER UPRIGHT (92" OCL) (277" MFH) | 1 | |
| | CC203382 | INNER UPRIGHT (98" OCL) (295" MFH) | 1 | |
| | CC203383 | INNER UPRIGHT (104" OCL) (313" MFH) | 1 | |
| 2 | 3EB-79-A6080 | COTTER PIN | 4 | |
| 3 | CC684305 | PIN | 2 | |
| 4 | CC680242 | CHAIN ANCHOR | 2 | |
| 5 | 3EB-79-A6081 | COTTER PIN | 2 | |
| 6 | SEE PARTS PG | HOSE - SEE FIG. 72-6500 | | |
| 7 | CC200429 | CAPSCREW, M10 X 1.5 X 20-10.9 | 1 | |
| 8 | 3EB-79-A6040 | LOCKWASHER, M10 | 1 | |
| 9 | CC206655 | TUBE CLAMP | 1 | |
| 10 | CC203387 | TUBE | 1 | |
| 11 | CC769572 | CAPSCREW, M12 X 35-12.9 | 2 | |
| 12 | CC203477 | STANDARD IHR BRACKET | 1 | |
| 13 | CC661786 | PAD | 1 | |
| 14 | 3EB-73-A5470 | CAPSCREW, M6 X 12-8.8 | 2 | |
| 15 | CC606212 | DOWEL PIN | 1 | |
| 16 | 3EB-79-A6050 | SHIM, .03" (0.7MM) (16 EACH) | AR | |
| 17 | CC662145 | ROLLER | 2 | |
| 18 | 3EB-79-A6090 | NUT | 4 | |
| 19 | CC200007 | JAM NUT | 4 | |
| 20 | CC611299 | FITTING, 10-10 | 1 | |
| 21 | CC206042 | BAND | 1 | |
| 22 | CC786881 | NUT, M8 | 2 | |
| 23 | CC206319 | STUD | 2 | |
| 24 | 3EB-79-A6070 | SNAP RING | 2 | |
| 25 | CC660051 | SHEAVE | 2 | |
| 26 | 3EB-73-A5330 | SNAP RING | 1 | |
| 27 | CC203262 | BAR | 1 | |
| 28 | CC763023 | NUT, M10 | 2 | |
| 29 | CC201497 | CROSSHEAD | 1 | |
| 30 | CC203406 | CAPSCREW, M12 X 1.75 X 16-12.9 | 2 | |

https://truckmanualshub.com/



## 45D-MQ 4-STAGE MAST (QUAD) - INNER UPRIGHT (WELDMENT)
## PID # 45D-MQ-884 TO 6358 - S/N 200001A~

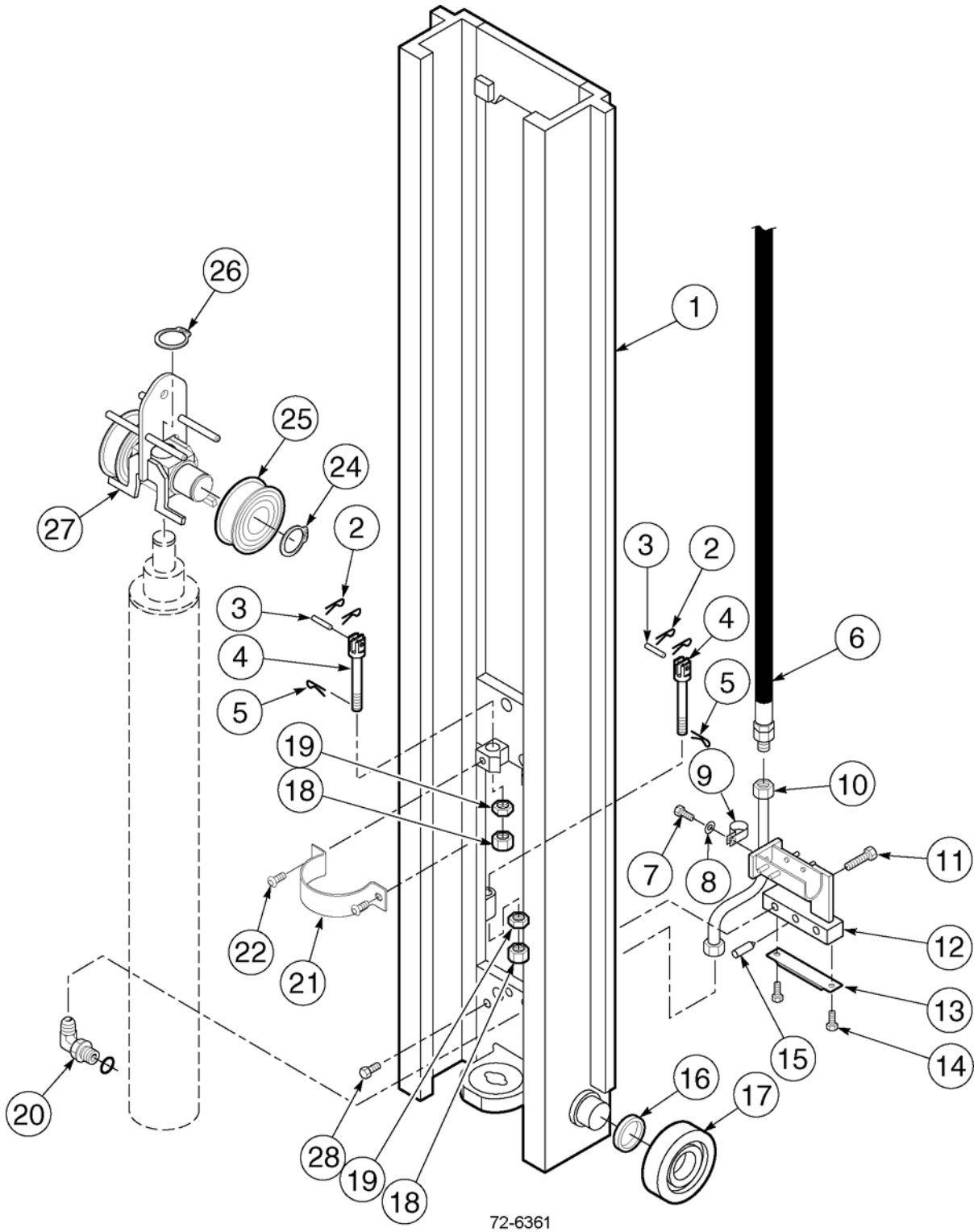

https://truckmanualshub.com/



## 45D-MQ 4-STAGE MAST (QUAD) - INNER UPRIGHT (WELDMENT)
## PID # 45D-MQ-884 TO 6358 - S/N 200001A~

| Item | Part Number | Description | Qty | Serial Number |
|---|---|---|---|---|
| | | **OCL = OUTER CHANNEL LENGTH, MFH = MAXIMUM FORK HEIGHT** | | |
| 1 | CC203377 | INNER UPRIGHT (68" OCL) (193" MFH) | 1 | |
| | CC203378 | INNER UPRIGHT (74" OCL) (217" MFH) | 1 | |
| | CC203379 | INNER UPRIGHT (80" OCL) (241" MFH) | 1 | |
| | CC203380 | INNER UPRIGHT (86" OCL) (259" MFH) | 1 | |
| | CC203381 | INNER UPRIGHT (92" OCL) (277" MFH) | 1 | |
| | CC203382 | INNER UPRIGHT (98" OCL) (295" MFH) | 1 | |
| | CC203383 | INNER UPRIGHT (104" OCL) (313" MFH) | 1 | |
| 2 | 3EB-79-A6080 | COTTER PIN | 4 | |
| 3 | CC684305 | PIN | 2 | |
| 4 | CC680242 | CHAIN ANCHOR | 2 | |
| 5 | 3EB-79-A6081 | COTTER PIN | 2 | |
| 6 | SEE PARTS PG | SEE FIG. 72-6500 | | |
| 7 | 3EB-79-A5330 | CAPSCREW, M10 X 1.5 X 20-10.9 | 1 | |
| 8 | 3EB-79-A6040 | LOCKWASHER, M10 | 1 | |
| 9 | CC206655 | TUBE CLAMP | 1 | |
| 10 | CC203387 | TUBE | 1 | |
| 11 | CC769572 | CAPSCREW, M12 X 35-12.9 | 2 | |
| 12 | CC203477 | IHR BRACKET, STANDARD | 1 | |
| | CC238353 | IHR BRACKET, L.H. | 1 | |
| | CC230805 | IHR BRACKET, R.H. | 1 | |
| 13 | CC661786 | PAD | 1 | |
| 14 | 3EB-73-A5470 | CAPSCREW, M6 X 12-8.8 | 2 | |
| 15 | CC606212 | DOWEL PIN | 1 | |
| 16 | 3EB-79-A6050 | SHIM, .03" (0.7MM) (16 EACH) | AR | |
| 17 | CC662145 | ROLLER | 2 | |
| 18 | 3EB-79-A6090 | NUT | 4 | |
| 19 | CC200007 | JAM NUT | 4 | |
| 20 | CC611299 | FITTING, 10-10 | 1 | |
| 21 | CC206042 | BAND | 1 | |
| 22 | CC786881 | NUT, M8 | 2 | |
| 23 | NOT USED | | | |
| 24 | CC3140 | SNAP RING | 2 | |
| 25 | CC660051 | SHEAVE | 2 | |
| 26 | 3EB-73-A5330 | SNAP RING | 1 | |
| 27 | CC210169 | CROSSHEAD | 1 | |
| 28 | CC203406 | CAPSCREW, M12 X 1.75 X 16-12.9 | 2 | |

https://truckmanualshub.com/



## 45D-MQ 4-STAGE MAST (QUAD) - INNER UPRIGHT (WELDMENT)
## PID # 45D-MQ-6359~ - S/N 200001A~

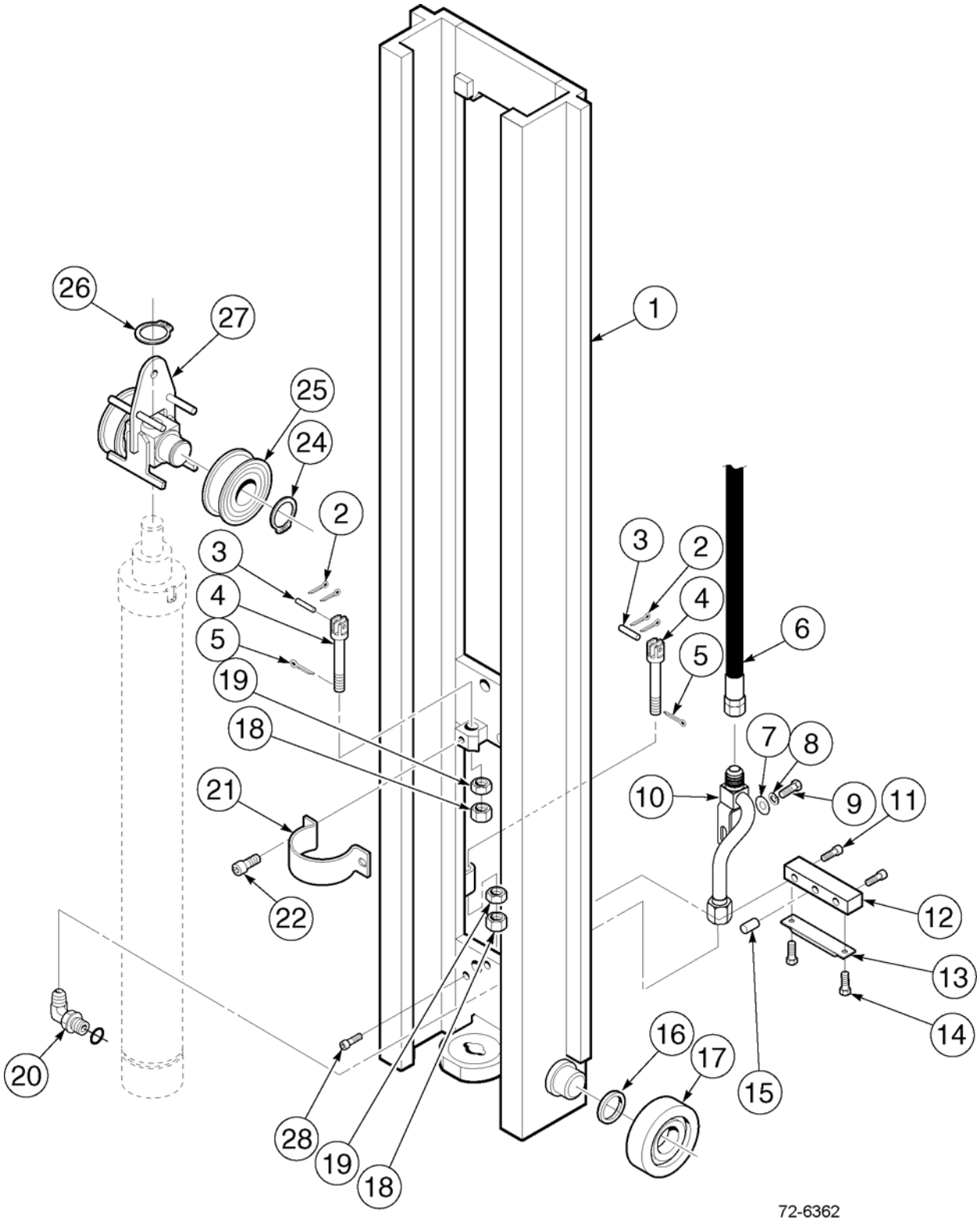

https://truckmanualshub.com/



## 45D-MQ 4-STAGE MAST (QUAD) - INNER UPRIGHT (WELDMENT)
## PID # 45D-MQ-6359~ - S/N 200001A~

| Item | Part Number | Description | Qty | Serial Number |
|---|---|---|---|---|
| | | **OCL = OUTER CHANNEL LENGTH, MFH = MAXIMUM FORK HEIGHT** | | |
| 1 | CC203377 | INNER UPRIGHT (68" OCL) (193" MFH) | 1 | |
| | CC203378 | INNER UPRIGHT (74" OCL) (217" MFH) | 1 | |
| | CC203379 | INNER UPRIGHT (80" OCL) (241" MFH) | 1 | |
| | CC203380 | INNER UPRIGHT (86" OCL) (259" MFH) | 1 | |
| | CC203381 | INNER UPRIGHT (92" OCL) (277" MFH) | 1 | |
| | CC203382 | INNER UPRIGHT (98" OCL) (295" MFH) | 1 | |
| | CC203383 | INNER UPRIGHT (104" OCL) (313" MFH) | 1 | |
| 2 | 3EB-79-A6080 | COTTER PIN | 4 | |
| 3 | CC684305 | PIN | 2 | |
| 4 | CC680242 | CHAIN ANCHOR | 2 | |
| 5 | 3EB-79-A6081 | COTTER PIN | 2 | |
| 6 | SEE PARTS PG | SEE FIG. 72-6501 | | |
| 7 | CC787398 | FLAT WASHER, M8 | 1 | |
| 8 | CC206315 | LOCKWASHER, M8 | 1 | |
| 9 | CC209742 | CAPSCREW, M8 X 16 | 1 | |
| 10 | CC248901 | TUBE | 1 | |
| 11 | CC769572 | CAPSCREW, M12 X 35-12.9 (KIT) | 2 | |
| 12 | CC203291 | NON-IHR STOP BRACKET, STANDARD (KIT) | 2 | |
| 13 | CC661786 | PAD (KIT) | 1 | |
| 14 | CC680218 | CAPSCREW, M6 X 12-8.8 (KIT) | 2 | |
| 15 | CC606212 | DOWEL PIN (KIT) | 1 | |
| 16 | 3EB-79-A6050 | SHIM, .03" (0.7MM) (16 EACH) | AR | |
| 17 | CC662145 | ROLLER | 2 | |
| 18 | 3EB-79-A6090 | NUT | 4 | |
| 19 | CC200007 | JAM NUT | 4 | |
| 20 | CC611299 | FITTING, 10-10 | 1 | |
| 21 | CC209625 | BAND | 1 | |
| 22 | CC219596 | NUT, M8 | 2 | |
| 23 | NOT USED | | | |
| 24 | 3EB-79-A6070 | SNAP RING | 2 | |
| 25 | CC660051 | SHEAVE | 2 | |
| 26 | 3EB-73-A5330 | SNAP RING | 1 | |
| 27 | CC210169 | CROSSHEAD | 1 | |
| 28 | CC203406 | CAPSCREW, M12 X 1.75 X 16-12.9 | 2 | |
| KIT | CC249002 | NON-IHR INNER MAST BUMPER STOP KIT | 1 | |

https://truckmanualshub.com/



## 45D-MQ 4-STAGE MAST (QUAD) - 4-ROLLER CARRIAGES
## S/N 200001A~

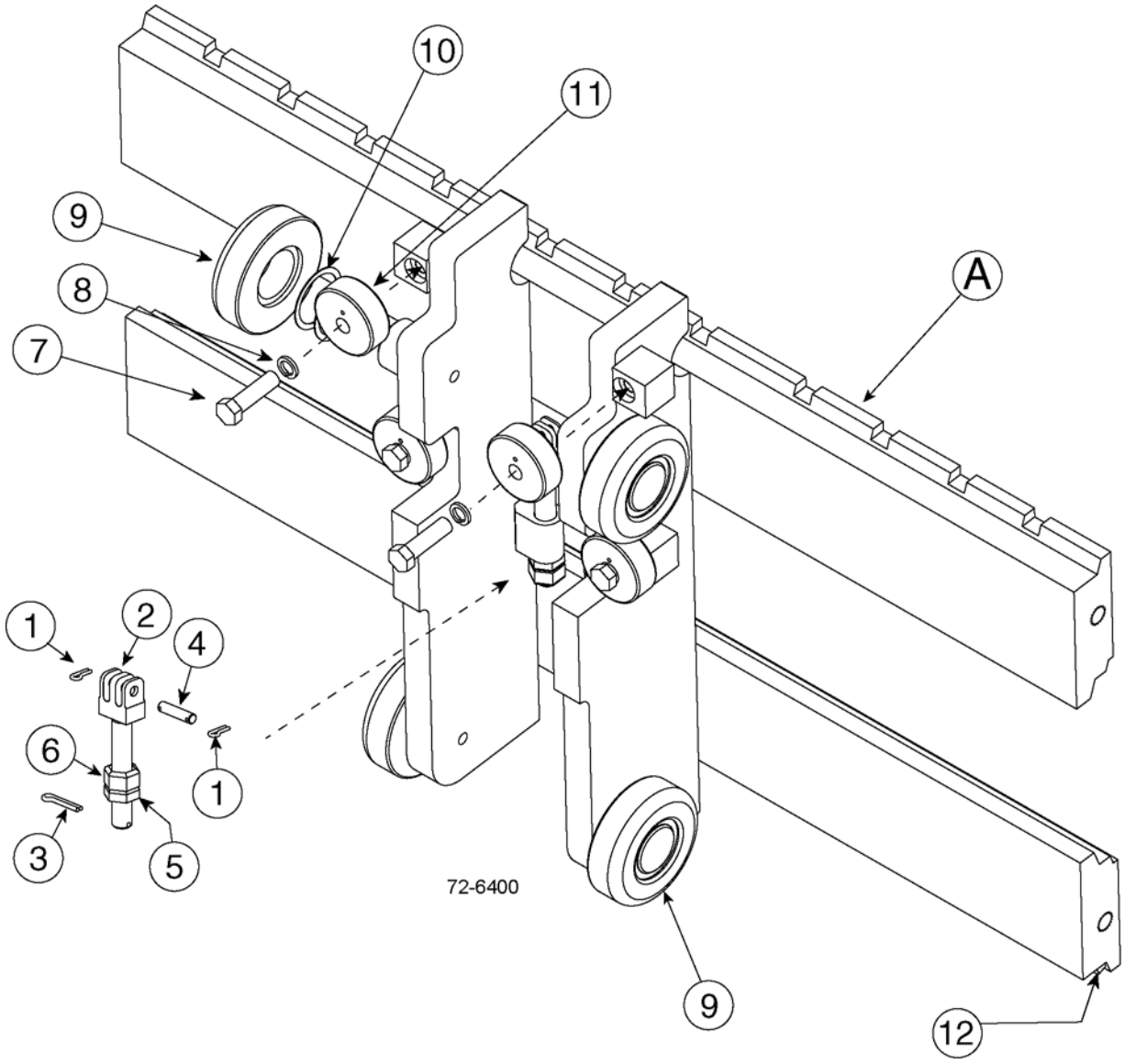

https://truckmanualshub.com/



## 45D-MQ 4-STAGE MAST (QUAD) - 4-ROLLER CARRIAGES
## S/N 200001A~

| Item | Part Number | Description | Qty | Serial Number |
|---|---|---|---|---|
| A | CC203323 | CARRIAGE (37") - CUSHION TIRE TRUCKS . . | 1 | |
| | CC203324 | CARRIAGE (41") - CUSHION TIRE TRUCKS . . | 1 | |
| | CC219851 | CARRIAGE (31") - PNEUMATIC TIRE TRUCKS | 1 | |
| | CC203325 | CARRIAGE (37") - PNEUMATIC TIRE TRUCKS | 1 | |
| | CC216747 | CARRIAGE (38.5") - PNEUMATIC TIRE TRUCKS | 1 | |
| | CC203326 | CARRIAGE (41") - PNEUMATIC TIRE TRUCKS | 1 | |
| 1 | 3EB-79-A6080 | COTTER PIN . . . . . | 4 | |
| 2 | CC683817 | CHAIN ANCHOR . . . . . | 2 | |
| 3 | 3EB-79-A6081 | COTTER PIN . . . . . | 2 | |
| 4 | CC684305 | PIN . . . . . | 2 | |
| 5 | CC200007 | NUT, .625 . . . . . | 2 | |
| 6 | 3EB-79-A6090 | JAM NUT . . . . . | 2 | |
| 7 | 3EB-79-A5290 | CAPSCREW, M12 X 45 . . . . . | 4 | |
| 8 | CC684660 | LOCKWASHER, M12 . . . . . | 4 | |
| 9 | CC662145 | ROLLER ASSY . . . . . | 4 | |
| 10 | 3EB-79-A6050 | SHIM (16 EACH). . . . . | AR | |
| 11 | CC683819 | THRUST ROLLER ASSY . . . . . | 4 | |
| 12 | CC219400 | FORKSTOP KIT . . . . . | 1 | |

https://truckmanualshub.com/



## 45D-MQ 4-STAGE MAST (QUAD) - 6-ROLLER CARRIAGES
## S/N 200001A~

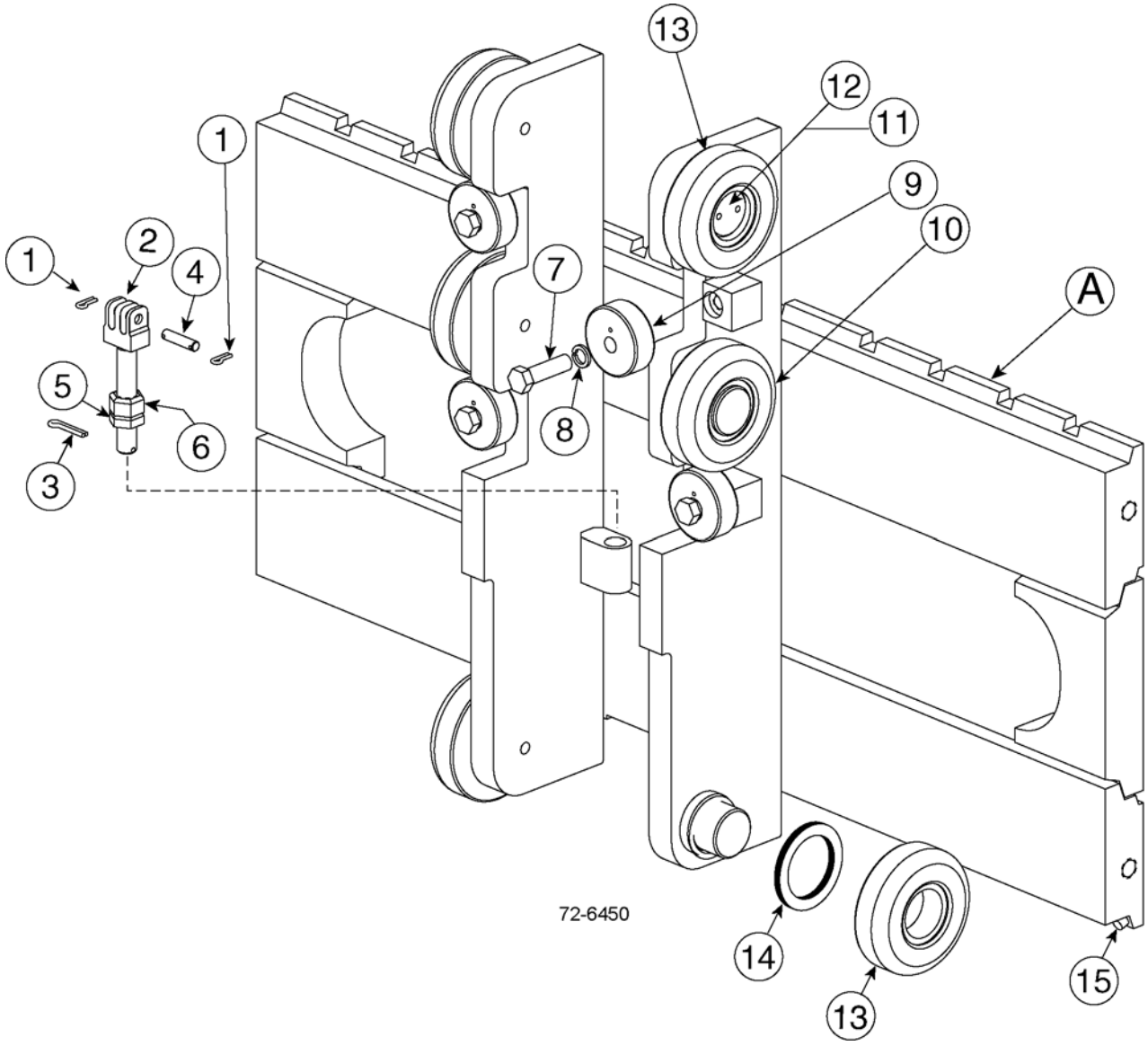

https://truckmanualshub.com/



## 45D-MQ 4-STAGE MAST (QUAD) - 6-ROLLER CARRIAGES
## S/N 200001A~

| Item | Part Number | Description | Qty | Serial Number |
|---|---|---|---|---|
| A | CC233777 | CARRIAGE (36.5") STD - CUSHION TIRE TRUCKS | 1 | |
| | CC203391 | CARRIAGE (37") STD - CUSHION TIRE TRUCKS | 1 | |
| | CC203469 | CARRIAGE (37") HD - CUSHION TIRE TRUCKS | 1 | |
| | CC203392 | CARRIAGE (41") STD - CUSHION TIRE TRUCKS | 1 | |
| | CC203470 | CARRIAGE (41") HD - CUSHION TIRE TRUCKS | 1 | |
| | CC250010 | CARRIAGE (43") HD - CUSHION TIRE TRUCKS | 1 | |
| | CC245079 | CARRIAGE (47") STD - CUSHION TIRE TRUCKS | 1 | |
| | CC203417 | CARRIAGE (49") STD - CUSHION TIRE TRUCKS | 1 | |
| | CC203471 | CARRIAGE (49") HD - CUSHION TIRE TRUCKS | 1 | |
| | CC203418 | CARRIAGE (61") STD - CUSHION TIRE TRUCKS | 1 | |
| | CC203472 | CARRIAGE (61") HD - CUSHION TIRE TRUCKS | 1 | |
| | CC214333 | CARRIAGE (62") HD - CUSHION TIRE TRUCKS | 1 | |
| | CC203393 | CARRIAGE (37") STD - PNEUMATIC TIRE TRUCKS | 1 | |
| | CC203473 | CARRIAGE (37") HD - PNEUMATIC TIRE TRUCKS | 1 | |
| | CC203394 | CARRIAGE (41") STD - PNEUMATIC TIRE TRUCKS | 1 | |
| | CC203474 | CARRIAGE (41") HD - PNEUMATIC TIRE TRUCKS | 1 | |
| | CC203419 | CARRIAGE (49") STD - PNEUMATIC TIRE TRUCKS | 1 | |
| | CC203475 | CARRIAGE (49") HD - PNEUMATIC TIRE TRUCKS | 1 | |
| | CC220811 | CARRIAGE (58") STD - PNEUMATIC TIRE TRUCKS | 1 | |
| | CC203420 | CARRIAGE (61") STD - PNEUMATIC TIRE TRUCKS | 1 | |
| | CC203476 | CARRIAGE (61") HD - PNEUMATIC TIRE TRUCKS | 1 | |
| 1 | 3EB-79-A6080 | COTTER PIN | 4 | |
| 2 | CC683817 | CHAIN ANCHOR | 2 | |
| 3 | 3EB-79-A6081 | COTTER PIN | 2 | |
| 4 | CC684305 | PIN | 2 | |
| 5 | CC200007 | NUT, .625 | 2 | |
| 6 | 3EB-79-A6090 | JAM NUT | 2 | |
| 7 | 3EB079-A5290 | CAPSCREW, M12 X 45 | 4 | |
| 8 | CC684660 | LOCKWASHER, M12 | 4 | |
| 9 | CC662145 | ROLLER ASSY | 4 | |
| 10 | CC660050 | LOAD ROLLER | 2 | |
| 11 | CC658378 | RETAINER PLATE | 2 | |
| 12 | CC680218 | HEX HEAD, M6 X 12 LONG | 4 | |
| 13 | CC662145 | LOAD ROLLER | 4 | |
| 14 | 3EB-79-A6050 | SHIM, LOAD ROLLER (16 EACH) | AR | |
| 15 | CC219400 | FORKSTOP KIT | 1 | |
| KIT | CC688378 | TOP ROLLER KIT | 1 | |

https://truckmanualshub.com/



## 45D-MQ 4-STAGE MAST (QUAD) - HOIST CHAINS & FREE LIFT HOSES
## PID # 45D-MQ-001 - 6358 - S/N 200001A~

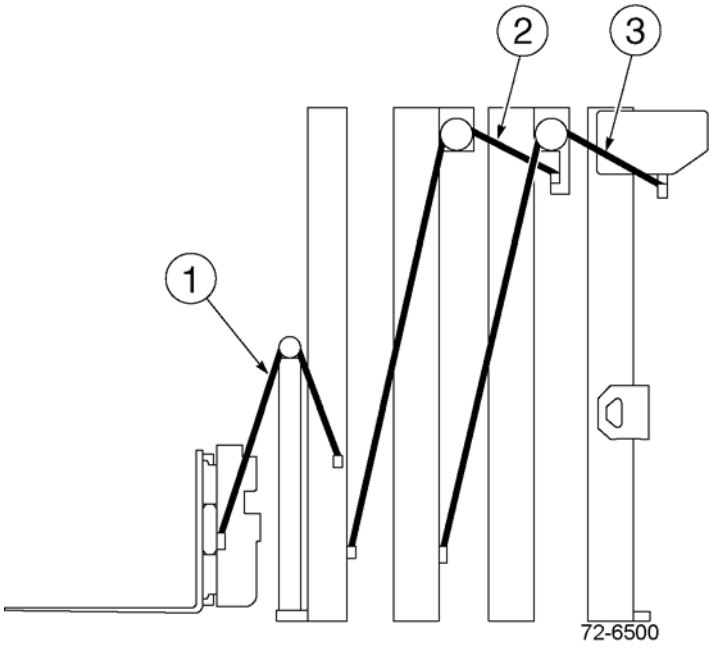


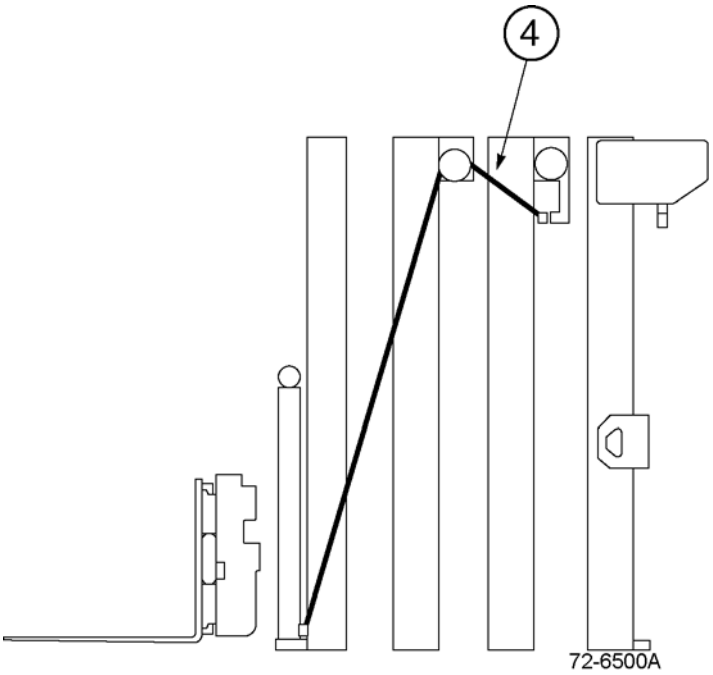

https://truckmanualshub.com/



## 45D-MQ 4-STAGE MAST (QUAD) - HOIST CHAINS & FREE LIFT HOSES
## PID # 45D-MQ-001 - 6358 - S/N 200001A~

| Item | Part Number | Description | Qty | Serial Number |
|---|---|---|---|---|
| | | **OCL = OUTER CHANNEL LENGTH, MFH = MAXIMUM FORK HEIGHT** | | |
| 1 | CC680458 | FREE LIFT CHAIN (68" OCL) (193" MFH) | 2 | |
| | CC681428 | FREE LIFT CHAIN (74" OCL) (217" MFH) | 2 | |
| | CC683979 | FREE LIFT CHAIN (80" OCL) (241" MFH) | 2 | |
| | CC683982 | FREE LIFT CHAIN (86" OCL) (259" MFL) | 2 | |
| | CC683985 | FREE LIFT CHAIN (92" OCL) (277" MFH) | 2 | |
| | CC683988 | FREE LIFT CHAIN (98" OCL) (295" MFH) | 2 | |
| | CC683992 | FREE LIFT CHAIN (104" OCL) (313" MFH) | 1 | |
| 2 | CC681429 | INNER CHAIN (68" OCL) (193" MFH) | 2 | |
| | CC681430 | INNER CHAIN (74" OCL) (217" MFH) | 2 | |
| | CC680459 | INNER CHAIN (80" OCL) (241" MFH) | 2 | |
| | CC678796 | INNER CHAIN (86" OCL) (259" MFH) | 2 | |
| | CC681431 | INNER CHAIN (92" OCL) (277" MFH) | 2 | |
| | CC678800 | INNER CHAIN (98" OCL) (295" MFH) | 2 | |
| | CC684000 | INNER CHAIN (104" OCL) (313" MFH) | 1 | |
| 3 | CC205984 | OUTER CHAIN (68" OCL) (193" MFH) | 2 | |
| | CC205989 | OUTER CHAIN (74" OCL) (217" MFH) | 2 | |
| | CC205204 | OUTER CHAIN (80" OCL) (241" MFH) | 2 | |
| | CC205996 | OUTER CHAIN (86" OCL) (259" MFH) | 2 | |
| | CC205999 | OUTER CHAIN (92" OCL) (277" MFH) | 2 | |
| | CC206002 | OUTER CHAIN (98" OCL) (295" MFH) | 2 | |
| | CC206005 | OUTER CHAIN (104" OCL) (313" MFH) | 1 | |
| 4 | CC206247 | FREE LIFT HOSE (68" OCL) (193" MFH) | 1 | |
| | CC206248 | FREE LIFT HOSE (74" OCL) (217" MFH) | 1 | |
| | CC206249 | FREE LIFT HOSE (80" OCL) (241" MFH) | 1 | |
| | CC206250 | FREE LIFT HOSE (86" OCL) (259" MFH) | 1 | |
| | CC206251 | FREE LIFT HOSE (92" OCL) (277" MFH) | 1 | |
| | CC206252 | FREE LIFT HOSE (98" OCL) (295" MFH) | 1 | |
| | CC206253 | FREE LIFT HOSE (104" OCL) (313" MFH) | 1 | |

https://truckmanualshub.com/



## 45D-MQ 4-STAGE MAST (QUAD) - HOIST CHAINS & FREE LIFT HOSES
## PID # 45D-MQ-6359~ - S/N 200001A~

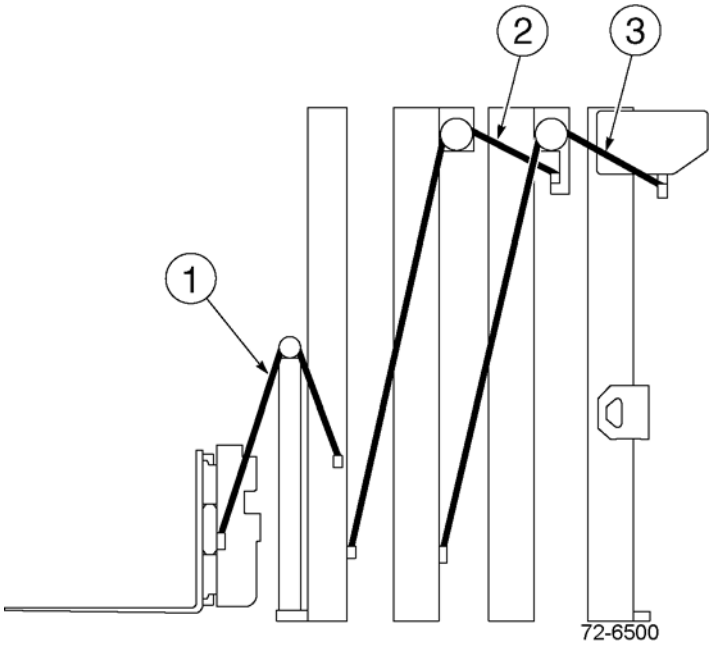


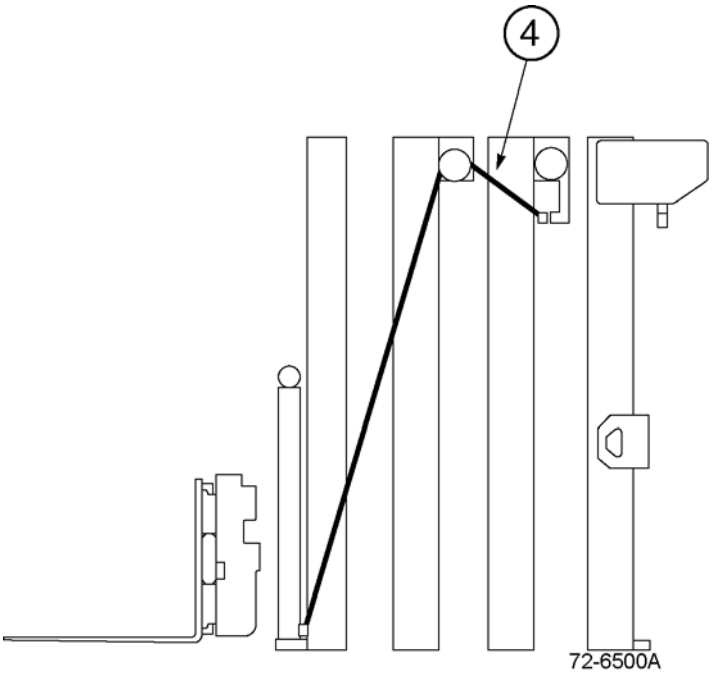

https://truckmanualshub.com/



## 45D-MQ 4-STAGE MAST (QUAD) - HOIST CHAINS & FREE LIFT HOSES
## PID # 45D-MQ-6359~ - S/N 200001A~

| Item | Part Number | Description | Qty | Serial Number |
|---|---|---|---|---|
| | | **OCL = OUTER CHANNEL LENGTH, MFH = MAXIMUM FORK HEIGHT** | | |
| 1 | CC680458 | FREE LIFT CHAIN (68" OCL) (193" MFH) | 2 | |
| | CC681428 | FREE LIFT CHAIN (74" OCL) (217" MFH) | 2 | |
| | CC683979 | FREE LIFT CHAIN (80" OCL) (241" MFH) | 2 | |
| | CC683982 | FREE LIFT CHAIN (86" OCL) (259" MFL) | 2 | |
| | CC683985 | FREE LIFT CHAIN (92" OCL) (277" MFH) | 2 | |
| | CC683988 | FREE LIFT CHAIN (98" OCL) (295" MFH) | 2 | |
| | CC683992 | FREE LIFT CHAIN (104" OCL) (313" MFH) | 1 | |
| 2 | CC681429 | INNER CHAIN (68" OCL) (193" MFH) | 2 | |
| | CC681430 | INNER CHAIN (74" OCL) (217" MFH) | 2 | |
| | CC680459 | INNER CHAIN (80" OCL) (241" MFH) | 2 | |
| | CC678796 | INNER CHAIN (86" OCL) (259" MFH) | 2 | |
| | CC681431 | INNER CHAIN (92" OCL) (277" MFH) | 2 | |
| | CC678800 | INNER CHAIN (98" OCL) (295" MFH) | 2 | |
| | CC684000 | INNER CHAIN (104" OCL) (313" MFH) | 1 | |
| 3 | CC205984 | OUTER CHAIN (68" OCL) (193" MFH) | 2 | |
| | CC205989 | OUTER CHAIN (74" OCL) (217" MFH) | 2 | |
| | CC205204 | OUTER CHAIN (80" OCL) (241" MFH) | 2 | |
| | CC205996 | OUTER CHAIN (86" OCL) (259" MFH) | 2 | |
| | CC205999 | OUTER CHAIN (92" OCL) (277" MFH) | 2 | |
| | CC206002 | OUTER CHAIN (98" OCL) (295" MFH) | 2 | |
| | CC206005 | OUTER CHAIN (104" OCL) (313" MFH) | 1 | |
| 4 | CC249088 | FREE LIFT HOSE (68" OCL) (193" MFH) | 1 | |
| | CC249094 | FREE LIFT HOSE (74" OCL) (217" MFH) | 1 | |
| | CC249100 | FREE LIFT HOSE (80" OCL) (241" MFH) | 1 | |
| | CC249106 | FREE LIFT HOSE (86" OCL) (259" MFH) | 1 | |
| | CC249111 | FREE LIFT HOSE (92" OCL) (277" MFH) | 1 | |
| | CC249117 | FREE LIFT HOSE (98" OCL) (295" MFH) | 1 | |
| | CC249123 | FREE LIFT HOSE (104" OCL) (313" MFH) | 1 | |

https://truckmanualshub.com/



## 45D-MQ 4-STAGE MAST (QUAD) - LOAD BACKREST
## S/N 200001A~

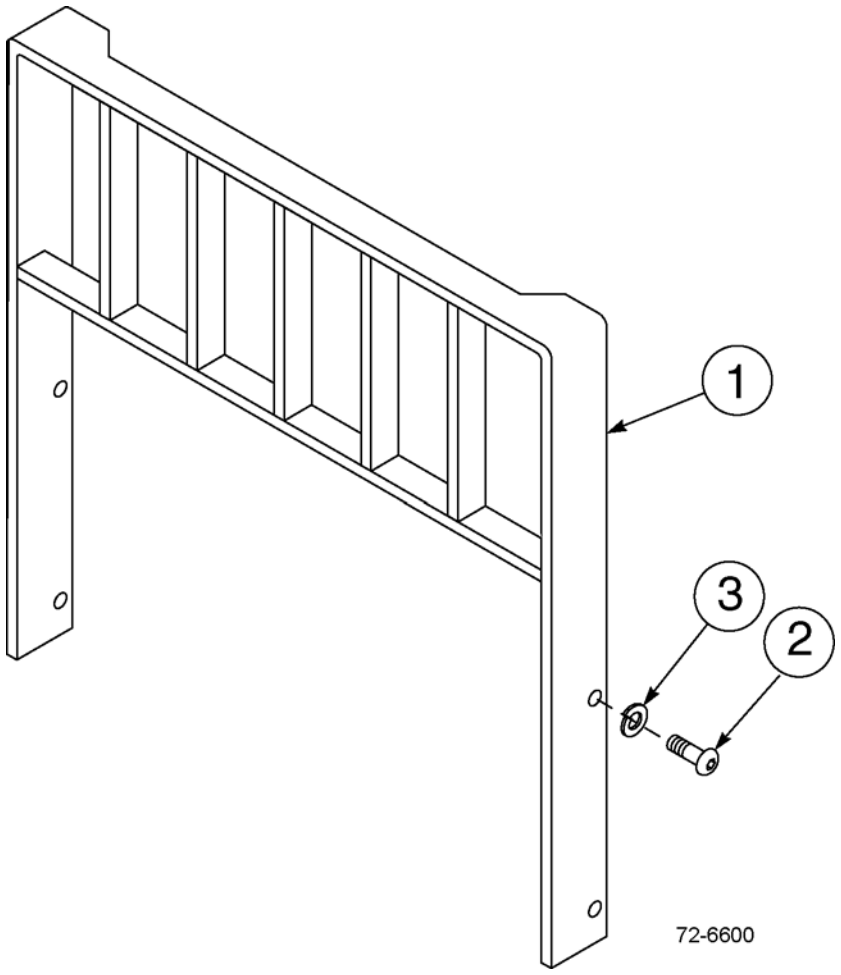

https://truckmanualshub.com/



## 45D-MQ 4-STAGE MAST (QUAD) - LOAD BACKREST
## S/N 200001A~

| Item | Part Number | Description | Qty | Serial Number |
|---|---|---|---|---|
| 1 | CC684769 | BACKREST (31" X 36") | 1 | |
| | CC684770 | BACKREST (31" X 48") | 1 | |
| | CC684771 | BACKREST (31" X 60") | 1 | |
| | CC226822 | BACKREST (37" X 30") | 1 | |
| | CC214063 | BACKREST (37" X 31") | 1 | |
| | CC250091 | BACKREST (37" X 34") | 1 | |
| | CC684772 | BACKREST (37" X 36") | 1 | |
| | CC234649 | BACKREST (37" X 38") | 1 | |
| | CC226827 | BACKREST (37" X 40") | 1 | |
| | CC246383 | BACKREST (37" X 41") | 1 | |
| | CC684773 | BACKREST (37" X 48") | 1 | |
| | CC226835 | BACKREST (37" X 54") | 1 | |
| | CC235274 | BACKREST (37" X 55") | 1 | |
| | CC684774 | BACKREST (37" X 60") | 1 | |
| | CC246397 | BACKREST (37" X 64") | 1 | |
| | CC230896 | BACKREST (37" X 72") | 1 | |
| | CC230596 | BACKREST (37" X 74") | 1 | |
| | CC238567 | BACKREST (41" X 30") | 1 | |
| | CC249220 | BACKREST (41" X 32") | 1 | |
| | CC684775 | BACKREST (41" X 36") | 1 | |
| | CC684776 | BACKREST (41" X 48") | 1 | |
| | CC246640 | BACKREST (41" X 54") | 1 | |
| | CC684777 | BACKREST (41" X 60") | 1 | |
| | CC245083 | BACKREST (47" X 30") | 1 | |
| | CC684778 | BACKREST (49" X 36") | 1 | |
| | CC684779 | BACKREST (49" X 48") | 1 | |
| | CC684780 | BACKREST (49" X 60") | 1 | |
| | CC226830 | BACKREST (58" X 48") | 1 | |
| | CC684781 | BACKREST (61" X 36") | 1 | |
| | CC684782 | BACKREST (61" X 48") | 1 | |
| | CC684783 | BACKREST (61" X 60") | 1 | |
| | CC245168 | BACKREST (61" X 62") | 1 | |
| 2 | CC200173 | CAPSCREW, M16 X 2.0 X 35-8.8 | 4 | |
| 3 | 3EB-71-A6030 | LOCKWASHER, M16 | 4 | |

https://truckmanualshub.com/



## 45D-MQ 4-STAGE MAST (QUAD) - MAST INSTALLATION PARTS
## S/N 200001A~

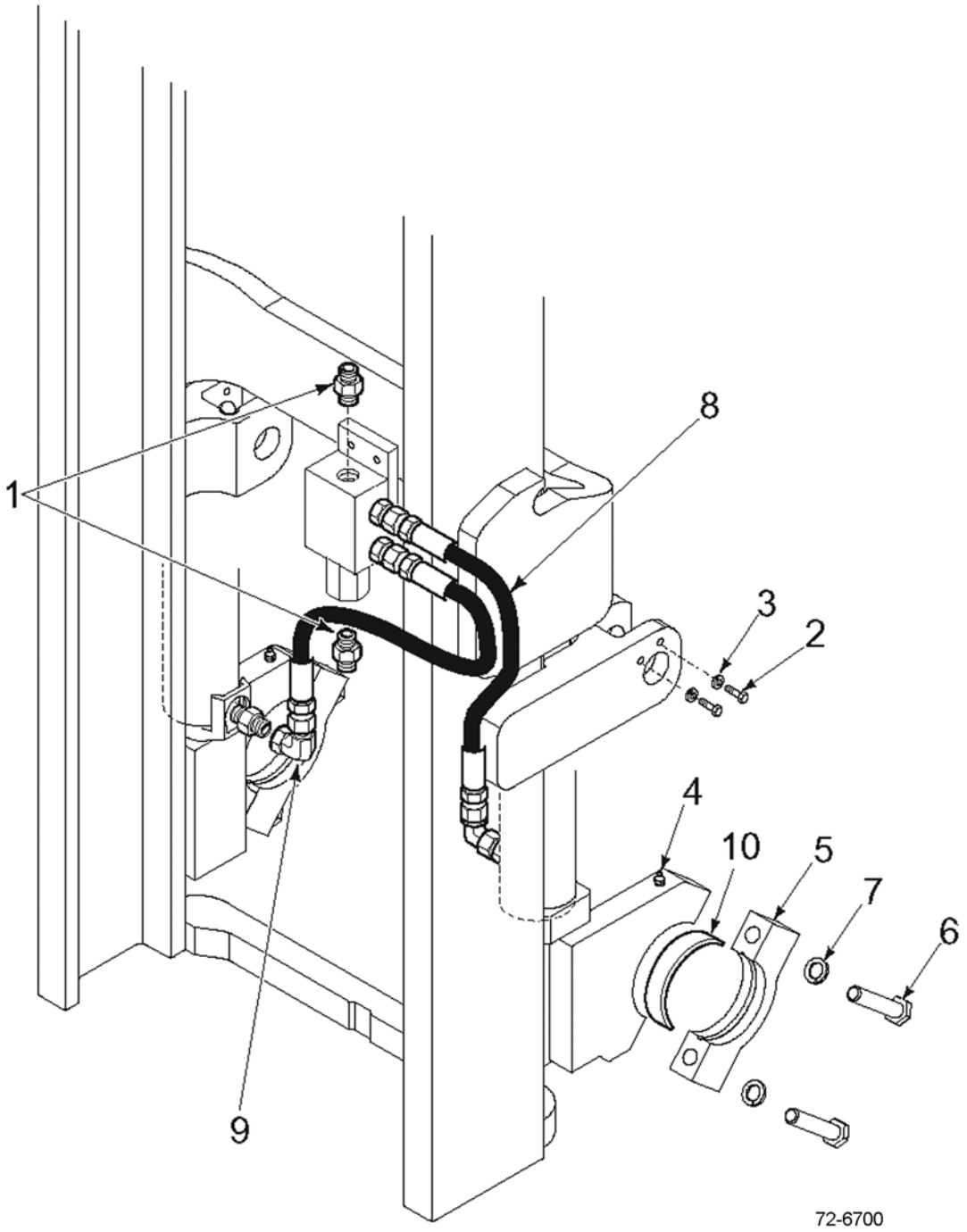

https://truckmanualshub.com/



## 45D-MQ 4-STAGE MAST (QUAD) - MAST INSTALLATION PARTS
## S/N 200001A~

| Item | Part Number | Description | Qty | Serial Number |
|---|---|---|---|---|
| 1 | CC601377 | FITTING, 8-8 | 2 | |
| 2 | CC212632 | CAPSCREW, M10 X 1.5 X 20-8.8 | 4 | |
| 3 | 3EB-79-A6040 | LOCKWASHER, M10 | 4 | |
| 4 | CC7418 | GREASE FITTING | 2 | |
| 5 | CC251901 | CAP | 2 | |
| 6 | CC251906 | CAPSCREW, M18 X 2.5 X 80-8.8 | 4 | |
| 7 | 3EB-71-A6030 | LOCKWASHER, M18 | 4 | |
| 8 | CC217524 | HOSE | 2 | |
| 9 | CC605761 | FITTING, 90° 8-8 | 2 | |
| 10 | 3EB-84-51290 | BUSHING | 2 | |

https://truckmanualshub.com/



## 45D-MQ 4-STAGE MAST (QUAD) - LOWERING CONTROL VALVE & BRACKET
## S/N 200001A~

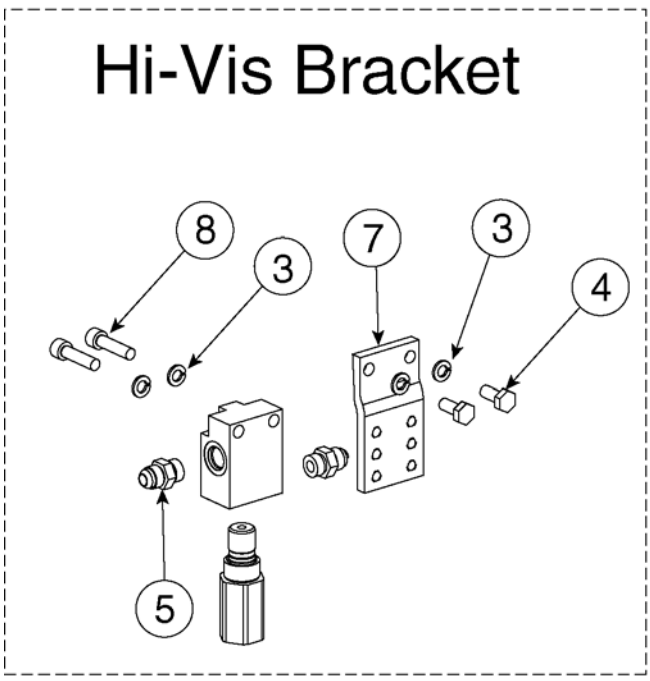


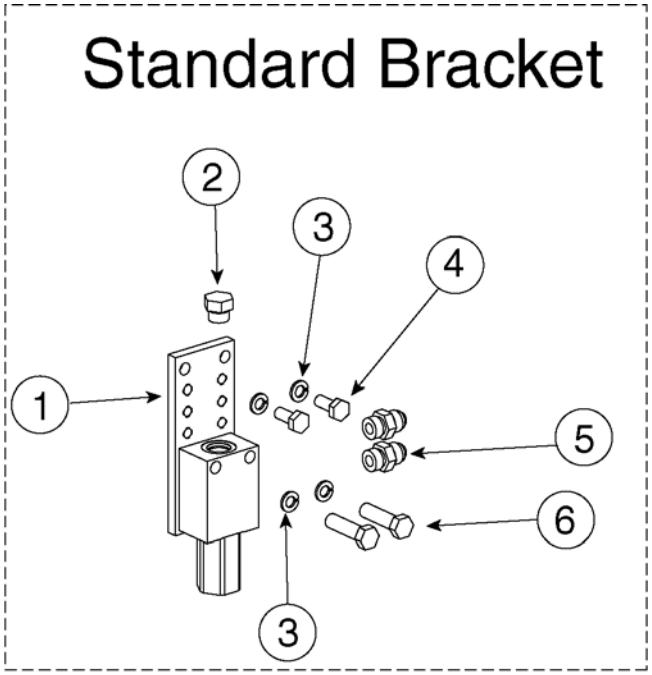


PARTS VARY BY PID #. CONTACT YOUR DEALER FOR SPECIFIC PART NUMBERS.

72-6850

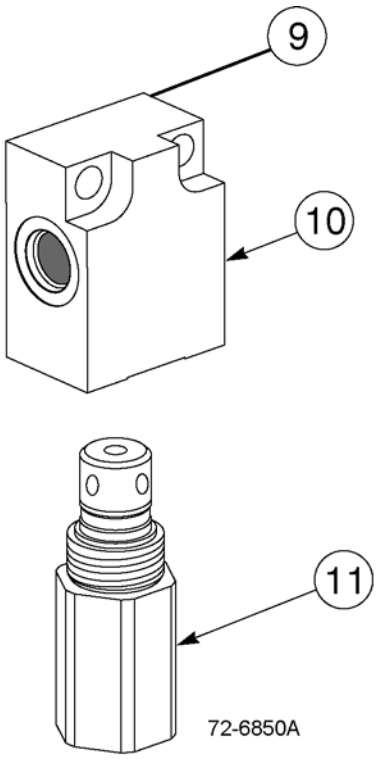


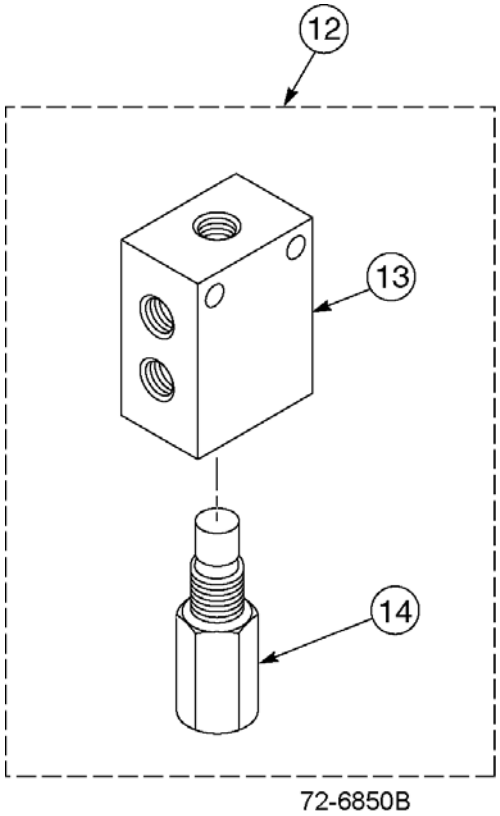

https://truckmanualshub.com/



## 45D-MQ 4-STAGE MAST (QUAD) - LOWERING CONTROL VALVE & BRACKET
## S/N 200001A~

| Item | Part Number | Description | Qty | Serial Number |
|---|---|---|---|---|
| 1 | CC683831 | MOUNTING BAR, STANDARD | 1 | |
| 2 | CC601378 | FITTING | 1 | |
| 3 | 3EB-79-A6040 | LOCKWASHER, M10 | 4 | |
| 4 | 3EB-73-A5490 | CAPSCREW, M10 | 2 | |
| 5 | CC601377 | FITTING | 2 | |
| 6 | CC683823 | CAPSCREW, M10 | 2 | |
| 7 | CC216402 | MOUNTING BAR, HI-VIS | 1 | |
| 8 | CC767611 | CAPSCREW, M10 | 2 | |
| 9 | 3EB-73-A5930 | LOWERING CONTROL VALVE ASSY - 17 GPM (SINGLE PORT) | 1 | |
| 10 | CC214793 | .VALVE BODY | 1 | |
| 11 | 3EB-73-A5920 | .VALVE CARTRIDGE - 17 GPM (2600 PSI) | 1 | |
| 12 | CC684810 | LOWERING CONTROL VALVE ASSY - 17 GPM (DUAL PORT) | 1 | |
| 13 | CC684152 | .VALVE BODY | 1 | |
| 14 | 3EB-73-A5920 | .VALVE CARTRIDGE - 17 GPM (2600 PSI) | 1 | |

https://truckmanualshub.com/



## 45D-MQ 4-STAGE MAST - INTERNAL HOSE REEVING - SINGLE FUNCTION - STD-VIS
## PID # 45D-MQ-001 TO 883 - S/N 200001A~

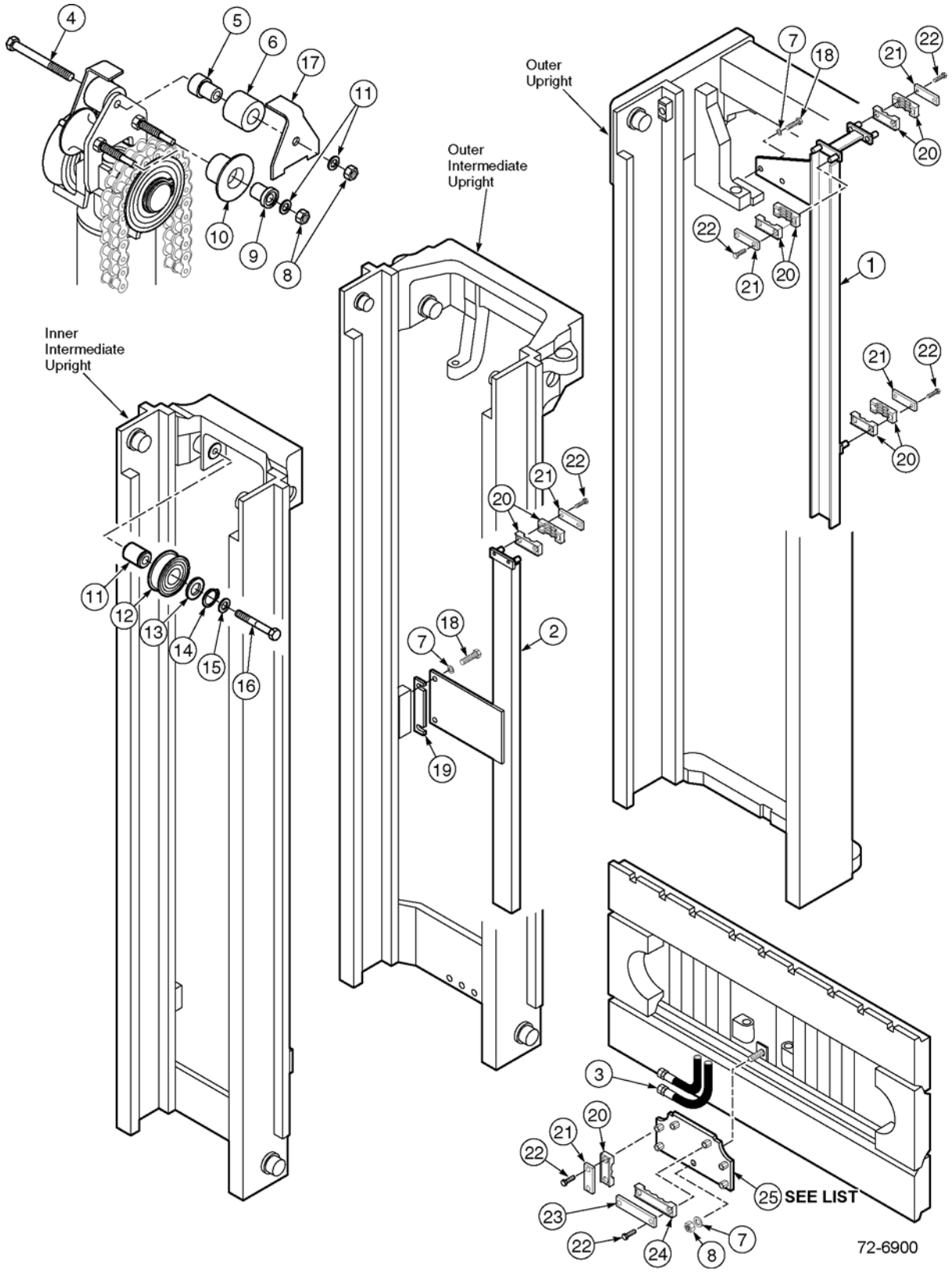

https://truckmanualshub.com/



## 45D-MQ 4-STAGE MAST - INTERNAL HOSE REEVING - SINGLE FUNCTION - STD-VIS
## PID # 45D-MQ-001 TO 883 - S/N 200001A~

| Item | Part Number | Description | Qty | Serial Number |
|---|---|---|---|---|
| | | **RCL = OCL = RETRACTED CHANNEL LENGTH** | | |
| | | **MASTS WITH 3" UNDERCLEARANCE** | | |
| 1 | CC203792 | UPPER GUIDE CHANNEL (68" RCL) | 1 | |
| | CC203793 | UPPER GUIDE CHANNEL (74" RCL) | 1 | |
| | CC203794 | UPPER GUIDE CHANNEL (80" RCL) | 1 | |
| | CC203795 | UPPER GUIDE CHANNEL (86" RCL) | 1 | |
| | CC203796 | UPPER GUIDE CHANNEL (92" RCL) | 1 | |
| | CC203797 | UPPER GUIDE CHANNEL (98" RCL) | 1 | |
| | CC203798 | UPPER GUIDE CHANNEL (104" RCL) | 1 | |
| 2 | CC203806 | LOWER GUIDE CHANNEL (68" RCL) | 1 | |
| | CC203807 | LOWER GUIDE CHANNEL (74" RCL) | 1 | |
| | CC203808 | LOWER GUIDE CHANNEL (80" RCL) | 1 | |
| | CC203809 | LOWER GUIDE CHANNEL (86" RCL) | 1 | |
| | CC203810 | LOWER GUIDE CHANNEL (92" RCL) | 1 | |
| | CC203811 | LOWER GUIDE CHANNEL (98" RCL) | 1 | |
| | CC203812 | LOWER GUIDE CHANNEL (104" RCL) | 1 | |
| 3 | CC206254 | HOSE (68" RCL) | 4 | |
| | CC206256 | HOSE (74" RCL) | 4 | |
| | CC206258 | HOSE (80" RCL) | 4 | |
| | CC206260 | HOSE (86" RCL) | 4 | |
| | CC206262 | HOSE (92" RCL) | 4 | |
| | CC206264 | HOSE (98" RCL) | 4 | |
| | CC206266 | HOSE (104" RCL) | 4 | |
| | | **MASTS WITH 5" UNDERCLEARANCE** | | |
| 1 | CC203792 | UPPER GUIDE CHANNEL (68" RCL) | 1 | |
| | CC203793 | UPPER GUIDE CHANNEL (74" RCL) | 1 | |
| | CC203794 | UPPER GUIDE CHANNEL (80" RCL) | 1 | |
| | CC203795 | UPPER GUIDE CHANNEL (86" RCL) | 1 | |
| | CC203796 | UPPER GUIDE CHANNEL (92" RCL) | 1 | |
| | CC203797 | UPPER GUIDE CHANNEL (98" RCL) | 1 | |
| | CC203798 | UPPER GUIDE CHANNEL (104" RCL) | 1 | |
| 2 | CC203806 | LOWER GUIDE CHANNEL (68" RCL) | 1 | |
| | CC203807 | LOWER GUIDE CHANNEL (74" RCL) | 1 | |
| | CC203808 | LOWER GUIDE CHANNEL (80" RCL) | 1 | |
| | CC203809 | LOWER GUIDE CHANNEL (86" RCL) | 1 | |
| | CC203810 | LOWER GUIDE CHANNEL (92" RCL) | 1 | |
| | CC203811 | LOWER GUIDE CHANNEL (98" RCL) | 1 | |
| | CC203812 | LOWER GUIDE CHANNEL (104" RCL) | 4 | |
| 3 | CC206255 | HOSE (68" RCL) | 4 | |

PARTS LIST CONTINUED ON NEXT PAGE

https://truckmanualshub.com/



## 45D-MQ 4-STAGE MAST - INTERNAL HOSE REEVING - SINGLE FUNCTION - STD-VIS
## PID # 45D-MQ-001 TO 883 - S/N 200001A~

| Item | Part Number | Description | Qty | Serial Number |
|---|---|---|---|---|
| | CC206257 | HOSE (74" RCL) | 4 | |
| | CC206259 | HOSE (80" RCL) | 4 | |
| | CC206261 | HOSE (86" RCL) | 4 | |
| | CC206263 | HOSE (92" RCL) | 4 | |
| | CC206265 | HOSE (98" RCL) | 4 | |
| | CC206267 | HOSE (104" RCL) | 4 | |
| 4 | CC768549 | CAPSCREW, M10 X 1.5 X 100-8.8 | 1 | |
| 5 | CC203296 | SHAFT | 2 | |
| 6 | CC208673 | TIRE | 2 | |
| 7 | CC683826 | LOCKWASHER, M10 | 10 | |
| 8 | CC763023 | NUT, M10 | 4 | |
| 9 | CC203295 | SHAFT | 4 | |
| 10 | CC203294 | TIRE | 4 | |
| 11 | CC203264 | SHAFT | 1 | |
| 12 | CC677267 | SHEAVE | 2 | |
| 13 | CC200524 | SHIM | 1 | |
| 14 | CC3130 | SNAP RING | 1 | |
| 15 | CC682822 | LOCKWASHER, M12 | 1 | |
| 16 | CC205206 | CAPSCREW, M12 X 1.75 X 55-8.8 | 1 | |
| 17 | CC203292 | HOSE GUARD | 2 | |
| 18 | CC684649 | CAPSCREW, M10 X 1.5 X 25-8.8 | 4 | |
| 19 | CC206884 | SPACER | 1 | |
| 20 | CC206886 | INSERT | 9 | |
| 21 | CC203408 | BAR | 5 | |
| 22 | CC763169 | CAPSCREW, M6 X 1.0 X 20-8.8 | 14 | |
| 23 | CC203407 | BAR | 1 | |
| 24 | CC208731 | INSERT | 1 | |
| 25 | CC210846 | BRACKET (REPLACES PREVIOUS BRACKET) (WHEN REPLACING BRACKET, MUST ALSO REPLACE FREE LIFT HOSES - SEE FIG. 72-6901) | 1 | |
| N/S | 3EB-71-A6010 | FITTING (MUST GO WITH CC210846 BRACKET) | 1 | |
| N/S | 3EB-71-A6040 | FITTING (MUST GO WITH CC210846 BRACKET) | 1 | |
| N/S | CC2680 | FITTING (MUST GO WITH CC210846 BRACKET) | 1 | |

https://truckmanualshub.com/

**NOTES:**

https://truckmanualshub.com/



# 45D-MQ 4-STAGE MAST - INTERNAL HOSE REEVING - SINGLE FUNCTION - STD-VIS
## PID # 45D-MQ-884~ - S/N 200001A~

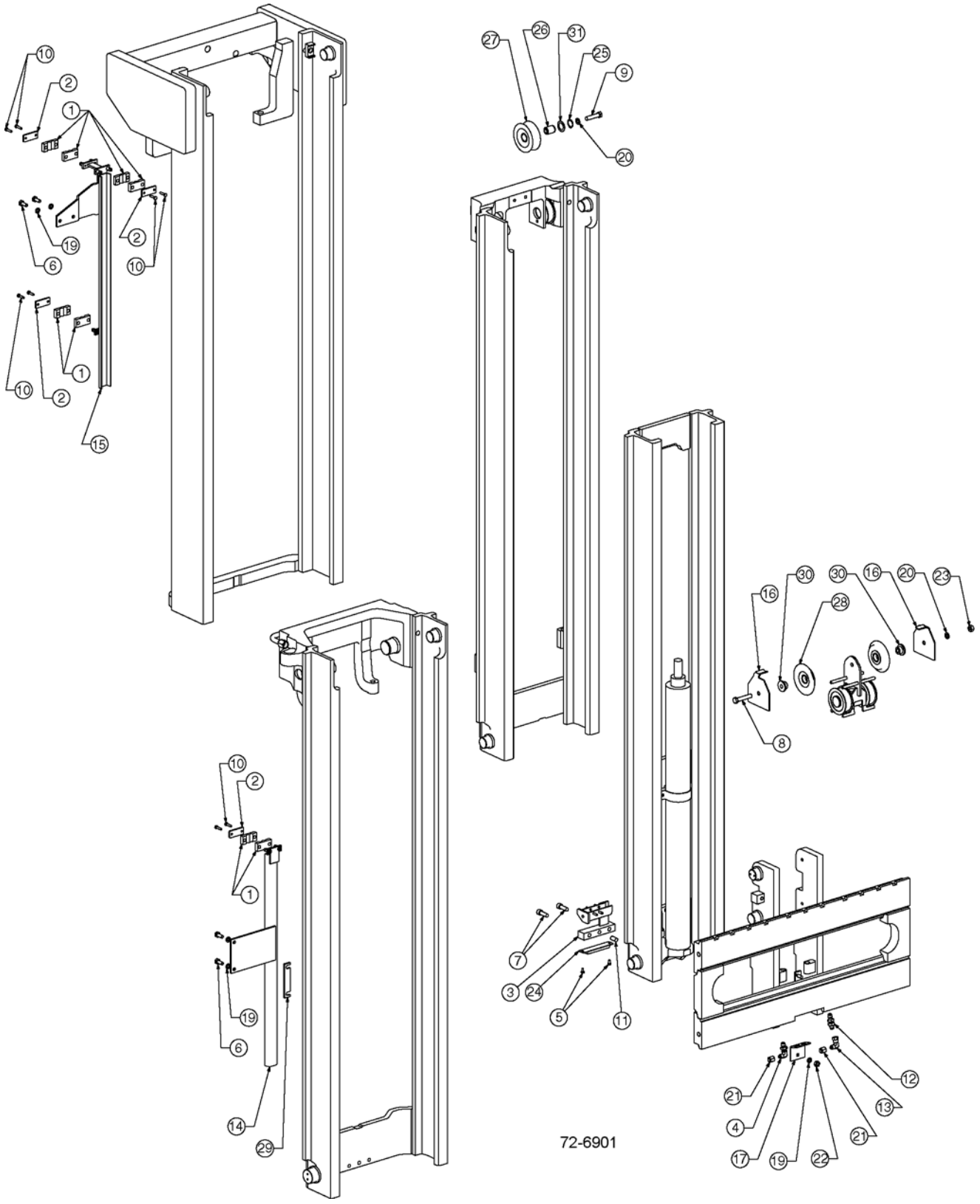

https://truckmanualshub.com/



## 45D-MQ 4-STAGE MAST - INTERNAL HOSE REEVING - SINGLE FUNCTION - STD-VIS
## PID # 45D-MQ-884~ - S/N 200001A~

| Item | Part Number | Description | Qty | Serial Number |
|---|---|---|---|---|
| | **OCL = OUTER CHANNEL LENGTH** | | | |
| 1 | 3EB-73-A5150 | HOSE CLAMP | 8 | |
| 2 | 3EB-73-A5160 | HOSECLAMP BAR | 4 | |
| 3 | CC203477 | LOWER INNER BRACKET | 1 | |
| 4 | CC2454 | 90° BULKHEAD FITTING | 1 | |
| 5 | 3EB-73-A5470 | CAPSCREW | 2 | |
| 6 | 3EB-73-A5490 | CAPSCREW, M10 X 25 LG | 4 | |
| 7 | CC769572 | CAPSCREW, M12 X 35 LG | 2 | |
| 8 | 3EB-79-A5230 | CAPSCREW, M12 X 65 LG | 1 | |
| 9 | CC205206 | CAPSCREW, M12 X 55 LG | 1 | |
| 10 | 3EB-79-A5240 | CAPSCREW, M6 X 25 LG | 8 | |
| 11 | CC606212 | DOWEL PIN | 1 | |
| 12 | 3EB-71-A6040 | BULKHEAD UNION | 1 | |
| 13 | CC2680 | FITTING | 1 | |
| 14 | SEE BELOW | LOWER GUIDE | 1 | |
| 15 | SEE BELOW | UPPER GUIDE | 1 | |
| 16 | CC210174 | HOSE GUARD | 2 | |
| 17 | 3EB-73-A5610 | CARRIAGE BRACKET | 1 | |
| 18 | NOT USED | | | |
| 19 | 3EB-79-A6040 | LOCKWASHER, M10 | 5 | |
| 20 | 3EB-79-A5360 | LOCKWASHER, M12 | 2 | |
| 21 | 3EB-79-A5250 | CAP PLUG, # 6 | 2 | |
| 22 | 3EB-79-A5180 | NUT, M10 | 1 | |
| 23 | 3EB-79-A5270 | NUT, M12 | 1 | |
| 24 | CC661786 | BUMPER PAD | 1 | |
| 25 | CC3130 | SNAP RING | 1 | |
| 26 | CC203264 | SHAFT | 1 | |
| 27 | CC204156 | SHEAVE | 1 | |
| 28 | CC210175 | SHEAVE | 2 | |
| 29 | CC206884 | SPACER | 1 | |
| 30 | CC210173 | STUBSHAFT | 2 | |
| 31 | CC200524 | WASHER | 1 | |
| | **OCL = OUTER CHANNEL LENGTH, MFH = MAXIMUM FORK HEIGHT** | | | |
| | CC249427 | IHR KIT - SINGLE FUNCTION (74" OCL) (217" MFH) | 1 | |
| | CC249433 | IHR KIT - SINGLE FUNCTION (80" OCL) (241" MFH) | 1 | |
| | CC249439 | IHR KIT - SINGLE FUNCTION (86" OCL) (259" MFH) | 1 | |

PARTS LIST CONTINUED ON NEXT PAGE

https://truckmanualshub.com/



## 45D-MQ 4-STAGE MAST - INTERNAL HOSE REEVING - SINGLE FUNCTION - STD-VIS
## PID # 45D-MQ-884~ - S/N 200001A~

| Item | Part Number | Description | Qty | Serial Number |
|---|---|---|---|---|
| | CC249445 | IHR KIT - SINGLE FUNCTION (92" OCL) (277" MFH) | 1 | |
| | CC249451 | IHR KIT - SINGLE FUNCTION (98" OCL) (295" MFH) | 1 | |
| | CC249457 | IHR KIT - SINGLE FUNCTION (104" OCL) (313" MFH) | 1 | |
| | CC203793 | UPPER GUIDE (74" OCL) (217" MFH) | 1 | |
| | CC203794 | UPPER GUIDE (80" OCL) (241" MFH) | 1 | |
| | CC203795 | UPPER GUIDE (86" OCL) (259" MFH) | 1 | |
| | CC203796 | UPPER GUIDE (92" OCL) (277" MFH) | 1 | |
| | CC203797 | UPPER GUIDE (98" OCL) (295" MFH) | 1 | |
| | CC203798 | UPPER GUIDE (104" OCL) (313" MFH) | 1 | |
| | CC203807 | LOWER GUIDE (74" OCL) (217" MFH) | 1 | |
| | CC203808 | LOWER GUIDE (80" OCL) (241" MFH) | 1 | |
| | CC203809 | LOWER GUIDE (86" OCL) (259" MFH) | 1 | |
| | CC203810 | LOWER GUIDE (92" OCL) (277" MFH) | 1 | |
| | CC203811 | LOWER GUIDE (98" OCL) (295" MFH) | 1 | |
| | CC203812 | LOWER GUIDE (104" OCL) ( 313" MFH) | 1 | |
| | CC237109 | HOSE (74" OCL) (217" MFH) | 2 | |
| | CC211509 | HOSE (80" OCL) (241" MFH) | 2 | |
| | CC231279 | HOSE (86" OCL) (259" MFH) | 2 | |
| | CC216392 | HOSE (92" OCL) (277" MFH) | 2 | |
| | CC218482 | HOSE (98" OCL) (295" MFH) | 2 | |
| | CC237147 | HOSE (104" OCL) (313" MFH) | 2 | |
| | CC211574 | FREE LIFT HOSE (74" OCL) (217" MFH) | 2 | |
| | CC211520 | FREE LIFT HOSE (80" OCL) (241" MFH) | 2 | |
| | CC211521 | FREE LIFT HOSE (86" OCL) (259" MFH) | 2 | |
| | CC211522 | FREE LIFT HOSE (92" OCL) (277" MFH) | 2 | |
| | CC211523 | FREE LIFT HOSE (98" OCL) (295" MFH) | 2 | |
| | CC211524 | FREE LIFT HOSE (104" OCL) (313" MFH) | 2 | |

https://truckmanualshub.com/

**NOTES:**

https://truckmanualshub.com/



## 45D-MQ 4-STAGE MAST - INTERNAL HOSE REEVING - SINGLE FUNCTION - HI-VIS
## PID # 45D-MQ-884~ - S/N 200001A~

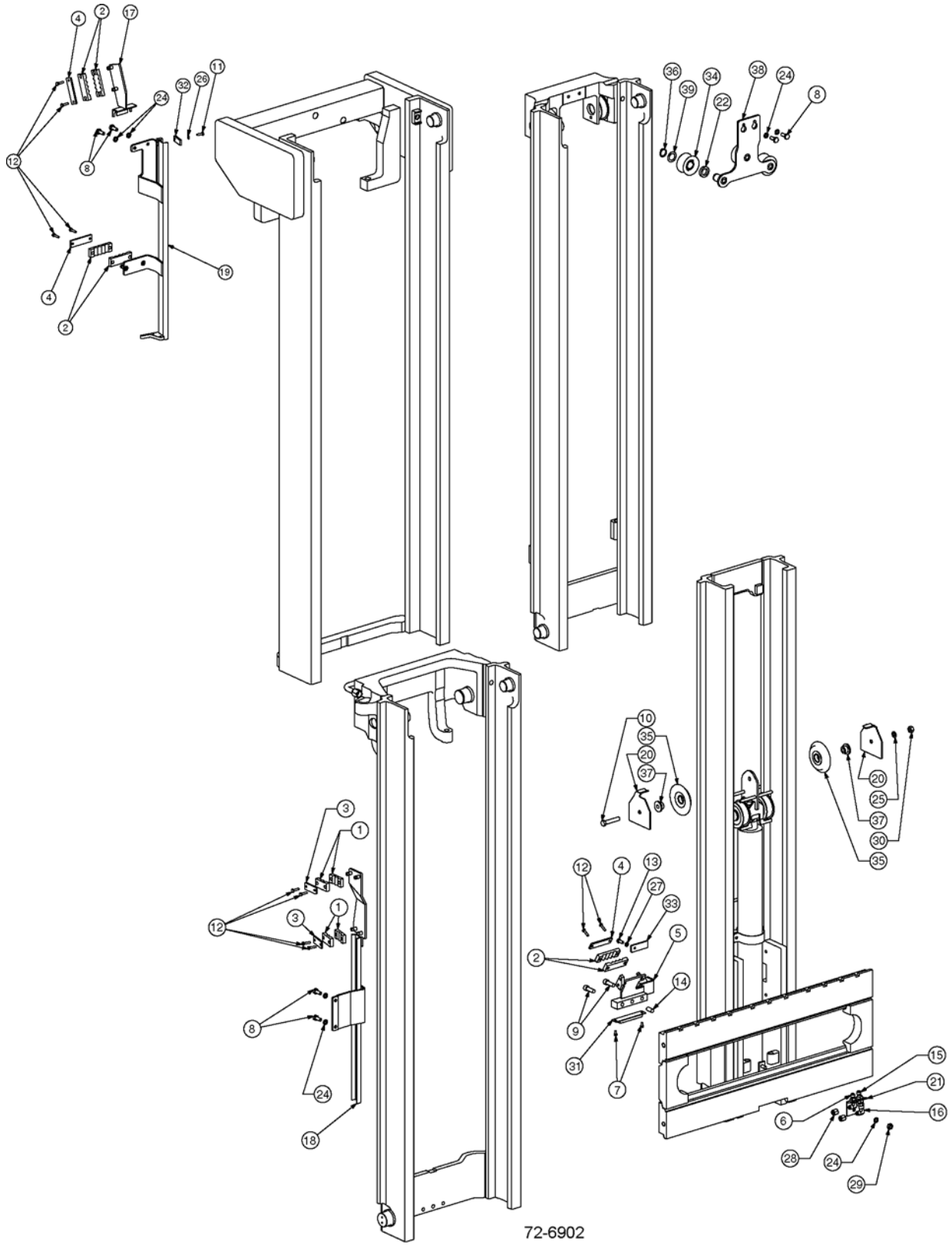

https://truckmanualshub.com/



## 45D-MQ 4-STAGE MAST - INTERNAL HOSE REEVING - SINGLE FUNCTION - HI-VIS
## PID # 45D-MQ-884~ - S/N 200001A~

| Item | Part Number | Description | Qty | Serial Number |
|---|---|---|---|---|
| | **OCL = OUTER CHANNEL LENGTH** | | | |
| 1 | 3EB-73-A5150 | HOSE CLAMP | 4 | |
| 2 | CC227854 | HOSE CLAMP | 6 | |
| 3 | 3EB-73-A5160 | HOSE CLAMP BAR | 2 | |
| 4 | CC227885 | HOSE CLAMP BAR | 3 | |
| 5 | CC230805 | LOWER INNER BRACKET | 1 | |
| 6 | 3EB-71-A6010 | 90° BULKHEAD UNION | 1 | |
| 7 | 3EB-73-A5470 | CAPSCREW | 2 | |
| 8 | 3EB-73-A5490 | CAPSCREW, M10 X 25 LG | 6 | |
| 9 | CC769572 | CAPSCREW, M12 X 35 LG | 2 | |
| 10 | 3EB-79-A5230 | CAPSCREW, M12 X 65 LG | 1 | |
| 11 | CC763169 | CAPSCREW, M6 X 20 LG | 1 | |
| 12 | 3EB-79-A5240 | CAPSCREW, M6 X 25 LG | 10 | |
| 13 | CC787372 | CAPSCREW, M8 X 20 LG | 1 | |
| 14 | CC606212 | DOWEL PIN | 1 | |
| 15 | 3EB-71-A6040 | BULKHEAD FITTING | 1 | |
| 16 | CC2680 | FITTING | 1 | |
| 17 | CC214931 | GUIDE BAR | 1 | |
| 18 | **SEE BELOW** | LOWER GUIDE | 1 | |
| 19 | **SEE BELOW** | UPPER GUIDE | 1 | |
| 20 | CC210174 | HOSE GUARD | 2 | |
| 21 | 3EB-73-A5610 | CARRIAGE BRACKET | 1 | |
| 22 | CC241395 | IHR SPACER | 3 | |
| 23 | **NOT USED** | | | |
| 24 | 3EB-79-A6040 | LOCKWASHER, M10 | 7 | |
| 25 | CC682382 | LOCKWASHER, M12 | 1 | |
| 26 | 3EB-73-A5340 | LOCKWASHER, M6 | 1 | |
| 27 | CC206315 | LOCKWASHER, M8 | 1 | |
| 28 | 3EB-79-A5250 | CAP PLUG, #6 | 2 | |
| 29 | 3EB-79-A5180 | NUT, M10 | 1 | |
| 30 | 3EB-79-A5270 | NUT, M12 | 1 | |
| 31 | CC661786 | BUMPER PAD | 1 | |
| 32 | CC215799 | HOSE RETAINER PLATE | 1 | |
| 33 | CC230606 | HOSE RETAINER PLATE | 1 | |
| 34 | CC215772 | SHEAVE | 3 | |
| 35 | CC210175 | SHEAVE | 2 | |
| 36 | CC688935 | SNAP RING | 3 | |
| 37 | 3EB-73-A5230 | STUBSHAFT | 2 | |
| 38 | CC238809 | UPPER BRACKET | 1 | |

PARTS LIST CONTINUED ON NEXT PAGE

https://truckmanualshub.com/



## 45D-MQ 4-STAGE MAST - INTERNAL HOSE REEVING - SINGLE FUNCTION - HI-VIS
## PID # 45D-MQ-884~ - S/N 200001A~

| Item | Part Number | Description | Qty | Serial Number |
|---|---|---|---|---|
| 39 | CC205086 | WASHER | 3 | |
| | **OCL = OUTER CHANNEL LENGTH, MFH = MAXIMUM FORK HEIGHT** | | | |
| | CC248797 | IHR KIT - SINGLE FUNCTION (74" OCL) (217" MFH) | 1 | |
| | CC253914 | IHR KIT - SINGLE - HI-PRESSURE (74" OCL) (217" MFH) | 1 | |
| | CC248801 | IHR KIT - SINGLE FUNCTION (80" OCL) (241" MFH) | 1 | |
| | CC253918 | IHR KIT - SINGLE - HI-PRESSURE (80" OCL) (241" MFH) | 1 | |
| | CC248806 | IHR KIT - SINGLE FUNCTION (86" OCL) (259" MFH) | 1 | |
| | CC253922 | IHR KIT - SINGLE - HI-PRESSURE (86" OCL) (259" MFH) | 1 | |
| | CC248811 | IHR KIT - SINGLE FUNCTION (92" OCL) (277" MFH) | 1 | |
| | CC253927 | IHR KIT - SINGLE - HI-PRESSURE (92" OCL) (277" MFH) | 1 | |
| | CC248817 | IHR KIT - SINGLE FUNCTION (98" OCL) (295" MFH) | 1 | |
| | CC253933 | IHR KIT - SINGLE - HI-PRESSURE (98" OCL) (295" MFH) | 1 | |
| | CC248821 | IHR KIT - SINGLE - HI-PRESSURE (104"" OCL) (313" MFH) | 1 | |
| | CC253937 | IHR KIT - SINGLE - HI-PRESSURE (104" OCL) (313" MFH) | 1 | |
| | CC216491 | UPPER GUIDE (74" OCL) (217" MFH) | 1 | |
| | CC216492 | UPPER GUIDE (80" OCL) (241" MFH) | 1 | |
| | CC216493 | UPPER GUIDE (86" OCL) (259" MFH) | 1 | |
| | CC216494 | UPPER GUIDE (92" OCL) (277" MFH) | 1 | |
| | CC216495 | UPPER GUIDE (98" OCL) (295" MFH) | 1 | |
| | CC216496 | UPPER GUIDE (104" OCL) (313" MFH) | 1 | |
| | CC216485 | LOWER GUIDE (74" OCL) (217" MFH) | 1 | |
| | CC216486 | LOWER GUIDE (80" OCL) (241" MFH) | 1 | |
| | CC216487 | LOWER GUIDE (86" OCL) (259" MFH) | 1 | |
| | CC216488 | LOWER GUIDE (92" OCL) (277" MFH) | 1 | |
| | CC216489 | LOWER GUIDE (98" OCL) (295" MFH) | 1 | |
| | CC216490 | LOWER GUIDE (104" OCL) (313" MFH) | | |
| | CC237113 | HOSE (74" OCL) (217" MFH) | 2 | |

PARTS LIST CONTINUED ON NEXT PAGE

https://truckmanualshub.com/



## 45D-MQ 4-STAGE MAST - INTERNAL HOSE REEVING - SINGLE FUNCTION - HI-VIS
## PID # 45D-MQ-884~ - S/N 200001A~

| Item | Part Number | Description | Qty | Serial Number |
|---|---|---|---|---|
| | CC218379 | HOSE (80" OCL) (241" MFH) . . . . . | 2 | |
| | CC237129 | HOSE (86" OCL) (259" MFH) . . . . . | 2 | |
| | CC214939 | HOSE (92" OCL) (277" MFH) . . . . . | 2 | |
| | CC206257 | HOSE (98" OCL) (295" MFH) . . . . . | 2 | |
| | CC237151 | HOSE (104" OCL) ( 313" MFH) . . . . . | 2 | |
| | CC246223 | HOSE - HIGH PRESSURE (74" OCL) (217" MFH) | 2 | |
| | CC246238 | HOSE - HIGH PRESSURE (80" OCL) (241" MFH) | 2 | |
| | CC246253 | HOSE - HIGH PRESSURE (86" OCL) (259" MFH) | 2 | |
| | CC246268 | HOSE - HIGH PRESSURE (92" OCL) (277" MFH) | 2 | |
| | CC246283 | HOSE - HIGH PRESSURE (98" OCL) (295" MFH) | 2 | |
| | CC246298 | HOSE - HIGH PRESSURE (104" OCL) (313" MFH) . . . . . | 2 | |
| | CC211574 | FREE LIFT HOSE (74" OCL) (217" MFH) . . . . . | 2 | |
| | CC211520 | FREE LIFT HOSE (80" OCL) (241" MFH) . . . . . | 2 | |
| | CC211521 | FREE LIFT HOSE (86" OCL) (259" MFH) . . . . . | 2 | |
| | CC211522 | FREE LIFT HOSE (92" OCL) (277" MFH) . . . . . | 2 | |
| | CC211523 | FREE LIFT HOSE (98" OCL) (295" MFH) . . . . . | 2 | |
| | CC211524 | FREE LIFT HOSE (104" OCL) (313" MFH) . . . . | 2 | |

## 45D-MQ 4-STAGE MAST - INTERNAL HOSE REEVING - SINGLE FUNCTION - HI-VIS LEFT HAND - PID # 45D-MQ-884~ - S/N 200001A~

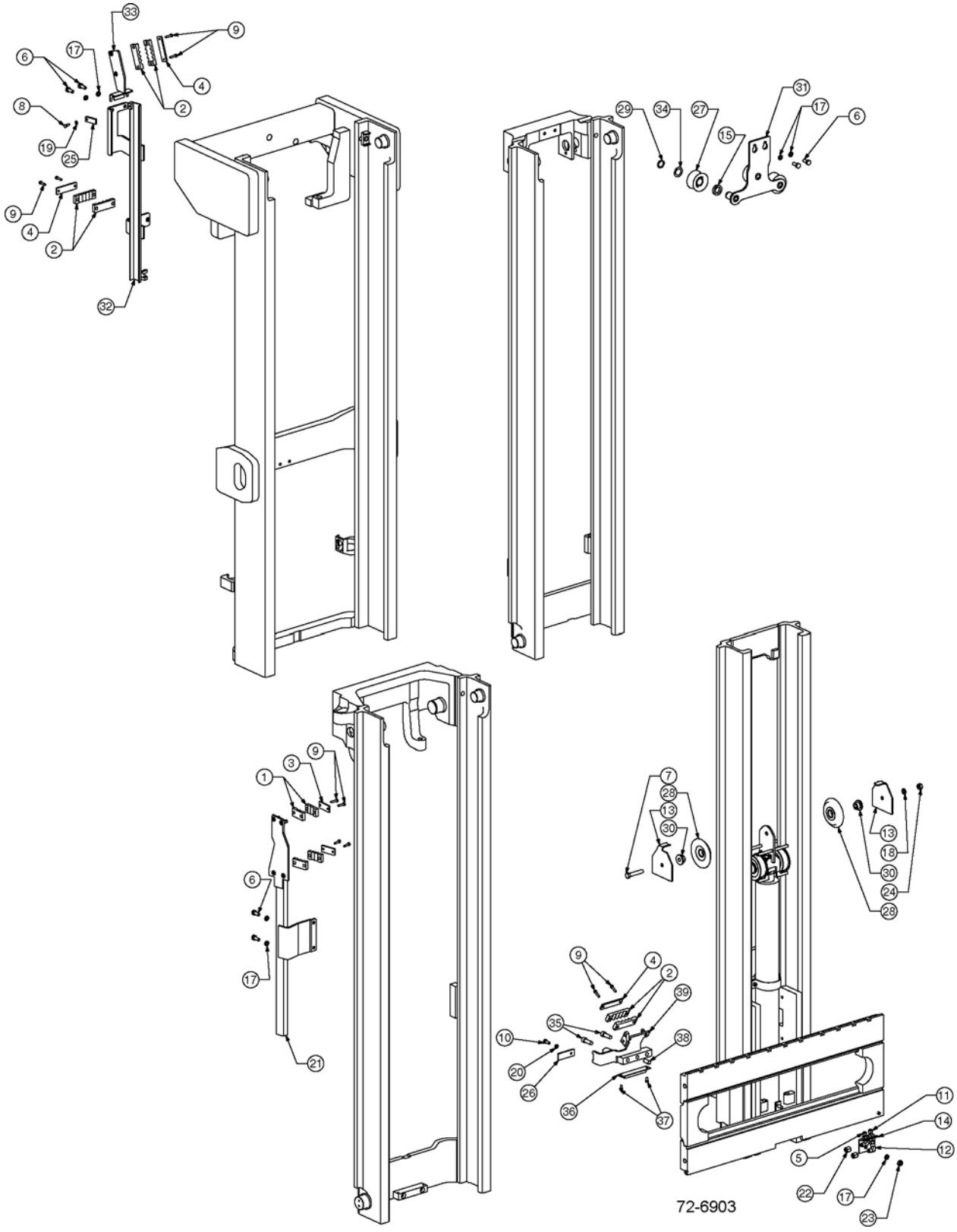

https://truckmanualshub.com/



## 45D-MQ 4-STAGE MAST - INTERNAL HOSE REEVING - SINGLE FUNCTION - HI-VIS LEFT HAND - PID # 45D-MQ-884~ - S/N 200001A~

| Item | Part Number | Description | Qty | Serial Number |
|---|---|---|---|---|
| | **OCL = OUTER CHANNEL LENGTH** | | | |
| 1 | 3EB-73-A5150 | HOSE CLAMP | 4 | |
| 2 | CC227854 | HOSE CLAMP | 6 | |
| 3 | 3EB-73-A5160 | HOSE CLAMP BAR | 2 | |
| 4 | CC227885 | HOSE CLAMP BAR | 3 | |
| 5 | 3EB-71-A6010 | 90° BULKHEAD UNION | 1 | |
| 6 | 3EB-73-A5490 | CAPSCREW, M10 X 25 LG | 6 | |
| 7 | 3EB-79-A5230 | CAPSCREW, M12 X 65 LG | 1 | |
| 8 | CC763169 | CAPSCREW, M6 X 20 LG | 1 | |
| 9 | 3EB-79-A5240 | CAPSCREW, M6 X 25 LG | 10 | |
| 10 | CC787372 | CAPSCREW, M8 X 20 LG | 1 | |
| 11 | 3EB-71-A6040 | BULKHEAD FITTING | 1 | |
| 12 | CC2680 | FITTING | 1 | |
| 13 | CC210174 | HOSE GUARD | 2 | |
| 14 | 3EB-73-A5610 | CARRIAGE BRACKET | 1 | |
| 15 | CC241395 | IHR SPACER | 3 | |
| 16 | **NOT USED** | | | |
| 17 | 3EB-79-A6040 | LOCKWASHER, M10 | 7 | |
| 18 | 3EB-79-A5360 | LOCKWASHER, M12 | 1 | |
| 19 | 3EB-73-A5340 | LOCKWASHER, M6 | 1 | |
| 20 | CC206315 | LOCKWASHER, M8 | 1 | |
| 21 | **SEE BELOW** | LOWER GUIDE | 1 | |
| 22 | 3EB-79-A5250 | CAP PLUG, #6 | 2 | |
| 23 | 3EB-79-A5180 | NUT, M10 | 1 | |
| 24 | 3EB-79-A5270 | NUT, M12 | 1 | |
| 25 | CC215779 | HOSE RETAINER PLATE | 1 | |
| 26 | CC230606 | HOSE RETAINER PLATE | 1 | |
| 27 | CC215772 | SHEAVE | 3 | |
| 28 | CC210175 | SHEAVE | 2 | |
| 29 | CC688935 | SNAP RING | 3 | |
| 30 | 3EB-73-A5230 | STUBSHAFT | 2 | |
| 31 | CC238809 | UPPER BRACKET | 1 | |
| 32 | **SEE BELOW** | UPPER GUIDE | 1 | |
| 33 | CC238696 | UPPER GUIDE BRACKET | 1 | |
| 34 | CC205086 | WASHER | 3 | |
| 35 | CC769582 | CAPSCREW, M12 X 35 LG | 2 | |
| 36 | CC661786 | BUMPER PAD | 1 | |
| 37 | 3EB-73-A5470 | CAPSCREW | 2 | |
| 38 | CC606212 | DOWEL PIN | 1 | |

PARTS LIST CONTINUED ON NEXT PAGE

https://truckmanualshub.com/



## 45D-MQ 4-STAGE MAST - INTERNAL HOSE REEVING - SINGLE FUNCTION - HI-VIS LEFT HAND - PID # 45D-MQ-884~ - S/N 200001A~

| Item | Part Number | Description | Qty | Serial Number |
|---|---|---|---|---|
| 39 | CC238353 | LOWER BRACKET | 1 | |
| | **OCL = OUTER CHANNEL LENGTH, MFH = MAXIMUM FORK HEIGHT** | | | |
| | CC249357 | IHR KIT - SINGLE FUNCTION (74" OCL) (217" MFH) | 1 | |
| | CC249363 | IHR KIT - SINGLE FUNCTION (80" OCL) (241" MFH) | 1 | |
| | CC249370 | IHR KIT - SINGLE FUNCTION (86" OCL) (259" MFH) | 1 | |
| | CC249376 | IHR KIT - SINGLE FUNCTION (92" OCL) (277" MFH) | 1 | |
| | CC249382 | IHR KIT - SINGLE FUNCTION (98" OCL) (295" MFH) | 1 | |
| | CC249388 | IHR KIT - SINGLE FUNCTION (104" OCL) (313" MFH) | 1 | |
| | CC238720 | UPPER GUIDE (74" OCL) (217" MFH) | 1 | |
| | CC238721 | UPPER GUIDE (80" OCL) (241" MFH) | 1 | |
| | CC238722 | UPPER GUIDE (86" OCL) (259" MFH) | 1 | |
| | CC238723 | UPPER GUIDE (92" OCL) (277" MFH) | 1 | |
| | CC238724 | UPPER GUIDE (98" OCL) (295" MFH) | 1 | |
| | CC238725 | UPPER GUIDE (104" OCL) (313" MFH) | 1 | |
| | CC238708 | LOWER GUIDE (74" OCL) (217" MFH) | 1 | |
| | CC238709 | LOWER GUIDE (80" OCL) (241" MFH) | 1 | |
| | CC238710 | LOWER GUIDE (86" OCL) (259" MFH) | 1 | |
| | CC238711 | LOWER GUIDE (92" OCL) (277" MFH) | 1 | |
| | CC238712 | LOWER GUIDE (98" OCL) (295" MFH) | 1 | |
| | CC238713 | LOWER GUIDE (104" OCL) (313" MFH) | 2 | |
| | CC237113 | HOSE (74" OCL) (217" MFH) | 2 | |
| | CC218379 | HOSE (80" OCL) (241" MFH) | 2 | |
| | CC237129 | HOSE (86" OCL) (259" MFH) | 2 | |
| | CC214939 | HOSE (92" OCL) (277" MFH) | 2 | |
| | CC206257 | HOSE (98" OCL) (295" ,FH) | 2 | |
| | CC237151 | HOSE (104" OCL) (313" MFH) | 2 | |
| | CC211574 | FREE LIFT HOSE (74" OCL) (217" MFH) | 2 | |
| | CC211520 | FREE LIFT HOSE (80" OCL) (241" MFH) | 2 | |
| | CC211521 | FREE LIFT HOSE (86" OCL) (259" MFH) | 2 | |
| | CC211522 | FREE LIFT HOSE (92" OCL) (277" MFH) | 2 | |
| | CC211523 | FREE LIFT HOSE (98" OCL) (295" MFH) | 2 | |
| | CC211524 | FREE LIFT HOSE (104" OCL) (313" MFH) | 2 | |

https://truckmanualshub.com/

**NOTES:**

https://truckmanualshub.com/



# 45D-MQ 4-STAGE MAST - INTERNAL HOSE REEVING - DOUBLE FUNCTION - STD-VIS
## PID # 45D-MQ-001 TO 883 - S/N 200001A~

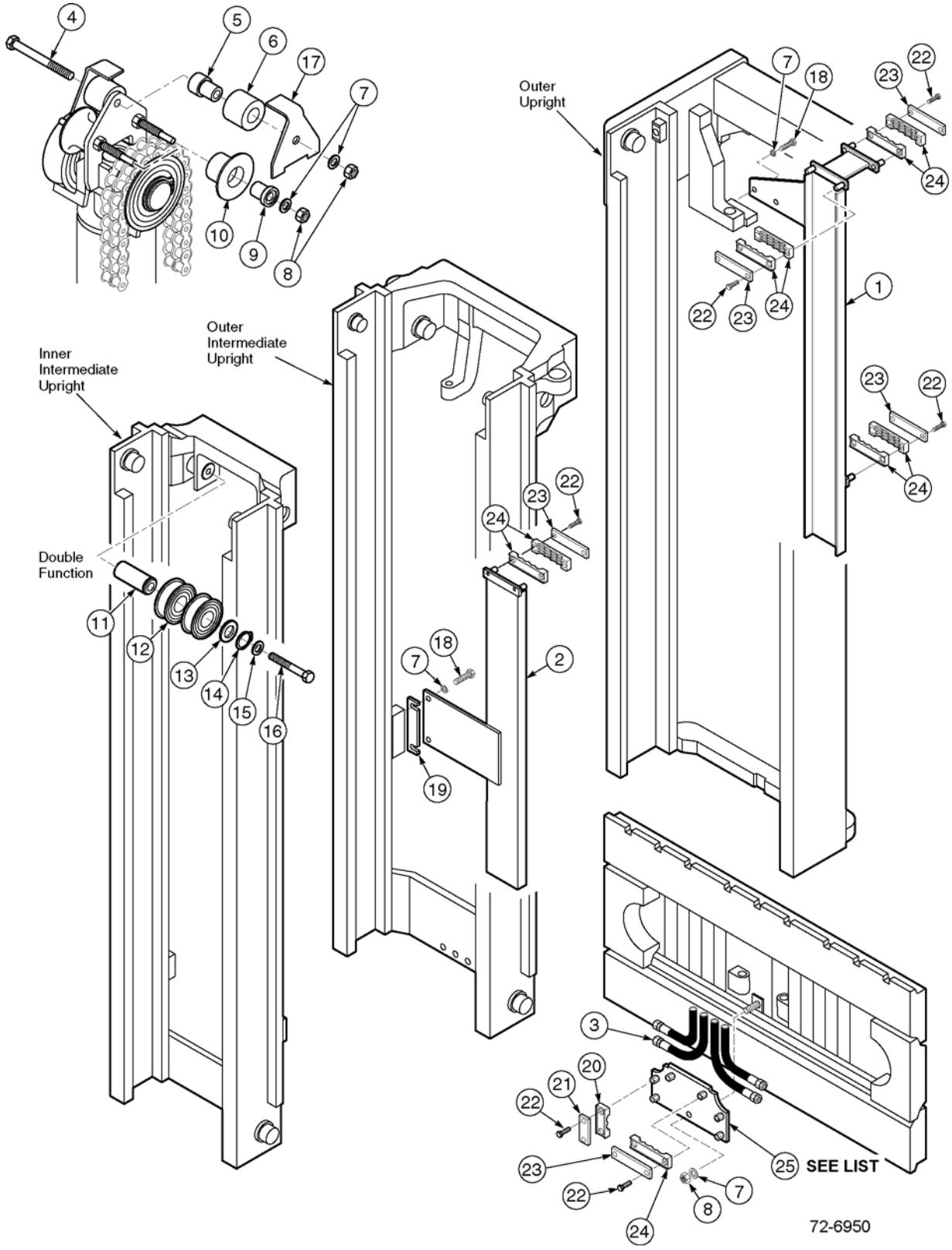

https://truckmanualshub.com/



## 45D-MQ 4-STAGE MAST - INTERNAL HOSE REEVING - DOUBLE FUNCTION - STD-VIS
## PID # 45D-MQ-001 TO 883 - S/N 200001A~

| Item | Part Number | Description | Qty | Serial Number |
|---|---|---|---|---|
| | | **RCL = OCL = RETRACTED CHANNEL LENGTH** | | |
| | | **MASTS WITH 3" UNDERCLEARANCE** | | |
| 1 | CC203799 | UPPER GUIDE CHANNEL (68" RCL) (193" MFH) | 1 | |
| | CC203800 | UPPER GUIDE CHANNEL (74" RCL) (217" MFH) | 1 | |
| | CC203801 | UPPER GUIDE CHANNEL (80" RCL) (241" MFH) | 1 | |
| | CC203802 | UPPER GUIDE CHANNEL (86" RCL) (259" MFH) | 1 | |
| | CC203803 | UPPER GUIDE CHANNEL (92" RCL) (277" MFH) | 1 | |
| | CC203804 | UPPER GUIDE CHANNEL (98" RCL) (295" MFH) | 1 | |
| | CC203805 | UPPER GUIDE CHANNEL (104" RCL) (313" MFH) | 1 | |
| 2 | CC203813 | LOWER GUIDE CHANNEL (68" RCL) (193" MFH) | 1 | |
| | CC203814 | LOWER GUIDE CHANNEL (74" RCL) (217" MFH) | 1 | |
| | CC203815 | LOWER GUIDE CHANNEL (80" RCL) (241" MFH) | 1 | |
| | CC203816 | LOWER GUIDE CHANNEL (86" RCL) (259" MFH) | 1 | |
| | CC203817 | LOWER GUIDE CHANNEL (92" RCL) (277" MFH) | 1 | |
| | CC203818 | LOWER GUIDE CHANNEL (98" RCL) (295" MFH) | 1 | |
| | CC203819 | LOWER GUIDE CHANNEL (104" RCL) (313" MFH) | 1 | |
| 3 | CC206254 | HOSE (68" RCL) (193" MFH) | 4 | |
| | CC206256 | HOSE (74" RCL) (217" MFH) | 4 | |
| | CC206258 | HOSE (80" RCL) (241" MFH) | 4 | |
| | CC206260 | HOSE (86" RCL) (259" MFH) | 4 | |
| | CC206262 | HOSE (92" RCL) (277" MFH) | 4 | |
| | CC206264 | HOSE (98" RCL) (295" MFH) | 4 | |
| | CC206266 | HOSE (104" RCL) (313" MFH) | 4 | |
| | | **MASTS WITH 5" UNDERCLEARANCE** | | |
| 1 | CC203799 | UPPER GUIDE CHANNEL (68" RCL) (193" MFH) | 1 | |
| | CC203800 | UPPER GUIDE CHANNEL (74" RCL) (217" MFH) | 1 | |
| | CC203801 | UPPER GUIDE CHANNEL (80" RCL) (241" MFH) | 1 | |
| | CC203802 | UPPER GUIDE CHANNEL (86" RCL) (259" MFH) | 1 | |
| | CC203803 | UPPER GUIDE CHANNEL (92" RCL) (277" MFH) | 1 | |
| | CC203804 | UPPER GUIDE CHANNEL (98" RCL) (295" MFH) | 1 | |
| | CC203805 | UPPER GUIDE CHANNEL (104" RCL) (313" MFH) | 1 | |
| 2 | CC203813 | LOWER GUIDE CHANNEL (68" RCL) (193" MFH) | 1 | |
| | CC203814 | LOWER GUIDE CHANNEL (74" RCL) (217" MFH) | 1 | |
| | CC203815 | LOWER GUIDE CHANNEL (80" RCL) (241" MFH) | 1 | |
| | CC203816 | LOWER GUIDE CHANNEL (86" RCL) (259" MFH) | 1 | |
| | CC203817 | LOWER GUIDE CHANNEL (92" RCL) (277" MFH) | 1 | |

PARTS LIST CONTINUED ON NEXT PAGE

https://truckmanualshub.com/



## 45D-MQ 4-STAGE MAST - INTERNAL HOSE REEVING - DOUBLE FUNCTION - STD-VIS
## PID # 45D-MQ-001 TO 883 - S/N 200001A~

| Item | Part Number | Description | Qty | Serial Number |
|---|---|---|---|---|
| | CC203818 | LOWER GUIDE CHANNEL (98" RCL) (295" MFH) | 1 | |
| | CC203819 | LOWER GUIDE CHANNEL (104" RCL) (313" MFH) | 1 | |
| 3 | CC206255 | HOSE (68" RCL) (193" MFH) | 4 | |
| | CC206257 | HOSE (74" RCL) (217" MFH) | 4 | |
| | CC206259 | HOSE (80" RCL) (241" MFH) | 4 | |
| | CC206261 | HOSE (86" RCL) (259" MFH) | 4 | |
| | CC206263 | HOSE (92" RCL) (277" MFH) | 4 | |
| | CC206265 | HOSE (98" RCL) (295" MFH) | 4 | |
| | CC206267 | HOSE (104" RCL) (313" MFH) | 4 | |
| 4 | CC768549 | CAPSCREW, M10 X 1.5 X 100-8.8 | 1 | |
| 5 | CC203296 | SHAFT | 2 | |
| 6 | CC203293 | TIRE | 2 | |
| 7 | CC683826 | LOCKWASHER, M10 | 10 | |
| 8 | 3EB-79-A5180 | NUT, M10 | 4 | |
| 9 | CC203295 | SHAFT | 4 | |
| 10 | CC203294 | TIRE | 4 | |
| 11 | CC203265 | SHAFT | 1 | |
| 12 | CC677267 | SHEAVE | 2 | |
| 13 | CC200524 | SHIM | 1 | |
| 14 | CC3130 | SNAP RING | 1 | |
| 15 | CC682822 | LOCKWASHER, M12 | 1 | |
| 16 | CC205205 | CAPSCREW, M12 X 1.75 X 55-8.8 | 1 | |
| 17 | CC203292 | HOSE GUARD | 2 | |
| 18 | 3EB-73-A5490 | CAPSCREW, M10 X 1.5 X 25-8.8 | 4 | |
| 19 | CC206884 | SPACER | 1 | |
| 20 | CC206886 | INSERT | 9 | |
| 21 | CC203408 | BAR | 5 | |
| 22 | CC763169 | CAPSCREW, M6 X 1.0 X 20-8.8 | 14 | |
| 23 | CC203407 | BAR | 1 | |
| 24 | CC206887 | INSERT | 1 | |
| 25 | CC214932 | BRACKET (REPLACES PREVIOUS BRACKET) (WHEN REPLACING BRACKET, MUST ALSO REPLACE FREE LIFT HOSES) (SEE FIG. 72-6901) | 1 | |
| N/S | 3EB-71-A6010 | FITTING (MUST USE WITH CC214932 BRACKET) | 1 | |

https://truckmanualshub.com/

**NOTES:**

https://truckmanualshub.com/



# 45D-MQ 4-STAGE MAST - INTERNAL HOSE REEVING - DOUBLE FUNCTION - STD-VIS
## PID # 45D-MQ-884~ - S/N 200001A~

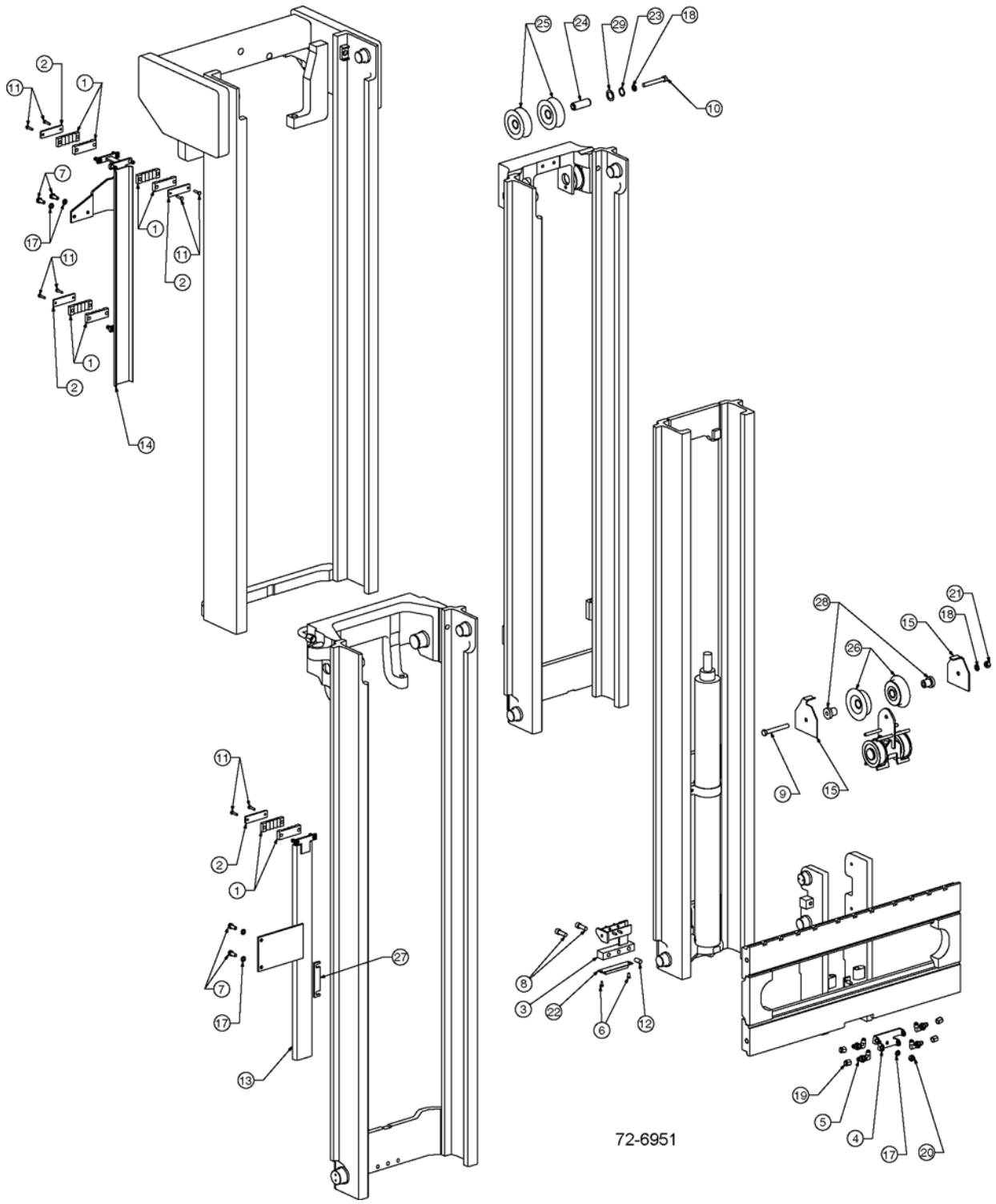

https://truckmanualshub.com/



## 45D-MQ 4-STAGE MAST - INTERNAL HOSE REEVING - DOUBLE FUNCTION - STD-VIS
## PID # 45D-MQ-884~ - S/N 200001A~

| Item | Part Number | Description | Qty | Serial Number |
|---|---|---|---|---|
| | | **OCL = OUTER CHANNEL LENGTH, MFH = MAXIMUM FORK HEIGHT** | | |
| 1 | CC227854 | HOSE CLAMP | 8 | |
| 2 | CC227885 | HOSE CLAMP BAR | 4 | |
| 3 | CC203477 | LOWER INNER BRACKET | 1 | |
| 4 | CC214932 | CARRIAGE BRACKET | 1 | |
| 5 | 3EB-71-A6010 | 90° BULKHEAD FITTING | 4 | |
| 6 | 3EB-73-A5470 | CAPSCREW | 2 | |
| 7 | 3EB-73-A5490 | CAPSCREW, M10 X 25 LG | 4 | |
| 8 | CC769572 | CAPSCREW, M12 X 35 LG | 2 | |
| 9 | CC684800 | CAPSCREW, M12 X 100 LG | 1 | |
| 10 | CC205205 | CAPSCREW, M12 X 90 LG | 1 | |
| 11 | 3EB-79-A5240 | CAPSCREW, M6 X 25 LG | 8 | |
| 12 | CC606212 | DOWEL PIN | 1 | |
| 13 | **SEE BELOW** | LOWER GUIDE | 1 | |
| 14 | **SEE BELOW** | UPPER GUIDE | 1 | |
| 15 | CC210174 | HOSE GUARD | 2 | |
| 16 | **NOT USED** | | | |
| 17 | 3EB-79-A6040 | LOCKWASHER, M10 | 5 | |
| 18 | 3EB-79-A5360 | LOCKWASHER, M12 | 2 | |
| 19 | 3EB-79-A5250 | CAP PLUG, #6 | 4 | |
| 20 | 3EB-79-A5180 | NUT, M10 | 1 | |
| 21 | 3EB-79-A5270 | NUT, M12 | 1 | |
| 22 | CC661786 | BUMPER PAD | 1 | |
| 23 | CC3130 | SNAP RING | 1 | |
| 24 | CC203265 | SHAFT | 1 | |
| 25 | CC204156 | SHEAVE | 1 | |
| 26 | CC210172 | SHEAVE | 2 | |
| 27 | CC206884 | SPACER | 1 | |
| 28 | CC210216 | STUBSHAFT | 2 | |
| 29 | CC200524 | WASHER | 1 | |
| | CC249458 | IHR KIT - DOUBLE FUNCTION (74" OCL) (217" MFH) | 1 | |
| | CC249464 | IHR KIT - DOUBLE FUNCTION (80" OCL) (241" MFH) | 1 | |
| | CC249470 | IHR KIT - DOUBLE FUNCTION (86" OCL) (259" MFH) | 1 | |
| | CC249476 | IHR KIT - DOUBLE FUNCTION (92" OCL) (277" MFH) | 1 | |

PARTS LIST CONTINUED ON NEXT PAGE

https://truckmanualshub.com/



## 45D-MQ 4-STAGE MAST - INTERNAL HOSE REEVING - DOUBLE FUNCTION - STD-VIS
## PID # 45D-MQ-884~ - S/N 200001A~

| Item | Part Number | Description | Qty | Serial Number |
|---|---|---|---|---|
| | CC249482 | IHR KIT - DOUBLE FUNCTION (98" OCL) (295" MFH) | 1 | |
| | CC249488 | IHR KIT - DOUBLE FUNCTION (104" OCL) (313" MFH) | 1 | |
| | CC203800 | UPPER GUIDE (74" OCL) (217" MFH) | 1 | |
| | CC203801 | UPPER GUIDE (80" OCL) (241" MFH) | 1 | |
| | CC203802 | UPPER GUIDE (86" OCL) (259" MFH) | 1 | |
| | CC203803 | UPPER GUIDE (92" OCL) (277" MFH) | 1 | |
| | CC203804 | UPPER GUIDE (98" OCL) (295" MFH) | 1 | |
| | CC203805 | UPPER GUIDE (104" OCL) (313" MFH) | 1 | |
| | CC203814 | LOWER GUIDE (74" OCL) (217" MFH) | 1 | |
| | CC203815 | LOWER GUIDE (80" OCL) (241" MFH) | 1 | |
| | CC203816 | LOWER GUIDE (86" OCL) (259" MFH) | 1 | |
| | CC203817 | LOWER GUIDE (92" OCL) (277" MFH) | 1 | |
| | CC203818 | LOWER GUIDE (98" OCL) (295" MFH) | 1 | |
| | CC203819 | LOWER GUIDE (104" OCL) (313" MFH) | 1 | |
| | CC237109 | HOSE (74" OCL) (217" MFH) | 2 | |
| | CC211509 | HOSE (80" OCL) (241" MFH) | 2 | |
| | CC231279 | HOSE (86" OCL) (259" MFH) | 2 | |
| | CC216392 | HOSE (92" OCL) (277" MFH) | 2 | |
| | CC218482 | HOSE (98" OCL) (295" MFH) | 2 | |
| | CC237147 | HOSE (104" OCL) (313" MFH) | 2 | |
| | CC211574 | FREE LIFT HOSE (74" OCL) (217" MFH) | 2 | |
| | CC211520 | FREE LIFT HOSE (80" OCL) (241" MFH) | 2 | |
| | CC211521 | FREE LIFT HOSE (86" OCL) (259" MFH) | 2 | |
| | CC211522 | FREE LIFT HOSE (92" OCL) (277" MFH) | 2 | |
| | CC211523 | FREE LIFT HOSE (98" OCL) (295" MFH) | 2 | |
| | CC211524 | FREE LIFT HOSE (104" OCL) (313" MFH) | 2 | |

https://truckmanualshub.com/

**NOTES:**

https://truckmanualshub.com/



## 45D-MQ 4-STAGE MAST - INTERNAL HOSE REEVING - DOUBLE FUNCTION - HI-VIS
## PID # 45D-MQ-884~ - S/N 200001A~

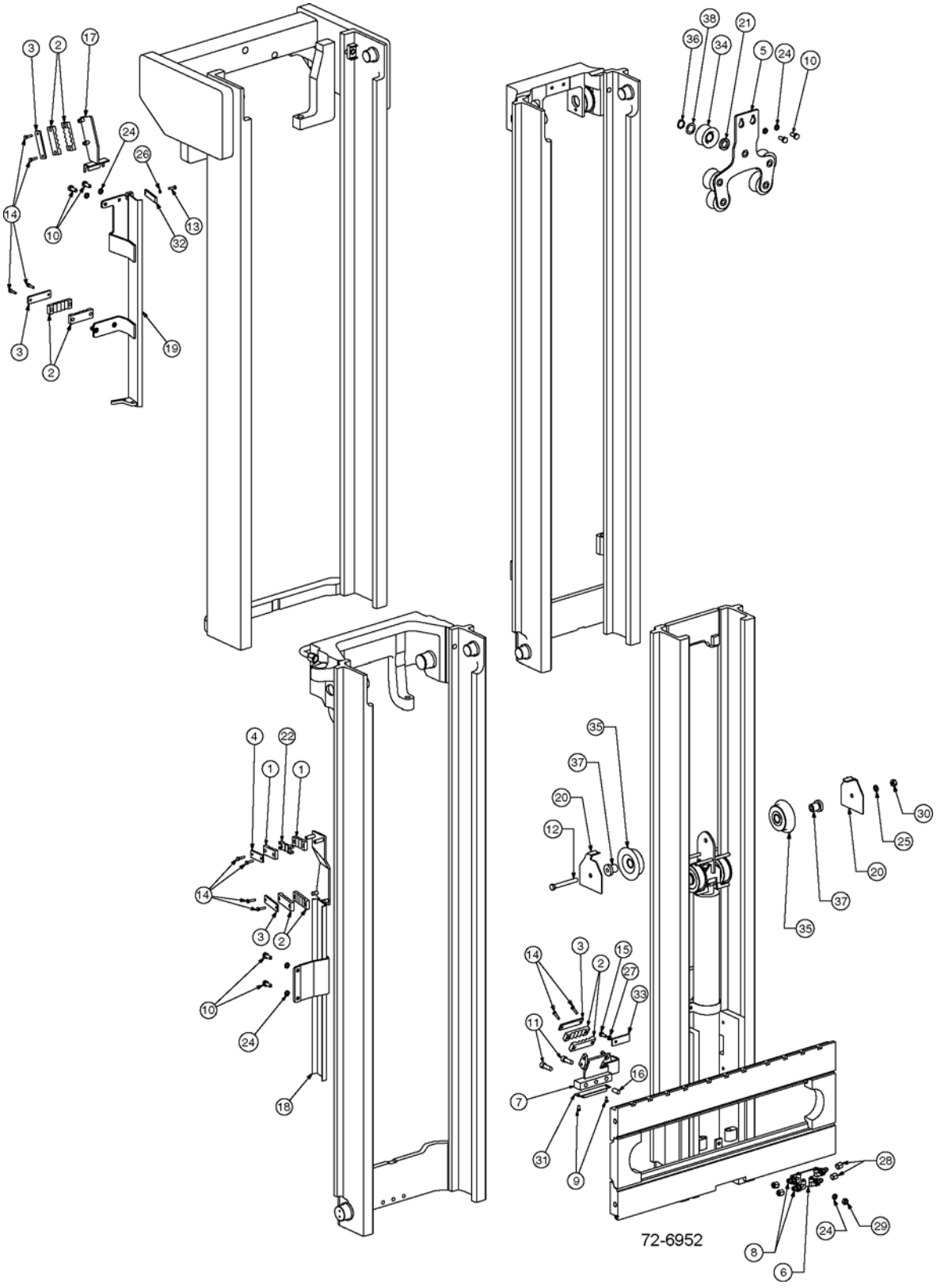

https://truckmanualshub.com/



## 45D-MQ 4-STAGE MAST - INTERNAL HOSE REEVING - DOUBLE FUNCTION - HI-VIS
## PID # 45D-MQ-884~ - S/N 200001A~

| Item | Part Number | Description | Qty | Serial Number |
|---|---|---|---|---|
| | | **OCL = OUTER CHANNEL LENGTH, MFH = MAXIMUM FORK HEIGHT** | | |
| 1 | 3EB-73-A5150 | HOSE CLAMP | 2 | |
| 2 | CC227854 | HOSE CLAMP | 8 | |
| 3 | CC227885 | HOSE CLAMP BAR | 4 | |
| 4 | 3EB-73-A5160 | HOSE CLAMP BAR | 1 | |
| 5 | CC238394 | UPPER IHR BRACKET | 1 | |
| 6 | CC214932 | CARRIAGE BRACKET | 1 | |
| 7 | CC230805 | LOWER INNER BRACKET | 1 | |
| 8 | 3EB-71-A6010 | 90° BULKHEAD FITTING | 4 | |
| 9 | 3EB-73-A5470 | CAPSCREW | 2 | |
| 10 | 3EB-73-A5490 | CAPSCREW, M10 X 25 LG | 6 | |
| 11 | CC769572 | CAPSCREW, M12 X 35 LG | 2 | |
| 12 | CC684800 | CAPSCREW, M12 X 100 LG | 1 | |
| 13 | CC763169 | CAPSCREW, M6 X 20 LG | 1 | |
| 14 | 3EB-79-A5240 | CAPSCREW, M6 X 25 LG | 10 | |
| 15 | CC787372 | CAPSCREW, M8 X 20 LG | 1 | |
| 16 | CC606212 | DOWEL PIN | 1 | |
| 17 | CC214931 | GUIDE BAR | 1 | |
| 18 | **SEE BELOW** | LOWER GUIDE | 1 | |
| 19 | **SEE BELOW** | UPPER GUIDE | 1 | |
| 20 | CC210174 | HOSE GUARD | 2 | |
| 21 | CC241395 | IHR SPACER | 5 | |
| 22 | CC246778 | LOWER INTERMEDIATE INSERT | 1 | |
| 23 | **NOT USED** | | | |
| 24 | 3EB-79-A6040 | LOCKWASHER, M10 | 7 | |
| 25 | CC682382 | LOCKWASHER, M12 | 1 | |
| 26 | 3EB-73-A5340 | LOCKWASHER, M6 | 1 | |
| 27 | CC206315 | LOCKWASHER, M8 | 1 | |
| 28 | 3EB-79-A5250 | CAP PLUG, #6 | 2 | |
| 29 | 3EB-79-A5180 | NUT, M10 | 1 | |
| 30 | 3EB-79-A5270 | NUT, M12 | 1 | |
| 31 | CC661786 | BUMPER PAD | 1 | |
| 32 | CC215789 | HOSE RETAINER PLATE | 1 | |
| 33 | CC230606 | HOSE RETAINER PLATE | 1 | |
| 34 | CC215772 | SHEAVE | 5 | |
| 35 | CC210172 | SHEAVE | 2 | |
| 36 | CC688935 | SNAP RING | 5 | |
| 37 | CC210216 | STUBSHAFT | 2 | |
| 38 | CC205086 | WASHER | 5 | |

PARTS LIST CONTINUED ON NEXT PAGE

https://truckmanualshub.com/



## 45D-MQ 4-STAGE MAST - INTERNAL HOSE REEVING - DOUBLE FUNCTION - HI-VIS
## PID # 45D-MQ-884~ - S/N 200001A~

| Item | Part Number | Description | Qty | Serial Number |
|---|---|---|---|---|
| | CC248824 | IHR KIT - DOUBLE FUNCTION (74" OCL) (217" MFH) | 1 | |
| | CC248827 | IHR KIT - DOUBLE FUNCTION (80" OCL) (241" MFH) | 1 | |
| | CC248832 | IHR KIT - DOUBLE FUNCTION (86" OCL) (259" MFH) | 1 | |
| | CC248837 | IHR KIT - DOUBLE FUNCTION (92" OCL) (277" MFH) | 1 | |
| | CC248840 | IHR KIT - DOUBLE FUNCTION (98" OCL) (295" MFH) | 1 | |
| | CC248842 | IHR KIT - DOUBLE FUNCTION (104" OCL) (313" MFH) | 1 | |
| | CC216470 | UPPER GUIDE (74" OCL) (217" MFH) | 1 | |
| | CC216471 | UPPER GUIDE (80" OCL) (241" MFH) | 1 | |
| | CC216472 | UPPER GUIDE (86" OCL) (259" MFH) | 1 | |
| | CC216473 | UPPER GUIDE (92" OCL) (277" MFH) | 1 | |
| | CC216474 | UPPER GUIDE (98" OCL) (295" MFH) | 1 | |
| | CC216475 | UPPER GUIDE (104" OCL) (313" MFH) | 1 | |
| | CC216464 | LOWER GUIDE (74" OCL) (217" MFH) | 1 | |
| | CC216465 | LOWER GUIDE (80" OCL) (241" MFH) | 1 | |
| | CC216466 | LOWER GUIDE (86" OCL) (259" MFH) | 1 | |
| | CC216467 | LOWER GUIDE (92" OCL) (277" MFH) | 1 | |
| | CC216468 | LOWER GUIDE (98" OCL) (295" MFH) | 1 | |
| | CC216469 | LOWER GUIDE (104" OCL) (313" MFH) | 1 | |
| | CC237109 | HOSE - LEFT SIDE (74" OCL) (217" MFH) | 2 | |
| | CC211509 | HOSE - LEFT SIDE (80" OCL) (241" MFH) | 2 | |
| | CC231279 | HOSE - LEFT SIDE (86" OCL) (259" MFH) | 2 | |
| | CC216392 | HOSE - LEFT SIDE (92" OCL) (277" MFH) | 2 | |
| | CC218482 | HOSE - LEFT SIDE (98" OCL) (295" MFH) | 2 | |
| | CC237147 | HOSE - LEFT SIDE (104" OCL) (313" MFH) | 2 | |
| | CC246217 | HOSE - LEFT - HIGH PRESSURE (74" OCL) (217" MFH) | 2 | |
| | CC246232 | HOSE - LEFT - HIGH PRESSURE (80" OCL) (241" MFH) | 2 | |
| | CC246247 | HOSE - LEFT - HIGH PRESSURE (86" OCL) (259" MFH) | 2 | |
| | CC246262 | HOSE - LEFT - HIGH PRESSURE (92" OCL) (277" MFH) | 2 | |

PARTS LIST CONTINUED ON NEXT PAGE

https://truckmanualshub.com/



## 45D-MQ 4-STAGE MAST - INTERNAL HOSE REEVING - DOUBLE FUNCTION - HI-VIS
## PID # 45D-MQ-884~ - S/N 200001A~

| Item | Part Number | Description | Qty | Serial Number |
|---|---|---|---|---|
| | CC246277 | HOSE - LEFT - HIGH PRESSURE (98" OCL) (295" MFH) | 2 | |
| | CC246292 | HOSE - LEFT - HIGH PRESSURE (104" OCL) (313" MFH) | 2 | |
| | CC237117 | HOSE - RIGHT SIDE - (74" OCL) (217" MFH) | 2 | |
| | CC210233 | HOSE - RIGHT SIDE - (80" OCL) (241" MFH) | 2 | |
| | CC206255 | HOSE - RIGHT SIDE - (86" OCL) (259" MFH) | 2 | |
| | CC237138 | HOSE - RIGHT SIDE - (92" OCL) (277" MFH) | 2 | |
| | CC210239 | HOSE - RIGHT SIDE - (98" OCL) (295" MFH) | 2 | |
| | CC206329 | HOSE - RIGHT SIDE - (104" OCL) (313" MFH) | 2 | |
| | CC246229 | HOSE - RIGHT - HIGH PRESSURE (74" OCL) (217" MFH) | 2 | |
| | CC246244 | HOSE - RIGHT - HIGH PRESSURE (80" OCL) (241" MFH) | 2 | |
| | CC246259 | HOSE - RIGHT - HIGH PRESSURE (86" OCL) (259" MFH) | 2 | |
| | CC246274 | HOSE - RIGHT - HIGH PRESSURE (92" OCL) (277" MFH) | 2 | |
| | CC246289 | HOSE - RIGHT - HIGH PRESSURE (98" OCL) (295" MFH) | 2 | |
| | CC246304 | HOSE - RIGHT - HIGH PRESSURE (104" OCL) (313" MFH) | 2 | |

https://truckmanualshub.com/



## 45D-MQ 4-STAGE MAST - INTERNAL HOSE REEVING - DOUBLE FUNCTION - HI-VIS LEFT HAND - PID # 45D-MQ-884~ - S/N 200001A~

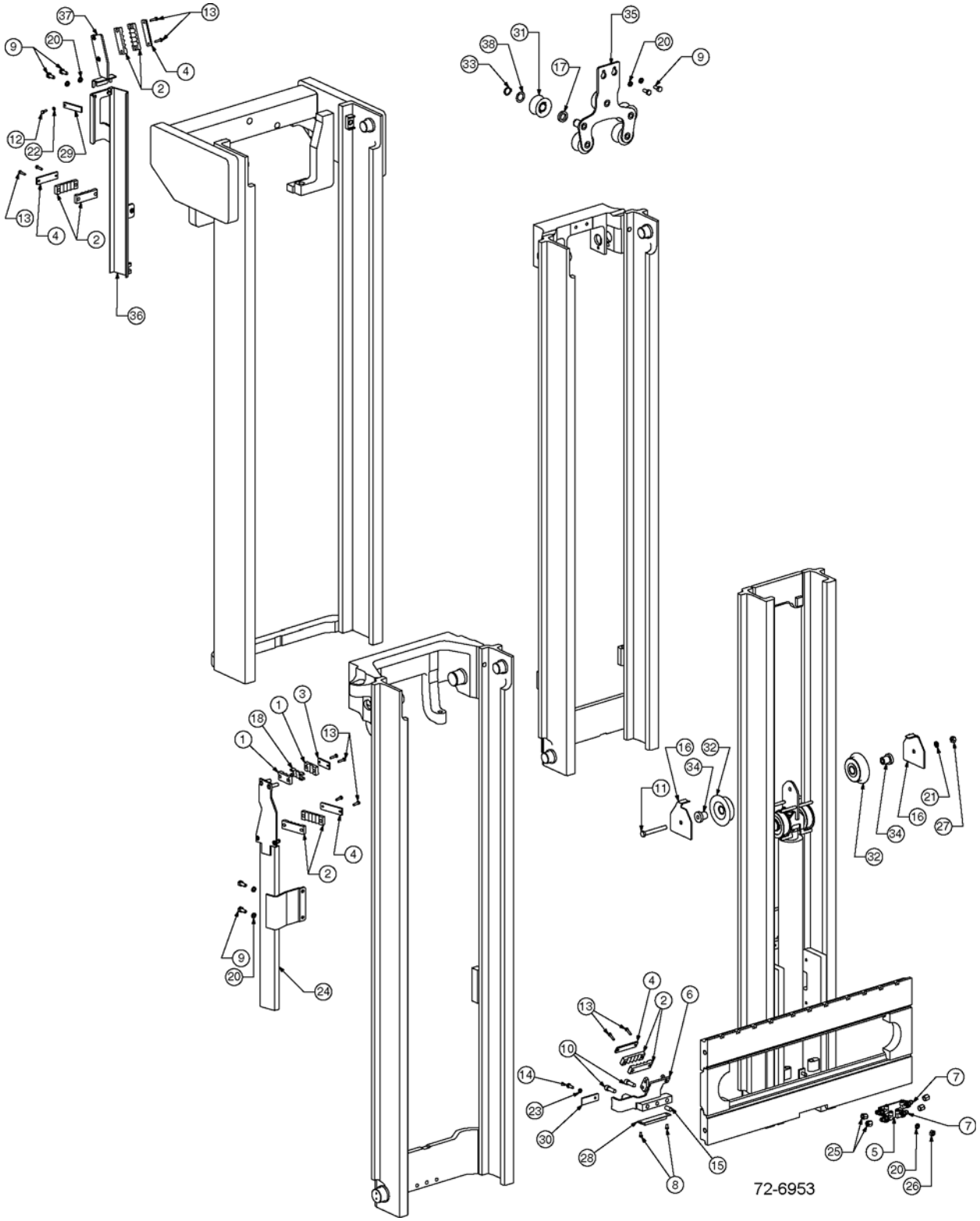

https://truckmanualshub.com/



## 45D-MQ 4-STAGE MAST - INTERNAL HOSE REEVING - DOUBLE FUNCTION - HI-VIS LEFT HAND - PID # 45D-MQ-884~ - S/N 200001A~

| Item | Part Number | Description | Qty | Serial Number |
|---|---|---|---|---|
| | | **OCL = OUTER CHANNEL LENGTH, MFH = MAXIMUM FORK HEIGHT** | | |
| 1 | 3EB-73-A5150 | HOSE CLAMP | 2 | |
| 2 | CC227854 | HOSE CLAMP | 8 | |
| 3 | 3EB-73-A5160 | HOSE CLAMP BAR | 1 | |
| 4 | CC227885 | HOSE CLAMP BAR | 4 | |
| 5 | CC214932 | CARRIAGE BRACKET | 1 | |
| 6 | CC238353 | LH BRACKET | 1 | |
| 7 | 3EB-71-A6010 | 90° BULKHEAD UNION | 4 | |
| 8 | 3EB-73-A5470 | CAPSCREW | 2 | |
| 9 | 3EB-73-A5490 | CAPSCREW, M10 X 25 LG | 6 | |
| 10 | CC769572 | CAPSCREW, M12 X 35 LG | 2 | |
| 11 | CC684800 | CAPSCREW, M12 X 100 LG | 1 | |
| 12 | CC763169 | CAPSCREW, M6 X 20 LG | 1 | |
| 13 | 3EB-79-A5240 | CAPSCREW, M6 X 25 LG | 10 | |
| 14 | CC787372 | CAPSCREW, M8 X 20 LG | 1 | |
| 15 | CC606212 | DOWEL PIN | 1 | |
| 16 | CC210174 | HOSE GUARD | 2 | |
| 17 | CC241395 | SPACER | 5 | |
| 18 | CC246778 | LOWER INTERMEDIATE INSERT | 1 | |
| 19 | **NOT USED** | | | |
| 20 | 3EB-79-A6040 | LOCKWASHER, M10 | 7 | |
| 21 | CC683822 | LOCKWASHER, M12 | 1 | |
| 22 | 3EB-73-A5340 | LOCKWASHER, M6 | 1 | |
| 23 | CC206315 | LOCKWASHER, M8 | 1 | |
| 24 | **SEE BELOW** | LOWER GUIDE | 1 | |
| 25 | 3EB-79-A5250 | CAP PLUG, #6 | 4 | |
| 26 | 3EB-79-A5180 | NUT, M10 | 1 | |
| 27 | 3EB-79-A5270 | NUT, M12 | 1 | |
| 28 | CC661786 | BUMPER PAD | 1 | |
| 29 | CC215789 | HOSE RETAINER PLATE | 1 | |
| 30 | CC230606 | HOSE RETAINER PLATE | 1 | |
| 31 | CC215772 | SHEAVE | 5 | |
| 32 | CC210172 | SHEAVE | 2 | |
| 33 | CC688935 | SNAP RING | 5 | |
| 34 | CC210216 | STUBSHAFT | 2 | |
| 35 | CC238811 | UPPER BRACKET | 1 | |
| 36 | **SEE BELOW** | UPPER GUIDE | 1 | |
| 37 | CC238696 | UPPER GUIDE BRACKET | 1 | |
| 38 | CC205086 | WASHER | 5 | |

PARTS LIST CONTINUED ON NEXT PAGE

https://truckmanualshub.com/



## 45D-MQ 4-STAGE MAST - INTERNAL HOSE REEVING - DOUBLE FUNCTION - HI-VIS LEFT HAND - PID # 45D-MQ-884~ - S/N 200001A~

| Item | Part Number | Description | Qty | Serial Number |
|---|---|---|---|---|
| | CC249396 | IHR KIT - DOUBLE FUNCTION (74" OCL) (217" MFH) | 1 | |
| | CC249402 | IHR KIT - DOUBLE FUNCTION (80" OCL) (241" MFH) | 1 | |
| | CC249408 | IHR KIT - DOUBLE FUNCTION (86" OCL) (259" MFH) | 1 | |
| | CC249414 | IHR KIT - DOUBLE FUNCTION (92" OCL) (277" MFH) | 1 | |
| | CC249420 | IHR KIT - DOUBLE FUNCTION (98" OCL) (295" MFH) | 1 | |
| | CC249426 | IHR KIT - DOUBLE FUNCTION (104" OCL) (313" MFH) | 1 | |
| | CC238726 | UPPER GUIDE (74" OCL) (217" MFH) | 1 | |
| | CC238727 | UPPER GUIDE (80" OCL) (241" MFH) | 1 | |
| | CC238728 | UPPER GUIDE (86" OCL) (259" MFH) | 1 | |
| | CC238729 | UPPER GUIDE (92" OCL) (277" MFH) | 1 | |
| | CC238730 | UPPER GUIDE (98" OCL) (295" MFH) | 1 | |
| | CC238731 | UPPER GUIDE (104" OCL) (313" MFH) | 1 | |
| | CC238714 | LOWER GUIDE (74" OCL) (217" MFH) | 1 | |
| | CC238715 | LOWER GUIDE (80" OCL) (241" MFH) | 1 | |
| | CC238716 | LOWER GUIDE (86" OCL) (259" MFH) | 1 | |
| | CC238717 | LOWER GUIDE (92" OCL) (277" MFH) | 1 | |
| | CC238718 | LOWER GUIDE (98" OCL) (295" MFH) | 1 | |
| | CC238719 | LOWER GUIDE (104" OCL) (313" MFH) | 1 | |
| | CC237109 | HOSE - LEFT SIDE (74" OCL) (217" MFH) | 2 | |
| | CC211509 | HOSE - LEFT SIDE (80" OCL) (241" MFH) | 2 | |
| | CC231279 | HOSE - LEFT SIDE (86" OCL) (259" MFH) | 2 | |
| | CC216392 | HOSE - LEFT SIDE (92" OCL) (277" MFH) | 2 | |
| | CC218482 | HOSE - LEFT SIDE (98" OCL) (295" MFH) | 2 | |
| | CC237147 | HOSE - LEFT SIDE (104" OCL) ( 313" MFH) | 2 | |
| | CC237117 | HOSE - RIGHT SIDE (74" OCL) (217" MFH) | 2 | |
| | CC210233 | HOSE - RIGHT SIDE (80" OCL) (241" MFH) | 2 | |
| | CC206255 | HOSE - RIGHT SIDE (86" OCL) (259" MFH) | 2 | |
| | CC237138 | HOSE - RIGHT SIDE (92" OCL) (277" MFH) | 2 | |
| | CC210239 | HOSE - RIGHT SIDE (98" OCL) (295" MFH) | 2 | |
| | CC206329 | HOSE - RIGHT SIDE (104" OCL) (313" MFH) | 2 | |
| | CC211574 | FREE LIFT HOSE (74" OCL) (217" MFH) | 2 | |
| | CC211520 | FREE LIFT HOSE (80" OCL) (241" MFH) | 2 | |
| | CC211521 | FREE LIFT HOSE (86" OCL) (259" MFH) | 2 | |

PARTS LIST CONTINUED ON NEXT PAGE

https://truckmanualshub.com/



## 45D-MQ 4-STAGE MAST - INTERNAL HOSE REEVING - DOUBLE FUNCTION - HI-VIS LEFT HAND - PID # 45D-MQ-884~ - S/N 200001A~

| Item | Part Number | Description | Qty | Serial Number |
|---|---|---|---|---|
| | CC211522 | FREE LIFT HOSE (92" OCL) (277" MFH) . . . . . | 2 | |
| | CC211523 | FREE LIFT HOSE (98" OCL) (295" MFH) . . . . . | 2 | |
| | CC211524 | FREE LIFT HOSE (104" OCL) (313" MFH) . . . . | 2 | |

https://truckmanualshub.com/



# 45D-MQ 4-STAGE MAST — RECOMMENDED STOCK LIST (RSL)

NO

ILLUSTRATION

REQUIRED

https://truckmanualshub.com/



## 45D-MQ 4-STAGE MAST — RECOMMENDED STOCK LIST (RSL)

| Item | Part Number | Description | Qty | No. of Masts Serviced |
|---|---|---|---|---|
| | | **MAIN LIFT CYLINDERS** | | |
| | SEE PARTS PG | MAIN LIFT CYL ASSY | 0 | 1 - 19 |
| | SEE PARTS PG | MAIN LIFT CYL ASSY | 1 | 20 - 50 |
| | SEE PARTS PG | SEAL KIT | 2 | 1 - 5 |
| | SEE PARTS PG | SEAL KIT | 4 | 6 - 19 |
| | SEE PARTS PG | SEAL KIT | 8 | 20 - 50 |
| | SEE PARTS PG | CHECK VALVE KIT | 2 | 1 - 5 |
| | SEE PARTS PG | CHECK VALVE KIT | 4 | 6 - 19 |
| | SEE PARTS PG | CHECK VALVE KIT | 8 | 20 - 50 |
| | | **FREE LIFT CYLINDER** | | |
| | SEE PARTS PG | FREE LIFT CYLINDER ASSY | 0 | 1 - 5 |
| | SEE PARTS PG | FREE LIFT CYLINDER ASSY | 1 | 6 - 19 |
| | SEE PARTS PG | FREE LIFT CYLINDER ASSY | 2 | 20 - 50 |
| | SEE PARTS PG | SEAL KIT | 2 | 1 - 5 |
| | SEE PARTS PG | SEAL KIT | 4 | 6 - 19 |
| | SEE PARTS PG | SEAL KIT | 8 | 20 - 50 |
| | SEE PARTS PG | CHECK VALVE KIT | 2 | 1 - 5 |
| | SEE PARTS PG | CHECK VALVE KIT | 4 | 6 - 19 |
| | SEE PARTS PG | CHECK VALVE KIT | 8 | 20 - 50 |
| | | **INTERNAL REEVING** | | |
| | SEE PARTS PG | HOSE, RH & LH | 2 | 1 - 5 |
| | SEE PARTS PG | HOSE, RH & LH | 4 | 6 - 19 |
| | SEE PARTS PG | HOSE, RH & LH | 8 | 20 - 50 |
| | 3EB-71-A6010 | FITTING | 1 | 1 - 5 |
| | 3EB-71-A6010 | FITTING | 2 | 6 - 19 |
| | 3EB-71-A6010 | FITTING | 4 | 20 - 50 |
| | CC210175 | CROSSHEAD SHEAVE, IHR, SINGLE IHR | 1 | 1 - 5 |
| | CC210175 | CROSSHEAD SHEAVE, IHR, SINGLE IHR | 2 | 6 - 19 |
| | CC210175 | CROSSHEAD SHEAVE, IHR, SINGLE IHR | 4 | 20 - 50 |
| | CC210172 | CROSSHEAD SHEAVE, IHR, DOUBLE IHR | 2 | 1 - 5 |
| | CC210172 | CROSSHEAD SHEAVE, IHR, DOUBLE IHR | 4 | 6 - 19 |
| | CC210172 | CROSSHEAD SHEAVE, IHR, DOUBLE IHR | 8 | 20 - 50 |
| | CC204156 | STD IHR - SHEAVE, SINGLE IHR | 2 | 1 - 5 |
| | CC204156 | STD IHR - SHEAVE, SINGLE IHR | 4 | 6 - 19 |
| | CC204156 | STD IHR - SHEAVE, SINGLE IHR | 8 | 20 - 50 |
| | CC204156 | STD IHR - SHEAVE, DOUBLE IHR | 2 | 1 - 5 |
| | CC204156 | STD IHR - SHEAVE, DOUBLE IHR | 4 | 6 - 19 |
| | CC204156 | STD IHR - SHEAVE, DOUBLE IHR | 8 | 20 - 50 |

PARTS LIST CONTINUED ON NEXT PAGE

https://truckmanualshub.com/



## 45D-MQ 4-STAGE MAST — RECOMMENDED STOCK LIST (RSL)

| Item | Part Number | Description | Qty | No. of Masts Serviced |
|---|---|---|---|---|
| | CC215772 | HI-VIS - SHEAVE, SINGLE IHR | 2 | 1 - 5 |
| | CC215772 | HI-VIS - SHEAVE, SINGLE IHR | 4 | 6 - 19 |
| | CC215772 | HI-VIS - SHEAVE, SINGLE IHR | 8 | 20 - 50 |
| | CC215772 | HI-VIS - SHEAVE, DOUBLE IHR. | 4 | 1 - 5 |
| | CC215772 | HI-VIS - SHEAVE, DOUBLE IHR. | 8 | 6 - 19 |
| | CC215772 | HI-VIS - SHEAVE, DOUBLE IHR. | 16 | 20 - 50 |
| | | **UPRIGHTS** | | |
| | 3EB-79-A6080 | COTTER PIN | 20 | 1 - 19 |
| | 3EB-79-A6080 | COTTER PIN | 40 | 20 - 50 |
| | CC679146 | CHAIN ANCHOR | 2 | 1 - 5 |
| | CC679146 | CHAIN ANCHOR | 4 | 6 - 19 |
| | CC679146 | CHAIN ANCHOR | 8 | 20 - 50 |
| | CC679144 | CHAIN ANCHOR | 2 | 1 - 5 |
| | CC679144 | CHAIN ANCHOR | 4 | 6 - 19 |
| | CC679144 | CHAIN ANCHOR | 8 | 20 - 50 |
| | CC679149 | PIN, CHAIN ANCHOR | 4 | 1 - 5 |
| | CC679149 | PIN, CHAIN ANCHOR | 8 | 6 - 19 |
| | CC679149 | PIN, CHAIN ANCHOR | 16 | 20 - 50 |
| | CC680242 | CHAIN ANCHOR | 6 | 1 - 5 |
| | CC680242 | CHAIN ANCHOR | 12 | 6 - 19 |
| | CC680242 | CHAIN ANCHOR | 24 | 20 - 50 |
| | CC684305 | CHAIN ANCHOR PIN | 2 | 1 - 5 |
| | CC684305 | CHAIN ANCHOR PIN | 4 | 6 - 19 |
| | CC684305 | CHAIN ANCHOR PIN | 8 | 20 - 50 |
| | 3EB-79-A6090 | NUT | 6 | 1 - 5 |
| | 3EB-79-A6090 | NUT | 12 | 6 - 19 |
| | 3EB-79-A6090 | NUT | 24 | 20 - 50 |
| | CC200007 | JAM NUT | 6 | 1 - 5 |
| | CC200007 | JAM NUT | 12 | 6 - 19 |
| | CC200007 | JAM NUT | 24 | 20 - 50 |
| | 3EB-79-A6081 | PIN, COTTER | 6 | 1 - 5 |
| | 3EB-79-A6081 | PIN, COTTER | 12 | 6 - 19 |
| | 3EB-79-A6081 | PIN, COTTER | 24 | 20 - 50 |
| | 3EB-79-A6050 | SHIM, .03 IN. | 16 | 1 - 5 |
| | 3EB-79-A6050 | SHIM, .03 IN. | 32 | 6 - 19 |
| | 3EB-79-A6050 | SHIM, .03 IN. | 64 | 20 - 50 |
| | CC662145 | LOAD ROLLER | 10 | 1 - 5 |
| | CC662145 | LOAD ROLLER | 20 | 6 - 19 |

PARTS LIST CONTINUED ON NEXT PAGE

https://truckmanualshub.com/



## 45D-MQ 4-STAGE MAST — RECOMMENDED STOCK LIST (RSL)

| Item | Part Number | Description | Qty | No. of Masts Serviced |
|---|---|---|---|---|
| | CC662145 | LOAD ROLLER | 40 | 20 - 50 |
| | CC201493 | LOAD ROLLER - OUTER | 2 | 1 - 5 |
| | CC201493 | LOAD ROLLER - OUTER | 4 | 6 - 19 |
| | CC201493 | LOAD ROLLER - OUTER | 16 | 20 - 50 |
| | CC210767 | SERVICE KIT, WEAR PLUG | 4 | 1 - 5 |
| | CC210767 | SERVICE KIT, WEAR PLUG | 8 | 6 - 19 |
| | CC210767 | SERVICE KIT, WEAR PLUG | 16 | 20 - 50 |
| | | **CROSSHEAD** | | |
| | CC660051 | CHAIN SHEAVE | 4 | 1 - 5 |
| | CC660051 | CHAIN SHEAVE | 8 | 6 - 19 |
| | CC660051 | CHAIN SHEAVE | 16 | 20 - 50 |
| | 3EB-73-A5330 | SNAP RING | 4 | 1 - 5 |
| | 3EB-73-A5330 | SNAP RING | 8 | 6 - 19 |
| | 3EB-73-A5330 | SNAP RING | 16 | 20 - 50 |
| | 3EB-79-A6070 | SNAP RING | 2 | 1 - 5 |
| | 3EB-79-A6070 | SNAP RING | 4 | 6 - 19 |
| | 3EB-79-A6070 | SNAP RING | 8 | 20 - 50 |
| | | **CARRIAGE AND CHAINS** | | |
| | SEE PARTS PG | FREE LIFT CHAINS | 2 | 1 - 5 |
| | SEE PARTS PG | FREE LIFT CHAINS | 4 | 6 - 19 |
| | SEE PARTS PG | FREE LIFT CHAINS | 8 | 20 - 50 |
| | SEE PARTS PG | MAIN LIFT CHAINS | 2 | 1 - 5 |
| | SEE PARTS PG | MAIN LIFT CHAINS | 4 | 6 - 19 |
| | SEE PARTS PG | MAIN LIFT CHAINS | 8 | 20 - 50 |
| | CC683819 | CARRIAGE SIDE THRUST ROLLER | 4 | 1 - 5 |
| | CC683819 | CARRIAGE SIDE THRUST ROLLER | 16 | 6 - 19 |
| | CC683819 | CARRIAGE SIDE THRUST ROLLER | 32 | 20 - 50 |
| | CC660050 | CARRIAGE ROLLER | 4 | 1 - 5 |
| | CC660050 | CARRIAGE ROLLER | 8 | 6 - 19 |
| | CC660050 | CARRIAGE ROLLER | 16 | 20 - 50 |
| | CC662145 | LOAD ROLLER | 8 | 1 - 5 |
| | CC662145 | LOAD ROLLER | 16 | 6 - 19 |
| | CC662145 | LOAD ROLLER | 32 | 20 - 50 |
| | CC683817 | CHAIN ANCHOR | 2 | 1 - 5 |
| | CC683817 | CHAIN ANCHOR | 4 | 6 - 19 |
| | CC683817 | CHAIN ANCHOR | 8 | 20 - 50 |
| | 3EB-79-A6080 | PIN, COTTER | 4 | 1 - 5 |
| | 3EB-79-A6080 | PIN, COTTER | 8 | 6 - 19 |

PARTS LIST CONTINUED ON NEXT PAGE

https://truckmanualshub.com/



## 45D-MQ 4-STAGE MAST — RECOMMENDED STOCK LIST (RSL)

| Item | Part Number | Description | Qty | No. of Masts Serviced |
|---|---|---|---|---|
| | 3EB-79-A6080 | PIN, COTTER . . . . . | 16 | 20 - 50 |
| | CC684305 | CHAIN PIN. . . . . | 4 | 1 - 19 |
| | CC684305 | CHAIN PIN. . . . . | 8 | 20 - 50 |

https://truckmanualshub.com/

**NOTES:**

https://truckmanualshub.com/



## 55D-MQ 4-STAGE MAST (QUAD) - SAFETY DECALS
## S/N 200001A~

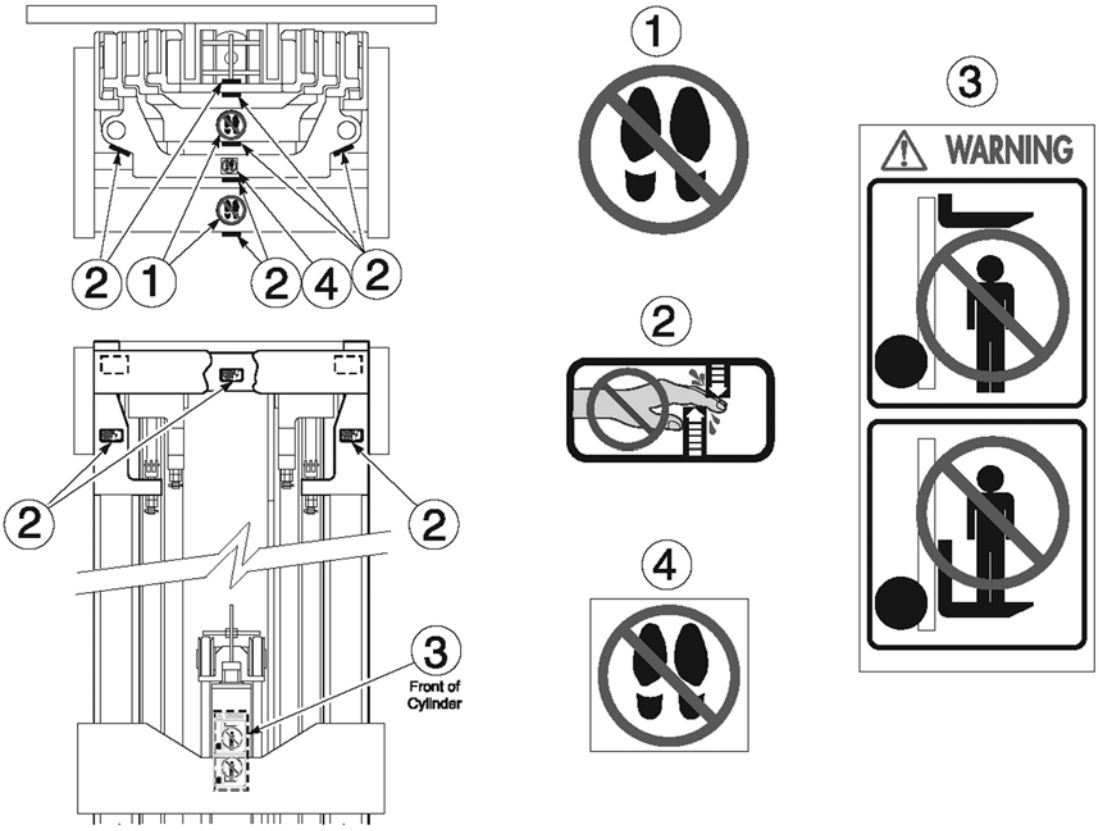


72-6100

https://truckmanualshub.com/



## 55D-MQ 4-STAGE MAST (QUAD) - SAFETY DECALS
## S/N 200001A~

| Item | Part Number | Description | Qty | Serial Number |
|---|---|---|---|---|
| 1 | 3EB-79-A6020 | DECAL - "NO STEP" . . . . . | 2 | |
| 2 | 3EB-79-A6010 | DECAL - "HANDS OFF" . . . . . | 9 | |
| 3 | 3EB-79-A5310 | DECAL - "WARNING" . . . . . | 1 | |
| 4 | 3EB-79-A6030 | DECAL - "NO STEP" . . . . . | 2 | |

https://truckmanualshub.com/



# 55D-MQ 4-STAGE MAST (QUAD) - MAIN LIFT CYLINDER - RIGHT SIDE
# S/N 200001A~

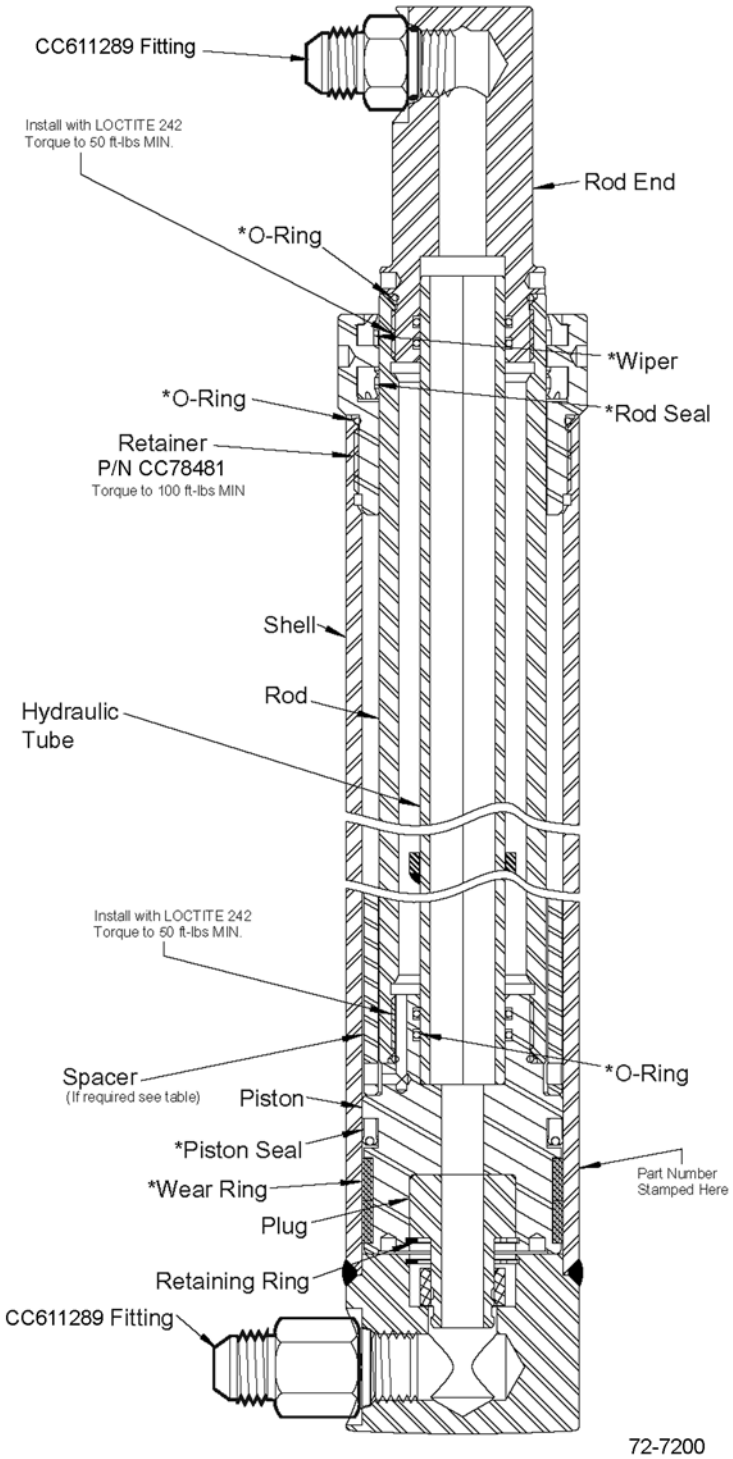

https://truckmanualshub.com/



## 55D-MQ 4-STAGE MAST (QUAD) - MAIN LIFT CYLINDER - RIGHT SIDE
## S/N 200001A~

| Item | Part Number | Description | Qty | Serial Number |
|---|---|---|---|---|
| | | **OCL = OUTER CHANNEL LENGTH , MFH = MAXIMUM FORK HEIGHT** | | |
| | CC1003069 | MAIN LIFT CYLINDER - (68" OCL) (MFH) | 1 | |
| | CC1003075 | MAIN LIFT CYLINDER - (74" OCL) (MFH) | 1 | |
| | CC1003081 | MAIN LIFT CYLINDER - (80" OCL) (MFH) | 1 | |
| | CC1003087 | MAIN LIFT CYLINDER - (86" OCL) (MFH) | 1 | |
| | CC1003093 | MAIN LIFT CYLINDER - (92" OCL) (MFH) | 1 | |
| | CC1003099 | MAIN LIFT CYLINDER - (98" OCL) (MFH) | 1 | |
| | CC1003105 | MAIN LIFT CYLINDER - (104" OCL) (MFH) | 1 | |
| KIT | CC1002524 | SEAL KIT | 1 | |

https://truckmanualshub.com/



## 55D-MQ 4-STAGE MAST (QUAD) - MAIN LIFT CYLINDER - LEFT SIDE
## S/N 200001A~

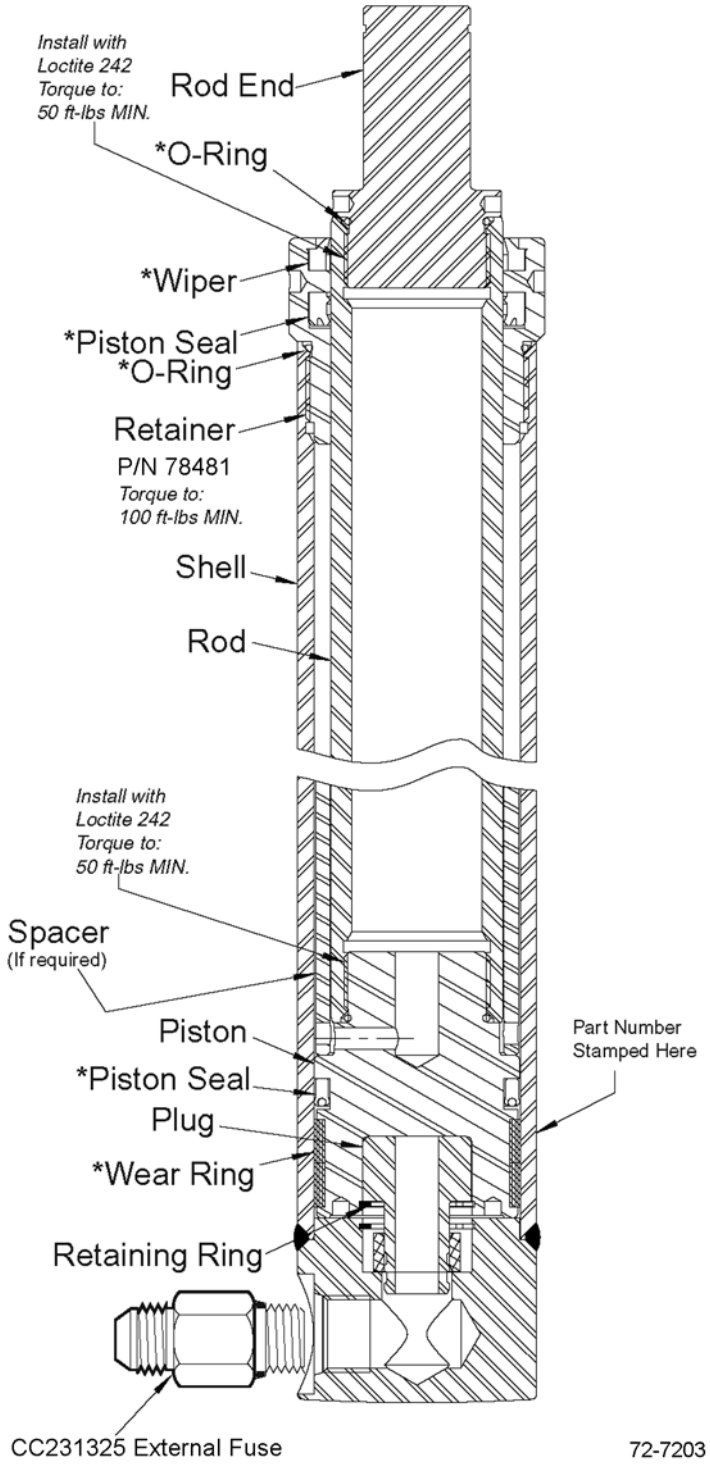

https://truckmanualshub.com/



## 55D-MQ 4-STAGE MAST (QUAD) - MAIN LIFT CYLINDER - LEFT SIDE
## S/N 200001A~

| Item | Part Number | Description | Qty | Serial Number |
|---|---|---|---|---|
| | | **OCL = OUTER CHANNEL LENGTH, MFH = MAXIMUM FORK HEIGHT** | | |
| | CC1003016 | MAIN LIFT CYLINDER - (68" OCL) (MFH) | 1 | |
| | CC1003022 | MAIN LIFT CYLINDER - (74" OCL) (MFH) | 1 | |
| | CC1003028 | MAIN LIFT CYLINDER - (80" OCL) (MFH) | 1 | |
| | CC1003034 | MAIN LIFT CYLINDER - (86" OCL) (MFH) | 1 | |
| | CC1003040 | MAIN LIFT CYLINDER - (92" OCL) (MFH) | 1 | |
| | CC1003046 | MAIN LIFT CYLINDER - (98" OCL) (MFH) | 1 | |
| | CC1003052 | MAIN LIFT CYLINDER - (104" OCL) (MFH) | 1 | |
| KIT | CC1002526 | SEAL KIT | 1 | |

https://truckmanualshub.com/



## 55D-MQ 4-STAGE MAST (QUAD) - FREE LIFT CYLINDER
## S/N 200001A~

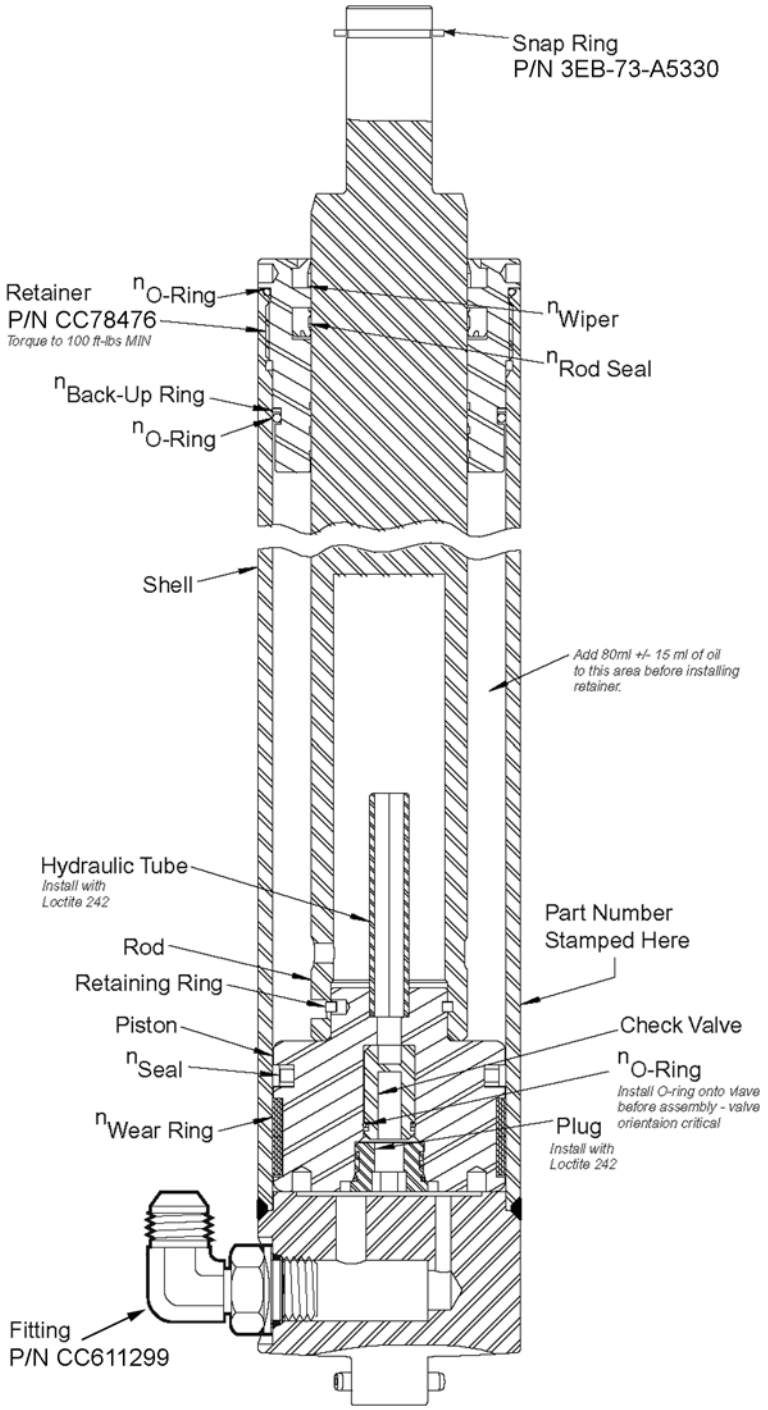

https://truckmanualshub.com/



## 55D-MQ 4-STAGE MAST (QUAD) - FREE LIFT CYLINDER
## S/N 200001A~

| Item | Part Number | Description | Qty | Serial Number |
|---|---|---|---|---|
| | | **OCL = OUTER CHANNEL LENGTH, MFH = MAXIMUM FORK HEIGHT** | | |
| | CC1001746 | MAIN LIFT CYLINDER - (68" OCL) (MFH) | 1 | |
| | CC1001752 | MAIN LIFT CYLINDER - (74" OCL) (MFH) | 1 | |
| | CC1001758 | MAIN LIFT CYLINDER - (80" OCL) (MFH) | 1 | |
| | CC1001764 | MAIN LIFT CYLINDER - (86" OCL) (MFH) | 1 | |
| | CC1001770 | MAIN LIFT CYLINDER - (92" OCL) (MFH) | 1 | |
| | CC1001776 | MAIN LIFT CYLINDER - (98" OCL) (MFH) | 1 | |
| | CC1001782 | MAIN LIFT CYLINDER - (104" OCL) (MFH) | 1 | |
| KIT | CC1002524 | SEAL KIT | 1 | |

https://truckmanualshub.com/



# 55D-MQ 4-STAGE MAST (QUAD) - WELDMENTS (UPRIGHTS)
## S/N 200001A~

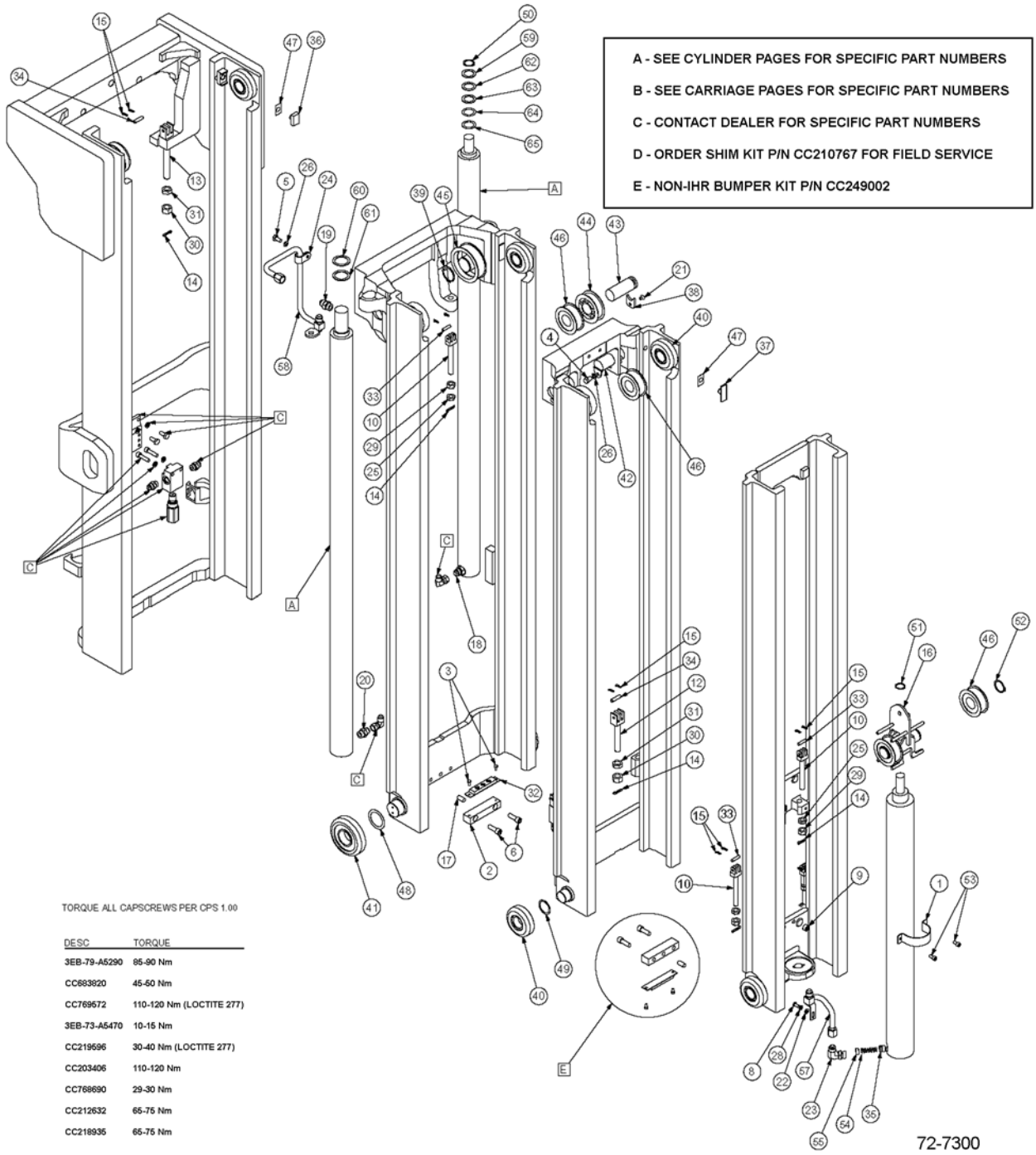


TORQUE ALL CAPSCREWS PER CPS 1.00

| DESC | TORQUE |
|---|---|
| 3EB-79-A5290 | 85-90 Nm |
| CC683820 | 45-50 Nm |
| CC769572 | 110-120 Nm (LOCTITE 277) |
| 3EB-73-A5470 | 10-15 Nm |
| CC219696 | 30-40 Nm (LOCTITE 277) |
| CC203406 | 110-120 Nm |
| CC768690 | 29-30 Nm |
| CC212632 | 65-75 Nm |
| CC218935 | 65-75 Nm |

https://truckmanualshub.com/



## 55D-MQ 4-STAGE MAST (QUAD) - WELDMENTS (UPRIGHTS)
## S/N 200001A~

| Item | Part Number | Description | Qty | Serial Number |
|---|---|---|---|---|
| | | **OCL = OUTER CHANNEL LENGTH, MFH = MAXIMUM FORK HEIGHT** | | |
| A | SEE PARTS PG | OUTER WELDMENT (UPRIGHT) . . . . . | 1 | |
| B | SEE PARTS PG | OUTER INTERMEDIATE WELDMENT (UPRIGHT) . . . . . | 1 | |
| C | SEE PARTS PG | INTERMEDIATE INNER WELDMENT (UPRIGHT) | 1 | |
| D | SEE PARTS PG | INNER WELDMENT (UPRIGHT) . . . . . | 1 | |
| E | SEE PARTS PG | FREE LIFT CYLINDER. . . . . | 1 | |
| F | SEE PARTS PG | MAIN LIFT CYLINDER . . . . . | 2 | |
| | CC249821 | BASE UNIT NO. (68" OCL) (MFH) . . . . . | 1 | |
| | CC249827 | BASE UNIT NO. (74" OCL) (MFH) . . . . . | 1 | |
| | CC249833 | BASE UNIT NO. (80" OCL) (MFH) . . . . . | 1 | |
| | CC249839 | BASE UNIT NO. (86" OCL) (MFH) . . . . . | 1 | |
| | CC249845 | BASE UNIT NO. (92" OCL) (MFH) . . . . . | 1 | |
| | CC249854 | BASE UNIT NO. (104" OCL) (MFH) . . . . . | 1 | |
| A | CC249869 | OUTER UPRIGHT (68" OCL) (MFH) . . . . . | 1 | |
| | CC249875 | OUTER UPRIGHT (74" OCL) (MFH) . . . . . | 1 | |
| | CC249881 | OUTER UPRIGHT (80" OCL) (MFH) . . . . . | 1 | |
| | CC249887 | OUTER UPRIGHT (86" OCL) (MFH) . . . . . | 1 | |
| | CC249893 | OUTER UPRIGHT (92" OCL) (MFH) . . . . . | 1 | |
| | CC249902 | OUTER UPRIGHT (104" OCL) (MFH) . . . . . | 1 | |
| B | CC203284 | OUTER INTER. UPRIGHT (68" OCL) (MFH) . . . | 1 | |
| | CC203285 | OUTER INTER. UPRIGHT (74" OCL) (MFH) . . . | 1 | |
| | CC203286 | OUTER INTER. UPRIGHT (80" OCL) (MFH) . . . | 1 | |
| | CC203287 | OUTER INTER. UPRIGHT (86" OCL) (MFH) . . . | 1 | |
| | CC203288 | OUTER INTER. UPRIGHT (92" OCL) (MFH) . . . | 1 | |
| | CC381280 | OUTER INTER. UPRIGHT (104" OCL) (MFH) . . | 1 | |
| C | CC249045 | INNER INTER. UPRIGHT (68" OCL) (MFH). . . . | 1 | |
| | CC249048 | INNER INTER. UPRIGHT (74" OCL) (MFH). . . . | 1 | |
| | CC249052 | INNER INTER. UPRIGHT (80" OCL) (MFH). . . . | 1 | |
| | CC249058 | INNER INTER. UPRIGHT (86" OCL) (MFH). . . . | 1 | |
| | CC249064 | INNER INTER. UPRIGHT (92" OCL) (MFH). . . . | 1 | |
| | CC249073 | INNER INTER. UPRIGHT (104" OCL) (MFH). . . | 1 | |
| D | CC203377 | INNER UPRIGHT (68" OCL) (MFH) . . . . . | 1 | |
| | CC203378 | INNER UPRIGHT (74" OCL) (MFH) . . . . . | 1 | |
| | CC203379 | INNER UPRIGHT (80" OCL) (MFH) . . . . . | 1 | |
| | CC203380 | INNER UPRIGHT (86" OCL) (MFH) . . . . . | 1 | |
| | CC203381 | INNER UPRIGHT (92" OCL) (MFH) . . . . . | 1 | |
| | CC381282 | INNER UPRIGHT (104" OCL) (MFH) . . . . . | 1 | |

PARTS LIST CONTINUED ON NEXT PAGE

https://truckmanualshub.com/



## 55D-MQ 4-STAGE MAST (QUAD) - WELDMENTS (UPRIGHTS)
## S/N 200001A~

| Item | Part Number | Description | Qty | Serial Number |
|---|---|---|---|---|
| 1 | CC209625 | FREE LIFT CYLINDER BAND | 1 | |
| 2 | CC203291 | BAR STOP | 1 | |
| 3 | 3EB-73-A5470 | CAPSCREW, HEX HEAD | 2 | |
| 4 | CC683820 | CAPSCREW, M10 X 17LG | 1 | |
| 5 | CC212632 | CAPSCREW, M10 X 20LG | 1 | |
| 6 | CC769572 | CAPSCREW, M12 X 35LG | 2 | |
| 7 | SEE PARTS PG | CARRIAGE | -- | |
| 8 | CC209742 | CAPSCREW, M8 X 16LG BH | 1 | |
| 9 | CC203406 | CAPSCREW, SOCKET HEAD | 2 | |
| 10 | CC680242 | CHAIN ANCHOR | 6 | |
| 11 | SEE PARTS PG | CARRIAGE | -- | |
| 12 | CC223080 | CHAIN ANCHOR | 2 | |
| 13 | CC223079 | CHAIN ANCHOR | 2 | |
| 14 | 3EB-79-A6081 | COTTER PIN | 10 | |
| 15 | 3EB-79-A6080 | COTTER PIN | 20 | |
| 16 | CC210169 | CROSSHEAD WELDMENT | 1 | |
| 17 | CC606212 | DOWEL PIN | 1 | |
| 18 | CC231325 | EXTERNAL FUSE ASSY | 1 | |
| 19 | CC611291 | FITTING | 1 | |
| 20 | CC611289 | FITTING | 1 | |
| 21 | CC768690 | CAPSCREW, FLAT HEAD | 1 | |
| 22 | CC787398 | FLAT WASHER, M8 | 1 | |
| 23 | CC611299 | ELBOW FITTING, 90° | 1 | |
| 24 | 3EB-79-A5160 | HOSE CLAMP | 1 | |
| 25 | CC200007 | JAM NUT | 6 | |
| 26 | 3EB-79-A6040 | LOCK WASHER, M10 | 2 | |
| 27 | SEE PARTS PG | CARRIAGE | -- | |
| 28 | CC206315 | LOCK WASHER, M8 | 1 | |
| 29 | 3EB-79-A6090 | FULL NUT | 6 | |
| 30 | CC200242 | FULL NUT | 4 | |
| 31 | CC200244 | JAM NUT | 4 | |
| 32 | CC661786 | BUMPER PAD | 1 | |
| 33 | CC684305 | CHAIN ANCHOR PIN | 6 | |
| 34 | CC679149 | CHAIN ANCHOR PIN | 4 | |
| 35 | CC560470 | FUSE PISTON | 1 | |
| 36 | CC201494 | PLUG | 2 | |
| 37 | CC215720 | WEAR PLUG | 4 | |
| 38 | CC248905 | RETAINING BAR | 1 | |
| 39 | CC3147 | RETAINER CLIP | 2 | |

PARTS LIST CONTINUED ON NEXT PAGE

https://truckmanualshub.com/



## 55D-MQ 4-STAGE MAST (QUAD) - WELDMENTS (UPRIGHTS)
## S/N 200001A~

| Item | Part Number | Description | Qty | Serial Number |
|---|---|---|---|---|
| 40 | CC662145 | LOAD ROLLER | 10 | |
| 41 | CC201493 | LOAD ROLLER | 2 | |
| 42 | CC203269 | SHAFT | 1 | |
| 43 | CC248909 | SHAFT | 1 | |
| 44 | CC203385 | SHEAVE | 1 | |
| 45 | CC249493 | SHEAVE | 2 | |
| 46 | CC660051 | SHEAVE | 4 | |
| 47 | CC203388 | SHIM | AR | |
| 48 | CC637536 | SHIM | AR | |
| 49 | 3EB-79-A6050 | LOAD ROLLER SHIM | AR | |
| 50 | CC3135 | SNAP RING | 1 | |
| 51 | 3EB-73-A5330 | SNAP RING | 1 | |
| 52 | 3EB-79-A6070 | SNAP RING | 2 | |
| 53 | CC219596 | SOCKET SCREW | 2 | |
| 54 | CC565085 | FUSE SPRING | 1 | |
| 55 | CC564107 | FUSE SPRING GUIDE | 1 | |
| 56 | SEE PARTS PG | CARRIAGE | -- | |
| 57 | CC248901 | TUBE ASSY | 1 | |
| 58 | CC248902 | TUBE ASSY | 1 | |
| 59 | CC203404 | CYLINDER SHIM | AR | |
| 60 | CC203403 | CYLINDER SHIM | AR | |
| 61 | CC203314 | CYLINDER SHIM | AR | |
| 62 | CC205196 | CYLINDER SHIM | AR | |
| 63 | CC205197 | CYLINDER SHIM | AR | |
| 64 | CC205198 | CYLINDER SHIM | AR | |
| 65 | CC205199 | CYLINDER SHIM | AR | |

https://truckmanualshub.com/



## 55D-MQ 4-STAGE MAST (QUAD) - 4-ROLLER CARRIAGES
## S/N 200001A~

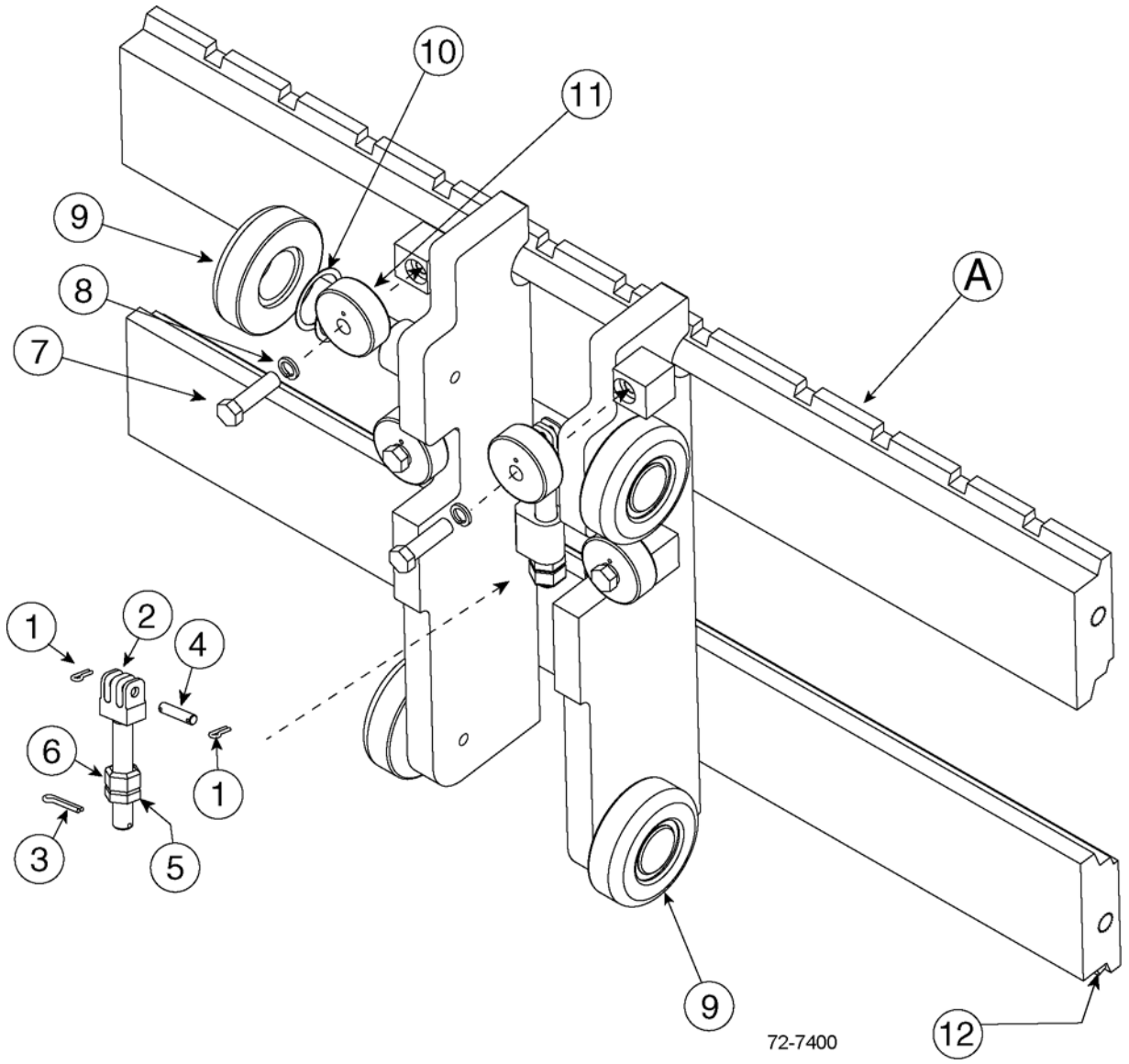

https://truckmanualshub.com/



## 55D-MQ 4-STAGE MAST (QUAD) - 4-ROLLER CARRIAGES
## S/N 200001A~

| Item | Part Number | Description | Qty | Serial Number |
|---|---|---|---|---|
| A | CC203323 | CARRIAGE (37") - CUSHION TIRE TRUCKS . . | 1 | |
| | CC203324 | CARRIAGE (41") - CUSHION TIRE TRUCKS . . | 1 | |
| | CC203325 | CARRIAGE (37") - PNEUMATIC TIRE TRUCKS | 1 | |
| | CC203326 | CARRIAGE (41") - PNEUMATIC TIRE TRUCKS | 1 | |
| 1 | 3EB-79-A6080 | COTTER PIN . . . . . | 4 | |
| 2 | CC683817 | CHAIN ANCHOR . . . . . | 2 | |
| 3 | 3EB-79-A6081 | COTTER PIN . . . . . | 2 | |
| 4 | CC684305 | PIN . . . . . | 2 | |
| 5 | CC200007 | NUT, .625 . . . . . | 2 | |
| 6 | 3EB-79-A6090 | JAM NUT . . . . . | 2 | |
| 7 | 3EB-79-A5290 | CAPSCREW, M12 X 45 . . . . . | 4 | |
| 8 | CC684660 | LOCKWASHER, M12 . . . . . | 4 | |
| 9 | CC662145 | LOAD ROLLER ASSY . . . . . | 4 | |
| 10 | 3EB-79-A6050 | LOAD ROLLER SHIM. . . . . | AR | |
| 11 | CC683819 | THRUST ROLLER ASSY . . . . . | 4 | |
| 12 | CC219400 | FORKSTOP KIT . . . . . | 1 | |

https://truckmanualshub.com/



## 55D-MQ 4-STAGE MAST (QUAD) - 6-ROLLER CARRIAGES
## S/N 200001A~

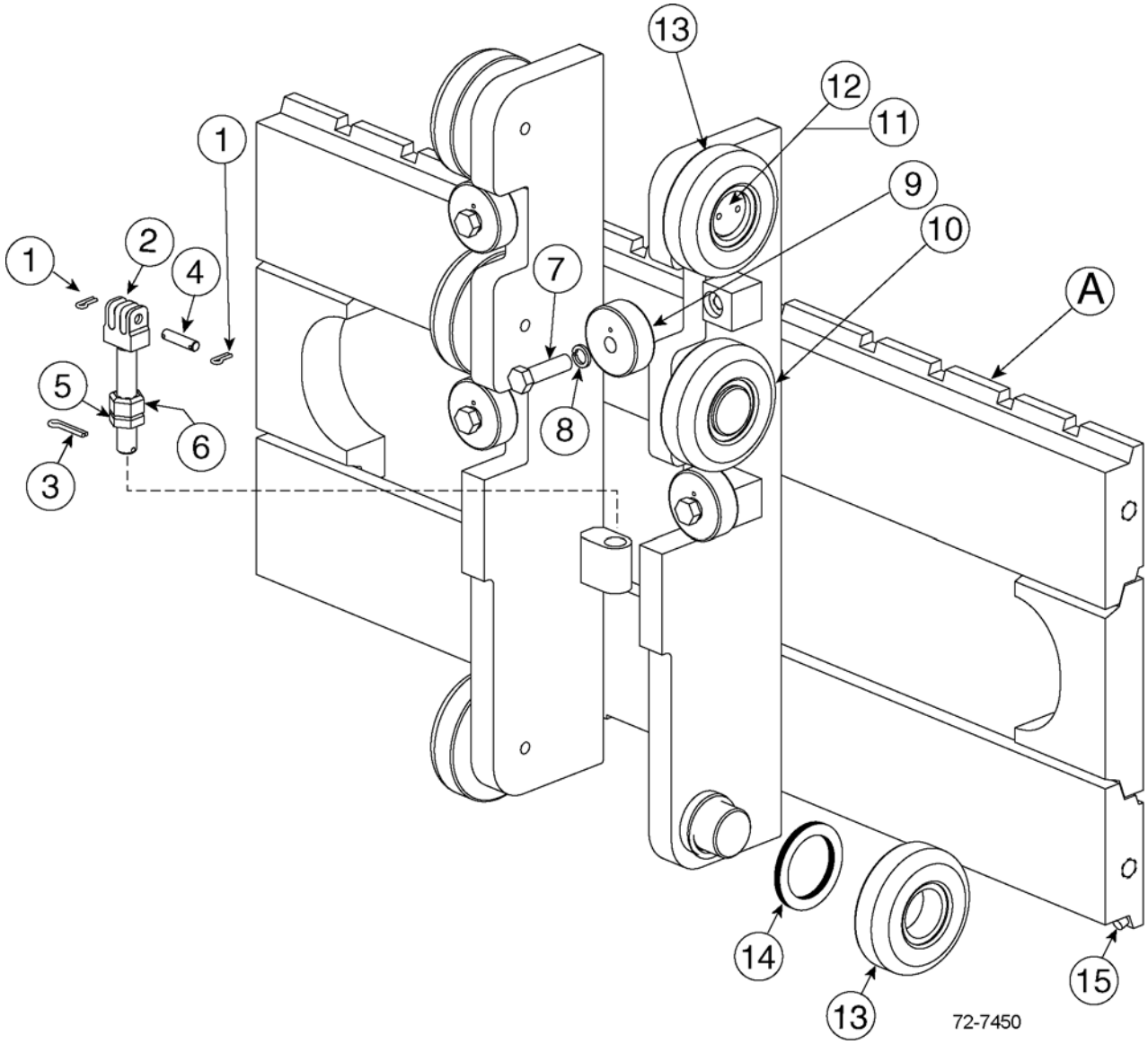

https://truckmanualshub.com/



## 55D-MQ 4-STAGE MAST (QUAD) - 6-ROLLER CARRIAGES
## S/N 200001A~

| Item | Part Number | Description | Qty | Serial Number |
|---|---|---|---|---|
| A | CC203391 | CARRIAGE (37") STD - CUSHION TIRE TRUCKS | 1 | |
| | CC203469 | CARRIAGE (37") HD - CUSHION TIRE TRUCKS | 1 | |
| | CC203392 | CARRIAGE (41") STD - CUSHION TIRE TRUCKS | 1 | |
| | CC203470 | CARRIAGE (41") HD - CUSHION TIRE TRUCKS | 1 | |
| | CC203417 | CARRIAGE (49") STD - CUSHION TIRE TRUCKS | 1 | |
| | CC203471 | CARRIAGE (49") HD - CUSHION TIRE TRUCKS | 1 | |
| | CC203393 | CARRIAGE (37") STD - PNEUMATIC TIRE TRUCKS | 1 | |
| | CC203473 | CARRIAGE (37") HD - PNEUMATIC TIRE TRUCKS | 1 | |
| | CC203394 | CARRIAGE (41") STD - PNEUMATIC TIRE TRUCKS | 1 | |
| | CC203474 | CARRIAGE (41") HD - PNEUMATIC TIRE TRUCKS | 1 | |
| | CC203419 | CARRIAGE (49") STD - PNEUMATIC TIRE TRUCKS | 1 | |
| | CC203475 | CARRIAGE (49") HD - PNEUMATIC TIRE TRUCKS | 1 | |
| 1 | 3EB-79-A6080 | COTTER PIN | 4 | |
| 2 | CC683817 | CHAIN ANCHOR | 2 | |
| 3 | 3EB-79-A6081 | COTTER PIN | 2 | |
| 4 | CC684305 | PIN | 2 | |
| 5 | CC200007 | NUT, .625 | 2 | |
| 6 | 3EB-79-A6090 | JAM NUT | 2 | |
| 7 | 3EB-79-A5290 | CAPSCREW, M12 X 45 | 4 | |
| 8 | CC684660 | LOCKWASHER, M12 | 4 | |
| 9 | CC683819 | THRUST ROLLER ASSY | 4 | |
| 10 | CC660050 | UNDERSIZED ROLLER | 2 | |
| 11 | CC658378 | RETAINER PLATE | 2 | |
| 12 | CC680218 | HEX HEAD, M6 X 12 LONG | 4 | |
| 13 | CC662145 | LOAD ROLLER ASSY | 4 | |
| 14 | 3EB-79-A6050 | SHIM, LOAD ROLLER | AR | |
| 15 | CC219400 | FORKSTOP KIT | 1 | |

https://truckmanualshub.com/



## 55D-MQ 4-STAGE MAST (QUAD) - HOIST CHAINS & FREE LIFT HOSES S/N 200001A~

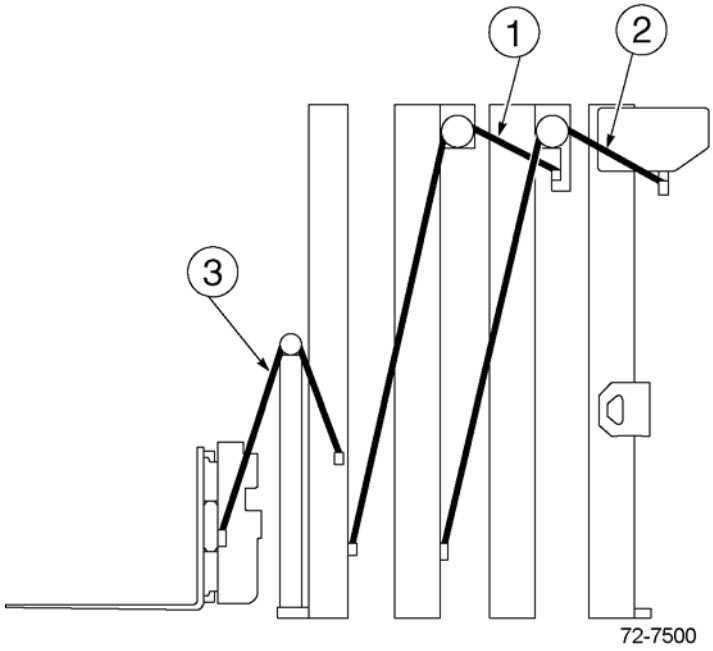


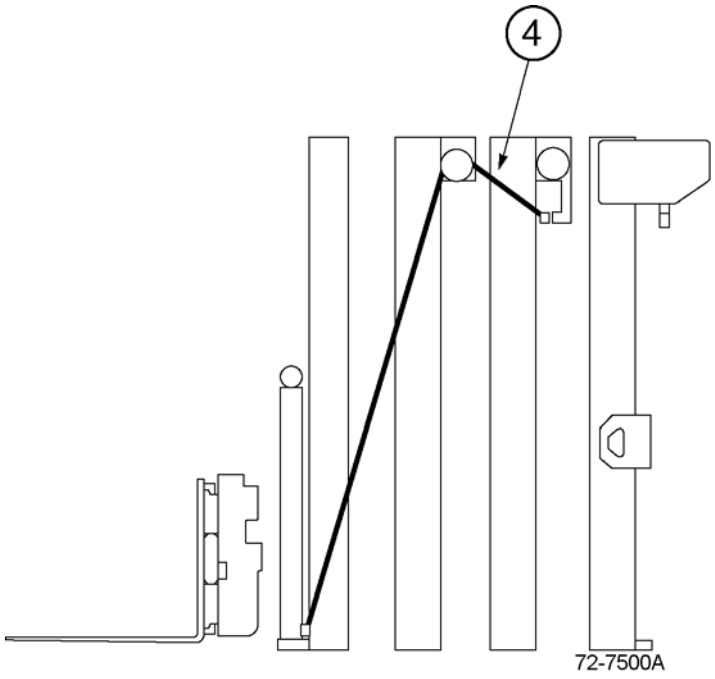

https://truckmanualshub.com/



## 55D-MQ 4-STAGE MAST (QUAD) - HOIST CHAINS & FREE LIFT HOSES
## S/N 200001A~

| Item | Part Number | Description | Qty | Serial Number |
|---|---|---|---|---|
| | | **OCL = OUTER CHANNEL LENGTH, MFH = MAXIMUM FORK HEIGHT** | | |
| 1 | CC680458 | FREE LIFT CHAIN (68" OCL) (193" MFH) . . . . . | 2 | |
| | CC681428 | FREE LIFT CHAIN (74" OCL) (217" MFH) . . . . . | 2 | |
| | CC683979 | FREE LIFT CHAIN (80" OCL) (241" MFH) . . . . . | 2 | |
| | CC683982 | FREE LIFT CHAIN (86" OCL) (259" MFL) . . . . . | 2 | |
| | CC683985 | FREE LIFT CHAIN (92" OCL) (277" MFH) . . . . . | 2 | |
| | CC683990 | FREE LIFT CHAIN (104" OCL) (313" MFH) . . . . | 2 | |
| 2 | CC681429 | INNER CHAIN (68" OCL) (193" MFH) . . . . . | 2 | |
| | CC681430 | INNER CHAIN (74" OCL) (217" MFH) . . . . . | 2 | |
| | CC680459 | INNER CHAIN (80" OCL) (241" MFH) . . . . . | 2 | |
| | CC678796 | INNER CHAIN (86" OCL) (259" MFH) . . . . . | 2 | |
| | CC681431 | INNER CHAIN (92" OCL) (277" MFH) . . . . . | 2 | |
| | CC683998 | INNER CHAIN (104" OCL) (313" MFH) . . . . . | 2 | |
| 3 | CC224931 | OUTER CHAIN (68" OCL) (193" MFH). . . . . | 2 | |
| | CC205989 | OUTER CHAIN (74" OCL) (217" MFH). . . . . | 2 | |
| | CC220707 | OUTER CHAIN (80" OCL) (241" MFH). . . . . | 2 | |
| | CC224937 | OUTER CHAIN (86" OCL) (259" MFH). . . . . | 2 | |
| | CC220708 | OUTER CHAIN (92" OCL) (277" MFH). . . . . | 2 | |
| | CC224944 | OUTER CHAIN (104" OCL) (313" MFH). . . . . | 1 | |
| 4 | CC249088 | FREE LIFT HOSE (68" OCL) (193" MFH) . . . . . | 1 | |
| | CC249094 | FREE LIFT HOSE (74" OCL) (217" MFH) . . . . . | 1 | |
| | CC249100 | FREE LIFT HOSE (80" OCL) (241" MFH) . . . . . | 1 | |
| | CC249106 | FREE LIFT HOSE (86" OCL) (259" MFH) . . . . . | 1 | |
| | CC249111 | FREE LIFT HOSE (92" OCL) (277" MFH) . . . . . | 1 | |
| | CC249120 | FREE LIFT HOSE (104" OCL) (313" MFH) . . . . | 1 | |

https://truckmanualshub.com/



## 55D-MQ 4-STAGE MAST (QUAD) - LOAD BACKREST
## S/N 200001A~

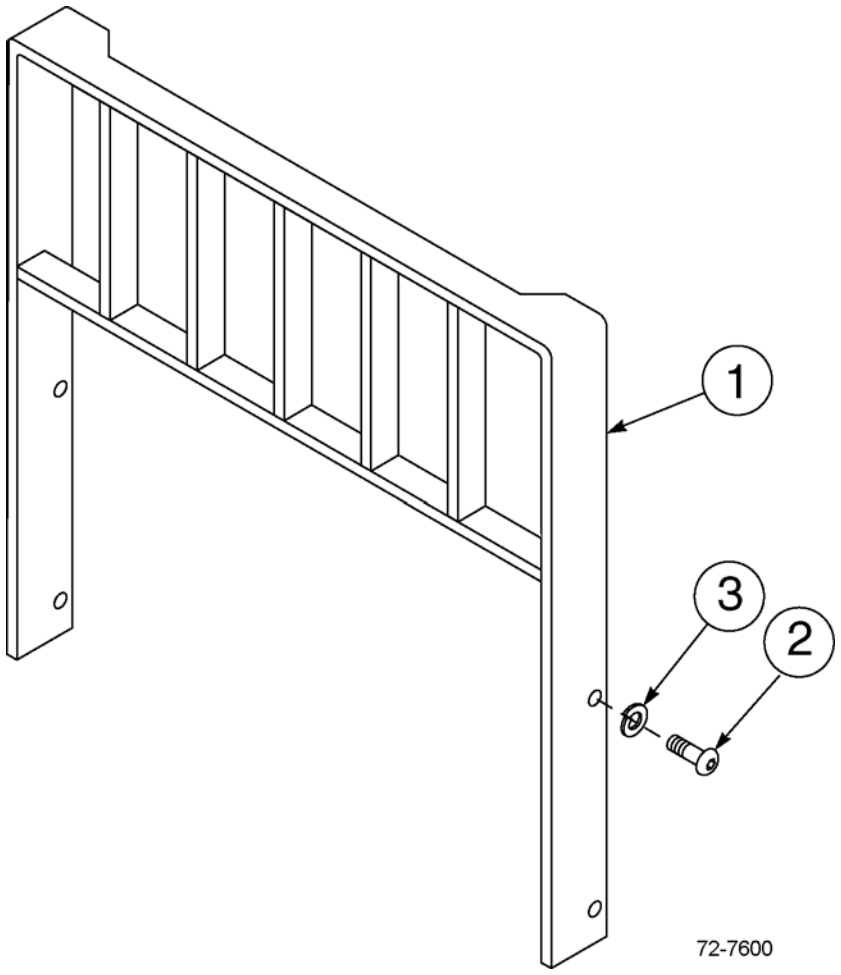

https://truckmanualshub.com/



## 55D-MQ 4-STAGE MAST (QUAD) - LOAD BACKREST
## S/N 200001A~

| Item | Part Number | Description | Qty | Serial Number |
|---|---|---|---|---|
| 1 | CC684772 | BACKREST (37" X 36") | 1 | |
| | CC684773 | BACKREST (37" X 48") | 1 | |
| | CC684774 | BACKREST (37" X 60") | 1 | |
| | CC684775 | BACKREST (41" X 36") | 1 | |
| | CC684776 | BACKREST (41" X 48") | 1 | |
| | CC684777 | BACKREST (41" X 60") | 1 | |
| 2 | CC200173 | .CAPSCREW, M16 X 2.0 X 35-8.8 | 4 | |
| 3 | 3EB-71-A6030 | .LOCKWASHER, M16. | 4 | |

https://truckmanualshub.com/



## 55D-MQ 4-STAGE MAST (QUAD) - MAST INSTALLATION PARTS
## S/N 200001A~

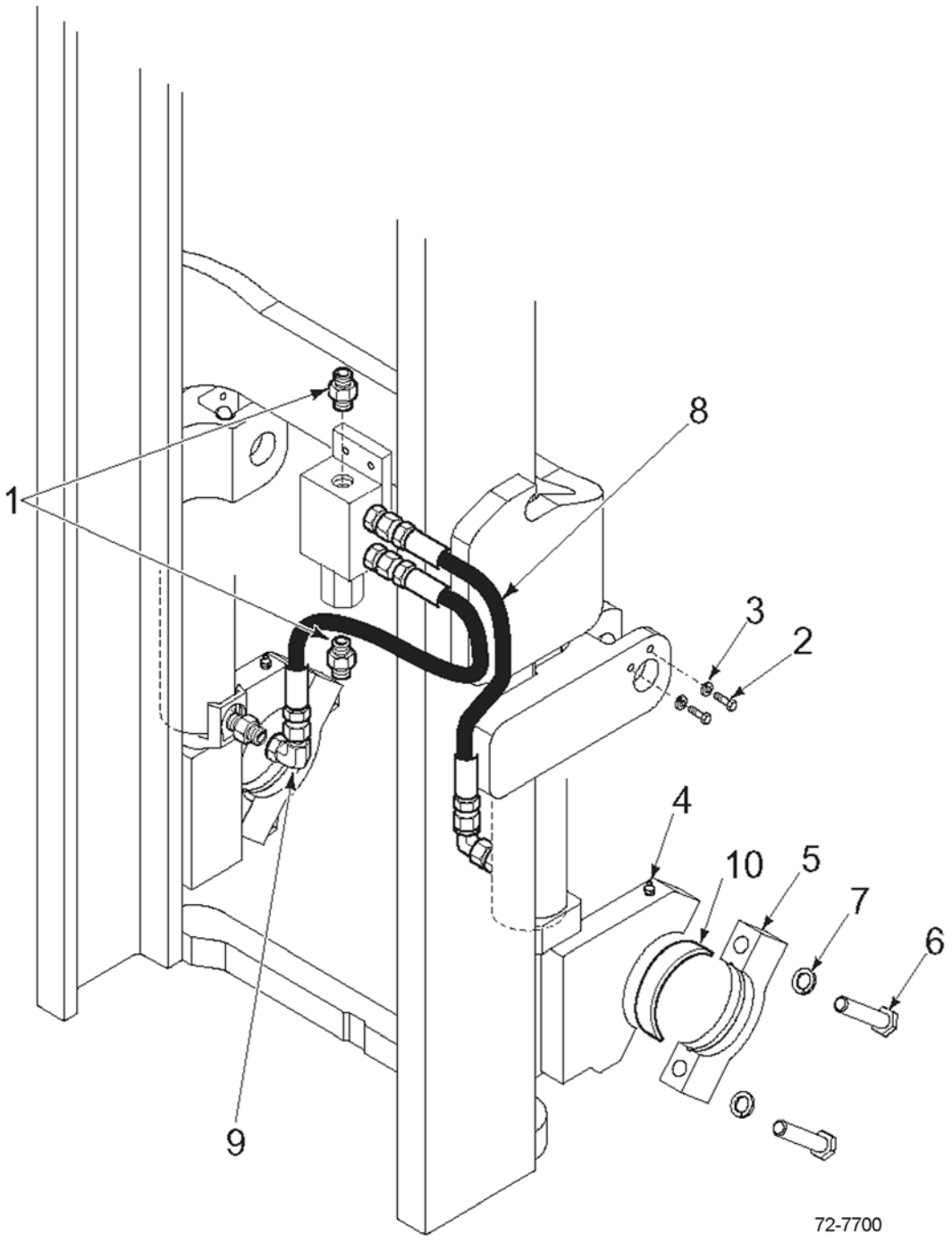

https://truckmanualshub.com/



## 55D-MQ 4-STAGE MAST (QUAD) - MAST INSTALLATION PARTS
## S/N 200001A~

| Item | Part Number | Description | Qty | Serial Number |
|---|---|---|---|---|
| 1 | CC601377 | FITTING, 8-8 | 2 | |
| 2 | CC212632 | CAPSCREW, M10 X 1.5 X 20-8.8 | 4 | |
| 3 | 3EB-79-A6040 | LOCKWASHER, M10 | 4 | |
| 4 | CC7418 | GREASE FITTING | 2 | |
| 5 | CC252686 | CAP | 2 | |
| 6 | CC251906 | CAPSCREW, M18 X 2.5 X 80-8.8 | 4 | |
| 7 | 3EB-71-A6030 | LOCKWASHER, M18 | 4 | |
| 8 | CC217524 | HOSE | 2 | |
| 9 | CC605761 | FITTING, 90° 8-8 | 2 | |
| 10 | 3EB-84-51290 | BUSHING (CUSHION TRUCKS) | 2 | |
| | 3EB-71-51290 | BUISHING (PNEUMATIC TRUCKS) | 2 | |

https://truckmanualshub.com/



## 55D-MQ 4-STAGE MAST (QUAD) - LOWERING CONTROL VALVE & BRACKET
## S/N 200001A~

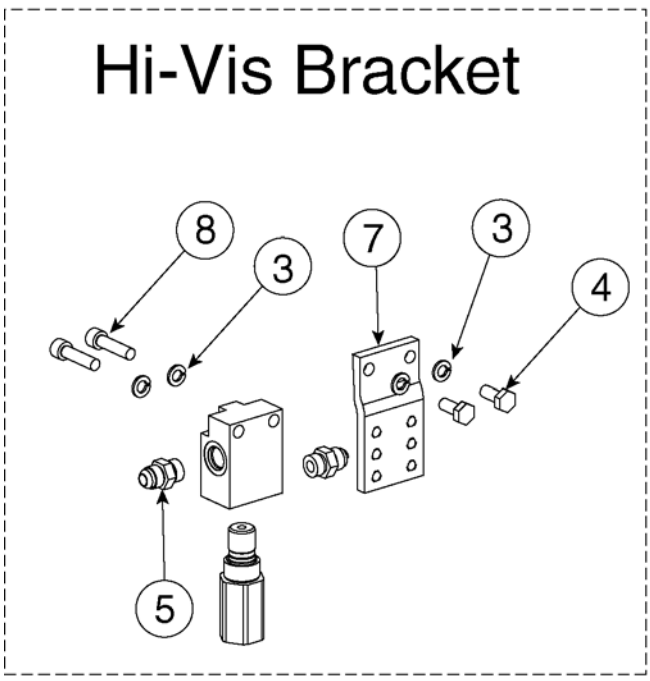


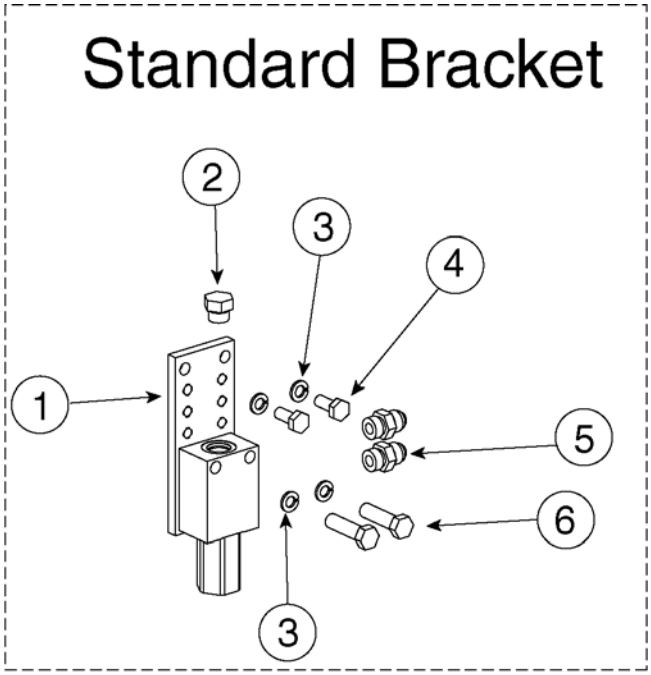


PARTS VARY BY PID #. CONTACT YOUR DEALER FOR SPECIFIC PART NUMBERS.

72-6850

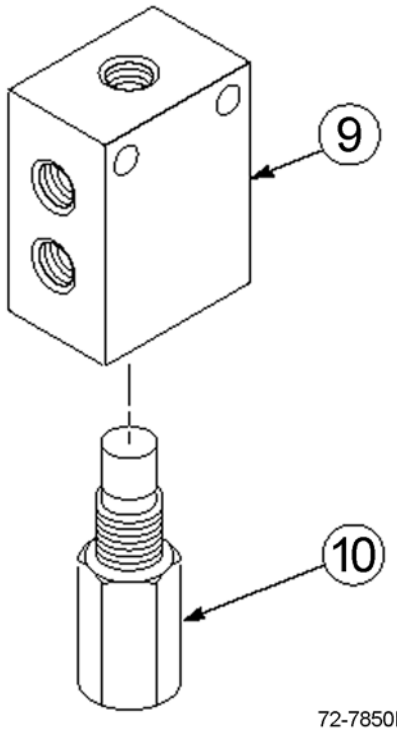


72-7850B

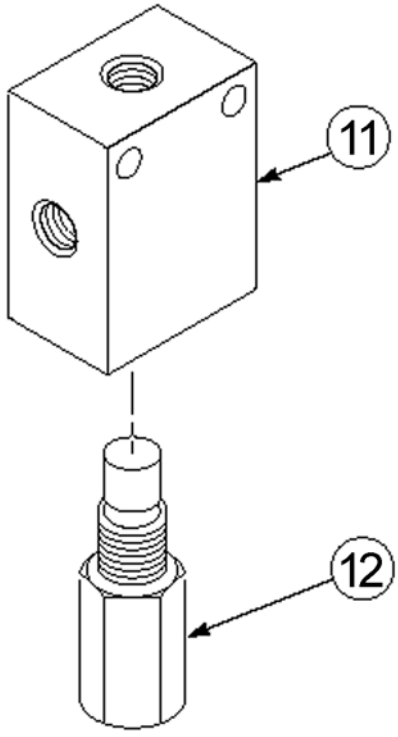


72-7850C

https://truckmanualshub.com/



## 55D-MQ 4-STAGE MAST (QUAD) - LOWERING CONTROL VALVE & BRACKET
## S/N 200001A~

| Item | Part Number | Description | Qty | Serial Number |
|---|---|---|---|---|
| 1 | CC683831 | MOUNTING BAR, STANDARD | 1 | |
| 2 | CC601378 | FITTING | 1 | |
| 3 | 3EB-79-A6040 | LOCKWASHER, M10 | 4 | |
| 4 | 3EB-73-A5490 | CAPSCREW, M10 | 2 | |
| 5 | CC601377 | FITTING | 2 | |
| 6 | CC683823 | CAPSCREW, M10 | 2 | |
| 7 | CC216402 | MOUNTING BAR, HI-VIS | 1 | |
| 8 | CC767611 | CAPSCREW, M10 | 2 | |
| 9 | CC684810 | LOWERING CONTROL VALVE ASSY - 17 GPM (DUAL PORT) | 1 | |
| | CC684812 | LOWERING CONTROL VALVE ASSY - 24 GPM (DUAL PORT) | 1 | |
| 9 | CC684152 | .VALVE BODY | 1 | |
| 10 | 3EB-73-A5920 | .VALVE CARTRIDGE - 17 GPM (2600 PSI) | 1 | |
| | CC684154 | .VALVE CARTRIDGE - 24 GPM (2600 PSI) | 1 | |
| 11 | 3EB-73-A5930 | LOWERING CONTROL VALVE ASSY - 17 GPM (SINGLE PORT) | 1 | |
| 12 | 3EB-73-A5910 | .VALVE BODY | 1 | |
| 13 | 3EB-73-A5920 | .VALVE CARTRIDGE - 17 GPM (2600 PSI) | 1 | |

https://truckmanualshub.com/



# 55D-MQ 4-STAGE MAST - INTERNAL HOSE REEVING - SINGLE FUNCTION - STD
## S/N 200001A~

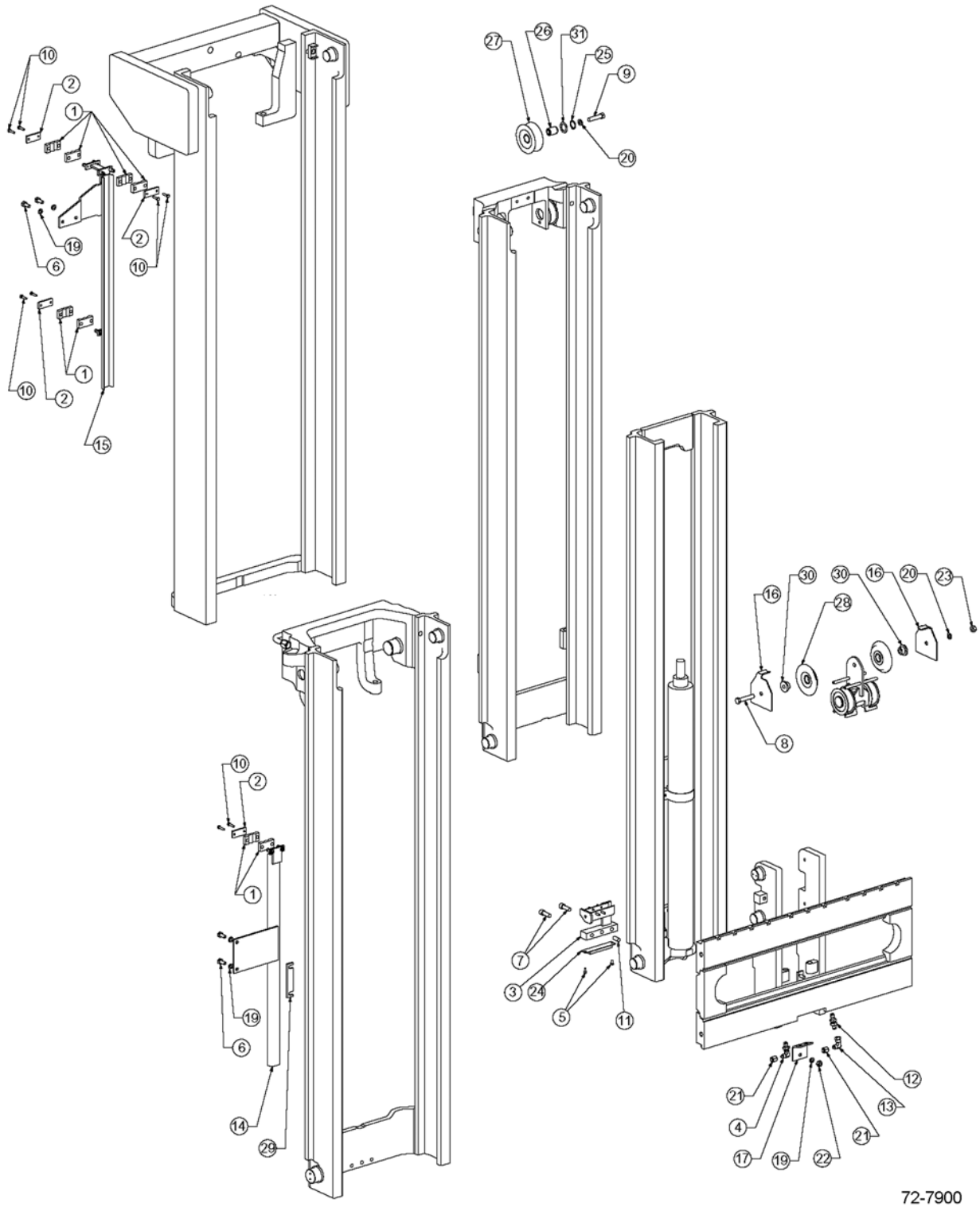

https://truckmanualshub.com/



## 55D-MQ 4-STAGE MAST - INTERNAL HOSE REEVING - SINGLE FUNCTION - STD
## S/N 200001A~

| Item | Part Number | Description | Qty | Serial Number |
|---|---|---|---|---|
| | | **RCL = OCL = RETRACTED (OVERALL) CHANNEL LENGTH** | | |
| | CC249427 | I.H.R. KIT (74" RCL) | 1 | |
| | CC249433 | I.H.R. KIT (80" RCL) | 1 | |
| | CC249439 | I.H.R. KIT (86" RCL) | 1 | |
| | CC249445 | I.H.R. KIT (92" RCL) | 1 | |
| | CC249451 | I.H.R. KIT (98" RCL) | 1 | |
| | CC249457 | I.H.R. KIT (104" RCL) | 1 | |
| | CC203793 | UPPER GUIDE CHANNEL (74" RCL) | 1 | |
| | CC203794 | UPPER GUIDE CHANNEL (80" RCL) | 1 | |
| | CC203795 | UPPER GUIDE CHANNEL (86" RCL) | 1 | |
| | CC203796 | UPPER GUIDE CHANNEL (92" RCL) | 1 | |
| | CC203797 | UPPER GUIDE CHANNEL (98" RCL) | 1 | |
| | CC203798 | UPPER GUIDE CHANNEL (104" RCL) | 1 | |
| | CC203807 | LOWER GUIDE CHANNEL (74" RCL) | 1 | |
| | CC203808 | LOWER GUIDE CHANNEL (80" RCL) | 1 | |
| | CC203809 | LOWER GUIDE CHANNEL (86" RCL) | 1 | |
| | CC203810 | LOWER GUIDE CHANNEL (92" RCL) | 1 | |
| | CC203811 | LOWER GUIDE CHANNEL (98" RCL) | 1 | |
| | CC203812 | LOWER GUIDE CHANNEL (104" RCL) | 1 | |
| | CC237109 | HOSE (74" RCL) | 2 | |
| | CC211509 | HOSE (80" RCL) | 2 | |
| | CC231279 | HOSE (86" RCL) | 2 | |
| | CC216392 | HOSE (92" RCL) | 2 | |
| | CC218482 | HOSE (98" RCL) | 2 | |
| | CC237147 | HOSE (104" RCL) | 2 | |
| | CC211574 | FREE LIFT HOSE (74" RCL) | 2 | |
| | CC211520 | FREE LIFT HOSE (80" RCL) | 2 | |
| | CC211521 | FREE LIFT HOSE (86" RCL) | 2 | |
| | CC211522 | FREE LIFT HOSE (92" RCL) | 2 | |
| | CC211523 | FREE LIFT HOSE (98" RCL) | 2 | |
| | CC211524 | FREE LIFT HOSE (104" RCL) | 2 | |
| 1 | CC227855 | HOSE CLAMP | 8 | |
| 2 | 3EB-73-A5160 | HOSE CLAMP BAR | 4 | |
| 3 | CC203477 | LOWER INNER BRACKET | 1 | |
| 4 | CC2454 | BULKHEAD FITTING, 90° | 1 | |
| 5 | 3EB-73-A5470 | CAPSCREW | 2 | |
| 6 | 3EB-73-A5490 | CAPSCREW, M10 X 25 LG | 4 | |
| 7 | CC769572 | CAPSCREW, M12 X 35 LG | 2 | |
| 8 | 3EB-79-A5230 | CAPSCREW, M12 X 65 LG | 1 | |

PARTS LIST CONTINUED ON NEXT PAGE

https://truckmanualshub.com/



## 55D-MQ 4-STAGE MAST - INTERNAL HOSE REEVING - SINGLE FUNCTION - STD
## S/N 200001A~

| Item | Part Number | Description | Qty | Serial Number |
|---|---|---|---|---|
| 9 | CC205206 | CAPSCREW, M12 X 55 LG | 1 | |
| 10 | 3EB-79-A5240 | CAPSCREW, M6 X 25 LG | 8 | |
| 11 | CC606212 | DOWEL PIN | 1 | |
| 12 | 3EB-71-A6040 | BULKHEAD UNION | 1 | |
| 13 | CC2680 | FITTING | 1 | |
| 14 | SEE ABOVE | LOWER GUIDE | -- | |
| 15 | SEE ABOVE | UPPER GUIDE | -- | |
| 16 | CC210174 | HOSE GUARD | 2 | |
| 17 | 3EB-73-A5610 | CARRIAGE BRACKET | 1 | |
| 18 | NOT USED | | | |
| 19 | 3EB-79-A6040 | LOCK WASHER, M10 | 5 | |
| 20 | 3EB-79-A5360 | LOCK WASHER, M12 | 2 | |
| 21 | 3EB-79-A5250 | #6 CAP PLUG | 2 | |
| 22 | 3EB-79-A5180 | NUT, M10 | 1 | |
| 23 | 3EB-79-A5270 | NUT, M12 | 1 | |
| 24 | CC661786 | BUMPER PAD | 1 | |
| 25 | CC3130 | SNAP RING | 1 | |
| 26 | CC203264 | SHAFT | 1 | |
| 27 | CC204156 | SHEAVE | 1 | |
| 28 | CC210175 | SHEAVE | 2 | |
| 29 | CC206884 | SPACER | 1 | |
| 30 | 3EB-73-A5230 | STUBSHAFT | 2 | |
| 31 | CC200524 | WASHER | 1 | |

https://truckmanualshub.com/

**NOTES:**

# 72-7950

## 55D-MQ 4-STAGE MAST - INTERNAL HOSE REEVING - DOUBLE FUNCTION - STD
## S/N 200001A~

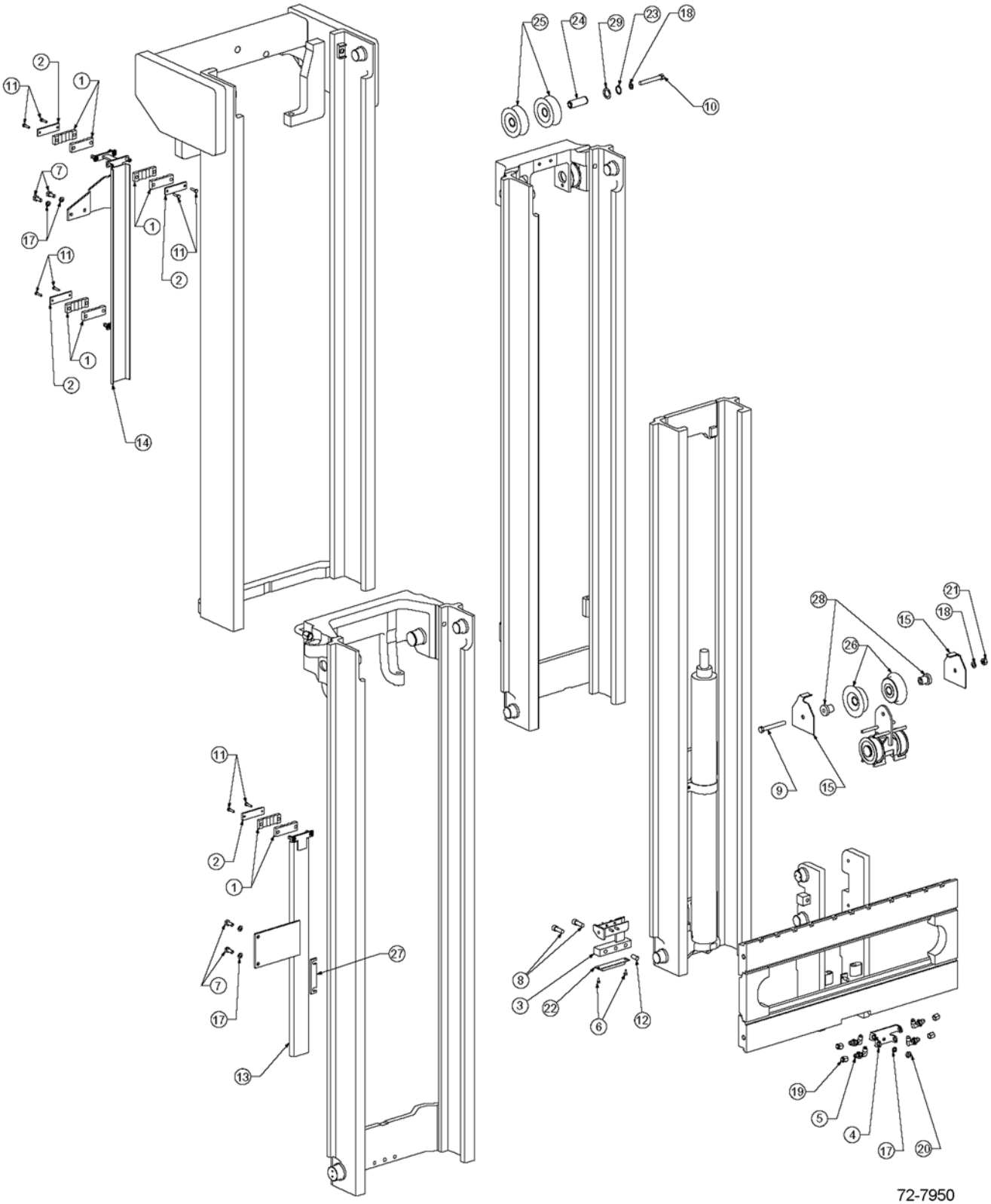

https://truckmanualshub.com/



## 55D-MQ 4-STAGE MAST - INTERNAL HOSE REEVING - DOUBLE FUNCTION - STD
## S/N 200001A~

| Item | Part Number | Description | Qty | Serial Number |
|---|---|---|---|---|
| | | **RCL = OCL = RETRACTED CHANNEL LENGTH** | | |
| | CC249458 | DOUBLE I.H.R. KIT (74" OCL) | 1 | |
| | CC249464 | DOUBLE I.H.R. KIT (80" OCL) | 1 | |
| | CC249470 | DOUBLE I.H.R. KIT (86" OCL) | 1 | |
| | CC249476 | DOUBLE I.H.R. KIT (92" OCL) | 1 | |
| | CC249482 | DOUBLE I.H.R. KIT (98" OCL) | 1 | |
| | CC249488 | DOUBLE I.H.R. KIT (104" OCL) | 1 | |
| | CC203800 | UPPER GUIDE CHANNEL (74" RCL) (217" MFH) | 1 | |
| | CC203801 | UPPER GUIDE CHANNEL (80" RCL) (241" MFH) | 1 | |
| | CC203802 | UPPER GUIDE CHANNEL (86" RCL) (259" MFH) | 1 | |
| | CC203803 | UPPER GUIDE CHANNEL (92" RCL) (277" MFH) | 1 | |
| | CC203804 | UPPER GUIDE CHANNEL (98" RCL) (295" MFH) | 1 | |
| | CC203805 | UPPER GUIDE CHANNEL (104" RCL) (313" MFH) | 1 | |
| | CC203814 | LOWER GUIDE CHANNEL (74" RCL) (217" MFH) | 1 | |
| | CC203815 | LOWER GUIDE CHANNEL (80" RCL) (241" MFH) | 1 | |
| | CC203816 | LOWER GUIDE CHANNEL (86" RCL) (259" MFH) | 1 | |
| | CC203817 | LOWER GUIDE CHANNEL (92" RCL) (277" MFH) | 1 | |
| | CC203818 | LOWER GUIDE CHANNEL (98" RCL) (295" MFH) | 1 | |
| | CC203819 | LOWER GUIDE CHANNEL (104" RCL) (313" MFH) | 1 | |
| | CC237109 | HOSE (74" RCL) (217" MFH) | 4 | |
| | CC211509 | HOSE (80" RCL) (241" MFH) | 4 | |
| | CC231279 | HOSE (86" RCL) (259" MFH) | 4 | |
| | CC216392 | HOSE (92" RCL) (277" MFH) | 4 | |
| | CC218482 | HOSE (98" RCL) (295" MFH) | 4 | |
| | CC237147 | HOSE (104" RCL) (313" MFH) | 4 | |
| | CC211574 | FREE LIFT HOSE (74" OCL) (241" MFH) | 4 | |
| | CC211520 | FREE LIFT HOSE (80" OCL) (217" MFH) | 4 | |
| | CC211521 | FREE LIFT HOSE (86" OCL) (259" MFH) | 4 | |
| | CC211522 | FREE LIFT HOSE (92" OCL) (277" MFH) | 4 | |
| | CC211523 | FREE LIFT HOSE (98" OCL) (295" MFH) | 4 | |
| | CC211524 | FREE LIFT HOSE (104" OCL) (313" MFH) | 4 | |
| 1 | CC227854 | HOSE CLAMP | 8 | |
| 2 | CC227885 | HOSE CLAMP BAR | 4 | |
| 3 | CC203477 | LOWER INNER BRACKET | 1 | |
| 4 | CC214932 | CARRIAGE BRACKET | 1 | |
| 5 | 3EB-71-A6010 | BULKHEAD FITTING, 90° | 4 | |
| 6 | 3EB-73-A5470 | CAPSCREW | 2 | |
| 7 | 3EB-73-A5490 | CAPSCREW, M10 X 25 LG | 4 | |
| 8 | CC769572 | CAPSCREW, M12 X 35 LG | 2 | |

PARTS LIST CONTINUED ON NEXT PAGE

https://truckmanualshub.com/



## 55D-MQ 4-STAGE MAST - INTERNAL HOSE REEVING - DOUBLE FUNCTION - STD S/N 200001A~

| Item | Part Number | Description | Qty | Serial Number |
|---|---|---|---|---|
| 9 | CC684800 | CAPSCREW, M12 X 100 LG | 1 | |
| 10 | CC205205 | CAPSCREW, M12 X 90 LG | 1 | |
| 11 | 3EB-79-A5240 | CAPSCREW, MG X 25 LG | 8 | |
| 12 | CC606212 | DOWEL PIN | 1 | |
| 13 | SEE PARTS PG | LOWER GUIDE CHANNEL | 1 | |
| 14 | SEE PARTS PG | UPPER GUIDE CHANNEL | 1 | |
| 15 | CC210174 | HOSE GUARD | 2 | |
| 16 | NOT USED | | | |
| 17 | 3EB-79-A6040 | LOCKWASHER, M10 | 5 | |
| 18 | 3EB-79-A5360 | LOCKWASHER, M12 | 2 | |
| 19 | 3EB-79-A5250 | #6 CAP PLUG | 4 | |
| 20 | 3EB-79-A5180 | NUT, M10 | 1 | |
| 21 | 3EB-79-A5270 | NUT, M12 | 1 | |
| 22 | CC661786 | BUMPER PAD | 1 | |
| 23 | CC3130 | SNAP RING | 1 | |
| 24 | CC203265 | SHAFT | 1 | |
| 25 | CC204156 | SHEAVE | 2 | |
| 26 | CC210172 | SHEAVE | 2 | |
| 27 | CC206684 | SPACER | 1 | |
| 28 | CC210216 | STUBSHAFT | 2 | |
| 29 | CC200524 | WASHER | 1 | |

https://truckmanualshub.com/

**NOTES:**

https://truckmanualshub.com/



## 55D-MQ 4-STAGE MAST - INTERNAL HOSE REEVING - SINGLE FUNCTION - HI-VIS
## S/N 200001A~

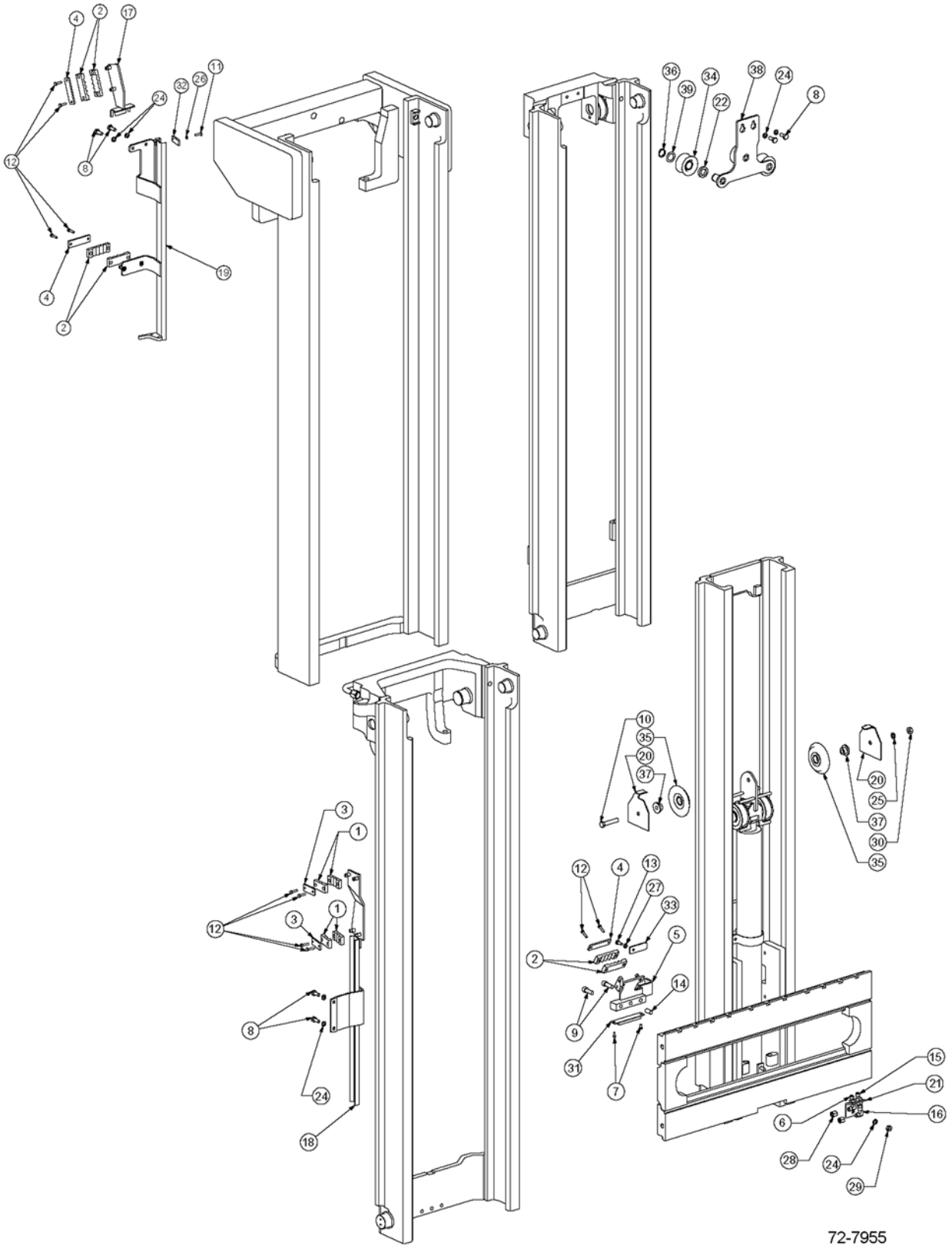

https://truckmanualshub.com/



## 55D-MQ 4-STAGE MAST - INTERNAL HOSE REEVING - SINGLE FUNCTION - HI-VIS
## S/N 200001A~

| Item | Part Number | Description | Qty | Serial Number |
|---|---|---|---|---|
| | | **OCL = OUTER CHANNEL LENGTH, MFH = MAXIMUM FORK HEIGHT** | | |
| | CC248795 | IHR KIT - SINGLE FUNCTION (68" OCL) (193" MFH) | 1 | |
| | CC248797 | IHR KIT - SINGLE FUNCTION (74" OCL) (217" MFH) | 1 | |
| | CC248801 | IHR KIT - SINGLE FUNCTION (80" OCL) (241" MFH) | 1 | |
| | CC248808 | IHR KIT - SINGLE FUNCTION (86" OCL) (259" MFH) | 1 | |
| | CC248811 | IHR KIT - SINGLE FUNCTION (92" OCL) (277" MFH) | 1 | |
| | CC248817 | IHR KIT - SINGLE FUNCTION (98" OCL) (295" MFH) | 1 | |
| | CC248821 | IHR KIT - SINGLE FUNCTION (104" OCL) (313" MFH) | 1 | |
| | CC216491 | UPPER GUIDE (68" OCL) (193" MFH) | 1 | |
| | CC216491 | UPPER GUIDE (74" OCL) (217" MFH) | 1 | |
| | CC216492 | UPPER GUIDE (80" OCL) (241" MFH) | 1 | |
| | CC216493 | UPPER GUIDE (86" OCL) (259" MFH) | 1 | |
| | CC216494 | UPPER GUIDE (92" OCL) (277" MFH) | 1 | |
| | CC216495 | UPPER GUIDE (98" OCL) (295" MFH) | 1 | |
| | CC216496 | UPPER GUIDE (104" OCL) (313" MFH) | 1 | |
| | CC216485 | LOWER GUIDE (68" OCL) (193" MFH) | 1 | |
| | CC216485 | LOWER GUIDE (74" OCL) (217" MFH) | 1 | |
| | CC216486 | LOWER GUIDE (80" OCL) (241" MFH) | 1 | |
| | CC216487 | LOWER GUIDE (86" OCL) (259" MFH) | 1 | |
| | CC216488 | LOWER GUIDE (92" OCL) (277" MFH) | 1 | |
| | CC216489 | LOWER GUIDE (98" OCL) (295" MFH) | 1 | |
| | CC216490 | LOWER GUIDE (104" OCL) (313" MFH) | 1 | |
| | CC237104 | HOSE (68" OCL) (193" MFH) | 2 | |
| | CC237113 | HOSE (74" OCL) (217" MFH) | 2 | |
| | CC218379 | HOSE (80" OCL) (241" MFH) | 2 | |
| | CC237129 | HOSE (86" OCL) (259" MFH) | 2 | |
| | CC214939 | HOSE (92" OCL) (277" MFH) | 2 | |
| | CC206257 | HOSE (98" OCL) (295" MFH) | 2 | |
| | CC237151 | HOSE (104" OCL) ( 313" MFH) | 2 | |
| | CC211573 | FREE LIFT HOSE (68" OCL) (193" MFH) | 2 | |
| | CC211574 | FREE LIFT HOSE (74" OCL) (217" MFH) | 2 | |
| | CC211520 | FREE LIFT HOSE (80" OCL) (241" MFH) | 2 | |

PARTS LIST CONTINUED ON NEXT PAGE

https://truckmanualshub.com/



## 55D-MQ 4-STAGE MAST - INTERNAL HOSE REEVING - SINGLE FUNCTION - HI-VIS
## S/N 200001A~

| Item | Part Number | Description | Qty | Serial Number |
|---|---|---|---|---|
| | CC211521 | FREE LIFT HOSE (86" OCL) (259" MFH) | 2 | |
| | CC211522 | FREE LIFT HOSE (92" OCL) (277" MFH) | 2 | |
| | CC211523 | FREE LIFT HOSE (98" OCL) (295" MFH) | 2 | |
| | CC211524 | FREE LIFT HOSE (104" OCL) ( 313" MFH) | 2 | |
| 1 | 3EB-73-A5150 | HOSE CLAMP | 4 | |
| 2 | CC227854 | HOSE CLAMP | 6 | |
| 3 | 3EB-73-A5160 | HOSE CLAMP BAR | 2 | |
| 4 | CC227885 | HOSE CLAMP BAR | 3 | |
| 5 | CC230805 | LOWER INNER BRACKET | 1 | |
| 6 | 3EB-71-A6010 | BULKHEAD UNION, 90° | 1 | |
| 7 | 3EB-73-A5470 | CAPSCREW | 2 | |
| 8 | 3EB-73-A5490 | CAPSCREW, M10 X 25 LG | 6 | |
| 9 | CC769572 | CAPSCREW, M12 X 35 LG | 2 | |
| 10 | 3EB-79-A5230 | CAPSCREW, M12 X 65 LG | 1 | |
| 11 | CC763169 | CAPSCREW, M6 X 20 LG | 1 | |
| 12 | 3EB-79-A5240 | CAPSCREW, M6 X 25 LG | 10 | |
| 13 | CC787372 | CAPSCREW, M8 X 20 LG | 1 | |
| 14 | CC606212 | DOWEL PIN | 1 | |
| 15 | 3EB-71-A6040 | BULKHEAD FITTING | 1 | |
| 16 | CC2680 | FITTING | 1 | |
| 17 | CC214931 | GUIDE BAR | 1 | |
| 18 | SEE PARTS PG | LOWER GUIDE | 1 | |
| 19 | SEE PARTS PG | UPPER GUIDE | 1 | |
| 20 | CC210174 | HOSE GUARD | 2 | |
| 21 | 3EB-73-A5610 | CARRIAGE BRACKET | 1 | |
| 22 | CC241395 | IHR SPACER | 3 | |
| 23 | NOT USED | | | |
| 24 | 3EB-79-A6040 | LOCKWASHER, M10 | 7 | |
| 25 | 3EB-79-A5360 | LOCKWASHER, M12 | 1 | |
| 26 | 3EB-73-A5340 | LOCKWASHER, M6 | 1 | |
| 27 | CC206315 | LOCKWASHER, M8 | 1 | |
| 28 | 3EB-79-A5250 | #6 CAP PLUG | 2 | |
| 29 | 3EB-79-A5180 | NUT, M10 | 1 | |
| 30 | 3EB-79-A5270 | NUT, M12 | 1 | |
| 31 | CC661786 | BUMPER PAD | 1 | |
| 32 | CC215799 | HOSE RETAINER PLATE | 1 | |
| 33 | CC230606 | HOSE RETAINER PLATE | 1 | |
| 34 | CC215772 | SHEAVE | 3 | |
| 35 | CC210175 | SHEAVE | 2 | |

PARTS LIST CONTINUED ON NEXT PAGE

https://truckmanualshub.com/



## 55D-MQ 4-STAGE MAST - INTERNAL HOSE REEVING - SINGLE FUNCTION - HI-VIS S/N 200001A~

| Item | Part Number | Description | Qty | Serial Number |
|---|---|---|---|---|
| 36 | CC688935 | SNAP RING | 3 | |
| 37 | 3EB-73-A5230 | STUBSHAFT | 2 | |
| 38 | CC238809 | UPPER BRACKET | 1 | |
| 39 | CC205086 | WASHER | 3 | |

https://truckmanualshub.com/



## 55D-MQ 4-STAGE MAST - INTERNAL HOSE REEVING - DOUBLE FUNCTION - HI-VIS S/N 200001A~

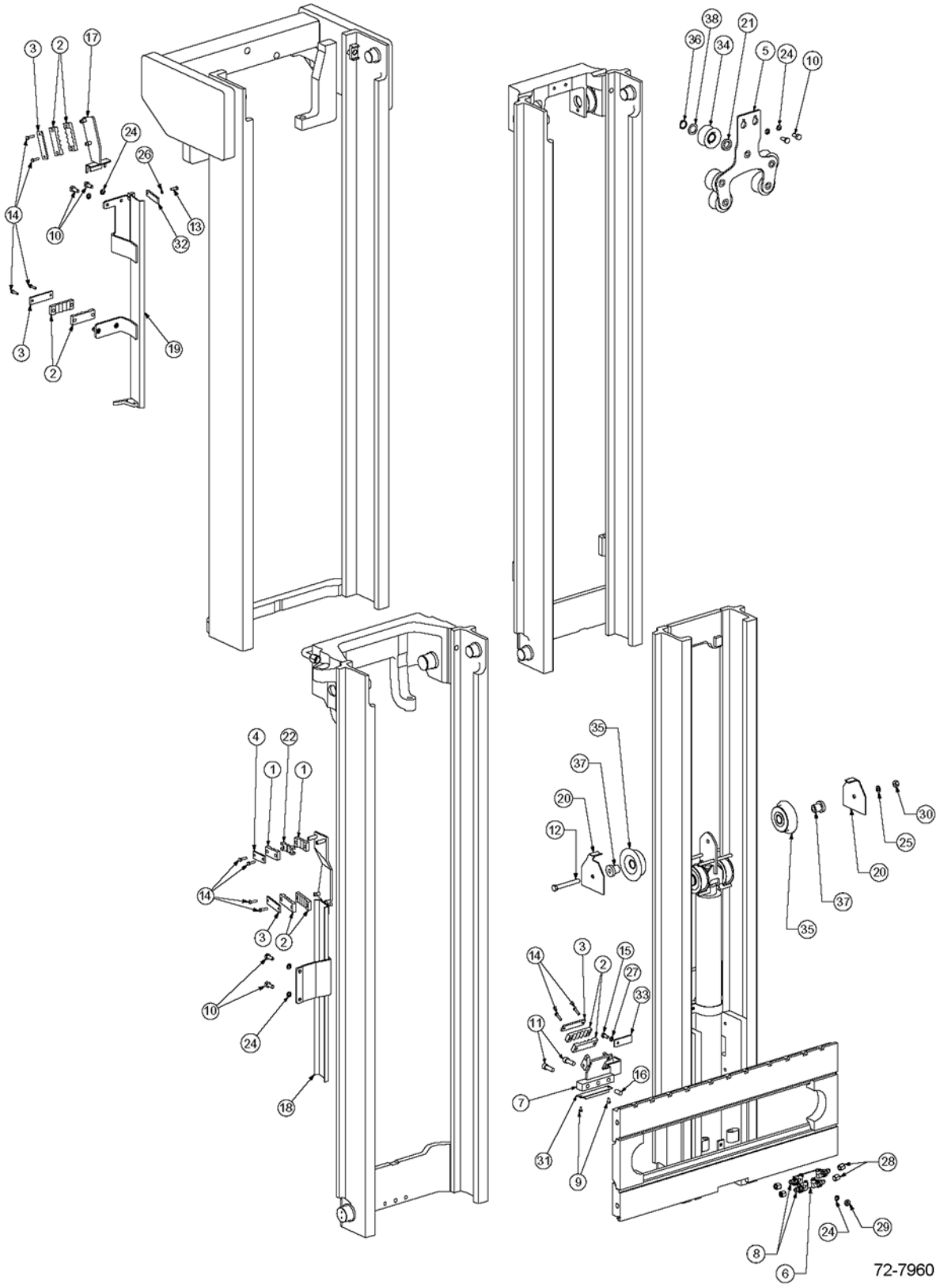

https://truckmanualshub.com/



## 55D-MQ 4-STAGE MAST - INTERNAL HOSE REEVING - DOUBLE FUNCTION - HI-VIS
## S/N 200001A~

| Item | Part Number | Description | Qty | Serial Number |
|---|---|---|---|---|
| | | **OCL = OUTER CHANNEL LENGTH, MFH = MAXIMUM FORK HEIGHT** | | |
| | CC248822 | IHR KIT - DOUBLE FUNCTION (68" OCL) (193" MFH) | 1 | |
| | CC248824 | IHR KIT - DOUBLE FUNCTION (74" OCL) (217" MFH) | 1 | |
| | CC248827 | IHR KIT - DOUBLE FUNCTION (80" OCL) (241" MFH) | 1 | |
| | CC248832 | IHR KIT - DOUBLE FUNCTION (86" OCL) (259" MFH) | 1 | |
| | CC248837 | IHR KIT - DOUBLE FUNCTION (92" OCL) (277" MFH) | 1 | |
| | CC248840 | IHR KIT - DOUBLE FUNCTION (98" OCL) (295" MFH) | 1 | |
| | CC248842 | IHR KIT - DOUBLE FUNCTION (104" OCL) (313" MFH) | 1 | |
| | CC216470 | UPPER GUIDE (68" OCL) (193" MFH) | 1 | |
| | CC216470 | UPPER GUIDE (74" OCL) (217" MFH) | 1 | |
| | CC216471 | UPPER GUIDE (80" OCL) (241" MFH) | 1 | |
| | CC216472 | UPPER GUIDE (86" OCL) (259" MFH) | 1 | |
| | CC216473 | UPPER GUIDE (92" OCL) (277" MFH) | 1 | |
| | CC216474 | UPPER GUIDE (98" OCL) (295" MFH) | 1 | |
| | CC216475 | UPPER GUIDE (104" OCL) (313" MFH) | 1 | |
| | CC216464 | LOWER GUIDE (68" OCL) (193" MFH) | 1 | |
| | CC216464 | LOWER GUIDE (74" OCL) (217" MFH) | 1 | |
| | CC216465 | LOWER GUIDE (80" OCL) (241" MFH) | 1 | |
| | CC216466 | LOWER GUIDE (86" OCL) (259" MFH) | 1 | |
| | CC216467 | LOWER GUIDE (92" OCL) (277" MFH) | 1 | |
| | CC216468 | LOWER GUIDE (98" OCL) (295" MFH) | 1 | |
| | CC216469 | LOWER GUIDE (104" OCL) (313" MFH) | 1 | |
| | CC237100 | LEFT HAND HOSE (68" OCL) (193" MFH) | 2 | |
| | CC237109 | LEFT HAND HOSE (74" OCL) (217" MFH) | 2 | |
| | CC211509 | LEFT HAND HOSE (80" OCL) (241" MFH) | 2 | |
| | CC231279 | LEFT HAND HOSE (86" OCL) (259" MFH) | 2 | |
| | CC216392 | LEFT HAND HOSE (92" OCL) (277" MFH) | 2 | |
| | CC218482 | LEFT HAND HOSE (98" OCL) (295" MFH) | 2 | |
| | CC237147 | LEFT HAND HOSE (104" OCL) (313" MFH) | 2 | |
| | CC218380 | RIGHT HAND HOSE (68" OCL) (193" MFH) | 2 | |
| | CC237117 | RIGHT HAND HOSE (74" OCL) (217" MFH) | 2 | |
| | CC210233 | RIGHT HAND HOSE (80" OCL) (241" MFH) | 2 | |

PARTS LIST CONTINUED ON NEXT PAGE

https://truckmanualshub.com/



## 55D-MQ 4-STAGE MAST - INTERNAL HOSE REEVING - DOUBLE FUNCTION - HI-VIS
## S/N 200001A~

| Item | Part Number | Description | Qty | Serial Number |
|---|---|---|---|---|
| | CC206255 | RIGHT HAND HOSE (86" OCL) (259" MFH) . . . | 2 | |
| | CC237138 | RIGHT HAND HOSE (92" OCL) (277" MFH) . . . | 2 | |
| | CC210239 | RIGHT HAND HOSE (98" OCL) (295" MFH) . . . | 2 | |
| | CC206329 | RIGHT HAND HOSE (104" OCL) (313" MFH) . . | 2 | |
| | CC211573 | FREE LIFT HOSE (68" OCL) (193" MFH) . . . . . | 2 | |
| | CC211574 | FREE LIFT HOSE (74" OCL) (217" MFH) . . . . . | 2 | |
| | CC211520 | FREE LIFT HOSE (80" OCL) (241" MFH) . . . . . | 2 | |
| | CC211521 | FREE LIFT HOSE (86" OCL) (259" MFH) . . . . . | 2 | |
| | CC211522 | FREE LIFT HOSE (92" OCL) (277" MFH) . . . . . | 2 | |
| | CC211523 | FREE LIFT HOSE (98" OCL) (295" MFH) . . . . . | 2 | |
| | CC211524 | FREE LIFT HOSE (104" OCL) ( 313" MFH) . . . . | 2 | |
| 1 | 3EB-73-A5150 | HOSE CLAMP . . . . . | 2 | |
| 2 | CC227854 | HOSE CLAMP . . . . . | 8 | |
| 3 | CC227885 | HOSE CLAMP BAR . . . . . | 4 | |
| 4 | 3EB-73-A5160 | HOSE CLAMP BAR . . . . . | 1 | |
| 5 | CC238394 | UPPER IHR BRACKET . . . . . | 1 | |
| 6 | CC214932 | CARRIAGE BRACKET . . . . . | 1 | |
| 7 | CC230805 | LOWER INNER BRACKET. . . . . | 1 | |
| 8 | 3EB-71-A6010 | BULKHEAD FITTING, 90°. . . . . | 4 | |
| 9 | 3EB-73-A5470 | CAPSCREW . . . . . | 2 | |
| 10 | 3EB-73-A5490 | CAPSCREW, M10 X 25 LG . . . . . | 6 | |
| 11 | CC769572 | CAPSCREW, M12 X 35 LG . . . . . | 2 | |
| 12 | CC684800 | CAPSCREW, M12 X 100 LG . . . . . | 1 | |
| 13 | CC763169 | CAPSCREW, M6 X 20 LG . . . . . | 1 | |
| 14 | 3EB-79-A5240 | CAPSCREW, M6 X 25 LG . . . . . | 10 | |
| 15 | CC787372 | CAPSCREW, M8 X 20 LG . . . . . | 1 | |
| 16 | CC606212 | DOWEL PIN . . . . . | 1 | |
| 17 | CC214931 | GUIDE BAR . . . . . | 1 | |
| 18 | SEE PARTS PG | LOWER GUIDE . . . . . | 1 | |
| 19 | SEE PARTS PG | UPPER GUIDE . . . . . | 1 | |
| 20 | CC210174 | HOSE GUARD . . . . . | 2 | |
| 21 | CC241395 | I.H.R. SPACER . . . . . | 5 | |
| 22 | CC246778 | LOWER INTERMEDIATE INSERT . . . . . | 1 | |
| 23 | NOT USED | | | |
| 24 | 3EB-79-A6040 | LOCKWASHER, M10 . . . . . | 7 | |
| 25 | 3EB-79-A5360 | LOCKWASHER, M12 . . . . . | 1 | |
| 26 | 3EB-73-A5340 | LOCKWASHER, M6 . . . . . | 1 | |
| 27 | CC206315 | LOCKWASHER, M8 . . . . . | 1 | |
| 28 | 3EB-79-A5250 | #6 CAP PLUG. . . . . | 4 | |

PARTS LIST CONTINUED ON NEXT PAGE

https://truckmanualshub.com/



## 55D-MQ 4-STAGE MAST - INTERNAL HOSE REEVING - DOUBLE FUNCTION - HI-VIS S/N 200001A~

| Item | Part Number | Description | Qty | Serial Number |
|---|---|---|---|---|
| 29 | 3EB-79-A5180 | NUT, M10 | 1 | |
| 30 | 3EB-79-A5270 | NUT, M12 | 1 | |
| 31 | CC661786 | BUMPER PAD | 1 | |
| 32 | CC215789 | HOSE RETAINER PLATE | 1 | |
| 33 | CC230606 | HOSE RETAINER PLATE | 1 | |
| 34 | CC215772 | SHEAVE | 5 | |
| 35 | CC210172 | SHEAVE | 2 | |
| 36 | CC688935 | SNAP RING | 5 | |
| 37 | CC210216 | STUBSHAFT | 2 | |
| 38 | CC205086 | WASHER | 5 | |

https://truckmanualshub.com/



# 55D-MQ 4-STAGE MAST - INTERNAL HOSE REEVING - SINGLE FUNCTION - HI-VIS LEFT HAND ONLY - S/N 200001A~

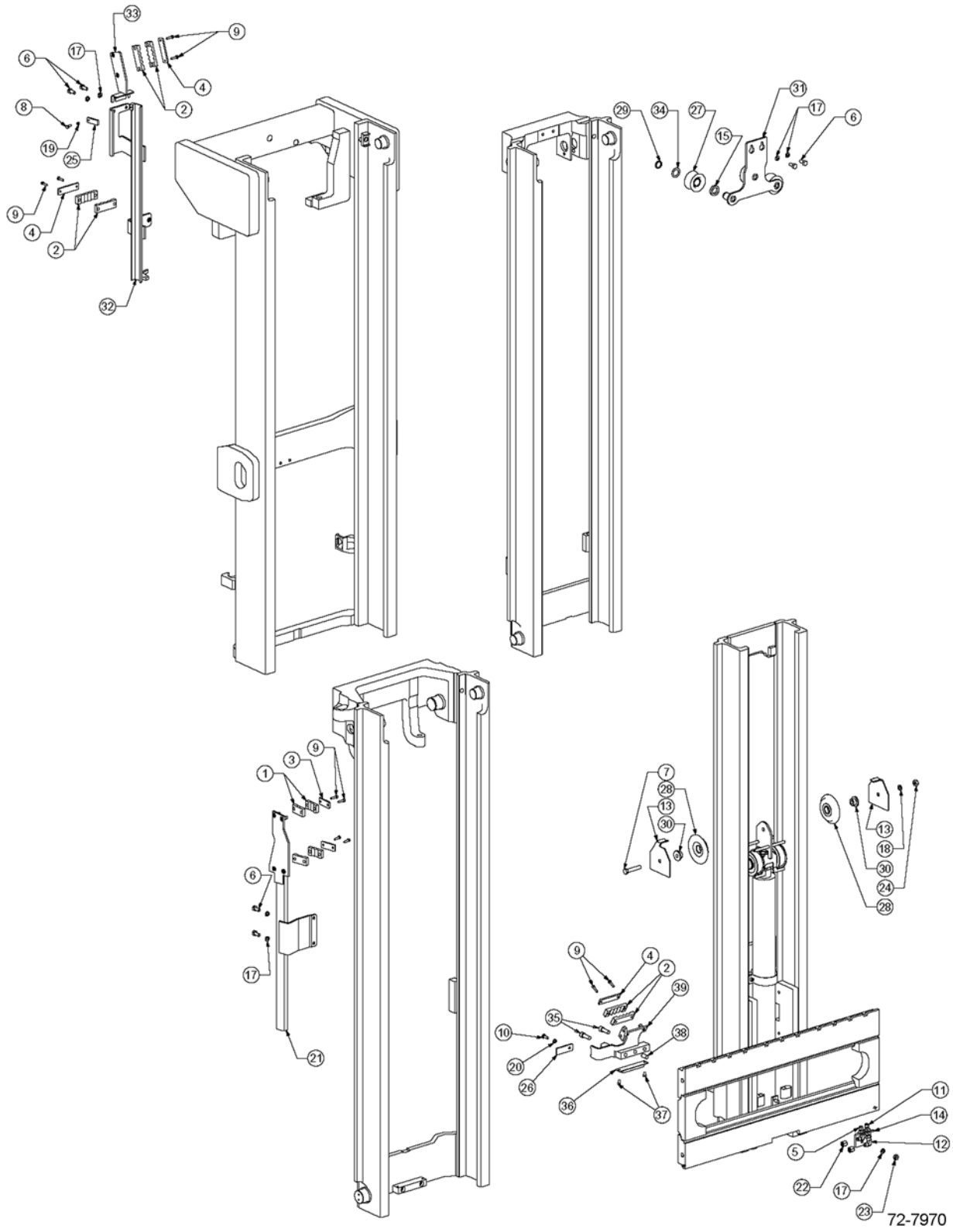

https://truckmanualshub.com/



## 55D-MQ 4-STAGE MAST - INTERNAL HOSE REEVING - SINGLE FUNCTION - HI-VIS LEFT HAND ONLY - S/N 200001A~

| Item | Part Number | Description | Qty | Serial Number |
|---|---|---|---|---|
| | | **OCL = OUTER CHANNEL LENGTH, MFH = MAXIMUM FORK HEIGHT** | | |
| | CC249351 | IHR KIT - SINGLE FUNCTION (68" OCL) (193" MFH) | 1 | |
| | CC249357 | IHR KIT - SINGLE FUNCTION (74" OCL) (217" MFH) | 1 | |
| | CC249363 | IHR KIT - SINGLE FUNCTION (80" OCL) (241" MFH) | 1 | |
| | CC249370 | IHR KIT - SINGLE FUNCTION (86" OCL) (259" MFH) | 1 | |
| | CC249376 | IHR KIT - SINGLE FUNCTION (92" OCL) (277" MFH) | 1 | |
| | CC249382 | IHR KIT - SINGLE FUNCTION (98" OCL) (295" MFH) | 1 | |
| | CC249388 | IHR KIT - SINGLE FUNCTION (104" OCL) (313" MFH) | 1 | |
| | CC238720 | UPPER GUIDE (68" OCL) (193" MFH) | 1 | |
| | CC238720 | UPPER GUIDE (74" OCL) (217" MFH) | 1 | |
| | CC238721 | UPPER GUIDE (80" OCL) (241" MFH) | 1 | |
| | CC238722 | UPPER GUIDE (86" OCL) (259" MFH) | 1 | |
| | CC238723 | UPPER GUIDE (92" OCL) (277" MFH) | 1 | |
| | CC238724 | UPPER GUIDE (98" OCL) (295" MFH) | 1 | |
| | CC238725 | UPPER GUIDE (104" OCL) (313" MFH) | 1 | |
| | CC238708 | LOWER GUIDE (68" OCL) (193" MFH) | 1 | |
| | CC238708 | LOWER GUIDE (74" OCL) (217" MFH) | 1 | |
| | CC238709 | LOWER GUIDE (80" OCL) (241" MFH) | 1 | |
| | CC238710 | LOWER GUIDE (86" OCL) (259" MFH) | 1 | |
| | CC238711 | LOWER GUIDE (92" OCL) (277" MFH) | 1 | |
| | CC238712 | LOWER GUIDE (98" OCL) (295" MFH) | 1 | |
| | CC238713 | LOWER GUIDE (104" OCL) (313" MFH) | 1 | |
| | CC237104 | HOSE (68" OCL) (193" MFH) | 2 | |
| | CC237113 | HOSE (74" OCL) (217" MFH) | 2 | |
| | CC218379 | HOSE (80" OCL) (241" MFH) | 2 | |
| | CC237129 | HOSE (86" OCL) (259" MFH) | 2 | |
| | CC214939 | HOSE (92" OCL) (277" MFH) | 2 | |
| | CC206257 | HOSE (98" OCL) (295" MFH) | 2 | |
| | CC237151 | HOSE (104" OCL) (313" MFH) | 2 | |
| | CC211573 | FREE LIFT HOSE (68" OCL) (193" MFH) | 2 | |
| | CC211574 | FREE LIFT HOSE (74" OCL) (217" MFH) | 2 | |
| | CC211520 | FREE LIFT HOSE (80" OCL) (241" MFH) | 2 | |

PARTS LIST CONTINUED ON NEXT PAGE

https://truckmanualshub.com/



## 55D-MQ 4-STAGE MAST - INTERNAL HOSE REEVING - SINGLE FUNCTION - HI-VIS LEFT HAND ONLY - S/N 200001A~

| Item | Part Number | Description | Qty | Serial Number |
|---|---|---|---|---|
| | CC211521 | FREE LIFT HOSE (86" OCL) (259" MFH) | 2 | |
| | CC211522 | FREE LIFT HOSE (92" OCL) (277" MFH) | 2 | |
| | CC211523 | FREE LIFT HOSE (98" OCL) (295" MFH) | 2 | |
| | CC211524 | FREE LIFT HOSE (104" OCL) (313" MFH) | 2 | |
| 1 | 3EB-73-A5150 | HOSE CLAMP | 4 | |
| 2 | CC227854 | HOSE CLAMP | 6 | |
| 3 | 3EB-73-A5160 | HOSE CLAMP BAR | 2 | |
| 4 | CC227885 | HOSE CLAMP BAR | 3 | |
| 5 | 3EB-71-A6010 | BULKHEAD UNION, 90° | 1 | |
| 6 | 3EB-73-A5490 | CAPSCREW, M10 X 25 LG | 6 | |
| 7 | 3EB-79-A5230 | CAPSCREW, M12 X 65 LG | 1 | |
| 8 | CC763169 | CAPSCREW, M6 X 20 LG | 1 | |
| 9 | 3EB-79-A5240 | CAPSCREW, M6 X 25 LG | 10 | |
| 10 | CC787372 | CAPSCREW, M8 X 20 LG | 1 | |
| 11 | 3EB-71-A6040 | BULKHEAD FITTING | 1 | |
| 12 | CC2680 | FITTING | 1 | |
| 13 | CC210174 | HOSE GUARD | 2 | |
| 14 | 3EB-73-A5610 | CARRIAGE BRACKET | 1 | |
| 15 | CC241395 | SPACER | 3 | |
| 16 | NOT USED | | | |
| 17 | 3EB-79-A6040 | LOCKWASHER, M10 | 7 | |
| 18 | 3EB-79-A5360 | LOCKWASHER, M12 | 1 | |
| 19 | 3EB-73-A5340 | LOCKWASHER, M6 | 1 | |
| 20 | CC206315 | LOCKWASHER, M8 | 1 | |
| 21 | SEE PARTS PG | LOWER GUIDE | 1 | |
| 22 | 3EB-79-A5250 | #6 CAP PLUG | 2 | |
| 23 | 3EB-79-A5180 | NUT, M10 | 1 | |
| 24 | 3EB-79-A5270 | NUT, M12 | 1 | |
| 25 | CC215779 | HOSE RETAINER PLATE | 1 | |
| 26 | CC230606 | HOSE RETAINER PLATE | 1 | |
| 27 | CC215772 | SHEAVE | 3 | |
| 28 | CC210175 | SHEAVE | 2 | |
| 29 | CC688935 | SNAP RING | 3 | |
| 30 | 3EB-73-A5230 | STUBSHAFT | 2 | |
| 31 | CC238809 | UPPER BRACKET | 1 | |
| 32 | SEE PARTS PG | UPPER GUIDE | 1 | |
| 33 | CC238696 | UPPER GUIDE BRACKET | 1 | |
| 34 | CC205086 | WASHER | 3 | |
| 35 | CC769572 | CAPSCREW, M12 X 35 LG | 2 | |

PARTS LIST CONTINUED ON NEXT PAGE

https://truckmanualshub.com/



## 55D-MQ 4-STAGE MAST - INTERNAL HOSE REEVING - SINGLE FUNCTION - HI-VIS LEFT HAND ONLY - S/N 200001A~

| Item | Part Number | Description | Qty | Serial Number |
|---|---|---|---|---|
| 36 | CC661786 | BUMPER PAD | 1 | |
| 37 | 3EB-73-A5470 | CAPSCREW | 2 | |
| 38 | CC606212 | DOWEL PIN | 1 | |
| 39 | CC238353 | LOWER BRACKET | 1 | |

https://truckmanualshub.com/



# 55D-MQ 4-STAGE MAST - INTERNAL HOSE REEVING - DOUBLE FUNCTION - HI-VIS LEFT HAND ONLY - S/N 200001A~

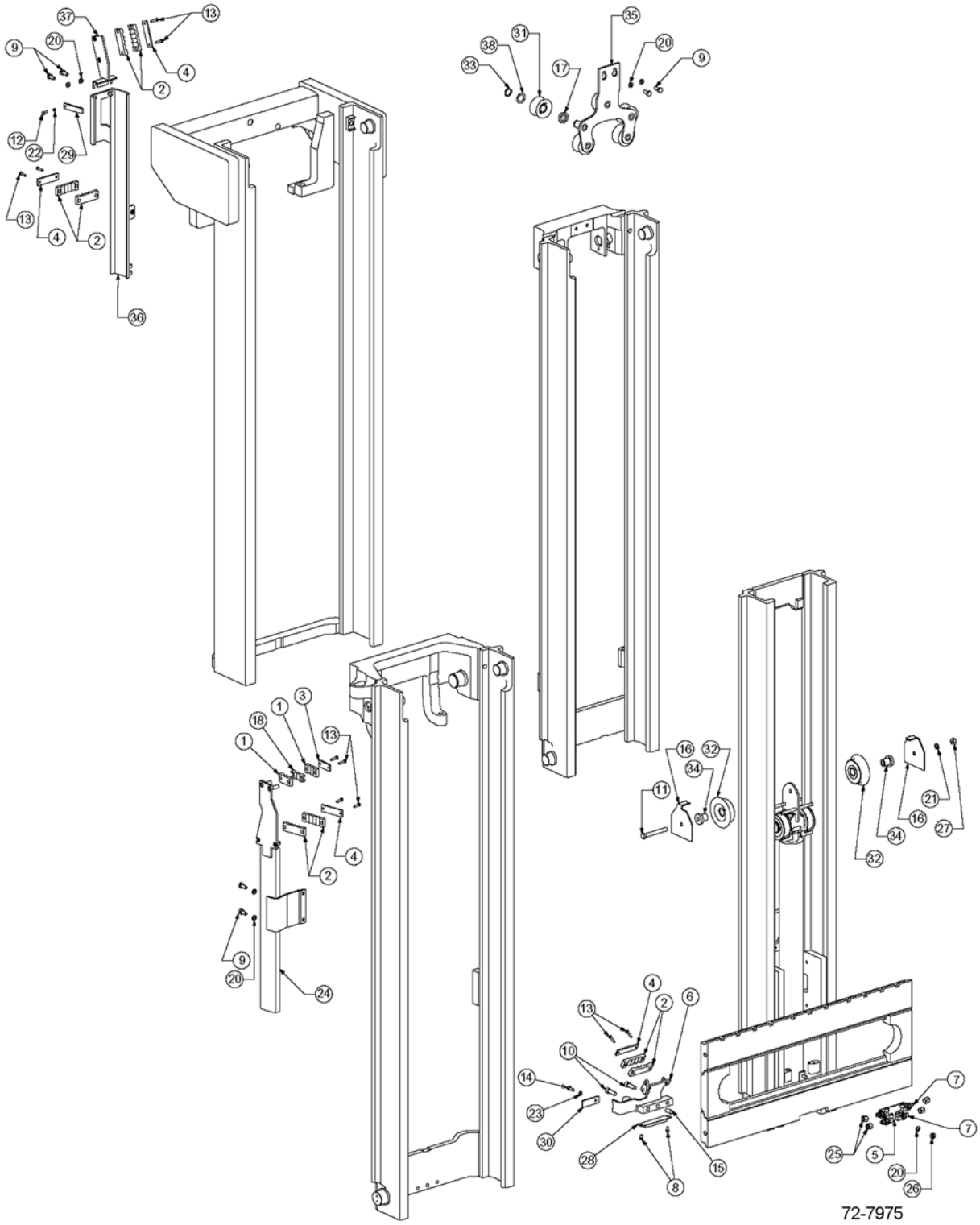

https://truckmanualshub.com/



## 55D-MQ 4-STAGE MAST - INTERNAL HOSE REEVING - DOUBLE FUNCTION - HI-VIS LEFT HAND ONLY - S/N 200001A~

| Item | Part Number | Description | Qty | Serial Number |
|---|---|---|---|---|
| | | **OCL = OUTER CHANNEL LENGTH, MFH = MAXIMUM FORK HEIGHT** | | |
| | CC249390 | IHR KIT - DOUBLE FUNCTION (68" OCL) (193" MFH) | 1 | |
| | CC249396 | IHR KIT - DOUBLE FUNCTION (74" OCL) (217" MFH) | 1 | |
| | CC249402 | IHR KIT - DOUBLE FUNCTION (80" OCL) (241" MFH) | 1 | |
| | CC249408 | IHR KIT - DOUBLE FUNCTION (86" OCL) (259" MFH) | 1 | |
| | CC249414 | IHR KIT - DOUBLE FUNCTION (92" OCL) (277" MFH) | 1 | |
| | CC249420 | IHR KIT - DOUBLE FUNCTION (98" OCL) (295" MFH) | 1 | |
| | CC249426 | IHR KIT - DOUBLE FUNCTION (104" OCL) (313" MFH) | 1 | |
| | CC238726 | UPPER GUIDE (68" OCL) (193" MFH) | 1 | |
| | CC238726 | UPPER GUIDE (74" OCL) (217" MFH) | 1 | |
| | CC238727 | UPPER GUIDE (80" OCL) (241" MFH) | 1 | |
| | CC238728 | UPPER GUIDE (86" OCL) (259" MFH) | 1 | |
| | CC238729 | UPPER GUIDE (92" OCL) (277" MFH) | 1 | |
| | CC238730 | UPPER GUIDE (98" OCL) (295" MFH) | 1 | |
| | CC238731 | UPPER GUIDE (104" OCL) (313" MFH) | 1 | |
| | CC238714 | LOWER GUIDE (68" OCL) (193" MFH) | 1 | |
| | CC238714 | LOWER GUIDE (74" OCL) (217" MFH) | 1 | |
| | CC238715 | LOWER GUIDE (80" OCL) (241" MFH) | 1 | |
| | CC238716 | LOWER GUIDE (86" OCL) (259" MFH) | 1 | |
| | CC238717 | LOWER GUIDE (92" OCL) (277" MFH) | 1 | |
| | CC238718 | LOWER GUIDE (98" OCL) (295" MFH) | 1 | |
| | CC238719 | LOWER GUIDE (104" OCL) (313" MFH) | 1 | |
| | CC237100 | LEFT HAND HOSE (68" OCL) (193" MFH) | 2 | |
| | CC237109 | LEFT HAND HOSE (74" OCL) (217" MFH) | 2 | |
| | CC211509 | LEFT HAND HOSE (80" OCL) (241" MFH) | 2 | |
| | CC231279 | LEFT HAND HOSE (86" OCL) (259" MFH) | 2 | |
| | CC216392 | LEFT HAND HOSE (92" OCL) (277" MFH) | 2 | |
| | CC218482 | LEFT HAND HOSE (98" OCL) (295" MFH) | 2 | |
| | CC237147 | LEFT HAND HOSE (104" OCL) (313" MFH) | 2 | |
| | CC218380 | RIGHT HAND HOSE (68" OCL) (193" MFH) | 2 | |
| | CC237117 | RIGHT HAND HOSE (74" OCL) (217" MFH) | 2 | |
| | CC210233 | RIGHT HAND HOSE (80" OCL) (241" MFH) | 2 | |

PARTS LIST CONTINUED ON NEXT PAGE

https://truckmanualshub.com/



## 55D-MQ 4-STAGE MAST - INTERNAL HOSE REEVING - DOUBLE FUNCTION - HI-VIS LEFT HAND ONLY - S/N 200001A~

| Item | Part Number | Description | Qty | Serial Number |
|---|---|---|---|---|
| | CC206255 | RIGHT HAND HOSE (86" OCL) (259" MFH) | 2 | |
| | CC227138 | RIGHT HAND HOSE (92" OCL) (277" MFH) | 2 | |
| | CC210239 | RIGHT HAND HOSE (98" OCL) (295" MFH) | 2 | |
| | CC206329 | RIGHT HAND HOSE (104" OCL) (313" MFH) | 2 | |
| | CC211573 | FREE LIFT HOSE (68" OCL) (193" MFH) | 4 | |
| | CC211574 | FREE LIFT HOSE (74" OCL) (217" MFH) | 4 | |
| | CC211520 | FREE LIFT HOSE (80" OCL) (241" MFH) | 4 | |
| | CC211521 | FREE LIFT HOSE (86" OCL) (259" MFH) | 4 | |
| | CC211522 | FREE LIFT HOSE (92" OCL) (277" MFH) | 4 | |
| | CC211523 | FREE LIFT HOSE (98" OCL) (295" MFH) | 4 | |
| | CC211524 | FREE LIFT HOSE (104" OCL) (313" MFH) | 4 | |
| 1 | 3EB-73-A5150 | HOSE CLAMP | 2 | |
| 2 | CC227854 | HOSE CLAMP | 8 | |
| 3 | 3EB-73-A5160 | HOSE CLAMP BAR | 1 | |
| 4 | CC227885 | HOSE CLAMP BAR | 4 | |
| 5 | CC214932 | CARRIAGE BRACKET | 1 | |
| 6 | CC238353 | LH BRACKET | 1 | |
| 7 | 3EB-71-A6010 | BULKHEAD UNION, 90° | 4 | |
| 8 | 3EB-73-A5470 | CAPSCREW | 2 | |
| 9 | 3EB-73-A5490 | CAPSCREW, M10 X 25 LG | 6 | |
| 10 | CC769572 | CAPSCREW, M12 X 35 LG | 2 | |
| 11 | CC684800 | CAPSCREW, M12 X 100 LG | 1 | |
| 12 | CC763169 | CAPSCREW, M6 X 20 LG | 1 | |
| 13 | 3EB-79-A5240 | CAPSCREW, M6 X 25 LG | 10 | |
| 14 | CC787372 | CAPSCREW, M8 X 20 LG | 1 | |
| 15 | CC606212 | DOWEL PIN | 1 | |
| 16 | CC210174 | HOSE GUARD | 2 | |
| 17 | CC241395 | SPACER | 5 | |
| 18 | CC246778 | LOWER INTERMEDIATE INSERT | 1 | |
| 19 | NOT USED | | | |
| 20 | 3EB-79-A6040 | LOCKWASHER, M10 | 7 | |
| 21 | 3EB-79-A5360 | LOCKWASHER, M12 | 1 | |
| 22 | 3EB-73-A5340 | LOCKWASHER, M6 | 1 | |
| 23 | CC206315 | LOCKWASHER, M8 | 1 | |
| 24 | SEE PARTS PG | LOWER GUIDE | 1 | |
| 25 | 3EB-79-A5250 | #6 CAP PLUG | 4 | |
| 26 | 3EB-79-A5180 | NUT, M10 | 1 | |
| 27 | 3EB-79-A5270 | NUT, M12 | 1 | |
| 28 | CC661786 | BUMPER PAD | 1 | |

PARTS LIST CONTINUED ON NEXT PAGE

https://truckmanualshub.com/



## 55D-MQ 4-STAGE MAST - INTERNAL HOSE REEVING - DOUBLE FUNCTION - HI-VIS LEFT HAND ONLY - S/N 200001A~

| Item | Part Number | Description | Qty | Serial Number |
|---|---|---|---|---|
| 29 | CC215789 | HOSE RETAINER PLATE | 1 | |
| 30 | CC230606 | HOSE RETAINER PLATE | 1 | |
| 31 | CC215772 | SHEAVE | 5 | |
| 32 | CC210172 | SHEAVE | 2 | |
| 33 | CC688935 | SNAP RING | 5 | |
| 34 | CC210216 | STUBSHAFT | 2 | |
| 35 | CC238811 | UPPER BRACKET | 1 | |
| 36 | SEE PARTS PG | UPPER GUIDE | 1 | |
| 37 | CC238696 | UPPER GUIDE BRACKET | 1 | |
| 38 | CC205086 | WASHER | 5 | |

https://truckmanualshub.com/



# 55D-MQ 4-STAGE MAST — RECOMMENDED STOCK LIST (RSL)

NO

ILLUSTRATION

REQUIRED

https://truckmanualshub.com/



## 55D-MQ 4-STAGE MAST — RECOMMENDED STOCK LIST (RSL)

| Item | Part Number | Description | Qty | No. of Masts Serviced |
|---|---|---|---|---|
| | | **MAIN LIFT CYLINDERS** | | |
| | SEE PARTS PG | MAIN LIFT CYL ASSY | 0 | 1 - 19 |
| | SEE PARTS PG | MAIN LIFT CYL ASSY | 1 | 20 - 50 |
| | SEE PARTS PG | SEAL KIT | 2 | 1 - 5 |
| | SEE PARTS PG | SEAL KIT | 4 | 6 - 19 |
| | SEE PARTS PG | SEAL KIT | 8 | 20 - 50 |
| | SEE PARTS PG | CHECK VALVE KIT | 2 | 1 - 5 |
| | SEE PARTS PG | CHECK VALVE KIT | 4 | 6 - 19 |
| | SEE PARTS PG | CHECK VALVE KIT | 8 | 20 - 50 |
| | | **FREE LIFT CYLINDER** | | |
| | SEE PARTS PG | FREE LIFT CYLINDER ASSY | 0 | 1 - 5 |
| | SEE PARTS PG | FREE LIFT CYLINDER ASSY | 1 | 6 - 19 |
| | SEE PARTS PG | FREE LIFT CYLINDER ASSY | 2 | 20 - 50 |
| | SEE PARTS PG | SEAL KIT | 2 | 1 - 5 |
| | SEE PARTS PG | SEAL KIT | 4 | 6 - 19 |
| | SEE PARTS PG | SEAL KIT | 8 | 20 - 50 |
| | SEE PARTS PG | CHECK VALVE KIT | 2 | 1 - 5 |
| | SEE PARTS PG | CHECK VALVE KIT | 4 | 6 - 19 |
| | SEE PARTS PG | CHECK VALVE KIT | 8 | 20 - 50 |
| | | **INTERNAL REEVING** | | |
| | SEE PARTS PG | HOSE, RH & LH | 2 | 1 - 5 |
| | SEE PARTS PG | HOSE, RH & LH | 4 | 6 - 19 |
| | SEE PARTS PG | HOSE, RH & LH | 8 | 20 - 50 |
| | 3EB-71-A6040 | FITTING | 1 | 1 - 5 |
| | 3EB-71-A6040 | FITTING | 2 | 6 - 19 |
| | 3EB-71-A6040 | FITTING | 4 | 20 - 50 |
| | CC214937 | CROSSHEAD SHEAVE, IHR, SINGLE IHR | 1 | 1 - 5 |
| | CC214937 | CROSSHEAD SHEAVE, IHR, SINGLE IHR | 2 | 6 - 19 |
| | CC214937 | CROSSHEAD SHEAVE, IHR, SINGLE IHR | 4 | 20 - 50 |
| | CC214935 | CROSSHEAD SHEAVE, IHR, DOUBLE IHR | 2 | 1 - 5 |
| | CC214935 | CROSSHEAD SHEAVE, IHR, DOUBLE IHR | 4 | 6 - 19 |
| | CC214935 | CROSSHEAD SHEAVE, IHR, DOUBLE IHR | 8 | 20 - 50 |
| | CC215772 | STD IHR - SHEAVE, SINGLE IHR | 2 | 1 - 5 |
| | CC215772 | STD IHR - SHEAVE, SINGLE IHR | 4 | 6 - 19 |
| | CC215772 | STD IHR - SHEAVE, SINGLE IHR | 8 | 20 - 50 |
| | CC215772 | STD IHR - SHEAVE, DOUBLE IHR | 2 | 1 - 5 |
| | CC215772 | STD IHR - SHEAVE, DOUBLE IHR | 4 | 6 - 19 |
| | CC215772 | STD IHR - SHEAVE, DOUBLE IHR | 8 | 20 - 50 |

PARTS LIST CONTINUED ON NEXT PAGE

https://truckmanualshub.com/



## 55D-MQ 4-STAGE MAST — RECOMMENDED STOCK LIST (RSL)

| Item | Part Number | Description | Qty | No. of Masts Serviced |
|---|---|---|---|---|
| | | **UPRIGHTS** | | |
| | 3EB-79-A6080 | COTTER PIN | 20 | 1 - 19 |
| | 3EB-79-A6080 | COTTER PIN | 40 | 20 - 50 |
| | CC201435 | CHAIN ANCHOR | 2 | 1 - 5 |
| | CC201435 | CHAIN ANCHOR | 4 | 6 - 19 |
| | CC201435 | CHAIN ANCHOR | 8 | 20 - 50 |
| | CC680240 | CHAIN ANCHOR | 2 | 1 - 5 |
| | CC680240 | CHAIN ANCHOR | 4 | 6 - 19 |
| | CC680240 | CHAIN ANCHOR | 8 | 20 - 50 |
| | CC680242 | CHAIN ANCHOR | 6 | 1 - 5 |
| | CC680242 | CHAIN ANCHOR | 12 | 6 - 19 |
| | CC680242 | CHAIN ANCHOR | 24 | 20 - 50 |
| | 3EB-79-A6090 | NUT | 6 | 1 - 5 |
| | 3EB-79-A6090 | NUT | 12 | 6 - 19 |
| | 3EB-79-A6090 | NUT | 24 | 20 - 50 |
| | CC200007 | JAM NUT | 6 | 1 - 5 |
| | CC200007 | JAM NUT | 12 | 6 - 19 |
| | CC200007 | JAM NUT | 24 | 20 - 50 |
| | 3EB-79-A6081 | PIN, COTTER | 6 | 1 - 5 |
| | 3EB-79-A6081 | PIN, COTTER | 12 | 6 - 19 |
| | 3EB-79-A6081 | PIN, COTTER | 24 | 20 - 50 |
| | 3EB-79-A6050 | SHIM,.03 IN. | 16 | 1 - 5 |
| | 3EB-79-A6050 | SHIM,.03 IN. | 32 | 6 - 19 |
| | 3EB-79-A6050 | SHIM,.03 IN. | 64 | 20 - 50 |
| | CC664206 | LOAD ROLLER | 10 | 1 - 5 |
| | CC664206 | LOAD ROLLER | 20 | 6 - 19 |
| | CC664206 | LOAD ROLLER | 40 | 20 - 50 |
| | CC661549 | LOAD ROLLER - OVERSIZED | 2 | 1 - 5 |
| | CC661549 | LOAD ROLLER - OVERSIZED | 4 | 6 - 19 |
| | CC661549 | LOAD ROLLER - OVERSIZED | 16 | 20 - 50 |
| | CC212588 | SERVICE KIT, WEAR PLUG | 4 | 1 - 5 |
| | CC212588 | SERVICE KIT, WEAR PLUG | 8 | 6 - 19 |
| | CC212588 | SERVICE KIT, WEAR PLUG | 16 | 20 - 50 |
| | | **CROSSHEAD** | | |
| | CC661550 | CHAIN SHEAVE | 4 | 1 - 5 |
| | CC661550 | CHAIN SHEAVE | 8 | 6 - 19 |
| | CC661550 | CHAIN SHEAVE | 16 | 20 - 50 |
| | 3EB-73-A5330 | SNAP RING | 4 | 1 - 5 |

PARTS LIST CONTINUED ON NEXT PAGE

https://truckmanualshub.com/



## 55D-MQ 4-STAGE MAST — RECOMMENDED STOCK LIST (RSL)

| Item | Part Number | Description | Qty | No. of Masts Serviced |
|---|---|---|---|---|
| | 3EB-73-A5330 | SNAP RING | 8 | 6 - 19 |
| | 3EB-73-A5330 | SNAP RING | 16 | 20 - 50 |
| | 3EB-79-A6070 | SNAP RING | 2 | 1 - 5 |
| | 3EB-79-A6070 | SNAP RING | 4 | 6 - 19 |
| | 3EB-79-A6070 | SNAP RING | 8 | 20 - 50 |
| | | **CARRIAGE AND CHAINS** | | |
| | SEE PARTS PG | FREE LIFT CHAINS | 2 | 1 - 5 |
| | SEE PARTS PG | FREE LIFT CHAINS | 4 | 6 - 19 |
| | SEE PARTS PG | FREE LIFT CHAINS | 8 | 20 - 50 |
| | SEE PARTS PG | MAIN LIFT CHAINS | 2 | 1 - 5 |
| | SEE PARTS PG | MAIN LIFT CHAINS | 4 | 6 - 19 |
| | SEE PARTS PG | MAIN LIFT CHAINS | 8 | 20 - 50 |
| | CC683819 | CARRIAGE SIDE THRUST ROLLER | 4 | 1 - 5 |
| | CC683819 | CARRIAGE SIDE THRUST ROLLER | 16 | 6 - 19 |
| | CC683819 | CARRIAGE SIDE THRUST ROLLER | 32 | 20 - 50 |
| | CC664206 | LOAD ROLLER | 4 | 1 - 5 |
| | CC664206 | LOAD ROLLER | 8 | 6 - 19 |
| | CC664206 | LOAD ROLLER | 16 | 20 - 50 |
| | CC661549 | LOAD ROLLER, OVERSIZED | 8 | 1 - 5 |
| | CC661549 | LOAD ROLLER, OVERSIZED | 16 | 6 - 19 |
| | CC661549 | LOAD ROLLER, OVERSIZED | 32 | 20 - 50 |
| | CC680240 | CHAIN ANCHOR | 2 | 1 - 5 |
| | CC680240 | CHAIN ANCHOR | 4 | 6 - 19 |
| | CC680240 | CHAIN ANCHOR | 8 | 20 - 50 |
| | 3EB-79-A6081 | PIN, COTTER | 4 | 1 - 5 |
| | 3EB-79-A6081 | PIN, COTTER | 8 | 6 - 19 |
| | 3EB-79-A6081 | PIN, COTTER | 16 | 20 - 50 |
| | CC680460 | CHAIN PIN | 4 | 1 - 19 |
| | CC680460 | CHAIN PIN | 8 | 20 - 50 |
| | 3EB-79-A6080 | COTTER PIN | 8 | 1 - 5 |
| | 3EB-79-A6080 | COTTER PIN | 16 | 6 - 19 |
| | 3EB-79-A6080 | COTTER PIN | 32 | 20 - 50 |
| | 3EB-79-A6090 | NUT | 6 | 1 - 5 |
| | 3EB-79-A6090 | NUT | 12 | 6 - 19 |
| | 3EB-79-A6090 | NUT | 24 | 20 - 50 |
| | CC200007 | JAM NUT | 6 | 1 - 5 |
| | CC200007 | JAM NUT | 12 | 6 - 19 |
| | CC200007 | JAM NUT | 24 | 20 - 50 |

https://truckmanualshub.com/



## OPTIONS - STROBE LIGHT - S/N 200001A~

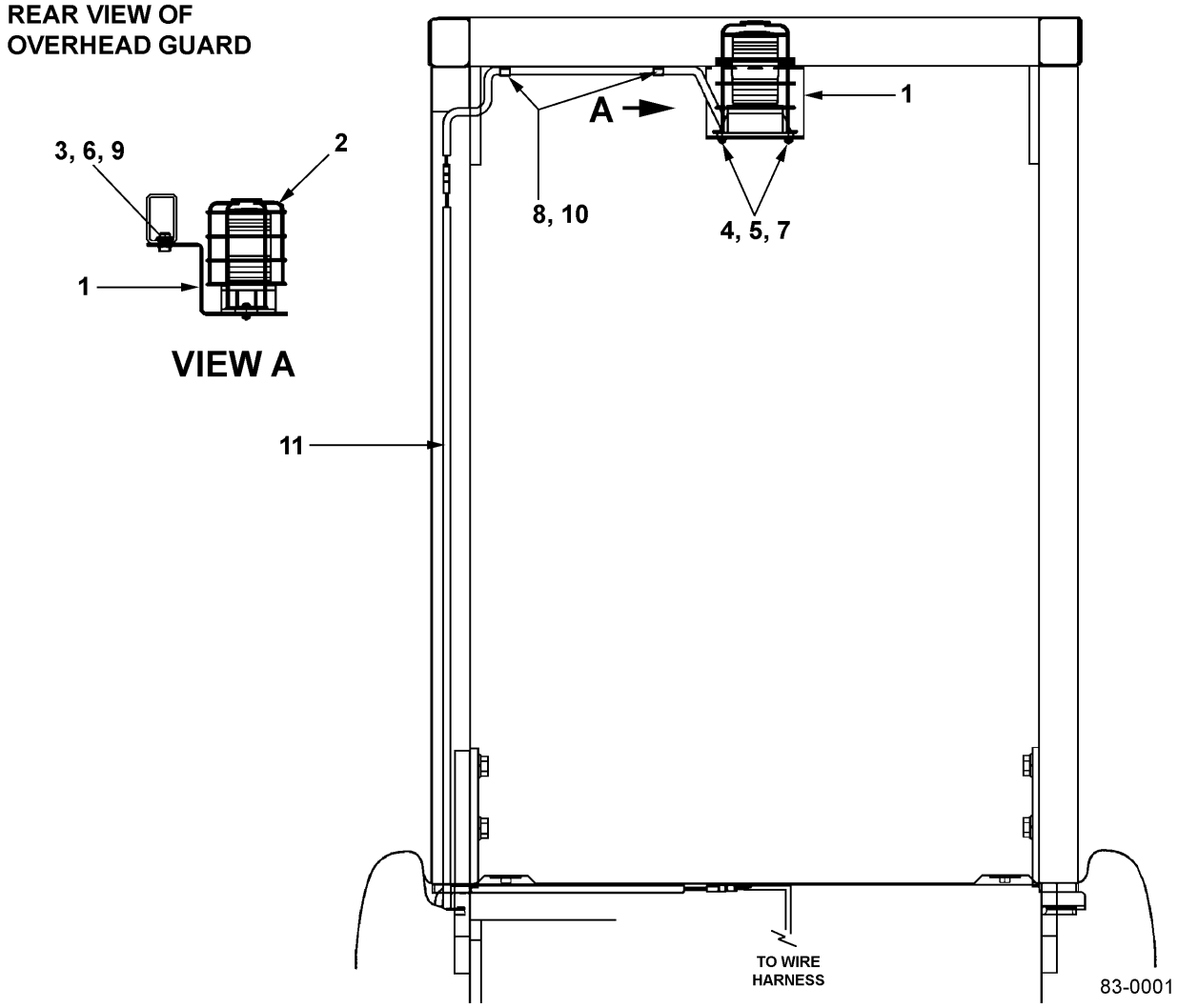

https://truckmanualshub.com/



## OPTIONS - STROBE LIGHT - S/N 200001A~

| Item | Part Number | Description | Qty | |
|---|---|---|---|---|
| | 3BB-56-A6210 | STROBE LIGHT - AMBER | 1 | |
| | 3BB-56-A6260 | STROBE LIGHT - BLUE | 1 | |
| | 3BB-56-A6310 | STROBE LIGHT - RED | 1 | |
| 1 | 3BB-56-A6220 | BRACKET | 1 | |
| 2 | 3EA-56-F1122 | GUARD ASSY | 1 | |
| 3 | 01010-80820 | BOLT | 2 | |
| 4 | 01580-10504 | NUT | 2 | |
| 5 | 01601-20513 | WASHER | 2 | |
| 6 | 01602-20825 | LOCK WASHER | 2 | |
| 7 | 3EB-56-F2990 | MACHINE SCREW | 2 | |
| 8 | 37B-1ES-F310 | RIVET | 2 | |
| 9 | 37B-1EU-F170 | NUTSERT | 2 | |
| 10 | 37B-1EV-A150 | CLAMP, WIRE | 2 | |
| 11 | 3BA-56-A5610 | WIRE ASSY | 1 | |

https://truckmanualshub.com/



## OPTIONS - BACK-UP BUZZER - S/N 200001A~

FRONT VIEW

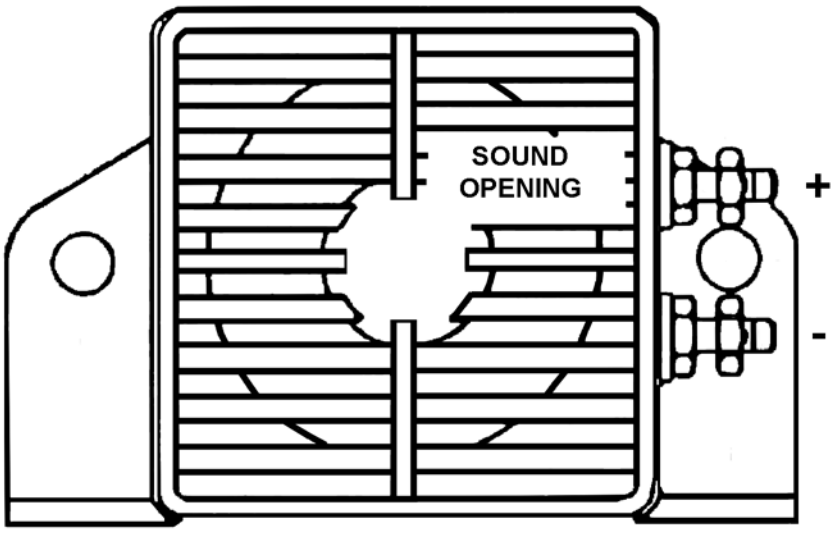


83-0002

https://truckmanualshub.com/



## OPTIONS - BACK-UP BUZZER - S/N 200001A~

| Item | Part Number | Description | Qty | |
|---|---|---|---|---|
| 1 | 3EA-56-F2210 | BACK-UP BUZZER ASSY (12-48 VOLT) . . . . . | 1 | |
| N/S | 01010-80816 | BOLT. . . . . | 2 | |
| N/S | 01023-10612 | SCREW. . . . . | 2 | |
| N/S | 01643-30823 | WASHER . . . . . | 2 | |
| N/S | 3EB-55-A7180 | WIRE. . . . . | 1 | |
| N/S | 3EB-56-A7980 | BRACKET . . . . . | 1 | |

https://truckmanualshub.com/



## OPTIONS - UNDER-CARRIAGE PROTECTOR ASSY - S/N 200001A~ ALL PNEUMATIC MODELS (ALSO SEE FIG. 83-0003A)

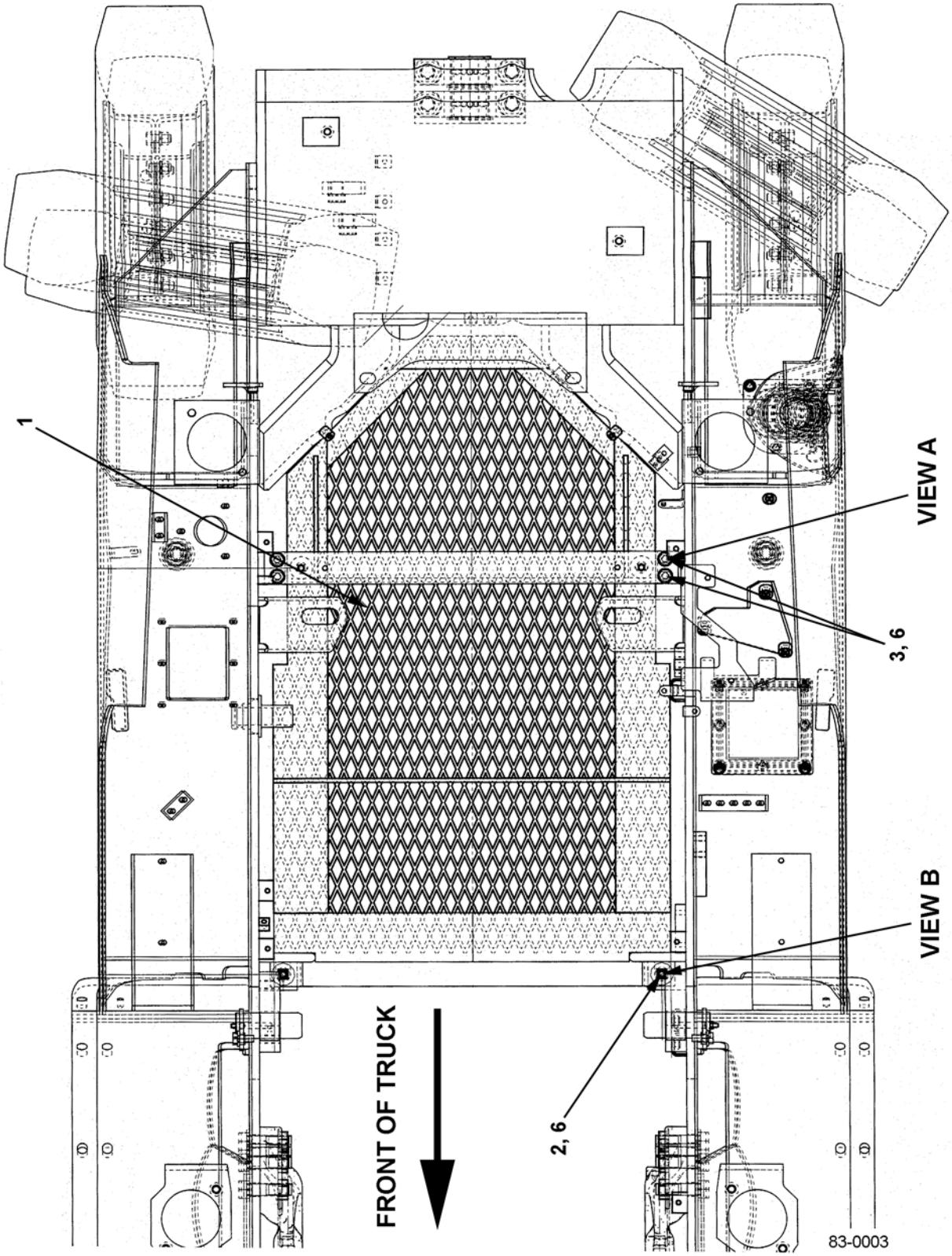

https://truckmanualshub.com/



## OPTIONS - UNDER-CARRIAGE PROTECTOR ASSY - S/N 200001A~ ALL PNEUMATIC MODELS (ALSO SEE FIG. 83-0003A)

| Item | Part Number | Description | Qty | |
|---|---|---|---|---|
| 1 | 3EB-52-A7810 | PROTECTOR | 1 | |
| 2 | 01435-00830 | BOLT | 2 | |
| 3 | 01435-00835 | BOLT | 2 | |
| 4 | 01594-00807 | LOCK NUT | 2 | |
| 5 | 3EB-04-31170 | RUBBER | 2 | |
| 6 | 3EB-52-32140 | WASHER | 4 | |

https://truckmanualshub.com/



## OPTIONS - UNDER-CARRIAGE PROTECTOR ASSY - DETAIL - S/N 200001A~ ALL PNEUMATIC MODELS (ALSO SEE FIG. 83-0003)

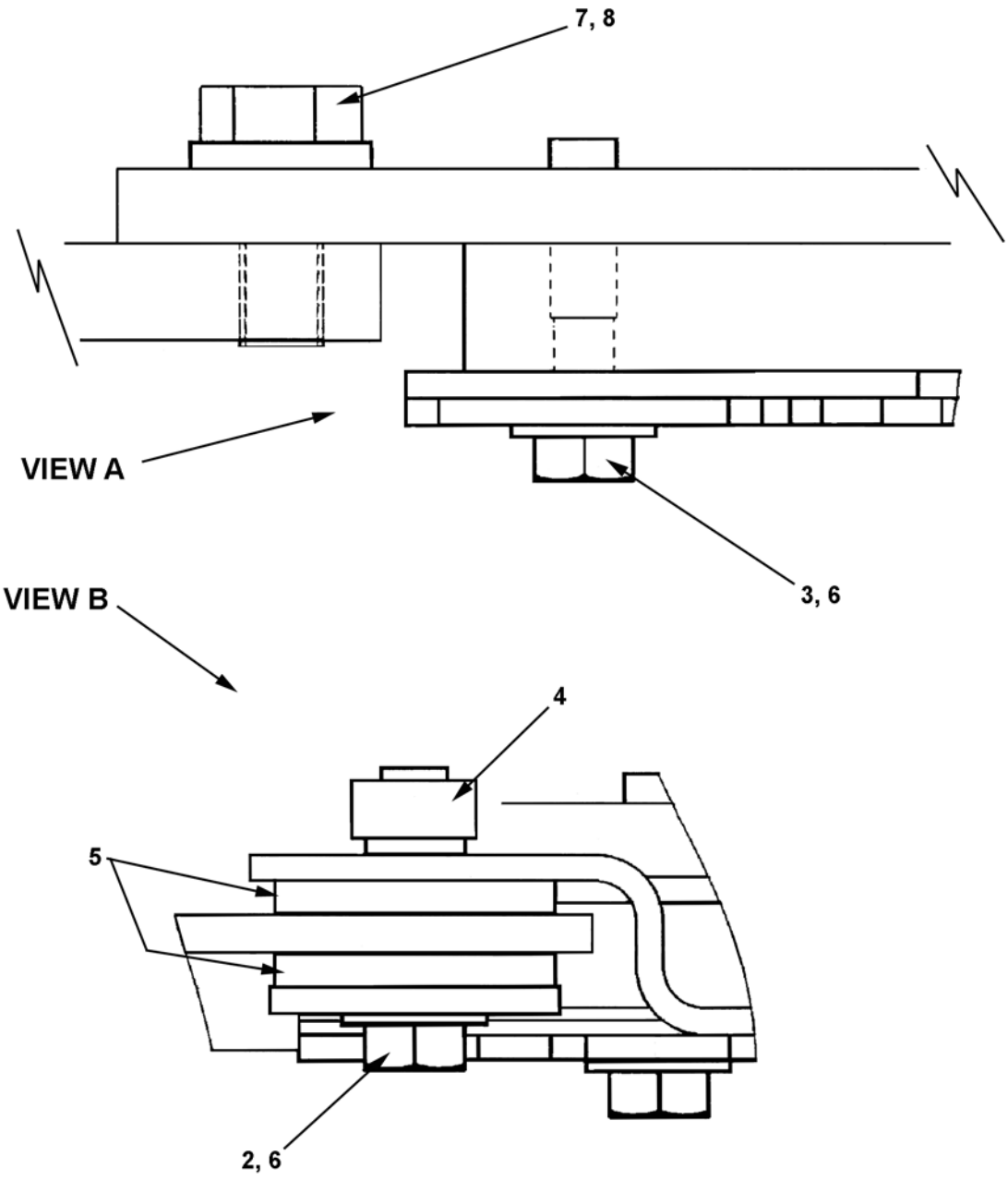

https://truckmanualshub.com/



## OPTIONS - UNDER-CARRIAGE PROTECTOR ASSY - DETAIL - S/N 200001A~ ALL PNEUMATIC MODELS (ALSO SEE FIG. 83-0003)

| Item | Part Number | Description | Qty | |
|---|---|---|---|---|
| 1 | 3EB-52-A7810 | PROTECTOR | 1 | |
| 2 | 01435-00830 | BOLT | 2 | |
| 3 | 01435-00835 | BOLT | 2 | |
| 4 | 01570-00808 | NUT | 2 | |
| 5 | 3EB-04-31170 | RUBBER | 2 | |
| 6 | 3EB-52-32140 | WASHER | 4 | |
| 7 | 01010-81025 | BOLT | 4 | |
| 8 | 01643-31032 | WASHER | 4 | |

https://truckmanualshub.com/



## OPTIONS - MISC. - S/N 200001A~

NO

ILLUSTRATION

AVAILABLE

https://truckmanualshub.com/



## OPTIONS - MISC. - S/N 200001A~

| Item | Part Number | Description | Qty | |
|---|---|---|---|---|

**LP LOW FUEL INDICATOR**

| | | |
|---|---|---|
| 3EB-50-A7910 | COVER RH, RW | 1 |
| 3EB-57-A7471 | WIRE (DX LP FUEL) | 1 |
| 3EB-57-A7861 | HARNESS | 1 |
| 3EP-05-17160 | SWITCH | 1 |
| 37B-1EM-4080 | LAMP | 1 |
| 3EB-57-A7862 | HARNESS, LP LOW FUEL (LP, LPS, ECO MODE) | 1 |

**ENGINE SHUT-DOWN SYSTEM (GASOLINE / LP / DUAL-FUEL ONLY)**

| | | |
|---|---|---|
| 01010-81235 | BOLT | 2 |
| 01023-60516 | SCREW | 2 |
| 01643-31232 | WASHER | 2 |
| 3EB-01-A7560 | LOP KIT, GASOLINE | 1 |
| 3EB-01-A7570 | .LOP BRACKET | 1 |
| 3EB-01-A7580 | .LOP MODULE | 1 |
| 3EB-01-A7590 | .DECAL - LOP | 1 |

**TRAVEL ALARM**

| | | |
|---|---|---|
| 01010-80816 | BOLT | 2 |
| 01023-10612 | SCREW | 2 |
| 01643-30823 | WASHER | 2 |
| 3EA-56-F2210 | BACK-UP ALARM (BUZZER | 1 |
| 3EB-56-A7960 | HARNESS, TRAVEL ALARM | 1 |
| 3EB-56-A7980 | BRACKET | 1 |

**ACCUMULATOR, 1 QT. (BX50)**

| | | |
|---|---|---|
| 3EB-61-A7380 | ACCUMULATOR, 1 QT. | 1 |
| PH12F50X-S | ST. THREAD CONNECTOR | 1 |
| 01011-81020A | BOLT | 4 |
| 01435-00816 | BOLT | 2 |
| 01435-00845 | BOLT | 1 |
| 01594-00807 | NUT | 2 |
| 01602-21030 | SPRING WASHER | 4 |
| 01643-31032 | WASHER | 5 |
| 3EB-04-31170 | RUBBER | 1 |
| 3EB-52-A7870 | PLATE (CROSSMEMBER) | 1 |
| 3EB-52-32140 | WASHER | 2 |
| 3EB-52-51611 | BRACKET | 1 |
| 3EB-61-A7330 | PIPE | 1 |

https://truckmanualshub.com/



## OPTIONS - MISC. - S/N 200001A~

| Item | Part Number | Description | Qty | |
|---|---|---|---|---|
| | 3EB-61-A7460 | PLATE | 1 | |
| | 3EB-61-A7470 | PIPE | 1 | |
| | 3EB-61-F5580 | PLATE, ACCUMULATOR | 2 | |
| | 3EB-66-A7511 | HOSE | 1 | |
| | | **ACCUMULATOR, 2 QT. (BX50)** | | |
| | 3EB-61-F5590 | ACCUMULATOR, 2 QT. (OPTIONAL) | 1 | |
| | | **REAR WORK LIGHT, SINGLE** | | |
| | 3BB-56-A6610 | REARK LIGHT (LED) | 1 | |
| | 3EB-56-A5612 | WORK LIGHT BRACKET | 1 | |
| | 01220-40525 | SCREW | 2 | |
| | 01580-10504 | NUT | 2 | |
| | 01641-20508 | WASHER | 2 | |
| | 3EB-56-A7260 | REAR WORK LIGHT STAY | 1 | |
| | 08192-12810 | RECEPTACLE ASSY | 1 | |
| | 08192-12910 | PLUG ASSY | 1 | |
| | 3BB-55-F2180 | 100’ ROLL, 1/4 CONV. LOOM | 1 | |
| | 3EB-56-A7270 | FUSE | 1 | |
| | 12015323 | PLUG (DELPHI) | 1 | |
| | 12129409 | TERMINAL (DELPHI) | 1 | |
| | 08192-12910 | PLUG ASSY | 1 | |
| | 37B-1ER-F160 | RING 5/16-3/8 INCH | 1 | |
| | 37B-1AE-6010 | TIE WRAP, SMALL | 4 | |
| | | **REAR WORK LIGHT, DOUBLE** | | |
| | 3BB-56-A6610 | REAR WORK LIGHT, LED | 2 | |
| | 3EB-56-A7261 | REAR WORK LIGHT, STAY HARNESS | 1 | |
| | 08192-12810 | .RECEPTACLE ASSY | 1 | |
| | 08192-12910 | .PLUG ASSY | 1 | |
| | 3BB-55-F2180 | .1/4 CONV. LOOM, 100 FT. ROLL | 1 | |
| | 3EB-56-A7270 | REAR WORK LIGHT FUSE HARNESS | 1 | |
| | 12015323 | .PLUG | 1 | |
| | 12129409 | .TERMINAL | 1 | |
| | 08192-12910 | .PLUG ASSY | 1 | |
| | 3BB-55-F2180 | .1/4 CONV. LOOM, 100 FT. ROLL | 1 | |
| | 37B-1ER-F160 | .RING, (5/16-3/8 IN.) | 1 | |
| | 3EB-56-A7760 | DUAL REAR WORK LIGT HARNESS | 1 | |
| | 08192-12810 | .RECEPTACLE ASSY | 1 | |

https://truckmanualshub.com/



## OPTIONS - MISC. - S/N 200001A~

| Item | Part Number | Description | Qty | |
|---|---|---|---|---|
| | 08192-12910 | .PLUG ASSY. | 1 | |
| | 3BB-55-F2180 | .1/4 CONV. LOOM, 100 FT. ROLL | 1 | |
| | 3EB-56-F5612 | WORK LIGHT BRACKET - LH | 1 | |
| | 3EB-56-A5671 | WORK LIGHT BRACKET - RH | 1 | |
| | 37B-1AE-6010 | TIE WRAP (SMALL) | 6 | |
| | 37B-1ES-F310 | RIVET | 4 | |
| | 37B-1EV-A150 | WIRE CLAMP | 4 | |
| | **BLOCK HEATER (GASOLINE / LP / DUAL-FUEL)** | | | |
| | 3EB-56-F5450 | BLOCK HEATER ASSY | 1 | |
| | 3EB-56-F5460 | BLOCK HEATER | 1 | |
| | **ECO MODE** | | | |
| | 3EB-57-A7862 | ECO MODE HARNESS | 1 | |
| | AMP1-174664-1 | LOCK PLATE (12P) | 1 | |
| | AMP172748-2 | DUMMY SEAL | 8 | |
| | AMP172888-2 | SEAL | 4 | |
| | AMP173706-1 | TERMINAL | 4 | |
| | AMP174663-2 | CONNECTOR (12P) | 1 | |
| | 08191-00770 | SEALING PLUG | 4 | |
| | 08192-12100 | RECEPTACLE (CAP) | 1 | |
| | 08192-12200 | PLUG (CAP) | 1 | |
| | 08192-12810 | RECEPTACLE ASSY | 1 | |
| | 08192-12910 | PLUG ASSY | 1 | |
| | 3EB-57-A7890 | ECO MODE JUMPER | 1 | |
| | **FIRE EXTINGUISHER** | | | |
| | 3EC-51-A2620 | FIRE EXTINGUISHER ASSY (ALL MODELS) | 1 | |
| | 3EB-94-F2110 | .FIRE EXTINGUISHER (ALL MODELS) | 1 | |
| | 3EB-94-F2120 | .BRACKET (ALL MODELS) | 1 | |
| | 37B-1EU-F150 | NUTSERT (ALL MODELS) | 4 | |
| | 01010-80616 | BOLT | 4 | |
| | 01580-10605 | NUT | 4 | |
| | 01602-20619 | SPRING WASHER | 4 | |
| | 01642-20608 | WASHER | 8 | |
| | 3EB-51-A7450 | SUB-BONNET RW (CUSHION) | 1 | |
| | 3EB-51-A7420 | SPONGE RW (CUSHION) | 1 | |
| | 3EB-51-A7460 | STAY RW (PNEUMATIC) | 1 | |

https://truckmanualshub.com/



## OPTIONS - MISC. - S/N 200001A~

| Item | Part Number | Description | Qty | |
|---|---|---|---|---|
| | | **OPERATOR FAN ASSEMBLY** | | |
| | 3EB-56-A7550 | OPERATOR FAN ASSY | 1 | |
| | 3EB-56-A7560 | OPERATOR FAN (12V) | 1 | |
| | 01010-80825 | BOLT | 2 | |
| | 01023-60425 | SCREW | 4 | |
| | 01580-10403 | NUT | 4 | |
| | 01641-20405 | WASHER | 4 | |
| | 01642-20810 | WASHER | 2 | |
| | 08192-12910 | PLUG ASSY | 1 | |
| | 3BB-55-F2180 | 100’ ROLL, 1/4 CONV. LOOM | 1 | |
| | 3EB-56-A7580 | HARNESS | 1 | |
| | 08192-12810 | RECEPTACLE ASSY | 1 | |
| | 3EB-56-F2980 | CLIP | 2 | |
| | 3EB-56-F6220 | BRACKET | 1 | |
| | 3EB-56-F6230 | PLATE | 1 | |
| | 3EB-57-A7862 | HARNESS | 1 | |
| | AMP1-174664-1 | LOCK PLATE (12P) | 1 | |
| | AMP172748-2 | DUMMY SEAL | 8 | |
| | AMP172888-2 | SEAL | 4 | |
| | AMP173706-1 | TERMINAL | 4 | |
| | AMP174662-2 | CONNECTOR (12P) | 1 | |
| | 08191-00770 | SEALING PLUG | 4 | |
| | 08192-12100 | RECEPTACLE (CAP) | 1 | |
| | 08192-12200 | PLUG (CAP) | 1 | |
| | | **KEYLESS ENTRY SYSTEM** | | |
| | 3EB-57-A7750 | SWITCH, KEYLESS ENTRY | 1 | |
| | 3EB-57-A7760 | KEYLESS SWITCH RW | 1 | |
| | 3EB-55-F5210 | SWITCH ASSY (KEYLESS, ANTI-RESTART) | 1 | |
| | | **PRE-CLEANER ASSY** | | |
| | 3EB-01-A7950 | PRE-CLEANER ASSY | 1 | |
| | 3EB-01-A7960 | STAY REWORK | 1 | |
| | 3EB-01-F5130 | PIPE | 1 | |
| | 3EB-01-F5120 | PRE-CLEANER (FLEETGUARD) | 1 | |
| | 3EB-01-31760 | COVER, AIR INTAKE, SOLID | 1 | |
| | | **MIRROR, REAR VIEW** | | |
| | 3EC-56-F3310 | MIRROR | 1 | |

https://truckmanualshub.com/



## OPTIONS - MISC. - S/N 200001A~

| Item | Part Number | Description | Qty | |
|---|---|---|---|---|

**STATIC STRAP OPTION**

| | | |
|---|---|---|
| 3EB-42-A7550 | STATIC STRAP ASSY (INDOOR) | 1 |
| 3EB-56-A7650 | STATIC STRAP ASSY (OUTDOOR) | 1 |
| 01024-80816 | BOLT (INDOOR) | 1 |
| 01024-80820 | BOLT (INDOOR & OUTDOOR) | 1 |
| 3BA-41-A5620 | STATIC STRAP RW (INDOOR) | 1 |
| 3EB-56-A7660 | STATIC STRAP RW (OUTDOOR) | 1 |
| 3BB-55-A3710 | STATIC STRAP (ALL) | 1 |

**SKID PLATE (2.8, 3.0 TON PNEUMATIC)**

| | | |
|---|---|---|
| 3EB-52-A7470 | FRAME REWORK | 1 |
| 3BB-52-A7260 | SKID PLATE | 1 |
| 3BB-52-A7380 | PLATE | 2 |
| 01010-80825 | BOLT | 4 |
| 01643-30823 | WASHER | 4 |

**SWITCH, ANTI-RESTART W/ KEY**

| | | |
|---|---|---|
| 3EB-55-A3621 | KEY SWITCH ASSY | 1 |
| 3EB-55-A3630 | . SWITCH | 1 |
| 3EB-55-A3641 | . KEY (KOMATSU) | 1 |
| 3EB-55-F5910 | SWITCH ASSY, ANTI-RESTART | 1 |

https://truckmanualshub.com/



## FORKS - S/N 200001A~

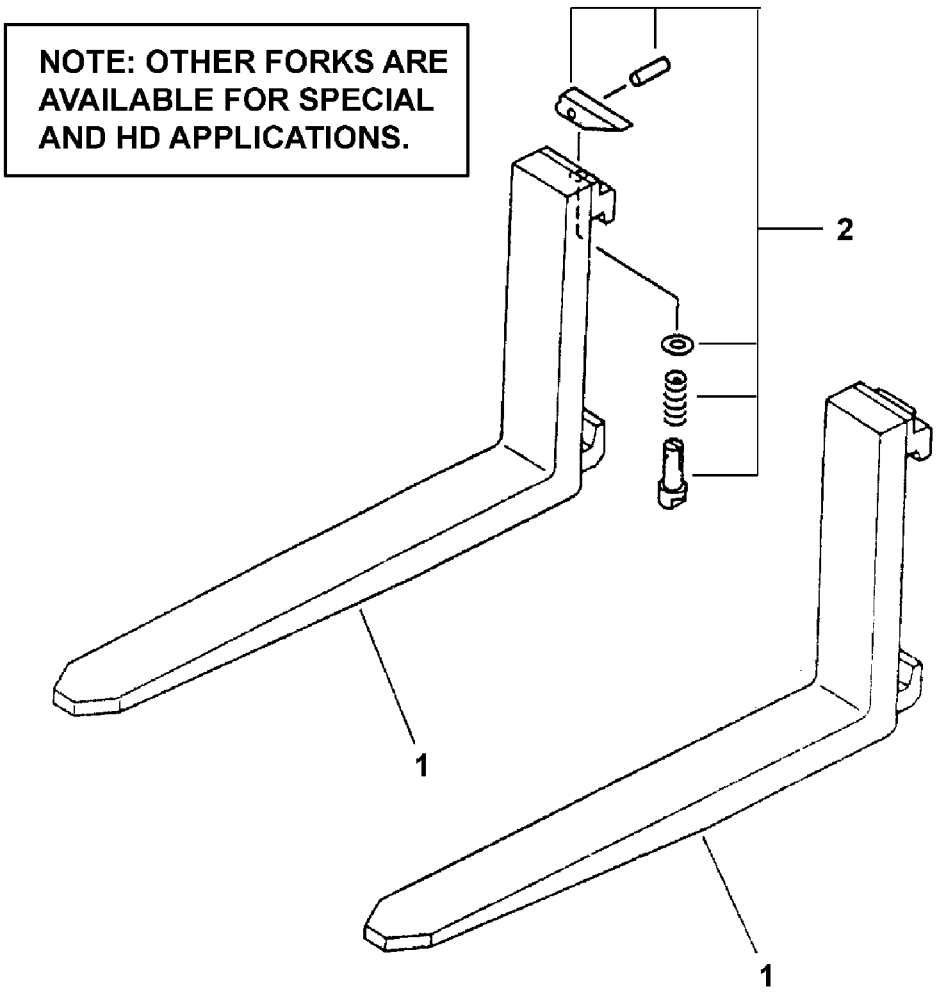


93-0001

https://truckmanualshub.com/



## FORKS - S/N 200001A~

| Item | Part Number | Description | Qty | |
|---|---|---|---|---|

**CLASS II FORKS - STANDARD TAPER STYLE FOR E50-MS, MD, MT, 45D-MQ MASTS (WIDTH X THICKNESS X LENGTH) (FG(D)20/25)**

| | | | |
|---|---|---|---|
| 1 | 37B-741-A611 | 4" X 1.58" X 36" (915 MM) . . . . . | 1 |
| | 37B-741-A621 | 4" X 1.58" X 42" (1065 MM) . . . . . | 1 |
| | 37B-741-A631 | 4" X 1.75" X 48" (1220 MM) . . . . . | 1 |
| | 45B-AAX-1140 | 4" X 1.75" X 54" (1370 MM) . . . . . | 1 |
| | 45B-AAX-1150 | 4" X 1.75" X 60" (1525 MM) . . . . . | 1 |
| | 45B-AAX-1180 | 4" X 1.75" X 72" (1830 MM) . . . . . | 1 |

**CLASS II FORKS - FULL TAPER AND POLISHED STYLE FOR E50-MS, MD, MT, 45D-MQ MASTS (FG(D)20/25)**

| | | | |
|---|---|---|---|
| | 45B-AAX-1810 | 4" X 1.75" X 36" (915 MM) . . . . . | 1 |
| | 45B-AAX-1830 | 4" X 1.75" X 42" (1065 MM) . . . . . | 1 |
| | 45B-AAX-1840 | 4" X 1.75" X 48" (1220 MM) . . . . . | 1 |
| | 45B-AAX-1850 | 4" X 1.75" X 54" (1370 MM) . . . . . | 1 |
| | 45B-AAX-1860 | 4" X 1.75" X 60" (1525 MM) . . . . . | 1 |
| | 45B-AAX-1980 | 4" X 1.75" X 72" (1830 MM) . . . . . | 1 |

**CLASS II FORKS - STANDARD TAPER STYLE FOR 55D-MQ MASTS (FG(D)30)**

| | | | |
|---|---|---|---|
| | 37B-741-A611 | 4" X 1.58" X 36" (915 MM) . . . . . | 1 |
| | 37B-741-A621 | 4" X 1.58" X 42" (1065 MM) . . . . . | 1 |
| | 37B-741-A631 | 4" X 1.58" X 48" (1220 MM) . . . . . | 1 |
| | 45B-AAX-1140 | 4" X 1.75" X 54" (1370 MM) . . . . . | 1 |
| | 45B-AAX-1150 | 4" X 1.75" X 60" (1525 MM) . . . . . | 1 |
| | 45B-AAX-1180 | 4" X 1.75" X 72" (1830 MM) . . . . . | 1 |

**CLASS II FORKS - FULL TAPER AND POLISHED STYLE FOR 55D-MQ MASTS (FG(D)30)**

| | | | |
|---|---|---|---|
| | 45B-AAX-1810 | 4" X 1.75" X 36" (915 MM) . . . . . | 1 |
| | 45B-AAX-1830 | 4" X 1.75" X 42" (1065 MM) . . . . . | 1 |
| | 45B-AAX-1840 | 4" X 1.75" X 48" (1220 MM) . . . . . | 1 |
| | 45B-AAX-1850 | 4" X 1.75" X 54" (1370 MM) . . . . . | 1 |
| | 45B-AAX-1860 | 4" X 1.75" X 60" (1525 MM) . . . . . | 1 |
| | 45B-AAX-1980 | 4" X 1.75" X 72" (1830 MM) . . . . . | 1 |

**CLASS III FORKS - STANDARD TAPER STYLE FOR E65-MS, MT MASTS (FG(D)30)**

| | | | |
|---|---|---|---|
| | 37B-741-A511 | 5" X 2" X 42" (1065 MM). . . . . | 1 |
| | 37B-741-A521 | 5" X 2" X 48" (1220 MM). . . . . | 1 |
| | 37B-741-A531 | 5" X 2" X 54" (1370 MM). . . . . | 1 |
| | 37B-741-A541 | 5" X 2" X 60" (1525 MM). . . . . | 1 |

PARTS LIST CONTINUED ON NEXT PAGE

https://truckmanualshub.com/



## FORKS - S/N 200001A~

| Item | Part Number | Description | Qty | |
|---|---|---|---|---|
| | 37B-741-A561 | 5" X 2" X 72" (1830 MM) | 1 | |
| | 37B-741-A571 | 5" X 2" X 96" (2440 MM) | 1 | |
| | | **CLASS III FORKS - FULL TAPER & POLISHED STYLE FOR E65-MS, MT MASTS (FG(D)30)** | | |
| | 45B-AAX-1930 | 5" X 2" X 42" (1065 MM) | 1 | |
| | 45B-AAX-1940 | 5" X 2" X 48" (1220 MM) | 1 | |
| | 45B-AAX-1950 | 5" X 2" X 54" (1370 MM) | 1 | |
| | 45B-AAX-1960 | 5" X 2" X 60" (1525 MM) | 1 | |
| | | **CLASS II FORKS - STANDARD TAPER STYLE FOR 55D-MQ MASTS (FG(D)32/35)** | | |
| | 37B-741-A611 | 4" X 1.58" X 36" (915 MM) | 1 | |
| | 37B-741-A621 | 4" X 1.58" X 42" (1065 MM) | 1 | |
| | 37B-741-A631 | 4" X 1.58" X 48" (1220 MM) | 1 | |
| | 45B-AAX-1140 | 4" X 1.75" X 54" (1370 MM) | 1 | |
| | 45B-AAX-1150 | 4" X 1.75" X 60" (1525 MM) | 1 | |
| | 45B-AAX-1180 | 4" X 1.75" X 72" (1830 MM) | 1 | |
| | | **CLASS II FORKS - FULL TAPER & POLISHED STYLE FOR 55D-MQ MASTS (FG(D)32/35)** | | |
| | 45B-AAX-1810 | 4" X 1.75" X 36" (915 MM) | 1 | |
| | 45B-AAX-1830 | 4" X 1.75" X 42" (1065 MM) | 1 | |
| | 45B-AAX-1840 | 4" X 1.75" X 48" (1220 MM) | 1 | |
| | 45B-AAX-1850 | 4" X 1.75" X 54" (1370 MM) | 1 | |
| | 45B-AAX-1860 | 4" X 1.75" X 60" (1525 MM) | 1 | |
| | | **CLASS III FORKS - STANDARD TAPER STYLE FOR E65MS, MT, KFL 2 & 3-STAGE MASTS (FG(D)32/35)** | | |
| | 37B-741-A511 | 5" X 2" X 42" (1065 MM) | 1 | |
| | 37B-741-A521 | 5" X 2" X 48" (1220 MM) | 1 | |
| | 37B-741-A531 | 5" X 2" X 54" (1370 MM) | 1 | |
| | 37B-741-A541 | 5" X 2" X 60" (1525 MM) | 1 | |
| | 37B-741-A561 | 5" X 2" X 72" (1830 MM) | 1 | |
| | 37B-741-A571 | 5" X 2" X 96" (2440 MM) | 1 | |
| | | **CLASS III FORKS - STANDARD TAPER STYLE FOR E65MS, MT, KFL 2 & 3-STAGE MASTS (FG(D)32/35)** | | |
| | 45B-AAX-1930 | 5" X 2" X 42" (1065 MM) | 1 | |
| | 45B-AAX-1940 | 5" X 2" X 48" (1220 MM) | 1 | |
| | 45B-AAX-1950 | 5" X 2" X 54" (1370 MM) | 1 | |
| | 45B-AAX-1960 | 5" X 2" X 60" (1525 MM) | 1 | |

PARTS LIST CONTINUED ON NEXT PAGE

https://truckmanualshub.com/



## FORKS - S/N 200001A~

| Item | Part Number | Description | Qty | |
|---|---|---|---|---|
| 2 | 3EB-72-121FR | CLASS II FORK PIN KIT (LEVER STYLE) (FOR ONE FORK) (.617" DIA. X 2.112" LONG PIN) | 1 | |
| | 3EC-72-121FR | CLASS III FORK PIN KIT (LEVER STYLE) (FOR ONE FORK) (.617" DIA. X 2.284" LONG PIN) | 1 | |

https://truckmanualshub.com/



## NAMEPLATES & DECALS - TOP & SIDE VIEWS - S/N 200001A~
## (ALSO SEE FIG. 96-0002, 96-0003)

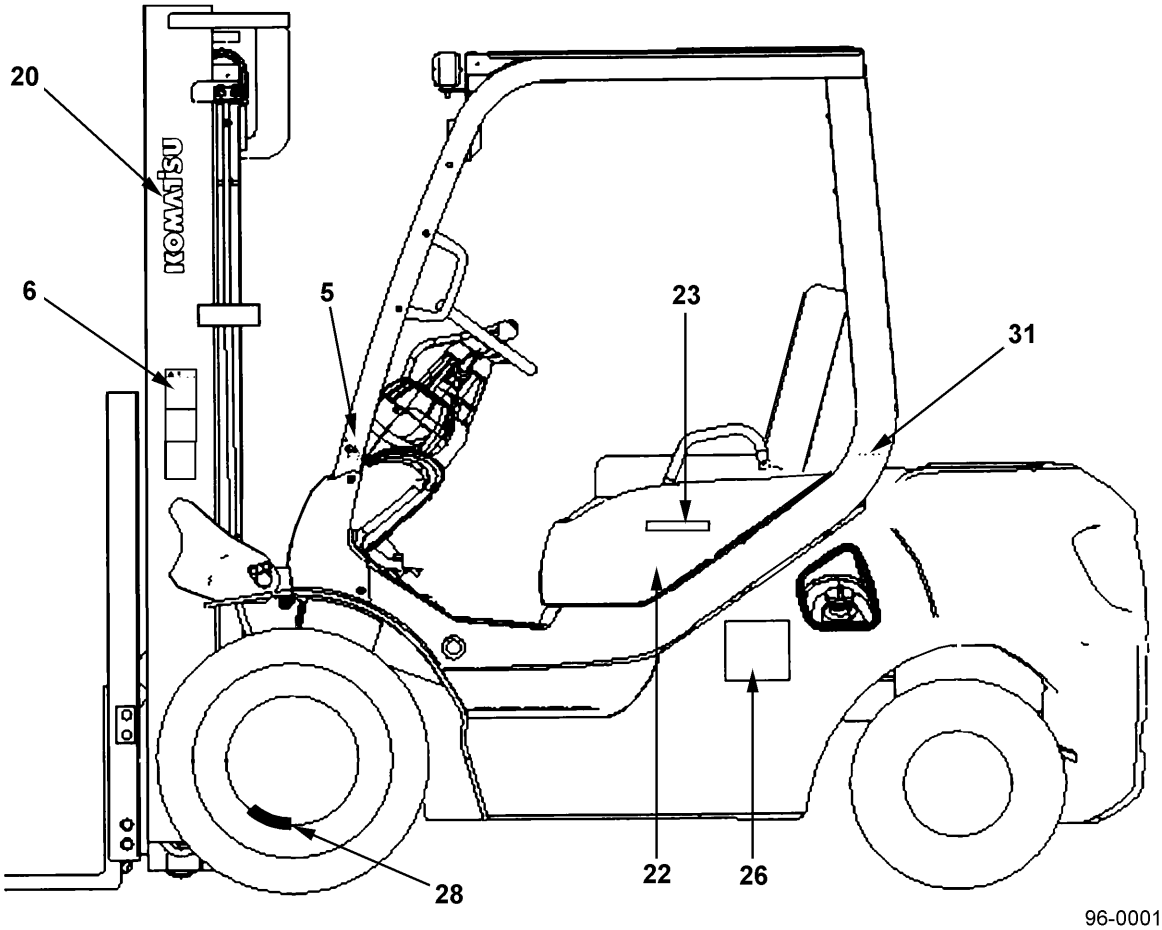


96-0001A

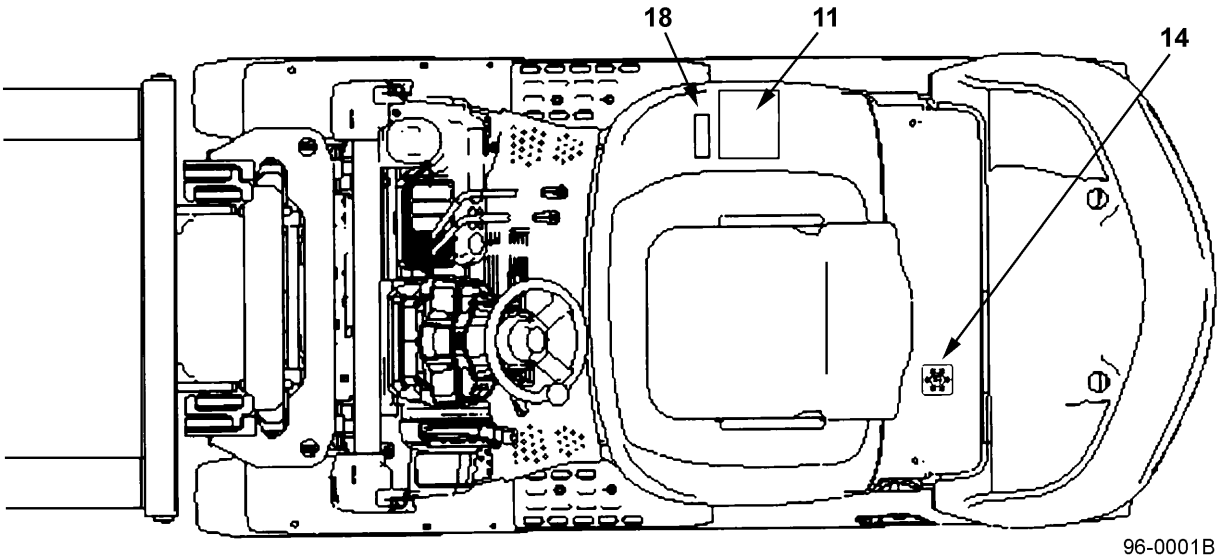


96-0001B

https://truckmanualshub.com/



## NAMEPLATES & DECALS - TOP & SIDE VIEWS - S/N 200001A~
## (ALSO SEE FIG. 96-0002, 96-0003)

| Item | Part Number | Description | Qty | |
|---|---|---|---|---|
| 1 | 09842-A0481 | NAME PLATE, ENGINE START | 1 | |
| 2 | 3EB-96-A5111 | NAME PLATE, TIP-OVER CAUTION | 1 | |
| 3 | 3EB-96-A7560 | NAME PLATE, BONNET OPEN | 1 | |
| 4 | 3EB-96-A5821 | NAME PLATE, PARKING BRAKE | 1 | |
| 5 | 3EB-96-A5910 | NAME PLATE, NO PASSENGER | 2 | |
| 6 | 3EB-96-A5920 | NAME PLATE, NO STAND/RIDE FORK | 2 | |
| 7 | 3EB-96-A5930 | NAME PLATE, FAN CAUTION | 2 | |
| 8 | 3EB-96-A5940 | NAME PLATE, PINCH POINT | 1 | |
| 9 | 3EB-96-A5960 | NAME PLATE, START CAUTION | 1 | |
| 10 | 3EB-96-A6110 | NAME PLATE, CLEAN AIR | 1 | |
| 11 | 3EB-96-A6120 | NAME PLATE, GENERAL OPERATING | 1 | |
| 12 | 3EB-96-A7110 | NAME PLATE, MAINTENANCE | 1 | |
| 13 | 3EB-96-25520 | NAME PLATE, LIFTING | 1 | |
| 14 | 37A-1AV-1030 | NAME PLATE, ANTIFREEZE | 1 | |
| 15 | 37A-2BS-1011 | NAME PLATE, HYDRAULIC OIL | 1 | |
| 16 | 3EB-96-51120 | RIVET | 4 | |
| 17 | 3EB-96-A7210 | NAME PLATE | 1 | |
| 18 | 3EB-96-A5510 | NAME PLATE, ASSEMBLED IN USA | 1 | |
| 19 | 3EB-96-A5520 | NAME PLATE | 1 | |
| 20 | 37B-1QF-A020 | NAME PLATE, KOMATSU, WHITE | 2 | |
| 21 | 09690-P0200 | NAME PLATE, KOMATSU - CW | 1 | |
| 22 | 37B-1QL-A030 | NAME MARK 20 (2.0T) | 2 | |
| | 37B-1QL-A040 | NAME MARK 25 (2.5T) | 2 | |
| | 37B-1QL-A060 | NAME MARK 28 (2.8T) | 2 | |
| | 37B-1QL-A050 | NAME MARK 30 (3.0T) | 2 | |
| | 37B-1QL-A070 | NAME MARK 32 (3.2T) | 2 | |
| | 37B-1QL-A080 | NAME MARK 35 (3.5T) | 2 | |
| 23 | 09690-C0160 | MARK | 2 | |
| 24 | 37B-1QM-A011 | NAME PLATE (G) | 1 | |
| | 37B-1QM-A021 | NAME PLATE (GS) | 1 | |
| | 37B-1QM-A031 | NAME PLATE (LP) | 1 | |
| | 37B-1QM-A041 | NAME PLATE (LPS) | 1 | |
| | 37B-1QM-A051 | NAME PLATE (DUAL-FUEL) | 1 | |
| | 37B-1QM-A061 | NAME PLATE (D) | 1 | |
| 25 | 37B-1ES-F310 | RIVET | 4 | |
| 26 | 3EB-96-13210 | NAME PLATE (GS) | 1 | |
| | 3EB-96-13410 | NAME PLATE (LPS) | 1 | |
| 27 | 37B-1QA-3010 | NAME PLATE (G) | 1 | |
| | 37B-1QB-3010 | NAME PLATE (D) | 1 | |

PARTS LIST CONTINUED ON NEXT PAGE

https://truckmanualshub.com/



## NAMEPLATES & DECALS - TOP & SIDE VIEWS - S/N 200001A~
## (ALSO SEE FIG. 96-0002, 96-0003)

| Item | Part Number | Description | Qty | |
|---|---|---|---|---|
| 28 | 3EB-96-A5970 | NAME PLATE, DEFLATE TIRE . . . . . | 1 | |
| 29 | 37B-1QT-A030 | NAME PLATE, HEADGUARD STRENGTH . . . . | 1 | |
| 30 | 3EB-96-A5950 | NAME PLATE, LP CAUTION . . . . . | 1 | |
| 31 | 37A-2BK-A020 | NAME PLATE, TIRE PRESSURE . . . . . | 1 | |
| N/S | 3EB-96-A5530 | NAME PLATE, BATTERY DISCONNECT (G, ULS) | 1 | |
| N/S | 3EB-96-A7710 | NAME PLATE, CAPACITY PLATE (SECONDARY) (ADHESIVE BACKING) . . . . . | 1 | |

https://truckmanualshub.com/

**NOTES:**

https://truckmanualshub.com/



## NAMEPLATES & DECALS - REAR VIEW & DETAILS - S/N 200001A~
## (ALSO SEE FIG. 96-0001, 96-0003)

REAR VIEW

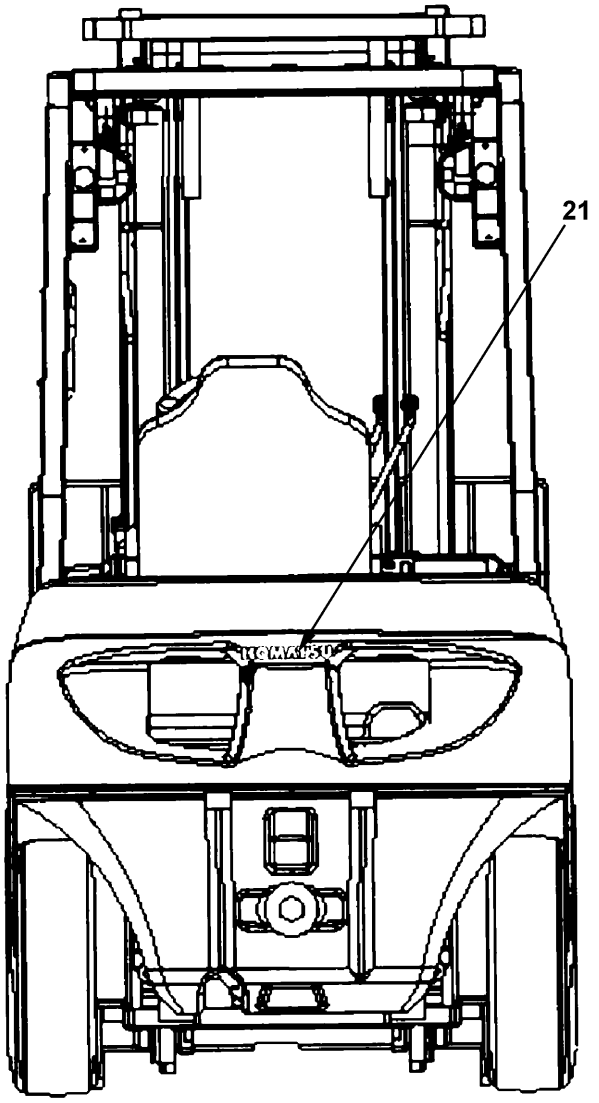


96-0002A

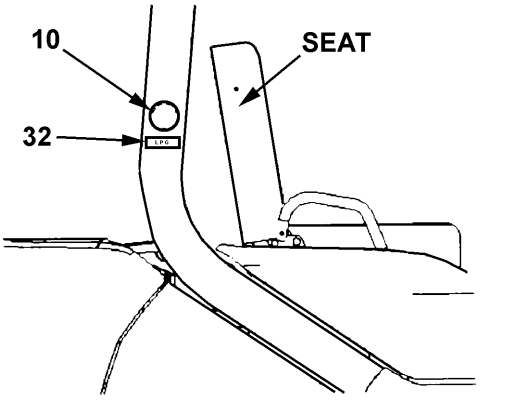


96-0002B

FAN SHROUD

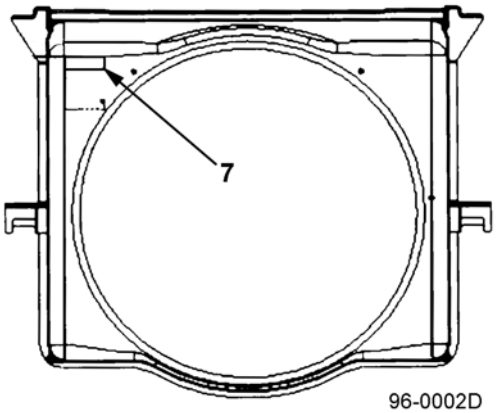


96-0002D

HYDRAULIC TANK COVER

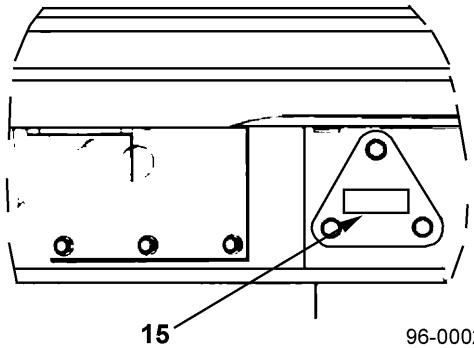


96-0002C

DASHBOARD

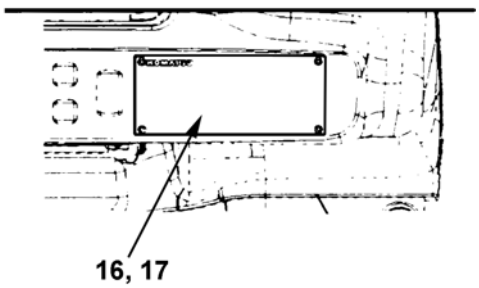


96-0002E

https://truckmanualshub.com/



## NAMEPLATES & DECALS - REAR VIEW & DETAILS - S/N 200001A~
## (ALSO SEE FIG. 96-0001, 96-0003)

| Item | Part Number | Description | Qty | |
|---|---|---|---|---|
| 1 | 09842-A0481 | NAME PLATE, ENGINE START | 1 | |
| 2 | 3EB-96-A5111 | NAME PLATE, TIP-OVER CAUTION | 1 | |
| 3 | 3EB-96-A7560 | NAME PLATE, BONNET OPEN | 1 | |
| 4 | 3EB-96-A5821 | NAME PLATE, PARKING BRAKE | 1 | |
| 5 | 3EB-96-A5910 | NAME PLATE, NO PASSENGER | 2 | |
| 6 | 3EB-96-A5920 | NAME PLATE, NO STAND/RIDE FORK | 2 | |
| 7 | 3EB-96-A5930 | NAME PLATE, FAN CAUTION | 2 | |
| 8 | 3EB-96-A5940 | NAME PLATE, PINCH POINT | 1 | |
| 9 | 3EB-96-A5960 | NAME PLATE, START CAUTION | 1 | |
| 10 | 3EB-96-A6110 | NAME PLATE, CLEAN AIR | 1 | |
| 11 | 3EB-96-A6120 | NAME PLATE, GENERAL OPERATING | 1 | |
| 12 | 3EB-96-A7110 | NAME PLATE, MAINTENANCE | 1 | |
| 13 | 3EB-96-25520 | NAME PLATE, LIFTING | 1 | |
| 14 | 37A-1AV-1030 | NAME PLATE, ANTIFREEZE | 1 | |
| 15 | 37A-2BS-1011 | NAME PLATE, HYDRAULIC OIL | 1 | |
| 16 | 3EB-96-51120 | RIVET | 4 | |
| 17 | 3EB-96-A7210 | NAME PLATE | 1 | |
| 18 | 3EB-96-A5510 | NAME PLATE, ASSEMBLED IN USA | 1 | |
| 19 | 3EB-96-A5520 | NAME PLATE | 1 | |
| 20 | 37B-1QF-A020 | NAME PLATE, KOMATSU, WHITE | 2 | |
| 21 | 09690-P0200 | NAME PLATE, KOMATSU - CW | 1 | |
| 22 | 37B-1QL-A030 | NAME MARK 20 (2.0T) | 2 | |
| | 37B-1QL-A040 | NAME MARK 25 (2.5T) | 2 | |
| | 37B-1QL-A060 | NAME MARK 28 (2.8T) | 2 | |
| | 37B-1QL-A050 | NAME MARK 30 (3.0T) | 2 | |
| | 37B-1QL-A070 | NAME MARK 32 (3.2T) | 2 | |
| | 37B-1QL-A080 | NAME MARK 35 (3.5T) | 2 | |
| 23 | 09690-C0160 | MARK | 2 | |
| 24 | 37B-1QM-A011 | NAME PLATE (G) | 1 | |
| | 37B-1QM-A021 | NAME PLATE (GS) | 1 | |
| | 37B-1QM-A031 | NAME PLATE (LP) | 1 | |
| | 37B-1QM-A041 | NAME PLATE (LPS) | 1 | |
| | 37B-1QM-A051 | NAME PLATE (DUAL-FUEL) | 1 | |
| | 37B-1QM-A061 | NAME PLATE (D) | 1 | |
| 25 | 37B-1ES-F310 | RIVET | 4 | |
| 26 | 3EB-96-13210 | NAME PLATE (GS) | 1 | |
| | 3EB-96-13410 | NAME PLATE (LPS) | 1 | |
| 27 | 37B-1QA-3010 | NAME PLATE (G) | 1 | |
| | 37B-1QB-3010 | NAME PLATE (D) | 1 | |

PARTS LIST CONTINUED ON NEXT PAGE

https://truckmanualshub.com/



## NAMEPLATES & DECALS - REAR VIEW & DETAILS - S/N 200001A~
## (ALSO SEE FIG. 96-0001, 96-0003)

| Item | Part Number | Description | Qty | |
|---|---|---|---|---|
| 28 | 3EB-96-A5970 | NAME PLATE, DEFLATE TIRE . . . . . | 1 | |
| 29 | 37B-1QT-A030 | NAME PLATE, HEADGUARD STRENGTH . . . . | 1 | |
| 30 | 3EB-96-A5950 | NAME PLATE, LP CAUTION . . . . . | 1 | |
| 31 | 37A-2BK-A020 | NAME PLATE, TIRE PRESSURE . . . . . | 1 | |
| 32 | 3EB-96-34910 | NAME PLATE, LPG . . . . . | 1 | |

https://truckmanualshub.com/

**NOTES:**

https://truckmanualshub.com/



## NAMEPLATES & DECALS - MISC. LOCATIONS - S/N 200001A~
## (ALSO SEE FIG. 96-0001, 96-0002)

TOP RIGHT SIDE - DASHBOARD

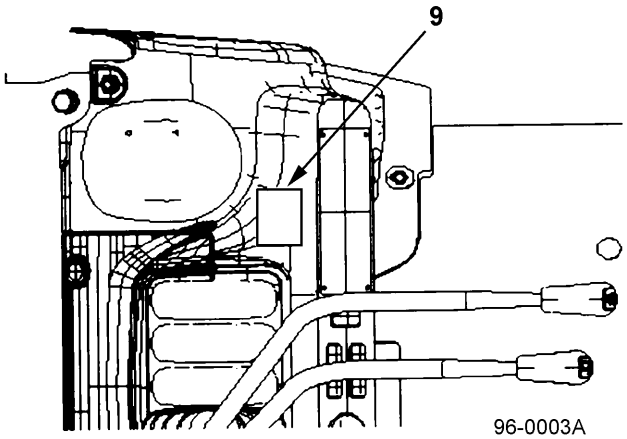


96-0003A

COUNTERWEIGHT - TOP

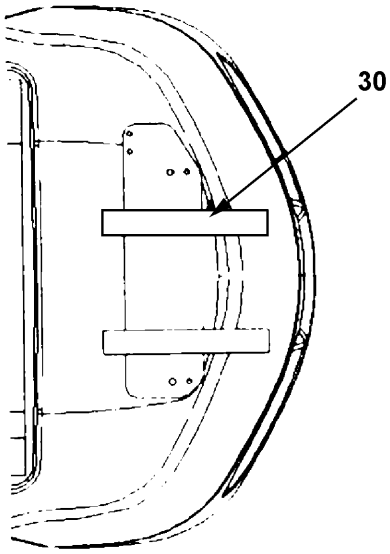


96-0003B

DASHBOARD

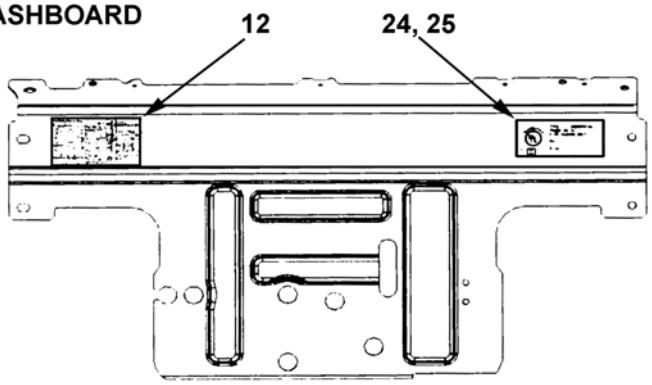


96-0003C

BACK OF MAST

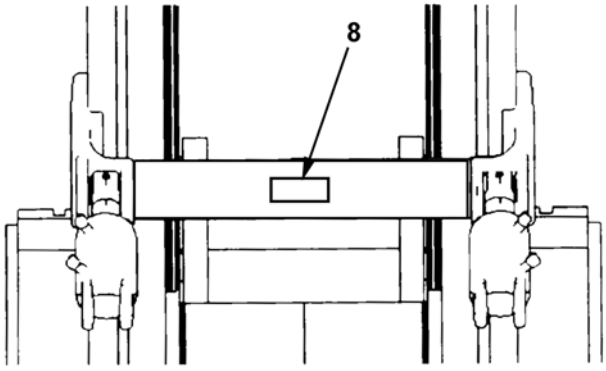


96-0003D

https://truckmanualshub.com/



## NAMEPLATES & DECALS - MISC. LOCATIONS - S/N 200001A~
## (ALSO SEE FIG. 96-0001, 96-0002)

| Item | Part Number | Description | Qty | |
|---|---|---|---|---|
| 1 | 09842-A0481 | NAME PLATE, ENGINE START | 1 | |
| 2 | 3EB-96-A5111 | NAME PLATE, TIP-OVER CAUTION | 1 | |
| 3 | 3EB-96-A7560 | NAME PLATE, BONNET OPEN | 1 | |
| 4 | 3EB-96-A5821 | NAME PLATE, PARKING BRAKE | 1 | |
| 5 | 3EB-96-A5910 | NAME PLATE, NO PASSENGER | 2 | |
| 6 | 3EB-96-A5920 | NAME PLATE, NO STAND/RIDE FORK | 2 | |
| 7 | 3EB-96-A5930 | NAME PLATE, FAN CAUTION | 2 | |
| 8 | 3EB-96-A5940 | NAME PLATE, PINCH POINT | 1 | |
| 9 | 3EB-96-A5960 | NAME PLATE, START CAUTION | 1 | |
| 10 | 3EB-96-A6110 | NAME PLATE, CLEAN AIR | 1 | |
| 11 | 3EB-96-A6120 | NAME PLATE, GENERAL OPERATING | 1 | |
| 12 | 3EB-96-A7110 | NAME PLATE, MAINTENANCE | 1 | |
| 13 | 3EB-96-25520 | NAME PLATE, LIFTING | 1 | |
| 14 | 37A-1AV-1030 | NAME PLATE, ANTIFREEZE | 1 | |
| 15 | 37A-2BS-1011 | NAME PLATE, HYDRAULIC OIL | 1 | |
| 16 | 3EB-96-51120 | RIVET | 4 | |
| 17 | 3EB-96-A7210 | NAME PLATE | 1 | |
| 18 | 3EB-96-A5510 | NAME PLATE, ASSEMBLED IN USA | 1 | |
| 19 | 3EB-96-A5520 | NAME PLATE | 1 | |
| 20 | 37B-1QF-A020 | NAME PLATE, KOMATSU, WHITE | 2 | |
| 21 | 09690-P0200 | NAME PLATE, KOMATSU - CW | 1 | |
| 22 | 37B-1QL-A030 | NAME MARK 20 (2.0T) | 2 | |
| | 37B-1QL-A040 | NAME MARK 25 (2.5T) | 2 | |
| | 37B-1QL-A060 | NAME MARK 28 (2.8T) | 2 | |
| | 37B-1QL-A050 | NAME MARK 30 (3.0T) | 2 | |
| | 37B-1QL-A070 | NAME MARK 32 (3.2T) | 2 | |
| | 37B-1QL-A080 | NAME MARK 35 (3.5T) | 2 | |
| 23 | 09690-C0160 | MARK | 2 | |
| 24 | 37B-1QM-A011 | NAME PLATE (G) | 1 | |
| | 37B-1QM-A021 | NAME PLATE (GS) | 1 | |
| | 37B-1QM-A031 | NAME PLATE (LP) | 1 | |
| | 37B-1QM-A041 | NAME PLATE (LPS) | 1 | |
| | 37B-1QM-A051 | NAME PLATE (DUAL-FUEL) | 1 | |
| | 37B-1QM-A061 | NAME PLATE (D) | 1 | |
| 25 | 37B-1ES-F310 | RIVET | 4 | |
| 26 | 3EB-96-13210 | NAME PLATE (GS) | 1 | |
| | 3EB-96-13410 | NAME PLATE (LPS) | 1 | |
| 27 | 37B-1QA-3010 | NAME PLATE (G) | 1 | |
| | 37B-1QB-3010 | NAME PLATE (D) | 1 | |

PARTS LIST CONTINUED ON NEXT PAGE

https://truckmanualshub.com/



## NAMEPLATES & DECALS - MISC. LOCATIONS - S/N 200001A~
## (ALSO SEE FIG. 96-0001, 96-0002)

| Item | Part Number | Description | Qty | |
|---|---|---|---|---|
| 28 | 3EB-96-A5970 | NAME PLATE, DEFLATE TIRE . . . . . | 1 | |
| 29 | 37B-1QT-A030 | NAME PLATE, HEADGUARD STRENGTH . . . . | 1 | |
| 30 | 3EB-96-A5950 | NAME PLATE, LP CAUTION . . . . . | 1 | |
| 31 | 37A-2BK-A020 | NAME PLATE, TIRE PRESSURE . . . . . | 1 | |
| 32 | 3EB-96-34910 | NAME PLATE, LPG . . . . . | 1 | |

https://truckmanualshub.com/

**NOTES:**

https://truckmanualshub.com/



## PAINT - S/N 200001A~

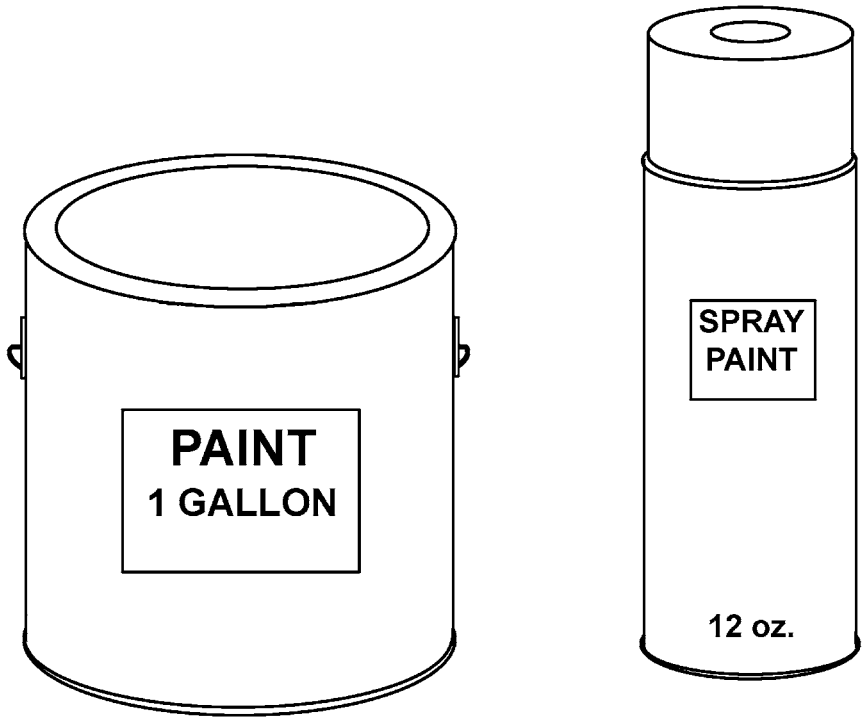


98-0001

https://truckmanualshub.com/



## PAINT - S/N 200001A~

| Item | Part Number | Description | Qty | |
|---|---|---|---|---|
| | 3EB-99-A6110 | NATURAL YELLOW - 12 OZ. SPRAY CAN . . . . | 1 | |
| | 3EB-99-A6210 | NATURAL YELLOW - 1 GALLON CAN . . . . . | 1 | |
| | 3EB-99-A6120 | BLACK GRAY - 12 OZ. SPRAY CAN . . . . . | 1 | |
| | 3EB-99-A6220 | BLACK GRAY - 1 GALLON CAN . . . . . | 1 | |
| | 3EB-99-A6130 | SUMMER GREEN - 12 OZ. SPRAY CAN . . . . . | 1 | |
| | 3EB-99-A6230 | SUMMEWR GREEN - 1 GALLON CAN . . . . . | 1 | |

https://truckmanualshub.com/

**NOTES:**

## NUMERICAL INDEX


| Part Number | Page | Part Number | Page | Part Number | Page |
|---|---|---|---|---|---|
| 01010-51640 | 43-4 | 01010-80835 | 6-2 | 01011-82015 | 41-4 |
| 01010-80612 | 21-10 | 01010-80835 | 6-4 | 01011-82215 | 41-2 |
| 01010-80612 | 21-2 | 01010-80855 | 15-12 | 01011-82215 | 41-4 |
| 01010-80612 | 21-4 | 01010-80890 | 6-2 | 01011-83030 | 43-2 |
| 01010-80612 | 21-6 | 01010-80890 | 6-4 | 01011-83030 | 43-2 |
| 01010-80616 | 15-14 | 01010-81025 | 27-4 | 01016-50880 | 37-2 |
| 01010-80616 | 15-2 | 01010-81025 | 27-5 | 01016-50880 | 37-4 |
| 01010-80616 | 37-2 | 01010-81025 | 41-14 | 01023-10412 | 37-2 |
| 01010-80616 | 55-2 | 01010-81025 | 41-2 | 01023-10508 | 55-12 |
| 01010-80616 | 6-2 | 01010-81025 | 41-4 | 01023-10508 | 55-20 |
| 01010-80616 | 6-4 | 01010-81025 | 83-8 | 01023-10508 | 55-22 |
| 01010-80616 | 83-12 | 01010-81040 | 13-2 | 01023-10508 | 55-32 |
| 01010-80660 | 5-2 | 01010-81040 | 15-2 | 01023-10514 | 55-38 |
| 01010-80810 | 15-14 | 01010-81045 | 1-4 | 01023-10612 | 55-10 |
| 01010-80812 | 21-12 | 01010-81050 | 13-2 | 01023-10612 | 55-32 |
| 01010-80812 | 55-40 | 01010-81050 | 21-12 | 01023-10612 | 55-32 |
| 01010-80816 | 13-2 | 01010-81070 | 21-12 | 01023-10612 | 55-34 |
| 01010-80816 | 1-4 | 01010-81220 | 30-22 | 01023-10612 | 55-38 |
| 01010-80816 | 21-10 | 01010-81220 | 30-24 | 01023-10612 | 83-10 |
| 01010-80816 | 55-2 | 01010-81230 | 55-20 | 01023-10612 | 83-4 |
| 01010-80816 | 55-2 | 01010-81230 | 55-22 | 01023-10614 | 41-10 |
| 01010-80816 | 55-20 | 01010-81230 | 55-44 | 01023-10616 | 4-10 |
| 01010-80816 | 55-22 | 01010-81230 | 55-46 | 01023-10616 | 4-6 |
| 01010-80816 | 55-34 | 01010-81235 | 21-10 | 01023-10616 | 4-8 |
| 01010-80816 | 55-4 | 01010-81235 | 21-12 | 01023-10620 | 55-34 |
| 01010-80816 | 55-44 | 01010-81235 | 21-13 | 01023-20616 | 56-2 |
| 01010-80816 | 55-46 | 01010-81235 | 21-2 | 01023-60425 | 83-13 |
| 01010-80816 | 55-6 | 01010-81235 | 21-4 | 01023-60516 | 83-10 |
| 01010-80816 | 6-2 | 01010-81235 | 21-6 | 01023-60612 | 50-8 |
| 01010-80816 | 6-4 | 01010-81235 | 83-10 | 01024-80612 | 4-14 |
| 01010-80816 | 83-10 | 01010-81280 | 15-5 | 01024-80612 | 4-16 |
| 01010-80816 | 83-4 | 01010-81280 | 15-9 | 01024-80612 | 55-16 |
| 01010-80818 | 13-2 | 01010-81290 | 21-12 | 01024-80612 | 55-18 |
| 01010-80818 | 15-2 | 01010-81640 | 41-2 | 01024-80612 | 55-40 |
| 01010-80820 | 55-2 | 01010-81640 | 41-4 | 01024-80612 | 55-42 |
| 01010-80820 | 55-20 | 01010-81645 | 24-14 | 01024-80616 | 36-2 |
| 01010-80820 | 55-22 | 01010-81845 | 24-10 | 01024-80616 | 55-16 |
| 01010-80820 | 55-32 | 01010-81845 | 24-12 | 01024-80616 | 55-18 |
| 01010-80820 | 55-36 | 01010-81845 | 24-3 | 01024-80616 | 55-42 |
| 01010-80820 | 55-4 | 01010-81845 | 24-7 | 01024-80616 | 66-6 |
| 01010-80820 | 55-44 | 01010-81865 | 41-2 | 01024-80616 | 66-8 |
| 01010-80820 | 55-46 | 01010-81865 | 41-4 | 01024-80812 | 55-38 |
| 01010-80820 | 6-2 | 01010-82060 | 41-2 | 01024-80812 | 6-6 |
| 01010-80820 | 6-4 | 01010-82060 | 41-4 | 01024-80812 | 66-2 |
| 01010-80820 | 83-2 | 01010-82075 | 41-2 | 01024-80816 | 1-64 |
| 01010-80825 | 1-64 | 01010-82075 | 41-4 | 01024-80816 | 1-8 |
| 01010-80825 | 6-6 | 01010-B0616 | 4-6 | 01024-80816 | 4-12 |
| 01010-80825 | 83-13 | 01010-B0616 | 4-8 | 01024-80816 | 5-4 |
| 01010-80825 | 83-14 | 01011-81020A | 83-10 | 01024-80816 | 55-16 |
| 01010-80830 | 15-12 | 01011-82015 | 41-2 | 01024-80816 | 55-18 |

## NUMERICAL INDEX


| Part Number | Page | Part Number | Page | Part Number | Page |
|---|---|---|---|---|---|
| 01024-80816 | 55-4 | 01024-81030 | 66-14 | 01435-00814 | 24-3 |
| 01024-80816 | 55-4 | 01024-81030 | 66-16 | 01435-00814 | 24-7 |
| 01024-80816 | 55-42 | 01024-81030 | 66-18 | 01435-00814 | 4-20 |
| 01024-80816 | 66-10 | 01024-81230 | 43-4 | 01435-00814 | 4-22 |
| 01024-80816 | 66-12 | 01024-81235 | 50-14 | 01435-00814 | 4-24 |
| 01024-80816 | 66-14 | 01024-81235 | 50-14 | 01435-00816 | 30-32 |
| 01024-80816 | 66-14 | 01024-81235 | 50-16 | 01435-00816 | 36-2 |
| 01024-80816 | 66-16 | 01024-81235 | 50-16 | 01435-00816 | 36-2 |
| 01024-80816 | 66-16 | 01050-41470 | 64-18 | 01435-00816 | 37-2 |
| 01024-80816 | 66-18 | 01050-51020 | 3-2 | 01435-00816 | 41-10 |
| 01024-80816 | 66-2 | 01050-51020 | 3-4 | 01435-00816 | 41-12 |
| 01024-80816 | 66-24 | 01050-51025 | 3-2 | 01435-00816 | 41-8 |
| 01024-80816 | 66-26 | 01050-51025 | 3-4 | 01435-00816 | 55-16 |
| 01024-80816 | 66-28 | 01050-51025 | 55-20 | 01435-00816 | 55-18 |
| 01024-80816 | 66-30 | 01050-51025 | 55-22 | 01435-00816 | 55-40 |
| 01024-80816 | 83-14 | 01050-51025 | 55-44 | 01435-00816 | 55-42 |
| 01024-80820 | 3-2 | 01050-51025 | 55-46 | 01435-00816 | 55-8 |
| 01024-80820 | 3-4 | 01050-51035 | 3-6 | 01435-00816 | 55-8 |
| 01024-80820 | 3-6 | 01050-51040 | 61-2 | 01435-00816 | 83-10 |
| 01024-80820 | 37-2 | 01050-51460 | 64-10 | 01435-00820 | 34-2 |
| 01024-80820 | 4-10 | 01050-51460 | 64-12 | 01435-00820 | 55-20 |
| 01024-80820 | 4-14 | 01050-51460 | 64-16 | 01435-00820 | 55-22 |
| 01024-80820 | 4-16 | 01050-51460 | 64-2 | 01435-00820 | 55-44 |
| 01024-80820 | 4-6 | 01050-51460 | 64-6 | 01435-00820 | 55-46 |
| 01024-80820 | 4-8 | 01121-00082 | 1-36 | 01435-00820 | 61-8 |
| 01024-80820 | 66-12 | 01121-05351 | 1-14 | 01435-00825 | 36-2 |
| 01024-80820 | 66-14 | 01220-40512 | 5-2 | 01435-00830 | 83-6 |
| 01024-80820 | 66-16 | 01220-40512 | 5-4 | 01435-00830 | 83-8 |
| 01024-80820 | 66-18 | 01220-40525 | 83-11 | 01435-00835 | 83-6 |
| 01024-80820 | 66-24 | 01252-60545 | 15-12 | 01435-00835 | 83-8 |
| 01024-80820 | 66-26 | 01252-70830 | 5-2 | 01435-00845 | 83-10 |
| 01024-80820 | 66-28 | 01252-70835 | 5-4 | 01435-01020 | 30-32 |
| 01024-80820 | 66-30 | 01252-71045 | 60-2 | 01435-01020 | 36-2 |
| 01024-80820 | 83-14 | 01252-80660 | 50-14 | 01435-01030 | 34-2 |
| 01024-80825 | 41-2 | 01252-80660 | 50-16 | 01435-40616 | 50-10 |
| 01024-80825 | 41-4 | 01370-00410 | 55-16 | 01555-00261 | 1-40 |
| 01024-80825 | 5-2 | 01370-00410 | 55-18 | 01570-00808 | 83-8 |
| 01024-80830 | 4-2 | 01370-00410 | 55-42 | 01580-10403 | 55-38 |
| 01024-80830 | 4-4 | 01370-00414 | 56-2 | 01580-10403 | 83-13 |
| 01024-80850 | 66-26 | 01370-40416 | 50-10 | 01580-10504 | 55-38 |
| 01024-80850 | 66-28 | 01435-00612 | 61-8 | 01580-10504 | 55-44 |
| 01024-80850 | 66-30 | 01435-00616 | 37-2 | 01580-10504 | 55-46 |
| 01024-81025 | 1-6 | 01435-00812 | 36-2 | 01580-10504 | 83-11 |
| 01024-81025 | 1-62 | 01435-00812 | 4-14 | 01580-10504 | 83-2 |
| 01024-81025 | 41-6 | 01435-00812 | 4-16 | 01580-10605 | 37-2 |
| 01024-81025 | 50-10 | 01435-00812 | 55-36 | 01580-10605 | 5-2 |
| 01024-81030 | 50-14 | 01435-00812 | 55-38 | 01580-10605 | 55-40 |
| 01024-81030 | 50-16 | 01435-00812 | 55-38 | 01580-10605 | 55-8 |
| 01024-81030 | 60-2 | 01435-00814 | 24-10 | 01580-10605 | 83-12 |
| 01024-81030 | 66-12 | 01435-00814 | 24-12 | 01580-10806 | 37-2 |

https://truckmanualshub.com/


## NUMERICAL INDEX


| Part Number | Page | Part Number | Page | Part Number | Page |
|---|---|---|---|---|---|
| 01580-10806 | 55-20 | 01602-20825 | 55-20 | 01643-30623 | 55-2 |
| 01580-10806 | 55-22 | 01602-20825 | 55-20 | 01643-30623 | 55-6 |
| 01580-10806 | 55-38 | 01602-20825 | 55-22 | 01643-30623 | 6-2 |
| 01580-11008 | 13-2 | 01602-20825 | 55-22 | 01643-30623 | 6-4 |
| 01580-11008 | 1-4 | 01602-20825 | 55-38 | 01643-30823 | 55-2 |
| 01580-11210 | 65-2 | 01602-20825 | 55-44 | 01643-30823 | 55-2 |
| 01580-11210 | 65-2 | 01602-20825 | 55-46 | 01643-30823 | 55-2 |
| 01580-11613 | 24-14 | 01602-20825 | 83-2 | 01643-30823 | 55-32 |
| 01580-11613 | 27-4 | 01602-21030 | 1-4 | 01643-30823 | 55-34 |
| 01580-11815 | 41-2 | 01602-21030 | 83-10 | 01643-30823 | 55-36 |
| 01580-11815 | 41-4 | 01602-21236 | 28-4 | 01643-30823 | 55-4 |
| 01582-11008 | 3-2 | 01602-21442 | 64-10 | 01643-30823 | 55-4 |
| 01582-11008 | 3-4 | 01602-21442 | 64-12 | 01643-30823 | 55-40 |
| 01582-11008 | 3-6 | 01602-21442 | 64-16 | 01643-30823 | 6-2 |
| 01582-11008 | 61-2 | 01602-21442 | 64-3 | 01643-30823 | 6-2 |
| 01582-11210 | 28-4 | 01602-21442 | 64-6 | 01643-30823 | 6-4 |
| 01582-11411 | 64-10 | 01602-21648 | 27-4 | 01643-30823 | 6-4 |
| 01582-11411 | 64-12 | 01640-20408 | 56-2 | 01643-30823 | 83-10 |
| 01582-11411 | 64-16 | 01640-20508 | 55-12 | 01643-30823 | 83-14 |
| 01582-11411 | 64-3 | 01640-20508 | 55-44 | 01643-30823 | 83-4 |
| 01582-11411 | 64-6 | 01640-20508 | 55-46 | 01643-31032 | 13-2 |
| 01582-11815 | 21-4 | 01640-20610 | 5-2 | 01643-31032 | 13-2 |
| 01582-11815 | 21-6 | 01640-20610 | 55-12 | 01643-31032 | 15-2 |
| 01582-31411 | 64-18 | 01640-20816 | 50-18 | 01643-31032 | 21-12 |
| 01583-11408 | 50-14 | 01640-21223 | 55-20 | 01643-31032 | 3-2 |
| 01583-11408 | 50-16 | 01640-21223 | 55-22 | 01643-31032 | 3-2 |
| 01593-13018 | 0-8 | 01640-21223 | 55-44 | 01643-31032 | 3-4 |
| 01593-13018 | 24-10 | 01640-21223 | 55-46 | 01643-31032 | 3-4 |
| 01593-13018 | 24-12 | 01640-21426 | 41-2 | 01643-31032 | 3-6 |
| 01593-13018 | 24-2 | 01640-21426 | 41-4 | 01643-31032 | 3-6 |
| 01593-13018 | 24-6 | 01640-21426 | 50-14 | 01643-31032 | 41-14 |
| 01594-00807 | 83-10 | 01640-21426 | 50-16 | 01643-31032 | 83-10 |
| 01594-00807 | 83-6 | 01641-20405 | 83-13 | 01643-31032 | 83-8 |
| 01596-01009 | 3-2 | 01641-20508 | 61-8 | 01643-31232 | 1-6 |
| 01596-01009 | 3-4 | 01641-20508 | 61-8 | 01643-31232 | 1-62 |
| 01596-01009 | 3-6 | 01641-20508 | 83-11 | 01643-31232 | 34-2 |
| 01599-01214 | 61-8 | 01641-20608 | 55-40 | 01643-31232 | 55-20 |
| 01601-20410 | 55-38 | 01641-20608 | 55-8 | 01643-31232 | 55-22 |
| 01601-20513 | 55-38 | 01641-31423 | 64-18 | 01643-31232 | 55-44 |
| 01601-20513 | 55-44 | 01642-20608 | 83-12 | 01643-31232 | 55-46 |
| 01601-20513 | 55-46 | 01642-20810 | 13-2 | 01643-31232 | 83-10 |
| 01601-20513 | 83-2 | 01642-20810 | 50-2 | 01643-31365 | 43-4 |
| 01601-23075 | 43-2 | 01642-20810 | 83-13 | 01643-31445 | 50-14 |
| 01601-23075 | 43-2 | 01642-40405 | 50-10 | 01643-31445 | 50-16 |
| 01602-20619 | 83-12 | 01642-40608 | 50-14 | 01643-31645 | 41-2 |
| 01602-20720 | 55-20 | 01642-40608 | 50-16 | 01643-31645 | 41-4 |
| 01602-20720 | 55-22 | 01642-40810 | 50-10 | 01643-31845 | 24-10 |
| 01602-20720 | 55-44 | 01643-30623 | 15-2 | 01643-31845 | 24-12 |
| 01602-20720 | 55-46 | 01643-30623 | 4-6 | 01643-31845 | 24-3 |
| 01602-20825 | 1-64 | 01643-30623 | 4-8 | 01643-31845 | 24-7 |

## NUMERICAL INDEX


| Part Number | Page | Part Number | Page | Part Number | Page |
|---|---|---|---|---|---|
| 01643-31845 | 41-2 | 04020-01228 | 21-12 | 06300-06006 | 15-4 |
| 01643-31845 | 41-4 | 04020-01228 | 21-13 | 06300-06006 | 15-8 |
| 01643-32060 | 41-2 | 04025-00316 | 15-14 | 06300-06006 | 15-8 |
| 01643-32060 | 41-2 | 04025-00650 | 24-10 | 06300-06206 | 15-4 |
| 01643-32060 | 41-2 | 04025-00650 | 24-12 | 06300-06206 | 15-4 |
| 01643-32060 | 41-4 | 04025-00650 | 24-2 | 06300-06206 | 15-4 |
| 01643-32060 | 41-4 | 04025-00650 | 24-6 | 06300-06206 | 15-8 |
| 01643-32060 | 41-4 | 04050-11210 | 36-2 | 06300-06206 | 15-8 |
| 01643-32260 | 41-2 | 04050-11212 | 61-8 | 06300-06206 | 15-8 |
| 01643-32260 | 41-4 | 04050-11212 | 61-8 | 06300-06306 | 15-4 |
| 01643-33080 | 43-2 | 04050-11610 | 37-2 | 06300-06306 | 15-5 |
| 01643-33080 | 43-2 | 04050-12015 | 30-32 | 06300-06306 | 15-8 |
| 01643-50823 | 13-2 | 04050-13025 | 24-10 | 06300-06306 | 15-9 |
| 01643-50823 | 1-4 | 04050-13025 | 24-12 | 06300-06307 | 15-5 |
| 01643-51032 | 24-10 | 04050-13025 | 24-2 | 06300-06307 | 15-9 |
| 01643-51032 | 24-12 | 04050-13025 | 24-6 | 06300-30207 | 0-7 |
| 01643-51032 | 24-2 | 04050-18050 | 21-13 | 06300-30207 | 0-7 |
| 01643-51032 | 24-6 | 04064-03515 | 15-4 | 06300-30207 | 24-10 |
| 01643-51232 | 21-13 | 04064-03515 | 15-4 | 06300-30207 | 24-12 |
| 01643-51232 | 30-22 | 04064-03515 | 15-8 | 06300-30207 | 24-2 |
| 01643-51232 | 30-24 | 04064-03515 | 15-8 | 06300-30207 | 24-6 |
| 01643-51232 | 61-8 | 04065-05520 | 15-4 | 06300-32007 | 0-7 |
| 01643-51645 | 24-14 | 04065-05520 | 15-4 | 06300-32007 | 24-2 |
| 01691-00052 | 1-40 | 04065-05520 | 15-8 | 06300-32007 | 24-6 |
| 02117-20021 | 1-40 | 04065-05520 | 15-8 | 06300-32010 | 0-7 |
| 02117-21521 | 0-2 | 04205-10518 | 36-2 | 06300-32010 | 24-2 |
| 02117-21521 | 1-40 | 04205-10616 | 37-2 | 06300-32010 | 24-6 |
| 02117-21521 | 1-48 | 04434-50612 | 30-22 | 06301-06006 | 15-4 |
| 02117-21521 | 55-24 | 04434-50612 | 30-24 | 06301-06006 | 15-4 |
| 02117-22023 | 0-2 | 04434-50808 | 6-6 | 06301-06006 | 15-8 |
| 02117-22023 | 55-24 | 04434-51008 | 30-32 | 06301-06006 | 15-8 |
| 02117-23021 | 1-40 | 04434-51008 | 55-20 | 07000-02145 | 21-10 |
| 02117-23021 | 55-24 | 04434-51008 | 55-22 | 07000-11006 | 60-2 |
| 02117-23523 | 0-2 | 04434-51008 | 55-44 | 07000-12015 | 60-2 |
| 02117-23523 | 1-40 | 04434-51008 | 55-46 | 07000-13030 | 64-12 |
| 02117-23523 | 1-48 | 04434-51308 | 4-14 | 07000-13030 | 64-6 |
| 02205-10508 | 50-2 | 04434-51408 | 6-2 | 07000-13034 | 66-12 |
| 02215-10406 | 55-20 | 04434-51408 | 6-4 | 07000-13034 | 66-14 |
| 02215-10406 | 55-22 | 04434-52310 | 6-2 | 07000-13034 | 66-16 |
| 02215-10406 | 55-44 | 04434-52310 | 6-4 | 07000-13034 | 66-18 |
| 02215-10406 | 55-46 | 04435-51008 | 30-32 | 07000-13035 | 64-10 |
| 02892-03081 | 60-2 | 04435-51208 | 4-22 | 07000-13035 | 64-16 |
| 02896-11009 | 66-24 | 04435-51208 | 4-24 | 07000-71009 | 15-12 |
| 02896-11009 | 66-26 | 04435-51308 | 4-20 | 07000-72020 | 15-2 |
| 02896-11009 | 66-28 | 04435-51408 | 36-2 | 07000-72075 | 1-64 |
| 02896-11009 | 66-30 | 06002-30214 | 0-7 | 07000-A2018 | 4-22 |
| 02896-11012 | 66-20 | 06002-30214 | 21-10 | 07000-A2018 | 4-24 |
| 02896-21009 | 4-18 | 06002-32213 | 0-7 | 07003-12228 | 0-12 |
| 02896-21009 | 4-20 | 06002-32213 | 21-4 | 07003-12228 | 55-2 |
| 04020-01024 | 15-2 | 06300-06006 | 15-4 | 07005-01012 | 15-14 |

## NUMERICAL INDEX


| Part Number | Page | Part Number | Page | Part Number | Page |
|---|---|---|---|---|---|
| 07012-00040 | 21-12 | 07281-00197 | 66-28 | 08192-12100 | 83-13 |
| 07012-C0045 | 15-5 | 07281-00197 | 66-30 | 08192-12200 | 83-12 |
| 07012-C0045 | 15-9 | 07281-00229 | 4-18 | 08192-12200 | 83-13 |
| 07020-00000 | 41-2 | 07281-00229 | 4-20 | 08192-12810 | 83-11 |
| 07020-00000 | 41-4 | 07281-00229 | 4-22 | 08192-12810 | 83-11 |
| 07020-00000 | 41-6 | 07281-00229 | 4-24 | 08192-12810 | 83-11 |
| 07020-00001 | 24-10 | 07281-00229 | 66-26 | 08192-12810 | 83-12 |
| 07020-00001 | 24-12 | 07281-00229 | 66-28 | 08192-12810 | 83-13 |
| 07020-00001 | 24-2 | 07281-00229 | 66-30 | 08192-12910 | 83-11 |
| 07020-00001 | 24-6 | 07281-00259 | 6-2 | 08192-12910 | 83-11 |
| 07020-00001 | 41-6 | 07281-00259 | 6-2 | 08192-12910 | 83-11 |
| 07020-00001 | 64-13 | 07281-00259 | 6-4 | 08192-12910 | 83-11 |
| 07020-00001 | 64-7 | 07281-00259 | 6-4 | 08192-12910 | 83-12 |
| 07020-00675 | 24-10 | 07281-00259 | 66-12 | 08192-12910 | 83-12 |
| 07020-00675 | 24-12 | 07281-00259 | 66-14 | 08192-12910 | 83-13 |
| 07020-00675 | 24-2 | 07281-00259 | 66-14 | 08911-1401G | 1-50 |
| 07020-00675 | 24-6 | 07281-00259 | 66-16 | 08911-1401G | 55-26 |
| 07020-00900 | 41-2 | 07281-00259 | 66-18 | 09690-C0160 | 96-10 |
| 07020-00900 | 41-4 | 07281-00259 | 66-18 | 09690-C0160 | 96-2 |
| 07030-00252 | 0-3 | 07281-00259 | 66-26 | 09690-C0160 | 96-6 |
| 07030-00252 | 15-2 | 07281-00259 | 66-28 | 09690-P0200 | 96-10 |
| 07030-01030 | 21-12 | 07281-00259 | 66-30 | 09690-P0200 | 96-2 |
| 07030-01030 | 36-2 | 07281-00259 | 66-4 | 09690-P0200 | 96-6 |
| 07040-11007 | 15-14 | 07281-00259 | 66-8 | 09842-A0481 | 96-10 |
| 07042-30108 | 66-20 | 07281-00419 | 61-2 | 09842-A0481 | 96-2 |
| 07042-30211 | 66-22 | 07281-00419 | 66-6 | 09842-A0481 | 96-6 |
| 07042-80108 | 15-14 | 07281-00419 | 66-8 | 10005-FU410 | 1-14 |
| 07042-80108 | 15-2 | 07281-00489 | 66-12 | 10006-FU410 | 1-14 |
| 07043-70108 | 15-14 | 07281-00489 | 66-14 | 10101-FY525 | 0-6 |
| 07046-14520 | 24-10 | 07281-00489 | 66-16 | 10101-FY52K | 1-52 |
| 07046-14520 | 24-12 | 07281-00489 | 66-18 | 10102-GW460 | 1-10 |
| 07046-14520 | 24-2 | 07281-10809 | 64-18 | 10102-GW461 | 1-10 |
| 07046-14520 | 24-6 | 07281-10909 | 64-18 | 10102-GW560 | 1-10 |
| 07102-203A9 | 4-22 | 07281-11029 | 64-18 | 10102-GW561 | 1-10 |
| 07102-203A9 | 4-24 | 07285-00130 | 36-2 | 10103-GW400 | 1-10 |
| 07260-20940 | 66-26 | 07285-00130 | 5-4 | 10103-GW500 | 1-10 |
| 07260-20940 | 66-28 | 08059-00310 | 36-2 | 11000-FU400 | 1-12 |
| 07260-20940 | 66-30 | 08059-00310 | 5-2 | 11000-FY500 | 1-12 |
| 07260-21450 | 66-26 | 08105-01220 | 0-3 | 11019-32201 | 1-12 |
| 07260-21450 | 66-28 | 08110-8201B | 1-54 | 11023-78200 | 1-12 |
| 07260-21450 | 66-30 | 08120-8161E | 1-44 | 11024-25N00 | 1-40 |
| 07260-21463 | 66-26 | 08120-8201F | 1-48 | 11024-78200 | 1-12 |
| 07260-21463 | 66-28 | 08120-8201F | 55-24 | 11024-85G00 | 1-12 |
| 07260-21463 | 66-30 | 08124-0201F | 1-48 | 11024-85G01 | 1-12 |
| 07280-05026 | 4-10 | 08124-0201F | 55-24 | 11024-K0100 | 1-12 |
| 07280-05026 | 4-8 | 08124-0251F | 1-50 | 11026-01M02 | 1-12 |
| 07280-05729 | 1-8 | 08124-0251F | 55-26 | 11026-53J00 | 1-14 |
| 07280-07429 | 1-64 | 08191-00770 | 83-12 | 11040-FY501 | 1-14 |
| 07281-00167 | 36-2 | 08191-00770 | 83-13 | 11042-FY525 | 0-6 |
| 07281-00197 | 66-26 | 08192-12100 | 83-12 | 11042-FY52K | 1-52 |

## NUMERICAL INDEX


| Part Number | Page | Part Number | Page | Part Number | Page |
|---|---|---|---|---|---|
| 11044-FU400 | 0-6 | 12015323 | 83-11 | 13034-FU400 | 1-24 |
| 11044-FU400 | 1-14 | 12033-4E110 | 1-18 | 13050-FU400 | 1-40 |
| 11044-FU400 | 1-52 | 12036-4E110 | 1-18 | 13070-50K00 | 1-22 |
| 11044-FU460 | 0-6 | 12038-4E110 | 1-18 | 13201-FY500 | 1-22 |
| 11044-FU460 | 1-14 | 12100-FU400 | 1-18 | 13202-FU400 | 1-22 |
| 11044-FU460 | 1-52 | 12100-FY500 | 1-18 | 13203-FY50A | 1-22 |
| 11046-73402 | 1-12 | 12109-D0210 | 1-18 | 13205-40F00 | 1-22 |
| 11046-73402 | 1-24 | 12111-FY500 | 1-18 | 13207-53F00 | 0-6 |
| 11046-73402 | 1-40 | 12112-H1000 | 1-18 | 13207-53F00 | 1-22 |
| 11053-73400 | 1-12 | 12117-FY500 | 1-18 | 13209-V7200 | 1-22 |
| 11056-FY500 | 1-14 | 12118-FY500 | 1-18 | 13210-16A00 | 1-22 |
| 11060-FU400 | 1-40 | 12119-FY500 | 1-18 | 13231-H1001 | 1-22 |
| 11060-W7001 | 1-40 | 12129409 | 83-11 | 13234-78200 | 1-22 |
| 11061-FU400 | 1-40 | 12129409 | 83-11 | 13235-78200 | 1-22 |
| 11062-07N00 | 1-40 | 12201-FU400 | 1-18 | 13238-FY500 | 1-22 |
| 11062-FY500 | 1-40 | 12201-FY500 | 1-18 | 13252-FY500 | 1-22 |
| 11065-30000 | 1-38 | 12231-FY500 | 1-18 | 13254-02N00 | 1-22 |
| 11072-50K01 | 0-3 | 12232-FY500 | 1-18 | 13255-58000 | 1-22 |
| 11072-50K01 | 1-40 | 12233-FY500 | 1-19 | 13256-W0400 | 1-22 |
| 11098-FY500 | 1-14 | 12234-FY500 | 1-19 | 13258-FY500 | 1-22 |
| 11099-FY500 | 1-14 | 12235-FY500 | 1-19 | 13258-FY510 | 1-22 |
| 11110-FU400 | 1-12 | 12236-FY500 | 1-19 | 13264-FU400 | 1-14 |
| 11128-01M00 | 1-12 | 12247-50K00 | 1-18 | 13268-88V62 | 1-14 |
| 11140-FT860 | 0-6 | 12248-50K00 | 1-18 | 13270-FY50A | 0-6 |
| 11140-FT860 | 1-12 | 12249-50K00 | 1-18 | 13270-FY50A | 1-14 |
| 11392-50K00 | 1-12 | 12250-50K00 | 1-18 | 13274-B1101 | 1-14 |
| 11715-FU400 | 1-48 | 12251-50K00 | 1-18 | 13289-58000 | 1-22 |
| 11715-FU400 | 1-48 | 12252-50K00 | 1-18 | 13501-FU400 | 1-24 |
| 11715-FU400 | 55-24 | 12279-FF200 | 1-12 | 13510-FF200 | 0-6 |
| 11715-FU400 | 55-24 | 12293-P0500 | 1-12 | 13510-FF200 | 1-24 |
| 11810-75T00 | 1-16 | 12297-FU400 | 1-12 | 14003-FU460 | 1-26 |
| 11812-41B00 | 1-16 | 12303-FU400 | 1-18 | 14003-FU460 | 1-36 |
| 11823-FU400 | 1-16 | 12307-FU460 | 1-18 | 14003-FU461 | 1-26 |
| 11828-FU400 | 1-16 | 12309-FU400 | 1-18 | 14004-FU400 | 1-26 |
| 11831-FU460 | 1-26 | 12310-K9302 | 1-19 | 14035-FY500 | 1-26 |
| 12010-FU420 | 1-18 | 12312-50K00 | 0-6 | 14037-42L01 | 1-26 |
| 12010-FU421 | 1-18 | 12312-50K00 | 1-19 | 14049-76001 | 1-40 |
| 12010-FU422 | 1-18 | 12315-58S00 | 1-19 | 14053-42L00 | 1-40 |
| 12010-FU423 | 1-18 | 12320-K9303 | 1-24 | 14053-E0600 | 1-26 |
| 12010-FU424 | 1-18 | 12351-FU400 | 1-24 | 14053-FU400 | 1-40 |
| 12010-FU470 | 1-18 | 12352-GW300 | 1-24 | 14055-FF100 | 1-40 |
| 12010-FU471 | 1-18 | 12353-GW300 | 1-24 | 14055-GX74A | 1-40 |
| 12010-FU520 | 1-18 | 12354-50K00 | 1-24 | 14069-82F00 | 1-26 |
| 12010-FU521 | 1-18 | 13001-50K00 | 1-22 | 14075-40F04 | 1-40 |
| 12010-FU522 | 1-18 | 13002-71200 | 1-12 | 14075-FU460 | 1-40 |
| 12010-FU523 | 1-18 | 13010-78201 | 1-22 | 14080-50K00 | 1-40 |
| 12010-FU524 | 1-18 | 13013-78200 | 1-22 | 14094-31U00 | 1-26 |
| 12010-FU570 | 1-18 | 13021-FY500 | 1-22 | 14330-GY360 | 1-28 |
| 12010-FU571 | 1-18 | 13024-FY500 | 1-22 | 14330-GY360 | 1-32 |
| 12015323 | 83-11 | 13028-FU400 | 1-22 | 14330-GY360 | 1-34 |

## NUMERICAL INDEX


| Part Number | Page | Part Number | Page | Part Number | Page |
|---|---|---|---|---|---|
| 14875-P6500 | 1-26 | 16197-FU461 | 0-12 | 16476-GY010 | 1-56 |
| 14X-14-19241 | 0-7 | 16197-FU46A | 1-30 | 16590-FU461 | 1-26 |
| 14X-14-19241 | 21-13 | 16197-FU46A | 1-32 | 16590-FU462 | 1-26 |
| 14X-14-19241 | 21-2 | 16197-FU46A | 1-34 | 16600-FU460 | 0-12 |
| 15010-66202 | 1-38 | 16214-16811 | 1-56 | 16600-FU460 | 1-28 |
| 15020-78205 | 1-38 | 16214-A8800 | 1-30 | 16600-FU461 | 1-32 |
| 15040-FU460 | 1-38 | 16214-A8800 | 1-32 | 16600-FU461 | 1-34 |
| 15050-66201 | 1-38 | 16214-A8800 | 1-34 | 16600-FU471 | 0-12 |
| 15066-78200 | 1-38 | 16237-FU460 | 1-56 | 16600-FU471 | 1-30 |
| 15075-FF200 | 1-12 | 16263-FU460 | 1-30 | 16600-FU471 | 1-32 |
| 150N4044 | 0-4 | 16263-FU460 | 1-32 | 16600-FU471 | 1-34 |
| 15132-66000 | 1-38 | 16263-FU460 | 1-34 | 16600-FU571 | 0-12 |
| 15208-01B02 | 0-14 | 16267-FU460 | 1-36 | 16600-FU571 | 1-30 |
| 15208-01B02 | 0-2 | 16270-FU460 | 1-28 | 16600-FU571 | 1-32 |
| 15208-01B02 | 1-38 | 16270-FU460 | 1-36 | 16600-FU571 | 1-34 |
| 15213-21002 | 1-12 | 16277-FU461 | 1-30 | 16610-GX11A | 1-30 |
| 15241-16A01 | 1-12 | 16277-FU461 | 1-32 | 16610-GX11A | 1-32 |
| 15255-1P110 | 0-2 | 16277-FU461 | 1-34 | 16610-GX11A | 1-34 |
| 15255-1P110 | 1-14 | 16290-FU460 | 1-30 | 16610-GX11A | 1-36 |
| 16065-FU460 | 1-30 | 16290-FU460 | 1-32 | 16610-GX21A | 1-30 |
| 16065-FU460 | 1-32 | 16290-FU460 | 1-34 | 16610-GX21A | 1-32 |
| 16065-FU460 | 1-34 | 16291-GX11A | 1-30 | 16610-GX21A | 1-34 |
| 16065-GY010 | 1-56 | 16291-GX11A | 1-32 | 16618-5L300 | 1-28 |
| 16065-OH600 | 1-30 | 16291-GX11A | 1-34 | 16618-FU460 | 1-28 |
| 16065-OH600 | 1-32 | 16310-GS40A | 0-12 | 16618-GX11A | 1-30 |
| 16065-OH600 | 1-34 | 16310-GU20A | 1-56 | 16618-GX11A | 1-32 |
| 16094-B8500 | 1-30 | 16310-GU20A | 6-2 | 16618-GX11A | 1-34 |
| 16094-B8500 | 1-32 | 16310-GU20A | 6-4 | 16638-GX11A | 0-12 |
| 16094-B8500 | 1-34 | 16318-GY360 | 1-28 | 16638-GX11A | 1-30 |
| 16098-FU460 | 1-30 | 16318-GY360 | 1-32 | 16638-GX11A | 1-32 |
| 16098-FU460 | 1-32 | 16318-GY360 | 1-34 | 16638-GX11A | 1-34 |
| 16098-FU460 | 1-34 | 16328-GY010 | 1-56 | 16919-W1602 | 1-56 |
| 16119-FU460 | 0-12 | 16349-18V00 | 1-56 | 17052-FU460 | 1-56 |
| 16119-FU460 | 1-36 | 16349-VS001 | 1-30 | 17053-FU460 | 1-56 |
| 16125-Y4400 | 1-56 | 16349-VS001 | 1-32 | 17054-FU460 | 1-56 |
| 16156-FU460 | 1-30 | 16349-VS001 | 1-34 | 17099-85G00 | 1-54 |
| 16156-FU460 | 1-32 | 16349-VS002 | 1-30 | 17108-K7005 | 1-28 |
| 16156-FU460 | 1-34 | 16349-VS002 | 1-32 | 17108-K7005 | 1-32 |
| 16163-Y4403 | 1-56 | 16349-VS002 | 1-34 | 17108-K7005 | 1-34 |
| 16175-FU460 | 1-36 | 16356-FU460 | 1-56 | 17111-50K00 | 1-28 |
| 16175-FU470 | 1-28 | 16375-FU460 | 1-56 | 17111-50K00 | 1-32 |
| 16175-FU470 | 1-30 | 16379-FU460 | 1-56 | 17111-50K00 | 1-34 |
| 16175-FU470 | 1-32 | 16388-FU460 | 1-56 | 17111-50K60 | 1-28 |
| 16175-FU470 | 1-34 | 16389-FU460 | 1-56 | 17111-50K60 | 1-32 |
| 16175-FU470 | 1-36 | 16420-E0100 | 1-54 | 17111-50K60 | 1-34 |
| 16185-FU460 | 1-28 | 16439-17B00 | 1-16 | 17111-FU400 | 1-28 |
| 16185-FU460 | 1-30 | 16439-26E00 | 1-40 | 17111-FU400 | 1-32 |
| 16185-FU460 | 1-32 | 16439-42L00 | 1-40 | 17111-FU400 | 1-34 |
| 16185-FU460 | 1-34 | 16439-42L01 | 1-16 | 17520-GY361 | 1-28 |
| 16185-FU460 | 1-36 | 16439-V5000 | 1-16 | 17520-GY361 | 1-32 |

## NUMERICAL INDEX


| Part Number | Page | Part Number | Page | Part Number | Page |
|---|---|---|---|---|---|
| 17520-GY361 | 1-34 | 22630-44B20 | 1-40 | 23156-08000 | 1-48 |
| 17522-FU463 | 1-28 | 22680-FU460 | 0-12 | 23156-08000 | 55-24 |
| 17522-FU4634 | 1-32 | 22690-FU460 | 0-12 | 23215-3S416 | 1-48 |
| 17522-FU4634 | 1-34 | 22710-FU460 | 55-34 | 23215-3S416 | 55-24 |
| 17527-GU24A | 6-2 | 23100-FU410 | 0-2 | 23215-GY360 | 1-48 |
| 17527-GU24A | 6-4 | 23100-FU410 | 1-48 | 23215-GY360 | 55-24 |
| 17571-5L300 | 1-28 | 23100-FU410 | 55-24 | 23300-FU410 | 0-2 |
| 17571-5L300 | 1-32 | 23100-GY360 | 0-2 | 23300-FU410 | 1-50 |
| 17571-5L300 | 1-34 | 23100-GY360 | 1-48 | 23300-FU410 | 55-26 |
| 17571-5V002 | 1-28 | 23100-GY360 | 55-24 | 23302-6J010 | 1-50 |
| 17571-5V002 | 1-32 | 23102-50K15 | 1-48 | 23302-6J010 | 55-26 |
| 17571-5V002 | 1-34 | 23102-50K15 | 55-24 | 23310-0M210 | 1-50 |
| 17904-FT860 | 0-12 | 23102-GY360 | 1-48 | 23310-0M210 | 55-26 |
| 17904-GU20A | 1-56 | 23102-GY360 | 55-24 | 23312-0W010 | 1-50 |
| 17904-GU20A | 6-2 | 23108-50K15 | 1-48 | 23312-0W010 | 55-26 |
| 17904-GU20A | 6-4 | 23108-50K15 | 55-24 | 23312-1S710 | 1-50 |
| 17937-Y4400 | 1-56 | 23108-GY360 | 1-48 | 23312-1S710 | 55-26 |
| 17937-Y4410 | 1-56 | 23108-GY360 | 55-24 | 23318-FU410 | 1-50 |
| 17958-16811 | 1-56 | 23110-GY360 | 1-50 | 23318-FU410 | 55-26 |
| 17958-16811 | 1-56 | 23110-GY360 | 55-26 | 23322-50Y12 | 1-50 |
| 17959-GU20A | 1-56 | 23115-20P10 | 1-48 | 23322-50Y12 | 55-26 |
| 17960-VR500 | 1-56 | 23115-20P10 | 55-24 | 23325-42L70 | 1-50 |
| 17962-FU460 | 1-56 | 23115-47N10 | 1-48 | 23325-42L70 | 55-26 |
| 18919-AM810 | 0-12 | 23115-47N10 | 55-24 | 23337-0W011 | 1-50 |
| 20602-01M00 | 1-26 | 23118-47N10 | 1-48 | 23337-0W011 | 55-26 |
| 20602-01M00 | 3-2 | 23118-47N10 | 55-24 | 23338-01N10 | 1-50 |
| 20692-65J00 | 0-6 | 23118-GY360 | 1-48 | 23338-01N10 | 55-26 |
| 20692-65J00 | 3-6 | 23118-GY360 | 55-24 | 23340-0M210 | 1-50 |
| 21010-FU425 | 0-2 | 23120-22J20 | 1-48 | 23340-0M210 | 55-26 |
| 21010-FU425 | 1-40 | 23120-22J20 | 55-24 | 23343-FU410 | 1-50 |
| 21014-07N00 | 0-2 | 23120-30R10 | 1-48 | 23343-FU410 | 55-26 |
| 21014-07N00 | 1-40 | 23120-30R10 | 55-24 | 23354-W9810 | 1-50 |
| 21051-FU500 | 1-40 | 23124-FF110 | 1-48 | 23354-W9810 | 55-26 |
| 21051-GY360 | 1-40 | 23124-FF110 | 55-24 | 23360-0M210 | 1-50 |
| 21060-FU410 | 0-2 | 23124-GY360 | 1-48 | 23360-0M210 | 55-26 |
| 21060-FU410 | 1-40 | 23124-GY360 | 55-24 | 23361-42L70 | 1-50 |
| 21064-GY30A | 1-40 | 23127-FF110 | 1-48 | 23361-42L70 | 1-50 |
| 21079-K9760 | 1-40 | 23127-FF110 | 55-24 | 23361-42L70 | 1-50 |
| 21200-50K00 | 0-3 | 23127-GY360 | 1-48 | 23361-42L70 | 55-26 |
| 21200-50K00 | 1-40 | 23127-GY360 | 55-24 | 23361-42L70 | 55-26 |
| 22131-4M505 | 1-24 | 23131-20P10 | 1-48 | 23361-42L70 | 55-26 |
| 22131-55K10 | 1-38 | 23131-20P10 | 55-24 | 23381-FU410 | 1-50 |
| 22177-FU460 | 1-38 | 23142-0B000 | 1-48 | 23381-FU410 | 55-26 |
| 22318-FU460 | 1-46 | 23142-0B000 | 55-24 | 23385-50Y12 | 1-50 |
| 22401-FU412 | 0-12 | 23150-FU410 | 1-48 | 23385-50Y12 | 55-26 |
| 22401-FU412 | 1-42 | 23150-FU410 | 55-24 | 23465-W9810 | 1-50 |
| 22435-FU400 | 1-42 | 23150-GY360 | 1-48 | 23465-W9810 | 55-26 |
| 22448-AR215 | 0-12 | 23150-GY360 | 55-24 | 23480-M0110 | 1-50 |
| 22448-AR215 | 1-42 | 23153-70T12 | 1-48 | 23480-M0110 | 1-50 |
| 22630-44B20 | 0-12 | 23153-70T12 | 55-24 | 23480-M0110 | 1-50 |

## NUMERICAL INDEX


| Part Number | Page | Part Number | Page | Part Number | Page |
|---|---|---|---|---|---|
| 23480-M0110 | 55-26 | 30B-13-11130 | 13-4 | 30B-13-11420 | 13-8 |
| 23480-M0110 | 55-26 | 30B-13-11130 | 13-8 | 30B-13-11430 | 13-4 |
| 23480-M0110 | 55-26 | 30B-13-11140 | 13-4 | 30B-13-11430 | 13-8 |
| 23731-6J906 | 0-12 | 30B-13-11140 | 13-8 | 30B-13-11440 | 13-4 |
| 23731-6J906 | 1-24 | 30B-13-11150 | 13-4 | 30B-13-11440 | 13-8 |
| 23731-6N206 | 0-12 | 30B-13-11150 | 13-8 | 30B-13-11460 | 13-5 |
| 23731-6N206 | 1-24 | 30B-13-11160 | 13-4 | 30B-13-11460 | 13-9 |
| 24075-GY360 | 1-42 | 30B-13-11160 | 13-8 | 30B-13-11470 | 13-5 |
| 24075-GY360 | 1-44 | 30B-13-11170 | 13-4 | 30B-13-11470 | 13-9 |
| 24136-FU460 | 1-44 | 30B-13-11170 | 13-8 | 30B-15-11110 | 15-16 |
| 24136-FU461 | 1-44 | 30B-13-11190 | 13-4 | 30B-15-11120 | 15-16 |
| 24136-FU461 | 1-44 | 30B-13-11190 | 13-8 | 30B-15-11140 | 15-16 |
| 24136-GU21A | 1-42 | 30B-13-11200 | 13-4 | 30B-15-11150 | 15-16 |
| 24136-GY360 | 1-42 | 30B-13-11200 | 13-8 | 30B-36-05020 | 30-26 |
| 24220-79901 | 1-16 | 30B-13-11240 | 13-4 | 30B-36-12150 | 30-26 |
| 24220-FU400 | 1-16 | 30B-13-11240 | 13-8 | 30B-36-12160 | 30-26 |
| 24319-C9905 | 1-30 | 30B-13-11250 | 13-4 | 30B-36-12160 | 30-28 |
| 24319-C9905 | 1-32 | 30B-13-11250 | 13-8 | 30B-36-12160 | 30-29 |
| 24319-C9905 | 1-34 | 30B-13-11260 | 13-4 | 30B-36-12170 | 30-26 |
| 24341-10Y01 | 1-30 | 30B-13-11260 | 13-8 | 30B-36-12180 | 30-26 |
| 24341-10Y01 | 1-32 | 30B-13-11270 | 13-4 | 30B-36-12180 | 30-28 |
| 24341-10Y01 | 1-34 | 30B-13-11270 | 13-8 | 30B-36-12310 | 30-26 |
| 24341-10Y03 | 1-30 | 30B-13-11280 | 13-4 | 30B-36-12310 | 30-28 |
| 24341-10Y03 | 1-32 | 30B-13-11280 | 13-8 | 30B-36-12320 | 30-26 |
| 24341-10Y03 | 1-34 | 30B-13-11290 | 13-4 | 30B-36-12330 | 30-26 |
| 24346-VS000 | 1-30 | 30B-13-11290 | 13-8 | 30B-36-12410 | 30-28 |
| 24346-VS000 | 1-32 | 30B-13-11300 | 13-4 | 30B-36-12450 | 30-28 |
| 24346-VS000 | 1-34 | 30B-13-11300 | 13-8 | 30B-36-12530 | 30-28 |
| 25080-89903 | 1-40 | 30B-13-11310 | 13-4 | 30B-36-12580 | 30-28 |
| 25230-C9971 | 55-32 | 30B-13-11310 | 13-8 | 30B-36-12590 | 30-28 |
| 25240-FJ10A | 0-6 | 30B-13-11330 | 13-4 | 30B-36-12620 | 30-28 |
| 25240-FJ10A | 1-12 | 30B-13-11330 | 13-8 | 30B-36-12640 | 30-28 |
| 26366-080002 | 3-6 | 30B-13-11340 | 13-4 | 30B-36-12650 | 30-28 |
| 28351-89902 | 0-12 | 30B-13-11340 | 13-8 | 30B-36-12660 | 30-28 |
| 28351-89902 | 55-6 | 30B-13-11350 | 13-4 | 30B-36-12670 | 30-28 |
| 300-22-31241 | 24-3 | 30B-13-11350 | 13-8 | 30B-36-12690 | 30-29 |
| 300-22-31241 | 24-7 | 30B-13-11360 | 13-4 | 30E-15-11130 | 15-16 |
| 300-919-9040 | 27-4 | 30B-13-11360 | 13-8 | 30E-15-11130 | 15-16 |
| 30412-FY600 | 1-24 | 30B-13-11370 | 13-4 | 316-22-21250 | 0-7 |
| 30412-P5100 | 1-12 | 30B-13-11370 | 13-8 | 316-22-21250 | 21-4 |
| 30A-13-11100 | 13-8 | 30B-13-11380 | 13-4 | 316-22-21250 | 21-6 |
| 30A-13-11110 | 13-8 | 30B-13-11380 | 13-8 | 32203-FU400 | 1-19 |
| 30B-13-05010 | 0-6 | 30B-13-11390 | 0-14 | 34A-01-35120 | 1-6 |
| 30B-13-05010 | 13-5 | 30B-13-11390 | 0-3 | 34A-01-35120 | 1-62 |
| 30B-13-05010 | 13-9 | 30B-13-11390 | 13-4 | 34A-10-81150 | 34-2 |
| 30B-13-11100 | 13-4 | 30B-13-11390 | 13-8 | 34A-42-11411 | 41-2 |
| 30B-13-11110 | 13-4 | 30B-13-11390 | 15-2 | 34A-42-11411 | 41-4 |
| 30B-13-11120 | 0-6 | 30B-13-11410 | 13-4 | 34A-42-11411 | 72-64 |
| 30B-13-11120 | 13-4 | 30B-13-11410 | 13-8 | 34A-42-11411 | 72-66 |
| 30B-13-11120 | 13-8 | 30B-13-11420 | 13-4 | 34A-42-41130 | 1-64 |

https://truckmanualshub.com/


## NUMERICAL INDEX


| Part Number | Page | Part Number | Page | Part Number | Page |
|---|---|---|---|---|---|
| 34A-42-41130 | 4-10 | 34B-30-14351 | 30-2 | 360-27-11220 | 24-10 |
| 34A-42-41130 | 4-14 | 34B-30-14351 | 30-6 | 360-27-11220 | 24-12 |
| 34A-42-41130 | 4-16 | 34B-30-14440 | 30-10 | 360-27-11220 | 24-2 |
| 34A-42-41130 | 4-6 | 34B-30-14440 | 30-15 | 360-27-11220 | 24-6 |
| 34A-42-41130 | 4-8 | 34B-30-14440 | 30-18 | 37A-1AV-1030 | 96-10 |
| 34A-50-22140 | 27-4 | 34B-30-14440 | 30-2 | 37A-1AV-1030 | 96-2 |
| 34A-50-22140 | 27-5 | 34B-30-14440 | 30-6 | 37A-1AV-1030 | 96-6 |
| 34A-76-42110 | 66-8 | 34B-30-14450 | 30-10 | 37A-1CP-A710 | 0-8 |
| 34B-15-11360 | 15-4 | 34B-30-14450 | 30-14 | 37A-1CP-A710 | 56-2 |
| 34B-15-11360 | 15-4 | 34B-30-14450 | 30-18 | 37A-1CP-A710 | 56-4 |
| 34B-15-11360 | 15-8 | 34B-30-14450 | 30-2 | 37A-1CP-A710 | 56-6 |
| 34B-15-11360 | 15-8 | 34B-30-14450 | 30-6 | 37A-1CP-A720 | 0-8 |
| 34B-21-12141 | 21-12 | 34B-30-14470 | 30-10 | 37A-1CP-A720 | 56-2 |
| 34B-21-14151 | 0-7 | 34B-30-14470 | 30-15 | 37A-1CP-A720 | 56-4 |
| 34B-21-14151 | 21-10 | 34B-30-14470 | 30-19 | 37A-1CP-A720 | 56-6 |
| 34B-21-14151 | 27-4 | 34B-30-14470 | 30-3 | 37A-1CP-A750 | 0-8 |
| 34B-21-14151 | 27-4 | 34B-30-14470 | 30-7 | 37A-1CP-A750 | 56-2 |
| 34B-24-11221 | 0-8 | 34B-30-14480 | 30-10 | 37A-1CP-A750 | 56-4 |
| 34B-24-11221 | 24-2 | 34B-30-14480 | 30-15 | 37A-1CP-A750 | 56-6 |
| 34B-24-11221 | 24-6 | 34B-30-14480 | 30-18 | 37A-1LH-2361 | 55-44 |
| 34B-27-00210 | 27-4 | 34B-30-14480 | 30-2 | 37A-1LH-2361 | 55-46 |
| 34B-27-11131 | 27-4 | 34B-30-14480 | 30-6 | 37A-1LH-2371 | 55-20 |
| 34B-27-11141 | 27-4 | 34B-30-14521 | 30-14 | 37A-1LH-2371 | 55-22 |
| 34B-27-11340 | 21-6 | 34B-30-14521 | 30-18 | 37A-1LK-2210 | 55-8 |
| 34B-27-11340 | 27-4 | 34B-30-14540 | 30-14 | 37A-1LM-2010 | 55-20 |
| 34B-27-11340 | 27-4 | 34B-30-14540 | 30-18 | 37A-1LM-2010 | 55-22 |
| 34B-27-11350 | 21-6 | 34B-30-14550 | 30-14 | 37A-1LM-2040 | 55-44 |
| 34B-27-11350 | 27-4 | 34B-30-14550 | 30-18 | 37A-1LM-2040 | 55-46 |
| 34B-27-11350 | 27-4 | 34B-30-14550 | 30-2 | 37A-27-14120 | 28-4 |
| 34B-27-32320 | 27-4 | 34B-30-14550 | 30-6 | 37A-27-14130 | 28-4 |
| 34B-27-32330 | 27-4 | 34B-30-14560 | 30-10 | 37A-27-18111 | 28-4 |
| 34B-27-32330 | 27-5 | 34B-30-14560 | 30-14 | 37A-2BK-A020 | 96-11 |
| 34B-27-32411SA | 27-4 | 34B-30-14560 | 30-18 | 37A-2BK-A020 | 96-3 |
| 34B-27-32440 | 27-5 | 34B-30-14560 | 30-2 | 37A-2BK-A020 | 96-7 |
| 34B-30-14160 | 30-14 | 34B-30-14560 | 30-6 | 37A-2BS-1011 | 96-10 |
| 34B-30-14160 | 30-18 | 34B-30-14570 | 30-10 | 37A-2BS-1011 | 96-2 |
| 34B-30-14160 | 30-2 | 34B-41-12910 | 21-2 | 37A-2BS-1011 | 96-6 |
| 34B-30-14160 | 30-6 | 34B-41-12910 | 21-4 | 37A-502-8130 | 66-4 |
| 34B-30-14260 | 30-14 | 34B-41-12910 | 21-6 | 37B-1AC-A110 | 4-14 |
| 34B-30-14260 | 30-18 | 34B-41-12920 | 21-2 | 37B-1AC-A150 | 4-14 |
| 34B-30-14260 | 30-2 | 34B-41-12920 | 21-4 | 37B-1AC-A150 | 4-16 |
| 34B-30-14260 | 30-6 | 34B-41-12920 | 21-6 | 37B-1AC-A160 | 4-16 |
| 34B-30-14320 | 30-10 | 34B-50-12730 | 50-8 | 37B-1AC-A170 | 4-10 |
| 34B-30-14320 | 30-14 | 34B-66-15180 | 0-14 | 37B-1AC-A170 | 4-6 |
| 34B-30-14320 | 30-18 | 34B-66-15180 | 0-4 | 37B-1AC-A170 | 4-8 |
| 34B-30-14320 | 30-2 | 34B-66-15180 | 0-8 | 37B-1AC-A180 | 4-10 |
| 34B-30-14320 | 30-6 | 34B-66-15180 | 66-6 | 37B-1AC-A180 | 4-8 |
| 34B-30-14351 | 30-10 | 34B-66-15180 | 66-8 | 37B-1AE-6010 | 83-11 |
| 34B-30-14351 | 30-14 | 358-60-15250 | 61-8 | 37B-1AE-6010 | 83-12 |
| 34B-30-14351 | 30-18 | 358-60-15250 | 61-8 | 37B-1AE-6030 | 55-20 |

## NUMERICAL INDEX


| Part Number | Page | Part Number | Page | Part Number | Page |
|---|---|---|---|---|---|
| 37B-1AE-6030 | 55-22 | 37B-1DD-5210 | 0-12 | 37B-1FT-A711 | 41-2 |
| 37B-1AJ-9010 | 64-12 | 37B-1DD-5210 | 55-32 | 37B-1FT-A711 | 41-4 |
| 37B-1AJ-9010 | 64-12 | 37B-1DD-5220 | 0-12 | 37B-1FT-A721 | 41-2 |
| 37B-1AJ-9010 | 64-6 | 37B-1DD-5220 | 55-32 | 37B-1FT-A721 | 41-4 |
| 37B-1AJ-9010 | 64-6 | 37B-1DD-5320 | 0-12 | 37B-1FZ-A7820 | 41-2 |
| 37B-1AJ-9010 | 64-6 | 37B-1DD-5320 | 0-12 | 37B-1FZ-A7820 | 41-4 |
| 37B-1AJ-9020 | 64-10 | 37B-1DD-5330 | 0-12 | 37B-1FZ-A7890 | 41-2 |
| 37B-1AJ-9020 | 64-16 | 37B-1DE-5351 | 1-60 | 37B-1FZ-A7890 | 41-4 |
| 37B-1AP-1010 | 64-12 | 37B-1DE-5361 | 1-60 | 37B-1FZ-A810 | 41-2 |
| 37B-1AP-1010 | 64-12 | 37B-1DG-5320 | 55-34 | 37B-1FZ-A810 | 41-4 |
| 37B-1AP-1010 | 64-6 | 37B-1DG-5330 | 55-34 | 37B-1HA-A710 | 61-8 |
| 37B-1AP-1010 | 64-6 | 37B-1DU-3031 | 0-12 | 37B-1HA-A720 | 61-8 |
| 37B-1AP-1010 | 64-6 | 37B-1DU-3031 | 5-2 | 37B-1HA-A730 | 61-8 |
| 37B-1AP-1020 | 64-10 | 37B-1EH-2011 | 0-4 | 37B-1HA-A740 | 61-8 |
| 37B-1AP-1020 | 64-16 | 37B-1EJ-2020 | 0-2 | 37B-1HD-5030 | 61-8 |
| 37B-1AZ-5030 | 1-4 | 37B-1EK-4010 | 55-12 | 37B-1HD-5040 | 61-8 |
| 37B-1AZ-5030 | 15-2 | 37B-1EK-4030 | 55-12 | 37B-1JE-A410 | 64-12 |
| 37B-1AZ-5030 | 15-4 | 37B-1EL-4020 | 55-12 | 37B-1JE-A410 | 64-6 |
| 37B-1AZ-5050 | 15-8 | 37B-1EM-4080 | 83-10 | 37B-1JE-A410 | 64-6 |
| 37B-1AZ-5050 | 1-4 | 37B-1EP-4020 | 4-16 | 37B-1JE-A420 | 64-12 |
| 37B-1AZ-5050 | 15-2 | 37B-1EP-4020 | 55-38 | 37B-1JE-A420 | 64-6 |
| 37B-1BR-5110 | 30-2 | 37B-1ER-F160 | 83-11 | 37B-1JE-A610 | 64-10 |
| 37B-1BR-5120 | 30-2 | 37B-1ER-F160 | 83-11 | 37B-1JE-A650 | 64-16 |
| 37B-1BR-5130 | 30-6 | 37B-1ES-F310 | 83-12 | 37B-1JV-A410 | 64-2 |
| 37B-1BR-5140 | 30-6 | 37B-1ES-F310 | 83-2 | 37B-1JV-A410 | 64-6 |
| 37B-1BR-5210 | 30-14 | 37B-1ES-F310 | 96-10 | 37B-1JV-A420 | 64-2 |
| 37B-1BR-5210 | 30-18 | 37B-1ES-F310 | 96-2 | 37B-1JV-A420 | 64-6 |
| 37B-1BR-5220 | 30-14 | 37B-1ES-F310 | 96-6 | 37B-1JV-A430 | 64-2 |
| 37B-1BR-5220 | 30-18 | 37B-1EU-F150 | 83-12 | 37B-1JV-A430 | 64-6 |
| 37B-1BR-5310 | 30-10 | 37B-1EU-F170 | 83-2 | 37B-1JV-A440 | 64-2 |
| 37B-1BR-5320 | 30-10 | 37B-1EV-A150 | 83-12 | 37B-1JV-A440 | 64-6 |
| 37B-1CS-A010 | 0-8 | 37B-1EV-A150 | 83-2 | 37B-1JV-A510 | 64-2 |
| 37B-1CS-A010 | 56-2 | 37B-1FA-A050 | 5-4 | 37B-1JV-A510 | 64-6 |
| 37B-1CV-2121 | 50-8 | 37B-1FA-A070 | 5-4 | 37B-1JV-A520 | 64-2 |
| 37B-1CW-3030 | 50-18 | 37B-1FB-5021 | 21-2 | 37B-1JV-A520 | 64-6 |
| 37B-1CW-3100 | 50-18 | 37B-1FB-5031 | 21-2 | 37B-1JV-A530 | 64-2 |
| 37B-1DA-5320 | 1-2 | 37B-1FC-5031 | 21-4 | 37B-1JV-A530 | 64-6 |
| 37B-1DA-5331 | 1-2 | 37B-1FC-5041 | 21-4 | 37B-1JV-A540 | 64-2 |
| 37B-1DA-5350 | 1-2 | 37B-1FD-5051 | 21-6 | 37B-1JV-A540 | 64-6 |
| 37B-1DA-5361 | 1-2 | 37B-1FE-5211 | 21-10 | 37B-1JV-A810 | 64-10 |
| 37B-1DD-5010 | 1-2 | 37B-1FE-5211 | 21-8 | 37B-1JV-A810 | 64-2 |
| 37B-1DD-5020 | 1-2 | 37B-1FF-A150 | 6-6 | 37B-1JV-A820 | 64-10 |
| 37B-1DD-5030 | 1-2 | 37B-1FF-A170 | 6-6 | 37B-1JV-A820 | 64-2 |
| 37B-1DD-5040 | 1-2 | 37B-1FH-3010 | 4-10 | 37B-1JV-A910 | 64-10 |
| 37B-1DD-5050 | 1-2 | 37B-1FH-3010 | 4-10 | 37B-1JV-A910 | 64-2 |
| 37B-1DD-5060 | 1-2 | 37B-1FH-3010 | 4-8 | 37B-1JV-A920 | 64-10 |
| 37B-1DD-5110 | 1-2 | 37B-1FH-3010 | 4-8 | 37B-1JV-A920 | 64-2 |
| 37B-1DD-5130 | 1-2 | 37B-1FH-3020 | 4-10 | 37B-1JW-A410 | 64-12 |
| 37B-1DD-5140 | 1-2 | 37B-1FH-A020 | 4-6 | 37B-1JW-A410 | 64-2 |
| 37B-1DD-5160 | 1-2 | 37B-1FH-A020 | 4-8 | 37B-1JW-A420 | 64-12 |

## NUMERICAL INDEX


| Part Number | Page | Part Number | Page | Part Number | Page |
|---|---|---|---|---|---|
| 37B-1JW-A420 | 64-2 | 37B-1PC-5070 | 66-18 | 37B-1QM-A021 | 96-6 |
| 37B-1JW-A440 | 64-12 | 37B-1PC-5070 | 66-4 | 37B-1QM-A031 | 96-10 |
| 37B-1JW-A510 | 64-12 | 37B-1PC-5090 | 4-22 | 37B-1QM-A031 | 96-2 |
| 37B-1JW-A510 | 64-2 | 37B-1PC-5090 | 4-24 | 37B-1QM-A031 | 96-6 |
| 37B-1JW-A520 | 64-12 | 37B-1PC-5090 | 66-12 | 37B-1QM-A041 | 96-10 |
| 37B-1JW-A520 | 64-2 | 37B-1PC-5090 | 66-14 | 37B-1QM-A041 | 96-2 |
| 37B-1JW-A540 | 64-12 | 37B-1PC-5090 | 66-26 | 37B-1QM-A041 | 96-6 |
| 37B-1JW-A810 | 64-16 | 37B-1PC-5090 | 66-28 | 37B-1QM-A051 | 96-10 |
| 37B-1JW-A810 | 64-2 | 37B-1PC-5090 | 66-30 | 37B-1QM-A051 | 96-2 |
| 37B-1JW-A820 | 64-16 | 37B-1PW-4030 | 66-26 | 37B-1QM-A051 | 96-6 |
| 37B-1JW-A820 | 64-2 | 37B-1PW-4030 | 66-28 | 37B-1QM-A061 | 96-10 |
| 37B-1JW-A910 | 64-16 | 37B-1PW-4030 | 66-30 | 37B-1QM-A061 | 96-2 |
| 37B-1JW-A910 | 64-2 | 37B-1PW-5010 | 66-26 | 37B-1QM-A061 | 96-6 |
| 37B-1JW-A920 | 64-16 | 37B-1PW-5010 | 66-28 | 37B-1QT-A030 | 96-11 |
| 37B-1JW-A920 | 64-2 | 37B-1PW-5010 | 66-30 | 37B-1QT-A030 | 96-3 |
| 37B-1KA-A710 | 0-8 | 37B-1PW-5040 | 66-26 | 37B-1QT-A030 | 96-7 |
| 37B-1KA-A710 | 60-2 | 37B-1PW-5040 | 66-28 | 37B-1RB-5010 | 66-12 |
| 37B-1KA-A710 | 60-4 | 37B-1PW-5040 | 66-30 | 37B-1RB-5010 | 66-14 |
| 37B-1KB-5040 | 0-9 | 37B-1QA-3010 | 96-10 | 37B-1RB-5010 | 66-16 |
| 37B-1KB-5040 | 60-8 | 37B-1QA-3010 | 96-2 | 37B-1RB-5010 | 66-18 |
| 37B-1KC-5020 | 0-8 | 37B-1QA-3010 | 96-6 | 37B-1RB-5020 | 66-14 |
| 37B-1KC-5020 | 60-2 | 37B-1QB-3010 | 96-10 | 37B-1RB-5020 | 66-16 |
| 37B-1KC-5020 | 60-6 | 37B-1QB-3010 | 96-2 | 37B-1RB-5020 | 66-18 |
| 37B-1KD-5040 | 0-9 | 37B-1QB-3010 | 96-6 | 37B-1RB-5030 | 66-12 |
| 37B-1KD-5040 | 60-10 | 37B-1QF-A020 | 96-10 | 37B-1RB-5030 | 66-14 |
| 37B-1KE-5030 | 60-2 | 37B-1QF-A020 | 96-2 | 37B-1RB-5040 | 66-12 |
| 37B-1LH-A720 | 55-2 | 37B-1QF-A020 | 96-6 | 37B-1RB-5040 | 66-14 |
| 37B-1LH-A720 | 55-8 | 37B-1QL-A030 | 96-10 | 37B-1RB-5040 | 66-16 |
| 37B-1LJ-A710 | 55-20 | 37B-1QL-A030 | 96-2 | 37B-1RB-5040 | 66-18 |
| 37B-1LJ-A710 | 55-22 | 37B-1QL-A030 | 96-6 | 37B-1RB-5060 | 66-2 |
| 37B-1LJ-A720 | 55-44 | 37B-1QL-A040 | 96-10 | 37B-1RC-5010 | 66-12 |
| 37B-1LJ-A720 | 55-46 | 37B-1QL-A040 | 96-2 | 37B-1RC-5010 | 66-14 |
| 37B-1LK-4010 | 55-40 | 37B-1QL-A040 | 96-6 | 37B-1RC-5010 | 66-16 |
| 37B-1PB-4030 | 0-4 | 37B-1QL-A050 | 96-10 | 37B-1RC-5010 | 66-18 |
| 37B-1PB-4030 | 0-8 | 37B-1QL-A050 | 96-2 | 37B-1RC-5010 | 66-26 |
| 37B-1PB-4030 | 66-6 | 37B-1QL-A050 | 96-6 | 37B-1RC-5010 | 66-28 |
| 37B-1PB-4040 | 0-4 | 37B-1QL-A060 | 96-10 | 37B-1RC-5010 | 66-30 |
| 37B-1PB-4040 | 0-8 | 37B-1QL-A060 | 96-2 | 37B-1RC-5010 | 66-4 |
| 37B-1PB-4040 | 66-8 | 37B-1QL-A060 | 96-6 | 37B-1RC-5030 | 66-18 |
| 37B-1PC-5010 | 66-2 | 37B-1QL-A070 | 96-10 | 37B-1TH-5010 | 21-10 |
| 37B-1PC-5020 | 66-2 | 37B-1QL-A070 | 96-2 | 37B-1TH-5020 | 21-16 |
| 37B-1PC-5030 | 66-4 | 37B-1QL-A070 | 96-6 | 37B-1TJ-5010 | 21-10 |
| 37B-1PC-5060 | 4-18 | 37B-1QL-A080 | 96-10 | 37B-1TJ-5020 | 21-16 |
| 37B-1PC-5060 | 4-20 | 37B-1QL-A080 | 96-2 | 37B-741-A511 | 93-2 |
| 37B-1PC-5060 | 4-22 | 37B-1QL-A080 | 96-6 | 37B-741-A511 | 93-3 |
| 37B-1PC-5060 | 4-24 | 37B-1QM-A011 | 96-10 | 37B-741-A521 | 93-2 |
| 37B-1PC-5070 | 66-12 | 37B-1QM-A011 | 96-2 | 37B-741-A521 | 93-3 |
| 37B-1PC-5070 | 66-14 | 37B-1QM-A011 | 96-6 | 37B-741-A531 | 93-2 |
| 37B-1PC-5070 | 66-14 | 37B-1QM-A021 | 96-10 | 37B-741-A531 | 93-3 |
| 37B-1PC-5070 | 66-16 | 37B-1QM-A021 | 96-2 | 37B-741-A541 | 93-2 |

## NUMERICAL INDEX


| Part Number | Page | Part Number | Page | Part Number | Page |
|---|---|---|---|---|---|
| 37B-741-A541 | 93-3 | 3BB-64-A6230 | 64-16 | 3EA-01-A5390 | 0-2 |
| 37B-741-A561 | 93-3 | 3BB-64-A6240 | 64-10 | 3EA-01-A5390 | 1-8 |
| 37B-741-A561 | 93-3 | 3BB-64-A6240 | 64-16 | 3EA-04-51110 | 0-6 |
| 37B-741-A571 | 93-3 | 3BB-64-A6250 | 64-10 | 3EA-04-51110 | 4-2 |
| 37B-741-A571 | 93-3 | 3BB-64-A6250 | 64-16 | 3EA-05-39680 | 6-2 |
| 37B-741-A611 | 93-2 | 3BB-64-A6260 | 64-10 | 3EA-05-39680 | 6-4 |
| 37B-741-A611 | 93-2 | 3BB-64-A6260 | 64-16 | 3EA-05-39950 | 6-2 |
| 37B-741-A611 | 93-3 | 3BB-64-A6270 | 64-10 | 3EA-05-39950 | 6-4 |
| 37B-741-A621 | 93-2 | 3BB-64-A6270 | 64-16 | 3EA-05-46140 | 66-26 |
| 37B-741-A621 | 93-2 | 3BB-64-A6280 | 64-10 | 3EA-05-46140 | 66-28 |
| 37B-741-A621 | 93-3 | 3BB-64-A6280 | 64-16 | 3EA-05-46140 | 66-30 |
| 37B-741-A631 | 93-2 | 3BB-64-A6290 | 64-10 | 3EA-05-46180 | 66-26 |
| 37B-741-A631 | 93-2 | 3BB-64-A6290 | 64-16 | 3EA-05-46180 | 66-28 |
| 37B-741-A631 | 93-3 | 3BB-64-A6310 | 0-4 | 3EA-05-46180 | 66-30 |
| 3BA-37-51140 | 37-2 | 3BB-64-A6310 | 64-13 | 3EA-05-A6110 | 5-2 |
| 3BA-41-A5620 | 83-14 | 3BB-64-A6310 | 64-3 | 3EA-05-A6110 | 5-4 |
| 3BA-50-69330 | 6-6 | 3BB-64-A6310 | 64-7 | 3EA-05-A6120 | 5-4 |
| 3BA-56-A5610 | 83-2 | 3BB-64-A6320 | 64-12 | 3EA-05-A6130 | 5-2 |
| 3BB-21-31230 | 21-2 | 3BB-64-A6320 | 64-7 | 3EA-05-A6130 | 5-4 |
| 3BB-21-31230 | 21-4 | 3BB-64-A6330 | 64-12 | 3EA-05-A6630 | 6-6 |
| 3BB-21-31230 | 21-6 | 3BB-64-A6330 | 64-7 | 3EA-05-A7610 | 6-2 |
| 3BB-21-31240 | 21-2 | 3BB-64-A6340 | 64-12 | 3EA-05-A7610 | 6-4 |
| 3BB-21-31240 | 21-4 | 3BB-64-A6340 | 64-7 | 3EA-05-A7920 | 6-6 |
| 3BB-21-31240 | 21-6 | 3BB-64-A6350 | 64-12 | 3EA-13-51200 | 13-8 |
| 3BB-30-12190 | 30-14 | 3BB-64-A6350 | 64-7 | 3EA-15-11180 | 15-4 |
| 3BB-30-12190 | 30-18 | 3BB-64-A6360 | 64-12 | 3EA-15-11180 | 15-4 |
| 3BB-30-12190 | 30-2 | 3BB-64-A6360 | 64-6 | 3EA-15-11180 | 15-8 |
| 3BB-30-12190 | 30-6 | 3BB-64-A6370 | 64-12 | 3EA-15-11180 | 15-8 |
| 3BB-33-57110 | 33-2 | 3BB-64-A6370 | 64-6 | 3EA-15-33220 | 15-12 |
| 3BB-33-57110 | 34-2 | 3BB-64-A6380 | 64-10 | 3EA-20-51090 | 21-16 |
| 3BB-52-A7260 | 83-14 | 3BB-64-A6380 | 64-16 | 3EA-43-21160 | 43-2 |
| 3BB-52-A7380 | 83-14 | 3BB-64-A6390 | 64-12 | 3EA-43-21160 | 43-2 |
| 3BB-55-A3710 | 83-14 | 3BB-64-A6390 | 64-6 | 3EA-51-11390 | 3-4 |
| 3BB-55-F2180 | 83-11 | 3BB-64-A6410 | 0-4 | 3EA-51-42110 | 50-14 |
| 3BB-55-F2180 | 83-11 | 3BB-64-A6420 | 64-10 | 3EA-51-42110 | 50-14 |
| 3BB-55-F2180 | 83-11 | 3BB-64-A6420 | 64-16 | 3EA-51-42110 | 50-16 |
| 3BB-55-F2180 | 83-12 | 3BB-64-A6430 | 64-10 | 3EA-51-42110 | 50-16 |
| 3BB-55-F2180 | 83-13 | 3BB-64-A6430 | 64-16 | 3EA-51-42120 | 50-14 |
| 3BB-56-A6210 | 83-2 | 3BB-64-A6440 | 64-10 | 3EA-51-42120 | 50-14 |
| 3BB-56-A6220 | 83-2 | 3BB-64-A6440 | 64-16 | 3EA-51-42120 | 50-16 |
| 3BB-56-A6260 | 83-2 | 3BB-64-A6520 | 64-12 | 3EA-51-42120 | 50-16 |
| 3BB-56-A6310 | 83-2 | 3BB-64-A6520 | 64-7 | 3EA-55-39670 | 55-10 |
| 3BB-56-A6610 | 83-11 | 3BB-64-A6530 | 64-12 | 3EA-55-A1810 | 55-8 |
| 3BB-56-A6610 | 83-11 | 3BB-64-A6530 | 64-7 | 3EA-55-A7411 | 55-16 |
| 3BB-64-A6210 | 64-10 | 3BB-64-A6540 | 64-12 | 3EA-55-A7411 | 55-18 |
| 3BB-64-A6210 | 64-16 | 3BB-64-A6540 | 64-6 | 3EA-55-A7440 | 55-16 |
| 3BB-64-A6210 | 64-3 | 3BB-64-A6560 | 64-13 | 3EA-55-A7440 | 55-18 |
| 3BB-64-A6220 | 64-10 | 3BB-64-A6560 | 64-7 | 3EA-55-A7440 | 55-42 |
| 3BB-64-A6220 | 64-16 | 3BB-66-A6370 | 66-24 | 3EA-55-A7461 | 55-42 |
| 3BB-64-A6230 | 64-10 | 3EA-01-A5390 | 0-14 | 3EA-56-38650 | 55-20 |

https://truckmanualshub.com/


## NUMERICAL INDEX


| Part Number | Page | Part Number | Page | Part Number | Page |
|---|---|---|---|---|---|
| 3EA-56-38650 | 55-22 | 3EB-03-31530 | 3-6 | 3EB-04-41160 | 4-2 |
| 3EA-56-38650 | 55-44 | 3EB-03-41120 | 3-2 | 3EB-04-41160 | 4-4 |
| 3EA-56-38650 | 55-46 | 3EB-03-41120 | 3-4 | 3EB-04-42140 | 4-10 |
| 3EA-56-F1122 | 83-2 | 3EB-03-41120 | 3-6 | 3EB-04-42140 | 4-6 |
| 3EA-56-F2210 | 83-10 | 3EB-03-51131 | 3-2 | 3EB-04-42140 | 4-8 |
| 3EA-56-F2210 | 83-4 | 3EB-03-51131 | 3-4 | 3EB-04-44190 | 4-18 |
| 3EA-66-33581 | 5-2 | 3EB-03-51131 | 3-6 | 3EB-04-44190 | 4-20 |
| 3EA-71-12780 | 21-10 | 3EB-03-51170 | 3-2 | 3EB-04-44190 | 4-22 |
| 3EA-71-12790 | 1-6 | 3EB-03-51170 | 3-4 | 3EB-04-44190 | 4-24 |
| 3EA-71-12790 | 1-62 | 3EB-03-51170 | 3-6 | 3EB-04-46620 | 4-10 |
| 3EA-M1-17170 | 4-22 | 3EB-03-A7110 | 0-6 | 3EB-04-46620 | 4-6 |
| 3EA-M1-17170 | 4-24 | 3EB-03-A7110 | 3-2 | 3EB-04-46620 | 4-8 |
| 3EB-01-31760 | 83-13 | 3EB-03-A7110 | 3-6 | 3EB-04-48110 | 4-18 |
| 3EB-01-34120 | 3-4 | 3EB-03-A7120 | 0-6 | 3EB-04-48140 | 4-18 |
| 3EB-01-51110 | 1-6 | 3EB-03-A7120 | 3-2 | 3EB-04-48140 | 4-20 |
| 3EB-01-51121 | 1-6 | 3EB-03-A7130 | 0-6 | 3EB-04-51180 | 4-6 |
| 3EB-01-51130 | 0-6 | 3EB-03-A7130 | 3-2 | 3EB-04-51180 | 4-8 |
| 3EB-01-51130 | 1-6 | 3EB-03-A7130 | 3-4 | 3EB-04-51230 | 4-22 |
| 3EB-01-51130 | 1-62 | 3EB-03-A7210 | 0-6 | 3EB-04-51420 | 4-12 |
| 3EB-01-51190 | 1-6 | 3EB-03-A7210 | 3-4 | 3EB-04-51430 | 4-12 |
| 3EB-01-51190 | 1-62 | 3EB-03-A7220 | 0-6 | 3EB-04-51711 | 4-22 |
| 3EB-01-51280 | 1-8 | 3EB-03-A7220 | 3-4 | 3EB-04-51721 | 4-22 |
| 3EB-01-51291 | 1-64 | 3EB-03-A7240 | 3-2 | 3EB-04-52610 | 0-6 |
| 3EB-01-52110 | 1-62 | 3EB-03-A7240 | 3-4 | 3EB-04-52610 | 4-4 |
| 3EB-01-52120 | 1-62 | 3EB-03-A7321 | 3-6 | 3EB-04-52910 | 4-12 |
| 3EB-01-A5392 | 0-14 | 3EB-03-A7330 | 3-6 | 3EB-04-53110 | 0-6 |
| 3EB-01-A5392 | 0-2 | 3EB-03-A7411 | 0-6 | 3EB-04-53110 | 4-4 |
| 3EB-01-A5392 | 1-64 | 3EB-03-A7411 | 3-2 | 3EB-04-53410 | 4-24 |
| 3EB-01-A7560 | 83-10 | 3EB-03-A7511 | 0-6 | 3EB-04-53420 | 4-24 |
| 3EB-01-A7570 | 83-10 | 3EB-03-A7511 | 3-4 | 3EB-04-56520 | 4-6 |
| 3EB-01-A7580 | 83-10 | 3EB-03-A7610 | 3-6 | 3EB-04-56530 | 4-6 |
| 3EB-01-A7590 | 83-10 | 3EB-03-A7810 | 3-6 | 3EB-04-56620 | 4-10 |
| 3EB-01-A7910 | 1-8 | 3EB-04-21130 | 0-3 | 3EB-04-56620 | 4-6 |
| 3EB-01-A7922 | 1-8 | 3EB-04-21130 | 4-2 | 3EB-04-56620 | 4-8 |
| 3EB-01-A7950 | 83-13 | 3EB-04-21130 | 4-4 | 3EB-04-56630 | 4-10 |
| 3EB-01-A7960 | 83-13 | 3EB-04-25140 | 4-10 | 3EB-04-56630 | 4-6 |
| 3EB-01-D6110 | 1-64 | 3EB-04-25140 | 4-16 | 3EB-04-56630 | 4-8 |
| 3EB-01-D6110 | 1-8 | 3EB-04-31140 | 4-2 | 3EB-04-56640 | 4-10 |
| 3EB-01-F5120 | 83-13 | 3EB-04-31140 | 4-4 | 3EB-04-56640 | 4-6 |
| 3EB-01-F5130 | 83-13 | 3EB-04-31170 | 4-2 | 3EB-04-56640 | 4-8 |
| 3EB-02-34630 | 1-64 | 3EB-04-31170 | 4-4 | 3EB-04-56650 | 4-10 |
| 3EB-02-41730 | 1-64 | 3EB-04-31170 | 83-10 | 3EB-04-56650 | 4-6 |
| 3EB-02-52130 | 1-6 | 3EB-04-31170 | 83-6 | 3EB-04-56650 | 4-8 |
| 3EB-02-52130 | 1-62 | 3EB-04-31170 | 83-8 | 3EB-04-56770 | 4-10 |
| 3EB-02-A7910 | 1-64 | 3EB-04-31180 | 4-2 | 3EB-04-56770 | 4-8 |
| 3EB-02-A7921 | 1-64 | 3EB-04-31180 | 4-4 | 3EB-04-A7110 | 4-2 |
| 3EB-02-A7931 | 1-64 | 3EB-04-32140 | 4-12 | 3EB-04-A7120 | 4-2 |
| 3EB-02-A7950 | 1-64 | 3EB-04-34550 | 4-18 | 3EB-04-A7160 | 4-2 |
| 3EB-03-31530 | 3-2 | 3EB-04-34550 | 4-20 | 3EB-04-A7180 | 4-2 |
| 3EB-03-31530 | 3-4 | 3EB-04-35510 | 4-24 | 3EB-04-A7210 | 0-6 |

## NUMERICAL INDEX


| Part Number | Page | Part Number | Page | Part Number | Page |
|---|---|---|---|---|---|
| 3EB-04-A7210 | 4-2 | 3EB-04-A7920 | 4-20 | 3EB-15-05500 | 0-6 |
| 3EB-04-A7231 | 4-6 | 3EB-05-34130 | 5-4 | 3EB-15-05500 | 15-12 |
| 3EB-04-A7240 | 4-8 | 3EB-05-41280 | 55-40 | 3EB-15-05500 | 15-18 |
| 3EB-04-A7261 | 4-6 | 3EB-05-A7180 | 6-2 | 3EB-15-05500 | 15-5 |
| 3EB-04-A7310 | 4-4 | 3EB-05-A7180 | 6-4 | 3EB-15-05500 | 15-9 |
| 3EB-04-A7360 | 4-4 | 3EB-05-A7230 | 6-2 | 3EB-15-11260 | 15-4 |
| 3EB-04-A7410 | 4-12 | 3EB-05-A7230 | 6-4 | 3EB-15-11260 | 15-4 |
| 3EB-04-A7420 | 4-12 | 3EB-05-A7260 | 6-2 | 3EB-15-11260 | 15-8 |
| 3EB-04-A7470 | 0-3 | 3EB-05-A7260 | 6-4 | 3EB-15-11260 | 15-8 |
| 3EB-04-A7471 | 4-10 | 3EB-05-A7270 | 6-2 | 3EB-15-31271 | 15-2 |
| 3EB-04-A7471 | 4-8 | 3EB-05-A7270 | 6-4 | 3EB-15-48310 | 15-14 |
| 3EB-04-A7480 | 0-3 | 3EB-05-A7290 | 6-2 | 3EB-15-48320 | 15-14 |
| 3EB-04-A7481 | 4-10 | 3EB-05-A7290 | 6-4 | 3EB-15-48330 | 15-14 |
| 3EB-04-A7481 | 4-8 | 3EB-05-A7420 | 41-8 | 3EB-15-48340 | 15-14 |
| 3EB-04-A7491 | 4-10 | 3EB-05-A7420 | 5-2 | 3EB-15-48350 | 15-14 |
| 3EB-04-A7491 | 4-8 | 3EB-05-A7420 | 5-4 | 3EB-15-48650 | 15-14 |
| 3EB-04-A7510 | 0-2 | 3EB-05-A7430 | 5-2 | 3EB-15-51111 | 15-2 |
| 3EB-04-A7511 | 4-6 | 3EB-05-A7451 | 5-2 | 3EB-15-51170 | 15-4 |
| 3EB-04-A7520 | 0-2 | 3EB-05-A7460 | 5-2 | 3EB-15-51170 | 15-4 |
| 3EB-04-A7521 | 4-6 | 3EB-05-A7470 | 5-2 | 3EB-15-51170 | 15-8 |
| 3EB-04-A7542 | 4-6 | 3EB-05-A7480 | 5-2 | 3EB-15-51170 | 15-8 |
| 3EB-04-A7542 | 4-6 | 3EB-05-A7480 | 5-4 | 3EB-15-51180 | 15-2 |
| 3EB-04-A7560 | 0-3 | 3EB-05-A7491 | 5-2 | 3EB-15-51230 | 15-4 |
| 3EB-04-A7561 | 4-10 | 3EB-05-A7530 | 5-2 | 3EB-15-51230 | 15-4 |
| 3EB-04-A7561 | 4-8 | 3EB-05-A7551 | 5-2 | 3EB-15-51230 | 15-8 |
| 3EB-04-A7570 | 0-3 | 3EB-05-A7570 | 5-2 | 3EB-15-51230 | 15-8 |
| 3EB-04-A7571 | 4-10 | 3EB-05-A7580 | 5-2 | 3EB-15-51250 | 15-4 |
| 3EB-04-A7571 | 4-8 | 3EB-05-A7610 | 5-4 | 3EB-15-51250 | 15-4 |
| 3EB-04-A7580 | 4-10 | 3EB-05-A7610 | 55-38 | 3EB-15-51250 | 15-8 |
| 3EB-04-A7580 | 4-6 | 3EB-05-A7620 | 5-4 | 3EB-15-51250 | 15-8 |
| 3EB-04-A7580 | 4-8 | 3EB-05-A7630 | 5-4 | 3EB-15-51280 | 15-4 |
| 3EB-04-A7590 | 4-10 | 3EB-05-A7710 | 6-6 | 3EB-15-51280 | 15-4 |
| 3EB-04-A7590 | 4-6 | 3EB-05-A7810 | 6-6 | 3EB-15-51280 | 15-8 |
| 3EB-04-A7590 | 4-8 | 3EB-05-A7910 | 5-4 | 3EB-15-51280 | 15-8 |
| 3EB-04-A7621 | 4-14 | 3EB-05-A7921 | 5-4 | 3EB-15-51290 | 15-4 |
| 3EB-04-A7621 | 4-16 | 3EB-05-A7930 | 5-4 | 3EB-15-51290 | 15-4 |
| 3EB-04-A7630 | 4-10 | 3EB-05-A7940 | 5-4 | 3EB-15-51290 | 15-8 |
| 3EB-04-A7630 | 4-14 | 3EB-06-A5141 | 6-6 | 3EB-15-51290 | 15-8 |
| 3EB-04-A7630 | 4-16 | 3EB079-A5290 | 72-294 | 3EB-15-51360 | 15-4 |
| 3EB-04-A7630 | 4-6 | 3EB079-A6080 | 72-52 | 3EB-15-51360 | 15-5 |
| 3EB-04-A7630 | 4-8 | 3EB-13-12730 | 13-4 | 3EB-15-51360 | 15-8 |
| 3EB-04-A7640 | 4-14 | 3EB-13-12730 | 13-8 | 3EB-15-51360 | 15-8 |
| 3EB-04-A7640 | 4-16 | 3EB-13-22422 | 13-4 | 3EB-15-51600 | 13-4 |
| 3EB-04-A7810 | 4-18 | 3EB-13-22422 | 13-8 | 3EB-15-51600 | 13-8 |
| 3EB-04-A7810 | 4-20 | 3EB-13-22432 | 13-4 | 3EB-15-51600 | 15-2 |
| 3EB-04-A7820 | 4-18 | 3EB-13-22432 | 13-8 | 3EB-15-51610 | 15-2 |
| 3EB-04-A7820 | 4-20 | 3EB-13-51200 | 13-4 | 3EB-15-52010 | 15-4 |
| 3EB-04-A7870 | 4-22 | 3EB-13-51250 | 13-2 | 3EB-15-52020 | 15-4 |
| 3EB-04-A7870 | 4-24 | 3EB-14-11451 | 21-12 | 3EB-15-52030 | 15-8 |
| 3EB-04-A7910 | 4-20 | 3EB-15-00030 | 21-12 | 3EB-15-52040 | 15-8 |

## NUMERICAL INDEX


| Part Number | Page | Part Number | Page | Part Number | Page |
|---|---|---|---|---|---|
| 3EB-15-52110 | 15-4 | 3EB-21-15140 | 21-10 | 3EB-21-53180 | 21-12 |
| 3EB-15-52120 | 15-4 | 3EB-21-25140 | 21-10 | 3EB-21-53200 | 21-10 |
| 3EB-15-52130 | 15-8 | 3EB-21-25150 | 21-10 | 3EB-21-53210 | 15-9 |
| 3EB-15-52140 | 15-8 | 3EB-21-25170 | 0-7 | 3EB-22-21150 | 21-10 |
| 3EB-15-53210 | 15-8 | 3EB-21-25170 | 21-4 | 3EB-22-21160 | 21-10 |
| 3EB-15-53210 | 15-8 | 3EB-21-25170 | 21-6 | 3EB-22-21170 | 0-7 |
| 3EB-15-53220 | 15-5 | 3EB-21-31141 | 21-12 | 3EB-22-21170 | 21-10 |
| 3EB-15-53220 | 15-9 | 3EB-21-32162 | 21-2 | 3EB-22-35541 | 21-10 |
| 3EB-15-53230 | 15-4 | 3EB-21-32162 | 21-4 | 3EB-22-45150 | 21-10 |
| 3EB-15-53230 | 15-4 | 3EB-21-32180 | 21-2 | 3EB-22-45610 | 0-8 |
| 3EB-15-53250 | 15-5 | 3EB-21-32180 | 21-4 | 3EB-22-45610 | 21-10 |
| 3EB-15-53260 | 15-5 | 3EB-21-32180 | 21-6 | 3EB-22-52111 | 21-10 |
| 3EB-15-53260 | 15-9 | 3EB-21-42170 | 21-4 | 3EB-22-55190 | 21-10 |
| 3EB-15-53290 | 15-5 | 3EB-21-42191 | 21-4 | 3EB-24-11160 | 24-10 |
| 3EB-15-53290 | 15-9 | 3EB-21-42191 | 21-6 | 3EB-24-11160 | 24-12 |
| 3EB-15-58110 | 15-14 | 3EB-21-42230 | 0-8 | 3EB-24-11160 | 24-2 |
| 3EB-15-58120 | 15-14 | 3EB-21-42230 | 21-4 | 3EB-24-11160 | 24-6 |
| 3EB-15-58130 | 15-14 | 3EB-21-51110 | 21-12 | 3EB-24-21270 | 24-10 |
| 3EB-15-58210 | 15-12 | 3EB-21-51120 | 21-12 | 3EB-24-21270 | 24-12 |
| 3EB-15-58310 | 15-14 | 3EB-21-51170 | 21-13 | 3EB-24-21270 | 24-2 |
| 3EB-15-58320 | 15-14 | 3EB-21-51190 | 21-12 | 3EB-24-21270 | 24-6 |
| 3EB-15-58330 | 15-14 | 3EB-21-51360 | 36-2 | 3EB-24-32260 | 0-7 |
| 3EB-15-58410 | 15-2 | 3EB-21-51370 | 36-2 | 3EB-24-32260 | 0-7 |
| 3EB-15-58510 | 15-14 | 3EB-21-51501 | 21-8 | 3EB-24-32260 | 24-10 |
| 3EB-15-58520 | 15-14 | 3EB-21-51510 | 21-12 | 3EB-24-32260 | 24-12 |
| 3EB-15-58530 | 15-14 | 3EB-21-51531 | 21-12 | 3EB-24-32260 | 24-2 |
| 3EB-15-58540 | 15-14 | 3EB-21-51551 | 21-12 | 3EB-24-32260 | 24-6 |
| 3EB-15-58610 | 15-12 | 3EB-21-51710 | 21-12 | 3EB-24-32390 | 24-10 |
| 3EB-16-21390 | 15-4 | 3EB-21-51720 | 21-12 | 3EB-24-32390 | 24-12 |
| 3EB-16-21390 | 15-4 | 3EB-21-52140 | 21-13 | 3EB-24-32390 | 24-2 |
| 3EB-16-21390 | 15-8 | 3EB-21-52310 | 21-2 | 3EB-24-32390 | 24-6 |
| 3EB-16-21390 | 15-8 | 3EB-21-52320 | 0-8 | 3EB-24-32440 | 0-7 |
| 3EB-21-00050 | 21-12 | 3EB-21-52320 | 21-2 | 3EB-24-32440 | 24-10 |
| 3EB-21-05060 | 0-3 | 3EB-21-52350 | 0-7 | 3EB-24-32440 | 24-12 |
| 3EB-21-05060 | 0-7 | 3EB-21-52350 | 21-2 | 3EB-24-32440 | 24-2 |
| 3EB-21-05060 | 21-10 | 3EB-21-52380 | 0-7 | 3EB-24-32440 | 24-6 |
| 3EB-21-05060 | 21-2 | 3EB-21-52380 | 21-2 | 3EB-24-41230 | 24-2 |
| 3EB-21-05060 | 21-4 | 3EB-21-52510 | 21-4 | 3EB-24-41230 | 24-6 |
| 3EB-21-05060 | 21-6 | 3EB-21-52710 | 21-6 | 3EB-24-41320 | 24-10 |
| 3EB-21-05070 | 0-3 | 3EB-21-52730 | 0-8 | 3EB-24-41320 | 24-12 |
| 3EB-21-05500 | 0-7 | 3EB-21-52730 | 21-6 | 3EB-24-41320 | 24-2 |
| 3EB-21-05500 | 21-13 | 3EB-21-52740 | 21-6 | 3EB-24-41320 | 24-6 |
| 3EB-21-11160 | 21-12 | 3EB-21-52750 | 0-7 | 3EB-24-41330 | 24-10 |
| 3EB-21-11190 | 21-12 | 3EB-21-52750 | 21-6 | 3EB-24-41330 | 24-12 |
| 3EB-21-11230 | 21-12 | 3EB-21-52760 | 21-6 | 3EB-24-41330 | 24-2 |
| 3EB-21-11340 | 21-12 | 3EB-21-53110 | 21-12 | 3EB-24-41330 | 24-6 |
| 3EB-21-11370 | 21-12 | 3EB-21-53140 | 21-12 | 3EB-24-42320 | 0-7 |
| 3EB-21-15130 | 21-2 | 3EB-21-53150 | 21-12 | 3EB-24-42320 | 24-10 |
| 3EB-21-15130 | 21-4 | 3EB-21-53161 | 21-12 | 3EB-24-42320 | 24-12 |
| 3EB-21-15130 | 21-6 | 3EB-21-53170 | 21-12 | 3EB-24-42320 | 24-2 |

https://truckmanualshub.com/


## NUMERICAL INDEX


| Part Number | Page | Part Number | Page | Part Number | Page |
|---|---|---|---|---|---|
| 3EB-24-42320 | 24-6 | 3EB-24-53211 | 0-7 | 3EB-27-52710 | 27-5 |
| 3EB-24-51112 | 24-2 | 3EB-24-53211 | 24-10 | 3EB-27-52710 | 50-14 |
| 3EB-24-51112 | 24-6 | 3EB-24-53211 | 24-12 | 3EB-27-52720 | 27-5 |
| 3EB-24-51211 | 0-7 | 3EB-24-53211 | 24-2 | 3EB-27-52720 | 27-5 |
| 3EB-24-51211 | 24-10 | 3EB-24-53211 | 24-6 | 3EB-27-52720 | 50-14 |
| 3EB-24-51211 | 24-12 | 3EB-24-53221 | 0-7 | 3EB-27-52910 | 27-5 |
| 3EB-24-51211 | 24-2 | 3EB-24-53221 | 24-10 | 3EB-27-52910 | 50-14 |
| 3EB-24-51211 | 24-6 | 3EB-24-53221 | 24-12 | 3EB-27-52920 | 27-5 |
| 3EB-24-51221 | 0-7 | 3EB-24-53221 | 24-2 | 3EB-27-52920 | 50-14 |
| 3EB-24-51221 | 24-10 | 3EB-24-53221 | 24-6 | 3EB-27-A5160 | 27-4 |
| 3EB-24-51221 | 24-12 | 3EB-24-A7410 | 28-2 | 3EB-27-A5810 | 27-2 |
| 3EB-24-51221 | 24-2 | 3EB-24-A7910 | 24-10 | 3EB-27-F5710 | 27-4 |
| 3EB-24-51221 | 24-6 | 3EB-24-A7910 | 24-12 | 3EB-27-F5710 | 27-4 |
| 3EB-24-51230 | 24-2 | 3EB-24-A7910 | 24-2 | 3EB-28-A7520 | 28-4 |
| 3EB-24-51230 | 24-6 | 3EB-24-A7910 | 24-6 | 3EB-30-00010 | 0-3 |
| 3EB-24-51261 | 0-7 | 3EB-24-A7920 | 0-7 | 3EB-30-00010 | 0-8 |
| 3EB-24-51261 | 24-10 | 3EB-24-A7920 | 24-10 | 3EB-30-00010 | 30-3 |
| 3EB-24-51261 | 24-12 | 3EB-24-A7920 | 24-12 | 3EB-30-00010 | 30-7 |
| 3EB-24-51261 | 24-2 | 3EB-24-A7920 | 24-2 | 3EB-30-31320 | 30-15 |
| 3EB-24-51261 | 24-6 | 3EB-24-A7920 | 24-6 | 3EB-30-31320 | 30-19 |
| 3EB-24-51271 | 0-7 | 3EB-24-A7930 | 0-7 | 3EB-30-31320 | 30-2 |
| 3EB-24-51271 | 24-10 | 3EB-24-A7930 | 24-10 | 3EB-30-31320 | 30-6 |
| 3EB-24-51271 | 24-12 | 3EB-24-A7930 | 24-12 | 3EB-30-41130 | 30-2 |
| 3EB-24-51271 | 24-2 | 3EB-24-A7930 | 24-2 | 3EB-30-41130 | 30-6 |
| 3EB-24-51271 | 24-6 | 3EB-24-A7930 | 24-6 | 3EB-30-41140 | 30-2 |
| 3EB-24-51380 | 24-10 | 3EB-24-A7940 | 24-10 | 3EB-30-41140 | 30-6 |
| 3EB-24-51380 | 24-12 | 3EB-24-A7940 | 24-12 | 3EB-30-41160 | 30-18 |
| 3EB-24-51380 | 24-2 | 3EB-24-A7940 | 24-2 | 3EB-30-41170 | 30-18 |
| 3EB-24-51380 | 24-6 | 3EB-24-A7940 | 24-6 | 3EB-30-41210 | 30-14 |
| 3EB-24-51390 | 24-10 | 3EB-25-A7110 | 24-10 | 3EB-30-41210 | 30-18 |
| 3EB-24-51390 | 24-12 | 3EB-25-A7110 | 24-12 | 3EB-30-41220 | 30-14 |
| 3EB-24-51390 | 24-2 | 3EB-25-A7170 | 24-10 | 3EB-30-41220 | 30-18 |
| 3EB-24-51390 | 24-6 | 3EB-25-A7170 | 24-12 | 3EB-30-41430 | 30-14 |
| 3EB-24-51510 | 24-10 | 3EB-25-A7170 | 24-2 | 3EB-30-41430 | 30-18 |
| 3EB-24-51510 | 24-12 | 3EB-25-A7170 | 24-6 | 3EB-30-41440 | 0-3 |
| 3EB-24-51510 | 24-3 | 3EB-25-A7210 | 24-10 | 3EB-30-41440 | 30-14 |
| 3EB-24-51510 | 24-7 | 3EB-25-A7210 | 24-12 | 3EB-30-41440 | 30-18 |
| 3EB-24-51520 | 24-10 | 3EB-25-A7510 | 24-14 | 3EB-30-41440 | 30-2 |
| 3EB-24-51520 | 24-12 | 3EB-25-A7520 | 24-14 | 3EB-30-41440 | 30-6 |
| 3EB-24-51520 | 24-3 | 3EB-25-A7570 | 24-14 | 3EB-30-41450 | 30-14 |
| 3EB-24-51520 | 24-7 | 3EB-25-A7580 | 24-14 | 3EB-30-41450 | 30-18 |
| 3EB-24-52112 | 24-2 | 3EB-27-52310 | 50-14 | 3EB-30-41540 | 30-14 |
| 3EB-24-52112 | 24-6 | 3EB-27-52310YL | 27-4 | 3EB-30-41540 | 30-18 |
| 3EB-24-52460 | 0-7 | 3EB-27-52310YL | 27-5 | 3EB-30-41540 | 30-2 |
| 3EB-24-52460 | 24-10 | 3EB-27-52320 | 50-14 | 3EB-30-41540 | 30-6 |
| 3EB-24-52460 | 24-12 | 3EB-27-52320YL | 27-4 | 3EB-30-41550 | 30-14 |
| 3EB-24-52460 | 24-2 | 3EB-27-52320YL | 27-5 | 3EB-30-41550 | 30-18 |
| 3EB-24-52460 | 24-6 | 3EB-27-52620 | 27-5 | 3EB-30-41550 | 30-2 |
| 3EB-24-53112 | 24-2 | 3EB-27-52640 | 27-5 | 3EB-30-41550 | 30-6 |
| 3EB-24-53112 | 24-6 | 3EB-27-52710 | 27-5 | 3EB-30-41650 | 30-2 |

## NUMERICAL INDEX


| Part Number | Page | Part Number | Page | Part Number | Page |
|---|---|---|---|---|---|
| 3EB-30-41650 | 30-6 | 3EB-30-51430 | 30-2 | 3EB-41-41490 | 41-4 |
| 3EB-30-41660 | 30-2 | 3EB-30-51430 | 30-6 | 3EB-41-41980 | 41-2 |
| 3EB-30-41660 | 30-6 | 3EB-30-51450 | 30-2 | 3EB-41-41980 | 41-4 |
| 3EB-30-42160 | 30-14 | 3EB-30-51450 | 30-6 | 3EB-41-44530 | 41-2 |
| 3EB-30-42160 | 30-18 | 3EB-33-41111 | 33-2 | 3EB-41-44530 | 41-4 |
| 3EB-30-42160 | 30-2 | 3EB-33-41111 | 34-2 | 3EB-41-51570 | 72-64 |
| 3EB-30-42160 | 30-6 | 3EB-33-41130 | 33-2 | 3EB-41-51570 | 72-66 |
| 3EB-30-42260 | 30-14 | 3EB-34-51510 | 0-9 | 3EB-41-51750 | 41-2 |
| 3EB-30-42260 | 30-18 | 3EB-34-51510 | 34-2 | 3EB-41-51750 | 41-4 |
| 3EB-30-42260 | 30-3 | 3EB-34-53111 | 34-2 | 3EB-41-51750 | 72-102 |
| 3EB-30-42260 | 30-7 | 3EB-36-51180 | 0-8 | 3EB-41-51750 | 72-104 |
| 3EB-30-43130 | 30-14 | 3EB-36-51180 | 30-22 | 3EB-41-51750 | 72-134 |
| 3EB-30-43130 | 30-18 | 3EB-36-51180 | 30-26 | 3EB-41-51750 | 72-136 |
| 3EB-30-43140 | 30-14 | 3EB-36-51180 | 36-2 | 3EB-41-51750 | 72-170 |
| 3EB-30-43140 | 30-18 | 3EB-36-51421 | 36-2 | 3EB-41-51750 | 72-172 |
| 3EB-30-43670 | 30-14 | 3EB-36-51440 | 36-2 | 3EB-41-51750 | 72-206 |
| 3EB-30-43670 | 30-18 | 3EB-36-51460 | 36-2 | 3EB-41-51750 | 72-208 |
| 3EB-30-44420 | 30-14 | 3EB-36-51590 | 30-28 | 3EB-41-51750 | 72-22 |
| 3EB-30-44420 | 30-18 | 3EB-36-52133 | 36-2 | 3EB-41-51750 | 72-238 |
| 3EB-30-44420 | 30-2 | 3EB-36-52400 | 36-2 | 3EB-41-51750 | 72-24 |
| 3EB-30-44420 | 30-6 | 3EB-37-41141 | 37-4 | 3EB-41-51750 | 72-240 |
| 3EB-30-44460 | 30-15 | 3EB-37-41160 | 37-2 | 3EB-41-52550 | 41-2 |
| 3EB-30-44460 | 30-19 | 3EB-37-41160 | 37-4 | 3EB-41-52550 | 41-4 |
| 3EB-30-44460 | 30-2 | 3EB-37-51390 | 37-4 | 3EB-41-52560 | 41-2 |
| 3EB-30-44460 | 30-6 | 3EB-37-A7211 | 37-2 | 3EB-41-52560 | 41-4 |
| 3EB-30-44560 | 30-14 | 3EB-37-A7251 | 37-2 | 3EB-41-56120 | 41-10 |
| 3EB-30-44560 | 30-18 | 3EB-37-A7280 | 37-2 | 3EB-41-56120 | 41-12 |
| 3EB-30-44570 | 30-14 | 3EB-37-A7290 | 37-2 | 3EB-41-56120 | 41-8 |
| 3EB-30-44570 | 30-18 | 3EB-38-41110 | 30-24 | 3EB-41-56130 | 41-10 |
| 3EB-30-44570 | 30-2 | 3EB-38-41120 | 30-22 | 3EB-41-56130 | 41-12 |
| 3EB-30-44570 | 30-6 | 3EB-38-41120 | 30-24 | 3EB-41-56130 | 41-8 |
| 3EB-30-44590 | 30-11 | 3EB-38-41170 | 30-22 | 3EB-41-56140 | 41-10 |
| 3EB-30-44590 | 30-14 | 3EB-38-51130 | 30-22 | 3EB-41-56140 | 41-12 |
| 3EB-30-44590 | 30-18 | 3EB-38-51150 | 30-22 | 3EB-41-A7460 | 41-6 |
| 3EB-30-44590 | 30-3 | 3EB-38-51430 | 30-24 | 3EB-41-A7690 | 41-8 |
| 3EB-30-44590 | 30-7 | 3EB-38-51530 | 30-24 | 3EB-42-56120 | 41-10 |
| 3EB-30-51110 | 0-8 | 3EB-38-51630 | 30-22 | 3EB-42-56120 | 41-8 |
| 3EB-30-51110 | 30-15 | 3EB-38-A7110 | 30-22 | 3EB-42-56810 | 41-8 |
| 3EB-30-51110 | 30-19 | 3EB-38-A7610 | 30-22 | 3EB-42-56820 | 41-8 |
| 3EB-30-51110 | 30-3 | 3EB-38-A7710 | 30-24 | 3EB-42-A7550 | 83-14 |
| 3EB-30-51110 | 30-7 | 3EB-39-41112 | 30-32 | 3EB-42-A7710 | 41-12 |
| 3EB-30-51120 | 0-8 | 3EB-39-41130 | 30-32 | 3EB-42-A7810 | 41-10 |
| 3EB-30-51120 | 30-15 | 3EB-41-31791 | 41-2 | 3EB-43-41720 | 43-2 |
| 3EB-30-51120 | 30-19 | 3EB-41-31791 | 41-4 | 3EB-43-41720 | 43-2 |
| 3EB-30-51120 | 30-3 | 3EB-41-31950 | 41-2 | 3EB-43-A7110 | 43-2 |
| 3EB-30-51120 | 30-7 | 3EB-41-31950 | 41-4 | 3EB-43-A7160 | 43-2 |
| 3EB-30-51210 | 0-8 | 3EB-41-31960 | 41-2 | 3EB-43-A7210 | 43-2 |
| 3EB-30-51210 | 30-11 | 3EB-41-31960 | 41-4 | 3EB-43-A7260 | 43-2 |
| 3EB-30-51220 | 0-8 | 3EB-41-35120 | 41-12 | 3EB-43-A7310 | 43-2 |
| 3EB-30-51220 | 30-11 | 3EB-41-41490 | 41-2 | 3EB-43-A7360 | 43-2 |

## NUMERICAL INDEX


| Part Number | Page | Part Number | Page | Part Number | Page |
|---|---|---|---|---|---|
| 3EB-43-A7410 | 43-2 | 3EB-50-A7880 | 50-10 | 3EB-52-A7470 | 83-14 |
| 3EB-43-A7460 | 43-2 | 3EB-50-A7910 | 83-10 | 3EB-52-A7510 | 4-10 |
| 3EB-43-A7510 | 43-2 | 3EB-50-F5313 | 50-2 | 3EB-52-A7510 | 4-8 |
| 3EB-43-A7560 | 43-2 | 3EB-50-F5442 | 50-2 | 3EB-52-A7810 | 83-6 |
| 3EB-43-A7660 | 43-2 | 3EB-51-21380 | 50-14 | 3EB-52-A7810 | 83-8 |
| 3EB-43-A7710 | 41-2 | 3EB-51-21380 | 50-16 | 3EB-52-A7870 | 83-10 |
| 3EB-43-A7710 | 41-4 | 3EB-51-42110 | 50-14 | 3EB-55-11290 | 0-3 |
| 3EB-43-A7721 | 43-4 | 3EB-51-42120 | 50-14 | 3EB-55-23340 | 55-10 |
| 3EB-43-A7760 | 43-4 | 3EB-51-42130 | 50-14 | 3EB-55-23340 | 55-14 |
| 3EB-44-17170 | 0-6 | 3EB-51-42140 | 50-14 | 3EB-55-31130 | 0-2 |
| 3EB-44-17170 | 41-12 | 3EB-51-51720 | 50-14 | 3EB-55-31130 | 55-10 |
| 3EB-44-17180 | 41-12 | 3EB-51-51720 | 50-16 | 3EB-55-31130 | 55-38 |
| 3EB-50-31420 | 50-18 | 3EB-51-51731 | 50-14 | 3EB-55-31260 | 55-32 |
| 3EB-50-41150 | 0-8 | 3EB-51-51731 | 50-16 | 3EB-55-31270 | 0-2 |
| 3EB-50-42540 | 50-10 | 3EB-51-51811 | 50-14 | 3EB-55-31270 | 55-32 |
| 3EB-50-42560 | 61-8 | 3EB-51-51811 | 50-16 | 3EB-55-31270 | 55-38 |
| 3EB-50-42560 | 61-8 | 3EB-51-A7110 | 50-14 | 3EB-55-31490 | 55-20 |
| 3EB-50-42570 | 61-8 | 3EB-51-A7110 | 50-16 | 3EB-55-31490 | 55-22 |
| 3EB-50-42570 | 61-8 | 3EB-51-A7312 | 50-14 | 3EB-55-33150 | 0-2 |
| 3EB-50-42580 | 50-14 | 3EB-51-A7312 | 50-16 | 3EB-55-33160 | 0-2 |
| 3EB-50-42580 | 50-16 | 3EB-51-A7420 | 83-12 | 3EB-55-38181 | 55-28 |
| 3EB-50-51621 | 37-4 | 3EB-51-A7450 | 83-12 | 3EB-55-39640 | 6-4 |
| 3EB-50-51810 | 50-10 | 3EB-51-A7460 | 83-12 | 3EB-55-41230 | 55-12 |
| 3EB-50-51810 | 50-12 | 3EB-51-A7511 | 50-14 | 3EB-55-41230 | 55-12 |
| 3EB-50-51810 | 50-8 | 3EB-51-A7511 | 50-16 | 3EB-55-41271 | 0-3 |
| 3EB-50-51932 | 50-12 | 3EB-52-32140 | 83-10 | 3EB-55-41271 | 55-16 |
| 3EB-50-51942 | 50-12 | 3EB-52-32140 | 83-6 | 3EB-55-41271 | 55-18 |
| 3EB-50-51950 | 50-10 | 3EB-52-32140 | 83-8 | 3EB-55-41271 | 55-42 |
| 3EB-50-52511 | 50-10 | 3EB-52-41230 | 50-6 | 3EB-55-41450 | 0-12 |
| 3EB-50-52520 | 50-10 | 3EB-52-41240 | 50-6 | 3EB-55-41450 | 0-9 |
| 3EB-50-52531 | 50-10 | 3EB-52-41510 | 50-8 | 3EB-55-41450 | 55-12 |
| 3EB-50-52540 | 50-10 | 3EB-52-41611 | 50-4 | 3EB-55-41450 | 55-12 |
| 3EB-50-52570 | 50-10 | 3EB-52-41750 | 50-18 | 3EB-55-41461 | 55-38 |
| 3EB-50-56911 | 50-12 | 3EB-52-51121 | 50-8 | 3EB-55-43220 | 55-8 |
| 3EB-50-56921 | 50-12 | 3EB-52-51130 | 50-4 | 3EB-55-43430 | 55-40 |
| 3EB-50-56930 | 50-12 | 3EB-52-51140 | 50-4 | 3EB-55-43430 | 55-8 |
| 3EB-50-56940 | 50-12 | 3EB-52-51150 | 50-4 | 3EB-55-47130 | 41-8 |
| 3EB-50-A5322 | 0-3 | 3EB-52-51160 | 50-4 | 3EB-55-47130 | 5-2 |
| 3EB-50-A5322 | 50-2 | 3EB-52-51540 | 50-8 | 3EB-55-47130 | 5-4 |
| 3EB-50-A6112 | 0-3 | 3EB-52-51611 | 41-14 | 3EB-55-47130 | 66-6 |
| 3EB-50-A6112 | 50-2 | 3EB-52-51611 | 83-10 | 3EB-55-47130 | 66-8 |
| 3EB-50-A6331 | 50-2 | 3EB-52-51710 | 50-8 | 3EB-55-51390 | 55-2 |
| 3EB-50-A6342 | 50-2 | 3EB-52-51720 | 50-8 | 3EB-55-51390 | 55-40 |
| 3EB-50-A7210 | 50-18 | 3EB-52-51730 | 50-8 | 3EB-55-51410 | 5-2 |
| 3EB-50-A7230 | 50-18 | 3EB-52-51740 | 50-8 | 3EB-55-51410 | 5-4 |
| 3EB-50-A7310 | 50-18 | 3EB-52-51770 | 50-8 | 3EB-55-51410 | 5-6 |
| 3EB-50-A7360 | 50-18 | 3EB-52-56160 | 50-6 | 3EB-55-51430 | 5-2 |
| 3EB-50-A7412 | 50-10 | 3EB-52-56171 | 50-6 | 3EB-55-51430 | 5-4 |
| 3EB-50-A7760 | 50-10 | 3EB-52-56180 | 50-6 | 3EB-55-51710 | 55-38 |
| 3EB-50-A7810 | 50-10 | 3EB-52-A7210 | 50-8 | 3EB-55-51711 | 0-4 |

## NUMERICAL INDEX


| Part Number | Page | Part Number | Page | Part Number | Page |
|---|---|---|---|---|---|
| 3EB-55-51711 | 55-36 | 3EB-55-A7480 | 55-42 | 3EB-56-A7390 | 55-32 |
| 3EB-55-51760 | 0-9 | 3EB-55-A7510 | 55-36 | 3EB-56-A7390 | 55-8 |
| 3EB-55-51760 | 55-12 | 3EB-55-A7612 | 55-38 | 3EB-56-A7420 | 55-10 |
| 3EB-55-52320 | 55-40 | 3EB-55-A7620 | 55-38 | 3EB-56-A7430 | 55-10 |
| 3EB-55-54310 | 56-2 | 3EB-55-A7671 | 55-14 | 3EB-56-A7460 | 55-20 |
| 3EB-55-55330 | 55-38 | 3EB-55-A7681 | 55-32 | 3EB-56-A7460 | 55-22 |
| 3EB-55-A2460 | 55-40 | 3EB-55-A7681 | 55-8 | 3EB-56-A7460 | 55-44 |
| 3EB-55-A3621 | 0-4 | 3EB-55-A7690 | 55-38 | 3EB-56-A7460 | 55-46 |
| 3EB-55-A3621 | 55-16 | 3EB-55-A7713 | 55-10 | 3EB-56-A7480 | 55-20 |
| 3EB-55-A3621 | 55-18 | 3EB-55-A7720 | 55-30 | 3EB-56-A7480 | 55-22 |
| 3EB-55-A3621 | 55-42 | 3EB-55-A7770 | 55-6 | 3EB-56-A7480 | 55-44 |
| 3EB-55-A3621 | 83-14 | 3EB-55-A7830 | 55-34 | 3EB-56-A7480 | 55-46 |
| 3EB-55-A3630 | 83-14 | 3EB-55-A7840 | 55-2 | 3EB-56-A7490 | 55-20 |
| 3EB-55-A3641 | 0-3 | 3EB-55-A7913 | 55-10 | 3EB-56-A7490 | 55-22 |
| 3EB-55-A3641 | 83-14 | 3EB-55-A7920 | 55-2 | 3EB-56-A7490 | 55-44 |
| 3EB-55-A5112 | 0-3 | 3EB-55-A7920 | 55-20 | 3EB-56-A7490 | 55-46 |
| 3EB-55-A5112 | 55-28 | 3EB-55-A7920 | 55-22 | 3EB-56-A7550 | 83-13 |
| 3EB-55-A5610 | 0-8 | 3EB-55-A7920 | 55-38 | 3EB-56-A7560 | 83-13 |
| 3EB-55-A5610 | 56-2 | 3EB-55-A7920 | 55-44 | 3EB-56-A7580 | 83-13 |
| 3EB-55-A5610 | 56-4 | 3EB-55-A7920 | 55-46 | 3EB-56-A7590 | 55-10 |
| 3EB-55-A5620 | 56-2 | 3EB-55-A7930 | 55-2 | 3EB-56-A7650 | 83-14 |
| 3EB-55-A5620 | 56-4 | 3EB-55-A7940 | 55-20 | 3EB-56-A7660 | 83-14 |
| 3EB-55-A6260 | 0-4 | 3EB-55-A7940 | 55-22 | 3EB-56-A7760 | 83-11 |
| 3EB-55-A6260 | 55-28 | 3EB-55-A7940 | 55-38 | 3EB-56-A7960 | 83-10 |
| 3EB-55-A7111 | 55-4 | 3EB-55-A7940 | 55-40 | 3EB-56-A7980 | 83-10 |
| 3EB-55-A7121 | 55-32 | 3EB-55-A7940 | 55-44 | 3EB-56-A7980 | 83-4 |
| 3EB-55-A7130 | 55-2 | 3EB-55-A7940 | 55-46 | 3EB-56-F2980 | 83-13 |
| 3EB-55-A7141 | 55-2 | 3EB-55-A7940 | 55-8 | 3EB-56-F2990 | 83-2 |
| 3EB-55-A7170 | 55-16 | 3EB-55-A7980 | 55-32 | 3EB-56-F5210 | 55-20 |
| 3EB-55-A7170 | 55-18 | 3EB-55-A7980 | 55-8 | 3EB-56-F5210 | 55-22 |
| 3EB-55-A7170 | 55-42 | 3EB-55-A7990 | 6-4 | 3EB-56-F5210 | 55-44 |
| 3EB-55-A7180 | 83-4 | 3EB-55-F5210 | 83-13 | 3EB-56-F5210 | 55-46 |
| 3EB-55-A7230 | 55-2 | 3EB-55-F5910 | 83-14 | 3EB-56-F5450 | 83-12 |
| 3EB-55-A7250 | 55-32 | 3EB-56-39220 | 55-20 | 3EB-56-F5460 | 83-12 |
| 3EB-55-A7260 | 55-2 | 3EB-56-39220 | 55-22 | 3EB-56-F5612 | 83-12 |
| 3EB-55-A7260 | 55-6 | 3EB-56-51590 | 0-8 | 3EB-56-F6220 | 83-13 |
| 3EB-55-A7270 | 55-10 | 3EB-56-51590 | 30-24 | 3EB-56-F6230 | 83-13 |
| 3EB-55-A7270 | 55-38 | 3EB-56-A5210 | 55-20 | 3EB-57-A7471 | 83-10 |
| 3EB-55-A7313 | 55-10 | 3EB-56-A5210 | 55-22 | 3EB-57-A7750 | 83-13 |
| 3EB-55-A7321 | 55-16 | 3EB-56-A5210 | 55-44 | 3EB-57-A7760 | 83-13 |
| 3EB-55-A7321 | 55-18 | 3EB-56-A5210 | 55-46 | 3EB-57-A7861 | 83-10 |
| 3EB-55-A7321 | 55-42 | 3EB-56-A5612 | 83-11 | 3EB-57-A7862 | 83-10 |
| 3EB-55-A7420 | 55-16 | 3EB-56-A5671 | 83-12 | 3EB-57-A7862 | 83-12 |
| 3EB-55-A7420 | 55-42 | 3EB-56-A7260 | 83-11 | 3EB-57-A7862 | 83-13 |
| 3EB-55-A7430 | 55-16 | 3EB-56-A7261 | 83-11 | 3EB-57-A7890 | 83-12 |
| 3EB-55-A7430 | 55-18 | 3EB-56-A7270 | 83-11 | 3EB-61-42120 | 61-2 |
| 3EB-55-A7430 | 55-42 | 3EB-56-A7270 | 83-11 | 3EB-61-42130 | 61-2 |
| 3EB-55-A7440 | 55-18 | 3EB-56-A7290 | 55-40 | 3EB-61-42140 | 61-2 |
| 3EB-55-A7480 | 55-16 | 3EB-56-A7310 | 55-40 | 3EB-61-51110 | 61-8 |
| 3EB-55-A7480 | 55-18 | 3EB-56-A7320 | 55-38 | 3EB-61-A7110 | 61-2 |

## NUMERICAL INDEX


| Part Number | Page | Part Number | Page | Part Number | Page |
|---|---|---|---|---|---|
| 3EB-61-A7110 | 61-4 | 3EB-66-41461 | 4-20 | 3EB-66-52170 | 66-12 |
| 3EB-61-A7210 | 61-2 | 3EB-66-41461 | 4-22 | 3EB-66-52170 | 66-14 |
| 3EB-61-A7210 | 61-6 | 3EB-66-41461 | 4-24 | 3EB-66-52170 | 66-16 |
| 3EB-61-A7330 | 83-10 | 3EB-66-41461 | 66-12 | 3EB-66-52170 | 66-18 |
| 3EB-61-A7380 | 83-10 | 3EB-66-41461 | 66-14 | 3EB-66-52180 | 66-12 |
| 3EB-61-A7460 | 83-11 | 3EB-66-41510 | 66-18 | 3EB-66-52180 | 66-14 |
| 3EB-61-A7470 | 83-11 | 3EB-66-41520 | 66-18 | 3EB-66-52180 | 66-16 |
| 3EB-61-F5580 | 83-11 | 3EB-66-42180 | 66-24 | 3EB-66-52180 | 66-18 |
| 3EB-61-F5590 | 66-22 | 3EB-66-43390 | 66-2 | 3EB-66-52180 | 66-4 |
| 3EB-61-F5590 | 83-11 | 3EB-66-43490 | 66-2 | 3EB-66-52190 | 66-18 |
| 3EB-64-13280 | 64-12 | 3EB-66-43620 | 66-6 | 3EB-66-52190 | 66-4 |
| 3EB-64-13280 | 64-6 | 3EB-66-43620 | 66-8 | 3EB-66-52410 | 66-18 |
| 3EB-64-22950 | 64-12 | 3EB-66-43630 | 66-6 | 3EB-66-53181 | 66-24 |
| 3EB-64-22950 | 64-6 | 3EB-66-43630 | 66-8 | 3EB-66-53410 | 24-3 |
| 3EB-64-22960 | 64-12 | 3EB-66-43661 | 66-6 | 3EB-66-53410 | 24-7 |
| 3EB-64-22960 | 64-6 | 3EB-66-43661 | 66-8 | 3EB-66-53420 | 66-2 |
| 3EB-64-A6450 | 64-10 | 3EB-66-43670 | 41-8 | 3EB-66-53430 | 66-2 |
| 3EB-64-A6450 | 64-16 | 3EB-66-43670 | 5-2 | 3EB-66-53440 | 66-2 |
| 3EB-64-A7110 | 24-3 | 3EB-66-43670 | 5-4 | 3EB-66-53450 | 66-2 |
| 3EB-64-A7110 | 24-7 | 3EB-66-43670 | 66-6 | 3EB-66-53460 | 24-3 |
| 3EB-64-A7110 | 65-2 | 3EB-66-43670 | 66-8 | 3EB-66-53460 | 24-7 |
| 3EB-64-A7210 | 24-10 | 3EB-66-44110 | 66-26 | 3EB-66-53532 | 66-2 |
| 3EB-64-A7210 | 24-12 | 3EB-66-44110 | 66-28 | 3EB-66-53830 | 66-6 |
| 3EB-64-A7210 | 65-2 | 3EB-66-44110 | 66-30 | 3EB-66-53830 | 66-8 |
| 3EB-64-A7810 | 64-10 | 3EB-66-44620 | 66-26 | 3EB-66-53840 | 66-6 |
| 3EB-64-A7810 | 64-16 | 3EB-66-44620 | 66-28 | 3EB-66-53840 | 66-8 |
| 3EB-64-A7820 | 64-10 | 3EB-66-44620 | 66-30 | 3EB-66-54210 | 66-10 |
| 3EB-64-A7820 | 64-16 | 3EB-66-44660 | 66-26 | 3EB-66-54220 | 66-4 |
| 3EB-64-A7830 | 64-10 | 3EB-66-44660 | 66-28 | 3EB-66-54221 | 66-10 |
| 3EB-64-A7830 | 64-16 | 3EB-66-44660 | 66-30 | 3EB-66-54310 | 66-10 |
| 3EB-65-A7110 | 64-18 | 3EB-66-51110 | 66-12 | 3EB-66-55180 | 66-26 |
| 3EB-65-A7120 | 64-18 | 3EB-66-51110 | 66-14 | 3EB-66-55180 | 66-28 |
| 3EB-65-A7210 | 64-18 | 3EB-66-51150 | 66-12 | 3EB-66-55180 | 66-30 |
| 3EB-66-33170 | 66-24 | 3EB-66-51150 | 66-14 | 3EB-66-55510 | 66-26 |
| 3EB-66-41120 | 66-12 | 3EB-66-51170 | 66-12 | 3EB-66-55510 | 66-28 |
| 3EB-66-41180 | 66-12 | 3EB-66-51170 | 66-14 | 3EB-66-55510 | 66-30 |
| 3EB-66-41180 | 66-14 | 3EB-66-51170 | 66-16 | 3EB-66-55520 | 66-26 |
| 3EB-66-41180 | 66-16 | 3EB-66-51170 | 66-18 | 3EB-66-55520 | 66-28 |
| 3EB-66-41180 | 66-18 | 3EB-66-51170 | 66-4 | 3EB-66-55520 | 66-30 |
| 3EB-66-41191 | 66-12 | 3EB-66-51180 | 66-12 | 3EB-66-55530 | 66-26 |
| 3EB-66-41191 | 66-14 | 3EB-66-51180 | 66-14 | 3EB-66-55530 | 66-28 |
| 3EB-66-41191 | 66-16 | 3EB-66-51180 | 66-16 | 3EB-66-55530 | 66-30 |
| 3EB-66-41191 | 66-18 | 3EB-66-51180 | 66-18 | 3EB-66-55540 | 66-26 |
| 3EB-66-41210 | 66-14 | 3EB-66-51411 | 66-14 | 3EB-66-55540 | 66-28 |
| 3EB-66-41220 | 66-14 | 3EB-66-52110 | 66-16 | 3EB-66-55540 | 66-30 |
| 3EB-66-41271 | 66-12 | 3EB-66-52110 | 66-18 | 3EB-66-59030 | 66-6 |
| 3EB-66-41271 | 66-14 | 3EB-66-52140 | 66-16 | 3EB-66-59070 | 66-8 |
| 3EB-66-41271 | 66-16 | 3EB-66-52140 | 66-18 | 3EB-66-A7110 | 66-12 |
| 3EB-66-41271 | 66-18 | 3EB-66-52150 | 66-16 | 3EB-66-A7110 | 66-14 |
| 3EB-66-41420 | 66-16 | 3EB-66-52150 | 66-18 | 3EB-66-A7140 | 66-12 |

## NUMERICAL INDEX


| Part Number | Page | Part Number | Page | Part Number | Page |
|---|---|---|---|---|---|
| 3EB-66-A7140 | 66-14 | 3EB-71-51290 | 72-364 | 3EB-71-A6010 | 72-70 |
| 3EB-66-A7160 | 66-16 | 3EB-71-51871 | 41-6 | 3EB-71-A6010 | 72-72 |
| 3EB-66-A7160 | 66-18 | 3EB-71-51881 | 41-6 | 3EB-71-A6010 | 72-74 |
| 3EB-66-A7210 | 61-2 | 3EB-71-61790 | 72-104 | 3EB-71-A6010 | 72-76 |
| 3EB-66-A7220 | 61-2 | 3EB-71-61790 | 72-134 | 3EB-71-A6010 | 72-78 |
| 3EB-66-A7310 | 66-24 | 3EB-71-61790 | 72-172 | 3EB-71-A6010 | 72-78 |
| 3EB-66-A7320 | 66-24 | 3EB-71-61790 | 72-2 | 3EB-71-A6010 | 72-78 |
| 3EB-66-A7330 | 66-24 | 3EB-71-61790 | 72-238 | 3EB-71-A6030 | 72-100 |
| 3EB-66-A7340 | 66-24 | 3EB-71-61790 | 72-24 | 3EB-71-A6030 | 72-102 |
| 3EB-66-A7350 | 66-24 | 3EB-71-61870 | 41-6 | 3EB-71-A6030 | 72-104 |
| 3EB-66-A7360 | 66-24 | 3EB-71-A6010 | 72-108 | 3EB-71-A6030 | 72-132 |
| 3EB-66-A7370 | 66-24 | 3EB-71-A6010 | 72-110 | 3EB-71-A6030 | 72-134 |
| 3EB-66-A7380 | 66-24 | 3EB-71-A6010 | 72-112 | 3EB-71-A6030 | 72-136 |
| 3EB-66-A7390 | 66-24 | 3EB-71-A6010 | 72-140 | 3EB-71-A6030 | 72-168 |
| 3EB-66-A7410 | 66-20 | 3EB-71-A6010 | 72-142 | 3EB-71-A6030 | 72-170 |
| 3EB-66-A7510 | 66-22 | 3EB-71-A6010 | 72-144 | 3EB-71-A6030 | 72-172 |
| 3EB-66-A7511 | 83-11 | 3EB-71-A6010 | 72-144 | 3EB-71-A6030 | 72-20 |
| 3EB-66-A7520 | 66-22 | 3EB-71-A6010 | 72-144 | 3EB-71-A6030 | 72-204 |
| 3EB-66-A7910 | 66-26 | 3EB-71-A6010 | 72-176 | 3EB-71-A6030 | 72-206 |
| 3EB-66-A7910 | 66-28 | 3EB-71-A6010 | 72-180 | 3EB-71-A6030 | 72-208 |
| 3EB-66-A7910 | 66-30 | 3EB-71-A6010 | 72-184 | 3EB-71-A6030 | 72-22 |
| 3EB-66-A7920 | 66-26 | 3EB-71-A6010 | 72-212 | 3EB-71-A6030 | 72-236 |
| 3EB-66-A7920 | 66-28 | 3EB-71-A6010 | 72-214 | 3EB-71-A6030 | 72-238 |
| 3EB-66-A7920 | 66-30 | 3EB-71-A6010 | 72-216 | 3EB-71-A6030 | 72-24 |
| 3EB-66-A7930 | 66-26 | 3EB-71-A6010 | 72-216 | 3EB-71-A6030 | 72-240 |
| 3EB-66-A7930 | 66-28 | 3EB-71-A6010 | 72-216 | 3EB-71-A6030 | 72-300 |
| 3EB-66-A7930 | 66-30 | 3EB-71-A6010 | 72-244 | 3EB-71-A6030 | 72-302 |
| 3EB-66-A7960 | 30-24 | 3EB-71-A6010 | 72-246 | 3EB-71-A6030 | 72-362 |
| 3EB-66-A7960 | 66-26 | 3EB-71-A6010 | 72-28 | 3EB-71-A6030 | 72-364 |
| 3EB-66-A7960 | 66-28 | 3EB-71-A6010 | 72-307 | 3EB-71-A6030 | 72-62 |
| 3EB-66-A7960 | 66-30 | 3EB-71-A6010 | 72-314 | 3EB-71-A6030 | 72-64 |
| 3EB-66-A7970 | 30-24 | 3EB-71-A6010 | 72-318 | 3EB-71-A6030 | 72-66 |
| 3EB-66-A7970 | 66-26 | 3EB-71-A6010 | 72-32 | 3EB-71-A6040 | 72-116 |
| 3EB-66-A7970 | 66-28 | 3EB-71-A6010 | 72-323 | 3EB-71-A6040 | 72-116 |
| 3EB-66-A7970 | 66-30 | 3EB-71-A6010 | 72-326 | 3EB-71-A6040 | 72-116 |
| 3EB-68-A7310 | 61-10 | 3EB-71-A6010 | 72-330 | 3EB-71-A6040 | 72-188 |
| 3EB-68-A7320 | 61-10 | 3EB-71-A6010 | 72-334 | 3EB-71-A6040 | 72-188 |
| 3EB-68-A7360 | 61-12 | 3EB-71-A6010 | 72-338 | 3EB-71-A6040 | 72-188 |
| 3EB-68-A7370 | 61-12 | 3EB-71-A6010 | 72-338 | 3EB-71-A6040 | 72-250 |
| 3EB-68-A7410 | 61-2 | 3EB-71-A6010 | 72-338 | 3EB-71-A6040 | 72-250 |
| 3EB-68-A7420 | 61-2 | 3EB-71-A6010 | 72-36 | 3EB-71-A6040 | 72-250 |
| 3EB-68-A7660 | 61-12 | 3EB-71-A6010 | 72-372 | 3EB-71-A6040 | 72-307 |
| 3EB-68-A7670 | 61-12 | 3EB-71-A6010 | 72-377 | 3EB-71-A6040 | 72-310 |
| 3EB-71-51290 | 72-104 | 3EB-71-A6010 | 72-381 | 3EB-71-A6040 | 72-36 |
| 3EB-71-51290 | 72-134 | 3EB-71-A6010 | 72-385 | 3EB-71-A6040 | 72-369 |
| 3EB-71-51290 | 72-172 | 3EB-71-A6010 | 72-389 | 3EB-71-A6040 | 72-377 |
| 3EB-71-51290 | 72-2 | 3EB-71-A6010 | 72-40 | 3EB-71-A6040 | 72-392 |
| 3EB-71-51290 | 72-208 | 3EB-71-A6010 | 72-44 | 3EB-71-A6040 | 72-392 |
| 3EB-71-51290 | 72-238 | 3EB-71-A6010 | 72-44 | 3EB-71-A6040 | 72-392 |
| 3EB-71-51290 | 72-24 | 3EB-71-A6010 | 72-44 | 3EB-71-A6040 | 72-40 |

## NUMERICAL INDEX


| Part Number | Page | Part Number | Page | Part Number | Page |
|---|---|---|---|---|---|
| 3EB-71-A6040 | 72-70 | 3EB-73-A5020 | 72-216 | 3EB-73-A5060 | 72-250 |
| 3EB-72-121FR | 93-4 | 3EB-73-A5020 | 72-216 | 3EB-73-A5070 | 72-156 |
| 3EB-73-A5010 | 72-117 | 3EB-73-A5020 | 72-244 | 3EB-73-A5070 | 72-228 |
| 3EB-73-A5010 | 72-117 | 3EB-73-A5020 | 72-246 | 3EB-73-A5070 | 72-90 |
| 3EB-73-A5010 | 72-117 | 3EB-73-A5020 | 72-250 | 3EB-73-A5070 | 72-92 |
| 3EB-73-A5010 | 72-12 | 3EB-73-A5020 | 72-250 | 3EB-73-A5080 | 72-164 |
| 3EB-73-A5010 | 72-126 | 3EB-73-A5020 | 72-250 | 3EB-73-A5110 | 72-230 |
| 3EB-73-A5010 | 72-156 | 3EB-73-A5020 | 72-70 | 3EB-73-A5120 | 72-110 |
| 3EB-73-A5010 | 72-156 | 3EB-73-A5020 | 72-72 | 3EB-73-A5120 | 72-112 |
| 3EB-73-A5010 | 72-189 | 3EB-73-A5020 | 72-74 | 3EB-73-A5120 | 72-156 |
| 3EB-73-A5010 | 72-189 | 3EB-73-A5020 | 72-76 | 3EB-73-A5120 | 72-184 |
| 3EB-73-A5010 | 72-189 | 3EB-73-A5020 | 72-78 | 3EB-73-A5120 | 72-228 |
| 3EB-73-A5010 | 72-198 | 3EB-73-A5020 | 72-78 | 3EB-73-A5120 | 72-244 |
| 3EB-73-A5010 | 72-228 | 3EB-73-A5020 | 72-78 | 3EB-73-A5120 | 72-246 |
| 3EB-73-A5010 | 72-228 | 3EB-73-A5020 | 72-78 | 3EB-73-A5120 | 72-70 |
| 3EB-73-A5010 | 72-230 | 3EB-73-A5020 | 72-78 | 3EB-73-A5120 | 72-90 |
| 3EB-73-A5010 | 72-251 | 3EB-73-A5020 | 72-78 | 3EB-73-A5120 | 72-92 |
| 3EB-73-A5010 | 72-251 | 3EB-73-A5030 | 72-108 | 3EB-73-A5130 | 72-12 |
| 3EB-73-A5010 | 72-251 | 3EB-73-A5030 | 72-110 | 3EB-73-A5140 | 72-126 |
| 3EB-73-A5010 | 72-54 | 3EB-73-A5030 | 72-112 | 3EB-73-A5140 | 72-156 |
| 3EB-73-A5010 | 72-90 | 3EB-73-A5030 | 72-116 | 3EB-73-A5140 | 72-228 |
| 3EB-73-A5010 | 72-90 | 3EB-73-A5030 | 72-116 | 3EB-73-A5140 | 72-230 |
| 3EB-73-A5010 | 72-92 | 3EB-73-A5030 | 72-116 | 3EB-73-A5140 | 72-54 |
| 3EB-73-A5010 | 72-92 | 3EB-73-A5030 | 72-176 | 3EB-73-A5140 | 72-90 |
| 3EB-73-A5020 | 72-108 | 3EB-73-A5030 | 72-180 | 3EB-73-A5140 | 72-92 |
| 3EB-73-A5020 | 72-110 | 3EB-73-A5030 | 72-184 | 3EB-73-A5150 | 72-108 |
| 3EB-73-A5020 | 72-112 | 3EB-73-A5030 | 72-188 | 3EB-73-A5150 | 72-110 |
| 3EB-73-A5020 | 72-116 | 3EB-73-A5030 | 72-188 | 3EB-73-A5150 | 72-112 |
| 3EB-73-A5020 | 72-116 | 3EB-73-A5030 | 72-188 | 3EB-73-A5150 | 72-140 |
| 3EB-73-A5020 | 72-116 | 3EB-73-A5030 | 72-244 | 3EB-73-A5150 | 72-142 |
| 3EB-73-A5020 | 72-140 | 3EB-73-A5030 | 72-246 | 3EB-73-A5150 | 72-176 |
| 3EB-73-A5020 | 72-142 | 3EB-73-A5030 | 72-250 | 3EB-73-A5150 | 72-180 |
| 3EB-73-A5020 | 72-144 | 3EB-73-A5030 | 72-250 | 3EB-73-A5150 | 72-184 |
| 3EB-73-A5020 | 72-144 | 3EB-73-A5030 | 72-250 | 3EB-73-A5150 | 72-212 |
| 3EB-73-A5020 | 72-144 | 3EB-73-A5030 | 72-28 | 3EB-73-A5150 | 72-214 |
| 3EB-73-A5020 | 72-144 | 3EB-73-A5030 | 72-32 | 3EB-73-A5150 | 72-244 |
| 3EB-73-A5020 | 72-144 | 3EB-73-A5030 | 72-44 | 3EB-73-A5150 | 72-246 |
| 3EB-73-A5020 | 72-144 | 3EB-73-A5030 | 72-44 | 3EB-73-A5150 | 72-28 |
| 3EB-73-A5020 | 72-176 | 3EB-73-A5030 | 72-44 | 3EB-73-A5150 | 72-310 |
| 3EB-73-A5020 | 72-180 | 3EB-73-A5060 | 72-112 | 3EB-73-A5150 | 72-314 |
| 3EB-73-A5020 | 72-184 | 3EB-73-A5060 | 72-116 | 3EB-73-A5150 | 72-318 |
| 3EB-73-A5020 | 72-188 | 3EB-73-A5060 | 72-116 | 3EB-73-A5150 | 72-32 |
| 3EB-73-A5020 | 72-188 | 3EB-73-A5060 | 72-116 | 3EB-73-A5150 | 72-330 |
| 3EB-73-A5020 | 72-188 | 3EB-73-A5060 | 72-184 | 3EB-73-A5150 | 72-334 |
| 3EB-73-A5020 | 72-212 | 3EB-73-A5060 | 72-188 | 3EB-73-A5150 | 72-36 |
| 3EB-73-A5020 | 72-214 | 3EB-73-A5060 | 72-188 | 3EB-73-A5150 | 72-377 |
| 3EB-73-A5020 | 72-216 | 3EB-73-A5060 | 72-188 | 3EB-73-A5150 | 72-381 |
| 3EB-73-A5020 | 72-216 | 3EB-73-A5060 | 72-246 | 3EB-73-A5150 | 72-385 |
| 3EB-73-A5020 | 72-216 | 3EB-73-A5060 | 72-250 | 3EB-73-A5150 | 72-389 |
| 3EB-73-A5020 | 72-216 | 3EB-73-A5060 | 72-250 | 3EB-73-A5150 | 72-40 |

## NUMERICAL INDEX


| Part Number | Page | Part Number | Page | Part Number | Page |
|---|---|---|---|---|---|
| 3EB-73-A5150 | 72-72 | 3EB-73-A5180 | 72-28 | 3EB-73-A5330 | 72-117 |
| 3EB-73-A5150 | 72-74 | 3EB-73-A5180 | 72-32 | 3EB-73-A5330 | 72-117 |
| 3EB-73-A5150 | 72-76 | 3EB-73-A5190 | 72-108 | 3EB-73-A5330 | 72-117 |
| 3EB-73-A5160 | 72-108 | 3EB-73-A5190 | 72-110 | 3EB-73-A5330 | 72-12 |
| 3EB-73-A5160 | 72-110 | 3EB-73-A5190 | 72-112 | 3EB-73-A5330 | 72-189 |
| 3EB-73-A5160 | 72-112 | 3EB-73-A5190 | 72-176 | 3EB-73-A5330 | 72-189 |
| 3EB-73-A5160 | 72-140 | 3EB-73-A5190 | 72-180 | 3EB-73-A5330 | 72-189 |
| 3EB-73-A5160 | 72-142 | 3EB-73-A5190 | 72-184 | 3EB-73-A5330 | 72-230 |
| 3EB-73-A5160 | 72-176 | 3EB-73-A5190 | 72-244 | 3EB-73-A5330 | 72-251 |
| 3EB-73-A5160 | 72-180 | 3EB-73-A5190 | 72-246 | 3EB-73-A5330 | 72-251 |
| 3EB-73-A5160 | 72-184 | 3EB-73-A5210 | 72-156 | 3EB-73-A5330 | 72-251 |
| 3EB-73-A5160 | 72-212 | 3EB-73-A5210 | 72-228 | 3EB-73-A5330 | 72-268 |
| 3EB-73-A5160 | 72-214 | 3EB-73-A5210 | 72-90 | 3EB-73-A5330 | 72-270 |
| 3EB-73-A5160 | 72-244 | 3EB-73-A5210 | 72-92 | 3EB-73-A5330 | 72-272 |
| 3EB-73-A5160 | 72-246 | 3EB-73-A5220 | 72-108 | 3EB-73-A5330 | 72-286 |
| 3EB-73-A5160 | 72-28 | 3EB-73-A5220 | 72-110 | 3EB-73-A5330 | 72-288 |
| 3EB-73-A5160 | 72-310 | 3EB-73-A5220 | 72-112 | 3EB-73-A5330 | 72-290 |
| 3EB-73-A5160 | 72-314 | 3EB-73-A5220 | 72-176 | 3EB-73-A5330 | 72-340 |
| 3EB-73-A5160 | 72-318 | 3EB-73-A5220 | 72-180 | 3EB-73-A5330 | 72-340 |
| 3EB-73-A5160 | 72-32 | 3EB-73-A5220 | 72-184 | 3EB-73-A5330 | 72-340 |
| 3EB-73-A5160 | 72-330 | 3EB-73-A5220 | 72-244 | 3EB-73-A5330 | 72-354 |
| 3EB-73-A5160 | 72-334 | 3EB-73-A5220 | 72-246 | 3EB-73-A5330 | 72-393 |
| 3EB-73-A5160 | 72-36 | 3EB-73-A5230 | 72-108 | 3EB-73-A5330 | 72-394 |
| 3EB-73-A5160 | 72-368 | 3EB-73-A5230 | 72-110 | 3EB-73-A5330 | 72-394 |
| 3EB-73-A5160 | 72-377 | 3EB-73-A5230 | 72-112 | 3EB-73-A5340 | 72-108 |
| 3EB-73-A5160 | 72-381 | 3EB-73-A5230 | 72-176 | 3EB-73-A5340 | 72-110 |
| 3EB-73-A5160 | 72-385 | 3EB-73-A5230 | 72-180 | 3EB-73-A5340 | 72-112 |
| 3EB-73-A5160 | 72-389 | 3EB-73-A5230 | 72-184 | 3EB-73-A5340 | 72-12 |
| 3EB-73-A5160 | 72-40 | 3EB-73-A5230 | 72-244 | 3EB-73-A5340 | 72-176 |
| 3EB-73-A5160 | 72-72 | 3EB-73-A5230 | 72-246 | 3EB-73-A5340 | 72-180 |
| 3EB-73-A5160 | 72-74 | 3EB-73-A5230 | 72-246 | 3EB-73-A5340 | 72-184 |
| 3EB-73-A5160 | 72-76 | 3EB-73-A5230 | 72-28 | 3EB-73-A5340 | 72-230 |
| 3EB-73-A5170 | 72-108 | 3EB-73-A5230 | 72-314 | 3EB-73-A5340 | 72-244 |
| 3EB-73-A5170 | 72-110 | 3EB-73-A5230 | 72-318 | 3EB-73-A5340 | 72-246 |
| 3EB-73-A5170 | 72-112 | 3EB-73-A5230 | 72-32 | 3EB-73-A5340 | 72-28 |
| 3EB-73-A5170 | 72-176 | 3EB-73-A5230 | 72-36 | 3EB-73-A5340 | 72-314 |
| 3EB-73-A5170 | 72-180 | 3EB-73-A5230 | 72-369 | 3EB-73-A5340 | 72-318 |
| 3EB-73-A5170 | 72-184 | 3EB-73-A5230 | 72-378 | 3EB-73-A5340 | 72-32 |
| 3EB-73-A5170 | 72-244 | 3EB-73-A5230 | 72-385 | 3EB-73-A5340 | 72-330 |
| 3EB-73-A5170 | 72-246 | 3EB-73-A5230 | 72-40 | 3EB-73-A5340 | 72-334 |
| 3EB-73-A5170 | 72-28 | 3EB-73-A5240 | 72-112 | 3EB-73-A5340 | 72-36 |
| 3EB-73-A5170 | 72-32 | 3EB-73-A5240 | 72-184 | 3EB-73-A5340 | 72-377 |
| 3EB-73-A5180 | 72-108 | 3EB-73-A5240 | 72-246 | 3EB-73-A5340 | 72-381 |
| 3EB-73-A5180 | 72-110 | 3EB-73-A5250 | 72-112 | 3EB-73-A5340 | 72-385 |
| 3EB-73-A5180 | 72-112 | 3EB-73-A5250 | 72-184 | 3EB-73-A5340 | 72-389 |
| 3EB-73-A5180 | 72-176 | 3EB-73-A5250 | 72-246 | 3EB-73-A5340 | 72-40 |
| 3EB-73-A5180 | 72-180 | 3EB-73-A5310 | 72-12 | 3EB-73-A5350 | 72-108 |
| 3EB-73-A5180 | 72-184 | 3EB-73-A5310 | 72-230 | 3EB-73-A5350 | 72-110 |
| 3EB-73-A5180 | 72-244 | 3EB-73-A5320 | 72-12 | 3EB-73-A5350 | 72-112 |
| 3EB-73-A5180 | 72-246 | 3EB-73-A5320 | 72-230 | 3EB-73-A5350 | 72-12 |

## NUMERICAL INDEX


| Part Number | Page | Part Number | Page | Part Number | Page |
|---|---|---|---|---|---|
| 3EB-73-A5350 | 72-176 | 3EB-73-A5470 | 72-314 | 3EB-73-A5510 | 72-94 |
| 3EB-73-A5350 | 72-180 | 3EB-73-A5470 | 72-318 | 3EB-73-A5610 | 72-108 |
| 3EB-73-A5350 | 72-184 | 3EB-73-A5470 | 72-326 | 3EB-73-A5610 | 72-110 |
| 3EB-73-A5350 | 72-230 | 3EB-73-A5470 | 72-330 | 3EB-73-A5610 | 72-176 |
| 3EB-73-A5350 | 72-244 | 3EB-73-A5470 | 72-334 | 3EB-73-A5610 | 72-180 |
| 3EB-73-A5350 | 72-246 | 3EB-73-A5470 | 72-353 | 3EB-73-A5610 | 72-244 |
| 3EB-73-A5350 | 72-28 | 3EB-73-A5470 | 72-368 | 3EB-73-A5610 | 72-28 |
| 3EB-73-A5350 | 72-32 | 3EB-73-A5470 | 72-372 | 3EB-73-A5610 | 72-310 |
| 3EB-73-A5350 | 72-36 | 3EB-73-A5470 | 72-377 | 3EB-73-A5610 | 72-314 |
| 3EB-73-A5350 | 72-40 | 3EB-73-A5470 | 72-381 | 3EB-73-A5610 | 72-318 |
| 3EB-73-A5430 | 72-122 | 3EB-73-A5470 | 72-386 | 3EB-73-A5610 | 72-32 |
| 3EB-73-A5430 | 72-150 | 3EB-73-A5470 | 72-389 | 3EB-73-A5610 | 72-369 |
| 3EB-73-A5430 | 72-50 | 3EB-73-A5470 | 72-58 | 3EB-73-A5610 | 72-377 |
| 3EB-73-A5430 | 72-84 | 3EB-73-A5470 | 72-96 | 3EB-73-A5610 | 72-385 |
| 3EB-73-A5440 | 72-152 | 3EB-73-A5490 | 72-108 | 3EB-73-A5620 | 72-108 |
| 3EB-73-A5440 | 72-86 | 3EB-73-A5490 | 72-110 | 3EB-73-A5620 | 72-110 |
| 3EB-73-A5450 | 72-118 | 3EB-73-A5490 | 72-112 | 3EB-73-A5620 | 72-112 |
| 3EB-73-A5450 | 72-128 | 3EB-73-A5490 | 72-140 | 3EB-73-A5620 | 72-176 |
| 3EB-73-A5450 | 72-14 | 3EB-73-A5490 | 72-142 | 3EB-73-A5620 | 72-180 |
| 3EB-73-A5450 | 72-145 | 3EB-73-A5490 | 72-176 | 3EB-73-A5620 | 72-184 |
| 3EB-73-A5450 | 72-16 | 3EB-73-A5490 | 72-180 | 3EB-73-A5620 | 72-244 |
| 3EB-73-A5450 | 72-162 | 3EB-73-A5490 | 72-184 | 3EB-73-A5620 | 72-246 |
| 3EB-73-A5450 | 72-190 | 3EB-73-A5490 | 72-212 | 3EB-73-A5620 | 72-28 |
| 3EB-73-A5450 | 72-200 | 3EB-73-A5490 | 72-214 | 3EB-73-A5620 | 72-32 |
| 3EB-73-A5450 | 72-217 | 3EB-73-A5490 | 72-244 | 3EB-73-A5630 | 72-108 |
| 3EB-73-A5450 | 72-232 | 3EB-73-A5490 | 72-246 | 3EB-73-A5630 | 72-110 |
| 3EB-73-A5450 | 72-252 | 3EB-73-A5490 | 72-274 | 3EB-73-A5630 | 72-112 |
| 3EB-73-A5450 | 72-45 | 3EB-73-A5490 | 72-28 | 3EB-73-A5630 | 72-176 |
| 3EB-73-A5450 | 72-56 | 3EB-73-A5490 | 72-304 | 3EB-73-A5630 | 72-180 |
| 3EB-73-A5450 | 72-58 | 3EB-73-A5490 | 72-310 | 3EB-73-A5630 | 72-184 |
| 3EB-73-A5450 | 72-79 | 3EB-73-A5490 | 72-314 | 3EB-73-A5630 | 72-244 |
| 3EB-73-A5450 | 72-94 | 3EB-73-A5490 | 72-318 | 3EB-73-A5630 | 72-246 |
| 3EB-73-A5450 | 72-96 | 3EB-73-A5490 | 72-32 | 3EB-73-A5640 | 72-110 |
| 3EB-73-A5460 | 72-128 | 3EB-73-A5490 | 72-323 | 3EB-73-A5640 | 72-112 |
| 3EB-73-A5460 | 72-16 | 3EB-73-A5490 | 72-326 | 3EB-73-A5640 | 72-140 |
| 3EB-73-A5460 | 72-162 | 3EB-73-A5490 | 72-330 | 3EB-73-A5640 | 72-142 |
| 3EB-73-A5460 | 72-200 | 3EB-73-A5490 | 72-334 | 3EB-73-A5640 | 72-184 |
| 3EB-73-A5460 | 72-232 | 3EB-73-A5490 | 72-36 | 3EB-73-A5640 | 72-212 |
| 3EB-73-A5460 | 72-58 | 3EB-73-A5490 | 72-366 | 3EB-73-A5640 | 72-214 |
| 3EB-73-A5460 | 72-96 | 3EB-73-A5490 | 72-368 | 3EB-73-A5640 | 72-244 |
| 3EB-73-A5470 | 72-128 | 3EB-73-A5490 | 72-372 | 3EB-73-A5640 | 72-246 |
| 3EB-73-A5470 | 72-16 | 3EB-73-A5490 | 72-377 | 3EB-73-A5640 | 72-28 |
| 3EB-73-A5470 | 72-162 | 3EB-73-A5490 | 72-381 | 3EB-73-A5640 | 72-32 |
| 3EB-73-A5470 | 72-200 | 3EB-73-A5490 | 72-385 | 3EB-73-A5640 | 72-36 |
| 3EB-73-A5470 | 72-232 | 3EB-73-A5490 | 72-389 | 3EB-73-A5640 | 72-40 |
| 3EB-73-A5470 | 72-276 | 3EB-73-A5490 | 72-40 | 3EB-73-A5640 | 72-72 |
| 3EB-73-A5470 | 72-280 | 3EB-73-A5490 | 72-70 | 3EB-73-A5640 | 72-74 |
| 3EB-73-A5470 | 72-286 | 3EB-73-A5490 | 72-72 | 3EB-73-A5640 | 72-76 |
| 3EB-73-A5470 | 72-288 | 3EB-73-A5490 | 72-74 | 3EB-73-A5650 | 72-108 |
| 3EB-73-A5470 | 72-310 | 3EB-73-A5490 | 72-76 | 3EB-73-A5650 | 72-28 |

## NUMERICAL INDEX


| Part Number | Page | Part Number | Page | Part Number | Page |
|---|---|---|---|---|---|
| 3EB-73-A5650 | 72-36 | 3EB-73-A5920 | 72-106 | 3EB-74-A5770 | 72-185 |
| 3EB-73-A5650 | 72-76 | 3EB-73-A5920 | 72-138 | 3EB-74-A5790 | 72-110 |
| 3EB-73-A5660 | 72-108 | 3EB-73-A5920 | 72-174 | 3EB-74-A5790 | 72-113 |
| 3EB-73-A5660 | 72-110 | 3EB-73-A5920 | 72-26 | 3EB-74-A5790 | 72-247 |
| 3EB-73-A5660 | 72-112 | 3EB-73-A5920 | 72-304 | 3EB-74-A5810 | 72-110 |
| 3EB-73-A5660 | 72-176 | 3EB-73-A5920 | 72-304 | 3EB-74-A5810 | 72-113 |
| 3EB-73-A5660 | 72-180 | 3EB-73-A5920 | 72-366 | 3EB-74-A5810 | 72-181 |
| 3EB-73-A5660 | 72-184 | 3EB-73-A5920 | 72-366 | 3EB-74-A5810 | 72-185 |
| 3EB-73-A5660 | 72-244 | 3EB-73-A5920 | 72-68 | 3EB-74-A5830 | 72-110 |
| 3EB-73-A5660 | 72-246 | 3EB-73-A5930 | 72-106 | 3EB-74-A5830 | 72-113 |
| 3EB-73-A5670 | 72-112 | 3EB-73-A5930 | 72-138 | 3EB-74-A5830 | 72-181 |
| 3EB-73-A5670 | 72-184 | 3EB-73-A5930 | 72-174 | 3EB-74-A5830 | 72-185 |
| 3EB-73-A5670 | 72-246 | 3EB-73-A5930 | 72-26 | 3EB-74-A5840 | 72-110 |
| 3EB-73-A5680 | 72-112 | 3EB-73-A5930 | 72-304 | 3EB-74-A5840 | 72-113 |
| 3EB-73-A5680 | 72-184 | 3EB-73-A5930 | 72-366 | 3EB-74-A5840 | 72-247 |
| 3EB-73-A5680 | 72-246 | 3EB-73-A6010 | 72-112 | 3EB-75-A5120 | 72-88 |
| 3EB-73-A5690 | 72-112 | 3EB-73-A6010 | 72-184 | 3EB-75-A5150 | 72-88 |
| 3EB-73-A5690 | 72-184 | 3EB-73-A6010 | 72-246 | 3EB-75-A5170 | 72-88 |
| 3EB-73-A5690 | 72-246 | 3EB-73-A6020 | 72-36 | 3EB-75-A5190 | 72-88 |
| 3EB-73-A5720 | 72-117 | 3EB-73-A6020 | 72-76 | 3EB-75-A5210 | 72-88 |
| 3EB-73-A5720 | 72-117 | 3EB-73-A6030 | 72-112 | 3EB-75-A5230 | 72-88 |
| 3EB-73-A5720 | 72-117 | 3EB-73-A6030 | 72-184 | 3EB-75-A5240 | 72-88 |
| 3EB-73-A5720 | 72-145 | 3EB-73-A6030 | 72-246 | 3EB-75-A5320 | 72-90 |
| 3EB-73-A5720 | 72-145 | 3EB-74-A5150 | 72-98 | 3EB-75-A5350 | 72-90 |
| 3EB-73-A5720 | 72-145 | 3EB-74-A5150 | 72-98 | 3EB-75-A5370 | 72-90 |
| 3EB-73-A5720 | 72-154 | 3EB-74-A5170 | 72-98 | 3EB-75-A5390 | 72-90 |
| 3EB-73-A5720 | 72-156 | 3EB-74-A5190 | 72-60 | 3EB-75-A5410 | 72-90 |
| 3EB-73-A5720 | 72-189 | 3EB-74-A5190 | 72-98 | 3EB-75-A5430 | 72-90 |
| 3EB-73-A5720 | 72-189 | 3EB-74-A5240 | 72-98 | 3EB-75-A5520 | 72-92 |
| 3EB-73-A5720 | 72-189 | 3EB-74-A5370 | 72-98 | 3EB-75-A5550 | 72-92 |
| 3EB-73-A5720 | 72-217 | 3EB-74-A5390 | 72-60 | 3EB-75-A5570 | 72-92 |
| 3EB-73-A5720 | 72-217 | 3EB-74-A5390 | 72-98 | 3EB-75-A5590 | 72-92 |
| 3EB-73-A5720 | 72-217 | 3EB-74-A5440 | 72-98 | 3EB-75-A5610 | 72-92 |
| 3EB-73-A5720 | 72-226 | 3EB-74-A5520 | 72-98 | 3EB-75-A5630 | 72-92 |
| 3EB-73-A5720 | 72-228 | 3EB-74-A5550 | 72-98 | 3EB-78-A5120 | 72-84 |
| 3EB-73-A5720 | 72-251 | 3EB-74-A5570 | 72-164 | 3EB-78-A5122 | 72-152 |
| 3EB-73-A5720 | 72-251 | 3EB-74-A5570 | 72-98 | 3EB-78-A5150 | 72-84 |
| 3EB-73-A5720 | 72-251 | 3EB-74-A5590 | 72-98 | 3EB-78-A5150 | 72-84 |
| 3EB-73-A5720 | 72-88 | 3EB-74-A5610 | 72-164 | 3EB-78-A5190 | 72-84 |
| 3EB-73-A5720 | 72-90 | 3EB-74-A5610 | 72-98 | 3EB-78-A5210 | 72-84 |
| 3EB-73-A5720 | 72-92 | 3EB-74-A5630 | 72-165 | 3EB-78-A5230 | 72-84 |
| 3EB-73-A5810 | 72-100 | 3EB-74-A5630 | 72-98 | 3EB-78-A5240 | 72-84 |
| 3EB-73-A5810 | 72-20 | 3EB-74-A5640 | 72-98 | 3EB-78-A5320 | 72-86 |
| 3EB-73-A5810 | 72-62 | 3EB-74-A5720 | 72-110 | 3EB-78-A5350 | 72-86 |
| 3EB-73-A5820 | 72-100 | 3EB-74-A5720 | 72-113 | 3EB-78-A5370 | 72-86 |
| 3EB-73-A5820 | 72-20 | 3EB-74-A5750 | 72-110 | 3EB-78-A5390 | 72-86 |
| 3EB-73-A5820 | 72-62 | 3EB-74-A5750 | 72-113 | 3EB-78-A5410 | 72-86 |
| 3EB-73-A5910 | 72-138 | 3EB-74-A5770 | 72-110 | 3EB-78-A5430 | 72-86 |
| 3EB-73-A5910 | 72-174 | 3EB-74-A5770 | 72-113 | 3EB-78-A5440 | 72-86 |
| 3EB-73-A5910 | 72-366 | 3EB-74-A5770 | 72-180 | 3EB-79-A5110 | 72-116 |

https://truckmanualshub.com/


## NUMERICAL INDEX


| Part Number | Page | Part Number | Page | Part Number | Page |
|---|---|---|---|---|---|
| 3EB-79-A5110 | 72-116 | 3EB-79-A5150 | 72-154 | 3EB-79-A5180 | 72-326 |
| 3EB-79-A5110 | 72-116 | 3EB-79-A5150 | 72-16 | 3EB-79-A5180 | 72-330 |
| 3EB-79-A5110 | 72-124 | 3EB-79-A5150 | 72-196 | 3EB-79-A5180 | 72-334 |
| 3EB-79-A5110 | 72-144 | 3EB-79-A5150 | 72-200 | 3EB-79-A5180 | 72-36 |
| 3EB-79-A5110 | 72-144 | 3EB-79-A5150 | 72-216 | 3EB-79-A5180 | 72-369 |
| 3EB-79-A5110 | 72-144 | 3EB-79-A5150 | 72-216 | 3EB-79-A5180 | 72-373 |
| 3EB-79-A5110 | 72-154 | 3EB-79-A5150 | 72-216 | 3EB-79-A5180 | 72-377 |
| 3EB-79-A5110 | 72-196 | 3EB-79-A5150 | 72-217 | 3EB-79-A5180 | 72-382 |
| 3EB-79-A5110 | 72-216 | 3EB-79-A5150 | 72-217 | 3EB-79-A5180 | 72-385 |
| 3EB-79-A5110 | 72-216 | 3EB-79-A5150 | 72-244 | 3EB-79-A5180 | 72-389 |
| 3EB-79-A5110 | 72-216 | 3EB-79-A5150 | 72-44 | 3EB-79-A5180 | 72-40 |
| 3EB-79-A5110 | 72-52 | 3EB-79-A5150 | 72-44 | 3EB-79-A5180 | 72-72 |
| 3EB-79-A5110 | 72-78 | 3EB-79-A5150 | 72-44 | 3EB-79-A5180 | 72-74 |
| 3EB-79-A5110 | 72-78 | 3EB-79-A5150 | 72-45 | 3EB-79-A5180 | 72-76 |
| 3EB-79-A5110 | 72-78 | 3EB-79-A5150 | 72-45 | 3EB-79-A5190 | 72-108 |
| 3EB-79-A5110 | 72-88 | 3EB-79-A5150 | 72-52 | 3EB-79-A5190 | 72-110 |
| 3EB-79-A5120 | 72-116 | 3EB-79-A5150 | 72-56 | 3EB-79-A5190 | 72-112 |
| 3EB-79-A5120 | 72-116 | 3EB-79-A5150 | 72-58 | 3EB-79-A5190 | 72-176 |
| 3EB-79-A5120 | 72-116 | 3EB-79-A5150 | 72-78 | 3EB-79-A5190 | 72-180 |
| 3EB-79-A5140 | 72-118 | 3EB-79-A5150 | 72-78 | 3EB-79-A5190 | 72-184 |
| 3EB-79-A5140 | 72-118 | 3EB-79-A5150 | 72-78 | 3EB-79-A5190 | 72-244 |
| 3EB-79-A5140 | 72-118 | 3EB-79-A5150 | 72-79 | 3EB-79-A5190 | 72-246 |
| 3EB-79-A5140 | 72-128 | 3EB-79-A5150 | 72-79 | 3EB-79-A5210 | 72-117 |
| 3EB-79-A5140 | 72-14 | 3EB-79-A5150 | 72-88 | 3EB-79-A5210 | 72-117 |
| 3EB-79-A5140 | 72-16 | 3EB-79-A5150 | 72-94 | 3EB-79-A5210 | 72-117 |
| 3EB-79-A5140 | 72-200 | 3EB-79-A5150 | 72-96 | 3EB-79-A5210 | 72-117 |
| 3EB-79-A5140 | 72-217 | 3EB-79-A5160 | 72-112 | 3EB-79-A5210 | 72-117 |
| 3EB-79-A5140 | 72-217 | 3EB-79-A5160 | 72-184 | 3EB-79-A5210 | 72-118 |
| 3EB-79-A5140 | 72-217 | 3EB-79-A5160 | 72-246 | 3EB-79-A5210 | 72-12 |
| 3EB-79-A5140 | 72-45 | 3EB-79-A5160 | 72-276 | 3EB-79-A5210 | 72-124 |
| 3EB-79-A5140 | 72-45 | 3EB-79-A5160 | 72-280 | 3EB-79-A5210 | 72-126 |
| 3EB-79-A5140 | 72-45 | 3EB-79-A5160 | 72-353 | 3EB-79-A5210 | 72-128 |
| 3EB-79-A5140 | 72-56 | 3EB-79-A5180 | 72-108 | 3EB-79-A5210 | 72-14 |
| 3EB-79-A5140 | 72-58 | 3EB-79-A5180 | 72-110 | 3EB-79-A5210 | 72-145 |
| 3EB-79-A5140 | 72-94 | 3EB-79-A5180 | 72-112 | 3EB-79-A5210 | 72-145 |
| 3EB-79-A5140 | 72-96 | 3EB-79-A5180 | 72-140 | 3EB-79-A5210 | 72-145 |
| 3EB-79-A5150 | 72-116 | 3EB-79-A5180 | 72-142 | 3EB-79-A5210 | 72-156 |
| 3EB-79-A5150 | 72-116 | 3EB-79-A5180 | 72-176 | 3EB-79-A5210 | 72-156 |
| 3EB-79-A5150 | 72-117 | 3EB-79-A5180 | 72-180 | 3EB-79-A5210 | 72-16 |
| 3EB-79-A5150 | 72-118 | 3EB-79-A5180 | 72-184 | 3EB-79-A5210 | 72-160 |
| 3EB-79-A5150 | 72-118 | 3EB-79-A5180 | 72-212 | 3EB-79-A5210 | 72-162 |
| 3EB-79-A5150 | 72-12 | 3EB-79-A5180 | 72-214 | 3EB-79-A5210 | 72-189 |
| 3EB-79-A5150 | 72-124 | 3EB-79-A5180 | 72-244 | 3EB-79-A5210 | 72-189 |
| 3EB-79-A5150 | 72-128 | 3EB-79-A5180 | 72-246 | 3EB-79-A5210 | 72-189 |
| 3EB-79-A5150 | 72-14 | 3EB-79-A5180 | 72-28 | 3EB-79-A5210 | 72-190 |
| 3EB-79-A5150 | 72-144 | 3EB-79-A5180 | 72-310 | 3EB-79-A5210 | 72-190 |
| 3EB-79-A5150 | 72-144 | 3EB-79-A5180 | 72-314 | 3EB-79-A5210 | 72-190 |
| 3EB-79-A5150 | 72-144 | 3EB-79-A5180 | 72-318 | 3EB-79-A5210 | 72-196 |
| 3EB-79-A5150 | 72-145 | 3EB-79-A5180 | 72-32 | 3EB-79-A5210 | 72-200 |
| 3EB-79-A5150 | 72-145 | 3EB-79-A5180 | 72-323 | 3EB-79-A5210 | 72-217 |

## NUMERICAL INDEX


| Part Number | Page | Part Number | Page | Part Number | Page |
|---|---|---|---|---|---|
| 3EB-79-A5210 | 72-217 | 3EB-79-A5220 | 72-252 | 3EB-79-A5240 | 72-334 |
| 3EB-79-A5210 | 72-217 | 3EB-79-A5220 | 72-252 | 3EB-79-A5240 | 72-36 |
| 3EB-79-A5210 | 72-226 | 3EB-79-A5220 | 72-45 | 3EB-79-A5240 | 72-369 |
| 3EB-79-A5210 | 72-228 | 3EB-79-A5220 | 72-45 | 3EB-79-A5240 | 72-373 |
| 3EB-79-A5210 | 72-228 | 3EB-79-A5220 | 72-45 | 3EB-79-A5240 | 72-377 |
| 3EB-79-A5210 | 72-230 | 3EB-79-A5220 | 72-58 | 3EB-79-A5240 | 72-381 |
| 3EB-79-A5210 | 72-232 | 3EB-79-A5220 | 72-79 | 3EB-79-A5240 | 72-385 |
| 3EB-79-A5210 | 72-251 | 3EB-79-A5220 | 72-79 | 3EB-79-A5240 | 72-389 |
| 3EB-79-A5210 | 72-251 | 3EB-79-A5220 | 72-79 | 3EB-79-A5240 | 72-40 |
| 3EB-79-A5210 | 72-251 | 3EB-79-A5220 | 72-96 | 3EB-79-A5240 | 72-72 |
| 3EB-79-A5210 | 72-252 | 3EB-79-A5230 | 72-108 | 3EB-79-A5240 | 72-74 |
| 3EB-79-A5210 | 72-252 | 3EB-79-A5230 | 72-110 | 3EB-79-A5240 | 72-76 |
| 3EB-79-A5210 | 72-252 | 3EB-79-A5230 | 72-112 | 3EB-79-A5250 | 72-108 |
| 3EB-79-A5210 | 72-45 | 3EB-79-A5230 | 72-140 | 3EB-79-A5250 | 72-110 |
| 3EB-79-A5210 | 72-45 | 3EB-79-A5230 | 72-176 | 3EB-79-A5250 | 72-112 |
| 3EB-79-A5210 | 72-45 | 3EB-79-A5230 | 72-180 | 3EB-79-A5250 | 72-140 |
| 3EB-79-A5210 | 72-45 | 3EB-79-A5230 | 72-184 | 3EB-79-A5250 | 72-142 |
| 3EB-79-A5210 | 72-45 | 3EB-79-A5230 | 72-212 | 3EB-79-A5250 | 72-176 |
| 3EB-79-A5210 | 72-45 | 3EB-79-A5230 | 72-244 | 3EB-79-A5250 | 72-180 |
| 3EB-79-A5210 | 72-54 | 3EB-79-A5230 | 72-246 | 3EB-79-A5250 | 72-184 |
| 3EB-79-A5210 | 72-56 | 3EB-79-A5230 | 72-28 | 3EB-79-A5250 | 72-212 |
| 3EB-79-A5210 | 72-58 | 3EB-79-A5230 | 72-310 | 3EB-79-A5250 | 72-214 |
| 3EB-79-A5210 | 72-78 | 3EB-79-A5230 | 72-314 | 3EB-79-A5250 | 72-246 |
| 3EB-79-A5210 | 72-78 | 3EB-79-A5230 | 72-318 | 3EB-79-A5250 | 72-28 |
| 3EB-79-A5210 | 72-78 | 3EB-79-A5230 | 72-32 | 3EB-79-A5250 | 72-310 |
| 3EB-79-A5210 | 72-79 | 3EB-79-A5230 | 72-368 | 3EB-79-A5250 | 72-314 |
| 3EB-79-A5210 | 72-79 | 3EB-79-A5230 | 72-377 | 3EB-79-A5250 | 72-318 |
| 3EB-79-A5210 | 72-79 | 3EB-79-A5230 | 72-385 | 3EB-79-A5250 | 72-32 |
| 3EB-79-A5210 | 72-90 | 3EB-79-A5230 | 72-70 | 3EB-79-A5250 | 72-326 |
| 3EB-79-A5210 | 72-92 | 3EB-79-A5230 | 72-72 | 3EB-79-A5250 | 72-330 |
| 3EB-79-A5210 | 72-94 | 3EB-79-A5230 | 72-74 | 3EB-79-A5250 | 72-334 |
| 3EB-79-A5210 | 72-96 | 3EB-79-A5230 | 72-76 | 3EB-79-A5250 | 72-36 |
| 3EB-79-A5220 | 72-118 | 3EB-79-A5240 | 72-108 | 3EB-79-A5250 | 72-369 |
| 3EB-79-A5220 | 72-118 | 3EB-79-A5240 | 72-110 | 3EB-79-A5250 | 72-373 |
| 3EB-79-A5220 | 72-118 | 3EB-79-A5240 | 72-112 | 3EB-79-A5250 | 72-377 |
| 3EB-79-A5220 | 72-128 | 3EB-79-A5240 | 72-140 | 3EB-79-A5250 | 72-381 |
| 3EB-79-A5220 | 72-145 | 3EB-79-A5240 | 72-142 | 3EB-79-A5250 | 72-385 |
| 3EB-79-A5220 | 72-145 | 3EB-79-A5240 | 72-176 | 3EB-79-A5250 | 72-389 |
| 3EB-79-A5220 | 72-145 | 3EB-79-A5240 | 72-180 | 3EB-79-A5250 | 72-40 |
| 3EB-79-A5220 | 72-16 | 3EB-79-A5240 | 72-184 | 3EB-79-A5250 | 72-70 |
| 3EB-79-A5220 | 72-162 | 3EB-79-A5240 | 72-212 | 3EB-79-A5250 | 72-72 |
| 3EB-79-A5220 | 72-190 | 3EB-79-A5240 | 72-214 | 3EB-79-A5250 | 72-74 |
| 3EB-79-A5220 | 72-190 | 3EB-79-A5240 | 72-244 | 3EB-79-A5250 | 72-76 |
| 3EB-79-A5220 | 72-190 | 3EB-79-A5240 | 72-246 | 3EB-79-A5270 | 72-108 |
| 3EB-79-A5220 | 72-200 | 3EB-79-A5240 | 72-28 | 3EB-79-A5270 | 72-110 |
| 3EB-79-A5220 | 72-217 | 3EB-79-A5240 | 72-310 | 3EB-79-A5270 | 72-112 |
| 3EB-79-A5220 | 72-217 | 3EB-79-A5240 | 72-314 | 3EB-79-A5270 | 72-156 |
| 3EB-79-A5220 | 72-217 | 3EB-79-A5240 | 72-318 | 3EB-79-A5270 | 72-176 |
| 3EB-79-A5220 | 72-232 | 3EB-79-A5240 | 72-32 | 3EB-79-A5270 | 72-180 |
| 3EB-79-A5220 | 72-252 | 3EB-79-A5240 | 72-326 | 3EB-79-A5270 | 72-184 |

## NUMERICAL INDEX


| Part Number | Page | Part Number | Page | Part Number | Page |
|---|---|---|---|---|---|
| 3EB-79-A5270 | 72-228 | 3EB-79-A5330 | 72-246 | 3EB-79-A5360 | 72-72 |
| 3EB-79-A5270 | 72-244 | 3EB-79-A5330 | 72-276 | 3EB-79-A5360 | 72-74 |
| 3EB-79-A5270 | 72-246 | 3EB-79-A5330 | 72-280 | 3EB-79-A5360 | 72-76 |
| 3EB-79-A5270 | 72-28 | 3EB-79-A5330 | 72-288 | 3EB-79-A5360 | 72-90 |
| 3EB-79-A5270 | 72-310 | 3EB-79-A5340 | 72-12 | 3EB-79-A5360 | 72-90 |
| 3EB-79-A5270 | 72-314 | 3EB-79-A5340 | 72-124 | 3EB-79-A5360 | 72-92 |
| 3EB-79-A5270 | 72-318 | 3EB-79-A5340 | 72-154 | 3EB-79-A5360 | 72-92 |
| 3EB-79-A5270 | 72-32 | 3EB-79-A5340 | 72-196 | 3EB-79-A5370 | 72-126 |
| 3EB-79-A5270 | 72-326 | 3EB-79-A5340 | 72-226 | 3EB-79-A5370 | 72-198 |
| 3EB-79-A5270 | 72-330 | 3EB-79-A5340 | 72-52 | 3EB-79-A5370 | 72-54 |
| 3EB-79-A5270 | 72-334 | 3EB-79-A5340 | 72-88 | 3EB-79-A5380 | 72-12 |
| 3EB-79-A5270 | 72-369 | 3EB-79-A5350 | 72-12 | 3EB-79-A5380 | 72-126 |
| 3EB-79-A5270 | 72-373 | 3EB-79-A5350 | 72-124 | 3EB-79-A5380 | 72-156 |
| 3EB-79-A5270 | 72-377 | 3EB-79-A5350 | 72-154 | 3EB-79-A5380 | 72-198 |
| 3EB-79-A5270 | 72-382 | 3EB-79-A5350 | 72-196 | 3EB-79-A5380 | 72-228 |
| 3EB-79-A5270 | 72-385 | 3EB-79-A5350 | 72-226 | 3EB-79-A5380 | 72-54 |
| 3EB-79-A5270 | 72-389 | 3EB-79-A5350 | 72-52 | 3EB-79-A5380 | 72-90 |
| 3EB-79-A5270 | 72-90 | 3EB-79-A5350 | 72-88 | 3EB-79-A5380 | 72-92 |
| 3EB-79-A5270 | 72-92 | 3EB-79-A5360 | 72-108 | 3EB-79-A5390 | 72-12 |
| 3EB-79-A5280 | 72-110 | 3EB-79-A5360 | 72-110 | 3EB-79-A5390 | 72-230 |
| 3EB-79-A5280 | 72-112 | 3EB-79-A5360 | 72-112 | 3EB-79-A6010 | 72-120 |
| 3EB-79-A5280 | 72-140 | 3EB-79-A5360 | 72-126 | 3EB-79-A6010 | 72-148 |
| 3EB-79-A5280 | 72-142 | 3EB-79-A5360 | 72-140 | 3EB-79-A6010 | 72-192 |
| 3EB-79-A5280 | 72-176 | 3EB-79-A5360 | 72-142 | 3EB-79-A6010 | 72-220 |
| 3EB-79-A5280 | 72-180 | 3EB-79-A5360 | 72-156 | 3EB-79-A6010 | 72-254 |
| 3EB-79-A5280 | 72-184 | 3EB-79-A5360 | 72-156 | 3EB-79-A6010 | 72-344 |
| 3EB-79-A5280 | 72-212 | 3EB-79-A5360 | 72-176 | 3EB-79-A6010 | 72-4 |
| 3EB-79-A5280 | 72-214 | 3EB-79-A5360 | 72-180 | 3EB-79-A6010 | 72-48 |
| 3EB-79-A5280 | 72-244 | 3EB-79-A5360 | 72-184 | 3EB-79-A6010 | 72-82 |
| 3EB-79-A5280 | 72-246 | 3EB-79-A5360 | 72-198 | 3EB-79-A6020 | 72-120 |
| 3EB-79-A5280 | 72-247 | 3EB-79-A5360 | 72-212 | 3EB-79-A6020 | 72-148 |
| 3EB-79-A5280 | 72-70 | 3EB-79-A5360 | 72-214 | 3EB-79-A6020 | 72-192 |
| 3EB-79-A5280 | 72-72 | 3EB-79-A5360 | 72-228 | 3EB-79-A6020 | 72-220 |
| 3EB-79-A5280 | 72-74 | 3EB-79-A5360 | 72-228 | 3EB-79-A6020 | 72-254 |
| 3EB-79-A5280 | 72-76 | 3EB-79-A5360 | 72-244 | 3EB-79-A6020 | 72-344 |
| 3EB-79-A5290 | 72-112 | 3EB-79-A5360 | 72-246 | 3EB-79-A6020 | 72-4 |
| 3EB-79-A5290 | 72-184 | 3EB-79-A5360 | 72-28 | 3EB-79-A6020 | 72-48 |
| 3EB-79-A5290 | 72-246 | 3EB-79-A5360 | 72-310 | 3EB-79-A6020 | 72-82 |
| 3EB-79-A5290 | 72-292 | 3EB-79-A5360 | 72-318 | 3EB-79-A6030 | 72-148 |
| 3EB-79-A5290 | 72-356 | 3EB-79-A5360 | 72-32 | 3EB-79-A6030 | 72-220 |
| 3EB-79-A5290 | 72-358 | 3EB-79-A5360 | 72-36 | 3EB-79-A6030 | 72-254 |
| 3EB-79-A5310 | 72-148 | 3EB-79-A5360 | 72-369 | 3EB-79-A6030 | 72-344 |
| 3EB-79-A5310 | 72-220 | 3EB-79-A5360 | 72-373 | 3EB-79-A6030 | 72-4 |
| 3EB-79-A5310 | 72-254 | 3EB-79-A5360 | 72-377 | 3EB-79-A6030 | 72-82 |
| 3EB-79-A5310 | 72-344 | 3EB-79-A5360 | 72-381 | 3EB-79-A6040 | 72-102 |
| 3EB-79-A5310 | 72-4 | 3EB-79-A5360 | 72-385 | 3EB-79-A6040 | 72-104 |
| 3EB-79-A5310 | 72-82 | 3EB-79-A5360 | 72-389 | 3EB-79-A6040 | 72-108 |
| 3EB-79-A5330 | 72-112 | 3EB-79-A5360 | 72-40 | 3EB-79-A6040 | 72-110 |
| 3EB-79-A5330 | 72-184 | 3EB-79-A5360 | 72-54 | 3EB-79-A6040 | 72-112 |
| 3EB-79-A5330 | 72-230 | 3EB-79-A5360 | 72-70 | 3EB-79-A6040 | 72-134 |

## NUMERICAL INDEX


| Part Number | Page | Part Number | Page | Part Number | Page |
|---|---|---|---|---|---|
| 3EB-79-A6040 | 72-134 | 3EB-79-A6040 | 72-373 | 3EB-79-A6050 | 72-339 |
| 3EB-79-A6040 | 72-136 | 3EB-79-A6040 | 72-377 | 3EB-79-A6050 | 72-339 |
| 3EB-79-A6040 | 72-136 | 3EB-79-A6040 | 72-381 | 3EB-79-A6050 | 72-354 |
| 3EB-79-A6040 | 72-140 | 3EB-79-A6040 | 72-385 | 3EB-79-A6050 | 72-356 |
| 3EB-79-A6040 | 72-142 | 3EB-79-A6040 | 72-389 | 3EB-79-A6050 | 72-358 |
| 3EB-79-A6040 | 72-154 | 3EB-79-A6040 | 72-40 | 3EB-79-A6050 | 72-393 |
| 3EB-79-A6040 | 72-154 | 3EB-79-A6040 | 72-64 | 3EB-79-A6050 | 72-393 |
| 3EB-79-A6040 | 72-170 | 3EB-79-A6040 | 72-66 | 3EB-79-A6050 | 72-393 |
| 3EB-79-A6040 | 72-172 | 3EB-79-A6040 | 72-70 | 3EB-79-A6050 | 72-45 |
| 3EB-79-A6040 | 72-176 | 3EB-79-A6040 | 72-72 | 3EB-79-A6050 | 72-45 |
| 3EB-79-A6040 | 72-180 | 3EB-79-A6040 | 72-74 | 3EB-79-A6050 | 72-45 |
| 3EB-79-A6040 | 72-184 | 3EB-79-A6040 | 72-76 | 3EB-79-A6050 | 72-54 |
| 3EB-79-A6040 | 72-206 | 3EB-79-A6040 | 72-88 | 3EB-79-A6050 | 72-56 |
| 3EB-79-A6040 | 72-206 | 3EB-79-A6040 | 72-88 | 3EB-79-A6050 | 72-58 |
| 3EB-79-A6040 | 72-208 | 3EB-79-A6050 | 72-117 | 3EB-79-A6050 | 72-78 |
| 3EB-79-A6040 | 72-208 | 3EB-79-A6050 | 72-117 | 3EB-79-A6050 | 72-78 |
| 3EB-79-A6040 | 72-212 | 3EB-79-A6050 | 72-117 | 3EB-79-A6050 | 72-78 |
| 3EB-79-A6040 | 72-214 | 3EB-79-A6050 | 72-12 | 3EB-79-A6050 | 72-90 |
| 3EB-79-A6040 | 72-22 | 3EB-79-A6050 | 72-126 | 3EB-79-A6050 | 72-92 |
| 3EB-79-A6040 | 72-22 | 3EB-79-A6050 | 72-128 | 3EB-79-A6050 | 72-94 |
| 3EB-79-A6040 | 72-226 | 3EB-79-A6050 | 72-14 | 3EB-79-A6050 | 72-96 |
| 3EB-79-A6040 | 72-226 | 3EB-79-A6050 | 72-144 | 3EB-79-A6060 | 72-142 |
| 3EB-79-A6040 | 72-230 | 3EB-79-A6050 | 72-144 | 3EB-79-A6060 | 72-156 |
| 3EB-79-A6040 | 72-238 | 3EB-79-A6050 | 72-144 | 3EB-79-A6060 | 72-214 |
| 3EB-79-A6040 | 72-24 | 3EB-79-A6050 | 72-156 | 3EB-79-A6060 | 72-228 |
| 3EB-79-A6040 | 72-24 | 3EB-79-A6050 | 72-16 | 3EB-79-A6060 | 72-90 |
| 3EB-79-A6040 | 72-240 | 3EB-79-A6050 | 72-160 | 3EB-79-A6060 | 72-92 |
| 3EB-79-A6040 | 72-244 | 3EB-79-A6050 | 72-162 | 3EB-79-A6070 | 72-117 |
| 3EB-79-A6040 | 72-246 | 3EB-79-A6050 | 72-189 | 3EB-79-A6070 | 72-117 |
| 3EB-79-A6040 | 72-274 | 3EB-79-A6050 | 72-189 | 3EB-79-A6070 | 72-117 |
| 3EB-79-A6040 | 72-276 | 3EB-79-A6050 | 72-189 | 3EB-79-A6070 | 72-12 |
| 3EB-79-A6040 | 72-28 | 3EB-79-A6050 | 72-198 | 3EB-79-A6070 | 72-189 |
| 3EB-79-A6040 | 72-280 | 3EB-79-A6050 | 72-200 | 3EB-79-A6070 | 72-189 |
| 3EB-79-A6040 | 72-284 | 3EB-79-A6050 | 72-216 | 3EB-79-A6070 | 72-189 |
| 3EB-79-A6040 | 72-286 | 3EB-79-A6050 | 72-216 | 3EB-79-A6070 | 72-230 |
| 3EB-79-A6040 | 72-288 | 3EB-79-A6050 | 72-216 | 3EB-79-A6070 | 72-251 |
| 3EB-79-A6040 | 72-302 | 3EB-79-A6050 | 72-228 | 3EB-79-A6070 | 72-251 |
| 3EB-79-A6040 | 72-304 | 3EB-79-A6050 | 72-232 | 3EB-79-A6070 | 72-251 |
| 3EB-79-A6040 | 72-310 | 3EB-79-A6050 | 72-251 | 3EB-79-A6070 | 72-284 |
| 3EB-79-A6040 | 72-314 | 3EB-79-A6050 | 72-251 | 3EB-79-A6070 | 72-286 |
| 3EB-79-A6040 | 72-318 | 3EB-79-A6050 | 72-251 | 3EB-79-A6070 | 72-290 |
| 3EB-79-A6040 | 72-32 | 3EB-79-A6050 | 72-277 | 3EB-79-A6070 | 72-340 |
| 3EB-79-A6040 | 72-326 | 3EB-79-A6050 | 72-281 | 3EB-79-A6070 | 72-340 |
| 3EB-79-A6040 | 72-330 | 3EB-79-A6050 | 72-284 | 3EB-79-A6070 | 72-340 |
| 3EB-79-A6040 | 72-334 | 3EB-79-A6050 | 72-286 | 3EB-79-A6070 | 72-354 |
| 3EB-79-A6040 | 72-353 | 3EB-79-A6050 | 72-288 | 3EB-79-A6070 | 72-394 |
| 3EB-79-A6040 | 72-36 | 3EB-79-A6050 | 72-290 | 3EB-79-A6070 | 72-394 |
| 3EB-79-A6040 | 72-364 | 3EB-79-A6050 | 72-292 | 3EB-79-A6070 | 72-394 |
| 3EB-79-A6040 | 72-366 | 3EB-79-A6050 | 72-294 | 3EB-79-A6080 | 72-117 |
| 3EB-79-A6040 | 72-369 | 3EB-79-A6050 | 72-339 | 3EB-79-A6080 | 72-117 |

## NUMERICAL INDEX


| Part Number | Page | Part Number | Page | Part Number | Page |
|---|---|---|---|---|---|
| 3EB-79-A6080 | 72-117 | 3EB-79-A6080 | 72-294 | 3EB-79-A6081 | 72-162 |
| 3EB-79-A6080 | 72-118 | 3EB-79-A6080 | 72-339 | 3EB-79-A6081 | 72-189 |
| 3EB-79-A6080 | 72-118 | 3EB-79-A6080 | 72-339 | 3EB-79-A6081 | 72-189 |
| 3EB-79-A6080 | 72-118 | 3EB-79-A6080 | 72-340 | 3EB-79-A6081 | 72-189 |
| 3EB-79-A6080 | 72-12 | 3EB-79-A6080 | 72-340 | 3EB-79-A6081 | 72-190 |
| 3EB-79-A6080 | 72-124 | 3EB-79-A6080 | 72-341 | 3EB-79-A6081 | 72-190 |
| 3EB-79-A6080 | 72-128 | 3EB-79-A6080 | 72-353 | 3EB-79-A6081 | 72-190 |
| 3EB-79-A6080 | 72-14 | 3EB-79-A6080 | 72-356 | 3EB-79-A6081 | 72-196 |
| 3EB-79-A6080 | 72-144 | 3EB-79-A6080 | 72-358 | 3EB-79-A6081 | 72-200 |
| 3EB-79-A6080 | 72-144 | 3EB-79-A6080 | 72-393 | 3EB-79-A6081 | 72-216 |
| 3EB-79-A6080 | 72-144 | 3EB-79-A6080 | 72-393 | 3EB-79-A6081 | 72-216 |
| 3EB-79-A6080 | 72-145 | 3EB-79-A6080 | 72-394 | 3EB-79-A6081 | 72-216 |
| 3EB-79-A6080 | 72-145 | 3EB-79-A6080 | 72-394 | 3EB-79-A6081 | 72-217 |
| 3EB-79-A6080 | 72-145 | 3EB-79-A6080 | 72-394 | 3EB-79-A6081 | 72-217 |
| 3EB-79-A6080 | 72-154 | 3EB-79-A6080 | 72-45 | 3EB-79-A6081 | 72-217 |
| 3EB-79-A6080 | 72-16 | 3EB-79-A6080 | 72-45 | 3EB-79-A6081 | 72-226 |
| 3EB-79-A6080 | 72-160 | 3EB-79-A6080 | 72-45 | 3EB-79-A6081 | 72-230 |
| 3EB-79-A6080 | 72-162 | 3EB-79-A6080 | 72-45 | 3EB-79-A6081 | 72-232 |
| 3EB-79-A6080 | 72-189 | 3EB-79-A6080 | 72-45 | 3EB-79-A6081 | 72-251 |
| 3EB-79-A6080 | 72-189 | 3EB-79-A6080 | 72-45 | 3EB-79-A6081 | 72-251 |
| 3EB-79-A6080 | 72-189 | 3EB-79-A6080 | 72-56 | 3EB-79-A6081 | 72-251 |
| 3EB-79-A6080 | 72-190 | 3EB-79-A6080 | 72-58 | 3EB-79-A6081 | 72-252 |
| 3EB-79-A6080 | 72-190 | 3EB-79-A6080 | 72-78 | 3EB-79-A6081 | 72-252 |
| 3EB-79-A6080 | 72-190 | 3EB-79-A6080 | 72-78 | 3EB-79-A6081 | 72-252 |
| 3EB-79-A6080 | 72-196 | 3EB-79-A6080 | 72-78 | 3EB-79-A6081 | 72-274 |
| 3EB-79-A6080 | 72-200 | 3EB-79-A6080 | 72-79 | 3EB-79-A6081 | 72-276 |
| 3EB-79-A6080 | 72-216 | 3EB-79-A6080 | 72-79 | 3EB-79-A6081 | 72-284 |
| 3EB-79-A6080 | 72-216 | 3EB-79-A6080 | 72-79 | 3EB-79-A6081 | 72-286 |
| 3EB-79-A6080 | 72-216 | 3EB-79-A6080 | 72-88 | 3EB-79-A6081 | 72-288 |
| 3EB-79-A6080 | 72-217 | 3EB-79-A6080 | 72-94 | 3EB-79-A6081 | 72-290 |
| 3EB-79-A6080 | 72-217 | 3EB-79-A6080 | 72-96 | 3EB-79-A6081 | 72-292 |
| 3EB-79-A6080 | 72-217 | 3EB-79-A6081 | 72-117 | 3EB-79-A6081 | 72-294 |
| 3EB-79-A6080 | 72-226 | 3EB-79-A6081 | 72-117 | 3EB-79-A6081 | 72-339 |
| 3EB-79-A6080 | 72-230 | 3EB-79-A6081 | 72-117 | 3EB-79-A6081 | 72-339 |
| 3EB-79-A6080 | 72-232 | 3EB-79-A6081 | 72-118 | 3EB-79-A6081 | 72-339 |
| 3EB-79-A6080 | 72-232 | 3EB-79-A6081 | 72-118 | 3EB-79-A6081 | 72-353 |
| 3EB-79-A6080 | 72-251 | 3EB-79-A6081 | 72-118 | 3EB-79-A6081 | 72-356 |
| 3EB-79-A6080 | 72-251 | 3EB-79-A6081 | 72-12 | 3EB-79-A6081 | 72-358 |
| 3EB-79-A6080 | 72-251 | 3EB-79-A6081 | 72-124 | 3EB-79-A6081 | 72-393 |
| 3EB-79-A6080 | 72-252 | 3EB-79-A6081 | 72-128 | 3EB-79-A6081 | 72-393 |
| 3EB-79-A6080 | 72-252 | 3EB-79-A6081 | 72-14 | 3EB-79-A6081 | 72-393 |
| 3EB-79-A6080 | 72-252 | 3EB-79-A6081 | 72-144 | 3EB-79-A6081 | 72-394 |
| 3EB-79-A6080 | 72-274 | 3EB-79-A6081 | 72-144 | 3EB-79-A6081 | 72-394 |
| 3EB-79-A6080 | 72-277 | 3EB-79-A6081 | 72-144 | 3EB-79-A6081 | 72-394 |
| 3EB-79-A6080 | 72-281 | 3EB-79-A6081 | 72-145 | 3EB-79-A6081 | 72-44 |
| 3EB-79-A6080 | 72-284 | 3EB-79-A6081 | 72-145 | 3EB-79-A6081 | 72-44 |
| 3EB-79-A6080 | 72-286 | 3EB-79-A6081 | 72-145 | 3EB-79-A6081 | 72-45 |
| 3EB-79-A6080 | 72-288 | 3EB-79-A6081 | 72-154 | 3EB-79-A6081 | 72-45 |
| 3EB-79-A6080 | 72-290 | 3EB-79-A6081 | 72-16 | 3EB-79-A6081 | 72-45 |
| 3EB-79-A6080 | 72-292 | 3EB-79-A6081 | 72-160 | 3EB-79-A6081 | 72-45 |

## NUMERICAL INDEX


| Part Number | Page | Part Number | Page | Part Number | Page |
|---|---|---|---|---|---|
| 3EB-79-A6081 | 72-52 | 3EB-79-A6090 | 72-44 | 3EB-96-A5920 | 96-10 |
| 3EB-79-A6081 | 72-56 | 3EB-79-A6090 | 72-52 | 3EB-96-A5920 | 96-2 |
| 3EB-79-A6081 | 72-58 | 3EB-79-A6090 | 72-78 | 3EB-96-A5920 | 96-6 |
| 3EB-79-A6081 | 72-79 | 3EB-79-A6090 | 72-78 | 3EB-96-A5930 | 96-10 |
| 3EB-79-A6081 | 72-79 | 3EB-79-A6090 | 72-78 | 3EB-96-A5930 | 96-2 |
| 3EB-79-A6081 | 72-79 | 3EB-79-A6090 | 72-88 | 3EB-96-A5930 | 96-6 |
| 3EB-79-A6081 | 72-88 | 3EB-84-51290 | 72-102 | 3EB-96-A5940 | 96-10 |
| 3EB-79-A6081 | 72-94 | 3EB-84-51290 | 72-136 | 3EB-96-A5940 | 96-2 |
| 3EB-79-A6081 | 72-96 | 3EB-84-51290 | 72-170 | 3EB-96-A5940 | 96-6 |
| 3EB-79-A6090 | 72-117 | 3EB-84-51290 | 72-2 | 3EB-96-A5950 | 96-11 |
| 3EB-79-A6090 | 72-117 | 3EB-84-51290 | 72-206 | 3EB-96-A5950 | 96-3 |
| 3EB-79-A6090 | 72-117 | 3EB-84-51290 | 72-22 | 3EB-96-A5950 | 96-7 |
| 3EB-79-A6090 | 72-12 | 3EB-84-51290 | 72-240 | 3EB-96-A5960 | 96-10 |
| 3EB-79-A6090 | 72-124 | 3EB-84-51290 | 72-302 | 3EB-96-A5960 | 96-2 |
| 3EB-79-A6090 | 72-144 | 3EB-84-51290 | 72-364 | 3EB-96-A5960 | 96-6 |
| 3EB-79-A6090 | 72-144 | 3EB-94-46410 | 66-26 | 3EB-96-A5970 | 96-11 |
| 3EB-79-A6090 | 72-144 | 3EB-94-46410 | 66-28 | 3EB-96-A5970 | 96-3 |
| 3EB-79-A6090 | 72-154 | 3EB-94-46410 | 66-30 | 3EB-96-A5970 | 96-7 |
| 3EB-79-A6090 | 72-189 | 3EB-94-F2110 | 83-12 | 3EB-96-A6110 | 96-10 |
| 3EB-79-A6090 | 72-189 | 3EB-94-F2120 | 83-12 | 3EB-96-A6110 | 96-2 |
| 3EB-79-A6090 | 72-189 | 3EB-96-13210 | 96-10 | 3EB-96-A6110 | 96-6 |
| 3EB-79-A6090 | 72-196 | 3EB-96-13210 | 96-2 | 3EB-96-A6120 | 96-10 |
| 3EB-79-A6090 | 72-216 | 3EB-96-13210 | 96-6 | 3EB-96-A6120 | 96-2 |
| 3EB-79-A6090 | 72-216 | 3EB-96-13410 | 96-10 | 3EB-96-A6120 | 96-6 |
| 3EB-79-A6090 | 72-216 | 3EB-96-13410 | 96-2 | 3EB-96-A7110 | 96-10 |
| 3EB-79-A6090 | 72-226 | 3EB-96-13410 | 96-6 | 3EB-96-A7110 | 96-2 |
| 3EB-79-A6090 | 72-230 | 3EB-96-25520 | 96-10 | 3EB-96-A7110 | 96-6 |
| 3EB-79-A6090 | 72-251 | 3EB-96-25520 | 96-2 | 3EB-96-A7210 | 96-10 |
| 3EB-79-A6090 | 72-251 | 3EB-96-25520 | 96-6 | 3EB-96-A7210 | 96-2 |
| 3EB-79-A6090 | 72-251 | 3EB-96-34910 | 96-11 | 3EB-96-A7210 | 96-6 |
| 3EB-79-A6090 | 72-276 | 3EB-96-34910 | 96-7 | 3EB-96-A7560 | 96-10 |
| 3EB-79-A6090 | 72-286 | 3EB-96-51120 | 96-10 | 3EB-96-A7560 | 96-2 |
| 3EB-79-A6090 | 72-288 | 3EB-96-51120 | 96-2 | 3EB-96-A7560 | 96-6 |
| 3EB-79-A6090 | 72-290 | 3EB-96-51120 | 96-6 | 3EB-96-A7710 | 96-3 |
| 3EB-79-A6090 | 72-292 | 3EB-96-A5111 | 96-10 | 3EB-98-A31252 | 0-8 |
| 3EB-79-A6090 | 72-294 | 3EB-96-A5111 | 96-2 | 3EB-98-A31252 | 61-2 |
| 3EB-79-A6090 | 72-339 | 3EB-96-A5111 | 96-6 | 3EB-99-A6110 | 0-4 |
| 3EB-79-A6090 | 72-339 | 3EB-96-A5510 | 96-10 | 3EB-99-A6110 | 98-2 |
| 3EB-79-A6090 | 72-339 | 3EB-96-A5510 | 96-2 | 3EB-99-A6120 | 0-4 |
| 3EB-79-A6090 | 72-353 | 3EB-96-A5510 | 96-6 | 3EB-99-A6120 | 98-2 |
| 3EB-79-A6090 | 72-356 | 3EB-96-A5520 | 96-10 | 3EB-99-A6130 | 0-4 |
| 3EB-79-A6090 | 72-358 | 3EB-96-A5520 | 96-2 | 3EB-99-A6130 | 98-2 |
| 3EB-79-A6090 | 72-393 | 3EB-96-A5520 | 96-6 | 3EB-99-A6210 | 0-4 |
| 3EB-79-A6090 | 72-393 | 3EB-96-A5530 | 96-3 | 3EB-99-A6210 | 98-2 |
| 3EB-79-A6090 | 72-393 | 3EB-96-A5821 | 96-10 | 3EB-99-A6220 | 0-4 |
| 3EB-79-A6090 | 72-394 | 3EB-96-A5821 | 96-2 | 3EB-99-A6220 | 98-2 |
| 3EB-79-A6090 | 72-394 | 3EB-96-A5821 | 96-6 | 3EB-99-A6230 | 0-4 |
| 3EB-79-A6090 | 72-394 | 3EB-96-A5910 | 96-10 | 3EB-99-A6230 | 98-2 |
| 3EB-79-A6090 | 72-44 | 3EB-96-A5910 | 96-2 | 3EB-K3-02030 | 0-3 |
| 3EB-79-A6090 | 72-44 | 3EB-96-A5910 | 96-6 | 3EB-K3-02030 | 30-15 |

https://truckmanualshub.com/


## NUMERICAL INDEX


| Part Number | Page | Part Number | Page | Part Number | Page |
|---|---|---|---|---|---|
| 3EB-K3-02030 | 30-3 | 3EC-30-11450 | 30-10 | 45B-AAX-1840 | 93-2 |
| 3EB-K3-02040 | 0-3 | 3EC-30-11510 | 30-10 | 45B-AAX-1840 | 93-2 |
| 3EB-K3-02040 | 30-15 | 3EC-30-11510 | 30-14 | 45B-AAX-1840 | 93-3 |
| 3EB-K3-02040 | 30-3 | 3EC-30-11510 | 30-18 | 45B-AAX-1850 | 93-2 |
| 3EB-K3-02050 | 0-3 | 3EC-30-11510 | 30-2 | 45B-AAX-1850 | 93-2 |
| 3EB-K3-02050 | 30-7 | 3EC-30-11510 | 30-6 | 45B-AAX-1850 | 93-3 |
| 3EB-K3-02060 | 0-3 | 3EC-30-11710 | 30-10 | 45B-AAX-1860 | 93-2 |
| 3EB-K3-02060 | 30-7 | 3EC-30-12650 | 30-14 | 45B-AAX-1860 | 93-2 |
| 3EB-K3-04010 | 0-3 | 3EC-30-12650 | 30-18 | 45B-AAX-1860 | 93-3 |
| 3EB-K3-04010 | 30-11 | 3EC-30-14540 | 30-10 | 45B-AAX-1930 | 93-3 |
| 3EB-K3-04020 | 0-3 | 3EC-30-31320 | 30-10 | 45B-AAX-1930 | 93-3 |
| 3EB-K3-04020 | 30-11 | 3EC-30-33110 | 0-3 | 45B-AAX-1940 | 93-3 |
| 3EC-04-34130 | 4-10 | 3EC-30-33110 | 30-10 | 45B-AAX-1940 | 93-3 |
| 3EC-04-34130 | 4-6 | 3EC-30-33160 | 30-10 | 45B-AAX-1950 | 93-3 |
| 3EC-04-34130 | 4-8 | 3EC-50-31820 | 50-18 | 45B-AAX-1950 | 93-3 |
| 3EC-30-11110 | 30-10 | 3EC-51-A2620 | 83-12 | 45B-AAX-1960 | 93-3 |
| 3EC-30-11150 | 30-10 | 3EC-55-37180 | 0-12 | 45B-AAX-1960 | 93-3 |
| 3EC-30-11160 | 30-10 | 3EC-55-37180 | 55-2 | 45B-AAX-1980 | 93-2 |
| 3EC-30-11170 | 30-10 | 3EC-56-F3310 | 83-13 | 45B-AAX-1980 | 93-2 |
| 3EC-30-11170 | 30-14 | 3EC-66-A1910 | 61-10 | 540-62-12540 | 61-2 |
| 3EC-30-11170 | 30-18 | 3EC-66-A1910 | 61-12 | 540-62-12540 | 66-20 |
| 3EC-30-11170 | 30-2 | 3EC-72-121FR | 93-4 | 540-62-12540 | 66-22 |
| 3EC-30-11170 | 30-6 | 3ED-30-31240 | 30-14 | 540-62-13330 | 66-26 |
| 3EC-30-11180 | 30-10 | 3ED-30-31240 | 30-18 | 540-62-13330 | 66-28 |
| 3EC-30-11180 | 30-14 | 3ED-30-31240 | 30-2 | 540-62-13330 | 66-30 |
| 3EC-30-11180 | 30-18 | 3ED-30-31240 | 30-6 | AMP1-174664-1 | 83-12 |
| 3EC-30-11180 | 30-2 | 3EP-05-17160 | 83-10 | AMP1-174664-1 | 83-13 |
| 3EC-30-11180 | 30-6 | 3FD-05-26130 | 5-2 | AMP172748-2 | 83-12 |
| 3EC-30-11190 | 30-10 | 3FD-05-26140 | 5-2 | AMP172748-2 | 83-13 |
| 3EC-30-11210 | 30-10 | 3FD-42-21310 | 0-6 | AMP172888-2 | 83-12 |
| 3EC-30-11230 | 30-10 | 3FD-42-21310 | 41-10 | AMP172888-2 | 83-13 |
| 3EC-30-11240 | 30-10 | 3SB-24-51640 | 64-13 | AMP173706-1 | 83-12 |
| 3EC-30-11250 | 30-10 | 3SB-24-51640 | 64-7 | AMP173706-1 | 83-13 |
| 3EC-30-11260 | 30-10 | 3SB-55-11380 | 5-2 | AMP174662-2 | 83-13 |
| 3EC-30-11270 | 30-10 | 3SB-55-11380 | 5-4 | AMP174663-2 | 83-12 |
| 3EC-30-11310 | 30-10 | 45B-AAX-1140 | 93-2 | AS35303-3601 | 0-3 |
| 3EC-30-11320 | 30-10 | 45B-AAX-1140 | 93-2 | CC1000225 | 72-10 |
| 3EC-30-11340 | 30-10 | 45B-AAX-1140 | 93-3 | CC1000230 | 72-10 |
| 3EC-30-11340 | 30-14 | 45B-AAX-1150 | 93-2 | CC1000236 | 72-10 |
| 3EC-30-11340 | 30-18 | 45B-AAX-1150 | 93-2 | CC1000470 | 72-150 |
| 3EC-30-11340 | 30-2 | 45B-AAX-1150 | 93-3 | CC1000474 | 72-150 |
| 3EC-30-11340 | 30-6 | 45B-AAX-1180 | 93-2 | CC1000476 | 72-150 |
| 3EC-30-11370 | 30-10 | 45B-AAX-1180 | 93-2 | CC1000481 | 72-150 |
| 3EC-30-11380 | 30-10 | 45B-AAX-1180 | 93-3 | CC1000484 | 72-150 |
| 3EC-30-11380 | 30-14 | 45B-AAX-1810 | 93-2 | CC1000493 | 72-150 |
| 3EC-30-11380 | 30-18 | 45B-AAX-1810 | 93-2 | CC1000495 | 72-150 |
| 3EC-30-11380 | 30-2 | 45B-AAX-1810 | 93-3 | CC1000502 | 72-150 |
| 3EC-30-11380 | 30-6 | 45B-AAX-1830 | 93-2 | CC1000505 | 72-150 |
| 3EC-30-11390 | 30-10 | 45B-AAX-1830 | 93-2 | CC1000508 | 72-150 |
| 3EC-30-11430 | 30-10 | 45B-AAX-1830 | 93-3 | CC1000541 | 72-152 |

## NUMERICAL INDEX


| Part Number | Page | Part Number | Page | Part Number | Page |
|---|---|---|---|---|---|
| CC1000545 | 72-152 | CC1001221 | 72-8 | CC1003081 | 72-346 |
| CC1000547 | 72-152 | CC1001256 | 72-6 | CC1003087 | 72-346 |
| CC1000552 | 72-152 | CC1001261 | 72-6 | CC1003093 | 72-346 |
| CC1000564 | 72-152 | CC1001267 | 72-6 | CC1003099 | 72-346 |
| CC1000566 | 72-152 | CC1001746 | 72-272 | CC1003105 | 72-346 |
| CC1000573 | 72-152 | CC1001746 | 72-350 | CC1003245 | 72-222 |
| CC1000576 | 72-152 | CC1001747 | 72-272 | CC1003251 | 72-222 |
| CC1000579 | 72-152 | CC1001752 | 72-272 | CC1003256 | 72-222 |
| CC1000649 | 72-258 | CC1001752 | 72-350 | CC1003260 | 72-222 |
| CC1000650 | 72-258 | CC1001758 | 72-272 | CC1003272 | 72-222 |
| CC1000651 | 72-258 | CC1001758 | 72-350 | CC1003279 | 72-222 |
| CC1000652 | 72-258 | CC1001764 | 72-272 | CC1003283 | 72-222 |
| CC1000653 | 72-258 | CC1001764 | 72-350 | CC1003305 | 72-224 |
| CC1000654 | 72-258 | CC1001770 | 72-272 | CC1003311 | 72-224 |
| CC1000655 | 72-258 | CC1001770 | 72-350 | CC1003316 | 72-224 |
| CC1000666 | 72-258 | CC1001776 | 72-272 | CC1003320 | 72-224 |
| CC1000698 | 72-264 | CC1001776 | 72-350 | CC1003332 | 72-224 |
| CC1000699 | 72-264 | CC1001782 | 72-272 | CC1003339 | 72-224 |
| CC1000700 | 72-264 | CC1001782 | 72-350 | CC1003343 | 72-224 |
| CC1000701 | 72-264 | CC1002002 | 72-260 | CC1003428 | 72-194 |
| CC1000702 | 72-264 | CC1002003 | 72-260 | CC1003433 | 72-194 |
| CC1000703 | 72-264 | CC1002008 | 72-260 | CC1003439 | 72-194 |
| CC1000704 | 72-264 | CC1002014 | 72-260 | CC1003448 | 72-194 |
| CC1000748 | 72-270 | CC1002020 | 72-260 | CC1003451 | 72-194 |
| CC1000751 | 72-270 | CC1002026 | 72-260 | CC1003454 | 72-194 |
| CC1000757 | 72-270 | CC1002032 | 72-260 | CC1003460 | 72-194 |
| CC1000762 | 72-270 | CC1002038 | 72-260 | CC1004774 | 72-194 |
| CC1000768 | 72-270 | CC1002044 | 72-266 | CC1004774 | 72-222 |
| CC1000772 | 72-270 | CC1002045 | 72-266 | CC1004775 | 72-194 |
| CC1000776 | 72-270 | CC1002050 | 72-266 | CC1004775 | 72-222 |
| CC1000785 | 72-264 | CC1002056 | 72-266 | CC1004776 | 72-194 |
| CC1000786 | 72-270 | CC1002062 | 72-266 | CC1004776 | 72-222 |
| CC1001115 | 72-122 | CC1002068 | 72-266 | CC1004777 | 72-194 |
| CC1001115 | 72-50 | CC1002074 | 72-266 | CC1004777 | 72-222 |
| CC1001127 | 72-122 | CC1002080 | 72-266 | CC1004777 | 72-224 |
| CC1001127 | 72-50 | CC1002524 | 72-346 | CC1004778 | 72-224 |
| CC1001131 | 72-122 | CC1002524 | 72-350 | CC1004779 | 72-224 |
| CC1001131 | 72-50 | CC1002525 | 72-260 | CC1004780 | 72-224 |
| CC1001138 | 72-122 | CC1002525 | 72-272 | CC1004781 | 72-224 |
| CC1001138 | 72-50 | CC1002526 | 72-266 | CC1004782 | 72-224 |
| CC1001139 | 72-122 | CC1002526 | 72-348 | CC1004783 | 72-224 |
| CC1001139 | 72-50 | CC1003016 | 72-348 | CC1348729 | 72-258 |
| CC1001147 | 72-122 | CC1003022 | 72-348 | CC1348729 | 72-264 |
| CC1001147 | 72-50 | CC1003028 | 72-348 | CC1349732 | 72-258 |
| CC1001153 | 72-122 | CC1003034 | 72-348 | CC1349747 | 72-264 |
| CC1001153 | 72-50 | CC1003040 | 72-348 | CC1349748 | 72-264 |
| CC1001159 | 72-122 | CC1003046 | 72-348 | CC1350240 | 72-270 |
| CC1001159 | 72-50 | CC1003052 | 72-348 | CC1350241 | 72-270 |
| CC1001210 | 72-8 | CC1003069 | 72-346 | CC1356992 | 72-258 |
| CC1001215 | 72-8 | CC1003075 | 72-346 | CC1356992 | 72-264 |

## NUMERICAL INDEX


| Part Number | Page | Part Number | Page | Part Number | Page |
|---|---|---|---|---|---|
| CC1358999 | 72-272 | CC200788 | 72-88 | CC203285 | 72-276 |
| CC1358999 | 72-86 | CC201435 | 72-188 | CC203285 | 72-280 |
| CC17010R1 | 72-258 | CC201435 | 72-188 | CC203285 | 72-352 |
| CC17010R1 | 72-264 | CC201435 | 72-188 | CC203286 | 72-276 |
| CC200006 | 72-158 | CC201435 | 72-198 | CC203286 | 72-280 |
| CC200006 | 72-280 | CC201435 | 72-226 | CC203286 | 72-352 |
| CC200007 | 72-276 | CC201435 | 72-250 | CC203287 | 72-276 |
| CC200007 | 72-280 | CC201435 | 72-250 | CC203287 | 72-280 |
| CC200007 | 72-286 | CC201435 | 72-250 | CC203287 | 72-352 |
| CC200007 | 72-288 | CC201435 | 72-393 | CC203288 | 72-276 |
| CC200007 | 72-290 | CC201435 | 72-393 | CC203288 | 72-280 |
| CC200007 | 72-292 | CC201435 | 72-393 | CC203288 | 72-352 |
| CC200007 | 72-294 | CC201493 | 72-274 | CC203289 | 72-276 |
| CC200007 | 72-339 | CC201493 | 72-340 | CC203289 | 72-280 |
| CC200007 | 72-339 | CC201493 | 72-340 | CC203290 | 72-276 |
| CC200007 | 72-339 | CC201493 | 72-340 | CC203290 | 72-280 |
| CC200007 | 72-353 | CC201493 | 72-354 | CC203291 | 72-276 |
| CC200007 | 72-356 | CC201494 | 72-274 | CC203291 | 72-280 |
| CC200007 | 72-358 | CC201494 | 72-353 | CC203291 | 72-290 |
| CC200007 | 72-393 | CC201497 | 72-286 | CC203291 | 72-353 |
| CC200007 | 72-393 | CC203202 | 72-140 | CC203292 | 72-307 |
| CC200007 | 72-393 | CC203202 | 72-142 | CC203292 | 72-323 |
| CC200007 | 72-394 | CC203202 | 72-212 | CC203293 | 72-323 |
| CC200007 | 72-394 | CC203202 | 72-214 | CC203294 | 72-307 |
| CC200007 | 72-394 | CC203202 | 72-70 | CC203294 | 72-323 |
| CC200173 | 72-100 | CC203202 | 72-72 | CC203295 | 72-307 |
| CC200173 | 72-132 | CC203202 | 72-74 | CC203295 | 72-323 |
| CC200173 | 72-168 | CC203202 | 72-76 | CC203296 | 72-307 |
| CC200173 | 72-20 | CC203262 | 72-286 | CC203296 | 72-323 |
| CC200173 | 72-204 | CC203263 | 72-276 | CC203314 | 72-277 |
| CC200173 | 72-236 | CC203264 | 72-307 | CC203314 | 72-281 |
| CC200173 | 72-300 | CC203264 | 72-310 | CC203314 | 72-354 |
| CC200173 | 72-362 | CC203264 | 72-369 | CC203323 | 72-292 |
| CC200173 | 72-62 | CC203265 | 72-323 | CC203323 | 72-356 |
| CC200242 | 72-274 | CC203265 | 72-326 | CC203324 | 72-292 |
| CC200242 | 72-284 | CC203265 | 72-373 | CC203324 | 72-356 |
| CC200242 | 72-353 | CC203266 | 72-284 | CC203325 | 72-292 |
| CC200244 | 72-274 | CC203267 | 72-284 | CC203325 | 72-356 |
| CC200244 | 72-284 | CC203269 | 72-284 | CC203326 | 72-292 |
| CC200244 | 72-353 | CC203269 | 72-354 | CC203326 | 72-356 |
| CC200429 | 72-158 | CC203277 | 72-274 | CC203377 | 72-286 |
| CC200429 | 72-286 | CC203278 | 72-274 | CC203377 | 72-288 |
| CC200524 | 72-307 | CC203279 | 72-274 | CC203377 | 72-290 |
| CC200524 | 72-310 | CC203280 | 72-274 | CC203377 | 72-352 |
| CC200524 | 72-323 | CC203281 | 72-274 | CC203378 | 72-286 |
| CC200524 | 72-326 | CC203282 | 72-274 | CC203378 | 72-288 |
| CC200524 | 72-369 | CC203283 | 72-274 | CC203378 | 72-290 |
| CC200524 | 72-373 | CC203284 | 72-276 | CC203378 | 72-352 |
| CC200788 | 72-154 | CC203284 | 72-280 | CC203379 | 72-286 |
| CC200788 | 72-226 | CC203284 | 72-352 | CC203379 | 72-288 |

## NUMERICAL INDEX


| Part Number | Page | Part Number | Page | Part Number | Page |
|---|---|---|---|---|---|
| CC203379 | 72-290 | CC203418 | 72-294 | CC203799 | 72-322 |
| CC203379 | 72-352 | CC203419 | 72-294 | CC203799 | 72-322 |
| CC203380 | 72-286 | CC203419 | 72-358 | CC203800 | 72-322 |
| CC203380 | 72-288 | CC203420 | 72-294 | CC203800 | 72-322 |
| CC203380 | 72-290 | CC203469 | 72-294 | CC203800 | 72-327 |
| CC203380 | 72-352 | CC203469 | 72-358 | CC203800 | 72-372 |
| CC203381 | 72-286 | CC203470 | 72-294 | CC203801 | 72-322 |
| CC203381 | 72-288 | CC203470 | 72-358 | CC203801 | 72-322 |
| CC203381 | 72-290 | CC203471 | 72-294 | CC203801 | 72-327 |
| CC203381 | 72-352 | CC203471 | 72-358 | CC203801 | 72-372 |
| CC203382 | 72-286 | CC203472 | 72-294 | CC203802 | 72-322 |
| CC203382 | 72-288 | CC203473 | 72-294 | CC203802 | 72-322 |
| CC203382 | 72-290 | CC203473 | 72-358 | CC203802 | 72-327 |
| CC203383 | 72-286 | CC203474 | 72-294 | CC203802 | 72-372 |
| CC203383 | 72-288 | CC203474 | 72-358 | CC203803 | 72-322 |
| CC203383 | 72-290 | CC203475 | 72-294 | CC203803 | 72-322 |
| CC203385 | 72-284 | CC203475 | 72-358 | CC203803 | 72-327 |
| CC203385 | 72-354 | CC203476 | 72-294 | CC203803 | 72-372 |
| CC203386 | 72-277 | CC203477 | 72-286 | CC203804 | 72-322 |
| CC203387 | 72-286 | CC203477 | 72-288 | CC203804 | 72-322 |
| CC203387 | 72-288 | CC203477 | 72-310 | CC203804 | 72-327 |
| CC203388 | 72-12 | CC203477 | 72-326 | CC203804 | 72-372 |
| CC203388 | 72-124 | CC203477 | 72-368 | CC203805 | 72-322 |
| CC203388 | 72-196 | CC203477 | 72-372 | CC203805 | 72-322 |
| CC203388 | 72-274 | CC203792 | 72-306 | CC203805 | 72-327 |
| CC203388 | 72-354 | CC203792 | 72-306 | CC203805 | 72-372 |
| CC203391 | 72-294 | CC203793 | 72-306 | CC203806 | 72-306 |
| CC203391 | 72-358 | CC203793 | 72-306 | CC203806 | 72-306 |
| CC203392 | 72-294 | CC203793 | 72-311 | CC203807 | 72-306 |
| CC203392 | 72-358 | CC203793 | 72-368 | CC203807 | 72-306 |
| CC203393 | 72-294 | CC203794 | 72-306 | CC203807 | 72-311 |
| CC203393 | 72-358 | CC203794 | 72-306 | CC203807 | 72-368 |
| CC203394 | 72-294 | CC203794 | 72-311 | CC203808 | 72-306 |
| CC203394 | 72-358 | CC203794 | 72-368 | CC203808 | 72-306 |
| CC203403 | 72-277 | CC203795 | 72-306 | CC203808 | 72-311 |
| CC203403 | 72-281 | CC203795 | 72-306 | CC203808 | 72-368 |
| CC203403 | 72-354 | CC203795 | 72-311 | CC203809 | 72-306 |
| CC203404 | 72-276 | CC203795 | 72-368 | CC203809 | 72-306 |
| CC203404 | 72-280 | CC203796 | 72-306 | CC203809 | 72-311 |
| CC203404 | 72-354 | CC203796 | 72-306 | CC203809 | 72-368 |
| CC203406 | 72-286 | CC203796 | 72-311 | CC203810 | 72-306 |
| CC203406 | 72-288 | CC203796 | 72-368 | CC203810 | 72-306 |
| CC203406 | 72-290 | CC203797 | 72-306 | CC203810 | 72-311 |
| CC203406 | 72-353 | CC203797 | 72-306 | CC203810 | 72-368 |
| CC203407 | 72-307 | CC203797 | 72-311 | CC203811 | 72-306 |
| CC203407 | 72-323 | CC203797 | 72-368 | CC203811 | 72-306 |
| CC203408 | 72-307 | CC203798 | 72-306 | CC203811 | 72-311 |
| CC203408 | 72-323 | CC203798 | 72-306 | CC203811 | 72-368 |
| CC203417 | 72-294 | CC203798 | 72-311 | CC203812 | 72-306 |
| CC203417 | 72-358 | CC203798 | 72-368 | CC203812 | 72-306 |

## NUMERICAL INDEX


| Part Number | Page | Part Number | Page | Part Number | Page |
|---|---|---|---|---|---|
| CC203812 | 72-311 | CC205197 | 72-280 | CC206257 | 72-319 |
| CC203812 | 72-368 | CC205197 | 72-354 | CC206257 | 72-323 |
| CC203813 | 72-322 | CC205198 | 72-276 | CC206257 | 72-376 |
| CC203813 | 72-322 | CC205198 | 72-280 | CC206257 | 72-384 |
| CC203814 | 72-322 | CC205198 | 72-354 | CC206258 | 72-306 |
| CC203814 | 72-322 | CC205199 | 72-276 | CC206258 | 72-322 |
| CC203814 | 72-327 | CC205199 | 72-280 | CC206259 | 72-307 |
| CC203814 | 72-372 | CC205199 | 72-354 | CC206259 | 72-323 |
| CC203815 | 72-322 | CC205204 | 72-296 | CC206260 | 72-306 |
| CC203815 | 72-322 | CC205204 | 72-298 | CC206260 | 72-322 |
| CC203815 | 72-327 | CC205205 | 72-326 | CC206261 | 72-307 |
| CC203815 | 72-372 | CC205205 | 72-323 | CC206261 | 72-323 |
| CC203816 | 72-322 | CC205205 | 72-373 | CC206262 | 72-306 |
| CC203816 | 72-322 | CC205206 | 72-307 | CC206262 | 72-322 |
| CC203816 | 72-327 | CC205206 | 72-310 | CC206263 | 72-307 |
| CC203816 | 72-372 | CC205206 | 72-369 | CC206263 | 72-323 |
| CC203817 | 72-322 | CC205984 | 72-296 | CC206264 | 72-306 |
| CC203817 | 72-322 | CC205984 | 72-298 | CC206264 | 72-322 |
| CC203817 | 72-327 | CC205989 | 72-296 | CC206265 | 72-307 |
| CC203817 | 72-372 | CC205989 | 72-298 | CC206265 | 72-323 |
| CC203818 | 72-322 | CC205989 | 72-360 | CC206266 | 72-306 |
| CC203818 | 72-323 | CC205996 | 72-296 | CC206266 | 72-322 |
| CC203818 | 72-327 | CC205996 | 72-298 | CC206267 | 72-307 |
| CC203818 | 72-372 | CC205999 | 72-296 | CC206267 | 72-323 |
| CC203819 | 72-322 | CC205999 | 72-298 | CC206315 | 72-140 |
| CC203819 | 72-323 | CC206002 | 72-296 | CC206315 | 72-142 |
| CC203819 | 72-327 | CC206002 | 72-298 | CC206315 | 72-212 |
| CC203819 | 72-372 | CC206005 | 72-296 | CC206315 | 72-214 |
| CC204156 | 72-310 | CC206005 | 72-298 | CC206315 | 72-290 |
| CC204156 | 72-326 | CC206042 | 72-286 | CC206315 | 72-314 |
| CC204156 | 72-338 | CC206042 | 72-288 | CC206315 | 72-318 |
| CC204156 | 72-338 | CC206247 | 72-296 | CC206315 | 72-330 |
| CC204156 | 72-338 | CC206248 | 72-296 | CC206315 | 72-334 |
| CC204156 | 72-338 | CC206249 | 72-296 | CC206315 | 72-353 |
| CC204156 | 72-338 | CC206250 | 72-296 | CC206315 | 72-377 |
| CC204156 | 72-338 | CC206251 | 72-296 | CC206315 | 72-381 |
| CC204156 | 72-369 | CC206252 | 72-296 | CC206315 | 72-385 |
| CC204156 | 72-373 | CC206253 | 72-296 | CC206315 | 72-389 |
| CC205086 | 72-315 | CC206254 | 72-306 | CC206315 | 72-70 |
| CC205086 | 72-318 | CC206254 | 72-322 | CC206315 | 72-72 |
| CC205086 | 72-330 | CC206255 | 72-306 | CC206315 | 72-74 |
| CC205086 | 72-334 | CC206255 | 72-323 | CC206315 | 72-76 |
| CC205086 | 72-378 | CC206255 | 72-332 | CC206319 | 72-286 |
| CC205086 | 72-382 | CC206255 | 72-335 | CC206321 | 72-158 |
| CC205086 | 72-385 | CC206255 | 72-381 | CC206323 | 72-158 |
| CC205086 | 72-390 | CC206255 | 72-389 | CC206329 | 72-332 |
| CC205196 | 72-276 | CC206256 | 72-306 | CC206329 | 72-335 |
| CC205196 | 72-280 | CC206256 | 72-322 | CC206329 | 72-381 |
| CC205196 | 72-354 | CC206257 | 72-307 | CC206329 | 72-389 |
| CC205197 | 72-276 | CC206257 | 72-316 | CC206655 | 72-286 |

## NUMERICAL INDEX


| Part Number | Page | Part Number | Page | Part Number | Page |
|---|---|---|---|---|---|
| CC206655 | 72-288 | CC210175 | 72-338 | CC211509 | 72-327 |
| CC206684 | 72-373 | CC210175 | 72-369 | CC211509 | 72-331 |
| CC206884 | 72-307 | CC210175 | 72-377 | CC211509 | 72-335 |
| CC206884 | 72-310 | CC210175 | 72-385 | CC211509 | 72-368 |
| CC206884 | 72-323 | CC210216 | 72-326 | CC211509 | 72-372 |
| CC206884 | 72-326 | CC210216 | 72-330 | CC211509 | 72-380 |
| CC206884 | 72-369 | CC210216 | 72-334 | CC211509 | 72-388 |
| CC206886 | 72-307 | CC210216 | 72-373 | CC211520 | 72-311 |
| CC206886 | 72-323 | CC210216 | 72-382 | CC211520 | 72-316 |
| CC206887 | 72-323 | CC210216 | 72-390 | CC211520 | 72-319 |
| CC208673 | 72-307 | CC210233 | 72-332 | CC211520 | 72-327 |
| CC208731 | 72-307 | CC210233 | 72-335 | CC211520 | 72-335 |
| CC209407 | 72-100 | CC210233 | 72-380 | CC211520 | 72-368 |
| CC209407 | 72-62 | CC210233 | 72-388 | CC211520 | 72-372 |
| CC209408 | 72-100 | CC210239 | 72-332 | CC211520 | 72-376 |
| CC209408 | 72-62 | CC210239 | 72-335 | CC211520 | 72-381 |
| CC209625 | 72-290 | CC210239 | 72-381 | CC211520 | 72-384 |
| CC209625 | 72-353 | CC210239 | 72-389 | CC211520 | 72-389 |
| CC209742 | 72-290 | CC210752 | 72-158 | CC211521 | 72-311 |
| CC209742 | 72-353 | CC210767 | 72-277 | CC211521 | 72-316 |
| CC210169 | 72-288 | CC210767 | 72-281 | CC211521 | 72-319 |
| CC210169 | 72-290 | CC210767 | 72-284 | CC211521 | 72-327 |
| CC210169 | 72-353 | CC210767 | 72-340 | CC211521 | 72-335 |
| CC210172 | 72-326 | CC210767 | 72-340 | CC211521 | 72-368 |
| CC210172 | 72-330 | CC210767 | 72-340 | CC211521 | 72-372 |
| CC210172 | 72-334 | CC210803 | 72-32 | CC211521 | 72-377 |
| CC210172 | 72-338 | CC210803 | 72-36 | CC211521 | 72-381 |
| CC210172 | 72-338 | CC210803 | 72-41 | CC211521 | 72-385 |
| CC210172 | 72-338 | CC210804 | 72-108 | CC211521 | 72-389 |
| CC210172 | 72-373 | CC210804 | 72-176 | CC211522 | 72-311 |
| CC210172 | 72-382 | CC210807 | 72-244 | CC211522 | 72-316 |
| CC210172 | 72-390 | CC210807 | 72-247 | CC211522 | 72-319 |
| CC210173 | 72-310 | CC210810 | 72-244 | CC211522 | 72-327 |
| CC210174 | 72-310 | CC210810 | 72-247 | CC211522 | 72-336 |
| CC210174 | 72-314 | CC210811 | 72-181 | CC211522 | 72-368 |
| CC210174 | 72-318 | CC210811 | 72-185 | CC211522 | 72-372 |
| CC210174 | 72-326 | CC210811 | 72-247 | CC211522 | 72-377 |
| CC210174 | 72-330 | CC210846 | 72-307 | CC211522 | 72-381 |
| CC210174 | 72-334 | CC210850 | 72-120 | CC211522 | 72-385 |
| CC210174 | 72-369 | CC210850 | 72-148 | CC211522 | 72-389 |
| CC210174 | 72-373 | CC210850 | 72-192 | CC211523 | 72-311 |
| CC210174 | 72-377 | CC210850 | 72-220 | CC211523 | 72-316 |
| CC210174 | 72-381 | CC210850 | 72-4 | CC211523 | 72-319 |
| CC210174 | 72-385 | CC210850 | 72-48 | CC211523 | 72-327 |
| CC210174 | 72-389 | CC210850 | 72-82 | CC211523 | 72-336 |
| CC210175 | 72-310 | CC210851 | 72-12 | CC211523 | 72-368 |
| CC210175 | 72-314 | CC210851 | 72-148 | CC211523 | 72-372 |
| CC210175 | 72-318 | CC210851 | 72-220 | CC211523 | 72-377 |
| CC210175 | 72-338 | CC210851 | 72-82 | CC211523 | 72-381 |
| CC210175 | 72-338 | CC211509 | 72-311 | CC211523 | 72-385 |

## NUMERICAL INDEX


| Part Number | Page | Part Number | Page | Part Number | Page |
|---|---|---|---|---|---|
| CC211523 | 72-389 | CC212632 | 72-302 | CC215719 | 72-124 |
| CC211524 | 72-311 | CC212632 | 72-353 | CC215719 | 72-196 |
| CC211524 | 72-316 | CC212632 | 72-364 | CC215719 | 72-79 |
| CC211524 | 72-319 | CC212632 | 72-64 | CC215719 | 72-79 |
| CC211524 | 72-327 | CC212632 | 72-66 | CC215719 | 72-79 |
| CC211524 | 72-336 | CC213003 | 72-212 | CC215720 | 72-277 |
| CC211524 | 72-368 | CC213003 | 72-214 | CC215720 | 72-280 |
| CC211524 | 72-372 | CC213918 | 72-212 | CC215720 | 72-284 |
| CC211524 | 72-377 | CC213918 | 72-214 | CC215720 | 72-353 |
| CC211524 | 72-381 | CC213919 | 72-140 | CC215721 | 72-277 |
| CC211524 | 72-385 | CC213919 | 72-142 | CC215721 | 72-280 |
| CC211524 | 72-389 | CC213919 | 72-72 | CC215721 | 72-284 |
| CC211573 | 72-376 | CC213919 | 72-74 | CC215722 | 72-277 |
| CC211573 | 72-381 | CC213919 | 72-76 | CC215722 | 72-280 |
| CC211573 | 72-384 | CC213922 | 72-108 | CC215722 | 72-284 |
| CC211573 | 72-389 | CC213922 | 72-176 | CC215772 | 72-314 |
| CC211574 | 72-311 | CC213922 | 72-212 | CC215772 | 72-318 |
| CC211574 | 72-316 | CC213922 | 72-214 | CC215772 | 72-330 |
| CC211574 | 72-319 | CC213923 | 72-180 | CC215772 | 72-334 |
| CC211574 | 72-327 | CC213923 | 72-185 | CC215772 | 72-339 |
| CC211574 | 72-335 | CC213923 | 72-185 | CC215772 | 72-339 |
| CC211574 | 72-368 | CC214063 | 72-300 | CC215772 | 72-339 |
| CC211574 | 72-372 | CC214333 | 72-294 | CC215772 | 72-339 |
| CC211574 | 72-376 | CC214793 | 72-106 | CC215772 | 72-339 |
| CC211574 | 72-381 | CC214793 | 72-210 | CC215772 | 72-339 |
| CC211574 | 72-384 | CC214793 | 72-242 | CC215772 | 72-377 |
| CC211574 | 72-389 | CC214793 | 72-26 | CC215772 | 72-382 |
| CC212587 | 72-12 | CC214793 | 72-304 | CC215772 | 72-385 |
| CC212587 | 72-196 | CC214931 | 72-314 | CC215772 | 72-390 |
| CC212587 | 72-45 | CC214931 | 72-330 | CC215772 | 72-392 |
| CC212587 | 72-45 | CC214931 | 72-377 | CC215772 | 72-392 |
| CC212587 | 72-45 | CC214931 | 72-381 | CC215772 | 72-392 |
| CC212587 | 72-79 | CC214932 | 72-323 | CC215772 | 72-392 |
| CC212587 | 72-79 | CC214932 | 72-326 | CC215772 | 72-392 |
| CC212587 | 72-79 | CC214932 | 72-330 | CC215772 | 72-392 |
| CC212588 | 72-393 | CC214932 | 72-334 | CC215779 | 72-318 |
| CC212588 | 72-393 | CC214932 | 72-372 | CC215779 | 72-385 |
| CC212588 | 72-393 | CC214932 | 72-381 | CC215789 | 72-330 |
| CC212632 | 72-102 | CC214932 | 72-389 | CC215789 | 72-334 |
| CC212632 | 72-104 | CC214935 | 72-392 | CC215789 | 72-382 |
| CC212632 | 72-134 | CC214935 | 72-392 | CC215789 | 72-390 |
| CC212632 | 72-136 | CC214935 | 72-392 | CC215799 | 72-314 |
| CC212632 | 72-170 | CC214937 | 72-392 | CC215799 | 72-377 |
| CC212632 | 72-172 | CC214937 | 72-392 | CC216052 | 72-108 |
| CC212632 | 72-206 | CC214937 | 72-392 | CC216052 | 72-140 |
| CC212632 | 72-208 | CC214939 | 72-316 | CC216052 | 72-142 |
| CC212632 | 72-22 | CC214939 | 72-319 | CC216052 | 72-176 |
| CC212632 | 72-238 | CC214939 | 72-376 | CC216052 | 72-180 |
| CC212632 | 72-24 | CC214939 | 72-384 | CC216052 | 72-212 |
| CC212632 | 72-240 | CC215719 | 72-12 | CC216052 | 72-214 |

## NUMERICAL INDEX


| Part Number | Page | Part Number | Page | Part Number | Page |
|---|---|---|---|---|---|
| CC216052 | 72-72 | CC216490 | 72-315 | CC216942 | 72-244 |
| CC216052 | 72-74 | CC216490 | 72-376 | CC216942 | 72-247 |
| CC216052 | 72-76 | CC216491 | 72-315 | CC216943 | 72-247 |
| CC216392 | 72-311 | CC216491 | 72-376 | CC216944 | 72-113 |
| CC216392 | 72-327 | CC216491 | 72-376 | CC216950 | 72-113 |
| CC216392 | 72-331 | CC216492 | 72-315 | CC216950 | 72-185 |
| CC216392 | 72-335 | CC216492 | 72-376 | CC216953 | 72-247 |
| CC216392 | 72-368 | CC216493 | 72-315 | CC217524 | 72-302 |
| CC216392 | 72-372 | CC216493 | 72-376 | CC217524 | 72-364 |
| CC216392 | 72-380 | CC216494 | 72-315 | CC218379 | 72-316 |
| CC216392 | 72-388 | CC216494 | 72-376 | CC218379 | 72-319 |
| CC216402 | 72-304 | CC216495 | 72-315 | CC218379 | 72-376 |
| CC216402 | 72-366 | CC216495 | 72-376 | CC218379 | 72-384 |
| CC216464 | 72-331 | CC216496 | 72-315 | CC218380 | 72-380 |
| CC216464 | 72-380 | CC216496 | 72-376 | CC218380 | 72-388 |
| CC216464 | 72-380 | CC216747 | 72-292 | CC218482 | 72-311 |
| CC216465 | 72-331 | CC216914 | 72-108 | CC218482 | 72-327 |
| CC216465 | 72-380 | CC216918 | 72-212 | CC218482 | 72-331 |
| CC216466 | 72-331 | CC216918 | 72-214 | CC218482 | 72-335 |
| CC216466 | 72-380 | CC216924 | 72-176 | CC218482 | 72-368 |
| CC216467 | 72-331 | CC216926 | 72-108 | CC218482 | 72-372 |
| CC216467 | 72-380 | CC216926 | 72-176 | CC218482 | 72-380 |
| CC216468 | 72-331 | CC216927 | 72-108 | CC218482 | 72-388 |
| CC216468 | 72-380 | CC216927 | 72-176 | CC219400 | 72-292 |
| CC216469 | 72-331 | CC216928 | 72-108 | CC219400 | 72-294 |
| CC216469 | 72-380 | CC216928 | 72-140 | CC219400 | 72-356 |
| CC216470 | 72-331 | CC216928 | 72-142 | CC219400 | 72-358 |
| CC216470 | 72-380 | CC216928 | 72-176 | CC219596 | 72-290 |
| CC216470 | 72-380 | CC216928 | 72-212 | CC219596 | 72-354 |
| CC216471 | 72-331 | CC216928 | 72-214 | CC219851 | 72-292 |
| CC216471 | 72-380 | CC216928 | 72-28 | CC220707 | 72-360 |
| CC216472 | 72-331 | CC216928 | 72-33 | CC220708 | 72-360 |
| CC216472 | 72-380 | CC216928 | 72-37 | CC220811 | 72-294 |
| CC216473 | 72-331 | CC216928 | 72-72 | CC223079 | 72-353 |
| CC216473 | 72-380 | CC216928 | 72-74 | CC223080 | 72-353 |
| CC216474 | 72-331 | CC216928 | 72-76 | CC223461 | 72-108 |
| CC216474 | 72-380 | CC216930 | 72-108 | CC223461 | 72-176 |
| CC216475 | 72-331 | CC216930 | 72-176 | CC223462 | 72-244 |
| CC216475 | 72-380 | CC216931 | 72-108 | CC223462 | 72-247 |
| CC216485 | 72-315 | CC216931 | 72-177 | CC224053 | 72-120 |
| CC216485 | 72-376 | CC216933 | 72-180 | CC224053 | 72-148 |
| CC216485 | 72-376 | CC216933 | 72-185 | CC224053 | 72-192 |
| CC216486 | 72-315 | CC216935 | 72-113 | CC224053 | 72-220 |
| CC216486 | 72-376 | CC216935 | 72-180 | CC224053 | 72-4 |
| CC216487 | 72-315 | CC216935 | 72-185 | CC224053 | 72-48 |
| CC216487 | 72-376 | CC216938 | 72-185 | CC224053 | 72-82 |
| CC216488 | 72-315 | CC216939 | 72-247 | CC224931 | 72-360 |
| CC216488 | 72-376 | CC216941 | 72-113 | CC224937 | 72-360 |
| CC216489 | 72-315 | CC216941 | 72-185 | CC224944 | 72-360 |
| CC216489 | 72-376 | CC216942 | 72-113 | CC225390 | 72-100 |

## NUMERICAL INDEX


| Part Number | Page | Part Number | Page | Part Number | Page |
|---|---|---|---|---|---|
| CC225390 | 72-62 | CC230717 | 72-176 | CC233187 | 72-90 |
| CC225416 | 72-108 | CC230765 | 72-154 | CC233188 | 72-92 |
| CC225576 | 72-168 | CC230765 | 72-226 | CC233366 | 72-154 |
| CC225576 | 72-236 | CC230765 | 72-88 | CC233367 | 72-156 |
| CC226416 | 72-177 | CC230805 | 72-288 | CC233368 | 72-158 |
| CC226822 | 72-300 | CC230805 | 72-314 | CC233372 | 72-226 |
| CC226825 | 72-236 | CC230805 | 72-330 | CC233374 | 72-230 |
| CC226827 | 72-100 | CC230805 | 72-377 | CC233378 | 72-154 |
| CC226827 | 72-300 | CC230805 | 72-381 | CC233379 | 72-156 |
| CC226827 | 72-62 | CC230896 | 72-300 | CC233380 | 72-158 |
| CC226828 | 72-168 | CC231058 | 72-158 | CC233384 | 72-154 |
| CC226828 | 72-236 | CC231059 | 72-158 | CC233385 | 72-156 |
| CC226830 | 72-300 | CC231060 | 72-158 | CC233386 | 72-158 |
| CC226831 | 72-168 | CC231212 | 72-168 | CC233390 | 72-226 |
| CC226831 | 72-236 | CC231212 | 72-236 | CC233392 | 72-230 |
| CC226834 | 72-168 | CC231256 | 72-181 | CC233399 | 72-154 |
| CC226834 | 72-236 | CC231256 | 72-185 | CC233400 | 72-156 |
| CC226835 | 72-300 | CC231260 | 72-168 | CC233401 | 72-158 |
| CC227138 | 72-389 | CC231260 | 72-236 | CC233405 | 72-226 |
| CC227854 | 72-314 | CC231279 | 72-311 | CC233407 | 72-230 |
| CC227854 | 72-318 | CC231279 | 72-327 | CC233408 | 72-154 |
| CC227854 | 72-326 | CC231279 | 72-331 | CC233409 | 72-156 |
| CC227854 | 72-330 | CC231279 | 72-335 | CC233410 | 72-158 |
| CC227854 | 72-334 | CC231279 | 72-368 | CC233417 | 72-226 |
| CC227854 | 72-372 | CC231279 | 72-372 | CC233419 | 72-230 |
| CC227854 | 72-377 | CC231279 | 72-380 | CC233435 | 72-154 |
| CC227854 | 72-381 | CC231279 | 72-388 | CC233436 | 72-156 |
| CC227854 | 72-385 | CC231325 | 72-264 | CC233437 | 72-158 |
| CC227854 | 72-389 | CC231325 | 72-266 | CC233441 | 72-154 |
| CC227855 | 72-368 | CC231325 | 72-353 | CC233442 | 72-156 |
| CC227885 | 72-314 | CC231380 | 72-160 | CC233443 | 72-158 |
| CC227885 | 72-318 | CC231382 | 72-160 | CC233453 | 72-226 |
| CC227885 | 72-326 | CC231427 | 72-158 | CC233455 | 72-230 |
| CC227885 | 72-330 | CC231595 | 72-100 | CC233462 | 72-154 |
| CC227885 | 72-334 | CC231595 | 72-62 | CC233463 | 72-156 |
| CC227885 | 72-372 | CC232707 | 72-113 | CC233464 | 72-158 |
| CC227885 | 72-377 | CC232707 | 72-185 | CC233471 | 72-154 |
| CC227885 | 72-381 | CC233025 | 72-164 | CC233472 | 72-156 |
| CC227885 | 72-385 | CC233033 | 72-234 | CC233473 | 72-158 |
| CC227885 | 72-389 | CC233049 | 72-164 | CC233474 | 72-226 |
| CC230596 | 72-300 | CC233057 | 72-234 | CC233476 | 72-230 |
| CC230606 | 72-314 | CC233077 | 72-234 | CC233480 | 72-154 |
| CC230606 | 72-318 | CC233081 | 72-164 | CC233481 | 72-156 |
| CC230606 | 72-330 | CC233093 | 72-234 | CC233482 | 72-158 |
| CC230606 | 72-334 | CC233125 | 72-165 | CC233486 | 72-226 |
| CC230606 | 72-377 | CC233141 | 72-234 | CC233488 | 72-230 |
| CC230606 | 72-382 | CC233165 | 72-165 | CC233777 | 72-294 |
| CC230606 | 72-385 | CC233169 | 72-234 | CC233970 | 72-185 |
| CC230606 | 72-390 | CC233177 | 72-165 | CC233971 | 72-180 |
| CC230717 | 72-108 | CC233185 | 72-234 | CC233971 | 72-185 |

## NUMERICAL INDEX


| Part Number | Page | Part Number | Page | Part Number | Page |
|---|---|---|---|---|---|
| CC233972 | 72-244 | CC234971 | 72-40 | CC235879 | 72-212 |
| CC233972 | 72-247 | CC234975 | 72-140 | CC235879 | 72-214 |
| CC233973 | 72-247 | CC234975 | 72-142 | CC235879 | 72-70 |
| CC233975 | 72-185 | CC234975 | 72-72 | CC235879 | 72-72 |
| CC233976 | 72-247 | CC234975 | 72-74 | CC235879 | 72-74 |
| CC233977 | 72-181 | CC234975 | 72-76 | CC235879 | 72-76 |
| CC233977 | 72-185 | CC234978 | 72-212 | CC235886 | 72-140 |
| CC233978 | 72-185 | CC234978 | 72-214 | CC235886 | 72-142 |
| CC233978 | 72-244 | CC234982 | 72-41 | CC235886 | 72-212 |
| CC233978 | 72-247 | CC234987 | 72-29 | CC235886 | 72-214 |
| CC233980 | 72-244 | CC234988 | 72-140 | CC235886 | 72-72 |
| CC233980 | 72-247 | CC234988 | 72-142 | CC235886 | 72-74 |
| CC234001 | 72-145 | CC234988 | 72-33 | CC235886 | 72-76 |
| CC234001 | 72-145 | CC234988 | 72-37 | CC235978 | 72-52 |
| CC234001 | 72-145 | CC234988 | 72-72 | CC235990 | 72-52 |
| CC234001 | 72-160 | CC234988 | 72-74 | CC235994 | 72-52 |
| CC234001 | 72-162 | CC234988 | 72-76 | CC236001 | 72-52 |
| CC234001 | 72-190 | CC234991 | 72-113 | CC236002 | 72-52 |
| CC234001 | 72-190 | CC234991 | 72-212 | CC236010 | 72-52 |
| CC234001 | 72-190 | CC234991 | 72-214 | CC236016 | 72-52 |
| CC234001 | 72-232 | CC234992 | 72-185 | CC236022 | 72-52 |
| CC234001 | 72-252 | CC234993 | 72-29 | CC236049 | 72-54 |
| CC234001 | 72-252 | CC234996 | 72-247 | CC236061 | 72-54 |
| CC234001 | 72-252 | CC234997 | 72-185 | CC236065 | 72-54 |
| CC234004 | 72-160 | CC235000 | 72-185 | CC236072 | 72-54 |
| CC234005 | 72-232 | CC235001 | 72-113 | CC236073 | 72-54 |
| CC234037 | 72-102 | CC235001 | 72-247 | CC236081 | 72-54 |
| CC234037 | 72-170 | CC235006 | 72-247 | CC236087 | 72-54 |
| CC234037 | 72-240 | CC235007 | 72-185 | CC236093 | 72-54 |
| CC234649 | 72-300 | CC235010 | 72-113 | CC236191 | 72-124 |
| CC234868 | 72-158 | CC235010 | 72-185 | CC236203 | 72-124 |
| CC234936 | 72-140 | CC235014 | 72-247 | CC236206 | 72-196 |
| CC234936 | 72-142 | CC235018 | 72-185 | CC236207 | 72-124 |
| CC234936 | 72-76 | CC235027 | 72-185 | CC236211 | 72-196 |
| CC234955 | 72-113 | CC235038 | 72-113 | CC236214 | 72-124 |
| CC234958 | 72-140 | CC235038 | 72-185 | CC236215 | 72-124 |
| CC234958 | 72-142 | CC235043 | 72-113 | CC236217 | 72-196 |
| CC234958 | 72-72 | CC235043 | 72-185 | CC236223 | 72-124 |
| CC234958 | 72-74 | CC235044 | 72-185 | CC236226 | 72-196 |
| CC234958 | 72-76 | CC235046 | 72-247 | CC236229 | 72-124 |
| CC234962 | 72-140 | CC235050 | 72-185 | CC236229 | 72-196 |
| CC234962 | 72-142 | CC235051 | 72-247 | CC236232 | 72-196 |
| CC234962 | 72-72 | CC235055 | 72-113 | CC236235 | 72-124 |
| CC234962 | 72-74 | CC235055 | 72-185 | CC236238 | 72-196 |
| CC234962 | 72-76 | CC235060 | 72-113 | CC236262 | 72-126 |
| CC234969 | 72-140 | CC235274 | 72-300 | CC236274 | 72-126 |
| CC234969 | 72-142 | CC235370 | 72-168 | CC236277 | 72-198 |
| CC234969 | 72-72 | CC235370 | 72-236 | CC236278 | 72-126 |
| CC234969 | 72-74 | CC235879 | 72-140 | CC236282 | 72-198 |
| CC234969 | 72-76 | CC235879 | 72-142 | CC236285 | 72-126 |

## NUMERICAL INDEX


| Part Number | Page | Part Number | Page | Part Number | Page |
|---|---|---|---|---|---|
| CC236286 | 72-126 | CC237129 | 72-376 | CC238409 | 72-16 |
| CC236288 | 72-198 | CC237129 | 72-384 | CC238410 | 72-16 |
| CC236294 | 72-126 | CC237138 | 72-332 | CC238411 | 72-16 |
| CC236297 | 72-198 | CC237138 | 72-335 | CC238412 | 72-16 |
| CC236300 | 72-126 | CC237138 | 72-381 | CC238446 | 72-12 |
| CC236300 | 72-198 | CC237147 | 72-311 | CC238451 | 72-12 |
| CC236303 | 72-198 | CC237147 | 72-327 | CC238457 | 72-12 |
| CC236306 | 72-126 | CC237147 | 72-331 | CC238525 | 72-28 |
| CC236309 | 72-198 | CC237147 | 72-335 | CC238525 | 72-28 |
| CC236902 | 72-140 | CC237147 | 72-368 | CC238525 | 72-32 |
| CC236902 | 72-142 | CC237147 | 72-372 | CC238525 | 72-32 |
| CC236902 | 72-212 | CC237147 | 72-380 | CC238525 | 72-36 |
| CC236902 | 72-214 | CC237147 | 72-388 | CC238525 | 72-36 |
| CC236902 | 72-72 | CC237151 | 72-316 | CC238525 | 72-40 |
| CC236902 | 72-74 | CC237151 | 72-319 | CC238525 | 72-40 |
| CC236902 | 72-76 | CC237151 | 72-376 | CC238526 | 72-28 |
| CC236907 | 72-56 | CC237151 | 72-384 | CC238526 | 72-32 |
| CC236908 | 72-56 | CC237555 | 72-154 | CC238526 | 72-36 |
| CC236909 | 72-56 | CC237555 | 72-226 | CC238526 | 72-40 |
| CC236910 | 72-56 | CC237555 | 72-88 | CC238534 | 72-28 |
| CC236915 | 72-58 | CC2377 | 72-276 | CC238534 | 72-32 |
| CC236916 | 72-58 | CC238137 | 72-12 | CC238534 | 72-36 |
| CC236917 | 72-58 | CC238137 | 72-124 | CC238534 | 72-40 |
| CC236918 | 72-58 | CC238137 | 72-156 | CC238567 | 72-300 |
| CC236923 | 72-128 | CC238137 | 72-196 | CC238570 | 72-102 |
| CC236924 | 72-128 | CC238137 | 72-228 | CC238570 | 72-104 |
| CC236925 | 72-128 | CC238137 | 72-52 | CC238570 | 72-170 |
| CC236926 | 72-128 | CC238137 | 72-90 | CC238570 | 72-172 |
| CC237100 | 72-380 | CC238137 | 72-92 | CC238570 | 72-22 |
| CC237100 | 72-388 | CC238150 | 72-36 | CC238570 | 72-24 |
| CC237104 | 72-376 | CC238150 | 72-40 | CC238570 | 72-64 |
| CC237104 | 72-384 | CC238170 | 72-140 | CC238570 | 72-66 |
| CC237109 | 72-311 | CC238170 | 72-212 | CC238696 | 72-318 |
| CC237109 | 72-327 | CC238170 | 72-214 | CC238696 | 72-334 |
| CC237109 | 72-331 | CC238170 | 72-72 | CC238696 | 72-385 |
| CC237109 | 72-335 | CC238171 | 72-214 | CC238696 | 72-390 |
| CC237109 | 72-368 | CC238174 | 72-104 | CC238708 | 72-319 |
| CC237109 | 72-372 | CC238174 | 72-24 | CC238708 | 72-384 |
| CC237109 | 72-380 | CC238174 | 72-66 | CC238708 | 72-384 |
| CC237109 | 72-388 | CC238353 | 72-288 | CC238709 | 72-319 |
| CC237113 | 72-315 | CC238353 | 72-319 | CC238709 | 72-384 |
| CC237113 | 72-319 | CC238353 | 72-334 | CC238710 | 72-319 |
| CC237113 | 72-376 | CC238353 | 72-386 | CC238710 | 72-384 |
| CC237113 | 72-384 | CC238353 | 72-389 | CC238711 | 72-319 |
| CC237117 | 72-332 | CC238394 | 72-330 | CC238711 | 72-384 |
| CC237117 | 72-335 | CC238394 | 72-381 | CC238712 | 72-319 |
| CC237117 | 72-380 | CC238401 | 72-14 | CC238712 | 72-384 |
| CC237117 | 72-388 | CC238402 | 72-14 | CC238713 | 72-319 |
| CC237129 | 72-316 | CC238403 | 72-14 | CC238713 | 72-384 |
| CC237129 | 72-319 | CC238404 | 72-14 | CC238714 | 72-335 |

## NUMERICAL INDEX


| Part Number | Page | Part Number | Page | Part Number | Page |
|---|---|---|---|---|---|
| CC238714 | 72-388 | CC241395 | 72-330 | CC246274 | 72-332 |
| CC238714 | 72-388 | CC241395 | 72-334 | CC246277 | 72-332 |
| CC238715 | 72-335 | CC241395 | 72-377 | CC246283 | 72-316 |
| CC238715 | 72-388 | CC241395 | 72-381 | CC246289 | 72-332 |
| CC238716 | 72-335 | CC241395 | 72-385 | CC246292 | 72-332 |
| CC238716 | 72-388 | CC241395 | 72-389 | CC246298 | 72-316 |
| CC238717 | 72-335 | CC241569 | 72-12 | CC246304 | 72-332 |
| CC238717 | 72-388 | CC241574 | 72-12 | CC246383 | 72-300 |
| CC238718 | 72-335 | CC241580 | 72-12 | CC246396 | 72-168 |
| CC238718 | 72-388 | CC241615 | 72-12 | CC246396 | 72-236 |
| CC238719 | 72-335 | CC241620 | 72-12 | CC246397 | 72-300 |
| CC238719 | 72-388 | CC241626 | 72-12 | CC246640 | 72-300 |
| CC238720 | 72-319 | CC242169 | 72-28 | CC246778 | 72-330 |
| CC238720 | 72-384 | CC242174 | 72-28 | CC246778 | 72-334 |
| CC238720 | 72-384 | CC242180 | 72-28 | CC246778 | 72-381 |
| CC238721 | 72-319 | CC242215 | 72-36 | CC246778 | 72-389 |
| CC238721 | 72-384 | CC242220 | 72-36 | CC246821 | 72-12 |
| CC238722 | 72-319 | CC242226 | 72-36 | CC246821 | 72-158 |
| CC238722 | 72-384 | CC245079 | 72-294 | CC246821 | 72-230 |
| CC238723 | 72-319 | CC245083 | 72-300 | CC248626 | 72-96 |
| CC238723 | 72-384 | CC245151 | 72-100 | CC248627 | 72-96 |
| CC238724 | 72-319 | CC245151 | 72-62 | CC248640 | 72-94 |
| CC238724 | 72-384 | CC245168 | 72-300 | CC248641 | 72-94 |
| CC238725 | 72-319 | CC245229 | 72-28 | CC248795 | 72-376 |
| CC238725 | 72-384 | CC245229 | 72-32 | CC248797 | 72-315 |
| CC238726 | 72-335 | CC245230 | 72-28 | CC248797 | 72-376 |
| CC238726 | 72-388 | CC245230 | 72-32 | CC248801 | 72-315 |
| CC238726 | 72-388 | CC245231 | 72-28 | CC248801 | 72-376 |
| CC238727 | 72-335 | CC245231 | 72-32 | CC248806 | 72-315 |
| CC238727 | 72-388 | CC245235 | 72-36 | CC248808 | 72-376 |
| CC238728 | 72-335 | CC245235 | 72-40 | CC248811 | 72-315 |
| CC238728 | 72-388 | CC245236 | 72-36 | CC248811 | 72-376 |
| CC238729 | 72-335 | CC245236 | 72-40 | CC248817 | 72-315 |
| CC238729 | 72-388 | CC245237 | 72-36 | CC248817 | 72-376 |
| CC238730 | 72-335 | CC245237 | 72-40 | CC248821 | 72-315 |
| CC238730 | 72-388 | CC245262 | 72-36 | CC248821 | 72-376 |
| CC238731 | 72-335 | CC245262 | 72-40 | CC248822 | 72-380 |
| CC238731 | 72-388 | CC2454 | 72-310 | CC248824 | 72-331 |
| CC238750 | 72-134 | CC2454 | 72-368 | CC248824 | 72-380 |
| CC238750 | 72-136 | CC246217 | 72-331 | CC248827 | 72-331 |
| CC238750 | 72-206 | CC246223 | 72-316 | CC248827 | 72-380 |
| CC238750 | 72-208 | CC246229 | 72-332 | CC248832 | 72-331 |
| CC238809 | 72-314 | CC246232 | 72-331 | CC248832 | 72-380 |
| CC238809 | 72-318 | CC246238 | 72-316 | CC248837 | 72-331 |
| CC238809 | 72-378 | CC246244 | 72-332 | CC248837 | 72-380 |
| CC238809 | 72-385 | CC246247 | 72-331 | CC248840 | 72-331 |
| CC238811 | 72-334 | CC246253 | 72-316 | CC248840 | 72-380 |
| CC238811 | 72-390 | CC246259 | 72-332 | CC248842 | 72-331 |
| CC241395 | 72-314 | CC246262 | 72-331 | CC248842 | 72-380 |
| CC241395 | 72-318 | CC246268 | 72-316 | CC248892 | 72-12 |

## NUMERICAL INDEX


| Part Number | Page | Part Number | Page | Part Number | Page |
|---|---|---|---|---|---|
| CC248892 | 72-44 | CC249382 | 72-319 | CC249881 | 72-352 |
| CC248892 | 72-44 | CC249382 | 72-384 | CC249887 | 72-352 |
| CC248892 | 72-44 | CC249388 | 72-319 | CC249893 | 72-352 |
| CC248901 | 72-290 | CC249388 | 72-384 | CC249902 | 72-352 |
| CC248901 | 72-354 | CC249390 | 72-388 | CC250010 | 72-294 |
| CC248902 | 72-280 | CC249396 | 72-335 | CC250035 | 72-142 |
| CC248902 | 72-354 | CC249396 | 72-388 | CC250035 | 72-70 |
| CC248905 | 72-353 | CC249402 | 72-335 | CC250035 | 72-74 |
| CC248909 | 72-354 | CC249402 | 72-388 | CC250036 | 72-142 |
| CC248948 | 72-100 | CC249408 | 72-335 | CC250036 | 72-74 |
| CC248948 | 72-62 | CC249408 | 72-388 | CC250066 | 72-28 |
| CC249002 | 72-290 | CC249414 | 72-335 | CC250066 | 72-32 |
| CC249045 | 72-284 | CC249414 | 72-388 | CC250066 | 72-36 |
| CC249045 | 72-352 | CC249420 | 72-335 | CC250066 | 72-40 |
| CC249048 | 72-284 | CC249420 | 72-388 | CC250091 | 72-300 |
| CC249048 | 72-352 | CC249426 | 72-335 | CC251401 | 72-128 |
| CC249052 | 72-284 | CC249426 | 72-388 | CC251443 | 72-58 |
| CC249052 | 72-352 | CC249427 | 72-310 | CC251519 | 72-232 |
| CC249058 | 72-284 | CC249427 | 72-368 | CC251520 | 72-232 |
| CC249058 | 72-352 | CC249433 | 72-310 | CC251521 | 72-232 |
| CC249064 | 72-284 | CC249433 | 72-368 | CC251522 | 72-232 |
| CC249064 | 72-352 | CC249439 | 72-310 | CC251820 | 72-200 |
| CC249070 | 72-284 | CC249439 | 72-368 | CC251821 | 72-200 |
| CC249073 | 72-352 | CC249445 | 72-311 | CC251822 | 72-200 |
| CC249075 | 72-284 | CC249445 | 72-368 | CC251823 | 72-200 |
| CC249088 | 72-298 | CC249451 | 72-311 | CC251901 | 72-102 |
| CC249088 | 72-360 | CC249451 | 72-368 | CC251901 | 72-136 |
| CC249094 | 72-298 | CC249457 | 72-311 | CC251901 | 72-170 |
| CC249094 | 72-360 | CC249457 | 72-368 | CC251901 | 72-206 |
| CC249100 | 72-298 | CC249458 | 72-326 | CC251901 | 72-22 |
| CC249100 | 72-360 | CC249458 | 72-372 | CC251901 | 72-240 |
| CC249106 | 72-298 | CC249464 | 72-326 | CC251901 | 72-302 |
| CC249106 | 72-360 | CC249464 | 72-372 | CC251901 | 72-64 |
| CC249111 | 72-298 | CC249470 | 72-326 | CC251906 | 72-102 |
| CC249111 | 72-360 | CC249470 | 72-372 | CC251906 | 72-134 |
| CC249117 | 72-298 | CC249476 | 72-326 | CC251906 | 72-136 |
| CC249120 | 72-360 | CC249476 | 72-372 | CC251906 | 72-170 |
| CC249123 | 72-298 | CC249482 | 72-327 | CC251906 | 72-172 |
| CC249220 | 72-168 | CC249482 | 72-372 | CC251906 | 72-206 |
| CC249220 | 72-236 | CC249488 | 72-327 | CC251906 | 72-208 |
| CC249220 | 72-300 | CC249488 | 72-372 | CC251906 | 72-22 |
| CC249351 | 72-384 | CC249493 | 72-354 | CC251906 | 72-238 |
| CC249357 | 72-319 | CC249821 | 72-352 | CC251906 | 72-240 |
| CC249357 | 72-384 | CC249827 | 72-352 | CC251906 | 72-302 |
| CC249363 | 72-319 | CC249833 | 72-352 | CC251906 | 72-364 |
| CC249363 | 72-384 | CC249839 | 72-352 | CC251906 | 72-64 |
| CC249370 | 72-319 | CC249845 | 72-352 | CC251997 | 72-238 |
| CC249370 | 72-384 | CC249854 | 72-352 | CC251997 | 72-240 |
| CC249376 | 72-319 | CC249869 | 72-352 | CC252597 | 72-96 |
| CC249376 | 72-384 | CC249875 | 72-352 | CC252613 | 72-128 |

## NUMERICAL INDEX


| Part Number | Page | Part Number | Page | Part Number | Page |
|---|---|---|---|---|---|
| CC252678 | 72-272 | CC255596 | 72-134 | CC280112 | 72-96 |
| CC252686 | 72-134 | CC255596 | 72-136 | CC280113 | 72-96 |
| CC252686 | 72-172 | CC255596 | 72-170 | CC280114 | 72-162 |
| CC252686 | 72-208 | CC255596 | 72-172 | CC280115 | 72-162 |
| CC252686 | 72-238 | CC255596 | 72-206 | CC280127 | 72-96 |
| CC252686 | 72-364 | CC255596 | 72-208 | CC280171 | 72-160 |
| CC252793 | 72-238 | CC255596 | 72-22 | CC280172 | 72-160 |
| CC252857 | 72-58 | CC255596 | 72-238 | CC280177 | 72-162 |
| CC253118 | 72-24 | CC255596 | 72-24 | CC280178 | 72-162 |
| CC253119 | 72-104 | CC255596 | 72-240 | CC280183 | 72-162 |
| CC253119 | 72-66 | CC255596 | 72-64 | CC280184 | 72-162 |
| CC253120 | 72-104 | CC255596 | 72-66 | CC290464 | 72-28 |
| CC253120 | 72-24 | CC255624 | 72-104 | CC290464 | 72-32 |
| CC253120 | 72-66 | CC255651 | 72-104 | CC290464 | 72-36 |
| CC253144 | 72-58 | CC255651 | 72-24 | CC290464 | 72-40 |
| CC253188 | 72-70 | CC255651 | 72-66 | CC290465 | 72-28 |
| CC253242 | 72-210 | CC255652 | 72-134 | CC290465 | 72-32 |
| CC253242 | 72-242 | CC255652 | 72-172 | CC290465 | 72-36 |
| CC253243 | 72-210 | CC255652 | 72-208 | CC290465 | 72-40 |
| CC253243 | 72-242 | CC255652 | 72-238 | CC291445 | 72-28 |
| CC253343 | 72-70 | CC255665 | 72-102 | CC291445 | 72-32 |
| CC253651 | 72-108 | CC255665 | 72-136 | CC291445 | 72-36 |
| CC253651 | 72-176 | CC255665 | 72-170 | CC291445 | 72-40 |
| CC253651 | 72-180 | CC255665 | 72-206 | CC3015 | 72-262 |
| CC253720 | 72-172 | CC255665 | 72-22 | CC3101894 | 72-122 |
| CC253733 | 72-162 | CC255665 | 72-240 | CC3101894 | 72-150 |
| CC253793 | 72-134 | CC255665 | 72-64 | CC3101894 | 72-50 |
| CC253793 | 72-172 | CC255666 | 72-102 | CC3101894 | 72-84 |
| CC253793 | 72-208 | CC255666 | 72-136 | CC3130 | 72-307 |
| CC253914 | 72-315 | CC255666 | 72-170 | CC3130 | 72-310 |
| CC253918 | 72-315 | CC255666 | 72-206 | CC3130 | 72-323 |
| CC253922 | 72-315 | CC255666 | 72-22 | CC3130 | 72-326 |
| CC253927 | 72-315 | CC255666 | 72-240 | CC3130 | 72-369 |
| CC253933 | 72-315 | CC255666 | 72-64 | CC3130 | 72-373 |
| CC253937 | 72-315 | CC255672 | 72-22 | CC3133 | 72-158 |
| CC253962 | 72-228 | CC255729 | 72-24 | CC3135 | 72-262 |
| CC253968 | 72-228 | CC255730 | 72-24 | CC3135 | 72-276 |
| CC253973 | 72-228 | CC255770 | 72-22 | CC3135 | 72-280 |
| CC253977 | 72-228 | CC2680 | 72-307 | CC3135 | 72-354 |
| CC253989 | 72-228 | CC2680 | 72-310 | CC3140 | 72-158 |
| CC253996 | 72-228 | CC2680 | 72-314 | CC3140 | 72-288 |
| CC254000 | 72-228 | CC2680 | 72-318 | CC3147 | 72-276 |
| CC255304 | 72-32 | CC2680 | 72-36 | CC3147 | 72-280 |
| CC255309 | 72-32 | CC2680 | 72-369 | CC3147 | 72-353 |
| CC255315 | 72-32 | CC2680 | 72-377 | CC3550-1531 | 72-70 |
| CC255350 | 72-40 | CC2680 | 72-385 | CC3550-1581 | 72-70 |
| CC255355 | 72-40 | CC2680 | 72-40 | CC357671 | 72-132 |
| CC255361 | 72-40 | CC280095 | 72-94 | CC357671 | 72-168 |
| CC255596 | 72-102 | CC280096 | 72-94 | CC357671 | 72-236 |
| CC255596 | 72-104 | CC280111 | 72-96 | CC361238 | 72-100 |

## NUMERICAL INDEX


| Part Number | Page | Part Number | Page | Part Number | Page |
|---|---|---|---|---|---|
| CC361238 | 72-62 | CC565085 | 72-272 | CC601377 | 72-302 |
| CC362796 | 72-168 | CC565085 | 72-354 | CC601377 | 72-304 |
| CC362796 | 72-236 | CC565085 | 72-86 | CC601377 | 72-364 |
| CC369519 | 72-100 | CC582668 | 72-268 | CC601377 | 72-366 |
| CC369519 | 72-62 | CC582680 | 72-268 | CC601377 | 72-64 |
| CC381280 | 72-352 | CC582692 | 72-268 | CC601378 | 72-274 |
| CC381282 | 72-352 | CC582704 | 72-268 | CC601378 | 72-304 |
| CC422809 | 72-122 | CC582716 | 72-268 | CC601378 | 72-366 |
| CC422809 | 72-150 | CC582728 | 72-268 | CC601402 | 72-170 |
| CC422809 | 72-50 | CC582740 | 72-268 | CC605761 | 72-274 |
| CC422809 | 72-84 | CC583924 | 72-262 | CC605761 | 72-302 |
| CC422817 | 72-10 | CC583925 | 72-262 | CC605761 | 72-364 |
| CC422817 | 72-152 | CC583926 | 72-262 | CC605948 | 72-274 |
| CC422817 | 72-86 | CC583927 | 72-262 | CC606212 | 72-276 |
| CC422818 | 72-10 | CC583928 | 72-262 | CC606212 | 72-280 |
| CC423385 | 72-6 | CC583929 | 72-262 | CC606212 | 72-286 |
| CC423385 | 72-8 | CC583930 | 72-262 | CC606212 | 72-288 |
| CC423412 | 72-6 | CC583931 | 72-256 | CC606212 | 72-290 |
| CC423412 | 72-8 | CC583932 | 72-256 | CC606212 | 72-310 |
| CC5508 | 72-262 | CC583933 | 72-256 | CC606212 | 72-318 |
| CC559982 | 72-268 | CC583934 | 72-256 | CC606212 | 72-326 |
| CC560349 | 72-268 | CC583935 | 72-256 | CC606212 | 72-330 |
| CC560470 | 72-10 | CC583936 | 72-256 | CC606212 | 72-334 |
| CC560470 | 72-152 | CC601250 | 72-102 | CC606212 | 72-353 |
| CC560470 | 72-268 | CC601250 | 72-104 | CC606212 | 72-369 |
| CC560470 | 72-353 | CC601250 | 72-134 | CC606212 | 72-373 |
| CC560470 | 72-86 | CC601250 | 72-136 | CC606212 | 72-377 |
| CC561242 | 72-268 | CC601250 | 72-170 | CC606212 | 72-381 |
| CC562630 | 72-256 | CC601250 | 72-172 | CC606212 | 72-386 |
| CC562630 | 72-262 | CC601250 | 72-206 | CC606212 | 72-389 |
| CC562847 | 72-262 | CC601250 | 72-208 | CC610402 | 72-102 |
| CC563782 | 72-262 | CC601250 | 72-22 | CC610402 | 72-104 |
| CC563904 | 72-10 | CC601250 | 72-238 | CC610402 | 72-172 |
| CC563904 | 72-152 | CC601250 | 72-24 | CC610402 | 72-240 |
| CC563904 | 72-268 | CC601250 | 72-240 | CC611289 | 72-102 |
| CC564050 | 72-256 | CC601250 | 72-64 | CC611289 | 72-104 |
| CC564050 | 72-258 | CC601250 | 72-66 | CC611289 | 72-134 |
| CC564050 | 72-262 | CC601377 | 72-102 | CC611289 | 72-136 |
| CC564051 | 72-256 | CC601377 | 72-104 | CC611289 | 72-170 |
| CC564052 | 72-262 | CC601377 | 72-134 | CC611289 | 72-172 |
| CC564054 | 72-262 | CC601377 | 72-136 | CC611289 | 72-206 |
| CC564107 | 72-10 | CC601377 | 72-170 | CC611289 | 72-208 |
| CC564107 | 72-152 | CC601377 | 72-172 | CC611289 | 72-22 |
| CC564107 | 72-268 | CC601377 | 72-206 | CC611289 | 72-238 |
| CC564107 | 72-272 | CC601377 | 72-208 | CC611289 | 72-24 |
| CC564107 | 72-354 | CC601377 | 72-22 | CC611289 | 72-240 |
| CC564107 | 72-86 | CC601377 | 72-238 | CC611289 | 72-256 |
| CC564108 | 72-268 | CC601377 | 72-24 | CC611289 | 72-258 |
| CC565085 | 72-10 | CC601377 | 72-240 | CC611289 | 72-260 |
| CC565085 | 72-152 | CC601377 | 72-274 | CC611289 | 72-262 |

## NUMERICAL INDEX


| Part Number | Page | Part Number | Page | Part Number | Page |
|---|---|---|---|---|---|
| CC611289 | 72-353 | CC661549 | 72-394 | CC664206 | 72-394 |
| CC611289 | 72-64 | CC661550 | 72-393 | CC664206 | 72-394 |
| CC611289 | 72-66 | CC661550 | 72-393 | CC664206 | 72-394 |
| CC611291 | 72-256 | CC661550 | 72-393 | CC667586 | 72-256 |
| CC611291 | 72-258 | CC661786 | 72-276 | CC677267 | 72-307 |
| CC611291 | 72-260 | CC661786 | 72-280 | CC677267 | 72-323 |
| CC611291 | 72-353 | CC661786 | 72-286 | CC677267 | 72-36 |
| CC611299 | 72-268 | CC661786 | 72-288 | CC677267 | 72-40 |
| CC611299 | 72-270 | CC661786 | 72-290 | CC677267 | 72-44 |
| CC611299 | 72-272 | CC661786 | 72-310 | CC677267 | 72-44 |
| CC611299 | 72-286 | CC661786 | 72-314 | CC677267 | 72-44 |
| CC611299 | 72-288 | CC661786 | 72-318 | CC678655 | 72-98 |
| CC611299 | 72-290 | CC661786 | 72-326 | CC678656 | 72-98 |
| CC611299 | 72-353 | CC661786 | 72-330 | CC678658 | 72-60 |
| CC611303 | 72-66 | CC661786 | 72-334 | CC678770 | 72-130 |
| CC626664 | 72-262 | CC661786 | 72-353 | CC678770 | 72-164 |
| CC637536 | 72-274 | CC661786 | 72-369 | CC678770 | 72-164 |
| CC637536 | 72-354 | CC661786 | 72-373 | CC678770 | 72-164 |
| CC642649 | 72-102 | CC661786 | 72-377 | CC678770 | 72-234 |
| CC642649 | 72-104 | CC661786 | 72-382 | CC678777 | 72-234 |
| CC642649 | 72-12 | CC661786 | 72-386 | CC678796 | 72-130 |
| CC642649 | 72-170 | CC661786 | 72-389 | CC678796 | 72-164 |
| CC642649 | 72-172 | CC662145 | 72-189 | CC678796 | 72-296 |
| CC642649 | 72-238 | CC662145 | 72-189 | CC678796 | 72-298 |
| CC642649 | 72-240 | CC662145 | 72-189 | CC678796 | 72-360 |
| CC6508 | 72-158 | CC662145 | 72-198 | CC678797 | 72-202 |
| CC6518 | 72-158 | CC662145 | 72-251 | CC678797 | 72-234 |
| CC6518 | 72-280 | CC662145 | 72-251 | CC678800 | 72-202 |
| CC657852 | 72-276 | CC662145 | 72-251 | CC678800 | 72-296 |
| CC657852 | 72-280 | CC662145 | 72-277 | CC678800 | 72-298 |
| CC658378 | 72-294 | CC662145 | 72-281 | CC678837 | 72-130 |
| CC658378 | 72-358 | CC662145 | 72-284 | CC678837 | 72-164 |
| CC660050 | 72-294 | CC662145 | 72-286 | CC679144 | 72-274 |
| CC660050 | 72-340 | CC662145 | 72-288 | CC679144 | 72-339 |
| CC660050 | 72-340 | CC662145 | 72-290 | CC679144 | 72-339 |
| CC660050 | 72-340 | CC662145 | 72-292 | CC679144 | 72-339 |
| CC660050 | 72-358 | CC662145 | 72-294 | CC679146 | 72-284 |
| CC660051 | 72-284 | CC662145 | 72-294 | CC679146 | 72-339 |
| CC660051 | 72-286 | CC662145 | 72-339 | CC679146 | 72-339 |
| CC660051 | 72-288 | CC662145 | 72-339 | CC679146 | 72-339 |
| CC660051 | 72-290 | CC662145 | 72-340 | CC679149 | 72-274 |
| CC660051 | 72-340 | CC662145 | 72-340 | CC679149 | 72-284 |
| CC660051 | 72-340 | CC662145 | 72-340 | CC679149 | 72-339 |
| CC660051 | 72-340 | CC662145 | 72-340 | CC679149 | 72-339 |
| CC660051 | 72-354 | CC662145 | 72-354 | CC679149 | 72-339 |
| CC661549 | 72-393 | CC662145 | 72-356 | CC679149 | 72-353 |
| CC661549 | 72-393 | CC662145 | 72-358 | CC680218 | 72-290 |
| CC661549 | 72-393 | CC664206 | 72-393 | CC680218 | 72-294 |
| CC661549 | 72-394 | CC664206 | 72-393 | CC680218 | 72-358 |
| CC661549 | 72-394 | CC664206 | 72-393 | CC680240 | 72-393 |

## NUMERICAL INDEX


| Part Number | Page | Part Number | Page | Part Number | Page |
|---|---|---|---|---|---|
| CC680240 | 72-393 | CC682822 | 72-323 | CC683979 | 72-296 |
| CC680240 | 72-393 | CC683763 | 72-18 | CC683979 | 72-298 |
| CC680240 | 72-394 | CC683763 | 72-60 | CC683979 | 72-360 |
| CC680240 | 72-394 | CC683766 | 72-18 | CC683980 | 72-164 |
| CC680240 | 72-394 | CC683767 | 72-98 | CC683980 | 72-234 |
| CC680242 | 72-250 | CC683774 | 72-98 | CC683982 | 72-164 |
| CC680242 | 72-250 | CC683775 | 72-60 | CC683982 | 72-164 |
| CC680242 | 72-250 | CC683780 | 72-60 | CC683982 | 72-234 |
| CC680242 | 72-276 | CC683780 | 72-98 | CC683982 | 72-296 |
| CC680242 | 72-280 | CC683781 | 72-164 | CC683982 | 72-298 |
| CC680242 | 72-286 | CC683782 | 72-234 | CC683982 | 72-360 |
| CC680242 | 72-288 | CC683783 | 72-164 | CC683985 | 72-164 |
| CC680242 | 72-290 | CC683784 | 72-60 | CC683985 | 72-234 |
| CC680242 | 72-339 | CC683785 | 72-234 | CC683985 | 72-296 |
| CC680242 | 72-339 | CC683786 | 72-98 | CC683985 | 72-298 |
| CC680242 | 72-339 | CC683788 | 72-60 | CC683985 | 72-360 |
| CC680242 | 72-353 | CC683817 | 72-292 | CC683987 | 72-164 |
| CC680242 | 72-393 | CC683817 | 72-294 | CC683987 | 72-202 |
| CC680242 | 72-393 | CC683817 | 72-340 | CC683988 | 72-164 |
| CC680242 | 72-393 | CC683817 | 72-340 | CC683988 | 72-234 |
| CC680458 | 72-296 | CC683817 | 72-340 | CC683988 | 72-296 |
| CC680458 | 72-298 | CC683817 | 72-356 | CC683988 | 72-298 |
| CC680458 | 72-360 | CC683817 | 72-358 | CC683990 | 72-130 |
| CC680459 | 72-130 | CC683819 | 72-292 | CC683990 | 72-360 |
| CC680459 | 72-234 | CC683819 | 72-340 | CC683992 | 72-296 |
| CC680459 | 72-296 | CC683819 | 72-340 | CC683992 | 72-298 |
| CC680459 | 72-298 | CC683819 | 72-340 | CC683994 | 72-130 |
| CC680459 | 72-360 | CC683819 | 72-356 | CC683994 | 72-164 |
| CC680460 | 72-394 | CC683819 | 72-358 | CC683995 | 72-164 |
| CC680460 | 72-394 | CC683819 | 72-394 | CC683996 | 72-234 |
| CC681238 | 72-158 | CC683819 | 72-394 | CC683998 | 72-130 |
| CC681238 | 72-64 | CC683819 | 72-394 | CC683998 | 72-202 |
| CC681238 | 72-66 | CC683820 | 72-284 | CC683998 | 72-360 |
| CC681428 | 72-296 | CC683820 | 72-353 | CC684000 | 72-164 |
| CC681428 | 72-298 | CC683822 | 72-334 | CC684000 | 72-202 |
| CC681428 | 72-360 | CC683823 | 72-274 | CC684000 | 72-296 |
| CC681429 | 72-164 | CC683823 | 72-304 | CC684000 | 72-298 |
| CC681429 | 72-296 | CC683823 | 72-366 | CC684152 | 72-304 |
| CC681429 | 72-298 | CC683826 | 72-307 | CC684152 | 72-366 |
| CC681429 | 72-360 | CC683826 | 72-323 | CC684152 | 72-68 |
| CC681430 | 72-234 | CC683831 | 72-276 | CC684154 | 72-366 |
| CC681430 | 72-296 | CC683831 | 72-304 | CC684242 | 72-188 |
| CC681430 | 72-298 | CC683831 | 72-366 | CC684242 | 72-188 |
| CC681430 | 72-360 | CC683893 | 72-18 | CC684242 | 72-188 |
| CC681431 | 72-296 | CC683895 | 72-202 | CC684305 | 72-158 |
| CC681431 | 72-298 | CC683958 | 72-234 | CC684305 | 72-160 |
| CC681431 | 72-360 | CC683976 | 72-164 | CC684305 | 72-162 |
| CC682382 | 72-314 | CC683977 | 72-130 | CC684305 | 72-188 |
| CC682382 | 72-330 | CC683977 | 72-234 | CC684305 | 72-188 |
| CC682822 | 72-307 | CC683979 | 72-164 | CC684305 | 72-189 |

## NUMERICAL INDEX


| Part Number | Page | Part Number | Page | Part Number | Page |
|---|---|---|---|---|---|
| CC684305 | 72-190 | CC684775 | 72-300 | CC684789 | 72-204 |
| CC684305 | 72-190 | CC684775 | 72-362 | CC684789 | 72-236 |
| CC684305 | 72-226 | CC684775 | 72-62 | CC684790 | 72-132 |
| CC684305 | 72-230 | CC684776 | 72-300 | CC684790 | 72-168 |
| CC684305 | 72-250 | CC684776 | 72-362 | CC684790 | 72-236 |
| CC684305 | 72-250 | CC684777 | 72-100 | CC684791 | 72-132 |
| CC684305 | 72-251 | CC684777 | 72-20 | CC684791 | 72-168 |
| CC684305 | 72-252 | CC684777 | 72-300 | CC684791 | 72-236 |
| CC684305 | 72-252 | CC684777 | 72-362 | CC684792 | 72-132 |
| CC684305 | 72-276 | CC684777 | 72-62 | CC684792 | 72-168 |
| CC684305 | 72-281 | CC684778 | 72-100 | CC684792 | 72-236 |
| CC684305 | 72-286 | CC684778 | 72-300 | CC684793 | 72-168 |
| CC684305 | 72-288 | CC684778 | 72-62 | CC684793 | 72-236 |
| CC684305 | 72-290 | CC684779 | 72-100 | CC684794 | 72-168 |
| CC684305 | 72-292 | CC684779 | 72-300 | CC684794 | 72-236 |
| CC684305 | 72-294 | CC684779 | 72-62 | CC684795 | 72-168 |
| CC684305 | 72-339 | CC684780 | 72-100 | CC684795 | 72-236 |
| CC684305 | 72-339 | CC684780 | 72-300 | CC684800 | 72-326 |
| CC684305 | 72-339 | CC684780 | 72-62 | CC684800 | 72-330 |
| CC684305 | 72-341 | CC684781 | 72-100 | CC684800 | 72-373 |
| CC684305 | 72-341 | CC684781 | 72-300 | CC684800 | 72-381 |
| CC684305 | 72-353 | CC684781 | 72-62 | CC684810 | 72-304 |
| CC684305 | 72-356 | CC684782 | 72-100 | CC684810 | 72-366 |
| CC684305 | 72-358 | CC684782 | 72-300 | CC684810 | 72-68 |
| CC684649 | 72-307 | CC684782 | 72-62 | CC684812 | 72-366 |
| CC684650 | 72-36 | CC684783 | 72-100 | CC688157 | 72-164 |
| CC684650 | 72-40 | CC684783 | 72-300 | CC688157 | 72-202 |
| CC684660 | 72-292 | CC684783 | 72-62 | CC688216 | 72-28 |
| CC684660 | 72-294 | CC684784 | 72-132 | CC688216 | 72-32 |
| CC684660 | 72-356 | CC684784 | 72-168 | CC688216 | 72-36 |
| CC684660 | 72-358 | CC684784 | 72-204 | CC688216 | 72-40 |
| CC684769 | 72-300 | CC684784 | 72-236 | CC688378 | 72-294 |
| CC684770 | 72-100 | CC684785 | 72-132 | CC688935 | 72-314 |
| CC684770 | 72-300 | CC684785 | 72-168 | CC688935 | 72-318 |
| CC684770 | 72-62 | CC684785 | 72-204 | CC688935 | 72-330 |
| CC684771 | 72-300 | CC684785 | 72-236 | CC688935 | 72-334 |
| CC684772 | 72-100 | CC684786 | 72-132 | CC688935 | 72-378 |
| CC684772 | 72-20 | CC684786 | 72-168 | CC688935 | 72-382 |
| CC684772 | 72-300 | CC684786 | 72-204 | CC688935 | 72-385 |
| CC684772 | 72-362 | CC684786 | 72-236 | CC688935 | 72-390 |
| CC684772 | 72-62 | CC684787 | 72-132 | CC689937 | 72-262 |
| CC684773 | 72-300 | CC684787 | 72-168 | CC7418 | 72-102 |
| CC684773 | 72-362 | CC684787 | 72-204 | CC7418 | 72-104 |
| CC684774 | 72-100 | CC684787 | 72-236 | CC7418 | 72-134 |
| CC684774 | 72-20 | CC684788 | 72-132 | CC7418 | 72-136 |
| CC684774 | 72-300 | CC684788 | 72-168 | CC7418 | 72-170 |
| CC684774 | 72-362 | CC684788 | 72-204 | CC7418 | 72-172 |
| CC684774 | 72-62 | CC684788 | 72-236 | CC7418 | 72-206 |
| CC684775 | 72-100 | CC684789 | 72-132 | CC7418 | 72-208 |
| CC684775 | 72-20 | CC684789 | 72-168 | CC7418 | 72-22 |

## NUMERICAL INDEX


| Part Number | Page | Part Number | Page | Part Number | Page |
|---|---|---|---|---|---|
| CC7418 | 72-238 | CC769572 | 72-288 | HU564 | 61-4 |
| CC7418 | 72-24 | CC769572 | 72-290 | HU564 | 61-6 |
| CC7418 | 72-240 | CC769572 | 72-310 | HU60955-1 | 0-4 |
| CC7418 | 72-302 | CC769572 | 72-314 | HU60955-1 | 61-2 |
| CC7418 | 72-364 | CC769572 | 72-326 | HU61108 | 61-2 |
| CC7418 | 72-64 | CC769572 | 72-330 | HU61108 | 61-4 |
| CC7418 | 72-66 | CC769572 | 72-334 | HUAX294B1-3 | 61-6 |
| CC761170 | 72-140 | CC769572 | 72-353 | KA760-15000 | 1-12 |
| CC761170 | 72-142 | CC769572 | 72-368 | KA760-15000 | 1-24 |
| CC761170 | 72-212 | CC769572 | 72-372 | KB20121-30801 | 60-10 |
| CC761170 | 72-214 | CC769572 | 72-377 | KB20121-30801 | 60-4 |
| CC761170 | 72-72 | CC769572 | 72-385 | KB20121-30801 | 60-6 |
| CC761170 | 72-74 | CC769572 | 72-389 | KB20121-30801 | 60-8 |
| CC761170 | 72-76 | CC769582 | 72-318 | KB20121-30901 | 60-10 |
| CC763023 | 72-286 | CC78476 | 72-272 | KB20121-30901 | 60-4 |
| CC763023 | 72-307 | CC78481 | 72-260 | KB20121-30901 | 60-6 |
| CC763169 | 72-307 | CC786881 | 72-286 | KB20121-30901 | 60-8 |
| CC763169 | 72-314 | CC786881 | 72-288 | KB20121-31001 | 60-10 |
| CC763169 | 72-318 | CC787372 | 72-314 | KB20121-31001 | 60-4 |
| CC763169 | 72-323 | CC787372 | 72-318 | KB20121-31001 | 60-6 |
| CC763169 | 72-330 | CC787372 | 72-334 | KB20121-31001 | 60-8 |
| CC763169 | 72-334 | CC787372 | 72-377 | KB20121-31101 | 60-10 |
| CC763169 | 72-381 | CC787372 | 72-381 | KB20121-31101 | 60-4 |
| CC763169 | 72-385 | CC787372 | 72-385 | KB20121-31101 | 60-6 |
| CC763169 | 72-389 | CC787372 | 72-389 | KB20121-31101 | 60-8 |
| CC767611 | 72-102 | CC787398 | 72-290 | KB20121-31406 | 60-10 |
| CC767611 | 72-104 | CC787398 | 72-353 | KB20121-31406 | 60-4 |
| CC767611 | 72-134 | CC7910 | 72-122 | KB20121-31406 | 60-6 |
| CC767611 | 72-136 | CC7910 | 72-150 | KB20121-31406 | 60-8 |
| CC767611 | 72-170 | CC7910 | 72-50 | KB20121-36407 | 60-4 |
| CC767611 | 72-172 | CC7910 | 72-84 | KB20121-36414 | 60-10 |
| CC767611 | 72-206 | HU1052 | 61-4 | KB20121-36414 | 60-6 |
| CC767611 | 72-208 | HU1052 | 61-6 | KB20121-36414 | 60-8 |
| CC767611 | 72-22 | HU1861 | 61-4 | KB20121-38303 | 60-10 |
| CC767611 | 72-238 | HU1861 | 61-6 | KB20121-38303 | 60-6 |
| CC767611 | 72-24 | HU294B1-10 | 61-6 | KB20121-38311 | 60-10 |
| CC767611 | 72-240 | HU5001-A59 | 61-6 | KB20121-38311 | 60-4 |
| CC767611 | 72-304 | HU5002-V5 | 61-6 | KB20121-38311 | 60-6 |
| CC767611 | 72-366 | HU5002-W4 | 61-6 | KB20121-38311 | 60-8 |
| CC767611 | 72-64 | HU5003-JA1 | 61-6 | KB20122-30417 | 60-10 |
| CC767611 | 72-66 | HU5004-A1 | 61-4 | KB20122-30417 | 60-4 |
| CC768549 | 72-307 | HU5006-JA2 | 61-4 | KB20122-30417 | 60-6 |
| CC768549 | 72-323 | HU5011 | 61-4 | KB20122-30417 | 60-8 |
| CC768690 | 72-284 | HU5011 | 61-6 | KB20122-30418 | 60-10 |
| CC768690 | 72-353 | HU5064 | 61-4 | KB20122-30418 | 60-4 |
| CC769018 | 72-268 | HU5064 | 61-6 | KB20122-30418 | 60-6 |
| CC769018 | 72-270 | HU5069-3 | 61-4 | KB20122-30418 | 60-8 |
| CC769572 | 72-276 | HU5069-4 | 61-6 | KB94721-34151 | 60-10 |
| CC769572 | 72-280 | HU5089-3 | 61-4 | KB94721-34151 | 60-4 |
| CC769572 | 72-286 | HU5089-4 | 61-6 | KB94721-34151 | 60-6 |

## NUMERICAL INDEX


| Part Number | Page | Part Number | Page | Part Number | Page |
|---|---|---|---|---|---|
| KB94721-34151 | 60-8 | KBB5912-23911 | 60-6 | MIT24580101 | 27-4 |
| KBB5911-10902 | 60-10 | KBB5912-24001 | 60-10 | MIT24580101 | 27-4 |
| KBB5911-10902 | 60-4 | KBB5912-24001 | 60-6 | MIT27300101 | 28-4 |
| KBB5911-10902 | 60-6 | KBB591A-20007 | 0-9 | MIT27300102 | 28-4 |
| KBB5911-10902 | 60-8 | KBB591A-20007 | 60-4 | MIT27340101 | 28-4 |
| KBB5911-11101 | 60-4 | KBB591A-20007 | 60-8 | MIT27340102 | 28-4 |
| KBB5911-11101 | 60-8 | KBB591A-30001 | 0-9 | MIT27400102 | 27-4 |
| KBB5911-11401 | 60-10 | KBB591A-30001 | 60-10 | MIT27580102 | 27-4 |
| KBB5911-11401 | 60-4 | KBB591A-30001 | 60-6 | MIT303000GS | 28-4 |
| KBB5911-11401 | 60-6 | KBB591B-20029 | 0-9 | MIT303300GS | 28-4 |
| KBB5911-11401 | 60-8 | KBB591B-20029 | 60-10 | MIT304000GS | 27-4 |
| KBB5911-11501 | 60-10 | KBB591B-20029 | 60-8 | MIT304000GS | 27-4 |
| KBB5911-11501 | 60-4 | KBB591B-20030 | 0-9 | MIT305800GS | 27-4 |
| KBB5911-11501 | 60-6 | KBB591B-20030 | 0-9 | MIT305800GS | 27-4 |
| KBB5911-11501 | 60-8 | KBB591B-20030 | 0-9 | MIT42300000 | 28-4 |
| KBB5911-11601 | 60-10 | KBB591B-20030 | 0-9 | MIT42330100 | 28-4 |
| KBB5911-11601 | 60-4 | KBB591B-20030 | 60-10 | MIT42400000 | 27-4 |
| KBB5911-11601 | 60-6 | KBB591B-20030 | 60-4 | MIT42580000 | 27-4 |
| KBB5911-11601 | 60-8 | KBB591B-20030 | 60-6 | MY63870-03850 | 33-2 |
| KBB5911-11901 | 60-10 | KBB591B-20030 | 60-8 | MY891-6010-00 | 33-2 |
| KBB5911-11901 | 60-4 | KBB591B-20036 | 0-9 | MYGS135-00050A | 33-2 |
| KBB5911-11901 | 60-6 | KBB591B-20036 | 60-6 | MYGS242-00020B | 33-2 |
| KBB5911-11901 | 60-8 | KBB591B-20045 | 0-9 | ON43001-07502 | 0-4 |
| KBB5911-13610 | 60-10 | KBB591B-20045 | 60-4 | ON43001-07502 | 65-2 |
| KBB5911-13610 | 60-4 | KBB591B-30020 | 0-9 | ON43001-07502 | 65-2 |
| KBB5911-13610 | 60-6 | KBB591B-30020 | 0-9 | ON43501-07526 | 65-2 |
| KBB5911-13610 | 60-8 | KBB591B-30020 | 60-10 | ON43503-07502-B | 65-2 |
| KBB5911-23211 | 60-10 | KBB591B-30020 | 60-6 | ON43503-07520 | 65-2 |
| KBB5911-23211 | 60-8 | KBT1112-09313 | 60-10 | ON43511-07521 | 65-2 |
| KBB5911-23261 | 60-6 | KBT1112-09313 | 60-6 | ON43535-07502 | 65-2 |
| KBB5911-23266 | 60-4 | KBT1112-09314 | 60-8 | ON43535-07526 | 65-2 |
| KBB5911-23406 | 60-10 | KBT1112-09315 | 60-4 | ON43556-07563 | 65-2 |
| KBB5911-23406 | 60-6 | MIT06415001 | 28-2 | ON43556-07563 | 65-2 |
| KBB5911-24101 | 60-10 | MIT06415002 | 28-2 | ON43561-07520 | 65-2 |
| KBB5911-24101 | 60-6 | MIT06415101 | 28-2 | ON43561-07521 | 65-2 |
| KBB5912-11302 | 60-10 | MIT06415102 | 28-2 | ON43563-07567 | 65-2 |
| KBB5912-11302 | 60-10 | MIT06420001 | 28-2 | ON43563-07567 | 65-2 |
| KBB5912-11302 | 60-4 | MIT06420002 | 28-2 | ON43564-08020 | 65-2 |
| KBB5912-11302 | 60-6 | MIT06420101 | 28-2 | ON43564-08020 | 65-2 |
| KBB5912-11302 | 60-6 | MIT06420102 | 28-2 | ON43565-07502 | 65-2 |
| KBB5912-11302 | 60-8 | MIT06605001 | 27-2 | ON43565-07502 | 65-2 |
| KBB5912-11303 | 60-10 | MIT06605002 | 27-2 | ON43566-08020 | 65-2 |
| KBB5912-11303 | 60-10 | MIT06605101 | 27-2 | ON43566-08020 | 65-2 |
| KBB5912-11303 | 60-4 | MIT06605102 | 27-2 | ON43567-07567 | 65-2 |
| KBB5912-11303 | 60-6 | MIT06610001 | 27-2 | ON43567-07567 | 65-2 |
| KBB5912-11303 | 60-6 | MIT06610002 | 27-2 | ON65531-07057 | 64-12 |
| KBB5912-11303 | 60-8 | MIT06610101 | 27-2 | ON65531-07057 | 64-6 |
| KBB5912-22007 | 60-8 | MIT06610102 | 27-2 | ON65536-08035 | 64-16 |
| KBB5912-22011 | 60-4 | MIT24400101 | 27-4 | ON96751-03070 | 65-2 |
| KBB5912-23911 | 60-10 | MIT24400101 | 27-4 | ON96751-03070 | 65-2 |

## NUMERICAL INDEX


| Part Number | Page | Part Number | Page | Part Number | Page |
|---|---|---|---|---|---|
| PH12F50X-S | 83-10 | YM129150-11230 | 1-72 | YM129900-13251 | 1-100 |
| YM105425-01690 | 1-70 | YM129150-11370 | 1-72 | YM129900-13251 | 1-78 |
| YM105430-67110 | 1-92 | YM129150-11750 | 1-72 | YM129900-14110 | 1-80 |
| YM119129-77250 | 1-98 | YM129150-11750 | 1-72 | YM129900-14140 | 1-68 |
| YM119129-77260 | 1-98 | YM129150-11810 | 1-72 | YM129900-14400 | 1-80 |
| YM119129-77320 | 1-98 | YM129150-14200 | 1-80 | YM129900-14590 | 1-80 |
| YM119129-77850 | 1-98 | YM129150-25920 | 1-80 | YM129900-25060 | 1-80 |
| YM119129-77870 | 1-98 | YM129150-35151 | 0-14 | YM129900-25110 | 1-80 |
| YM119129-77890 | 1-98 | YM129150-35151 | 0-2 | YM129900-26250 | 1-68 |
| YM119129-77900 | 1-98 | YM12915049360 | 1-100 | YM129900-26250 | 1-68 |
| YM119129-77930 | 1-98 | YM129150-49360 | 1-82 | YM129900-26250 | 1-80 |
| YM119171-59910 | 1-92 | YM129150-59131 | 1-90 | YM129900-32001 | 1-68 |
| YM119305-59120 | 1-90 | YM129150-59131 | 1-90 | YM129900-32030 | 1-100 |
| YM119326-77820 | 1-73 | YM129150-77340 | 1-96 | YM129900-32030 | 1-68 |
| YM119600-11460 | 1-100 | YM129400-92440 | 1-100 | YM129900-32040 | 1-100 |
| YM119600-11460 | 1-72 | YM129470-77340 | 1-98 | YM129900-32040 | 1-68 |
| YM119620-59700 | 1-90 | YM129550-59120 | 1-90 | YM129900-42055 | 0-2 |
| YM119717-53010 | 1-90 | YM129612-77260 | 1-96 | YM129900-42055 | 1-82 |
| YM119717-77800 | 1-73 | YM129612-77700 | 1-96 | YM129900-42061 | 0-2 |
| YM119810-77340 | 1-96 | YM129612-77710 | 1-96 | YM129900-42061 | 1-100 |
| YM119810-77340 | 1-98 | YM129612-77730 | 1-96 | YM129900-42061 | 1-82 |
| YM121400-11340 | 1-100 | YM129612-77750 | 1-96 | YM129900-42070 | 1-82 |
| YM121400-11340 | 1-72 | YM129795-11180 | 1-72 | YM129900-42140 | 1-100 |
| YM121450-42450 | 1-82 | YM129900-01200 | 1-66 | YM129900-42140 | 1-82 |
| YM121850-49550 | 0-3 | YM129900-01250 | 1-66 | YM129900-42161 | 1-82 |
| YM121850-49550 | 1-100 | YM129900-01780 | 1-68 | YM129900-42170 | 1-82 |
| YM121850-49550 | 1-82 | YM129900-02020 | 1-66 | YM129900-42461 | 1-82 |
| YM121850-49810 | 0-3 | YM129900-02340 | 1-66 | YM129900-44700 | 0-2 |
| YM121850-49810 | 1-82 | YM129900-02410 | 1-66 | YM129900-44700 | 1-82 |
| YM123900-13610 | 1-78 | YM129900-02930 | 1-66 | YM129900-49551 | 1-82 |
| YM123900-13630 | 1-78 | YM129900-02940 | 1-66 | YM129900-49560 | 1-100 |
| YM124066-59100 | 1-90 | YM129900-07900 | 1-72 | YM129900-49560 | 1-82 |
| YM124080-77390 | 1-98 | YM129900-11100 | 1-72 | YM129900-77010 | 0-2 |
| YM124080-77520 | 1-98 | YM129900-11110 | 1-72 | YM129900-77010 | 1-94 |
| YM124160-01751 | 1-68 | YM129900-11120 | 1-72 | YM129900-77330 | 1-96 |
| YM124160-01751 | 1-72 | YM129900-11200 | 1-72 | YM129900-77330 | 1-98 |
| YM124160-11360 | 1-72 | YM129900-11240 | 1-72 | YM129900-77400 | 1-94 |
| YM124411-01780 | 1-70 | YM129900-11280 | 1-72 | YM129900-77440 | 1-94 |
| YM124460-11340 | 1-100 | YM129900-11310 | 1-100 | YM129900-77450 | 1-94 |
| YM124460-11340 | 1-72 | YM129900-11310 | 1-72 | YM129900-77450 | 1-94 |
| YM124465-44950 | 1-100 | YM129900-11370 | 1-72 | YM129900-77460 | 1-94 |
| YM124465-44950 | 1-82 | YM129900-11510 | 1-72 | YM129900-77480 | 1-94 |
| YM129001-91810 | 1-68 | YM129900-11520 | 1-72 | YM129900-77510 | 1-94 |
| YM129001-91810 | 1-68 | YM129900-11530 | 1-72 | YM129900-77520 | 1-94 |
| YM129052-55630 | 1-92 | YM129900-11600 | 1-72 | YM129900-77540 | 1-94 |
| YM129100-01580 | 1-68 | YM129900-11650 | 1-72 | YM129900-77550 | 1-94 |
| YM129100-01580 | 1-70 | YM129900-11660 | 1-72 | YM129900-77591 | 1-94 |
| YM129136-77261 | 1-96 | YM129900-12050 | 1-100 | YM129900-77610 | 1-94 |
| YM129150-02450 | 1-80 | YM129900-12050 | 1-76 | YM129900-77620 | 1-94 |
| YM129150-11230 | 1-72 | YM129900-12100 | 1-76 | YM129900-77640 | 1-94 |

https://truckmanualshub.com/


## NUMERICAL INDEX


| Part Number | Page | Part Number | Page | Part Number | Page |
|---|---|---|---|---|---|
| YM129900-77650 | 1-94 | YM129931-51010 | 1-84 | YM26014-080252 | 1-98 |
| YM129900-77700 | 1-94 | YM129931-53000 | 1-90 | YM26106-080122 | 1-66 |
| YM129900-77710 | 1-94 | YM129931-77820 | 1-73 | YM26106-080122 | 1-70 |
| YM129901-01350 | 1-100 | YM129951-01740 | 1-68 | YM26106-080142 | 1-80 |
| YM129901-01350 | 1-66 | YM129970-26200 | 1-80 | YM26106-080162 | 1-68 |
| YM129901-01500 | 1-68 | YM171008-77450 | 1-94 | YM26106-080162 | 1-73 |
| YM129901-01950 | 1-84 | YM171008-77730 | 1-94 | YM26106-080202 | 1-68 |
| YM129901-01960 | 1-84 | YM171008-77740 | 1-94 | YM26106-080252 | 1-82 |
| YM129901-11450 | 1-100 | YM171008-77750 | 1-94 | YM26106-080252 | 1-92 |
| YM129901-11450 | 1-72 | YM171051-01921 | 1-66 | YM26106-080302 | 1-68 |
| YM129901-25900 | 1-80 | YM171056-49120 | 1-82 | YM26106-080402 | 1-68 |
| YM129901-53020 | 1-90 | YM171056-49351 | 1-82 | YM26106-080402 | 1-68 |
| YM129901-55800 | 1-92 | YM22190-080002 | 1-100 | YM26106-080452 | 1-68 |
| YM129901-55810 | 1-92 | YM22190-080002 | 1-66 | YM26106-080452 | 1-76 |
| YM129901-55820 | 1-92 | YM22190-120002 | 1-100 | YM26106-080552 | 1-80 |
| YM129901-55830 | 1-92 | YM22190-120002 | 1-90 | YM26106-080552 | 1-82 |
| YM129901-55840 | 1-92 | YM22190-120002 | 1-90 | YM26106-100122 | 1-68 |
| YM129901-55850 | 0-14 | YM22190-120002 | 1-92 | YM26106-100142 | 1-84 |
| YM129901-55850 | 1-92 | YM22190-160002 | 1-100 | YM26106-100162 | 1-84 |
| YM129901-55860 | 0-2 | YM22190-160002 | 1-70 | YM26106-100202 | 1-84 |
| YM129901-55860 | 1-92 | YM22217-140000 | 1-80 | YM26106-100652 | 1-73 |
| YM129901-59510 | 1-90 | YM22242-000180 | 1-72 | YM26116-060162 | 1-82 |
| YM129901-59560 | 1-100 | YM22312-120200 | 1-70 | YM26116-101202 | 1-98 |
| YM129901-59560 | 1-90 | YM22351-060012 | 1-66 | YM26116-120302 | 1-94 |
| YM129901-59580 | 1-90 | YM22512-070140 | 1-80 | YM26206-100252 | 1-70 |
| YM129901-59810 | 1-90 | YM22857-500100 | 1-72 | YM26206-100352 | 1-70 |
| YM129901-59820 | 1-90 | YM23000-013000 | 1-92 | YM26226-080302 | 1-68 |
| YM129901-59830 | 1-90 | YM23871-005000 | 1-72 | YM26306-080002 | 1-68 |
| YM129901-59840 | 1-90 | YM23875-030000 | 1-82 | YM26306-080002 | 1-78 |
| YM129910-07910 | 1-72 | YM23876-030000 | 1-66 | YM26306-080002 | 1-78 |
| YM129930-01620 | 1-70 | YM23876-030000 | 1-66 | YM26306-100002 | 1-72 |
| YM129930-01870 | 1-68 | YM23876-030000 | 1-66 | YM26306-100002 | 1-98 |
| YM129930-13100 | 1-78 | YM23876-030000 | 1-72 | YM26450-060252 | 1-84 |
| YM129930-13130 | 1-78 | YM24190-080001 | 1-82 | YM26577-040162 | 1-72 |
| YM129930-42480 | 0-2 | YM24311-000120 | 1-100 | YM26577-060152 | 1-82 |
| YM129930-59500 | 1-92 | YM24311-000120 | 1-73 | YM26776-140002 | 1-80 |
| YM129930-59520 | 1-90 | YM24311-000320 | 1-100 | YM27225-080080 | 1-72 |
| YM129930-61990 | 1-84 | YM24311-000320 | 1-68 | YM27241-300000 | 1-66 |
| YM129930-67010 | 1-84 | YM24311-000320 | 1-73 | YM27241-400000 | 1-72 |
| YM129930-77200 | 0-2 | YM24311-240100 | 1-100 | YM27310-080001 | 1-72 |
| YM129930-77200 | 1-98 | YM24321-000850 | 1-100 | YM729900-01500 | 1-68 |
| YM129930-77212 | 0-2 | YM24321-000850 | 1-68 | YM729900-02800 | 1-66 |
| YM129930-77212 | 1-96 | YM24341-000500 | 1-100 | YM729901-01570 | 1-66 |
| YM129930-77740 | 1-96 | YM24341-000500 | 1-68 | YM729901-92690 | 1-100 |
| YM129930-77930 | 1-96 | YM24341-000500 | 1-80 | YM977770-1207F | 1-100 |
| YM129930-77950 | 1-96 | YM25132-004500 | 1-82 | YM977770-1207F | 1-68 |
| YM129930-77950 | 1-98 | YM25132-004600 | 1-82 | YM977770-1207F | 1-70 |
| YM129930-91120 | 1-70 | YM25132-004600 | 1-82 | YM977770-1207F | 1-73 |
| YM129931-01710 | 1-70 | YM26014-080162 | 1-82 | YMX0130206040 | 1-85 |
| YM129931-11700 | 1-72 | YM260140-80252 | 1-96 | YMX0130206040 | 1-85 |

https://truckmanualshub.com/



## NUMERICAL INDEX


| Part Number | Page | Part Number | Page | Part Number | Page |
|---|---|---|---|---|---|
| YMX0131214140 | 1-87 | YMX1463050000 | 1-84 | YMX1466000700 | 1-86 |
| YMX0141106440 | 1-85 | YMX1463104020 | 1-84 | YMX1466000800 | 1-84 |
| YMX0265081140 | 1-86 | YMX1463105100 | 1-84 | YMX1466000800 | 1-84 |
| YMX0293214050 | 1-87 | YMX1463115420 | 1-84 | YMX1466001200 | 1-86 |
| YMX0294704030 | 1-87 | YMX1463121900 | 1-84 | YMX1466001700 | 1-86 |
| YMX0299980300 | 1-85 | YMX1463125100 | 1-84 | YMX1466004400 | 1-85 |
| YMX0299980570 | 1-85 | YMX1464013020 | 1-85 | YMX1466010700 | 1-87 |
| YMX0299984130 | 1-86 | YMX1464211020 | 1-86 | YMX1466020100 | 1-85 |
| YMX0299985870 | 1-86 | YMX1464220300 | 1-86 | YMX1466020500 | 1-86 |
| YMX0299986840 | 1-84 | YMX1464303820 | 1-85 | YMX1466020600 | 1-86 |
| YMX1390060200 | 1-85 | YMX1464320000 | 1-85 | YMX1466205000 | 1-84 |
| YMX1391040000 | 1-84 | YMX1464330100 | 1-85 | YMX1466205000 | 1-84 |
| YMX1391060100 | 1-85 | YMX1464400220 | 1-85 | YMX1466211700 | 1-85 |
| YMX1391060200 | 1-86 | YMX1465151820 | 1-85 | YMX1466211700 | 1-85 |
| YMX1392080900 | 1-86 | YMX1465152520 | 1-85 | YMX1466214901 | 1-86 |
| YMX1393080300 | 1-86 | YMX1465262800 | 1-85 | YMX1466501220 | 1-86 |
| YMX1393100200 | 1-85 | YMX1465266400 | 1-85 | YMX1466584820 | 1-86 |
| YMX1395080200 | 1-86 | YMX1465300000 | 1-85 | YMX1468052120 | 1-85 |
| YMX1395120500 | 1-86 | YMX1465300100 | 1-85 | YMX1468209620 | 1-85 |
| YMX1460186820 | 1-86 | YMX1465404000 | 1-85 | YMX1468321500 | 1-85 |
| YMX1461000220 | 1-84 | YMX1465404100 | 1-85 | YMX1468321600 | 1-85 |
| YMX1461030100 | 1-84 | YMX1465410000 | 1-85 | YMX1468551320 | 1-86 |
| YMX1461100220 | 1-86 | YMX1465453400 | 1-86 | YMX1468796720 | 1-86 |
| YMX1461140000 | 1-86 | YMX1465453500 | 1-86 | YMX1469109400 | 1-87 |
| YMX1461200120 | 1-86 | YMX1465453600 | 1-86 | YMX1469753601 | 1-86 |
| YMX1461200120 | 1-90 | YMX1465680000 | 1-86 | YMX2114155110 | 1-94 |
| YMX1462000300 | 1-84 | YMX1465690300 | 1-86 | YMX2114255110 | 1-94 |
| YMX1462000320 | 1-84 | YMX1465700100 | 1-86 | YMX2130631300 | 1-94 |
| YMX1462010000 | 1-84 | YMX1465720020 | 1-86 | YMXL125G1200 | 1-98 |
| YMX1462020100 | 1-84 | YMX1465740320 | 1-87 | YMXL125G1300 | 1-98 |
| YMX1462030000 | 1-84 | YMX1465760400 | 1-86 | YMXL125G1301 | 1-98 |
| YMX1462040000 | 1-84 | YMX1465804100 | 1-86 | YMXL125G1315 | 1-98 |
| YMX1462050000 | 1-84 | YMX1465880500 | 1-86 | YMXL125G1330 | 1-98 |
| YMX1462060100 | 1-86 | YMX1465920400 | 1-85 | YMXL125G1500 | 1-98 |
| YMX1462105320 | 1-84 | YMX1465927900 | 1-85 | YMXL125GI400 | 1-98 |
| YMX1462105820 | 1-84 | YMX1465980600 | 1-87 | YMXL15073251 | 1-98 |
| YMX1462206620 | 1-84 | YMX1465980700 | 1-87 | YMXL1807320 | 1-98 |
| YMX1462300000 | 1-84 | YMX1465980800 | 1-87 | YMXL24OG5100 | 1-98 |
| YMX1462300100 | 1-85 | YMX1465980900 | 1-87 | YZ54522--050 | 56-6 |
| YMX1462310001 | 1-85 | YMX1465981000 | 1-87 | YZ68322-080 | 56-6 |
| YMX1462320320 | 1-87 | YMX1466000000 | 1-85 | YZ769100-883 | 56-6 |
| YMX1462330000 | 1-85 | YMX1466000100 | 1-85 | YZ769298-140 | 56-6 |
| YMX1462340500 | 1-85 | YMX1466000200 | 1-85 | YZ769540-054 | 56-6 |
| YMX1463010000 | 1-84 | YMX1466000400 | 1-86 | YZ769540-066 | 56-6 |
| YMX1463030000 | 1-84 | YMX1466000500 | 1-86 | | |
| YMX1463040000 | 1-84 | YMX1466000600 | 1-86 | | |

# KOMATSU FORKLIFT USA, INC.
# 14481 Lochridge Blvd., Bldg. #2
# Covington, GA 30014-4908

**VOICE PHONE: (770) 385-4815**
**FAX PHONE: (770) 385-4838**