부품 매뉴얼
PARTS MANUAL

JANEIRO 2013

RUTHZIL TRATOR COMERCIAL DE PEÇAS LTDA 11 97083-6812 ROLANDO

CLARK **C 20/25/30/33(35) D**

SERIAL NUMBER : P232D - XXXX - 9677 KF

부품 청구시 항상 장비의 SERIAL NO. 도 함께 알려 주십시오.

ALWAYS GIVE TRUCK SERIAL NUMBER WHEN ORDERING PARTS.

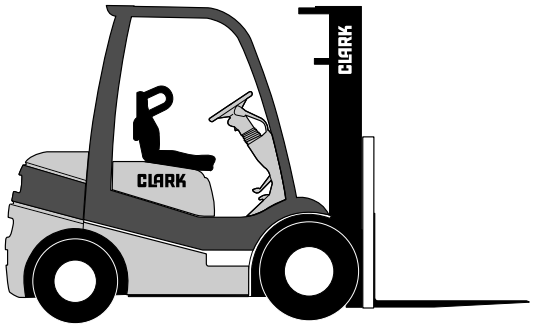

Part No. 8039006

Jan. 2013

CLARK THE FORKLIFT

(본사) 경기도 부천시 오정구 오정동 202-1
(Head office) 202-1 Ojung-Dong, Ojung-Gu, Bucheon-city, Kyunggi-do, Korea
(공장) 경남 창원시 웅남동 40-1
(Factory) 40-1 Ungnam-dong, Changwon-city, Kyungnam, Korea

00-515 ENGINE MOUNTING
엔진 어셈블리

00-547 CRANKCASE
크랭크케이스

00-548 GEAR COVER
기어 커버

00-549 CAMSHAFT
캠 축

00-642 CYLINDER HEAD
실린더 헤드

00-643 CRANKSHAFT
크랭크 축

00-644 GASKETS
가스킷

01-082 RADIATOR SCREEN
라디에터 스크린

01-294 LUBRICATION SYSTEM
윤활 오일 시스템

01-302 FLYWHEEL HOUSING
플라이휠 하우징

01-304 WATER PUMP MOUNTING
워터 펌프 마운팅

01-306 COOLING SYSTEM
냉각 장치

01-362 COOLING SYSTEM
냉각 장치

02-154 NON PRE-CLEANER GP
논-프리크리너 그룹

02-228 PRE-CLEANER(OPTION)
프리 크리너 (옵션)

02-446 FUEL INJECTION PUMP
연료 분사 펌프

02-460 FUEL INJECTION LINE
연료 분사 라인

02-461 FUEL LINE
연료 라인

02-462 ACCELERATOR LINKAGE
악셀레이터 링케이지

02-463 ACCEL CONTROL ASSEMBLY
악셀레이터 컨트롤 어셈블리

02-474 AIR CLEANER ASSEMBLY
에어 크리너 어셈블리

02-478 INDICATOR LIGHT INSTALLATION
지시등 조립그룹

02-489 FUEL CAP WITH KEY
연료캡 - 키포함

03-149 LICENSE PLATE MOUNTING
번호판 마운팅

03-163 E EXHAUST SYSTEM
배기 장치

03-170 INTAKE SYSTEM
흡기 시스템 (듀얼)

03-532 INTAKE & EXHAUST MANIFOLDS
흡기 & 배기 기관

03-533 INTAKE SYSTEM
흡기 시스템 (듀얼)

03-535 FUEL SYSTEM
연료 시스템

03-558 SWING DOWN BRACKET ASSEMBLY
*

03-559 SWING DOWN BRACKET ASSEMBLY
*

03-574 EXHAUST SYSTEM
배기 장치

03-581 SWITCH INSTALLATION
스위치 조립그룹

03-601 PRECLEANER, AIR CLEANER INSTALLATION
프리 크리너 에어 크리너 조립그룹

03-640 SWING DOWN LPG TANK MTG
스윙 다운 LPG 탱크 조립그룹

05-035 TRANSMISSION PUMP & HYDRAULICS
트랜스미션 펌프 & 유압

05-036 CONVERTOR HOUSING AND PUMP DRIVE
컨버터 하우징 & 펌프 드라이브

05-165 CONVERTER HOUSING & CLUTCH ASSY
컨버터 하우징 & 클러치

06-110 TRANSAXLE ASSEMBLY
트랜스액슬 어셈블리

06-619 TRANSMISSION CASE AND DIFFERENTIAL ASSEMBLY
트랜스미션 케이스 & 차동장치 어셈블리

06-750 E TRANSMISSION CLUTCH PACK
트랜스미션 클러치 팩

06-801 CONTROL COVER
컨트롤 커버

07-048 ENGINE & TRANSAXLE MOUNTING
엔진 / 트랜스액슬 마운팅

10-003 TRANSMISSION COOLING LINES
트랜스미션 쿨링 라인

11-060 STARTER
스타터

12-009 ALTERNATOR MOUNTING
알터네이터 어셈블리

12-171 ALTERNATOR MOUNTING
알터네이터 어셈블리

12-211 BATTERY MOUNTING
베터리 어셈블리

12-247 ALTERNATOR ASSEMBLY
알터네이터 어셈블리

12-257 ALTERNATOR
알터네이터

13-033 KEY & DIRECTIONAL SWITCH INSTALLATION
키 & 다이렉트스위치 조립그룹

13-034 HEAD LAMP INSTALLATION
헤드램프 조립그룹

13-044 REAR WORK LIGHT INSTALLATION
후방등 조립그룹

13-120 COMBINATION LAMP INSTALLATION
컴비네이션 램프 조립그룹

13-128 LAMP INSTALLATION
램프 조립그룹

13-150 LED LIGHTS INSTALLATION
LED 라이트 조립그룹

13-162 STROBE LIGHT MOUNTING
경광등 어셈블리

13-182 STROBE LIGHT
경광등

13-183 STROBE LIGHT MOUNTING
경광등 어셈블리

13-228 BACK-UP ALARM INSTALLATION
백-업 알람 조립그룹

13-230 HEAD & T/SIGNAL LIGHT INSTALLATION
헤드 & 턴시그널라이트 조립그룹

13-312 SOLENOID VALVE ELECTRIC MOUNTING
솔레노이드 벨브 전기 마운팅

13-327 REAR ACCESSORY MOUNTING
리어 악세서리 마운팅

13-332 HEAD & T/SIGNAL LIGHT INSTALLATION
헤드 & 턴시그널라이트 조립그룹

13-336 STATIC ELECTRICITY DISCHARGER
전압 방전기

13-338 HEAD & T/SIGNAL LIGHT INSTALLATION
헤드 & 턴시그널라이트 조립그룹

14-133 ELECTRICAL WIRING (INSTRUMENT)
*

14-153 DS CONSTRUCTION
DS 구조

14-267 ELECTRICAL WIRING (MAIN)
*

14-339 LPS CONSTRUCTION
LPS 구성품

14-878 SEAT OPERATED BRAKE
시트 조작 브레이크

15-074 DELAY TIMER MOUNTING
타임 딜레이 마운팅

20-086 DRIVE AXLE
드라이브 액슬

20-268 DRIVE AXLE FILTER BREATHER MOUNTING
*

22-011 BRAKE ASSEMBLY
브레이크 어셈블리

22-013 DRIVE WHEEL & TIRE MOUNTING
드라이브휠 & 타이어 마운팅

22-014 STEER WHEEL & TIRE MOUNTING
스티어휠 & 타이어 마운팅

22-017 UNITROL SYSTEM
유니트롤 시스템

22-024 DRIVE WHEEL & TIRE (SOLID TYPE)
*

22-026 DRIVE WHEEL & TIRE (SOLID TYPE)
*

22-027 STEER WHEEL & TIRE (SOLID TYPE)
*

22-033 DUAL DRIVE WHEEL & TIRE MOUNTING
*

22-034 WIDE DRIVE WHEEL & TIRE MOUNTING
*

22-041 DRIVE WHEEL AND TIRE
드라이브 휠 및 타이어

22-043 DRIVE WHEEL AND TIRE
드라이브 휠 및 타이어

22-044 STEER WHEEL & TIRE
스티어링 휠 & 타이어

23-407 DRIVE WHEEL & TIRE MOUNTING
드라이브 휠 & 타이어

23-442 DRIVE WHEEL & TIRE(WIDE)
드라이브 휠 및 타이어 (광폭)

23-448 DRIVE WHEEL & TIRE MOUNTING
드라이브휠 & 타이어 마운팅

23-460 BRAKE LINES
브레이크 라인

23-545 PARKING BRAKE LINKAGE
주차 브레이크 링케이지

23-562 BRAKE & INCHING LINES
브레이크 및 인칭라인

25-050 STEER COLUMN & GEAR MOUNTING
*

25-076 STEERING UNIT
스티어링 유니트

25-144 STEERING COLUMN
스티어링 칼럼

25-250 STEERING WHEEL MOUNTING
*

26-026 HYDRAULIC STEERING LINES
스티어링 라인

26-225 HYDRAULIC RETURN LINES
유압 라인 - 리턴

26-273 STEER AXLE MOUNTING
스티어링 액슬 마운팅

26-274 STEER CYLINDER
스티어링 실린더

26-276 STEER AXLE ASSEMBLY
스티어링 액슬 어셈블리

29-144 HYDRAULIC SUMP
유압 섬프

29-192 HYDRAULIC PUMP
유압 펌프

29-237 HYDRAULIC TANK & COMPONENTS MOUNTING
유압탱크 & 구성품 마운팅

29-461 HYDRAULIC TANK & COMPONENTS MOUNTING
유압탱크 & 구성품 마운팅

30-125 HYDRAULIC VALVE MOUNTING (2SPOOL)
유압벨브 마운팅 (2스풀)

30-126 HYDRAULIC VALVE MOUNTING (3SPOOL)
유압벨브 마운팅 (3스풀)

30-127 HYDRAULIC VALVE MOUNTING (4SPOOL)
유압벨브 마운팅 (4스풀)

30-128 MAIN CONTROL VALVE 2-SPOOL
메인 컨트롤 밸브 - 2 스풀

30-129 MAIN CONTROL VALVE 3-SPOOL
메인 컨트롤 밸브 - 3 스풀

30-130 MAIN CONTROL VALVE 4-SPOOL
메인 컨트롤 밸브 - 4 스풀

30-209 HYDRAULIC VALVE MOUNTING (2SPOOL)
유압벨브 마운팅 (2스풀)

30-210 HYDRAULIC VALVE MOUNTING (3SPOOL)
유압벨브 마운팅 (3스풀)

30-211 HYDRAULIC VALVE MOUNTING (4SPOOL)
유압벨브 마운팅 (4스풀)

30-510 MAIN CONTROL VALVE 3-SPOOL(PUSH BUTTON)
메인 컨트롤 밸브 - 3 스풀 (푸시버턴)

30-511 MAIN CONTROL VALVE 4-SPOOL(PUSH BUTTON)
메인 컨트롤 밸브 - 4 스풀 (푸시버턴)

30-512 HYDRAULIC CONTROL VALVE-2 SPOOL
유압 컨트롤 밸브 - 2 스풀

30-513 HYDRAULIC CONTROL VALVE-3 SPOOL
유압 컨트롤 밸브 - 3 스풀

30-514 HYDRAULIC CONTROL VALVE-4 SPOOL
유압 컨트롤 밸브 - 4 스풀

31-123 TILT LIMIT WITH OVERRIDE
틸트 제한해제

31-139 HYDRAULIC LIFT & TILT LINES
유압 리프트 & 틸트 라인

31-140 HYDRAULIC SUPPLY LINES
유압 공급 라인

31-221 HYDRAULIC SUPPLY LINES
유압 공급 라인

31-223 HYDRAULIC RETURN LINES
유압 리턴 라인

32-129 TILT CYLINDER
틸트 실린더

32-155 TILT CYLINDER MOUNTING
틸트 실린더 어셈블리

32-167 TILT AMOUNT GROUP
틸트 어마운트 그룹

32-171 ACCUMULATOR INSTALLATION
*

33-014 SOLENOID VALVE
솔레노이드 밸브

33-028 CLAMP LEVER LOCK SYSTEM
*

33-069 RELIEF VALVE ASSEMBLY
릴리프 밸브 어셈블리

33-130 SELECTOR SOLENOID VALVE
셀렉터 솔레노이드 밸브

34-044 LOAD BACK REST
로드 백 레스트

34-103 CARRIAGE ASSEMBLY
캐리지 어셈블리

34-209 CARRIAGE ASSEMBLY
캐리지 어셈블리

34-734 UPRIGHT MOUNTING
업라이트 마운팅

37-003 OVERHEAD GUARD COVER
오버헤드가드 커버

37-050 REAR WIPER INSTALLATION
리어 와이퍼 조립그룹

37-054 CAB DOOR SASH ASSEMBLY
*

37-056 ENCLOSED CAB
캡 (박스형)

37-057 ENCLOSED CAB
캡 (박스형)

37-076 BACK MIRROR
백미러

37-114 HOOD MOUNTING
후드 마운팅

37-116 SHEET METAL & TRIM
시트 메탈 & 트림

37-124 SEAT ARMREST ASSEMBLY
아암레스트 어셈블리

38-225 FRAME & COUNTERWEIGHT
프레임 & 카운터웨이트

38-270 FRAME TANK BOTTOM PLUG
프레임 탱크 하단 플러그

39-012 LEAD WIRE GROUND
접지선

39-235 ELECTRICAL COMPONENTS (CAB)
*

39-510 OVERHEAD GUARD MOUNTING
오버헤드가드 마운팅

39-514 SEAT MOUNTING
시트 마운팅

39-519 LOAD BACK REST
로드 백 레스트

39-547 LOAD BACK REST
로드 백 레스트

39-559 NOISE REDUCTION INSTALLATION
소음저감 조립그룹

39-562 NOISE REDUCTION INSTALLATION
소음저감 조립그룹

39-585 SEAT ASSEMBLY (SUSPENSION)
시트 어셈블리

39-586 SEAT ASSEMBLY (STATIC)
시트 어셈블리

39-593 ELECTRICAL COMPONENTS (CAB)
*

39-597 CAB MOUNTING
캐빈 마운팅

39-626 ENCLOSED CAB
캡 (박스형)

39-661 SEAT ASSEMBLY
시트 어셈블리

39-672 SPONGE MOUNTING
스폰지 마운팅

39-674 FLOOR PLATE MOUNTING
플로어 플레이트 마운팅

39-829 SEAT MOUNTING
시트 어셈블리

39-831 ENCLOSED CAB
캡 (박스형)

39-834 SEAT ASSEMBLY (SUSPENSION)
시트 어셈블리

39-836 ENCLOSED CAB
캡 (박스형)

39-837 ENCLOSED CAB
캡 (박스형)

39-871 ENCLOSED CAB
캡 (박스형)

39-963 COWL MOUNTING
카울 마운팅

39-967 ENCLOSED CAB
캡 (박스형)

39-969 POD INSTALLATION
파드 조립그룹

39-977 OVERHEAD GUARD MOUNTING
오버헤드가드 마운팅

40-243 MODEL & SPECIFICATION DECALS
*

40-254 DECALS
데칼

41-008 STORAGE CONSOLE
저장 콘솔

41-010 HEATER ASSEMBLY
히터 어셈블리

41-039 HEATER INSTALLATION
히터 조립그룹

41-126 OPERATOR FAN MOUNTING
*

47-000 SEAT WING KIT
시트윙 키트

47-005 REAR HAND GRIP MOUNTING
*

50-109 E DEVICE HOSE REEL
디바이스 호스릴

50-157 SOLENOID VALVE
솔레노이드 밸브

50-171 ATTACHMENT HOSE ADAPTATION (CARRIAGE)
작업장치 호스 적용 (캐리지)

50-172 HIGH TERMINATION FOR DEVICE HOSE ADAPTATION
*

50-175 HIGH TERMINATION FOR DEVICE HOSE ADAPTATION
*

50-177 SOLENOID VALVE FOR DEVICE HOSE ADAPTATION
*

50-232 ATTACHMENT HOSE ADAPTATION (UPRIGHT)
작업장치 호스 적용 (업라이트)

50-243 QUICK DISCONNECT FOR DEVICE HOSE ADAPTATION
퀵 차단 (호스 어댑션 장치용)

50-269 ATTACHMENT HOSE ADAPTATION (UPRIGHT)
작업장치 호스 적용 (업라이트)

50-270 ATTACHMENT HOSE & CABLE ADAPTATION (UPRIGHT)
*

50-284 ATTACHMENT HOSE ADAPTATION (CARRIAGE)
작업장치 호스 적용 (캐리지)

50-289 ATTACHMENT HOSE & CABLE ADAPTATION (UPRIGHT)
*

50-290 ATTACHMENT HOSE & CABLE ADAPTATION (UPRIGHT)
*

50-291 ATTACHMENT HOSE & CABLE ADAPTATION (UPRIGHT)
*

50-292 ATTACHMENT HOSE & CABLE ADAPTATION (UPRIGHT)
*

50-293 ATTACHMENT HOSE & CABLE ADAPTATION (UPRIGHT)
*

50-407 ATTACHMENT HOSE ADAPTATION (UPRIGHT)
작업장치 호스 적용 (업라이트)

50-410 ATTACHMENT HOSE ADAPTATION (UPRIGHT)
작업장치 호스 적용 (업라이트)

50-432 ATTACHMENT HOSE ADAPTATION (UPRIGHT)
작업장치 호스 적용 (업라이트)

50-439 ATTACHMENT HOSE ADAPTATION (UPRIGHT)
작업장치 호스 적용 (업라이트)

50-590 AUXILIARY VALVE LINES
보조 밸브 라인

50-716 E HOSE ADAPTATION
호스 어댑션

50-765 HIGH TERMINATION PLUMBING
하이 터미네이션 배관

50-791 ATTACHMENT HOSE ADAPTATION (CARRIAGE)
작업장치 호스 적용 (캐리지)

50-793 ATTACHMENT HOSE ADAPTATION (CARRIAGE)
작업장치 호스 적용 (캐리지)

50-794 ATTACHMENT HOSE ADAPTATION (CARRIAGE)
작업장치 호스 적용 (캐리지)

50-796 ATTACHMENT HOSE ADAPTATION (CARRIAGE)
작업장치 호스 적용 (캐리지)

50-797 ATTACHMENT HOSE ADAPTATION (CARRIAGE)
작업장치 호스 적용 (캐리지)

50-798 QUICK DISCONNECT FOR DEVICE HOSE ADAPTATION
퀵 차단 (호스 어댑션 장치용)

50-820 SOLENOID VALVE FOR DEVICE HOSE ADAPTATION
*

53-024 FORK POSITIONER
포크 포지셔너

53-084 FORK POSITIONER
포크 포지셔너

53-146 F/P SIDESHIFT CYLINDER
포크포지셔너 사이드쉬프트실린더

53-164 FORK POSITIONER
포크 포지셔너

53-187 SIDE SHIFT ASSEMBLY
*

53-198 SIDESHIFT CYLINDER
사이드 쉬프트 실린더

54-015 FORK POSITIONER (BASIC)
포크 포지셔너 (기본)

60-005 BLOCK HEATER GP
블록 히터 그룹

62-002 SPEED LIMIT INSTALLATION
속도 제한장치 조립그룹

66-058 FORK
포크

66-159 LIFT CYLINDER ASSEMBLY
리프트 실린더 어셈블리

66-160 SECONDARY CYLINDER ASSEMBLY
2차 실린더 어셈블리

66-179 STANDARD UPRIGHT
표준 업라이트

66-232 TRIPLE STAGE UPRIGHT
3단 업라이트

66-235 PRIMARY CYLINDER ASSEMBLY
*

66-999 EXTENTION FORK
익스텐션 포크

75-(33)014 VARIABLE RELIEF VALVE INSTALLATION
가변 릴리프 밸브 어셈블리

75-(33)045 DEVICE HYDRAULIC PRESSURE GAUGE INSTALLATION
디바이스 유압 압력게이지 조립그룹

75-004 SEAT OPERATED BRAKE
시트 조작 브레이크

75-005 SEAT OPERATED BRAKE
시트 조작 브레이크

75-012 SEAT OPERATED BRAKE SWITCH
시트 조작 브레이크 스위치

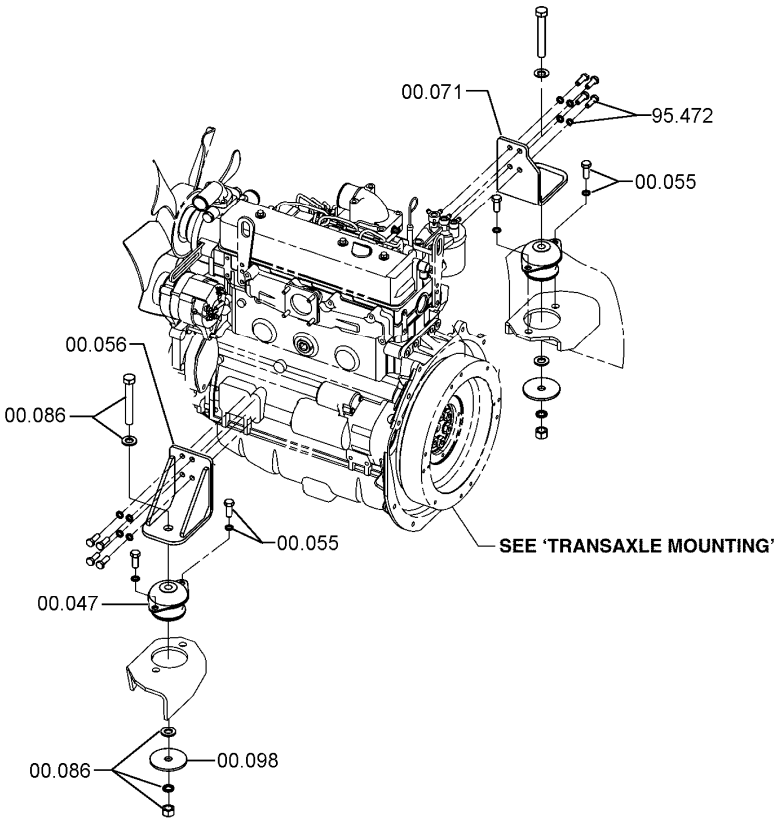

ENGINE MOUNTING **00-515**

00.047	DAMPENER, ENGINE FRONT VIBRATION 댐프너
00.055	FASTENER, ENGINE FRONT VIBRATION DAMPENER 패스너
00.056	MOUNT, ENGINE RH 마운트
00.071	MOUNT, ENGINE LH 마운트
00.086	FASTENER, RH ENGINE MOUNT 패스너
00.098	WASHER, ENGINE MOUNTING TO FRAME RH 와셔
95.472	FASTENER, ENGINE MOUNT 패스너

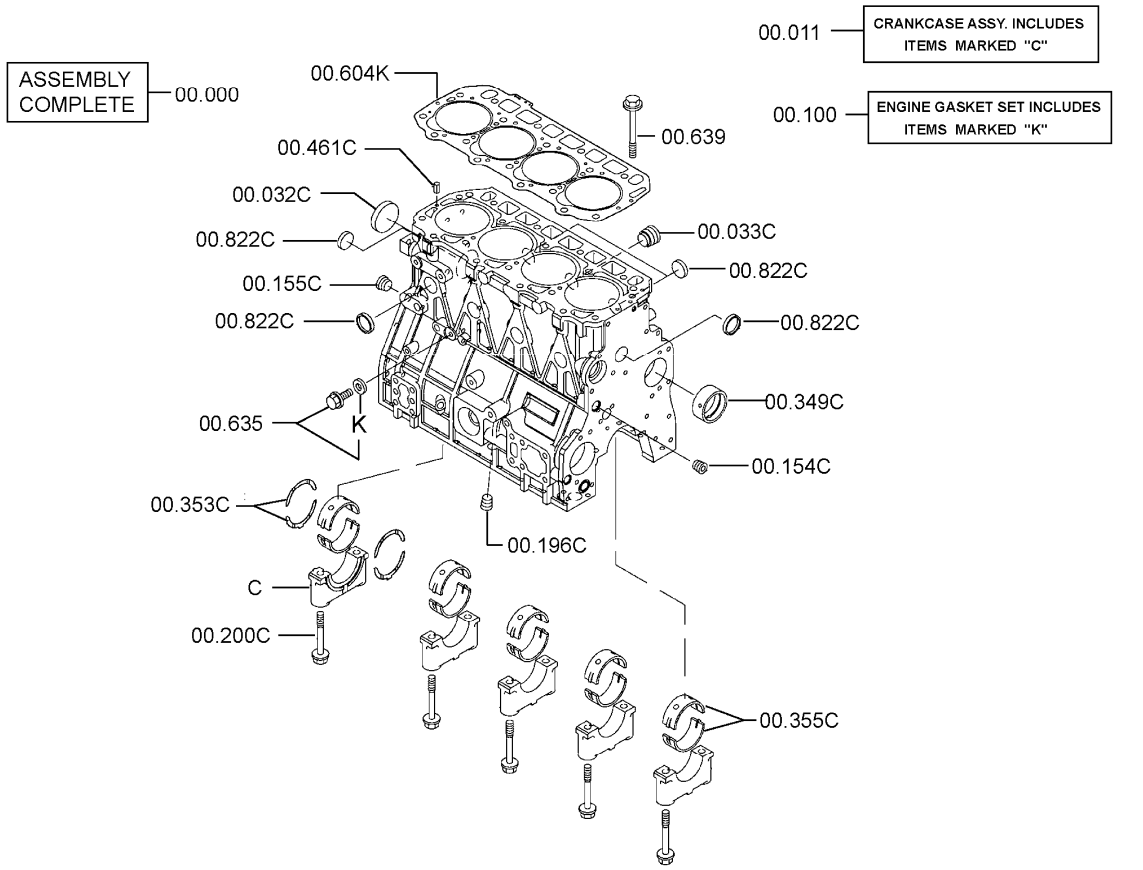

00.000 PRODUCTION ENGINE ASSEMBLY
엔진

00.011 CRANKCASE
크랭크케이스

00.032 PLUG, CRANKCASE
플러그

00.033 PLUG, CRANKCASE
플러그

00.100 GASKET KIT, ENGINE OVERHAUL
가스켓킷

00.154 PLUG - EXPANSION, CRANKCASE END
플러그

00.155 PLUG - EXPANSION, CRANKCASE END
플러그

00.196 PLUG-EXPANSION, CRANKCASE SIDE
플러그

00.200 FASTENER, CRANKSHAFT BEARING NO. 1 CAP
패스너

00.349 BEARING, ENGINE BALANCER SHAFT FRONT
베어링

00.353 PLATE, CRANKSHAFT THRUST
플레이트

00.355 BEARING, MAIN JOURNAL (ENGINE SET)
베어링

00.461 DOWEL, CRANKCASE HEAD
다웰

00.604 GASKET, CRANKCASE HEAD
가스켓

00.635 FASTENER, CRANKCASE HEAD
패스너

00.639 FASTENER, CRANKCASE HEAD
패스너

00.822 PLUG, CRANKCASE
플러그

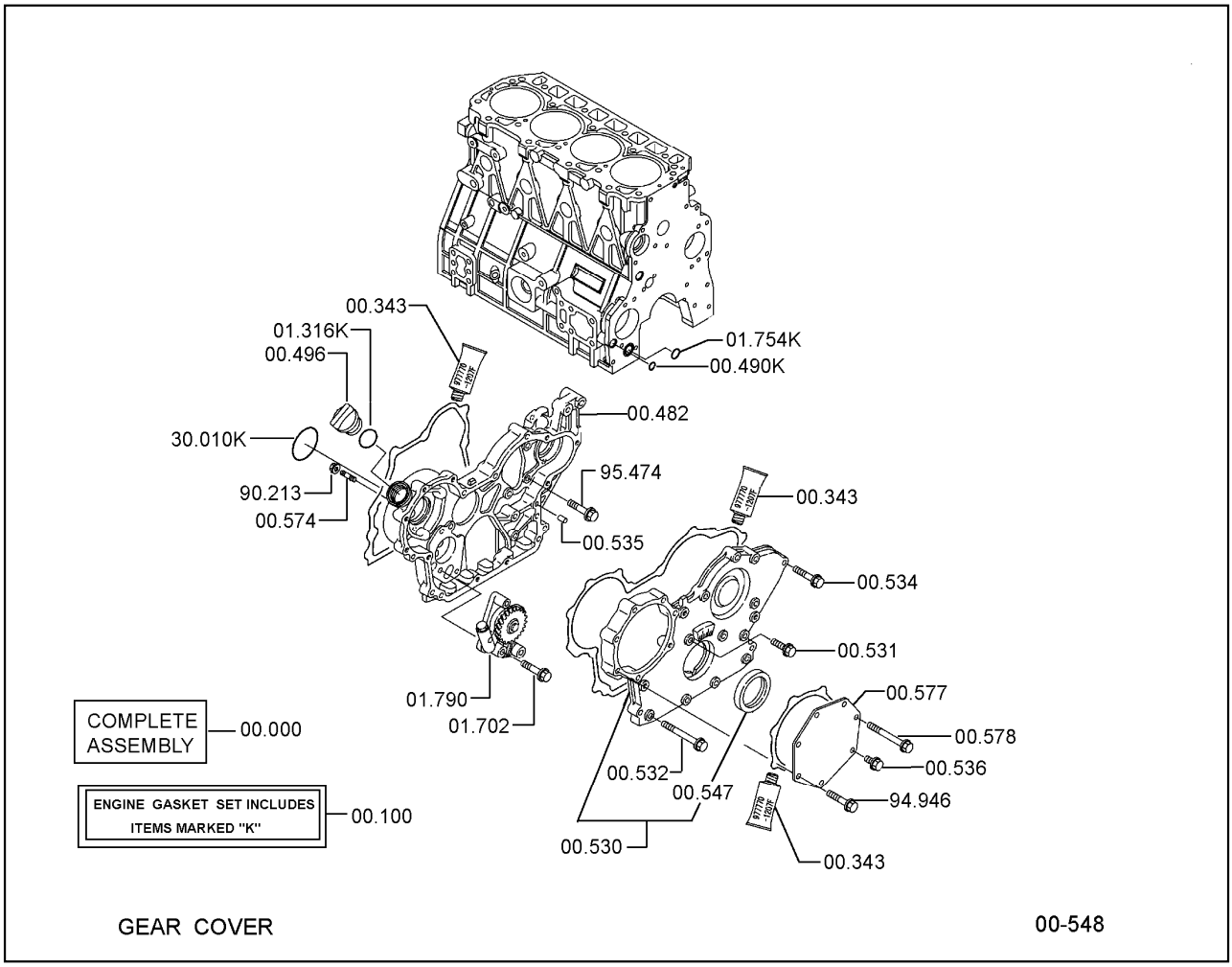

00.000 PRODUCTION ENGINE ASSEMBLY
엔진

00.100 GASKET KIT, ENGINE OVERHAUL
가스켓킷

00.343 GASKET, LIQUID
가스켓

00.457 FASTENER, REAR OIL SEAL HOUSING CLAMPING
패스너

00.482 PLATE, GEAR COVER BACKING
플레이트

00.490 SEAL, ENGINE FRONT GEAR COVER PLUG
시일

00.496 PLUG, ENGINE FRONT GEAR COVER
플러그

00.530 COVER, ENGINE FRONT GEAR
커버

00.531 FASTENER, ENGINE FRONT GEAR COVER
패스너

00.532 FASTENER, ENGINE FRONT GEAR COVER
패스너

00.534 FASTENER, ENGINE FRONT GEAR COVER
패스너

00.535 FASTENER, ENGINE FRONT GEAR COVER
패스너

00.536 FASTENER, ENGINE FRONT GEAR COVER
패스너

00.547 SEAL, ENGINE FRONT GEAR COVER
시일

00.577 COVER, INJECTION PUMP GEAR ACCESS
커버

00.578 FASTENER, INJECTION PUMP GEAR ACCESS COVER
패스너

01.316 SEAL, ENGINE OIL FILTER DRAIN COCK
시일

01.702 FASTENER, OIL PUMP
패스너

01.754 SEAL, OIL PUMP OUTLET TUBE FITTING
시일

01.790 GEAR, OIL PUMP DRIVEN
기어

30.010 SEAL, HOUSING COVER
시일

90.213 NUT, ENGINE FRONT GEAR COVER FASTENER
너트

94.946 FASTENER, INJECTION PUMP GEAR ACCESS COVER
패스너

95.474 FASTENER, ENGINE OIL PUMP DRIVE CHAIN ACCESS HOLE
패스너

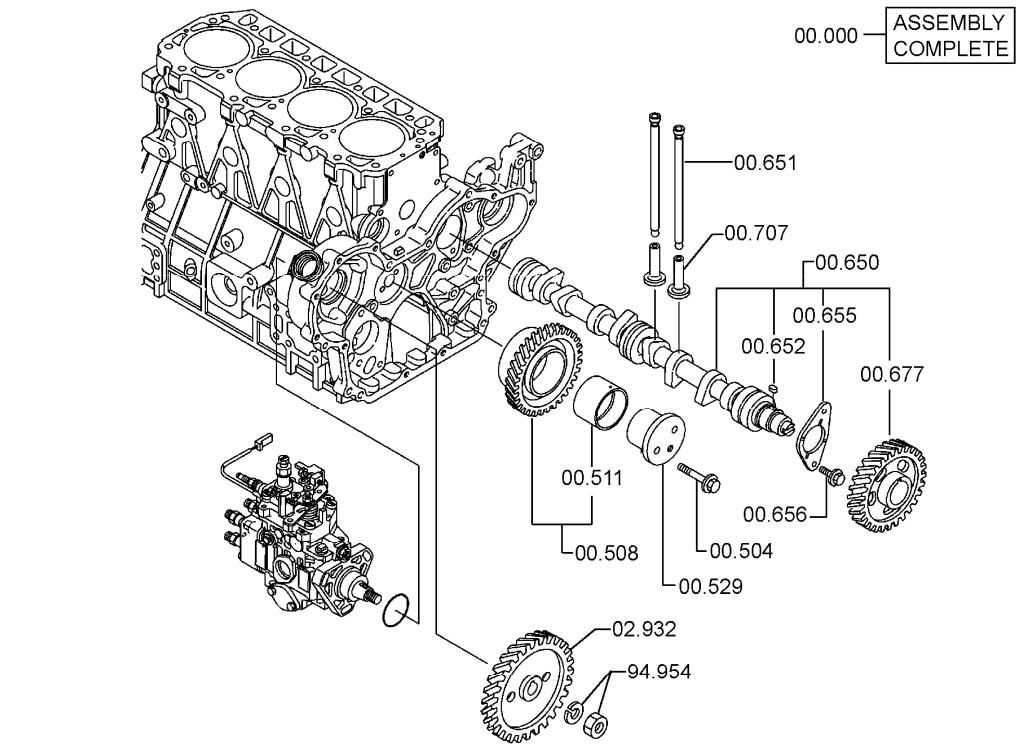

00.000 PRODUCTION ENGINE ASSEMBLY
엔진

00.504 FASTENER, UPPER IDLER GEAR SPINDLE
패스너

00.508 GEAR, ENGINE LOWER IDLER
기어

00.511 BEARING, IDLER GEAR SHAFT OUTER
베어링

00.529 SPINDLE, IDLER GEAR
스핀들

00.650 CAMSHAFT
캠샤프트

00.651 PUSH ROD, ENGINE ROCKET ARM
푸시로드

00.652 KEY, CAMSHAFT TIMING GEAR WOODRUFF
키

00.655 PLATE, CAMSHAFT THRUST
플레이트

00.656 FASTENER, CAMSHAFT THRUST PLATE
패스너

00.677 GEAR, CAMSHAFT TIMING
기어

00.707 LIFTER, ENGINE VALVE
리프터

02.932 GEAR, FUEL INJECTION PUMP DRIVE
기어

94.954 FASTENER, FUEL INJECTION PUMP ADAPTOR
패스너

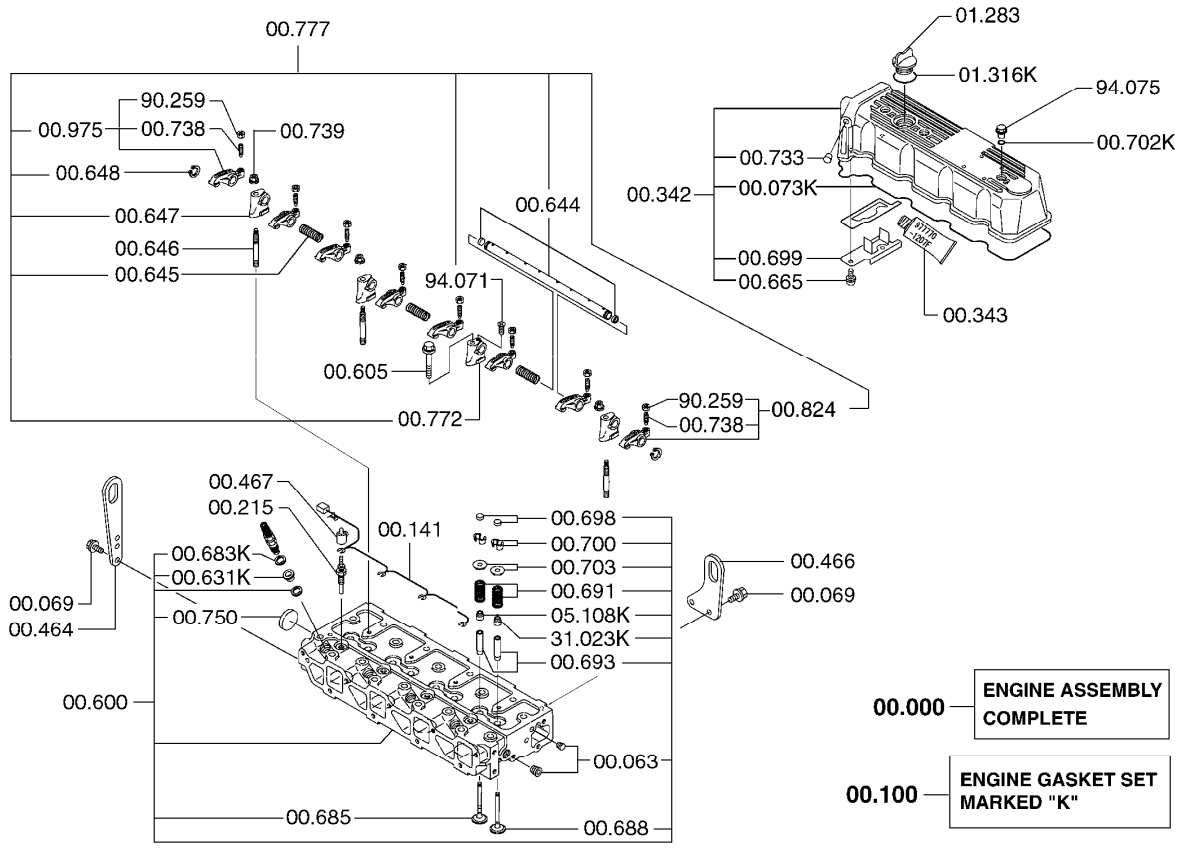

00.000	PRODUCTION ENGINE ASSEMBLY 엔진
00.063	PLUG, CRANKCASE HEAD 플러그
00.069	FASTENER, ENGINE LIFTING BRACKET 패스너
00.073	GASKET, CRANKCASE HEAD END COVER 가스켓
00.100	GASKET KIT, ENGINE OVERHAUL 가스켓킷
00.141	CONNECTOR, CRANKCASE VENT TUBE 커넥터
00.215	GLOW PLUG, CRANKCASE HEAD HEATER 글로우플러그
00.342	BONNET ASSY 보닛
00.343	GASKET, LIQUID 가스켓
00.464	BRACKET, ENGINE LIFTING 브라켓
00.466	BRACKET, ENGINE LIFTING 브라켓
00.467	COVER, ROCKER ARM COVER HOLE 커버
00.600	HEAD ASSEMBLY, CRANKCASE 헤드
00.605	FASTENER, CRANKCASE HEAD 패스너
00.631	FASTENER, CRANKCASE HEAD 패스너
00.644	PIVOT, ENGINE ROCKER ARM 피봇
00.645	SPRING, ENGINE ROCKER ARM 스프링
00.646	FASTENER, ENGINE ROCKER ARM PIVOT SUPPORT 패스너
00.647	SUPPORT, ENGINE ROCKER ARM PIVOT 서포트
00.648	LOCATOR, ENGINE ROCKER ARM 로케이터
00.665	FASTENER, ROCKER ARM COVER 패스너
00.683	SEAT, EXHAUST VALVE INSERT 시트
00.685	VALVE, EXHAUST 밸브
00.688	VALVE, INTAKE 밸브
00.691	SPRING, ENGINE INTAKE VALVE 스프링
00.693	GUIDE, INTAKE VALVE 가이드
00.698	LOCK, EXHAUST VALVE SPRING SEAT 로크
00.699	OIL BAFFLE,CAMSHAFT 오일
00.700	LOCK, INTAKE VALVE SPRING SEAT 로크
00.702	SEAL, ROCKER ARM COVER FASTENER 시일

00.703 SEAT, INTAKE VALVE SPRING
시트

00.733 PLUG, CRANKCASE HEAD END COVER
플러그

00.738 STUD, ENGINE ROCKER ARM PIVOT SUPPORT
스터드

00.739 NUT, ENGINE ROCKER ARM PIVOT SUPPORT
너트

00.750 PLUG, CRANKCASE HEAD
플러그

00.772 SUPPORT, ENGINE ROCKER ARM PIVOT
서포트

00.777 SUPPORT, ENGINE ROCKER ARM PIVOT
서포트

00.824 ARM ASSY, ENGINE ROCKER
암

00.975 ARM ASSY,CYLINDER HEAD ROCKER
암

01.283 CAP, CRANKCASE OIL FILLER
캡

01.316 SEAL, ENGINE OIL FILTER DRAIN COCK
시일

05.108 SEAL, VALVE OUTLET PORT
시일

31.023 SEAL, VALVE INLET PORT
시일

90.259 NUT, ENGINE ROCKER ARM PIVOT SUPPORT FASTENER
너트

94.071 FASTENER, ROCKER ARM PIVOT SUPPORT
패스너

94.075 FASTENER, ROCKER ARM COVER HOLE COVER
패스너

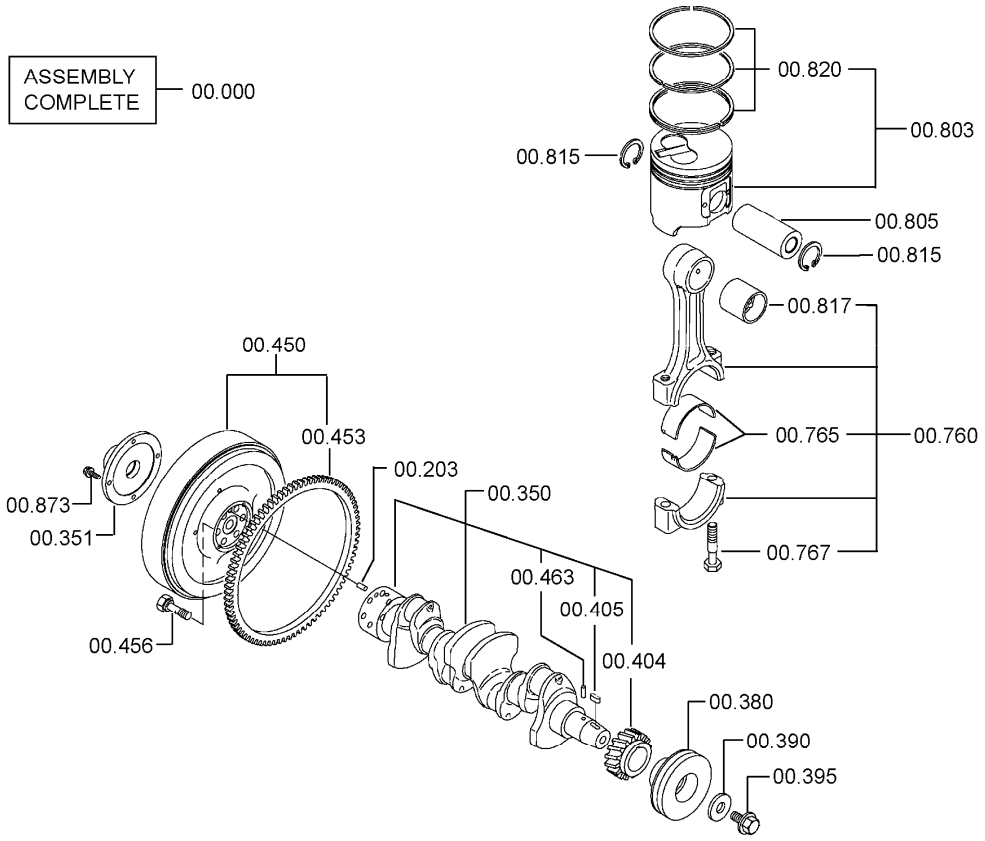

00.000 PRODUCTION ENGINE ASSEMBLY
엔진

00.203 DOWEL, CRANKSHAFT BEARING CAP
다월

00.350 CRANKSHAFT
크랭크샤프트

00.351 PLATE, FLYWHEEL REINFORCING
플레이트

00.380 PULLEY, CRANKSHAFT
풀리

00.390 WASHER, CRANKSHAFT PULLEY
와셔

00.395 FASTENER, CRANKSHAFT PULLEY
패스너

00.404 GEAR, CRANKSHAFT TIMING
기어

00.405 KEY, CRANKSHAFT TIMING GEAR
키

00.450	FLYWHEEL 플라이휠
00.453	GEAR, FLYWHEEL RING 기어
00.456	FASTENER, CRANKSHAFT TO FLYWHEEL 패스너
00.463	DOWEL, CRANKSHAFT 다웰
00.760	ROD ASSEMBLY, CONNECTING 로드
00.765	BEARING, CONNECTING ROD 베어링
00.767	FASTENER, CONNECTING ROD BEARING CAP 패스너
00.803	PISTON (ONE CYLINDER) 피스톤과핀
00.805	PIN, PISTON 핀
00.815	RETAINER, PISTON PIN 리테이너
00.817	BUSHING, PISTON PIN (ENGINE SET) 부싱
00.820	PISTON RING 피스톤링
00.873	FASTENER, FLYWHEEL HSG TO CRANKCASE 패스너

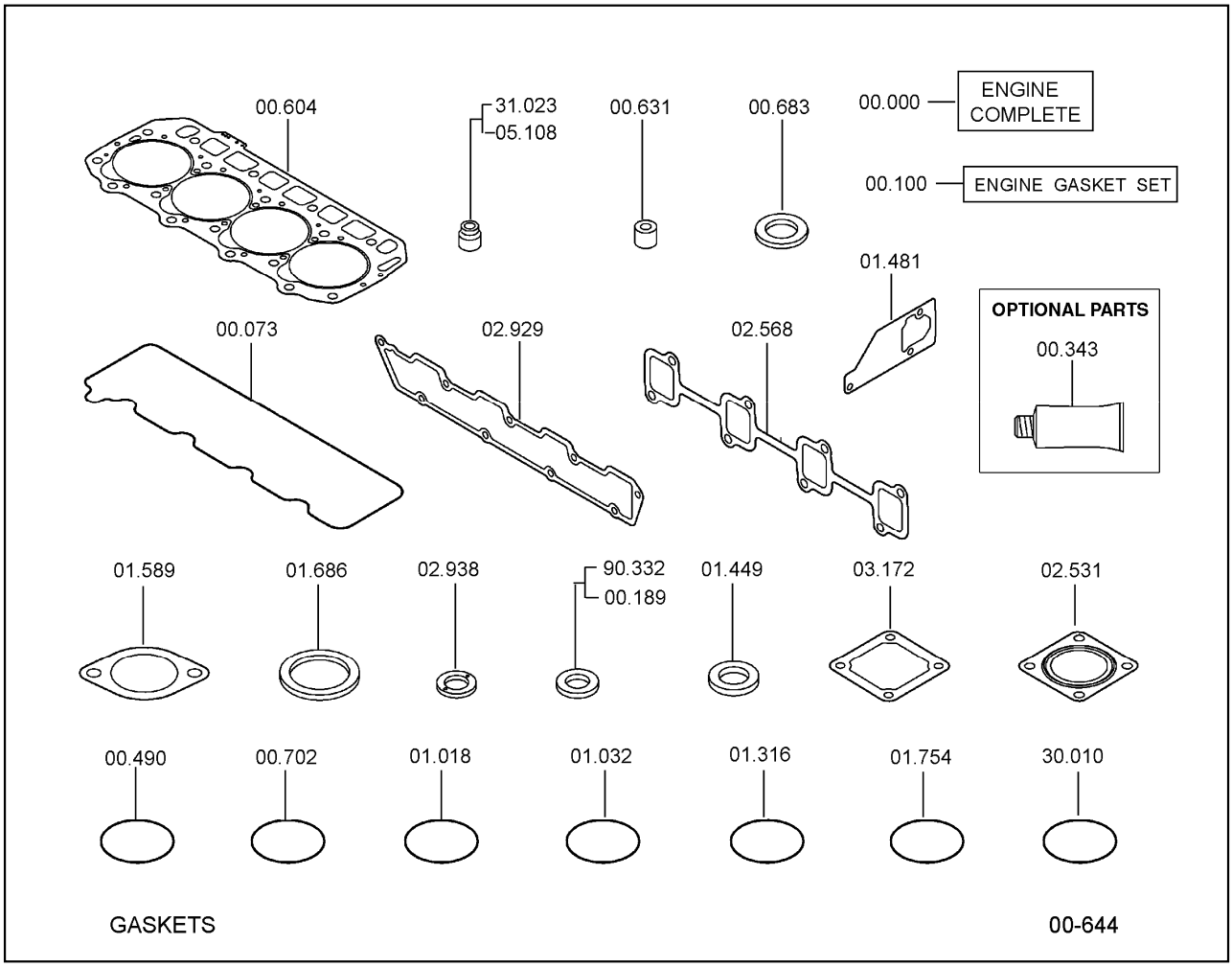

00.000 PRODUCTION ENGINE ASSEMBLY
엔진

00.073 GASKET, CRANKCASE HEAD END COVER
가스켓

00.100 GASKET KIT, ENGINE OVERHAUL
가스켓킷

00.189 SEAL, CRANKCASE OIL GALLEY PLUG
시일

00.343 GASKET, LIQUID
가스켓

00.490 SEAL, ENGINE FRONT GEAR COVER PLUG
시일

00.604 GASKET, CRANKCASE HEAD
가스켓

00.631 FASTENER, CRANKCASE HEAD
패스너

00.683 SEAT, EXHAUST VALVE INSERT
시트

00.702	SEAL, ROCKER ARM COVER FASTENER 시일
01.018	SEAL, OIL LEVEL DIPSTICK ADAPTOR 시일
01.032	SEAL, ENGINE WATER PUMP DISCHARGE ELBOW 시일
01.316	SEAL, ENGINE OIL FILTER DRAIN COCK 시일
01.449	SEAL, ENGINE WATER PUMP 시일
01.481	GASKET, ENGINE WATER PUMP BODY 가스켓
01.589	GASKET, WATER OUTLET ELBOW 가스켓
01.686	GASKET, ENGINE THERMOSTAT 가스켓
01.754	SEAL, OIL PUMP OUTLET TUBE FITTING 시일
02.531	GASKET, EXHAUST SYSTEM VENTURI OUTLET 가스켓
02.568	GASKET, INTAKE TO EXHAUST MANIFOLD 가스켓
02.929	GASKET, INTAKE MANIFOLD 가스켓
02.938	SEAL, INJECTOR LEAK OFF LINE 시일
03.172	GASKET, COLD START RESERVOIR COVER 가스켓
05.108	SEAL, VALVE OUTLET PORT 시일
30.010	SEAL, HOUSING COVER 시일
31.023	SEAL, VALVE INLET PORT 시일
90.332	WASHER, CRANKCASE OIL PAN FASTENER 와셔

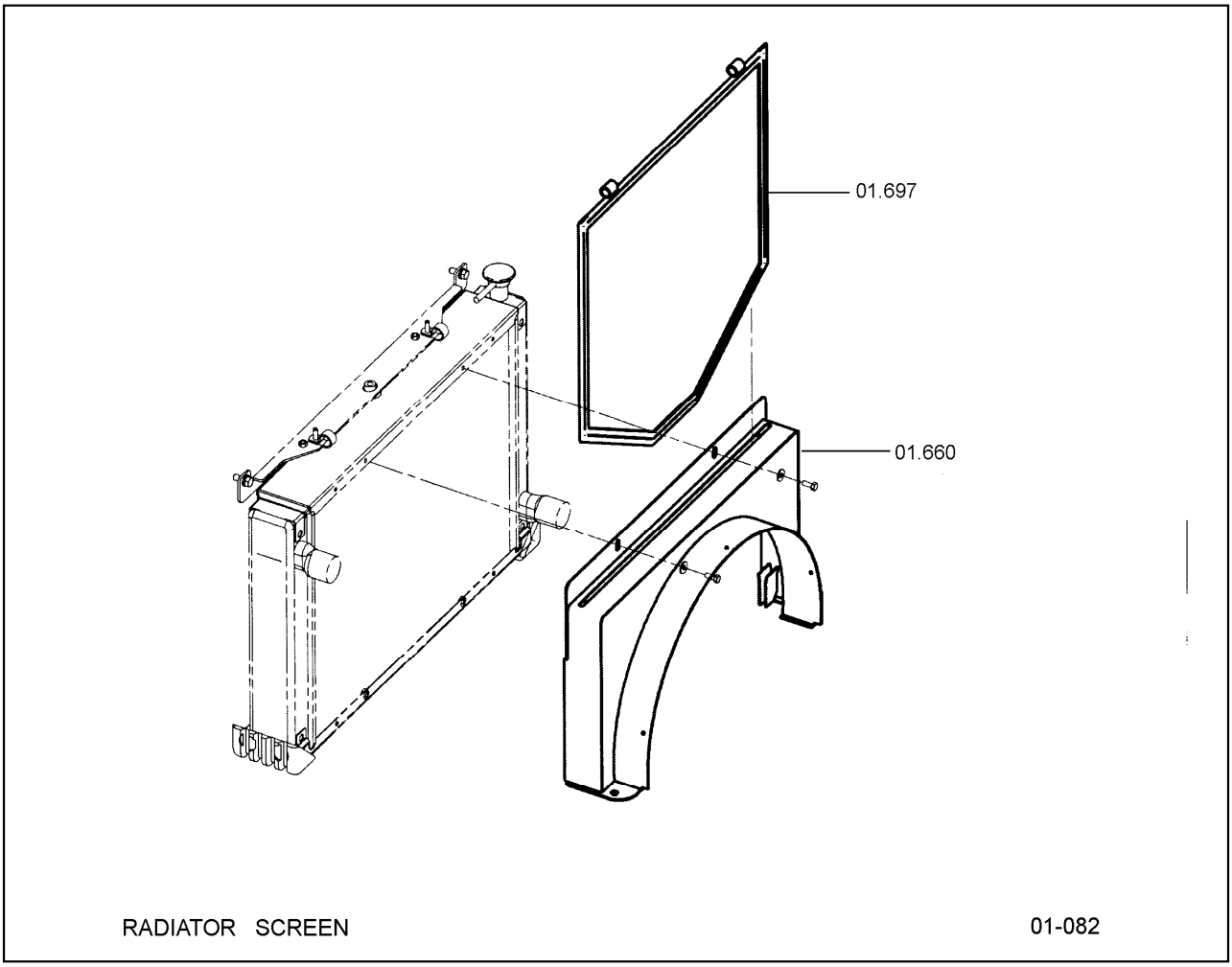

01.660 SHROUD, RADIATOR
슈라우드

01.697 SCREEN, RADIATOR DUST PROTECTION
스크린

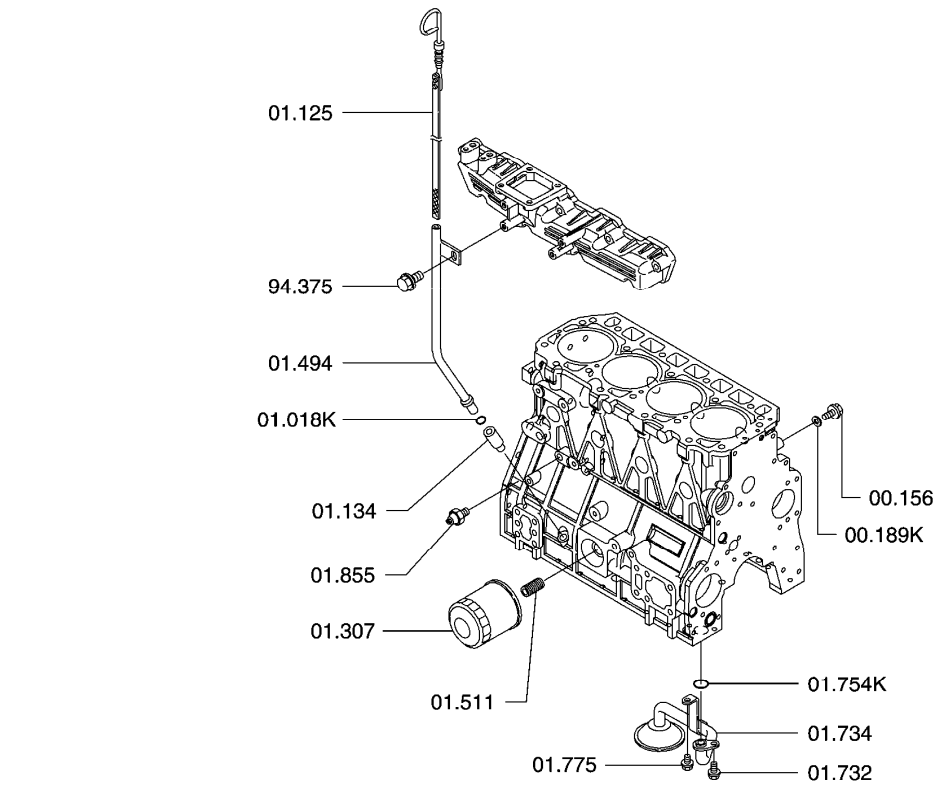

00.000 PRODUCTION ENGINE ASSEMBLY
엔진

00.100 GASKET KIT, ENGINE OVERHAUL
가스켓킷

00.156 PLUG, CRANKCASE OIL GALLEY
플러그

00.189 SEAL, CRANKCASE OIL GALLEY PLUG
시일

01.018 SEAL, OIL LEVEL DIPSTICK ADAPTOR
시일

01.125 DIPSTICK, CRANKCASE OIL LEVEL
딥스틱

01.134 ADAPTOR, CRANKCASE OIL LEVEL DIPSTICK
어댑터

01.307 CARTRIDGE & GASKET, ENGINE OIL FILTER
카트리지와가스켓

01.494 TUBE, OIL LEVEL DIPSTICK ADAPTOR
튜브

01.511 ADAPTOR, ENGINE OIL FILTER
어댑터

01.732 FASTENER, OIL PUMP STRAINER TUBE
패스너

01.734 LINE, OIL PUMP STRAINER
라인

01.754 SEAL, OIL PUMP OUTLET TUBE FITTING
시일

01.775 BOLT, OIL PUMP STRAINER BRACKET
볼트

01.855 SENSOR, OIL PRESSURE
센서

94.375 FASTENER, CRANKCASE OIL LEVEL DIPSTICK ADAPTOR BRA
패스너

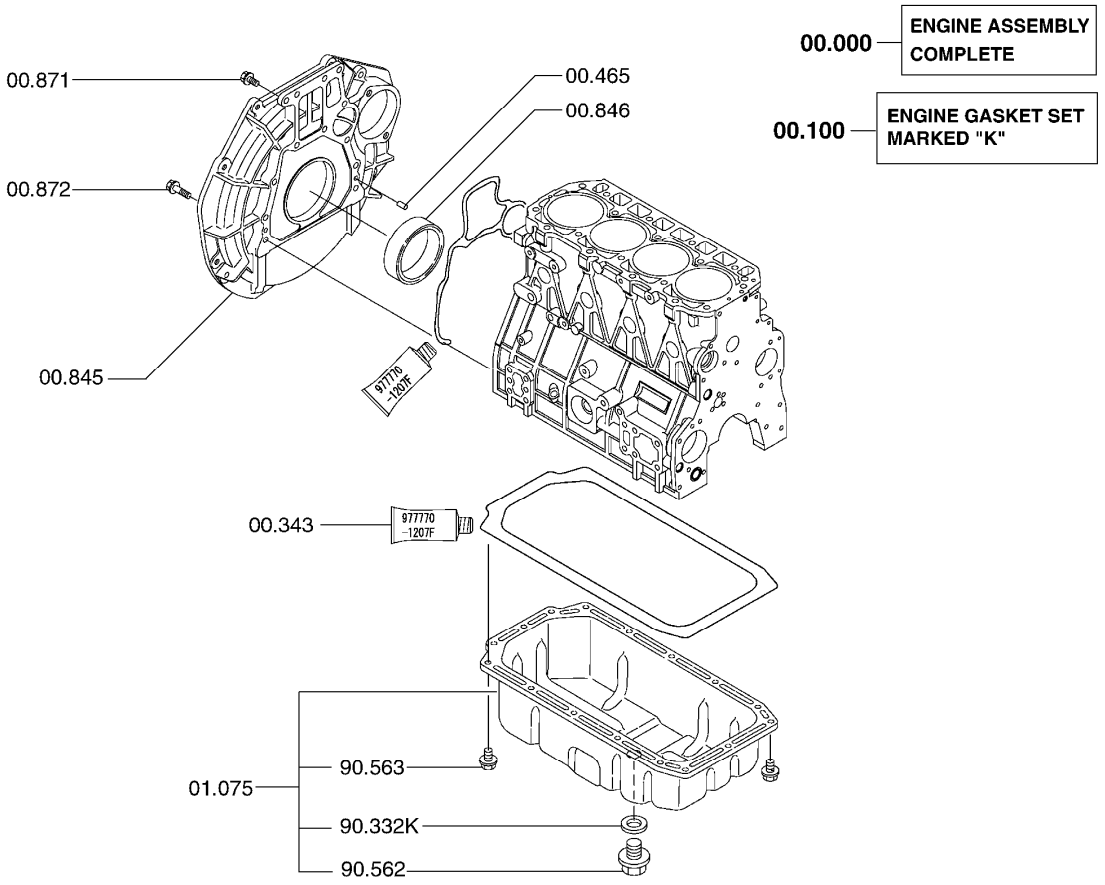

00.000 PRODUCTION ENGINE ASSEMBLY
엔진

00.100 GASKET KIT, ENGINE OVERHAUL
가스켓킷

00.343 GASKET, LIQUID
가스켓

00.465 DOWEL, FLYWHEEL
다월

00.845 HOUSING, FLYWHEEL
하우징

00.846 SEAL, FLYWHEEL HOUSING
시일

00.871 FASTENER, FLYWHEEL HOUSING
패스너

00.872 FASTENER, FLYWHEEL HOUSING
패스너

01.075 PAN, CRANKCASE OIL
팬

90.332 WASHER, CRANKCASE OIL PAN FASTENER
와셔

90.562 BOLT, CRANKCASE OIL PAN
볼트

90.563 BOLT, CRANKCASE OIL PAN
볼트

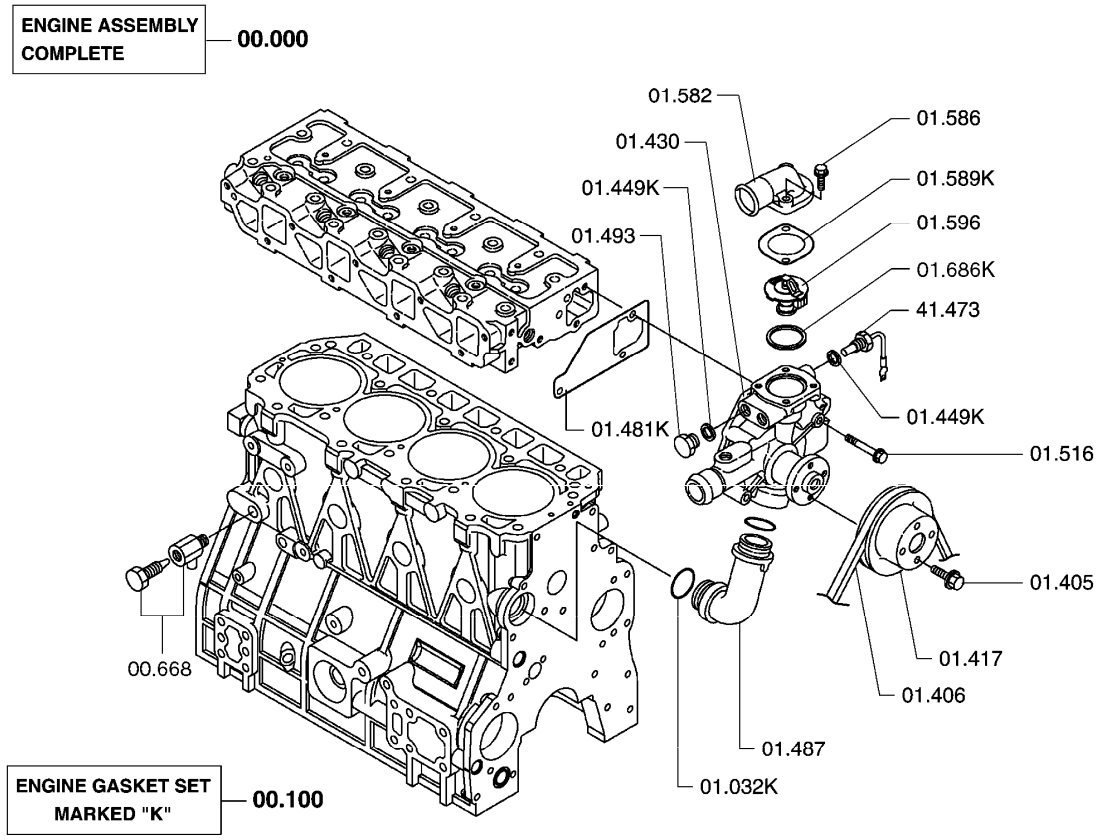

WATER PUMP MOUNTING **01-304**

00.000 PRODUCTION ENGINE ASSEMBLY
엔진

00.100 GASKET KIT, ENGINE OVERHAUL
가스켓킷

00.668 PLUG, CRANKCASE WATER
플러그

01.032 SEAL, ENGINE WATER PUMP DISCHARGE ELBOW
시일

01.405 FASTENER, FAN BLADE
패스너

01.406 BELT, FAN
븸트셋

01.417 PULLEY, FAN
풀리

01.430 PUMP ASSEMBLY, ENGINE WATER
펌프

01.449 SEAL, ENGINE WATER PUMP
시일

01.481	GASKET, ENGINE WATER PUMP BODY 가스켓
01.487	HOSE, ENGINE WATER PUMP DISCHARGE 호스
01.493	ADAPTOR, OIL LEVEL DIPSTICK 어댑터
01.516	FASTENER, ENGINE WATER PUMP DISCHARGE FLANGE 패스너
01.582	ELBOW, WATER OUTLET 엘보우
01.586	FASTENER, WATER OUTLET ELBOW - FANSIDE 패스너
01.589	GASKET, WATER OUTLET ELBOW 가스켓
01.596	THERMOSTAT, ENGINE 써머스태트
01.686	GASKET, ENGINE THERMOSTAT 가스켓
41.473	SENDER, WATER TEMPERATURE 센더

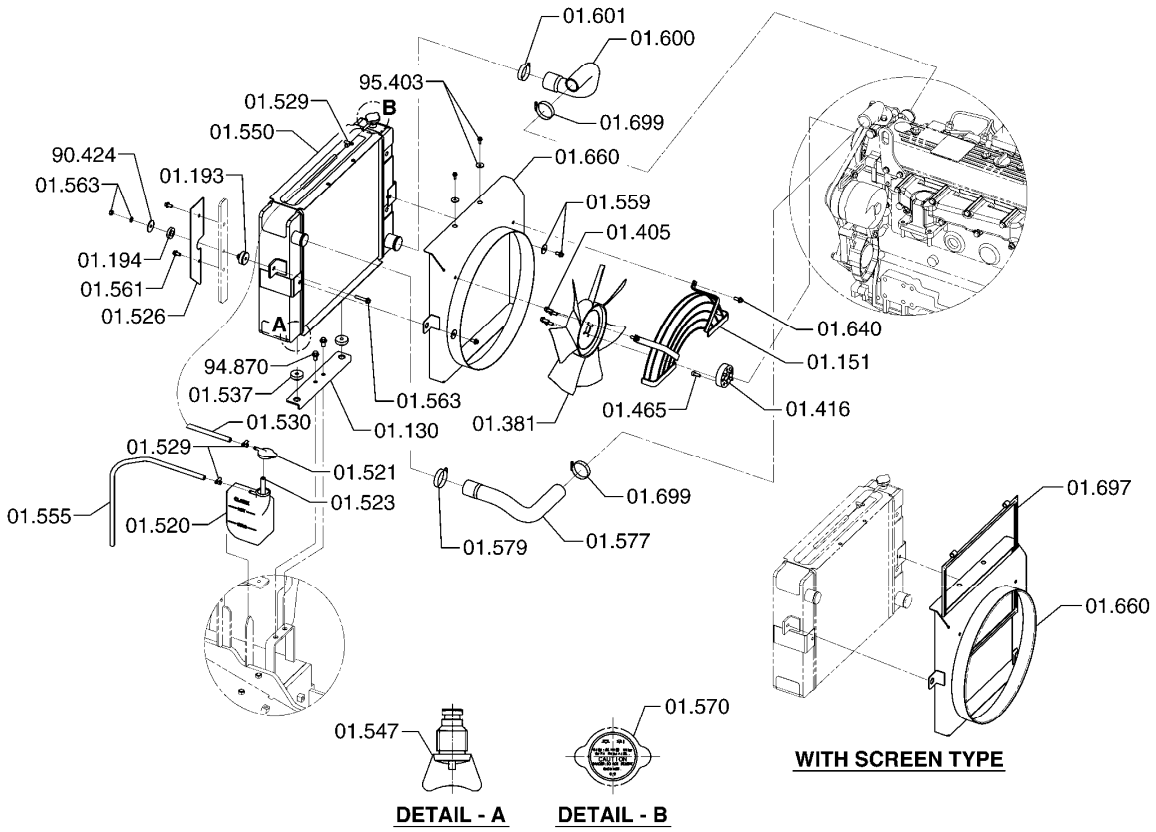

01.130	BRACKET, RADIATOR 브라켓	01.547	DRAIN COCK, RADIATOR 드레인콕
01.151	GUARD, RADIATOR FAN 가드	01.550	RADIATOR 라디에터
01.193	ISOLATOR, RADIATOR MOUNTING 절연재	01.555	LINE, RADIATOR OVERFLOW 라인
01.194	ISOLATOR, RADIATOR MOUNTING 절연재	01.559	FASTENER, RADIATOR UPPER SUPPORT (RADIATOR END) 패스너
01.381	BLADE, FAN 블레이드	01.561	FASTENER, RADIATOR MOUNTING 패스너
01.405	FASTENER, FAN BLADE 패스너	01.563	FASTENER, RADIATOR MOUNTING BRACKET 패스너
01.416	SPACER, FAN BLADE 스페이서	01.570	CAP, RADIATOR 캡
01.465	FASTENER, FAN BLADE SPACER 패스너	01.577	HOSE, RADIATOR UPPER 호스
01.520	COMPENSATION TANK, COOLING SYSTEM 보상기	01.579	CLAMP, RADIATOR UPPER HOSE 클램프
01.521	COVER, COMPENSATION TANK 커버	01.600	HOSE, RADIATOR LOWER 호스
01.523	LINE, COOLING SYSTEM COMPENSATION TANK 라인	01.601	CLAMP, RADIATOR LOWER HOSE 클램프
01.526	BRACKET, RADIATOR FILLER MOUNTING 브라켓	01.640	FASTENER, RADIATOR SHROUD EXTENTION 패스너
01.529	CLAMP, RADIATOR OVERFLOW LINE 클램프	01.660	SHROUD, RADIATOR 슈라우드
01.530	LINE, RADIATOR FILLER 라인	01.697	SCREEN, RADIATOR DUST PROTECTION 스크린
01.537	PAD, RADIATOR MOUNTING LOWER 패드	01.699	CLAMP, RADIATOR HOSE FASTENER 클램프

90.424 WASHER, RADIATOR MOUNTING FASTENER
와셔

94.870 FASTENER, RADIATOR MOUNTING BRACKET
패스너

95.403 FASTENER, RADIATOR SHROUD BRACKET
패스너

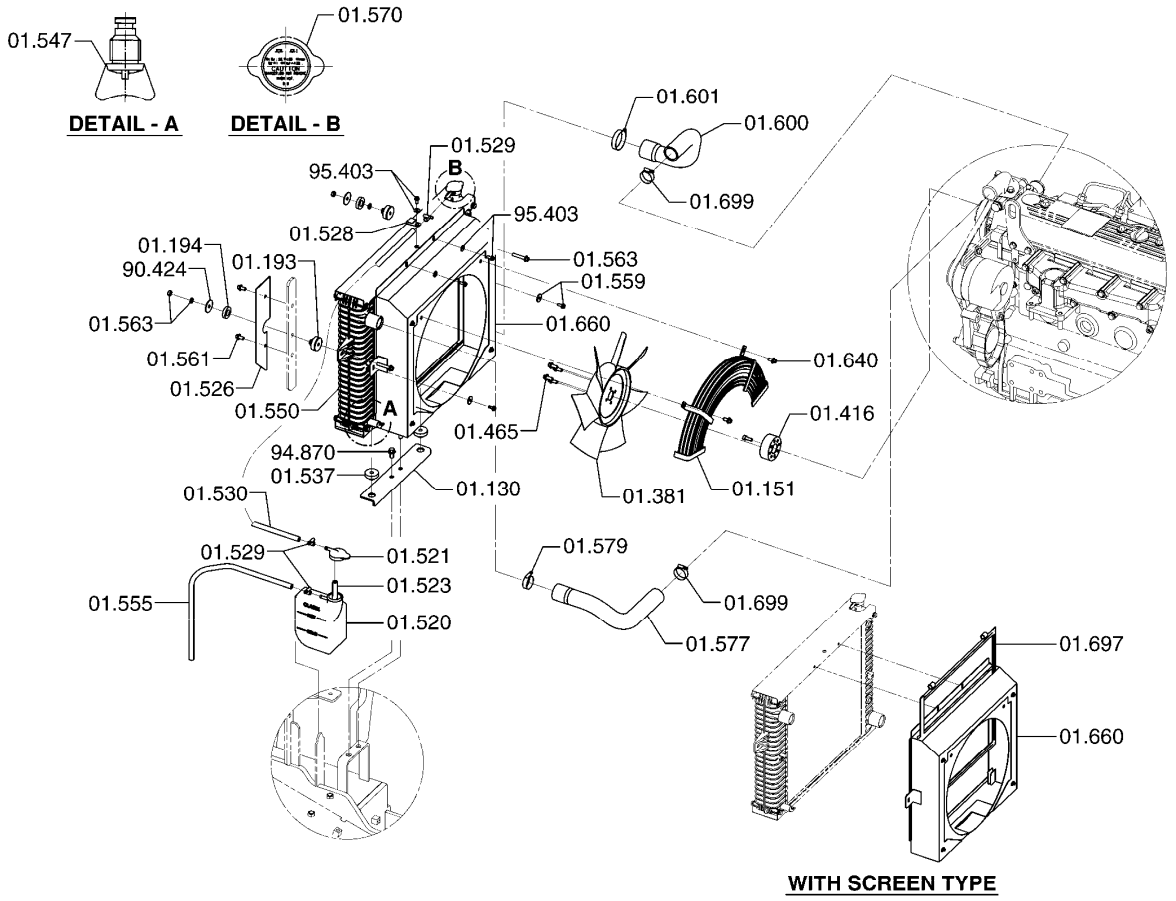

01.130	BRACKET, RADIATOR 브라켓	01.547	DRAIN COCK, RADIATOR 드레인콕
01.151	GUARD, RADIATOR FAN 가드	01.550	RADIATOR 라디에터
01.193	ISOLATOR, RADIATOR MOUNTING 절연재	01.555	LINE, RADIATOR OVERFLOW 라인
01.194	ISOLATOR, RADIATOR MOUNTING 절연재	01.559	FASTENER, RADIATOR UPPER SUPPORT (RADIATOR END) 패스너
01.381	BLADE, FAN 블레이드	01.561	FASTENER, RADIATOR MOUNTING 패스너
01.416	SPACER, FAN BLADE 스페이서	01.563	FASTENER, RADIATOR MOUNTING BRACKET 패스너
01.465	FASTENER, FAN BLADE SPACER 패스너	01.570	CAP, RADIATOR 캡
01.520	COMPENSATION TANK, COOLING SYSTEM 보상기	01.577	HOSE, RADIATOR UPPER 호스
01.521	COVER, COMPENSATION TANK 커버	01.579	CLAMP, RADIATOR UPPER HOSE 클램프
01.523	LINE, COOLING SYSTEM COMPENSATION TANK 라인	01.600	HOSE, RADIATOR LOWER 호스
01.526	BRACKET, RADIATOR FILLER MOUNTING 브라켓	01.601	CLAMP, RADIATOR LOWER HOSE 클램프
01.528	CLIP, RADIATOR OVERFLOW LINE 클립	01.640	FASTENER, RADIATOR SHROUD EXTENTION 패스너
01.529	CLAMP, RADIATOR OVERFLOW LINE 클램프	01.660	SHROUD, RADIATOR 슈라우드
01.530	LINE, RADIATOR FILLER 라인	01.697	SCREEN, RADIATOR DUST PROTECTION 스크린
01.537	PAD, RADIATOR MOUNTING LOWER 패드	01.699	CLAMP, RADIATOR HOSE FASTENER 클램프

90.424 WASHER, RADIATOR MOUNTING FASTENER
와셔

94.870 FASTENER, RADIATOR MOUNTING BRACKET
패스너

95.403 FASTENER, RADIATOR SHROUD BRACKET
패스너

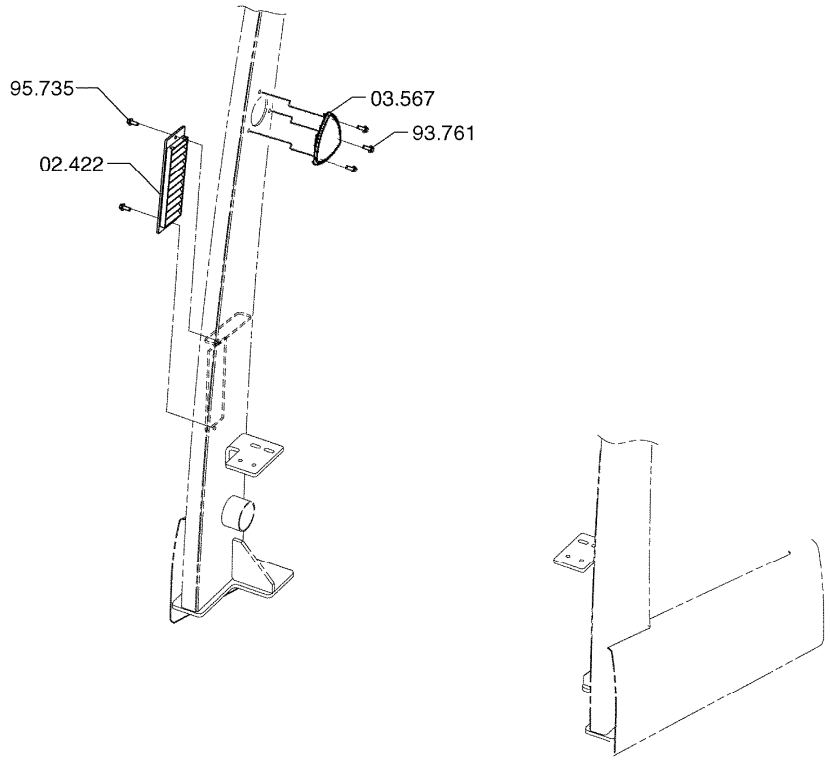

NON PRE-CLEANER GP **02-154**

02.422	SCREEN, ENGINE INTAKE AIR 스크린
03.567	PLUG, AIR INTAKE DRIVER OVERHEAD GUARD 플러그
93.761	FASTENER, DRIVERS OVERHEAD GUARD TOP SECTION COVER 패스너
95.735	FASTENER, ENGINE AIR INTAKE SCREEN 패스너

■INDICATES AN ASSEMBLY HAVING SERVICEABLE COMPONENTS ILLUSTRATED ELSEWHERE

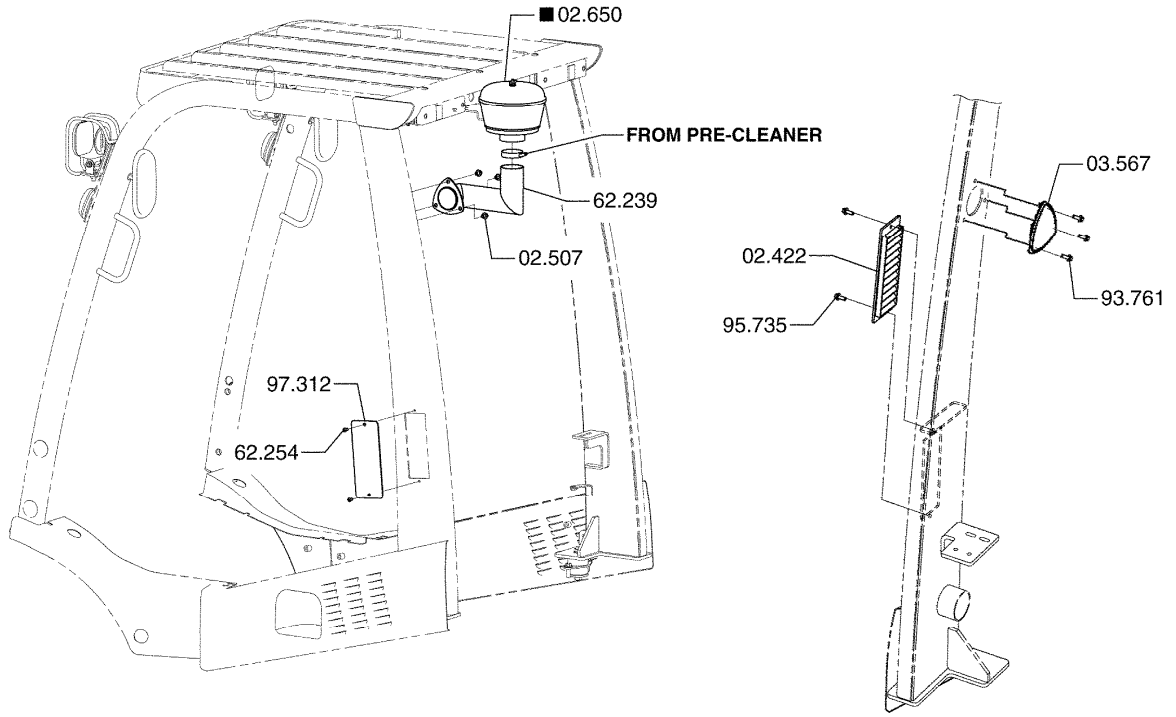

PRE - CLEANER MOUNTING **02-228**

02.422	SCREEN, ENGINE INTAKE AIR 스크린
02.507	FASTENER, AIR CLEANER OUTLET LINE MOUNTING BRACKET 패스너
02.650	PRE-CLEANER ASSEMBLY, ENGINE AIR 프리크리너
03.567	PLUG, AIR INTAKE DRIVER OVERHEAD GUARD 플러그
62.239	TUBE, PRE-AIR CLEANER LINE 튜브
62.254	COVER, ENGINE INTAKE AIR SCREEN *
93.761	FASTENER, DRIVERS OVERHEAD GUARD TOP SECTION COVER 패스너
95.735	FASTENER, ENGINE AIR INTAKE SCREEN 패스너
97.312	FASTENER, ENGINE INTAKE AIR SCREEN COVER *

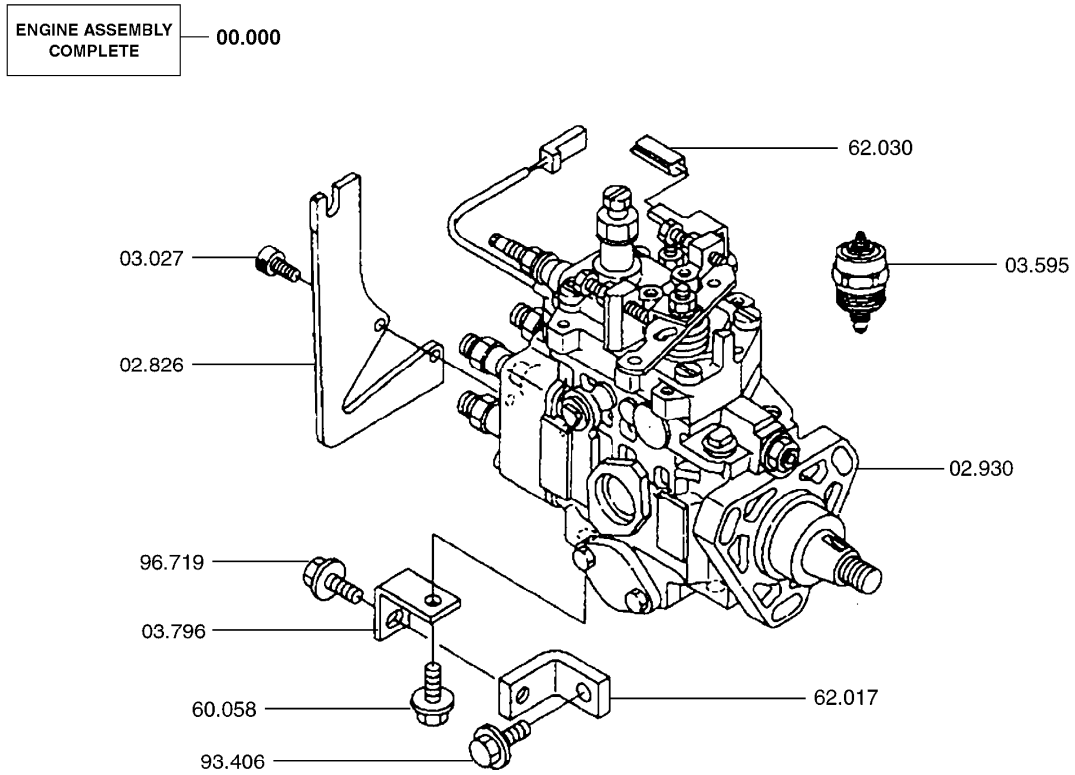

FUEL INJECTION PUMP **02-446**

00.000 PRODUCTION ENGINE ASSEMBLY
엔진

02.826 BRACKET, FUEL LINE CLIP
브라켓

02.930 PUMP ASSEMBLY, FUEL INJECTION
펌프

03.027 FASTENER, FUEL INJECTION PUMP
패스너

03.595 SOLENOID VALVE, INJECTION PUMP COLD ADVANCE DEVICE
솔레노이드밸브

03.796 LEVER,INJECTION PUMP CONTROL
레버

60.058 SEAL, BOOM POSITIONING SWITCH SHAFT
시일

62.017 STOPPER, FUEL INJECTION PUMP
스토퍼

62.030 SHIM, FUEL INJECTION PUMP DRIVE SHAFT
심

93.406 FASTENER, FUEL INJECTION PUMP
패스너

96.719 SCREW,LEVER STOP
스크류

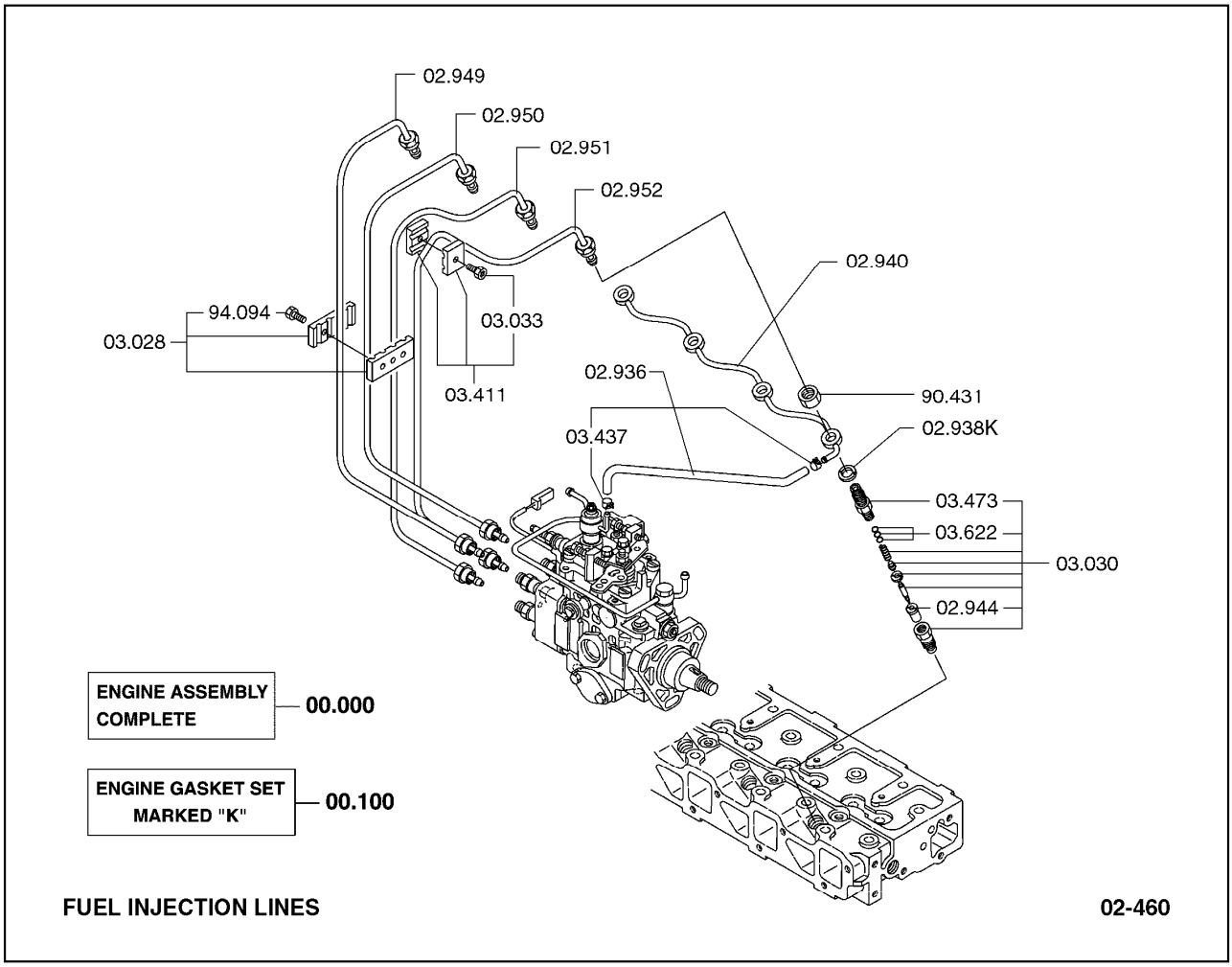

00.000 PRODUCTION ENGINE ASSEMBLY
엔진

00.100 GASKET KIT, ENGINE OVERHAUL
가스켓킷

02.936 LINE, INJECTION PUMP RETURN
라인

02.938 SEAL, INJECTOR LEAK OFF LINE
시일

02.940 LINE, INJECTOR LEAK OFF
라인

02.944 NOZZLE, FUEL INJECTOR
노즐

02.949 LINE, INJECTOR (NO 1 CYLINDER)
라인

02.950 LINE, INJECTOR (NO 2 CYLINDER)
라인

02.951 LINE, INJECTOR (NO 3 CYLINDER)
라인

02.952	LINE, INJECTOR (NO 4 CYLINDER) 라인
03.028	CLIP, INJECTOR LINE 클립
03.030	INJECTOR ASSEMBLY, FUEL 인젝터
03.033	FASTENER, FUEL INJECTOR 패스너
03.411	CLIP, INJECTOR LINE 클립
03.437	CLAMP, FUEL INJECTOR LINE 클램프
03.473	BODY, FUEL INJECTOR 바디
03.622	SHIM, FUEL INJECTOR HOUSING 심
90.431	NUT, CRANKCASE HEAD FASTENER 너트
94.094	FASTENER, FUEL LINE CLIP 패스너

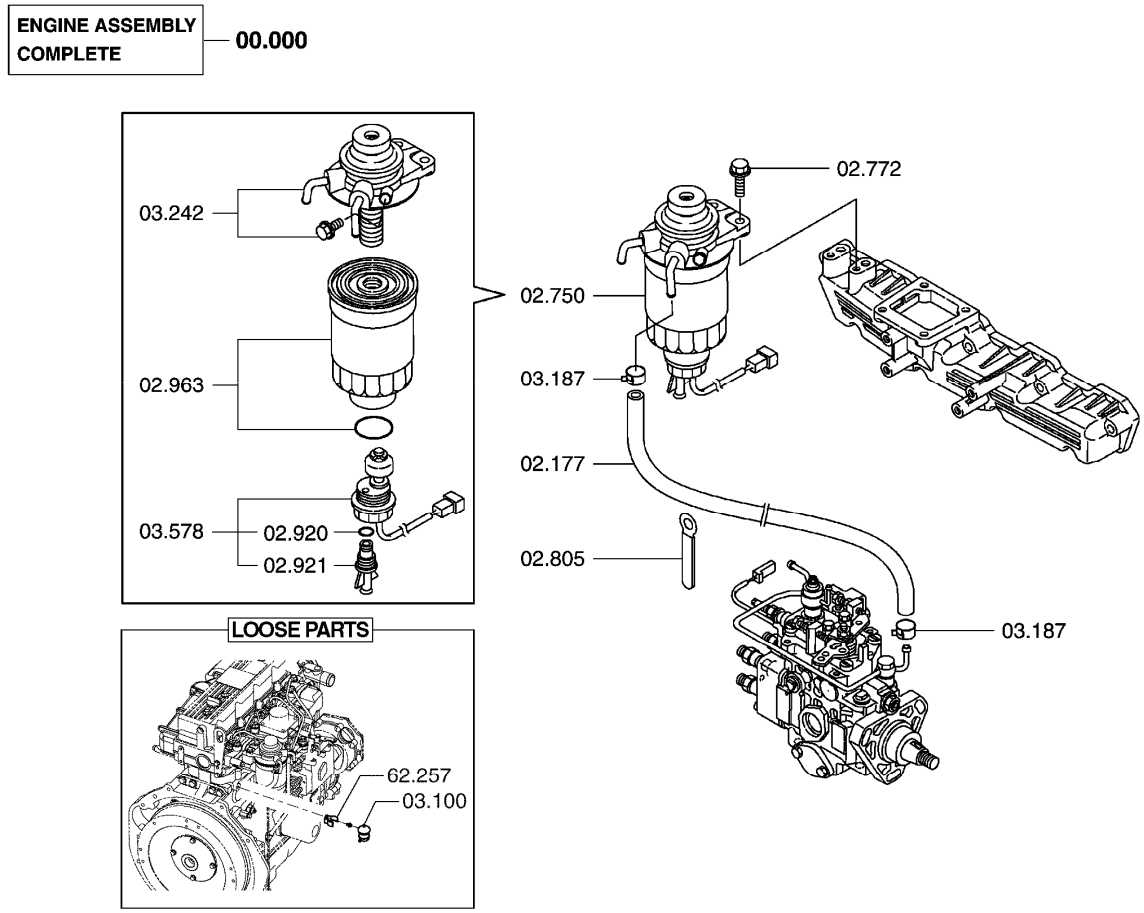

00.000 PRODUCTION ENGINE ASSEMBLY
엔진

02.177 LINE, FILTER INLET
라인

02.750 FILTER ASSEMBLY, FUEL
필터

02.772 FASTENER, FUEL FILTER COVER
패스너

02.805 CLAMP, FUEL RETURN LINE
클램프

02.920 SEAL, FUEL FILTER DRAIN PLUG
시일

02.921 PLUG, FUEL FILTER DRAIN
플러그

02.963 ELEMENT, FUEL FILTER
엘리먼트

03.100 STRAINER ASSEMBLY, FUEL
스트레이너

03.187	CLIP, FUEL LINE 클립
03.242	FITTING BODY, FUEL FILTER INLET 피팅
03.578	SENSOR, FUEL FILTER 센서
62.257	CLAMP, FUEL STRAINER FASTEN *

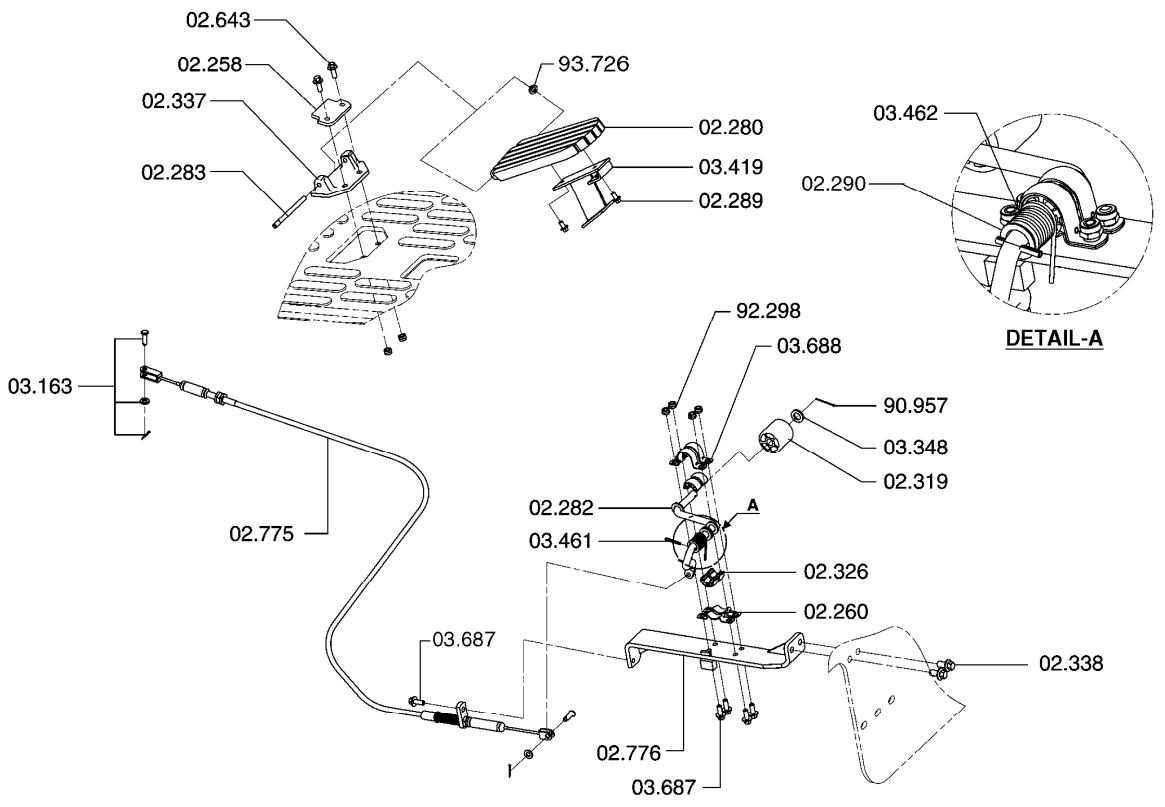

ACCELERATOR LINKAGE **02-462**

02.258 STOP, ACCELERATOR PEDAL
스톱

02.260 BRACKET, ACCELERATOR LINKAGE MOUNTING
브라켓

02.280 PEDAL, ACCELERATOR
페달

02.282 ROD, ACCELERATOR PUSH
로드

02.283 PIN, ACCELERATOR PEDAL TO BRACKET PIVOT
핀

02.289 FASTENER, ACCELERATOR PEDAL BRACKET ATTACHING
패스너

02.290 BUSHING, ACCELERATOR BELLCRANK
부싱

02.319 BUSHING, ACCELERATOR LINKAGE LEVER
부싱

02.326 BEARING, ACCELERATOR LEVER
베어링

02.337	BRACKET, ACCELERATOR LEVER MOUNTING 브라켓
02.338	FASTENER, ACCELERATOR LEVER MOUNTING BRACKET 패스너
02.643	FASTENER, ACCELERATOR PEDAL HEEL SUPPORT 패스너
02.775	CABLE, ACCELERATOR CONTROL 케이블
02.776	BRACKET, ACCELERATOR CONTROL CABLE 브라켓
03.163	FASTENER, ACCELERATOR CONTROL ROD END 패스너
03.348	WASHER, ACCELERATOR LINKAGE RETURN LEVER FAST 와셔
03.419	WEAR PLATE, ACCELERATOR PEDAL ROLLER 웨어플레이트
03.461	PIN, ACCELERATOR CONTROL ROD END 핀
03.462	SPRING, ACCELERATOR PEDAL RETURN 스프링
03.687	FASTENER, ACC CONTROL CABLE BRACKET MTG 패스너
03.688	BRACKET, ACCELERATOR LEVER ATTACHING 브라켓
90.957	RETAINER, ACCELERATOR LINKAGE LEVER PIN 리테이너
92.298	NUT, ACCELERATOR LEVER ATTACHING BRACKET FASTENER 너트
93.726	WASHER, ACCELERATOR PEDAL PIVOT RETAINER 와셔

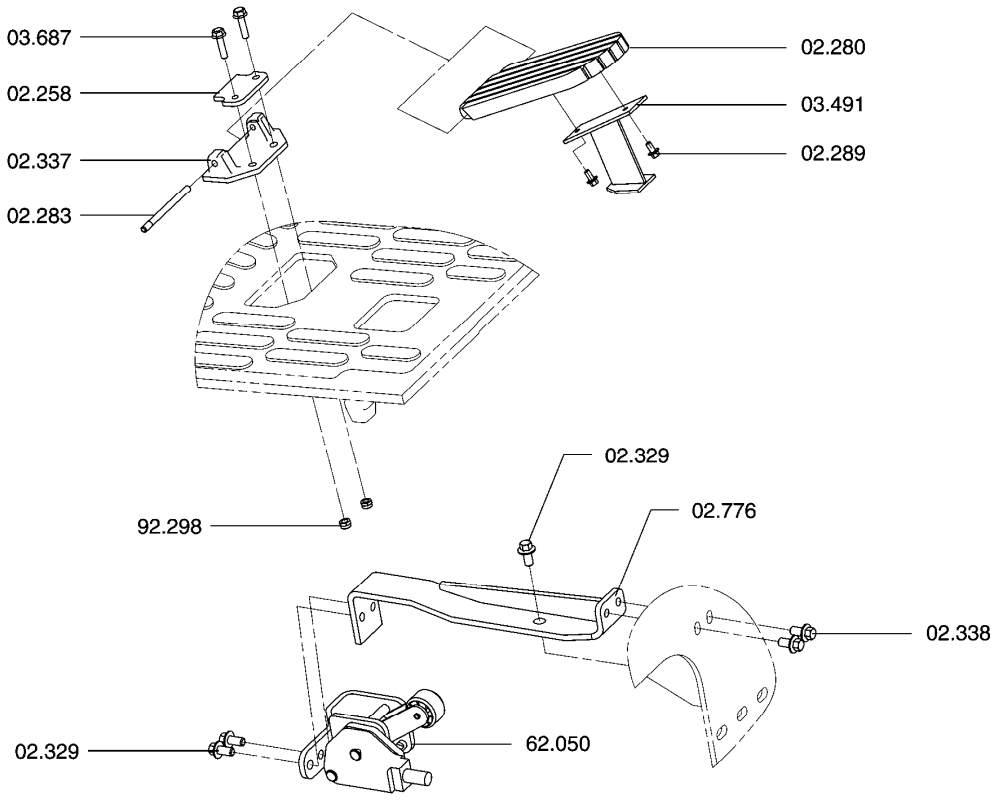

ACCEL CONTROL ASSEMBLY **02-463**

02.258 STOP, ACCELERATOR PEDAL
스톱

02.280 PEDAL, ACCELERATOR
페달

02.283 PIN, ACCELERATOR PEDAL TO BRACKET PIVOT
핀

02.289 FASTENER, ACCELERATOR PEDAL BRACKET ATTACHING
패스너

02.329 FASTENER, ACCELERATOR PEDAL
패스너

02.337 BRACKET, ACCELERATOR LEVER MOUNTING
브라켓

02.338 FASTENER, ACCELERATOR LEVER MOUNTING BRACKET
패스너

02.776 BRACKET, ACCELERATOR CONTROL CABLE
브라켓

03.491 MAGNET, LOCK-OFF VALVE
마그넷

03.687 FASTENER, ACC CONTROL CABLE BRACKET MTG
패스너

62.050 PEDAL ASSEMBLY, ACCELERATOR
페달

92.298 NUT, ACCELERATOR LEVER ATTACHING BRACKET FASTENER
너트

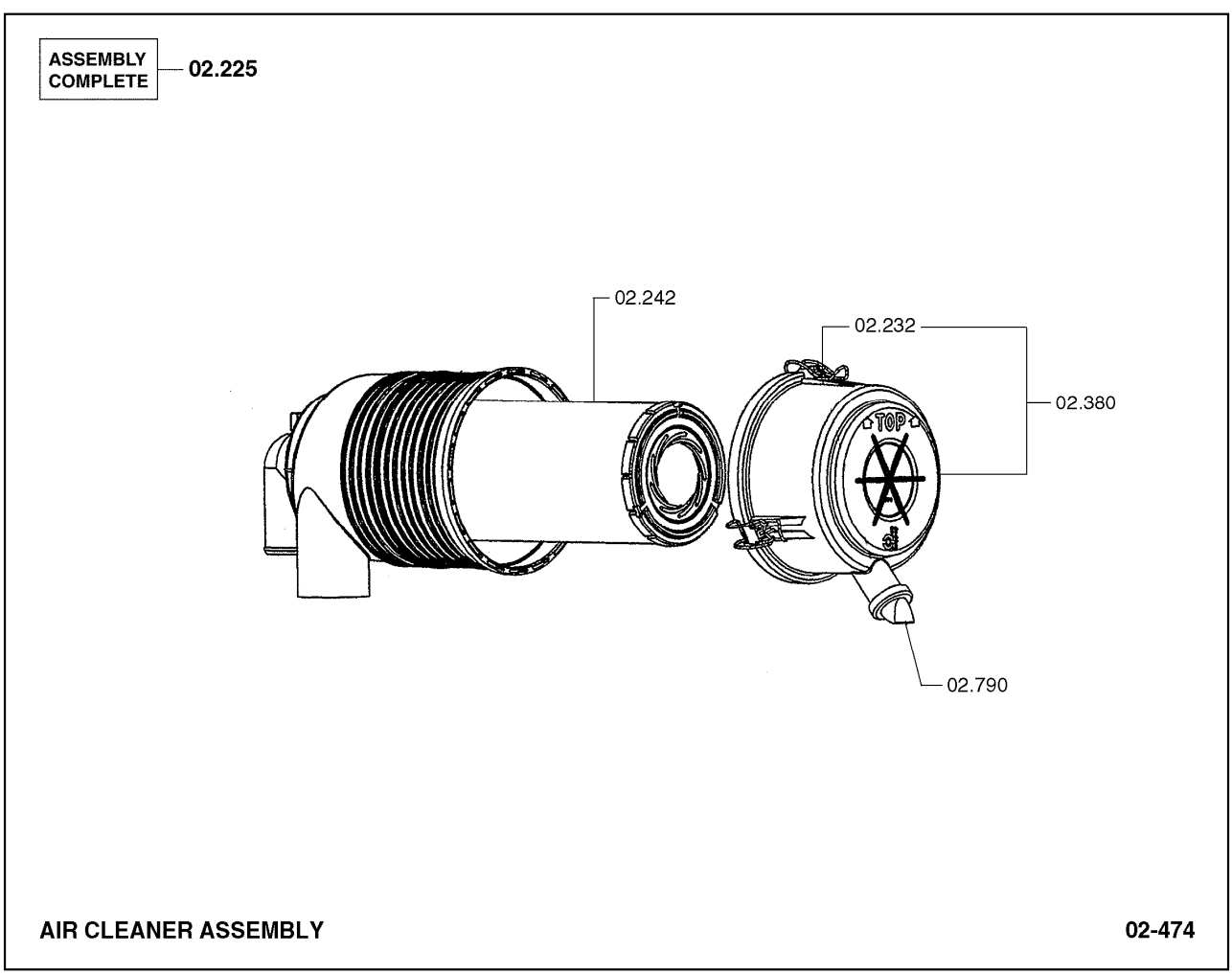

02.225	CLEANER ASSEMBLY, ENGINE INTAKE AIR 에어클리너
02.232	CLAMP, INTAKE AIR CLEANER 클램프
02.242	ELEMENT & GASKET, ENGINE INTAKE AIR CLEANER 엘리먼트와가스켓
02.380	CAP,FILTER 캡
02.790	VALVE, ENGINE INTAKE AIR CLEANER DUST UNLDR 밸브

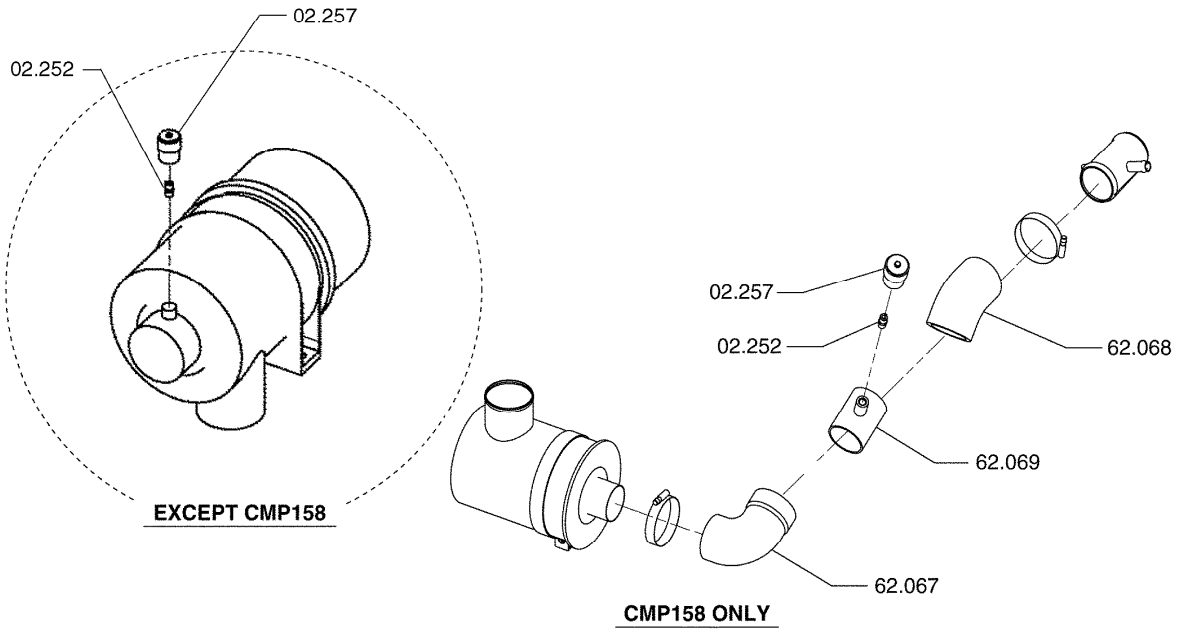

INDICATOR LIGHT INSTALLATION **02-478**

02.252 FITTING, MAIN AIR CLEANER OUTLET TUBE
피팅

02.257 INDICATOR, ENGINE INTAKE AIR CLEANER AIR RES
인디케이터

62.067 HOSE, AIR CLEANER INTAKE
호스

62.068 HOSE, AIR CLEANER INTAKE
호스

62.069 TUBE, AIR CLEANER INTAKE
튜브

NOTE :
NON SERVICEABLE
ITEMS MARKED “N”

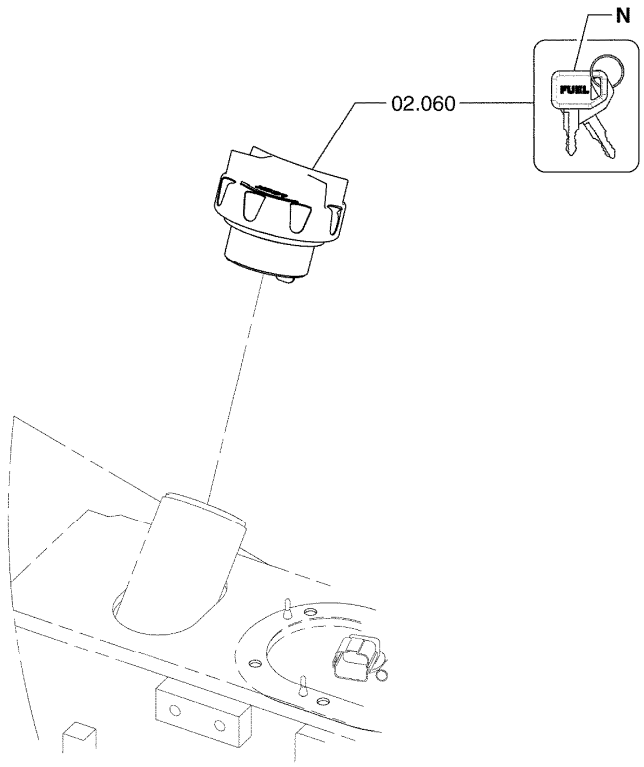

FUEL CAP WITH KEY **02-489**

02.060 CAP, FUEL TANK
캡

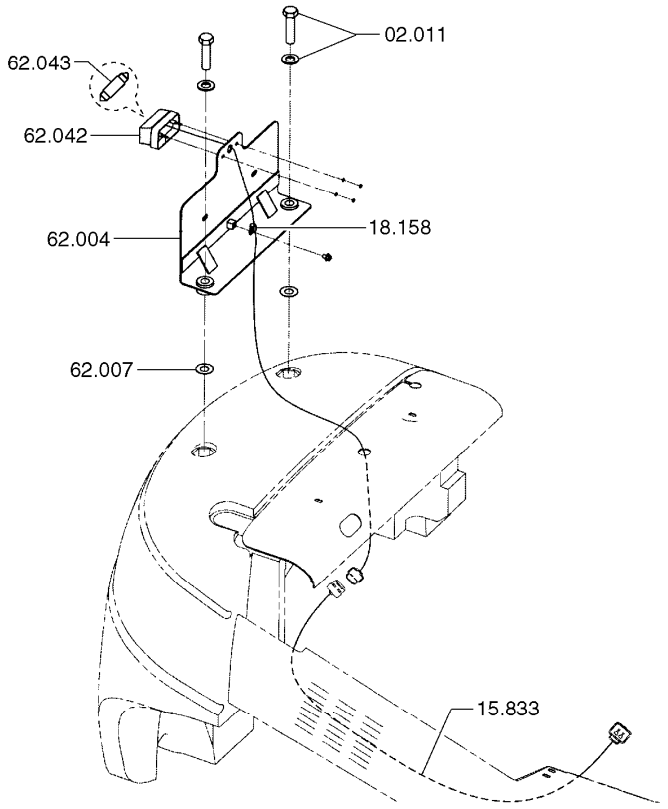

LICENSE PLATE MOUNTING **03-149**

02.011	FASTENER, TANK REAR MOUNTING BRACKET 패스너
15.833	WIRE HARNESS, LICENCE LAMP *
18.158	CLAMP,WIRE HARNESS 클램프
62.004	PLATE, LICENSE 플레이트
62.007	SHIM, TANK BRACKET 심
62.042	LAMP ASSEMBLY, LICENSE PLATE 램프
62.043	BULB, LICENSE PLATE LAMP 전구

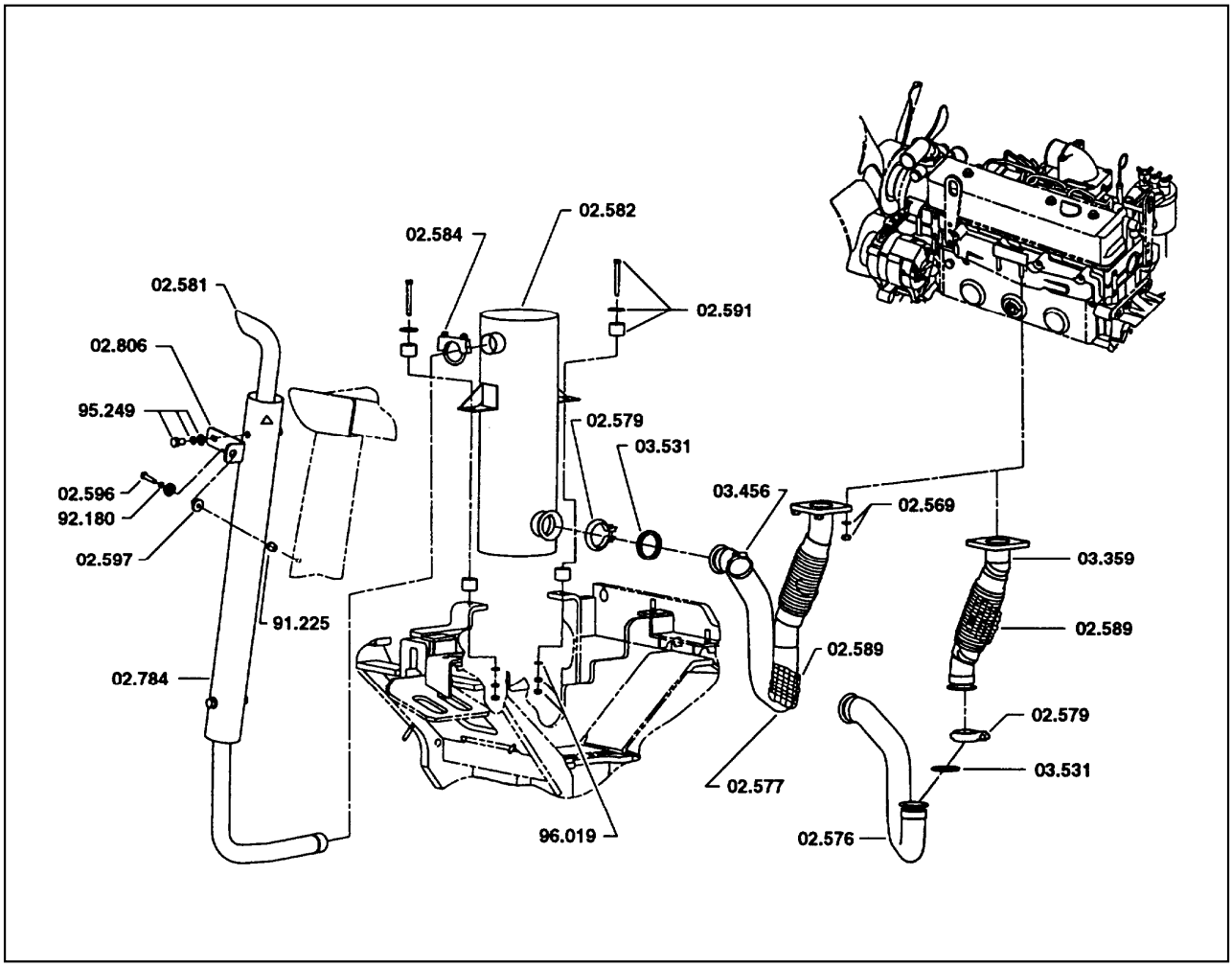

02.569 FASTENER, EXHAUST PIPE FLANGE TO MANIFOLD
패스너

02.576 PIPE, EXHAUST
파이프

02.577 PIPE, REAR EXHAUST
파이프

02.579 CLAMP, EXHAUST PIPE TO MUFFLER
클램프

02.581 EXTENSION, TAIL PIPE
익스텐션

02.582 MUFFLER
머플러

02.584 CLAMP, TAIL PIPE TO MUFFLER
클램프

02.589 SHIELD, HEAT (AT MANIFOLD)
쉴드

02.591 FASTENER, MUFFLER MOUNTING
패스너

02.596 FASTENER, VIBRATION DAMPENER TO FRAME
패스너

02.597 DAMPENER, TAIL PIPE VIBRATION
댐프너

02.784 GUARD, TAIL PIPE
가드

02.806 BRACKET, TAIL PIPE MOUNTING
브라켓

03.351 NUT, ACCELERATOR LINKAGE RETURN LEVER FAST
너트

03.359 PIPE, EXHAUST
파이프

03.456 CLAMP, EXHAUST PIPE HEAT SHIELD
클램프

03.531 GASKET, EXHAUST PIPE
가스켓

91.225 NUT, MUFFLER MTG BRACKET FASTENER
너트

92.180 LOCKWASHER, TAIL PIPE MOUNTING BRACKET FASTENER
로크와셔

95.249 FASTENER, TAIL PIPE CONNECTION FLANGE
패스너

96.019 FASTENER, EXHAUST PIPE BRACKET
패스너

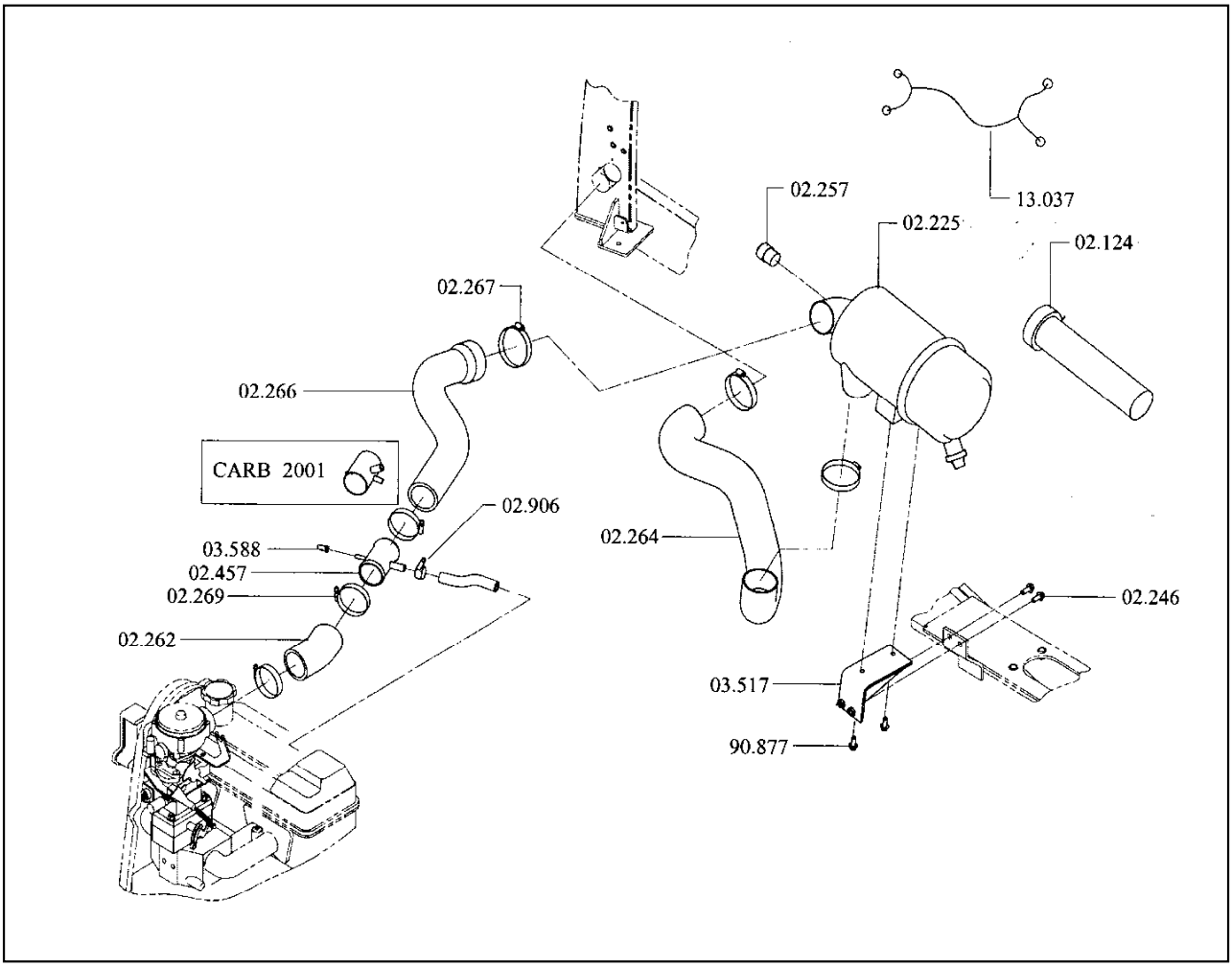

02.124 ELEMENT, FILTER
엘리먼트

02.225 CLEANER ASSEMBLY, ENGINE INTAKE AIR
에어클리너

02.246 FASTENER, ENGINE INTAKE AIR CLEANER ATTACHING
패스너

02.257 INDICATOR, ENGINE INTAKE AIR CLEANER AIR RES
인디케이터

02.262 HOSE, MAIN AIR CLEANER OUTLET
호스

02.264 TUBE, MAIN AIR CLEANER OUTLET
튜브

02.266 HOSE, MAIN AIR CLEANER OUTLET
호스

02.267 CLAMP, MAIN AIR CLEANER OUTLET HOSE
클램프

02.269 CLAMP, MAIN AIR CLEANER OUTLET HOSE
클램프

02.457	FITTING, MAIN AIR CLEANER OUTLET TUBE 피팅
02.906	CLAMP, CARBURETOR PREHEATER LINE 클램프
03.517	BRACKET, AIR CLEANER MOUNTING 브라켓
03.588	PLUG, ADAPTOR AIR INTAKE HOSE 플러그
13.037	HARNESS, FILTER 하네스
90.877	NUT, ENGINE INTAKE AIR CLEANER BRACKET 너트

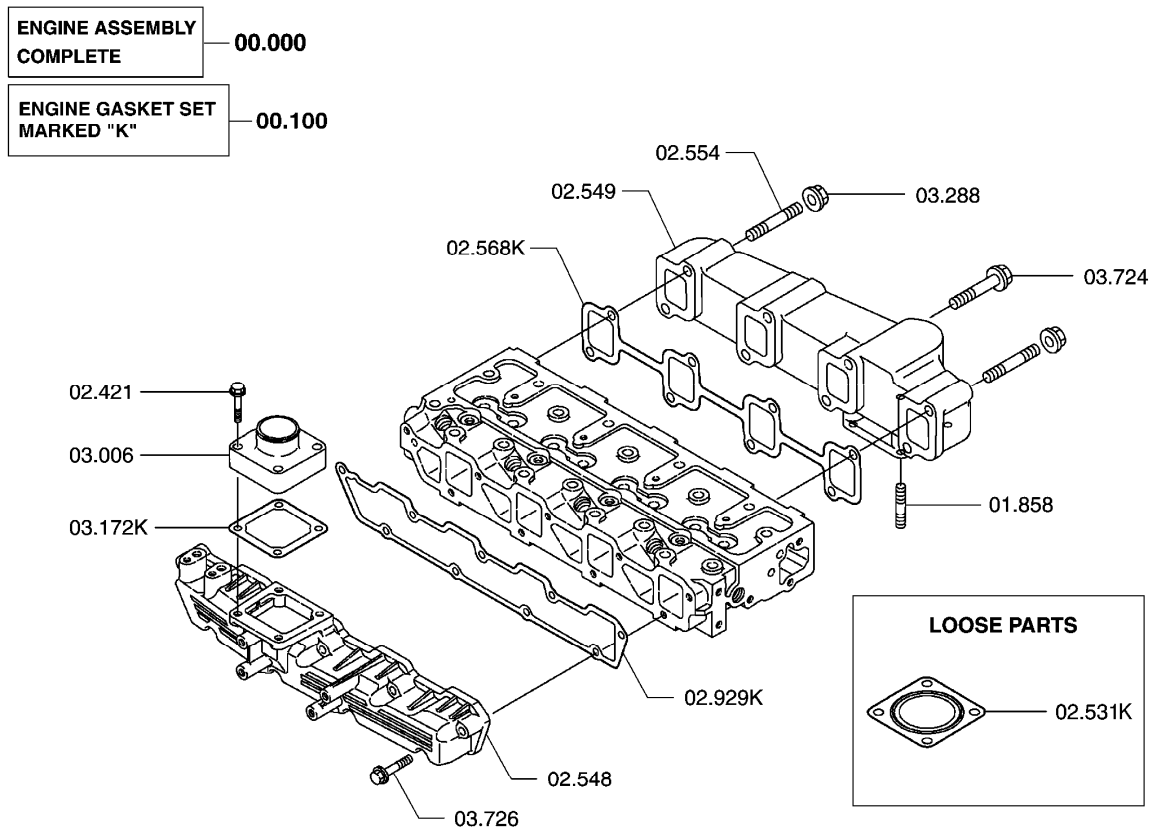

00.000 PRODUCTION ENGINE ASSEMBLY
엔진

00.100 GASKET KIT, ENGINE OVERHAUL
가스켓킷

01.858 FASTENER, INTAKE MANIFOLD
패스너

02.421 FASTENER, ENGINE AIR INTAKE ADAPTOR
패스너

02.531 GASKET, EXHAUST SYSTEM VENTURI OUTLET
가스켓

02.548 MANIFOLD, INTAKE
매니폴드

02.549 MANIFOLD, EXHAUST
매니폴드

02.554 FASTENER, MANIFOLD TO CRANKCASE
패스너

02.568 GASKET, INTAKE TO EXHAUST MANIFOLD
가스켓

02.929 GASKET, INTAKE MANIFOLD
가스켓

03.006 HEATER, COLD START
히터

03.172 GASKET, COLD START RESERVOIR COVER
가스켓

03.288 NUT, EXHAUST MANIFOLD EXTENSION
너트

03.724 FASTENER, EXHAUST MANIFOLD
패스너

03.726 FASTENER, INTAKE MANIFOLD
패스너

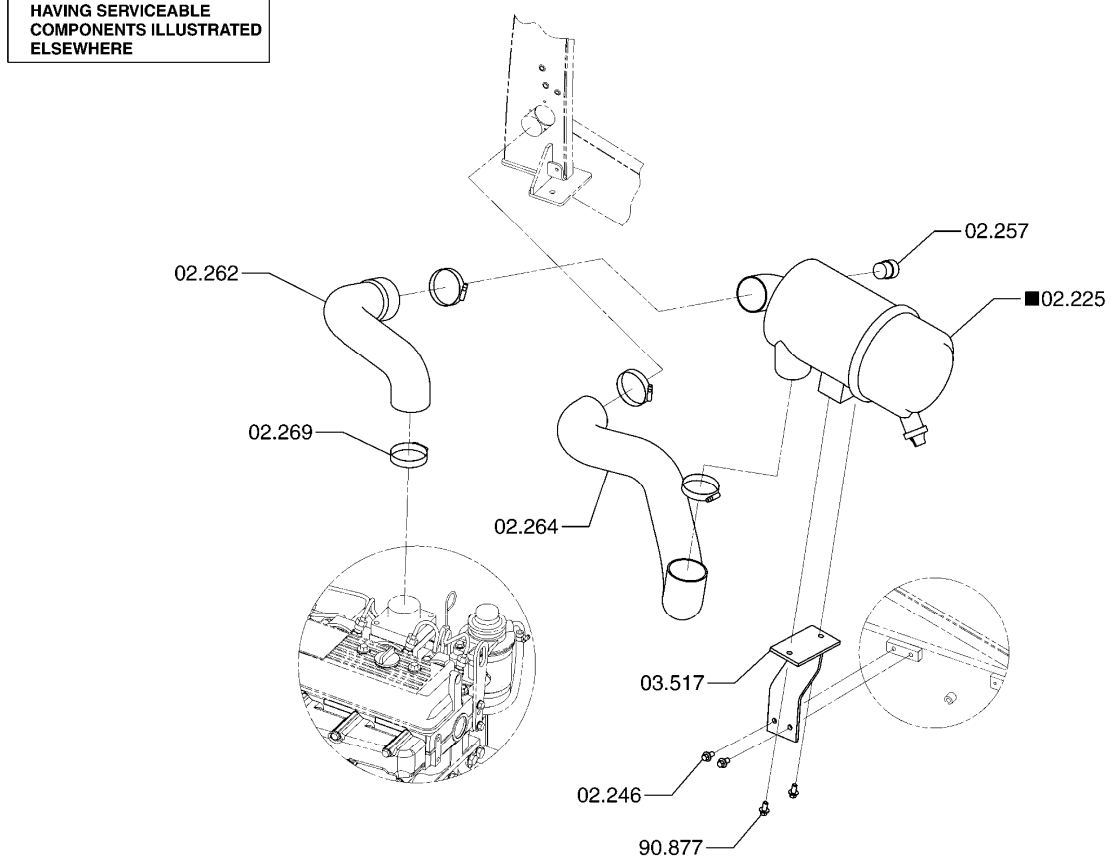

02.225 CLEANER ASSEMBLY, ENGINE INTAKE AIR
에어클리너

02.246 FASTENER, ENGINE INTAKE AIR CLEANER ATTACHING
패스너

02.257 INDICATOR, ENGINE INTAKE AIR CLEANER AIR RES
인디케이터

02.262 HOSE, MAIN AIR CLEANER OUTLET
호스

02.264 TUBE, MAIN AIR CLEANER OUTLET
튜브

02.269 CLAMP, MAIN AIR CLEANER OUTLET HOSE
클램프

03.517 BRACKET, AIR CLEANER MOUNTING
브라켓

90.877 NUT, ENGINE INTAKE AIR CLEANER BRACKET
너트

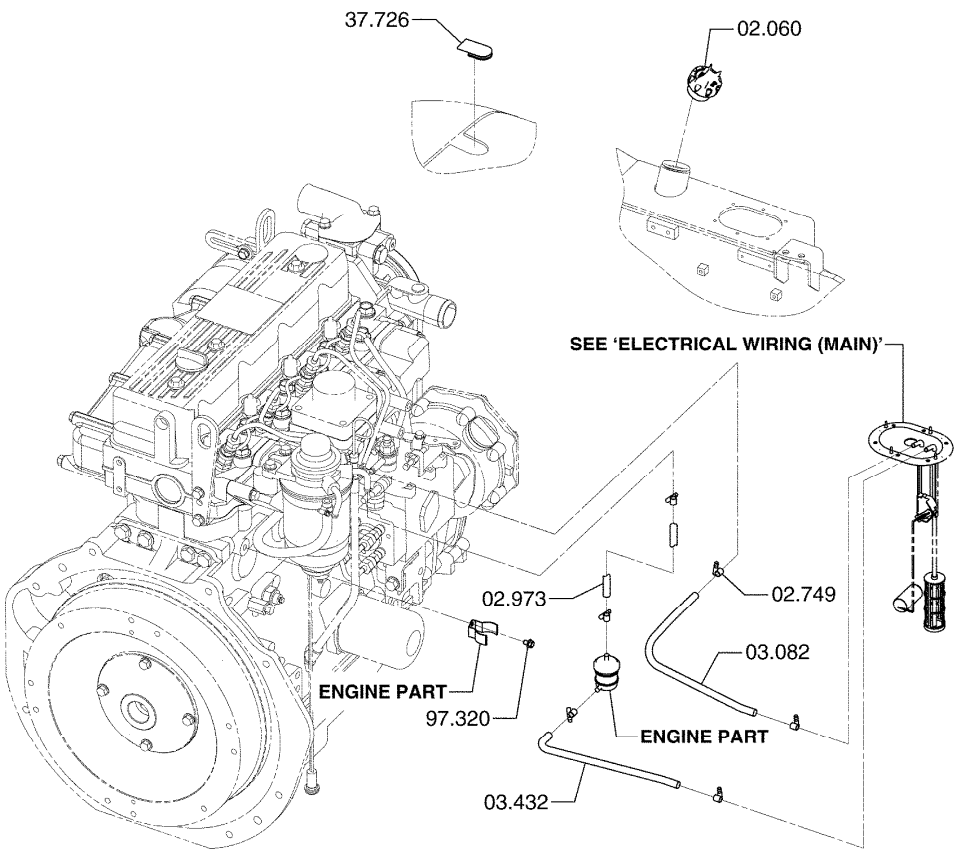

FUEL SYSTEM **03-535**

02.060 CAP, FUEL TANK
캡

02.749 CLAMP, TANK TO FUEL PUMP LINE
클램프

02.973 LINE, FUEL PUMP OUTLET
라인

03.082 LINE, FUEL TANK RETURN
라인

03.432 LINE, FUEL STRAINER INLET
라인

37.726 PLUG, RADIATOR COVER HOLE
플러그

97.320 FASTENER, FUEL STRAINER CLAMP
*

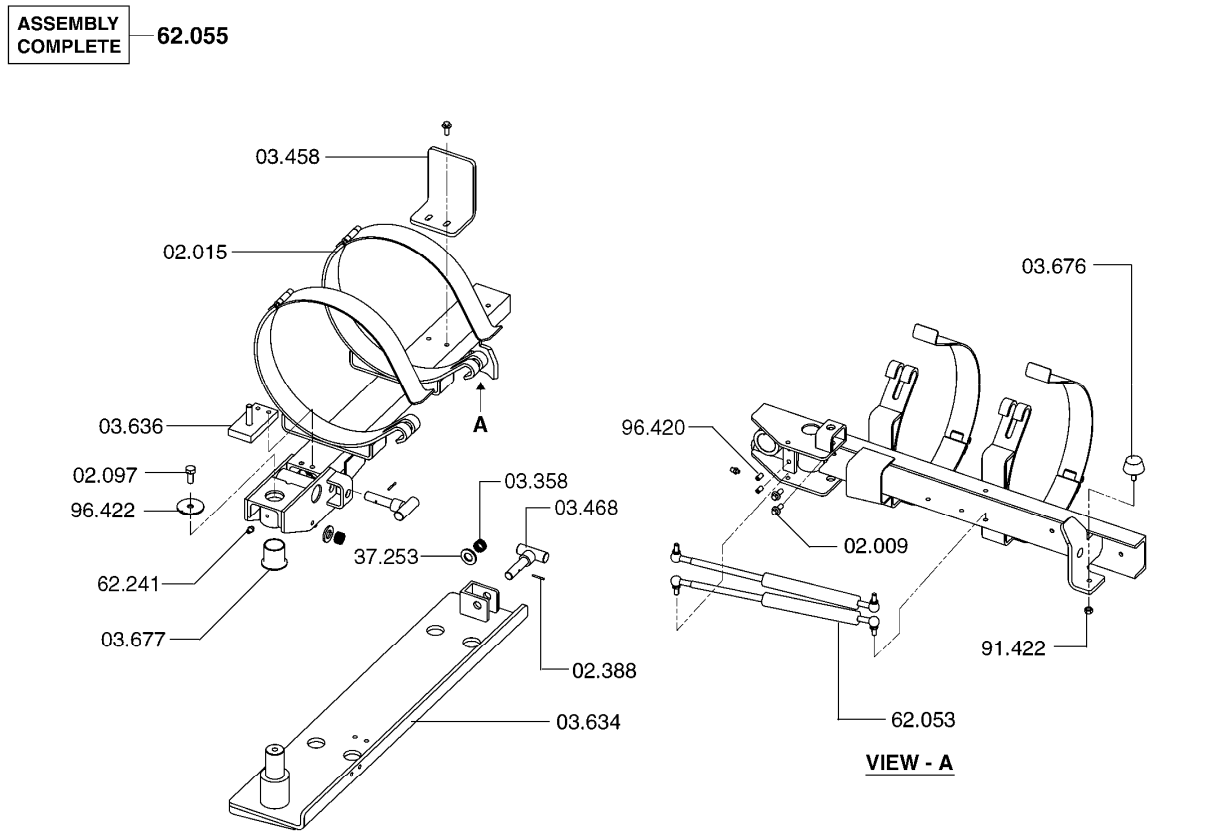

SWING DOWN BRACKET ASSEMBLY **03-558**

02.009 FASTENER, LPG TANK GUARD MOUNTING
패스너

02.015 STRAP, LPG TANK CLAMP
스트랩

02.097 FASTENER, TANK GUARD PIVOT ROD
패스너

02.388 PIN, TANK LOCATING
핀

03.358 CAP, FUEL TANK
캡

03.458 BRACKET, LPG TANK LOCATING PIN
브라켓

03.468 HANDLE, LPG TANK MOUNTING BRACKET
핸들

03.634 SUPPORT, LPG TANK BRACKET
서포트

03.636 SUPPORT, LPG TANK MOUNTING BRACKET
서포트

03.676	STOP, LPG TANK PIVOT 스톱
03.677	BUSHING, LPG TANK PIVOT 부싱
37.253	WASHER, GAS TANK SHIELD FASTENER 와셔
62.053	PROP, SWING DOWN LPG TANK MTG 프롭
62.055	BRACKET, SWING DOWN LPG TANK MTG 브라켓
62.241	FITTING-LUB, LPG TANK BRACKET PIVOT *
91.422	NUT, LPG TANK SUPPORT 너트
96.420	FASTENER, LPG TANK MOUNTING BRACKET 패스너
96.422	WASHER, LPG TANK BRACKET PIVOT 와셔

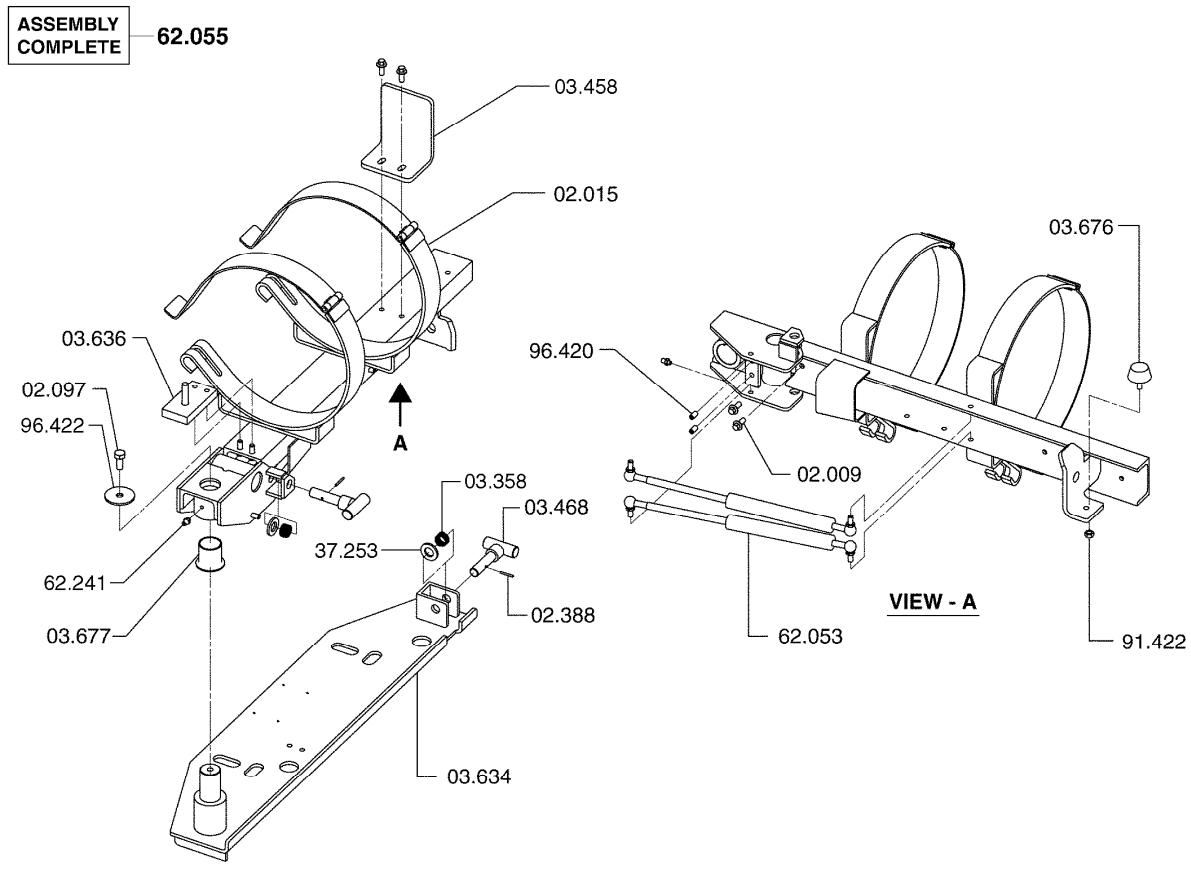

SWING DOWN BRACKET ASSEMBLY **03-559**

02.009 FASTENER, LPG TANK GUARD MOUNTING
패스너

02.015 STRAP, LPG TANK CLAMP
스트랩

02.097 FASTENER, TANK GUARD PIVOT ROD
패스너

02.388 PIN, TANK LOCATING
핀

03.358 CAP, FUEL TANK
캡

03.458 BRACKET, LPG TANK LOCATING PIN
브라켓

03.468 HANDLE, LPG TANK MOUNTING BRACKET
핸들

03.634 SUPPORT, LPG TANK BRACKET
서포트

03.636 SUPPORT, LPG TANK MOUNTING BRACKET
서포트

03.676	STOP, LPG TANK PIVOT 스톱
03.677	BUSHING, LPG TANK PIVOT 부싱
37.253	WASHER, GAS TANK SHIELD FASTENER 와셔
62.053	PROP, SWING DOWN LPG TANK MTG 프롭
62.055	BRACKET, SWING DOWN LPG TANK MTG 브라켓
62.241	FITTING-LUB, LPG TANK BRACKET PIVOT *
91.422	NUT, LPG TANK SUPPORT 너트
96.420	FASTENER, LPG TANK MOUNTING BRACKET 패스너
96.422	WASHER, LPG TANK BRACKET PIVOT 와셔

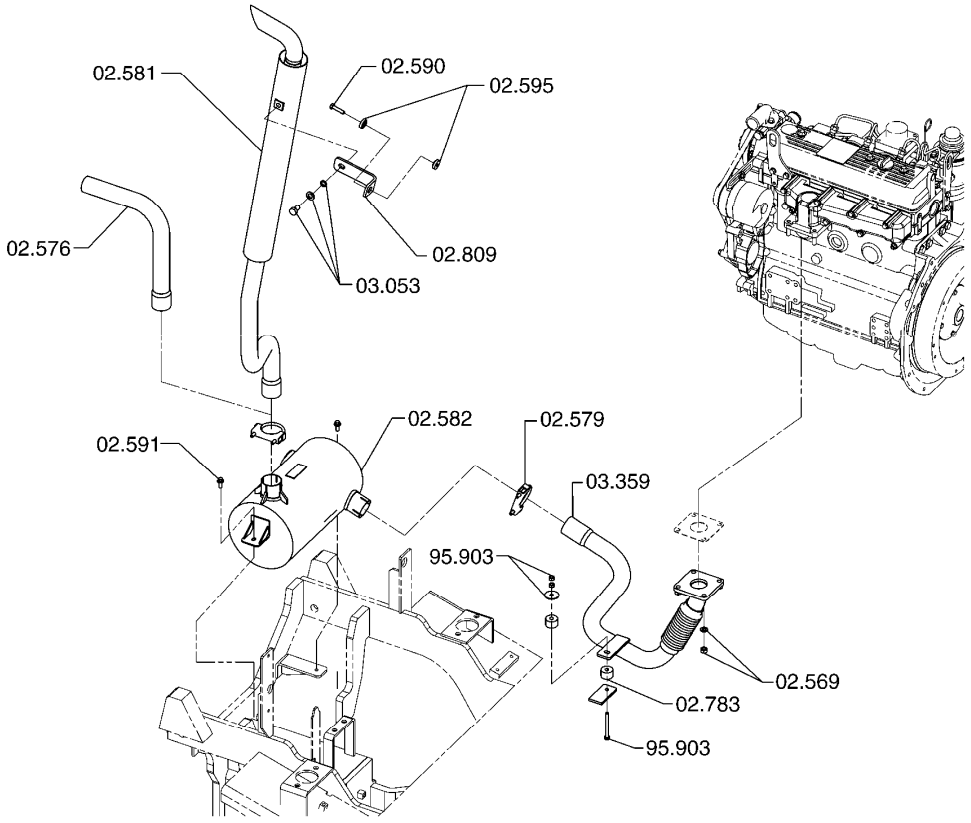

EXHAUST SYSTEM **03-574**

02.569 FASTENER, EXHAUST PIPE FLANGE TO MANIFOLD
패스너

02.576 PIPE, EXHAUST
파이프

02.579 CLAMP, EXHAUST PIPE TO MUFFLER
클램프

02.581 EXTENSION, TAIL PIPE
익스텐션

02.582 MUFFLER
머플러

02.590 FASTENER, MUFFLER MOUNTING BRACKET
패스너

02.591 FASTENER, MUFFLER MOUNTING
패스너

02.595 DAMPENER, EXHAUST PIPE VIBRATION
댐프너

02.783 DAMPENER, MUFFLER MOUNTING VIBRATION
댐프너

02.809 BRACKET, MUFFLER MOUNTING
브라켓

03.053 RETAINER, TAIL PIPE GUARD
리테이너

03.359 PIPE, EXHAUST
파이프

95.903 FASTENER, EXHAUST PIPE BRACKET
패스너

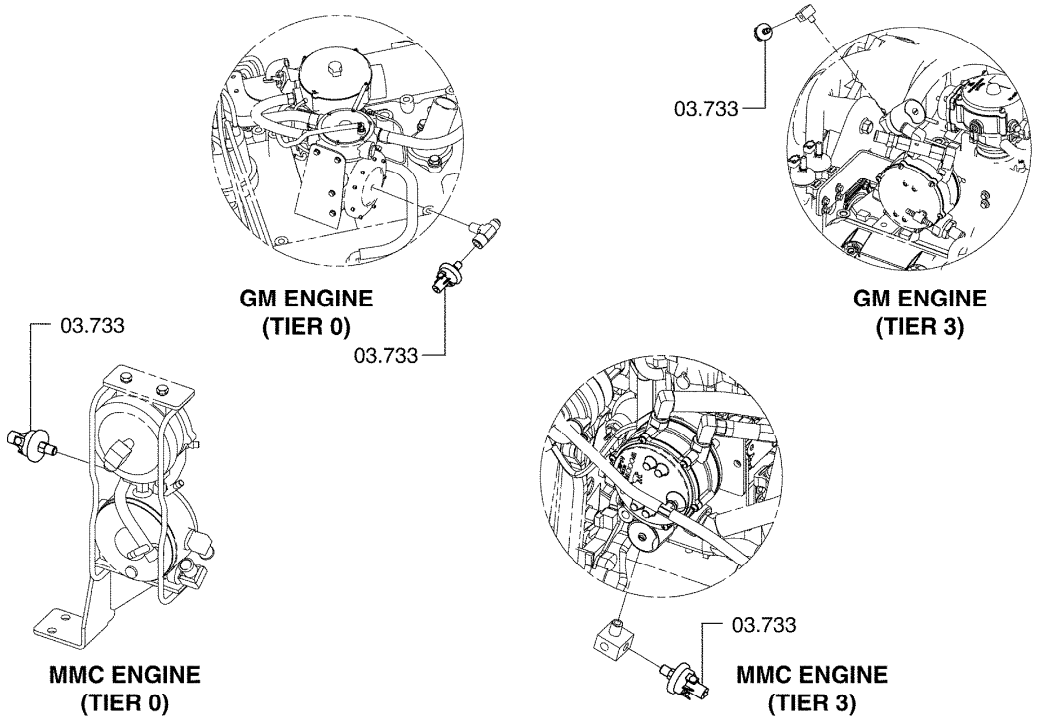

SWITCH INSTALLATION **03-581**

03.733 SWITCH,LPG PRESSURE
스위치

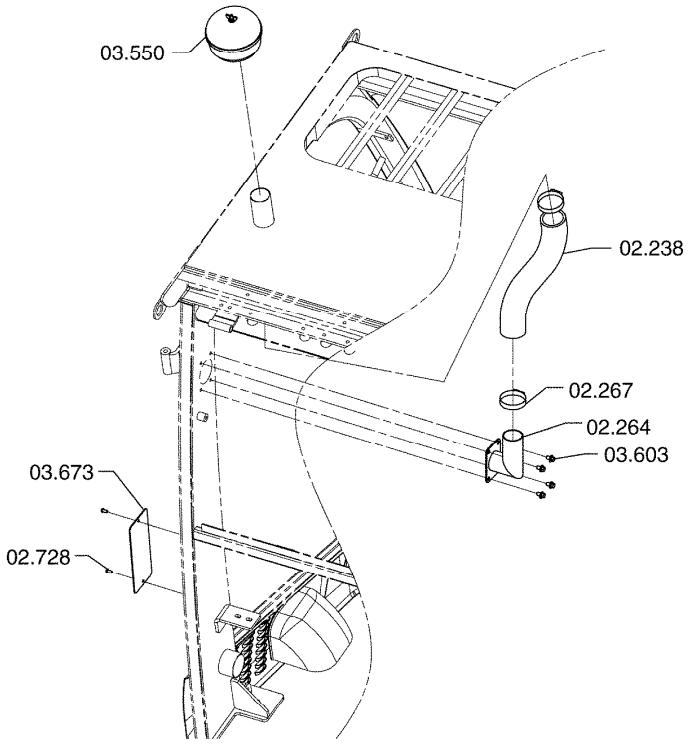

PRECLEANER, AIR CLEANER INSTALLATION **03-601**

02.238 TUBE, MAIN AIR CLEANER INLET
튜브

02.264 TUBE, MAIN AIR CLEANER OUTLET
튜브

02.267 CLAMP, MAIN AIR CLEANER OUTLET HOSE
클램프

02.728 FASTENER, AIR INTAKE BRACKET
패스너

03.550 PRE CLEANER ASSEMBLY, ENGINE AIR
프리크리너

03.603 FASTENER, AIR CLEANER TUBE CLAMP
패스너

03.673 VENT, AIR INTAKE
벤트

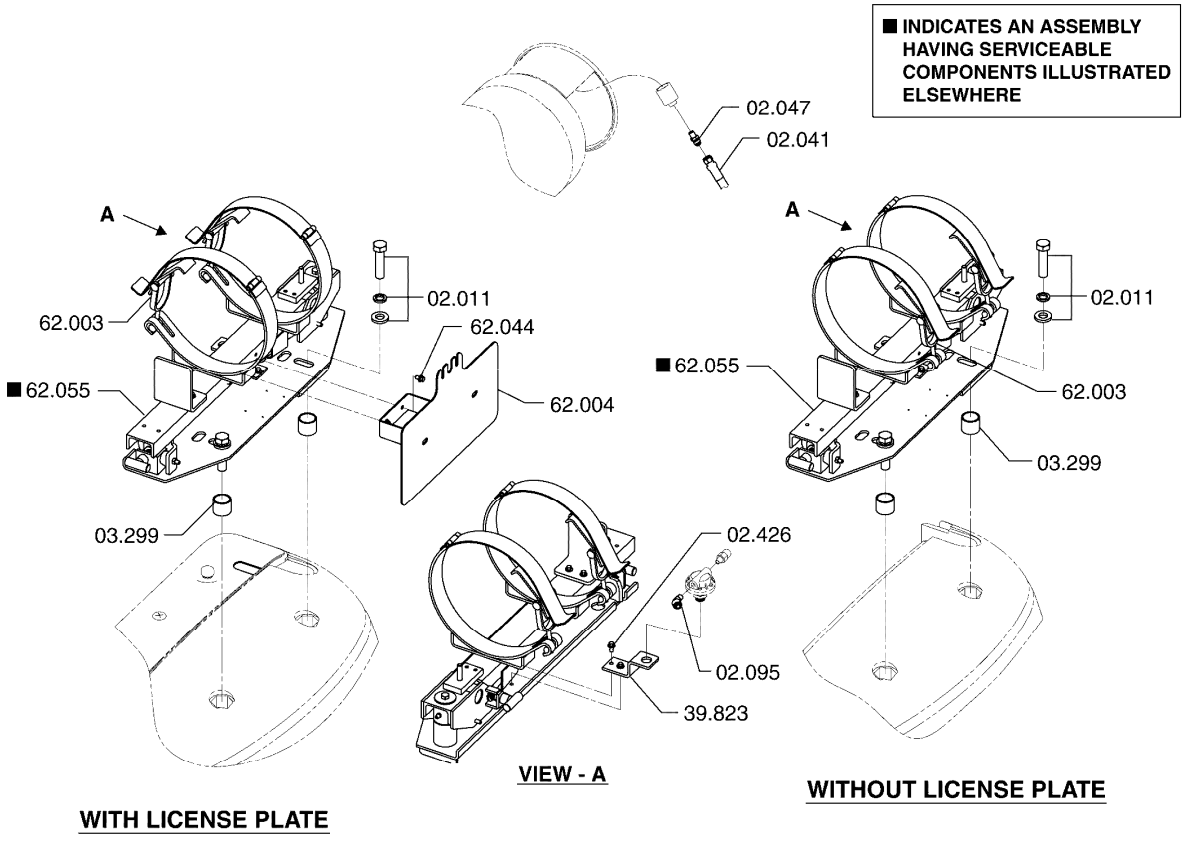

02.011 FASTENER, TANK REAR MOUNTING BRACKET
패스너

02.041 LINE, LP GAS TANK OUTLET
라인

02.047 FITTING, LPG ADAPTOR OUTLET
피팅

02.095 FITTING, LPG THREE WAY ADAPTOR
피팅

02.426 FASTENER, FUEL FILTER BRACKET
패스너

03.299 SPACER, LPG TANK GUARD MOUNTING FASTENER
스페이서

39.823 BRACKET, FUEL FILTER
브라켓

62.003 CLAMP, LPG TANK
클램프

62.004 PLATE, LICENSE
플레이트

62.044 FASTENER, LICENSE PLATE MOUNTING
패스너

62.055 BRACKET, SWING DOWN LPG TANK MTG
브라켓

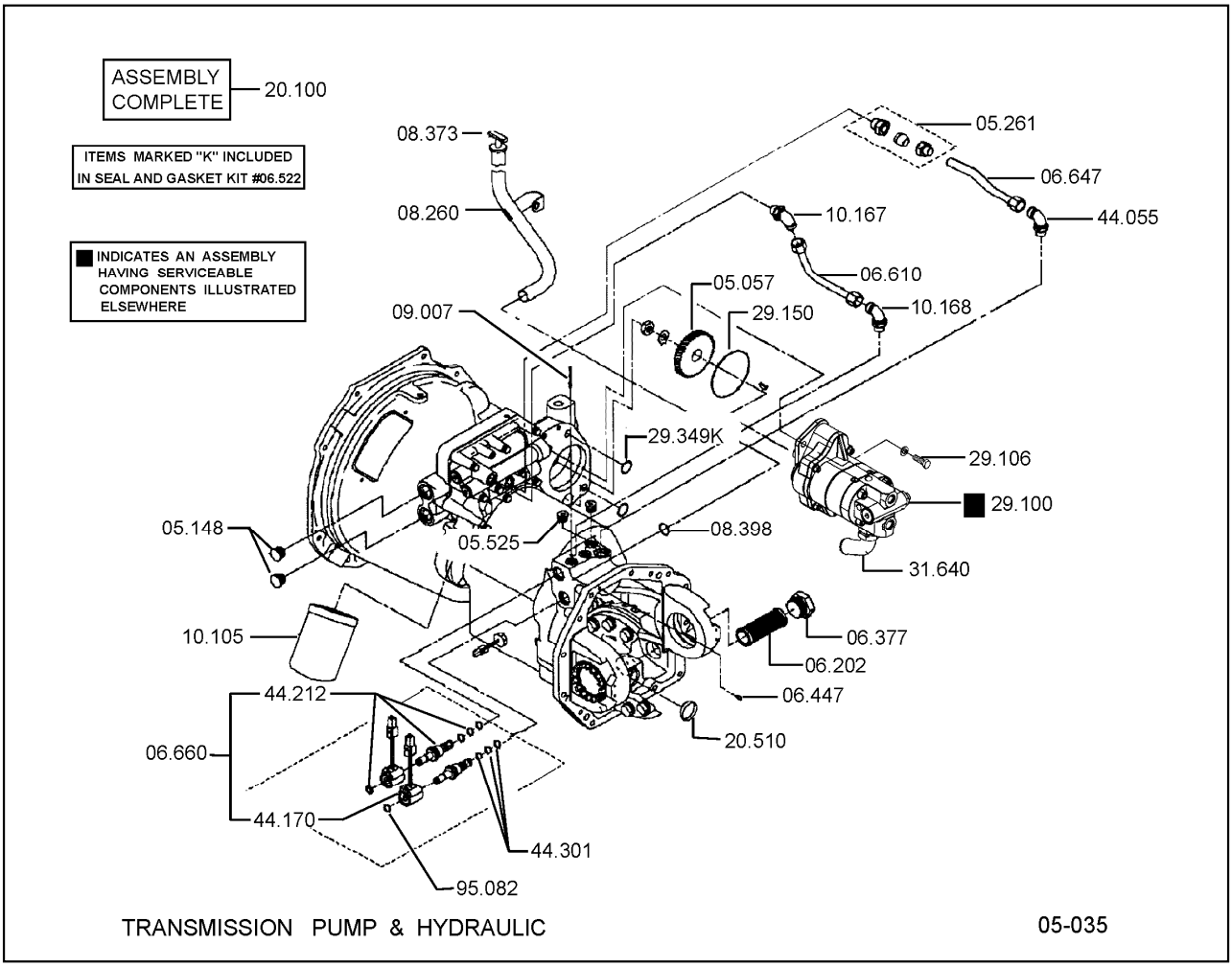

05.057	GEAR, PUMP DRIVE 기어	10.167	FITTING, TRANSMISSION CONTROL COVER OUTLET 피팅
05.148	PLUG, CONVERTER HOUSING 플러그	10.168	FITTING, TRANSMISSION CONTROL COVER OUTLET 피팅
05.261	TUBE FITTING, TRANSMISSION LUB LINE 튜브피팅	20.100	TRANSAXLE ASSEMBLY 트랜스액슬
05.525	PLUG, TRANSMISSION CASE 플러그	20.510	EXPANSION PLUG, INTERNAL GEAR HUB 플러그
06.202	STRAINER, TRANSMISSION SUMP 스트레이너	29.100	PUMP ASSEMBLY, HYDRAULIC 펌프
06.377	PLUG, TRANSMISSION SUMP OIL LEVEL 플러그	29.106	FASTENER, PUMP TO PLATE 패스너
06.447	PLUG, TRANSMISSION CASE 플러그	29.150	GASKET, HYDRAULIC PUMP MOUNTING 가스켓
06.610	TUBE, TRANSMISSION "HIGH" OIL 튜브	29.349	SEAL, PUMP COVER SEAL LOCATOR 시일
06.647	LINE, TRANSMISSION LUBRICATION 라인	31.640	FITTING, HYD PUMP OUTLET (COVER END) 피팅
06.660	SOLENOID ASSEMBLY, TRANSMISSION 솔레노이드	44.055	FITTING, TRANSMISSION CONTROL COVER RETURN LINE 피팅
08.260	TUBE, TRAN OIL LEVEL DIPSTICK SUPPORT 튜브	44.170	COIL, TRANSMISSION CONTROL COVER SOLENOID 코일
08.373	DIPSTICK, TRANSMISSION 딥스틱	44.212	CARTRIDGE, CONTROL VALVE SHIFT SOLENOID 카트리지
08.398	SEAL, TRANSMISSION DIPSTICK SUPPORT 시일	44.301	SEAL KIT, SOLENOID VALVE 시일킷
09.007	PLUG - EXPANSION, GEAR CASE 플러그	95.082	FASTENER, CONTROL SELECTOR SOLENOID RELAY 패스너
10.105	ELEMENT & GASKET, OIL FILTER 엘리먼트와가스켓		

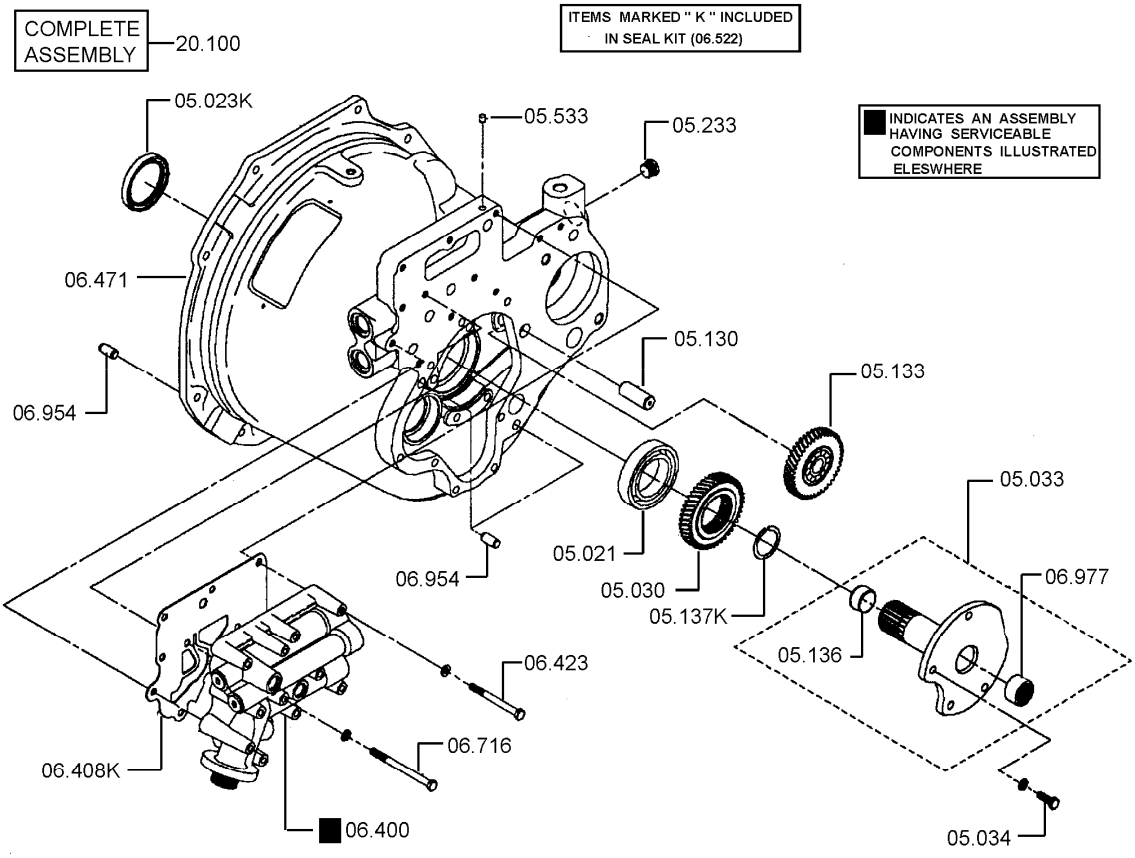

05.021 BEARING, IMPELLER HUB
베어링

05.023 SEAL, CONVERTER IMPELLER HUB
시일

05.030 GEAR, IMPELLER HUB
기어

05.033 STATOR SUPPORT ASSEMBLY, CONVERTER
스테이터

05.034 FASTENER, STATOR SUPPORT
패스너

05.130 SHAFT, CONVERTER PUMP IDLER GEAR
샤프트

05.133 GEAR, CONVERTOR PUMP IDLER
기어

05.136 BEARING, CONVERTER STATOR SUPPORT
베어링

05.137 LOCATOR, CONVERTER STATOR SUPPORT (OUTER)
로케이터

05.233	PLUG, CONVERTOR HOUSING EXPANDER 플러그
05.533	PLUG, CONVERTER HOUSING 플러그
06.400	CONTROL COVER & VALVE ASSEMBLY 컨트롤커버와밸브
06.408	GASKET, CONTROL COVER ATTACHING 가스켓
06.423	FASTENER, CONTROL VALVE HOUSING 패스너
06.471	HOUSING, CONVERTER 하우징
06.522	SEAL AND GASKET KIT, TRANSMISSION 시일과가스켓킷
06.716	FASTENER, CONTROL COVER 패스너
06.954	DOWEL, TRANSMISSION CASE TO CONVERTER 다웰
06.977	BEARING, REVERSE CLUTCH HUB (ENGINE END) 베어링
20.100	TRANSAXLE ASSEMBLY 트랜스액슬

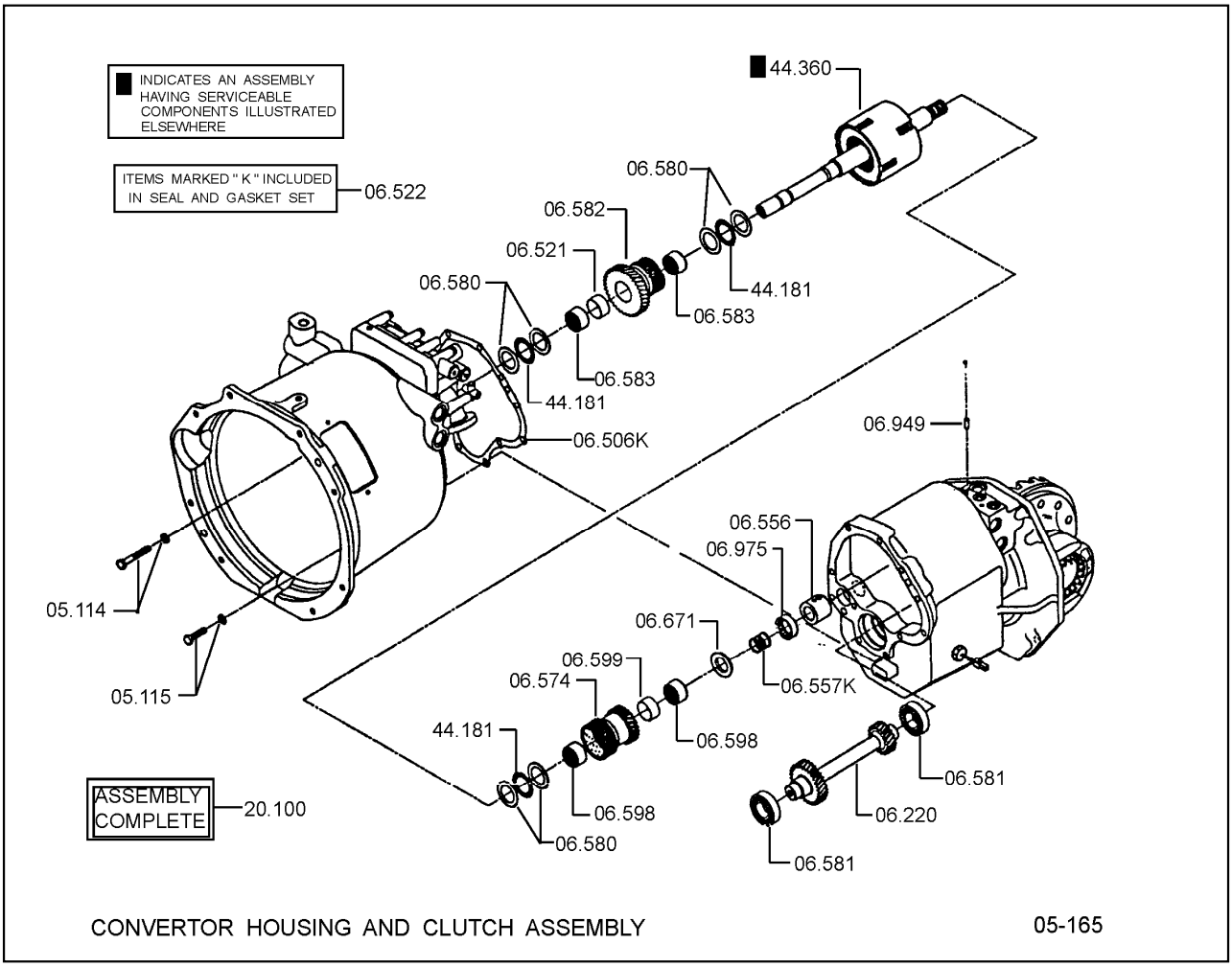

05.114 FASTENER, CONVERTER TO CASE
패스너

05.115 FASTENER, CONVERTER TO CASE
패스너

06.220 GEAR, REVERSE IDLER
기어

06.506 SEAL, CONVERTER HOUSING TO CASE-INNER
시일

06.521 BALL, INCHING RELIEF VALVE
볼

06.522 SEAL AND GASKET KIT, TRANSMISSION
시일과가스켓킷

06.556 DISTRIBUTOR, TRANSMISSION DIRECTION SEL OIL
디스트리뷰터

06.557 SEAL, TRANSMISSION DIRECTION SELECTOR OIL DIST
시일

06.574 GEAR & BEARING FORWARD
기어와베어링

06.580 THRUST WASHER, REVERSE CLUTCH HUB & DRUM
트러스트와셔

06.581 BEARING, REVERSE GEAR
베어링

06.582 GEAR & BEARING, REVERSE
기어욱붱어링

06.583 BEARING, REVERSE GEAR
베어링

06.598 BEARING, TRANSMISSION INTERMEDIATE SHAFT OUTER
베어링

06.599 SPACER, TRANSMISSION INTERMEDIATE SHAFT
스페이서

06.671 BEARING, DIRECTION SEL CL HUB
베어링

06.949 RETAINER, CLUTCH OIL DISTRIBUTION SLEEVE
리테이너

06.975 BEARING, REVERSE CLUTCH HUB (AXLE END)
베어링

20.100 TRANSAXLE ASSEMBLY
트랜스액슬

44.181 BEARING, CLUTCH SHAFT THRUST
베어링

44.360 TURBINE SHAFT, DRUM & CLUTCH ASSY
터빈샤프트

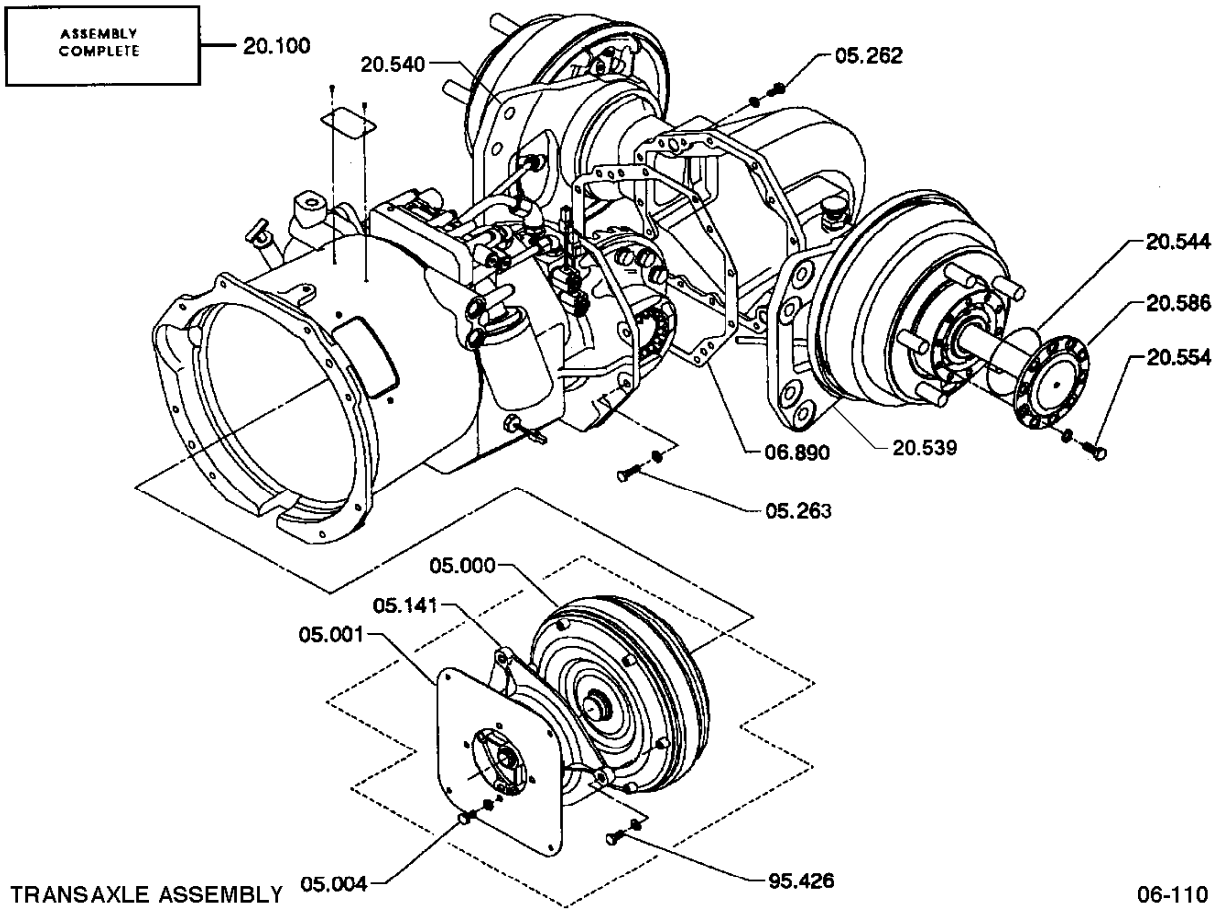

05.000 CONVERTER ASSEMBLY, TORQUE
컨버터

05.001 GEAR, CONVERTER RING
기어

05.004 FASTENER, CONVERTER DRIVE & REINFORCING PLATE
패스너

05.141 ADAPTOR, CONVERTER DRIVE
어댑터

05.262 FASTENER, AXLE HOUSING TO CASE
패스너

05.263 FASTENER,CASE TO AXLE HOUSING
패스너

06.890 GASKET, CONTROL COVER PLATE
가스켓

20.100 TRANSAXLE ASSEMBLY
트랜스액슬

20.539 SUPPORT, DRIVE AXLE SPINDLE (RH)
서포트

20.540	SUPPORT, DRIVE AXLE SPINDLE (LH) 서포트
20.544	SEAL, DRIVE AXLE SHAFT 시일
20.554	FASTENER, DRIVE AXLE HUB CAP 패스너
20.586	SHAFT, DRIVE AXLE 샤프트
95.426	FASTENER, CONVERTER DRIVE ADAPTOR 패스너

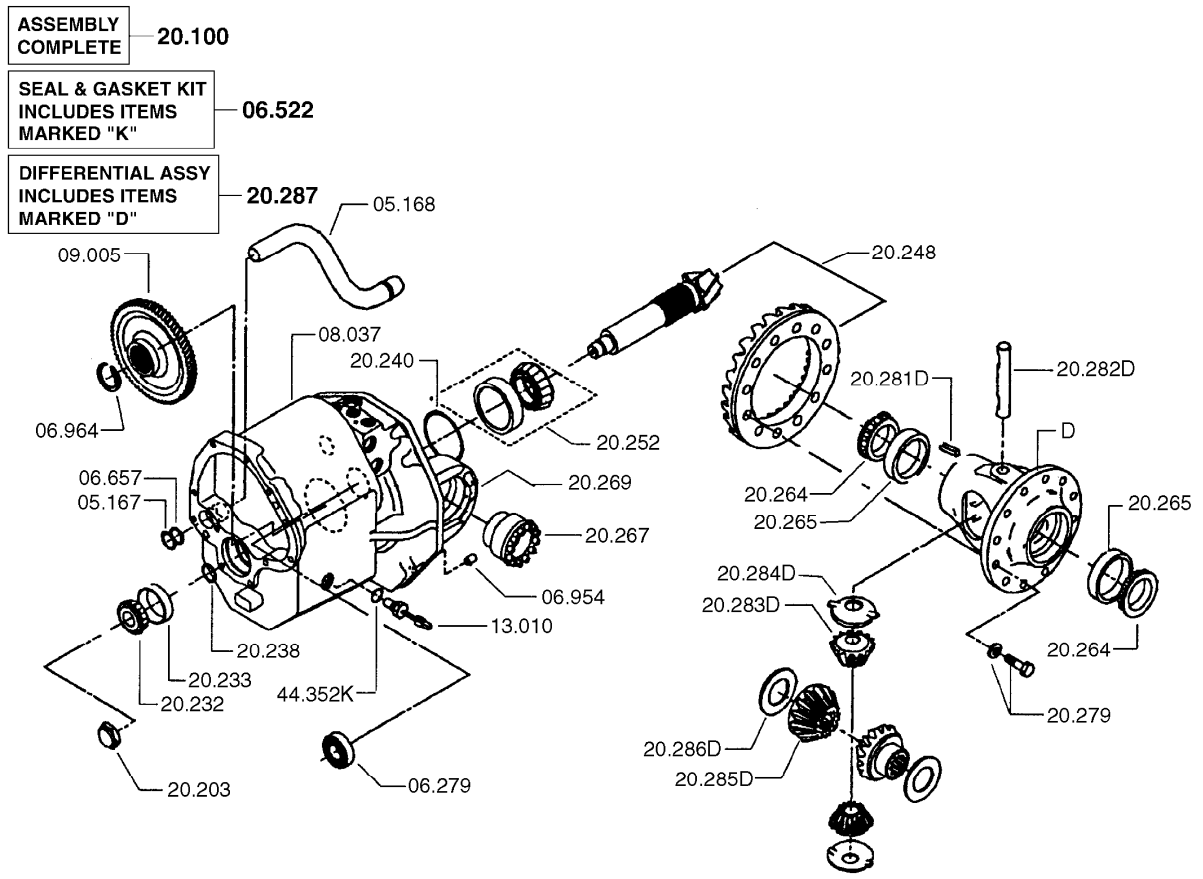

TRANSMISSION CASE AND DIFFERENTIAL **06-619**

05.167	FASTENER, CONVERTER PUMP INLET LINE 패스너	20.240	SPACER, DIFFERENTIAL PINION BEARING 스페이서
05.168	LINE, CONVERTER PUMP INLET 라인	20.248	RING GEAR & PINION SET, DIFFERENTIAL 링
06.279	BEARING, TRANSMISSION OUTPUT SHAFT 베어링	20.252	BEARING, DIFFERENTIAL PINION INNER 베어링
06.522	SEAL AND GASKET KIT, TRANSMISSION 시일과가스켓킷	20.264	CONE, DIFFERENTIAL BEARING 콘
06.657	SEAL, TRANS VALVE PRESS PUMP INLET LINE 시일	20.265	CUP, DIFFERENTIAL BEARING 컵
06.954	DOWEL, TRANSMISSION CASE TO CONVERTER 다월	20.267	NUT, DIFFERENTIAL BEARING ADJUSTING 너트
06.964	RING, OUTPUT SHAFT GEAR LOCATING 링	20.269	FASTENER, DIFF BEARING ADJUSTING NUT LOCK 패스너
08.037	CASE, TRANSMISSION 케이스	20.279	FASTENER, DIFFERENTIAL CASE TO RING GEAR 패스너
09.005	GEAR, OUTPUT 기어	20.281	FASTENER, DIFF SIDE PINION PIN 패스너
13.010	CONTROL, CONVERTOR TEMPERATURE INDICATOR 컨트롤	20.282	SPIDER, DIFFERENTIAL PINION 스파이더
20.100	TRANSAXLE ASSEMBLY 트랜스액슬	20.283	GEAR, DIFFERENTIAL SIDE PINION 기어
20.203	NUT, DIFFERENTIAL PINION COMPANION FLANGE 너트	20.284	WASHER, DIFF SIDE PINION GEAR THRUST 와셔
20.232	CONE, DIFFERENTIAL PINION OUTER BEARING 콘	20.285	GEAR, DIFFERENTIAL SIDE 기어
20.233	CUP, DIFFERENTIAL PINION OUTER BEARING 컵	20.286	WASHER, DIFFERENTIAL SIDE GEAR THRUST 와셔
20.238	SHIM KIT, DIFFERENTIAL PINION BEARING CAGE 심	20.287	CASE & GEAR ASSEMBLY, DIFFERENTIAL 케이스와기어

44.352 SEAL, CONVERTOR TEMP INDICATOR CONTROL
시일

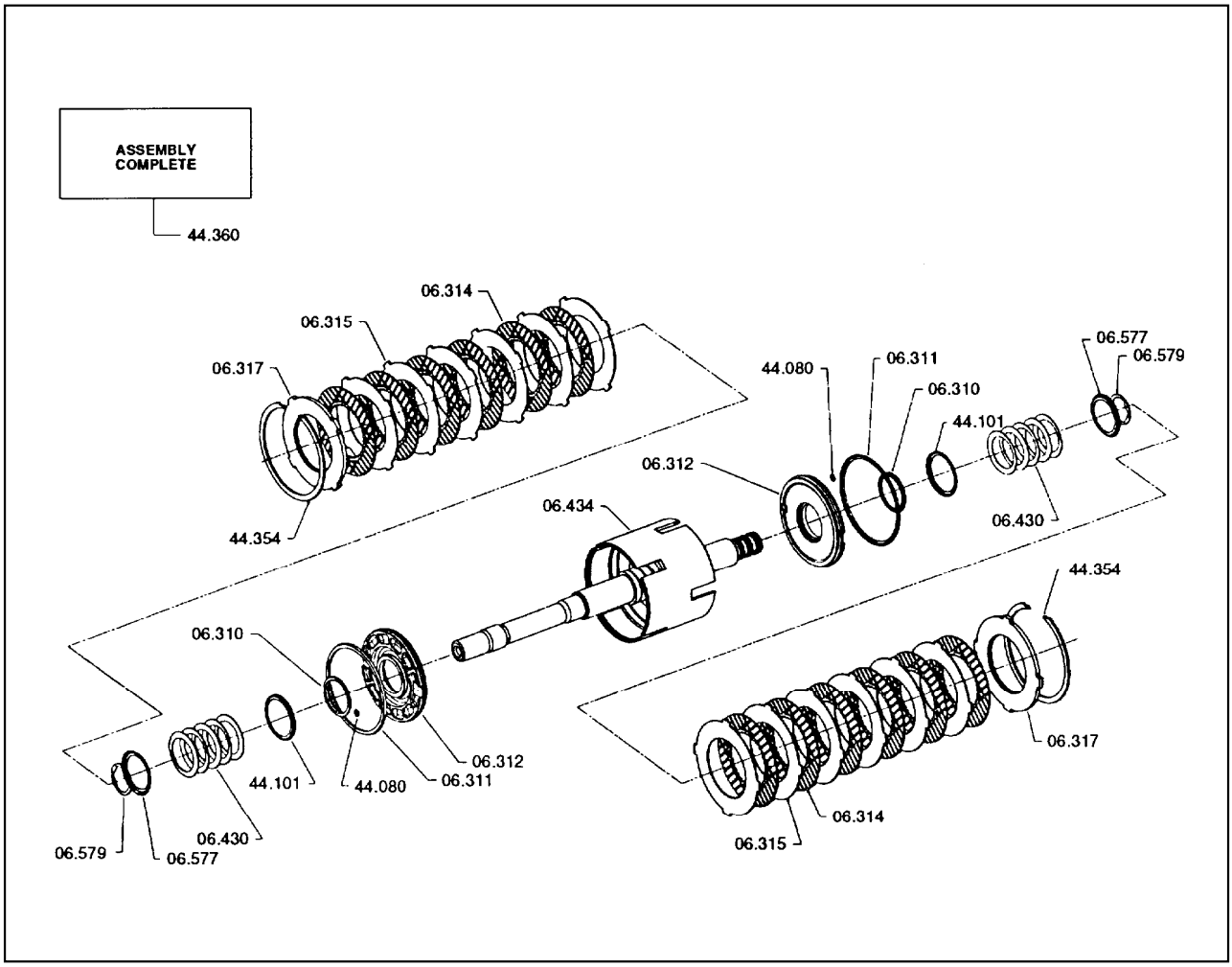

06.310 SEAL, FORWARD CLUCH PISTON INNER
시일

06.311 SEAL, FORWARD CLUTCH PISTON OUTER
시일

06.312 PISTON, FORWARD CLUTCH
피스톤

06.314 DISC, FORWARD CLUTCH INNER
디스크

06.315 DISC, FORWARD CLUTCH OUTER
디스크

06.317 PLATE, FORWARD CLUTCH DISC END
플레이트

06.430 SPRING, FORWARD CLUTCH PISTON RETURN
스프링

06.434 SHAFT & GEAR, CLUTCH DRIVE
샤프트와기어

06.577 RETAINER, FORWARD CLUTCH SPRING
리테이너

06.579	FASTENER, REVERSE CLUTCH SPRING RETAINER 패스너
44.080	SEAL, FORWARD CLUTCH LUBRICATION PRESSURE PORT PLU 시일
44.101	THRUST WASHER, CLUTCH SHAFT PILOT BEARING 트러스트와셔
44.354	RING, CLUTCH PACK RETAINING 링
44.360	TURBINE SHAFT, DRUM & CLUTCH ASSY 터빈샤프트

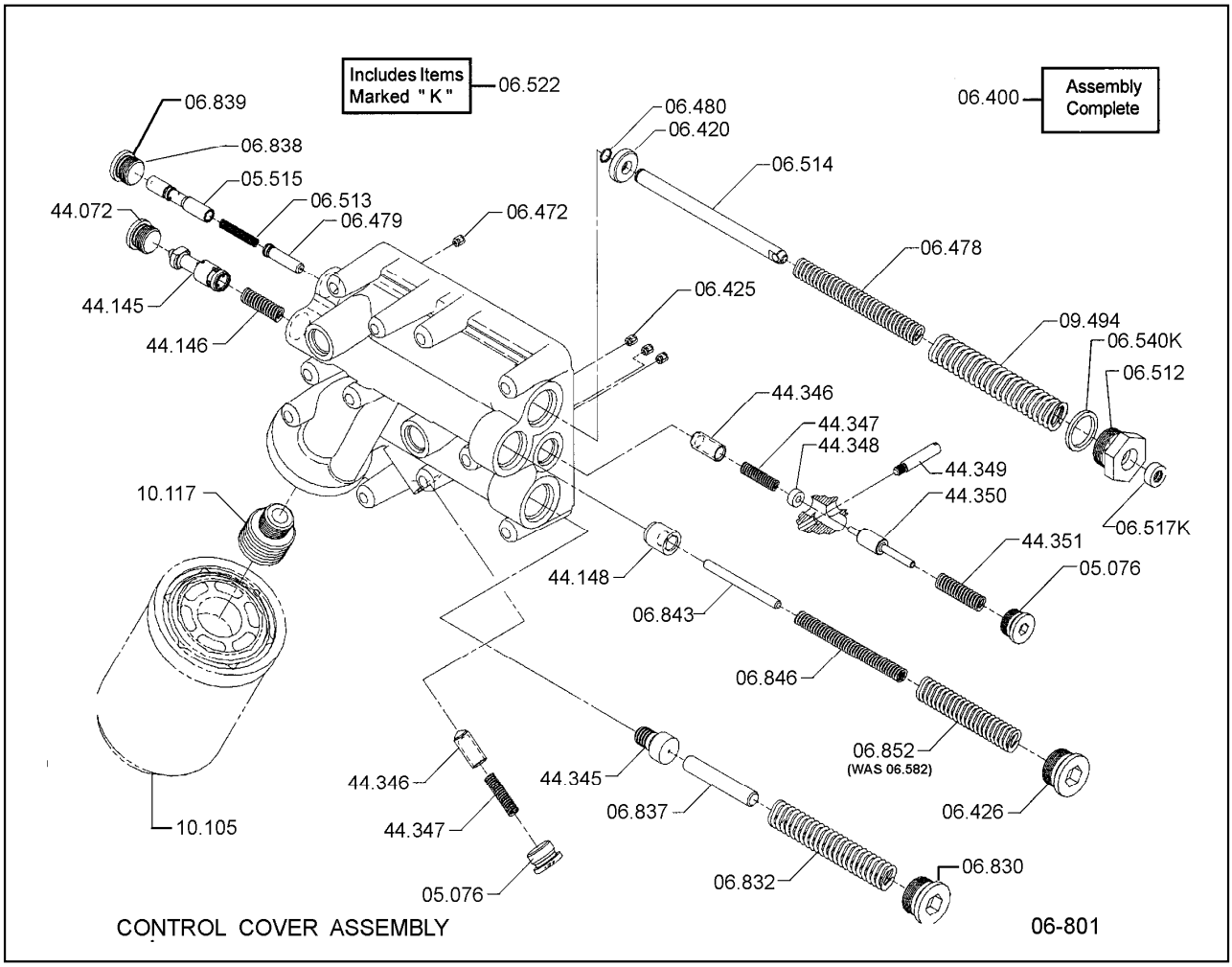

05.076	PLUG, COOLER PORT (SMALL) 플러그
05.515	SPOOL, INCHING 스풀
06.400	CONTROL COVER & VALVE ASSEMBLY 컨트롤커버와밸브
06.420	GUIDE & STOP, SHUT-OFF VALVE SPRING 가이드와스톱
06.425	PLUG, CONTROL COVER OIL PASSAGE 플러그
06.426	PLUG, CONTROL COVER 플러그
06.472	PLUG, CONTROL VALVE HOUSING OIL PASSAGE 플러그
06.478	SPRING, INCHING PISTON RETURN 스프링
06.479	PISTON, INCHING 피스톤
06.480	SEAL, INCHING PISTON 시일
06.512	STOP, INCHING SPOOL 스톱
06.513	SPRING, INCHING VALVE 스프링
06.514	ROD, INCHING VALVE 로드
06.517	SEAL, INCHING VALVE PISTON PORT FITTING 시일
06.522	SEAL AND GASKET KIT, TRANSMISSION 시일과가스켓킷
06.540	SEAL, INCHING PISTON HOUSING 시일
06.830	STOP, PRESSURE REGULATING VALVE 스톱
06.832	SPRING, CLUTCH PRESSURE REGULATING VALVE 스프링
06.837	FASTENER, PRESSURE REGULATING VALVE STOP 패스너
06.838	STOP, INCHING VALVE 스톱
06.839	SEAL, INCHING VALVE STOP 시일
06.843	STOP, ACCUMULATOR PISTON 스톱
06.846	SPRING, ACCUMULATOR PISTON (INNER) 스프링
06.852	SPRING, ACCUMULATOR PISTON (OUTER) 스프링
09.494	SPRING, INCHING SPOOL RETURN 스프링
10.105	ELEMENT & GASKET, OIL FILTER 엘리먼트와가스켓
10.117	FITTING, OIL FILTER TO BASE 피팅
44.072	PLUG, MODULATION VALVE BODY 플러그
44.145	SPOOL, MODULATOR 스풀
44.146	SPRING, MODULATOR SPOOL 스프링

44.148 SPOOL, ACCUMULATOR
스풀

44.345 SPOOL, CLUTCH PRESSURE REGULATOR
스풀

44.346 SPOOL, TRANS COOLER/LUBE OIL FILTER BY-PASS
스풀

44.347 SPRING, TRANS COOLER/LUBE OIL FILTER BY-PASS SPO
스프링

44.348 STOP, TRANS LUBE BY-PASS SPOOL SPRING
스톱

44.349 PIN, TRANS LUBE BY-PASS AND COOLER SEPARATOR
핀

44.350 SPOOL, TRANS LUBE BY-ASS RELIEF
스풀

44.351 SPRING, TRANS LUBE BY-PASS RELIEF SPOOL
스프링

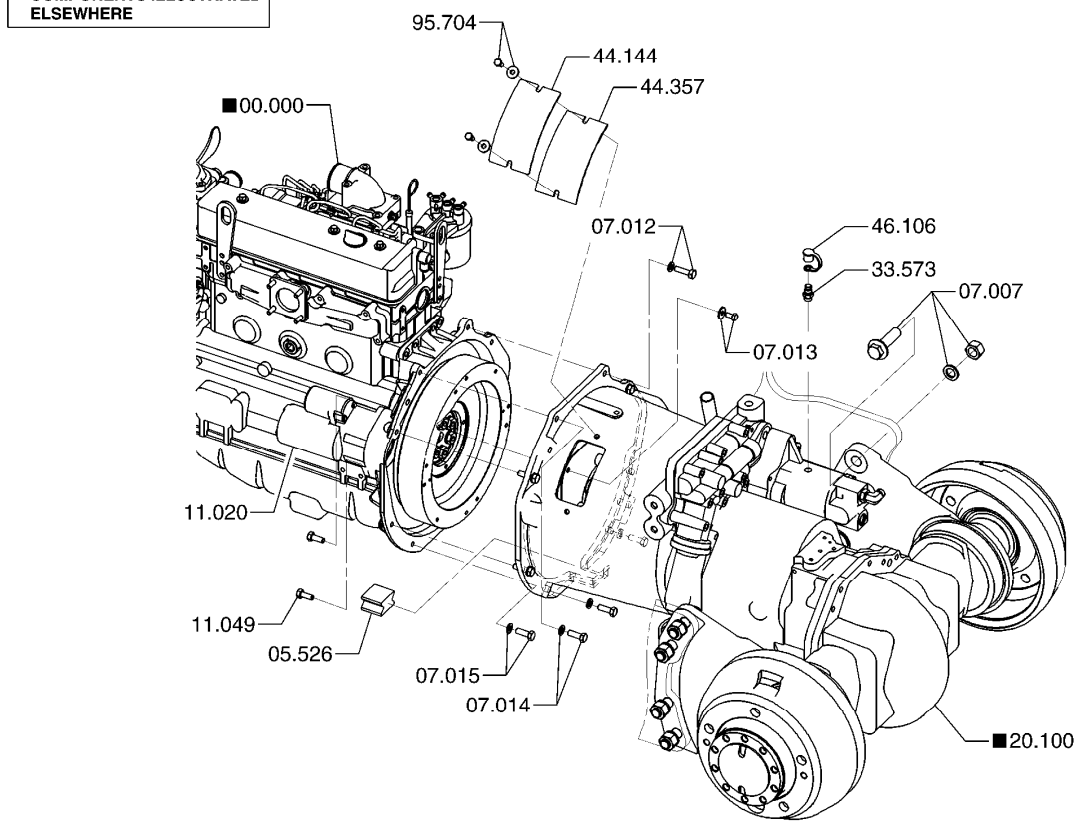

ENGINE & TRANSAXLE MOUNTING **07-048**

00.000	PRODUCTION ENGINE ASSEMBLY 엔진
05.526	PLUG, TRANSMISSION CASE 플러그
07.007	FASTENER, TRANSMISSION MOUNTING BRACKET LH 패스너
07.012	FASTENER, TRANSMISSION TO ENGINE 패스너
07.013	FASTENER, TRANSMISSION TO ENGINE 패스너
07.014	FASTENER, TRANSMISSION TO ENGINE 패스너
07.015	FASTENER, TRANSMISSION TO ENGINE 패스너
11.020	MOTOR ASSEMBLY, STARTING 모터
11.049	FASTENER, STARTING MOTOR 패스너

20.100	TRANSAXLE ASSEMBLY 트랜스액슬
33.573	FITTING, HYDRAULIC PRESSURE GAUGE 피팅
44.144	COVER, CONVERTER HOUSING 커버
44.357	GASKET, CONVERTER HOUSING COVER 가스켓
46.106	DUST CAP, HYDRAULIC PRESSURE GAUGE FITTING *
95.704	FASTENER, CONVERTER HOUSING PLATE 패스너

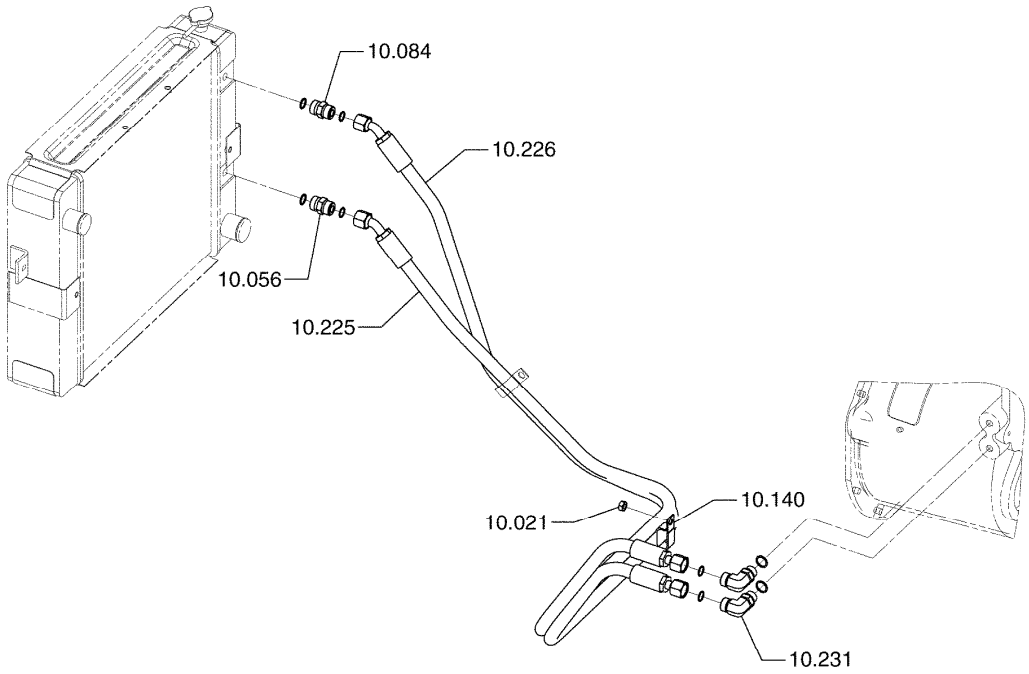

TRANSMISSION COOLING LINES **10-003**

10.021	FASTENER, COOLER OUTLET LINE CLAMP 패스너
10.056	FITTING, COOLER OUTLET 피팅
10.084	FITTING, COOLER INLET LINE 피팅
10.140	CLAMP, COOLER LINE 클램프
10.225	LINE, OIL COOLING 라인
10.226	LINE, OIL COOLING 라인
10.231	FITTING, OIL COOLING LINES 피팅

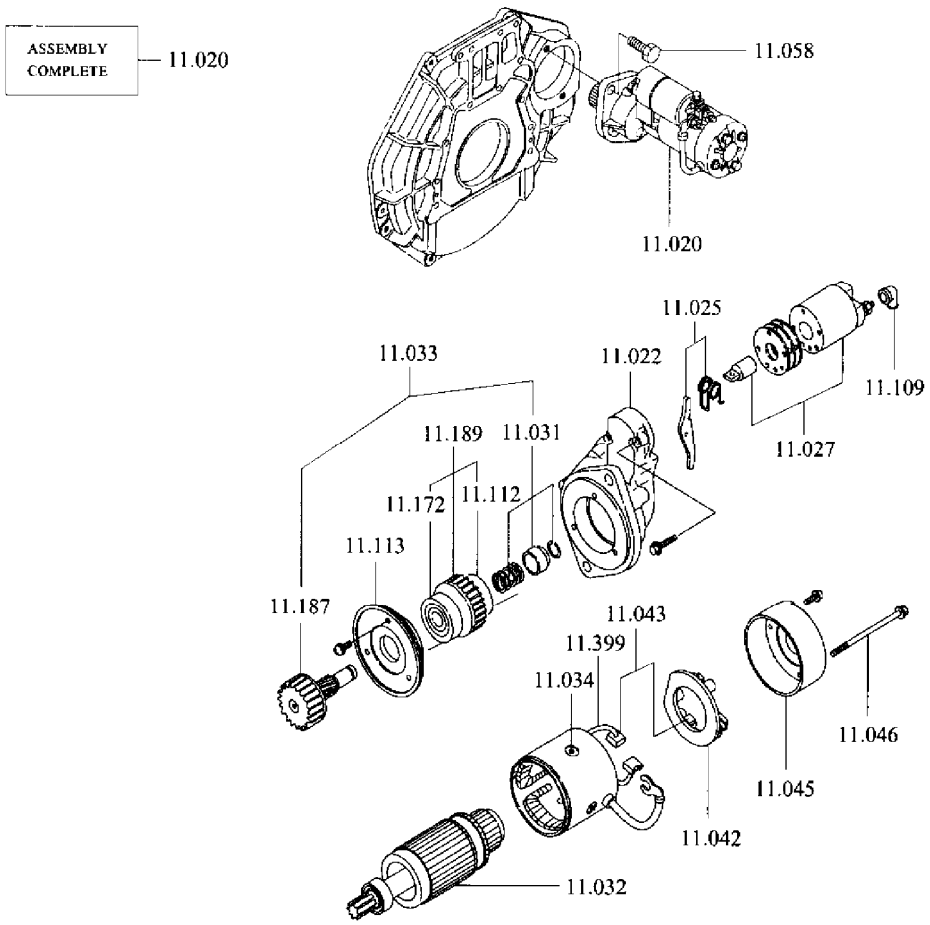

11.020 MOTOR ASSEMBLY, STARTING
모터

11.022 HOUSING & BUSHING, DRIVE END
하우징와부싱

11.025 LEVER, DRIVE SHIFT FORK
레버

11.027 SWITCH, SOLENOID
스위치

11.031 COLLAR, PINION STOP
칼라

11.032 ARMATURE, STARTING MOTOR
아마츄어

11.033 DRIVE ASSEMBLY, STARTING MOTOR
드라이브

11.034 FASTENER, STARTING MOTOR
패스너

11.042 BRUSH HOLDER & BRUSH (KIT)
브러쉬홀더

11.043 BRUSH SET, STARTING MOTOR
브러쉬셋

11.045 FRAME, COMMUTATOR END
프레임

11.046 FASTENER, THRU
패스너

11.058 SPACER, STARTING MOTOR MOUNTING
스페이서

11.109 FITTING, STARTER SOLENOID INTERLOCK
피팅

11.112 BEARING, CRANKING MOTOR DRIVE LINKAGE HOUSING
베어링

11.113 RETAINER, CRANKING MOTOR DRIVE SHIFT LEVER FULCRUM
리테이너

11.172 BEARING, CRANKING MOTOR CENTER
베어링

11.187 GEAR, STARTER REDUCTION INTERNAL
기어

11.189 CLUTCH, STARTER OVERRUNNING
클러치

11.399 HOUSING ASSEMBLY, CRANKING MOTOR
하우징

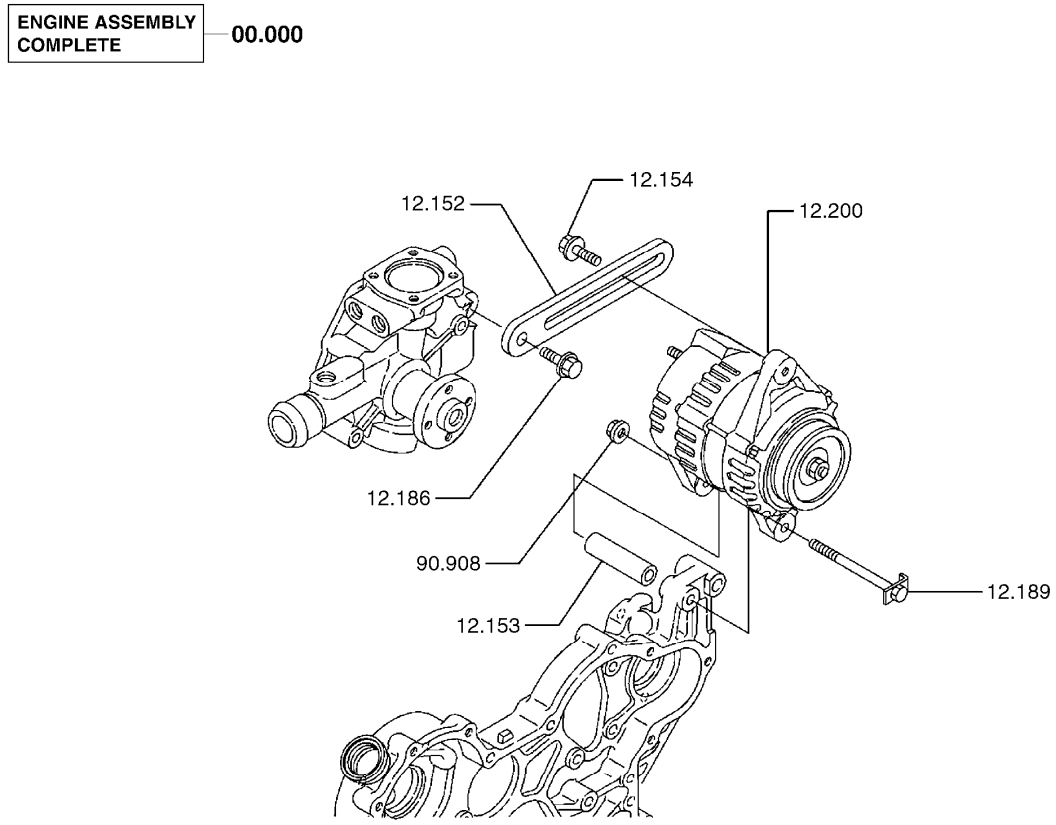

00.000 PRODUCTION ENGINE ASSEMBLY
엔진

12.152 BRACKET, ALTERNATOR ADJUSTING STRAP
브라켓

12.153 SPACER, ALTERNATOR MOUNTING
스페이서

12.154 FASTENER, ALTERNATOR MOUNTING
패스너

12.186 FASTENER, ALTERNATOR MOUNTING
패스너

12.189 FASTENER, ALTERNATOR MOUNTING
패스너

12.200 ALTERNATOR ASSEMBLY
알터네이터

90.908 WASHER, ALT TO BRACKET FASTENER
와셔

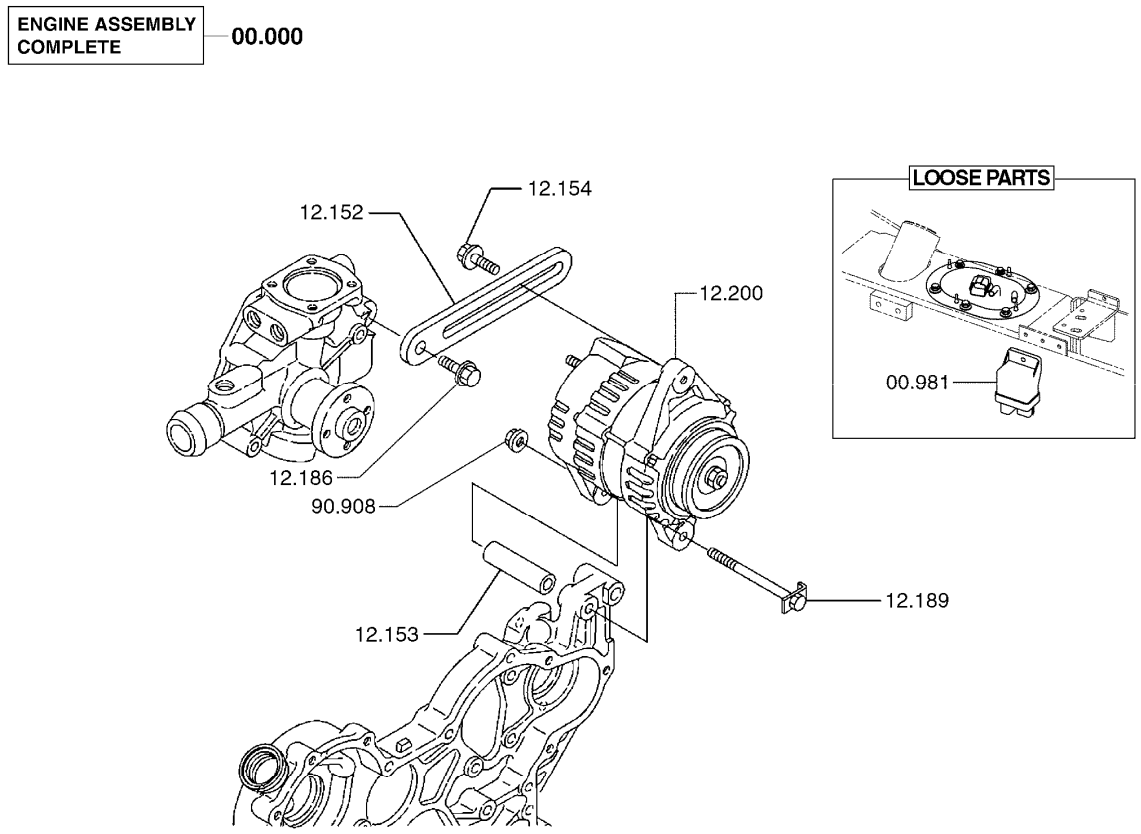

00.000	PRODUCTION ENGINE ASSEMBLY 엔진
00.981	RELAY, ENGINE PRE-HEATER 릴레J
12.152	BRACKET, ALTERNATOR ADJUSTING STRAP 브라켓
12.153	SPACER, ALTERNATOR MOUNTING 스페이서
12.154	FASTENER, ALTERNATOR MOUNTING 패스너
12.186	FASTENER, ALTERNATOR MOUNTING 패스너
12.189	FASTENER, ALTERNATOR MOUNTING 패스너
12.200	ALTERNATOR ASSEMBLY 알터네이터
90.908	WASHER, ALT TO BRACKET FASTENER 와셔

	ALTERNATOR ASSEMBLY	12.200	28	STATOR ASSEM
	INSULATION, HEAT SINK	††	29	FASTENER, AL
	SCREW, HEAT SINK INSULATION MTG	12.287	30	PLATE, ALT DI
	WASHER, HEAT SINK GUARD	12.288	31	BEARING, ALT
	WASHER, HEAT SINK INSULATING	12.289	32	FRAME, ALTERI
	RECTIFIER, ALT NEGATIVE SILICON	12.254	33	COLLAR, ALTEI
	HEAT SINK ASSEMBLY, ALTERNATOR	12.220	34	ASSEMBLY, AL
	INSULATOR, RECTIFIER MOUNTING	12.263	35	FASTENER, ALT
	SHIELD ALTERNATOR DUST	12.246	36	PIN, ALTERNA
	BRUSH KIT, ALTERNATOR	12.235	37	KEY, ALTERNA
	TERMINAL ALT HOLDER ATTACHING	12.248	38	SHAFT, ALTERN
	BRUSH HOLDER, ALTERNATOR	12.234	39	KEY, ALTERNAT
	GROUNDING JUMPER, BRUSH HOLDER	††	40	BOLT, THROUGH
	FRAME, ALT SLIP RING END	12.230	41	TERMINAL, ALT
	ROTOR, ASSEMBLY ALTERNATOR	12.214	42	PLATE, ALTERN
	RING SLIP, ALTERNATOR ROTOR	12.215	43	FASTENER, ALT
	INSULATOR, ALTERNATOR SLIP RING	12.275	44	RECTIFIER, AL
	CLAMP. ALT SR FRAME END BRG RET	12.229	45	FASTENER ALT

12.009 SUPPORT, BATTERY
서포트

12.010 BATTERY
배터리

12.011 CLAMP, BATTERY HOLD DOWN
클램프

12.012 STUD, BATTERY HOLD DOWN
스터드

12.013 FASTENER, BATTERY HOLD DOWN (AT CLAMP)
패스너

12.049 FASTENER, BATTERY SUPPORT
패스너

12.094 BRACKET, BATTERY SUPPORT
브라켓

14.025 CABLE, BATTERY TO STARTER
케이블

14.026 CABLE, BATTERY GROUND
케이블

14.042 FASTENER, BATTERY GROUND CABLE
패스너

14.147 CABLE, BATTERY NEGATIVE
케이블

15.822 WIRE, MACHINE GROUND EXTENSION
욱J潔紂電謬

18.161 FASTENER, GROUND WIRE
패스너

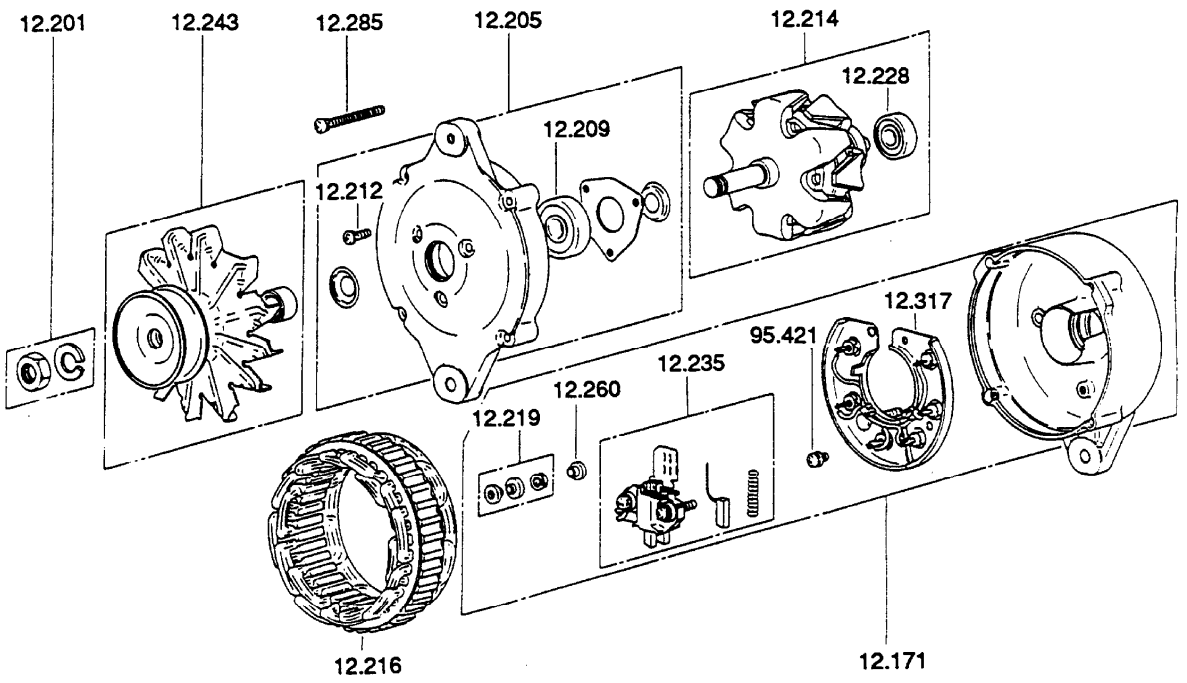

12.171 HOUSING, ALTERNATOR RECTIFIER
하우징

12.200 ALTERNATOR ASSEMBLY
알터네이터

12.201 FASTENER, ALTERNATOR PULLEY TO SHAFT
패스너

12.205 FRAME, ALTERNATOR DRIVE END
프레임

12.209 BEARING, ALTERNATOR DRIVE END
베어링

12.212 FASTENER, ALTERNATOR DRIVE END BEARING RETAINER PL
패스너

12.214 ROTOR ASSEMBLY, ALTERNATOR
로터

12.216 STATOR ASSEMBLY, ALTERNATOR
스테이터

12.219 TERMINAL PACKAGE, F1 & RELAY
터미널패키지

12.228	BEARING, ALTERNATOR SLIP RING FRAME END 베어링
12.235	BRUSH KIT, ALTERNATOR 브러쉬킷
12.243	FAN, ALTERNATOR 팬
12.260	INSULATOR, RECTIFIER MOUNTING 절연체
12.285	FASTENER, THROUGH 패스너
12.317	RECTIFIER ASSEMBLY, ALTERNATOR 정류기
95.421	FASTENER, ALTERNATOR RECTIFIER 패스너

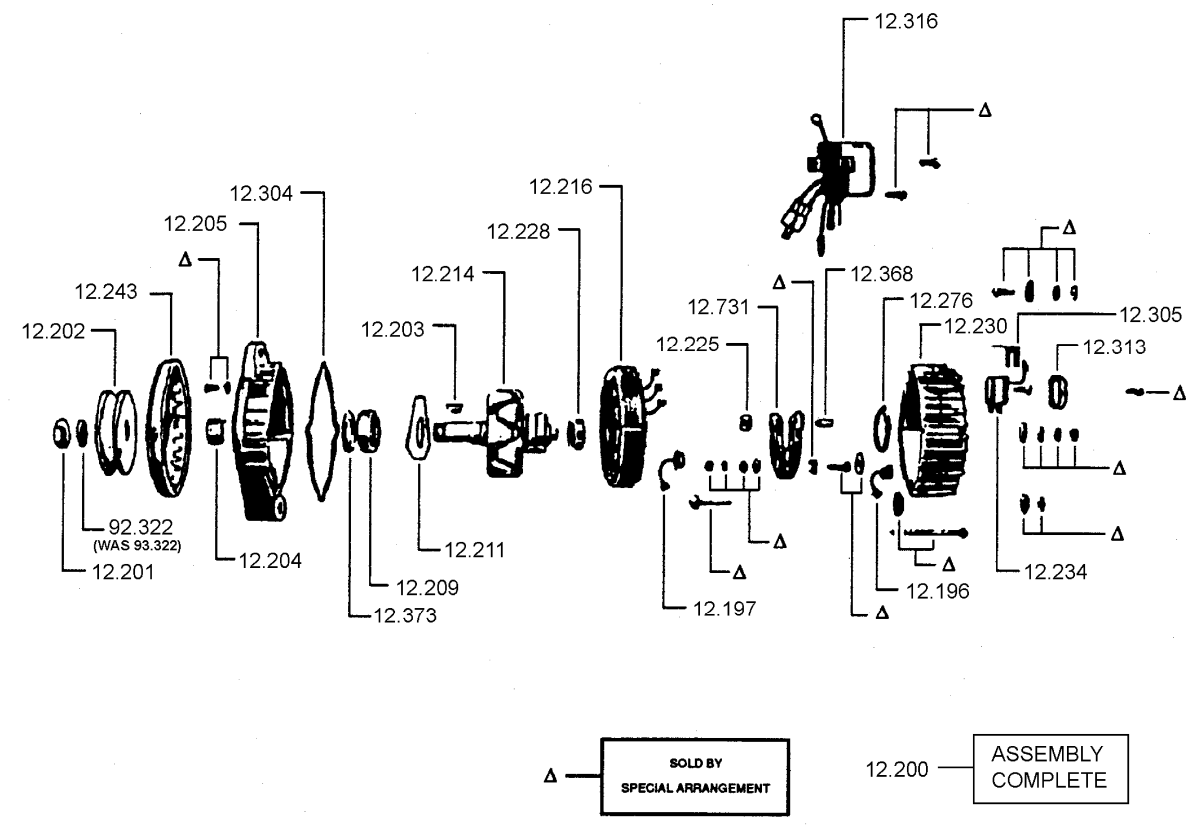

12.196 DIODE REC NEGATIVE
다이오드

12.197 DIODE REC POSITIVE
다이오드

12.200 ALTERNATOR ASSEMBLY
알터네이터

12.201 FASTENER, ALTERNATOR PULLEY TO SHAFT
패스너

12.202 PULLEY, ALTERNATOR
풀리

12.203 KEY, ALTERNATOR PULLEY
키

12.204 COLLAR, ALTERNATOR DRIVE END
칼라

12.205 FRAME, ALTERNATOR DRIVE END
프레임

12.209 BEARING, ALTERNATOR DRIVE END
베어링

12.211 RETAINER, ALTERNATOR DRIVE END BEARING
리테이너

12.214 ROTOR ASSEMBLY, ALTERNATOR
로터

12.216 STATOR ASSEMBLY, ALTERNATOR
스테이터

12.225 INSULATOR, ALTERNATOR HEAT SINK
절연체

12.228 BEARING, ALTERNATOR SLIP RING FRAME END
베어링

12.230 FRAME, ALTERNATOR SLIP RING END
프레임

12.234 BRUSH HOLDER, ALTERNATOR
브러쉬홀더

12.243 FAN, ALTERNATOR
팬

12.276 RETAINER, SLIP RING FRAME END BEARING
리테이너

12.304 SEAL, ALTERNATOR HOUSING
시일

12.305 INSULATOR, ALTERNATOR BRUSH LEAD
절연체

12.313 COVER, ALTERNATOR BRUSH ACCESS
커버

12.316 REGULATOR, ALTERNATOR VOLTAGE OUTPUT
레귤레이터

12.368 INSULATOR, TERMINAL
절연체

12.373 SEAL, ALTERNATOR DRIVE END BEARING
시일

12.731 SEAL, ALTERNATOR DRIVE END BEARING
시일

92.322 LOCKWASHER, ALTERNATOR PULLEY FASTENER
로크와셔

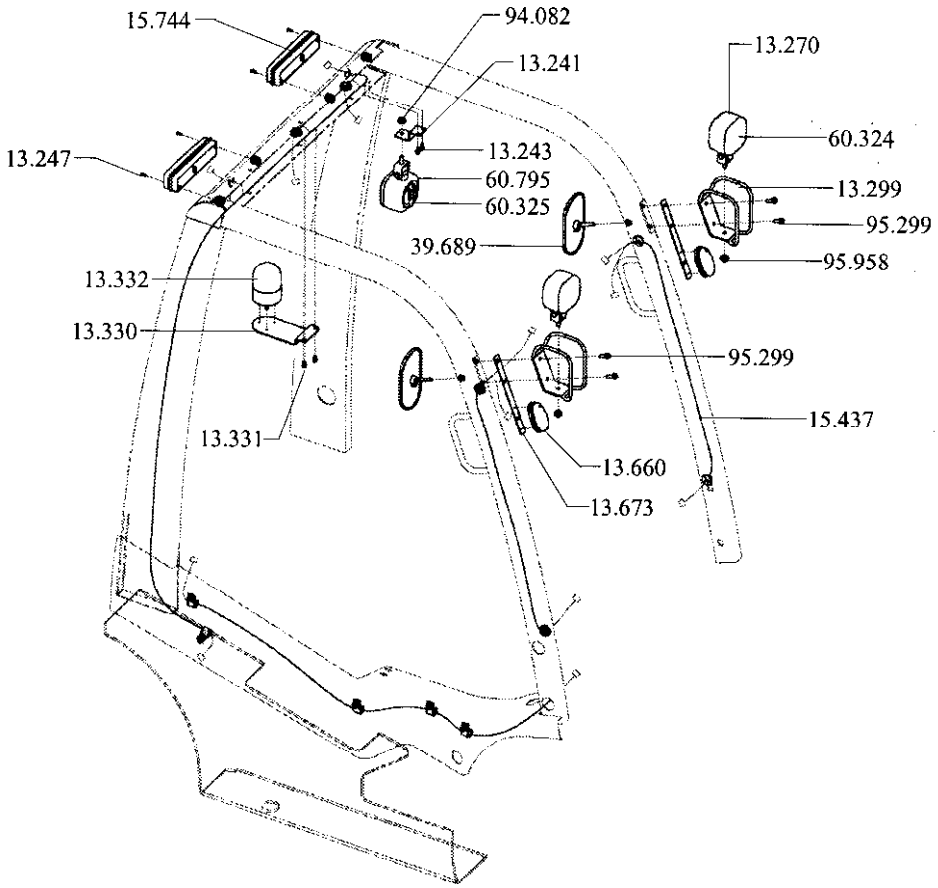

13.047	SWITCH, CIRCUIT LOCKING 스위치
14.238	HARNESS, DIRECTION CONTROL SWITCH WIRING 하네스
14.502	WIRE, IGNITION SWITCH TO ENGINE HARNESS 와이어
60.260	KEY, CIRCUIT LOCKING SWITCH 키

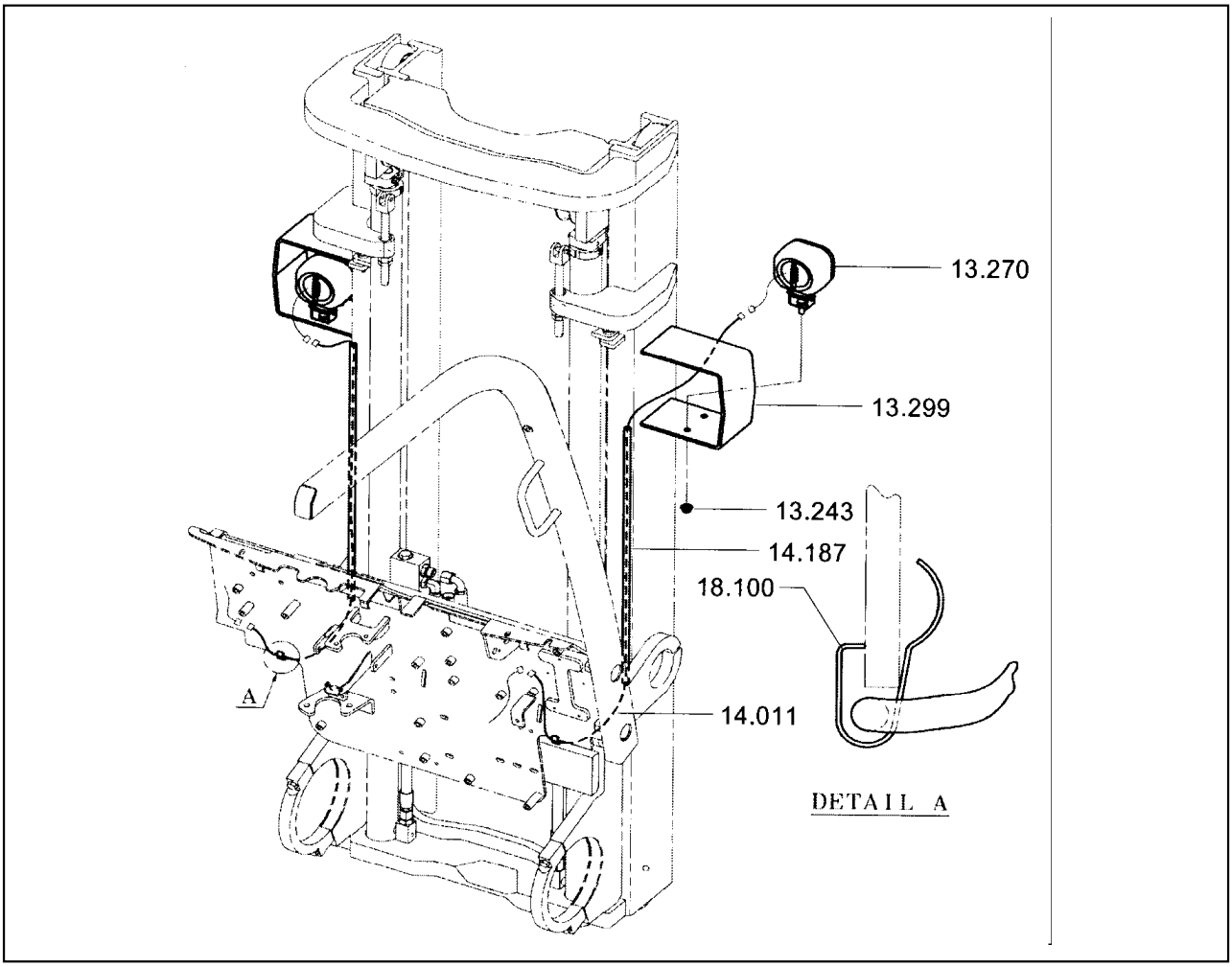

13.270 HEADLAMP, ADJUSTABLE
헤드램프

14.018 WIRE, HEADLIGHT
와이어

15.437 HARNESS, HEADLAMP WIRING
하네스

18.100 CLIP, HEAD LIGHT WIRE
클립

60.324 BULB, HEADLAMP
전구

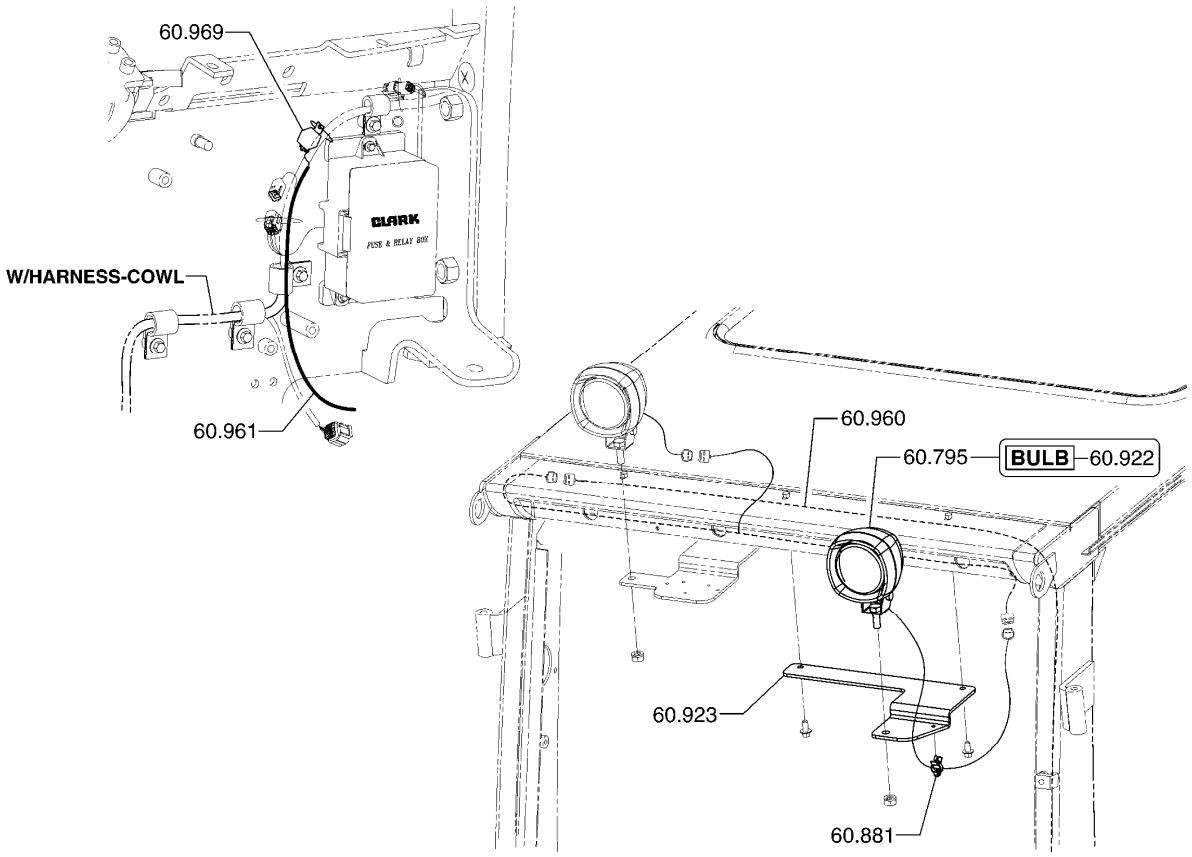

REAR WORK LIGHT INSTALLATION **13-044**

60.795 LIGHT, REAR WORK
라이트

60.881 CLIP,WORK LIGHT WIRE
클립

60.922 BULB, REAR WORK LAMP
전구

60.923 BRACKET, REAR WORK LAMP MOUNTING
브라켓

60.960 HARNESS, REAR WORK LAMP EXTENSION
*

60.961 HARNESS, REAR WORK LAMP SWITCH
*

60.969 RELAY, REAR WORK LIGHT
*

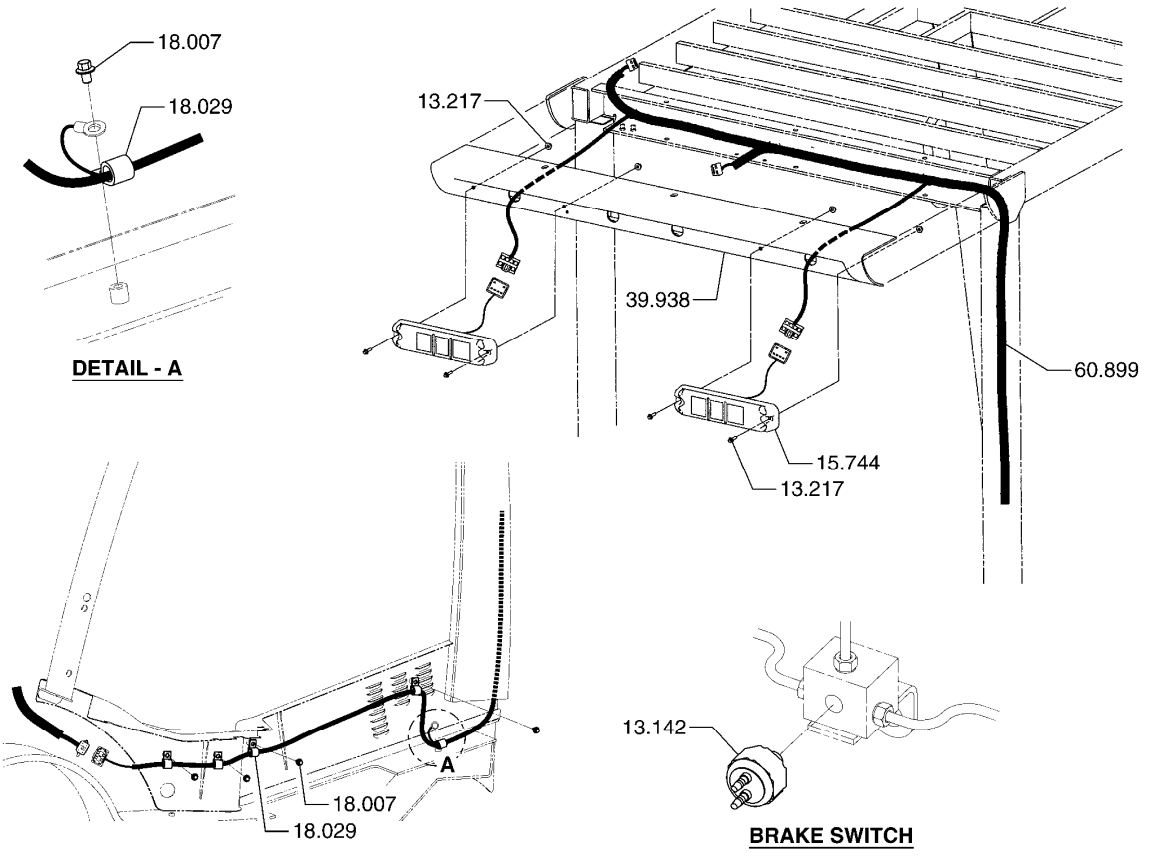

COMBINATION LAMP INSTALLATION **13-120**

13.142	SWITCH, BRAKE INTERLOCK 스위치
13.217	FASTENER, COM STOP & TAIL LAMP ASSY MTG 패스너
15.744	LAMP ASSEMBLY, COMBINATION STOP & TAIL 램프
18.007	FASTENER, HARNESS CLIP 패스너
18.029	CLIP, HARNESS 클립
39.938	BRACKET, OVERHEAD GUARD REAR SUPPORT 브라켓
60.899	WIRING HARNESS, REAR ACCESSORY 욱J潔紂電謬

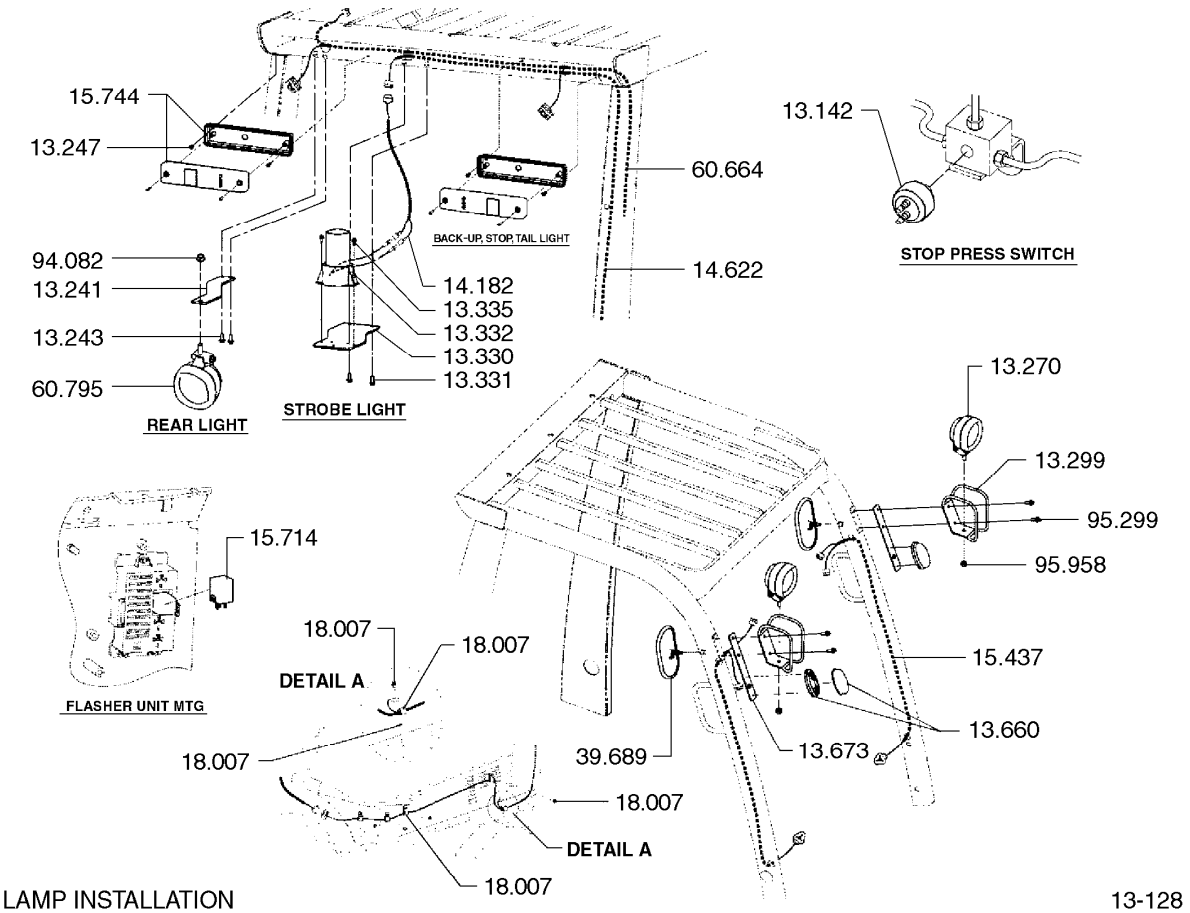

13.142 SWITCH, BRAKE INTERLOCK
스위치

13.241 BRACKET, HEAD LAMP
브라켓

13.243 FASTENER, HEAD LAMP BRACKET
패스너

13.247 FASTENER, TAIL LAMP ASSEMBLY
패스너

13.270 HEADLAMP, ADJUSTABLE
헤드램프

13.299 GUARD, HEADLIGHT
가드

13.330 BRACKET, WARNING LIGHT
브라켓

13.331 FASTENER, WARNING LIGHT BRACKET
패스너

13.332 ASSEMBLY, WARNING LIGHT
경고등

13.335	FASTENER, WARNING LIGHT 패스너
13.660	LIGHT, TURN SIGNAL 라이트
13.673	BRACKET, TURN LIGHT 브라켓
14.182	WIRE, WARNING LIGHT 와이어
14.622	HARNESS, TOWING LIGHTS 하네스
15.437	HARNESS, HEADLAMP WIRING 하네스
15.714	FLASHER, UNIT 플래셔
15.744	LAMP ASSEMBLY, COMBINATION STOP & TAIL 램프
18.007	FASTENER, HARNESS CLIP 패스너
39.689	MIRROR, REAR VIEW 미러
60.664	HARNESS, WARNING DEVICE 하네스
60.795	LIGHT, REAR WORK 라이트
94.082	NUT, HEADLAMP MOUNTING BRACKET FASTENER 너트
95.299	FASTENER, HEADLAMP GUARD 패스너
95.958	NUT, HEADLAMP GUARD FASTENER 너트

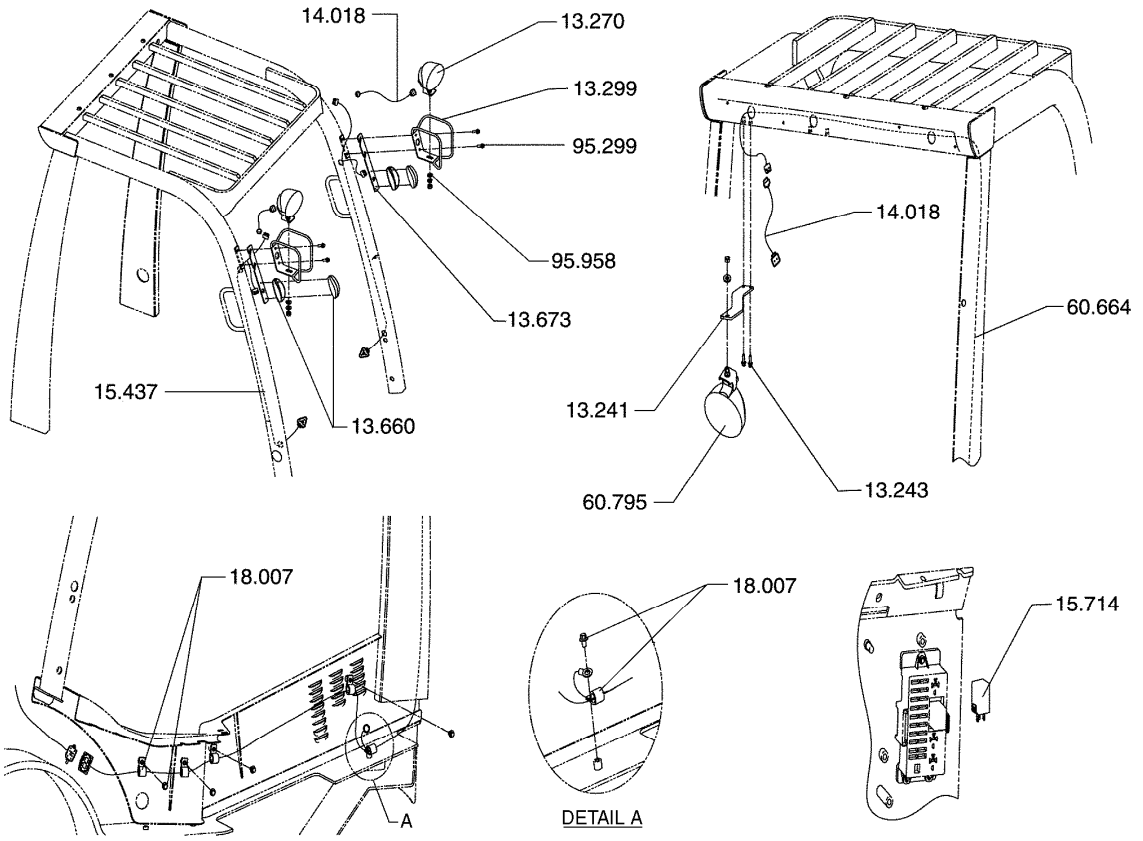

LED LIGHTS INSTALLATION **13-150**

13.241 BRACKET, HEAD LAMP
브라켓

13.243 FASTENER, HEAD LAMP BRACKET
패스너

13.270 HEADLAMP, ADJUSTABLE
헤드램프

13.299 GUARD, HEADLIGHT
가드

13.660 LIGHT, TURN SIGNAL
라이트

13.673 BRACKET, TURN LIGHT
브라켓

14.018 WIRE, HEADLIGHT
와이어

15.437 HARNESS, HEADLAMP WIRING
하네스

15.714 FLASHER, UNIT
플래셔

18.007	FASTENER, HARNESS CLIP 패스너
60.664	HARNESS, WARNING DEVICE 하네스
60.795	LIGHT, REAR WORK 라이트
95.299	FASTENER, HEADLAMP GUARD 패스너
95.958	NUT, HEADLAMP GUARD FASTENER 너트

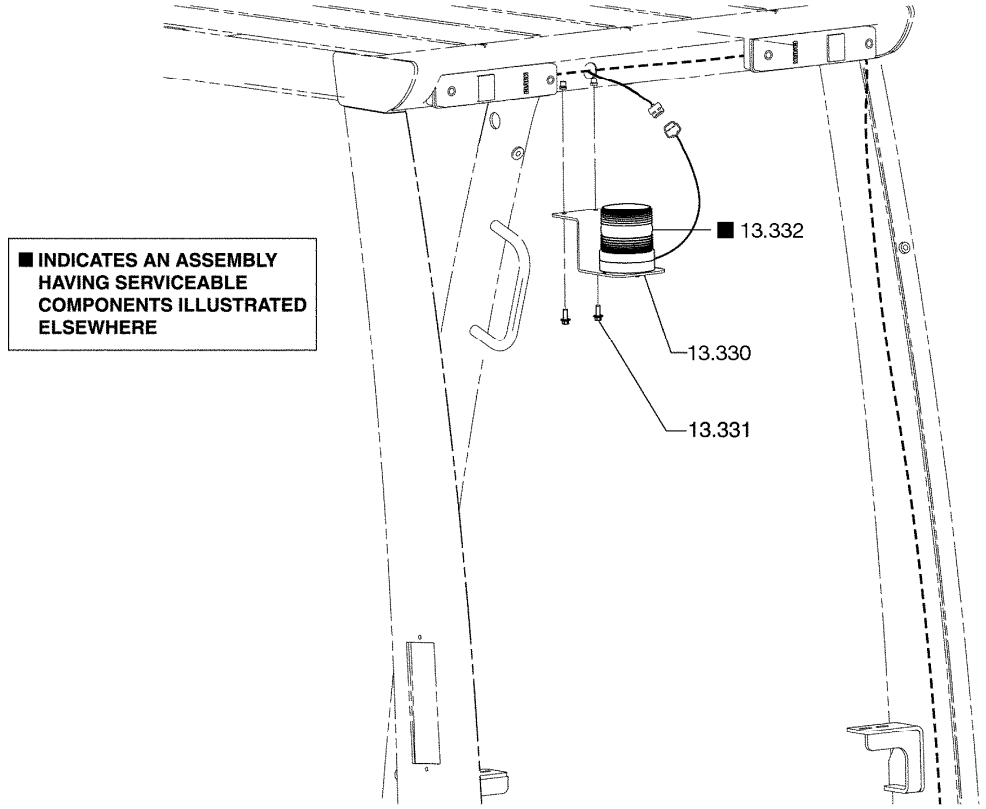

STROBE LIGHT MOUNTING **13-162**

13.330 BRACKET, WARNING LIGHT
브라켓

13.331 FASTENER, WARNING LIGHT BRACKET
패스너

13.332 ASSEMBLY, WARNING LIGHT
경고등

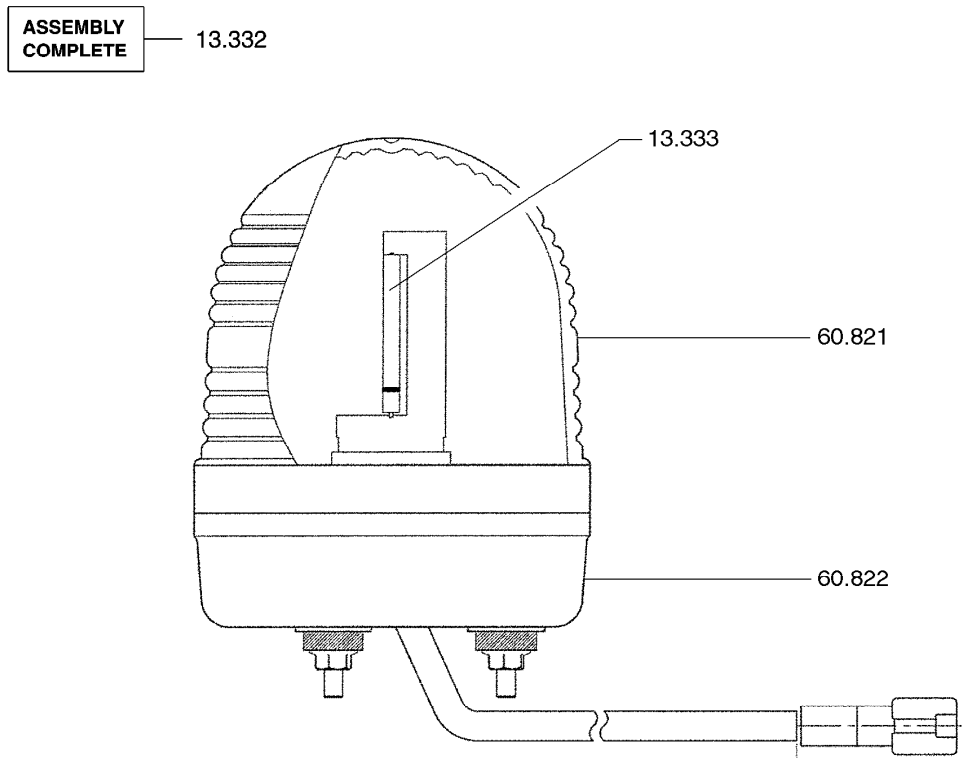

STROBE LIGHT **13-182**

13.332 ASSEMBLY, WARNING LIGHT
경고등

13.333 BULB, WARNING LIGHT
전구

60.821 GLOBE, STROBE LIGHT
글로브

60.822 BASE, STROBE LIGHT
베이스

■ INDICATES AN ASSEMBLY HAVING SERVICEABLE COMPONENTS ILLUSTRATED ELSEWHERE

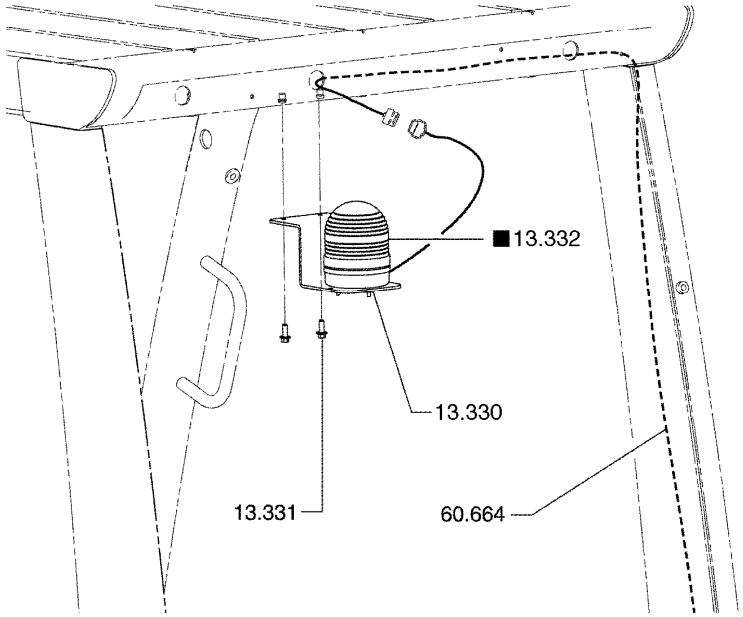

STROBE LIGHT MOUNTING **13-183**

13.330	BRACKET, WARNING LIGHT 브라켓
13.331	FASTENER, WARNING LIGHT BRACKET 패스너
13.332	ASSEMBLY, WARNING LIGHT 경고등
60.664	HARNESS, WARNING DEVICE 하네스

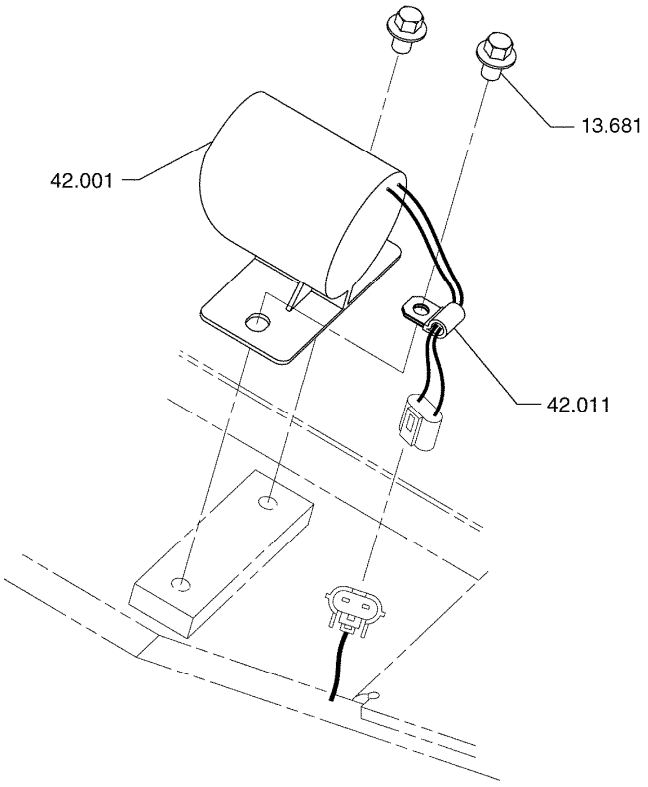

BACK-UP ALARM INSTALLATION **13-228**

13.681 FASTENER, WARNING DEVICE
패스너

42.001 WARNING DEVICE, AUDIBLE (AIR OPER)
경보장치

42.011 CLIP, AUDIBLE WARNING DEVICE CABLE
클립

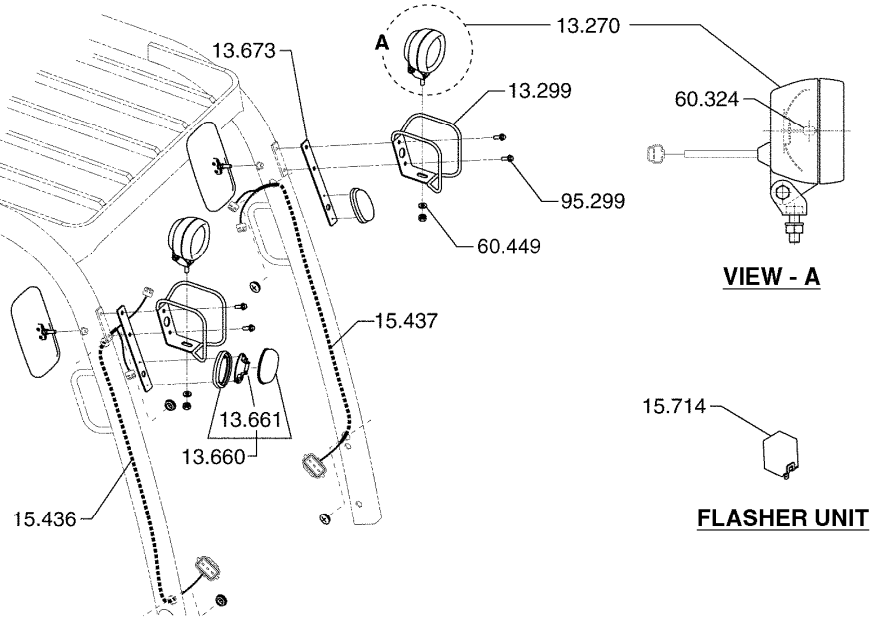

HEAD & T/SIGNAL LIGHT INSTALLATION **13-230**

13.270 HEADLAMP, ADJUSTABLE
헤드램프

13.299 GUARD, HEADLIGHT
가드

13.660 LIGHT, TURN SIGNAL
라이트

13.661 BULB, TURN SIGNAL LIGHT
전구

13.673 BRACKET, TURN LIGHT
브라켓

15.436 HARNESS, RH HEADLAMP WIRING
하네스

15.437 HARNESS, HEADLAMP WIRING
하네스

15.714 FLASHER, UNIT
플래셔

60.324 BULB, HEADLAMP
전구

60.449 SPACER, HEAD LAMP BRACKET MOUNTING
스페이서

95.299 FASTENER, HEADLAMP GUARD
패스너

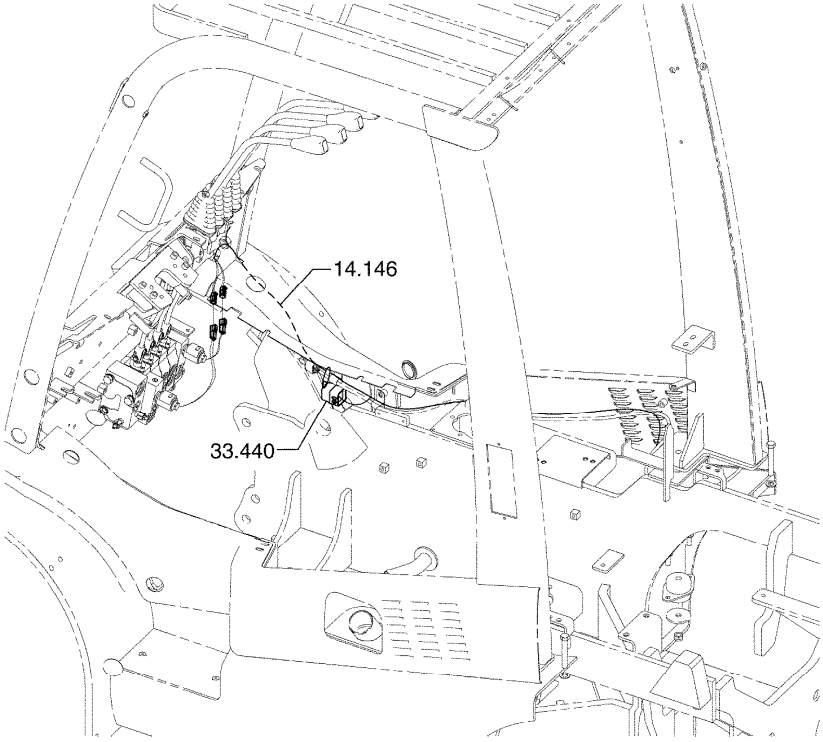

SOLENOID VALVE ELECTRIC MOUNTING **13-312**

14.146 HARNESS, VALVE SWITCH WIRING
하네스

33.440 RELAY, SOLENOID VALVE
릴레이

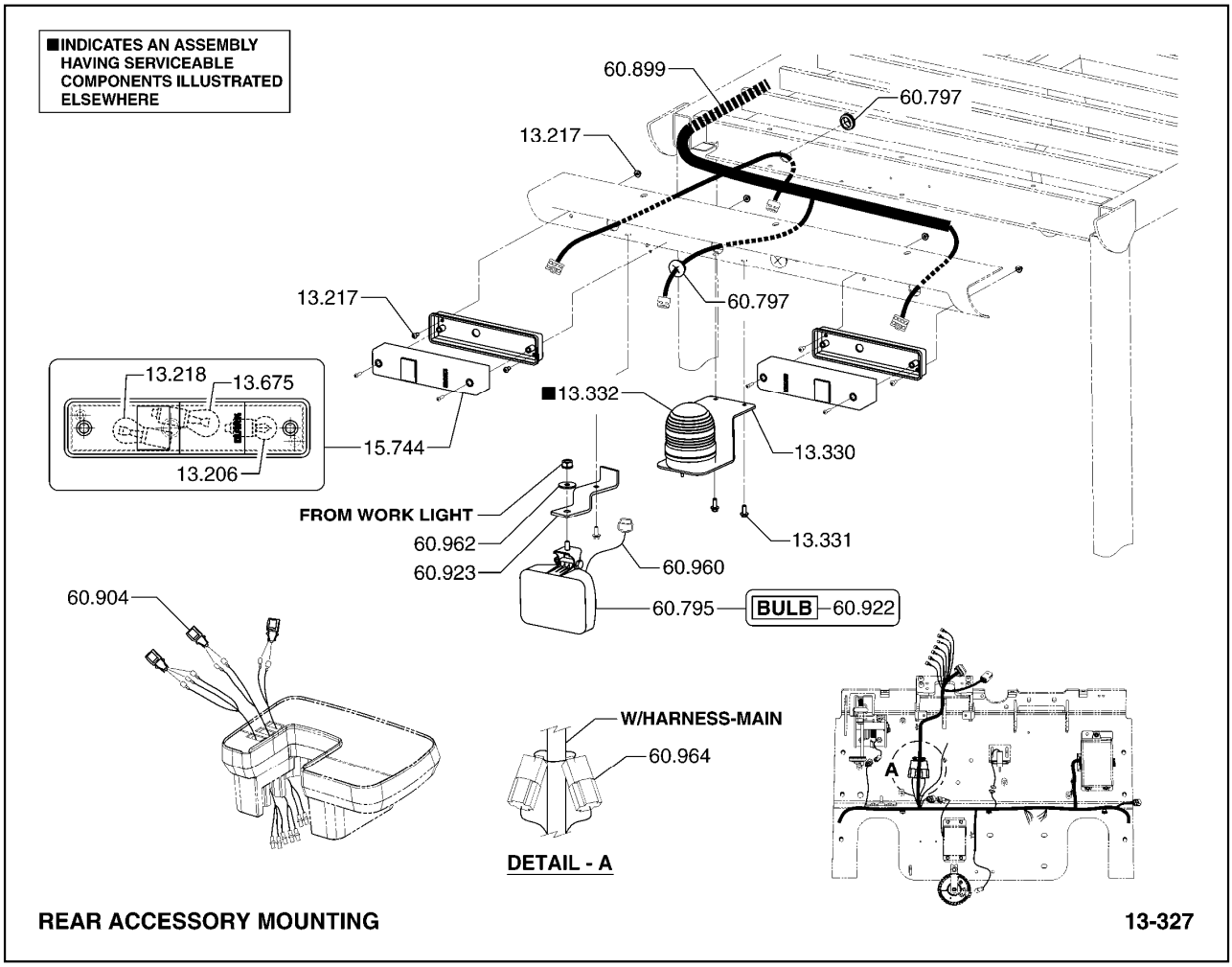

13.206 BULB, BACK-UP LAMP
전구

13.217 FASTENER, COM STOP & TAIL LAMP ASSY MTG
패스너

13.218 BULB, STOP & TAIL LAMP
전구

13.330 BRACKET, WARNING LIGHT
브라켓

13.331 FASTENER, WARNING LIGHT BRACKET
패스너

13.332 ASSEMBLY, WARNING LIGHT
경고등

13.675 BULB, TURN LIGHT
전구

15.744 LAMP ASSEMBLY, COMBINATION STOP & TAIL
램프

60.795 LIGHT, REAR WORK
라이트

60.797	GROMMET, REAR ACCESSORY WIRE 그룽멧
60.899	WIRING HARNESS, REAR ACCESSORY 욱J潔紂電謬
60.904	SWITCH, STROBE LIGHT 스J穎
60.922	BULB, REAR WORK LAMP 전구
60.923	BRACKET, REAR WORK LAMP MOUNTING 브라켓
60.960	HARNESS, REAR WORK LAMP EXTENSION *
60.962	SPACER, REAR WORK LAMP MOUNTING *
60.964	RELAY, FOOT BRAKE *

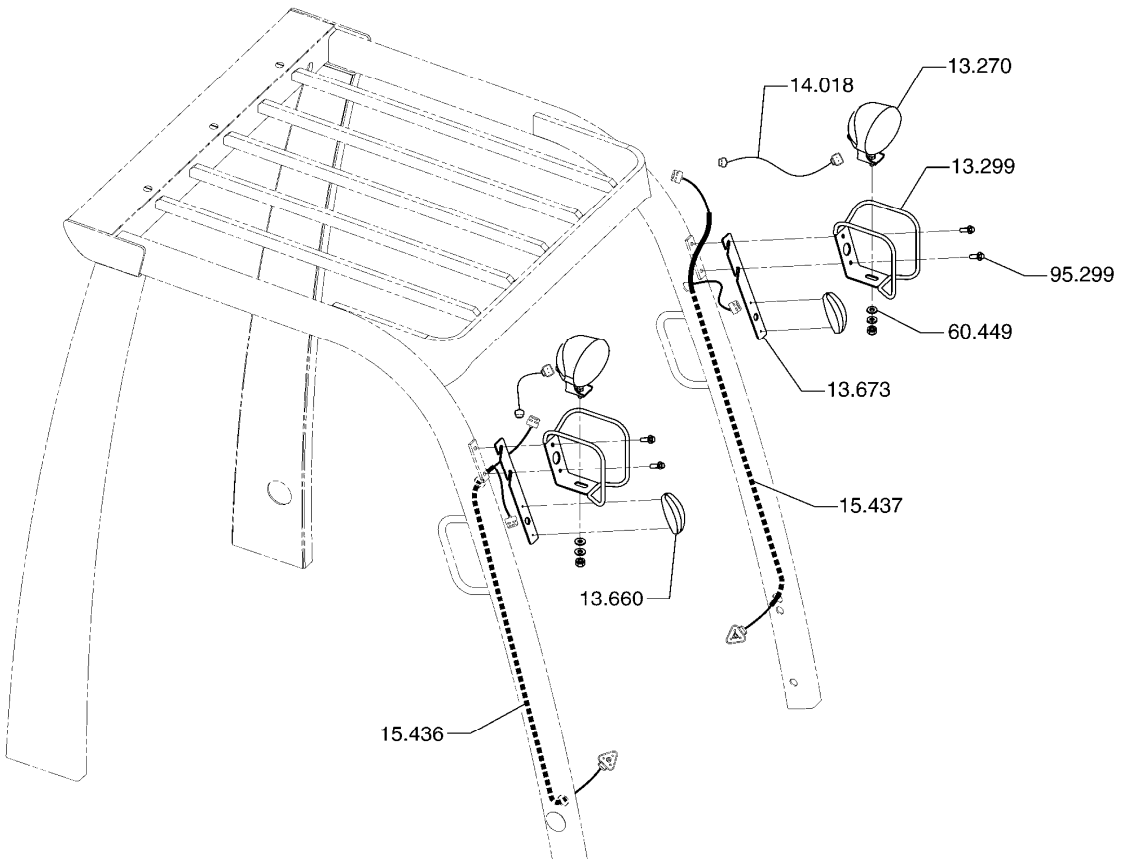

HEAD & T/SIGNAL LIGHT INSTALLATION **13-332**

13.270	HEADLAMP, ADJUSTABLE 헤드램프
13.299	GUARD, HEADLIGHT 가드
13.660	LIGHT, TURN SIGNAL 라이트
13.673	BRACKET, TURN LIGHT 브라켓
14.018	WIRE, HEADLIGHT 와이어
15.436	HARNESS, RH HEADLAMP WIRING 하네스
15.437	HARNESS, HEADLAMP WIRING 하네스
15.714	FLASHER, UNIT 플래셔
60.449	SPACER, HEAD LAMP BRACKET MOUNTING 스페이서

95.299 FASTENER, HEADLAMP GUARD
패스너

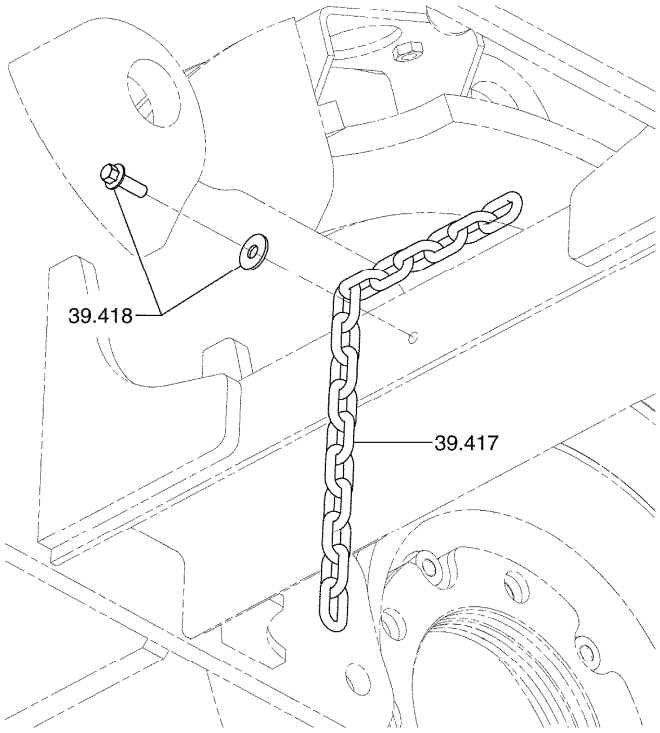

STATIC ELECTRICITY DISCHARGER **13-336**

39.417 GROUND STRAP, ELECTRIC TRUCK
접지케이블

39.418 FASTENER, ELECTRIC TRUCK GROUND STRAP
패스너

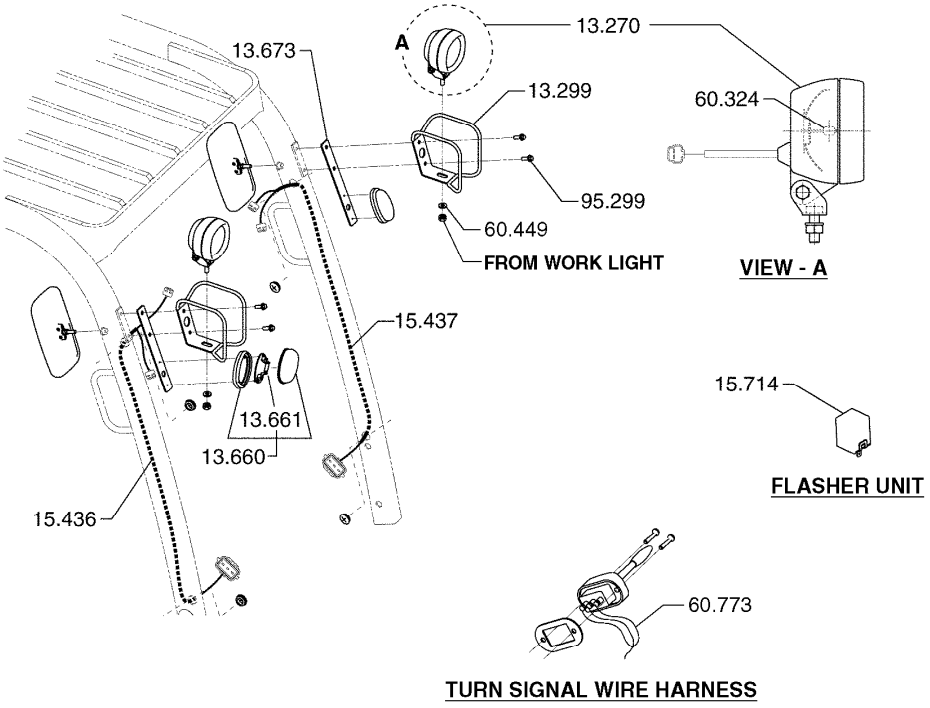

HEAD & T/SIGNAL LIGHT INSTALLATION **13-338**

13.270 HEADLAMP, ADJUSTABLE
헤드램프

13.284 BRACKET, ADJUSTABLE HEADLAMP
브라켓

13.285 FASTENER, ADJUSTABLE HEADLAMP BRACKET
패스너

13.299 GUARD, HEADLIGHT
가드

13.660 LIGHT, TURN SIGNAL
라이트

13.661 BULB, TURN SIGNAL LIGHT
전구

13.673 BRACKET, TURN LIGHT
브라켓

15.436 HARNESS, RH HEADLAMP WIRING
하네스

15.437 HARNESS, HEADLAMP WIRING
하네스

15.714	FLASHER, UNIT 플래셔
60.324	BULB, HEADLAMP 전구
60.449	SPACER, HEAD LAMP BRACKET MOUNTING 스페이서
60.773	HARNESS, TURN SIGNAL 하네스
95.299	FASTENER, HEADLAMP GUARD 패스너

2	HARNESS, CONTROL CIRCUIT WIRING	14.050	16	CABLE, DRIVE
3	CLIP, CONTROL CIRCUIT WIRING HARNESS	18.025	17	CABLE, DRIVE
4	STRAP, HARNESS	18.027	18	CABLE, DRIVE
5	RECEPTACLE & CABLE, BATTERY	14.039	19	CABLE, DRIVE
6	RECEPTACLE, BATTERY CABLE	14.040	20	WIRE ASSEMBLY
7	WIRE ASSEMBLY, PUMP SOLENOID TO VALVE	14.163	21	FASTENER, BAT
8	WIRE ASSEMBLY, PUMP SOLENOID JUMPER	14.164	22	PLATE, RECEPT
9	WIRE ASSEMBLY, PUMP SOL TO PUMP MOTOR	14.047	23	FASTENER, REC
0	CABLE, BATTERY NEGATIVE	14.147	24	WIRE, DRIVE M
1	CABLE, RESISTOR TO B/	14.148	25	WIRE, PLUGGIN
2	WIRE ASSEMBLY, RESISTOR TO H/SPD CONT	14.221	26	WIRE, DIODE T
3	WIRE ASSEMBLY, RESISTOR TO H/SPD CONT	14.257	27	WIRE, DIODE T
4	CABLE, DRIVE MOTOR (A2)	14.087	28	CONNECTOR, AU
5	CABLE, DRIVE MOTOR (A1)	14.086		

13.000 PANEL, INSTRUMENT CLUSTER
판넬

13.003 HORN
혼

13.004 FASTENER, HORN MOUNTING BRACKET
패스너

13.079 FASTENER, INSTRUMENT CLUSTER TO INST PANEL
패스너

14.352 FUSE, CONTROL CIRCUIT
퓨즈

15.433 GROMMET, CONTROL CIRCUIT WIRING HARNESS
그로멧

15.447 DIODE, HARNESS
다이오드

15.640 WIRING HARNESS, MACHINE COWL
와이어하네스

15.710 RELAY, ELECTRICAL
릴레이

18.009	FASTENER, HARNESS CLIP 패스너
18.010	CLIP, HARNESS 클립
18.011	FASTENER, HARNESS CLIP 패스너
18.012	CLIP, WIRE HARNESS 클립
18.014	CLIP, HARNESS 클립
18.020	CLIP, HARNESS 클립
60.383	GROMMET, CONTROL CIRCUIT WIRING HARNESS 그로멧
65.289	BODY, FUSE BOX *
65.832	COVER, FUSE BOX 커버
95.009	FASTENER, FUSE BOX MOUNTING 패스너

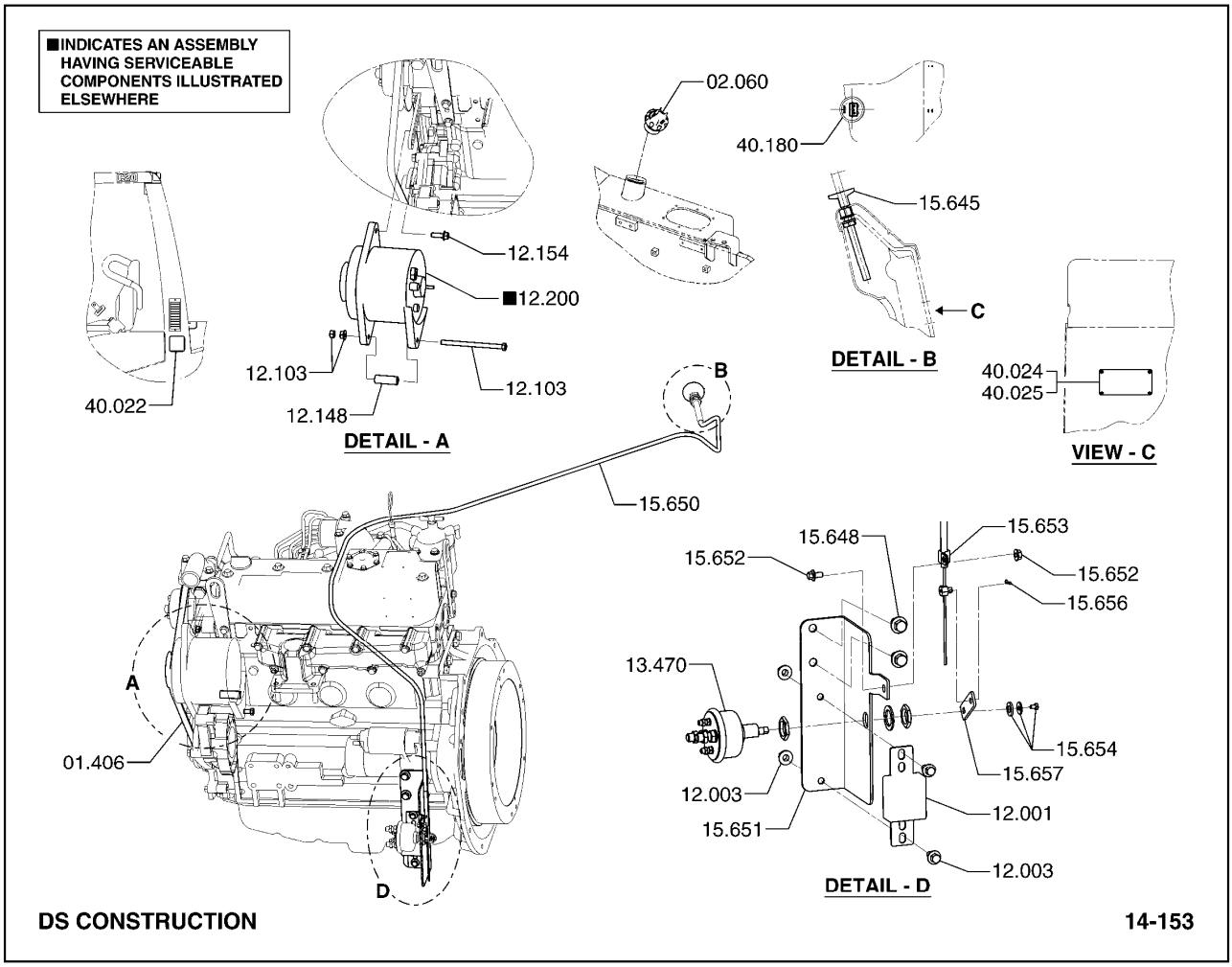

01.406 BELT, FAN
븜트셋

02.060 CAP, FUEL TANK
캡

12.001 REGULATOR, VOLTAGE
레귤레이터

12.003 FASTENER, VOLTAGE REGULATOR
패스너

12.103 FASTENER, ALTERNATOR TO BRACKET
패스너

12.148 SPACER, ALTERNATOR MOUNTING
스페이서

12.154 FASTENER, ALTERNATOR MOUNTING
패스너

12.200 ALTERNATOR ASSEMBLY
알터네이터

13.470 SWITCH, DISCONNECT
스위치

15.645 KNOB, DISCONNECT SWITCH ACTUATING
노브

15.648 FASTENER, DISCONNECT SWITCH MOUNTING BRACKET
패스너

15.650 CABLE, DISCONNECT SWITCH TO KNOB
케이블

15.651 BRACKET, DISCONNECT SWITCH MOUNTING
브라켓

15.652 FASTENER, DISCONNECT SWITCH CLAMP
?스너

15.653 CLAMP, DISCONNECT SWITCH CABLE
클룟프

15.654 FASTENER, DISCONNECT SWITCH BRACKET TO LEVER
패스너

15.656 PIN, DISCONNECT SWITCH CABLE LEVER
핀

15.657 LEVER, DISCONNECT SWITCH ACTUATING
레버

40.022 DECAL, UNDERWRITERS LABEL
데칼

40.024 PLATE, UNDERWRITERS LABEL
플레이트

40.025 FASTENER, UNDERWRITERS LABEL PLATE
패스너

40.180 DECAL, BATTERY DISCONNECT SWITCH
데칼

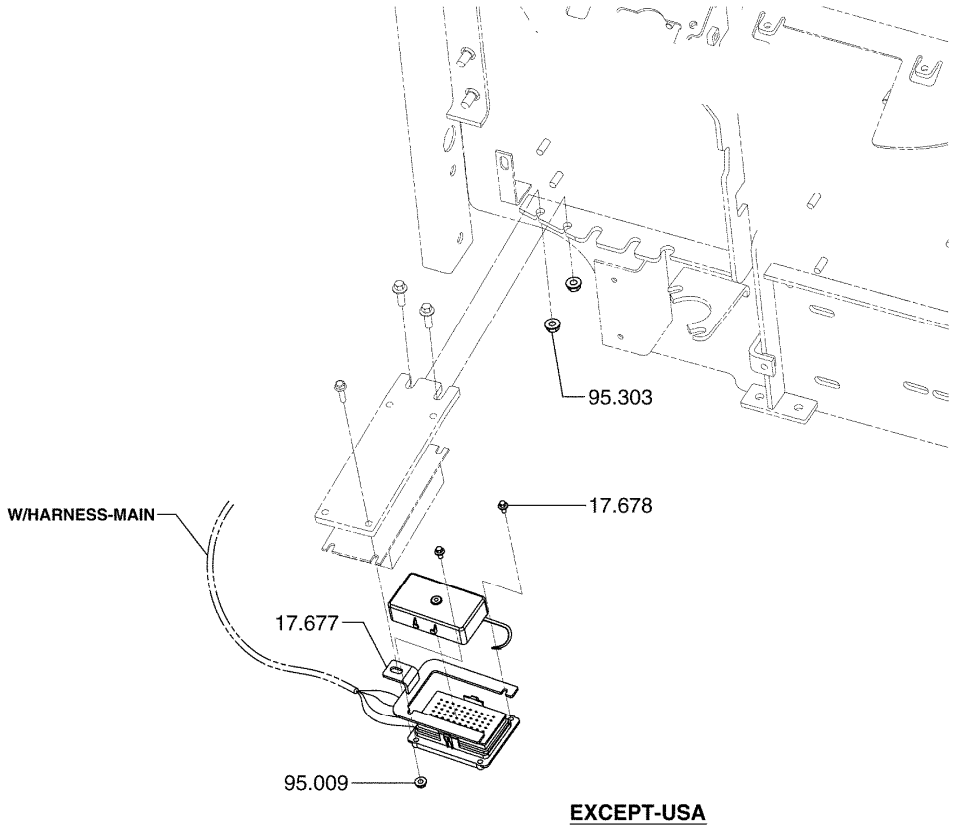

ELECTRICAL COMPONENTS **14-267**

01.854 SENSOR, ENGINE COOLANT TEMPERATURE
센서

11.001 RELAY, STARTER
릴레이

11.002 FASTENER, STARTER RELAY
패스너

13.070 SENDER, FUEL GAUGE
센더

13.071 GASKET, FUEL GAUGE SENDER
가스켓

13.072 FASTENER, FUEL GAUGE SENDER
패스너

13.140 STRAINER, FUEL GAGE SENDER
*

14.114 HARNESS, MACHINE WIRING
하네스

18.000 CLIP, WIRING HARNESS
클립

18.001	FASTENER, WIRING HARNESS CLIP 패스너
18.002	CLIP, WIRING HARNESS 클립
18.004	CLIP, WIRING HARNESS 클립
18.008	CLIP, WIRING HARNESS 클립
18.094	BRACKET, WIRE HARNESS STRAP 브라켓
96.200	FASTENER, WIRING HARNESS GROUND 패스너
97.271	FASTENER, CABLE & WIRE TO ALTERNATOR *
97.272	FASTENER, CABLE & WIRE TO STARTER *

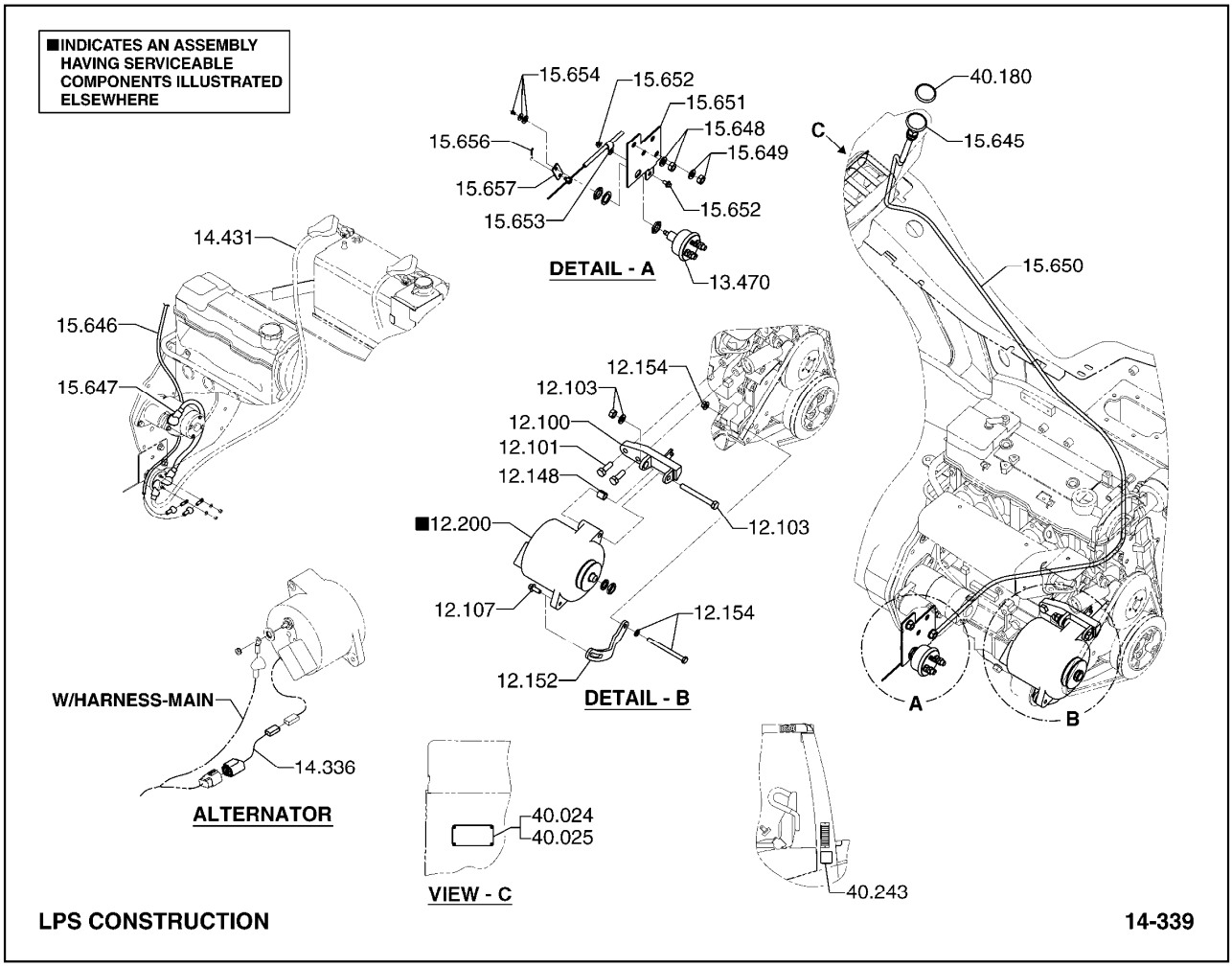

12.100 BRACKET, ALTERNATOR MOUNTING
브라켓

12.101 FASTENER, ALTERNATOR BRACKET
패스너

12.103 FASTENER, ALTERNATOR TO BRACKET
패스너

12.107 FASTENER, ADJUSTING STRAP TO ALTERNATOR
패스너

12.148 SPACER, ALTERNATOR MOUNTING
스페이서

12.152 BRACKET, ALTERNATOR ADJUSTING STRAP
브라켓

12.154 FASTENER, ALTERNATOR MOUNTING
패스너

12.200 ALTERNATOR ASSEMBLY
알터네이터

13.470 SWITCH, DISCONNECT
스위치

14.336	HARNESS, ALTERNATOR 하네스
14.431	CABLE, BATTERY TO DISCONNECT SWITCH 케이블
15.645	KNOB, DISCONNECT SWITCH ACTUATING 노브
15.646	HARNESS, ENGINE DISCONNECT 하네스
15.647	CABLE, DISCONNECT SWITCH TO STARTER 케이블
15.648	FASTENER, DISCONNECT SWITCH MOUNTING BRACKET 패스너
15.649	FASTENER, DISCONNECT SWITCH MOUNTING BRACKET 패스너
15.650	CABLE, DISCONNECT SWITCH TO KNOB 케이블
15.651	BRACKET, DISCONNECT SWITCH MOUNTING 브라켓
15.652	FASTENER, DISCONNECT SWITCH CLAMP ?스너
15.653	CLAMP, DISCONNECT SWITCH CABLE 클룻프
15.654	FASTENER, DISCONNECT SWITCH BRACKET TO LEVER 패스너
15.656	PIN, DISCONNECT SWITCH CABLE LEVER 핀
15.657	LEVER, DISCONNECT SWITCH ACTUATING 레버
40.024	PLATE, UNDERWRITERS LABEL 플레이트
40.025	FASTENER, UNDERWRITERS LABEL PLATE 패스너
40.180	DECAL, BATTERY DISCONNECT SWITCH 데칼
40.243	DECAL, LPS 데칼

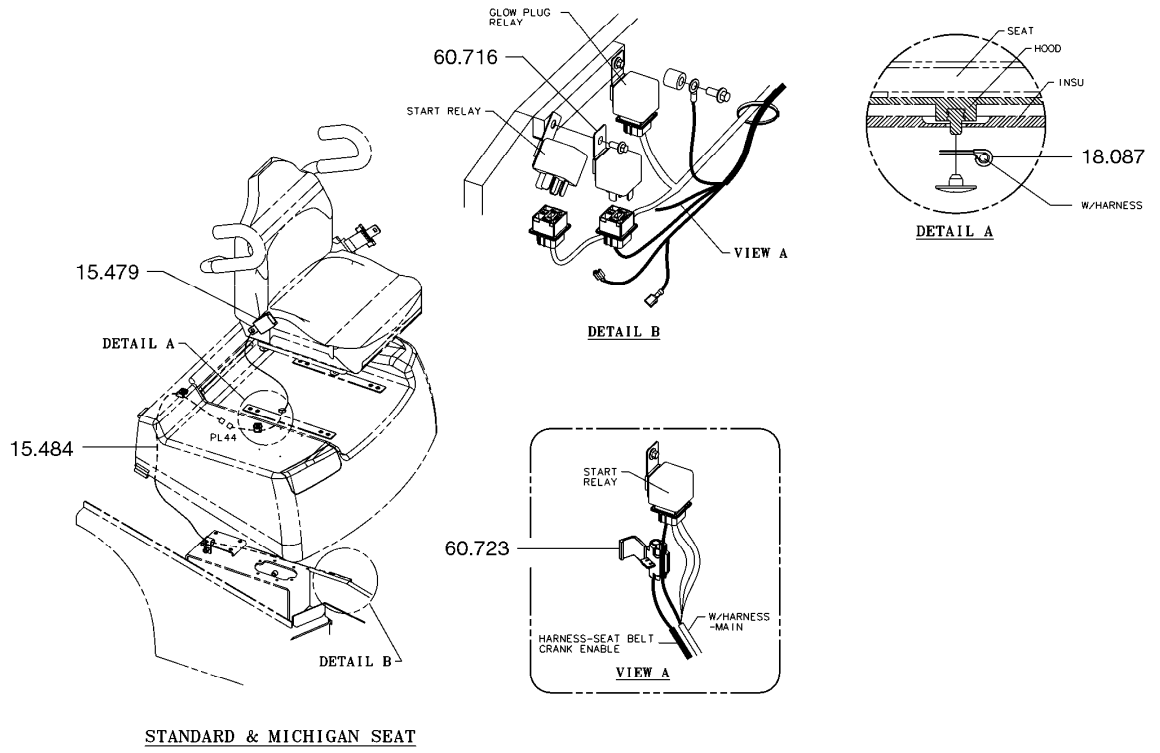

SEAT OPERATED BRAKE 14-878

15.479 SWITCH, SEAT INSTALLATION
스위치

15.484 HARNESS, SEAT SWITCH INSTALLATION
하네스

18.087 CLIP, SEAT SAFETY SWITCH WIRE
클립

60.716 RELAY, SAFETY START
릴레이

60.723 CONNECTOR, SEAT SWITCH WIRING
커넥터

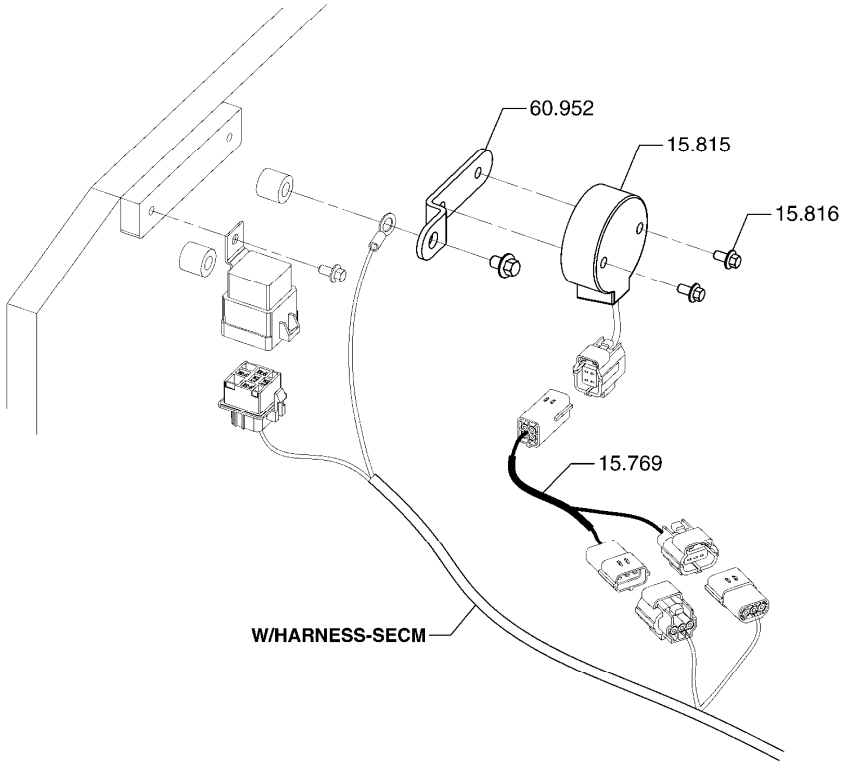

DELAY TIMER MOUNTING **15-074**

15.769 WIRE HARNESS, TIMER DELAY
와이어하네스

15.815 TIMER, FUEL BLOCK SOLENOID
타이머

15.816 FASTENER, FUEL BLOCK SOLENOID TIMER
패스너

60.952 BRACKET, ENGINE CONDITION SIGNAL RELAY SUPPORT
브라켓

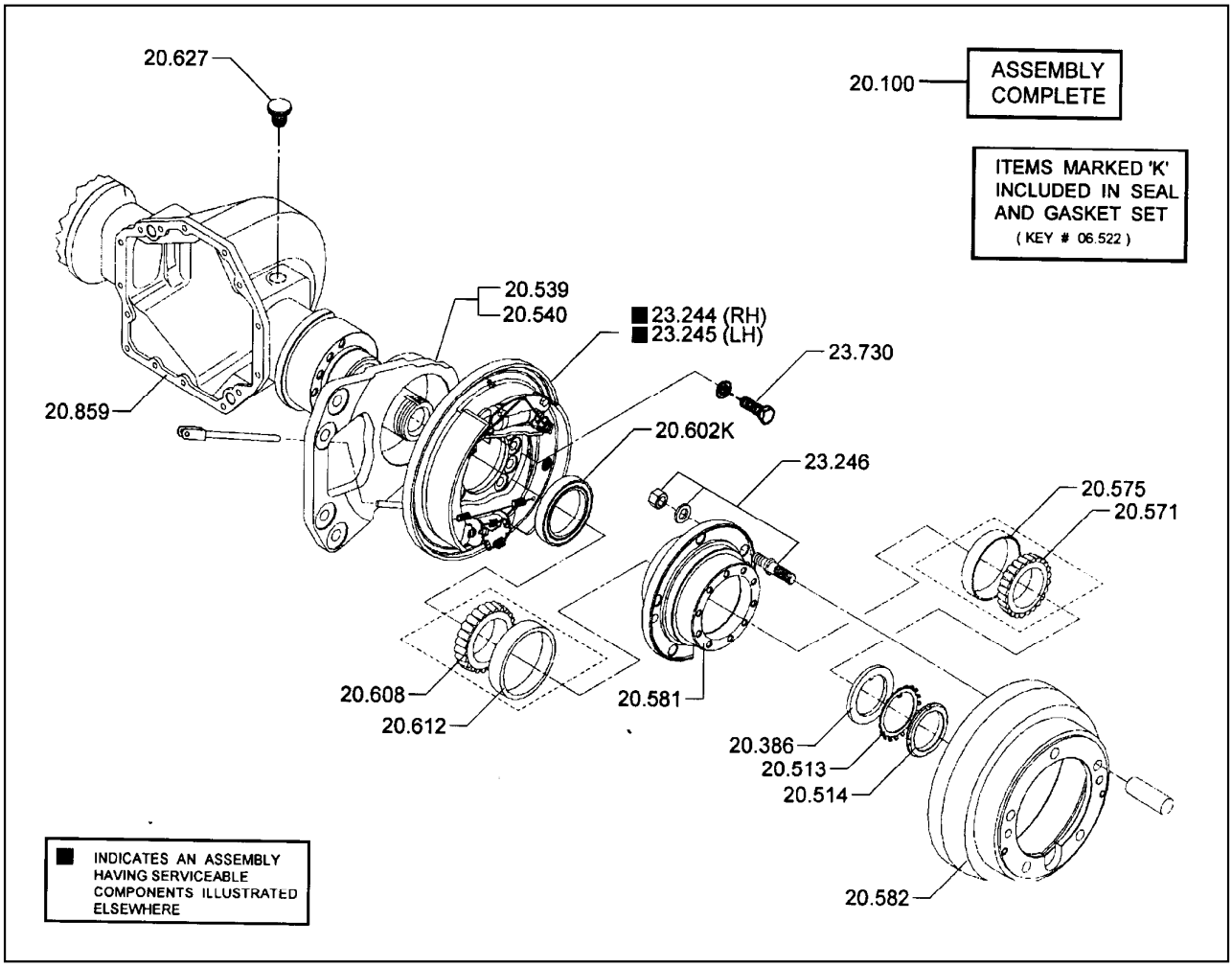

20.100 TRANSAXLE ASSEMBLY
트랜스액슬

20.386 WASHER, DRIVE AXLE HUB SEAL
와셔

20.513 RETAINER, DRIVE AXLE HUB BEARING
리테이너

20.514 LOCKPLATE, DRIVE AXLE HUB BEARING RETAINER
로크플레이트

20.539 SUPPORT, DRIVE AXLE SPINDLE (RH)
서포트

20.540 SUPPORT, DRIVE AXLE SPINDLE (LH)
서포트

20.571 CONE, DRIVE AXLE HUB OUTER BEARING
콘

20.575 CUP, DRIVE AXLE HUB OUTER BEARING
컵

20.581 HUB ASSEMBLY, DRIVE AXLE
허브

20.582	HUB, DRIVE WHEEL 허브
20.602	SEAL, DRIVE AXLE HUB INNER OIL 시일
20.608	CONE, DRIVE AXLE HUB INNER BEARING 콘
20.612	CUP, DRIVE AXLE HUB INNER BEARING 컵
20.627	VENT, DIFFERENTIAL & AXLE 벤트
20.859	HOUSING, DRIVE AXLE 하우징
23.244	BRAKE ASSEMBLY, RH DRIVE WHEEL 브레이크
23.245	BRAKE ASSEMBLY, LH DRIVE WHEEL 브레이크
23.246	FASTENER, BRAKE ASSEMBLY 패스너
23.730	FASTENER, BRAKE ASSEMBLY 패스너

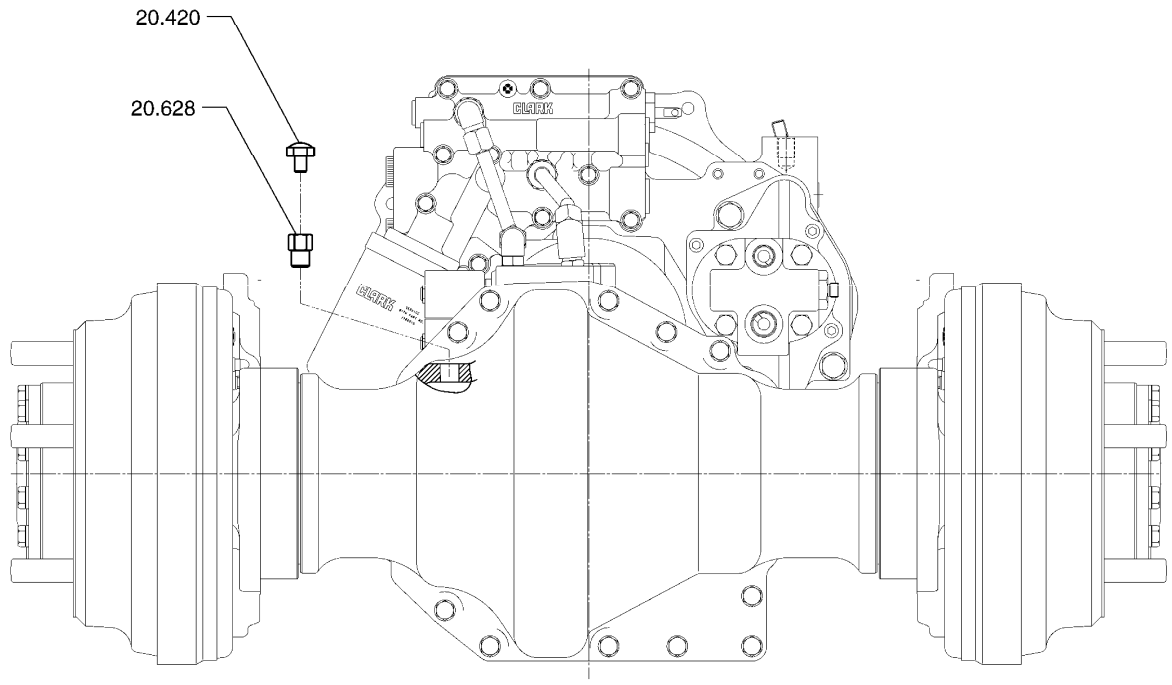

DRIVE AXLE FILTER BREATHER MOUNTING **20-268**

20.420 BREATHER, DRIVE AXLE
*

20.628 ADAPTOR, DRIVE AXLE BREATHER VENT
어댑톼

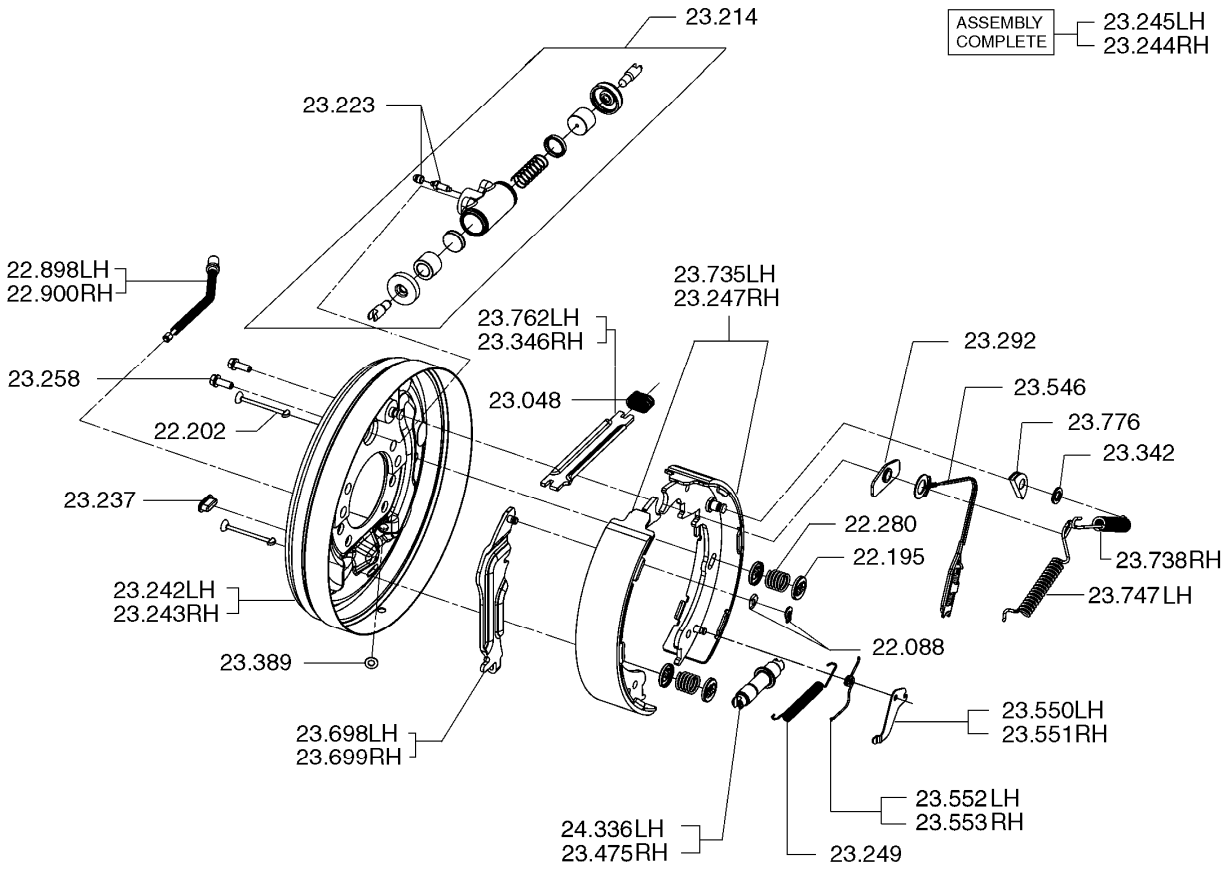

22.088	RETAINER, PARKING BRAKE LINKAGE LEVER FULCRUM 리테이너	23.249	SPRING, LH BRAKE RETURN 스프링
22.195	CUP, BRAKE SHOE GUIDE 컵	23.258	FASTENER, LH WHEEL CYLINDER 패스너
22.202	PIN, BRAKE CABLE CLEVIS 핀	23.292	ANCHOR, BRAKE SHOE 앵커
22.280	SPRING, BRAKE SHOE GUIDE PIN 스프링	23.342	FASTENER, BRAKE SPRING ANCHOR 패스너
22.898	CABLE, PARKING BRAKE DRAW - LH 케이블	23.346	ARM, PARKING BRAKE 암
22.900	CABLE, PARKING BRAKE DRAW - RH 케이블	23.389	RETAINER, PARKING BRAKE CABLE 리테이너
23.048	SPRING, PARKING BRAKE OPERATING ARM ANTI-RATTLE 스프링	23.475	ADJUSTOR, BRAKE SHOE 어드져스터
23.214	CYLINDER ASSEMBLY, LH BRAKE 실린더	23.546	CABLE, BRAKE ADJUSTER (RH) 케이블
23.223	BLEEDER, BRAKE WHEEL CYLINDER 블리더	23.550	LEVER, BRAKE ADJUSTER (LH) 레버
23.237	COVER, RH BRAKE ADJUSTOR 커버	23.551	LEVER, BRAKE ADJUSTER (RH) 레버
23.242	PLATE, LH BRAKE BACKING 플레이트	23.552	SPRING, BRAKE ADJUSTER (LH) 스프링
23.243	PLATE, RH BRAKE BACKING 플레이트	23.553	SPRING, BRAKE ADJUSTER (RH) 스프링
23.244	BRAKE ASSEMBLY, RH DRIVE WHEEL 브레이크	23.698	LEVER, PARKING BRAKE OPERATING LH 레버
23.245	BRAKE ASSEMBLY, LH DRIVE WHEEL 브레이크	23.699	ARM, BRAKE ADJUSTOR REACTION LH 암
23.247	SHOE SET, BRAKE LINING 슈	23.735	SHOE & LINING SET, BRAKE 슈와라이닝

23.738 SPRING, BRAKE SHOE RETURN (RH)
스프링

23.747 SPRING, BRAKE SHOE RETURN (LH)
스프링

23.762 ARM, PARKING BRAKE OPERATING
암

23.776 SHEAVE, PARKING BRAKE CABLE
쉬브

24.336 ADJUSTOR, BRAKE SHOE LH
어드져스터

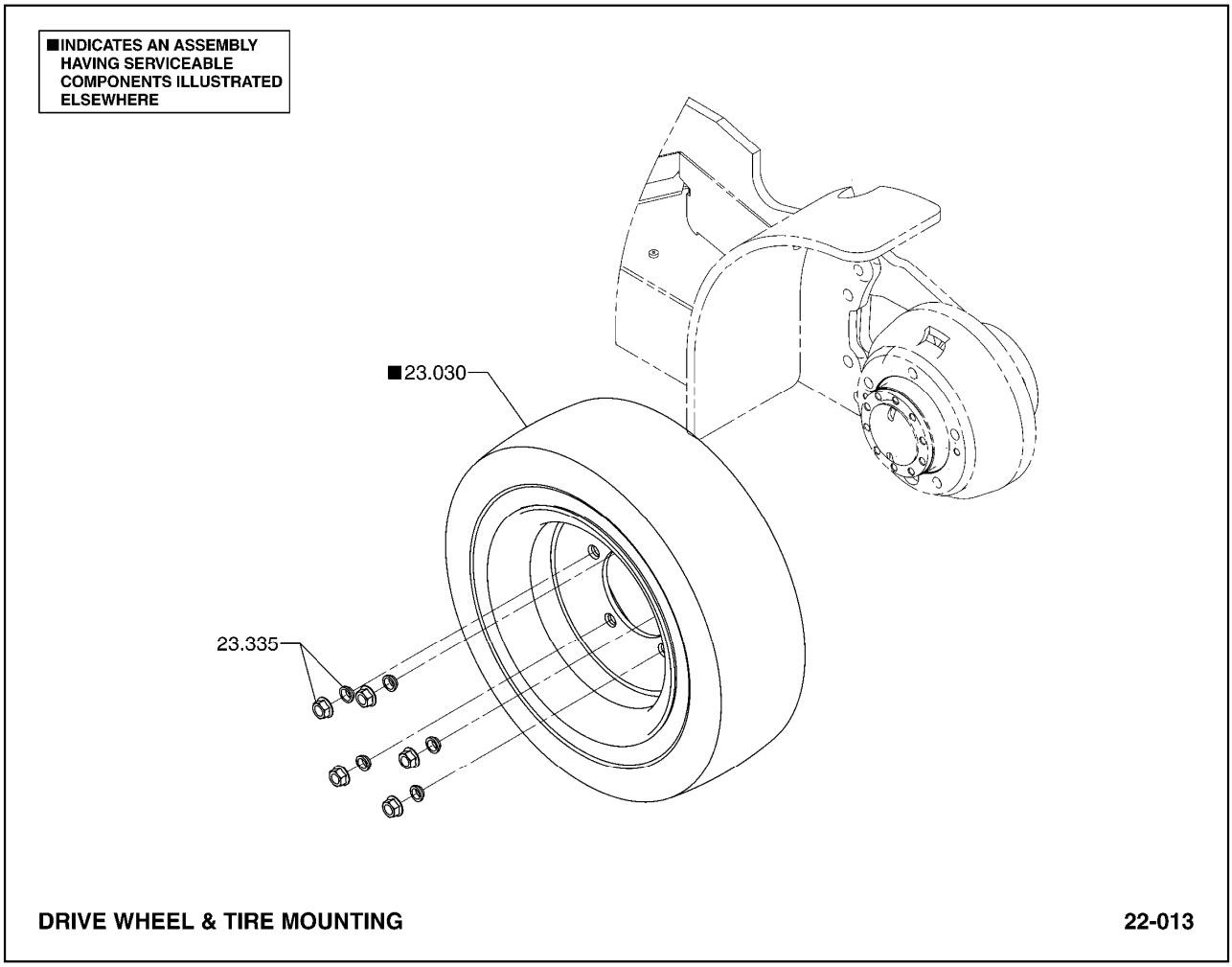

23.030 DRIVE WHEEL AND TIRE ASSEMBLY
드라이브휠타이어

23.335 FASTENER, DRIVE WHEEL
패스너

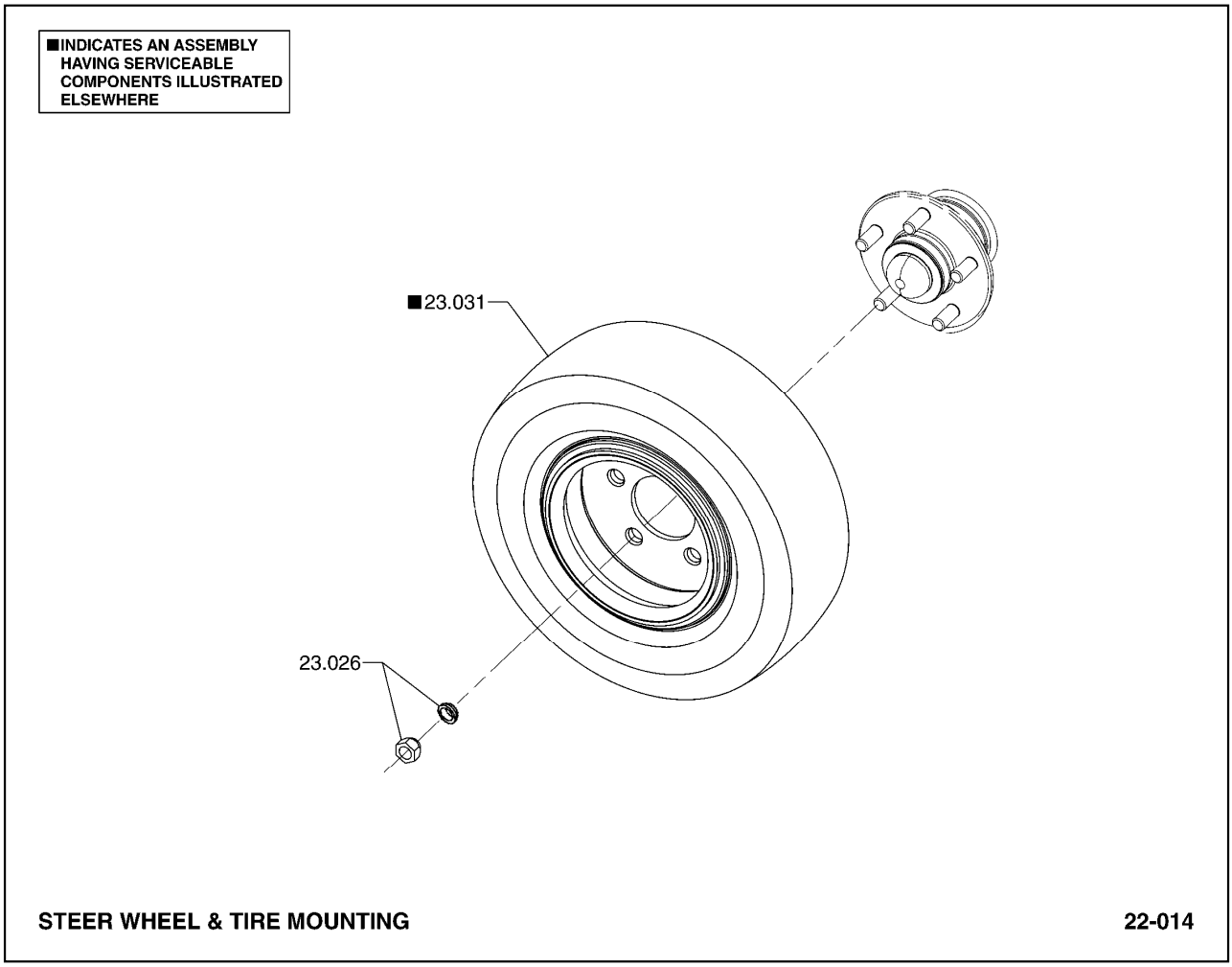

23.026 FASTENER, STEER WHEEL
패스너

23.031 STEER WHEEL AND TIRE ASSEMBLY
휠

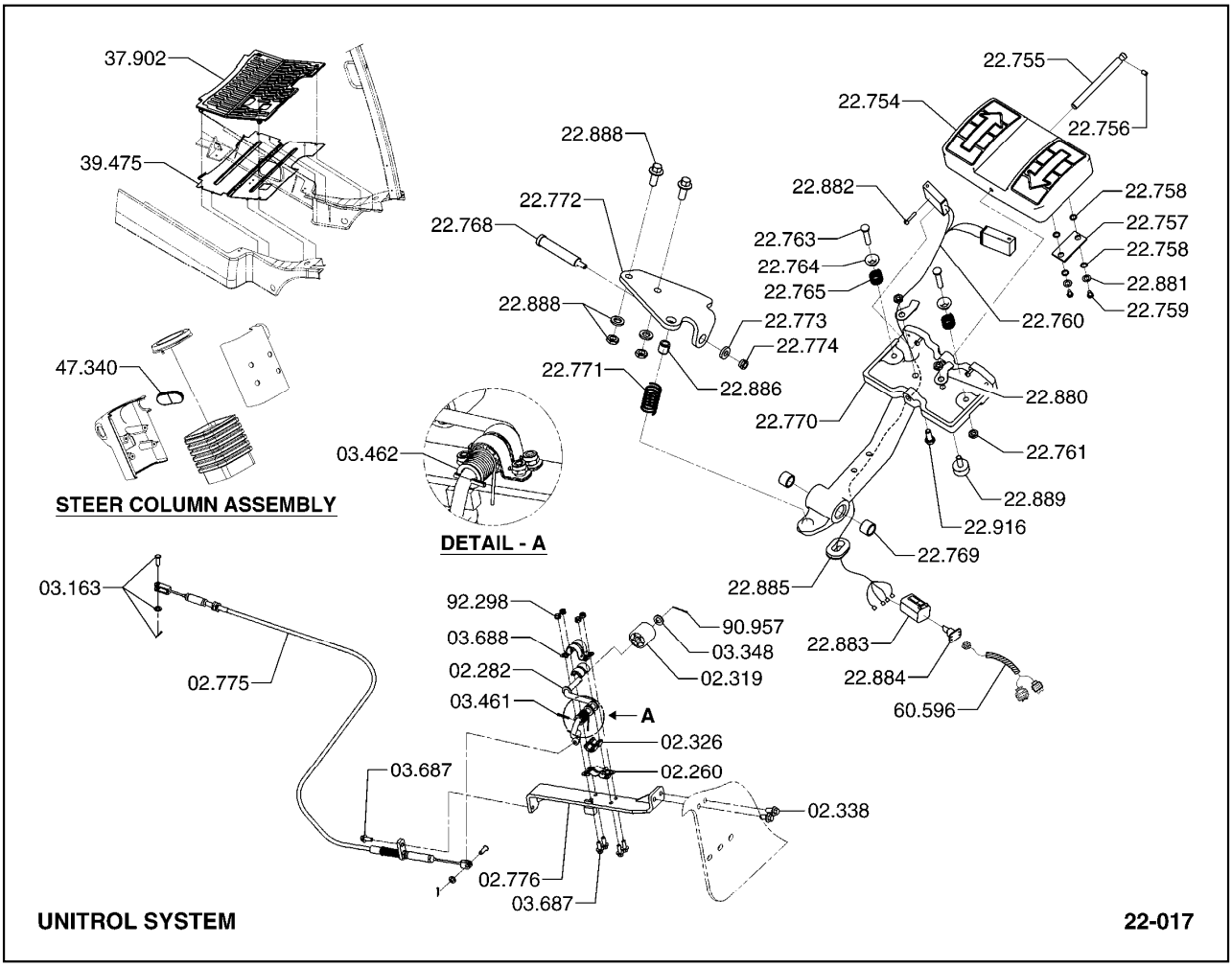

02.260	BRACKET, ACCELERATOR LINKAGE MOUNTING 브라켓	22.756	FASTENER, UNITROL PEDAL PAD PIVOT 패스너
02.282	ROD, ACCELERATOR PUSH 로드	22.757	PLATE, UNITROL PEDAL PAD STOP 플레이트
02.319	BUSHING, ACCELERATOR LINKAGE LEVER 부싱	22.758	SEAL, UNITROL PEDAL PAD STOP PLATE 시일
02.326	BEARING, ACCELERATOR LEVER 베어링	22.759	FASTENER, UNITROL PEDAL PAD STOP PLATE 패스너
02.338	FASTENER, ACCELERATOR LEVER MOUNTING BRACKET 패스너	22.760	HARNESS, UNITROL PEDAL SWITCH WIRING 하네스
02.775	CABLE, ACCELERATOR CONTROL 케이블	22.761	NUT, UNITROL PEDAL PAD TENSION SPRING RETAINER 너트
02.776	BRACKET, ACCELERATOR CONTROL CABLE 브라켓	22.763	RETAINER, UNITROL PEDAL PAD TENSION SPRING 리테이너
03.163	FASTENER, ACCELERATOR CONTROL ROD END 패스너	22.764	GUIDE, UNITROL PEDAL PAD TENSION SPRING 가이드
03.348	WASHER, ACCELERATOR LINKAGE RETURN LEVER FAST 와셔	22.765	SPRING, UNITROL PEDAL PAD TENSION 스프링
03.461	PIN, ACCELERATOR CONTROL ROD END 핀	22.768	PIVOT, UNITROL PEDAL 피봇
03.462	SPRING, ACCELERATOR PEDAL RETURN 스프링	22.769	BEARING, UNITROL PEDAL BRACKET 베어링
03.687	FASTENER, ACC CONTROL CABLE BRACKET MTG 패스너	22.770	BRACKET, UNITROL PEDAL 브라켓
03.688	BRACKET, ACCELERATOR LEVER ATTACHING 브라켓	22.771	SPRING, UNITROL PEDAL RETURN 스프링
22.754	PAD, UNITROL PEDAL 패드	22.772	BRACKET, UNITROL PEDAL MOUNTING 브라켓
22.755	SHAFT, UNITROL PEDAL PAD PIVOT 샤프트	22.773	WASHER, UNITROL PEDAL PIVOT FASTENER 와셔

22.774 FASTENER, UNITROL PEDAL PIVOT
패스너

22.880 RETAINER, UNITROL SWITCH WIRE
리테이너

22.881 WASHER, UNITROL PEDAL PAD STOP PLATE FASTENER
와셔

22.882 FASTENER, UNITROL PEDAL SWITCH
패스너

22.883 CONNECTOR, UNITROL PEDAL SWITCH WIRING HARNESS
커넥터

22.884 LOCK, UNITROL PEDAL SWITCH WIRING HARNESS CONNEC
로크

22.885 GROMMET, UNITROL PEDAL WIRING HARNESS
그로멧

22.886 RETAINER, UNITROL PEDAL RETURN SPRING
리테이너

22.888 FASTENER, UNITROL PEDAL MOUNTING BRACKET
패스너

22.889 BUMPER, UNITROL PEDAL PAD
범퍼

22.916 FASTENER, UNITROL SWITCH WIRE RETAINER
패스너

37.902 MAT, FLOORPLATE
매트

39.475 PLATE, FRONT FLOOR
플레이트

47.340 COVER, DIRECTIONAL LEVER
커버

60.596 HARNESS, UNITROL ASEMBLY TO TRUCK HARNESS
하네스

90.957 RETAINER, ACCELERATOR LINKAGE LEVER PIN
리테이너

92.298 NUT, ACCELERATOR LEVER ATTACHING BRACKET FASTENE
너트

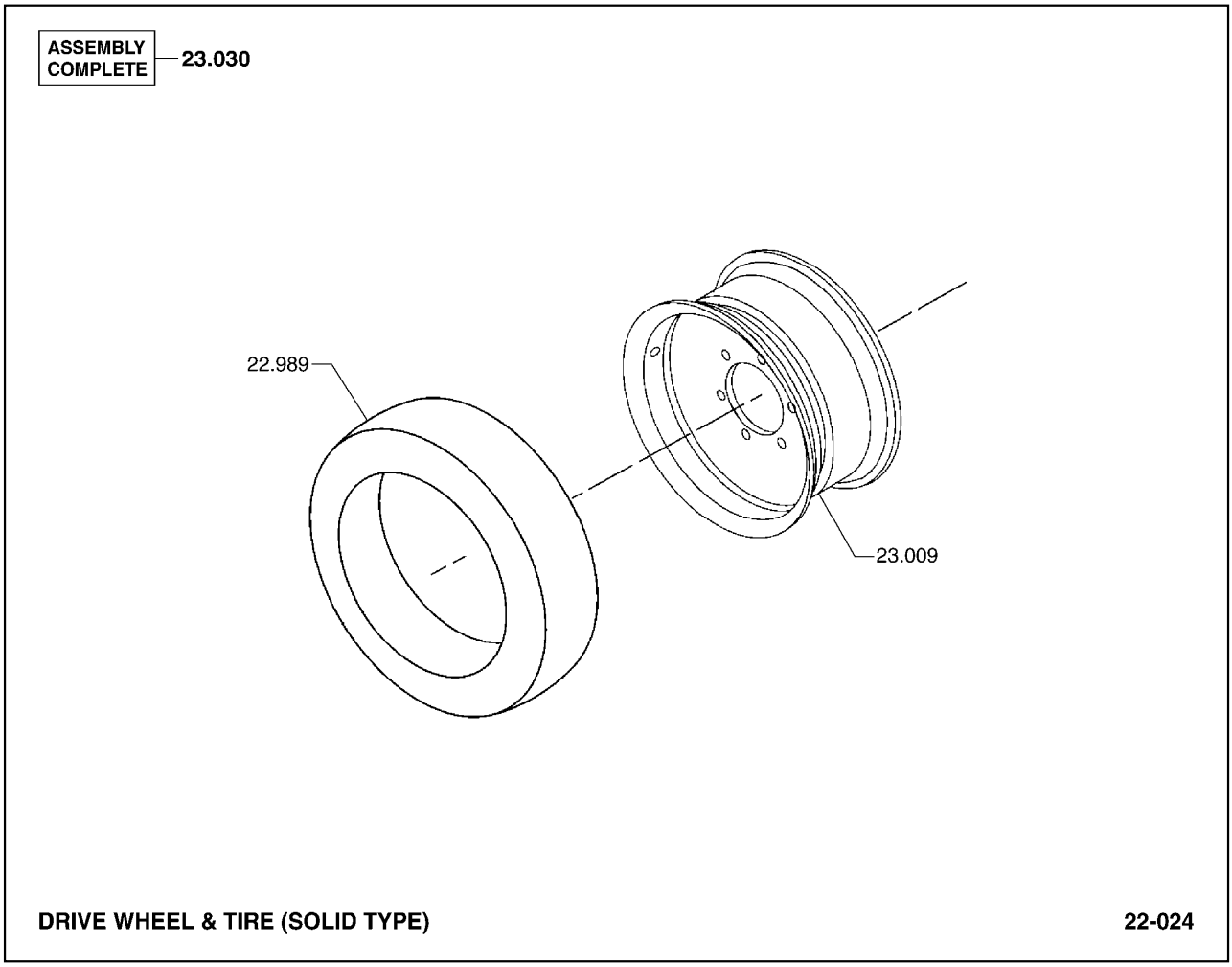

22.989	TIRE ASSEMBLY, DRIVE *
23.009	RIM ASSEMBLY, DRIVE WHEEL 림
23.030	DRIVE WHEEL AND TIRE ASSEMBLY 드라이브휠타이어

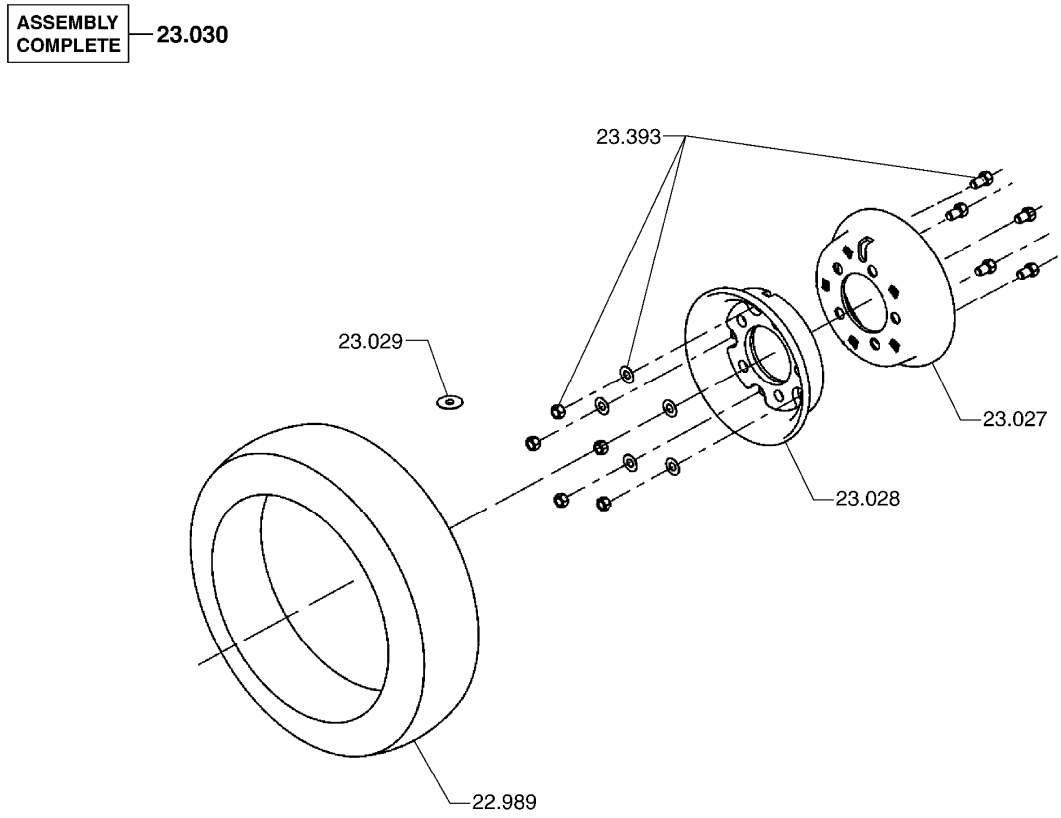

DRIVE WHEEL & TIRE (SOLID TYPE) **22-026**

22.989	TIRE ASSEMBLY, DRIVE *
23.027	OUTER HALF, DRIVE WHEEL 아웃하프
23.028	INNER HALF, DRIVE WHEEL 인너하프
23.029	FASTENER, DRIVE WHEEL ASSEMBLY 패스너
23.030	DRIVE WHEEL AND TIRE ASSEMBLY 드라이브휠타이어
23.393	FASTENER, DRIVE WHEEL 패스너

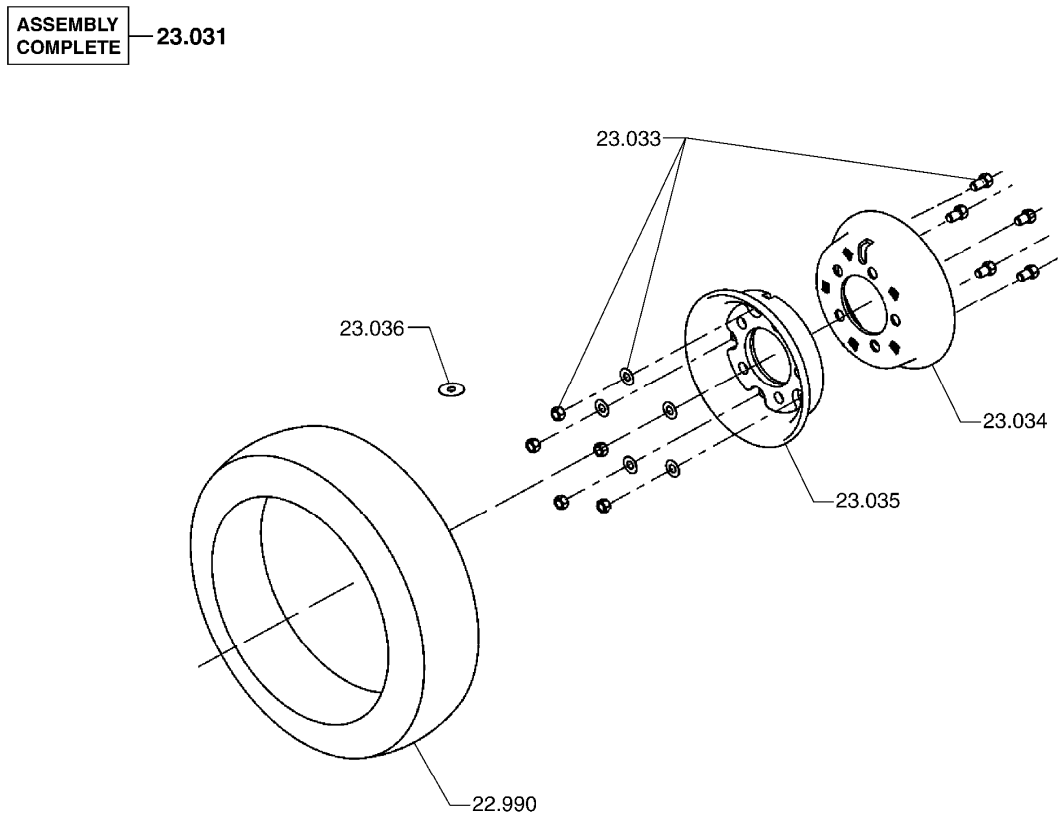

STEER WHEEL & TIRE (SOLID TYPE) **22-027**

22.990	TIRE ASSEMBLY, STEER *
23.031	STEER WHEEL AND TIRE ASSEMBLY 휠
23.033	FASTENER, STEER WHEEL 패스너
23.034	OUTER HALF, STEER WHEEL 아웃하프
23.035	INNER HALF, STEER WHEEL 인너하프
23.036	FASTENER, STEER WHEEL ASSEMBLY 패스너

■INDICATES AN ASSEMBLY HAVING SERVICEABLE COMPONENTS ILLUSTRATED ELSEWHERE

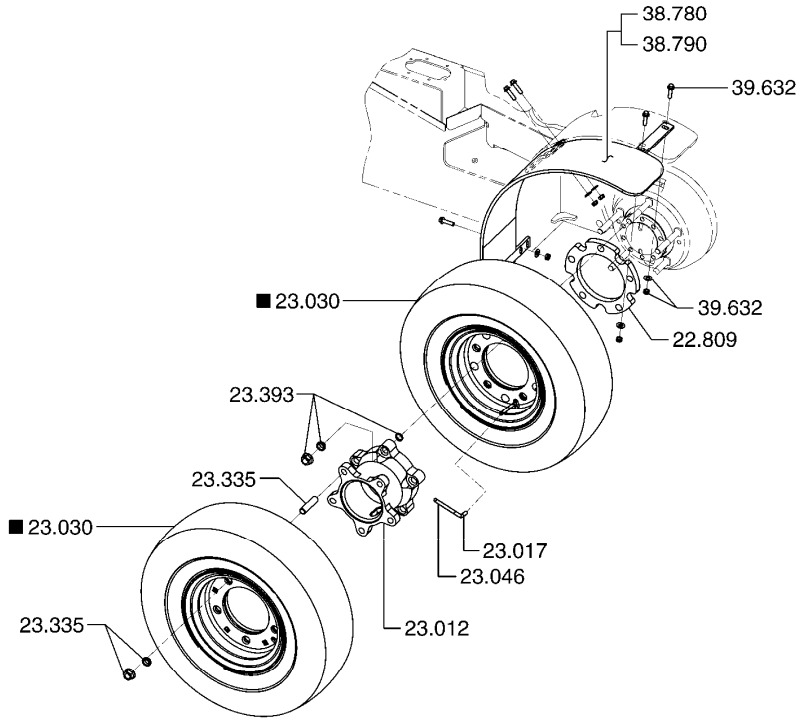

DUAL DRIVE TIRE MOUNTING **22-033**

22.809 SPACER, DRIVE WHEEL OFFSET MOUNTING
스페이서

23.012 SPACER, DRIVE WHEEL DUAL RIM
스페이서

23.017 EXTENSION, DRIVE WHEEL VALVE
익스텐션

23.030 DRIVE WHEEL AND TIRE ASSEMBLY
드라이브휠타이어

23.046 EXTENSION, DRIVE WHEEL
익스텐션

23.335 FASTENER, DRIVE WHEEL
패스너

23.393 FASTENER, DRIVE WHEEL
패스너

38.780 FENDER, RIGHT HAND FRONT
펜더

38.790 FENDER, LEFT HAND FRONT
펜더

39.632 FASTENER, FENDER SUPPORT
패스너

■INDICATES AN ASSEMBLY HAVING SERVICEABLE COMPONENTS ILLUSTRATED ELSEWHERE

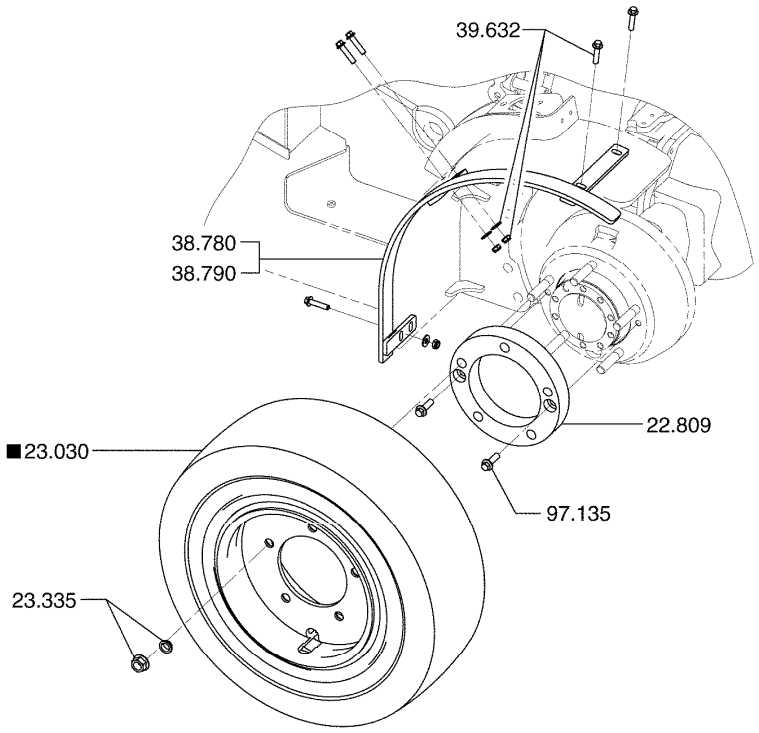

WIDE DRIVE TIRE MOUNTING **22-034**

22.809	SPACER, DRIVE WHEEL OFFSET MOUNTING 스페이서
23.030	DRIVE WHEEL AND TIRE ASSEMBLY 드라이브휠타이어
23.335	FASTENER, DRIVE WHEEL 패스너
38.780	FENDER, RIGHT HAND FRONT 펜더
38.790	FENDER, LEFT HAND FRONT 펜더
39.632	FASTENER, FENDER SUPPORT 패스너
97.135	FASTENER, DRIVE WHEEL OFFSET SPACER 패스너

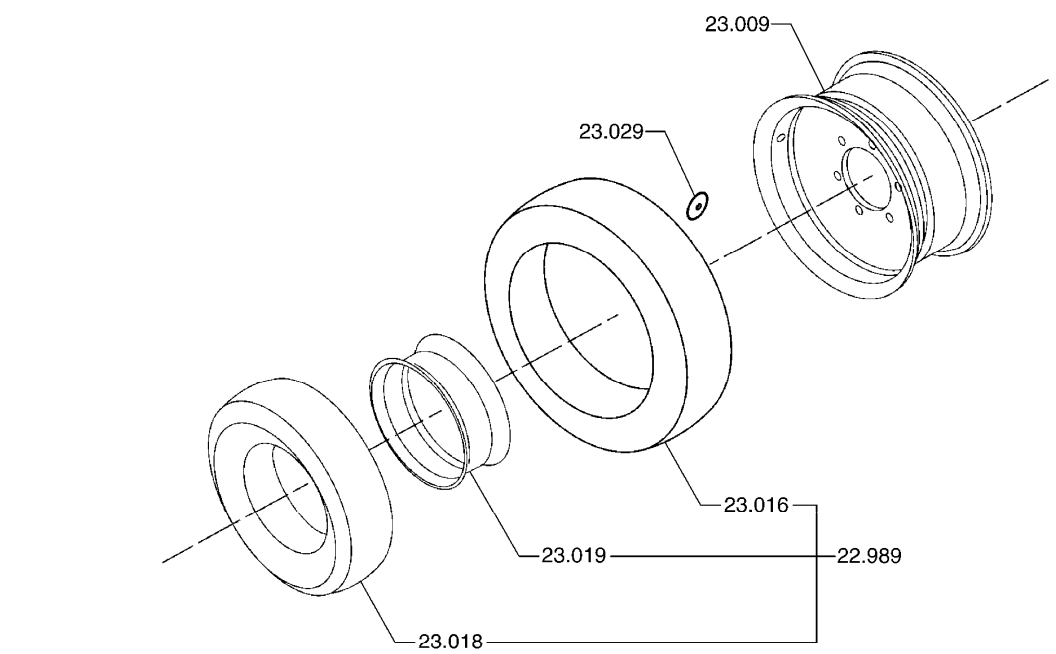

22.989	TIRE ASSEMBLY, DRIVE *
23.009	RIM ASSEMBLY, DRIVE WHEEL 림
23.016	TIRE, DRIVE WHEEL 타이어
23.018	TUBE, DRIVE WHEEL 튜브
23.019	FLAP, DRIVE WHEEL TUBE 플랩
23.029	FASTENER, DRIVE WHEEL ASSEMBLY 패스너
23.030	DRIVE WHEEL AND TIRE ASSEMBLY 드라이브휠타이어

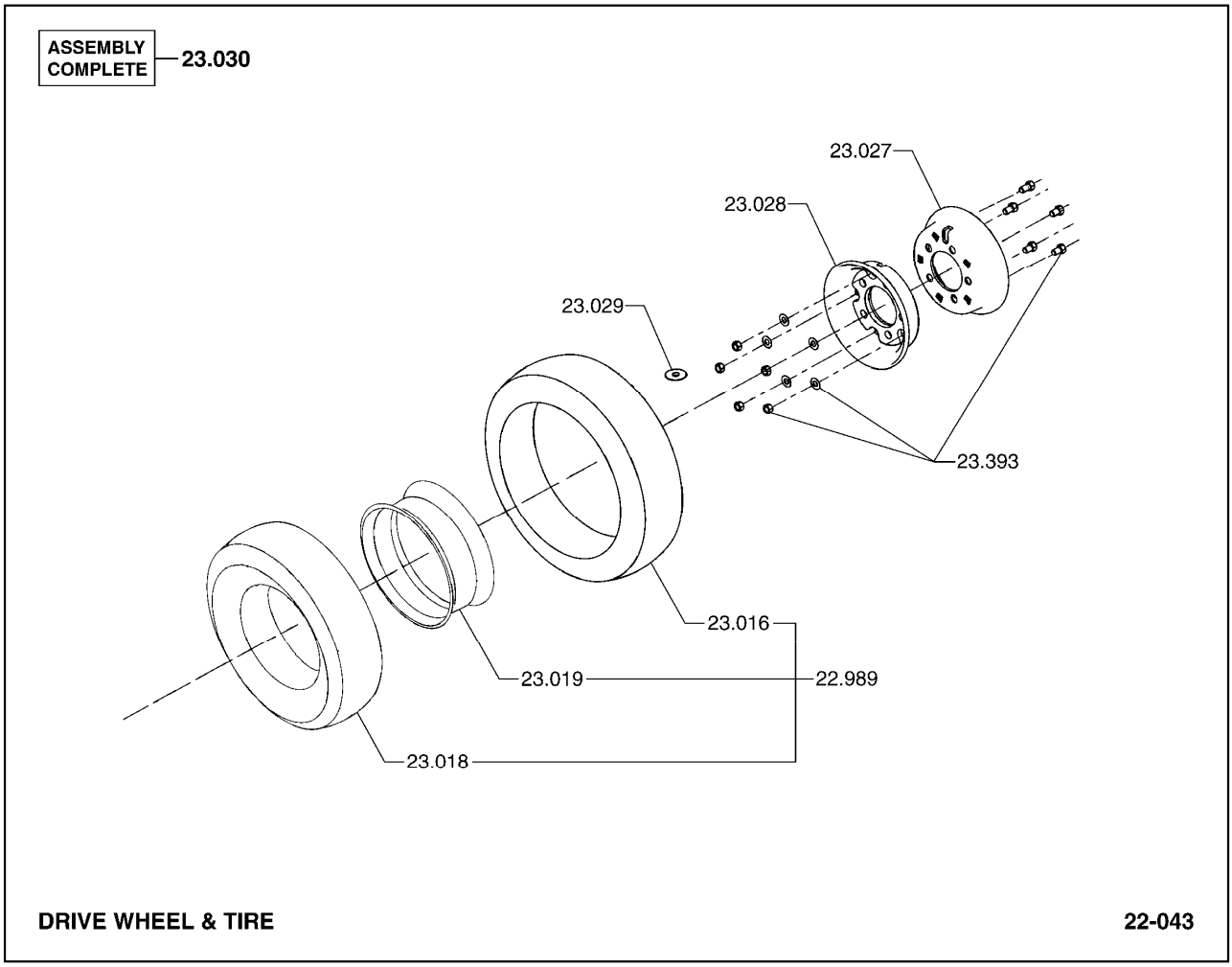

22.989	TIRE ASSEMBLY, DRIVE *
23.016	TIRE, DRIVE WHEEL 타이어
23.018	TUBE, DRIVE WHEEL 튜브
23.019	FLAP, DRIVE WHEEL TUBE 플랩
23.027	OUTER HALF, DRIVE WHEEL 아웃하프
23.028	INNER HALF, DRIVE WHEEL 인너하프
23.029	FASTENER, DRIVE WHEEL ASSEMBLY 패스너
23.030	DRIVE WHEEL AND TIRE ASSEMBLY 드라이브휠타이어
23.393	FASTENER, DRIVE WHEEL 패스너

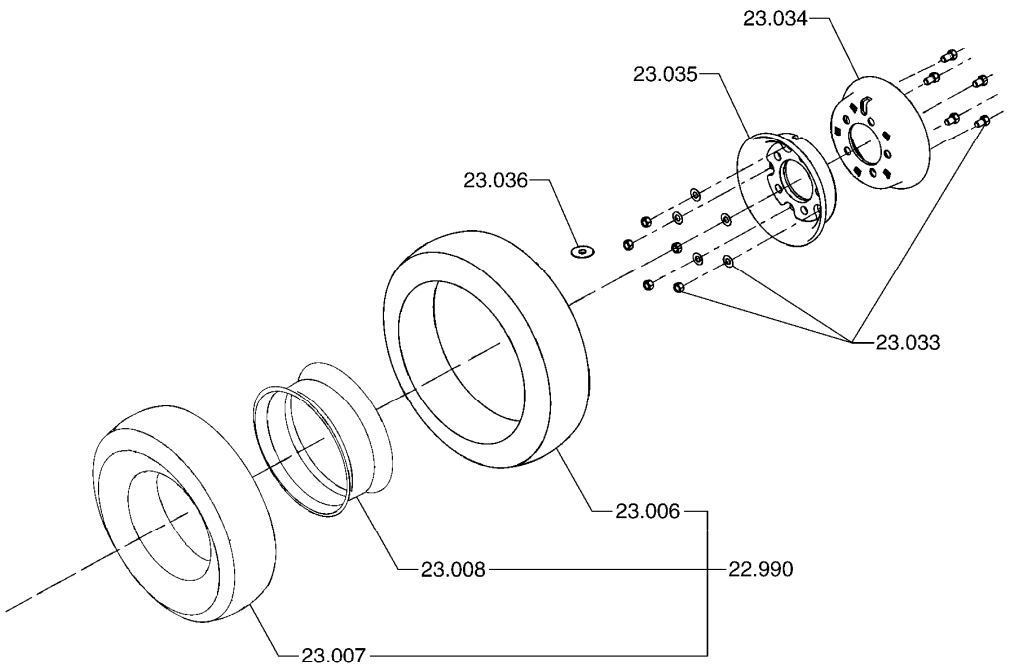

22.990	TIRE ASSEMBLY, STEER *
23.006	TIRE, STEER WHEEL 타이어
23.007	TUBE, STEER WHEEL 튜브
23.008	FLAP, STEER WHEEL 플랩
23.031	STEER WHEEL AND TIRE ASSEMBLY 휠
23.033	FASTENER, STEER WHEEL 패스너
23.034	OUTER HALF, STEER WHEEL 아웃하프
23.035	INNER HALF, STEER WHEEL 인너하프
23.036	FASTENER, STEER WHEEL ASSEMBLY 패스너

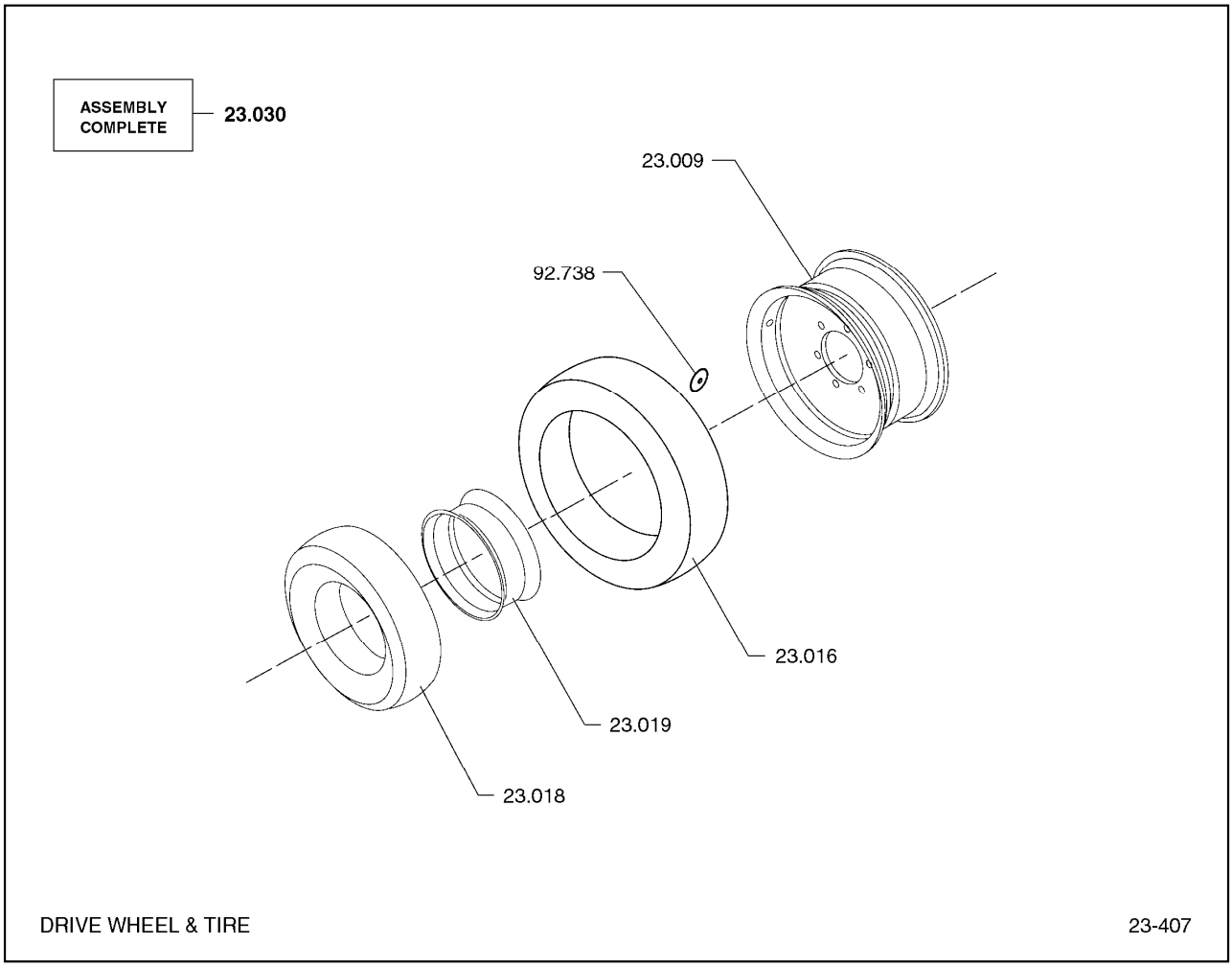

23.009 RIM ASSEMBLY, DRIVE WHEEL
림

23.016 TIRE, DRIVE WHEEL
타이어

23.018 TUBE, DRIVE WHEEL
튜브

23.019 FLAP, DRIVE WHEEL TUBE
플랩

23.030 DRIVE WHEEL AND TIRE ASSEMBLY
드라이브휠타이어

92.738 WASHER, DRIVE WHEEL ASSEMBLY FASTENER
와셔

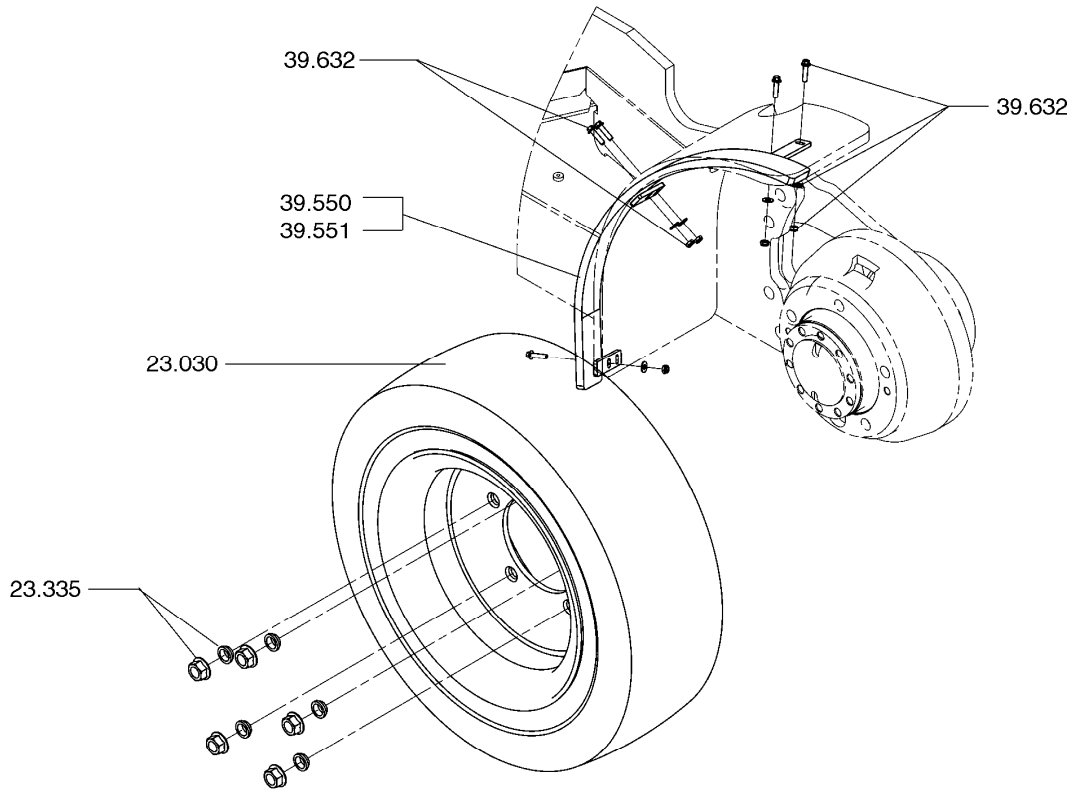

DRIVE WHEEL & TIRE(WIDE)

23.030 DRIVE WHEEL AND TIRE ASSEMBLY
드라이브휠타이어

23.335 FASTENER, DRIVE WHEEL
패스너

39.550 FENDER, REAR (RH)
펜더

39.551 FENDER, REAR (LH))
펜더

39.632 FASTENER, FENDER SUPPORT
패스너

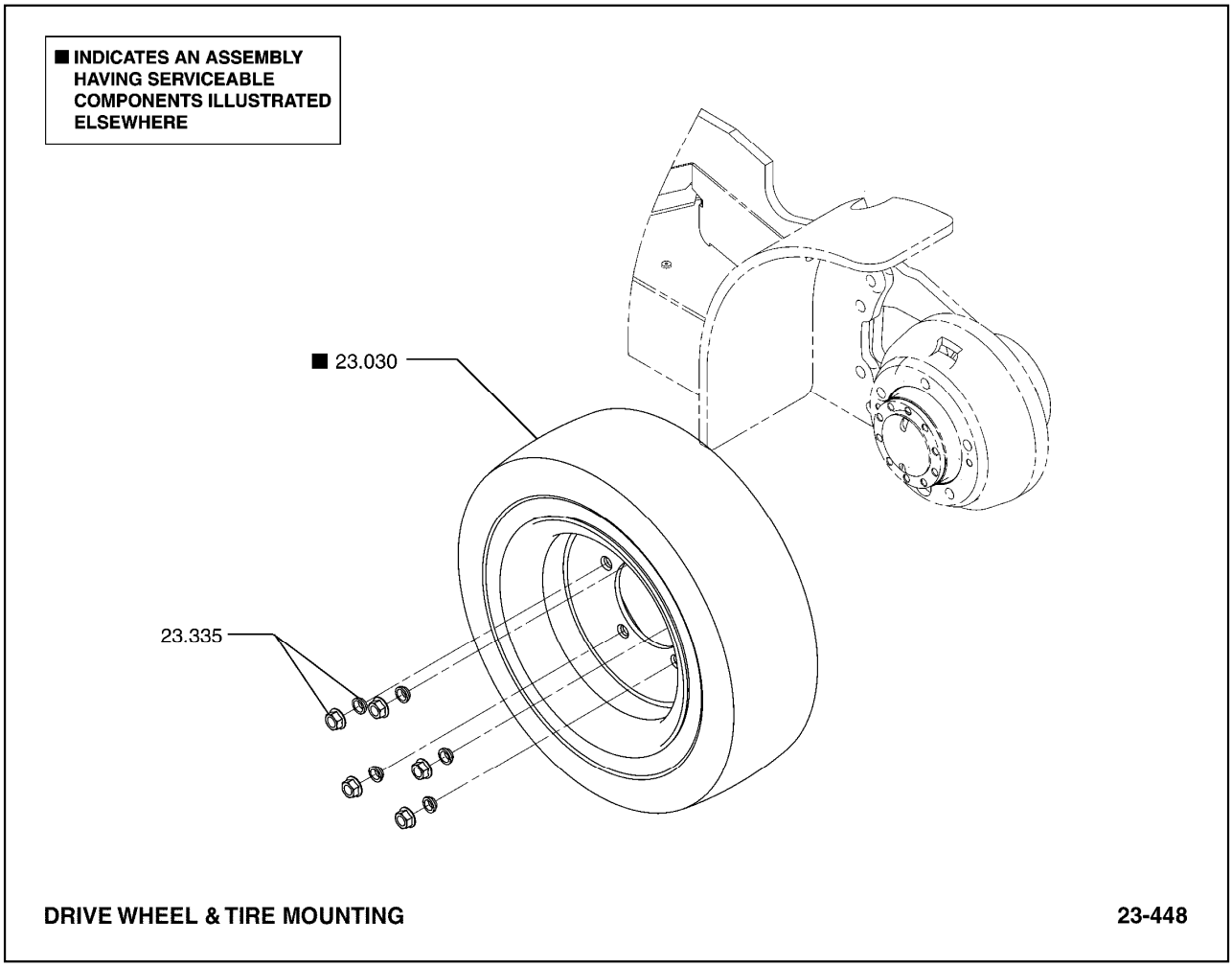

23.030 DRIVE WHEEL AND TIRE ASSEMBLY
드라이브휠타이어

23.335 FASTENER, DRIVE WHEEL
패스너

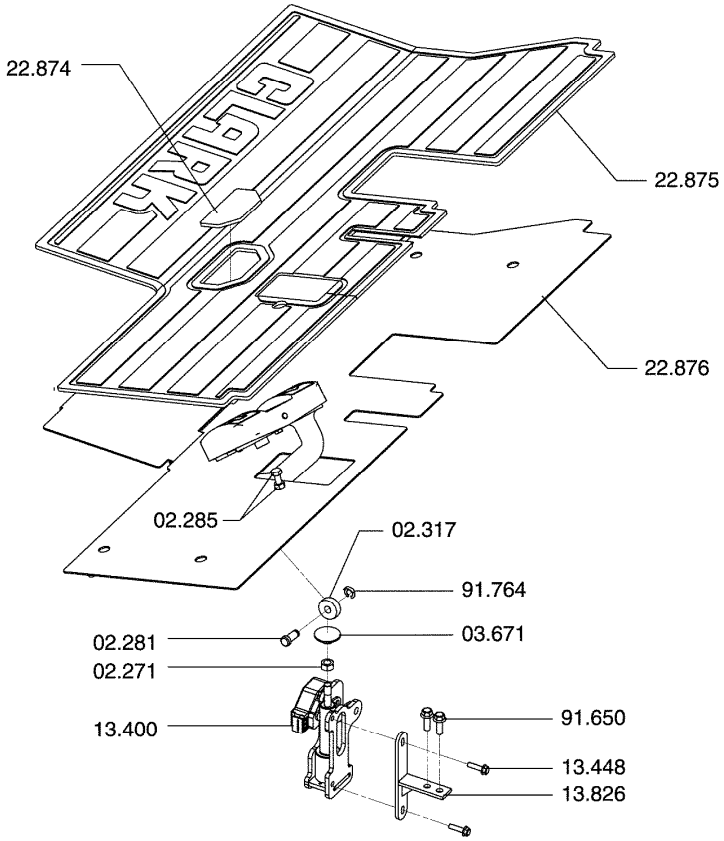

UNITROL PEDAL MOUNTING **23-460**

13.142 SWITCH, BRAKE INTERLOCK
스위치

22.011 COVER, BRAKE LINE REEL HOUSING
커버

22.023 FASTENER, BRAKE LINE REEL
패스너

22.338 CLAMP, BRAKE FLUID RESERVOIR
클룻프

22.357 CAP, BRAKE FLUID RESERVOIR
캡

22.452 CLAMP, BRAKE MASTER CYLINDER FILLER LINE
클램프

22.528 BLEEDER, BRAKE LINES ADAPTOR
블리더

22.627 TEE, BRAKE LINE
티

22.951 FASTENER, BRAKE LINE CLAMP
패스너

23.173 FITTING, BRAKE MASTER CYLINDER OUTLET
피팅

23.176 GASKET, BRAKE MASTER CYLINDER OUTLET FTG BOLT
가스켓

23.186 LINE, BRAKE MASTER CYLINDER OUTLET
라인

23.207 LINE, LH DRIVE WHEEL BRAKE CYLINDER TO TEE
라인

23.208 LINE, RH DRIVE WHEEL BRAKE CYLINDER TO TEE
라인

23.792 RESERVOIR, BRAKE FLUID
리저버

23.793 FASTENER, BRAKE FLUID RESERVOIR
패스너

23.794 LINE, BRAKE MASTER CYLINDER INLET
라인

23.906 CLAMP, BRAKE MASTER CYLINDER LINE
클램프

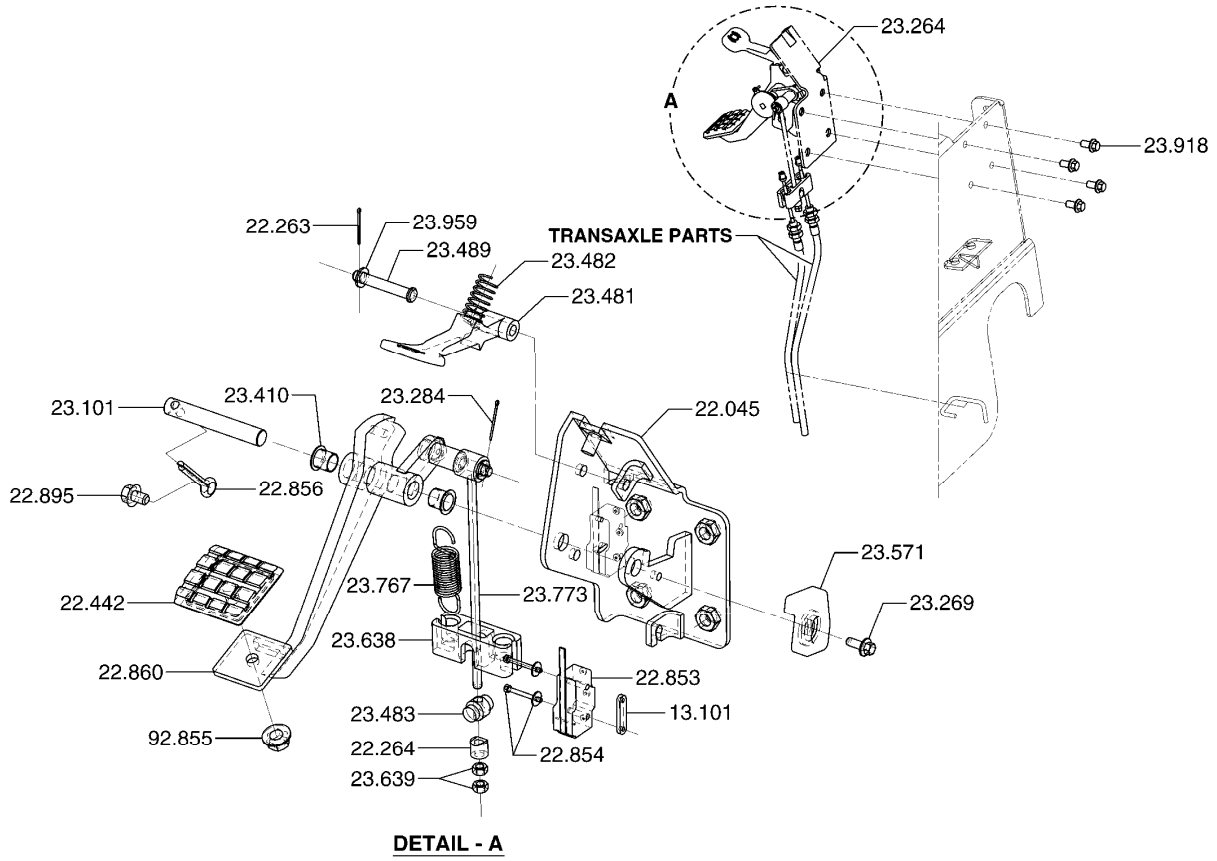

13.101 PLATE, BRAKE LOCK ACTUATING SWITCH
플레이트

22.045 BRACKET, PARKING BRAKE PEDAL PIVOT MTG
브라켓

22.263 RETAINER, PARKING BRAKE RELEASE LEVER PIVOT
리테이너

22.264 ADJUSTOR, PARKING BRAKE
어드져스터

22.442 PAD, PARKING BRAKE PEDAL
패드

22.853 SWITCH, PARKING BRAKE PEDAL ACTUATING
스위치

22.854 FASTENER, PARKING BRAKE PEDAL ACTUATING
패스너

22.855 PIVOT, PARKING BRAKE PEDAL
피봇

22.856 RETAINER, PARKING BRAKE PEDAL PIVOT
리테이너

22.860	PEDAL, PARKING BRAKE 페달
22.895	FASTENER, PARKING BRAKE PEDAL PIVOT RETAINER 패스너
23.264	BRAKE ASSEMBLY, PARKING 브레이크
23.269	FASTENER, PARKING BRAKE LEVER 패스너
23.284	FASTENER, PARKING BRAKE CABLE BRACKET 패스너
23.410	BEARING, PARKING BRAKE CAM ROLLER 베어링
23.481	LEVER, PARKING BRAKE RELEASE 레버
23.482	SPRING, PARKING BRAKE RELEASE LEVER 스프링
23.483	PIVOT, PARKING BRAKE RELEASE LEVER 피봇
23.489	PIVOT, PARKING BRAKE RELEASE LEVER 피봇
23.571	BUMPER, PARKING BRAKE LEVER 범퍼
23.638	ANCHOR, PARKING BRAKE CABLE 앵커
23.639	FASTENER, PARKING BRAKE CABLE ANCHOR 패스너
23.767	SPRING, PARKING BRAKE DRAW 스프링
23.851	LINK, PARKING BRAKE 링크
23.918	FASTENER, PARKING BRAKE PEDAL PIVOT BRACKET 패스너
23.959	FASTENER, PARKING BRAKE RELEASE VALVE 패스너
92.855	NUT, PARKING BRAKE FASTENER 너트

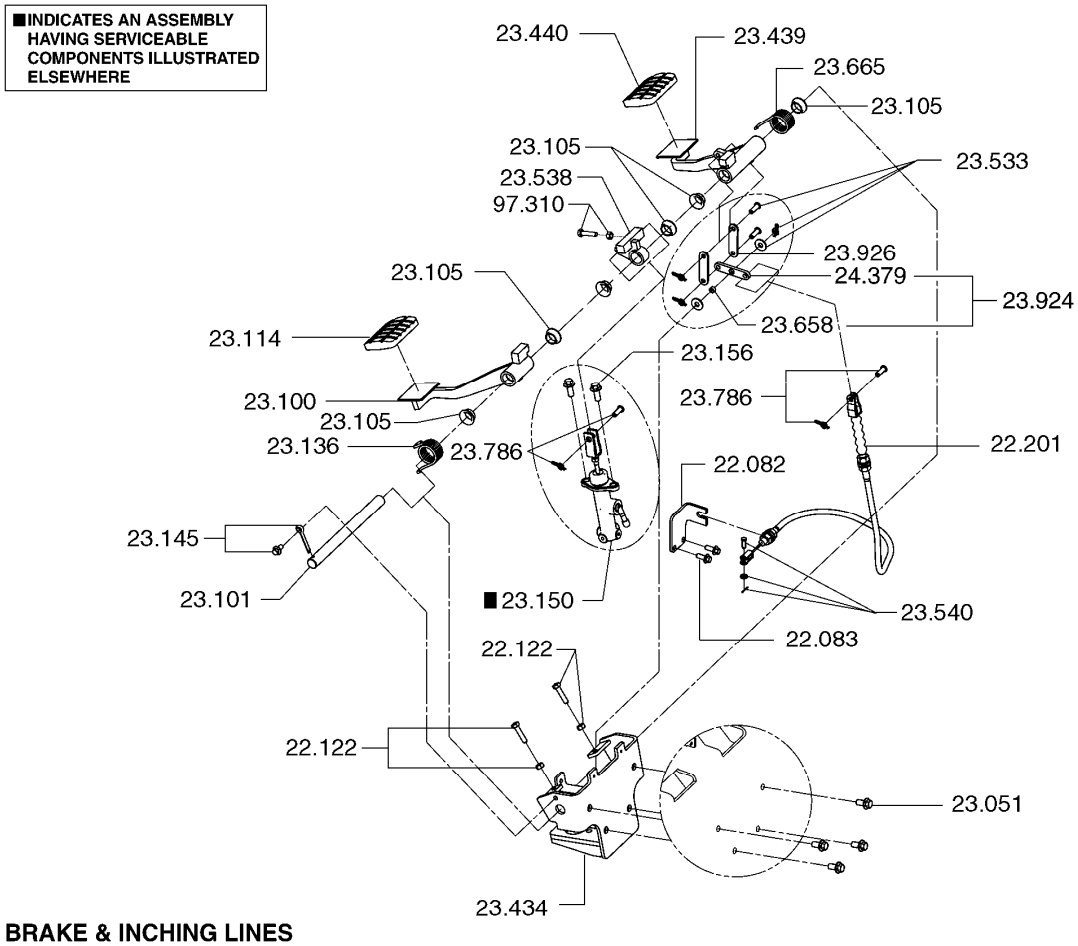

22.082 BRACKET, BRAKE CABLE (BRAKE END)
브라켓

22.083 FASTENER, BRAKE CABLE BRACKET (BRAKE END)
패스너

22.122 FASTENER, BRAKE PEDAL PIVOT RETAINER
패스너

22.201 CABLE, INCHING
케이블

23.051 FASTENER, MASTER CYLINDER MOUNTING BRACKET
패스너

23.100 PEDAL, BRAKE
페달

23.101 SHAFT, BRAKE PEDAL
샤프트

23.105 BEARING, BRAKE PEDAL
베어링

23.114 PAD & FASTENER, BRAKE PEDAL
패드와패스너

23.136	SPRING, BRAKE PEDAL RETURN 스프링
23.145	FASTENER, BRAKE PEDAL SHAFT 패스너
23.150	CYLINDER ASSEMBLY, BRAKE MASTER COMPLETE 실린더
23.156	FASTENER, CYLINDER & TANK ATTACHING 패스너
23.434	BRACKET, BRAKE PEDAL PIVOT 브라켓
23.439	PEDAL, INCHING 페달
23.440	PAD & FASTENER, INCHING PEDAL 패드와패스너
23.533	FASTENER, BRAKE LINK CLEVIS 패스너
23.538	ARM, BRAKE LINKAGE PIVOT 암
23.540	FASTENER, BRAKE LINKAGE PIVOT ARM 패스너
23.658	BEARING, BRAKE PEDAL LINK 베어링
23.665	SPRING, INCHING PEDAL RETURN 스프링
23.786	FASTENER, INCHING BRAKE PEDAL 패스너
23.924	LINK, BRAKE ADJUSTOR 링크
23.926	LINK, BRAKE ADJUSTOR 링크
24.379	LINK, INCHING 링크
97.310	FASTENER, BRAKE LINKAGE PIVOT ARM MOUNTING *

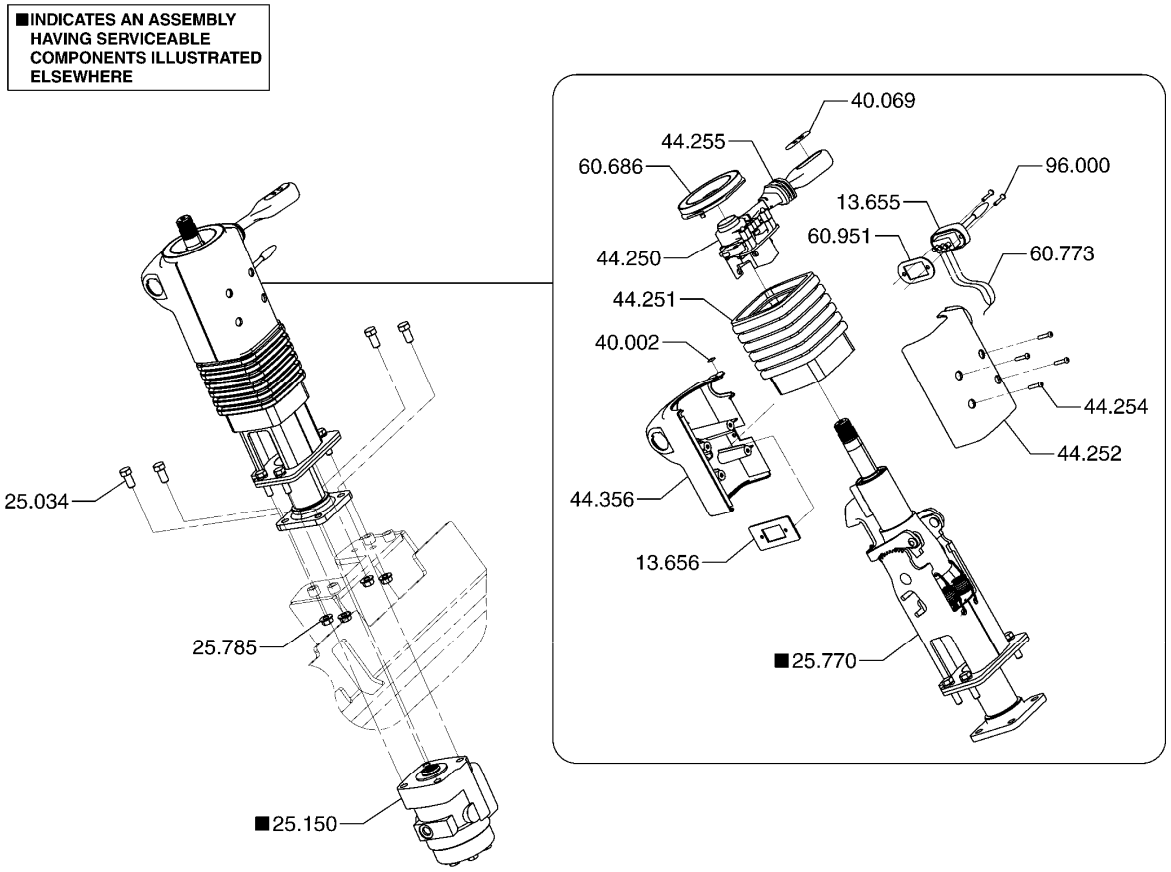

05.185 BASE, DIRECTIONAL SELECTOR LEVER
베이스

06.101 LEVER ASSEMBLY, FORWARD & REVERSE
레버

13.110 SWITCH, DIRECTIONAL CONTROL (FORWARD)
스위치

13.111 FASTENER, DIRECTIONAL CONTROL SWITCH
패스너

13.130 FASTENER, DIRECTION CONTROL LEVER
패스너

13.655 SWITCH, TURN INDICATOR
스위치

13.656 BRACKET, TURN INDICATOR SWITCH
브라켓

25.034 FASTENER, STEERING GEAR ATTACHING
패스너

25.150 GEAR BOX ASSEMBLY, STEERING
기어박스

25.770	SHAFT & COLUMN ASSY, POWER STEERING (TILT) 샤프트와컬럼
25.785	FASTENER, TILT STEERING SHAFT & COLUMN ASSEMBLY 패스너
40.002	LEGEND, SHIFT PATTERN 범례
40.069	DECAL, FORWARD-BACKWARD 드칼
44.250	DIRECTIONAL CONTROL ASSEMBLY 방향컨트롤
44.251	HOUSING, DIRECTIONAL CONTROL ASSEMBLY 하우징
44.252	COVER, DIRECTIONAL CONTROL ASSEMBLY HOUSING 커버
44.254	FASTENER, DIRECTIONAL CONTROL ASSY HOUSING COVER 패스너
44.255	SEAL, DIRECTIONAL CONTROL ASSY LEVER 시일
44.356	COVER, DIRECTIONAL CONTROL ASSEMBLY HOUSING REAR 커버
60.483	RETAINER, DIRECTIONAL CONTROL LEVER 리테이너
60.686	RING, HORN CONTACT 링
60.773	HARNESS, TURN SIGNAL 하네스
60.951	GROMMET, TURN INDICATOR SWITCH 그로멧
67.017	FASTENER, DIRECTIONAL CONTROL DETENT SUPPORT 패스너
67.018	SPRING, DIRECTIONAL CONTROL DETENT 스프링
96.000	FASTENER, TURN INDICATOR SWITCH 패스너

ASSEMBLY COMPLETE — 25.150

SEAL KIT INCLUDES ITEMS MARKED "K" — 25.109

NEEDLE BEARING KIT INCLUDES ITEMS MARKED "R" — 25.972

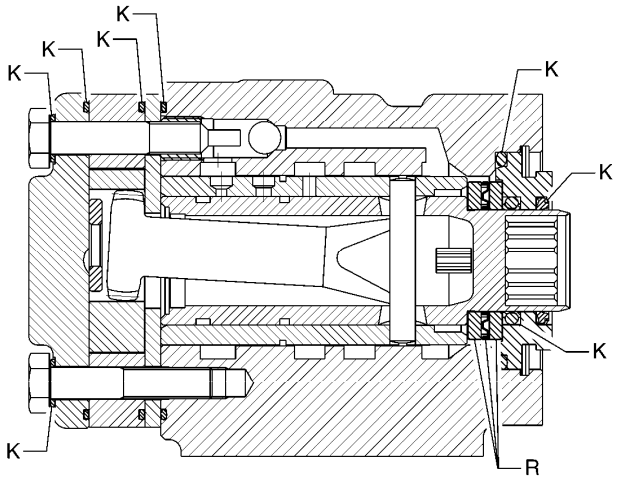

STEERING UNIT **25-076**

25.109 KIT, STEER GEAR SEAL
킷

25.150 GEAR BOX ASSEMBLY, STEERING
기어박스

25.972 BEARING KIT, STEERING GEAR
*

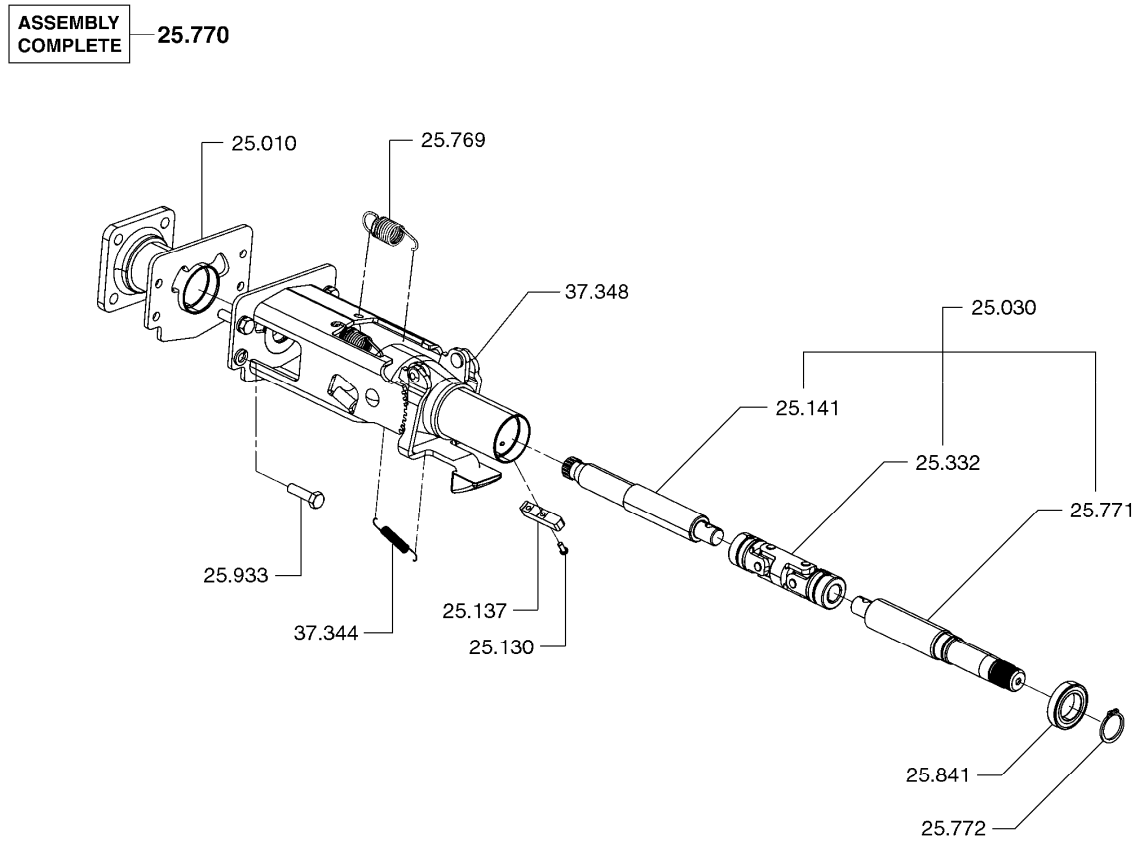

STEERING COLUMN **25-144**

25.010 JACKET, STEERING COLUMN
자켓

25.030 SHAFT ASSEMBLY, STEERING COLUMN
샤프트

25.130 FASTENER, DIRECTIONAL ASSEMBLY
패스너

25.137 KEY, DIRECTIONAL ASSEMBLY
키

25.141 SHAFT, STEERING GEAR
샤프트

25.332 YOKE, STEER UNIVERSAL JOINT CLAMP
요크

25.769 SPRING, STEERING COLUMN TILTING (LOWER)
스프링

25.770 SHAFT & COLUMN ASSY, POWER STEERING (TILT)
샤프트와컬럼

25.771 SHAFT, STEERING COLUMN (TILT)
샤프트

25.772 RETAINER, STEERING COLUMN SHAFT
리테이너

25.841 BUSHING, STEERING GEAR SHAFT
부싱

25.933 FASTENER, STEERING COLUMN
패스너

37.344 SPRING, STEERING COLUMN TILTING
스프링

37.348 PYLON, STEERING COLUMN
파일런

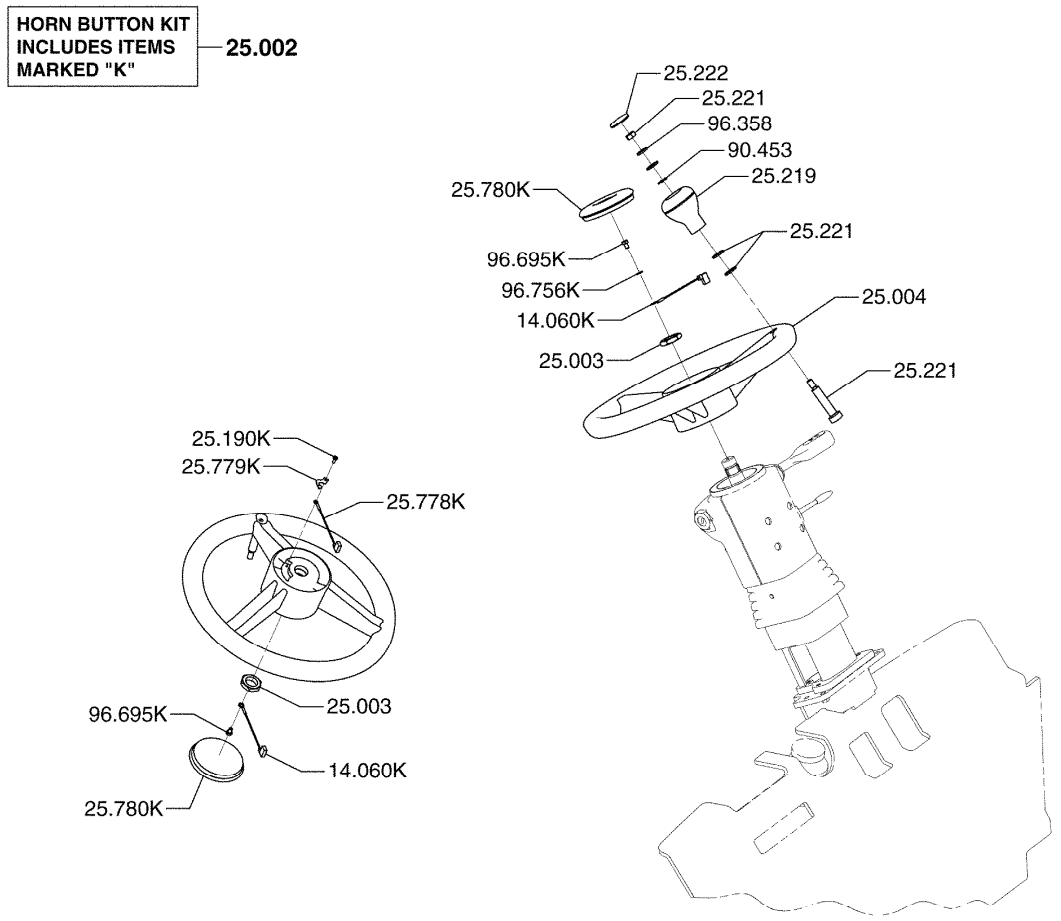

14.060 WIRE, HORN BUTTON TERM TO CONNECTOR
와이어

25.002 HORN BUTTON KIT
혼버튼킷

25.003 NUT, HANDWHEEL
너트

25.004 HAND WHEEL, STEERING GEAR
핸드휠

25.190 FASTENER, HORN BUTTON
패스너

25.219 KNOB, STEERING HAND WHEEL SPINNER
노브

25.221 FASTENER, STEERING SPINNER KNOB
패스너

25.222 CAP, STEERING SPINNER KNOB
캡

25.778 WIRE, CONTACT HORN
와이어

25.779	CONTACT, HORN 컨택트
25.780	HORN BUTTON 혼버튼
90.453	WASHER, STEERING SPINNER KNOB FASTENER 와셔
96.358	WASHER, STEERING HANDWHEEL SPINNER KNOB FASTENER 와셔
96.695	FASTENER, WIRE MOUNTING 패스너
96.756	WASHER, WIRE MOUNTING FASTENER 와셔

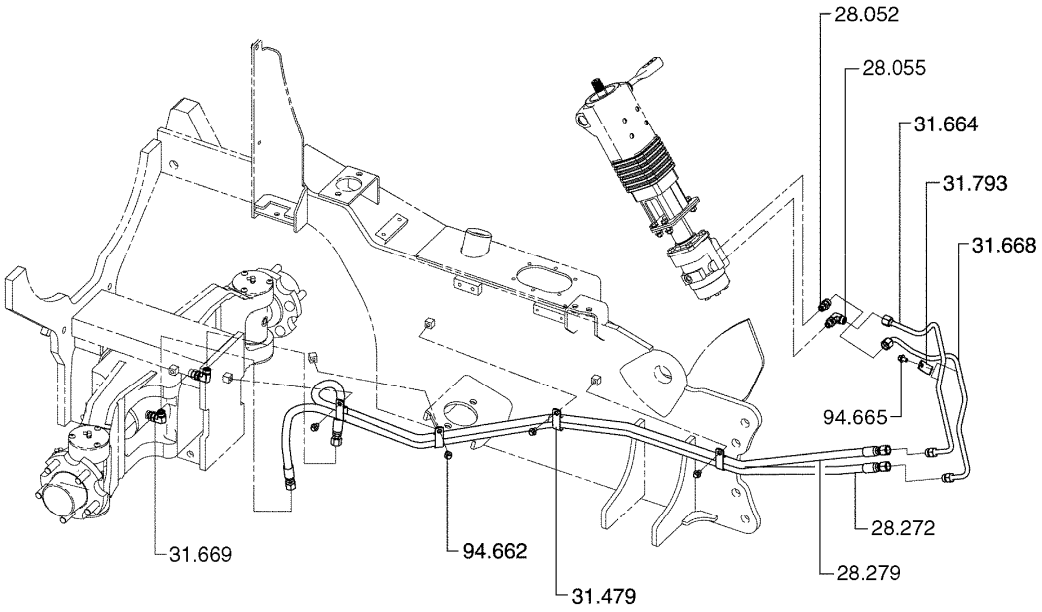

HYDRAULIC STEERING LINES **26-026**

28.052 FITTING, STEERING GEAR
피팅

28.055 FITTING, STEERING GEAR
피팅

28.272 LINE, STEER CYLINDER INLET
라인

28.279 LINE, STEER CYLINDER INLET
라인

31.479 CLAMP, STEERING LINES
클램프

31.664 LINE, STEERING CYLINDER ANCHOR PORT
라인

31.668 LINE, STEERING CYLINDER ROD PORT
라인

31.669 FITTING, STEERING CYLINDER ROD PORT
피팅

31.793 CLAMP, POWER STEERING LINES
클램프

94.662 FASTENER, POWER STEERING LINES CLAMP
패스너

94.665 FASTENER, POWER STEERING LINES CLAMP
패스너

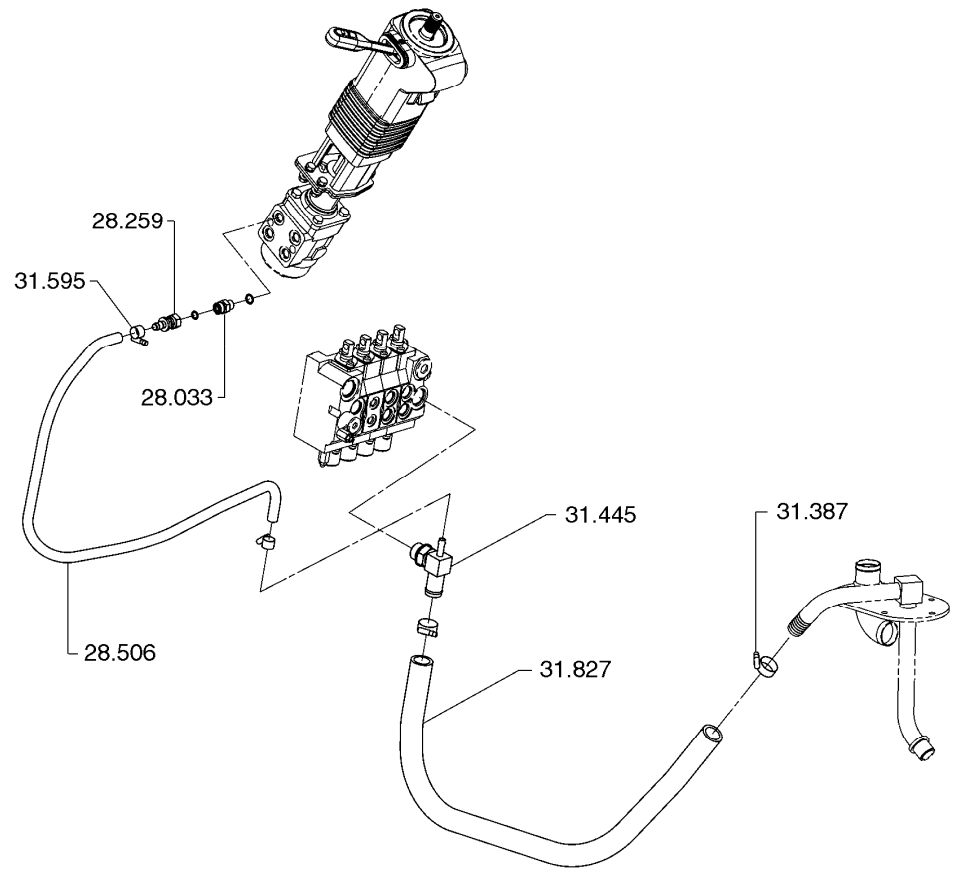

HYDRAULIC RETURN LINES **26-225**

28.033 FITTING, SUMP RETURN
피팅

28.259 FITTING, SUMP RETURN LINE
피팅

28.506 LINE, SUMP RETURN
라인

31.387 CLAMP, MAIN VALVE TO SUMP LINE
클램프

31.445 FITTING, MAIN VALVE TO FILTER LINE
피팅

31.595 CLAMP, SUMP RETURN LINE FITTING
클램프

31.827 LINE, FILTER INLET
라인

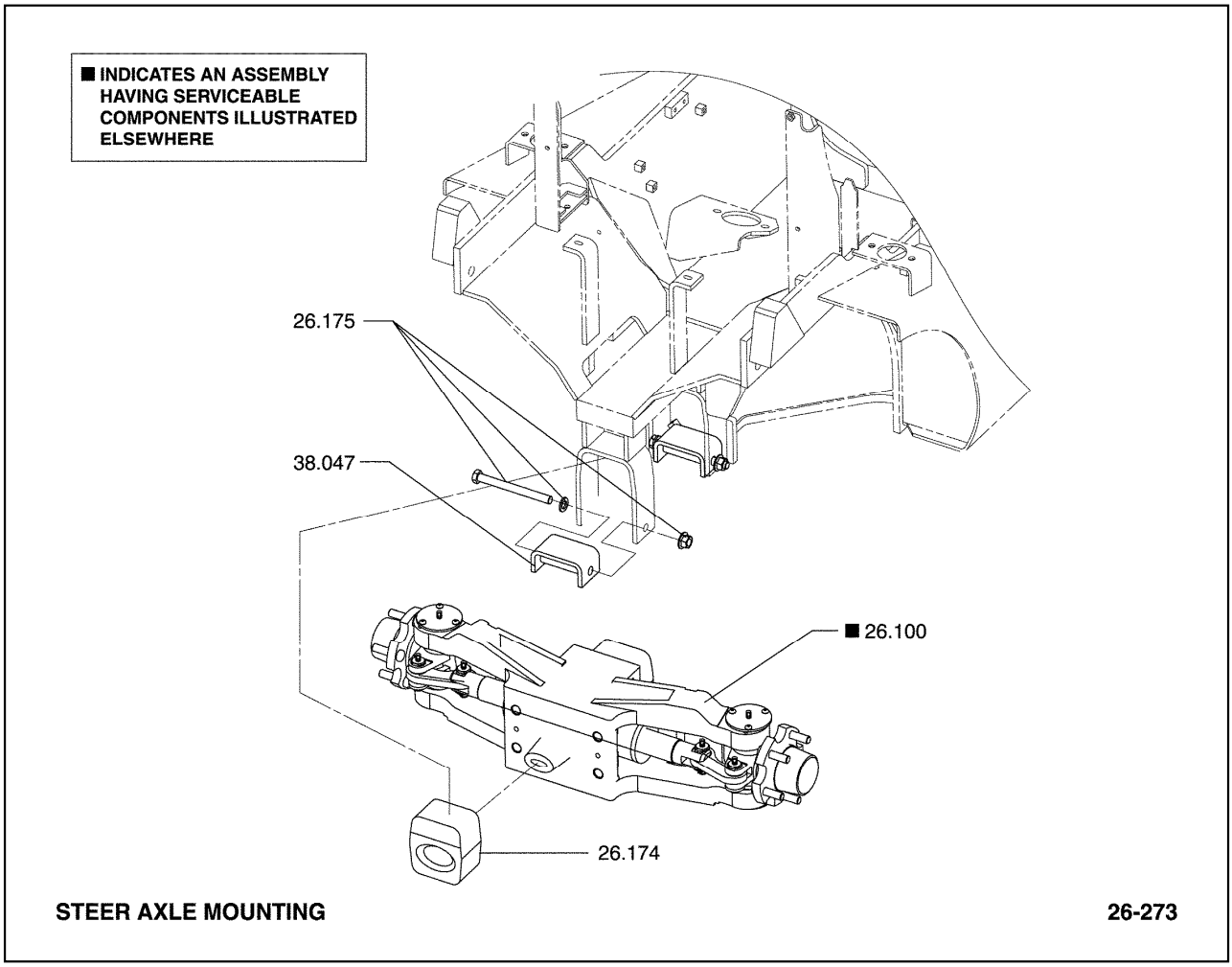

26.100 AXLE ASSEMBLY, STEERING
스티어액슬

26.174 SILENT BLOCK, AXLE MOUNTING (REAR)
사일런트블록

26.175 FASTENER, SILENT BLOCK TO FRAME (REAR)
패스너

38.047 BRACKET, STEER AXLE MOUNTING
브라켓

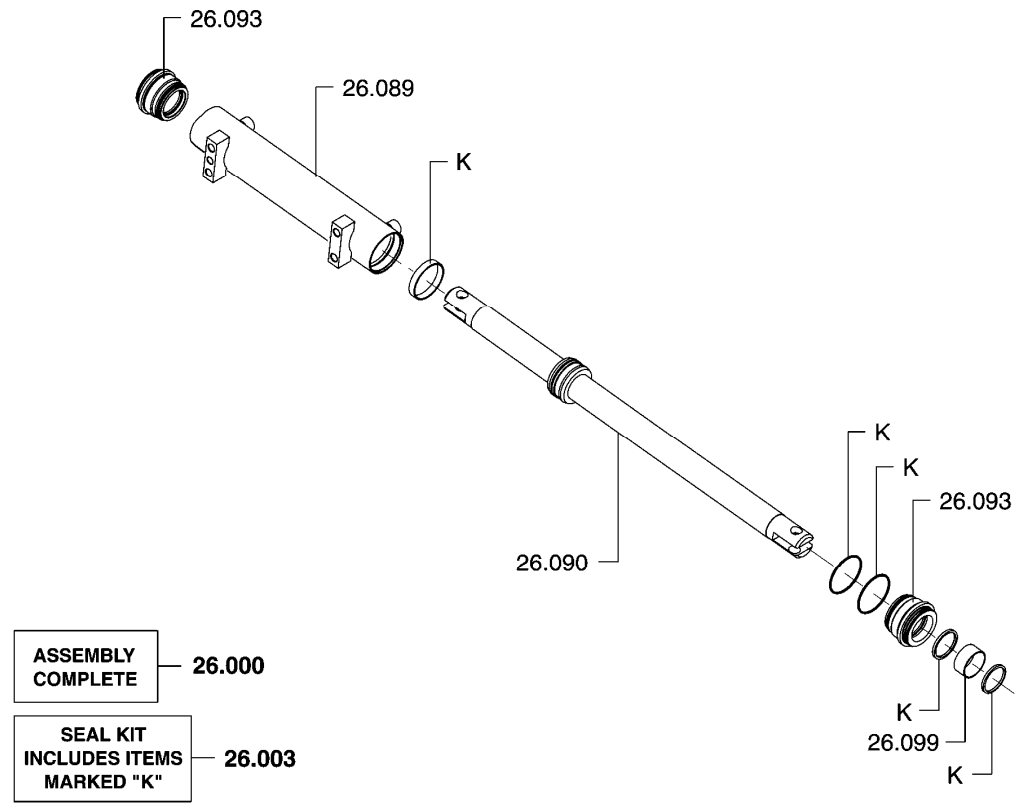

26.000	CYLINDER ASSEMBLY, STEERING 실린더
26.003	SEAL KIT, PISTON ROD 시일킷
26.089	BARREL, STEERING CYLINDER 배럴
26.090	STEER CYLINDER PISTON 롱드욱피스톤
26.093	GLAND, STEERING CYLINDER 그랜드
26.099	BUSHING, STEERING CYLINDER GLAND 부싱

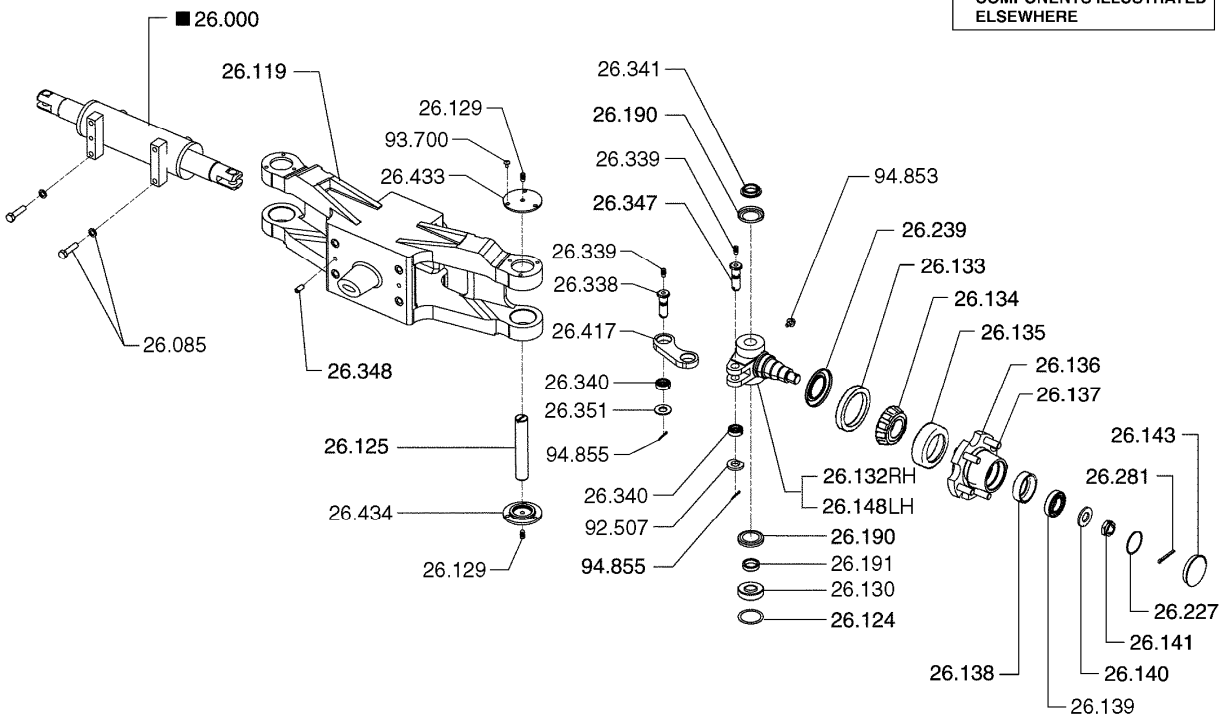

STEER AXLE ASSEMBLY **26-276**

26.000	CYLINDER ASSEMBLY, STEERING 실린더	26.139	CONE, STEER WHEEL HUB BEARING (OUTER) 콘
26.085	FASTENER, STEERING CYLINDER MOUNTING BRKT 패스너	26.140	WASHER, STEER WHEEL HUB BEARING THRUST 와셔
26.100	AXLE ASSEMBLY, STEERING 스티어액슬	26.141	FASTENER, STEER WHEEL HUB 패스너
26.119	AXLE, STEER 액슬	26.143	CAP, STEER WHEEL HUB 캡
26.124	SHIM, STEER AXLE KNUCKLE 심	26.148	KNUCKLE, STEER AXLE (LH) 너트
26.125	PIN, STEER AXLE KNUCKLE 핀	26.190	SEAL, STEER AXLE KNUCKLE OIL 시일
26.129	FITTING - LUB, STEER AXLE KNUCKLE 피팅	26.191	PLUG - EXPANSION, STEER AXLE KNUCKLE PIN 플러그
26.130	BEARING, STEER AXLE KNUCKLE PIN 베어링	26.227	SEAL, STEER AXLE FORK HOUSING 시일
26.132	KNUCKLE, STEER AXLE (RH) 너트	26.239	SEAL, STEER AXLE FORK COVER 시일
26.133	SEAL, STEER WHEEL HUB 시일	26.281	RETAINER, STEER AXLE HUB BRG KNUCKLE NUT 리테이너
26.134	CONE, STEER WHEEL HUB BEARING (INNER) 콘	26.338	PIN, STEERING ARM 핀
26.135	CUP, STEER WHEEL HUB BEARING (INNER) 컵	26.339	LUB-FITTING, STEERING ARM 윤활피팅
26.136	HUB & CUP, STEER WHEEL 허브와컵	26.340	BEARING, STEERING ARM PIN 베어링
26.137	FASTENER, STEER WHEEL 패스너	26.341	SPACER, STEER AXLE PIVOT BUSHING 스페이서
26.138	CUP, STEER WHEEL HUB BEARING (OUTER) 컵	26.347	PIN, STEER ARM 핀

26.348	LOCATOR, STEER CYLINDER 로케이터
26.351	WASHER, STEERING ARM PIN 와셔
26.417	ARM, STEERING 암
26.433	COVER, STEER AXLE KNUCKLE PIVOT (TOP) *
26.434	COVER, STEER AXLE KNUCKLE PIVOT (BOTTOM) *
92.507	WASHER, STEERING ARM FASTENER 와셔
93.700	FASTENER, STEER AXLE KNUCKLE PIN COVER 패스너
94.853	FASTENER, STEER AXLE KNUCKLE PIN 패스너
94.855	RETAINER, STEERING ARM PIN 리테이너

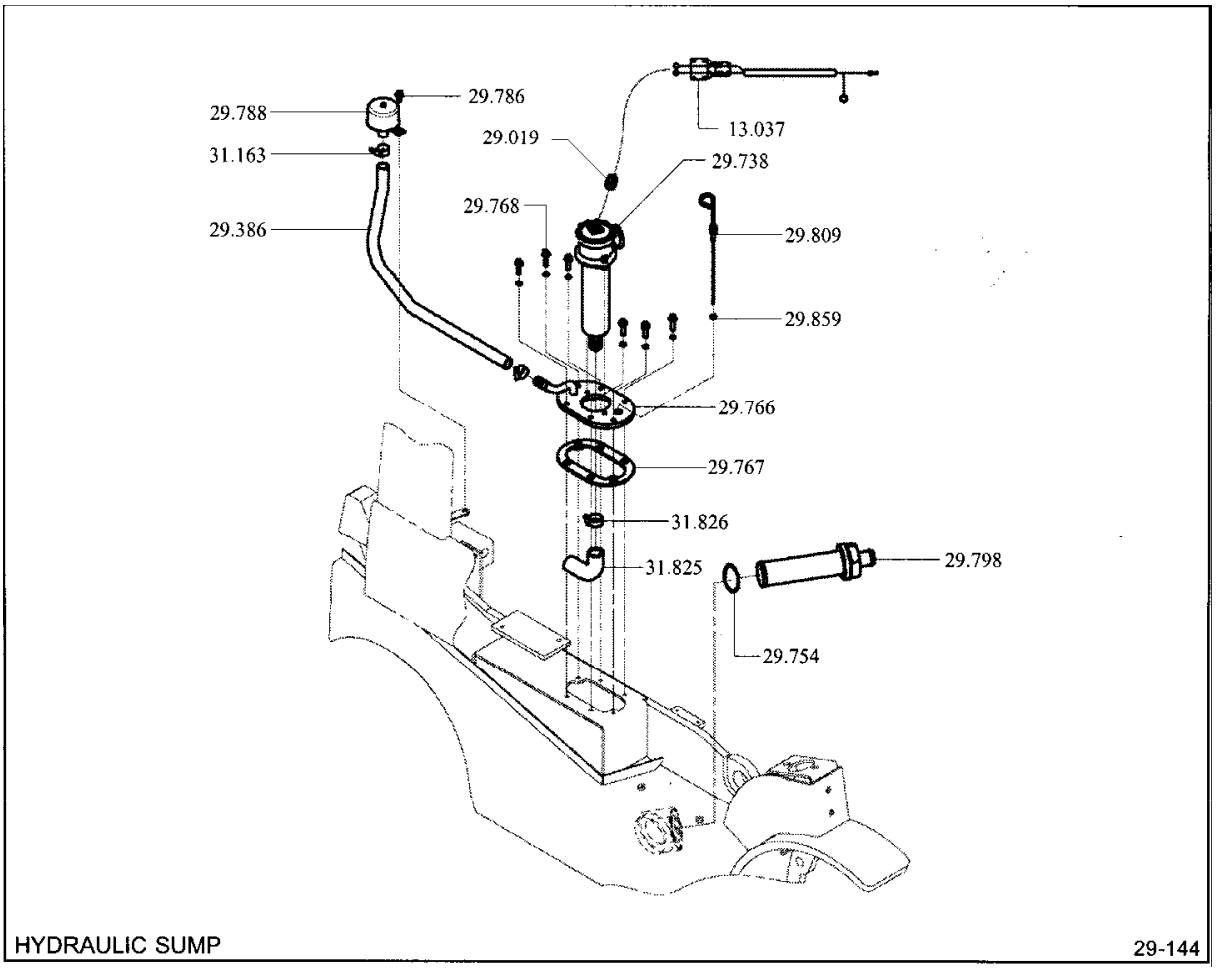

13.037 HARNESS, FILTER
하네스

29.019 INDICATOR, HYDRAULIC OIL FILTER
인디케이터

29.386 LINE, SUMP BREATHER
라인

29.738 FILTER ASSEMBLY, HYDRAULIC SUMP
필터

29.754 SEAL, HYDRAULIC SUMP FILTER SCREEN
시일

29.766 COVER, SUMP TANK
커버

29.767 SEAL, SUMP TANK COVER
시일

29.768 FASTENER, SUMP TANK COVER
패스너

29.786 FASTENER, SUMP BREATHER
패스너

29.788 BREATHER, SUMP
브리더

29.798 SCREEN, HYDRAULIC SUMP PRE FILTER
스크린

29.809 DIPSTICK, SUMP LEVEL
딥스틱

29.859 SEAL, DIPSTICK SUMP LEVEL ADAPTOR
시일

31.163 CLAMP, SUMP RETURN LINE
클램프

31.825 LINE, FILTER INLET
라인

31.826 CLAMP, FILTER INLET LINE
클램프

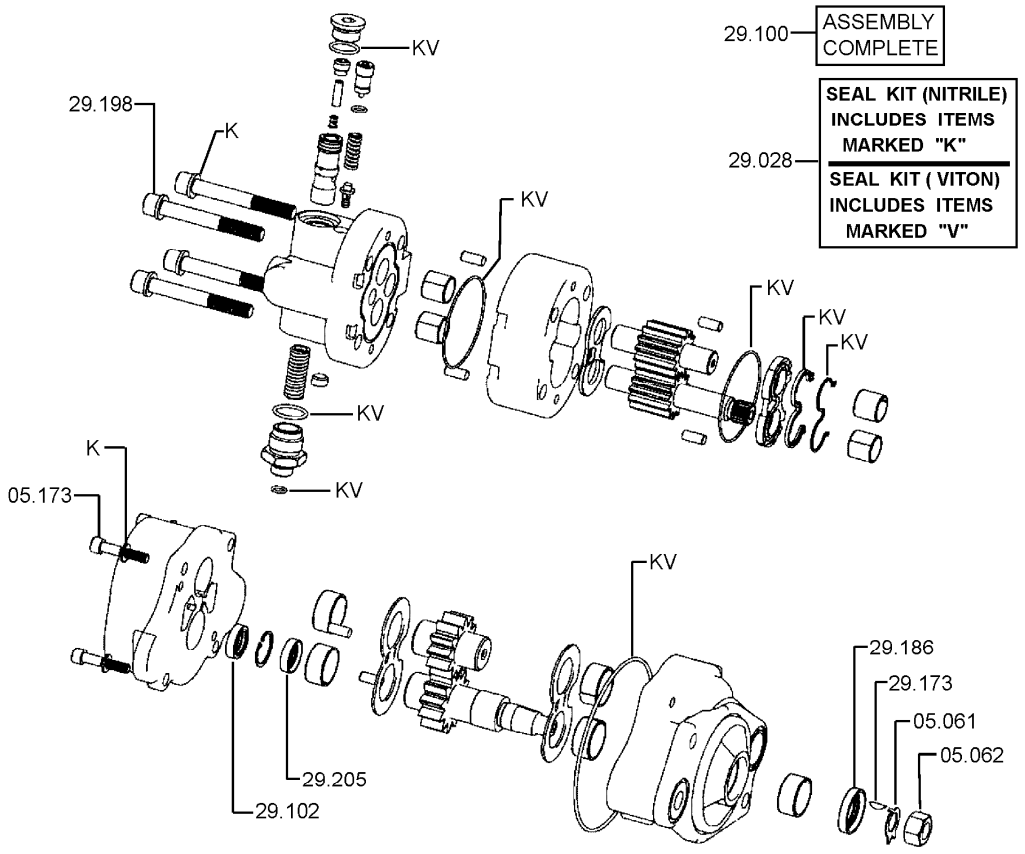

05.061 RING-RETAINING, BEARING LOCATING
링

05.062 RING-RETAINING, PUMP SHAFT BEARING
링

05.173 FASTENER, CONVERTER PUMP COVER
패스너

29.028 SEAL KIT, HYDRAULIC UNIT PUMP
시일킷

29.100 PUMP ASSEMBLY, HYDRAULIC
펌프

29.102 SEAL, PUMP SHAFT
시일

29.173 KEY, PUMP GEAR
키

29.186 SEAL, PUMP SHAFT
시일

29.198 FASTENER, PUMP HOUSING
패스너

29.205 SEAL, PUMP SHAFT
시일

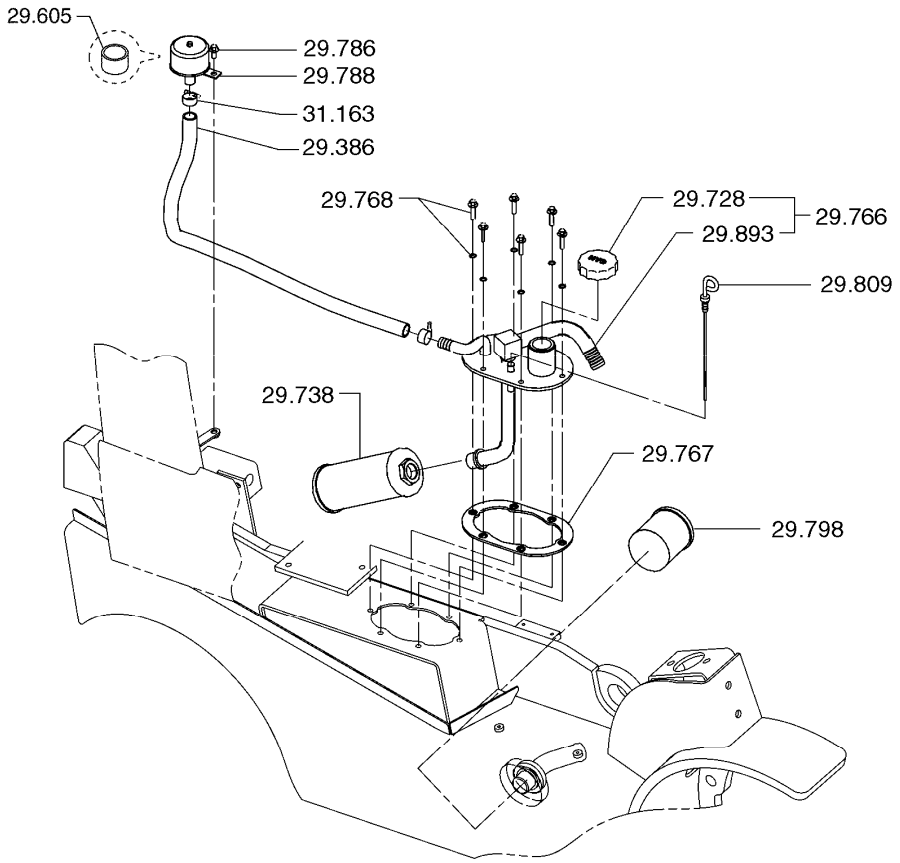

HYDRAULIC TANK & COMPONENTS MOUNTING **29-237**

29.386 LINE, SUMP BREATHER
라인

29.605 FILTER, AIR BREATHER
필터

29.728 CAP, HYDRAULIC SUMP FILLER
캡

29.738 FILTER ASSEMBLY, HYDRAULIC SUMP
필터

29.766 COVER, SUMP TANK
커버

29.767 SEAL, SUMP TANK COVER
시일

29.768 FASTENER, SUMP TANK COVER
패스너

29.786 FASTENER, SUMP BREATHER
패스너

29.788 BREATHER, SUMP
브리더

29.798	SCREEN, HYDRAULIC SUMP PRE FILTER 스크린
29.809	DIPSTICK, SUMP LEVEL 딥스틱
29.893	PLATE, HYDRAULIC SUMP 플레이트
31.163	CLAMP, SUMP RETURN LINE 클램프

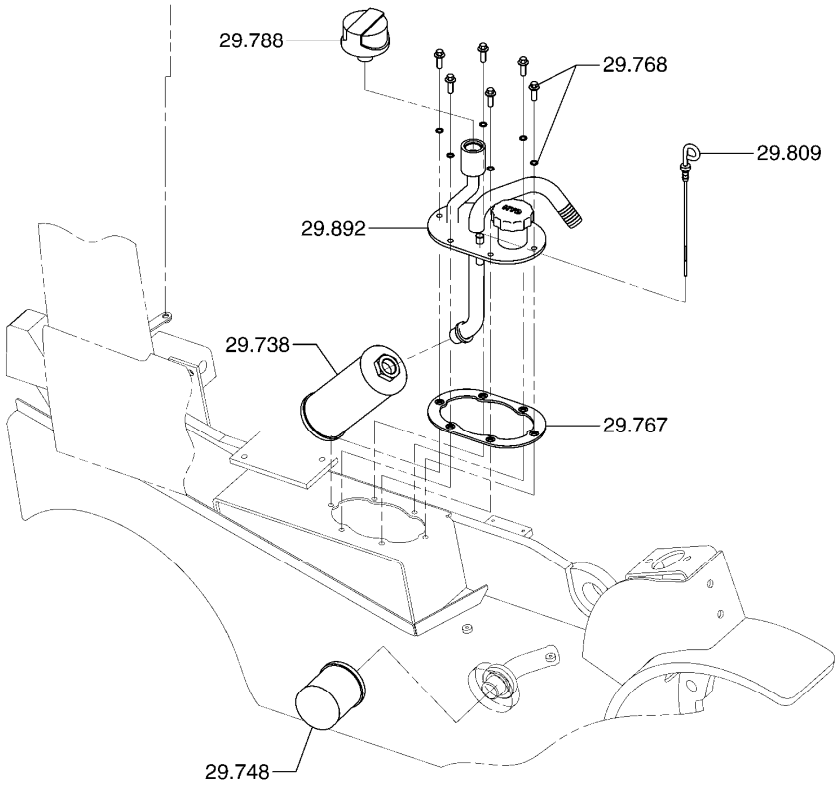

HYDRAULIC TANK & COMPONENTS MOUNTING **29-461**

29.738 FILTER ASSEMBLY, HYDRAULIC SUMP
필터

29.748 STRAINER, HYDRAULIC
스트레이너

29.767 SEAL, SUMP TANK COVER
시일

29.768 FASTENER, SUMP TANK COVER
패스너

29.788 BREATHER, SUMP
브리더

29.809 DIPSTICK, SUMP LEVEL
딥스틱

29.892 COVER, HYDRAULIC SUMP
커버

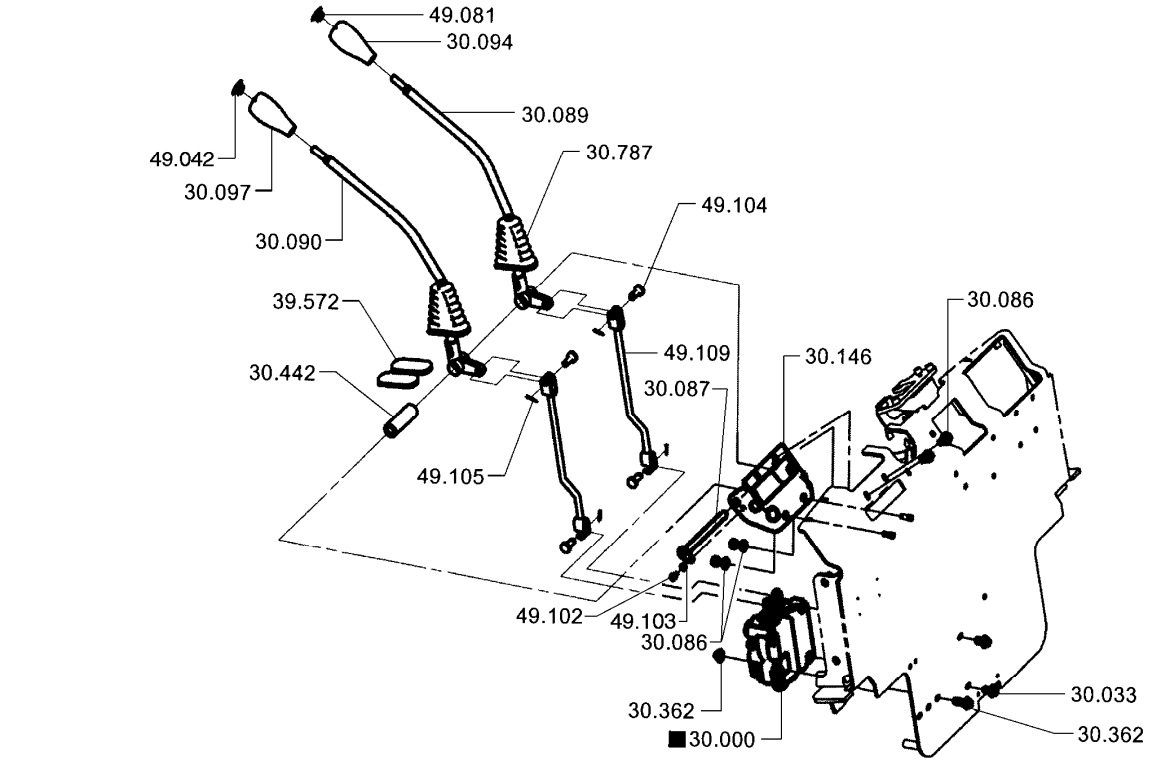

HYDRAULIC VALVE MOUNTING (2 SPOOL) **30-125**

30.000	VALVE ASSEMBLY, HYDRAULIC 벨브
30.033	FASTENER, HYDRAULIC VALVE MOUNTING 패스너
30.086	FASTENER, CONTROL LEVER PIVOT BRACKET 패스너
30.087	PIN, VALVE CONTROL LEVER PIVOT 핀
30.089	LEVER, LIFT CONTROL 레버
30.090	LEVER, TILT CONTROL 레버
30.094	KNOB, LIFT CONTROL LEVER 노브
30.097	KNOB, TILT CONTROL LEVER 노브
30.146	BRACKET, CONTROL LINKAGE LOWER 브라켓

30.362	FASTENER, VALVE MOUNTING PLATE 패스너
30.442	SPACER, CONTROL LEVERS 스페이서
30.787	BOOT, VALVE CONTROL LEVER 부트
39.572	COVER, AUXILIARY VALVE LEVER HOLE 커버
49.081	CAP, LIFT CONTROL LEVER 캡
49.082	CAP, LIFT CONTROL LEVER 캡
49.102	FASTENER, VALVE CONTROL LEVER PIVOT RETAINER 패스너
49.103	RETAINER, VALVE CONTROL LEVER PIVOT PIN 리테이너
49.104	PIN, VALVE CONTROL LEVER CLEVIS ROD 핀
49.105	RETAINER, VALVE CONTROL LEVER CLEVIS ROD PIN 리테이너
49.109	ROD, VALVE CONTROL CLEVIS 로드

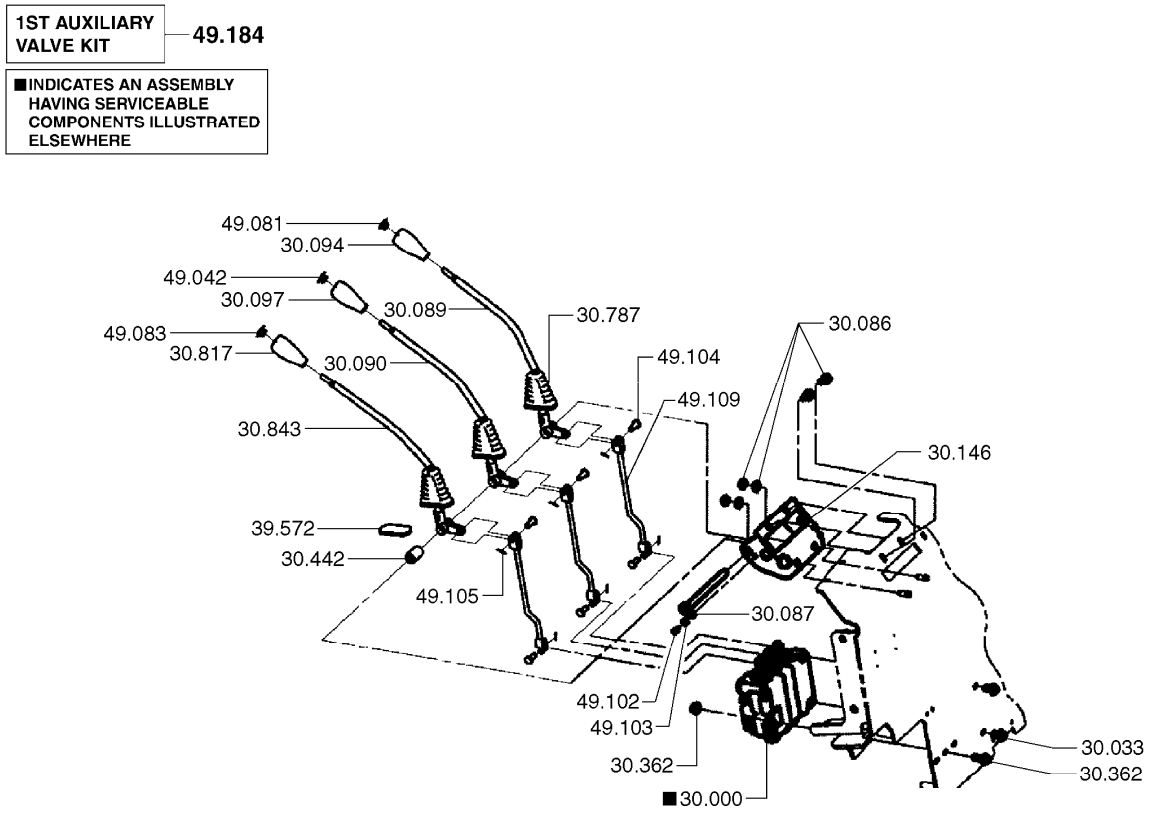

30.000 VALVE ASSEMBLY, HYDRAULIC
벨브

30.033 FASTENER, HYDRAULIC VALVE MOUNTING
패스너

30.086 FASTENER, CONTROL LEVER PIVOT BRACKET
패스너

30.087 PIN, VALVE CONTROL LEVER PIVOT
핀

30.089 LEVER, LIFT CONTROL
레버

30.090 LEVER, TILT CONTROL
레버

30.094 KNOB, LIFT CONTROL LEVER
노브

30.097 KNOB, TILT CONTROL LEVER
노브

30.146 BRACKET, CONTROL LINKAGE LOWER
브라켓

30.362	FASTENER, VALVE MOUNTING PLATE 패스너
30.442	SPACER, CONTROL LEVERS 스페이서
30.787	BOOT, VALVE CONTROL LEVER 부트
30.817	KNOB, AUXILIARY VALVE CONTROL LEVER 노브
30.843	LEVER, AUXILIARY VALVE CONTROL (1ST AUX) 레버
39.572	COVER, AUXILIARY VALVE LEVER HOLE 커버
49.042	CAP, TILT CONTROL LEVER 캡
49.081	CAP, LIFT CONTROL LEVER 캡
49.083	CAP, VALVE CONTROL LEVER DECAL 캡
49.102	FASTENER, VALVE CONTROL LEVER PIVOT RETAINER 패스너
49.103	RETAINER, VALVE CONTROL LEVER PIVOT PIN 리테이너
49.104	PIN, VALVE CONTROL LEVER CLEVIS ROD 핀
49.105	RETAINER, VALVE CONTROL LEVER CLEVIS ROD PIN 리테이너
49.109	ROD, VALVE CONTROL CLEVIS 로드
49.184	VALVE KIT, 2ND AUXILIARY 밸브킷

■INDICATES AN ASSEMBLY HAVING SERVICEABLE COMPONENTS ILLUSTRATED ELSEWHERE

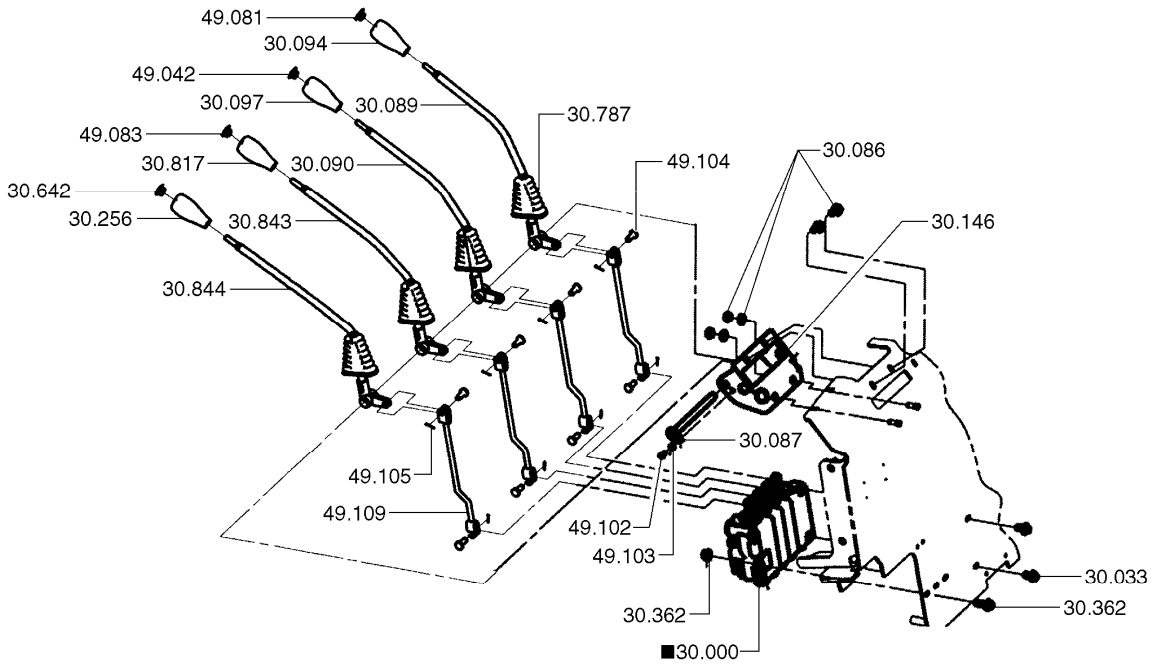

HYDRAULIC VALVE MOUNTING (4 SPOOL) **30-127**

30.000 VALVE ASSEMBLY, HYDRAULIC
벨브

30.033 FASTENER, HYDRAULIC VALVE MOUNTING
패스너

30.086 FASTENER, CONTROL LEVER PIVOT BRACKET
패스너

30.087 PIN, VALVE CONTROL LEVER PIVOT
핀

30.089 LEVER, LIFT CONTROL
레버

30.090 LEVER, TILT CONTROL
레버

30.094 KNOB, LIFT CONTROL LEVER
노브

30.097 KNOB, TILT CONTROL LEVER
노브

30.146 BRACKET, CONTROL LINKAGE LOWER
브라켓

30.256	KNOB, AUXILIARY VALVE CONTROL LEVER 노브
30.362	FASTENER, VALVE MOUNTING PLATE 패스너
30.642	CAP, AUXILIARY VALVE SPOOL 캡
30.787	BOOT, VALVE CONTROL LEVER 부트
30.817	KNOB, AUXILIARY VALVE CONTROL LEVER 노브
30.843	LEVER, AUXILIARY VALVE CONTROL (1ST AUX) 레버
30.844	LEVER, AUXILIARY VALVE CONTROL (2ND AUX) 레버
49.042	CAP, TILT CONTROL LEVER 캡
49.081	CAP, LIFT CONTROL LEVER 캡
49.083	CAP, VALVE CONTROL LEVER DECAL 캡
49.102	FASTENER, VALVE CONTROL LEVER PIVOT RETAINER 패스너
49.103	RETAINER, VALVE CONTROL LEVER PIVOT PIN 리테이너
49.104	PIN, VALVE CONTROL LEVER CLEVIS ROD 핀
49.105	RETAINER, VALVE CONTROL LEVER CLEVIS ROD PIN 리테이너
49.109	ROD, VALVE CONTROL CLEVIS 로드

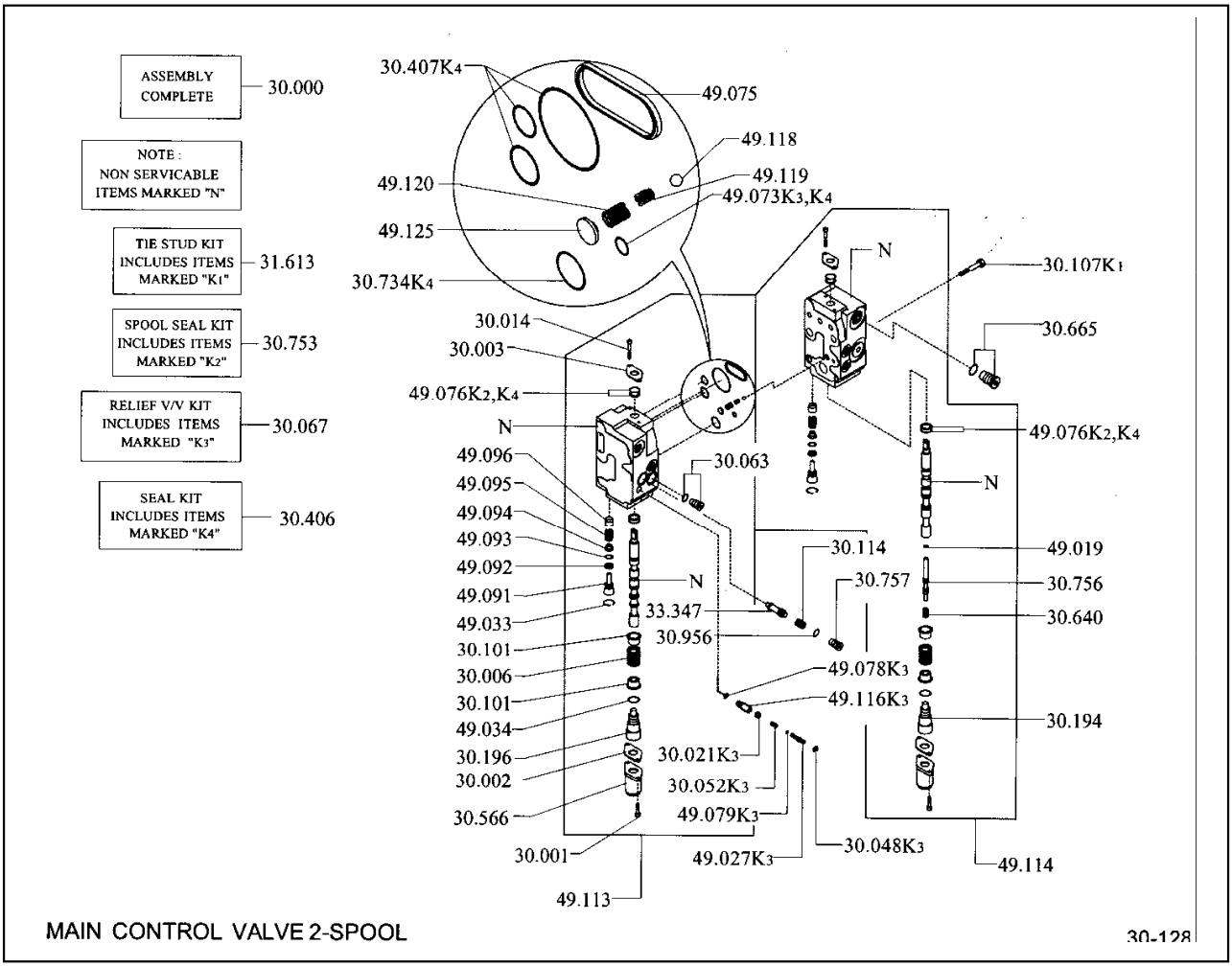

30.000	VALVE ASSEMBLY, HYDRAULIC 벨브	30.196	FASTENER, SPOOL CENTERING SPRING GUIDE 패스너
30.001	FASTENER, SPRING COVER 패스너	30.406	SEAL KIT, HYDRAULIC VALVE (LIFT) 시일킷
30.002	COVER, SPOOL CENTERING SPRING 커버	30.407	SEAL, TILT VALVE SPOOL 시일
30.003	RETAINER, VALVE SPOOL LOWER SEAL 리테이너	30.566	DUST SHIELD, HYDRAULIC VALVE SPOOL 더스트쉴드
30.006	SPRING, VALVE SPOOL CENTERING 스프링	30.640	SPRING, VALVE SPOOL POPPET 스프링
30.014	FASTENER, SPOOL WIPER RETAINER 패스너	30.665	PLUG, INLET SECTION PRESSURE PORT 플러그
30.021	POPPET, RELIEF 포펫	30.734	SEAL, VALVE OUTLET SECTION (REAR) 시일
30.048	FASTENER, SPOOL WIPER RETAINER 패스너	30.753	SPOOL SEAL KIT 스풀시일킷
30.052	SPRING, RELIEF VALVE 스프링	30.756	FLOW CONTROL, HYDRAULIC VALVE TILT SECTION 플로우컨트롤
30.063	PLUG, INLET SECTION PRESSURE PORT 플러그	30.757	PLUG, HYDRAULIC VALVE CHECK VALVE 플러그
30.067	RELIEF VALVE KIT, VALVE INLET SECTION 릴리프밸브	30.956	SEAL, RELIEF VALVE PLUG 시일
30.101	RETAINER, SPOOL CENTERING SPRING 리테이너	31.613	TIE STUD KIT, HYDRAULIC VALVE 타이스터드킷
30.107	FASTENER, VALVE THRU 패스너	33.347	RELIEF VALVE, LIFT LINE CHECK VALVE 릴리프밸브
30.114	SPRING, VALVE OUTLET SECTION CHECK VALVE 스프링	49.019	SEAL, HYDRAULIC VALVE SPOOL EYE 시일
30.194	FASTENER, SPOOL CENTERING SPRING GUIDE 패스너	49.027	SPRING, HYDRAULIC VALVE BANK 스프링

49.033 SEAL, HYDRAULIC VALVE BANK
시일

49.034 SEAL, HYDRAULIC VALVE BANK
시일

49.073 SEAL, VALVE INLET SECTION CHECK VALVE BALL
시일

49.075 RETAINER, HYDRAULIC VALVE SECTION SEAL
리테이너

49.076 SEAL, MAIN HYDRAULIC VALVE INLET SECTION
시일

49.078 SEAL, MAIN HYDRAULIC VALVE INLET SECTION
시일

49.079 SEAL, MAIN HYDRAULIC VALVE INLET SECTION
시일

49.091 ADJUSTOR, MAIN VALVE FLOW CONTROL
어드져스터

49.092 SEAL, MAIN VALVE FLOW CONTROL BACK-UP
시일

49.093 SEAL, MAIN VALVE FLOW CONTROL ADJUSTOR
시일

49.094 SEAL, MAIN VALVE FLOW CONTROL ADJUSTOR RELIEF
시일

49.095 SPRING, MAIN VALVE FLOW CONTROL ADJUSTOR RELIEF
스프링

49.096 POPPET, MAIN VALVE FLOW CONTROL ADJUSTOR RELIEF
포펫

49.113 LIFT SECTION, HYDRAULIC VALVE
리프트섹션

49.114 TILT SECTION, HYDRAULIC VALVE
틸트섹션

49.116 PLUG, VALVE LIFT SECTION
플러그

49.118 BALL, VALVE SECTION CHECK VALVE
볼

49.119 SPRING, VALVE SECTION CHECK VALVE
스프링

49.120 SPRING, VALVE SECTION CHECK VALVE
스프링

49.125 PLUG, VALVE AUX SECTION
플러그

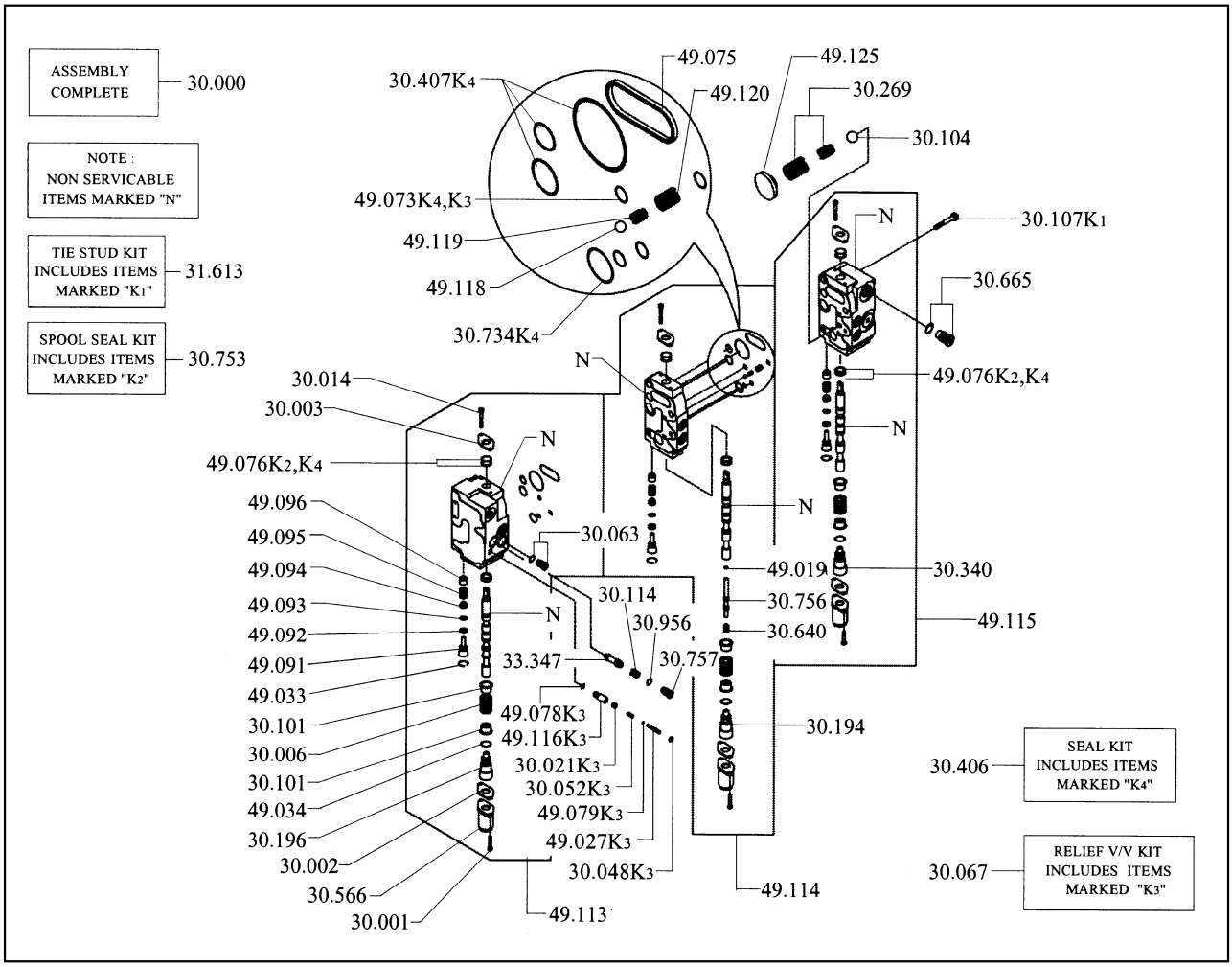

30.000	VALVE ASSEMBLY, HYDRAULIC 벨브
30.001	FASTENER, SPRING COVER 패스너
30.002	COVER, SPOOL CENTERING SPRING 커버
30.003	RETAINER, VALVE SPOOL LOWER SEAL 리테이너
30.006	SPRING, VALVE SPOOL CENTERING 스프링
30.014	FASTENER, SPOOL WIPER RETAINER 패스너
30.021	POPPET, RELIEF 포펫
30.048	FASTENER, SPOOL WIPER RETAINER 패스너
30.052	SPRING, RELIEF VALVE 스프링
30.063	PLUG, INLET SECTION PRESSURE PORT 플러그
30.067	RELIEF VALVE KIT, VALVE INLET SECTION 릴리프밸브
30.101	RETAINER, SPOOL CENTERING SPRING 리테이너
30.104	BALL, VALVE INLET SECTION CHECK VALVE 볼
30.107	FASTENER, VALVE THRU 패스너
30.114	SPRING, VALVE OUTLET SECTION CHECK VALVE 스프링
30.194	FASTENER, SPOOL CENTERING SPRING GUIDE 패스너
30.196	FASTENER, SPOOL CENTERING SPRING GUIDE 패스너
30.269	SPRING, AUXILIARY INLET SECTION CHECK VALVE 스프링
30.340	FASTENER, AUX VALVE SPOOL WIPER RETAINER 패스너
30.406	SEAL KIT, HYDRAULIC VALVE (LIFT) 시일킷
30.407	SEAL, TILT VALVE SPOOL 시일
30.566	DUST SHIELD, HYDRAULIC VALVE SPOOL 더스트쉴드
30.640	SPRING, VALVE SPOOL POPPET 스프링
30.665	PLUG, INLET SECTION PRESSURE PORT 플러그
30.734	SEAL, VALVE OUTLET SECTION (REAR) 시일
30.753	SPOOL SEAL KIT 스풀시일킷
30.756	FLOW CONTROL, HYDRAULIC VALVE TILT SECTION 플로우컨트롤
30.757	PLUG, HYDRAULIC VALVE CHECK VALVE 플러그
30.956	SEAL, RELIEF VALVE PLUG 시일
31.613	TIE STUD KIT, HYDRAULIC VALVE 타이스터드킷

33.347 RELIEF VALVE, LIFT LINE CHECK VALVE
릴리프밸브

49.019 SEAL, HYDRAULIC VALVE SPOOL EYE
시일

49.027 SPRING, HYDRAULIC VALVE BANK
스프링

49.033 SEAL, HYDRAULIC VALVE BANK
시일

49.034 SEAL, HYDRAULIC VALVE BANK
시일

49.073 SEAL, VALVE INLET SECTION CHECK VALVE BALL
시일

49.075 RETAINER, HYDRAULIC VALVE SECTION SEAL
리테이너

49.076 SEAL, MAIN HYDRAULIC VALVE INLET SECTION
시일

49.078 SEAL, MAIN HYDRAULIC VALVE INLET SECTION
시일

49.079 SEAL, MAIN HYDRAULIC VALVE INLET SECTION
시일

49.091 ADJUSTOR, MAIN VALVE FLOW CONTROL
어드져스터

49.092 SEAL, MAIN VALVE FLOW CONTROL BACK-UP
시일

49.093 SEAL, MAIN VALVE FLOW CONTROL ADJUSTOR
시일

49.094 SEAL, MAIN VALVE FLOW CONTROL ADJUSTOR RELIEF
시일

49.095 SPRING, MAIN VALVE FLOW CONTROL ADJUSTOR RELIEF
스프링

49.096 POPPET, MAIN VALVE FLOW CONTROL ADJUSTOR RELIEF
포펫

49.113 LIFT SECTION, HYDRAULIC VALVE
리프트섹션

49.114 TILT SECTION, HYDRAULIC VALVE
틸트섹션

49.115 AUX SECTION, HYDRAULIC VALVE
보조섹션

49.116 PLUG, VALVE LIFT SECTION
플러그

49.118 BALL, VALVE SECTION CHECK VALVE
볼

49.119 SPRING, VALVE SECTION CHECK VALVE
스프링

49.120 SPRING, VALVE SECTION CHECK VALVE
스프링

49.125 PLUG, VALVE AUX SECTION
플러그

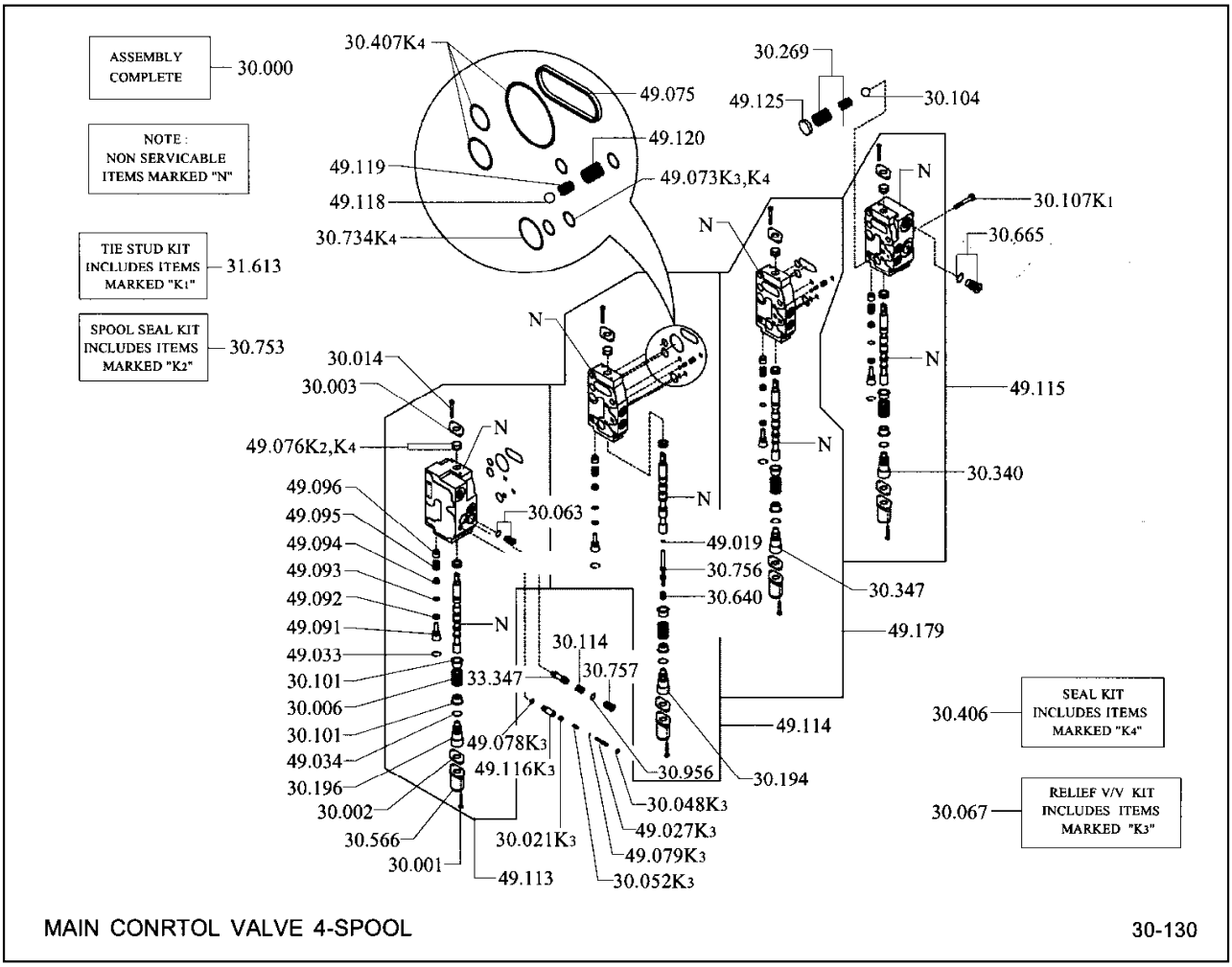

30.000	VALVE ASSEMBLY, HYDRAULIC 벨브	30.196	FASTENER, SPOOL CENTERING SPRING GUIDE 패스너
30.002	COVER, SPOOL CENTERING SPRING 커버	30.269	SPRING, AUXILIARY INLET SECTION CHECK VALVE 스프링
30.003	RETAINER, VALVE SPOOL LOWER SEAL 리테이너	30.340	FASTENER, AUX VALVE SPOOL WIPER RETAINER 패스너
30.006	SPRING, VALVE SPOOL CENTERING 스프링	30.347	FASTENER, AUX VALVE SPOOL WIPER RETAINER 패스너
30.014	FASTENER, SPOOL WIPER RETAINER 패스너	30.406	SEAL KIT, HYDRAULIC VALVE (LIFT) 시일킷
30.021	POPPET, RELIEF 포펫	30.407	SEAL, TILT VALVE SPOOL 시일
30.048	FASTENER, SPOOL WIPER RETAINER 패스너	30.566	DUST SHIELD, HYDRAULIC VALVE SPOOL 더스트쉴드
30.052	SPRING, RELIEF VALVE 스프링	30.640	SPRING, VALVE SPOOL POPPET 스프링
30.063	PLUG, INLET SECTION PRESSURE PORT 플러그	30.665	PLUG, INLET SECTION PRESSURE PORT 플러그
30.067	RELIEF VALVE KIT, VALVE INLET SECTION 릴리프밸브	30.734	SEAL, VALVE OUTLET SECTION (REAR) 시일
30.101	RETAINER, SPOOL CENTERING SPRING 리테이너	30.753	SPOOL SEAL KIT 스풀시일킷
30.104	BALL, VALVE INLET SECTION CHECK VALVE 볼	30.756	FLOW CONTROL, HYDRAULIC VALVE TILT SECTION 플로우컨트롤
30.107	FASTENER, VALVE THRU 패스너	30.757	PLUG, HYDRAULIC VALVE CHECK VALVE 플러그
30.114	SPRING, VALVE OUTLET SECTION CHECK VALVE 스프링	30.956	SEAL, RELIEF VALVE PLUG 시일
30.194	FASTENER, SPOOL CENTERING SPRING GUIDE 패스너	31.613	TIE STUD KIT, HYDRAULIC VALVE 타이스터드킷

33.347 RELIEF VALVE, LIFT LINE CHECK VALVE
릴리프밸브

49.019 SEAL, HYDRAULIC VALVE SPOOL EYE
시일

49.027 SPRING, HYDRAULIC VALVE BANK
스프링

49.033 SEAL, HYDRAULIC VALVE BANK
시일

49.034 SEAL, HYDRAULIC VALVE BANK
시일

49.073 SEAL, VALVE INLET SECTION CHECK VALVE BALL
시일

49.075 RETAINER, HYDRAULIC VALVE SECTION SEAL
리테이너

49.076 SEAL, MAIN HYDRAULIC VALVE INLET SECTION
시일

49.078 SEAL, MAIN HYDRAULIC VALVE INLET SECTION
시일

49.079 SEAL, MAIN HYDRAULIC VALVE INLET SECTION
시일

49.091 ADJUSTOR, MAIN VALVE FLOW CONTROL
어드져스터

49.092 SEAL, MAIN VALVE FLOW CONTROL BACK-UP
시일

49.093 SEAL, MAIN VALVE FLOW CONTROL ADJUSTOR
시일

49.094 SEAL, MAIN VALVE FLOW CONTROL ADJUSTOR RELIEF
시일

49.095 SPRING, MAIN VALVE FLOW CONTROL ADJUSTOR RELIEF
스프링

49.096 POPPET, MAIN VALVE FLOW CONTROL ADJUSTOR RELIEF
포펫

49.113 LIFT SECTION, HYDRAULIC VALVE
리프트섹션

49.114 TILT SECTION, HYDRAULIC VALVE
틸트섹션

49.115 AUX SECTION, HYDRAULIC VALVE
보조섹션

49.116 PLUG, VALVE LIFT SECTION
플러그

49.118 BALL, VALVE SECTION CHECK VALVE
볼

49.119 SPRING, VALVE SECTION CHECK VALVE
스프링

49.120 SPRING, VALVE SECTION CHECK VALVE
스프링

49.125 PLUG, VALVE AUX SECTION
플러그

49.179 AUX SECTION, HYDRAULIC VALVE
보조섹션

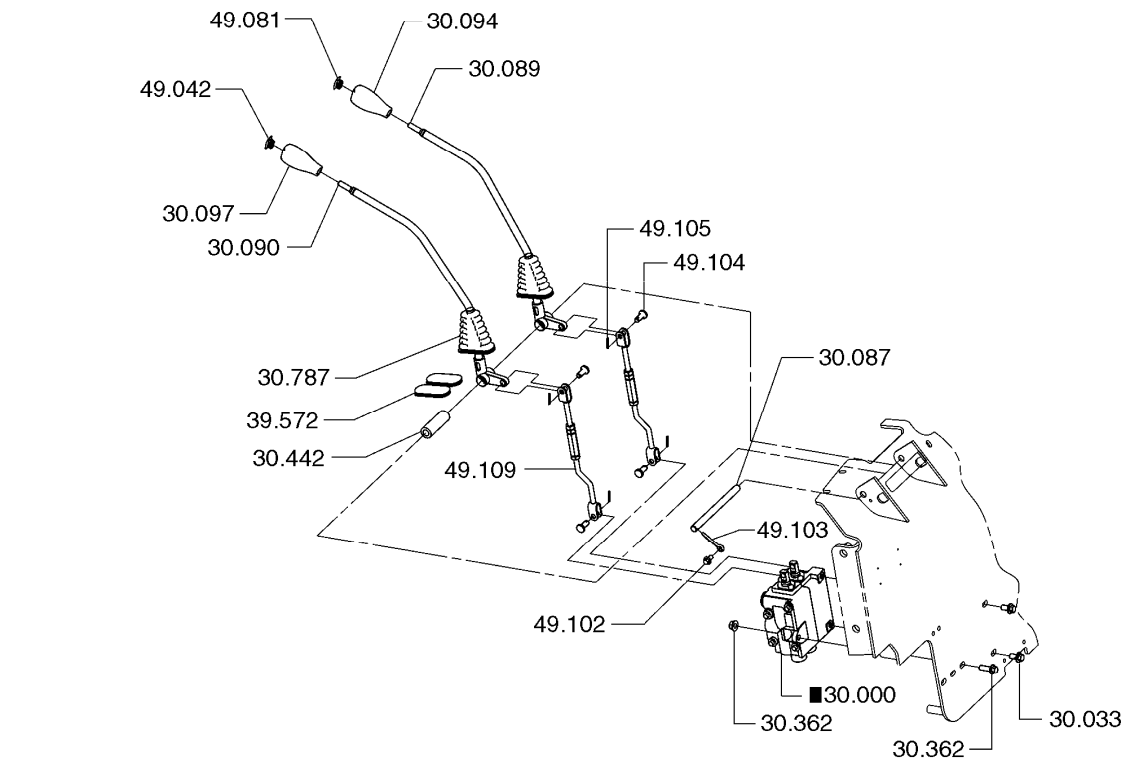

HYDRAULIC VALVE MOUNTING (2 SPOOL) **30-209**

30.000 VALVE ASSEMBLY, HYDRAULIC
벨브

30.033 FASTENER, HYDRAULIC VALVE MOUNTING
패스너

30.087 PIN, VALVE CONTROL LEVER PIVOT
핀

30.089 LEVER, LIFT CONTROL
레버

30.090 LEVER, TILT CONTROL
레버

30.094 KNOB, LIFT CONTROL LEVER
노브

30.097 KNOB, TILT CONTROL LEVER
노브

30.362 FASTENER, VALVE MOUNTING PLATE
패스너

30.442 SPACER, CONTROL LEVERS
스페이서

30.787	BOOT, VALVE CONTROL LEVER 부트
39.572	COVER, AUXILIARY VALVE LEVER HOLE 커버
49.042	CAP, TILT CONTROL LEVER 캡
49.081	CAP, LIFT CONTROL LEVER 캡
49.102	FASTENER, VALVE CONTROL LEVER PIVOT RETAINER 패스너
49.103	RETAINER, VALVE CONTROL LEVER PIVOT PIN 리테이너
49.104	PIN, VALVE CONTROL LEVER CLEVIS ROD 핀
49.105	RETAINER, VALVE CONTROL LEVER CLEVIS ROD PIN 리테이너
49.109	ROD, VALVE CONTROL CLEVIS 로드

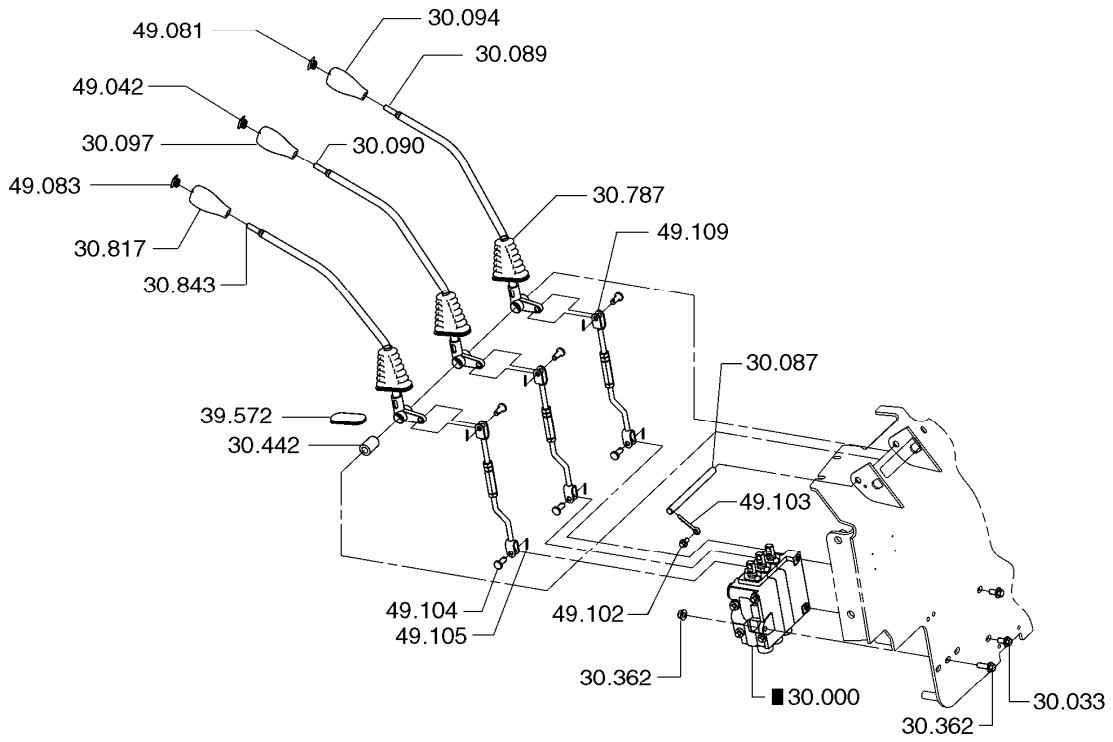

HYDRAULIC VALVE MOUNTING (3 SPOOL) **30-210**

30.000	VALVE ASSEMBLY, HYDRAULIC 벨브
30.033	FASTENER, HYDRAULIC VALVE MOUNTING 패스너
30.087	PIN, VALVE CONTROL LEVER PIVOT 핀
30.089	LEVER, LIFT CONTROL 레버
30.090	LEVER, TILT CONTROL 레버
30.094	KNOB, LIFT CONTROL LEVER 노브
30.097	KNOB, TILT CONTROL LEVER 노브
30.362	FASTENER, VALVE MOUNTING PLATE 패스너
30.442	SPACER, CONTROL LEVERS 스페이서

30.787	BOOT, VALVE CONTROL LEVER 부트
30.817	KNOB, AUXILIARY VALVE CONTROL LEVER 노브
30.843	LEVER, AUXILIARY VALVE CONTROL (1ST AUX) 레버
39.572	COVER, AUXILIARY VALVE LEVER HOLE 커버
49.042	CAP, TILT CONTROL LEVER 캡
49.081	CAP, LIFT CONTROL LEVER 캡
49.083	CAP, VALVE CONTROL LEVER DECAL 캡
49.102	FASTENER, VALVE CONTROL LEVER PIVOT RETAINER 패스너
49.103	RETAINER, VALVE CONTROL LEVER PIVOT PIN 리테이너
49.104	PIN, VALVE CONTROL LEVER CLEVIS ROD 핀
49.105	RETAINER, VALVE CONTROL LEVER CLEVIS ROD PIN 리테이너
49.109	ROD, VALVE CONTROL CLEVIS 로드

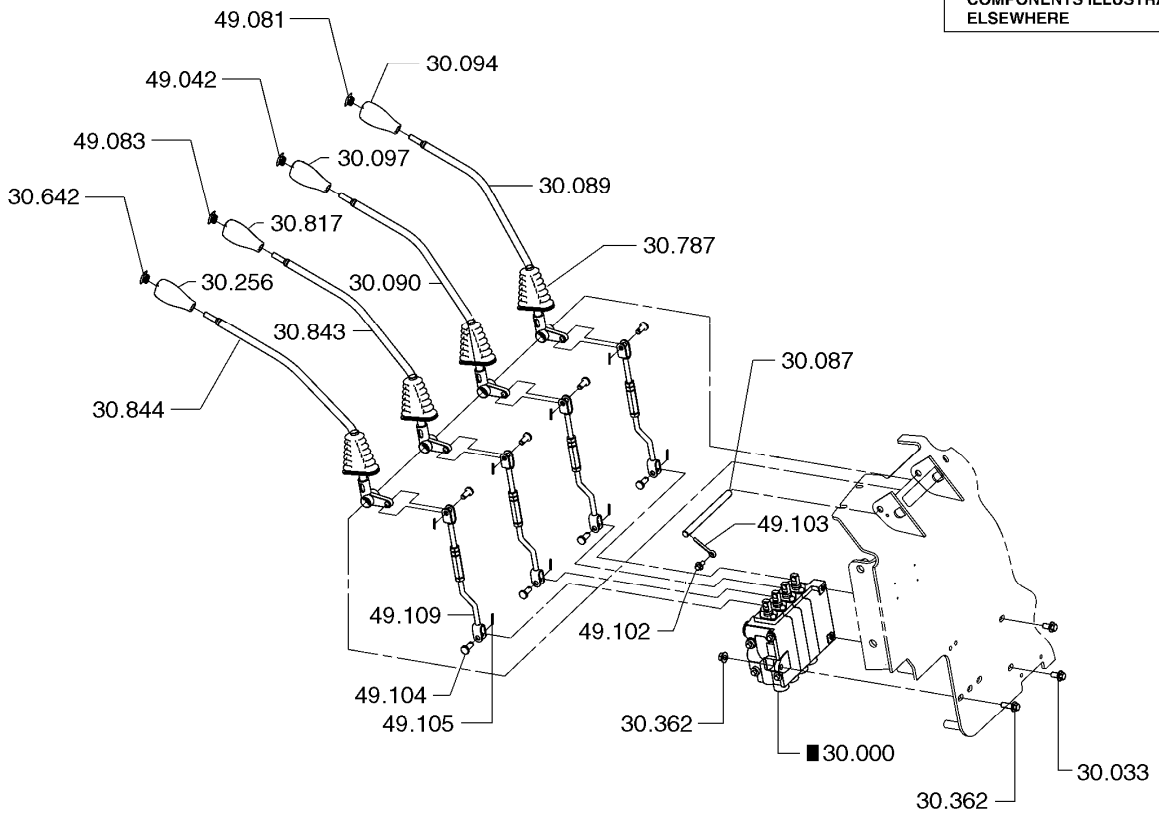

HYDRAULIC VALVE MOUNTING (4 SPOOL) **30-211**

30.000 VALVE ASSEMBLY, HYDRAULIC
벨브

30.033 FASTENER, HYDRAULIC VALVE MOUNTING
패스너

30.087 PIN, VALVE CONTROL LEVER PIVOT
핀

30.089 LEVER, LIFT CONTROL
레버

30.090 LEVER, TILT CONTROL
레버

30.094 KNOB, LIFT CONTROL LEVER
노브

30.097 KNOB, TILT CONTROL LEVER
노브

30.256 KNOB, AUXILIARY VALVE CONTROL LEVER
노브

30.362 FASTENER, VALVE MOUNTING PLATE
패스너

30.642	CAP, AUXILIARY VALVE SPOOL 캡
30.787	BOOT, VALVE CONTROL LEVER 부트
30.817	KNOB, AUXILIARY VALVE CONTROL LEVER 노브
30.843	LEVER, AUXILIARY VALVE CONTROL (1ST AUX) 레버
30.844	LEVER, AUXILIARY VALVE CONTROL (2ND AUX) 레버
49.042	CAP, TILT CONTROL LEVER 캡
49.081	CAP, LIFT CONTROL LEVER 캡
49.083	CAP, VALVE CONTROL LEVER DECAL 캡
49.102	FASTENER, VALVE CONTROL LEVER PIVOT RETAINER 패스너
49.103	RETAINER, VALVE CONTROL LEVER PIVOT PIN 리테이너
49.104	PIN, VALVE CONTROL LEVER CLEVIS ROD 핀
49.105	RETAINER, VALVE CONTROL LEVER CLEVIS ROD PIN 리테이너
49.109	ROD, VALVE CONTROL CLEVIS 로드

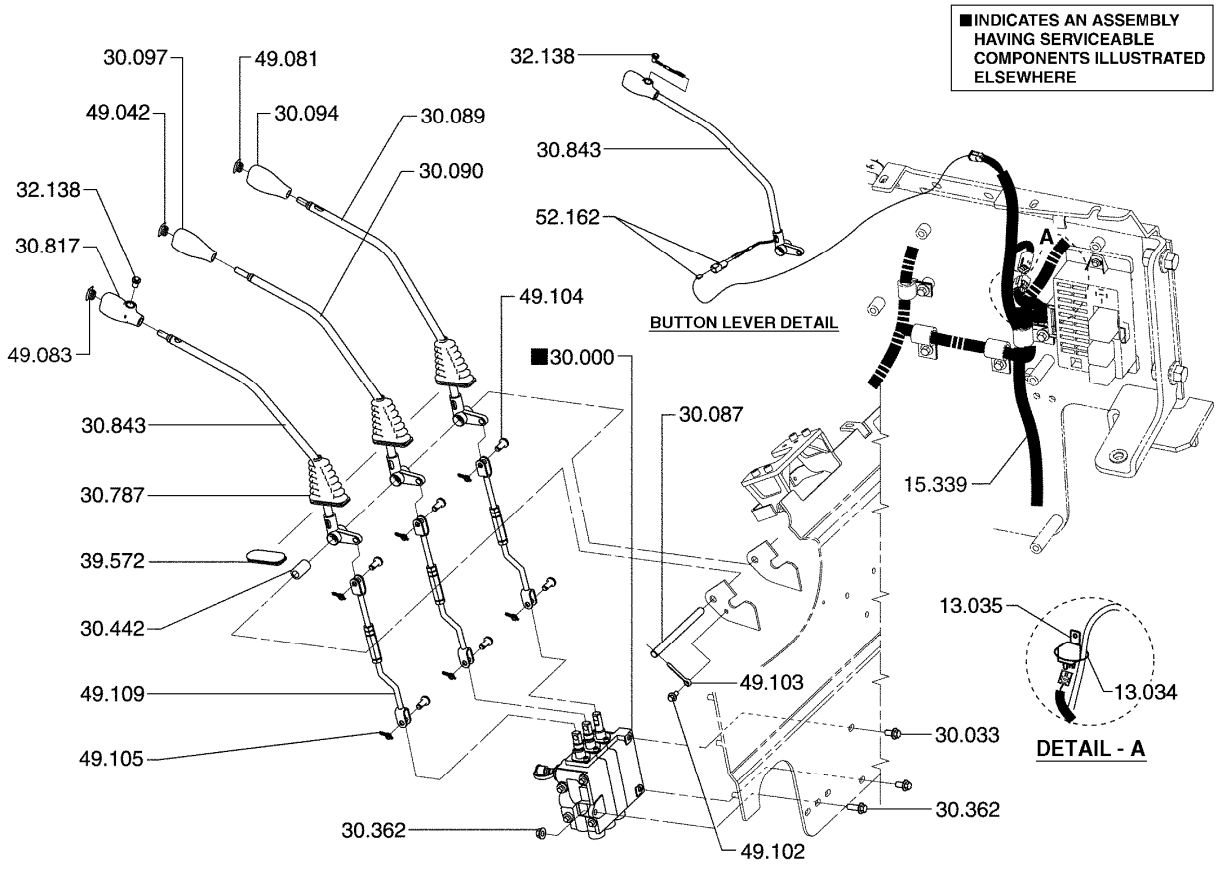

MAIN CONTROL VALVE 3-SPOOL (PUSH BUTTON) **30-510**

13.034 CLIP, VALVE SWITCH WIRING HARNESS
*

13.035 RELAY, VALVE SWITCH WIRING HARNESS
*

15.339 HARNESS, AUXILIARY VALVE SWITCH WIRING
하네스

30.000 VALVE ASSEMBLY, HYDRAULIC
벨브

30.033 FASTENER, HYDRAULIC VALVE MOUNTING
패스너

30.087 PIN, VALVE CONTROL LEVER PIVOT
핀

30.089 LEVER, LIFT CONTROL
레버

30.090 LEVER, TILT CONTROL
레버

30.094 KNOB, LIFT CONTROL LEVER
노브

30.097	KNOB, TILT CONTROL LEVER 노브
30.362	FASTENER, VALVE MOUNTING PLATE 패스너
30.442	SPACER, CONTROL LEVERS 스페이서
30.787	BOOT, VALVE CONTROL LEVER 부트
30.817	KNOB, AUXILIARY VALVE CONTROL LEVER 노브
30.843	LEVER, AUXILIARY VALVE CONTROL (1ST AUX) 레버
32.137	BRACKET, INSTRUMENT MOUNTING 브라켓
32.138	SWITCH, PUSH BUTTON 스위치
39.572	COVER, AUXILIARY VALVE LEVER HOLE 커버
49.042	CAP, TILT CONTROL LEVER 캡
49.081	CAP, LIFT CONTROL LEVER 캡
49.083	CAP, VALVE CONTROL LEVER DECAL 캡
49.102	FASTENER, VALVE CONTROL LEVER PIVOT RETAINER 패스너
49.103	RETAINER, VALVE CONTROL LEVER PIVOT PIN 리테이너
49.104	PIN, VALVE CONTROL LEVER CLEVIS ROD 핀
49.105	RETAINER, VALVE CONTROL LEVER CLEVIS ROD PIN 리테이너
49.109	ROD, VALVE CONTROL CLEVIS 로드
52.162	CONNECTOR, AUXILIARY VALVE LEVER WIRE 커넥터

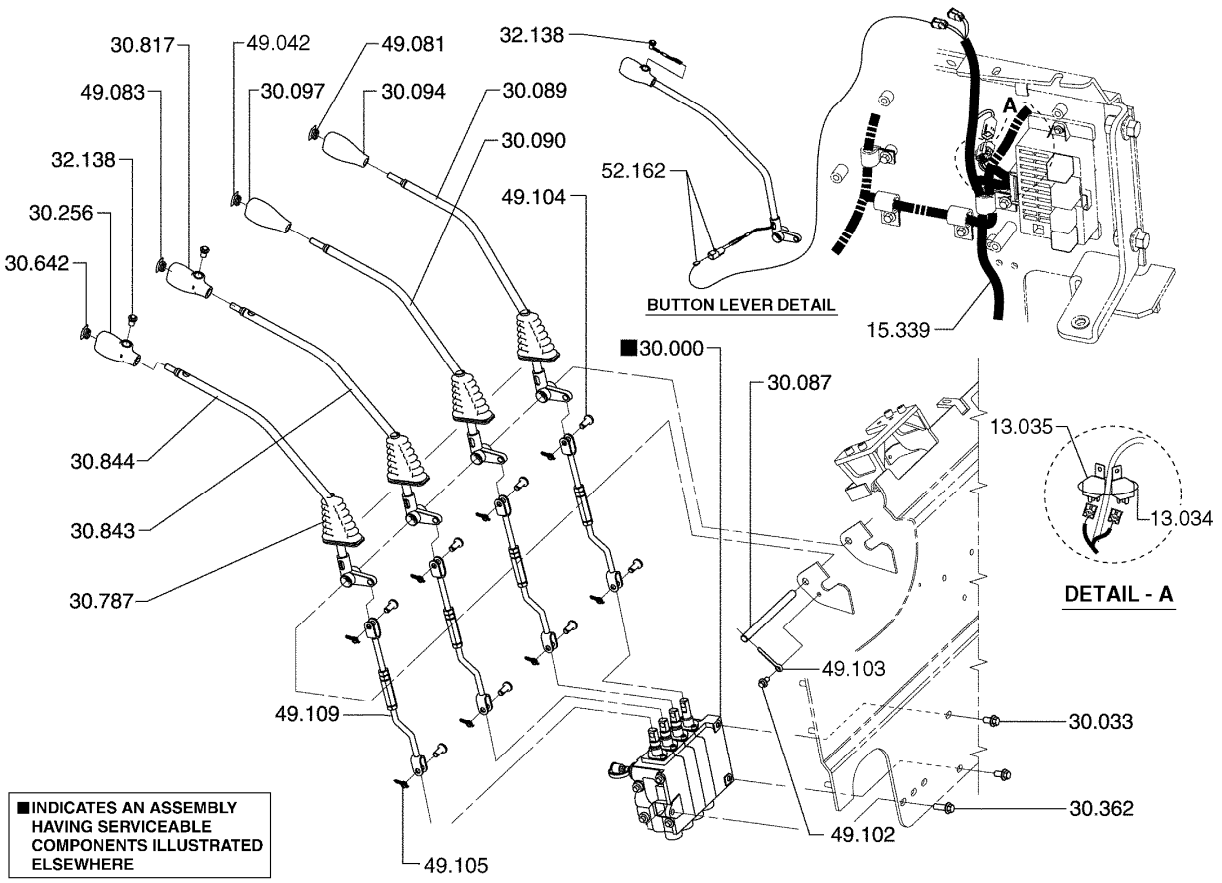

MAIN CONTROL VALVE 4-SPOOL (PUSH BUTTON) **30-511**

13.034 CLIP, VALVE SWITCH WIRING HARNESS
*

13.035 RELAY, VALVE SWITCH WIRING HARNESS
*

15.339 HARNESS, AUXILIARY VALVE SWITCH WIRING
하네스

30.000 VALVE ASSEMBLY, HYDRAULIC
벨브

30.033 FASTENER, HYDRAULIC VALVE MOUNTING
패스너

30.087 PIN, VALVE CONTROL LEVER PIVOT
핀

30.089 LEVER, LIFT CONTROL
레버

30.090 LEVER, TILT CONTROL
레버

30.094 KNOB, LIFT CONTROL LEVER
노브

30.097 KNOB, TILT CONTROL LEVER
노브

30.256 KNOB, AUXILIARY VALVE CONTROL LEVER
노브

30.362 FASTENER, VALVE MOUNTING PLATE
패스너

30.642 CAP, AUXILIARY VALVE SPOOL
캡

30.787 BOOT, VALVE CONTROL LEVER
부트

30.817 KNOB, AUXILIARY VALVE CONTROL LEVER
노브

30.843 LEVER, AUXILIARY VALVE CONTROL (1ST AUX)
레버

30.844 LEVER, AUXILIARY VALVE CONTROL (2ND AUX)
레버

32.138 SWITCH, PUSH BUTTON
스위치

49.042 CAP, TILT CONTROL LEVER
캡

49.081 CAP, LIFT CONTROL LEVER
캡

49.082 CAP, LIFT CONTROL LEVER
캡

49.102 FASTENER, VALVE CONTROL LEVER PIVOT RETAINER
패스너

49.103 RETAINER, VALVE CONTROL LEVER PIVOT PIN
리테이너

49.104 PIN, VALVE CONTROL LEVER CLEVIS ROD
핀

49.105 RETAINER, VALVE CONTROL LEVER CLEVIS ROD PIN
리테이너

49.109 ROD, VALVE CONTROL CLEVIS
로드

52.162 CONNECTOR, AUXILIARY VALVE LEVER WIRE
커넥터

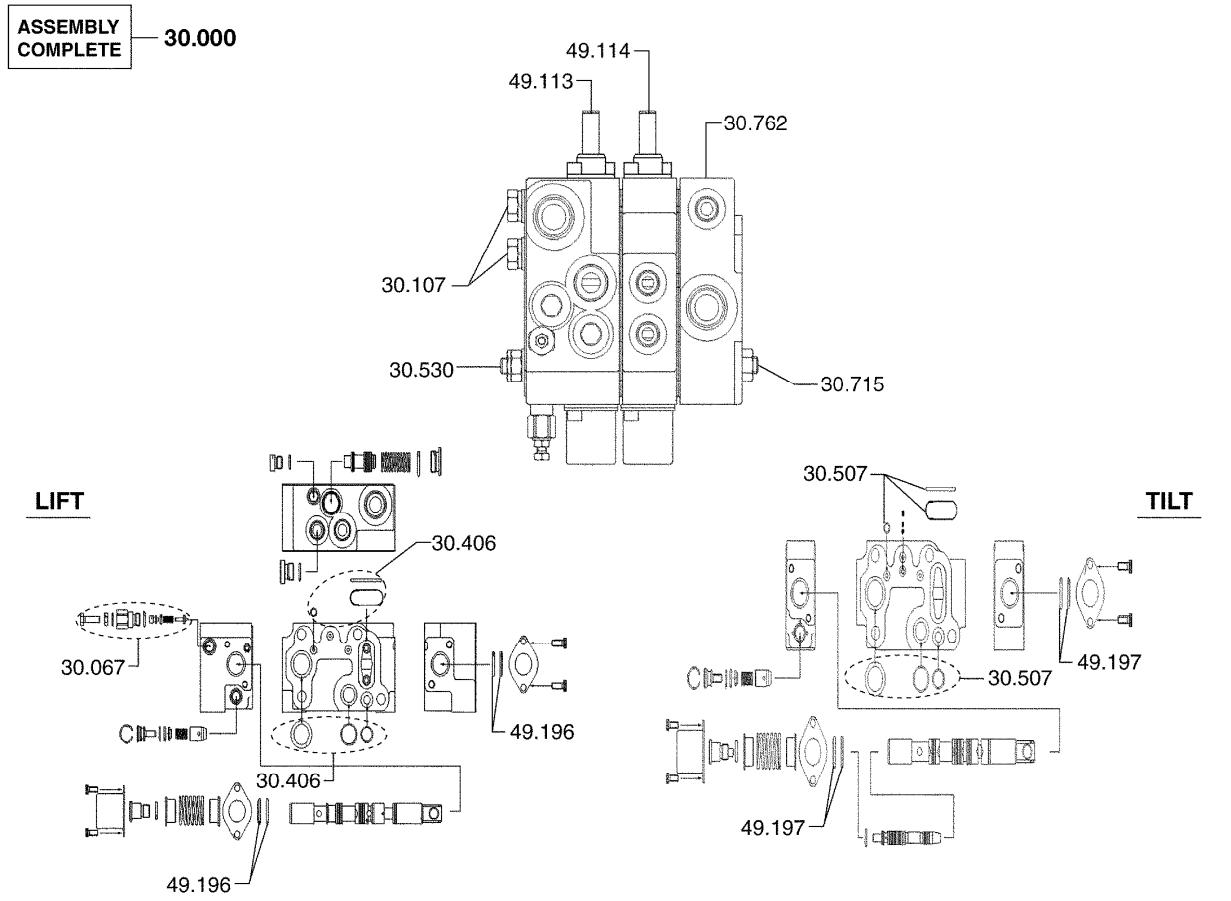

30.000 VALVE ASSEMBLY, HYDRAULIC
벨브

30.067 RELIEF VALVE KIT, VALVE INLET SECTION
릴리프밸브

30.107 FASTENER, VALVE THRU
패스너

30.406 SEAL KIT, HYDRAULIC VALVE (LIFT)
시일킷

30.507 SEAL KIT, HYDRAULIC VALVE (TILT)
시일킷

30.530 FASTENER, VALVE THRU
패스너

30.715 FASTENER, VALVE THRU
패스너

30.762 END COVER, HYDRAULIC VALVE
엔드커버

49.113 LIFT SECTION, HYDRAULIC VALVE
리프트섹션

49.114 TILT SECTION, HYDRAULIC VALVE
틸트섹션

49.196 SPOOL SEAL KIT, LIFT SECTION
스풀실킷

49.197 SPOOL SEAL KIT, TILT SECTION
스풀실킷

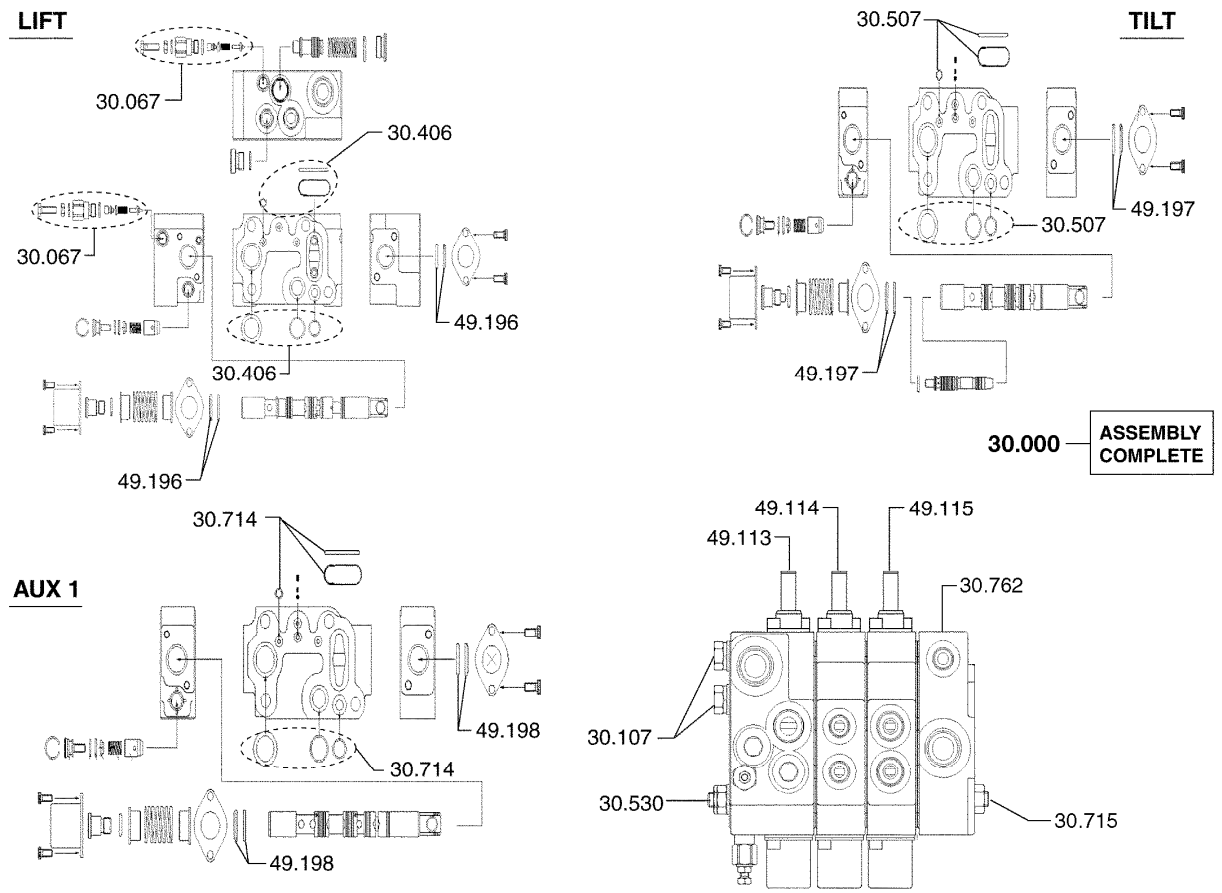

30.000	VALVE ASSEMBLY, HYDRAULIC 벨브
30.067	RELIEF VALVE KIT, VALVE INLET SECTION 릴리프밸브
30.107	FASTENER, VALVE THRU 패스너
30.406	SEAL KIT, HYDRAULIC VALVE (LIFT) 시일킷
30.507	SEAL KIT, HYDRAULIC VALVE (TILT) 시일킷
30.530	FASTENER, VALVE THRU 패스너
30.714	SEAL KIT, HYDRAULIC VALVE SECTION (AUX) 시일킷
30.715	FASTENER, VALVE THRU 패스너
30.762	END COVER, HYDRAULIC VALVE 엔드커버

49.113 LIFT SECTION, HYDRAULIC VALVE
리프트섹션

49.114 TILT SECTION, HYDRAULIC VALVE
틸트섹션

49.115 AUX SECTION, HYDRAULIC VALVE
보조섹션

49.196 SPOOL SEAL KIT, LIFT SECTION
스풀실킷

49.197 SPOOL SEAL KIT, TILT SECTION
스풀실킷

49.198 SPOOL SEAL KIT, AUX SECTION
스풀실킷

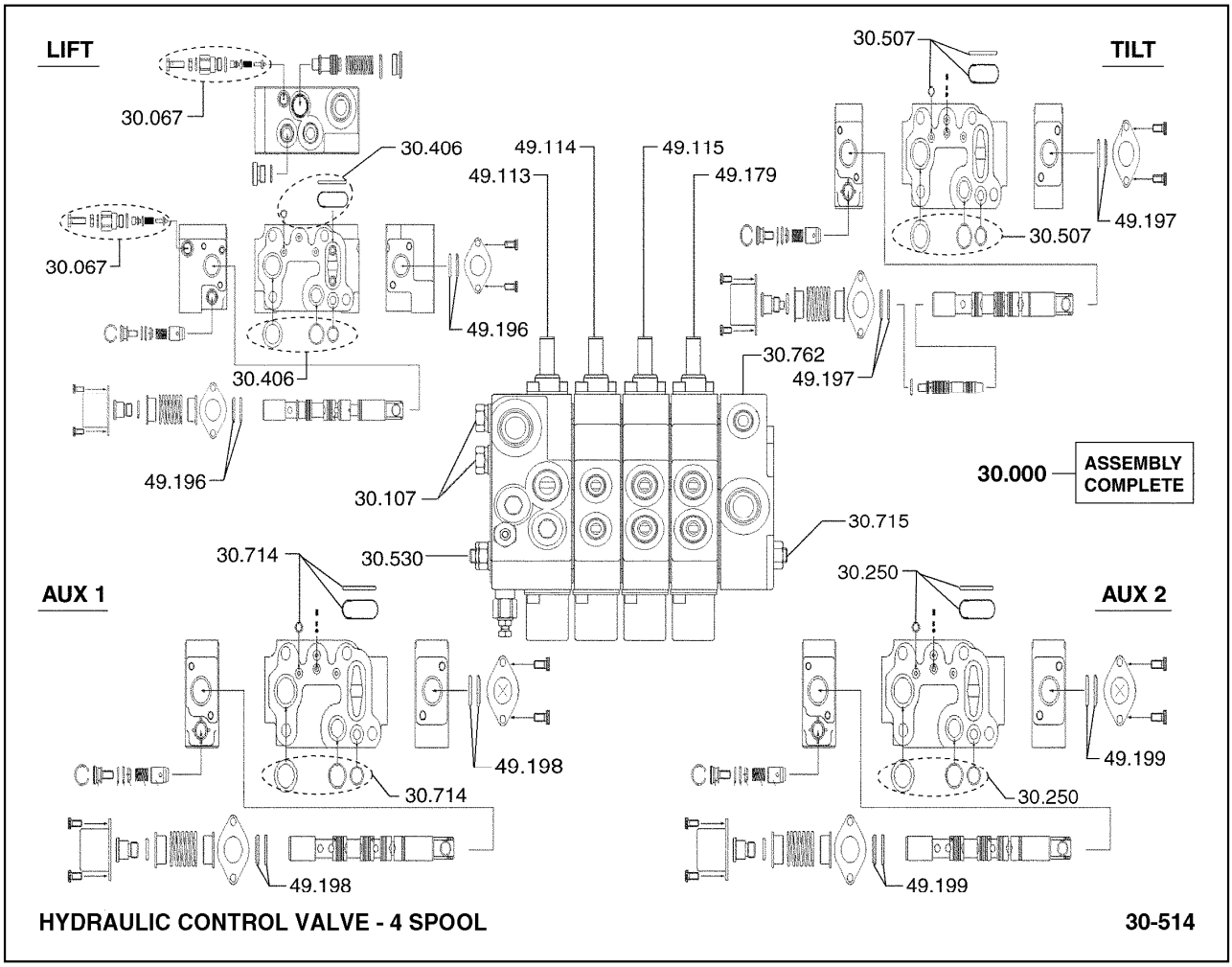

30.000 VALVE ASSEMBLY, HYDRAULIC
벨브

30.067 RELIEF VALVE KIT, VALVE INLET SECTION
릴리프밸브

30.107 FASTENER, VALVE THRU
패스너

30.250 SEAL KIT, HYDRAULIC VALVE SECTION (AUX)
시일킷

30.406 SEAL KIT, HYDRAULIC VALVE (LIFT)
시일킷

30.507 SEAL KIT, HYDRAULIC VALVE (TILT)
시일킷

30.530 FASTENER, VALVE THRU
패스너

30.714 SEAL KIT, HYDRAULIC VALVE SECTION (AUX)
시일킷

30.715 FASTENER, VALVE THRU
패스너

30.762 END COVER, HYDRAULIC VALVE
엔드커버

49.113 LIFT SECTION, HYDRAULIC VALVE
리프트섹션

49.114 TILT SECTION, HYDRAULIC VALVE
틸트섹션

49.115 AUX SECTION, HYDRAULIC VALVE
보조섹션

49.179 AUX SECTION, HYDRAULIC VALVE
보조섹션

49.196 SPOOL SEAL KIT, LIFT SECTION
스풀실킷

49.197 SPOOL SEAL KIT, TILT SECTION
스풀실킷

49.198 SPOOL SEAL KIT, AUX SECTION
스풀실킷

49.199 SPOOL SEAL KIT, AUX SECTION
스풀실킷

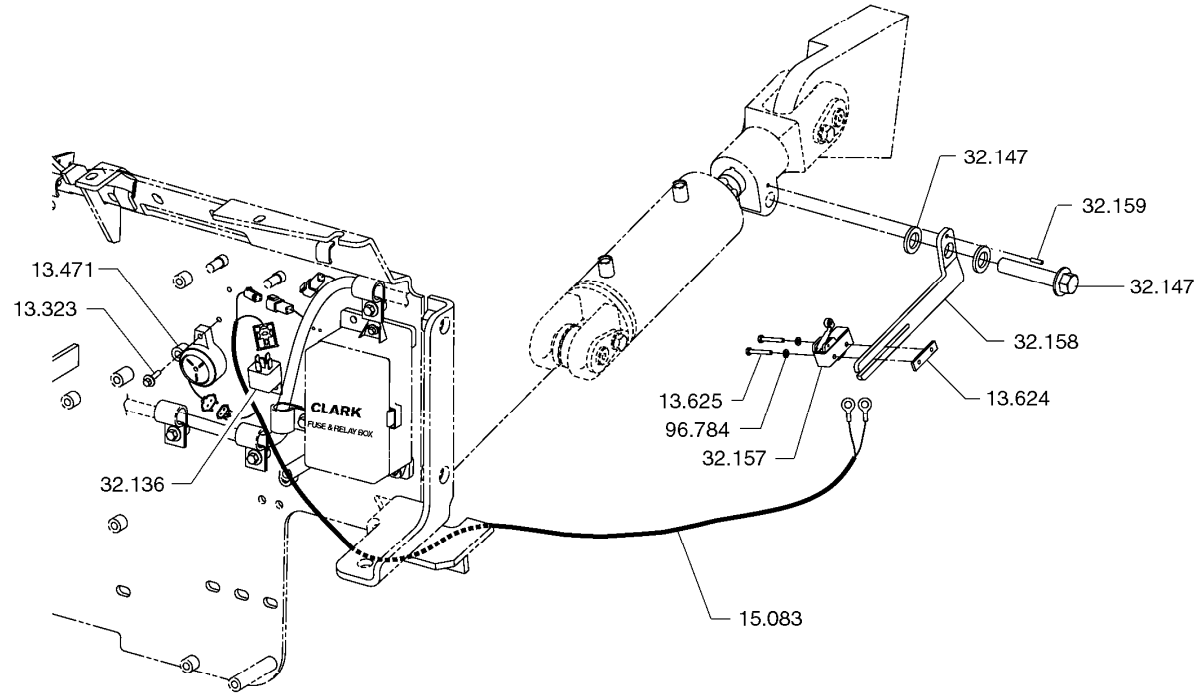

TITLT LIMIT 31-123

13.323 FASTENER, WARNING BUZZER
패스너

13.471 BUZZER, WARNING
부저

13.624 BRACKET, TILT LIMIT SWITCH
브라켓

13.625 FASTENER, TILT LIMIT SWITCH
패스너

15.083 CONDUCTOR, TILT LIMIT DEVICE FEED
컨덕터

32.136 RELAY, TILT LIMIT DEVICE
릴레이

32.147 WASHER, TILT LIMIT FASTENER
와셔

32.157 SWITCH, TILT LIMIT
스위치

32.158 BRACKET, TILT LIMIT SWITCH
브라켓

32.159 RETAINER, TILT LIMIT SWITCH BRACKET
리테이너

96.784 WASHER, TILT LIMIT SWITCH FASTENER
와셔

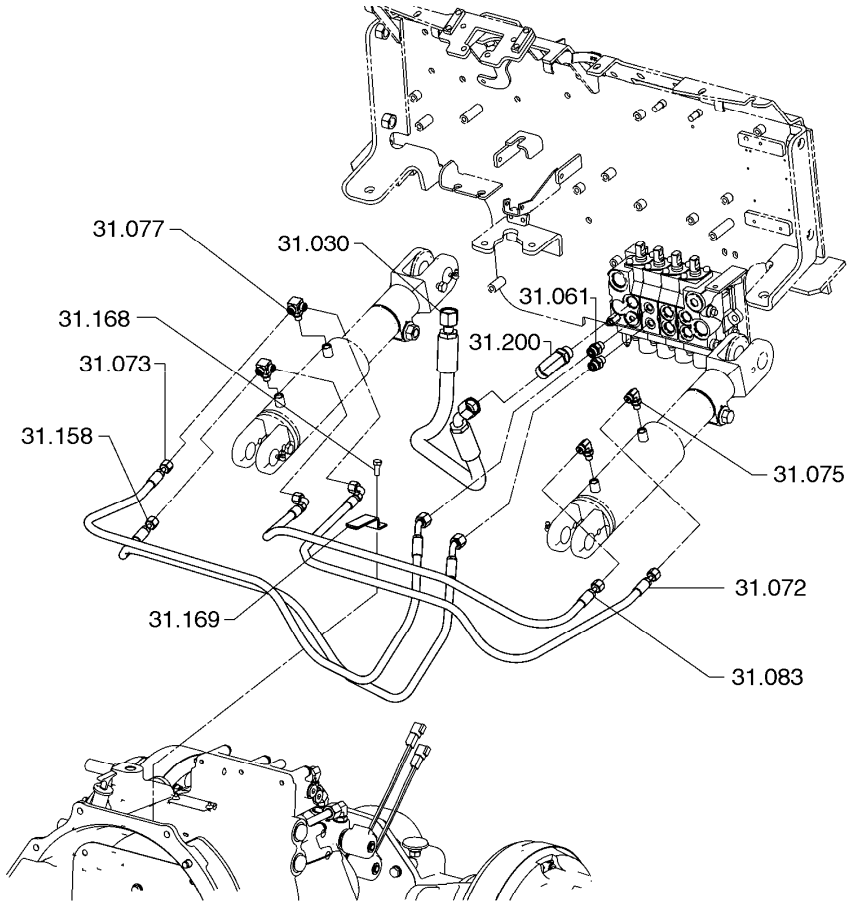

HYDRAULIC LIFT & TILT LINES **31-139**

31.030	LINE, VALVE TO LIFT CYLINDER 라인
31.061	FITTING, VALVE TILT PORT "A" 피팅
31.072	LINE, RH TILT CYLINDER ROD PORT 라인
31.073	LINE, LH TILT CYLINDER ROD PORT 라인
31.075	FITTING, RH TILT CYLINDER ROD PORT 피팅
31.077	FITTING, LH TILT CYLINDER ROD PORT 피팅
31.083	LINE, RH TILT CYLINDER ANCHOR PORT 라인
31.158	LINE, LH TILT CYLINDER ANCHOR PORT 라인
31.168	FASTENER, TILT LINE CLAMP 패스너

31.169 CLAMP, TILT LINE
클램프

31.200 FITTING, MAIN VALVE LIFT PORT
피팅

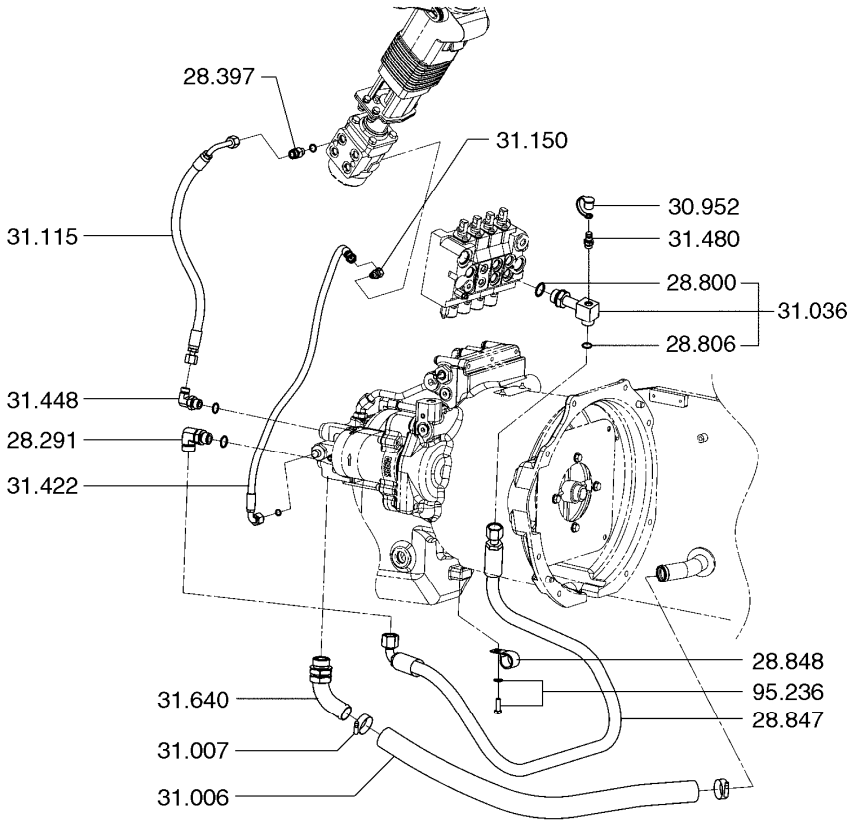

HYDRAULIC SUPPLY LINES **31-140**

28.291 FITTING, PUMP OUTLET
피팅

28.397 FITTING, STEERING GEAR LINE
피팅

28.800 SEAL, MAIN VALVE INLET PORT FITTING
시일

28.806 SEAL, MAIN VALVE INLET LINE FITTING
시일

28.847 LINE, MAIN VALVE INLET
라인

28.848 CLAMP, MAIN VALVE INLET LINE
클램프

30.952 DUST CAP, PRESSURE GAUGE PORT FITTING
더스트캡

31.006 LINE, PUMP INLET
라인

31.007 CLAMP, PUMP INLET LINE
클램프

31.036 FITTING, MAIN VALVE INLET PORT
피팅

31.115 LINE, STEERING PUMP OUTLET
라인

31.150 FITTING, STEER VALVE DISCHARGE PORT
피팅

31.422 LINE, PUMP OUTLET (COVER END)
라인

31.448 FITTING, PUMP OUTLET LINE
피팅

31.480 PLUG, PRESSURE GAUGE PORT
플러그

31.640 FITTING, HYD PUMP OUTLET (COVER END)
피팅

95.236 FASTENER, HYDRAULIC LINE CLAMP
패스너

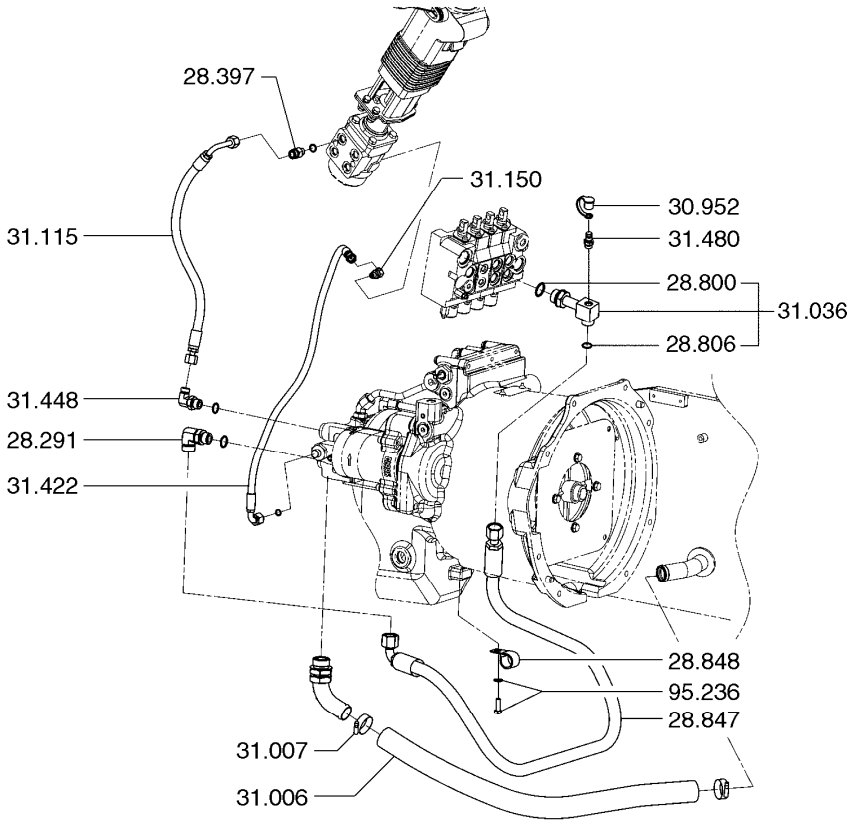

HYDRAULIC SUPPLY LINES **31-221**

28.291 FITTING, PUMP OUTLET
피팅

28.397 FITTING, STEERING GEAR LINE
피팅

28.800 SEAL, MAIN VALVE INLET PORT FITTING
시일

28.806 SEAL, MAIN VALVE INLET LINE FITTING
시일

28.847 LINE, MAIN VALVE INLET
라인

28.848 CLAMP, MAIN VALVE INLET LINE
클램프

30.952 DUST CAP, PRESSURE GAUGE PORT FITTING
더스트캡

31.006 LINE, PUMP INLET
라인

31.007 CLAMP, PUMP INLET LINE
클램프

31.036 FITTING, MAIN VALVE INLET PORT
피팅

31.115 LINE, STEERING PUMP OUTLET
라인

31.150 FITTING, STEER VALVE DISCHARGE PORT
피팅

31.422 LINE, PUMP OUTLET (COVER END)
라인

31.448 FITTING, PUMP OUTLET LINE
피팅

31.480 PLUG, PRESSURE GAUGE PORT
플러그

95.236 FASTENER, HYDRAULIC LINE CLAMP
패스너

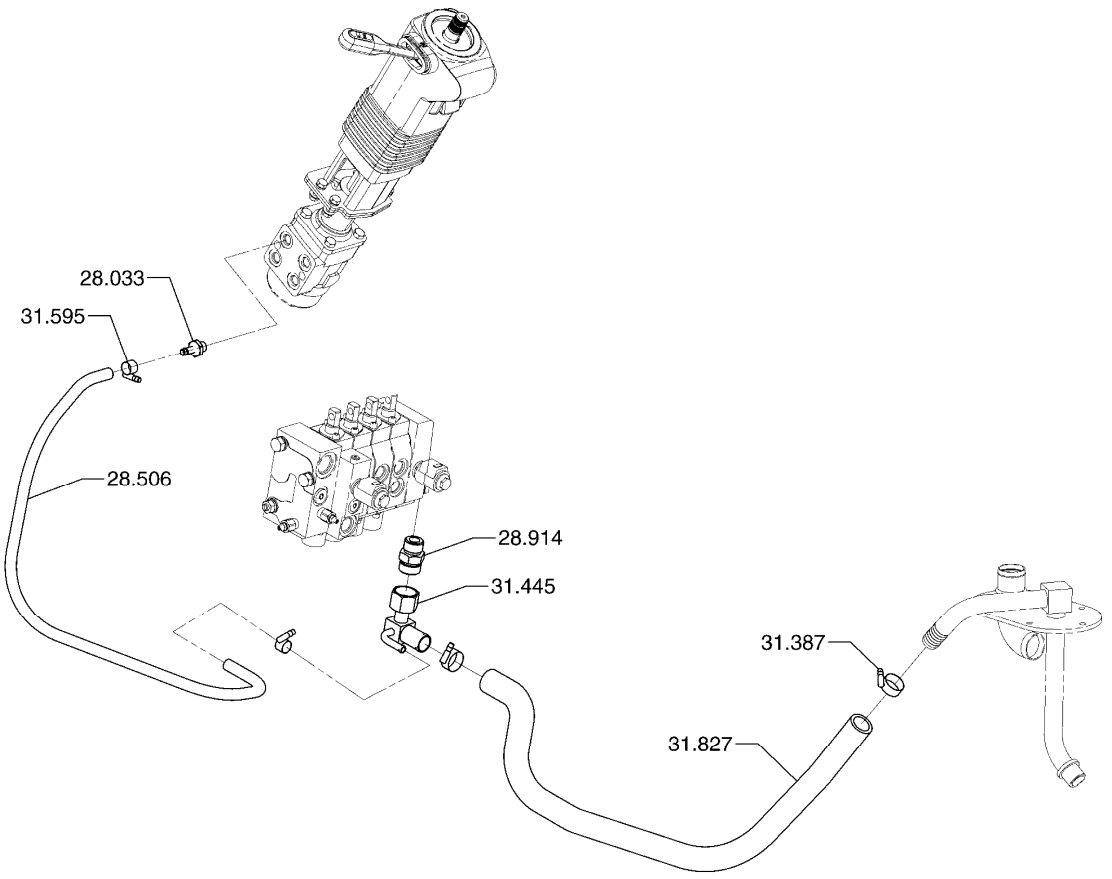

HYDRAULIC RETURN LINES **31-223**

28.033 FITTING, SUMP RETURN
피팅

28.506 LINE, SUMP RETURN
라인

28.914 FITTING, VALVE SUMP RETURN PORT
피팅

31.387 CLAMP, MAIN VALVE TO SUMP LINE
클램프

31.445 FITTING, MAIN VALVE TO FILTER LINE
피팅

31.595 CLAMP, SUMP RETURN LINE FITTING
클램프

31.827 LINE, FILTER INLET
라인

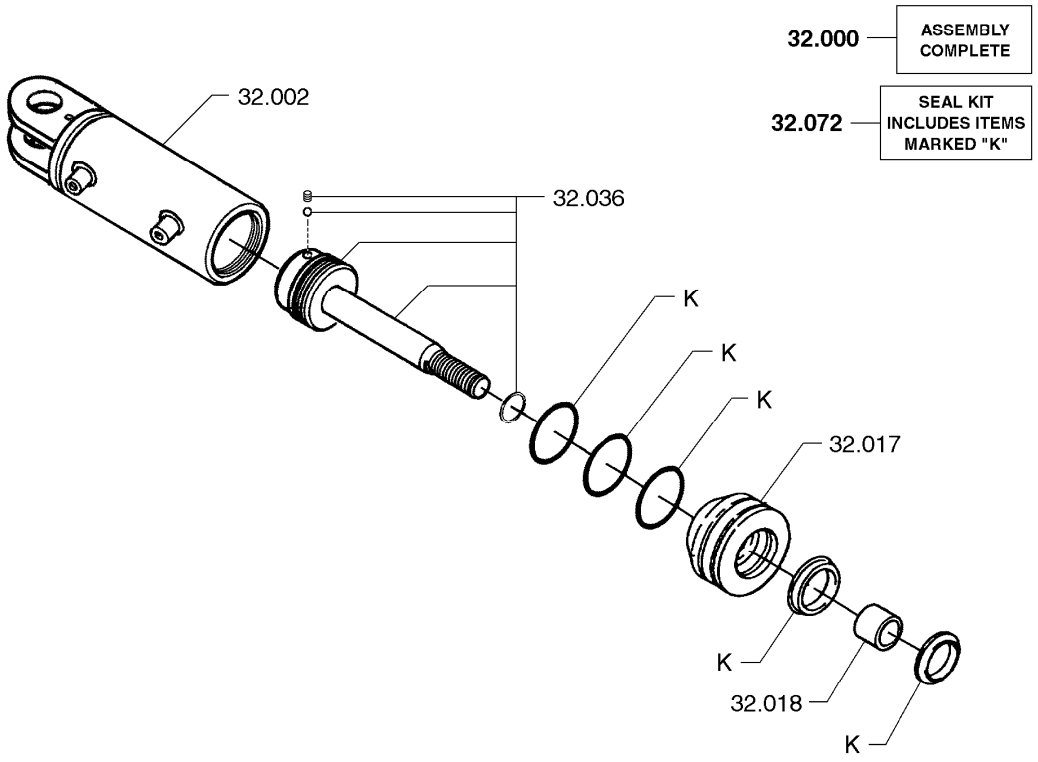

TILT CYLINDER 32-129

32.000 CYLINDER ASSEMBLY, TILT
실린더

32.002 CYLINDER ASSEMBLY, WELDED
실린더

32.017 GLAND, TILT CYLINDER
그랜드

32.018 BUSHING, TILT CYLINDER GLAND
부싱

32.036 ROD & PISTON ASSEMBLY, TILT CYLINDER
로드와피스톤

32.072 PACKING KIT, TILT CYLINDER
패킹킷

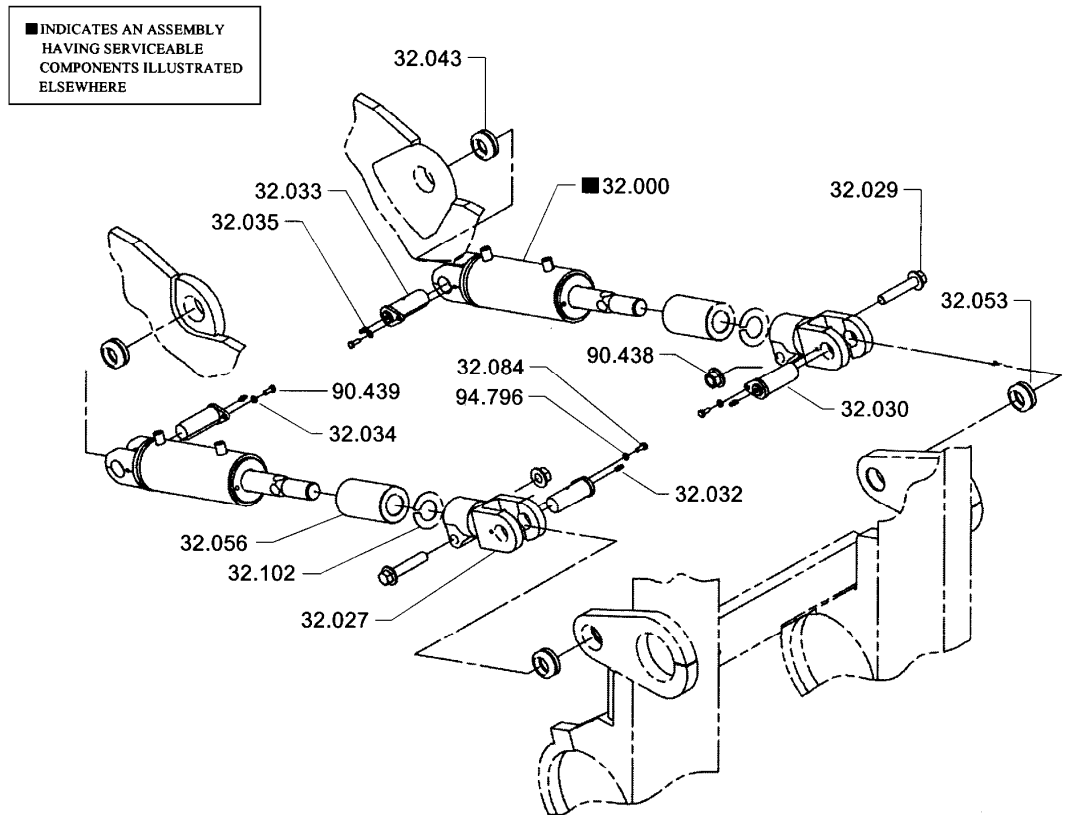

32.000 CYLINDER ASSEMBLY, TILT
실린더

32.027 END, RH TILT CYLINDER ROD
엔드

32.029 FASTENER, TILT CYLINDER ROD END
패스너

32.030 PIN, TILT CYLINDER TO UPRIGHT
핀

32.032 FITTING, TILT CYLINDER TO UPRIGHT PIN LUB
피팅

32.033 PIN, TILT CYLINDER REAR MOUNTING RH
핀

32.034 RETAINER, TILT CYLINDER ANCHOR PIN
리테이너

32.035 FITTING, TILT CYLINDER TO FRAME PIN LUB
피팅

32.043 BEARING, TILT CYLINDER FRAME MOUNTING
베어링

32.053	BEARING, TILT CYLINDER ROD END 베어링
32.056	SPACER, TILT CYLINDER ROD END 스페이서
32.084	CAPSCREW, TILT CYLINDER ROD END PIN RETAINER 캡스크류
32.102	SHIM, TILT CYLINDER STROKE ADJUSTING 심
90.438	NUT, TILT CYLINDER ROD END FASTENER 너트
90.439	BOLT, TILT CYLINDER TO FRAME PIN LOCK 볼트
94.796	WASHER, TILT CYLINDER ROD END PIN RETAINER FASTENE 와셔

■ INDICATES AN ASSEMBLY HAVING SERVICEABLE COMPONENTS ILLUSTRATED ELSEWHERE

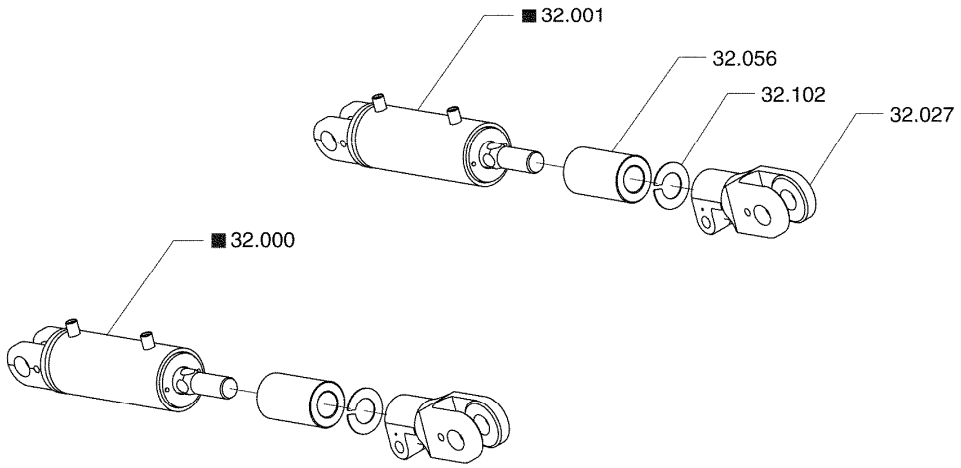

TILT AMOUNT GP **32-167**

32.000	CYLINDER ASSEMBLY, TILT 실린더
32.001	TILT CYLINDER ASSEMBLY (LH) 틸트실린더
32.027	END, RH TILT CYLINDER ROD 엔드
32.056	SPACER, TILT CYLINDER ROD END 스페이서
32.102	SHIM, TILT CYLINDER STROKE ADJUSTING 심

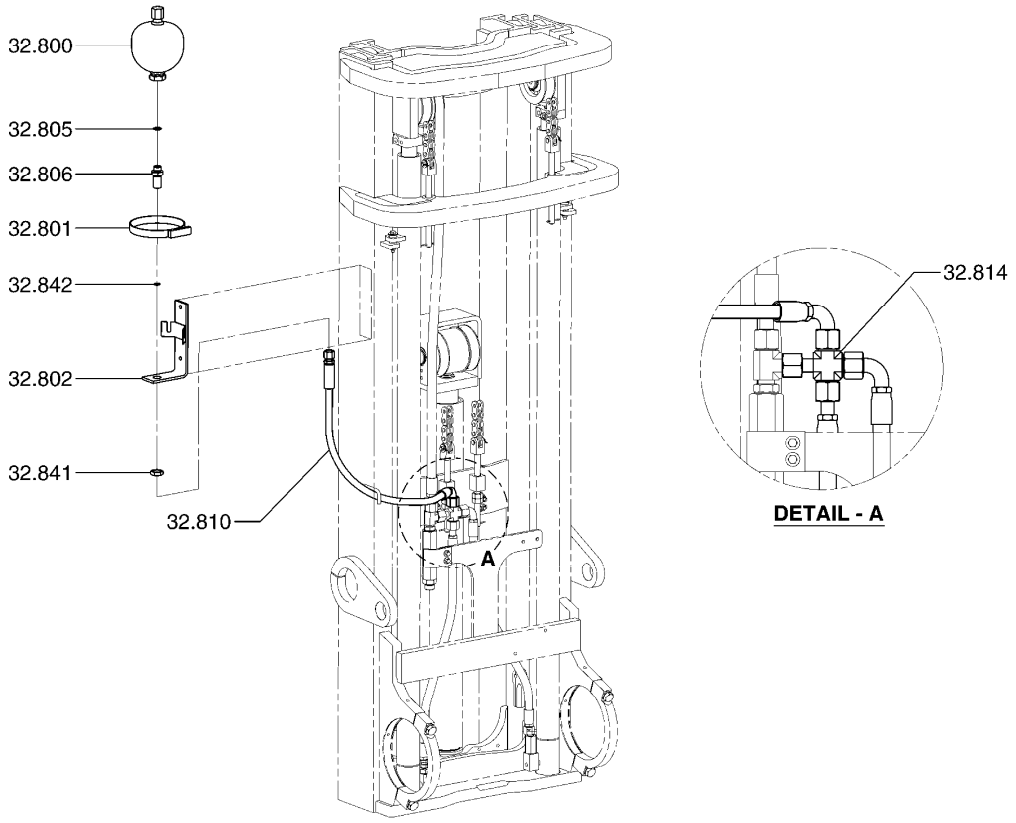

ACCUMULATOR INSTALLATION **32-171**

30.000 VALVE ASSEMBLY, HYDRAULIC
벨브

32.800 ACCUMULATOR, HYDRAULIC
어큐뮬레이터

32.801 CLAMP, HYDRAULIC ACCUMULATOR MOUNTING
클램프

32.802 BRACKET, HYDRAULIC ACCUMULATOR
브라켓

32.805 SEAL, HYDRAULIC ACCUMULATOR CONNECTOR
시일

32.806 CONNECTOR, HYDRAULIC ACCUMULATOR
커넥터

32.810 LINE, HYDRAULIC ACCUMULATOR
라인

32.814 FITTING, HYDRAULIC ACCUMULATOR LINE
피팅

32.841 NUT, HYDRAULIC ACCUMULATOR FITTING
너트

32.842 SEAL, HYDRAULC ACCUMULATOR FITTING
시일

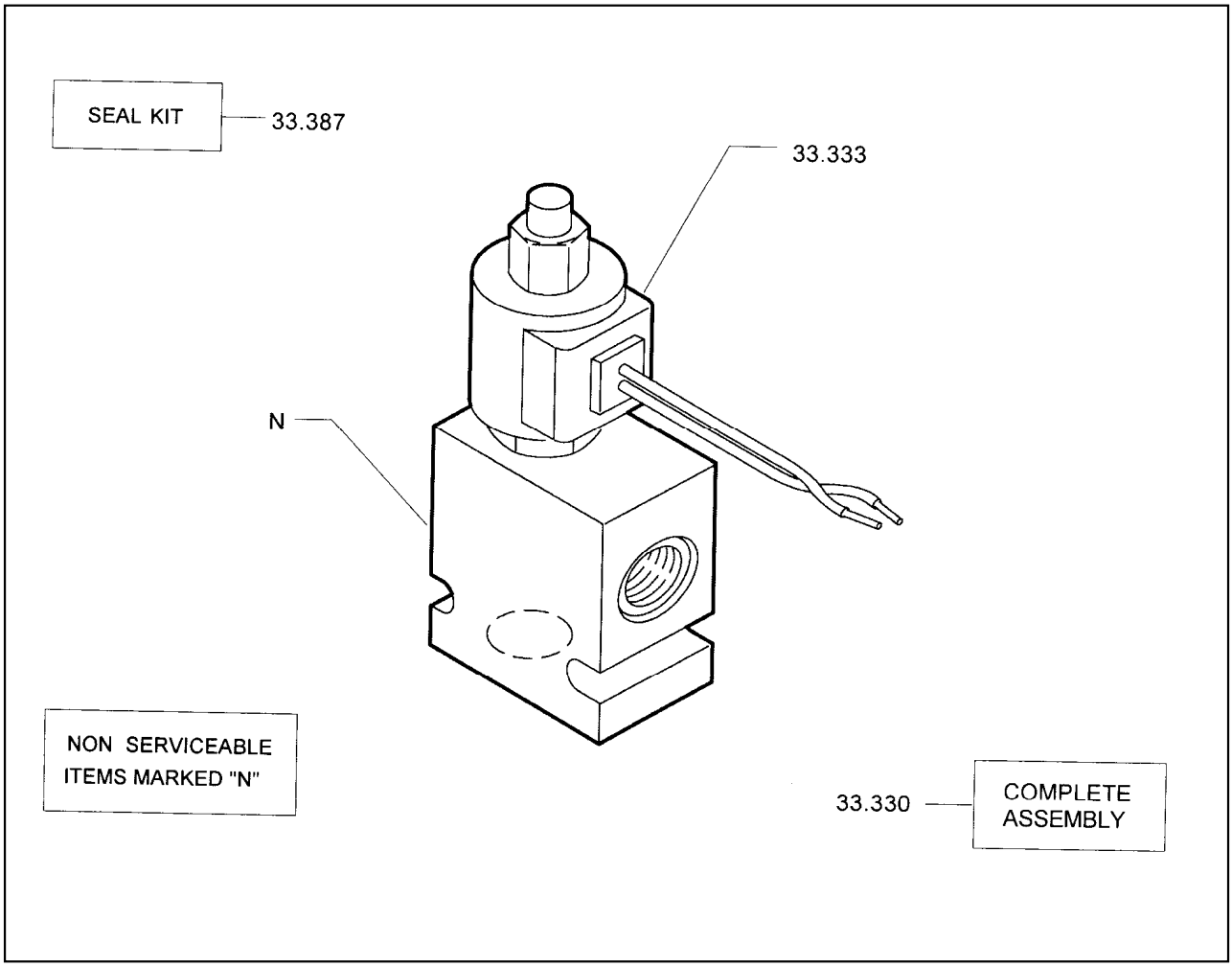

33.330 VALVE ASSEMBLY, CLAMP SOLENOID
벨브

33.333 COIL, CLAMP VALVE SOLENOID
코일

33.387 SEAL KIT, DEVICE SELECTOR VALVE
시일킷

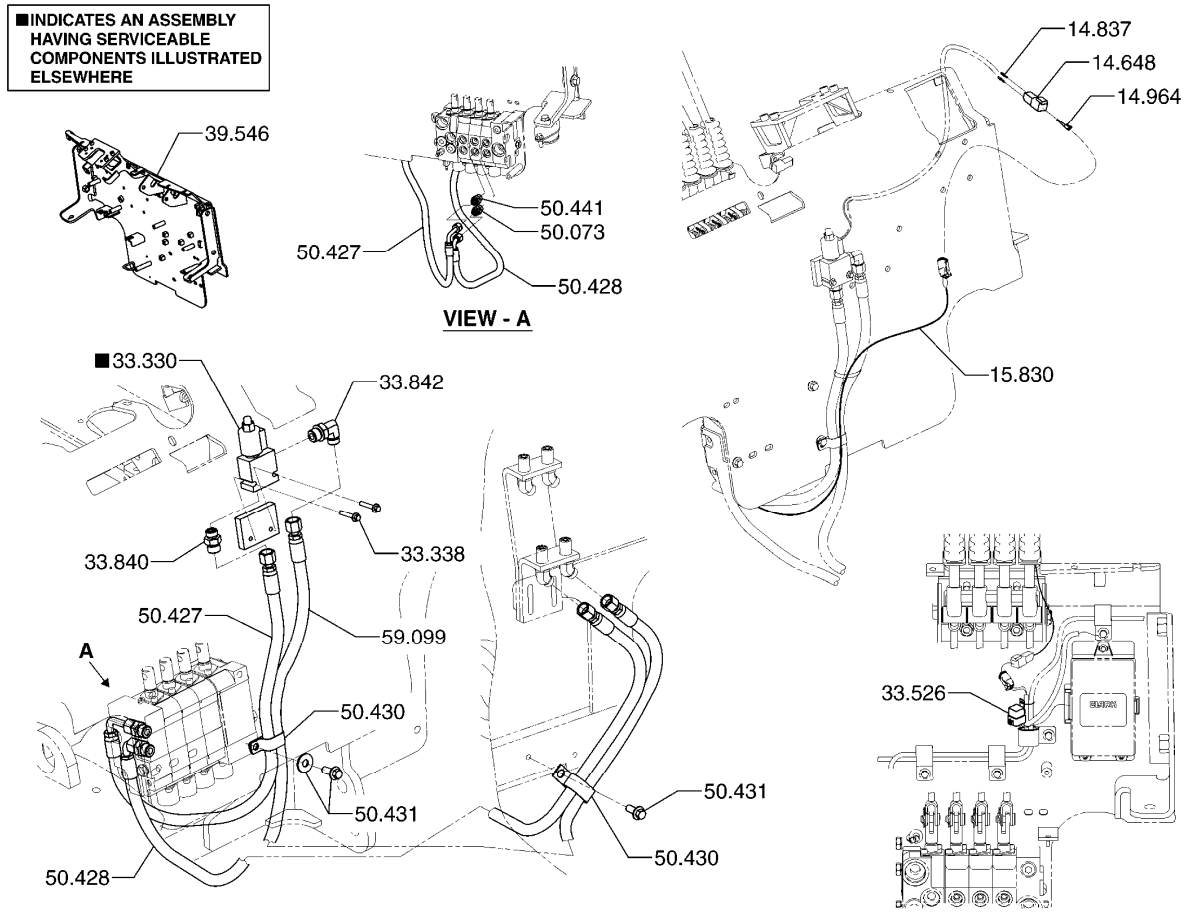

14.648 CONNECTOR, SOLENOID VALVE FEED WIRE
커넥터

14.837 TERMINAL, SOLENOID VALVE WIRING CONNECTOR
터미널

14.964 LOCK, SOLENOID VALVE FEED WIRE CONNECTOR
*

15.830 WIRING HARNESS, CLAMP SOLENOID VALVE
*

33.330 VALVE ASSEMBLY, CLAMP SOLENOID
벨브

33.338 FASTENER, CLAMP SOLENOID VALVE
패스너

33.526 RELAY, CLAMP SOLENOID VALVE
*

33.840 FITTING, CLAMP SOLENOID VALVE INLET PORT
피팅

33.842 FITTING, CLAMP SOLENOID VALVE OUTLET PORT
피팅

39.546	COWL ASSEMBLY 카울
50.073	FITTING, 2ND AUXILIARY VALVE "B" PORT 피팅
50.427	LINE, 2ND AUXILIARY VALVE "A" PORT 라인
50.428	LINE, 2ND AUXILIARY VALVE "B" PORT 라인
50.430	CLAMP, AUXILIARY VALVE LINES 클램프
50.431	FASTENER, AUX VALVE LINES CLAMP 패스너
50.441	FITTING, 2ND AUXILIARY VALVE "A" PORT 피팅
59.099	LINE, 2ND AUXILIARY FUNCTION 라인

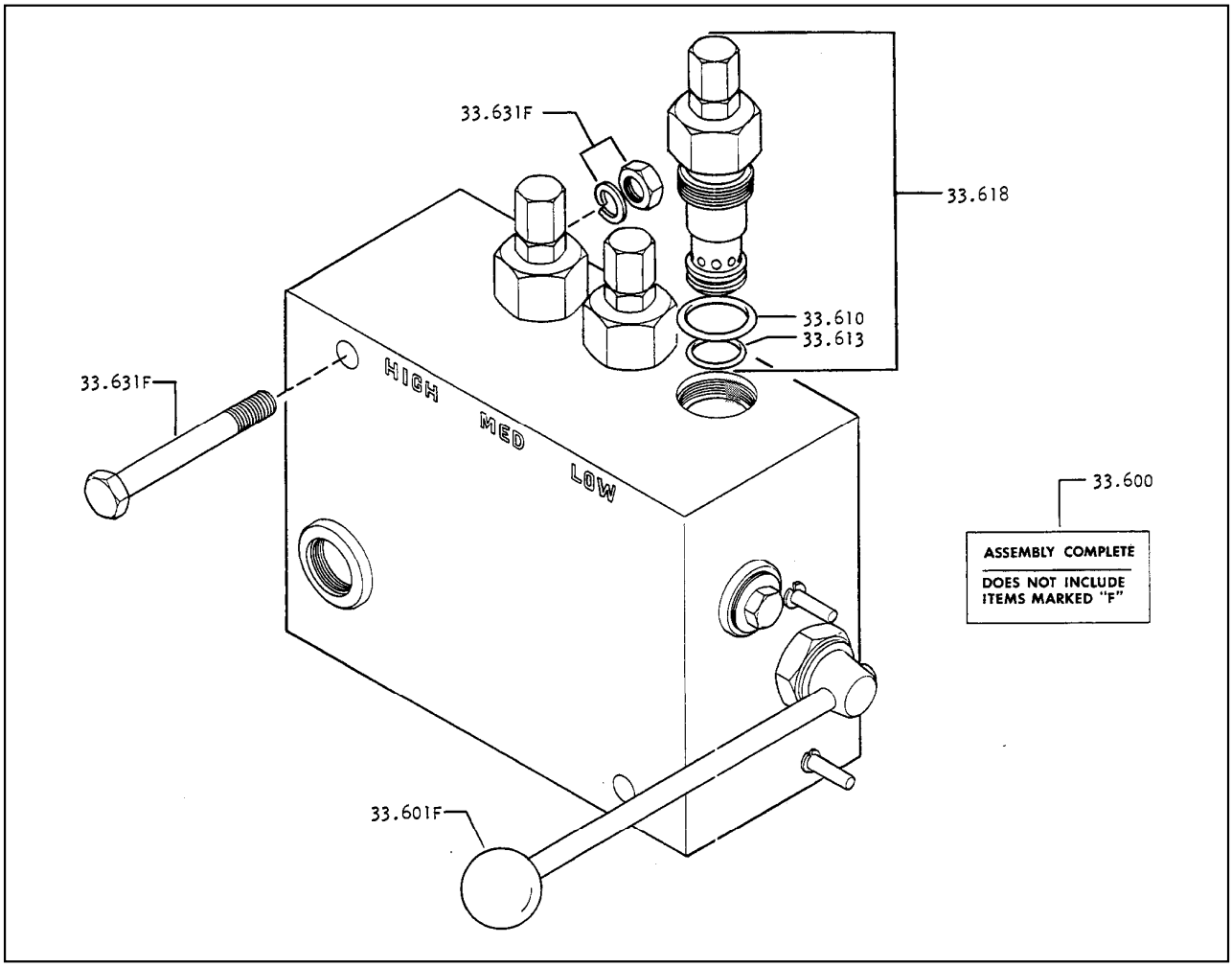

33.600 RELIEF VALVE, DEVICE VARIABLE PRESSURE
릴리프밸브

33.601 LEVER, DEVICE VARIABLE RELIEF VALVE
레버

33.610 SEAL, DEVICE PRESS RELIEF VAL CHECK PORT PLUG
시일

33.613 SEAL, DEVICE RELIEF VALVE PISTON ADJ END
시일

33.618 CARTRIDGE KIT, DEVICE VARIABLE RELIEF VALVE
카트리지킷

33.631 FASTENER, DEVICE RELIEF VALVE
패스너

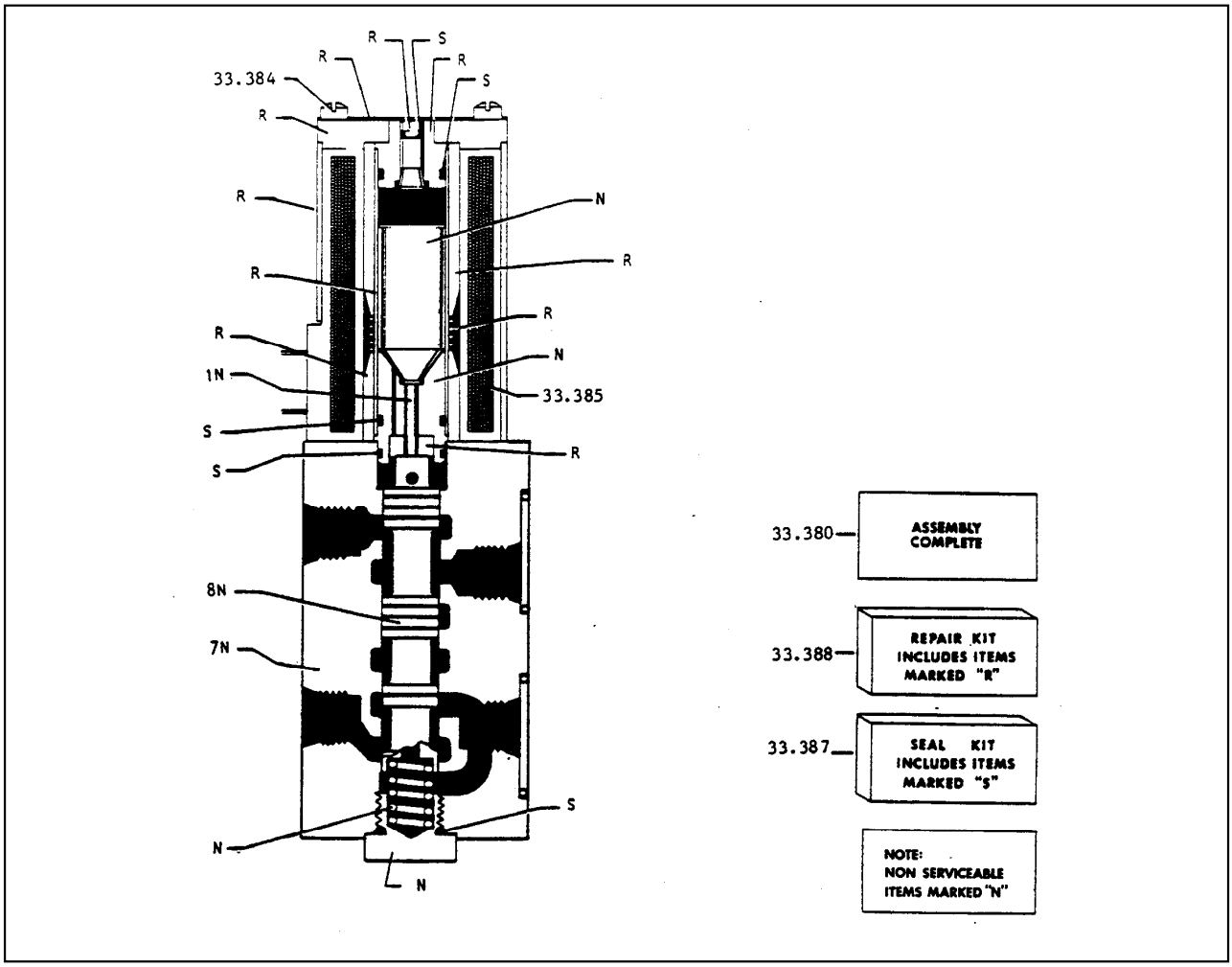

33.380 VALVE ASSEMBLY, DEVICE SELECTOR SOLENOID
벨브

33.384 FASTENER, DEV SELECTOR VALVE SOLENOID COIL
패스너

33.385 COIL, DEVICE SELECTOR VALVE SOLENOID
코일

33.387 SEAL KIT, DEVICE SELECTOR VALVE
시일킷

33.388 REPAIR KIT, DEVICE SELECTOR VALVE
리페어킷

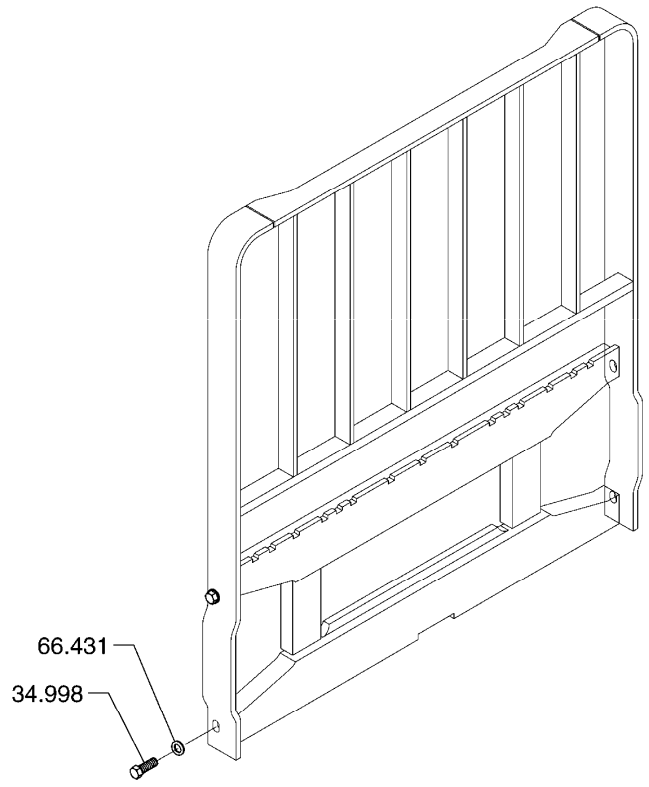

LOAD BACK REST **34-044**

34.998 FASTENER, LOAD SAFETY BACK REST
패스너

66.431 RETAINER, LBR CAPSCREW
리테이너

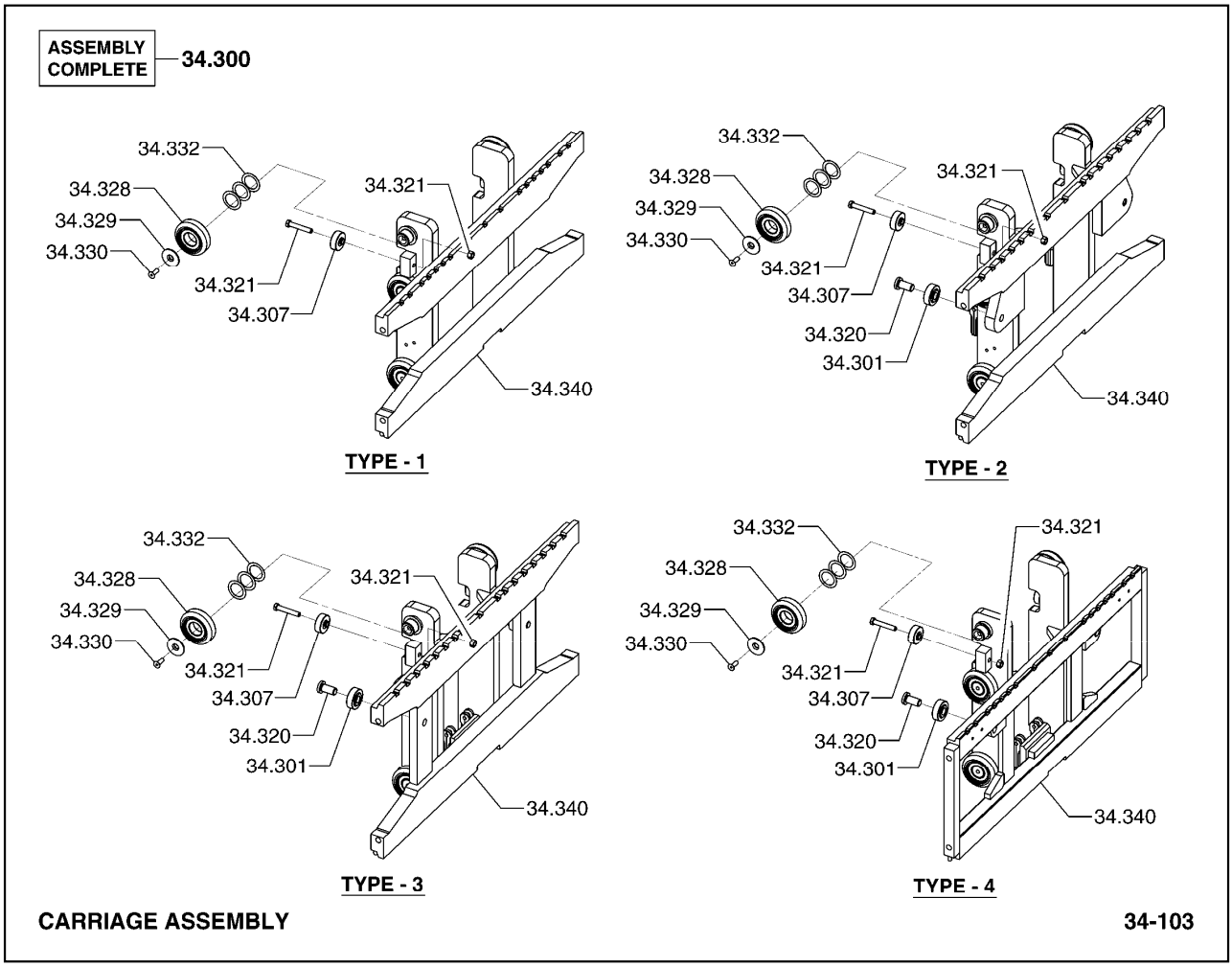

34.300 ASSEMBLY, FORK BARS & CARRIAGE
캐리지

34.301 ROLLER, CARRIAGE OUTER THRUST
롤러

34.307 ROLLER, CARRIAGE INNER THRUST
롤러

34.320 SHAFT, CARRIAGE OUTER THRUST ROLLER
샤프트

34.321 FASTENER, CARRIAGE ROLLER SHAFT
패스너

34.328 ROLLER, CARRIAGE CAPTIVE
롤러

34.329 RETAINER, CARRIAGE CAPTIVE ROLLER
리테이너

34.330 FASTENER, CARRIAGE CAPTIVE ROLLER RETAINER
패스너

34.332 SHIM, CARRIAGE CAPTIVE ROLLER
심

34.340 CARRIAGE WELDED ASSEMBLY
캐리지용접물

This Carriage assembly was manufactured by the CASCADE CORPORATION and is not serviced by CLARK Material Handling Company.

CASCADE parts manuals, technical specifications and lists of worldwide distributors are available on-line at:

http://www.cascorp.com.

When ordering service parts, it will be necessary to provide CASCADE with the CASCADE model and serial numbers of the carriage. CASCADE will not recognize the CLARK carriage part number listed on the PIC or in PartsPRO.

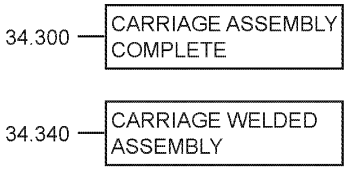

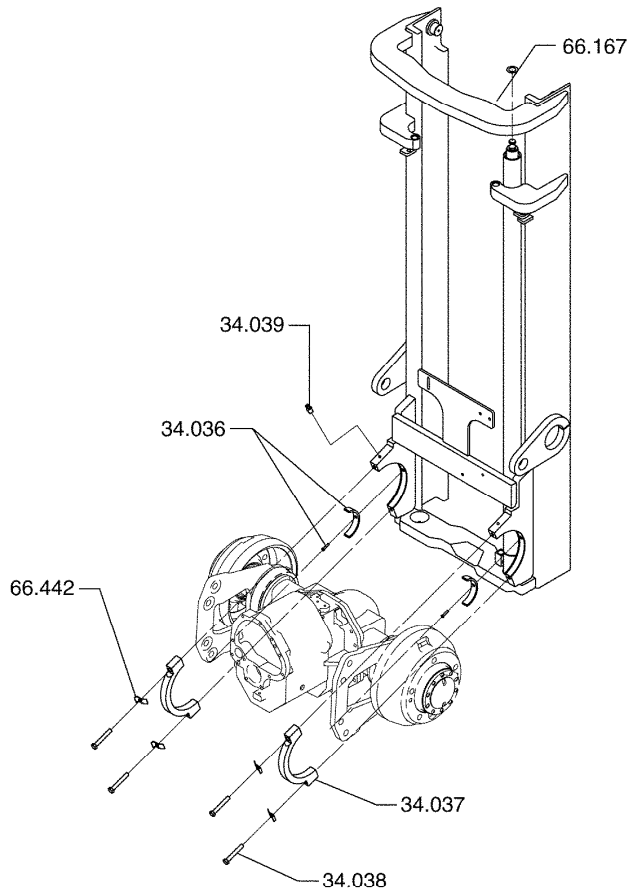

UPRIGHT MOUNTING **34-734**

34.036 BUSHING, UPRIGHT TRUNNION
부싱

34.037 CAP, UPRIGHT TRUNNION
캡

34.038 FASTENER, UPRIGHT TRUNNION CAP
패스너

34.039 FITTING-LUB, UPRIGHT TRUNNION
피팅

66.167 SHIM, LIFT CYLINDER UPPER
심

66.442 KEEPER, UPRIGHT TRUNNION CAP
키퍼

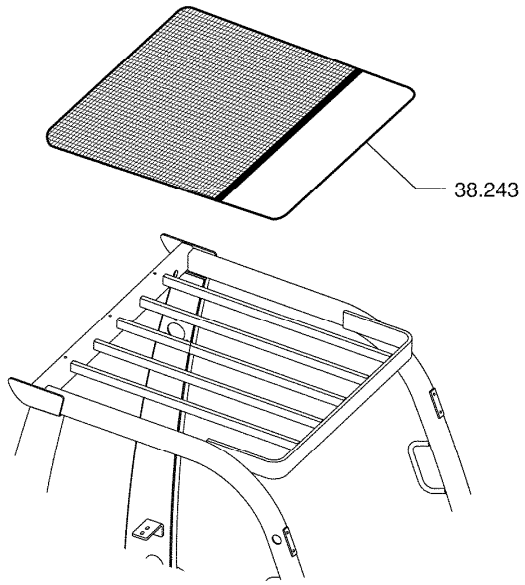

OVERHEAD GUARD COVER **37-003**

38.243 COVER ASSEMBLY, OVERHEAD GUARD TOP
커버

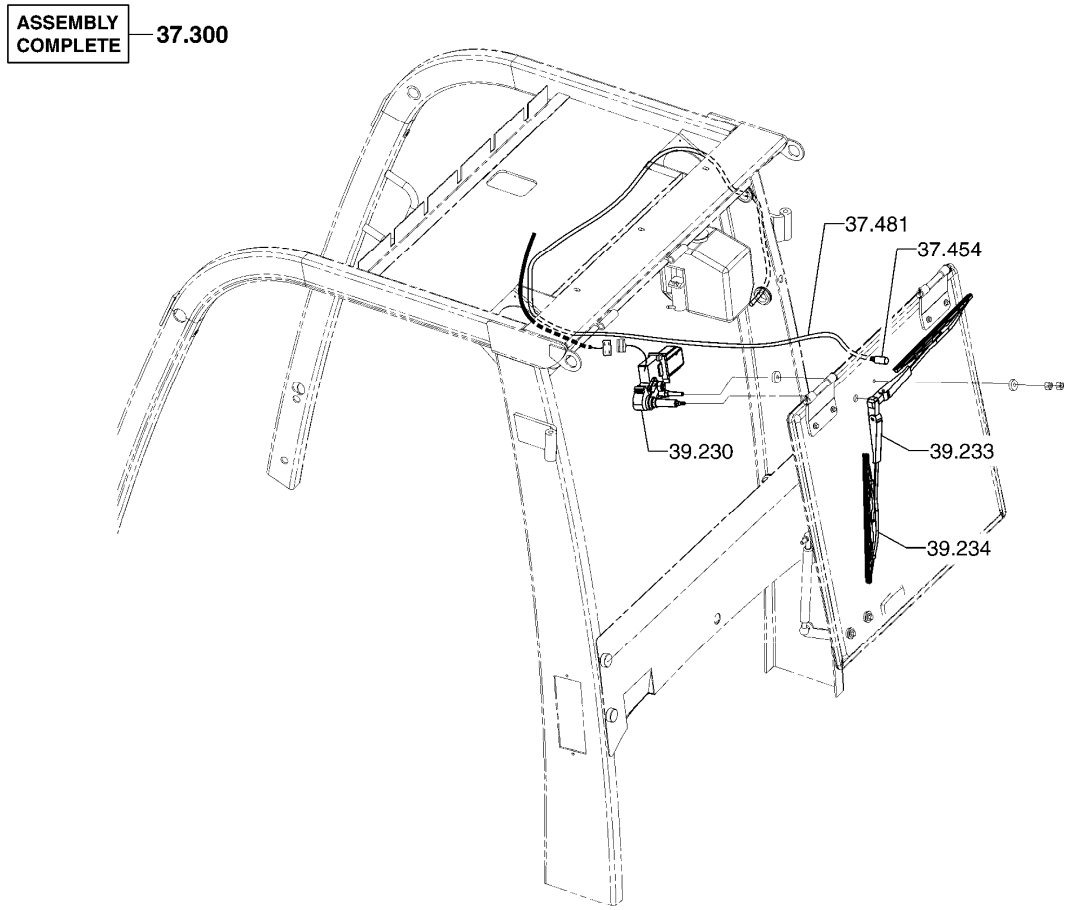

REAR WIPER INSTALLATION **37-050**

37.300 CAB ASSEMBLY
캐빈

37.454 NOZZLE, REAR WINDOW GLASS WASHER
노즐

37.481 LINE, WINDOW GLASS WASHER
라인

39.230 MOTOR, REAR WINDOW WIPER
모터

39.233 ARM, REAR WINDOW WIPER
암

39.234 BLADE, REAR WINDOW WIPER
블레이드

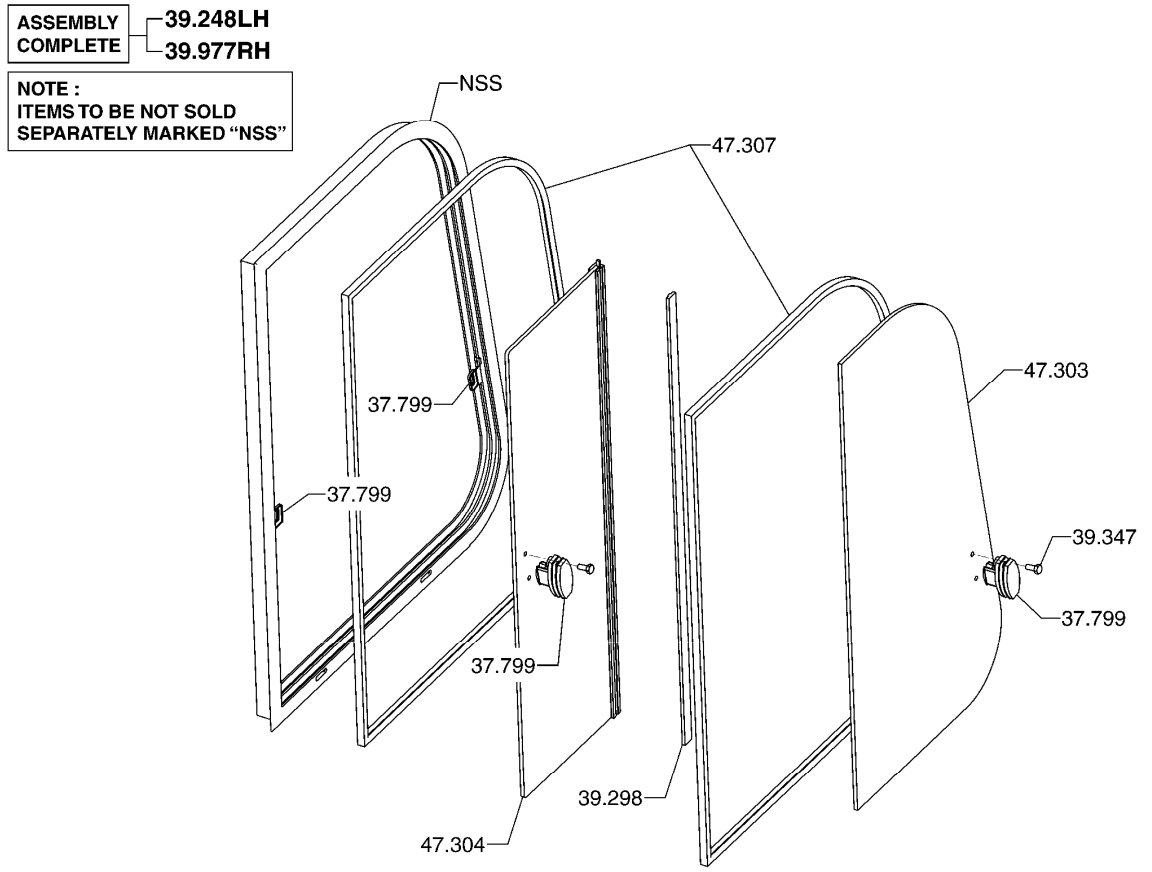

37.799 LATCH, CAB DOOR WINDOW ASSEMBLY
래치

39.248 WINDOW ASSEMBLY, CAB DOOR (LH)
윈도우

39.298 CHANNEL, FRONT DOOR GLASS - FRONT
채널

39.347 FASTENER, CAB REAR WINDOW LATCH
패스너

39.977 WINDOW ASSEMBLY, CAB DOOR (RH)
윈도우

47.303 GLASS, CAB DOOR (FRONT)
글래스

47.304 GLASS, CAB DOOR (REAR)
글래스

47.307 CHANNEL, CAB SIDE DOOR WINDOW
채널

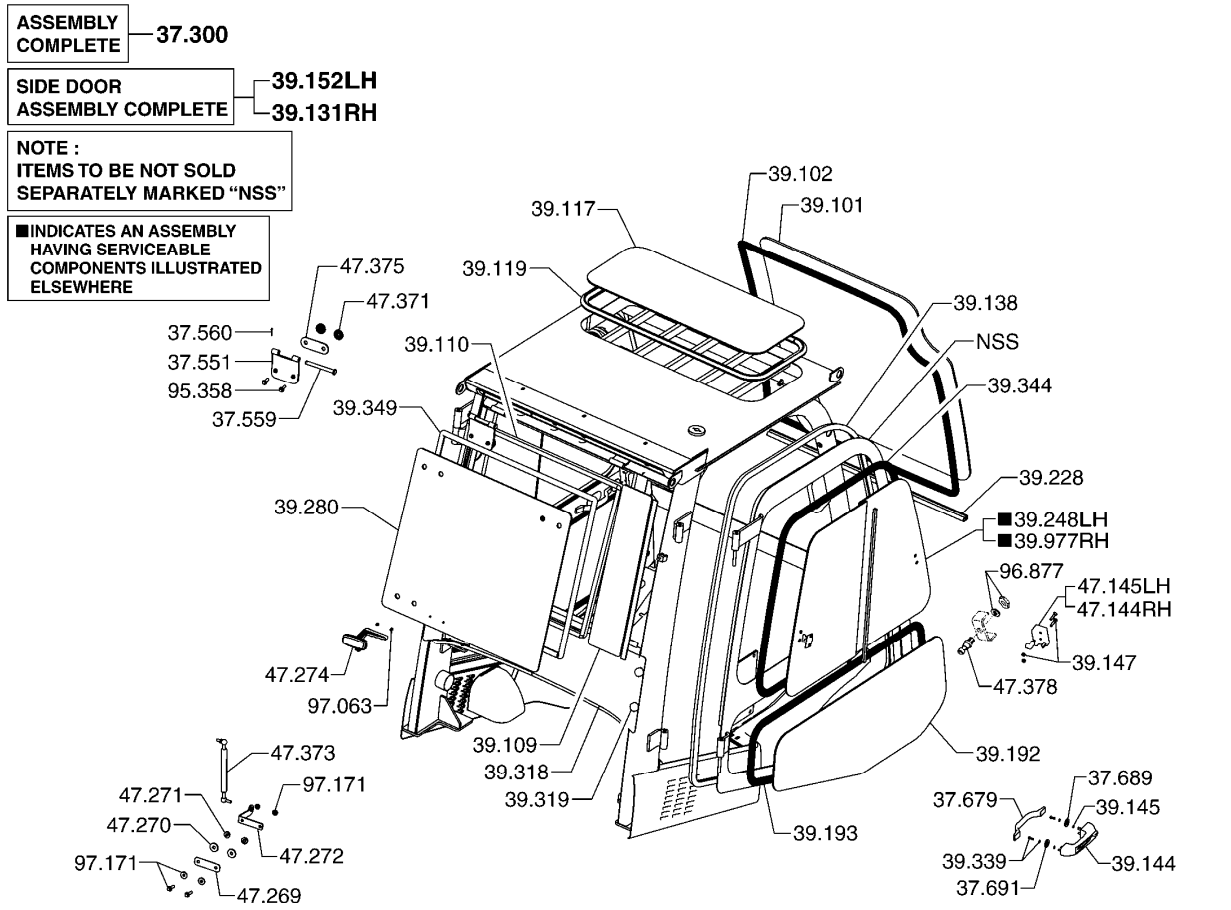

37.300	CAB ASSEMBLY 캐빈
37.551	HANGER, CAB REAR GLASS 행거
37.559	PIN, CABIN REAR GLASS HANGER 핀
37.560	RETAINER, CAB REAR GLASS HANGER PIN 리테이너
37.679	HANDLE, RH DOOR INSIDE 핸들
37.689	SEAL, DOOR OUTSIDE HANDLE 시일
37.691	SEAL, DOOR OUTSIDE HANDLE 시일
39.101	GLASS, WINDSHIELD 글래스
39.102	WEATHERSEAL, WINDSHIELD SETTING 웨더시일
39.109	GLASS, REAR 글래스
39.110	WEATHERSEAL, REAR GLASS SETTING 웨더시일
39.117	ROOF SCREEN 루프스크린
39.119	SEAL STRIP, ROOF WINDOW 시일스트립
39.131	DOOR ASSEMBLY, RIGHT HAND 도어
39.138	WEATHERSEAL, RIGHT HAND DOOR 웨더시일
39.144	HANDLE, RH DOOR OUTSIDE 핸들
39.145	FASTENER, RH DOOR HANDLE 패스너
39.147	FASTENER, RIGHT HAND DOOR LATCH 패스너
39.152	DOOR ASSEMBLY, LEFT HAND 도어
39.192	GLASS, RIGHT HAND DOOR (LOWER) 글래스
39.193	WEATHERSEAL, RH DOOR GLASS (LOWER) 웨더시일
39.228	WEATHERSEAL, WINDSHIELD SETTING 웨더시일
39.248	WINDOW ASSEMBLY, CAB DOOR (LH) 윈도우
39.280	GLASS, REAR WINDOW - MOVEABLE 글래스
39.318	PANEL, REAR LOWER 판넬
39.319	FASTENER, LOWER REAR PANEL 패스너
39.339	FASTENER, RH DOOR INSIDE HANDLE 패스너
39.344	WEATHERSEAL, RH DOOR WINDOW ASSEMBLY 웨더시일
39.349	WEATHERSEAL, CAB REAR WINDOW 웨더시일
39.977	WINDOW ASSEMBLY, CAB DOOR (RH) 윈도우

47.144 LATCH, RH DOOR INSIDE
래치

47.145 LATCH, LH DOOR INSIDE
래치

47.269 BRACKET, CAB REAR GLASS GAS SPRING SUPPORT
브라켓

47.270 RUBBER, CAB REAR GLASS GAS SPRING MOUNTING
러버

47.271 RUBBER, CAB REAR GLASS GAS SPRING MOUNTING
러버

47.272 BRACKET, CAB REAR GLASS GAS SPRING MOUNTING
브라켓

47.274 HANDLE, CAB REAR GLASS
핸들

47.371 CAP, CAB REAR GLASS GAS SPRING MOUNTING FASTENER
*

47.373 SHOCK ABSORBER, CAB REAR GLASS
*

47.375 BRACKET, CAB REAR GLASS HANGER
*

47.378 SUPPORT, CAB DOOR INSIDE LATCH
*

95.358 FASTENER, REAR GLASS HANGER
패스너

96.877 FASTENER, DOOR INSIDE LATCH STRIKER
패스너

97.063 FASTENER, REAR DOOR HANDLE MOUNTING
패스너

97.171 FASTENER, CAB REAR GLASS GAS SPRING MOUNTING
*

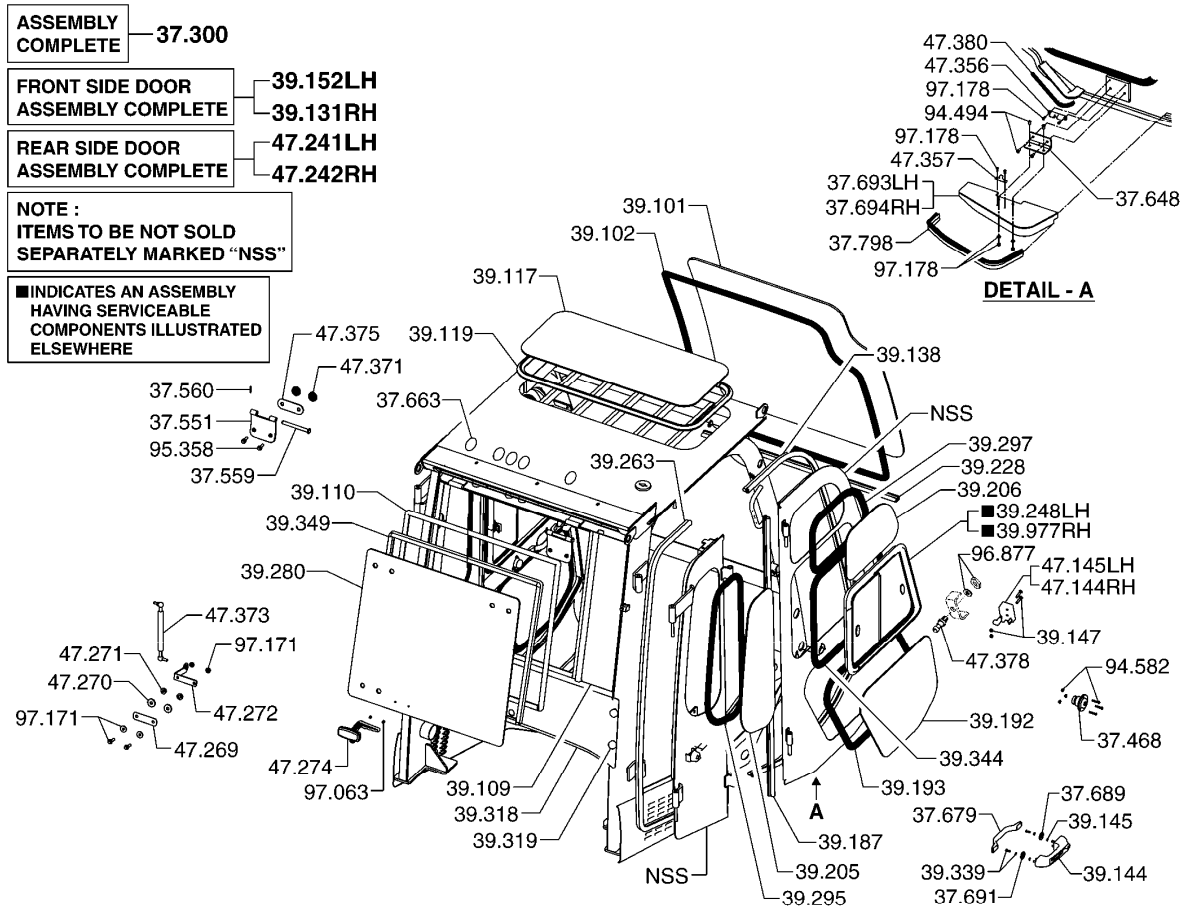

37.300	CAB ASSEMBLY 캐빈
37.468	CATCH, CAB DOOR LATCH 캐치
37.551	HANGER, CAB REAR GLASS 행거
37.559	PIN, CABIN REAR GLASS HANGER 핀
37.560	RETAINER, CAB REAR GLASS HANGER PIN 리테이너
37.648	SUPPORT, CAB HOLD DOWN LATCH 서포트
37.663	PLUG, CAB FRAME 플러그
37.679	HANDLE, RH DOOR INSIDE 핸들
37.689	SEAL, DOOR OUTSIDE HANDLE 시일
37.691	SEAL, DOOR OUTSIDE HANDLE 시일
37.693	COVER, DOOR INSIDE LATCH LH 커버
37.694	COVER, DOOR INSIDE LATCH RH 커버
37.798	SEAL, CAB DOOR INSIDE COVER 시일
39.101	GLASS, WINDSHIELD 글래스
39.102	WEATHERSEAL, WINDSHIELD SETTING 웨더시일
39.109	GLASS, REAR 글래스
39.110	WEATHERSEAL, REAR GLASS SETTING 웨더시일
39.117	ROOF SCREEN 루프스크린
39.119	SEAL STRIP, ROOF WINDOW 시일스트립
39.131	DOOR ASSEMBLY, RIGHT HAND 도어
39.138	WEATHERSEAL, RIGHT HAND DOOR 웨더시일
39.144	HANDLE, RH DOOR OUTSIDE 핸들
39.145	FASTENER, RH DOOR HANDLE 패스너
39.147	FASTENER, RIGHT HAND DOOR LATCH 패스너
39.152	DOOR ASSEMBLY, LEFT HAND 도어
39.187	SEAL, DOOR HINGE 시일
39.192	GLASS, RIGHT HAND DOOR (LOWER) 글래스
39.193	WEATHERSEAL, RH DOOR GLASS (LOWER) 웨더시일
39.205	GLASS, RH DOOR REAR 글래스
39.206	GLASS, RH DOOR FRONT 글래스

39.228 WEATHERSEAL, WINDSHIELD SETTING
웨더시일

39.248 WINDOW ASSEMBLY, CAB DOOR (LH)
윈도우

39.263 WEATHERSEAL, CAB TO TRUCK - REAR
웨더시일

39.280 GLASS, REAR WINDOW - MOVEABLE
글래스

39.295 WEATHERSEAL, DOOR REAR GLASS
웨더시일

39.297 WEATHERSEAL, DOOR FRONT GLASS - FRONT
웨더시일

39.318 PANEL, REAR LOWER
판넬

39.319 FASTENER, LOWER REAR PANEL
패스너

39.339 FASTENER, RH DOOR INSIDE HANDLE
패스너

39.344 WEATHERSEAL, RH DOOR WINDOW ASSEMBLY
웨더시일

39.349 WEATHERSEAL, CAB REAR WINDOW
웨더시일

39.977 WINDOW ASSEMBLY, CAB DOOR (RH)
윈도우

47.144 LATCH, RH DOOR INSIDE
래치

47.145 LATCH, LH DOOR INSIDE
래치

47.241 DOOR ASSY, CAB REAR (RH)
도어

47.242 DOOR ASSY, CAB REAR (LH)
도어

47.269 BRACKET, CAB REAR GLASS GAS SPRING SUPPORT
브라켓

47.270 RUBBER, CAB REAR GLASS GAS SPRING MOUNTING
러버

47.271 RUBBER, CAB REAR GLASS GAS SPRING MOUNTING
러버

47.272 BRACKET, CAB REAR GLASS GAS SPRING MOUNTING
브라켓

47.274 HANDLE, CAB REAR GLASS
핸들

47.356 CATCH, CAB DOOR LOWER
캐치

47.357 CATCH, CAB DOOR LOWER
캐치

47.371 CAP, CAB REAR GLASS GAS SPRING MOUNTING FASTENER
*

47.373 SHOCK ABSORBER, CAB REAR GLASS
*

47.375 BRACKET, CAB REAR GLASS HANGER
*

47.378 SUPPORT, CAB DOOR INSIDE LATCH
*

47.380 WEATHERSEAL, CAB DOOR STEP COVER
*

94.494 FASTENER, CAB HOLD DOWN LATCH PIN
패스너

94.582 FASTENER, CAB DOOR LATCH CATCH
패스너

95.358 FASTENER, REAR GLASS HANGER
패스너

96.877 FASTENER, DOOR INSIDE LATCH STRIKER
패스너

97.063 FASTENER, REAR DOOR HANDLE MOUNTING
패스너

97.171 FASTENER, CAB REAR GLASS GAS SPRING MOUNTING
*

97.178 FASTENER, CAB DOOR LOWER CATCH
*

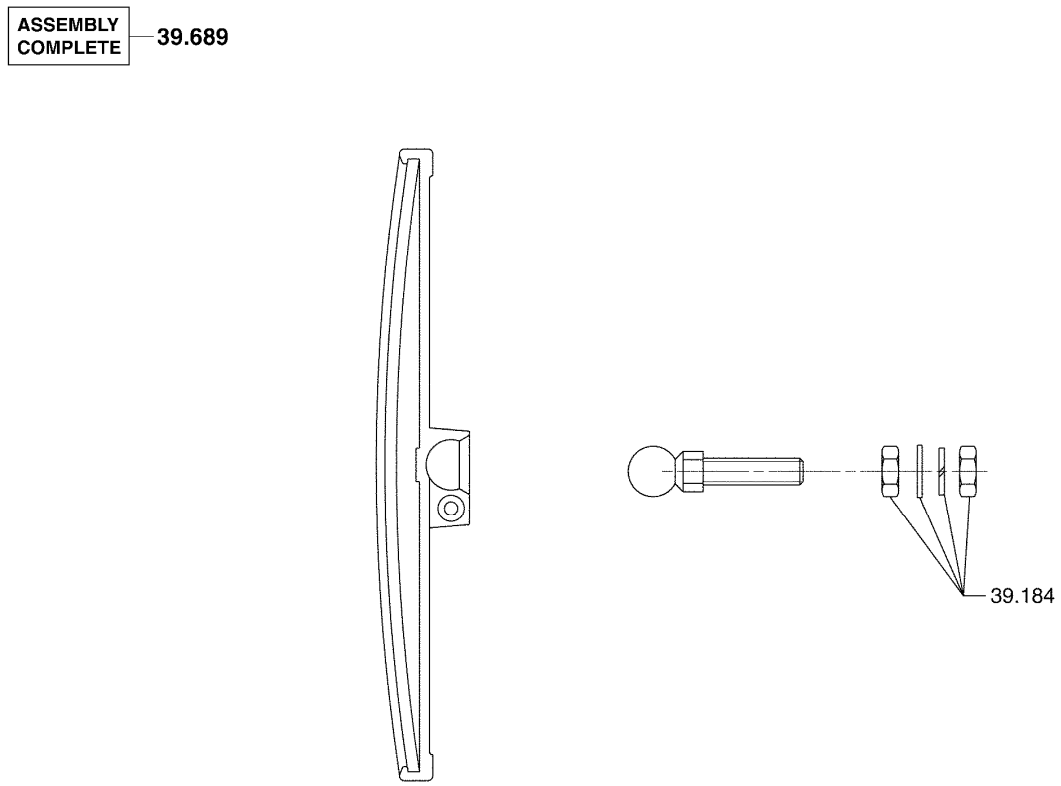

39.184 FASTENER, REAR VIEW MIRROR
패스너

39.689 MIRROR, REAR VIEW
미러

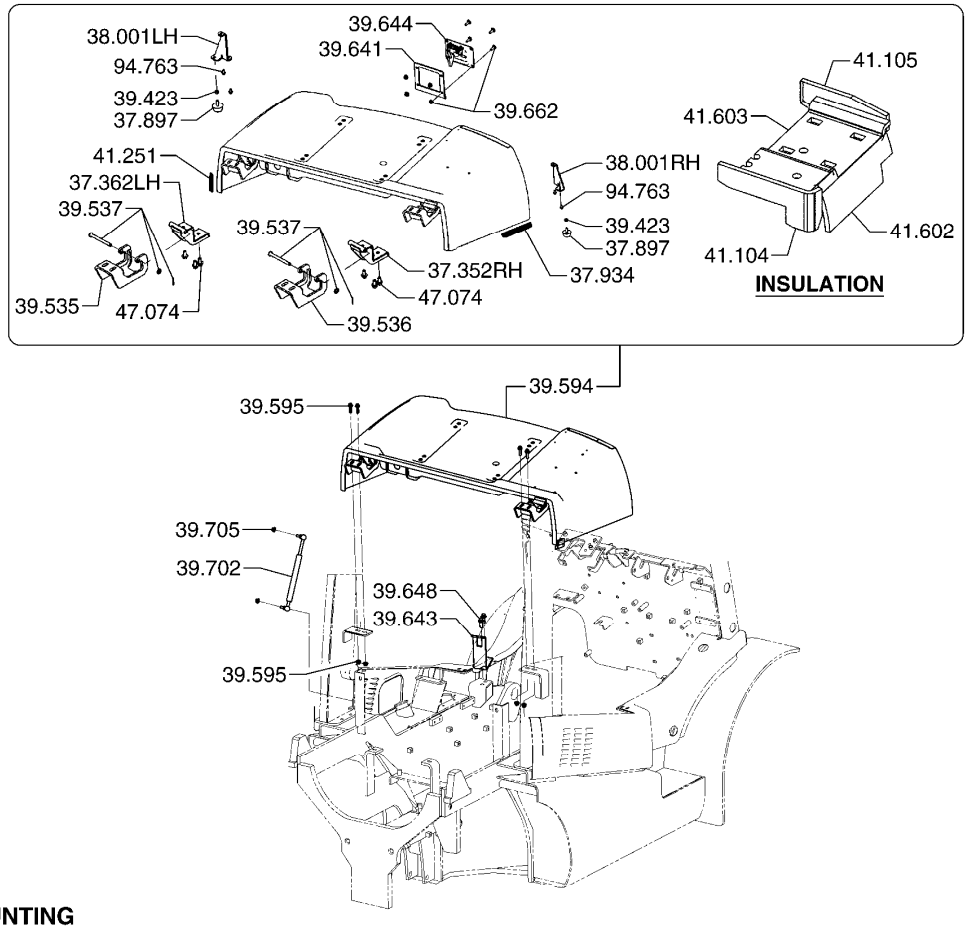

37.352 BRACKET, TOP HOOD SPRING (RH)
브라켓

37.362 BRACKET, TOP HOOD SPRING (LH)
브라켓

37.897 BUMPER, TOP HOOD
범퍼

37.934 SEAL, HOOD ACCESS COVER
시일

38.001 BRACKET, HOOD SUPPORT
브라켓

39.423 FASTENER, TOP HOOD
패스너

39.535 BRACKET, TOP HOOD MOUNTING
브라켓

39.536 BRACKET, TOP HOOD MOUNTING
브라켓

39.537 FASTENER, TOP HOOD MOUNTING BRACKET
패스너

39.594	HOOD, TOP 후드
39.595	FASTENER, TOP HOOD 패스너
39.641	PLATE, TOP HOOD LATCH MOUNTING 플레이트
39.643	CATCH, TOP HOOD LATCH 캐치
39.644	LATCH, TOP HOOD 래치
39.648	FASTENER, TOP HOOD LATCH CATCH 패스너
39.662	FASTENER, TOP HOOD LATCH BRACKET 패스너
39.702	PROP, HOOD 프롭
39.705	FASTENER, HOOD PROP 패스너
41.104	SOUND SEAL, RH SIDE HOOD 사운드시일
41.105	SOUND SEAL, LH SIDE HOOD 사운드시일
41.251	SOUND SEAL, TOP HOOD 사운드시일
41.602	SOUND SEAL, ENGINE HOOD 사운드시일
41.603	SOUND SEAL, ENGINE HOOD 사운드시일
47.074	FASTENER, TOP HOOD SPRING BRACKET 패스너
94.763	FASTENER, HOOD SUPPORT 패스너

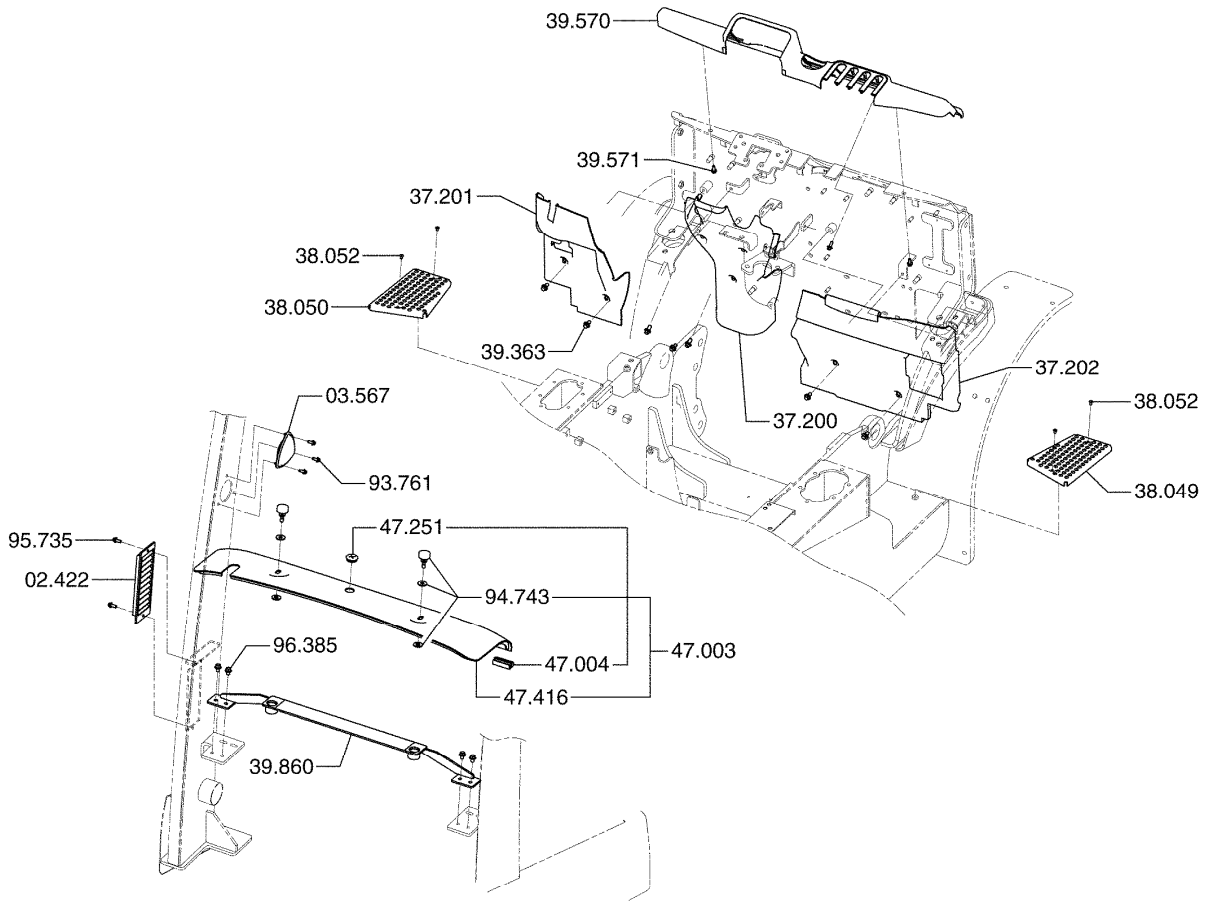

02.422 SCREEN, ENGINE INTAKE AIR
스크린

03.567 PLUG, AIR INTAKE DRIVER OVERHEAD GUARD
플러그

37.200 PANEL, FRONT
판넬

37.201 PANEL, LH SIDE
판넬

37.202 PANEL, RH SIDE
판넬

38.049 STEP ASSEMBLY, RH
스텝

38.050 STEP ASSEMBLY, LH
스텝

38.052 FASTENER, STEP FRONT
패스너

39.363 FASTENER, RH SIDE PANEL
패스너

39.570	COVER ASSEMBLY, DASH 커버
39.571	FASTENER, DASH COVER 패스너
39.860	BRACKET, RADIATOR BAFFLE MOUNTING 브라켓
47.003	COVER, RADIATOR 커버
47.004	SEAL, RADIATOR COVER 시일
47.251	GROMMET, RADIATOR COVER 그로멧
47.416	COVER, RADIATOR *
94.743	FASTENER, RADIATOR COVER TRIM 패스너
95.735	FASTENER, ENGINE AIR INTAKE SCREEN 패스너
96.385	FASTENER, RADIATOR BAFFLE BRACKET 패스너
97.761	FASTENER, RADIATOR BAFFLE BRACKET 패스너

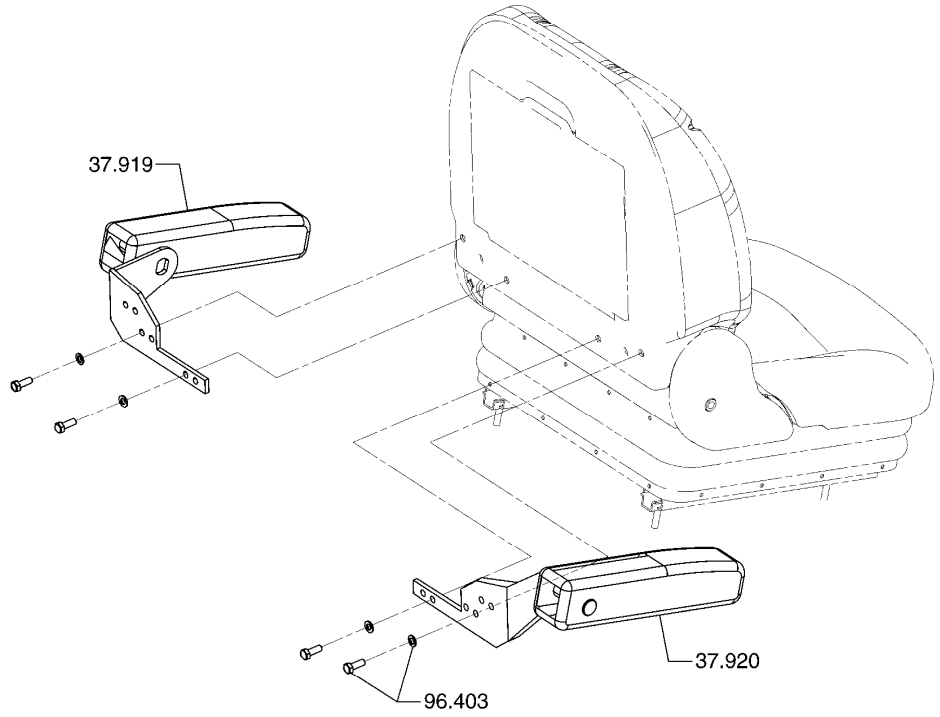

SEAT ARMREST ASSEMBLY **37-124**

37.919 ARMREST LH, SEAT
암레스트

37.920 ARMREST RH, SEAT
암레스트

96.403 FASTENER, SEAT ARMREST BRACKET
패스너

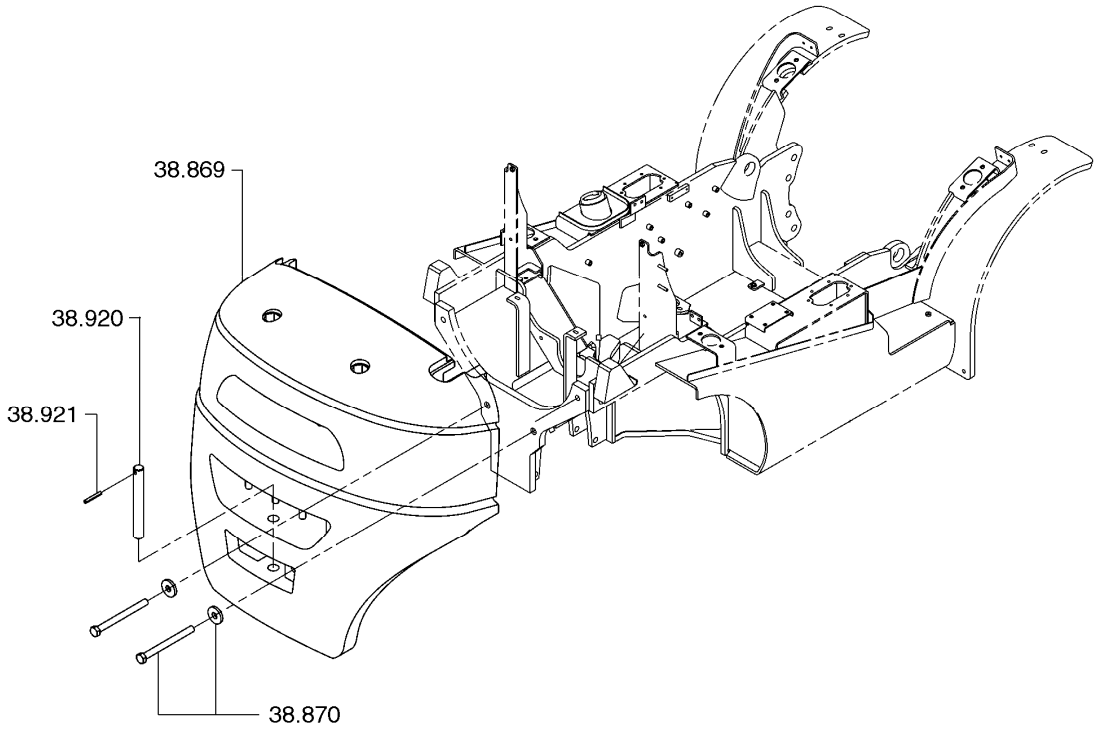

FRAME & COUNTERWEIGHT **38-225**

38.869 COUNTERWEIGHT
카운터웨이트

38.870 FASTENER, COUNTERWEIGHT (LOWER)
패스너

38.920 PIN, COUPLER
핀

38.921 PIN, COUPLER PIN CROSS
핀

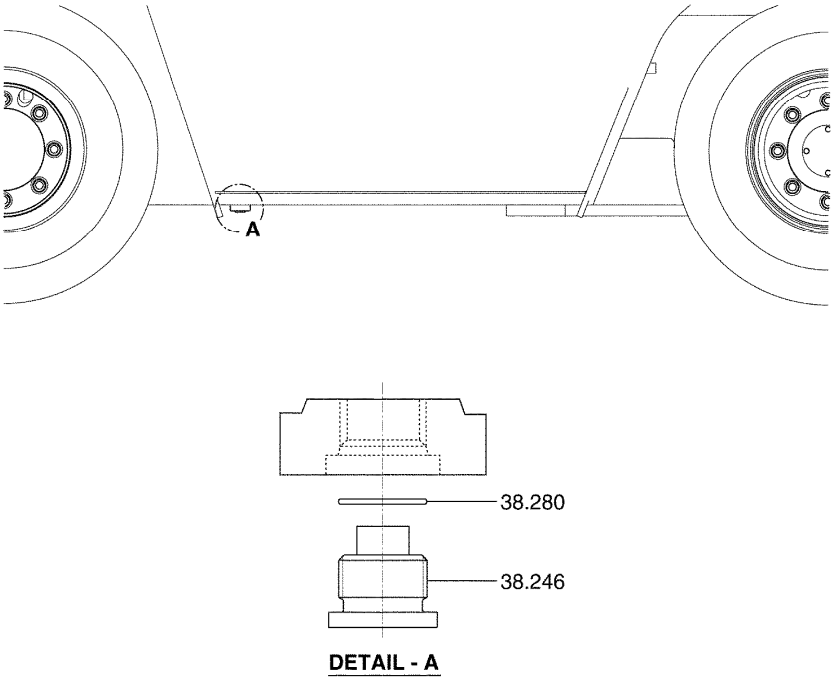

FRAME TANK BOTTOM PLUG **38-270**

38.246 PLUG, FRAME BOTTOM MAGNETIC
플러그

38.280 SEAL, FRAME BOTTOM MAGNETIC PLUG
실

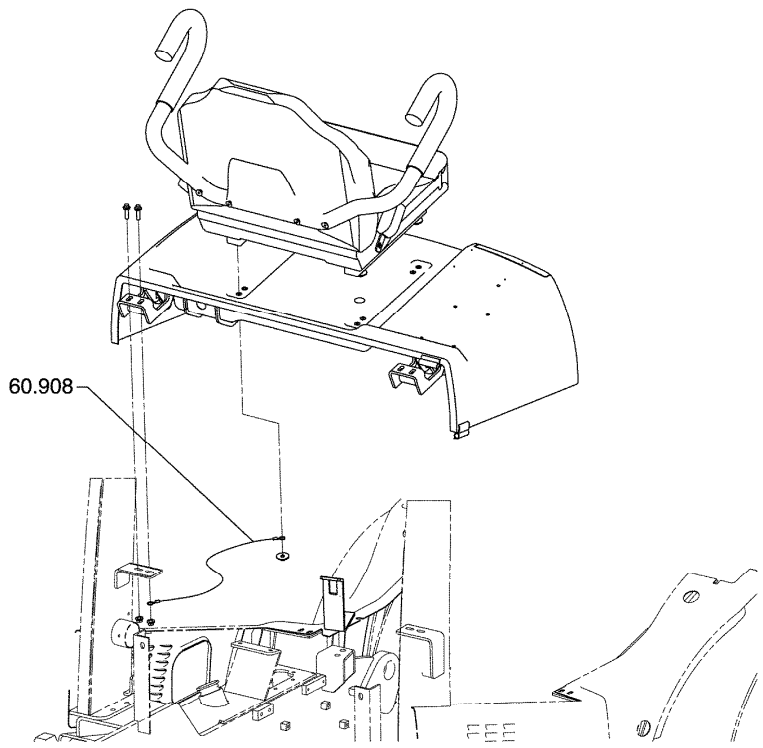

LEAD WIRE GROUND **39-012**

60.908 WIRE, LEAD GROUND
와이어

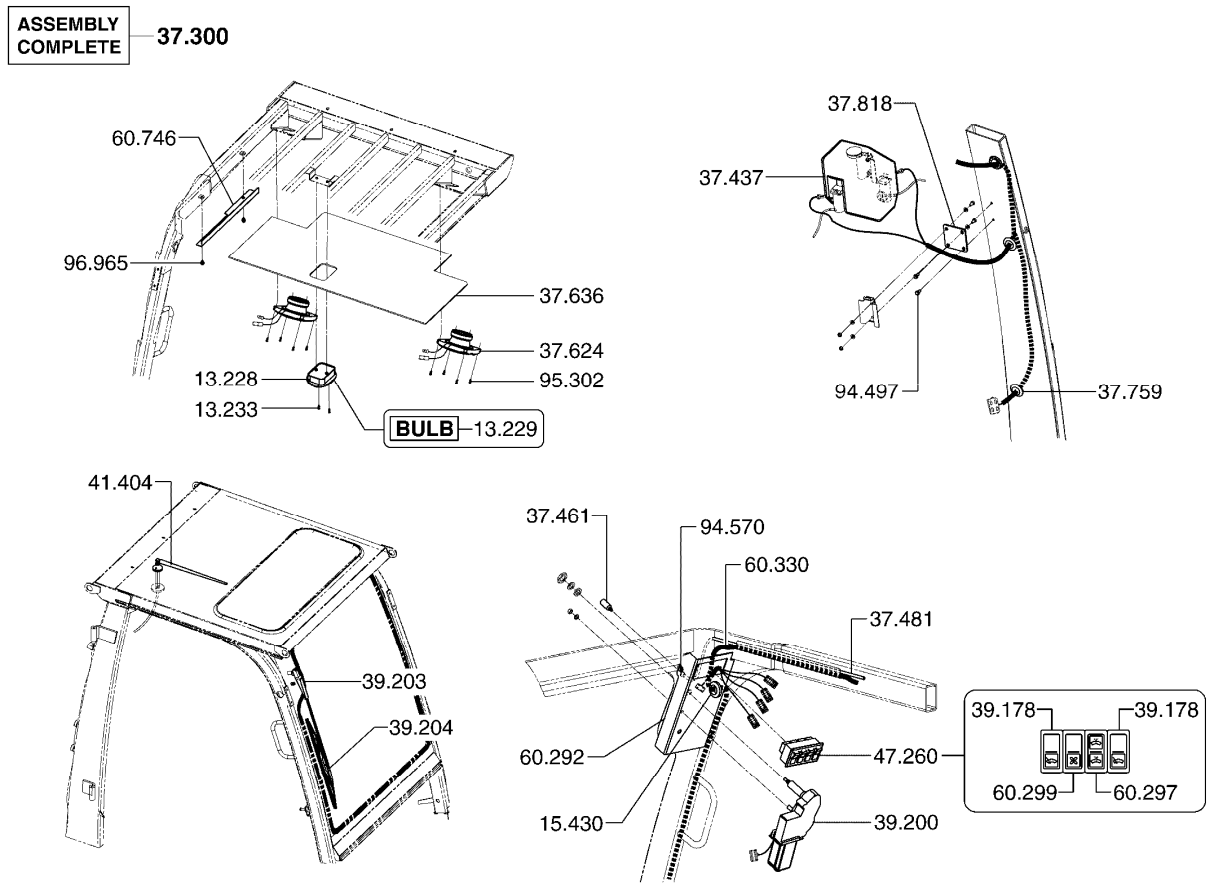

13.228 LAMP ASSEMBLY, DOME
램프

13.229 BULB, DOME LAMP
전구

13.233 FASTENER, DOME LAMP
패스너

15.430 GROMMET, CABIN WIRING HARNESS
그로멧

37.300 CAB ASSEMBLY
캐빈

37.437 PUMP & TANK, WINDSHIELD WASHER
펌프와탱크

37.461 NOZZLE, WINDSHIELD GLASS WASHER
노즐

37.481 LINE, WINDOW GLASS WASHER
라인

37.624 SPEAKER, CABIN
스피커

37.636	COVERING, CAB INSIDE ROOF 커버링
37.759	GROMMET, COVER WINDSHIELD WIPER MOTOR 그로멧
37.818	BRACKET, WINDSHIELD WASHER TANK 브라켓
39.178	SWITCH, WINDSHIELD WIPER 스위치
39.200	MOTOR, WINDSHIELD WIPER 모터
39.203	ARM, WINDSHIELD WIPER 암
39.204	BLADE, WINDSHIELD WIPER 블레이드
41.404	ANTENNA, AUDIO 안테나
47.260	SWITCH ASSY, CABIN 스위치
60.292	COVER, CAB SWITCH PANEL 커버
60.297	SWITCH, WINDSHIELD WASHER 스위치
60.299	SWITCH, HEATER ON/OFF 스위치
60.330	WIRING HARNESS, CAB 와이어하네스
60.746	PROTECTION,HARNESS 보호장치
94.497	FASTENER, WINDSHIELD WASHER TANK 패스너
94.570	FASTENER, CAB SWITCH PANEL COVER 패스너
95.302	FASTENER, LOUDSPEAKER 패스너
96.965	FASTENER, REAR WINDOW WIPER BRACKET 패스너

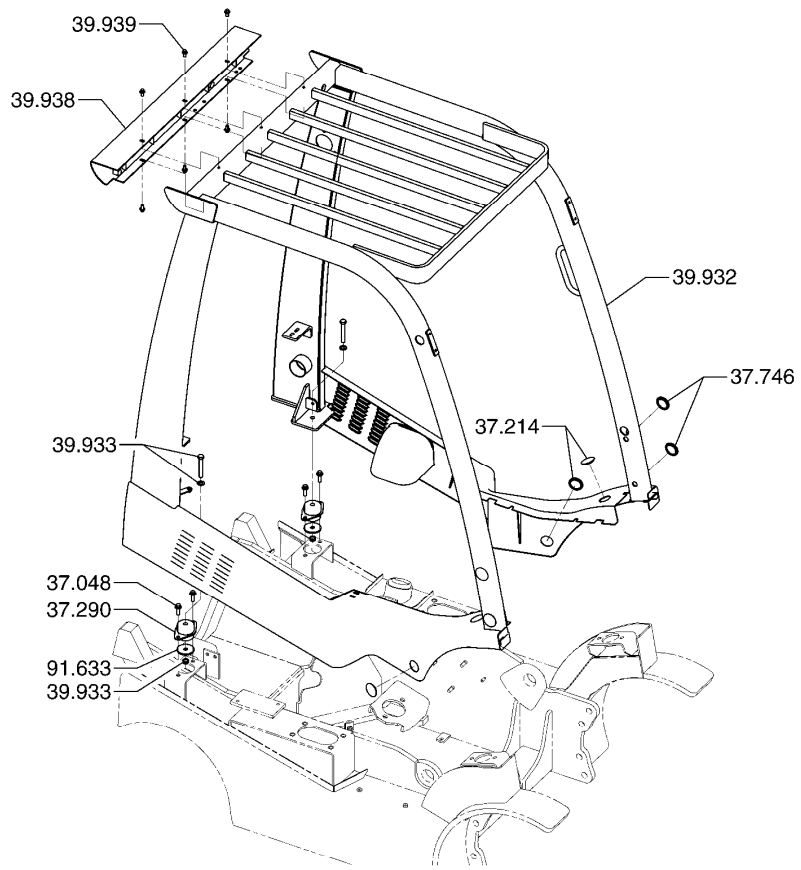

OVERHEAD GUARD MOUNTING **39-510**

37.048 FASTENER, OVERHEAD GUARD BUMPER
패스너

37.214 PLUG-BUTTON
플러그

37.290 DAMPENER, OVERHEAD GUARD VIBRATION
댐프너

37.746 PLUG, DRIVER OVERHEAD GUARD
플러그

39.932 GUARD, OVERHEAD
가드

39.933 FASTENER, OVERHEAD GUARD
패스너

39.938 BRACKET, OVERHEAD GUARD REAR SUPPORT
브라켓

39.939 FASTENER, OVERHEAD GUARD REAR SUPPORT BRACKET
패스너

91.633 WASHER, OVERHEAD GUARD FASTENER
와셔

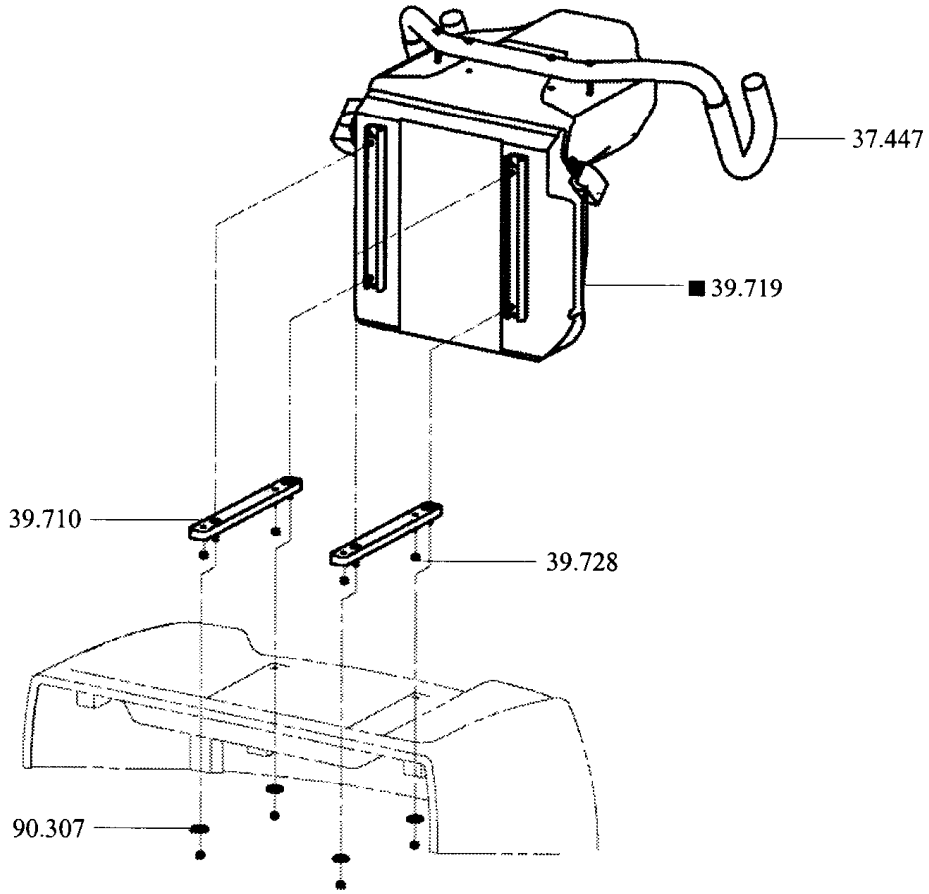

37.447 RESTRAINT, OPERATOR SEAT LATERAL
레스트레인트

39.710 SUPPORT, SEAT ADJUSTOR (RH)
서포트

39.719 SEAT ASSEMBLY
시트

39.728 FASTENER, SEAT FRAME TO ADJUSTOR
패스너

90.307 LOCKWASHER, ADJUSTOR TO SEAT SUPPORT FASTENER
로크와셔

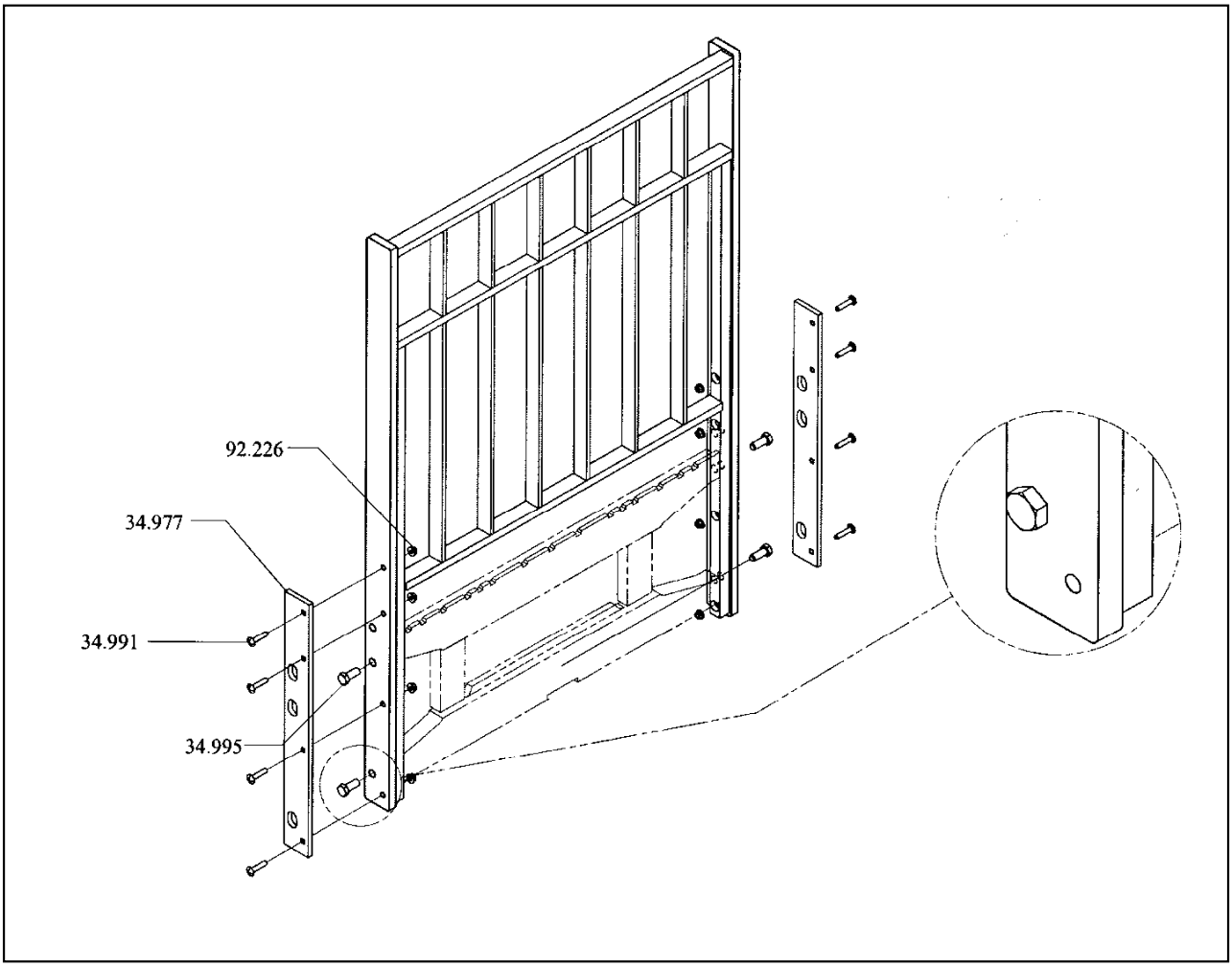

34.977 RETAINER, LOAD BACK REST TRUNNION PIN
리테이너

34.991 FASTENER, LOAD SAFETY BACK REST EXT
패스너

34.995 FASTENER, LOAD SAFETY BACK REST
패스너

92.226 NUT, LOAD SAFETY BACK REST FASTENER
너트

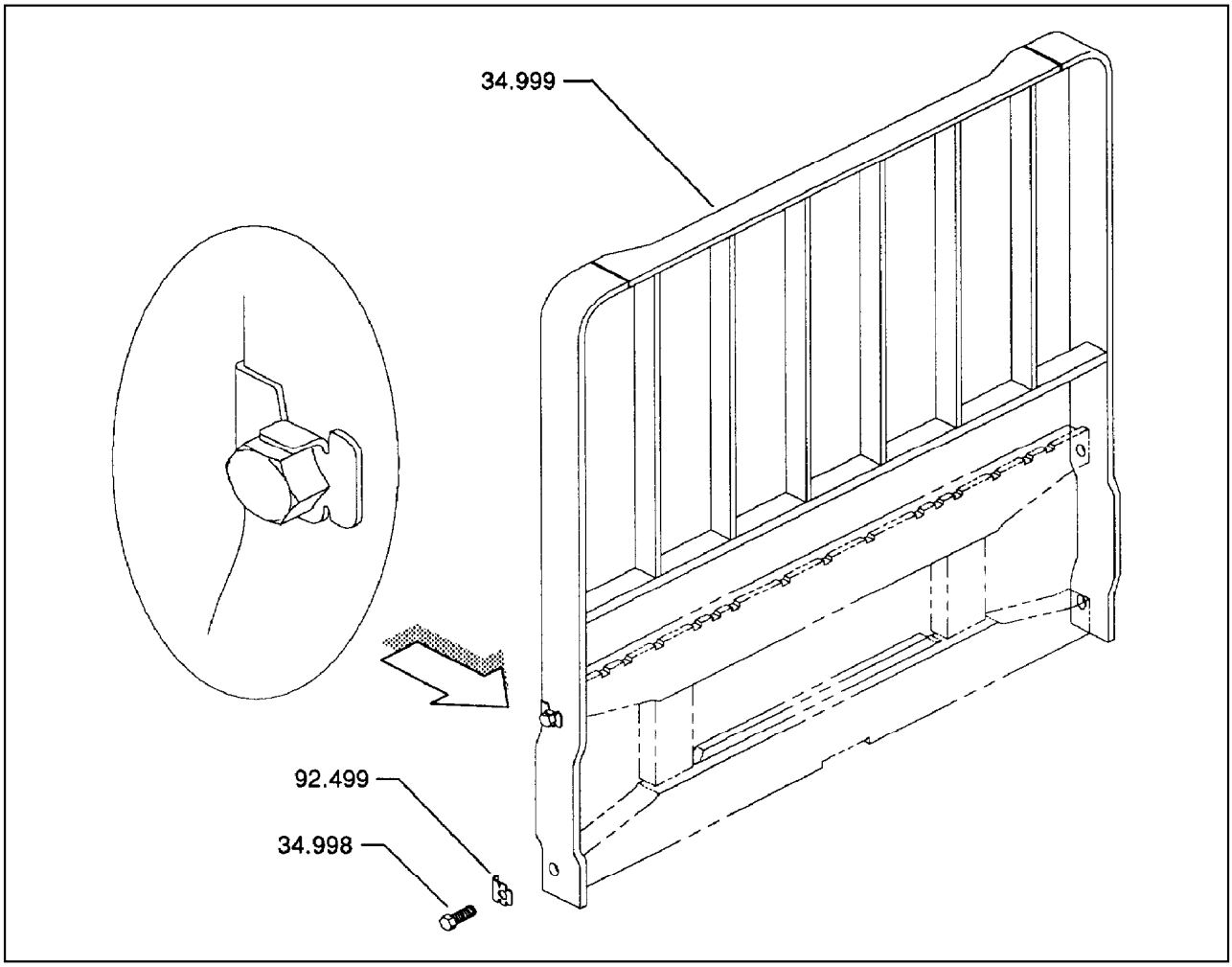

34.998 FASTENER, LOAD SAFETY BACK REST
패스너

34.999 BACK REST, LOAD SAFETY-COMPLETE
백레스트

92.499 LOCKWASHER, LOAD SAFETY BACK REST FASTENER
로크와셔

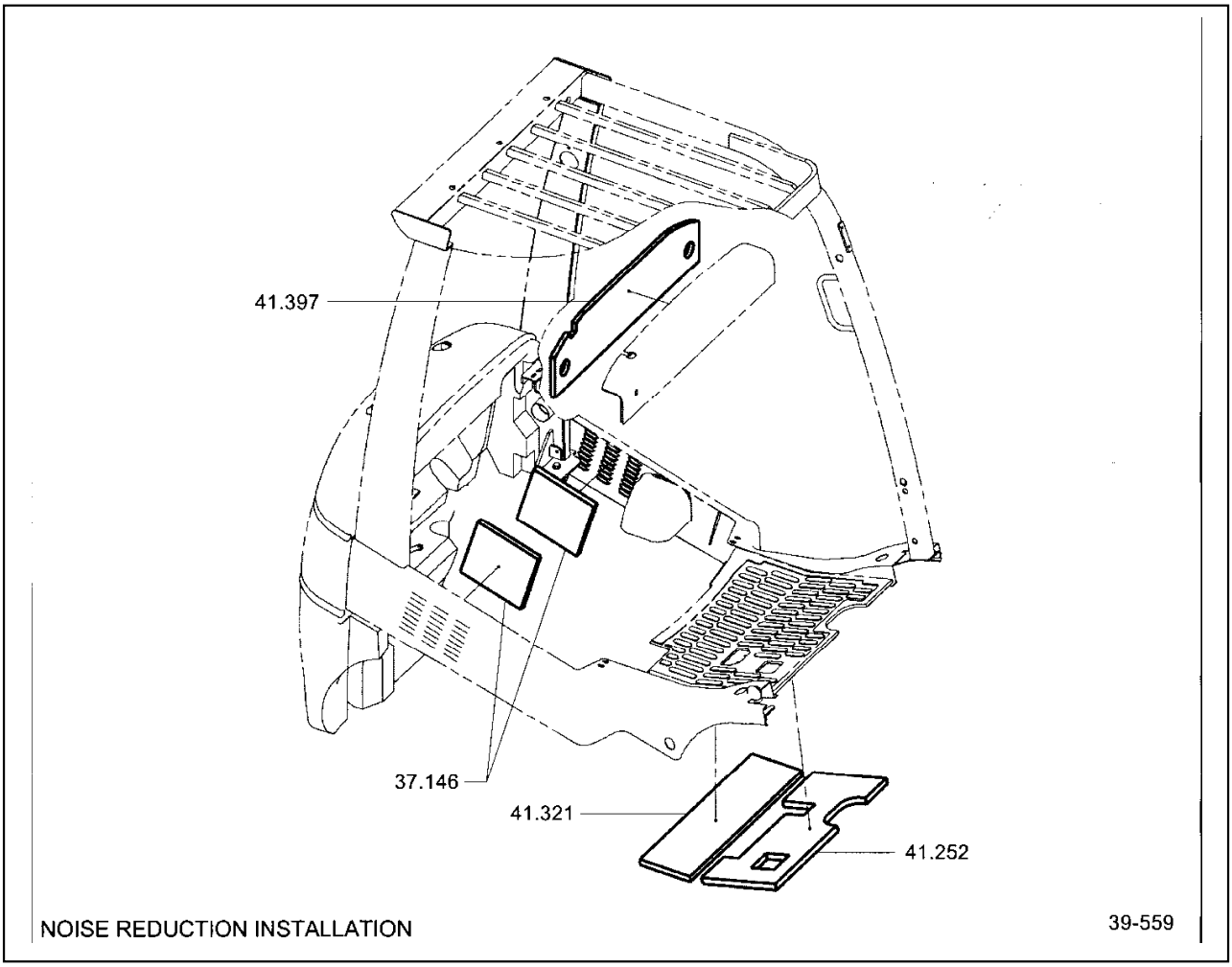

37.146 SOUND ABSORBER, OVERHEAD GUARD
흡음재

41.252 SOUND SEAL, FLOOR PLATE FRONT
사운드시일

41.321 SOUND SEAL, FLOOR PLATE REAR
사운드시일

41.397 SOUND ABSORBER, RADIATOR COVER
흡음재

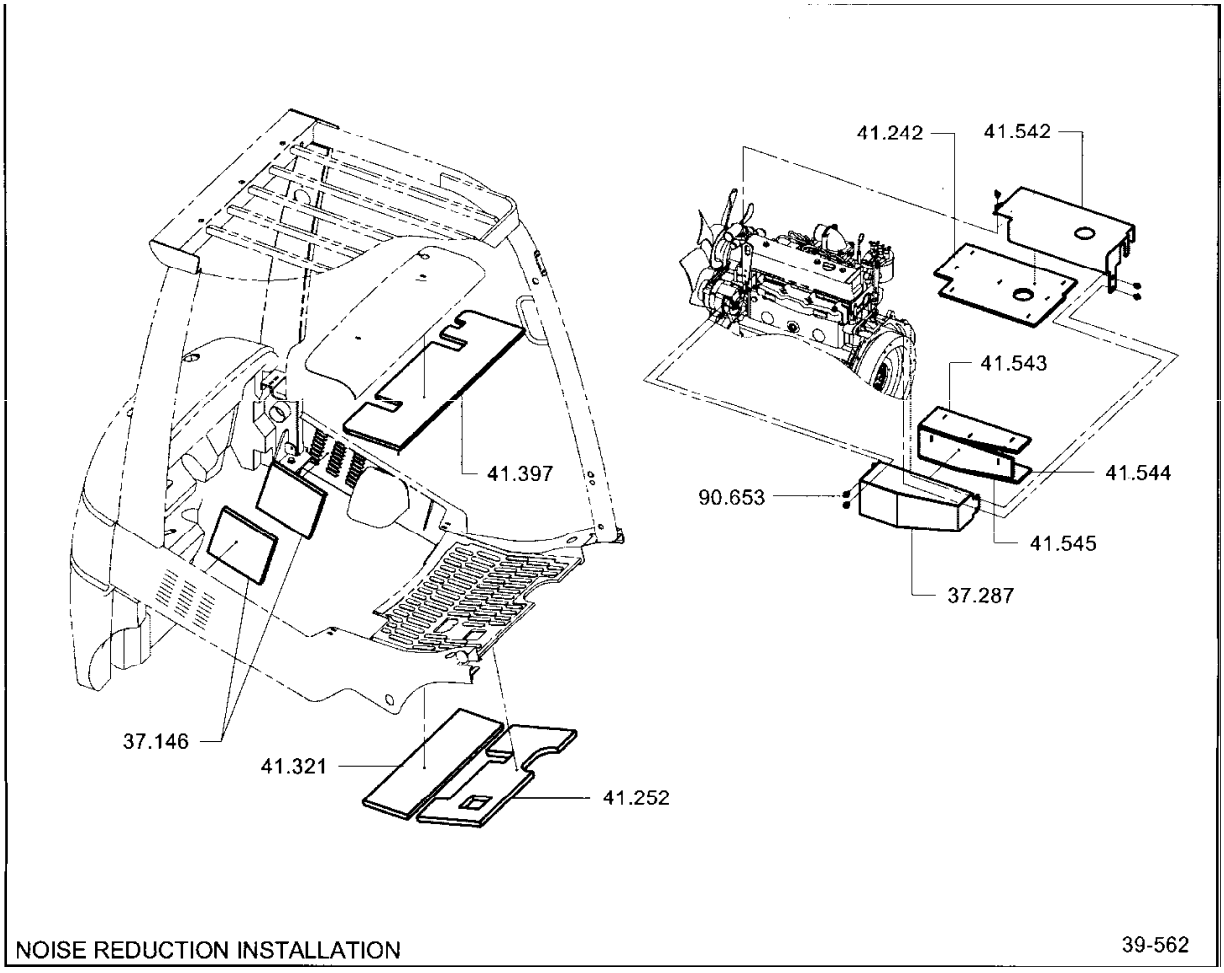

37.146 SOUND ABSORBER, OVERHEAD GUARD
흡음재

37.287 COVER, ENGINE COMPARTMENT
커버

41.242 SOUND SEAL, ENGINE COMPARTMENT
사운드시일

41.252 SOUND SEAL, FLOOR PLATE FRONT
사운드시일

41.321 SOUND SEAL, FLOOR PLATE REAR
사운드시일

41.397 SOUND ABSORBER, RADIATOR COVER
흡음재

41.542 COVER, ENG MANIFOLD
커버

41.543 SOUND SEAL, MANIFOLD COVER
사운드시일

41.544 SOUND SEAL, MANIFOLD BOTTOM
사운드시일

41.545 SOUND SEAL, MANIFOLD FRONT
사운드시일

90.653 BOLT, SOUND SEAL BACKING PLATE
볼트

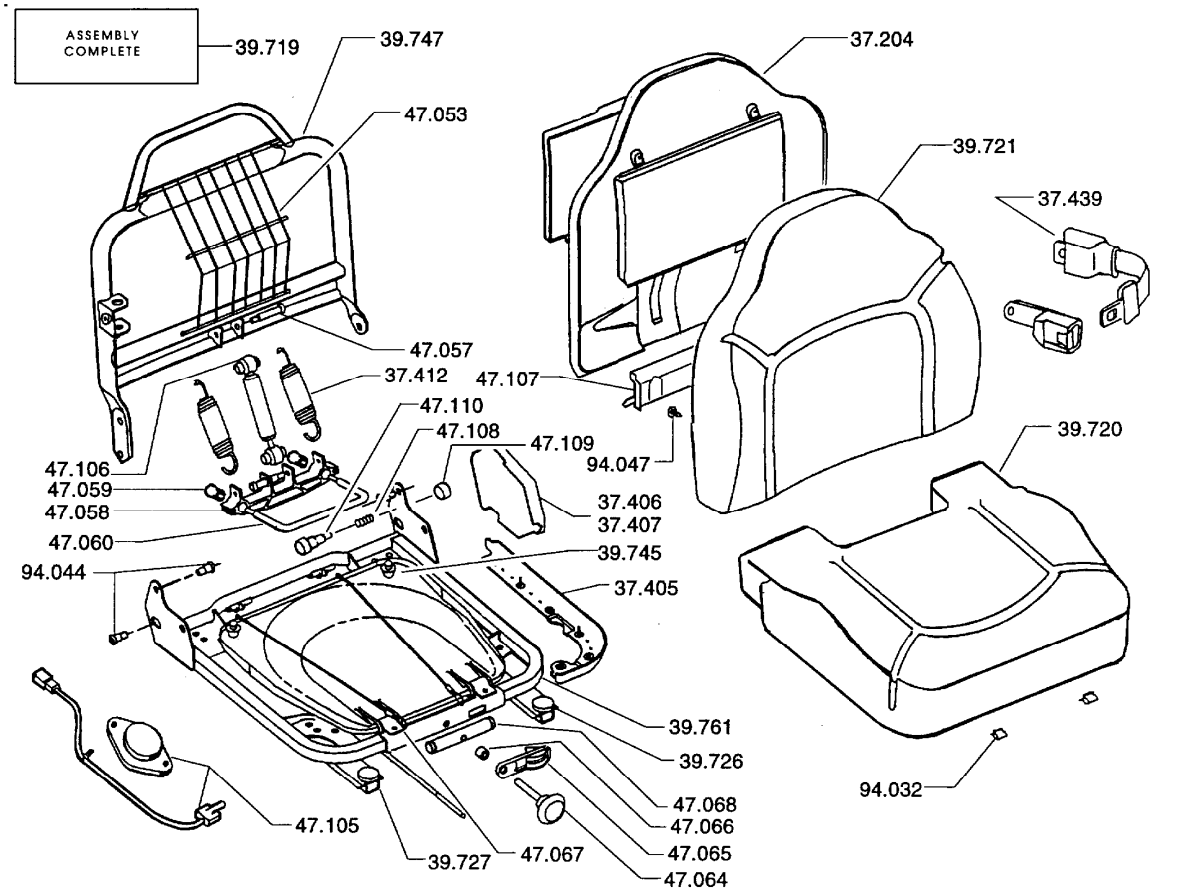

37.204	COVER, SEAT BACK REST CUSHION 커버	47.057	PIN, BACK FRAME SHOCK 핀
37.405	TRIM, SEAT MOUNTING PLATE 트림	47.058	SADDLE SPRING, SPRING ARM 샤들스프링
37.406	BRACKET, SEAT BACK REST COVER LH 브라켓	47.059	SADDLE BUSHING, SPRING ARM 샤들부싱
37.407	BRACKET, SEAT BACK REST COVER RH 브라켓	47.060	SPRING ARM, SUSPENSION SEAT 스프링
37.412	SPRING, SEAT SUSPENSION TENSION 스프링	47.064	KNOB, SEAT ASSEMBLY WEIGHT ADJUSTER 노브
37.439	SAFETY BELT, SEAT 세이프티벨트	47.065	WEIGHT INDICATOR ASSEMBLY 웨이트인디케이터
39.719	SEAT ASSEMBLY 시트	47.066	SPACER, SEAT ASSEMBLY WEIGHT ADJUST SCREW 스페이서
39.720	CUSHION, SEAT 쿠션	47.067	CLIP, FRONT SEAT FRAME 클립
39.721	CUSHION, SEAT BACK REST 쿠션	47.068	BAR, WEIGHT ADJUSTER 바
39.726	ADJUSTOR, SEAT 어드져스터	47.105	SWITCH KIT, SEAT 스위치킷
39.727	ADJUSTOR, SEAT WITH LATCH 어드져스터	47.106	SHOCK ABSORBER, SUSPENSION SEAT 쇽압쇼버
39.745	BUMPER, SEAT SUPPORT 범퍼	47.107	COVER, MECHANISM 커버
39.747	PLATE, SEAT BACK REST CUSHION MOUNTING 플레이트	47.108	SPRING, SEAT ASSEMBLY PLUNGER 스프링
39.761	PLATE, SEAT CUSHION MOUNTING 플레이트	47.109	KNOB, FOLD DOWN SEAT 노브
47.053	LUMBAR FLEXOLATOR 룸바	47.110	PLUNGER, FOLD DOWN SEAT 플런저

94.032 RETAINER, SEAT FRAME
리테이너

94.044 FASTENER, SEAT CUSHION MOUNTING PLATE
패스너

94.047 FASTENER, SEAT BACK REST CUSHION
패스너

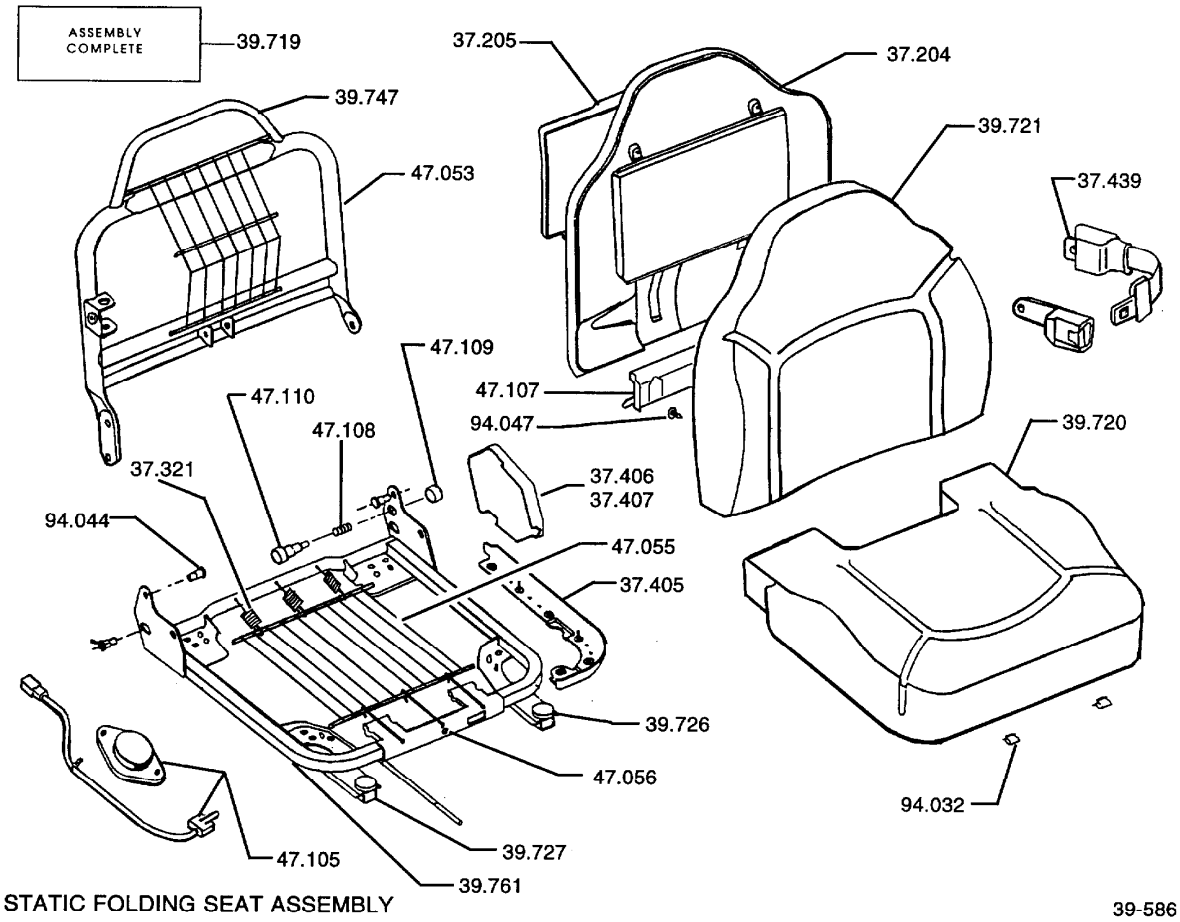

37.204 COVER, SEAT BACK REST CUSHION
커버

37.205 TRAY, LITERATURE
트레이

37.321 SPRING, SEAT SUSPENSION
스프링

37.405 TRIM, SEAT MOUNTING PLATE
트림

37.406 BRACKET, SEAT BACK REST COVER LH
브라켓

37.407 BRACKET, SEAT BACK REST COVER RH
브라켓

37.439 SAFETY BELT, SEAT
세이프티벨트

39.719 SEAT ASSEMBLY
시트

39.720 CUSHION, SEAT
쿠션

39.721	CUSHION, SEAT BACK REST 쿠션
39.726	ADJUSTOR, SEAT 어드져스터
39.727	ADJUSTOR, SEAT WITH LATCH 어드져스터
39.747	PLATE, SEAT BACK REST CUSHION MOUNTING 플레이트
39.761	PLATE, SEAT CUSHION MOUNTING 플레이트
47.053	LUMBAR FLEXOLATOR 룸바
47.055	SEAT FLEXOLATOR 시트
47.056	CLIP, SPRING 클립
47.105	SWITCH KIT, SEAT 스위치킷
47.107	COVER, MECHANISM 커버
47.108	SPRING, SEAT ASSEMBLY PLUNGER 스프링
47.109	KNOB, FOLD DOWN SEAT 노브
47.110	PLUNGER, FOLD DOWN SEAT 플런저
94.032	RETAINER, SEAT FRAME 리테이너
94.044	FASTENER, SEAT CUSHION MOUNTING PLATE 패스너
94.047	FASTENER, SEAT BACK REST CUSHION 패스너

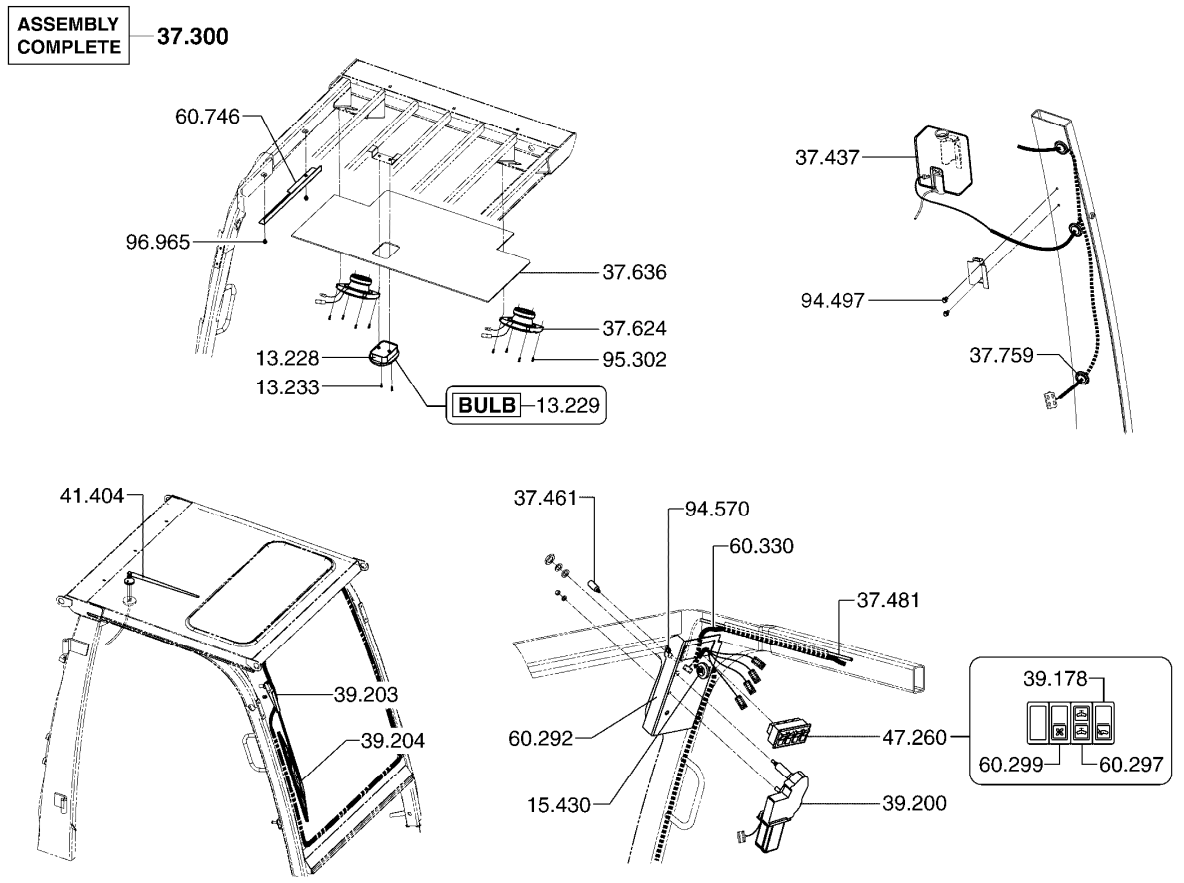

ELECTRICAL COMPONENTS(CAB) **39-593**

13.228 LAMP ASSEMBLY, DOME
램프

13.229 BULB, DOME LAMP
전구

13.233 FASTENER, DOME LAMP
패스너

15.430 GROMMET, CABIN WIRING HARNESS
그로멧

37.300 CAB ASSEMBLY
캐빈

37.437 PUMP & TANK, WINDSHIELD WASHER
펌프와탱크

37.461 NOZZLE, WINDSHIELD GLASS WASHER
노즐

37.481 LINE, WINDOW GLASS WASHER
라인

37.624 SPEAKER, CABIN
스피커

37.636	COVERING, CAB INSIDE ROOF 커버링
37.759	GROMMET, COVER WINDSHIELD WIPER MOTOR 그로멧
39.178	SWITCH, WINDSHIELD WIPER 스위치
39.200	MOTOR, WINDSHIELD WIPER 모터
39.203	ARM, WINDSHIELD WIPER 암
39.204	BLADE, WINDSHIELD WIPER 블레이드
41.404	ANTENNA, AUDIO 안테나
47.260	SWITCH ASSY, CABIN 스위치
60.292	COVER, CAB SWITCH PANEL 커버
60.297	SWITCH, WINDSHIELD WASHER 스위치
60.299	SWITCH, HEATER ON/OFF 스위치
60.330	WIRING HARNESS, CAB 와이어하네스
60.746	PROTECTION,HARNESS 보호장치
94.497	FASTENER, WINDSHIELD WASHER TANK 패스너
94.570	FASTENER, CAB SWITCH PANEL COVER 패스너
95.302	FASTENER, LOUDSPEAKER 패스너
96.965	FASTENER, REAR WINDOW WIPER BRACKET 패스너

■INDICATES AN ASSEMBLY HAVING SERVICEABLE COMPONENTS ILLUSTRATED ELSEWHERE

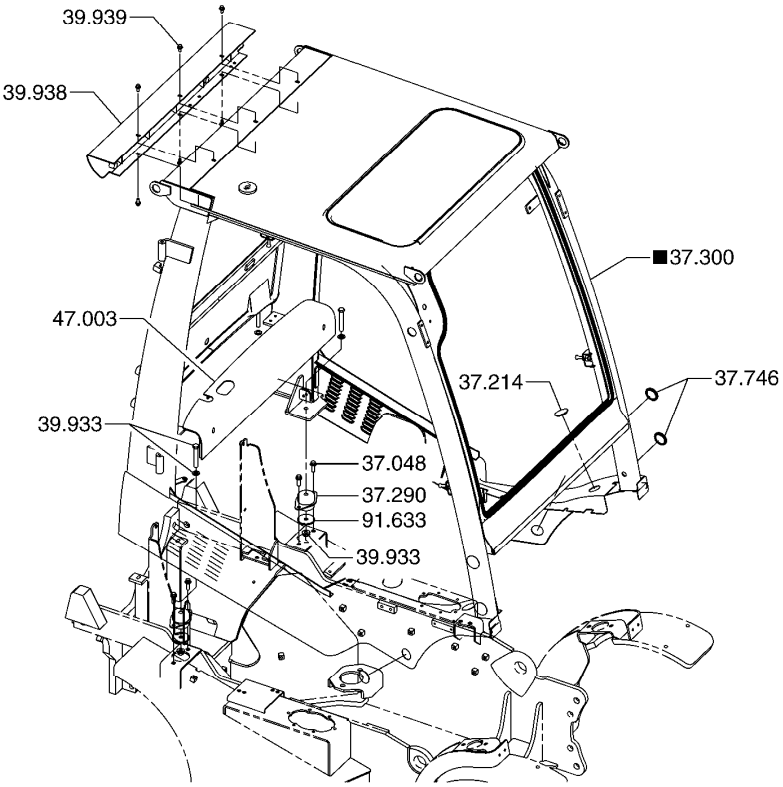

CAB MOUNTING **39-597**

37.048 FASTENER, OVERHEAD GUARD BUMPER
패스너

37.214 PLUG-BUTTON
플러그

37.290 DAMPENER, OVERHEAD GUARD VIBRATION
댐프너

37.300 CAB ASSEMBLY
캐빈

37.746 PLUG, DRIVER OVERHEAD GUARD
플러그

39.933 FASTENER, OVERHEAD GUARD
패스너

39.938 BRACKET, OVERHEAD GUARD REAR SUPPORT
브라켓

39.939 FASTENER, OVERHEAD GUARD REAR SUPPORT BRACKET
패스너

47.003 COVER, RADIATOR
커버

91.633 WASHER, OVERHEAD GUARD FASTENER
와셔

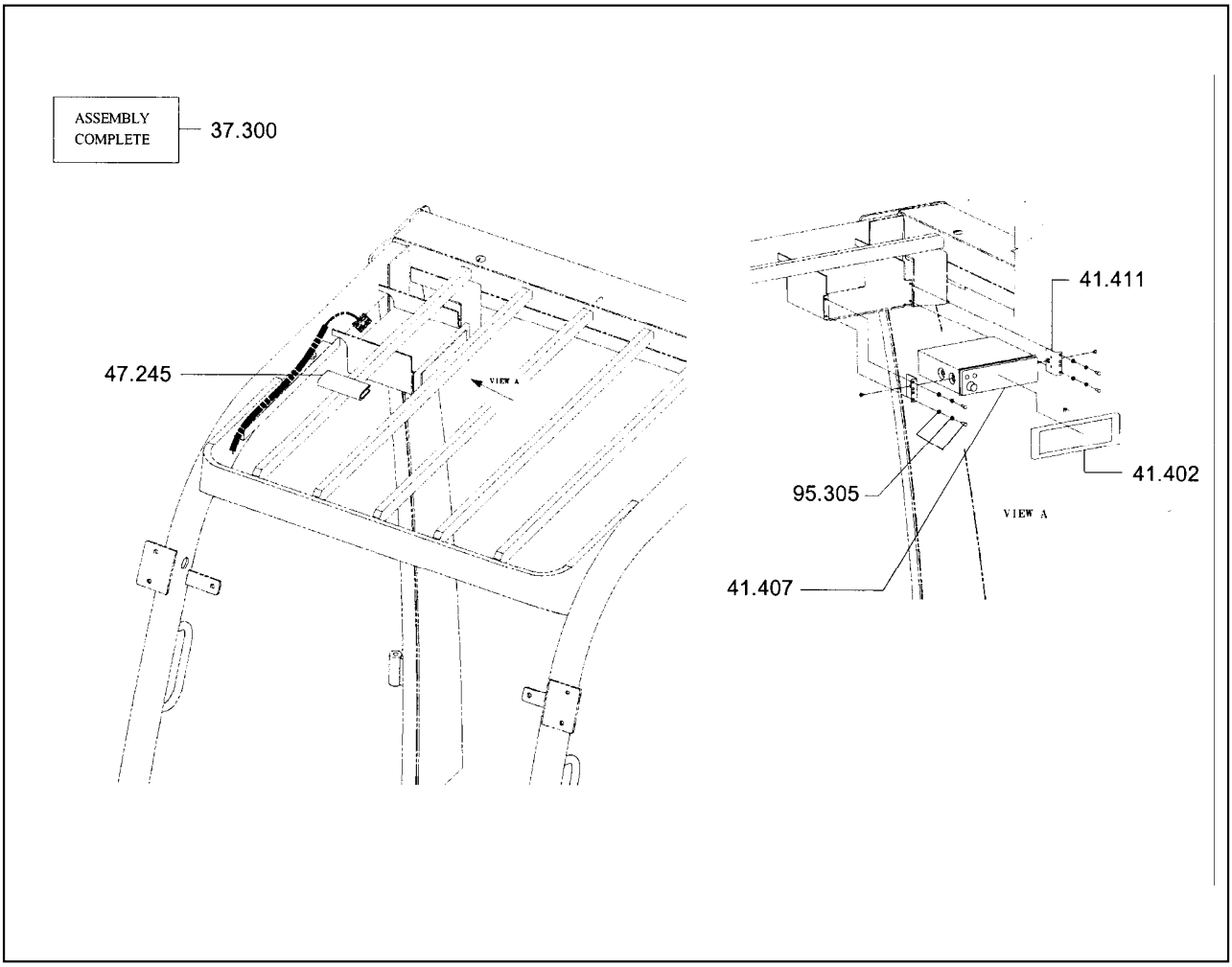

37.300	CAB ASSEMBLY 캐빈
41.402	COVER, AUDIO AND TRANSCEIVER MOUNTING BOX 커버
41.407	AUDIO 라디오
41.411	BRACKET, AUDIO AND TRANSCEIVER BOX MOUNTING 브라켓
47.245	MANUAL, CASSETTE 매뉴얼
95.305	FASTENER, AUDIO AND TRANSCEIVER BOX TO MOUNTING BR 패스너

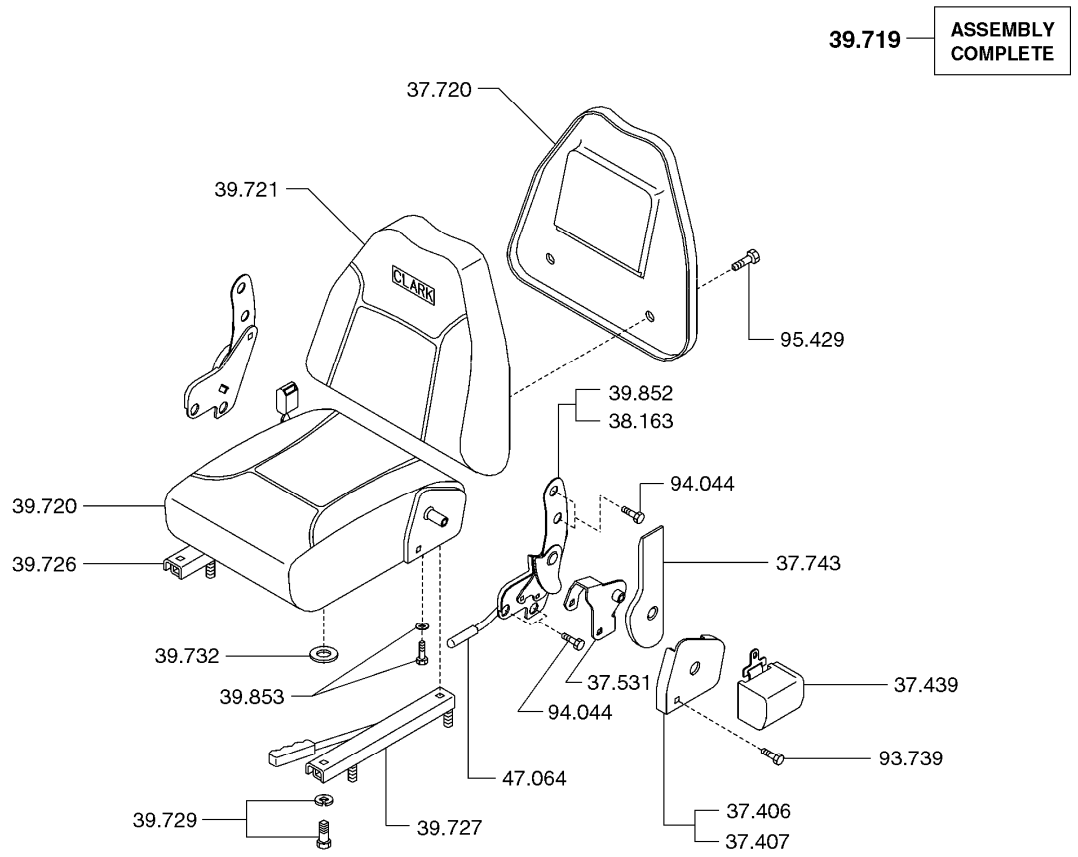

SEAT ASSEMBLY **39-661**

37.406 BRACKET, SEAT BACK REST COVER LH
브라켓

37.407 BRACKET, SEAT BACK REST COVER RH
브라켓

37.439 SAFETY BELT, SEAT
세이프티벨트

37.531 BRACKET, SEAT SAFETY BELT MOUNTING
브라켓

37.720 COVER, OPERATOR SEAT LATERAL RESTRAINT
커버

37.743 COVER, SEAT SUPPORT LATCH
커버

38.163 BRACKET, SEAT SUPPORT RH
브라켓

39.719 SEAT ASSEMBLY
시트

39.720 CUSHION, SEAT
쿠션

39.721	CUSHION, SEAT BACK REST 쿠션
39.726	ADJUSTOR, SEAT 어드져스터
39.727	ADJUSTOR, SEAT WITH LATCH 어드져스터
39.729	FASTENER, ADJUSTOR TO SEAT SUPPORT 패스너
39.732	SPACER, SEAT FRAME TO ADJUSTOR 스페이서
39.852	BRACKET, SEAT SUPPORT LH 브라켓
39.853	FASTENER, SEAT SUPPORT BRACKET 패스너
47.064	KNOB, SEAT ASSEMBLY WEIGHT ADJUSTER 노브
93.739	FASTENER, SAFETY BELT ASSEMBLY 패스너
94.044	FASTENER, SEAT CUSHION MOUNTING PLATE 패스너
95.429	FASTENER, SEAT LATERAL RESTRAINT COVER 패스너

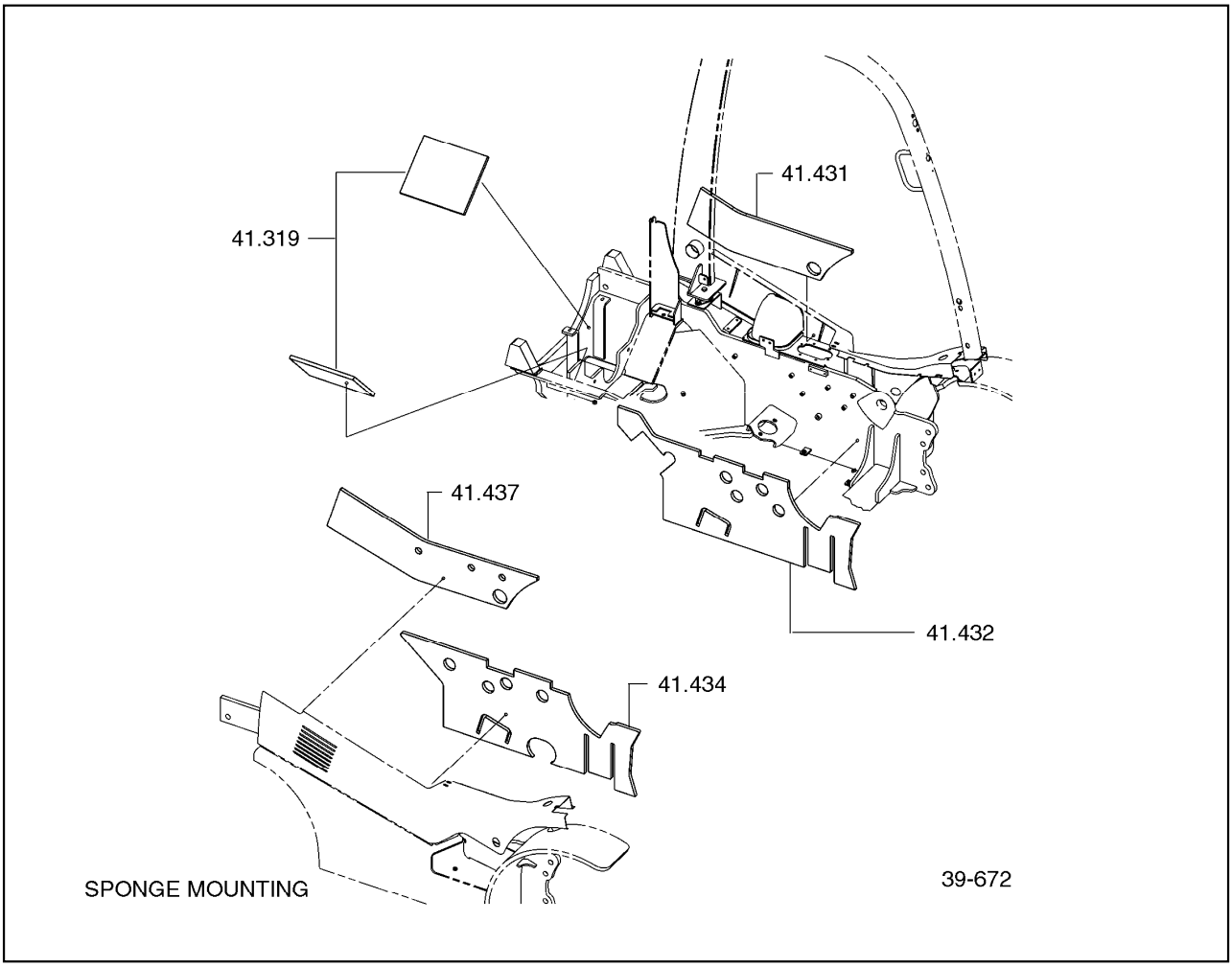

41.319 SOUND SEAL, REAR FRAME LOWER
사운드시일

41.431 SOUND SEAL, FRAME UPPER LH
사운드시일

41.432 SOUND SEAL, FRAME LOWER LH
사운드시일

41.434 SOUND SEAL, FRAME LOWER RH
사운드시일

41.437 SOUND SEAL,FRAME RH UPPER
사운드시일

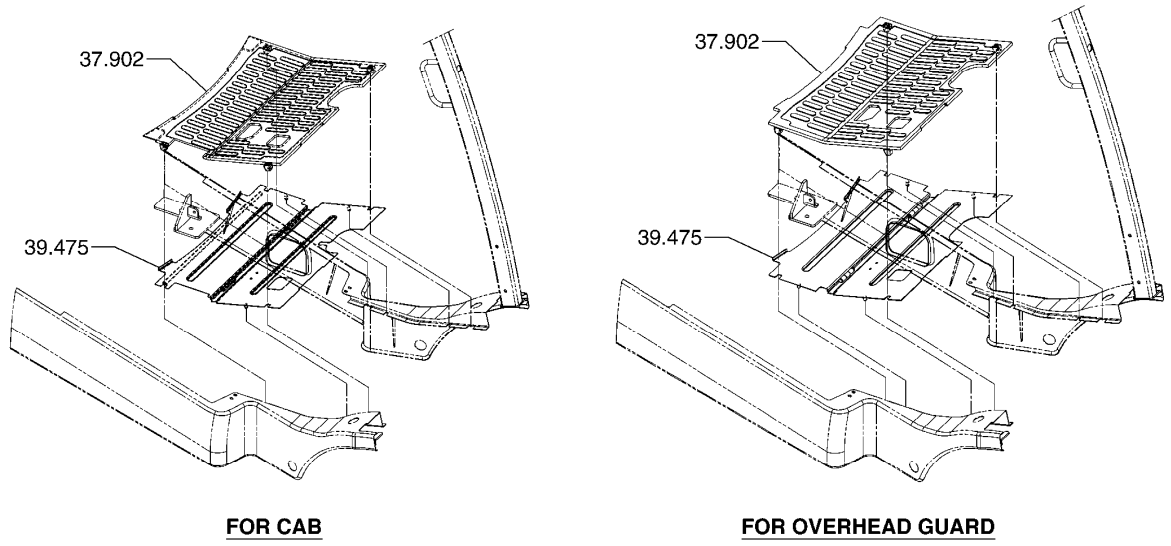

FOR CAB **FOR OVERHEAD GUARD**

FLOOR PLATE MOUNTING **39-674**

37.902 MAT, FLOORPLATE
매트

39.475 PLATE, FRONT FLOOR
플레이트

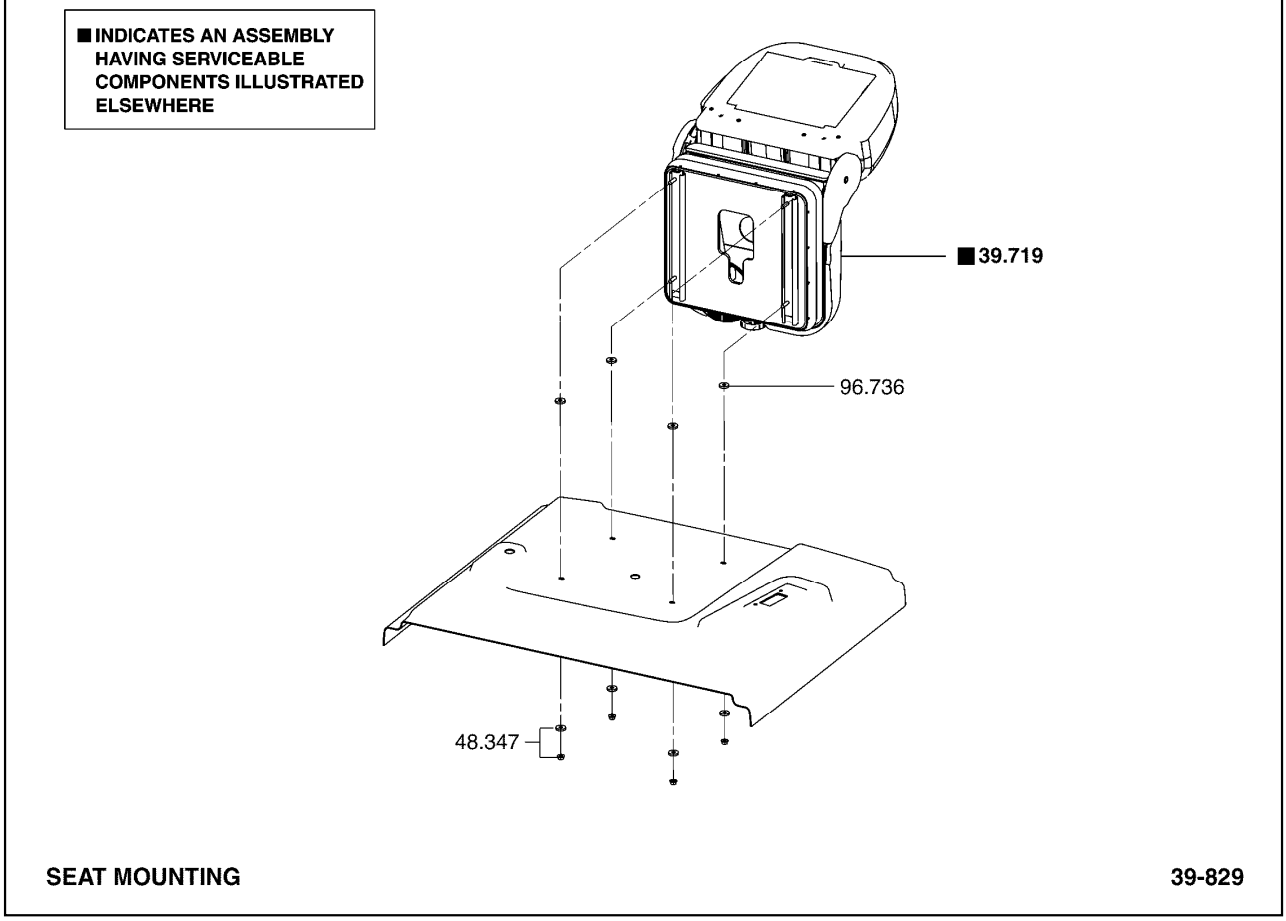

39.719 SEAT ASSEMBLY
시트

48.347 FASTENER, SEAT ASSEMBLY
패스너

96.736 WASHER, SEAT ASSEMBLY FASTENER
와셔

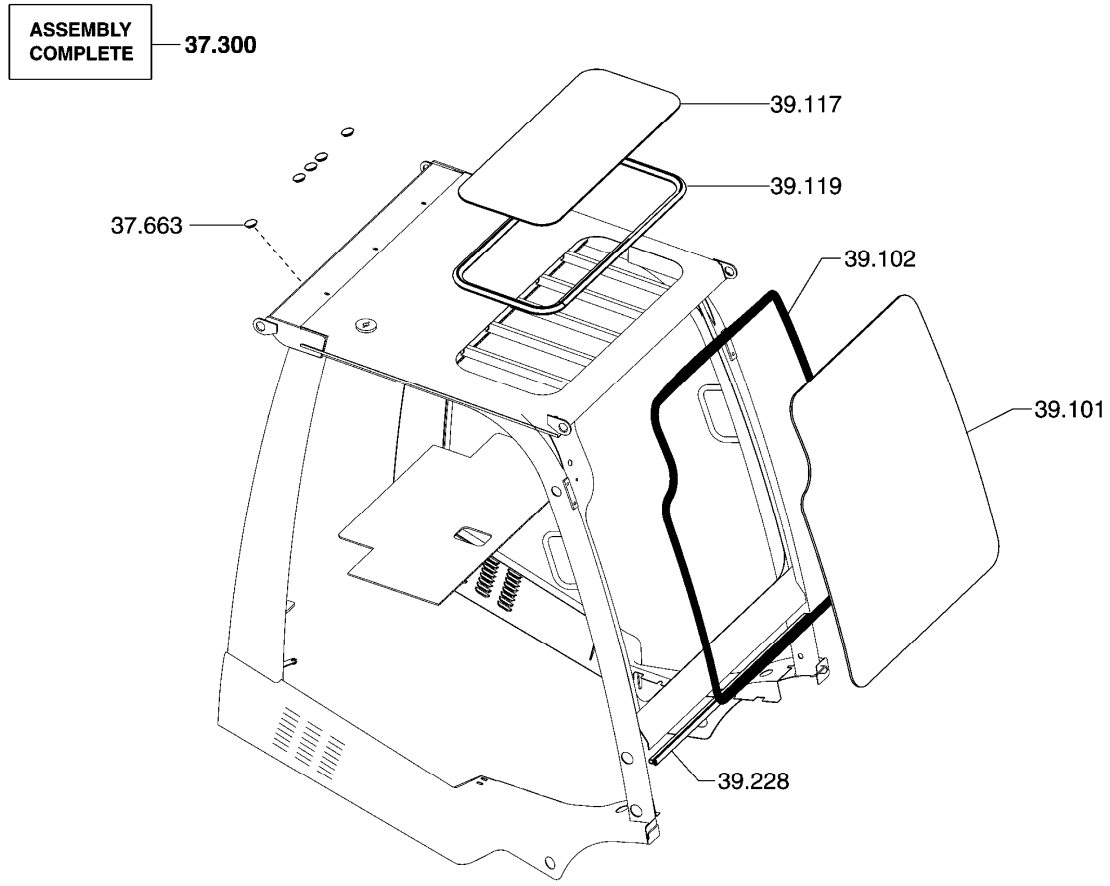

ENCLOSED CAB **39-831**

37.300	CAB ASSEMBLY 캐빈
37.663	PLUG, CAB FRAME 플러그
39.101	GLASS, WINDSHIELD 글래스
39.102	WEATHERSEAL, WINDSHIELD SETTING 웨더시일
39.117	ROOF SCREEN 루프스크린
39.119	SEAL STRIP, ROOF WINDOW 시일스트립
39.228	WEATHERSEAL, WINDSHIELD SETTING 웨더시일

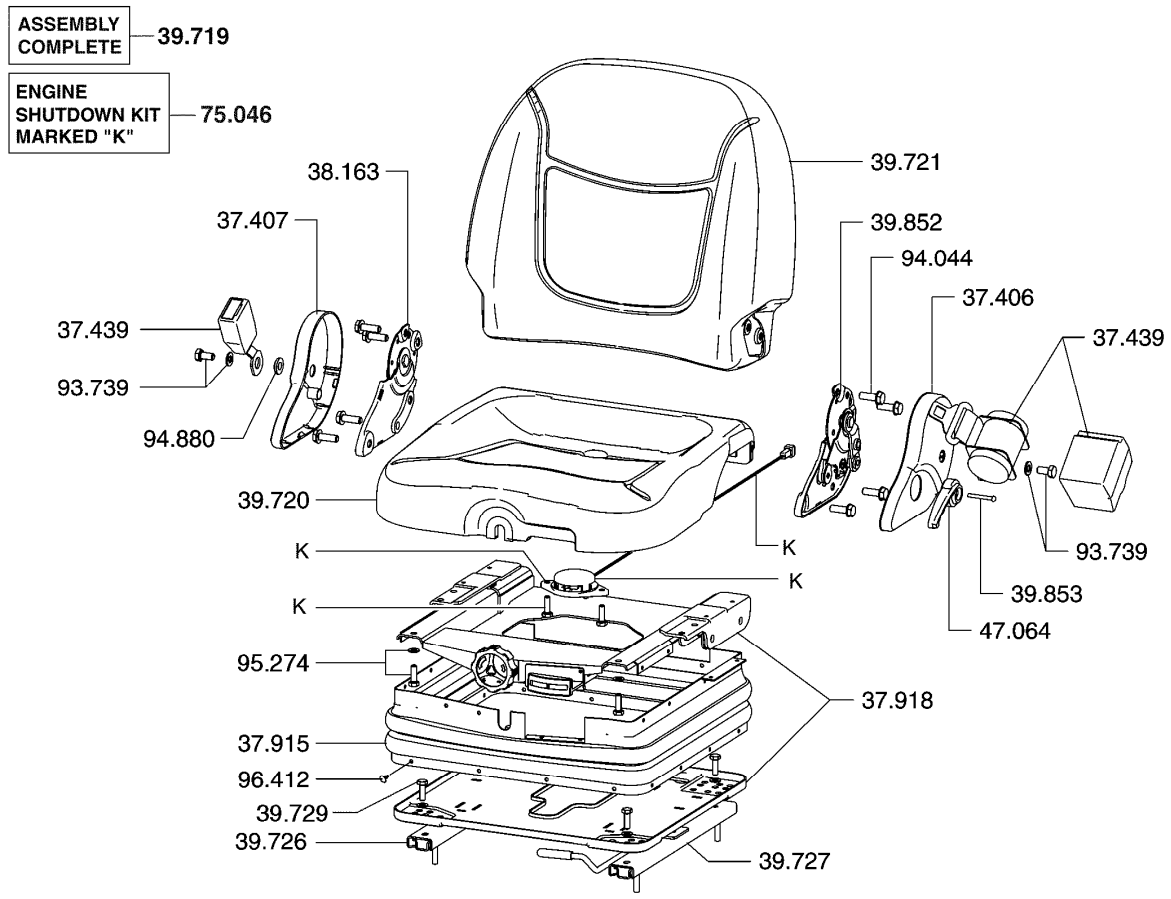

SEAT ASSEMBLY (SUSPENSION) **39-834**

37.406 BRACKET, SEAT BACK REST COVER LH
브라켓

37.407 BRACKET, SEAT BACK REST COVER RH
브라켓

37.439 SAFETY BELT, SEAT
세이프티벨트

37.915 SUSPENSION COVER, SEAT SUSPENSION
서스펜션

37.918 SUSPENSION ASSEMBLY, SEAT
서스펜션

38.163 BRACKET, SEAT SUPPORT RH
브라켓

39.719 SEAT ASSEMBLY
시트

39.720 CUSHION, SEAT
쿠션

39.721 CUSHION, SEAT BACK REST
쿠션

39.726	ADJUSTOR, SEAT 어드져스터
39.727	ADJUSTOR, SEAT WITH LATCH 어드져스터
39.729	FASTENER, ADJUSTOR TO SEAT SUPPORT 패스너
39.852	BRACKET, SEAT SUPPORT LH 브라켓
39.853	FASTENER, SEAT SUPPORT BRACKET 패스너
47.064	KNOB, SEAT ASSEMBLY WEIGHT ADJUSTER 노브
75.046	KIT, SEAT ACTUATED ENGINE SHUTDOWN 킷
93.739	FASTENER, SAFETY BELT ASSEMBLY 패스너
94.044	FASTENER, SEAT CUSHION MOUNTING PLATE 패스너
94.880	FASTENER, SEAT SUPPORT CATCH BRACKET 패스너
95.274	FASTENER, SEAT CUSHION SUSPENSION SUPPORT 패스너
96.412	FASTENER, SEAT SUSPENSION BACK SIDE COVER 패스너

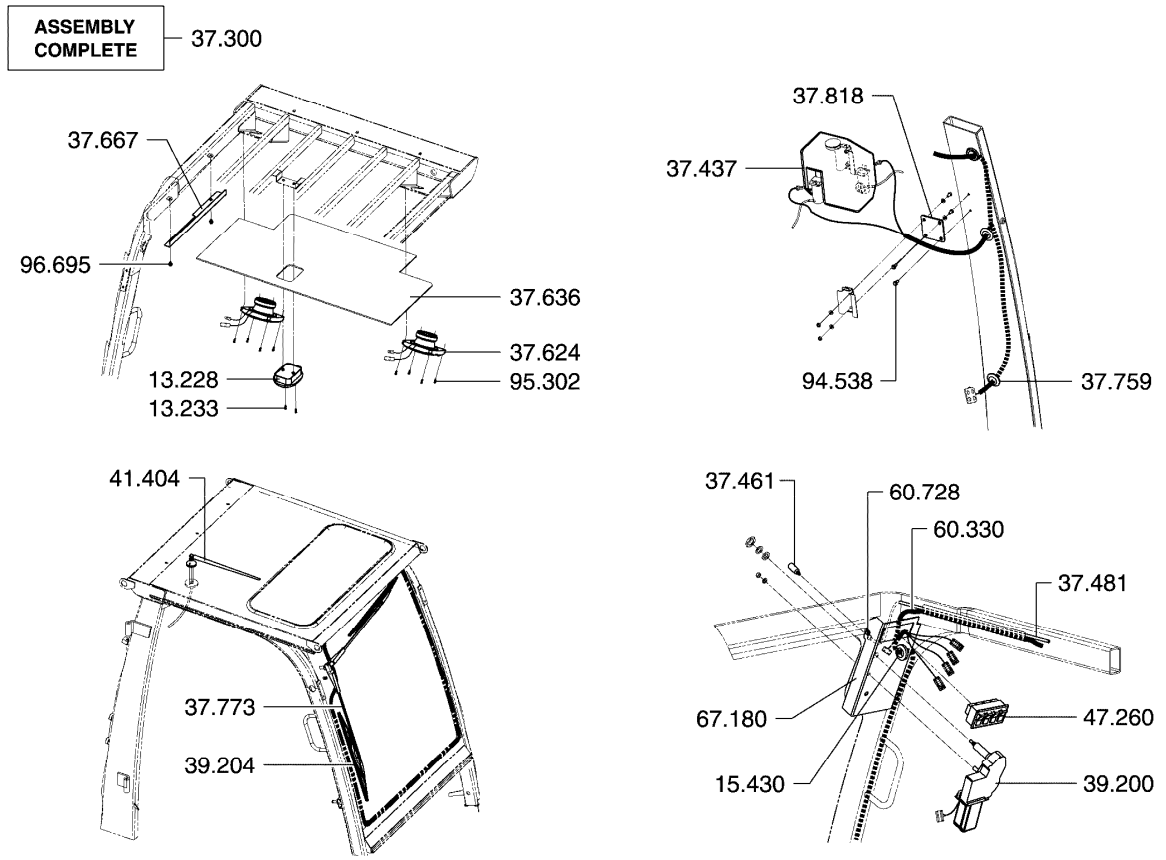

13.228 LAMP ASSEMBLY, DOME
램프

13.233 FASTENER, DOME LAMP
패스너

15.430 GROMMET, CABIN WIRING HARNESS
그로멧

37.300 CAB ASSEMBLY
캐빈

37.437 PUMP & TANK, WINDSHIELD WASHER
펌프와탱크

37.461 NOZZLE, WINDSHIELD GLASS WASHER
노즐

37.481 LINE, WINDOW GLASS WASHER
라인

37.624 SPEAKER, CABIN
스피커

37.636 COVERING, CAB INSIDE ROOF
커버링

37.667 COVER, CAB REAR PANEL WIPER MOTOR
커버

37.759 GROMMET, COVER WINDSHIELD WIPER MOTOR
그로멧

37.773 WINDSHIELD WIPER INSTALLATION
윈드실드와이퍼

37.818 BRACKET, WINDSHIELD WASHER TANK
브라켓

39.200 MOTOR, WINDSHIELD WIPER
모터

39.204 BLADE, WINDSHIELD WIPER
블레이드

41.404 ANTENNA, AUDIO
안테나

47.260 SWITCH ASSY, CABIN
스위치

60.330 WIRING HARNESS, CAB
와이어하네스

60.728 CAPSCREW, BRACKET FASTENER
캡스크류

67.180 BRACKET,SWITCH MTG.
브라켓

94.538 WASHER, WINDSHIELD WASHER TANK FASTENER
와셔

95.302 FASTENER, LOUDSPEAKER
패스너

96.695 FASTENER, WIRE MOUNTING
패스너

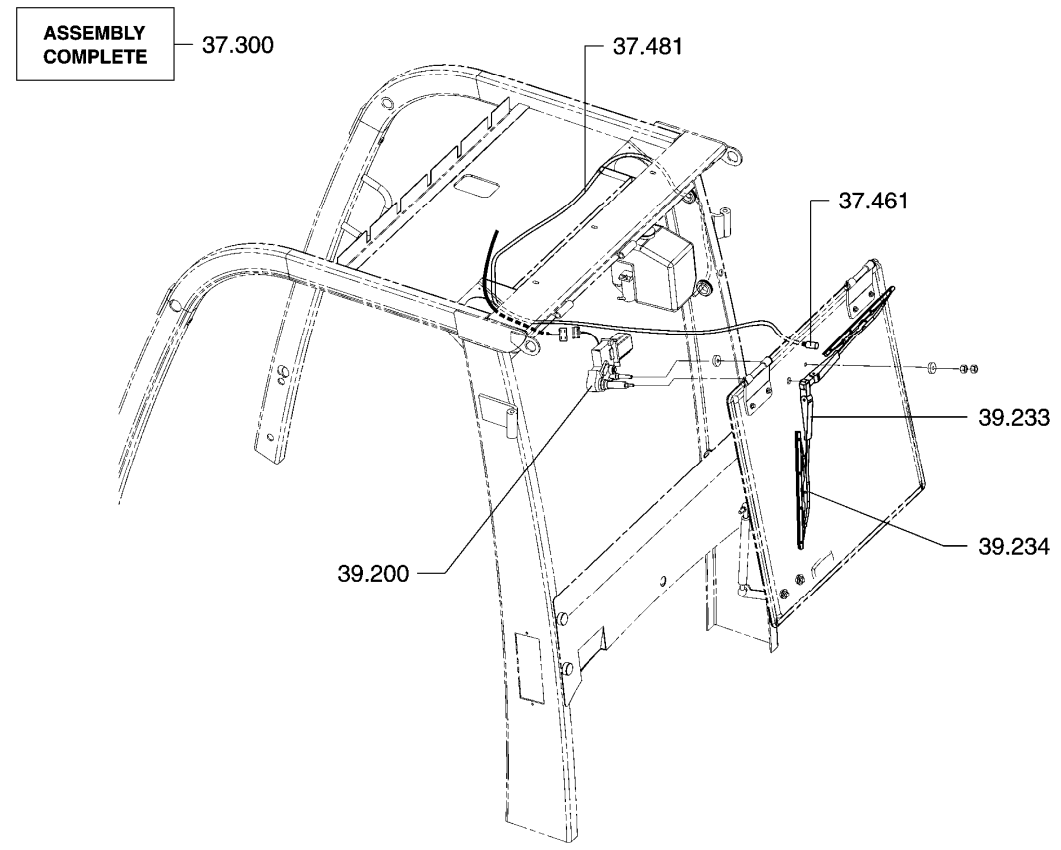

37.300 CAB ASSEMBLY
캐빈

37.461 NOZZLE, WINDSHIELD GLASS WASHER
노즐

37.481 LINE, WINDOW GLASS WASHER
라인

39.200 MOTOR, WINDSHIELD WIPER
모터

39.233 ARM, REAR WINDOW WIPER
암

39.234 BLADE, REAR WINDOW WIPER
블레이드

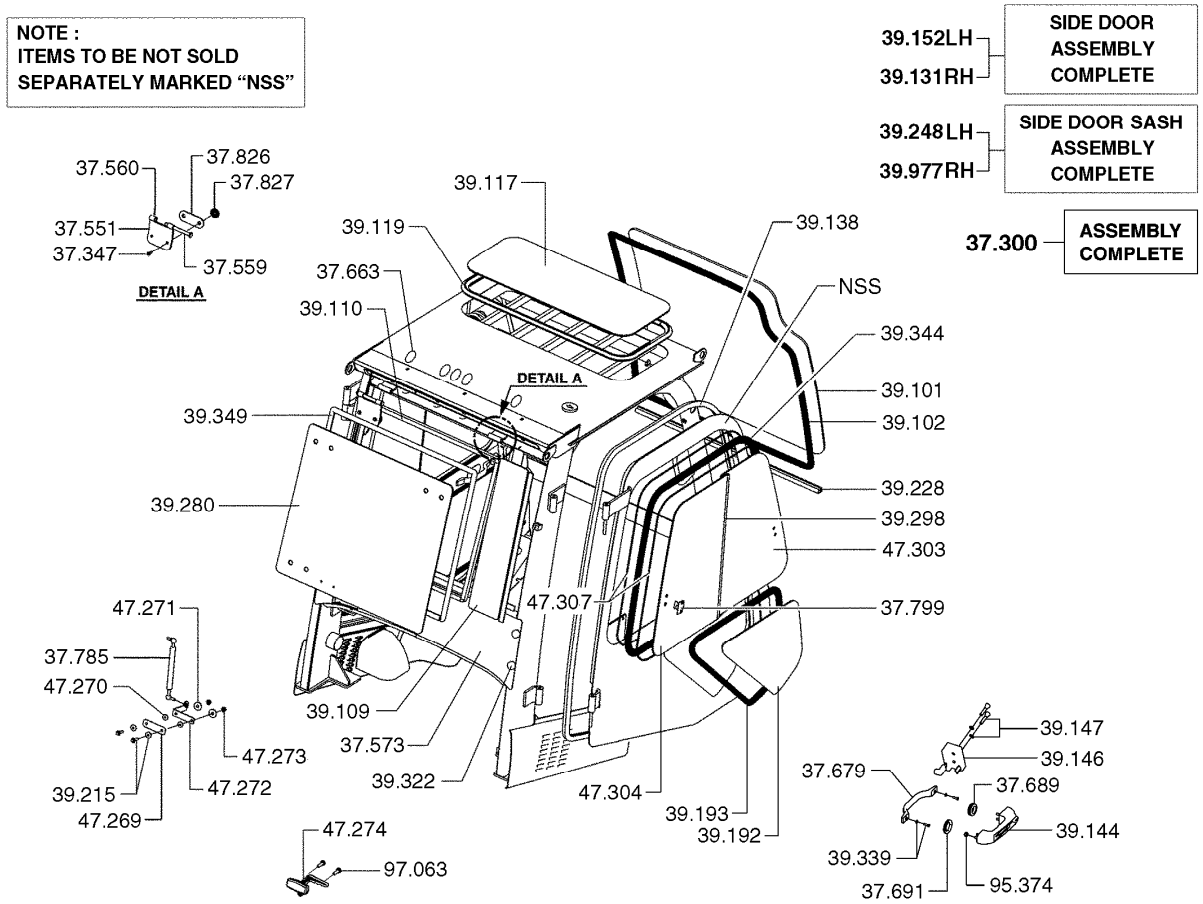

ENCLOSED CAB **39-871**

37.300	CAB ASSEMBLY 캐빈
37.347	BRACKET, TILT STEERING COLUMN COVER 브라켓
37.468	CATCH, CAB DOOR LATCH 캐치
37.559	PIN, CABIN REAR GLASS HANGER 핀
37.560	RETAINER, CAB REAR GLASS HANGER PIN 리테이너
37.573	SUPPORT, DOOR STOP 서포트
37.663	PLUG, CAB FRAME 플러그
37.679	HANDLE, RH DOOR INSIDE 핸들
37.689	SEAL, DOOR OUTSIDE HANDLE 시일
37.691	SEAL, DOOR OUTSIDE HANDLE 시일
37.785	SHOCK ABSORBER, CAB INSPECTION FRAME 쇽압쇼버
37.799	LATCH, CAB DOOR WINDOW ASSEMBLY 래치
37.826	BRACKET, CAB REAR PANEL FASTENER PROTECTION (LH) 브라켓
37.827	CAP, REAR PANEL DAMPENER BRACKET FASTENER PROTEC 캡
39.101	GLASS, WINDSHIELD 글래스
39.102	WEATHERSEAL, WINDSHIELD SETTING 웨더시일
39.109	GLASS, REAR 글래스
39.110	WEATHERSEAL, REAR GLASS SETTING 웨더시일
39.117	ROOF SCREEN 루프스크린
39.119	SEAL STRIP, ROOF WINDOW 시일스트립
39.131	DOOR ASSEMBLY, RIGHT HAND 도어
39.138	WEATHERSEAL, RIGHT HAND DOOR 웨더시일
39.144	HANDLE, RH DOOR OUTSIDE 핸들
39.146	LATCH, RH DOOR INSIDE 래치
39.147	FASTENER, RIGHT HAND DOOR LATCH 패스너
39.152	DOOR ASSEMBLY, LEFT HAND 도어
39.192	GLASS, RIGHT HAND DOOR (LOWER) 글래스
39.193	WEATHERSEAL, RH DOOR GLASS (LOWER) 웨더시일
39.215	FASTENER, GAS SPRING 패스너
39.228	WEATHERSEAL, WINDSHIELD SETTING 웨더시일

39.248 WINDOW ASSEMBLY, CAB DOOR (LH)
윈도우

39.280 GLASS, REAR WINDOW - MOVEABLE
글래스

39.298 CHANNEL, FRONT DOOR GLASS - FRONT
채널

39.322 FASTENER, REAR WINDOW GUARD
패스너

39.339 FASTENER, RH DOOR INSIDE HANDLE
패스너

39.344 WEATHERSEAL, RH DOOR WINDOW ASSEMBLY
웨더시일

39.349 WEATHERSEAL, CAB REAR WINDOW
웨더시일

39.977 WINDOW ASSEMBLY, CAB DOOR (RH)
윈도우

47.269 BRACKET, CAB REAR GLASS GAS SPRING SUPPORT
브라켓

47.270 RUBBER, CAB REAR GLASS GAS SPRING MOUNTING
러버

47.271 RUBBER, CAB REAR GLASS GAS SPRING MOUNTING
러버

47.272 BRACKET, CAB REAR GLASS GAS SPRING MOUNTING
브라켓

47.273 NUT, CAB REAR GLASS GAS SPRING MOUNTING
너트

47.274 HANDLE, CAB REAR GLASS
핸들

47.303 GLASS, CAB DOOR (FRONT)
글래스

47.304 GLASS, CAB DOOR (REAR)
글래스

47.307 CHANNEL, CAB SIDE DOOR WINDOW
채널

95.374 WASHER, DOOR INSIDE HANDLE FASTENER
와셔

97.063 FASTENER, REAR DOOR HANDLE MOUNTING
패스너

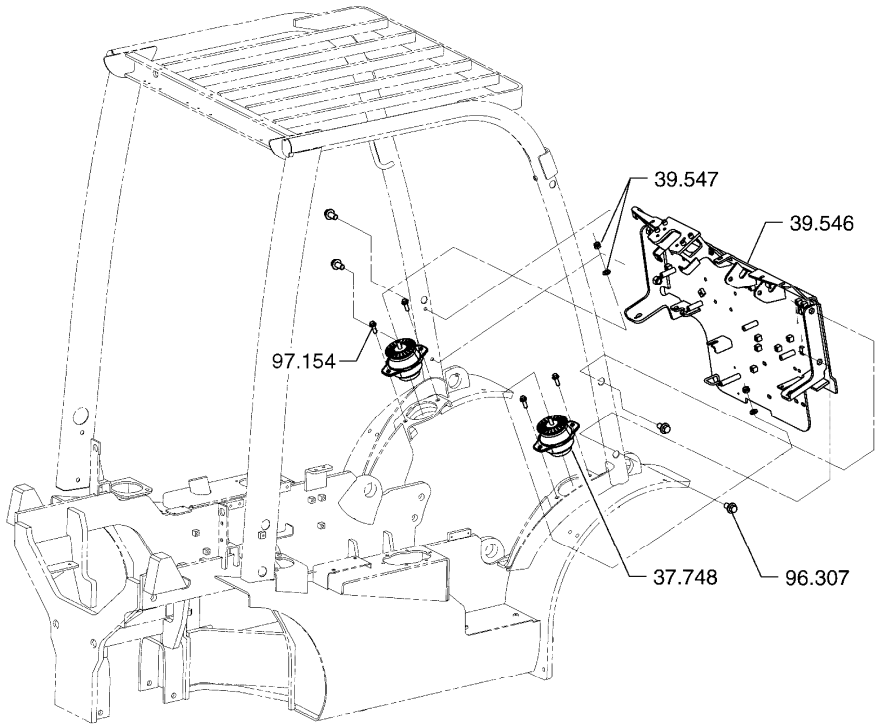

COWL MOUNTING **39-963**

37.748 DAMPENER, COWL VIBRATION
댐프너

39.546 COWL ASSEMBLY
카울

39.547 FASTENER, COWL ASSEMBLY
패스너

96.307 FASTENER, COWL PLATE
패스너

97.154 FASTENER, COWL DAMPENER MOUNTING
패스너

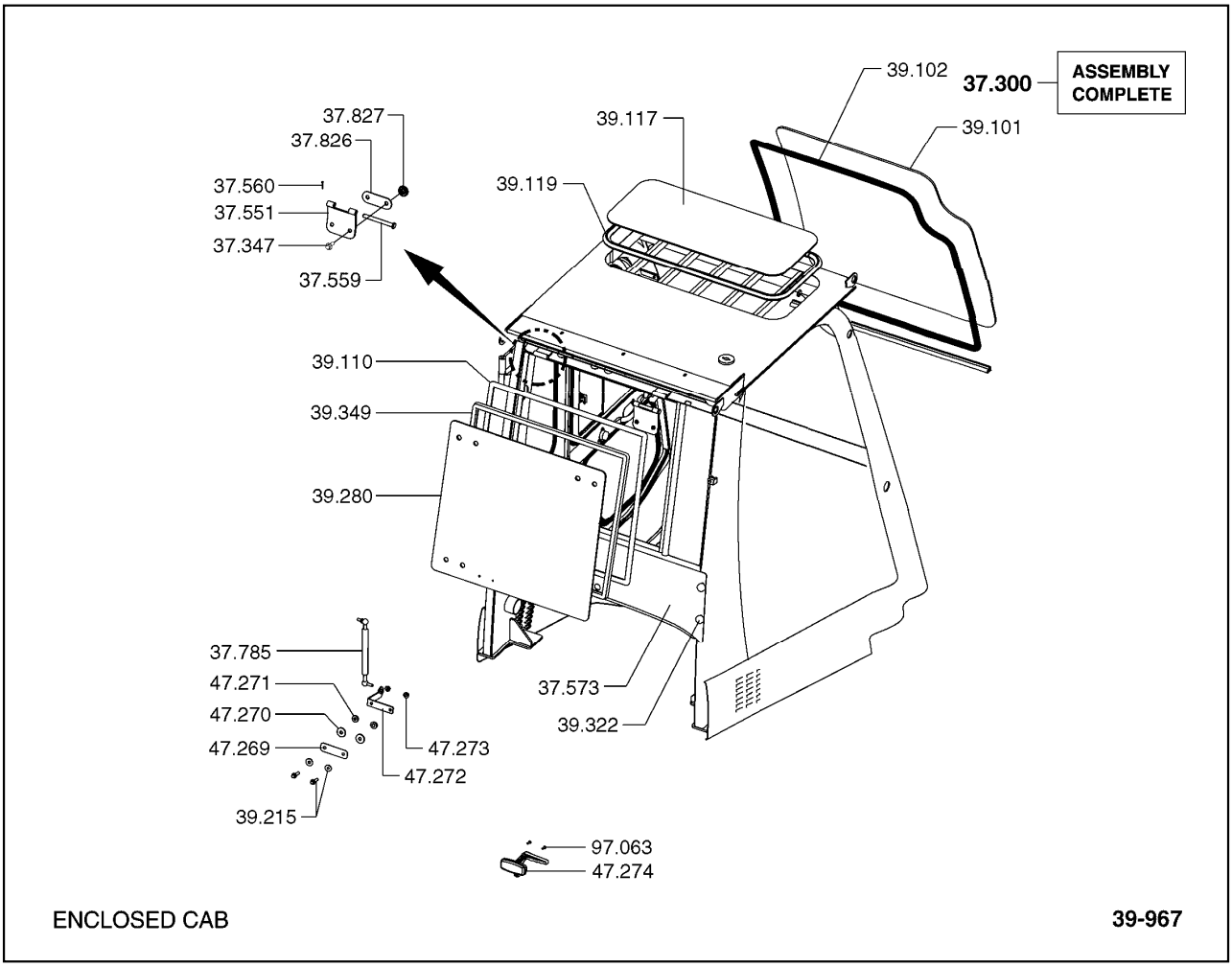

37.300 CAB ASSEMBLY
캐빈

37.347 BRACKET, TILT STEERING COLUMN COVER
브라켓

37.551 HANGER, CAB REAR GLASS
행거

37.559 PIN, CABIN REAR GLASS HANGER
핀

37.560 RETAINER, CAB REAR GLASS HANGER PIN
리테이너

37.573 SUPPORT, DOOR STOP
서포트

37.785 SHOCK ABSORBER, CAB INSPECTION FRAME
쇽압쇼버

37.826 BRACKET, CAB REAR PANEL FASTENER PROTECTION (LH)
브라켓

37.827 CAP, REAR PANEL DAMPENER BRACKET FASTENER PROTECTI
캡

39.101	GLASS, WINDSHIELD 글래스
39.102	WEATHERSEAL, WINDSHIELD SETTING 웨더시일
39.110	WEATHERSEAL, REAR GLASS SETTING 웨더시일
39.117	ROOF SCREEN 루프스크린
39.119	SEAL STRIP, ROOF WINDOW 시일스트립
39.215	FASTENER, GAS SPRING 패스너
39.280	GLASS, REAR WINDOW - MOVEABLE 글래스
39.322	FASTENER, REAR WINDOW GUARD 패스너
39.349	WEATHERSEAL, CAB REAR WINDOW 웨더시일
47.269	BRACKET, CAB REAR GLASS GAS SPRING SUPPORT 브라켓
47.270	RUBBER, CAB REAR GLASS GAS SPRING MOUNTING 러버
47.271	RUBBER, CAB REAR GLASS GAS SPRING MOUNTING 러버
47.272	BRACKET, CAB REAR GLASS GAS SPRING MOUNTING 브라켓
47.273	NUT, CAB REAR GLASS GAS SPRING MOUNTING 너트
47.274	HANDLE, CAB REAR GLASS 핸들
97.063	FASTENER, REAR DOOR HANDLE MOUNTING 패스너

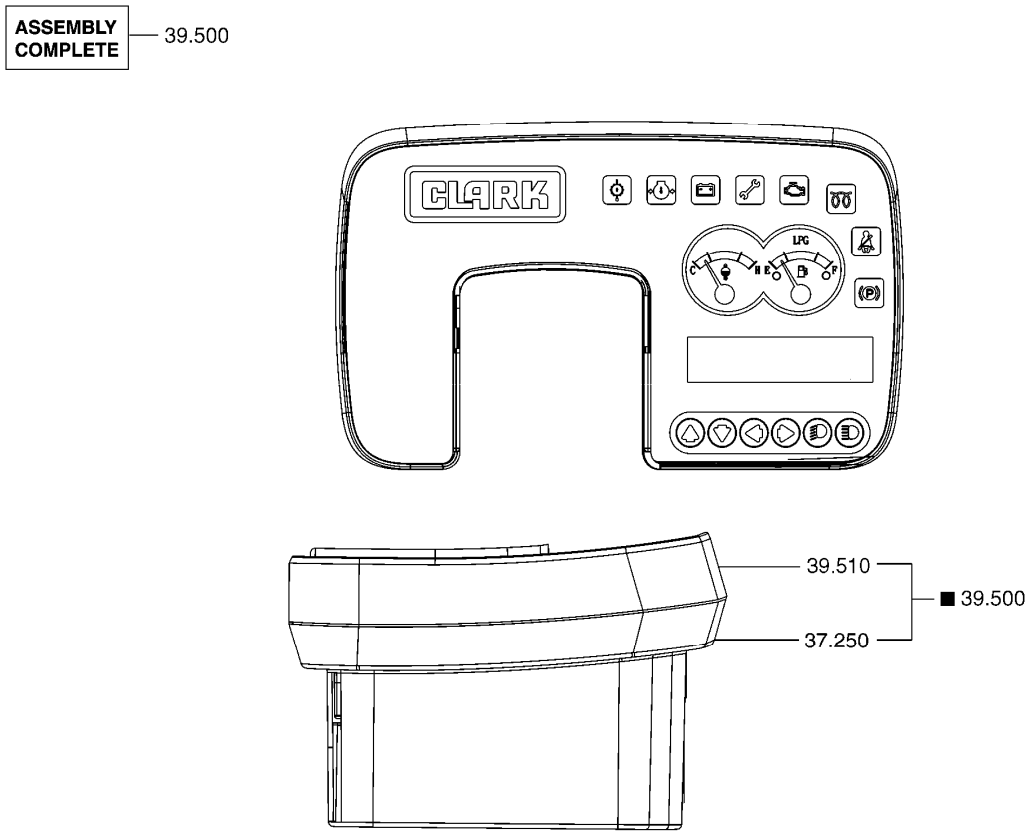

POD INSTALLATION **39-969**

13.000 PANEL, INSTRUMENT CLUSTER
판넬

37.250 HOUSING, INSTRUMENT PANEL
하우징

39.510 HOUSING, INSTRUMENT PANEL
하우징

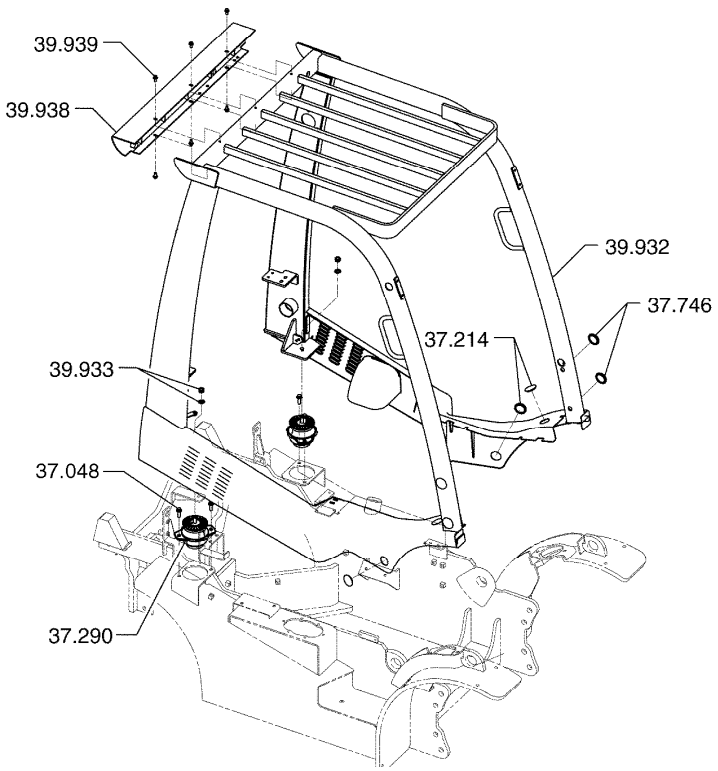

OVERHEAD GUARD MOUNTING **39-977**

37.048 FASTENER, OVERHEAD GUARD BUMPER
패스너

37.214 PLUG-BUTTON
플러그

37.290 DAMPENER, OVERHEAD GUARD VIBRATION
댐프너

37.746 PLUG, DRIVER OVERHEAD GUARD
플러그

39.932 GUARD, OVERHEAD
가드

39.933 FASTENER, OVERHEAD GUARD
패스너

39.938 BRACKET, OVERHEAD GUARD REAR SUPPORT
브라켓

39.939 FASTENER, OVERHEAD GUARD REAR SUPPORT BRACKET
패스너

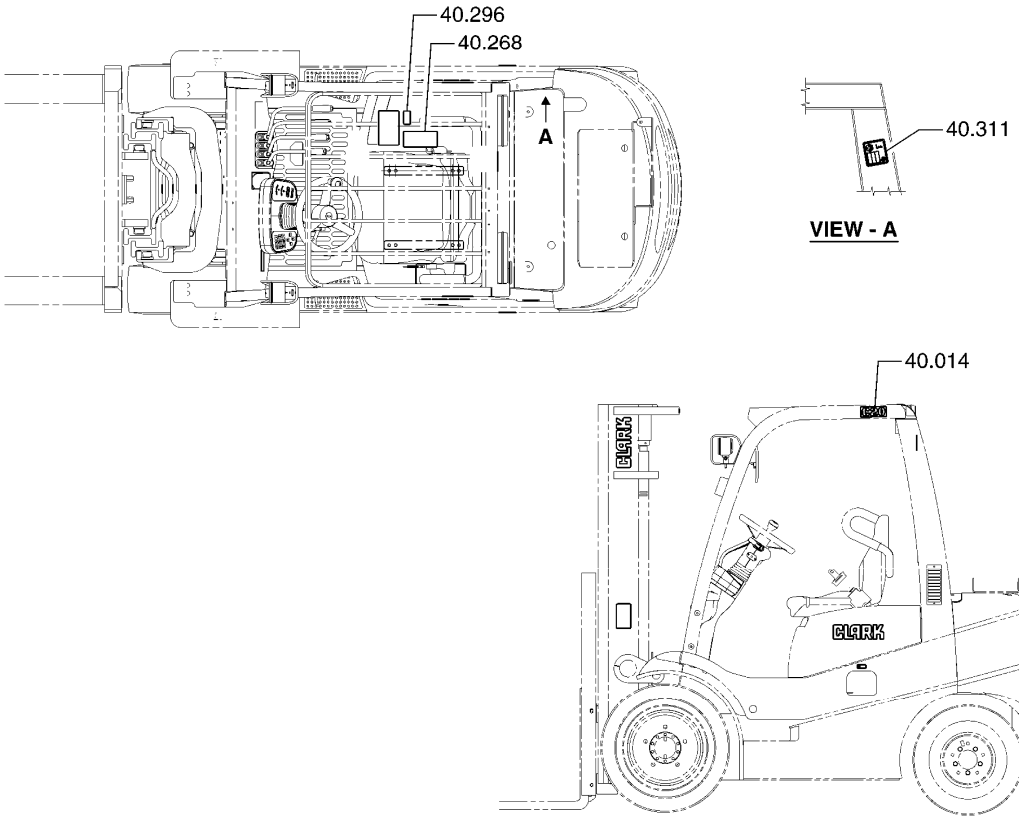

MODEL & SPECIFICATION DECALS **40-243**

40.014 DECAL, MODEL NAME
데칼

40.268 DECAL, SPEC
데칼

40.296 DECAL, TIRE PRESSURE
데칼

40.311 DECAL, SOUND POWER LEVEL
데칼

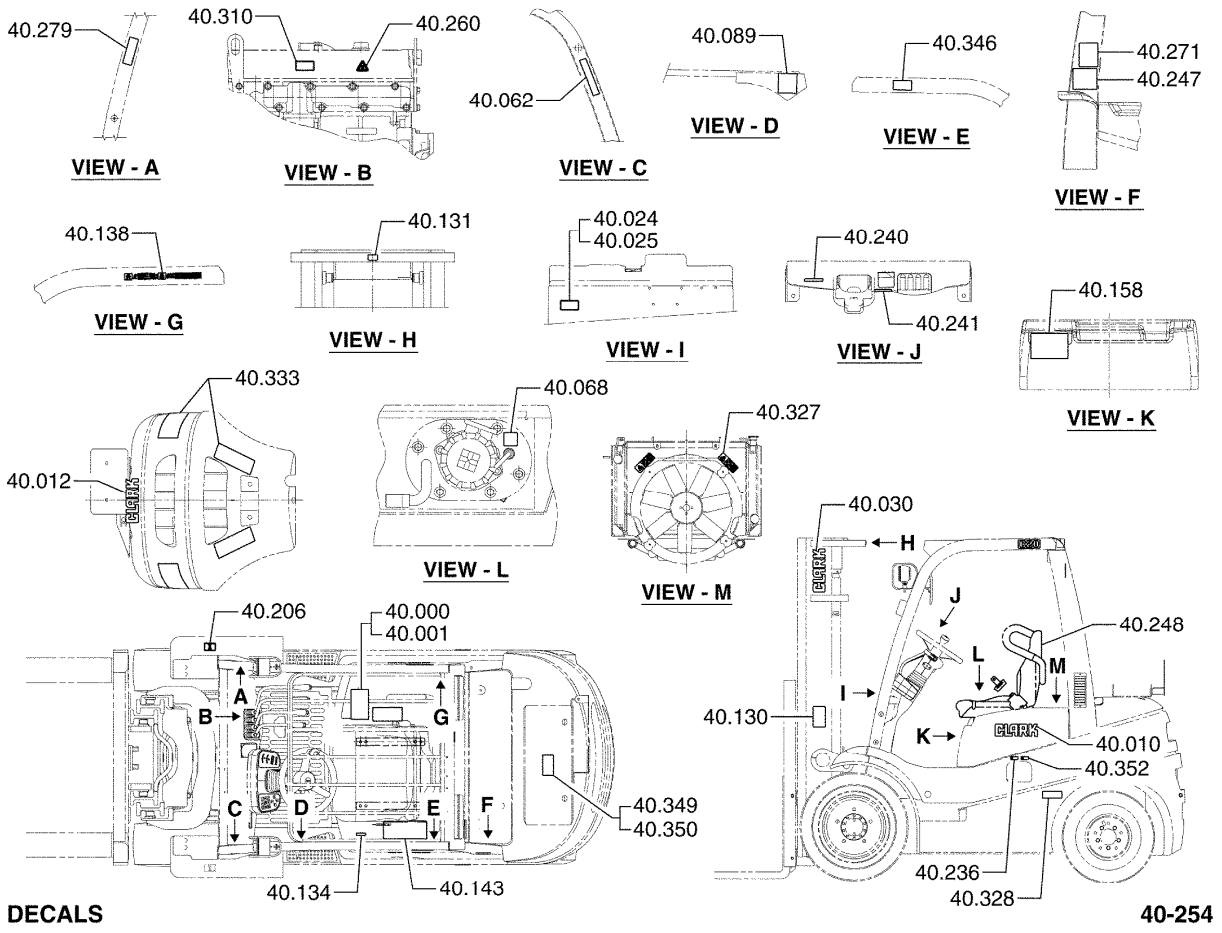

40.000	PLATE, CAPACITY & SERIAL NUMBER 플레이트	40.158	DECAL, WARNING INDICATOR 데칼
40.001	FASTENER, CAPACITY & SERIAL PLATE 패스너	40.206	DECAL, SLING EYE 데칼
40.010	DECAL, CLARK 데칼	40.236	DECAL, FUEL 데칼
40.012	DECAL, CLARK LOGO-SMALL 데칼	40.240	DECAL, FUEL WARNING 데칼
40.024	PLATE, UNDERWRITERS LABEL 플레이트	40.241	DECAL, BRAKE OIL SPEC 데칼
40.025	FASTENER, UNDERWRITERS LABEL PLATE 패스너	40.247	DECAL, LPG FUEL CYL REPLACEMENT PROCEDURE 데칼
40.030	DECAL, CLARK VERTICAL 데칼	40.248	DECAL, SERVICE CHART 데칼
40.062	DECAL, DRIVERS CAUTION 플레J錨	40.260	DECAL, HOT SURFACE WARNING 데칼
40.068	DECAL, HYD-SYSTEM OIL 데칼	40.271	DECAL, LP GAS 데칼
40.089	PLATE, SAFETY INSTRUCTION 플레이트	40.279	DECAL, STARTING PROCEDURE 데칼
40.130	LEGEND, SAFETY 범례	40.310	DECAL, EXHAUST GAS 데칼
40.131	LEGEND, SAFETY 범례	40.327	DECAL, FAN WARNING 데칼
40.134	DECAL, OPERATORS MANUAL LOCATION 데칼	40.328	DECAL, WHEEL NUT WARNING 데칼
40.138	DECAL, SAFETY 데칼	40.333	REFLECTOR, COUNTERWEIGHT *
40.143	DECAL, OPERATORS INSTRUCTIONS 데칼	40.346	DECAL, OVERHEAD GUARD DROP TEST *

40.349 PLATE, LESS LP TANK
*

40.350 FASTENER, PLATE LESS LP TANK
*

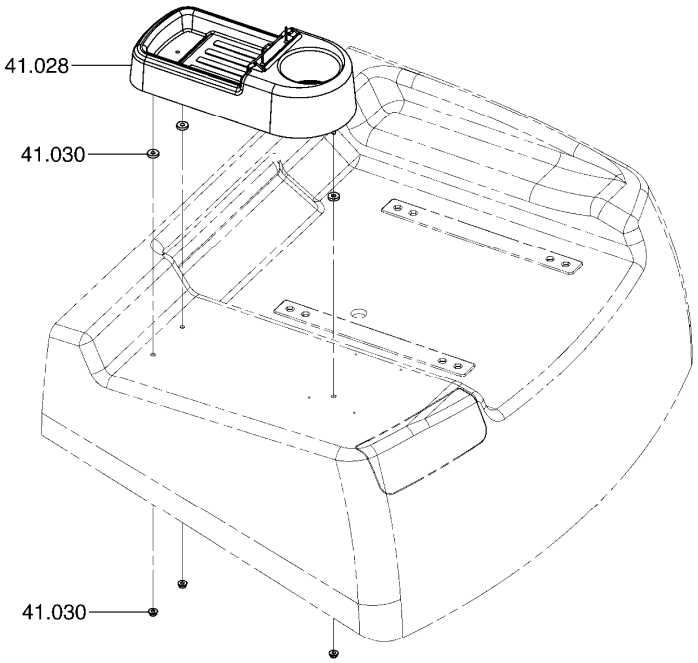

STORAGE CONSOLE MOUNTING **41-008**

41.028 CONSOLE, OPERATOR STORAGE CONSOLE
콘솔

41.030 FASTENER, STORAGE CONSOLE
패스너

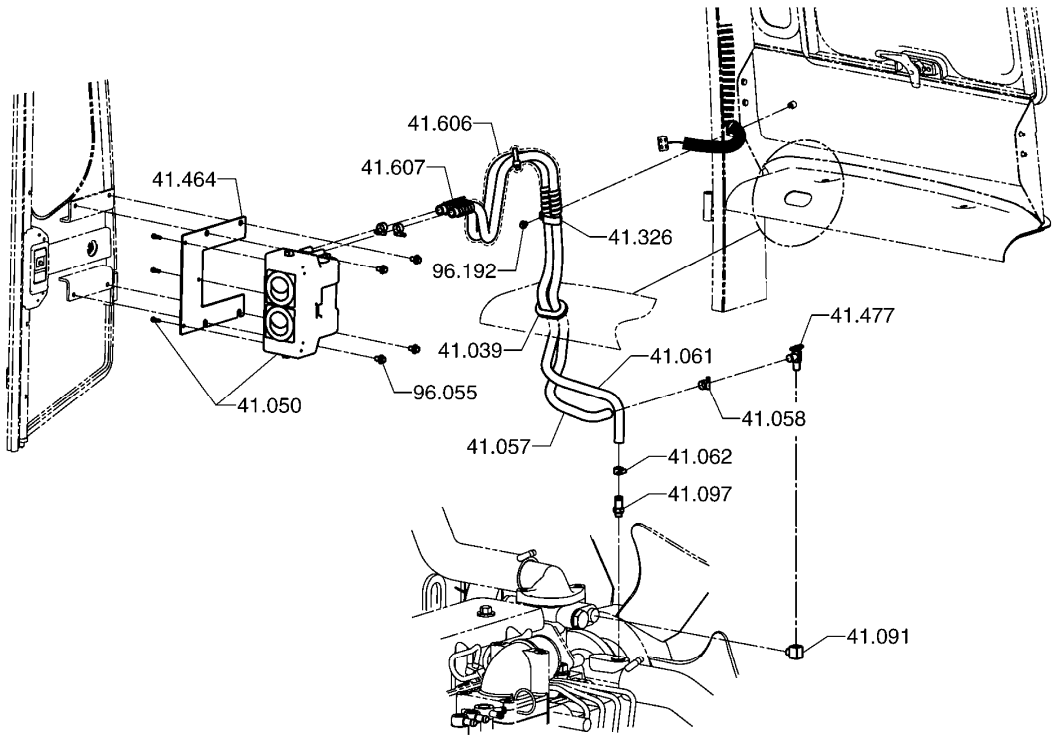

HEATER INSTALLATION **41-010**

41.039 GROMMET, HEATER LINE
그로멧

41.050 HEATER ASSEMBLY
히터

41.057 LINE, HEATER INLET
라인

41.058 CLAMP, HEATER INLET LINE
클램프

41.061 LINE, HEATER OUTLET
라인

41.062 CLAMP, HEATER OUTLET LINE
클램프

41.091 FITTING, HEATER INLET LINE ENGINE
피팅

41.097 FITTING, HEATER OUTLET LINE
피팅

41.326 CLAMP, HEATER HOSE PROTECTOR
클램프

41.464	BRACKET, HEATER 브라켓
41.477	VALVE, HEATER LINE 밸브
41.606	SLEEVE, HEATER HOSE *
41.607	GUARD, HEATER HOSE *
96.055	FASTENER, HEATER MOUNTING BRACKET 패스너
96.192	FASTENER, HEATER INLET LINE CLAMP 패스너

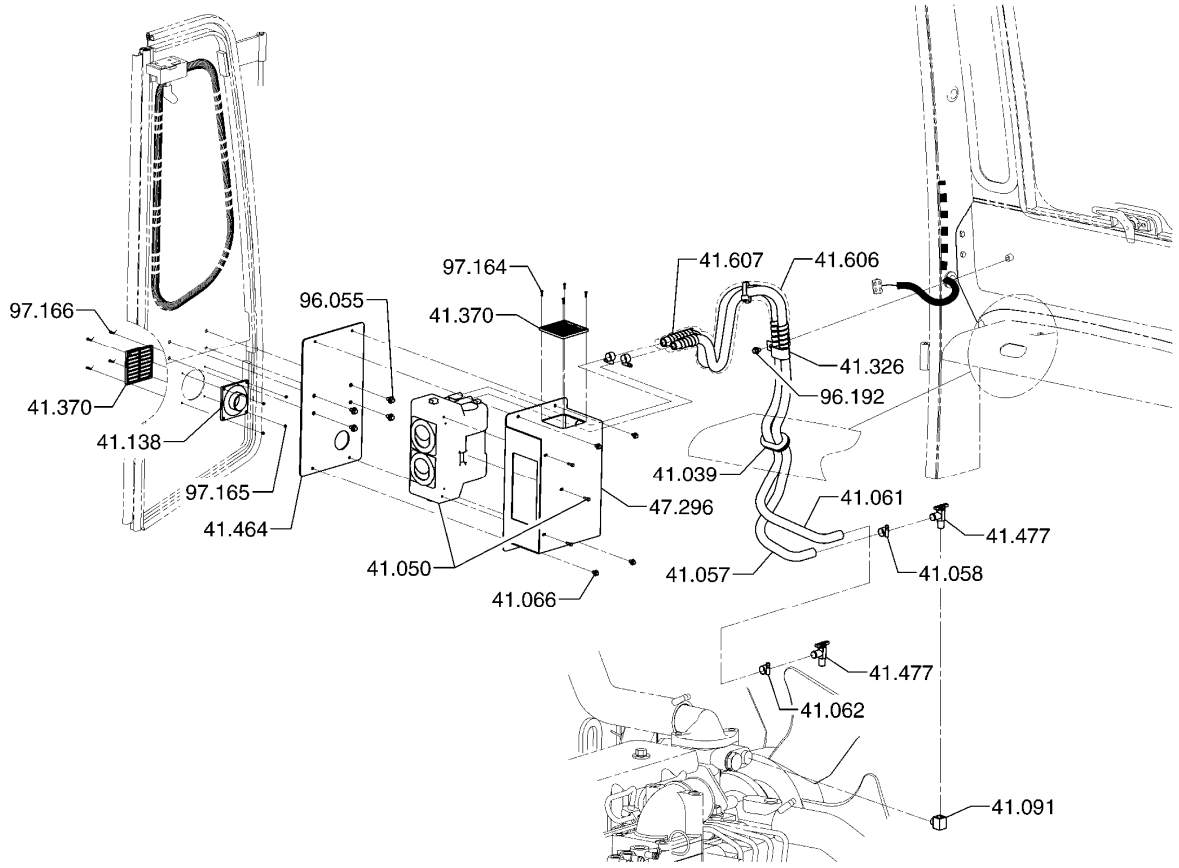

HEATER INSTALLATION **41-039**

41.039 GROMMET, HEATER LINE
그로멧

41.050 HEATER ASSEMBLY
히터

41.057 LINE, HEATER INLET
라인

41.058 CLAMP, HEATER INLET LINE
클램프

41.061 LINE, HEATER OUTLET
라인

41.062 CLAMP, HEATER OUTLET LINE
클램프

41.066 FASTENER, HEATER MOUNTING BRACKET
패스너

41.091 FITTING, HEATER INLET LINE ENGINE
피팅

41.138 ADAPTOR, HEATER AIR INTAKE LINE
어댑터

41.326 CLAMP, HEATER HOSE PROTECTOR
클램프

41.370 SCREEN, HEATER AIR INTAKE
스크린

41.464 BRACKET, HEATER
브라켓

41.477 VALVE, HEATER LINE
밸브

41.606 SLEEVE, HEATER HOSE
*

41.607 GUARD, HEATER HOSE
*

47.296 COVER ASSEMBLY, HEATER
커버

96.055 FASTENER, HEATER MOUNTING BRACKET
패스너

96.192 FASTENER, HEATER INLET LINE CLAMP
패스너

97.164 FASTENER, HEATER AIR INTAKE SCREEN
*

97.165 FASTENER, HEATER AIR INTAKE LINE ADAPTOR
*

97.166 FASTENER, HEATER AIR INTAKE SCREEN
*

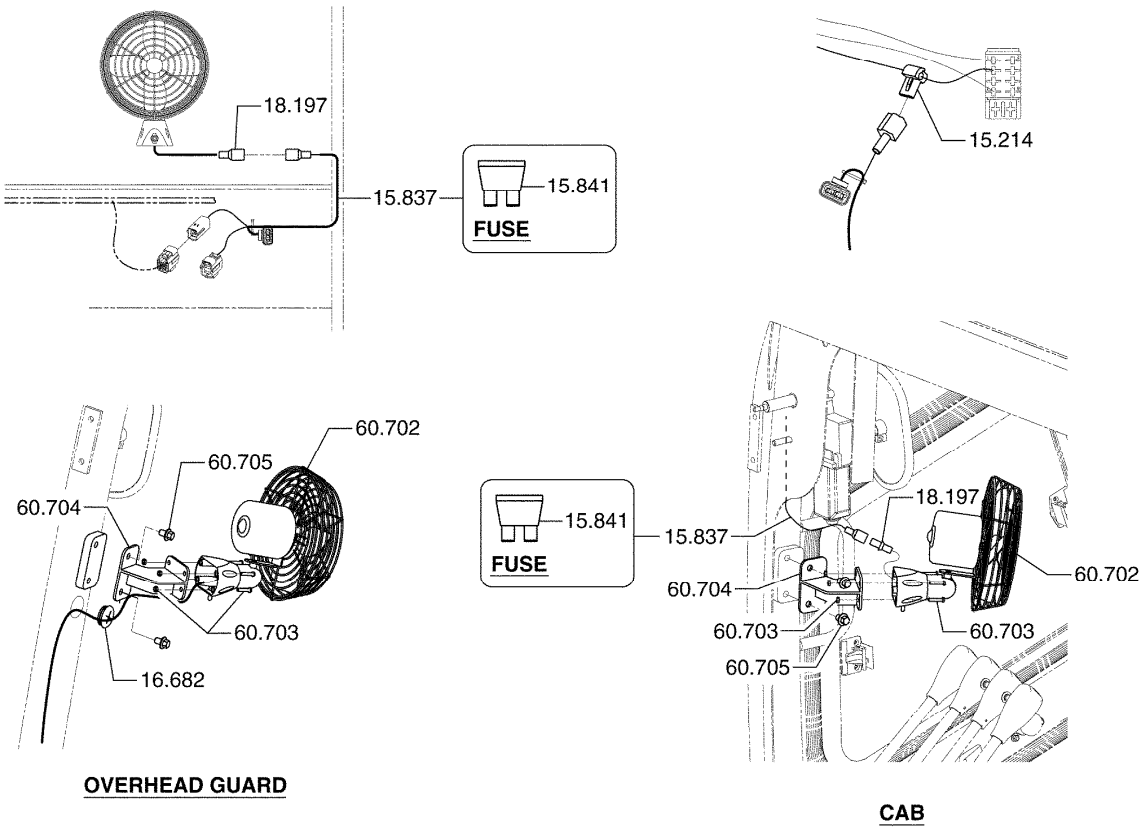

OPERATOR FAN MOUNTING **41-126**

15.214 CONNECTOR, WIRE HARNESS
커넥터

15.837 WIRE HARNESS, OPERATOR COOLING FAN
*

15.841 FUSE, OPERATOR COOLING FAN WIRE
*

16.682 GROMMET, FAN WIRING HARNESS INSULATION
그로멧

18.197 TERMINAL, OPERATOR COOLING FAN WIRE
*

60.702 FAN, OPERATOR COOLING
팬

60.703 FASTENER, OPERATOR COOLING FAN
패스너

60.704 BRACKET, OPERATOR COOLING FAN MOUNTING
브라켓

60.705 FASTENER, OPERATOR COOLING FAN MOUNTING BRACKET
패스너

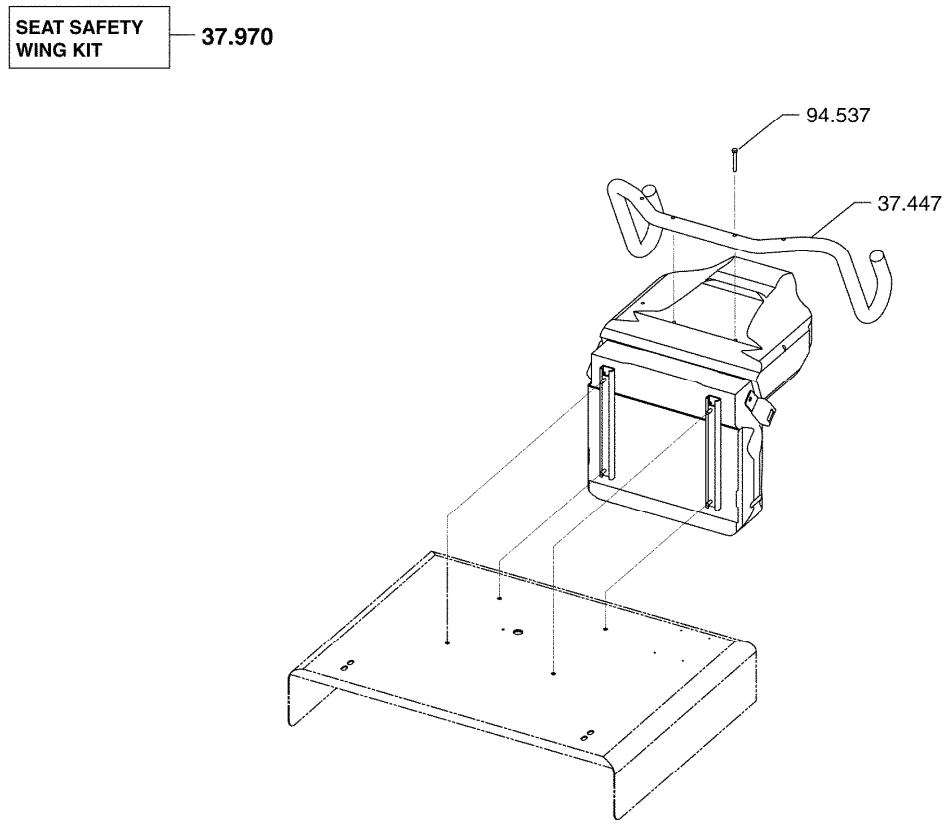

37.447 RESTRAINT, OPERATOR SEAT LATERAL
레스트레인트

37.970 KIT, SEAT SAFETY
킷

94.537 FASTENER, OPERATOR SEAT LATERAL RESTRAINT
패스너

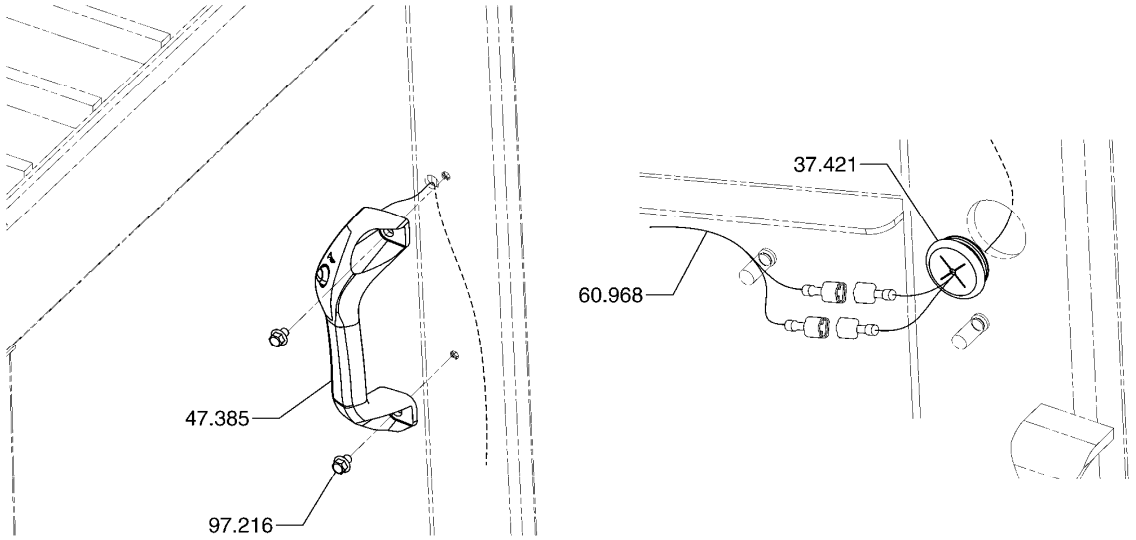

REAR HAND GRIP MOUNTING **47-005**

37.421 GROMMET, OVERHEAD GUARD REAR SUPPORT PIVOT
그로멧

47.385 GRIP, OVERHEAD GUARD REAR HAND
*

60.968 WIRE, OVERHEAD GUARD REAR HAND GRIP SWITCH
*

97.216 FASTENER, OVERHEAD GUARD REAR HAND GRIP
*

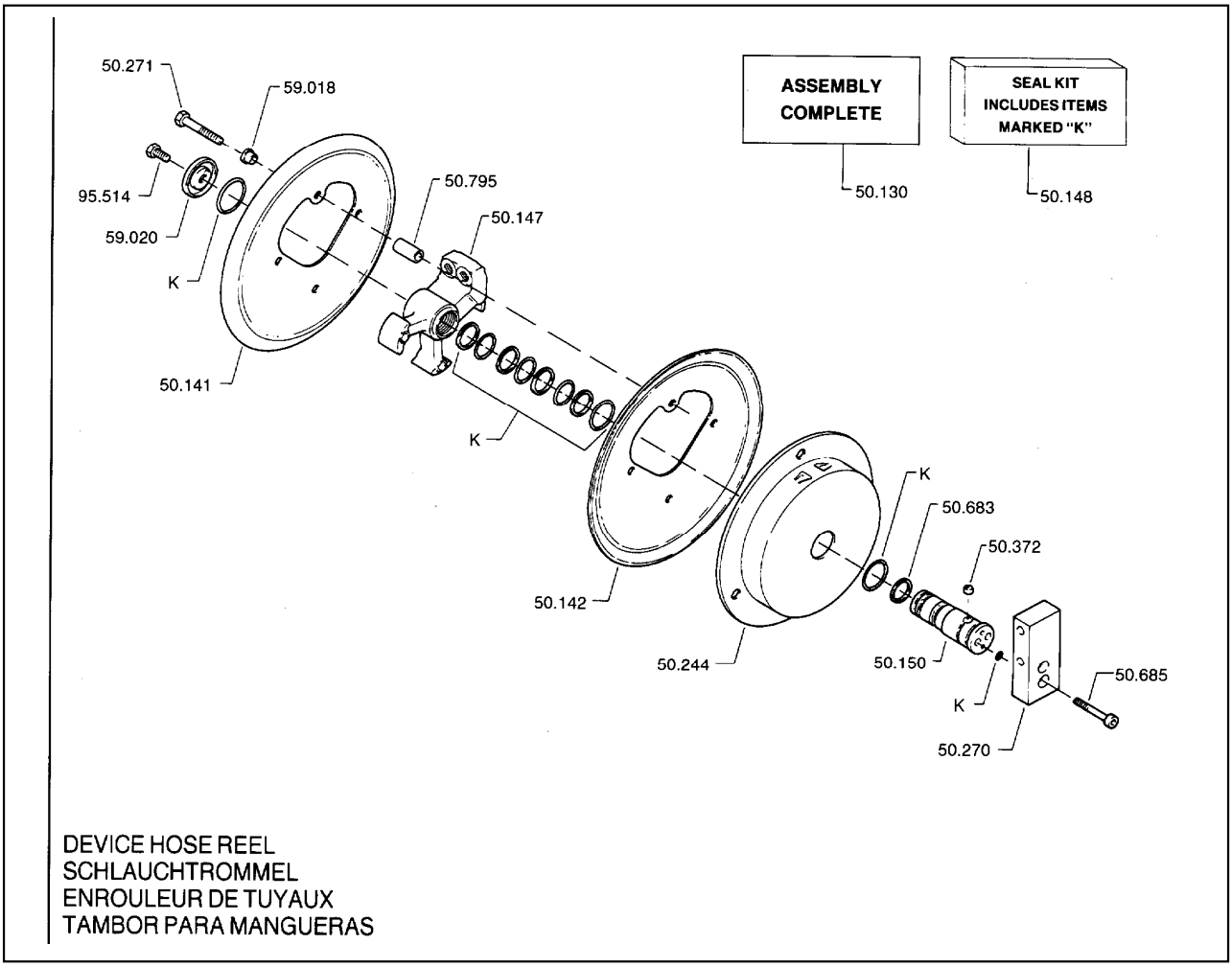

50.130 REEL ASSEMBLY, DEVICE RH HOSE
릴

50.141 FLANGE, DEVICE RH HOSE REEL OUTBOARD
플랜지

50.142 FLANGE, DEVICE RH HOSE REEL CENTER
플랜지

50.147 HUB, DEVICE RH HOSE REEL
허브

50.148 SEAL, DEVICE RH HOSE REEL AXLE
시일

50.150 AXLE, DEVICE RH HOSE REEL
액슬

50.244 HOUSING ASSEMBLY, DEVICE RH HOSE REEL SPRING
하우징

50.270 BASE, DEVICE RH HOSE REEL
베이스

50.271 FASTENER, DEVICE RH HOSE REEL AXLE
패스너

50.372	DOG, DEVICE RH HOSE REEL SPRING 도그
50.683	LOCK, DEVICE HOSE REEL DOG 로크
50.685	FASTENER, DEVICE HOSE REEL BASE 패스너
50.795	SPACER, DEVICE HOSE REEL SPRING HOUSING 스페이서
59.018	GUIDE, DEVICE HOSE REEL FASTENER 가이드
59.020	CAP, DEVICE HOSE REEL AXLE 캡
95.514	FASTENER, DEVICE HOSE REEL AXLE CAP 패스너

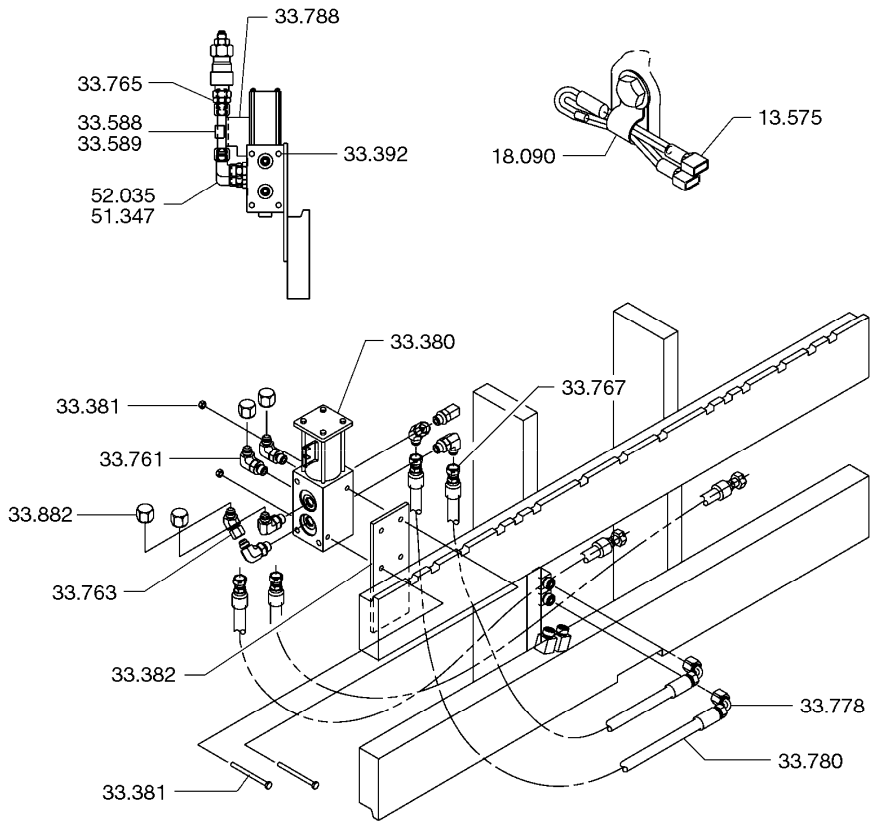

SOLENOID VALVE **50-157**

13.575 WIRE, DEV SELECTOR VALVE SWITCH FEED
와이어

18.090 CLIP, REEL WIRE HARNESS
클립

33.380 VALVE ASSEMBLY, DEVICE SELECTOR SOLENOID
벨브

33.381 FASTENER, DEVICE SELECTOR VALVE
패스너

33.382 BRACKET, DEVICE SELECTOR VALVE
브라켓

33.392 FASTENER, SECONDARY SELECTOR VALVE
패스너

33.588 CLIP, BY-PASS CLAMP LOCK VALVE
클립

33.589 FASTENER, BY-PASS CLAMP LOCK VALVE CLIP
패스너

33.761 FITTING, DEVICE SELECTOR VALVE C4 PORT
피팅

33.763 FITTING, DEVICE SELECTOR VALVE C4 PORT
피팅

33.765 LINE, DEVICE SELECTOR VALVE C4 PORT HYDRAULIC
라인

33.767 HOSE COUPLING, DEV SEL VALVE C1 PORT
호스커플링

33.778 HOSE COUPLING, DEV SEL VALVE C3 PORT
호스커플링

33.780 LINE, DEVICE SELECTOR VALVE C2 PORT HYDRAULIC
라인

33.788 BRACKET, DEVICE SEL VALVE HYDRAULIC LINE
브라켓

33.882 PLUG, DEVICE SEL VALVE "P" PORT
플러그

51.347 FITTING, SELECTOR VALVE P PORT
피팅

52.035 FITTING, SEC SEL VALVE C4 PORT LINE
피팅

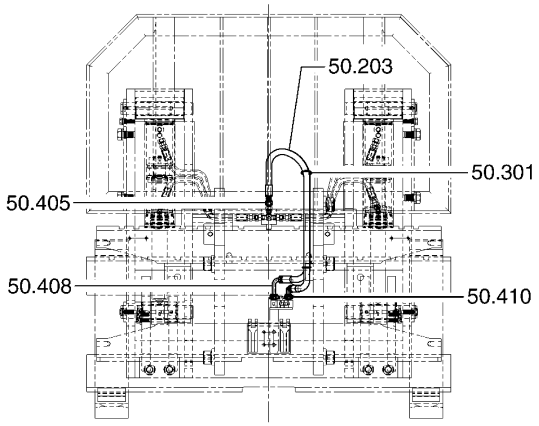

HINGED BUCKET (HB) / FORK (HF) - BASIC

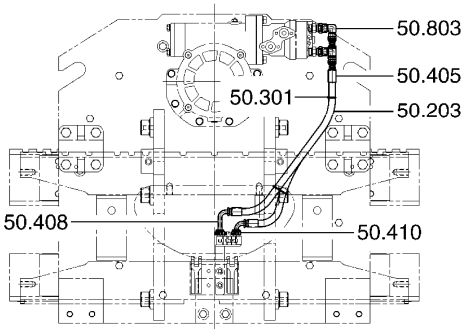

ROTATING FORK (RF) - BASIC

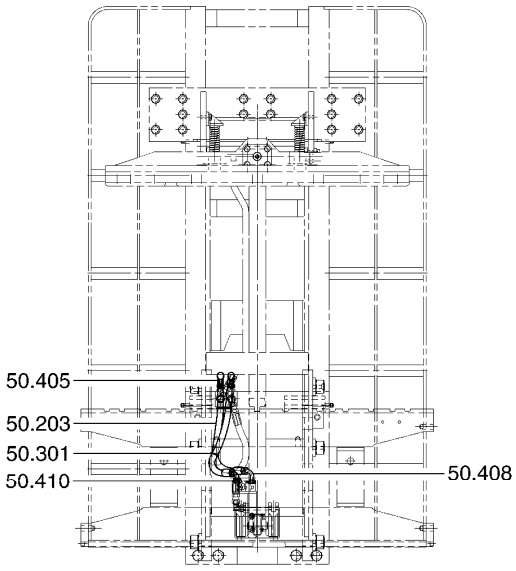

LOAD STABILIZER (LS) - BASIC

ATTACHMENT HOSE ADAPTATION (CARRIAGE) **50-171**

50.203 LINE, DEVICE HYDRAULIC (AT CARRIAGE)
라인

50.301 CLIP, DEVICE RH HOSE (AT CARRIAGE)
클립

50.405 COUPLING, DEVICE HOSE
커플링

50.408 COUPLING, DEVICE HOSE
커플링

50.410 COUPLING, DEVICE HOSE
커플링

50.803 FITTING, DEVICE HYDRAULIC LINE
피팅

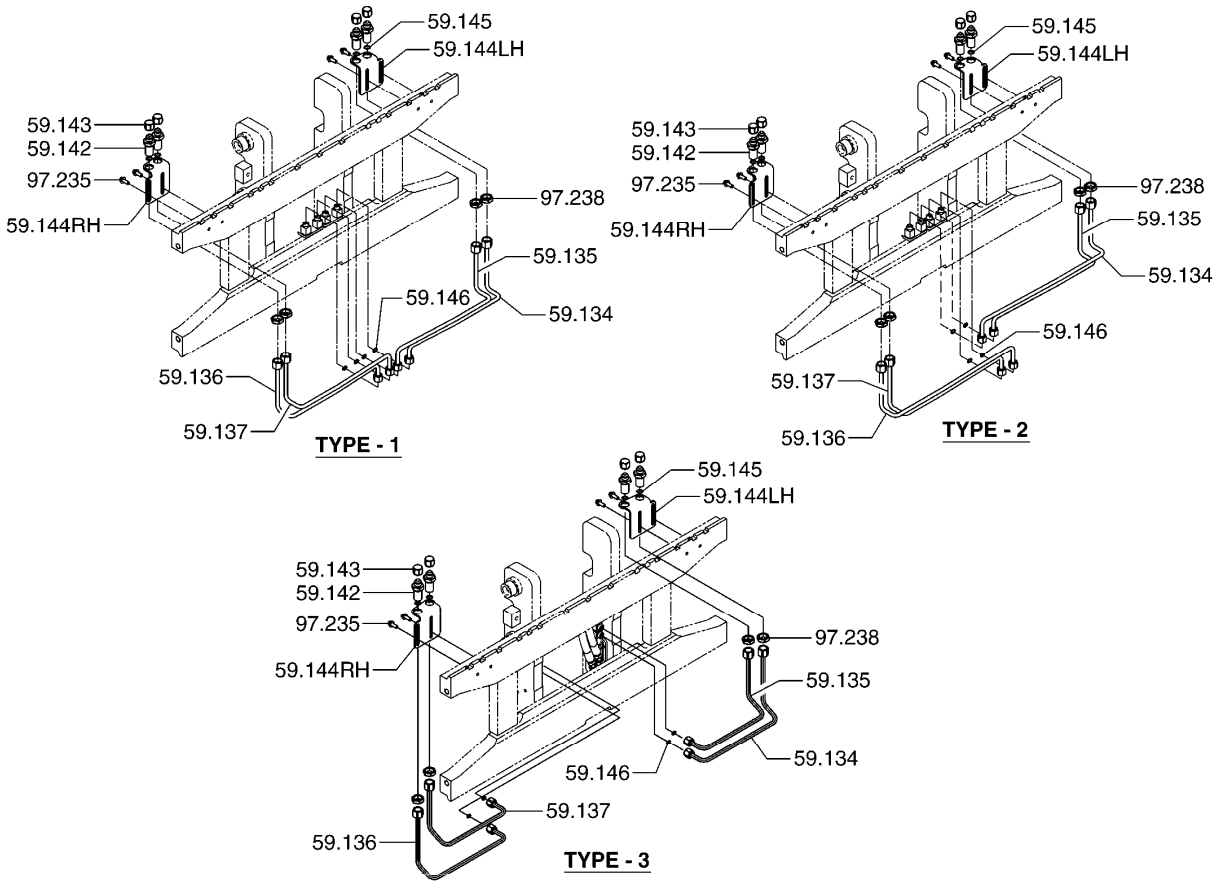

HIGH TERMINATION FOR DEVICE HOSE ADAPTATION **50-172**

59.134 LINE, DEVICE LH LINE FOR HIGH TERMINATION
*

59.135 LINE, DEVICE LH LINE FOR HIGH TERMINATION
*

59.136 LINE, DEVICE RH LINE FOR HIGH TERMINATION
*

59.137 LINE, DEVICE RH LINE FOR HIGH TERMINATION
*

59.142 FITTING, DEVICE LINE FOR HIGH TERMINATION
*

59.143 CAP, DEVICE LINE FITTING FOR HIGH TERMINATION
*

59.144 BRACKET, DEVICE LINE FOR HIGH TERMINATION
*

59.145 SEAL, DEVICE LINE FITTING FOR HIGH TERMINATION
*

59.146 SEAL, DEVICE LINE FITTING FOR HIGH TERMINATION
*

97.235 FASTENER, DEVICE LINE CLAMP FOR HIGH TERMINATION
*

97.238 FASTENER, DEVICE LINE FITTING FOR HIGH TERMINATION
*

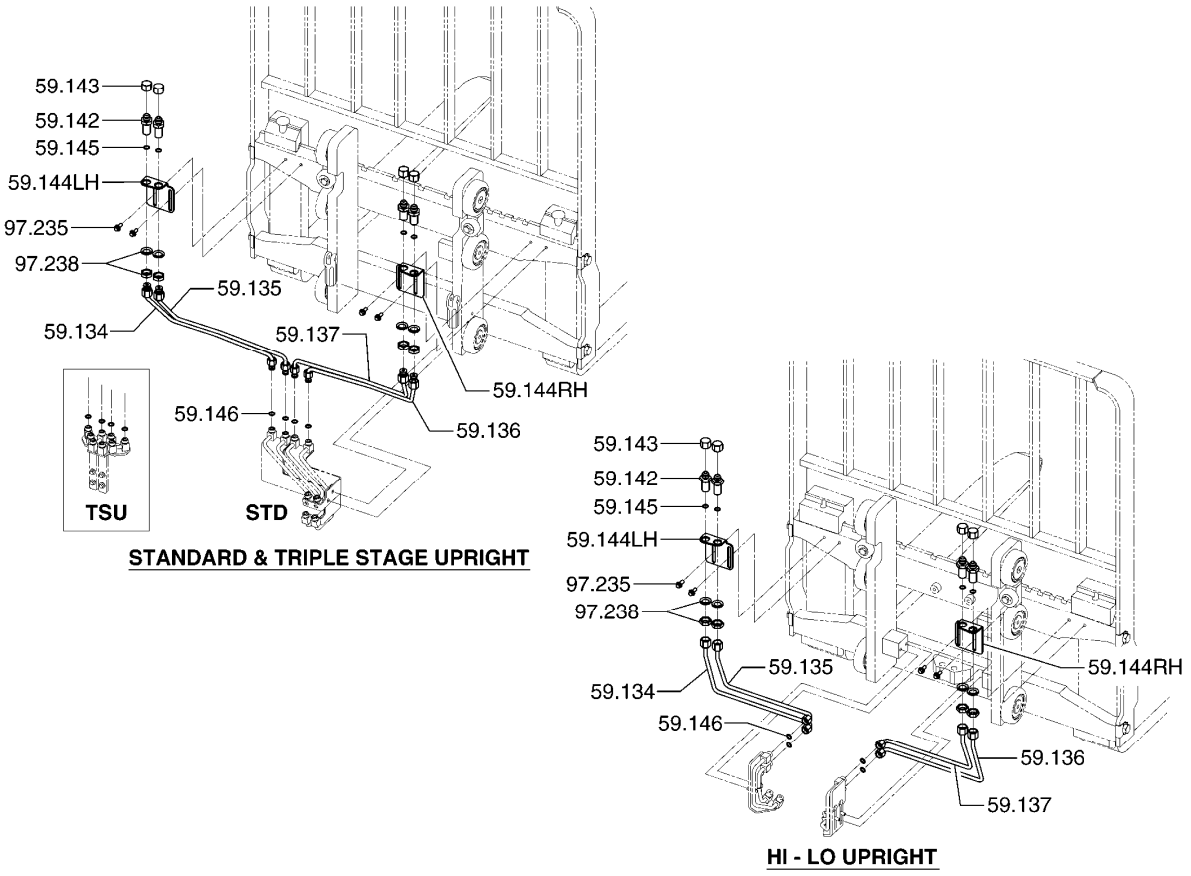

HIGH TERMINATION FOR DEVICE HOSE ADAPTATION **50-175**

59.134 LINE, DEVICE LH LINE FOR HIGH TERMINATION
*

59.135 LINE, DEVICE LH LINE FOR HIGH TERMINATION
*

59.136 LINE, DEVICE RH LINE FOR HIGH TERMINATION
*

59.137 LINE, DEVICE RH LINE FOR HIGH TERMINATION
*

59.142 FITTING, DEVICE LINE FOR HIGH TERMINATION
*

59.143 CAP, DEVICE LINE FITTING FOR HIGH TERMINATION
*

59.144 BRACKET, DEVICE LINE FOR HIGH TERMINATION
*

59.145 SEAL, DEVICE LINE FITTING FOR HIGH TERMINATION
*

59.146 SEAL, DEVICE LINE FITTING FOR HIGH TERMINATION
*

97.235 FASTENER, DEVICE LINE CLAMP FOR HIGH TERMINATION
*

97.238 FASTENER, DEVICE LINE FITTING FOR HIGH TERMINATION
*

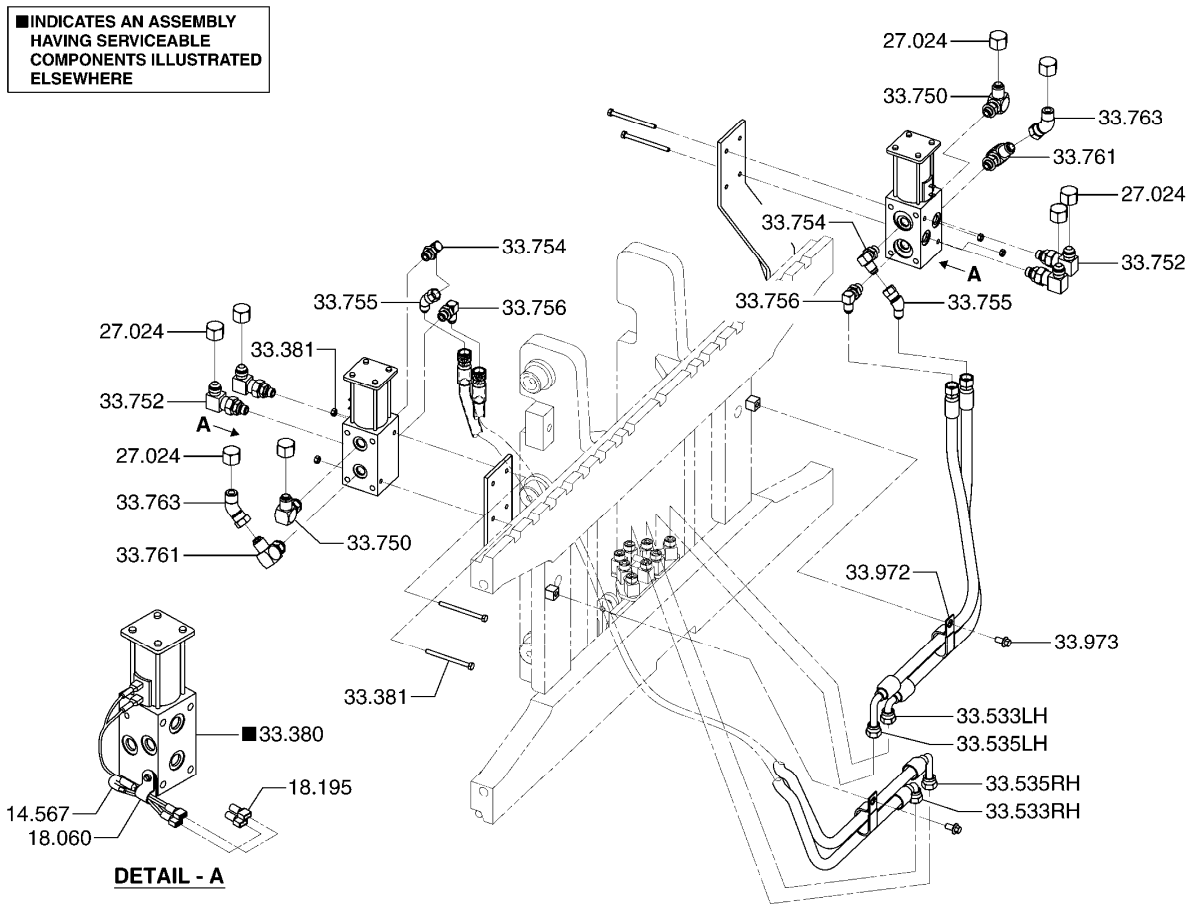

SOLENOID VALVE FOR DEVICE HOSE ADAPTATION **50-177**

14.567 WIRE, DEVICE SELECTOR VALVE SWITCH FEED
와이어

18.060 CLAMP, DEVICE SELECTOR VALVE CABLE
클램프

18.195 TERMINAL, DEVICE SELECTOR VALVE SWITCH FEED WIRE
*

27.024 PLUG, DEVICE SELECTOR VALVE OPTIONAL OUTLET PORT
플러그

33.380 VALVE ASSEMBLY, DEVICE SELECTOR SOLENOID
벨브

33.381 FASTENER, DEVICE SELECTOR VALVE
패스너

33.533 LINE, DEVICE SELECTOR VALVE "P" PORT HYDRAULIC
*

33.535 LINE, DEVICE SELECTOR VALVE "R" PORT HYDRAULIC
*

33.750 FITTING, DEVICE SELECTOR VALVE C1 PORT
피팅

33.752 FITTING, DEVICE SELECTOR VALVE C2 PORT
피팅

33.754 FITTING, DEVICE SELECTOR VALVE "P" PORT
피팅

33.755 FITTING, DEVICE SELECTOR VALVE "P" PORT
피팅

33.756 FITTING, DEVICE SELECTOR VALVE "R" PORT
피팅

33.761 FITTING, DEVICE SELECTOR VALVE C4 PORT
피팅

33.763 FITTING, DEVICE SELECTOR VALVE C4 PORT
피팅

33.972 CLIP, DEVICE SELECTOR VALVE LINE
클립

33.973 FASTENER, DEVICE SELECTOR VALVE LINE CLIP
패스너

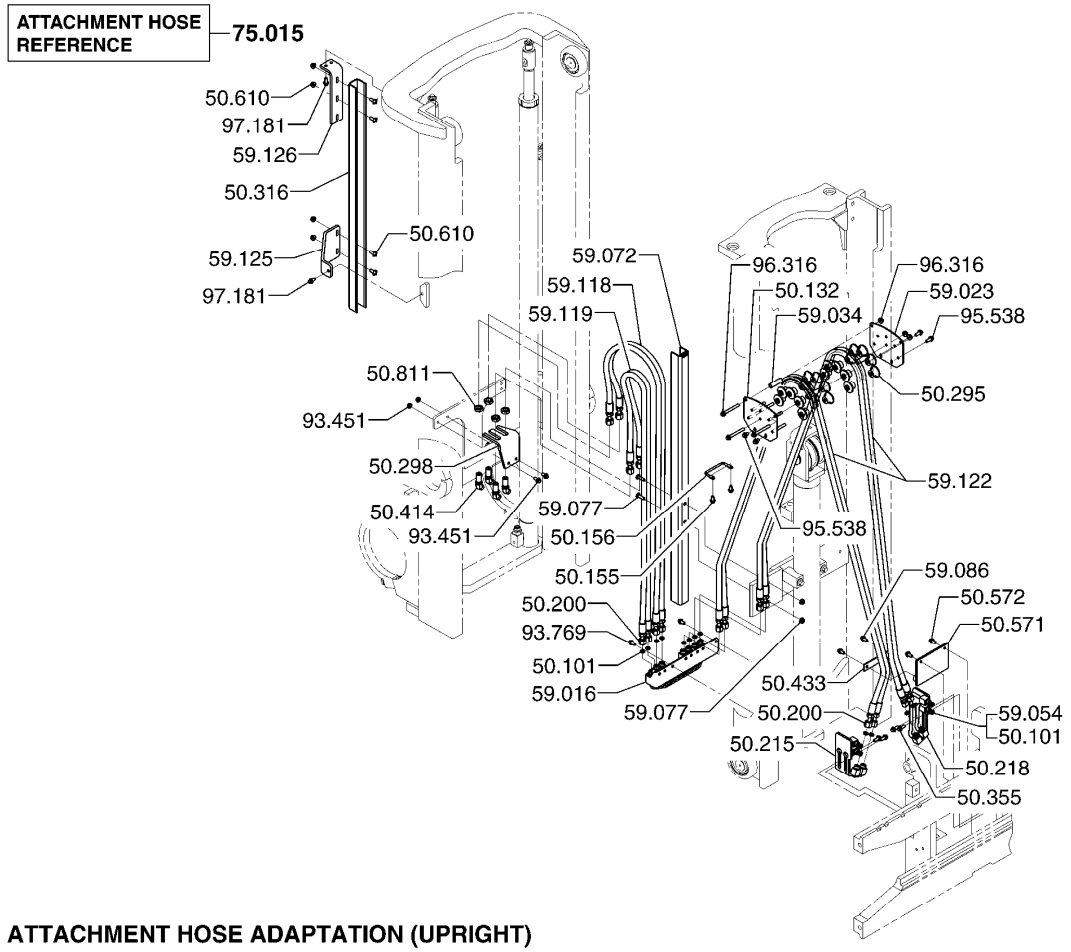

50.101	SEAL, DEVICE HOSE SWIVEL COUPLING 시일	50.610	FASTENER, DEVICE HOSE GUARD 패스너
50.132	BRACKET, DEVICE HOSE REEL 브라켓	50.811	NUT, DEVICE HOSE FITTING 너트
50.155	FASTENER, DEVICE HOSE CLIP 패스너	59.016	JUNCTION BLOCK, DEVICE HOSE 연결블록
50.156	CLIP, DEVICE HOSE 클립	59.023	BRACKET, DEVICE HOSE REEL MOUNTING 브라켓
50.200	COUPLING, DEVICE HOSE 커플링	59.034	TUBE, DEVICE HOSE REEL MOUNTING BRACKET 튜브
50.215	TERMINAL BLOCK, DEVICE HOSE 터미널블록	59.054	PLUG, DEVICE HOSE JUNCTION BLOCK 플러그
50.218	TERMINAL BLOCK, DEVICE LH HOSE 터미널블록	59.072	GUARD, DEVICE HOSE 가드
50.295	ROLLER, DEVICE HOSE UPPER 롤러	59.077	FASTENER, DEVICE HOSE GUARD 패스너
50.298	BRACKET, DEVICE HOSE TERMINAL 브라켓	59.086	FASTENER, DEVICE HOSE CLIP BRACKET 패스너
50.316	GUARD, DEVICE RH HOSE 가드	59.118	LINE, DEVICE HYDRAULIC (OUTER RAIL) 라J
50.355	FASTENER, DEVICE HOSE TERMINAL BLOCK 패스너	59.119	LINE, DEVICE HYDRAULIC (OUTER RAIL) 라J
50.414	FITTING, DEVICE HOSE CONNECTOR 피팅	59.122	LINE, DEVICE HYDRAULIC (INNER RAIL) 라J
50.433	BRACKET, DEVICE HOSE CLAMP 브라켓	59.125	BRACKET, DEVICE HOSE GUARD MOUNTING *
50.571	BRACKET, DEVICE HOSE 브라켓	59.126	BRACKET, DEVICE HOSE GUARD MOUNTING *
50.572	FASTENER, DEVICE HOSE BRACKET 패스너	75.015	MODULE, ATTACHMENT HOSE LINES *

93.316 DOWEL, STEERING INTERLOCK SWITCH FASTENER
다월

93.451 FASTENER, DEVICE HOSE TERMINAL BRACKET
패스너

93.769 FASTENER, DEVICE LINE JUNCTION BLOCK
패스너

95.538 FASTENER, DEVICE HOSE REEL BRACKET
패스너

96.316 FASTENER, DEVICE HOSE REEL
패스너

97.181 FASTENER, DEVICE HOSE GUARD MOUNTING BRACKET
*

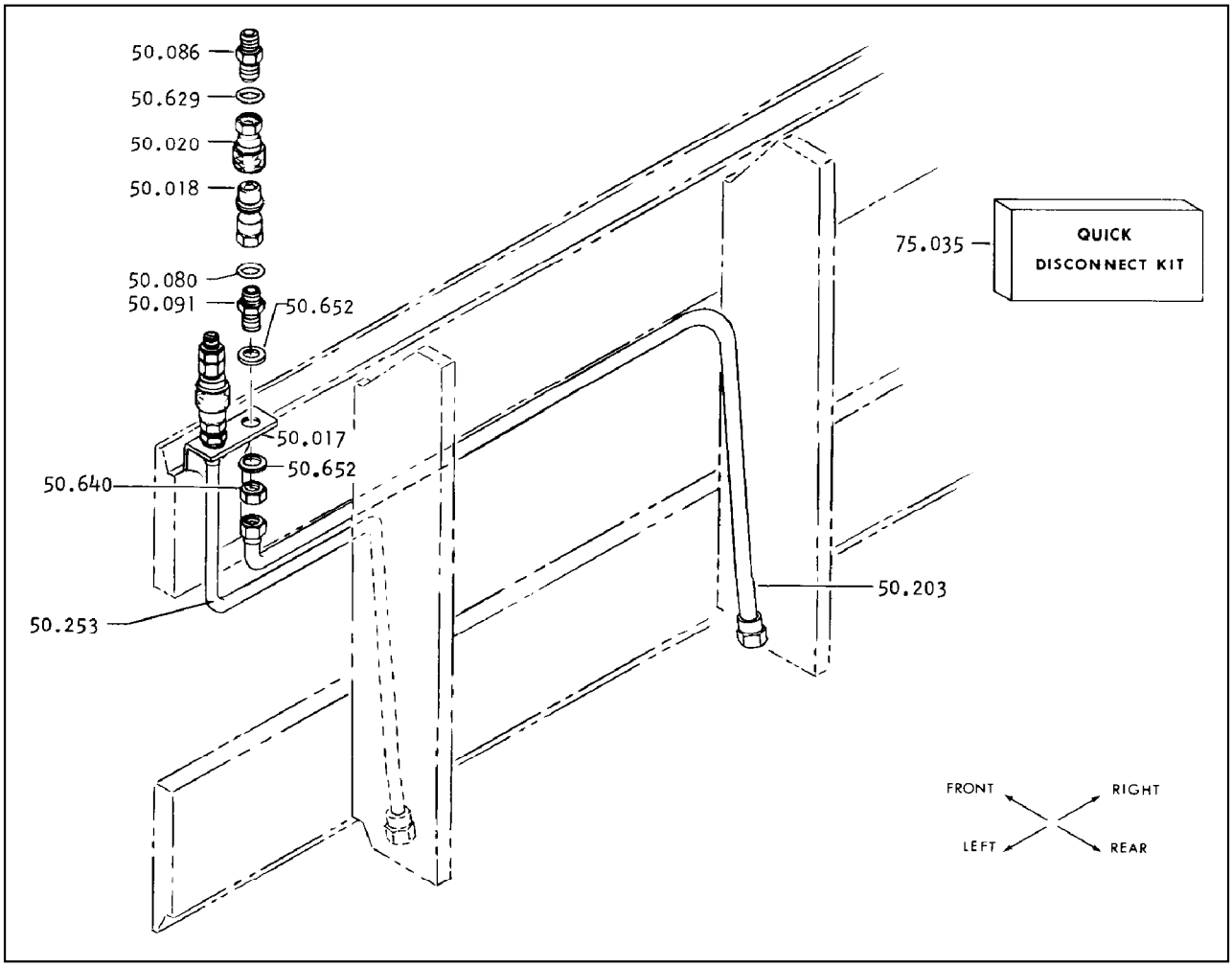

50.017 TERMINAL BRACKET, DEVICE HOSE
터미널브라켓

50.018 DISCONNECT, DEVICE HOSE NIPPLE HALF
디스컨넥트

50.020 DISCONNECT, DEVICE HOSE SOCKET HALF
디스컨넥트

50.080 SEAL, DEVICE HOSE DISCONNECT NIPPLE RH
시일

50.086 FITTING, DEVICE RH HYDRAULIC HOSE
피팅

50.091 FITTING, DEVICE RH HYDRAULIC HOSE
피팅

50.203 LINE, DEVICE HYDRAULIC (AT CARRIAGE)
라인

50.253 LINE, DEVICE HYDRAULIC (AT CARRIAGE)
라인

50.629 SEAL, DEVICE HOSE DISCONNECT SOCKET RH
시일

50.640 FASTENER, DEVICE RH HYD HOSE FITTING
패스너

50.652 SPACER, DEVICE RH HYDRAULIC HOSE FITTING
스페이서

75.035 KIT, QUICK DISCONNECT FOR DEVICE HOSE ADAPTATION
킷

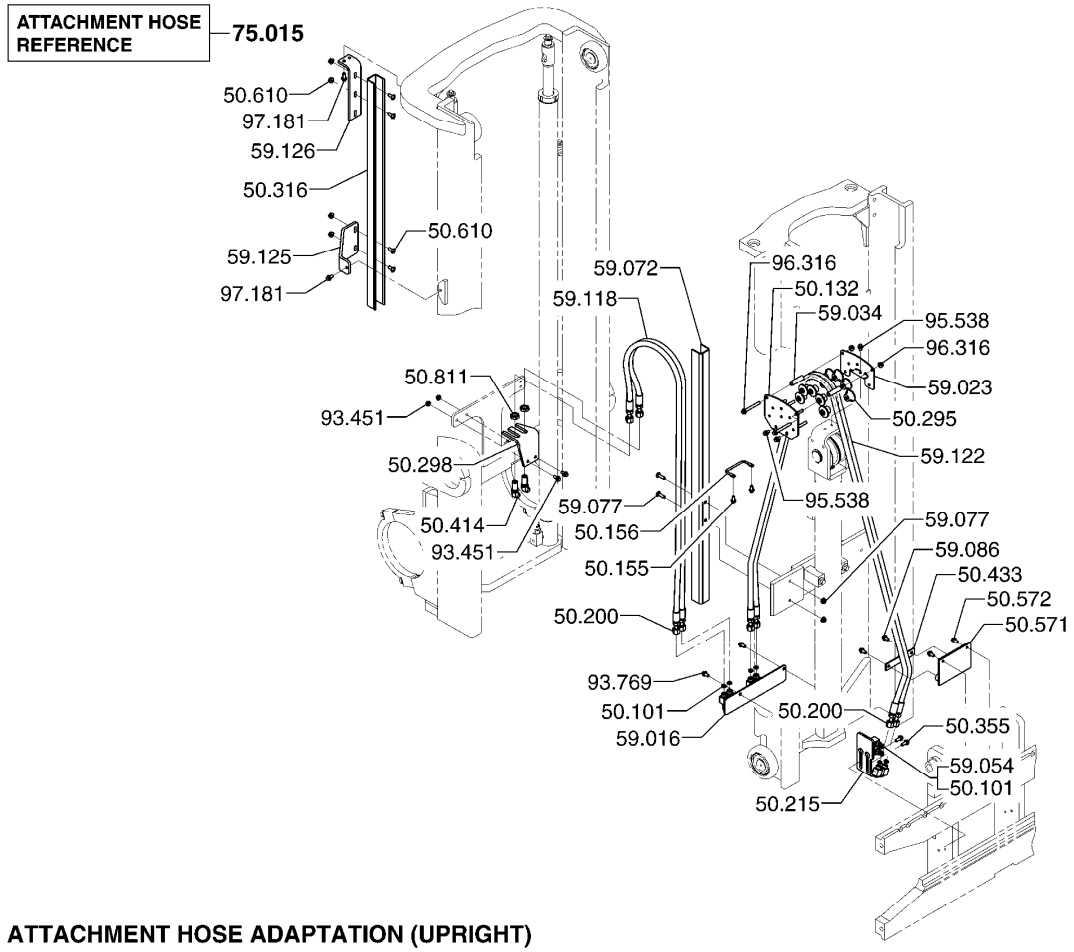

ATTACHMENT HOSE ADAPTATION (UPRIGHT) **50-269**

50.101	SEAL, DEVICE HOSE SWIVEL COUPLING 시일
50.132	BRACKET, DEVICE HOSE REEL 브라켓
50.155	FASTENER, DEVICE HOSE CLIP 패스너
50.156	CLIP, DEVICE HOSE 클립
50.200	COUPLING, DEVICE HOSE 커플링
50.215	TERMINAL BLOCK, DEVICE HOSE 터미널블록
50.295	ROLLER, DEVICE HOSE UPPER 롤러
50.298	BRACKET, DEVICE HOSE TERMINAL 브라켓
50.316	GUARD, DEVICE RH HOSE 가드
50.355	FASTENER, DEVICE HOSE TERMINAL BLOCK 패스너
50.414	FITTING, DEVICE HOSE CONNECTOR 피팅
50.433	BRACKET, DEVICE HOSE CLAMP 브라켓
50.571	BRACKET, DEVICE HOSE 브라켓
50.572	FASTENER, DEVICE HOSE BRACKET 패스너
50.610	FASTENER, DEVICE HOSE GUARD 패스너
50.811	NUT, DEVICE HOSE FITTING 너트
59.016	JUNCTION BLOCK, DEVICE HOSE 연결블록
59.023	BRACKET, DEVICE HOSE REEL MOUNTING 브라켓
59.034	TUBE, DEVICE HOSE REEL MOUNTING BRACKET 튜브
59.054	PLUG, DEVICE HOSE JUNCTION BLOCK 플러그
59.072	GUARD, DEVICE HOSE 가드
59.077	FASTENER, DEVICE HOSE GUARD 패스너
59.086	FASTENER, DEVICE HOSE CLIP BRACKET 패스너
59.101	TIE STRAP, AUXILIARY FUNCTION LINES 타이스트랩
59.118	LINE, DEVICE HYDRAULIC (OUTER RAIL) 라J
59.122	LINE, DEVICE HYDRAULIC (INNER RAIL) 라J
59.125	BRACKET, DEVICE HOSE GUARD MOUNTING *
59.126	BRACKET, DEVICE HOSE GUARD MOUNTING *
75.015	MODULE, ATTACHMENT HOSE LINES *
93.316	DOWEL, STEERING INTERLOCK SWITCH FASTENER 다월

93.451 FASTENER, DEVICE HOSE TERMINAL BRACKET
패스너

93.769 FASTENER, DEVICE LINE JUNCTION BLOCK
패스너

95.538 FASTENER, DEVICE HOSE REEL BRACKET
패스너

96.316 FASTENER, DEVICE HOSE REEL
패스너

97.181 FASTENER, DEVICE HOSE GUARD MOUNTING BRACKET
*

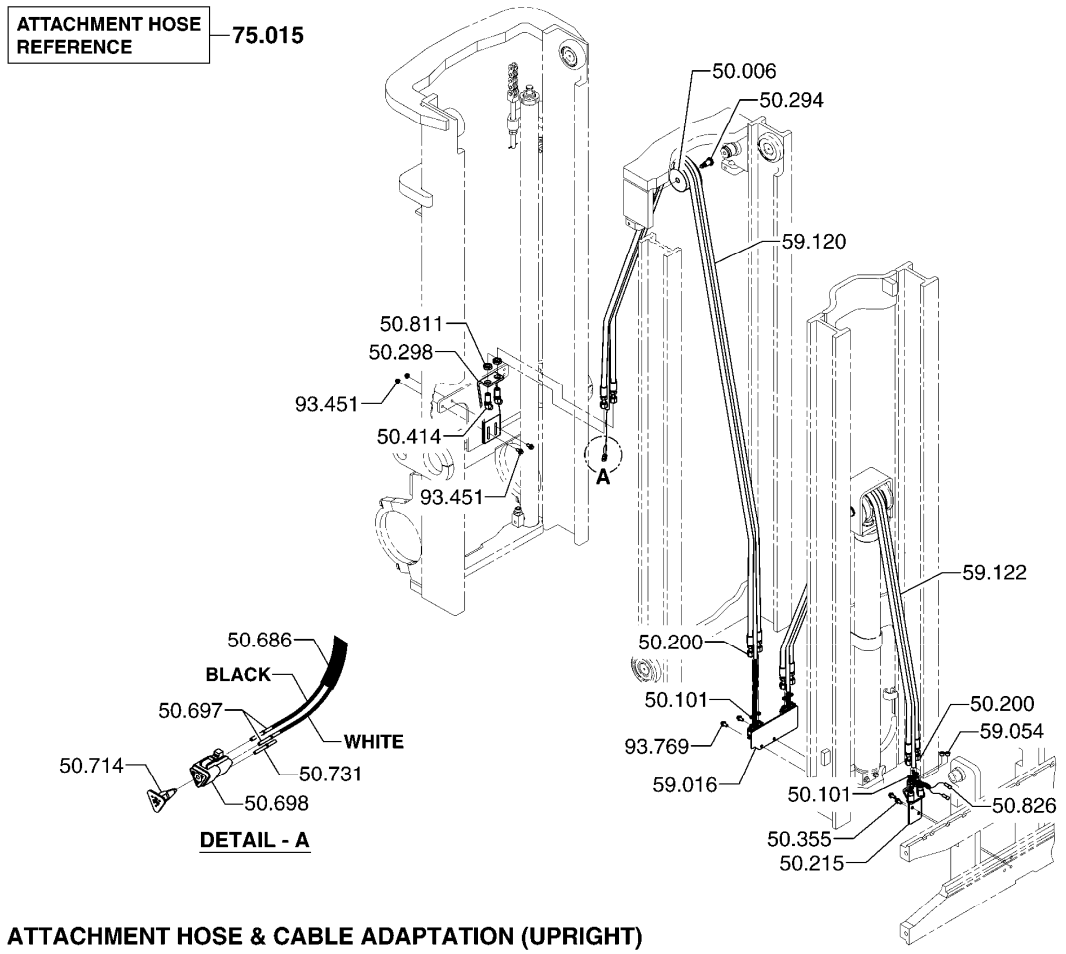

ATTACHMENT HOSE & CABLE ADAPTATION (UPRIGHT) **50-270**

50.006 SHEAVE, DEVICE HOSE UPPER
쉬브

50.101 SEAL, DEVICE HOSE SWIVEL COUPLING
시일

50.200 COUPLING, DEVICE HOSE
커플링

50.215 TERMINAL BLOCK, DEVICE HOSE
터미널블록

50.294 PIVOT, DEVICE HOSE UPPER SHEAVE
피봇

50.298 BRACKET, DEVICE HOSE TERMINAL
브라켓

50.355 FASTENER, DEVICE HOSE TERMINAL BLOCK
패스너

50.414 FITTING, DEVICE HOSE CONNECTOR
피팅

50.686 WIRE, DEVICE
와이어

50.697	CONNECTOR, DEVICE CABLE (PIN END) 커넥터
50.698	CONNECTOR, DEVICE CABLE (SOCKET END) 커넥터
50.714	LOCK, DEVICE CABLE CONNECTOR *
50.731	PLUG, DEVICE CABLE CONNECTOR *
50.811	NUT, DEVICE HOSE FITTING 너트
50.826	TERMINAL, DEVICE CABLE 터미널
59.016	JUNCTION BLOCK, DEVICE HOSE 연결블록
59.054	PLUG, DEVICE HOSE JUNCTION BLOCK 플러그
59.120	LINE, DEVICE HYDRAULIC (INTERMEDIATE RAIL) 라J
59.122	LINE, DEVICE HYDRAULIC (INNER RAIL) 라J
75.015	MODULE, ATTACHMENT HOSE LINES *
93.451	FASTENER, DEVICE HOSE TERMINAL BRACKET 패스너
93.769	FASTENER, DEVICE LINE JUNCTION BLOCK 패스너

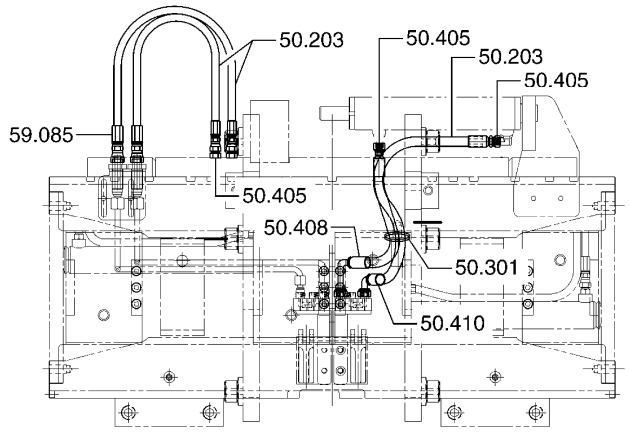

FORK POSITIONER (FP) - SHIFT
TYPE - 1

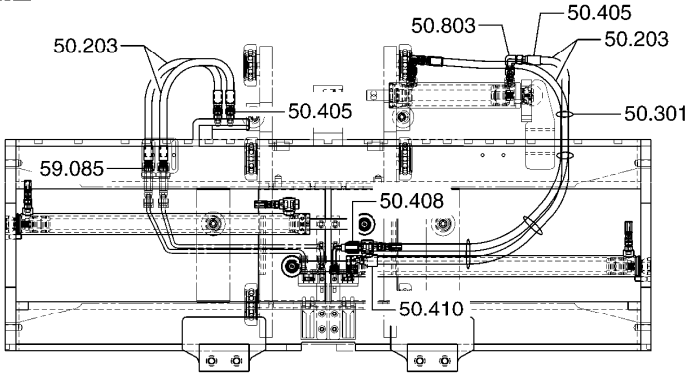

FORK POSITIONER (FP) - SHIFT
TYPE - 2

ATTACHMENT HOSE ADAPTATION (CARRIAGE) **50-284**

50.203 LINE, DEVICE HYDRAULIC (AT CARRIAGE)
라인

50.301 CLIP, DEVICE RH HOSE (AT CARRIAGE)
클립

50.405 COUPLING, DEVICE HOSE
커플링

50.408 COUPLING, DEVICE HOSE
커플링

50.410 COUPLING, DEVICE HOSE
커플링

50.803 FITTING, DEVICE HYDRAULIC LINE
피팅

59.085 COUPLING, DEVICE HOSE
커플링

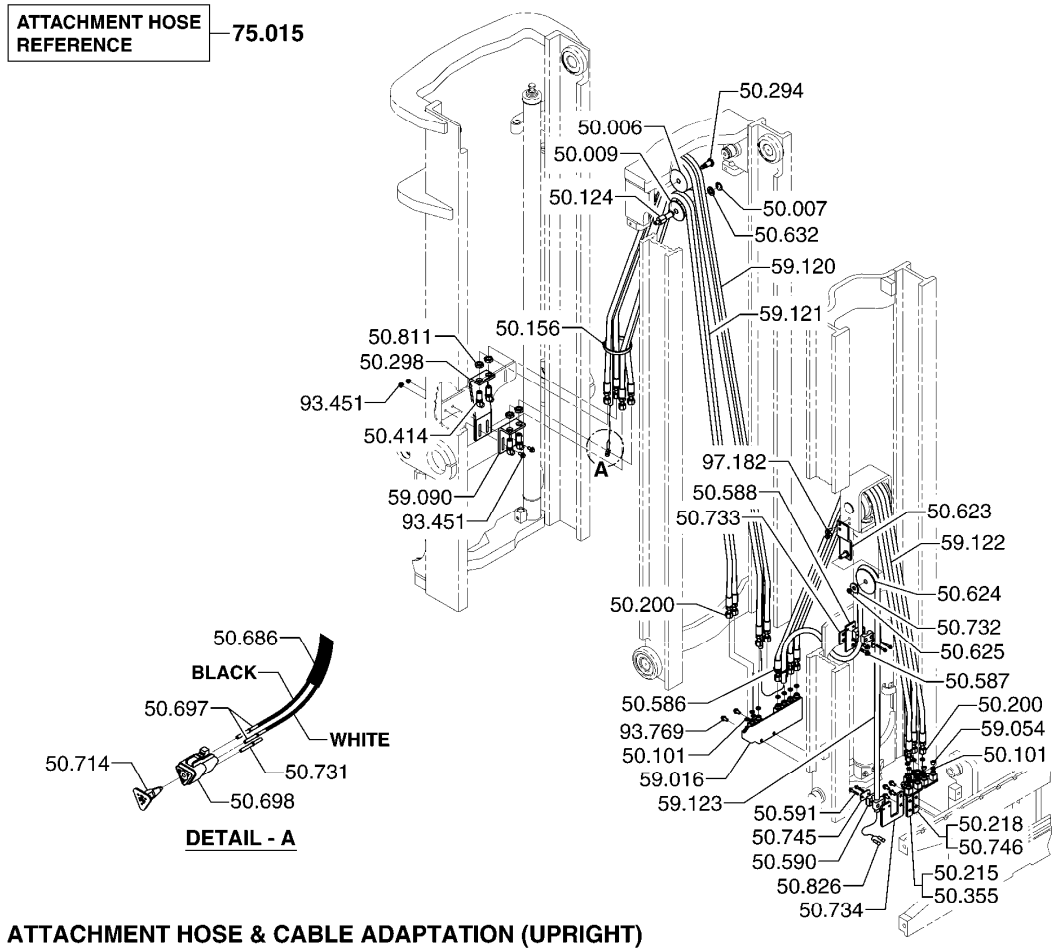

ATTACHMENT HOSE & CABLE ADAPTATION (UPRIGHT) **50-289**

50.006	SHEAVE, DEVICE HOSE UPPER 쉬브	50.588	BRACKET, DEVICE CABLE CLAMP 브라켓
50.007	RETAINER, DEVICE HOSE SHEAVE 리테이너	50.590	CLAMP, DEVICE CABLE LOWER 클램프
50.009	SHEAVE, DEVICE HOSE LOWER 쉬브	50.591	FASTENER, DEVICE CABLE CLAMP LOWER 패스너
50.101	SEAL, DEVICE HOSE SWIVEL COUPLING 시일	50.623	BRACKET, DEVICE CABLE LOWER SHEAVE 브라켓
50.124	PIVOT, DEVICE HOSE LOWER RH SHEAVE 피봇	50.624	SHEAVE, DEVICE CABLE 쉬브
50.156	CLIP, DEVICE HOSE 클립	50.625	RETAINER, DEVICE CABLE LOWER SHEAVE 리테이너
50.200	COUPLING, DEVICE HOSE 커플링	50.632	SPACER, DEVICE HOSE SHEAVE 스페이서
50.215	TERMINAL BLOCK, DEVICE HOSE 터미널블록	50.686	WIRE, DEVICE 와이어
50.218	TERMINAL BLOCK, DEVICE LH HOSE 터미널블록	50.697	CONNECTOR, DEVICE CABLE (PIN END) 커넥터
50.294	PIVOT, DEVICE HOSE UPPER SHEAVE 피봇	50.698	CONNECTOR, DEVICE CABLE (SOCKET END) 커넥터
50.298	BRACKET, DEVICE HOSE TERMINAL 브라켓	50.714	LOCK, DEVICE CABLE CONNECTOR *
50.355	FASTENER, DEVICE HOSE TERMINAL BLOCK 패스너	50.731	PLUG, DEVICE CABLE CONNECTOR *
50.414	FITTING, DEVICE HOSE CONNECTOR 피팅	50.732	SPACER, DEVICE CABLE SHEAVE *
50.586	CLIP, DEVICE CABLE 클립	50.733	SPACER, DEVICE CABLE CLAMP BRACKET *
50.587	FASTENER, DEVICE CABLE CLIP 패스너	50.734	BRACKET, DEVICE CABLE TERMINAL CLAMP *

50.745 BRACKET, DEVICE CABLE TERMINAL CLAMP MOUNTING
*

50.746 FASTENER, DEVICE HOSE TERMINAL BLOCK
*

50.811 NUT, DEVICE HOSE FITTING
너트

50.826 TERMINAL, DEVICE CABLE
터미널

59.016 JUNCTION BLOCK, DEVICE HOSE
연결블록

59.054 PLUG, DEVICE HOSE JUNCTION BLOCK
플러그

59.090 BRACKET, DEVICE HOSE TERMINAL
브라켓

59.120 LINE, DEVICE HYDRAULIC (INTERMEDIATE RAIL)
라J

59.121 LINE, DEVICE HYDRAULIC (INTERMEDIATE RAIL)
라J

59.122 LINE, DEVICE HYDRAULIC (INNER RAIL)
라J

59.123 LINE, DEVICE HYDRAULIC (INNER RAIL)
라J

75.015 MODULE, ATTACHMENT HOSE LINES
*

93.451 FASTENER, DEVICE HOSE TERMINAL BRACKET
패스너

93.769 FASTENER, DEVICE LINE JUNCTION BLOCK
패스너

97.182 FASTENER, DEVICE CABLE LOWER SHEAVE BRACKET
*

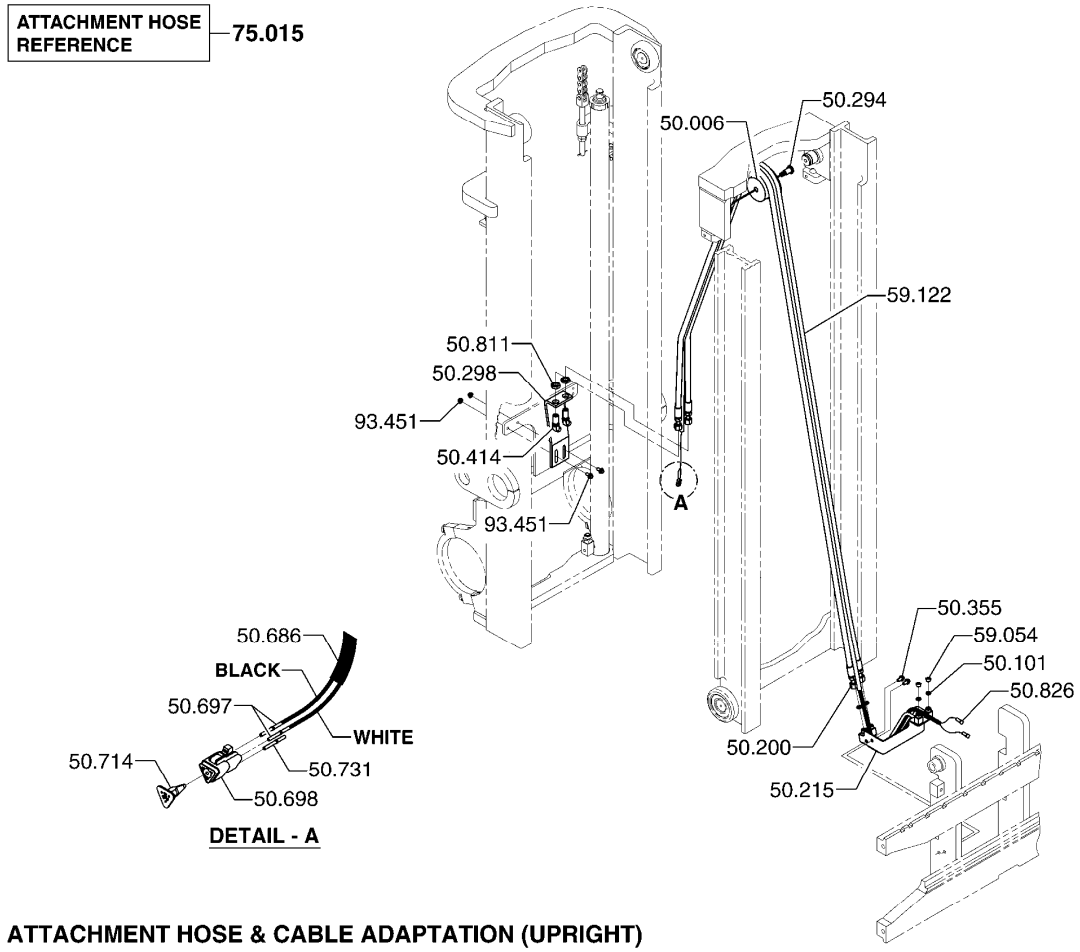

ATTACHMENT HOSE & CABLE ADAPTATION (UPRIGHT) **50-290**

50.006	SHEAVE, DEVICE HOSE UPPER 쉬브
50.101	SEAL, DEVICE HOSE SWIVEL COUPLING 시일
50.200	COUPLING, DEVICE HOSE 커플링
50.215	TERMINAL BLOCK, DEVICE HOSE 터미널블록
50.294	PIVOT, DEVICE HOSE UPPER SHEAVE 피봇
50.298	BRACKET, DEVICE HOSE TERMINAL 브라켓
50.355	FASTENER, DEVICE HOSE TERMINAL BLOCK 패스너
50.414	FITTING, DEVICE HOSE CONNECTOR 피팅
50.686	WIRE, DEVICE 와이어

50.697	CONNECTOR, DEVICE CABLE (PIN END) 커넥터
50.698	CONNECTOR, DEVICE CABLE (SOCKET END) 커넥터
50.714	LOCK, DEVICE CABLE CONNECTOR *
50.731	PLUG, DEVICE CABLE CONNECTOR *
50.811	NUT, DEVICE HOSE FITTING 너트
50.826	TERMINAL, DEVICE CABLE 터미널
59.054	PLUG, DEVICE HOSE JUNCTION BLOCK 플러그
59.122	LINE, DEVICE HYDRAULIC (INNER RAIL) 라J
75.015	MODULE, ATTACHMENT HOSE LINES *
93.451	FASTENER, DEVICE HOSE TERMINAL BRACKET 패스너

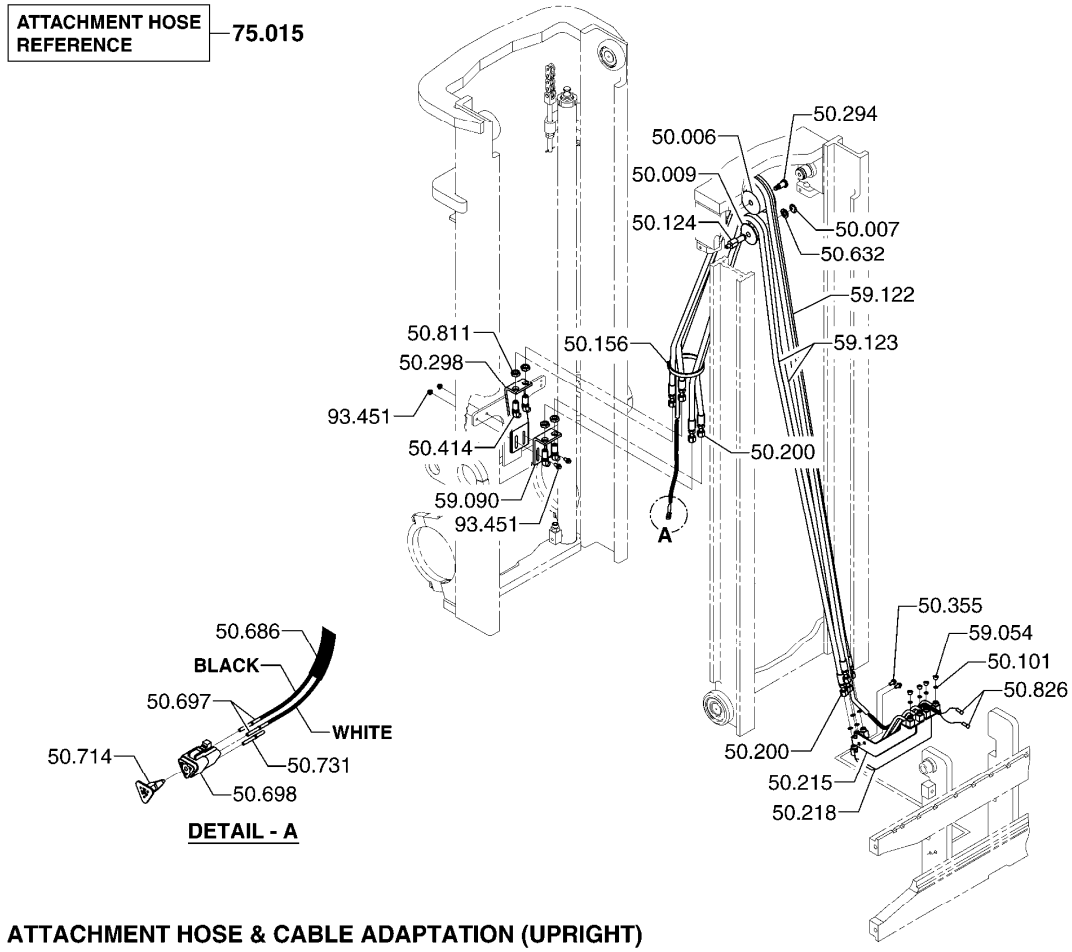

50.006 SHEAVE, DEVICE HOSE UPPER
쉬브

50.007 RETAINER, DEVICE HOSE SHEAVE
리테이너

50.009 SHEAVE, DEVICE HOSE LOWER
쉬브

50.101 SEAL, DEVICE HOSE SWIVEL COUPLING
시일

50.124 PIVOT, DEVICE HOSE LOWER RH SHEAVE
피봇

50.156 CLIP, DEVICE HOSE
클립

50.200 COUPLING, DEVICE HOSE
커플링

50.215 TERMINAL BLOCK, DEVICE HOSE
터미널블록

50.218 TERMINAL BLOCK, DEVICE LH HOSE
터미널블록

50.294	PIVOT, DEVICE HOSE UPPER SHEAVE 피봇
50.298	BRACKET, DEVICE HOSE TERMINAL 브라켓
50.355	FASTENER, DEVICE HOSE TERMINAL BLOCK 패스너
50.414	FITTING, DEVICE HOSE CONNECTOR 피팅
50.632	SPACER, DEVICE HOSE SHEAVE 스페이서
50.686	WIRE, DEVICE 와이어
50.697	CONNECTOR, DEVICE CABLE (PIN END) 커넥터
50.698	CONNECTOR, DEVICE CABLE (SOCKET END) 커넥터
50.714	LOCK, DEVICE CABLE CONNECTOR *
50.731	PLUG, DEVICE CABLE CONNECTOR *
50.811	NUT, DEVICE HOSE FITTING 너트
50.826	TERMINAL, DEVICE CABLE 터미널
59.054	PLUG, DEVICE HOSE JUNCTION BLOCK 플러그
59.090	BRACKET, DEVICE HOSE TERMINAL 브라켓
59.122	LINE, DEVICE HYDRAULIC (INNER RAIL) 라J
59.123	LINE, DEVICE HYDRAULIC (INNER RAIL) 라J
75.015	MODULE, ATTACHMENT HOSE LINES *
93.451	FASTENER, DEVICE HOSE TERMINAL BRACKET 패스너

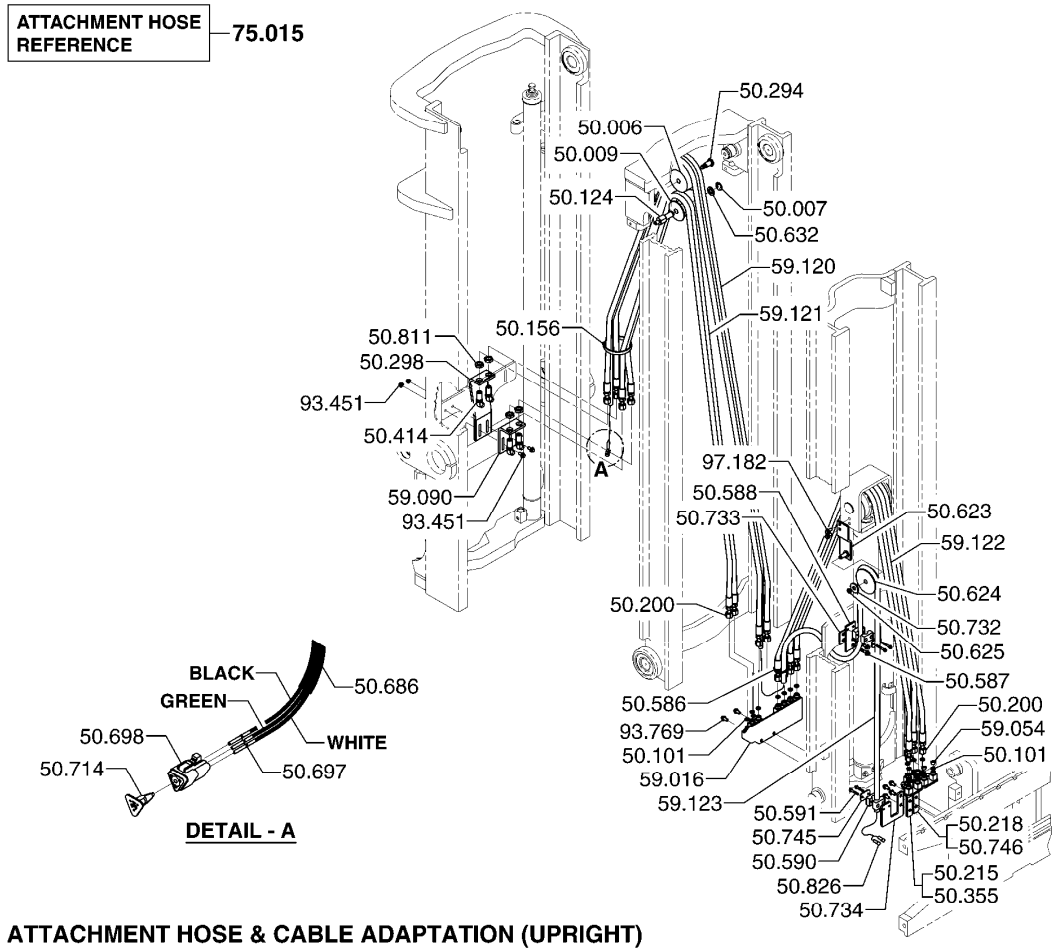

50.006	SHEAVE, DEVICE HOSE UPPER 쉬브	50.588	BRACKET, DEVICE CABLE CLAMP 브라켓
50.007	RETAINER, DEVICE HOSE SHEAVE 리테이너	50.590	CLAMP, DEVICE CABLE LOWER 클램프
50.009	SHEAVE, DEVICE HOSE LOWER 쉬브	50.591	FASTENER, DEVICE CABLE CLAMP LOWER 패스너
50.101	SEAL, DEVICE HOSE SWIVEL COUPLING 시일	50.623	BRACKET, DEVICE CABLE LOWER SHEAVE 브라켓
50.124	PIVOT, DEVICE HOSE LOWER RH SHEAVE 피봇	50.624	SHEAVE, DEVICE CABLE 쉬브
50.156	CLIP, DEVICE HOSE 클립	50.625	RETAINER, DEVICE CABLE LOWER SHEAVE 리테이너
50.200	COUPLING, DEVICE HOSE 커플링	50.632	SPACER, DEVICE HOSE SHEAVE 스페이서
50.215	TERMINAL BLOCK, DEVICE HOSE 터미널블록	50.686	WIRE, DEVICE 와이어
50.218	TERMINAL BLOCK, DEVICE LH HOSE 터미널블록	50.697	CONNECTOR, DEVICE CABLE (PIN END) 커넥터
50.294	PIVOT, DEVICE HOSE UPPER SHEAVE 피봇	50.698	CONNECTOR, DEVICE CABLE (SOCKET END) 커넥터
50.298	BRACKET, DEVICE HOSE TERMINAL 브라켓	50.714	LOCK, DEVICE CABLE CONNECTOR *
50.355	FASTENER, DEVICE HOSE TERMINAL BLOCK 패스너	50.732	SPACER, DEVICE CABLE SHEAVE *
50.414	FITTING, DEVICE HOSE CONNECTOR 피팅	50.733	SPACER, DEVICE CABLE CLAMP BRACKET *
50.586	CLIP, DEVICE CABLE 클립	50.734	BRACKET, DEVICE CABLE TERMINAL CLAMP *
50.587	FASTENER, DEVICE CABLE CLIP 패스너	50.745	BRACKET, DEVICE CABLE TERMINAL CLAMP MOUNTING *

50.746 FASTENER, DEVICE HOSE TERMINAL BLOCK
*

50.811 NUT, DEVICE HOSE FITTING
너트

50.826 TERMINAL, DEVICE CABLE
터미널

59.016 JUNCTION BLOCK, DEVICE HOSE
연결블록

59.054 PLUG, DEVICE HOSE JUNCTION BLOCK
플러그

59.090 BRACKET, DEVICE HOSE TERMINAL
브라켓

59.120 LINE, DEVICE HYDRAULIC (INTERMEDIATE RAIL)
라J

59.121 LINE, DEVICE HYDRAULIC (INTERMEDIATE RAIL)
라J

59.122 LINE, DEVICE HYDRAULIC (INNER RAIL)
라J

59.123 LINE, DEVICE HYDRAULIC (INNER RAIL)
라J

75.015 MODULE, ATTACHMENT HOSE LINES
*

93.451 FASTENER, DEVICE HOSE TERMINAL BRACKET
패스너

93.769 FASTENER, DEVICE LINE JUNCTION BLOCK
패스너

97.182 FASTENER, DEVICE CABLE LOWER SHEAVE BRACKET
*

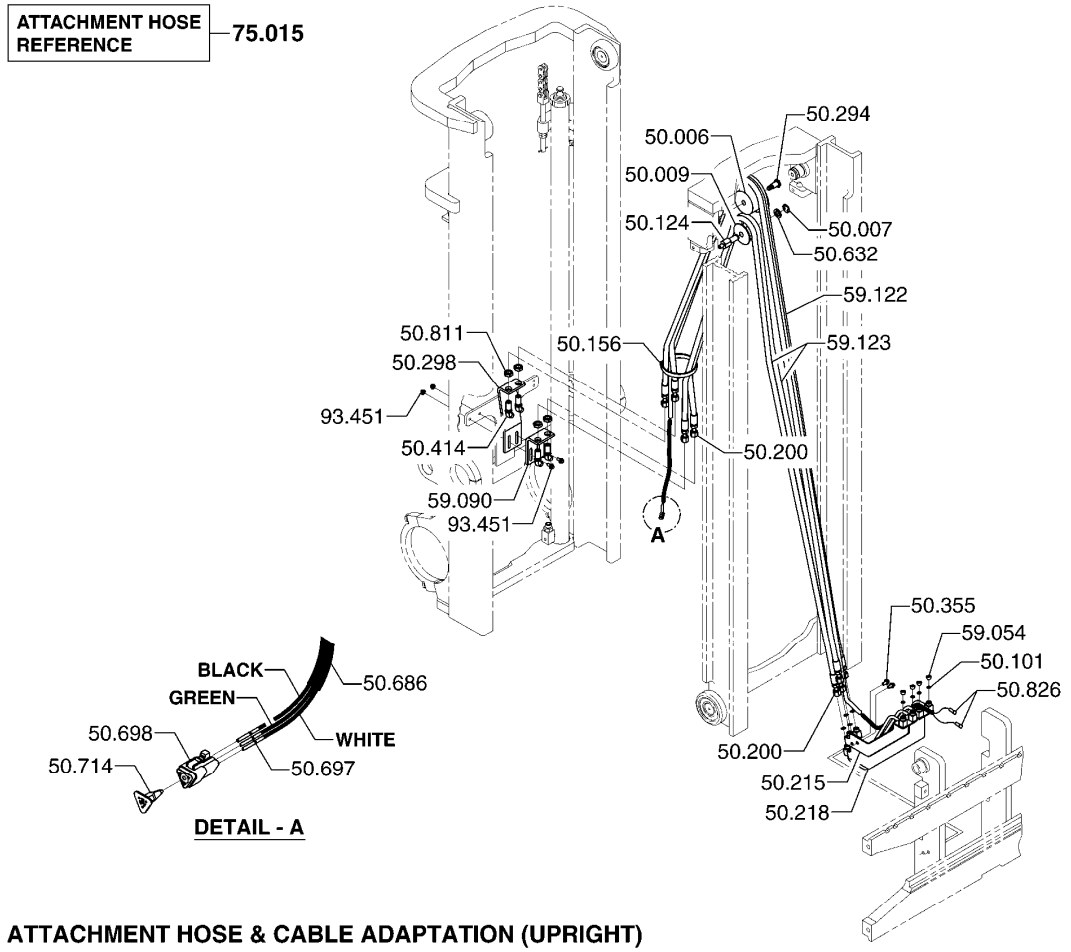

50.006 SHEAVE, DEVICE HOSE UPPER
쉬브

50.007 RETAINER, DEVICE HOSE SHEAVE
리테이너

50.009 SHEAVE, DEVICE HOSE LOWER
쉬브

50.101 SEAL, DEVICE HOSE SWIVEL COUPLING
시일

50.124 PIVOT, DEVICE HOSE LOWER RH SHEAVE
피봇

50.156 CLIP, DEVICE HOSE
클립

50.200 COUPLING, DEVICE HOSE
커플링

50.215 TERMINAL BLOCK, DEVICE HOSE
터미널블록

50.218 TERMINAL BLOCK, DEVICE LH HOSE
터미널블록

50.294	PIVOT, DEVICE HOSE UPPER SHEAVE 피봇
50.298	BRACKET, DEVICE HOSE TERMINAL 브라켓
50.355	FASTENER, DEVICE HOSE TERMINAL BLOCK 패스너
50.414	FITTING, DEVICE HOSE CONNECTOR 피팅
50.632	SPACER, DEVICE HOSE SHEAVE 스페이서
50.686	WIRE, DEVICE 와이어
50.697	CONNECTOR, DEVICE CABLE (PIN END) 커넥터
50.698	CONNECTOR, DEVICE CABLE (SOCKET END) 커넥터
50.714	LOCK, DEVICE CABLE CONNECTOR *
50.811	NUT, DEVICE HOSE FITTING 너트
50.826	TERMINAL, DEVICE CABLE 터미널
59.054	PLUG, DEVICE HOSE JUNCTION BLOCK 플러그
59.090	BRACKET, DEVICE HOSE TERMINAL 브라켓
59.122	LINE, DEVICE HYDRAULIC (INNER RAIL) 라J
59.123	LINE, DEVICE HYDRAULIC (INNER RAIL) 라J
75.015	MODULE, ATTACHMENT HOSE LINES *
93.451	FASTENER, DEVICE HOSE TERMINAL BRACKET 패스너

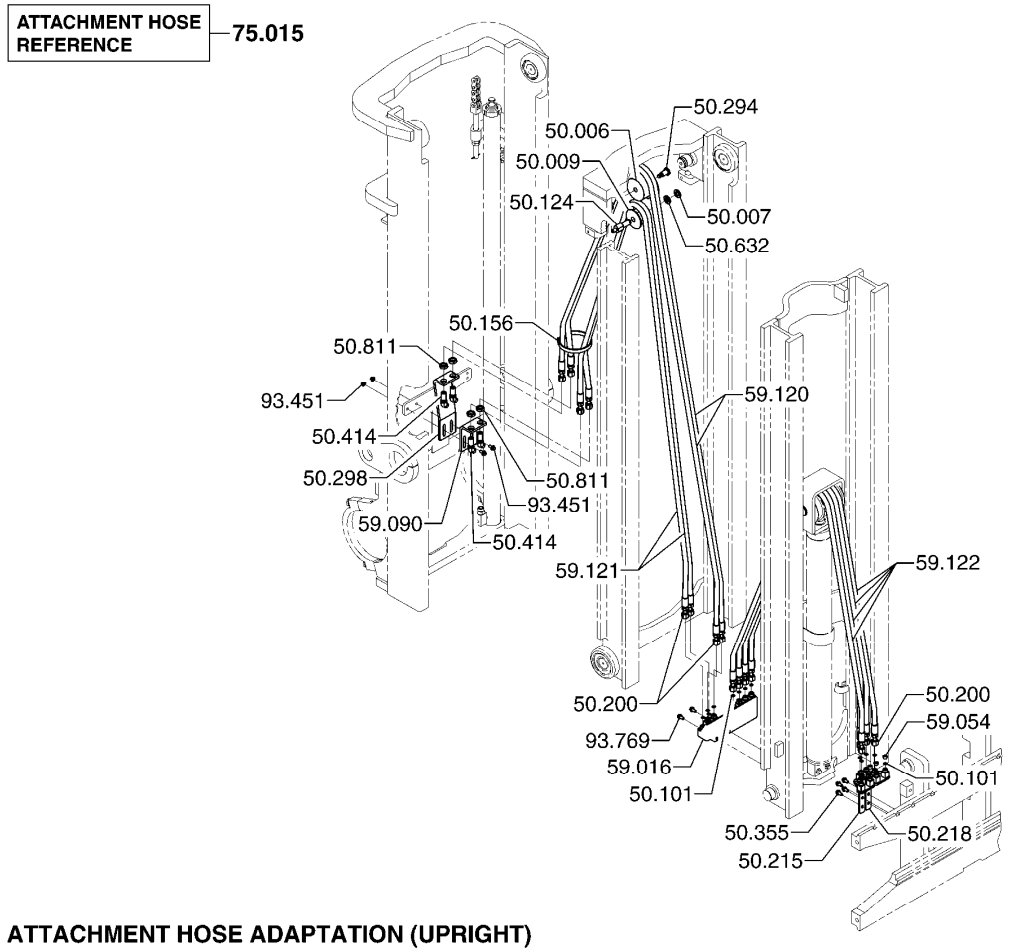

ATTACHMENT HOSE ADAPTATION (UPRIGHT) **50-407**

50.006 SHEAVE, DEVICE HOSE UPPER
쉬브

50.007 RETAINER, DEVICE HOSE SHEAVE
리테이너

50.009 SHEAVE, DEVICE HOSE LOWER
쉬브

50.101 SEAL, DEVICE HOSE SWIVEL COUPLING
시일

50.124 PIVOT, DEVICE HOSE LOWER RH SHEAVE
피봇

50.156 CLIP, DEVICE HOSE
클립

50.200 COUPLING, DEVICE HOSE
커플링

50.215 TERMINAL BLOCK, DEVICE HOSE
터미널블록

50.218 TERMINAL BLOCK, DEVICE LH HOSE
터미널블록

50.294	PIVOT, DEVICE HOSE UPPER SHEAVE 피봇
50.298	BRACKET, DEVICE HOSE TERMINAL 브라켓
50.355	FASTENER, DEVICE HOSE TERMINAL BLOCK 패스너
50.414	FITTING, DEVICE HOSE CONNECTOR 피팅
50.632	SPACER, DEVICE HOSE SHEAVE 스페이서
50.811	NUT, DEVICE HOSE FITTING 너트
59.016	JUNCTION BLOCK, DEVICE HOSE 연결블록
59.054	PLUG, DEVICE HOSE JUNCTION BLOCK 플러그
59.090	BRACKET, DEVICE HOSE TERMINAL 브라켓
59.120	LINE, DEVICE HYDRAULIC (INTERMEDIATE RAIL) 라J
59.121	LINE, DEVICE HYDRAULIC (INTERMEDIATE RAIL) 라J
59.122	LINE, DEVICE HYDRAULIC (INNER RAIL) 라J
75.015	MODULE, ATTACHMENT HOSE LINES *
93.451	FASTENER, DEVICE HOSE TERMINAL BRACKET 패스너
93.769	FASTENER, DEVICE LINE JUNCTION BLOCK 패스너

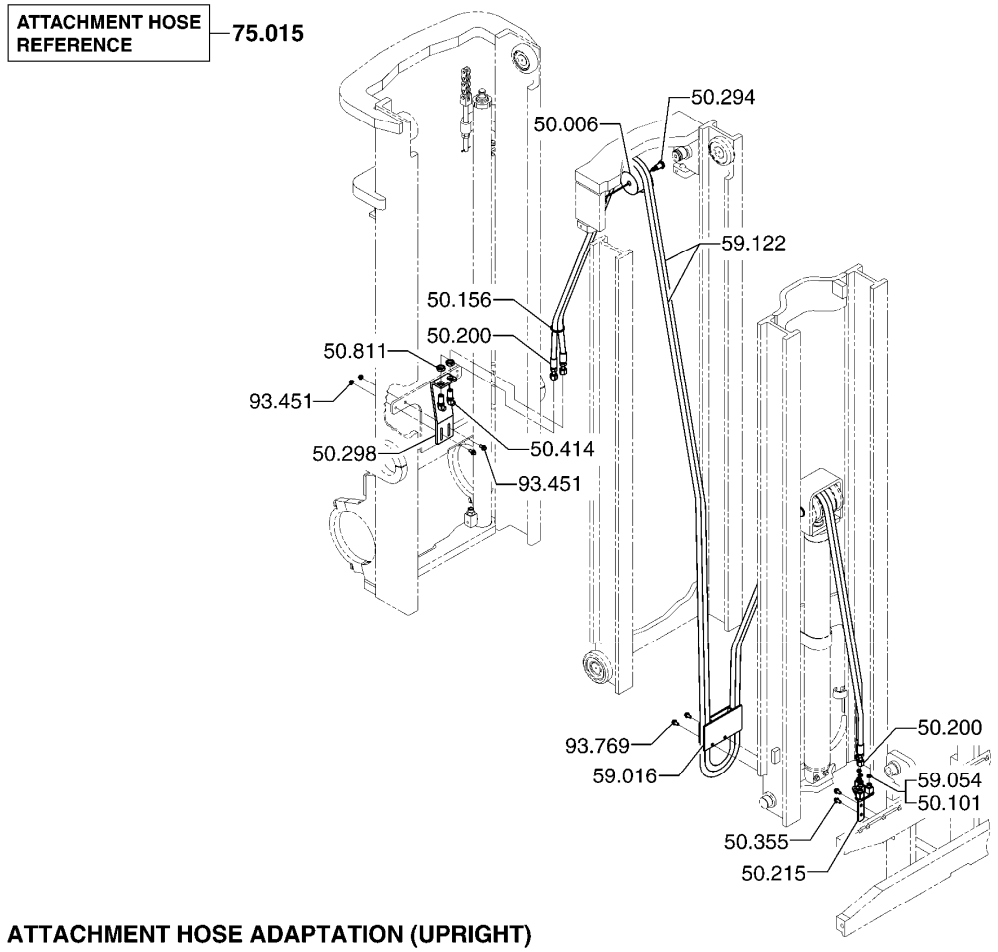

ATTACHMENT HOSE ADAPTATION (UPRIGHT) **50-410**

50.006 SHEAVE, DEVICE HOSE UPPER
쉬브

50.101 SEAL, DEVICE HOSE SWIVEL COUPLING
시일

50.156 CLIP, DEVICE HOSE
클립

50.200 COUPLING, DEVICE HOSE
커플링

50.215 TERMINAL BLOCK, DEVICE HOSE
터미널블록

50.294 PIVOT, DEVICE HOSE UPPER SHEAVE
피봇

50.298 BRACKET, DEVICE HOSE TERMINAL
브라켓

50.355 FASTENER, DEVICE HOSE TERMINAL BLOCK
패스너

50.414 FITTING, DEVICE HOSE CONNECTOR
피팅

50.811	NUT, DEVICE HOSE FITTING 너트
59.016	JUNCTION BLOCK, DEVICE HOSE 연결블록
59.054	PLUG, DEVICE HOSE JUNCTION BLOCK 플러그
59.122	LINE, DEVICE HYDRAULIC (INNER RAIL) 라J
75.015	MODULE, ATTACHMENT HOSE LINES *
93.451	FASTENER, DEVICE HOSE TERMINAL BRACKET 패스너
93.769	FASTENER, DEVICE LINE JUNCTION BLOCK 패스너

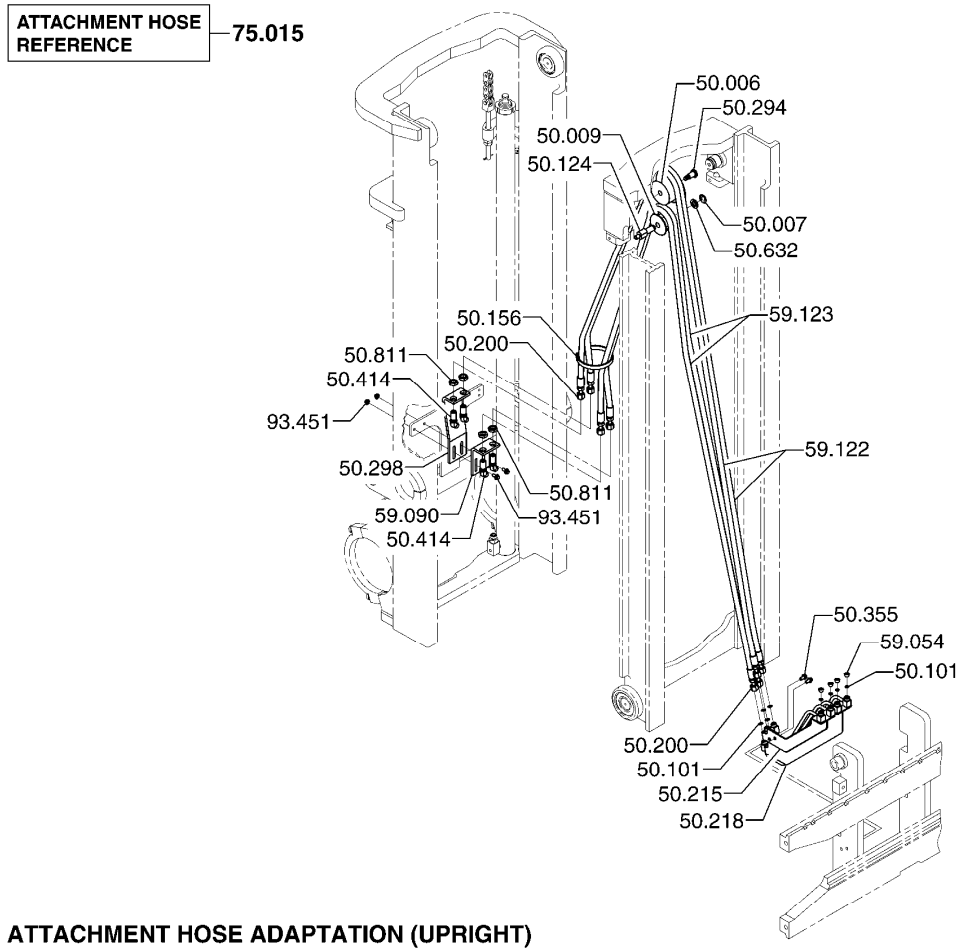

ATTACHMENT HOSE ADAPTATION (UPRIGHT) **50-432**

50.006 SHEAVE, DEVICE HOSE UPPER
쉬브

50.007 RETAINER, DEVICE HOSE SHEAVE
리테이너

50.009 SHEAVE, DEVICE HOSE LOWER
쉬브

50.101 SEAL, DEVICE HOSE SWIVEL COUPLING
시일

50.124 PIVOT, DEVICE HOSE LOWER RH SHEAVE
피봇

50.156 CLIP, DEVICE HOSE
클립

50.200 COUPLING, DEVICE HOSE
커플링

50.215 TERMINAL BLOCK, DEVICE HOSE
터미널블록

50.218 TERMINAL BLOCK, DEVICE LH HOSE
터미널블록

50.294	PIVOT, DEVICE HOSE UPPER SHEAVE 피봇
50.298	BRACKET, DEVICE HOSE TERMINAL 브라켓
50.355	FASTENER, DEVICE HOSE TERMINAL BLOCK 패스너
50.414	FITTING, DEVICE HOSE CONNECTOR 피팅
50.632	SPACER, DEVICE HOSE SHEAVE 스페이서
50.811	NUT, DEVICE HOSE FITTING 너트
59.054	PLUG, DEVICE HOSE JUNCTION BLOCK 플러그
59.090	BRACKET, DEVICE HOSE TERMINAL 브라켓
59.122	LINE, DEVICE HYDRAULIC (INNER RAIL) 라J
59.123	LINE, DEVICE HYDRAULIC (INNER RAIL) 라J
75.015	MODULE, ATTACHMENT HOSE LINES *
93.451	FASTENER, DEVICE HOSE TERMINAL BRACKET 패스너

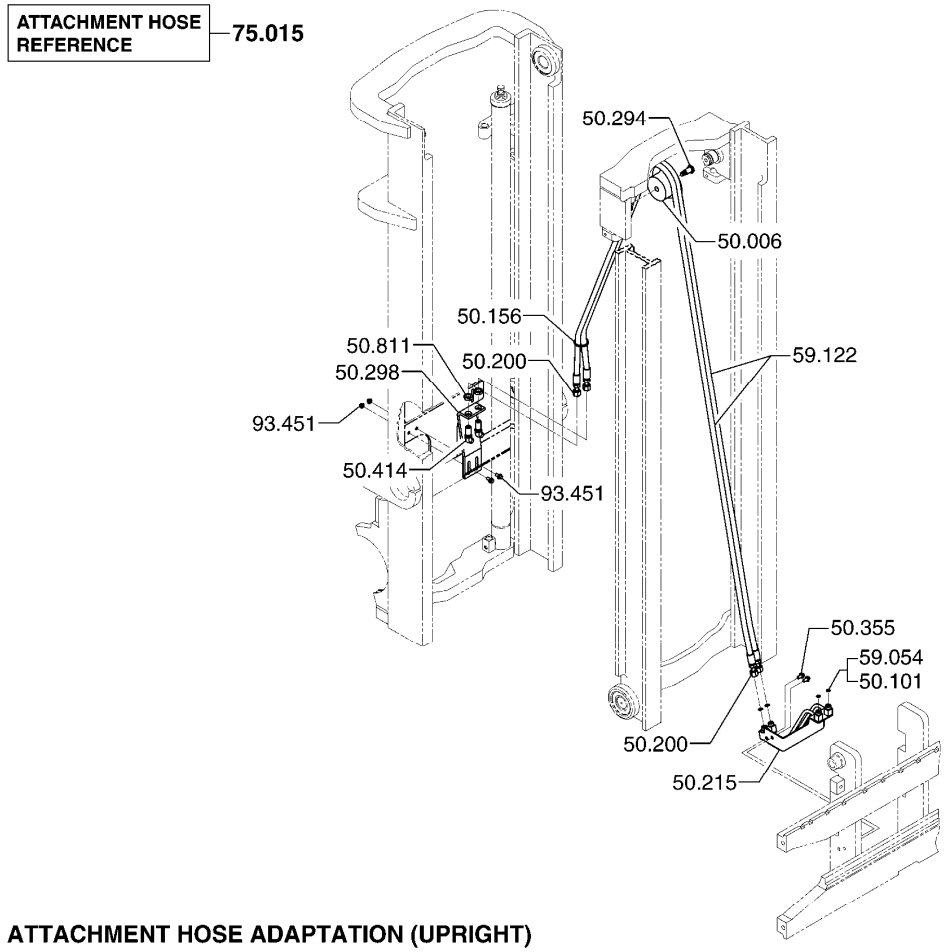

ATTACHMENT HOSE ADAPTATION (UPRIGHT) **50-439**

50.006 SHEAVE, DEVICE HOSE UPPER
쉬브

50.101 SEAL, DEVICE HOSE SWIVEL COUPLING
시일

50.156 CLIP, DEVICE HOSE
클립

50.200 COUPLING, DEVICE HOSE
커플링

50.215 TERMINAL BLOCK, DEVICE HOSE
터미널블록

50.294 PIVOT, DEVICE HOSE UPPER SHEAVE
피봇

50.298 BRACKET, DEVICE HOSE TERMINAL
브라켓

50.355 FASTENER, DEVICE HOSE TERMINAL BLOCK
패스너

50.414 FITTING, DEVICE HOSE CONNECTOR
피팅

50.811	NUT, DEVICE HOSE FITTING 너트
59.054	PLUG, DEVICE HOSE JUNCTION BLOCK 플러그
59.122	LINE, DEVICE HYDRAULIC (INNER RAIL) 라J
75.015	MODULE, ATTACHMENT HOSE LINES *
93.451	FASTENER, DEVICE HOSE TERMINAL BRACKET 패스너

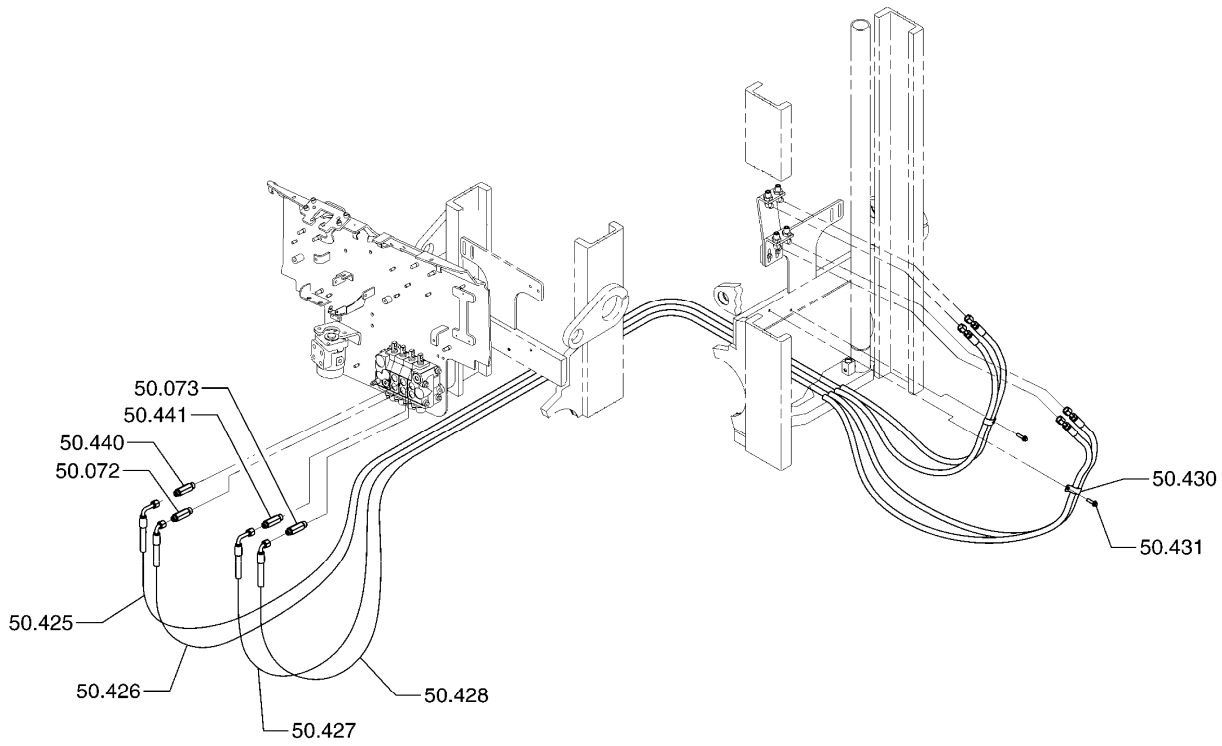

AUXILIARY VALVE LINES **50-590**

50.072 FITTING, 1ST AUXILIARY VALVE "B" PORT
피팅

50.073 FITTING, 2ND AUXILIARY VALVE "B" PORT
피팅

50.425 LINE, 1ST AUXILIARY VALVE "A" PORT
라인

50.426 LINE, 1ST AUXILIARY VALVE "B" PORT
라인

50.427 LINE, 2ND AUXILIARY VALVE "A" PORT
라인

50.428 LINE, 2ND AUXILIARY VALVE "B" PORT
라인

50.430 CLAMP, AUXILIARY VALVE LINES
클램프

50.431 FASTENER, AUX VALVE LINES CLAMP
패스너

50.440 FITTING, 1ST AUXILIARY VALVE "A" PORT
피팅

50.441 FITTING, 2ND AUXILIARY VALVE "A" PORT
피팅

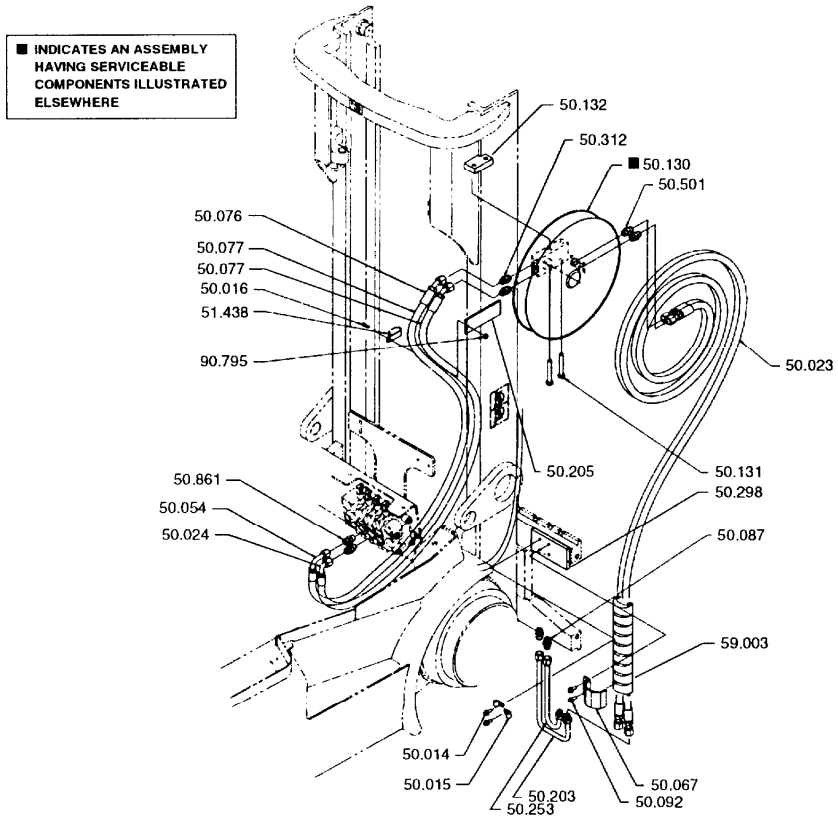

HOSE ADAPTATION
SCHLAUCHBEFESTIGUNG
FIXATION DE TUYAU
FIJACION DE MANGUERA

50.014 FASTENER, DEVICE HOSE CLIP TO BRACKET RH
패스너

50.015 CLIP, DEVICE LINE TO UPRIGHT
클립

50.016 FASTENER, DEVICE LINE TO UPRIGHT CLIP
패스너

50.023 LINE, DEVICE HYDRAULIC
라인

50.024 COUPLING, DEVICE RH HOSE (VALVE END)
커플링

50.054 COUPLING, DEVICE LH HOSE (VALVE END)
커플링

50.067 CLAMP, DEVICE HOSE TO BRACKET
클램프

50.076 COUPLING, DEVICE RH HOSE (REEL INLET)
커플링

50.077 LINE, DEVICE RH HYDRAULIC (VALVE TO REEL)
라인

50.087 FITTING, DEVICE LH HYDRAULIC HOSE
피팅

50.092 FASTENER, DEVICE HOSE TO BRACKET RH CLAMP
패스너

50.130 REEL ASSEMBLY, DEVICE RH HOSE
릴

50.131 FASTENER, DEVICE RH HOSE REEL
패스너

50.132 BRACKET, DEVICE HOSE REEL
브라켓

50.203 LINE, DEVICE HYDRAULIC (AT CARRIAGE)
라인

50.205 BRACKET, DEVICE LINE CLAMP
브라켓

50.253 LINE, DEVICE HYDRAULIC (AT CARRIAGE)
라인

50.298 BRACKET, DEVICE HOSE TERMINAL
브라켓

50.312 FITTING, DEVICE RH HOSE REEL INLET
피팅

50.501 FITTING, DEVICE HOSE REEL OUTLET
피팅

50.861 FITTING, AUXILIARY VALVE A PORT
피팅

51.438 CLIP, DEVICE HOSE
클립

59.003 RETAINER, DEVICE HOSE
리테이너

90.795 NUT, DEVICE HOSE CLAMP FASTENER
너트

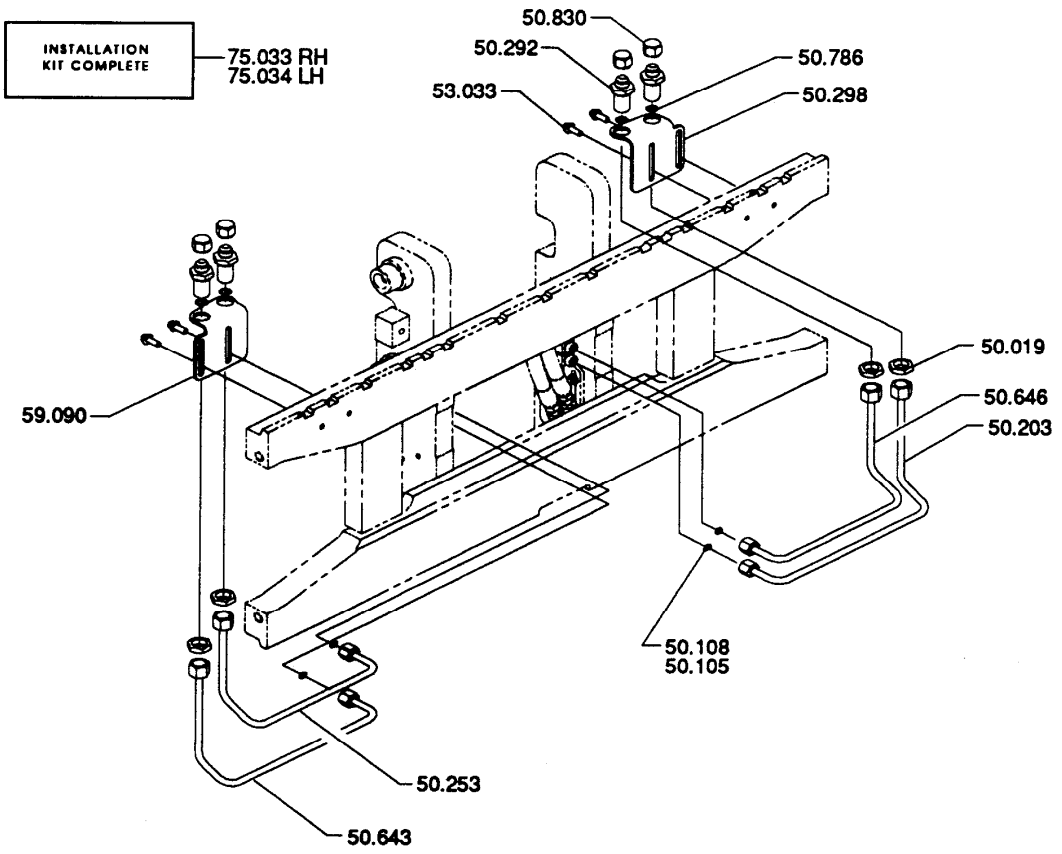

CARRIAGE HIGH TERMINATION PLUMBING 50-765

50.019 FASTENER, DEVICE HOSE DISCONNECT
패스너

50.105 SEAL, DEVICE HOSE SWIVEL COUPLING PLUG
시일

50.108 SEAL, DEVICE HOSE SWIVEL COUPLING INLET PORT
시일

50.203 LINE, DEVICE HYDRAULIC (AT CARRIAGE)
라인

50.253 LINE, DEVICE HYDRAULIC (AT CARRIAGE)
라인

50.292 FITTING, DEVICE RH HYDRAULIC HOSE
피팅

50.298 BRACKET, DEVICE HOSE TERMINAL
브라켓

50.643 LINE, DEVICE UPPER (AT CARRIAGE)
라인

50.646 LINE, DEVICE
라인

50.786	SEAL, DEVICE RH HOSE TERMINAL BLOCK PORT 시일
50.830	CAP, DEVICE HOSE REEL FITTING 캡
53.033	FASTENER, HOSE TERMINAL BRACKET 패스너
59.090	BRACKET, DEVICE HOSE TERMINAL 브라켓
75.033	KIT, CARRIAGE TERMINATION PIPING - RH 킷
75.034	KIT, CARRIAGE TERMINATION PIPING - LH 킷

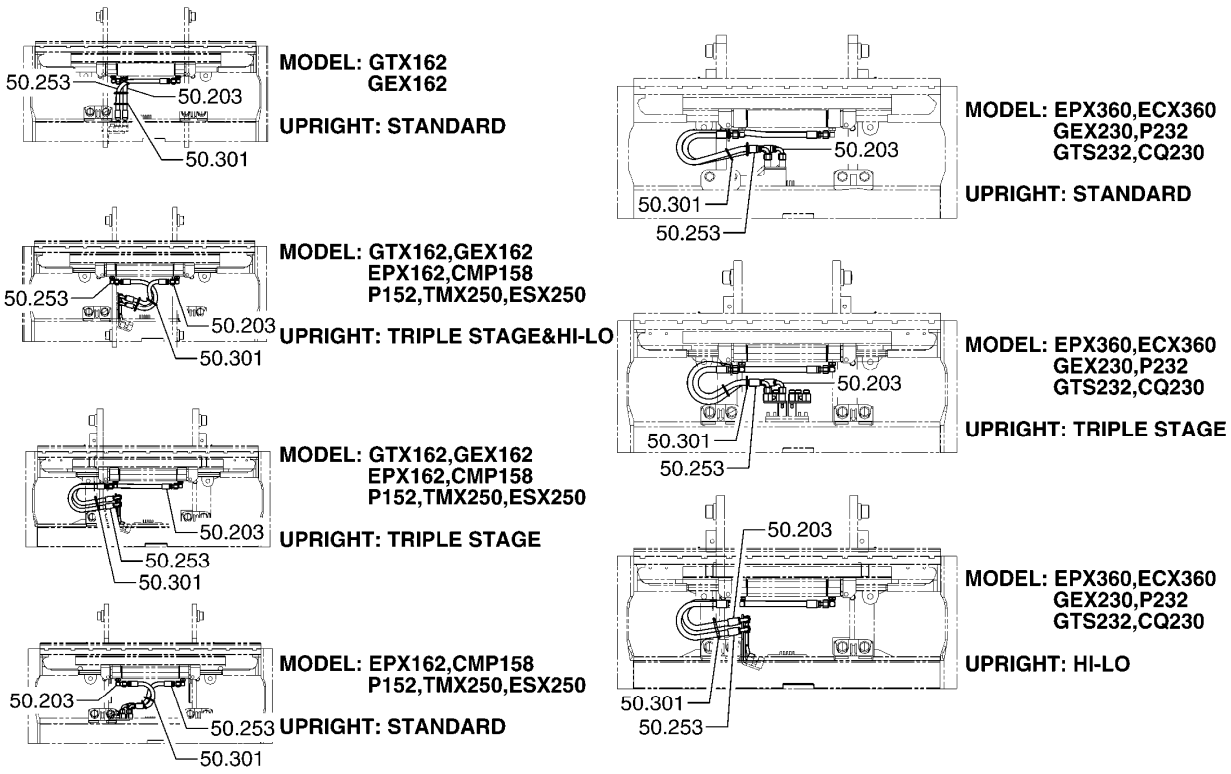

50.203 LINE, DEVICE HYDRAULIC (AT CARRIAGE)
라인

50.253 LINE, DEVICE HYDRAULIC (AT CARRIAGE)
라인

50.301 CLIP, DEVICE RH HOSE (AT CARRIAGE)
클립

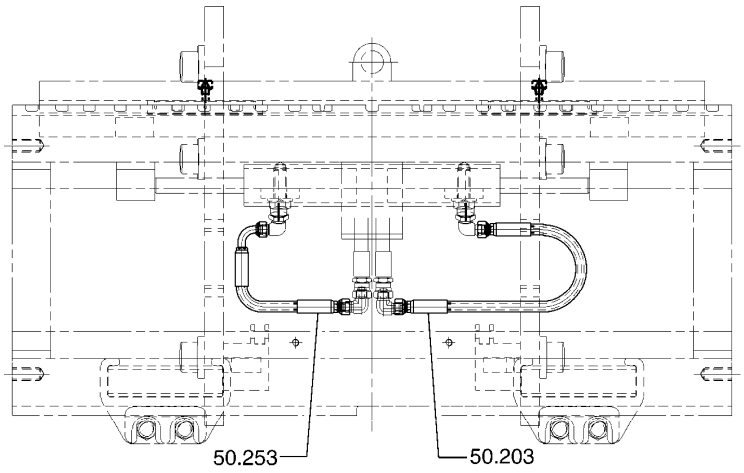

ATTACHMENT HOSE ADAPTATION (CARRIAGE) **50-793**

50.203 LINE, DEVICE HYDRAULIC (AT CARRIAGE)
라인

50.253 LINE, DEVICE HYDRAULIC (AT CARRIAGE)
라인

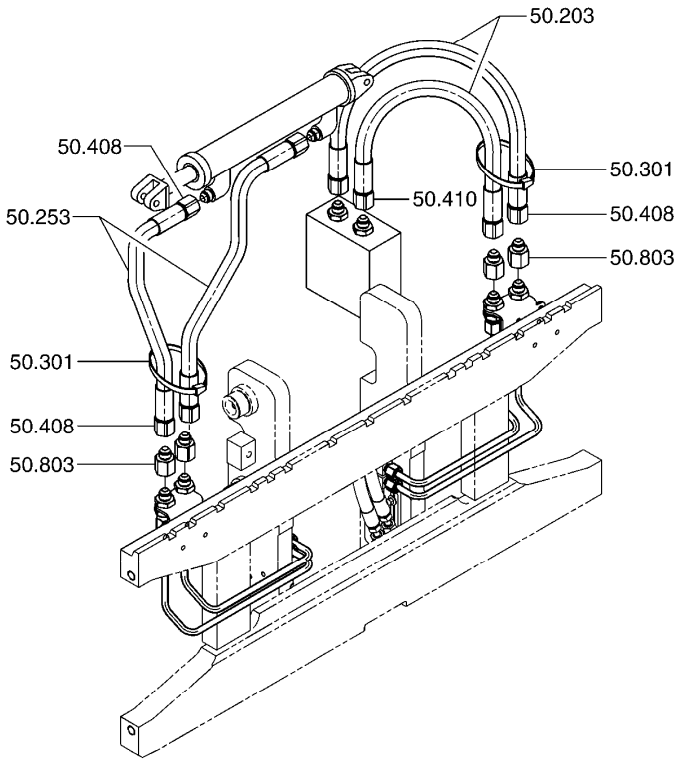

ATTACHMENT HOSE ADAPTATION (CARRIAGE) **50-794**

50.203 LINE, DEVICE HYDRAULIC (AT CARRIAGE)
라인

50.253 LINE, DEVICE HYDRAULIC (AT CARRIAGE)
라인

50.301 CLIP, DEVICE RH HOSE (AT CARRIAGE)
클립

50.408 COUPLING, DEVICE HOSE
커플링

50.410 COUPLING, DEVICE HOSE
커플링

50.803 FITTING, DEVICE HYDRAULIC LINE
피팅

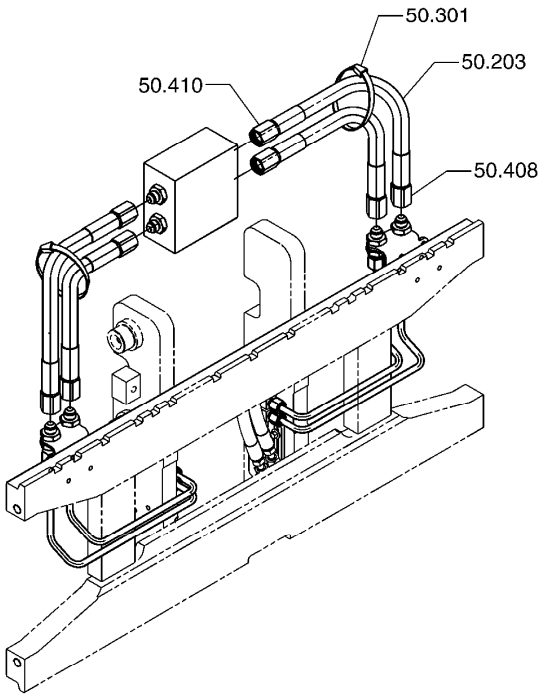

ATTACHMENT HOSE ADAPTATION (CARRIAGE) **50-796**

50.203 LINE, DEVICE HYDRAULIC (AT CARRIAGE)
라인

50.301 CLIP, DEVICE RH HOSE (AT CARRIAGE)
클립

50.408 COUPLING, DEVICE HOSE
커플링

50.410 COUPLING, DEVICE HOSE
커플링

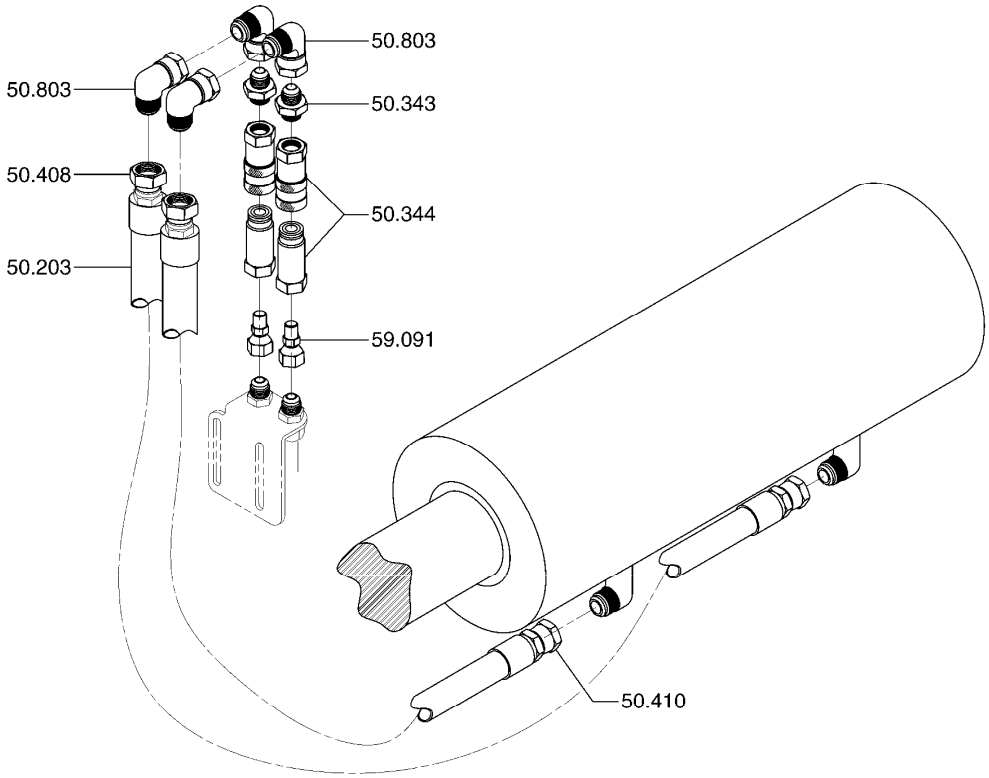

ATTACHMENT HOSE ADAPTATION (CARRIAGE) **50-797**

50.203 LINE, DEVICE HYDRAULIC (AT CARRIAGE)
라인

50.343 FITTING, DEVICE LH LINE
피팅

50.344 FITTING, DEVICE LH LINE
피팅

50.408 COUPLING, DEVICE HOSE
커플링

50.410 COUPLING, DEVICE HOSE
커플링

50.803 FITTING, DEVICE HYDRAULIC LINE
피팅

59.091 FITTING, DEVICE HYDRAULIC LINE
피팅

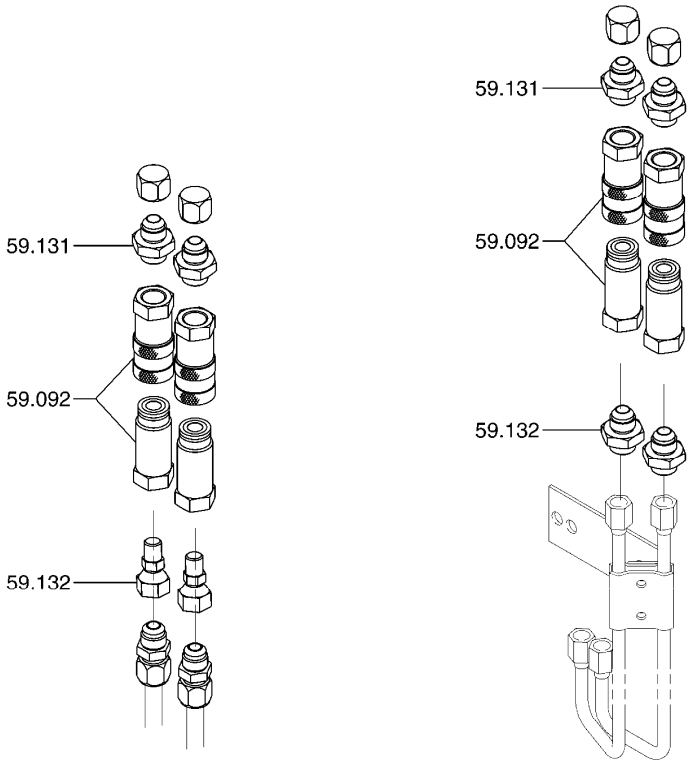

QUICK DISCONNECT FOR DEVICE HOSE ADAPTATION **50-798**

59.092 QUICK DISCONNECT, DEVICE HOSE
퀵디스커넥트

59.131 FITTING, DEVICE LINE QUICK DISCONNECT
*

59.132 FITTING, DEVICE LINE QUICK DISCONNECT
*

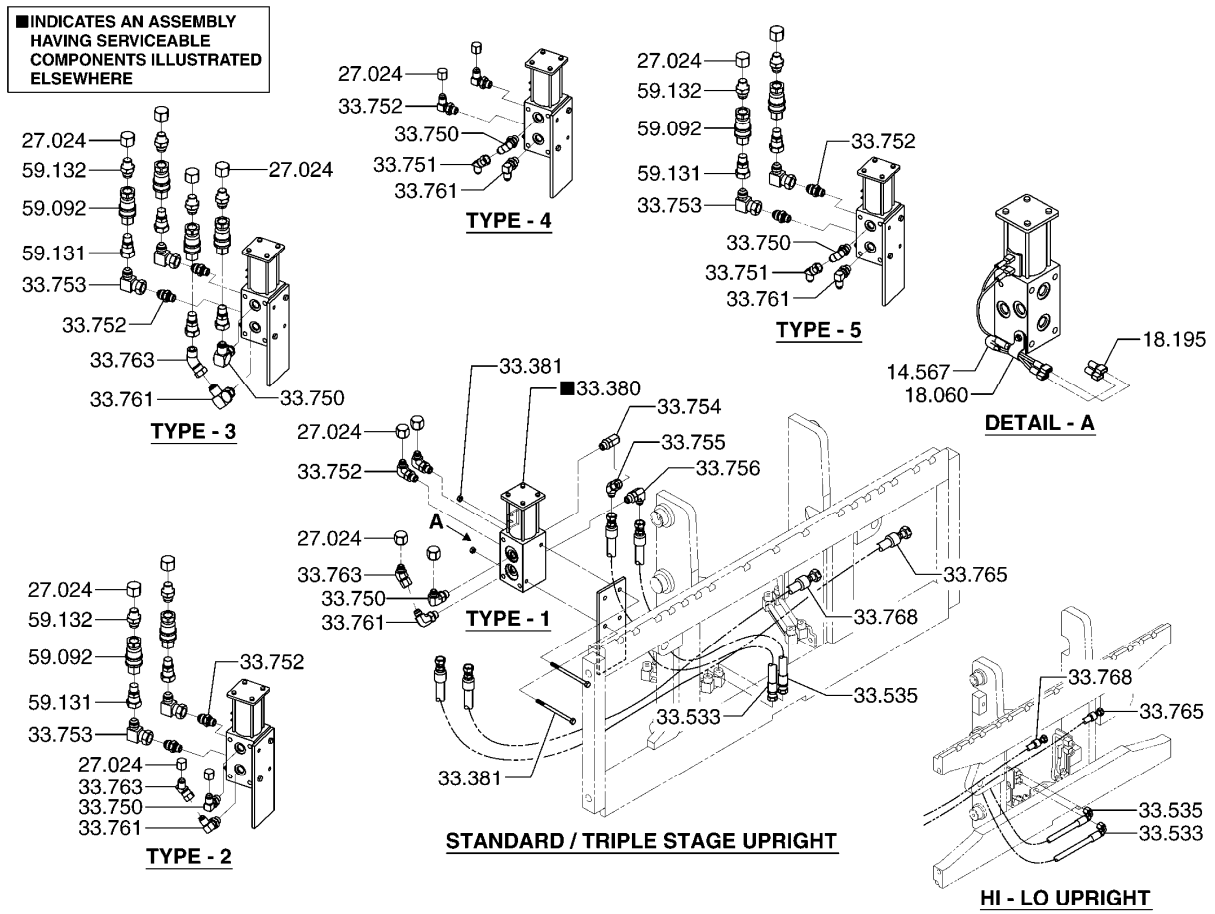

14.567 WIRE, DEVICE SELECTOR VALVE SWITCH FEED
와이어

18.060 CLAMP, DEVICE SELECTOR VALVE CABLE
클램프

18.195 TERMINAL, DEVICE SELECTOR VALVE SWITCH FEED WIRE
*

27.024 PLUG, DEVICE SELECTOR VALVE OPTIONAL OUTLET PORT
플러그

33.380 VALVE ASSEMBLY, DEVICE SELECTOR SOLENOID
벨브

33.381 FASTENER, DEVICE SELECTOR VALVE
패스너

33.533 LINE, DEVICE SELECTOR VALVE "P" PORT HYDRAULIC
*

33.535 LINE, DEVICE SELECTOR VALVE "R" PORT HYDRAULIC
*

33.750 FITTING, DEVICE SELECTOR VALVE C1 PORT
피팅

33.751	FITTING, DEVICE SELECTOR VALVE C1 PORT 피팅
33.752	FITTING, DEVICE SELECTOR VALVE C2 PORT 피팅
33.753	FITTING, DEVICE SELECTOR VALVE C2 PORT 피팅
33.754	FITTING, DEVICE SELECTOR VALVE "P" PORT 피팅
33.755	FITTING, DEVICE SELECTOR VALVE "P" PORT 피팅
33.756	FITTING, DEVICE SELECTOR VALVE "R" PORT 피팅
33.761	FITTING, DEVICE SELECTOR VALVE C4 PORT 피팅
33.763	FITTING, DEVICE SELECTOR VALVE C4 PORT 피팅
33.765	LINE, DEVICE SELECTOR VALVE C4 PORT HYDRAULIC 라인
33.768	LINE, DEVICE SELECTOR VALVE C1 PORT HYDRAULIC 라인
59.092	QUICK DISCONNECT, DEVICE HOSE 퀵디스커넥트
59.131	FITTING, DEVICE LINE QUICK DISCONNECT *
59.132	FITTING, DEVICE LINE QUICK DISCONNECT *

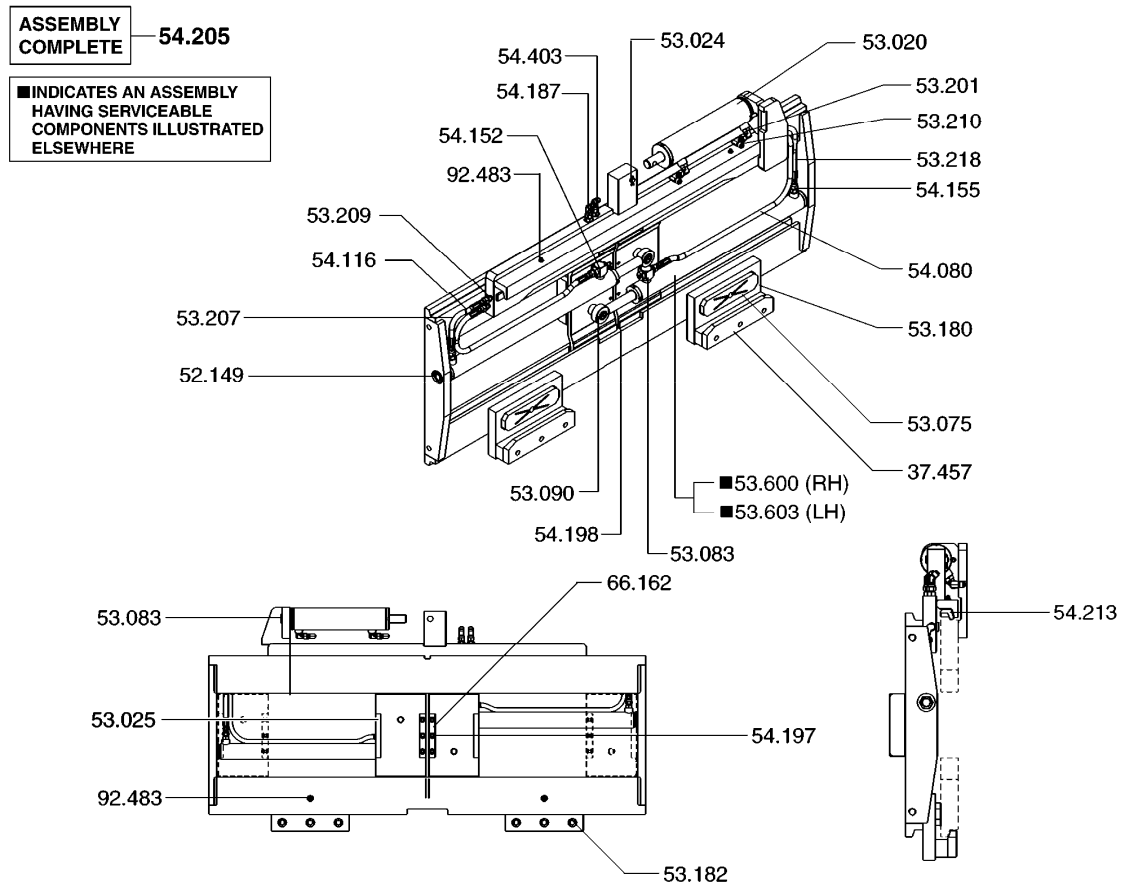

FORK POSITIONER **53-024**

37.457	HOOK, CAB CLOTHING HANGER 후크
52.149	NUT, SIDE SHIFT CYLINDER ANCHOR PORT LINE FITTIN 너트
53.020	CYLINDER ASSEMBLY, SIDE SHIFTER 실린더
53.024	ANCHOR, SIDE SHIFTER CYLINDER BASE 앵커
53.025	GUIDE, SIDE SHIFTER MOVABLE FRAME LOWER 가이드
53.075	BEARING, SIDE SHIFTER (LOWER) 베어링
53.083	FASTENER, SIDE SHIFTER CYLINDER ANCHOR 패스너
53.090	FASTENER, SIDE SHIFTER MOVABLE FRAME 패스너
53.180	SPACER, SIDE SHIFTER BEARING 스페이서
53.182	FASTENER, SIDE SHIFTER HANGER 패스너
53.201	FITTING, SIDE SHIFTER CYLINDER ANCHOR PORT 피팅
53.207	LINE, SIDE SHIFTER CYLINDER ANCHOR PORT 라인
53.209	FITTING, SIDE SHIFTER CYLINDER ANCHOR PORT LINE 피팅
53.210	FITTING, SIDE SHIFTER CYLINDER ANCHOR PORT LINE 피팅
53.218	LINE, SIDE SHIFTER CYLINDER ROD PORT 라인
53.600	CYLINDER ASSEMBLY, INBOARD RH FORK 실린더
53.603	CYLINDER ASSEMBLY, INBOARD LH FORK 실린더
54.080	LINE, SIDE SHIFT CYLINDER ANCHOR PORT 라인
54.116	LINE, SIDE SHIFT CYLINDER ROD PORT 라인
54.152	FITTING, SIDE SHIFTER CYLINDER ANCHOR PORT LINE 피팅
54.155	FITTING, SIDE SHIFTER CYLINDER ROD PORT LINE 피팅
54.187	FITTING, SIDE SHIFTER ANCHOR PORT LINE 피팅
54.197	FASTENER, SIDE SHIFTING BASE PLATE TO ARM 패스너
54.198	BEARING, SIDE SHIFTER BASE PLATE ARM 베어링
54.205	ATTACHMENT, FORK POSITIONER 어태치먼트
54.213	BEARING, SIDE SHIFTER (UPPER) 베어링
54.403	FITTING-LUB, SIDE SHIFTER BASE PLATE ARM 피팅
66.162	STOP, CARRIAGE TRAVEL 스톱
92.483	NIPPLE, LUBRICATION 니플

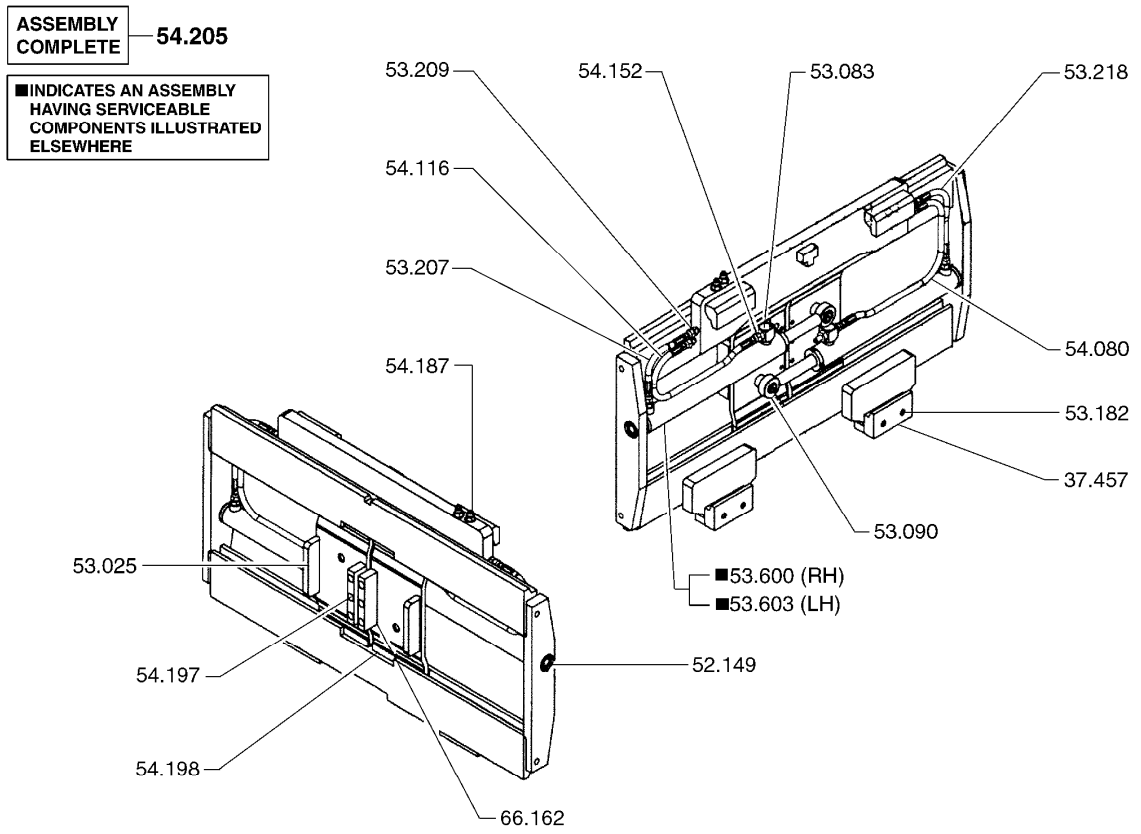

FORK POSITIONER (BASIC) **53-084**

37.457 HOOK, CAB CLOTHING HANGER
후크

52.149 NUT, SIDE SHIFT CYLINDER ANCHOR PORT LINE FITTING
너트

53.025 GUIDE, SIDE SHIFTER MOVABLE FRAME LOWER
가이드

53.083 FASTENER, SIDE SHIFTER CYLINDER ANCHOR
패스너

53.090 FASTENER, SIDE SHIFTER MOVABLE FRAME
패스너

53.182 FASTENER, SIDE SHIFTER HANGER
패스너

53.207 LINE, SIDE SHIFTER CYLINDER ANCHOR PORT
라인

53.209 FITTING, SIDE SHIFTER CYLINDER ANCHOR PORT LINE
피팅

53.218 LINE, SIDE SHIFTER CYLINDER ROD PORT
라인

53.600	CYLINDER ASSEMBLY, INBOARD RH FORK 실린더
53.603	CYLINDER ASSEMBLY, INBOARD LH FORK 실린더
54.080	LINE, SIDE SHIFT CYLINDER ANCHOR PORT 라인
54.116	LINE, SIDE SHIFT CYLINDER ROD PORT 라인
54.152	FITTING, SIDE SHIFTER CYLINDER ANCHOR PORT LINE 피팅
54.187	FITTING, SIDE SHIFTER ANCHOR PORT LINE 피팅
54.197	FASTENER, SIDE SHIFTING BASE PLATE TO ARM 패스너
54.198	BEARING, SIDE SHIFTER BASE PLATE ARM 베어링
54.205	ATTACHMENT, FORK POSITIONER 어태치먼트
66.162	STOP, CARRIAGE TRAVEL 스톱

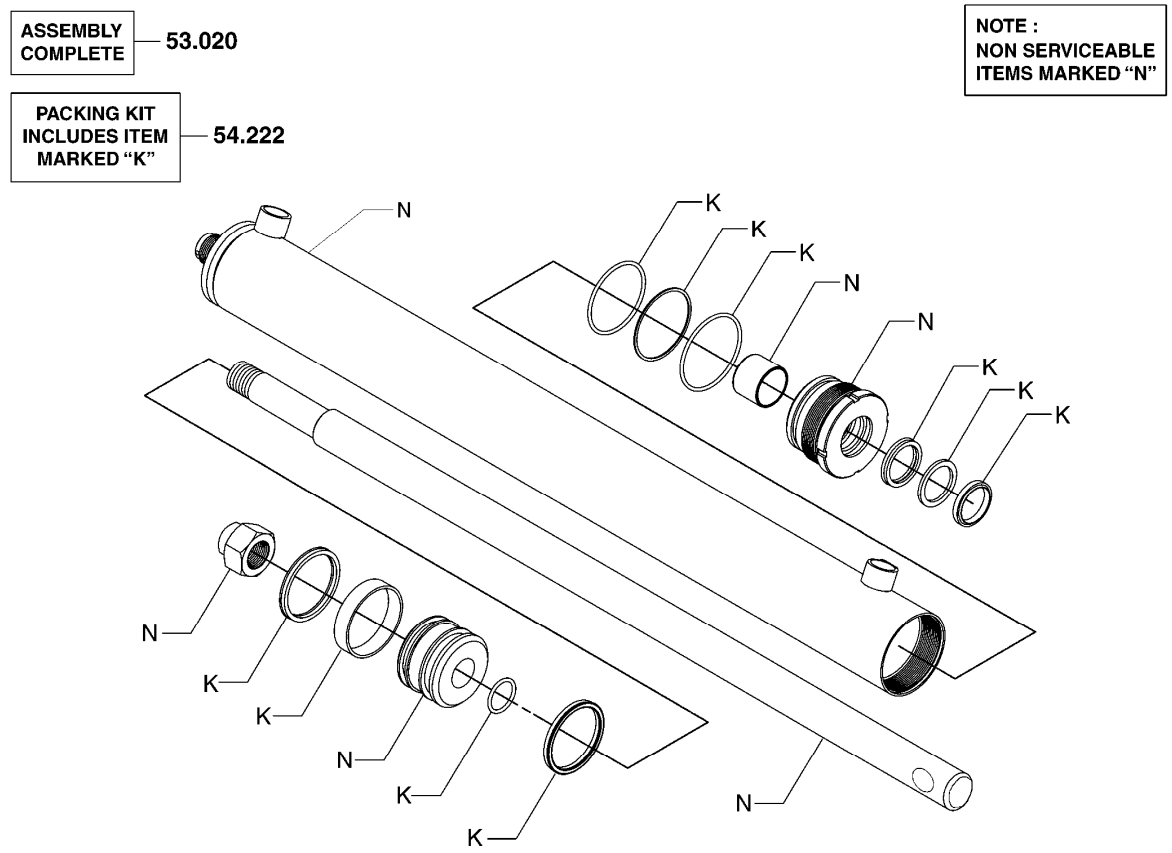

53.020 CYLINDER ASSEMBLY, SIDE SHIFTER
실린더

54.222 PACKING KIT, SIDE SHIFTER CYLINDER
패킹킷

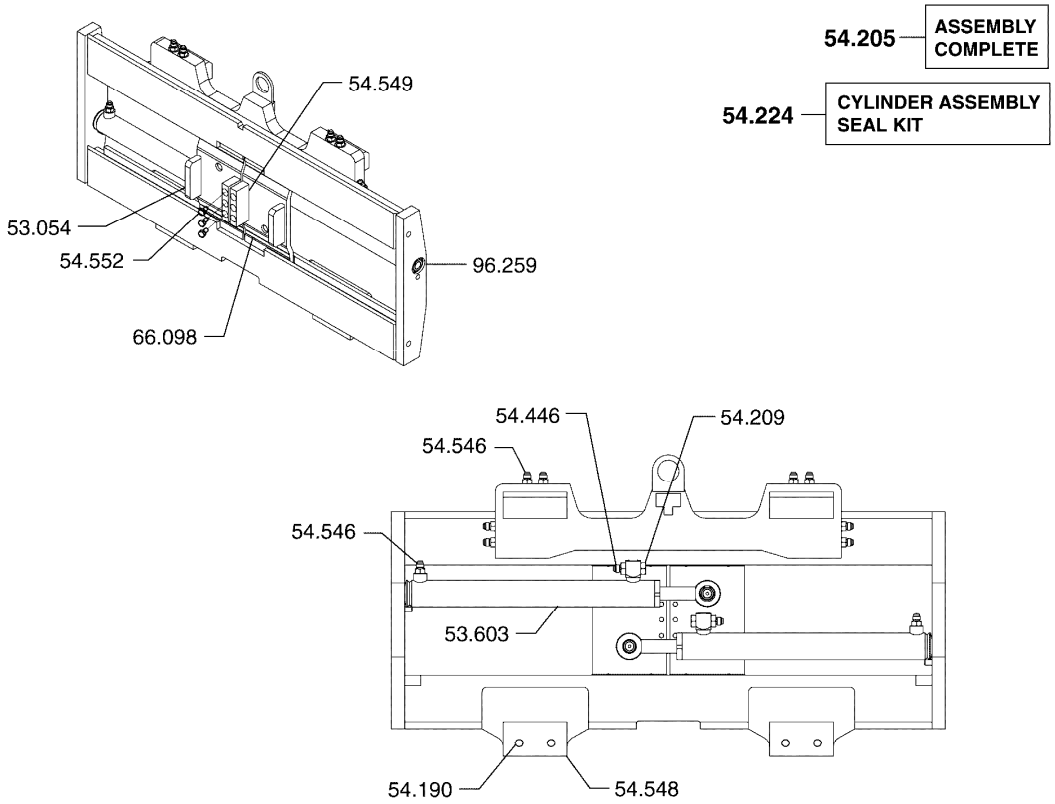

FORK POSITIONER **53-164**

53.054 GUIDE, FORK
가이드

53.603 CYLINDER ASSEMBLY, INBOARD LH FORK
실린더

54.190 FASTENER, FORK HANGER SUPPORT
패스너

54.205 ATTACHMENT, FORK POSITIONER
어태치먼트

54.209 PLUG, FORK CYLINDER FLOW DIVIDER
플러그

54.224 PACKING KIT, LH FORK CYLINDER
패킹킷

54.446 FITTING - LUB, FORK POSITIONER
피팅

54.546 FITTING - LUB, FORK POSITIONER
피팅

54.548 HOOK, FORK POSITIONER HANGER
후크

54.549 STOP, FORK POSITIONER CYLINDER
스톱

54.552 FASTENER, FORK POSITIONER CYLINDER STOP
패스너

66.098 BEARING, FORK HORIZONTAL THRUST ROLLER
베어링

96.259 FASTENER, FORK CYLINDER ANCHOR END PIN RETAINER
패스너

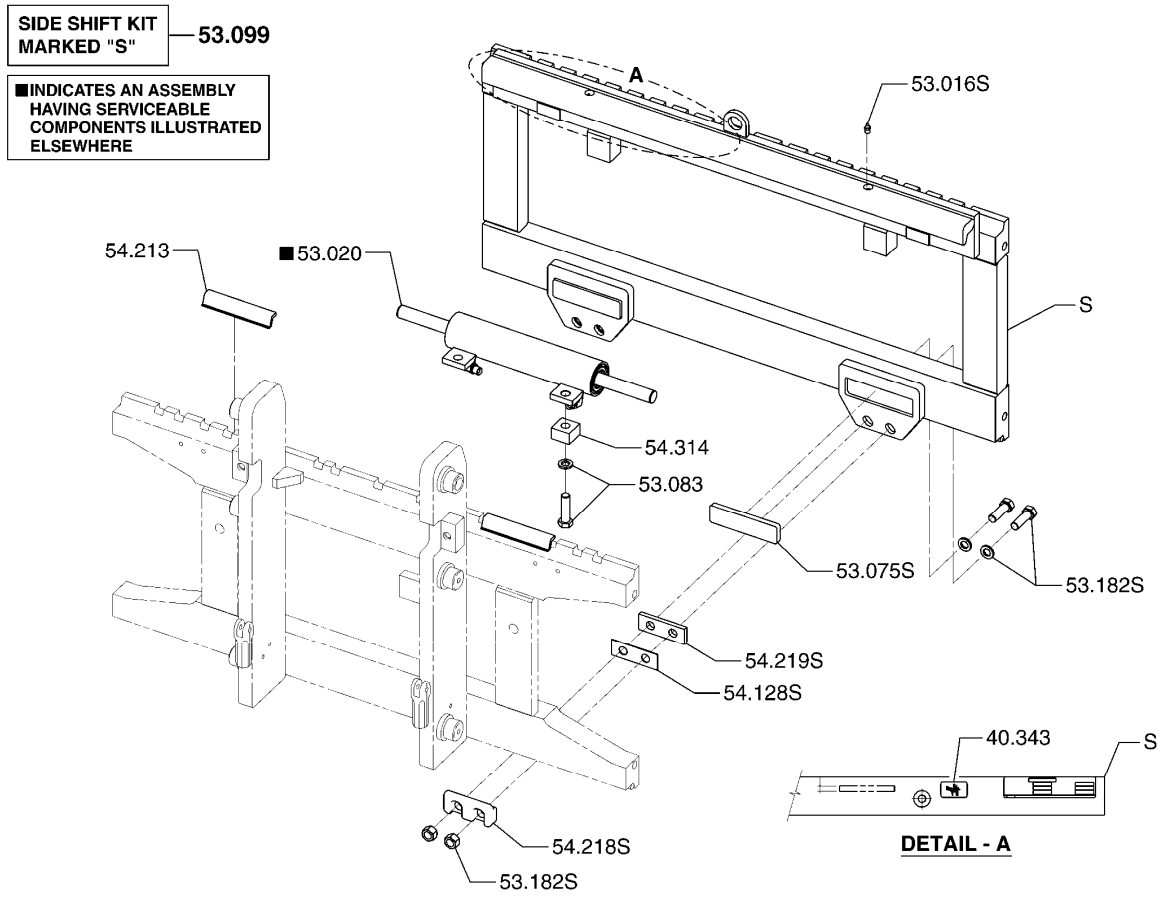

SIDE SHIFT ASSEMBLY **53-187**

40.343	DECAL, ATTACHMENT SAFETY *
53.016	FITTING-LUB, SIDE SHIFTER MOVABLE FRAME SUPPORT SH 피팅
53.020	CYLINDER ASSEMBLY, SIDE SHIFTER 실린더
53.075	BEARING, SIDE SHIFTER (LOWER) 베어링
53.083	FASTENER, SIDE SHIFTER CYLINDER ANCHOR 패스너
53.099	SIDE SHIFTER, DEVICE 사이드쉬프트
53.182	FASTENER, SIDE SHIFTER HANGER 패스너
54.128	SPACER, SIDE SHIFTER MOVEABLE FRAME BEARING 스페이서
54.213	BEARING, SIDE SHIFTER (UPPER) 베어링

54.218 HOOK, SIDE SHIFTER HANGER
후크

54.219 SPACER, SIDE SHIFTING BASE PLATE HANGER
스페이서

54.314 SPACER, SIDE SHIFTER CYLINDER REAR
스페이서

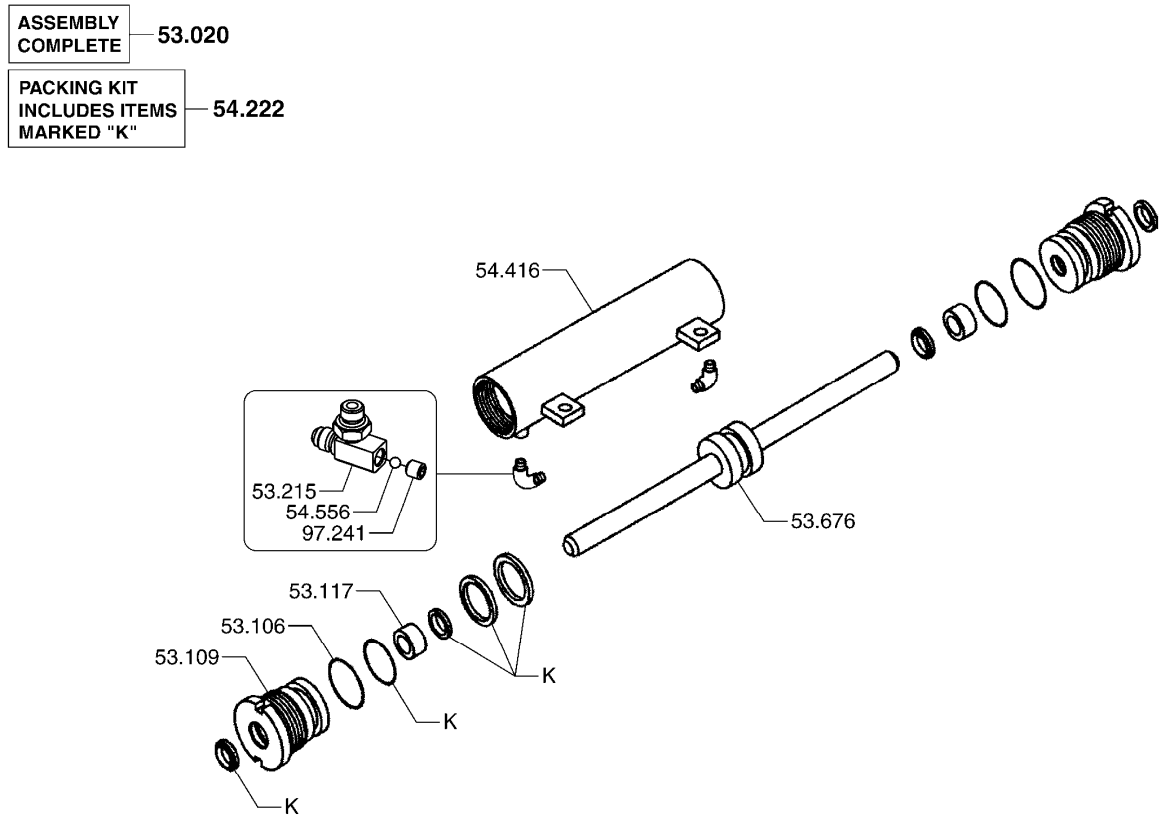

SIDESHIFT CYLINDER **53-198**

53.020 CYLINDER ASSEMBLY, SIDE SHIFTER
실린더

53.109 GLAND, SIDE SHIFTER CYLINDER
그랜드

53.110 RETAINER, SIDE SHIFTER CYLINDER GLAND
리테이너

53.117 BUSHING, SIDE SHIFTER CYLINDER GLAND
부싱

53.215 FITTING, SIDE SHIFTER CYLINDER ROD PORT
피팅

53.676 ROD, SIDE SHIFTER CYLINDER PISTON
로드

54.222 PACKING KIT, SIDE SHIFTER CYLINDER
패킹킷

54.416 BARREL, SIDE SHIFT CYLINDER
배럴

54.556 BALL, SIDE SHIFTER CYLINDER ROD PORT
*

97.241 SET SCREW, SIDE SHIFTER CYLINDER ROD PORT
*

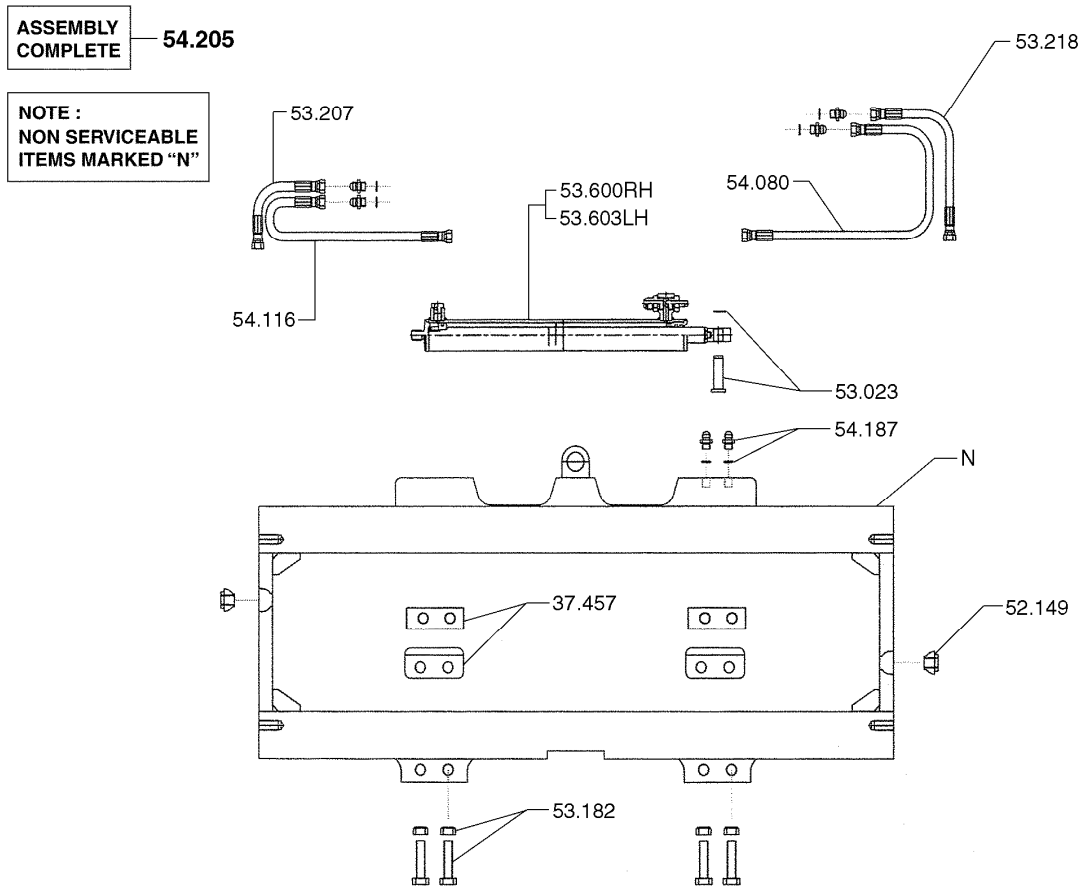

52.149 NUT, SIDE SHIFT CYLINDER ANCHOR PORT LINE FITTING
너트

53.023 ANCHOR, SIDE SHIFTER CYLINDER ROD END
앵커

53.182 FASTENER, SIDE SHIFTER HANGER
패스너

53.207 LINE, SIDE SHIFTER CYLINDER ANCHOR PORT
라인

53.218 LINE, SIDE SHIFTER CYLINDER ROD PORT
라인

53.600 CYLINDER ASSEMBLY, INBOARD RH FORK
실린더

53.603 CYLINDER ASSEMBLY, INBOARD LH FORK
실린더

54.080 LINE, SIDE SHIFT CYLINDER ANCHOR PORT
라인

54.116 LINE, SIDE SHIFT CYLINDER ROD PORT
라인

54.187 FITTING, SIDE SHIFTER ANCHOR PORT LINE
피팅

54.205 ATTACHMENT, FORK POSITIONER
어태치먼트

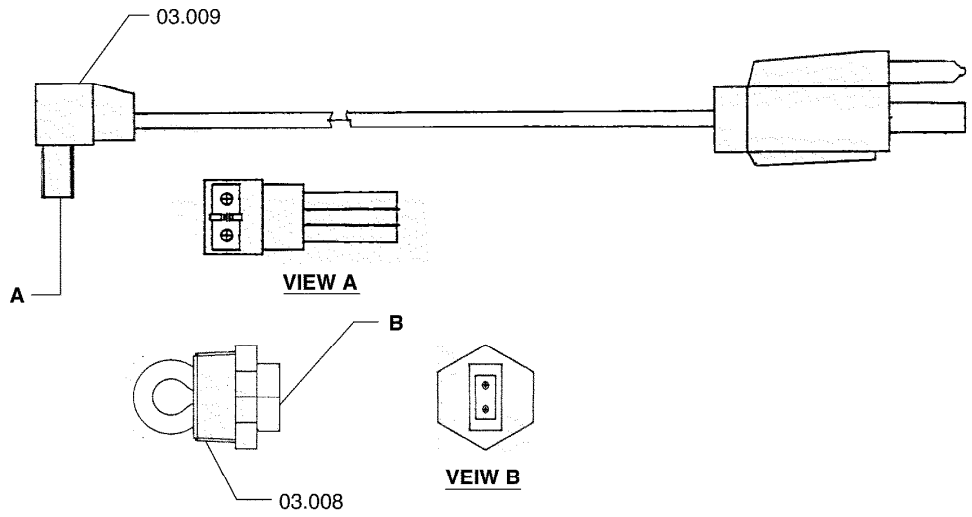

BLOCK HEATER GP **60-005**

03.008 SWITCH, COLD START HEATER
스위치

03.009 WIRE, COLD START HEATER SWITCH
와이어

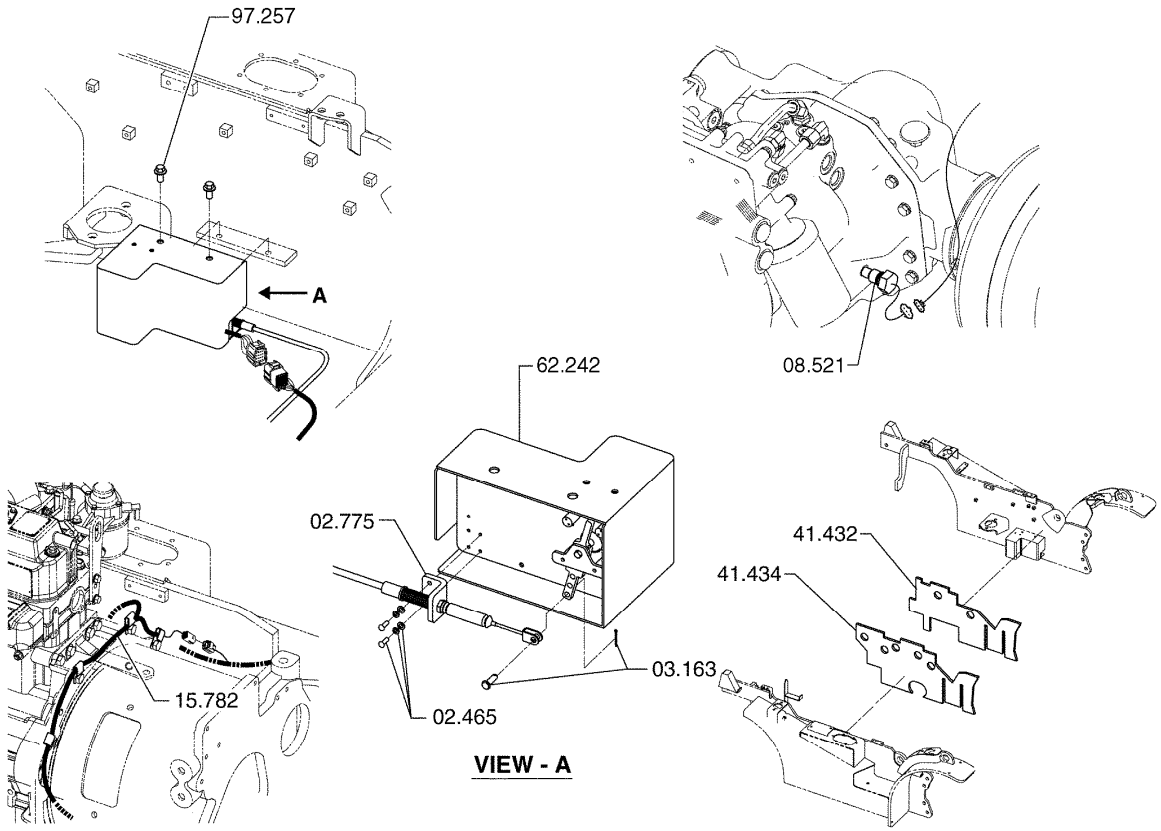

SPEED LIMIT INSTALLATION **62-002**

02.465 FASTENER, ACCELERATOR CONTROL LINKAGE
패스너

02.775 CABLE, ACCELERATOR CONTROL
케이블

03.163 FASTENER, ACCELERATOR CONTROL ROD END
패스너

08.521 SENSOR, TRANSMISSION SPEED TURBINE
센서

15.782 HARNESS, SPEED SENSOR
하네스

41.432 SOUND SEAL, FRAME LOWER LH
사운드시일

41.434 SOUND SEAL, FRAME LOWER RH
사운드시일

62.242 CONTROLLER, SPEED LIMIT
*

97.257 FASTENER, SPEED LIMIT CONTROLLER MOUNTING
*

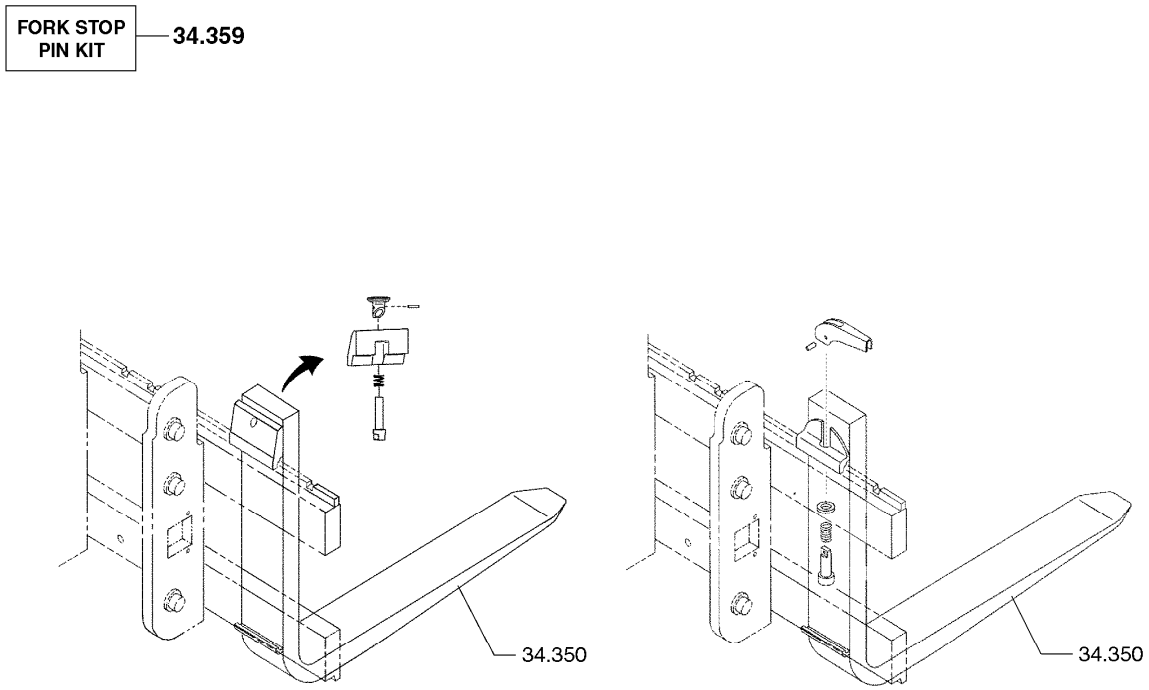

34.350 FORK ASSEMBLY
포크

34.359 KIT, FORK STOP PIN (CAPTIVE)
킷

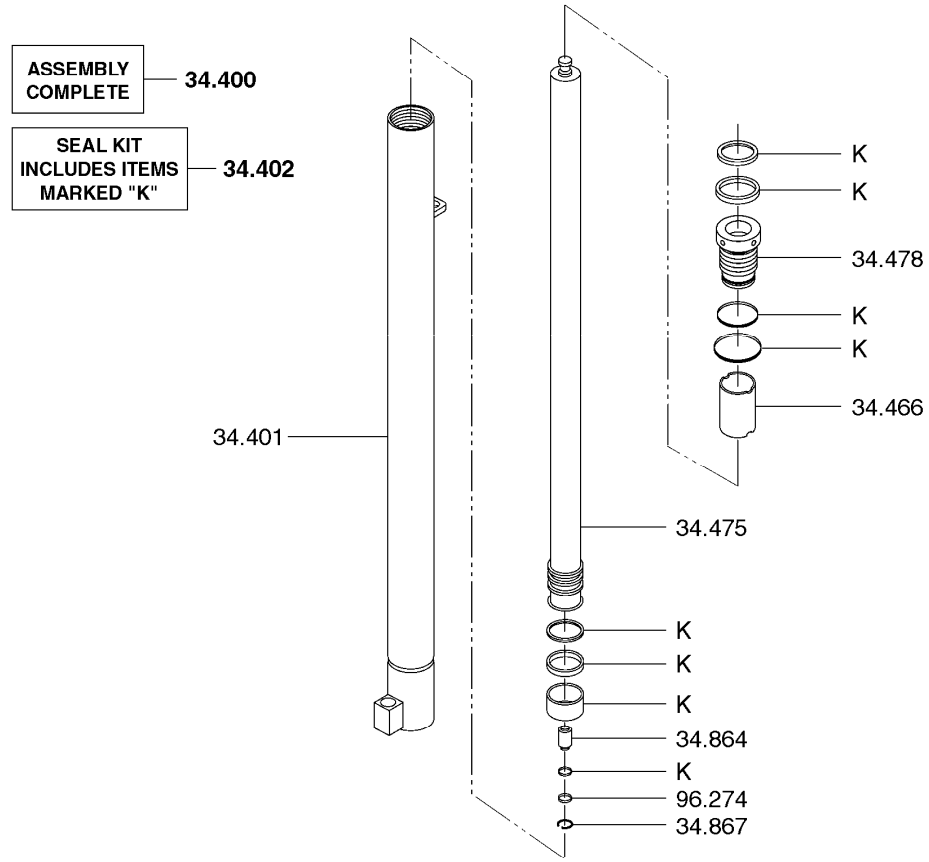

LIFT CYLINDER ASSEMBLY 66-159

34.400 CYLINDER ASSEMBLY, LIFT
실린더

34.401 BARREL, LIFT CYLINDER
배럴

34.402 SEAL & PACKING KIT, LIFT CYLINDER
시일과팩킹킷

34.466 SPACER, LIFT CYLINDER FEED TUBE
스페이서

34.475 ROD, LIFT CYLINDER
로드

34.478 GLAND, LIFT CYLINDER
그랜드

34.864 CHECK VALVE, LIFT CYLINDER
체크밸브

34.867 RETAINER, LIFT CYLINDER CHECK VALVE
리테이너

96.274 WASHER, LIFT CYLINDER CHECK VALVE
욱셔

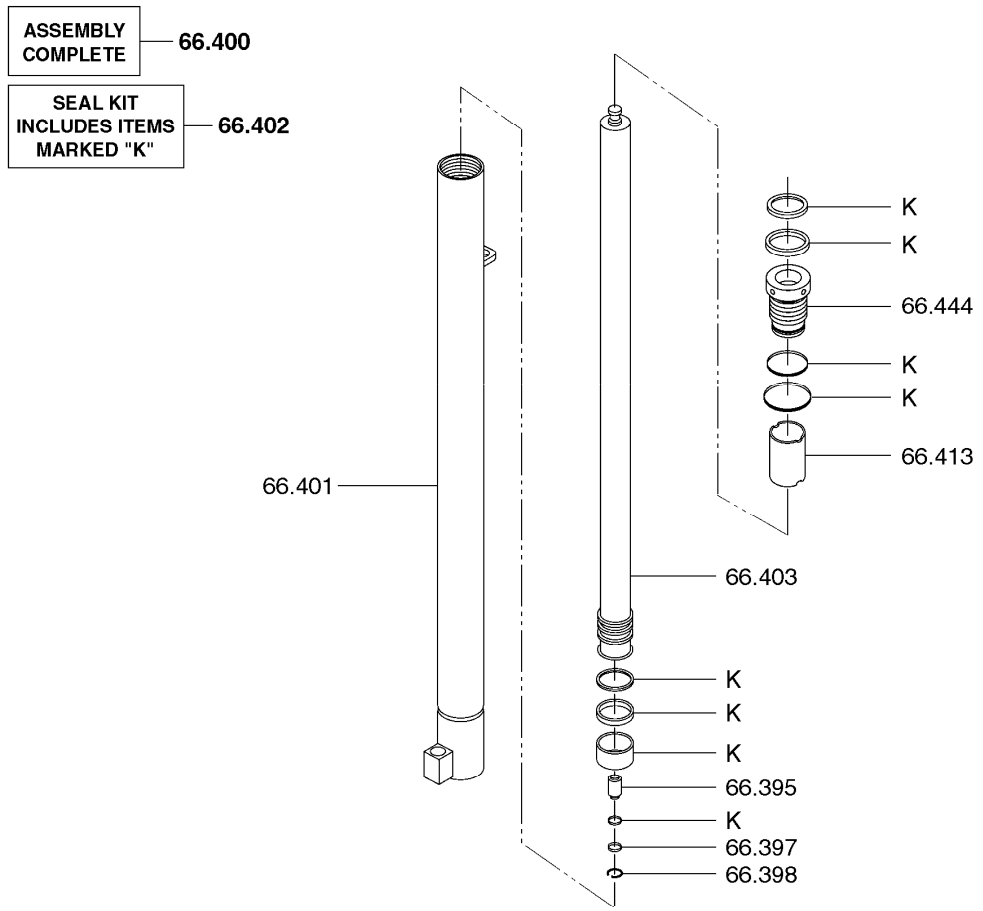

SECONDARY CYLINDER ASSEMBLY **66-160**

66.395 CHECK VALVE, FINAL LIFT CYLINDER
체크밸브

66.397 WASHER, FINAL LIFT CYLINDER CHECK VALVE
와셔

66.398 SNAP RING, FINAL LIFT CYLINDER CHECK VALVE
스냅링

66.400 CYLINDER ASSEMBLY, FINAL LIFT
실린더

66.401 BARREL, FINAL LIFT CYLINDER
배럴

66.402 PACKING KIT, FINAL LIFT CYLINDER
패킹킷

66.403 PISTON ROD, FINAL LIFT CYLINDER
피스톤로드

66.413 SPACER, FINAL LIFT CYLINDER PISTON ROD
스페이서

66.444 GLAND, FINAL LIFT CYLINDER
그룹드

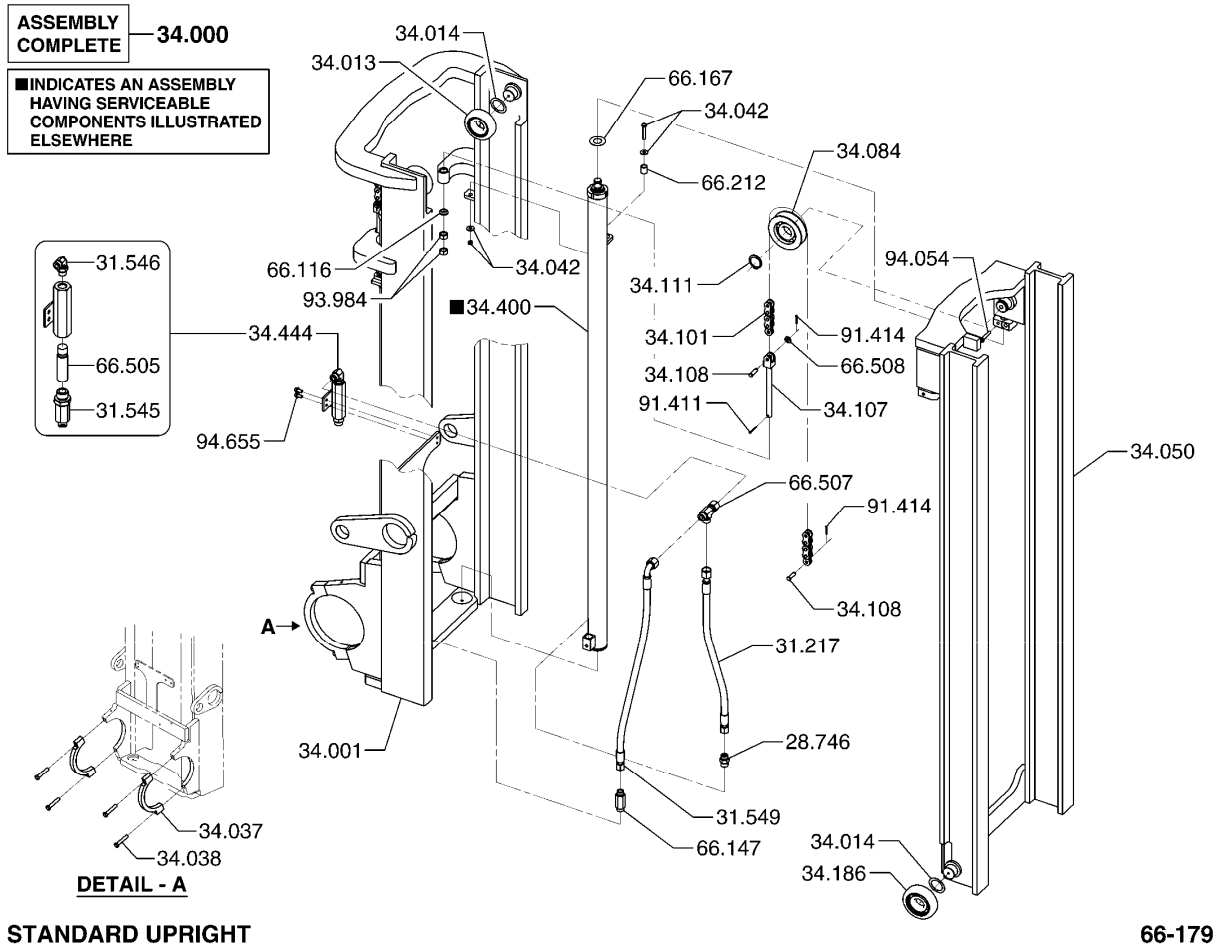

28.746	FITTING, LIFT CYLINDER LINE 피팅	34.107	ANCHOR, LIFT CHAIN 앵커
31.217	LINE, LIFT CYLINDER INLET FITTING 라인	34.108	FASTENER, LIFT CHAIN TO ANCHOR 패스너
31.545	FITTING, LIFT CYL FLOW CONTROL VALVE INLET 피팅	34.111	FASTENER, CHAIN SHEAVE SHAFT (CARRIER) 패스너
31.546	FITTING, LIFT CYL FLOW CONTROL VALVE OUTLET 피팅	34.186	ROLLER, UPRIGHT 롤러
31.549	LINE, LIFT CYL FLOW CONTROL VALVE INLET 라인	34.400	CYLINDER ASSEMBLY, LIFT 실린더
34.000	UPRIGHT & LIFT CYL ASSEMBLY 업라이트와실린더	34.444	VALVE ASSEMBLY, LIFT CYLINDER FLOW CONTROL 밸브
34.001	OUTER RAIL WELDER ASSEMBLY, UPRIGHT 아웃레일	66.116	SPACER, LIFT CHAIN ANCHOR 스페이서
34.013	ROLLER, UPRIGHT 롤러	66.147	VALVE, FINAL LIFT CYLINDER PORT FLOW CONTROL 밸브
34.014	SHIM, UPRIGHT ROLLER 심	66.167	SHIM, LIFT CYLINDER UPPER 심
34.037	CAP, UPRIGHT TRUNNION 캡	66.212	SPACER, LIFT CYLINDER FASTENER 스페이서
34.038	FASTENER, UPRIGHT TRUNNION CAP 패스너	66.505	CARTRIDGE, LIFT CYLINDER FLOW CONTROL VALVE *
34.042	FASTENER, LIFT CYLINDER (UPPER) 패스너	66.507	TEE, LIFT CYLINDER LINE *
34.050	INNER RAIL WELDED ASSEMBLY, UPRIGHT 인너레일	66.508	SPACER, LIFT CHAIN ANCHOR FASTENER *
34.084	SHEAVE, LIFT CHAIN 쉬브	91.411	RETAINER, LIFT CHAIN TO ANCHOR FASTENER 리테이너
34.101	CHAIN, LIFT 체인	91.414	RETAINER, LIFT CHAIN TO ANCHOR FASTENER 리테이너

93.984 FASTENER, LIFT CHAIN ANCHOR
패스너

94.054 FASTENER, LIFT CYLINDER (UPPER)
패스너

94.655 FASTENER, LIFT CYLINDER LINE JUNCTION BLOCK
패스너

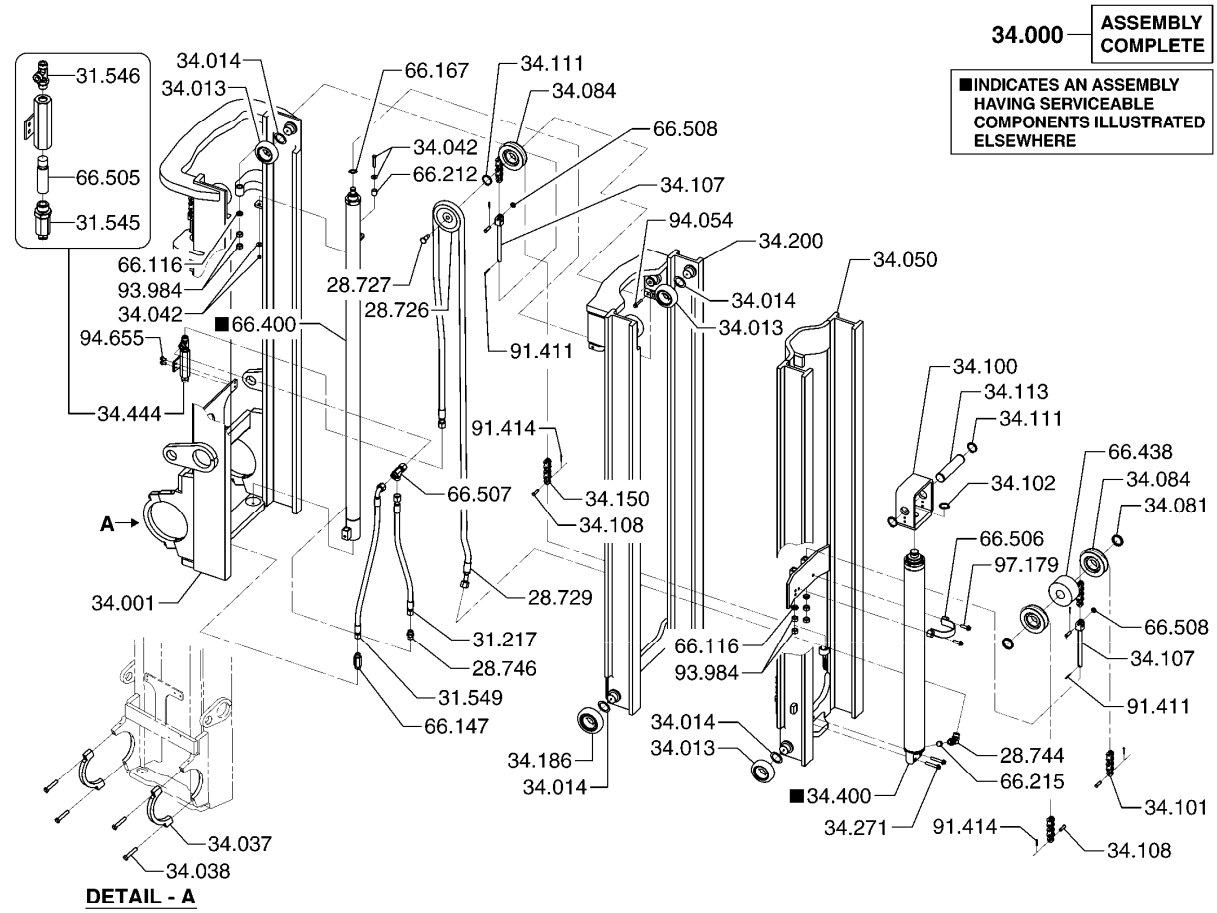

28.726	SHEAVE, LIFT CYLINDER HOSE 쉬브
28.727	PIVOT, LIFT CYLINDER HOSE SHEAVE 피봇
28.729	LINE, LIFT CYLINDER 라인
28.744	FITTING, LIFT CYLINDER LINE 피팅
28.746	FITTING, LIFT CYLINDER LINE 피팅
31.217	LINE, LIFT CYLINDER INLET FITTING 라인
31.545	FITTING, LIFT CYL FLOW CONTROL VALVE INLET 피팅
31.546	FITTING, LIFT CYL FLOW CONTROL VALVE OUTLET 피팅
31.549	LINE, LIFT CYL FLOW CONTROL VALVE INLET 라인
34.000	UPRIGHT & LIFT CYL ASSEMBLY 업라이트와실린더
34.001	OUTER RAIL WELDER ASSEMBLY, UPRIGHT 아웃레일
34.013	ROLLER, UPRIGHT 롤러
34.014	SHIM, UPRIGHT ROLLER 심
34.037	CAP, UPRIGHT TRUNNION 캡
34.038	FASTENER, UPRIGHT TRUNNION CAP 패스너
34.042	FASTENER, LIFT CYLINDER (UPPER) 패스너
34.050	INNER RAIL WELDED ASSEMBLY, UPRIGHT 인너레일
34.081	SPACER, LIFT CHAIN SHEAVE CARRIER 스페이서
34.084	SHEAVE, LIFT CHAIN 쉬브
34.100	CARRIER, LIFT CYLINDER CHAIN SHEAVE 캐리어
34.101	CHAIN, LIFT 체인
34.102	FASTENER, SHEAVE CARRIER 패스너
34.107	ANCHOR, LIFT CHAIN 앵커
34.108	FASTENER, LIFT CHAIN TO ANCHOR 패스너
34.111	FASTENER, CHAIN SHEAVE SHAFT (CARRIER) 패스너
34.113	SHAFT, LIFT CHAIN SHEAVE (CARRIER) 샤프트
34.150	CHAIN, UPRIGHT RAIL LIFT 체인
34.186	ROLLER, UPRIGHT 롤러
34.200	INTERMEDIATE RAIL WELDED ASSEMBLY, UPRIGHT 인터레일
34.271	FASTENER, LIFT CYLINDER LOWER 패스너

34.400 CYLINDER ASSEMBLY, LIFT
실린더

34.444 VALVE ASSEMBLY, LIFT CYLINDER FLOW CONTROL
벨브

66.116 SPACER, LIFT CHAIN ANCHOR
스페이서

66.147 VALVE, FINAL LIFT CYLINDER PORT FLOW CONTROL
밸브

66.167 SHIM, LIFT CYLINDER UPPER
심

66.212 SPACER, LIFT CYLINDER FASTENER
스페이서

66.215 VALVE, LIFT CYLINDER PORT FLOW CONTROL
밸브

66.400 CYLINDER ASSEMBLY, FINAL LIFT
실린더

66.438 SHEAVE, HOSE
쉬브

66.505 CARTRIDGE, LIFT CYLINDER FLOW CONTROL VALVE
*

66.506 CLAMP, LIFT CYLINDER
*

66.507 TEE, LIFT CYLINDER LINE
*

66.508 SPACER, LIFT CHAIN ANCHOR FASTENER
*

91.411 RETAINER, LIFT CHAIN TO ANCHOR FASTENER
리테이너

91.414 RETAINER, LIFT CHAIN TO ANCHOR FASTENER
리테이너

93.984 FASTENER, LIFT CHAIN ANCHOR
패스너

94.054 FASTENER, LIFT CYLINDER (UPPER)
패스너

94.655 FASTENER, LIFT CYLINDER LINE JUNCTION BLOCK
패스너

97.179 FASTENER, LIFT CYLINDER CLAMP
*

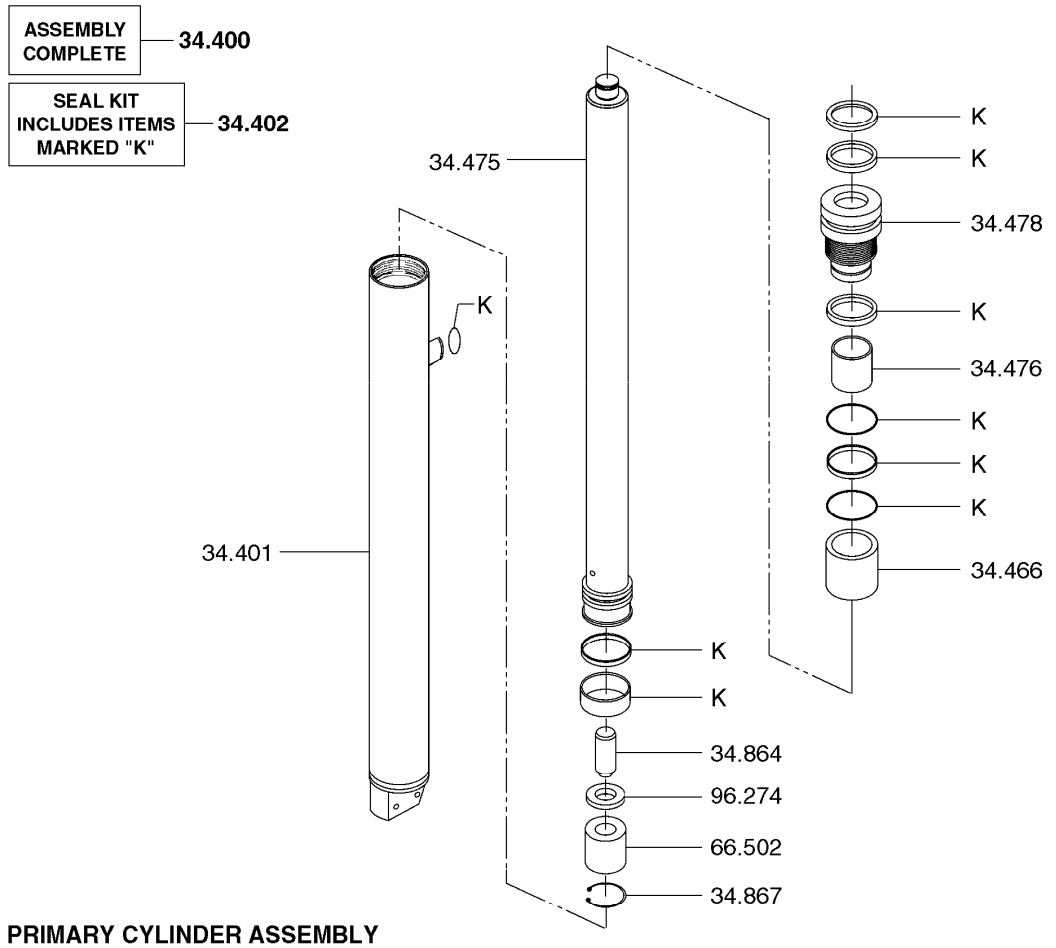

PRIMARY CYLINDER ASSEMBLY **66-235**

34.400 CYLINDER ASSEMBLY, LIFT
실린더

34.401 BARREL, LIFT CYLINDER
배럴

34.402 SEAL & PACKING KIT, LIFT CYLINDER
시일과팩킹킷

34.466 SPACER, LIFT CYLINDER FEED TUBE
스페이서

34.475 ROD, LIFT CYLINDER
로드

34.476 BEARING, LIFT CYLINDER ROD
베어링

34.478 GLAND, LIFT CYLINDER
그랜드

34.864 CHECK VALVE, LIFT CYLINDER
체크밸브

34.867 RETAINER, LIFT CYLINDER CHECK VALVE
리테이너

66.502 CUSHION, LIFT CYLINDER
쿠션

96.274 WASHER, LIFT CYLINDER CHECK VALVE
욱셔

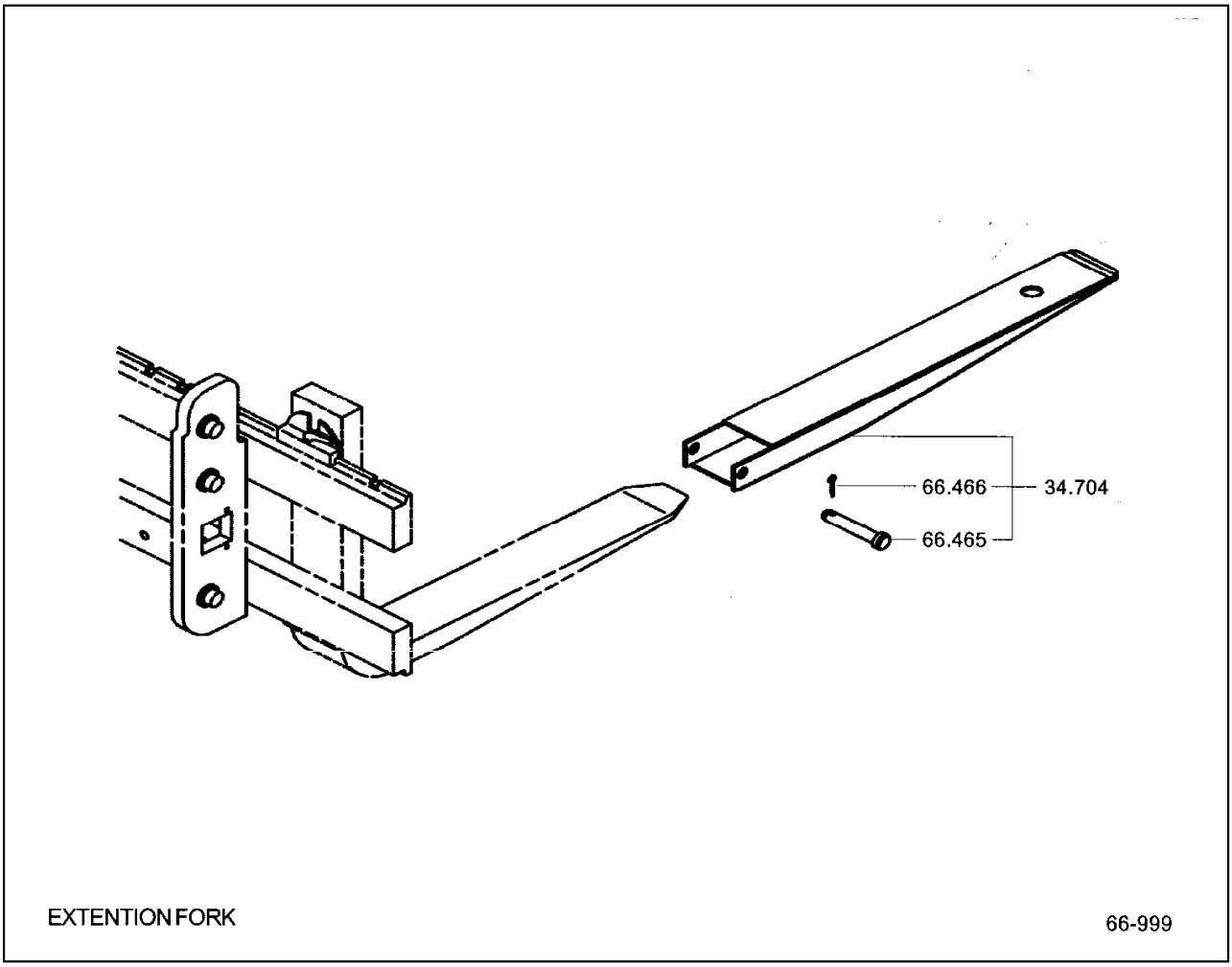

34.704	EXTENSION, FORK ASSEMBLY COMPLETE 익스텐션
66.465	PIN, EXTENTION FORK 핀
66.466	PIN, EXTENTION FORK 핀

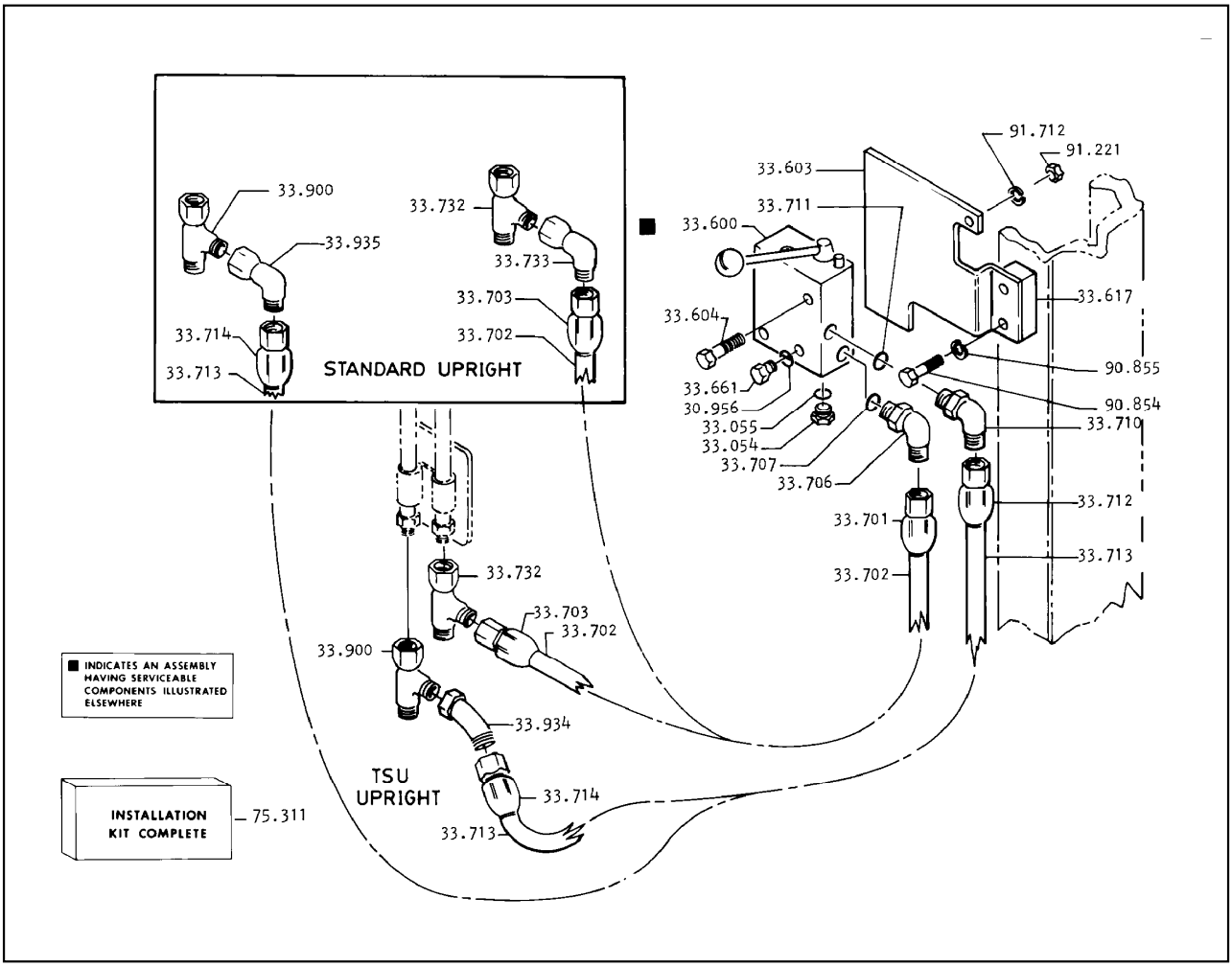

30.956	SEAL, RELIEF VALVE PLUG 시일
33.054	PLUG, RELIEF VALVE PORT 플러그
33.055	SEAL, RELIEF VALVE PORT PLUG 시일
33.600	RELIEF VALVE, DEVICE VARIABLE PRESSURE 릴리프밸브
33.603	BRACKET, DEVICE CARIABLE RELIEF VALVE 브라켓
33.604	FASTENER, DEVICE VARIABLE RELIEF VALVE 패스너
33.617	SPACER, DEV VARIABLE RELIEF VAL BRKT 스페이서
33.661	FITTING, DEVICE RELIEF VALVE OUTLET PORT 피팅
33.701	COUPLING, DEVICE RELIEF VALVE INLET LINE 커플링
33.702	LINE, DEVICE RELIEF VALVE INLET 라인
33.703	COUPLING, DEVICE RELIEF VALVE INLET LINE 커플링
33.706	FITTING, DEVICE RELIEF VALVE INLET PORT 피팅
33.707	SEAL, DEVICE RELIEF VALVE INLET PORT FITTING 시일
33.710	FITTING, DEVICE RELIEF VALVE DISCHARGE PORT 피팅
33.711	SEAL, DEVICE RELIEF VALVE DISCHARGE PORT FTG 시일
33.712	COUPLING, DEVICE RELIEF VALVE DISCHARGE HOSE 커플링
33.713	LINE, DEVICE RELIEF VALVE DISCHARGE 라인
33.714	COUPLING, DEVICE RELIEF VALVE DISCHARGE LINE 커플링
33.732	FITTING, DEVICE RELIEF VALVE INLET 피팅
33.733	FITTING, DEVICE RELIEF VALVE INLET 피팅
33.900	FITTING, DEVICE RELIEF VALVE DISCHARGE LINE 피팅
33.934	FITTING, DEVICE RELIEF VALVE DISCHARGE LINE 피팅
33.934	FITTING, DEVICE RELIEF VALVE DISCHARGE LINE 피팅
33.935	FITTING, DEVICE RELIEF VALVE DISCHARGE LINE 피팅
75.311	KIT, RELIEF VALVE INSTALLATION 킷
90.854	BOLT, DEVICE MOUNTING BRACKET FASTENER 볼트
90.855	LOCKWASHER, DEVICE MOUNTING BRACKET FASTENER 로크와셔
91.221	NUT, DEV VARIABLE RELIEF VALVE FASTENER 너트
91.712	LOCKWASHER, DEVICE RELIEF VALVE FASTENER 로크와셔

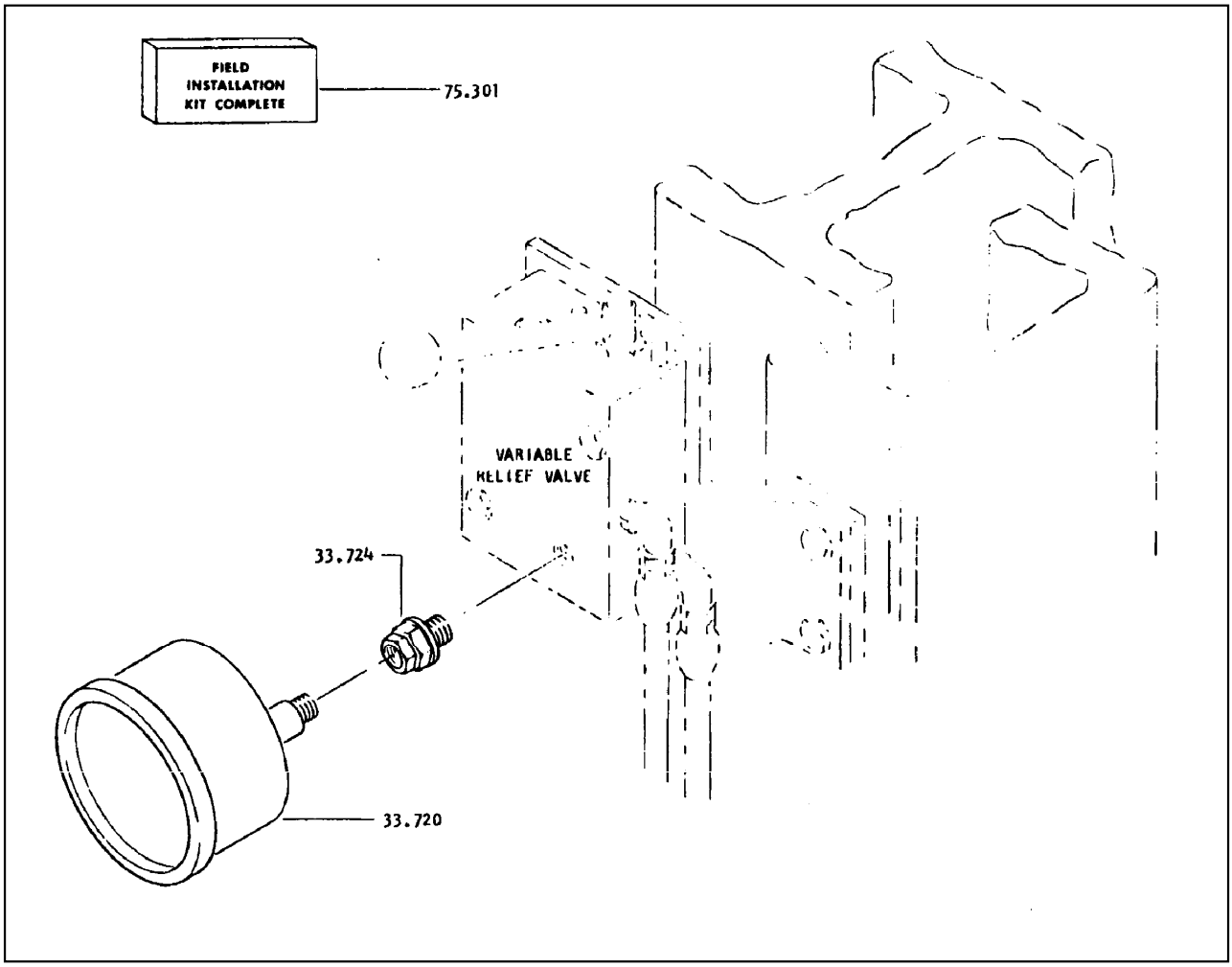

33.720 GAUGE, DEVICE HYDRAULIC PRESSURE
게이지

33.724 FITTING, DEVICE HYD PRESSURE GAUGE
피팅

75.301 DEVICE, HYDRAULIC PRESSURE GAUGE
디바이스

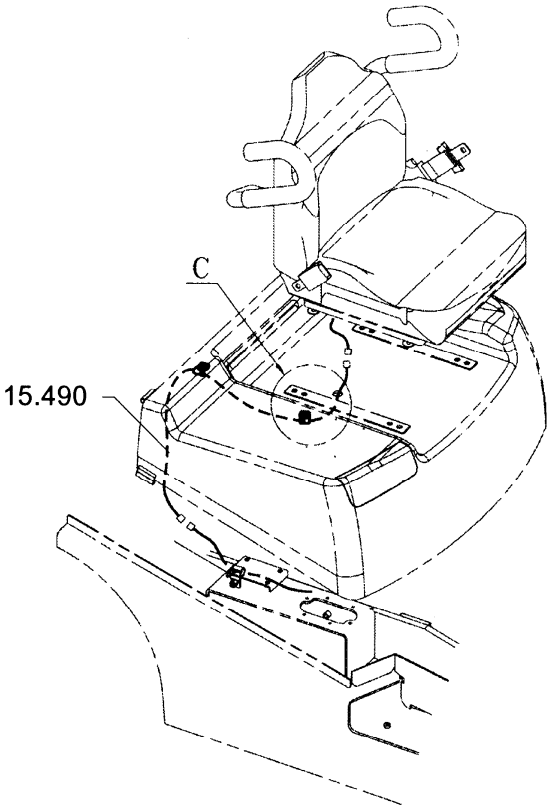

STANDARD SEAT

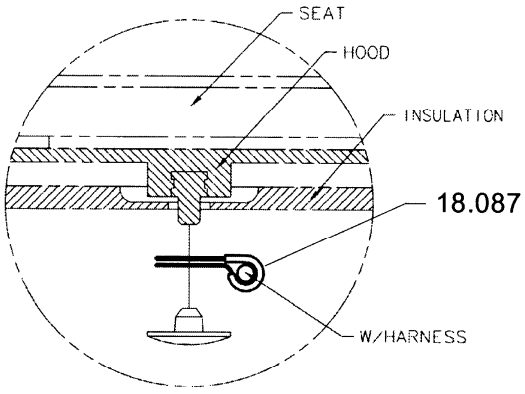

DETAIL C

15.490 HARNESS, SEAT ACTUATED ENGINE SHUTDOWN WIRING
하네스

18.087 CLIP, SEAT SAFETY SWITCH WIRE
클립

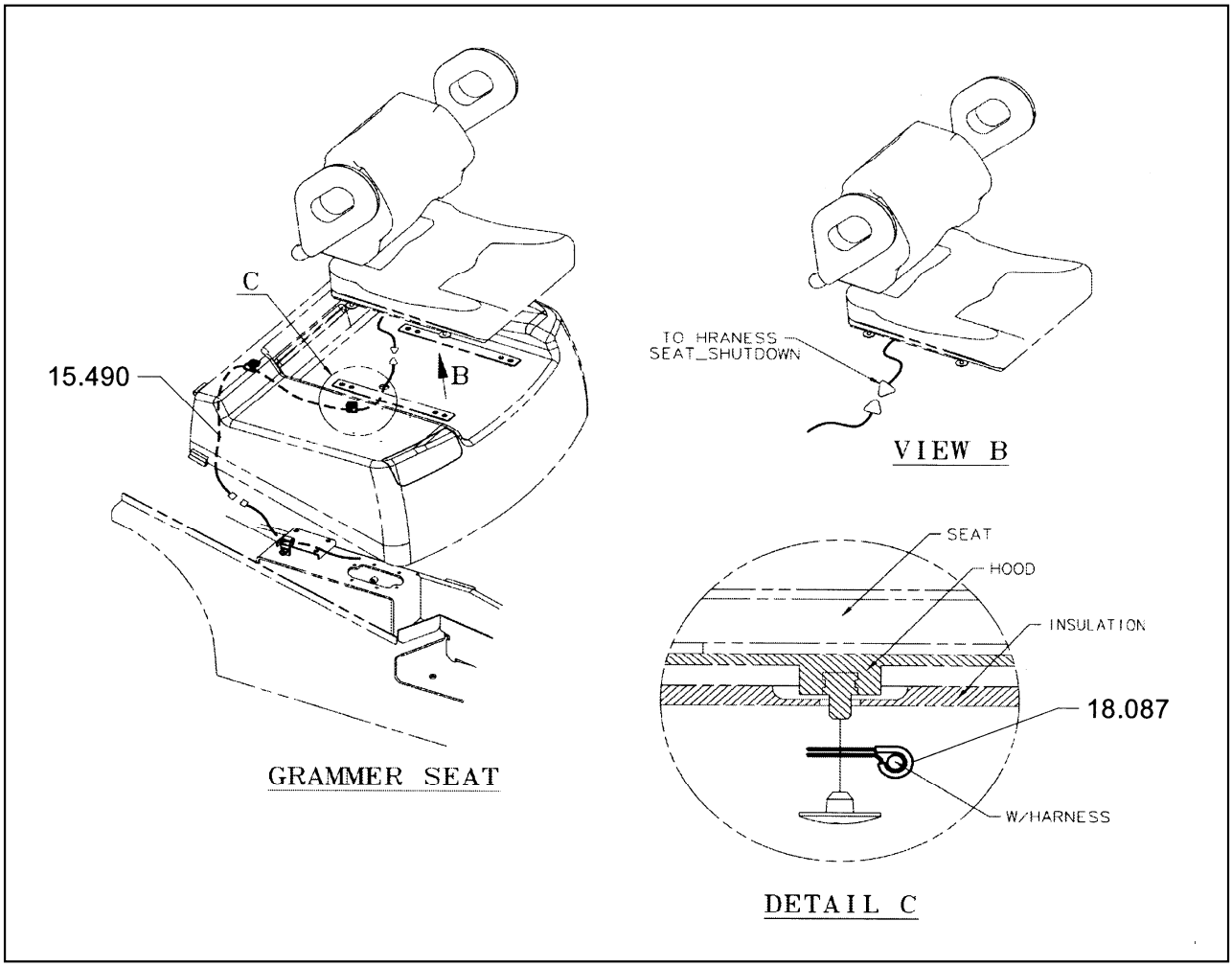

15.490 HARNESS, SEAT ACTUATED ENGINE SHUTDOWN WIRING
하네스

18.087 CLIP, SEAT SAFETY SWITCH WIRE
클립

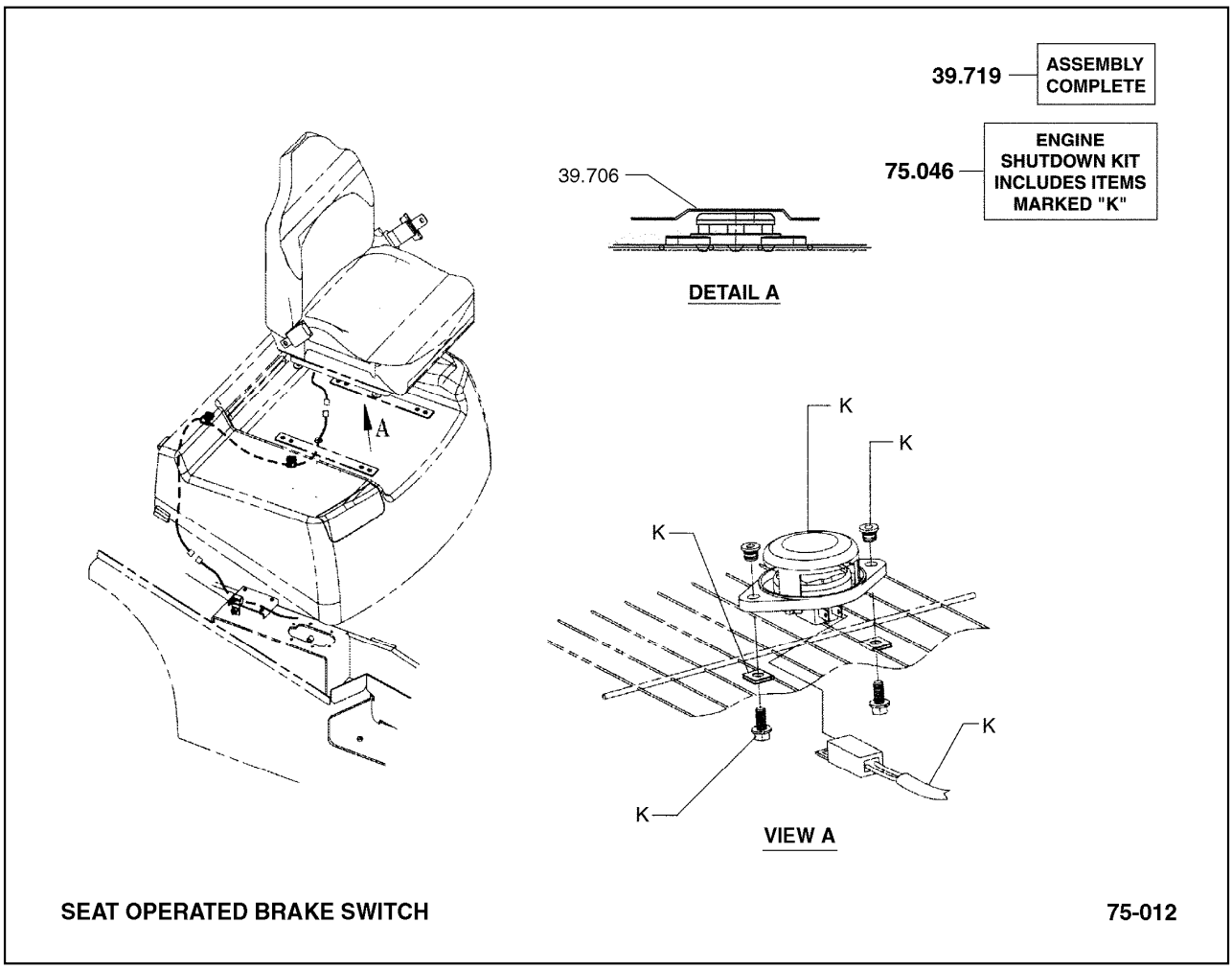

39.706 SUPPORT, SEAT
서포트

39.719 SEAT ASSEMBLY
시트

75.046 KIT, SEAT ACTUATED ENGINE SHUTDOWN
킷