부품 매뉴얼
PARTS MANUAL

JANEIRO 2013

RUTHZIL TRATOR COMERCIAL DE PEÇAS LTDA 11 97083-6812 ROLANDO

CLARK **C 20/25/30/33(35) L**

SERIAL NUMBER : P232L - XXXX - 9839 CNF (HMC, Tier 4)

부품 청구시 항상 장비의 SERIAL NO. 도 함께 알려 주십시오.

ALWAYS GIVE TRUCK SERIAL NUMBER WHEN ORDERING PARTS.

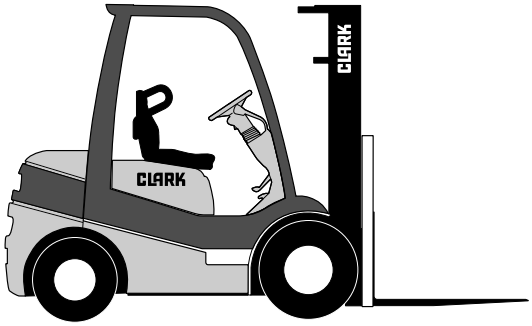

Publication Date : Jan. 2013

CLARK
THE FORKLIFT

(본사) 경기도 부천시 오정구 오정동 202-1
(Head office) 202-1 Ojung-Dong, Ojung-Gu, Bucheon-city, Kyunggi-do, Korea
(공장) 경남 창원시 웅남동 40-1
(Factory) 40-1 Ungnam-dong, Changwon-city, Kyungnam, Korea

00-687 ENGINE MOUNTING
엔진 어셈블리

00-688 ENGINE GASKET KIT
엔진 가스킷 킷트

00-690 CYLINDER HEAD & COVERS
실린더 헤드 & 커버

00-691 CRANKCASE
크랭크케이스

01-339 COOLING SYSTEM
냉각 장치

01-349 WATER COOLING SYSTEM
쿨링 워터 시스템

01-360 COOLING SYSTEM
냉각 장치

02-154 NON PRE-CLEANER GP
논-프리크리너 그룹

02-156 ACCELERATOR SYSTEM
악셀레이터 장치

02-228 PRE-CLEANER(OPTION)
프리 크리너 (옵션)

02-463 ACCEL CONTROL ASSEMBLY
악셀레이터 컨트롤 어셈블리

02-474 AIR CLEANER ASSEMBLY
에어 크리너 어셈블리

02-478 INDICATOR LIGHT INSTALLATION
지시등 조립그룹

03-135 LPG TANK MOUNTING
LPG 탱크 마운팅

03-166 LPG TANK MOUNTING
LPG 탱크 마운팅

03-170 INTAKE SYSTEM
흡기 시스템 (듀얼)

03-376 LPG TANK MOUNTING
LPG 탱크 마운팅

03-558 SWING DOWN BRACKET ASSEMBLY
*

03-559 SWING DOWN BRACKET ASSEMBLY
*

03-581 SWITCH INSTALLATION
스위치 조립그룹

03-597 FUEL SYSTEM
연료 시스템

03-599 INTAKE & EXHAUST MANIFOLD
흡기 & 배기 매니폴드

03-601 PRECLEANER, AIR CLEANER INSTALLATION
프리 크리너 에어 크리너 조립그룹

03-603 EXHAUST SYSTEM
배기 장치

03-605 FUEL LINE
연료 라인

03-640 SWING DOWN LPG TANK MTG
스윙 다운 LPG 탱크 조립그룹

03-683 INTAKE & EXHAUST MANIFOLD
흡기 & 배기 매니폴드

03-684 FUEL LINES
연료 라인

03-698 INTAKE SYSTEM
흡기 시스템 (듀얼)

05-035 TRANSMISSION PUMP & HYDRAULICS
트랜스미션 펌프 & 유압

05-036 CONVERTOR HOUSING AND PUMP DRIVE
컨버터 하우징 & 펌프 드라이브

05-165 CONVERTER HOUSING & CLUTCH ASSY
컨버터 하우징 & 클러치

06-143 SPEED LIMIT INSTALLATION
속도 제한장치 조립그룹

06-144 TRANSAXLE ASSEMBLY
트랜스액슬 어셈블리

06-619 TRANSMISSION CASE AND DIFFERENTIAL ASSEMBLY
트랜스미션 케이스 & 차동장치 어셈블리

06-750 E TRANSMISSION CLUTCH PACK
트랜스미션 클러치 팩

06-801 CONTROL COVER
컨트롤 커버

07-075 TRANSAXLE MOUNTING
트랜스액슬 마운팅

10-131 TRANSMISSION COOLING LINES
트랜스미션 쿨링 라인

11-110 ELECTRICAL CONTROL
전기장치 컨트롤

12-193 ALTERNATOR ASSEMBLY
알터네이터 어셈블리

12-213 BATTERY MOUNTING
베터리 어셈블리

12-257 ALTERNATOR
알터네이터

13-033 KEY & DIRECTIONAL SWITCH INSTALLATION
키 & 다이렉트스위치 조립그룹

13-034 HEAD LAMP INSTALLATION
헤드램프 조립그룹

13-044 REAR WORK LIGHT INSTALLATION
후방등 조립그룹

13-120 COMBINATION LAMP INSTALLATION
컴비네이션 램프 조립그룹

13-128 LAMP INSTALLATION
램프 조립그룹

13-150 LED LIGHTS INSTALLATION
LED 라이트 조립그룹

13-162 STROBE LIGHT MOUNTING
경광등 어셈블리

13-182 STROBE LIGHT
경광등

13-183 STROBE LIGHT MOUNTING
경광등 어셈블리

13-228 BACK-UP ALARM INSTALLATION
백-업 알람 조립그룹

13-230 HEAD & T/SIGNAL LIGHT INSTALLATION
헤드 & 턴시그널라이트 조립그룹

13-327 REAR ACCESSORY MOUNTING
리어 악세서리 마운팅

13-332 HEAD & T/SIGNAL LIGHT INSTALLATION
헤드 & 턴시그널라이트 조립그룹

13-338 HEAD & T/SIGNAL LIGHT INSTALLATION
헤드 & 턴시그널라이트 조립그룹

13-360 STATIC ELECTRICITY DISCHARGER
전압 방전기

14-133 ELECTRICAL WIRING (INSTRUMENT)
*

14-247 ELECTRICAL WIRING (MAIN)
*

14-579 LPS CONSTRUCTION
LPS 구성품

14-878 SEAT OPERATED BRAKE
시트 조작 브레이크

20-086 DRIVE AXLE
드라이브 액슬

20-268 DRIVE AXLE FILTER BREATHER MOUNTING
*

22-011 BRAKE ASSEMBLY
브레이크 어셈블리

22-013 DRIVE WHEEL & TIRE MOUNTING
드라이브휠 & 타이어 마운팅

22-014 STEER WHEEL & TIRE MOUNTING
스티어휠 & 타이어 마운팅

22-024 DRIVE WHEEL & TIRE (SOLID TYPE)
*

22-026 DRIVE WHEEL & TIRE (SOLID TYPE)
*

22-027 STEER WHEEL & TIRE (SOLID TYPE)
*

22-033 DUAL DRIVE WHEEL & TIRE MOUNTING
*

22-034 WIDE DRIVE WHEEL & TIRE MOUNTING
*

22-041 DRIVE WHEEL AND TIRE
드라이브 휠 및 타이어

22-043 DRIVE WHEEL AND TIRE
드라이브 휠 및 타이어

22-044 STEER WHEEL & TIRE
스티어링 휠 & 타이어

23-399 STEER WHEEL & TIRE
스티어링 휠 & 타이어

23-407 DRIVE WHEEL & TIRE MOUNTING
드라이브 휠 & 타이어

23-411 BRAKE & INCHING LINES
브레이크 및 인칭라인

23-442 DRIVE WHEEL & TIRE(WIDE)
드라이브 휠 및 타이어 (광폭)

23-448 DRIVE WHEEL & TIRE MOUNTING
드라이브휠 & 타이어 마운팅

23-460 BRAKE LINES
브레이크 라인

23-523 PARKING BRAKE LINKAGE
주차 브레이크 링케이지

25-050 STEER COLUMN & GEAR MOUNTING
*

25-076 STEERING UNIT
스티어링 유니트

25-144 STEERING COLUMN
스티어링 칼럼

25-250 STEERING WHEEL MOUNTING
*

26-026 HYDRAULIC STEERING LINES
스티어링 라인

26-225 HYDRAULIC RETURN LINES
유압 라인 - 리턴

26-273 STEER AXLE MOUNTING
스티어링 액슬 마운팅

26-274 STEER CYLINDER
스티어링 실린더

26-276 STEER AXLE ASSEMBLY
스티어링 액슬 어셈블리

29-192 HYDRAULIC PUMP
유압 펌프

29-237 HYDRAULIC TANK & COMPONENTS MOUNTING
유압탱크 & 구성품 마운팅

29-461 HYDRAULIC TANK & COMPONENTS MOUNTING
유압탱크 & 구성품 마운팅

30-209 HYDRAULIC VALVE MOUNTING (2SPOOL)
유압벨브 마운팅 (2스풀)

30-210 HYDRAULIC VALVE MOUNTING (3SPOOL)
유압벨브 마운팅 (3스풀)

30-211 HYDRAULIC VALVE MOUNTING (4SPOOL)
유압벨브 마운팅 (4스풀)

30-510 MAIN CONTROL VALVE 3-SPOOL(PUSH BUTTON)
메인 컨트롤 밸브 - 3 스풀 (푸시버턴)

30-511 MAIN CONTROL VALVE 4-SPOOL(PUSH BUTTON)
메인 컨트롤 밸브 - 4 스풀 (푸시버턴)

30-512 HYDRAULIC CONTROL VALVE-2 SPOOL
유압 컨트롤 밸브 - 2 스풀

30-513 HYDRAULIC CONTROL VALVE-3 SPOOL
유압 컨트롤 밸브 - 3 스풀

30-514 HYDRAULIC CONTROL VALVE-4 SPOOL
유압 컨트롤 밸브 - 4 스풀

31-123 TILT LIMIT WITH OVERRIDE
틸트 제한해제

31-139 HYDRAULIC LIFT & TILT LINES
유압 리프트 & 틸트 라인

31-307 HYDRAULIC SUPPLY LINES
유압 공급 라인

32-129 TILT CYLINDER
틸트 실린더

32-155 TILT CYLINDER MOUNTING
틸트 실린더 어셈블리

32-167 TILT AMOUNT GROUP
틸트 어마운트 그룹

32-171 ACCUMULATOR INSTALLATION
*

33-069 RELIEF VALVE ASSEMBLY
릴리프 밸브 어셈블리

33-130 SELECTOR SOLENOID VALVE
셀렉터 솔레노이드 밸브

34-044 LOAD BACK REST
로드 백 레스트

34-103 CARRIAGE ASSEMBLY
캐리지 어셈블리

34-209 CARRIAGE ASSEMBLY
캐리지 어셈블리

34-734 UPRIGHT MOUNTING
업라이트 마운팅

37-003 OVERHEAD GUARD COVER
오버헤드가드 커버

37-050 REAR WIPER INSTALLATION
리어 와이퍼 조립그룹

37-054 CAB DOOR SASH ASSEMBLY
*

37-056 ENCLOSED CAB
캡 (박스형)

37-057 ENCLOSED CAB
캡 (박스형)

37-076 BACK MIRROR
백미러

37-082 OVERHEAD GUARD MOUNTING
오버헤드가드 마운팅

37-083 OVERHEAD GUARD MOUNTING
오버헤드가드 마운팅

37-114 HOOD MOUNTING
후드 마운팅

37-116 SHEET METAL & TRIM
시트 메탈 & 트림

37-124 SEAT ARMREST ASSEMBLY
아암레스트 어셈블리

38-225 FRAME & COUNTERWEIGHT
프레임 & 카운터웨이트

38-270 FRAME TANK BOTTOM PLUG
프레임 탱크 하단 플러그

39-012 LEAD WIRE GROUND
접지선

39-235 ELECTRICAL COMPONENTS (CAB)
*

39-519 LOAD BACK REST
로드 백 레스트

39-559 NOISE REDUCTION INSTALLATION
소음저감 조립그룹

39-562 NOISE REDUCTION INSTALLATION
소음저감 조립그룹

39-593 ELECTRICAL COMPONENTS (CAB)
*

39-626 ENCLOSED CAB
캡 (박스형)

39-661 SEAT ASSEMBLY
시트 어셈블리

39-674 FLOOR PLATE MOUNTING
플로어 플레이트 마운팅

39-829 SEAT MOUNTING
시트 어셈블리

39-834 SEAT ASSEMBLY (SUSPENSION)
시트 어셈블리

39-963 COWL MOUNTING
카울 마운팅

39-969 POD INSTALLATION
파드 조립그룹

39-976 CAB MOUNTING
캐빈 마운팅

39-977 OVERHEAD GUARD MOUNTING
오버헤드가드 마운팅

40-243 MODEL & SPECIFICATION DECALS
*

40-254 DECALS
데칼

40-260 TRUCK FLUIDS
트럭 유체

41-008 STORAGE CONSOLE
저장 콘솔

41-038 HEATER INSTALLATION
히터 조립그룹

47-000 SEAT WING KIT
시트윙 키트

47-005 REAR HAND GRIP MOUNTING
*

50-109 E DEVICE HOSE REEL
디바이스 호스릴

50-157 SOLENOID VALVE
솔레노이드 밸브

50-171 ATTACHMENT HOSE ADAPTATION (CARRIAGE)
작업장치 호스 적용 (캐리지)

50-172 HIGH TERMINATION FOR DEVICE HOSE ADAPTATION
*

50-175 HIGH TERMINATION FOR DEVICE HOSE ADAPTATION
*

50-177 SOLENOID VALVE FOR DEVICE HOSE ADAPTATION
*

50-232 ATTACHMENT HOSE ADAPTATION (UPRIGHT)
작업장치 호스 적용 (업라이트)

50-243 QUICK DISCONNECT FOR DEVICE HOSE ADAPTATION
퀵 차단 (호스 어댑션 장치용)

50-269 ATTACHMENT HOSE ADAPTATION (UPRIGHT)
작업장치 호스 적용 (업라이트)

50-270 ATTACHMENT HOSE & CABLE ADAPTATION (UPRIGHT)
*

50-284 ATTACHMENT HOSE ADAPTATION (CARRIAGE)
작업장치 호스 적용 (캐리지)

50-289 ATTACHMENT HOSE & CABLE ADAPTATION (UPRIGHT)
*

50-290 ATTACHMENT HOSE & CABLE ADAPTATION (UPRIGHT)
*

50-291 ATTACHMENT HOSE & CABLE ADAPTATION (UPRIGHT)
*

50-292 ATTACHMENT HOSE & CABLE ADAPTATION (UPRIGHT)
*

50-293 ATTACHMENT HOSE & CABLE ADAPTATION (UPRIGHT)
*

50-407 ATTACHMENT HOSE ADAPTATION (UPRIGHT)
작업장치 호스 적용 (업라이트)

50-410 ATTACHMENT HOSE ADAPTATION (UPRIGHT)
작업장치 호스 적용 (업라이트)

50-432 ATTACHMENT HOSE ADAPTATION (UPRIGHT)
작업장치 호스 적용 (업라이트)

50-439 ATTACHMENT HOSE ADAPTATION (UPRIGHT)
작업장치 호스 적용 (업라이트)

50-590 AUXILIARY VALVE LINES
보조 밸브 라인

50-716 E HOSE ADAPTATION
호스 어댑션

50-765 HIGH TERMINATION PLUMBING
하이 터미네이션 배관

50-791 ATTACHMENT HOSE ADAPTATION (CARRIAGE)
작업장치 호스 적용 (캐리지)

50-793 ATTACHMENT HOSE ADAPTATION (CARRIAGE)
작업장치 호스 적용 (캐리지)

50-794 ATTACHMENT HOSE ADAPTATION (CARRIAGE)
작업장치 호스 적용 (캐리지)

50-796 ATTACHMENT HOSE ADAPTATION (CARRIAGE)
작업장치 호스 적용 (캐리지)

50-797 ATTACHMENT HOSE ADAPTATION (CARRIAGE)
작업장치 호스 적용 (캐리지)

50-798 QUICK DISCONNECT FOR DEVICE HOSE ADAPTATION
퀵 차단 (호스 어댑션 장치용)

50-820 SOLENOID VALVE FOR DEVICE HOSE ADAPTATION
*

53-024 FORK POSITIONER
포크 포지셔너

53-084 FORK POSITIONER
포크 포지셔너

53-146 F/P SIDESHIFT CYLINDER
포크포지셔너 사이드쉬프트실린더

53-164 FORK POSITIONER
포크 포지셔너

53-187 SIDE SHIFT ASSEMBLY
*

53-198 SIDESHIFT CYLINDER
사이드 쉬프트 실린더

54-015 FORK POSITIONER (BASIC)
포크 포지셔너 (기본)

60-005 BLOCK HEATER GP
블록 히터 그룹

62-002 SPEED LIMIT INSTALLATION
속도 제한장치 조립그룹

66-058 FORK
포크

66-159 LIFT CYLINDER ASSEMBLY
리프트 실린더 어셈블리

66-160 SECONDARY CYLINDER ASSEMBLY
2차 실린더 어셈블리

66-179 STANDARD UPRIGHT
표준 업라이트

66-232 TRIPLE STAGE UPRIGHT
3단 업라이트

66-235 PRIMARY CYLINDER ASSEMBLY
*

66-999 EXTENTION FORK
익스텐션 포크

75-(33)014 VARIABLE RELIEF VALVE INSTALLATION
가변 릴리프 밸브 어셈블리

75-(33)045 DEVICE HYDRAULIC PRESSURE GAUGE INSTALLATION
디바이스 유압 압력게이지 조립그룹

75-001 SEAT OPERATED BRAKE SWITCH
시트 조작 브레이크 스위치

75-004 SEAT OPERATED BRAKE
시트 조작 브레이크

75-005 SEAT OPERATED BRAKE
시트 조작 브레이크

75-012 SEAT OPERATED BRAKE SWITCH
시트 조작 브레이크 스위치

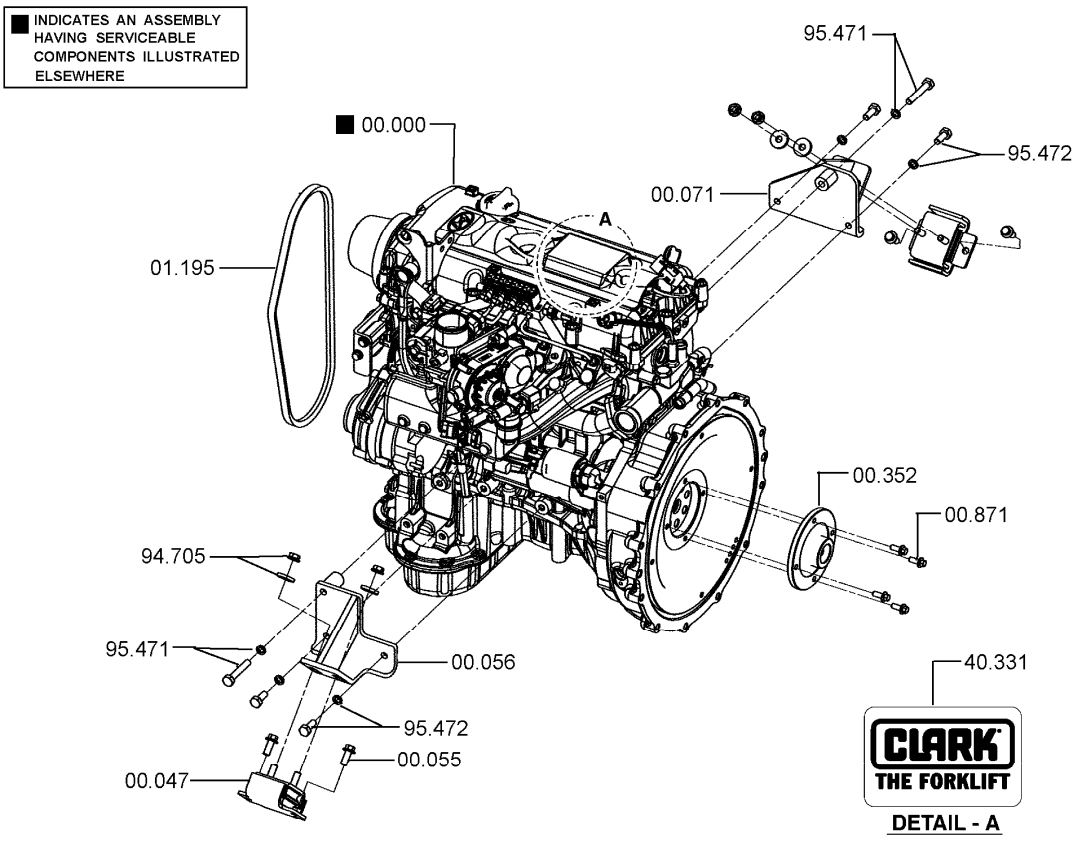

00.000	PRODUCTION ENGINE ASSEMBLY 엔진
00.047	DAMPENER, ENGINE FRONT VIBRATION 댐프너
00.055	FASTENER, ENGINE FRONT VIBRATION DAMPENER 패스너
00.056	MOUNT, ENGINE RH 마운트
00.071	MOUNT, ENGINE LH 마운트
00.352	ADAPTOR, FLYWHEEL MOUNTING 어댑터
00.871	FASTENER, FLYWHEEL HOUSING 패스너
01.195	BELT, FAN 벨트
40.331	DECAL, CLARK LOGO (ENGINE) *

94.705 FASTENER, ENGINE MOUNTING BRACKET
패스너

95.471 FASTENER, ENGINE MOUNT
패스너

95.472 FASTENER, ENGINE MOUNT
패스너

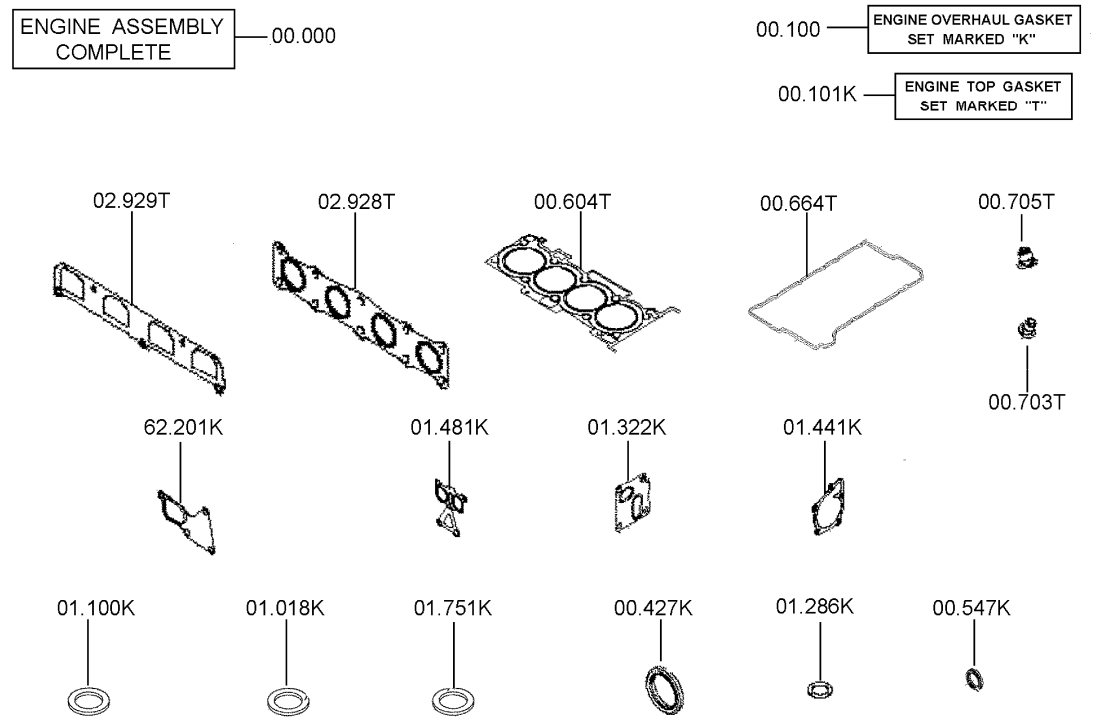

00.000 PRODUCTION ENGINE ASSEMBLY
엔진

00.100 GASKET KIT, ENGINE OVERHAUL
가스켓킷

00.101 VALVE GRIND GASKET KIT (TOP SET)
밸브가스켓

00.427 SEAL, CRANKCASE REAR OIL
시일

00.547 SEAL, ENGINE FRONT GEAR COVER
시일

00.604 GASKET, CRANKCASE HEAD
가스켓

00.664 GASKET, ROCKER ARM COVER
가스켓

00.703 SEAT, INTAKE VALVE SPRING
시트

00.705 SEAT, EXHAUST VALVE SPRING
시트

01.018	SEAL, OIL LEVEL DIPSTICK ADAPTOR 시일
01.100	GASKET, CRANKCASE OIL PAN DRAIN PLUG 가스켓
01.286	GASKET, OIL FILLER CAP 가스켓
01.322	GASKET, ENGINE OIL FILTER ADAPTOR 가스켓
01.441	GASKET, ENGINE WATER PUMP ATTACHING 가스켓
01.481	GASKET, ENGINE WATER PUMP BODY 가스켓
01.751	SEAL, OIL PAN DIPSTICK HOLE PLUG 시일
02.928	GASKET, EXHAUST MANIFOLD 가스켓
02.929	GASKET, INTAKE MANIFOLD 가스켓
62.201	GASKET, ENGINE WATER TEMPERATURE CONTROL 가스켓

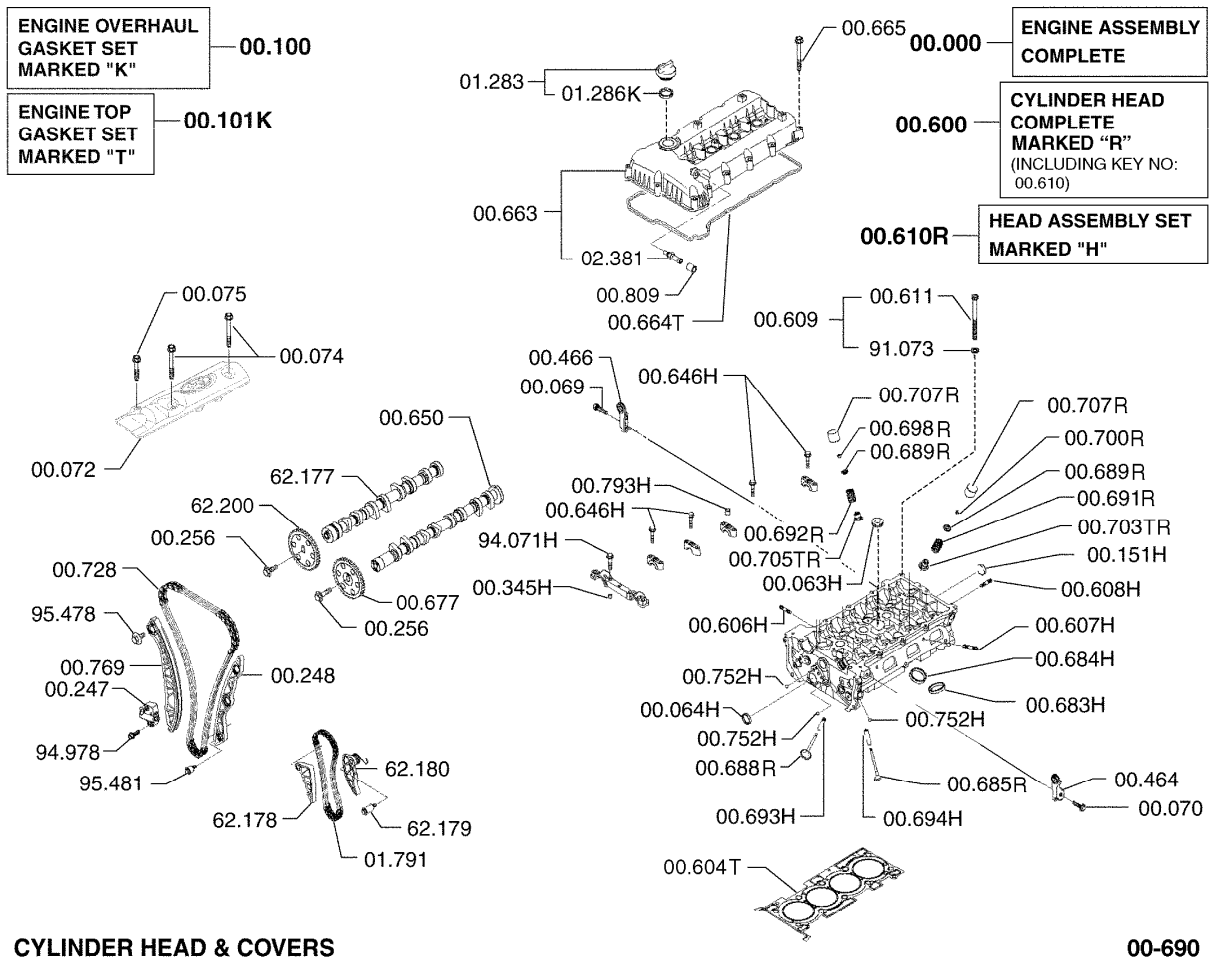

00.000	PRODUCTION ENGINE ASSEMBLY 엔진	00.464	BRACKET, ENGINE LIFTING 브라켓
00.063	PLUG, CRANKCASE HEAD 플러그	00.466	BRACKET, ENGINE LIFTING 브라켓
00.064	SEAL, CAMSHAFT OIL 시일	00.600	HEAD ASSEMBLY, CRANKCASE 헤드
00.069	FASTENER, ENGINE LIFTING BRACKET 패스너	00.604	GASKET, CRANKCASE HEAD 가스켓
00.070	FASTENER, ENGINE LIFTING BRACKET 패스너	00.606	FASTENER, CRANKCASE HEAD 패스너
00.072	COVER, CRANKCASE HEAD END 커버	00.607	FASTENER, CRANKCASE HEAD 패스너
00.074	FASTENER, CRANKCASE HEAD END COVER 패스너	00.608	FASTENER, CRANKCASE HEAD 패스너
00.075	FASTENER, CRANKCASE HEAD END COVER 패스너	00.609	FASTENER, CRANKCASE HEAD 패스너
00.100	GASKET KIT, ENGINE OVERHAUL 가스켓킷	00.610	HEAD, CRANKCASE 헤드
00.101	VALVE GRIND GASKET KIT (TOP SET) 밸브가스켓	00.611	FASTENER, CRANKCASE HEAD 패스너
00.151	PLUG, CRANKCASE HEAD REAR 플러그	00.646	FASTENER, ENGINE ROCKER ARM PIVOT SUPPORT 패스너
00.247	TENSIONER, CAMSHAFT TIMING BELT 텐셔너	00.650	CAMSHAFT 캠샤프트
00.248	GUIDE, CAMSHAFT TIMING BELT TENSIONER 가이드	00.663	COVER, ROCKER ARM 커버
00.256	FASTENER, CAMSHAFT TIMING GEAR 패스너	00.664	GASKET, ROCKER ARM COVER 가스켓
00.345	BUSHING, CRANKCASE HEAD 부싱	00.665	FASTENER, ROCKER ARM COVER 패스너

00.677 GEAR, CAMSHAFT TIMING
기어

00.683 SEAT, EXHAUST VALVE INSERT
시트

00.684 SEAT, INTAKE VALVE INSERT
시트

00.685 VALVE, EXHAUST
밸브

00.688 VALVE, INTAKE
밸브

00.689 RETAINER, ENGINE VALVE SEAL
리테이너

00.691 SPRING, ENGINE INTAKE VALVE
스프링

00.692 SPRING, ENGINE EXHAUST VALVE
스프링

00.693 GUIDE, INTAKE VALVE
가이드

00.694 GUIDE, EXHAUST VALVE
가이드

00.698 LOCK, EXHAUST VALVE SPRING SEAT
로크

00.700 LOCK, INTAKE VALVE SPRING SEAT
로크

00.703 SEAT, INTAKE VALVE SPRING
시트

00.705 SEAT, EXHAUST VALVE SPRING
시트

00.707 LIFTER, ENGINE VALVE
리프터

00.728 CHAIN, CAMSHAFT TIMING
체인

00.752 RETAINER, CRANKCASE HEAD COMBUSTION CHAMBER INSE
리테이너

00.769 TENSIONER, CAMSHAFT TIMING CHAIN
텐셔너

00.793 BUSHING, ENGINE LOCKER ARM PIVOT SUPPORT
부싱

00.809 SLEEVE, CRANKCASE VENT TUBE VALVE
슬리브

01.283 CAP, CRANKCASE OIL FILLER
캡

01.286 GASKET, OIL FILLER CAP
가스켓

01.791 CHAIN, OIL PUMP DRIVE
체인

02.381 VALVE, PCV
밸브

62.177 CAMSHAFT, EXHAUST
캠샤프트

62.178 GUIDE, ENGINE OIL PUMP CHAIN
가이드

62.179 FASTENER, ENGINE OIL PUMP CHAIN TENSION
패스너

62.180 TENSIONER, ENGINE OIL PUMP CHAIN
텐셔너

62.200 GEAR, CAMSHAFT TIMING
기어

91.073 LOCKWASHER, CRANKCASE HEAD FASTENER
로크와셔

94.071 FASTENER, ROCKER ARM PIVOT SUPPORT
패스너

94.978 FASTENER, CAMSHAFT TIMING BELT TENSIONER
패스너

95.478 FASTENER, ENGINE BALANCER WEIGHT DRIVE CHAIN GUI
패스너

95.481 FASTENER, ENGINE BALANCER WEIGHT DRIVE CHAIN GUI
패스너

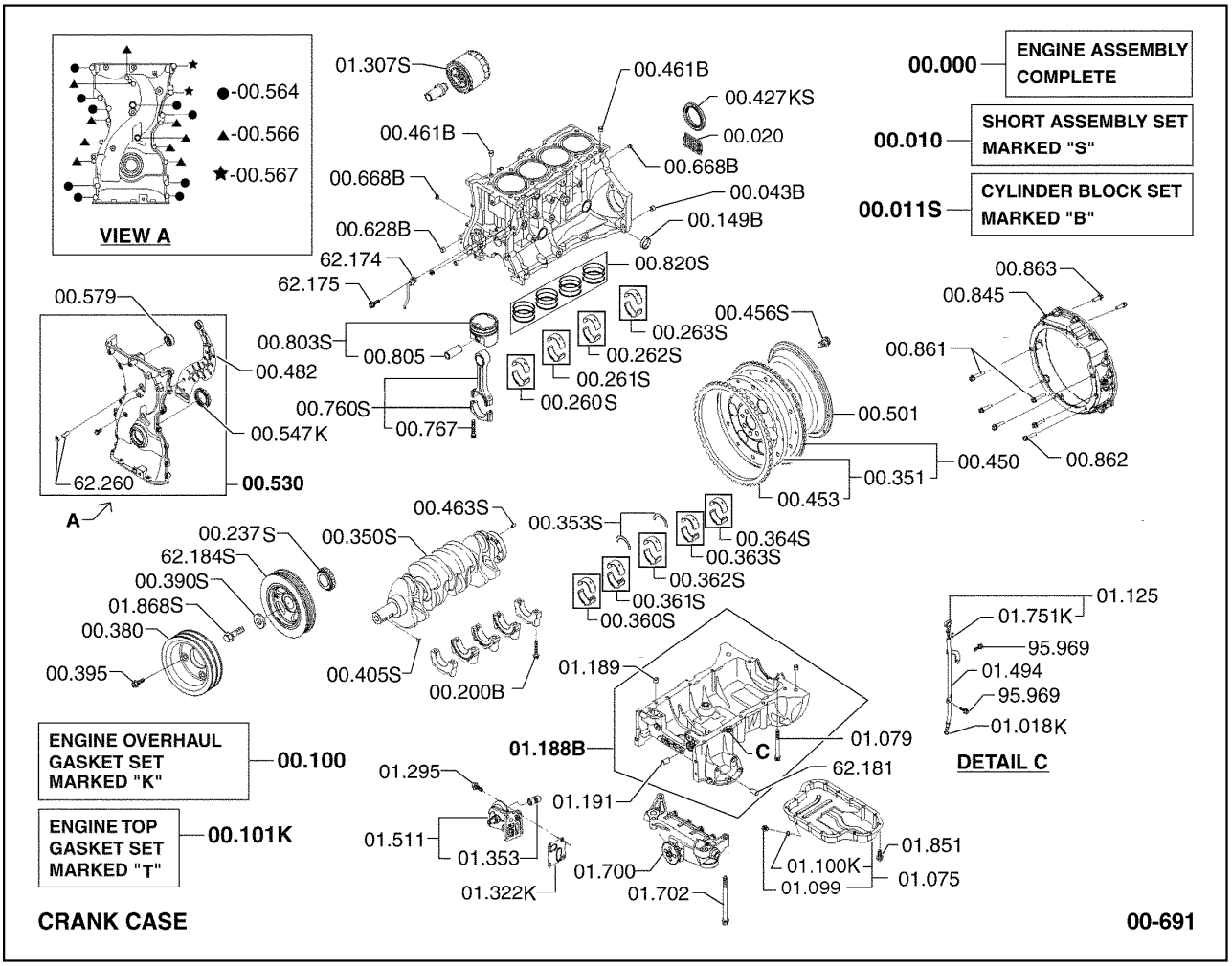

00.000	PRODUCTION ENGINE ASSEMBLY 엔진
00.010	SHORT ENGINE ASSEMBLY 숏엔진
00.011	CRANKCASE 크랭크케이스
00.020	COVER, CRANKCASE ACCESS HOLE 커버
00.043	BUSHING, ENGINE REAR SUPPORT BRACKET 부싱
00.100	GASKET KIT, ENGINE OVERHAUL 가스켓킷
00.101	VALVE GRIND GASKET KIT (TOP SET) 밸브가스켓
00.149	PLUG - EXPANSION, CRANKCASE SIDE 플러그
00.189	SEAL, CRANKCASE OIL GALLEY PLUG 시일
00.200	FASTENER, CRANKSHAFT BEARING NO. 1 CAP 패스너
00.237	GUIDE, CRANKSHAFT TIMING SPROCKET 가이드
00.260	BEARING, CONNECTING ROD (CYL. #1) 베어링
00.261	BEARING, CONNECTING ROD (CYL. #2) 베어링
00.262	BEARING, CONNECTING ROD (CYL. #3) 베어링
00.263	BEARING, CONNECTING ROD (CYL. #4) 베어링
00.350	CRANKSHAFT 크랭크샤프트
00.351	PLATE, FLYWHEEL REINFORCING 플레이트
00.353	PLATE, CRANKSHAFT THRUST 플레이트
00.360	BEARING, NO. 1 MAIN JOURNAL 베어링
00.361	BEARING, NO. 2 MAIN JOURNAL 베어링
00.362	BEARING, NO. 3 MAIN JOURNAL 베어링
00.363	BEARING, NO. 4 MAIN JOURNAL 베어링
00.364	BEARING, NO. 5 MAIN JOURNAL 베어링
00.380	PULLEY, CRANKSHAFT 풀리
00.390	WASHER, CRANKSHAFT PULLEY 와셔
00.395	FASTENER, CRANKSHAFT PULLEY 패스너
00.405	KEY, CRANKSHAFT TIMING GEAR 키
00.427	SEAL, CRANKCASE REAR OIL 시일
00.450	FLYWHEEL 플라이휠
00.453	GEAR, FLYWHEEL RING 기어

00.456 FASTENER, CRANKSHAFT TO FLYWHEEL
패스너

00.461 DOWEL, CRANKCASE HEAD
다월

00.463 DOWEL, CRANKSHAFT
다월

00.482 PLATE, GEAR COVER BACKING
플레이트

00.501 SPACER, FLYWHEEL RING GEAR
스페이서

00.530 COVER, ENGINE FRONT GEAR
커버

00.547 SEAL, ENGINE FRONT GEAR COVER
시일

00.564 FASTENER, ENGINE FRONT GEAR COVER
패스너

00.566 FASTENER, ENGINE FRONT GEAR COVER
패스너

00.567 FASTENER, ENGINE FRONT GEAR COVER
패스너

00.579 PLUG, ENGINE FRONT GEAR COVER
플러그

00.628 PLUG, CRANKCASE HEAD
플러그

00.668 PLUG, CRANKCASE WATER
플러그

00.760 ROD ASSEMBLY, CONNECTING
로드

00.767 FASTENER, CONNECTING ROD BEARING CAP
패스너

00.803 PISTON (ONE CYLINDER)
피스톤과핀

00.805 PIN, PISTON
핀

00.820 PISTON RING
피스톤링

00.845 HOUSING, FLYWHEEL
하우징

00.861 FASTENER, FLYWHEEL HOUSING TO CRANKCASE
패스너

00.862 FASTENER, FLYWHEEL HOUSING TO CRANKCASE
패스너

00.863 FASTENER, FLYWHEEL HOUSING TO CRANKCASE
패스너

01.018 SEAL, OIL LEVEL DIPSTICK ADAPTOR
시일

01.075 PAN, CRANKCASE OIL
팬

01.079 FASTENER, CRANKCASE OIL PAN
패스너

01.099 PLUG, CRANKCASE OIL PAN DRAIN
플러그

01.100 GASKET, CRANKCASE OIL PAN DRAIN PLUG
가스켓

01.125 DIPSTICK, CRANKCASE OIL LEVEL
딥스틱

01.188 PAN, CRANKCASE OIL UPPER
팬

01.191 PIN, ENGINE OIL PAN
핀

01.295 FASTENER, ENGINE OIL FILTER ATTACHING
패스너

01.307 CARTRIDGE & GASKET, ENGINE OIL FILTER
카트리지와가스켓

01.322 GASKET, ENGINE OIL FILTER ADAPTOR
가스켓

01.353 FITTING, BLOCK TO OIL FILTER
피팅

01.494 TUBE, OIL LEVEL DIPSTICK ADAPTOR
튜브

01.511 ADAPTOR, ENGINE OIL FILTER
어댑터

01.700 OIL PUMP ASSEMBLY
오일펌프

01.702 FASTENER, OIL PUMP
패스너

01.751 SEAL, OIL PAN DIPSTICK HOLE PLUG
시일

01.851 STUD, OIL PAN
스터드

01.868 FASTENER, CRANKSHAFT PULLEY
패스너

62.174 OIL JET, ENGINE OIL PUMP CHAIN
오일젯

62.175 FASTENER, ENGINE OIL JET
패스너

62.181 BUSHING, ENGINE KNOCK
부싱

62.184 PULLEY, ENGINE CRANKSHAFT DAMPER
풀리

62.260 PLUG, ENGINE FRONT GEAR COVER NIPPLE
*

95.969 FASTENER, ENGINE OIL LEVEL CONTROL
패스너

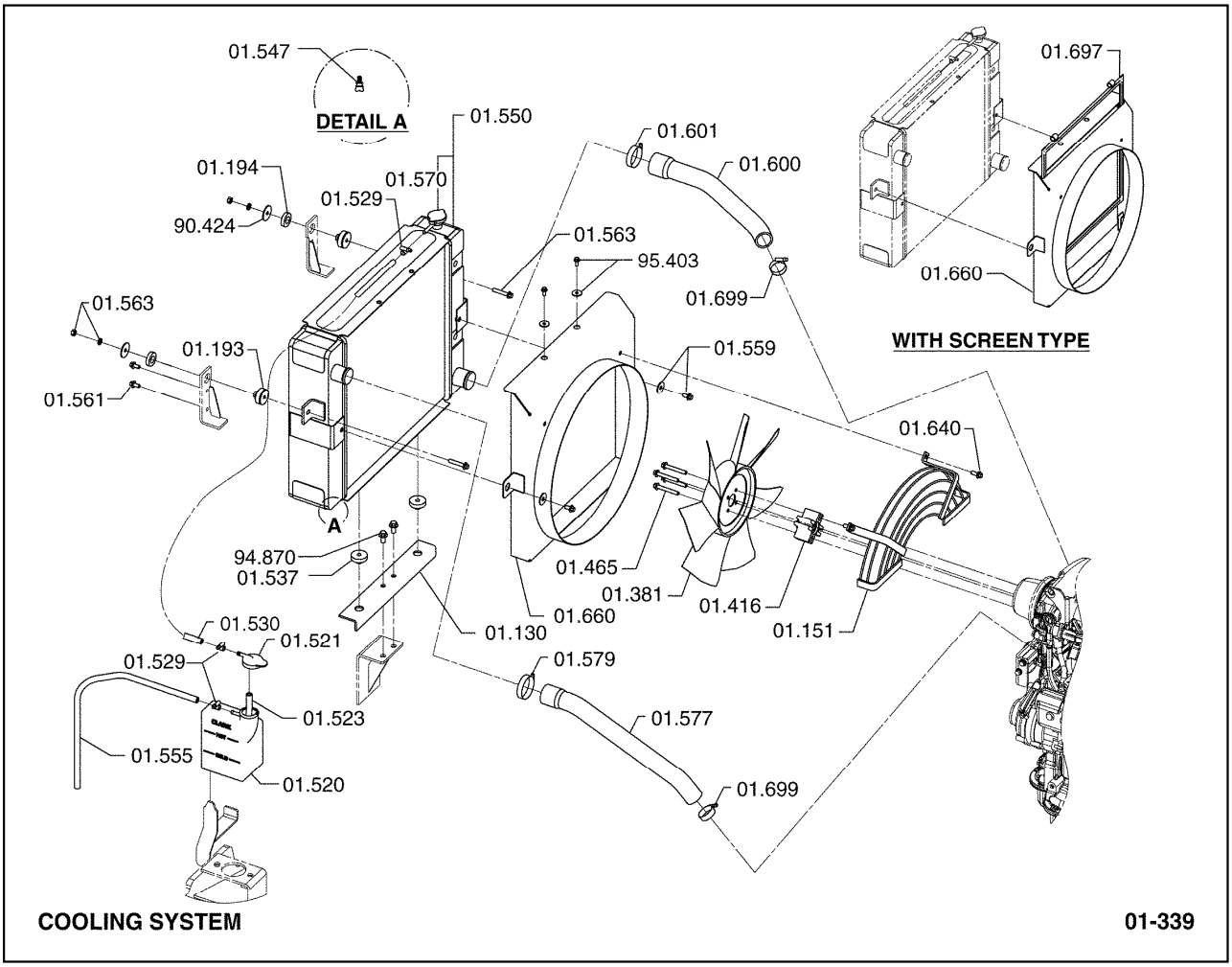

01.130	BRACKET, RADIATOR 브라켓	01.555	LINE, RADIATOR OVERFLOW 라인
01.151	GUARD, RADIATOR FAN 가드	01.559	FASTENER, RADIATOR UPPER SUPPORT (RADIATOR END) 패스너
01.193	ISOLATOR, RADIATOR MOUNTING 절연재	01.561	FASTENER, RADIATOR MOUNTING 패스너
01.194	ISOLATOR, RADIATOR MOUNTING 절연재	01.563	FASTENER, RADIATOR MOUNTING BRACKET 패스너
01.381	BLADE, FAN 블레이드	01.570	CAP, RADIATOR 캡
01.416	SPACER, FAN BLADE 스페이서	01.577	HOSE, RADIATOR UPPER 호스
01.465	FASTENER, FAN BLADE SPACER 패스너	01.579	CLAMP, RADIATOR UPPER HOSE 클램프
01.520	COMPENSATION TANK, COOLING SYSTEM 보상기	01.600	HOSE, RADIATOR LOWER 호스
01.521	COVER, COMPENSATION TANK 커버	01.601	CLAMP, RADIATOR LOWER HOSE 클램프
01.523	LINE, COOLING SYSTEM COMPENSATION TANK 라인	01.640	FASTENER, RADIATOR SHROUD EXTENTION 패스너
01.529	CLAMP, RADIATOR OVERFLOW LINE 클램프	01.660	SHROUD, RADIATOR 슈라우드
01.530	LINE, RADIATOR FILLER 라인	01.697	SCREEN, RADIATOR DUST PROTECTION 스크린
01.537	PAD, RADIATOR MOUNTING LOWER 패드	01.699	CLAMP, RADIATOR HOSE FASTENER 클램프
01.547	DRAIN COCK, RADIATOR 드레인콕	90.424	WASHER, RADIATOR MOUNTING FASTENER 와셔
01.550	RADIATOR 라디에터	94.870	FASTENER, RADIATOR MOUNTING BRACKET 패스너

95.403 FASTENER, RADIATOR SHROUD BRACKET
패스너

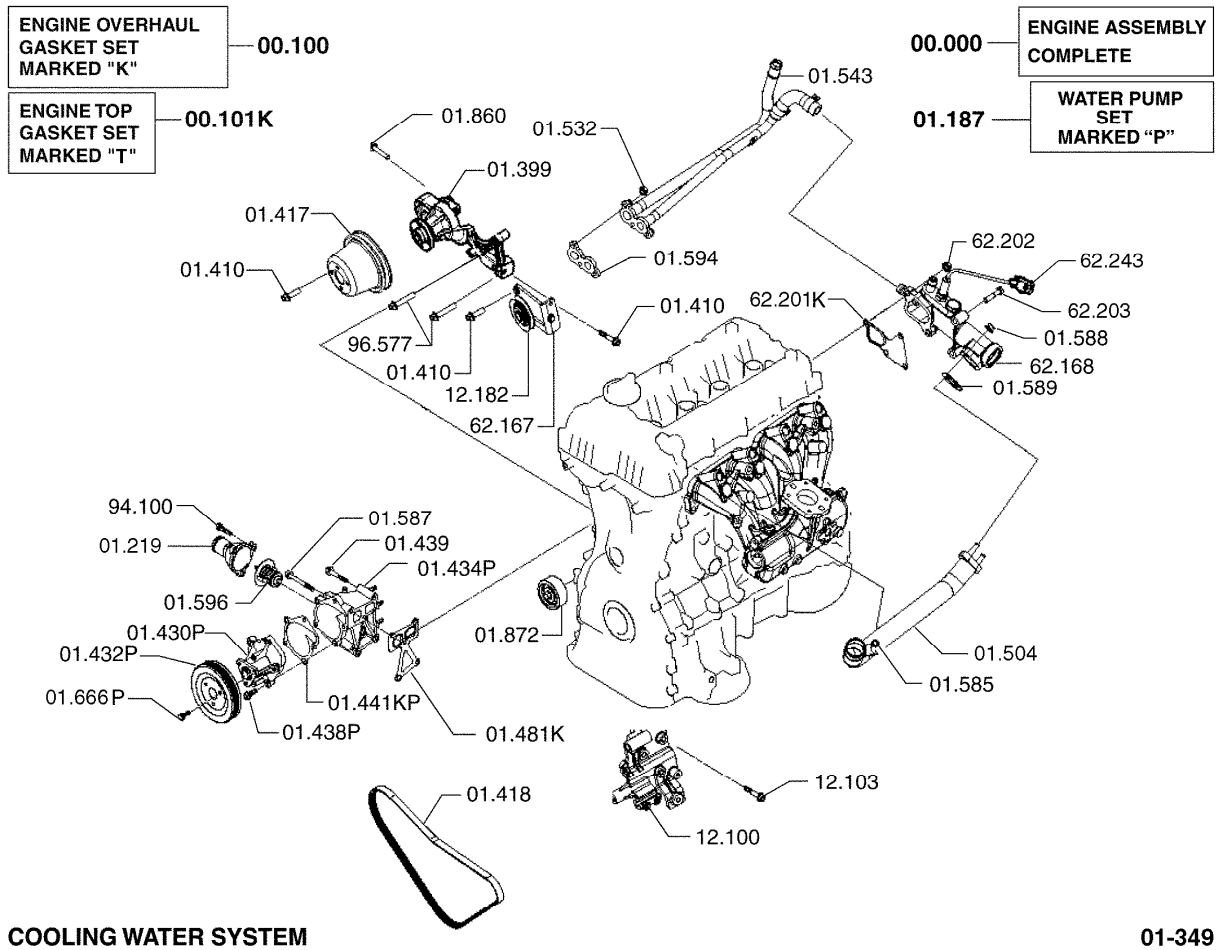

00.000	PRODUCTION ENGINE ASSEMBLY 엔진
00.100	GASKET KIT, ENGINE OVERHAUL 가스켓킷
00.101	VALVE GRIND GASKET KIT (TOP SET) 밸브가스켓
01.187	ENGINE WATER PUMP SET 엔진워터펌프
01.219	FITTING, WATER PUMP INLET 피팅
01.399	BRACKET, FAN MOUNTING 브라켓
01.410	FASTENER, IDLER ADJUSTMENT 패스너
01.417	PULLEY, FAN 풀리
01.418	BELT, WATER PUMP 벨트
01.430	PUMP ASSEMBLY, ENGINE WATER 펌프
01.432	PULLEY, WATER PUMP 풀리
01.434	COVER, WATER PUMP 커버
01.438	FASTENER, WATER PUMP 패스너
01.439	FASTENER, WATER PUMP 패스너
01.441	GASKET, ENGINE WATER PUMP ATTACHING 가스켓
01.481	GASKET, ENGINE WATER PUMP BODY 가스켓
01.504	PIPE, ENGINE WATER PUMP INLET 파이프
01.532	FASTENER, ENG THERMOSTAT BY-PASS FITTING 패스너
01.543	LINE, ENGINE THERMO BY PASS 라인
01.585	FASTENER, WATER OUTLET ELBOW-REAR 패스너
01.587	FASTENER, WATER INLET COVER 패스너
01.588	FASTENER, WATER OUTLET ELBOW 패스너
01.589	GASKET, WATER OUTLET ELBOW 가스켓
01.594	GASKET, ENGINE THERMOSTAT HOUSING ATT 가스켓
01.596	THERMOSTAT, ENGINE 써머스태트
01.666	FASTENER, WATER PUMP PULLEY 패스너
01.860	FASTENER, FAN DRIVE HUB MOUNTING SHAFT 패스너
01.872	IDLER, V-BELT 아이들러
12.100	BRACKET, ALTERNATOR MOUNTING 브라켓
12.103	FASTENER, ALTERNATOR TO BRACKET 패스너

12.182 PULLEY, ALTERNATOR TENSIONER
풀리

62.167 BRACKET, ENGINE TENTION PULLEY
브

62.168 CONTROL ASSEMBLY, ENGINE WATER TEMPERATURE
컨트롤

62.201 GASKET, ENGINE WATER TEMPERATURE CONTROL
가스켓

62.202 FASTENER, ENGINE WATER TEMPERATURE CONTROL
패스너

62.203 FASTENER, ENGINE WATER TEMPERATURE CONTROL
패스너

62.243 SENSOR, ENGINE COOLANT TEMPERTURE (ECU)
*

94.100 FASTENER, WATER PUMP DISCHARGE FLANGE
패스너

96.577 FASTENER, FAN MOUNTING BRACKET
패스너

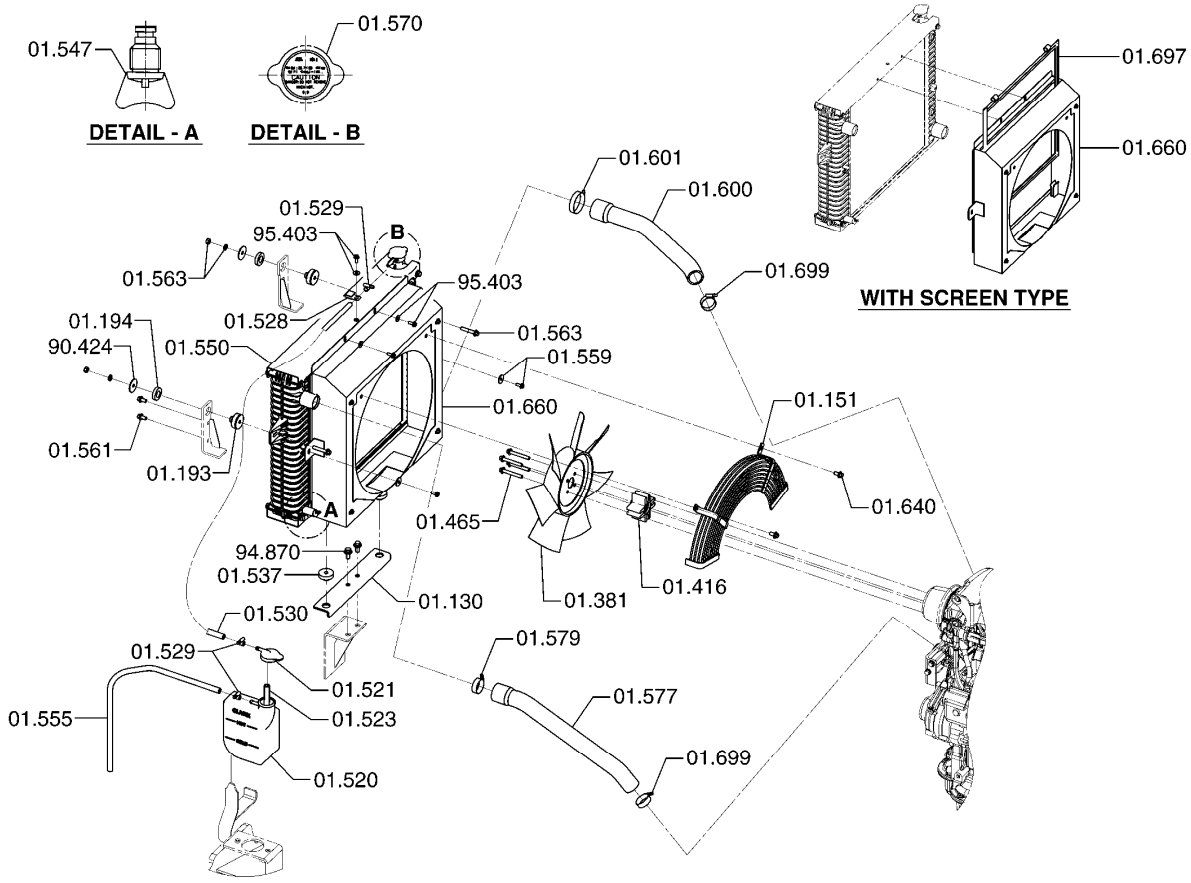

01.130	BRACKET, RADIATOR 브라켓	01.550	RADIATOR 라디에터
01.151	GUARD, RADIATOR FAN 가드	01.555	LINE, RADIATOR OVERFLOW 라인
01.193	ISOLATOR, RADIATOR MOUNTING 절연재	01.559	FASTENER, RADIATOR UPPER SUPPORT (RADIATOR END) 패스너
01.194	ISOLATOR, RADIATOR MOUNTING 절연재	01.561	FASTENER, RADIATOR MOUNTING 패스너
01.381	BLADE, FAN 블레이드	01.563	FASTENER, RADIATOR MOUNTING BRACKET 패스너
01.416	SPACER, FAN BLADE 스페이서	01.570	CAP, RADIATOR 캡
01.465	FASTENER, FAN BLADE SPACER 패스너	01.577	HOSE, RADIATOR UPPER 호스
01.520	COMPENSATION TANK, COOLING SYSTEM 보상기	01.579	CLAMP, RADIATOR UPPER HOSE 클램프
01.521	COVER, COMPENSATION TANK 커버	01.600	HOSE, RADIATOR LOWER 호스
01.523	LINE, COOLING SYSTEM COMPENSATION TANK 라인	01.601	CLAMP, RADIATOR LOWER HOSE 클램프
01.528	CLIP, RADIATOR OVERFLOW LINE 클립	01.640	FASTENER, RADIATOR SHROUD EXTENTION 패스너
01.529	CLAMP, RADIATOR OVERFLOW LINE 클램프	01.660	SHROUD, RADIATOR 슈라우드
01.530	LINE, RADIATOR FILLER 라인	01.697	SCREEN, RADIATOR DUST PROTECTION 스크린
01.537	PAD, RADIATOR MOUNTING LOWER 패드	01.699	CLAMP, RADIATOR HOSE FASTENER 클램프
01.547	DRAIN COCK, RADIATOR 드레인콕	90.424	WASHER, RADIATOR MOUNTING FASTENER 와셔

94.870 FASTENER, RADIATOR MOUNTING BRACKET
패스너

95.403 FASTENER, RADIATOR SHROUD BRACKET
패스너

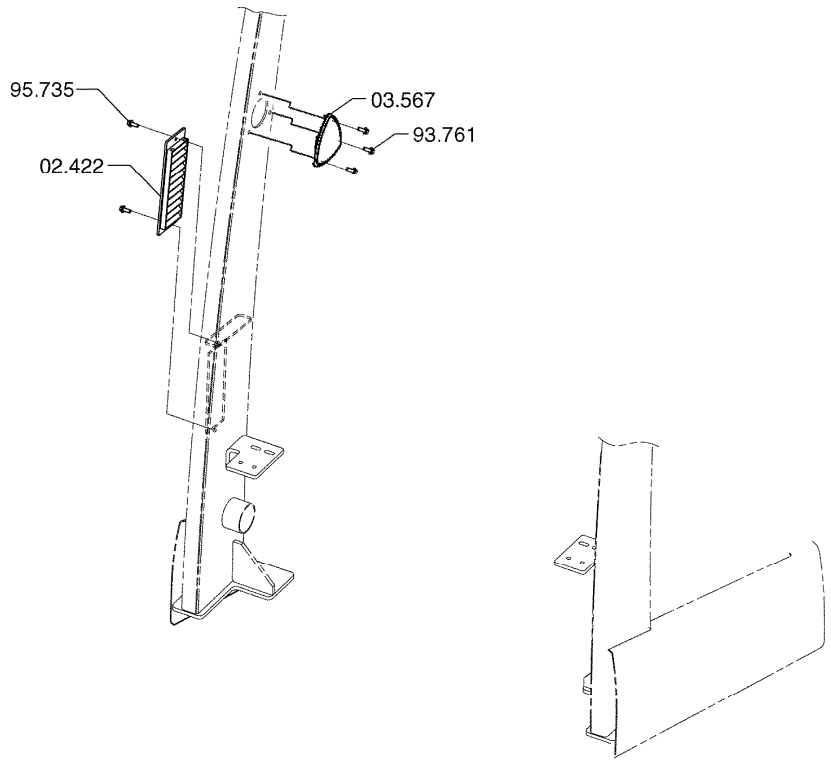

NON PRE-CLEANER GP **02-154**

02.422	SCREEN, ENGINE INTAKE AIR 스크린
03.567	PLUG, AIR INTAKE DRIVER OVERHEAD GUARD 플러그
93.761	FASTENER, DRIVERS OVERHEAD GUARD TOP SECTION COVER 패스너
95.735	FASTENER, ENGINE AIR INTAKE SCREEN 패스너

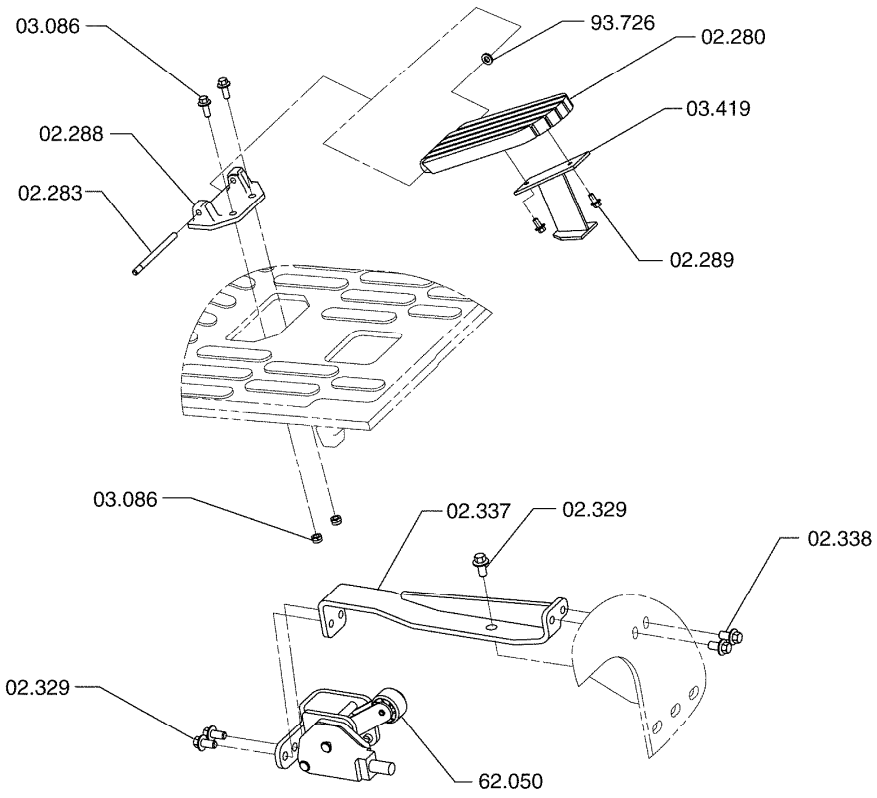

ACCELERATOR SYSTEM **02-156**

02.280 PEDAL, ACCELERATOR
페달

02.283 PIN, ACCELERATOR PEDAL TO BRACKET PIVOT
핀

02.288 BRACKET, ACCELERATOR PEDAL ATTACHING
브라켓

02.289 FASTENER, ACCELERATOR PEDAL BRACKET ATTACHING
패스너

02.329 FASTENER, ACCELERATOR PEDAL
패스너

02.337 BRACKET, ACCELERATOR LEVER MOUNTING
브라켓

02.338 FASTENER, ACCELERATOR LEVER MOUNTING BRACKET
패스너

03.086 FASTENER, ACCELERATOR PEDAL STOP
패스너

03.419 WEAR PLATE, ACCELERATOR PEDAL ROLLER
웨어플레이트

62.050 PEDAL ASSEMBLY, ACCELERATOR
페달

93.726 WASHER, ACCELERATOR PEDAL PIVOT RETAINER
와셔

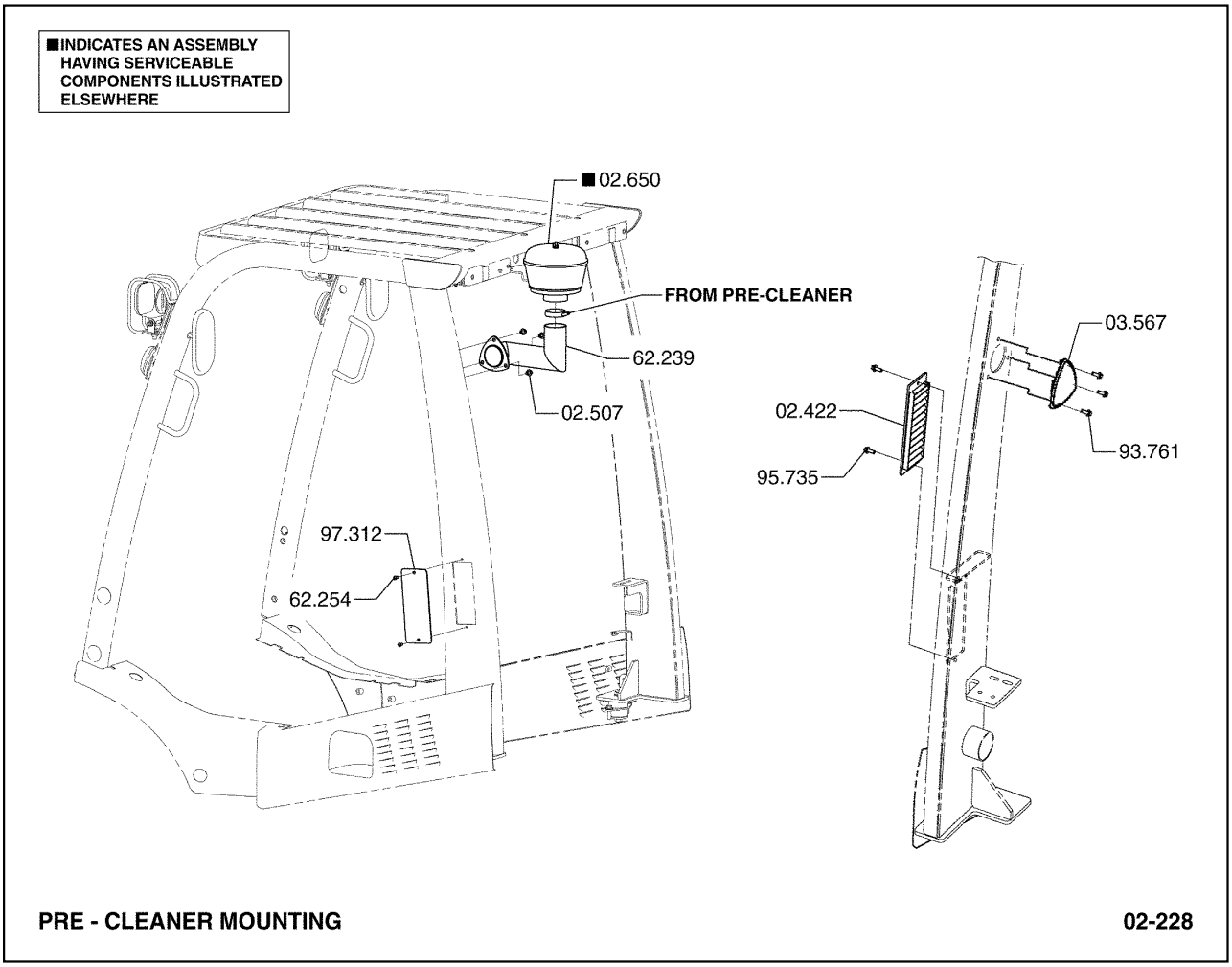

02.422	SCREEN, ENGINE INTAKE AIR 스크린
02.507	FASTENER, AIR CLEANER OUTLET LINE MOUNTING BRACKET 패스너
02.650	PRE-CLEANER ASSEMBLY, ENGINE AIR 프리크리너
03.567	PLUG, AIR INTAKE DRIVER OVERHEAD GUARD 플러그
62.239	TUBE, PRE-AIR CLEANER LINE 튜브
62.254	COVER, ENGINE INTAKE AIR SCREEN *
93.761	FASTENER, DRIVERS OVERHEAD GUARD TOP SECTION COVER 패스너
95.735	FASTENER, ENGINE AIR INTAKE SCREEN 패스너
97.312	FASTENER, ENGINE INTAKE AIR SCREEN COVER *

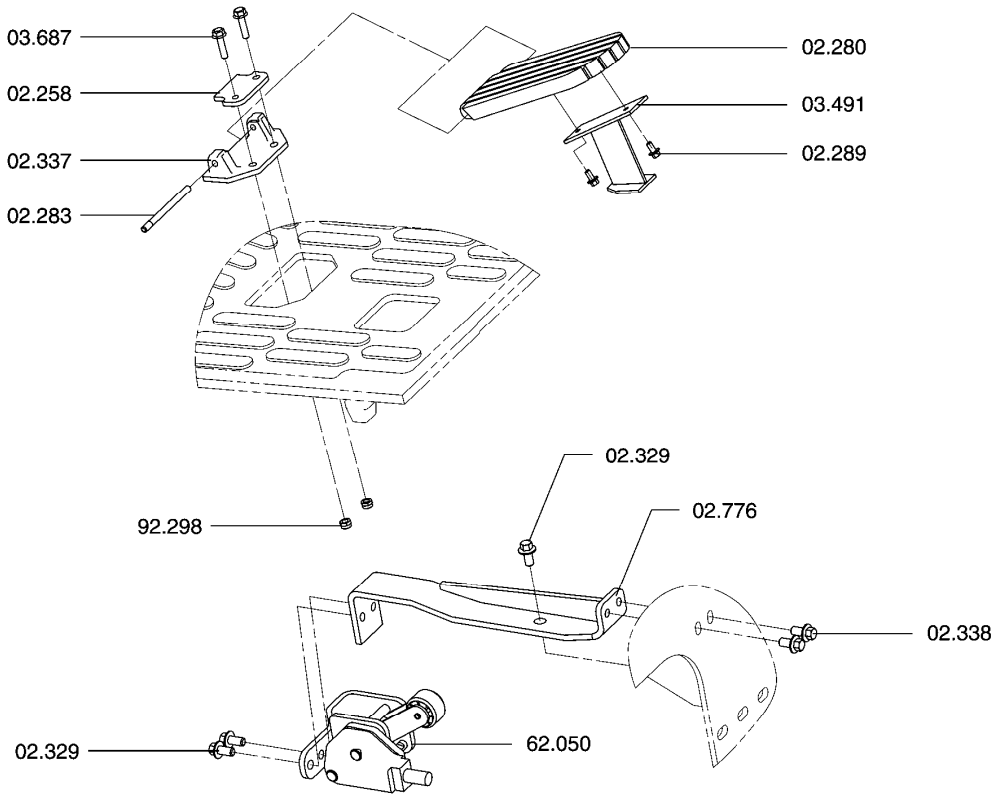

ACCEL CONTROL ASSEMBLY **02-463**

02.258 STOP, ACCELERATOR PEDAL
스톱

02.280 PEDAL, ACCELERATOR
페달

02.283 PIN, ACCELERATOR PEDAL TO BRACKET PIVOT
핀

02.289 FASTENER, ACCELERATOR PEDAL BRACKET ATTACHING
패스너

02.329 FASTENER, ACCELERATOR PEDAL
패스너

02.337 BRACKET, ACCELERATOR LEVER MOUNTING
브라켓

02.338 FASTENER, ACCELERATOR LEVER MOUNTING BRACKET
패스너

02.776 BRACKET, ACCELERATOR CONTROL CABLE
브라켓

03.491 MAGNET, LOCK-OFF VALVE
마그넷

03.687	FASTENER, ACC CONTROL CABLE BRACKET MTG 패스너
62.050	PEDAL ASSEMBLY, ACCELERATOR 페달
92.298	NUT, ACCELERATOR LEVER ATTACHING BRACKET FASTENER 너트

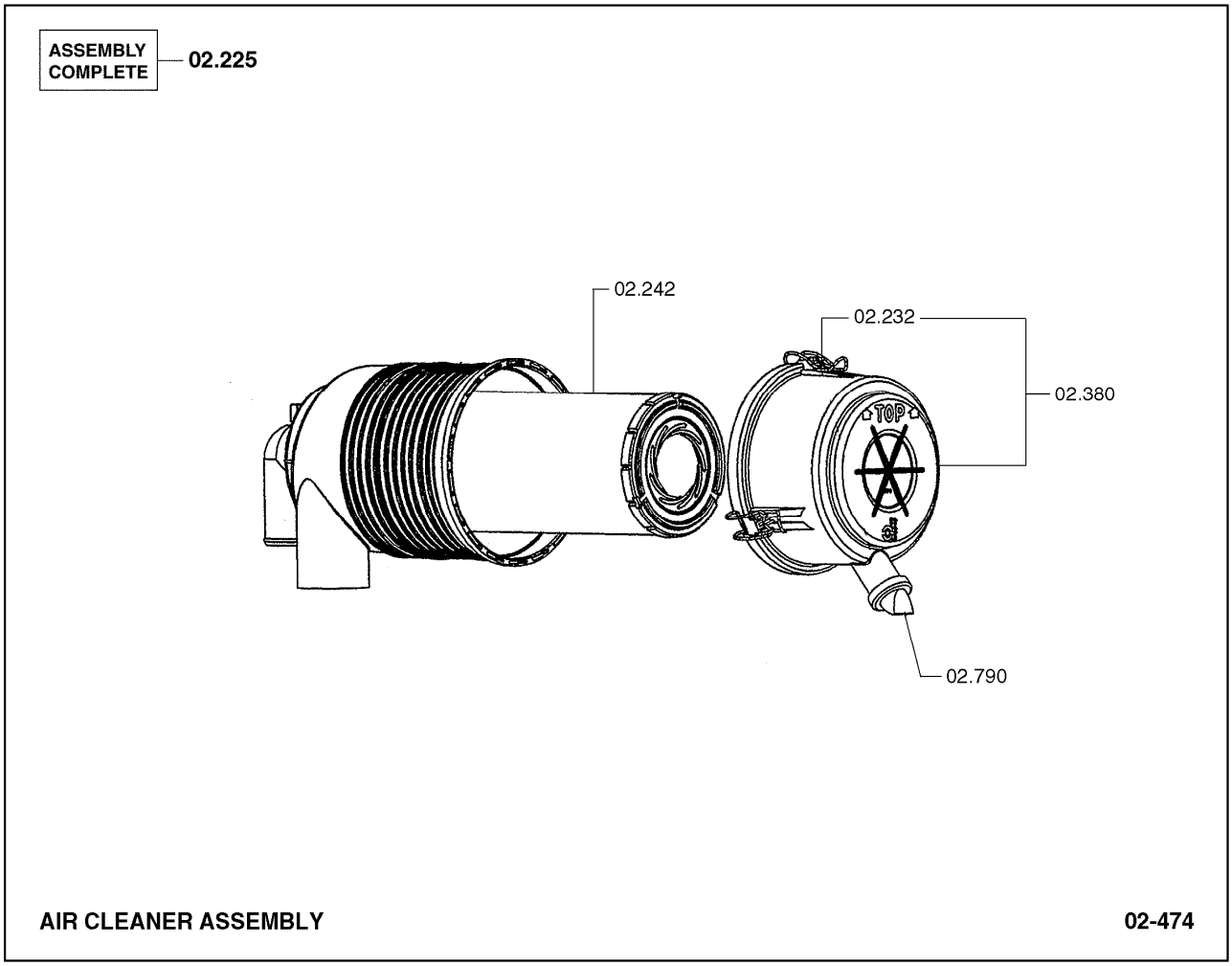

02.225	CLEANER ASSEMBLY, ENGINE INTAKE AIR 에어클리너
02.232	CLAMP, INTAKE AIR CLEANER 클램프
02.242	ELEMENT & GASKET, ENGINE INTAKE AIR CLEANER 엘리먼트와가스켓
02.380	CAP,FILTER 캡
02.790	VALVE, ENGINE INTAKE AIR CLEANER DUST UNLDR 밸브

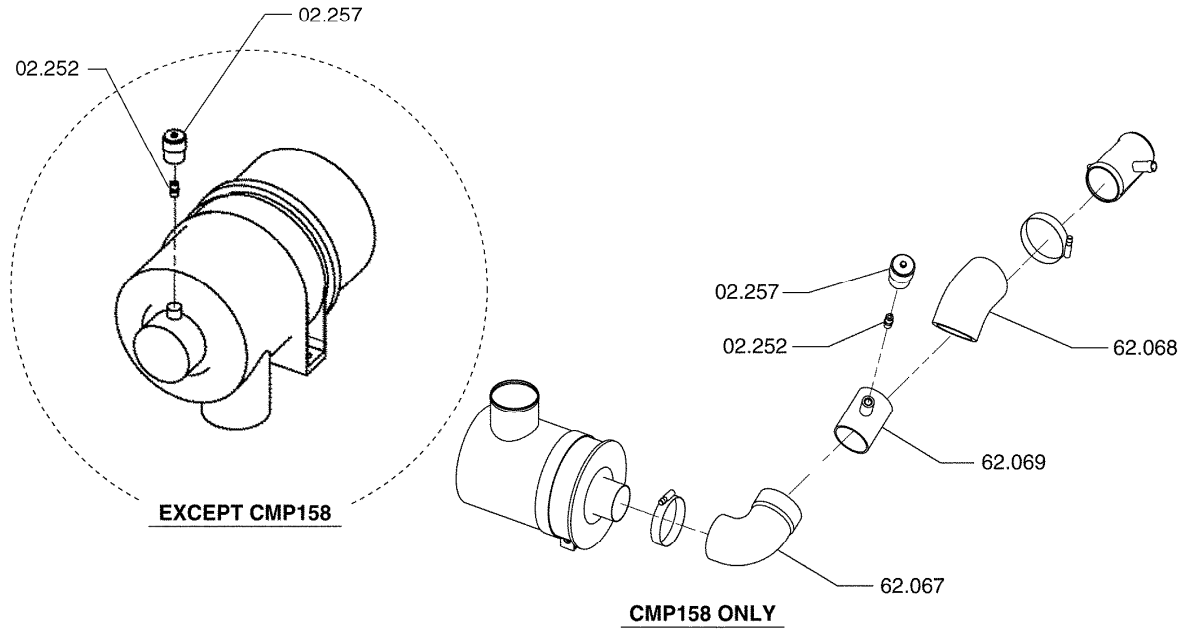

INDICATOR LIGHT INSTALLATION **02-478**

02.252 FITTING, MAIN AIR CLEANER OUTLET TUBE
피팅

02.257 INDICATOR, ENGINE INTAKE AIR CLEANER AIR RES
인디케이터

62.067 HOSE, AIR CLEANER INTAKE
호스

62.068 HOSE, AIR CLEANER INTAKE
호스

62.069 TUBE, AIR CLEANER INTAKE
튜브

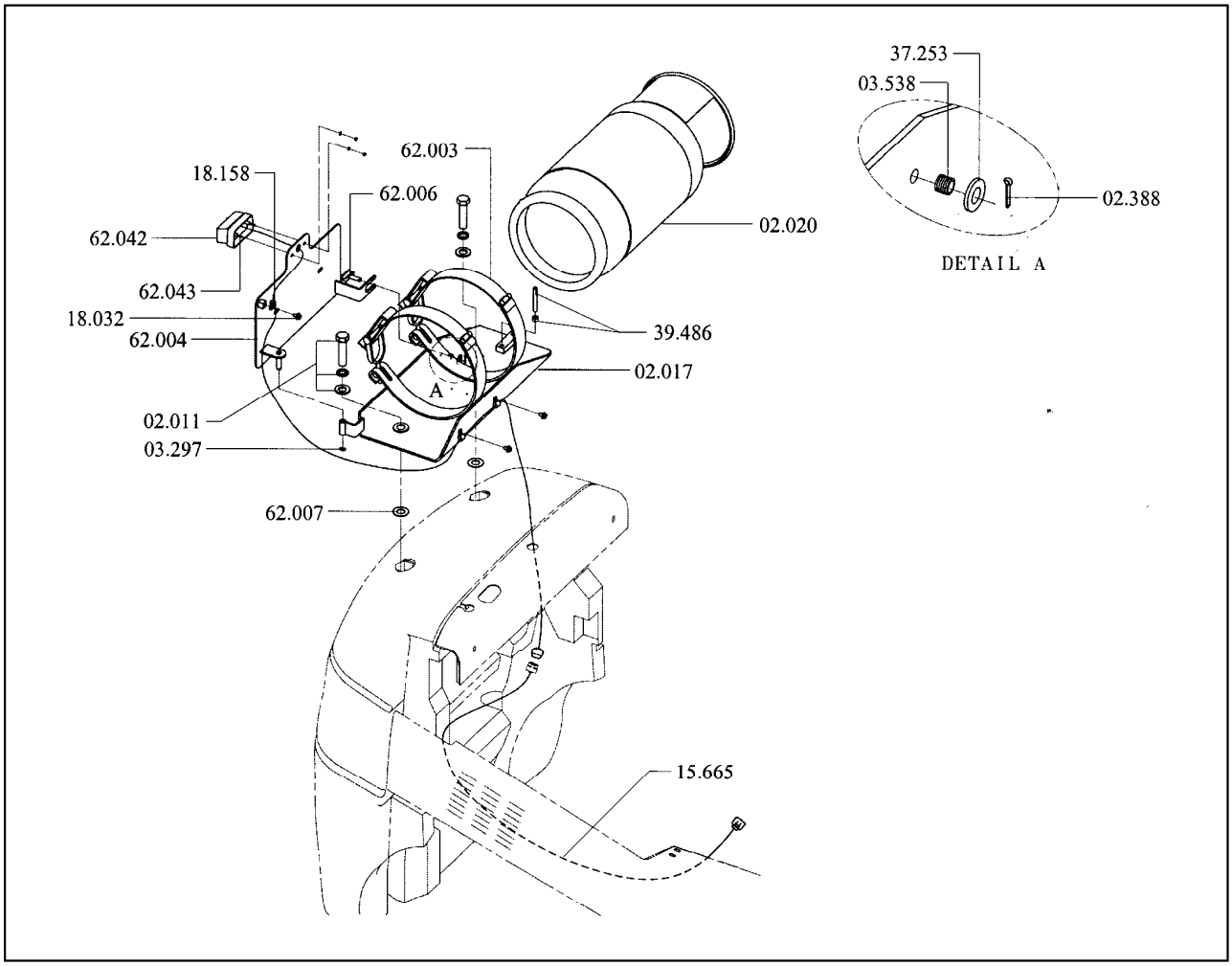

02.011 FASTENER, TANK REAR MOUNTING BRACKET
패스너

02.017 SUPPORT, GAS TANK MOUNTING
서포트

02.020 TANK, FUEL
탱크

02.388 PIN, TANK LOCATING
핀

03.297 RETAINER, LPG TANK GUARD
리테이너

03.538 SPRING, LPG TANK BRACKET RETAINING
스프링

15.665 WIRE HARNESS
욱J潔紂電謬

18.032 FASTENER, WIRE HARNESS CLAMP
패스너

18.158 CLAMP,WIRE HARNESS
클램프

37.253	WASHER, GAS TANK SHIELD FASTENER 와셔
39.486	FASTENER, GAS TANK SHIELD 패스너
62.003	CLAMP, LPG TANK 클램프
62.004	PLATE, LICENSE 플레이트
62.006	LOCK, LICENSE 로크
62.007	SHIM, TANK BRACKET 심
62.042	LAMP ASSEMBLY, LICENSE PLATE 램프
62.043	BULB, LICENSE PLATE LAMP 전구

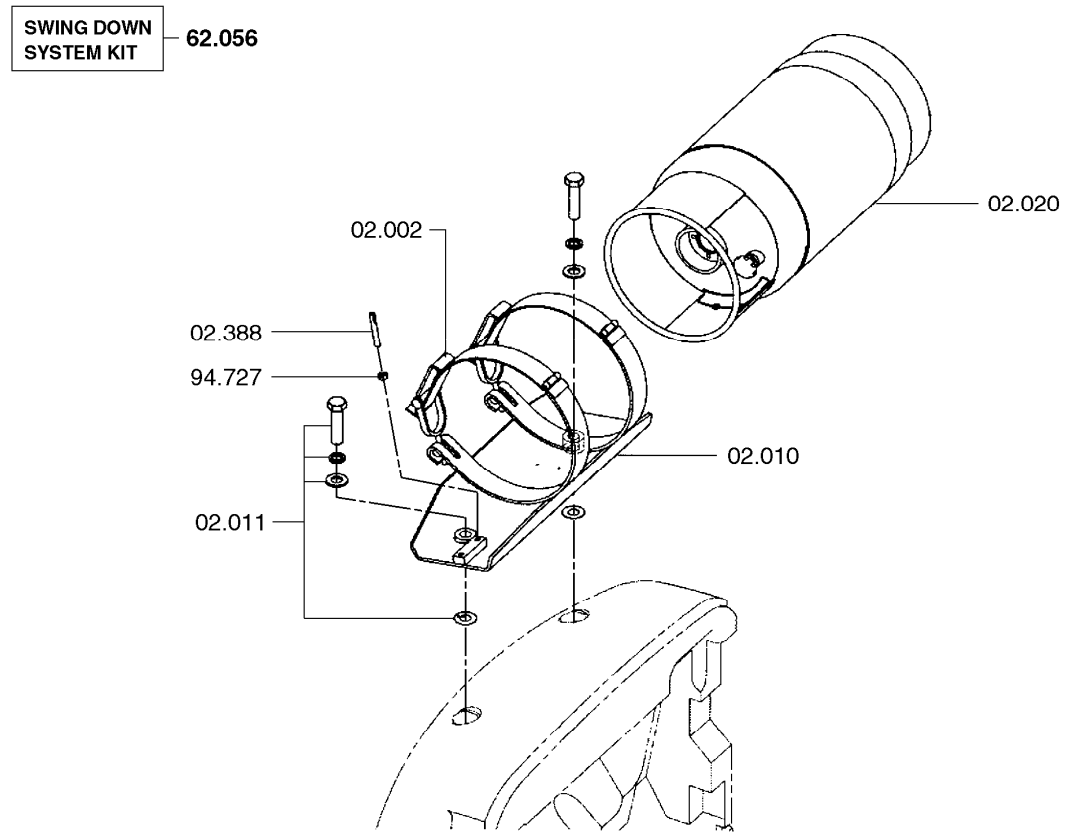

LPG TANK MOUNTING 03-166

02.002 CLAMP ARM, LPG TANK GUARD
클램프암

02.010 BRACKET, LPG TANK REAR MOUNTING
브라켓

02.011 FASTENER, TANK REAR MOUNTING BRACKET
패스너

02.020 TANK, FUEL
탱크

02.388 PIN, TANK LOCATING
핀

62.056 KIT, SWING DOWN SYSTEM
킷

94.727 NUT, LPG TANK LOCATING PIN BRACKET FASTENER
너트

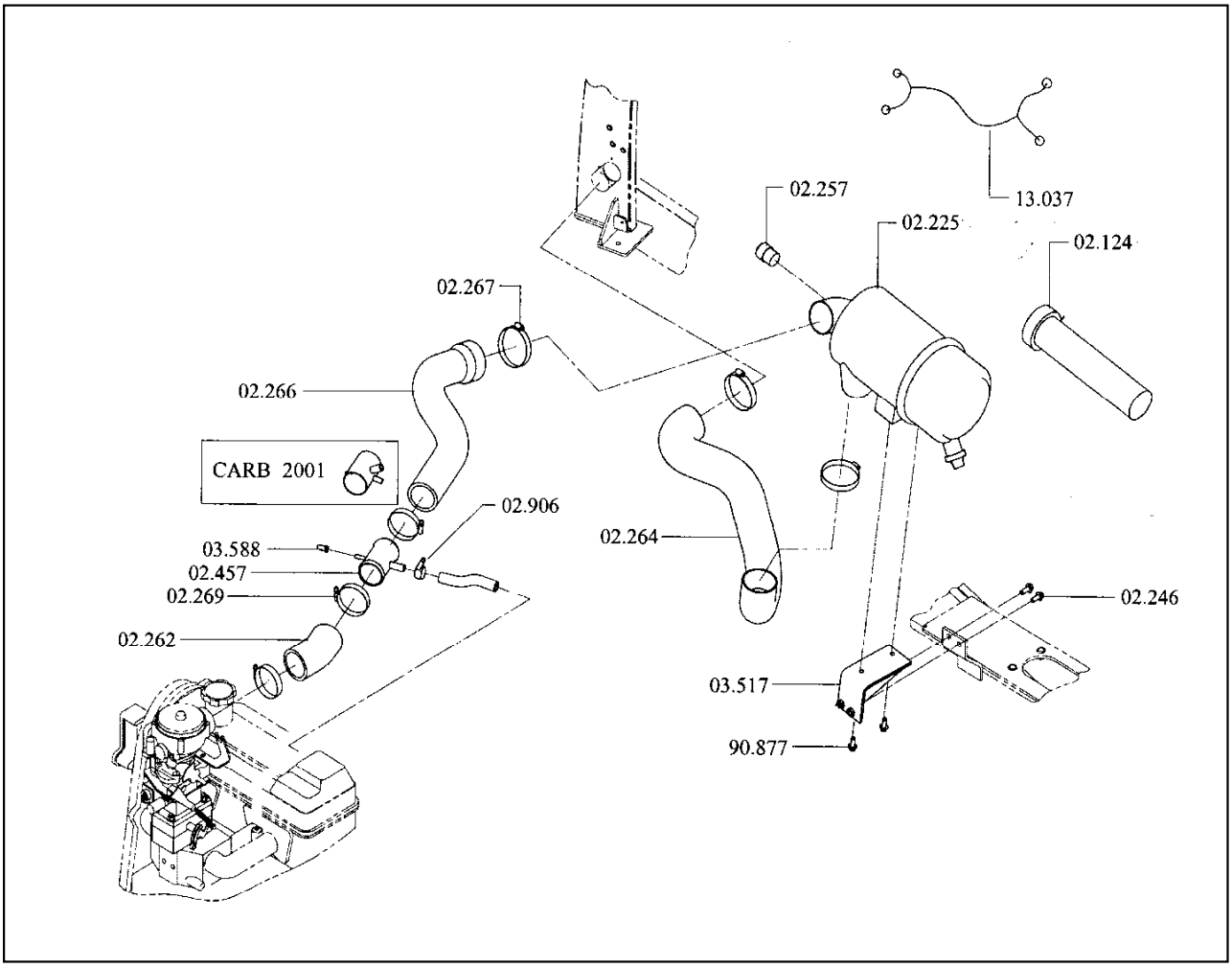

02.124 ELEMENT, FILTER
엘리먼트

02.225 CLEANER ASSEMBLY, ENGINE INTAKE AIR
에어클리너

02.246 FASTENER, ENGINE INTAKE AIR CLEANER ATTACHING
패스너

02.257 INDICATOR, ENGINE INTAKE AIR CLEANER AIR RES
인디케이터

02.262 HOSE, MAIN AIR CLEANER OUTLET
호스

02.264 TUBE, MAIN AIR CLEANER OUTLET
튜브

02.266 HOSE, MAIN AIR CLEANER OUTLET
호스

02.267 CLAMP, MAIN AIR CLEANER OUTLET HOSE
클램프

02.269 CLAMP, MAIN AIR CLEANER OUTLET HOSE
클램프

02.457	FITTING, MAIN AIR CLEANER OUTLET TUBE 피팅
02.906	CLAMP, CARBURETOR PREHEATER LINE 클램프
03.517	BRACKET, AIR CLEANER MOUNTING 브라켓
03.588	PLUG, ADAPTOR AIR INTAKE HOSE 플러그
13.037	HARNESS, FILTER 하네스
90.877	NUT, ENGINE INTAKE AIR CLEANER BRACKET 너트

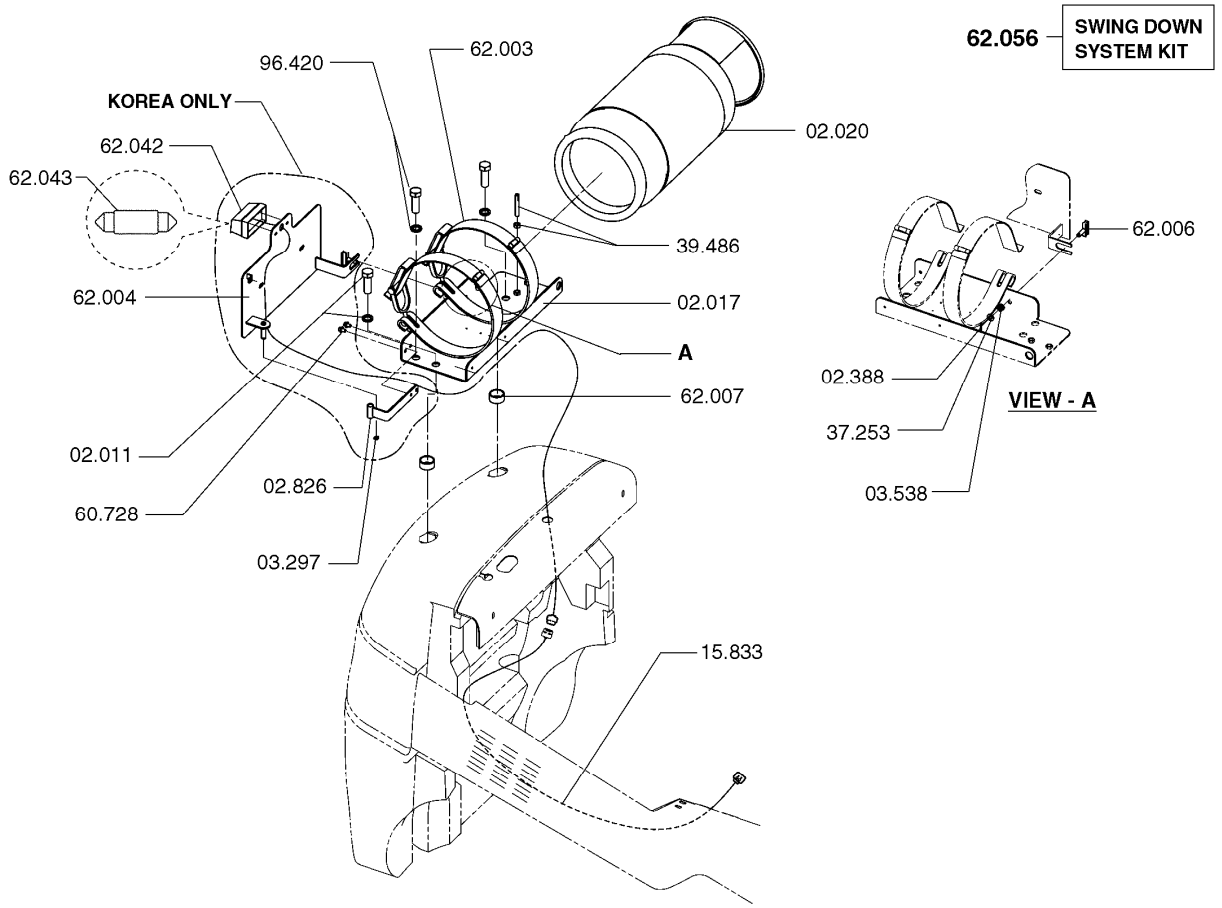

02.011 FASTENER, TANK REAR MOUNTING BRACKET
패스너

02.017 SUPPORT, GAS TANK MOUNTING
서포트

02.020 TANK, FUEL
탱크

02.388 PIN, TANK LOCATING
핀

02.826 BRACKET, FUEL LINE CLIP
브라켓

03.297 RETAINER, LPG TANK GUARD
리테이너

03.538 SPRING, LPG TANK BRACKET RETAINING
스프링

15.833 WIRE HARNESS, LICENCE LAMP
*

37.253 WASHER, GAS TANK SHIELD FASTENER
와셔

39.486	FASTENER, GAS TANK SHIELD 패스너
60.728	CAPSCREW, BRACKET FASTENER 캡스크류
62.003	CLAMP, LPG TANK 클램프
62.004	PLATE, LICENSE 플레이트
62.006	LOCK, LICENSE 로크
62.007	SHIM, TANK BRACKET 심
62.042	LAMP ASSEMBLY, LICENSE PLATE 램프
62.043	BULB, LICENSE PLATE LAMP 전구
62.056	KIT, SWING DOWN SYSTEM 킷
96.420	FASTENER, LPG TANK MOUNTING BRACKET 패스너

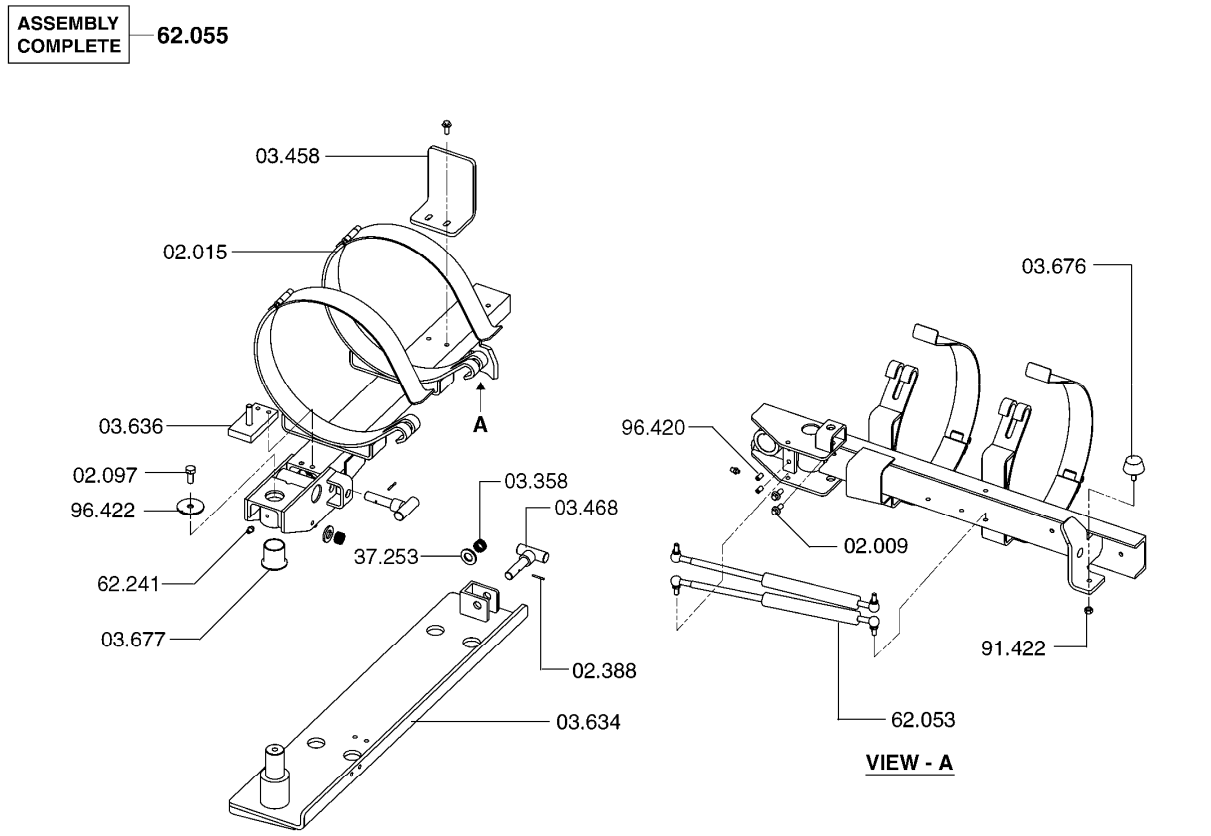

SWING DOWN BRACKET ASSEMBLY **03-558**

02.009 FASTENER, LPG TANK GUARD MOUNTING
패스너

02.015 STRAP, LPG TANK CLAMP
스트랩

02.097 FASTENER, TANK GUARD PIVOT ROD
패스너

02.388 PIN, TANK LOCATING
핀

03.358 CAP, FUEL TANK
캡

03.458 BRACKET, LPG TANK LOCATING PIN
브라켓

03.468 HANDLE, LPG TANK MOUNTING BRACKET
핸들

03.634 SUPPORT, LPG TANK BRACKET
서포트

03.636 SUPPORT, LPG TANK MOUNTING BRACKET
서포트

03.676	STOP, LPG TANK PIVOT 스톱
03.677	BUSHING, LPG TANK PIVOT 부싱
37.253	WASHER, GAS TANK SHIELD FASTENER 와셔
62.053	PROP, SWING DOWN LPG TANK MTG 프롭
62.055	BRACKET, SWING DOWN LPG TANK MTG 브라켓
62.241	FITTING-LUB, LPG TANK BRACKET PIVOT *
91.422	NUT, LPG TANK SUPPORT 너트
96.420	FASTENER, LPG TANK MOUNTING BRACKET 패스너
96.422	WASHER, LPG TANK BRACKET PIVOT 와셔

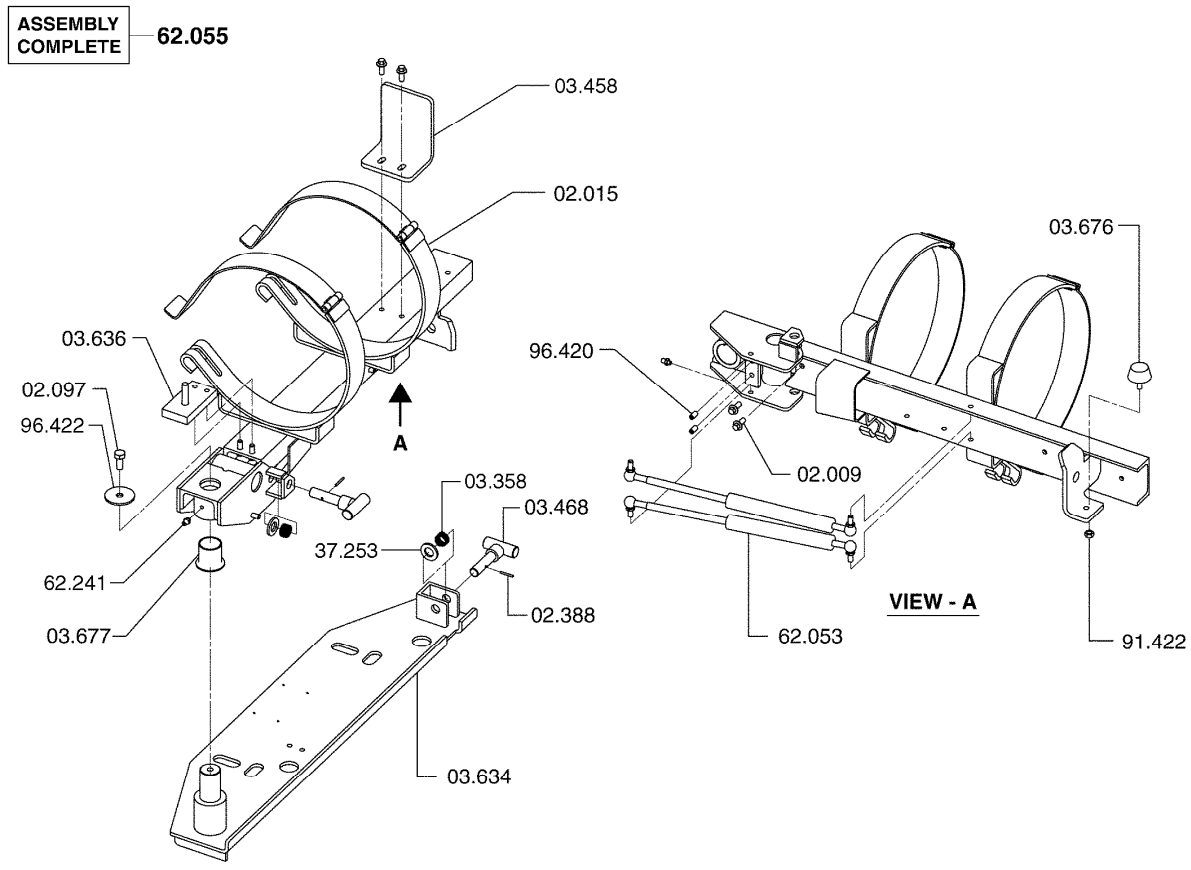

SWING DOWN BRACKET ASSEMBLY **03-559**

02.009 FASTENER, LPG TANK GUARD MOUNTING
패스너

02.015 STRAP, LPG TANK CLAMP
스트랩

02.097 FASTENER, TANK GUARD PIVOT ROD
패스너

02.388 PIN, TANK LOCATING
핀

03.358 CAP, FUEL TANK
캡

03.458 BRACKET, LPG TANK LOCATING PIN
브라켓

03.468 HANDLE, LPG TANK MOUNTING BRACKET
핸들

03.634 SUPPORT, LPG TANK BRACKET
서포트

03.636 SUPPORT, LPG TANK MOUNTING BRACKET
서포트

03.676	STOP, LPG TANK PIVOT 스톱
03.677	BUSHING, LPG TANK PIVOT 부싱
37.253	WASHER, GAS TANK SHIELD FASTENER 와셔
62.053	PROP, SWING DOWN LPG TANK MTG 프롭
62.055	BRACKET, SWING DOWN LPG TANK MTG 브라켓
62.241	FITTING-LUB, LPG TANK BRACKET PIVOT *
91.422	NUT, LPG TANK SUPPORT 너트
96.420	FASTENER, LPG TANK MOUNTING BRACKET 패스너
96.422	WASHER, LPG TANK BRACKET PIVOT 와셔

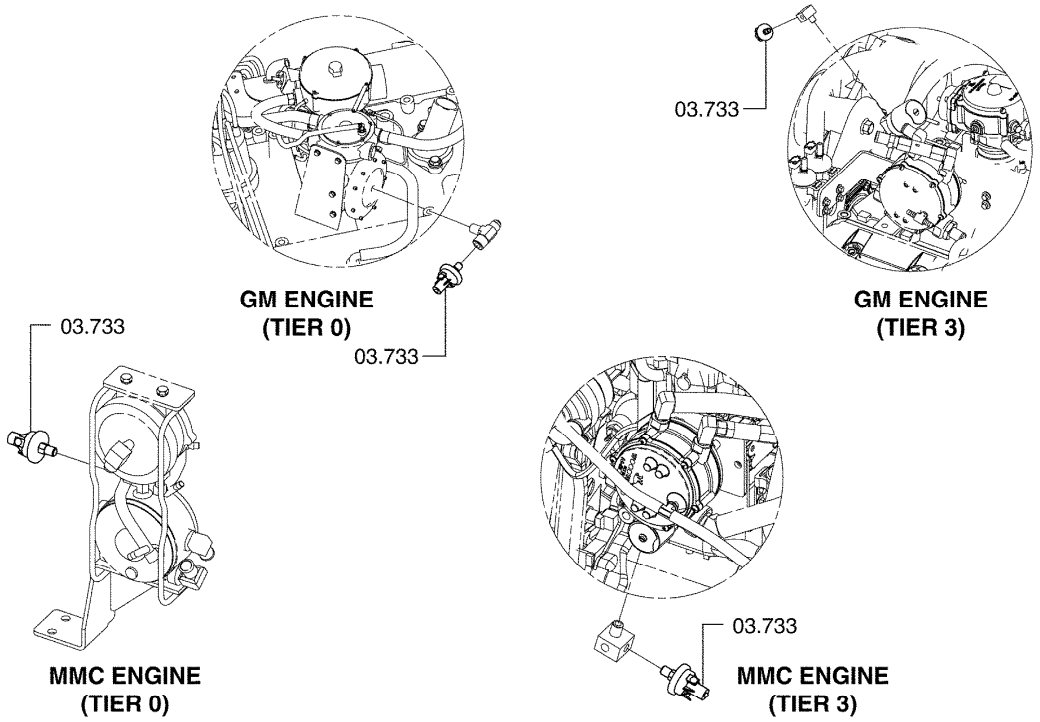

SWITCH INSTALLATION **03-581**

03.733 SWITCH,LPG PRESSURE
스위치

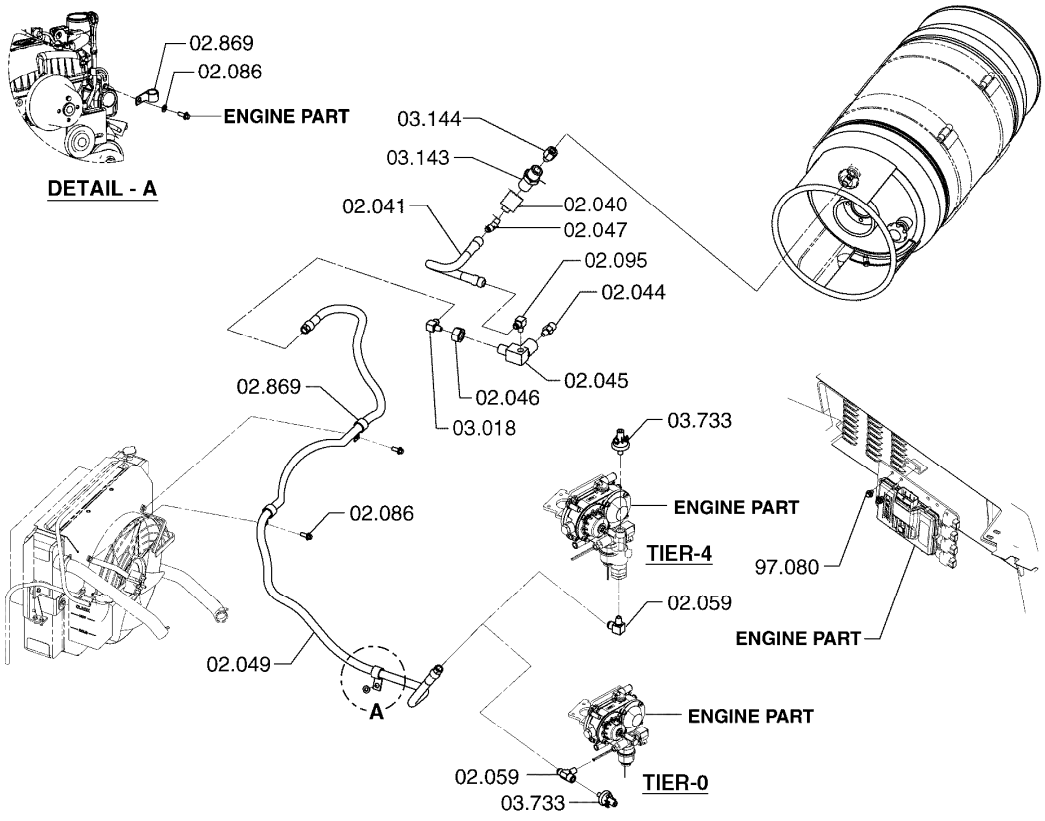

FUEL SYSTEM **03-597**

02.040 COUPLER, LPG QUICK DISCONNECT
커플러

02.041 LINE, LP GAS TANK OUTLET
라인

02.044 VALVE, HYDROSTATIC RELIEF
밸브

02.045 ADAPTOR, THREE WAY THRU HOOD
어댑터

02.046 FASTENER, ADAPTOR
패스너

02.047 FITTING, LPG ADAPTOR OUTLET
피팅

02.049 LINE, ADAPTOR OUTLET
라인

02.059 FITTING, LPG VAPORIZER INLET
피팅

02.086 FASTENER, LPG LINE CLIP
패스너

02.095	FITTING, LPG THREE WAY ADAPTOR 피팅
02.869	CLIP, LPG LINE 클립
03.018	FITTING, THREE WAY VALVE OUTLET LINE 피팅
03.143	COUPLER, LPG QUICK DISCONNECT 커플러
03.144	COUPLER, LPG QUICK DISCONNECT 커플러
03.733	SWITCH,LPG PRESSURE 스위치
97.080	FASTENER, ECU MOUNTING 패스너

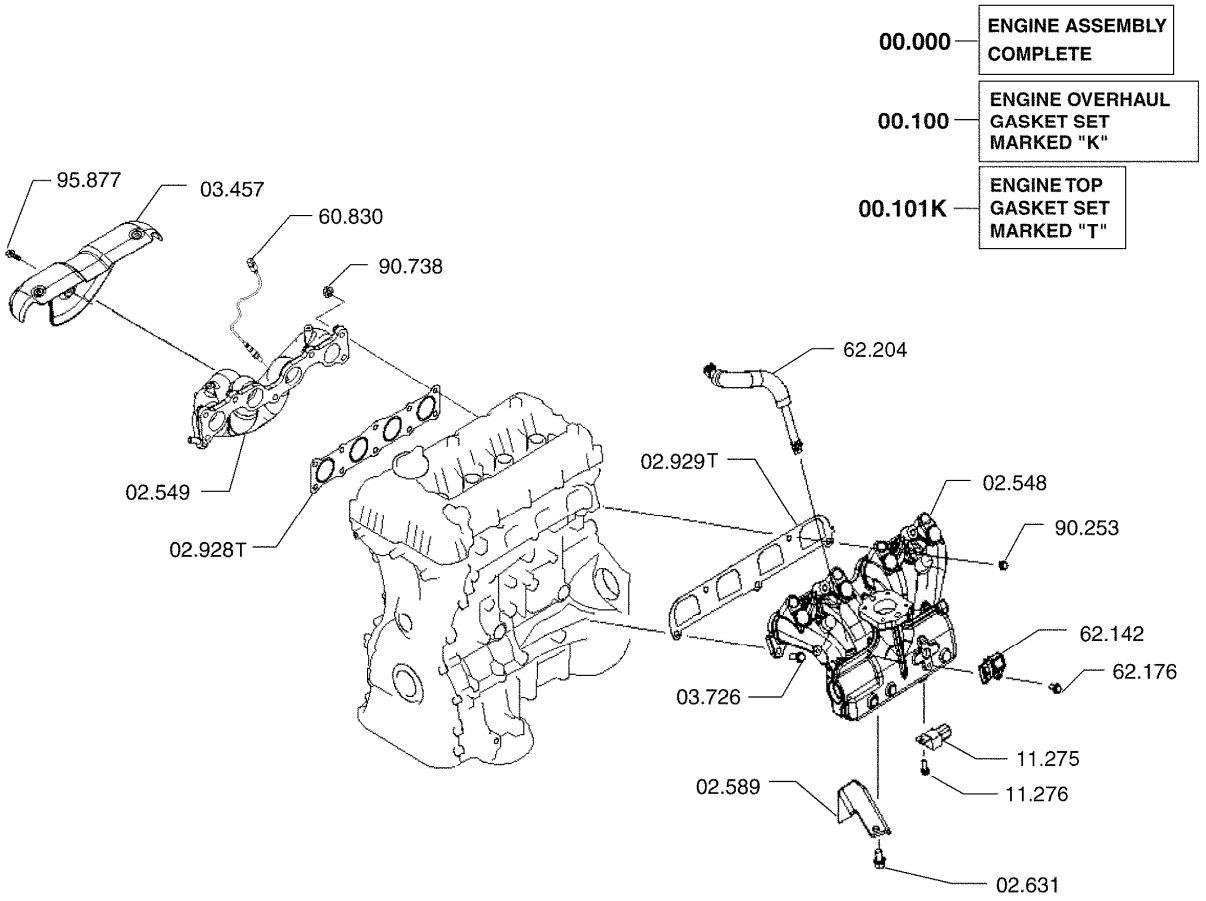

00.000 PRODUCTION ENGINE ASSEMBLY
엔진

00.100 GASKET KIT, ENGINE OVERHAUL
가스켓킷

00.101 VALVE GRIND GASKET KIT (TOP SET)
밸브가스켓

02.548 MANIFOLD, INTAKE
매니폴드

02.549 MANIFOLD, EXHAUST
매니폴드

02.589 SHIELD, HEAT (AT MANIFOLD)
쉴드

02.631 FASTENER, HEAT SHIELD
패스너

02.928 GASKET, EXHAUST MANIFOLD
가스켓

02.929 GASKET, INTAKE MANIFOLD
가스켓

03.457	SHIELD, MANIFOLD HEAT 쉴드
03.726	FASTENER, INTAKE MANIFOLD 패스너
11.275	CONDENSER, IGNITION 콘덴서
11.276	FASTENER, IGNITION CONDENSER 패스너
60.830	SENSOR, ENG CONTROL OXYGEN 센서
62.142	SENSOR, ENGINE MAP 센서
62.176	FASTENER, ENGINE MAP SENSOR 패스너
62.204	LINE, PCV 라인
90.253	NUT, MANIFOLD FASTENER 너트
90.738	NUT, MANIFOLD FASTENER 너트
95.877	FASTENER, HEAD SHIELD 패스너

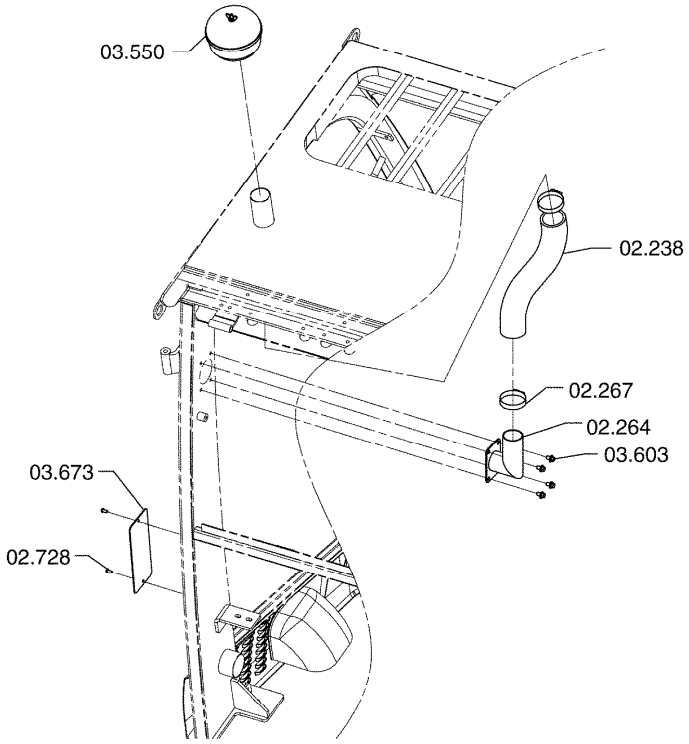

PRECLEANER, AIR CLEANER INSTALLATION **03-601**

02.238	TUBE, MAIN AIR CLEANER INLET 튜브
02.264	TUBE, MAIN AIR CLEANER OUTLET 튜브
02.267	CLAMP, MAIN AIR CLEANER OUTLET HOSE 클램프
02.728	FASTENER, AIR INTAKE BRACKET 패스너
03.550	PRE CLEANER ASSEMBLY, ENGINE AIR 프리크리너
03.603	FASTENER, AIR CLEANER TUBE CLAMP 패스너
03.673	VENT, AIR INTAKE 벤트

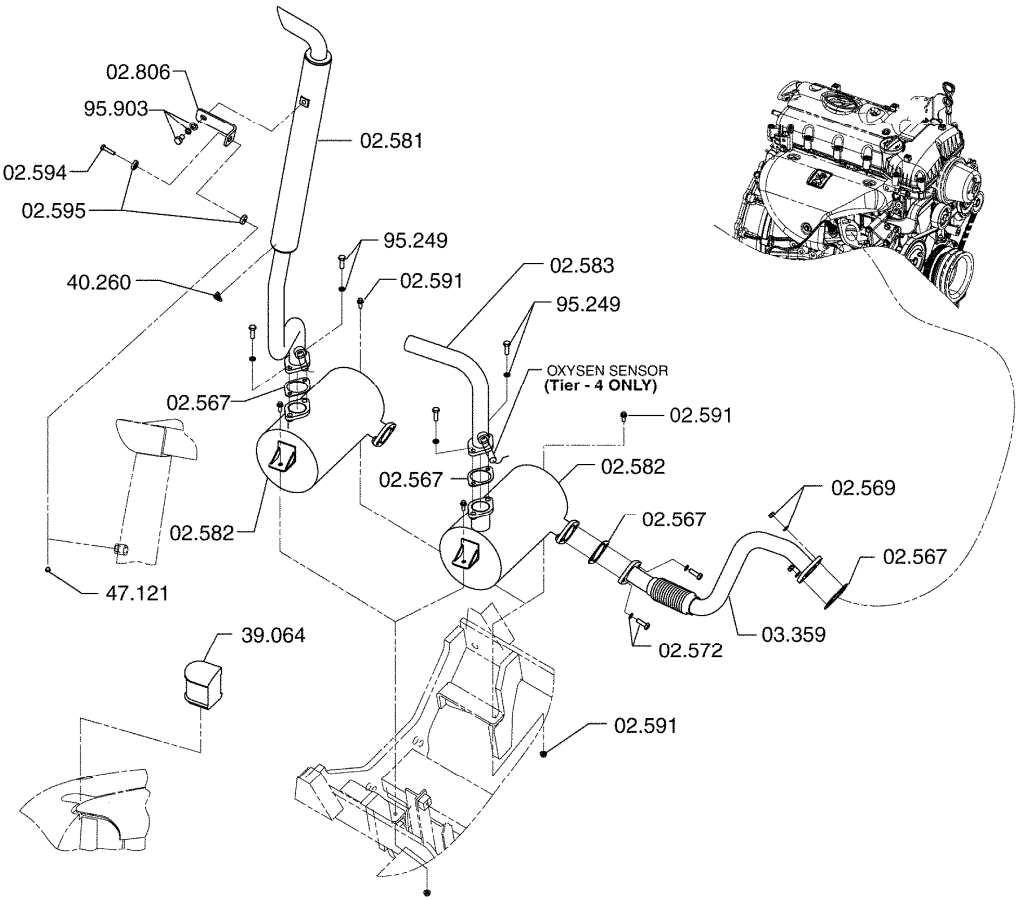

EXHAUST SYSTEM **03-603**

02.567 GASKET, EXHAUST PIPE FLANGE TO MANIFOLD
가스켓

02.569 FASTENER, EXHAUST PIPE FLANGE TO MANIFOLD
패스너

02.572 FASTENER, EXHAUST PIPE STRAP
패스너

02.581 EXTENSION, TAIL PIPE
익스텐션

02.582 MUFFLER
머플러

02.583 PIPE, TAIL
파이프

02.591 FASTENER, MUFFLER MOUNTING
패스너

02.594 FASTENER, TAIL PIPE MOUNTING BRACKET
패스너

02.595 DAMPENER, EXHAUST PIPE VIBRATION
댐프너

02.806	BRACKET, TAIL PIPE MOUNTING 브라켓
03.359	PIPE, EXHAUST 파이프
39.064	COVER, COUNTERWEIGHT UPPER 커버
40.260	DECAL, HOT SURFACE WARNING 데칼
47.121	PLUG, OVERHEAD GUARD 플러그
95.249	FASTENER, TAIL PIPE CONNECTION FLANGE 패스너
95.903	FASTENER, EXHAUST PIPE BRACKET 패스너

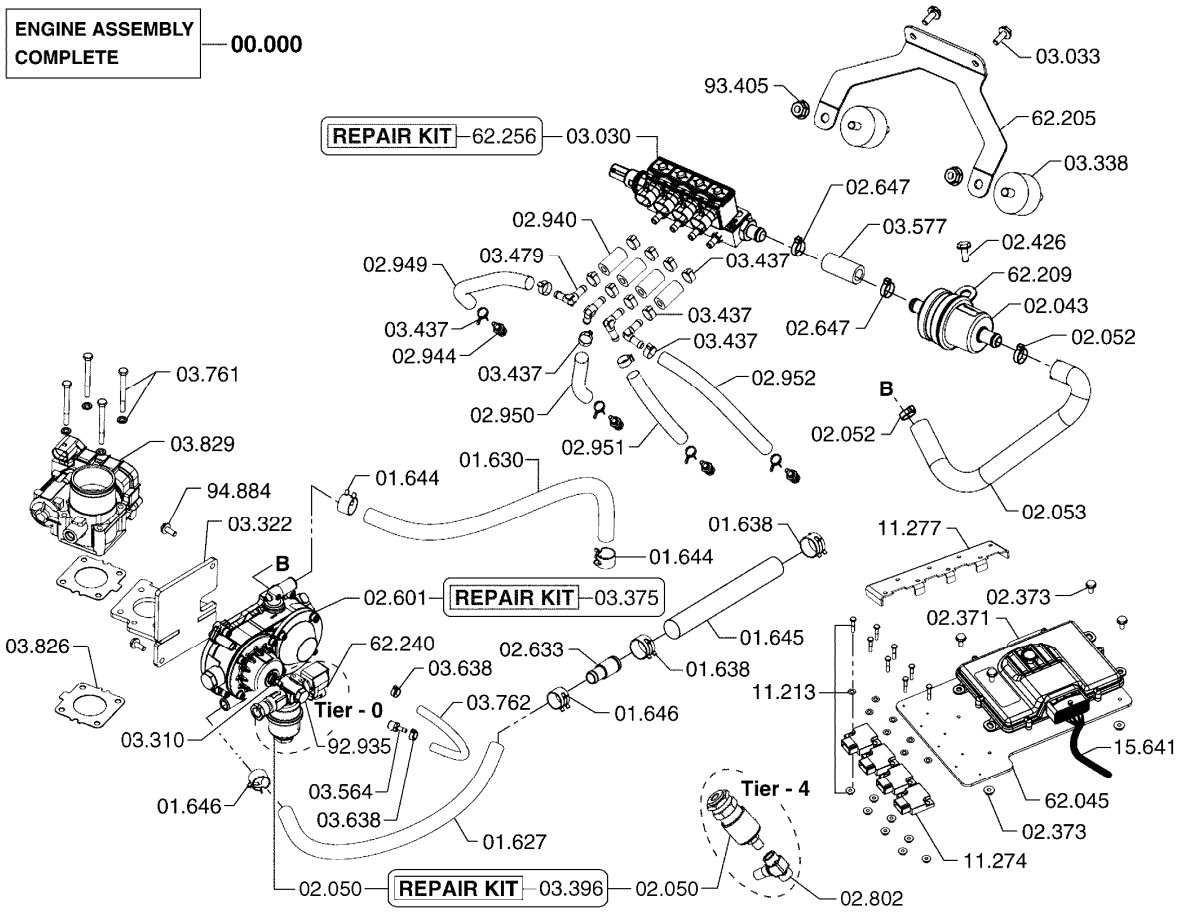

00.000	PRODUCTION ENGINE ASSEMBLY 엔진	02.633	LINE, VAPORIZER OUTLET 라인
01.627	LINE, VAPORIZER WATER OUTLET 라인	02.647	CLIP, FUEL FILTER OUTLET LINE CLIP 클립
01.630	LINE, VAPORIZER WATER INLET 라인	02.802	FITTING, LPG VAPORIZER INLET 피팅
01.638	CLAMP, VAPORIZER WATER OUTLET LINE 클램프	02.940	LINE, INJECTOR LEAK OFF 라인
01.644	CLAMP, VAPORIZER WATER INLET LINE 클램프	02.944	NOZZLE, FUEL INJECTOR 노즐
01.645	LINE, VAPORIZER WATER OUTLET 라인	02.949	LINE, INJECTOR (NO 1 CYLINDER) 라인
01.646	CLAMP, VAPORIZER WATER OUTLET LINE 클램프	02.950	LINE, INJECTOR (NO 2 CYLINDER) 라인
02.043	FILTER, FUEL 필터	02.951	LINE, INJECTOR (NO 3 CYLINDER) 라인
02.050	VALVE, LPG LOCK OFF 밸브	02.952	LINE, INJECTOR (NO 4 CYLINDER) 라인
02.052	CLAMP, REGULATOR OUTLET HOSE 클램프	03.030	INJECTOR ASSEMBLY, FUEL 인젝터
02.053	LINE, REGULATOR OUTLET 라인	03.033	FASTENER, FUEL INJECTOR 패스너
02.371	CONTROL UNIT, ELECTRONIC (ECU) 컨트롤유닛	03.310	FITTING, FUEL LOCK-OFF VALVE OUTLET 피팅
02.373	FASTENER, ECU TO FUEL MODULE 패스너	03.322	BRACKET, LPG REGULATOR MOUNTING 브라켓
02.426	FASTENER, FUEL FILTER BRACKET 패스너	03.338	DAMPENER, FUEL INJECTOR LINE VIBRATION 댐프너
02.601	REGULATOR,VAPORIZER ASSY 레귤레이터	03.375	REPAIR KIT, LP GAS VAPOR REGULATOR 리페어킷

03.396	REPAIR KIT, FUEL VALVE AND FILTER 리페어킷
03.437	CLAMP, FUEL INJECTOR LINE 클램프
03.479	NOZZLE, TIP FUEL INJECTOR 노즐
03.564	NOZZLE, VACUUM REDUCTION 노즐
03.577	LINE, ENGINE FUEL FILTER 라인
03.638	CLAMP, VACUUM LINE 클램프
03.761	FASTENER, THROTTLE POSITIONER BRACKET 패스너
03.762	HOSE, VACUUM 호스
03.826	GASKET, THROTTLE BODY 가스켓
03.829	THROTTLE BODY AND SHAFT 트로틀
11.213	FASTENER, TRANSISTOR IGNITION RESISTOR 패스너
11.274	TRANSISTOR, ENGINE IGNITION 트랜지스터
11.277	COVER, ENGINE IGNITION TRANSISTOR 커버
15.641	WIRING HARNESS, ENGINE 와이어하네스
62.045	BRACKET, ELECTRONIC CONTROL UNIT 브라켓
62.205	BRACKET, FUEL INJECTOR 브라켓
62.209	CLAMP, FUEL FILTER 클램프
62.240	SOLENOID, FUEL LOCK-OFF VALVE *
62.256	REPAIR KIT, FUEL INJECTOR *
92.935	FASTENER, LOCK-OFF VALVE AND FILTER 패스너
93.405	NUT, FUEL INJECTOR FASTENER 너트
94.884	FASTENER, LPG VAPORIZER MOUNTING 패스너

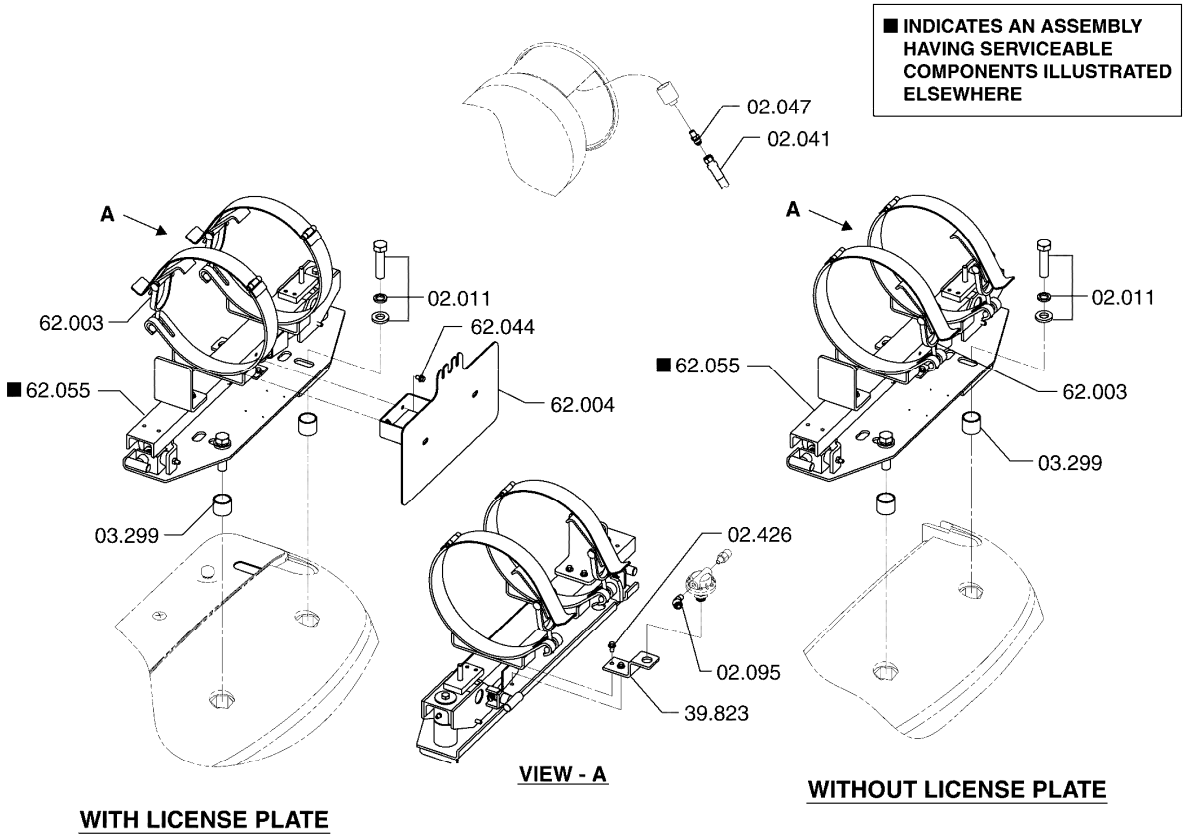

02.011 FASTENER, TANK REAR MOUNTING BRACKET
패스너

02.041 LINE, LP GAS TANK OUTLET
라인

02.047 FITTING, LPG ADAPTOR OUTLET
피팅

02.095 FITTING, LPG THREE WAY ADAPTOR
피팅

02.426 FASTENER, FUEL FILTER BRACKET
패스너

03.299 SPACER, LPG TANK GUARD MOUNTING FASTENER
스페이서

39.823 BRACKET, FUEL FILTER
브라켓

62.003 CLAMP, LPG TANK
클램프

62.004 PLATE, LICENSE
플레이트

62.044 FASTENER, LICENSE PLATE MOUNTING
패스너

62.055 BRACKET, SWING DOWN LPG TANK MTG
브라켓

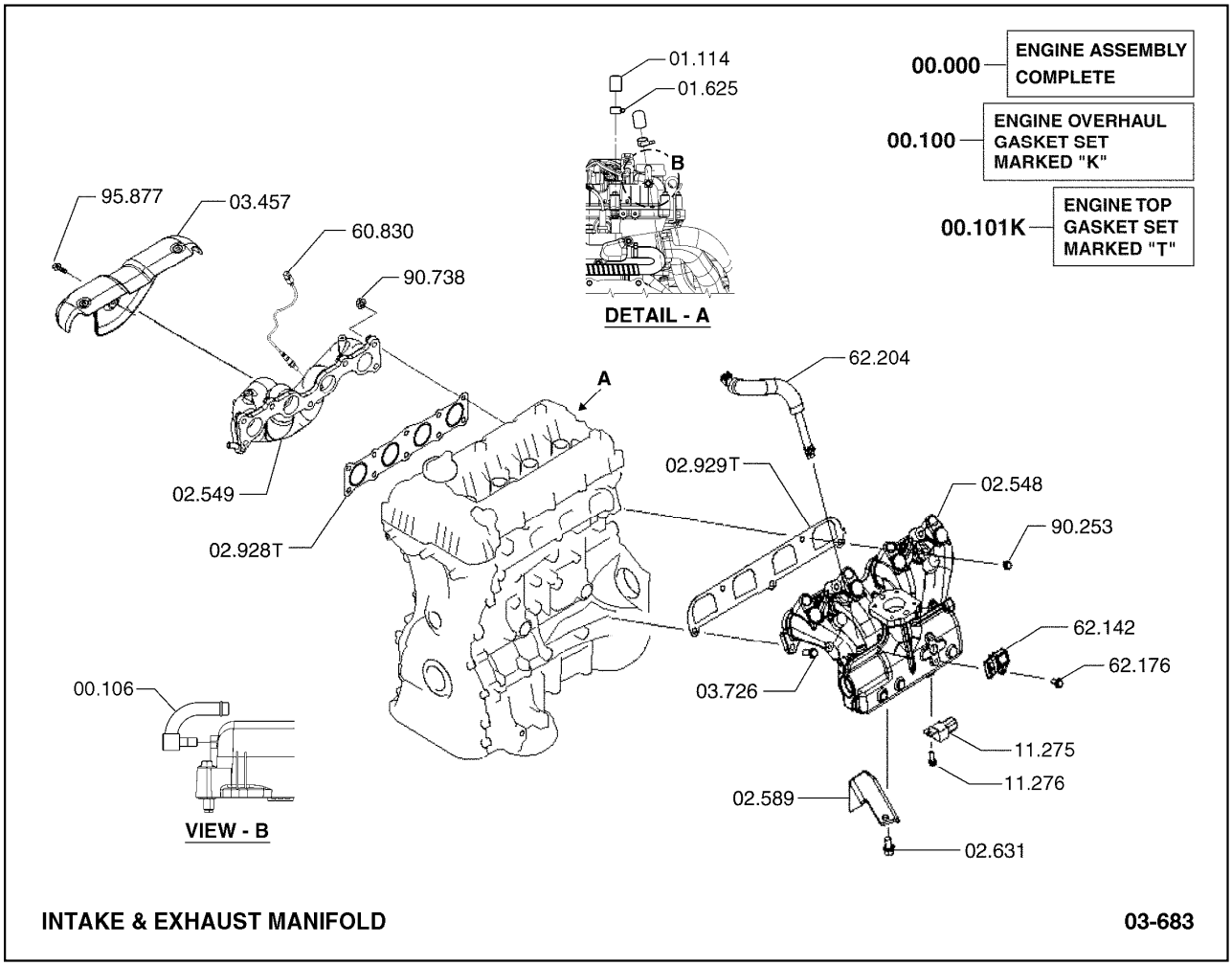

00.000 PRODUCTION ENGINE ASSEMBLY
엔진

00.100 GASKET KIT, ENGINE OVERHAUL
가스켓킷

00.101 VALVE GRIND GASKET KIT (TOP SET)
밸브가스켓

00.106 FITTING, CRANKCASE VENT TUBE
피팅

01.114 PLUG,WATER OUTLET ELBOW
플러그

01.625 CLAMP, WATER OUTLET HOUSING HOSE
클램프

02.548 MANIFOLD, INTAKE
매니폴드

02.549 MANIFOLD, EXHAUST
매니폴드

02.589 SHIELD, HEAT (AT MANIFOLD)
쉴드

02.631	FASTENER, HEAT SHIELD 패스너
02.928	GASKET, EXHAUST MANIFOLD 가스켓
02.929	GASKET, INTAKE MANIFOLD 가스켓
03.457	SHIELD, MANIFOLD HEAT 쉴드
03.726	FASTENER, INTAKE MANIFOLD 패스너
11.275	CONDENSER, IGNITION 콘덴서
11.276	FASTENER, IGNITION CONDENSER 패스너
60.830	SENSOR, ENG CONTROL OXYGEN 센서
62.142	SENSOR, ENGINE MAP 센서
62.176	FASTENER, ENGINE MAP SENSOR 패스너
62.204	LINE, PCV 라인
90.253	NUT, MANIFOLD FASTENER 너트
90.738	NUT, MANIFOLD FASTENER 너트
95.877	FASTENER, HEAD SHIELD 패스너

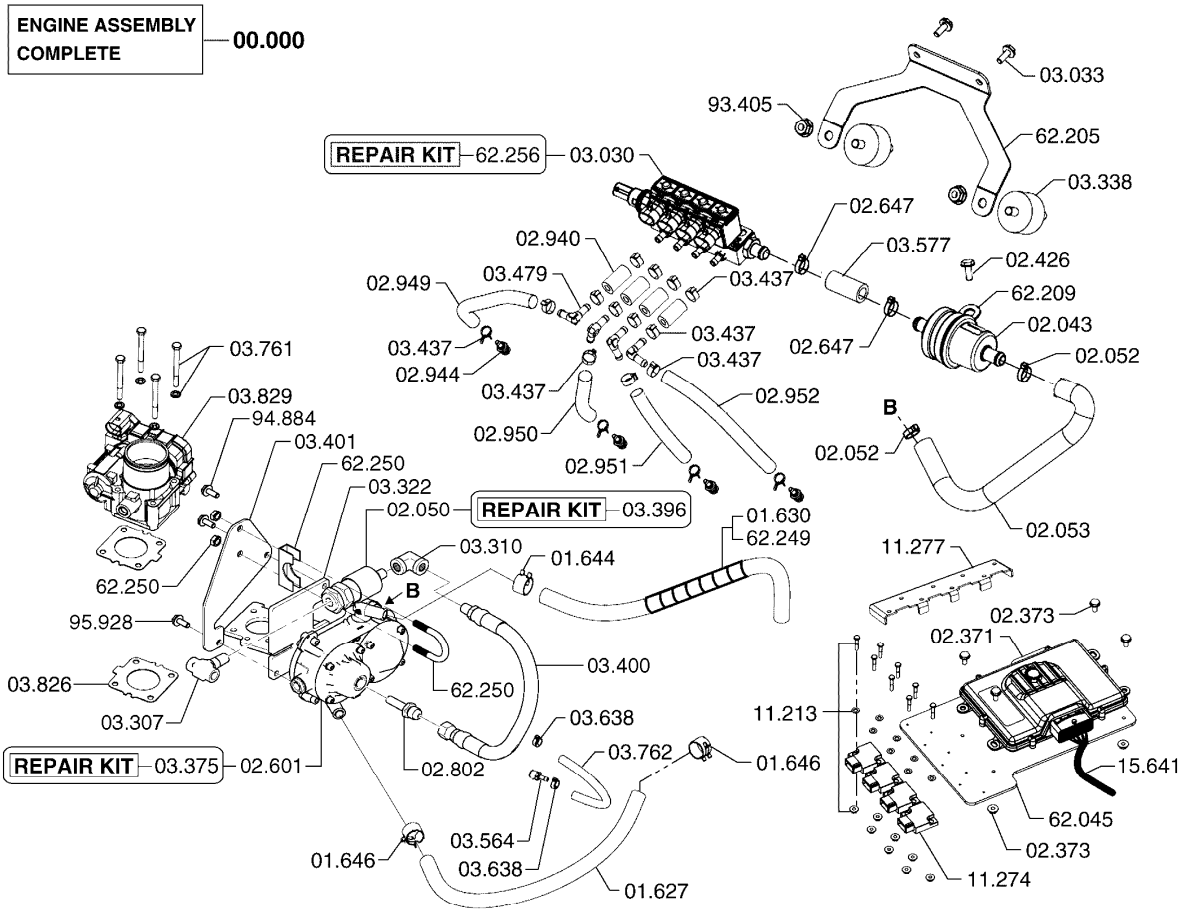

00.000	PRODUCTION ENGINE ASSEMBLY 엔진
01.627	LINE, VAPORIZER WATER OUTLET 라인
01.630	LINE, VAPORIZER WATER INLET 라인
01.644	CLAMP, VAPORIZER WATER INLET LINE 클램프
01.646	CLAMP, VAPORIZER WATER OUTLET LINE 클램프
02.043	FILTER, FUEL 필터
02.050	VALVE, LPG LOCK OFF 밸브
02.052	CLAMP, REGULATOR OUTLET HOSE 클램프
02.053	LINE, REGULATOR OUTLET 라인
02.371	CONTROL UNIT, ELECTRONIC (ECU) 컨트롤유닛
02.373	FASTENER, ECU TO FUEL MODULE 패스너
02.426	FASTENER, FUEL FILTER BRACKET 패스너
02.601	REGULATOR,VAPORIZER ASSY 레귤레이터
02.647	CLIP, FUEL FILTER OUTLET LINE CLIP 클립
02.802	FITTING, LPG VAPORIZER INLET 피팅
02.940	LINE, INJECTOR LEAK OFF 라인
02.944	NOZZLE, FUEL INJECTOR 노즐
02.949	LINE, INJECTOR (NO 1 CYLINDER) 라인
02.950	LINE, INJECTOR (NO 2 CYLINDER) 라인
02.951	LINE, INJECTOR (NO 3 CYLINDER) 라인
02.952	LINE, INJECTOR (NO 4 CYLINDER) 라인
03.030	INJECTOR ASSEMBLY, FUEL 인젝터
03.033	FASTENER, FUEL INJECTOR 패스너
03.307	FITTING, FUEL LOCK-OFF VALVE INLET 피팅
03.310	FITTING, FUEL LOCK-OFF VALVE OUTLET 피팅
03.322	BRACKET, LPG REGULATOR MOUNTING 브라켓
03.338	DAMPENER, FUEL INJECTOR LINE VIBRATION 댐프너
03.375	REPAIR KIT, LP GAS VAPOR REGULATOR 리페어킷
03.396	REPAIR KIT, FUEL VALVE AND FILTER 리페어킷
03.400	LINE, FUEL LOCK-OFF VALVE OUTLET 라인

03.401	BRACKET, LPG LOCK-OFF VALVE MOUNTING 브라켓
03.437	CLAMP, FUEL INJECTOR LINE 클램프
03.479	NOZZLE, TIP FUEL INJECTOR 노즐
03.564	NOZZLE, VACUUM REDUCTION 노즐
03.577	LINE, ENGINE FUEL FILTER 라인
03.638	CLAMP, VACUUM LINE 클램프
03.761	FASTENER, THROTTLE POSITIONER BRACKET 패스너
03.762	HOSE, VACUUM 호스
03.826	GASKET, THROTTLE BODY 가스켓
03.829	THROTTLE BODY AND SHAFT 트로틀
11.213	FASTENER, TRANSISTOR IGNITION RESISTOR 패스너
11.274	TRANSISTOR, ENGINE IGNITION 트랜지스터
11.277	COVER, ENGINE IGNITION TRANSISTOR 커버
15.641	WIRING HARNESS, ENGINE 와이어하네스
62.045	BRACKET, ELECTRONIC CONTROL UNIT 브라켓
62.205	BRACKET, FUEL INJECTOR 브라켓
62.209	CLAMP, FUEL FILTER 클램프
62.249	GUARD, ENGINE VAPORIZER WATER INLET *
62.250	U-BOLT CLAMP, FUEL LPG LOCK-OFF *
62.256	REPAIR KIT, FUEL INJECTOR *
93.405	NUT, FUEL INJECTOR FASTENER 너트
94.884	FASTENER, LPG VAPORIZER MOUNTING 패스너
95.928	FASTENER, LPG LOCK OFF VAVLE BRACKET 패스너

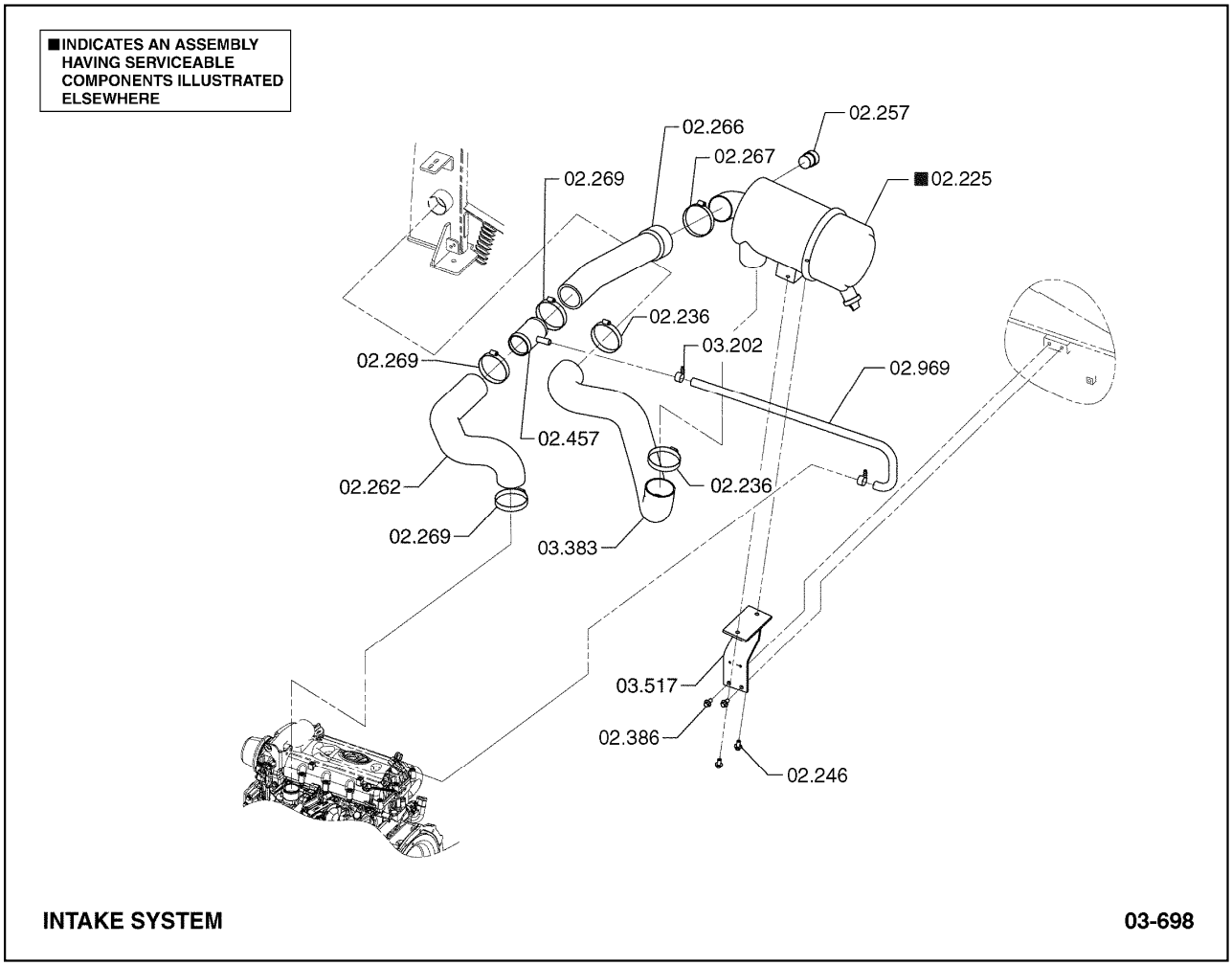

02.225 CLEANER ASSEMBLY, ENGINE INTAKE AIR
에어클리너

02.236 CLAMP, MAIN AIR CLEANER INLET HOSE
클램프

02.246 FASTENER, ENGINE INTAKE AIR CLEANER ATTACHING
패스너

02.257 INDICATOR, ENGINE INTAKE AIR CLEANER AIR RES
인디케이터

02.262 HOSE, MAIN AIR CLEANER OUTLET
호스

02.266 HOSE, MAIN AIR CLEANER OUTLET
호스

02.267 CLAMP, MAIN AIR CLEANER OUTLET HOSE
클램프

02.269 CLAMP, MAIN AIR CLEANER OUTLET HOSE
클램프

02.386 FASTENER, ENGINE INTAKE AIR CLEANER SUPPORT
패스너

02.457 FITTING, MAIN AIR CLEANER OUTLET TUBE
피팅

02.969 HOSE, MAIN AIR CLEANER INLET
호스

03.202 CLAMP, ENGINE AIR INTAKE ADAPTOR
클램프

03.383 LINE, MAIN AIR CLEANER INLET LINE
라인

03.517 BRACKET, AIR CLEANER MOUNTING
브라켓

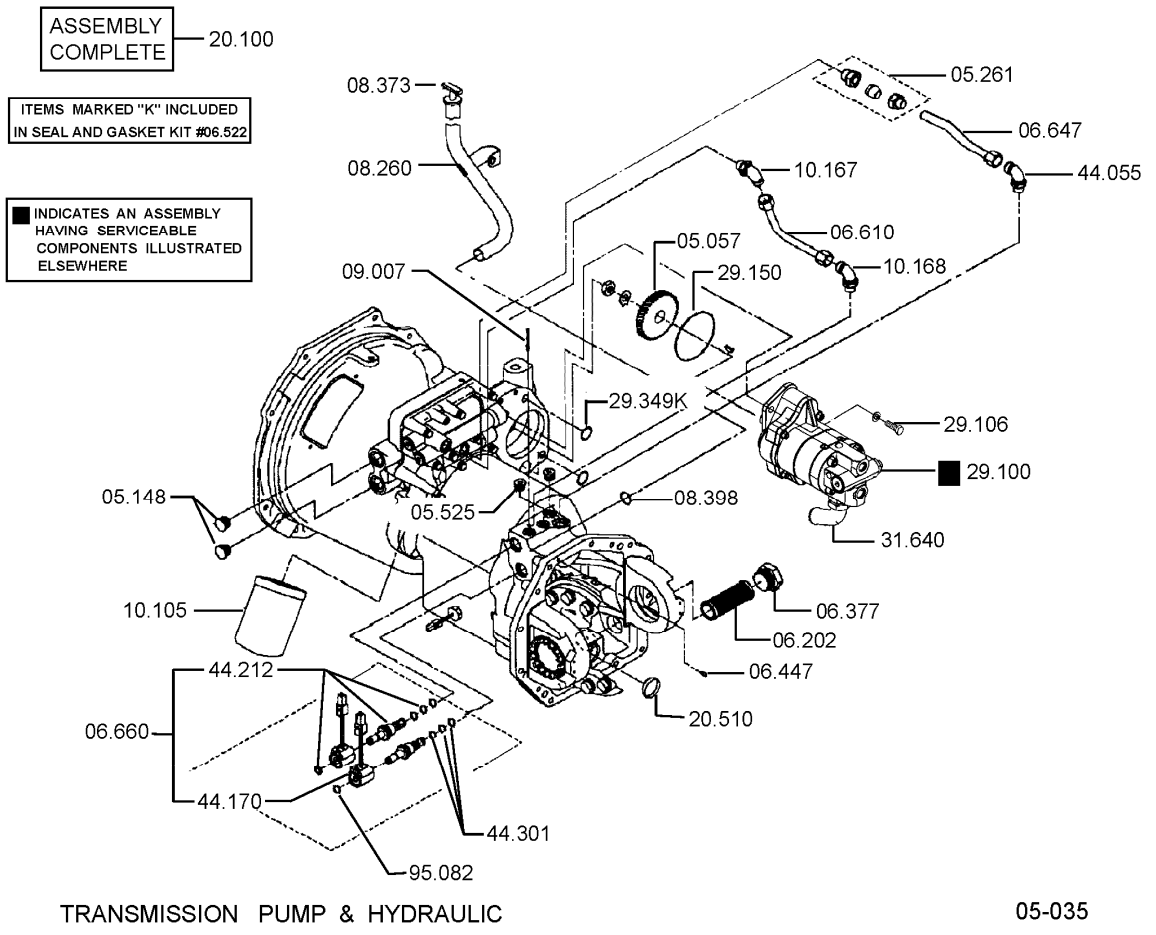

05.057	GEAR, PUMP DRIVE 기어	10.167	FITTING, TRANSMISSION CONTROL COVER OUTLET 피팅
05.148	PLUG, CONVERTER HOUSING 플러그	10.168	FITTING, TRANSMISSION CONTROL COVER OUTLET 피팅
05.261	TUBE FITTING, TRANSMISSION LUB LINE 튜브피팅	20.100	TRANSAXLE ASSEMBLY 트랜스액슬
05.525	PLUG, TRANSMISSION CASE 플러그	20.510	EXPANSION PLUG, INTERNAL GEAR HUB 플러그
06.202	STRAINER, TRANSMISSION SUMP 스트레이너	29.100	PUMP ASSEMBLY, HYDRAULIC 펌프
06.377	PLUG, TRANSMISSION SUMP OIL LEVEL 플러그	29.106	FASTENER, PUMP TO PLATE 패스너
06.447	PLUG, TRANSMISSION CASE 플러그	29.150	GASKET, HYDRAULIC PUMP MOUNTING 가스켓
06.610	TUBE, TRANSMISSION "HIGH" OIL 튜브	29.349	SEAL, PUMP COVER SEAL LOCATOR 시일
06.647	LINE, TRANSMISSION LUBRICATION 라인	31.640	FITTING, HYD PUMP OUTLET (COVER END) 피팅
06.660	SOLENOID ASSEMBLY, TRANSMISSION 솔레노이드	44.055	FITTING, TRANSMISSION CONTROL COVER RETURN LINE 피팅
08.260	TUBE, TRAN OIL LEVEL DIPSTICK SUPPORT 튜브	44.170	COIL, TRANSMISSION CONTROL COVER SOLENOID 코일
08.373	DIPSTICK, TRANSMISSION 딥스틱	44.212	CARTRIDGE, CONTROL VALVE SHIFT SOLENOID 카트리지
08.398	SEAL, TRANSMISSION DIPSTICK SUPPORT 시일	44.301	SEAL KIT, SOLENOID VALVE 시일킷
09.007	PLUG - EXPANSION, GEAR CASE 플러그	95.082	FASTENER, CONTROL SELECTOR SOLENOID RELAY 패스너
10.105	ELEMENT & GASKET, OIL FILTER 엘리먼트와가스켓		

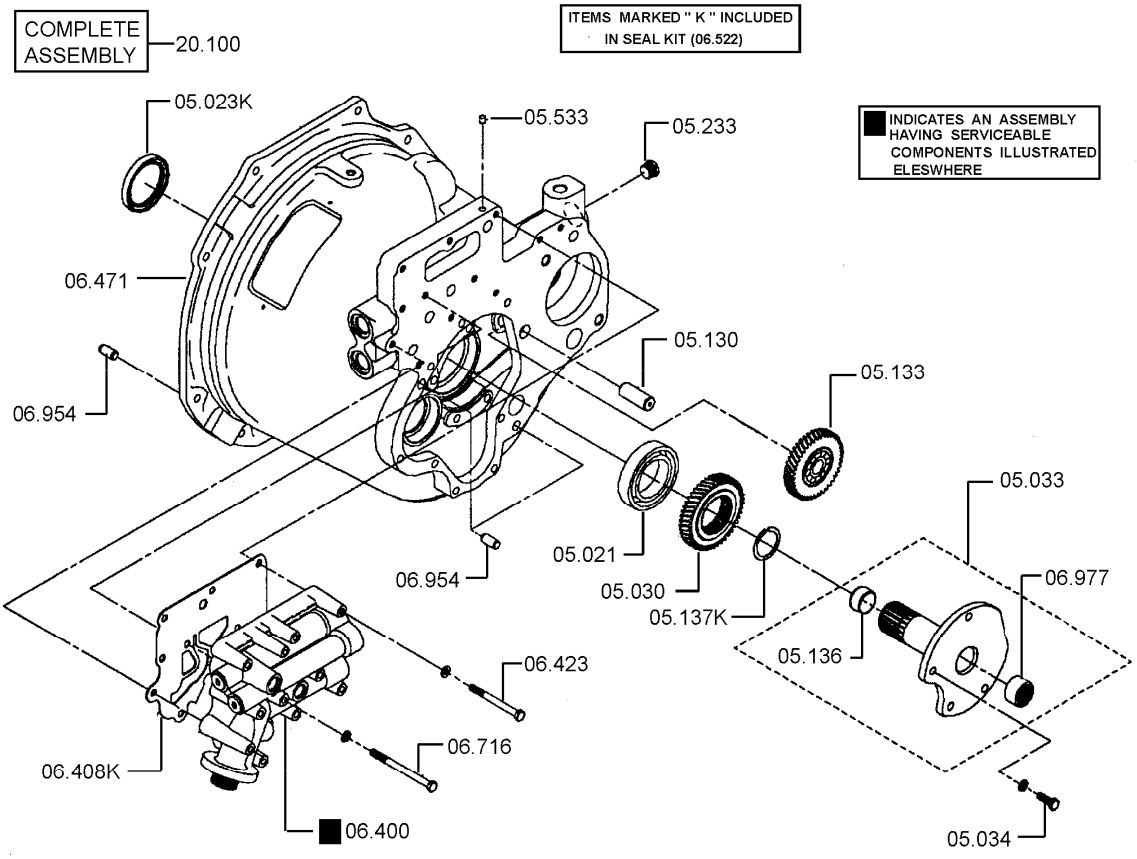

05.021 BEARING, IMPELLER HUB
베어링

05.023 SEAL, CONVERTER IMPELLER HUB
시일

05.030 GEAR, IMPELLER HUB
기어

05.033 STATOR SUPPORT ASSEMBLY, CONVERTER
스테이터

05.034 FASTENER, STATOR SUPPORT
패스너

05.130 SHAFT, CONVERTER PUMP IDLER GEAR
샤프트

05.133 GEAR, CONVERTOR PUMP IDLER
기어

05.136 BEARING, CONVERTER STATOR SUPPORT
베어링

05.137 LOCATOR, CONVERTER STATOR SUPPORT (OUTER)
로케이터

05.233 PLUG, CONVERTOR HOUSING EXPANDER
플러그

05.533 PLUG, CONVERTER HOUSING
플러그

06.400 CONTROL COVER & VALVE ASSEMBLY
컨트롤커버와밸브

06.408 GASKET, CONTROL COVER ATTACHING
가스켓

06.423 FASTENER, CONTROL VALVE HOUSING
패스너

06.471 HOUSING, CONVERTER
하우징

06.522 SEAL AND GASKET KIT, TRANSMISSION
시일과가스켓킷

06.716 FASTENER, CONTROL COVER
패스너

06.954 DOWEL, TRANSMISSION CASE TO CONVERTER
다월

06.977 BEARING, REVERSE CLUTCH HUB (ENGINE END)
베어링

20.100 TRANSAXLE ASSEMBLY
트랜스액슬

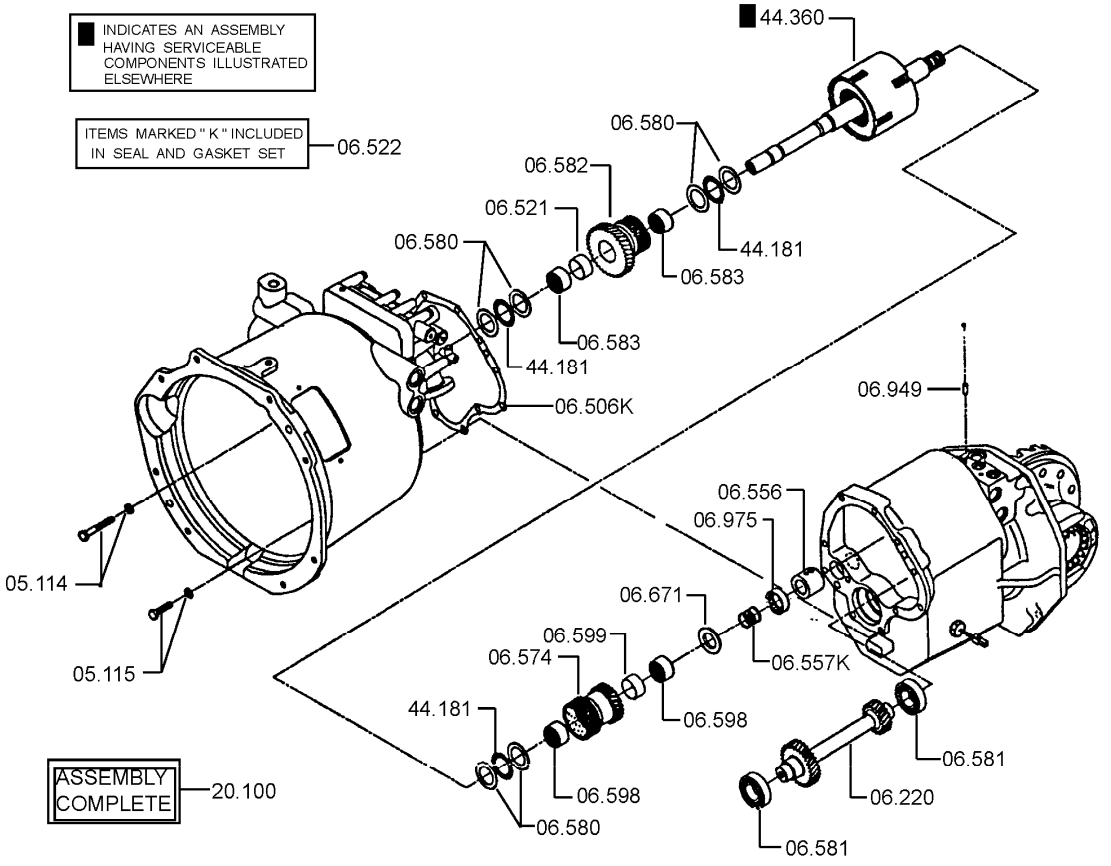

CONVERTOR HOUSING AND CLUTCH ASSEMBLY 05-165

05.114 FASTENER, CONVERTER TO CASE
패스너

05.115 FASTENER, CONVERTER TO CASE
패스너

06.220 GEAR, REVERSE IDLER
기어

06.506 SEAL, CONVERTER HOUSING TO CASE-INNER
시일

06.521 BALL, INCHING RELIEF VALVE
볼

06.522 SEAL AND GASKET KIT, TRANSMISSION
시일과가스켓킷

06.556 DISTRIBUTOR, TRANSMISSION DIRECTION SEL OIL
디스트리뷰터

06.557 SEAL, TRANSMISSION DIRECTION SELECTOR OIL DIST
시일

06.574 GEAR & BEARING FORWARD
기어와베어링

06.580 THRUST WASHER, REVERSE CLUTCH HUB & DRUM
트러스트와셔

06.581 BEARING, REVERSE GEAR
베어링

06.582 GEAR & BEARING, REVERSE
기어욱붱어링

06.583 BEARING, REVERSE GEAR
베어링

06.598 BEARING, TRANSMISSION INTERMEDIATE SHAFT OUTER
베어링

06.599 SPACER, TRANSMISSION INTERMEDIATE SHAFT
스페이서

06.671 BEARING, DIRECTION SEL CL HUB
베어링

06.949 RETAINER, CLUTCH OIL DISTRIBUTION SLEEVE
리테이너

06.975 BEARING, REVERSE CLUTCH HUB (AXLE END)
베어링

20.100 TRANSAXLE ASSEMBLY
트랜스액슬

44.181 BEARING, CLUTCH SHAFT THRUST
베어링

44.360 TURBINE SHAFT, DRUM & CLUTCH ASSY
터빈샤프트

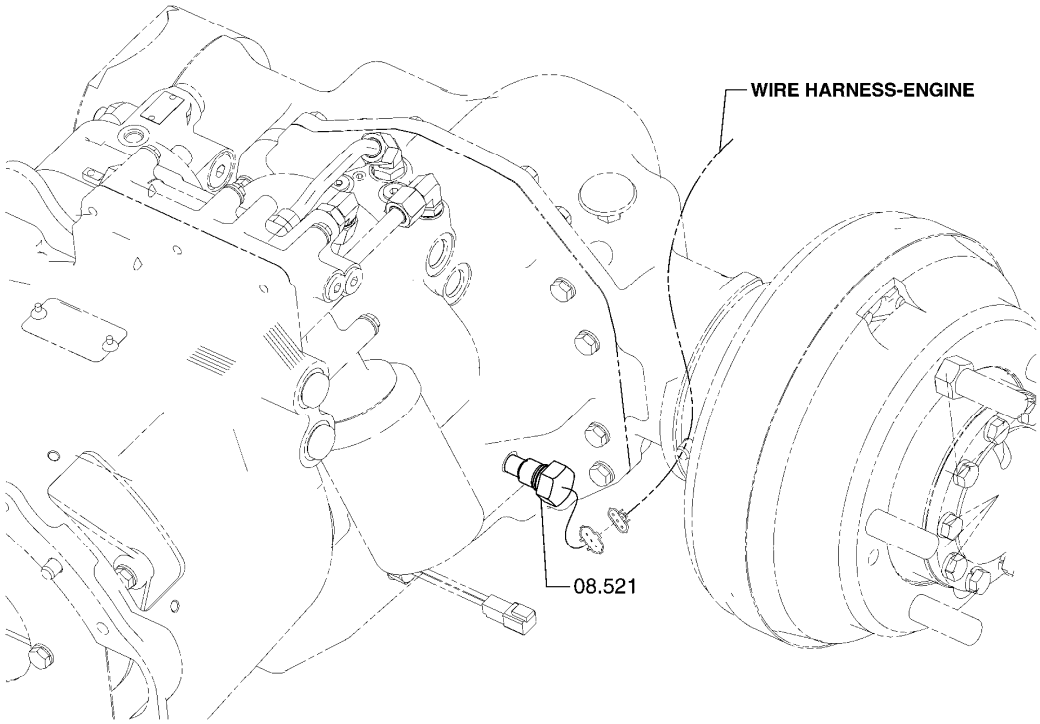

SPEED LIMIT INSTALLATION **06-143**

08.521 SENSOR, TRANSMISSION SPEED TURBINE
센서

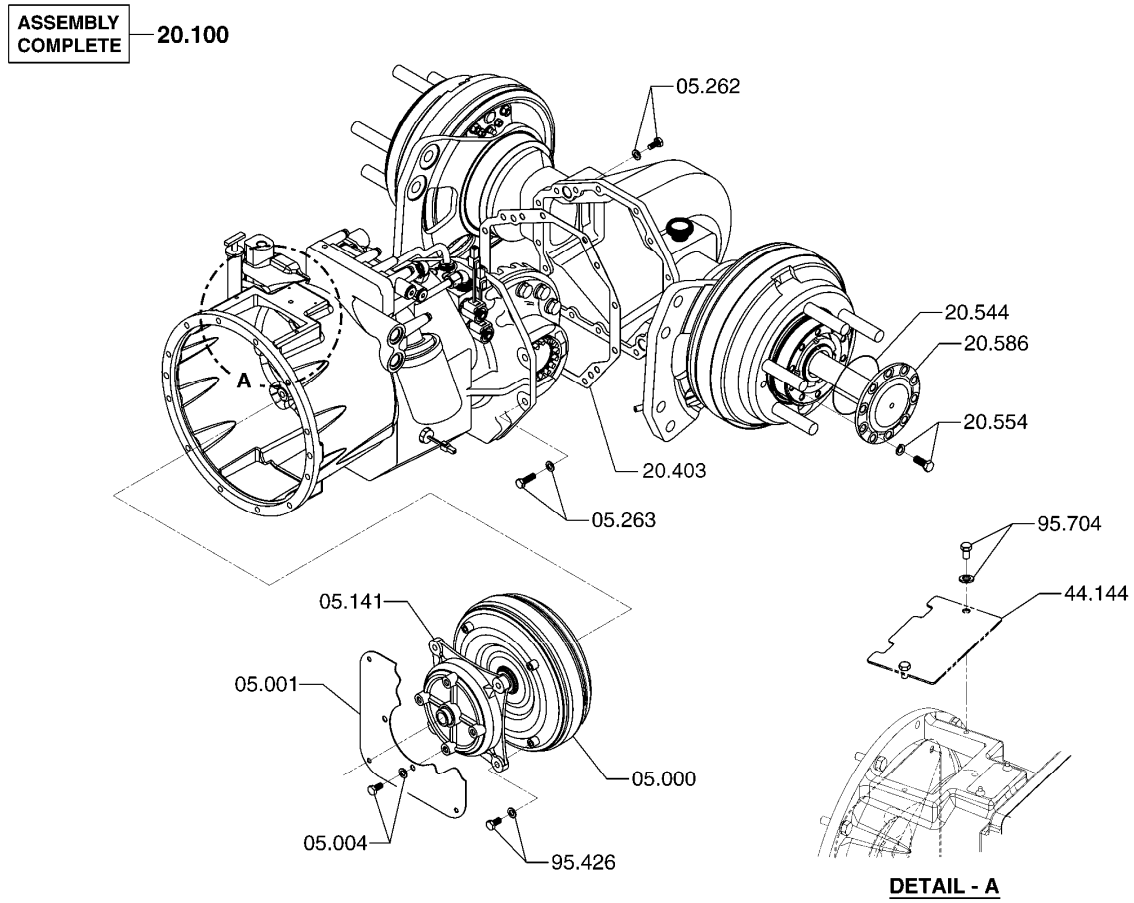

TRANSAXLE ASSEMBLY **06-144**

05.000 CONVERTER ASSEMBLY, TORQUE
컨버터

05.001 GEAR, CONVERTER RING
기어

05.004 FASTENER, CONVERTER DRIVE & REINFORCING PLATE
패스너

05.141 ADAPTOR, CONVERTER DRIVE
어댑터

05.262 FASTENER, AXLE HOUSING TO CASE
패스너

05.263 FASTENER,CASE TO AXLE HOUSING
패스너

20.100 TRANSAXLE ASSEMBLY
트랜스액슬

20.403 GASKET, DIFFERENTIAL & CARRIER HOUSING
가스켓

20.544 SEAL, DRIVE AXLE SHAFT
시일

20.554 FASTENER, DRIVE AXLE HUB CAP
패스너

20.586 SHAFT, DRIVE AXLE
샤프트

44.144 COVER, CONVERTER HOUSING
커버

95.426 FASTENER, CONVERTER DRIVE ADAPTOR
패스너

95.704 FASTENER, CONVERTER HOUSING PLATE
패스너

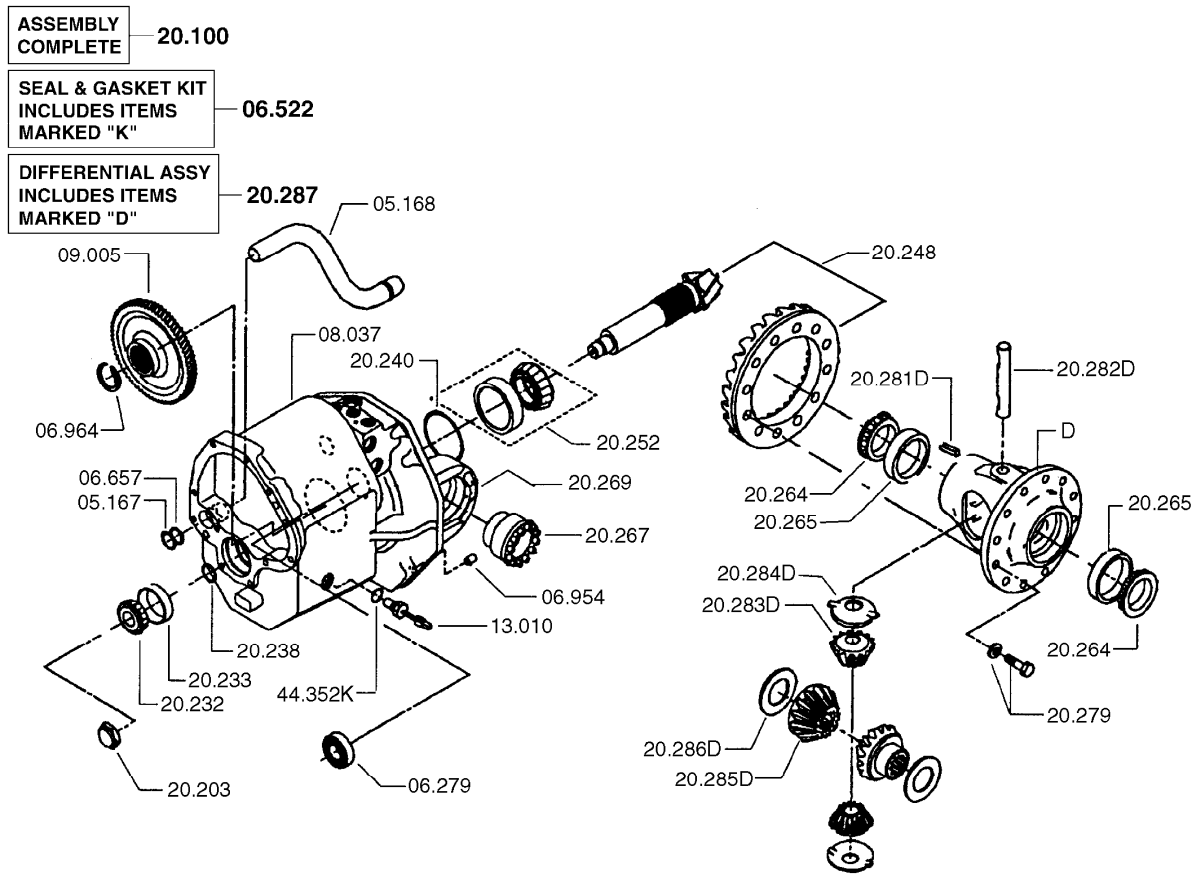

TRANSMISSION CASE AND DIFFERENTIAL **06-619**

05.167	FASTENER, CONVERTER PUMP INLET LINE 패스너	20.240	SPACER, DIFFERENTIAL PINION BEARING 스페이서
05.168	LINE, CONVERTER PUMP INLET 라인	20.248	RING GEAR & PINION SET, DIFFERENTIAL 링
06.279	BEARING, TRANSMISSION OUTPUT SHAFT 베어링	20.252	BEARING, DIFFERENTIAL PINION INNER 베어링
06.522	SEAL AND GASKET KIT, TRANSMISSION 시일과가스켓킷	20.264	CONE, DIFFERENTIAL BEARING 콘
06.657	SEAL, TRANS VALVE PRESS PUMP INLET LINE 시일	20.265	CUP, DIFFERENTIAL BEARING 컵
06.954	DOWEL, TRANSMISSION CASE TO CONVERTER 다월	20.267	NUT, DIFFERENTIAL BEARING ADJUSTING 너트
06.964	RING, OUTPUT SHAFT GEAR LOCATING 링	20.269	FASTENER, DIFF BEARING ADJUSTING NUT LOCK 패스너
08.037	CASE, TRANSMISSION 케이스	20.279	FASTENER, DIFFERENTIAL CASE TO RING GEAR 패스너
09.005	GEAR, OUTPUT 기어	20.281	FASTENER, DIFF SIDE PINION PIN 패스너
13.010	CONTROL, CONVERTOR TEMPERATURE INDICATOR 컨트롤	20.282	SPIDER, DIFFERENTIAL PINION 스파이더
20.100	TRANSAXLE ASSEMBLY 트랜스액슬	20.283	GEAR, DIFFERENTIAL SIDE PINION 기어
20.203	NUT, DIFFERENTIAL PINION COMPANION FLANGE 너트	20.284	WASHER, DIFF SIDE PINION GEAR THRUST 와셔
20.232	CONE, DIFFERENTIAL PINION OUTER BEARING 콘	20.285	GEAR, DIFFERENTIAL SIDE 기어
20.233	CUP, DIFFERENTIAL PINION OUTER BEARING 컵	20.286	WASHER, DIFFERENTIAL SIDE GEAR THRUST 와셔
20.238	SHIM KIT, DIFFERENTIAL PINION BEARING CAGE 심	20.287	CASE & GEAR ASSEMBLY, DIFFERENTIAL 케이스와기어

44.352 SEAL, CONVERTOR TEMP INDICATOR CONTROL
시일

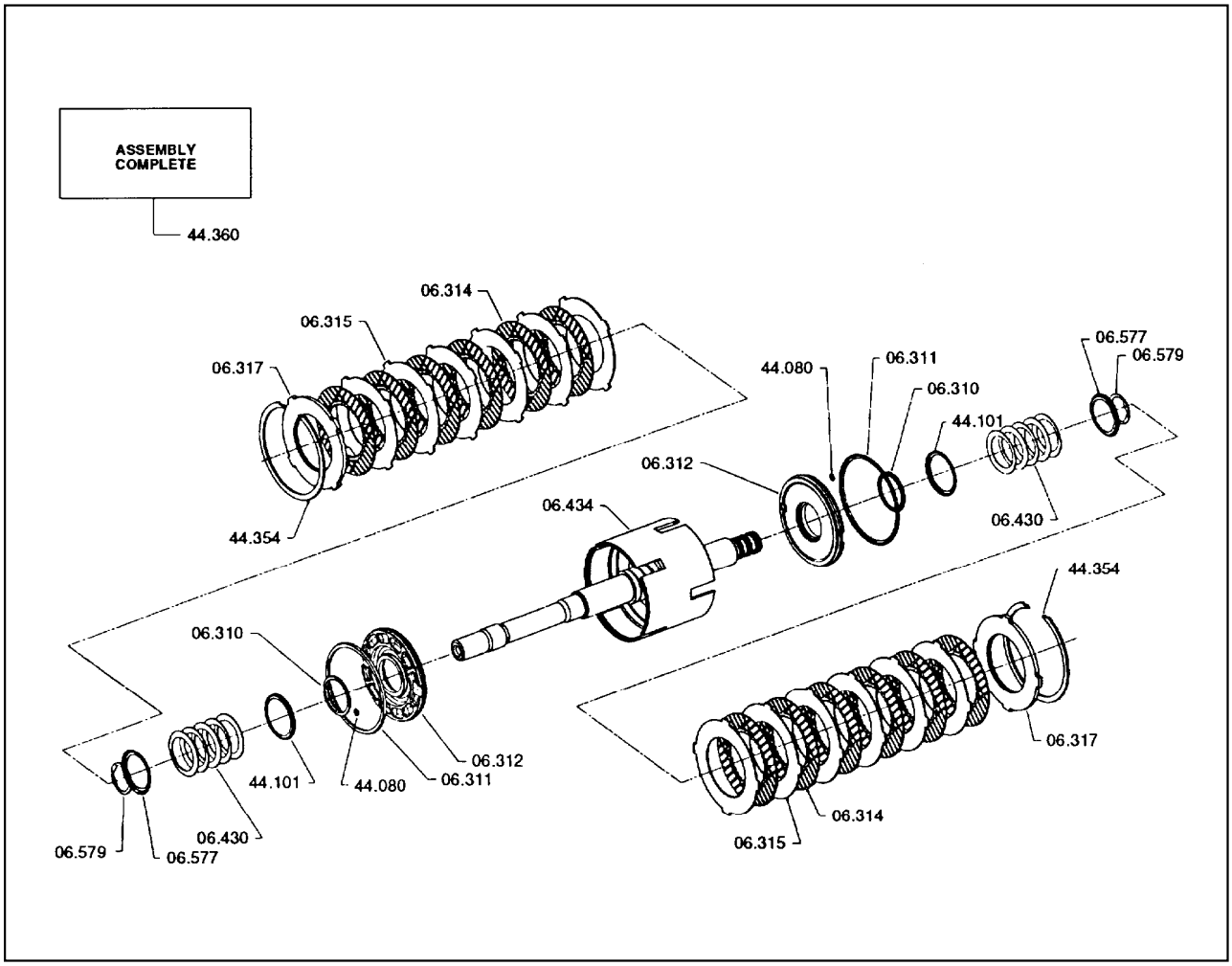

06.310 SEAL, FORWARD CLUCH PISTON INNER
시일

06.311 SEAL, FORWARD CLUTCH PISTON OUTER
시일

06.312 PISTON, FORWARD CLUTCH
피스톤

06.314 DISC, FORWARD CLUTCH INNER
디스크

06.315 DISC, FORWARD CLUTCH OUTER
디스크

06.317 PLATE, FORWARD CLUTCH DISC END
플레이트

06.430 SPRING, FORWARD CLUTCH PISTON RETURN
스프링

06.434 SHAFT & GEAR, CLUTCH DRIVE
샤프트와기어

06.577 RETAINER, FORWARD CLUTCH SPRING
리테이너

06.579	FASTENER, REVERSE CLUTCH SPRING RETAINER 패스너
44.080	SEAL, FORWARD CLUTCH LUBRICATION PRESSURE PORT PLU 시일
44.101	THRUST WASHER, CLUTCH SHAFT PILOT BEARING 트러스트와셔
44.354	RING, CLUTCH PACK RETAINING 링
44.360	TURBINE SHAFT, DRUM & CLUTCH ASSY 터빈샤프트

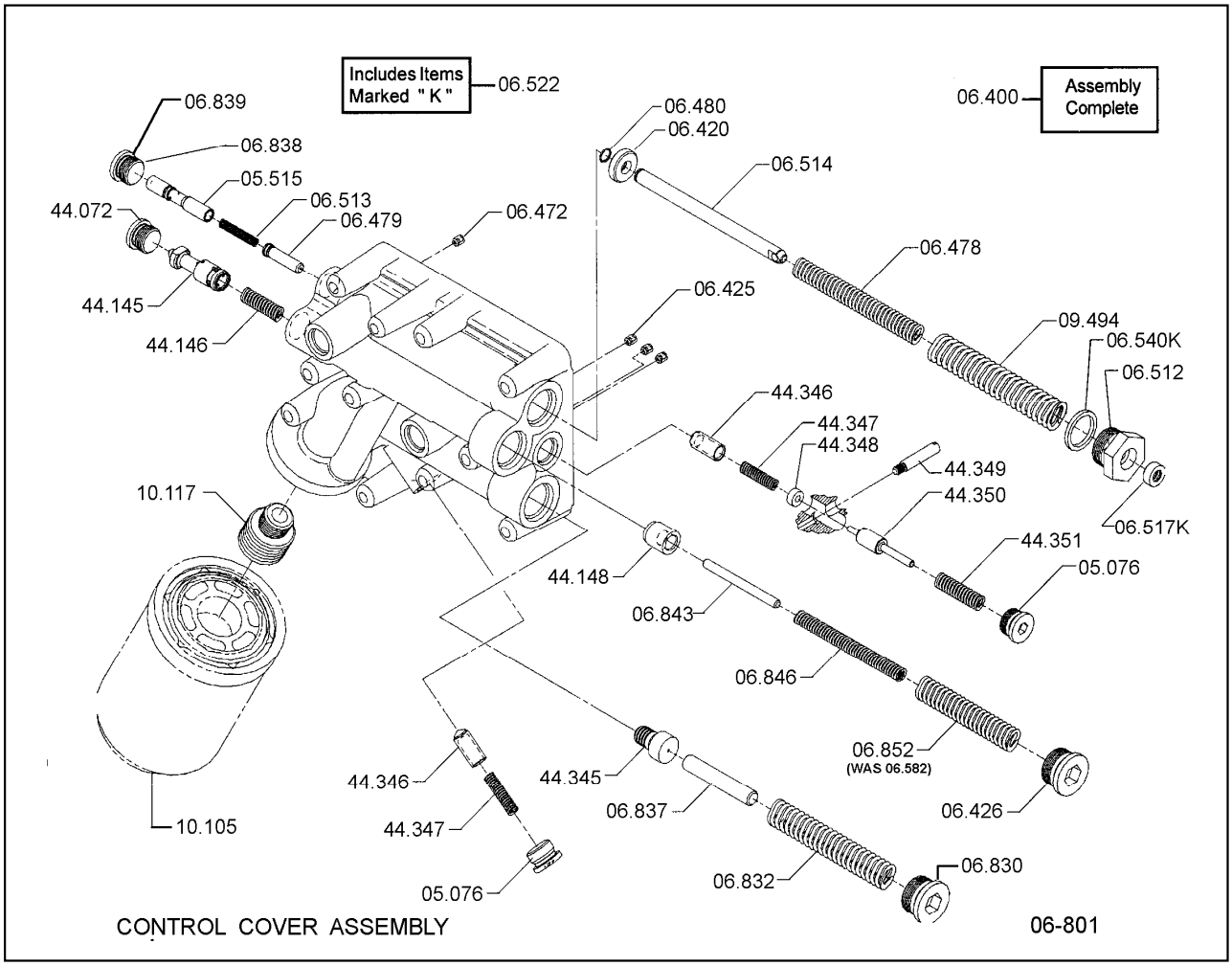

05.076	PLUG, COOLER PORT (SMALL) 플러그
05.515	SPOOL, INCHING 스풀
06.400	CONTROL COVER & VALVE ASSEMBLY 컨트롤커버와밸브
06.420	GUIDE & STOP, SHUT-OFF VALVE SPRING 가이드와스톱
06.425	PLUG, CONTROL COVER OIL PASSAGE 플러그
06.426	PLUG, CONTROL COVER 플러그
06.472	PLUG, CONTROL VALVE HOUSING OIL PASSAGE 플러그
06.478	SPRING, INCHING PISTON RETURN 스프링
06.479	PISTON, INCHING 피스톤
06.480	SEAL, INCHING PISTON 시일
06.512	STOP, INCHING SPOOL 스톱
06.513	SPRING, INCHING VALVE 스프링
06.514	ROD, INCHING VALVE 로드
06.517	SEAL, INCHING VALVE PISTON PORT FITTING 시일
06.522	SEAL AND GASKET KIT, TRANSMISSION 시일과가스켓킷
06.540	SEAL, INCHING PISTON HOUSING 시일
06.830	STOP, PRESSURE REGULATING VALVE 스톱
06.832	SPRING, CLUTCH PRESSURE REGULATING VALVE 스프링
06.837	FASTENER, PRESSURE REGULATING VALVE STOP 패스너
06.838	STOP, INCHING VALVE 스톱
06.839	SEAL, INCHING VALVE STOP 시일
06.843	STOP, ACCUMULATOR PISTON 스톱
06.846	SPRING, ACCUMULATOR PISTON (INNER) 스프링
06.852	SPRING, ACCUMULATOR PISTON (OUTER) 스프링
09.494	SPRING, INCHING SPOOL RETURN 스프링
10.105	ELEMENT & GASKET, OIL FILTER 엘리먼트와가스켓
10.117	FITTING, OIL FILTER TO BASE 피팅
44.072	PLUG, MODULATION VALVE BODY 플러그
44.145	SPOOL, MODULATOR 스풀
44.146	SPRING, MODULATOR SPOOL 스프링

44.148 SPOOL, ACCUMULATOR
스풀

44.345 SPOOL, CLUTCH PRESSURE REGULATOR
스풀

44.346 SPOOL, TRANS COOLER/LUBE OIL FILTER BY-PASS
스풀

44.347 SPRING, TRANS COOLER/LUBE OIL FILTER BY-PASS SPO
스프링

44.348 STOP, TRANS LUBE BY-PASS SPOOL SPRING
스톱

44.349 PIN, TRANS LUBE BY-PASS AND COOLER SEPARATOR
핀

44.350 SPOOL, TRANS LUBE BY-ASS RELIEF
스풀

44.351 SPRING, TRANS LUBE BY-PASS RELIEF SPOOL
스프링

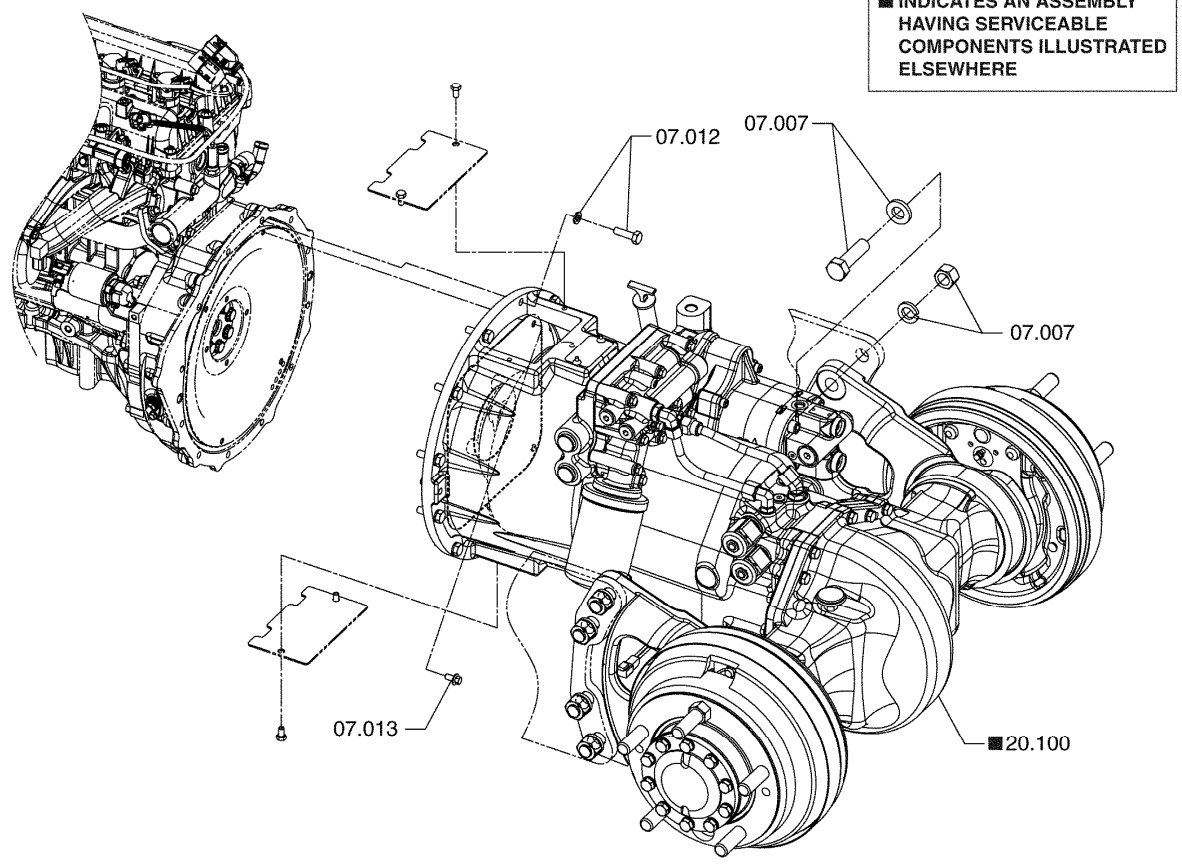

07.007 FASTENER, TRANSMISSION MOUNTING BRACKET LH
패스너

07.012 FASTENER, TRANSMISSION TO ENGINE
패스너

07.013 FASTENER, TRANSMISSION TO ENGINE
패스너

20.100 TRANSAXLE ASSEMBLY
트랜스액슬

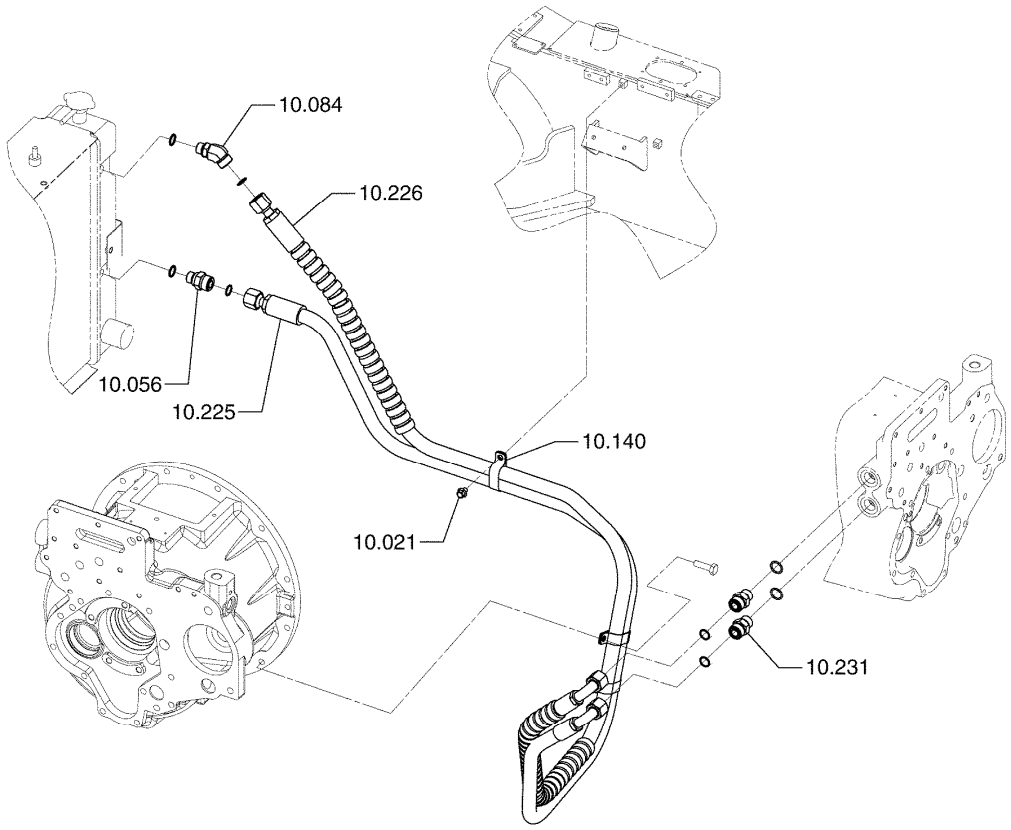

TRANSMISSION COOLING LINES **10-131**

10.021	FASTENER, COOLER OUTLET LINE CLAMP 패스너
10.056	FITTING, COOLER OUTLET 피팅
10.084	FITTING, COOLER INLET LINE 피팅
10.140	CLAMP, COOLER LINE 클램프
10.225	LINE, OIL COOLING 라인
10.226	LINE, OIL COOLING 라인
10.231	FITTING, OIL COOLING LINES 피팅

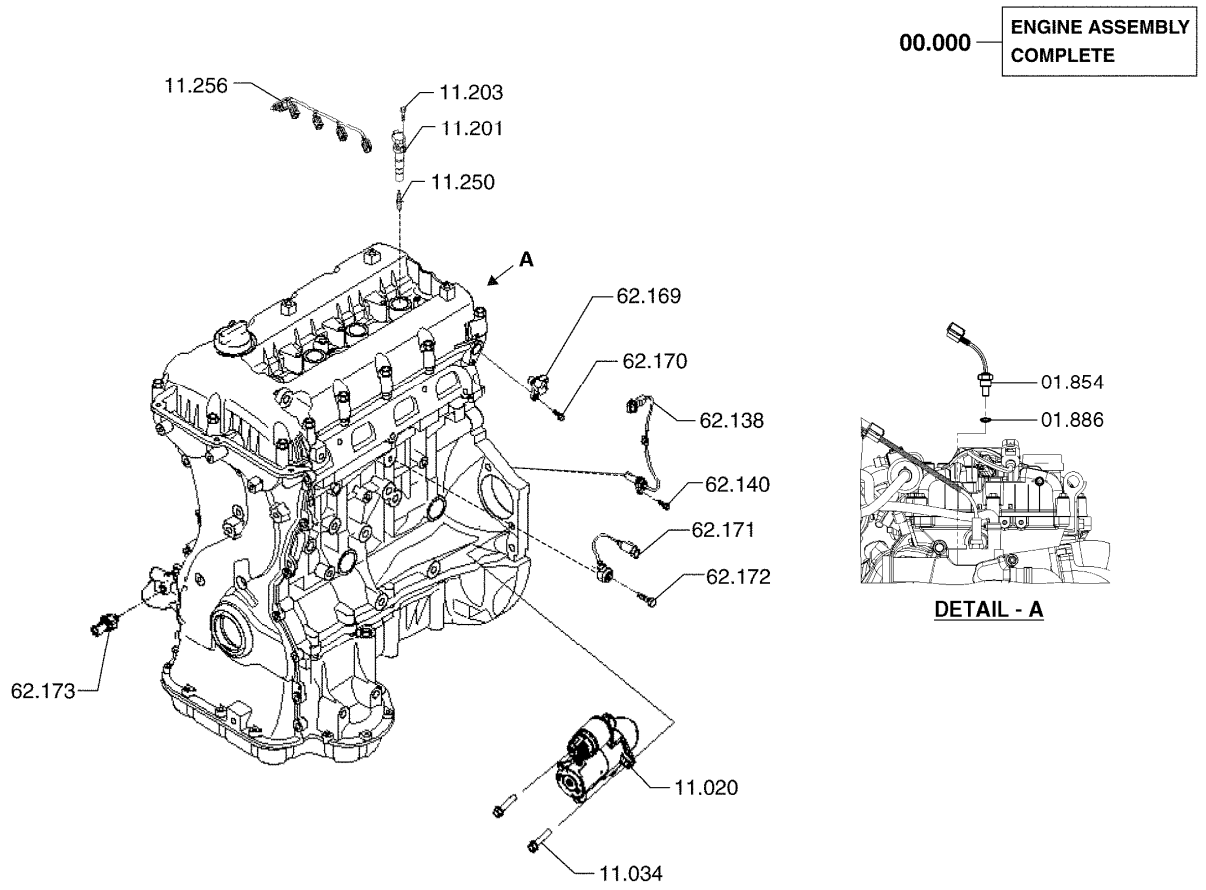

00.000 PRODUCTION ENGINE ASSEMBLY
엔진

01.854 SENSOR, ENGINE COOLANT TEMPERATURE
센서

01.886 SEAL, ENGINE COOLANT TEMPERATURE SENSOR
실

11.020 MOTOR ASSEMBLY, STARTING
모터

11.034 FASTENER, STARTING MOTOR
패스너

11.201 COIL, IGNITION
코일

11.203 FASTENER, COIL
패스너

11.250 SPARK PLUG
스파크

11.256 HARNESS, IGNITION COIL WIRING
하네스

62.138 SENSOR, ENGINE CRANKSHAFT POSITION
센서

62.140 FASTENER, ENGINE CRANKSHAFT POSITION SENSOR
패스너

62.169 SENSOR, ENGINE CAMSHAFT POSITION
센서

62.170 FASTENER, ENGINE CAMSHAFT POSITION SENSOR
패스너

62.171 SENSOR, ENGINE KNOCK
센서

62.172 FASTENER, ENGINE KNOCK SENSOR
패스너

62.173 SWITCH, ENGINE OIL PRESSURE
스위치

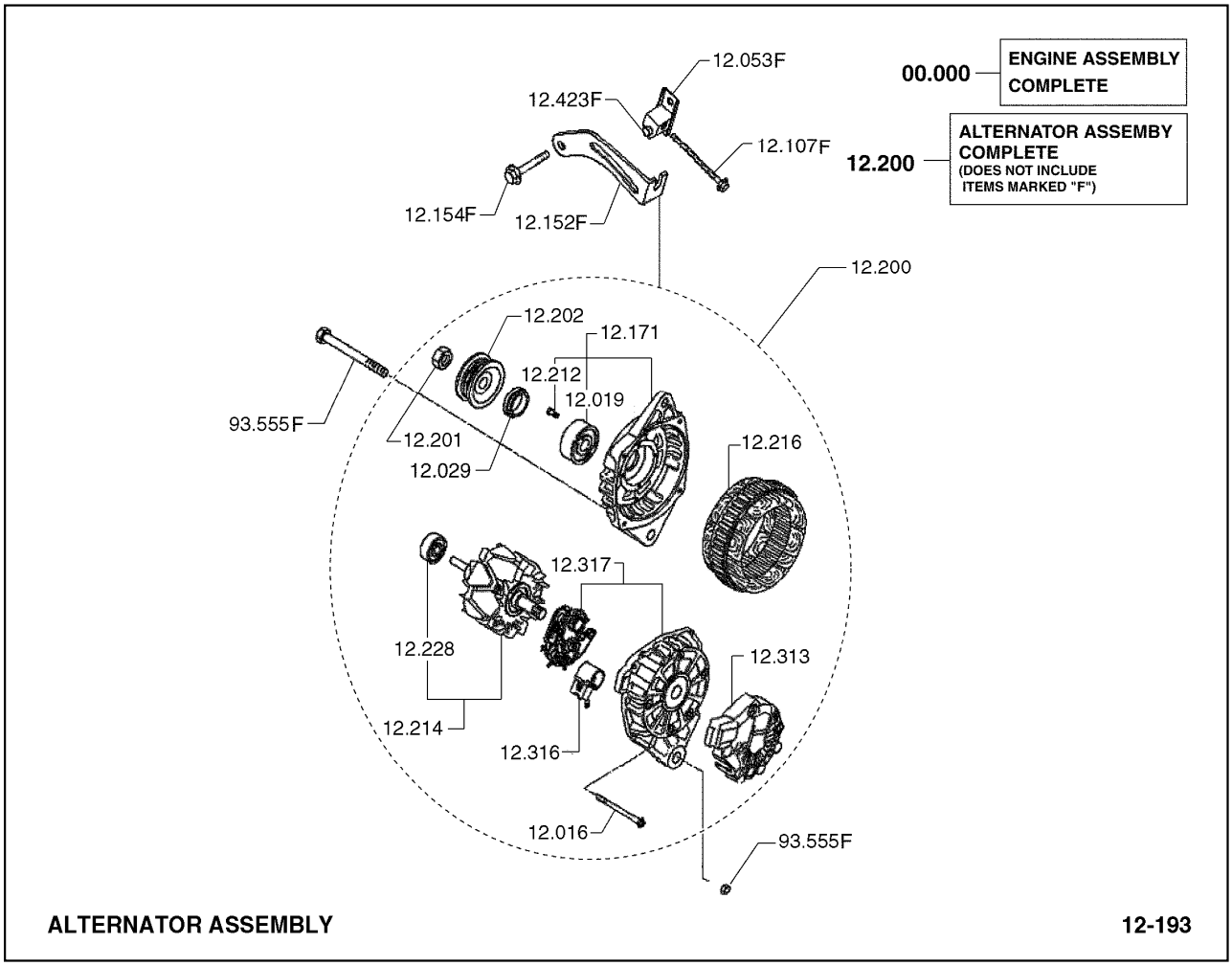

00.000 PRODUCTION ENGINE ASSEMBLY
엔진

12.016 FASTENER, GENERATOR THRU
패스너

12.019 BEARING, GENERATOR DRIVE END
베어링

12.029 SPACER, GENERATOR DRIVE END
스페이서

12.053 SUPPORT, GENERATOR MOUNTING BRACKET
서포트

12.107 FASTENER, ADJUSTING STRAP TO ALTERNATOR
패스너

12.152 BRACKET, ALTERNATOR ADJUSTING STRAP
브라켓

12.154 FASTENER, ALTERNATOR MOUNTING
패스너

12.171 HOUSING, ALTERNATOR RECTIFIER
하우징

12.200	ALTERNATOR ASSEMBLY 알터네이터
12.201	FASTENER, ALTERNATOR PULLEY TO SHAFT 패스너
12.202	PULLEY, ALTERNATOR 풀리
12.212	FASTENER, ALTERNATOR DRIVE END BEARING RETAINER PL 패스너
12.214	ROTOR ASSEMBLY, ALTERNATOR 로터
12.216	STATOR ASSEMBLY, ALTERNATOR 스테이터
12.228	BEARING, ALTERNATOR SLIP RING FRAME END 베어링
12.313	COVER, ALTERNATOR BRUSH ACCESS 커버
12.316	REGULATOR, ALTERNATOR VOLTAGE OUTPUT 레귤레이터
12.317	RECTIFIER ASSEMBLY, ALTERNATOR 정류기
12.423	FASTENER, ADJUSTING STRAP TO ALTERNATOR 패스너
93.555	FASTENER, ALTERNATOR RECTIFIER HOUSING COVER 패스너

1	ALTERNATOR ASSEMBLY	12.200	16	TERMINAL, AL
2	FASTENER, ALTERNATOR PULLEY TO SHAFT	12.201	17	RECTIFIER ANI
3	KEY, ALTERNATOR PULLEY	12.203	18	DIODE, ALTERI
4	FAN, ALTERNATOR	12.243	19	MOUNT ASSEMBI
5	SPACER, ALTERNATOR FAN	12.245	20	RECTIFIER ASS
6	PULLEY, ALTERNATOR	12.202	21	BRUSH HOLDER
7	FRAME, ALTERNATOR DRIVE END	12.205	22	BRUSH KIT, AI
8	BEARING, ALTERNATOR DRIVE END	12.209	23	FRAME, ALTERI
9	PLATE, ALTERNATOR DRIVE END BRG RET	12.211	24	FASTENER, THI
10	FASTENER, ALTERNATOR DR END RET PLATE	12.212	25	FASTENER, BRI
11	SPACER, ALTERNATOR DRIVE END	12.213	26	TERMINAL, AL
12	ROTOR ASSEMBLY, ALTERNATOR	12.214	27	BEARING, ALT
13	RING-SLIP, ALTERNATOR ROTOR	12.215	28	DIODE, ALTERI
14	STATOR ASSEMBLY, ALTERNATOR	12.216	29	CAPACITOR, A
15	TERMINAL PACKAGE, BATTERY	12.218		

12.009 SUPPORT, BATTERY
서포트

12.010 BATTERY
배터리

12.011 CLAMP, BATTERY HOLD DOWN
클램프

12.013 FASTENER, BATTERY HOLD DOWN (AT CLAMP)
패스너

12.049 FASTENER, BATTERY SUPPORT
패스너

14.025 CABLE, BATTERY TO STARTER
케이블

14.026 CABLE, BATTERY GROUND
케이블

14.042 FASTENER, BATTERY GROUND CABLE
패스너

14.147 CABLE, BATTERY NEGATIVE
케이블

97.272	FASTENER, CABLE & WIRE TO STARTER *

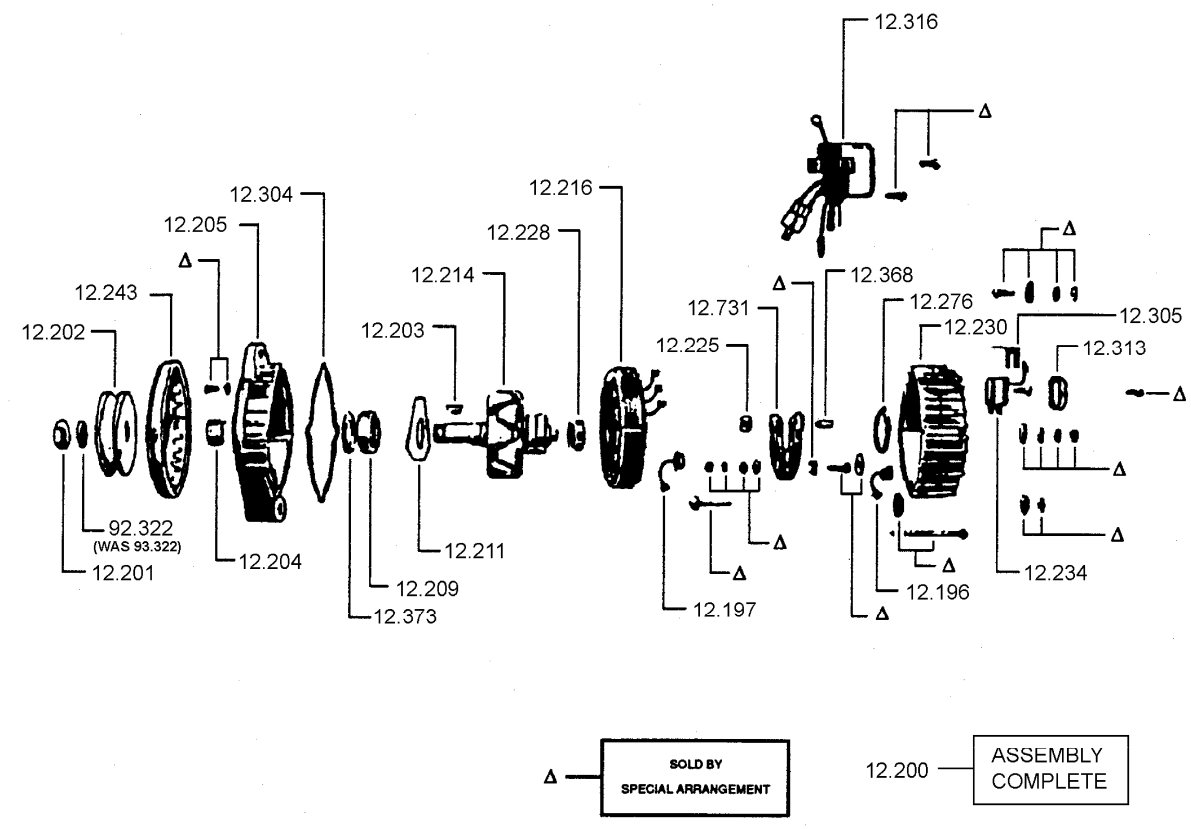

12.196 DIODE REC NEGATIVE
다이오드

12.197 DIODE REC POSITIVE
다이오드

12.200 ALTERNATOR ASSEMBLY
알터네이터

12.201 FASTENER, ALTERNATOR PULLEY TO SHAFT
패스너

12.202 PULLEY, ALTERNATOR
풀리

12.203 KEY, ALTERNATOR PULLEY
키

12.204 COLLAR, ALTERNATOR DRIVE END
칼라

12.205 FRAME, ALTERNATOR DRIVE END
프레임

12.209 BEARING, ALTERNATOR DRIVE END
베어링

12.211 RETAINER, ALTERNATOR DRIVE END BEARING
리테이너

12.214 ROTOR ASSEMBLY, ALTERNATOR
로터

12.216 STATOR ASSEMBLY, ALTERNATOR
스테이터

12.225 INSULATOR, ALTERNATOR HEAT SINK
절연체

12.228 BEARING, ALTERNATOR SLIP RING FRAME END
베어링

12.230 FRAME, ALTERNATOR SLIP RING END
프레임

12.234 BRUSH HOLDER, ALTERNATOR
브러쉬홀더

12.243 FAN, ALTERNATOR
팬

12.276 RETAINER, SLIP RING FRAME END BEARING
리테이너

12.304 SEAL, ALTERNATOR HOUSING
시일

12.305 INSULATOR, ALTERNATOR BRUSH LEAD
절연체

12.313 COVER, ALTERNATOR BRUSH ACCESS
커버

12.316 REGULATOR, ALTERNATOR VOLTAGE OUTPUT
레귤레이터

12.368 INSULATOR, TERMINAL
절연체

12.373 SEAL, ALTERNATOR DRIVE END BEARING
시일

12.731 SEAL, ALTERNATOR DRIVE END BEARING
시일

92.322 LOCKWASHER, ALTERNATOR PULLEY FASTENER
로크와셔

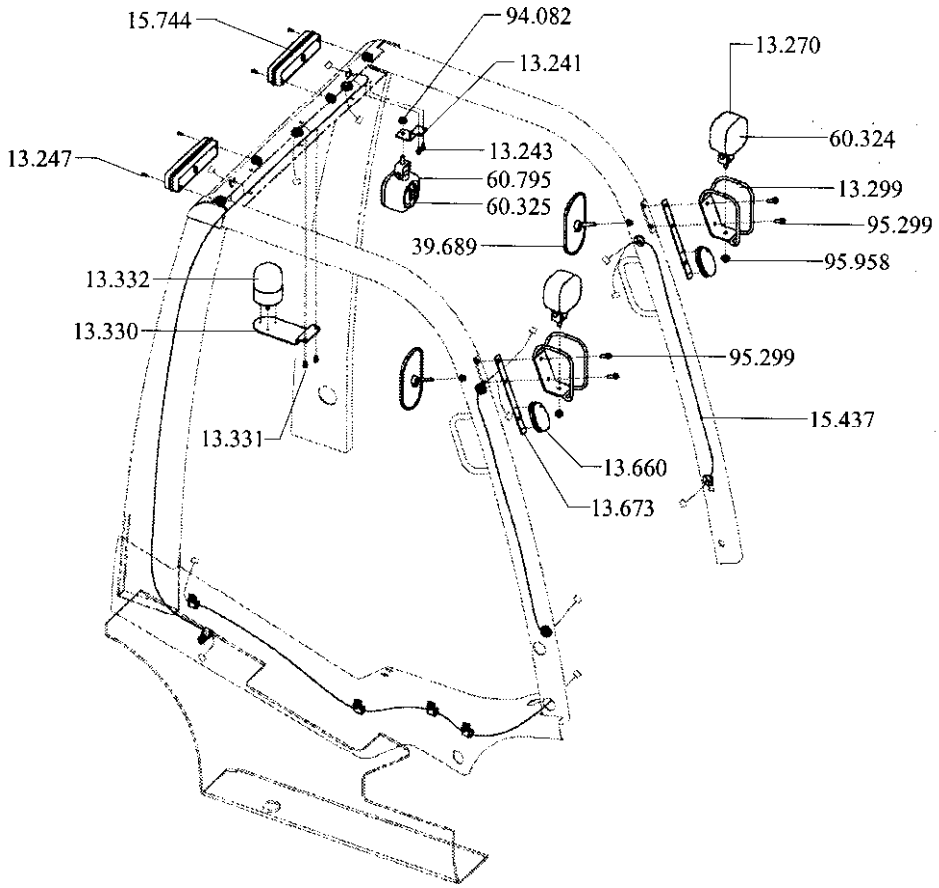

13.047 SWITCH, CIRCUIT LOCKING
스위치

14.238 HARNESS, DIRECTION CONTROL SWITCH WIRING
하네스

14.502 WIRE, IGNITION SWITCH TO ENGINE HARNESS
와이어

60.260 KEY, CIRCUIT LOCKING SWITCH
키

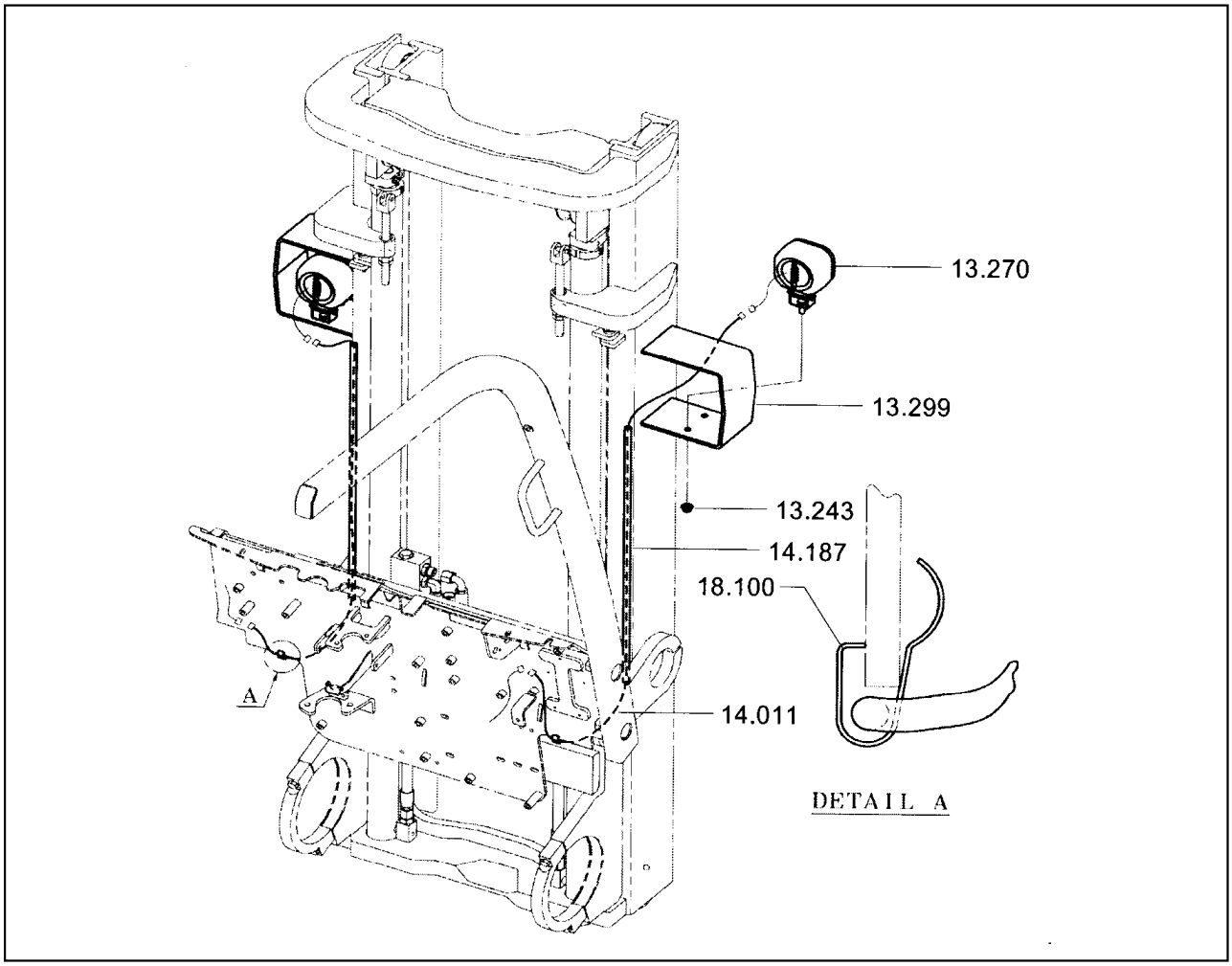

13.270	HEADLAMP, ADJUSTABLE 헤드램프
14.018	WIRE, HEADLIGHT 와이어
15.437	HARNESS, HEADLAMP WIRING 하네스
18.100	CLIP, HEAD LIGHT WIRE 클립
60.324	BULB, HEADLAMP 전구

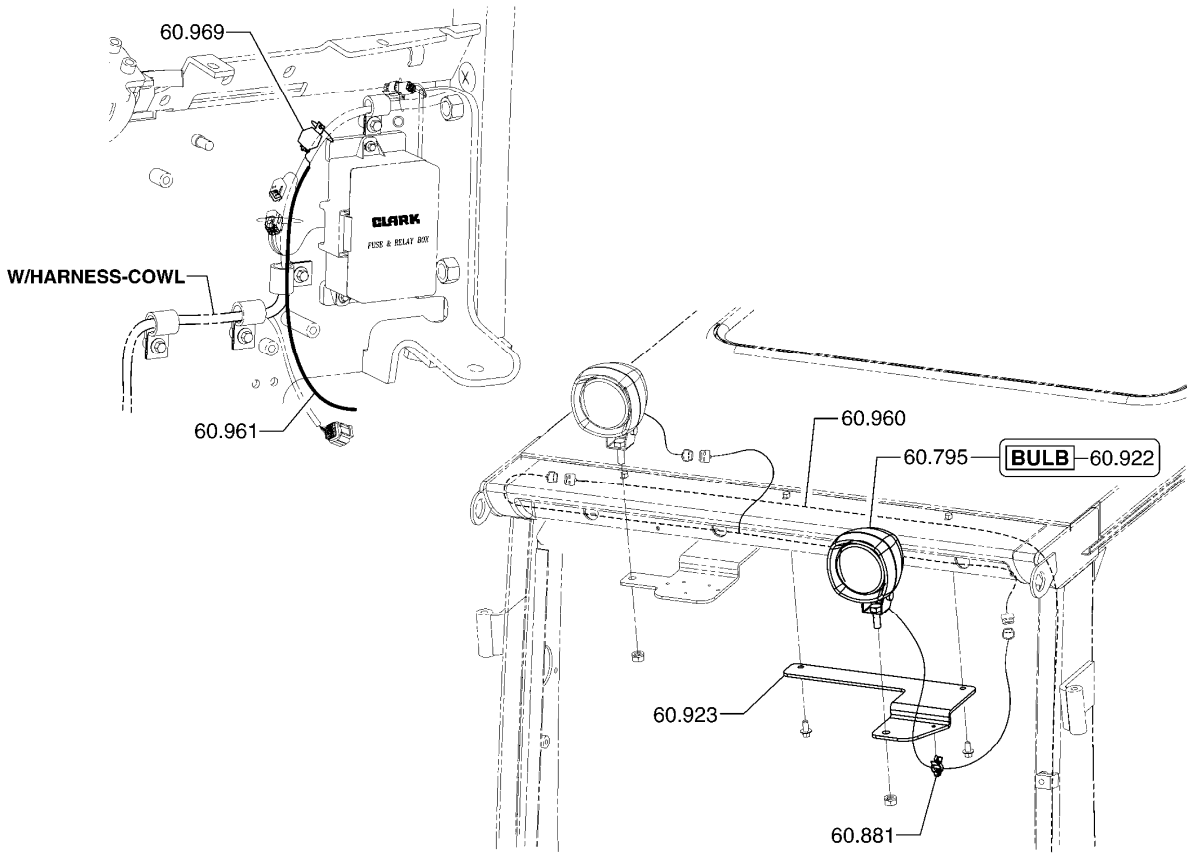

REAR WORK LIGHT INSTALLATION **13-044**

60.795 LIGHT, REAR WORK
라이트

60.881 CLIP,WORK LIGHT WIRE
클립

60.922 BULB, REAR WORK LAMP
전구

60.923 BRACKET, REAR WORK LAMP MOUNTING
브라켓

60.960 HARNESS, REAR WORK LAMP EXTENSION
*

60.961 HARNESS, REAR WORK LAMP SWITCH
*

60.969 RELAY, REAR WORK LIGHT
*

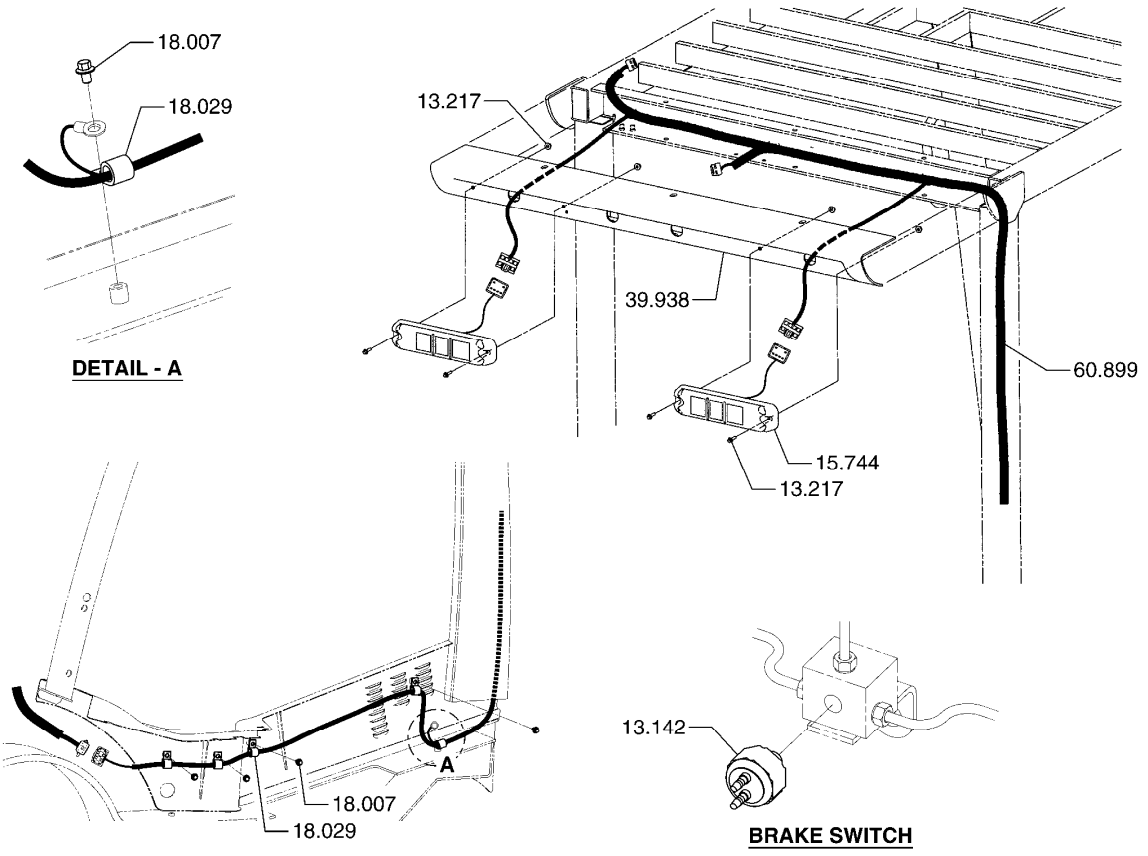

COMBINATION LAMP INSTALLATION **13-120**

13.142	SWITCH, BRAKE INTERLOCK 스위치
13.217	FASTENER, COM STOP & TAIL LAMP ASSY MTG 패스너
15.744	LAMP ASSEMBLY, COMBINATION STOP & TAIL 램프
18.007	FASTENER, HARNESS CLIP 패스너
18.029	CLIP, HARNESS 클립
39.938	BRACKET, OVERHEAD GUARD REAR SUPPORT 브라켓
60.899	WIRING HARNESS, REAR ACCESSORY 욱J潔紵電謬

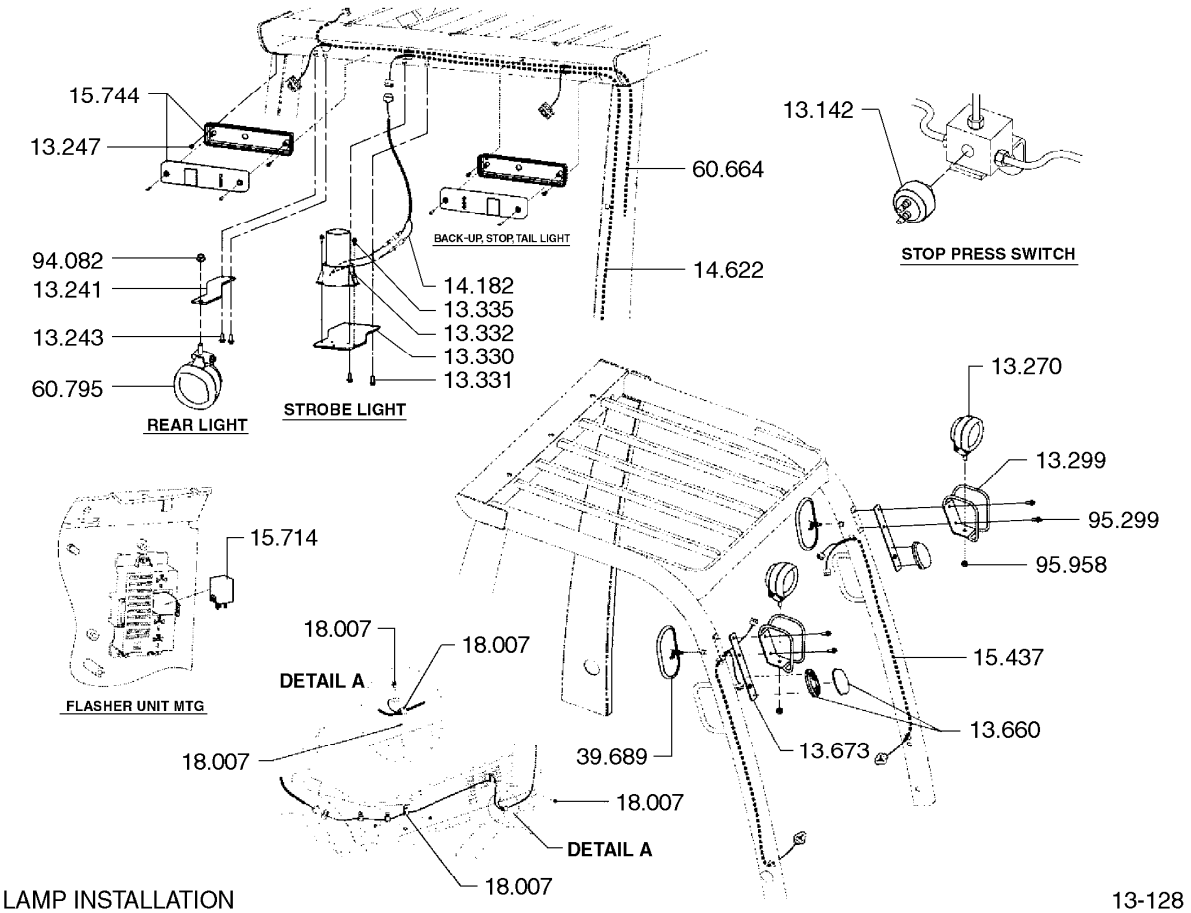

13.142 SWITCH, BRAKE INTERLOCK
스위치

13.241 BRACKET, HEAD LAMP
브라켓

13.243 FASTENER, HEAD LAMP BRACKET
패스너

13.247 FASTENER, TAIL LAMP ASSEMBLY
패스너

13.270 HEADLAMP, ADJUSTABLE
헤드램프

13.299 GUARD, HEADLIGHT
가드

13.330 BRACKET, WARNING LIGHT
브라켓

13.331 FASTENER, WARNING LIGHT BRACKET
패스너

13.332 ASSEMBLY, WARNING LIGHT
경고등

13.335	FASTENER, WARNING LIGHT 패스너
13.660	LIGHT, TURN SIGNAL 라이트
13.673	BRACKET, TURN LIGHT 브라켓
14.182	WIRE, WARNING LIGHT 와이어
14.622	HARNESS, TOWING LIGHTS 하네스
15.437	HARNESS, HEADLAMP WIRING 하네스
15.714	FLASHER, UNIT 플래셔
15.744	LAMP ASSEMBLY, COMBINATION STOP & TAIL 램프
18.007	FASTENER, HARNESS CLIP 패스너
39.689	MIRROR, REAR VIEW 미러
60.664	HARNESS, WARNING DEVICE 하네스
60.795	LIGHT, REAR WORK 라이트
94.082	NUT, HEADLAMP MOUNTING BRACKET FASTENER 너트
95.299	FASTENER, HEADLAMP GUARD 패스너
95.958	NUT, HEADLAMP GUARD FASTENER 너트

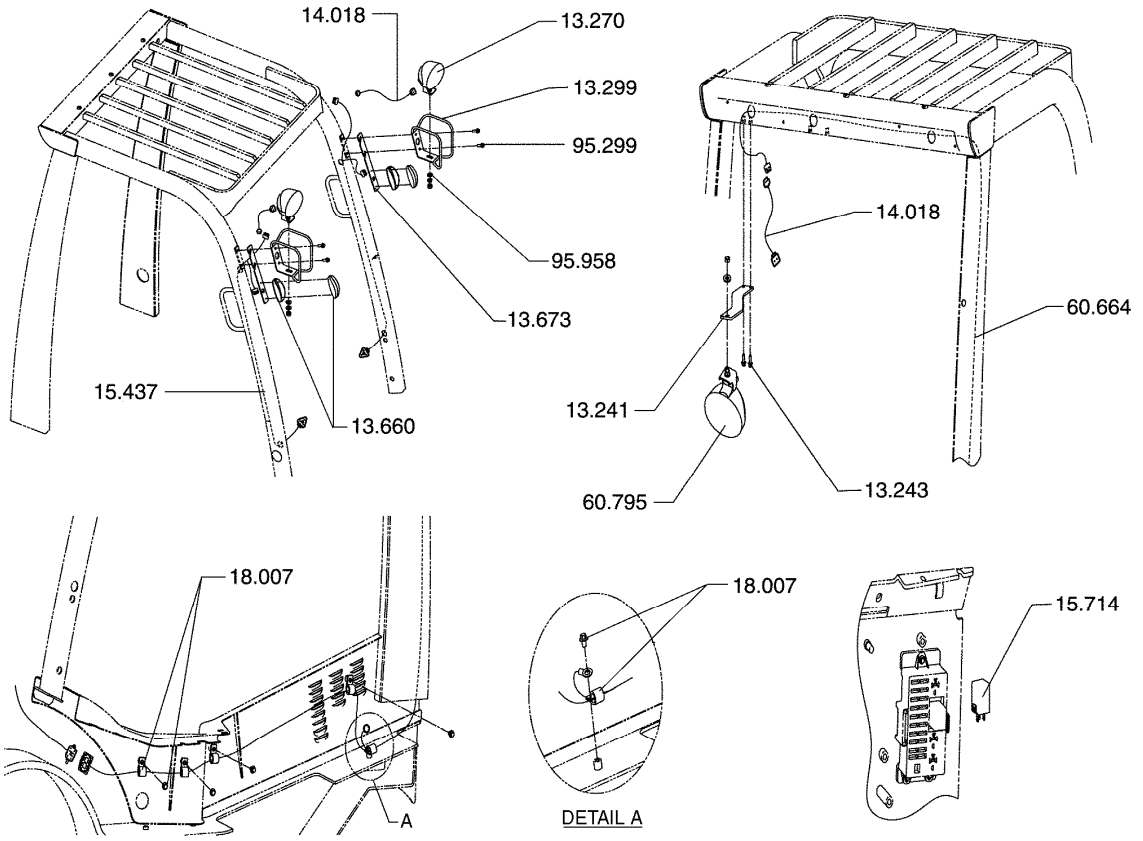

LED LIGHTS INSTALLATION **13-150**

13.241 BRACKET, HEAD LAMP
브라켓

13.243 FASTENER, HEAD LAMP BRACKET
패스너

13.270 HEADLAMP, ADJUSTABLE
헤드램프

13.299 GUARD, HEADLIGHT
가드

13.660 LIGHT, TURN SIGNAL
라이트

13.673 BRACKET, TURN LIGHT
브라켓

14.018 WIRE, HEADLIGHT
와이어

15.437 HARNESS, HEADLAMP WIRING
하네스

15.714 FLASHER, UNIT
플래셔

18.007	FASTENER, HARNESS CLIP 패스너
60.664	HARNESS, WARNING DEVICE 하네스
60.795	LIGHT, REAR WORK 라이트
95.299	FASTENER, HEADLAMP GUARD 패스너
95.958	NUT, HEADLAMP GUARD FASTENER 너트

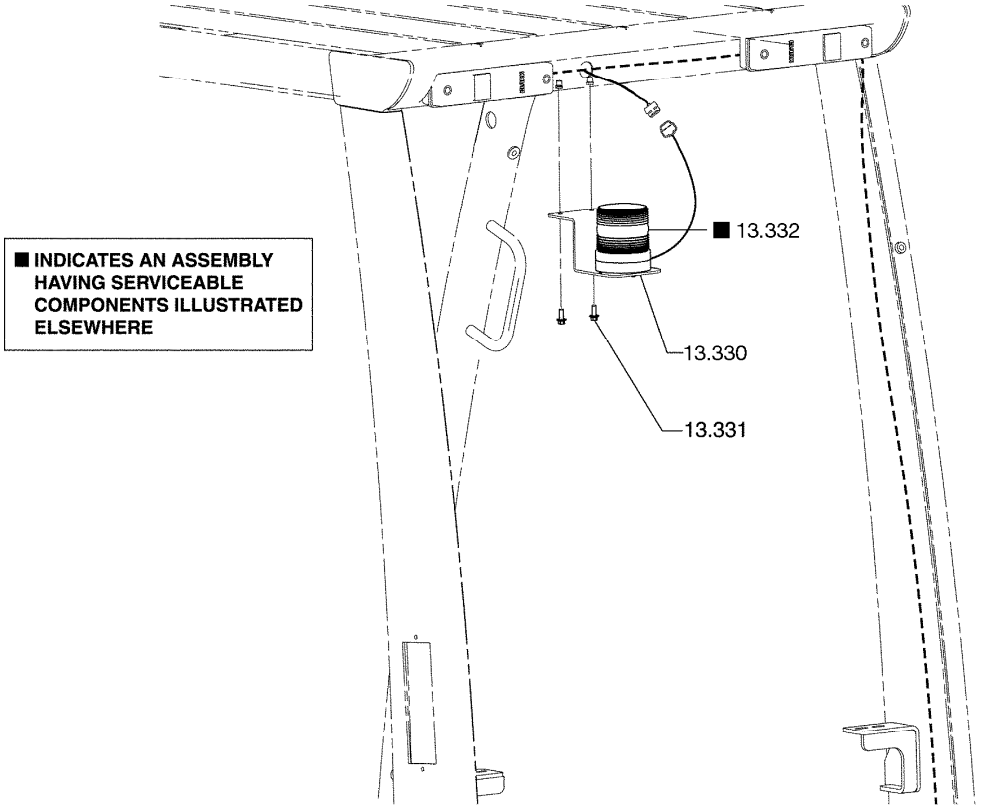

STROBE LIGHT MOUNTING **13-162**

13.330 BRACKET, WARNING LIGHT
브라켓

13.331 FASTENER, WARNING LIGHT BRACKET
패스너

13.332 ASSEMBLY, WARNING LIGHT
경고등

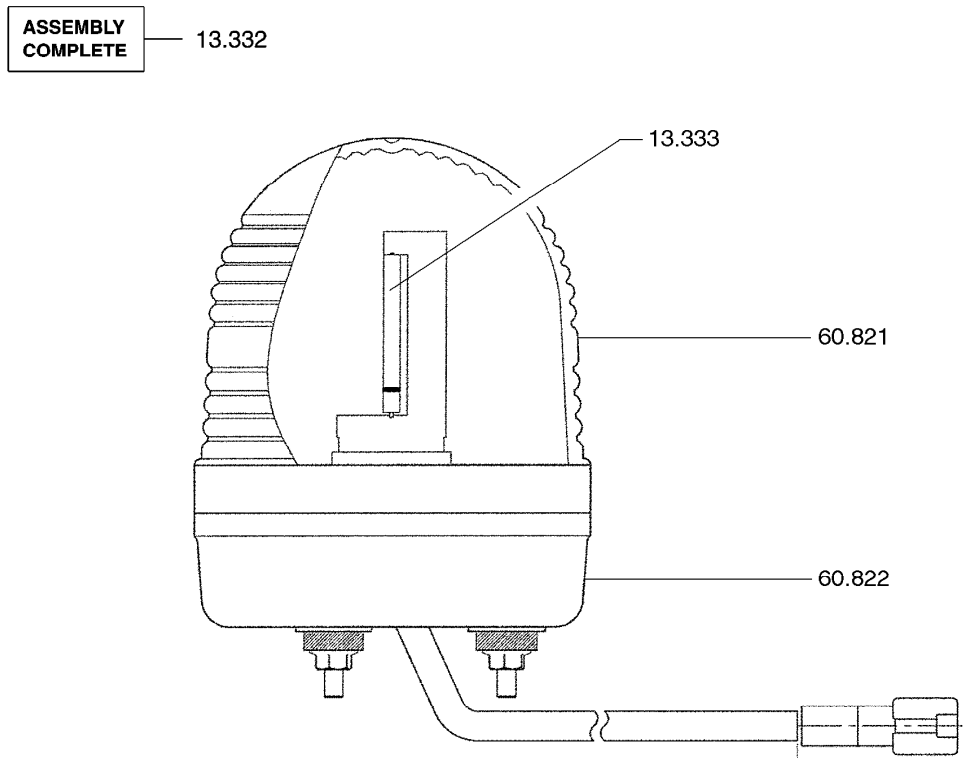

STROBE LIGHT **13-182**

13.332 ASSEMBLY, WARNING LIGHT
경고등

13.333 BULB, WARNING LIGHT
전구

60.821 GLOBE, STROBE LIGHT
글로브

60.822 BASE, STROBE LIGHT
베이스

■ INDICATES AN ASSEMBLY HAVING SERVICEABLE COMPONENTS ILLUSTRATED ELSEWHERE

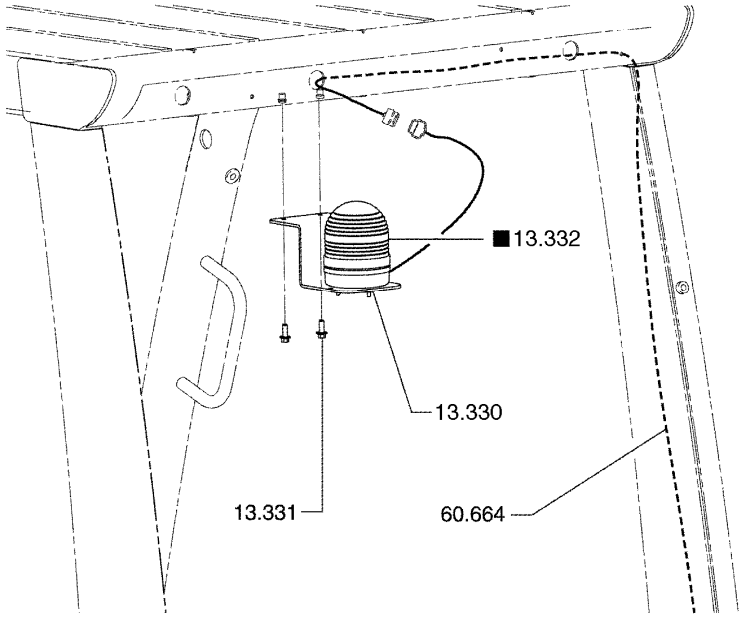

STROBE LIGHT MOUNTING **13-183**

13.330	BRACKET, WARNING LIGHT 브라켓
13.331	FASTENER, WARNING LIGHT BRACKET 패스너
13.332	ASSEMBLY, WARNING LIGHT 경고등
60.664	HARNESS, WARNING DEVICE 하네스

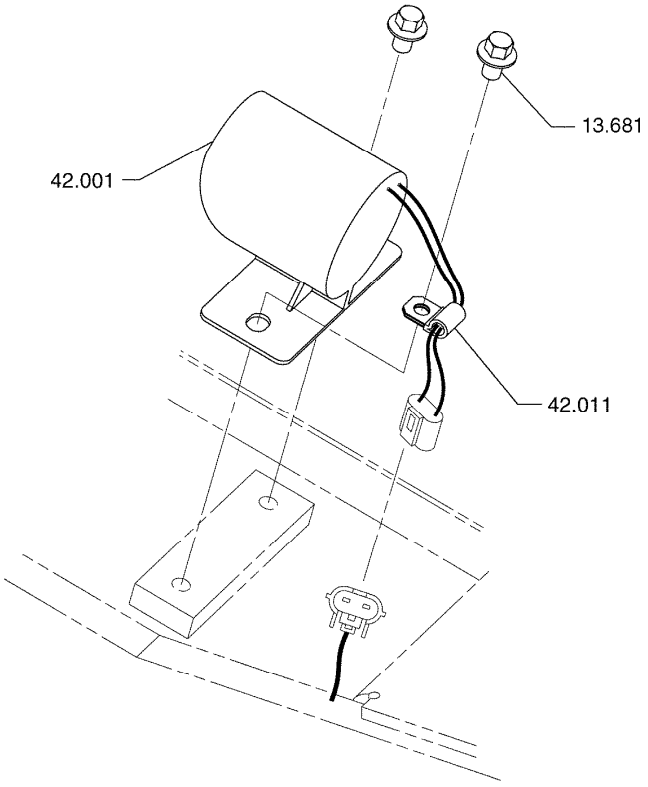

BACK-UP ALARM INSTALLATION **13-228**

13.681 FASTENER, WARNING DEVICE
패스너

42.001 WARNING DEVICE, AUDIBLE (AIR OPER)
경보장치

42.011 CLIP, AUDIBLE WARNING DEVICE CABLE
클립

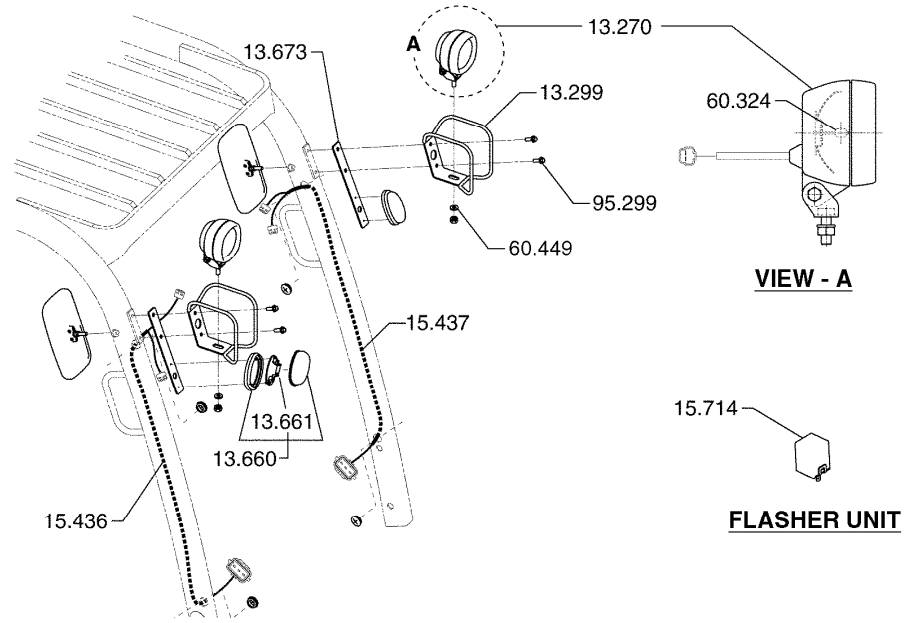

HEAD & T/SIGNAL LIGHT INSTALLATION **13-230**

13.270	HEADLAMP, ADJUSTABLE 헤드램프
13.299	GUARD, HEADLIGHT 가드
13.660	LIGHT, TURN SIGNAL 라이트
13.661	BULB, TURN SIGNAL LIGHT 전구
13.673	BRACKET, TURN LIGHT 브라켓
15.436	HARNESS, RH HEADLAMP WIRING 하네스
15.437	HARNESS, HEADLAMP WIRING 하네스
15.714	FLASHER, UNIT 플래셔
60.324	BULB, HEADLAMP 전구

60.449 SPACER, HEAD LAMP BRACKET MOUNTING
스페이서

95.299 FASTENER, HEADLAMP GUARD
패스너

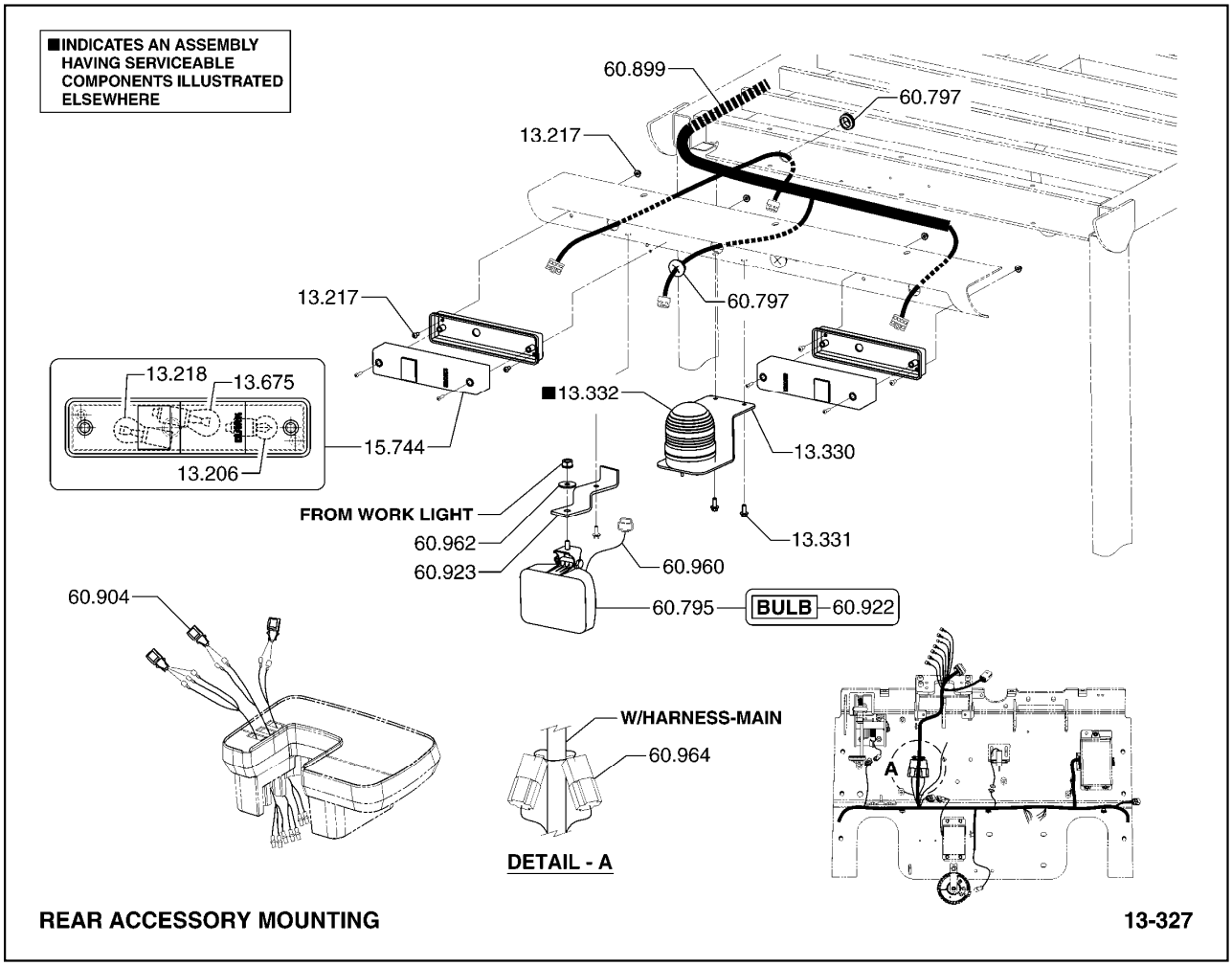

13.206 BULB, BACK-UP LAMP
전구

13.217 FASTENER, COM STOP & TAIL LAMP ASSY MTG
패스너

13.218 BULB, STOP & TAIL LAMP
전구

13.330 BRACKET, WARNING LIGHT
브라켓

13.331 FASTENER, WARNING LIGHT BRACKET
패스너

13.332 ASSEMBLY, WARNING LIGHT
경고등

13.675 BULB, TURN LIGHT
전구

15.744 LAMP ASSEMBLY, COMBINATION STOP & TAIL
램프

60.795 LIGHT, REAR WORK
라이트

60.797	GROMMET, REAR ACCESSORY WIRE 그룽멧
60.899	WIRING HARNESS, REAR ACCESSORY 욱J潔紂電謬
60.904	SWITCH, STROBE LIGHT 스J穎
60.922	BULB, REAR WORK LAMP 전구
60.923	BRACKET, REAR WORK LAMP MOUNTING 브라켓
60.960	HARNESS, REAR WORK LAMP EXTENSION *
60.962	SPACER, REAR WORK LAMP MOUNTING *
60.964	RELAY, FOOT BRAKE *

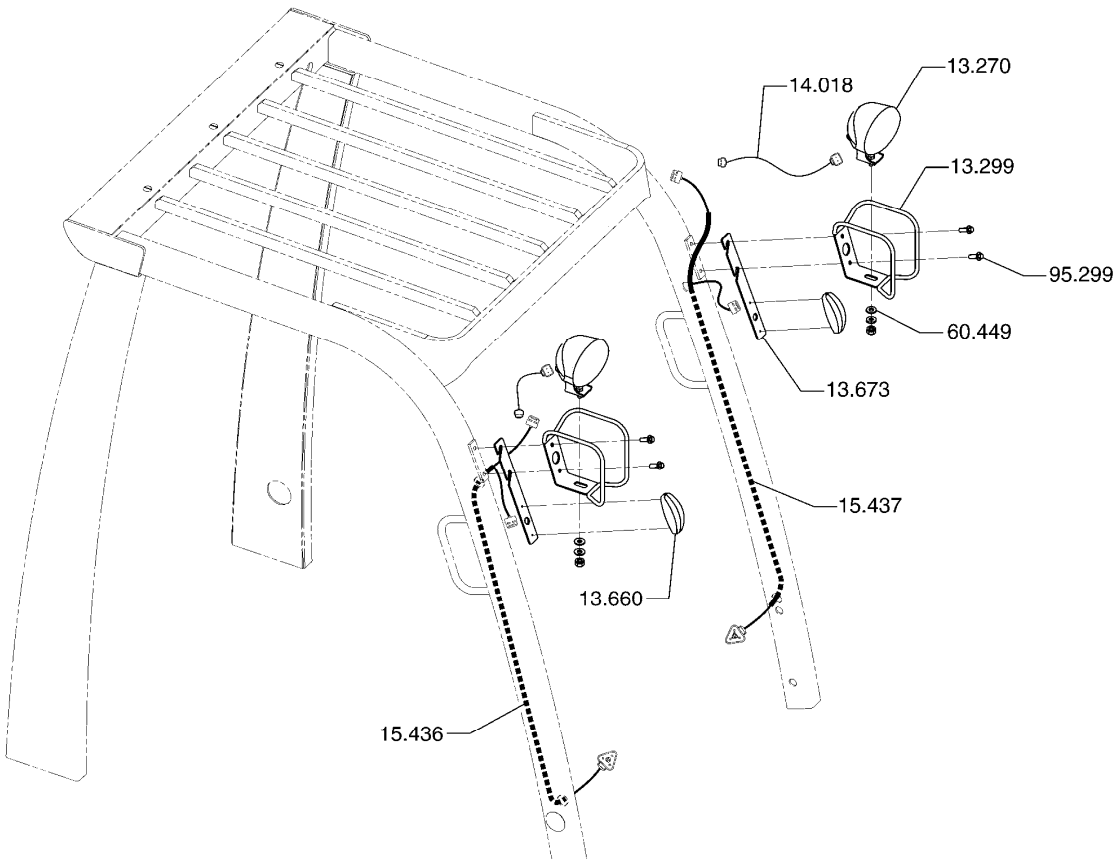

HEAD & T/SIGNAL LIGHT INSTALLATION **13-332**

13.270	HEADLAMP, ADJUSTABLE 헤드램프
13.299	GUARD, HEADLIGHT 가드
13.660	LIGHT, TURN SIGNAL 라이트
13.673	BRACKET, TURN LIGHT 브라켓
14.018	WIRE, HEADLIGHT 와이어
15.436	HARNESS, RH HEADLAMP WIRING 하네스
15.437	HARNESS, HEADLAMP WIRING 하네스
15.714	FLASHER, UNIT 플래셔
60.449	SPACER, HEAD LAMP BRACKET MOUNTING 스페이서

95.299 FASTENER, HEADLAMP GUARD
패스너

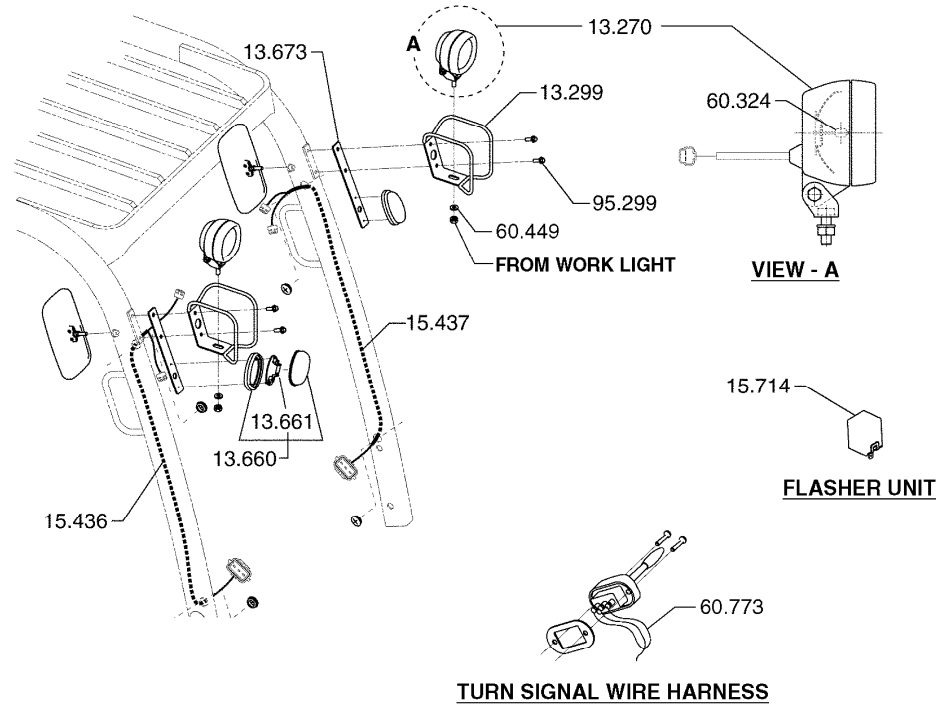

HEAD & T/SIGNAL LIGHT INSTALLATION **13-338**

13.270 HEADLAMP, ADJUSTABLE
헤드램프

13.284 BRACKET, ADJUSTABLE HEADLAMP
브라켓

13.285 FASTENER, ADJUSTABLE HEADLAMP BRACKET
패스너

13.299 GUARD, HEADLIGHT
가드

13.660 LIGHT, TURN SIGNAL
라이트

13.661 BULB, TURN SIGNAL LIGHT
전구

13.673 BRACKET, TURN LIGHT
브라켓

15.436 HARNESS, RH HEADLAMP WIRING
하네스

15.437 HARNESS, HEADLAMP WIRING
하네스

15.714	FLASHER, UNIT 플래셔
60.324	BULB, HEADLAMP 전구
60.449	SPACER, HEAD LAMP BRACKET MOUNTING 스페이서
60.773	HARNESS, TURN SIGNAL 하네스
95.299	FASTENER, HEADLAMP GUARD 패스너

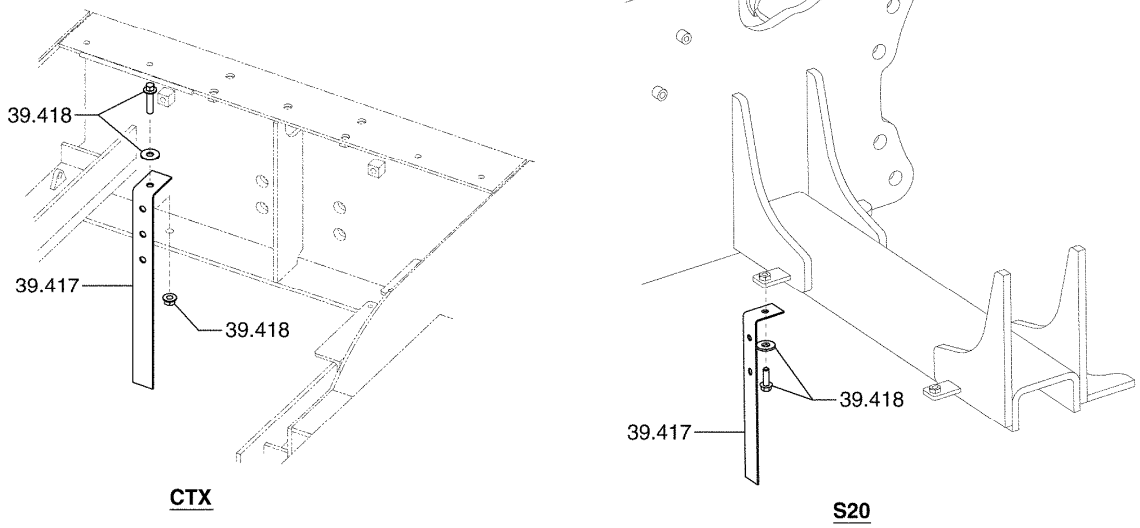

STATIC ELECTRICITY DISCHARGER **13-360**

39.417 GROUND STRAP, ELECTRIC TRUCK
접지케이블

39.418 FASTENER, ELECTRIC TRUCK GROUND STRAP
패스너

2	HARNESS, CONTROL CIRCUIT WIRING	14.050	16	CABLE, DRIVE
3	CLIP, CONTROL CIRCUIT WIRING HARNESS	18.025	17	CABLE, DRIVE
4	STRAP, HARNESS	18.027	18	CABLE, DRIVE
5	RECEPTACLE & CABLE, BATTERY	14.039	19	CABLE, DRIVE
6	RECEPTACLE, BATTERY CABLE	14.040	20	WIRE ASSEMBLY
7	WIRE ASSEMBLY, PUMP SOLENOID TO VALVE	14.163	21	FASTENER, BAT
8	WIRE ASSEMBLY, PUMP SOLENOID JUMPER	14.164	22	PLATE, RECEPT
9	WIRE ASSEMBLY, PUMP SOL TO PUMP MOTOR	14.047	23	FASTENER, REC
0	CABLE, BATTERY NEGATIVE	14.147	24	WIRE, DRIVE M
1	CABLE, RESISTOR TO B/	14.148	25	WIRE, PLUGGIN
2	WIRE ASSEMBLY, RESISTOR TO H/SPD CONT	14.221	26	WIRE, DIODE T
3	WIRE ASSEMBLY, RESISTOR TO H/SPD CONT	14.257	27	WIRE, DIODE T
4	CABLE, DRIVE MOTOR (A2)	14.087	28	CONNECTOR, AU
5	CABLE, DRIVE MOTOR (A1)	14.086		

13.000 PANEL, INSTRUMENT CLUSTER
판넬

13.003 HORN
혼

13.004 FASTENER, HORN MOUNTING BRACKET
패스너

13.079 FASTENER, INSTRUMENT CLUSTER TO INST PANEL
패스너

14.352 FUSE, CONTROL CIRCUIT
퓨즈

15.433 GROMMET, CONTROL CIRCUIT WIRING HARNESS
그로멧

15.447 DIODE, HARNESS
다이오드

15.640 WIRING HARNESS, MACHINE COWL
와이어하네스

15.710 RELAY, ELECTRICAL
릴레이

18.009	FASTENER, HARNESS CLIP 패스너
18.010	CLIP, HARNESS 클립
18.011	FASTENER, HARNESS CLIP 패스너
18.012	CLIP, WIRE HARNESS 클립
18.014	CLIP, HARNESS 클립
18.020	CLIP, HARNESS 클립
60.383	GROMMET, CONTROL CIRCUIT WIRING HARNESS 그로멧
65.289	BODY, FUSE BOX *
65.832	COVER, FUSE BOX 커버
95.009	FASTENER, FUSE BOX MOUNTING 패스너

201	COIL, IGNITION	14.002	WIRE, HOUR ME
250	SPARK PLUG	14.003	FUSE, HORN
301	REGULATOR, VOLTAGE	14.004	FUSE, MAIN
301	RELAY, HORN	14.025	CABLE, BATTER
303	HORN	14.026	CABLE, BATTER
304	FASTENER, HORN	14.031	KIT, HIGH TEN
311	CONTROL, ENGINE TEMPERATURE INDICATOR	14.114	HARNESS, MACH
313	CONTROL, ENGINE OIL PRESSURE INDICATOR	14.572	RESISTOR, ALT
315	CONTROL, ENGINE HOUR METER	14.787	FUSE, ACCESS

01.854 SENSOR, ENGINE COOLANT TEMPERATURE
센서

11.001 RELAY, STARTER
릴레이

11.002 FASTENER, STARTER RELAY
패스너

13.688 RELAY, ENGINE CONDITION SIGNAL
릴레이

14.114 HARNESS, MACHINE WIRING
하네스

15.447 DIODE, HARNESS
다이오드

18.000 CLIP, WIRING HARNESS
클립

18.001 FASTENER, WIRING HARNESS CLIP
패스너

18.002 CLIP, WIRING HARNESS
클립

18.008	CLIP, WIRING HARNESS 클립
97.271	FASTENER, CABLE & WIRE TO ALTERNATOR *

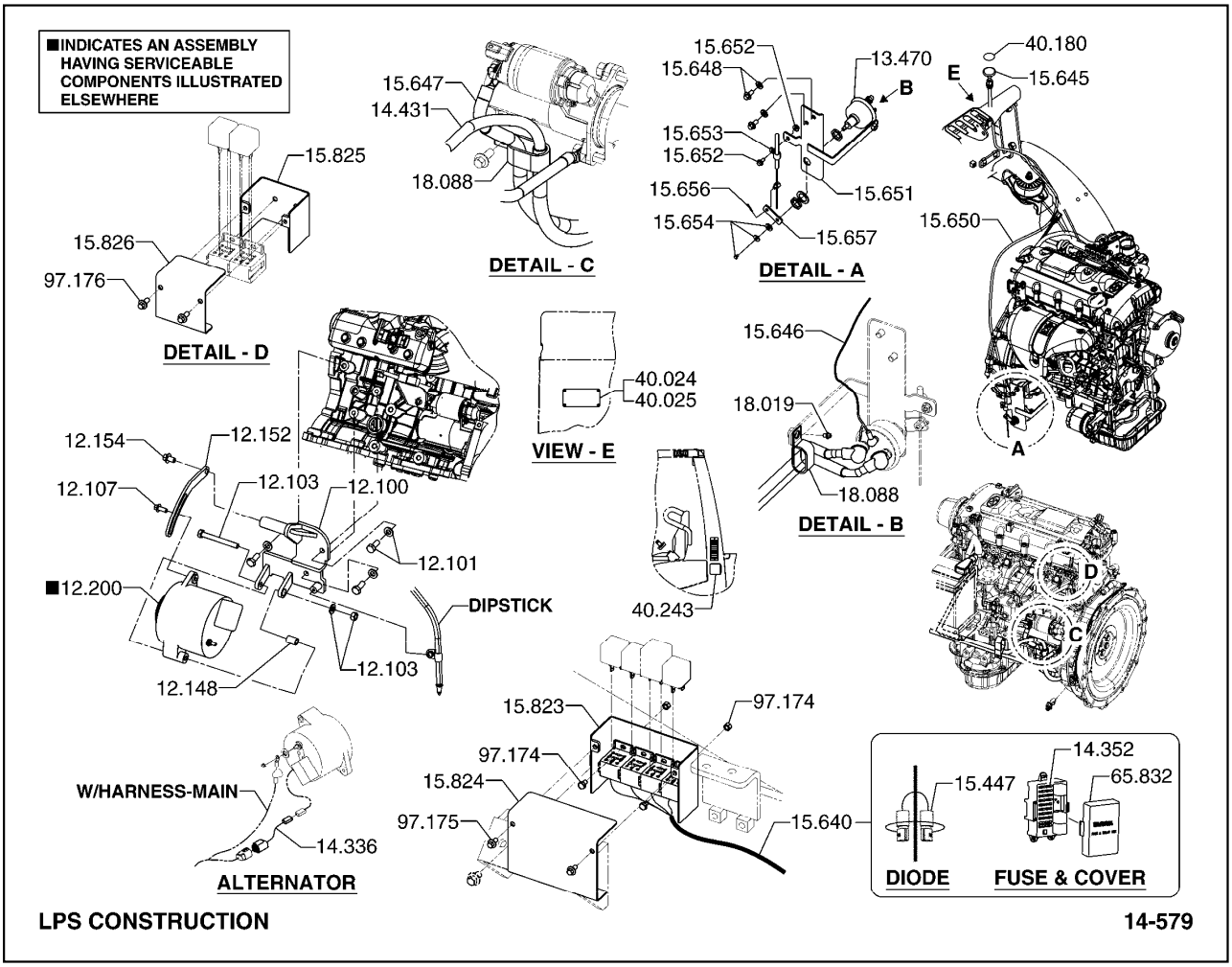

12.100	BRACKET, ALTERNATOR MOUNTING 브라켓	15.646	HARNESS, ENGINE DISCONNECT 하네스
12.101	FASTENER, ALTERNATOR BRACKET 패스너	15.647	CABLE, DISCONNECT SWITCH TO STARTER 케이블
12.103	FASTENER, ALTERNATOR TO BRACKET 패스너	15.648	FASTENER, DISCONNECT SWITCH MOUNTING BRACKET 패스너
12.107	FASTENER, ADJUSTING STRAP TO ALTERNATOR 패스너	15.650	CABLE, DISCONNECT SWITCH TO KNOB 케이블
12.148	SPACER, ALTERNATOR MOUNTING 스페이서	15.651	BRACKET, DISCONNECT SWITCH MOUNTING 브라켓
12.152	BRACKET, ALTERNATOR ADJUSTING STRAP 브라켓	15.652	FASTENER, DISCONNECT SWITCH CLAMP ?스너
12.154	FASTENER, ALTERNATOR MOUNTING 패스너	15.653	CLAMP, DISCONNECT SWITCH CABLE 클룻프
12.200	ALTERNATOR ASSEMBLY 알터네이터	15.654	FASTENER, DISCONNECT SWITCH BRACKET TO LEVER 패스너
13.470	SWITCH, DISCONNECT 스위치	15.656	PIN, DISCONNECT SWITCH CABLE LEVER 핀
14.336	HARNESS, ALTERNATOR 하네스	15.657	LEVER, DISCONNECT SWITCH ACTUATING 레버
14.352	FUSE, CONTROL CIRCUIT 퓨즈	15.823	BRACKET, CIRCUIT SWITCH RELAY PROTECTION *
14.431	CABLE, BATTERY TO DISCONNECT SWITCH 케이블	15.824	COVER, CIRCUIT SWITCH RELAY PROTECTION *
15.447	DIODE, HARNESS 다이오드	15.825	COVER, ENGINE CONDITION RELAY PROTECTION *
15.640	WIRING HARNESS, MACHINE COWL 와이어하네스	15.826	COVER, ENGINE CONDITION RELAY PROTECTION *
15.645	KNOB, DISCONNECT SWITCH ACTUATING 노브	18.019	FASTENER, BATTERY CABLE CLIP 패스너

18.088	CLAMP, BATTERY CABLE 클램프
40.024	PLATE, UNDERWRITERS LABEL 플레이트
40.025	FASTENER, UNDERWRITERS LABEL PLATE 패스너
40.180	DECAL, BATTERY DISCONNECT SWITCH 데칼
40.243	DECAL, LPS 데칼
65.289	BODY, FUSE BOX *
65.832	COVER, FUSE BOX 커버
97.174	FASTENER, CIRCUIT SWITCH RELAY PROTECTION *
97.175	FASTENER, CIRCUIT SWITCH RELAY PROTECTION *
97.176	FASTENER, ENGINE CONDITION RELAY PROTECTION *

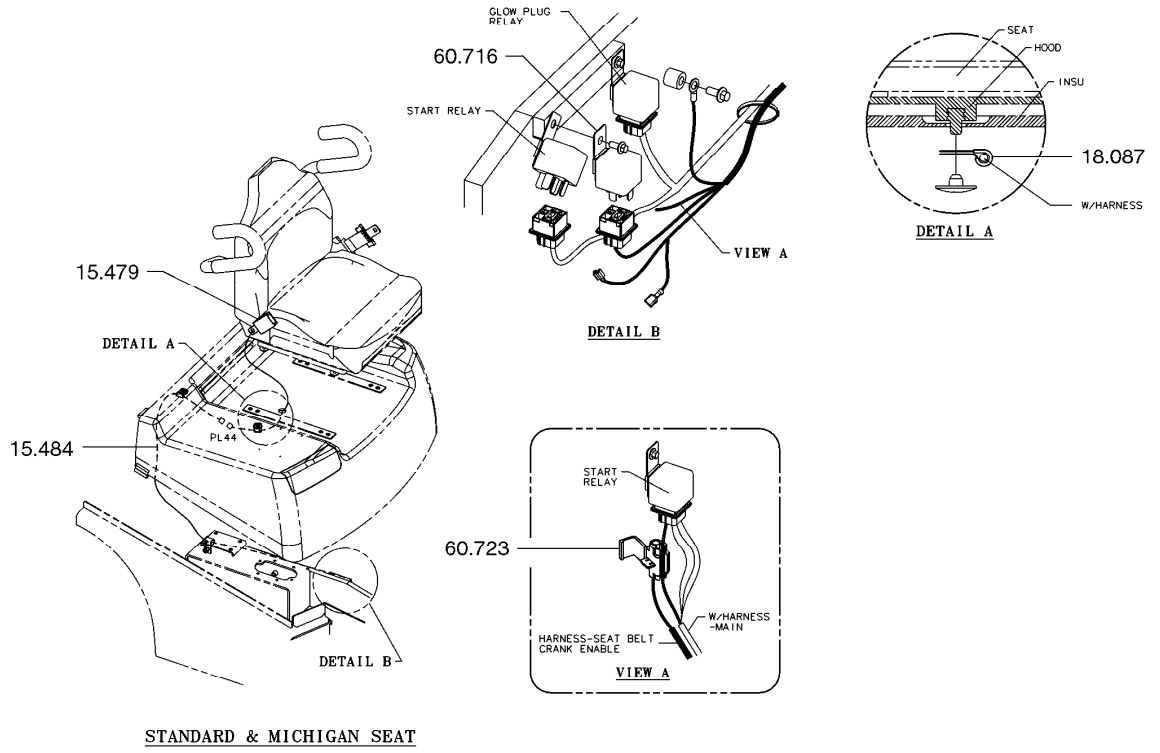

SEAT OPERATED BRAKE 14-878

15.479 SWITCH, SEAT INSTALLATION
스위치

15.484 HARNESS, SEAT SWITCH INSTALLATION
하네스

18.087 CLIP, SEAT SAFETY SWITCH WIRE
클립

60.716 RELAY, SAFETY START
릴레이

60.723 CONNECTOR, SEAT SWITCH WIRING
커넥터

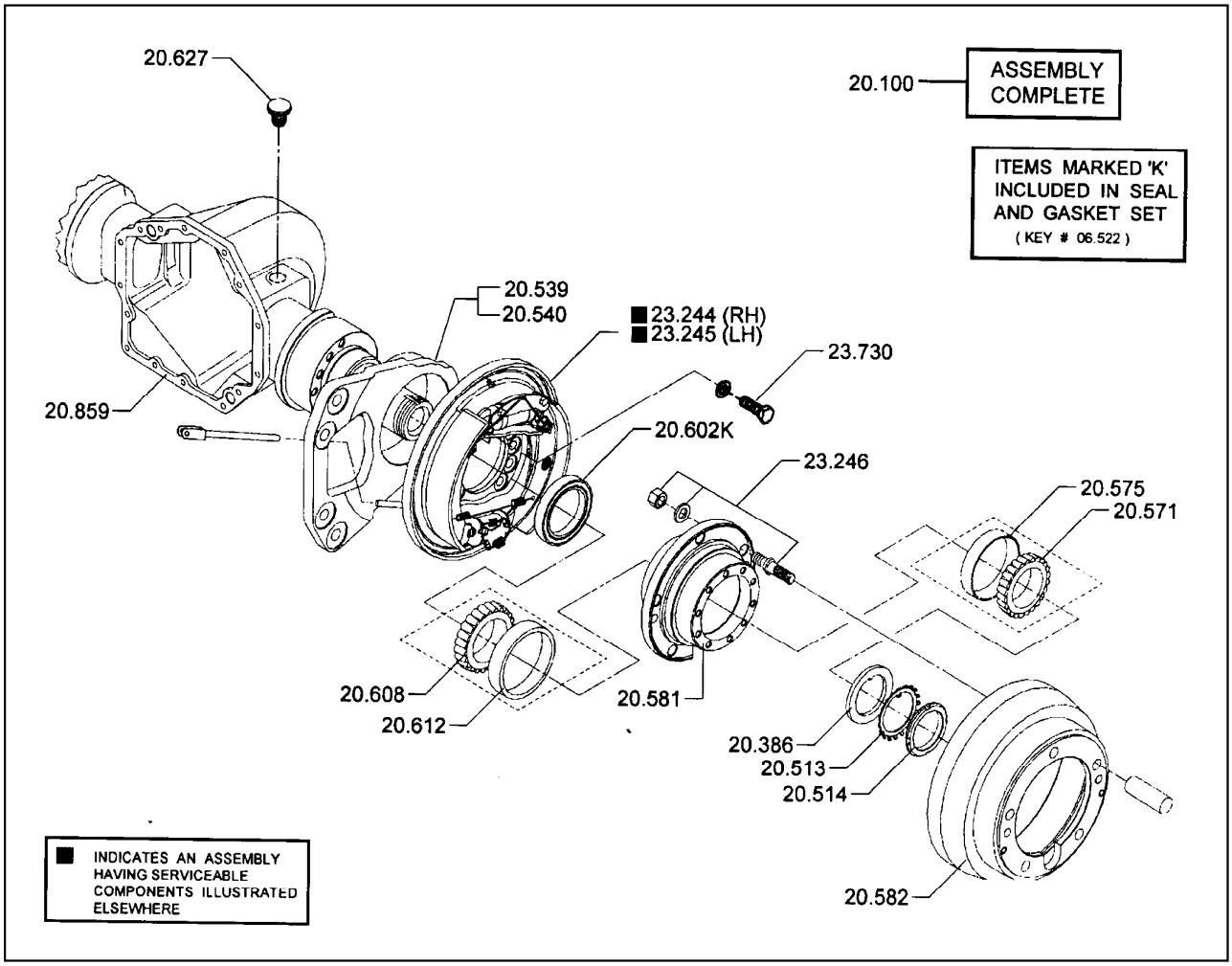

20.100 TRANSAXLE ASSEMBLY
트랜스액슬

20.386 WASHER, DRIVE AXLE HUB SEAL
와셔

20.513 RETAINER, DRIVE AXLE HUB BEARING
리테이너

20.514 LOCKPLATE, DRIVE AXLE HUB BEARING RETAINER
로크플레이트

20.539 SUPPORT, DRIVE AXLE SPINDLE (RH)
서포트

20.540 SUPPORT, DRIVE AXLE SPINDLE (LH)
서포트

20.571 CONE, DRIVE AXLE HUB OUTER BEARING
콘

20.575 CUP, DRIVE AXLE HUB OUTER BEARING
컵

20.581 HUB ASSEMBLY, DRIVE AXLE
허브

20.582	HUB, DRIVE WHEEL 허브
20.602	SEAL, DRIVE AXLE HUB INNER OIL 시일
20.608	CONE, DRIVE AXLE HUB INNER BEARING 콘
20.612	CUP, DRIVE AXLE HUB INNER BEARING 컵
20.627	VENT, DIFFERENTIAL & AXLE 벤트
20.859	HOUSING, DRIVE AXLE 하우징
23.244	BRAKE ASSEMBLY, RH DRIVE WHEEL 브레이크
23.245	BRAKE ASSEMBLY, LH DRIVE WHEEL 브레이크
23.246	FASTENER, BRAKE ASSEMBLY 패스너
23.730	FASTENER, BRAKE ASSEMBLY 패스너

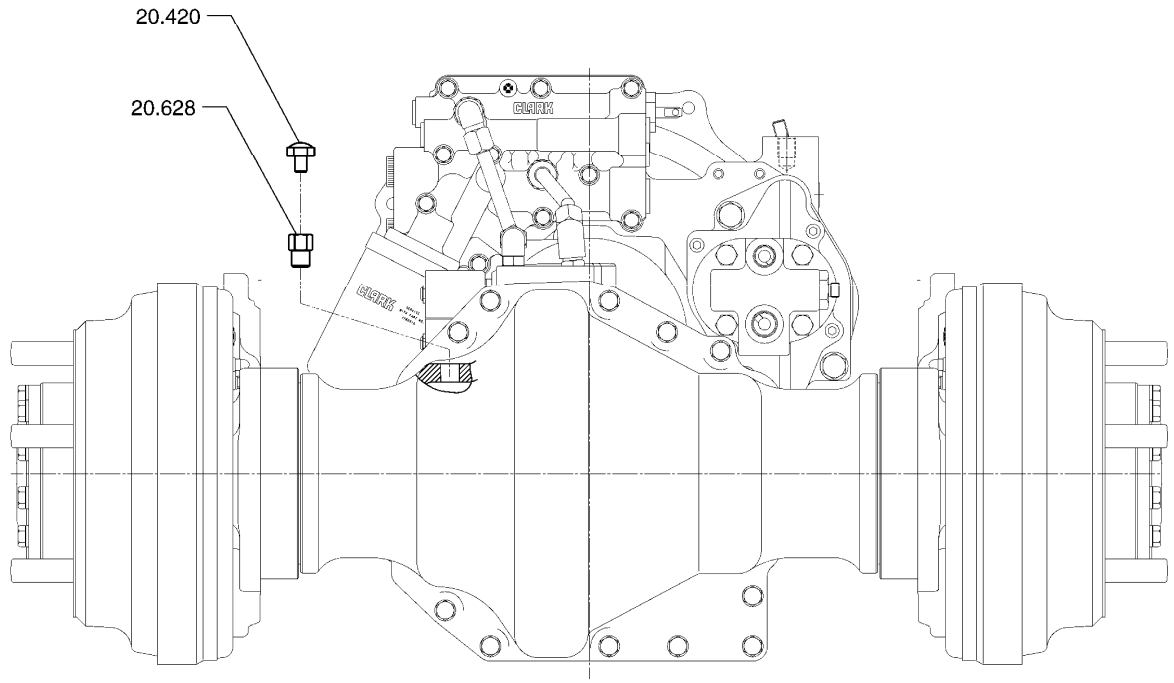

DRIVE AXLE FILTER BREATHER MOUNTING **20-268**

20.420 BREATHER, DRIVE AXLE
*

20.628 ADAPTOR, DRIVE AXLE BREATHER VENT
어댑톼

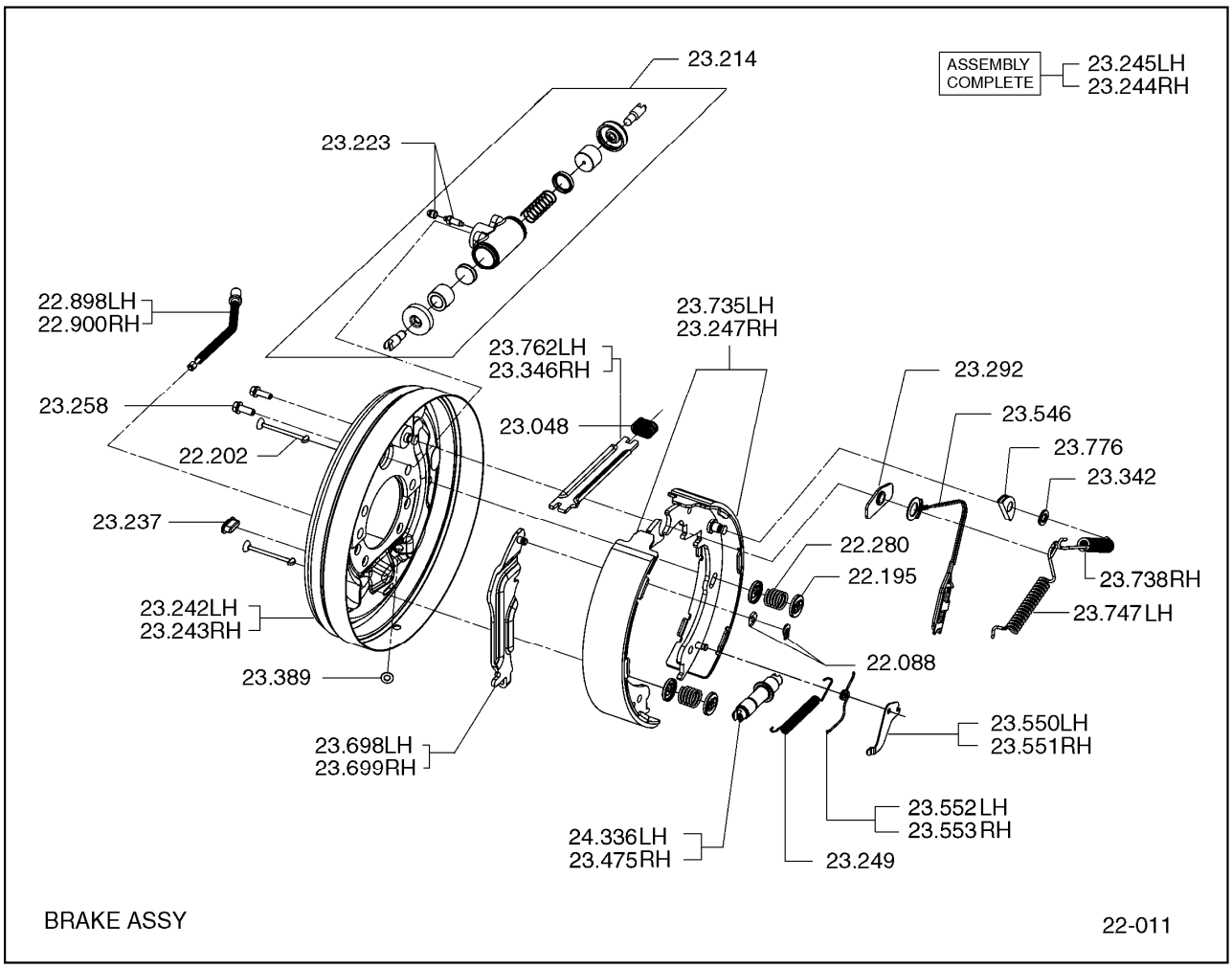

22.088	RETAINER, PARKING BRAKE LINKAGE LEVER FULCRUM 리테이너	23.249	SPRING, LH BRAKE RETURN 스프링
22.195	CUP, BRAKE SHOE GUIDE 컵	23.258	FASTENER, LH WHEEL CYLINDER 패스너
22.202	PIN, BRAKE CABLE CLEVIS 핀	23.292	ANCHOR, BRAKE SHOE 앵커
22.280	SPRING, BRAKE SHOE GUIDE PIN 스프링	23.342	FASTENER, BRAKE SPRING ANCHOR 패스너
22.898	CABLE, PARKING BRAKE DRAW - LH 케이블	23.346	ARM, PARKING BRAKE 암
22.900	CABLE, PARKING BRAKE DRAW - RH 케이블	23.389	RETAINER, PARKING BRAKE CABLE 리테이너
23.048	SPRING, PARKING BRAKE OPERATING ARM ANTI-RATTLE 스프링	23.475	ADJUSTOR, BRAKE SHOE 어드져스터
23.214	CYLINDER ASSEMBLY, LH BRAKE 실린더	23.546	CABLE, BRAKE ADJUSTER (RH) 케이블
23.223	BLEEDER, BRAKE WHEEL CYLINDER 블리더	23.550	LEVER, BRAKE ADJUSTER (LH) 레버
23.237	COVER, RH BRAKE ADJUSTOR 커버	23.551	LEVER, BRAKE ADJUSTER (RH) 레버
23.242	PLATE, LH BRAKE BACKING 플레이트	23.552	SPRING, BRAKE ADJUSTER (LH) 스프링
23.243	PLATE, RH BRAKE BACKING 플레이트	23.553	SPRING, BRAKE ADJUSTER (RH) 스프링
23.244	BRAKE ASSEMBLY, RH DRIVE WHEEL 브레이크	23.698	LEVER, PARKING BRAKE OPERATING LH 레버
23.245	BRAKE ASSEMBLY, LH DRIVE WHEEL 브레이크	23.699	ARM, BRAKE ADJUSTOR REACTION LH 암
23.247	SHOE SET, BRAKE LINING 슈	23.735	SHOE & LINING SET, BRAKE 슈와라이닝

23.738 SPRING, BRAKE SHOE RETURN (RH)
스프링

23.747 SPRING, BRAKE SHOE RETURN (LH)
스프링

23.762 ARM, PARKING BRAKE OPERATING
암

23.776 SHEAVE, PARKING BRAKE CABLE
쉬브

24.336 ADJUSTOR, BRAKE SHOE LH
어드져스터

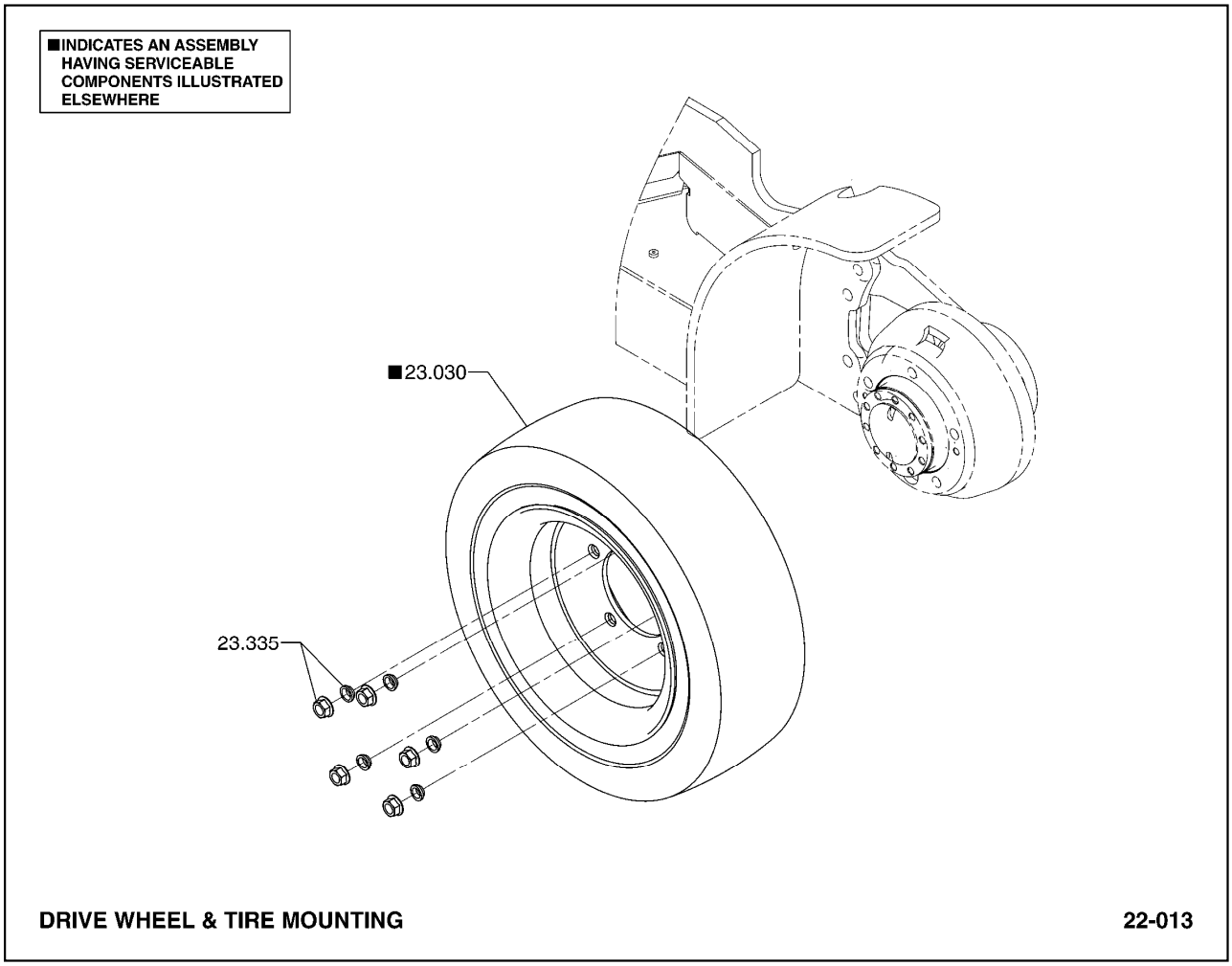

23.030 DRIVE WHEEL AND TIRE ASSEMBLY
드라이브휠타이어

23.335 FASTENER, DRIVE WHEEL
패스너

■INDICATES AN ASSEMBLY HAVING SERVICEABLE COMPONENTS ILLUSTRATED ELSEWHERE

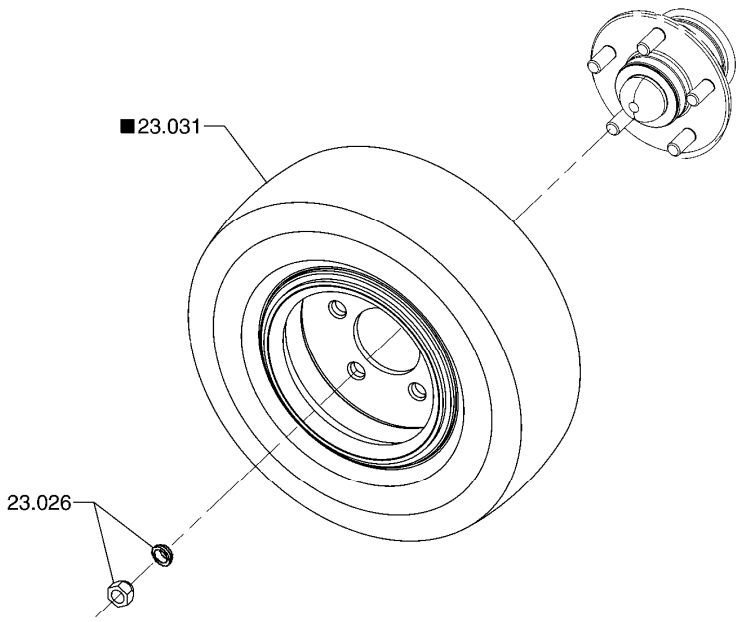

STEER WHEEL & TIRE MOUNTING **22-014**

23.026 FASTENER, STEER WHEEL
패스너

23.031 STEER WHEEL AND TIRE ASSEMBLY
휠

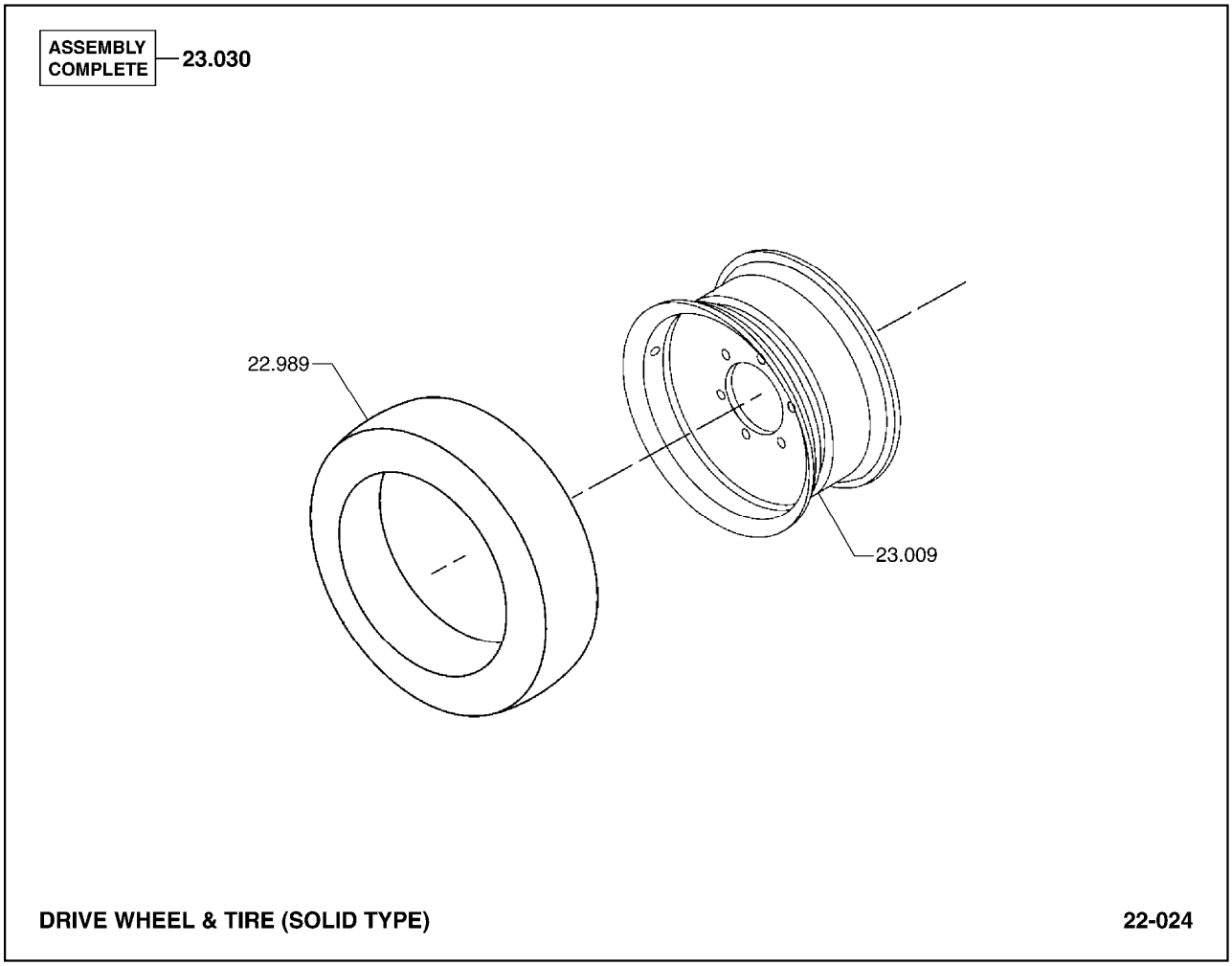

22.989	TIRE ASSEMBLY, DRIVE *
23.009	RIM ASSEMBLY, DRIVE WHEEL 림
23.030	DRIVE WHEEL AND TIRE ASSEMBLY 드라이브휠타이어

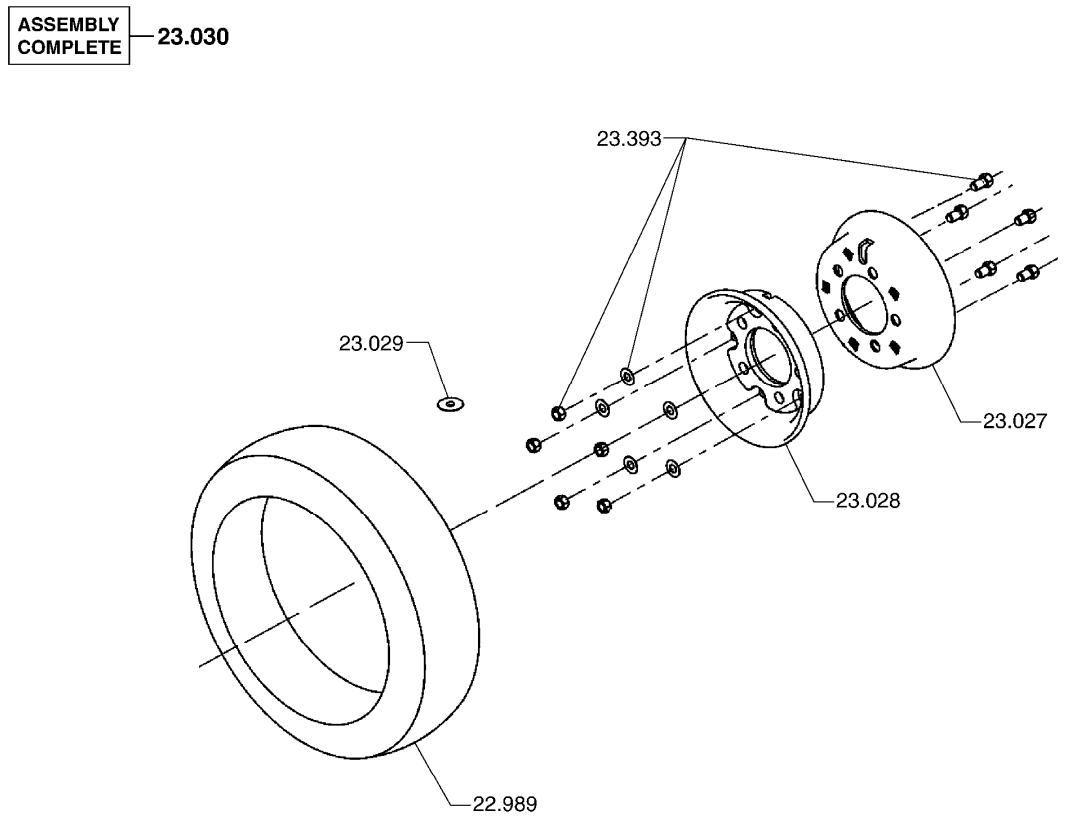

DRIVE WHEEL & TIRE (SOLID TYPE) **22-026**

22.989	TIRE ASSEMBLY, DRIVE *
23.027	OUTER HALF, DRIVE WHEEL 아웃하프
23.028	INNER HALF, DRIVE WHEEL 인너하프
23.029	FASTENER, DRIVE WHEEL ASSEMBLY 패스너
23.030	DRIVE WHEEL AND TIRE ASSEMBLY 드라이브휠타이어
23.393	FASTENER, DRIVE WHEEL 패스너

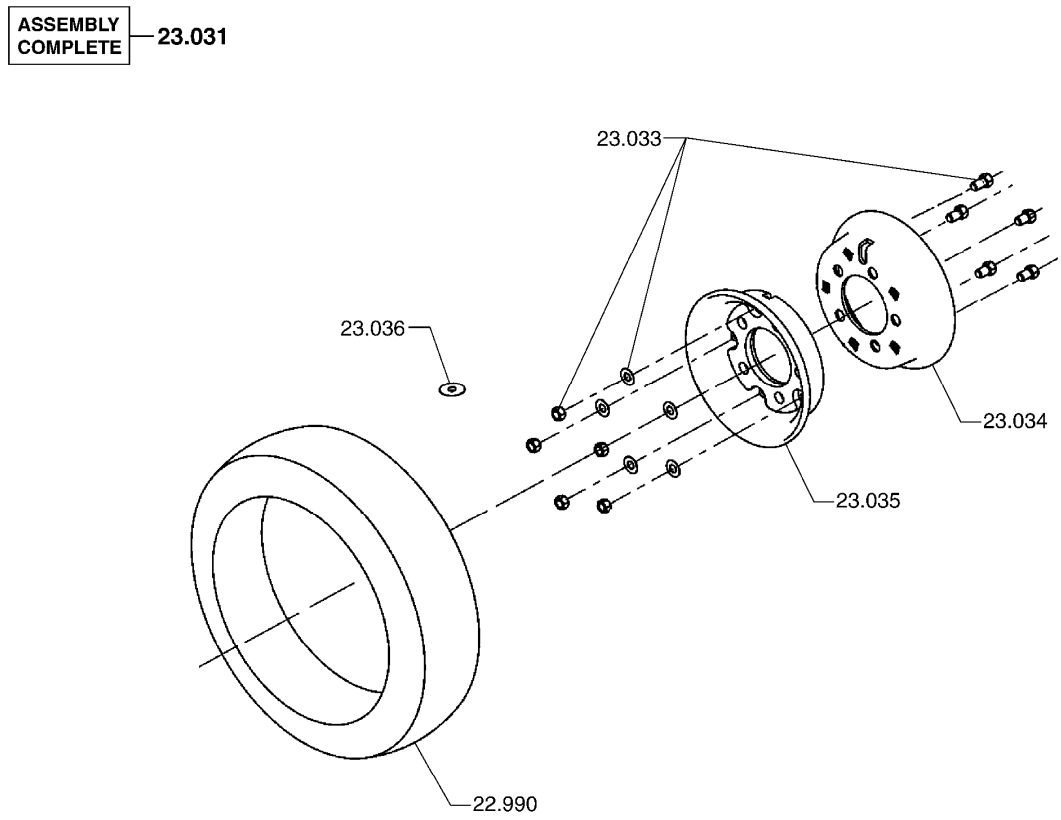

STEER WHEEL & TIRE (SOLID TYPE) **22-027**

22.990	TIRE ASSEMBLY, STEER *
23.031	STEER WHEEL AND TIRE ASSEMBLY 휠
23.033	FASTENER, STEER WHEEL 패스너
23.034	OUTER HALF, STEER WHEEL 아웃하프
23.035	INNER HALF, STEER WHEEL 인너하프
23.036	FASTENER, STEER WHEEL ASSEMBLY 패스너

■INDICATES AN ASSEMBLY HAVING SERVICEABLE COMPONENTS ILLUSTRATED ELSEWHERE

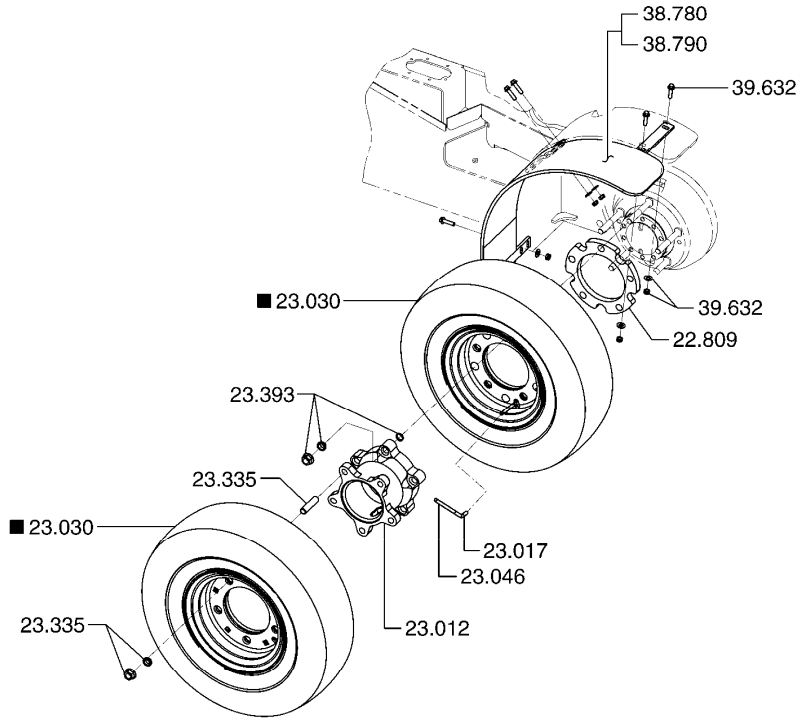

DUAL DRIVE TIRE MOUNTING **22-033**

22.809 SPACER, DRIVE WHEEL OFFSET MOUNTING
스페이서

23.012 SPACER, DRIVE WHEEL DUAL RIM
스페이서

23.017 EXTENSION, DRIVE WHEEL VALVE
익스텐션

23.030 DRIVE WHEEL AND TIRE ASSEMBLY
드라이브휠타이어

23.046 EXTENSION, DRIVE WHEEL
익스텐션

23.335 FASTENER, DRIVE WHEEL
패스너

23.393 FASTENER, DRIVE WHEEL
패스너

38.780 FENDER, RIGHT HAND FRONT
펜더

38.790 FENDER, LEFT HAND FRONT
펜더

39.632 FASTENER, FENDER SUPPORT
패스너

■INDICATES AN ASSEMBLY HAVING SERVICEABLE COMPONENTS ILLUSTRATED ELSEWHERE

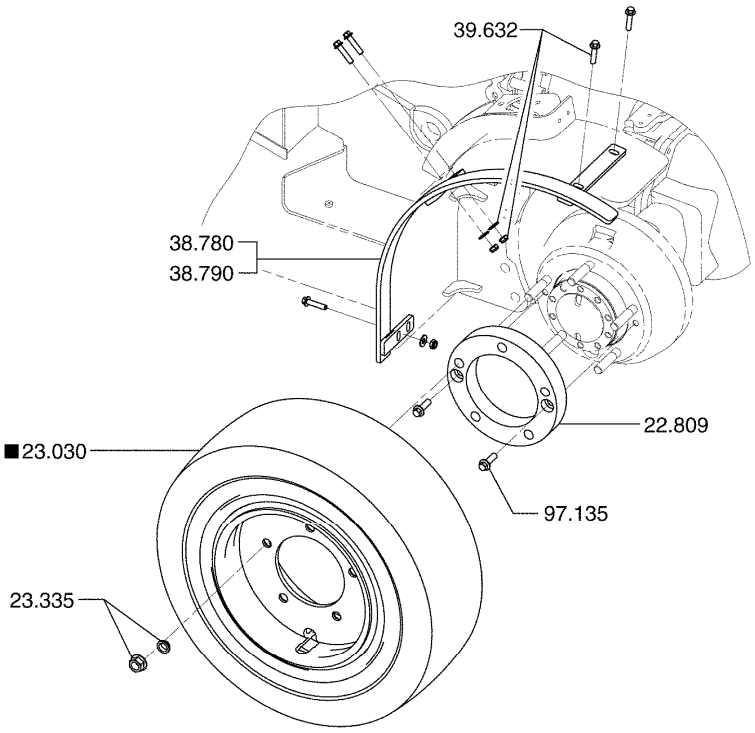

WIDE DRIVE TIRE MOUNTING **22-034**

22.809	SPACER, DRIVE WHEEL OFFSET MOUNTING 스페이서
23.030	DRIVE WHEEL AND TIRE ASSEMBLY 드라이브휠타이어
23.335	FASTENER, DRIVE WHEEL 패스너
38.780	FENDER, RIGHT HAND FRONT 펜더
38.790	FENDER, LEFT HAND FRONT 펜더
39.632	FASTENER, FENDER SUPPORT 패스너
97.135	FASTENER, DRIVE WHEEL OFFSET SPACER 패스너

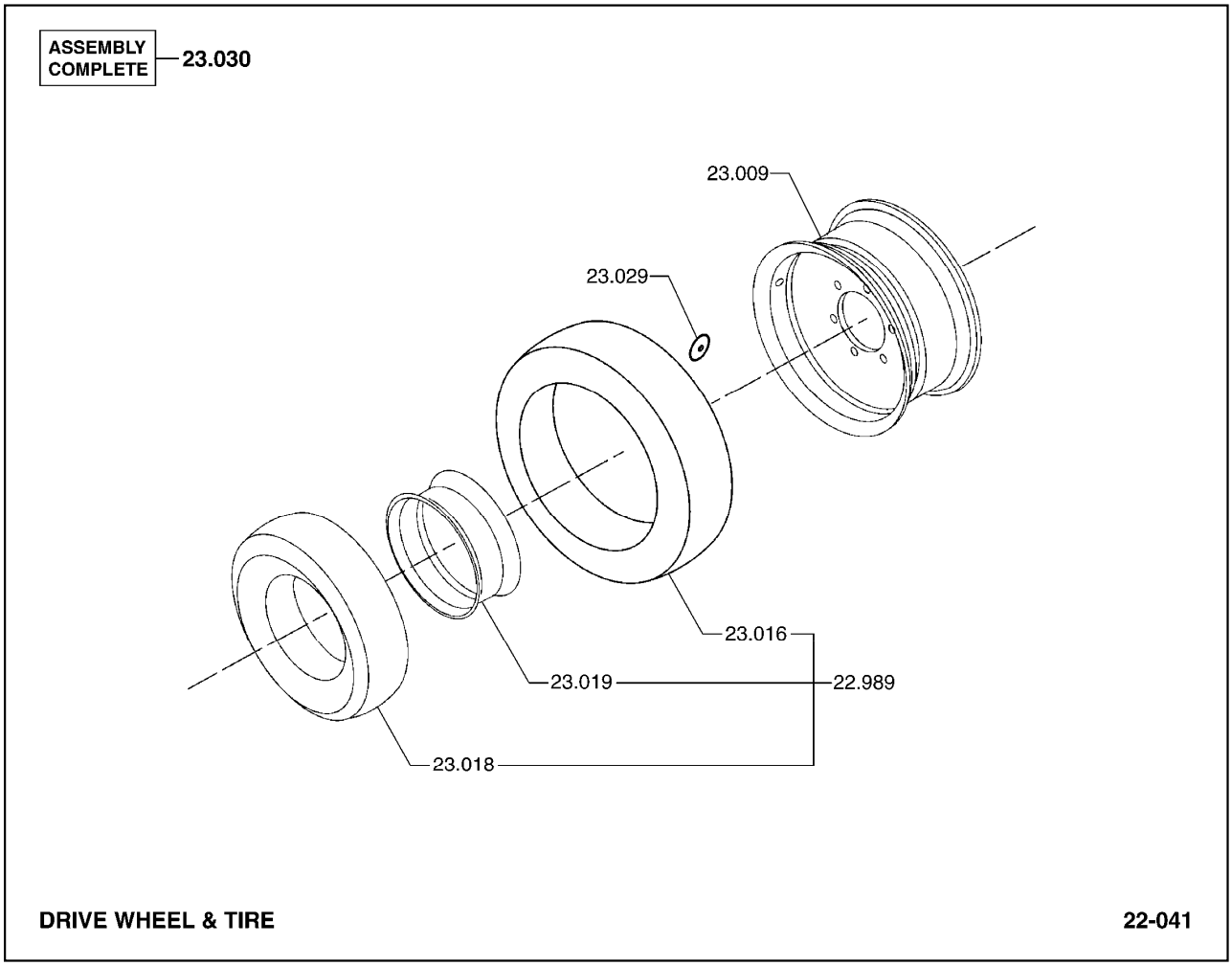

22.989	TIRE ASSEMBLY, DRIVE *
23.009	RIM ASSEMBLY, DRIVE WHEEL 림
23.016	TIRE, DRIVE WHEEL 타이어
23.018	TUBE, DRIVE WHEEL 튜브
23.019	FLAP, DRIVE WHEEL TUBE 플랩
23.029	FASTENER, DRIVE WHEEL ASSEMBLY 패스너
23.030	DRIVE WHEEL AND TIRE ASSEMBLY 드라이브휠타이어

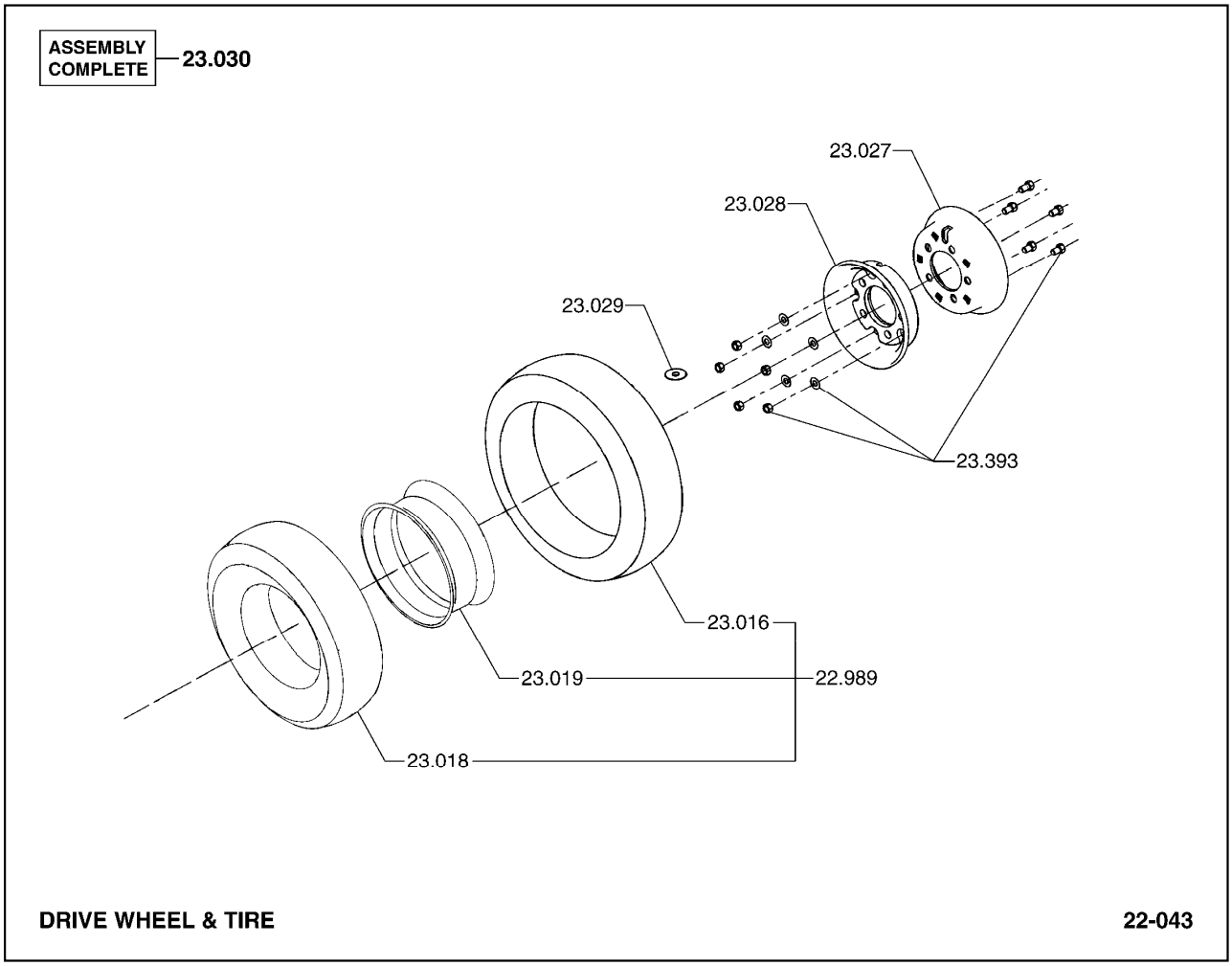

22.989	TIRE ASSEMBLY, DRIVE *
23.016	TIRE, DRIVE WHEEL 타이어
23.018	TUBE, DRIVE WHEEL 튜브
23.019	FLAP, DRIVE WHEEL TUBE 플랩
23.027	OUTER HALF, DRIVE WHEEL 아웃하프
23.028	INNER HALF, DRIVE WHEEL 인너하프
23.029	FASTENER, DRIVE WHEEL ASSEMBLY 패스너
23.030	DRIVE WHEEL AND TIRE ASSEMBLY 드라이브휠타이어
23.393	FASTENER, DRIVE WHEEL 패스너

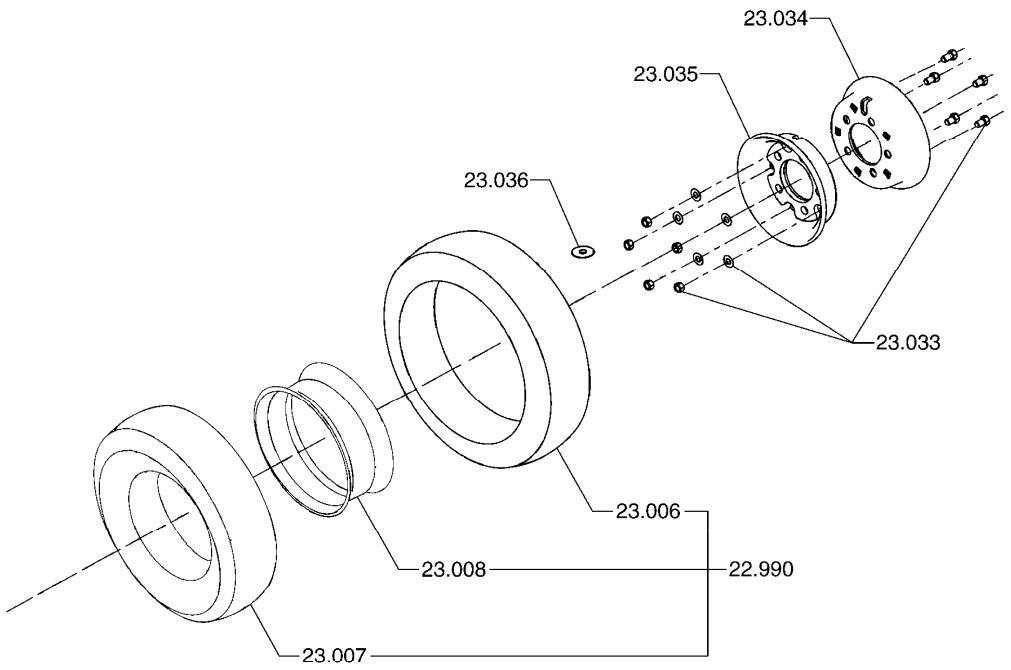

22.990	TIRE ASSEMBLY, STEER *
23.006	TIRE, STEER WHEEL 타이어
23.007	TUBE, STEER WHEEL 튜브
23.008	FLAP, STEER WHEEL 플랩
23.031	STEER WHEEL AND TIRE ASSEMBLY 휠
23.033	FASTENER, STEER WHEEL 패스너
23.034	OUTER HALF, STEER WHEEL 아웃하프
23.035	INNER HALF, STEER WHEEL 인너하프
23.036	FASTENER, STEER WHEEL ASSEMBLY 패스너

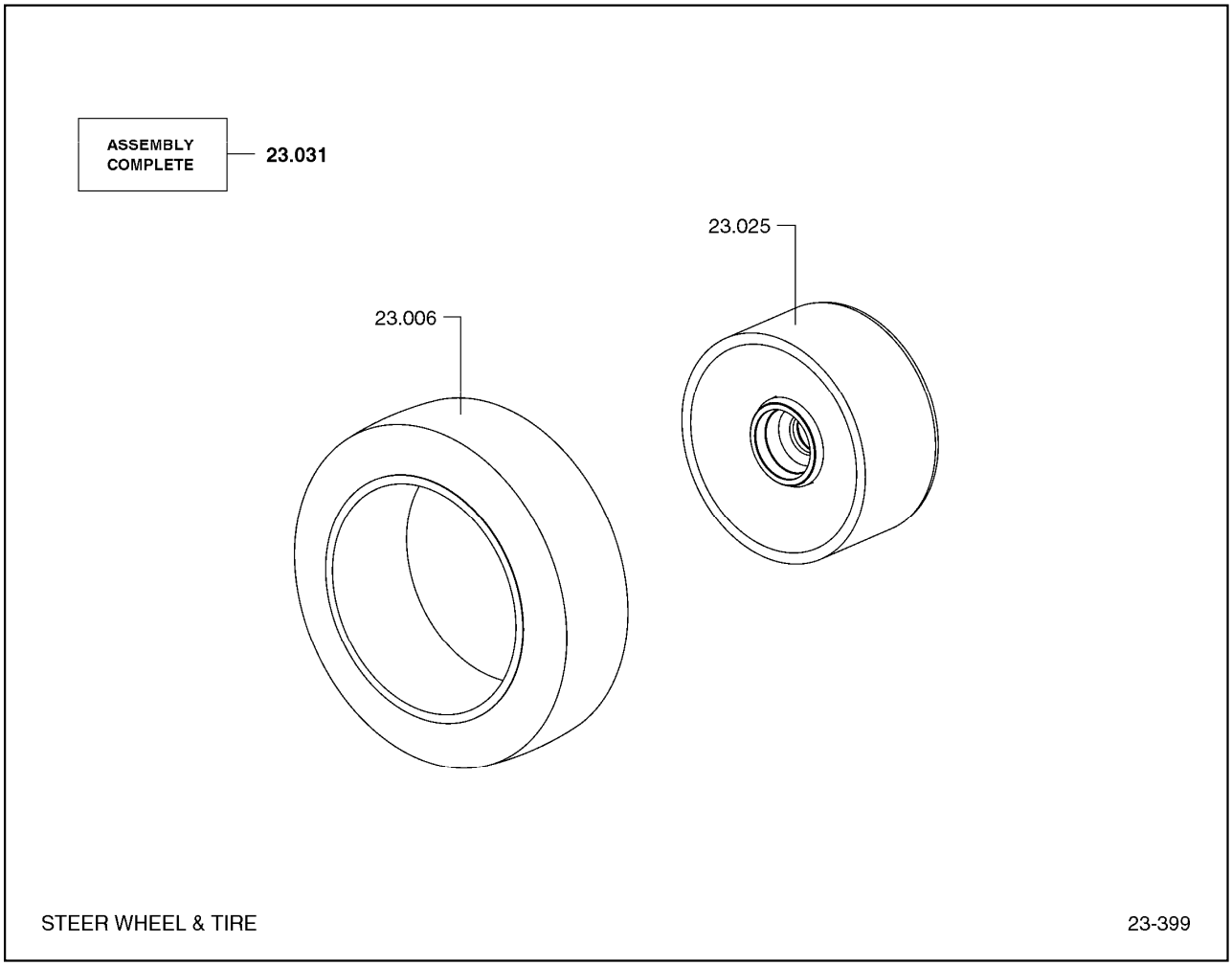

23.006	TIRE, STEER WHEEL 타이어
23.025	WHEEL ASSEMBLY, STEER 휠
23.031	STEER WHEEL AND TIRE ASSEMBLY 휠

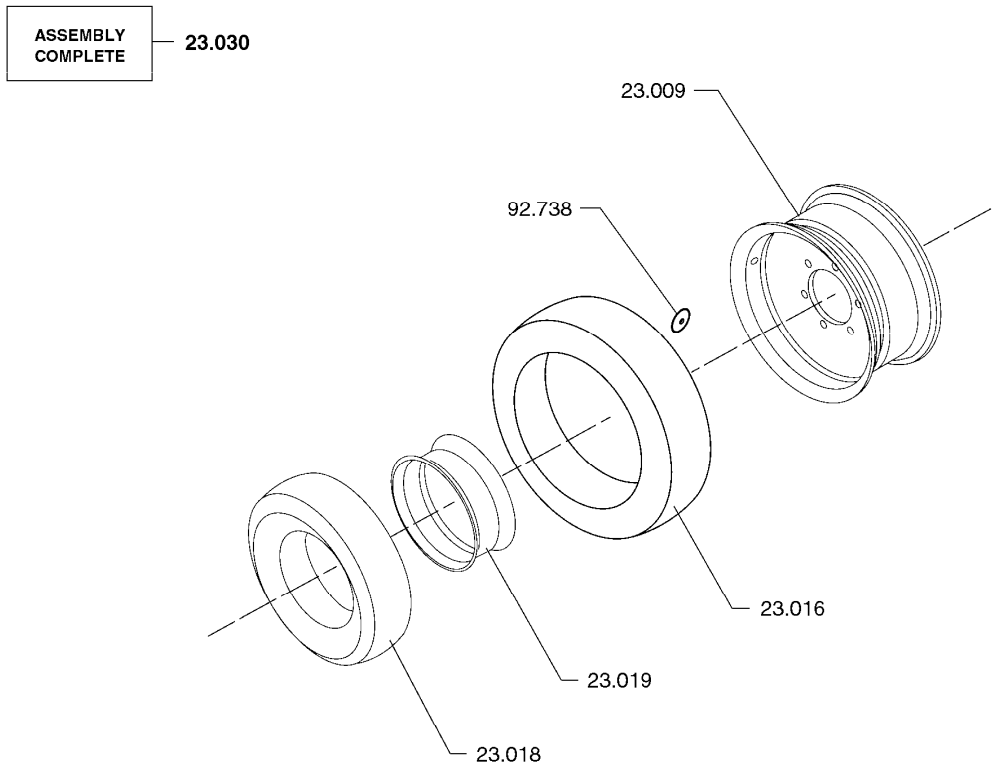

DRIVE WHEEL & TIRE 23-407

23.009	RIM ASSEMBLY, DRIVE WHEEL 림
23.016	TIRE, DRIVE WHEEL 타이어
23.018	TUBE, DRIVE WHEEL 튜브
23.019	FLAP, DRIVE WHEEL TUBE 플랩
23.030	DRIVE WHEEL AND TIRE ASSEMBLY 드라이브휠타이어
92.738	WASHER, DRIVE WHEEL ASSEMBLY FASTENER 와셔

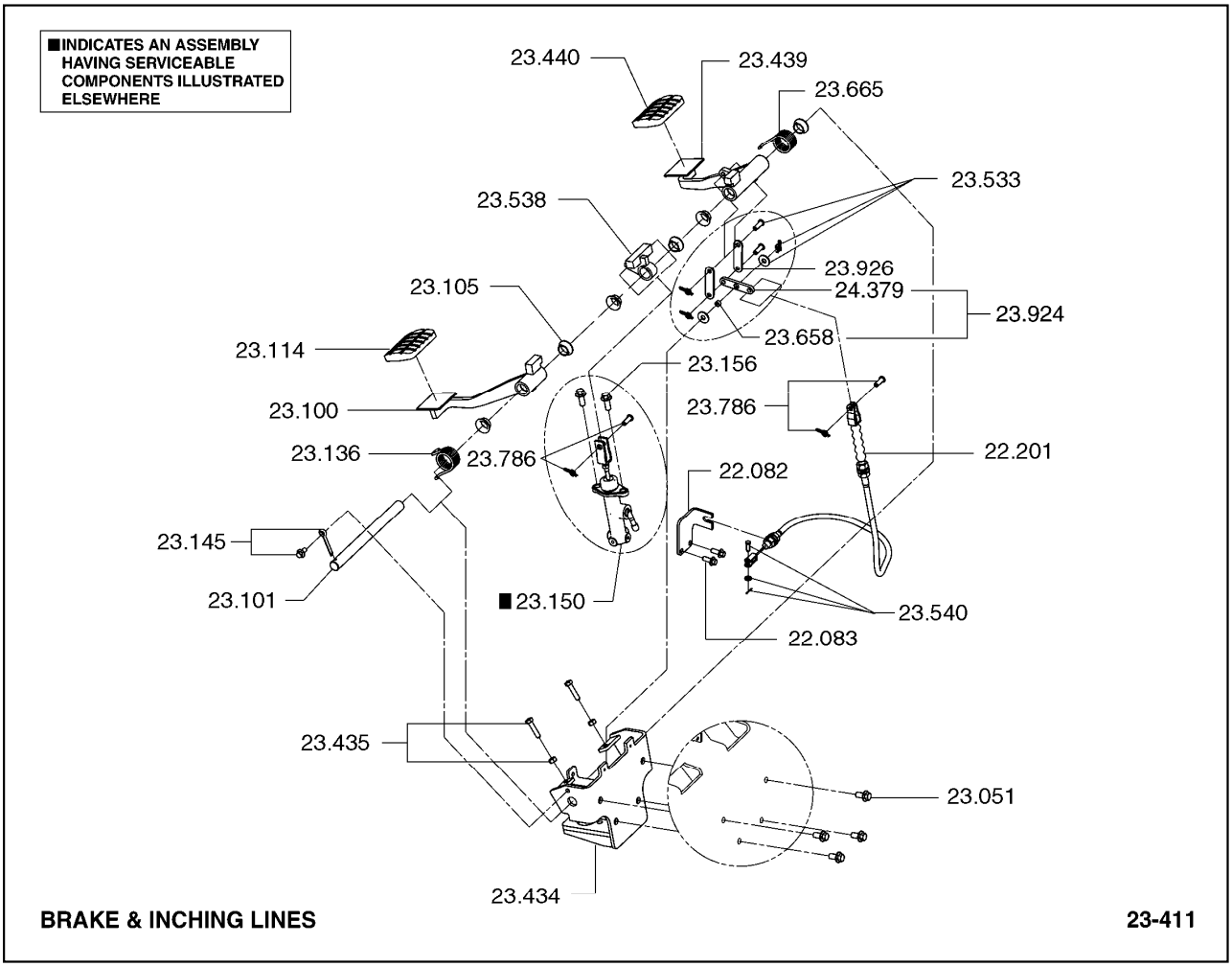

22.082 BRACKET, BRAKE CABLE (BRAKE END)
브라켓

22.083 FASTENER, BRAKE CABLE BRACKET (BRAKE END)
패스너

22.122 FASTENER, BRAKE PEDAL PIVOT RETAINER
패스너

22.201 CABLE, INCHING
케이블

23.051 FASTENER, MASTER CYLINDER MOUNTING BRACKET
패스너

23.100 PEDAL, BRAKE
페달

23.101 SHAFT, BRAKE PEDAL
샤프트

23.105 BEARING, BRAKE PEDAL
베어링

23.114 PAD & FASTENER, BRAKE PEDAL
패드와패스너

23.136 SPRING, BRAKE PEDAL RETURN
스프링

23.145 FASTENER, BRAKE PEDAL SHAFT
패스너

23.150 CYLINDER ASSEMBLY, BRAKE MASTER COMPLETE
실린더

23.156 FASTENER, CYLINDER & TANK ATTACHING
패스너

23.434 BRACKET, BRAKE PEDAL PIVOT
브라켓

23.439 PEDAL, INCHING
페달

23.440 PAD & FASTENER, INCHING PEDAL
패드와패스너

23.533 FASTENER, BRAKE LINK CLEVIS
패스너

23.538 ARM, BRAKE LINKAGE PIVOT
암

23.540 FASTENER, BRAKE LINKAGE PIVOT ARM
패스너

23.658 BEARING, BRAKE PEDAL LINK
베어링

23.665 SPRING, INCHING PEDAL RETURN
스프링

23.786 FASTENER, INCHING BRAKE PEDAL
패스너

23.924 LINK, BRAKE ADJUSTOR
링크

23.926 LINK, BRAKE ADJUSTOR
링크

24.379 LINK, INCHING
링크

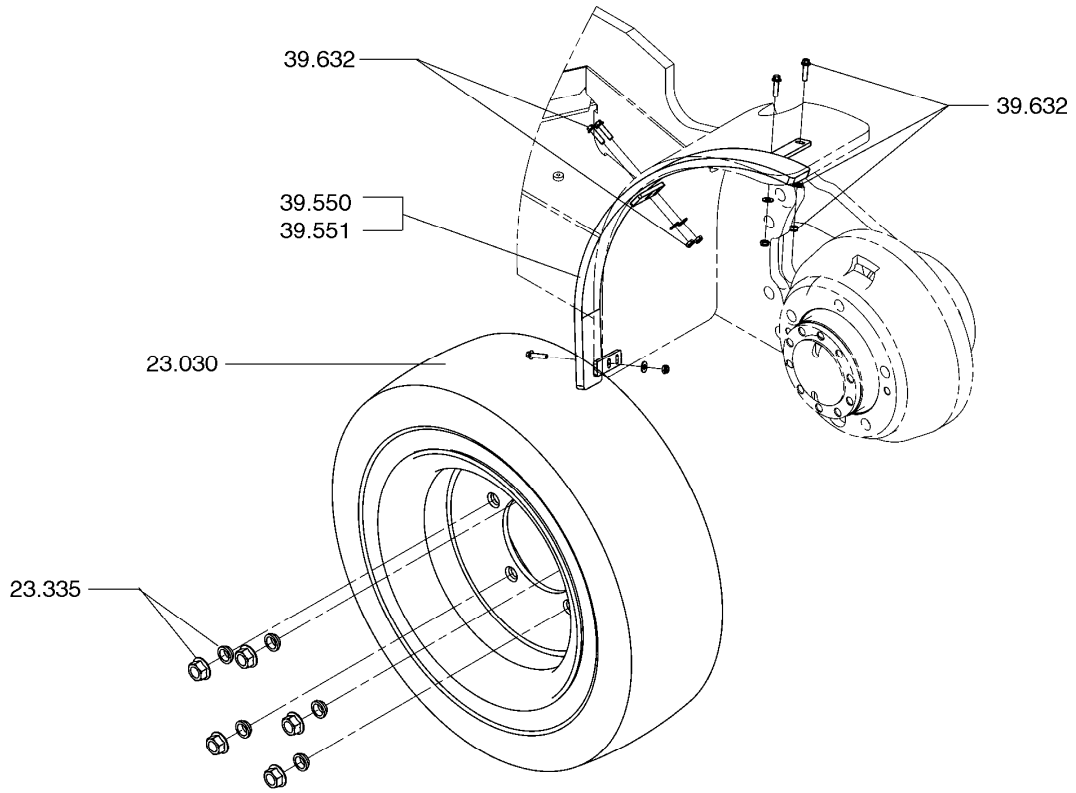

DRIVE WHEEL & TIRE(WIDE)

23.030	DRIVE WHEEL AND TIRE ASSEMBLY 드라이브휠타이어
23.335	FASTENER, DRIVE WHEEL 패스너
39.550	FENDER, REAR (RH) 펜더
39.551	FENDER, REAR (LH)) 펜더
39.632	FASTENER, FENDER SUPPORT 패스너

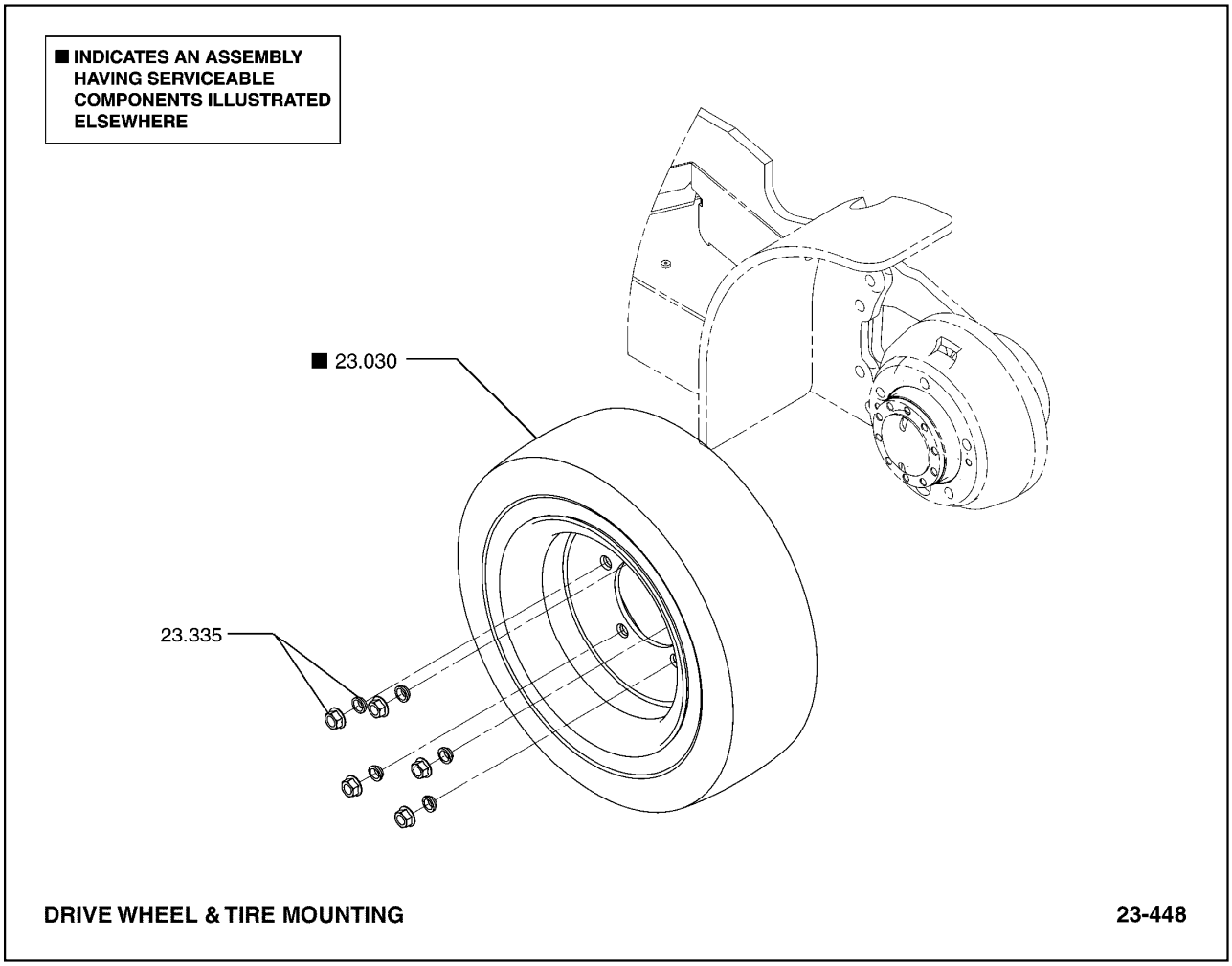

23.030 DRIVE WHEEL AND TIRE ASSEMBLY
드라이브휠타이어

23.335 FASTENER, DRIVE WHEEL
패스너

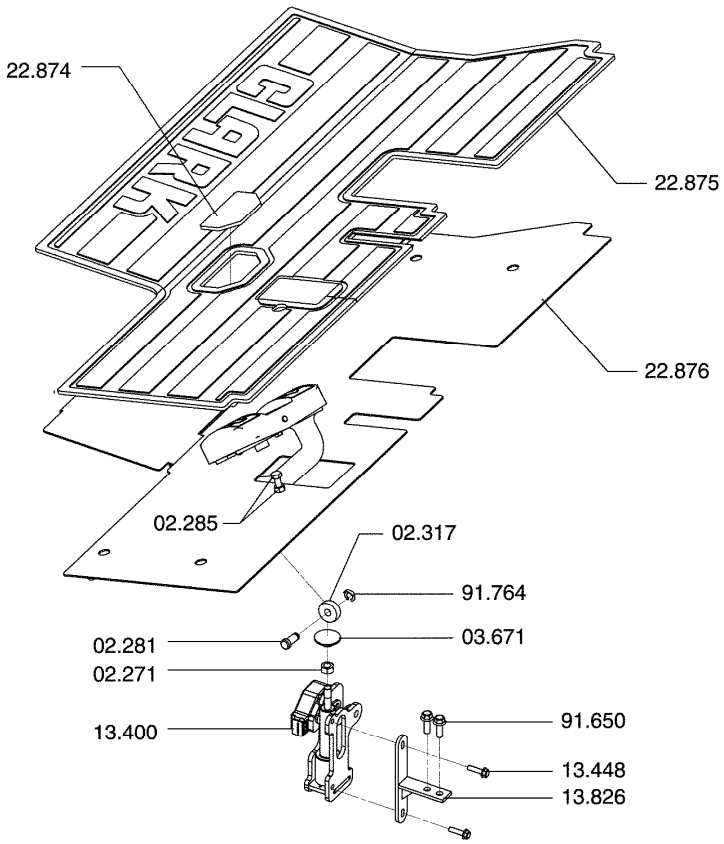

UNITROL PEDAL MOUNTING **23-460**

13.142 SWITCH, BRAKE INTERLOCK
스위치

22.011 COVER, BRAKE LINE REEL HOUSING
커버

22.023 FASTENER, BRAKE LINE REEL
패스너

22.338 CLAMP, BRAKE FLUID RESERVOIR
클룻프

22.357 CAP, BRAKE FLUID RESERVOIR
캡

22.452 CLAMP, BRAKE MASTER CYLINDER FILLER LINE
클램프

22.528 BLEEDER, BRAKE LINES ADAPTOR
블리더

22.627 TEE, BRAKE LINE
티

22.951 FASTENER, BRAKE LINE CLAMP
패스너

23.173 FITTING, BRAKE MASTER CYLINDER OUTLET
피팅

23.176 GASKET, BRAKE MASTER CYLINDER OUTLET FTG BOLT
가스켓

23.186 LINE, BRAKE MASTER CYLINDER OUTLET
라인

23.207 LINE, LH DRIVE WHEEL BRAKE CYLINDER TO TEE
라인

23.208 LINE, RH DRIVE WHEEL BRAKE CYLINDER TO TEE
라인

23.792 RESERVOIR, BRAKE FLUID
리저버

23.793 FASTENER, BRAKE FLUID RESERVOIR
패스너

23.794 LINE, BRAKE MASTER CYLINDER INLET
라인

23.906 CLAMP, BRAKE MASTER CYLINDER LINE
클램프

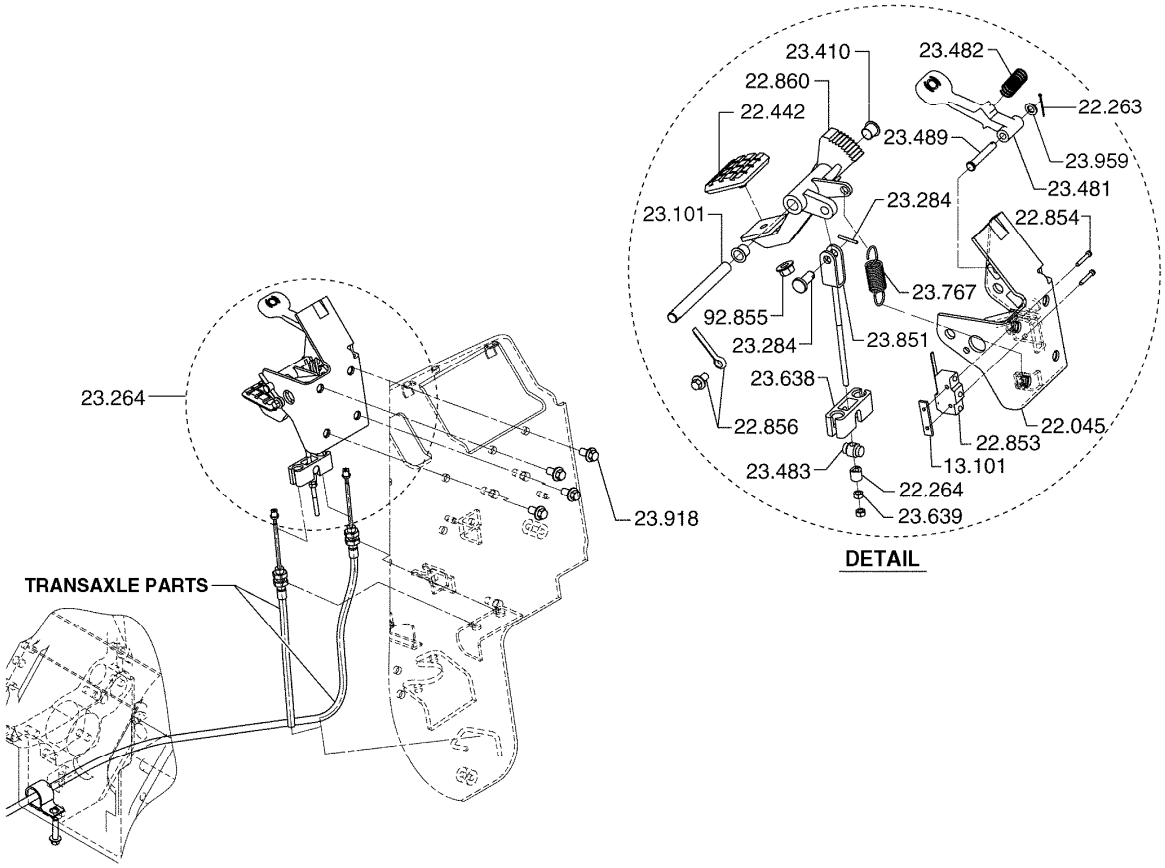

13.101 PLATE, BRAKE LOCK ACTUATING SWITCH
플레이트

22.045 BRACKET, PARKING BRAKE PEDAL PIVOT MTG
브라켓

22.263 RETAINER, PARKING BRAKE RELEASE LEVER PIVOT
리테이너

22.264 ADJUSTOR, PARKING BRAKE
어드져스터

22.442 PAD, PARKING BRAKE PEDAL
패드

22.853 SWITCH, PARKING BRAKE PEDAL ACTUATING
스위치

22.854 FASTENER, PARKING BRAKE PEDAL ACTUATING
패스너

22.855 PIVOT, PARKING BRAKE PEDAL
피봇

22.856 RETAINER, PARKING BRAKE PEDAL PIVOT
리테이너

22.860	PEDAL, PARKING BRAKE 페달
22.895	FASTENER, PARKING BRAKE PEDAL PIVOT RETAINER 패스너
23.264	BRAKE ASSEMBLY, PARKING 브레이크
23.284	FASTENER, PARKING BRAKE CABLE BRACKET 패스너
23.410	BEARING, PARKING BRAKE CAM ROLLER 베어링
23.481	LEVER, PARKING BRAKE RELEASE 레버
23.482	SPRING, PARKING BRAKE RELEASE LEVER 스프링
23.483	PIVOT, PARKING BRAKE RELEASE LEVER 피봇
23.489	PIVOT, PARKING BRAKE RELEASE LEVER 피봇
23.638	ANCHOR, PARKING BRAKE CABLE 앵커
23.639	FASTENER, PARKING BRAKE CABLE ANCHOR 패스너
23.767	SPRING, PARKING BRAKE DRAW 스프링
23.851	LINK, PARKING BRAKE 링크
23.918	FASTENER, PARKING BRAKE PEDAL PIVOT BRACKET 패스너
23.959	FASTENER, PARKING BRAKE RELEASE VALVE 패스너
92.855	NUT, PARKING BRAKE FASTENER 너트

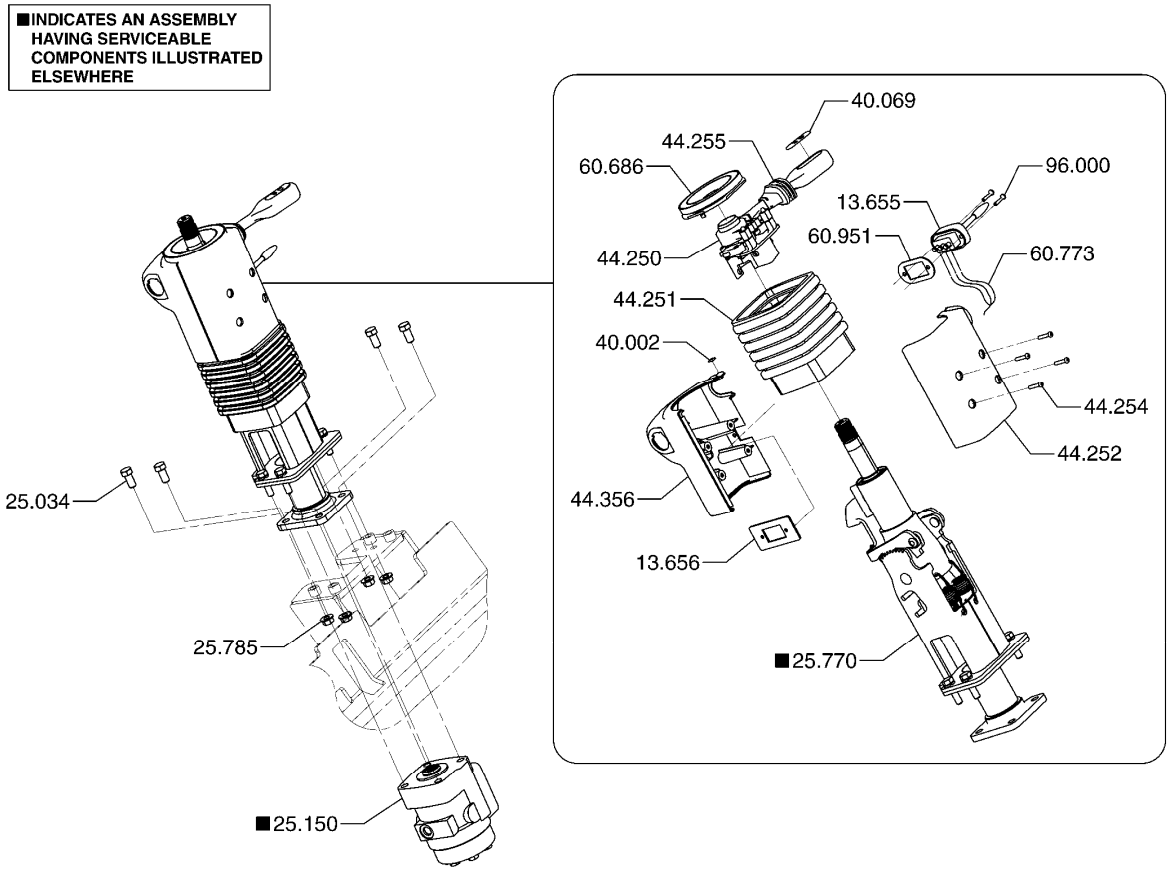

05.185 BASE, DIRECTIONAL SELECTOR LEVER
베이스

06.101 LEVER ASSEMBLY, FORWARD & REVERSE
레버

13.110 SWITCH, DIRECTIONAL CONTROL (FORWARD)
스위치

13.111 FASTENER, DIRECTIONAL CONTROL SWITCH
패스너

13.130 FASTENER, DIRECTION CONTROL LEVER
패스너

13.655 SWITCH, TURN INDICATOR
스위치

13.656 BRACKET, TURN INDICATOR SWITCH
브라켓

25.034 FASTENER, STEERING GEAR ATTACHING
패스너

25.150 GEAR BOX ASSEMBLY, STEERING
기어박스

25.770	SHAFT & COLUMN ASSY, POWER STEERING (TILT) 샤프트와컬럼
25.785	FASTENER, TILT STEERING SHAFT & COLUMN ASSEMBLY 패스너
40.002	LEGEND, SHIFT PATTERN 범례
40.069	DECAL, FORWARD-BACKWARD 드칼
44.250	DIRECTIONAL CONTROL ASSEMBLY 방향컨트롤
44.251	HOUSING, DIRECTIONAL CONTROL ASSEMBLY 하우징
44.252	COVER, DIRECTIONAL CONTROL ASSEMBLY HOUSING 커버
44.254	FASTENER, DIRECTIONAL CONTROL ASSY HOUSING COVER 패스너
44.255	SEAL, DIRECTIONAL CONTROL ASSY LEVER 시일
44.356	COVER, DIRECTIONAL CONTROL ASSEMBLY HOUSING REAR 커버
60.483	RETAINER, DIRECTIONAL CONTROL LEVER 리테이너
60.686	RING, HORN CONTACT 링
60.773	HARNESS, TURN SIGNAL 하네스
60.951	GROMMET, TURN INDICATOR SWITCH 그로멧
67.017	FASTENER, DIRECTIONAL CONTROL DETENT SUPPORT 패스너
67.018	SPRING, DIRECTIONAL CONTROL DETENT 스프링
96.000	FASTENER, TURN INDICATOR SWITCH 패스너

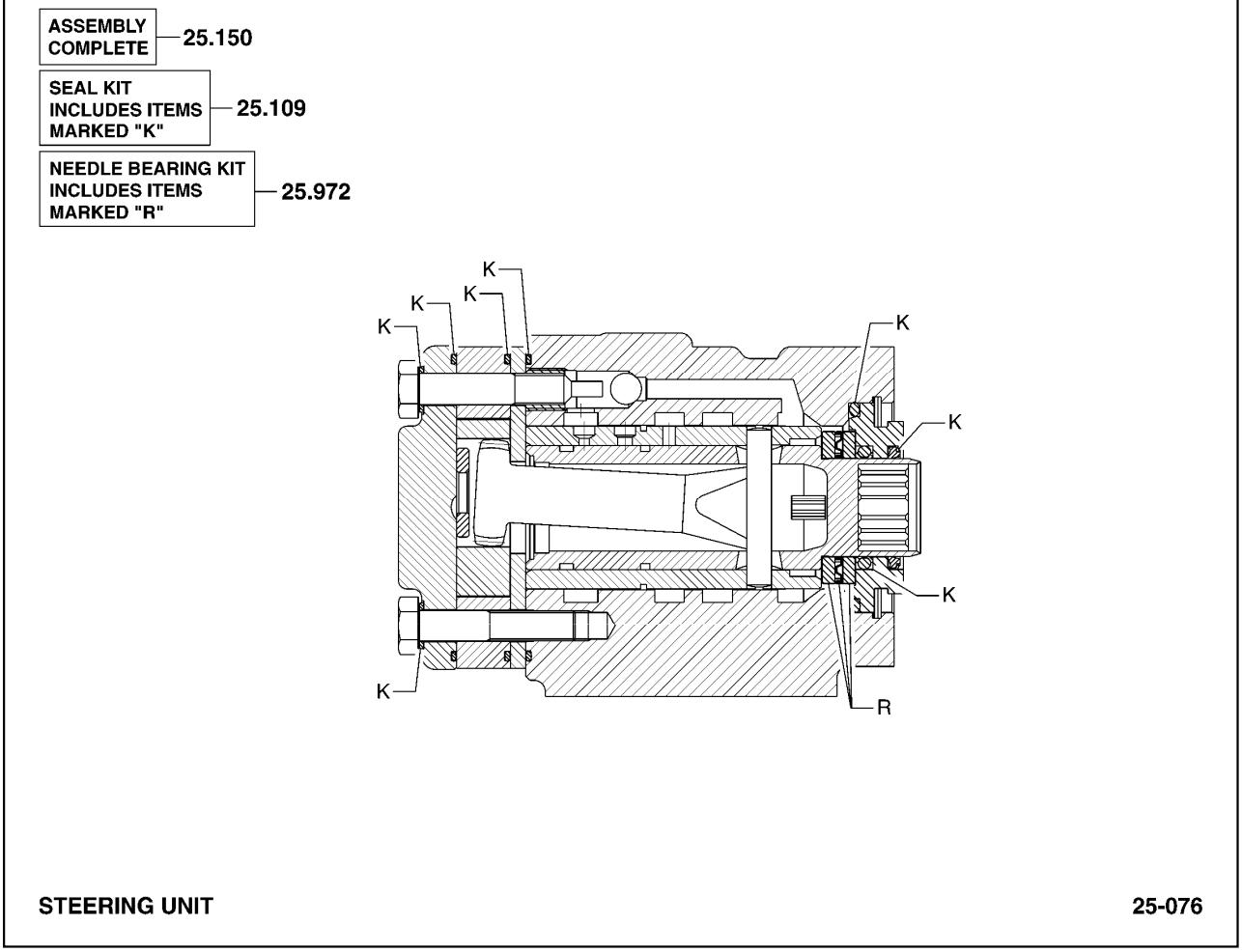

25.109 KIT, STEER GEAR SEAL
킷

25.150 GEAR BOX ASSEMBLY, STEERING
기어박스

25.972 BEARING KIT, STEERING GEAR
*

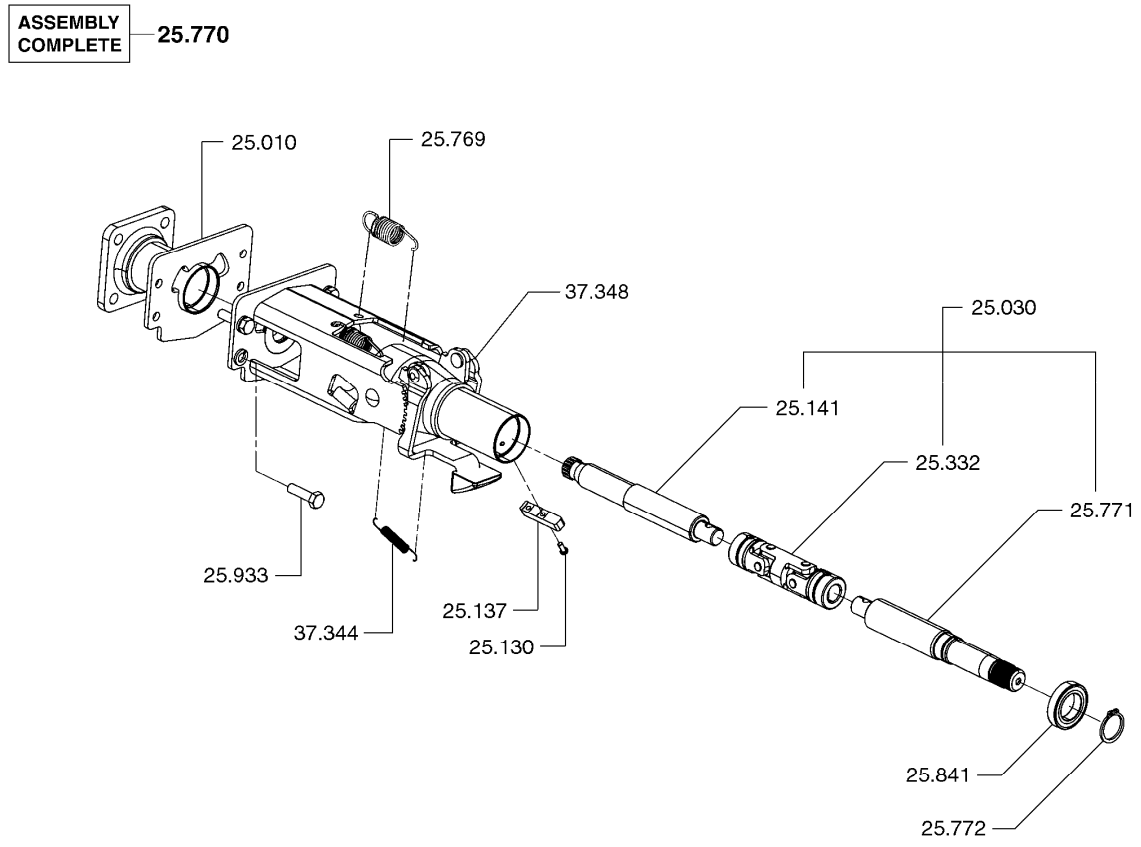

25.010 JACKET, STEERING COLUMN
자켓

25.030 SHAFT ASSEMBLY, STEERING COLUMN
샤프트

25.130 FASTENER, DIRECTIONAL ASSEMBLY
패스너

25.137 KEY, DIRECTIONAL ASSEMBLY
키

25.141 SHAFT, STEERING GEAR
샤프트

25.332 YOKE, STEER UNIVERSAL JOINT CLAMP
요크

25.769 SPRING, STEERING COLUMN TILTING (LOWER)
스프링

25.770 SHAFT & COLUMN ASSY, POWER STEERING (TILT)
샤프트와컬럼

25.771 SHAFT, STEERING COLUMN (TILT)
샤프트

25.772	RETAINER, STEERING COLUMN SHAFT 리테이너
25.841	BUSHING, STEERING GEAR SHAFT 부싱
25.933	FASTENER, STEERING COLUMN 패스너
37.344	SPRING, STEERING COLUMN TILTING 스프링
37.348	PYLON, STEERING COLUMN 파일런

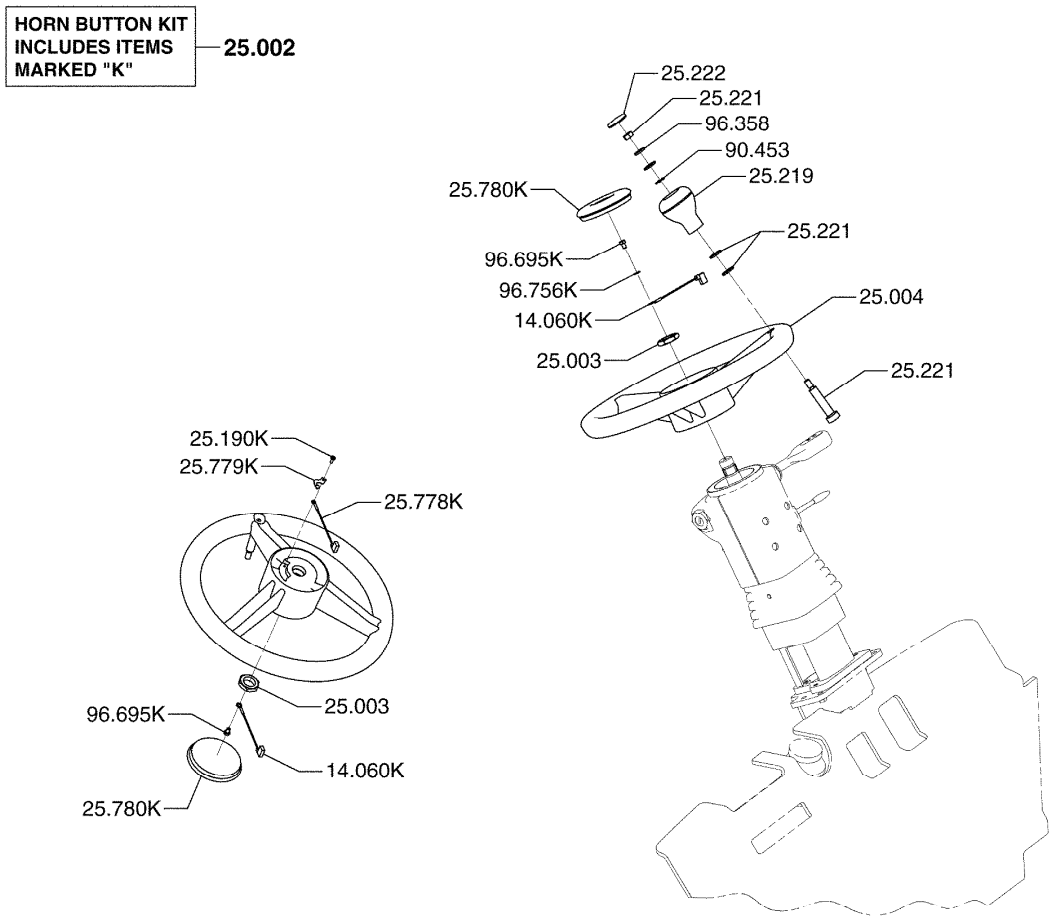

STEERING WHEEL MOUNTING **25-250**

14.060	WIRE, HORN BUTTON TERM TO CONNECTOR 와이어
25.002	HORN BUTTON KIT 혼버튼킷
25.003	NUT, HANDWHEEL 너트
25.004	HAND WHEEL, STEERING GEAR 핸드휠
25.190	FASTENER, HORN BUTTON 패스너
25.219	KNOB, STEERING HAND WHEEL SPINNER 노브
25.221	FASTENER, STEERING SPINNER KNOB 패스너
25.222	CAP, STEERING SPINNER KNOB 캡
25.778	WIRE, CONTACT HORN 와이어

25.779	CONTACT, HORN 컨택트
25.780	HORN BUTTON 혼버튼
90.453	WASHER, STEERING SPINNER KNOB FASTENER 와셔
96.358	WASHER, STEERING HANDWHEEL SPINNER KNOB FASTENER 와셔
96.695	FASTENER, WIRE MOUNTING 패스너
96.756	WASHER, WIRE MOUNTING FASTENER 와셔

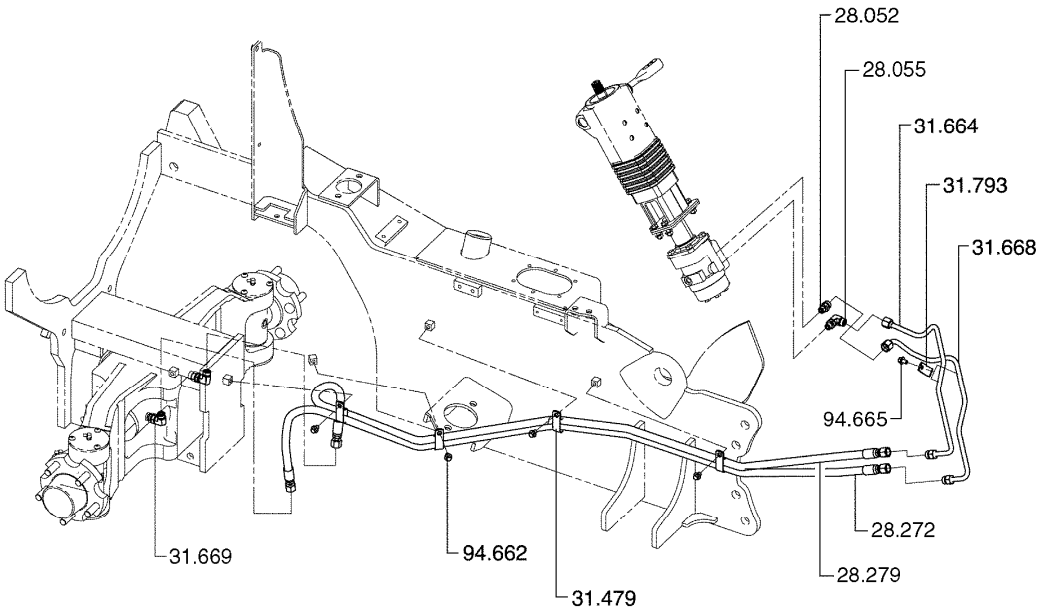

HYDRAULIC STEERING LINES **26-026**

28.052 FITTING, STEERING GEAR
피팅

28.055 FITTING, STEERING GEAR
피팅

28.272 LINE, STEER CYLINDER INLET
라인

28.279 LINE, STEER CYLINDER INLET
라인

31.479 CLAMP, STEERING LINES
클램프

31.664 LINE, STEERING CYLINDER ANCHOR PORT
라인

31.668 LINE, STEERING CYLINDER ROD PORT
라인

31.669 FITTING, STEERING CYLINDER ROD PORT
피팅

31.793 CLAMP, POWER STEERING LINES
클램프

94.662 FASTENER, POWER STEERING LINES CLAMP
패스너

94.665 FASTENER, POWER STEERING LINES CLAMP
패스너

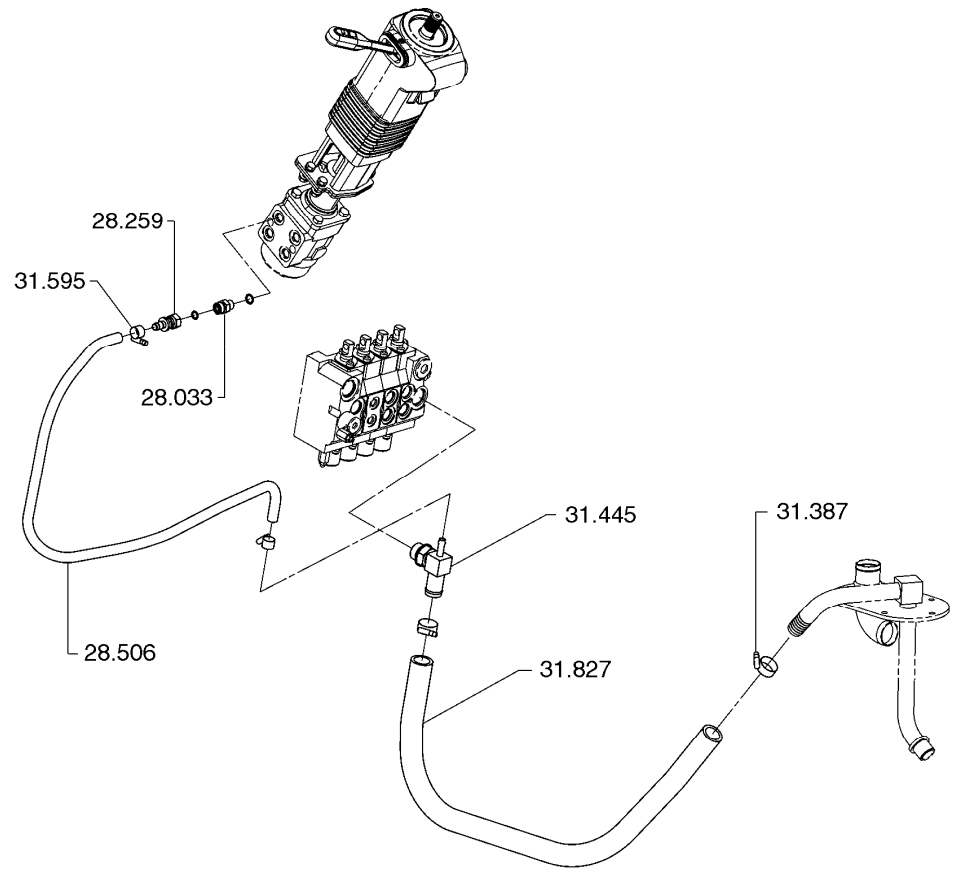

HYDRAULIC RETURN LINES **26-225**

28.033 FITTING, SUMP RETURN
피팅

28.259 FITTING, SUMP RETURN LINE
피팅

28.506 LINE, SUMP RETURN
라인

31.387 CLAMP, MAIN VALVE TO SUMP LINE
클램프

31.445 FITTING, MAIN VALVE TO FILTER LINE
피팅

31.595 CLAMP, SUMP RETURN LINE FITTING
클램프

31.827 LINE, FILTER INLET
라인

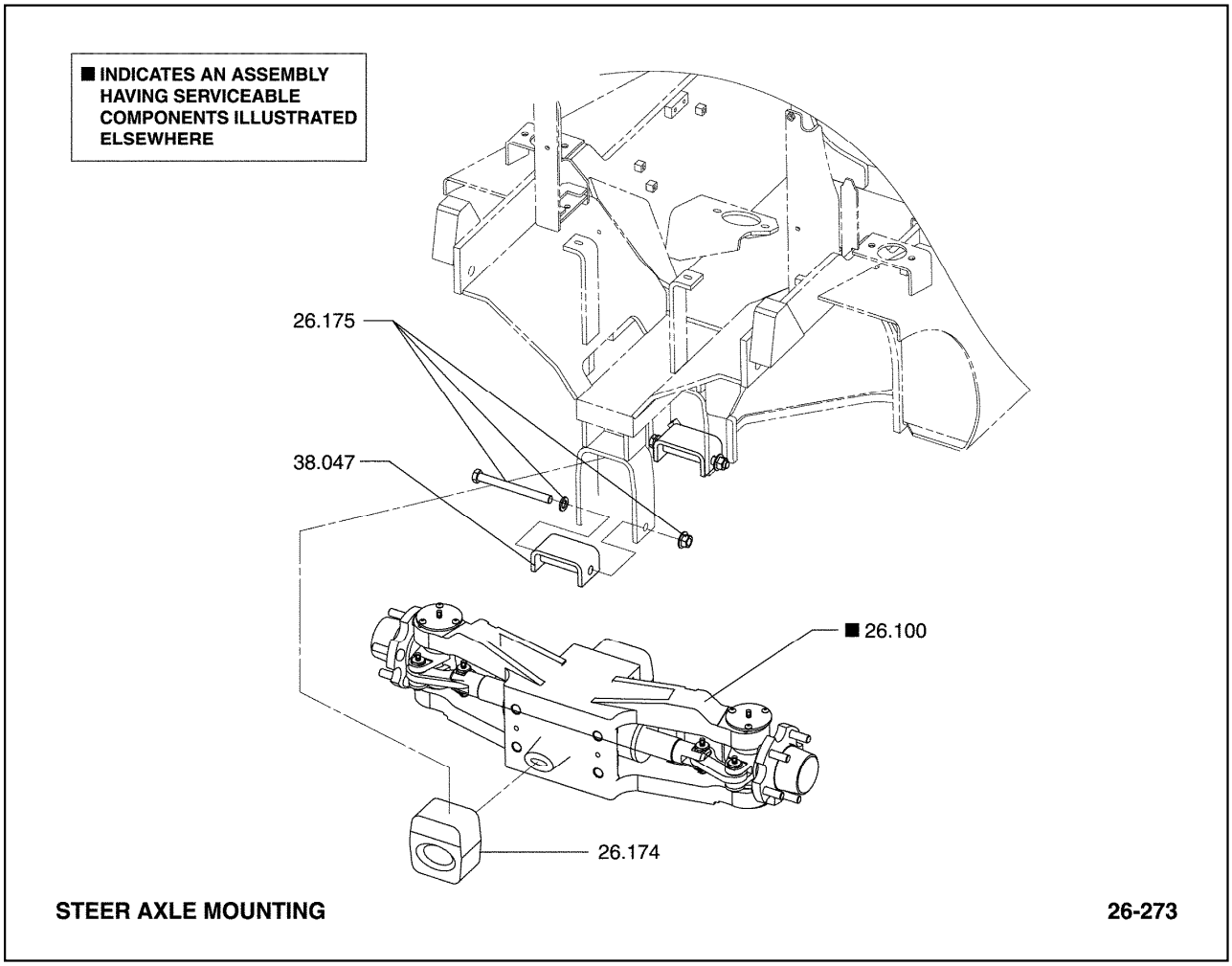

26.100 AXLE ASSEMBLY, STEERING
스티어액슬

26.174 SILENT BLOCK, AXLE MOUNTING (REAR)
사일런트블록

26.175 FASTENER, SILENT BLOCK TO FRAME (REAR)
패스너

38.047 BRACKET, STEER AXLE MOUNTING
브라켓

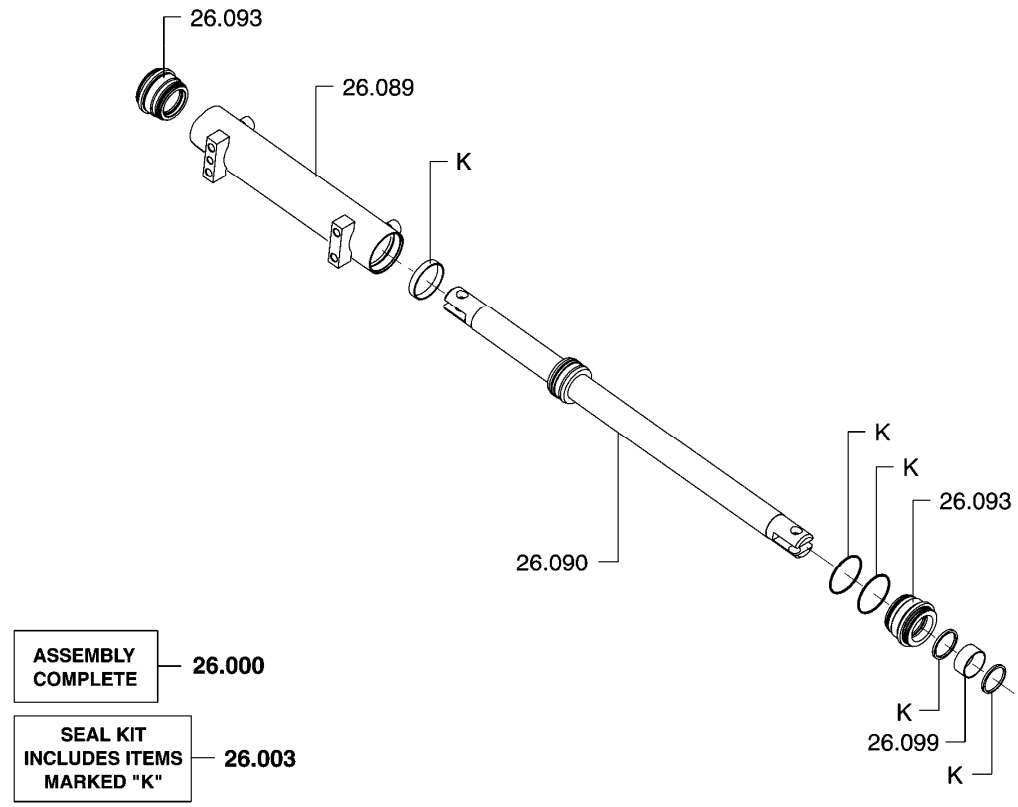

26.000	CYLINDER ASSEMBLY, STEERING 실린더
26.003	SEAL KIT, PISTON ROD 시일킷
26.089	BARREL, STEERING CYLINDER 배럴
26.090	STEER CYLINDER PISTON 룽드욱피스톤
26.093	GLAND, STEERING CYLINDER 그랜드
26.099	BUSHING, STEERING CYLINDER GLAND 부싱

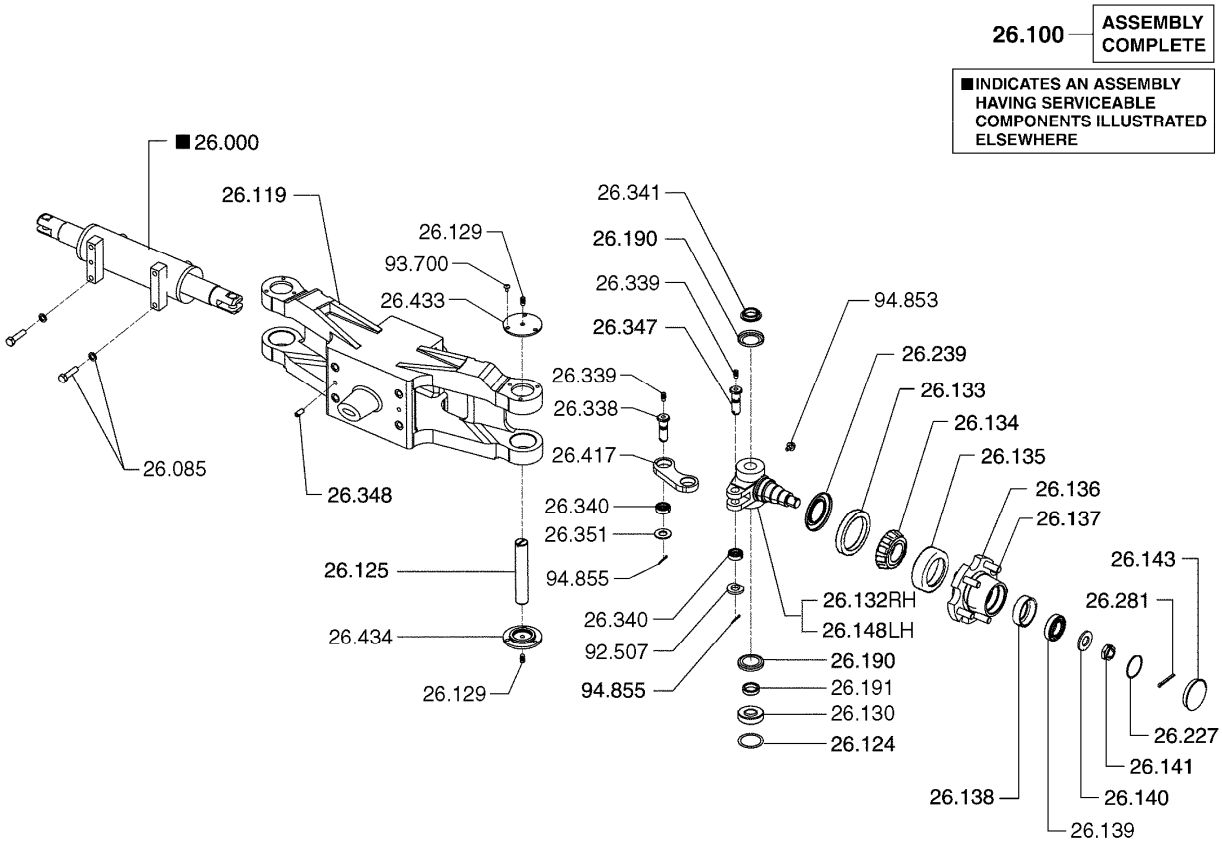

26.000	CYLINDER ASSEMBLY, STEERING 실린더	26.139	CONE, STEER WHEEL HUB BEARING (OUTER) 콘
26.085	FASTENER, STEERING CYLINDER MOUNTING BRKT 패스너	26.140	WASHER, STEER WHEEL HUB BEARING THRUST 와셔
26.100	AXLE ASSEMBLY, STEERING 스티어액슬	26.141	FASTENER, STEER WHEEL HUB 패스너
26.119	AXLE, STEER 액슬	26.143	CAP, STEER WHEEL HUB 캡
26.124	SHIM, STEER AXLE KNUCKLE 심	26.148	KNUCKLE, STEER AXLE (LH) 너트
26.125	PIN, STEER AXLE KNUCKLE 핀	26.190	SEAL, STEER AXLE KNUCKLE OIL 시일
26.129	FITTING - LUB, STEER AXLE KNUCKLE 피팅	26.191	PLUG - EXPANSION, STEER AXLE KNUCKLE PIN 플러그
26.130	BEARING, STEER AXLE KNUCKLE PIN 베어링	26.227	SEAL, STEER AXLE FORK HOUSING 시일
26.132	KNUCKLE, STEER AXLE (RH) 너트	26.239	SEAL, STEER AXLE FORK COVER 시일
26.133	SEAL, STEER WHEEL HUB 시일	26.281	RETAINER, STEER AXLE HUB BRG KNUCKLE NUT 리테이너
26.134	CONE, STEER WHEEL HUB BEARING (INNER) 콘	26.338	PIN, STEERING ARM 핀
26.135	CUP, STEER WHEEL HUB BEARING (INNER) 컵	26.339	LUB-FITTING, STEERING ARM 윤활피팅
26.136	HUB & CUP, STEER WHEEL 허브와컵	26.340	BEARING, STEERING ARM PIN 베어링
26.137	FASTENER, STEER WHEEL 패스너	26.341	SPACER, STEER AXLE PIVOT BUSHING 스페이서
26.138	CUP, STEER WHEEL HUB BEARING (OUTER) 컵	26.347	PIN, STEER ARM 핀

26.348	LOCATOR, STEER CYLINDER 로케이터
26.351	WASHER, STEERING ARM PIN 와셔
26.417	ARM, STEERING 암
26.433	COVER, STEER AXLE KNUCKLE PIVOT (TOP) *
26.434	COVER, STEER AXLE KNUCKLE PIVOT (BOTTOM) *
92.507	WASHER, STEERING ARM FASTENER 와셔
93.700	FASTENER, STEER AXLE KNUCKLE PIN COVER 패스너
94.853	FASTENER, STEER AXLE KNUCKLE PIN 패스너
94.855	RETAINER, STEERING ARM PIN 리테이너

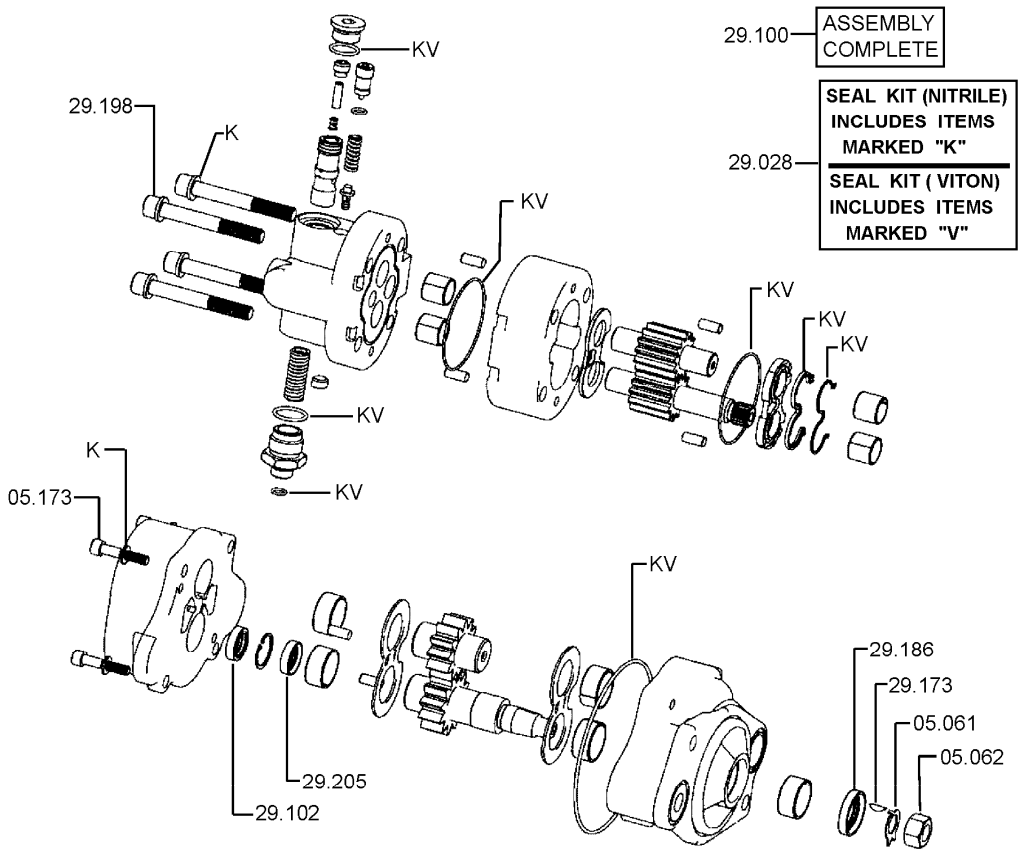

HYDRAULIC PUMP 29-192

05.061 RING-RETAINING, BEARING LOCATING
링

05.062 RING-RETAINING, PUMP SHAFT BEARING
링

05.173 FASTENER, CONVERTER PUMP COVER
패스너

29.028 SEAL KIT, HYDRAULIC UNIT PUMP
시일킷

29.100 PUMP ASSEMBLY, HYDRAULIC
펌프

29.102 SEAL, PUMP SHAFT
시일

29.173 KEY, PUMP GEAR
키

29.186 SEAL, PUMP SHAFT
시일

29.198 FASTENER, PUMP HOUSING
패스너

29.205 SEAL, PUMP SHAFT
시일

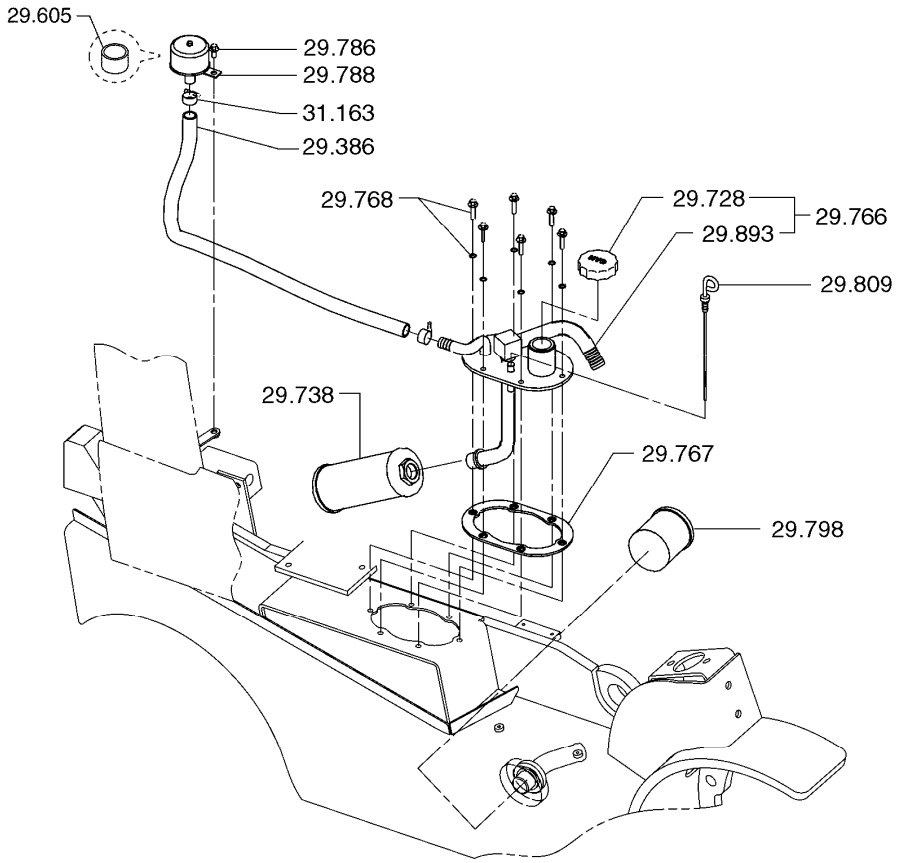

HYDRAULIC TANK & COMPONENTS MOUNTING **29-237**

29.386 LINE, SUMP BREATHER
라인

29.605 FILTER, AIR BREATHER
필터

29.728 CAP, HYDRAULIC SUMP FILLER
캡

29.738 FILTER ASSEMBLY, HYDRAULIC SUMP
필터

29.766 COVER, SUMP TANK
커버

29.767 SEAL, SUMP TANK COVER
시일

29.768 FASTENER, SUMP TANK COVER
패스너

29.786 FASTENER, SUMP BREATHER
패스너

29.788 BREATHER, SUMP
브리더

29.798	SCREEN, HYDRAULIC SUMP PRE FILTER 스크린
29.809	DIPSTICK, SUMP LEVEL 딥스틱
29.893	PLATE, HYDRAULIC SUMP 플레이트
31.163	CLAMP, SUMP RETURN LINE 클램프

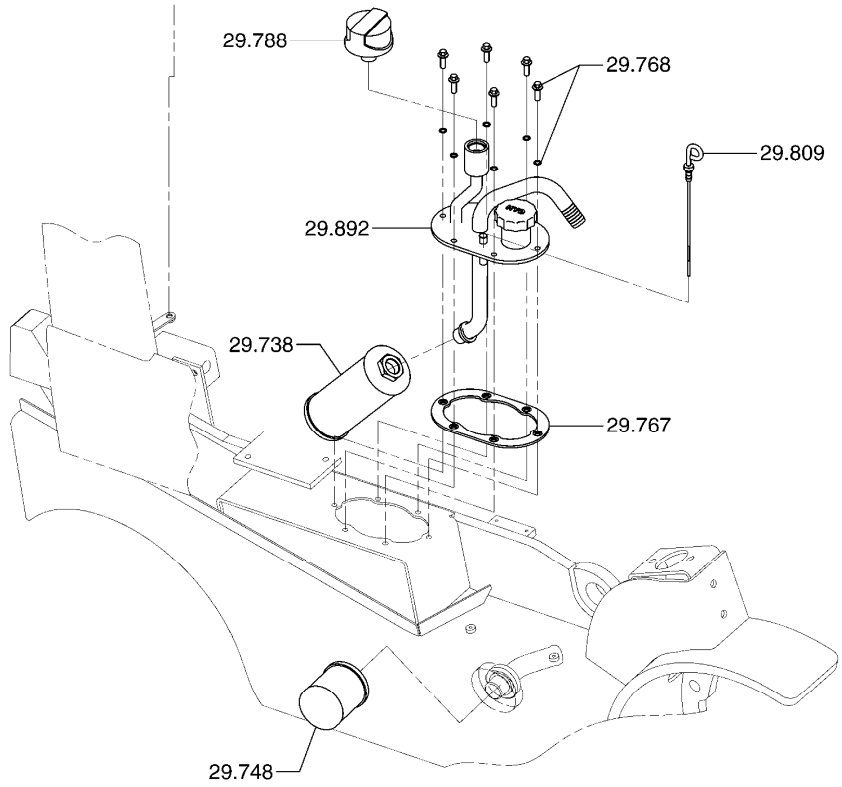

HYDRAULIC TANK & COMPONENTS MOUNTING **29-461**

29.738 FILTER ASSEMBLY, HYDRAULIC SUMP
필터

29.748 STRAINER, HYDRAULIC
스트레이너

29.767 SEAL, SUMP TANK COVER
시일

29.768 FASTENER, SUMP TANK COVER
패스너

29.788 BREATHER, SUMP
브리더

29.809 DIPSTICK, SUMP LEVEL
딥스틱

29.892 COVER, HYDRAULIC SUMP
커버

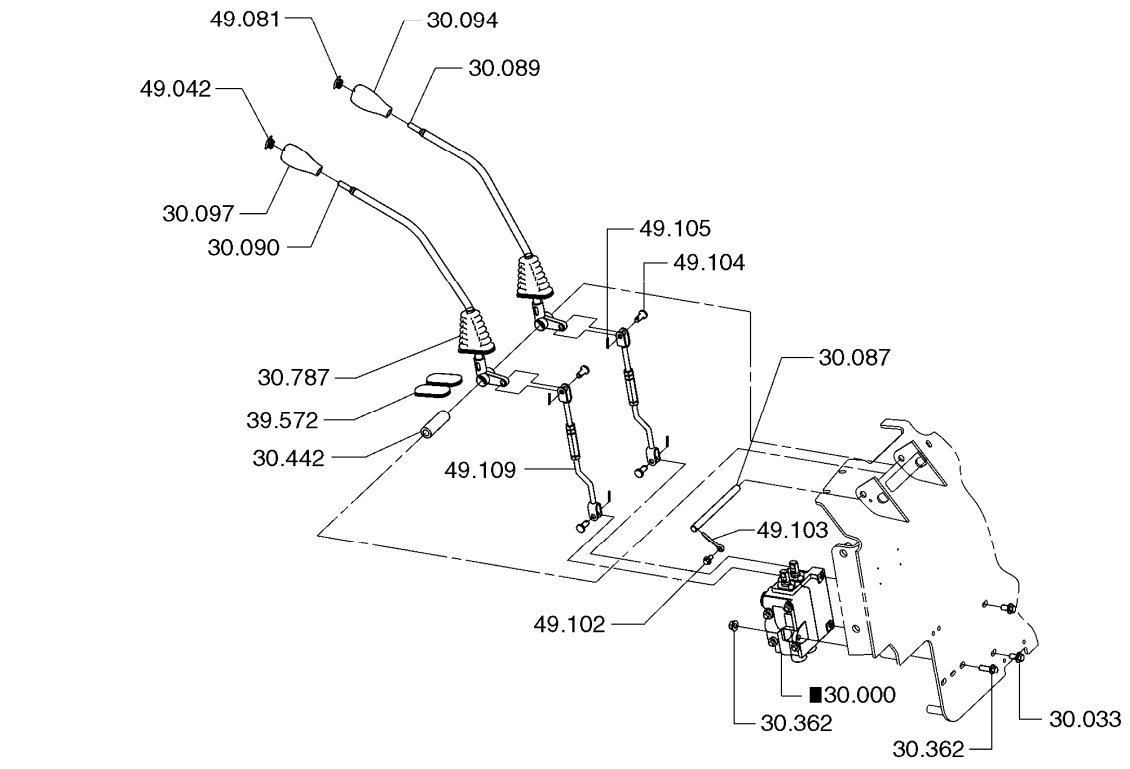

HYDRAULIC VALVE MOUNTING (2 SPOOL) **30-209**

30.000 VALVE ASSEMBLY, HYDRAULIC
벨브

30.033 FASTENER, HYDRAULIC VALVE MOUNTING
패스너

30.087 PIN, VALVE CONTROL LEVER PIVOT
핀

30.089 LEVER, LIFT CONTROL
레버

30.090 LEVER, TILT CONTROL
레버

30.094 KNOB, LIFT CONTROL LEVER
노브

30.097 KNOB, TILT CONTROL LEVER
노브

30.362 FASTENER, VALVE MOUNTING PLATE
패스너

30.442 SPACER, CONTROL LEVERS
스페이서

30.787	BOOT, VALVE CONTROL LEVER 부트
39.572	COVER, AUXILIARY VALVE LEVER HOLE 커버
49.042	CAP, TILT CONTROL LEVER 캡
49.081	CAP, LIFT CONTROL LEVER 캡
49.102	FASTENER, VALVE CONTROL LEVER PIVOT RETAINER 패스너
49.103	RETAINER, VALVE CONTROL LEVER PIVOT PIN 리테이너
49.104	PIN, VALVE CONTROL LEVER CLEVIS ROD 핀
49.105	RETAINER, VALVE CONTROL LEVER CLEVIS ROD PIN 리테이너
49.109	ROD, VALVE CONTROL CLEVIS 로드

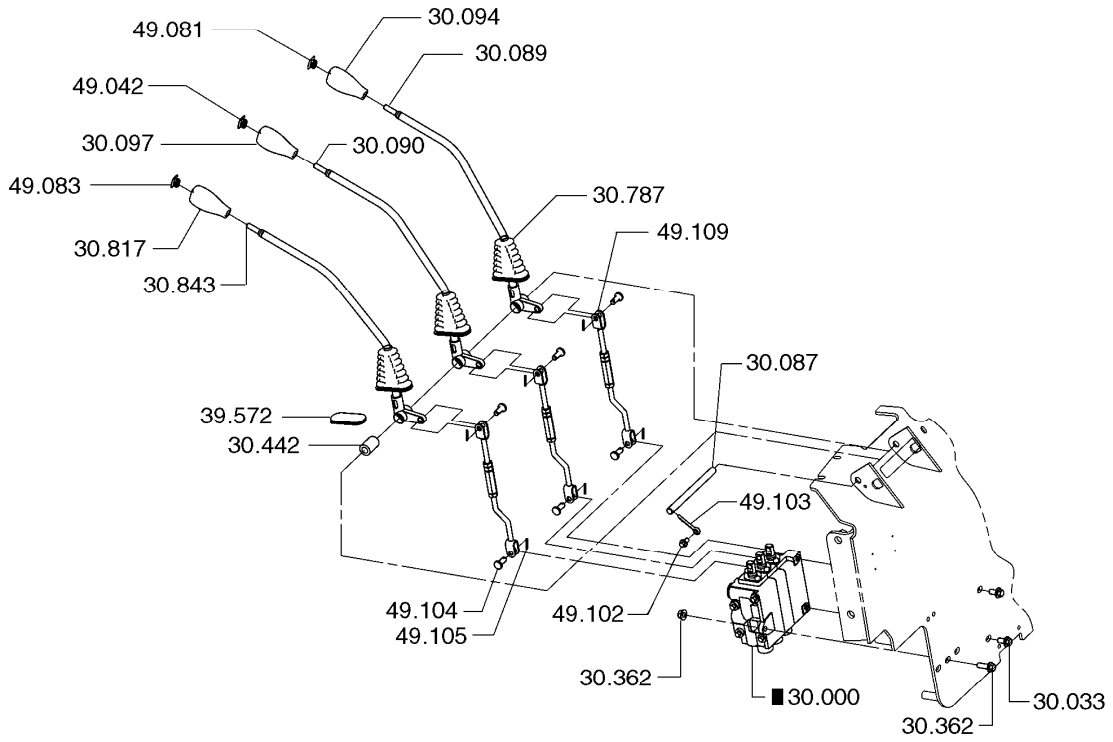

HYDRAULIC VALVE MOUNTING (3 SPOOL) **30-210**

30.000 VALVE ASSEMBLY, HYDRAULIC
벨브

30.033 FASTENER, HYDRAULIC VALVE MOUNTING
패스너

30.087 PIN, VALVE CONTROL LEVER PIVOT
핀

30.089 LEVER, LIFT CONTROL
레버

30.090 LEVER, TILT CONTROL
레버

30.094 KNOB, LIFT CONTROL LEVER
노브

30.097 KNOB, TILT CONTROL LEVER
노브

30.362 FASTENER, VALVE MOUNTING PLATE
패스너

30.442 SPACER, CONTROL LEVERS
스페이서

30.787	BOOT, VALVE CONTROL LEVER 부트
30.817	KNOB, AUXILIARY VALVE CONTROL LEVER 노브
30.843	LEVER, AUXILIARY VALVE CONTROL (1ST AUX) 레버
39.572	COVER, AUXILIARY VALVE LEVER HOLE 커버
49.042	CAP, TILT CONTROL LEVER 캡
49.081	CAP, LIFT CONTROL LEVER 캡
49.083	CAP, VALVE CONTROL LEVER DECAL 캡
49.102	FASTENER, VALVE CONTROL LEVER PIVOT RETAINER 패스너
49.103	RETAINER, VALVE CONTROL LEVER PIVOT PIN 리테이너
49.104	PIN, VALVE CONTROL LEVER CLEVIS ROD 핀
49.105	RETAINER, VALVE CONTROL LEVER CLEVIS ROD PIN 리테이너
49.109	ROD, VALVE CONTROL CLEVIS 로드

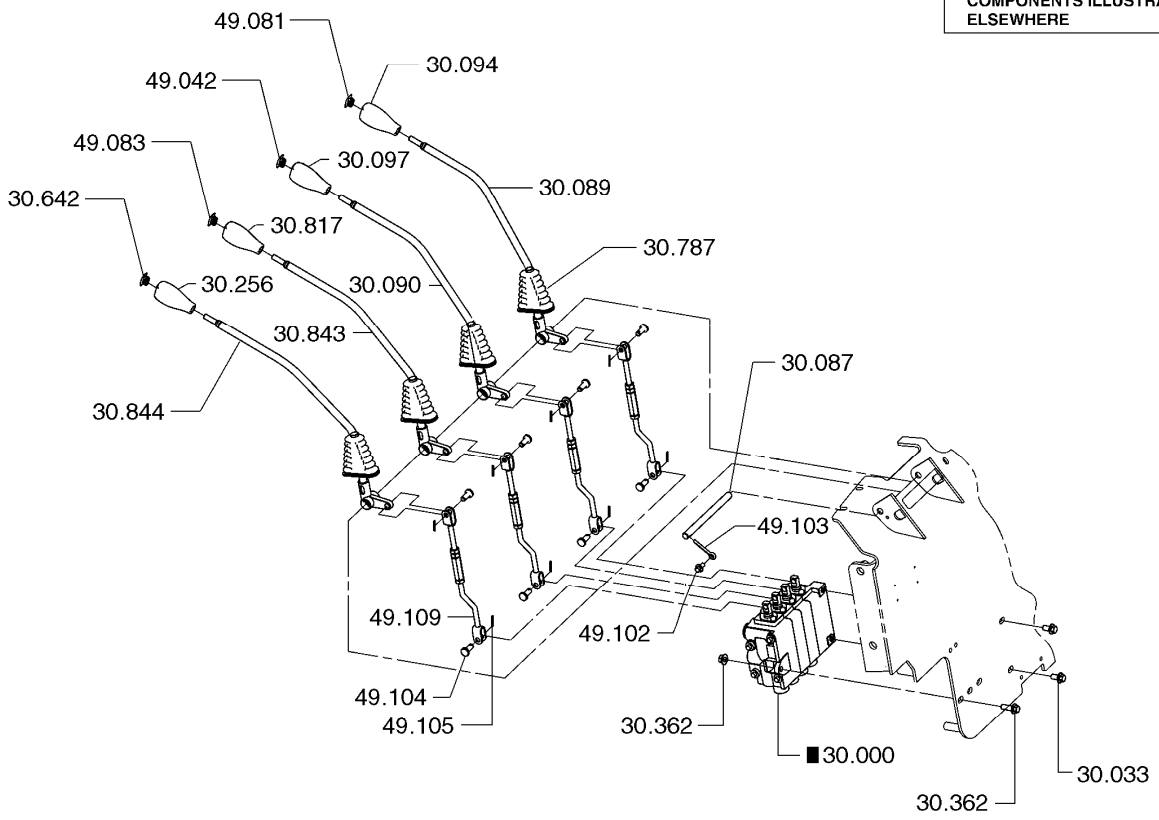

HYDRAULIC VALVE MOUNTING (4 SPOOL) **30-211**

30.000 VALVE ASSEMBLY, HYDRAULIC
벨브

30.033 FASTENER, HYDRAULIC VALVE MOUNTING
패스너

30.087 PIN, VALVE CONTROL LEVER PIVOT
핀

30.089 LEVER, LIFT CONTROL
레버

30.090 LEVER, TILT CONTROL
레버

30.094 KNOB, LIFT CONTROL LEVER
노브

30.097 KNOB, TILT CONTROL LEVER
노브

30.256 KNOB, AUXILIARY VALVE CONTROL LEVER
노브

30.362 FASTENER, VALVE MOUNTING PLATE
패스너

30.642	CAP, AUXILIARY VALVE SPOOL 캡
30.787	BOOT, VALVE CONTROL LEVER 부트
30.817	KNOB, AUXILIARY VALVE CONTROL LEVER 노브
30.843	LEVER, AUXILIARY VALVE CONTROL (1ST AUX) 레버
30.844	LEVER, AUXILIARY VALVE CONTROL (2ND AUX) 레버
49.042	CAP, TILT CONTROL LEVER 캡
49.081	CAP, LIFT CONTROL LEVER 캡
49.083	CAP, VALVE CONTROL LEVER DECAL 캡
49.102	FASTENER, VALVE CONTROL LEVER PIVOT RETAINER 패스너
49.103	RETAINER, VALVE CONTROL LEVER PIVOT PIN 리테이너
49.104	PIN, VALVE CONTROL LEVER CLEVIS ROD 핀
49.105	RETAINER, VALVE CONTROL LEVER CLEVIS ROD PIN 리테이너
49.109	ROD, VALVE CONTROL CLEVIS 로드

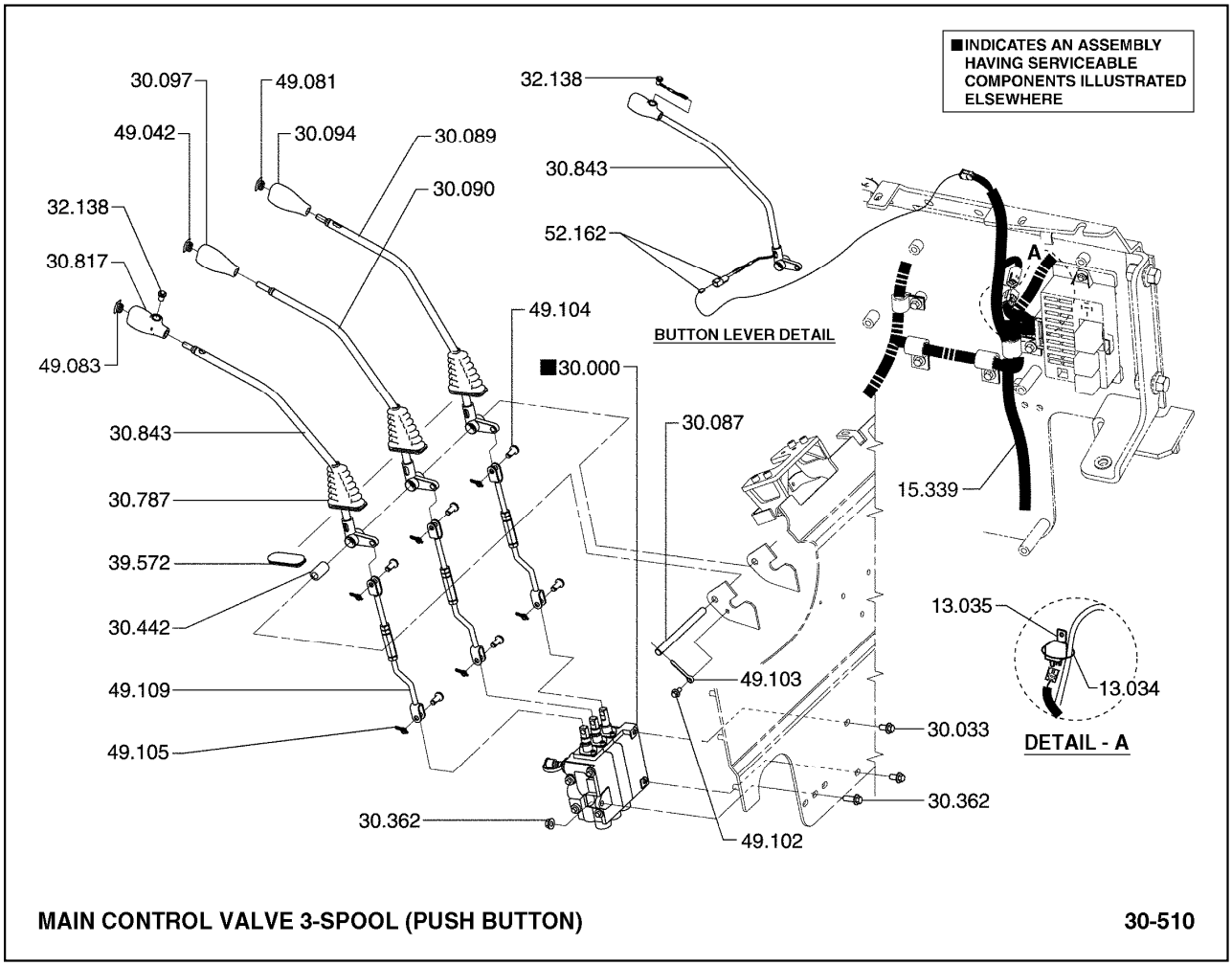

13.034 CLIP, VALVE SWITCH WIRING HARNESS
*

13.035 RELAY, VALVE SWITCH WIRING HARNESS
*

15.339 HARNESS, AUXILIARY VALVE SWITCH WIRING
하네스

30.000 VALVE ASSEMBLY, HYDRAULIC
벨브

30.033 FASTENER, HYDRAULIC VALVE MOUNTING
패스너

30.087 PIN, VALVE CONTROL LEVER PIVOT
핀

30.089 LEVER, LIFT CONTROL
레버

30.090 LEVER, TILT CONTROL
레버

30.094 KNOB, LIFT CONTROL LEVER
노브

30.097	KNOB, TILT CONTROL LEVER 노브
30.362	FASTENER, VALVE MOUNTING PLATE 패스너
30.442	SPACER, CONTROL LEVERS 스페이서
30.787	BOOT, VALVE CONTROL LEVER 부트
30.817	KNOB, AUXILIARY VALVE CONTROL LEVER 노브
30.843	LEVER, AUXILIARY VALVE CONTROL (1ST AUX) 레버
32.137	BRACKET, INSTRUMENT MOUNTING 브라켓
32.138	SWITCH, PUSH BUTTON 스위치
39.572	COVER, AUXILIARY VALVE LEVER HOLE 커버
49.042	CAP, TILT CONTROL LEVER 캡
49.081	CAP, LIFT CONTROL LEVER 캡
49.083	CAP, VALVE CONTROL LEVER DECAL 캡
49.102	FASTENER, VALVE CONTROL LEVER PIVOT RETAINER 패스너
49.103	RETAINER, VALVE CONTROL LEVER PIVOT PIN 리테이너
49.104	PIN, VALVE CONTROL LEVER CLEVIS ROD 핀
49.105	RETAINER, VALVE CONTROL LEVER CLEVIS ROD PIN 리테이너
49.109	ROD, VALVE CONTROL CLEVIS 로드
52.162	CONNECTOR, AUXILIARY VALVE LEVER WIRE 커넥터

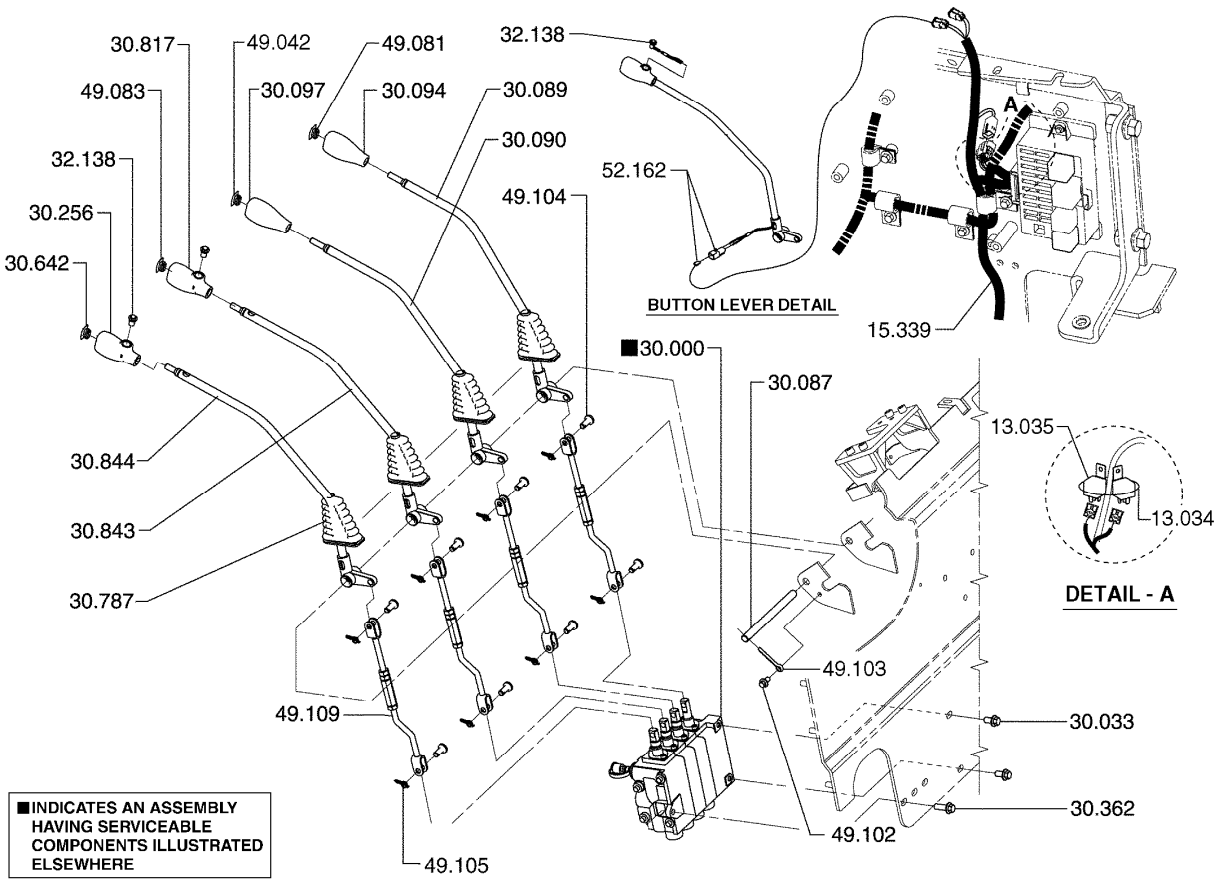

MAIN CONTROL VALVE 4-SPOOL (PUSH BUTTON) **30-511**

13.034 CLIP, VALVE SWITCH WIRING HARNESS
*

13.035 RELAY, VALVE SWITCH WIRING HARNESS
*

15.339 HARNESS, AUXILIARY VALVE SWITCH WIRING
하네스

30.000 VALVE ASSEMBLY, HYDRAULIC
벨브

30.033 FASTENER, HYDRAULIC VALVE MOUNTING
패스너

30.087 PIN, VALVE CONTROL LEVER PIVOT
핀

30.089 LEVER, LIFT CONTROL
레버

30.090 LEVER, TILT CONTROL
레버

30.094 KNOB, LIFT CONTROL LEVER
노브

30.097	KNOB, TILT CONTROL LEVER 노브
30.256	KNOB, AUXILIARY VALVE CONTROL LEVER 노브
30.362	FASTENER, VALVE MOUNTING PLATE 패스너
30.642	CAP, AUXILIARY VALVE SPOOL 캡
30.787	BOOT, VALVE CONTROL LEVER 부트
30.817	KNOB, AUXILIARY VALVE CONTROL LEVER 노브
30.843	LEVER, AUXILIARY VALVE CONTROL (1ST AUX) 레버
30.844	LEVER, AUXILIARY VALVE CONTROL (2ND AUX) 레버
32.138	SWITCH, PUSH BUTTON 스위치
49.042	CAP, TILT CONTROL LEVER 캡
49.081	CAP, LIFT CONTROL LEVER 캡
49.082	CAP, LIFT CONTROL LEVER 캡
49.102	FASTENER, VALVE CONTROL LEVER PIVOT RETAINER 패스너
49.103	RETAINER, VALVE CONTROL LEVER PIVOT PIN 리테이너
49.104	PIN, VALVE CONTROL LEVER CLEVIS ROD 핀
49.105	RETAINER, VALVE CONTROL LEVER CLEVIS ROD PIN 리테이너
49.109	ROD, VALVE CONTROL CLEVIS 로드
52.162	CONNECTOR, AUXILIARY VALVE LEVER WIRE 커넥터

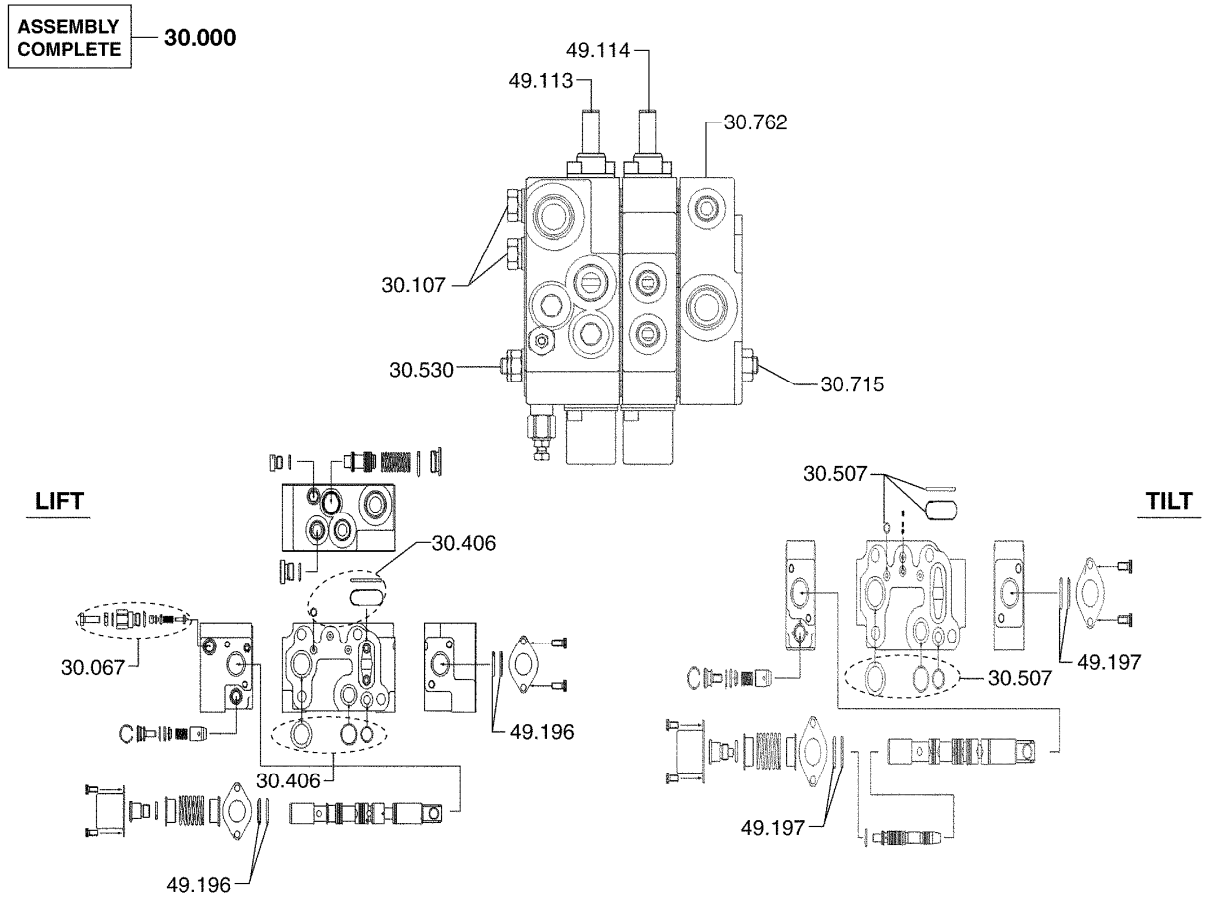

HYDRAULIC CONTROL VALVE - 2 SPOOL **30-512**

30.000	VALVE ASSEMBLY, HYDRAULIC 벨브
30.067	RELIEF VALVE KIT, VALVE INLET SECTION 릴리프밸브
30.107	FASTENER, VALVE THRU 패스너
30.406	SEAL KIT, HYDRAULIC VALVE (LIFT) 시일킷
30.507	SEAL KIT, HYDRAULIC VALVE (TILT) 시일킷
30.530	FASTENER, VALVE THRU 패스너
30.715	FASTENER, VALVE THRU 패스너
30.762	END COVER, HYDRAULIC VALVE 엔드커버
49.113	LIFT SECTION, HYDRAULIC VALVE 리프트섹션

49.114	TILT SECTION, HYDRAULIC VALVE 틸트섹션
49.196	SPOOL SEAL KIT, LIFT SECTION 스풀실킷
49.197	SPOOL SEAL KIT, TILT SECTION 스풀실킷

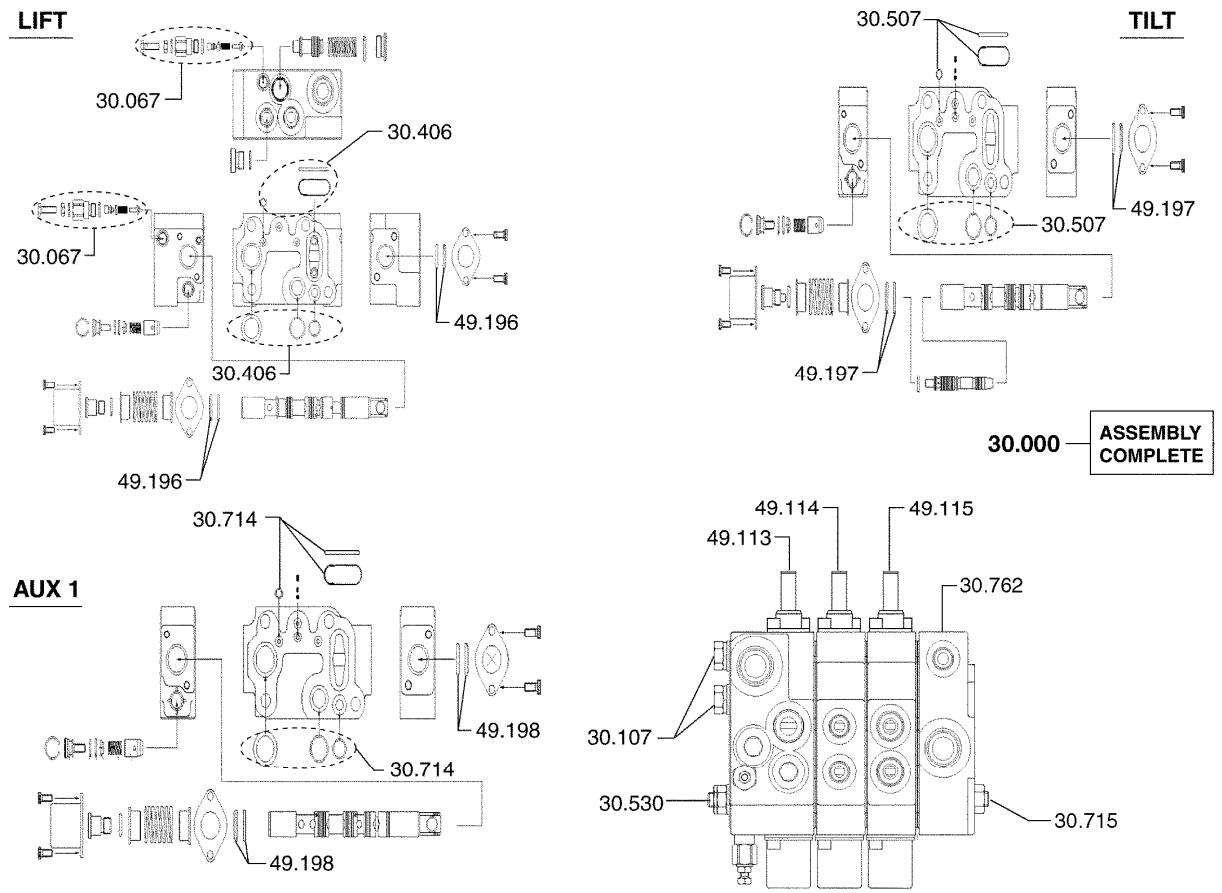

30.000	VALVE ASSEMBLY, HYDRAULIC 벨브
30.067	RELIEF VALVE KIT, VALVE INLET SECTION 릴리프밸브
30.107	FASTENER, VALVE THRU 패스너
30.406	SEAL KIT, HYDRAULIC VALVE (LIFT) 시일킷
30.507	SEAL KIT, HYDRAULIC VALVE (TILT) 시일킷
30.530	FASTENER, VALVE THRU 패스너
30.714	SEAL KIT, HYDRAULIC VALVE SECTION (AUX) 시일킷
30.715	FASTENER, VALVE THRU 패스너
30.762	END COVER, HYDRAULIC VALVE 엔드커버

49.113 LIFT SECTION, HYDRAULIC VALVE
리프트섹션

49.114 TILT SECTION, HYDRAULIC VALVE
틸트섹션

49.115 AUX SECTION, HYDRAULIC VALVE
보조섹션

49.196 SPOOL SEAL KIT, LIFT SECTION
스풀실킷

49.197 SPOOL SEAL KIT, TILT SECTION
스풀실킷

49.198 SPOOL SEAL KIT, AUX SECTION
스풀실킷

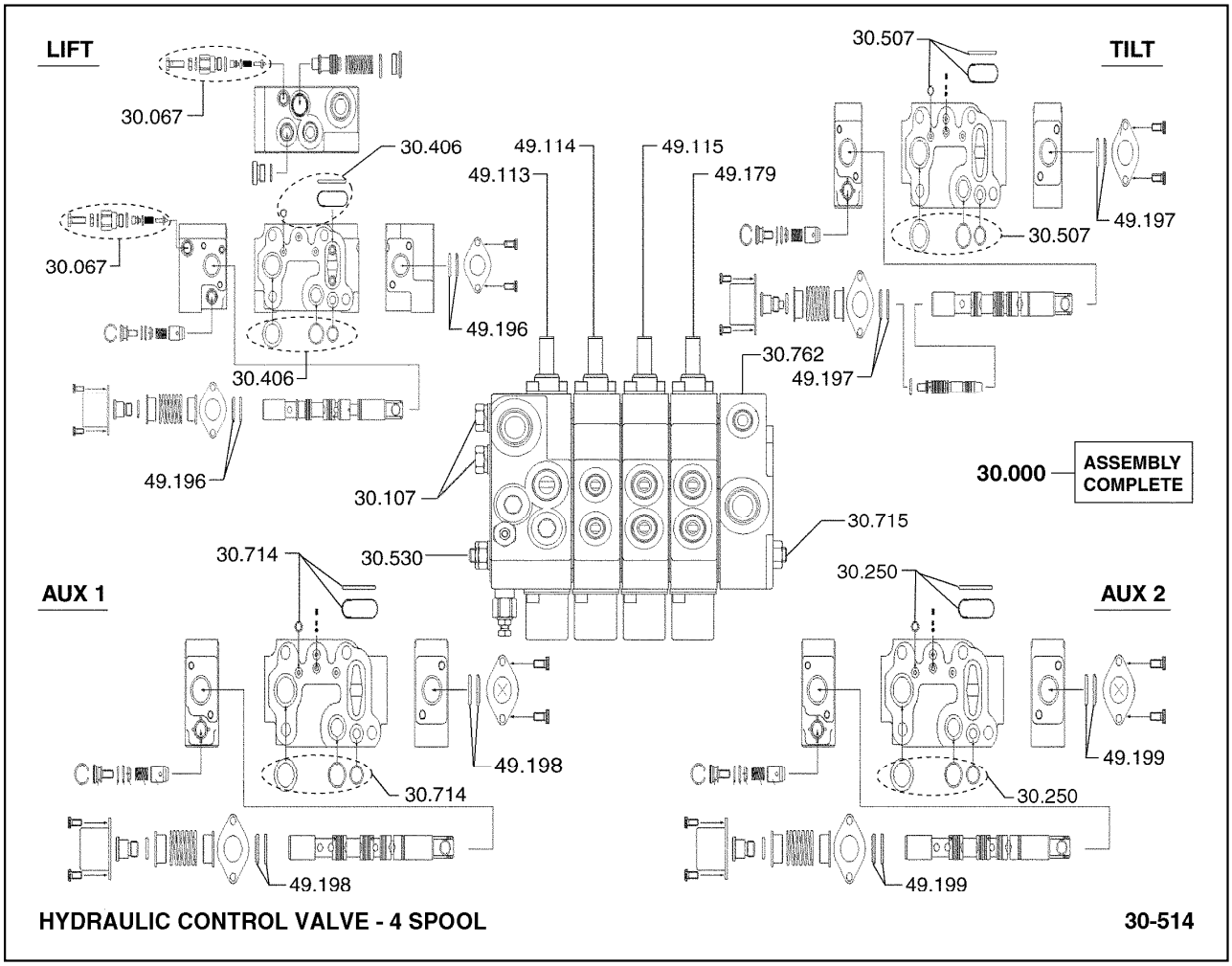

30.000 VALVE ASSEMBLY, HYDRAULIC
벨브

30.067 RELIEF VALVE KIT, VALVE INLET SECTION
릴리프밸브

30.107 FASTENER, VALVE THRU
패스너

30.250 SEAL KIT, HYDRAULIC VALVE SECTION (AUX)
시일킷

30.406 SEAL KIT, HYDRAULIC VALVE (LIFT)
시일킷

30.507 SEAL KIT, HYDRAULIC VALVE (TILT)
시일킷

30.530 FASTENER, VALVE THRU
패스너

30.714 SEAL KIT, HYDRAULIC VALVE SECTION (AUX)
시일킷

30.715 FASTENER, VALVE THRU
패스너

30.762 END COVER, HYDRAULIC VALVE
엔드커버

49.113 LIFT SECTION, HYDRAULIC VALVE
리프트섹션

49.114 TILT SECTION, HYDRAULIC VALVE
틸트섹션

49.115 AUX SECTION, HYDRAULIC VALVE
보조섹션

49.179 AUX SECTION, HYDRAULIC VALVE
보조섹션

49.196 SPOOL SEAL KIT, LIFT SECTION
스풀실킷

49.197 SPOOL SEAL KIT, TILT SECTION
스풀실킷

49.198 SPOOL SEAL KIT, AUX SECTION
스풀실킷

49.199 SPOOL SEAL KIT, AUX SECTION
스풀실킷

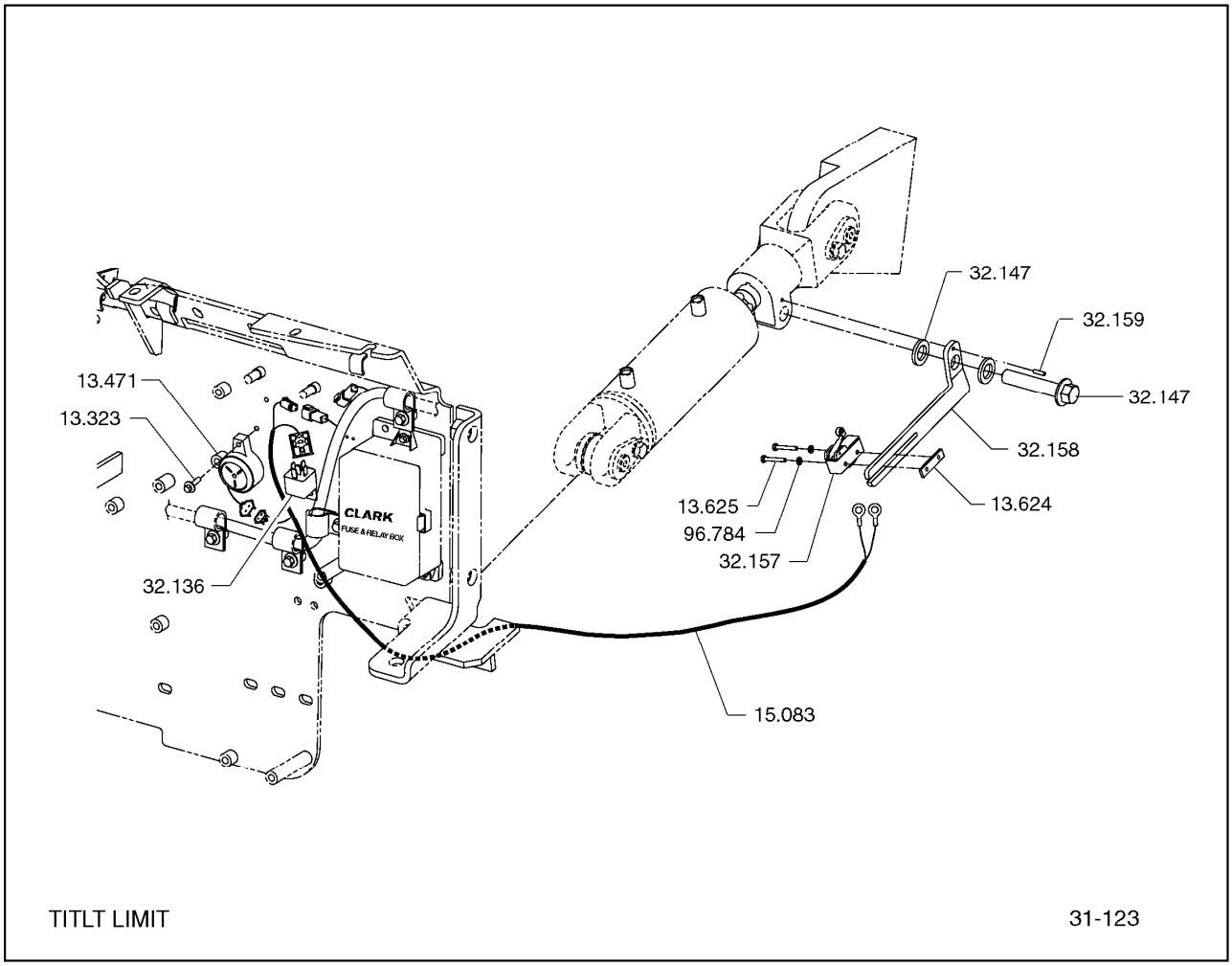

13.323 FASTENER, WARNING BUZZER
패스너

13.471 BUZZER, WARNING
부져

13.624 BRACKET, TILT LIMIT SWITCH
브라켓

13.625 FASTENER, TILT LIMIT SWITCH
패스너

15.083 CONDUCTOR, TILT LIMIT DEVICE FEED
컨덕터

32.136 RELAY, TILT LIMIT DEVICE
릴레이

32.147 WASHER, TILT LIMIT FASTENER
와셔

32.157 SWITCH, TILT LIMIT
스위치

32.158 BRACKET, TILT LIMIT SWITCH
브라켓

32.159	RETAINER, TILT LIMIT SWITCH BRACKET 리테이너
96.784	WASHER, TILT LIMIT SWITCH FASTENER 와셔

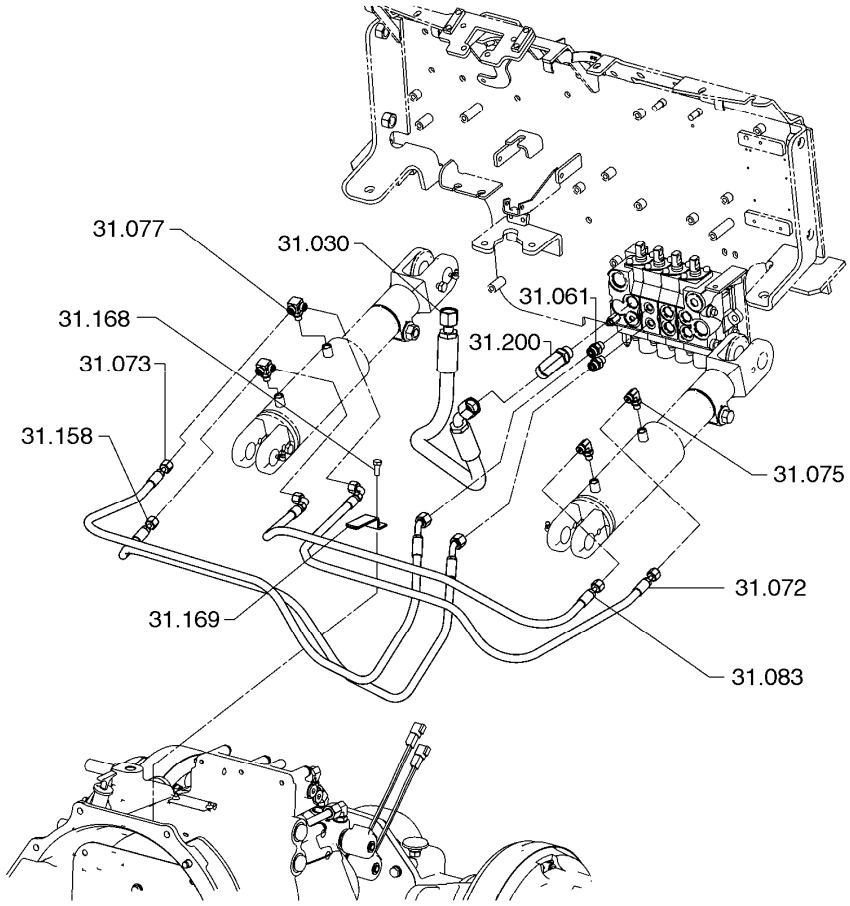

HYDRAULIC LIFT & TILT LINES **31-139**

31.030 LINE, VALVE TO LIFT CYLINDER
라인

31.061 FITTING, VALVE TILT PORT "A"
피팅

31.072 LINE, RH TILT CYLINDER ROD PORT
라인

31.073 LINE, LH TILT CYLINDER ROD PORT
라인

31.075 FITTING, RH TILT CYLINDER ROD PORT
피팅

31.077 FITTING, LH TILT CYLINDER ROD PORT
피팅

31.083 LINE, RH TILT CYLINDER ANCHOR PORT
라인

31.158 LINE, LH TILT CYLINDER ANCHOR PORT
라인

31.168 FASTENER, TILT LINE CLAMP
패스너

31.169 CLAMP, TILT LINE
클램프

31.200 FITTING, MAIN VALVE LIFT PORT
피팅

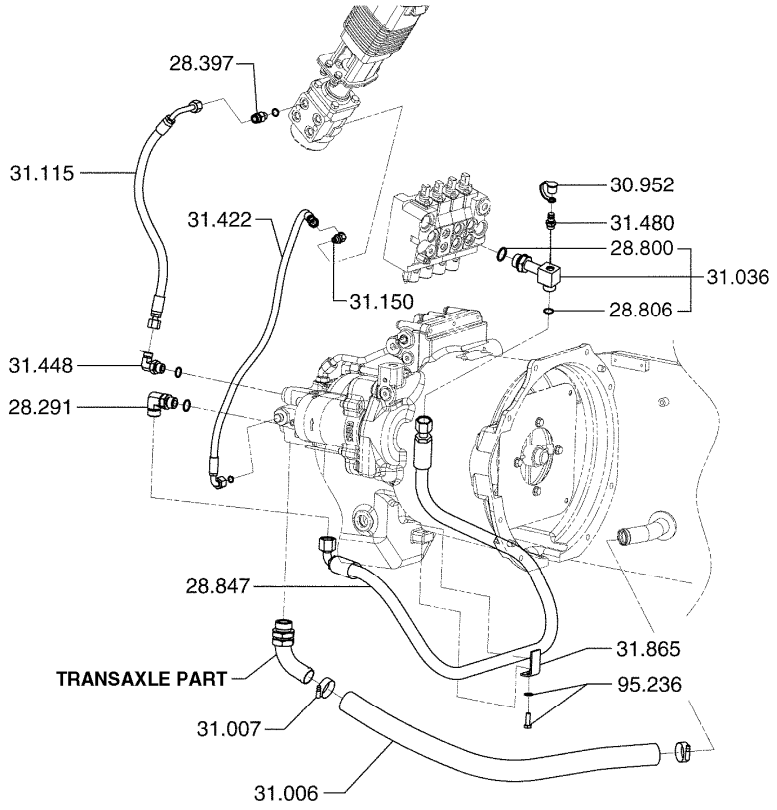

HYDRAULIC SUPPLY LINES **31-307**

28.291 FITTING, PUMP OUTLET
피팅

28.397 FITTING, STEERING GEAR LINE
피팅

28.800 SEAL, MAIN VALVE INLET PORT FITTING
시일

28.806 SEAL, MAIN VALVE INLET LINE FITTING
시일

28.847 LINE, MAIN VALVE INLET
라인

30.952 DUST CAP, PRESSURE GAUGE PORT FITTING
더스트캡

31.006 LINE, PUMP INLET
라인

31.007 CLAMP, PUMP INLET LINE
클램프

31.036 FITTING, MAIN VALVE INLET PORT
피팅

31.115	LINE, STEERING PUMP OUTLET 라인
31.150	FITTING, STEER VALVE DISCHARGE PORT 피팅
31.422	LINE, PUMP OUTLET (COVER END) 라인
31.448	FITTING, PUMP OUTLET LINE 피팅
31.480	PLUG, PRESSURE GAUGE PORT 플러그
31.865	BRACKET, VALVE INLET LINE CLAMP 브라켓
95.236	FASTENER, HYDRAULIC LINE CLAMP 패스너

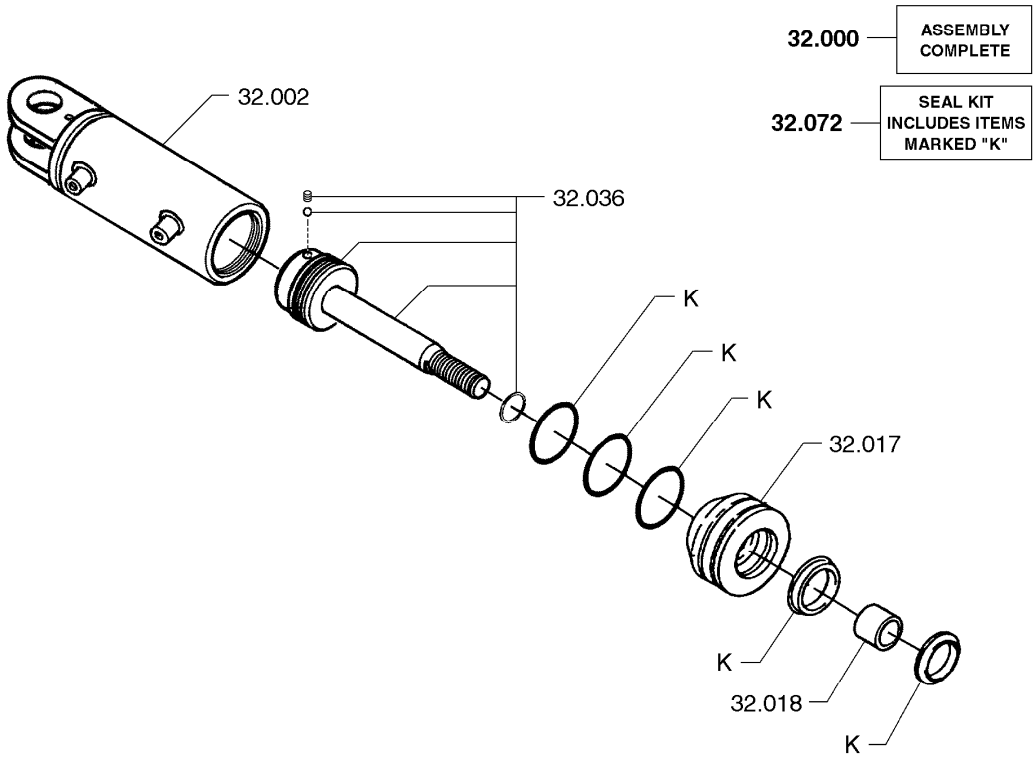

TILT CYLINDER 32-129

32.000 CYLINDER ASSEMBLY, TILT
실린더

32.002 CYLINDER ASSEMBLY, WELDED
실린더

32.017 GLAND, TILT CYLINDER
그랜드

32.018 BUSHING, TILT CYLINDER GLAND
부싱

32.036 ROD & PISTON ASSEMBLY, TILT CYLINDER
로드와피스톤

32.072 PACKING KIT, TILT CYLINDER
패킹킷

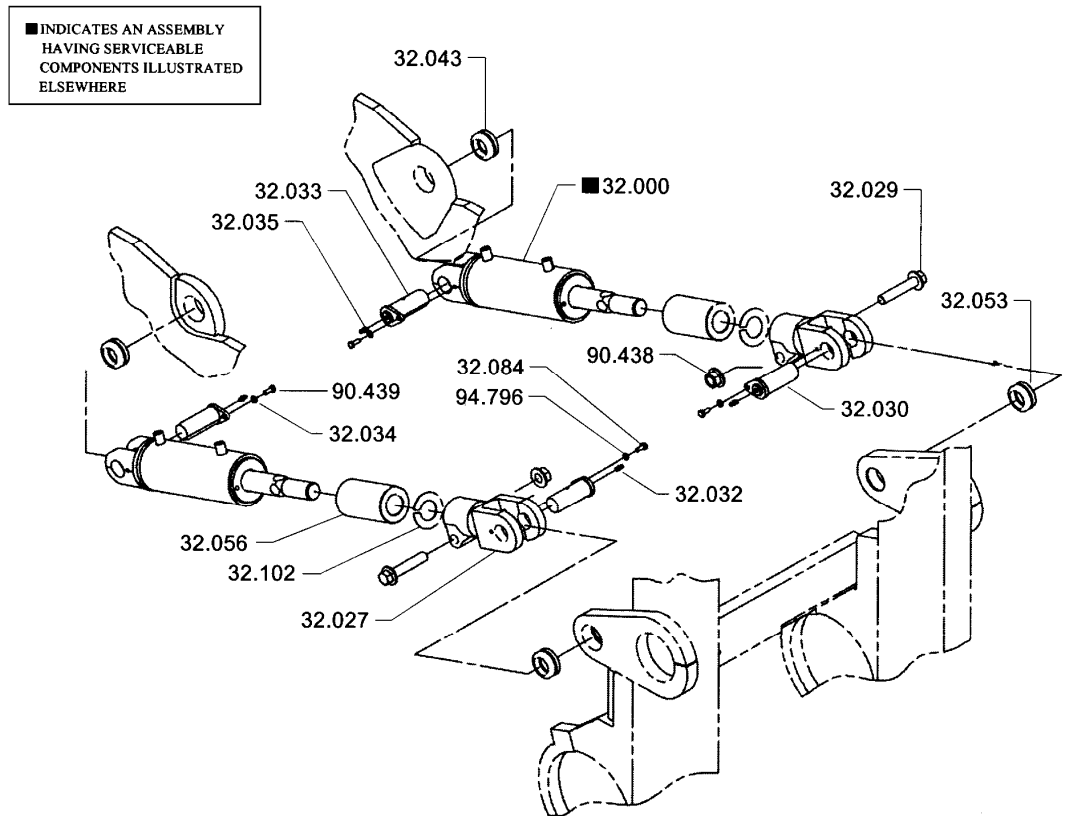

32.000 CYLINDER ASSEMBLY, TILT
실린더

32.027 END, RH TILT CYLINDER ROD
엔드

32.029 FASTENER, TILT CYLINDER ROD END
패스너

32.030 PIN, TILT CYLINDER TO UPRIGHT
핀

32.032 FITTING, TILT CYLINDER TO UPRIGHT PIN LUB
피팅

32.033 PIN, TILT CYLINDER REAR MOUNTING RH
핀

32.034 RETAINER, TILT CYLINDER ANCHOR PIN
리테이너

32.035 FITTING, TILT CYLINDER TO FRAME PIN LUB
피팅

32.043 BEARING, TILT CYLINDER FRAME MOUNTING
베어링

32.053	BEARING, TILT CYLINDER ROD END 베어링
32.056	SPACER, TILT CYLINDER ROD END 스페이서
32.084	CAPSCREW, TILT CYLINDER ROD END PIN RETAINER 캡스크류
32.102	SHIM, TILT CYLINDER STROKE ADJUSTING 심
90.438	NUT, TILT CYLINDER ROD END FASTENER 너트
90.439	BOLT, TILT CYLINDER TO FRAME PIN LOCK 볼트
94.796	WASHER, TILT CYLINDER ROD END PIN RETAINER FASTENE 와셔

■ INDICATES AN ASSEMBLY HAVING SERVICEABLE COMPONENTS ILLUSTRATED ELSEWHERE

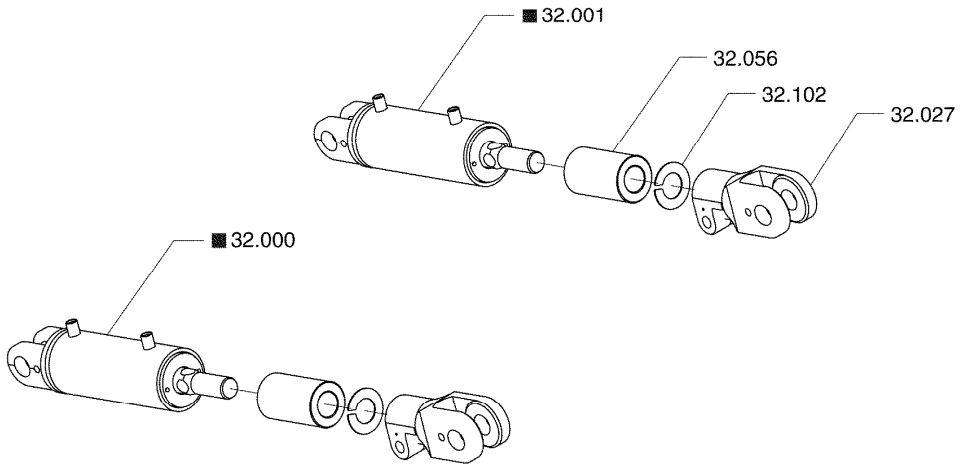

TILT AMOUNT GP **32-167**

32.000	CYLINDER ASSEMBLY, TILT 실린더
32.001	TILT CYLINDER ASSEMBLY (LH) 틸트실린더
32.027	END, RH TILT CYLINDER ROD 엔드
32.056	SPACER, TILT CYLINDER ROD END 스페이서
32.102	SHIM, TILT CYLINDER STROKE ADJUSTING 심

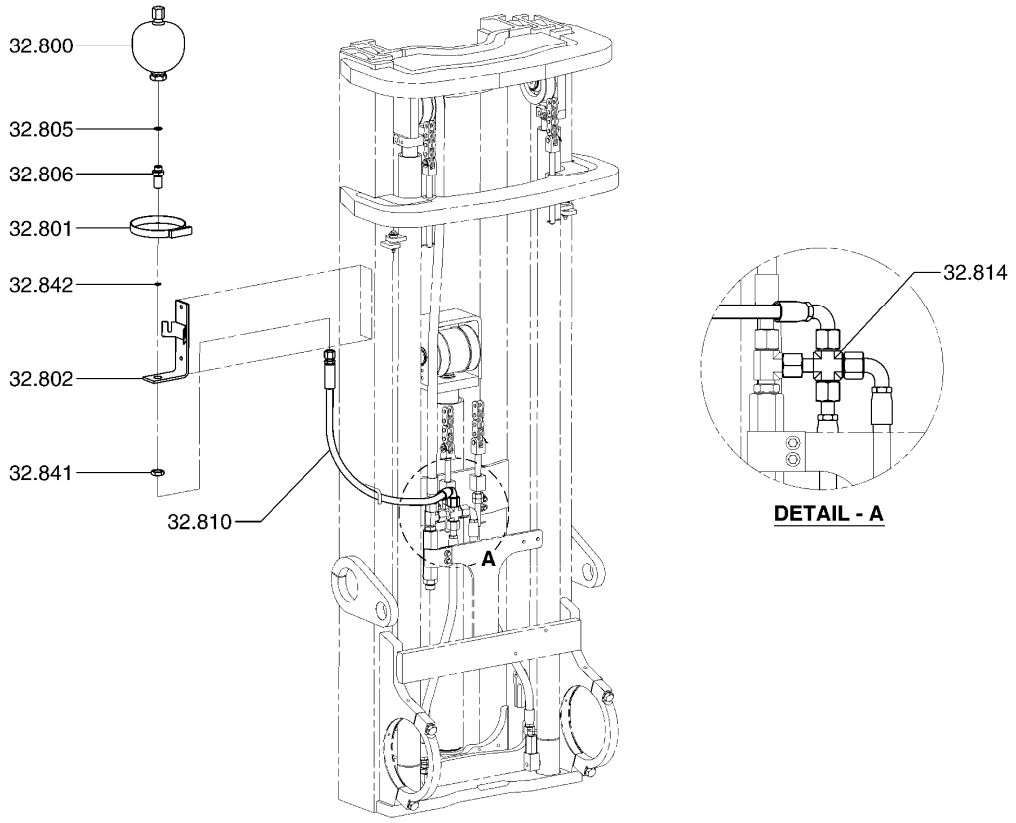

ACCUMULATOR INSTALLATION **32-171**

30.000 VALVE ASSEMBLY, HYDRAULIC
벨브

32.800 ACCUMULATOR, HYDRAULIC
어큐뮬레이터

32.801 CLAMP, HYDRAULIC ACCUMULATOR MOUNTING
클램프

32.802 BRACKET, HYDRAULIC ACCUMULATOR
브라켓

32.805 SEAL, HYDRAULIC ACCUMULATOR CONNECTOR
시일

32.806 CONNECTOR, HYDRAULIC ACCUMULATOR
커넥터

32.810 LINE, HYDRAULIC ACCUMULATOR
라인

32.814 FITTING, HYDRAULIC ACCUMULATOR LINE
피팅

32.841 NUT, HYDRAULIC ACCUMULATOR FITTING
너트

32.842 SEAL, HYDRAULC ACCUMULATOR FITTING
시일

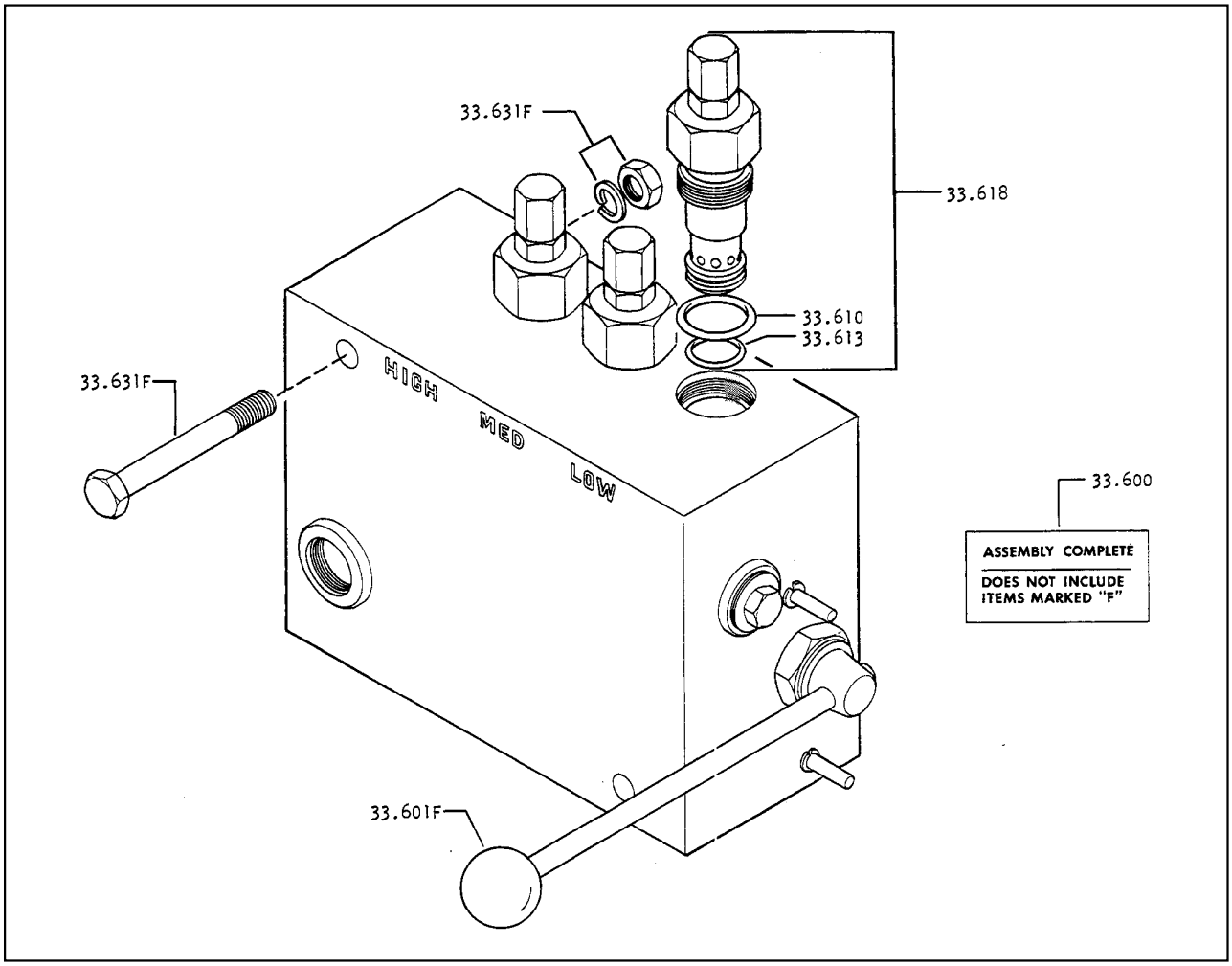

33.600 RELIEF VALVE, DEVICE VARIABLE PRESSURE
릴리프밸브

33.601 LEVER, DEVICE VARIABLE RELIEF VALVE
레버

33.610 SEAL, DEVICE PRESS RELIEF VAL CHECK PORT PLUG
시일

33.613 SEAL, DEVICE RELIEF VALVE PISTON ADJ END
시일

33.618 CARTRIDGE KIT, DEVICE VARIABLE RELIEF VALVE
카트리지킷

33.631 FASTENER, DEVICE RELIEF VALVE
패스너

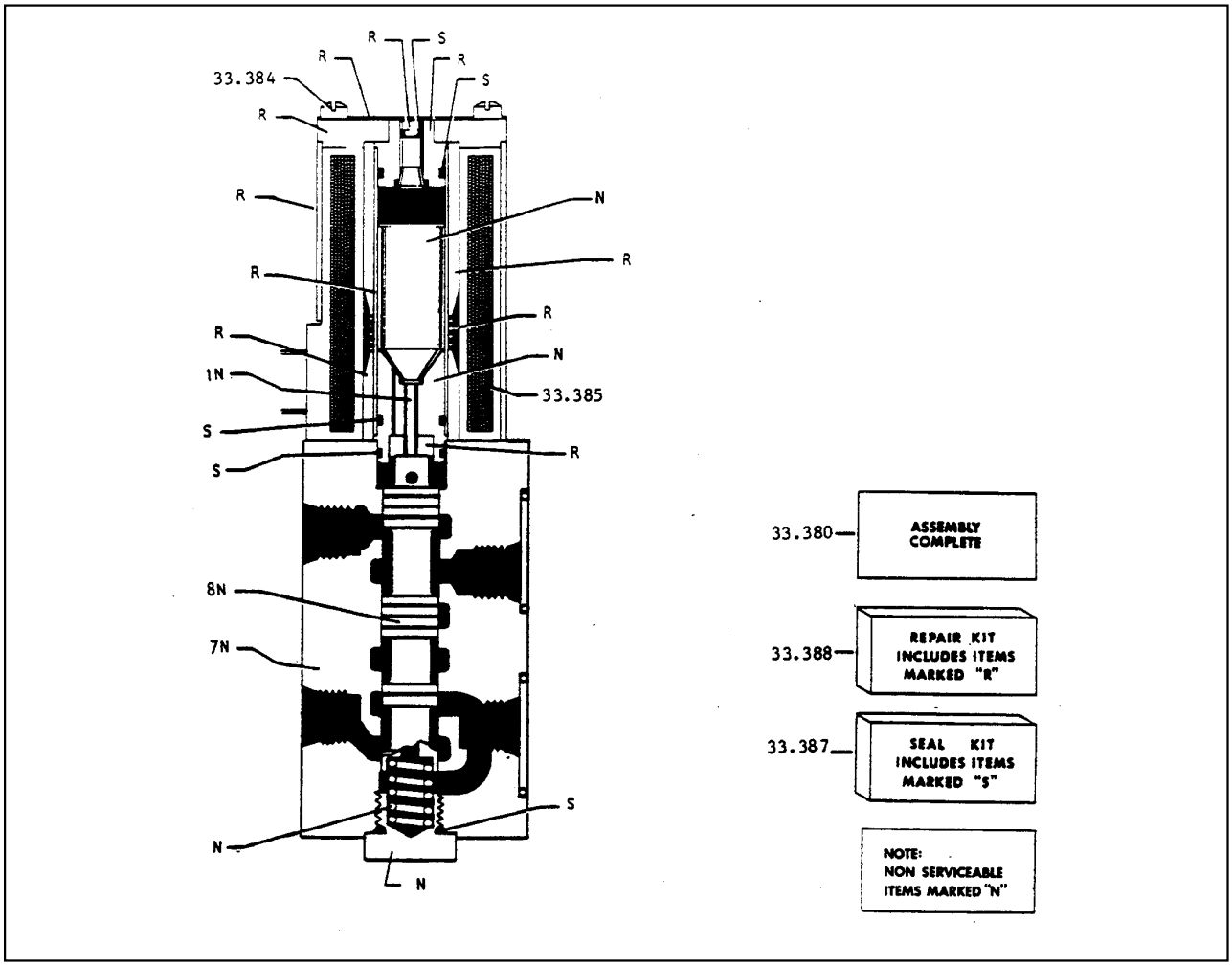

33.380 VALVE ASSEMBLY, DEVICE SELECTOR SOLENOID
벨브

33.384 FASTENER, DEV SELECTOR VALVE SOLENOID COIL
패스너

33.385 COIL, DEVICE SELECTOR VALVE SOLENOID
코일

33.387 SEAL KIT, DEVICE SELECTOR VALVE
시일킷

33.388 REPAIR KIT, DEVICE SELECTOR VALVE
리페어킷

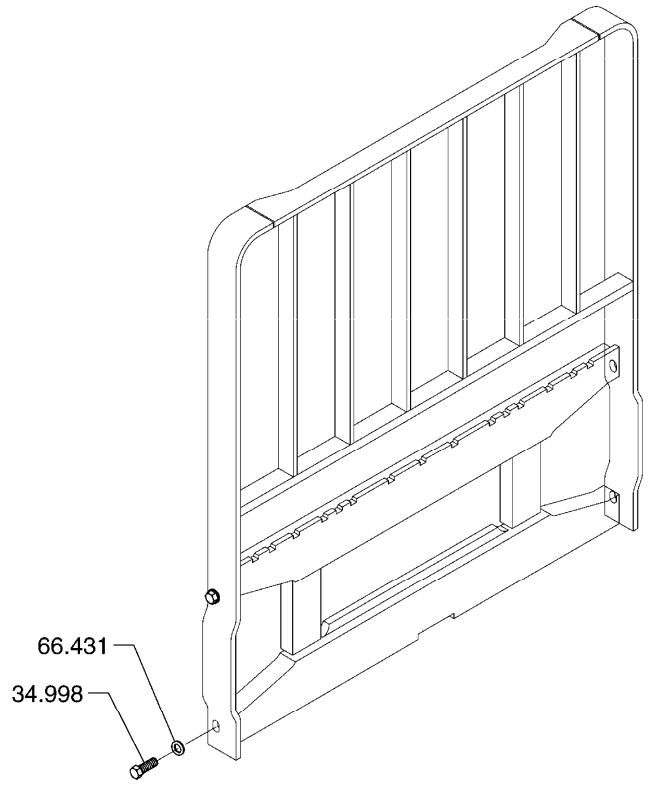

LOAD BACK REST **34-044**

34.998 FASTENER, LOAD SAFETY BACK REST
패스너

66.431 RETAINER, LBR CAPSCREW
리테이너

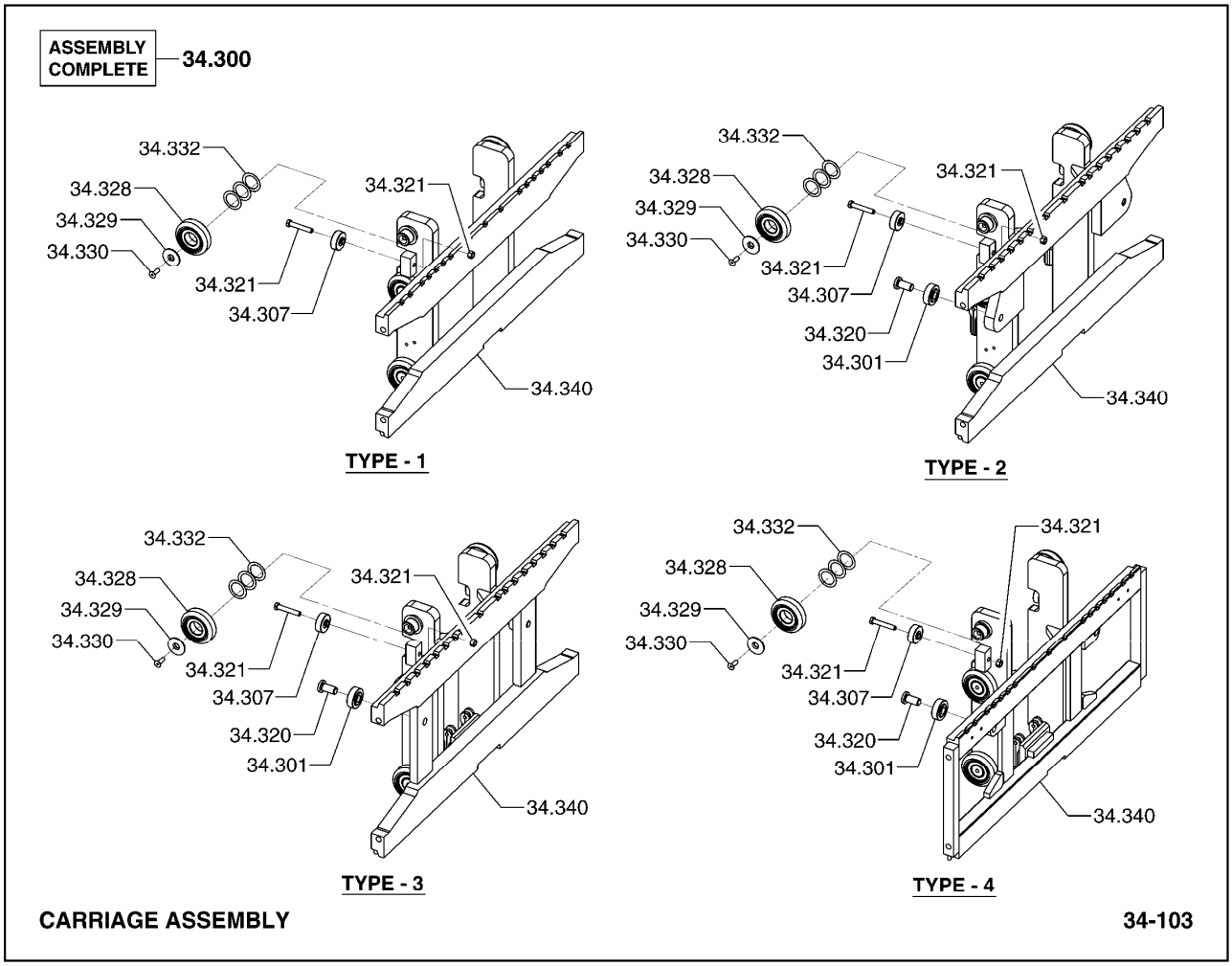

34.300 ASSEMBLY, FORK BARS & CARRIAGE
캐리지

34.301 ROLLER, CARRIAGE OUTER THRUST
롤러

34.307 ROLLER, CARRIAGE INNER THRUST
롤러

34.320 SHAFT, CARRIAGE OUTER THRUST ROLLER
샤프트

34.321 FASTENER, CARRIAGE ROLLER SHAFT
패스너

34.328 ROLLER, CARRIAGE CAPTIVE
롤러

34.329 RETAINER, CARRIAGE CAPTIVE ROLLER
리테이너

34.330 FASTENER, CARRIAGE CAPTIVE ROLLER RETAINER
패스너

34.332 SHIM, CARRIAGE CAPTIVE ROLLER
심

34.340 CARRIAGE WELDED ASSEMBLY
캐리지용접물

This Carriage assembly was manufactured by the CASCADE CORPORATION and is not serviced by CLARK Material Handling Company.

CASCADE parts manuals, technical specifications and lists of worldwide distributors are available on-line at:

http://www.cascorp.com.

When ordering service parts, it will be necessary to provide CASCADE with the CASCADE model and serial numbers of the carriage. CASCADE will not recognize the CLARK carriage part number listed on the PIC or in PartsPRO.

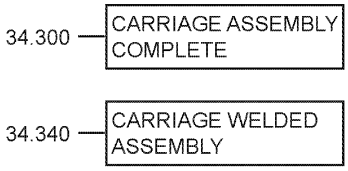

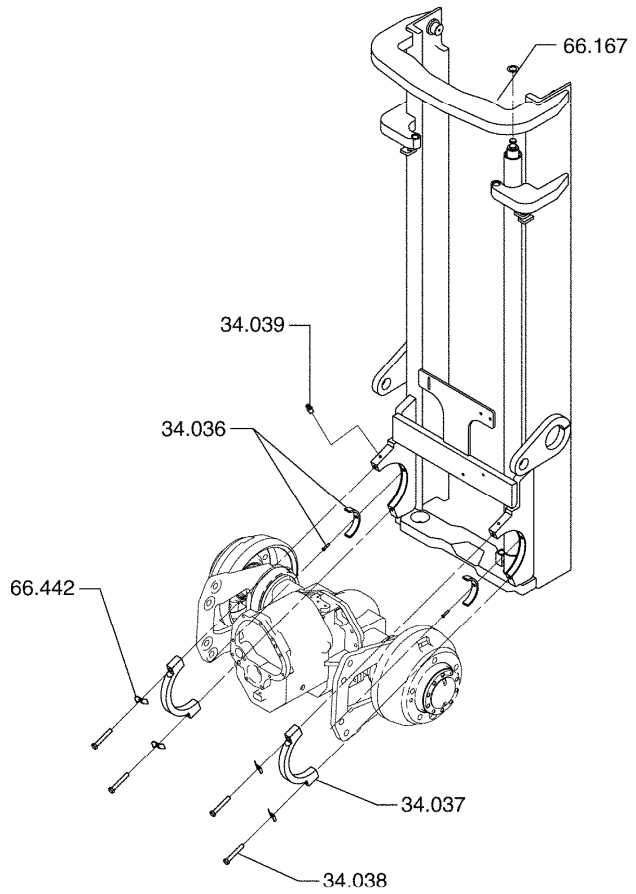

UPRIGHT MOUNTING **34-734**

34.036 BUSHING, UPRIGHT TRUNNION
부싱

34.037 CAP, UPRIGHT TRUNNION
캡

34.038 FASTENER, UPRIGHT TRUNNION CAP
패스너

34.039 FITTING-LUB, UPRIGHT TRUNNION
피팅

66.167 SHIM, LIFT CYLINDER UPPER
심

66.442 KEEPER, UPRIGHT TRUNNION CAP
키퍼

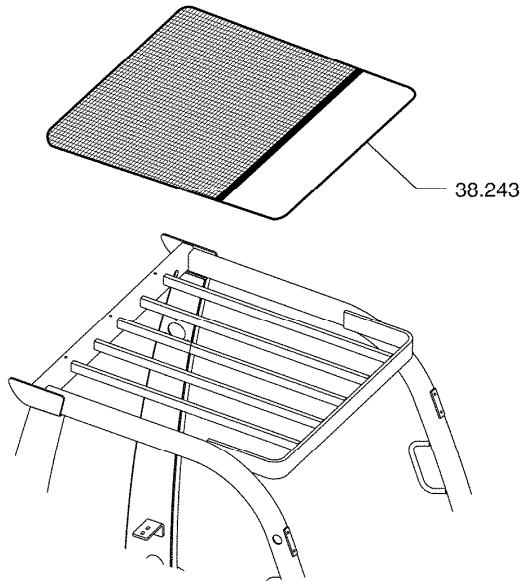

OVERHEAD GUARD COVER **37-003**

38.243 COVER ASSEMBLY, OVERHEAD GUARD TOP
커버

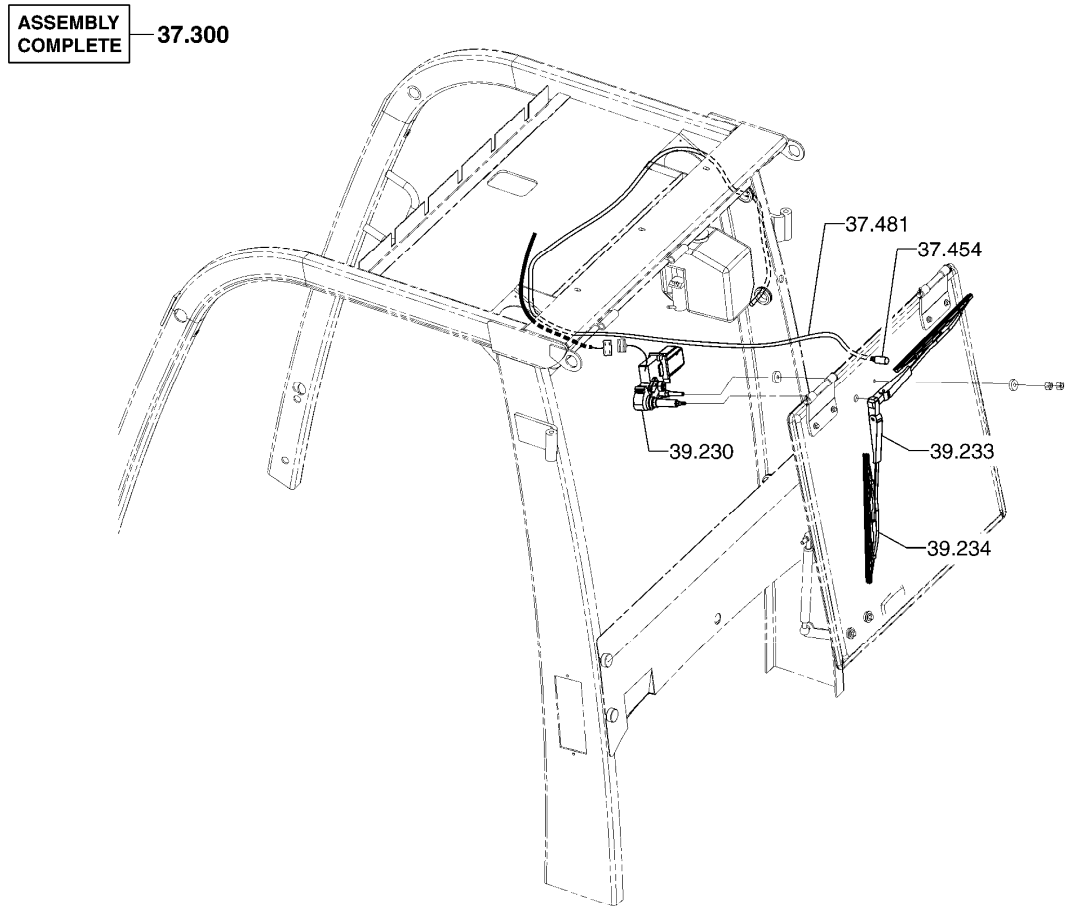

REAR WIPER INSTALLATION **37-050**

37.300	CAB ASSEMBLY 캐빈
37.454	NOZZLE, REAR WINDOW GLASS WASHER 노즐
37.481	LINE, WINDOW GLASS WASHER 라인
39.230	MOTOR, REAR WINDOW WIPER 모터
39.233	ARM, REAR WINDOW WIPER 암
39.234	BLADE, REAR WINDOW WIPER 블레이드

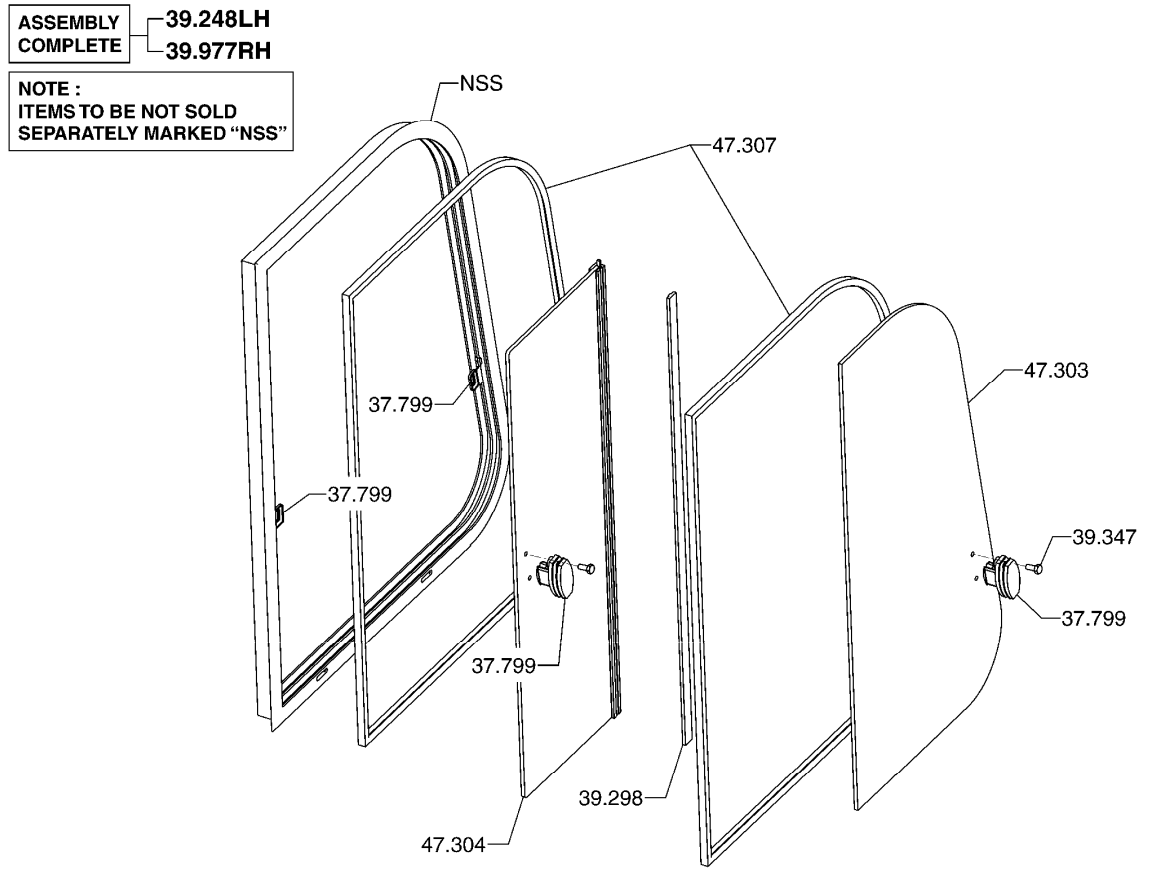

37.799 LATCH, CAB DOOR WINDOW ASSEMBLY
래치

39.248 WINDOW ASSEMBLY, CAB DOOR (LH)
윈도우

39.298 CHANNEL, FRONT DOOR GLASS - FRONT
채널

39.347 FASTENER, CAB REAR WINDOW LATCH
패스너

39.977 WINDOW ASSEMBLY, CAB DOOR (RH)
윈도우

47.303 GLASS, CAB DOOR (FRONT)
글래스

47.304 GLASS, CAB DOOR (REAR)
글래스

47.307 CHANNEL, CAB SIDE DOOR WINDOW
채널

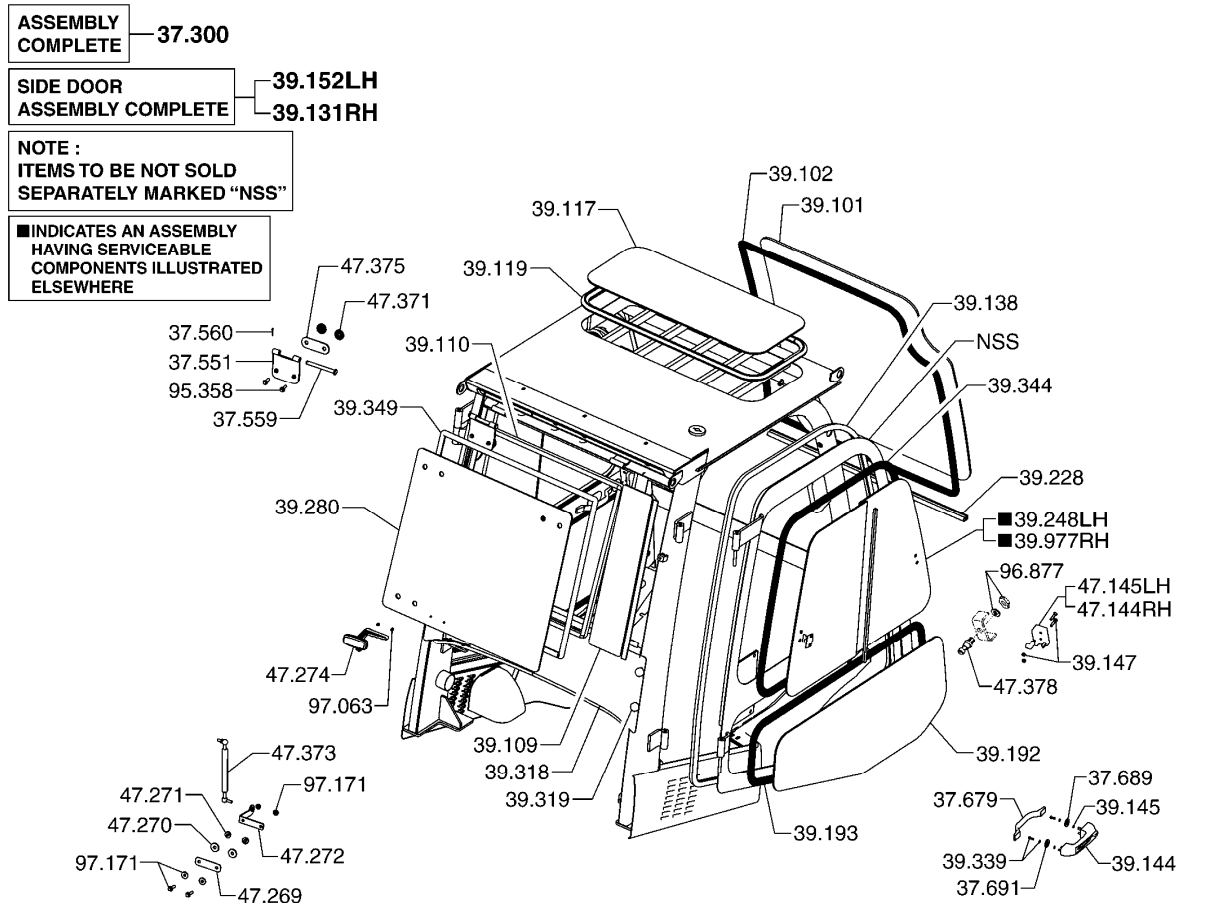

37.300	CAB ASSEMBLY 캐빈
37.551	HANGER, CAB REAR GLASS 행거
37.559	PIN, CABIN REAR GLASS HANGER 핀
37.560	RETAINER, CAB REAR GLASS HANGER PIN 리테이너
37.679	HANDLE, RH DOOR INSIDE 핸들
37.689	SEAL, DOOR OUTSIDE HANDLE 시일
37.691	SEAL, DOOR OUTSIDE HANDLE 시일
39.101	GLASS, WINDSHIELD 글래스
39.102	WEATHERSEAL, WINDSHIELD SETTING 웨더시일
39.109	GLASS, REAR 글래스
39.110	WEATHERSEAL, REAR GLASS SETTING 웨더시일
39.117	ROOF SCREEN 루프스크린
39.119	SEAL STRIP, ROOF WINDOW 시일스트립
39.131	DOOR ASSEMBLY, RIGHT HAND 도어
39.138	WEATHERSEAL, RIGHT HAND DOOR 웨더시일
39.144	HANDLE, RH DOOR OUTSIDE 핸들
39.145	FASTENER, RH DOOR HANDLE 패스너
39.147	FASTENER, RIGHT HAND DOOR LATCH 패스너
39.152	DOOR ASSEMBLY, LEFT HAND 도어
39.192	GLASS, RIGHT HAND DOOR (LOWER) 글래스
39.193	WEATHERSEAL, RH DOOR GLASS (LOWER) 웨더시일
39.228	WEATHERSEAL, WINDSHIELD SETTING 웨더시일
39.248	WINDOW ASSEMBLY, CAB DOOR (LH) 윈도우
39.280	GLASS, REAR WINDOW - MOVEABLE 글래스
39.318	PANEL, REAR LOWER 판넬
39.319	FASTENER, LOWER REAR PANEL 패스너
39.339	FASTENER, RH DOOR INSIDE HANDLE 패스너
39.344	WEATHERSEAL, RH DOOR WINDOW ASSEMBLY 웨더시일
39.349	WEATHERSEAL, CAB REAR WINDOW 웨더시일
39.977	WINDOW ASSEMBLY, CAB DOOR (RH) 윈도우

47.144 LATCH, RH DOOR INSIDE
래치

47.145 LATCH, LH DOOR INSIDE
래치

47.269 BRACKET, CAB REAR GLASS GAS SPRING SUPPORT
브라켓

47.270 RUBBER, CAB REAR GLASS GAS SPRING MOUNTING
러버

47.271 RUBBER, CAB REAR GLASS GAS SPRING MOUNTING
러버

47.272 BRACKET, CAB REAR GLASS GAS SPRING MOUNTING
브라켓

47.274 HANDLE, CAB REAR GLASS
핸들

47.371 CAP, CAB REAR GLASS GAS SPRING MOUNTING FASTENER
*

47.373 SHOCK ABSORBER, CAB REAR GLASS
*

47.375 BRACKET, CAB REAR GLASS HANGER
*

47.378 SUPPORT, CAB DOOR INSIDE LATCH
*

95.358 FASTENER, REAR GLASS HANGER
패스너

96.877 FASTENER, DOOR INSIDE LATCH STRIKER
패스너

97.063 FASTENER, REAR DOOR HANDLE MOUNTING
패스너

97.171 FASTENER, CAB REAR GLASS GAS SPRING MOUNTING
*

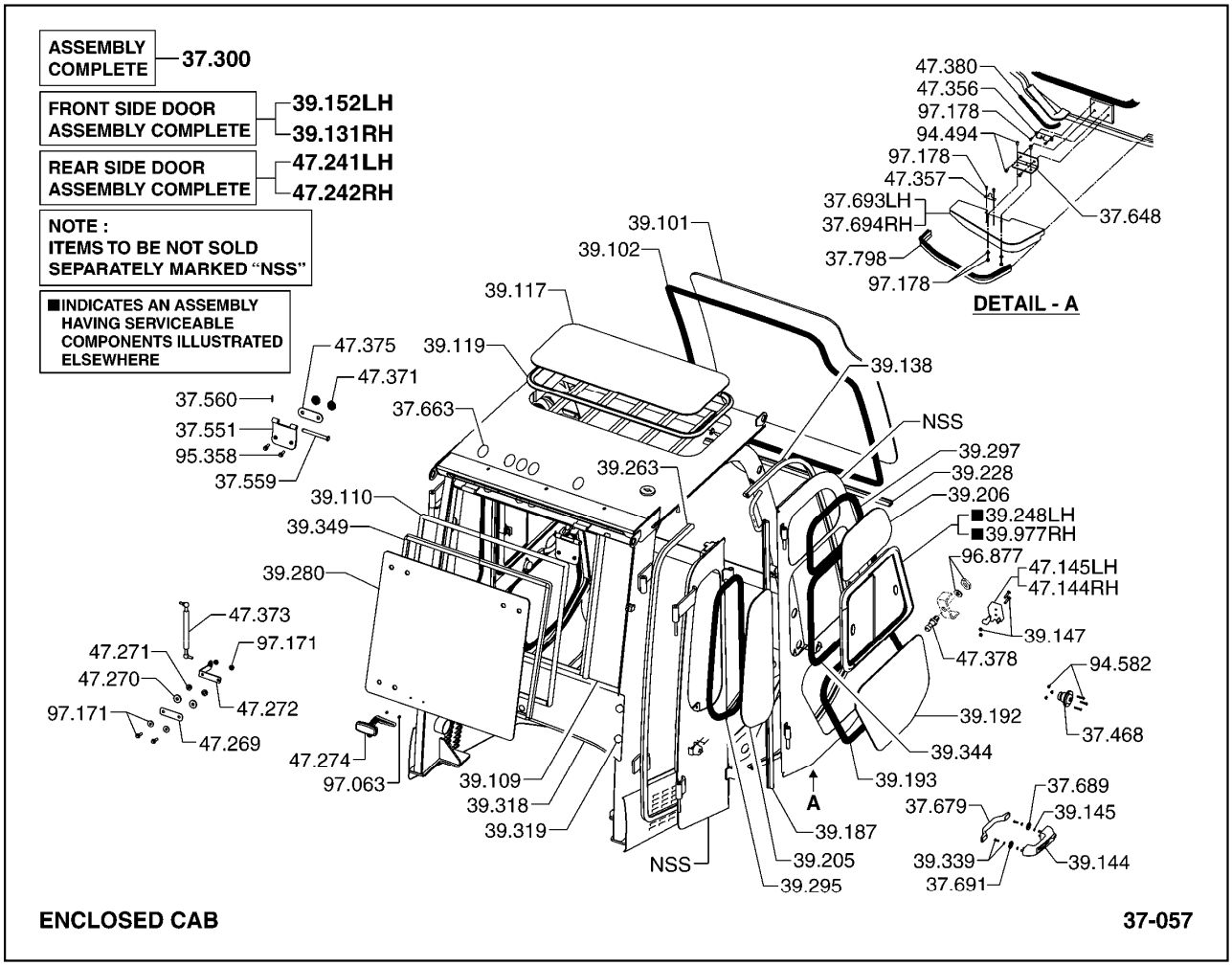

37.300	CAB ASSEMBLY 캐빈
37.468	CATCH, CAB DOOR LATCH 캐치
37.551	HANGER, CAB REAR GLASS 행거
37.559	PIN, CABIN REAR GLASS HANGER 핀
37.560	RETAINER, CAB REAR GLASS HANGER PIN 리테이너
37.648	SUPPORT, CAB HOLD DOWN LATCH 서포트
37.663	PLUG, CAB FRAME 플러그
37.679	HANDLE, RH DOOR INSIDE 핸들
37.689	SEAL, DOOR OUTSIDE HANDLE 시일
37.691	SEAL, DOOR OUTSIDE HANDLE 시일
37.693	COVER, DOOR INSIDE LATCH LH 커버
37.694	COVER, DOOR INSIDE LATCH RH 커버
37.798	SEAL, CAB DOOR INSIDE COVER 시일
39.101	GLASS, WINDSHIELD 글래스
39.102	WEATHERSEAL, WINDSHIELD SETTING 웨더시일
39.109	GLASS, REAR 글래스
39.110	WEATHERSEAL, REAR GLASS SETTING 웨더시일
39.117	ROOF SCREEN 루프스크린
39.119	SEAL STRIP, ROOF WINDOW 시일스트립
39.131	DOOR ASSEMBLY, RIGHT HAND 도어
39.138	WEATHERSEAL, RIGHT HAND DOOR 웨더시일
39.144	HANDLE, RH DOOR OUTSIDE 핸들
39.145	FASTENER, RH DOOR HANDLE 패스너
39.147	FASTENER, RIGHT HAND DOOR LATCH 패스너
39.152	DOOR ASSEMBLY, LEFT HAND 도어
39.187	SEAL, DOOR HINGE 시일
39.192	GLASS, RIGHT HAND DOOR (LOWER) 글래스
39.193	WEATHERSEAL, RH DOOR GLASS (LOWER) 웨더시일
39.205	GLASS, RH DOOR REAR 글래스
39.206	GLASS, RH DOOR FRONT 글래스

39.228 WEATHERSEAL, WINDSHIELD SETTING
웨더시일

39.248 WINDOW ASSEMBLY, CAB DOOR (LH)
윈도우

39.263 WEATHERSEAL, CAB TO TRUCK - REAR
웨더시일

39.280 GLASS, REAR WINDOW - MOVEABLE
글래스

39.295 WEATHERSEAL, DOOR REAR GLASS
웨더시일

39.297 WEATHERSEAL, DOOR FRONT GLASS - FRONT
웨더시일

39.318 PANEL, REAR LOWER
판넬

39.319 FASTENER, LOWER REAR PANEL
패스너

39.339 FASTENER, RH DOOR INSIDE HANDLE
패스너

39.344 WEATHERSEAL, RH DOOR WINDOW ASSEMBLY
웨더시일

39.349 WEATHERSEAL, CAB REAR WINDOW
웨더시일

39.977 WINDOW ASSEMBLY, CAB DOOR (RH)
윈도우

47.144 LATCH, RH DOOR INSIDE
래치

47.145 LATCH, LH DOOR INSIDE
래치

47.241 DOOR ASSY, CAB REAR (RH)
도어

47.242 DOOR ASSY, CAB REAR (LH)
도어

47.269 BRACKET, CAB REAR GLASS GAS SPRING SUPPORT
브라켓

47.270 RUBBER, CAB REAR GLASS GAS SPRING MOUNTING
러버

47.271 RUBBER, CAB REAR GLASS GAS SPRING MOUNTING
러버

47.272 BRACKET, CAB REAR GLASS GAS SPRING MOUNTING
브라켓

47.274 HANDLE, CAB REAR GLASS
핸들

47.356 CATCH, CAB DOOR LOWER
캐치

47.357 CATCH, CAB DOOR LOWER
캐치

47.371 CAP, CAB REAR GLASS GAS SPRING MOUNTING FASTENER
*

47.373 SHOCK ABSORBER, CAB REAR GLASS
*

47.375 BRACKET, CAB REAR GLASS HANGER
*

47.378 SUPPORT, CAB DOOR INSIDE LATCH
*

47.380 WEATHERSEAL, CAB DOOR STEP COVER
*

94.494 FASTENER, CAB HOLD DOWN LATCH PIN
패스너

94.582 FASTENER, CAB DOOR LATCH CATCH
패스너

95.358 FASTENER, REAR GLASS HANGER
패스너

96.877 FASTENER, DOOR INSIDE LATCH STRIKER
패스너

97.063 FASTENER, REAR DOOR HANDLE MOUNTING
패스너

97.171 FASTENER, CAB REAR GLASS GAS SPRING MOUNTING
*

97.178 FASTENER, CAB DOOR LOWER CATCH
*

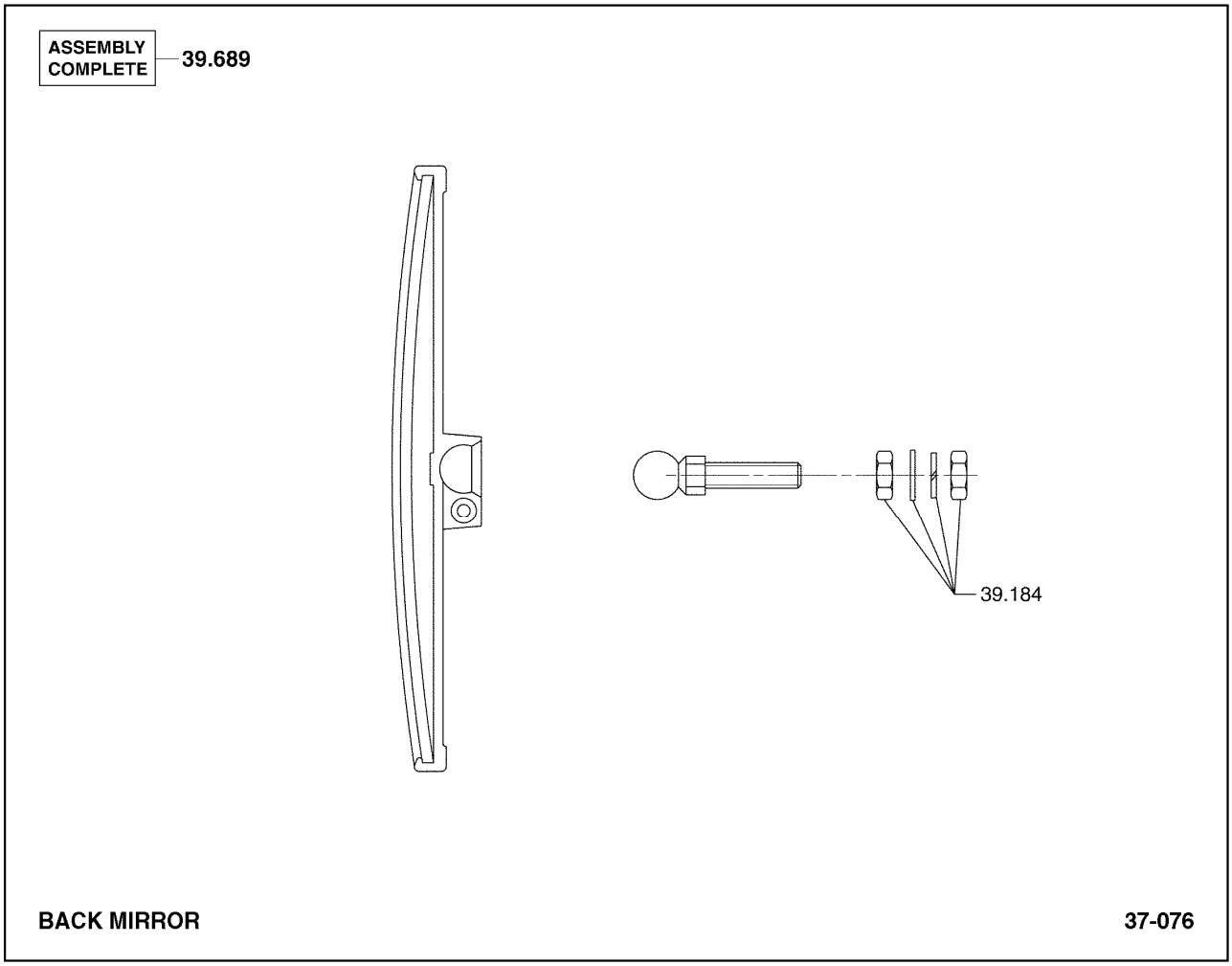

39.184 FASTENER, REAR VIEW MIRROR
패스너

39.689 MIRROR, REAR VIEW
미러

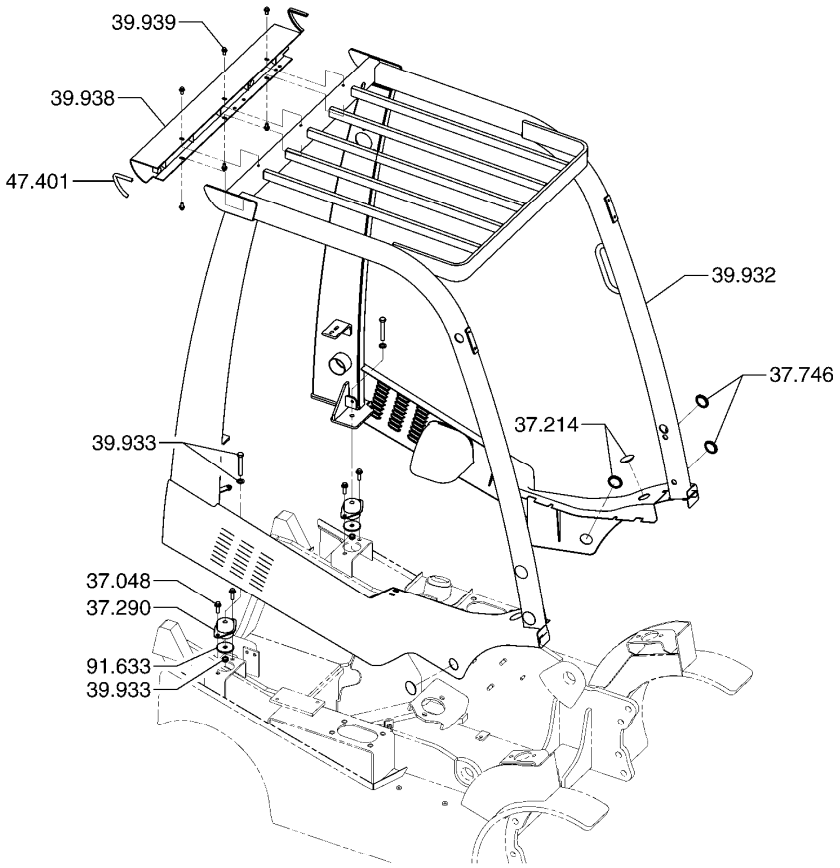

OVERHEAD GUARD MOUNTING **37-082**

37.048 FASTENER, OVERHEAD GUARD BUMPER
패스너

37.214 PLUG-BUTTON
플러그

37.290 DAMPENER, OVERHEAD GUARD VIBRATION
댐프너

37.746 PLUG, DRIVER OVERHEAD GUARD
플러그

39.932 GUARD, OVERHEAD
가드

39.933 FASTENER, OVERHEAD GUARD
패스너

39.938 BRACKET, OVERHEAD GUARD REAR SUPPORT
브라켓

39.939 FASTENER, OVERHEAD GUARD REAR SUPPORT BRACKET
패스너

47.401 WEATHERSTRIP, OVERHEAD GUARD REAR SUPPORT
*

91.633 WASHER, OVERHEAD GUARD FASTENER
와셔

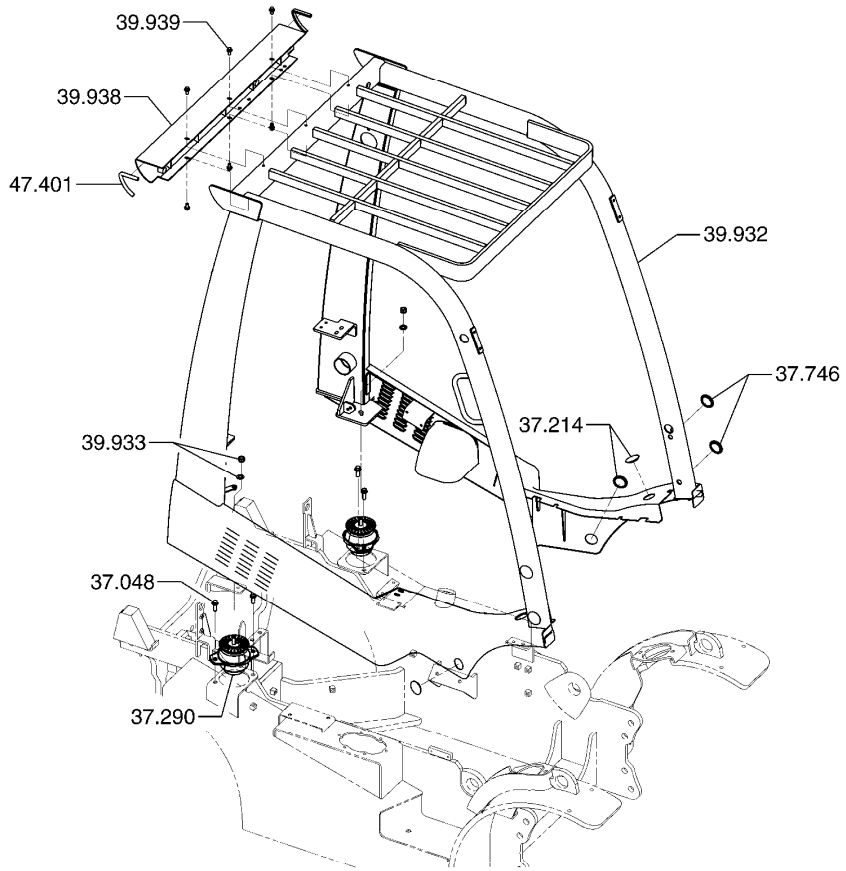

OVERHEAD GUARD MOUNTING **37-083**

37.048 FASTENER, OVERHEAD GUARD BUMPER
패스너

37.214 PLUG-BUTTON
플러그

37.290 DAMPENER, OVERHEAD GUARD VIBRATION
댐프너

37.746 PLUG, DRIVER OVERHEAD GUARD
플러그

39.932 GUARD, OVERHEAD
가드

39.933 FASTENER, OVERHEAD GUARD
패스너

39.938 BRACKET, OVERHEAD GUARD REAR SUPPORT
브라켓

39.939 FASTENER, OVERHEAD GUARD REAR SUPPORT BRACKET
패스너

47.401 WEATHERSTRIP, OVERHEAD GUARD REAR SUPPORT
*

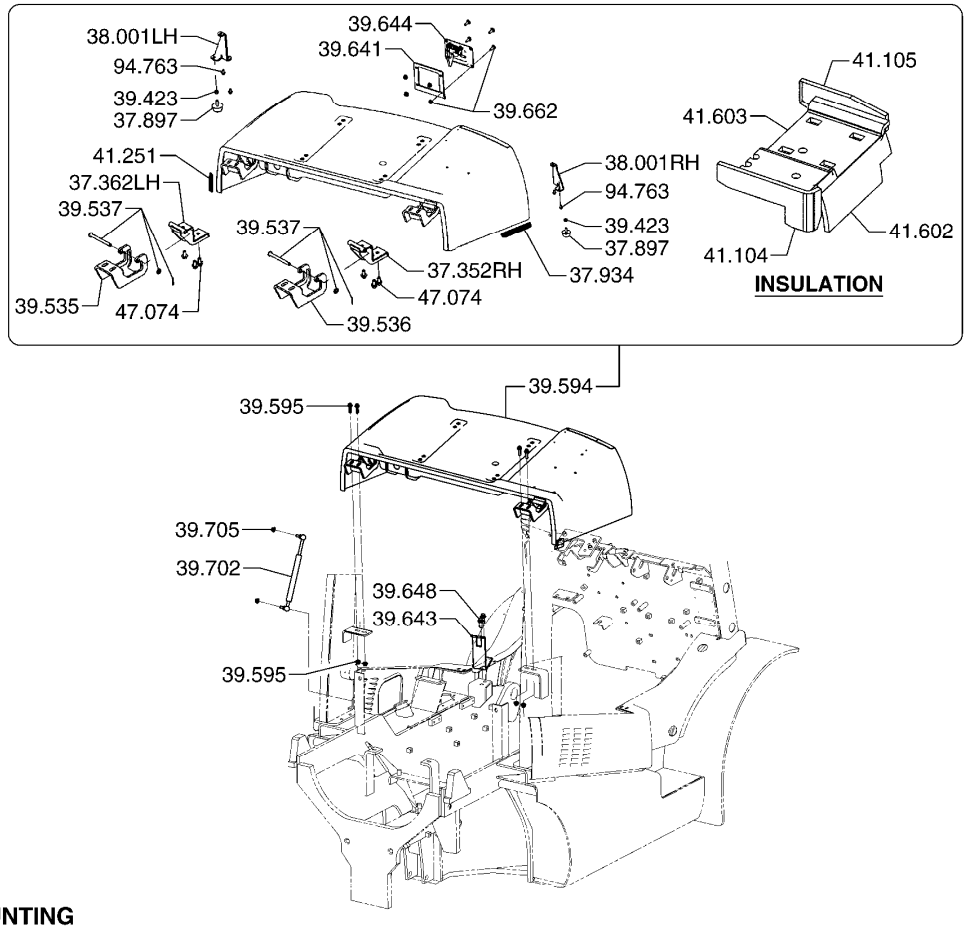

37.352 BRACKET, TOP HOOD SPRING (RH)
브라켓

37.362 BRACKET, TOP HOOD SPRING (LH)
브라켓

37.897 BUMPER, TOP HOOD
범퍼

37.934 SEAL, HOOD ACCESS COVER
시일

38.001 BRACKET, HOOD SUPPORT
브라켓

39.423 FASTENER, TOP HOOD
패스너

39.535 BRACKET, TOP HOOD MOUNTING
브라켓

39.536 BRACKET, TOP HOOD MOUNTING
브라켓

39.537 FASTENER, TOP HOOD MOUNTING BRACKET
패스너

39.594	HOOD, TOP 후드
39.595	FASTENER, TOP HOOD 패스너
39.641	PLATE, TOP HOOD LATCH MOUNTING 플레이트
39.643	CATCH, TOP HOOD LATCH 캐치
39.644	LATCH, TOP HOOD 래치
39.648	FASTENER, TOP HOOD LATCH CATCH 패스너
39.662	FASTENER, TOP HOOD LATCH BRACKET 패스너
39.702	PROP, HOOD 프롭
39.705	FASTENER, HOOD PROP 패스너
41.104	SOUND SEAL, RH SIDE HOOD 사운드시일
41.105	SOUND SEAL, LH SIDE HOOD 사운드시일
41.251	SOUND SEAL, TOP HOOD 사운드시일
41.602	SOUND SEAL, ENGINE HOOD 사운드시일
41.603	SOUND SEAL, ENGINE HOOD 사운드시일
47.074	FASTENER, TOP HOOD SPRING BRACKET 패스너
94.763	FASTENER, HOOD SUPPORT 패스너

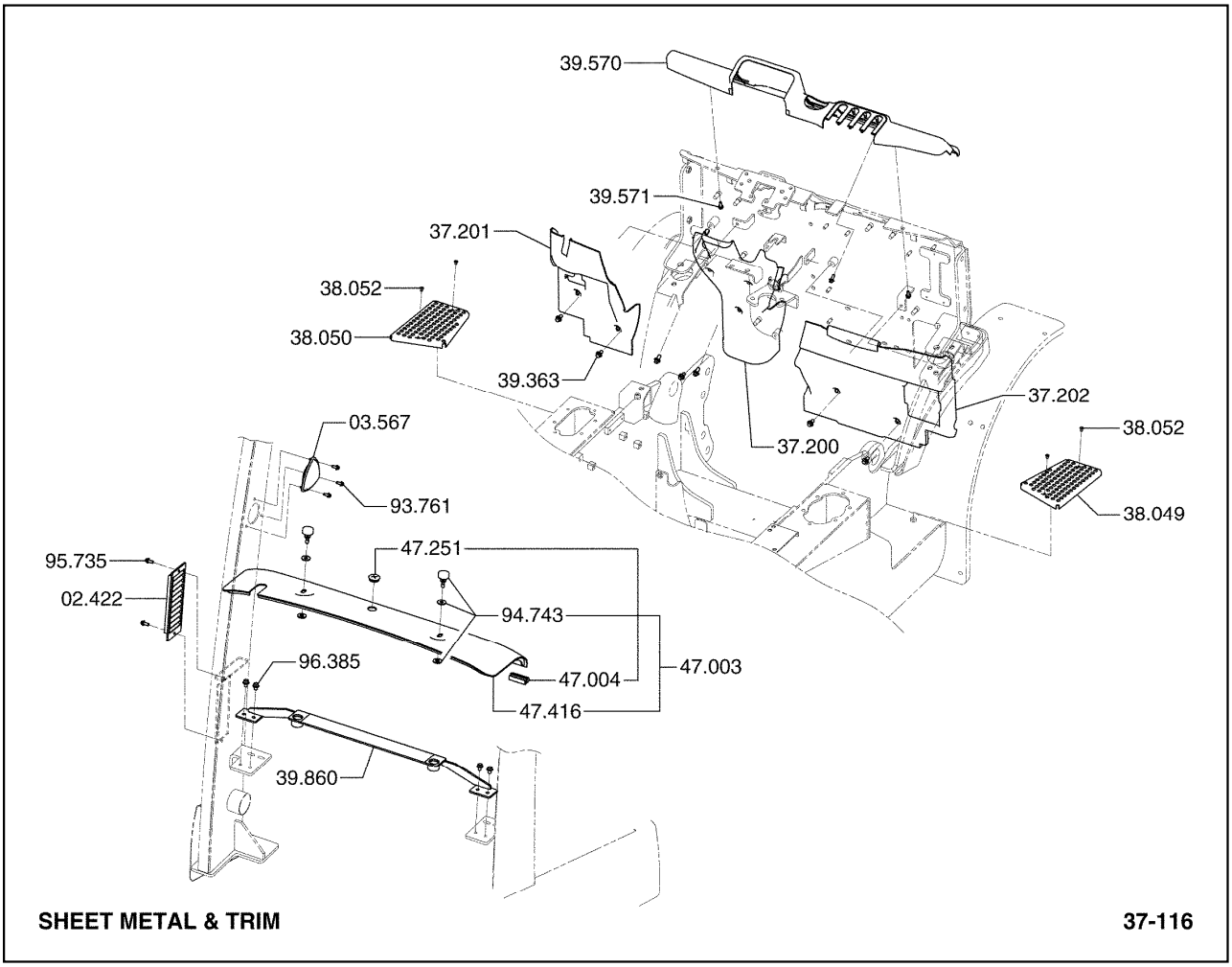

02.422 SCREEN, ENGINE INTAKE AIR
스크린

03.567 PLUG, AIR INTAKE DRIVER OVERHEAD GUARD
플러그

37.200 PANEL, FRONT
판넬

37.201 PANEL, LH SIDE
판넬

37.202 PANEL, RH SIDE
판넬

38.049 STEP ASSEMBLY, RH
스텝

38.050 STEP ASSEMBLY, LH
스텝

38.052 FASTENER, STEP FRONT
패스너

39.363 FASTENER, RH SIDE PANEL
패스너

39.570	COVER ASSEMBLY, DASH 커버
39.571	FASTENER, DASH COVER 패스너
39.860	BRACKET, RADIATOR BAFFLE MOUNTING 브라켓
47.003	COVER, RADIATOR 커버
47.004	SEAL, RADIATOR COVER 시일
47.251	GROMMET, RADIATOR COVER 그로멧
47.416	COVER, RADIATOR *
94.743	FASTENER, RADIATOR COVER TRIM 패스너
95.735	FASTENER, ENGINE AIR INTAKE SCREEN 패스너
96.385	FASTENER, RADIATOR BAFFLE BRACKET 패스너
97.761	FASTENER, RADIATOR BAFFLE BRACKET 패스너

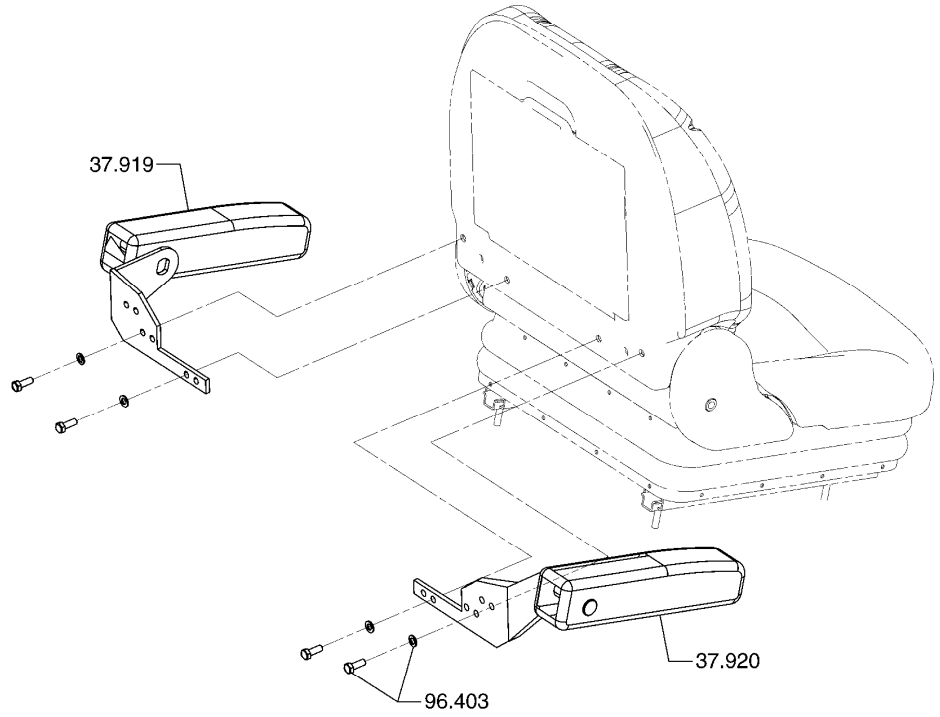

SEAT ARMREST ASSEMBLY **37-124**

37.919 ARMREST LH, SEAT
암레스트

37.920 ARMREST RH, SEAT
암레스트

96.403 FASTENER, SEAT ARMREST BRACKET
패스너

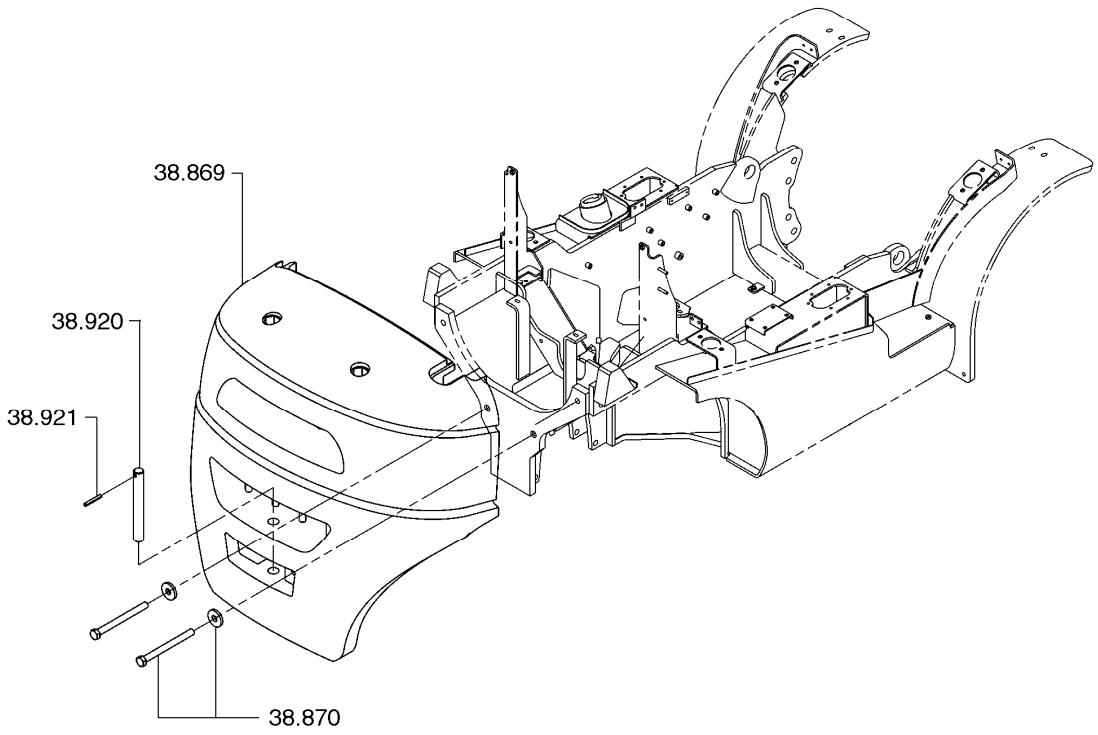

FRAME & COUNTERWEIGHT **38-225**

38.869 COUNTERWEIGHT
카운터웨이트

38.870 FASTENER, COUNTERWEIGHT (LOWER)
패스너

38.920 PIN, COUPLER
핀

38.921 PIN, COUPLER PIN CROSS
핀

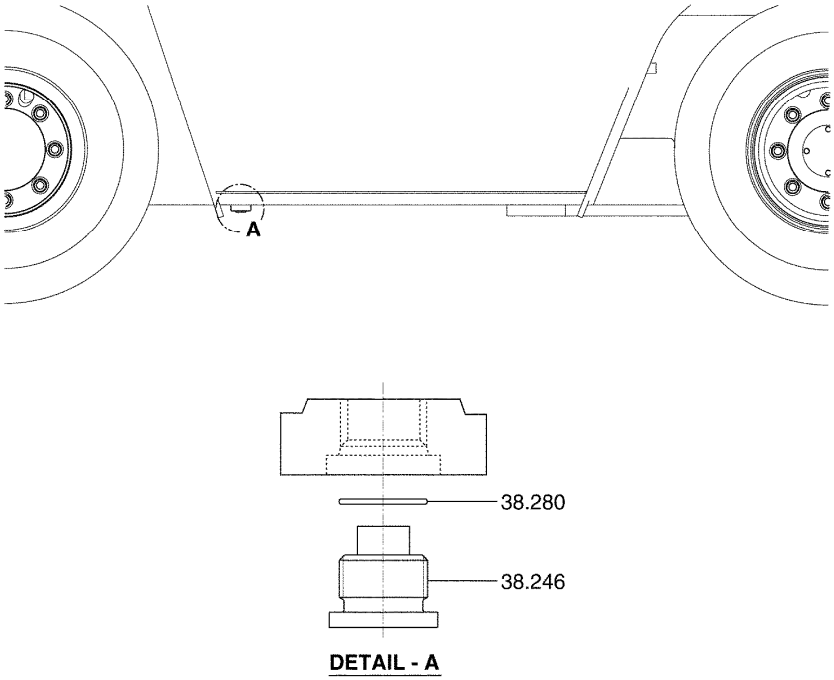

FRAME TANK BOTTOM PLUG **38-270**

38.246 PLUG, FRAME BOTTOM MAGNETIC
플러그

38.280 SEAL, FRAME BOTTOM MAGNETIC PLUG
실

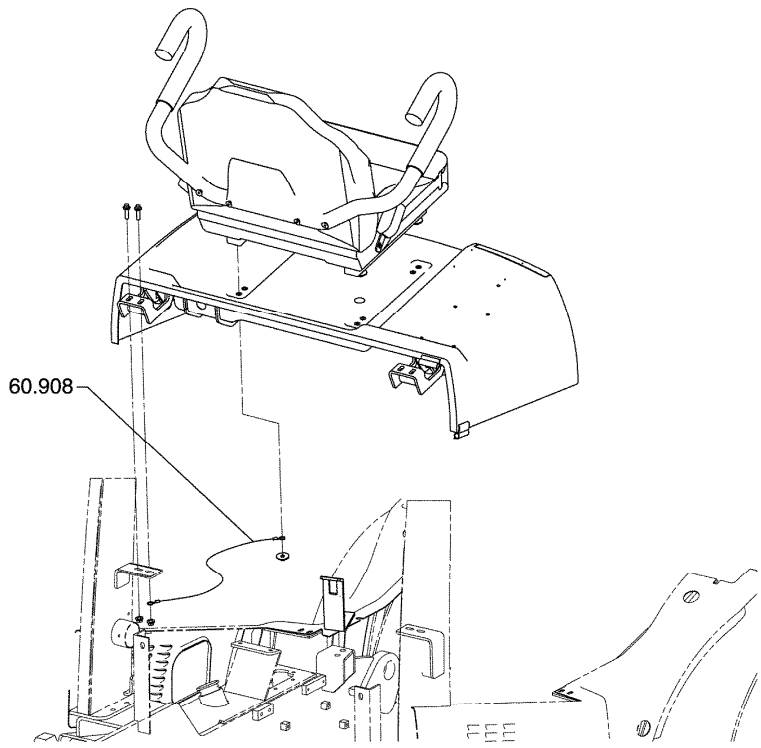

LEAD WIRE GROUND **39-012**

60.908 WIRE, LEAD GROUND
와이어

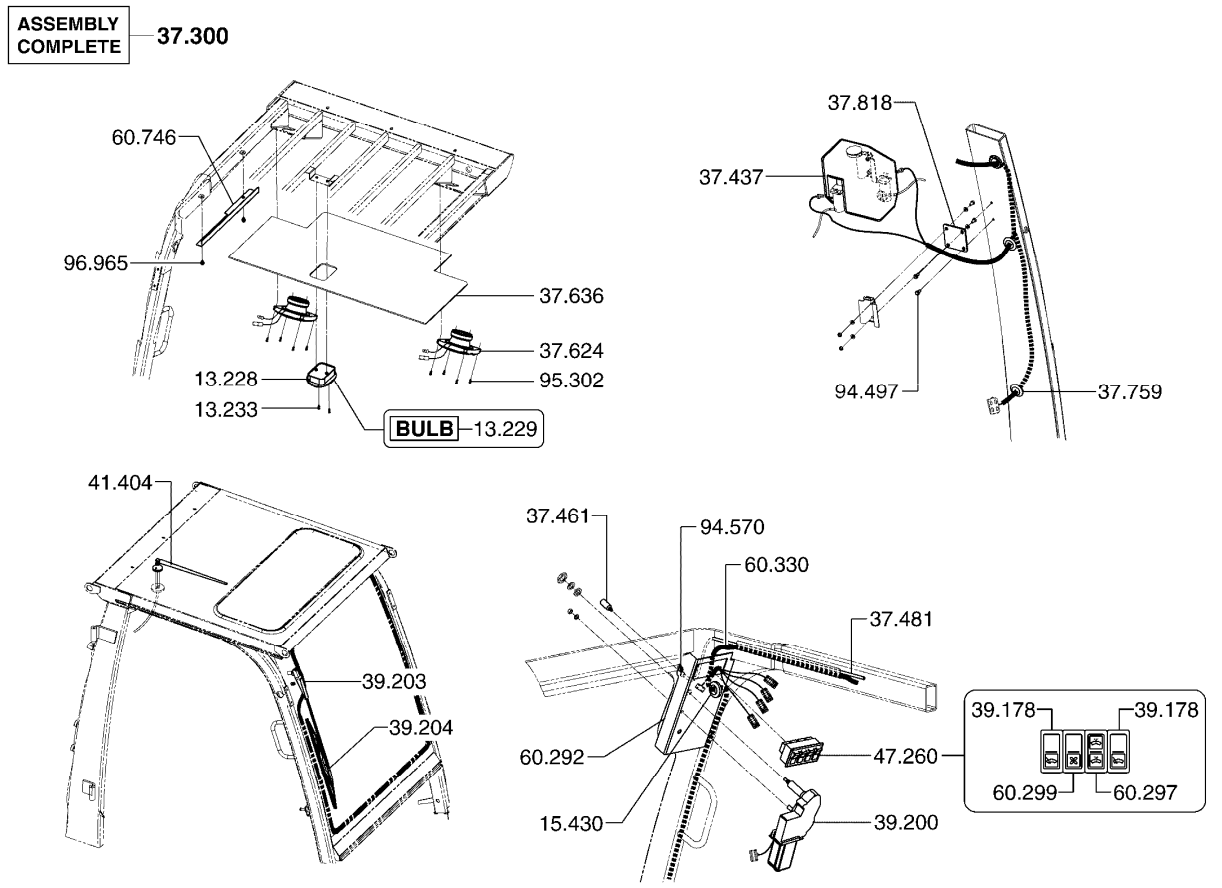

13.228 LAMP ASSEMBLY, DOME
램프

13.229 BULB, DOME LAMP
전구

13.233 FASTENER, DOME LAMP
패스너

15.430 GROMMET, CABIN WIRING HARNESS
그로멧

37.300 CAB ASSEMBLY
캐빈

37.437 PUMP & TANK, WINDSHIELD WASHER
펌프와탱크

37.461 NOZZLE, WINDSHIELD GLASS WASHER
노즐

37.481 LINE, WINDOW GLASS WASHER
라인

37.624 SPEAKER, CABIN
스피커

37.636	COVERING, CAB INSIDE ROOF 커버링
37.759	GROMMET, COVER WINDSHIELD WIPER MOTOR 그로멧
37.818	BRACKET, WINDSHIELD WASHER TANK 브라켓
39.178	SWITCH, WINDSHIELD WIPER 스위치
39.200	MOTOR, WINDSHIELD WIPER 모터
39.203	ARM, WINDSHIELD WIPER 암
39.204	BLADE, WINDSHIELD WIPER 블레이드
41.404	ANTENNA, AUDIO 안테나
47.260	SWITCH ASSY, CABIN 스위치
60.292	COVER, CAB SWITCH PANEL 커버
60.297	SWITCH, WINDSHIELD WASHER 스위치
60.299	SWITCH, HEATER ON/OFF 스위치
60.330	WIRING HARNESS, CAB 와이어하네스
60.746	PROTECTION,HARNESS 보호장치
94.497	FASTENER, WINDSHIELD WASHER TANK 패스너
94.570	FASTENER, CAB SWITCH PANEL COVER 패스너
95.302	FASTENER, LOUDSPEAKER 패스너
96.965	FASTENER, REAR WINDOW WIPER BRACKET 패스너

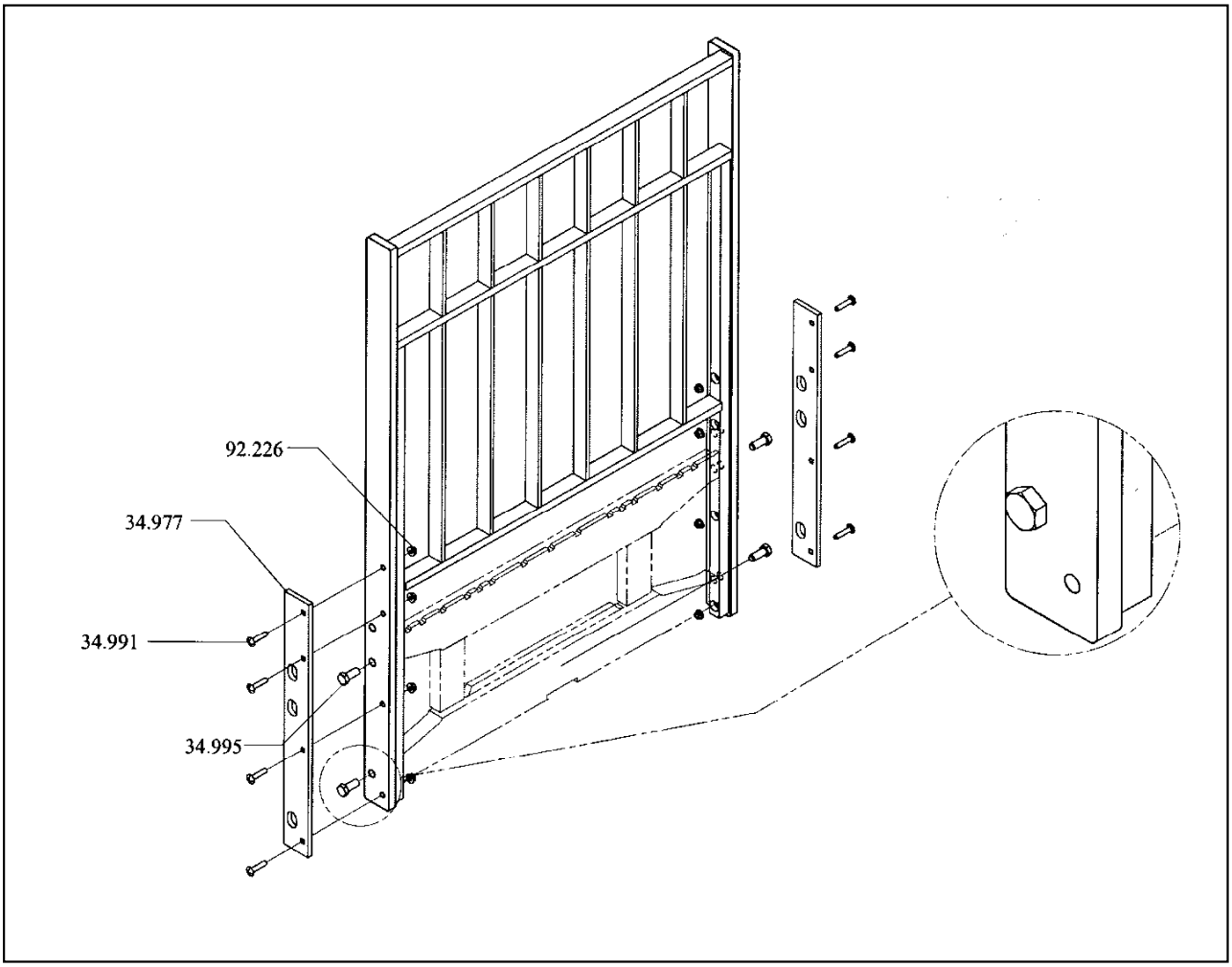

34.977 RETAINER, LOAD BACK REST TRUNNION PIN
리테이너

34.991 FASTENER, LOAD SAFETY BACK REST EXT
패스너

34.995 FASTENER, LOAD SAFETY BACK REST
패스너

92.226 NUT, LOAD SAFETY BACK REST FASTENER
너트

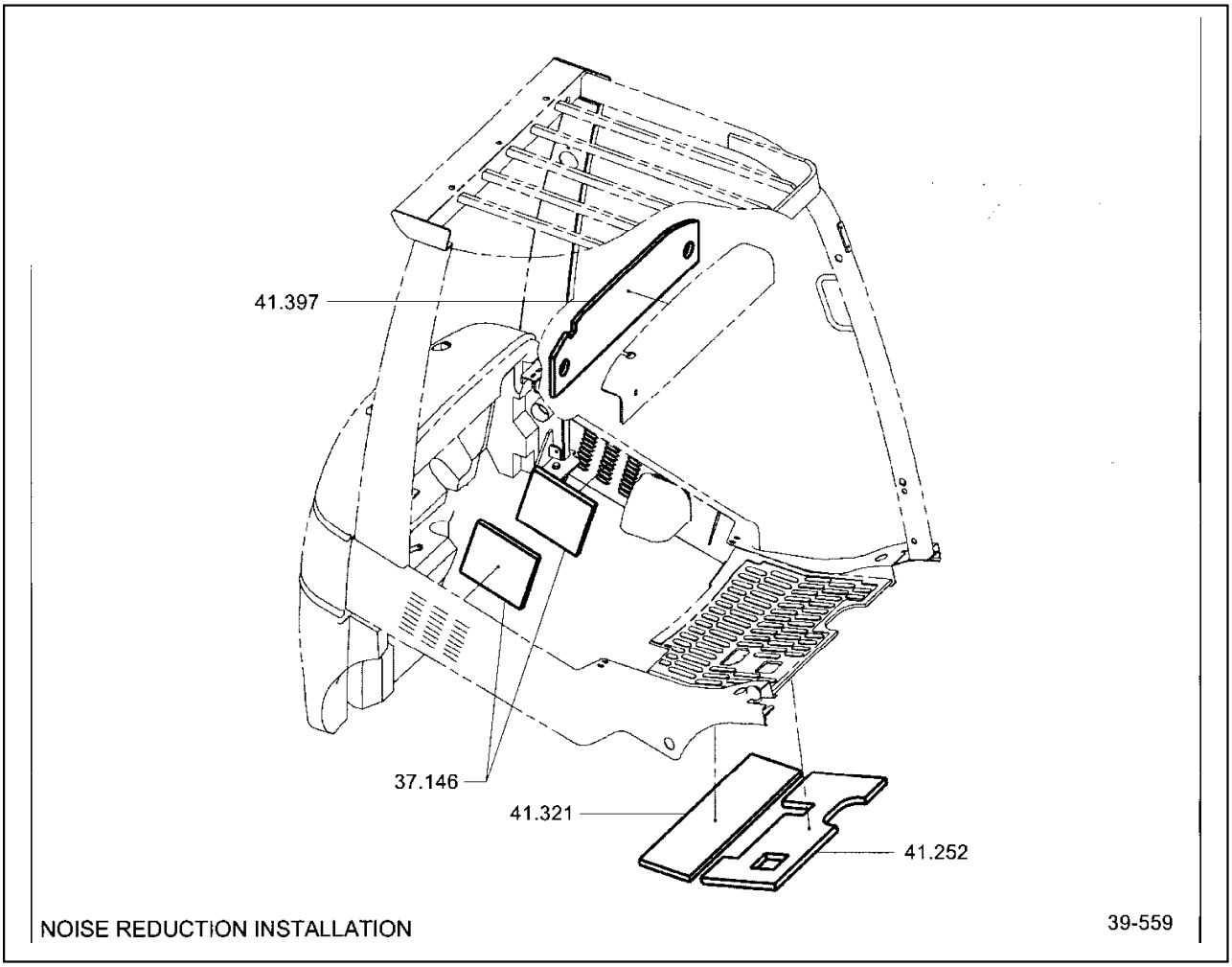

37.146 SOUND ABSORBER, OVERHEAD GUARD
흡음재

41.252 SOUND SEAL, FLOOR PLATE FRONT
사운드시일

41.321 SOUND SEAL, FLOOR PLATE REAR
사운드시일

41.397 SOUND ABSORBER, RADIATOR COVER
흡음재

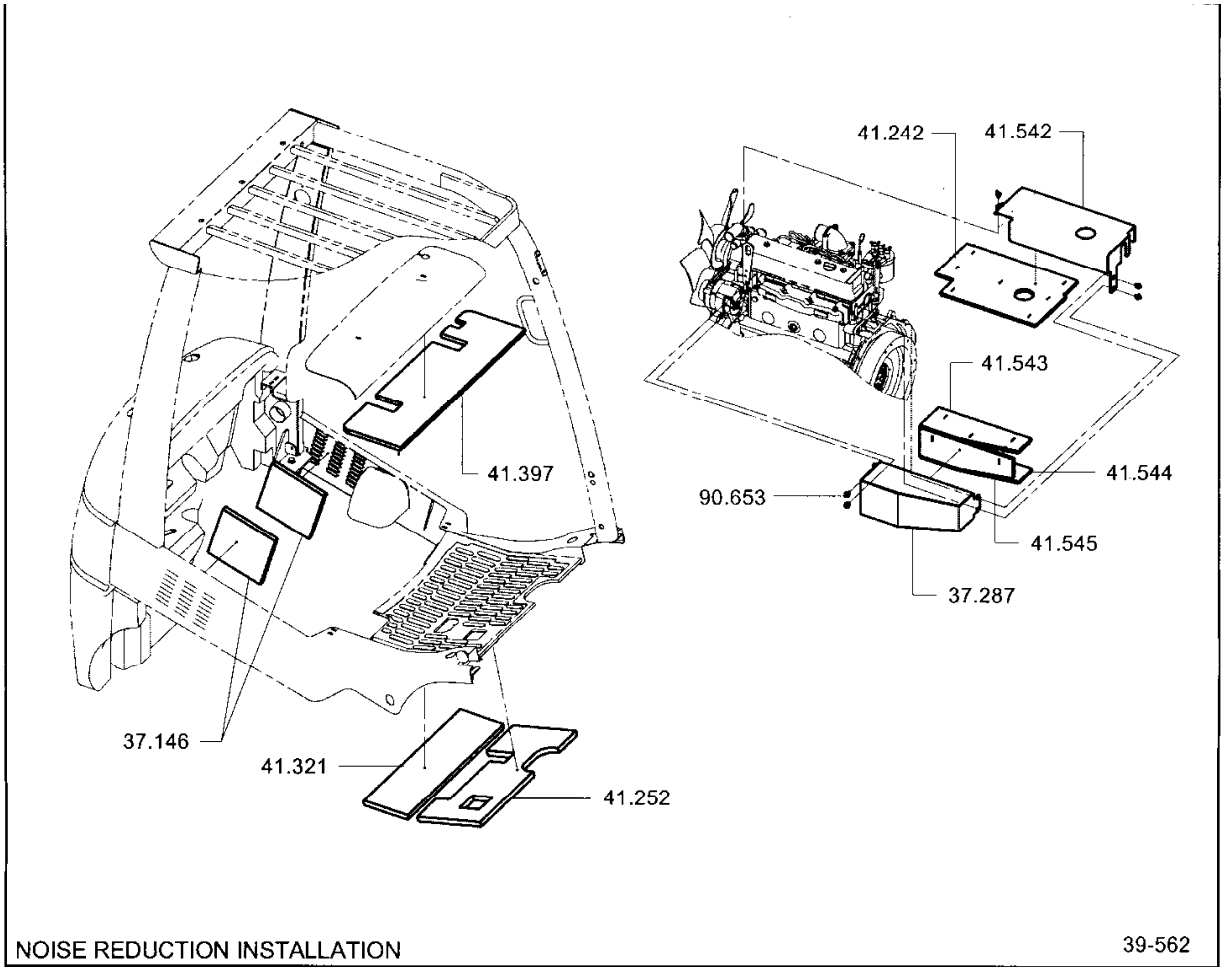

37.146 SOUND ABSORBER, OVERHEAD GUARD
흡음재

37.287 COVER, ENGINE COMPARTMENT
커버

41.242 SOUND SEAL, ENGINE COMPARTMENT
사운드시일

41.252 SOUND SEAL, FLOOR PLATE FRONT
사운드시일

41.321 SOUND SEAL, FLOOR PLATE REAR
사운드시일

41.397 SOUND ABSORBER, RADIATOR COVER
흡음재

41.542 COVER, ENG MANIFOLD
커버

41.543 SOUND SEAL, MANIFOLD COVER
사운드시일

41.544 SOUND SEAL, MANIFOLD BOTTOM
사운드시일

41.545 SOUND SEAL, MANIFOLD FRONT
사운드시일

90.653 BOLT, SOUND SEAL BACKING PLATE
볼트

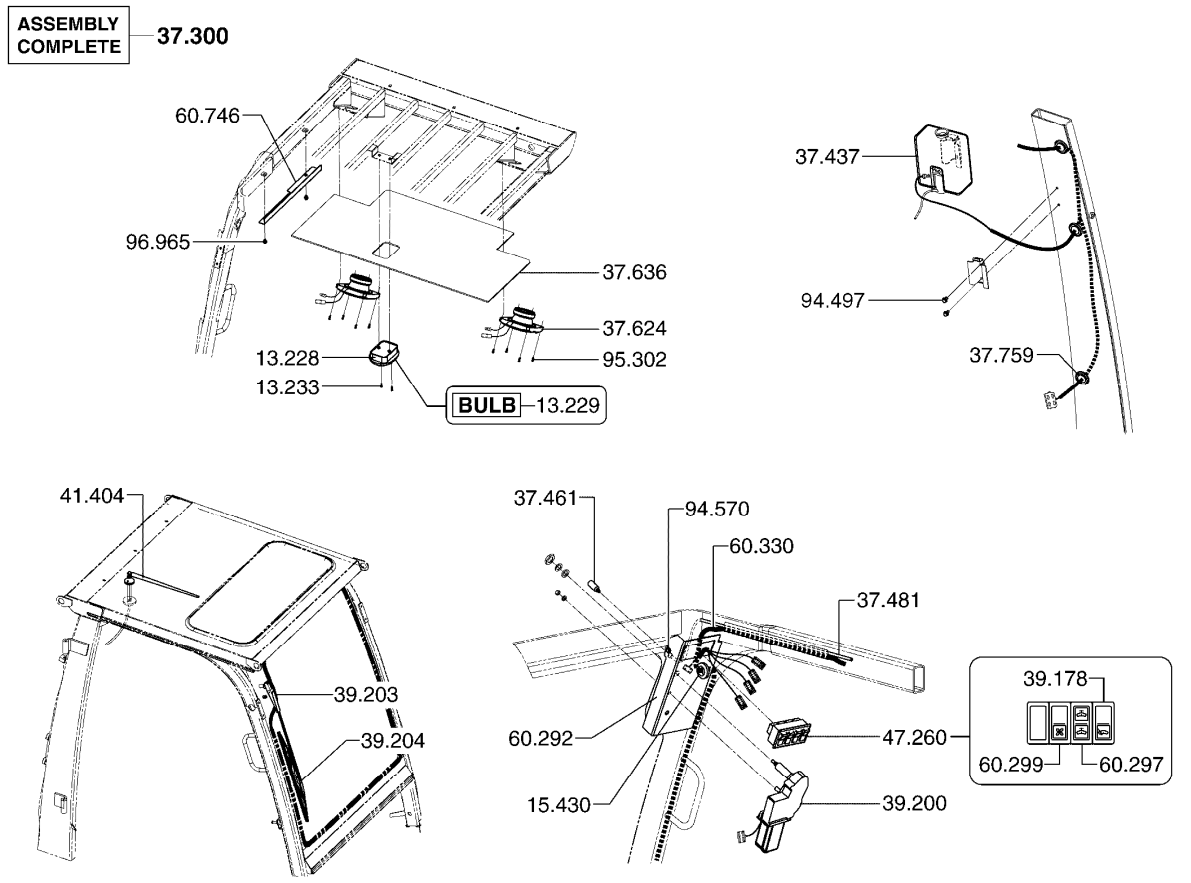

13.228 LAMP ASSEMBLY, DOME
램프

13.229 BULB, DOME LAMP
전구

13.233 FASTENER, DOME LAMP
패스너

15.430 GROMMET, CABIN WIRING HARNESS
그로멧

37.300 CAB ASSEMBLY
캐빈

37.437 PUMP & TANK, WINDSHIELD WASHER
펌프와탱크

37.461 NOZZLE, WINDSHIELD GLASS WASHER
노즐

37.481 LINE, WINDOW GLASS WASHER
라인

37.624 SPEAKER, CABIN
스피커

37.636	COVERING, CAB INSIDE ROOF 커버링
37.759	GROMMET, COVER WINDSHIELD WIPER MOTOR 그로멧
39.178	SWITCH, WINDSHIELD WIPER 스위치
39.200	MOTOR, WINDSHIELD WIPER 모터
39.203	ARM, WINDSHIELD WIPER 암
39.204	BLADE, WINDSHIELD WIPER 블레이드
41.404	ANTENNA, AUDIO 안테나
47.260	SWITCH ASSY, CABIN 스위치
60.292	COVER, CAB SWITCH PANEL 커버
60.297	SWITCH, WINDSHIELD WASHER 스위치
60.299	SWITCH, HEATER ON/OFF 스위치
60.330	WIRING HARNESS, CAB 와이어하네스
60.746	PROTECTION,HARNESS 보호장치
94.497	FASTENER, WINDSHIELD WASHER TANK 패스너
94.570	FASTENER, CAB SWITCH PANEL COVER 패스너
95.302	FASTENER, LOUDSPEAKER 패스너
96.965	FASTENER, REAR WINDOW WIPER BRACKET 패스너

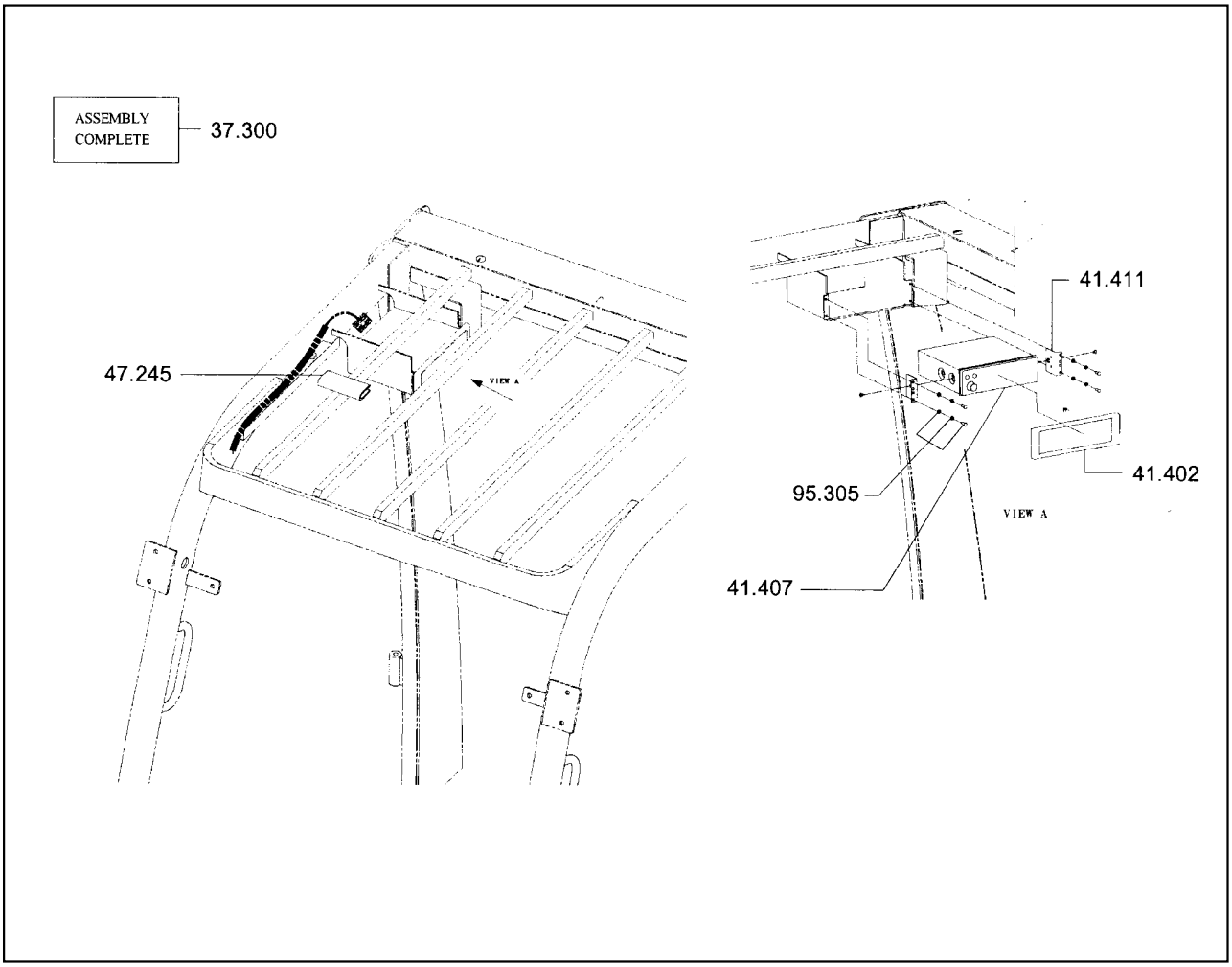

37.300	CAB ASSEMBLY 캐빈
41.402	COVER, AUDIO AND TRANSCEIVER MOUNTING BOX 커버
41.407	AUDIO 라디오
41.411	BRACKET, AUDIO AND TRANSCEIVER BOX MOUNTING 브라켓
47.245	MANUAL, CASSETTE 매뉴얼
95.305	FASTENER, AUDIO AND TRANSCEIVER BOX TO MOUNTING BR 패스너

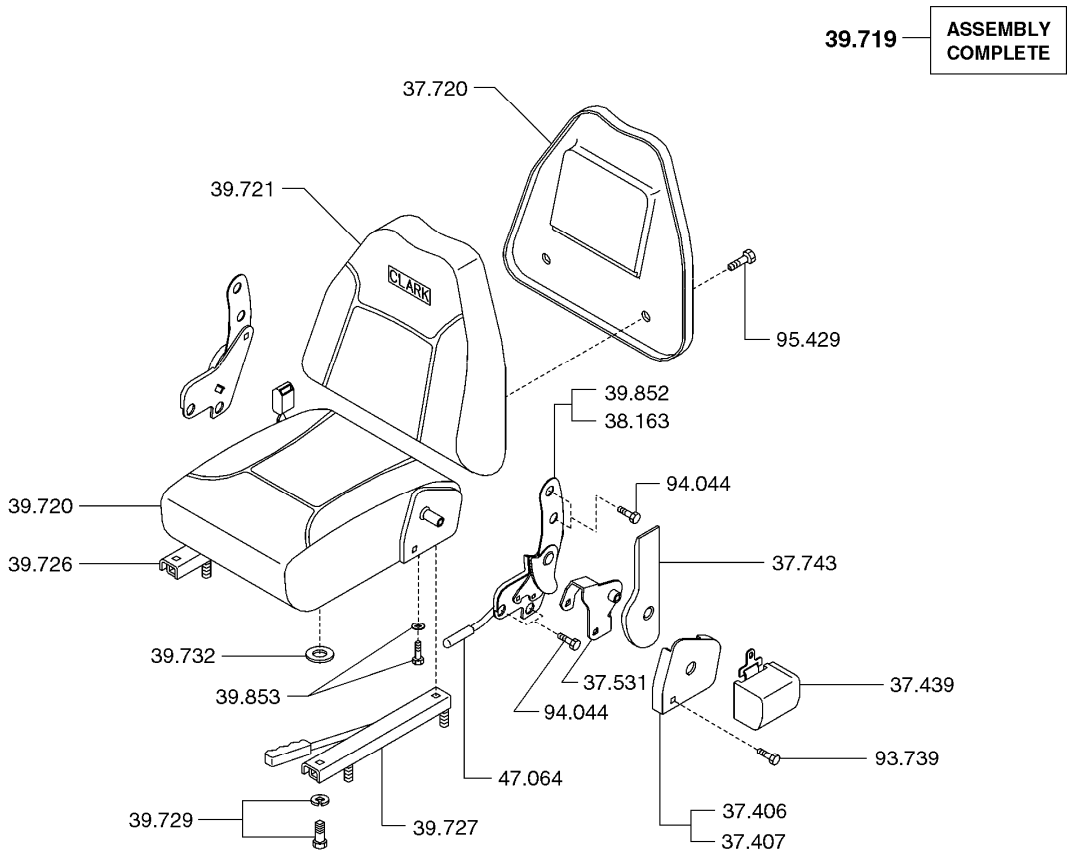

SEAT ASSEMBLY **39-661**

37.406 BRACKET, SEAT BACK REST COVER LH
브라켓

37.407 BRACKET, SEAT BACK REST COVER RH
브라켓

37.439 SAFETY BELT, SEAT
세이프티벨트

37.531 BRACKET, SEAT SAFETY BELT MOUNTING
브라켓

37.720 COVER, OPERATOR SEAT LATERAL RESTRAINT
커버

37.743 COVER, SEAT SUPPORT LATCH
커버

38.163 BRACKET, SEAT SUPPORT RH
브라켓

39.719 SEAT ASSEMBLY
시트

39.720 CUSHION, SEAT
쿠션

39.721	CUSHION, SEAT BACK REST 쿠션
39.726	ADJUSTOR, SEAT 어드져스터
39.727	ADJUSTOR, SEAT WITH LATCH 어드져스터
39.729	FASTENER, ADJUSTOR TO SEAT SUPPORT 패스너
39.732	SPACER, SEAT FRAME TO ADJUSTOR 스페이서
39.852	BRACKET, SEAT SUPPORT LH 브라켓
39.853	FASTENER, SEAT SUPPORT BRACKET 패스너
47.064	KNOB, SEAT ASSEMBLY WEIGHT ADJUSTER 노브
93.739	FASTENER, SAFETY BELT ASSEMBLY 패스너
94.044	FASTENER, SEAT CUSHION MOUNTING PLATE 패스너
95.429	FASTENER, SEAT LATERAL RESTRAINT COVER 패스너

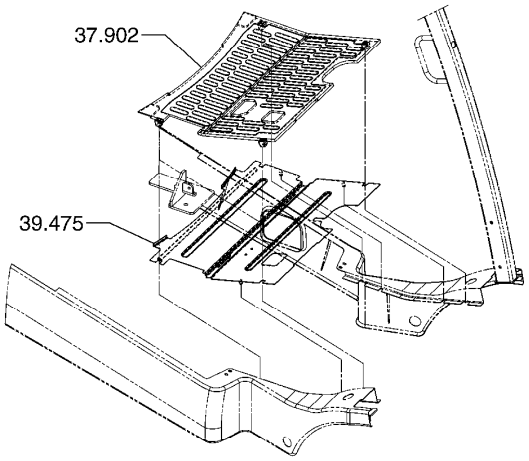

FOR CAB

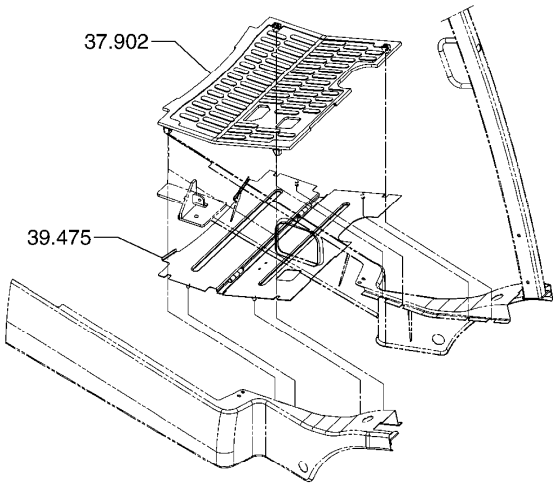

FOR OVERHEAD GUARD

FLOOR PLATE MOUNTING **39-674**

37.902 MAT, FLOORPLATE
매트

39.475 PLATE, FRONT FLOOR
플레이트

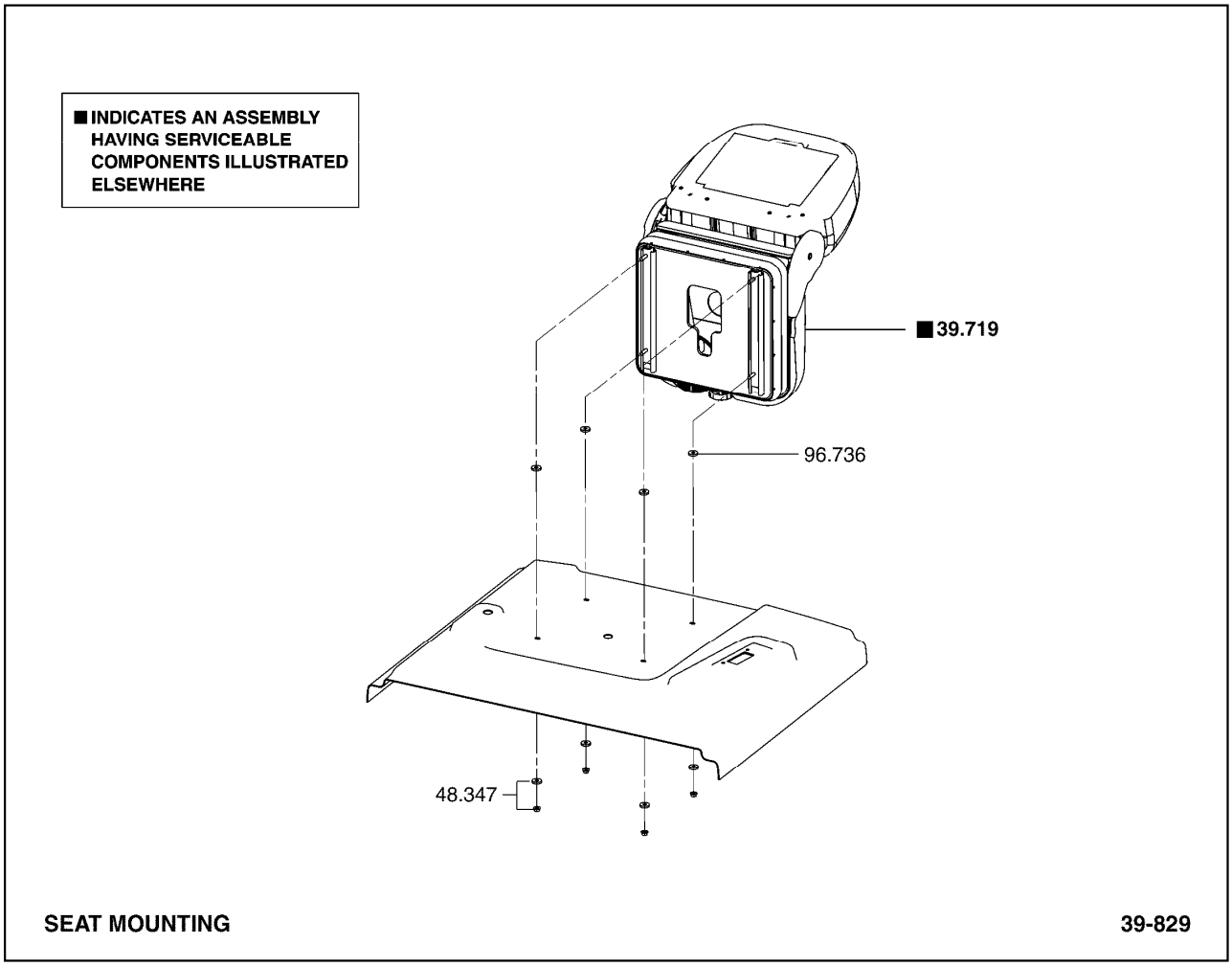

39.719	SEAT ASSEMBLY 시트
48.347	FASTENER, SEAT ASSEMBLY 패스너
96.736	WASHER, SEAT ASSEMBLY FASTENER 와셔

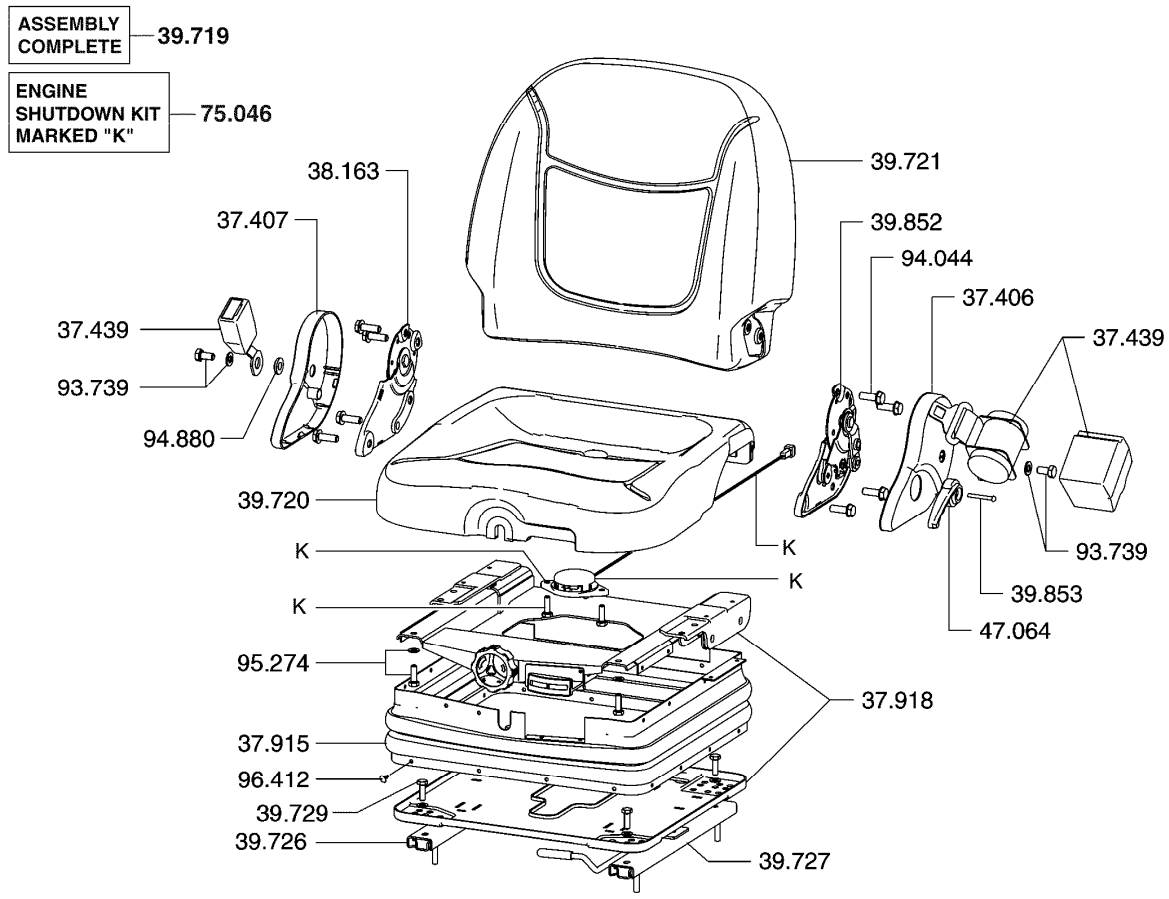

37.406 BRACKET, SEAT BACK REST COVER LH
브라켓

37.407 BRACKET, SEAT BACK REST COVER RH
브라켓

37.439 SAFETY BELT, SEAT
세이프티벨트

37.915 SUSPENSION COVER, SEAT SUSPENSION
서스펜션

37.918 SUSPENSION ASSEMBLY, SEAT
서스펜션

38.163 BRACKET, SEAT SUPPORT RH
브라켓

39.719 SEAT ASSEMBLY
시트

39.720 CUSHION, SEAT
쿠션

39.721 CUSHION, SEAT BACK REST
쿠션

39.726	ADJUSTOR, SEAT 어드져스터
39.727	ADJUSTOR, SEAT WITH LATCH 어드져스터
39.729	FASTENER, ADJUSTOR TO SEAT SUPPORT 패스너
39.852	BRACKET, SEAT SUPPORT LH 브라켓
39.853	FASTENER, SEAT SUPPORT BRACKET 패스너
47.064	KNOB, SEAT ASSEMBLY WEIGHT ADJUSTER 노브
75.046	KIT, SEAT ACTUATED ENGINE SHUTDOWN 킷
93.739	FASTENER, SAFETY BELT ASSEMBLY 패스너
94.044	FASTENER, SEAT CUSHION MOUNTING PLATE 패스너
94.880	FASTENER, SEAT SUPPORT CATCH BRACKET 패스너
95.274	FASTENER, SEAT CUSHION SUSPENSION SUPPORT 패스너
96.412	FASTENER, SEAT SUSPENSION BACK SIDE COVER 패스너

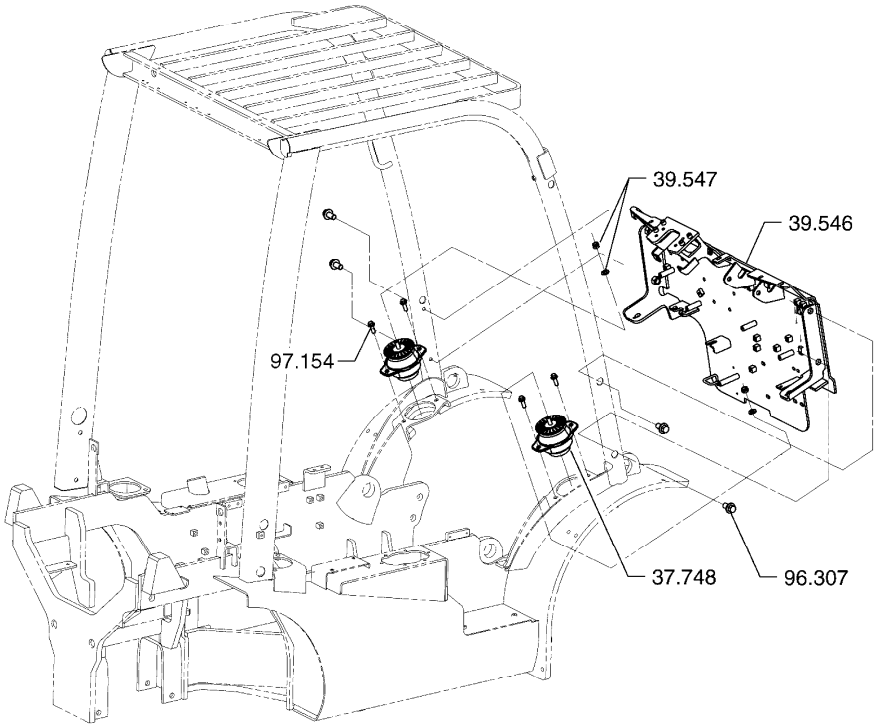

COWL MOUNTING **39-963**

37.748 DAMPENER, COWL VIBRATION
댐프너

39.546 COWL ASSEMBLY
카울

39.547 FASTENER, COWL ASSEMBLY
패스너

96.307 FASTENER, COWL PLATE
패스너

97.154 FASTENER, COWL DAMPENER MOUNTING
패스너

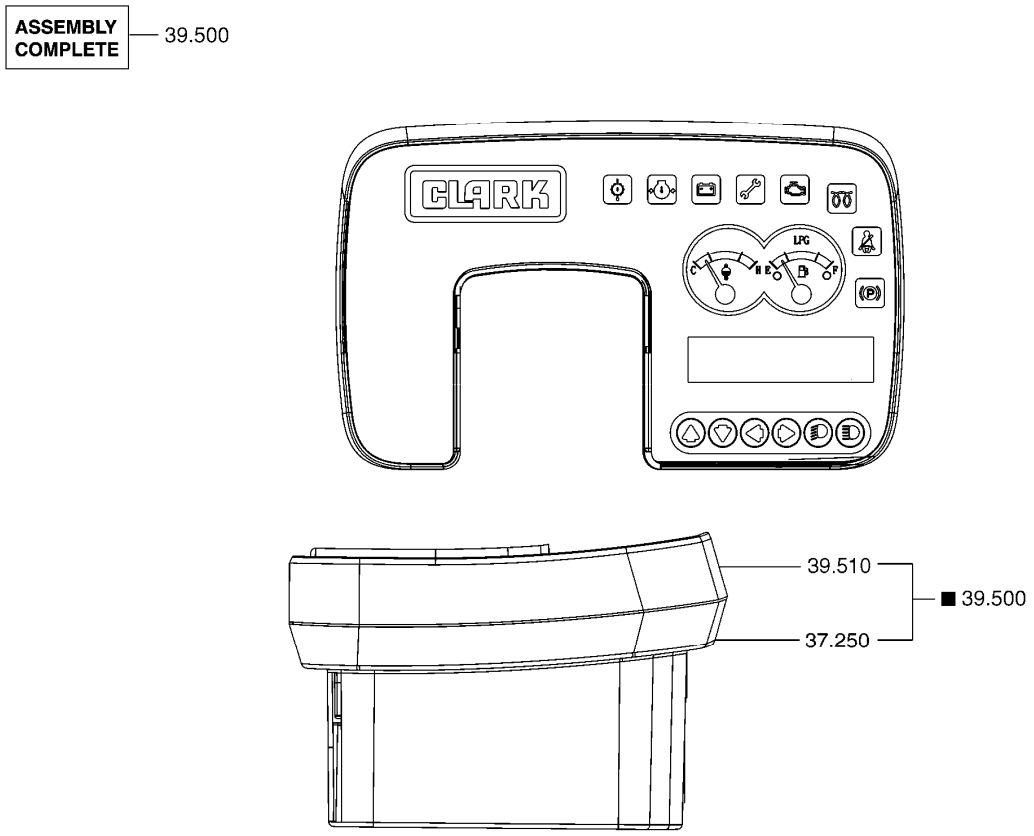

13.000 PANEL, INSTRUMENT CLUSTER
판넬

37.250 HOUSING, INSTRUMENT PANEL
하우징

39.510 HOUSING, INSTRUMENT PANEL
하우징

■INDICATES AN ASSEMBLY HAVING SERVICEABLE COMPONENTS ILLUSTRATED ELSEWHERE

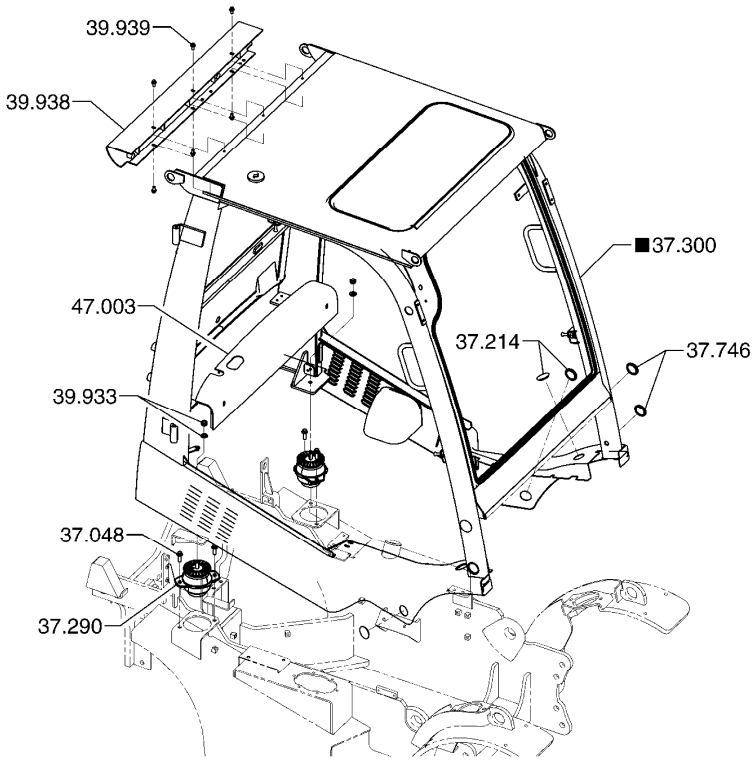

CAB MOUNTING **39-976**

37.048 FASTENER, OVERHEAD GUARD BUMPER
패스너

37.214 PLUG-BUTTON
플러그

37.290 DAMPENER, OVERHEAD GUARD VIBRATION
댐프너

37.300 CAB ASSEMBLY
캐빈

37.746 PLUG, DRIVER OVERHEAD GUARD
플러그

39.933 FASTENER, OVERHEAD GUARD
패스너

39.938 BRACKET, OVERHEAD GUARD REAR SUPPORT
브라켓

39.939 FASTENER, OVERHEAD GUARD REAR SUPPORT BRACKET
패스너

47.003 COVER, RADIATOR
커버

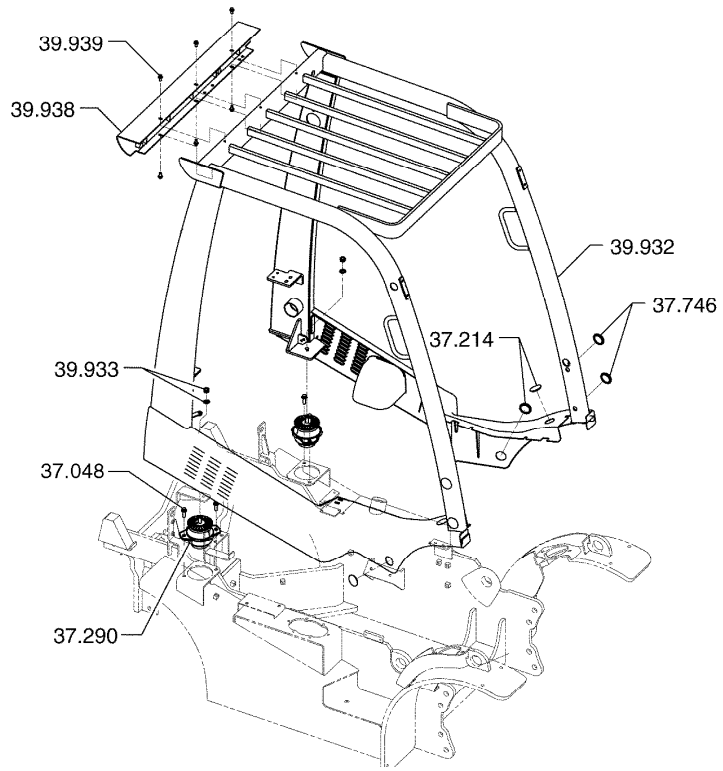

OVERHEAD GUARD MOUNTING **39-977**

37.048 FASTENER, OVERHEAD GUARD BUMPER
패스너

37.214 PLUG-BUTTON
플러그

37.290 DAMPENER, OVERHEAD GUARD VIBRATION
댐프너

37.746 PLUG, DRIVER OVERHEAD GUARD
플러그

39.932 GUARD, OVERHEAD
가드

39.933 FASTENER, OVERHEAD GUARD
패스너

39.938 BRACKET, OVERHEAD GUARD REAR SUPPORT
브라켓

39.939 FASTENER, OVERHEAD GUARD REAR SUPPORT BRACKET
패스너

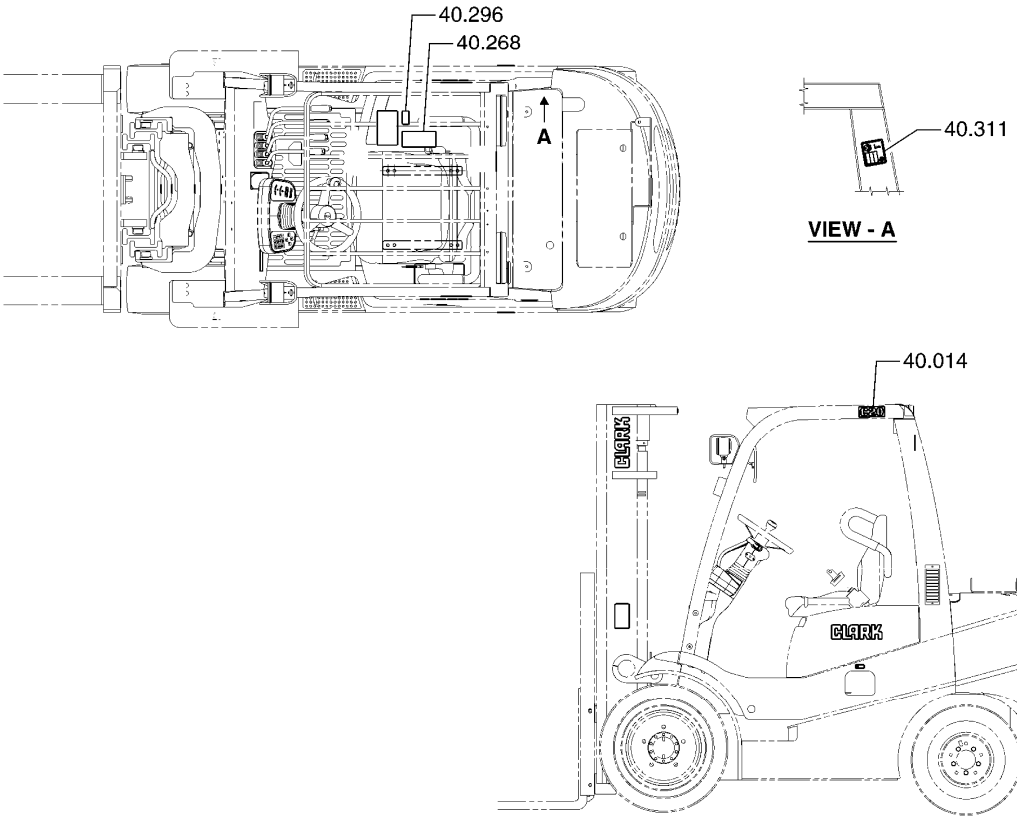

MODEL & SPECIFICATION DECALS **40-243**

40.014 DECAL, MODEL NAME
데칼

40.268 DECAL, SPEC
데칼

40.296 DECAL, TIRE PRESSURE
데칼

40.311 DECAL, SOUND POWER LEVEL
데칼

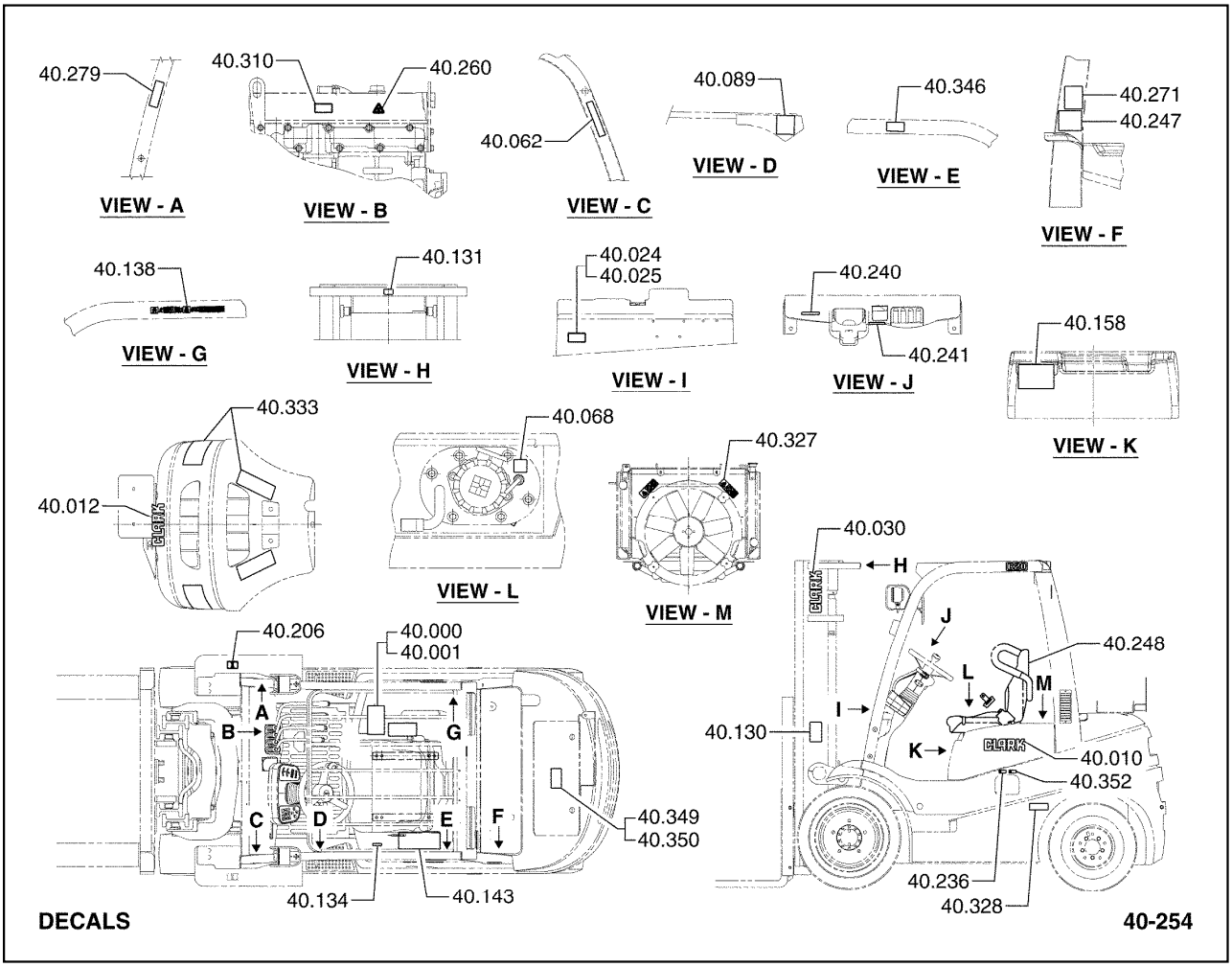

40.000	PLATE, CAPACITY & SERIAL NUMBER 플레이트	40.158	DECAL, WARNING INDICATOR 데칼
40.001	FASTENER, CAPACITY & SERIAL PLATE 패스너	40.206	DECAL, SLING EYE 데칼
40.010	DECAL, CLARK 데칼	40.236	DECAL, FUEL 데칼
40.012	DECAL, CLARK LOGO-SMALL 데칼	40.240	DECAL, FUEL WARNING 데칼
40.024	PLATE, UNDERWRITERS LABEL 플레이트	40.241	DECAL, BRAKE OIL SPEC 데칼
40.025	FASTENER, UNDERWRITERS LABEL PLATE 패스너	40.247	DECAL, LPG FUEL CYL REPLACEMENT PROCEDURE 데칼
40.030	DECAL, CLARK VERTICAL 데칼	40.248	DECAL, SERVICE CHART 데칼
40.062	DECAL, DRIVERS CAUTION 플레J鉗	40.260	DECAL, HOT SURFACE WARNING 데칼
40.068	DECAL, HYD-SYSTEM OIL 데칼	40.271	DECAL, LP GAS 데칼
40.089	PLATE, SAFETY INSTRUCTION 플레이트	40.279	DECAL, STARTING PROCEDURE 데칼
40.130	LEGEND, SAFETY 범례	40.310	DECAL, EXHAUST GAS 데칼
40.131	LEGEND, SAFETY 범례	40.327	DECAL, FAN WARNING 데칼
40.134	DECAL, OPERATORS MANUAL LOCATION 데칼	40.328	DECAL, WHEEL NUT WARNING 데칼
40.138	DECAL, SAFETY 데칼	40.333	REFLECTOR, COUNTERWEIGHT *
40.143	DECAL, OPERATORS INSTRUCTIONS 데칼	40.346	DECAL, OVERHEAD GUARD DROP TEST *

40.349 PLATE, LESS LP TANK
*

40.350 FASTENER, PLATE LESS LP TANK
*

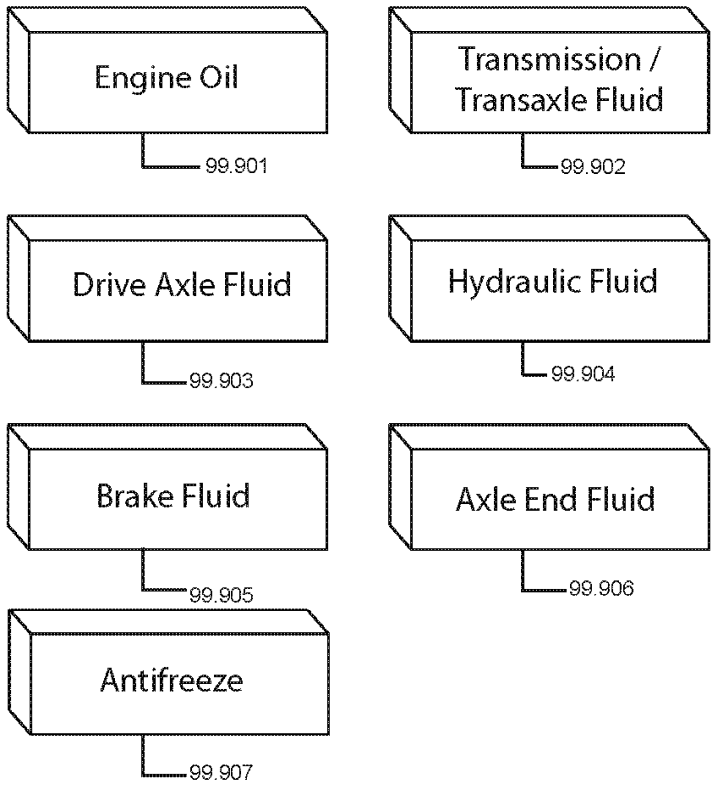

NOTE: All Trucks Do Not Use All Fluid Key Numbers

TRUCK FLUIDS 40-260

99.901 ENGINE OIL
엔진오일

99.902 TRANSMISSION FLUID
트랜스미션오일

99.903 DRIVE AXLE FLUID
드라이브액슬

99.904 HYDRAULIC SUMP OIL
유압섬프오일

99.905 BRAKE FLUID
브레이크오일

99.906 AXLE END FLUID
액슬엔드오일

99.907 ENGINE ANTIFREEZE
부동액

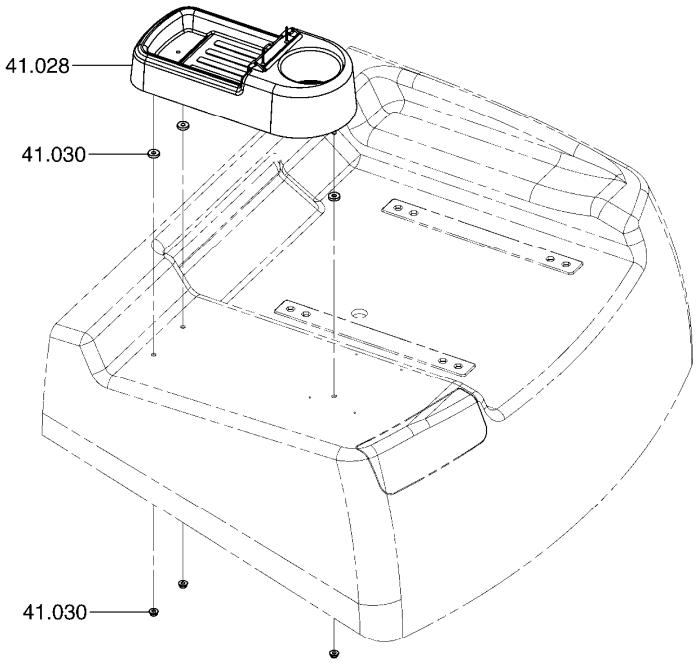

STORAGE CONSOLE MOUNTING **41-008**

41.028 CONSOLE, OPERATOR STORAGE CONSOLE
콘솔

41.030 FASTENER, STORAGE CONSOLE
패스너

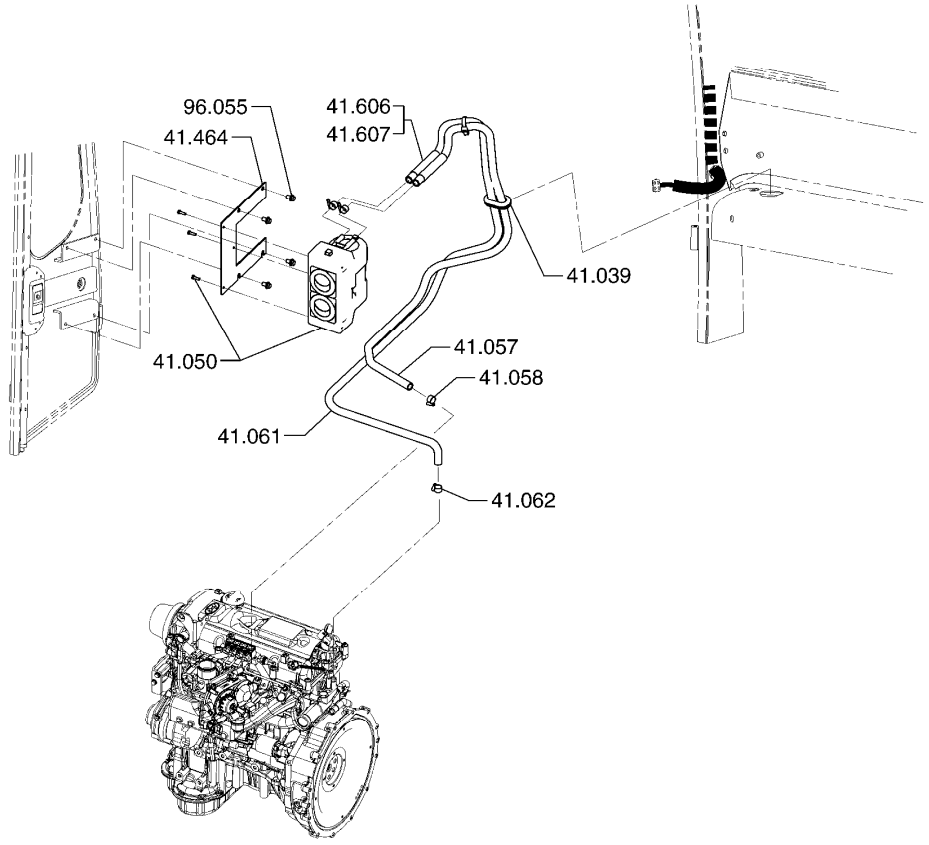

HEATER INSTALLATION **41-038**

41.039 GROMMET, HEATER LINE
그로멧

41.050 HEATER ASSEMBLY
히터

41.057 LINE, HEATER INLET
라인

41.058 CLAMP, HEATER INLET LINE
클램프

41.061 LINE, HEATER OUTLET
라인

41.062 CLAMP, HEATER OUTLET LINE
클램프

41.464 BRACKET, HEATER
브라켓

41.606 SLEEVE, HEATER HOSE
*

41.607 GUARD, HEATER HOSE
*

96.055 FASTENER, HEATER MOUNTING BRACKET
패스너

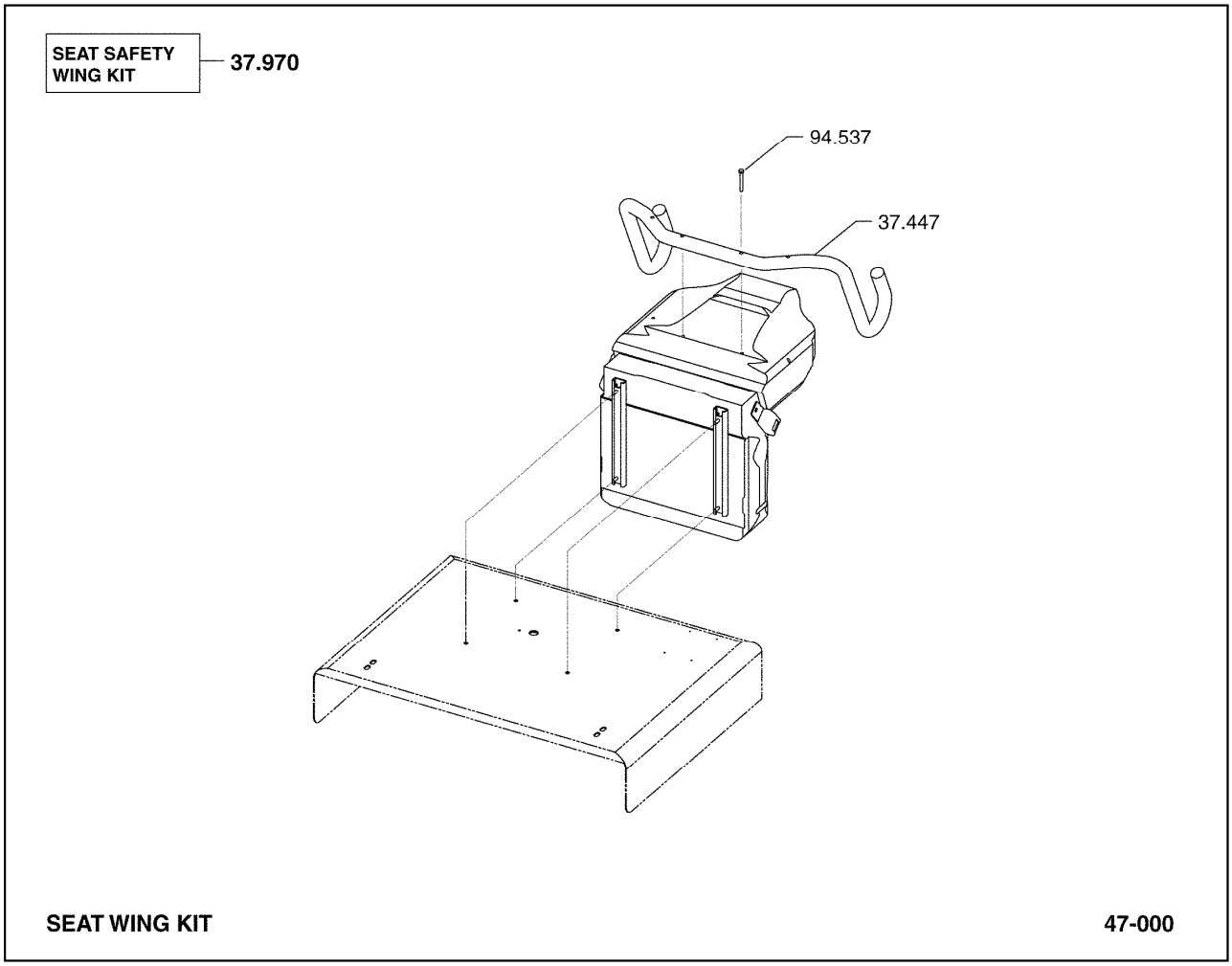

37.447 RESTRAINT, OPERATOR SEAT LATERAL
레스트레인트

37.970 KIT, SEAT SAFETY
킷

94.537 FASTENER, OPERATOR SEAT LATERAL RESTRAINT
패스너

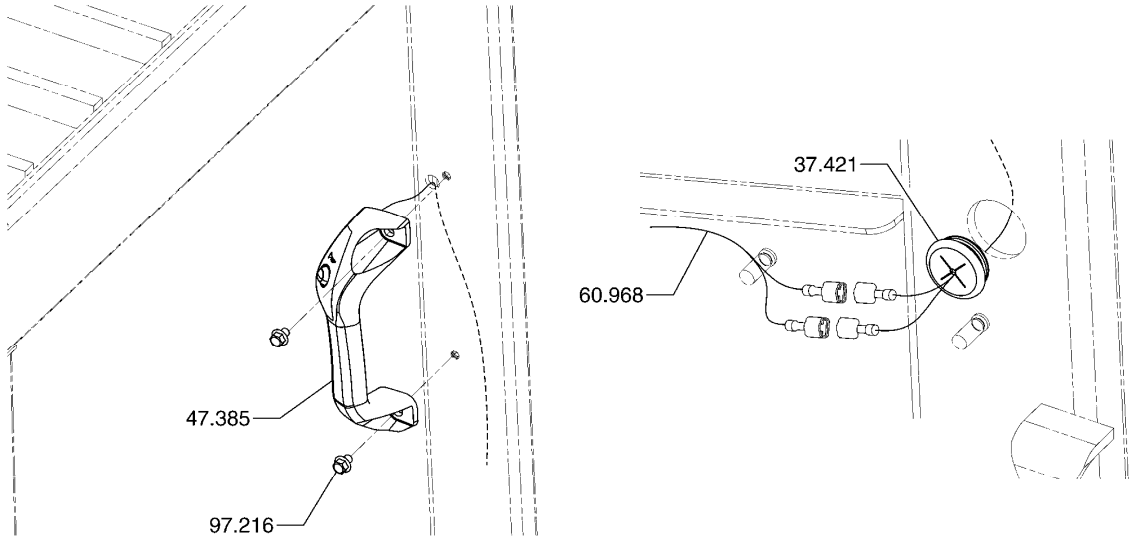

REAR HAND GRIP MOUNTING **47-005**

37.421 GROMMET, OVERHEAD GUARD REAR SUPPORT PIVOT
그로멧

47.385 GRIP, OVERHEAD GUARD REAR HAND
*

60.968 WIRE, OVERHEAD GUARD REAR HAND GRIP SWITCH
*

97.216 FASTENER, OVERHEAD GUARD REAR HAND GRIP
*

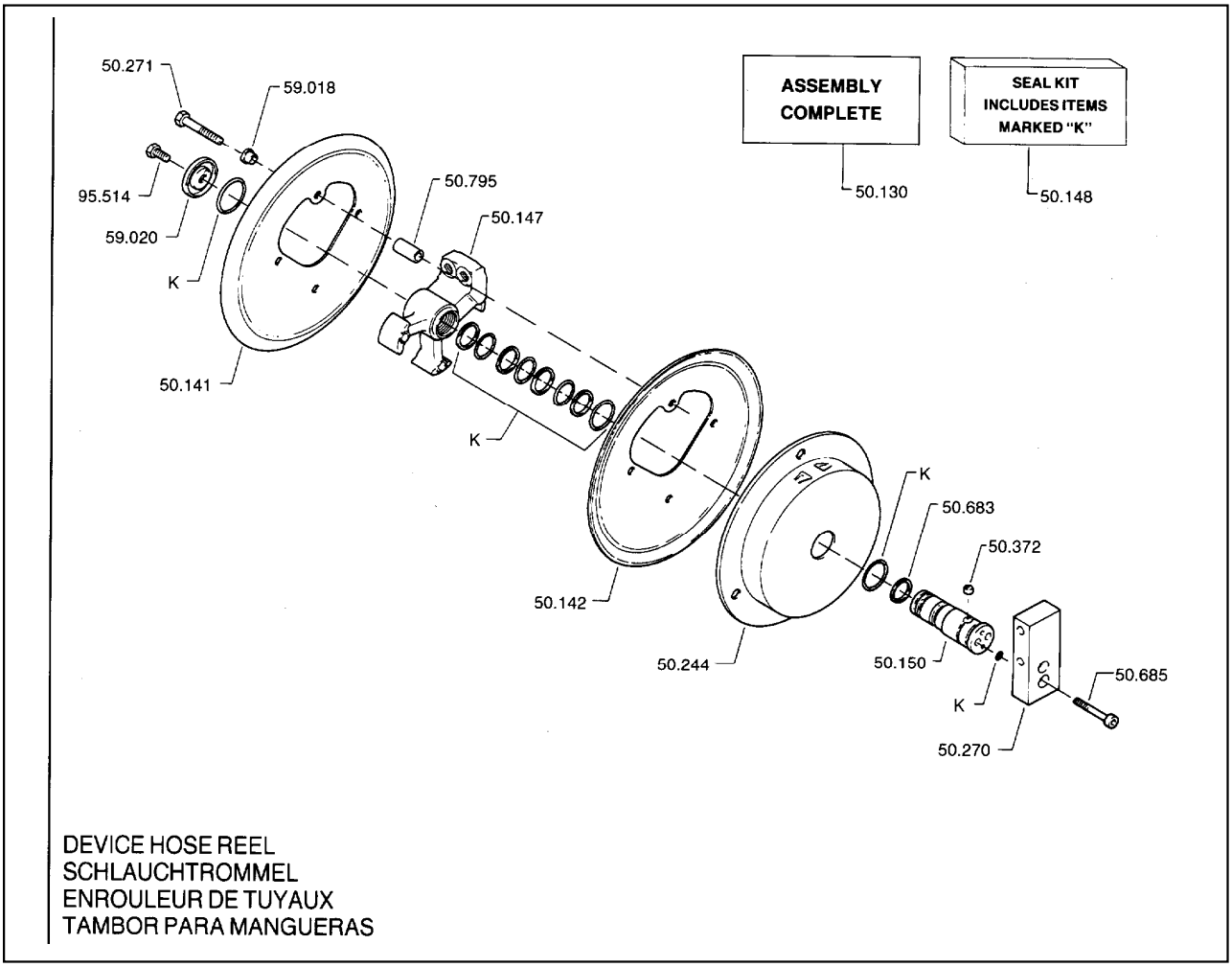

50.130 REEL ASSEMBLY, DEVICE RH HOSE
릴

50.141 FLANGE, DEVICE RH HOSE REEL OUTBOARD
플랜지

50.142 FLANGE, DEVICE RH HOSE REEL CENTER
플랜지

50.147 HUB, DEVICE RH HOSE REEL
허브

50.148 SEAL, DEVICE RH HOSE REEL AXLE
시일

50.150 AXLE, DEVICE RH HOSE REEL
액슬

50.244 HOUSING ASSEMBLY, DEVICE RH HOSE REEL SPRING
하우징

50.270 BASE, DEVICE RH HOSE REEL
베이스

50.271 FASTENER, DEVICE RH HOSE REEL AXLE
패스너

50.372	DOG, DEVICE RH HOSE REEL SPRING 도그
50.683	LOCK, DEVICE HOSE REEL DOG 로크
50.685	FASTENER, DEVICE HOSE REEL BASE 패스너
50.795	SPACER, DEVICE HOSE REEL SPRING HOUSING 스페이서
59.018	GUIDE, DEVICE HOSE REEL FASTENER 가이드
59.020	CAP, DEVICE HOSE REEL AXLE 캡
95.514	FASTENER, DEVICE HOSE REEL AXLE CAP 패스너

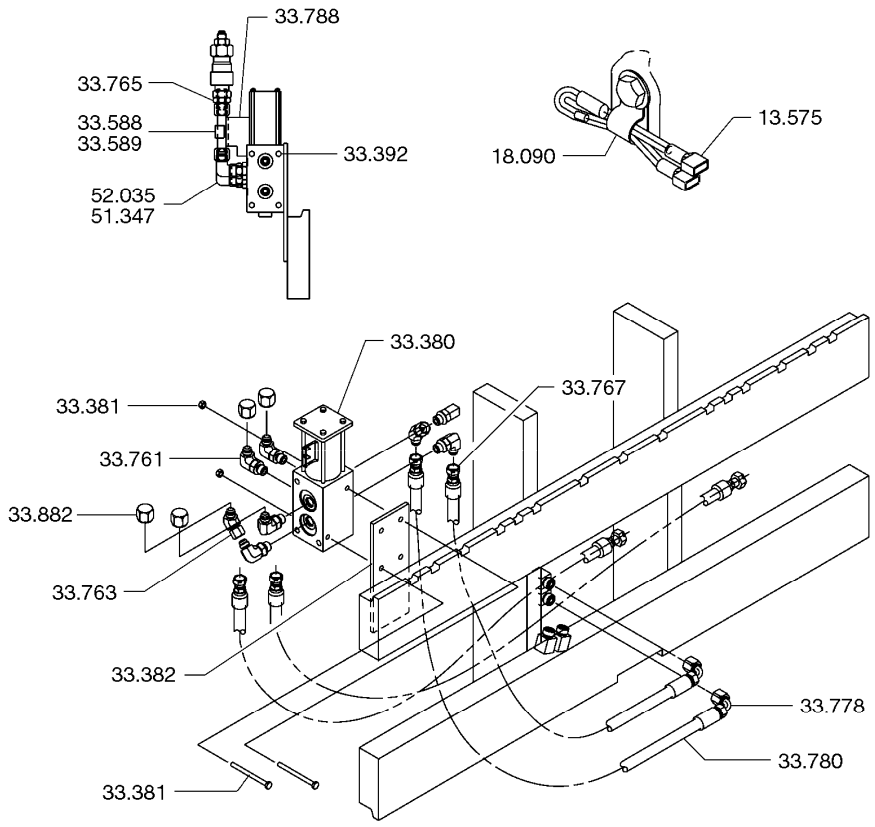

SOLENOID VALVE **50-157**

13.575 WIRE, DEV SELECTOR VALVE SWITCH FEED
와이어

18.090 CLIP, REEL WIRE HARNESS
클립

33.380 VALVE ASSEMBLY, DEVICE SELECTOR SOLENOID
벨브

33.381 FASTENER, DEVICE SELECTOR VALVE
패스너

33.382 BRACKET, DEVICE SELECTOR VALVE
브라켓

33.392 FASTENER, SECONDARY SELECTOR VALVE
패스너

33.588 CLIP, BY-PASS CLAMP LOCK VALVE
클립

33.589 FASTENER, BY-PASS CLAMP LOCK VALVE CLIP
패스너

33.761 FITTING, DEVICE SELECTOR VALVE C4 PORT
피팅

33.763 FITTING, DEVICE SELECTOR VALVE C4 PORT
피팅

33.765 LINE, DEVICE SELECTOR VALVE C4 PORT HYDRAULIC
라인

33.767 HOSE COUPLING, DEV SEL VALVE C1 PORT
호스커플링

33.778 HOSE COUPLING, DEV SEL VALVE C3 PORT
호스커플링

33.780 LINE, DEVICE SELECTOR VALVE C2 PORT HYDRAULIC
라인

33.788 BRACKET, DEVICE SEL VALVE HYDRAULIC LINE
브라켓

33.882 PLUG, DEVICE SEL VALVE "P" PORT
플러그

51.347 FITTING, SELECTOR VALVE P PORT
피팅

52.035 FITTING, SEC SEL VALVE C4 PORT LINE
피팅

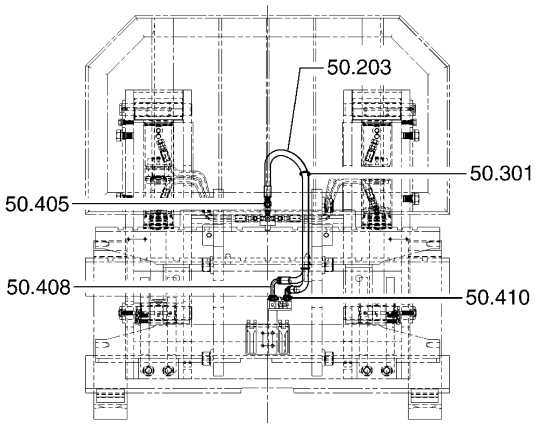

HINGED BUCKET (HB) / FORK (HF) - BASIC

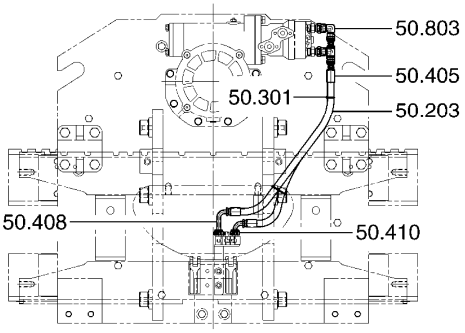

ROTATING FORK (RF) - BASIC

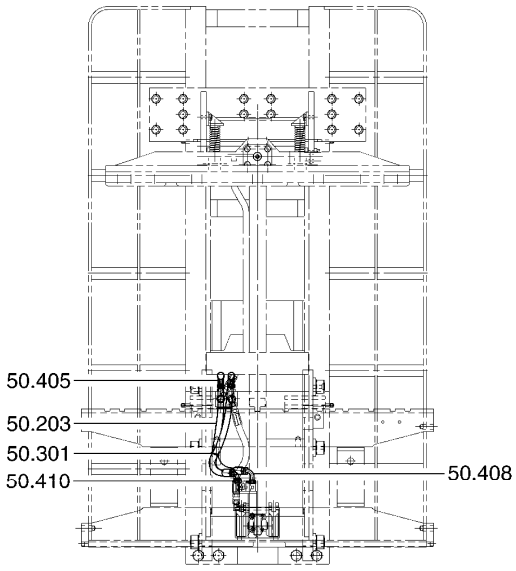

LOAD STABILIZER (LS) - BASIC

ATTACHMENT HOSE ADAPTATION (CARRIAGE) 50-171

50.203 LINE, DEVICE HYDRAULIC (AT CARRIAGE)
라인

50.301 CLIP, DEVICE RH HOSE (AT CARRIAGE)
클립

50.405 COUPLING, DEVICE HOSE
커플링

50.408 COUPLING, DEVICE HOSE
커플링

50.410 COUPLING, DEVICE HOSE
커플링

50.803 FITTING, DEVICE HYDRAULIC LINE
피팅

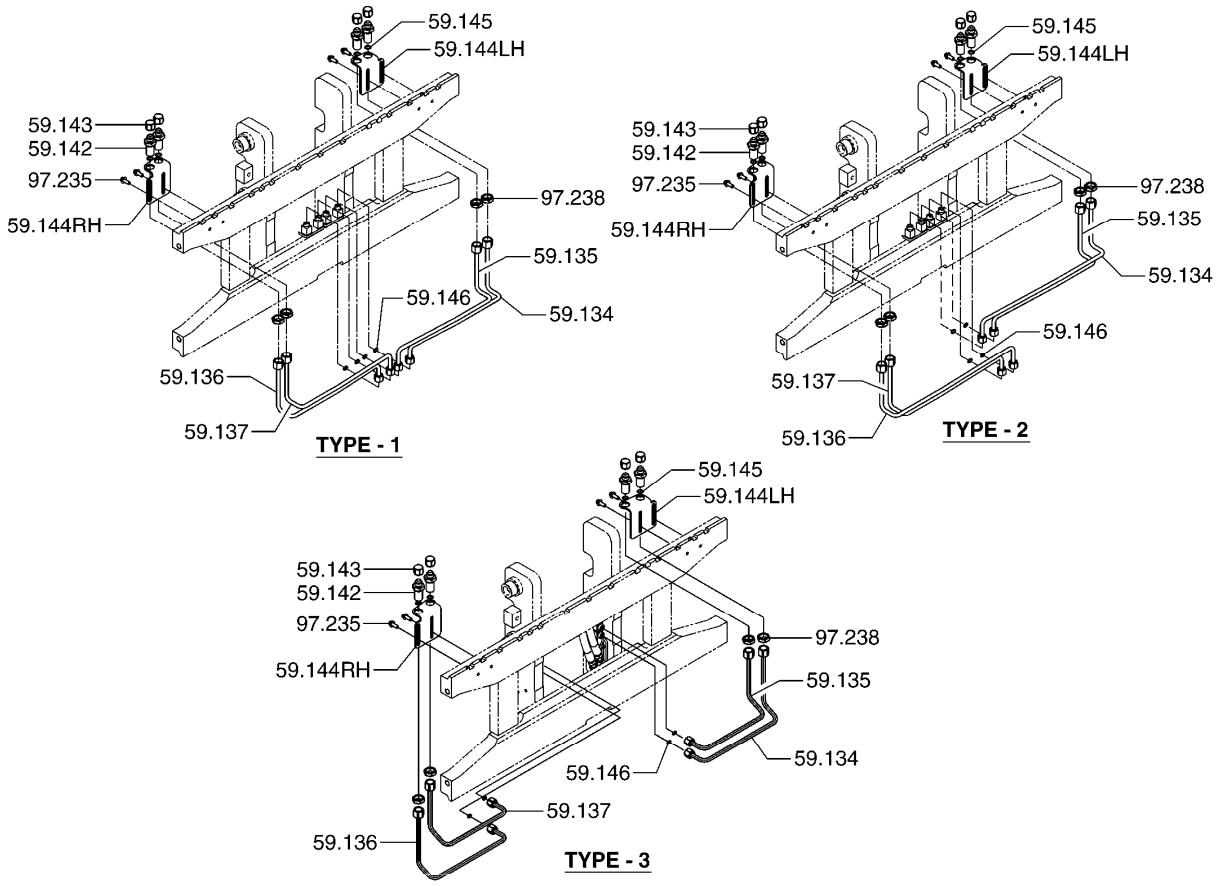

HIGH TERMINATION FOR DEVICE HOSE ADAPTATION **50-172**

59.134 LINE, DEVICE LH LINE FOR HIGH TERMINATION
*

59.135 LINE, DEVICE LH LINE FOR HIGH TERMINATION
*

59.136 LINE, DEVICE RH LINE FOR HIGH TERMINATION
*

59.137 LINE, DEVICE RH LINE FOR HIGH TERMINATION
*

59.142 FITTING, DEVICE LINE FOR HIGH TERMINATION
*

59.143 CAP, DEVICE LINE FITTING FOR HIGH TERMINATION
*

59.144 BRACKET, DEVICE LINE FOR HIGH TERMINATION
*

59.145 SEAL, DEVICE LINE FITTING FOR HIGH TERMINATION
*

59.146 SEAL, DEVICE LINE FITTING FOR HIGH TERMINATION
*

97.235 FASTENER, DEVICE LINE CLAMP FOR HIGH TERMINATION
*

97.238 FASTENER, DEVICE LINE FITTING FOR HIGH TERMINATION
*

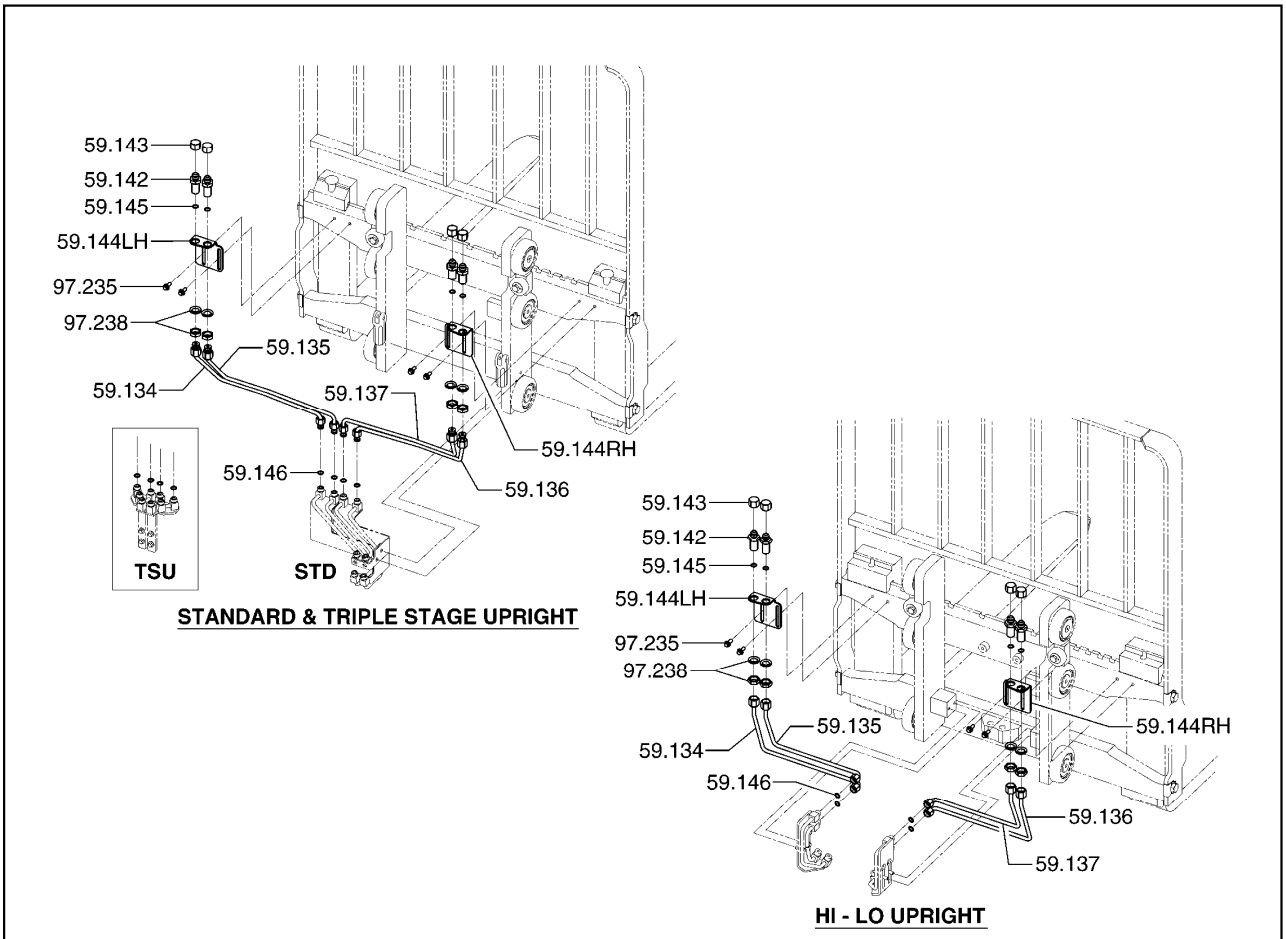

59.134 LINE, DEVICE LH LINE FOR HIGH TERMINATION
*

59.135 LINE, DEVICE LH LINE FOR HIGH TERMINATION
*

59.136 LINE, DEVICE RH LINE FOR HIGH TERMINATION
*

59.137 LINE, DEVICE RH LINE FOR HIGH TERMINATION
*

59.142 FITTING, DEVICE LINE FOR HIGH TERMINATION
*

59.143 CAP, DEVICE LINE FITTING FOR HIGH TERMINATION
*

59.144 BRACKET, DEVICE LINE FOR HIGH TERMINATION
*

59.145 SEAL, DEVICE LINE FITTING FOR HIGH TERMINATION
*

59.146 SEAL, DEVICE LINE FITTING FOR HIGH TERMINATION
*

97.235	FASTENER, DEVICE LINE CLAMP FOR HIGH TERMINATION *
97.238	FASTENER, DEVICE LINE FITTING FOR HIGH TERMINATION *

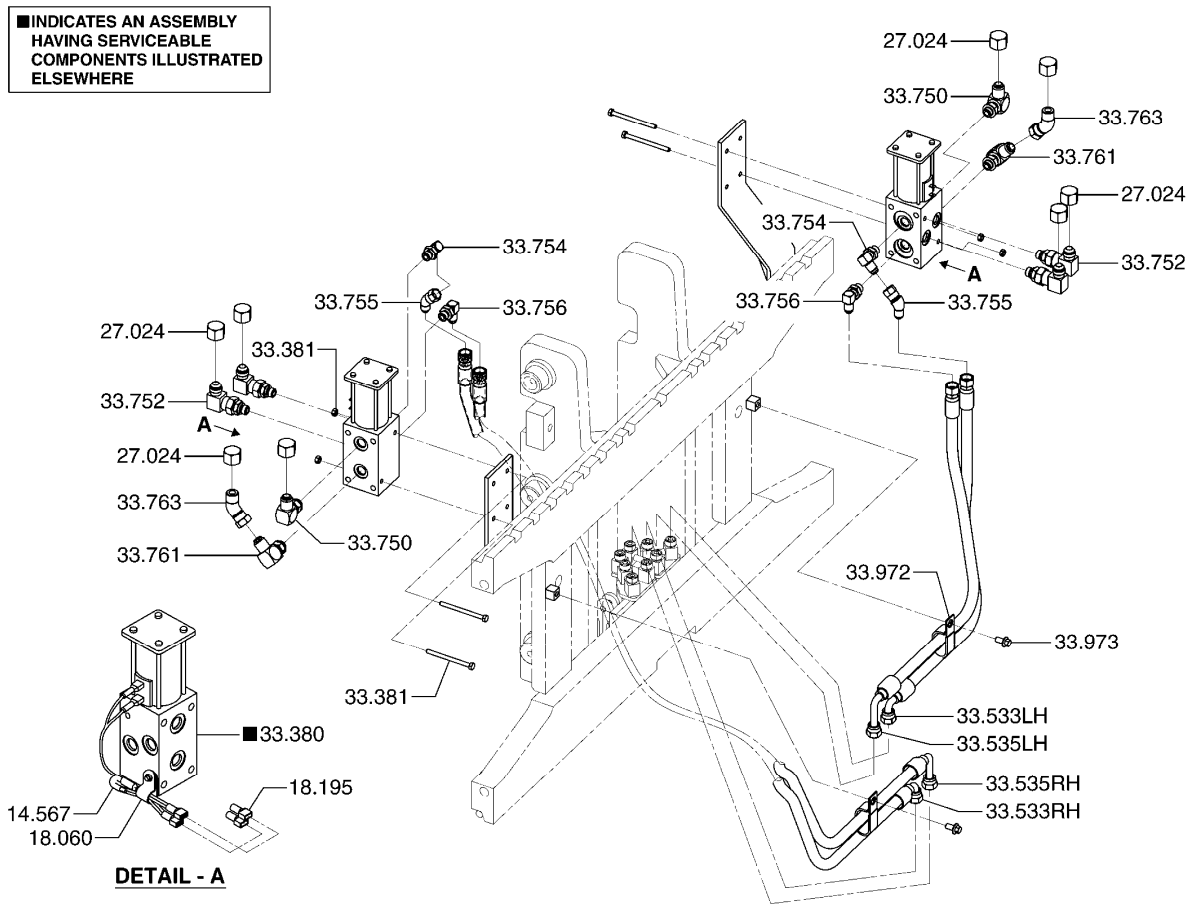

14.567 WIRE, DEVICE SELECTOR VALVE SWITCH FEED
와이어

18.060 CLAMP, DEVICE SELECTOR VALVE CABLE
클램프

18.195 TERMINAL, DEVICE SELECTOR VALVE SWITCH FEED WIRE
*

27.024 PLUG, DEVICE SELECTOR VALVE OPTIONAL OUTLET PORT
플러그

33.380 VALVE ASSEMBLY, DEVICE SELECTOR SOLENOID
벨브

33.381 FASTENER, DEVICE SELECTOR VALVE
패스너

33.533 LINE, DEVICE SELECTOR VALVE "P" PORT HYDRAULIC
*

33.535 LINE, DEVICE SELECTOR VALVE "R" PORT HYDRAULIC
*

33.750 FITTING, DEVICE SELECTOR VALVE C1 PORT
피팅

33.752 FITTING, DEVICE SELECTOR VALVE C2 PORT
피팅

33.754 FITTING, DEVICE SELECTOR VALVE "P" PORT
피팅

33.755 FITTING, DEVICE SELECTOR VALVE "P" PORT
피팅

33.756 FITTING, DEVICE SELECTOR VALVE "R" PORT
피팅

33.761 FITTING, DEVICE SELECTOR VALVE C4 PORT
피팅

33.763 FITTING, DEVICE SELECTOR VALVE C4 PORT
피팅

33.972 CLIP, DEVICE SELECTOR VALVE LINE
클립

33.973 FASTENER, DEVICE SELECTOR VALVE LINE CLIP
패스너

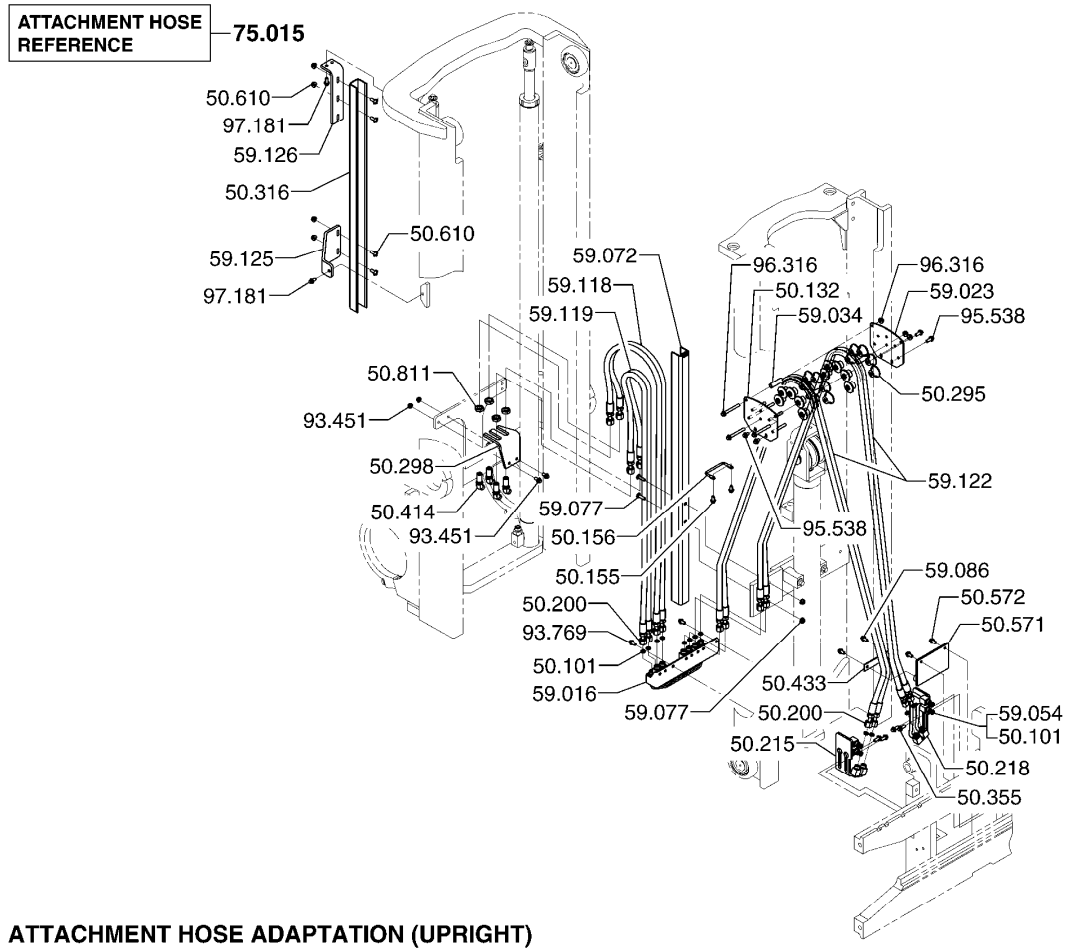

50.101	SEAL, DEVICE HOSE SWIVEL COUPLING 시일	50.610	FASTENER, DEVICE HOSE GUARD 패스너
50.132	BRACKET, DEVICE HOSE REEL 브라켓	50.811	NUT, DEVICE HOSE FITTING 너트
50.155	FASTENER, DEVICE HOSE CLIP 패스너	59.016	JUNCTION BLOCK, DEVICE HOSE 연결블록
50.156	CLIP, DEVICE HOSE 클립	59.023	BRACKET, DEVICE HOSE REEL MOUNTING 브라켓
50.200	COUPLING, DEVICE HOSE 커플링	59.034	TUBE, DEVICE HOSE REEL MOUNTING BRACKET 튜브
50.215	TERMINAL BLOCK, DEVICE HOSE 터미널블록	59.054	PLUG, DEVICE HOSE JUNCTION BLOCK 플러그
50.218	TERMINAL BLOCK, DEVICE LH HOSE 터미널블록	59.072	GUARD, DEVICE HOSE 가드
50.295	ROLLER, DEVICE HOSE UPPER 롤러	59.077	FASTENER, DEVICE HOSE GUARD 패스너
50.298	BRACKET, DEVICE HOSE TERMINAL 브라켓	59.086	FASTENER, DEVICE HOSE CLIP BRACKET 패스너
50.316	GUARD, DEVICE RH HOSE 가드	59.118	LINE, DEVICE HYDRAULIC (OUTER RAIL) 라J
50.355	FASTENER, DEVICE HOSE TERMINAL BLOCK 패스너	59.119	LINE, DEVICE HYDRAULIC (OUTER RAIL) 라J
50.414	FITTING, DEVICE HOSE CONNECTOR 피팅	59.122	LINE, DEVICE HYDRAULIC (INNER RAIL) 라J
50.433	BRACKET, DEVICE HOSE CLAMP 브라켓	59.125	BRACKET, DEVICE HOSE GUARD MOUNTING *
50.571	BRACKET, DEVICE HOSE 브라켓	59.126	BRACKET, DEVICE HOSE GUARD MOUNTING *
50.572	FASTENER, DEVICE HOSE BRACKET 패스너	75.015	MODULE, ATTACHMENT HOSE LINES *

93.316 DOWEL, STEERING INTERLOCK SWITCH FASTENER
다월

93.451 FASTENER, DEVICE HOSE TERMINAL BRACKET
패스너

93.769 FASTENER, DEVICE LINE JUNCTION BLOCK
패스너

95.538 FASTENER, DEVICE HOSE REEL BRACKET
패스너

96.316 FASTENER, DEVICE HOSE REEL
패스너

97.181 FASTENER, DEVICE HOSE GUARD MOUNTING BRACKET
*

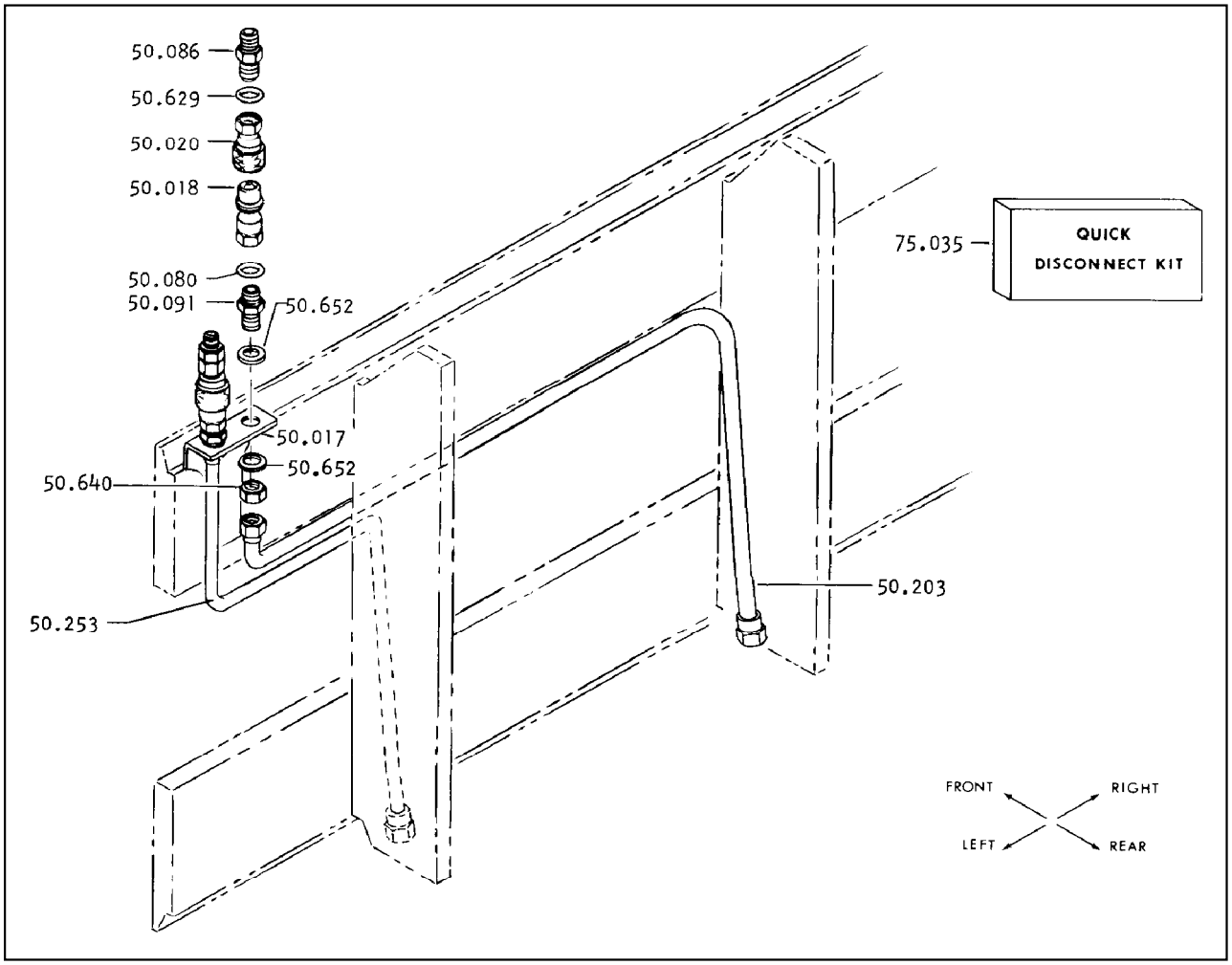

50.017 TERMINAL BRACKET, DEVICE HOSE
터미널브라켓

50.018 DISCONNECT, DEVICE HOSE NIPPLE HALF
디스컨넥트

50.020 DISCONNECT, DEVICE HOSE SOCKET HALF
디스컨넥트

50.080 SEAL, DEVICE HOSE DISCONNECT NIPPLE RH
시일

50.086 FITTING, DEVICE RH HYDRAULIC HOSE
피팅

50.091 FITTING, DEVICE RH HYDRAULIC HOSE
피팅

50.203 LINE, DEVICE HYDRAULIC (AT CARRIAGE)
라인

50.253 LINE, DEVICE HYDRAULIC (AT CARRIAGE)
라인

50.629 SEAL, DEVICE HOSE DISCONNECT SOCKET RH
시일

50.640	FASTENER, DEVICE RH HYD HOSE FITTING 패스너
50.652	SPACER, DEVICE RH HYDRAULIC HOSE FITTING 스페이서
75.035	KIT, QUICK DISCONNECT FOR DEVICE HOSE ADAPTATION 킷

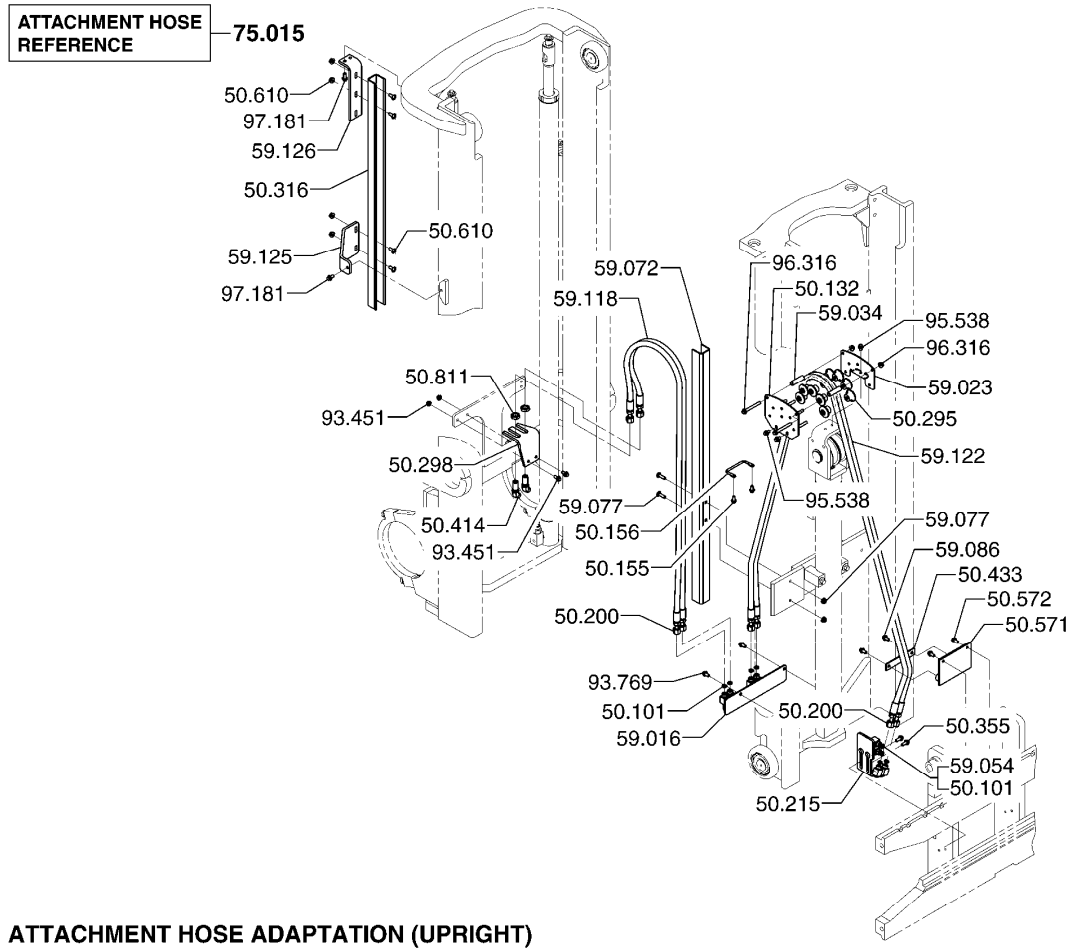

50.101	SEAL, DEVICE HOSE SWIVEL COUPLING 시일	50.811	NUT, DEVICE HOSE FITTING 너트
50.132	BRACKET, DEVICE HOSE REEL 브라켓	59.016	JUNCTION BLOCK, DEVICE HOSE 연결블록
50.155	FASTENER, DEVICE HOSE CLIP 패스너	59.023	BRACKET, DEVICE HOSE REEL MOUNTING 브라켓
50.156	CLIP, DEVICE HOSE 클립	59.034	TUBE, DEVICE HOSE REEL MOUNTING BRACKET 튜브
50.200	COUPLING, DEVICE HOSE 커플링	59.054	PLUG, DEVICE HOSE JUNCTION BLOCK 플러그
50.215	TERMINAL BLOCK, DEVICE HOSE 터미널블록	59.072	GUARD, DEVICE HOSE 가드
50.295	ROLLER, DEVICE HOSE UPPER 롤러	59.077	FASTENER, DEVICE HOSE GUARD 패스너
50.298	BRACKET, DEVICE HOSE TERMINAL 브라켓	59.086	FASTENER, DEVICE HOSE CLIP BRACKET 패스너
50.316	GUARD, DEVICE RH HOSE 가드	59.101	TIE STRAP, AUXILIARY FUNCTION LINES 타이스트랩
50.355	FASTENER, DEVICE HOSE TERMINAL BLOCK 패스너	59.118	LINE, DEVICE HYDRAULIC (OUTER RAIL) 라J
50.414	FITTING, DEVICE HOSE CONNECTOR 피팅	59.122	LINE, DEVICE HYDRAULIC (INNER RAIL) 라J
50.433	BRACKET, DEVICE HOSE CLAMP 브라켓	59.125	BRACKET, DEVICE HOSE GUARD MOUNTING *
50.571	BRACKET, DEVICE HOSE 브라켓	59.126	BRACKET, DEVICE HOSE GUARD MOUNTING *
50.572	FASTENER, DEVICE HOSE BRACKET 패스너	75.015	MODULE, ATTACHMENT HOSE LINES *
50.610	FASTENER, DEVICE HOSE GUARD 패스너	93.316	DOWEL, STEERING INTERLOCK SWITCH FASTENER 다월

93.451 FASTENER, DEVICE HOSE TERMINAL BRACKET
패스너

93.769 FASTENER, DEVICE LINE JUNCTION BLOCK
패스너

95.538 FASTENER, DEVICE HOSE REEL BRACKET
패스너

96.316 FASTENER, DEVICE HOSE REEL
패스너

97.181 FASTENER, DEVICE HOSE GUARD MOUNTING BRACKET
*

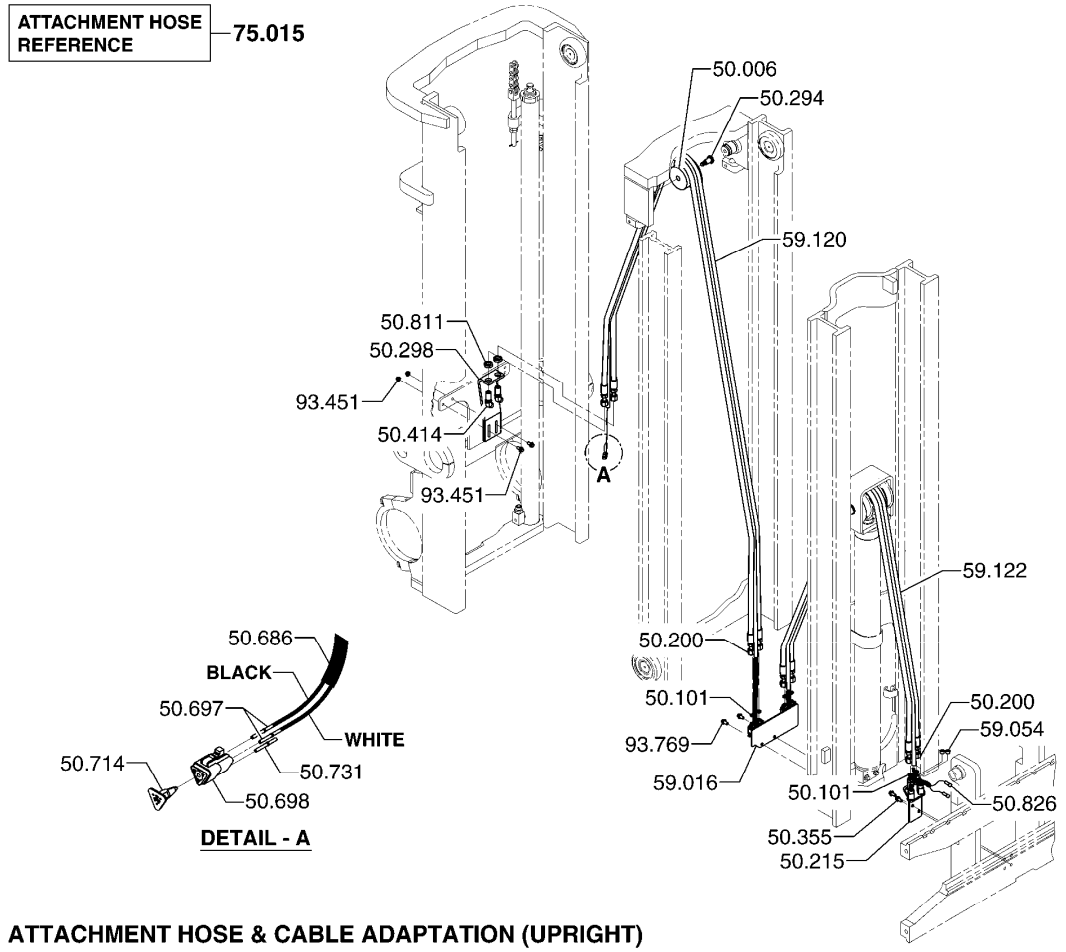

ATTACHMENT HOSE & CABLE ADAPTATION (UPRIGHT) **50-270**

50.006 SHEAVE, DEVICE HOSE UPPER
쉬브

50.101 SEAL, DEVICE HOSE SWIVEL COUPLING
시일

50.200 COUPLING, DEVICE HOSE
커플링

50.215 TERMINAL BLOCK, DEVICE HOSE
터미널블록

50.294 PIVOT, DEVICE HOSE UPPER SHEAVE
피봇

50.298 BRACKET, DEVICE HOSE TERMINAL
브라켓

50.355 FASTENER, DEVICE HOSE TERMINAL BLOCK
패스너

50.414 FITTING, DEVICE HOSE CONNECTOR
피팅

50.686 WIRE, DEVICE
와이어

50.697	CONNECTOR, DEVICE CABLE (PIN END) 커넥터
50.698	CONNECTOR, DEVICE CABLE (SOCKET END) 커넥터
50.714	LOCK, DEVICE CABLE CONNECTOR *
50.731	PLUG, DEVICE CABLE CONNECTOR *
50.811	NUT, DEVICE HOSE FITTING 너트
50.826	TERMINAL, DEVICE CABLE 터미널
59.016	JUNCTION BLOCK, DEVICE HOSE 연결블록
59.054	PLUG, DEVICE HOSE JUNCTION BLOCK 플러그
59.120	LINE, DEVICE HYDRAULIC (INTERMEDIATE RAIL) 라J
59.122	LINE, DEVICE HYDRAULIC (INNER RAIL) 라J
75.015	MODULE, ATTACHMENT HOSE LINES *
93.451	FASTENER, DEVICE HOSE TERMINAL BRACKET 패스너
93.769	FASTENER, DEVICE LINE JUNCTION BLOCK 패스너

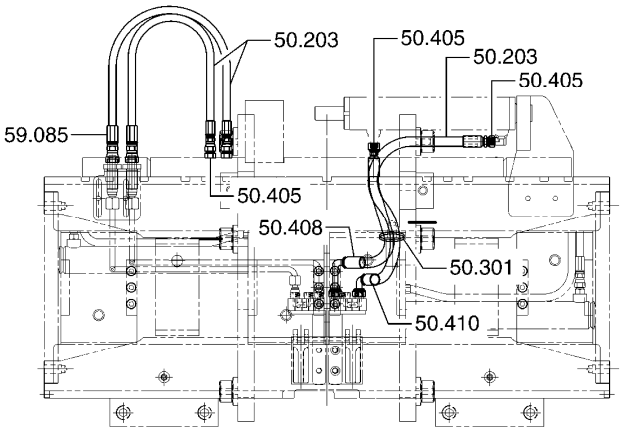

FORK POSITIONER (FP) - SHIFT
TYPE - 1

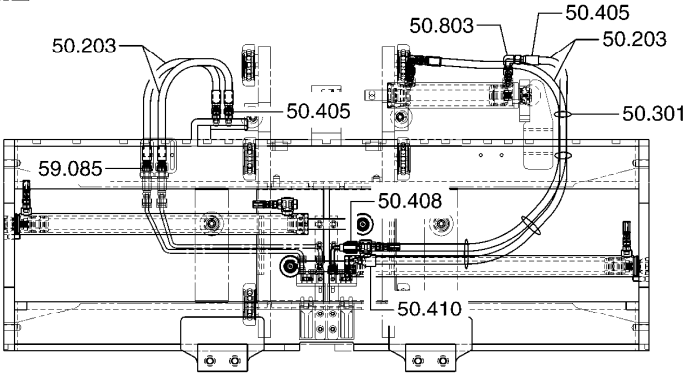

FORK POSITIONER (FP) - SHIFT
TYPE - 2

ATTACHMENT HOSE ADAPTATION (CARRIAGE) **50-284**

50.203 LINE, DEVICE HYDRAULIC (AT CARRIAGE)
라인

50.301 CLIP, DEVICE RH HOSE (AT CARRIAGE)
클립

50.405 COUPLING, DEVICE HOSE
커플링

50.408 COUPLING, DEVICE HOSE
커플링

50.410 COUPLING, DEVICE HOSE
커플링

50.803 FITTING, DEVICE HYDRAULIC LINE
피팅

59.085 COUPLING, DEVICE HOSE
커플링

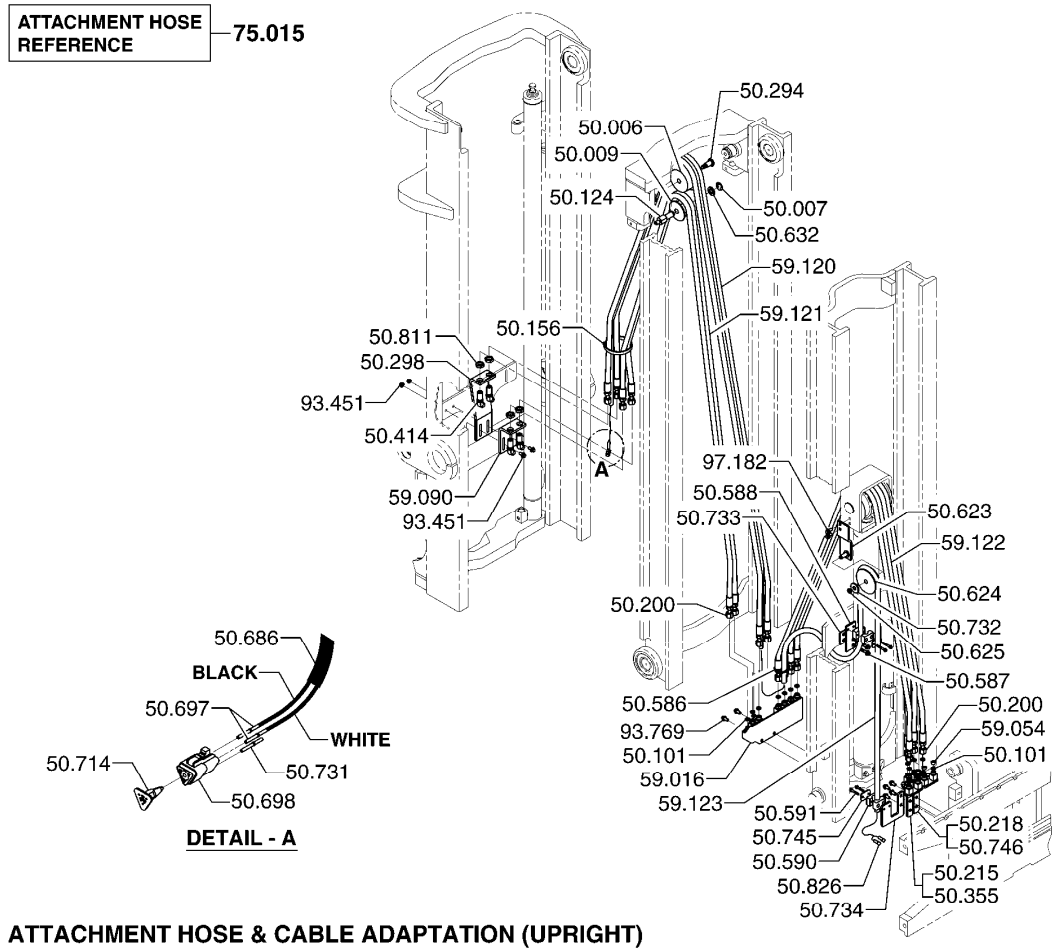

50.006	SHEAVE, DEVICE HOSE UPPER 쉬브	50.588	BRACKET, DEVICE CABLE CLAMP 브라켓
50.007	RETAINER, DEVICE HOSE SHEAVE 리테이너	50.590	CLAMP, DEVICE CABLE LOWER 클램프
50.009	SHEAVE, DEVICE HOSE LOWER 쉬브	50.591	FASTENER, DEVICE CABLE CLAMP LOWER 패스너
50.101	SEAL, DEVICE HOSE SWIVEL COUPLING 시일	50.623	BRACKET, DEVICE CABLE LOWER SHEAVE 브라켓
50.124	PIVOT, DEVICE HOSE LOWER RH SHEAVE 피봇	50.624	SHEAVE, DEVICE CABLE 쉬브
50.156	CLIP, DEVICE HOSE 클립	50.625	RETAINER, DEVICE CABLE LOWER SHEAVE 리테이너
50.200	COUPLING, DEVICE HOSE 커플링	50.632	SPACER, DEVICE HOSE SHEAVE 스페이서
50.215	TERMINAL BLOCK, DEVICE HOSE 터미널블록	50.686	WIRE, DEVICE 와이어
50.218	TERMINAL BLOCK, DEVICE LH HOSE 터미널블록	50.697	CONNECTOR, DEVICE CABLE (PIN END) 커넥터
50.294	PIVOT, DEVICE HOSE UPPER SHEAVE 피봇	50.698	CONNECTOR, DEVICE CABLE (SOCKET END) 커넥터
50.298	BRACKET, DEVICE HOSE TERMINAL 브라켓	50.714	LOCK, DEVICE CABLE CONNECTOR *
50.355	FASTENER, DEVICE HOSE TERMINAL BLOCK 패스너	50.731	PLUG, DEVICE CABLE CONNECTOR *
50.414	FITTING, DEVICE HOSE CONNECTOR 피팅	50.732	SPACER, DEVICE CABLE SHEAVE *
50.586	CLIP, DEVICE CABLE 클립	50.733	SPACER, DEVICE CABLE CLAMP BRACKET *
50.587	FASTENER, DEVICE CABLE CLIP 패스너	50.734	BRACKET, DEVICE CABLE TERMINAL CLAMP *

50.745 BRACKET, DEVICE CABLE TERMINAL CLAMP MOUNTING
*

50.746 FASTENER, DEVICE HOSE TERMINAL BLOCK
*

50.811 NUT, DEVICE HOSE FITTING
너트

50.826 TERMINAL, DEVICE CABLE
터미널

59.016 JUNCTION BLOCK, DEVICE HOSE
연결블록

59.054 PLUG, DEVICE HOSE JUNCTION BLOCK
플러그

59.090 BRACKET, DEVICE HOSE TERMINAL
브라켓

59.120 LINE, DEVICE HYDRAULIC (INTERMEDIATE RAIL)
라J

59.121 LINE, DEVICE HYDRAULIC (INTERMEDIATE RAIL)
라J

59.122 LINE, DEVICE HYDRAULIC (INNER RAIL)
라J

59.123 LINE, DEVICE HYDRAULIC (INNER RAIL)
라J

75.015 MODULE, ATTACHMENT HOSE LINES
*

93.451 FASTENER, DEVICE HOSE TERMINAL BRACKET
패스너

93.769 FASTENER, DEVICE LINE JUNCTION BLOCK
패스너

97.182 FASTENER, DEVICE CABLE LOWER SHEAVE BRACKET
*

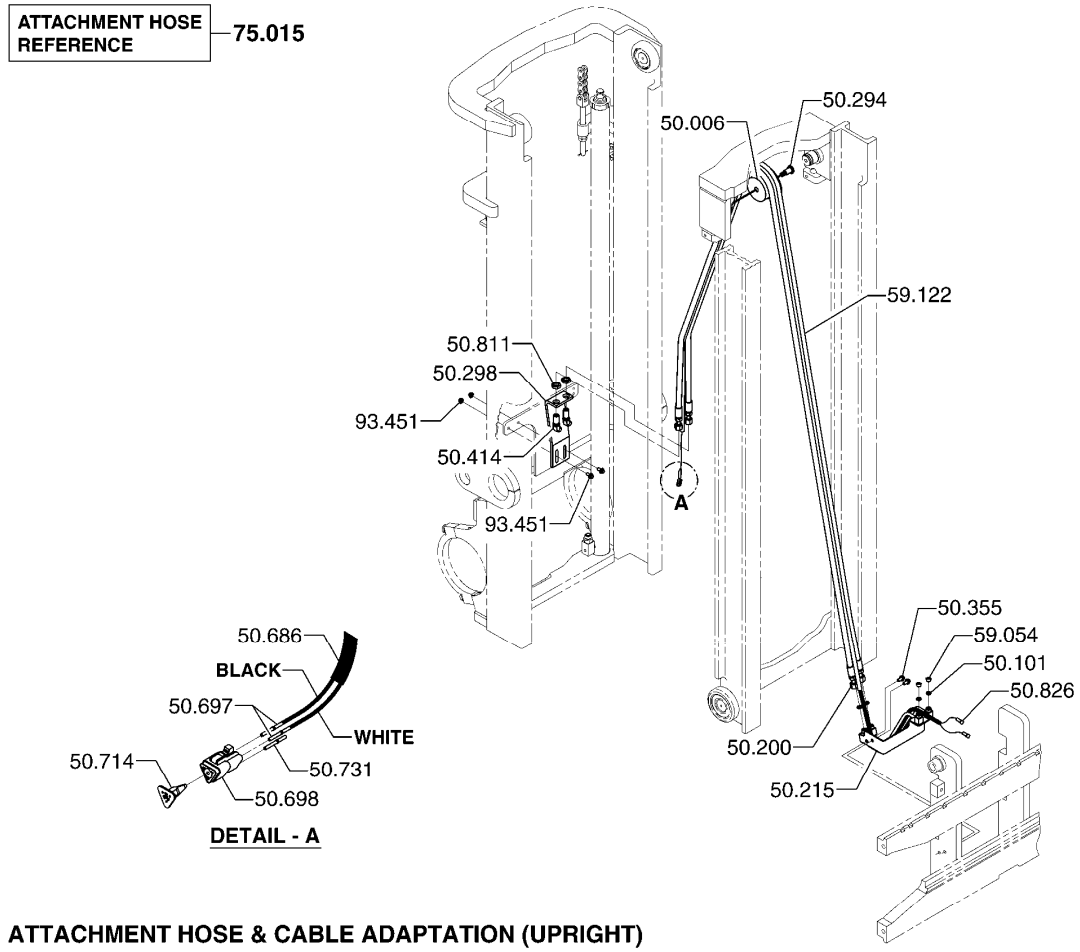

50.006 SHEAVE, DEVICE HOSE UPPER
쉬브

50.101 SEAL, DEVICE HOSE SWIVEL COUPLING
시일

50.200 COUPLING, DEVICE HOSE
커플링

50.215 TERMINAL BLOCK, DEVICE HOSE
터미널블록

50.294 PIVOT, DEVICE HOSE UPPER SHEAVE
피봇

50.298 BRACKET, DEVICE HOSE TERMINAL
브라켓

50.355 FASTENER, DEVICE HOSE TERMINAL BLOCK
패스너

50.414 FITTING, DEVICE HOSE CONNECTOR
피팅

50.686 WIRE, DEVICE
와이어

50.697	CONNECTOR, DEVICE CABLE (PIN END) 커넥터
50.698	CONNECTOR, DEVICE CABLE (SOCKET END) 커넥터
50.714	LOCK, DEVICE CABLE CONNECTOR *
50.731	PLUG, DEVICE CABLE CONNECTOR *
50.811	NUT, DEVICE HOSE FITTING 너트
50.826	TERMINAL, DEVICE CABLE 터미널
59.054	PLUG, DEVICE HOSE JUNCTION BLOCK 플러그
59.122	LINE, DEVICE HYDRAULIC (INNER RAIL) 라J
75.015	MODULE, ATTACHMENT HOSE LINES *
93.451	FASTENER, DEVICE HOSE TERMINAL BRACKET 패스너

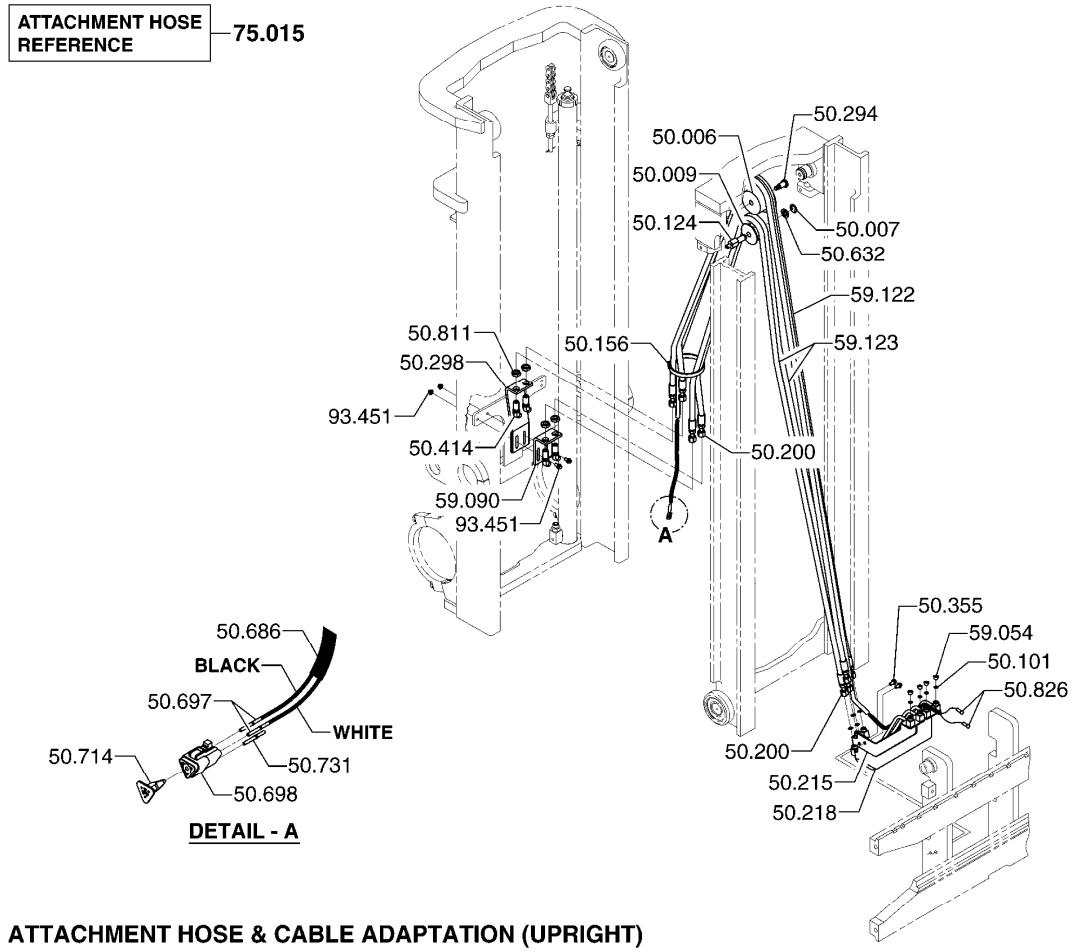

50.006 SHEAVE, DEVICE HOSE UPPER
쉬브

50.007 RETAINER, DEVICE HOSE SHEAVE
리테이너

50.009 SHEAVE, DEVICE HOSE LOWER
쉬브

50.101 SEAL, DEVICE HOSE SWIVEL COUPLING
시일

50.124 PIVOT, DEVICE HOSE LOWER RH SHEAVE
피봇

50.156 CLIP, DEVICE HOSE
클립

50.200 COUPLING, DEVICE HOSE
커플링

50.215 TERMINAL BLOCK, DEVICE HOSE
터미널블록

50.218 TERMINAL BLOCK, DEVICE LH HOSE
터미널블록

50.294	PIVOT, DEVICE HOSE UPPER SHEAVE 피봇
50.298	BRACKET, DEVICE HOSE TERMINAL 브라켓
50.355	FASTENER, DEVICE HOSE TERMINAL BLOCK 패스너
50.414	FITTING, DEVICE HOSE CONNECTOR 피팅
50.632	SPACER, DEVICE HOSE SHEAVE 스페이서
50.686	WIRE, DEVICE 와이어
50.697	CONNECTOR, DEVICE CABLE (PIN END) 커넥터
50.698	CONNECTOR, DEVICE CABLE (SOCKET END) 커넥터
50.714	LOCK, DEVICE CABLE CONNECTOR *
50.731	PLUG, DEVICE CABLE CONNECTOR *
50.811	NUT, DEVICE HOSE FITTING 너트
50.826	TERMINAL, DEVICE CABLE 터미널
59.054	PLUG, DEVICE HOSE JUNCTION BLOCK 플러그
59.090	BRACKET, DEVICE HOSE TERMINAL 브라켓
59.122	LINE, DEVICE HYDRAULIC (INNER RAIL) 라J
59.123	LINE, DEVICE HYDRAULIC (INNER RAIL) 라J
75.015	MODULE, ATTACHMENT HOSE LINES *
93.451	FASTENER, DEVICE HOSE TERMINAL BRACKET 패스너

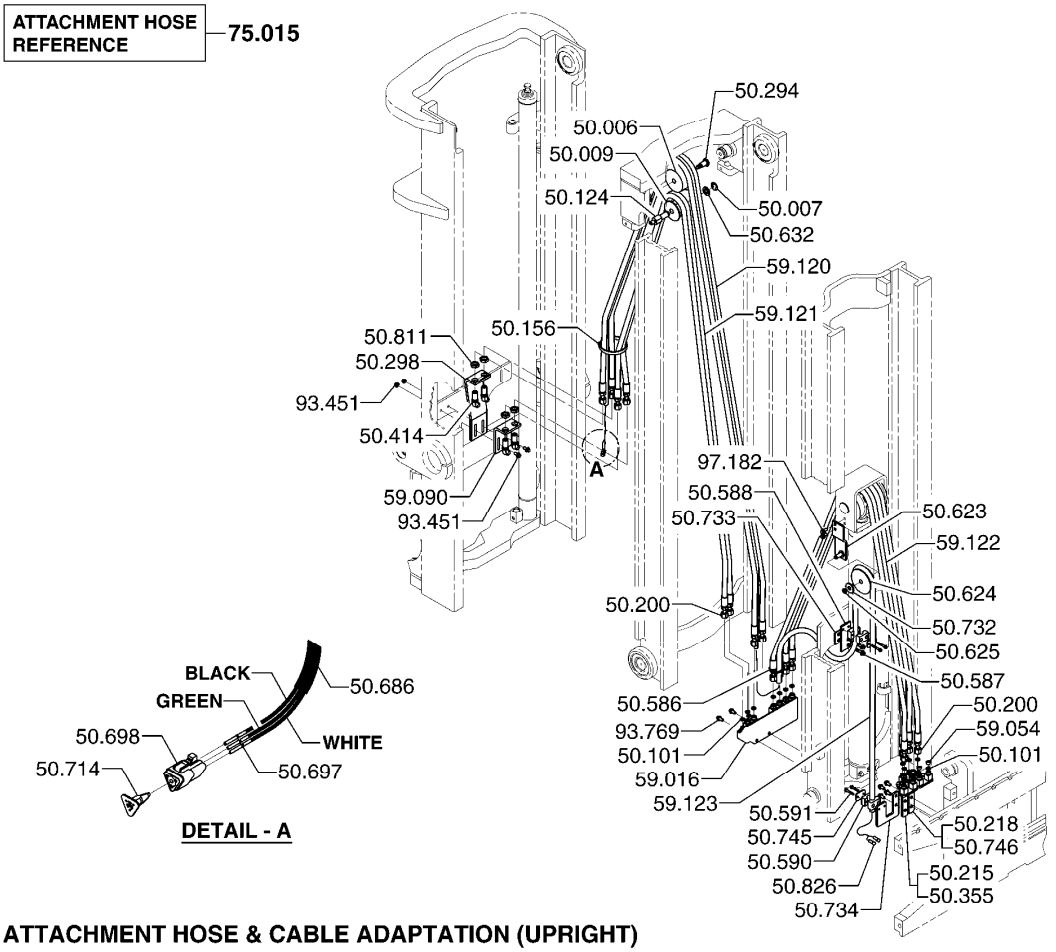

50.006	SHEAVE, DEVICE HOSE UPPER 쉬브	50.588	BRACKET, DEVICE CABLE CLAMP 브라켓
50.007	RETAINER, DEVICE HOSE SHEAVE 리테이너	50.590	CLAMP, DEVICE CABLE LOWER 클램프
50.009	SHEAVE, DEVICE HOSE LOWER 쉬브	50.591	FASTENER, DEVICE CABLE CLAMP LOWER 패스너
50.101	SEAL, DEVICE HOSE SWIVEL COUPLING 시일	50.623	BRACKET, DEVICE CABLE LOWER SHEAVE 브라켓
50.124	PIVOT, DEVICE HOSE LOWER RH SHEAVE 피봇	50.624	SHEAVE, DEVICE CABLE 쉬브
50.156	CLIP, DEVICE HOSE 클립	50.625	RETAINER, DEVICE CABLE LOWER SHEAVE 리테이너
50.200	COUPLING, DEVICE HOSE 커플링	50.632	SPACER, DEVICE HOSE SHEAVE 스페이서
50.215	TERMINAL BLOCK, DEVICE HOSE 터미널블록	50.686	WIRE, DEVICE 와이어
50.218	TERMINAL BLOCK, DEVICE LH HOSE 터미널블록	50.697	CONNECTOR, DEVICE CABLE (PIN END) 커넥터
50.294	PIVOT, DEVICE HOSE UPPER SHEAVE 피봇	50.698	CONNECTOR, DEVICE CABLE (SOCKET END) 커넥터
50.298	BRACKET, DEVICE HOSE TERMINAL 브라켓	50.714	LOCK, DEVICE CABLE CONNECTOR *
50.355	FASTENER, DEVICE HOSE TERMINAL BLOCK 패스너	50.732	SPACER, DEVICE CABLE SHEAVE *
50.414	FITTING, DEVICE HOSE CONNECTOR 피팅	50.733	SPACER, DEVICE CABLE CLAMP BRACKET *
50.586	CLIP, DEVICE CABLE 클립	50.734	BRACKET, DEVICE CABLE TERMINAL CLAMP *
50.587	FASTENER, DEVICE CABLE CLIP 패스너	50.745	BRACKET, DEVICE CABLE TERMINAL CLAMP MOUNTING *

50.746 FASTENER, DEVICE HOSE TERMINAL BLOCK
*

50.811 NUT, DEVICE HOSE FITTING
너트

50.826 TERMINAL, DEVICE CABLE
터미널

59.016 JUNCTION BLOCK, DEVICE HOSE
연결블록

59.054 PLUG, DEVICE HOSE JUNCTION BLOCK
플러그

59.090 BRACKET, DEVICE HOSE TERMINAL
브라켓

59.120 LINE, DEVICE HYDRAULIC (INTERMEDIATE RAIL)
라J

59.121 LINE, DEVICE HYDRAULIC (INTERMEDIATE RAIL)
라J

59.122 LINE, DEVICE HYDRAULIC (INNER RAIL)
라J

59.123 LINE, DEVICE HYDRAULIC (INNER RAIL)
라J

75.015 MODULE, ATTACHMENT HOSE LINES
*

93.451 FASTENER, DEVICE HOSE TERMINAL BRACKET
패스너

93.769 FASTENER, DEVICE LINE JUNCTION BLOCK
패스너

97.182 FASTENER, DEVICE CABLE LOWER SHEAVE BRACKET
*

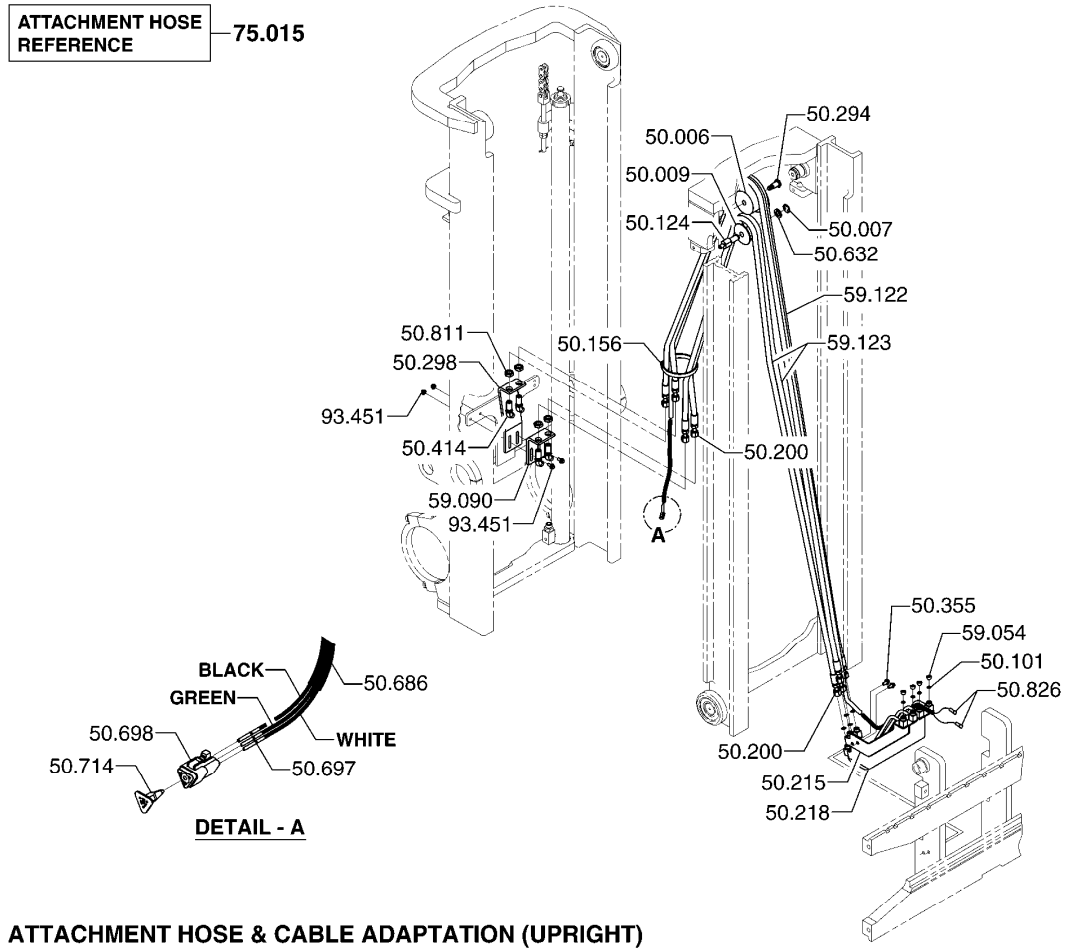

50.006 SHEAVE, DEVICE HOSE UPPER
쉬브

50.007 RETAINER, DEVICE HOSE SHEAVE
리테이너

50.009 SHEAVE, DEVICE HOSE LOWER
쉬브

50.101 SEAL, DEVICE HOSE SWIVEL COUPLING
시일

50.124 PIVOT, DEVICE HOSE LOWER RH SHEAVE
피봇

50.156 CLIP, DEVICE HOSE
클립

50.200 COUPLING, DEVICE HOSE
커플링

50.215 TERMINAL BLOCK, DEVICE HOSE
터미널블록

50.218 TERMINAL BLOCK, DEVICE LH HOSE
터미널블록

50.294	PIVOT, DEVICE HOSE UPPER SHEAVE 피봇
50.298	BRACKET, DEVICE HOSE TERMINAL 브라켓
50.355	FASTENER, DEVICE HOSE TERMINAL BLOCK 패스너
50.414	FITTING, DEVICE HOSE CONNECTOR 피팅
50.632	SPACER, DEVICE HOSE SHEAVE 스페이서
50.686	WIRE, DEVICE 와이어
50.697	CONNECTOR, DEVICE CABLE (PIN END) 커넥터
50.698	CONNECTOR, DEVICE CABLE (SOCKET END) 커넥터
50.714	LOCK, DEVICE CABLE CONNECTOR *
50.811	NUT, DEVICE HOSE FITTING 너트
50.826	TERMINAL, DEVICE CABLE 터미널
59.054	PLUG, DEVICE HOSE JUNCTION BLOCK 플러그
59.090	BRACKET, DEVICE HOSE TERMINAL 브라켓
59.122	LINE, DEVICE HYDRAULIC (INNER RAIL) 라J
59.123	LINE, DEVICE HYDRAULIC (INNER RAIL) 라J
75.015	MODULE, ATTACHMENT HOSE LINES *
93.451	FASTENER, DEVICE HOSE TERMINAL BRACKET 패스너

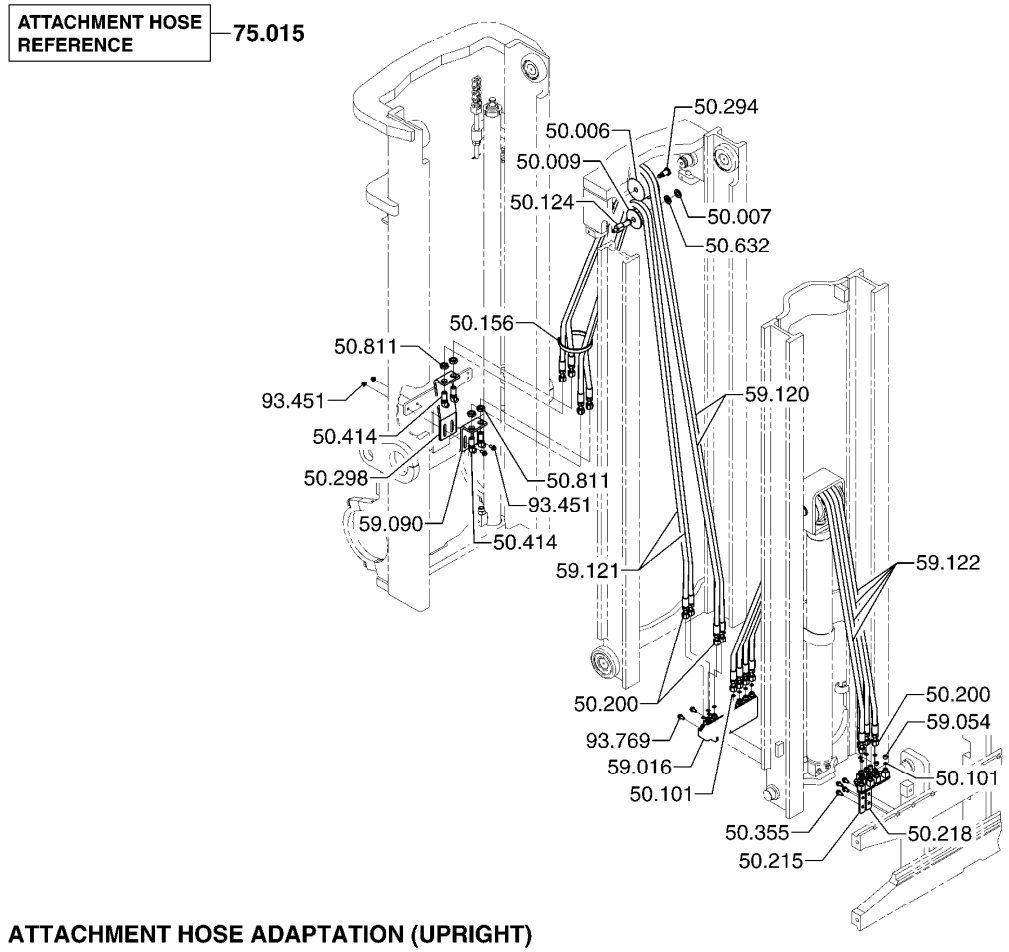

ATTACHMENT HOSE ADAPTATION (UPRIGHT) **50-407**

50.006 SHEAVE, DEVICE HOSE UPPER
쉬브

50.007 RETAINER, DEVICE HOSE SHEAVE
리테이너

50.009 SHEAVE, DEVICE HOSE LOWER
쉬브

50.101 SEAL, DEVICE HOSE SWIVEL COUPLING
시일

50.124 PIVOT, DEVICE HOSE LOWER RH SHEAVE
피봇

50.156 CLIP, DEVICE HOSE
클립

50.200 COUPLING, DEVICE HOSE
커플링

50.215 TERMINAL BLOCK, DEVICE HOSE
터미널블록

50.218 TERMINAL BLOCK, DEVICE LH HOSE
터미널블록

50.294	PIVOT, DEVICE HOSE UPPER SHEAVE 피봇
50.298	BRACKET, DEVICE HOSE TERMINAL 브라켓
50.355	FASTENER, DEVICE HOSE TERMINAL BLOCK 패스너
50.414	FITTING, DEVICE HOSE CONNECTOR 피팅
50.632	SPACER, DEVICE HOSE SHEAVE 스페이서
50.811	NUT, DEVICE HOSE FITTING 너트
59.016	JUNCTION BLOCK, DEVICE HOSE 연결블록
59.054	PLUG, DEVICE HOSE JUNCTION BLOCK 플러그
59.090	BRACKET, DEVICE HOSE TERMINAL 브라켓
59.120	LINE, DEVICE HYDRAULIC (INTERMEDIATE RAIL) 라J
59.121	LINE, DEVICE HYDRAULIC (INTERMEDIATE RAIL) 라J
59.122	LINE, DEVICE HYDRAULIC (INNER RAIL) 라J
75.015	MODULE, ATTACHMENT HOSE LINES *
93.451	FASTENER, DEVICE HOSE TERMINAL BRACKET 패스너
93.769	FASTENER, DEVICE LINE JUNCTION BLOCK 패스너

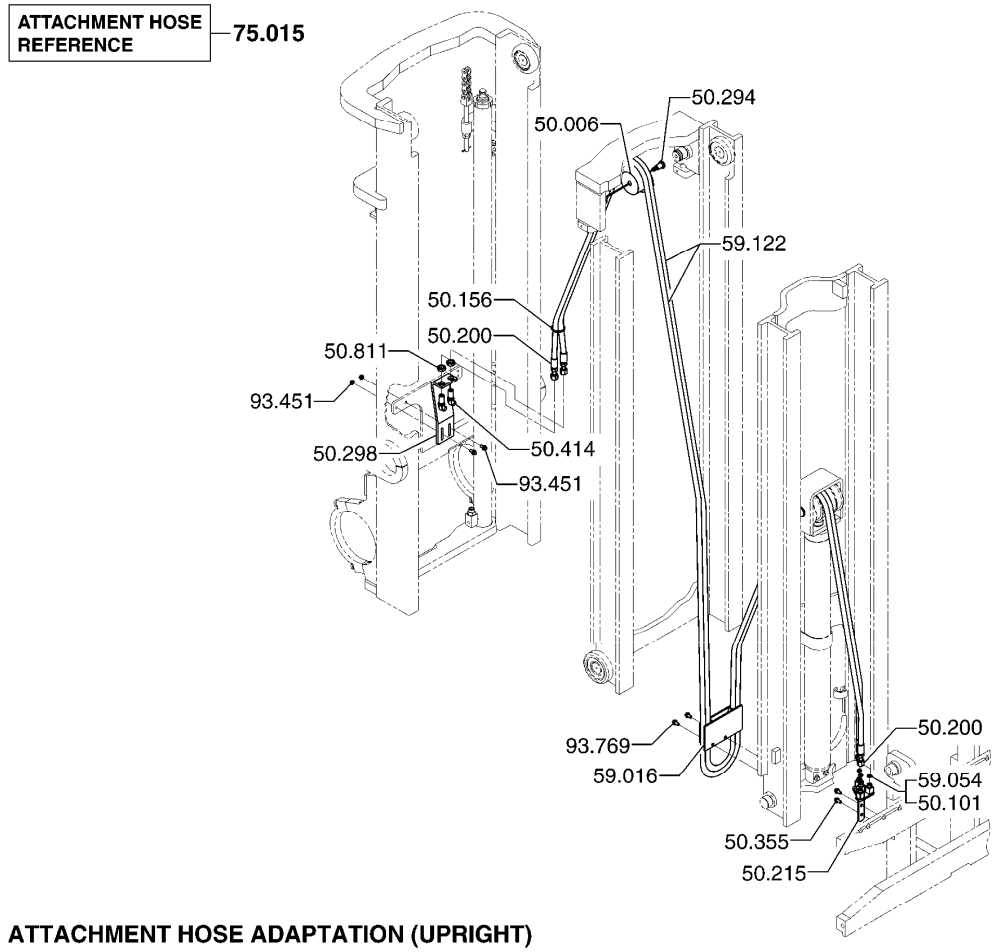

ATTACHMENT HOSE ADAPTATION (UPRIGHT) **50-410**

50.006 SHEAVE, DEVICE HOSE UPPER
쉬브

50.101 SEAL, DEVICE HOSE SWIVEL COUPLING
시일

50.156 CLIP, DEVICE HOSE
클립

50.200 COUPLING, DEVICE HOSE
커플링

50.215 TERMINAL BLOCK, DEVICE HOSE
터미널블록

50.294 PIVOT, DEVICE HOSE UPPER SHEAVE
피봇

50.298 BRACKET, DEVICE HOSE TERMINAL
브라켓

50.355 FASTENER, DEVICE HOSE TERMINAL BLOCK
패스너

50.414 FITTING, DEVICE HOSE CONNECTOR
피팅

50.811	NUT, DEVICE HOSE FITTING 너트
59.016	JUNCTION BLOCK, DEVICE HOSE 연결블록
59.054	PLUG, DEVICE HOSE JUNCTION BLOCK 플러그
59.122	LINE, DEVICE HYDRAULIC (INNER RAIL) 라J
75.015	MODULE, ATTACHMENT HOSE LINES *
93.451	FASTENER, DEVICE HOSE TERMINAL BRACKET 패스너
93.769	FASTENER, DEVICE LINE JUNCTION BLOCK 패스너

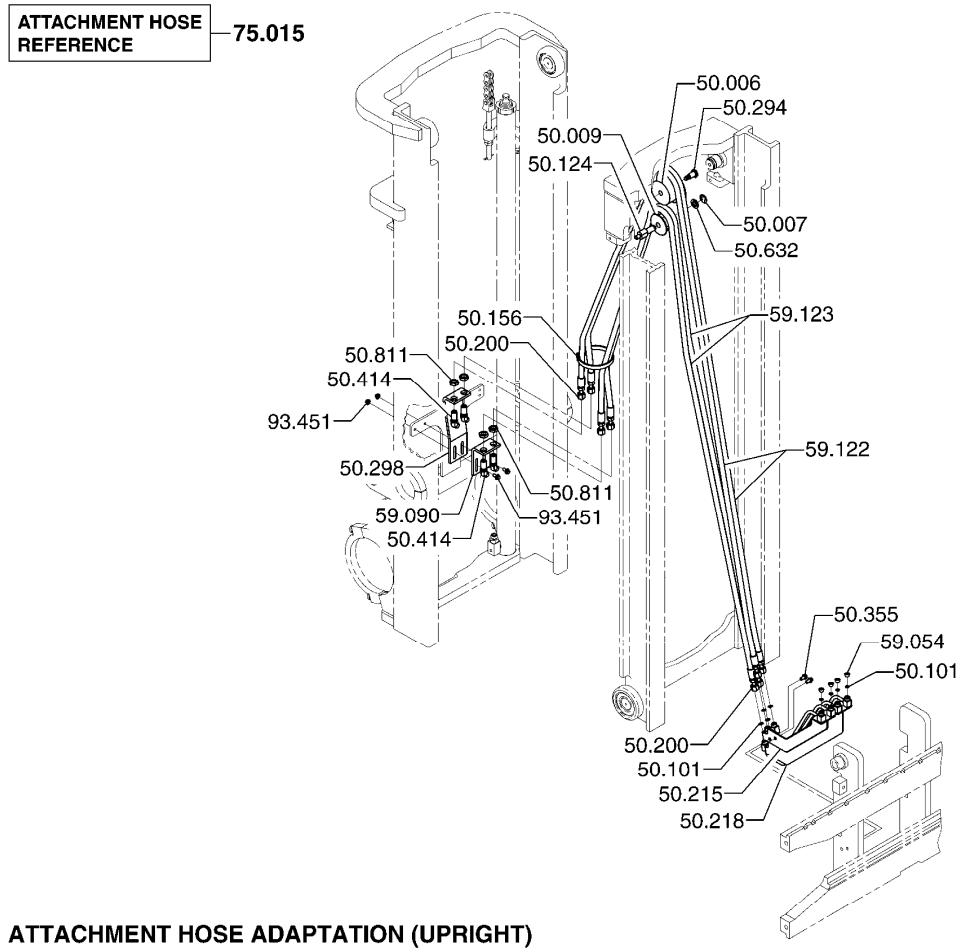

50.006 SHEAVE, DEVICE HOSE UPPER
쉬브

50.007 RETAINER, DEVICE HOSE SHEAVE
리테이너

50.009 SHEAVE, DEVICE HOSE LOWER
쉬브

50.101 SEAL, DEVICE HOSE SWIVEL COUPLING
시일

50.124 PIVOT, DEVICE HOSE LOWER RH SHEAVE
피봇

50.156 CLIP, DEVICE HOSE
클립

50.200 COUPLING, DEVICE HOSE
커플링

50.215 TERMINAL BLOCK, DEVICE HOSE
터미널블록

50.218 TERMINAL BLOCK, DEVICE LH HOSE
터미널블록

50.294	PIVOT, DEVICE HOSE UPPER SHEAVE 피봇
50.298	BRACKET, DEVICE HOSE TERMINAL 브라켓
50.355	FASTENER, DEVICE HOSE TERMINAL BLOCK 패스너
50.414	FITTING, DEVICE HOSE CONNECTOR 피팅
50.632	SPACER, DEVICE HOSE SHEAVE 스페이서
50.811	NUT, DEVICE HOSE FITTING 너트
59.054	PLUG, DEVICE HOSE JUNCTION BLOCK 플러그
59.090	BRACKET, DEVICE HOSE TERMINAL 브라켓
59.122	LINE, DEVICE HYDRAULIC (INNER RAIL) 라J
59.123	LINE, DEVICE HYDRAULIC (INNER RAIL) 라J
75.015	MODULE, ATTACHMENT HOSE LINES *
93.451	FASTENER, DEVICE HOSE TERMINAL BRACKET 패스너

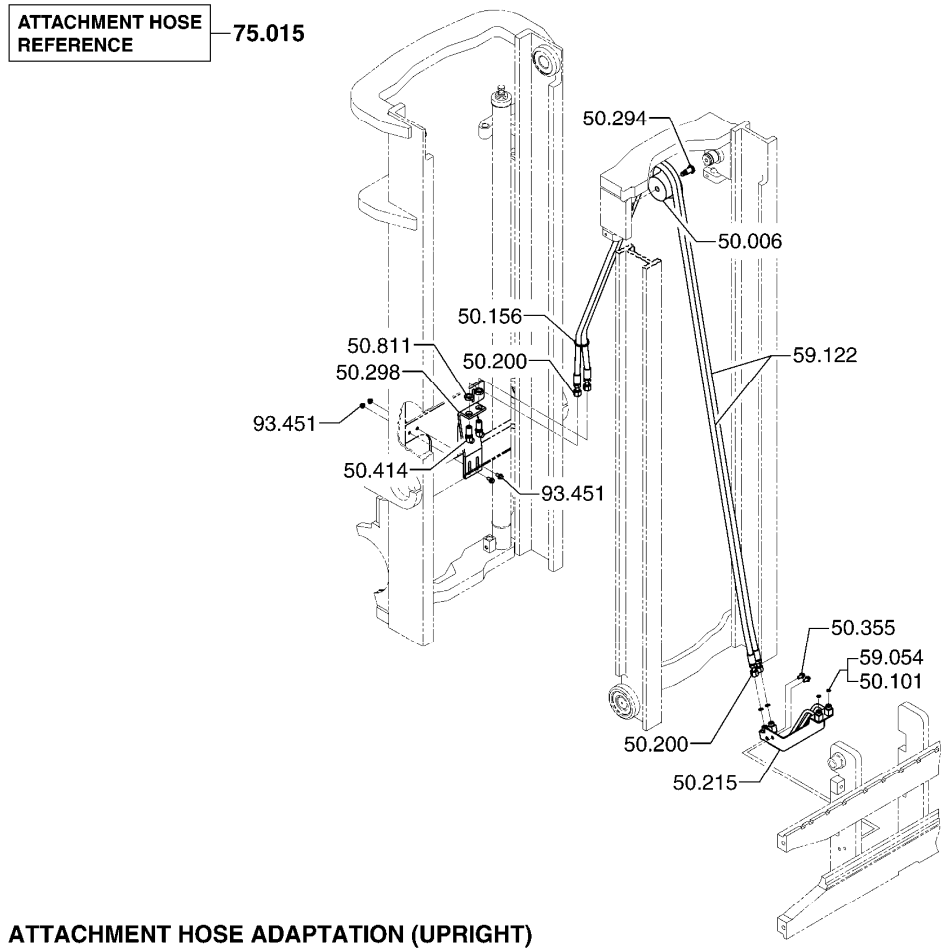

50.006 SHEAVE, DEVICE HOSE UPPER
쉬브

50.101 SEAL, DEVICE HOSE SWIVEL COUPLING
시일

50.156 CLIP, DEVICE HOSE
클립

50.200 COUPLING, DEVICE HOSE
커플링

50.215 TERMINAL BLOCK, DEVICE HOSE
터미널블록

50.294 PIVOT, DEVICE HOSE UPPER SHEAVE
피봇

50.298 BRACKET, DEVICE HOSE TERMINAL
브라켓

50.355 FASTENER, DEVICE HOSE TERMINAL BLOCK
패스너

50.414 FITTING, DEVICE HOSE CONNECTOR
피팅

50.811	NUT, DEVICE HOSE FITTING 너트
59.054	PLUG, DEVICE HOSE JUNCTION BLOCK 플러그
59.122	LINE, DEVICE HYDRAULIC (INNER RAIL) 라J
75.015	MODULE, ATTACHMENT HOSE LINES *
93.451	FASTENER, DEVICE HOSE TERMINAL BRACKET 패스너

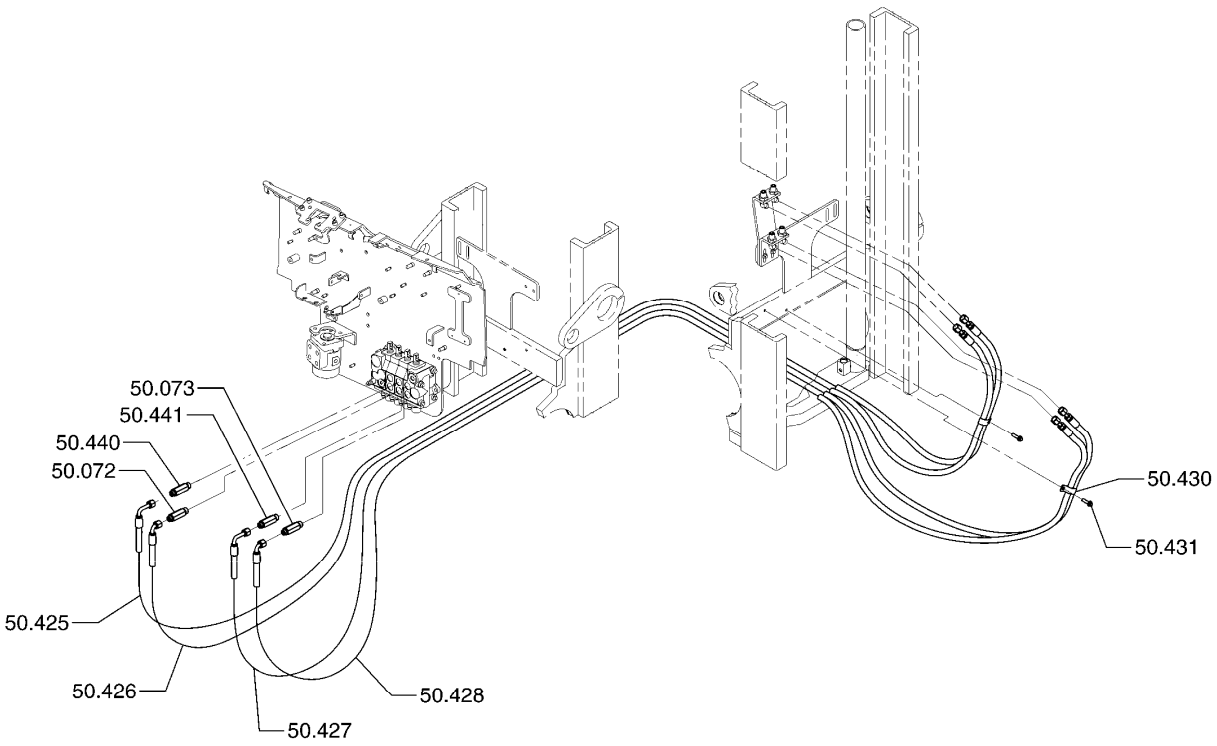

AUXILIARY VALVE LINES **50-590**

50.072 FITTING, 1ST AUXILIARY VALVE "B" PORT
피팅

50.073 FITTING, 2ND AUXILIARY VALVE "B" PORT
피팅

50.425 LINE, 1ST AUXILIARY VALVE "A" PORT
라인

50.426 LINE, 1ST AUXILIARY VALVE "B" PORT
라인

50.427 LINE, 2ND AUXILIARY VALVE "A" PORT
라인

50.428 LINE, 2ND AUXILIARY VALVE "B" PORT
라인

50.430 CLAMP, AUXILIARY VALVE LINES
클램프

50.431 FASTENER, AUX VALVE LINES CLAMP
패스너

50.440 FITTING, 1ST AUXILIARY VALVE "A" PORT
피팅

50.441 FITTING, 2ND AUXILIARY VALVE "A" PORT
피팅

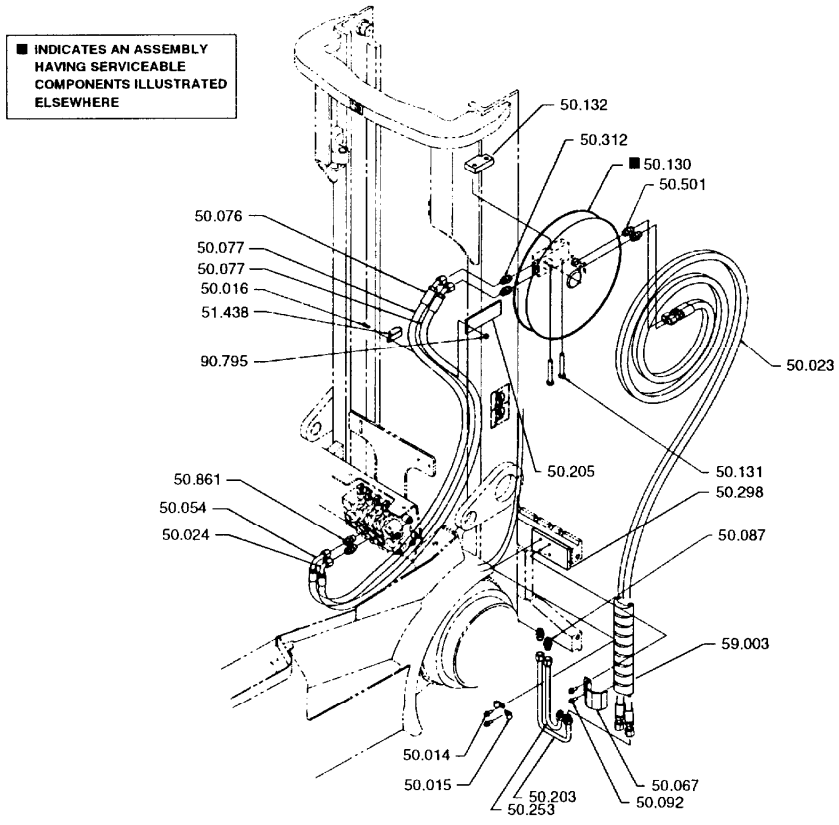

HOSE ADAPTATION
SCHLAUCHBEFESTIGUNG
FIXATION DE TUYAU
FIJACION DE MANGUERA

50.014 FASTENER, DEVICE HOSE CLIP TO BRACKET RH
패스너

50.015 CLIP, DEVICE LINE TO UPRIGHT
클립

50.016 FASTENER, DEVICE LINE TO UPRIGHT CLIP
패스너

50.023 LINE, DEVICE HYDRAULIC
라인

50.024 COUPLING, DEVICE RH HOSE (VALVE END)
커플링

50.054 COUPLING, DEVICE LH HOSE (VALVE END)
커플링

50.067 CLAMP, DEVICE HOSE TO BRACKET
클램프

50.076 COUPLING, DEVICE RH HOSE (REEL INLET)
커플링

50.077 LINE, DEVICE RH HYDRAULIC (VALVE TO REEL)
라인

50.087 FITTING, DEVICE LH HYDRAULIC HOSE
피팅

50.092 FASTENER, DEVICE HOSE TO BRACKET RH CLAMP
패스너

50.130 REEL ASSEMBLY, DEVICE RH HOSE
릴

50.131 FASTENER, DEVICE RH HOSE REEL
패스너

50.132 BRACKET, DEVICE HOSE REEL
브라켓

50.203 LINE, DEVICE HYDRAULIC (AT CARRIAGE)
라인

50.205 BRACKET, DEVICE LINE CLAMP
브라켓

50.253 LINE, DEVICE HYDRAULIC (AT CARRIAGE)
라인

50.298 BRACKET, DEVICE HOSE TERMINAL
브라켓

50.312 FITTING, DEVICE RH HOSE REEL INLET
피팅

50.501 FITTING, DEVICE HOSE REEL OUTLET
피팅

50.861 FITTING, AUXILIARY VALVE A PORT
피팅

51.438 CLIP, DEVICE HOSE
클립

59.003 RETAINER, DEVICE HOSE
리테이너

90.795 NUT, DEVICE HOSE CLAMP FASTENER
너트

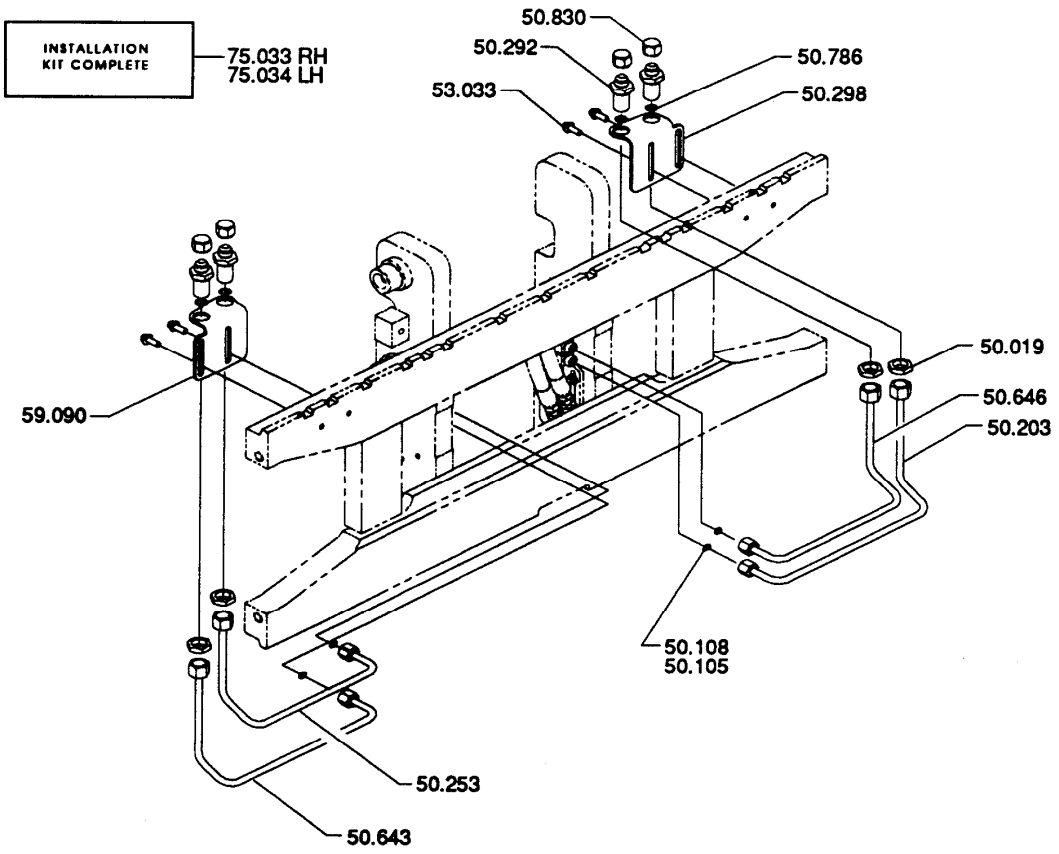

CARRIAGE HIGH TERMINATION PLUMBING 50-765

50.019 FASTENER, DEVICE HOSE DISCONNECT
패스너

50.105 SEAL, DEVICE HOSE SWIVEL COUPLING PLUG
시일

50.108 SEAL, DEVICE HOSE SWIVEL COUPLING INLET PORT
시일

50.203 LINE, DEVICE HYDRAULIC (AT CARRIAGE)
라인

50.253 LINE, DEVICE HYDRAULIC (AT CARRIAGE)
라인

50.292 FITTING, DEVICE RH HYDRAULIC HOSE
피팅

50.298 BRACKET, DEVICE HOSE TERMINAL
브라켓

50.643 LINE, DEVICE UPPER (AT CARRIAGE)
라인

50.646 LINE, DEVICE
라인

50.786	SEAL, DEVICE RH HOSE TERMINAL BLOCK PORT 시일
50.830	CAP, DEVICE HOSE REEL FITTING 캡
53.033	FASTENER, HOSE TERMINAL BRACKET 패스너
59.090	BRACKET, DEVICE HOSE TERMINAL 브라켓
75.033	KIT, CARRIAGE TERMINATION PIPING - RH 킷
75.034	KIT, CARRIAGE TERMINATION PIPING - LH 킷

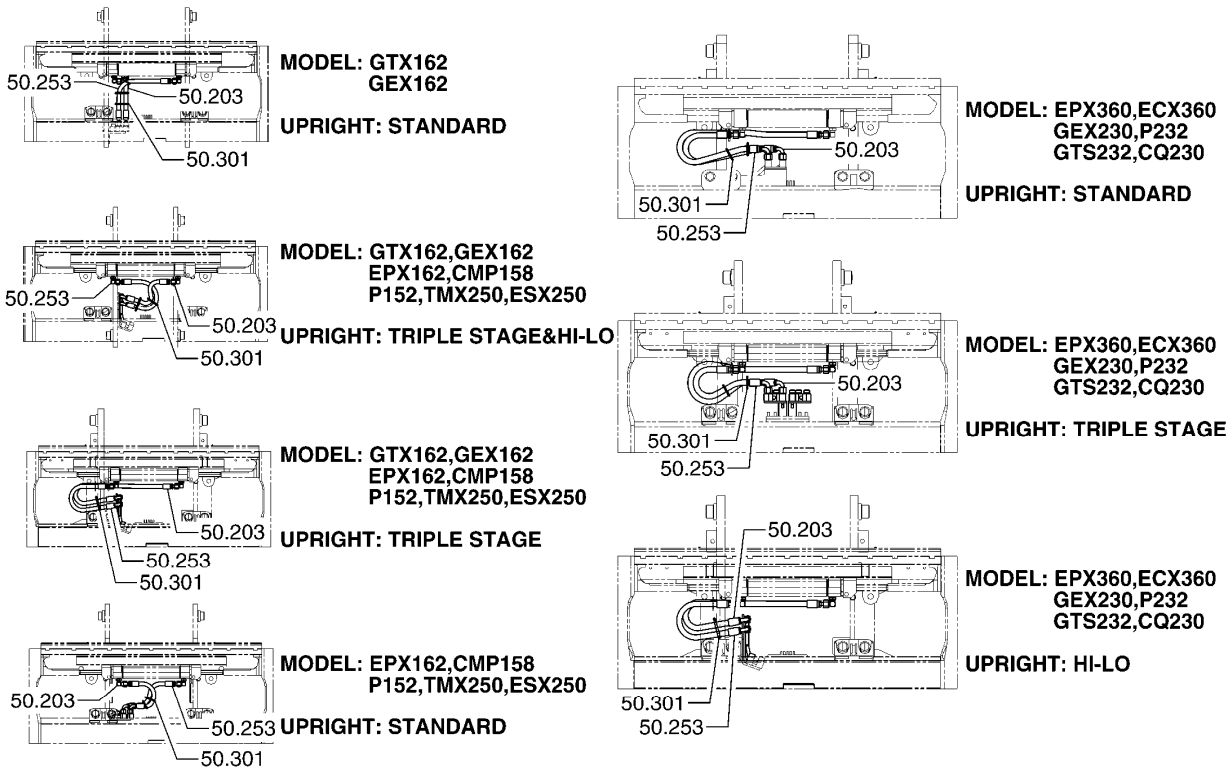

50.203 LINE, DEVICE HYDRAULIC (AT CARRIAGE)
라인

50.253 LINE, DEVICE HYDRAULIC (AT CARRIAGE)
라인

50.301 CLIP, DEVICE RH HOSE (AT CARRIAGE)
클립

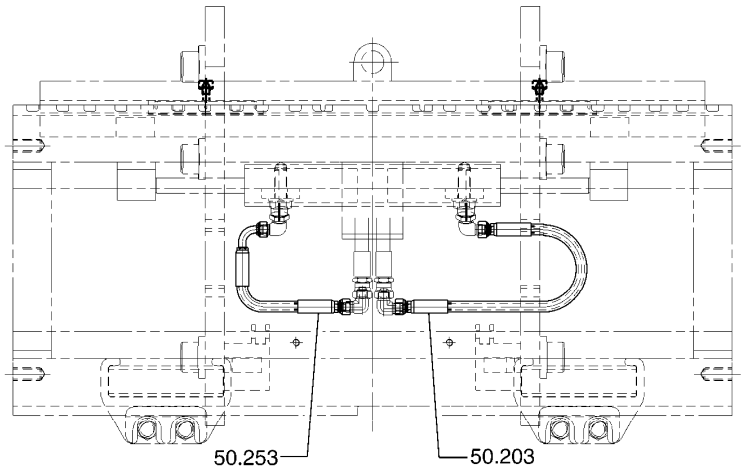

ATTACHMENT HOSE ADAPTATION (CARRIAGE) **50-793**

50.203 LINE, DEVICE HYDRAULIC (AT CARRIAGE)
라인

50.253 LINE, DEVICE HYDRAULIC (AT CARRIAGE)
라인

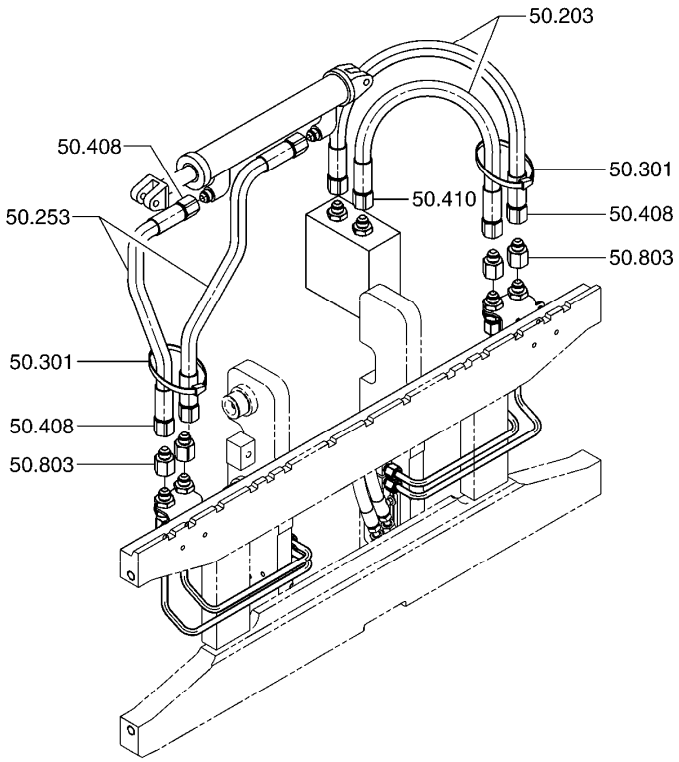

ATTACHMENT HOSE ADAPTATION (CARRIAGE) **50-794**

50.203 LINE, DEVICE HYDRAULIC (AT CARRIAGE)
라인

50.253 LINE, DEVICE HYDRAULIC (AT CARRIAGE)
라인

50.301 CLIP, DEVICE RH HOSE (AT CARRIAGE)
클립

50.408 COUPLING, DEVICE HOSE
커플링

50.410 COUPLING, DEVICE HOSE
커플링

50.803 FITTING, DEVICE HYDRAULIC LINE
피팅

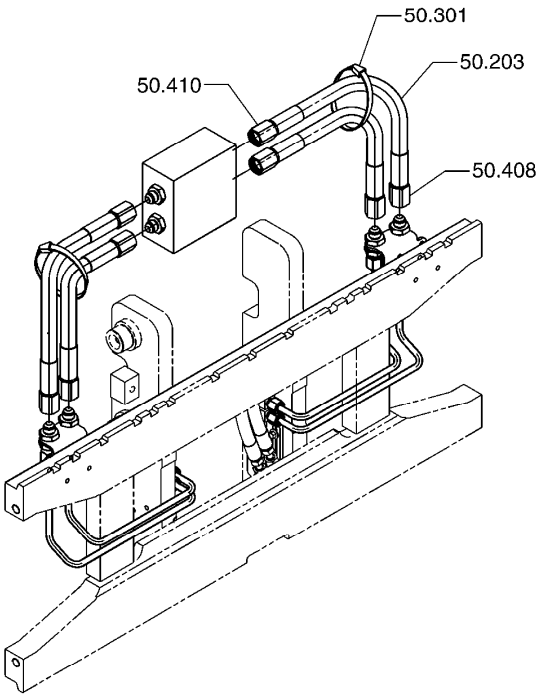

ATTACHMENT HOSE ADAPTATION (CARRIAGE) **50-796**

50.203 LINE, DEVICE HYDRAULIC (AT CARRIAGE)
라인

50.301 CLIP, DEVICE RH HOSE (AT CARRIAGE)
클립

50.408 COUPLING, DEVICE HOSE
커플링

50.410 COUPLING, DEVICE HOSE
커플링

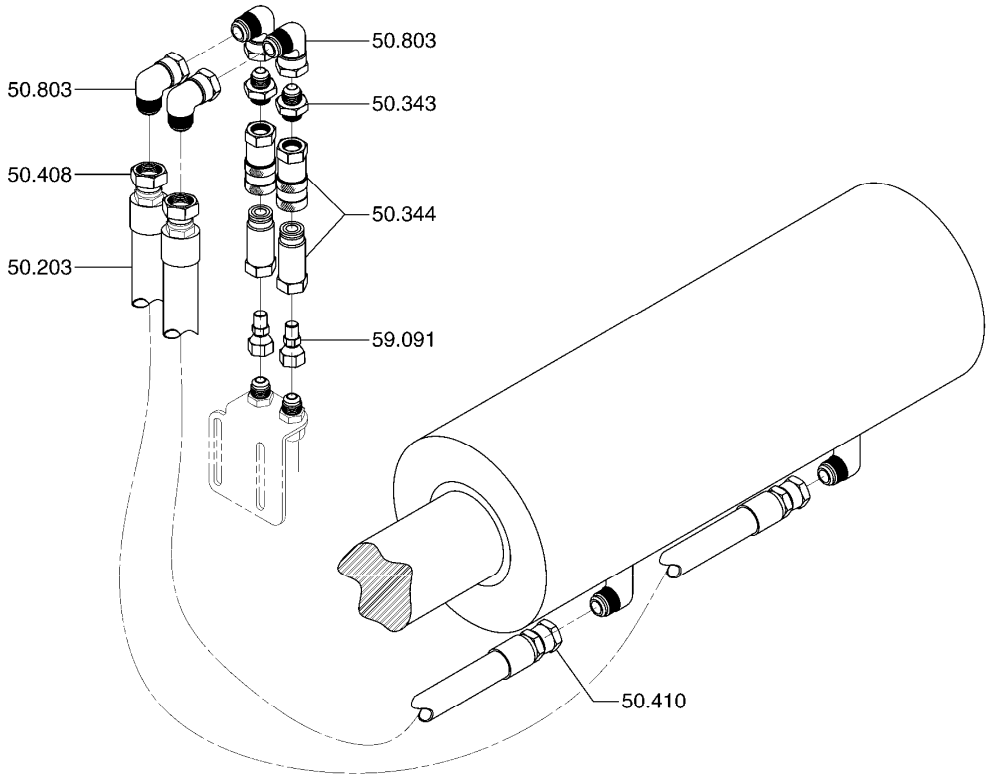

ATTACHMENT HOSE ADAPTATION (CARRIAGE) **50-797**

50.203 LINE, DEVICE HYDRAULIC (AT CARRIAGE)
라인

50.343 FITTING, DEVICE LH LINE
피팅

50.344 FITTING, DEVICE LH LINE
피팅

50.408 COUPLING, DEVICE HOSE
커플링

50.410 COUPLING, DEVICE HOSE
커플링

50.803 FITTING, DEVICE HYDRAULIC LINE
피팅

59.091 FITTING, DEVICE HYDRAULIC LINE
피팅

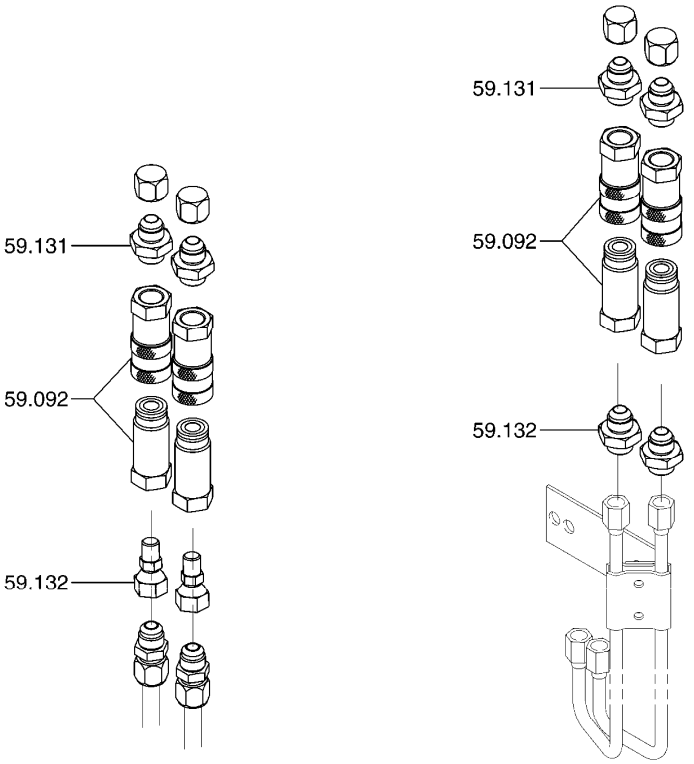

QUICK DISCONNECT FOR DEVICE HOSE ADAPTATION **50-798**

59.092 QUICK DISCONNECT, DEVICE HOSE
퀵디스커넥트

59.131 FITTING, DEVICE LINE QUICK DISCONNECT
*

59.132 FITTING, DEVICE LINE QUICK DISCONNECT
*

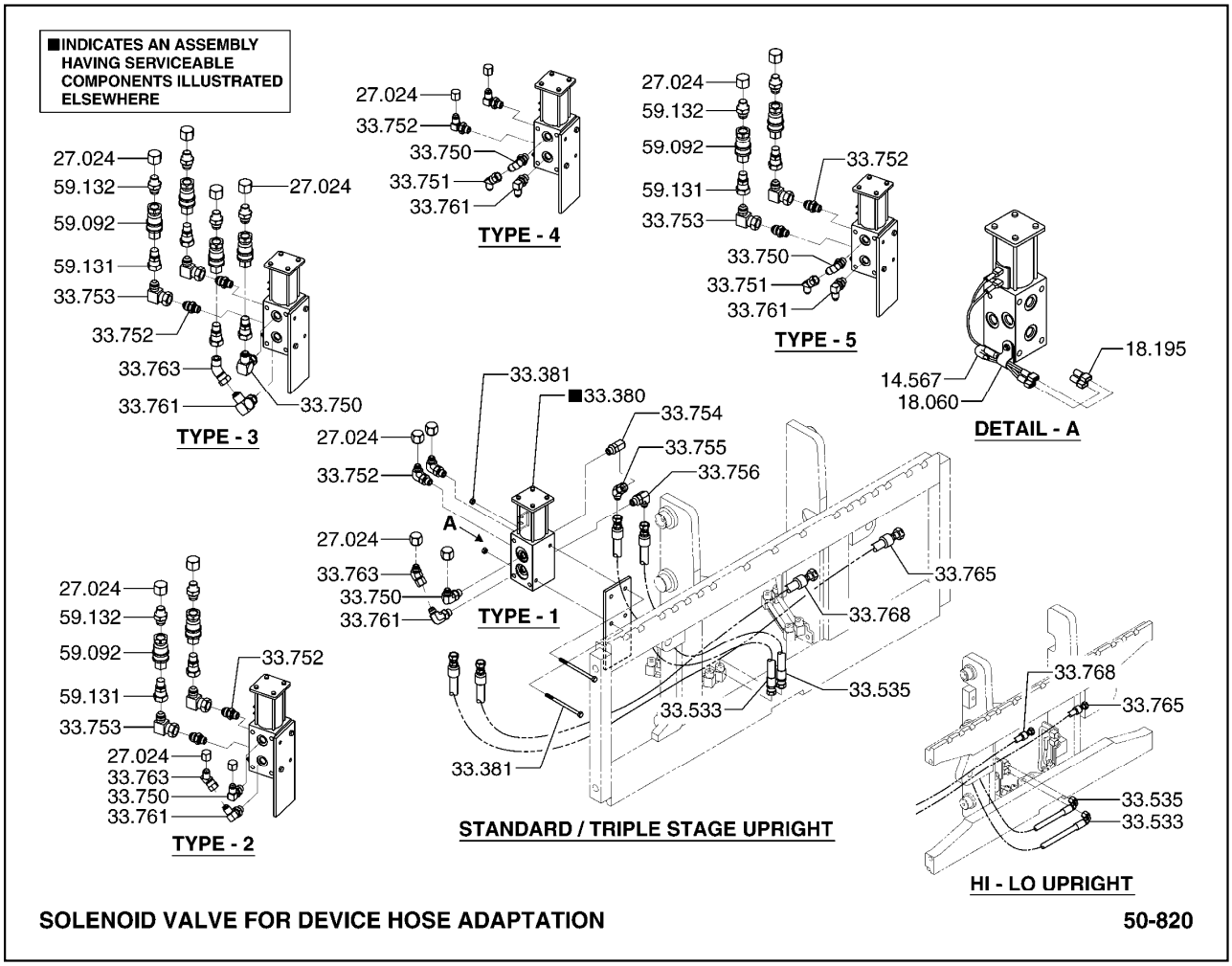

14.567 WIRE, DEVICE SELECTOR VALVE SWITCH FEED
와이어

18.060 CLAMP, DEVICE SELECTOR VALVE CABLE
클램프

18.195 TERMINAL, DEVICE SELECTOR VALVE SWITCH FEED WIRE
*

27.024 PLUG, DEVICE SELECTOR VALVE OPTIONAL OUTLET PORT
플러그

33.380 VALVE ASSEMBLY, DEVICE SELECTOR SOLENOID
벨브

33.381 FASTENER, DEVICE SELECTOR VALVE
패스너

33.533 LINE, DEVICE SELECTOR VALVE "P" PORT HYDRAULIC
*

33.535 LINE, DEVICE SELECTOR VALVE "R" PORT HYDRAULIC
*

33.750 FITTING, DEVICE SELECTOR VALVE C1 PORT
피팅

33.751	FITTING, DEVICE SELECTOR VALVE C1 PORT 피팅
33.752	FITTING, DEVICE SELECTOR VALVE C2 PORT 피팅
33.753	FITTING, DEVICE SELECTOR VALVE C2 PORT 피팅
33.754	FITTING, DEVICE SELECTOR VALVE "P" PORT 피팅
33.755	FITTING, DEVICE SELECTOR VALVE "P" PORT 피팅
33.756	FITTING, DEVICE SELECTOR VALVE "R" PORT 피팅
33.761	FITTING, DEVICE SELECTOR VALVE C4 PORT 피팅
33.763	FITTING, DEVICE SELECTOR VALVE C4 PORT 피팅
33.765	LINE, DEVICE SELECTOR VALVE C4 PORT HYDRAULIC 라인
33.768	LINE, DEVICE SELECTOR VALVE C1 PORT HYDRAULIC 라인
59.092	QUICK DISCONNECT, DEVICE HOSE 퀵디스커넥트
59.131	FITTING, DEVICE LINE QUICK DISCONNECT *
59.132	FITTING, DEVICE LINE QUICK DISCONNECT *

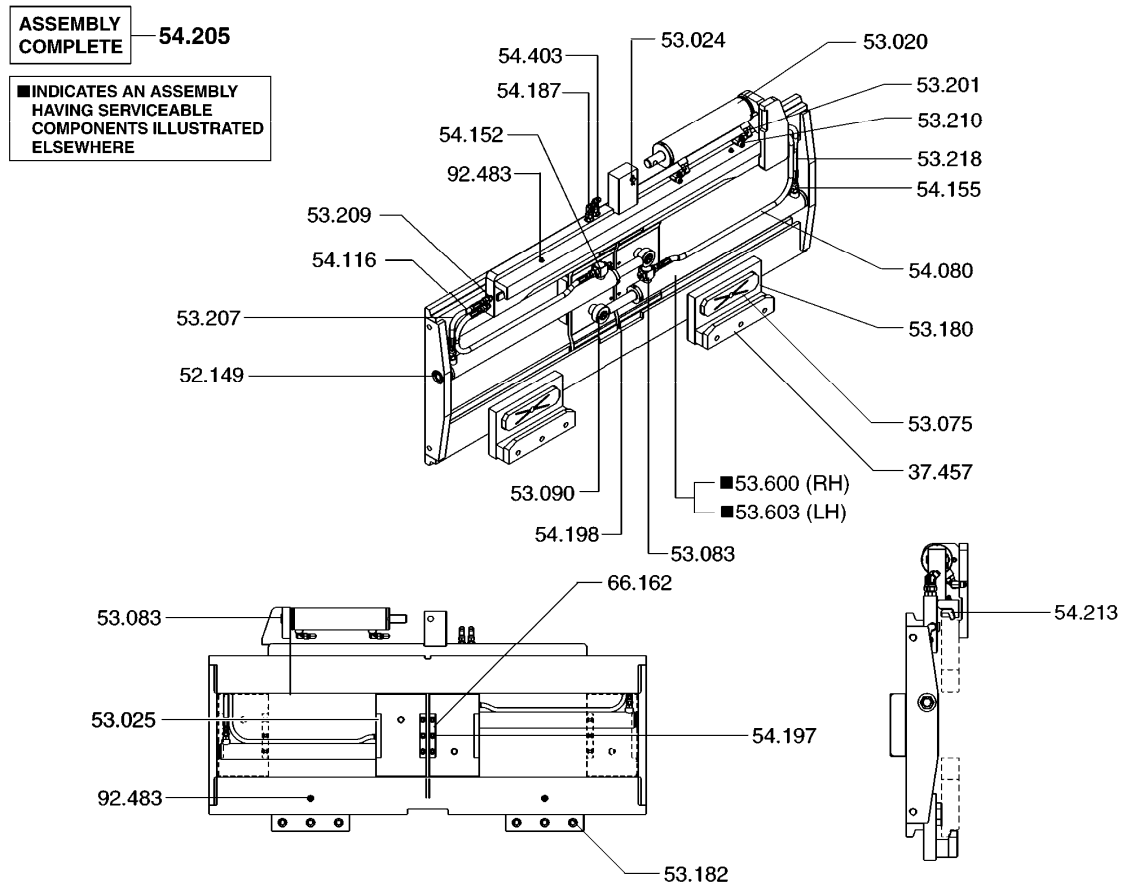

37.457	HOOK, CAB CLOTHING HANGER 후크	53.600	CYLINDER ASSEMBLY, INBOARD RH FORK 실린더
52.149	NUT, SIDE SHIFT CYLINDER ANCHOR PORT LINE FITTIN 너트	53.603	CYLINDER ASSEMBLY, INBOARD LH FORK 실린더
53.020	CYLINDER ASSEMBLY, SIDE SHIFTER 실린더	54.080	LINE, SIDE SHIFT CYLINDER ANCHOR PORT 라인
53.024	ANCHOR, SIDE SHIFTER CYLINDER BASE 앵커	54.116	LINE, SIDE SHIFT CYLINDER ROD PORT 라인
53.025	GUIDE, SIDE SHIFTER MOVABLE FRAME LOWER 가이드	54.152	FITTING, SIDE SHIFTER CYLINDER ANCHOR PORT LINE 피팅
53.075	BEARING, SIDE SHIFTER (LOWER) 베어링	54.155	FITTING, SIDE SHIFTER CYLINDER ROD PORT LINE 피팅
53.083	FASTENER, SIDE SHIFTER CYLINDER ANCHOR 패스너	54.187	FITTING, SIDE SHIFTER ANCHOR PORT LINE 피팅
53.090	FASTENER, SIDE SHIFTER MOVABLE FRAME 패스너	54.197	FASTENER, SIDE SHIFTING BASE PLATE TO ARM 패스너
53.180	SPACER, SIDE SHIFTER BEARING 스페이서	54.198	BEARING, SIDE SHIFTER BASE PLATE ARM 베어링
53.182	FASTENER, SIDE SHIFTER HANGER 패스너	54.205	ATTACHMENT, FORK POSITIONER 어태치먼트
53.201	FITTING, SIDE SHIFTER CYLINDER ANCHOR PORT 피팅	54.213	BEARING, SIDE SHIFTER (UPPER) 베어링
53.207	LINE, SIDE SHIFTER CYLINDER ANCHOR PORT 라인	54.403	FITTING-LUB, SIDE SHIFTER BASE PLATE ARM 피팅
53.209	FITTING, SIDE SHIFTER CYLINDER ANCHOR PORT LINE 피팅	66.162	STOP, CARRIAGE TRAVEL 스톱
53.210	FITTING, SIDE SHIFTER CYLINDER ANCHOR PORT LINE 피팅	92.483	NIPPLE, LUBRICATION 니플
53.218	LINE, SIDE SHIFTER CYLINDER ROD PORT 라인		

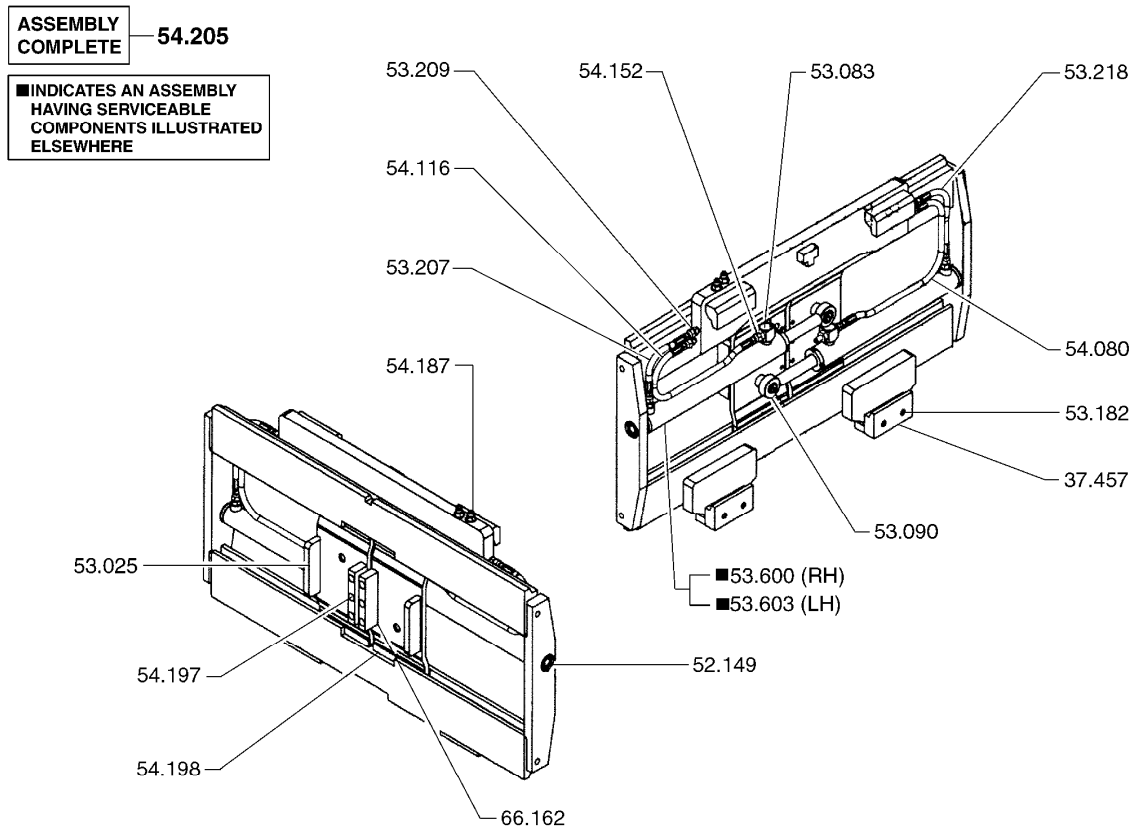

FORK POSITIONER (BASIC) **53-084**

37.457 HOOK, CAB CLOTHING HANGER
후크

52.149 NUT, SIDE SHIFT CYLINDER ANCHOR PORT LINE FITTING
너트

53.025 GUIDE, SIDE SHIFTER MOVABLE FRAME LOWER
가이드

53.083 FASTENER, SIDE SHIFTER CYLINDER ANCHOR
패스너

53.090 FASTENER, SIDE SHIFTER MOVABLE FRAME
패스너

53.182 FASTENER, SIDE SHIFTER HANGER
패스너

53.207 LINE, SIDE SHIFTER CYLINDER ANCHOR PORT
라인

53.209 FITTING, SIDE SHIFTER CYLINDER ANCHOR PORT LINE
피팅

53.218 LINE, SIDE SHIFTER CYLINDER ROD PORT
라인

53.600	CYLINDER ASSEMBLY, INBOARD RH FORK 실린더
53.603	CYLINDER ASSEMBLY, INBOARD LH FORK 실린더
54.080	LINE, SIDE SHIFT CYLINDER ANCHOR PORT 라인
54.116	LINE, SIDE SHIFT CYLINDER ROD PORT 라인
54.152	FITTING, SIDE SHIFTER CYLINDER ANCHOR PORT LINE 피팅
54.187	FITTING, SIDE SHIFTER ANCHOR PORT LINE 피팅
54.197	FASTENER, SIDE SHIFTING BASE PLATE TO ARM 패스너
54.198	BEARING, SIDE SHIFTER BASE PLATE ARM 베어링
54.205	ATTACHMENT, FORK POSITIONER 어태치먼트
66.162	STOP, CARRIAGE TRAVEL 스톱

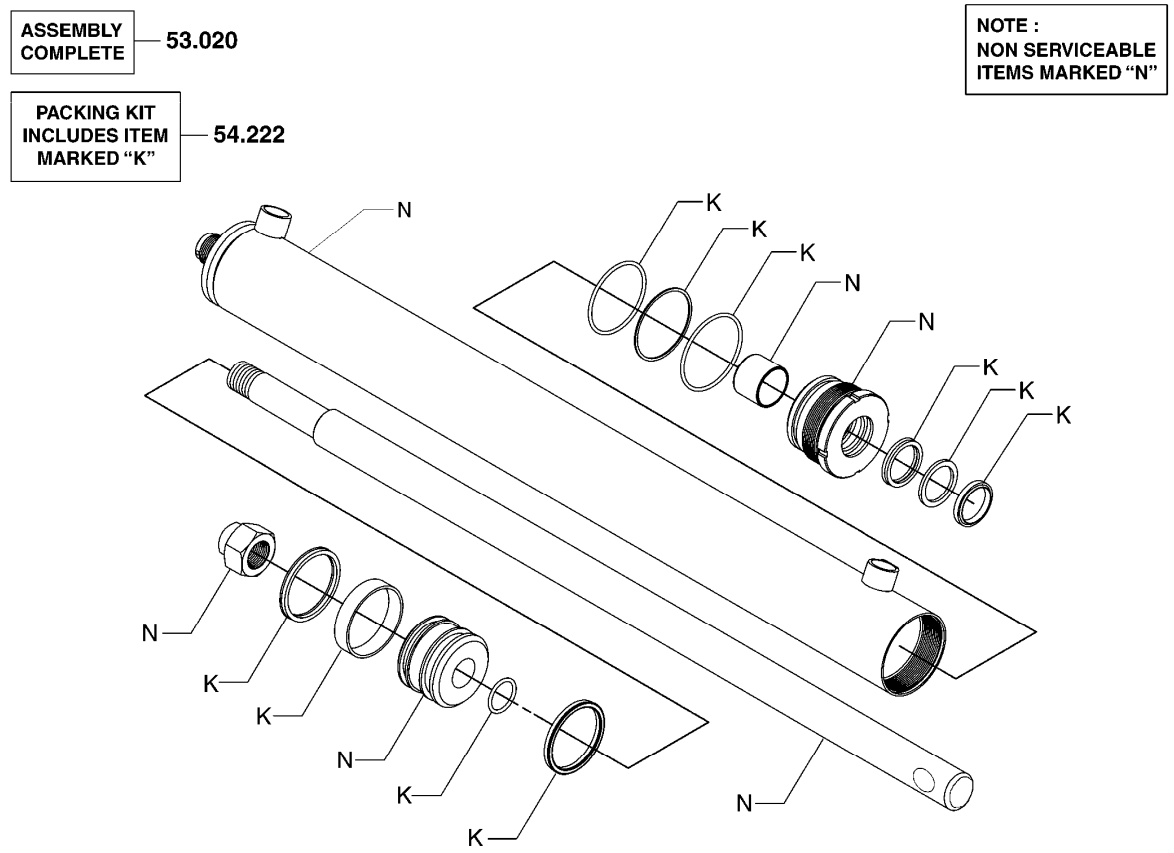

53.020 CYLINDER ASSEMBLY, SIDE SHIFTER
실린더

54.222 PACKING KIT, SIDE SHIFTER CYLINDER
패킹킷

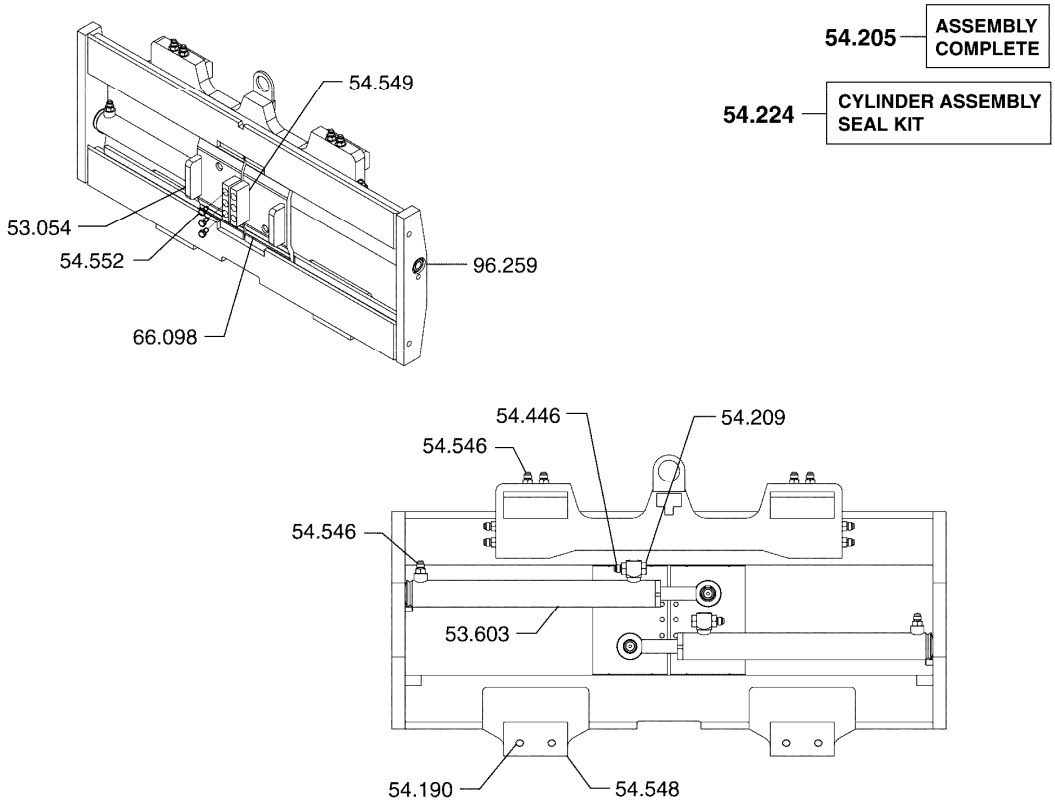

FORK POSITIONER **53-164**

53.054 GUIDE, FORK
가이드

53.603 CYLINDER ASSEMBLY, INBOARD LH FORK
실린더

54.190 FASTENER, FORK HANGER SUPPORT
패스너

54.205 ATTACHMENT, FORK POSITIONER
어태치먼트

54.209 PLUG, FORK CYLINDER FLOW DIVIDER
플러그

54.224 PACKING KIT, LH FORK CYLINDER
패킹킷

54.446 FITTING - LUB, FORK POSITIONER
피팅

54.546 FITTING - LUB, FORK POSITIONER
피팅

54.548 HOOK, FORK POSITIONER HANGER
후크

54.549 STOP, FORK POSITIONER CYLINDER
스톱

54.552 FASTENER, FORK POSITIONER CYLINDER STOP
패스너

66.098 BEARING, FORK HORIZONTAL THRUST ROLLER
베어링

96.259 FASTENER, FORK CYLINDER ANCHOR END PIN RETAINER
패스너

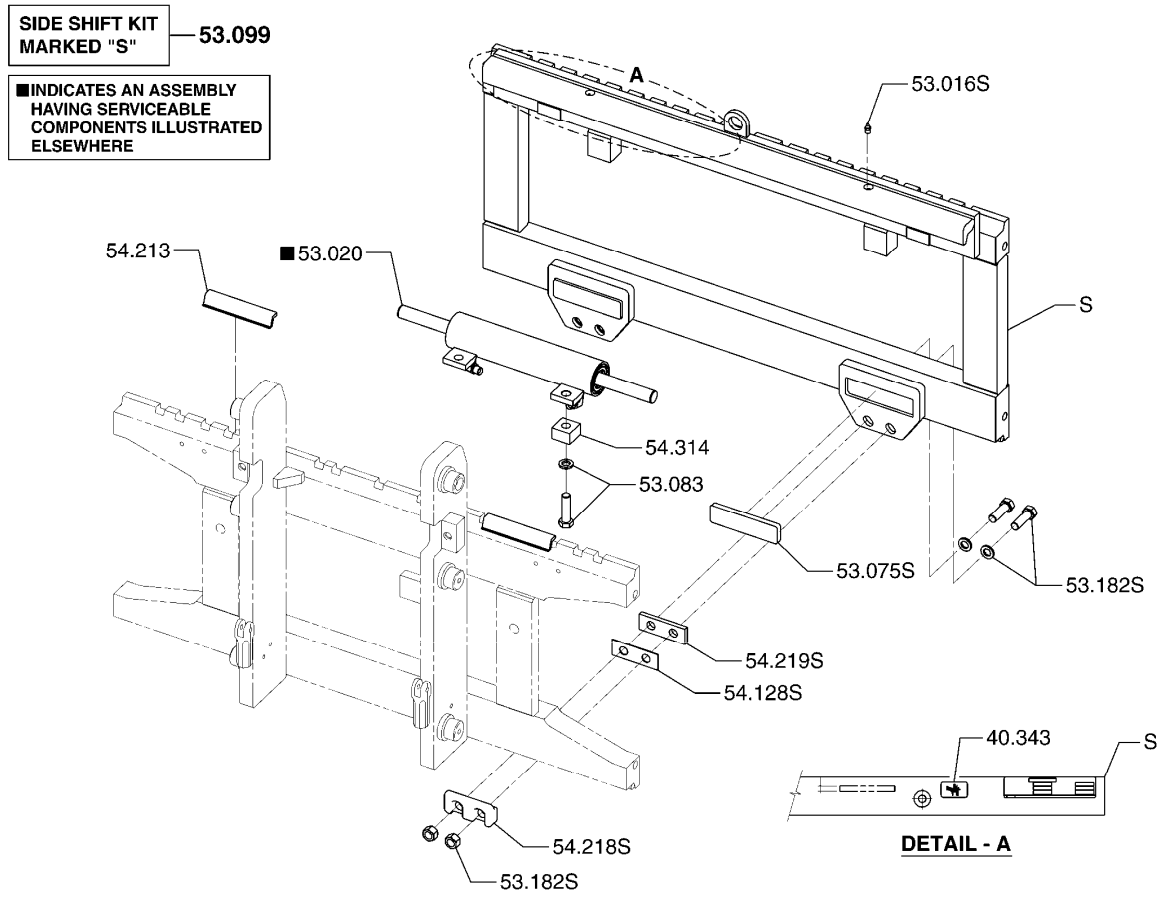

40.343	DECAL, ATTACHMENT SAFETY *
53.016	FITTING-LUB, SIDE SHIFTER MOVABLE FRAME SUPPORT SH 피팅
53.020	CYLINDER ASSEMBLY, SIDE SHIFTER 실린더
53.075	BEARING, SIDE SHIFTER (LOWER) 베어링
53.083	FASTENER, SIDE SHIFTER CYLINDER ANCHOR 패스너
53.099	SIDE SHIFTER, DEVICE 사이드쉬프트
53.182	FASTENER, SIDE SHIFTER HANGER 패스너
54.128	SPACER, SIDE SHIFTER MOVEABLE FRAME BEARING 스페이서
54.213	BEARING, SIDE SHIFTER (UPPER) 베어링

54.218 HOOK, SIDE SHIFTER HANGER
후크

54.219 SPACER, SIDE SHIFTING BASE PLATE HANGER
스페이서

54.314 SPACER, SIDE SHIFTER CYLINDER REAR
스페이서

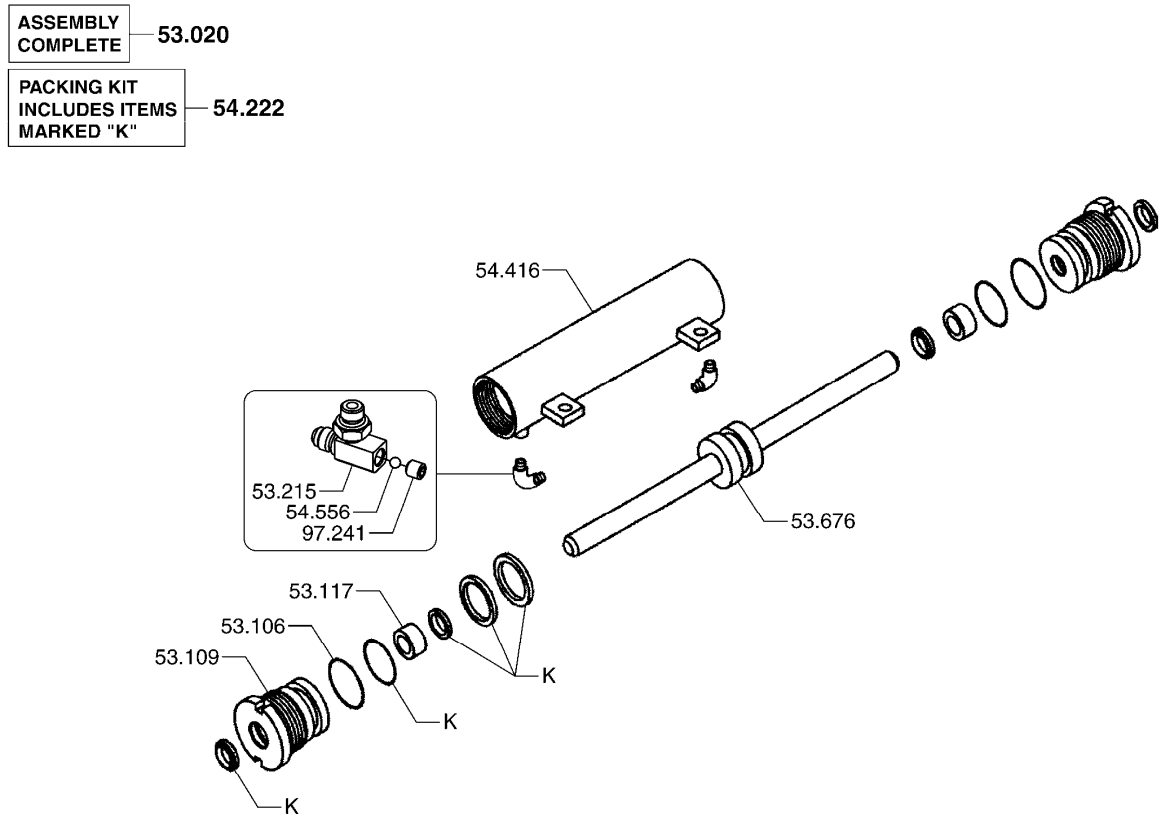

SIDESHIFT CYLINDER **53-198**

53.020	CYLINDER ASSEMBLY, SIDE SHIFTER 실린더
53.109	GLAND, SIDE SHIFTER CYLINDER 그랜드
53.110	RETAINER, SIDE SHIFTER CYLINDER GLAND 리테이너
53.117	BUSHING, SIDE SHIFTER CYLINDER GLAND 부싱
53.215	FITTING, SIDE SHIFTER CYLINDER ROD PORT 피팅
53.676	ROD, SIDE SHIFTER CYLINDER PISTON 로드
54.222	PACKING KIT, SIDE SHIFTER CYLINDER 패킹킷
54.416	BARREL, SIDE SHIFT CYLINDER 배럴
54.556	BALL, SIDE SHIFTER CYLINDER ROD PORT *

97.241 SET SCREW, SIDE SHIFTER CYLINDER ROD PORT
*

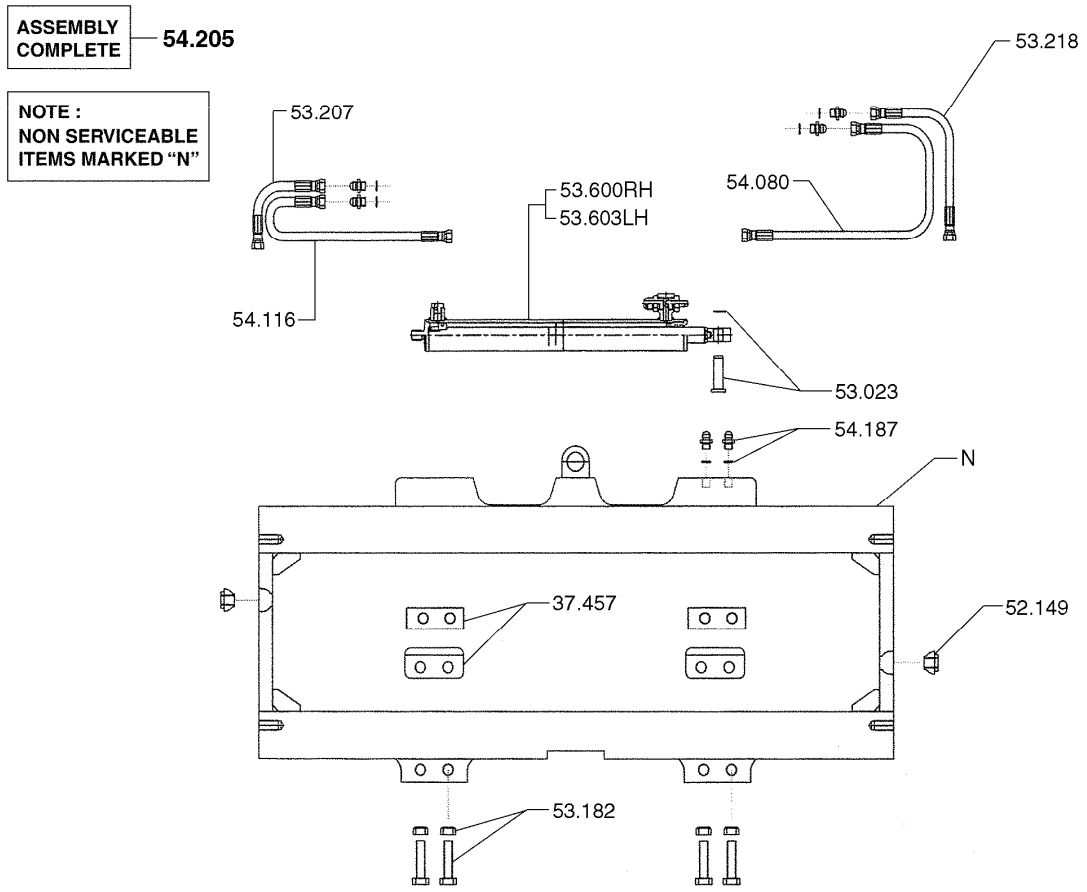

52.149 NUT, SIDE SHIFT CYLINDER ANCHOR PORT LINE FITTING
너트

53.023 ANCHOR, SIDE SHIFTER CYLINDER ROD END
앵커

53.182 FASTENER, SIDE SHIFTER HANGER
패스너

53.207 LINE, SIDE SHIFTER CYLINDER ANCHOR PORT
라인

53.218 LINE, SIDE SHIFTER CYLINDER ROD PORT
라인

53.600 CYLINDER ASSEMBLY, INBOARD RH FORK
실린더

53.603 CYLINDER ASSEMBLY, INBOARD LH FORK
실린더

54.080 LINE, SIDE SHIFT CYLINDER ANCHOR PORT
라인

54.116 LINE, SIDE SHIFT CYLINDER ROD PORT
라인

54.187 FITTING, SIDE SHIFTER ANCHOR PORT LINE
피팅

54.205 ATTACHMENT, FORK POSITIONER
어태치먼트

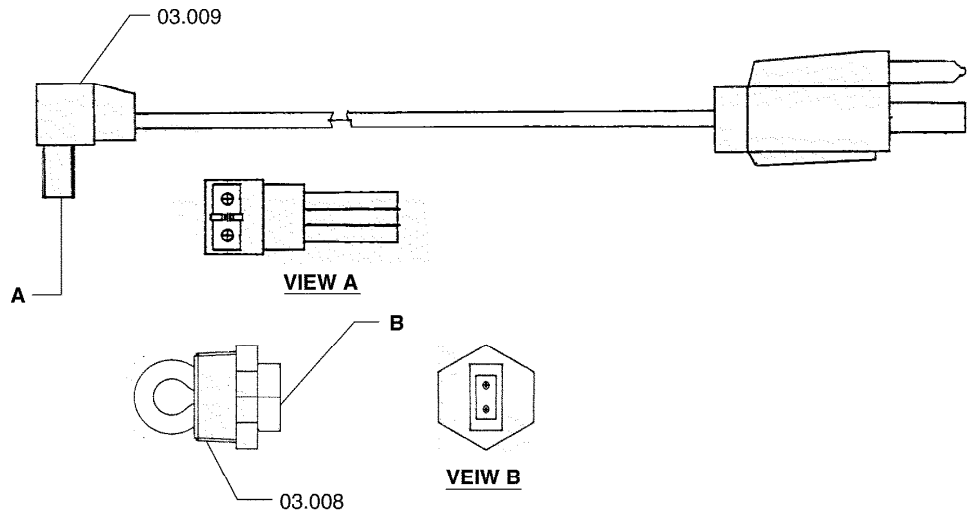

BLOCK HEATER GP **60-005**

03.008 SWITCH, COLD START HEATER
스위치

03.009 WIRE, COLD START HEATER SWITCH
와이어

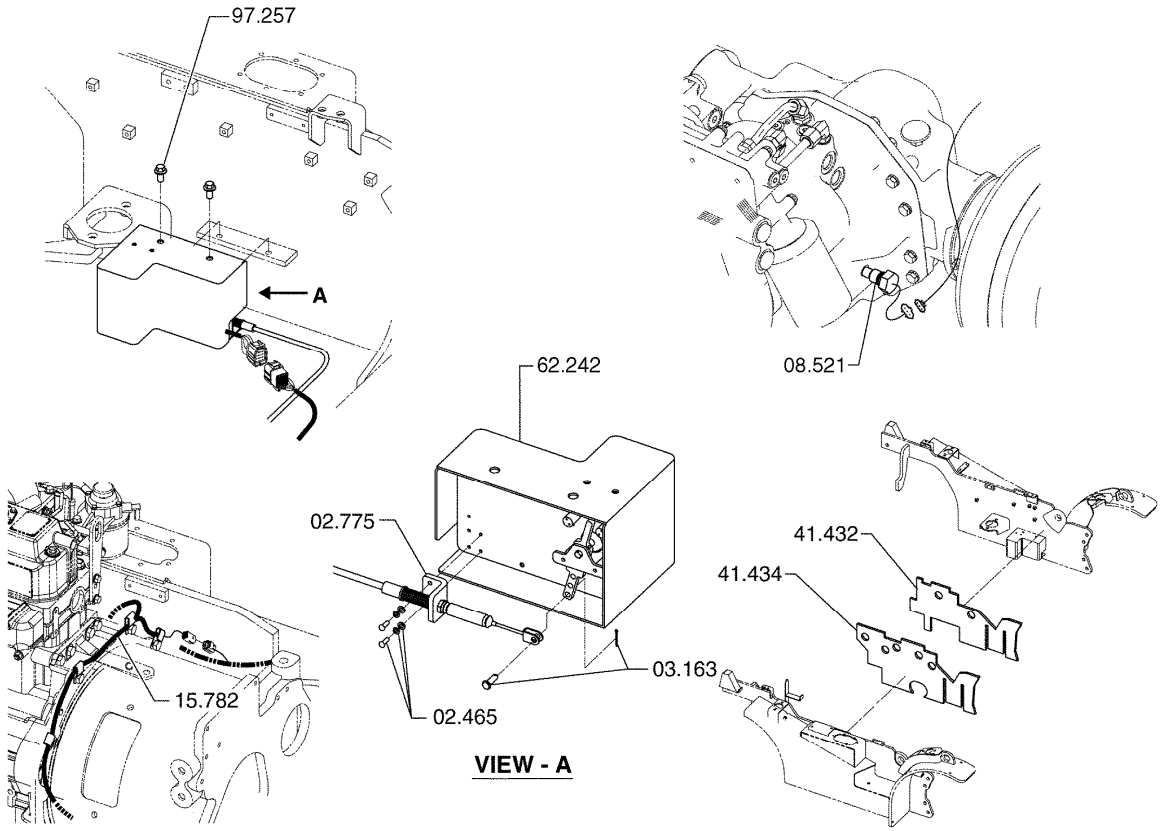

SPEED LIMIT INSTALLATION **62-002**

02.465 FASTENER, ACCELERATOR CONTROL LINKAGE
패스너

02.775 CABLE, ACCELERATOR CONTROL
케이블

03.163 FASTENER, ACCELERATOR CONTROL ROD END
패스너

08.521 SENSOR, TRANSMISSION SPEED TURBINE
센서

15.782 HARNESS, SPEED SENSOR
하네스

41.432 SOUND SEAL, FRAME LOWER LH
사운드시일

41.434 SOUND SEAL, FRAME LOWER RH
사운드시일

62.242 CONTROLLER, SPEED LIMIT
*

97.257 FASTENER, SPEED LIMIT CONTROLLER MOUNTING
*

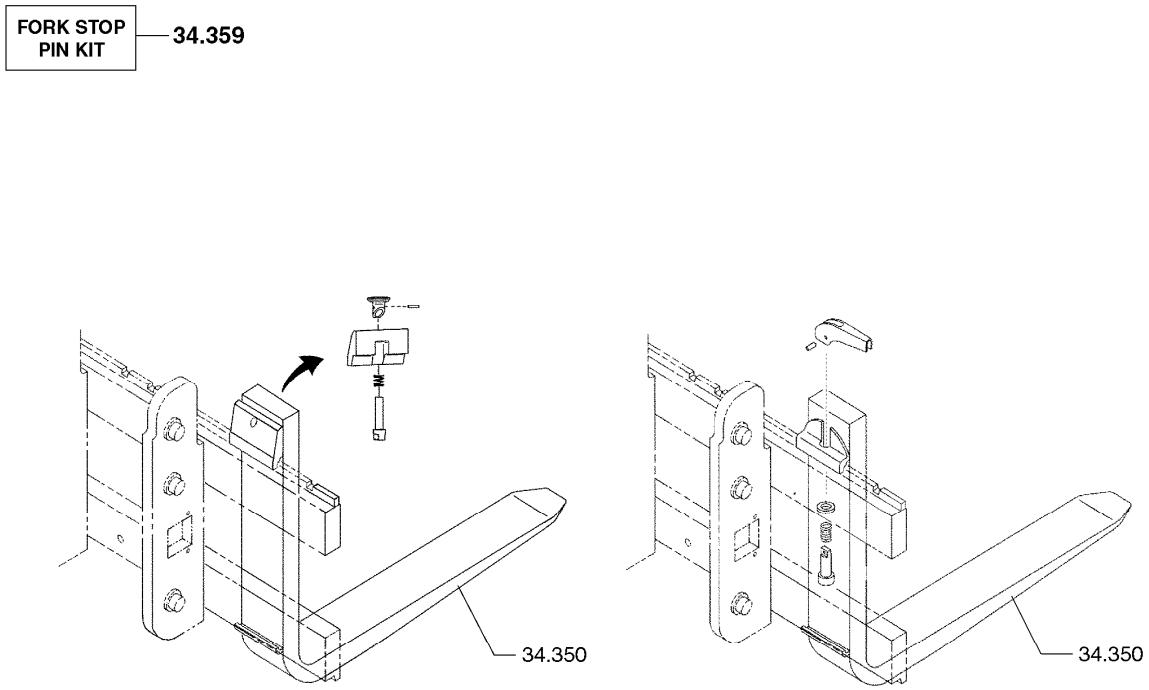

34.350 FORK ASSEMBLY
포크

34.359 KIT, FORK STOP PIN (CAPTIVE)
킷

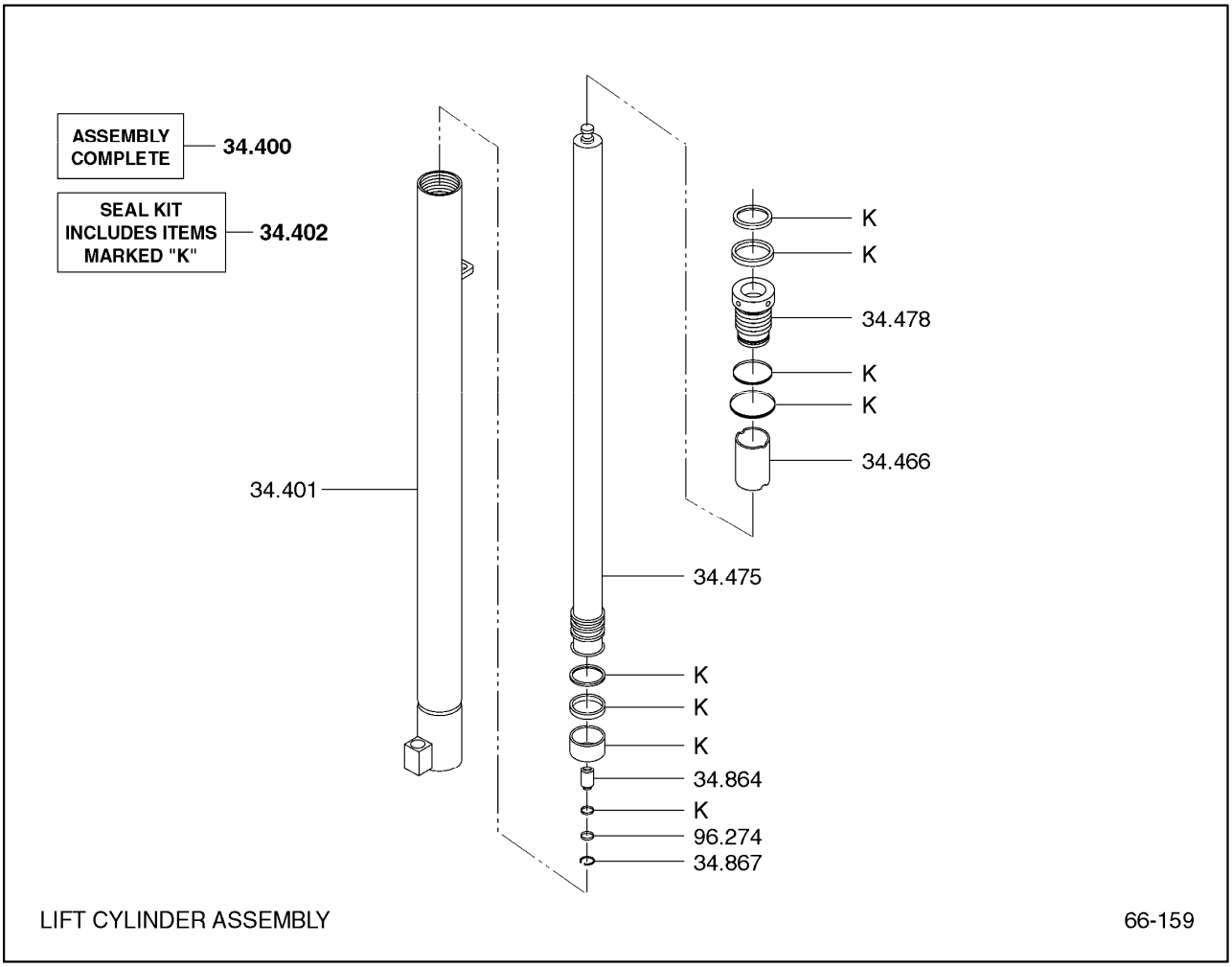

34.400 CYLINDER ASSEMBLY, LIFT
실린더

34.401 BARREL, LIFT CYLINDER
배럴

34.402 SEAL & PACKING KIT, LIFT CYLINDER
시일과팩킹킷

34.466 SPACER, LIFT CYLINDER FEED TUBE
스페이서

34.475 ROD, LIFT CYLINDER
로드

34.478 GLAND, LIFT CYLINDER
그랜드

34.864 CHECK VALVE, LIFT CYLINDER
체크밸브

34.867 RETAINER, LIFT CYLINDER CHECK VALVE
리테이너

96.274 WASHER, LIFT CYLINDER CHECK VALVE
웍셔

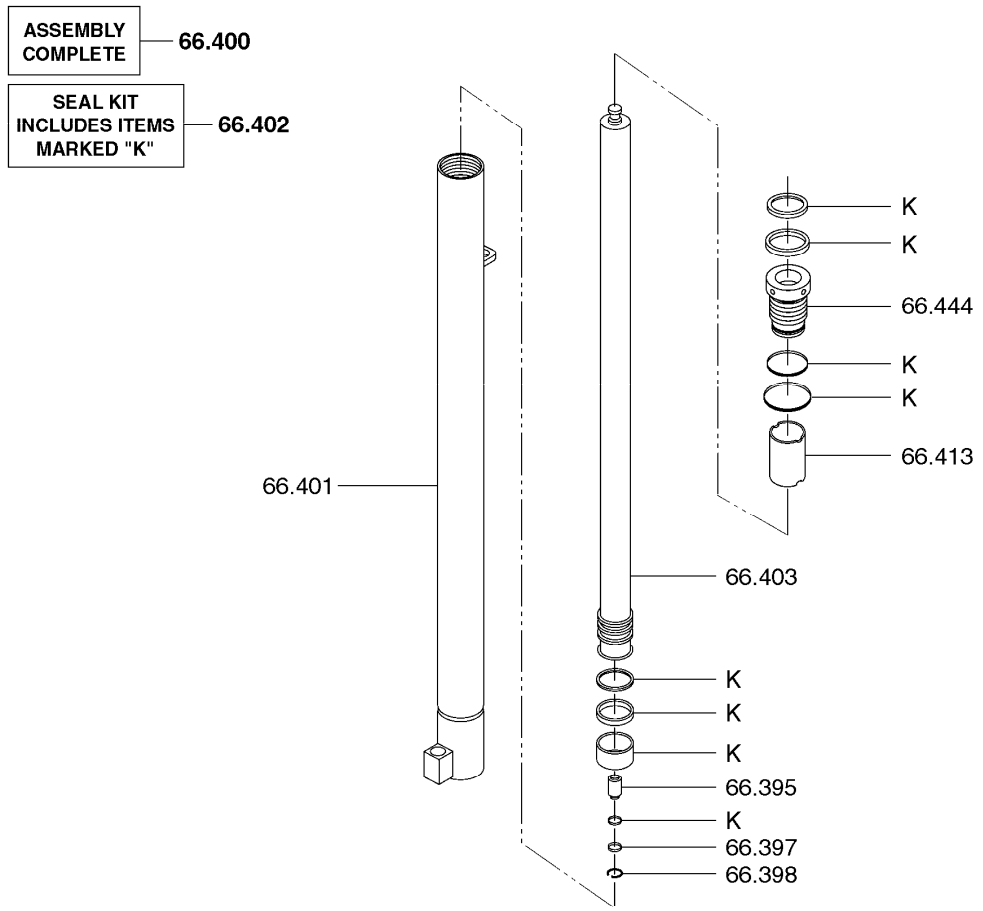

SECONDARY CYLINDER ASSEMBLY **66-160**

66.395 CHECK VALVE, FINAL LIFT CYLINDER
체크밸브

66.397 WASHER, FINAL LIFT CYLINDER CHECK VALVE
와셔

66.398 SNAP RING, FINAL LIFT CYLINDER CHECK VALVE
스냅링

66.400 CYLINDER ASSEMBLY, FINAL LIFT
실린더

66.401 BARREL, FINAL LIFT CYLINDER
배럴

66.402 PACKING KIT, FINAL LIFT CYLINDER
패킹킷

66.403 PISTON ROD, FINAL LIFT CYLINDER
피스톤로드

66.413 SPACER, FINAL LIFT CYLINDER PISTON ROD
스페이서

66.444 GLAND, FINAL LIFT CYLINDER
그룹드

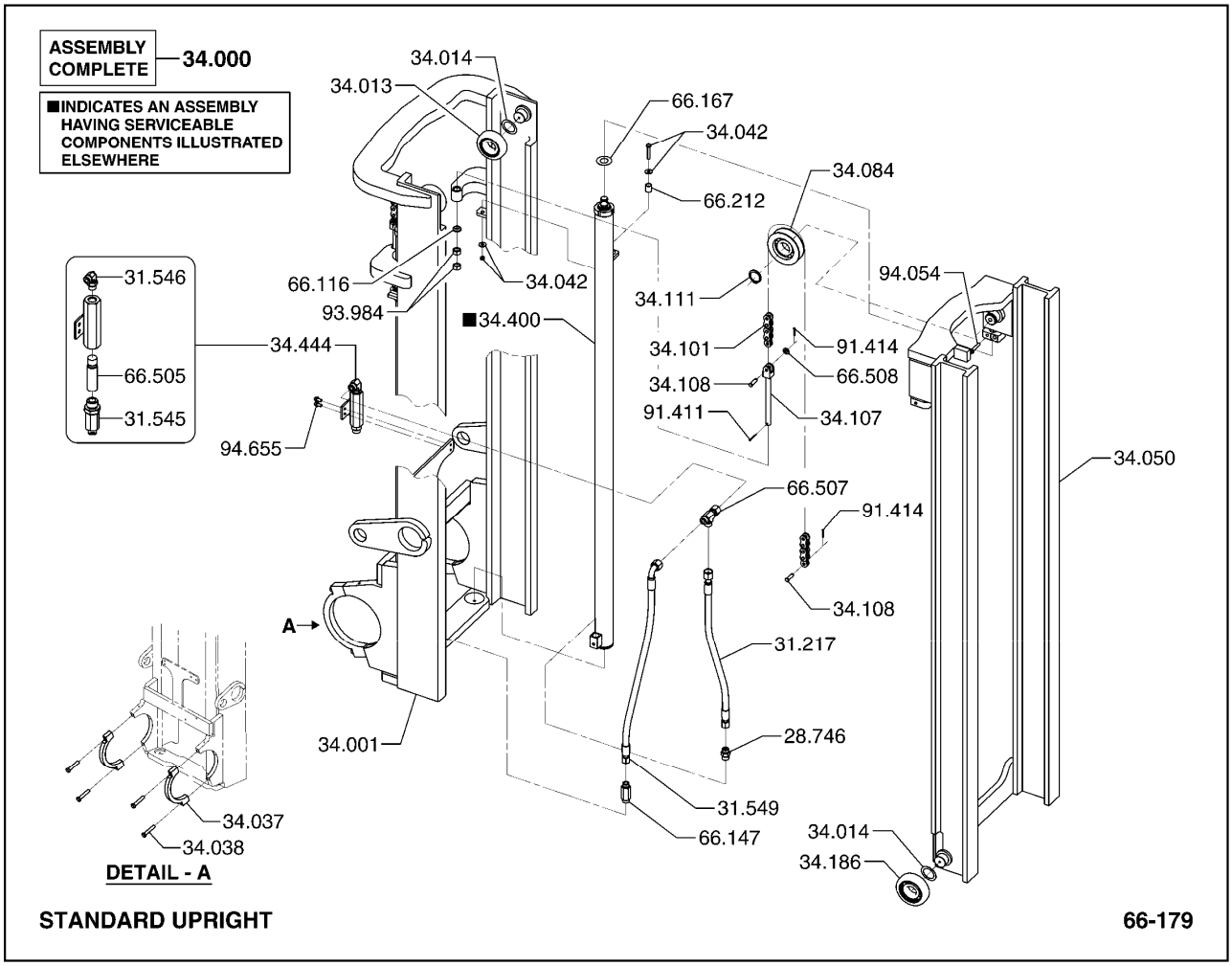

28.746	FITTING, LIFT CYLINDER LINE 피팅	34.107	ANCHOR, LIFT CHAIN 앵커
31.217	LINE, LIFT CYLINDER INLET FITTING 라인	34.108	FASTENER, LIFT CHAIN TO ANCHOR 패스너
31.545	FITTING, LIFT CYL FLOW CONTROL VALVE INLET 피팅	34.111	FASTENER, CHAIN SHEAVE SHAFT (CARRIER) 패스너
31.546	FITTING, LIFT CYL FLOW CONTROL VALVE OUTLET 피팅	34.186	ROLLER, UPRIGHT 롤러
31.549	LINE, LIFT CYL FLOW CONTROL VALVE INLET 라인	34.400	CYLINDER ASSEMBLY, LIFT 실린더
34.000	UPRIGHT & LIFT CYL ASSEMBLY 업라이트와실린더	34.444	VALVE ASSEMBLY, LIFT CYLINDER FLOW CONTROL 벨브
34.001	OUTER RAIL WELDER ASSEMBLY, UPRIGHT 아웃레일	66.116	SPACER, LIFT CHAIN ANCHOR 스페이서
34.013	ROLLER, UPRIGHT 롤러	66.147	VALVE, FINAL LIFT CYLINDER PORT FLOW CONTROL 밸브
34.014	SHIM, UPRIGHT ROLLER 심	66.167	SHIM, LIFT CYLINDER UPPER 심
34.037	CAP, UPRIGHT TRUNNION 캡	66.212	SPACER, LIFT CYLINDER FASTENER 스페이서
34.038	FASTENER, UPRIGHT TRUNNION CAP 패스너	66.505	CARTRIDGE, LIFT CYLINDER FLOW CONTROL VALVE *
34.042	FASTENER, LIFT CYLINDER (UPPER) 패스너	66.507	TEE, LIFT CYLINDER LINE *
34.050	INNER RAIL WELDED ASSEMBLY, UPRIGHT 인너레일	66.508	SPACER, LIFT CHAIN ANCHOR FASTENER *
34.084	SHEAVE, LIFT CHAIN 쉬브	91.411	RETAINER, LIFT CHAIN TO ANCHOR FASTENER 리테이너
34.101	CHAIN, LIFT 체인	91.414	RETAINER, LIFT CHAIN TO ANCHOR FASTENER 리테이너

93.984 FASTENER, LIFT CHAIN ANCHOR
패스너

94.054 FASTENER, LIFT CYLINDER (UPPER)
패스너

94.655 FASTENER, LIFT CYLINDER LINE JUNCTION BLOCK
패스너

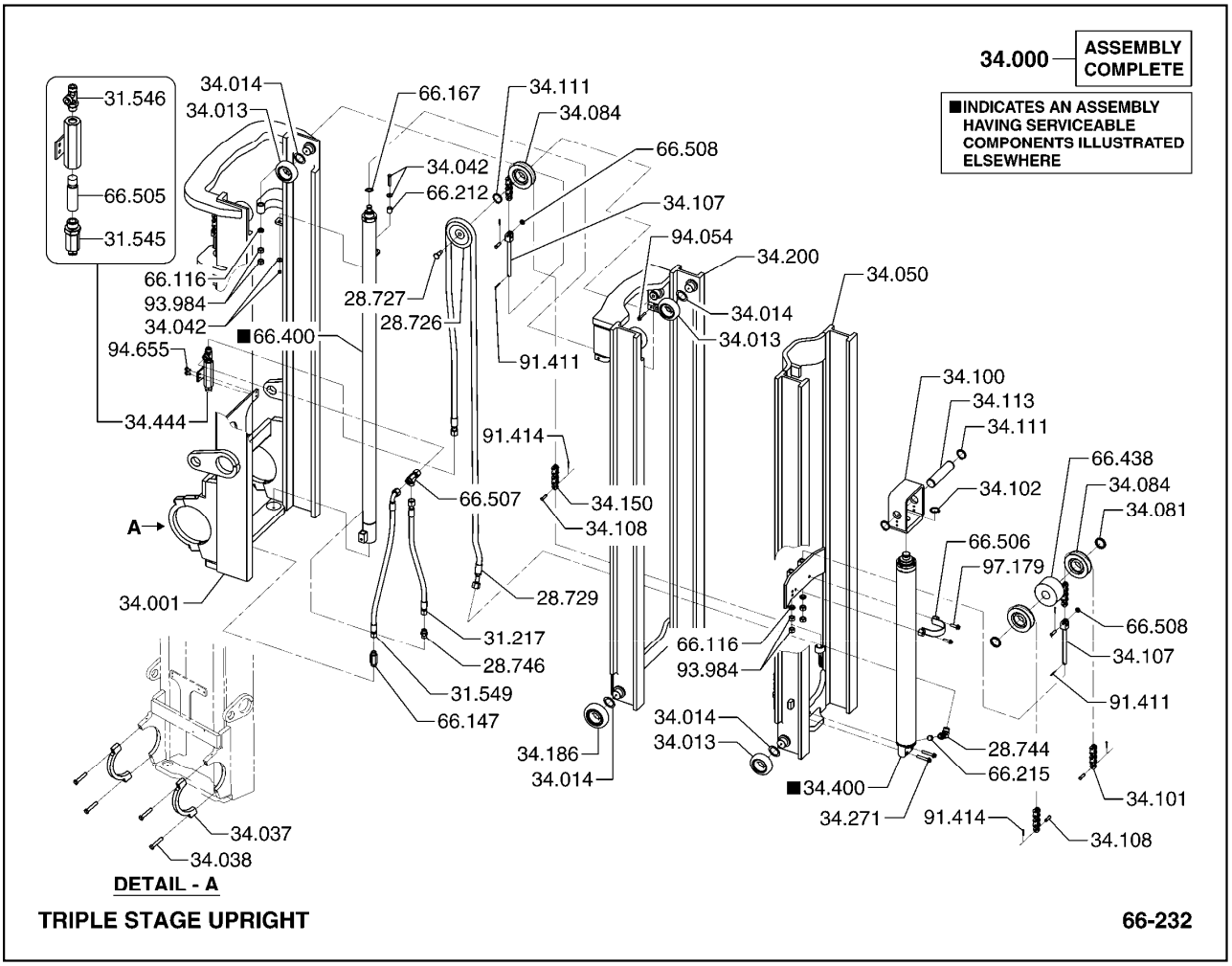

28.726	SHEAVE, LIFT CYLINDER HOSE 쉬브	34.042	FASTENER, LIFT CYLINDER (UPPER) 패스너
28.727	PIVOT, LIFT CYLINDER HOSE SHEAVE 피봇	34.050	INNER RAIL WELDED ASSEMBLY, UPRIGHT 인너레일
28.729	LINE, LIFT CYLINDER 라인	34.081	SPACER, LIFT CHAIN SHEAVE CARRIER 스페이서
28.744	FITTING, LIFT CYLINDER LINE 피팅	34.084	SHEAVE, LIFT CHAIN 쉬브
28.746	FITTING, LIFT CYLINDER LINE 피팅	34.100	CARRIER, LIFT CYLINDER CHAIN SHEAVE 캐리어
31.217	LINE, LIFT CYLINDER INLET FITTING 라인	34.101	CHAIN, LIFT 체인
31.545	FITTING, LIFT CYL FLOW CONTROL VALVE INLET 피팅	34.102	FASTENER, SHEAVE CARRIER 패스너
31.546	FITTING, LIFT CYL FLOW CONTROL VALVE OUTLET 피팅	34.107	ANCHOR, LIFT CHAIN 앵커
31.549	LINE, LIFT CYL FLOW CONTROL VALVE INLET 라인	34.108	FASTENER, LIFT CHAIN TO ANCHOR 패스너
34.000	UPRIGHT & LIFT CYL ASSEMBLY 업라이트와실린더	34.111	FASTENER, CHAIN SHEAVE SHAFT (CARRIER) 패스너
34.001	OUTER RAIL WELDER ASSEMBLY, UPRIGHT 아웃레일	34.113	SHAFT, LIFT CHAIN SHEAVE (CARRIER) 샤프트
34.013	ROLLER, UPRIGHT 롤러	34.150	CHAIN, UPRIGHT RAIL LIFT 체인
34.014	SHIM, UPRIGHT ROLLER 심	34.186	ROLLER, UPRIGHT 롤러
34.037	CAP, UPRIGHT TRUNNION 캡	34.200	INTERMEDIATE RAIL WELDED ASSEMBLY, UPRIGHT 인터레일
34.038	FASTENER, UPRIGHT TRUNNION CAP 패스너	34.271	FASTENER, LIFT CYLINDER LOWER 패스너

34.400	CYLINDER ASSEMBLY, LIFT 실린더
34.444	VALVE ASSEMBLY, LIFT CYLINDER FLOW CONTROL 벨브
66.116	SPACER, LIFT CHAIN ANCHOR 스페이서
66.147	VALVE, FINAL LIFT CYLINDER PORT FLOW CONTROL 밸브
66.167	SHIM, LIFT CYLINDER UPPER 심
66.212	SPACER, LIFT CYLINDER FASTENER 스페이서
66.215	VALVE, LIFT CYLINDER PORT FLOW CONTROL 밸브
66.400	CYLINDER ASSEMBLY, FINAL LIFT 실린더
66.438	SHEAVE, HOSE 쉬브
66.505	CARTRIDGE, LIFT CYLINDER FLOW CONTROL VALVE *
66.506	CLAMP, LIFT CYLINDER *
66.507	TEE, LIFT CYLINDER LINE *
66.508	SPACER, LIFT CHAIN ANCHOR FASTENER *
91.411	RETAINER, LIFT CHAIN TO ANCHOR FASTENER 리테이너
91.414	RETAINER, LIFT CHAIN TO ANCHOR FASTENER 리테이너
93.984	FASTENER, LIFT CHAIN ANCHOR 패스너
94.054	FASTENER, LIFT CYLINDER (UPPER) 패스너
94.655	FASTENER, LIFT CYLINDER LINE JUNCTION BLOCK 패스너
97.179	FASTENER, LIFT CYLINDER CLAMP *

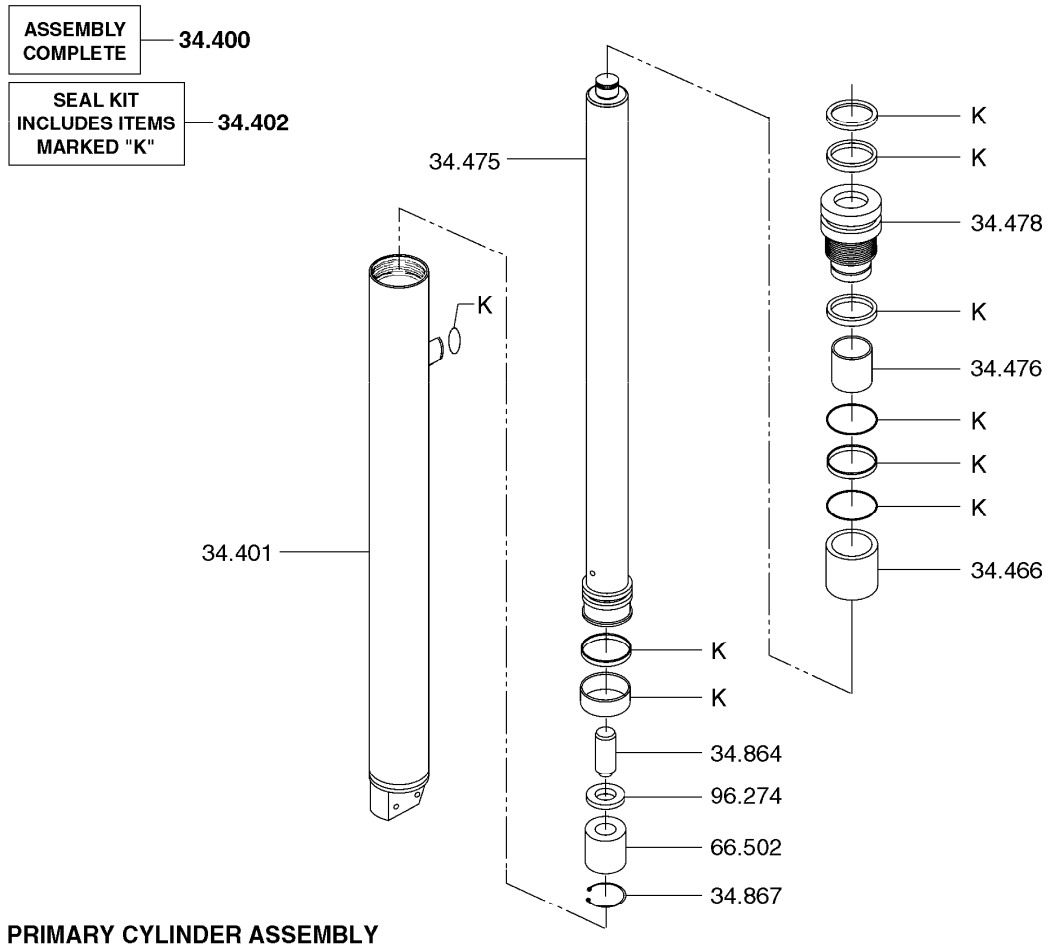

34.400 CYLINDER ASSEMBLY, LIFT
실린더

34.401 BARREL, LIFT CYLINDER
배럴

34.402 SEAL & PACKING KIT, LIFT CYLINDER
시일과팩킹킷

34.466 SPACER, LIFT CYLINDER FEED TUBE
스페이서

34.475 ROD, LIFT CYLINDER
로드

34.476 BEARING, LIFT CYLINDER ROD
베어링

34.478 GLAND, LIFT CYLINDER
그랜드

34.864 CHECK VALVE, LIFT CYLINDER
체크밸브

34.867 RETAINER, LIFT CYLINDER CHECK VALVE
리테이너

66.502 CUSHION, LIFT CYLINDER
쿠션

96.274 WASHER, LIFT CYLINDER CHECK VALVE
옥셔

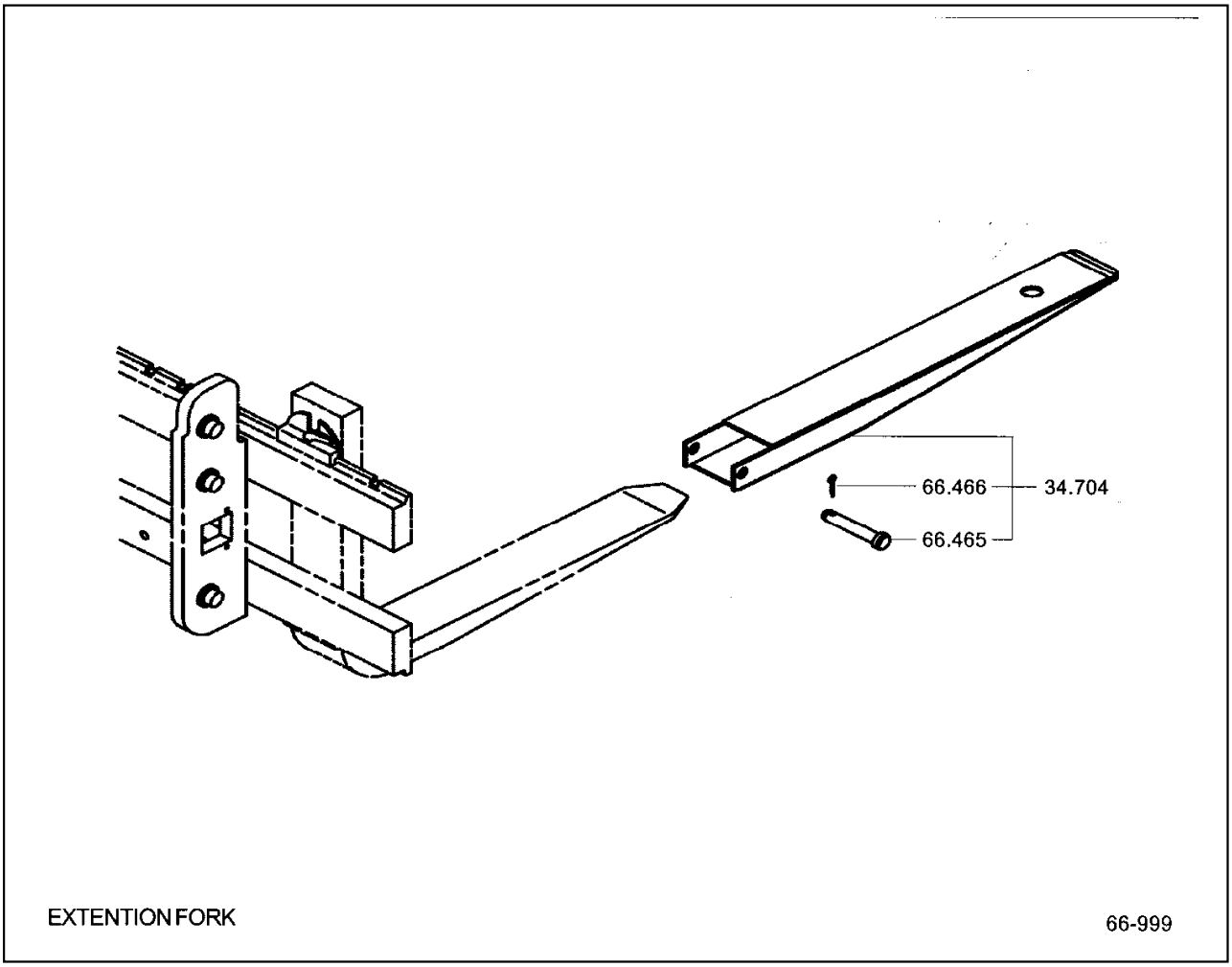

34.704 EXTENSION, FORK ASSEMBLY COMPLETE
익스텐션

66.465 PIN, EXTENTION FORK
핀

66.466 PIN, EXTENTION FORK
핀

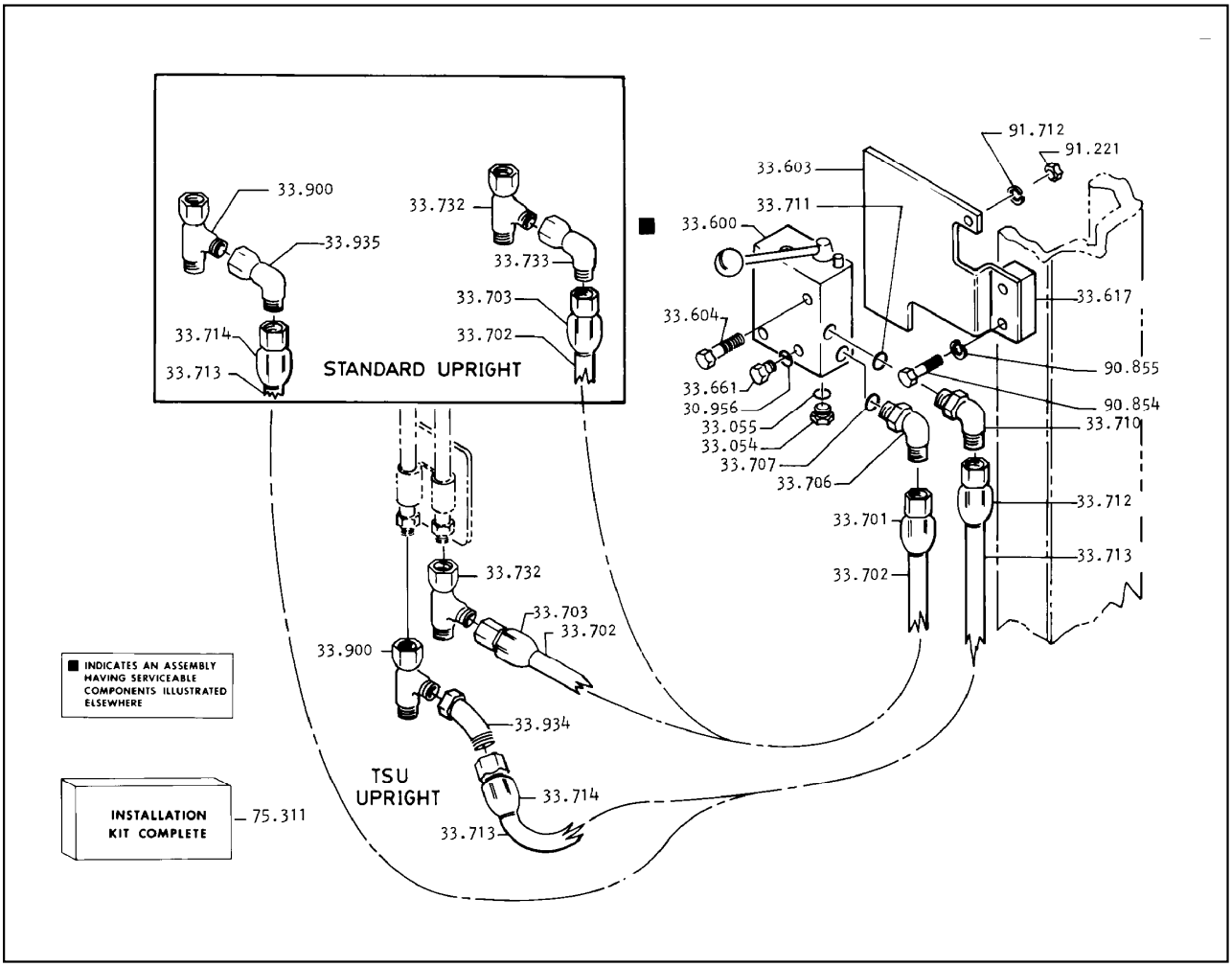

30.956	SEAL, RELIEF VALVE PLUG 시일
33.054	PLUG, RELIEF VALVE PORT 플러그
33.055	SEAL, RELIEF VALVE PORT PLUG 시일
33.600	RELIEF VALVE, DEVICE VARIABLE PRESSURE 릴리프밸브
33.603	BRACKET, DEVICE CARIABLE RELIEF VALVE 브라켓
33.604	FASTENER, DEVICE VARIABLE RELIEF VALVE 패스너
33.617	SPACER, DEV VARIABLE RELIEF VAL BRKT 스페이서
33.661	FITTING, DEVICE RELIEF VALVE OUTLET PORT 피팅
33.701	COUPLING, DEVICE RELIEF VALVE INLET LINE 커플링
33.702	LINE, DEVICE RELIEF VALVE INLET 라인
33.703	COUPLING, DEVICE RELIEF VALVE INLET LINE 커플링
33.706	FITTING, DEVICE RELIEF VALVE INLET PORT 피팅
33.707	SEAL, DEVICE RELIEF VALVE INLET PORT FITTING 시일
33.710	FITTING, DEVICE RELIEF VALVE DISCHARGE PORT 피팅
33.711	SEAL, DEVICE RELIEF VALVE DISCHARGE PORT FTG 시일
33.712	COUPLING, DEVICE RELIEF VALVE DISCHARGE HOSE 커플링
33.713	LINE, DEVICE RELIEF VALVE DISCHARGE 라인
33.714	COUPLING, DEVICE RELIEF VALVE DISCHARGE LINE 커플링
33.732	FITTING, DEVICE RELIEF VALVE INLET 피팅
33.733	FITTING, DEVICE RELIEF VALVE INLET 피팅
33.900	FITTING, DEVICE RELIEF VALVE DISCHARGE LINE 피팅
33.934	FITTING, DEVICE RELIEF VALVE DISCHARGE LINE 피팅
33.934	FITTING, DEVICE RELIEF VALVE DISCHARGE LINE 피팅
33.935	FITTING, DEVICE RELIEF VALVE DISCHARGE LINE 피팅
75.311	KIT, RELIEF VALVE INSTALLATION 킷
90.854	BOLT, DEVICE MOUNTING BRACKET FASTENER 볼트
90.855	LOCKWASHER, DEVICE MOUNTING BRACKET FASTENER 로크와셔
91.221	NUT, DEV VARIABLE RELIEF VALVE FASTENER 너트
91.712	LOCKWASHER, DEVICE RELIEF VALVE FASTENER 로크와셔

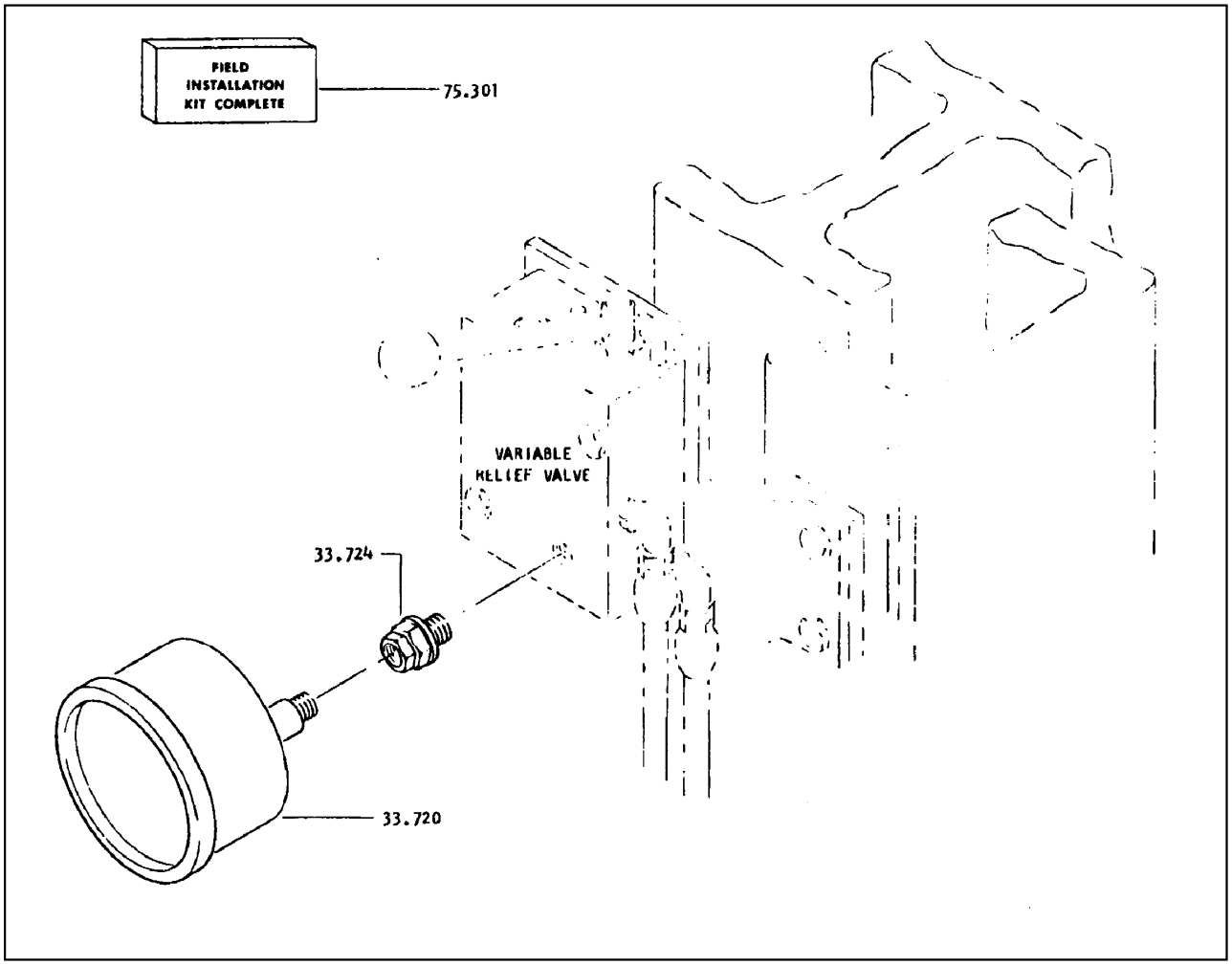

33.720	GAUGE, DEVICE HYDRAULIC PRESSURE 게이지
33.724	FITTING, DEVICE HYD PRESSURE GAUGE 피팅
75.301	DEVICE, HYDRAULIC PRESSURE GAUGE 디바이스

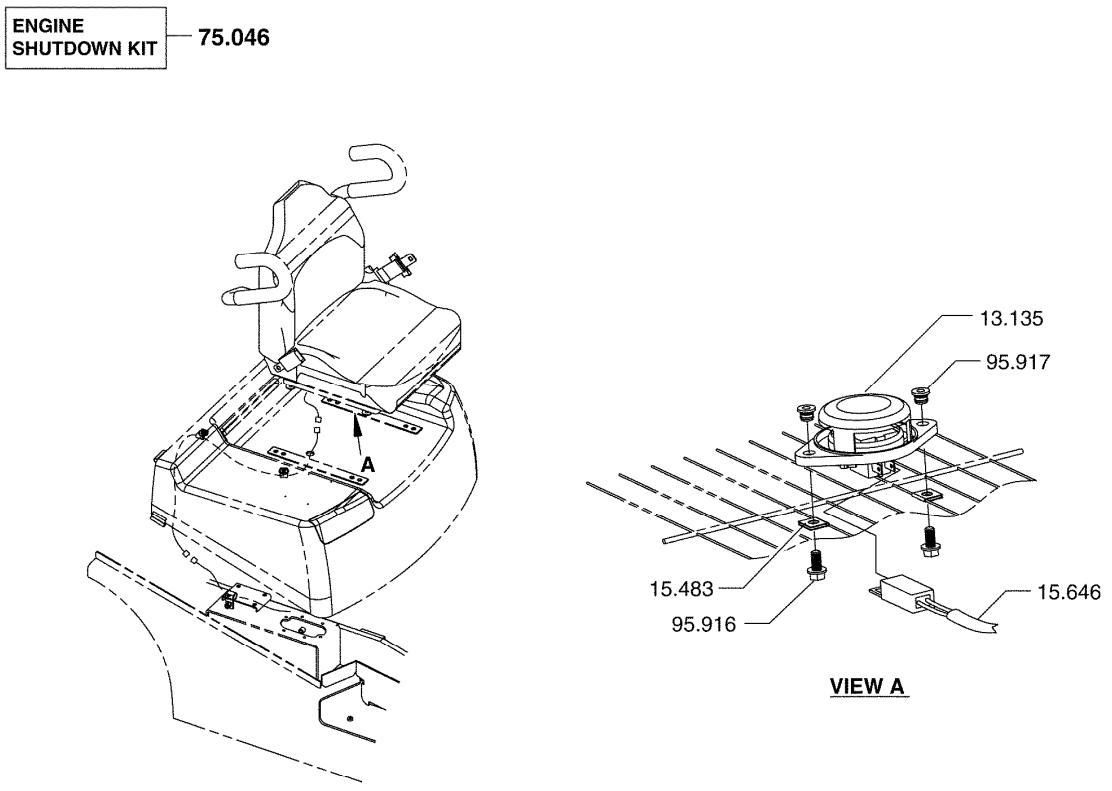

SEAT OPERATED BRAKE SWITCH **75-001**

13.135	SWITCH, SEAT SAFETY 스위치
15.483	CLAMP, SEAT SWITCH INSTALLATION CABLE 클램프
15.646	HARNESS, ENGINE DISCONNECT 하네스
75.046	KIT, SEAT ACTUATED ENGINE SHUTDOWN 킷
95.916	FASTENER, SEAT SWITCH 패스너
95.917	NUT, SEAT SWITCH FASTENER 너트

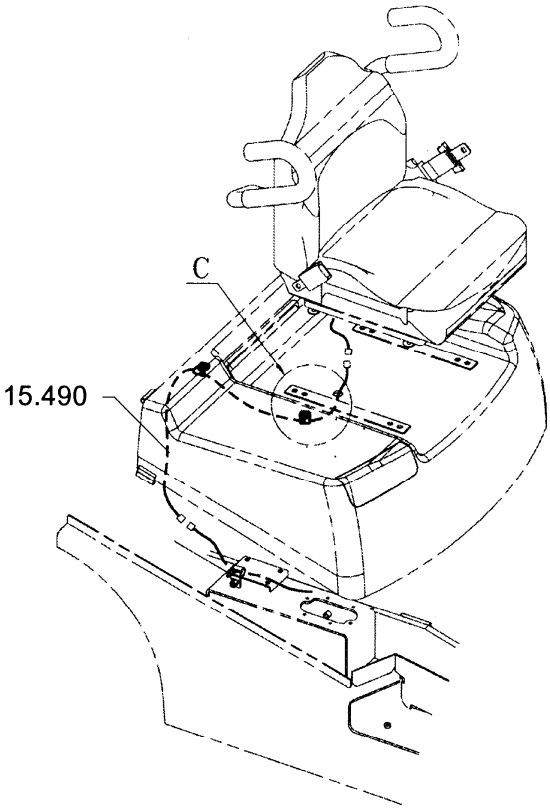

STANDARD SEAT

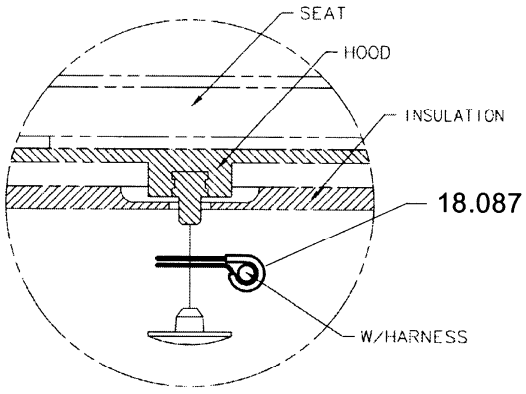

DETAIL C

15.490 HARNESS, SEAT ACTUATED ENGINE SHUTDOWN WIRING
하네스

18.087 CLIP, SEAT SAFETY SWITCH WIRE
클립

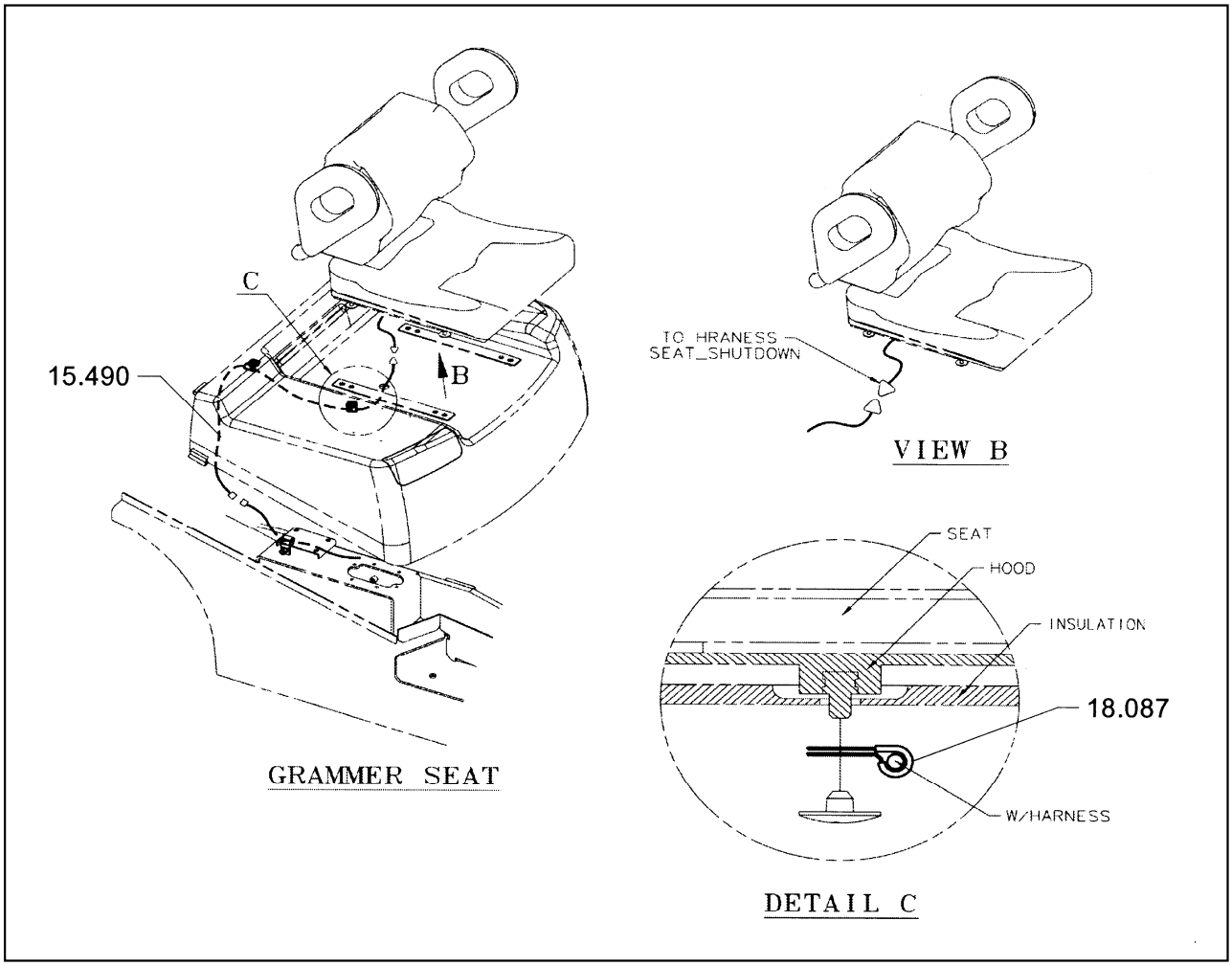

15.490 HARNESS, SEAT ACTUATED ENGINE SHUTDOWN WIRING
하네스

18.087 CLIP, SEAT SAFETY SWITCH WIRE
클립

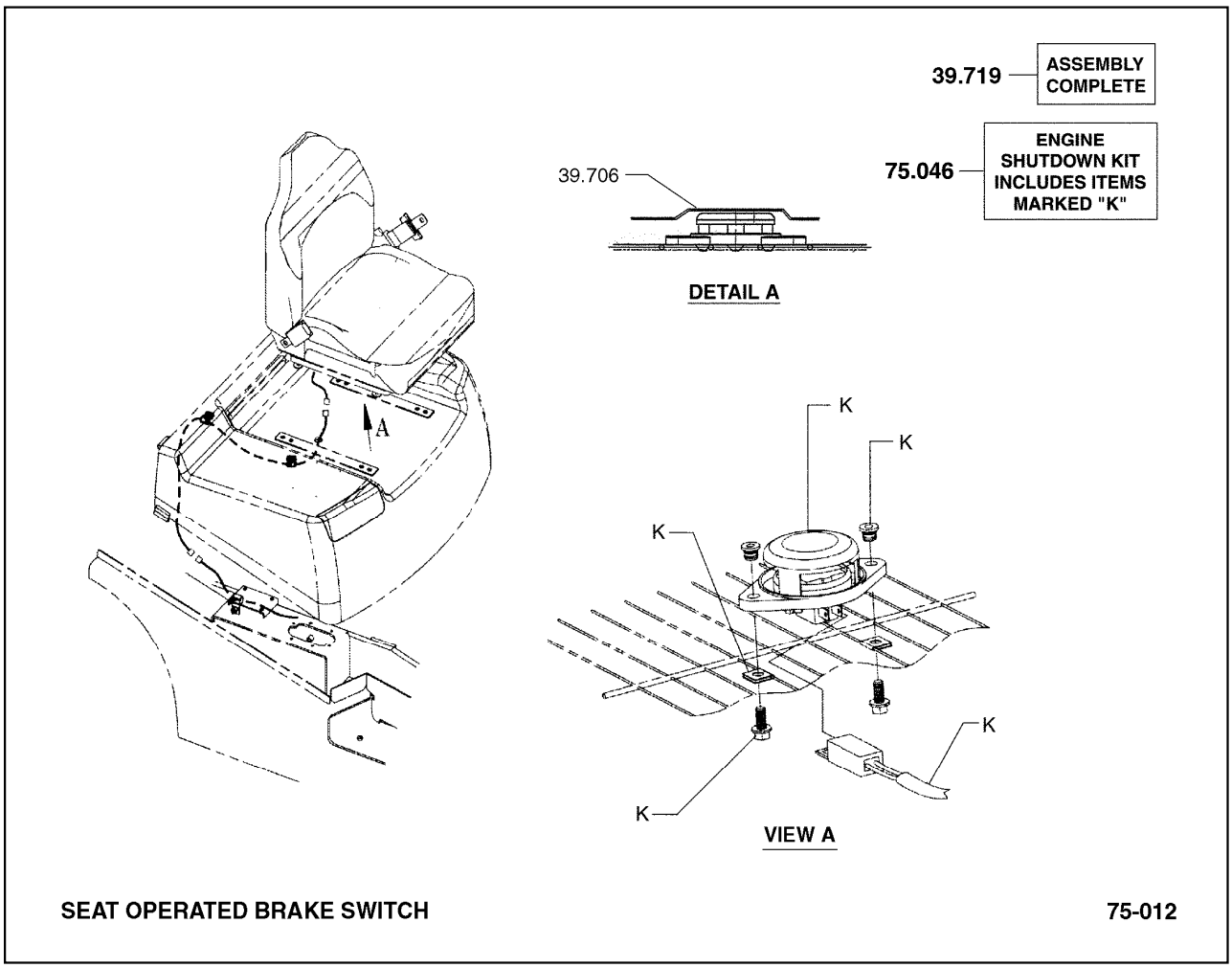

39.706 SUPPORT, SEAT
서포트

39.719 SEAT ASSEMBLY
시트

75.046 KIT, SEAT ACTUATED ENGINE SHUTDOWN
킷