RUTHZIL TRATOR COMERCIAL DE PEÇAS LTDA 11 97083-6812 ROLANDO CITRANGULO

CA15 SPARE PARTS CATALOG

JUNHO 1987

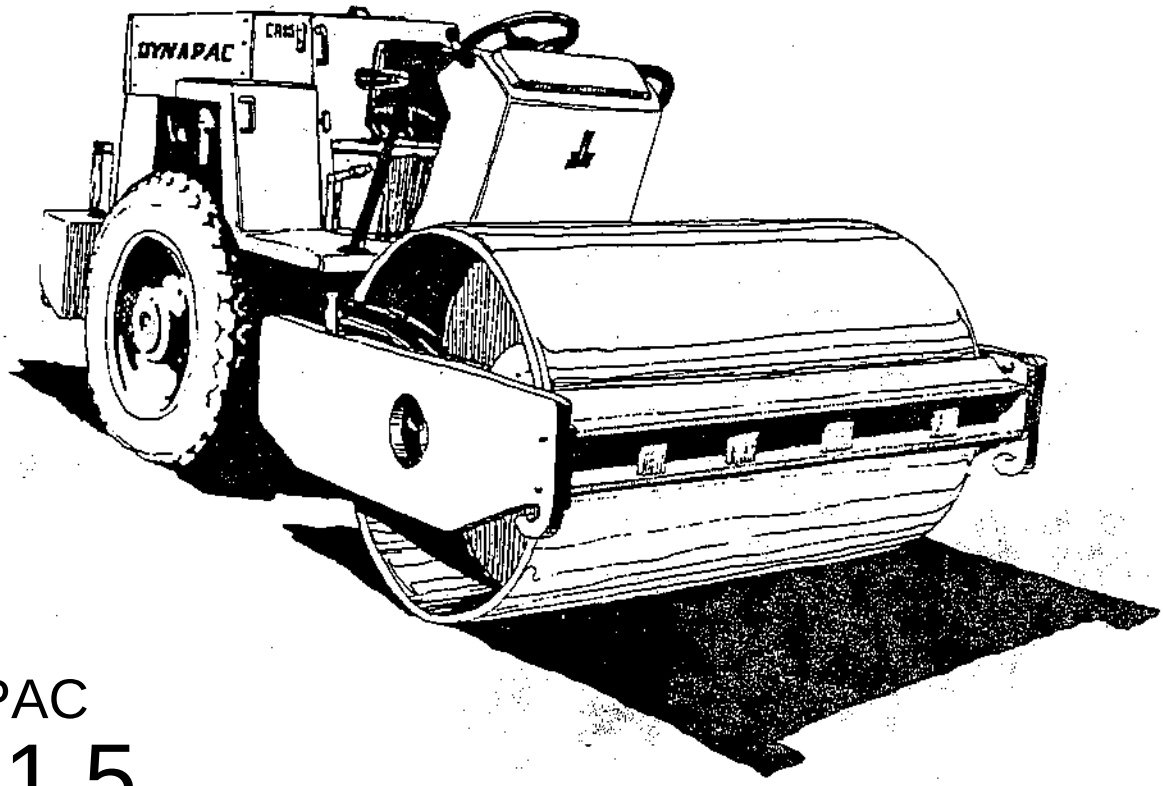

DYNAPAC

C A 1 5

Engines

J. Deere
Detroit
Ford

Axles

Hurth
Rockwell

SPARE PARTS CATALOG

CA15

VIBRATORY ROLLER

PA-15-PL01

Reprinted June 1987
Order No. 829009

DYNAPAC

HEAVY CONSTRUCTION EQUIPMENT

U.S.A.
P.O. Box 368,
Stanhope, N.J., 07874 U.S.A.
Phone: (201) 347-0700
Telex: 136481 DYNSTPE

SWEDEN
P.O. Box 504,
S-371 23 Karlskrona
Phone: 011-46-4-552-2930
Telex: 43041 DYNKAR S

BRAZIL
P.O. Box 5694,
Sao Paulo, Brazil
Phone: 011-491-80-00
Telex: 1171833 DYNP BR

CANADA
980 Pacific Gate
Mississauga, L5T 1Y1, Ontario
Phone: 416-677-7270
Telex: 06968962 DYNTOR

JAPAN
1-8, Yanagisaki 1-chome
Kawaguchi-shi, Saitama-ken, 333 Japan
Phone: 81 482 65 0123
Telex: 2952569 DWKAWA J

EUROC

INTRODUCTION

1. This catalog provides information for identifying and ordering all replaceable parts and assemblies for the DYNAPAC Model CA-15 Vibratory Roller Compactor, manufactured by Dynapac Mfg. Inc., Kelly Place, Stanhope, New Jersey 07874, U.S.A.

2. Using the Numerical Index.

   In back of the catalog you will find a Numerical Index. When the Part Number is known, refer to the index and note the page number. Turn to the page for specific information about the part and the illustration for a visual description and application.

3. Using the catalog

   This catalog is based on a group system which will be common to all new Dynapac Parts Catalogs. It starts with a Table of Contents followed by the individual groups, and ends with the Numerical Index. The Table of Contents shows the groups included in the catalog and each group in turn begins with a Table of Contents that describes the pages included in that group. The pages within the groups are made up of a parts list page on the left and an illustration page on the right. Illustrated below is an explanation of how the parts list page works.

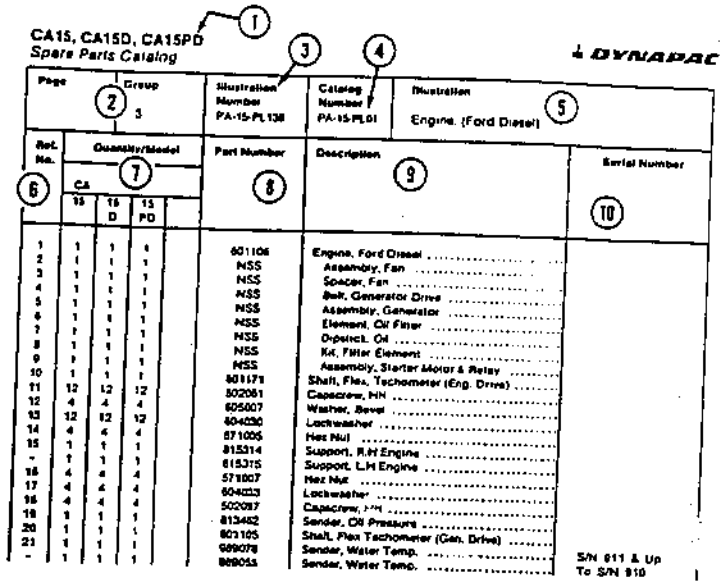

(1) The product, the Part Numbers of which are shown in the section.

(2) Group and Page Numbers

(3) Illustration Number. This number is also shown in the lower right hand corner of the illustration.

(4) Spare Parts Catalog Number and Issue Number.

(5) Name of Group Page and Illustration.

(6) Ref. No. corresponds to number on illustration.

(7) Quantity columns show number of parts required for the Ref. No. listed under the Model column.

(8) Part Number to be used when placing an order.

(9) Decription column describes parts listed on page. Parts which are indented in the Description column are part of the preceding assembly or subassembly. The Quantity column indicates the quantity of each part required on a machine except when the parts are indented, in which case the quantity shown is the number required for the preceding assembly or subassembly.

(10) Serial Number column denotes serial number information.

4. Terms and Abbreviations Used.

   A. Right hand and left hand (R.H., L.H.) sides of the compactor are identified as viewed when sitting in the operator's seat with the engine behind and facing in the direction of forward travel. See illustration.

   B. Bolts and screws, etc. which are hex head and/or heat treated are indicated as HH and HT respectively.

   C. NSS identifies parts which are "not sold seperately."

   D. A/R identifies parts to be ordered in quantities "as required."

   E. The abbreviation S/N stands for machine serial number.

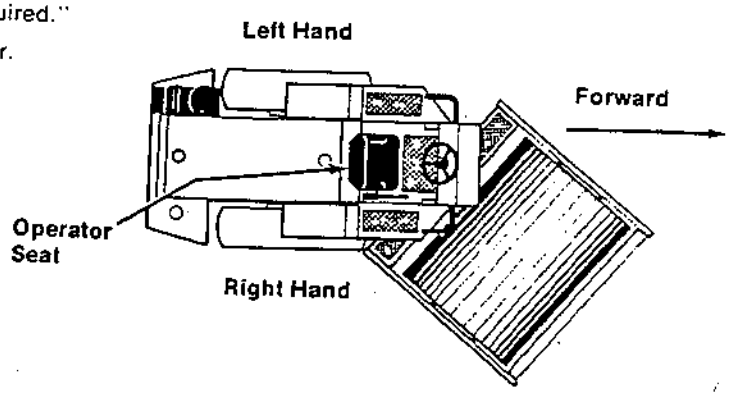

5. Ordering Parts

   All orders to your DYNAPAC Dealer for parts should include the model and serial numbers of the compactor, the complete description, correct part number, quantity required, method of shipment and shipping address. When ordering parts for complete vendor units or subassemblies, please include all data appearing on the identification plate.

Page	Group	Illustration Number	Catalog Number	Illustration
2	00	PA-15-PL178	PA-15-PL01	Table of Contents

Ref. No.	Group	Description	See Page
1	Group 1	**FRAME**	
		Frames	2
		Engine Covers & Hydraulic Reservoir	4
		Scrapers (S/N 1026 to 2100 on PD Drum)	6
		Scrapers, to S/N 1025	8
		Strike-Off Blade	10
		Steering Hitch, to S/N 1850	12
		Steering Hitch, S/N 1851 & Up	14
		Scraper (S/N 2101 & Up on PD Drum)	16
2	Group 2	**DRUM**	
		Drum, Standard, S/N 1851 & Up	2
		Drum, Std. or Dual Amp. to S/N 1850	4
		Drum, Drum Drive & Padded, S/N 1851 & Up, 1851 to 2100 on PD Drum	6-8
		Drum, D, PD & Dual Amp. S/N 741 to 1850	10-12
		Drum, D, PD & w/Staffa Drive to S/N 740	14
		Torque Hub, S/N 741 & Up	16-18
		Drum, PD S/N 2101 & Up	20-22
3	Group 3	**ENGINE**	
		Engine, John Deere	2
		Engine, Ford	4
		Engine, Detroit	6
		Air Cleaner, Ford & John Deere	8
		Air Cleaner, Detroit	10
		Cooling System, John Deere	12
		Cooling System, Ford	14
		Cooling System, Detroit	16
		Fuel System, John Deere	18
		Fuel System, Ford	20
		Fuel System, Detroit	22
		Exhaust System, John Deere	24
		Exhaust System, Ford	26
		Exhaust System, Detroit	28
		Pump Drive Assembly	30
		Pump Drive, Vibration & Steering	32
		Pump Drive, Strike-Off Blade Det., to S/N 469	34
4	Group 4	**TRANSMISSION (To S/N 2079)**	
		Wheel	2
		Axle & Motor Assembly	4
		Brake & Planetary Assembly	6-8
		Differential & Axle Assembly	10-12
		Two Speed Gear Box	14
		TRANSMISSION (From S/N 2080 & Up)	
		Wheel	16
		Axle & Motor Assembly	18
		Brake Assembly	20
		Planetary Assembly	22
		Differential Assembly	24

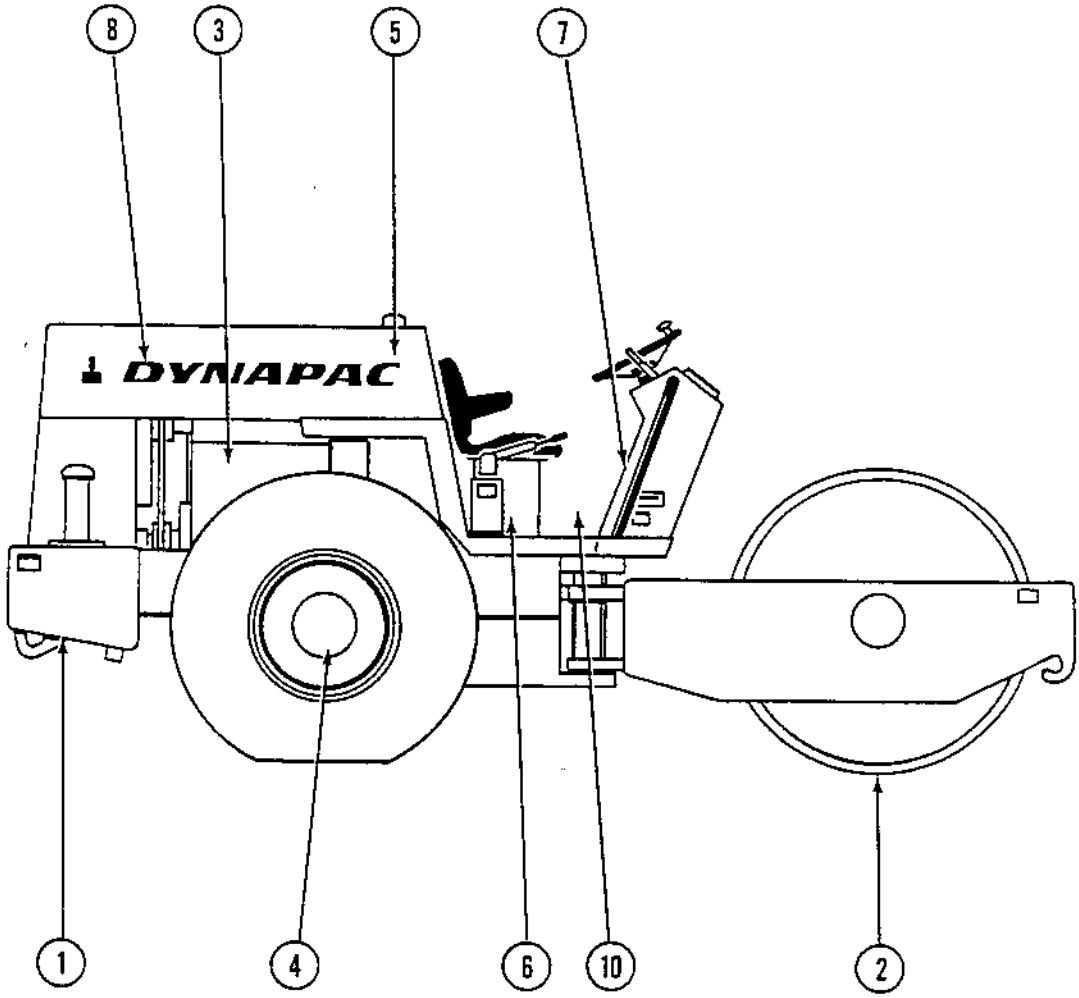
8
3
5
7
DYNAPAC
1
4
6
10
2

Page	Group	Illustration Number	Catalog Number	Illustration
4	00	PA-15-PL178	PA-15-PL01	Table of Contents

Ref. No.	Group	Description	See Page
5	Group 5	**HYDRAULIC SYSTEMS**	
		Hydraulic Schematic (S/N 2080 & Up)	2
		Hydraulic Schematic (To S/N 2049)	4
		Traction System, Standard (From S/N 2080 & Up)	6
		Traction System, Standard (To S/N 2079)	8
		Traction System, CA15D, PD, (S/N 2080 & Up)	10
		Traction System, CA15D, PD (S/N 741 to 2079)	12
		Traction System, CA15D, PD, (To S/N 740)	14
		Traction Pump (S/N 2080 & Up)	16-18
		Charge Pump Assembly (Valid For Both Pumps)	20
		Control Valve Assembly (S/N 2080 & Up)	22
		Traction Pump (To S/N 2079)	24-26
		Traction Motor, Axle (S/N 2080 & Up)	28-30
		Traction Motor, Axle (To S/N 2079)	32-34
		Manifold Valve Assembly (To S/N 2079)	36
		Traction Motor, Drum (S/N 2080 & Up)	38
		Traction Motor, Drum (S/N 741 to 2079)	40
		Traction Motor, Drum (S/N 441 to 740)	42
		Traction Motor, Drum (To S/N 440)	44
		Vibration System, Standard	46
		Vibration System, Dual Amplitude	48
		Vibration & Steering Pump	50
		Vibration Motor	52
		Vibration Control Valve	54
		Vibration Control Valve, Dual Amplitude	56
		Steering System	58
		Steering Valve, Tag YS-11 or YS-12	60
		Steering Valve, Tag 211-1039	62
		Steering Cylinder	64
		Strike-Off Blade System (To S/N 469)	66
		Strike-Off Blade System (S/N 470 & Up)	68
		Strike-Off Blade Control Valve	70
		Strike-Off Blade Cylinder	72
		Hydraulic Oil Filter (S/N 2080 & Up)	74
		Hydraulic Oil Filter (To S/N 2079)	76
		Brake System, Hydraulic (S/N 2080 & Up)	78

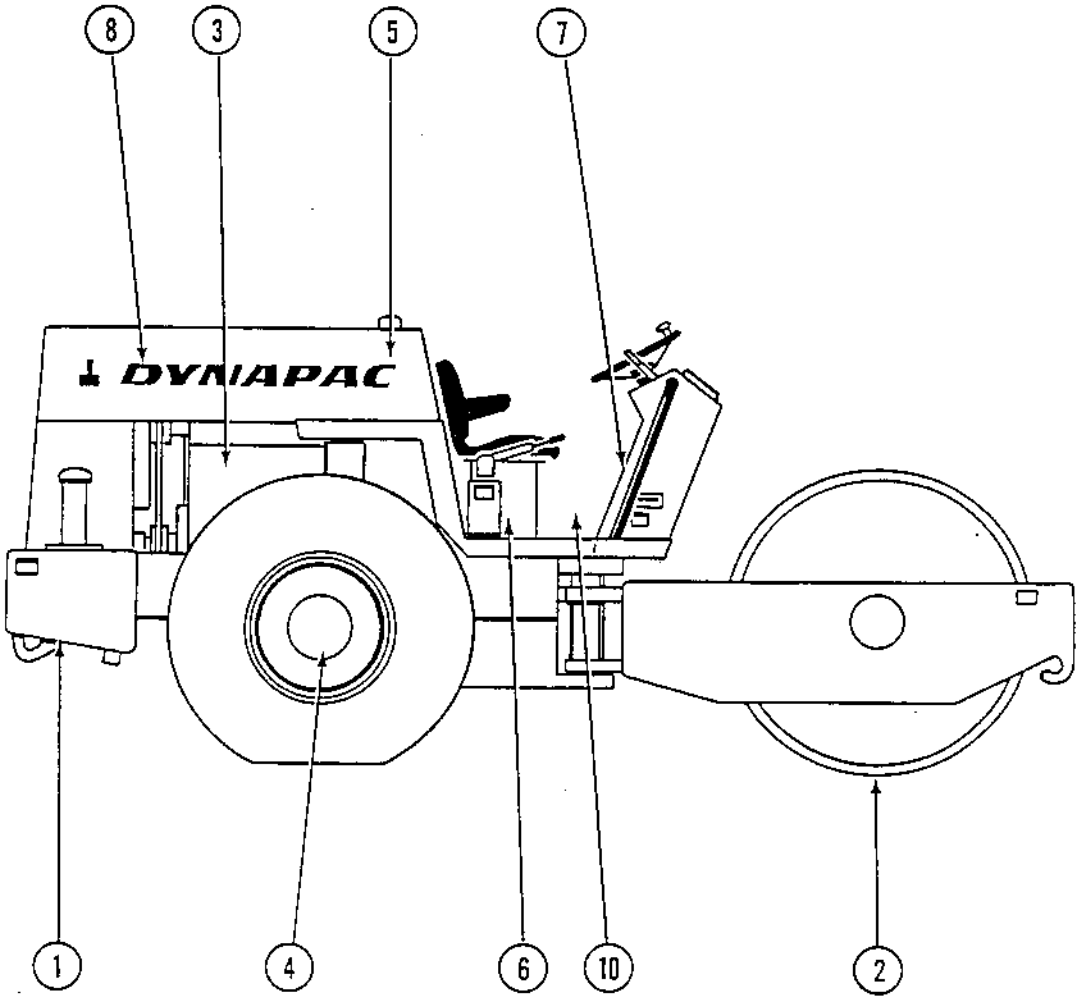
8
3
5
7
DYNAPAC
1
4
6
10
2

Page	Group	Illustration Number	Catalog Number	Illustration
6	00	PA-15-PL178	PA-15-PL01	Table of Contents

Ref. No.	Group	Description	See Page
6	Group 6	**ELECTRICAL EQUIPMENT**	
		Wiring Assembly, John Deere, to S/N 2079	2
		Wiring Assembly, Ford	4
		Wiring Assembly, Detroit, to S/N 450	6
		Wiring Assembly, Detroit, S/N 451 to 2079	8
		Wiring Assembly, John Deere, S/N 2080 & Up	10
		Wiring Assembly, Detroit, S/N 2080 & Up	12
7	Group 7	**DRIVER'S PLATFORM**	
		Driver's Platform	2
		Instrument Panel	4
		Controls & Control Cables	6-8
		Forward & Reverse Control, S/N 505 & Up	10
		Forward & Reverse Control, to S/N 504	12-16
		Hand Brake Assy., to S/N 468	18
		Foot Brake and Hand Brake to S/N 2079	20-22
8	Group 8	**DECALS**	
		Decals, CA15, 15D & 15PD to S/N 2079	2
		Decals, CA15 & 15D Dual Amplitude	4
		Decals, CA15, 15D & 15PD S/N 2080 & Up	6
10	Group 10	**OPTIONAL EQUIPMENT**	
		Cab Assembly	2
		Cab Heater & Defroster	4
		Headlight Assembly	6
		Seat Belt and ROPS Assembly	8
		Umbrella	10
		Noise Reduction, John Deere	12
		Noise Reduction, Ford	14
		Noise Reduction, Detroit	16
		Right Side Engine Cover	18
		Left Side Engine Cover	20
		NUMERICAL INDEX	

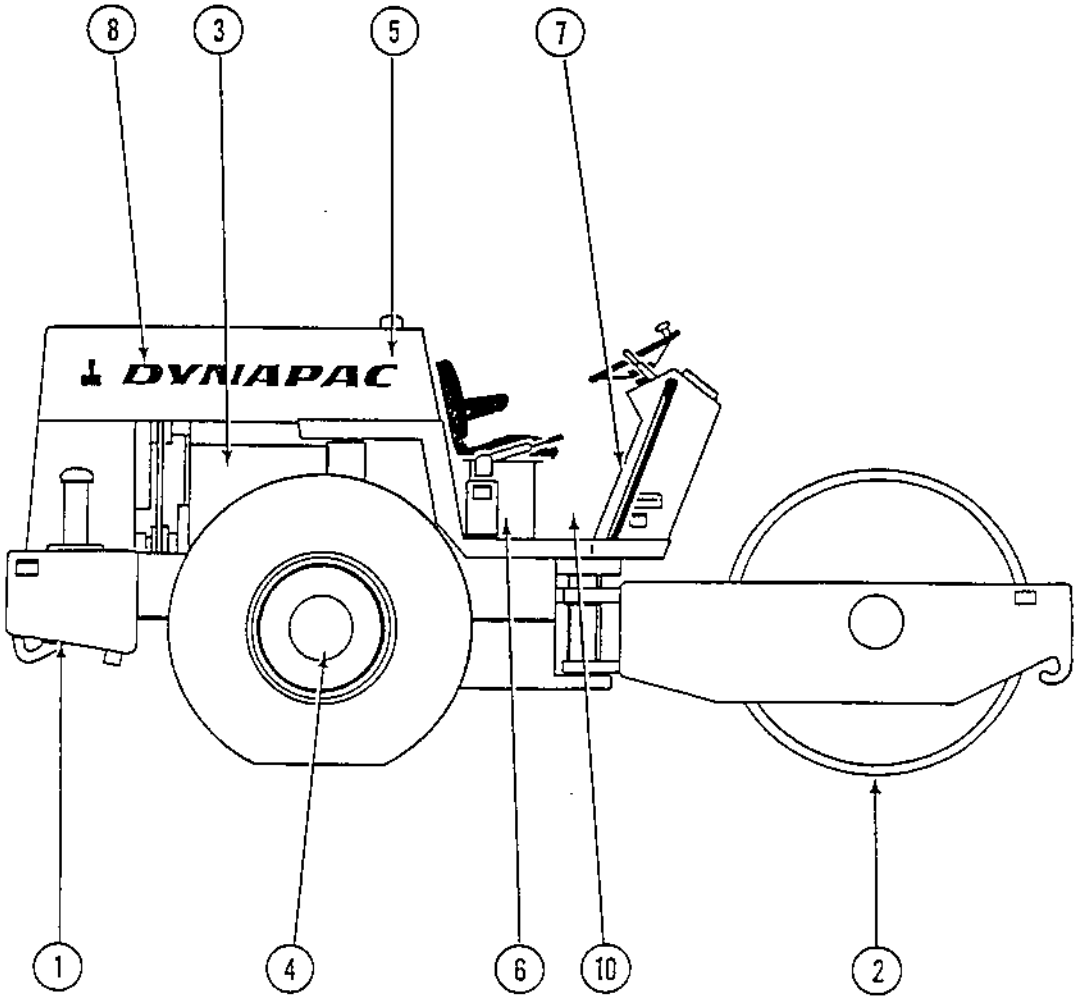
8
3
5
7
DYNAPAC
1
4
6
10
2

DYNAPAC

FRAME

Frames 2
Engine Covers & Hydraulic Reservoir 4
Scrapers (S/N 1026 to 2100 on PD Drum) 6
Scrapers to S/N 1025 8
Strike-Off Blade 10
Steering Hitch, to S/N 1850 12
Steering Hitch, S/N 1851 & Up 14
Scraper (S/N 2101 and Up on PD Drum) 16

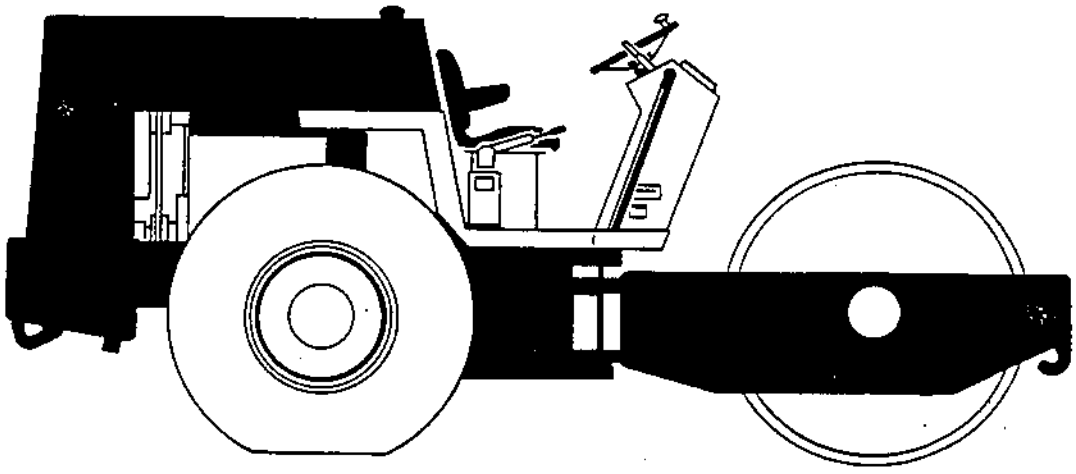

Page	Group	Illustration Number	Catalog Number	Illustration
2	1	PA-15-PL136	PA-15-PL01	Frames

Ref. No.	Quantity/Model CA 15	CA 15 D	CA 15 PD	Part Number	Description	Serial Number
1	1	1	1	815005	Tractor Frame, (Detroit & J. Deere)	S/N 2080 & Up
-	1	1	1	815871	Tractor Frame, (Detroit)	S/N 1851 to 2079
-	1	1	1	815025	Tractor Frame, (Detroit)	To S/N 1850
-	1	1	1	815871	Tractor Frame, (John Deere)	S/N 1851 to 2079
-	1	1	1	815435	Tractor Frame, (John Deere)	To S/N 1850
-	1	-	-	815294	Tractor Frame, (Ford)	To S/N 1850
2	1	1	1	-	Fuel System, (See Group 3)	
3	2	2	2	815220	Bracket, Tool Box	
4	1	1	1	825698	Tool, Box	
5	4	4	4	571001	Hex Nut	
6	4	4	4	604026	Lockwasher	
7	4	4	4	502004	Capscrew, HH	
8	2	2	2	813316	Bearing	
9	2	2	2	310025	Fitting, Lubrication	
10	2	2	2	814049	Nipple, Short	
11	-	-	-	-	Assy, Steering Hitch (See Group 1)	
-	1	1	1	815258	Assy, Safety Lock	
12	1	1	1	815215	Lock, Safety	
13	1	1	1	502124	Capscrew, HH	
14	1	1	1	600007	Washer, Flat	
15	1	1	1	502031	Capscrew, HH	
16	1	1	1	635019	Pin, Hitch	
17	1	1	1	586050	Locknut	
18	3	3	3	815256	Tab, Safety Lock	
19	1	-	-	815894	Frame, Drum	S/N 1851 & Up
-	1	-	-	815490	Frame, Drum	To S/N 1850
-	-	1	1	815895	Frame, Drum	S/N 1851 & Up
-	-	1	-	815494	Frame, Drum	To S/N 1850
-	-	-	1	815494	Frame, Drum	S/N 1026 to 1850
-	-	-	1	815495	Frame, Drum	To S/N 1025
20	A/R	A/R	A/R	842291	Shim, Drum, 1/8" or 3.175 mm	
21	A/R	A/R	A/R	842292	Shim, Drum, 1/4" or 6.35 mm	
22	A/R	A/R	A/R	842293	Shim, Drum, 1/16" or 1.588 mm	
23	A/R	A/R	A/R	842294	Shim, Drum, 3/16" or 4.763 mm	
24		1	1	815595	Guard, Traction Motor	S/N 814 & Up
-		1	1	842288	Guard, Traction Motor	To S/N 813
25	8	8	8	502097	Capscrew, HH	
26	8	8	8	813475	Hex Nut, Elastic Stop	

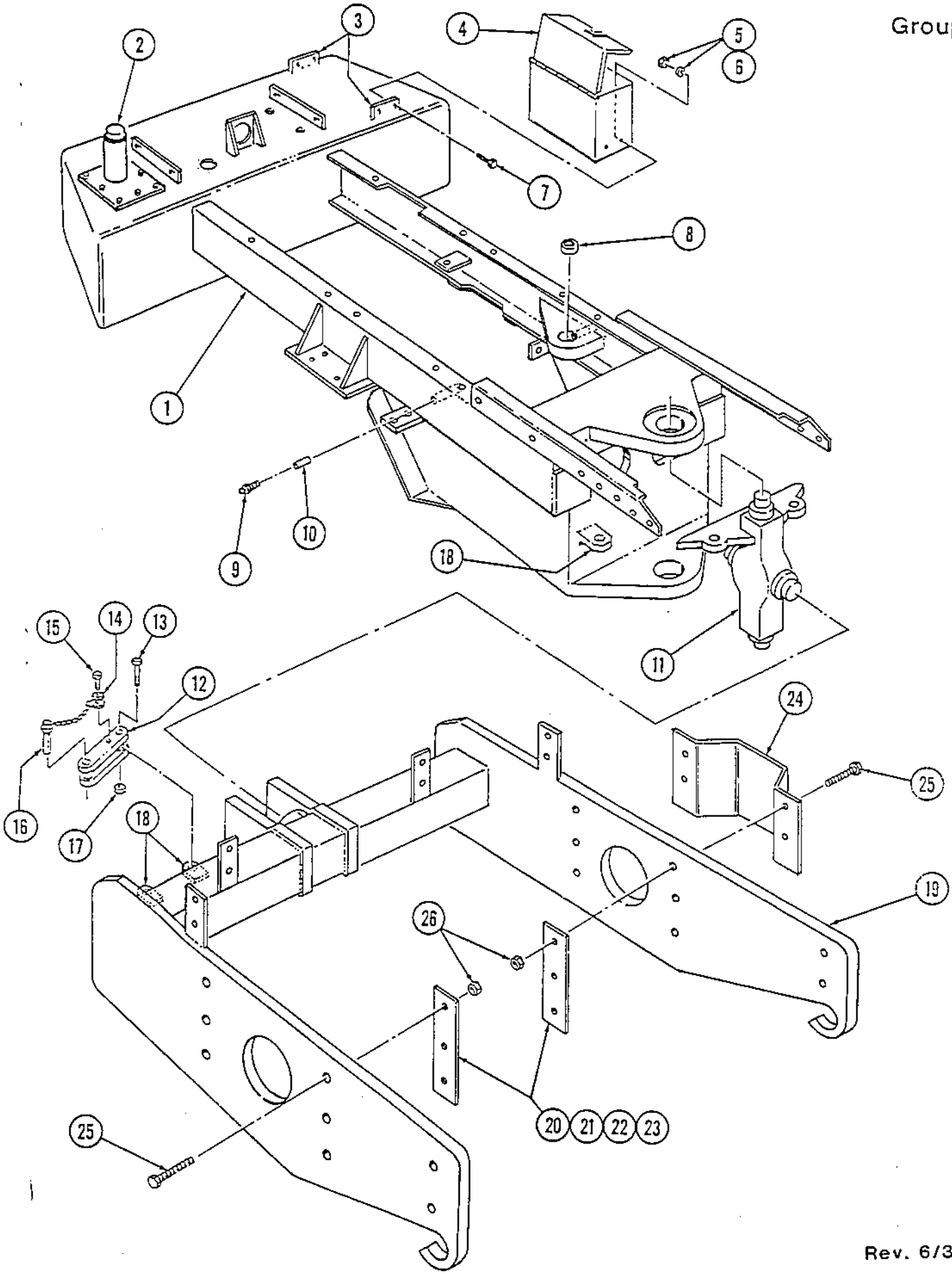
1
2
3
4
5
6
7
8
9
10
11
12
13
14
15
16
17
18
19
20
21
22
23
24
25
26

Page	Group	Illustration Number	Catalog Number	Illustration
4	1	PA-15-PL171	PA-15-PL01	Engine Covers and Hydraulic Reservoir

Ref. No.	Quantity/Model CA 15	CA 15 D	CA 15 PD	Part Number	Description	Serial Number
1	1	1	1	815038	Reservoir, Hydraulic	
2	14	14	14	502036	Capscrew, HH	
3	37	37	37	600007	Washer, Flat	
4	37	37	37	604028	Lockwasher	
5	28	28	28	571003	Hex Nut	
6	1	1	1	815043	Support, RH Engine (Detroit Eng.)	
-	1	1	1	815314	Support, RH Engine (Ford Eng.)	
-	1	1	1	815439	Support, RH Engine (J. Deere Eng.)	
7	1	1	1	815044	Support, LH Engine (Detroit Eng.)	
-	1	1	1	815315	Support, LH Engine (Ford Eng.)	
-	1	1	1	815440	Support, LH Engine (J. Deere Eng.)	
8	1	1	1	815277	Fender & Platform, RH	
9	4	4	4	502061	Capscrew, HH	
10	4	4	4	600010	Washer, Flat	
11	4	4	4	605007	Washer, Bevel	
12	4	4	4	604030	Lockwasher	
13	4	4	4	571005	Hex Nut	
14	1	1	1	815051	Cover, Hyd. Reservoir	
15	18	18	18	502004	Capscrew, HH	
16	6	6	6	600005	Washer, Flat	
17	1	1	1	815276	Fender & Platform, LH	
18	18	18	18	604026	Lockwasher	
19	6	6	6	571001	Hex Nut	
20	1	1	1	815045	Gasket, Hyd. Reservoir	
21	1	1	1	815046	Cover, Hyd. Reservoir	
22	1	1	1	499432	Assy., Filler Cap	
-	1	1	1	NSS	Base, Filler Cap	
-	1	1	1	NSS	Screen, Filter	
23	6	6	6	604019	Lockwasher	
24	6	6	6	229001	Capscrew, HH	
25	23	23	23	502035	Capscrew, HH	
26	1	1	1	815039	Hood, Engine (Detroit & J. Deere Eng.)	
-	1	1	1	815338	Hood, Engine (Ford Eng.)	
27	1	1	1	815037	Guard, Radiator (Detroit & Ford Eng.)	
-	1	1	1	815453	Guard, Radiator (J. Deere Eng.)	
28	1	1	1	999024	Bracket, Horn	
29	1	1	1	999025	Hex Nut	
30	1	1	1	571002	Hex Nut	
31	1	1	1	604027	Lockwasher	
32	1	1	1	999023	Horn	
33	1	1	1	502018	Capscrew, HH	
34	1	1	1	813377	Gauge, Hyd. Oil Level	

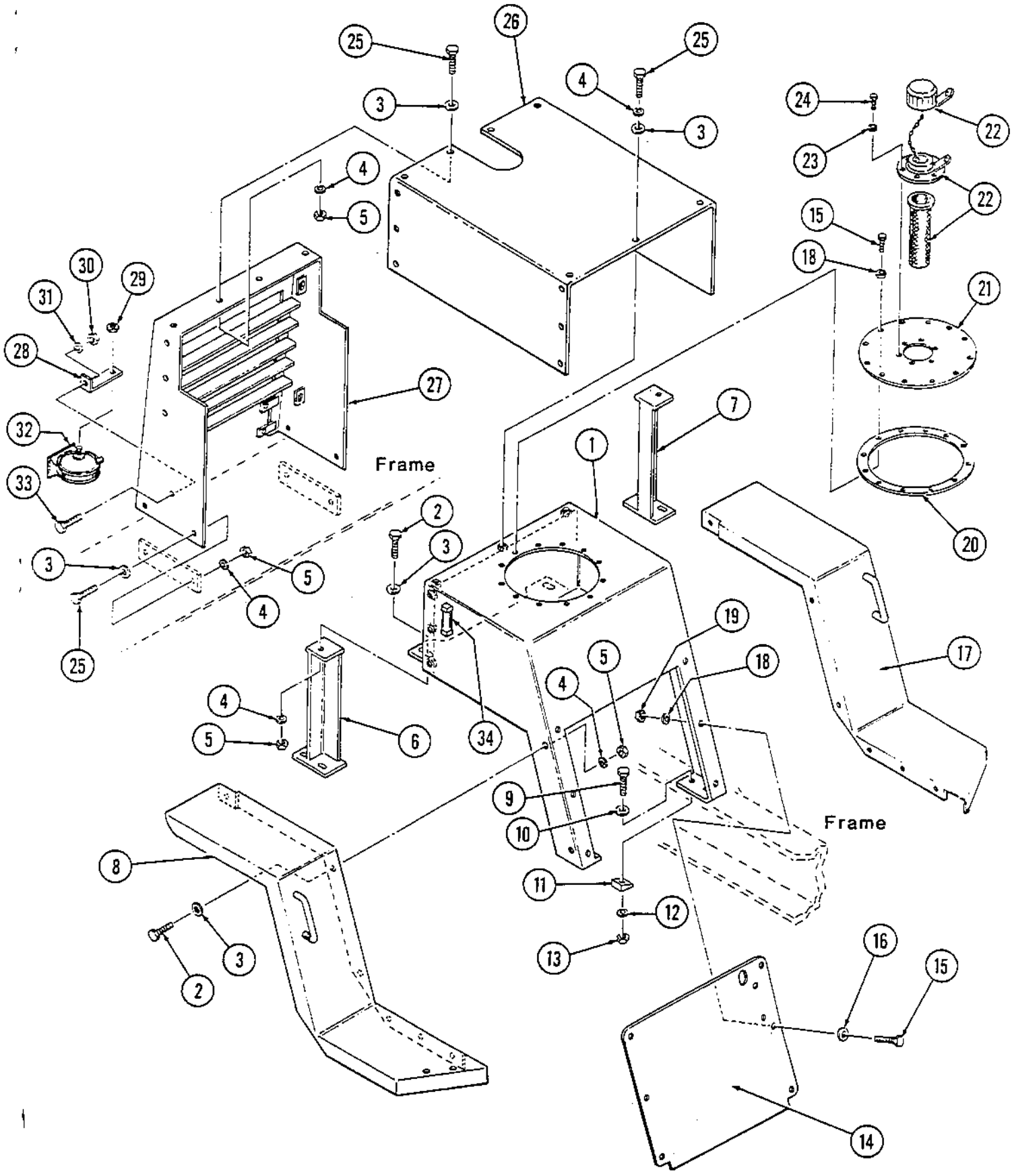

Rev. 6/30/87

PA-15-PL171

Page	Group	Illustration Number	Catalog Number	Illustration
6	1	PA-15-PL114	PA-15-PL01	Scraper Bar Assemblies

Ref. No.	Quantity/Model CA 15	15 D	15 PD	15 PDB	Part Number	Description	Serial Number
1	-	-	1	1	815680	Bar, Cleaner (See Note)	S/N 1026 to 2100
2	-	-	20	20	801657	Lock	
3	-	-	20	20	801656	Tooth	
4	-	-	10	10	815679	Nose Piece	
5	-	-	4	4	571007	Hex Nut	
6	-	-	4	4	604033	Lockwasher	
7	-	-	4	4	600013	Washer, Flat	
8	-	-	4	4	815681	Shim	
9	-	-	4	4	502148	Capscrew, HH	
10	1	1	-	-	815470	Bar, Scraper	
11	4	4	-	-	571007	Hex Nut	
12	4	4	-	-	604033	Lockwasher	
13	4	4	-	-	600013	Washer, Flat	
14	4	4	-	-	502098	Capscrew, HH	

*Note: For Scraper Assy. From S/N 2101 & Up, See Page 16, Group 2.

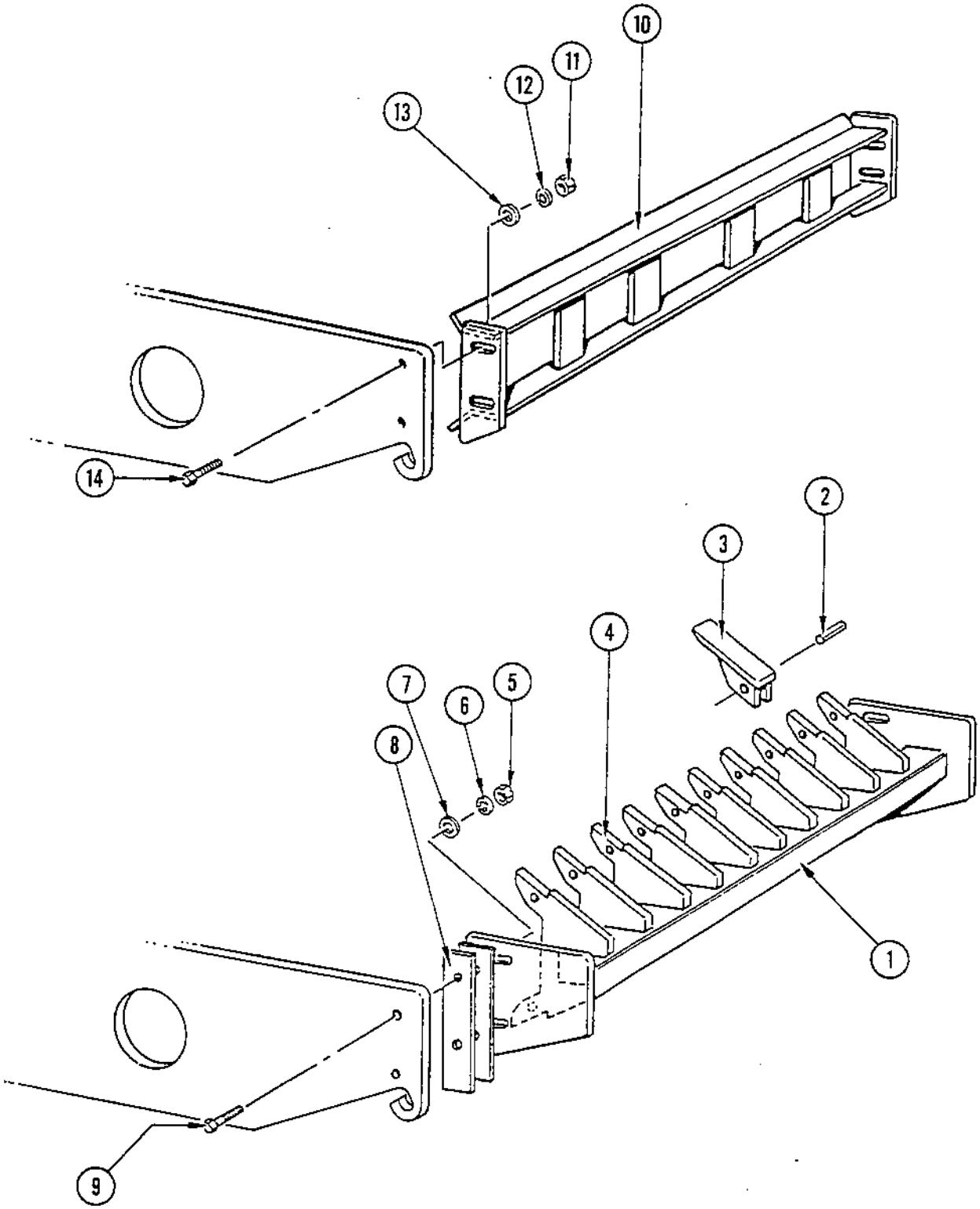
10
11
12
13
14
2
3
4
5
6
7
8
1
9

Page	Group	Illustration Number	Catalog Number	Illustration
8	1	PA-15-PL109	PA-15-PL01	Scraper Bar Assembly (To S/N 1025)

Ref. No.	Quantity/Model CA 15 PD	CA 15 PDB			Part Number	Description	Serial Number
1	1	1			815106	Front Mounting Plate	
2	2	2			815107	Clamp	
3	20	20			815108	Cleaner Bar	
4	76	76			502087	Capscrew, HH	
5	80	80			571006	Hex Nut	
6	80	80			604032	Lockwasher	
7	4	4			502098	Capscrew, HH	
8	4	4			502216	Capscrew, HH	
9	4	4			571007	Hex Nut	
10	4	4			604033	Lockwasher	

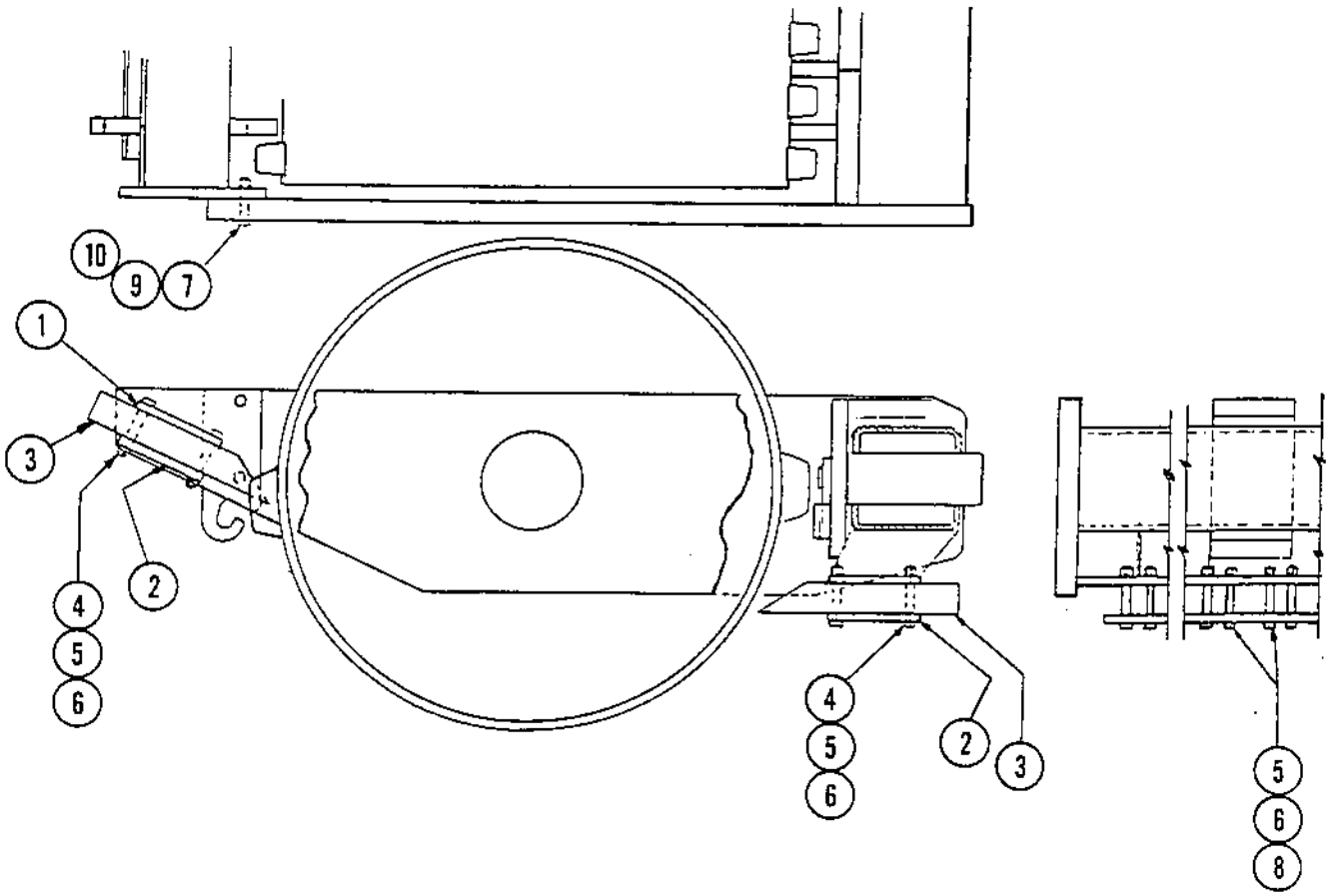
10
9
7
1
3
4
5
6
2
4
5
6
2
3
5
6
8

Page	Group	Illustration Number	Catalog Number	Illustration
10	1	PA-15-PL154	PA-15-PL01	Strike Off Blade Assembly

Ref. No.	Quantity/Model CA 15 PDB				Part Number	Description	Serial Number
1	1				815190	Blade, Strike Off	
2	1				801250	Blade	
3	14				801251	Bolt, Plow	
4	14				604033	Lockwasher	
5	14				571007	Hex Nut	
6	2				815265	Shoe, Plow	
7	4				604030	Lockwasher	
8	4				571005	Hex Nut	
9	4				600069	Washer, Flat	
10	4				502062	Capscrew, HH	
11	2				310018	Fitting, Lubrication	
12	4				635022	Pin, Clevis	
13	4				635020	Clip, Hairpin	
14	2				815194	Pin, Blade	
15	2				815263	Washer, Flat	
16	2				630020	Pin, Cotter	
17	2				332127	Plug	
18	2				100071	Bushing	
19	2				815191	Bracket, Blade Pivot	
20	4				310022	Fitting, Lubrication	
21	4				813316	Bushing	
22	1				815192	Pivot, RH Cylinder	
23	1				815193	Pivot, LH Cylinder	
24	1				815371	Bracket	
25	1				815370	Guide, Indicator	
26	1				571003	Hex Nut	
27	1				502042	Capscrew, HH	
28	1				815369	Indicator, Level	
29	1				630008	Pin, Cotter	
30	1				550038	Pin, Clevis	
31	1				815372	Bracket	

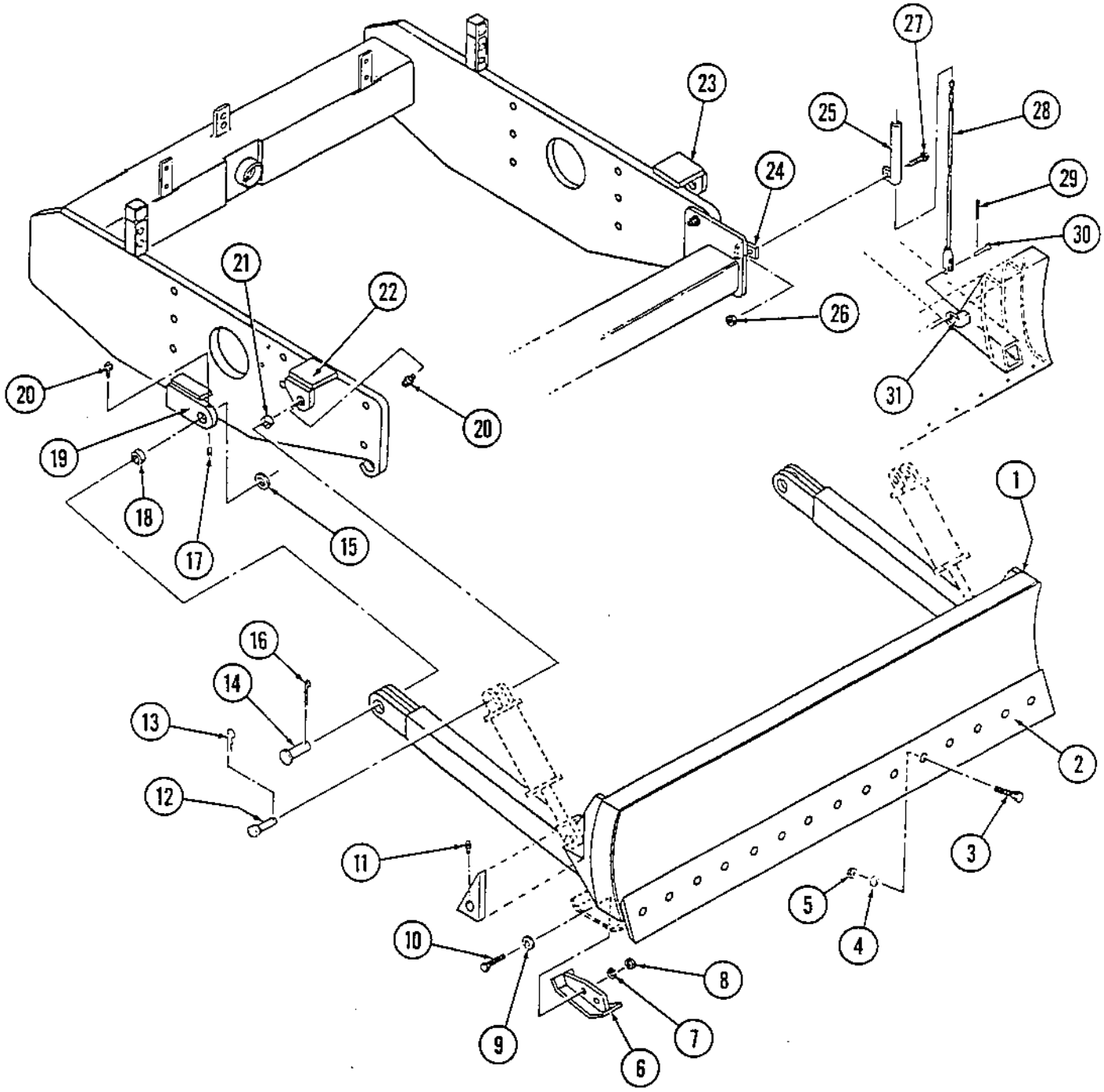
1
2
3
4
5
6
7
8
9
10
11
12
13
14
15
16
17
18
19
20
20
21
22
23
24
25
26
27
28
29
30
31

PA-15-PL154

Page	Group	Illustration Number	Catalog Number	Illustration
12	1	PA-15-PL135	PA-15-PL01	Steering Hitch Assembly (To S/N 1850)

Ref. No.	Quantity/Model CA 15	15 D	15 PD	Part Number	Description	Serial Number
1	1	1	1	335622	Hitch, Steering	
2	1	1	1	335625	Pin	
3	2	2	2	571005	Hex Nut	
4	2	2	2	604030	Lockwasher	
5	1	1	1	850179	Lock Plate, Steering Hitch	
6	1	1	1	850251	Lock Plate, Steering Hitch	
7	2	2	2	602017	Washer, Flat	
8	2	2	2	502060	Capscrew, HH	
9	2	2	2	923126	Pin, Dowel	
10	1	1	1	825176	Spacer	
11	4	4	4	502141	Capscrew, HH	
12	4	4	4	604034	Lockwasher	
13	1	1	1	433562201	Back Plate, Steering Hitch	
14	4	4	4	801605	Assy, Bearing	
15	4	4	4	813473	O-Ring	
16	4	4	4	310022	Fitting, Lubrication	
17	1	1	1	826026	Lock Plate, Steering Hitch	
18	1	1	1	826025	Lock Plate, Steering Hitch	
19	1	1	1	335624	Pin	
20	2	2	2	813469	Lockwasher	
21	2	2	2	813468	Locknut	
22	2	2	2	813316	Bearing	
23	1	1	1	826450	Ear, R.H	
24	1	1	1	826451	Ear, L.H	
25	1	1	1	335626	Spacer	
26	1	1	1	825909	Assy, Flange & Tube	To S/N 1423
-	1	1	1	825984	Assy, Flange & Tube	S/N 1424 to 1850

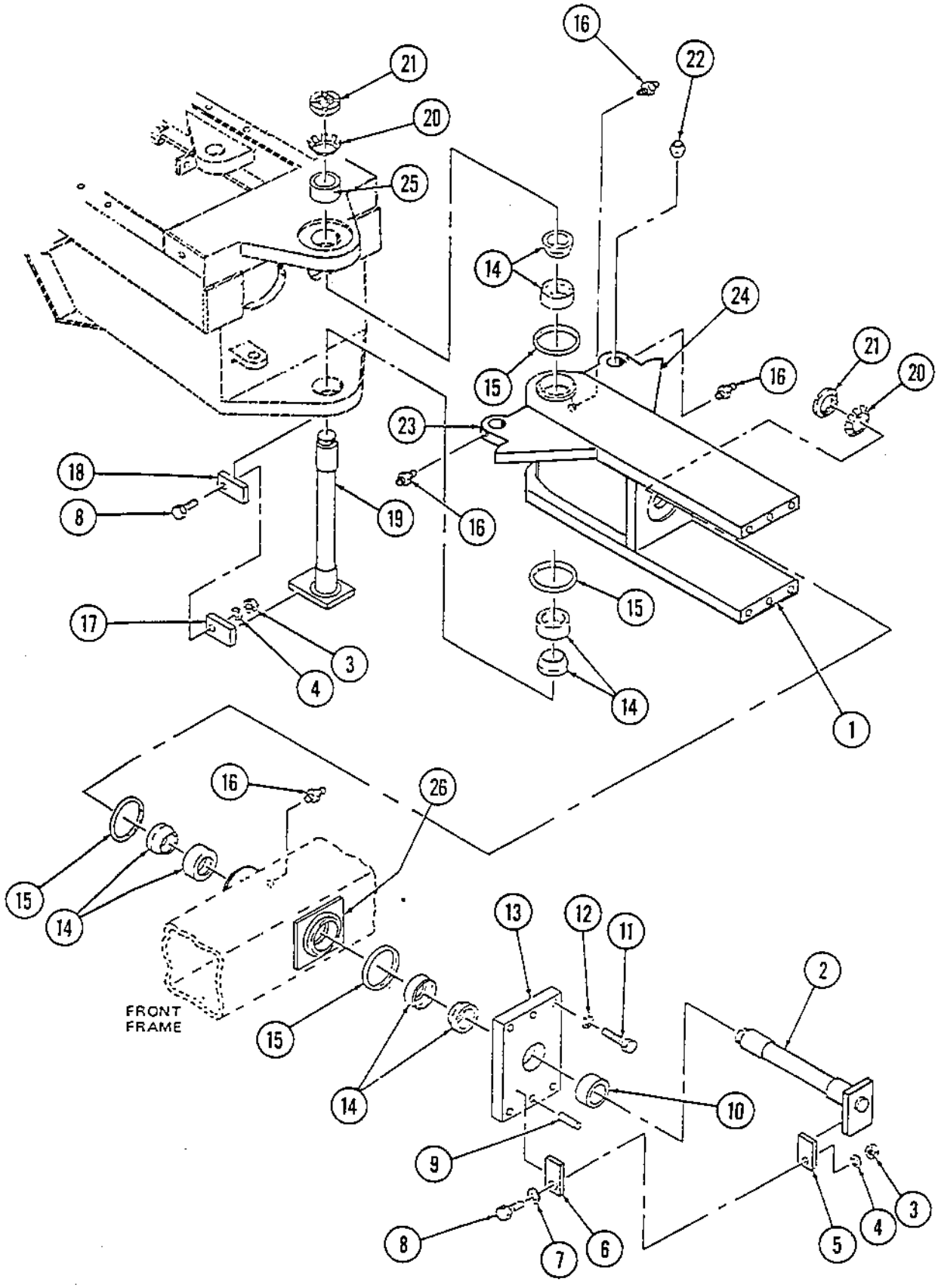

PA-15-PL135

Page	Group	Illustration Number	Catalog Number	Illustration
14	1	PA-15-PL117	PA-15-PL01	Steering Hitch (S/N 1851 & Up)

Ref. No.	Quantity/Model CA 15	CA 15 D	CA 15 PD		Part Number	Description	Serial Number
1	12	12	12		500037	Capscrew, HH	
2	12	12	12		615045	Washer, Conical Spring	
3	2	2	2		337042	Cover	
4	A/R	A/R	A/R		337045	Shim, 1.0 mm	
-	A/R	A/R	A/R		345874	Shim, 0.35 mm	
-	A/R	A/R	A/R		345875	Shim, 0.1 mm	
5	6	6	6		310035	Fitting, Lubrication	
6	4	4	4		801605	Assembly, Bearing	
7	2	2	2		813316	Bearing	
8	A/R	A/R	A/R		345871	Shim, 1.0 mm	
-	A/R	A/R	A/R		345873	Shim, 0.1 mm	
9	1	1	1		345853	Cover	
10	12	12	12		500287	Capscrew, HH	
11	3	3	3		167032	V-Ring	
12	1	1	1		343597	Link, Steering	
13	3	3	3		910995	Screw, Stop	
14	1	1	1		—	Frame, Tractor	See Group 1
15	1	1	1		—	Frame, Drum	See Group 1

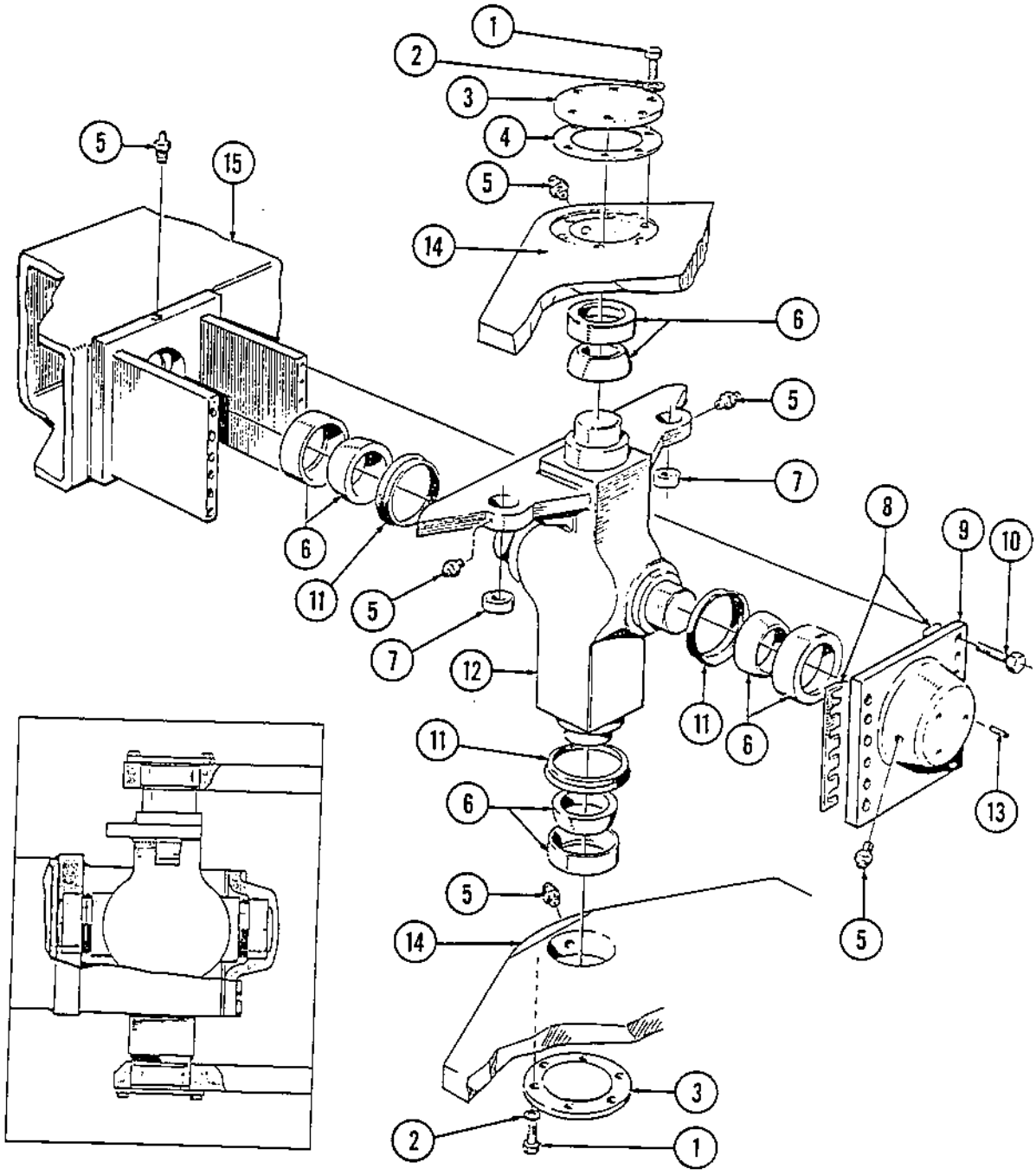
1
2
3
4
5
15
14
6
7
8
9
10
11
12
13

Page	Group	Illustration Number	Catalog Number	Illustration
16	1	PA-15-PL189	PA-15-PL01	Scraper Bar Assembly (Padded Drum From S/N 2101 & Up)

Ref. No.	Quantity/Model				Part Number	Description	Serial Number
	CA15						
	PD						
1	1				266986	Bar, Cleaner	
2	18				801631	Lock	
3	18				801630	Tooth	
4	9				266984	Nose Piece	
5	4				571007	Hex Nut	
6	4				604033	Lockwasher	
7	4				600013	Washer, Flat	
8	4				815681	Shim	
9	4				502148	Capscrew, HH	

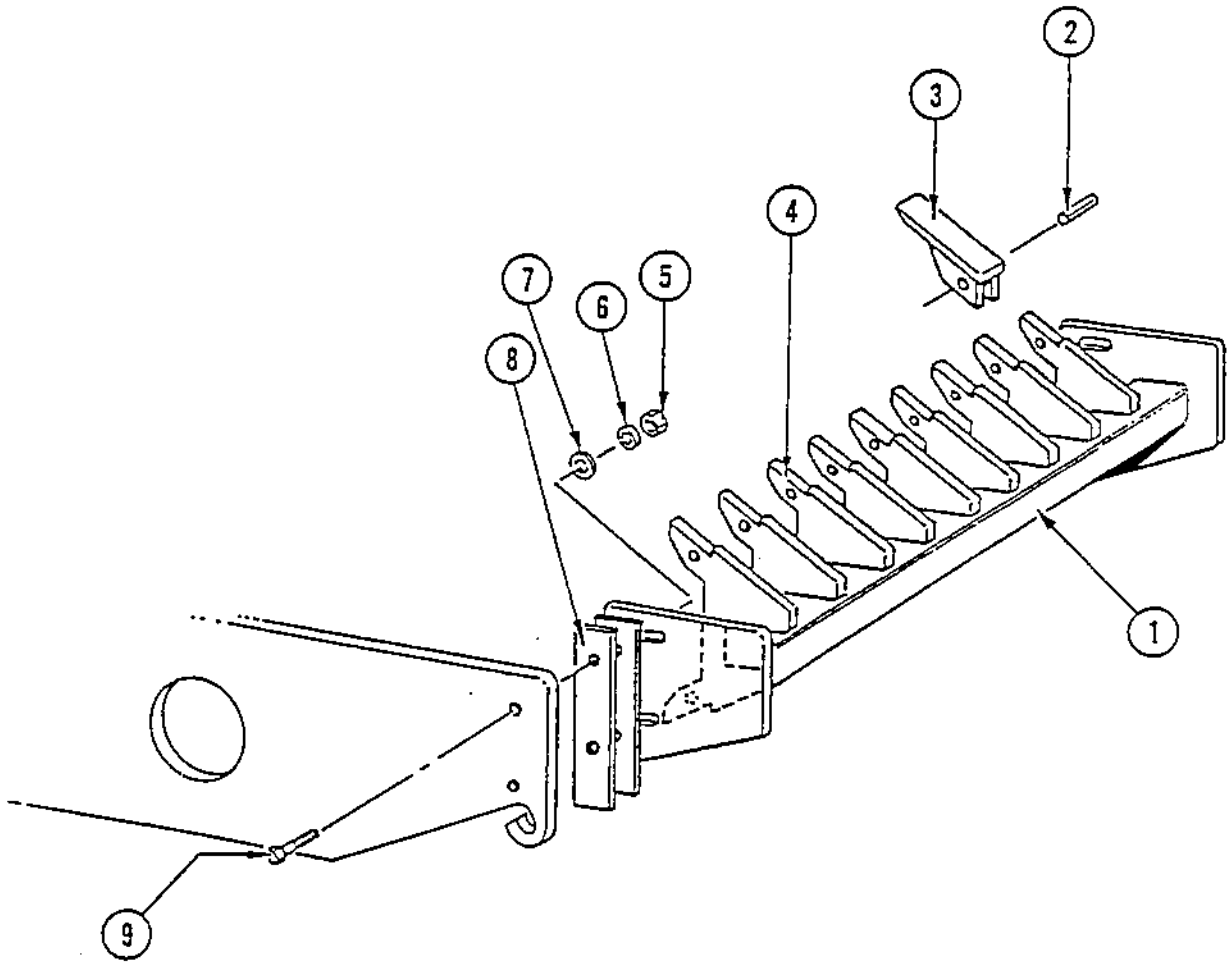
1
2
3
4
5
6
7
8
9

DYNAPAC

DRUM

Drum, Standard, S/N 1851 & Up	2
Drum, Standard or Dual Amp., to S/N 1850	4
Drum, Drum Drive & Padded, S/N 1851 to 2100 on PD Drum	6-8
Drum, D, PD & Dual Amp., S/N 741 to 1850	10-12
Drum, D, PD w/Staffa Drive, to S/N 740	14
Torque Hub, S/N 741 & Up	16-18
Drum, Padded, S/N 2101 & Up	20-22

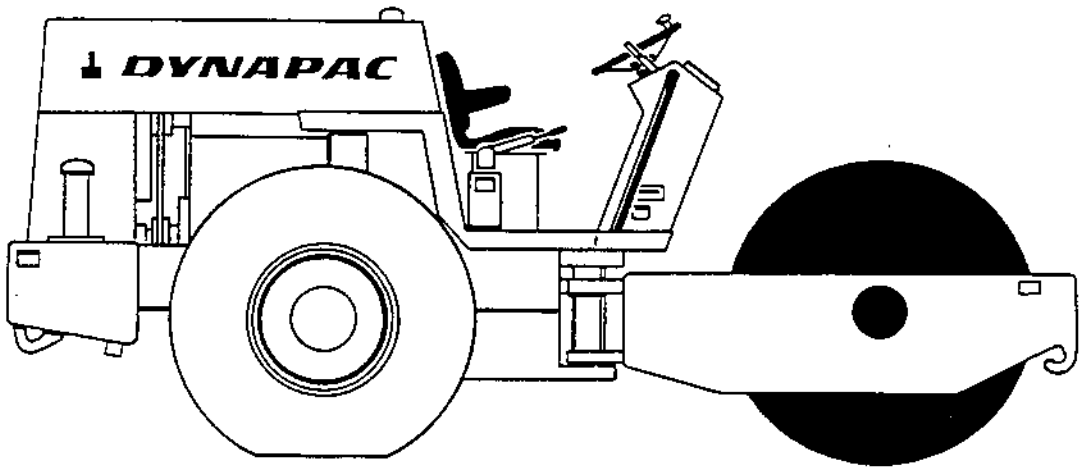

Page	Group	Illustration Number	Catalog Number	Illustration
2	2	PA-15-PL101	PA-15-PL01	Drum Assembly (Standard)

Ref. No.	Quantity/Model CA 15	Part Number	Description	Serial Number
-	1	343915	Assembly, Standard Drum	From S/N 1851
1	1	343905	Drum, Standard Shell	
2	64	500076	Capscrew, HH	
3	64	500037	Capscrew, HH	
4	72	600009	Washer, Flat	
5	64	586019	Locknut	
6	8	336742	Absorber, Shock	
7	2	343894	Mount, Shock	
8	2	343322	Plate, Mounting	
9	4	500195	Capscrew, HH	
10	1	343461	Cover	
11	16	508019	Capscrew, Soc. Hd.	
12	2	343462	Clamp, Bearing	
13	2	160105	O-Ring	
14	2	116041	Bearing	
15	2	343318	Housing, Bearing	
16	56	615046	Washer, Conical Spring	
17	16	570008	Hex Nut	
18	2	167023	Seal	
19	1	922552	Plug, Oil Sight Level	
20	2	160107	O-Ring	
21	2	343897	Housing, Bearing	
22	16	500102	Capscrew, HH	
23	1	232247	Plug, Magnetic	
24	1	162017	Washer, Sealing	
25	24	500119	Capscrew, HH	
26	2	114036	Bearing, Roller	
27	1	343895	Assembly, Eccentric Shaft	
28	1	343561	Flange, Motor	
29	1	232041	Breather	
30	1	162012	Washer, Sealing	
31	1	232070	Plug, HH	
32	1	343410	Coupling, Splined	
33	4	500133	Capscrew, HH	
34	4	604009	Lockwasher	
35	2	500051	Capscrew, HH	
36	2	500193	Capscrew, HH	
37	1	801054	Assy., Hyd. Vib. Motor	See Group 5
38	1	813478	O-Ring	

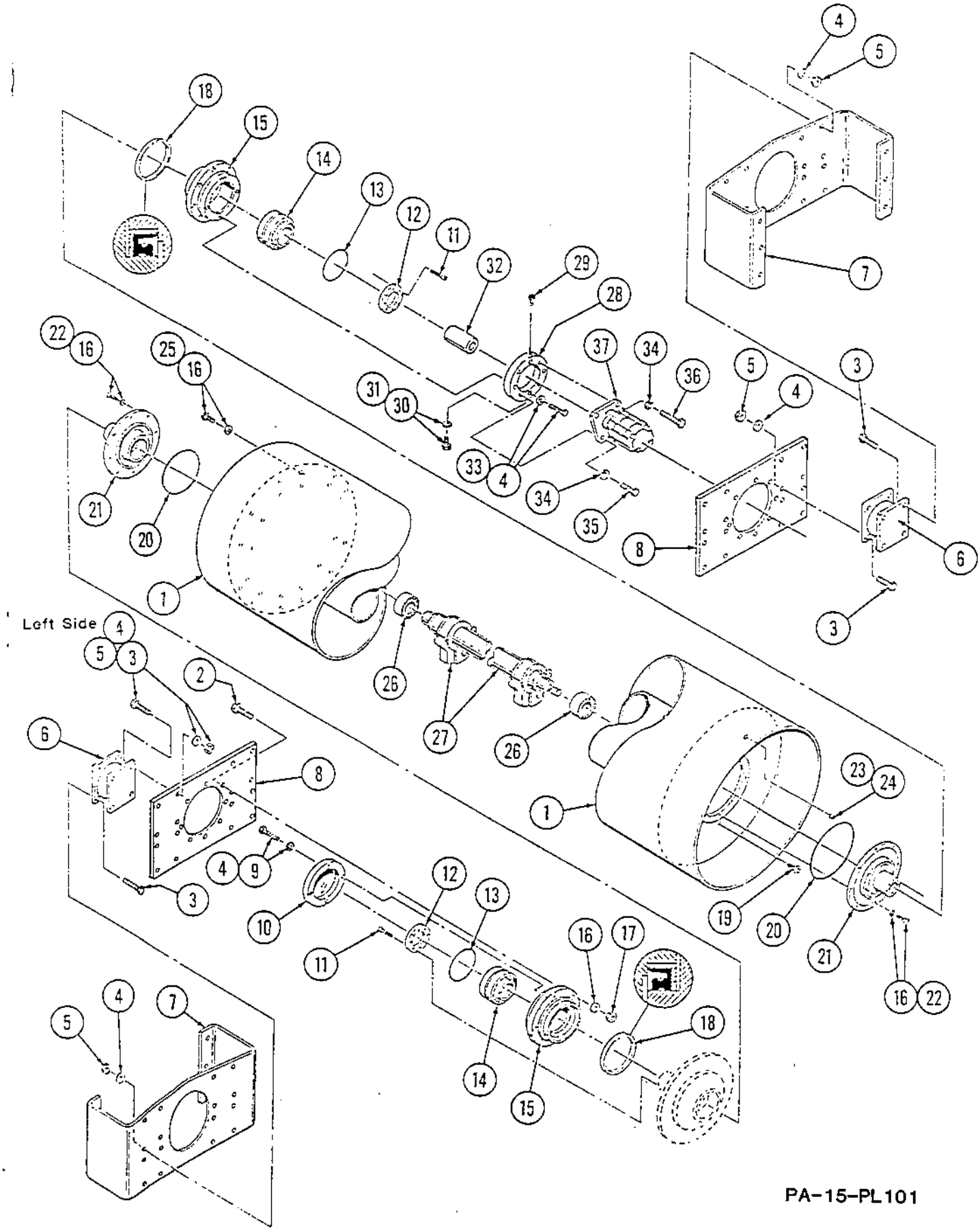
Left Side
PA-15-PL101

Page	Group	Illustration Number	Catalog Number	Illustration
4	2	PA-15-PL144	PA-15-PL01	Drum Assembly (Standard or Dual Amplitude)

Ref. No.	Quantity/Model CA 15	Part Number	Description	Serial Number
-	1	815010	Assembly, Standard Drum	To 1850
-	1	815782	Assembly, Dual Amplitude Drum	To 1850
1	1	815024	Shell, Standard Drum	
2	1	114065	Bearing	
3	1	815019	Shaft, Eccentric (Standard)	
-	1	340482	Shaft, Eccentric (Dual Amplitude)	
4	1	813482	Plug, Oil Level Sight	
5	1	813483	Plug, Magnetic Pipe	
6	2	160107	O-Ring	
7	2	815018	Housing, Bearing & Stub Shaft	
8	16	615029	Washer, Hi Strength	
9	16	166016	Capscrew, Sealing HH	
10	2	815013	Housing, Bearing	
11	2	167023	Seal	
12	40	502059	Capscrew, HH	
13	2	116013	Assembly, Bearing	
14	2	815016	Retainer, Bearing	
15	16	509003	Capscrew, Soc. Hd.	
16	16	221212	Lockwasher, Hi Collar	
17	1	815014	Adapter, Motor	
18	8	502060	Capscrew, HH	
19	52	604030	Lockwasher	
20	1	232064	Vent, Breather	
21	1	813478	O-Ring	
22	1	416043	Coupling, Splined	
23	1	801054	Assembly, Vibration Motor (See Group 5)	
24	2	502057	Capscrew, HH	
25	2	502058	Capscrew, HH	
26	4	801187	Shock	
27	32	571005	Hex Nut	
28	1	815012	Frame, RH Shock Mount	
29	1	815015	Cover	
30	1	815011	Frame, LH Shock Mount	

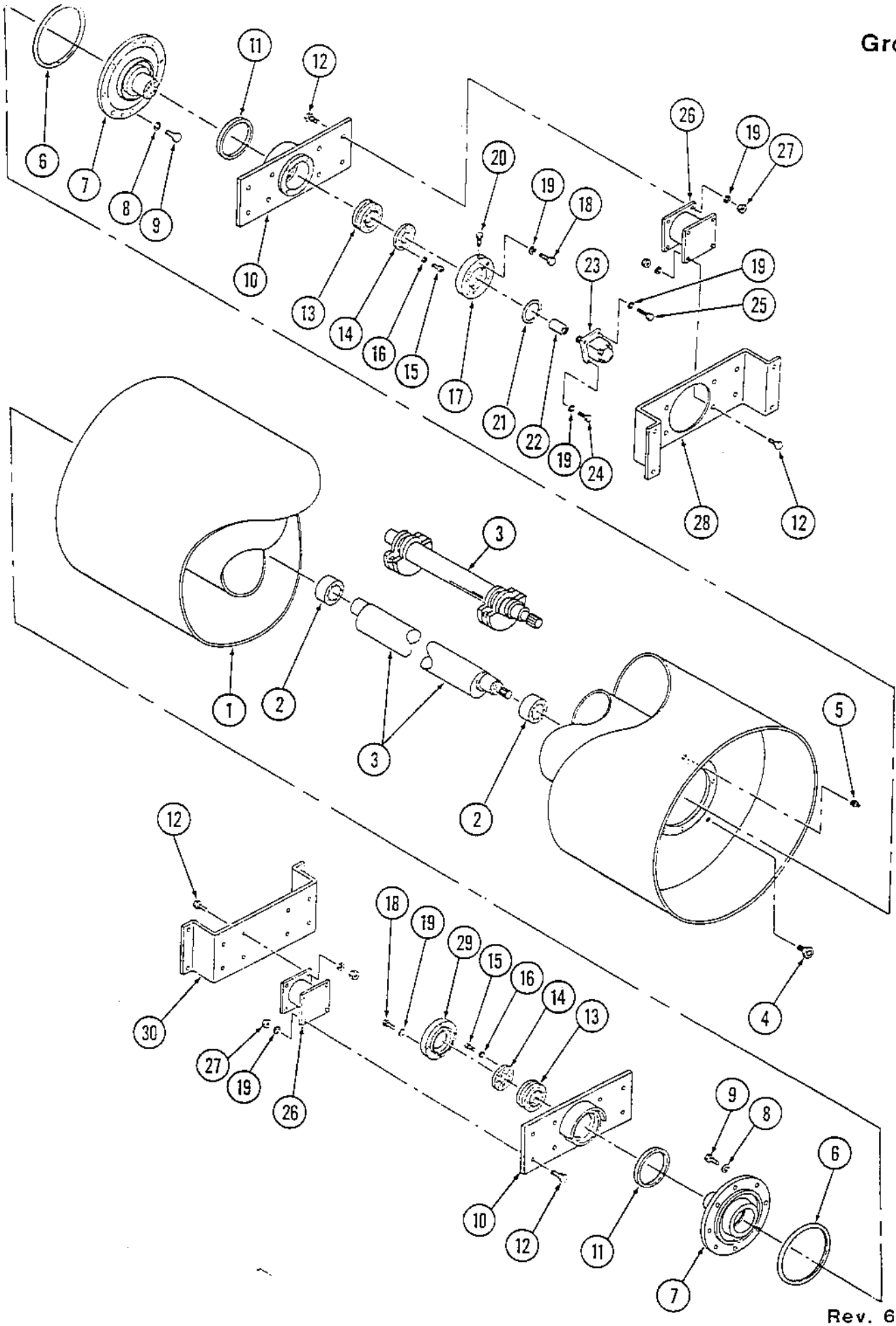
1
2
3
4
5
6
7
8
9
10
11
12
13
14
15
16
17
18
19
20
21
22
23
24
25
26
27
28
29
30

Page	Group	Illustration Number	Catalog Number	Illustration
6	2	PA-15-PL102	PA-15-PL01	Drum Assembly (Drum Drive & Padded Drum)

Ref. No.	Quantity/Model CA 15D	CA 15PD	Part Number	Description	Serial Number
-	1		343901	Assy., Drum Drive Drum	From S/N 1851
-		1	343902	Assy., Padded Drum (See Note)	From S/N 1851 to 2100
1	1		343905	Drum, Drive Shell	
-		1	343906	Drum, Padded Shell	
2	32	32	500076	Capscrew, HH	
3	24	24	600011	Washer, Flat	
4	24	24	343899	Sleeve	
5	6	6	343898	Bracket, Shock Mount	
6	10	10	336742	Absorber, Shock	
7	56	56	500037	Capscrew, HH	
8	64	64	600009	Washer, Flat	
9	56	56	586019	Locknut	
10	2	2	160107	O-Ring	
11	1	1	343892	Housing, Bearing	
12	16	16	500102	Capscrew, HH	
13	24	24	615046	Washer, Conical Spring	
14	1	1	160362	O-Ring	
15	1	1	343907	Cover, Bearing	
16	6	6	500028	Capscrew, HH	
17	6	6	615044	Washer, Conical Spring	
18	2	2	114036	Bearing	
19	1		343895	Assy., Eccentric Shaft	
-		1	343896	Assy., Eccentric Shaft	
20	1	1	922552	Plug, Oil Sight Level	
21	1	1	232247	Plug, Magnetic	
22	1	1	162017	Washer, Sealing	
23	1	1	343897	Housing, Bearing	
24	1	1	167023	Seal	
25	1	1	343318	Housing, Bearing	
26	8	8	570008	Hex Nut	
27	1	1	116041	Bearing	
28	1	1	160105	O-Ring	

*Note: For PD Drum From S/N 2101 & Up, See Page 20-22, Group 2.

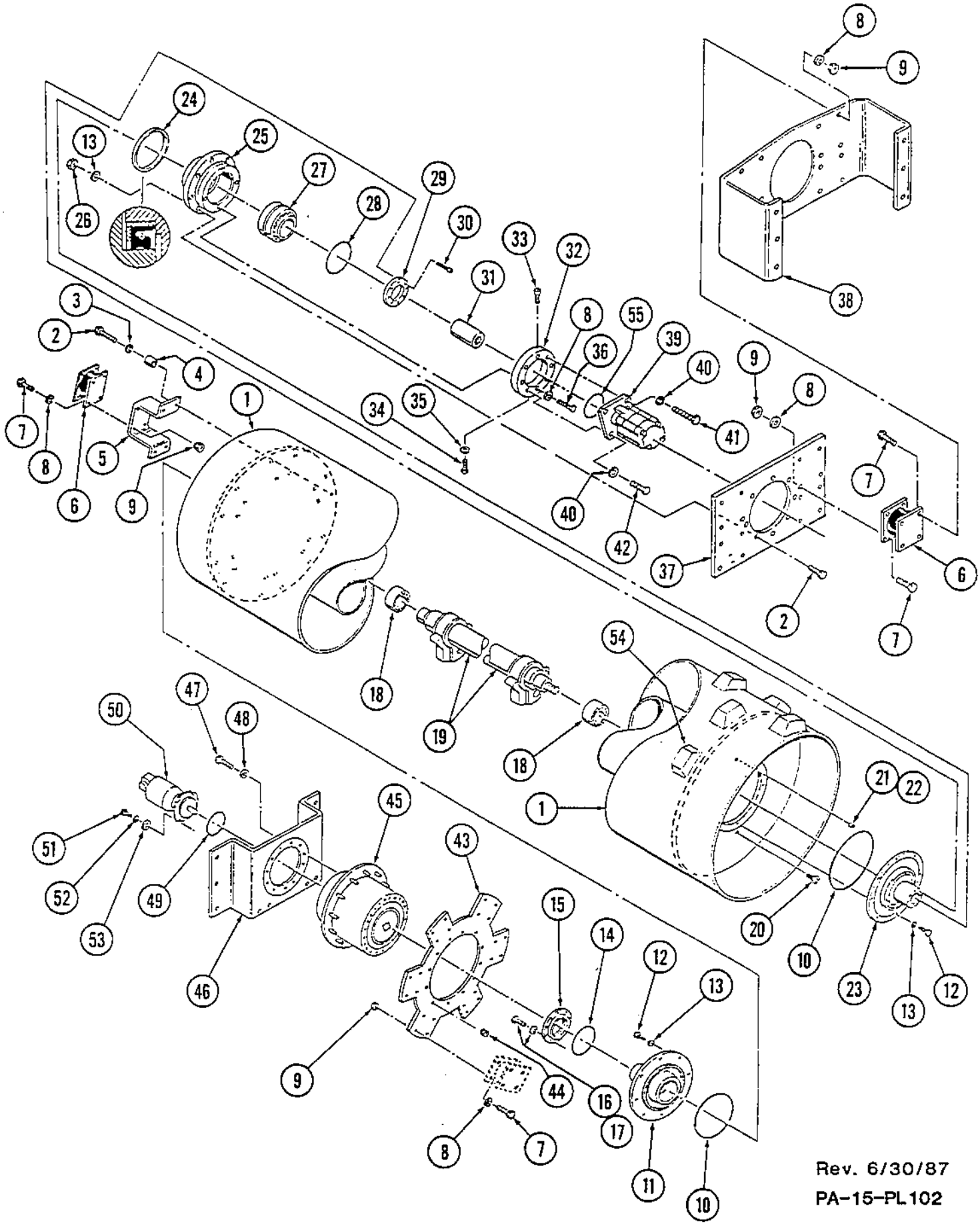

Rev. 6/30/87
PA-15-PL102

Page	Group	Illustration Number	Catalog Number	Illustration
8	2	PA-15-PL102	PA-15-PL01	Drum Assembly (Drum Drive & Padded Drum)

Ref. No.	Quantity/Model CA 15D	CA 15PD			Part Number	Description	Serial Number
29	1	1			343462	Clamp, Bearing	
30	8	8			508019	Capscrew, Soc. Hd.	
31	1	1			343410	Coupling, Splined	
32	1	1			343561	Flange, Motor	
33	1	1			232041	Breather	
34	1	1			232070	Plug	
35	1	1			162012	Washer, Sealing	
36	4	4			500133	Capscrew, HH	
37	1	1			343322	Plate, Mounting	
38	1	1			343894	Frame, Shock Mount	
39	1	1			801054	Assy., Hyd. Vib Motor	See Group 5
40	4	4			604009	Lockwasher	
41	2	2			500193	Capscrew, HH	
42	2	2			500051	Capscrew, HH	
43	1	1			343909	Plate, Drive	
44	12	12			813694	Hex Nut	
45	1	1			801150	Assy., Torque Hub	See Group 2
46	1	1			842285	Bracket, Mounting	
47	12	12			503056	Capscrew, HH	
48	12	12			615047	Washer, Conical Spring	
49	1	1			801413	O-Ring	
50	1	1			801144	Assy., Hyd. Traction Motor	See Group 5
51	4	4			502059	Capscrew, HH	
52	4	4			604030	Lockwasher	
53	4	4			335545	Washer, Special	
54		132			815266	Pads	
55	1	1			801413	O-Ring	

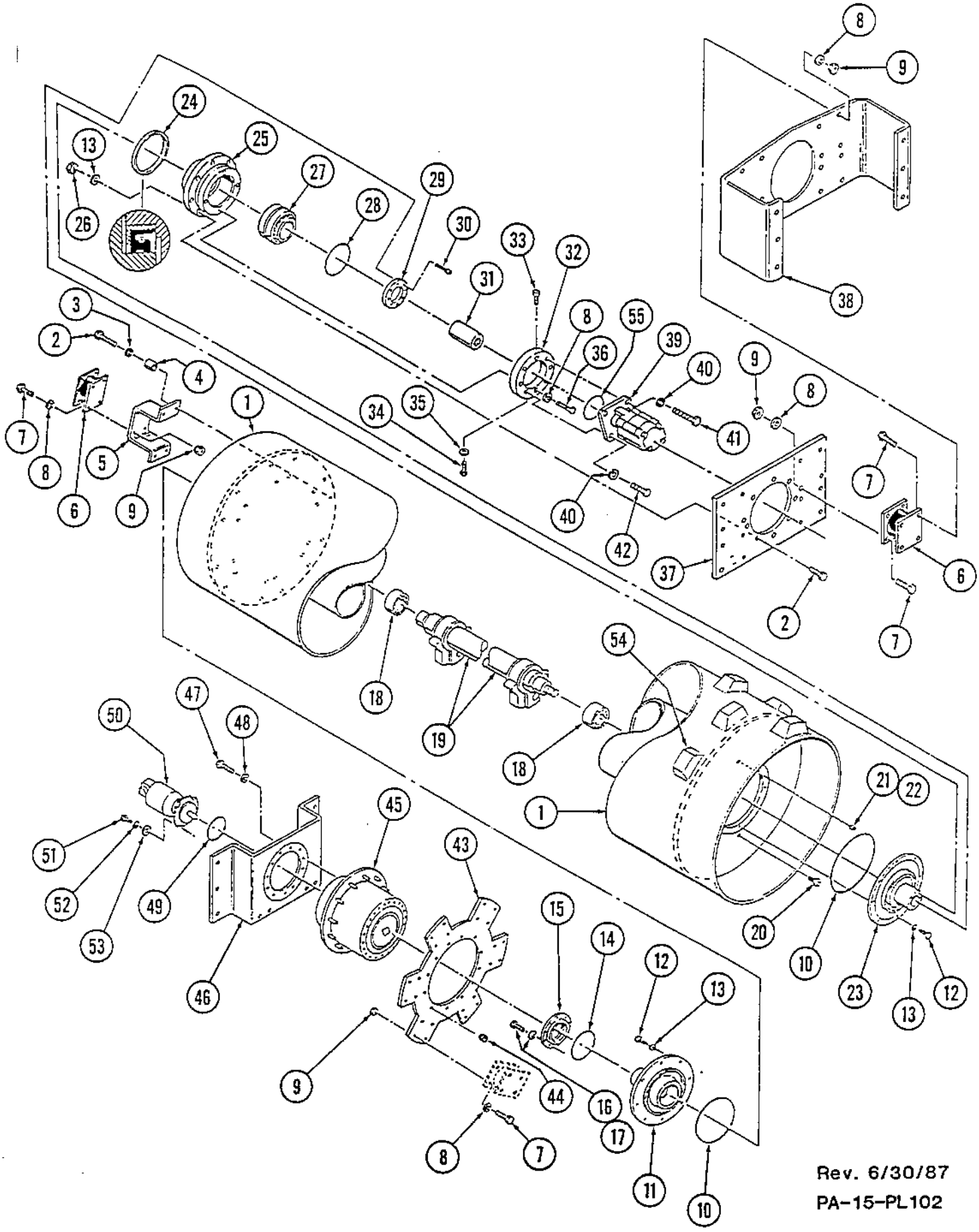

Rev. 6/30/87
PA-15-PL102

Page	Group	Illustration Number	Catalog Number	Illustration
10	2	PA-15-PL145	PA-15-PL01	Drum Assembly (D, PD and Dual Amplitude)

Ref. No.	Quantity/Model CA 15 D	CA 15 PD			Part Number	Description	Serial Number
-	1	-			815446	Assembly, Drum Drive	741 To 1850
-	1	-			815779	Assembly, Dual Amplitude Drum	741 To 1850
-	-	1			815498	Assembly, Padded Drum	741 To 1850
1	1	-			815496	Shell, Drum Drive Drum	
-	-	1			815446	Shell, Padded Drum	
2	1	-			815224	Shaft, Drum Drive Eccentric	
-	1	-			815805	Shaft, Dual Amplitude Eccentric	
-	-	1			815130	Shaft, Padded Drum Eccentric	
3	2	2			114065	Bearing	
4	1	1			813483	Plug, Magnetic Pipe	
5	1	1			813482	Plug, Oil Level Sight	
6	2	2			160107	O-Ring	
7	1	1			815018	Housing, Bearing	
8	16	16			615029	Washer, Hi Strength	
9	16	16			166016	Capscrew, Sealing HH	
10	1	1			167023	Seal	
11	32	48			503034	Capscrew, HH	
12	40	56			604030	Lockwasher	
13	1	1			842033	Housing, Bearing	
14	1	1			116013	Assembly, Bearing	
15	1	1			815016	Retainer, Bearing	
16	6	6			221212	Lockwasher, Hi Collar	
17	6	6			509003	Capscrew, Soc. Hd.	
18	1	1			815014	Adapter, Motor	
19	1	1			232064	Vent, Breather	
20	68	68			502060	Capscrew, HH	

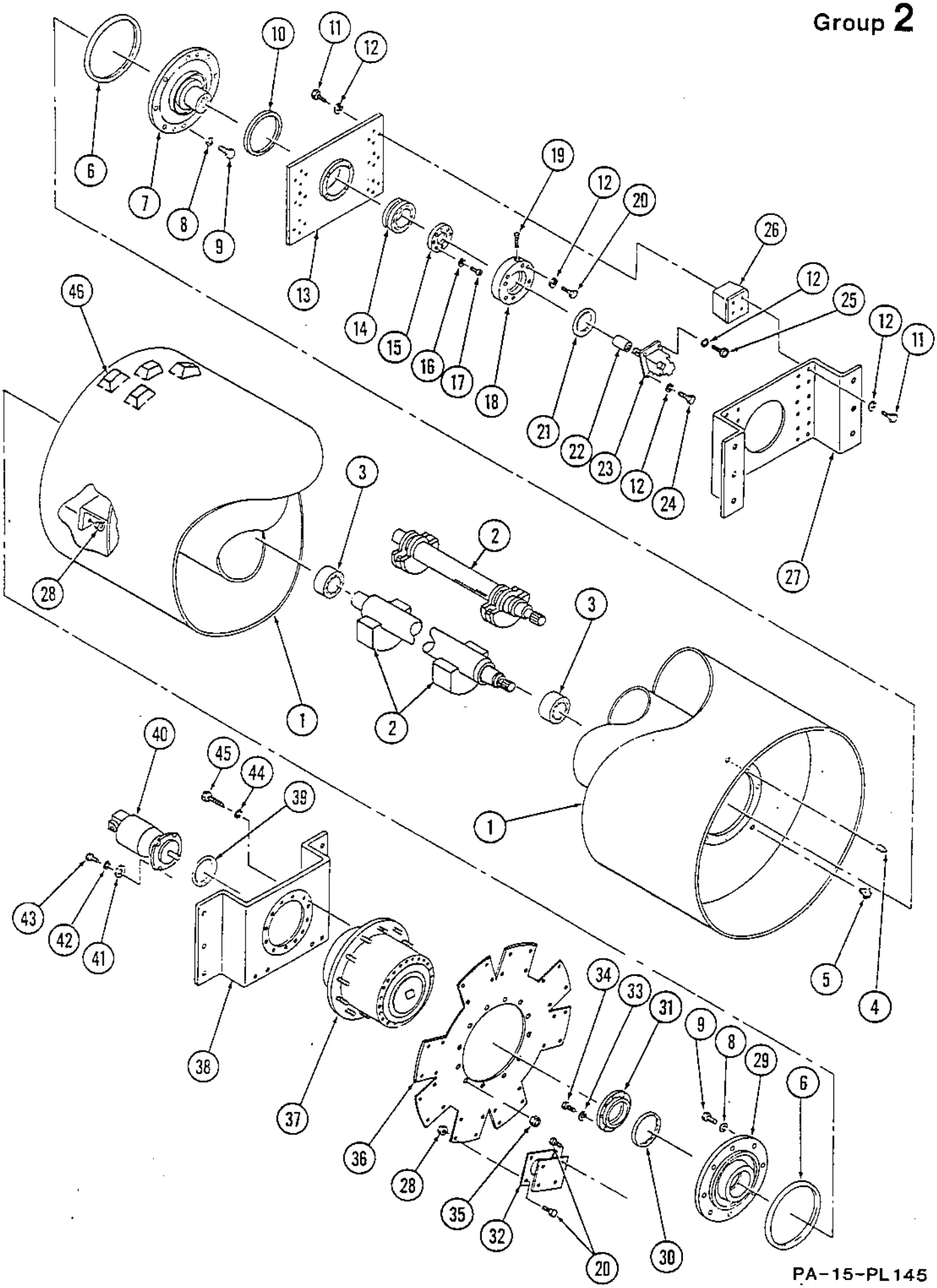
1
2
3
4
5
6
7
8
9
10
11
12
13
14
15
16
17
18
19
20
21
22
23
24
25
26
27
28
29
30
31
32
33
34
35
36
37
38
39
40
41
42
43
44
45
46

PA-15-PL145

Page	Group	Illustration Number	Catalog Number	Illustration
12	2	PA-15-PL145	PA-15-PL01	Drum Assembly (D, PD and Dual Amplitude)

Ref. No.	Quantity/Model CA 15 D	Quantity/Model CA 15 PD			Part Number	Description	Serial Number
21	1	1			813478	O-Ring	
22	1	1			416043	Coupling, Splined	
23	1	1			801054	Assembly, Vibration Motor (See Group 5)	
24	2	2			502057	Capscrew, HH	
25	2	2			502058	Capscrew, HH	
26	4	4			450073	Shock, RH	
27	1	1			842287	Frame, Shock Mount	
28	64	64			586044	Locknut	
29	1	1			842249	Housing, Bearing	
30	1	1			160105	O-Ring	
31	1	1			842034	Cover, Bearing Clamp	
32	8	8			801187	Shock, LH	
33	6	6			813484	Lockwasher, Hi Collar	
34	6	6			502035	Capscrew, HH	
35	12	12			813694	Hex Nut	
36	1	1			842221	Plate, Drive	
37	1	1			801150	Assembly, Torque Hub (See Group 2)	
38	1	1			842284	Bracket, Mounting	
39	1	1			801413	O-Ring	
40	1	1			801144	Assembly, Traction Motor (See Group 5)	
41	4	4			335545	Washer, Special	
42	4	4			604030	Lockwasher	
43	4	4			502059	Capscrew, HH	
44	12	12			604033	Lockwasher	
45	12	12			503094	Capscrew, HH	
46	-	132			815266	Pad, L.P. Drum	

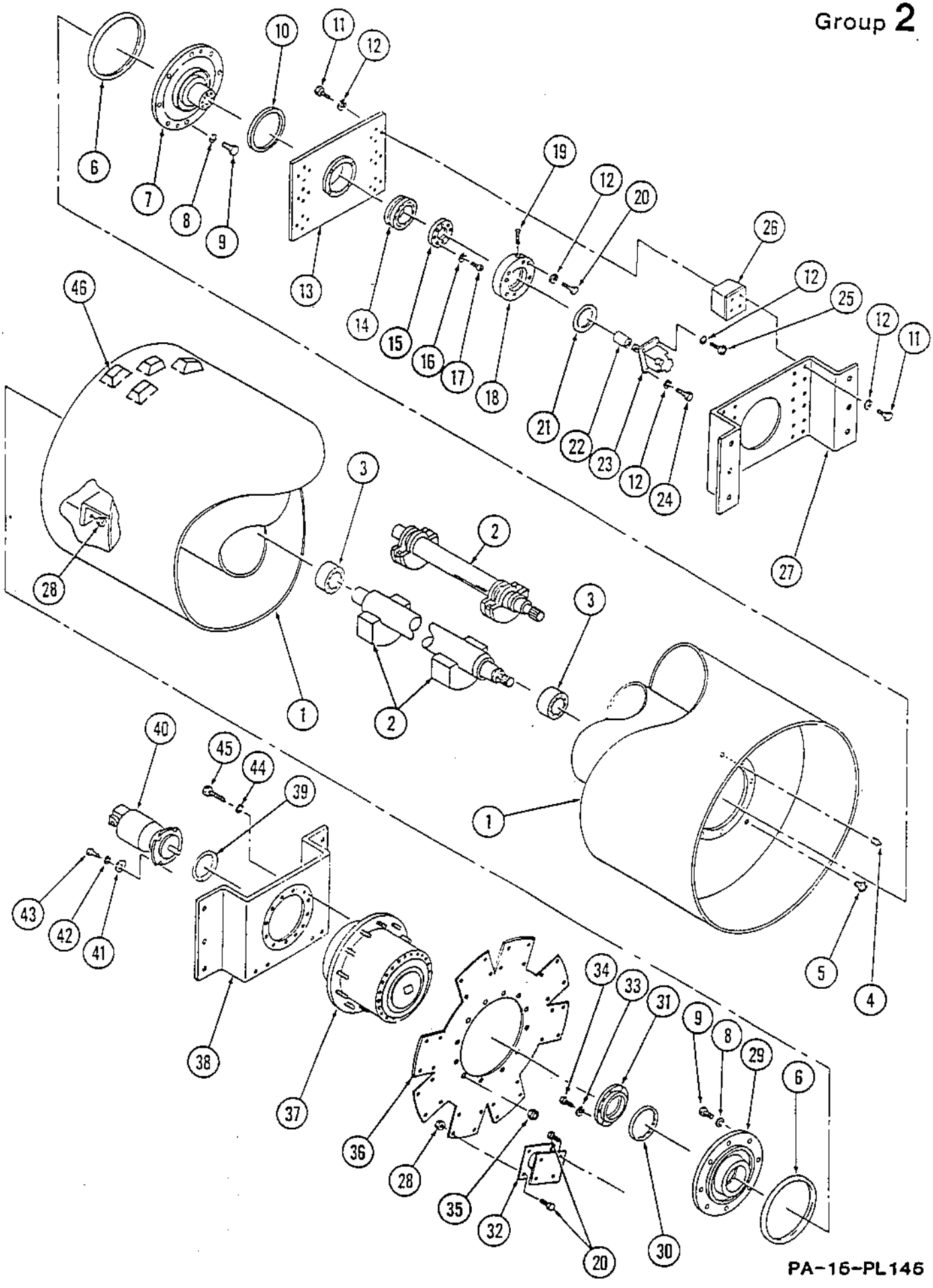
1
2
3
4
5
6
7
8
9
10
11
12
13
14
15
16
17
18
19
20
21
22
23
24
25
26
27
28
29
30
31
32
33
34
35
36
37
38
39
40
41
42
43
44
45
46

PA-16-PL145

Page	Group	Illustration Number	Catalog Number	Illustration
14	2	PA-15-PL146	PA-15-PL01	Drum Assembly (D & PD with Staffa Drive to S/N 740)

Ref. No.	Quantity/Model CA 15 D	Quantity/Model CA 15 PD	Part Number	Description	Serial Number
1	1	-	815216	Shell, Drum Drive Drum	To S/N 740
-	-	1	815132	Shell, Padded Drum	To S/N 740
2	1	-	815224	Shaft, Eccentric	
-	-	1	815130	Shaft, Eccentric	
3	2	2	114065	Bearing	
4	1	1	813483	Plug, Magnetic Pipe	
5	A/R	A/R	801175	Sealant, Liquid Plastic	
6	1	1	815018	Housing, Bearing	
7	16	16	166016	Capscrew, Sealing HH	
8	16	16	615029	Washer, Hi Strength	
9	4	4	450073	Shock, RH	
10	1	1	815016	Retainer, Bearing	
11	1	1	842032	Frame, Shock Mount	
12	1	1	815014	Adaptor, Motor	
13	1	1	116013	Assembly, Bearing	
14	1	1	842033	Housing, Bearing	
15	1	1	167023	Seal	
16	1	1	813482	Plug, Oil Level Sight	
17	2	2	160107	O-Ring	
18	1	1	416043	Coupling, Splined	
19	1	1	160105	O-Ring	
20	1	1	842034	Cover, Bearing Clamp	
21	6	6	502035	Capscrew, HH	
22	6	6	604028	Lockwasher	
23	1	1	842035	Housing, Bearing	
24	8	8	502077	Capscrew, HH	
25	8	8	604032	Lockwasher	
26	34	34	502058	Capscrew, HH	
27	104	104	604030	Lockwasher	
28	1	1	842114	Plate, Drive	
29	32	32	515003	Capscrew, HH	
30	32	32	572004	Hex Nut	
31	8	8	801187	Shock, LH	
32	1	1	801054	Assy., Vib. Motor (See Group 5)	
33	6	6	514013	Capscrew, Soc. Hd.	
34	6	6	221212	Lockwasher, Hi Collar	
35	1	1	813478	O-Ring	
36	4	4	502060	Capscrew, HH	
37	1	1	232064	Vent, Breather	
38	2	2	502057	Capscrew, HH	
-	1	1	842005	Assy., Motor & Bracket	
39	1	1	801101	Assy., Traction Motor (See Group 5)	
40	1	1	842040	Bracket, Motor Mount	
41	2	2	842207	Stud, Motor	
42	5	5	813475	Lock Nut	
43	2	2	571007	Hex Nut	
44	3	3	502210	Capscrew, HH	
45	1	1	891848	Key	
46	1	1	480616	Hex Nut	

Dynapac Ltd.

TO: ALL DYNAPAC "B" DEALERS

ATT: PARTS MANAGER / SERVICE MANAGER

FROM: MIKE CADDEN, PARTS MANAGER

DATE: NOVEMBER 16, 1976. REVISION OF BULLETIN # 12 DATED APRIL 1, 1976.

SUBJECT: DRUM DRIVE MOTOR
MODELS CA15, CA25, CC42

THERE HAS BEEN A DESIGN CHANGE ON THE STAFFA DRUM DRIVE MOTORS ON THE ABOVE MODELS. THE ORIGINAL MOTOR WAS LISTED AS PART# 801063. THE NEW MOTOR IS PART #801101. THE TWO ARE NOT INTERCHANGEABLE DUE TO THE HOSE CONNECTIONS AT THE MOTOR. SHOULD A MOTOR CHANGE BE REQUIRED, WE SUGGEST THE FOLLOWING:

1. WE HAVE A SUPPLY OF REBUILT # 801063 MOTORS IN STOCK AND RECOMMEND AS AFIRST CHOICE FOR A REPLACEMENT. THIS DOES NOT ENTAIL THE PURCHASE OF ADDITIONAL PARTS.

2. IF A COMPLETE CHANGEOVER IS DESIRED, THE CHART BELOW OUTLINES THE PARTS REQUIRED. THE SERIAL NUMBER CUT-OFF OF THE ORIGINAL # 801063 MOTOR IS 15CA441, 25CA1158 AND 42CC309.

PART #	DESCRIPTION	MODEL CA15 QUANTITY	MODEL CA25 QUANTITY	MODEL CC42 QUANTITY
801101	MOTOR	1	1	1
1040-20-12	ADAPTER	2	2	2
815089-36	HOSE	1	--	--
815089-37	HOSE	1	--	--
CA1403-7	HOSE	--	2	--
842127-39	HOSE (F.D)	--	--	1
842127-40	HOSE (F.D)	--	--	1
842127-38	HOSE (R.D)	--	--	2

YOURS TRULY

Michael Cadden

MIKE CADDEN
PARTS MANAGER,
MC/MB
ENCL.

DYNAPAC

Address
5340 MAINGATE DR.
MISSISSAUGA, ONT.
L4W 1R8

Telephone
AREA CODE 416
625-4784

Telex
05-961108
DYNTOR

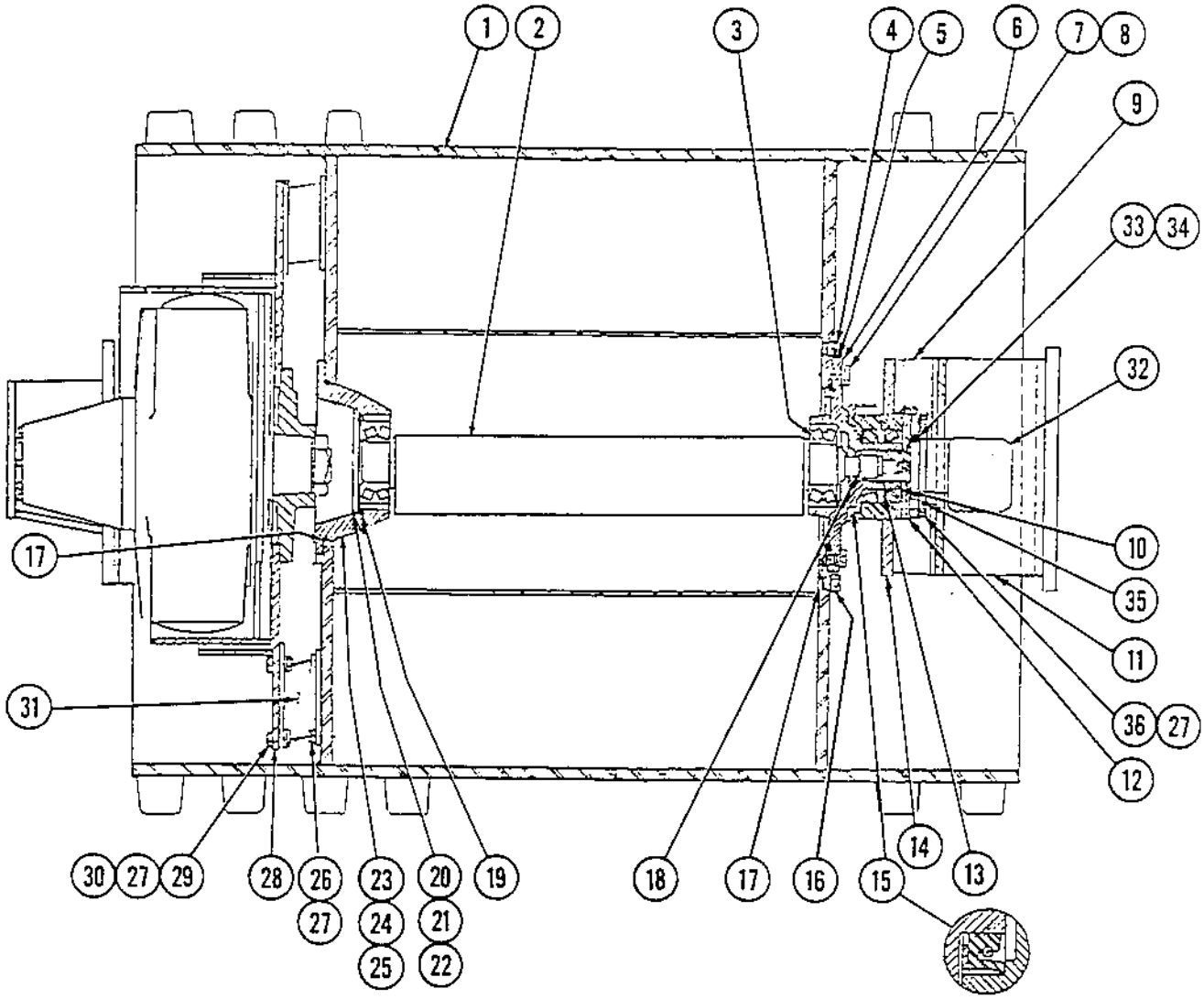
1
2
3
4
5
6
7
8
9
33
34
32
10
35
11
36
27
12
17
31
30
27
29
28
26
27
23
24
25
20
21
22
19
18
17
16
15
14
13

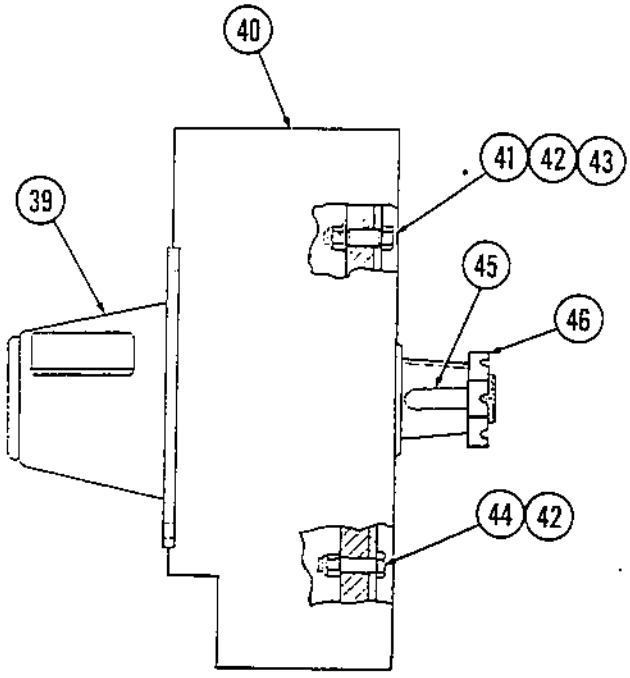
40
41
42
43
39
45
46
44
42

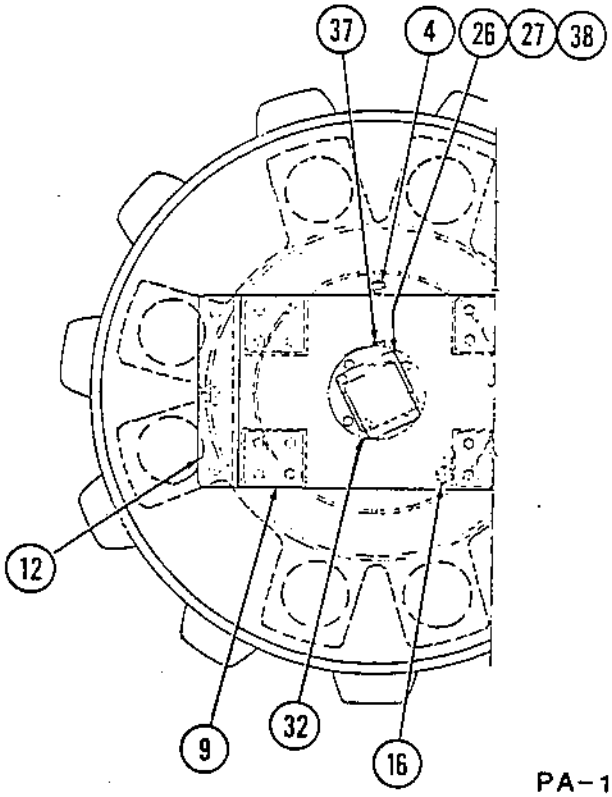
37
4
26
27
38
12
9
32
16

PA-15-PL146

Page	Group	Illustration Number	Catalog Number	Illustration
16	2	PA-15-PL108	PA-15-PL01	Torque Hub Assembly

Ref. No.	Quantity/Model CA				Part Number	Description	Serial Number
	15D	15PD					
1	1	1			801150	Hub Assembly, Drive	S/N 741 & Up
-	1	1			423470	**Hub Sub-Assy., Spindle (for R7C2)	
-	1	1			893446	Hub Sub-Assy., Spindle	
2	1	1			423473	**Hub, (for R7C2)	
-	1	1			423327	Hub (See Note**)	
3	2	2			423352	Plug, Magnetic Pipe	
4	12	12			423149	Stud	
5	1	1			423331	Bearing, Cup	
6	1	1			423332	Bearing, Cone	
7	1	1			423321	Gear, Internal	
8	4	4			423312	Plate, Retainer	
9	8	8			423338	Bolt	
10	1	1			423322	Gear, Internal Hub	
11	1	1			423335	Shim Set	
12	1	1			423324	Plate, Bearing	
13	6	6			423339	Bolt	
14	1	1			423334	Bearing, Cup	
15	1	1			423330	Bearing, Cone	
16	1	1			423471	**Seal, Face (for R7C2)	
-	1	1			423333	Seal, Face	
17	1	1			423472	**Spindle (for R7C2)	
-	1	1			423323	Spindle (See Note**)	
-	1	1			423315	Carrier, Sub-Assembly	
18	1	1			423319	Carrier	
-	1	1			928151	Kit, Carrier Repair	
19	A/R	A/R			893451	*Spacer (.721/.720)	
-	A/R	A/R			893452	*Spacer (.726/.725)	
-	A/R	A/R			423336	*Spacer (.809/.808)	

*Select Spacer for correct fit, use one Spacer per Cluster Gear.

**Note: Check Model No. Tag on front of Hub. If first 4 digits of Model No. are R7C2 use parts marked with **'s. If you need P/N 423327 Hub or 423323 Spindle, an 801150 Rebuilt Hub Assy. should be ordered due to Mfg.'s modifications. P/N 893446 is no longer available, and is replaced by 423470 Hub Sub-Assy. which will update your Hub. Assy. to a R7C2 Tag Level.

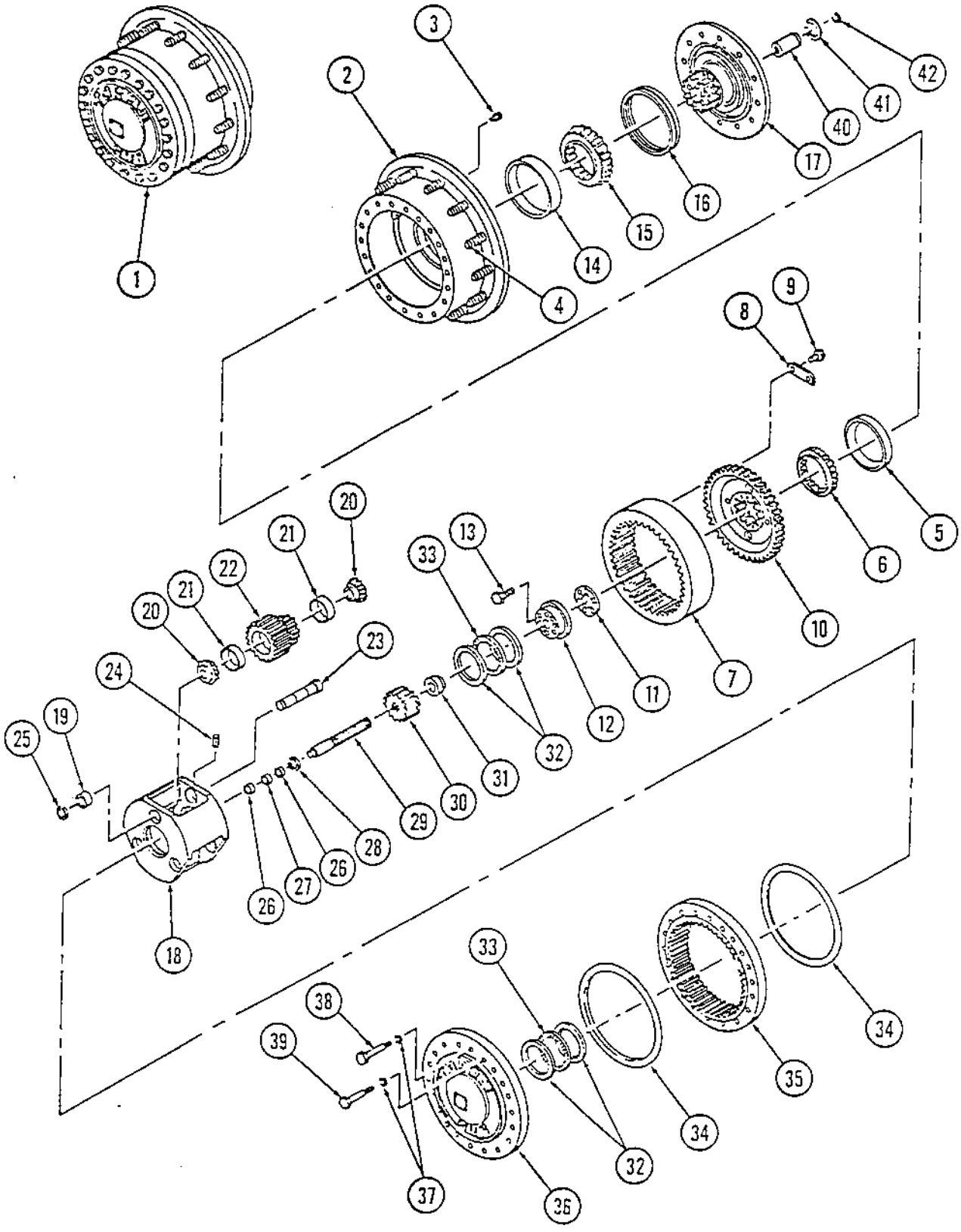
1
2
3
4
5
6
7
8
9
10
11
12
13
14
15
16
17
18
19
20
21
22
23
24
25
26
27
28
29
30
31
32
33
34
35
36
37
38
39
40
41
42

Page	Group	Illustration Number	Catalog Number	Illustration
18	2	PA-15-PL108	PA-15-PL01	Torque Hub Assembly

Ref. No.	Quantity/Model CA 15D	CA 15PD			Part Number	Description	Serial Number
20	6	6			423329	Bearing, Cone	
21	6	6			423328	Bearing, Cup	
22	1	1			423320	Gear Assy. (incl. items 19-25, matched set of 3)	
23	3	3			423316	Shaft, Planet	
24	3	3			423346	Pin, Roll	
25	3	3			423345	Ring, Retaining	
26	2	2			423311	Washer, Thrust	
27	1	1			423310	Bearing, Thrust	
28	1	1			423343	Ring, Retaining	
29	1	1			423309	Shaft, Input	
30	1	1			423314	Gear, Input	
31	1	1			423337	Spacer, Thrust	
32	4	4			423318	Washer, Thrust	
33	2	2			423317	Bearing, Thrust	
34	2	2			423340	O-Ring	
35	1	1			423325	Gear, Ring	
36	1	1			892896	Cover	
37	20	20			423351	Lockwasher	
38	4	4			423348	Bolt, Shoulder	
39	16	16			423347	Bolt	
40	1	1			892475	Coupling	
41	1	1			423344	Ring, Retaining	
42	1	1			423342	Ring, Retaining	

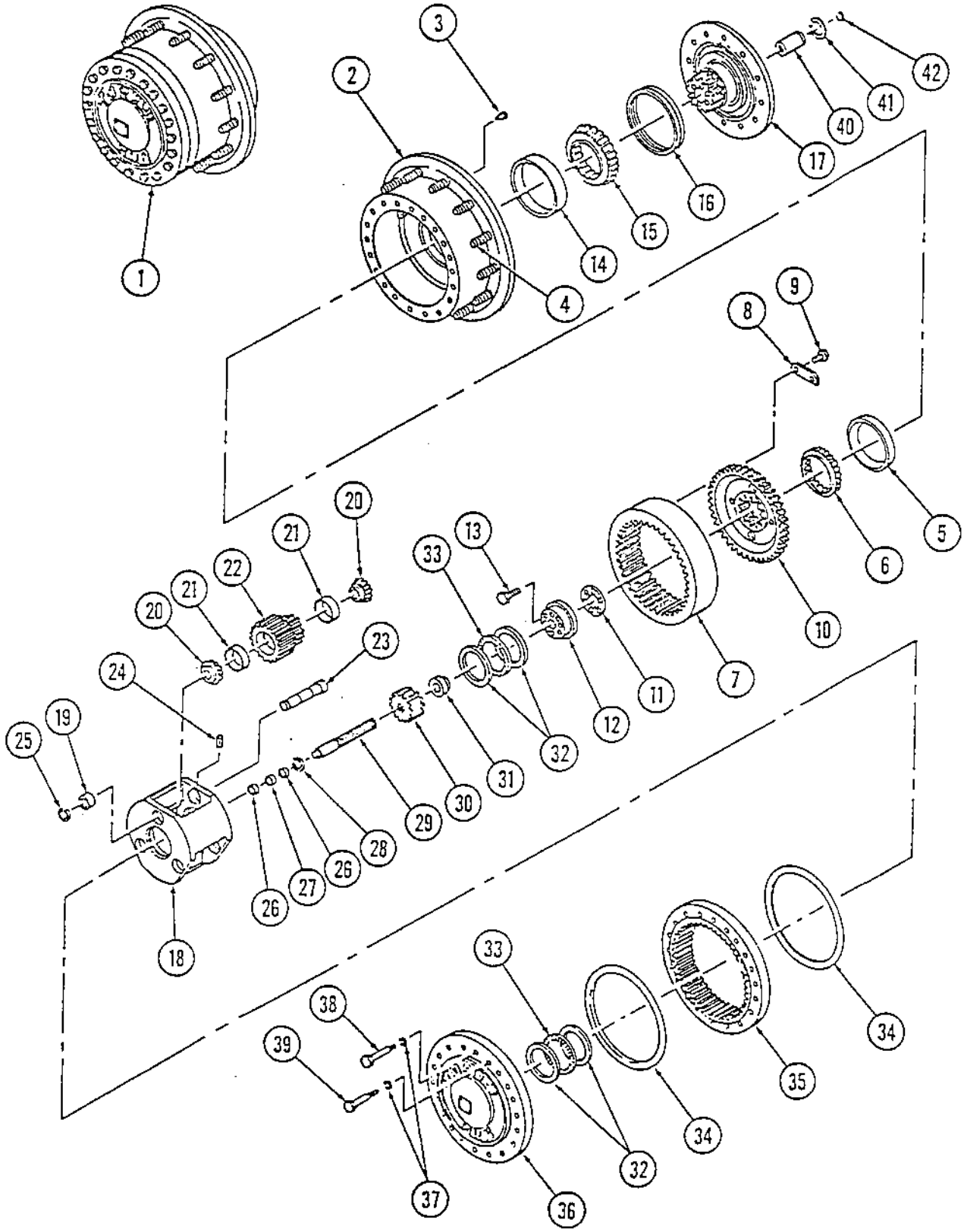
1
2
3
4
5
6
7
8
9
10
11
12
13
14
15
16
17
18
19
20
21
22
23
24
25
26
27
28
29
30
31
32
33
34
35
36
37
38
39
40
41
42

Page	Group	Illustration Number	Catalog Number	Illustration
20	2	PA-15-PL190	PA-15-PL01	Drum Assembly (Padded Drum From S/N 2101 & Up)

Ref. No.	Quantity/Model CA15 PD	Part Number	Description	Serial Number
-	1	266804	Assy., Padded Drum	S/N 2101 & Up
1	1	266800	Shell, Padded Drum	
2	140	266759	Pad	
3	32	500076	Capscrew, HH	
4	24	600011	Washer, Flat	
5	24	343899	Sleeve	
6	6	343955	Bracket, Shock Mount	
7	10	336742	Absorber, Shock	
8	56	500194	Capscrew, HH	
9	64	600009	Washer, Flat	
10	56	586019	Locknut	
11	2	160107	O-Ring	
12	1	343892	Housing, Bearing	
13	16	500102	Capscrew, HH	
14	24	615046	Washer, Conical Spring	
15	1	160362	O-Ring	
16	1	343907	Cover, Bearing	
17	6	500028	Capscrew, HH	
18	6	615044	Washer, Conical Spring	
19	2	114036	Bearing	
20	1	343896	Assy., Eccentric Shaft	
21	1	922552	Plug, Oil Sight Level	
22	1	232247	Plug, Magnetic	
23	1	162017	Washer, Sealing	
24	1	343897	Housing, Bearing	
25	1	167023	Seal	
26	1	343318	Housing, Bearing	
27	8	570008	Hex Nut	
28	1	116041	Bearing	
29	1	160105	O-Ring	

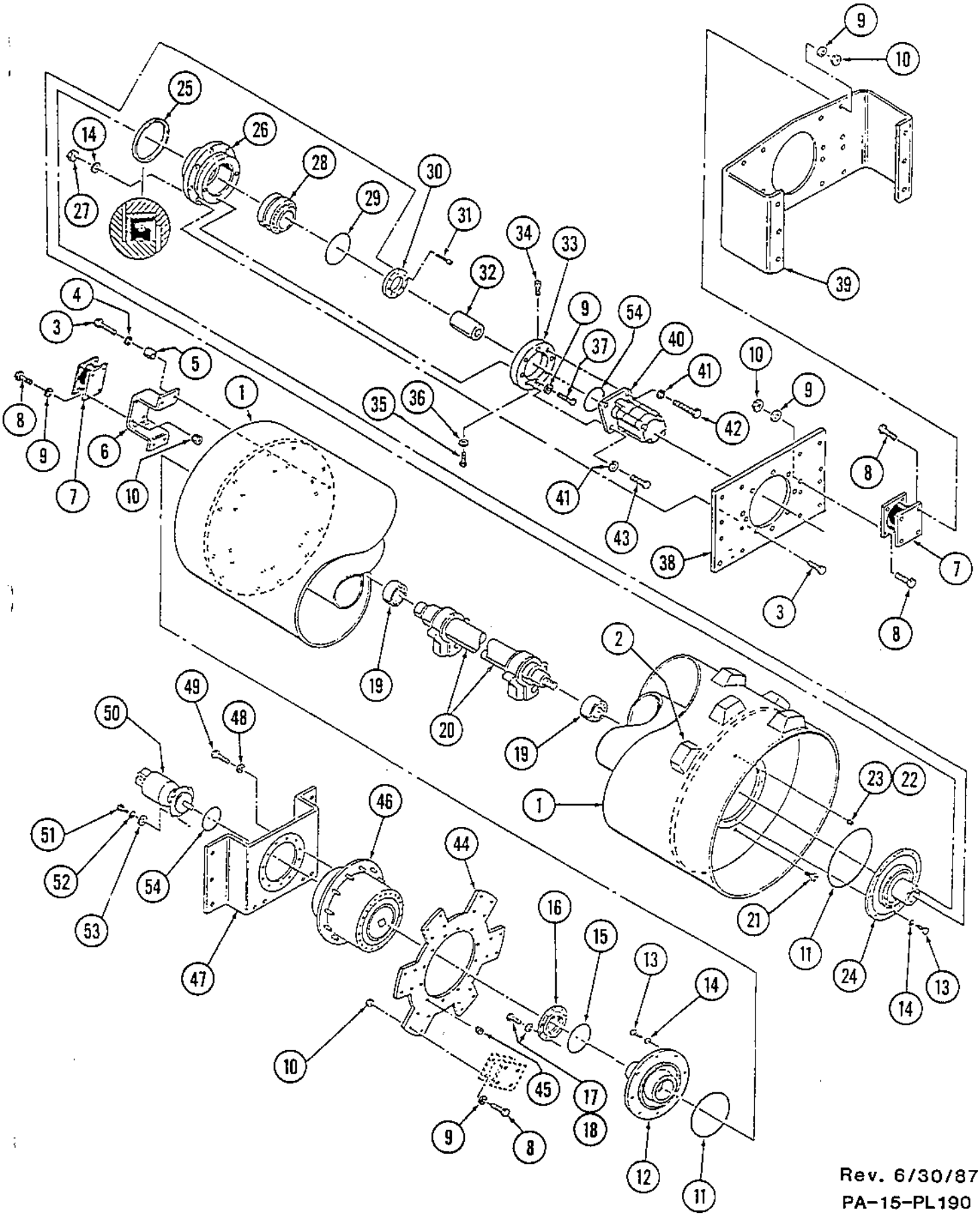

Rev. 6/30/87
PA-15-PL190

Page	Group	Illustration Number	Catalog Number	Illustration
22	2	PA-15-PL190	PA-15-PL01	Drum Assembly (Padded Drum From S/N 2101 & Up)

Ref. No.	Quantity/Model CA15 PD	Part Number	Description	Serial Number
30	1	343462	Clamp, Bearing	
31	8	508019	Capscrew, Soc. Hd.	
32	1	343410	Coupling, Splined	
33	1	343561	Flange, Motor	
34	1	232064	Breather	
35	1	232070	Plug	
36	1	162012	Washer, Sealing	
37	4	500133	Capscrew, HH	
38	1	343322	Plate, Mounting	
39	1	343894	Frame, Shock Mount	
40	1	801054	Assy., Hyd. Vib. Motor	
41	4	604009	Lockwasher	
42	2	500193	Capscrew, HH	
43	2	500051	Capscrew, HH	
44	1	343909	Plate, Drive	
45	12	813694	Hex Nut	
46	1	801150	Assy., Torque Hub	
47	1	842285	Bracket, Mounting	
48	12	615047	Washer, Conical Spring	
49	12	503056	Capscrew, HH	
50	1	801144	Assy., Hyd. Traction Motor	
51	4	502059	Capscrew, HH	
52	4	604030	Lockwasher	
53	4	335545	Washer, Special	
54	2	801413	O-Ring	

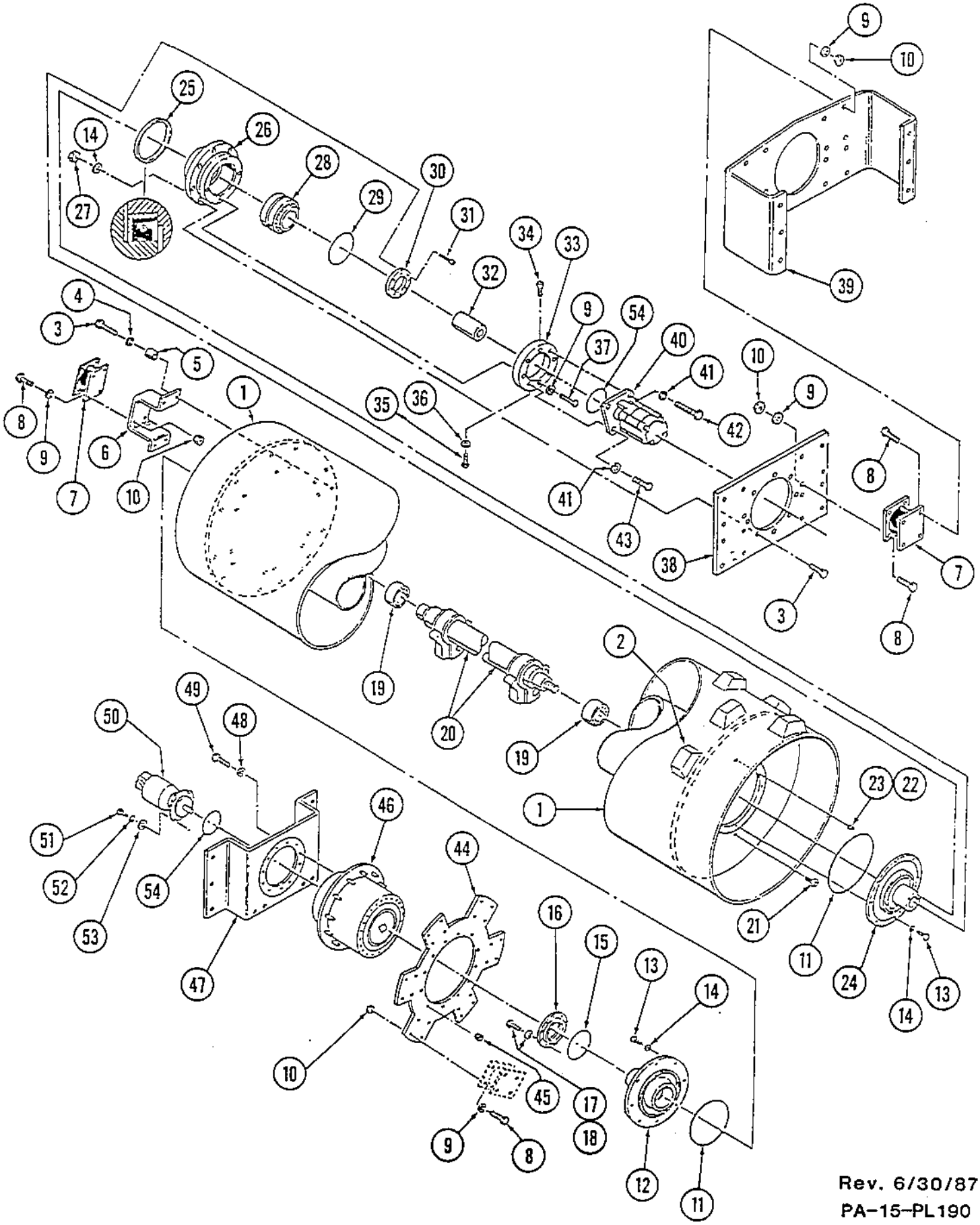

Rev. 6/30/87
PA-15-PL190

DYNAPAC

ENGINE

Engine, John Deere	2
Engine, Ford	4
Engine, Detroit	6
Air Cleaner, Ford & J. Deere Engine	8
Air Cleaner, Detroit Engine	10
Cooling System, J. Deere	12
Cooling System, Ford	14
Cooling System, Detroit	16
Fuel System, J. Deere	18
Fuel System, Ford	20
Fuel System, Detroit	22
Exhaust System, John Deere	24
Exhaust System, Ford	26
Exhaust System, Detroit	28
Pump Drive Assembly	30
Pump Drive, Vibration & Steering	32
Pump Drive, Strike-Off Blade, Detroit to S/N 469	34

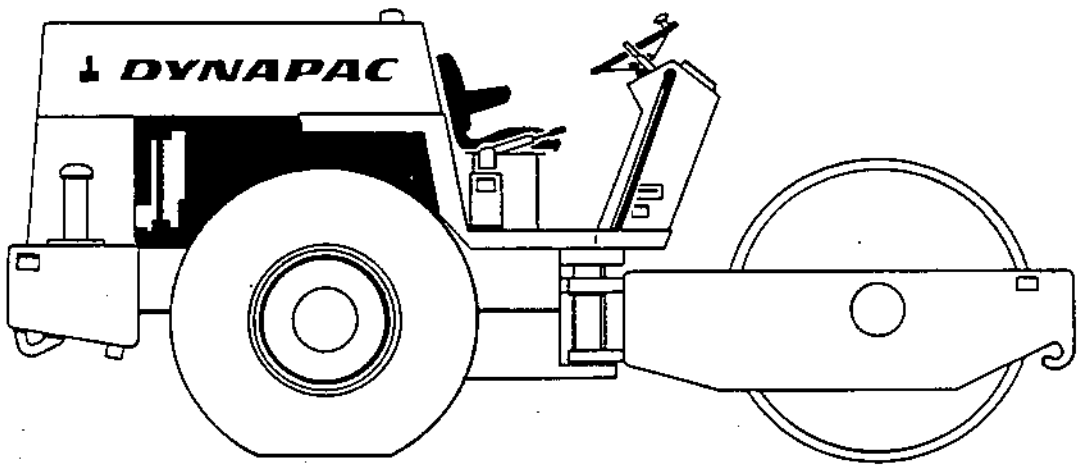

Page	Group	Illustration Number	Catalog Number	Illustration
2	3	PA-15-PL137	PA-15-PL01	Engine, (John Deere)

Ref. No.	Quantity/Model CA 15	CA 15 D	CA 15 PD	Part Number	Description	Serial Number
1	1	1	1	801148	Engine, John Deere	
2	1	1	1	NSS	Fan	
3	4	4	4	502023	Capscrew, HH	
4	4	4	4	604027	Lockwasher	
5	4	4	4	600006	Washer, Flat	
6	1	1	1	NSS	Belt, Fan	
7	1	1	1	NSS	Assy, Alternator	
8	1	1	1	NSS	Regulator, Voltage	
9	1	1	1	NSS	Element, Oil Filter	
10	1	1	1	NSS	Dipstick, Oil Level	
11	1	1	1	NSS	Assy, Starter Motor & Relay	
12	1	1	1	815442	Adapter, Fan	
13	1	1	1	989131	Tang, Tach Drive	1928 to 1931,1936 & Up
14	1	1	1	843156	Assy, Tach Generator	1928 to 1931, 1936 & Up
15	1	1	1	976025	Diode	
16	1	1	1	989078	Sender, Water Temp.	S/N 911 & Up
-	1	1	1	989055	Sender, Water Temp.	To S/N 910
17	1	1	1	813462	Sender, Oil Pessure	
18	1	1	1	801792	Gasket, Tachometer	To 1929, 1932 to 1935
19	1	1	1	801655	Cable, Tachometer	To 1929, 1932 to 1935
20	1	1	1	815439	Support, R.H Engine	1743 & Up
-	1	1	1	815440	Support L.H Engine	To S/N 1742
21	12	12	12	604030	Lockwasher	
22	12	12	12	502062	Capscrew, HH	
23	8	8	8	605007	Washer, Bevel	
24	12	12	12	600010	Washer, Flat	
25	12	12	12	571005	Hex Nut	
26	1	1	1	815951	Mount, Right Rear Engine	
-	1	1	1	815950	Mount, Left Rear Engine	
27	4	4	4	502061	Capscrew, HH	
28	4	4	4	604032	Lockwasher	
29	4	4	4	502077	Capscrew, HH	
30	1	1	1	456039	Cable, Throttle	
31	1	1	1	891141	Handle, T	
32	1	1	1	821497	Bracket, Throttle Cable	1743 & Up
-	1	1	1	821263	Bracket, Throttle Cable	To S/N 1742
33	1	1	1	457100	Ball Joint, Throttle Cable	
34	1	1	1	572001	Hex Nut	

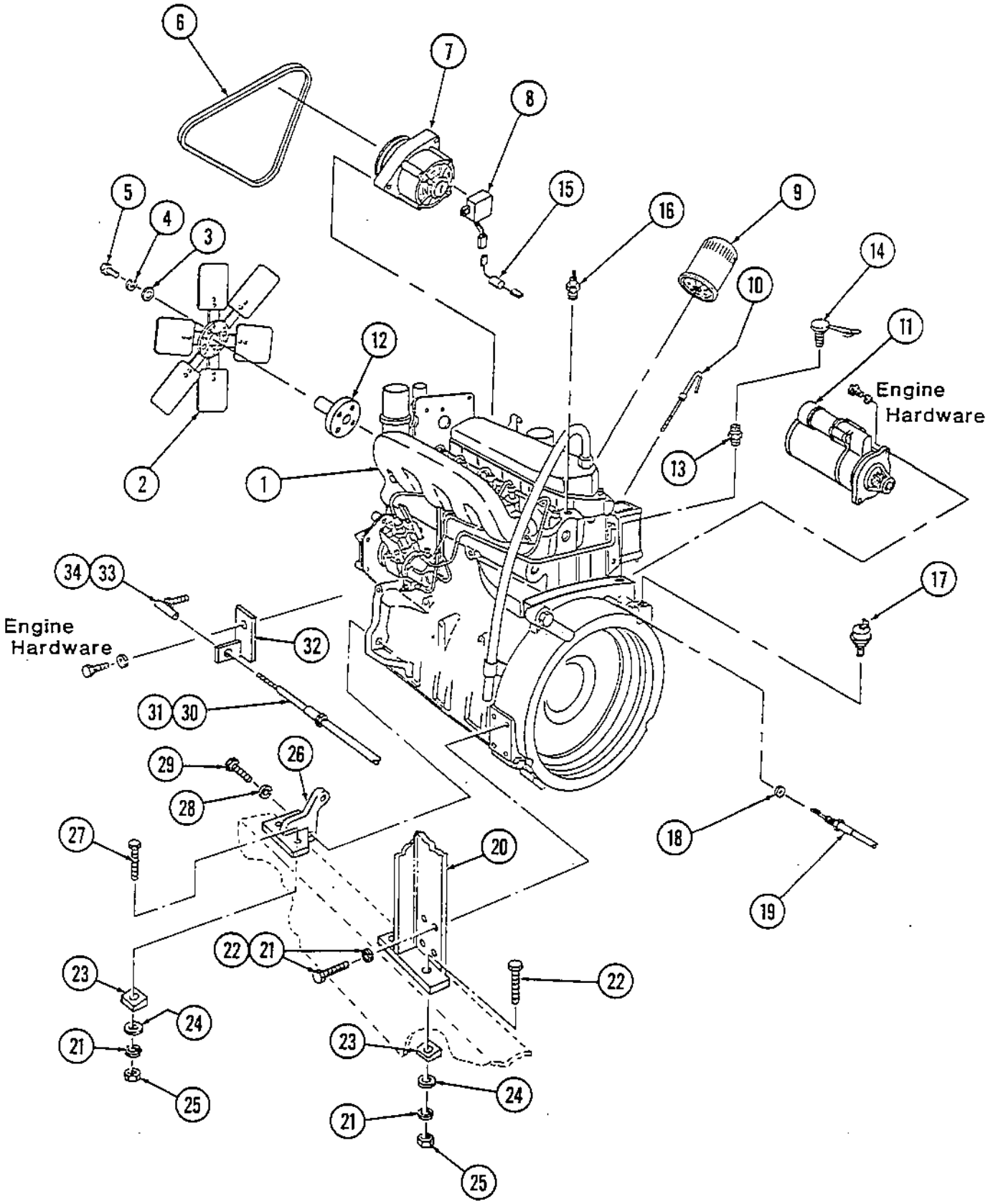

PA-15-PL137

Page	Group	Illustration Number	Catalog Number	Illustration
4	3	PA-15-PL138	PA-15-PL01	Engine, (Ford Diesel)

Ref. No.	Quantity/Model CA 15	CA 15 D	CA 15 PD		Part Number	Description	Serial Number
1	1	1	1		801106	Engine, Ford Diesel	
2	1	1	1		NSS	Assembly, Fan	
3	1	1	1		NSS	Spacer, Fan	
4	1	1	1		NSS	Belt, Generator Drive	
5	1	1	1		NSS	Assembly, Generator	
6	1	1	1		NSS	Element, Oil Filter	
7	1	1	1		NSS	Dipstick, Oil	
8	1	1	1		NSS	Kit, Filter Element	
9	1	1	1		NSS	Assembly, Starter Motor & Relay	
10	1	1	1		801171	Shaft, Flex, Tachometer (Eng. Drive)	
11	12	12	12		502061	Capscrew, HH	
12	4	4	4		605007	Washer, Bevel	
13	12	12	12		604030	Lockwasher	
14	4	4	4		571005	Hex Nut	
15	1	1	1		815314	Support, R.H Engine	
-	1	1	1		815315	Support, L.H Engine	
16	4	4	4		571007	Hex Nut	
17	4	4	4		604033	Lockwasher	
18	4	4	4		502097	Capscrew, HH	
19	1	1	1		813462	Sender, Oil Pressure	
20	1	1	1		801105	Shaft, Flex Tachometer (Gen. Drive)	
21	1	1	1		989078	Sender, Water Temp.	S/N 911 & Up
-	1	1	1		989055	Sender, Water Temp.	To S/N 910
22	2	2	2		456039	Cable, Shutdown & Throttle Contol	
23	1	1	1		891141	Handle, T	
24	1	1	1		630003	Pin, Cotter	
25	1	1	1		801375	Pivot	
26	1	1	1		572009	Hex Nut	
27	1	1	1		813361	Yoke	
28	1	1	1		815310	Bracket, Cable Mounting	
29	1	1	1		815311	Bracket, Cable Mounting	
30	4	4	4		604027	Lockwasher	
31	4	4	4		503015	Capscrew, HH	
32	1	1	1		801247	Clamp, Cable	
33	1	1	1		517046	Capscrew, HH	
34	1	1	1		604026	Lockwasher	
35	1	1	1		571001	Hex Nut	

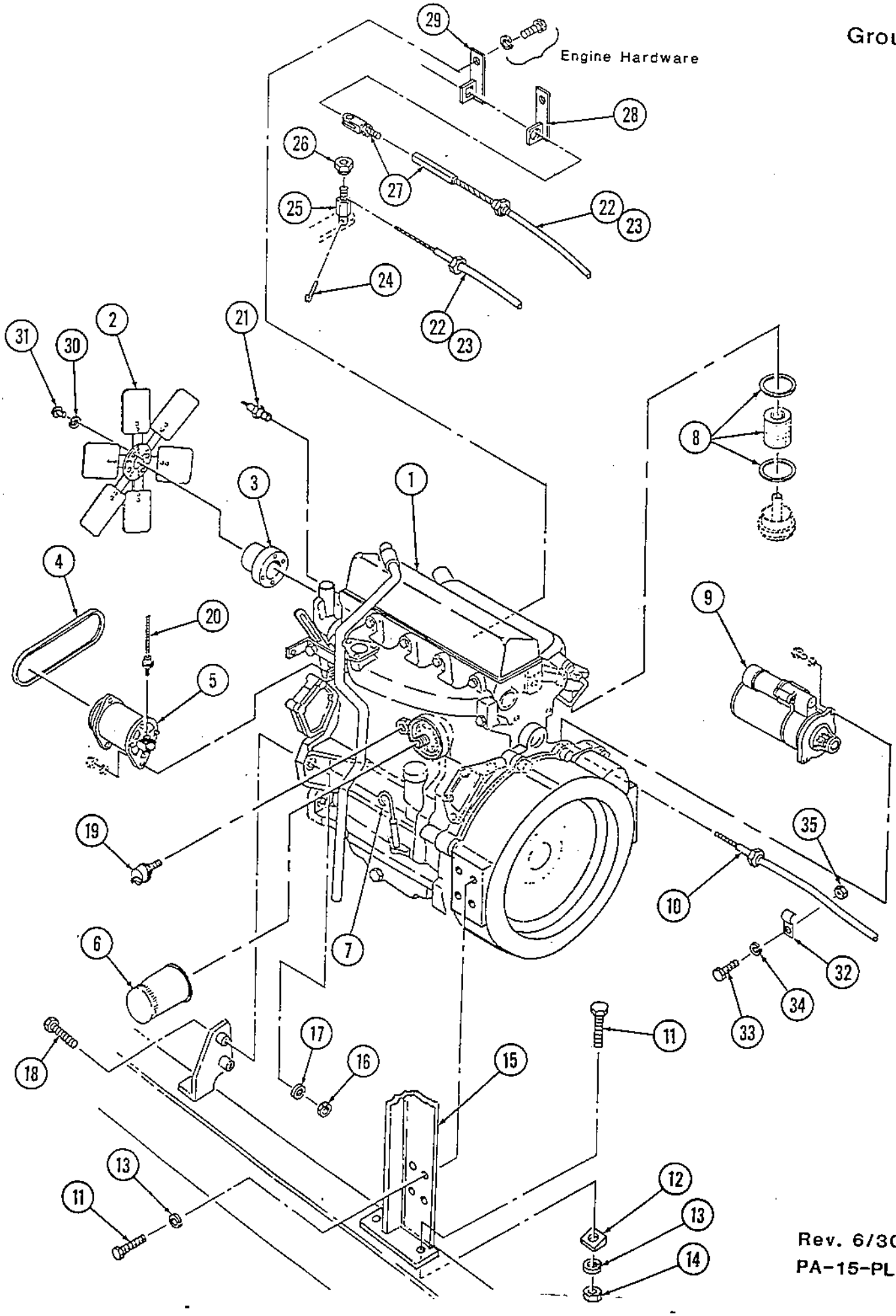
Engine Hardware
1
2
3
4
5
6
7
8
9
10
11
12
13
14
15
16
17
18
19
20
21
22
23
24
25
26
27
28
29
30
31
32
33
34
35

Page	Group	Illustration Number	Catalog Number	Illustration
6	3	PA-15-PL143	PA-15-PL01	Engine (Detroit)

Ref. No.	Quantity/Model CA 15	CA 15 D	CA 15 PD	Part Number	Description	Serial Number
1	1	1	1	801038	Engine, Detroit Diesel	
2	1	1	1	815962	Bracket, Rear Engine	
3	2	2	2	604028	Lockwasher	
4	2	2	2	502130	Capscrew, HH	
5	2	2	2	502054	Capscrew, HH	
6	2	2	2	604029	Lockwasher	
7	2	2	2	600069	Washer, Flat	
8	4	4	4	502061	Capscrew, HH	
9	8	8	8	600010	Washer, Flat	
10	8	8	8	605007	Washer, Bevel	
11	8	8	8	604030	Lockwasher	
12	8	8	8	571005	Hex Nut	
13	12	12	12	502062	Capscrew, HH	
14	1	1	1	815043	Support, RH Engine	
-	1	1	1	815044	Support, LH Engine	
15	1	1	1	813462	Switch, Oil Pressure	
16	1	1	1	456060	Shaft, Flex Tachometer	To S/N 1741
17	1	1	1	457083	Key,Tachometer Shaft	To S/N 1741
18	1	1	1	843156	Assy., Tach. Generator	S/N 1742 & up
19	1	1	1	989131	Tang, Tach. Drive	S/N 1742 & up
20	1	1	1	456028	Cable, Throttle Control	See Group 7
21	1	1	1	891141	Handle, T	
22	1	1	1	815035	Link, Throttle Cable	
23	1	1	1	335658	Capscrew, HH Throttle Pivot	
24	1	1	1	604027	Lockwasher	
25	1	1	1	801622	Sender, Water Temp	
26	1	1	1	456069	Cable, Throttle Stop	See Note 1
27	1	1	1	801377	Clamp	To 1007 & 1010
28	2	2	2	502002	Capscrew, HH	
29	2	2	2	504026	Lockwasher	
30	2	2	2	571001	Hex Nut	
31	1	1	1	801186	Stop, Throttle	See Note 1
32	1	1	1	550080	Screw, Rd. Hd.	
33	1	1	1	604019	Lockwasher	
34	1	1	1	815506	Bracket, Cable	
35	1	1	1	813313	Clamp	
36	1	1	1	NSS	Cable, Engine Stop	
37	1	1	1	815933	Bracket, Throttle Cable	
38	2	2	2	502035	Capscrew, HH	
39	2	2	2	604028	Lockwasher	
40	2	2	2	600007	Washer, Flat	

Note 1: Quantity of 2 used to S/N 1007 & 1010

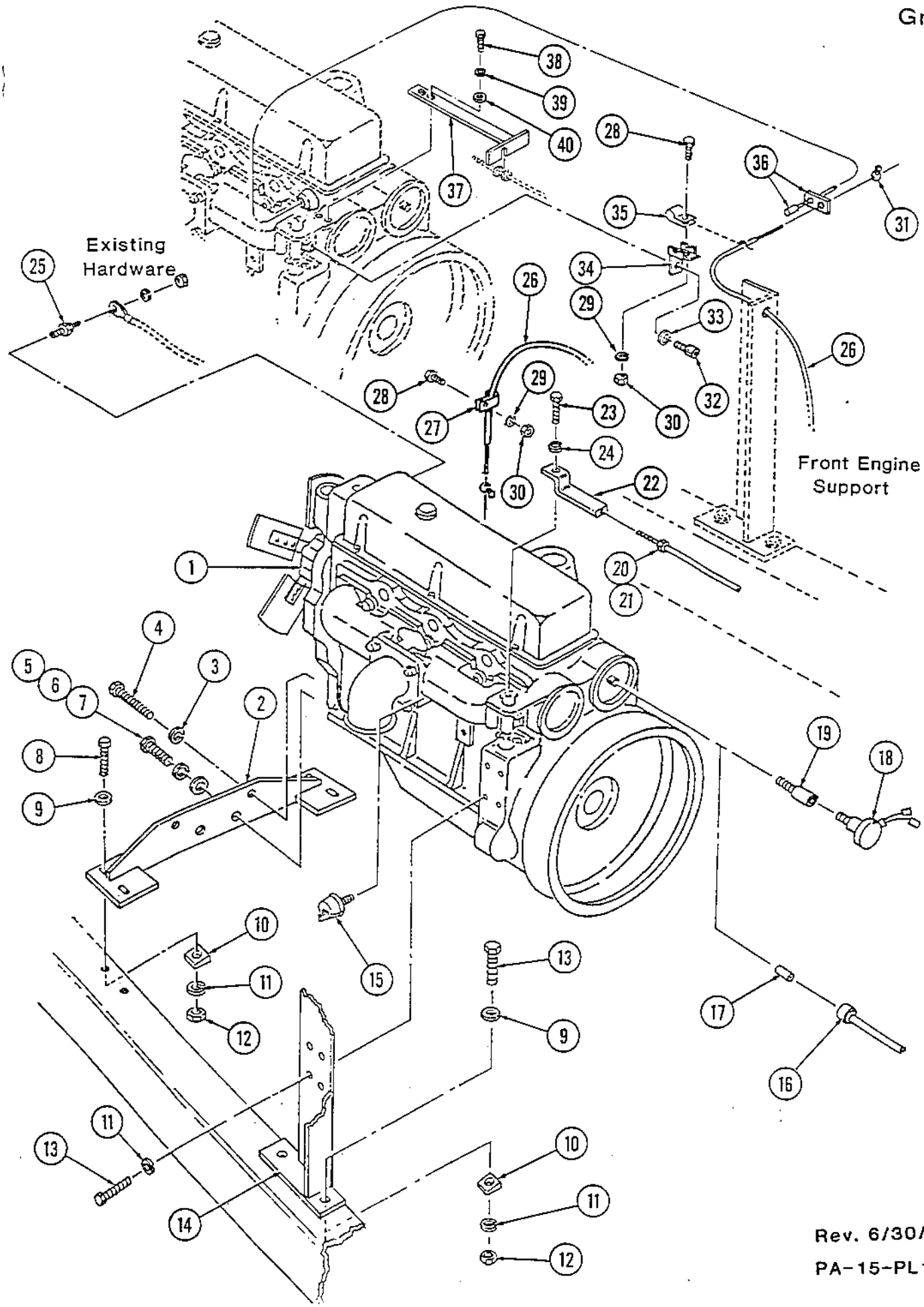
Existing Hardware
Front Engine Support

Page	Group	Illustration Number	Catalog Number	Illustration
8	3	PA-15-PL104	PA-15-PL01	Air Cleaner Assembly (Ford & J. Deere Engine)

Ref. No.	Quantity/Model CA 15	15D	15PD	Part Number	Description	Serial Number
1	2	2	2	499133	Strap, Mounting	
2	4	4	4	502016	Capscrew, HH	
3	4	4	4	604027	Lockwasher	
4	1	1	1	499134	Assembly, Air Cleaner	
5	1	1	1	499369	Assy., Cup	
6	1	1	1	499368	Baffle, Skirt	
7	1	1	1	891510	Assy., Clamp	
8	1	1	1	891518	Assy., Nut & Gasket	
9	1	1	1	891528	Element, Air Cleaner	
10	1	1	1	891521	Body, Air Cleaner	
11	1	1	1	499317	Pre Cleaner	
12	4	4	4	313023	Clamp, Hose	
13	1	1	1	801468	Reducer, Hump	
14	1	1	1	80158502	Adapter, Air Inlet	
15	1	1	1	801467	Elbow, Air Cleaner	

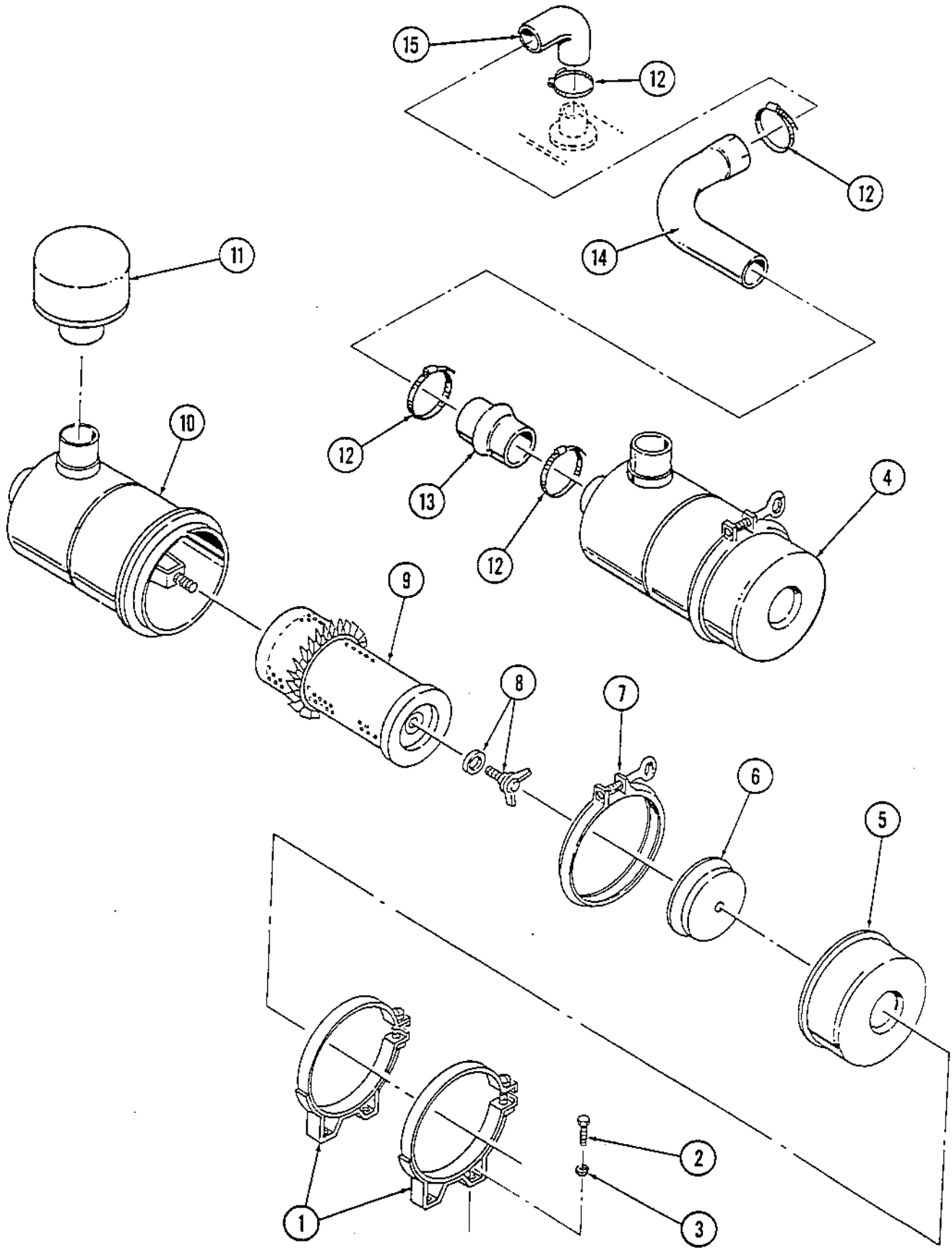
15
12
12
14
11
10
12
13
12
4
9
8
7
6
5
2
1
3

Page	Group	Illustration Number	Catalog Number	Illustration
10	3	PA-15-PL103	PA-15-PL01	Air Cleaner Assembly (Detroit Engine)

Ref. No.	Quantity/Model CA				Part Number	Description	Serial Number
	15	15D	15PD				
1	2	2	2		813791	Strap, Mounting	
2	8	8	8		604027	Lockwasher	
3	4	4	4		502016	Capscrew, HH	
4	1	1	1		499225	Assemby, Air Cleaner	
5	1	1	1		891523	Assy., Cup	
6	1	1	1		499240	O-Ring	
7	1	1	1		893524	Assy., Baffle	
8	1	1	1		893228	Assy., Clamp	
9	1	1	1		499489	Assy., Nut & Gasket	
10	1	1	1		499313	Element, Air Cleaner	
11	1	1	1		499476	Body, Air Cleaner	
12	1	1	1		813792	Assy., Pre Cleaner	
13	1	1	1		891530	Clamp	
14	2	2	2		921121	Clamp, Hose	
15	1	1	1		801179	Hose, Hump	
16	1	1	1		815507	Tube, Air Cleaner	
17	4	4	4		502018	Capscrew, HH	

DYNAPAC
DYNAPAC MFG INC

SERVICE INFORMATION

SI-024-5-16-77

TO: All Dynapac "B" Dealers

ATTN: Service Manager

FROM: J. Sawchuck, Service Manager

SUBJECT: Rigid Air Intake Kits
Models CA-15, CA-25, CC-50

In our current production of the above models which utilize Caterpillar and GM engines, we have discontinued the use of the #63SB-4" flexible hose air intake and are now using systems designed with solid rubber elbows and steel tubing. This provides more rigidity and safety for the engine air intake. The serial number breakdown of the start of these new systems are as as follows:

Model CA-15	GM	S/N 745 & 748 & Up
Model CA-25	GM	S/N 1550 & Up
Model CA-25	Cat	S/N 1531 to 1536, 1538 & Up
Model CC-50	Cat	S/N 316 & Up

These new systems are now set up in kit form for field installation as noted below and are comprised of all tubes, elbows and clamps necessary for each model.

Model	Engine	Kit No.	List Price
CA-15	GM	~~875578~~	
CA-25	GM	~~826264~~	
CA-25	Cat	~~826263~~	
CC-50	Cat	~~850641~~	

KITS NO LONGER AVAILABLE. YOU MUST ORDER ALL PARTS ON P. 64 EXCEPT AIR CLEANER.

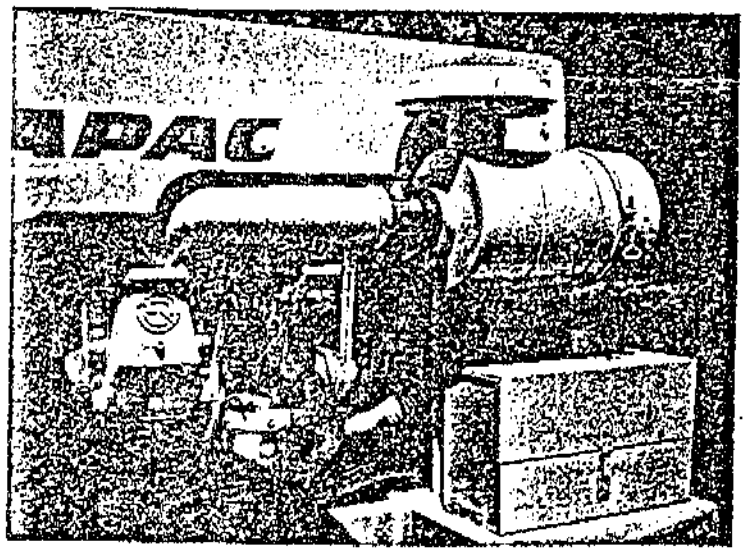

CA-15
RIGID AIR
INTAKE

MAILING ADDRESS
P.O. Box 368
Stanhope, N.J. 07874

SHIPPING ADDRESS
Kelly Place
Stanhope, N.J. 07874

TELEPHONE
201-347-0700

CABLE ADDRESS
Dynapac Stanhope

TELEX
13-6481
DYN STPE

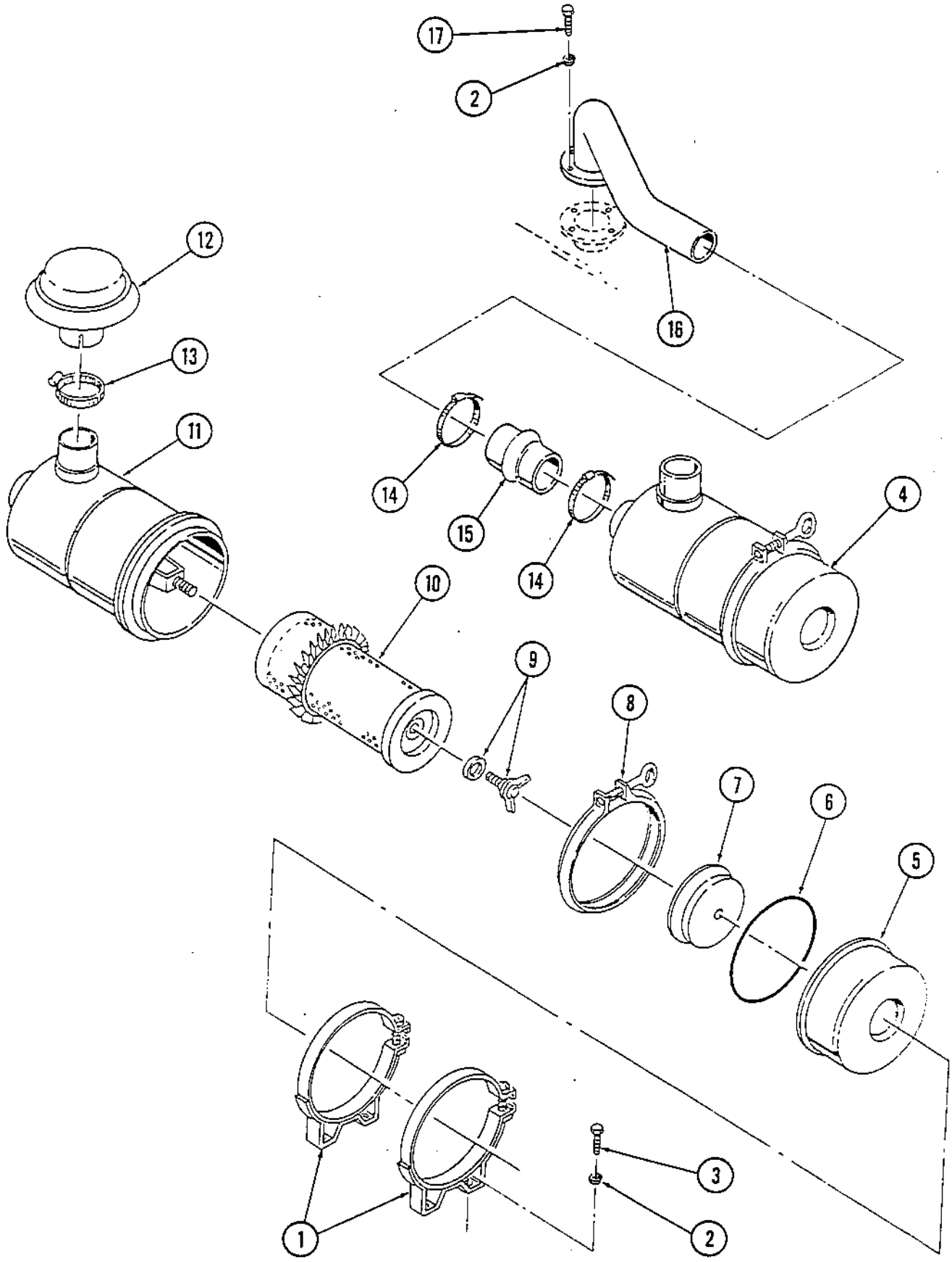

Rev. 6/30/87
PA-15-PL103

Page	Group	Illustration Number	Catalog Number	Illustration
12	3	PA-15-PL129	PA-15-PL01	Cooling System (J. Deere Engine)

Ref. No.	Quantity/Model CA 15	15D	15PD		Part Number	Description	Serial Number
1	1	1	1		815441	Assy., Radiator & Oil Cooler	
2	15	15	15		502004	Capscrew, HH	
3	15	15	15		604026	Lockwasher	
4	1	1	1		815970	Guard, Fan	
5	9	9	9		600005	Washer, Flat	
6	1	1	1		571001	Hex Nut	
7	1	1	1		815444	Shroud, Fan	
8	1	1	1		815858	Assy., Oil Cooler	
9	1	1	1		801149	Radiator	
10	1	1	1		891440	Cap, Pressure	
11	4	4	4		600007	Washer, Flat	
12	4	4	4		502035	Capscrew, HH	
13	4	4	4		604028	Lockwasher	
14	4	4	4		571003	Hex Nut	
15	1	1	1		813306	Petcock, Drain	
16	4	4	4		313076	Clamp, Hose	
17	1	1	1		499228	Hose	
18	1	1	1		745015	Hose	

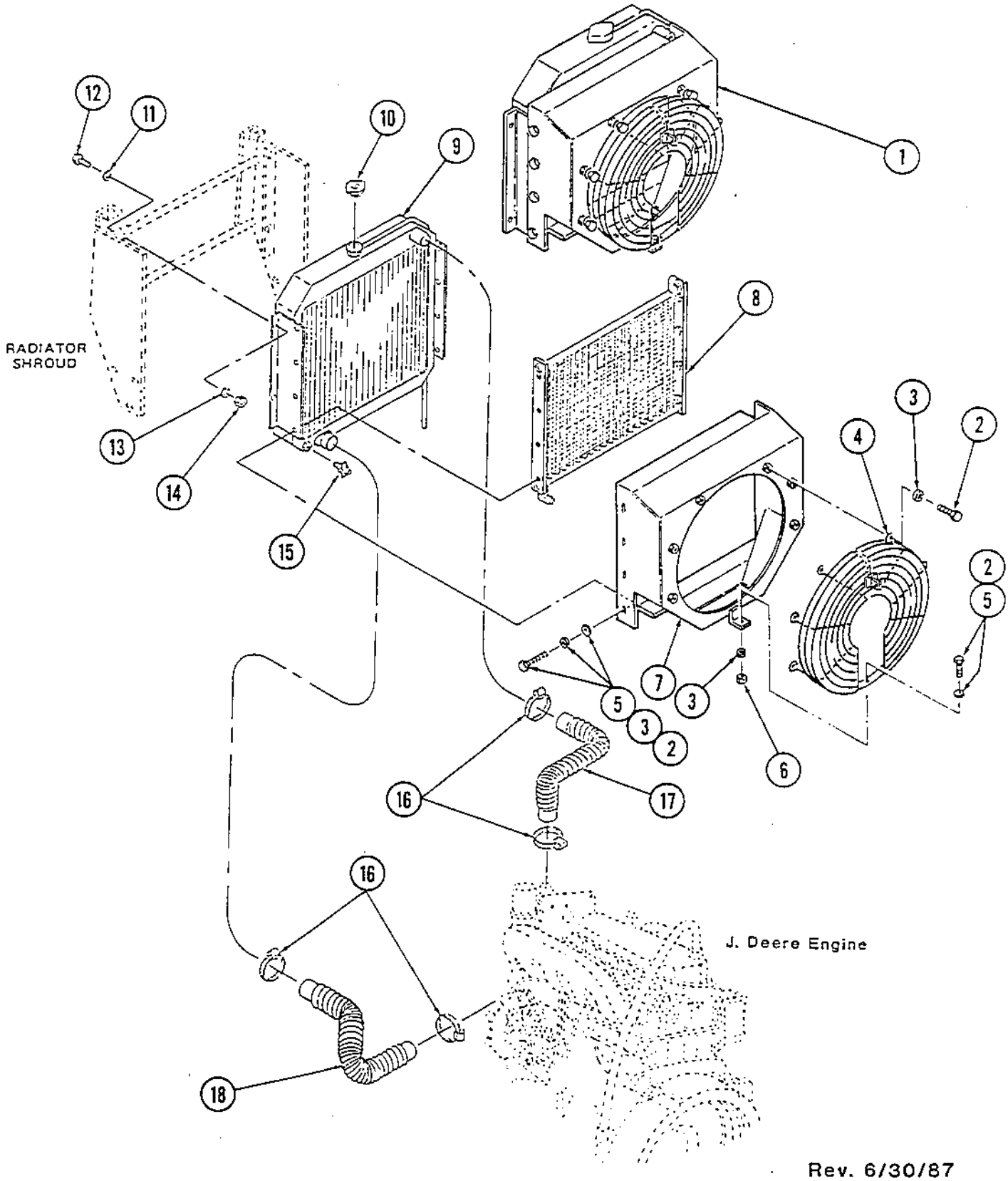
RADIATOR SHROUD
J. Deere Engine

Page	Group	Illustration Number	Catalog Number	Illustration
14	3	PA-15-PL130	PA-15-PL01	Cooling System (Ford Eng.)

Ref. No.	Quantity/Model CA 15	CA 15 D	CA 15 PD	Part Number	Description	Serial Number
1	1	1	1	815335	Assy., Radiator & Oil Cooler	
2	1	1	1	801164	Radiator	
3	1	1	1	891440	Cap, Pressure	
4	1	1	1	815858	Cooler, Oil	
5	1	1	1	815283	Shroud	
6	8	8	8	892351	Capscrew, HH washer	
7	8	8	8	891591	Lockwasher	
8	2	2	2	801246	Clamp, Hose	
9	1	1	1	499228	Hose	
10	2	2	2	813311	Clamp, Hose	
11	1	1	1	745053	Hose	
12	1	1	1	813306	Petcock, Drain	
13	4	4	4	571003	Hex Nut	
14	4	4	4	604028	Lockwasher	
15	4	4	4	600007	Washer, Flat	
16	4	4	4	502035	Capscrew, HH	

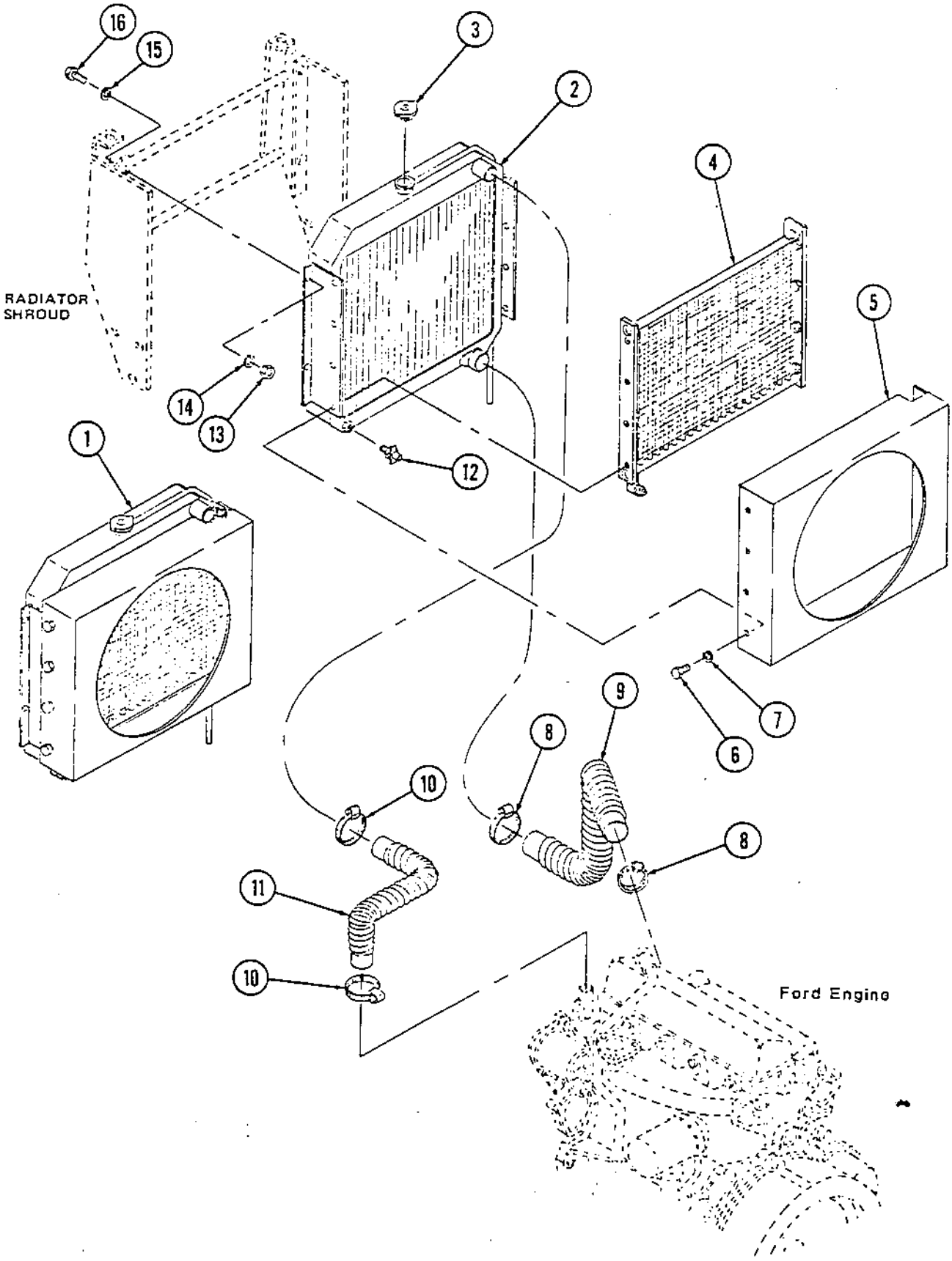
16
15
3
2
4
5
RADIATOR
SHROUD
14
13
12
1
9
8
7
6
10
8
11
10
Ford Engine

PA-15-PL130

Page	Group	Illustration Number	Catalog Number	Illustration
16	3	PA-15-PL128	PA-15-PL01	Cooling System (Detroit Eng.)

Ref. No.	Quantity/Model CA 15	CA 15 D	CA 15 PD		Part Number	Description	Serial Number
1	1	1	1		815859	Assy., Radiator & Oil Cooler	
2	1	1	1		801164	Radiator	
3	1	1	1		891440	Cap, Pressure	
4	1	1	1		815858	Cooler, Oil	
5	1	1	1		815631	Shroud	
6	8	8	8		502004	Capscrew, HH	
7	8	8	8		604026	Lockwasher	
8	8	8	8		600005	Washer, Flat	
9	1	1	1		499228	Hose	
10	4	4	4		813311	Clamp, Hose	
11	1	1	1		499227	Hose	
12	1	1	1		813306	Petcock, Drain	
13	4	4	4		571003	Hex Nut	
14	4	4	4		604028	Lockwasher	
15	4	4	4		600007	Washer, Flat	
16	4	4	4		502035	Capscrew, HH	

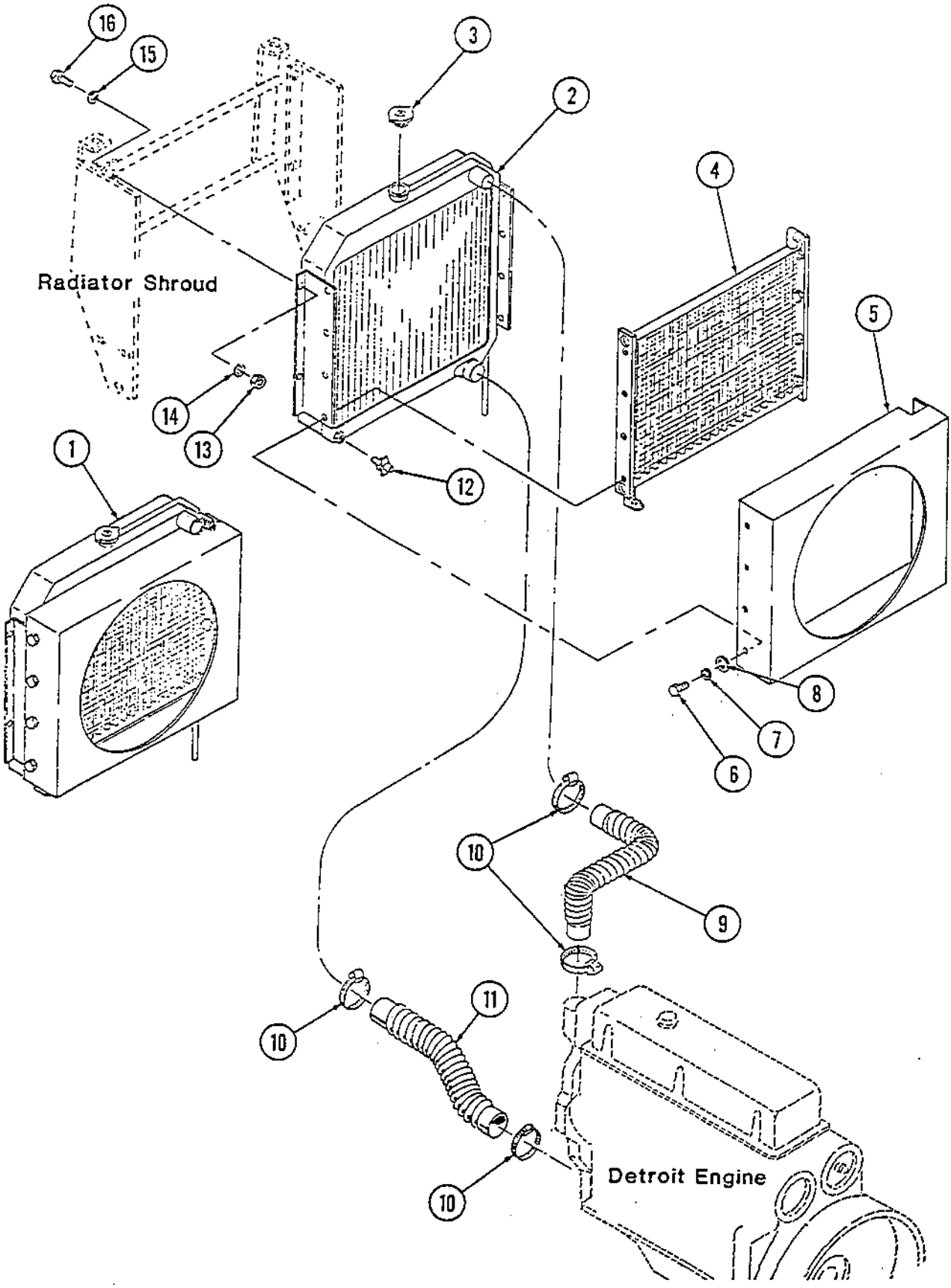
16
15
3
2
4
Radiator Shroud
5
14
13
1
12
8
7
6
10
9
11
10
10
Detroit Engine

PA-15-PL128

Page	Group	Illustration Number	Catalog Number	Illustration
18	3	PA-15-PL122	PA-15-PL01	Fuel System (John Deere Eng.)

Ref. No.	Quantity/Model CA 15	15 D	15 PD	Part Number	Description	Serial Number
1	1	1	1	923297	Petcock	See Note 1
2	1	1	1	334453	Bushing, Reducer	See Note 1
3	1	1	1	850145	Gasket	See Note 1
-	A/R	A/R	A/R	801266	Caulking, Clear Silicone Compound	See Note 1
4	1	1	1	826262	Filler & Cap Assy.	See Note 1
5	1	1	1	80153305	Cap, Fuel	See Note 1
-	1	1	1	813467	Cap, Fuel Tank	See Note 1
6	8	8	8	502036	Capscrew, HH	See Note 1
7	8	8	8	801272	Washer, Sealing	See Note 1
8	1	1	1	813391	Plug, Magnetic	
9	2	2	2	815597	Pipe, Fuel	See Note 2
10	1	1	1	813315	Gasket, Sender	
11	1	1	1	813314	Sender, Fuel Level	
12	5	5	5	550028	Screw, Rd. Hd.	
13	5	5	5	604019	Lockwasher	
14	2	2	2	813320	Elbow, 90°	
15	1	1	1	334447	Bushing	
16	1	1	1	234571	Connector, Male	
17	2	2	2	813075	Clamp, Hose	
18	1	1	1	205069	Hose, Fuel Return	
19	1	1	1	815052	Hose, Fuel Supply	
20	1	1	1	921129	Clamp, Duplex	
21	2	2	2	502002	Capscrew, HH	
22	1	1	1	813716	Clamp	
23	1	1	1	813323	Connector, Male	
24	1	1	1	234574	Elbow,90°	
25	1	1	1	821477	Tube, Fuel	

NOTE 1: S/N 877, 883 to 885, 887 to 892, 902 & Up. Fuel Cap 813467 used prior to above S/N's.

NOTE 2: From S/N 902 & up. For S/N's before 902 use P/N 813322.

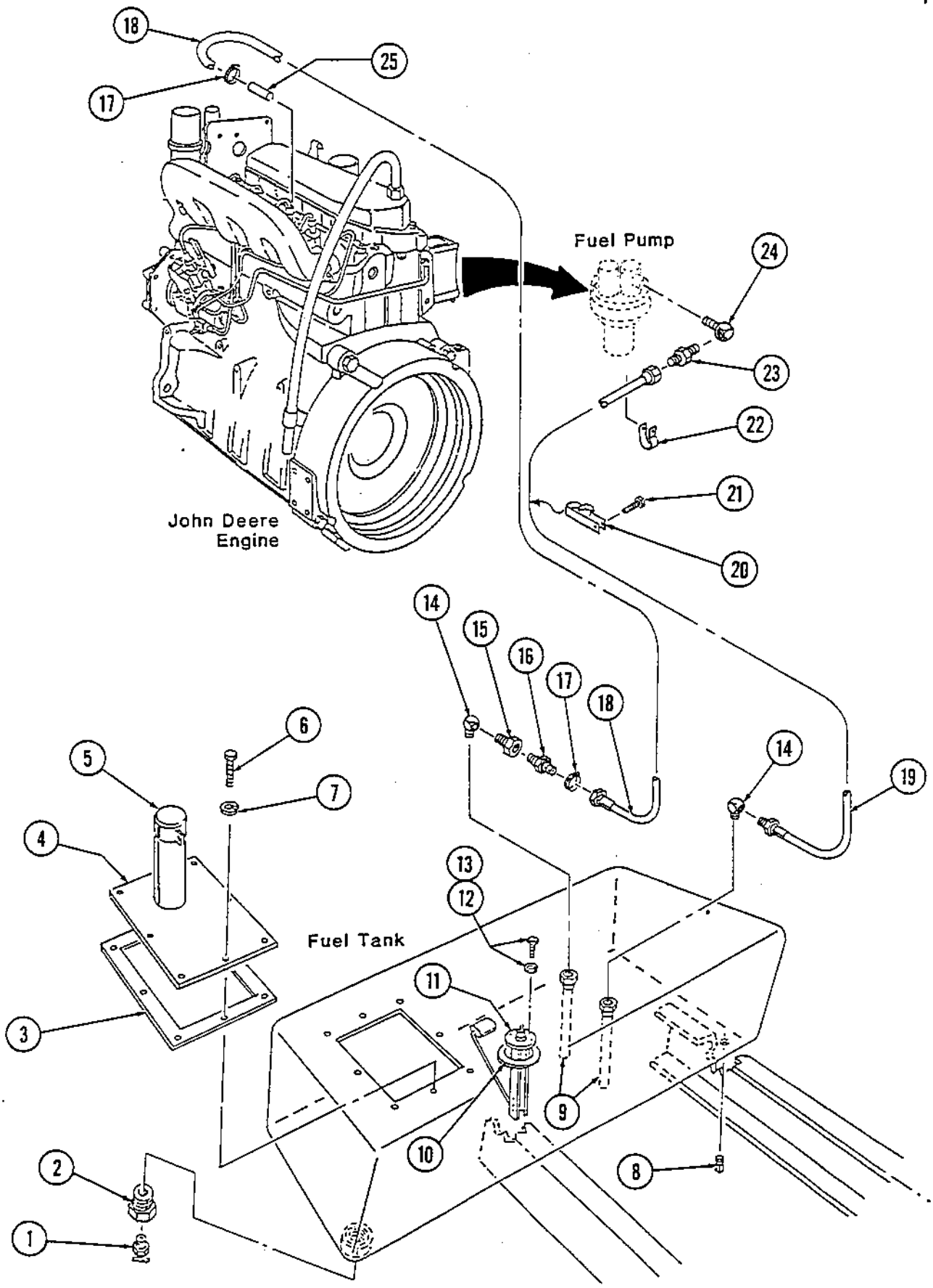
18
25
17
Fuel Pump
24
23
22
21
20
John Deere
Engine
14
15
16
17
18
14
19
6
5
7
4
13
12
Fuel Tank
11
3
9
10
2
8
1

PA-15-PL122

Page	Group	Illustration Number	Catalog Number	Illustration
20	3	PA-15-PL124	PA-15-PL01	Fuel System (Ford Engine)

Ref. No.	Quantity/Model CA 15	CA 15 D	CA 15 PD	Part Number	Description	Serial Number
1	1	1	1	923297	Petcock	See Note 1
2	1	1	1	334453	Bushing, Reducer	See Note 1
3	1	1	1	850145	Gasket	See Note 1
-	A/R	A/R	A/R	801266	Caulking, Clear Silicone Compound	See Note 1
4	1	1	1	826262	Filler & Cap Assy.	See Note 1
5	1	1	1	80153305	Cap, Fuel	See Note 1
-	1	1	1	813467	Cap, Fuel Tank	See Note 1
6	8	8	8	502036	Capscrew, HH	See Note 1
7	8	8	8	801272	Washer, Sealing	See Note 1
8	1	1	1	813391	Plug, Magnetic	
9	2	2	2	815597	Pipe, Fuel	See Note 2
10	1	1	1	813315	Gasket, Sender	
11	1	1	1	813314	Sender, Fuel Level	
12	5	5	5	550028	Screw, Rd. Hd.	
13	5	5	5	604019	Lockwasher	
14	2	2	2	813320	Elbow 90°	See Note 1
15	1	1	1	334451	Connector, Male	
16	6	6	6	813075	Clamp, Hose	
17	1	1	1	205110	Hose, Fuel Line	
18	1	1	1	334450	Connector, Male	
19	1	1	1	244043	Fuel Line (66" Lg. or 168 cm)	
20	1	1	1	334448	Tube, Fuel	
21	2	2	2	502004	Capscrew, HH	
22	2	2	2	604026	Lockwasher	
23	1	1	1	499415	Pump, Fuel	
24	2	2	2	334452	Elbow, 90°	
25	1	1	1	205069	Hose, Fuel Line (49½" Lg. or 126 cm)	
26	1	1	1	334448	Connector, Male	

NOTE 1: S/N 877, 883 to 885, 887 to 892, 902 & Up. Fuel Cap 813467 used prior to above S/N's.

NOTE 2: From S/N 902 & up. For S/N's before 902 use P/N 813322

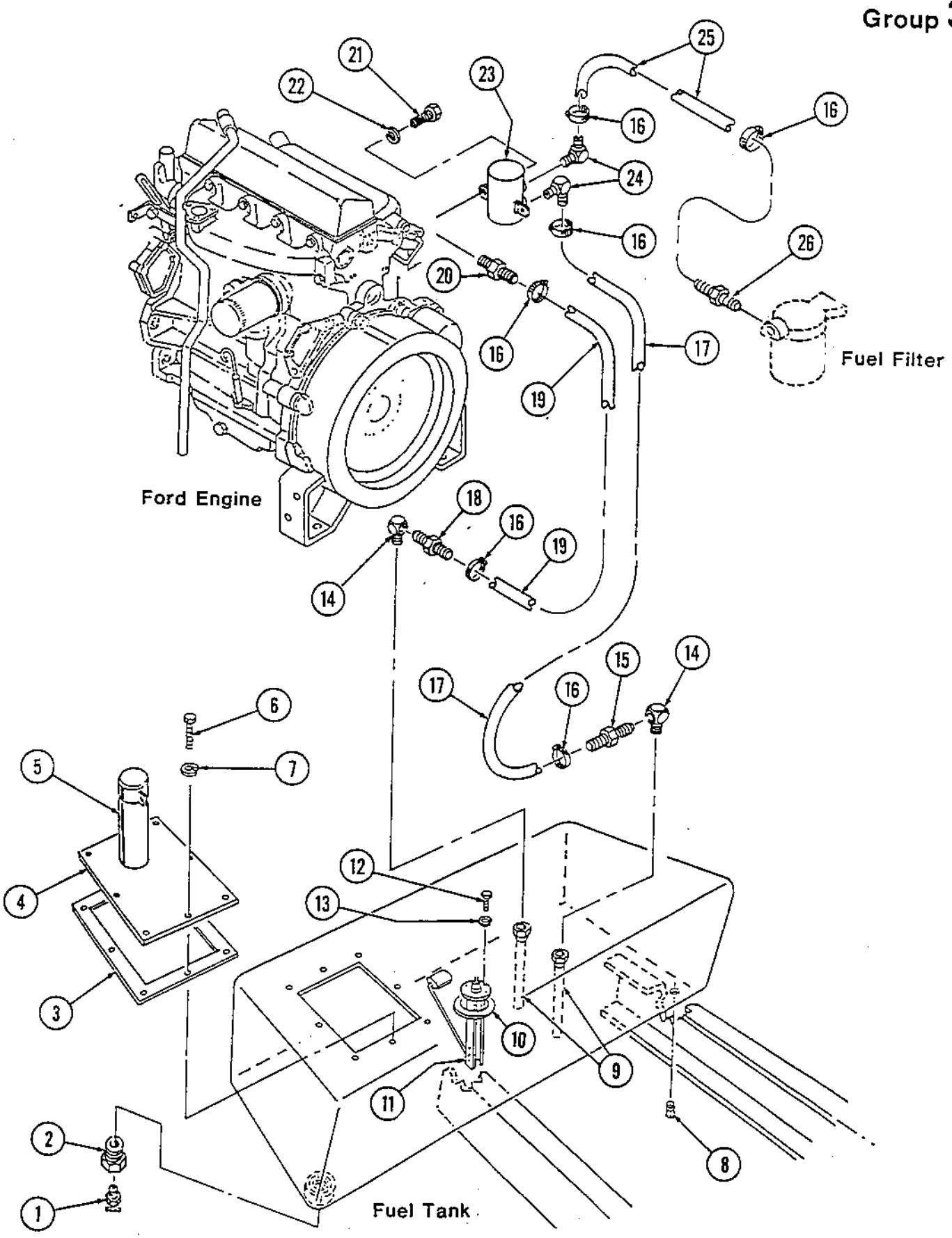

PA-15-PL124

Page	Group	Illustration Number	Catalog Number	Illustration
22	3	PA-15-PL123	PA-15-PL01	Fuel System (Detroit Eng.)

Ref. No.	Quantity/Model CA 15	CA 15 D	CA 15 PD		Part Number	Description	Serial Number
1	1	1	1		923297	Petcock	See Note 1
2	1	1	1		334453	Bushing, Reducer	See Note 1
3	1	1	1		850145	Gasket	See Note 1
-	A/R	A/R	A/R		801266	Caulking, Clear Silicone Compound	See Note 1
4	1	1	1		826262	Filler & Cap Assy.	See Note 1
5	1	1	1		80153305	Cap, Fuel	See Note 1
-	1	1	1		813467	Cap, Fuel Tank	See Note 1
6	8	8	8		502036	Capscrew, HH	See Note 1
7	8	8	8		801272	Washer, Sealing	See Note 1
8	1	1	1		813391	Plug, Magnetic	
9	2	2	2		815597	Pipe, Fuel	See Note 2
10	1	1	1		813315	Gasket, Sender	
11	1	1	1		813314	Sender, Fuel Level	
12	5	5	5		550028	Screw, Rd. Hd.	
13	5	5	5		604019	Lockwasher	
14	2	2	2		813320	Elbow, 90°	See Note 1
15	1	1	1		234276	Connector, Male	
16	1	1	1		815053	Fuel Line, Return	
17	1	1	1		815052	Fuel Line, Supply	
18	1	1	1		331087	Elbow, 90°	

NOTE 1: S/N 877, 883 to 885, 887 to 892, 902 & Up. (Fuel Cap 813467 used prior to above S/N's.)
NOTE 2: From S/N 902 & up. For S/N's before 902 use P/N 813322.

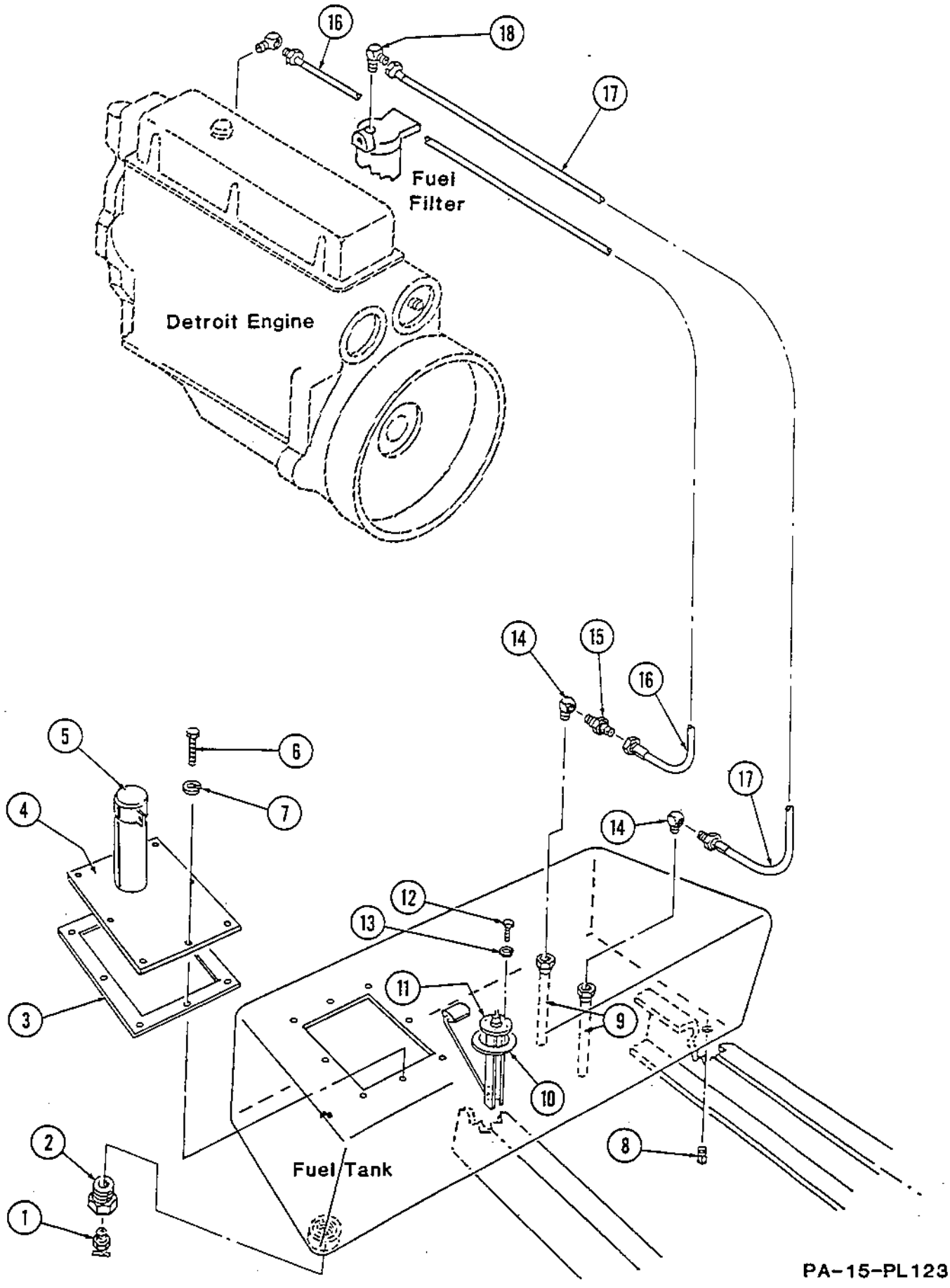
16
18
17
Fuel
Filter
Detroit Engine
14
15
16
17
5
6
7
4
14
12
13
11
9
3
10
2
8
1
Fuel Tank

PA-15-PL123

Page	Group	Illustration Number	Catalog Number	Illustration
24	3	PA-15-PL187	PA-15-PL01	Exhaust System, J.Deere

Ref. No.	Quantity/Model CA 15	15D	15PD		Part Number	Description	Serial Number
1	1	1	1		801058	Muffler	
2	2	2	2		815069	Strap, Muffler	
3	4	4	4		502037	Capscrew, HH	
4	4	4	4		605006	Washer, Bevel	
5	6	6	6		604028	Lockwasher	
6	6	6	6		571003	Hex Nut	
7	1	1	1		815456	Pipe,45° Exhaust	
8	1	1	1		801470	Gasket, Exhaust Pipe	
9	1	1	1		921136	U-Clamp	
10	1	1	1		815249	Exhaust Pipe, Flexible	
11	1	1	1		921097	U-Clamp	
12	2	2	2		502038	Capscrew, HH	

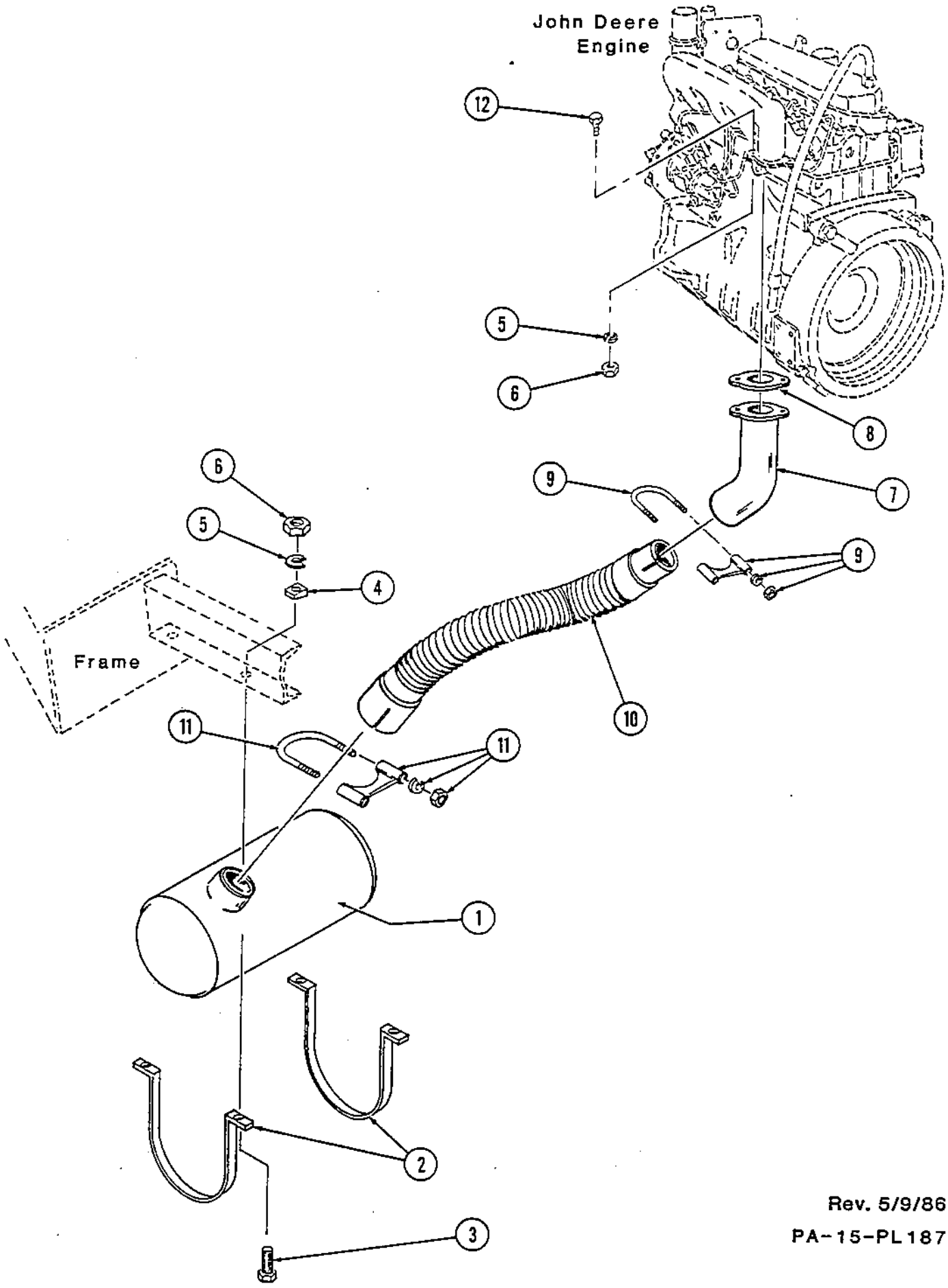

Rev. 5/9/86

PA-15-PL187

Page	Group	Illustration Number	Catalog Number	Illustration
26	3	PA-15-PL188	PA-15-PL01	Exhaust System, Ford

Ref. No.	Quantity/Model CA				Part Number	Description	Serial Number
	15	15D	15PD				
1	1	1	1		801058	Muffler	
2	2	2	2		815303	Spacer, Muffler	
3	2	2	2		815069	Strap, Muffler	
4	4	4	4		502039	Capscrew, HH	
5	4	4	4		605006	Washer, Bevel	
6	4	4	4		604028	Lockwasher	
7	4	4	4		571003	Hex Nut	
8	2	2	2		921136	U-Clamp	
9	1	1	1		815430	Elbow, 45°	
10	1	1	1		815249	Exhaust Pipe	
11	1	1	1		921097	U-Clamp	

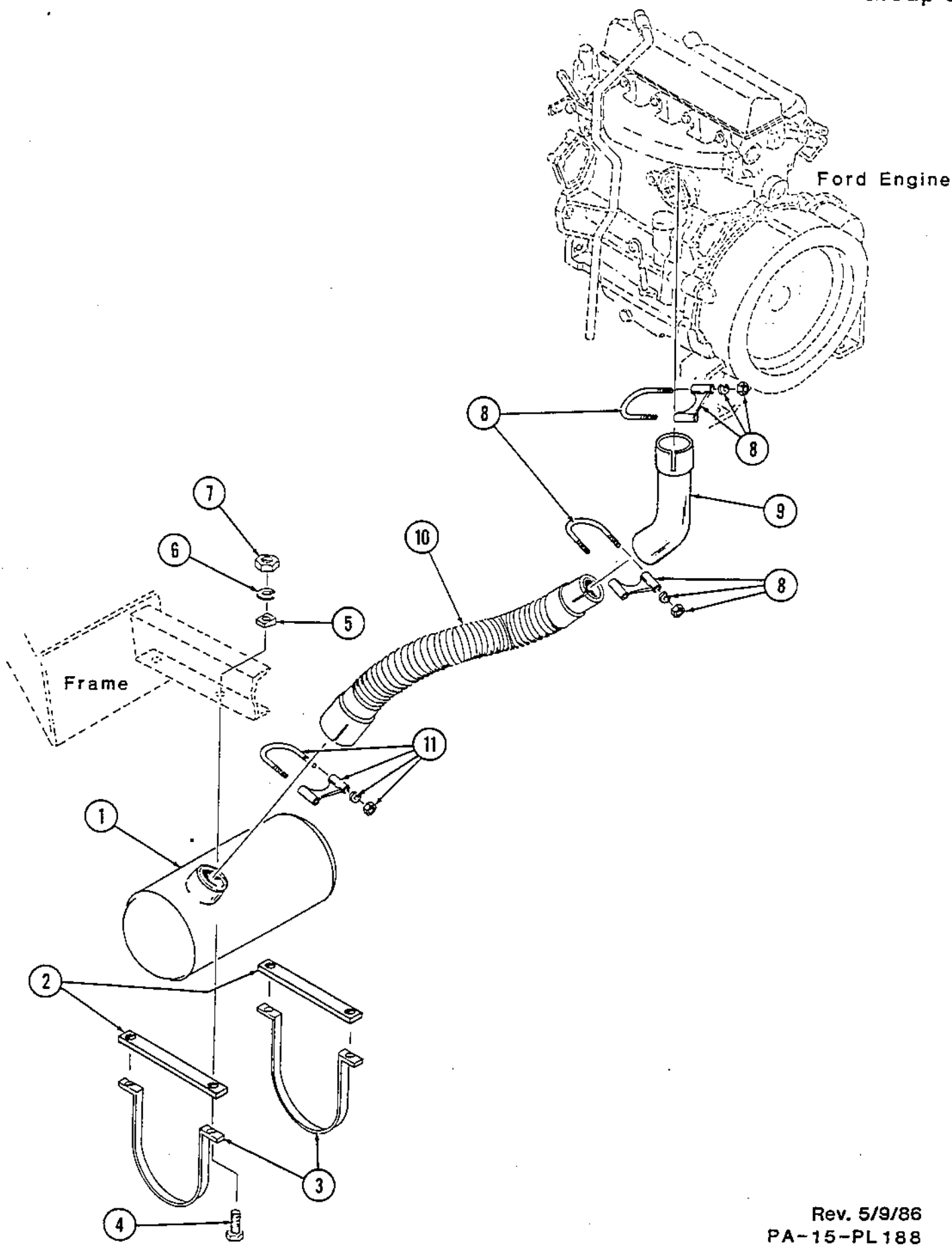
Ford Engine
Frame
1
2
3
4
5
6
7
8
8
8
9
10
11

Page	Group	Illustration Number	Catalog Number	Illustration
28	3	PA-15-PL186	PA-15-PL01	Exhaust System, Detroit

Ref. No.	Quantity/Model CA 15	CA 15D	CA 15PD		Part Number	Description	Serial Number
1	1	1	1		801058	Muffler	
2	2	2	2		815069	Strap, Muffler	
3	4	4	4		502037	Capscrew, HH	
4	4	4	4		605007	Washer, Bevel	
5	4	4	4		604028	Lockwasher	
6	4	4	4		571003	Hex Nut	
7	1	1	1		921098	Clamp, V-Band	
8	1	1	1		815085	Exhaust Pipe	
9	1	1	1		921097	U-Clamp	

Engine, Detroit Diesel

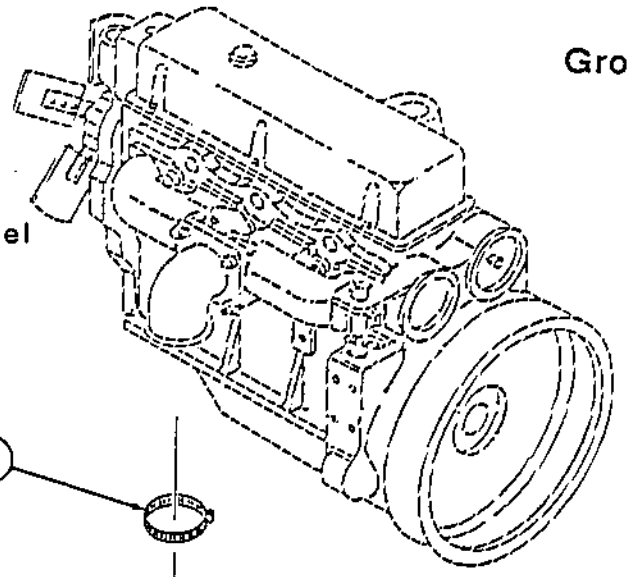

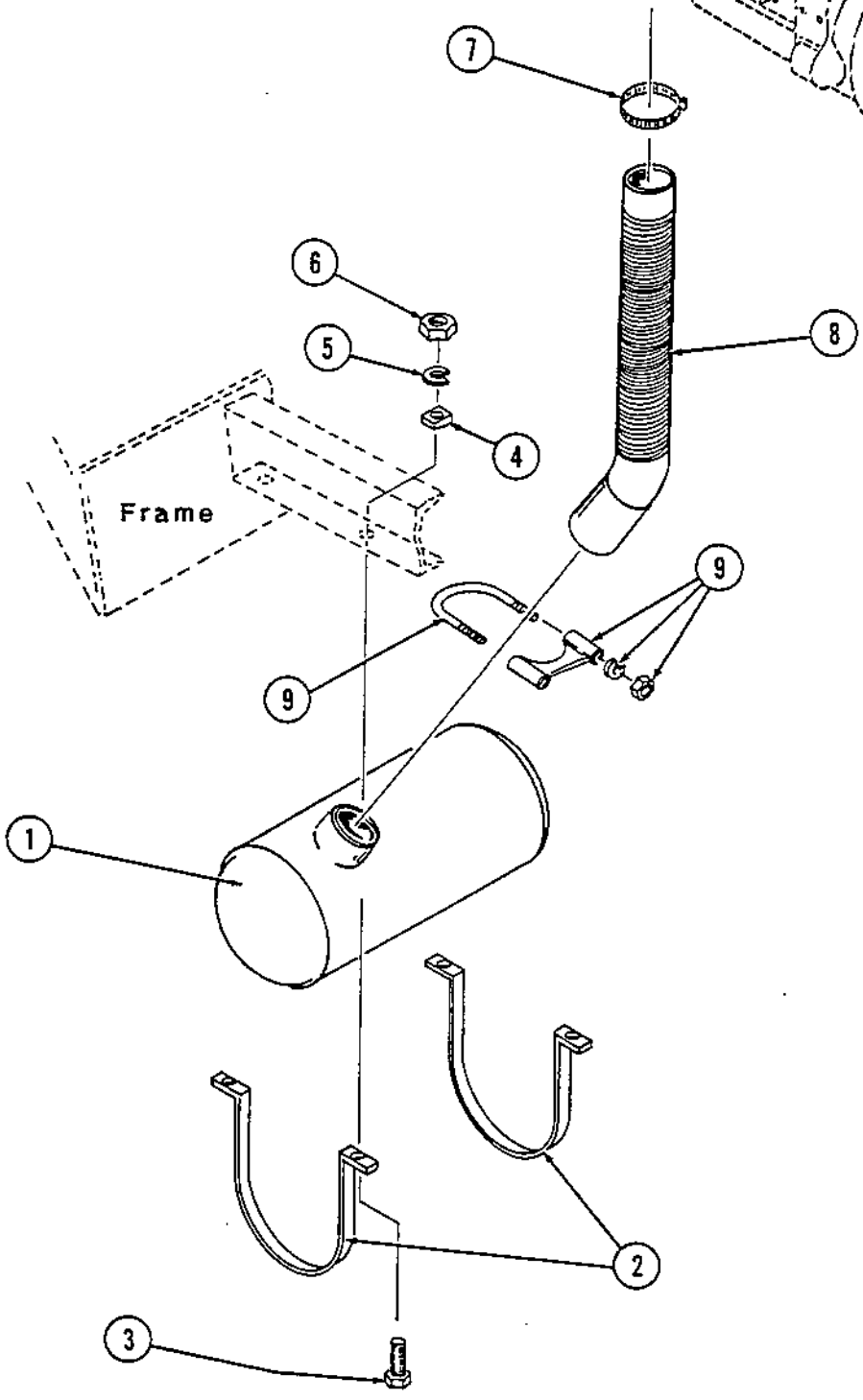

Page	Group	Illustration Number	Catalog Number	Illustration
30	3	PA-15-PL140	PA-15-PL01	Pump Drive Assembly (Detroit, Ford, J. Deere)

Ref. No.	Quantity/Model CA 15	CA 15 D	CA 15 PD	Part Number	Description	Serial Number
1	1	1	1	480283	Assembly, Drive Plate (Detroit Eng.)	
2	8	8	8	604028	Lockwasher	
3	8	8	8	502033	Capscrew, HH	
4	1	1	1	480282	Adapter, Engine	
5	4	4	4	571007	Hex Nut	
6	4	4	4	604033	Lockwasher	
7	4	4	4	502092	Capscrew, HH	
8	12	12	12	604028	Lockwasher	
9	12	12	12	502035	Capscrew, HH	
10	1	1	1	813599	Adapter, Pump "C"	
11	1	1	1	813647	O-Ring, Traction Pump	
12	1	1	1	416067	Shaft, Direct Drive	
13	1	1	1	801051	Pump, Traction (See Group 5)	
14	4	4	4	502060	Capscrew, HH	
15	4	4	4	335545	Washer, Special Flat	
16	4	4	4	604030	Lockwasher	
17	1	1	1	480919	Assy., Drive Plate (Ford & J. Deere Eng.)	
18	6	6	6	604028	Lockwasher	
19	6	6	6	502033	Capscrew, HH	

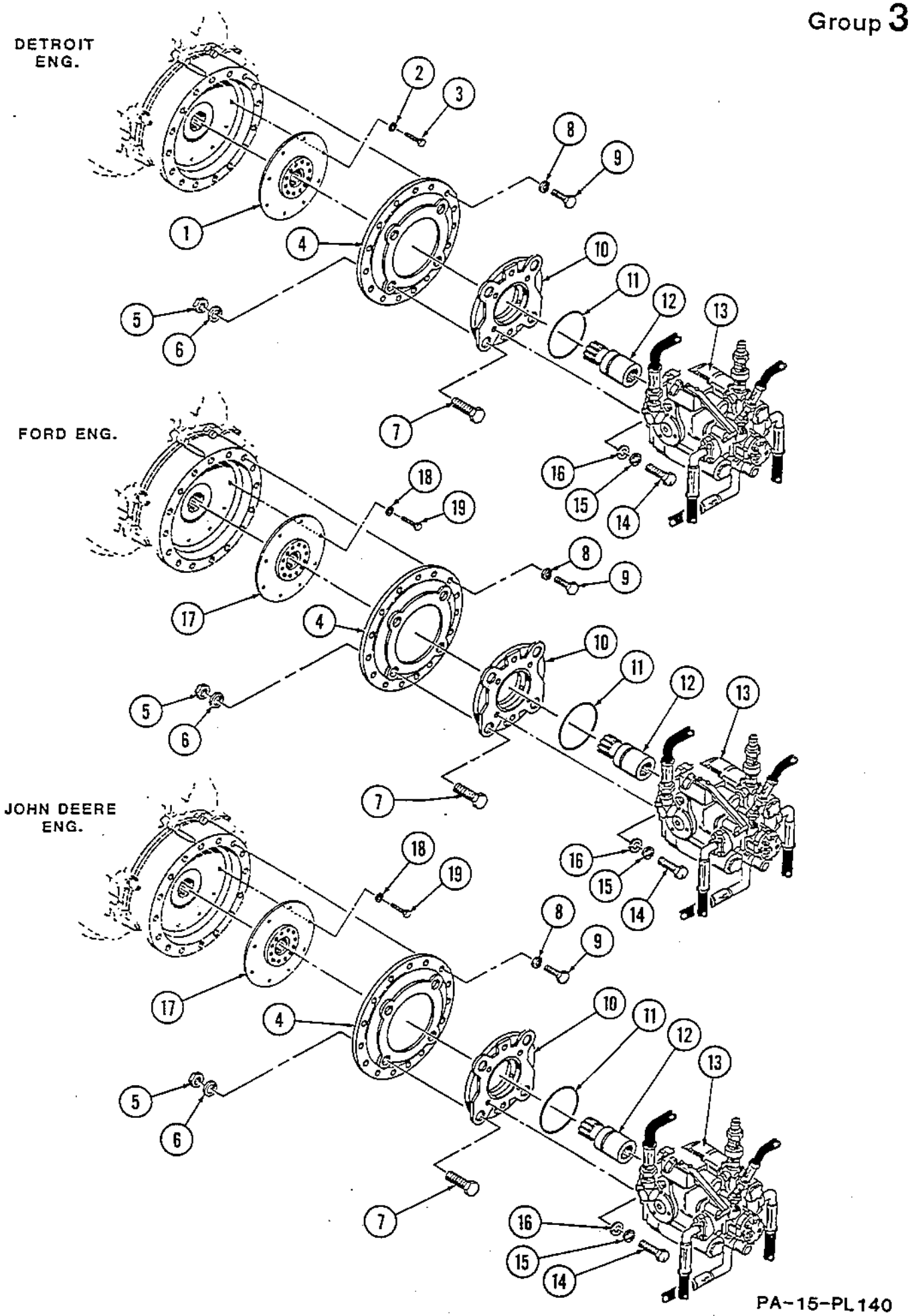
DETROIT ENG.
FORD ENG.
JOHN DEERE ENG.
1
2
3
4
5
6
7
8
9
10
11
12
13
14
15
16
17
18
19

PA-15-PL140

Page	Group	Illustration Number	Catalog Number	Illustration
32	3	PA-15-PL139	PA-15-PL01	Pump Drive Assembly (Vibration & Steering)

Ref. No.	Quantity/Model CA 15	15 D	15 PD		Part Number	Description	Serial Number
-	1	1	1		416068	Assembly, U-Joint	
1	1	1	1		510033	Set Screw, Soc. Hd. (Key Shaft)	
2	1	1	1		416070	Assembly, Spider & Bearing	
3	4	4	4		920958	Capscrew	
4	1	1	1		416073	Plate, Center	
5	1	1	1		416071	Assembly, Spider & Bearing	
6	1	1	1		416069	Yoke, Fitting (Key Shaft)	
-	1	1	1		815461	Yoke, Fitting (Splined Shaft)	
7	8	8	8		416198	Capscrew, HH	
8	1	1	1		815048	Yoke, Fitting (Drive End)	
9	4	4	4		502060	Capscrew, HH	
10	4	4	4		600010	Washer, Flat	
11	4	4	4		604030	Lockwasher	
12	4	4	4		571005	Hex Nut	
13	4	4	4		502033	Capscrew, Soc. Hd. (Detroit & Ford)	
-	4	4	4		509010	Capscrew, Soc. Hd. (J. Deere)	
14	4	4	4		813484	Lockwasher, Hi-Collar	
15	4	4	4		514008	Capscrew, Soc. Hd. (J. Deere)	
-	4	4	4		509077	Capscrew, Soc. Hd. (Ford)	
16	4	4	4		813484	Lockwasher, Hi-Collar (J. Deere)	
-	4	4	4		604042	Lockwasher, Hi-Collar (Ford)	
17	1	1	1		815279	Adapter, Pulley (Ford)	
-	1	1	1		815443	Adapter, Pulley (J. Deere)	
18	1	1	1		815336	Pulley, Modified (Ford)	

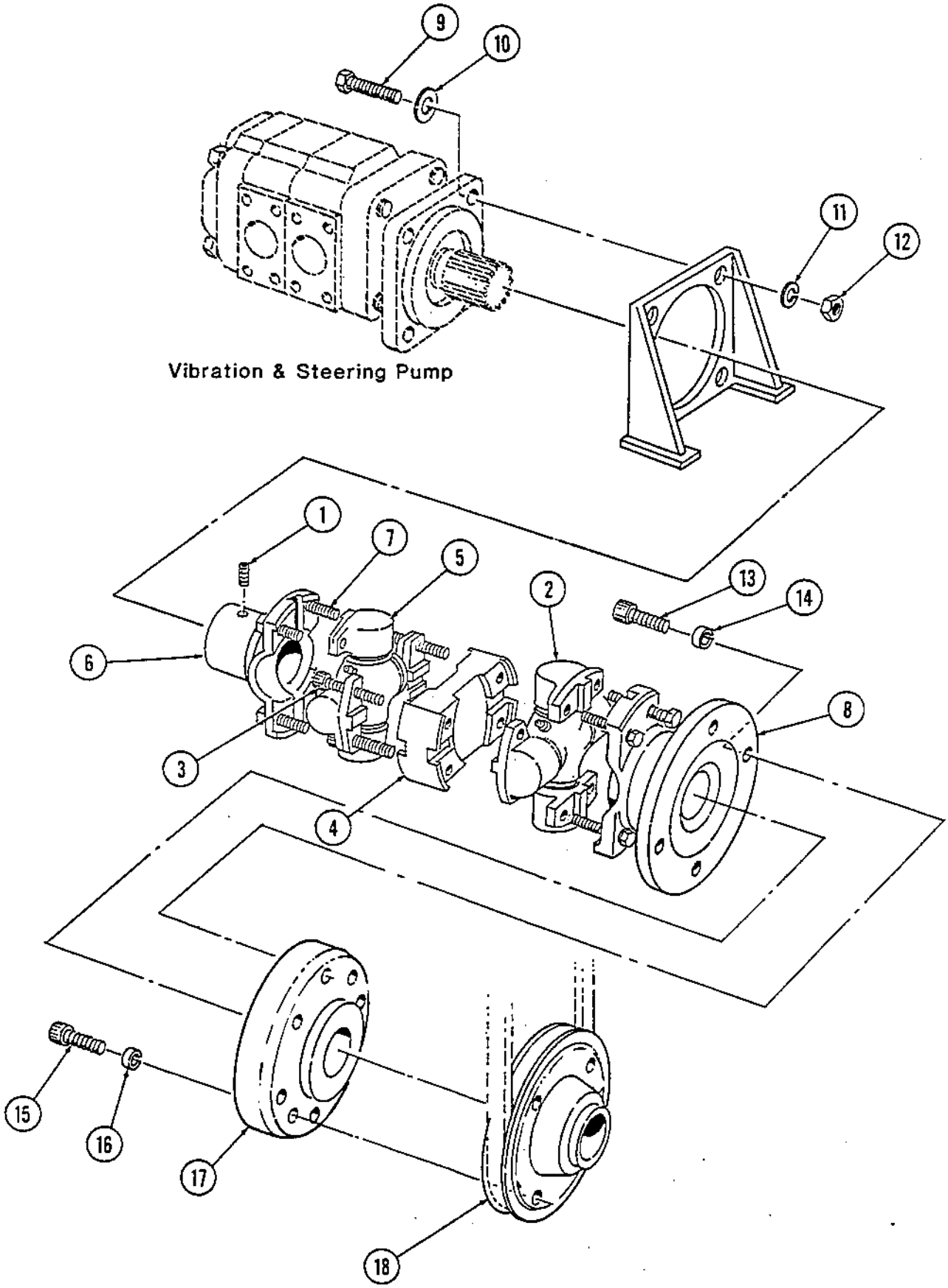
9
10
11
12
Vibration & Steering Pump
1
7
5
2
13
14
6
8
3
4
15
16
17
18

Page	Group	Illustration Number	Catalog Number	Illustration
34	3	PA-15-PL148	PA-15-PL01	Pump Drive Assy. Strike Off Blade (Detroit Diesel to S/N 469)

Ref. No.	Quantity/Model CA 15 PDB				Part Number	Description	Serial Number
1	1				893269	Assembly, Hyd. Pump	
2	1				892714	Adapter, Pump	
3	1				892724	Disc, Pump Drive	
4	1				892717	Coupling, Pump Drive	
5	1				892715	Sprocket, Pump Drive	
6	1				815326	Gasket	
7	2				911102	Capscrew, HH	
8	2				911293	Lockwasher	
9	4				892719	Capscrew, HH	
10	3				600006	Washer, Flat	
11	1				635015	Pin, Roll	

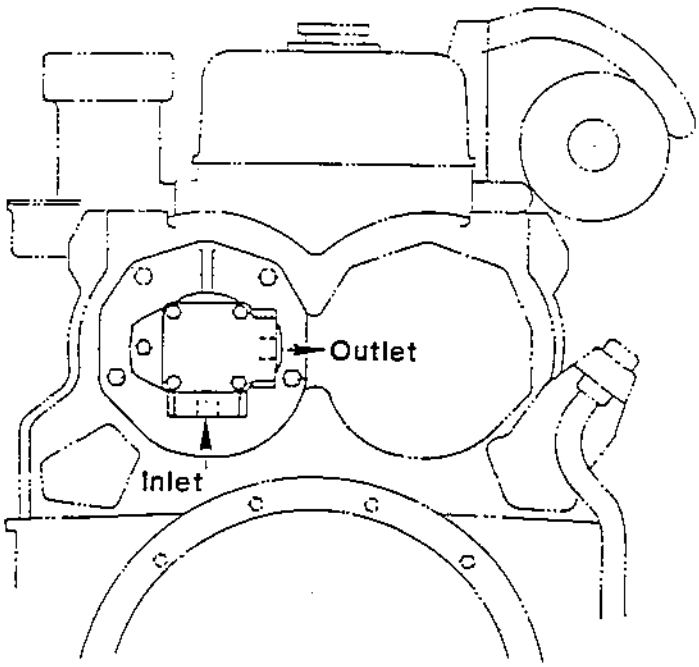
Outlet
Inlet

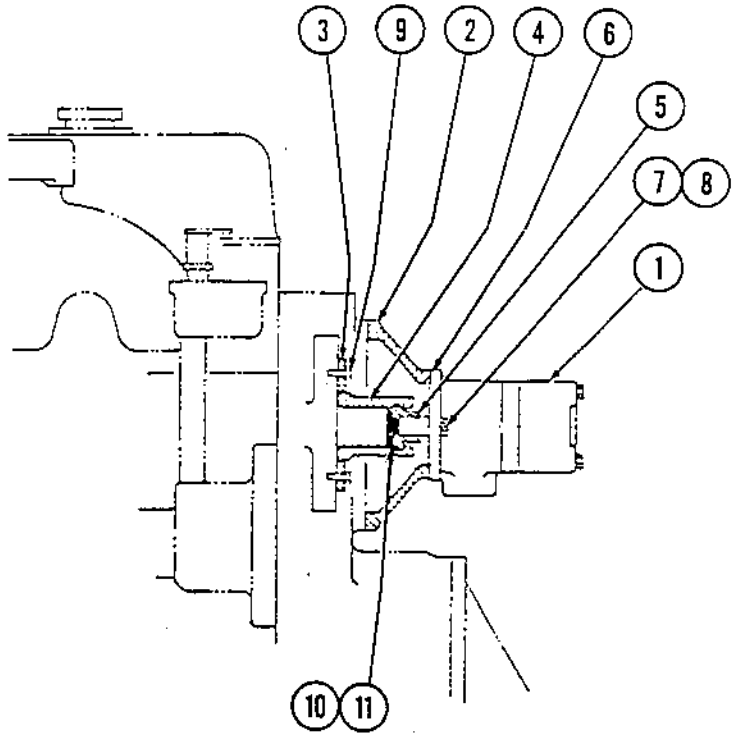
3
9
2
4
6
5
7
8
1
10
11

DYNAPAC

TRANSMISSION **(To S/N 2079)**

Wheel	2
Axle and Motor Assembly	4
Brake and Planetary Assembly	6-8
Differential and Axle Assembly	10-12
Two Speed Gear Box	14

TRANSMISSION **(From S/N 2080 & Up)**

Wheel	16
Axle and Motor Assembly	18
Brake Assembly	20
Planetary Assembly	22
Differential Assembly	24

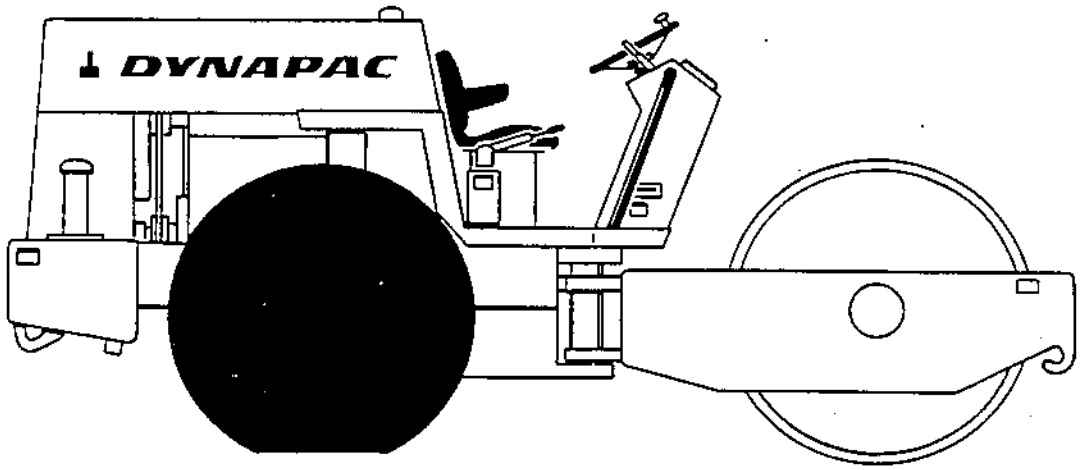

Page	Group	Illustration Number	Catalog Number	Illustration
2	4	PA-15-PL163	PA-15-PL01	Wheel (To S/N 2079)

Ref. No.	Quantity/Model CA 15	CA 15 D	CA 15 PD		Part Number	Description	Serial Number
1	2	2			401028	Assy., Traction Tire & Tube	
2	2	2	2		815072	Rim, Wheel	
3	16	16	16		813694	Nut, Wheel	
4	-	-	2		893316	Assy., Cleated Tire & Tube	

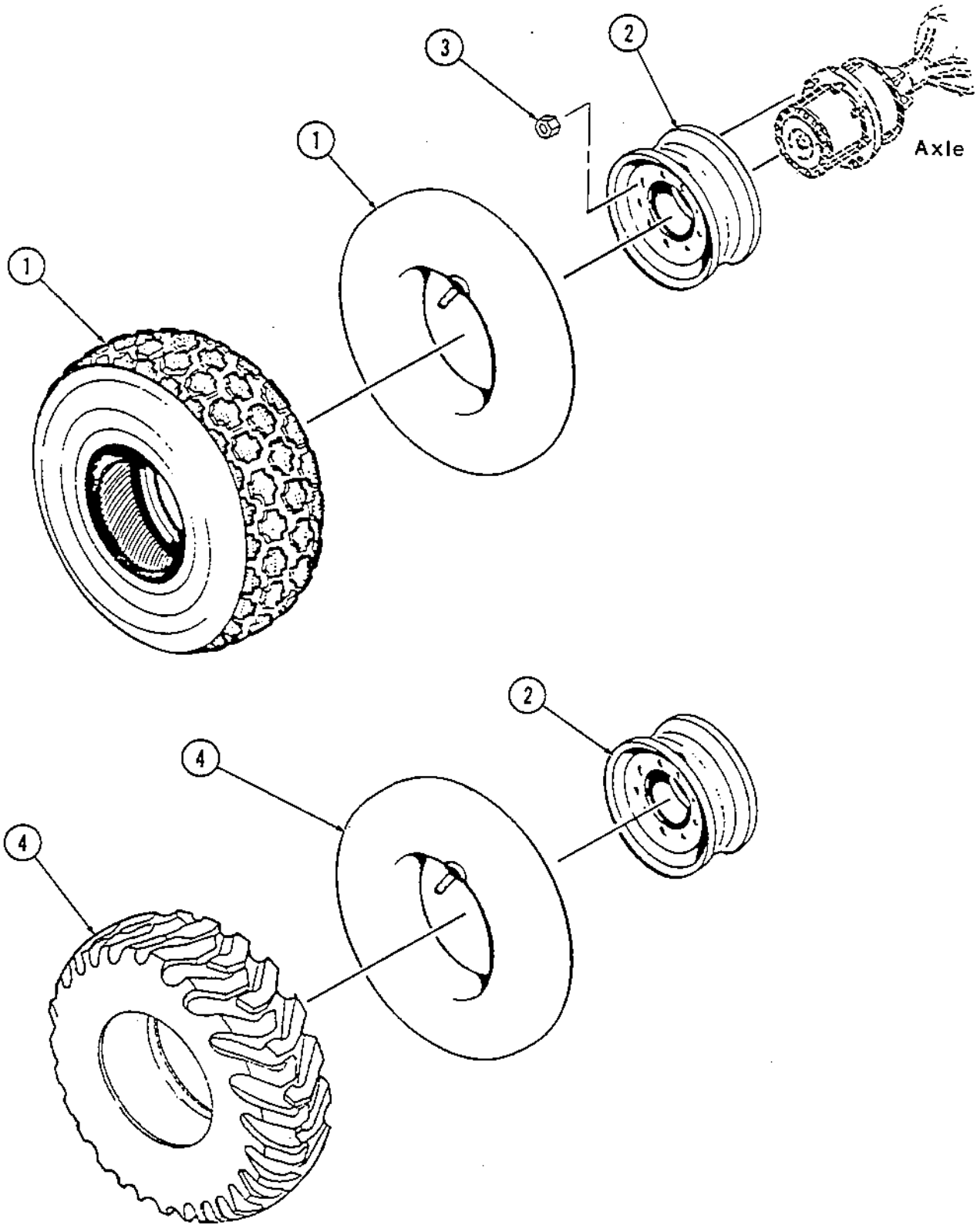
3
2
1
Axle
1
2
4
4

Page	Group	Illustration Number	Catalog Number	Illustration
4	4	PA-15-PL185	PA-15-PL01	Axle & Motor Assembly (To S/N 2079)

Ref. No.	Quantity/Model CA 15	15 D	15 PD	Part Number	Description	Serial Number
-	1	1	1	347854	Axle Assembly (See Page 6 Group 4)	
1	4	4	4	502164	Capscrew, HH	To S/N 1026
2	16	16	16	615033	Washer, QT	
3	4	4	4	605009	Washer, Bevel	To S/N 1026
4	8	8	8	502276	Capscrew, HH	See Note 1
5	8	8	8	586050	Locknut, Heavy	
6	1	1	1	813478	O-Ring	
7	1	1	1	815074	Adapter, Sleeve	
8	1	1	1	335557	Traction Motor, Axle (See Group 5)	
9	4	4	4	335545	Washer, Special	
10	4	4	4	604030	Lockwasher	
11	4	4	4	502059	Capscrew, HH	

NOTE 1: Qty. of 4 used to S/N 1026

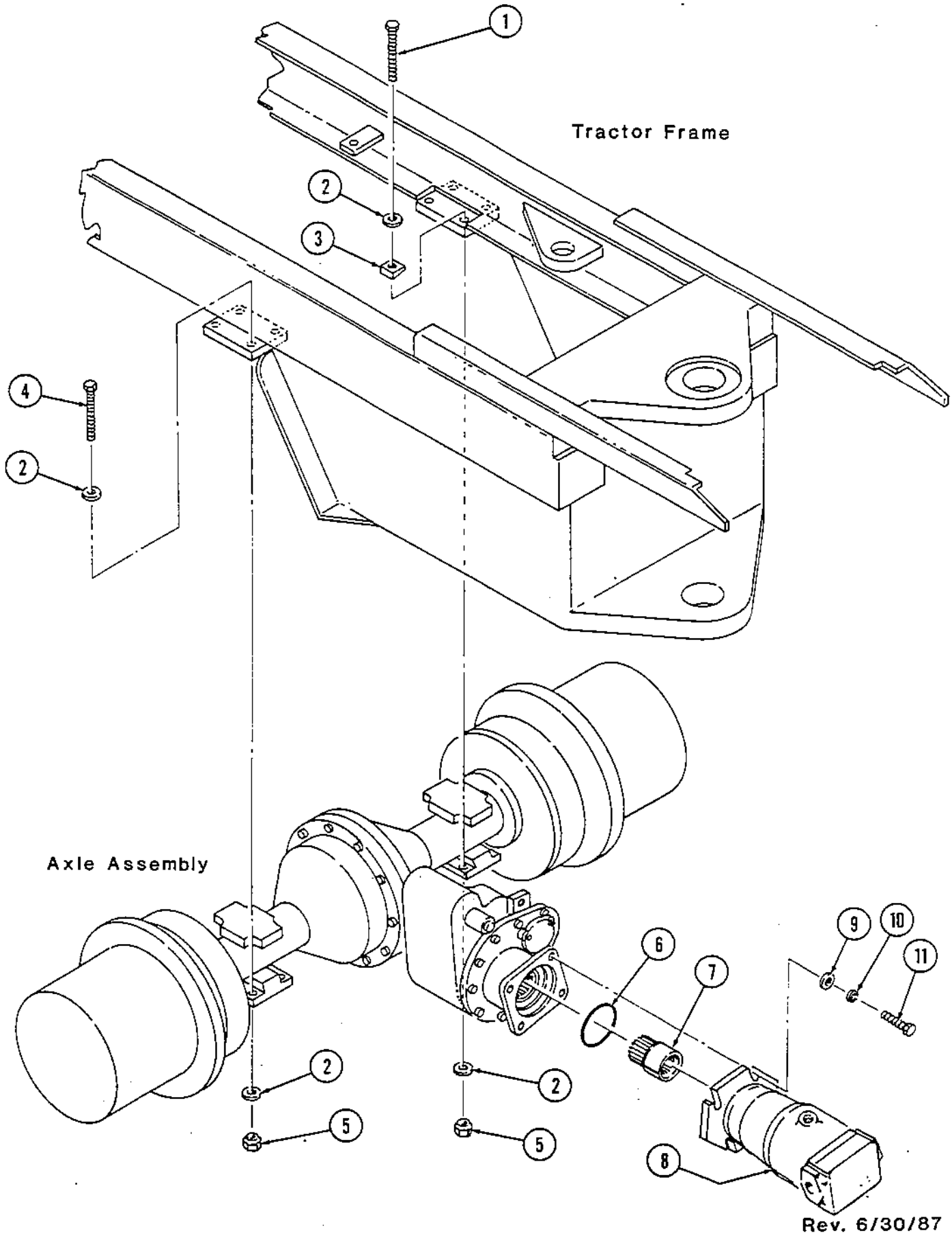

Rev. 6/30/87
PA-15-PL185

Page	Group	Illustration Number	Catalog Number	Illustration
6	4	PA-15-PL105	PA-15-PL01	Axle Assembly Brake & Planetary Assembly (To S/N 2079)

Ref. No.	Quantity/Model CA 15	CA 15D	CA 15PD	Part Number	Description	Serial Number
1	1	1	1	347854	Axle Assy., (From s/n 1926 & Up)	
-	1	1	1	801659	Axle Assy., (From S/N 1027 to 1925)	
-	1	1	1	NSS	Axle Assy., (To S/N 1026)	See Note
2	1	1	1	416096	Backing Plate, L.H. (Shown)	
3	1	1	1	416095	Backing Plate R.H.	
4	2	2	2	416098	Wheel Cylinder Assy.	
5	4	4	4	416097	Shoe Brake (with Lining)	
6	8	8	8	416144	Retainer, Anti Rattle Rod	
7	4	4	4	416163	Spring, Anti Rattle Rod	
8	4	4	4	416143	Rod, Anti Rattle	
9	4	4	4	814041	Lockwasher, Wheel Cylinder	
10	4	4	4	814036	Capscrew, Wheel Cylinder	
11	2	2	2	416121	Bleeder Screw, Wheel Cylinder	
12	2	2	2	813984	Gasket, Inlet Connection	
13	2	2	2	416142	Inlet Connection, Cylinder	
14	2	2	2	416160	Cover, Control Lever	
15	2	2	2	416138	Spring, Lever Cover	
16	1	1	1	✱416188	Link, Brake Control, L.H.	
17	1	1	1	416182	Link, Brake Control R.H.	
18	2	2	2	893494	Cotter Pin, Lever Cover	
19	2	2	2	416139	Spring, Brake Shoe Return	
20	2	2	2	416137	Spring, Brake Shoe Retaining	
21	16	16	16	416114	Bolt, Brake Drum to Hub	
22	16	16	16	416223	Washer, Brake Drum to Hub	
23	2	2	2	416187	Drum, Brake	
24	2	2	2	416118	Wear Sleeve, Oil Seal	
25	2	2	2	891066	Oil Seal, Hub Bearing	
26	2	2	2	416178	Cone, Hub Bearing Inner	
27	2	2	2	416177	Cone, Hub Bearing Outer	

✱MISPRINT – S/B 416183

NOTE: For Axle Assembly to S/N 1026 replacement, consult the manufacturer's Parts Department.

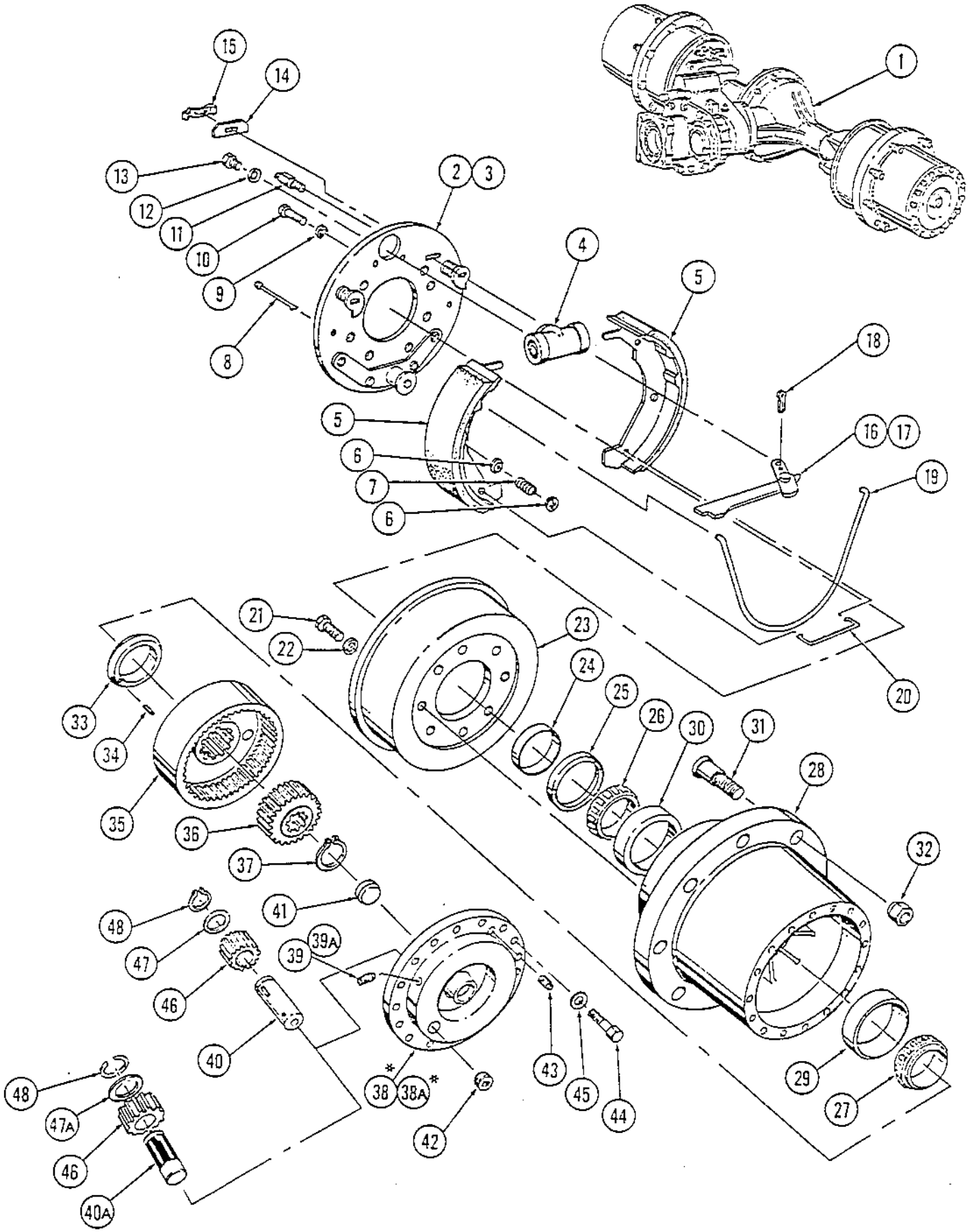
1
2
3
4
5
6
7
8
9
10
11
12
13
14
15
16
17
18
19
20
21
22
23
24
25
26
27
28
29
30
31
32
33
34
35
36
37
38
38A
39
39A
40
40A
41
42
43
44
45
46
47
47A
48

Page	Group	Illustration Number	Catalog Number	Illustration
8	4	PA-15-PL105	PA-15-PL01	Axle Assembly Brake & Planetary Assembly (To S/N 2079)

Ref. No.	Quantity/Model CA 15	CA 15D	CA 15PD	Part Number	Description	Serial Number
28	2	2	2	416116	Hub, Wheel	
29	2	2	2	416179	Cup, Hub Bearing Outer	
30	2	2	2	416179	Cup, Hub Bearing Inner	
31	16	16	16	813939	Stud, Wheel	
32	16	16	16	813694	Nut, Wheel	
33	2	2	2	891068	Nut, Hub Bearing Adjusting	
34	2	2	2	416148	Pin, Hub Bearing Adj. Nut	
35	2	2	2	416192	Gear, Planetary Ring	
36	2	2	2	814000	Gear, Planetary Sun	
37	2	2	2	813966	Snap Ring, Axle Shaft	
38	2	2	2	416175	Spider Assy., Planetary	See Note
38A	2	2	2	923803	Spider Assy., Planetary	
39	3	3	3	814037	Setscrew, Planetary Pinion Shaft	
39A	3	3	3	922999	Setscrew, Planetary Pinion Shaft	
40	3	3	3	813997	Shaft, Planetary Pinion	
40A	3	3	3	923804	Shaft, Planetary Pinion	
41	1	1	1	416151	Button, Axle Shaft Thrust	
42	2	2	2	814034	Plug, Planetary Spider Filler	
43	2	2	2	814033	Plug, Planetary Spider Drain	
44	32	32	32	416165	Capscrew, Planetary Spider to Hub	
45	32	32	32	416126	Washer, Planetary Spider to Hub	
46	6	6	6	813998	Pinion, Planetary	
47	6	6	6	813961	Washer, Planetary Pinion Thrust	
47A	3	3	3	923805	Washer, Planetary Pinion Thrust	
48	6	6	6	813967	Snap Ring, Planetary Pinion Shaft	

NOTE: If item 40 (Planetary Pinion Shaft) has a black nylon coating, then use the "A" items listed above. The vendor tag on the Axle should read, PRTA-134-FSH116.

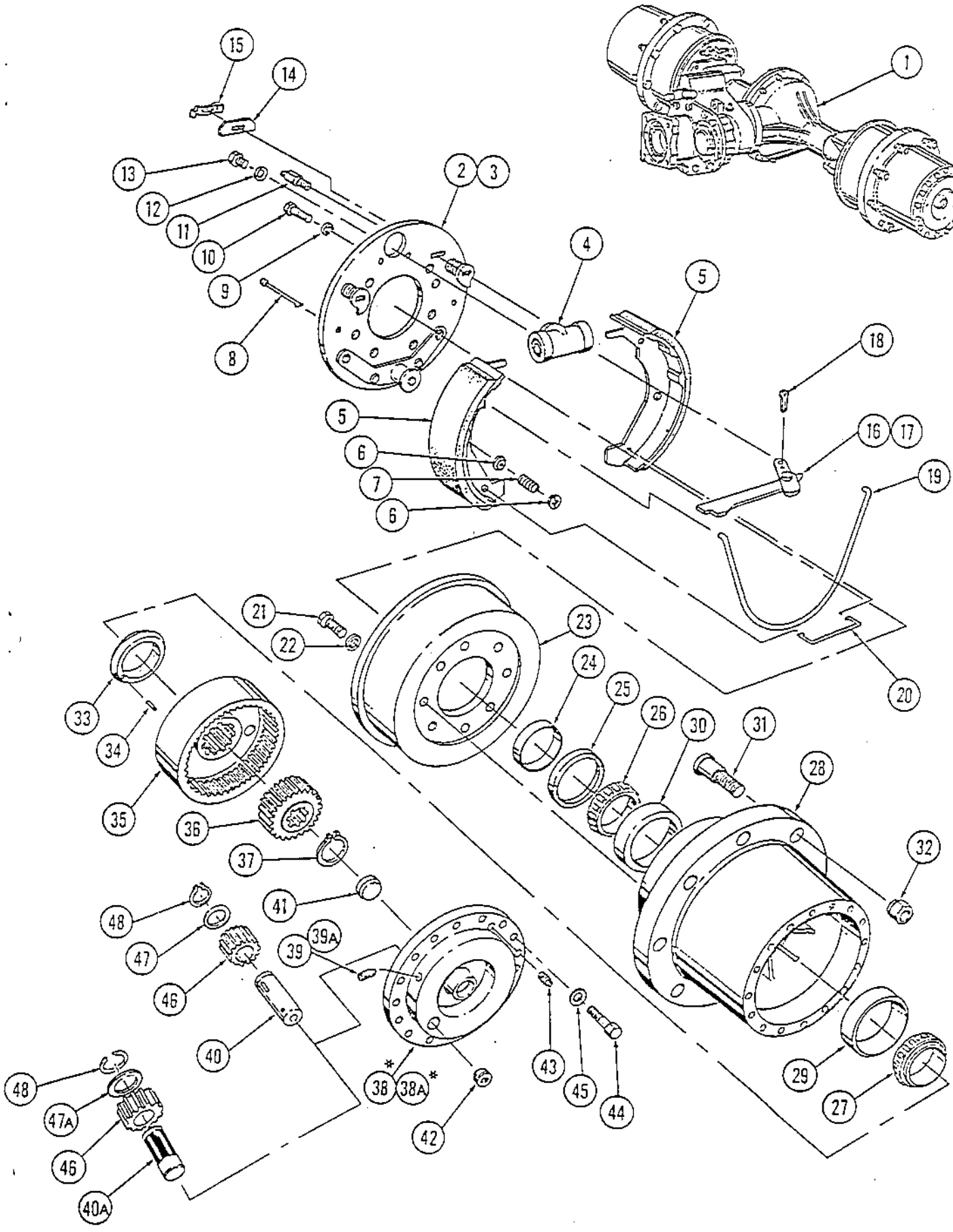
1
2
3
4
5
6
7
8
9
10
11
12
13
14
15
16
17
18
19
20
21
22
23
24
25
26
27
28
29
30
31
32
33
34
35
36
37
38
38A
39
39A
40
40A
41
42
43
44
45
46
47
47A
48

Page	Group	Illustration Number	Catalog Number	Illustration
10	4	PA-15-PL106	PA-15-PL01	Axle Assembly (Differential & Axle Assy. To S/N 2079)

Ref. No.	Quantity/Model CA 15	15D	15PD		Part Number	Description	Serial Number
1	1	1	1		416168	Shaft, Axle Long	
2	1	1	1		911398	Carrier Cover & Tube Assy.	From S/N 1330, 1334 & Up
-	1	1	1		910224	Carrier Cover & Tube Assy.	From S/N 1027, to 1329, 1331 to 1333
-	1	1	1		910221	Carrier Cover & Tube Assy.	Up to S/N 1026
3	1	1	1		814002	Cup, Diff. Bearing	
4	1	1	1		416108	Plug, Diff. Drain & Filler	
5	1	1	1		416133	Pin, Bevel Gear Thrust Block	
6	1	1	1		416158	Thrust Block, Bevel Drive Gear	
7	1	1	1		416189	Seat, Lower Spring	
8	1	1	1		416188	Seat, Upper Spring	
9	1	1	1		423054	Breather, Axle Housing	
10	11	11	11		911702	Bolt, Diff. Carrier Flange	
11	1	1	1		416154	Gasket, Diff. Carrier Flange	
12	1	1	1		911399	Carrier & Tube Assy.	From S/N 1330, 1334 & Up
-	1	1	1		910222	Carrier & Tube Assy.	From S/N 1027 to 1329, 1331 to 1333
-	1	1	1		910219	Carrier & Tube Assy.	Up to S/N 1026
13	1	1	1		814002	Cup, Diff. Bearing	
14	1	1	1		416108	Plug, Diff & Filler	
15	1	1	1		416189	Seat, Lower Spring	
16	1	1	1		416188	Seat, Upper Spring	
17	11	11	11		416126	Lockwasher, Diff. Carrier Flange	
18	11	11	11		814032	Nut, Diff. Carrier Flange	
19	16	16	16		416106	Nut, Spindle to Backing Plate	To S/N 1329, 1331 to 1333
20	1	1	1		416167	Shaft, Axle Short	
21	2	2	2		416195	Cone, Diff. Bearing	
22	1	1	1		911700	Diff. Case	
23	8	8	8		416223	Washer, Diff. Case	
24	8	8	8		910229	Capscrew, Diff. Case	

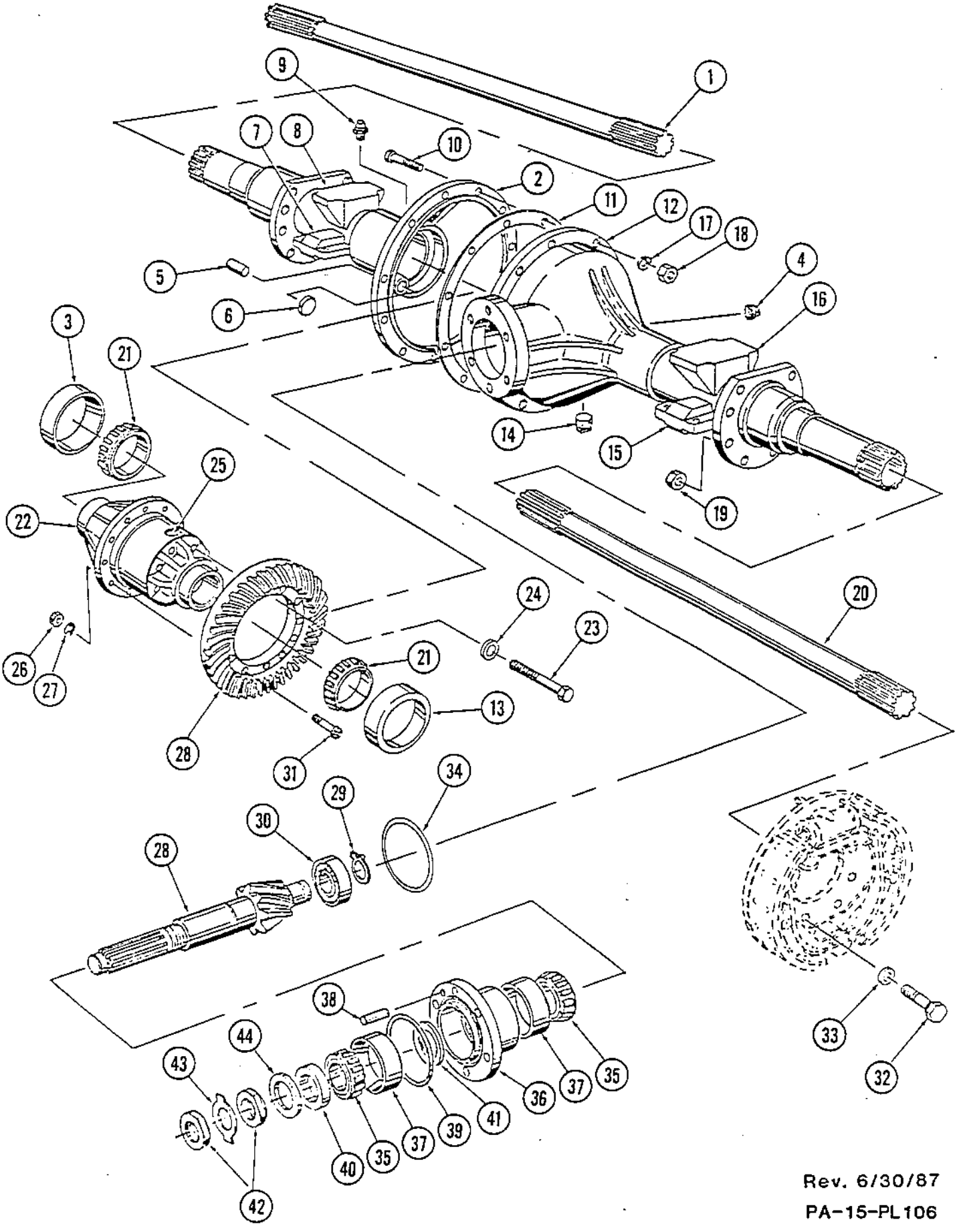
1
9
7
8
10
2
11
12
17
18
4
5
16
6
3
21
14
15
19
25
22
20
24
23
26
27
21
13
28
31
34
29
30
28
38
44
43
40
35
37
39
41
36
37
35
42
33
32

Page	Group	Illustration Number	Catalog Number	Illustration
12	4	PA-15-PL106	PA-15-PL01	Axle Assembly (Differential & Axle Assy. To S/N 2079)

Ref. No.	Quantity/Model CA 15	15D	15PD	Part Number	Description	Serial Number
25	1	1	1	416405	Diff. Assembly (No Spin)	
26	12	12	12	814032	Nut, Diff. Case to Bevel Gear	
27	12	12	12	416126	Washer, Diff. Case to Bevel Gear	
28	1	1	1	416222	Gear, Bevel Drive (6.67-1 Ratio)	
29	1	1	1	416130	Lock, Bevel Pinion Rear Brg.	
30	1	1	1	416125	Bearing, Pinion Rear	
31	12	12	12	416136	Bolt, Diff. Case & Bevel Gear	
32	16	16	16	921387	Bolt, Spindle to Backing Plate	From S/N 1330, 1334 & Up
-	16	16	16	814038	Bolt, Spindle to Backing Plate	To S/N 1329 1331 to 1333
33	16	16	16	416224	Washer, Spindle to Back Plate	
34	A/R	A/R	A/R	910787	Liquid Gasket, Bevel Pinion Cage	
35	2	2	2	911701	Cone Bevel Pinion	From S/N 1027 & up
-	1	1	1	416099	Cone, Bevel Pinion	To S/N 1026
36	1	1	1	911699	Cage, Pinion Brg. & Cup Assy.	From S/N 1027 & up
-	1	1	1	416171	Cage, Pinion Brg. & Cup Assy.	To S/N 1026
37	2	2	2	910238	Cup, Bevel Pinion	From S/N 1027 & up
-	2	2	2	814025	Cup, Bevel Pinion	To S/N 1026
38	1	1	1	416132	Dowel, Pinion Brg. Cage	
39	A/R	A/R	A/R	910787	Liquid Gasket, Tube	
40	1	1	1	416131	Sleeve, Bevel Pinion Bearing	
41	A/R	A/R	A/R	911708	Shim, Bevel Pinion Bearing (.445)	From S/N 1027 & up
-	A/R	A/R	A/R	911709	Shim, Bevel Pinion Bearing (.475)	See Note
42	2	2	2	416124	Nut, Bevel Pinion Bearing	
43	1	1	1	911705	Lock, Bevel Pinion Brg. Nut	
44	1	1	1	911706	Washer, Bevel Pinion Brg. Nut	

NOTE: For Shims other than those listed specify size needed.

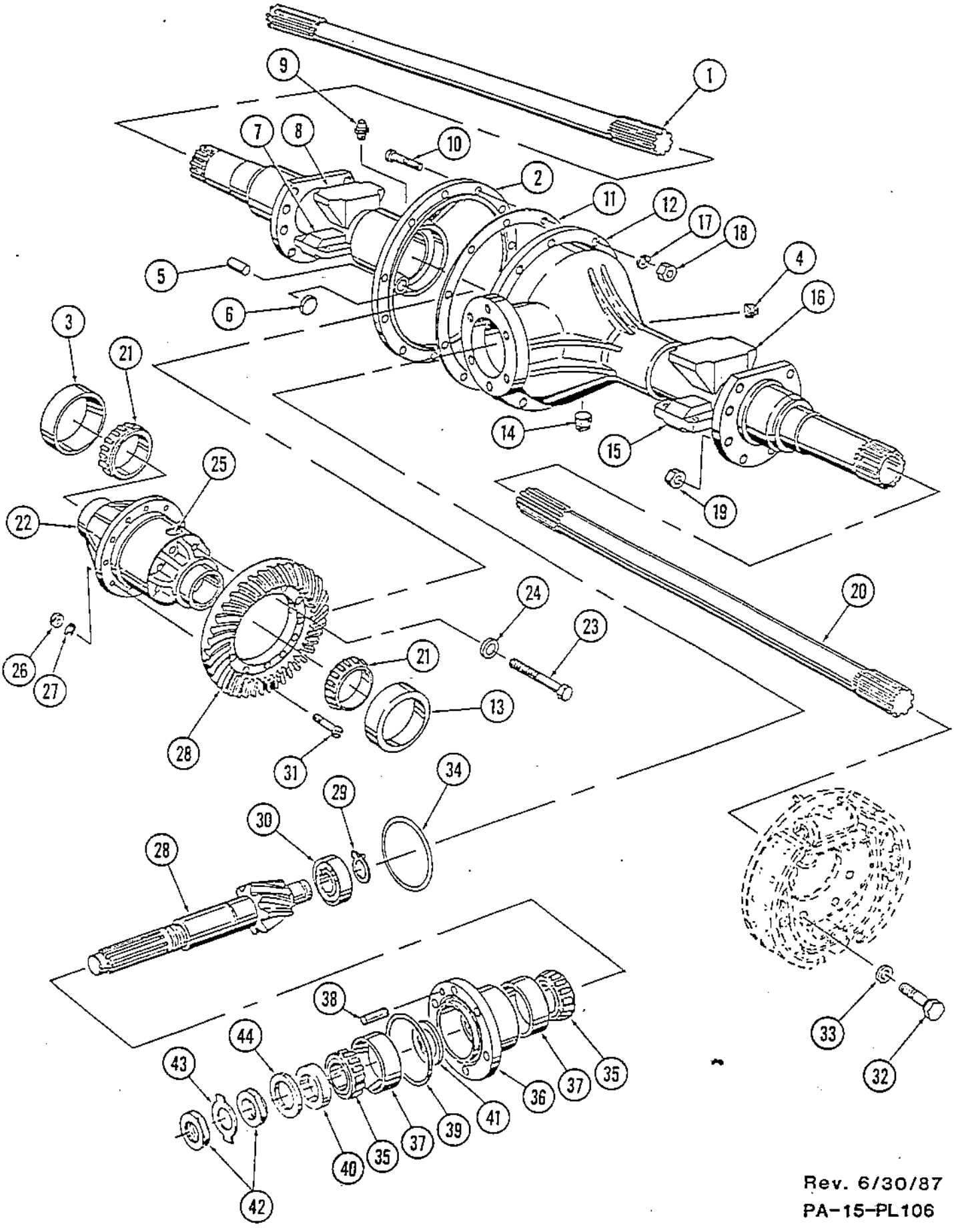
1
9
7
8
10
2
11
12
17
18
4
5
16
6
3
21
14
15
19
25
22
20
24
23
26
27
21
13
28
31
34
29
30
28
33
32
38
44
43
36
37
35
41
39
37
35
40
42

Page	Group	Illustration Number	Catalog Number	Illustration
14	4	PA-15-PL107	PA-15-PL01	Axle Assembly (Two Speed Gear Box Assy. To S/N 2079)

Ref. No.	Quantity/Model CA 15	15D	15PD		Part Number	Description	Serial Number
1	1	1	1		891702	2 Speed Gear Box Assembly	
2	1	1	1		423054	Breather, Transmission Case	
3	1	1	1		423073	Plug, Shift Shaft Hole	
4	1	1	1		423076	Ball, Shift Shaft Detent	
5	1	1	1		423082	Spring, Shift Shaft Detent	
6	1	1	1		423067	Washer, Shift Shaft Detent	
7	1	1	1		423083	Screw, Shift Shaft Detent	
8	1	1	1		*927153	Case, Transmission	From S/N 1926 &up
-	1	1	1		*423053	Case, Transmission	To S/N 1925
9	1	1	1		910218	Seal, Oil Bevel Pinion	
10	2	2	2		423072	Dowel, Case Cover	
11	1	1	1		423077	Gasket, Transm. Case & Cover	
12	5	5	5		423065	Capscrew, Case to Cover	
13	1	1	1		911704	Capscrew, Case to Cover	
14	6	6	6		423064	Lockwasher, Case to Carrier	
15	1	1	1		927152	Seal, Shift Shaft Oil	From S/N 1926 &up
-	1	1	1		423056	Seal, Shift Shaft Oil	To S/N 1925
16	1	1	1		423081	Fork, Shift Hi/Lo	
17	1	1	1		423079	Setscrew, Shift Fork Lock	
18	1	1	1		423058	Lockwire, Shift Fork Setscrew	
19	1	1	1		423078	Shaft, Shift Hi/Lo	
20	1	1	1		423088	Gear, Sliding, Hi/Lo (38T)	
21	1	1	1		423069	Bearing, Bevel Pinion Pilot	
22	1	1	1		927154	Pinion, Input Drive (22T)	From S/N 1926 &up
-	1	1	1		423087	Pinion, Input Drive	To S/N 1925
23	2	2	2		814033	Plug, Oil Level & Drain	
24	10	10	10		423061	Capscrew, Case to Cover	
25	10	10	10		814041	Lockwasher, Case to Cover	
26	2	2	2		423066	Bearing, Idler Shaft	
-	1	1	1		423553	Assembly, Counter Shaft Gear	
27	1	1	1		NSS	Gear, Lo Speed Idler (21T)	
28	1	1	1		423084	Shaft, Idler	
29	2	2	2		NSS	Key, Idler Gear	
30	1	1	1		NSS	Gear, Lo Speed Idler (37T)	
31	1	1	1		423071	Spacer, Idler Shaft Bearing	
32	2	2	2		423070	Bearing, Input Drive Pinion	
33	1	1	1		423068	Spacer, Input Bearing	
34	1	1	1		423074	Snap Ring, Input Bearing Retainer	
35	1	1	1		423075	Snap Ring, Input Drive Pinion Brg.	
36	1	1	1		911710	Cover, Idler Shaft	
37	A/R	A/R	A/R		910787	Liquid Gasket (Tube)	
38	3	3	3		911703	Capscrew, Idler Shaft Cover	
39	3	3	3		911707	Lockwasher, Idler Shaft Cover	

*NOTE: Also includes item 40 on Differential & Axle Assembly

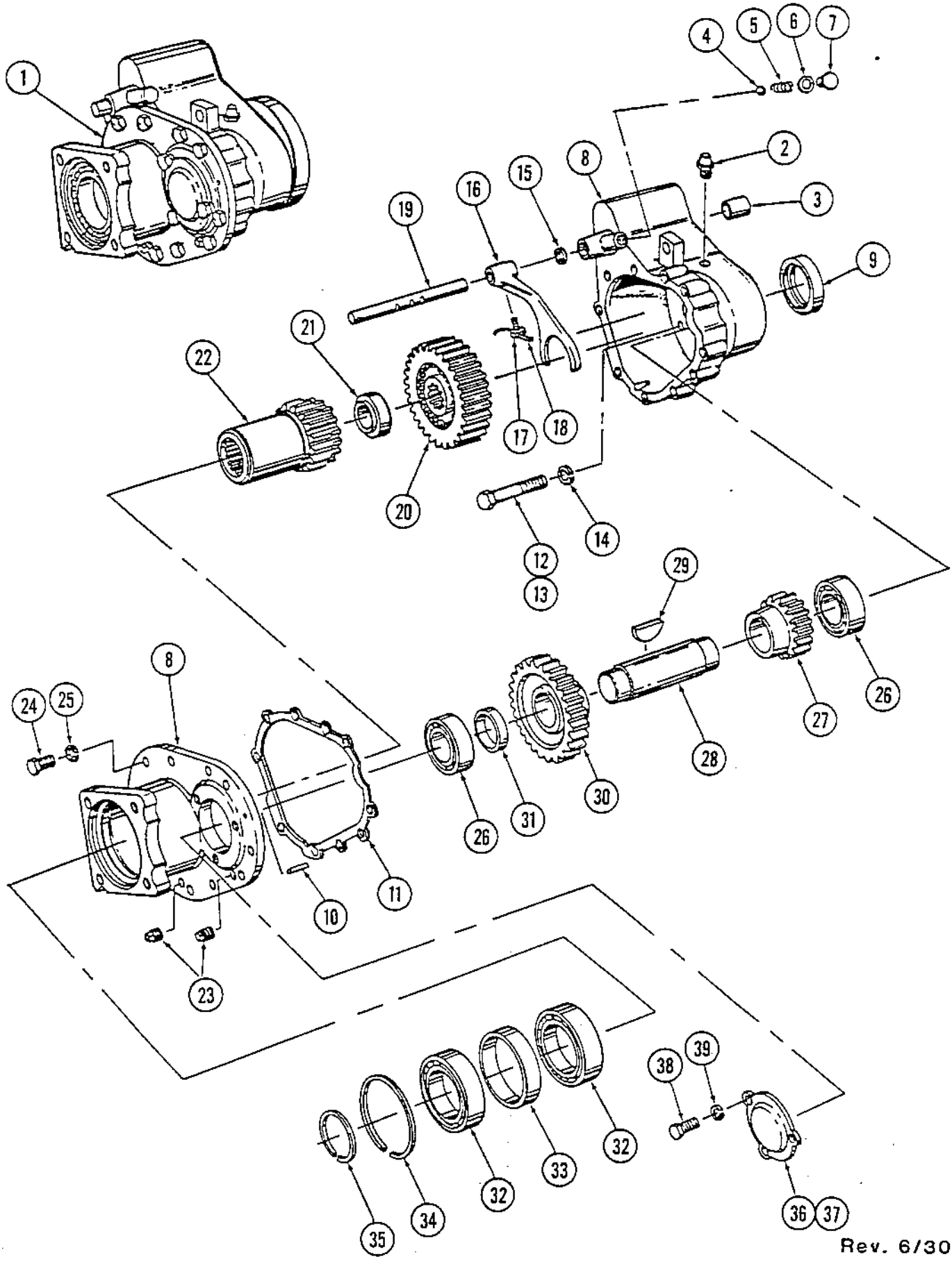

Rev. 6/30/87

PA-15-PL107

Page	Group	Illustration Number	Catalog Number	Illustration
16	4	PA-15-PL191	PA-15-PL01	Wheel (From S/N 2080 & Up)

Ref. No.	Quantity/Model CA 15	CA 15D	CA 15PD		Part Number	Description	Serial Number
-	2	2			815659	Assy., Traction Tire & Wheel	
1	1	1			900244	Tire & Tube	
2	1	1			815511	Rim, Wheel	
3	24	24	24		926783	Nut, Wheel	
-			1		815524	Assy., Right Side Tire & Wheel (cleated)	
4			1		900410	Assy., Cleated Tire & Tube	
5			1		815511	Rim, Wheel	
-			1		815523	Assy., Left Side Tire & Wheel (cleated)	
6			1		900410	Assy., Cleated Tire & Tube	
7			1		815511	Rim, Wheel	

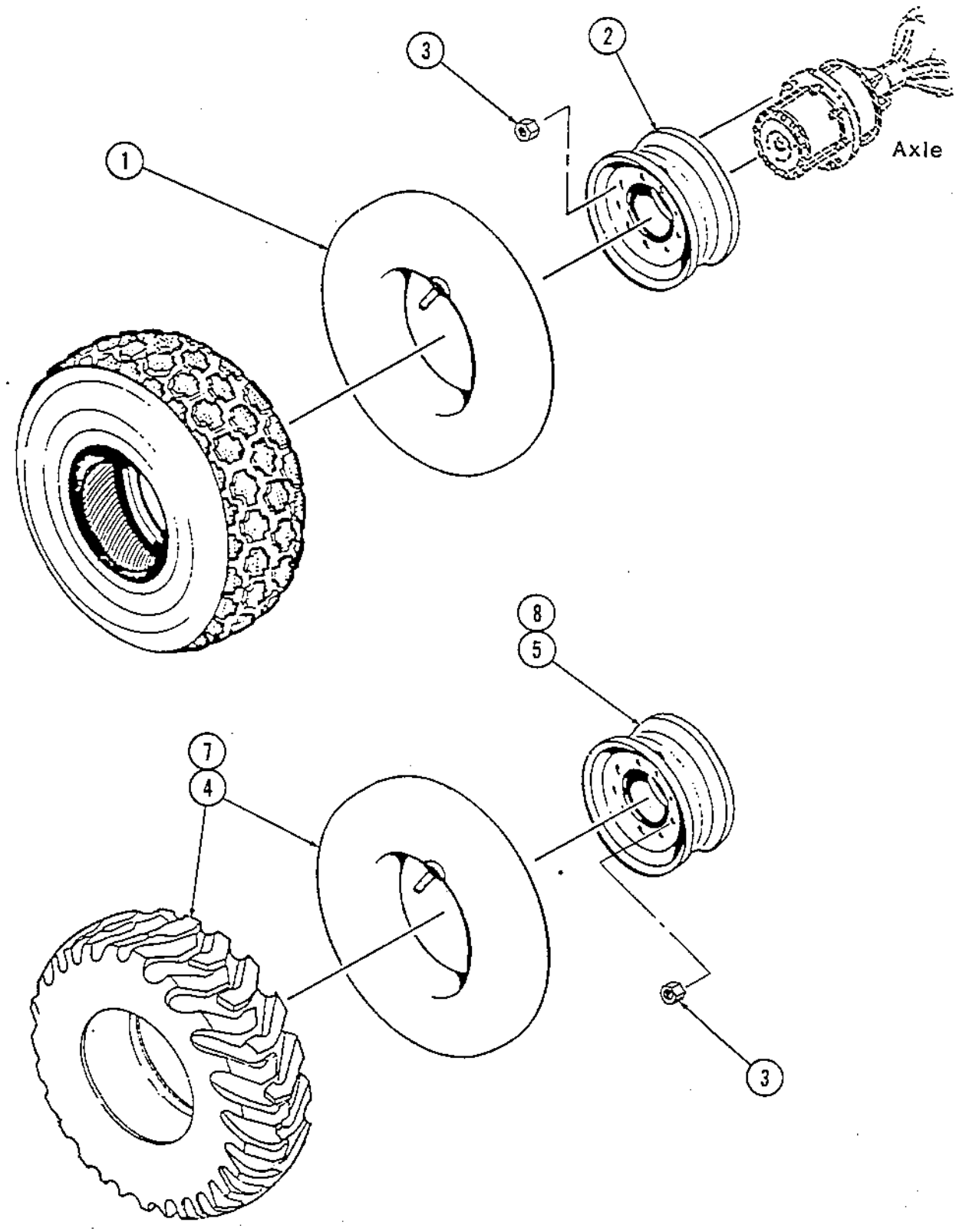
3
2
Axle
1
8
5
7
4
3

Page	Group	Illustration Number	Catalog Number	Illustration
18	4	PA-15-PL192	PA-15-PL01	Axle and Motor Assembly (S/N 2080 & Up)

Ref. No.	Quantity/Model CA				Part Number	Description	Serial Number
	15	15D	15PD				
1	1	1	1		348500	Rear Axle Assembly	
2	8	8	8		929217	Screw	
3	16	16	16		600014	Washer	
4	8	8	8		586022	Nut, Locking	
5	1	1	1		348618	Mounting Kit	
6	1	1	1		929713	Flange	
7	8	8	8		929712	Screw	
8	1	1	1		929648	O-Ring	
9	1	1	1		929711	Splined Sleeve	
10	1	1	1		929709	Lock Ring	
11	1	1	1		929710	Lock Ring	
12	1	1	1		348531	Traction Motor, Axle	
13	1	1	1		160157	O-Ring	
14	8	8	8		615045	Washer, Conical Spring	
15	4	4	4		500056	Capscrew, HH	

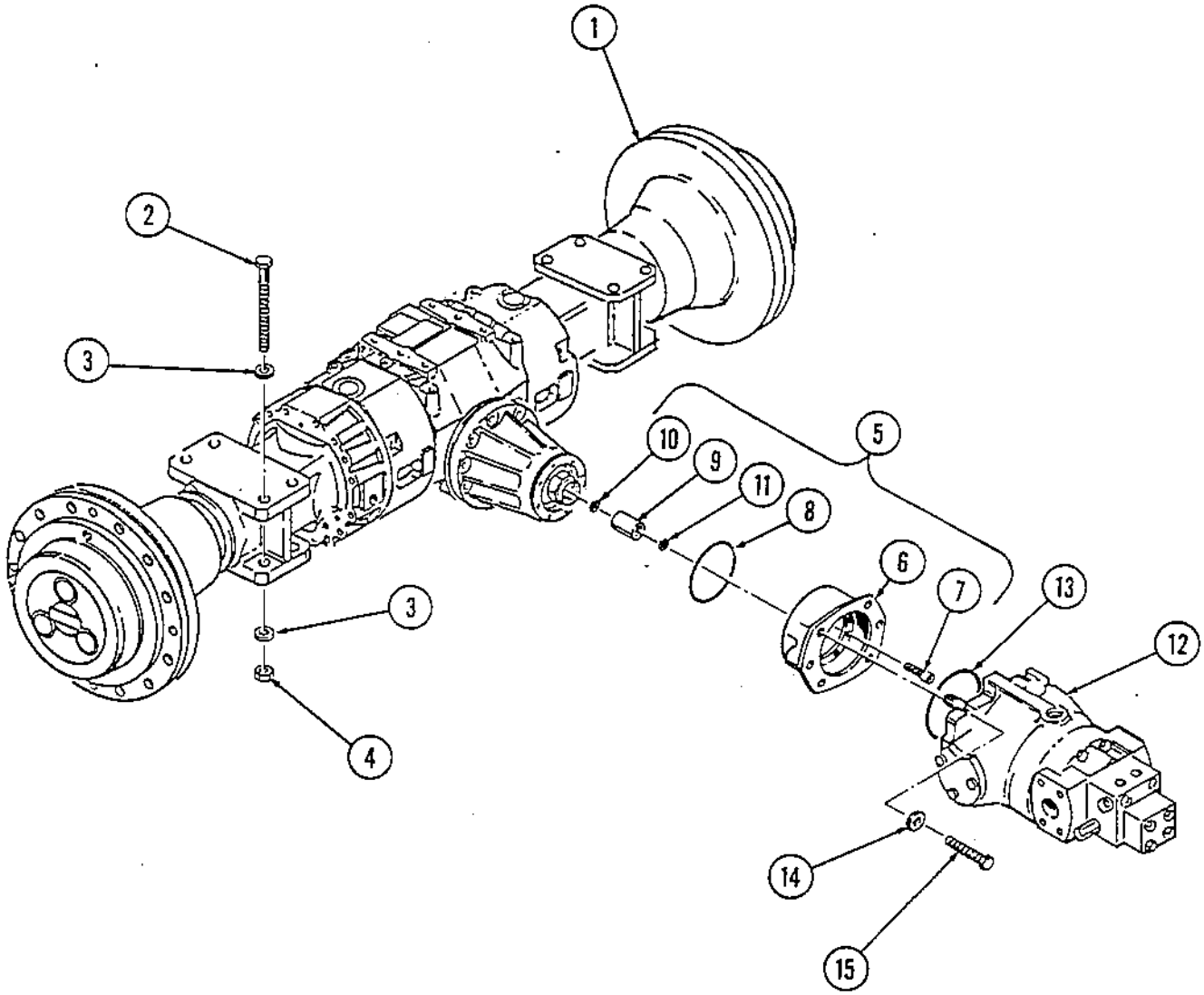
1
2
3
3
4
5
6
7
8
9
10
11
12
13
14
15

Page	Group	Illustration Number	Catalog Number	Illustration
20	4	PA-15-PL195	PA-15-PL01	Brake Assembly (S/N 2080 & Up)

Ref. No.	Quantity/Model CA				Part Number	Description	Serial Number
	15	15D	15PD				
1	4	4	4		929708	Screw	
2	4	4	4		929707	Holder	
3	4	4	4		929706	Cylinder	
4	84	84	84		929705	Cup Spring	
5	4	4	4		929678	Piston	
6	4	4	4		929703	Plug	
7	1	1	1		929897	Seal Kit	
8	4	4	4		NSS	O-Ring	
9	4	4	4		NSS	O-Ring	
10	4	4	4		NSS	O-Ring	
11	4	4	4		NSS	O-Ring	
12	4	4	4		NSS	O-Ring	
13	6	6	6		NSS	O-Ring	
14	6	6	6		NSS	Seal	
15	6	6	6		NSS	O-Ring	
16	4	4	4		929701	Nut	
17	4	4	4		929700	Screw	
18	8	8	8		926855	Screw	
19	4	4	4		929680	Bush	
20	4	4	4		929896	Bearing Kit	
21	1	1	1		NSS	Bearing	
22	1	1	1		NSS	Washer	
23	1	1	1		NSS	Inner Race	
24	1	1	1		929699	Brake Lever, Right	
24	1	1	1		929698	Brake Lever, Left	
25	6	6	6		929697	Piston	
26	2	2	2		929694	Screw	
27	4	4	4		929687	Plug	
28	4	4	4		929685	Pusher	
29	2	2	2		926847	Washer	
30	2	2	2		926846	Nut	
31	6	6	6		929693	Screw	
32	6	6	6		929692	Spring	
33	6	6	6		929690	Nut	
34	1	1	1		929689	Brake Disc, Right	
34	2	2	2		929688	Brake Disc, Left	
35	2	2	2		929898	Brake Disc Kit	
36	6	6	6		NSS	Brake Disc	
37	5	5	5		NSS	Brake Disc	
38	2	2	2		926844	Plug	
39	2	2	2		926845	Vent. Screw	

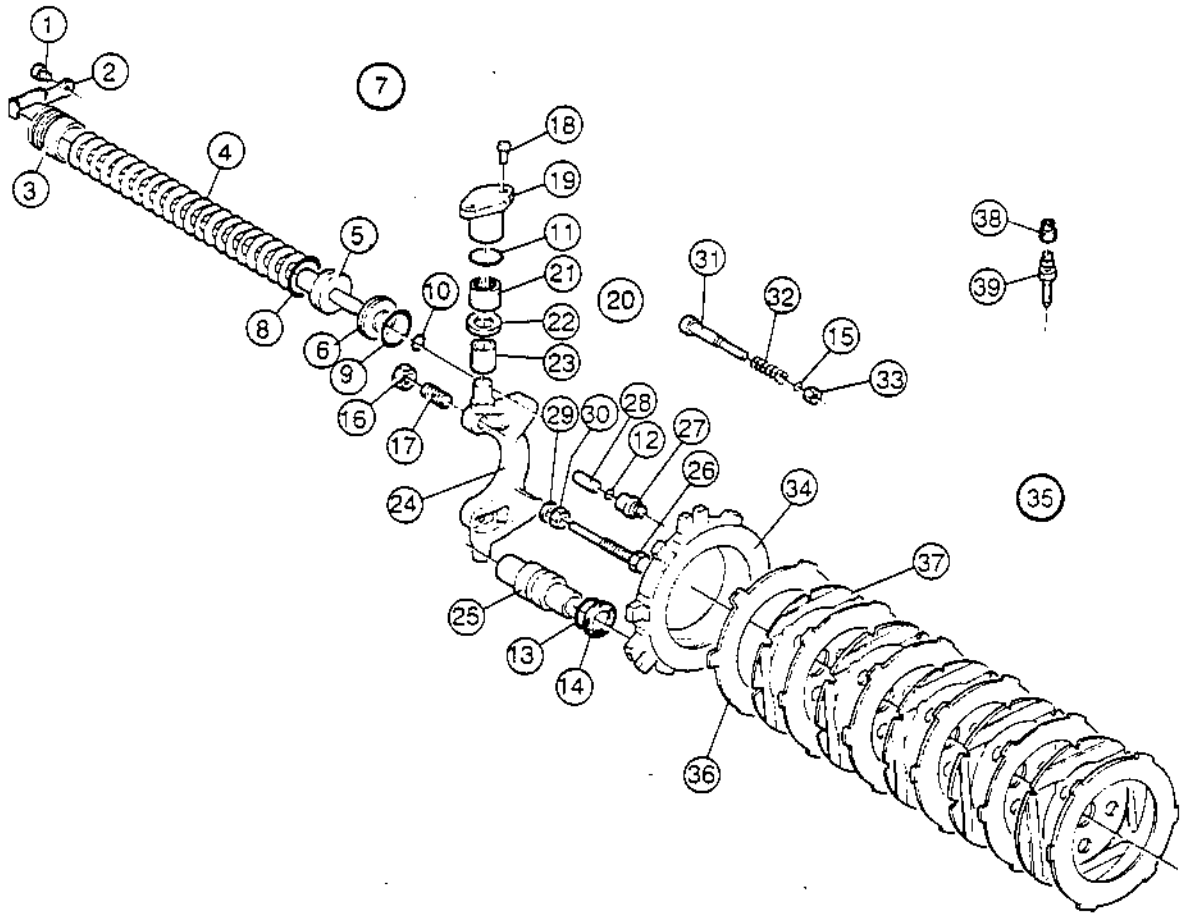
1
2
3
4
5
6
7
8
9
10
11
12
13
14
15
16
17
18
19
20
21
22
23
24
25
26
27
28
29
30
31
32
33
34
35
36
37
38
39

Page	Group	Illustration Number	Catalog Number	Illustration
22	4	PA-15-PL196	PA-15-PL01	Planetary Gear Assembly (S/N 2080 & Up)

Ref. No.	Quantity/Model CA 15	CA 15D	CA 15PD		Part Number	Description	Serial Number
1	4	4	4		926732	Plug	
2	2	2	2		929649	Screw	
3	2	2	2		929894	Seal Kit	
4	2	2	2		NSS	Seal	
5	1	1	1		NSS	Seal	
6	1	1	1		NSS	O-Ring	
7	1	1	1		NSS	O-Ring	
8	3	3	3		NSS	O-Ring	
9	2	2	2		929651	Ring	
10	2	2	2		929655	Shaft	
11	2	2	2		929676	Ring	
12	4	4	4		929674	Bearing	
13	2	2	2		929653	Hub	
14	24	24	24		929652	Stud	
15	24	24	24		926783	Nut	
16	2	2	2		929672	Ring Gear	
17	2	2	2		929671	Snap Ring	
18	10	10	10		929670	Dowel	
19	2	2	2		929669	Ring Gear Support	
20	2	2	2		929668	Locking Plate	
21	10	10	10		929654	Screw	
22	12	12	12		929667	Screw	
23	6	6	6		929666	Washer	
24	2	2	2		929660	Planet Gear Carrier	
25	2	2	2		929895	Planet Gear Kit	
26	6	6	6		NSS	Washer	
27	6	6	6		NSS	Snap Ring	
28	3	3	3		NSS	Gear	
29	3	3	3		NSS	Bearing	
30	3	3	3		NSS	Shaft	
31	6	6	6		929663	Dowel	
32	2	2	2		929662	Spacer	
33	8	8	8		929661	Screw	
34	2	2	2		926729	Magnetic Plug	

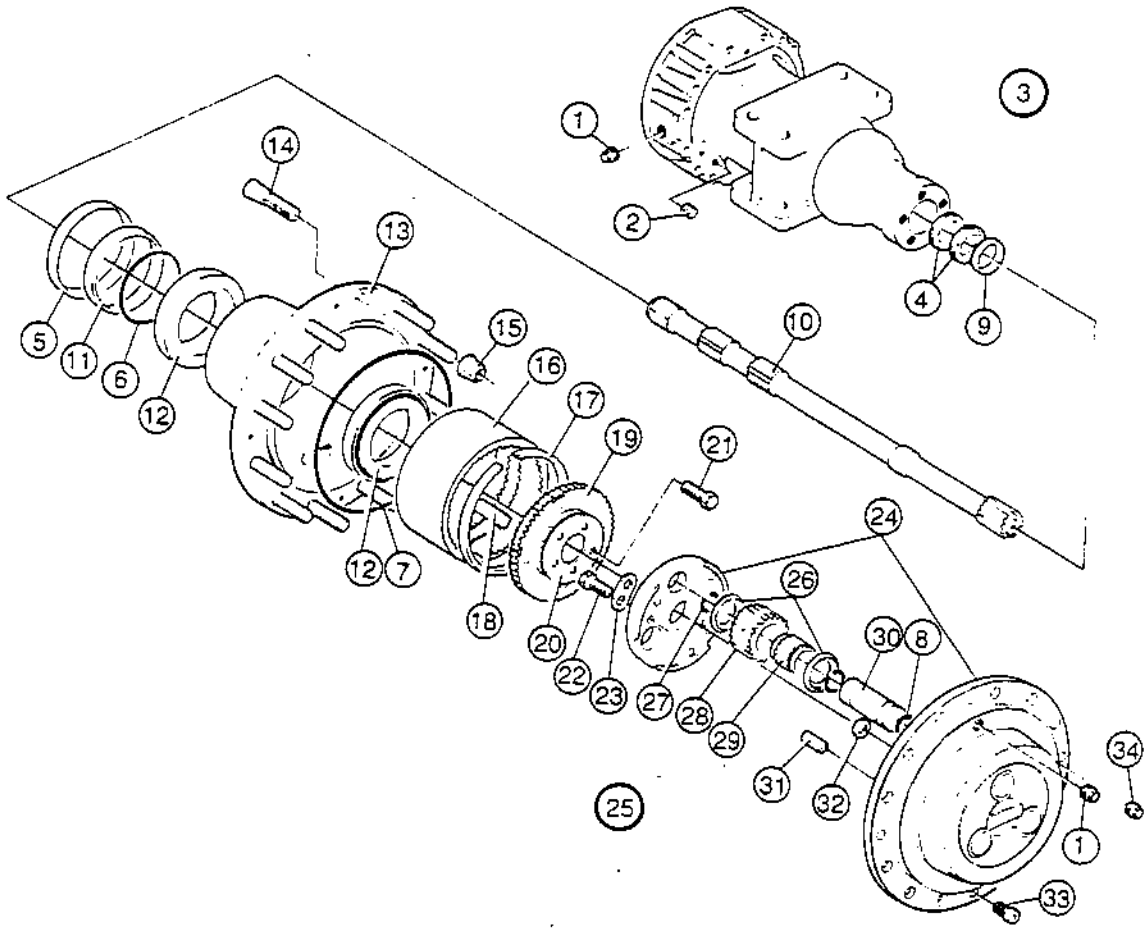
1
2
3
4
9
10
5
11
6
12
14
13
15
16
17
19
21
12
7
18
20
22
23
24
26
27
28
29
30
8
31
32
25
34
1
33

Page	Group	Illustration Number	Catalog Number	Illustration
24	4	PA-15-PL197	PA-15-PL01	Differential Assembly (S/N 2080 & Up)

Ref. No.	Quantity/Model CA 15	CA 15D	CA 15PD		Part Number	Description	Serial Number
1	2	2	2		929622	Screw	See Note
2	2	2	2		929623	Holder	See Note
3	2	2	2		929624	Nut	See Note
4	1	1	1		929893	Seal Kit	See Note
5	6	6	6		NSS	O-Ring	
6	1	1	1		NSS	Gasket	
7	1	1	1		NSS	O-Ring	
8	1	1	1		NSS	O-Ring	
9	1	1	1		929616	Cover	
10	1	1	1		929617	Lock Ring	
11	1	1	1		929614	Plug	
12	1	1	1		926732	Plug	
13	3	3	3		926729	Magnetic Plug	See Note
14	28	28	28		929618	Stud	See Note
15	32	32	32		211733	Nut	See Note
16	4	4	4		929619	Stud	See Note
17	1	1	1		926736	Breather	
18	1	1	1		929620	Plug	
19	2	2	2		929621	Plug	See Note
20	1	1	1		929638	Nut	
21	1	1	1		929892	Bearing Kit	See Note
22	1	1	1		NSS	Bearing	
23	2	2	2		NSS	Bearing	
24	1	1	1		NSS	Bearing	
25	A/R	A/R	A/R		929632	Spacer	
25	A/R	A/R	A/R		929633	Spacer	
25	A/R	A/R	A/R		929634	Spacer	
25	A/R	A/R	A/R		929635	Spacer	
26	A/R	A/R	A/R		929639	Shim 0.10 mm Or .004" Thick	
26	A/R	A/R	A/R		929640	Shim 0.15 mm Or .006" Thick	
26	A/R	A/R	A/R		929641	Shim 0.25 mm Or .010" Thick	
26	A/R	A/R	A/R		929642	Shim 0.50 mm Or .020" Thick	
27	A/R	A/R	A/R		929643	Shim 0.35 mm Or .014" Thick	
27	A/R	A/R	A/R		929644	Shim 0.40 mm Or .016" Thick	
27	A/R	A/R	A/R		929645	Shim 0.45 mm Or .018" Thick	
27	A/R	A/R	A/R		929646	Shim 0.55 mm Or .022" Thick	
28	1	1	1		929627	Bevel Gear Set	
29	1	1	1		929630	Differential Case	
30	1	1	1		929631	Spacer	
31	1	1	1		929626	No Spin Unit	
32	8	8	8		929625	Screw	
33	12	12	12		929628	Washer	
34	12	12	12		929629	Screw	
35	10	10	10		929636	Screw	

Note: Parts For Left or Right Side

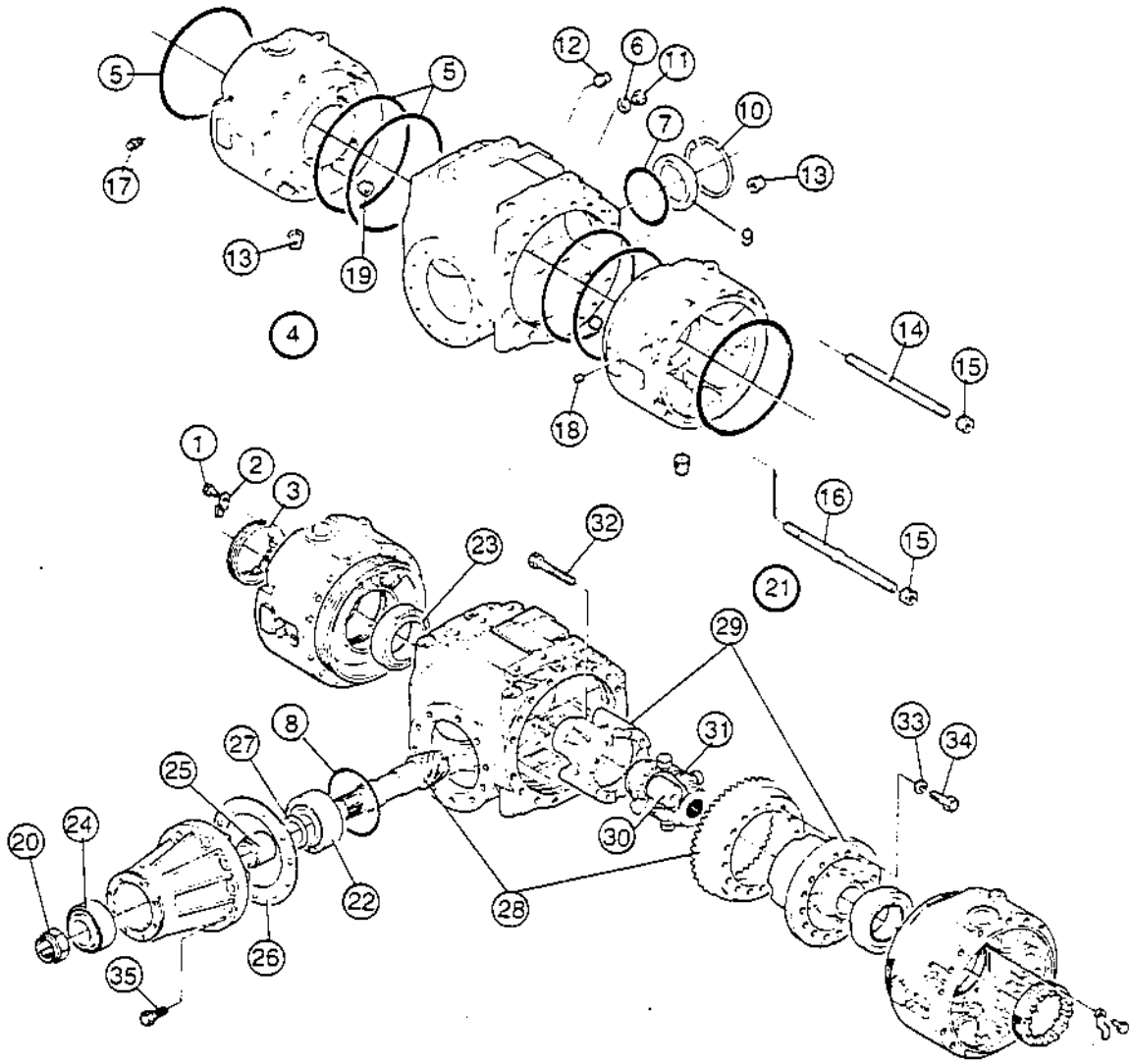
5
5
12
6
11
10
7
13
17
9
13
19
4
14
15
18
16
15
1
2
3
23
32
21
29
8
27
25
31
33
34
20
24
22
28
30
26
35

DYNAPAC

Group 5
Rev. 6/30/87

HYDRAULIC SYSTEMS

Hydraulic Schematic (S/N 2080 & Up)	2
Hydraulic Schematic (To S/N 2049)	4
Traction System, Standard (From S/N 2080 & Up)	6
Traction System, Standard (To S/N 2079)	8
Traction System, CA15D, PD, (S/N 2080 & Up)	10
Traction System, CA15D, PD, (S/N 741 to 2079)	12
Traction System, CA15D, PD, (To S/N 740)	14
Traction Pump (S/N 2080 & Up)	16-18
Charge Pump Assembly (Valid For Both Pumps)	20
Control Valve Assembly (S/N 2080 & Up)	22
Traction Pump (To S/N 2079)	24-26
Traction Motor, Axle (S/N 2080 & Up)	28-30
Traction Motor, Axle (To S/N 2079)	32-34
Manifold Valve Assembly (To S/N 2079)	36
Traction Motor, Drum (S/N 2080 & Up)	38
Traction Motor, Drum (S/N 741 to 2079)	40
Traction Motor, Drum (S/N 441 to 740)	42
Traction Motor, Drum (To S/N 440)	44

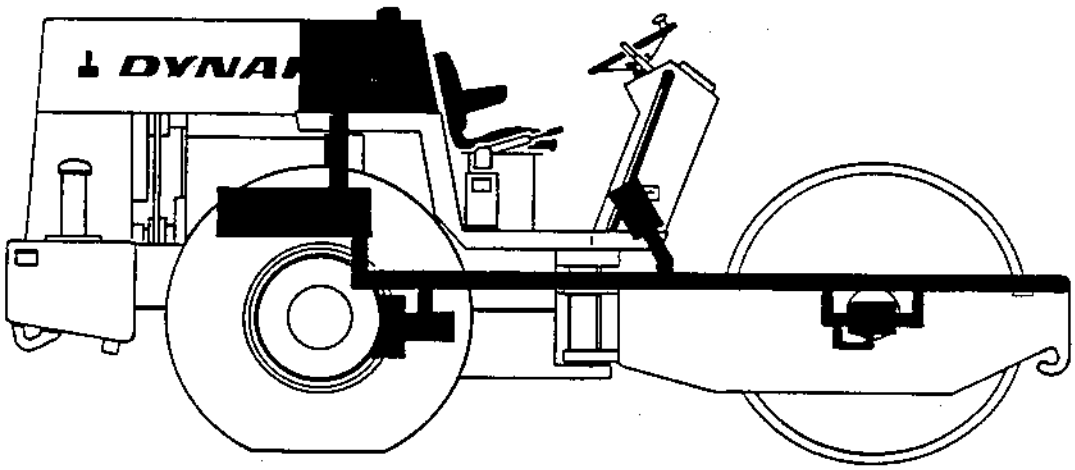

DYNAPAC

HYDRAULIC SYSTEMS (continued)

Vibration System, Standard	46
Vibration System, Dual Amplitude	48
Vibration & Steering Pump	50
Vibration Motor	52
Vibration Control Valve	54
Vibration Control Valve, Dual Amplitude	56
Steering System	58
Steering Valve, Tag YS-11 or YS-12	60
Steering Valve, Tag 211-1039	62
Steering Cylinder	64
Strike-Off Blade System (To S/N 469)	66
Strike-Off Blade System (S/N 470 & Up)	68
Strike-Off Blade Control Valve	70
Strike-Off Blade Cylinder	72
Hydraulic Oil Filter (S/N 2080 & Up)	74
Hydraulic Oil Filter (To S/N 2079)	76
Brake System, Hydraulic (S/N 2080 & Up)	78

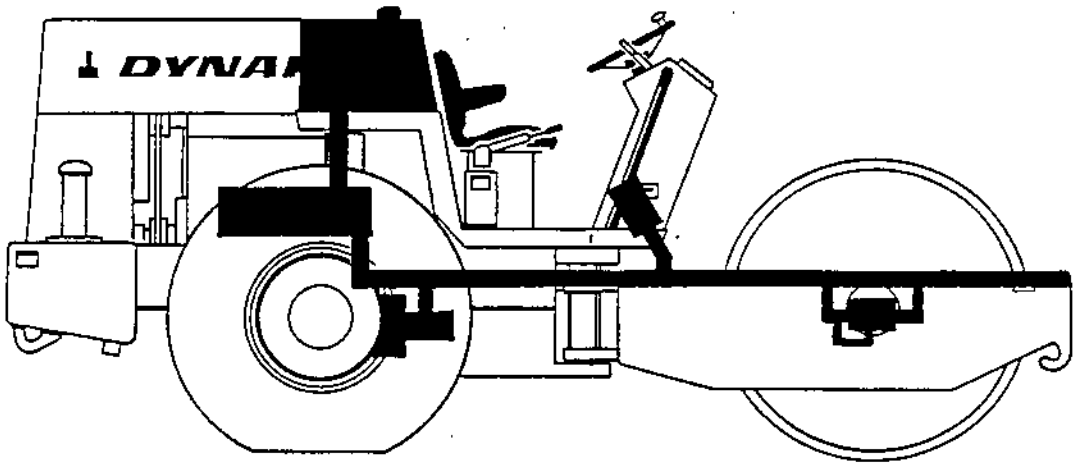

Page	Group	Illustration Number	Catalog Number	Illustration
2	5	PA-15-PL194	PA-15-PL01	Hydraulic Schematic (S/N 2080 & Up)

Ref. No.	Quantity/Model				Part Number	Description	Serial Number
	CA						
	15	15 D	15 PD	15 PDB			

HYDRAULIC SYSTEM

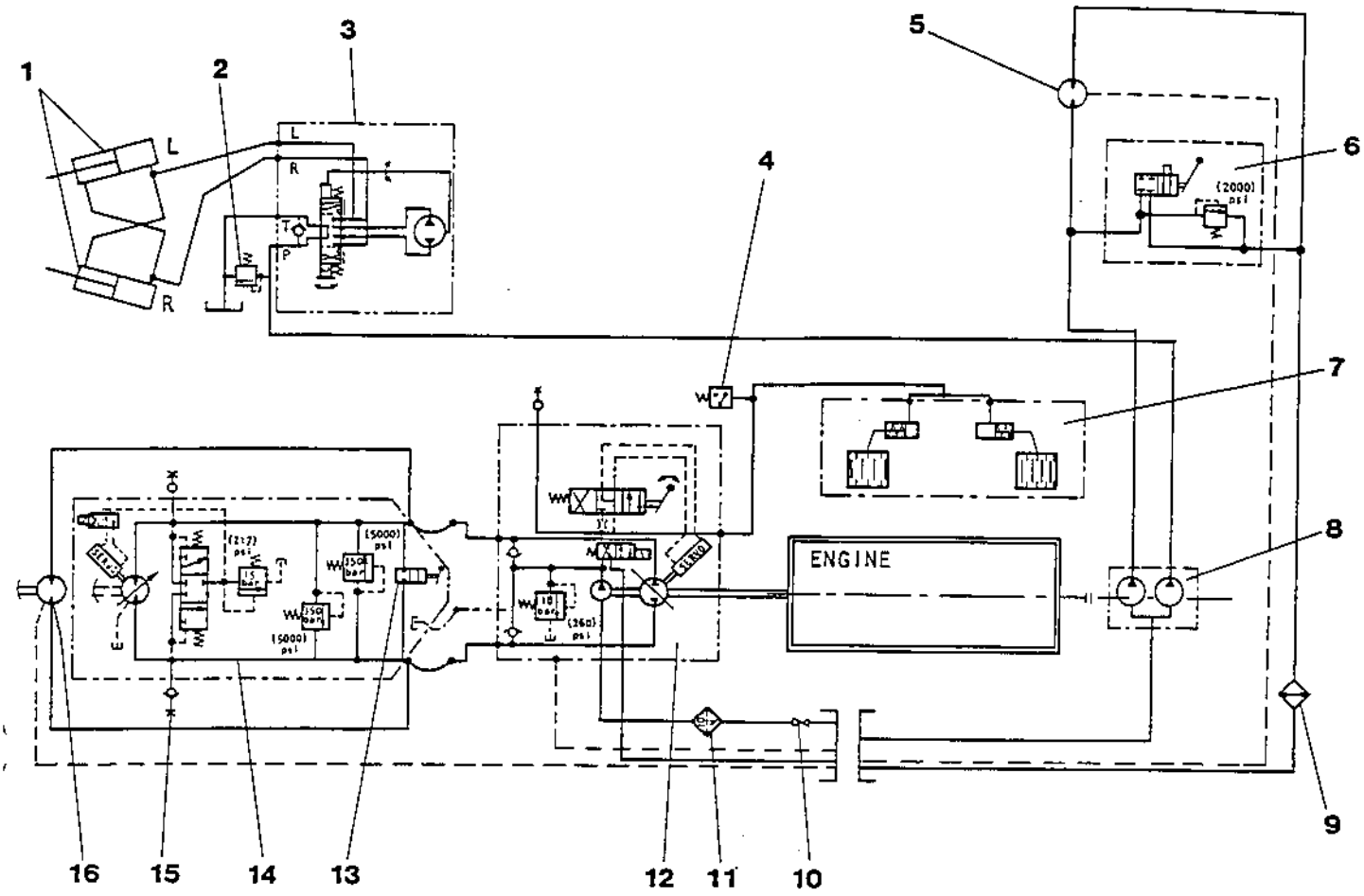

Hydraulic System, CA15, D, PD, CA20, D

1 Steering Cylinders
2 Relief Valve, steering system
3 Steering Valve
4 Brake Pressure Switch
5 Vibration Motor
6 Vibration Valve
7 Failsafe Brakes
8 Duplex Pump, Steering and Vibration
9 Hydraulic oil cooler
10 Shut-off Valve
11 Suction Filter, Charge circuit
12 Traction Pump
13 Bypass Valve
14 Traction Motor, Axle
15 Pressure Measurement Test Port
16 Traction Motor, Drum
(D, PD machines only)

Page	Group	Illustration Number	Catalog Number	Illustration
4	5	PA-15-PL176	PA-15-PL01	Hydraulic Schematic (To S/N 2079)

Ref. No.	Quantity/Model				Part Number	Description	Serial Number
	CA						
	15	15 D	15 PD	15 PDB			

Hydraulic Systems

The roller hydraulic system can be divided into three systems:

- Traction System
- Steering System
- Vibration System

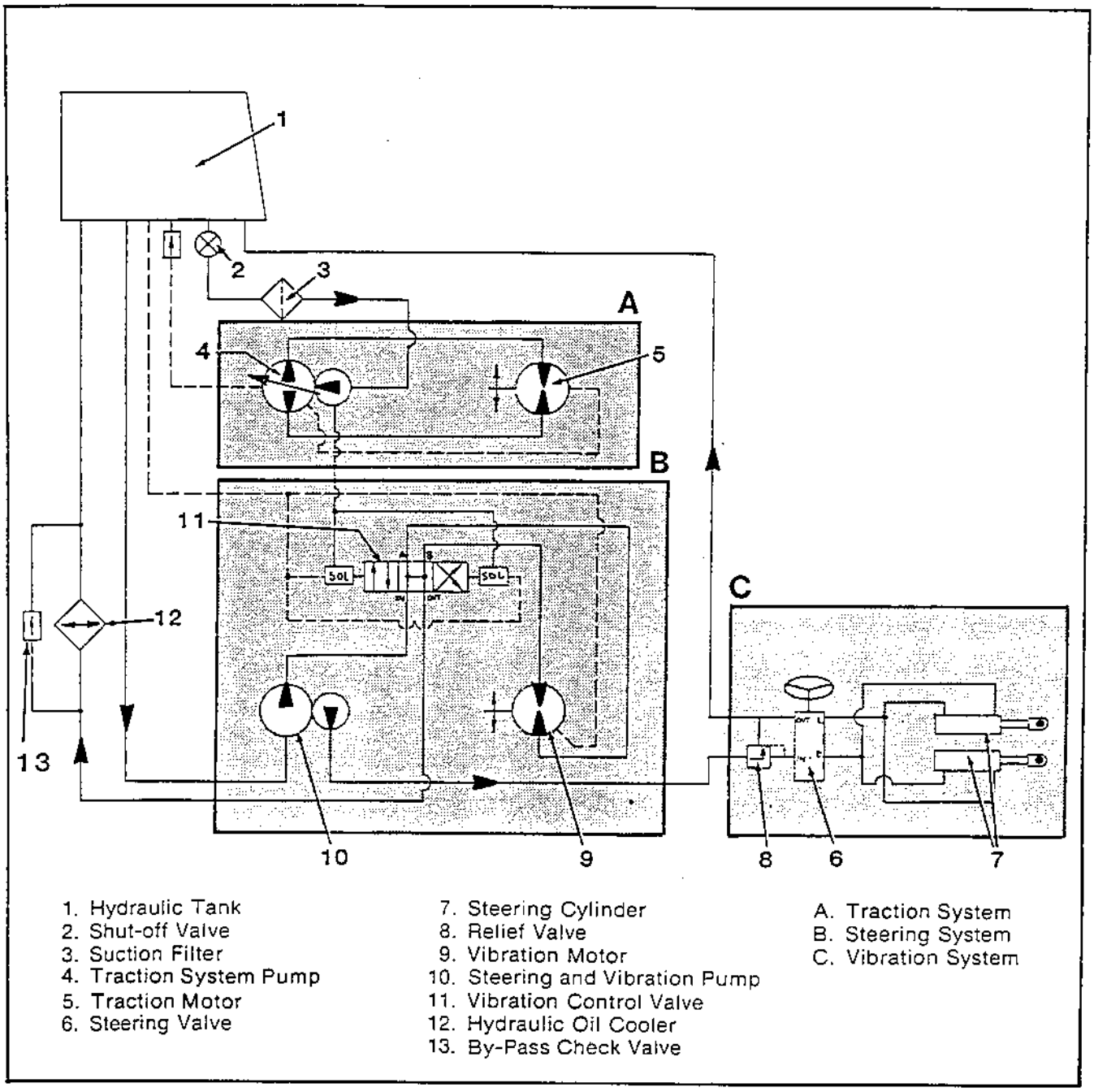

1. Hydraulic Tank
2. Shut-off Valve
3. Suction Filter
4. Traction System Pump
5. Traction Motor
6. Steering Valve
7. Steering Cylinder
8. Relief Valve
9. Vibration Motor
10. Steering and Vibration Pump
11. Vibration Control Valve
12. Hydraulic Oil Cooler
13. By-Pass Check Valve

A. Traction System
B. Steering System
C. Vibration System

Page	Group	Illustration Number	Catalog Number	Illustration
6	5	PA-15-PL198	PA-15-PL01	Traction System, Standard (S/N 2080 & Up)

Ref. No.	Quantity/Model CA 15	Part Number	Description	Serial Number
1	1	813738	Adapter	
2	2	502018	Capscrew, HH	
3	4	604027	Lockwasher	
4	4	600006	Washer, Flat	
5	1	813451	Valve, Gate	
6	1	234395	Elbow, 90°	
7	1	234667	Adapter, Reducing	
8	1	814250	Valve, Check	
9	1	923196	Adapter, Tee	
10	1	482182	Hose Assy., Pump to Tank Return	
11	2	334604	Adapter, 90°	
12	1	160144	O-Ring	
13	1	815649	Hose Assy., Hyd. Filter to Pump	
14	1	334157	Adapter	
15	2	813449	Adapter	
16	1	825265	Bracket, Filter	
17	2	502016	Capscrew, HH	
18	2	571002	Hex Nut	
19	1	334158	Adapter	
20	1	160144	O-Ring	
21	1	892276	Adapter	
22	1	160144	O-Ring	
23	1	989078	Sender, Hyd. Oil Temperature	
24	1	813434	Bushing	
25	1	900457	Adapter, Tee	
26	1	482318	Hose Assy., Motor to Pump Return	
27	4	332073	Kit, Flange	
-	4	502036	Capscrew, HH	
-	4	604006	Lockwasher	
-	1	813429	O-Ring	
28	2	482058	Hose Assy., Pump to Axle Motor	
29	2	234855	Adapter, 90°	
30	2	910162	Nipple, Measuring	
31	1	500040	Capscrew, HH	
32	1	338895	Bar, Angle	
33	1	586002	Locknut	
34	1	337528	Filter Assy., Hydraulic (see pg. 74)	

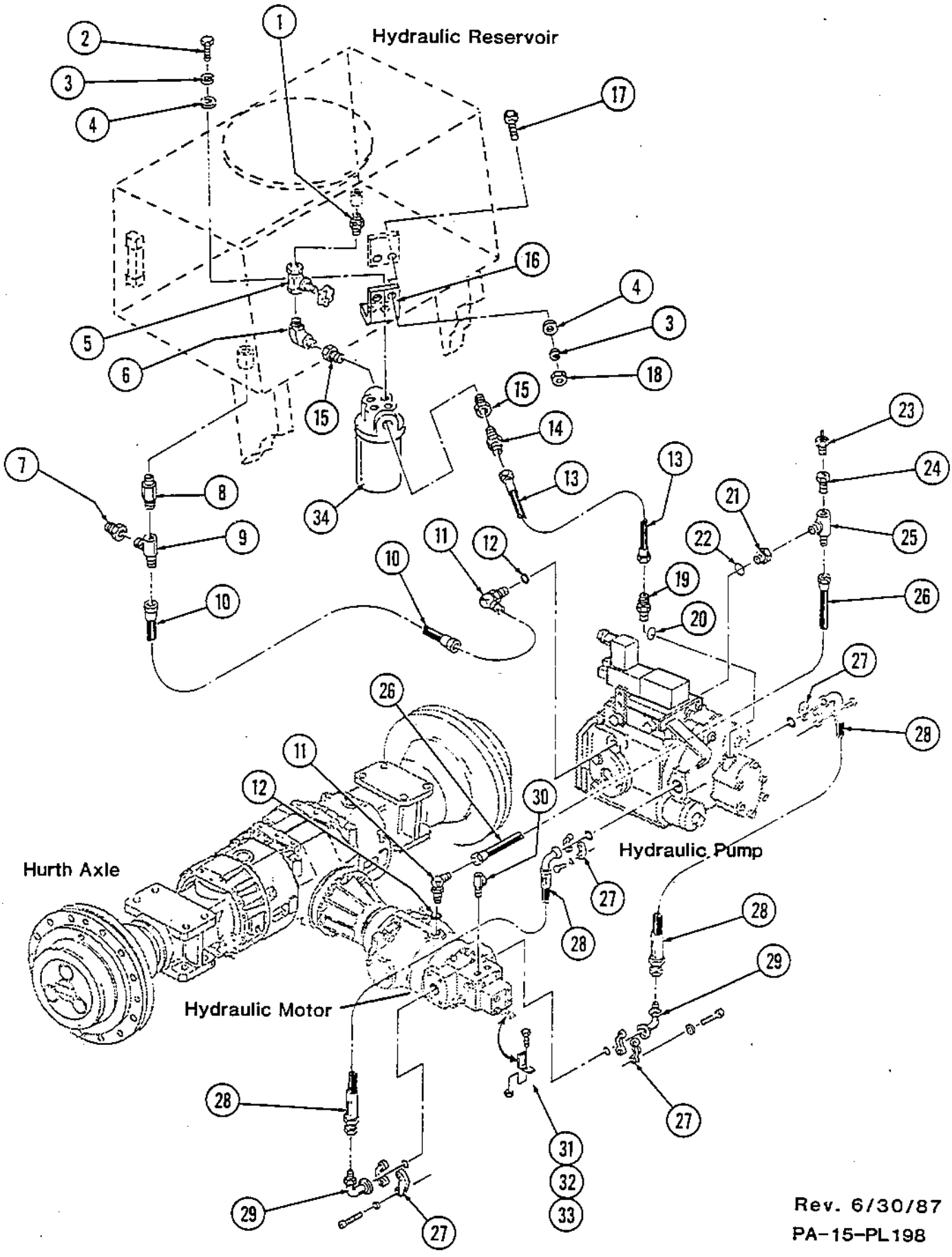

Rev. 6/30/87
PA-15-PL198

Page	Group	Illustration Number	Catalog Number	Illustration
8	5	PA-15-PL179	PA-15-PL01	Traction System, Standard (To S/N 2079)

Ref. No.	Quantity/Model CA 15	Part Number	Description	Serial Number
1	1	801503	Plug, Magnetic Pipe	
2	1	825265	Bracket, Filter	
3	2	502018	Capscrew, HH	
4	4	604027	Lockwasher	
5	4	600006	Washer, Flat	
6	2	502016	Capscrew, HH	
7	2	571002	Hex Nut	
8	1	813738	Nipple, Hex	
9	1	813451	Valve, Gate	
10	1	234395	Elbow, 90°	
11	1	335554	Assy., Hyd. Filter (See Group 5)	
12	2	813449	Bushing, Reducer	
13	1	334157	Connector, Male	
14	1	81508910	Hose Assy., Hyd. Res. To Pump	
15	1	814250	Valve, Check	
16	1	334127	Connector, Female	
17	1	81508907	Hose Assy., Pump To Hyd. Res.	
18	1	989078	Sender, Hyd. Oil Temperature	
19	1	850216	Adapter, Hyd. Oil Sender	
20	1	234131	Elbow 45°	
21	1	160144	O-Ring	
22	1	81508909	Hose Assy., Pump To Axle Motor	
23	4	332073	Kit, Flange	
24	1	813429	O-Ring	
25	1	81508908	Hose Assy., Pump To Axle Motor	
26	2	85021601	Elbow, 90°	
27	1	160144	O-Ring	
28	1	81508911	Hose Assy., Motor Drain To Pump	

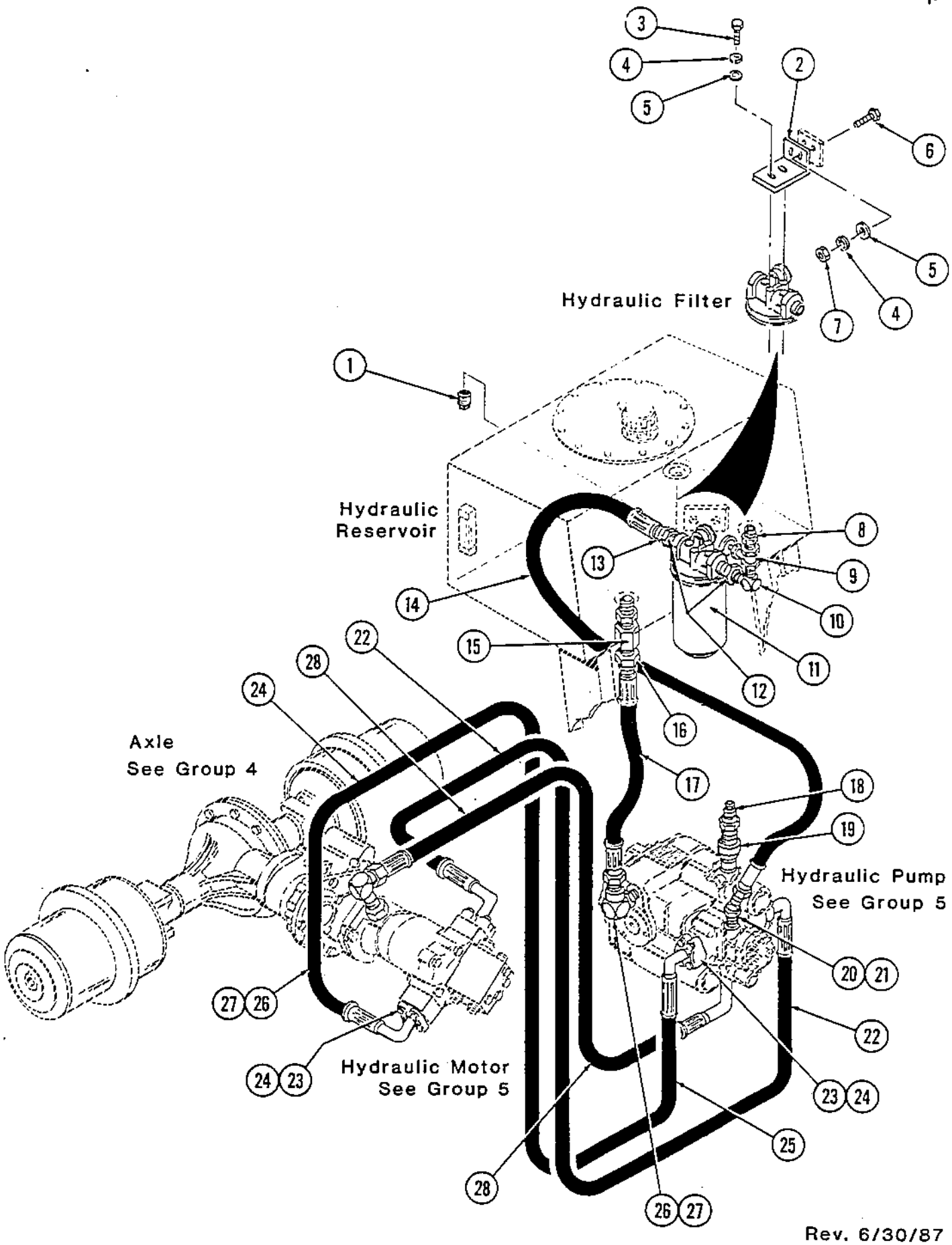
Hydraulic Filter
Hydraulic Reservoir
Axle
See Group 4
Hydraulic Motor
See Group 5
Hydraulic Pump
See Group 5

Page	Group	Illustration Number	Catalog Number	Illustration
10	5	PA-15-PL199	PA-15-PL01	Traction System, Drum Drive (S/N 2080 & Up)

Ref. No.	Quantity/Model CA 15D	CA 15PD			Part Number	Description	Serial Number
1	1	1			813738	Adapter	
2	2	2			502018	Capscrew, HH	
3	4	4			604027	Lockwasher	
4	4	4			600006	Washer, Flat	
5	1	1			813451	Valve, Gate	
6	1	1			234395	Elbow, 90°	
7	1	1			482441	Hose Assy., Motor Return to Tank	
8	1	1			334135	Adapter, Tee	
9	1	1			234667	Adapter, Reducing	
10	1	1			814250	Valve, Check	
11	1	1			923196	Adapter, Tee	
12	1	1			482182	Hose Assy., Pump to Tank Return	
13	2	2			334604	Adapter, 90°	
14	1	1			160144	O-Ring	
15	1	1			815649	Hose Assy. Hyd. Filter to Pump	
16	1	1			334157	Adapter	
17	2	2			813449	Adapter	
18	1	1			825265	Bracket, Filter	
19	2	2			502016	Capscrew, HH	
20	6	6			502043	Capscrew, HH	
21	6	6			604028	Lockwasher	
22	3	3			335675	Block, Rubber	
23	4	4			571003	Hex Nut	
24	6	6			502043	Capscrew, HH	
25	3	3			335632	Plate, Hold Down	
26	2	2			571002	Hex Nut	
27	1	1			334158	Adapter	
28	1	1			160144	O-Ring	
29	1	1			892276	Adapter	
30	1	1			160144	O-Ring	
31	1	1			989078	Sender, Hyd. Oil Temperature	
32	1	1			813434	Bushing	
33	1	1			900457	Adapter, Tee	
34	1	1			482318	Hose Assy., Motor to Pump Return	
35	6	6			332073	Kit, Flange	
-	4	4			502036	Capscrew, HH	
-	4	4			604006	Lockwasher	
-	1	1			813429	O-Ring	
36	2	2			482058	Hose Assy., Pump to Axle Motor	
37	2	2			910162	Nipple, Measuring	
38	1	1			500040	Capscrew, HH	
39	1	1			338895	Bar, Angle	
40	1	1			586002	Locknut	
41	2	2			381508912	Hose Assy., Pump to Drum Motor	
42	1	1			802311	Motor, Hydraulic (See Pg. 34)	
43	1	1			160346	O-Ring	
44	1	1			334134	Adapter, Straight	
45	1	1			160146	O-Ring	
46	2	2			334141	Adapter, Reducing	
47	2	2			334504	Adapter, Tee	
48	2	2			234855	Adapter, 90°	
49	1	1			337528	Filter Assy., Hydraulic (See Pg. 74)	

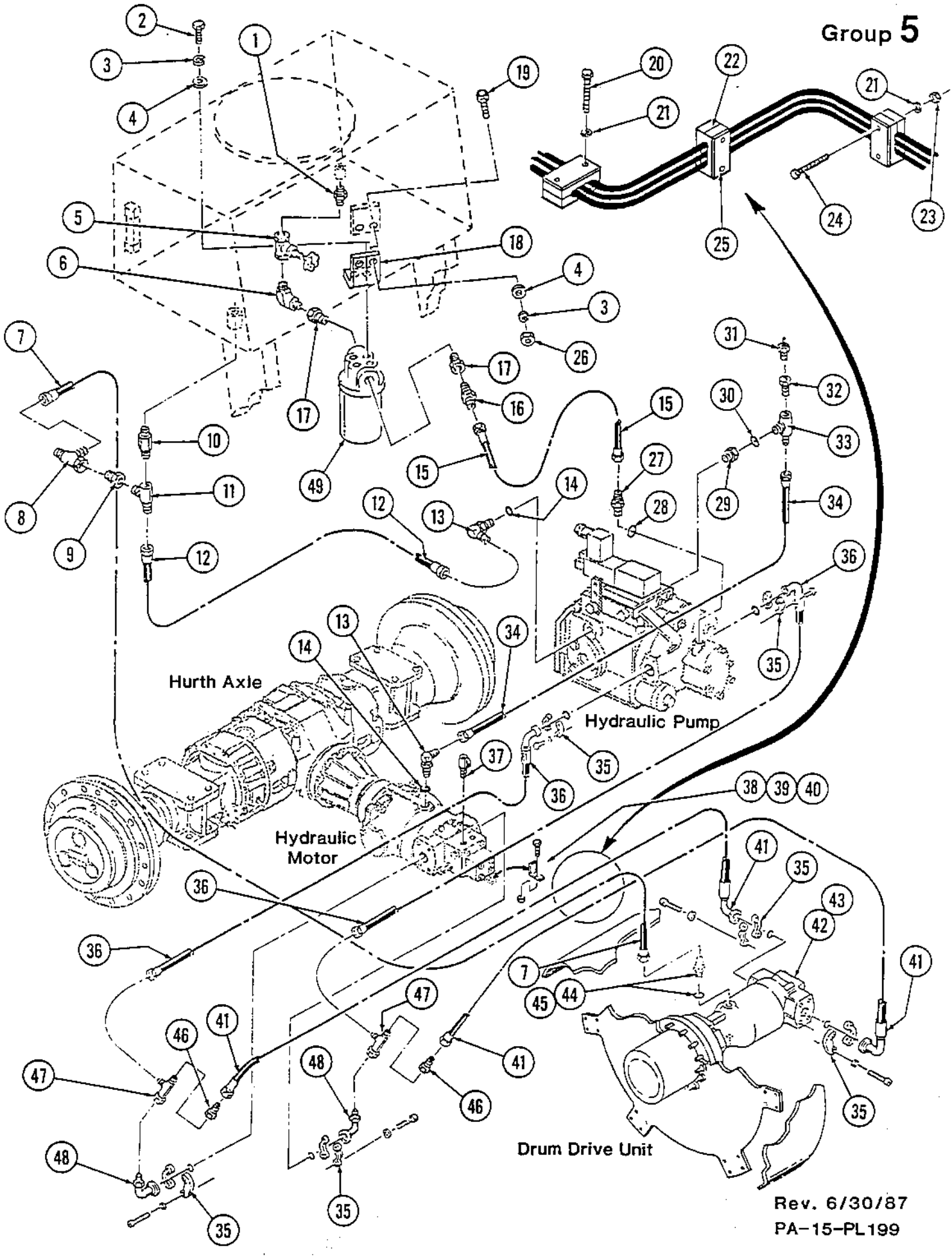

Rev. 6/30/87
PA-15-PL199

Page	Group	Illustration Number	Catalog Number	Illustration
12	5	PA-15-PL181	PA-15-PL01	Traction System Drum Drive (S/N 741 to 2079)

Ref. No.	Quantity/Model CA 15	Quantity/Model CA 15 PD	Part Number	Description	Serial Number
1	1	1	334424	Tee	
2	1	1	334410	Elbow, 90°	
3	1	1	232206	Plug, Soc. Hd. Pipe	
4	1	1	81508933	Hose Assy., Motor Drain To Hyd. Res.	
5	1	1	801244	Elbow, 45°	
6	1	1	160146	O-Ring	
7	6	6	332073	Kit, Flange	
8	1	1	813429	O-Ring	
9	1	1	334134	Elbow, 90°	
10	1	1	160146	O-Ring	
11	1	1	81508940	Hose Assy., Axle Motor To Drum Motor	
12	1	1	81508941	Hose Assy., Axle Motor To Drum Motor	
13	1	1	81508910	Hose Assy., Hyd. Res. To Pump	
14	1	1	814250	Valve, Check	
15	1	1	334127	Adapter	
16	1	1	81508907	Hose Assy., Pump To Hyd. Res.	
17	1	1	81508909	Hose Assy., Pump To Axle Motor	
18	1	1	81508911	Hose Assy., Motor Drain To Pump	
19	1	1	81508908	Hose Assy., Pump To Axle Motor	
20	1	1	85021601	Elbow, 90°	
21	1	1	160144	O-Ring	
22	1	1	234624	Elbow, 45° Swivel	
23	2	2	813721	Elbow, 90°	
24	1	1	160154	O-Ring	
25	2	2	335669	Adapter	
26	2	2	813429	O-Ring	
27	8	8	514014	Capscrew, Soc. Hd.	
28	1	1	989078	Sender, Hyd. Oil Temperature	
29	1	1	850216	Adapter, Hyd. Oil Sender	
30	1	1	234131	Elbow, 45°	
31	1	1	160144	O-Ring	
32	3	3	825911	Block, Rubber	
33	3	3	335632	Plate, Hold Down	
34	6	6	502043	Capscrew, HH	
35	6	6	604028	Lockwasher	
36	4	4	571003	Hex Nut	

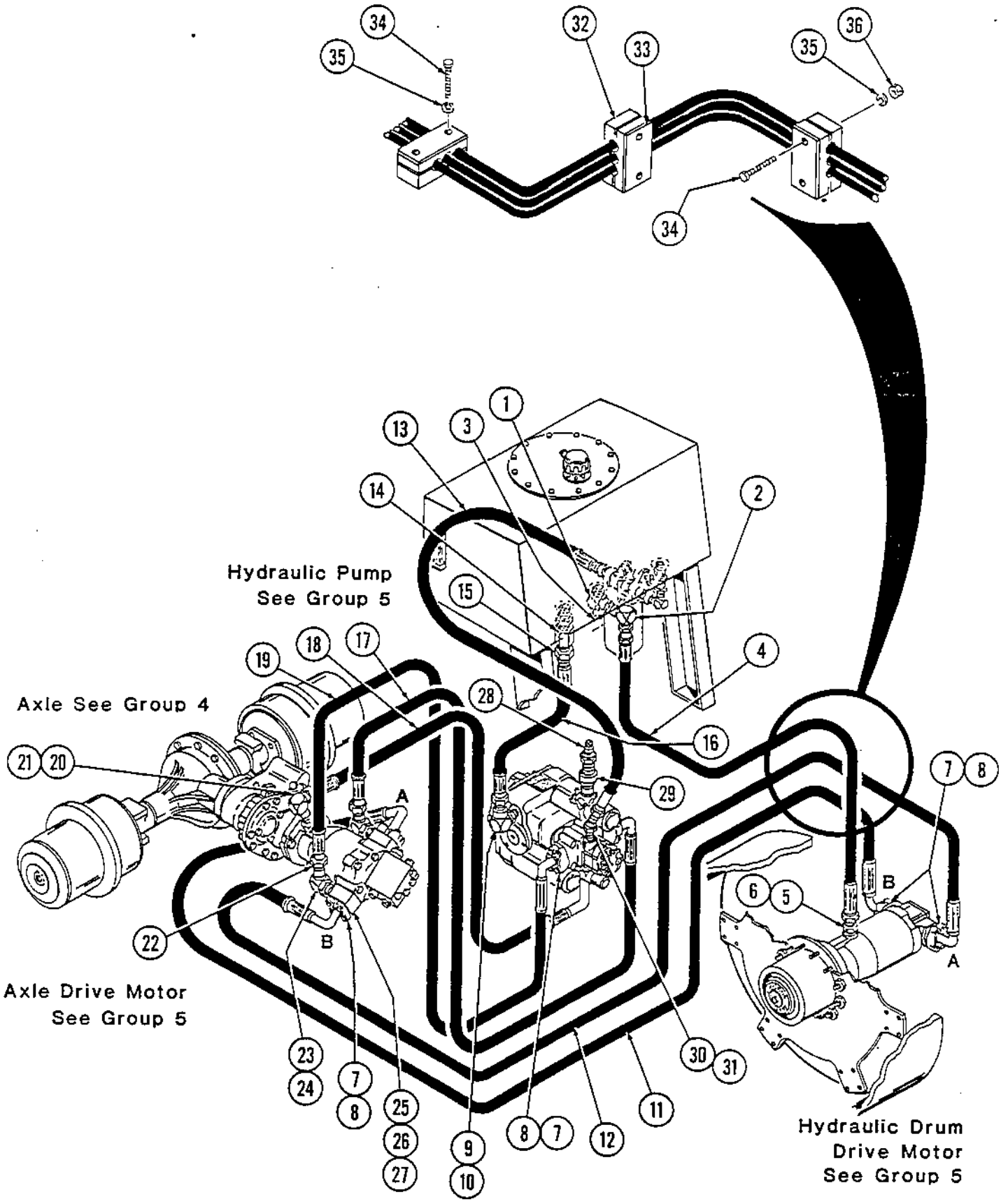

Rev. 6/30/87

PA-15-PL181

Page	Group	Illustration Number	Catalog Number	Illustration
14	5	PA-15-PL182	PA-15-PL01	Traction System Drum Drive (To S/N 740)

Ref. No.	Quantity/Model CA 15 D	Quantity/Model CA 15 PD			Part Number	Description	Serial Number
1	1	1			334424	Tee	
2	1	1			334410	Elbow, 90°	
3	1	1			232206	Plug, Soc. Hd. Pipe	
4	1	1			81508933	Hose Assy., Motor Drain To Hyd. Res.	
5	1	1			813500	Elbow, 45°	
6	1	1			160146	O-Ring	
7	2	2			334441	Adapter	From S/N 442
8	1	1			160164	O-Ring	From S/N 442
9	1	1			335668	Flange, Adapter	To S/N 441
10	2	2			813797	O-Ring	To S/N 441
11	2	2			232066	Kit, Flange	To S/N 441
12	2	2			503068	Capscrew, Soc. Hd.	To S/N 441
13	4	4			510009	Capscrew, Soc. Hd.	To S/N 441
14	4	4			813484	Lockwasher, Hi Collar	To S/N 441
15	1	1			81508910	Hose Assy., Res. To Pump	
16	1	1			81508934	Hose Assy., Axle Motor To Drum Motor	To S/N 441
-	1	1			81508937	Hose Assy., Axle Motor To Drum Motor	From S/N 442
17	1	1			81508932	Hose Assy., Axle Motor To Drum Motor	To S/N 441
-	1	1			81508936	Hose Assy., Axle Motor To Drum Motor	From S/N 442
18	1	1			814250	Valve, Check	
19	1	1			334127	Adapter	
20	1	1			81508907	Hose Assy., Pump To Hyd. Res.	
21	1	1			989078	Sender, Hyd. Oil Temperature	
22	1	1			850216	Adapter, Hyd. Oil Sender	
23	1	1			81508909	Hose Assy., Pump To Axle Motor	
24	1	1			81508911	Hose Assy., Motor Drain To Pump	
25	1	1			81508908	Hose Assy., Pump To Axle Motor	
26	1	1			234624	Elbow, 45° Swivel	
27	2	2			813499	Elbow, 90°	
28	1	1			160153	O-Ring	
29	1	1			335669	Adapter	
30	2	2			813429	O-Ring	
31	8	8			502043	Capscrew, Soc. Hd.	
32	1	1			334134	Elbow, 90°	
33	1	1			160146	O-Ring	
34	4	4			332073	Kit, Flange	
35	1	1			813429	O-Ring	
36	1	1			234131	Elbow, 45°	
37	1	1			160144	O-Ring	
38	3	3			335675	Block, Rubber	
39	3	3			335632	Plate, Hold Down	
40	6	6			502045	Capscrew, HH	
41	6	6			604028	Lockwasher	
42	4	4			571003	Hex Nut	

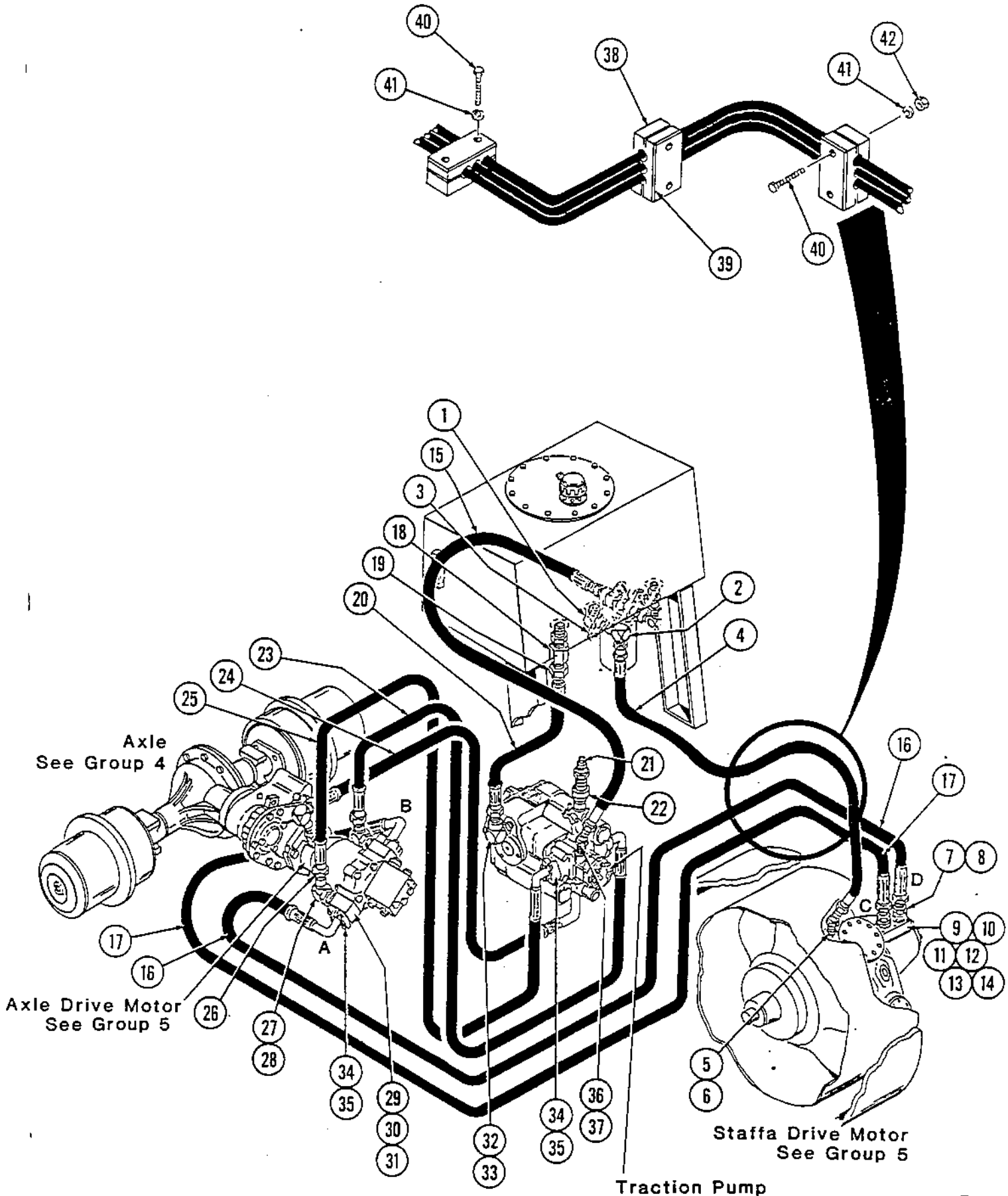

Rev. 6/30/87

PA-15-PL182

Page	Group	Illustration Number	Catalog Number	Illustration
16	5	PA-15-PL200	PA-15-PL01	Traction Pump (S/N 2080 & Up)

Ref. No.	Quantity/Model CA			Part Number	Description	Serial Number
	15	15D	15PD			
-	1	1	1	348530	Pump, Traction	
-	1	1	1	927130	Seal Kit (See Note)	
1	4	4	4	813834	Screw	
2	4	4	4	813844	Washer	
3	1	1	1	813692	Charge Pump Assy., (See Page 20)	
4	1	1	1	NSS	Gasket	
5	2	2	2	813630	Check Valve Assy.	
6	1	1	1	NSS	O-Ring	
7	3	3	3	813838	Screw	
8	5	5	5	813839	Screw	
9	9	9	9	813846	Washer	
10	1	1	1	480305	Cover, Rear	
11	A/R	A/R	A/R	481611	Shim	
12	1	1	1	NSS	Gasket	
13	1	1	1	813813	Roller Bearing	
14	1	1	1	813821	Pin	
15	1	1	1	813867	Valve Plate	
-	1	1	1	927131	Cylinder Block Kit, Assy.	
16	1	1	1	813878	Bearing Plate	
17	1	1	1	813875	Guide Ring	
18	1	1	1	813829	Retaining Ring	
19	1	1	1	813855	Spring Holder	
20	1	1	1	813856	Spring Guide	
21	1	1	1	480306	Spring	
22	1	1	1	813854	Spring Holder	
23	1	1	1	813851	Pin	
24	1	1	1	813874	Cylinder Block	
25	6	6	6	911060	Spring	
26	1	1	1	813866	Guide Sleeve	
27	1	1	1	813870	Piston Retainer	
28	9	9	9	813873	Piston Assy.	
29	1	1	1	480307	Thrust Plate	
30	1	1	1	813872	Pump Housing	
31	2	2	2	813822	Pin	
32	1	1	1	NSS	O-Ring	
33	1	1	1	813825	Plug	
34	1	1	1	927132	Plug Assy.	
35	1	1	1	NSS	O-Ring	
36	1	1	1	927505	Swash Plate Assy.	
37	1	1	1	813885	Link	
38	2	2	2	480288	Retaining Ring	
39	1	1	1	813823	Pin	
40	1	1	1	813863	Drive Shaft	
41	1	1	1	813815	Roller Bearing	
42	1	1	1	NSS	Gasket	
43	2	2	2	813822	Pin	

Note: Seal Kit contains items 4, 6, 12, 32, 35, 42, 47, 48, 59, 60, 68, & 69. Also items 3 & 4 on Control Valve, pg. 22.

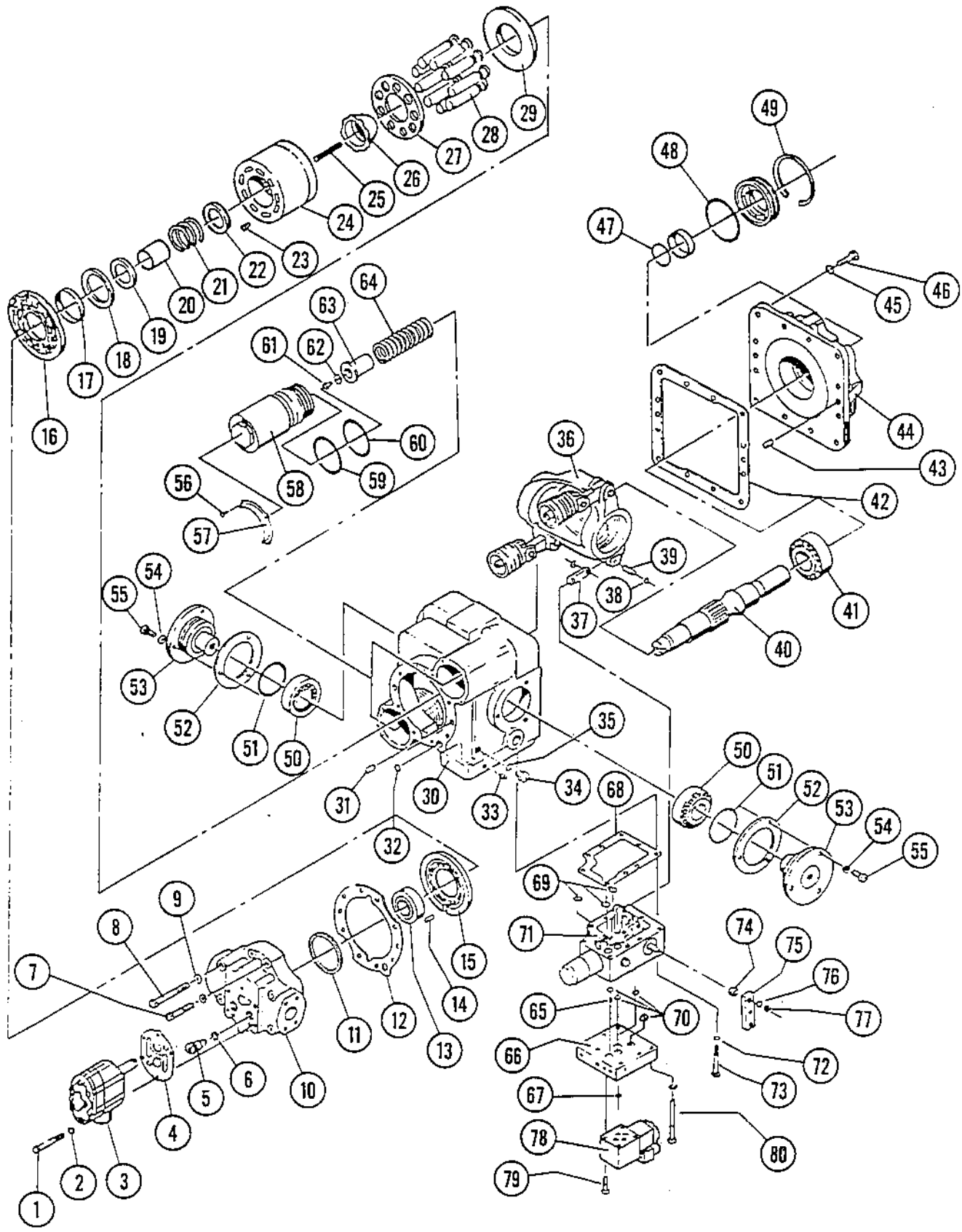
1
2
3
4
5
6
7
8
9
10
11
12
13
14
15
16
17
18
19
20
21
22
23
24
25
26
27
28
29
30
31
32
33
34
35
36
37
38
39
40
41
42
43
44
45
46
47
48
49
50
51
52
53
54
55
56
57
58
59
60
61
62
63
64
65
66
67
68
69
70
71
72
73
74
75
76
77
78
79
80

Page	Group	Illustration Number	Catalog Number	Illustration
18	5	PA-15-PL200	PA-15-PL01	Traction Pump (S/N 2080 & Up)

Ref. No.	Quantity/Model CA 15	15D	15PD	Part Number	Description	Serial Number
44	1	1	1	813861	Cover, Front	
45	12	12	12	813846	Washer	
46	12	12	12	813837	Screw	
-	1	1	1	481616	Drive Shaft Seal Assy.	
47	1	1	1	NSS	O-Ring	
48	1	1	1	NSS	O-Ring	
49	1	1	1	813621	Retaining Ring	
50	2	2	2	480318	Roller Bearing	
51	2	2	2	NSS	O-Ring	
52	A/R	A/R	A/R	813858	Shim	
53	2	2	2	813857	Bearing Journal	
54	6	6	6	813845	Washer	
55	6	6	6	813835	Screw	
56	4	4	4	813840	Screw	
57	2	2	2	813850	Sleeve Retainer	
58	2	2	2	927136	Servo Cylinder Assy.	
59	2	2	2	NSS	O-Ring	
60	2	2	2	NSS	O-Ring	
61	2	2	2	480290	Screw	
62	2	2	2	480292	Washer	
63	2	2	2	813860	Spring Guide	
64	2	2	2	480308	Spring	
65	1	1	1	910245	Orifice	
66	1	1	1	927508	Connection Plate	
67	4	4	4	927511	O-Ring	
68	1	1	1	813634	Gasket	
69	3	3	3	NSS	O-Ring	
70	4	4	4	910707	O-Ring	
71	1	1	1	927507	Control Valve Servo	
72	9	9	9	813844	Washer	
73	9	9	9	813833	Screw	
74	1	1	1	813888	Spacer Ring	
75	1	1	1	813887	Control Lever	
76	1	1	1	813847	Washer	
77	1	1	1	813816	Nut	
78	1	1	1	922305	Solenoid Valve	
79	4	4	4	927510	Screw	
80	6	6	6	927509	Screw	

Note: Seal Kit contains items 4, 6, 12, 32, 35, 42, 47, 48, 59, 60, 68, & 69. Also items 3 & 4 on Control Valve, pg. 22.

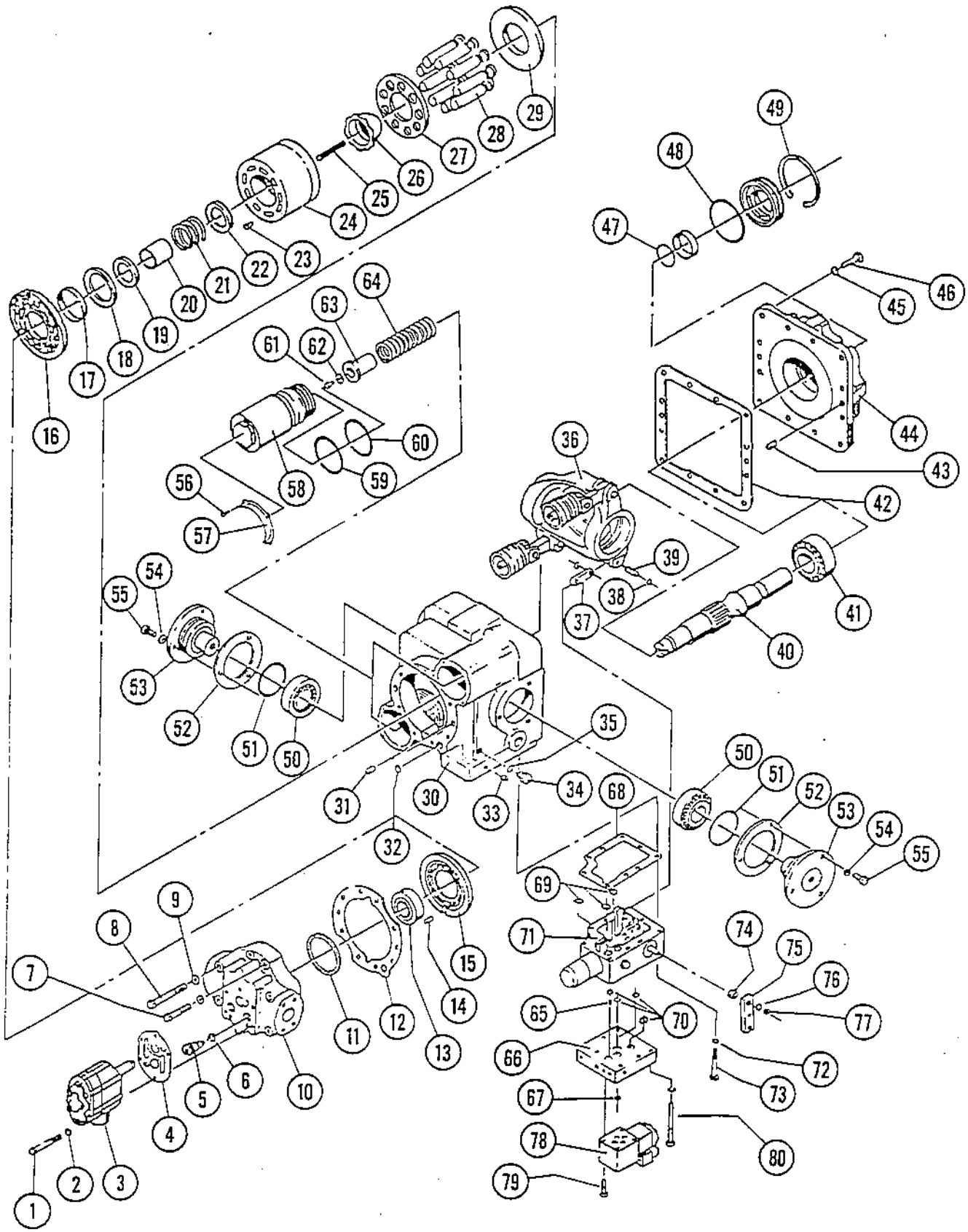
1
2
3
4
5
6
7
8
9
10
11
12
13
14
15
16
17
18
19
20
21
22
23
24
25
26
27
28
29
30
31
32
33
34
35
36
37
38
39
40
41
42
43
44
45
46
47
48
49
50
51
52
53
54
55
56
57
58
59
60
61
62
63
64
65
66
67
68
69
70
71
72
73
74
75
76
77
78
79
80

Page	Group	Illustration Number	Catalog Number	Illustration
20	5	PA-15-PL201	PA-15-PL01	Charge Pump Assembly

Ref. No.	Quantity/Model CA 15	15D	15PD		Part Number	Description	Serial Number
1	1	1	1		813692	Charge Pump Assembly	
2	1	1	1		480408	Plug	
3	A/R	A/R	A/R		480402	Shim	
4	1	1	1		813618	O-Ring	
5	1	1	1		480413	Spring	
6	1	1	1		480412	Relief Valve	
7	1	1	1		480406	Spacer	
8	1	1	1		923075	Pin	
9	1	1	1		480410	Pump Housing	
10	1	1	1		480350	Pin	
11	1	1	1		480405	Drive Shaft	
12	1	1	1		926901	Spacer Plate Assembly	
13	1	1	1		480340	Key	
14	2	2	2		480352	Pin	
15	1	1	1		480403	End Cap	
16	2	2	2		813844	Washer	
17	2	2	2		480364	Screw	

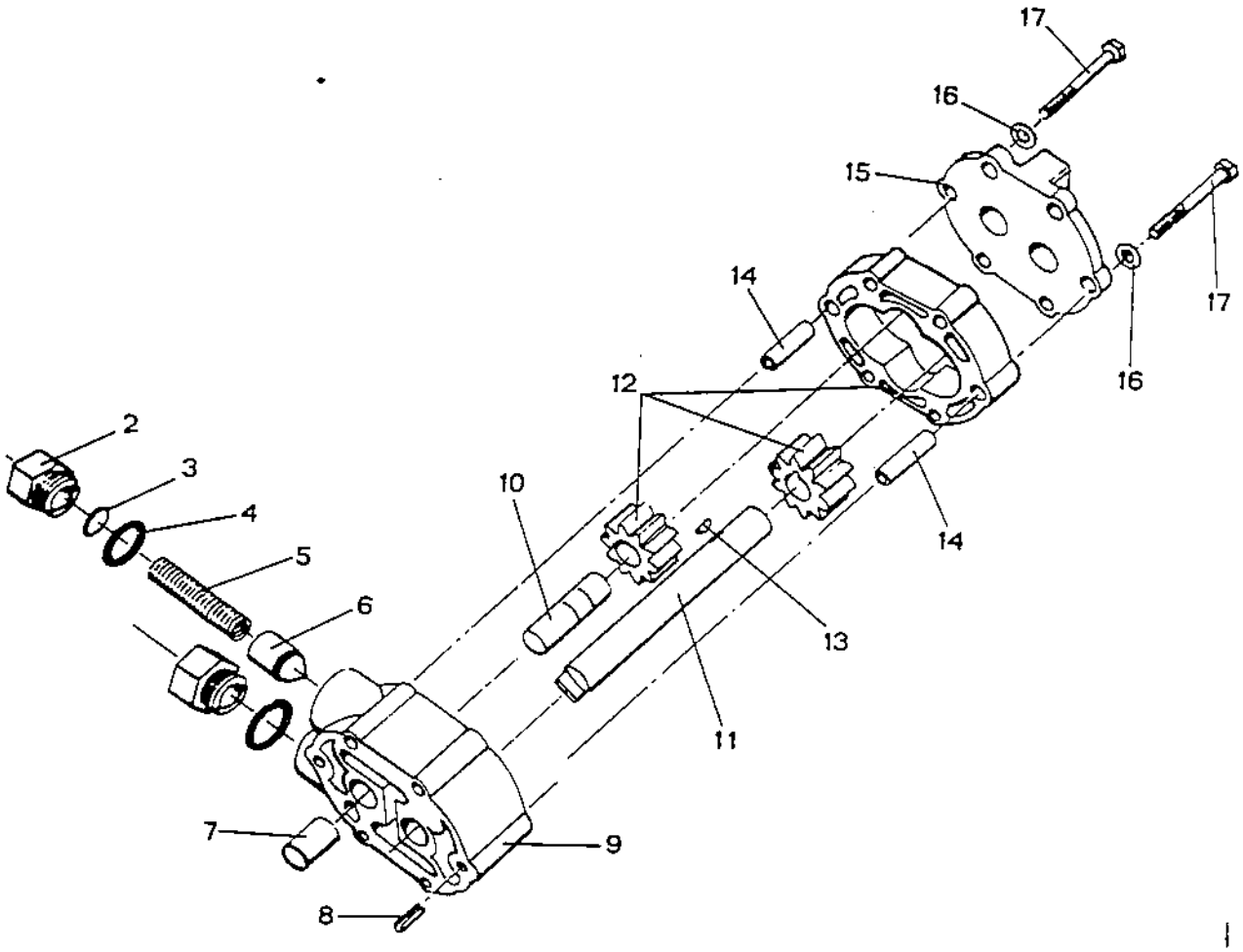
17
16
15
14
12
2
3
4
5
6
10
13
14
16
17
11
7
9
8

Page	Group	Illustration Number	Catalog Number	Illustration
22	5	PA-15-PL202	PA-15-PL01	Control Valve Assembly (S/N 2080 & Up)

Ref. No.	Quantity/Model CA				Part Number	Description	Serial Number
	15	15D	15PD				
1	1	1	1		927507	Control Valve Assembly	
2	1	1	1		893080	Spring	
3	1	1	1		911431	O-Ring	
4	1	1	1		910706	O-Ring	
5	1	1	1		922032	Bushing	
6	1	1	1		911430	O-Ring	
7	1	1	1		911454	Spring	
8	1	1	1		813613	O-Ring	
9	1	1	1		911468	Cover	
10	1	1	1		813890	Pin (Old Design)	
11	1	1	1		813844	Washer (Old Design)	
12	1	1	1		813820	Split Pin (Old Design)	

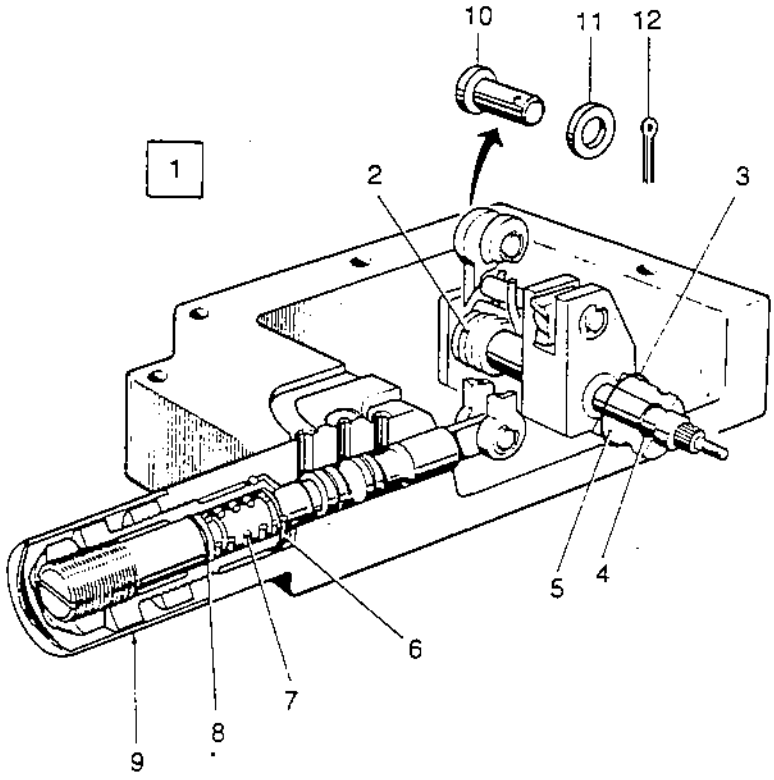
10
11
12
1
2
3
4
5
6
7
8
9

Page	Group	Illustration Number	Catalog Number	Illustration
24	5	PA-15-PL115	PA-15-PL01	Traction Pump (To S/N 2079)

Ref. No.	Quantity/Model CA 15	CA 15 D	CA 15 PD		Part Number	Description	Serial Number
-	1	1	1		801051	Pump, Traction	
-	1	1	1		813692	Kit, Charge Pump See Pg. 20	
1	4	4	4		813834	Capscrew, HH	
2	4	4	4		813844	Washer, Flat	
3	1	1	1		813692	Pump, Charge	
4	1	1	1		813633	Gasket, Charge Pump	
-	2	2	2		813630	Kit, Valve Check	
5	2	2	2		813886	Valve, Check	
6	2	2	2		813614	O-Ring	
7	3	3	3		813838	Capscrew, HH	
8	5	5	5		813839	Capscrew, HH	
9	8	8	8		813846	Washer, Flat	
10	1	1	1		480305	End Cap, Pump	
11	A/R	A/R	A/R		813880	Shim	
12	1	1	1		813862	Gasket, End Cap	
13	1	1	1		813813	Bearing, Rear	
14	1	1	1		813821	Pin, St., Hdls	
15	1	1	1		480304	Plate, R.H. Valve	
-	1	1	1		893013	Kit, Cylinder Block	
16	1	1	1		813878	Plate, Bearing	
17	1	1	1		813875	Plate, Pilot Bearing	
18	1	1	1		813829	Ring, Retaining	
19	1	1	1		813855	Retainer, Spring	
20	1	1	1		813856	Spring, Guide	
21	1	1	1		480306	Spring, Cylinder Block	
22	1	1	1		813854	Spring, Seat	
23	9	9	9		813853	Spring	
24	1	1	1		813851	Pin	
25	1	1	1		813874	Block, Cylinder	
26	1	1	1		813866	Guide	
27	1	1	1		813870	Retainer, Slipper	
28	9	9	9		480309	Piston	
29	1	1	1		813871	Plate, Thrust	
30	4	4	4		480289	Screw, Torx	
31	2	2	2		813850	Sleeve, Retainer	
-	2	2	2		893068	Kit, Servo Sleeve	
32	2	2	2		480301	Servo, Sleeve	
33	2	2	2		813818	O-Ring	
34	2	2	2		813817	O-Ring	
-	1	1	1		921374	Kit, Servo Piston	
35	2	2	2		480290	Screw	
36	2	2	2		480292	Washer, Special	
37	2	2	2		813860	Spring, Guide	
38	2	2	2		813859	Servo, Spring	
39	2	2	2		480303	Servo, Piston	
40	2	2	2		813824	Pin	
41	4	4	4		813831	Ring, Retaining	
42	4	4	4		813849	Servo, P Link	
43	1	1	1		813869	Swashplate Variable	
44	2	2	2		813824	Pin	

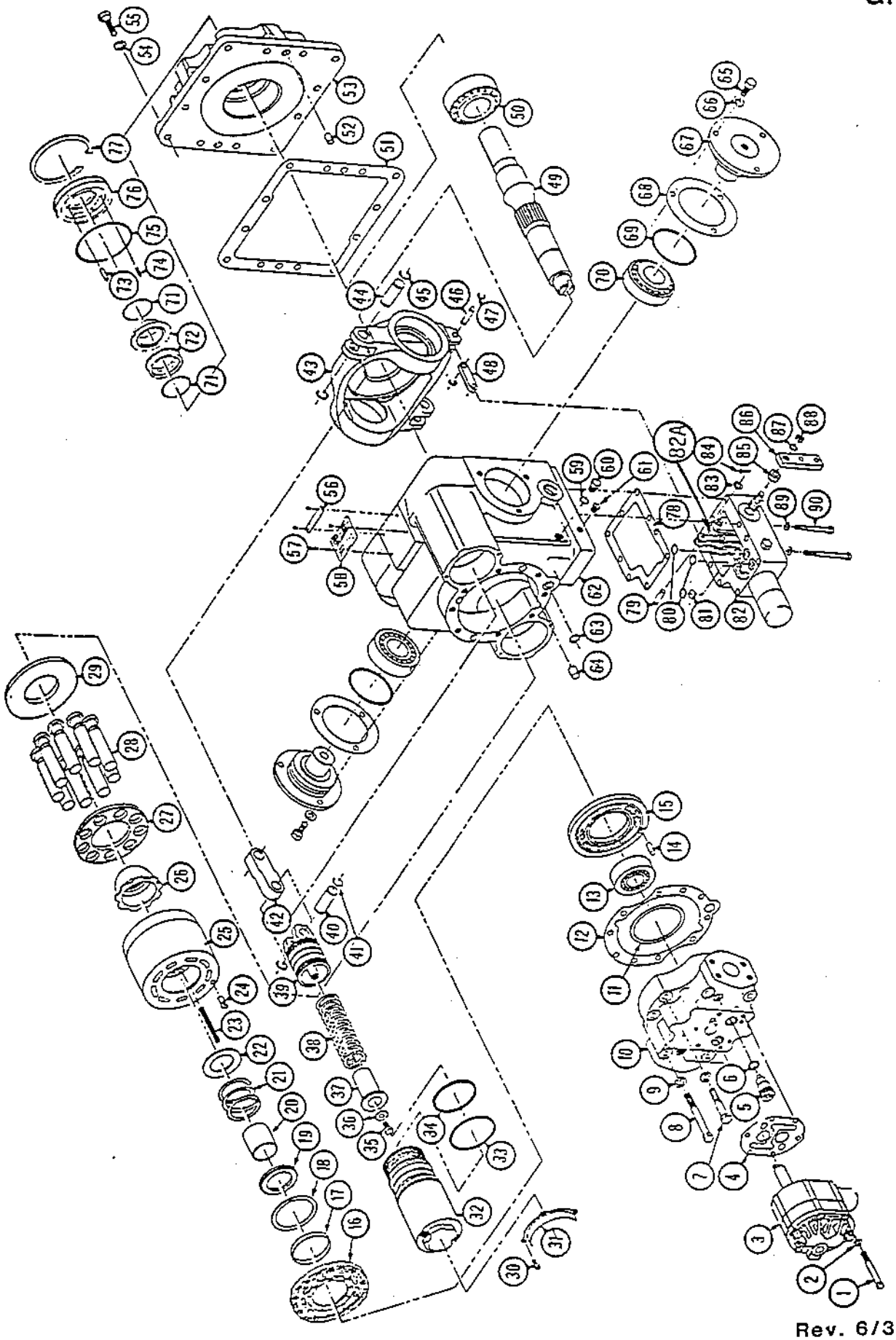

Page	Group	Illustration Number	Catalog Number	Illustration
26	5	PA-15-PL115	PA-15-PL01	Traction Pump (To S/N 2079)

Ref. No.	Quantity/Model CA 15	CA 15 D	CA 15 PD		Part Number	Description	Serial Number
45	4	4	4		480287	Ring, Retaining	
46	1	1	1		813823	Pin	
47	2	2	2		480288	Ring, Retaining	
48	1	1	1		813885	Control, Swash Link	
49	1	1	1		813863	Pump, Shaft	
50	1	1	1		813815	Bearing, Front	
51	1	1	1		813623	Gasket, Front Cover	
52	2	2	2		813822	Pin	
53	1	1	1		813861	Cover, Front	
54	12	12	12		813846	Washer, Flat	
55	12	12	12		813837	Capscrew, HH	
56	1	1	1		NSS	Arrow, Direction	
57	4	4	4		NSS	Screw	
58	1	1	1		NSS	Nameplate	
59	1	1	1		813617	O-Ring	
60	1	1	1		813826	Plug	
61	1	1	1		813825	Plug, Pipe	
62	1	1	1		813872	Housing	
63	1	1	1		813863	O-Ring	
64	2	2	2		813822	Pin	
65	6	6	6		813835	Capscrew, HH	
66	6	6	6		813845	Washer, Flat	
67	2	2	2		813857	Trunnion	
68	A/R	A/R	A/R		813858	Gasket, Trunnion	
69	2	2	2		813819	O-Ring	
70	2	2	2		813814	Bearing, Trunnion	
-	1	1	1		813626	Kit, Shaft Seal	
71	2	2	2		813616	O-Ring	
72	1	1	1		813624	Seal Kit	
73	1	1	1		813619	Pin, Groove	
74	6	6	6		813625	Seal, Spring	
75	1	1	1		813612	O-Ring	
76	1	1	1		813622	Retainer, Seal	
77	1	1	1		813621	Ring, Retaining	
-	1	1	1		813889	Kit, Control Assembly	
78	1	1	1		813634	Gasket, Valve Housing	
79	1	1	1		813890	Pin	
80	3	3	3		813613	O-Ring	
81	1	1	1		813628	Plug	
82	1	1	1		813889	Control	
82A	1	1	1		893080	Control, Spring	
83	1	1	1		813844	Washer, Flat	
84	1	1	1		813820	Pin, Cotter	
85	1	1	1		813888	Spacer	
86	1	1	1		335593	Handle	
87	1	1	1		813847	Washer, Toothlock	
88	1	1	1		813816	Hex Nut	
89	9	9	9		813844	Washer, Flat	
90	9	9	9		813833	Capscrew, HH	
-	1	1	1		893069	Kit, Gasket (includes all O-Rings, Seals & Gaskets)	

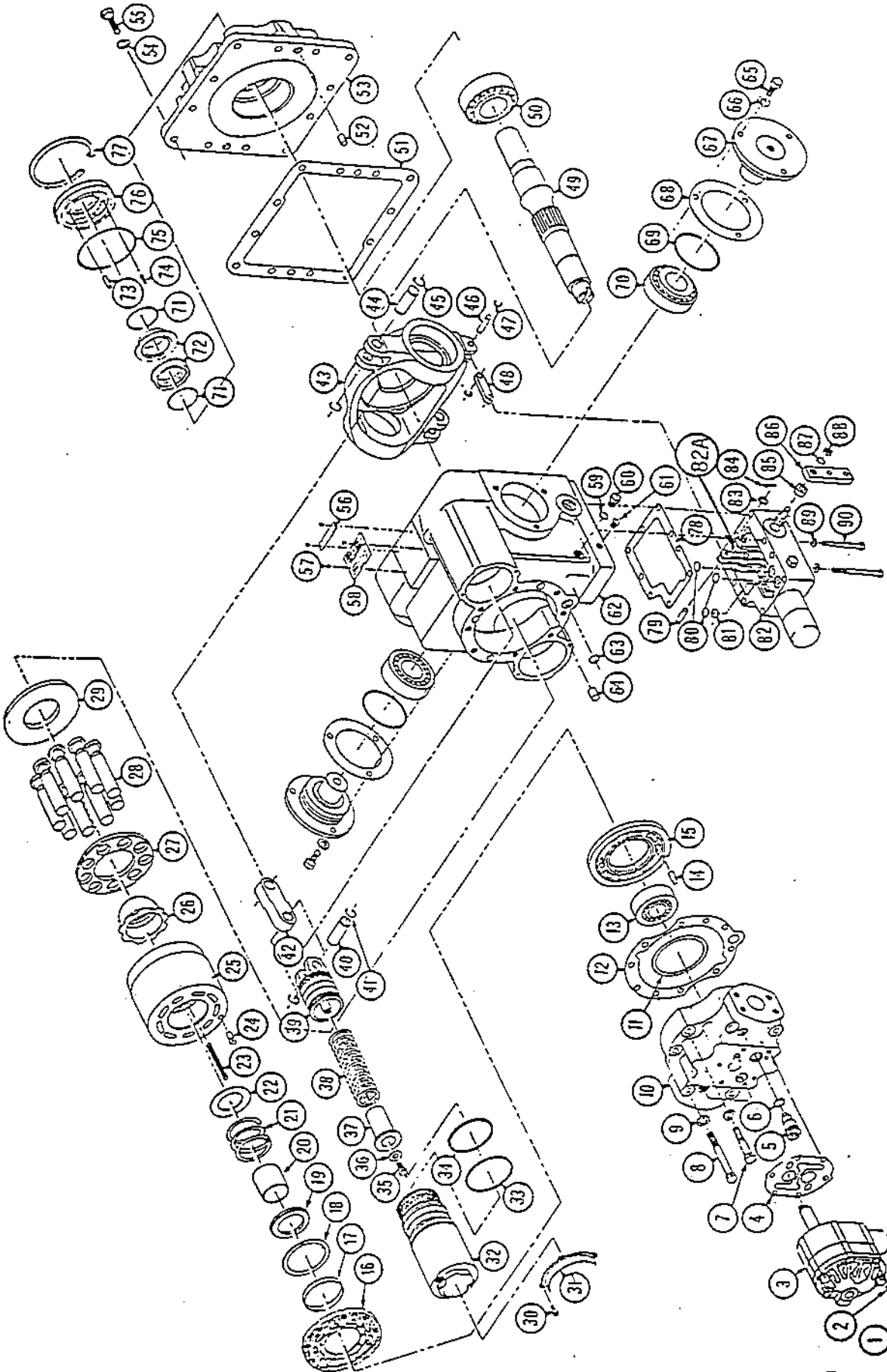

Page	Group	Illustration Number	Catalog Number	Illustration
28	5	PA-15-PL203	PA-15-PL01	Traction Motor, Drive Axle (S/N 2080 & Up)

Ref. No.	Quantity/Model CA 15	CA 15D	CA 15PD	Part Number	Description	Serial Number
-	1	1	1	348531	Hydr. Motor, Drive Axle	
1	1	1	1	926282	Valve Assy.	
2	2	2	2	926266	Relief Valve Assy.	
3	1	1	1	926258	Valve Housing Assy.	
4	1	1	1	900190	Seal Kit	
5	2	2	2	NSS	O-Ring	
6	1	1	1	NSS	Gasket	
7	2	2	2	NSS	O-Ring	
8	1	1	1	NSS	O-Ring	
9	1	1	1	NSS	O-Ring	
10	1	1	1	NSS	Bearing	
11	1	1	1	NSS	O-Ring	
12	1	1	1	NSS	O-Ring	
13	1	1	1	NSS	Gasket	
14	1	1	1	NSS	O-Ring	
15	2	2	2	NSS	O-Ring	
16	2	2	2	NSS	Back-Up Ring	
17	2	2	2	NSS	O-Ring	
18	2	2	2	NSS	Back-Up Ring	
19	2	2	2	NSS	O-Ring	
20	2	2	2	NSS	Back-Up Ring	
21	2	2	2	NSS	O-Ring	
22	2	2	2	481078	Bearing	
23	6	6	6	481082	Screw	
24	6	6	6	813846	Washer	
25	2	2	2	481086	Bearing Journal	
26	1	1	1	481087	Shim	
27	1	1	1	924615	Cylinder Block Kit	
28	9	9	9	912095	Piston Kit	
29	1	1	1	481099	Retainer	
30	1	1	1	481095	Guide Sleeve	
31	1	1	1	481100	Cylinder Block	
32	1	1	1	481163	Pin	
33	6	6	6	481084	Spring	
34	1	1	1	481088	Seat Spring	
35	1	1	1	481083	Spring	
36	1	1	1	481085	Guide Spring	
37	1	1	1	481089	Spring Plate	
38	1	1	1	481081	Retaining Ring	

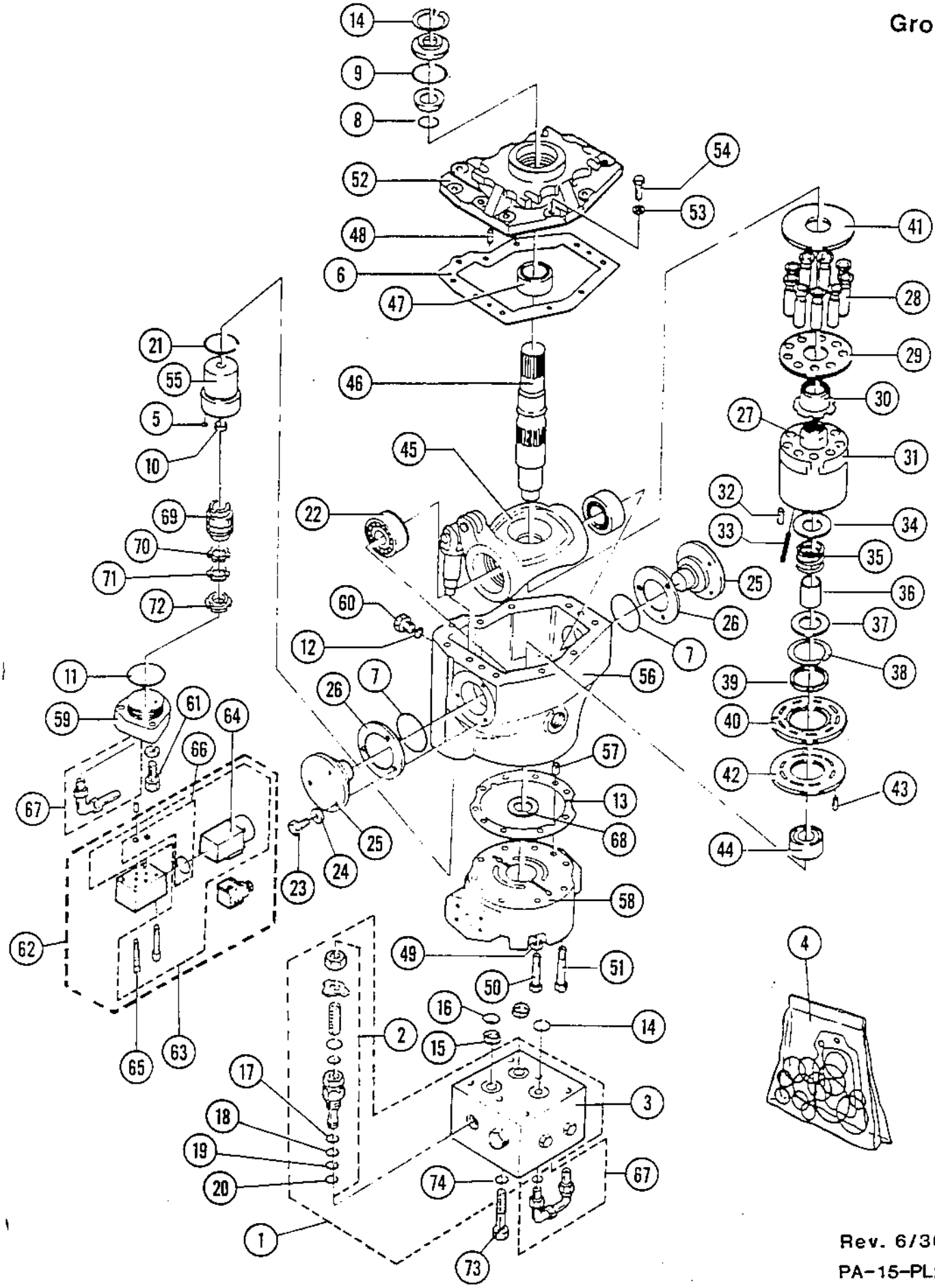

Rev. 6/30/87

PA-15-PL203

Page	Group	Illustration Number	Catalog Number	Illustration
30	5	PA-15-PL203	PA-15-PL01	Traction Motor, Drive Axle (S/N 2080 & Up)

Ref. No.	Quantity/Model CA				Part Number	Description	Serial Number
	15	15D	15PD				
39	1	1	1		481101	Guide Ring	
40	1	1	1		481105	Bearing Plate	
41	1	1	1		481098	Thrust Plate	
42	1	1	1		912090	Bearing Plate	
43	1	1	1		481130	Pin	
44	1	1	1		481077	Bearing	
45	1	1	1		926671	Swash Plate Assy.	
46	1	1	1		922299	Shaft	
47	1	1	1		481079	Bearing	
48	2	2	2		481131	Pin	
49	9	9	9		813846	Washer	
50	3	3	3		813838	Screw	
51	5	5	5		813839	Screw	
52	1	1	1		922360	Cover	
53	10	10	10		912095	Washer	
54	9	9	9		813837	Screw	
55	1	1	1		924603	Servo Sleeve	
56	1	1	1		922303	Housing	
57	2	2	2		481131	Pin	
58	1	1	1		NSS	Housing	
59	1	1	1		924614	Control Plate Assy.	
60	1	1	1		481132	Plug	
61	3	3	3		481196	Screw	
62	1	1	1		924616	Solenoid Valve Assy.	
63	1	1	1		924612	Installation Kit	
64	1	1	1		924611	Solenoid	
65	4	4	4		924610	Screw	
66	1	1	1		924579	Seal Kit	
67	2	2	2		900189	Hose Assy.	
68	1	1	1		NSS	Shim	
69	1	1	1		926921	Servo Piston	
70	1	1	1		926923	Washer	
71	1	1	1		926924	Washer	
72	1	1	1		926922	Nut	
73	6	6	6		900187	Screw	
74	6	6	6		900188	Washer	

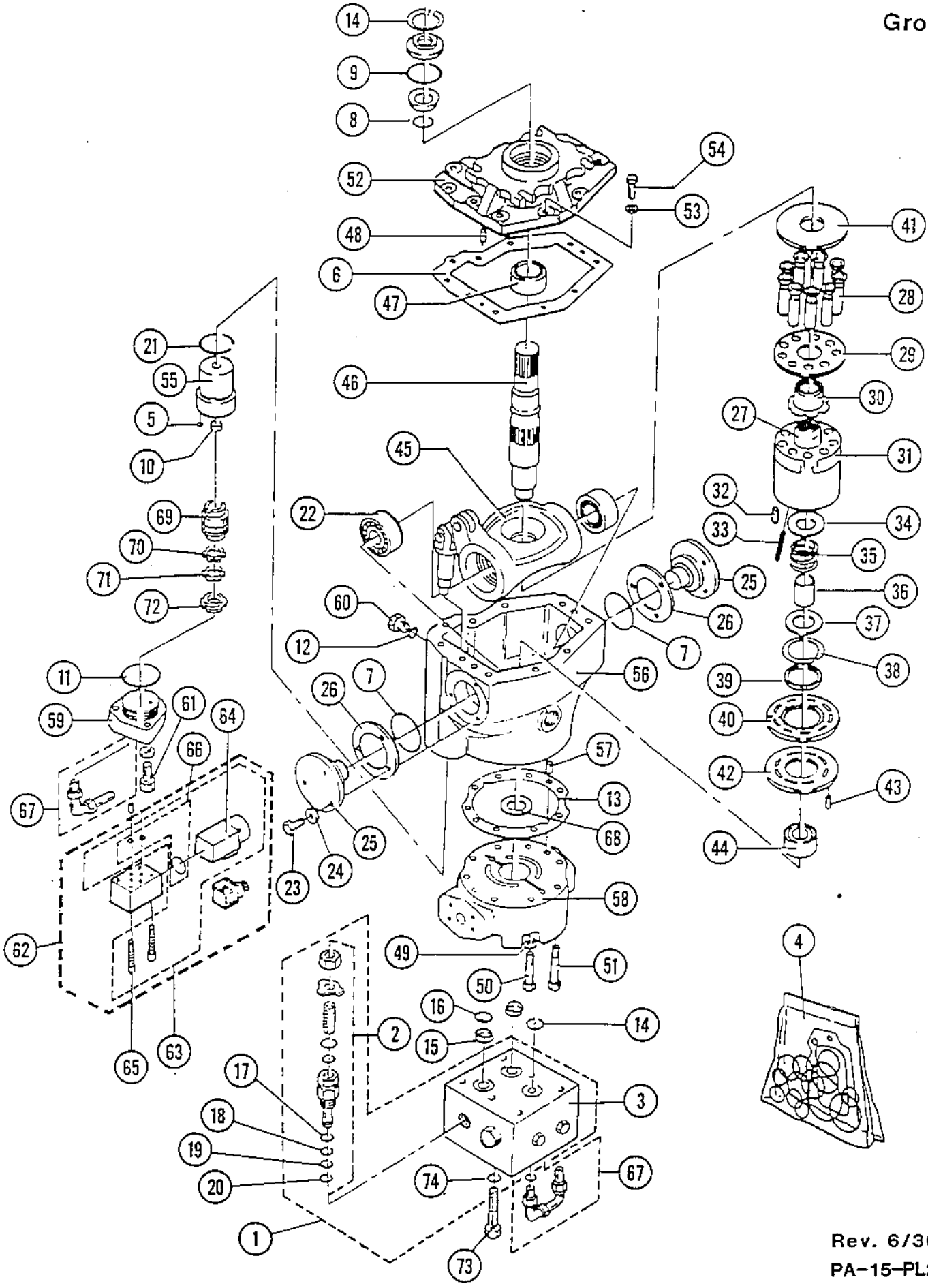

Rev. 6/30/87
PA-15-PL203

Page	Group	Illustration Number	Catalog Number	Illustration
32	5	PA-15-PL121	PA-15-PL01	Traction Motor (Drive Axle) (To S/N 2079)

Ref. No.	Quantity/Model CA 15	CA 15 D	CA 15 PD	Part Number	Description	Serial Number
1	1	1	1	335557	Assembly, Traction Motor	
-	1	1	1	813626	Kit, Seal	
2	1	1	1	813621	Ring, Retaining	
3	1	1	1	813622	Retainer, Seal	
4	6	6	6	813625	Seal, Spring	
5	1	1	1	813619	Pin, Groove	
6	1	1	1	813612	O-Ring	
7	2	2	2	813616	O-Ring	
8	1	1	1	813624	Seal Kit	
9	1	1	1	813865	Housing, Motor	
10	1	1	1	813825	Plug, Pipe	
11	2	2	2	813821	Pin	
12	1	1	1	813618	O-Ring	
13	1	1	1	813827	Plug, HH	
14	2	2	2	813822	Pin	
15	1	1	1	813815	Bearing, Front	
16	1	1	1	921370	Shaft, Drive	
17	1	1	1	813876	Plate, Swash	
-	1	1	1	893013	Kit, Cylinder Block	
18	9	9	9	813873	Piston	
19	1	1	1	813870	Slipper, Retainer	
20	1	1	1	813866	Guide, Retainer	
21	9	9	9	813853	Spring, Retaining	
22	1	1	1	813874	Assembly, Cylinder Block	
23	1	1	1	813851	Pin	
24	1	1	1	813854	Seat, Spring	
25	1	1	1	480306	Spring Cylinder Block	
26	1	1	1	813856	Guide, Spring	
27	1	1	1	813855	Retainer, Spring	
28	1	1	1	813829	Ring, Retaining	
29	1	1	1	813875	Pilot	
30	1	1	1	813878	Plate, Bearing	

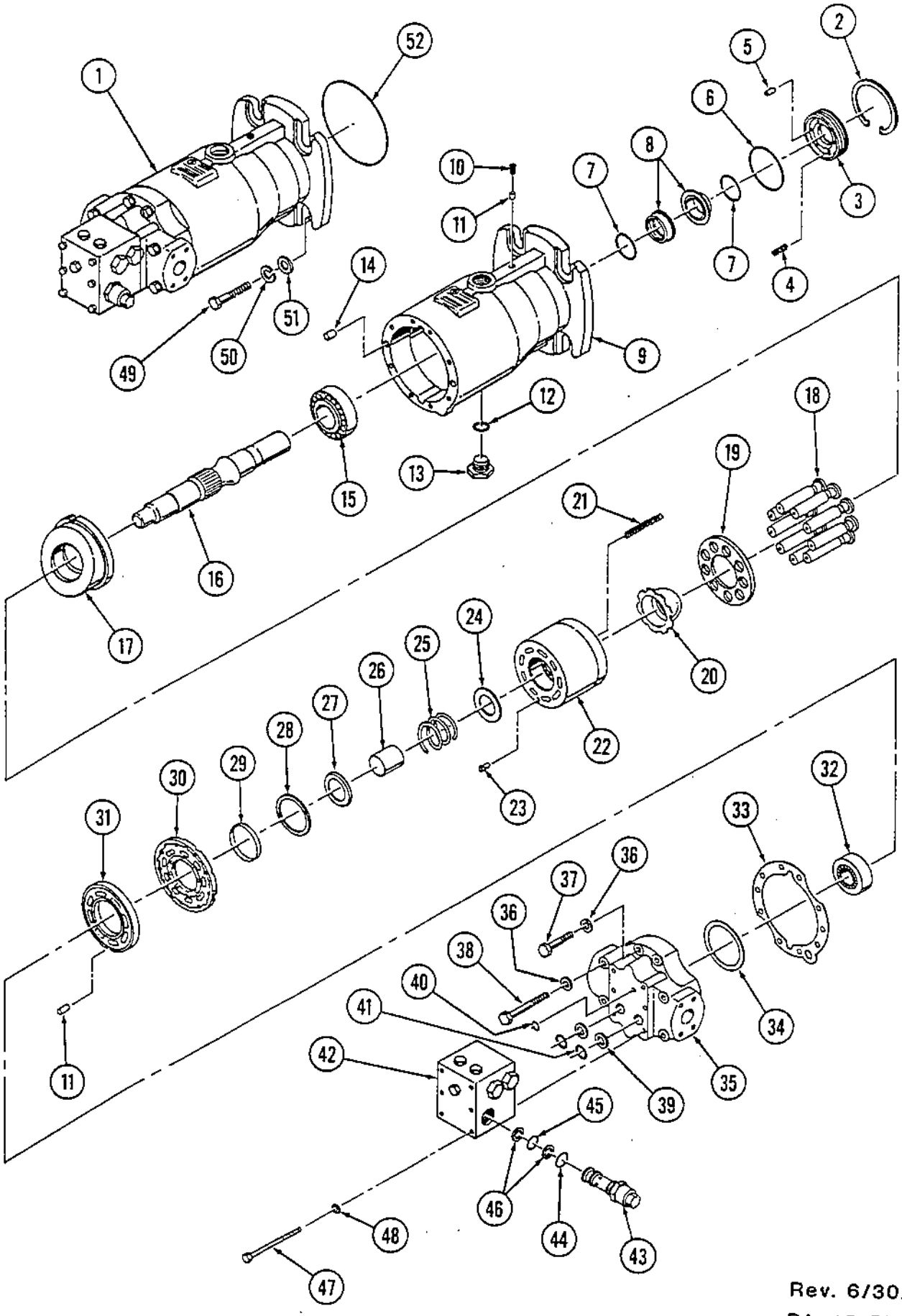

Rev. 6/30/87
PA-15-PL121

Page	Group	Illustration Number	Catalog Number	Illustration
34	5	PA-15-PL121	PA-15-PL01	Traction Motor (Drive Axle) (To S/N 2079)

Ref. No.	Quantity/Model CA 15	CA 15 D	CA 15 PD		Part Number	Description	Serial Number
31	1	1	1		893010	Plate, Valve	
32	1	1	1		813813	Bearing, Rear	
33	1	1	1		813862	Gasket, End Cap	
34	A/R	A/R	A/R		813880	Shim	
35	1	1	1		893011	Cap, End	
36	9	9	9		813846	Washer	
37	5	5	5		813839	Capscrew, HH	
38	3	3	3		813838	Capscrew, HH	
-	1	1	1		481228	Kit, Seal	
39	2	2	2		813620	Ring	
40	1	1	1		813611	O-Ring	
41	2	2	2		813615	O-Ring	
42	1	1	1		480204	Assembly, Manifold Valve	See Group 5
43	2	2	2		813627	Kit, High Pres. Relief Valve	
44	1	1	1		480348	O-Ring	
45	1	1	1		480344	O-Ring	
46	2	2	2		480355	Ring, Back-up	
47	6	6	6		813836	Capscrew, HH	
48	6	6	6		813845	Washer, Flat	
49	4	4	4		502059	Capscrew, HH	
50	4	4	4		604030	Lockwasher	
51	4	4	4		615094	Washer, Flat	
52	1	1	1		801413	O-Ring	

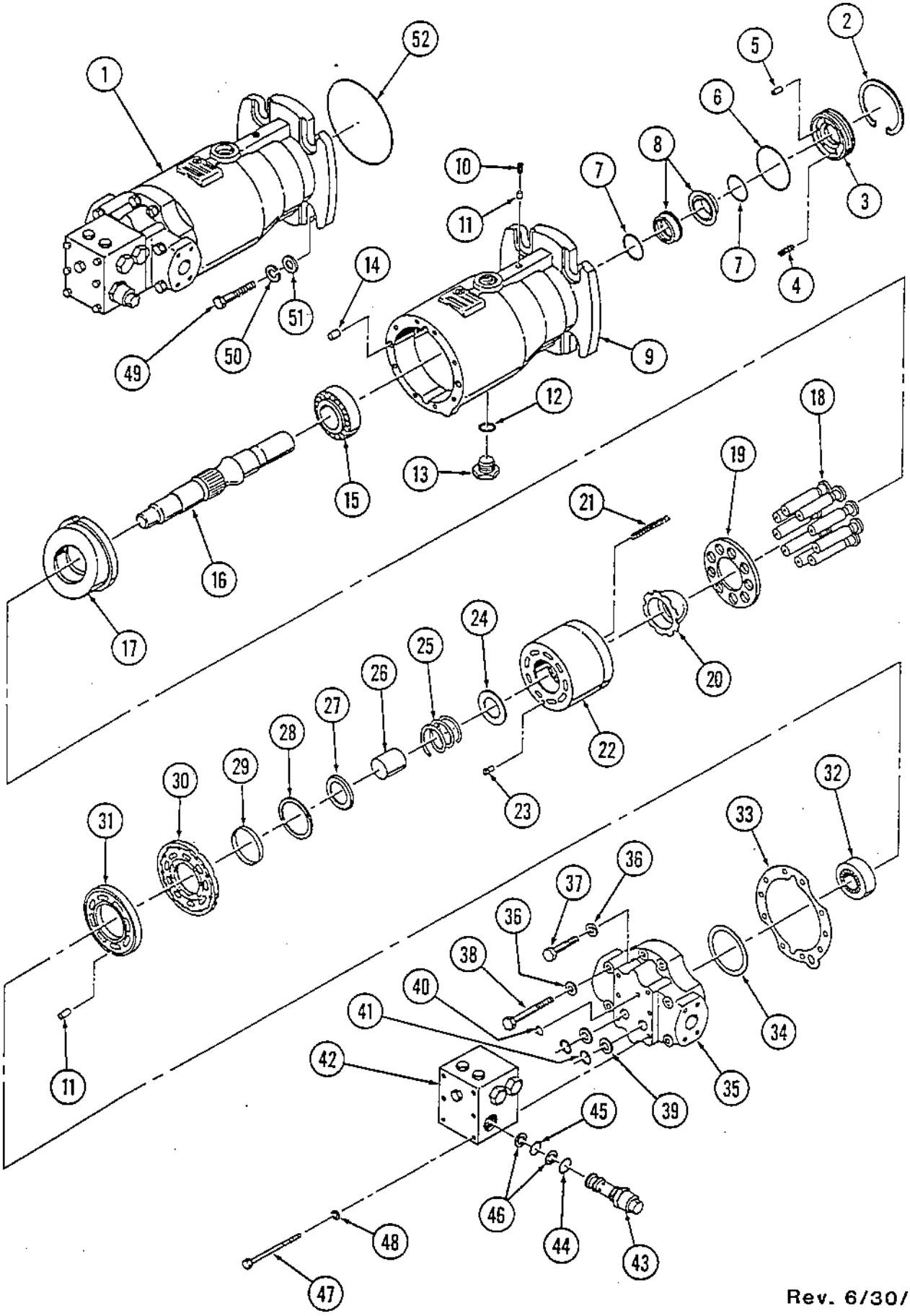

Rev. 6/30/87
PA-15-PL121

Page	Group	Illustration Number	Catalog Number	Illustration
36	5	PA-15-PL116	PA-15-PL01	Manifold Valve Assembly (To S/N 2079)

Ref. No.	Quantity/Model CA 15	15D	15PD		Part Number	Description	Serial Number
-	1	1	1		480204	Assembly, Manifold Valve	
1	1	1	1		NSS	Assembly, Housing & Shuttle	
2	2	2	2		480637	Washer	
3	2	2	2		480407	Spring, Shuttle Valve	
4	3	3	3		813618	O-Ring	
5	2	2	2		480408	Plug, HH	
6	2	2	2		813627	Valve, High Pressure Relief	S/N 741 & Up
-	2	2	2		813493	Valve, High Pressure Relief	To S/N 740
7	2	2	2		480355	Ring, Back-Up	
8	1	1	1		480344	O-Ring	
9	1	1	1		480348	O-Ring	
10	3	3	3		813617	O-Ring	
11	1	1	1		233194	Valve, Charge Relief	
12	1	1	1		911068	Spring, Charge Relief	
13	3	3	3		480402	Shims	
14	1	1	1		480408	Plug, HH	
15	2	2	2		813620	Ring, Back-Up	
16	2	2	2		813615	O-Ring	
17	1	1	1		813611	O-Ring	
18	6	6	6		813845	Washer, Flat	
19	6	6	6		813836	Capscrew, HH	

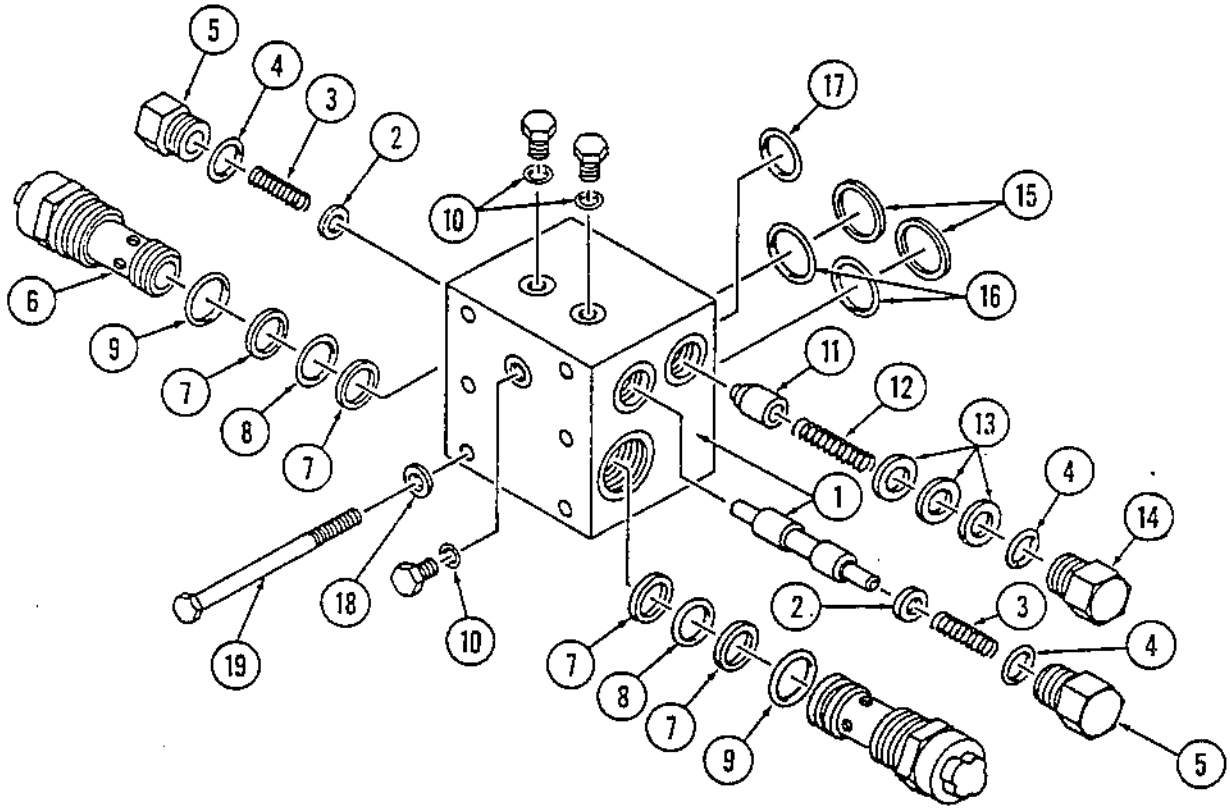
5
4
3
2
10
17
15
16
6
9
7
8
7
11
12
13
4
14
1
2
3
4
5
18
19
10
7
8
7
9

Page	Group	Illustration Number	Catalog Number	Illustration
38	5	PA15-PL193	PA15-PL01	Traction Motor, Drum Drive (S/N 2080 & Up)

Ref. No.	Quantity/Model CA 15 D	Quantity/Model CA 15 PD			Part Number	Description	Serial Number
1	3	3			802311	Motor Assembly, Traction	
2	1	1			481211	Housing, Motor	
3	1	1			813821	Pin	
4	1	1			813825	Plug	
-	1	1			813626	Kit, Seal	
5	2	2			813616	O-Ring	
6	1	1			813624	Seal, Kit	
7	1	1			813619	Pin, Groove	
8	6	6			813625	Spring, Seal	
9	1	1			813612	O-Ring	
10	1	1			813622	Seal, Retainer	
11	1	1			813621	Ring, Retainer	
12	1	1			892979	Plug, Hex Hd	
13	1	1			813618	O-Ring	
14	2	2			813822	Pin	
15	1	1			813815	Bearing, Front	
16	1	1			481217	Plate, Swash	
-	1	1			481227	Kit, Cylinder Block	
17	9	9			481223	Assembly, Piston	
18	1	1			481215	Retainer, Slipper	
19	1	1			481214	Guide, Slipper Retainer	
20	6	6			481226	Spring, Slipper Retainer	
21	1	1			481225	Block, Cylinder	
22	1	1			813851	Pin	
23	1	1			481209	Seat, Spring	
24	1	1			481224	Spring, Cylinder Block	
25	1	1			481210	Guide, Spring	
26	1	1			481219	Retainer, Spring	
27	1	1			481207	Ring, Retainer	
28	1	1			481216	Pilot, Bearing Plate	
29	1	1			481218	Plate, Bearing	
30	1	1			893008	Shaft	
31	1	1			481221	Plate, Valve	
32	1	1			481206	Pin	
33	1	1			920961	Bearing, Rear	
34	1	1			481213	Gasket, End Cap	
35	1	1			481220	Kit, Shim	
36	1	1			928176	End Cap, Motor	
37	7	7			813846	Washer, Flat	
38	4	4			813839	Capscrew, HH	
39	3	3			813838	Capscrew, HH	

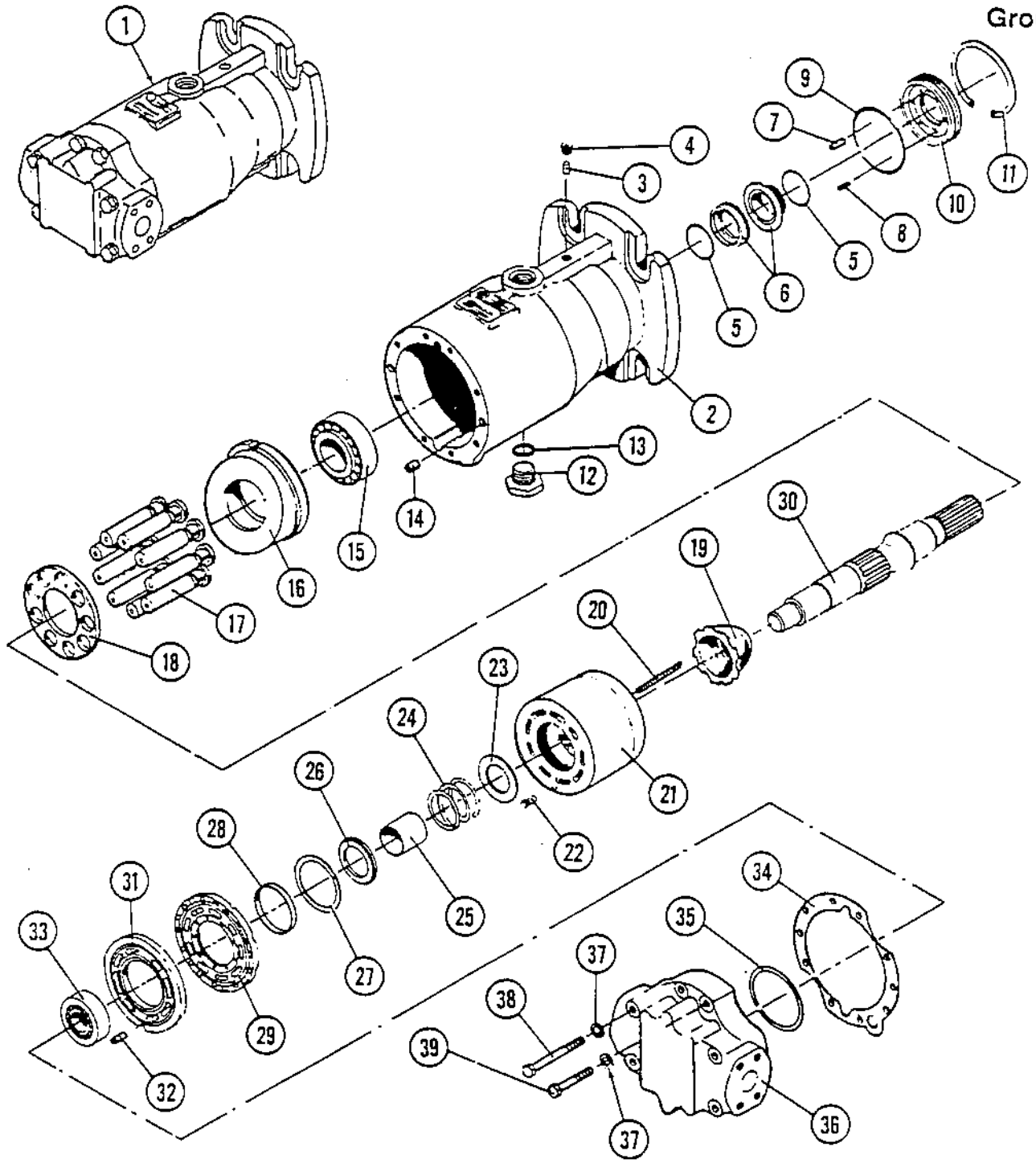
1
4
3
9
7
11
10
8
5
6
5
2
13
12
14
15
16
17
18
30
19
20
23
24
26
28
31
33
29
27
25
22
21
34
35
37
38
39
37
36
32

Page	Group	Illustration Number	Catalog Number	Illustration
40	5	PA-15-PL111	PA-15-PL01	Traction Motor (Drum Drive) (S/N 741 to 2079)

Ref. No.	Quantity/Model CA 15 D	Quantity/Model CA 15 PD	Part Number	Description	Serial Number
1	1	1	801144	Assembly, Traction Motor	
2	1	1	813865	Housing, Motor	
3	2	2	813821	Pin	
4	1	1	813825	Plug, Pipe	
-	1	1	813626	Kit, Seal	
5	2	2	813616	O-Ring	
6	1	1	813624	Seal	
7	1	1	813619	Pin, Groove	
8	6	6	813625	Seal, Spring	
9	1	1	813612	O-Ring	
10	1	1	813622	Retainer, Seal	
11	1	1	813621	Ring, Retaining	
12	1	1	813618	O-Ring	
13	1	1	892979	Plug, HH	
14	2	2	813822	Pin	
15	1	1	813815	Bearing, Front	
16	1	1	921370	Shaft, Drive	
17	1	1	813876	Plate, Swash	
-	1	1	893013	Kit, Cylinder Block	
18	9	9	813873	Piston	
19	1	1	813870	Slipper, Retainer	
20	1	1	813866	Guide, Retainer	
21	6	6	911060	Spring, Retainer	
22	1	1	813874	Assembly, Cylinder Block	
23	1	1	813851	Pin	
24	1	1	813854	Seat, Spring	
25	1	1	480306	Spring, Cylinder Block	
26	1	1	813856	Guide, Spring	
27	1	1	813855	Retainer, Spring	
28	1	1	813829	Ring, Retaining	
29	1	1	813875	Pilot	
30	1	1	813878	Plate, Bearing	
31	1	1	893010	Plate, Valve	
32	1	1	813813	Bearing, Rear	
33	1	1	813862	Gasket, End Cap	
34	A/R	A/R	813880	Shim	
35	1	1	911061	Cap, End	
36	9	9	813846	Washer	
37	5	5	813839	Capscrew, HH	
38	3	3	813838	Capscrew, HH	
39	1	1	801413	O-Ring	
40	4	4	502059	Capscrew, HH	
41	4	4	604030	Lockwasher	
42	4	4	615094	Washer, Flat	

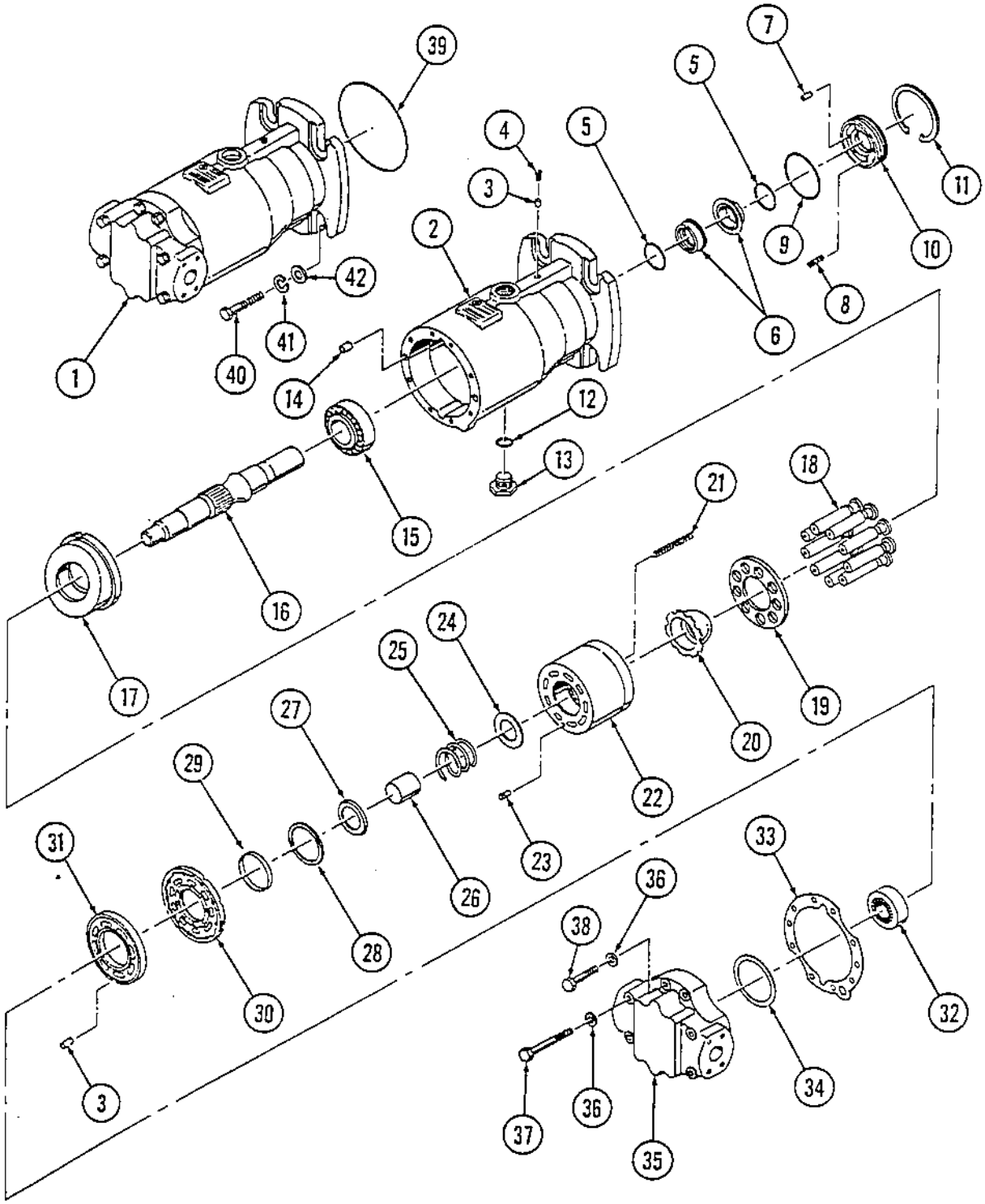
1
2
3
4
5
6
7
8
9
10
11
12
13
14
15
16
17
18
19
20
21
22
23
24
25
26
27
28
29
30
31
32
33
34
35
36
37
38
39
40
41
42

Page	Group	Illustration Number	Catalog Number	Illustration
42	5	PA-15-PL113	PA-15-PL01	Staffa Traction Motor (S/N 441 to 740)

Ref. No.	Quantity/Model CA 15 D	Quantity/Model CA 15 PD			Part Number	Description	Serial Number
-	1	1			801101	Traction Motor (HDB200 80X)	S/N 441 to 740
1	1	1			892355	Case, Motor	
2	1	1			814212	Bearing, Rear	
3	12	12			893473	Seal, Valve Ring	
4	5	5			892660	O-Ring, End Cap	
5	4	4			911580	Capscrew, Soc. Hd. Valve End Cap	
6	1	1			893471	End Cap, Valve	
7	1	1			892651	Spool, Valve	
8	5	5			892658	Capscrew, Soc. Hd. Valve Mounting	
9	1	1			893382	Housing, Valve	
10	1	1			814210	O-Ring, Spigot	
11	5	5			814202	O-Ring-Valve Face Ports	
12	2	2			814196	Plug, Drain	
13	5	5			814170	Head, Cylinder	
14	50	50			814208	S.H.C.S. Cylinder Head	
15	1	1			481061	Coupling, Oldham	
16	5	5			481069	Screw, Restrictor	
17	5	5			893463	Rod, Connecting	
18	10	10			893469	Ring, Half Piston Retaining	
19	5	5			481067	Piston	
20	5	5			814185	Ring, Piston Seal Backing	
21	5	5			814184	Ring, Piston Seal	
22	5	5			814209	Circlip	
23	1	1			891848	Key (1.002 x 1.001 x 3/4")	
24	1	1			814195	O-Ring, Front Cover	
25	A/R	A/R			911132	Shim, Plastic, .002"	
-	A/R	A/R			911133	Shim, Plastic, .005"	
-	A/R	A/R			911134	Shim, Plastic, .010"	
26	A/R	A/R			893468	Shim, Steel .032"	
27	1	1			481073	O-Ring, Shim Plate	
28	1	1			892656	Seal, Shaft	
29	10	10			892657	Capscrew, Soc. Hd. Front Plate Cover	
30	1	1			814189	Plate, Shim	
31	1	1			814188	Cover, Front	
32	1	1			814213	Bearing, Front	
33	1	1			480616	Nut	
34	2	2			814182	Ring, Retaining Connecting Rod	
35	1	1			893647	Assembly, Crankshaft	
36	2	2			814202	O-Ring, Inlet/Output Ports	
-	1	1			893383	Assembly, Complete Valve	
-	5	5			893466	Sub-Assy., Complete Piston	

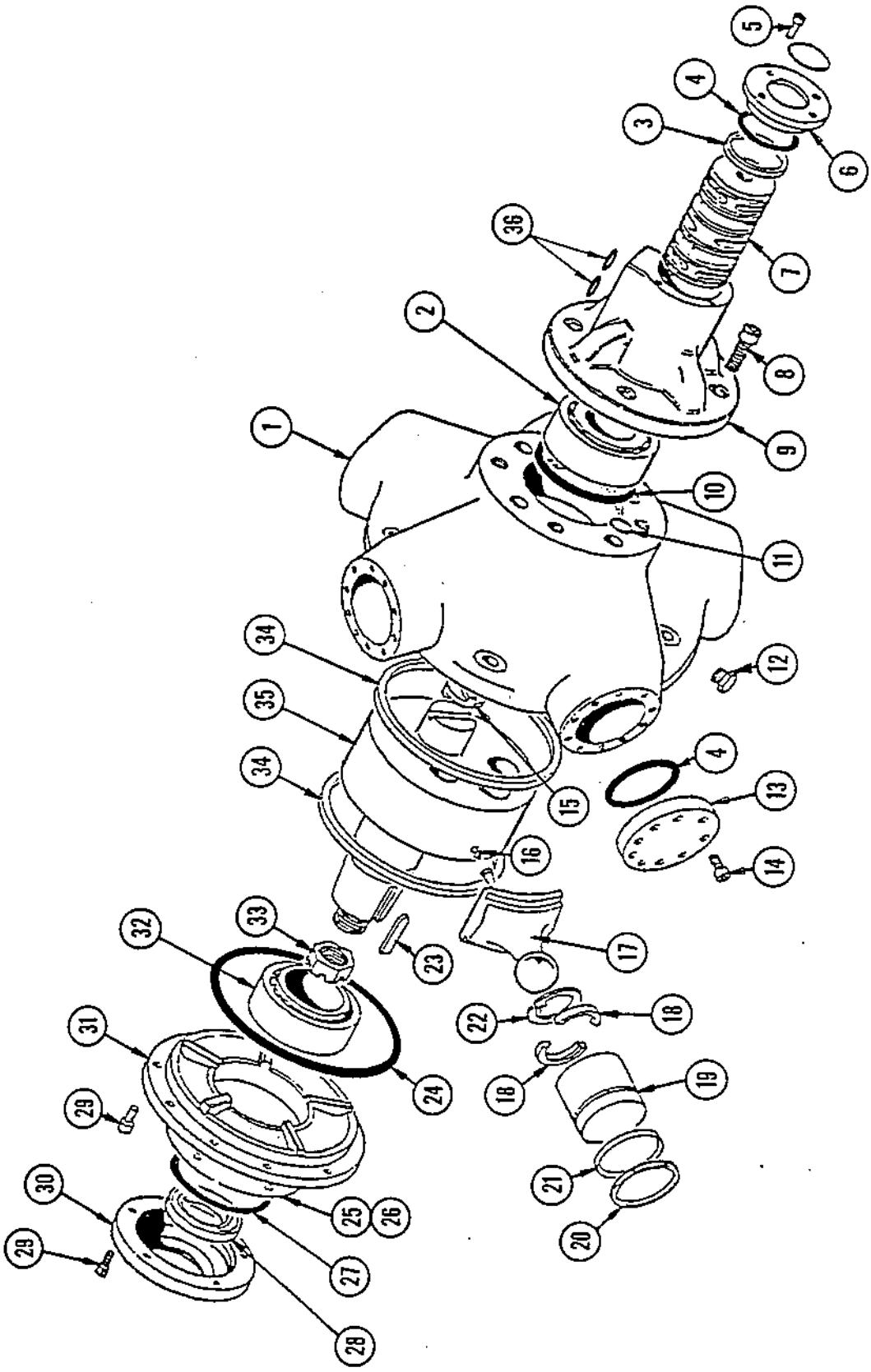
1
2
3
4
5
6
7
8
9
10
11
12
13
14
15
16
17
18
19
20
21
22
23
24
25
26
27
28
29
30
31
32
33
34
35
36

Page	Group	Illustration Number	Catalog Number	Illustration
44	5	PA-15-PL112	PA-15-PL01	Staffa Traction Motor (To S/N 440)

Ref. No.	Quantity/Model CA 15 D	CA 15 PD			Part Number	Description	Serial Number
-	1	1			*801063	Traction Motor (HDB 200)	To S/N 440
1	1	1			892355	Case, Motor
2	1	1			814212	Bearing, Rear
3	12	12			893472	Seal, Valve Ring
4	5	5			893464	O-Ring, End Cap
5	4	4			814207	Capscrew, Soc. Hd., Valve End Cap
6	1	1			893470	End Cap, Valve
7	1	1			481065	Spool, Valve
8	5	5			814206	Capscrew, Soc. Hd. Valve Mounting
9	1	1			814181	Housing, Valve
10	1	1			814210	O-Ring, Spigot
11	5	5			814202	O-Ring, Valve Face Ports
12	2	2			814196	Plug, Drain
13	5	5			814170	Cylinder, Head
14	50	50			814208	Capscrew, Soc. Hd. Cylinder Head
15	1	1			814186	Coupling, Oldham
16	5	5			481069	Screw, Restrictor
17	5	5			893463	Rod, Connecting
18	10	10			893469	Ring, Half Piston Retaining
19	5	5			481067	Piston
20	5	5			814185	Ring, Piston Seal Backing
21	5	5			814184	Ring, Piston Seal
22	5	5			814209	Circlip
23	1	1			891848	Key (1.002 x 1.001 x 3/4")
24	1	1			814195	O-Ring, Front Cover
25	A/R	A/R			911132	Shim, Plastic, .002"
-	A/R	A/R			911133	Shim, Plastic, .005"
-	A/R	A/R			911134	Shim, Plastic, .010"
26	A/R	A/R			893468	Shim, Steel .032"
27	1	1			481073	O-Ring, Shim Plate
28	1	1			892656	Seal, Shaft
29	10	10			892657	Capscrew, Soc. Hd. Front Plate Cover
30	1	1			814189	Plate, Shim
31	1	1			814188	Cover, Front
32	1	1			814213	Bearing, Front
33	1	1			480616	Nut
34	2	2			814182	Ring, Retaining Connecting Rod
35	1	1			893647	Assembly, Crankshaft
36	2	2			813797	O-Ring, Inlet/Output Ports
-	1	1			892882	Assembly, Complete Valve
-	5	5			893466	Sub-Assy., Complete Piston

*Motor 801063 is no longer available. For complete Motor replacement use P/N 801101 plus 2 Adapters P/N 334441 and 1 each of the following Hose Assemblies. 1 Hose P/N 81508936 and 1 Hose 81508937.

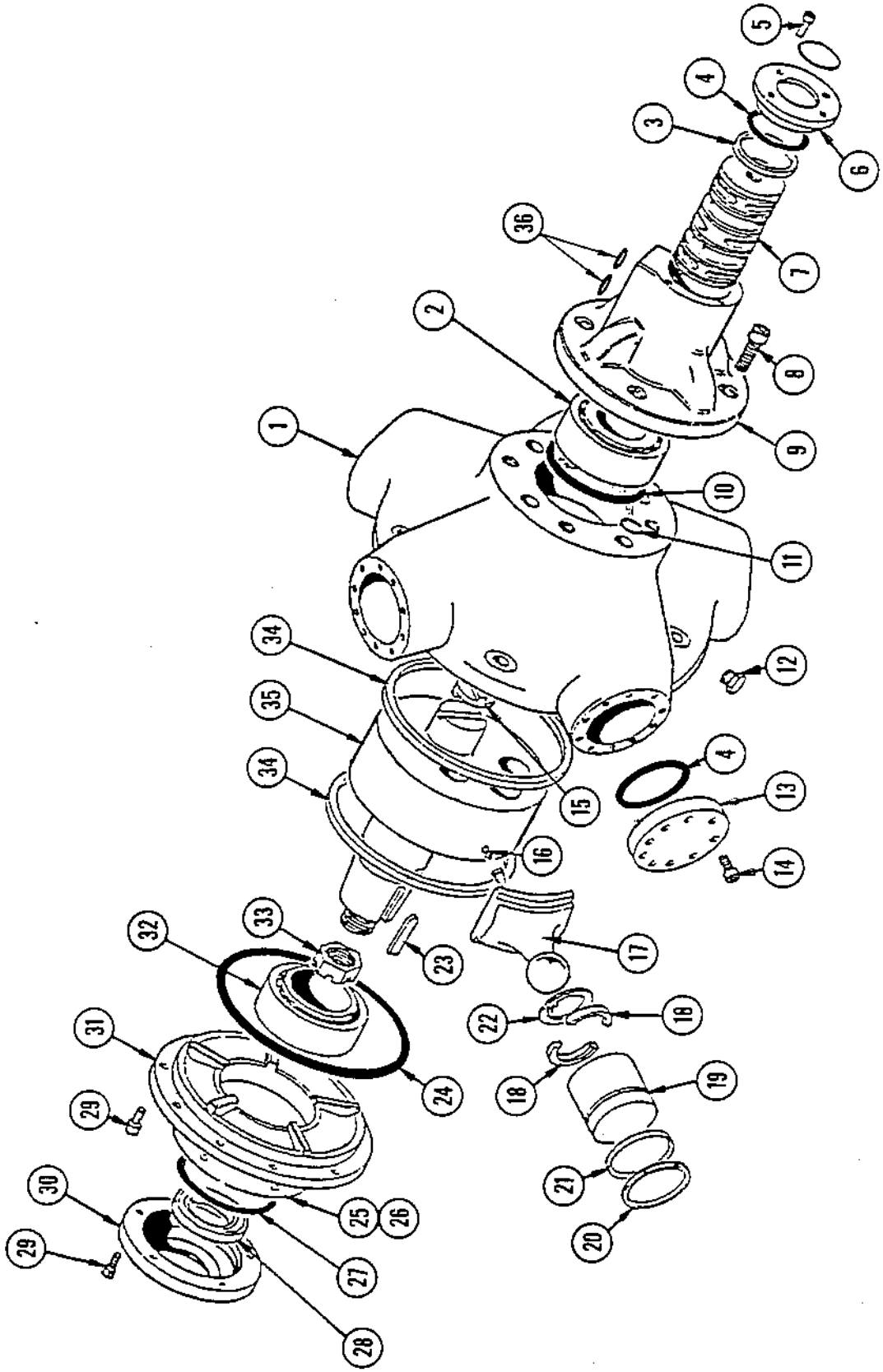
5
4
3
6
36
7
2
8
1
9
10
11
34
12
35
4
34
13
15
16
14
32
33
23
17
31
22
18
24
18
19
29
21
30
25
26
20
29
27
28

Page	Group	Illustration Number	Catalog Number	Illustration
46	5	PA-15-PL177	PA-15-PL01	Vibration System

Ref. No.	Quantity/Model CA 15	CA 15 D	CA 15 PD		Part Number	Description	Serial Number
1	1	1	1		81508918	Hose Assy., Hyd. Res. to Oil Cooler	
2	2	2	2		921102	Clamp, Hose	
3	3	3	3		801459	Capscrew	
4	3	3	3		604028	Lockwasher	
5	3	3	3		571003	Hex Nut	
6	1	1	1		813428	Connector, Male	
7	1	1	1		813784	Plug, Magnetic Pipe	
8	1	1	1		334126	Connector, Male	
9	1	1	1		335564	Valve, Vib. Control (See Group 5)	
10	1	1	1		334128	Elbow 90°	
11	1	1	1		334617	Connector, Male	
12	1	1	1		81508914	Hose Assy., Vib. Valve to Tee	
13	1	1	1		81508919	Hose Assy., Hyd. Res to Pump	
14	1	1	1		81508915	Hose Assy., Vib Valve to Tee	
15	1	1	1		81508912	Hose Assy., Tee to Motor	
16	2	2	2		332073	Flange, Kit	
17	1	1	1		813429	O-Ring	
18	1	1	1		81508913	Hose Assy., Tee to Motor	
19	2	2	2		334129	Tee	
20	2	2	2		921108	Clamp, Hose	
21	1	1	1		81508917	Hose Assy., Pump to Tee	
22	1	1	1		334132	Elbow 45°	
23	1	1	1		160153	O-Ring	
24	1	1	1		332065	Flange, Kit	
25	1	1	1		160191	O-Ring	
26	1	1	1		81508916	Hose, Assy., Oil Cooler to Tee	
27	2	2	2		502043	Capscrew, HH	
28	2	2	2		604028	Lockwasher	
29	2	2	2		571003	Hex Nut	
30	3	3	3		335675	Block, Rubber	
31	3	3	3		335632	Plate, Hold Down	
32	6	6	6		502045	Capscrew, HH	
33	6	6	6		604028	Lockwasher	
34	4	4	4		571003	Hex Nut	
35	2	2	2		600007	Washer, Flat	
36	2	2	2		232122	Plug, Pipe	

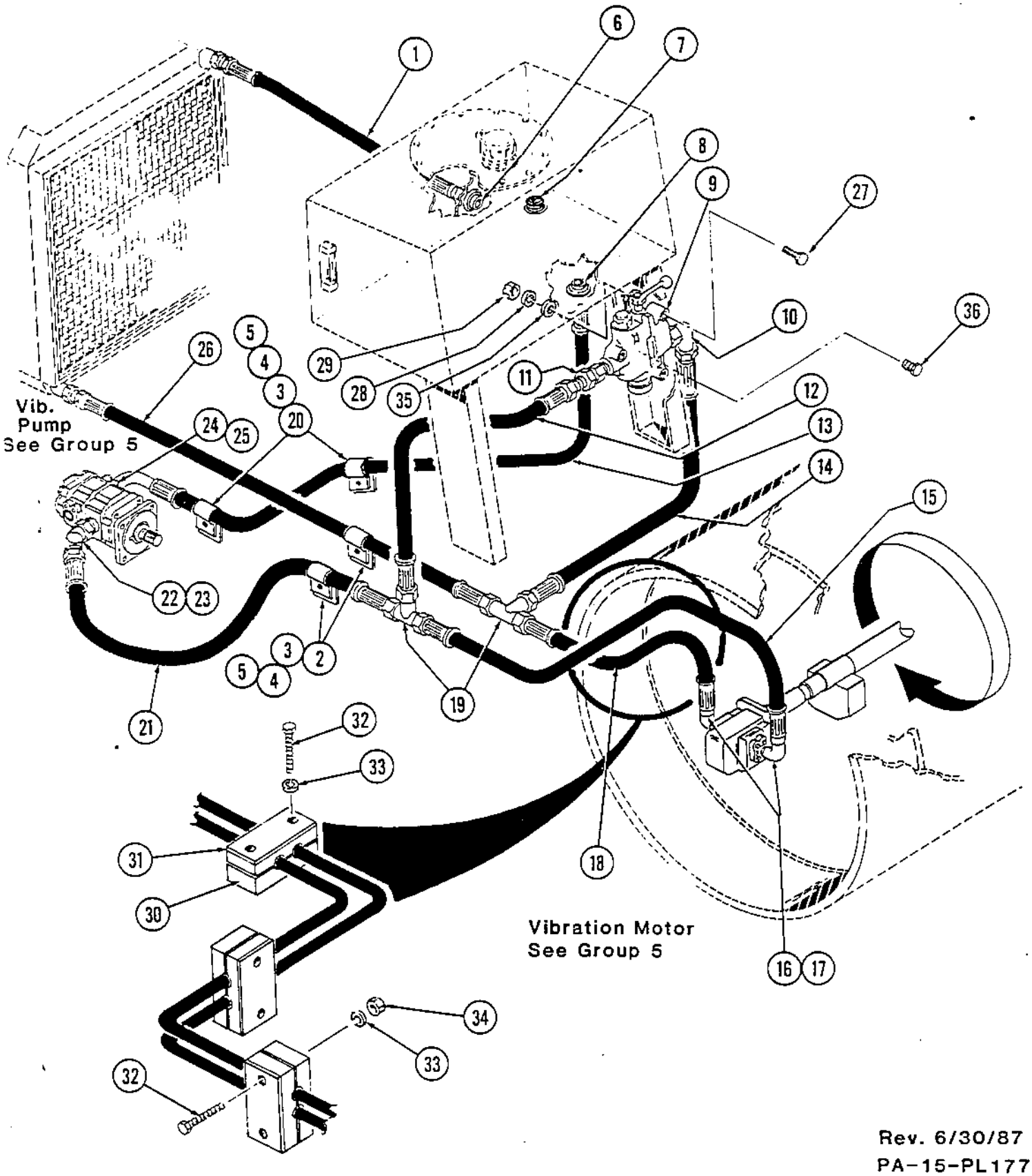

Rev. 6/30/87
PA-15-PL177

Page	Group	Illustration Number	Catalog Number	Illustration
48	5	PA-15-PL183	PA-15-PL01	Vibration System (Dual Amplitude To S/N 1850)

Ref. No.	Quantity/Model CA 15	Quantity/Model CA 15 D	Quantity/Model	Quantity/Model	Part Number	Description	Serial Number
1	1	1			813428	Connector, Male	
2	2	2			921102	Clamp, Hose	
3	1	1			81508918	Hose Assy., Oil Cooler To Res.	
4	1	1			813784	Plug, Pipe	
5	1	1			234277	Elbow, 45°	
6	1	1			234331	Union	
7	1	1			81508916	Hose Assy., Oil Cooler To Vib. Valve	
8	1	1			332065	Kit, Flange	
9	1	1			160191	O-Ring	
10	1	1			334132	Elbow, 45°	
11	1	1			160153	O-Ring	
12	1	1			81508930	Hose Assy., Pump To Vib. Valve Inlet	
13	1	1			81508919	Hose Assy., Hyd. Res. To Vib. Pump	
14	1	1			921100	Clamp, Hose	
15	1	1			81508927	Hose Assy., Motor Return To Res.	
16	1	1			81508926	Hose Assy., Vib. Valve To Vib. Motor	
17	1	1			81508925	Hose Assy., Vib. Valve To Vib. Motor	
18	2	2			234327	Elbow, 45°	
19	2	2			332073	Kit, Flange	
20	1	1			813429	O-Ring	
21	1	1			234320	Tee	
22	1	1			234316	Nipple, Hex	
23	1	1			334207	Bushing	
24	2	2			234322	Elbow, 90°	
25	1	1			81508928	Hose Assy., Vib. To Hyd. Res.	
26	1	1			332125	Cap, Hex Nut	
27	1	1			334359	Tee	
28	1	1			160150	O-Ring	
29	1	1			84218204	Hose Assy., Traction Pump To Vib. Valve	
30	1	1			334126	Connector	
31	1	1			813348	Grommet	
32	1	1			334132	Elbow, 45°	
33	1	1			160153	O-Ring	
34	1	1			234335	Elbow, 90°	
35	1	1			813499	Elbow, 90°	
36	1	1			160153	O-Ring	
37	1	1			234333	Tee	
38	1	1			234358	Connector	
39	1	1			84218202	Hose Assy., Vib. Control Valve	
40	1	1			815146	Elbow, 90°	
41	1	1			160153	O-Ring	
42	2	2			232124	Plug, Hex. Hd.	
43	1	1			815147	Elbow, 90°	
44	1	1			160153	O-Ring	
45	1	1			570201	Tubing, Copper	
46	1	1			234336	Tee	

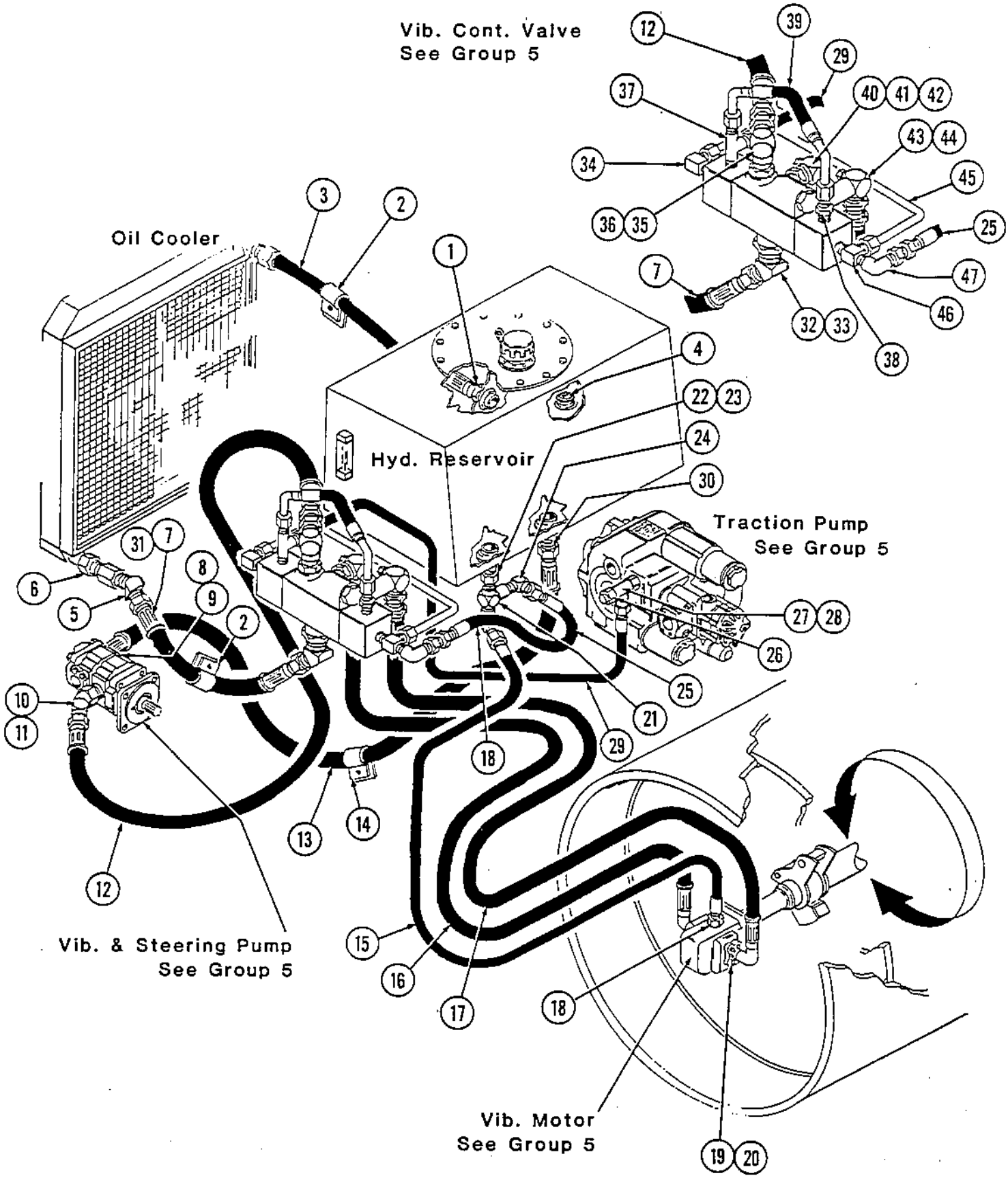

Rev. 6/30/87
PA-15-183

Page	Group	Illustration Number	Catalog Number	Illustration
50	5	PA-15-PL120	PA-15-PL01	Vibration & Steering Pump

Ref. No.	Quantity/Model CA 15	CA 15 D	CA 15 PD		Part Number	Description	Serial Number
-	1	1	1		801053	Assembly, Complete Pump	To S/N 517
-	1	1	1		801102	Assembly, Complete Pump	S/N 518 to 707 709 to 730
-	1	1	1		801153	Assembly, Complete Pump	S/N 708, 731 & up
1	1	1	1		813904	Cover, End Shaft	
2	4	4	4		813656	Seal, Ring	
3	8	8	8		813921	Bearing, Roller	
4	1	1	1		813919	Seal, Double Lip	
5	1	1	1		813907	Plug	
6	1	1	1		813673	Bearing, Roller	
7	1	1	1		813677	Ring, Retainer	
8	1	1	1		813920	Cover, End Port	
9	1	1	1		481399	Housing, Gear (Use with Pump Assy., 801053 & 801153)	
-	1	1	1		911715	Housing, Gear (Use with Pump Assy., 801102)	
10	4	4	4		813642	Plate, Thrust	
11	24	24	24		813646	Seal, Pocket	
12	4	4	4		813668	Seal, Gasket	
13	1	1	1		911714	Set, Gear & Shaft (Use with Pump Assy., 801053)	
-	1	1	1		911713	Set, Gear & Shaft (Use with Pump Assy., 801102)	
-	1	1	1		481236	Set, Gear & Shaft (Use with Pump Assy., 801153)	
14	1	1	1		480334	Carrier, Bearing	
15	1	1	1		813664	Housing, Gear	
16	1	1	1		813908	Set, Gear	
17	1	1	1		813922	Shaft	
18	4	4	4		813892	Stud	
19	4	4	4		813915	Washer, Flat	
20	4	4	4		813917	Hex Nut	

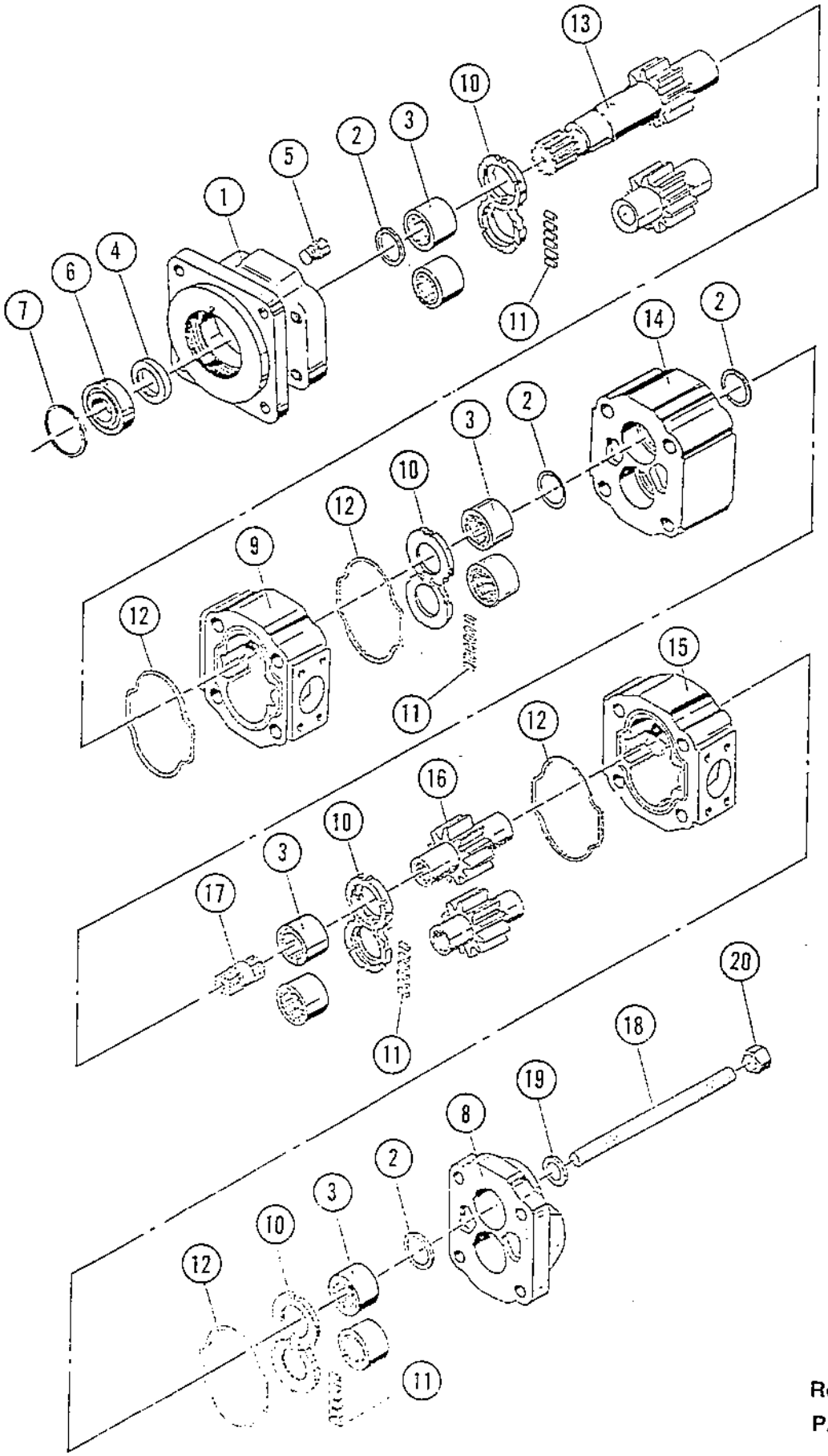
1
2
3
4
5
6
7
8
9
10
11
12
13
14
15
16
17
18
19
20

Page	Group	Illustration Number	Catalog Number	Illustration
52	5	PA-15-PL125	PA-15-PL01	Vibration Motor

Ref. No.	Quantity/Model CA 15	CA 15 D	CA 15 PD	Part Number	Description	Serial Number
1	1	1	1	801054	Motor, Vibration	
2	1	1	1	891495	Cover, Shaft End	
-	1	1	1	921563	Kit, Seal	
3	1	1	1	480563	Seal, Shaft	
4	12	12	12	813646	Seal, Pocket	
5	2	2	2	813668	Seal, Gasket	
6	1	1	1	813673	Bearing	
7	1	1	1	813677	Ring, Snap	
8	1	1	1	891019	Retainer, Seal	
9	2	2	2	480499	Check Assembly	
10	2	2	2	813656	Seal, Ring	
11	4	4	4	813921	Bearing, Roller	
12	2	2	2	813642	Plate, Thrust	
13	1	1	1	480333	Housing, Gear	
14	1	1	1	480329	Gear Set, Drive & Shaft	
15	1	1	1	813920	Cover, Port End	
16	4	4	4	813915	Lockwasher	
17	4	4	4	813918	Capscrew, HH	
18	4	4	4	532026	Stud, Threaded	
19	8	8	8	604030	Lockwasher	
20	4	4	4	570005	Hex Nut	
21	4	4	4	502058	Capscrew, HH	
22	2	2	2	813478	O-Ring	

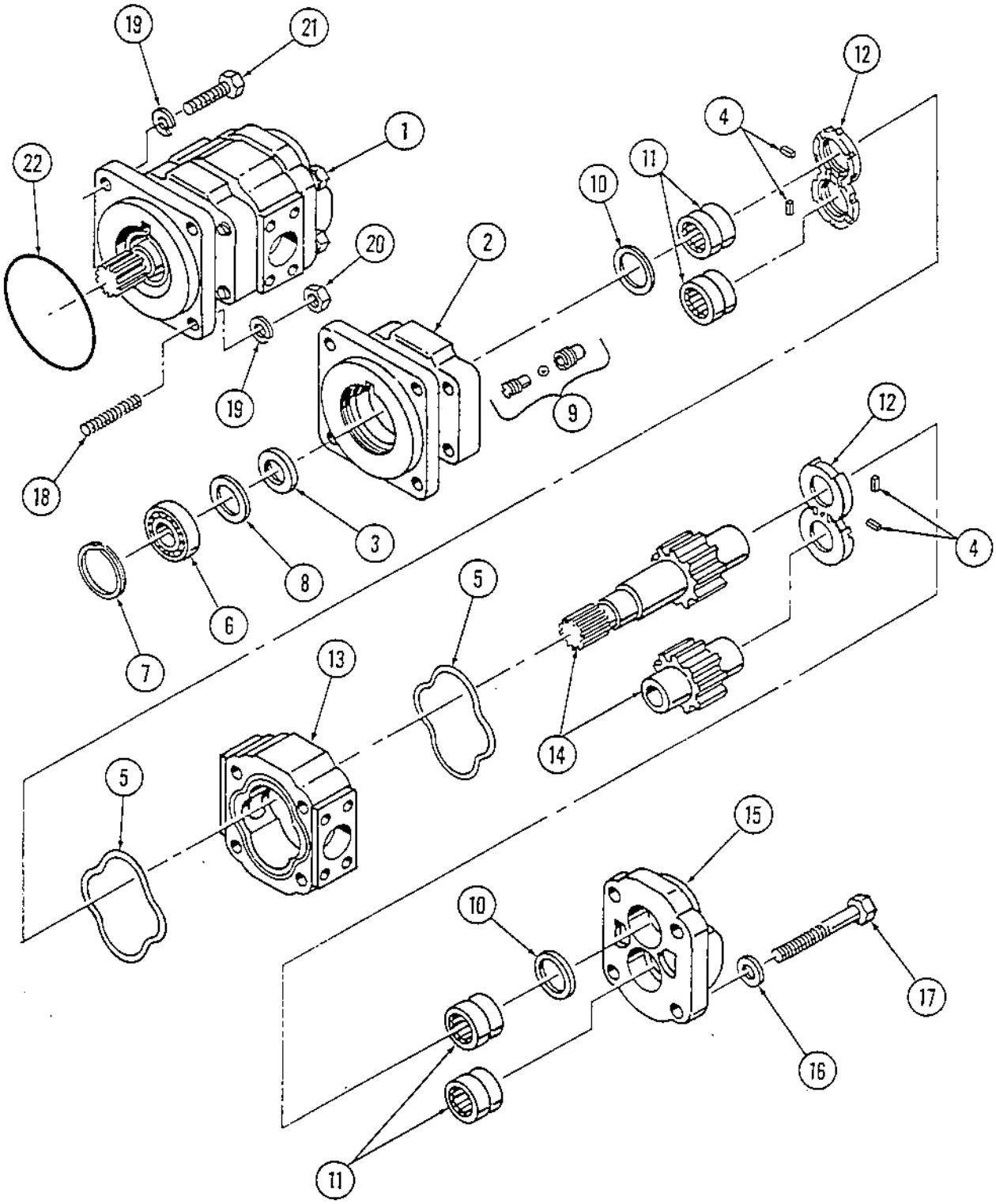
19
21
12
4
1
22
11
10
20
2
19
9
18
12
3
4
8
5
6
7
13
14
5
15
10
17
16
11

Page	Group	Illustration Number	Catalog Number	Illustration
54	5	PA-15-PL126	PA-15-PL01	Vibration Control Valve

Ref. No.	Quantity/Model CA 15	CA 15 D	CA 15 PD		Part Number	Description	Serial Number
-	1	1	1		335564	Assembly, Valve, Complete	
1	1	1	1		814090	Cover, Rubber	
2	1	1	1		814086	Ring, Snap	
3	1	1	1		814085	Disc	
4	1	1	1		814094	Spring	
5	1	1	1		814082	Bolt	
6	1	1	1		814127	Lockwasher	
7	1	1	1		814128	Sleeve, Detent	
8	2	2	2		814089	Ring, Seal	
9	1	1	1		814126	Plug	
10	1	1	1		814092	Washer	
11	1	1	1		814091	Spring	
12	1	1	1		814093	Pin	
13	1	1	1		814083	Pin, Clevis	
14	1	1	1		814133	Plug	
15	1	1	1		814095	O-Ring	
16	1	1	1		814132	Cone, Valve	
17	1	1	1		NSS	Housing & Spindle	
18	1	1	1		891745	Cartridge, Relief, 2000 PSI	
-	1	1	1		911581	Kit, Seal	
19	1	1	1		NSS	O-Ring	
20	1	1	1		NSS	O-Ring	
21	1	1	1		NSS	Ring, Seal	
22	1	1	1		813714	Link, Coupling	
23	1	1	1		813714	Pin, Cotter	
24	1	1	1		814077	Pin, Cotter	
25	1	1	1		825338	Handle, Valve	

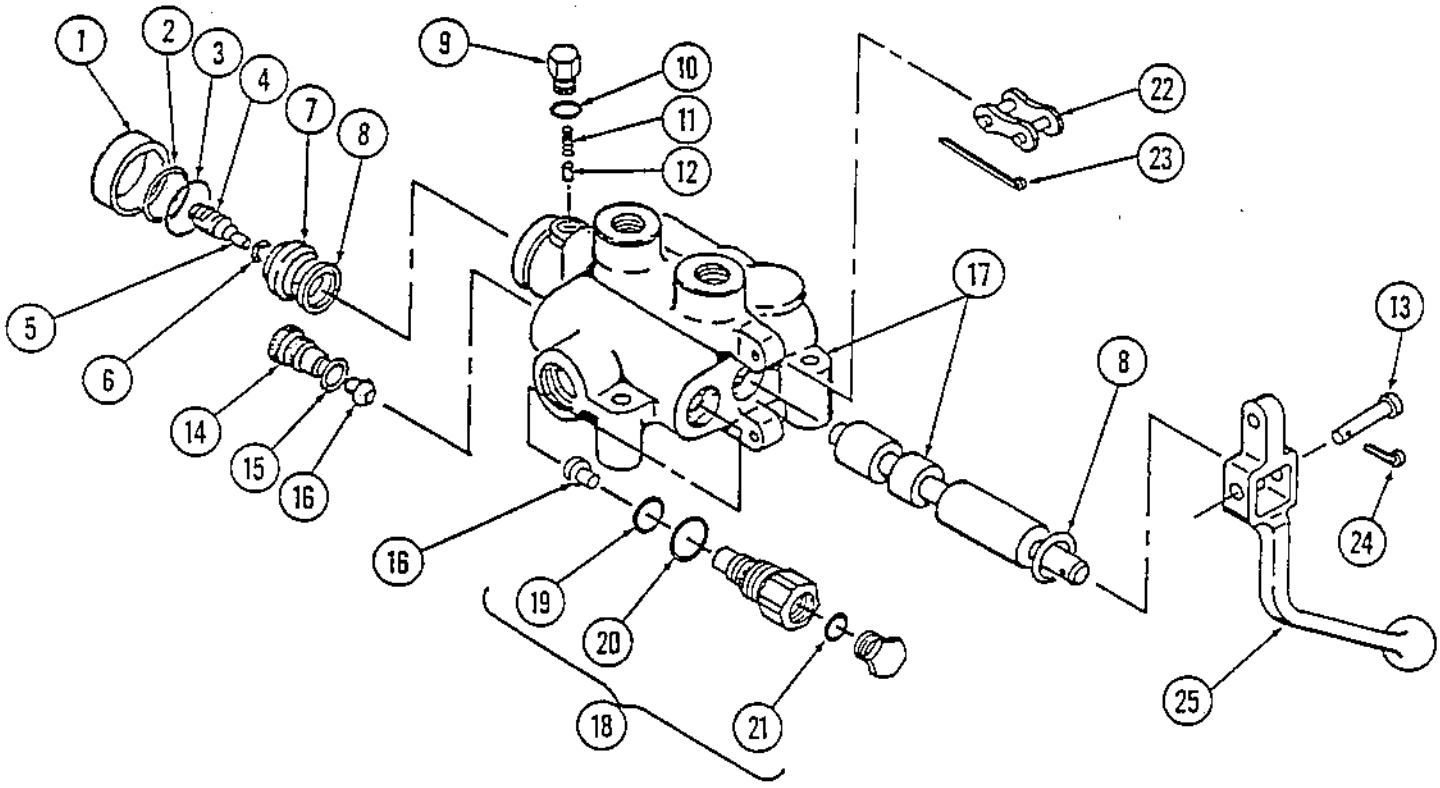
1
2
3
4
7
8
9
10
11
12
22
23
5
6
17
13
8
14
15
16
16
19
20
24
18
21
25

Page	Group	Illustration Number	Catalog Number	Illustration
56	5	PA-15-PL118	PA-15-PL01	Vibration Control Valve (Dual Amplitude)

Ref. No.	Quantity/Model CA 15	Quantity/Model CA 15 D			Part Number	Description	Serial Number
1	1	1			337510	Assembly, Complete Valve	To S/N 1850
2	2	2			975048	Assembly, Solenoid	
3	1	1			NSS	Hex Nut	
4	1	1			NSS	Nameplate	
5	1	1			NSS	Housing, Coil	
6	1	1			975049	Coil, 12 Volt	
7	1	1			NSS	Gasket, Housing	
8	1	1			NSS	Washer, Housing	
9	1	1			NSS	Assembly, Sleeve	
10	1	1			NSS	Seal, Flange	
11	1	1			NSS	Spring, Piston	
12	1	1			NSS	Spool & Piston	
13	1	1			NSS	Spacer	
14	1	1			NSS	Body, Solenoid Cartridge	
15	1	1			481116	Seal, Upper Back-Up	
16	1	1			481113	O-Ring, Upper Cartridge	
17	2	2			481114	O-Ring, Lower Cartridge	
18	1	1			481115	Seal, Lower Back-Up	
19	1	1			NSS	Body, Valve & Spool	
20	2	2			481124	O-Ring	
21	2	2			481111	Washer, Stop	
22	2	2			481112	Spring, Centering	
23	1	1			481120	Block, R.S. Solenoid	
24	8	8			481122	Capscrew	
25	1	1			481119	Block, L.S. Solenoid	
26	1	1			333112	Assembly, Relief Valve, (2000 PSI)	
27	1	1			481125	O-Ring	
28	1	1			481121	Washer, Back-Up	
29	1	1			481123	O-Ring	
30	3	3			502038	Capscrew, HH	
31	3	3			604028	Lockwasher	
32	3	3			571003	Hex Nut	
33	1	1			815931	Bracket (Vib. Cont. Valve)	S/N 1731 to 1850
-	-	-			815765	Bracket (Vib. Cont. Valve)	To S/N 1730

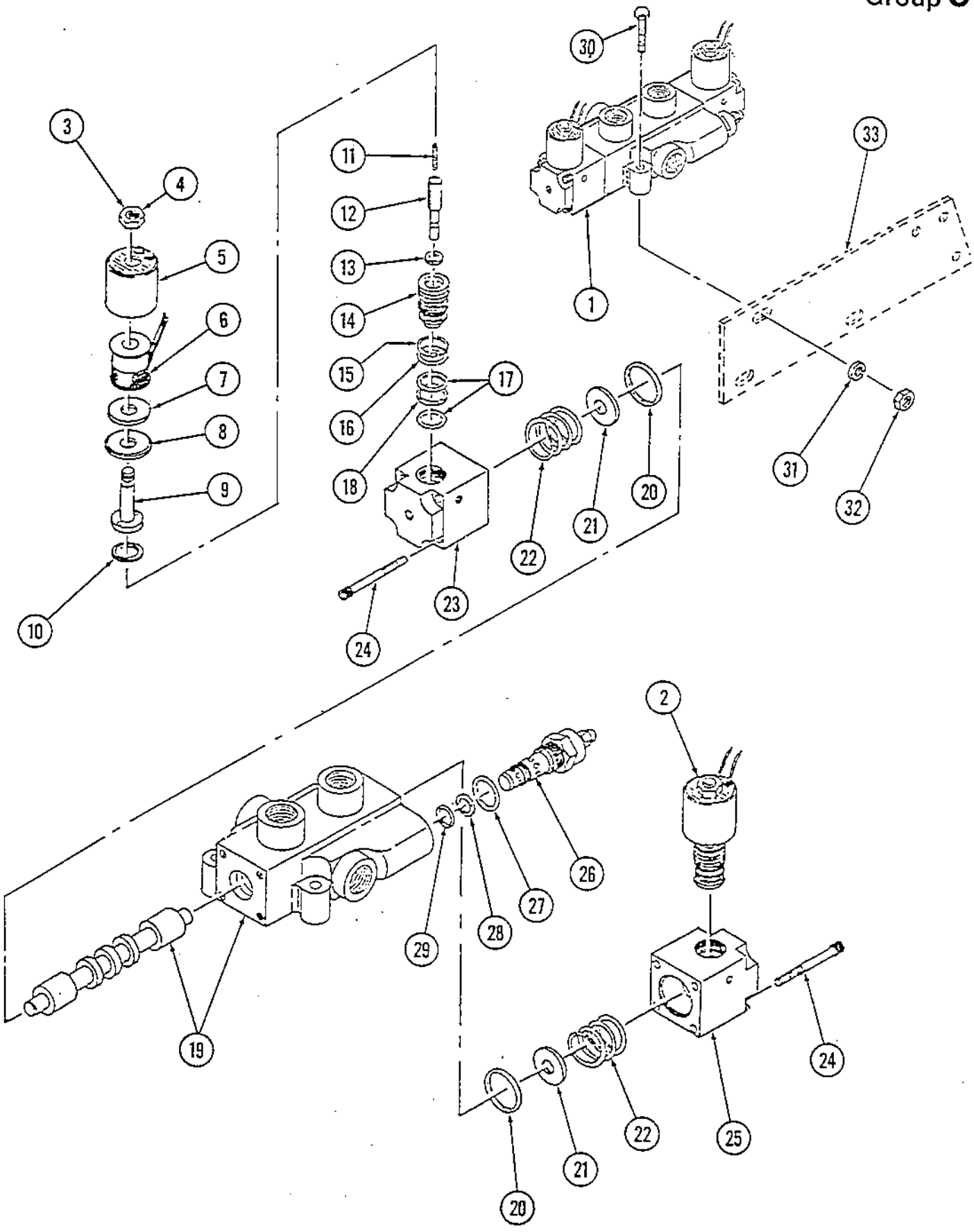

Rev. 6/30/87
PA-15-PL118

Page	Group	Illustration Number	Catalog Number	Illustration
58	5	PA-15-PL173	PA-15-PL01	Steering System

Ref. No.	Quantity/Model CA 15	15 D	PD		Part Number	Description	Serial Number
1	1	1	1		335567	Valve Assy., Steering (See Group 5)	
2	1	1	1		334134	Adapter	
3	1	1	1		160146	O-Ring	
4	1	1	1		334135	Tee	
5	1	1	1		813437	Adapter	
6	1	1	1		160146	O-Ring	
7	1	1	1		813438	Adapter, Hex Nipple	
8	1	1	1		480202	Valve, Relief	
9	1	1	1		813435	Elbow 90°	See Note
10	1	1	1		482167	Hose Assy., Relief Valve to Tee	See Note
11	2	2	2		813500	Adapter 45°	
12	1	1	1		160146	O-Ring	
13	1	1	1		81508904	Hose Assy., Valve to RH Cylinder	
14	1	1	1		81508905	Hose Assy., Valve to LH Cylinder	
15	1	1	1		813445	Elbow 45°	
16	1	1	1		81508902	Hose Assy., Valve to Hyd. Reservoir	
17	1	1	1		81508903	Hose Assy., Pump to Valve	
18	1	1	1		334205	Connector	
19	1	1	1		334126	Connector	
20	1	1	1		81508919	Hose, Assy., Hyd. Reservoir to Pump	
21	1	1	1		332065	Kit, Flange	
22	1	1	1		160191	O-Ring	
23	1	1	1		-	Pump Assy., Vib & Steering (See Group 5)	
24	1	1	1		232066	Kit, Flange	
25	1	1	1		813443	O-Ring	
26	2	2	2		335560	Cyl. Assy., Hyd. Steering (See Group 5)	
27	2	2	2		334070	Tee	
28	2	2	2		81508906	Hose Assy., Cylinder to Cylinder	
29	1	1	1		921100	Clamp, Hose	

NOTE: When replacing item 10 Hose P/N 482167 check item 9. If item 9 is a Straight Connector it should be replaced with a 90° Elbow P/N 813435 item 9. The old Straight Connector will not work with new improved Hose item 10.

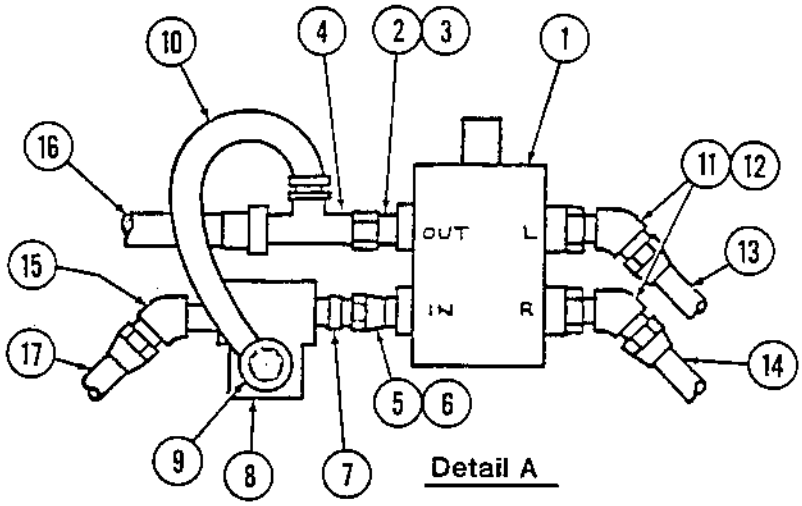

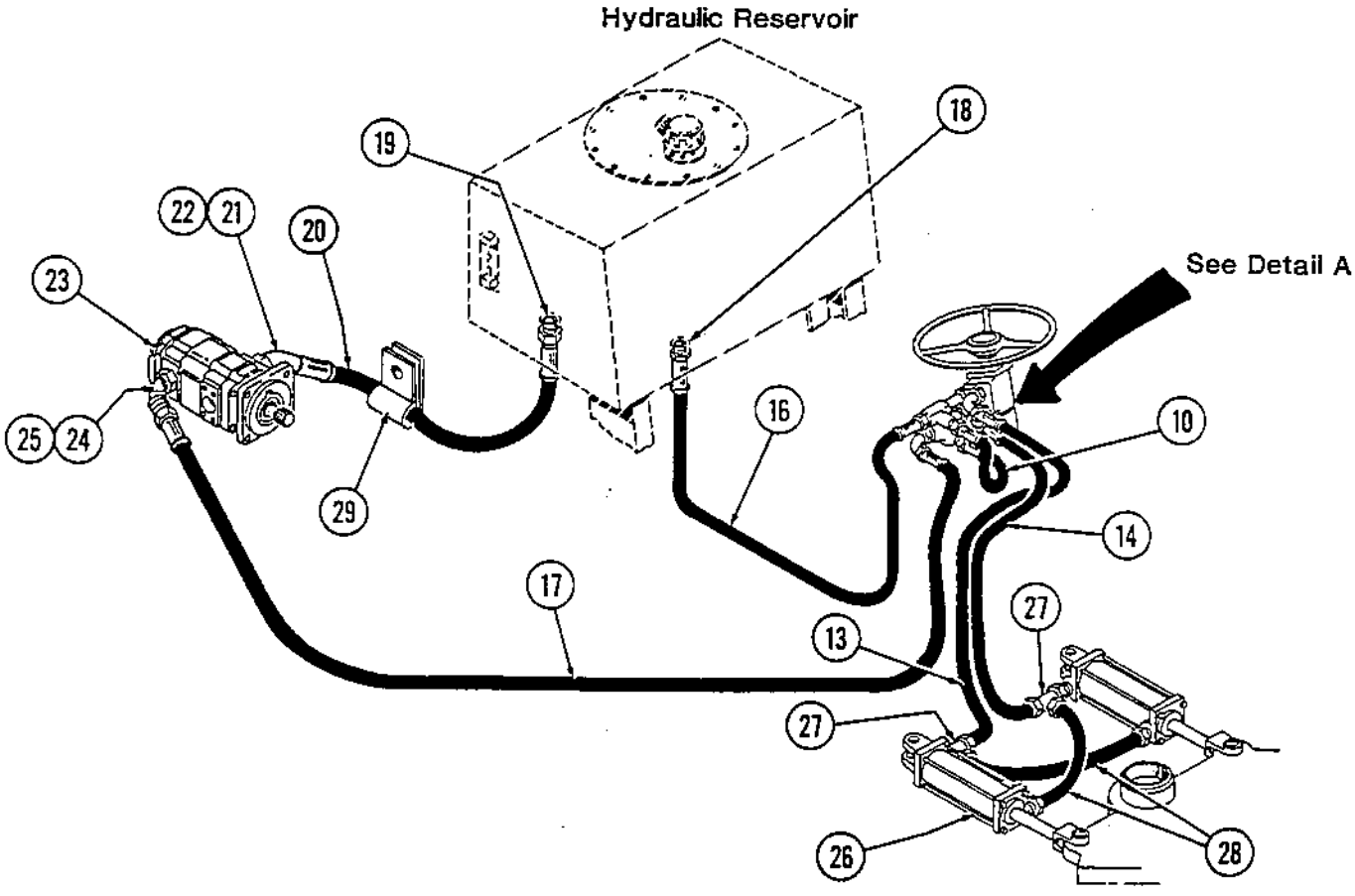

Rev. 6/30/87

PA-15-PL173

Page	Group	Illustration Number	Catalog Number	Illustration
60	5	PA-15-PL158	PA-15-PL01	Steering Valve (For Vendor Tag YS-11 or YS-12)

Ref. No.	Quantity/Model CA 15	CA 15 D	CA 15 PD	Part Number	Description	Serial Number
1	1	1	1	335567	Assy., Steering Valve	
2	7	7	7	814155	Screw, Cap	
3	1	1	1	481273	Cap, End	
4	2	2	2	814160	Gerotor Set	
5	1	1	1	892835	Spacer	
6	1	1	1	892834	Spacer	
7	1	1	1	814151	Spline	
8	1	1	1	814156	Plate	
9	1	1	1	814150	Drive	
-	1	1	1	814159	Assembly, Control	
10	1	1	1	NSS	Housing, Valve	
11	1	1	1	NSS	Sleeve, Control	
12	1	1	1	NSS	Spool, Control	
13	6	6	6	814143	Spring, Centering	
14	1	1	1	892102	Pin, Centering	
15	1	1	1	814148	Spring, Compression	
16	1	1	1	892160	Ball, Steel	
17	1	1	1	814149	Seat, Check	
18	1	1	1	814167	Plug, Seal	
19	1	1	1	892113	Seal	
-	1	1	1	892716	Kit, Seal	
20	1	1	1	892113	Seal	
21	1	1	1	892119	Seal	
22	1	1	1	892271	Seal, Quad Ring	
23	1	1	1	814146	Seal, Oil	
-	1	1	1	481272	Kit, Needle Bearing	
24	2	2	2	NSS	Race, Bearing	
25	1	1	1	NSS	Bearing, Needle Thrust	
26	1	1	1	NSS	Locator, Bearing	
27	1	1	1	814145	Plate, Valve Mounting	
28	4	4	4	814165	Screw, Cap	

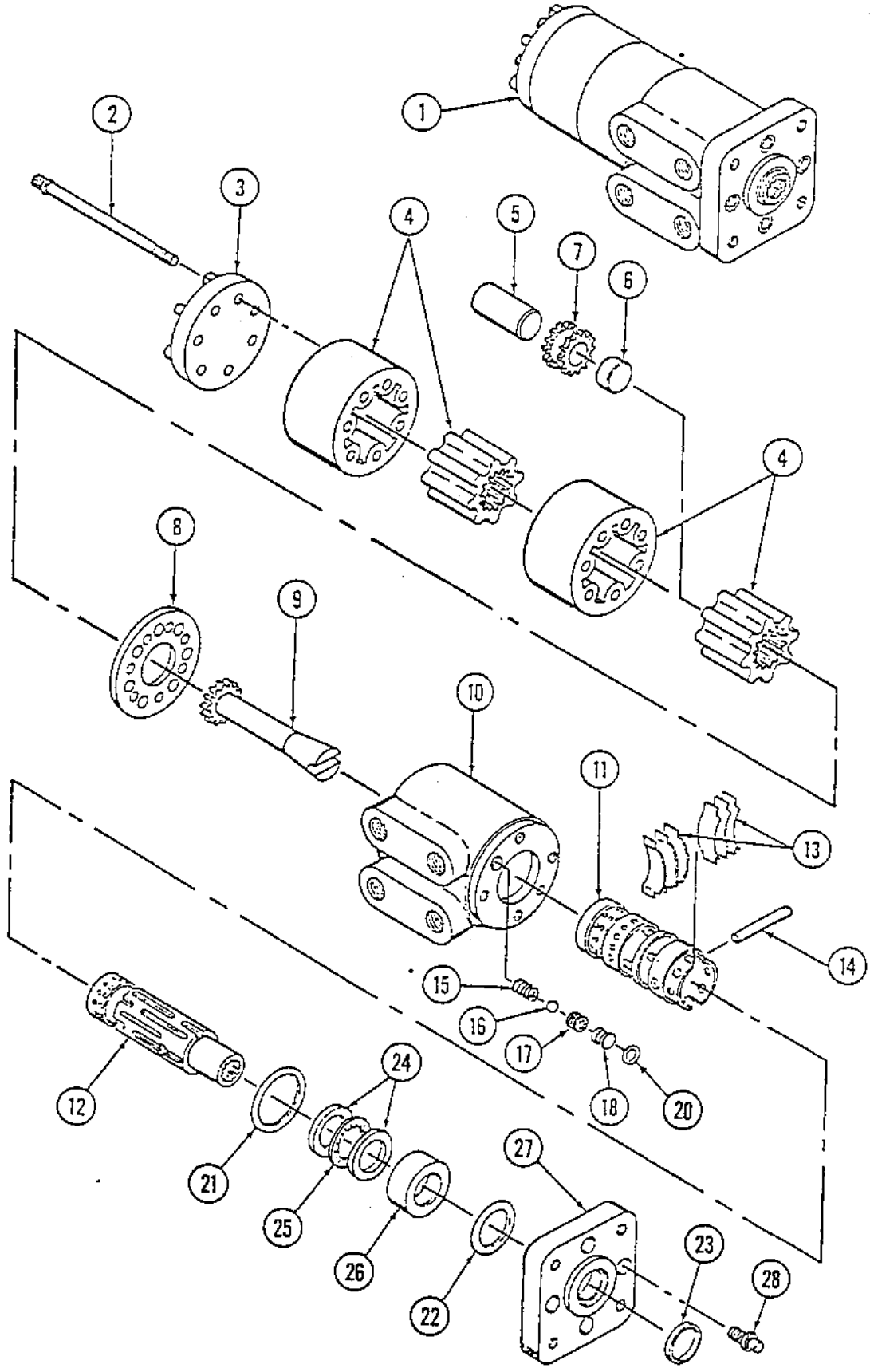
1
2
3
4
5
7
6
4
8
9
10
11
13
14
15
16
17
18
20
12
24
21
25
26
22
27
23
28

Page	Group	Illustration Number	Catalog Number	Illustration
62	5	PA-15-PL157	PA-15-PL01	Steering Valve (For Vendor Tag 211-1039)

Ref. No.	Quantity/Model CA 15	15 D	PD		Part Number	Description	Serial Number
1	1	1	1		335567	Assy., Steering Valve	
-	1	1	1		894013	Kit, Seal	
2	1	1	1		814146	Seal	
3	1	1	1		911585	Seal	
4	1	1	1		892271	Seal, Quad Ring	
5	1	1	1		911584	Seal	
6	1	1	1		892113	Seal	
7	3	3	3		911587	Seal	
8	1	1	1		911582	Ring, Retaining	
9	1	1	1		911069	Bushing, Seal Gland	
-	1	1	1		911608	Kit, Needle Bearing	
10	2	2	2		NSS	Bearing, Race	
11	1	1	1		NSS	Bearing, Needle Thrust	
12	1	1	1		911583	Screw, Set	
13	1	1	1		911590	Seat, Check Ball	
14	1	1	1		911586	Ball, Check	
15	1	1	1		911588	Retainer, Check Ball	
-	1	1	1		911591	Assembly Control	
16	1	1	1		NSS	Housing	
17	1	1	1		NSS	Sleeve, Control	
18	1	1	1		NSS	Spool, Control	
19	6	6	6		814143	Spring, Centering	
20	1	1	1		892102	Pin, Centering	
21	1	1	1		911589	Plate, Spacer	
22	1	1	1		814150	Drive	
23	1	1	1		911593	Gerotor	
24	1	1	1		911592	Spacer	
25	1	1	1		911594	Cap, End	
26	7	7	7		814155	Screw, Cap	

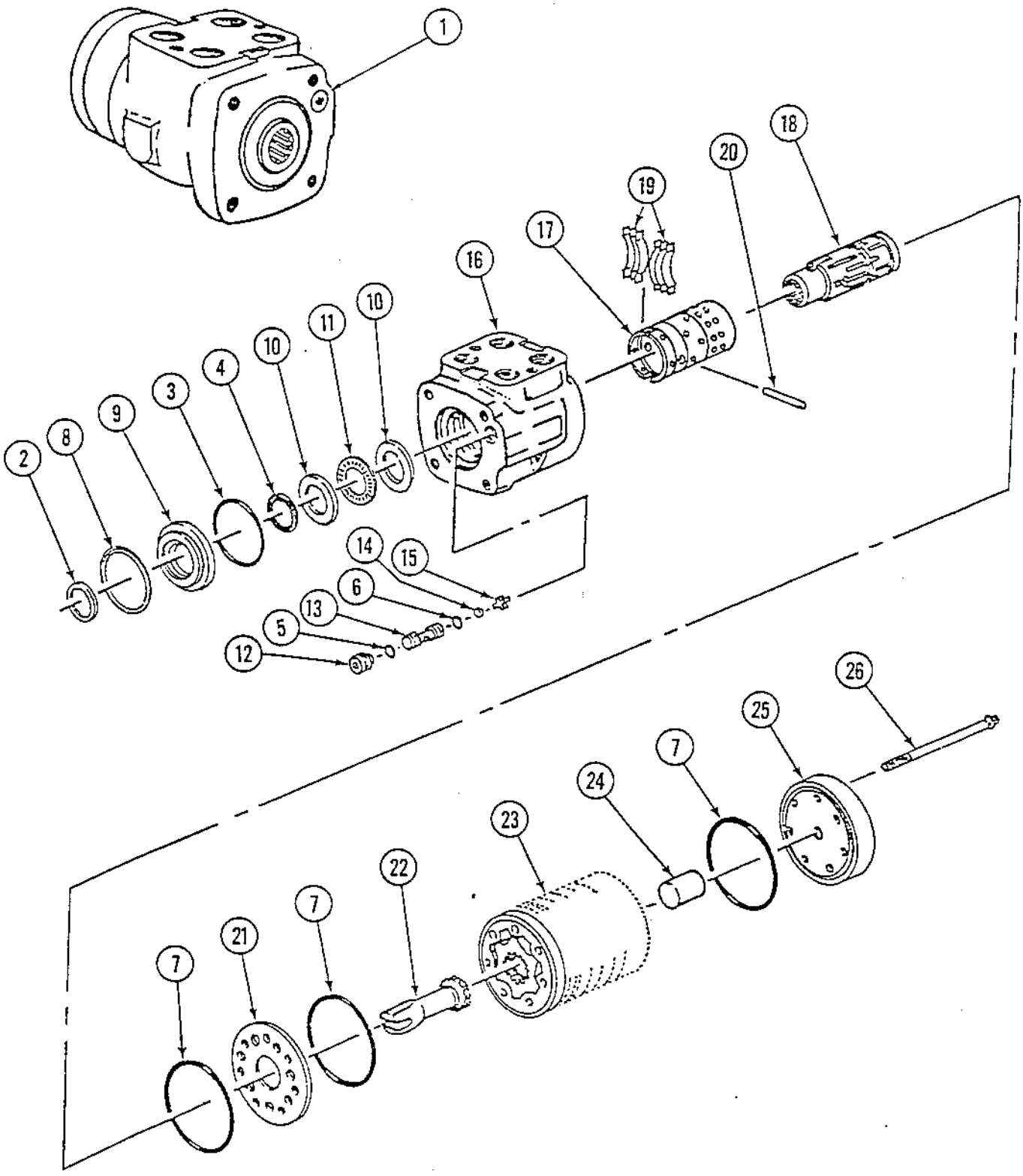
1
2
8
9
3
4
10
11
10
16
17
19
20
18
14
15
6
13
5
12
26
25
7
24
23
22
7
21
7

Page	Group	Illustration Number	Catalog Number	Illustration
64	5	PA-15-PL153	PA-15-PL01	Steering Cylinder

Ref. No.	Quantity/Model CA 15	CA 15 D	CA 15 PD	Part Number	Description	Serial Number
-	2	2	2	335560	Assembly, Steering Cylinder	
1	1	1	1	891827	Assy., Piston Rod/W Clevis	S/N 745 & Up
-	1	1	1	813540	Rod, Piston	To S/N 744
2	1	1	1	416046	Assy., Rod Clevis	To S/N 744
3	1	1	1	813538	Tube	
4	1	1	1	813541	Gland	
5	2	2	2	635022	Pin, Clevis	
6	2	2	2	635020	Clip, Hairpin	
7	1	1	1	813539	Piston	
8	1	1	1	813543	Locknut	
9	1	1	1	813772	Butt	
10	4	4	4	813773	Rod, Tie	
-	1	1	1	813551	Kit, Seal	
11	2	2	2	813547	O-Ring	
12	2	2	2	813549	Washer, Back-up	
13	1	1	1	813546	O-Ring	
14	1	1	1	813544	O-Ring	
15	1	1	1	813545	O-Ring	
16	1	1	1	813548	Washer, Back-up	
17	1	1	1	813550	Wiper	

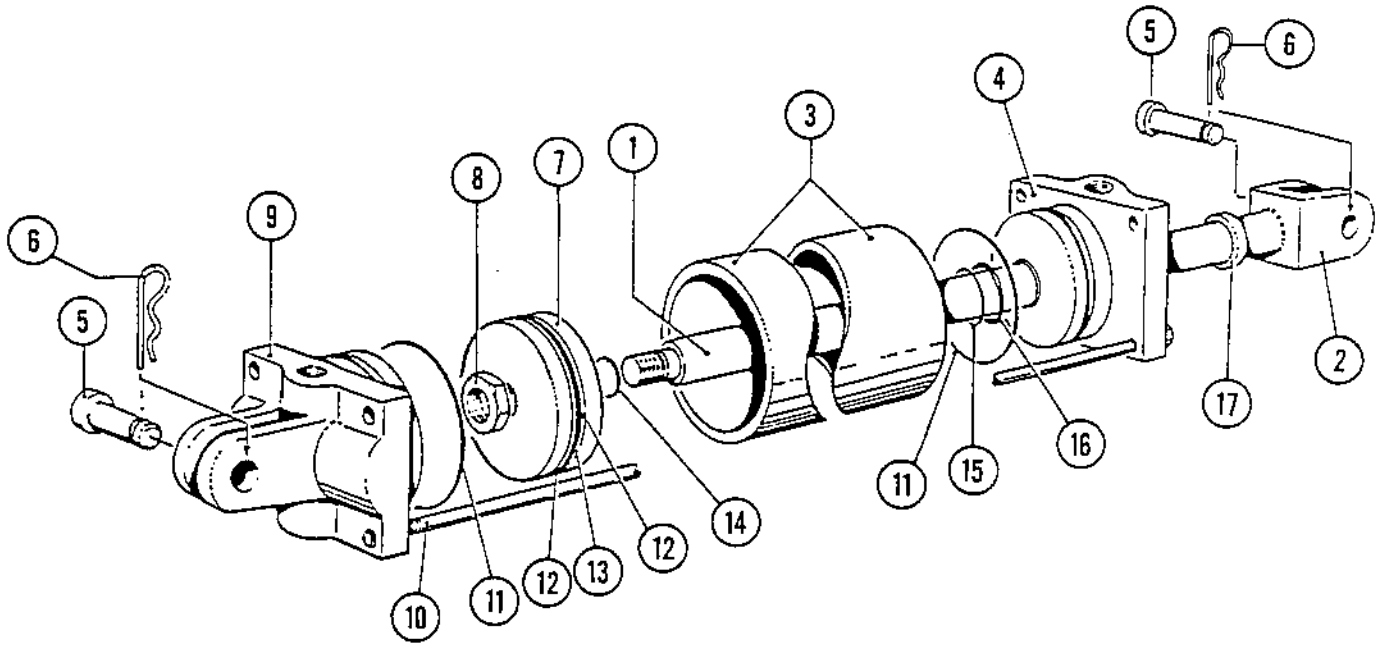
5
6
4
3
1
8
7
9
6
5
2
17
16
15
11
14
12
13
12
11
10

Page	Group	Illustration Number	Catalog Number	Illustration
66	5	PA-15-PL170	PA-15-PL01	Strike Off Blade System (To S/N 469)

Ref. No.	Quantity/Model CA 15 PDB				Part Number	Description	Serial Number
1	2				335560	Assy., Blade Cylinder (See Group 5)	
2	7				813435	Elbow 90°	
3	2				334197	Elbow, Swivel, 90°	
4	2				81525209	Hose Assy., Valve to Cylinder	
5	2				81525210	Hose Assy., Valve to Cylinder	
6	6				813486	Ty-Rap	
7	4				502043	Capscrew, HH	
8	4				600027	Washer, Flat	
9	8				604028	Lockwasher	
10	6				571003	Hex Nut	
11	2				801230	Strip, Rubber	
12	1				815349	Clamp, Hose	
13	2				600007	Washer, Flat	
14	2				502033	Capscrew, HH	
15	2				815367	Clamp, Hose	
16	2				815350	Clamp, Hose	
17	2				891874	Strip, Rubber	
18	2				825990	Bracket, Hose	
19	2				801199	Tee, Bulkhead	
20	1				81525212	Hose Assy., Blade Valve to Tee	
21	1				81525211	Hose Assy., Blade Valve to Tee	
22	1				893269	Assy., Hydraulic Pump	
23	1				-	Assy., Pump Drive (See Group 3)	
24	1				334287	Bushing, Reducer	
25	1				81525207	Hose Assy., Hyd. Tank to Pump	
26	1				81525205	Hose Assy., Pump to Blade Valve	
27	2				334117	Connector, Male	
28	1				813730	Nipple	
29	1				801500	Tee, Female	
30	1				234371	Tee, Male Run	
31	1				81525206	Hose Assy., Valve to Tank	
32	1				815264	Lever, Blade Valve	
33	1				219002	Grip, Blade Lever	
34	1				815051	Cover, Modified	
35	1				891648	Assy., Strike-Off Blade Valve	
36	1				815267	Bracket, Valve Mounting	
37	2				502042	Capscrew, HH	
38	1				334128	Elbow 90°	
39	1				813445	Elbow 45°	
40	2				813434	Bushing, Reducer	
41	1				334157	Connector, Male	
42	1				82523536	Decal, Blade Position	

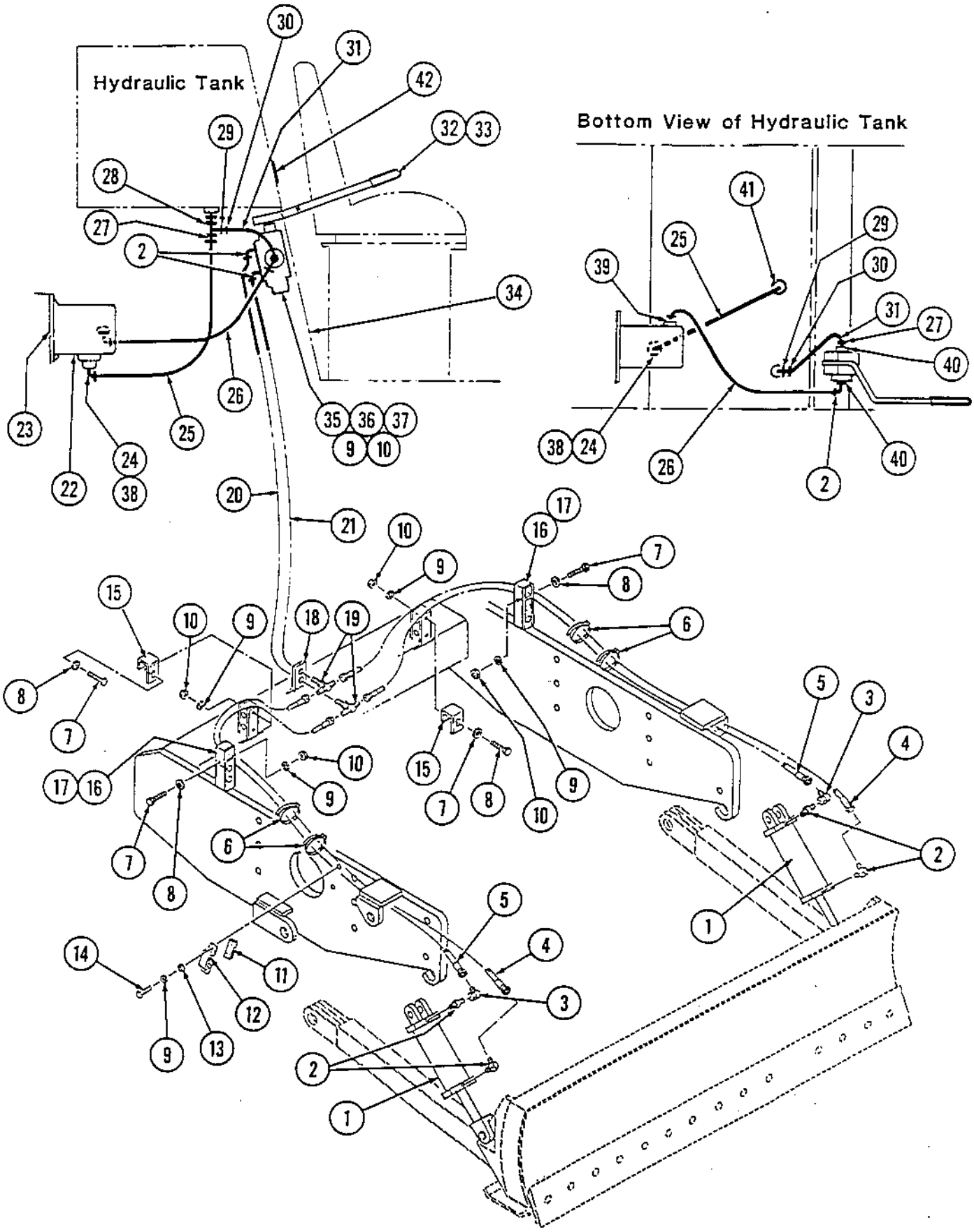
Hydraulic Tank
Bottom View of Hydraulic Tank

Page	Group	Illustration Number	Catalog Number	Illustration
68	5	PA-15-PL164	PA-15-PL01	Strike Off Blade System (S/N 470 & Up)

Ref. No.	Quantity/Model CA 15 PDB				Part Number	Description	Serial Number
1	2				335560	Cylinder, Blade (See Group 5)	S/N 470 & up
2	7				813435	Elbow, 90°	
3	2				334197	Elbow, 90° Swivel	
4	2				81525209	Assy., Hose	
5	2				81525210	Assy., Hose	
6	6				813486	Ty-Rap	
7	4				502043	Capscrew, HH	
8	4				600007	Washer, Flat	
9	4				604028	Lockwasher	
10	4				571003	Hex Nut	
11	2				502021	Capscrew, HH	
12	1				346230	Clamp, Hose	
13	2				604027	Washer, Flat	
14	2				310025	Fitting, Lubrication	
15	2				815367	Clamp, Hose	
16	2				850351	Clamp, Hose	
17	2				891874	Strip, Rubber	
18	2				825990	Bracket, Hose	
19	2				801199	Tee, Bulkhead	
20	1				801153	Pump Vib. & Steering (See Group 5)	
21	1				232066	Kit, Flange	
22	1				813443	O-Ring	
23	2				NSS	Capscrew, HH	
24	2				NSS	Lockwasher	
25	1				81525215	Assy., Hose (Pump to Blade Valve)	
26	2				81525214	Assy., Hose (Valve to Blade Cyls.)	
27	1				813414	Clamp	
28	8				604026	Lockwasher	
29	1				502002	Capscrew, HH	
30	7				571001	Hex Nut	
31	4				502006	Capscrew, HH	
32	1				826021	Bracket, Valve Mounting	
33	1				550047	Pin, Clevis	
34	2				630051	Pin, Cotter	
35	1				826023	Bracket, Valve Lever Anchor	
36	1				550038	Pin, Clevis	
37	1				630008	Pin, Cotter	
38	1				813362	Pin, Clevis	
39	1				815413	Lever, Valve	
40	1				219002	Grip, Hand	
41	1				335567	Valve, Steering (See Group 5)	
42	1				480202	Valve, Relief	
43	1				81525213	Assy., Hose (BLade Valve to Str. Valve)	
44	1				826022	Link, Valve Handle	
45	2				801198	Elbow, 90°	
46	2				234662	Elbow, Swivel, 45°	
47	1				801115	Valve, Blade (See Group 5)	
48	3				502140	Capscrew, HH	
49	1				82523536	Decal, Blade Position	
50	2				332137	Plug	
51	2				310022	Fitting, Lubrication	
52	2				310018	Fitting, Lubrication	

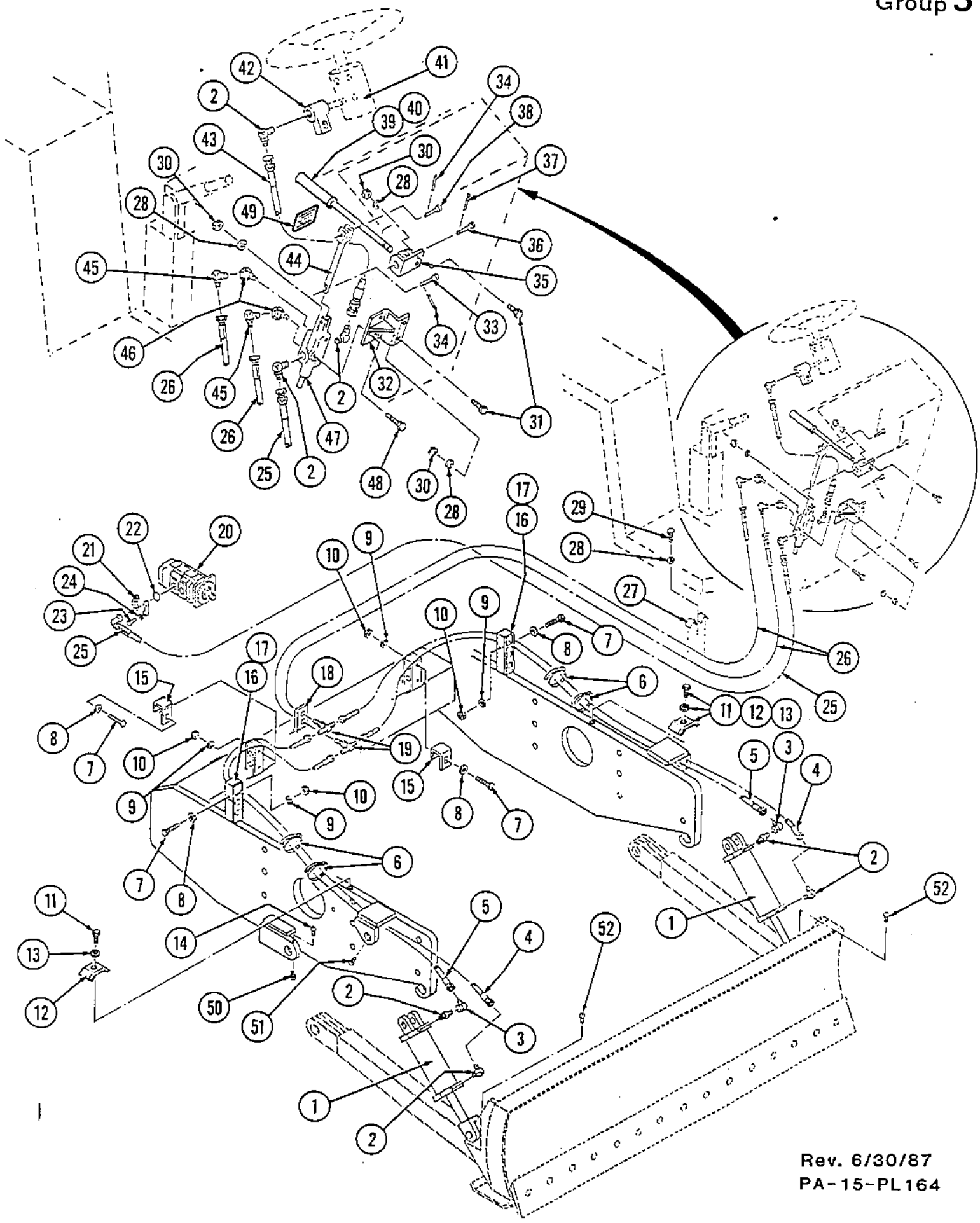

Rev. 6/30/87
PA-15-PL164

Page	Group	Illustration Number	Catalog Number	Illustration
70	5	PA-15-PL147	PA-15-PL01	Blade Control Valve

Ref. No.	Quantity/Model CA 15 PDB				Part Number	Description	Serial Number
1	1				801115	Assembly, Blade Control Valve	S/N 470 & Up
2	1				NSS	Body, Valve	
3	1				NSS	Spool, Valve	
4	2				911192	O-Ring	
5	1				911566	Seat	
6	2				911569	Screw, Cap	
-	1				911567	Kit, Detent	
7	1				NSS	Washer	
8	1				NSS	Spring	
9	1				NSS	Spacer	
10	1				NSS	Spool, Detent	
11	1				NSS	Cap, End	
12	2				NSS	Screw, Detent	
13	2				NSS	Spring	
14	2				NSS	Ball, 1/4" Steel	
-	1				911568	Kit, Relief Valve Kit	
15	1				NSS	Ball, 5/16" Steel	
16	1				NSS	Retainer	
17	1				NSS	Spring	
18	2				NSS	Gasket	
19	1				NSS	Screw, Adjustment	
20	1				NSS	Hex Nut	
21	1				NSS	Nut, Low Crown	

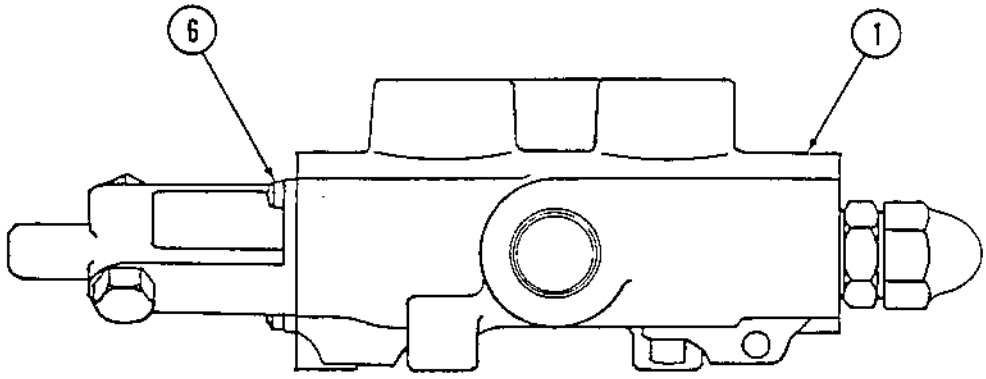
6
1

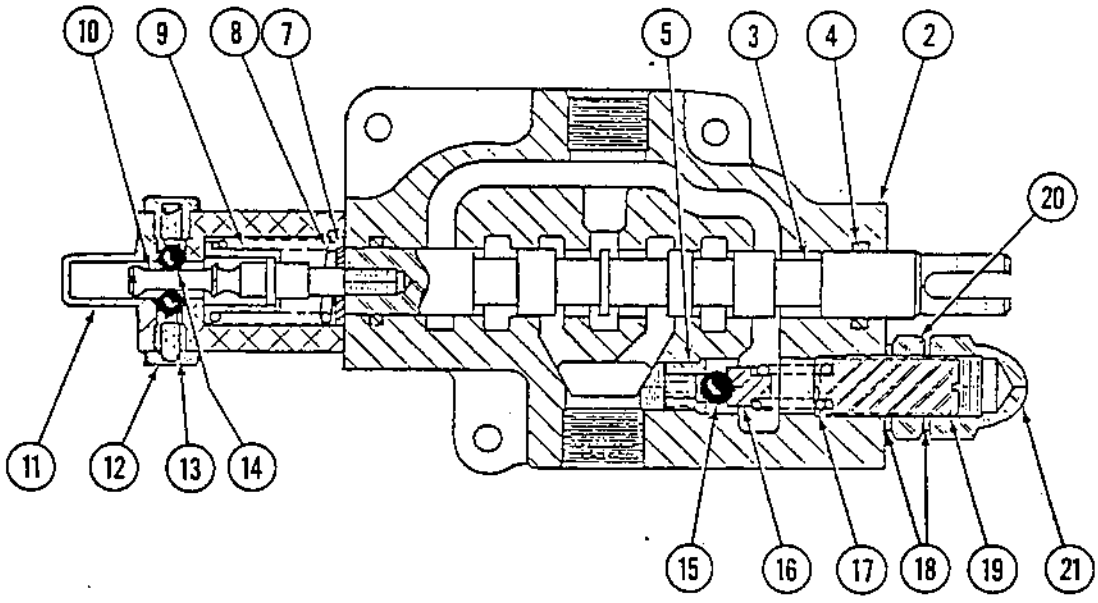
10
9
8
7
5
3
4
2
20
11
12
13
14
15
16
17
18
19
21

Page	Group	Illustration Number	Catalog Number	Illustration
72	5	PA-15-PL155	PA-15-PL01	Blade Cylinder

Ref. No.	Quantity/Model CA 15 PDB				Part Number	Description	Serial Number
-	2				335560	Assembly, Blade Cylinder	
1	1				891827	Assy., Piston Rod/W Clevis	S/N 745 & Up
-	1				813540	Rod, Piston	To S/N 744
2	1				416046	Assy., Rod Clevis	To S/N 744
3	1				813538	Tube	
4	1				813541	Gland	
5	2				635022	Pin, Clevis	
6	2				635020	Clip, Hairpin	
7	1				813539	Piston	
8	1				813543	Locknut	
9	1				813772	Butt	
10	4				813773	Rod, Tie	
-	1				813551	Kit, Seal	
11	2				813547	O-Ring	
12	2				813549	Washer, Back-up	
13	1				813546	O-Ring	
14	1				813544	O-Ring	
15	1				813545	O-Ring	
16	1				813548	Washer, Back-up	
17	1				813550	Wiper	

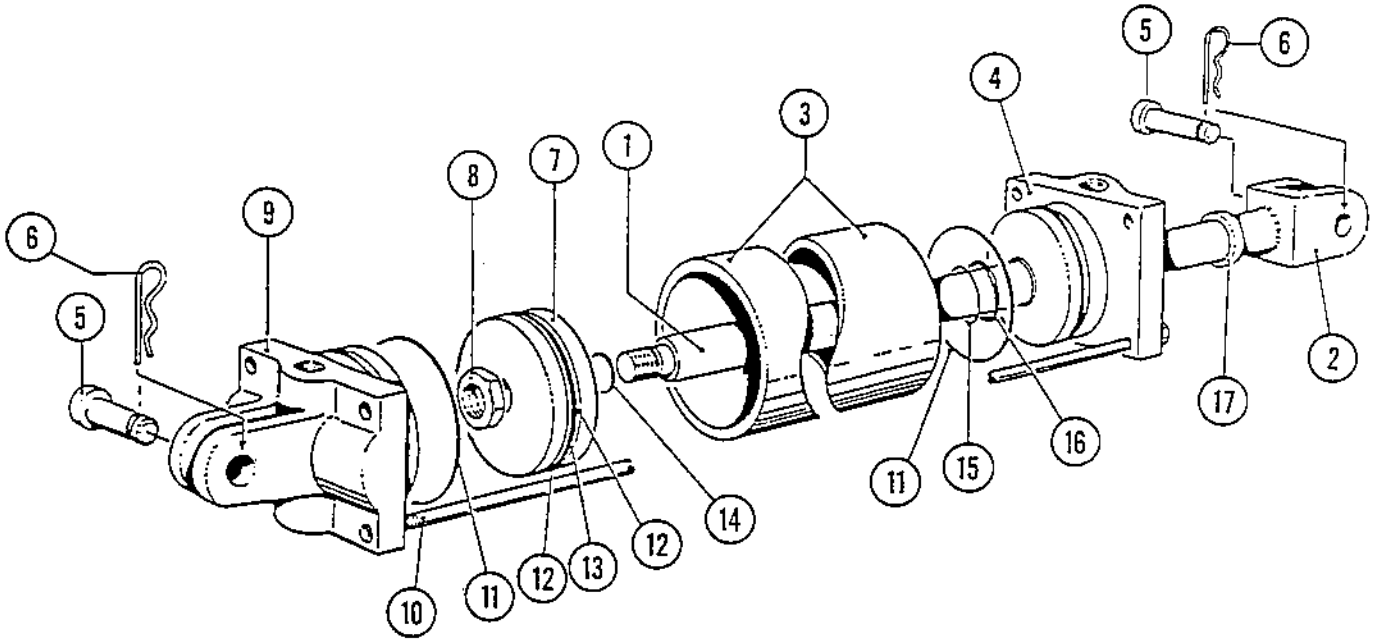
1
2
3
4
5
6
7
8
9
10
11
12
13
14
15
16
17

Page	Group	Illustration Number	Catalog Number	Illustration
74	5	PA-15-PL204	PA-15-PL01	Hydraulic Oil Filter Assembly (S/N 2080 & Up)

Ref. No.	Quantity/Model CA 15	CA 15D	CA 15PD	Part Number	Description	Serial Number
-	1	1	1	337528	Hydr. Oil Filter Assembly	
1	1	1	1	499349	Filter Element	
2	1	1	1	499352	Blocked By-Pass	
3	1	1	1	499358	Spring	
4	1	1	1	499357	Poppet	
5	1	1	1	499355	Indicator	
6	1	1	1	499354	Plug	

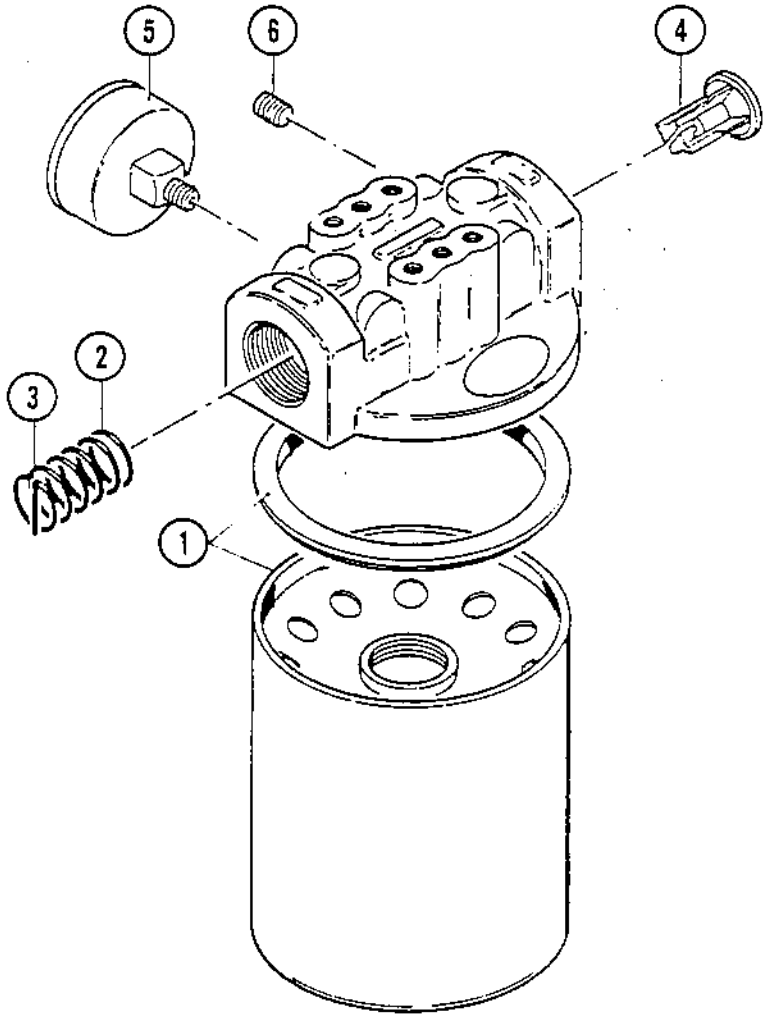
5
6
4
2
3
1

Page	Group	Illustration Number	Catalog Number	Illustration
76	5	PA-15-PL156	PA-15-PL01	Hydraulic Oil Filter (To S/N 2079)

Ref. No.	Quantity/Model CA 15	CA 15 D	CA 15 PD	Part Number	Description	Serial Number
1	1	1	1	335554	Assembly, Hyd. Oil Filter	
2	1	1	1	499355	Gauge, Vacuum	
3	1	1	1	335657	Kit, Filter Element	
4	1	1	1	814117	O-RING	
5	1	1	1	814116	GASKET	
6	2	2	2	814139	SEAL GASKET	
7	1	1	1	814140	WASHER	
8	1	1	1	914115	SPRING	

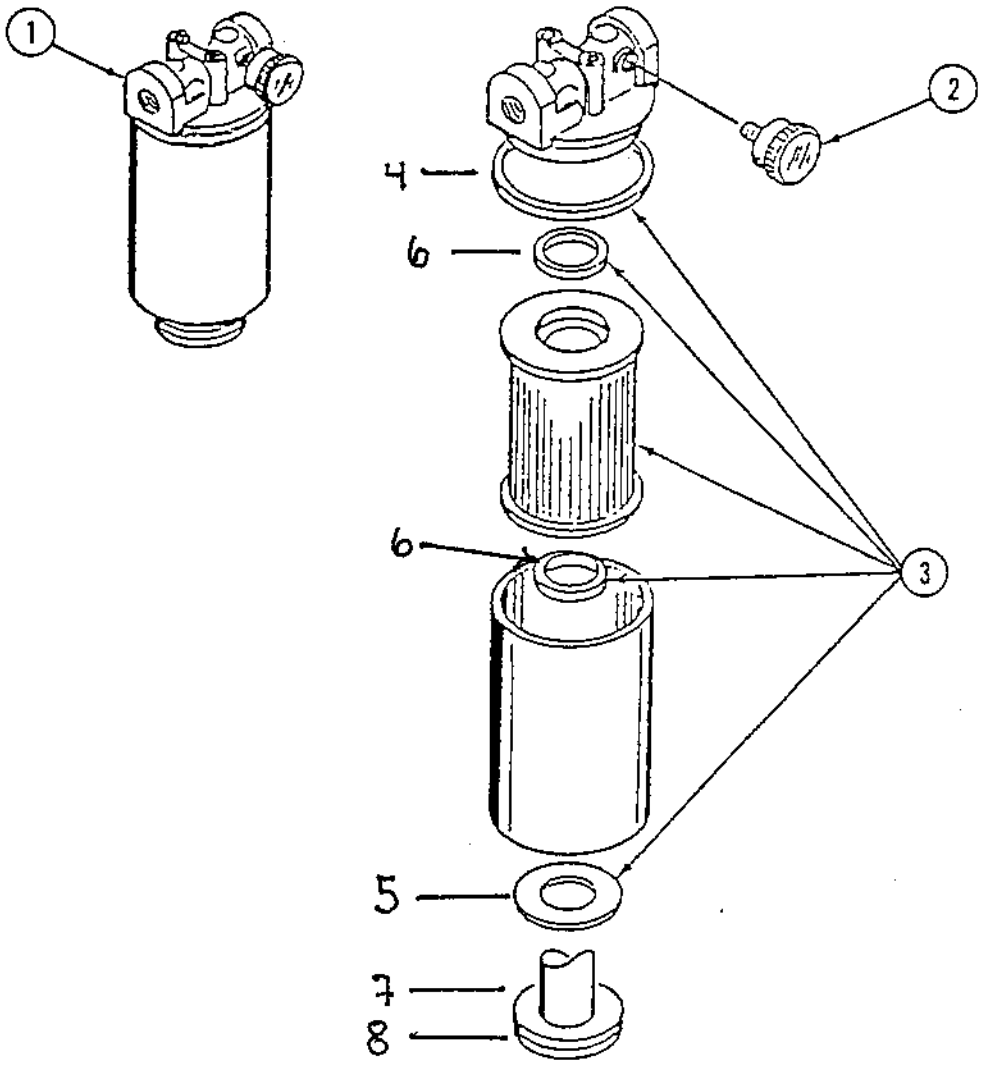
1
2
4
6
6
3
5
7
8

Page	Group	Illustration Number	Catalog Number	Illustration
78	5	PA-15-PL205	PA-15-PL01	Hydraulic Brake Assembly (S/N 2080 & Up)

Ref. No.	Quantity/Model CA 15	15D	15PD		Part Number	Description	Serial Number
1	1	1	1		482455	Hose Assy., Return to Hyd. Tank	
2	2	2	2		234233	Adapter	
3	1	1	1		160188	O-Ring	
4	2	2	2		334234	Tee-Adapter	
5	1	1	1		334523	Adapter, Reducing	
6	1	1	1		929225	Adapter	
7	1	1	1		346498	Switch, Pressure	
8	1	1	1		482101	Hose Assy., Pump to Left Brake	
9	1	1	1		334463	Adapter	
10	1	1	1		802661	O-Ring	
11	1	1	1		482313	Hose Assy., Cross Over to Right Brake	
12	1	1	1		928911	Adapter, 90°	
13	1	1	1		802661	O-Ring	

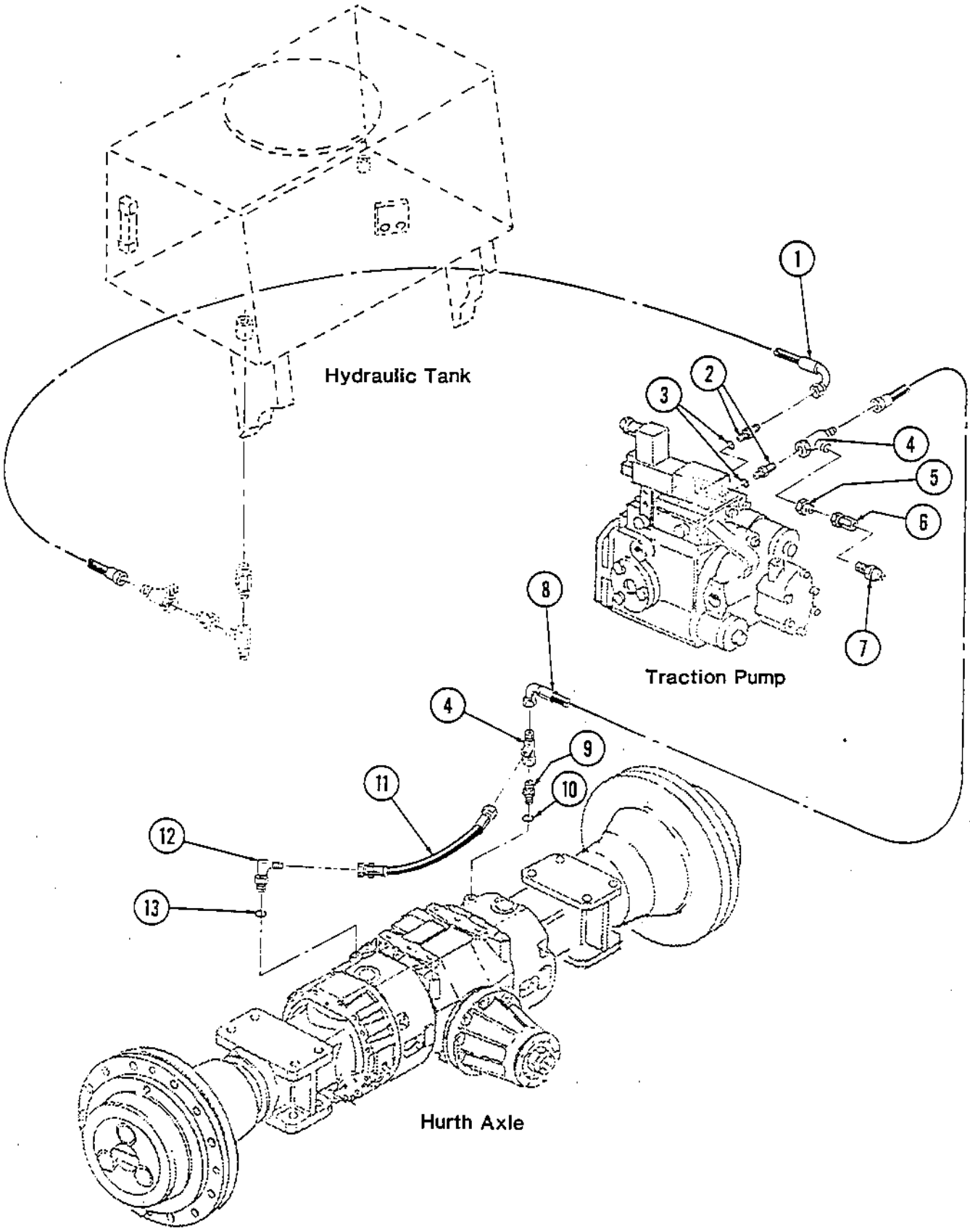
Hydraulic Tank
1
2
3
4
5
6
7
Traction Pump
8
4
9
10
11
12
13
Hurth Axle

DYNAPAC

ELECTRICAL EQUIPMENT

Wiring Assembly, John Deere (To S/N 2079) 2
Wiring Assembly, Ford 4
Wiring Assembly, Detroit, to S/N 450 6
Wiring Assembly, Detroit, S/N 451 & Up (To S/N 2079) 8
Wiring Assembly, John Deere (S/N 2080 & Up) 10
Wiring Assembly, Detroit (S/N 2080 & Up) 12

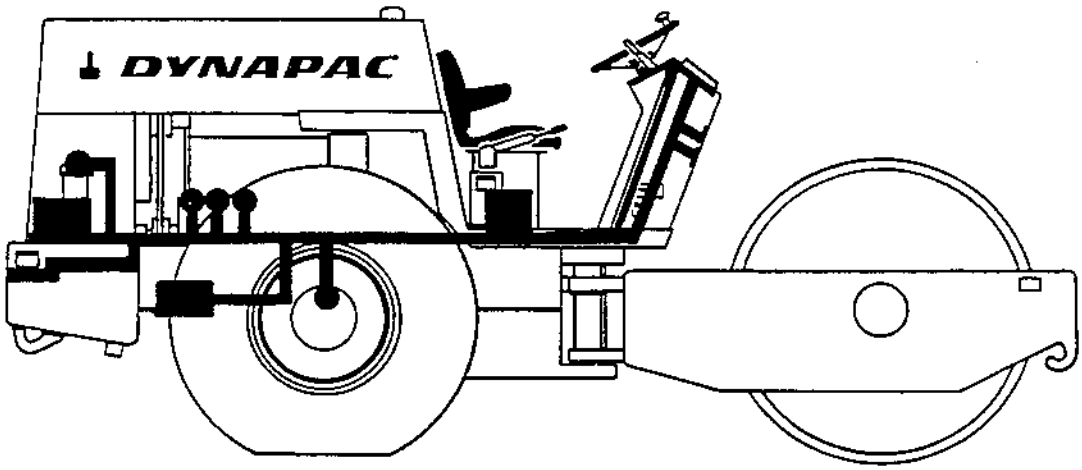

Page	Group	Illustration Number	Catalog Number	Illustration
2	6	PA-15-PL131	PA-15-PL01	Electrical Wiring Assembly (John Deere S/N 451 to 2079)

Ref. No.	Quantity/Model CA 15	15 D	15 PD		Part Number	Description	Serial Number
1	1	1	1		815434	Harness, Wiring	
2	1	1	1		81509004	Cable, Starter	
3	1	1	1		976025	Diode	
4	1	1	1		81509005	Cable, Ground	
5	1	1	1		815861	Assembly, Wire	
6	2	2	2		815431	Assembly, Wire	
7	1	1	1		815863	Assembly, Wire	
8	1	1	1		815864	Assembly, Wire	1928 & Up
9	1	1	1		815860	Assembly, Wire	1928 & Up
10	1	1	1		802153	Tachometer & Hourmeter (Elec. Tach)	1928 & Up
11	1	1	1		815865	Assembly, Wire	
12	1	1	1		815866	Assembly, Wire	
13	1	1	1		815867	Assembly, Wire	
14	1	1	1		815868	Assembly, Wire	
15	2	2	2		815869	Assembly, Wire	
16	1	1	1		815870	Assembly, Wire	
17	1	1			815808	Assembly, Wire (Dual Amplitude)	
18	1	1			814266	Switch, Vibration (Dual Amplitude)	
19	1	1			815807	Assembly, Wire (Dual Amplitude)	
20	1	1			801343	Switch, Amp. Cont. (Dual Amplitude)	
21	1	1	1		989130	Generator, Tachometer	1928 & Up

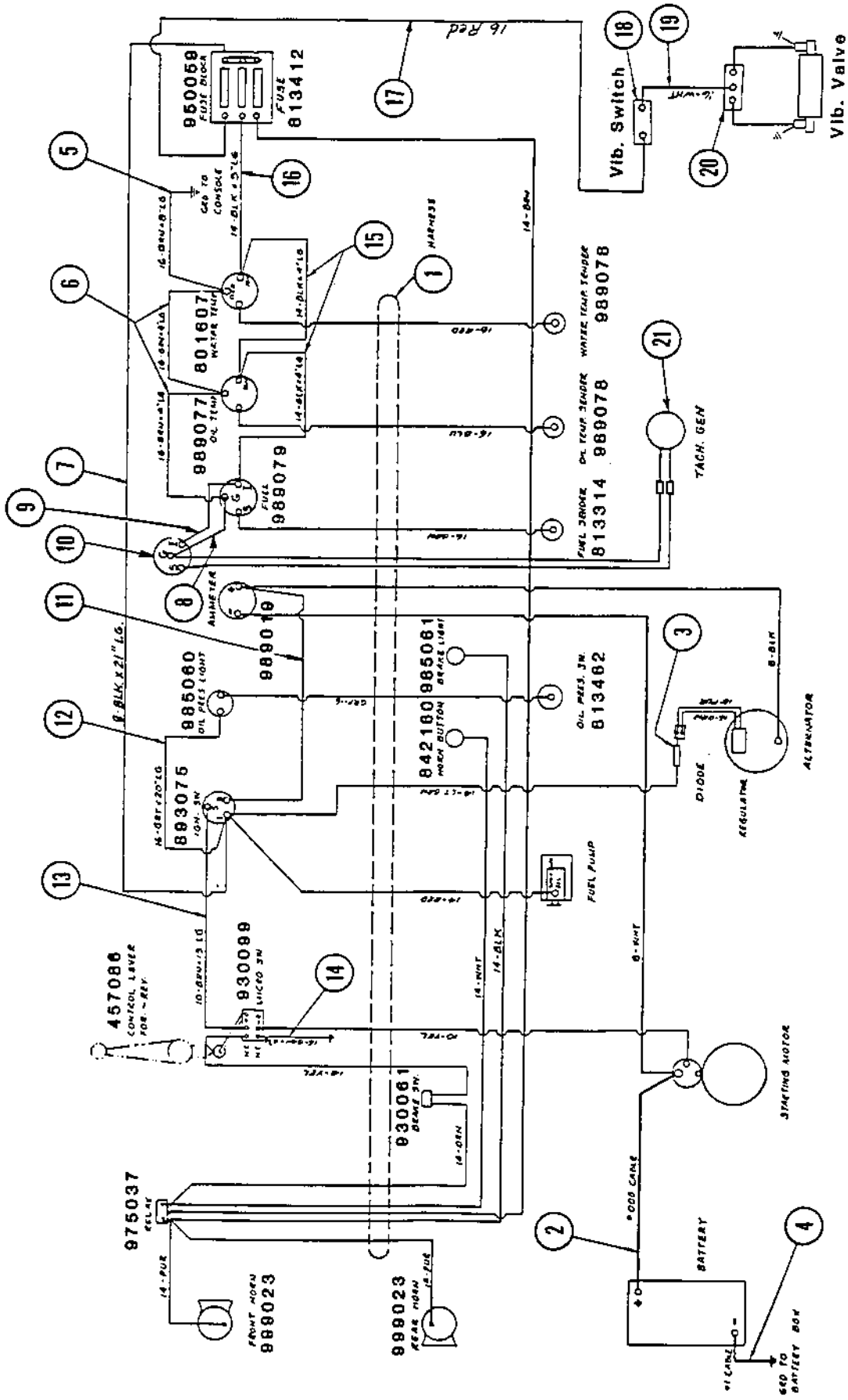
950059
FUSE BLOCK
FUSE
813412
16 Red
17
Vib. Switch
18
19
20
Vib. Valve
5
GRD TO CONSOLE
16-BRN
14-BLK
16-BRN
16-BRN
16-BRN

Page	Group	Illustration Number	Catalog Number	Illustration
4	6	PA-15-PL134	PA-15-PL01	Electrical Wiring Assembly (Ford Engine)

Ref. No.	Quantity/Model CA 15	CA 15 D	CA 15 PD		Part Number	Description	Serial Number
1	1	1	1		815308	Harness, Wiring	
2	1	1	1		815309	Harness, Wiring	
3	1	1	1		81509004	Cable, Starter	
4	1	1	1		81509005	Cable, Ground	
5	1	1	1		815861	Assembly, Wire	
6	2	2	2		815862	Assembly, Wire	
7	1	1	1		815863	Assembly, Wire	
8	1	1	1		815866	Assembly, Wire	
9	1	1	1		815867	Assembly, Wire	
10	1	1	1		815868	Assembly, Wire	
11	1	1	1		815865	Assembly, Wire	
12	2	2	2		815869	Assembly, Wire	
13	1	1	1		815870	Assembly, Wire	
14	1	1	1		960119	Terminal	
15	1	1	1		960108	Terminal	
16	1	1	1		80144312	Wire, Stranded 4" Lg. or 1.575 Cm	

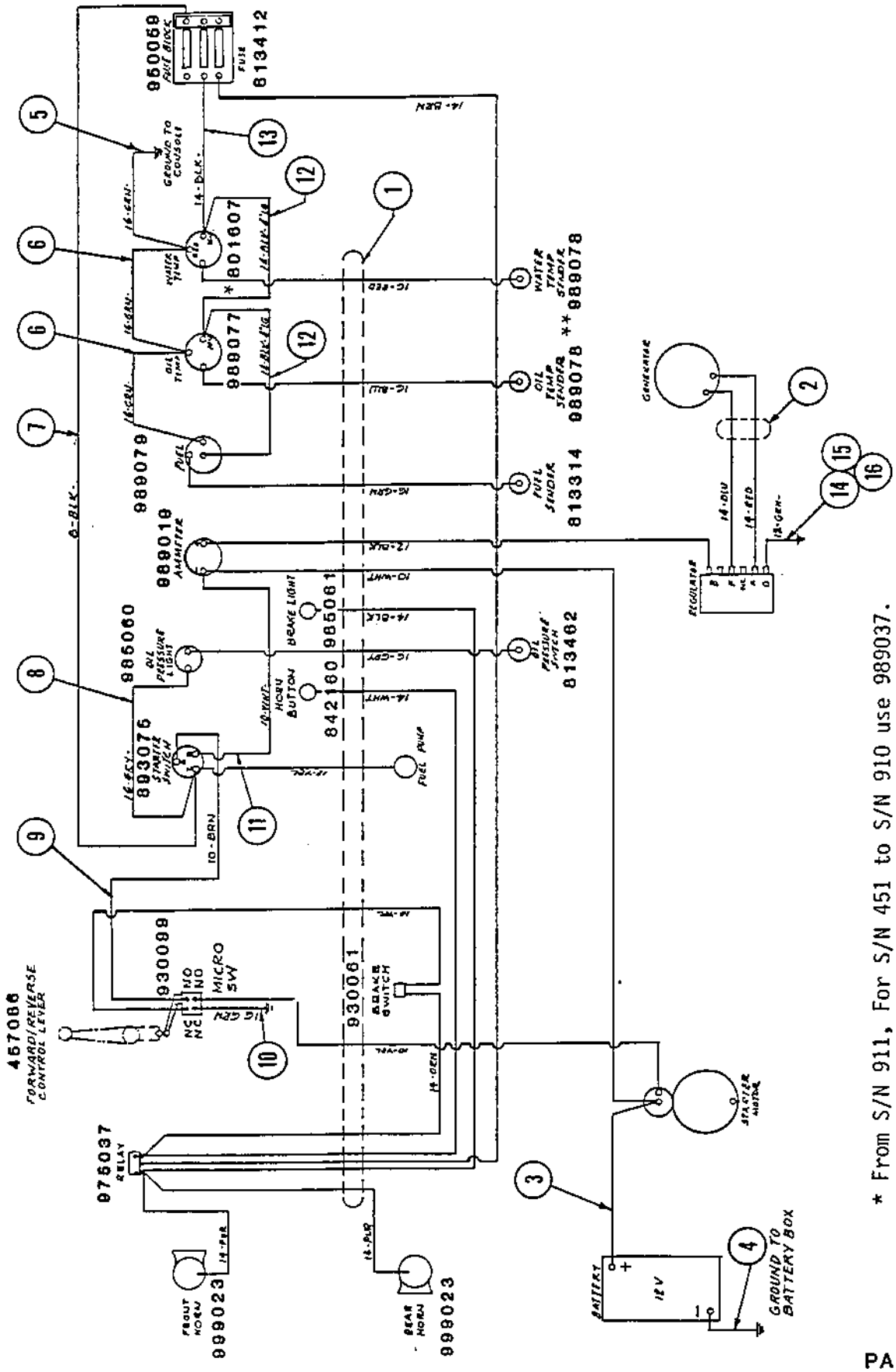

* From S/N 911, For S/N 451 to S/N 910 use 989037.

** From S/N 911, For S/N 451 to S/N 910 use 989055.

PA-15-PL134

Page	Group	Illustration Number	Catalog Number	Illustration
6	6	PA-15-PL132	PA-15-PL01	Electrical Wiring Assembly (Detroit Engine To S/N 450)

Ref. No.	Quantity/Model CA 15	CA 15 D	CA 15 PD		Part Number	Description	Serial Number
1	1	1	1		815003	Harness, Wiring	
2	1	1	1		815004	Harness, Wiring	
3	1	1	1		81509001	Cable, Starter	
4	1	1	1		433560701	Cable, Starter Ground	
5	1	1	1		905026	Cable, Battery Ground	
6	1	1	1		815861	Assembly, Wire	
7	2	2	2		815862	Assembly, Wire	
8	1	1	1		815863	Assembly, Wire	
9	1	1	1		815866	Assembly, Wire	
10	1	1	1		815867	Assembly, Wire	
11	1	1	1		815868	Assembly, Wire	
12	1	1	1		815865	Assembly, Wire	
13	2	2	2		815869	Assembly, Wire	
14	1	1	1		815870	Assembly, Wire	
15	1	1	1		960106	Terminal	
16	1	1	1		960108	Terminal	
17	1	1	1		80144312	Wire, Stranded 4" Lg. or 1.575 cm	

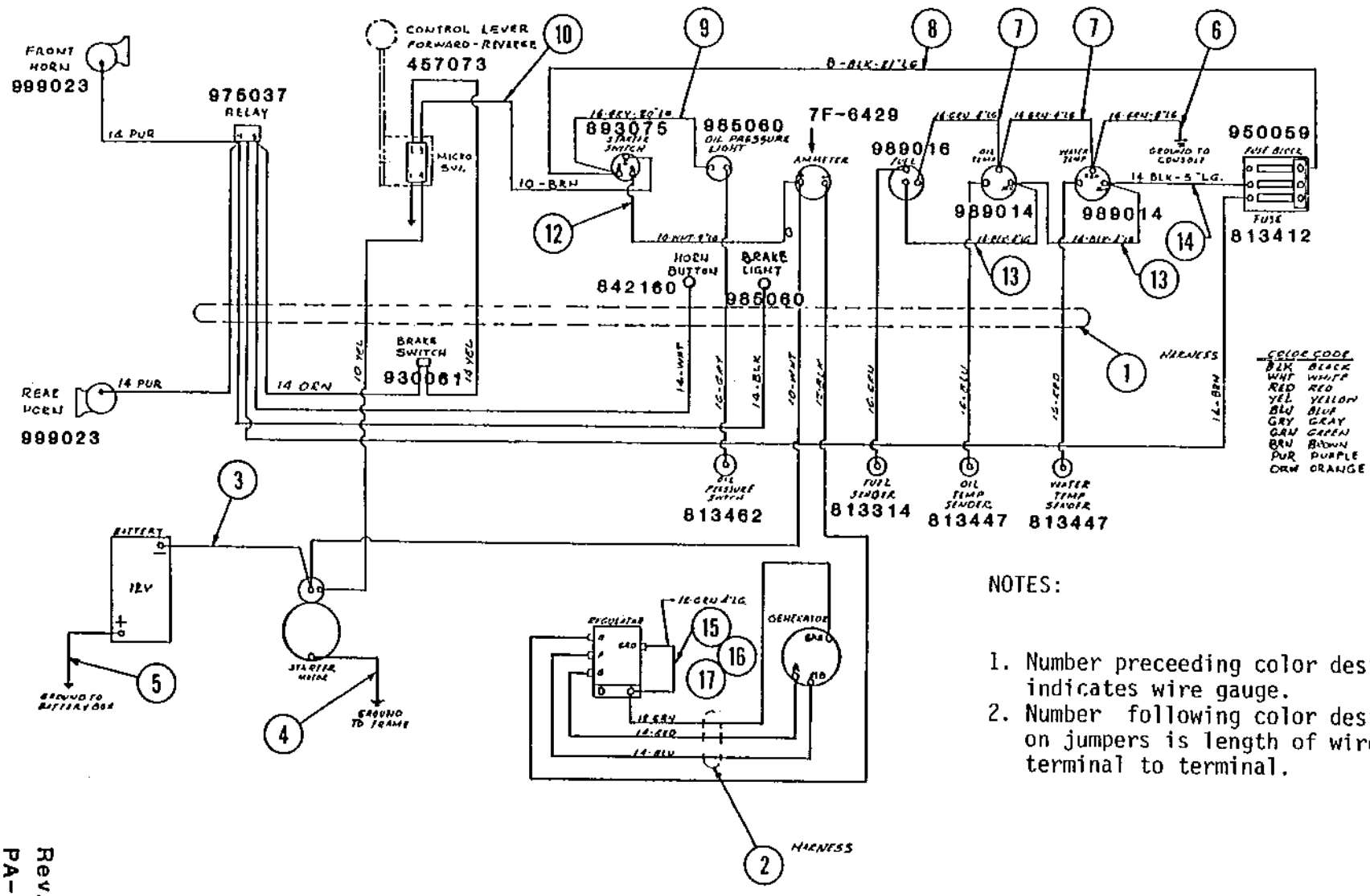

NOTES:

1. Number preceeding color designation indicates wire gauge.
2. Number following color designation on jumpers is length of wire from terminal to terminal.

Page	Group	Illustration Number	Catalog Number	Illustration
8	6	PA-15-PL133	PA-15-PL01	Electrical Wiring Assembly (Detroit Engine S/N 451 to 2079)

Ref. No.	Quantity/Model CA 15	15 D	15 PD	Part Number	Description	Serial Number
1	1	1	1	815328	Harness, Wiring	
2	1	1	1	81509006	Cable, Starter	
3	1	1	1	82523901	Cable, Starter Ground	
4	1	1	1	81509005	Cable, Battery Ground	
5	1	1	1	815861	Assembly, Wire	
6	2	2	2	815862	Assembly, Wire	
7	1	1	1	815863	Assembly, Wire	
8	1	1	1	815864	Assembly, Wire	1742 & Up
9	1	1	1	815860	Assembly, Wire	1742 & Up
10	1	1	1	802153	Tachometer & Hourmeter, (Elec. Tach)	1742 & Up
11	1	1	1	815865	Assembly, Wire	
12	1	1	1	815866	Assembly, Wire	
13	1	1	1	815867	Assembly, Wire	
14	1	1	1	815868	Assembly, Wire	
15	2	2	2	815869	Assembly, Wire	
16	1	1	1	815870	Assembly, Wire	
17	1	1	1	81517410	Cable, Alternator Ground	
18	1	1	1	80148801	Terminal	
19	1	1	1	989130	Generator, Tachometer	1742 & Up

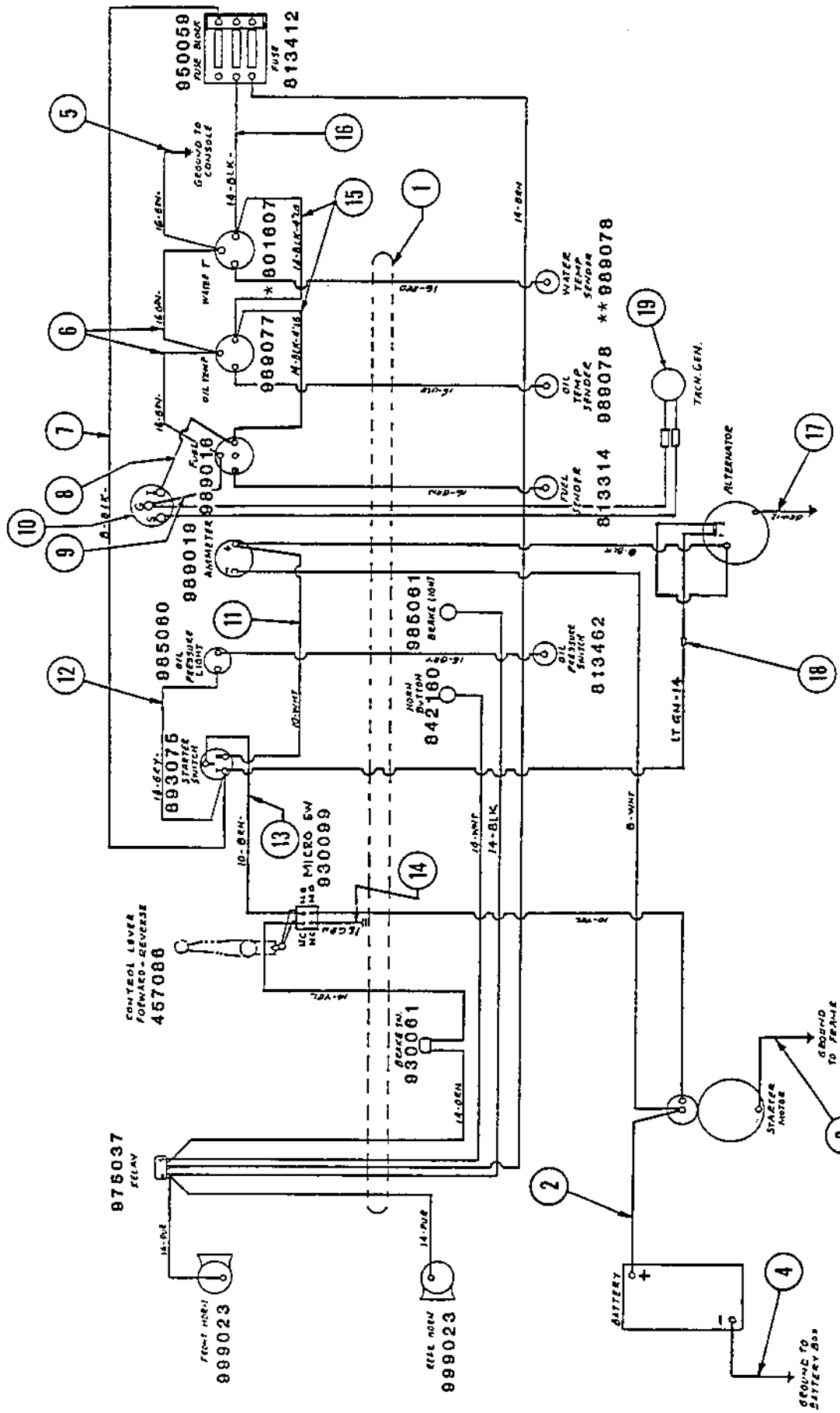

* From S/N 911, For S/N 451 to S/N 910 use 989037.

** From S/N 911, For S/N 451 to S/N 910 use 989055.

Page	Group	Illustration Number	Catalog Number	Illustration
10	6	PA-15-PL207	PA-15-PL01	Wiring Assembly, J. Deere Eng. (S/N 2080 & Up)

Ref. No.	Quantity/Model CA				Part Number	Description	Serial Number
	15	15D	15PD				
1	1	1	1		821397	Fuse Block	
2	2	2	2		813412	Fuse, 10 Amp	
3	2	2	2		80154602	Fuse, 7½ Amp	
4	1	1	1		815998	Wire, Assembly	
5	1	1	1		815696	Harness Assembly	
6	1	1	1		930151	Switch, High/Low Speed	
7	1	1	1		815870	Wire Assembly	
8	1	1	1		801607	Gauge, Water Temp.	
9	1	1	1		815869	Wire Assembly	
10	1	1	1		815861	Wire Assembly	
11	2	2	2		815862	Wire Assembly	
12	1	1	1		989077	Gauge, Hydraulic Oil Temp.	
13	1	1	1		815863	Wire Assembly	
14	1	1	1		989079	Gauge, Fuel Level	
15	1	1	1		815860	Wire Assembly	
16	1	1	1		815864	Wire Assembly	
17	1	1	1		802153	Assy. Elec. Tach. & Clamp	
18	1	1	1		989019	Ammeter	
19	1	1	1		815865	Wire Assembly	
20	1	1	1		985060	Light Assy., Eng. Oil Pressure	
21	1	1	1		985012	Bulb	
22	1	1	1		815866	Wire Assembly	
23	1	1	1		815999	Wire Assembly	
24	1	1	1		813411	Switch, Ignition	
25	1	1	1		930200	Switch, Emergency Stop	
26	1	1	1		815867	Wire Assembly	
27	1	1	1		930099	Micro Switch	
28	1	1	1		815868	Wire Assembly	
29	1	1	1		346498	Switch, Brake Pressure	
30	1	1	1		975037	Relay, Horn	
31	2	2	2		999023	Horn	
32	1	1	1		815921	Harness Assembly	
33	1	1	1		81509005	Cable, Battery Ground	
34	1	1	1		81509004	Cable, Starter	
35	1	1	1		842160	Button, Horn	
36	1	1	1		985061	Light Assy., Brake Light	
37	1	1	1		985086	Bulb	
38	1	1	1		813462	Switch, Oil Pressure	
39	1	1	1		976025	Diode (J.Deere Eng.)	
40	1	1	1		813314	Sender, Fuel Level	
41	2	2	2		989078	Sender, Hyd. Oil or Water Temp.	
42	1	1	1		843156	Generator, Tach.	
43	1	1	1		922305	Valve Assy., Brake Solenoid	
44	1	1	1		924616	Valve Assy., Hi/Lo Speed Solenoid	

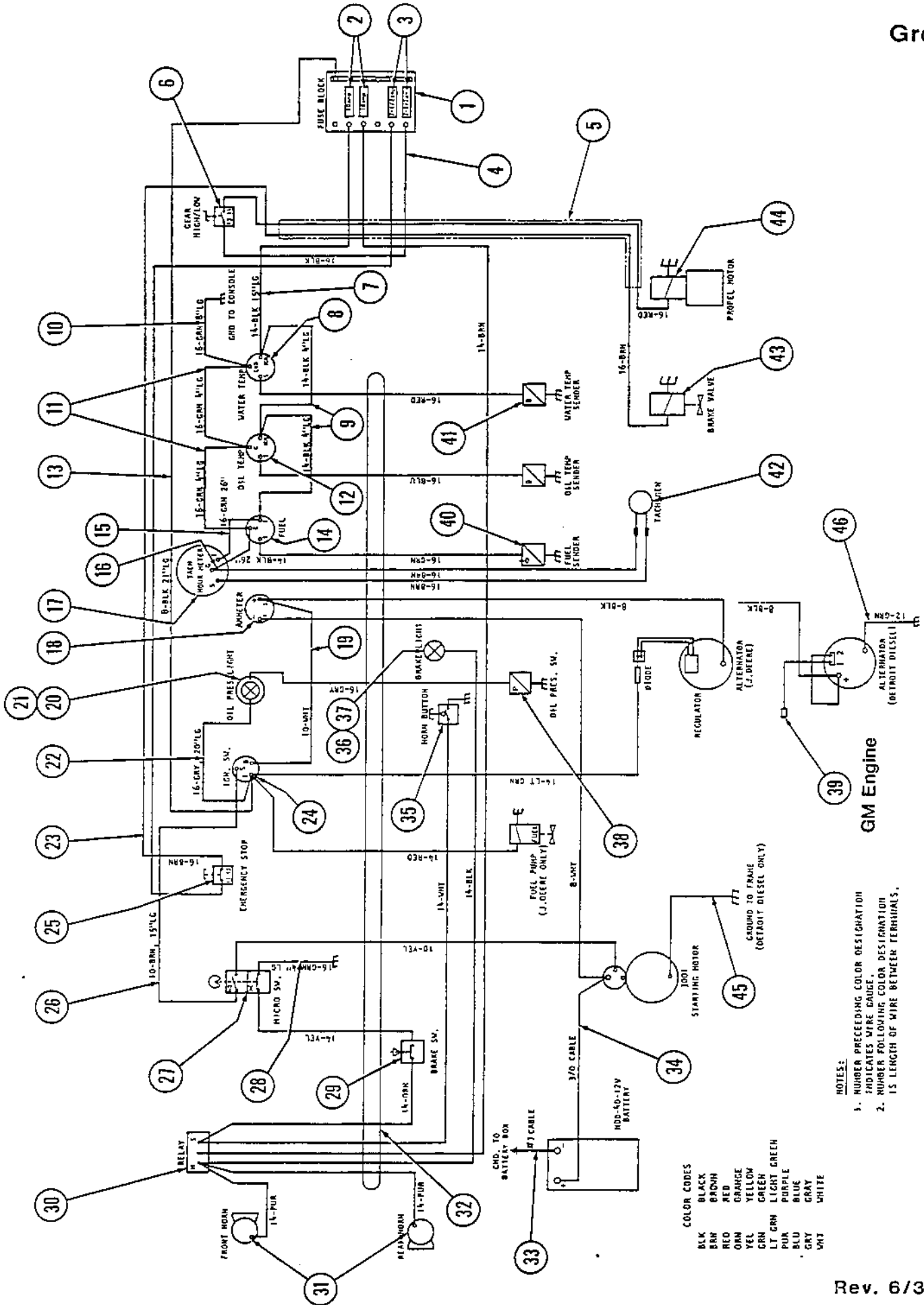
FUSE BLOCK
GEAR HIGH/LOW
GND TO CONSOLE
WATER TEMP
OIL TEMP
FUEL
TACH HOUR METER
AMMETER
OIL PRES. LIGHT
IGN. SW.
EMERGENCY STOP
MICRO SW.
BRAKE SW.
RELAY
FRONT HORN
REAR HORN
BRAKE LIGHT
HORN BUTTON
OIL PRES. SW.
FUEL PUMP (J.DEERE ONLY)
WATER TEMP SENDER
OIL TEMP SENDER
FUEL SENDER
TACH GEN
PROPEL MOTOR
BRAKE VALVE
DIODE
REGULATOR
ALTERNATOR (J.DEERE)
ALTERNATOR (DETROIT DIESEL)
GROUND TO FRAME (DETROIT DIESEL ONLY)
1001 STARTING MOTOR
HDD-40-12V BATTERY
CMD. TO BATTERY BOX
GM Engine
NOTES:
1. NUMBER PRECEEDING COLOR DESIGNATION INDICATES WIRE GAUGE.
2. NUMBER FOLLOWING COLOR DESIGNATION IS LENGTH OF WIRE BETWEEN TERMINALS.
COLOR CODES
BLK BLACK
BRN BROWN
RED RED
ORN ORANGE
YEL YELLOW
GRN GREEN
LT GRN LIGHT GREEN
PUR PURPLE
BLU BLUE
GRY GRAY
WHT WHITE

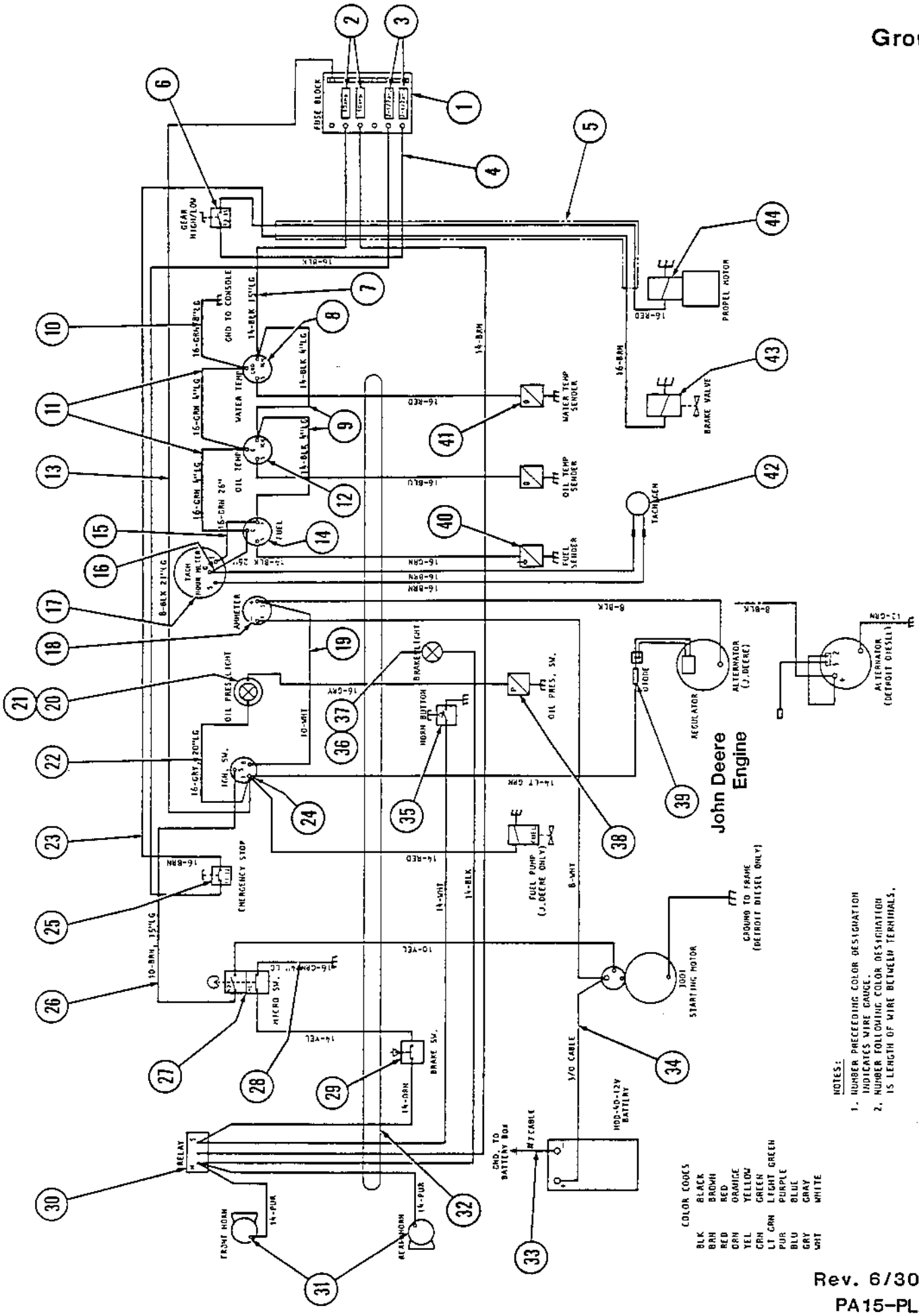

COLOR CODES

BLK	BLACK
BRN	BROWN
RED	RED
ORN	ORANGE
YEL	YELLOW
GRN	GREEN
LT GRN	LIGHT GREEN
PUR	PURPLE
BLU	BLUE
GRY	GRAY
WHT	WHITE

NOTES:

1. NUMBER PRECEDING COLOR DESIGNATION INDICATES WIRE GAUGE.
2. NUMBER FOLLOWING COLOR DESIGNATION IS LENGTH OF WIRE BETWEEN TERMINALS.

Rev. 6/30/87

PA15-PL207

Page	Group	Illustration Number	Catalog Number	Illustration
12	6	PA-15-PL208	PA-15-PL01	Wiring Assembly, Detroit Eng. (S/N 2080 & Up)

Ref. No.	Quantity/Model CA			Part Number	Description	Serial Number
	15	15D	15PD			
1	1	1	1	821397	Fuse Block	
2	2	2	2	813412	Fuse, 10 Amp	
3	2	2	2	80154602	Fuse, 7½ Amp	
4	1	1	1	815998	Wire, Assembly	
5	1	1	1	815696	Harness Assembly	
6	1	1	1	930151	Switch, High/Low Speed	
7	1	1	1	815870	Wire Assembly	
8	1	1	1	801607	Gauge, Water Temp.	
9	1	1	1	815869	Wire Assembly	
10	1	1	1	815861	Wire Assembly	
11	2	2	2	815862	Wire Assembly	
12	1	1	1	989077	Gauge, Hydraulic Oil Temp.	
13	1	1	1	815863	Wire Assembly	
14	1	1	1	989079	Gauge, Fuel Level	
15	1	1	1	815860	Wire Assembly	
16	1	1	1	815864	Wire Assembly	
17	1	1	1	802153	Assy. Elec. Tach. & Clamp	
18	1	1	1	989019	Ammeter	
19	1	1	1	815865	Wire Assembly	
20	1	1	1	985060	Light Assy., Eng. Oil Pressure	
21	1	1	1	985012	Bulb	
22	1	1	1	815866	Wire Assembly	
23	1	1	1	815999	Wire Assembly	
24	1	1	1	813411	Switch, Ignition	
25	1	1	1	930200	Switch, Emergency Stop	
26	1	1	1	815867	Wire Assembly	
27	1	1	1	930099	Micro Switch	
28	1	1	1	815868	Wire Assembly	
29	1	1	1	346498	Switch, Brake Pressure	
30	1	1	1	975037	Relay, Horn	
31	2	2	2	999023	Horn	
32	1	1	1	815922	Harness Assembly	
33	1	1	1	81509005	Cable, Battery Ground	
34	1	1	1	81509006	Cable, Starter	
35	1	1	1	842160	Button, Horn	
36	1	1	1	985061	Light Assy., Brake Light	
37	1	1	1	985086	Bulb	
38	1	1	1	813462	Switch, Oil Pressure	
39	1	1	1	80148801	Terminal (Detroit Eng.)	
40	1	1	1	813314	Sender, Fuel Level	
41	2	2	2	989078	Sender, Hyd. Oil or Water Temp.	
42	1	1	1	843156	Generator, Tach.	
43	1	1	1	922305	Valve Assy., Brake Solenoid	
44	1	1	1	924616	Valve Assy., Hi/Lo Speed Solenoid	
45	1	1	1	82523901	Cable, Starter Ground	
46	1	1	1	81517410	Cable, Alternator Ground	

DYNAPAC

DRIVER'S PLATFORM

Driver's Platform	2
Instrument Panel	4
Controls & Control Cables	6-8
Forward & Reverse Control (S/N 505 & Up)	10
Forward & Reverse Control (To S/N 504)	12-16
Hand Brake Assy. (To S/N 468)	18
Foot Brake & Hand Brake (To S/N 2079)	20-22

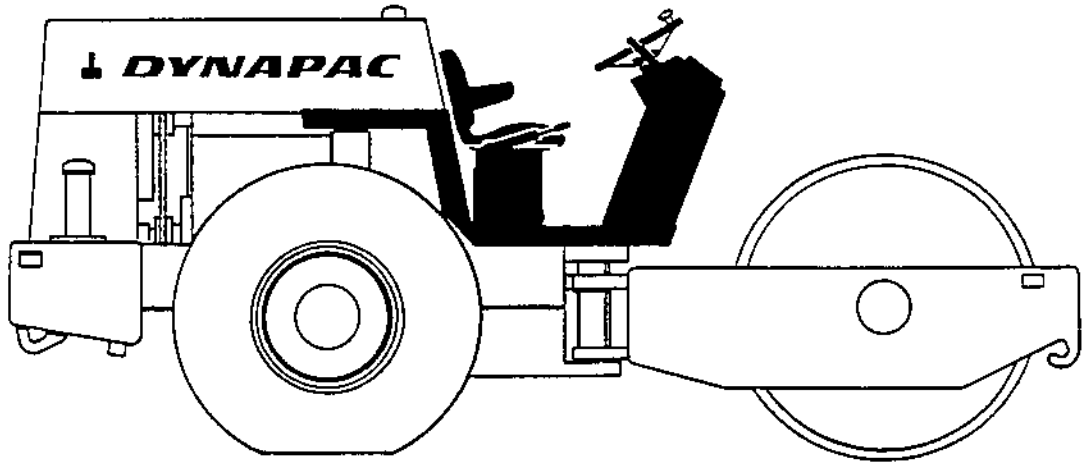

Page	Group	Illustration Number	Catalog Number	Illustration
2	7	PA-15-PL172	PA-15-PL01	Driver's Platform

Ref. No.	Quantity/Model CA			Part Number	Description	Serial Number
	15	15 D	15 PD			
1	1	1	1	815034	Console	From S/N 2080 & Up
-	1	1	1	815049	Console	To S/N 2079
2	1	1	1	815059	Cover, Instrument Panel	
3	1	1	1	815301	Handrail, LH	
4	8	8	8	502036	Capscrew, HH	
5	8	8	8	600007	Washer, Flat	
6	14	14	14	604028	Lockwasher	
7	8	8	8	571003	Hex Nut	
8	2	2	2	517046	Capscrew, HH	
9	1	1	1	975037	Relay, Horn	
10	2	2	2	604026	Lockwasher	
11	2	2	2	571001	Hex Nut	
12	1	1	1	999023	Horn	
13	1	1	1	571003	Hex Nut	
14	6	6	6	604027	Lockwasher	
15	1	1	1	999024	Bracket	
16	1	1	1	999025	Hex Nut	
17	1	1	1	502035	Capscrew, HH	
18	1	1	1	815302	Handrail, RH	
19	1	1	1	815054	Floorboard & Battery Box	To S/N 2079
-	1	1	1	815454	Floorboard & Battery Box	S/N 2080 & Up
20	6	6	6	502033	Capscrew, HH	
21	6	6	6	571002	Hex Nut	
22	1	1	1	909072	Grommet, Battery Cable	
23	1	1	1	335587	Base, Battery Box	
24	2	2	2	813330	Bolt, Battery Hold Down	
25	1	1	1	335496	Bar, Battery Hold Down	
26	2	2	2	801411	U-Channel 20½" Lg. ea. or 52.07 cm ea.	
27	1	1	1	470023	Battery	
28	1	1	1	465030	Seat	
29	4	4	4	502016	Capscrew, HH	
30	A/R	A/R	A/R	80116701	Trim, Edge 48" Lg. or 122 cm	
31	1	-	-	604006	Lockwasher	

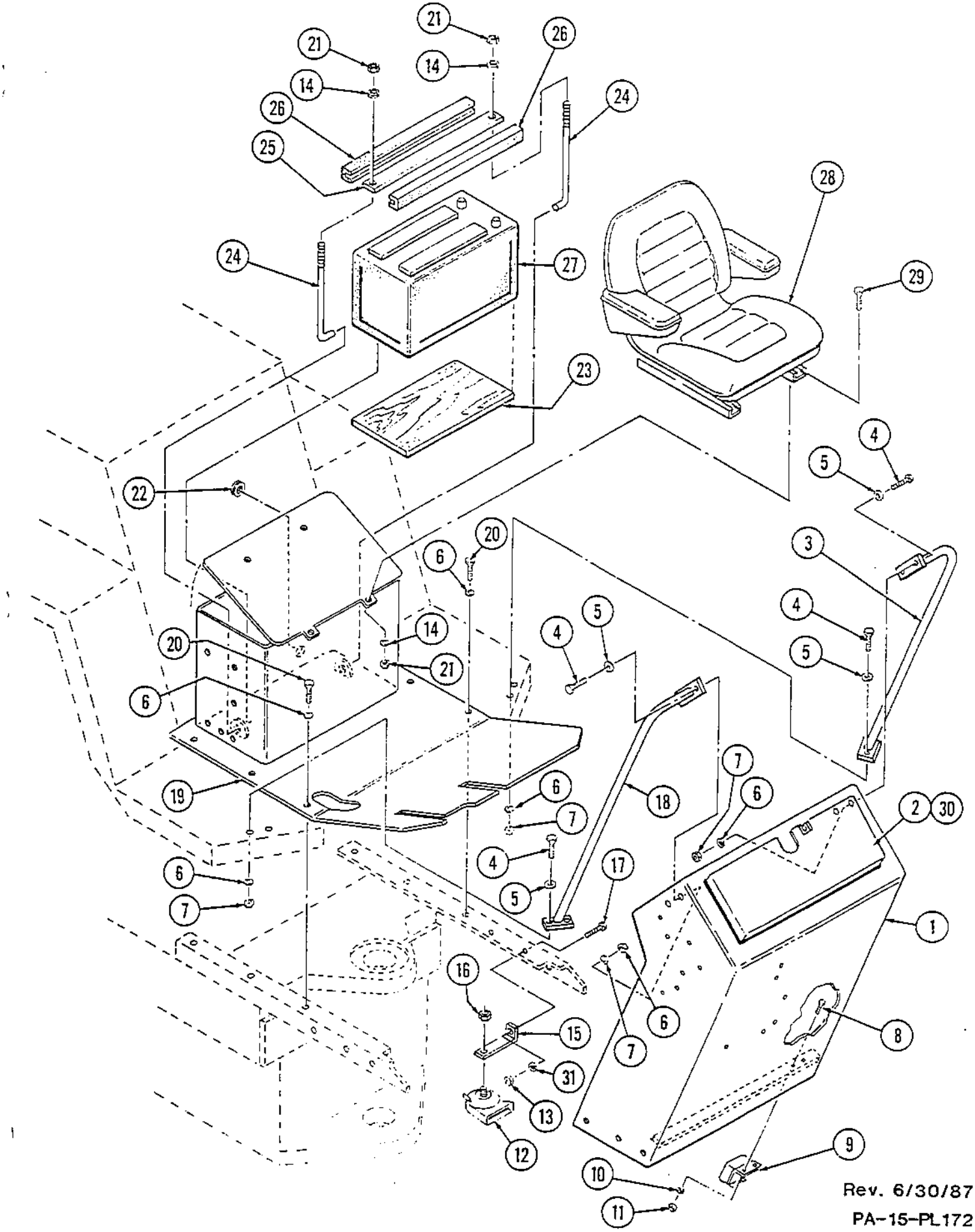

Rev. 6/30/87

PA-15-PL172

Page	Group	Illustration Number	Catalog Number	Illustration
4	7	PA-15-PL174	PA-15-PL01	Instrument Panel

Ref. No.	Quantity/Model CA 15	CA 15 D	CA 15 PD		Part Number	Description	Serial Number
1	1	1	1		815034	Console	From S/N 2080
-	1	1	1		815049	Console	To S/N 2079
2	1	1	1		801607	Gauge, Water Temp	S/N 911 & up
-	1	1	1		989037	Gauge, Water Temp (See Note 1)	S/N 451 to 910
3	1	1	1		989077	Gauge, Oil Temp	From S/N 451 & up
-	1	1	1		* 989014	Gauge, Oil Temp	To S/N 448 & 450
4	1	1	1		989079	Gauge, Fuel	From S/N 451 & up
-	1	1	1		989016	Gauge, Fuel	To S/N 448 & 450
5	1	1	1		989019	Ammeter	
6	1	1	1		813349	Assy, Wheel Spinner	
7	1	1	1		813411	Switch, Ignition	
8	1	1	1		802153	Assy., Tach & Clamp (Detroit Eng.) Elec.	S/N 1742 & up
-	1	1	1		499223	Assy., Tach & Clamp (Detroit Eng.)	To S/N 1741
-	1	1	1		802153	Assy., Tach & Clamp (J. Deere Eng.) Elec.	1924, 1928 to 1931 S/N 1936 & up
-	1	1	1		813343	Assy., Tach & Clamp (J. Deere & Ford)	To S/N 1927, 1932 to 1935
9	1	1	1		815209	Cover, Fwd/Rev Notch	S/N 282 to 291
10	2	2	2		211105	Capscrew, Rd. Hd.	
11	6	6	6		604019	Lockwasher	
12	1	1	1		457086	Assy., Control Lever (See Group 7)	
13	1	1	1		985061	Assy, Brake Pilot Light	
14	1	1	1		985086	Bulb	
15	1	1	1		456069	Cable, Assy., Engine Stop	See Note 2
16	1	1	1		457127	T-Handle, Engine Stop	
17	1	1	1		813336	Wheel, Steering	
18	1	1	1		813342	Nut, Wheel	
19	1	1	1		813337	Button, Plug	
20	1	1	1		335563	Column, Steering	
21	2	2	2		502035	Capscrew, HH	
22	2	2	2		604028	Lockwasher	
23	1	1	1		842160	Button, Horn	
24	2	2	2		550018	Capscrew, HH	
25	2	2	2		813370	Hex Nut	
26	2	2	2		550104	Capscrew, Soc. Hd.	To S/N 2079
27	1	1	1		950059	Block, Fuse	To S/N 2079
28	3	3	3		813412	Fuse	To S/N 2079
29	1	1	1		985060	Assy., Engine Oil Pressure Light	
30	1	1	1		985012	Bulb	
31	1	1	1		335567	Assy., Steering Valve (See Group 5)	
32	1	1	1		457105	Elbow, Tach. Adapter (J. Deere & Ford)	To S/N 1927, 1932 to S/N 1935
33	1	1	1		821397	Block, Fuse	S/N 2080 & up
34	4	4	4		813412	Fuse	S/N 2080 & up
35	2	2	2		80154602	Fuse	S/N 2080 & up
36	2	2	2		510018	Capscrew, Soc. Hd	S/N 2080 & up
37	1	1	1		930151	Switch, High/Low Speed	S/N 2080 & up
38	1	1	1		930200	Switch, Emergency Stop	S/N 2080 & up
					* 989015	GAUGE, OIL TEMP.	

Note 1: For Machines up to S/N 448 & 450 use 989014 for Water Temp. Gauge.
Note 2: Quantity of 2 used to S/N 1007 & 1010.

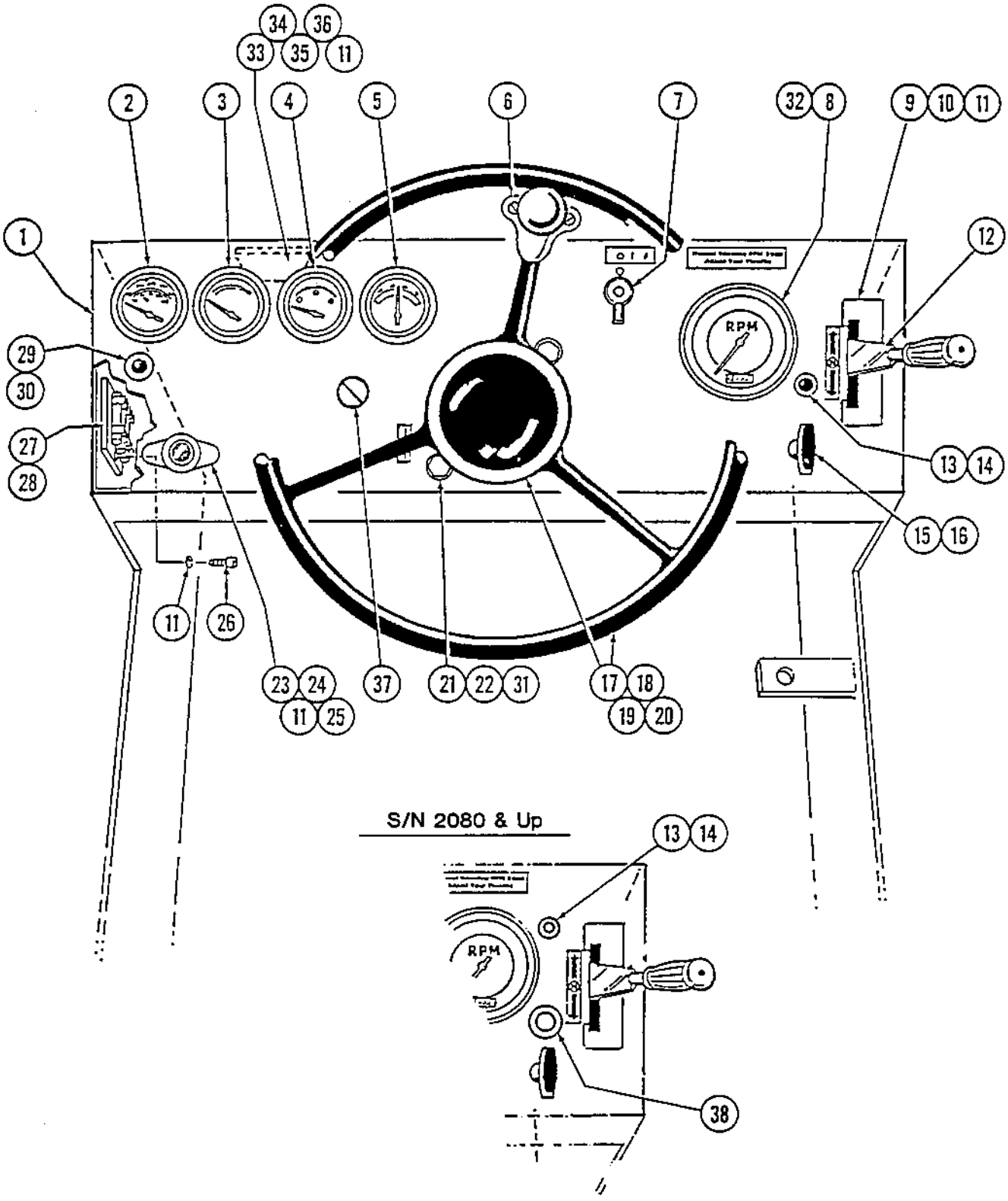
34
36
33
35
11
2
3
4
5
6
7
32
8
9
10
11
1
12
29
30
27
28
13
14
15
16
11
26
23
24
11
25
37
21
22
31
17
18
19
20
RPM
S/N 2080 & Up
13
14
RPM
38

Page	Group	Illustration Number	Catalog Number	Illustration
6	7	PA-15-PL175	PA-15-PL01	Controls & Control Cables

Ref. No.	Quantity/Model CA 15	CA 15 D	CA 15 PD		Part Number	Description	Serial Number
1	1	1	1		-	Assy., Fwd/Rev Control See Group 7	
2	1	1	1		456039	Cable, Throttle Control (Ford & J. Deere)	
-	1	1	1		456028	Cable, Throttle Control (Detroit)	
3	1	1	1		891141	T-Handle, Throttle	See Note 1
4	1	1	1		630052	Pin, Cotter	S/N 469 to 2079
5	1	1	1		550048	Pin, Clevis	
6	1	1	1		815316	Link Transmission Shift	
7	1	1	1		572004	Hex Nut	
8	1	1	1		415193	Yoke	S/N 469 to 2079
9	2	2	2		572002	Hex Nut	
10	2	2	2		604027	Lockwasher	
11	2	2	2		502131	Capscrew, HH	
12	1	1	1		457054	Clamp, Cable	
13	1	1	1		815080	Block, Cable	
14	1	1	1		456029	Cable, Fwd/Rev	
15	1	1	1		100053	Bushing, (Used on early models)	
16	2	2	2		813361	Assembly, Yoke	
17	1	1	1	*	456069	Cable, Engine Shutdown (Detroit)	See Note 2
-	1	1	1		457127	T-Handle, Shutdown	
18	1	1	1		456039	Cable, Engine Shutdown (Ford)	
-	1	1	1		891141	T-Handle, Shutdown	
19	1	1	1		219002	Grip, Hand	S/N 469 to 2079
20	1	1	1		815325	Lever, Transmission Shift	
21	1	1	1		100061	Bushing	
22	2	2	2		630009	Pin, Cotter	
23	1	1	1		815323	Pin	
24	1	1	1		630008	Pin, Cotter	
25	1	1	1		550113	Pin, Clevis	
26	1	1	1		602017	Washer, Flat	S/N 469 to 2079
27	1	1	1		813712	Knob	To S/N 468
28	1	1	1		815066	Shaft, Transmission Shift Lever	
29	1	1	1		815082	Bracket, Transmission Lever	
30	1	1	1		815083	Bracket, Frame	To S/N 468

NOTE 1: Used for both 456039 & 456028 cables.

NOTE 2: Qty. of 2 used to S/N 1007 & 1010.

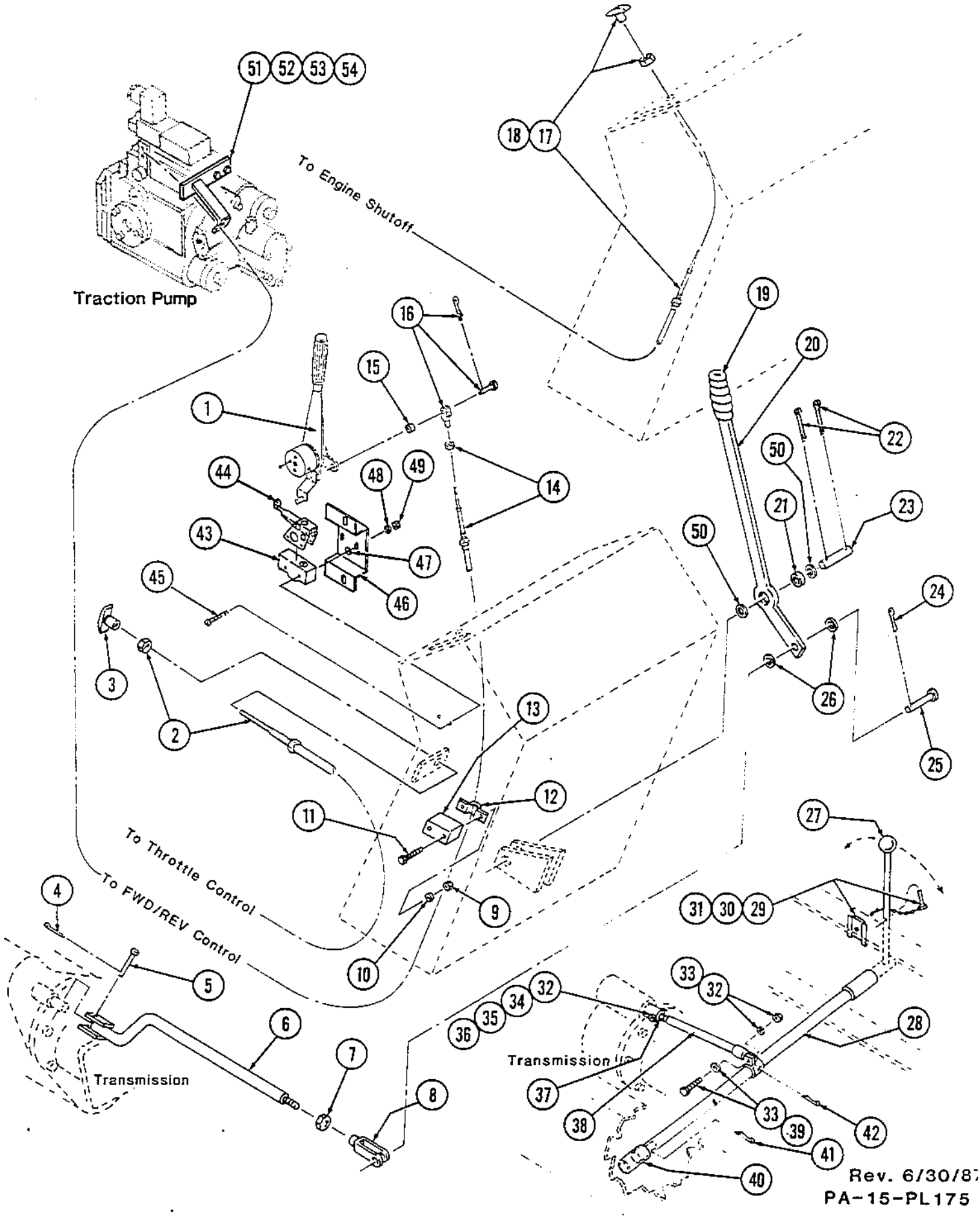

51 52 53 54
Traction Pump
To Engine Shutoff
18 17
16
15
1
19
20
22
50
21
23
44
48
49
14
43
47
46
45
50
24
3
2
26
25
13
12
11
27
To Throttle Control
To FWD/REV Control
4
9
31 30 29
10
5
33
32
32
34
35
36
28
6
7
Transmission
Transmission
37
8
38
33
39
42
41
40

Page	Group	Illustration Number	Catalog Number	Illustration
8	7	PA-15-PL175	PA-15-PL01	Controls & Control Cables

Ref. No.	Quantity/Model CA 15	CA 15 D	CA 15 PD		Part Number	Description	Serial Number
31	1	1	1		815088	Assembly, Pin Latch	To S/N 468
32	2	2	2		571001	Hex Nut	
33	2	2	2		604026	Lockwasher	
34	2	2	2		600005	Washer, Flat	
35	2	2	2		572001	Hex Nut	
36	1	1	1		502140	Capscrew, HH	
37	2	2	2		416066	Ball Joint, Rod End	
38	1	1	1		8150655	Bar, Transmission Connector	
39	1	1	1		509081	Capscrew, HH	
40	2	2	2		815068	Spacer	
41	2	2	2		630028	Pin, Cotter	
42	1	1	1		635003	Pin, Groove	To S/N 468
43	1	1	1		930099	Switch, Micro	To S/N 2079
44	1	1	1		457087	Actuator	
45	2	2	2		893394	Screw, Rd. Hd. Brass	
46	1	1	1		337843	Bracket, Switch Mount	
47	2	2	2		600028	Washer, Flat	
48	2	2	2		604024	Lockwasher , Int. Tooth	
49	2	2	2		571021	Hex Nut, Brass	
50	2	2	2		602017	Washer, Flat	
51	1	1	1		815036	Bracket	To S/N 2079
-	1	1	1		815513	Bracket	S/N 2080 & Up
52	2	2	2		600005	Washer, Flat	To S/N 2079
53	2	2	2		502012	Capscrew, HH	To S/N 2079
-	2	2	2		500053	Capscrew, HH	S/N 2080 & Up
54	2	2	2		604026	Lockwasher	To S/N 2079
-	2	2	2		615043	Lockwasher, Conical Spring	S/N 2080 & Up

NOTE 1: Used for both 456039 & 456028 cables.

NOTE 2: Qty. of 2 used to S/N 1007 & 1010.

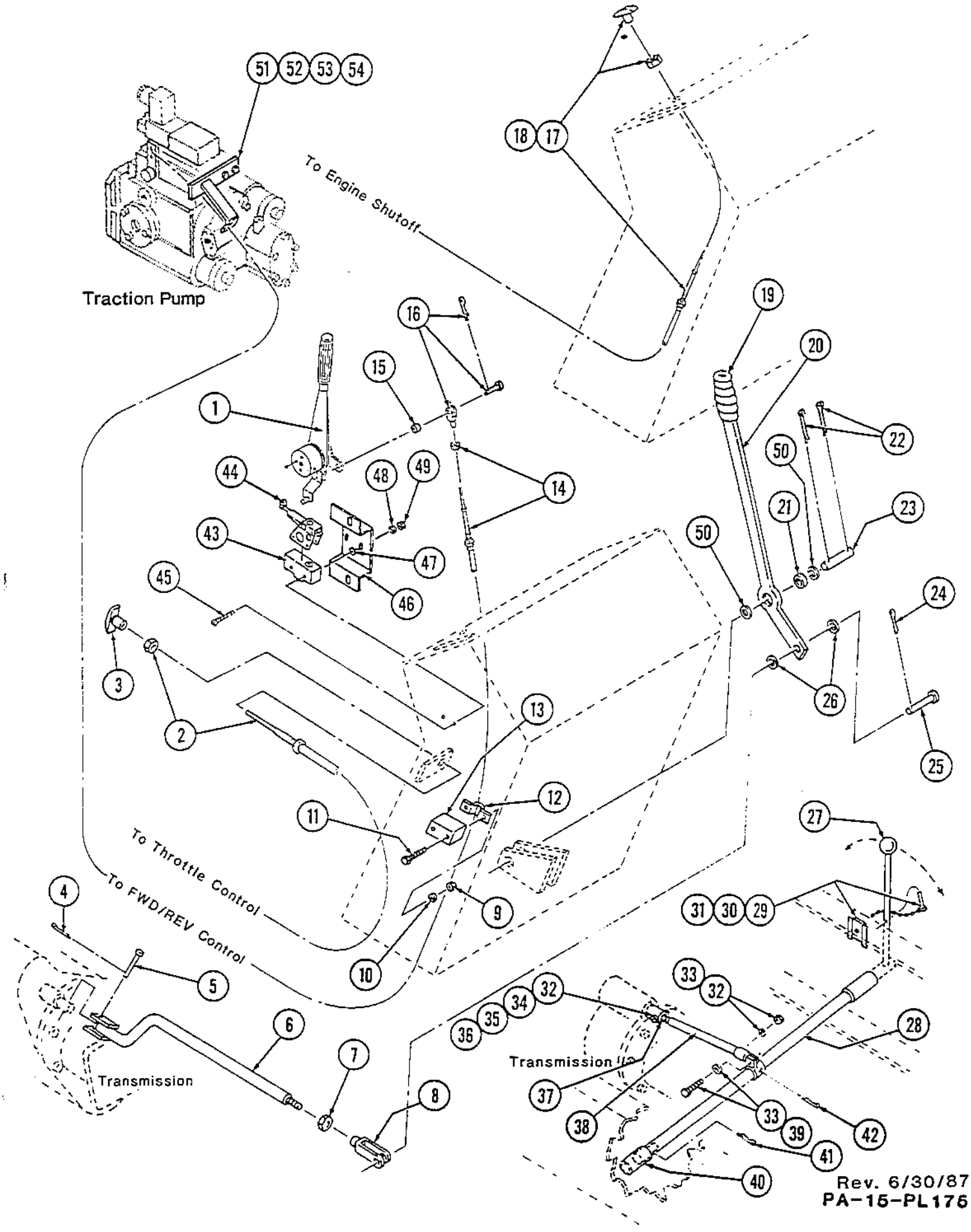
Traction Pump
To Engine Shutoff
To Throttle Control
To FWD/REV Control
Transmission
Transmission

Page	Group	Illustration Number	Catalog Number	Illustration
10	7	PA-15-PL159	PA-15-PL01	Forward/Reverse Control

Ref. No.	Quantity/Model CA 15	CA 15 D	CA 15 PD		Part Number	Description	Serial Number
-	1	1	1		457086	Assy., Fwd/Rev Control	S/N 505 & Up
1	1	1	1		891813	Lever, Input	
2	1	1	1		891816	Grip, Handle	
3	1	1	1		891806	Square, Locking	
4	1	1	1		891814	Washer, Nylon	
5	1	1	1		891788	Ball	
6	1	1	1		891198	Cap	
7	1	1	1		891787	Spring	
8	1	1	1		891803	Drum, Center	
9	1	1	1		891804	Plug, Brass	
10	2	2	2		891196	Setscrew, Allen Hd.	
11	1	1	1		891811	Lever, Actuator Output	
12	1	1	1		891802	Lever, Output	
13	2	2	2		892828	Lockwasher	
14	2	2	2		817057	Screw, Rd. Hd.	
15	1	1	1		891586	Washer, Nylon	
16	1	1	1		891805	Bolt, Centering	

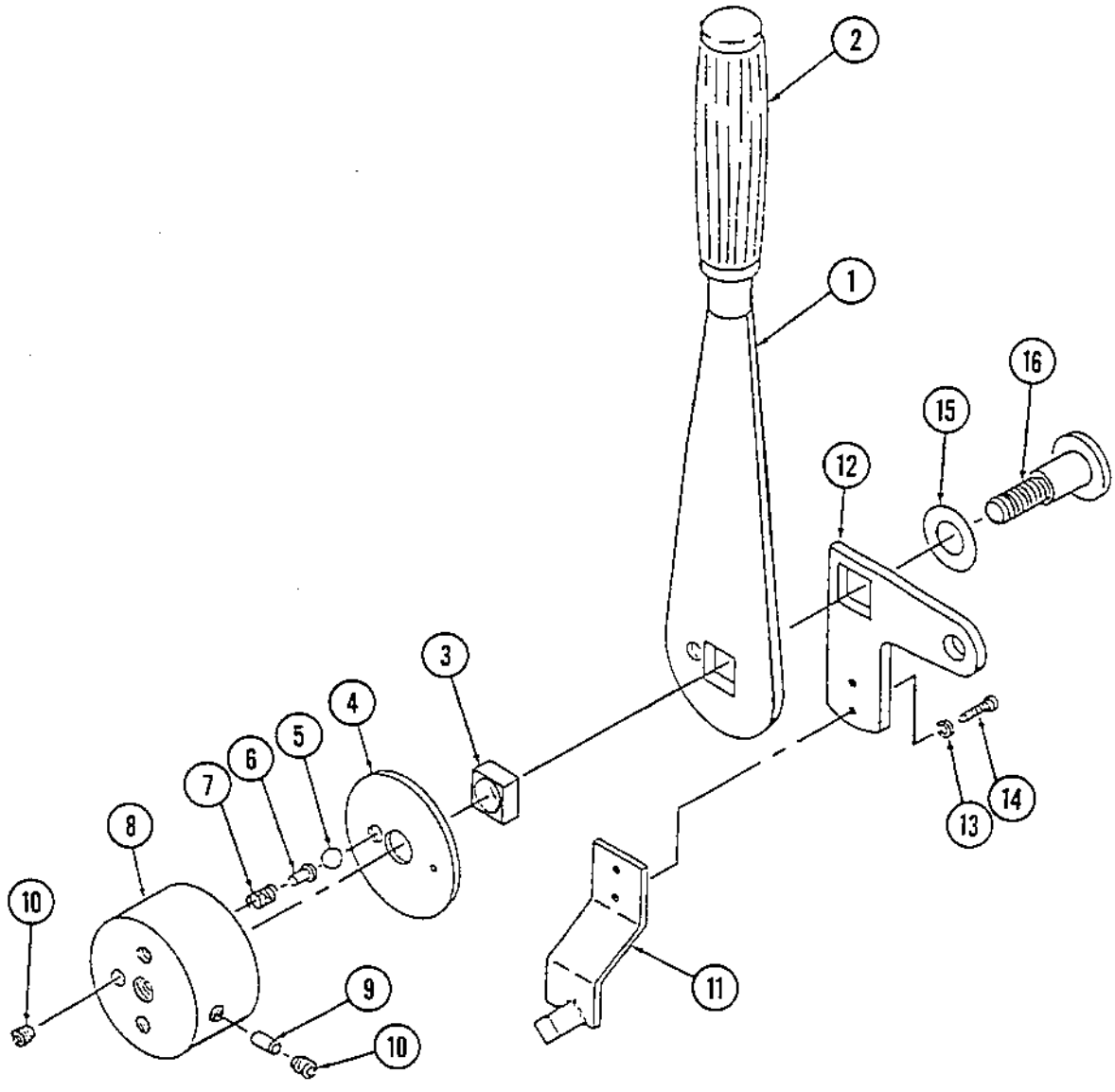
2
1
16
15
12
3
4
5
6
7
8
10
9
10
11
13
14

Page	Group	Illustration Number	Catalog Number	Illustration
12	7	PA-15-PL160	PA-15-PL01	Forward/Reverse Control

Ref. No.	Quantity/Model CA 15	CA 15 D	CA 15 PD		Part Number	Description	Serial Number
-	1	1	1		457073	Assy., Fwd/Rev Control	S/N 292 To 504
1	1	1	1		891815	Ball, Input Lever	
2	3	3	3		891790	Washer, Int. Tooth	
3	1	1	1		891791	Bolt, HH	
4	1	1	1		891801	Lever, Input	
5	1	1	1		891806	Square, Locking	
6	1	1	1		891814	Washer, Nylon	
7	1	1	1		891788	Ball	
8	1	1	1		891198	Cap	
9	1	1	1		891787	Spring	
10	1	1	1		891803	Drum, Center	
11	1	1	1		891804	Plug, Brass	
12	2	2	2		891196	Setscrew, Allen Hd.	
13	2	2	2		NSS	Screw, Flat Hd.	
14	1	1	1		930102	Switch, Micro	
15	1	1	1		457098	Actuator	
16	2	2	2		NSS	Washer, Int. Tooth	
17	2	2	2		NSS	Hex Nut	
18	1	1	1		891800	Bracket, Switch Mount	
19	2	2	2		891789	Bolt, HH	
20	1	1	1		891580	Lever, Output	
21	1	1	1		891199	Lever, Actuator	
22	1	1	1		893517	Washer, Int. Tooth	
23	1	1	1		NSS	Hex Nut	
24	1	1	1		891586	Washer, Nylon	
25	1	1	1		891805	Bolt, Centering	

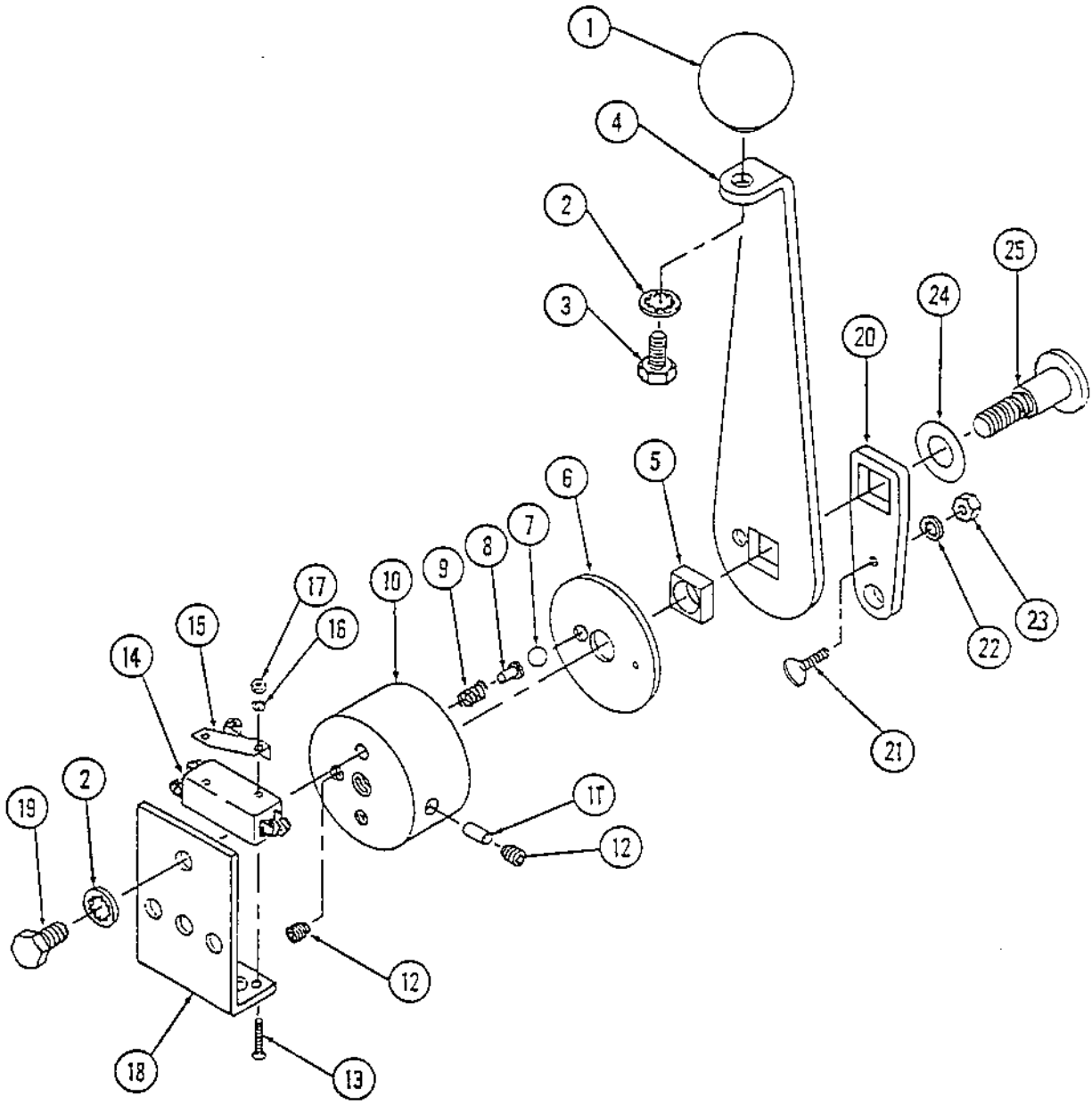
1
4
2
3
25
24
20
5
6
7
8
9
10
17
16
15
14
22
23
21
19
2
11
12
12
18
13

Page	Group	Illustration Number	Catalog Number	Illustration
14	7	PA-15-PL161	PA-15-PL01	Forward/Reverse Control

Ref. No.	Quantity/Model CA 15	CA 15 D	CA 15 PD		Part Number	Description	Serial Number
-	1	1	1		457072	Assy., Fwd/Rev Control	S/N 282 To 291
1	1	1	1		891801	Lever, Input	
2	3	3	3		891790	Washer, Int. Tooth	
3	1	1	1		891791	Bolt, HH	
4	1	1	1		891815	Ball, Input Handle	
5	1	1	1		891806	Square, Locking	
6	1	1	1		891814	Washer, Nylon	
7	1	1	1		891788	Ball	
8	1	1	1		891198	Cap	
9	1	1	1		891787	Spring	
10	1	1	1		891803	Drum, Center	
11	1	1	1		891804	Plug, Brass	
12	2	2	2		891196	Setscrew, Allen Hd.	
13	1	1	1		891800	Bracket, Mounting	
14	2	2	2		891789	Bolt, HH	
15	1	1	1		891580	Lever, Output	
16	1	1	1		891799	Washer, Nylon	
17	1	1	1		891805	Bolt, Centering	

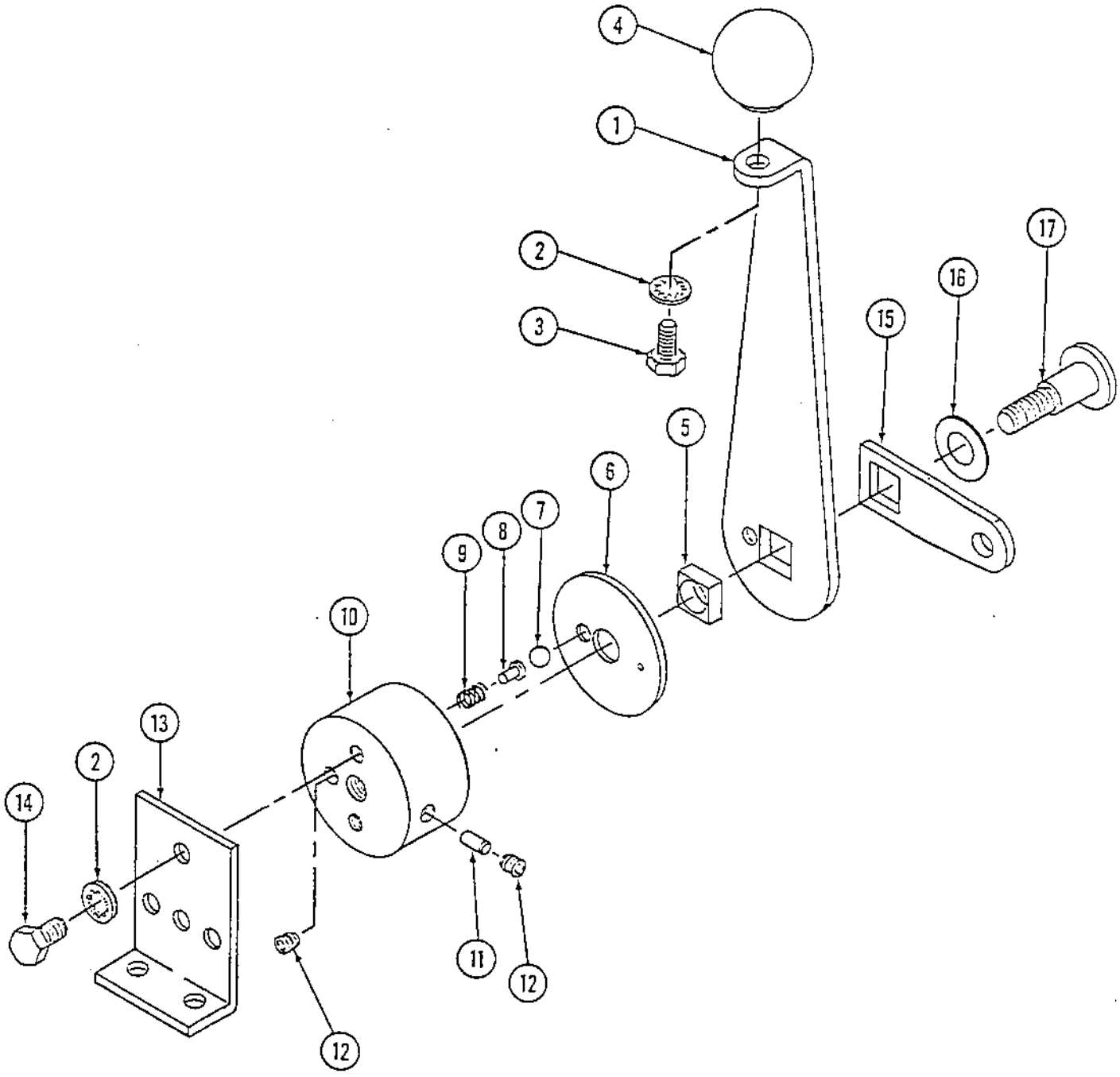
4
1
2
3
17
16
15
5
6
7
8
9
10
13
2
14
11
12
12

Page	Group	Illustration Number	Catalog Number	Illustration
16	7	PA-15-PL162	PA-15-PL01	Forward/Reverse Control

Ref. No.	Quantity/Model CA 15	15 D	15 PD		Part Number	Description	Serial Number
-	1	1	1		891583	Assy., Fwd/Rev Control	To S/N 281
1	1	1	1		891801	Lever, Input	
2	1	1	1		891790	Washer, Int. Tooth	
3	1	1	1		891791	Bolt, HH	
4	1	1	1		891815	Ball, Input Lever	
5	1	1	1		891814	Washer, Nylon	
6	1	1	1		893487	Bracket, Mounting	
7	1	1	1		NSS	Hex Nut	
8	1	1	1		891806	Square, Locking	
9	1	1	1		891797	Lever, Output	
10	1	1	1		891586	Washer, Nylon	
11	1	1	1		NSS	Washer, Flat	
12	1	1	1		894021	Bolt, Shoulder	

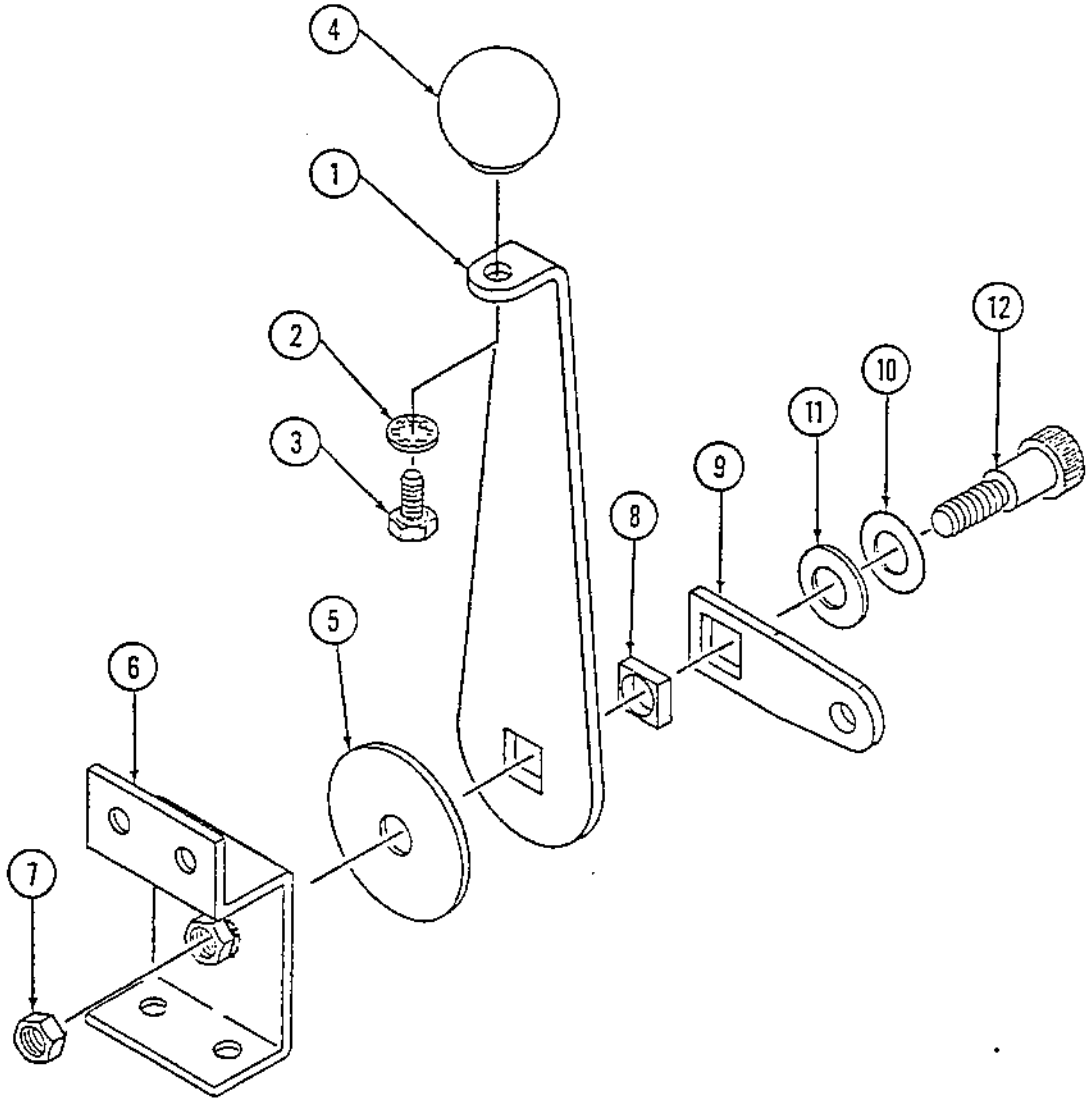
4
1
2
3
12
10
11
9
8
5
6
7

Page	Group	Illustration Number	Catalog Number	Illustration
18	7	PA-15-PL180	PA-15-PL01	Hand Brake Assembly (To S/N 468)

Ref. No.	Quantity/Model CA 15	CA 15 D	CA 15 PD		Part Number	Description	Serial Number
1	1	1	1		801055	Assembly, Brake Lever	
2	2	2	2		415086	Yoke, Brake Lever	
3	1	1	1		815061	Bar, Brake Connector	
4	2	2	2		572005	Hex Nut	
5	4	4	4		813363	Yoke, Brake	
6	4	4	4		813364	Pin, Clevis	
7	4	4	4		630036	Pin, Cotter	
8	4	4	4		572001	Hex Nut	
9	2	2	2		815064	Bar, Brake Connector	
10	1	1	1		930061	Switch, Brake	
11	1	1	1		815227	Switch, Brake Actuator	
12	1	1	1		815062	Shaft, Brake Lever	
13	2	2	2		415088	Bearing, Flange	
14	2	2	2		635009	Pin, Groove	
15	1	1	1		815063	Lever, Brake Shaft	
16	2	2	2		801459	Capscrew, HH	
17	2	2	2		571003	Capscrew, HH	
18	2	2	2		604028	Lockwasher	
19	2	2	2		801060	Spacer, Ratchet	
20	2	2	2		815091	Pin, Clevis	
21	1	1	1		100048	Bearing, Sleeve	
22	1	1	1		502150	Capscrew, HH	
23	1	1	1		813475	Nut, Elastic Stop	
24	2	2	2		630059	Pin, Cotter	

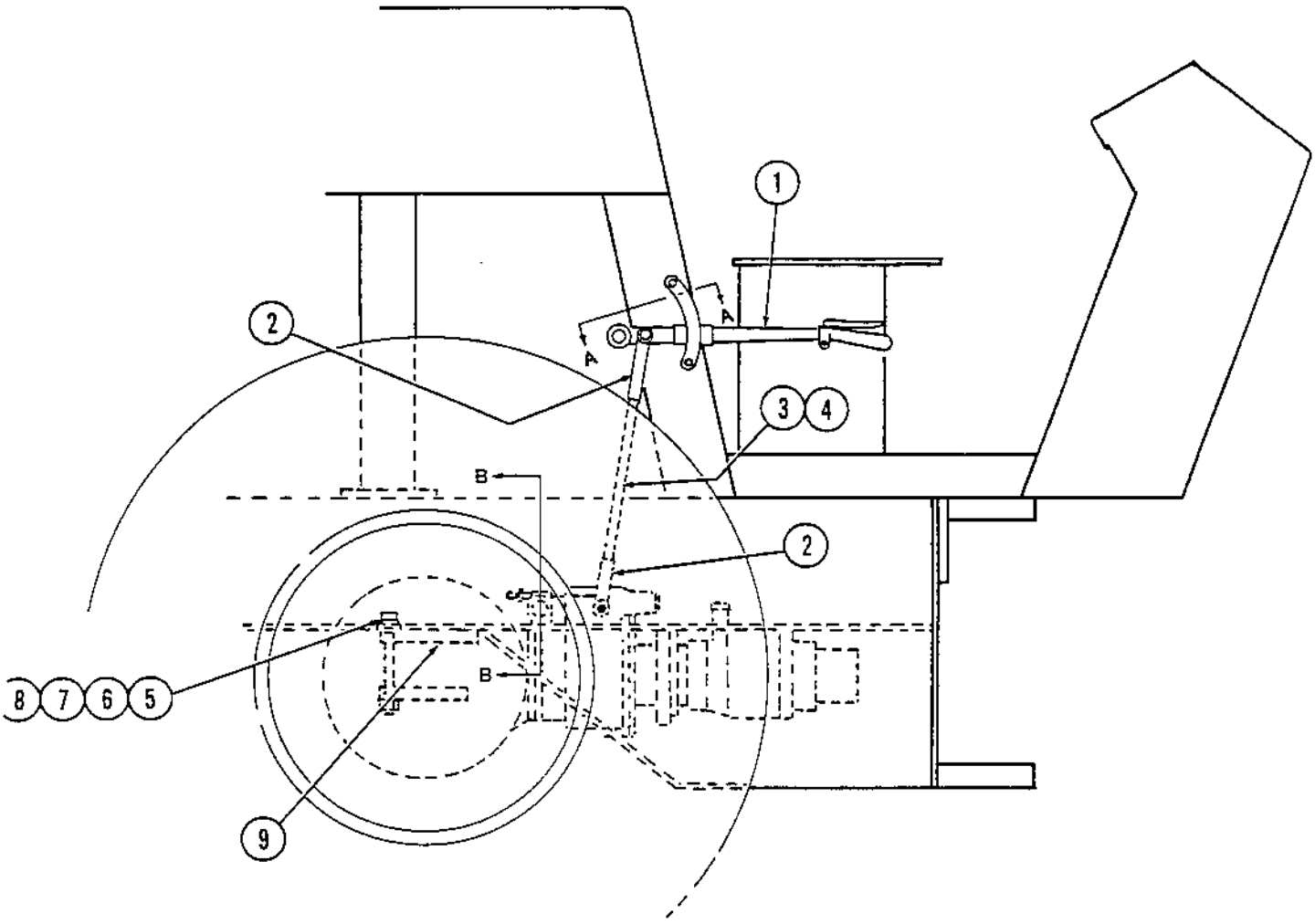

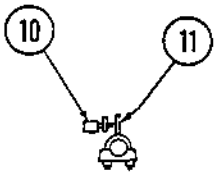

Section C-C

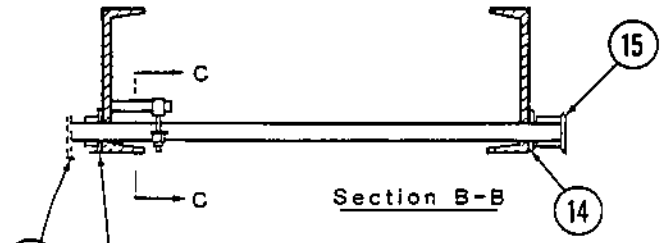

Section B-B

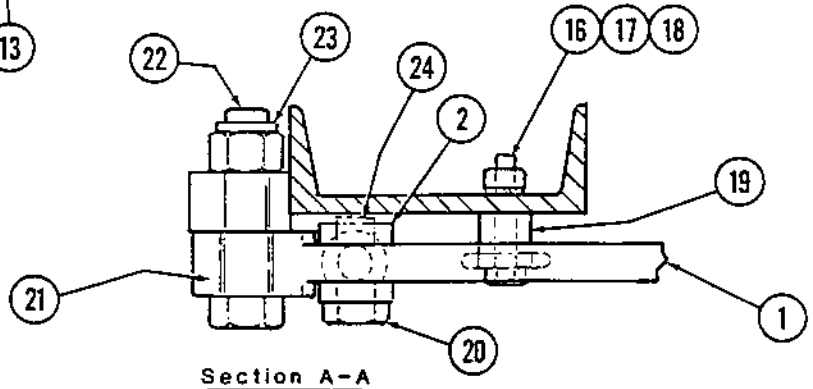

Section A-A

Page	Group	Illustration Number	Catalog Number	Illustration
20	7	PA-15-PL184	PA-15-PL01	Foot & Hand Brake Assy. (To S/N 2079)

Ref. No.	Quantity/Model CA 15	CA 15 D	CA 15 PD	Part Number	Description	Serial Number
1	1	1	1	815317	Pedal, Brake	
2	2	2	2	813339	Bushing	
3	1	1	1	503043	Capscrew, HH	
4	1	1	1	550037	Pin, Clevis	
5	1	1	1	630035	Pin, Cotter	
6	1	1	1	335585	Yoke	
7	1	1	1	503024	Set Screw, Cup Pt. Soc. Hd.	
8	1	1	1	813512	Rod, Push	
9	1	1	1	572004	Locknut	
10	1	1	1	815318	Bracket, Master Cylinder	
11	1	1	1	813344	Washer, Brass	
12	1	1	1	813351	Washer, Brass	
13	1	1	1	813334	Bolt, Connector	
14	1	1	1	813333	Connector, Brake	
15	1	1	1	813332	Cylinder, Master	
-	1	1	1	813497	Kit, Master Cyl. Repair	
16	1	1	1	813335	Spring, Brake Pedal	
17	10	10	10	604028	Lockwasher	
18	2	2	2	502045	Capscrew, HH	
19	1	1	1	815289	Brake Line, Master Cylinder	
20	1	1	1	815291	Line, R.H. Brake	
21	-	-	-	—	Existing Hardware	
22	1	1	1	815292	Bracket, Tee	
23	1	1	1	—	Hex Nut	
24	1	1	1	604027	Lockwasher	
25	1	1	1	813310	Tee	
26	1	1	1	502016	Capscrew, HH	
27	1	1	1	815290	Line, L.H. Brake	
28	2	2	2	502041	Capscrew, HH	

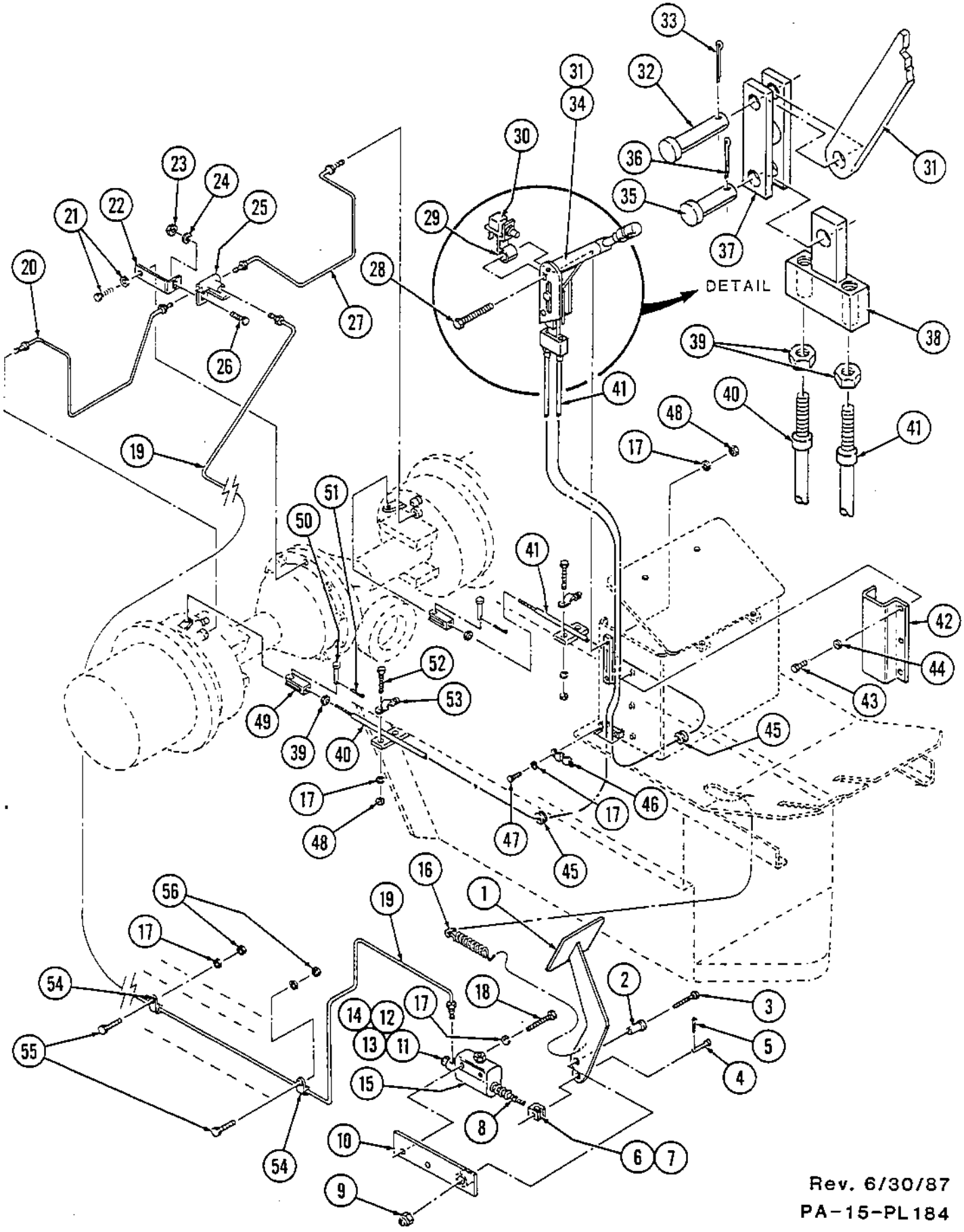
DETAIL

Page	Group	Illustration Number	Catalog Number	Illustration
22	7	PA-15-PL184	PA-15-PL01	Foot & Hand Brake Assy. (To S/N 2079)

Ref. No.	Quantity/Model CA 15	15 D	15 PD		Part Number	Description	Serial Number
29	1	1	1		842101	Bracket, Brake Switch	
30	1	1	1		930061	Switch, Brake	
31	1	1	1		415194	Lever, Brake	
32	1	1	1		NSS	Pin, Clevis	
33	1	1	1		NSS	Pin, Cotter	
34	1	1	1		85021001	Spacer	
35	1	1	1		813362	Pin, Clevis	
36	1	1	1		630035	Pin, Cotter	
37	1	1	1		815320	Link, Connecting	
38	1	1	1		815319	Attachment, Cable	
39	4	4	4		572003	Hex Nut	
40	1	1	1		456057	Cable, R.H. Brake	
41	1	1	1		456058	Cable, L.H. Brake	
42	1	1	1		815322	Cover, Brake Lever	
43	3	3	3		502004	Capscrew, HH	
44	3	3	3		604026	Lockwasher	
45	2	2	2		813367	Grommet	
46	1	1	1		815321	Clamp, Cable	
47	2	2	2		502038	Capscrew, HH	
48	6	6	6		571003	Hex Nut	
49	2	2	2		815329	Clevis	
50	2	2	2		813364	Pin, Clevis	
51	2	2	2		630052	Pin, Cotter	
52	4	4	4		502036	Capscrew, HH	
53	2	2	2		813353	Clamp, Cable	
54	2	2	2		813313	Clamp, Brake Line	
55	2	2	2		502035	Capscrew, HH	
56	2	2	2		571003	Hex Nut	

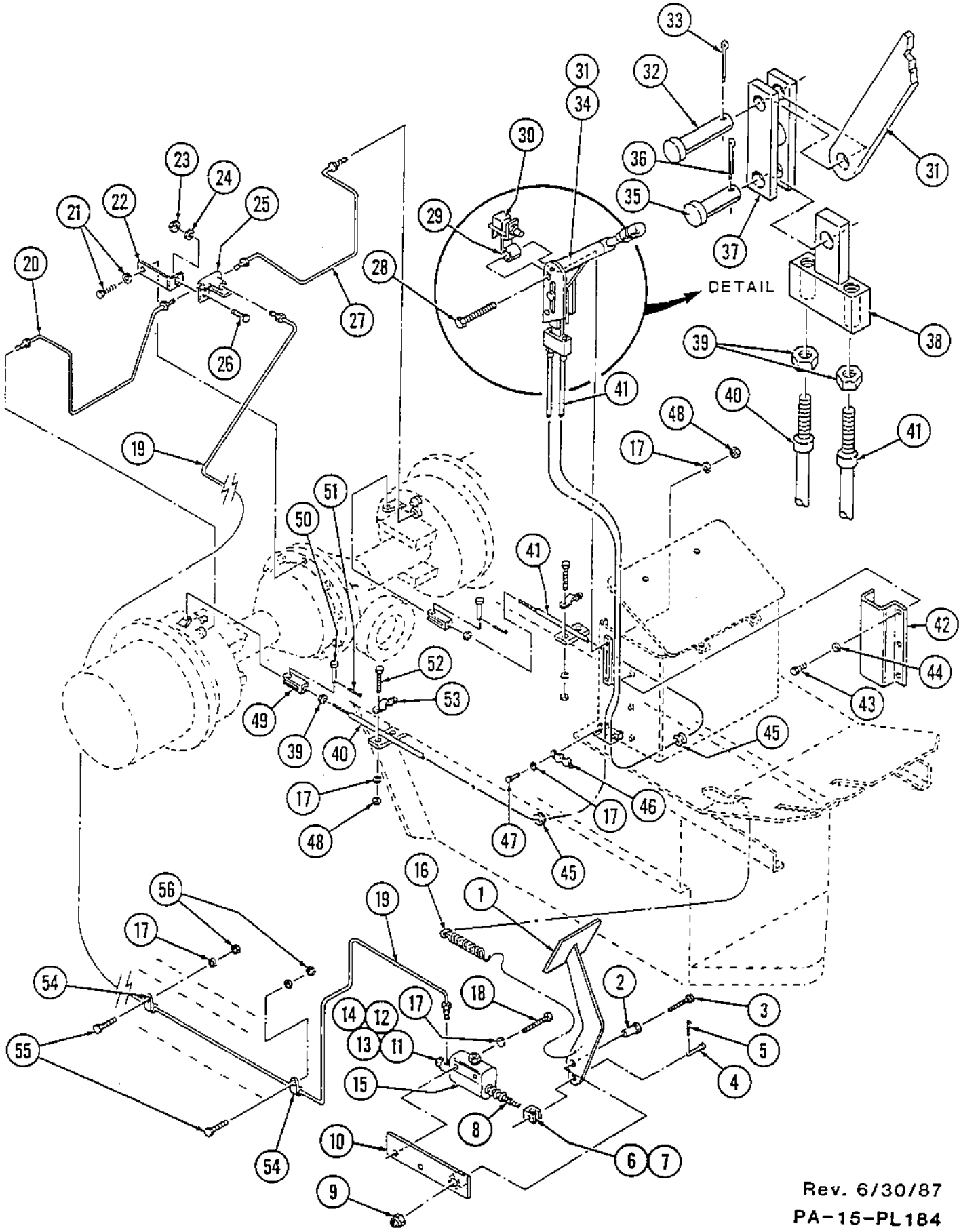
DETAIL

DYNAPAC

DECALS

CA15, 15D & 15PD (To S/N 2079) 2
CA15, 15D, Dual Amplitude 4
CA15, 15D & 15PD (S/N 2080 & Up) 6

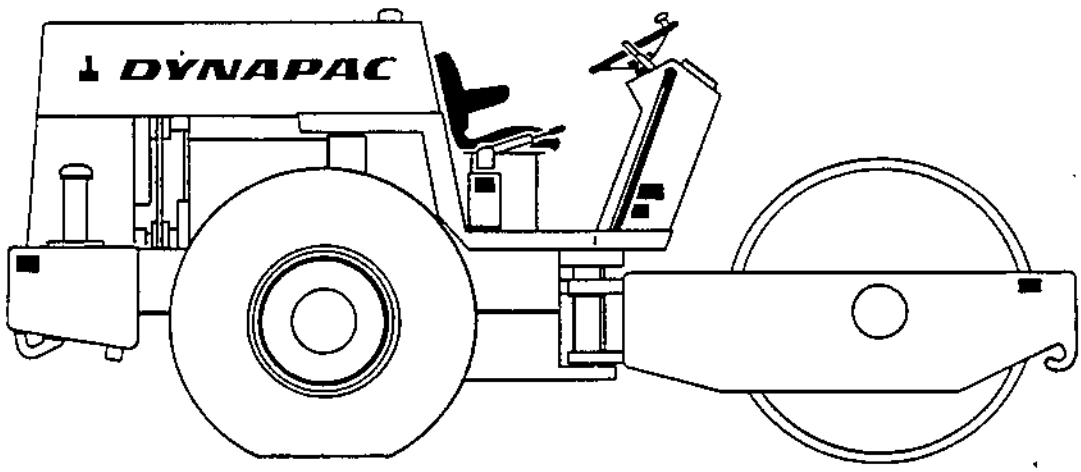

Page	Group	Illustration Number	Catalog Number	Illustration
2	8	PA-15-PL141	PA-15-PL01	Decals (To S/N 2079)

Ref. No.	Quantity/Model CA 15	15 D	15 PD	Part Number	Description	Serial Number
-	1			815463	Kit, Decal	
-		1		815465	Kit, Decal	
			1	815466	Kit, Decal	
1	1	1	1	801458	Decal, Safety Precaution	
2	1	1	1	826788	Decal, Operating Safety	
3	1	1	1	80110807	Decal, Group Symbol	
4	3	3	3	309100502	Decal, Dynapac	
5	6	6	6	825675	Walks, Safety	
6	2	2	2	NSS	Decal, Tie Down & Blocking	
7	1	1	1	NSS	Decal, Hyd. Oil Level	
8	2	2	2	NSS	Decal, Identification	
9	1	1	1	NSS	Decal, Lubrication	
10	2	2	2	NSS	Decal, Stay Clear Warning	
11	1	1	1	NSS	Decal, Trans. Shift Warning	
12	-	1	1	NSS	Decal, Oil Level	
13	-	1	1	NSS	Decal, Oil Fill	
14	1	1	1	NSS	Decal, Drum Oil Level	
15	1	1	1	NSS	Decal, Motion Control	
16	1	1	1	NSS	Decal, Throttle	
17	1	1	1	NSS	Decal, Engine Stop	
18	1	1	1	NSS	Decal, Tachometer	
19	1	1	1	NSS	Decal, Towing	
20	1	1	1	NSS	Decal, Operating Instructions	
21	1	1	1	NSS	Decal, Ignition Switch	
22	1	1	1	NSS	Decal, Towing Temp. & Press	
23	1	1	1	NSS	Decal, Speed Selector	
24	1	1	1	NSS	Decal, Emergency Stop (Det. Eng.)	To 1007 & 1010
25	1	1	1	NSS	Decal, Vibration	
26	1	1	1	NSS	Decal, Speed Position	
27	1	1	1	NSS	Decal, Hydraulic Oil	
28	1	1	1	NSS	Decal, Diesel Fuel	
29	1	1	1	NSS	Decal, Brake Safety	
30	1	1	1	NSS	Decal, Water	

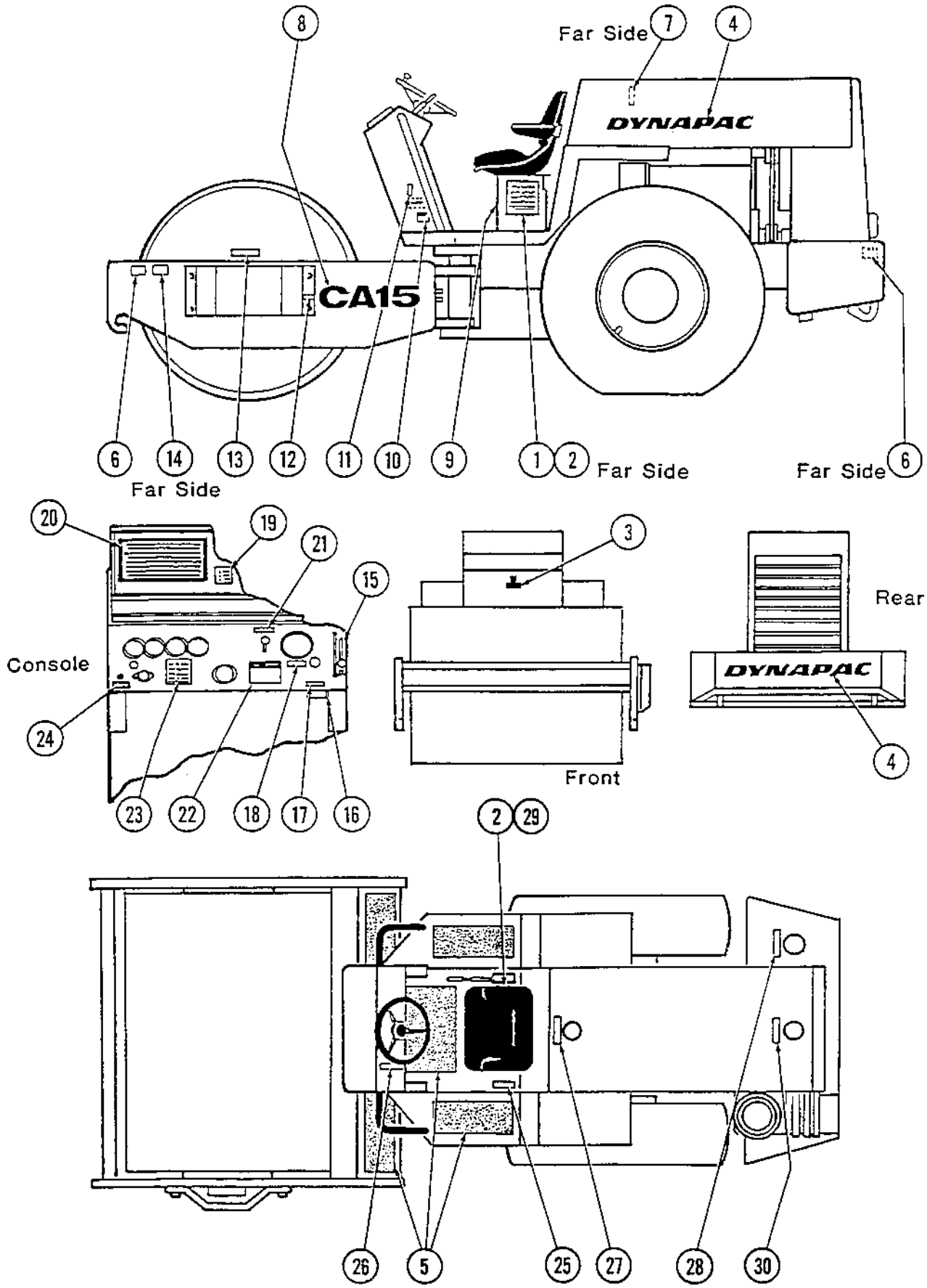
8
Far Side
7
4
DYNAPAC
CA15
6
14
13
12
11
10
9
1
2
Far Side
Far Side
6
Far Side
20
19
21
15
Console
24
23
22
18
17
16
3
Front
Rear
DYNAPAC
4
2
29
26
5
25
27
28
30

PA-15-PL141

Page	Group	Illustration Number	Catalog Number	Illustration
4	8	PA-15-PL142	PA-15-PL01	Decals (Dual Amplitude Machine)

Ref. No.	Quantity/Model CA 15	Quantity/Model CA 15 D			Part Number	Description	Serial Number
-	1	-			815803	Kit, Decal	
-	-	1			815802	Kit, Decal	
1	1	1			801458	Decal, Safety Precaution	
2	1	1			826788	Decal, Operating Safety	
3	1	1			80110807	Decal, Group Symbol	
4	3	3			309100502	Decal, Dynapac	
5	6	6			825675	Walks, Safety	
6	2	2			NSS	Decal, Tie Down & Blocking	
7	1	1			NSS	Decal, Hyd. Oil Level	
8	2	2			NSS	Decal, Identification	
9	1	1			NSS	Decal, Lubrication	
10	2	2			NSS	Decal, Stay Clear Warning	
11	1	1			NSS	Decal, Trans. Shift Warning	
12	-	1			NSS	Decal, Oil Level	
13	-	1			NSS	Decal, Oil Fill	
14	1	1			NSS	Decal, Drum Oil Level	
15	1	1			NSS	Decal, Motion Control	
16	1	1			NSS	Decal, Throttle	
17	1	1			NSS	Decal, Engine Stop	
18	1	1			NSS	Decal, Tachometer	
19	1	1			NSS	Decal, Towing	
20	1	1			NSS	Decal, Operating Instructions	
21	1	1			NSS	Decal, Ignition Switch	
22	1	1			NSS	Decal, Towing Temp & Pressure	
23	1	1			NSS	Decal, Speed Selector	
24	1	1			NSS	Decal, Vibration Frequency	
25	1	1			NSS	Decal, Vibration	
26	1	1			NSS	Decal, On-Off	
27	1	1			NSS	Decal, Emergency Stop (Det. Eng.)	To 1007 & 1010
28	1	1			NSS	Decal, Speed Position	
29	1	1			NSS	Decal, Hydraulic Oil	
30	1	1			NSS	Decal, Diesel Fuel	
31	1	1			NSS	Decal, Brake Safety	
32	1	1			NSS	Decal, Water	
33	1	1			NSS	Decal, Amplitude Control	

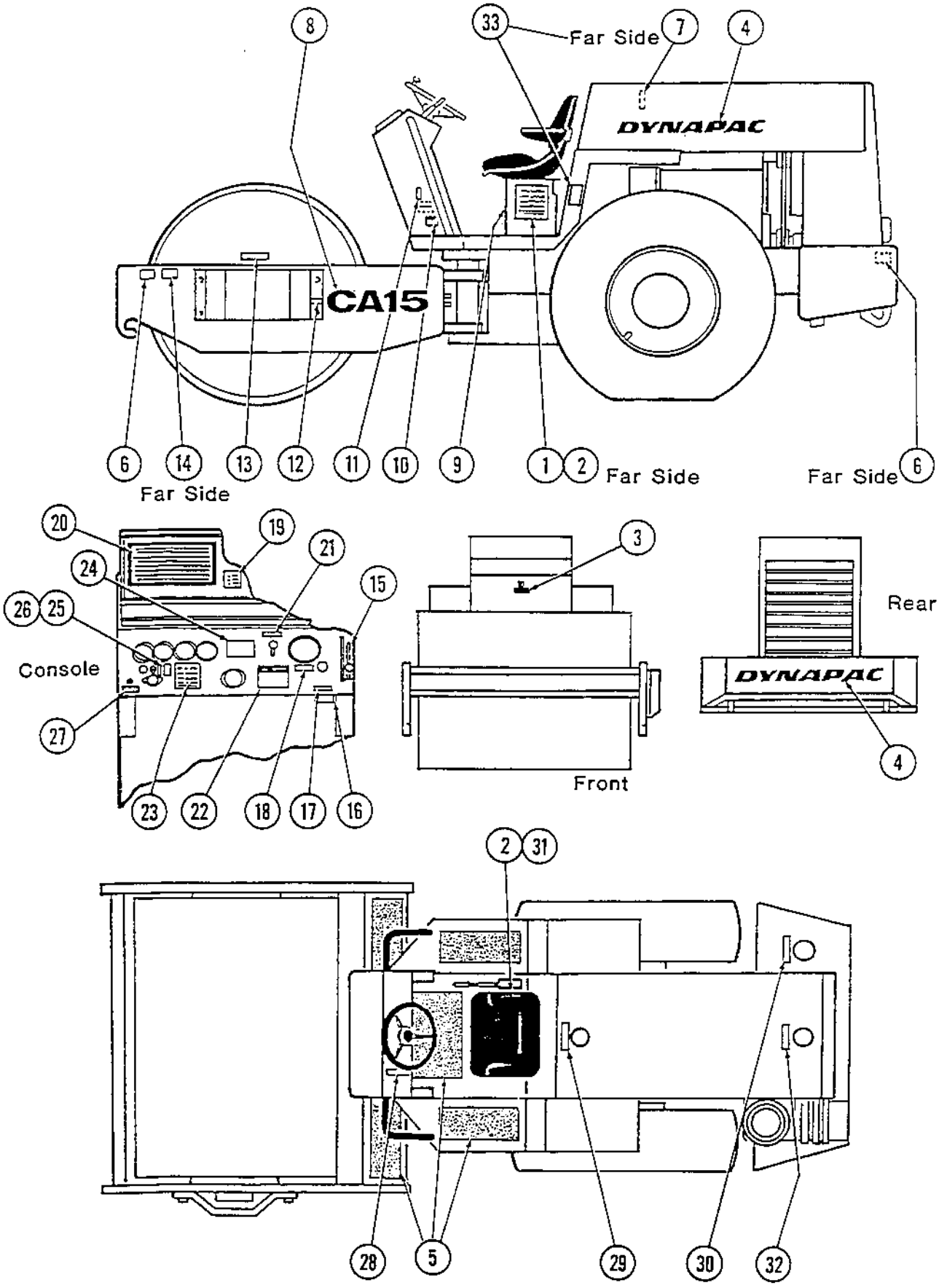
8
33
Far Side
7
4
DYNAPAC
CA15
6
14
13
12
11
10
9
1
2
Far Side
Far Side
6
Far Side
20
19
21
24
15
26
25
Console
27
23
22
18
17
16
3
Front
Rear
DYNAPAC
4
2
31
28
5
29
30
32

Page	Group	Illustration Number	Catalog Number	Illustration
6	8	PA-15-PL206	PA-15-PL01	Decals (S/N 2080 & Up)

Ref. No.	Quantity/Model CA 15	15D	15PD		Part Number	Description	Serial Number
-	1	1	1		815913	Kit, Decal	
1	1	1	1		801458	Plate, Safety Precaution	
2	12	12	12		926903	Tacks, Metal	
3	1	1	1		826788	Operating Safety Plate	
4	1	1	1		80110807	Decal, Group Symbol	
5	3	3	3		309100502	Decal, Dynapac	
6	6	6	6		825675	Safety Walk	
7	1	1	1		NSS	Decal, Vibration	
8	1	1	1		NSS	Decal, Hydraulic Oil	
9	1	1	1		NSS	Decal, Diesel Fuel	
10	1	1	1		NSS	Decal, Water	
11	1	1	1		NSS	Decal, Throttle	
12	1	1	1		NSS	Decal, Engine Stop	
13	1	1	1		NSS	Decal, Decibel Level	
14	1	1	1		NSS	Decal, High Speed	
15	1	1	1		NSS	Decal, Low Speed	
16	1	1	1		NSS	Decal, Motion Control	
17	1	1	1		NSS	Decal, Brake	
18	1	1	1		NSS	Decal, Ignition Switch	
19	1	1	1		NSS	Decal, Operating Instructions	
20	1	1	1		NSS	Edge Trim	
21	2	2	2		NSS	Decal, Tie Down & Blocking	
22	1	1	1		NSS	Decal, Drum Oil Level	
23	-	1	1		NSS	Decal, Oil Fill	
24	-	1	1		NSS	Decal, Oil Level	
25	2	2	2		NSS	Decal, Stay Clear Warning	
26	1	1	1		NSS	Decal, Lubrication Chart	
27	1	1	1		NSS	Name Plate	
28	2	2	2		NSS	Decal, Identification	
29	1	1	1		NSS	Decal, Hydraulic Oil Level	

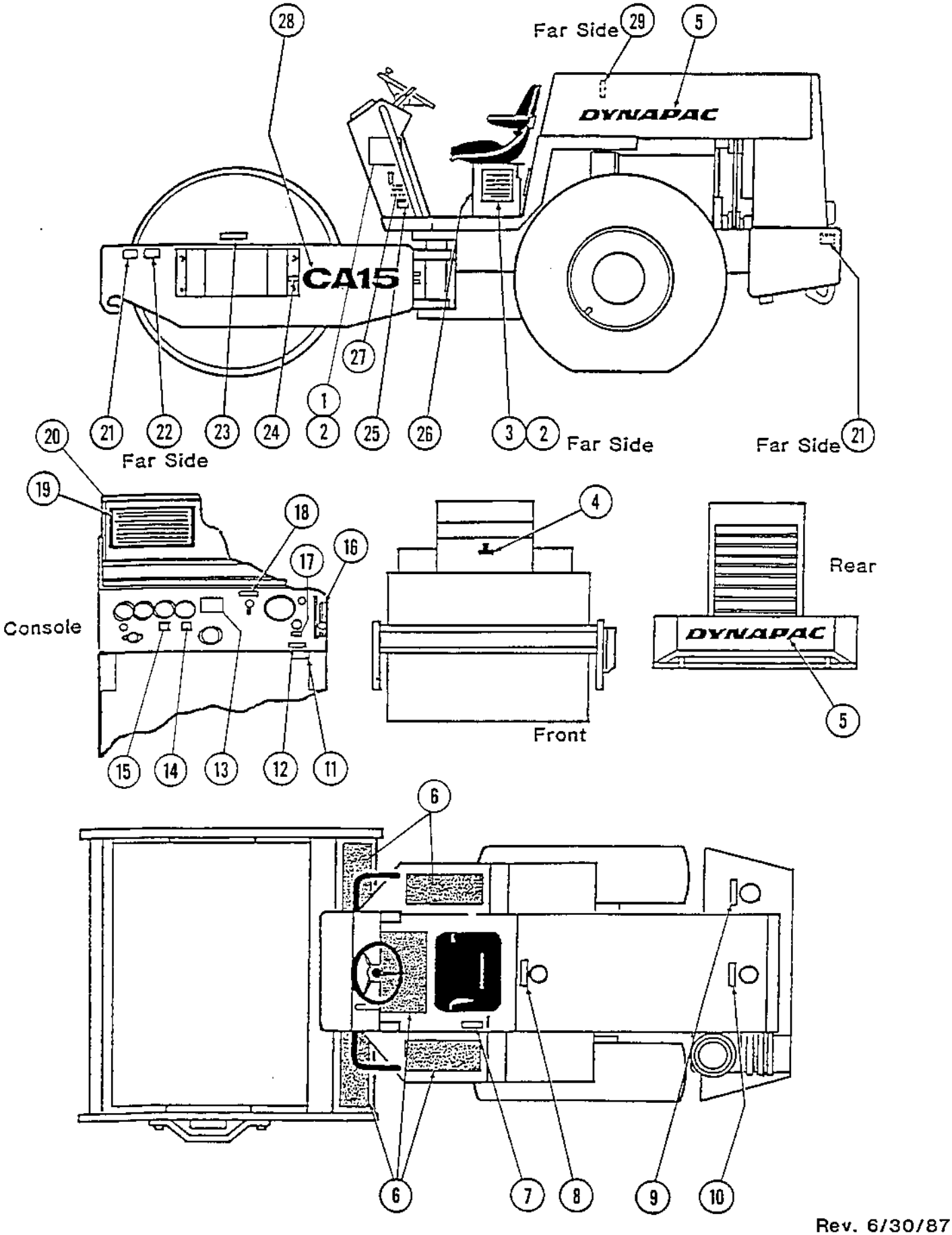

Rev. 6/30/87
PA-15-PL206

DYNAPAC

OPTIONAL EQUIPMENT

Cab Assembly	2
Cab Heater & Defroster	4
Headlight Assembly	6
Seat Belt and ROPS	8
Umbrella	10
Noise Reduction, J. Deere	12
Noise Reduction, Ford	14
Noise Reduction, Detroit	16
Right Side Engine Cover	18
Left Side Engine Cover	20

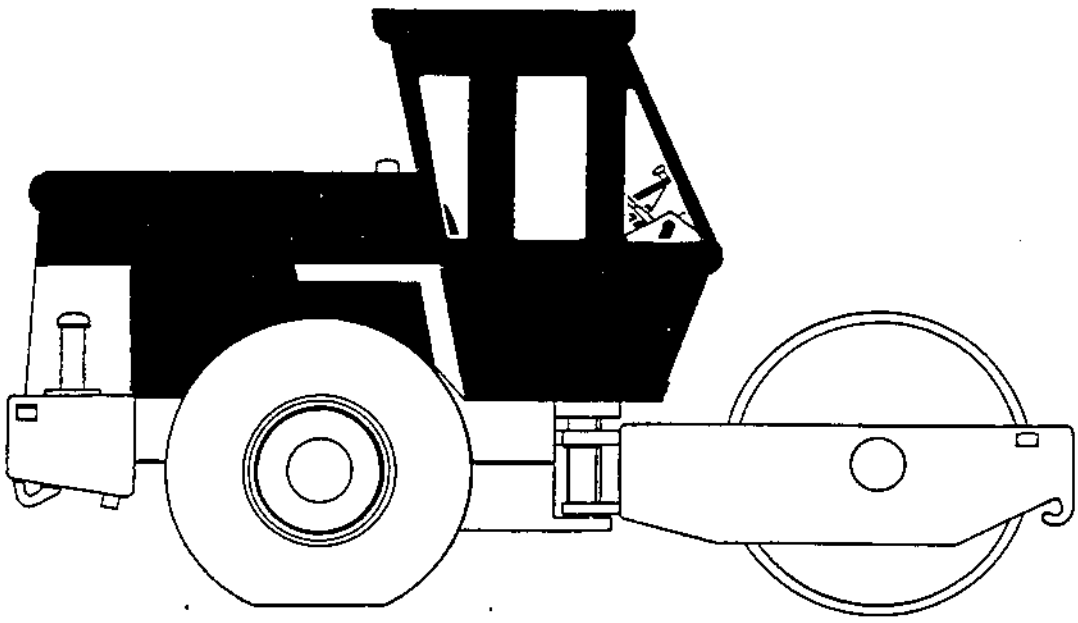

Page	Group	Illustration Number	Catalog Number	Illustration
2	10	PA-15-PL150	PA-15-PL01	Cab Assembly

Ref. No.	Quantity/Model CA 15	CA 15 D	CA 15 PD	Part Number	Description	Serial Number
1	1	1	1	815352	Cab	
2	2	2	2	815245	Bracket, Mounting	
3	16	16	16	502035	Capscrew, HH	
4	16	16	16	604028	Washer, Flat	
5	16	16	16	600007	Lockwasher	
6	16	16	16	571003	Hex Nut	
7	6	6	6	517046	Capscrew, HH	
8	10	10	10	600005	Washer, Flat	
9	10	10	10	604026	Lockwasher	
10	6	6	6	571001	Hex Nut	
11	6	6	6	586049	Capscrew, HH	
12	8	8	8	604030	Lockwasher	
13	8	8	8	571005	Hex Nut	
14	4	4	4	815246	Spacer, Seat	
15	4	4	4	502285	Capscrew, HH	
16	6	6	6	604027	Lockwasher	
17	2	2	2	502058	Capscrew, HH	
18	2	2	2	815244	Brace, Door	
19	2	2	2	334313	Joint, Swivel	
20	2	2	2	572002	Hex Nut	
21	1	1	1	499297	Motor, Windshield Wiper	
22	1	1	1	499298	Arm, Windshield Wiper	
23	1	1	1	499299	Blade, Windshield Wiper	
24	1	1	1	211106	Capscrew, HH	
25	1	1	1	604019	Lockwasher	
26	1	1	1	571019	Hex Nut	
27	1	1	1	815583	Harness, Wire	
28	4	4	4	921013	Clamp	
29	1	1	1	815584	Harness, Wire	

Top View

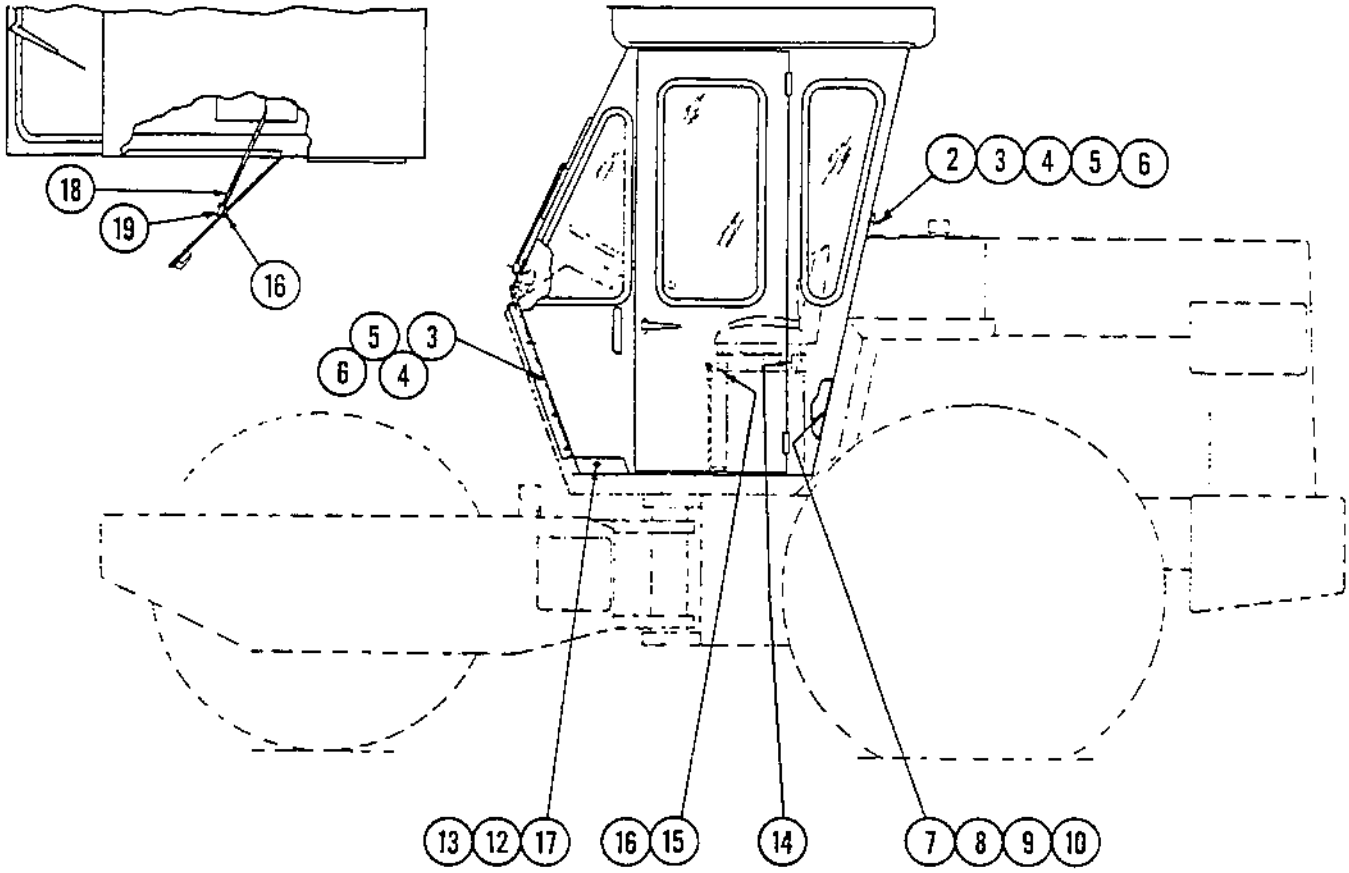

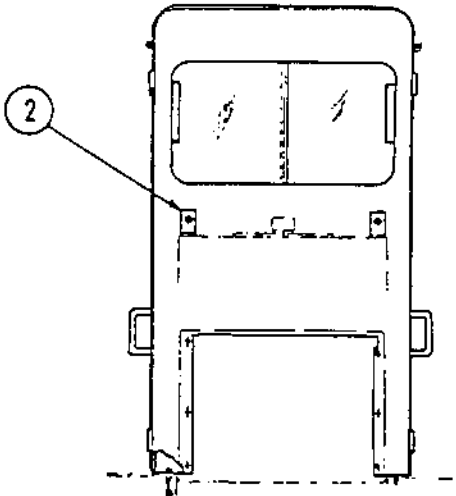

Rear View

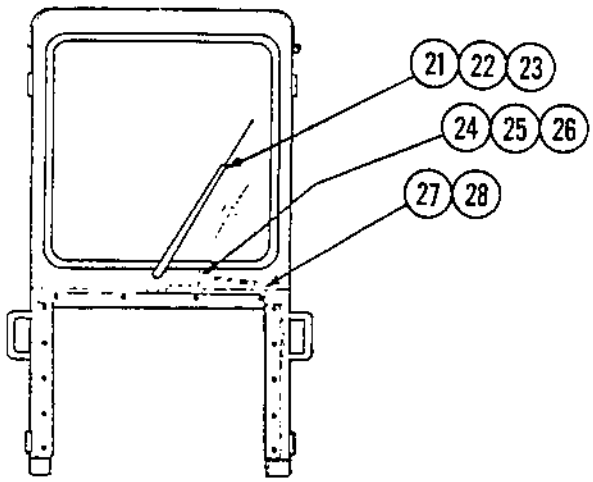

Front View

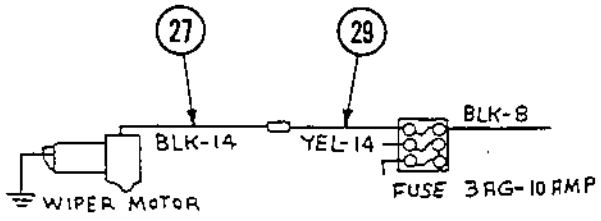

Page	Group	Illustration Number	Catalog Number	Illustration
4	10	PA-15-PL151	PA-15-PL01	Cab Heater & Defroster

Ref. No.	Quantity/Model CA 15	CA 15 D	CA 15 PD		Part Number	Description	Serial Number
1	1	1	1		801347	Assy., Heater and Defroster	
2	2	2	2		826171	Support, Nozzle	
3	1	1	1		801219	Nozzle, Defroster	
4	1	1	1		801220	Hose, Defroster 2" x 24" Lg. or 5.08 x 61 cm	
5	1	1	1		801221	Hose, Heater 5/8" x 28" Lg or .625 mm x 853.44 cm	
6	4	4	4		801226	Clamp, Hose	
7	1	1	1		801741	Elbow, 90°	
8	1	1	1		813325	Bushing, Reducer	
9	1	1	1		233088	Valve, Shut-Off	
10	1	1	1		234317	Nipple, Hex	
11	1	1	1		801214	Switch, Heater/Defroster	
12	4	4	4		550074	Screw, Machine	
13	2	2	2		600028	Washer, Flat	
14	4	4	4		604019	Lockwasher	
15	4	4	4		813370	Hex Nut	
16	3	3	3		220012	Hex Nut	
17	3	3	3		604027	Lockwasher	
18	2	2	2		801348	Pipe, 3/8" or 9.525 mm	
19	2	2	2		813320	Elbow, 90°	
20	1	1	1		801350	Grommet, Defroster	
21	8	8	8		813486	Ty-Rap	
22	1	1	1		801742	Elbow, 45°	
23	1	1	1		334207	Bushing, Reducer	
24	3	3	3		81516504	Assembly, Wire	
25	1	1	1		813413	Block, Fuse	
26	3	3	3		813412	Fuse	
27	2	2	2		550026	Capscrew, HH	
28	1	1	1		81516505	Assembly, Wire	
29	1	1	1		81517416	Assembly, Wire	

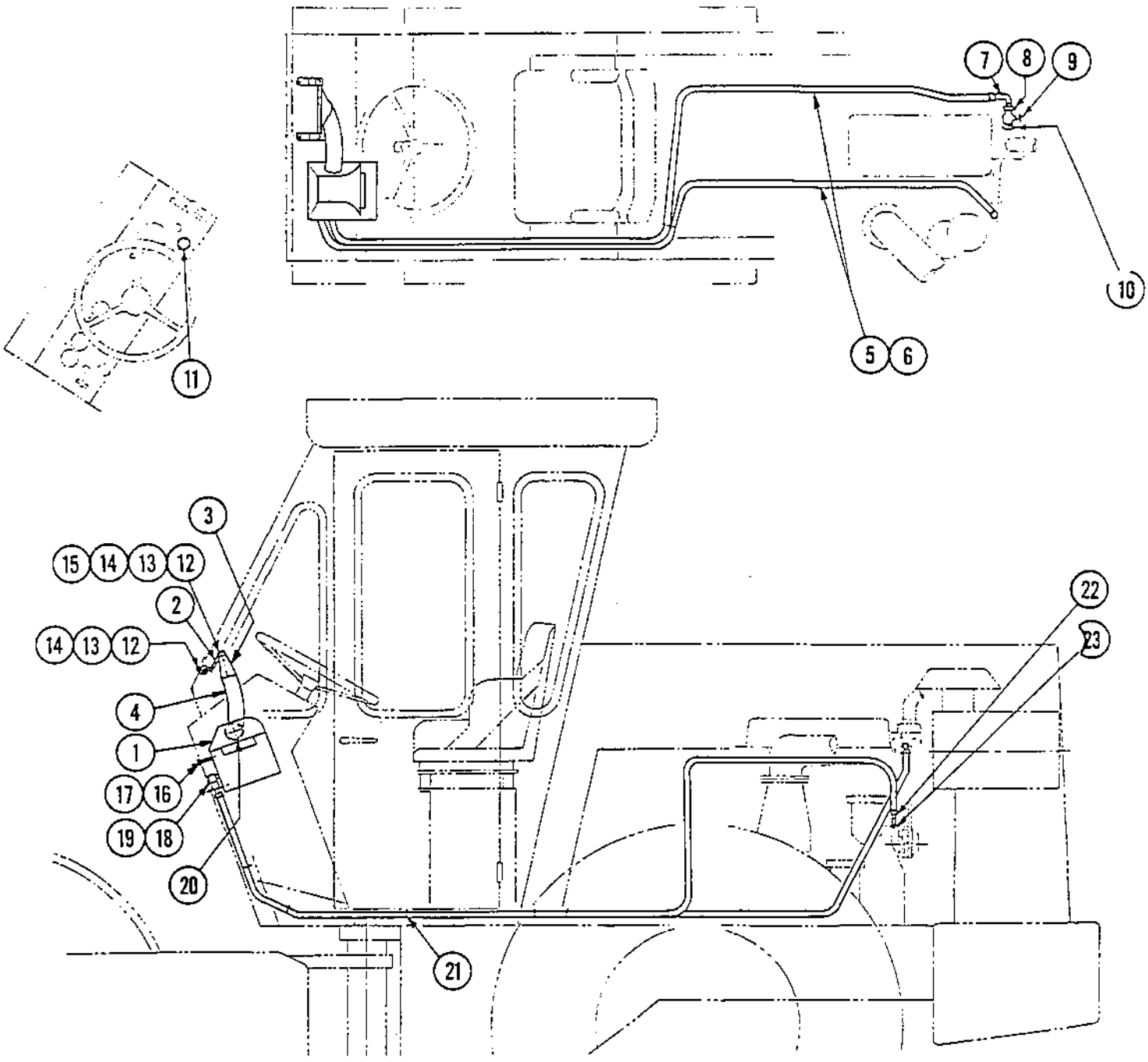

WIRING DIAGRAM

Page	Group	Illustration Number	Catalog Number	Illustration
6	10	PA-15-PL152	PA-15-PL01	Headlight Assembly

Ref. No.	Quantity/Model CA 15	CA 15 D	CA 15 PD		Part Number	Description	Serial Number
1	4	4	4		813495	Assembly, Headlight	
2	1	1	1		892596	Bulb, Sealed Beam	
3	1	1	1		801338	Switch, Headlight	
4	1	1	1		81517406	Assembly, Wire	
5	1	1	1		81517407	Assembly, Wire	
6	1	1	1		80144612	Wire, 40" Lg. or 101.6 cm	
7	1	1	1		85033305	Harness, Wire	
8	9	9	9		313041	Ty-Rap	
9	4	4	4		814075	Terminal, Pigtail	
10	2	2	2		80133101	Loom, 3" Lg. or 7.62 cm	
11	1	1	1		85033304	Harness, Wire	
12	8	8	8		813528	Clamp	
13	1	1	1		815225	Bracket	

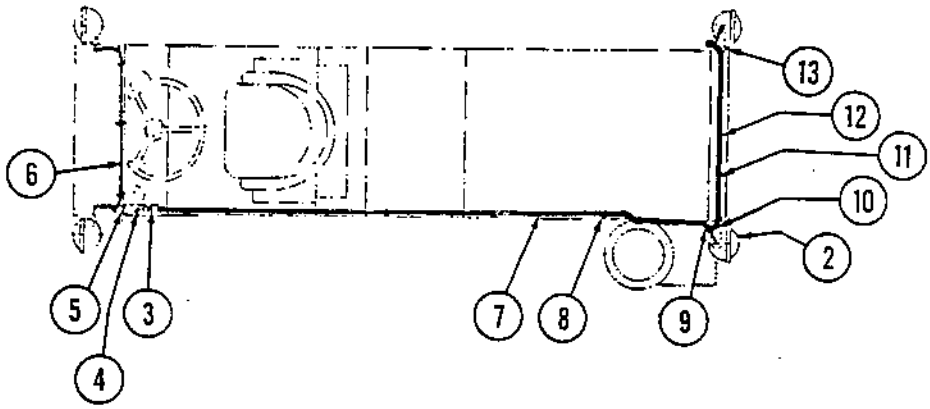

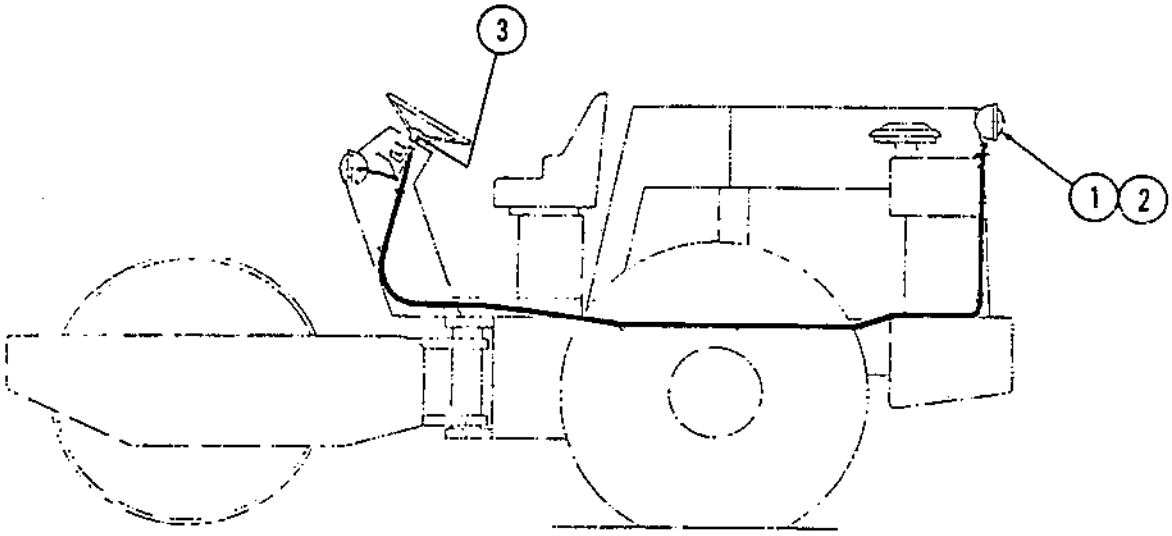

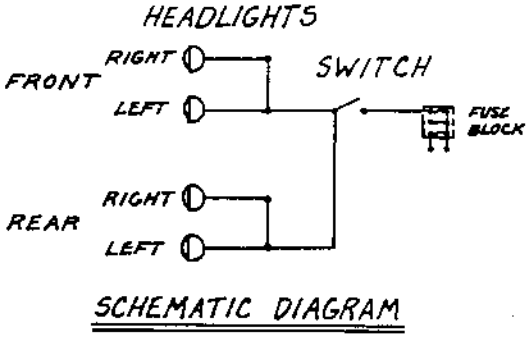

SCHEMATIC DIAGRAM

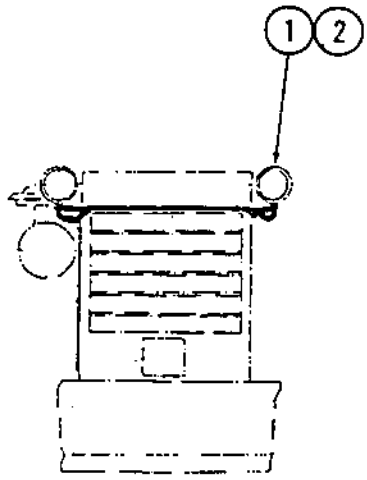

Page	Group	Illustration Number	Catalog Number	Illustration
8	10	PA-15-PL149	PA-15-PL01	Seat Belt & R.O.P.S. Assembly

Ref. No.	Quantity/Model CA 15	CA 15D	CA 15PD	Part Number	Description	Serial Number
-	1	1	1	815282	Assy., Seat Belt & R.O.P.S.	
1	1	1	1	815462	Assy., Seat Belt Kit	
2	2	2	2	826119	Spacer	
3	1	1	1	929847	Structure, Roll Over Protection	
4	1	1	1	815508	Structure, Roll Over Protection Cab	

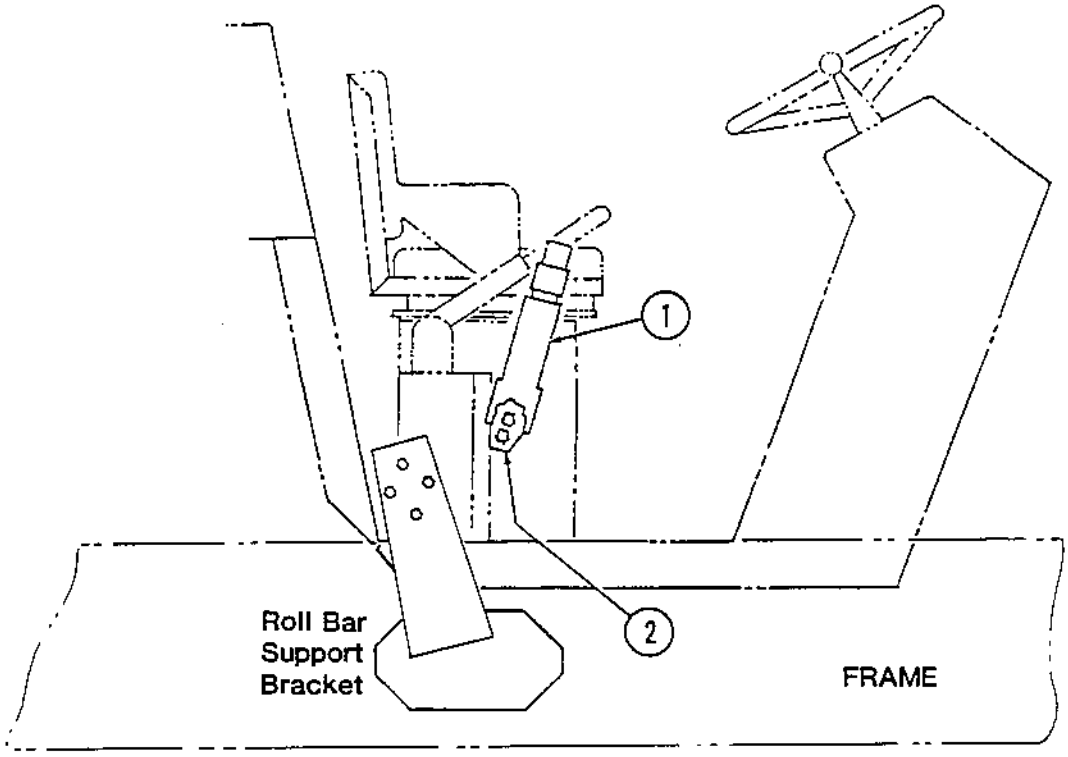
1
2
Roll Bar
Support
Bracket
FRAME

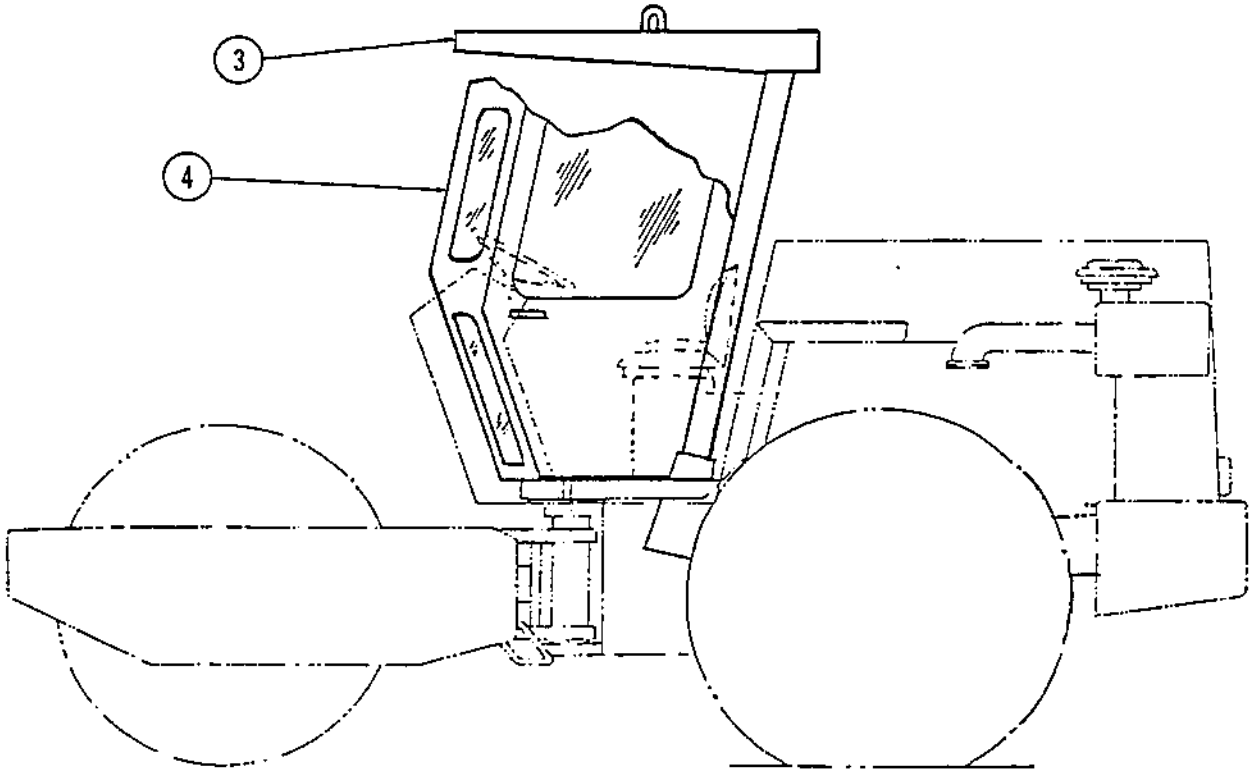
3
4

Page	Group	Illustration Number	Catalog Number	Illustration
10	10	PA-15-PL127	PA-15-PL01	Umbrella

Ref. No.	Quantity/Model CA				Part Number	Description	Serial Number
	15	15 D	15 PD				
1	1	1	1	1	499421	Umbrella	

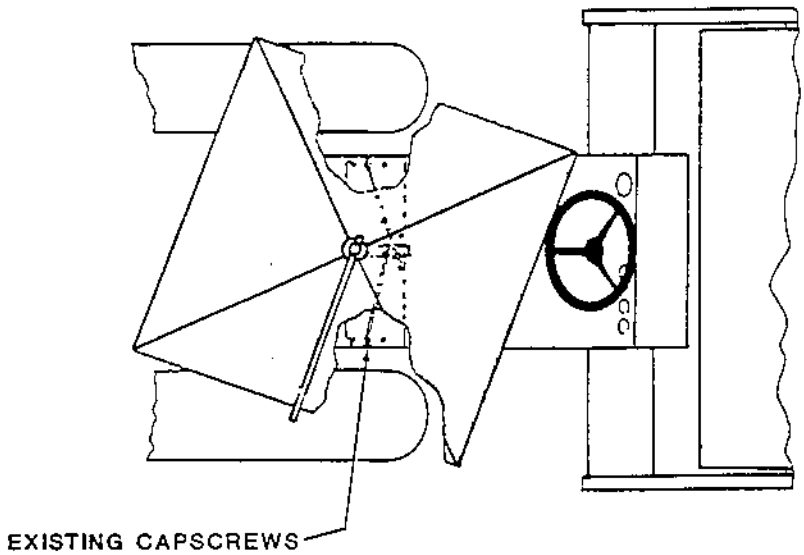
EXISTING CAPSCREWS

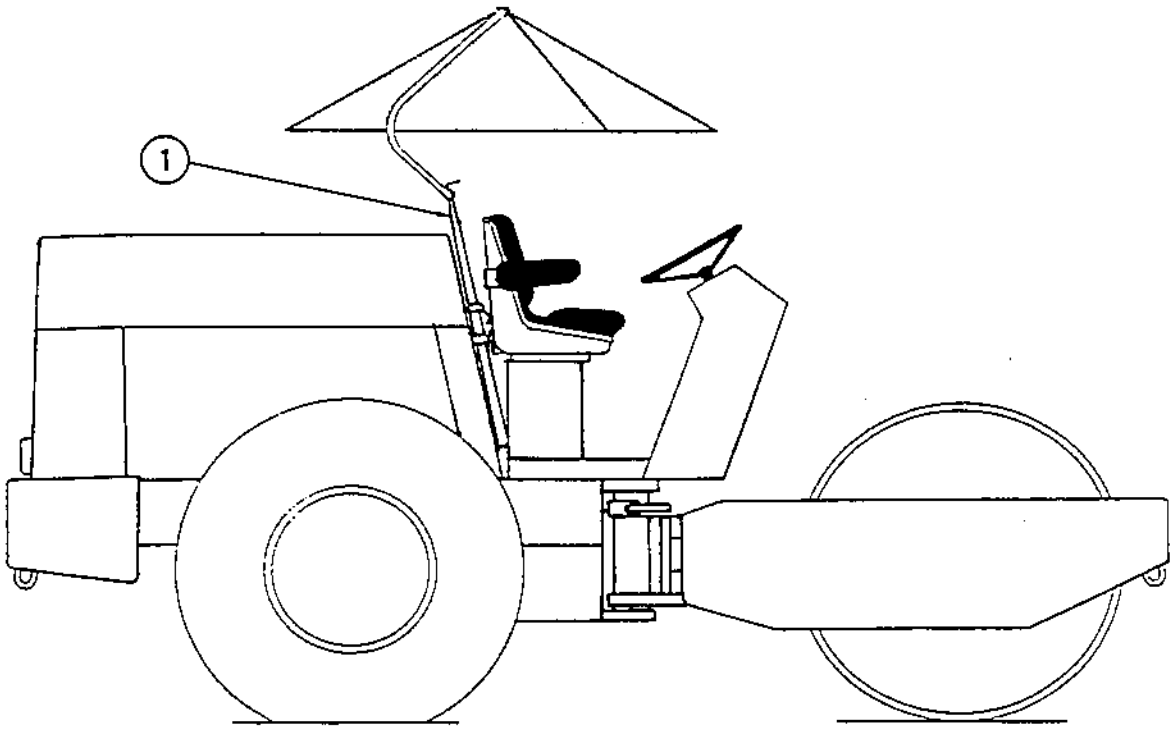
1

Page	Group	Illustration Number	Catalog Number	Illustration
12	10	PA-15-PL167	PA-15-PL01	Noise Reduction Assy. (J. Deere Engine)

Ref. No.	Quantity/Model CA 15	CA 15 D	CA 15 PD	Part Number	Description	Serial Number
-	1	1	1	815582	Kit, Complete Noise Reduction	J.Deere Eng
1	1	1	1	815580	Adapter, Air Inlet	
2	4	4	4	503073	Capscrew, HH	
3	12	12	12	604028	Lockwasher	
4	8	8	8	502023	Capscrew, HH	
5	8	8	8	600007	Washer, Flat	
6	1	1	1	801468	Reducer	
7	1	1	1	815412	Cover, Air Cleaner	
8	1	1	1	815405	Foam, Air Cleaner Cover	
9	1	1	1	815406	Foam, Air Cleaner Cover	
10	1	1	1	815467	Foam, Air Cleaner Cover	
11	4	4	4	815581	Spacer	
12	4	4	4	532025	Stud	
13	4	4	4	604027	Lockwasher	
14	4	4	4	571002	Hex Nut	
-	1	1	1	815373	Kit, Noise Reduction	
15	1	1	1	815374	Assy., LH Engine Cover	See Page 20
16	1	1	1	815373	Assy., RH Engine Cover	See Page 18
17	1	1	1	815380	Cover	
18	1	1	1	815400	Bracket	
19	4	4	4	550026	Capscrew, RD, Hd.	
20	4	4	4	600028	Washer, Flat	
21	4	4	4	604019	Lockwasher	
22	1	1	1	815404	Foam, Reservoir Cover	
23	1	1	1	815408	Foam, RS Engine Hood	
24	1	1	1	815410	Foam, Engine Hood Top	
25	1	1	1	815409	Foam, LS Engine Hood	
26	6	6	6	502023	Capscrew, HH	
27	19	19	19	604028	Lockwasher	
28	15	15	15	571003	Hex Nut	
29	8	8	8	502036	Capscrew, HH	
30	4	4	4	502039	Capscrew, HH	
31	1	1	1	502018	Capscrew, HH	
32	1	1	1	801204	Channel, Rubber 28" Lg. or 71.12 cm	
33	A/R	A/R	A/R	499224	Compound, Adhesive (Tube)	
34	1	1	1	165012	Bellows, Rubber	
35	1	1	1	815411	Cover, Radiator Fill	
36	1	1	1	815407	Foam, Radiator Cover	
37	1	1	1	801201	Fastener, Pawl	
38	2	2	2	503009	Capscrew, HH	
39	2	2	2	604027	Lockwasher	

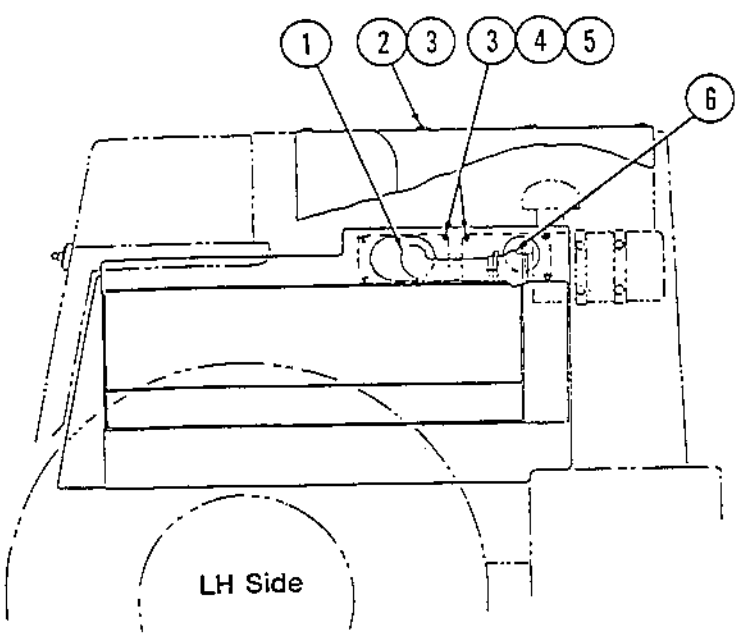
1
2
3
3
4
5
6
LH Side

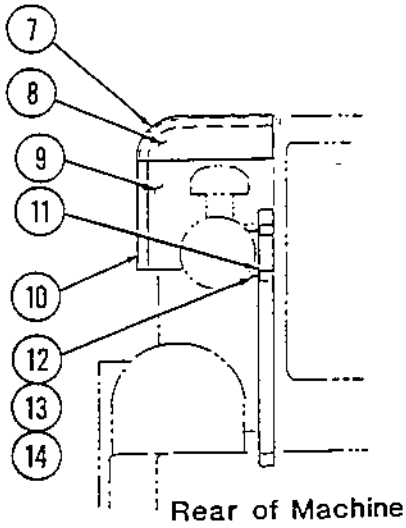
7
8
9
11
10
12
13
14
Rear of Machine

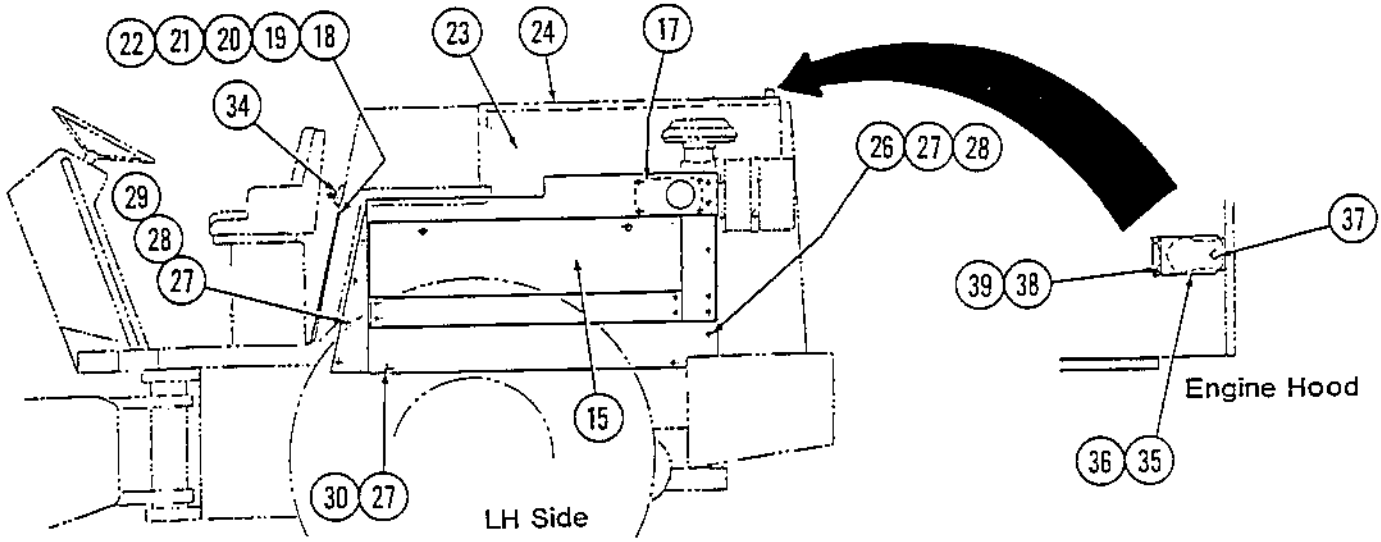
22
21
20
19
18
23
24
17
34
29
28
27
26
27
28
37
39
38
Engine Hood
36
35
15
30
27
LH Side

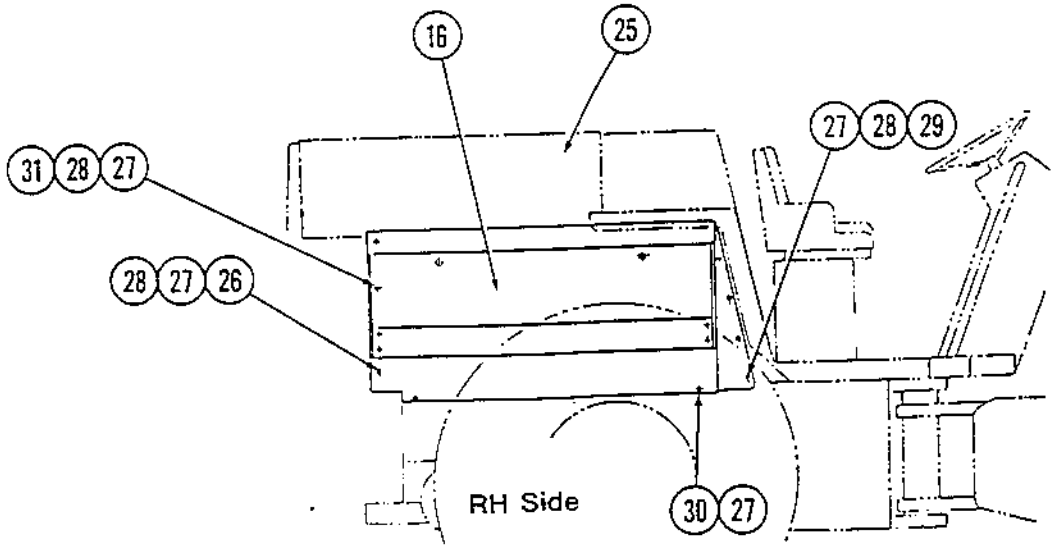
16
25
31
28
27
27
28
29
28
27
26
RH Side
30
27

PA-15-PL167

Page	Group	Illustration Number	Catalog Number	Illustration
14	10	PA-15-PL165	PA-15-PL01	Noise Reduction Assy. (Ford Engine)

Ref. No.	Quantity/Model CA 15	15 D	15 PD	Part Number	Description	Serial Number
-				815442	Kit, Complete Noise Reduction	Ford Engine
1	1	1	1	815417	Adapter, Air Inlet	
2	1	1	1	815416	Cover, Air Cleaner	
3	1	1	1	815418	Foam, Air Cleaner Cover	
4	1	1	1	815419	Foam, Air Cleaner Cover	
5	1	1	1	815420	Foam, Air Cleaner Cover	
6	4	4	4	503073	Capscrew, HH	
7	8	8	8	604028	Lockwasher	
8	1	1	1	801258	Latch	
9	2	2	2	NSS	Tubing, Steel	
10	4	4	4	604027	Lockwasher	
11	2	2	2	502023	Capscrew, HH	
12	1	1	1	801257	Clamp	
13	2	2	2	502018	Capscrew, HH	
14	4	4	4	502033	Capscrew, HH	
15	4	4	4	600007	Washer, Flat	
-	1	1	1	815373	Kit, Noise Reduction	
16	1	1	1	815374	Assy., LH Engine Cover	See Page 20
17	1	1	1	815375	Assy., RH Engine Cover	See Page 18
18	1	1	1	815380	Cover	
19	1	1	1	815400	Bracket	
20	4	4	4	550026	Capscrew, Rd. Hd.	
21	4	4	4	600028	Washer, Flat	
22	4	4	4	604019	Lockwasher	
23	1	1	1	815404	Foam, Reservoir Cover	
24	1	1	1	815408	Foam, RS Engine Hood	
25	1	1	1	815410	Foam, Engine Hood Top	
26	1	1	1	815409	Foam, LS Engine Hood	
27	6	6	6	502023	Capscrew, HH	
28	19	19	19	604028	Lockwasher	
29	15	15	15	571003	Hex Nut	
30	8	8	8	502036	Capscrew, HH	
31	4	4	4	502039	Capscrew, HH	
32	1	1	1	502018	Capscrew, HH	
33	1	1	1	801204	Channel, Rubber 28" Lg. or 71.12 cm	
34	A/R	A/R	A/R	499224	Compound, Adhesive (Tube)	
35	1	1	1	165012	Bellows, Rubber	
36	1	1	1	815411	Cover, Radiator Fill	
37	1	1	1	815407	Foam, Radiator Cover	
38	1	1	1	801201	Fastener, Pawl	
39	2	2	2	503009	Capscrew, HH	
40	2	2	2	604027	Lockwasher	

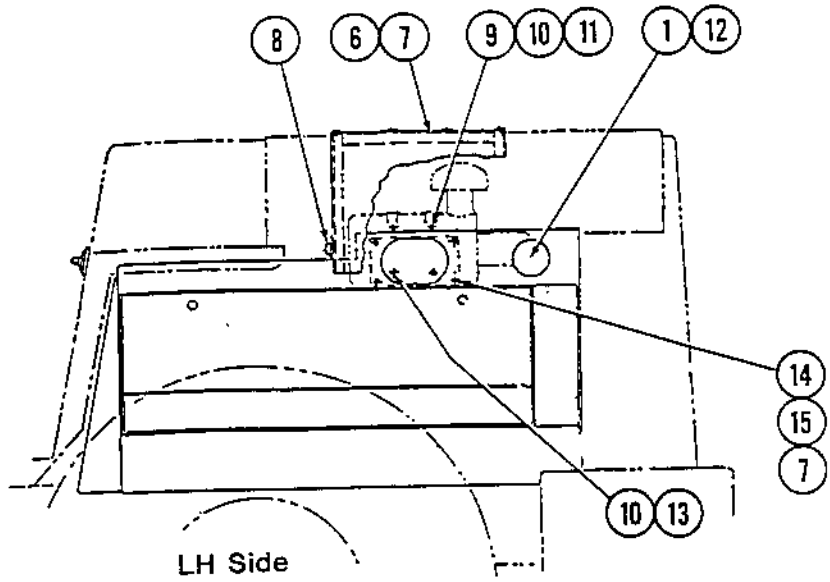
8
6
7
9
10
11
1
12
14
15
7
10
13
LH Side

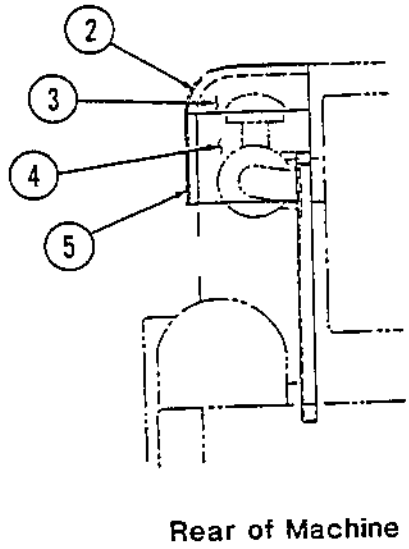
2
3
4
5
Rear of Machine

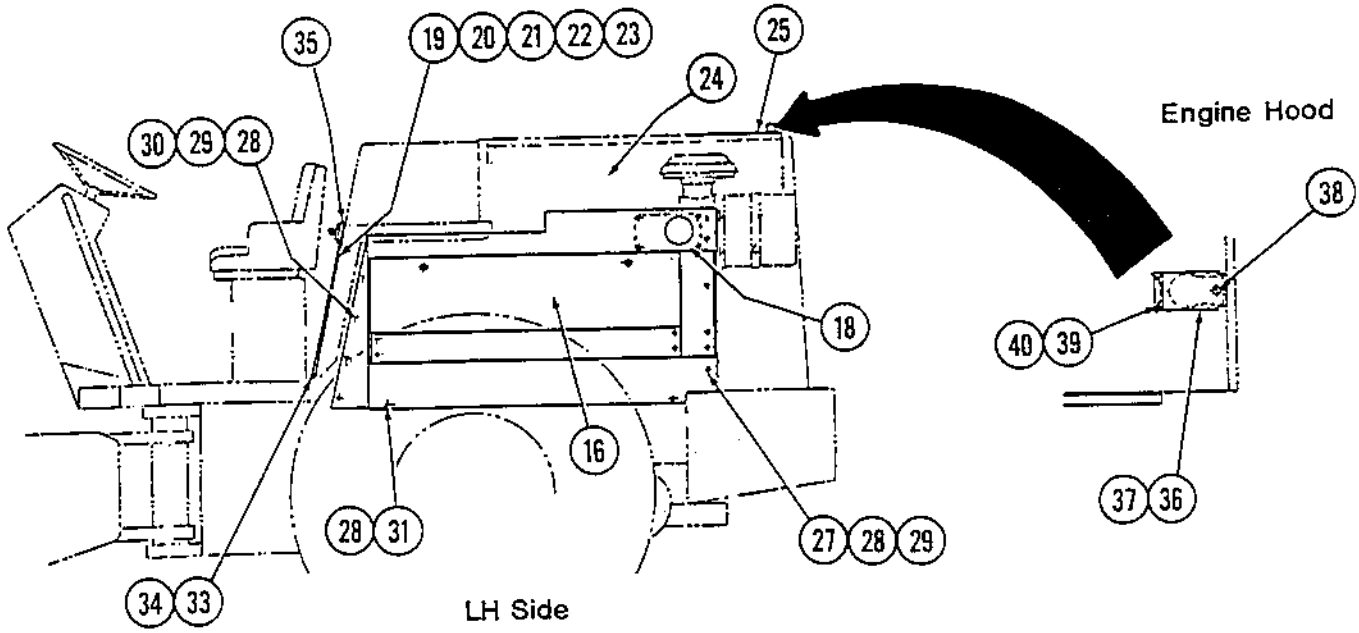
35
19
20
21
22
23
25
24
30
29
28
Engine Hood
38
18
40
39
16
28
31
27
28
29
37
36
34
33
LH Side

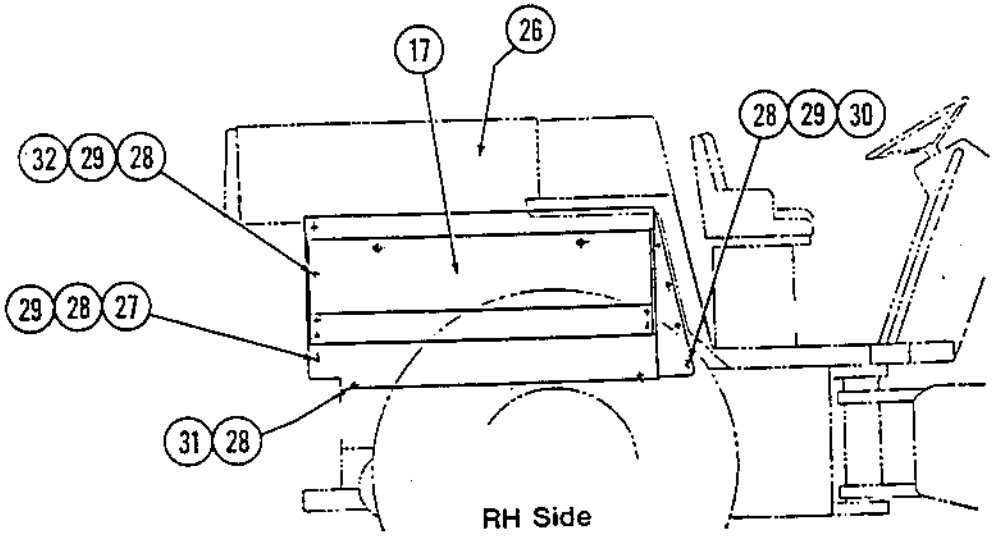
17
26
28
29
30
32
29
28
29
28
27
31
28
RH Side

PA-15-PL165

Page	Group	Illustration Number	Catalog Number	Illustration
16	10	PA-15-PL166	PA-15-PL01	Noise Reduction Assy. (Detroit Engine)

Ref. No.	Quantity/Model CA 15	15 D	15 PD	Part Number	Description	Serial Number
-	1	1	1	815421	Kit, Complete Noise Reduction	Detroit Engine
1	1	1	1	815579	Adapter, Air Inlet	
2	1	1	1	815683	Clip, Mounting	
3	5	5	5	503073	Capscrew, HH	
4	14	14	14	604028	Lockwasher	
5	9	9	9	502033	Capscrew, HH	
6	9	9	9	604028	Washer, Flat	
7	1	1	1	571003	Hex Nut	
8	1	1	1	815412	Cover, Air Cleaner	
9	1	1	1	815405	Foam, Air Cleaner Cover	
10	1	1	1	815406	Foam, Air Cleaner Cover	
11	1	1	1	815467	Foam, Air Cleaner Cover	
12	4	4	4	815581	Spacer	
13	4	4	4	502024	Stud	
14	4	4	4	604027	Lockwasher	
15	4	4	4	572005	Hex Nut	
-	1	1	1	815373	Kit, Noise Reduction	
16	1	1	1	815374	Assy., LH Engine Cover	See Page 20
17	1	1	1	815375	Assy., RH Engine Cover	See Page 18
18	1	1	1	815380	Cover	
19	1	1	1	815400	Bracket	
20	4	4	4	550026	Capscrew, Rd. Hd.	
21	4	4	4	600028	Washer, Flat	
22	4	4	4	604019	Lockwasher	
23	1	1	1	815404	Foam, Reservoir Cover	
24	1	1	1	815408	Foam, RS Engine Hood	
25	1	1	1	815410	Foam, Engine Hood Top	
26	1	1	1	815409	Foam, LS Engine Hood	
27	6	6	6	502023	Capscrew, HH	
28	19	19	19	604028	Lockwasher	
29	15	15	15	571003	Hex Nut	
30	8	8	8	502036	Capscrew, HH	
31	4	4	4	502039	Capscrew, HH	
32	1	1	1	502018	Capscrew, HH	
33	1	1	1	801204	Channel, Rubber 28" Lg. or 71.12 cm	
34	A/R	A/R	A/R	499224	Compound, Adhesive (Tube)	
35	1	1	1	165012	Bellows, Rubber	
36	1	1	1	815411	Cover, Radiator Fill	
37	1	1	1	815407	Foam, Radiator Cover	
38	1	1	1	801201	Fastener, Pawl	
39	2	2	2	503009	Capscrew, HH	
40	2	2	2	604027	Lockwasher	

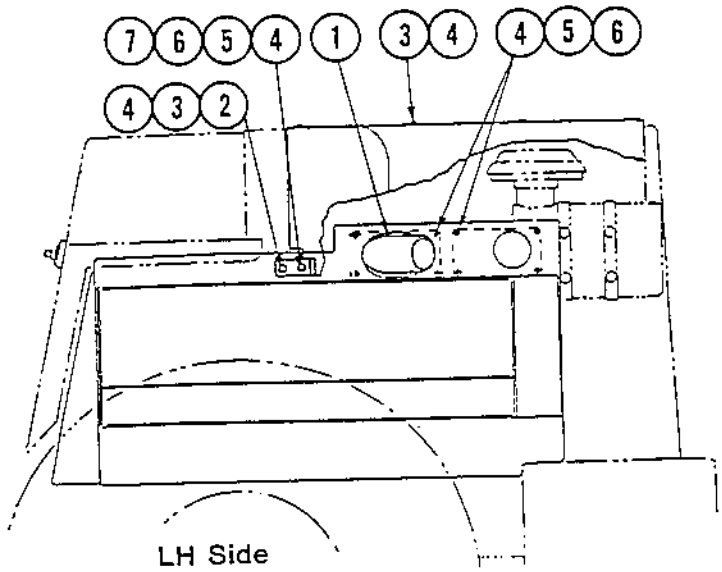
7 6 5 4 1 3 4 4 5 6
4 3 2
LH Side

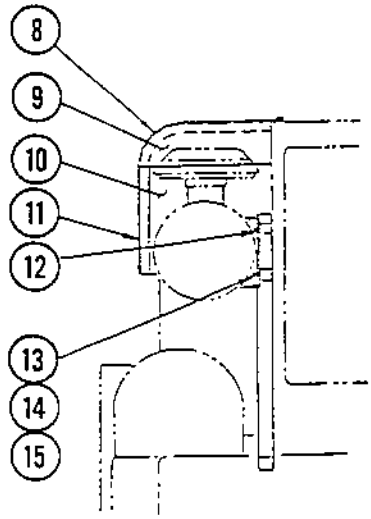
8
9
10
11
12
13
14
15
Rear of Machine

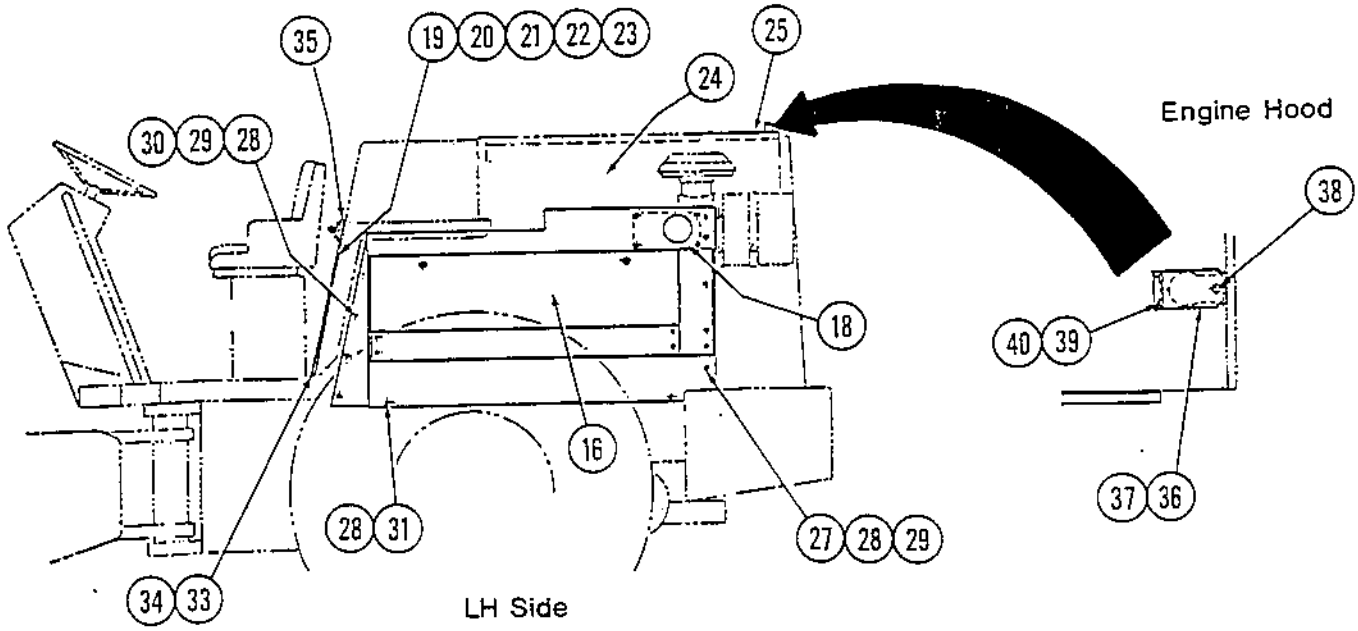
35
19 20 21 22 23
25
24
30 29 28
Engine Hood
38
18
40 39
16
28 31
27 28 29
37 36
34 33
LH Side

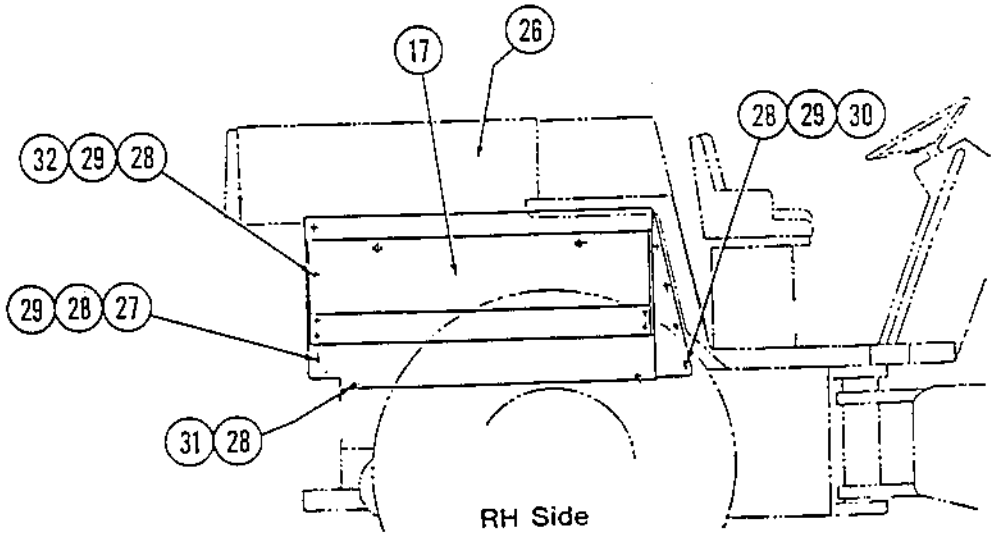
17
26
28 29 30
32 29 28
29 28 27
31 28
RH Side

PA-15-PL166

Page	Group	Illustration Number	Catalog Number	Illustration
18	10	PA-15-PL169	PA-15-PL01	Right Side Engine Cover Assy.

Ref. No.	Quantity/Model CA 15	CA 15 D	CA 15 PD		Part Number	Description	Serial Number
-	1	1	1		815375	Assy., R.S. Engine Cover	
1	1	1	1		815377	Cover, Side	
2	1	1	1		815379	Door, Side	
3	1	1	1		815388	Foam, Side Cover	
4	1	1	1		815389	Foam, Side Cover	
5	1	1	1		815390	Foam, Side Cover	
6	1	1	1		815391	Foam, Side Cover	
7	2	2	2		80123101	Strip, Rubber	
8	1	1	1		80123105	Strip, Rubber	
9	2	2	2		475046	Fastener, Pawl	
10	1	1	1		80120404	Channel, Rubber	
11	1	1	1		80123102	Strip, Rubber	
12	1	1	1		80123003	Strip, Rubber	
13	2	2	2		502023	Capscrew, HH	
14	4	4	4		604028	Lockwasher	
15	2	2	2		571003	Hex Nut	
16	1	1	1		815399	Strip, Rubber	
17	1	1	1		815398	Strip, Rubber	
18	2	2	2		502039	Capscrew, HH	
19	1	1	1		815397	Strip, Rubber	
20	1	1	1		815395	Strip, Rubber	
21	A/R	A/R	A/R		499224	Compound, Adhesive	

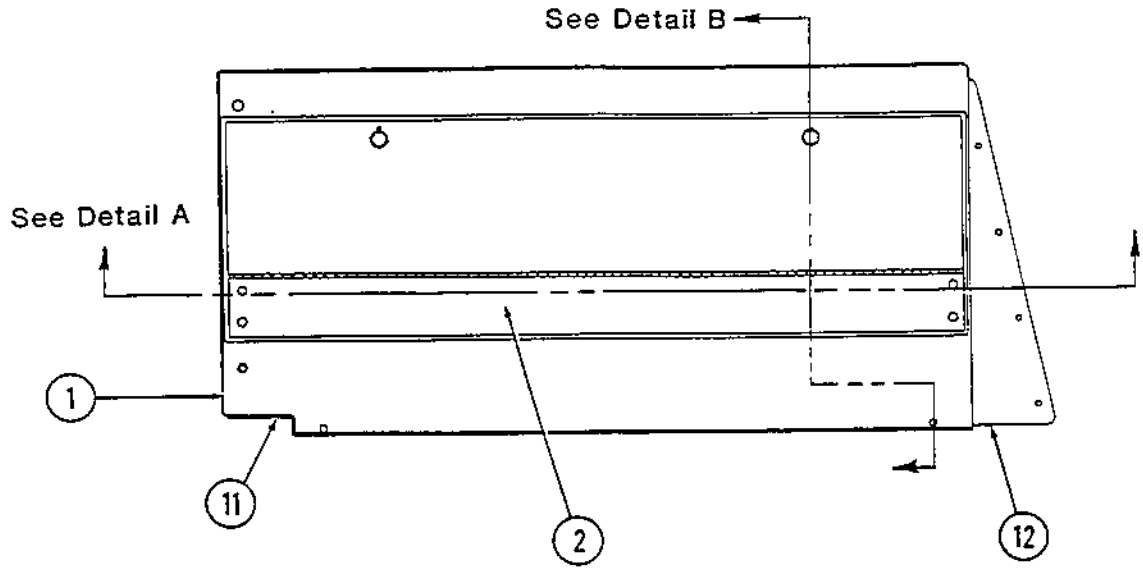

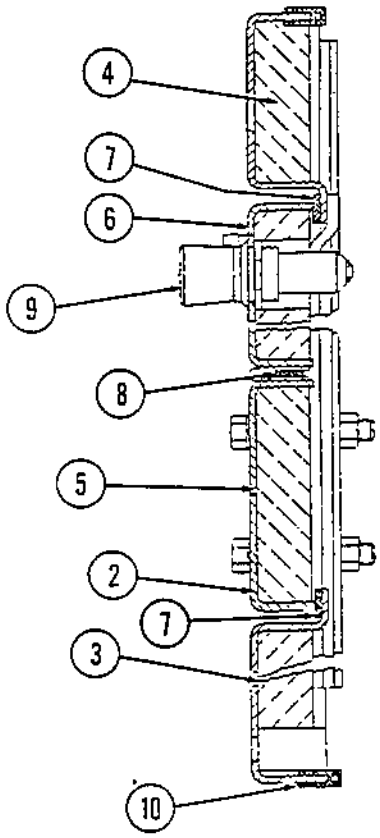

Detail B

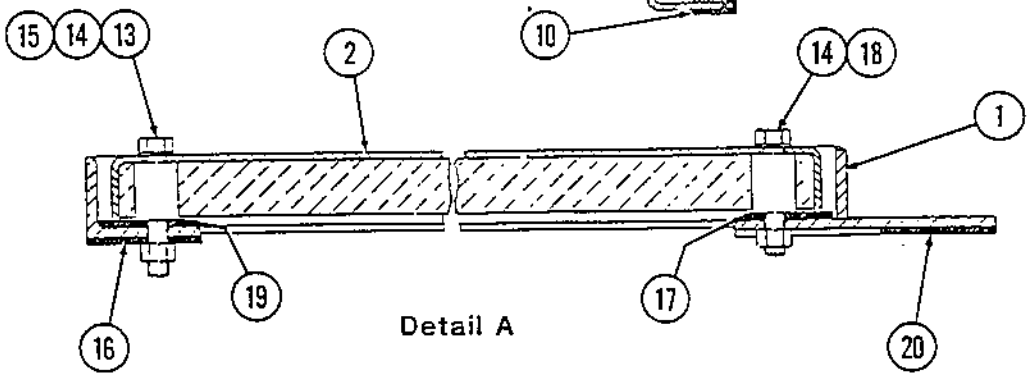

Detail A

Page	Group	Illustration Number	Catalog Number	Illustration
20	10	PA-15-PL168	PA-15-PL01	Left Side Engine Cover Assy.

Ref. No.	Quantity/Model CA 15	15 D	15 PD		Part Number	Description	Serial Number
-	1	1	1		815374	Assy., L.S. Engine Cover	
1	1	1	1		815376	Cover, Side	
2	1	1	1		815378	Door, Side	
3	1	1	1		815382	Cover, Fixed	
4	1	1	1		815383	Foam, Side Cover	
5	1	1	1		815384	Foam, Side Cover	
6	1	1	1		815385	Foam, Fixed Cover	
7	1	1	1		815386	Foam, Side Door	
8	1	1	1		815387	Foam, Side Door	
9	2	2	2		80123101	Strip, Rubber	
10	2	2	2		475046	Fastener, Pawl	
11	1	1	1		80123105	Strip, Rubber	
12	1	1	1		80120405	Channel, Rubber	
13	1	1	1		80123003	Strip, Rubber	
14	1	1	1		80123102	Strip, Rubber	
15	4	4	4		502283	Capscrew, HH	
16	4	4	4		604027	Lockwasher	
17	4	4	4		571002	Hex Nut	
18	1	1	1		815395	Strip, Rubber	
19	2	2	2		815398	Strip, Rubber	
20	4	4	4		502039	Capscrew, HH	
21	4	4	4		604028	Lockwasher	
22	4	4	4		571003	Hex Nut	
23	1	1	1		815396	Strip, Rubber	
24	1	1	1		815397	Strip, Rubber	
25	A/R	A/R	A/R		499224	Compound, Adhesive	

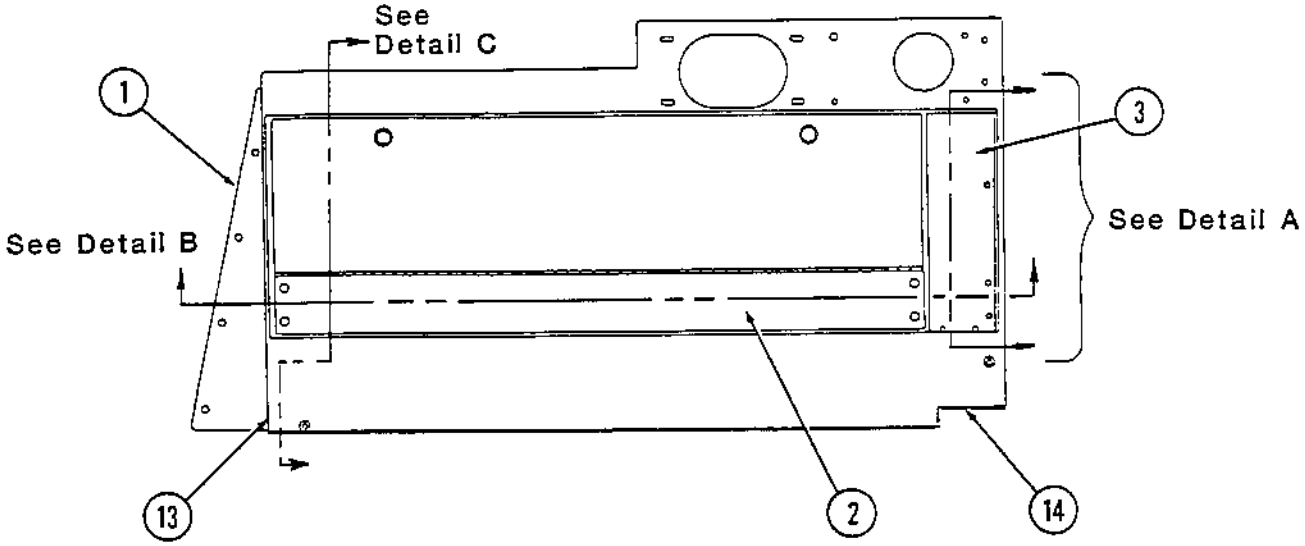

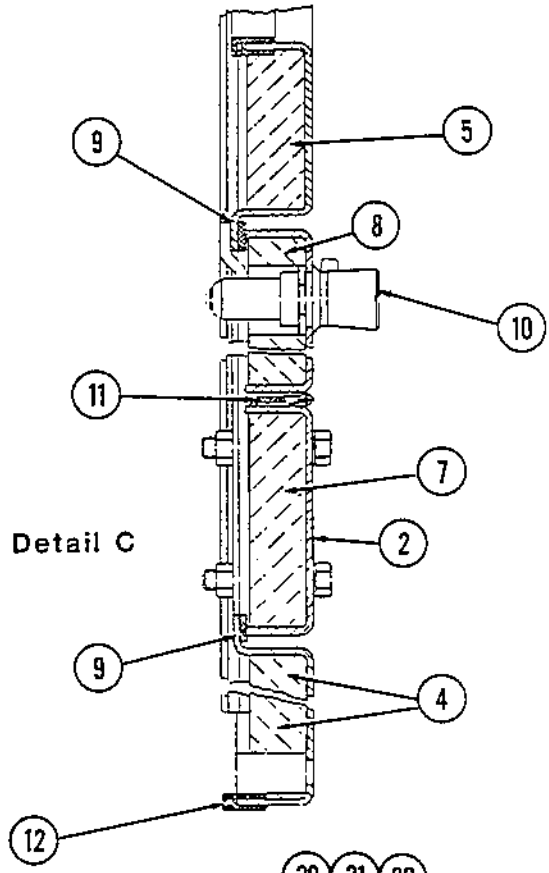

Detail C

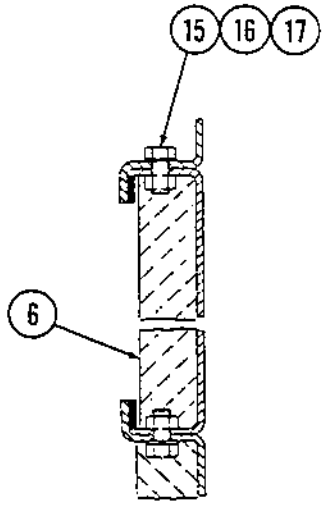

Detail A

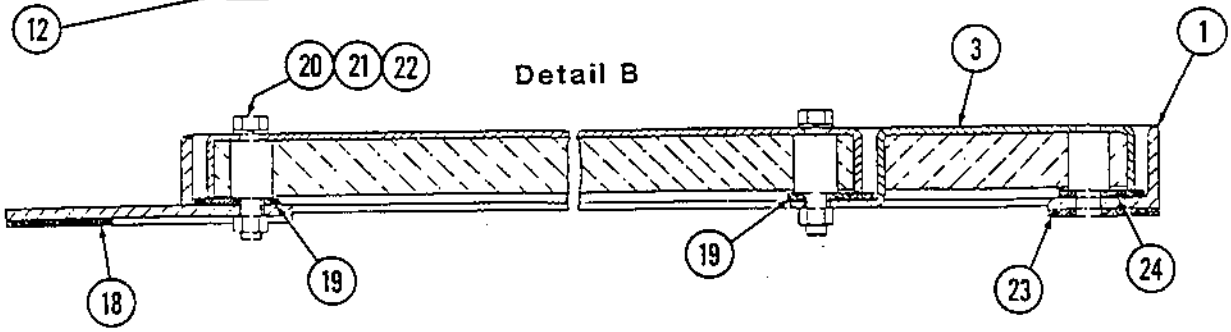

PA-15-PL168

DYNAPAC

NUMERICAL INDEX

Rev. 6/30/87

Page			Issue			Numerical Index					
Part No.	Group	Page	Part No.	Group	Page	Part No	Group	Page	Part No.	Group	Page
100048	7	10	167023	2	6	234062	5	48	334410	5	6
100053	7	6	167023	2	10	244043	3	20	334410	5	8
100061	7	6	167023	2	14	309100502	8	2	334424	5	6
100071	1	10	167032	1	14	309100502	8	4	334424	5	8
114036	2	6	205069	3	18	310018	1	10	334441	5	6
114065	2	4	205069	3	20	310022	1	10	334447	3	18
114065	2	10	205110	3	20	310022	1	12	334448	3	20
114065	2	14	211105	7	4	310025	1	2	334450	3	20
116013	2	4	219002	7	6	310035	1	14	334451	3	20
116013	2	10	219002	5	46	313041	10	6	334452	3	20
116013	2	14	219002	5	48	313076	3	12	334453	3	18
116041	2	2	232041	2	2	331087	3	22	334453	3	20
116041	2	6	232041	2	8	332065	5	26	334453	3	22
160105	2	2	232064	2	4	332065	5	28	335496	7	2
160105	2	6	232064	2	10	332065	5	38	335545	4	4
160105	2	12	232064	2	14	332073	5	4	335545	2	8
160105	2	14	232066	5	6	332073	5	6	335545	2	12

Page	Issue	Numerical Index
1	PA-15-PL01	

Part No.		Page	Part No.		Page	Part No.		Page	Part No.		Page
100048	7	18	162012	2	2	234277	5	48	332073	5	10
100061	7	6	162012	2	8	234316	5	48	332073	5	12
100071	1	10	162012	2	22	234317	10	4	332073	5	14
110053	7	6	162017	2	2	234320	5	48	332073	5	46
114036	2	2	162017	2	6	234322	5	48	332073	5	48
114036	2	20	162017	2	20	234327	5	48	332125	5	48
114065	2	4	165012	10	12	234331	5	48	332127	1	10
114065	2	6	165012	10	14	234333	5	48	332137	5	68
114065	2	10	165012	10	16	234335	5	48	333112	5	56
114065	2	14	166016	2	6	234336	5	48	334070	5	58
116013	2	4	166016	2	14	234358	5	48	334117	5	66
116013	2	10	167023	2	2	234371	5	66	334126	5	46
116013	2	14	167023	2	4	234395	5	6	334126	5	48
116041	2	2	167023	2	6	234395	5	8	334126	5	58
116041	2	6	167023	2	10	234395	5	10	334127	5	8
116041	2	20	167023	2	14	234571	3	18	334127	5	12
160105	2	2	167023	2	20	234574	3	18	334127	5	14
160105	2	6	167032	1	14	234624	5	12	334128	5	46
160105	2	12	205069	3	18	234624	5	14	334128	5	66
160105	2	14	205069	3	20	234662	5	68	334129	5	46
160105	2	20	205110	3	20	234667	5	6	334132	5	46
160107	2	2	211733	4	24	234667	5	10	334132	5	48
160107	2	4	219002	5	66	234855	5	6	334134	5	10
160107	2	6	219002	5	68	234855	5	10	334134	5	12
160107	2	10	219002	7	6	244043	3	20	334134	5	14
160107	2	14	232041	2	2	266759	2	20	334134	5	58
160107	2	20	232041	2	8	266800	2	20	334135	5	10
160144	5	6	232064	2	4	266804	2	20	334135	5	58
160144	5	8	232064	2	10	266984	1	16	334141	5	10
160144	5	10	232064	2	14	266986	1	16	334157	5	6
160144	5	12	232064	2	22	309100502	8	2	334157	5	8
160144	5	14	232066	5	14	309100502	8	4	334157	5	10
160146	5	10	232066	5	58	309100502	8	6	334157	5	66
160146	5	12	232066	5	68	310018	1	10	334158	5	6
160146	5	14	232070	2	8	310018	5	68	334158	5	10
160146	5	58	232070	2	22	310022	1	10	334197	5	66
160150	5	48	232122	5	46	310022	1	12	334197	5	68
160153	5	14	232124	5	48	310022	5	68	334205	5	58
160153	5	46	232206	5	12	310025	1	2	334207	5	48
160153	5	48	232206	5	14	310025	5	68	334207	10	4
160154	5	12	232247	2	2	310035	1	14	334234	5	78
160157	4	18	232247	2	6	313023	3	8	334287	5	66
160164	5	14	232247	2	20	313041	10	6	334313	10	2
160188	5	78	233088	10	4	313076	3	12	334359	5	48
160191	5	46	233194	5	36	331087	3	22	334410	5	12
160191	5	48	234131	5	8	332065	5	46	334410	5	14
160191	5	58	234131	5	12	332065	5	48	334424	5	12
160346	5	10	234131	5	14	332065	5	58	334424	5	14
160362	2	6	234233	5	78	332073	5	6	334441	5	14
160362	2	20	234276	3	22	332073	5	8	334441	5	44

Numerical Index | **Issue** PA-15-PL01 | **Page** 2

Part No.		Page	Part No.		Page	Part No.		Page	Part No.		Page
334447	3	18	335668	5	14	343899	2	6	416098	4	6
334448	3	20	335669	5	12	343899	2	20	416099	4	12
334450	3	20	335669	5	14	343901	2	6	416106	4	10
334451	3	20	335675	5	10	343902	2	6	416108	4	10
334452	3	20	335675	5	14	343905	2	2	416114	4	6
334453	3	18	335675	5	46	343905	2	6	416116	4	8
334453	3	20	336742	2	2	343906	2	6	416118	4	6
334453	3	22	336742	2	6	343907	2	6	416121	4	6
334463	5	78	336742	2	20	343907	2	20	416124	4	12
334504	5	10	337042	1	14	343909	2	8	416125	4	12
334523	5	78	337045	1	14	343909	2	22	416126	4	8
334604	5	6	337510	5	56	343915	2	2	416126	4	10
334604	5	10	337528	5	6	343955	2	20	416126	4	12
334617	5	46	337528	5	10	345853	1	14	416130	4	12
335496	7	2	337528	5	74	345871	1	14	416131	4	12
335545	2	8	337843	7	8	345873	1	14	416132	4	12
335545	2	12	338895	5	6	345874	1	14	416133	4	10
335545	2	22	338895	5	10	345875	1	14	416136	4	12
335545	3	30	340482	2	4	346230	5	68	416137	4	6
335545	4	4	343318	2	2	346498	5	78	416138	4	6
335554	5	8	343318	2	6	346498	6	10	416139	4	6
335554	5	76	343318	2	20	346498	6	12	416142	4	6
335557	4	4	343322	2	2	347854	4	4	416143	4	6
335557	5	32	343322	2	8	347854	4	6	416143	4	8
335560	5	58	343322	2	22	348500	4	18	416144	4	6
335560	5	64	343410	2	2	348530	5	16	416148	4	8
335560	5	66	343410	2	8	348531	4	18	416151	4	8
335560	5	68	343410	2	22	348531	5	28	416154	4	10
335560	5	72	343461	2	2	348618	4	18	416158	4	10
335563	7	4	343462	2	2	381506912	5	10	416160	4	6
335564	5	46	343462	2	8	401028	4	2	416163	4	6
335564	5	54	343462	2	22	401101	5	30	416165	4	8
335567	5	58	343561	2	2	415086	7	18	416167	4	10
335567	5	60	343561	2	8	415088	7	18	416168	4	10
335567	5	62	343561	2	8	415193	7	6	416171	4	12
335567	5	68	343561	2	22	416043	2	4	416175	4	8
335567	7	4	343597	1	14	416043	2	12	416177	4	6
335585	7	20	343892	2	6	416043	2	14	416178	4	6
335587	7	2	343892	2	20	416046	5	64	416179	4	8
335593	5	26	343894	2	2	416046	5	72	416182	4	6
335622	1	12	343894	2	8	416066	7	8	416187	4	6
335624	1	12	343894	2	22	416067	3	30	416188	4	6
335625	1	12	343895	2	2	416068	3	32	416188	4	10
335626	1	12	343895	2	6	416069	3	32	416189	4	10
335632	5	10	343896	2	6	416070	3	32	416192	4	8
335632	5	12	343896	2	20	416071	3	32	416195	4	10
335632	5	14	343897	2	2	416073	3	32	416198	3	22
335632	5	46	343897	2	6	416095	4	6	416222	4	12
335657	5	76	343897	2	20	416096	4	6	416223	4	6
335658	3	6	343898	2	6	416097	4	6	416223	4	10

Page	Issue	Numerical Index
3	PA-15-PL01	

Part No.		Page	Part No.		Page	Part No.		Page	Part No.		Page
416224	4	12	423330	2	16	457100	3	2	480403	5	20
416405	4	12	423331	2	16	457105	7	4	480405	5	20
423053	4	14	423332	2	16	457127	7	4	480406	5	20
423054	4	10	423333	2	16	457127	7	6	480407	5	36
423054	4	14	423334	2	16	465030	7	2	480408	5	20
423056	4	14	423335	2	16	470023	7	2	480408	5	36
423058	4	14	423336	2	16	475046	10	18	480410	5	20
423061	4	14	423337	2	18	475046	10	20	480412	5	20
423064	4	14	423338	2	16	480202	5	58	480413	5	20
423065	4	14	423339	2	16	480202	5	68	480499	5	52
423066	4	14	423340	2	18	480204	5	34	480563	5	52
423067	4	14	423342	2	18	480204	5	36	480616	5	42
423068	4	14	423343	2	18	480282	3	30	480616	5	44
423069	4	14	423344	2	18	480283	3	30	480637	5	36
423070	4	14	423345	2	18	480287	5	26	480919	3	30
423071	4	14	423346	2	18	480288	5	16	481061	5	42
423072	4	14	423347	2	18	480288	5	26	481065	5	44
423073	4	14	423348	2	18	480289	5	24	481067	5	42
423074	4	14	423351	2	18	480290	5	18	481067	5	44
423075	4	14	423352	2	16	480290	5	24	481069	5	42
423076	4	14	423470	2	16	480292	5	18	481069	5	44
423077	4	14	423471	2	16	480292	5	24	481073	5	42
423078	4	14	423472	2	16	480301	5	24	481073	5	44
423079	4	14	423473	2	16	480303	5	24	481077	5	30
423081	4	14	423553	4	14	480304	5	24	481078	5	28
423082	4	14	433562201	1	12	480305	5	16	481079	5	30
423083	4	14	433563701	6	6	480305	5	24	481081	5	28
423084	4	14	450073	2	12	480306	5	16	481082	5	28
423087	4	14	450073	2	14	480306	5	24	481083	5	28
423088	4	14	451194	7	22	480306	5	32	481084	5	28
423149	2	16	456028	3	6	480306	5	40	481085	5	28
423309	2	18	456028	7	6	480307	5	16	481086	5	28
423310	2	18	456029	7	6	480308	5	18	481087	5	28
423311	2	18	456039	3	2	480309	5	24	481088	5	28
423312	2	16	456039	3	4	480318	5	18	481089	5	28
423314	2	18	456039	7	6	480329	5	52	481095	5	28
423315	2	16	456057	7	22	480333	5	52	481098	5	30
423316	2	18	456058	7	22	480334	5	50	481099	5	28
423317	2	18	456060	3	6	480340	5	20	481100	5	28
423318	2	18	456069	3	6	480344	5	34	481101	5	30
423319	2	16	456069	7	4	480344	5	36	481105	5	30
423320	2	18	456069	7	6	480348	5	34	481111	5	56
423321	2	16	457054	7	6	480348	5	36	481112	5	56
423322	2	16	457072	7	14	480350	5	20	481113	5	56
423323	2	16	457073	7	12	480352	5	20	481114	5	56
423324	2	16	457083	3	6	480355	5	34	481115	5	56
423325	2	18	457086	7	4	480355	5	36	481116	5	56
423327	2	16	457086	7	10	480364	5	20	481119	5	56
423328	2	18	457087	7	8	480402	5	20	481120	5	56
423329	2	18	457098	7	12	480402	5	36	481121	5	56

Numerical Index

Issue PA-15-PL01

Page 4

Part No.		Page	Part No.		Page	Part No.		Page	Part No.		Page
481122	5	56	499224	10	12	605009	4	4	80110807	8	4
481123	5	56	499224	10	14	630003	3	4	80110807	8	6
481124	5	56	499224	10	16	630008	1	10	801115	5	68
481125	5	56	499224	10	18	630008	5	68	801115	5	70
481130	5	30	499224	10	20	630008	7	6	801144	2	8
481131	5	30	499225	3	10	630009	7	6	801144	2	12
481132	5	30	499227	3	16	630020	1	10	801144	2	22
481163	5	28	499228	3	12	630028	7	8	801144	5	40
481196	5	30	499228	3	14	630035	7	20	801148	3	2
481206	5	38	499228	3	16	630035	7	22	801149	3	12
481207	5	38	499240	3	10	630036	7	18	801150	2	8
481209	5	38	499297	10	2	630051	5	68	801150	2	12
481210	5	38	499298	10	2	630052	7	6	801150	2	16
481211	5	38	499299	10	2	630052	7	22	801150	2	22
481213	5	38	499317	3	8	630059	7	18	801153	5	50
481214	5	38	499349	5	74	635003	7	8	801153	5	68
481215	5	38	499352	5	74	635009	7	18	801164	3	14
481216	5	38	499354	5	74	635015	3	34	801164	3	16
481217	5	38	499355	5	74	635019	1	2	80116701	7	2
481218	5	38	499355	5	76	635020	5	64	801171	3	4
481219	5	38	499357	5	74	635020	5	72	801175	2	14
481220	5	38	499358	5	74	635022	1	10	801179	3	10
481221	5	38	499368	3	8	635022	5	64	801186	3	6
481223	5	38	499369	3	8	635022	5	72	801187	2	4
481224	5	38	499415	3	20	745015	3	12	801187	2	12
481225	5	38	499421	10	10	745053	3	14	801187	2	14
481226	5	38	499432	1	4	801038	3	6	801198	5	68
481227	5	38	499476	3	10	801051	3	30	801199	5	66
481228	5	34	499489	3	10	801051	5	24	801199	5	68
481236	5	50	502024	10	16	801053	5	50	801201	10	12
481272	5	60	510033	3	32	801054	2	2	801201	10	14
481273	5	60	532025	10	12	801054	2	4	801201	10	16
481399	5	50	532026	5	52	801054	2	8	801204	10	12
481611	5	16	550037	7	20	801054	2	12	801204	10	14
481616	5	18	550038	1	10	801054	2	14	801204	10	16
482058	5	6	550038	5	68	801054	2	22	80120404	10	18
482058	5	10	550047	5	68	801054	5	52	80120405	10	20
482101	5	78	550048	7	6	801055	7	18	801214	10	4
482167	5	58	550113	7	6	801058	3	24	801219	10	4
482182	5	6	570201	5	48	801058	3	26	801220	10	4
482182	5	10	571021	7	8	801058	3	28	801221	10	4
482313	5	78	586022	4	18	801060	7	18	801226	10	4
482318	5	6	600014	4	18	801063	5	44	801230	5	66
482318	5	10	605006	3	24	801101	2	14	80123003	10	18
482441	5	10	605006	3	26	801101	5	42	80123003	10	20
482455	5	78	605007	1	4	801101	5	44	80123101	10	18
488313	3	10	605007	3	2	801102	5	50	80123101	10	20
499133	3	8	605007	3	4	801105	3	4	80123102	10	18
499134	3	8	605007	3	6	801106	3	4	80123102	10	20
499223	7	4	605007	3	28	80110807	8	2	80123105	10	18

Page	Issue	Numerical Index
5	PA-15-PL01	

Part No.		Page	Part No.		Page	Part No.		Page	Part No.		Page
80123105	10	20	80158502	3	8	813322	3	18	813434	5	10
801244	5	12	801605	1	12	813322	3	20	813434	5	66
801246	3	14	801605	1	14	813323	3	18	813435	5	58
801247	3	4	801607	6	10	813326	10	4	813435	5	66
801250	1	10	801607	6	12	813330	7	2	813435	5	68
801251	1	10	801607	7	4	813332	7	20	813437	5	58
801257	10	14	801622	3	6	813333	7	20	813438	5	58
801258	10	14	801630	1	16	813334	7	20	813443	5	58
801266	3	18	801631	1	16	813335	7	20	813443	5	68
801266	3	20	801655	3	2	813336	7	4	813445	5	58
801266	3	22	801656	1	6	813337	7	4	813445	5	66
801272	3	18	801657	1	6	813339	7	20	813449	5	6
801272	3	20	801659	4	6	813342	7	4	813449	5	8
801272	3	22	801741	10	4	813343	7	4	813449	5	10
80133101	10	6	801742	10	4	813344	7	20	813451	5	6
801338	10	6	801792	3	2	813348	5	48	813451	5	8
801343	6	2	802153	6	2	813349	7	4	813451	5	10
801347	10	4	802153	6	8	813351	7	20	813462	3	2
801348	10	4	802153	6	10	813353	7	22	813462	3	4
801350	10	4	802153	6	12	813361	3	4	813462	3	6
801375	3	4	802153	7	4	813361	7	6	813462	6	1
801377	3	6	802311	5	10	813362	5	68	813462	6	12
801411	7	2	802311	5	38	813362	7	22	813467	3	18
801413	2	8	802661	5	78	813363	7	18	813467	3	20
801413	2	12	813075	3	18	813364	7	18	813467	3	22
801413	2	22	813075	3	20	813364	7	22	813473	1	12
801413	5	34	813306	3	12	813367	7	22	813475	2	14
801413	5	40	813306	3	14	813377	1	4	813478	2	2
80144312	6	4	813306	3	16	813391	3	18	813478	2	4
80144312	6	6	813310	7	20	813391	3	20	813478	2	12
80144612	10	6	813311	3	14	813391	3	22	813478	2	14
801458	8	2	813311	3	16	813411	6	10	813478	4	4
801458	8	4	813313	3	6	813411	6	12	813478	5	52
801458	8	6	813313	7	22	813411	7	4	813482	2	6
801459	5	46	813314	3	18	813412	6	10	813482	2	10
801459	7	18	813314	3	20	813412	6	12	813482	2	14
801467	3	8	813314	3	22	813412	7	4	813483	2	6
801468	3	8	813314	6	10	813412	10	4	813483	2	10
801468	10	12	813314	6	12	813413	10	4	813483	2	14
801470	3	24	813315	3	18	813414	5	68	813486	5	66
80148801	6	8	813315	3	20	813428	5	46	813486	5	68
80148801	6	12	813315	3	22	813428	5	48	813486	10	4
801500	5	66	813316	1	2	813429	5	6	813493	5	36
801503	5	8	813316	1	10	813429	5	8	813495	10	6
80153305	3	18	813316	1	12	813429	5	10	813497	7	20
80153305	3	20	813316	1	14	813429	5	12	813499	5	14
80153305	3	22	813320	3	18	813429	5	14	813499	5	4
80154602	6	10	813320	3	20	813429	5	46	813500	5	14
80154602	6	12	813320	3	22	813429	5	48	813500	5	58
80154602	7	4	813320	10	4	813434	5	6	813512	7	20

Numerical Index

Issue PA-15-PL01

Page 6

Part No.		Page	Part No.		Page	Part No.		Page	Part No.		Page
813528	10	6	813619	5	26	813692	5	16	813822	5	38
813538	5	64	813619	5	32	813692	5	20	813822	5	40
813538	5	72	813619	5	38	813692	5	24	813823	5	16
813539	5	64	813619	5	40	813694	2	8	813823	5	26
813539	5	72	813620	5	34	813694	2	22	813824	5	24
813540	5	64	813620	5	36	813694	4	2	813825	5	16
813540	5	72	813621	5	18	813694	4	8	813825	5	26
813541	5	64	813621	5	26	813712	7	6	813825	5	32
813541	5	72	813621	5	32	813714	5	54	813825	5	38
813543	5	64	813621	5	32	813716	3	18	813825	5	40
813543	5	72	813621	5	38	813721	5	12	813826	5	26
813544	5	64	813621	5	40	813730	5	66	813827	5	32
813544	5	72	813622	5	26	813738	5	6	813829	5	16
813545	5	64	813622	5	38	813738	5	8	813829	5	24
813545	5	72	813622	5	40	813738	5	10	813829	5	32
813546	5	64	813623	5	26	813772	5	64	813829	5	40
813546	5	72	813624	5	26	813772	5	72	813831	5	24
813547	5	64	813624	5	32	813773	5	64	813833	5	18
813547	5	72	813624	5	38	813773	5	72	813833	5	26
813548	5	64	813624	5	40	813784	5	46	813834	5	16
813548	5	72	813625	5	26	813784	5	48	813834	5	24
813549	5	64	813625	5	32	813791	3	10	813835	5	18
813549	5	72	813625	5	38	813792	3	10	813835	5	26
813550	5	64	813625	5	40	813797	5	14	813836	5	34
813550	5	72	813626	5	26	813797	5	44	813836	5	36
813551	5	64	813626	5	32	813813	5	16	813837	5	18
813551	5	72	813626	5	38	813813	5	24	813837	5	26
813599	3	30	813626	5	40	813813	5	34	813837	5	30
813611	5	34	813627	5	34	813813	5	40	813838	5	16
813611	5	36	813627	5	36	813814	5	26	813838	5	24
813612	5	26	813628	5	26	813815	5	16	813838	5	30
813612	5	32	813630	5	16	813815	5	26	813838	5	34
813612	5	38	813630	5	24	813815	5	32	813838	5	38
813612	5	40	813633	5	24	813815	5	38	813838	5	40
813613	5	22	813634	5	18	813815	5	40	813839	5	16
813613	5	26	813634	5	26	813816	5	18	813839	5	24
813614	5	24	813642	5	50	813816	5	26	813839	5	30
813615	5	34	813642	5	52	813817	5	24	813839	5	34
813615	5	36	813646	5	50	813818	5	24	813839	5	38
813616	5	26	813646	5	52	813819	5	26	813839	5	40
813616	5	32	813647	3	30	813820	5	22	813840	5	18
813616	5	38	813656	5	50	813820	5	26	813844	5	16
813616	5	40	813656	5	52	813821	5	16	813844	5	18
813617	5	26	813664	5	50	813821	5	24	813844	5	20
813617	5	36	813668	5	50	813821	5	32	813844	5	22
813618	5	20	813668	5	52	813821	5	38	813844	5	24
813618	5	32	813673	5	50	813821	5	40	813844	5	26
813618	5	36	813673	5	52	813822	5	16	813845	5	18
813618	5	38	813677	5	50	813822	5	26	813845	5	26
813618	5	40	813677	5	52	813822	5	32	813845	5	34

Page	Issue	Numerical Index
7	PA-15-PL01	

Part No.		Page	Part No.		Page	Part No.		Page	Part No.		Page
813845	5	36	813866	5	16	813920	5	50	814149	5	60
813846	5	16	813866	5	24	813920	5	52	814150	5	60
813846	5	18	813866	5	32	813921	5	50	814150	5	62
813846	5	24	813866	5	40	813921	5	52	814151	5	60
813846	5	26	813867	5	16	813922	5	50	814155	5	60
813846	5	28	813869	5	24	813939	4	8	814155	5	62
813846	5	30	813870	5	16	813961	4	8	814156	5	60
813846	5	34	813870	5	24	813966	4	8	814159	5	60
813846	5	38	813870	5	32	813967	4	8	814160	5	60
813846	5	40	813870	5	40	813984	4	6	814165	5	60
813847	5	18	813871	5	24	813997	4	8	814167	5	60
813847	5	26	813872	5	16	813998	4	8	814170	5	42
813849	5	24	813873	5	16	814000	4	8	814170	5	44
813850	5	18	813873	5	32	814002	4	10	814181	5	44
813850	5	24	813873	5	40	814025	4	12	814182	5	42
813851	5	16	813874	5	16	814032	4	10	814182	5	44
813851	5	24	813874	5	24	814032	4	12	814184	5	42
813851	5	32	813874	5	32	814033	4	8	814184	5	44
813851	5	38	813874	5	40	814033	4	14	814185	5	42
813851	5	40	813875	5	16	814034	4	8	814185	5	44
813853	5	24	813875	5	24	814036	4	6	814186	5	44
813853	5	32	813875	5	32	814037	4	8	814188	5	42
813854	5	16	813875	5	40	814038	4	12	814188	5	44
813854	5	24	813876	5	32	814041	4	6	814189	5	42
813854	5	32	813876	5	40	814041	4	14	814189	5	44
813854	5	40	813878	5	16	814049	1	2	814195	5	42
813855	5	16	813878	5	24	814075	10	6	814195	5	44
813855	5	24	813878	5	32	814077	5	54	814196	5	42
813855	5	32	813878	5	40	814082	5	54	814196	5	44
813855	5	40	813880	5	24	814083	5	54	814202	5	42
813856	5	16	813880	5	34	814085	5	54	814202	5	44
813856	5	24	813880	5	40	814086	5	54	814206	5	44
813856	5	32	813885	5	16	814089	5	54	814207	5	44
813856	5	40	813885	5	26	814090	5	54	814208	5	42
813857	5	18	813886	5	24	814091	5	54	814208	5	44
813857	5	26	813887	5	18	814092	5	54	814209	5	42
813858	5	18	813888	5	18	814093	5	54	814209	5	44
813858	5	26	813888	5	26	814094	5	54	814210	5	42
813859	5	24	813889	5	26	814095	5	54	814210	5	44
813860	5	18	813890	5	22	814126	5	54	814212	5	42
813860	5	24	813890	5	26	814127	5	54	814212	5	44
813861	5	18	813892	5	50	814128	5	54	814213	5	42
813861	5	26	813904	5	50	814132	5	54	814213	5	44
813862	5	24	813907	5	50	814133	5	54	814220	1	2
813862	5	34	813908	5	50	814143	5	60	814250	5	6
813862	5	40	813915	5	50	814143	5	62	814250	5	8
813863	5	16	813915	5	52	814145	5	60	814250	5	10
813863	5	26	813917	5	50	814146	5	60	814250	5	12
813865	5	32	813918	5	52	814146	5	62	814250	5	14
813865	5	40	813919	5	50	814148	5	60	814266	6	2

Numerical Index

Issue PA-15-PL01

Page 8

Part No.		Page	Part No.		Page	Part No.		Page	Part No.		Page
815003	6	6	815069	3	26	81508936	5	14	815249	3	26
815004	6	6	815069	3	28	81508936	5	44	81525205	5	66
815005	1	2	815072	4	2	81508937	5	14	81525206	5	66
815010	2	4	815074	4	4	81508937	5	44	81525207	5	66
815011	2	4	815080	7	6	81508940	5	12	81525209	5	66
815012	2	4	815082	7	6	81508941	5	12	81525209	5	68
815014	2	4	815083	7	6	81509001	6	6	81525210	5	66
815014	2	10	815085	3	28	81509004	6	2	81525210	5	68
815014	2	14	815088	7	8	81509004	6	4	81525211	5	66
815015	2	4	81508902	5	58	81509004	6	10	81525212	5	66
815016	2	4	81508903	5	58	81509005	6	2	81525213	5	68
815016	2	10	81508904	5	58	81509005	6	4	81525214	5	68
815016	2	14	81508905	5	58	81509005	6	8	81525215	5	68
815018	2	4	81508906	5	58	81509005	6	10	815256	1	2
815018	2	10	81508907	5	8	81509005	6	12	815258	1	2
815018	2	14	81508907	5	12	81509006	6	8	815264	5	66
815019	2	4	81508907	5	14	81509006	6	12	815265	1	10
815024	2	4	81508908	5	8	815091	7	18	815266	2	8
815025	1	2	81508908	5	12	815106	1	8	815266	2	12
815034	7	2	81508908	5	14	815107	1	8	815267	5	66
815034	7	4	81508909	5	8	815108	1	8	815276	1	4
815035	3	6	81508909	5	12	815130	2	10	815277	1	4
815036	7	8	81508909	5	14	815130	2	14	815279	3	32
815037	1	4	81508910	5	8	815132	2	14	815282	10	8
815038	1	4	81508910	5	12	815146	5	48	815283	3	14
815039	1	4	81508910	5	14	815147	5	48	815289	7	20
815039	7	2	81508911	5	8	81516504	10	4	815291	7	20
815043	1	4	81508911	5	12	81516505	10	4	815292	7	20
815043	3	6	81508911	5	14	81517406	10	6	815294	1	2
815044	1	4	81508912	5	46	81517407	10	6	815301	7	2
815044	3	6	81508913	5	46	81517410	6	8	815302	7	2
815045	1	4	81508914	5	46	81517410	6	12	815303	3	26
815046	1	4	81508915	5	46	81517416	10	4	815308	6	4
815048	3	32	81508916	5	46	815190	1	10	815309	6	4
815049	7	4	81508916	5	48	815191	1	10	815310	3	4
815051	1	4	81508917	5	46	815192	1	10	815311	3	4
815051	5	66	81508918	5	46	815193	1	10	815314	1	4
815052	3	18	81508918	5	48	815194	1	10	815314	3	4
815052	3	22	81508919	5	46	815209	7	4	815315	1	4
815053	3	22	81508919	5	48	815215	1	2	815315	3	4
815054	7	2	81508919	5	58	815216	2	14	815316	7	6
815059	7	2	81508925	5	48	815220	1	2	815317	7	20
815061	7	18	81508926	5	48	815224	2	10	815318	7	20
815062	7	18	81508927	5	48	815224	2	14	815319	7	22
815063	7	18	81508928	5	48	815225	10	6	815320	7	22
815064	7	18	81508930	5	48	815227	7	18	815321	7	22
8150655	7	8	81508932	5	14	815244	10	2	815322	7	22
815066	7	6	81508933	5	12	815245	10	2	815323	7	6
815068	7	8	81508933	5	14	815246	10	2	815325	7	6
815069	3	24	81508934	5	14	815249	3	24	815326	3	34

Page	Issue	Numerical Index
9	PA-15-PL01	

Part No.		Page	Part No.		Page	Part No.		Page	Part No.		Page
815328	6	8	815400	10	14	815461	3	32	815808	6	2
815329	7	22	815400	10	16	815462	10	8	815858	3	12
815335	3	14	815404	10	12	815463	8	2	815858	3	14
815336	3	32	815404	10	14	815465	8	2	815858	3	16
815338	1	4	815404	10	16	815466	8	2	815859	3	16
815349	5	66	815405	10	12	815467	10	12	815860	6	2
815350	5	66	815405	10	16	815467	10	16	815860	6	8
815352	10	2	815406	10	12	815470	1	6	815860	6	10
815367	5	66	815406	10	16	815490	1	2	815860	6	12
815367	5	68	815407	10	12	815494	1	2	815861	6	2
815369	1	10	815407	10	14	815495	1	2	815861	6	4
815370	1	10	815407	10	16	815496	2	10	815861	6	6
815371	1	10	815408	10	12	815498	2	10	815861	6	8
815372	1	10	815408	10	14	815506	3	6	815861	6	10
815373	10	12	815408	10	16	815507	3	10	815861	6	12
815373	10	14	815409	10	12	815508	10	8	815862	6	4
815373	10	16	815409	10	14	815511	4	16	815862	6	6
815374	10	12	815409	10	16	815513	7	8	815862	6	8
815374	10	14	815410	10	12	815523	4	16	815862	6	10
815374	10	16	815410	10	14	815524	4	16	815862	6	12
815374	10	20	815410	10	16	815579	10	16	815863	6	2
815375	10	14	815411	10	12	815580	10	12	815863	6	4
815375	10	16	815411	10	14	815581	10	12	815863	6	6
815375	10	18	815411	10	16	815581	10	16	815863	6	8
815376	10	20	815412	10	12	815582	10	12	815863	6	10
815377	10	18	815412	10	16	815583	10	2	815863	6	12
815378	10	20	815413	5	68	815584	10	2	815864	6	2
815379	10	18	815416	10	14	815595	1	2	815864	6	8
815380	10	12	815417	10	14	815597	3	18	815864	6	10
815380	10	14	815418	10	14	815597	3	20	815864	6	12
815380	10	16	815419	10	14	815597	3	22	815865	6	2
815382	10	20	815420	10	14	815631	3	16	815865	6	4
815383	10	20	815421	10	16	815649	5	6	815865	6	6
815384	10	20	815430	3	26	815649	5	10	815865	6	8
815385	10	20	815431	6	2	815659	4	16	815865	6	10
815386	10	20	815434	6	2	815679	1	6	815865	6	12
815387	10	20	815435	1	2	815680	1	6	815866	6	2
815388	10	16	815439	1	4	815681	1	6	815866	6	4
815389	10	18	815439	3	2	815681	1	16	815866	6	6
815390	10	18	815440	1	4	815683	10	16	815866	6	8
815391	10	18	815440	3	2	815696	6	10	815866	6	10
815395	10	18	815441	3	12	815696	6	12	815866	6	12
815395	10	20	815442	3	2	815698	1	2	815867	6	2
815396	10	20	815442	10	14	815765	5	56	815867	6	4
815397	10	18	815443	3	32	815779	2	10	815867	6	6
815397	10	20	815444	3	12	815782	2	4	815867	6	8
815398	10	18	815446	2	10	815802	8	4	815867	6	10
815398	10	20	815453	1	4	815803	8	4	815867	6	12
815399	10	18	815454	7	2	815805	2	10	815868	6	2
815400	10	12	815456	3	24	815807	6	2	815868	6	4

Numerical Index	Issue	Page
	PA-15-PL01	10

Part No.		Page	Part No.		Page	Part No.		Page	Part No.		Page
815868	6	6	825909	1	12	843156	6	10	891787	7	10
815868	6	8	825911	5	12	843156	6	12	891787	7	12
815868	6	10	825984	1	12	850145	3	18	891787	7	14
815868	6	12	825990	5	66	850145	3	20	891788	7	10
815869	6	2	825990	5	68	850145	3	22	891788	7	12
815869	6	4	826021	5	68	850179	1	12	891788	7	14
815869	6	6	826022	5	68	85021001	7	22	891789	7	12
815869	6	8	826023	5	68	850216	5	8	891789	7	14
815869	6	10	826025	1	12	850216	5	12	891790	7	12
815869	6	12	826026	1	12	850216	5	14	891790	7	14
815870	6	2	826119	10	8	85021601	5	8	891790	7	16
815870	6	4	826171	10	4	85021601	5	12	891791	7	12
815870	6	6	826262	3	18	850251	1	12	891791	7	14
815870	6	8	826262	3	20	85033304	10	6	891791	7	16
815870	6	10	826262	3	22	85033305	10	6	891797	7	16
815870	6	12	826450	1	12	850351	5	68	891799	7	14
815871	1	2	826451	1	12	860108	6	6	891800	7	12
815895	1	2	826788	8	2	891019	5	52	891800	7	14
815913	8	6	826788	8	4	891066	4	6	891801	7	12
815921	6	10	826788	8	6	891068	4	8	891801	7	14
815922	6	12	830200	6	10	891141	3	2	891801	7	16
815931	5	56	842005	2	14	891141	3	4	891802	7	10
815933	3	6	842032	2	14	891141	3	6	891803	7	10
815950	3	2	842033	2	10	891141	7	6	891803	7	12
815951	3	2	842033	2	14	891196	7	10	891803	7	14
815962	3	6	842034	2	12	891196	7	12	891804	7	10
815970	3	12	842034	2	14	891196	7	14	891804	7	12
815998	6	10	842035	2	14	891198	7	10	891804	7	14
815998	6	12	842040	2	14	891198	7	12	891805	7	10
815999	6	10	842101	7	22	891198	7	14	891805	7	12
815999	6	12	842114	2	14	891199	7	12	891805	7	14
817057	7	10	842160	6	10	891440	3	12	891806	7	10
821263	3	2	842160	6	12	891440	3	14	891806	7	12
821397	6	10	842160	7	4	891440	3	16	891806	7	14
821397	6	12	84218202	5	48	891495	5	52	891806	7	16
821397	7	4	84218204	5	48	891510	3	8	891811	7	10
821477	3	18	842207	2	14	891518	3	8	891813	7	10
821497	3	2	842221	2	12	891521	3	8	891814	7	10
825176	1	12	842249	2	12	891523	3	10	891814	7	12
82523536	5	66	842284	2	12	891528	3	8	891814	7	14
82523536	5	68	842285	2	8	891530	3	10	891814	7	16
82523901	6	8	842285	2	22	891580	7	12	891815	7	12
82523901	6	12	842287	2	12	891580	7	14	891815	7	14
825265	5	6	842288	1	2	891583	7	16	891815	7	16
825265	5	8	842291	1	2	891586	7	10	891816	7	10
825265	5	10	842292	1	2	891586	7	12	891827	5	64
825338	5	54	842293	1	2	891586	7	16	891827	5	72
825675	8	2	842294	1	2	891648	5	66	891848	2	14
825675	8	4	843156	3	2	891702	4	14	891848	5	42
825675	8	6	843156	3	6	891745	5	54	891848	5	44

Page	Issue	Numerical Index
11	PA-15-PL01	

Part No.		Page	Part No.		Page	Part No.		Page	Part No.		Page
891874	5	66	893269	5	66	910707	5	18	911705	4	12
891874	5	68	893316	4	2	910787	4	12	911706	4	12
892102	5	60	893382	5	42	910787	4	14	911707	4	14
892102	5	62	893383	5	42	910995	1	14	911708	4	12
892113	5	60	893394	7	8	911060	5	16	911709	4	12
892113	5	62	893446	2	16	911060	5	40	911710	4	14
892119	5	60	893451	2	16	911061	5	40	911713	5	50
892160	5	60	893452	2	16	911068	5	36	911714	5	50
892271	5	60	893463	5	42	911069	5	62	911715	5	50
892271	5	62	893463	5	44	911102	3	34	912090	5	30
892276	5	6	893464	5	44	911132	5	42	912095	5	28
892276	5	10	893466	5	42	911132	5	44	912095	5	30
892351	3	14	893466	5	44	911133	5	42	920958	3	32
892355	5	42	893468	5	42	911133	5	44	920961	5	38
892355	5	44	893468	5	44	911134	5	42	921013	10	2
892475	2	18	893469	5	42	911134	5	44	921097	3	24
892596	10	6	893469	5	44	911192	5	70	921097	3	26
892651	5	42	893470	5	44	911293	3	34	921097	3	28
892656	5	42	893471	5	42	911398	4	10	921098	3	28
892656	5	44	893472	5	44	911399	4	10	921100	5	48
892657	5	42	893473	5	42	911430	5	22	921100	5	58
892657	5	44	893487	7	16	911431	5	22	921102	5	46
892658	5	42	893494	4	6	911454	5	22	921102	5	48
892660	5	42	893517	7	12	911468	5	22	921108	5	46
892714	3	34	893524	3	10	911566	5	70	921121	3	10
892715	3	34	893647	5	42	911567	5	70	921129	3	18
892716	5	60	893647	5	44	911568	5	70	921136	3	24
892717	3	34	894013	5	62	911569	5	70	921136	3	26
892719	3	34	894021	7	16	911580	5	42	921370	5	32
892724	3	34	900187	5	30	911581	5	54	921370	5	40
892828	7	10	900188	5	30	911582	5	62	921374	5	24
892834	5	60	900189	5	30	911583	5	62	921387	4	12
892835	5	60	900190	5	28	911584	5	62	921563	5	52
892882	5	44	900244	4	16	911585	5	62	922032	5	22
892896	2	18	900410	4	16	911586	5	62	922299	5	30
892979	5	38	900457	5	6	911587	5	62	922303	5	30
892979	5	40	900457	5	10	911588	5	62	922305	5	18
893008	5	38	905026	6	6	911589	5	62	922305	6	10
893010	5	34	909072	7	2	911590	5	62	922305	6	12
893010	5	40	910162	5	6	911591	5	62	922360	5	30
893011	5	34	910162	5	10	911592	5	62	922552	2	6
893013	5	24	910218	4	14	911593	5	62	922552	2	20
893013	5	32	910219	4	10	911594	5	62	922999	4	8
893013	5	40	910221	4	10	911608	5	62	923075	5	20
893068	5	24	910222	4	10	911699	4	12	923126	1	12
893069	5	26	910224	4	10	911700	4	10	923196	5	6
893080	5	22	910229	4	10	911701	4	12	923196	5	10
893080	5	26	910238	4	12	911702	4	10	923297	3	18
893228	3	10	910245	5	18	911703	4	14	923297	3	20
893269	3	34	910706	5	22	911704	4	14	923297	3	22

Numerical Index	Issue	Page
	PA-15-PL01	12

Part No.		Page	Part No.		Page	Part No.		Page	Part No.		Page
923803	4	8	928151	2	16	929670	4	22	950059	7	4
923804	4	8	928176	5	38	929671	4	22	960106	6	6
923805	4	8	928911	5	78	929672	4	22	960108	6	4
924579	5	30	929217	4	18	929674	4	22	960108	6	6
924603	5	30	929225	5	78	929676	4	22	960119	6	4
924610	5	30	929614	4	24	929678	4	20	975037	6	10
924611	5	30	929616	4	24	929680	4	20	975037	6	12
924612	5	30	929617	4	24	929685	4	20	975037	7	2
924614	5	30	929618	4	24	929687	4	20	975048	5	56
924615	5	28	929619	4	24	929688	4	20	975049	5	56
924616	5	30	929621	4	24	929689	4	20	976025	3	2
924616	6	10	929622	4	24	929690	4	20	976025	6	2
924616	6	12	929623	4	24	929692	4	20	976025	6	10
924620	4	24	929624	4	24	929693	4	20	985012	6	10
926258	5	28	929625	4	24	929694	4	20	985012	6	12
926266	5	28	929626	4	24	929697	4	20	985012	7	4
926282	5	28	929627	4	24	929698	4	20	985060	6	10
926671	5	30	929628	4	24	929699	4	20	985060	6	12
926729	4	22	929629	4	24	929700	4	20	985060	7	4
926729	4	24	929630	4	24	929701	4	20	985061	6	10
926732	4	22	929631	4	24	929703	4	20	985061	6	12
926732	4	24	929632	4	24	929705	4	20	985061	7	4
926736	4	24	929633	4	24	929706	4	20	985086	6	10
926783	4	16	929634	4	24	929707	4	20	985086	6	12
926783	4	22	929635	4	24	929708	4	20	985086	7	4
926844	4	20	929636	4	24	929709	4	18	989014	7	4
926845	4	20	929638	4	24	929710	4	18	989016	7	4
926846	4	20	929639	4	24	929711	4	18	989019	6	10
926847	4	20	929640	4	24	929712	4	18	989019	6	12
926855	4	20	929641	4	24	929713	4	18	989019	7	4
926901	5	20	929642	4	24	929847	10	8	989037	7	4
926903	8	6	929643	4	24	929892	4	24	989055	3	2
926921	5	30	929644	4	24	929893	4	24	989055	3	4
926922	5	30	929645	4	24	929894	4	22	989077	6	10
926923	5	30	929646	4	24	929895	4	22	989077	6	12
926924	5	30	929648	4	18	929896	4	20	989077	7	4
927130	5	16	929649	4	22	929897	4	20	989078	3	2
927131	5	16	929651	4	22	929898	4	20	989078	3	4
927132	5	16	929652	4	22	930061	7	18	989078	5	6
927136	5	18	929653	4	22	930061	7	22	989078	5	8
927152	4	14	929654	4	22	930099	6	10	989078	5	10
927153	4	14	929655	4	22	930099	6	12	989078	5	12
927154	4	14	929660	4	22	930099	7	8	989078	5	14
927505	5	16	929661	4	22	930102	7	12	989078	6	10
927507	5	18	929662	4	22	930151	6	10	989078	6	12
927507	5	22	929663	4	22	930151	6	12	989079	6	10
927508	5	18	929666	4	22	930151	7	4	989079	6	12
927509	5	18	929667	4	22	930200	6	10	989079	7	4
927510	5	18	929668	4	22	930200	6	12	989130	6	2
927511	5	18	929669	4	22	930200	7	4	989130	6	8

Page	Issue	Numerical Index
13	PA-15-PL01	

Part No.		Page	Part No.	Page	Part No.	Page	Part No.	Page
989131	3	2						
989131	3	6						
999023	1	4						
999023	6	10						
999023	6	12						
999023	7	2						
999024	1	4						
999024	7	2						
999025	1	4						