RUTHZIL TRATOR COMERCIAL DE PEÇAS LTDA 11 97083-6812 ROLANDO

DYNAPAC CA150D

SPARE PARTS CATALOGUE

SCA150D-1EN1

DEZEMBRO 2001

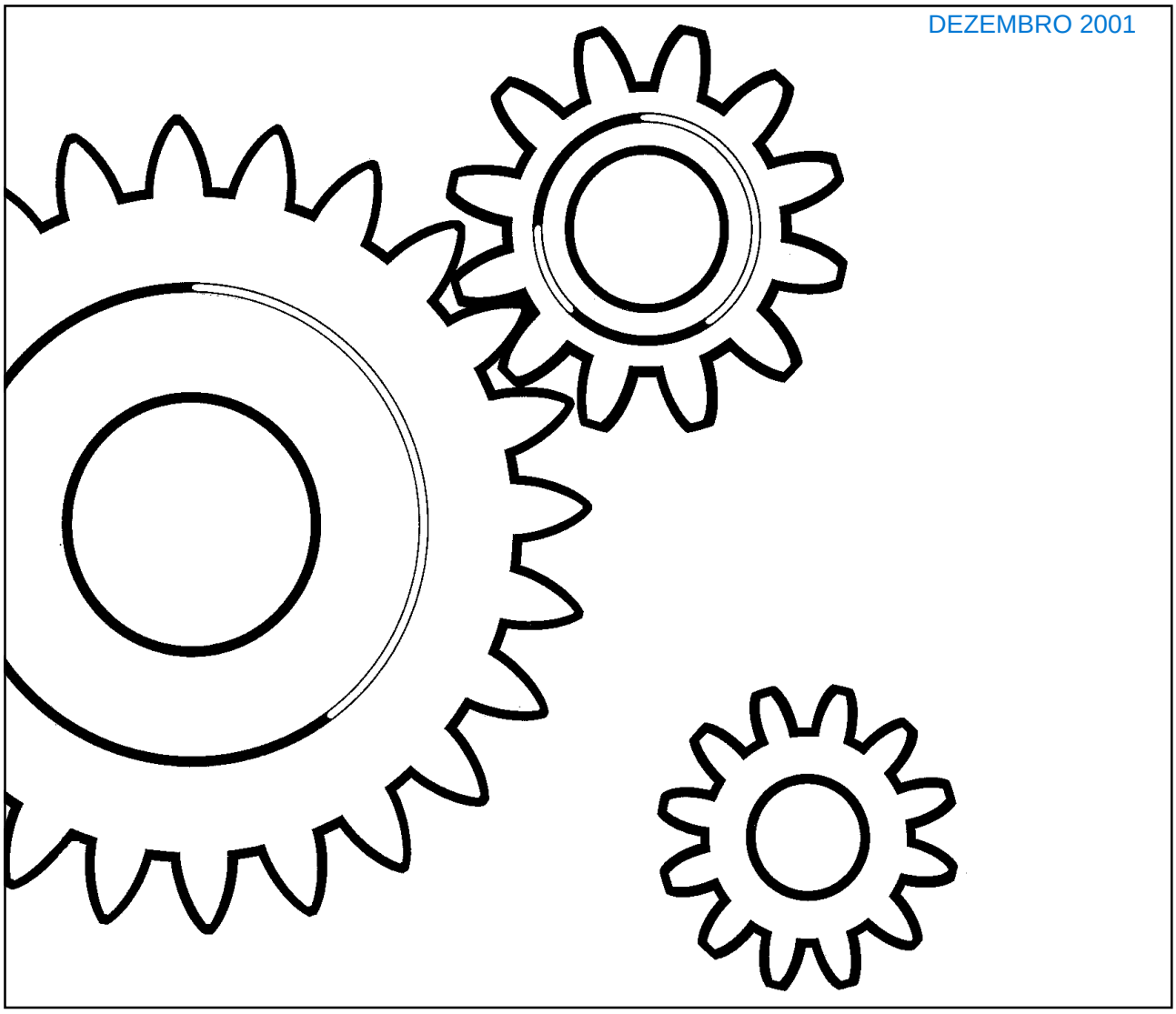

DYNAPAC
Metso Dynapac AB
Box 504, SE-371 23 Karlskrona, Sweden
Phone: +46 455 30 60 00, Fax: +46 455 30 60 30
www.dynapac.com

DYNAPAC

Vibratory Roller
CA 150 D

Spare Parts Catalogue

SCA150D-1EN1

Valid from roller serial number:

**73220152*-*

Diesel engines:

CUMMINS 4BT 3.3

Published catalogue issues valid for these rollers:

Catalogue	*Issue date*	*Valid for serial numbers*
SCA150D-1EN1	*2001-12*	*See above*



We reserve the right to change specifications without notice.
Printed in Sweden.

DYNAPAC

RESERVDELSBESTÄLLNING

Följande uppgifter ska lämnas vid beställning av reservdelar för att undvika leveransfel:

1. Maskintyp.
2. Vältens serienummer.
3. Antal av önskad reservdel.
4. Reserdelens artikelnummer.
5. Reservdelens benämning.
6. Måttuppgifter vid beställning av metervara.

ORDERING SPARE PARTS

To avoid errors in delivery, please give the following information when ordering spare parts:

1. Type of machine.
2. Roller serial number.
3. Quantity required.
4. Part number.
5. Parts denomination.
6. Dimensions when ordering per length.

ERSATZTEILBESTELLUNG

Zur Vermeidung von Fehllieferungen sind bei der Bestellung von Ersatzteilen folgende Angaben zu machen:

1. Maschinentyp.
2. Herstellungsnummer.
3. Bestellmenge. (Quantity)
4. Ersatzteilnummer. (Part Nº)
5. Ersatzteilbenennung. (Denomination)
6. Massangaben bei Bestellung von Meterware.

ORDINI DI RICAMBI

Per evitare errori nelle consegne di ricambi, Vi preghiamo di comunicarci le seguenti informazioni al momento dell 'ordinazione:

1. Tipo di macchina.
2. Numero di serie della macchina.
3. Quantità dei pezzi desiderati. (Quantity)
4. Numero di codice del pezzo. (Part Nº)
5. Descrizione del pezzo di ricambio. (Denomination)
6. Misura, in caso di ordine per metro.

PEDIDO DE RECAMBIOS

Para evitar errores en las entregas, deberán indicarse los siguientes datos al hacer un pedido de recambios:

1. Tipo de máquina.
2. Número de serie.
3. Cantidad de piezas deseadas. (Quantity)
4. Número de artículo de la pieza de recambio. (Part Nº)
5. Denominación de la pieza. (Denomination)
6. Indíquese la medida al solicitar un artículo que se expide por metros.

COMMANDE DE PIECES DE RECHANGE

Les indications suivantes doivent être fournies lors de la commande de piéces de rechange, afin d'éviter toute erreur de livraison:

1. Type de machine.
2. Numéro de série.
3. Quantité désirée de pièce de rechange. (Quantity)
4. Numéro de la piéce de rechange. (Part Nº)
5. Dénomination de la piéce de rechange. (Denomination)
6. Longueur en cas de commande au mètre.

YOUR AGENT/DEALER:

DYNAPAC

Text pages

The text pages is structured as the picture on the right.

1. This is the remarks for specific items and the descriptions of the remarks is at the bottom of the parts list.
2. Parts indicated by a dot and moved to the right are included when buying the assembled unit above.
3. Spare parts and service code for a specific part, mainly for internal use at Dynapac. "A" = Service part, "B" = Fast moving part, "C" = Suggested exchanged part and "D" = Regular spare part.

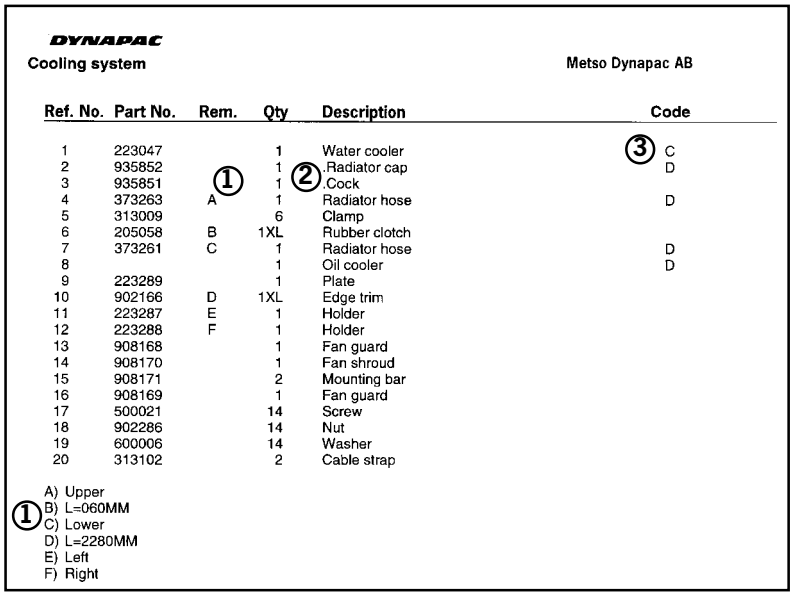

DYNAPAC

Cooling system — Metso Dynapac AB

Ref. No.	Part No.	Rem.	Qty	Description	Code
1	223047		1	Water cooler	③ C
2	935852		1	Radiator cap	D
3	935851	①	1	② Cock	
4	373263	A	1	Radiator hose	D
5	313009		6	Clamp	
6	205058	B	1XL	Rubber clotch	
7	373261	C	1	Radiator hose	D
8			1	Oil cooler	D
9	223289		1	Plate	
10	902166	D	1XL	Edge trim	
11	223287	E	1	Holder	
12	223288	F	1	Holder	
13	908168		1	Fan guard	
14	908170		1	Fan shroud	
15	908171		2	Mounting bar	
16	908169		1	Fan guard	
17	500021		14	Screw	
18	902286		14	Nut	
19	600006		14	Washer	
20	313102		2	Cable strap	

① A) Upper
B) L=060MM
C) Lower
D) L=2280MM
E) Left
F) Right

Changes

PARTS INFO	SERVICE INFO	GROUP	PAGE	NOTES

Notes

Notes

DYNAPAC

PÄRMETIKETT

För att undvika fel vid reservdelsbeställning finns här nedan två etiketter som passar i fickorna på pärmarnas ryggar. På dessa kan man se från vilket vältnummer av aktuell maskin reservdelskatalogen gäller. Gör så här:

1. Tag denna sida ur pärmen.
2. Klipp ut etiketten till VÄNSTER (1) och sätt in den i fickan på DENNA pärmens rygg.
3. Finns det en etikett till HÖGER (2), kan denna användas på pärmen för FÖREGÅENDE utgåva av denna katalog.
4. Kasta detta papper.

BINDER LABEL

To avoid errors when ordering spare parts use the labels below to identify the catalogues on the back of the binder. The label contain the serial number range for which the catalogue is valid. Do like this:

1. Remove this page from the binder.
2. Cut out the LEFT label (1) and put it on THIS binders back.
3. If there is a label to the RIGHT (2), it can be used on the binder for PRECEDING issue of this catalogue.
4. Throw away this paper.

KATALOG-BESCHRIFTUNG

Zur Vermeidung von Fehlen bei der Ersatzteilbestellung benutzen Sie bitte die unteren Beschriftungen, um die Kataloge auf der Rückseite zu kennzeichen. Auf der Beschriftung ist angegaben, für welche Maschinennummern der jeweilige Katalog gültig ist. Ablauf:

1. Nehmen Sie dieses Blatt aus dem Katalog.
2. Schneiden Sie die LINKE Beschriftung (1) aus. Schieben Sie die Beschriftung in die tasche auf DEM Katalogrücke.
3. Sollte die Beschriftung unten RECHTS (2) mitgeliefert werden, kennzeichen Sie damit bitte die ÄLTERE Ausführung dieses Kataloges.
4. Den Rest dieses Blattes bitte vernichten.

ETICHETTA POSTA SUL RACCOGLITORE

Per evitare errori quando ordinate pezzi di ricambio, usate le etichette in calce che servono ad identificare i cataloghi sul retro del raccoglitore. L'etichetta indica il numero di matricola delle maccine prese in considerazione nel catalogo.

1. Rimuovete questa pagina dal raccoglitore.
2. Ritagliate l'etichetta posta a SINISTRA (1) e ponetela sul retro DEL raccoglitore.
3. Se trovate anche un'etichetta sulla DESTRA (2), ritagliatela e ponetela sul raccoglitore relativo alla PRECEDENTE edizione del catalogo.
4. Distruggete questo foglio.

ETIQUETA PARA LA CARPETA

Para evitar errores al pedir repuestos utilicen las etiquetas abajo descritas para identificar los catálogos en la parte trasera de la carpeta. En la etiqueta se ven los números de referencia de la serie para la cual es válido el catálogo. Instrucciones:

1. Quitar esta página de la carpeta.
2. Corta la etiqueta IZQUIERDA (1) y ponerla est ESTA carpeta en la parte trasera.
3. Si hay una etiqueta en la parte DERECHA (2) se puede utilizar en la carpeta para el catálogo que PRECEDE a esta.
4. Tirar esta hoja.

ETIQUETAGE DU CATALOGUE

Afin d'éviter des erreurs lors de commandes de pièces de rechange, nous vous conseillons d'apposer les marquages ci-dessous à l'arrière du classeur, pour identifier les catalogues. Ce marquage indique les numéros de série pour lesquels le catalogue est adapté. Il convient de procéder de la façon suivante:

1. Retirez cette page du classeur.
2. Découpez l'étiquette de GAUCHE (1), et apposez-la à l'arrière de CE catalogue.
3. Si il y a une étiquette à DROITE (2), vous pourrez l'apposer sur le classeur de l'edition PRECEDENTE du catalogue.
4. Détruire cetta feuille.

1.



CA150D

Catalogue **SCA150D-1EN1**
Valid **from** serial number:
***73220152* -**

CA150D S/N 73220152- 2

Service kits 4

939075 Service kit 50 h 6
939076 Service kit 250 / 750 h 8
939077 Service kit 500 h 10
939078 Service kit 1000 h 12
938558 Service kit Steering link 14

Frame 16

Frames 18
Scraper 20
Hitch 22
Structure 24
Side covers Option 26

Drum 28

Drum 30

Engine 32

Engine 34
Cooling system 36
Combustion air system 38
Fuel system 40
Exhaust system 42

Transmission 44

Rear axle and wheels 46
384789 Rear axle 48
Housing 50
Differential with limited slip 52
Brakes 54
Planet gear 56

Hydraulic system 58

Propulsion system, Front 60
384790 Propulsion motor 62
Propulsion system 64
Vibration system 66
372044 Hydraulic oil tank 68
Steering system 70
375031 Hydraulic cylinder 72
Brake system 74
Brake drum Option 76
372250 Propulsion motor 78
Variable rear axle motor Option 82
383855 Rear axle 84
Housing 86
Differential with limited slip 88
Brakes 90
Planet gear 92
Central test panel hydraulic Option 94

Electrical equipment 96

Electrical system 98
Control panel 100
Working lights Option 102

Rotating beacon Option . . . 104
Back-up alarm Option . . . 106
Compaction meter Option . . . 108

Drivers platform . . . 110

Drivers platform . . . 112
Control panel . . . 114
Steering column, cpl . . . 116
Canopy Option . . . 118
Rops and fops . . . 120
Cab mounting . . . 122
Cab Screens . . . 124
Cab, door, left side . . . 128
Cab Interior rear mirror . . . 130
Cab Exterior rear mirror . . . 132
Wiper arm with blade, front . . . 134
Cab Work light . . . 136
Cab Electric . . . 138

Decals . . . 140

Decals . . . 142
Decals . . . 144

Standard equipment . . . 146

Standard equipment . . . 148

Optional equipment . . . 150

Tool equipment . . . 152
Pad shell . . . 154
Scraper . . . 156


50
60
90
91
70
30
20
80
10
40
DYNAPAC
DYNAPAC

Ref. No.	Part No.	Rem.	Qty	Description	Code
1				Service kits (Page 4)	
10				Frame (Page 16)	
20				Drum (Page 28)	
30				Engine (Page 32)	
40				Transmission (Page 44)	
50				Hydraulic system (Page 58)	
60				Electrical equipment (Page 96)	
70				Drivers platform (Page 110)	
80				Decals (Page 140)	
90				Standard equipment (Page 146)	
91				Optional equipment (Page 150)	

Ref. No.	Part No.	Rem.	Qty	Description	Code
1	939075			Service kit 50 h (Page 6)	
2	939076			Service kit 250 / 750 h (Page 8)	
3	939077			Service kit 500 h (Page 10)	
4	939078			Service kit 1000 h (Page 12)	
5	938558			Service kit Steering link (Page 14)	

939075 Service kit 50 h

17517

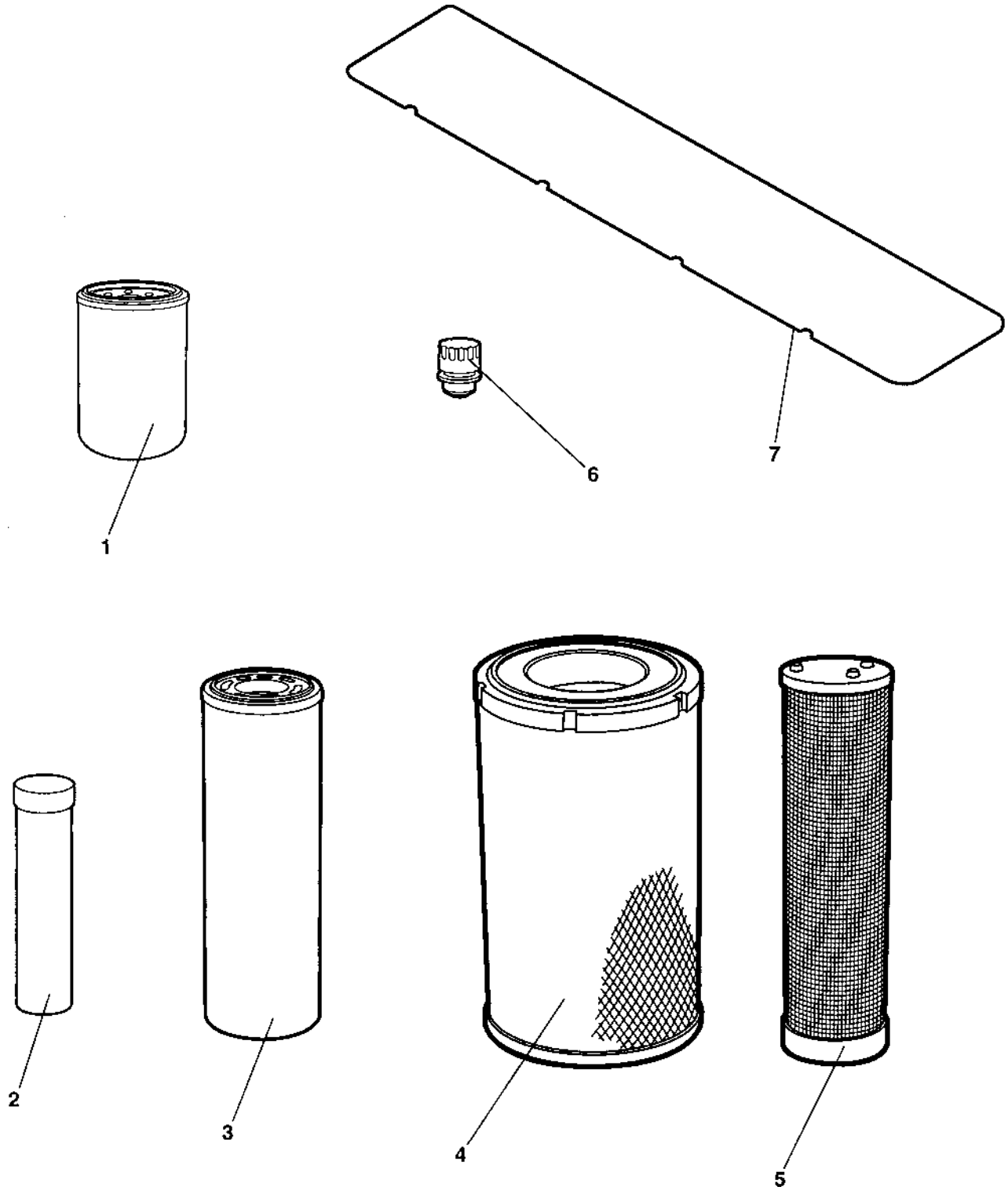

939075 Service kit 50 h

Ref. No.	Part No.	Rem.	Qty	Description	Code
1	939068		1	Oil filter	A
2	904663		1	Lube grease	
3	372229		1	Filter element Hydraulic	A

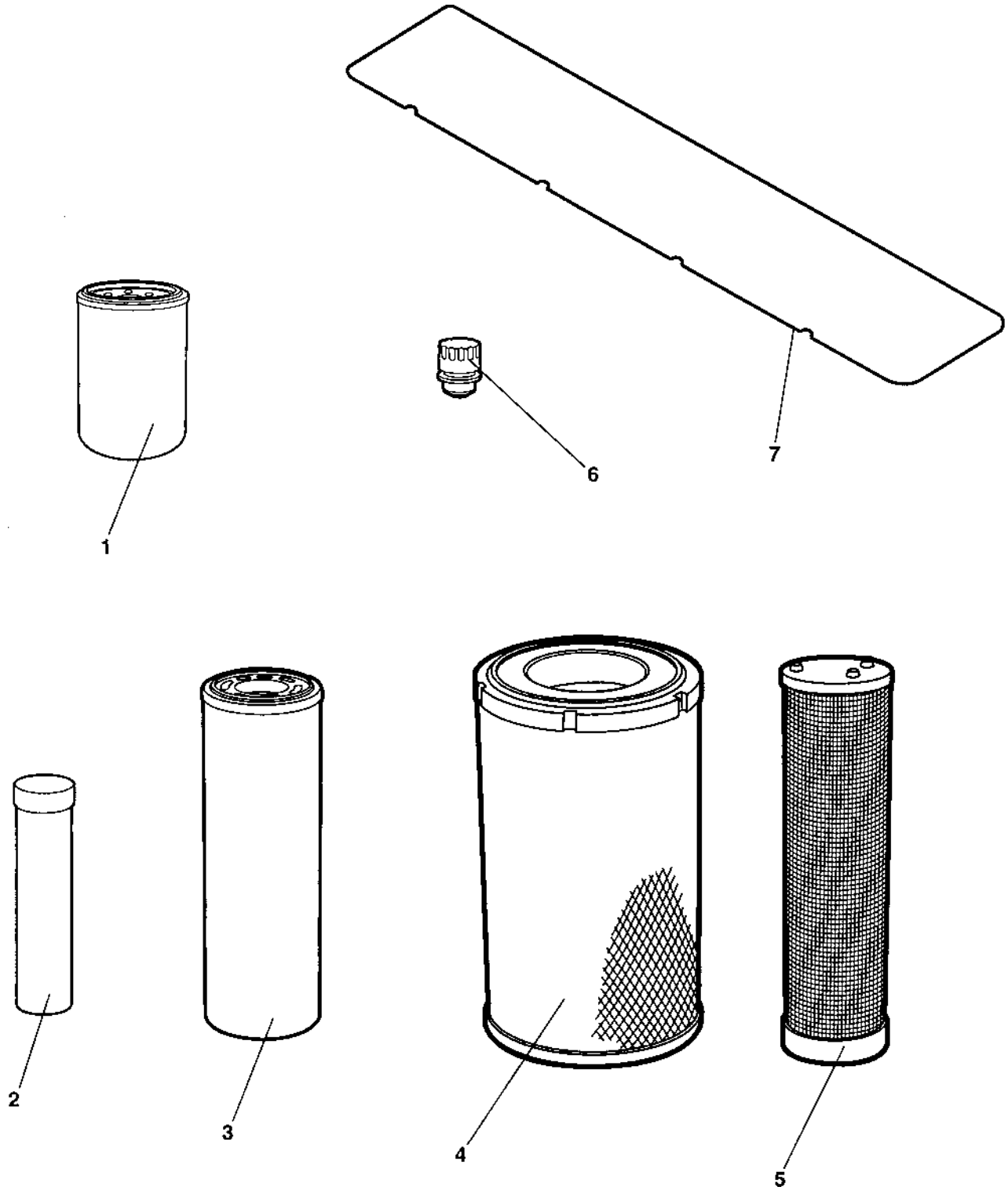
1
2
3
4
5
6
7

939076 Service kit 250 / 750 h

Ref. No.	Part No.	Rem.	Qty	Description	Code
1	939068		1	Oil filter	A
2	904663		1	Lube grease	

939077 Service kit 500 h

17517

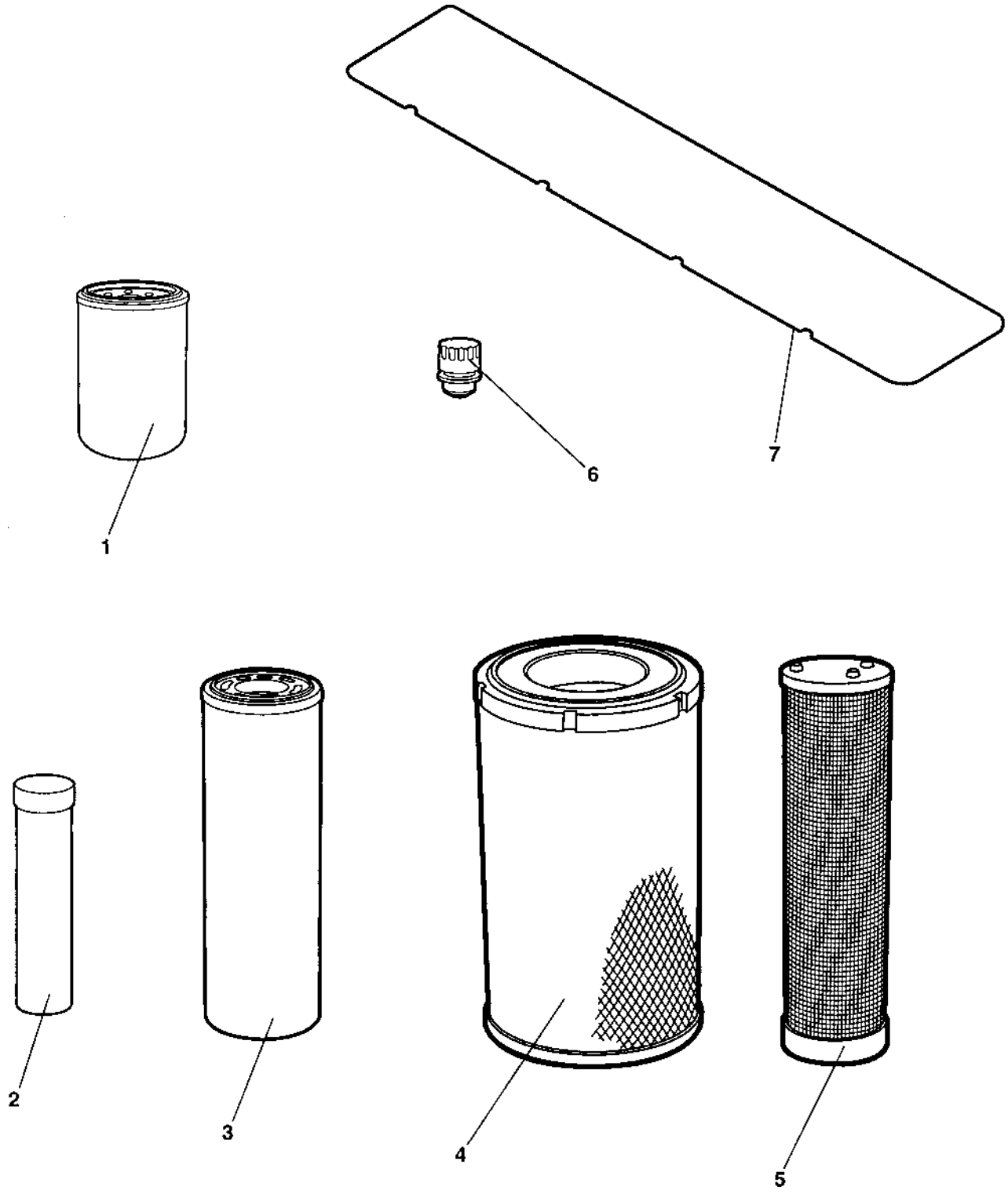

939077 Service kit 500 h

Ref. No.	Part No.	Rem.	Qty	Description	Code
1	939068		1	Oil filter	A
2	904663		1	Lube grease	
4	908450	1	1	Air filter	A

1) Main

939078 Service kit 1000 h

17517

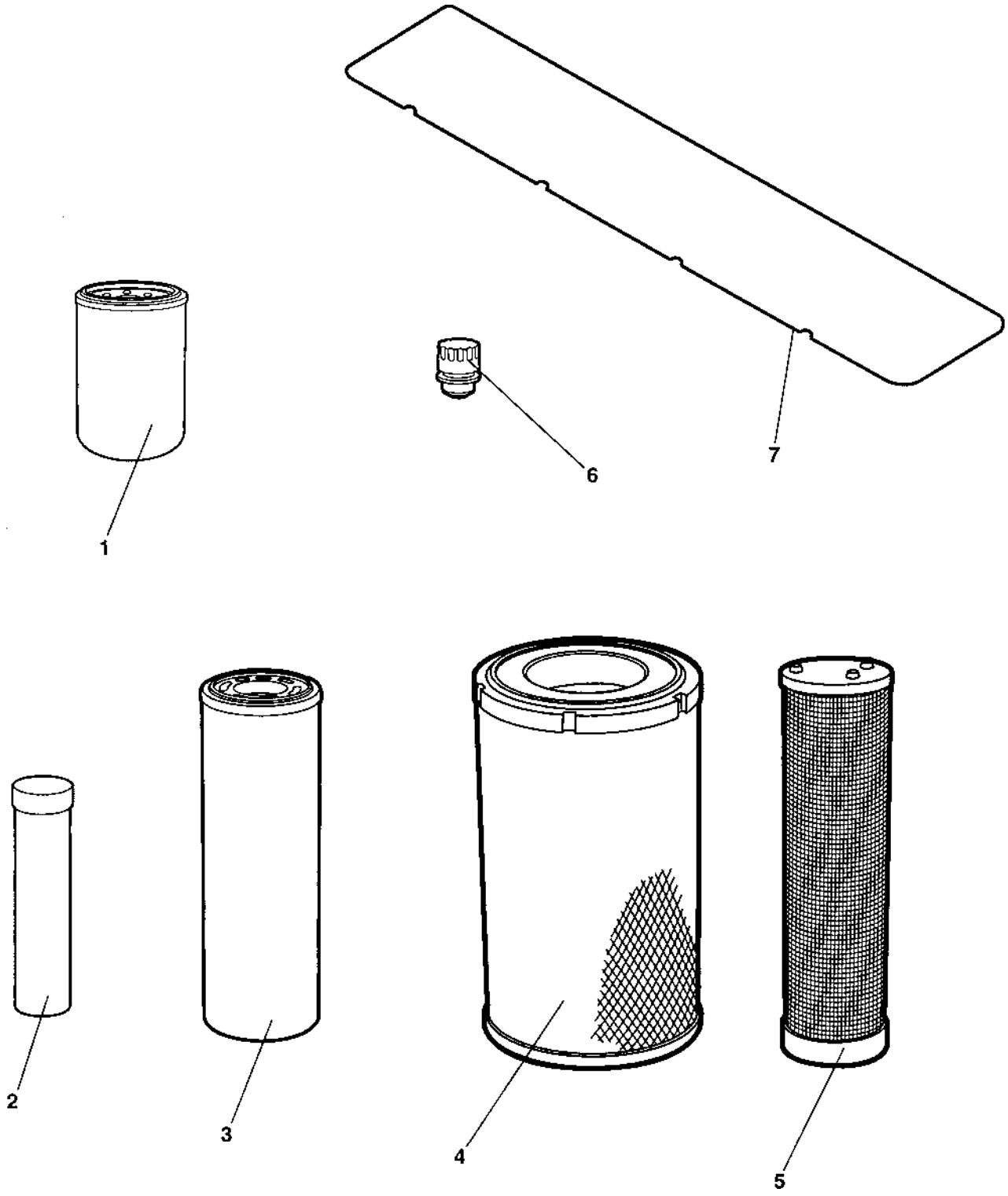

939078 Service kit 1000 h

Ref. No.	Part No.	Rem.	Qty	Description	Code
1	939068		1	Oil filter	A
2	904663		1	Lube grease	
3	372229		1	Filter element Hydraulic	A
4	908450	1	1	Air filter	A
5	908451	2	1	Air filter	A
6	357138		1	Ventilating filter	B
7	939070	3	1	Gasket	B

1) Main
2) Safety
3) Valve cover

938558 Service kit Steering link

938558

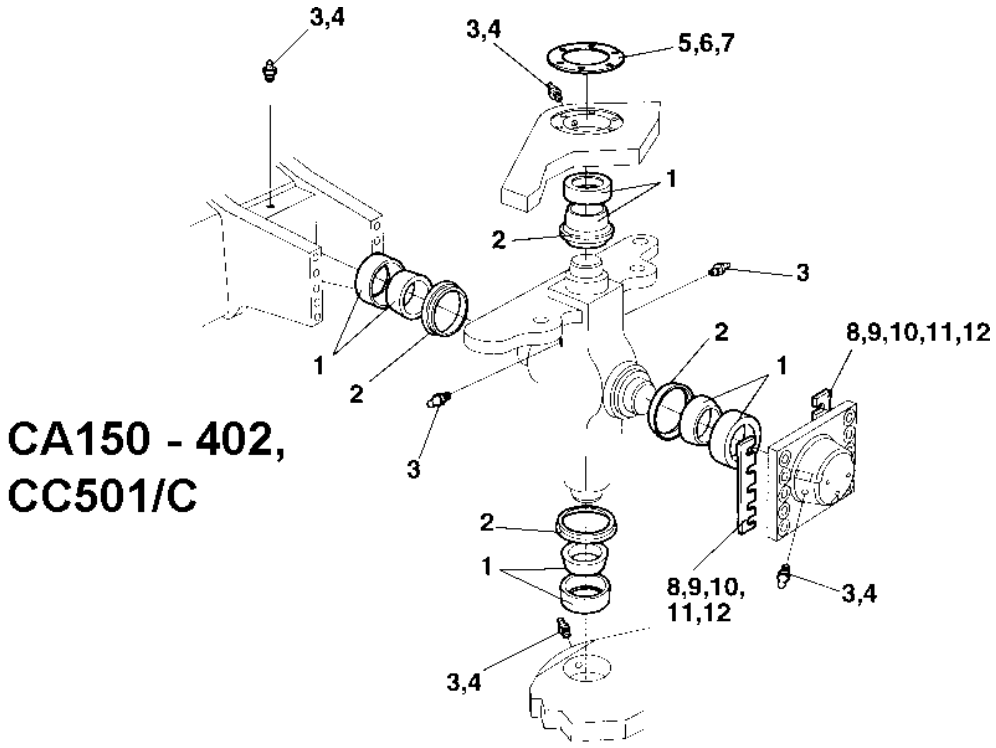

CA150 - 402,
CC501/C

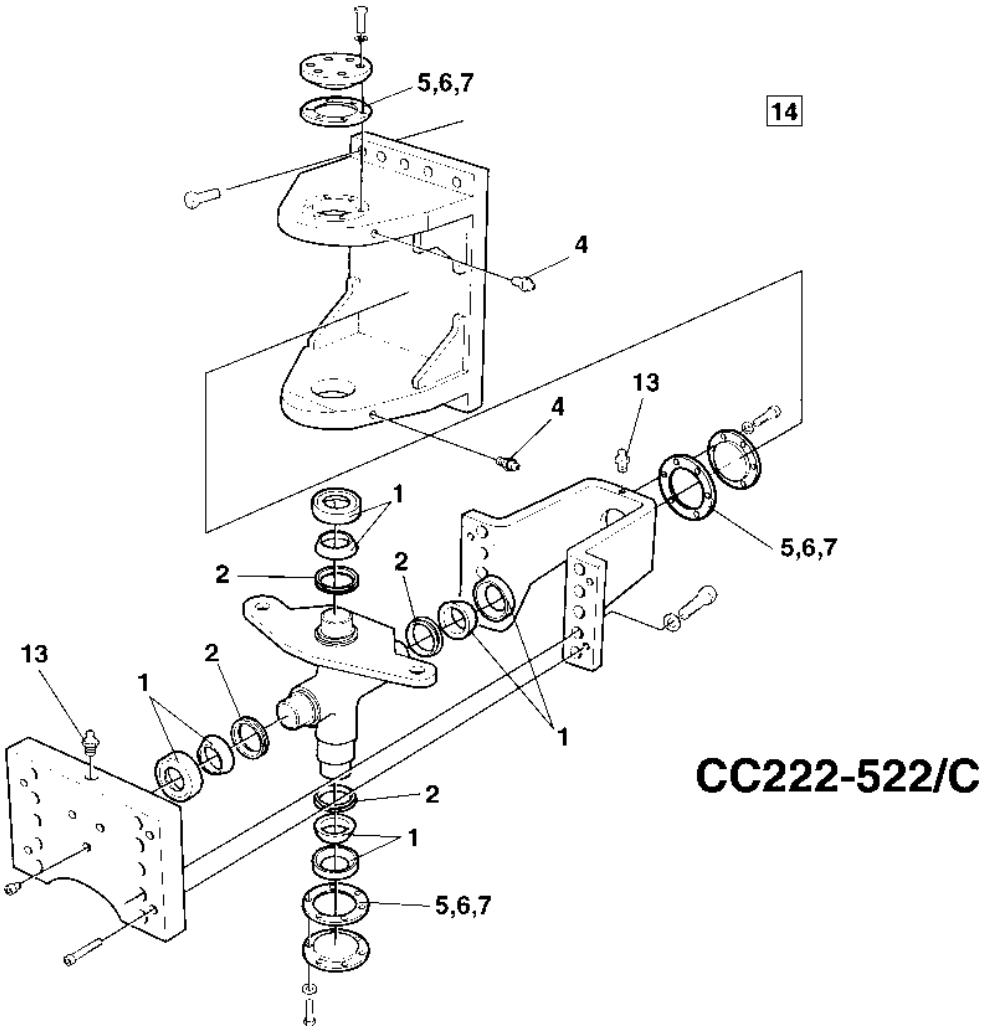

CC222-522/C

938558 Service kit Steering link

Ref. No.	Part No.	Rem.	Qty	Description	Code
1	100040		4	Axial ball bearing	D
2	167032		4	Lip-type oil seal	D
3	310008	2	3	Grease nipple	D
4	926214		2	Grease fitting	D
5	337045		3	Shim T=1,0 mm	D
6	345874		3	Shim T=0,35 mm	D
7	345875		3	Shim T=0,10 mm	D
8	345871	1	2	Shim T=1,0 mm	D
9	345872	1	2	Shim T=0,35 mm	D
10	345873	1	2	Shim T=0,10 mm	D
11	380993	1	2	Shim T = 2,0 mm	D
12	384498	1	2	Shim T = 0,15 mm	D
13	929863	3	1	Lubricant nipple	D
14	904663		1	Lube grease	
15			1	Instructions	

1) Valid for CA152-402 and CC501/C
2) Valid for CC501/C
3) Valid for CC222/232/322/422/432/522/C

Ref. No.	Part No.	Rem.	Qty	Description	Code
10				Frames (Page 18)	
20				Scraper (Page 20)	
40				Hitch (Page 22)	
50				Structure (Page 24)	
70				Side covers Option (Page 26)	

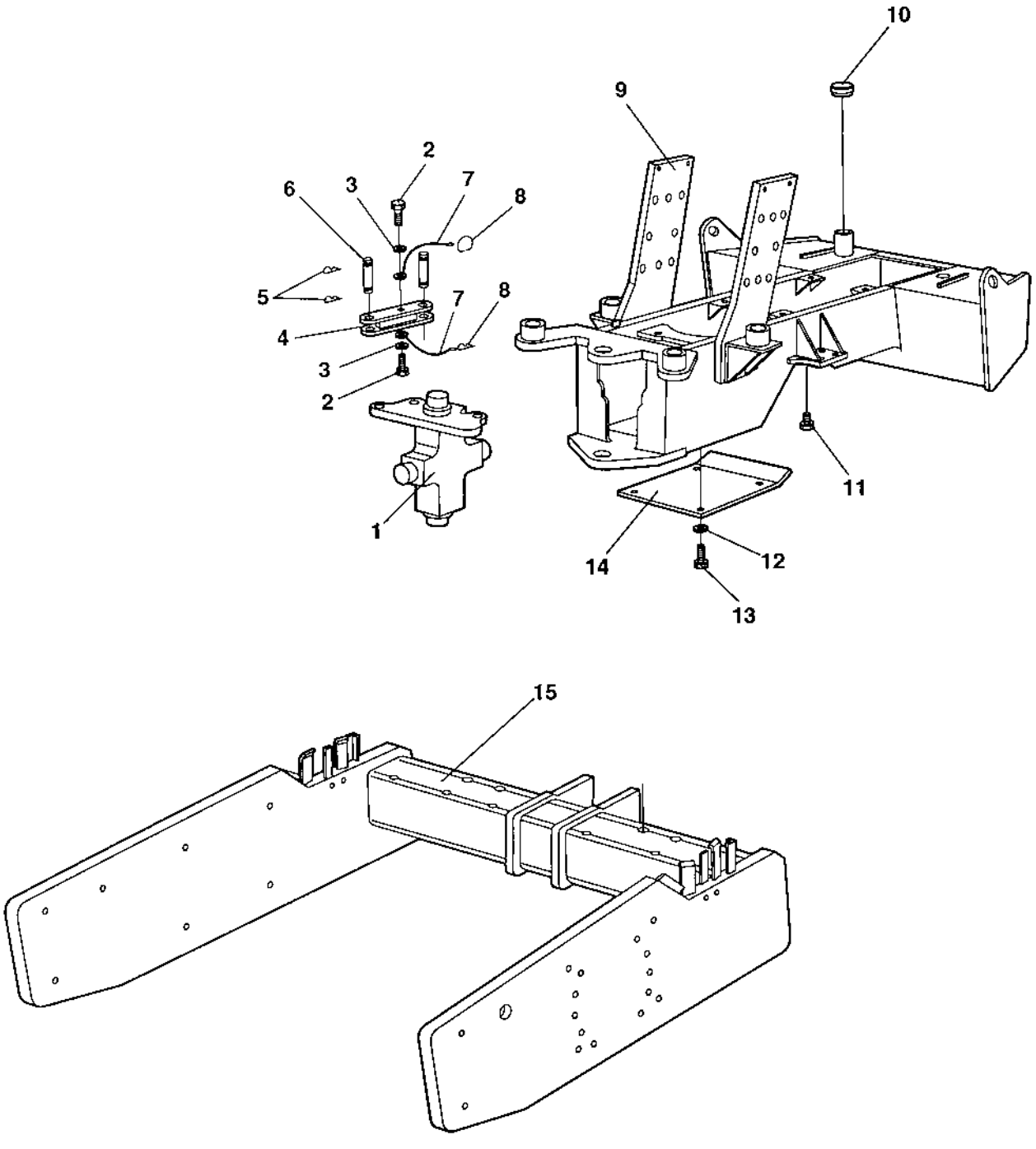
10
9
2
6
3
7
8
5
7
8
4
3
2
1
11
14
12
13
15

Ref. No.	Part No.	Rem.	Qty	Description	Code
1			1	Hitch (Page 22)	
2	500043		2	Screw M10x16H 8,8	
3	904230		2	Washer 10,5x22x2	
4	374869		1	Safety rod	
5	635061		3	Hair clip	D
6	347119		2	Shaft	D
7	343775		2	Wire	
8	357488		1	Spring	
9	384442		1	Tractor frame	D
10	373460		1	Fuel cap	D
11	813391		1	Magnetic plug	D
12	904557		4	Washer 10,5x22x4	
13	500029		4	Screw M10-1,5x30 8,8	
14	372479		1	Protective plate	
15	384443		1	Drum frame	

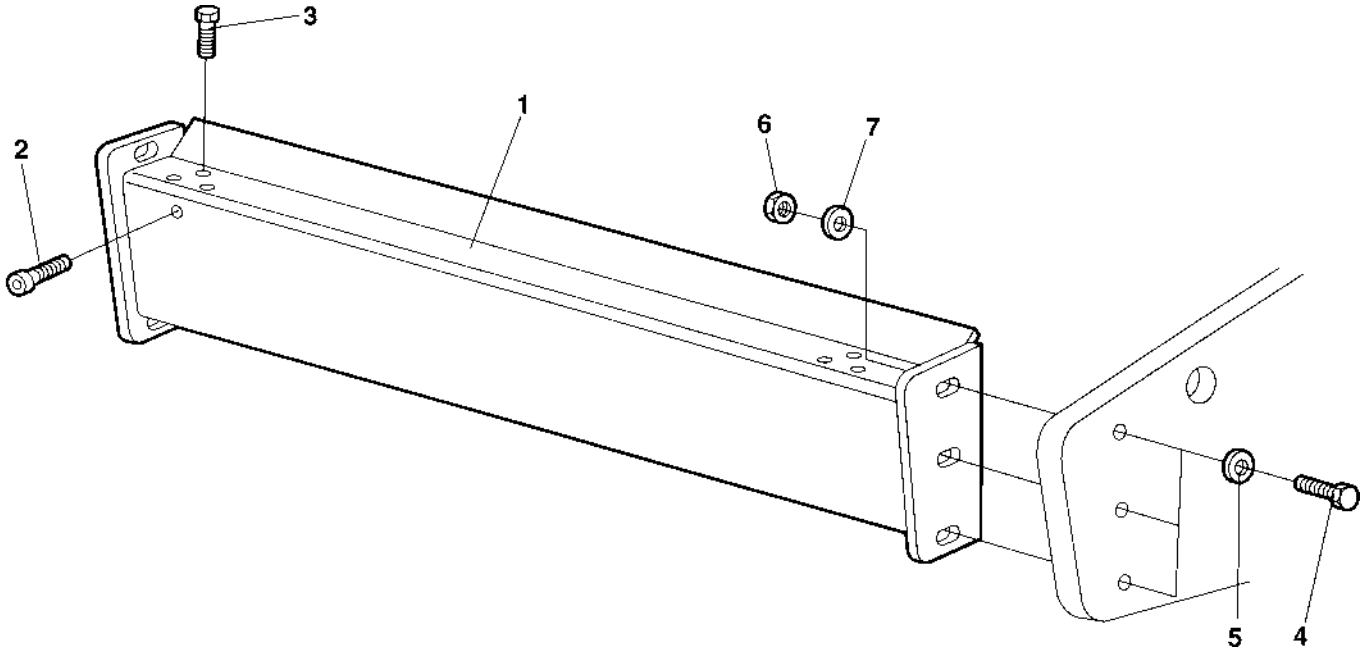
3
1
6
7
2
5
4

Ref. No.	Part No.	Rem.	Qty	Description	Code
1	373758		1	Scraper beam	
2	232041		1	.Filter plug	D
3	500048		6	.Screw M10-1,5x20 8,8	
4	500209		4	Screw M20-2,5x90 8,8	
5	904233		4	Washer 21,0x36x3	
6	570015		4	Nut M20	
7	903290		4	Washer 21x36x6	

Hitch

16083

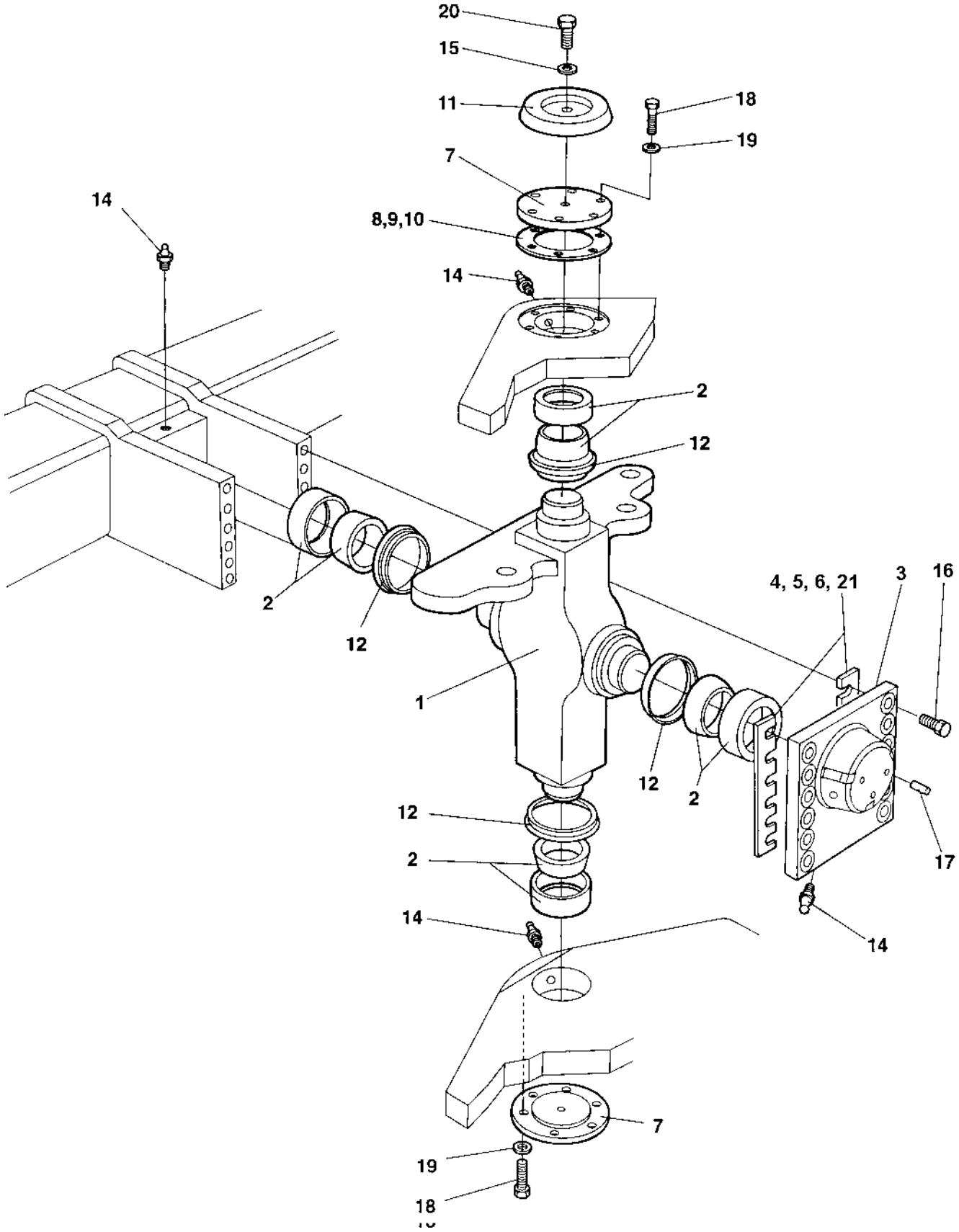
20
15
11
18
19
7
8,9,10
14
14
2
12
2
12
4, 5, 6, 21
3
16
1
12
2
12
2
14
17
14
7
19
18

Ref. No.	Part No.	Rem.	Qty	Description	Code
1	374900		1	Hitch	
2	100040		4	Axial ball bearing	D
3	373421		1	Bearing cover	
4	345871		N	Shim T=1,0 mm	D
5	345872		N	Shim T=0,35 mm	D
6	345873		N	Shim T=0,10 mm	D
7	337042		2	Bearing cover	
8	337045		N	Shim T=1,0 mm	D
9	345874		N	Shim T=0,35 mm	D
10	345875		N	Shim T=0,10 mm	D
11	343159		1	Cover	
12	167032		4	Lip-type oil seal	D
14	926214		4	Grease fitting	D
15	904229		1	Washer 8,4x16x1,5	
16	500287		12	Screw	
17	910995		3	Stop screw	
18	500037		12	Screw M12-1,75x35 8,8	
19	904231		12	Washer 13x24x2	
20	500018		1	Screw M8-1,25x12 8,8	
21	380993		N	Shim T = 2,0 mm	D
	384498		N	Shim T = 0,15 mm	D

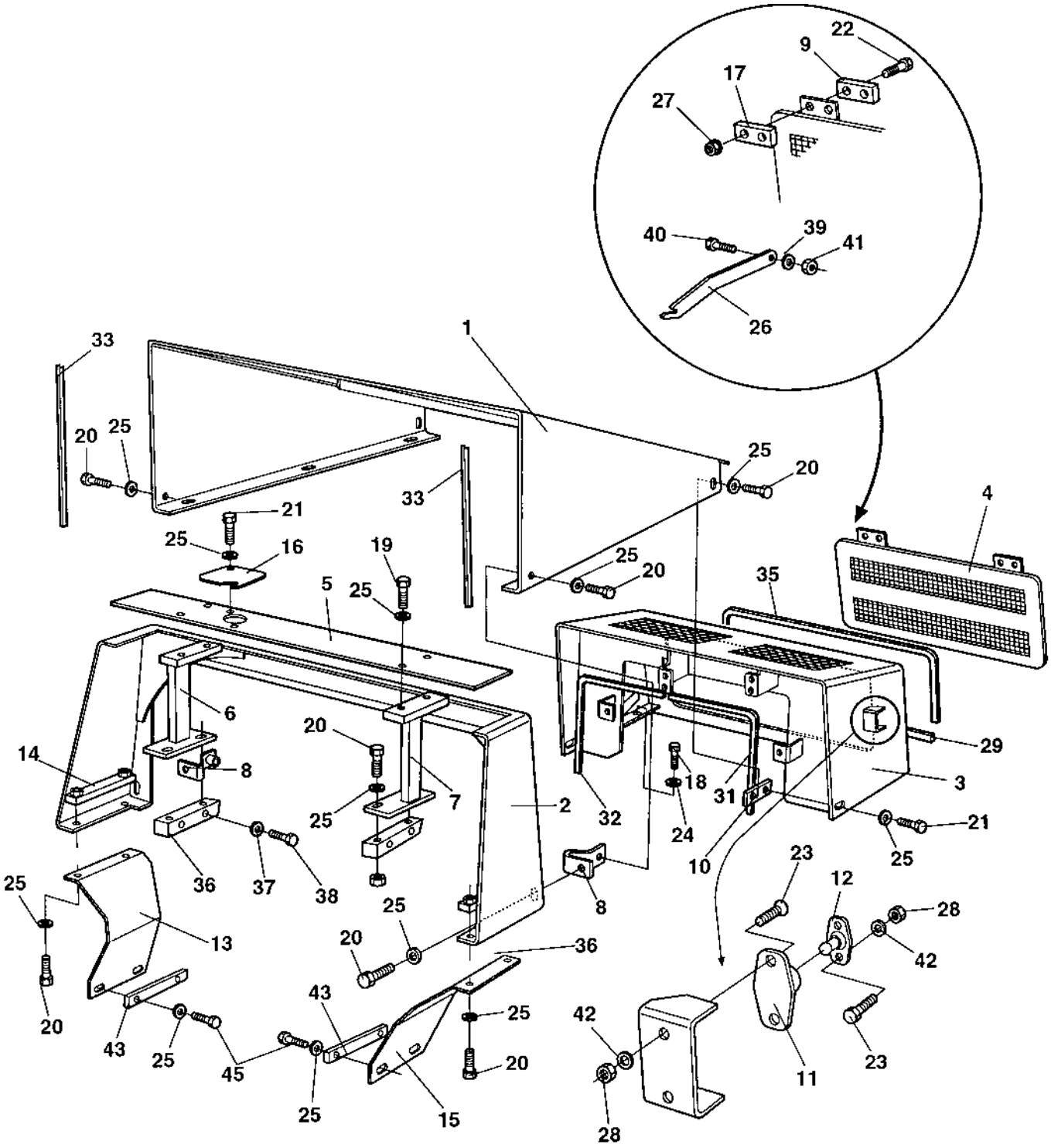
22
9
17
27
40
39
41
26
1
33
20
25
33
25
20
4
21
25
16
19
25
20
35
5
25
6
20
29
14
8
7
2
32
18
31
3
25
24
21
10
25
36
37
38
23
12
25
8
28
13
25
20
36
42
20
43
25
43
25
42
45
25
20
11
23
25
15
28

Ref. No.	Part No.	Rem.	Qty	Description	Code
1	384703		1	Hood	
2	376340		1	Protection cover	
3	384707		1	Hood	
4	382406		1	Rear cover	
5	376354		1	Cover	
6	376348		1	Holder, right	
7	376349		1	Holder, left	
8	376366		2	Holder	
9	380755		2	Holder	
10	380109		2	Holder	
11	450066		2	Door bumper	D
12	450067		2	Door bumper	D
13	381348		1	Holder	
14	381330		2	Holder	
15	381347		1	Holder	
16	381297		1	Cover	
17	380012		2	Holder	
18	500031		4	Screw M10-1,5x40 8,8	
19	500047		4	Screw M8-1,25x35 8,8	
20	500022		17	Screw M8-1,25x30 8,8	
21	500053		5	Screw M8-1,25x20 8,8	
22	924875		4	Screw M6x35	
23	904504		8	Screw M5 x 18	
24	904567		4	Washer	
25	904640		30	Washer 8.4x22x3	
26	382411		1	Hook	
27	902285		4	Lock nut M6	
28	586011		8	Lock nut 3/8 UNF	
29	902379	A	1	Edge trim	
31	902166	B	1	Edge trim	
32	902166	C	1	Edge trim	
33	902166	D	2	Edge trim	
35	902379	E	1	Edge trim	
36	381989		2	Holder	
37	904231		4	Washer 13x24x2	
38	500133		4	Screw M12x70	
39	904228		2	Washer 6,4x12x1,5	
40	500040		1	Screw M6-1x20 8,8	
41	586002		1	Lock nut M6	
42	904281		16	Washer 5,3x10x1	
43	384776		2	Spacer	
45	500023		4	Screw	

A) L=330 mm
B) L=1140 mm
C) L=820 mm
D) L=460 mm
E) L=1500 mm

Side covers Option

17466

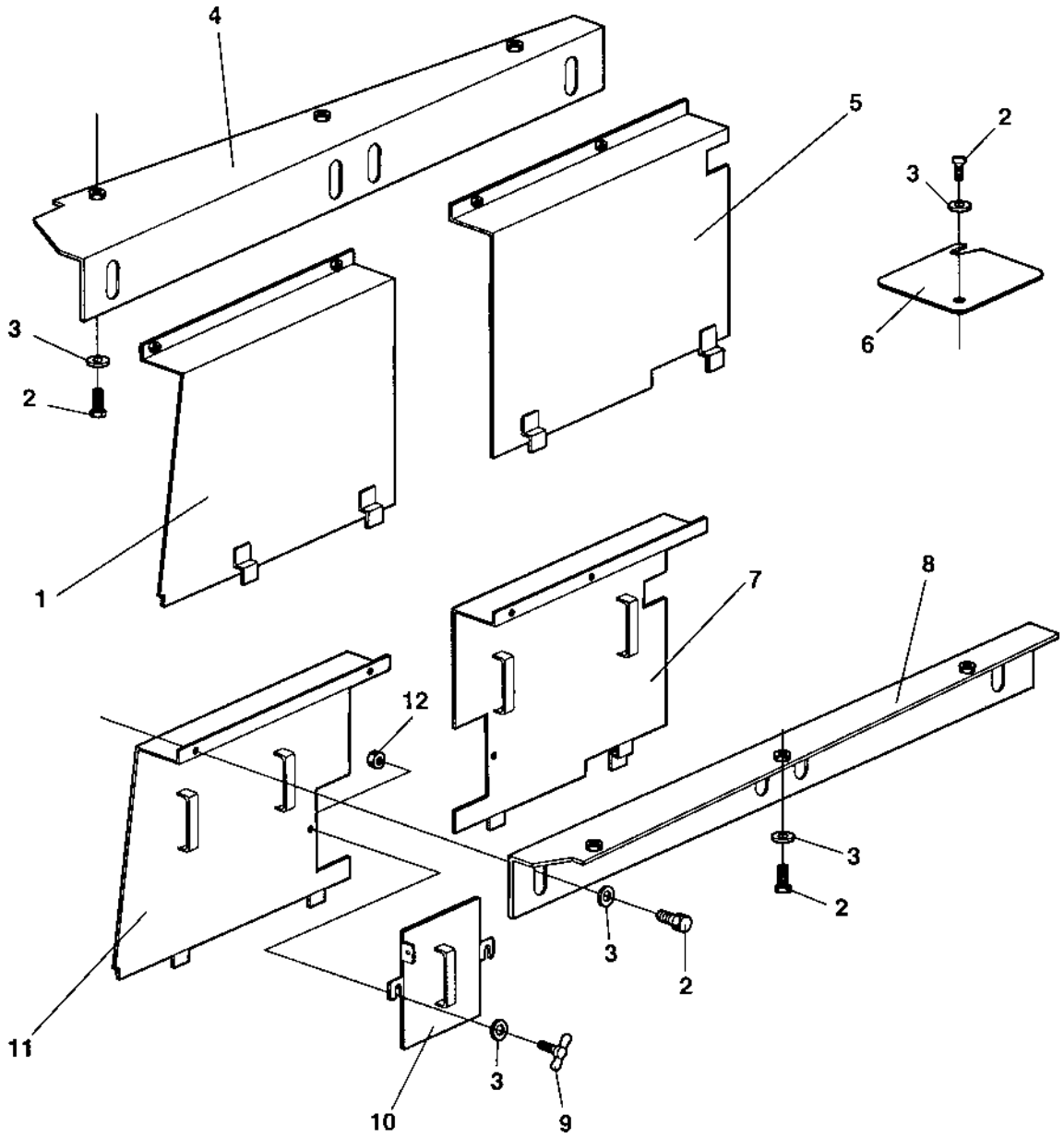

Side covers Option

Ref. No.	Part No.	Rem.	Qty	Description	Code
1	384675		1	Cover plate, right	
2	500053		16	Screw M8-1,25x20 8,8	
3	904640		18	Washer 8.4x22x3	
4	384689		1	Holder, right	
5	384678		1	Cover plate, right	
6	385764		1	Cover	
7	384683		1	Cover plate, left	
8	384690		1	Holder, left	
9	904718		2	Wing screw	
10	384691		1	Hatch	
11	384681		1	Cover plate, left	
12	586003		2	Lock nut M8	

Ref. No.	Part No.	Rem.	Qty	Description	Code
10				Drum (Page 30)	

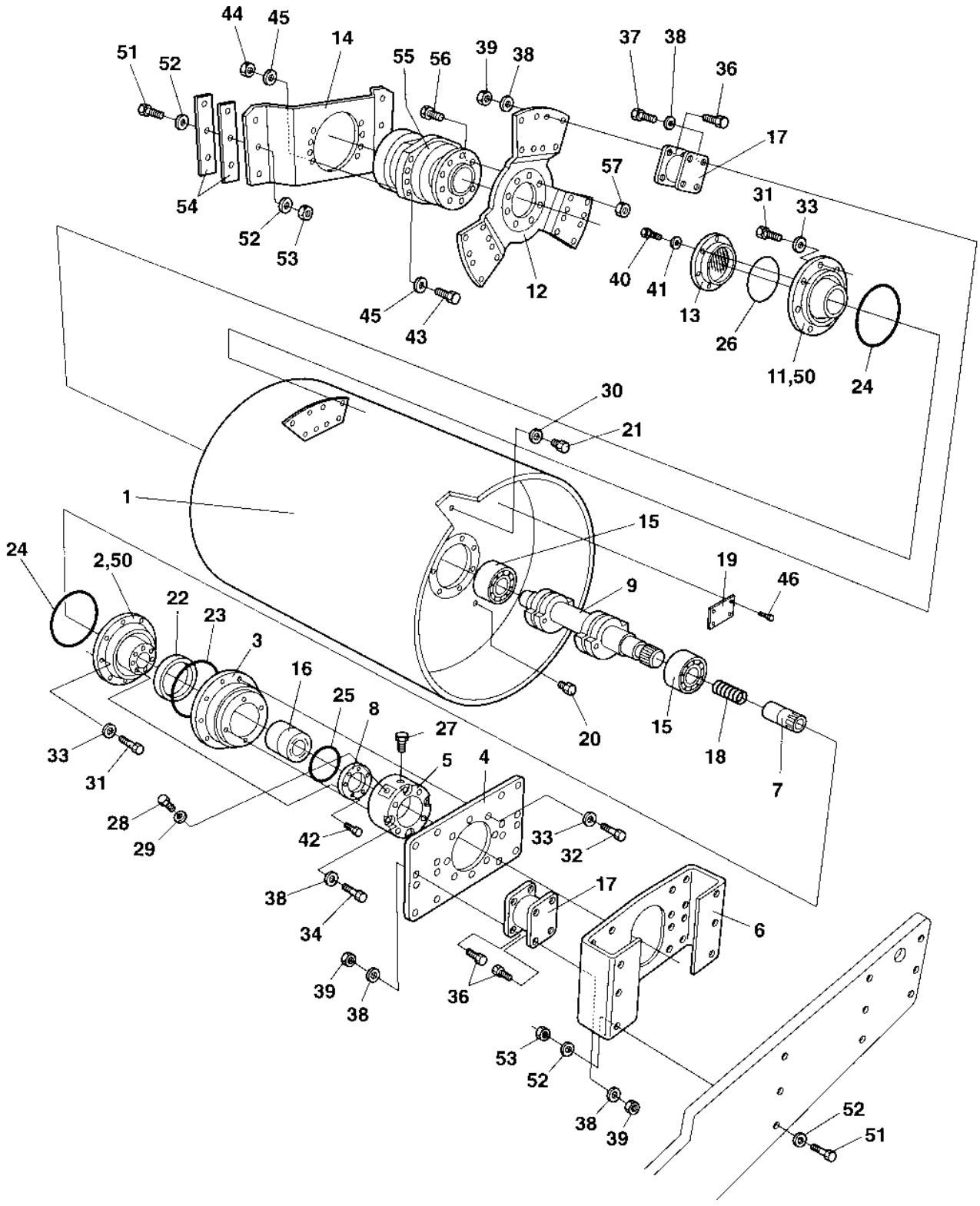
44
45
14
51
52
55
56
39
38
37
38
36
17
57
54
52
53
12
45
43
40
41
31
33
13
26
11,50
24
30
21
1
15
24
2,50
22
23
3
16
25
8
27
5
4
19
46
9
20
15
18
7
33
31
28
29
42
33
32
38
34
17
6
39
38
36
53
52
38
39
52
51

Ref. No.	Part No.	Rem.	Qty	Description	Code
1	372634		1	Drum	
2	374836		1	Bearing housing	
3	343318		1	Bearing housing	D
4	343322		1	Holder plate	
5	343561		1	Motor adapter	
6	372641		1	Holder plate	
7	370365		1	Splined sleeve	
8	343462		1	Bearing cover	
9	372640		1	Eccentric	
11	374907		1	Bearing housing	
12	372638		1	Drive disc	
13	343907		1	Bearing cover	
14	372639		1	Holder plate	
15	114036		2	Drum bearing	D
16	116041		1	Taper roller bearing	D
17	336742		10	Shock absorber	B
18	349715		1	Spring	
19	343801		1	Sign plate	
20	922552		1	Oil level glass	
21	343744		1	Magnetic plug M30	D
22	167023		1	Seal ring	D
23	929447		1	V-ring	D
24	160344		2	O-ring	D
25	160105		1	O-ring	D
26	160362		1	O-ring	D
27	926736		1	Breather M14	B
28	370231		1	Plug	
29	162018		1	Sealing	D
30	162017		1	Seal ring M30	D
31	500076		16	Screw M16x55	
32	500076		8	Screw M16x55	
33	904232		24	Washer 17x30x3	
34	500133		4	Screw M12x70	
36	500194		56	Screw M12x40	
37	500046		24	Screw	
38	904231		84	Washer 13x24x2	
39	570007		56	Nut	
40	500028		6	Screw M10-1,5x25 8,8	
41	904230		6	Washer 10,5x22x2	
42	508019		8	Screw M8x25	
43	500208		8	Screw	
44	570015		8	Nut M20	
45	904233		16	Washer 21,0x36x3	
46	527002		4	Screw	
50	900775		6	Plug	
51	500209		12	Screw M20-2,5x90 8,8	
52	904233		24	Washer 21,0x36x3	
53	586022		12	Lock nut M20	
54	815056		N	Shim	
55		1	1	Hydraulic motor	
56		1	10	.Bolt	
57		1	10	.Nut	

1) See Hydraulic pages - Propulsion system, Front.

Ref. No.	Part No.	Rem.	Qty	Description	Code
10				Engine (Page 34)	
20				Cooling system (Page 36)	
30				Combustion air system (Page 38)	
40				Fuel system (Page 40)	
50				Exhaust system (Page 42)	

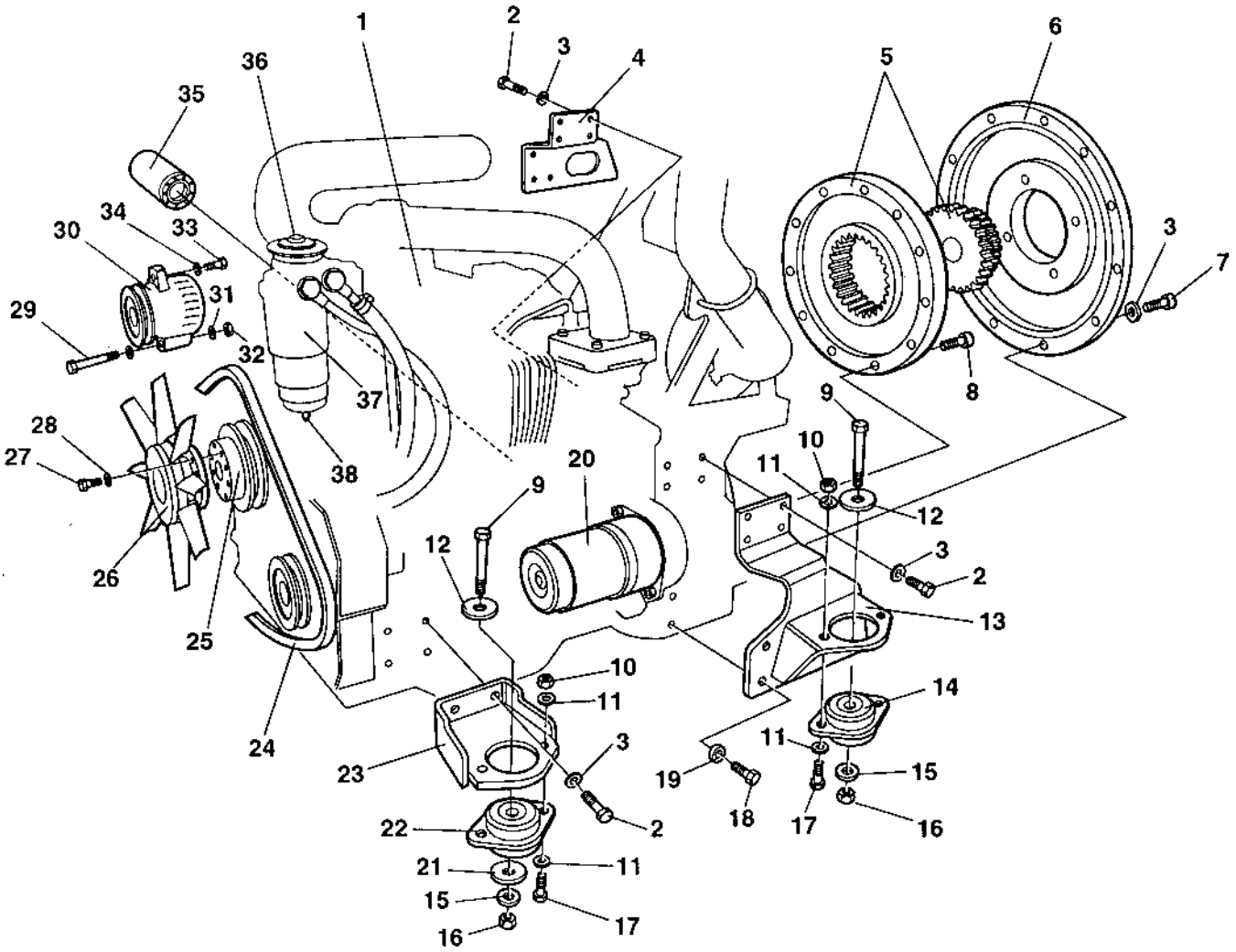
1
2
3
4
5
6
7
8
9
10
11
12
13
14
15
16
17
18
19
20
21
22
23
24
25
26
27
28
29
30
31
32
33
34
35
36
37
38

Ref. No.	Part No.	Rem.	Qty	Description	Code
1	384713		1	Engine	
2	500029		16	Screw M10-1,5x30 8,8	
3	904637		28	Washer 10x18x2	
4	384803		1	Engine bracket, left	
5	370229		1	Coupling	
6	359403		1	Pump bracket	
7	508029		12	Screw M10-1,5x30H 8,8	
8	500030		8	Screw M10-1,5x35H 8,8	
9	500228		4	Screw	
10	586019		8	Lock nut M12	
11	904638		16	Washer 12x22x2	
12	347512		4	Washer	
13	384802		1	Engine bracket, right	
14	372983		2	Shock absorber	D
15	904233		4	Washer 21,0x36x3	
16	586022		4	Lock nut M20	
17	500194		8	Screw M12x40	
18	500056		6	Screw M12-1,75x45 8,8	
19	375152		6	Spacer	
20	939069		1	Starter	C
21	370258		2	Spacer washer	
22	372984		2	Shock absorber	D
23	384468		2	Engine bracket	
24	939067		1	Belt	B
25	939071		1	Pulley	
26	385234		1	Fan	
27	500021		4	Screw M8-1,25x25 8,8	
28	904229		4	Washer 8,4x16x1,5	
29	500031		1	Screw M10-1,5x40 8,8	
30	939066		1	Alternator	C
31	904557		1	Washer 10,5x22x4	
32	570103		1	Nut M10	
33	500022		1	Screw M8-1,25x30 8,8	
34	904229		1	Washer 8,4x16x1,5	
35	939068		1	Oil filter	A
36	939072		1	Fuel filter, head	
37	939073		1	Fuel filter, cartridge	
38	939074		1	Level sender	

Cooling system

17419

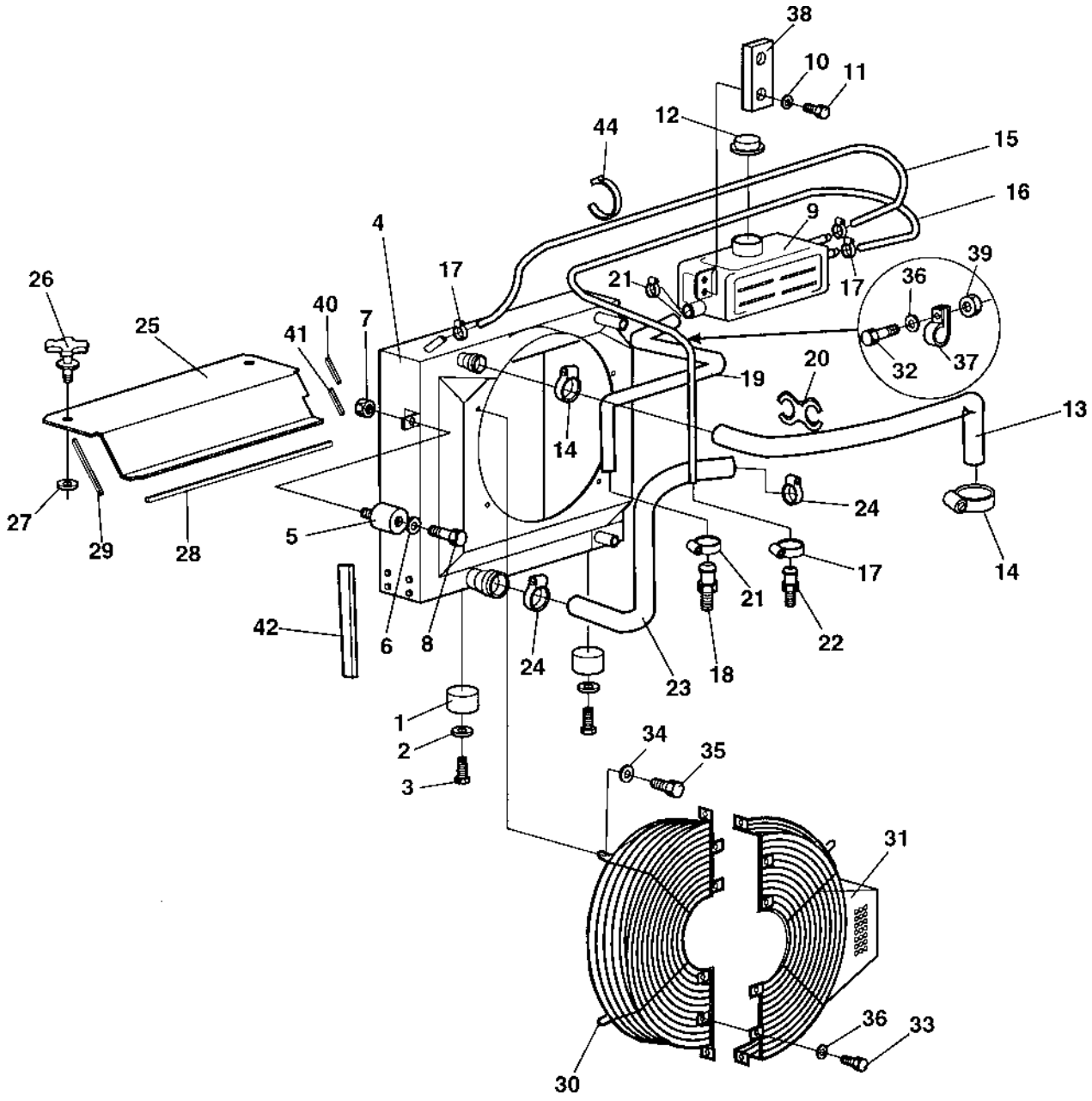

Ref. No.	Part No.	Rem.	Qty	Description	Code
1	371773		2	Shock absorber	
2	904230		2	Washer 10,5x22x2	
3	500048		2	Screw M10-1,5x20 8,8	
4	384198		1	Radiator	
5	371774		2	Shock absorber	
6	904369		2	Washer 6,7x14x1,5	
7	902285		2	Lock nut M6	
8	500012		2	Screw M6x12	
9	374864		1	Expansion tank	
10	904228		4	Washer 6,4x12x1,5	
11	500075		4	Screw M6-1x25 8,8	
12	903714		1	Cap	D
13	384796		1	Coolant hose	
14	313008		2	Hose clamp	D
15	384811		1	Rubber hose	
16	384811		1	Rubber hose	
17	313075		4	Hose clamp	
18	384821		1	Connector	
19	384798		1	Coolant hose	
20	384819		1	Clamp	
21	313004		2	Hose clamp	
22	384822		1	Connector	
23	384797		1	Coolant hose	
24	313010		2	Hose clamp	
25	384724		1	Air inlet	
26	904486		2	Quick lock	
27	926985		2	Quick lock washer	
28	902166	A	1	Edge trim	
29	902166	B	1	Edge trim	
30	384814		1	Fan guard	
31	385306		1	Fan guard	
32	500021		1	Screw M8-1,25x25 8,8	
33	500018		5	Screw M8-1,25x12 8,8	
34	904556		4	Washer 8,4x16x3,0	
35	500019		4	Screw M8-1,25x16 8,8	
36	904229		7	Washer 8,4x16x1,5	
37	921072		1	Clamp	
38	381413		2	Washer	
39	570005		1	Nut M8	
40	902166	C	1	Edge trim	
41	202028	D	1	Edge trim	
42	202043		2	Rubber strip	
44	313041		2	Cable ties L=186 mm	

A) L=620 mm
B) L=200 mm
C) L=70 mm
D) L=150 mm

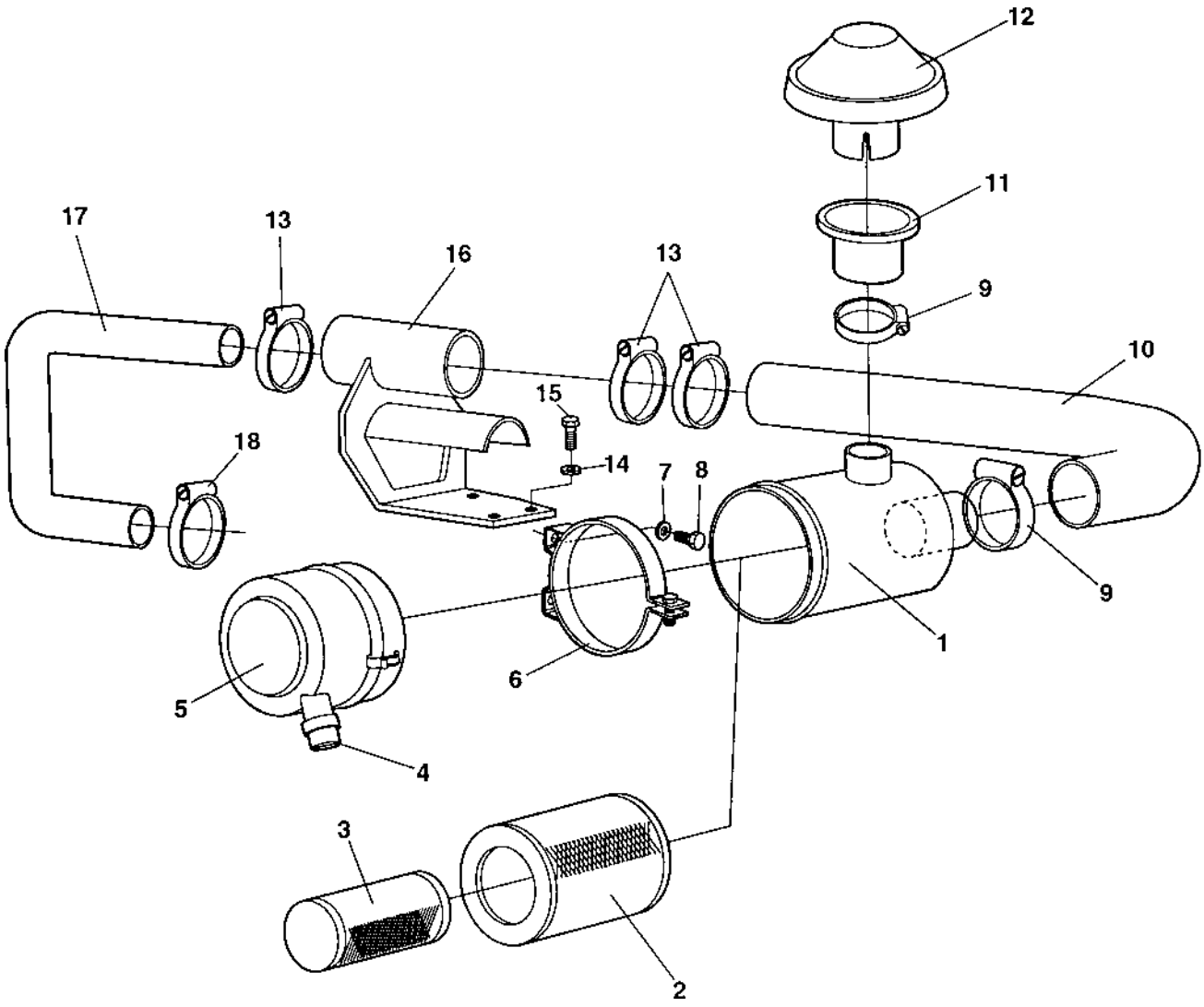
12
11
17
13
16
13
9
10
15
18
14
7
8
9
1
6
5
4
3
2

Ref. No.	Part No.	Rem.	Qty	Description	Code
1	380161		1	Air cleaner	
2	908450	A	1	.Air filter	A
3	908451	B	1	.Air filter	A
4	908399		1	.Vacuator valve	D
5	908452		1	.Cover	
6	813791		2	Mounting band	
7	904229		4	Washer 8,4x16x1,5	
8	500019		4	Screw M8-1,25x16 8,8	
9	904060		2	Hose clamp	
10	380157		1	Air inlet hose	
11	348309		1	Rubber bushing	
12	499266		1	Protection cover	
13	904059		3	Hose clamp	
14	904637		3	Washer 10x18x2	
15	500028		3	Screw M10-1,5x25 8,8	
16	384774		1	Hose holder	
17	384828		1	Air inlet hose	
18	791170		1	Hose clamp	

A) Main
B) Safety

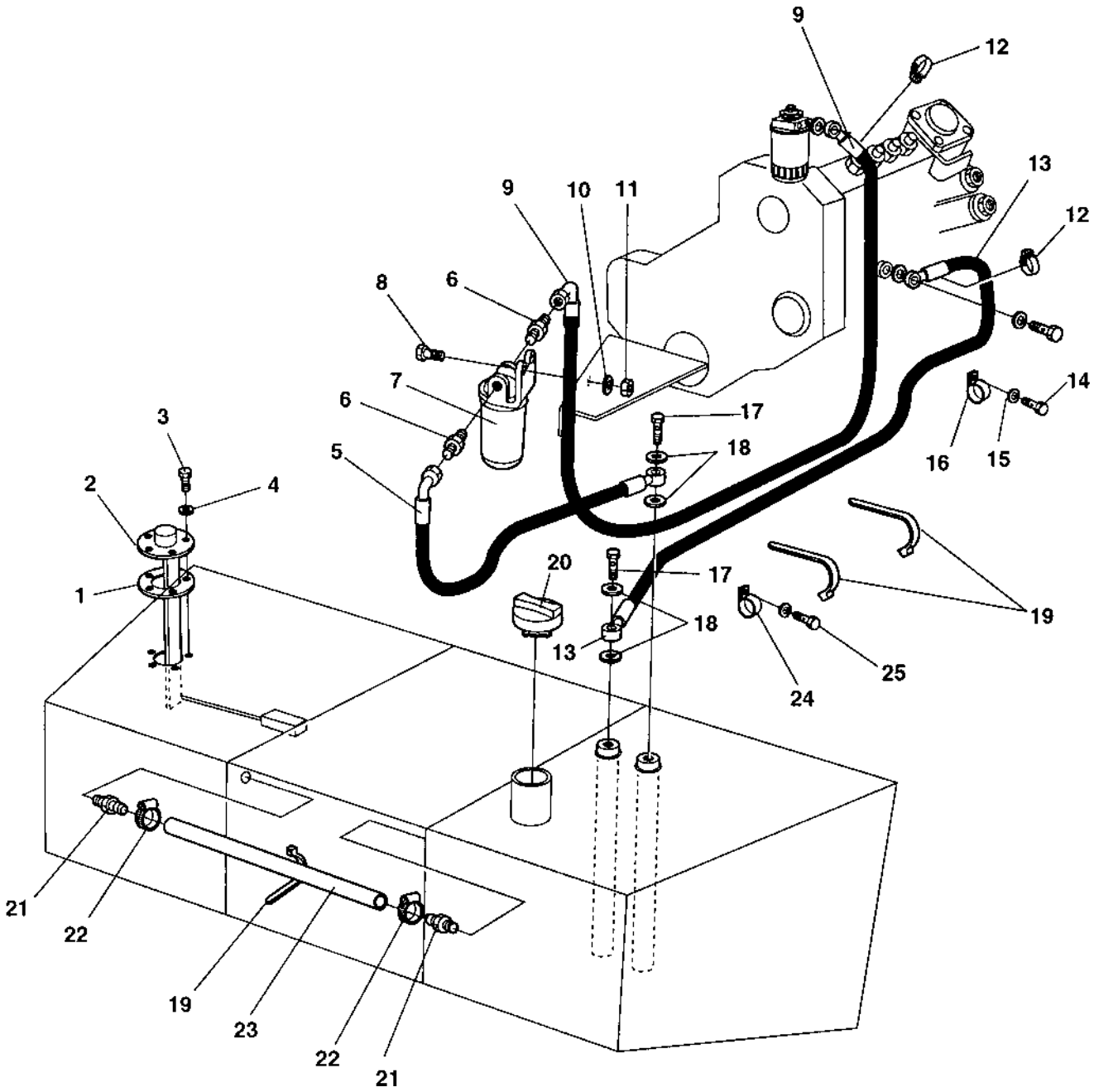
9
12
13
12
9
10
11
8
6
7
6
5
3
2
4
1
17
18
16
15
14
20
17
18
13
19
25
24
21
22
19
23
22
21

Ref. No.	Part No.	Rem.	Qty	Description	Code
1	813315		1	Gasket	D
2	791129		1	Fuel level sender	
3	500006		5	Screw	
4	904281		5	Washer 5,3x10x1	
5	381081		1	Fuel hose	
6	900248		2	Stack kit	
7	900247		1	Filter	A
8	500040		2	Screw M6-1x20 8,8	
9	384846		1	Fuel hose	
10	904228		2	Washer 6,4x12x1,5	
11	902285		2	Lock nut M6	
12	313001		2	Hose clamp	
13	384895		1	Fuel hose	
14	500019		1	Screw M8-1,25x16 8,8	
15	904229		2	Washer 8,4x16x1,5	
16	904346		1	Clamp	
17	330171		2	Hollow screw	
18	747282		4	Copper washer	
19	313041		N	Cable ties L=186 mm	
20	373460		1	Fuel cap	D
21	373574		2	Hose connection	
22	313001		2	Hose clamp	
23	244054	A	1	Hose reinforced	
24	921050	B	1	Clamp	
25	500053		1	Screw M8-1,25x20 8,8	

A) L=0.67 m
B) Mount to engine bracket

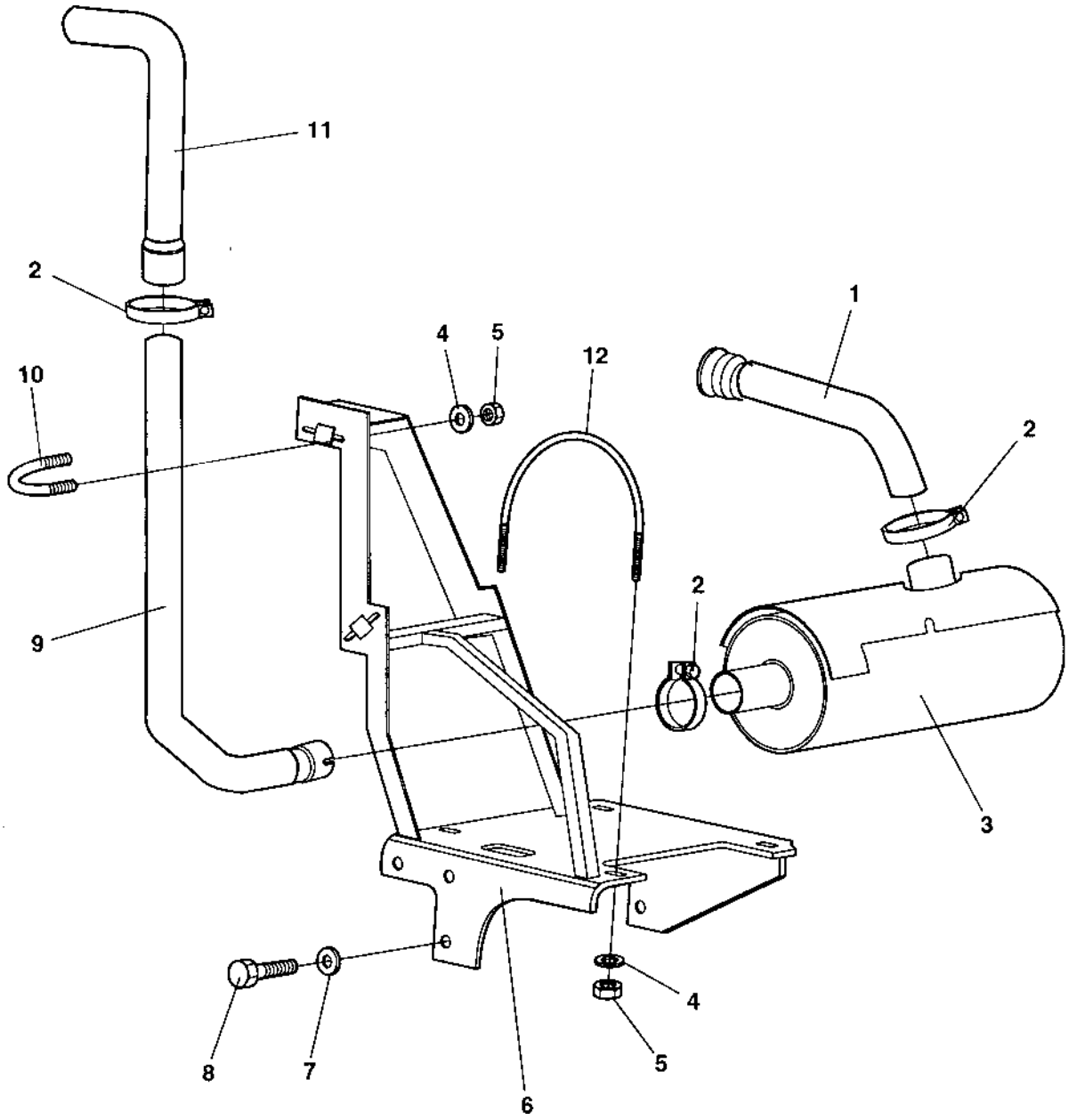
11
2
10
4
5
12
1
2
9
2
3
4
5
8
7
6

Exhaust system

Ref. No.	Part No.	Rem.	Qty	Description	Code
1	384909		1	Exhaust pipe	
2	313036		3	Clamp	D
3	384601		1	Muffler	
4	904640		8	Washer 8.4x22x3	
5	586003		8	Lock nut M8	
6	384714		1	Bracket	
7	904637		6	Washer 10x18x2	
8	500029		6	Screw M10-1,5x30 8,8	
9	384602		1	Exhaust pipe	
10	384696		2	Pipe clamp	
11	384868		1	Exhaust pipe	
12	384693		2	Pipe clamp	

Ref. No.	Part No.	Rem.	Qty	Description	Code
10				Rear axle and wheels (Page 46)	
20	384789			Rear axle (Page 48)	

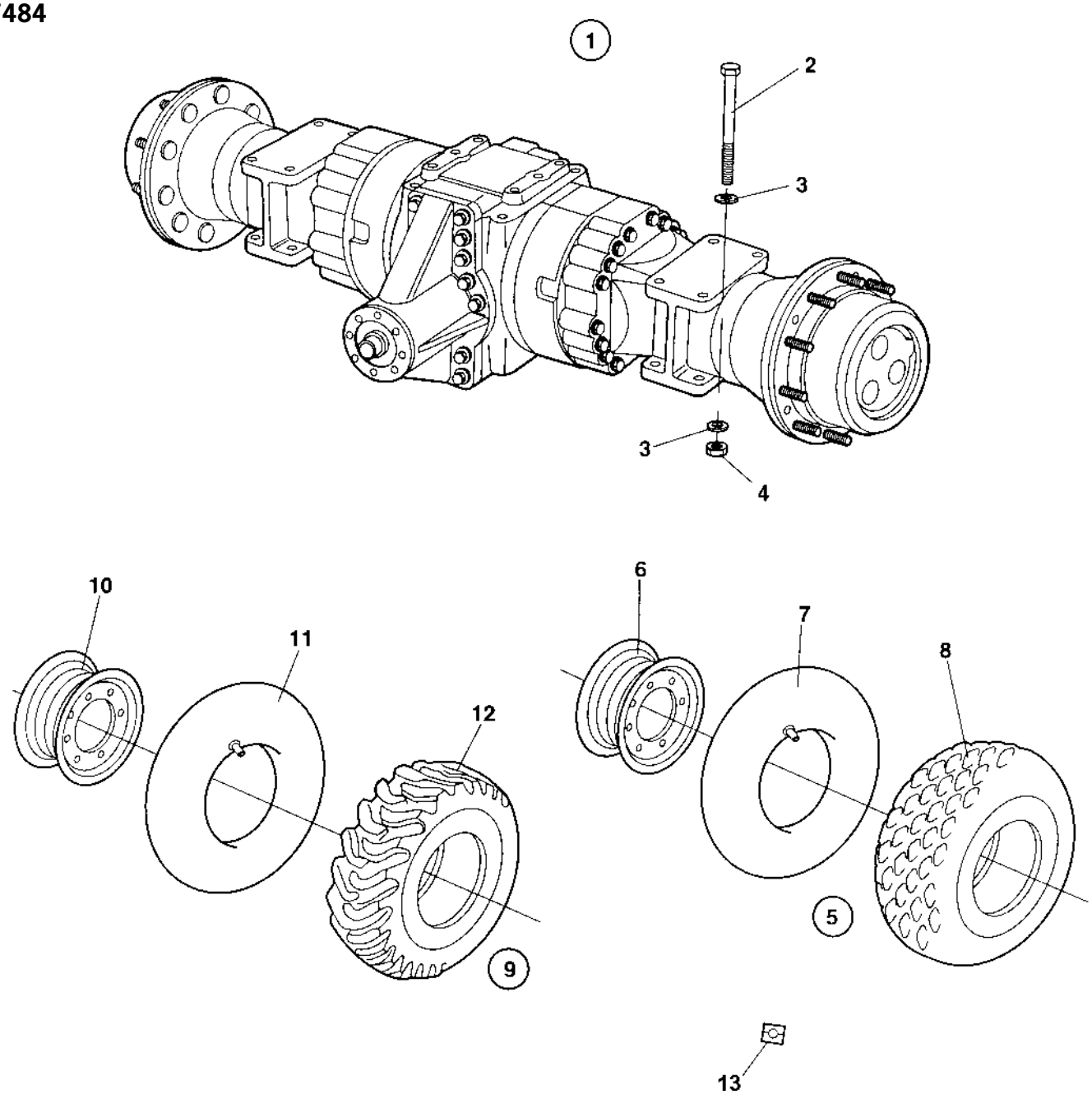
1
2
3
3
4
10
11
12
9
6
7
8
5
13

Ref. No.	Part No.	Rem.	Qty	Description	Code
1	384789		1	Rear axle (Page 48)	
2	500295		8	Screw M20x240	
3	904233		16	Washer 21,0x36x3	
4	901145		8	Lock nut	
5	371937		2	Wheel, cpl	
	371941	A	2	Wheel, cpl	
6	371594		1	.Rim	
7	929050		1	.Tube	D
8	373617		1	.Tyre	D
9	371938	B	1	Tractor tyre, cpl	
	371939	C	1	Tractor tyre, cpl	
	371942	D	1	Tractor tyre, cpl	
	371943	E	1	Tractor tyre, cpl	
10	371594		1	.Rim	
11	929050		1	.Tube	D
12	373618		1	.Tyre	D
13	903985		2	.Decal "SAFETY", "TYRE IN BALLAST"	

A) Liquidfilled, option
B) Left, option
C) Right, option
D) Liquid filled, left, option
E) Liquid filled, right, option

384789 Rear axle

17492

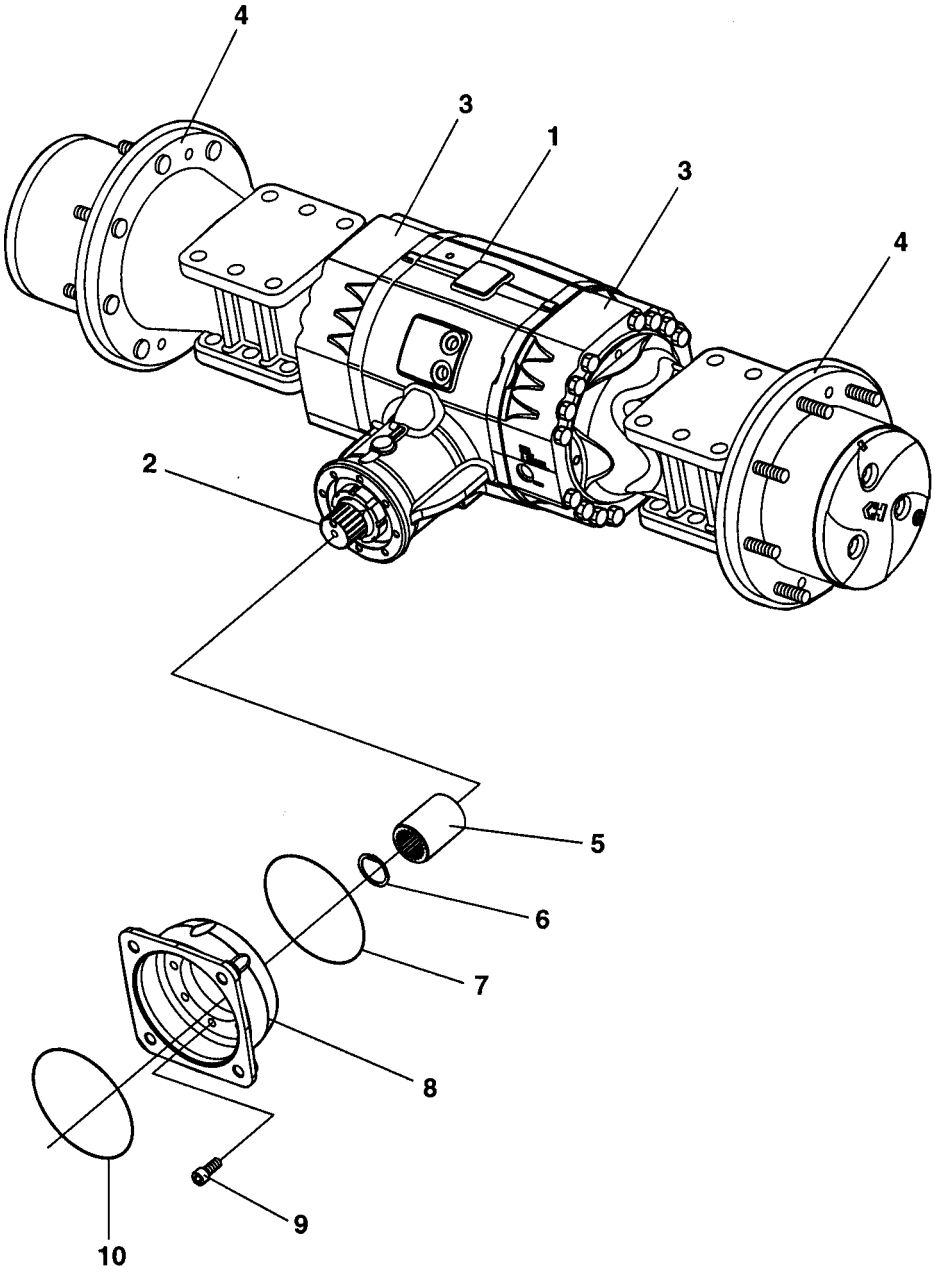

Ref. No.	Part No.	Rem.	Qty	Description	Code
1			1	Housing (Page 50)	
2			2	Differential with limited slip (Page 52)	
3			1	Brakes (Page 54)	
4			2	Planet gear (Page 56)	
5	901833		1	Splined sleeve	
6	909632		1	Snap ring	
7	929648		1	O-ring	D
8	909631		1	Flange	
9	929712		8	Screw	
10	909630		1	O-ring	D

Housing

17490

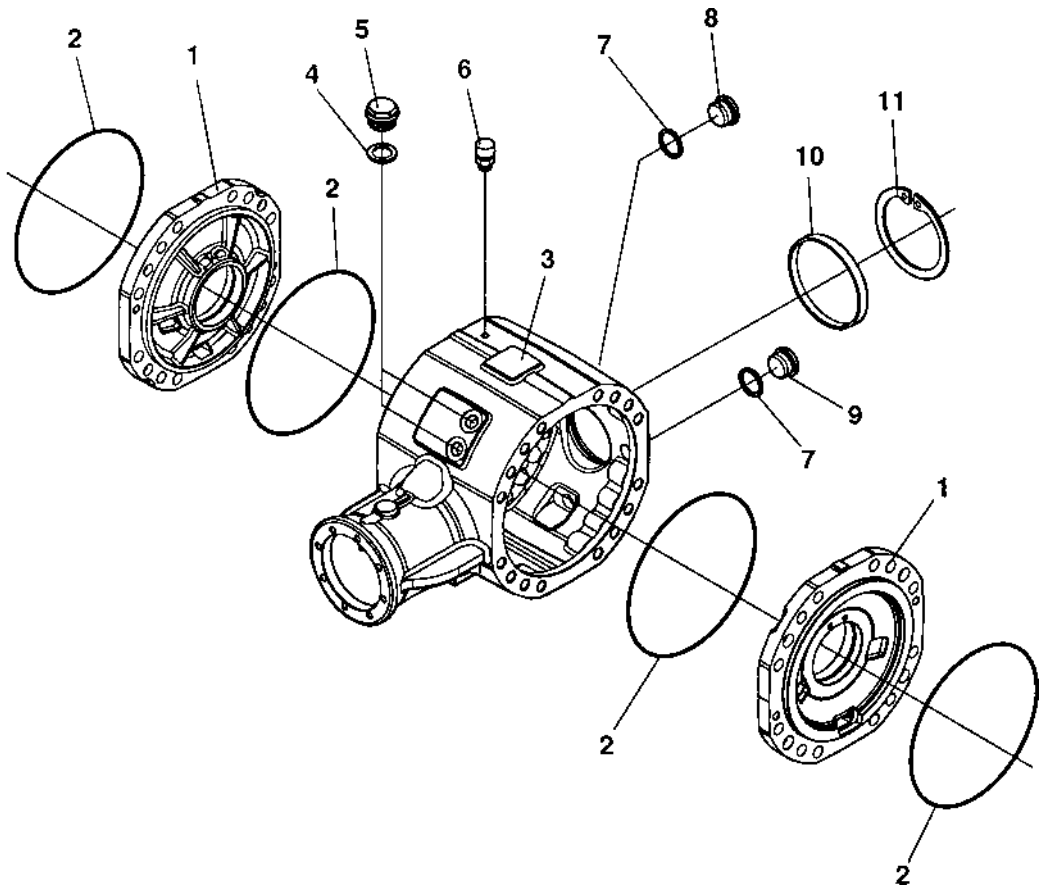

Housing

Ref. No.	Part No.	Rem.	Qty	Description	Code
1	938980		2	Cover	
2	938981		4	O-ring	
3	938982		1	Housing	
4	938983		2	Seal washer	
5	909544		4	Screw	
6	938984		1	Vent nipple	
7	909607		2	Seal	D
8	938985		1	Magnet plug	
9	909596		1	Plug	
10	938986		1	Plug	
11	938987		1	Circlip	

Differential with limited slip

17491

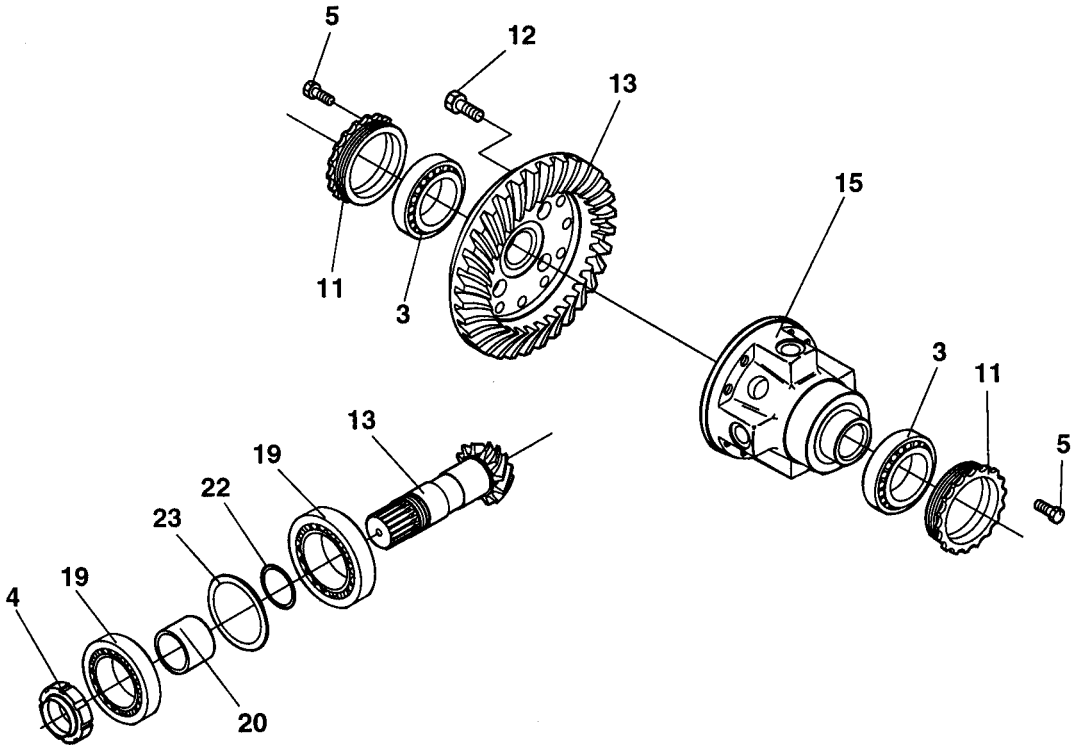

Ref. No.	Part No.	Rem.	Qty	Description	Code
3	936023		2	Bearing	
4	938988		1	Ring nut	
5	938989		2	Screw	
11	938990		2	Ring nut	
12	938991		12	Screw	
13	938992		1	Gear set	
15	938994		1	Limited slip disc	
19	926116		2	Bearing	
20	938995		1	Spacer	
22	936053		1	Shim 0.15mm	
	936054		1	Shim 0.20mm	
	936055		1	Shim 0.40mm	
	936056		1	Shim 0.50mm	
23	938996		1	Shim 0,20 mm	
	938997		1	Shim 0,30 mm	
	938998		1	Shim 0,15 mm	
	938999		1	Shim 0,10 mm	

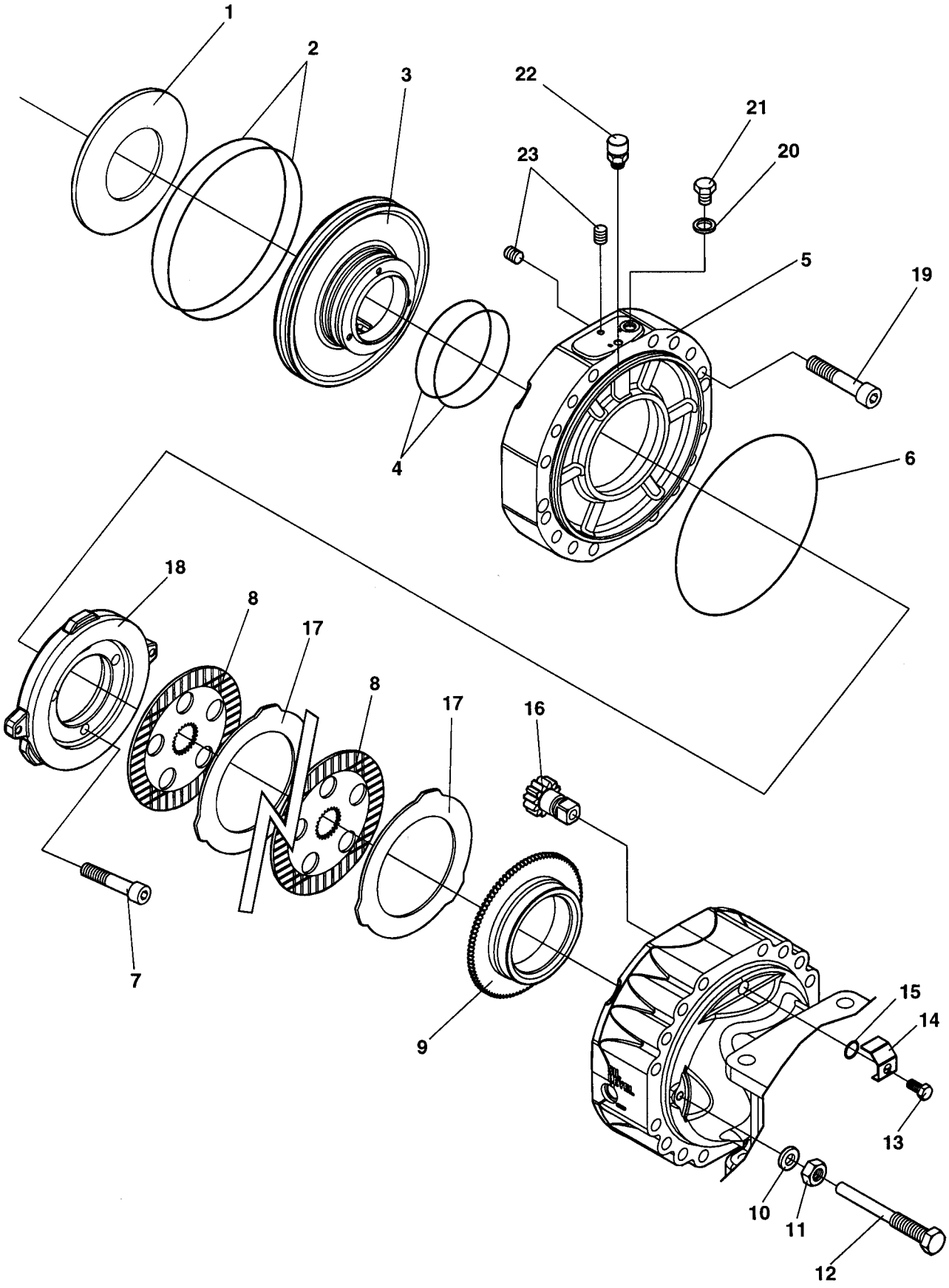
1
2
3
22
21
20
23
5
19
4
6
18
8
17
8
17
16
7
9
15
14
13
10
11
12

Ref. No.	Part No.	Rem.	Qty	Description	Code
1	909616		2	Spring	
2	939021		4	O-ring	
3	939022		2	Piston	
4	939023		4	O-ring	
5	939024		2	Cover	
6	939025		2	O-ring	
7	939026		6	Screw	
8	939027		8	Brake disc	
9	939028		2	Ring	
10	939029		4	Lock washer	
11	900957		4	Nut	
12	939030		4	Adjusting bolt	
13	909547		2	Screw	
14	939031		2	Plate	
15	939032		2	O-ring	
16	936097		2	Pinion	
17	939033		8	Brake disc	
18	939034		2	Disc	
19	939035		4	Screw	
20	939036		2	Seal washer	
21	939037		2	Screw	
22	939038		2	Vent nipple	
23	939039		4	Stop screw	

Planet gear

17493

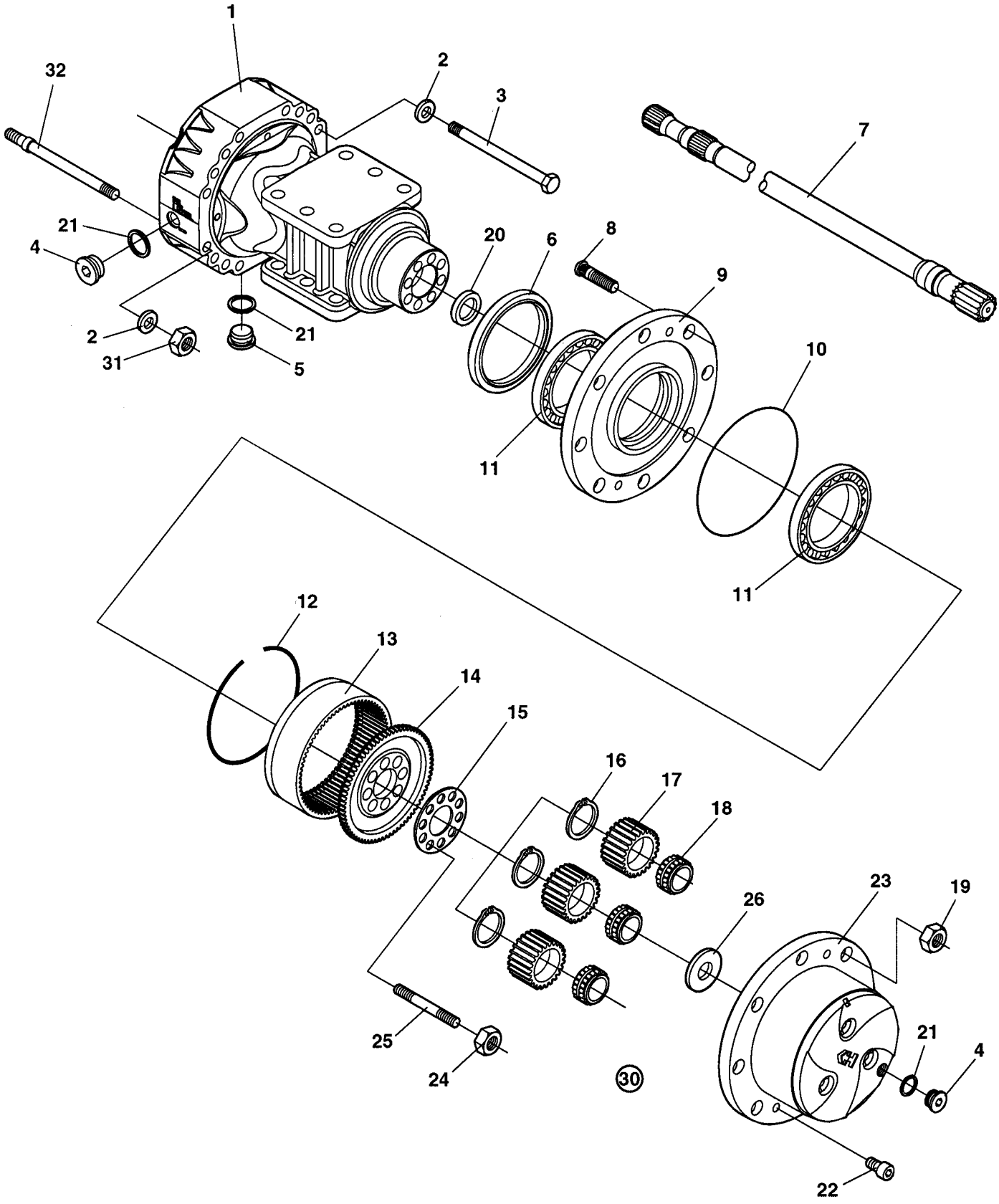

Planet gear

Ref. No.	Part No.	Rem.	Qty	Description	Code
1	939002		1	Housing	
2	939003		16	Spring washer	
3	939004		12	Screw	
4	909596		2	Plug	
5	939005		1	Magnet plug	
6	939006		1	Seal	
7	939007		1	Shaft	
8	926781		8	Wheel screw	
9	939008		1	Wheel hub	
10	936020		1	O-ring	D
11	939009		2	Bearing	
12		1	1		
13		1	1		
14		1	1		
15	939010		1	Locking plate	
16	939011	1	3	Circlip	
17	939012	1	3	Planet gear	
18	939013	1	3	Bearing	
19	901987		8	Wheel nut	
20	939014		1	Seal	
21	909607		3	Seal	D
22	939015		2	Screw	
23		1	1		
24	939016		8	Nut	
25	939017		8	Stud	
26		1	1		
30	939018		1	Planet gear carrier	
31	939019		4	Nut	
32	939020		4	Stud	

1) Included in ref. 30

Ref. No.	Part No.	Rem.	Qty	Description	Code
10				Propulsion system, Front (Page 60)	
12	384790			Propulsion motor (Page 62)	C
15				Propulsion system (Page 64)	
20				Vibration system (Page 66)	
25	372044			Hydraulic oil tank (Page 68)	
30				Steering system (Page 70)	
35	375031			Hydraulic cylinder (Page 72)	C
40				Brake system (Page 74)	
50				Brake drum Option (Page 76)	
55	372250			Propulsion motor (Page 78)	C
60				Variable rear axle motor Option (Page 82)	
65	383855			Rear axle (Page 84)	
70				Central test panel hydraulic Option (Page 94)	

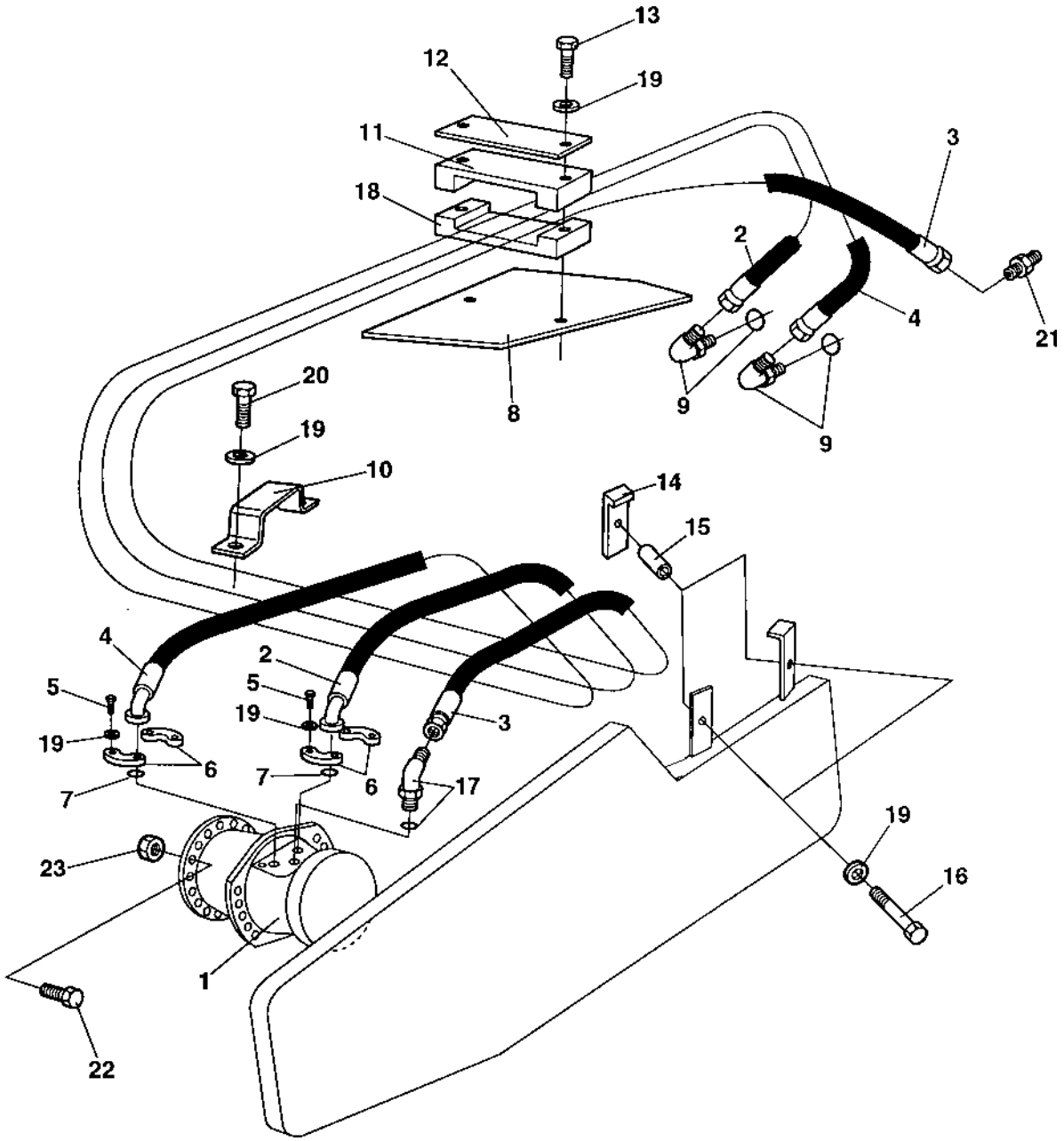
13
12
19
11
3
18
2
4
21
20
8
9
9
19
10
14
15
4
2
5
5
19
19
3
6
6
7
7
17
19
23
16
1
22

Propulsion system, Front

Ref. No.	Part No.	Rem.	Qty	Description	Code
1	384790		1	Propulsion motor (Page 62)	C
2	483553		1	Hydraulic hose	
3	483133		1	Hydraulic hose	
4	483554		1	Hydraulic hose	
5	500030		8	Screw M10-1,5x35H 8,8	
6	929226		4	Flange half	
7	904004		2	O-ring	D
8	349211		1	Hose protection	
9	791231		2	Elbow 90	D
10	373395		1	Hose clamp	
11	343732		1	Hose clamp	
12	335914		1	Cover plate	
13	500077		2	Screw	
14	373270		2	Hose clamp	
15	373423		2	Spacer	
16	500033		2	Screw M10-1,5x60 8,8	
17	813500		1	Elbow 45, O-ring	
18	343872		1	Hose clamp	D
19	904637		14	Washer 10x18x2	
20	500028		2	Screw M10-1,5x25 8,8	
21	334122		1	Adapter	
22	936727		10	Stud M22	
23	936728		10	Nut M22	

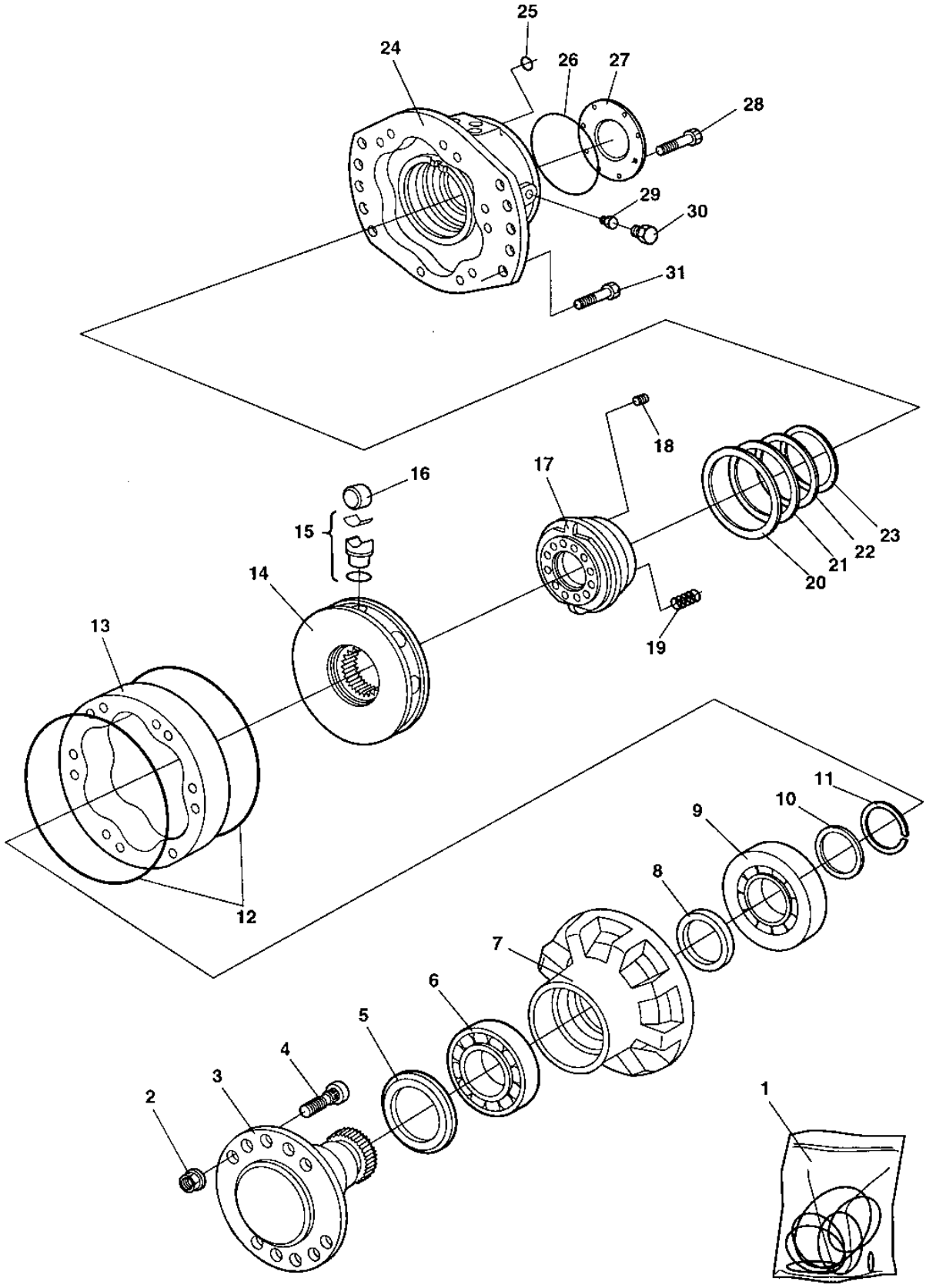
25
24
26
27
28
29
30
31
18
16
17
15
14
13
23
22
21
20
19
12
11
10
9
8
7
6
5
4
3
2
1

384790 Propulsion motor

Ref. No.	Part No.	Rem.	Qty	Description	Code
1	939046		1	Seal kit 384790	
2	936728		10	Nut M22	
3	937286		1	Shaft	
4	936727		10	Stud M22	
5	937293		1	Face seal	
6	937291		1	Bearing	
7	939047		1	Housing	
8	937294		1	Shaft seal	
9	937292		1	Bearing	
10	938693		N	Washer T=1.9mm	
	938694		N	Washer T=2.1mm	
	938695		N	Washer T=2.3mm	
	938696		N	Washer T=2.5mm	
	938697		N	Washer T=2.15mm	
11	937290		1	Split ring	
12	939062		2	SQ. seal ring	
13	937298		1	Piston cam	
14	939048		1	Cylinder block	
15	939050		10	Piston	
16	939049		10	Roller	
17	939052		1	Distributor ring	
18	939053		1	Stop pin	
19	936453		14	Spring	
20	939054		1	Seal 136,3	
21	939055		1	Seal 126,4	
22	939056		1	Seal 121	
23	939057		1	Seal 115,5	
24	939051		1	Housing	
25	937307		1	O-ring	
26	939058		1	SQ. seal ring	
27	939060		1	End cover	
28	939061		8	Screw M16x30	
29	902399		2	Plug	
30	936789		1	Plug	
31	939059		16	Screw M16x90	

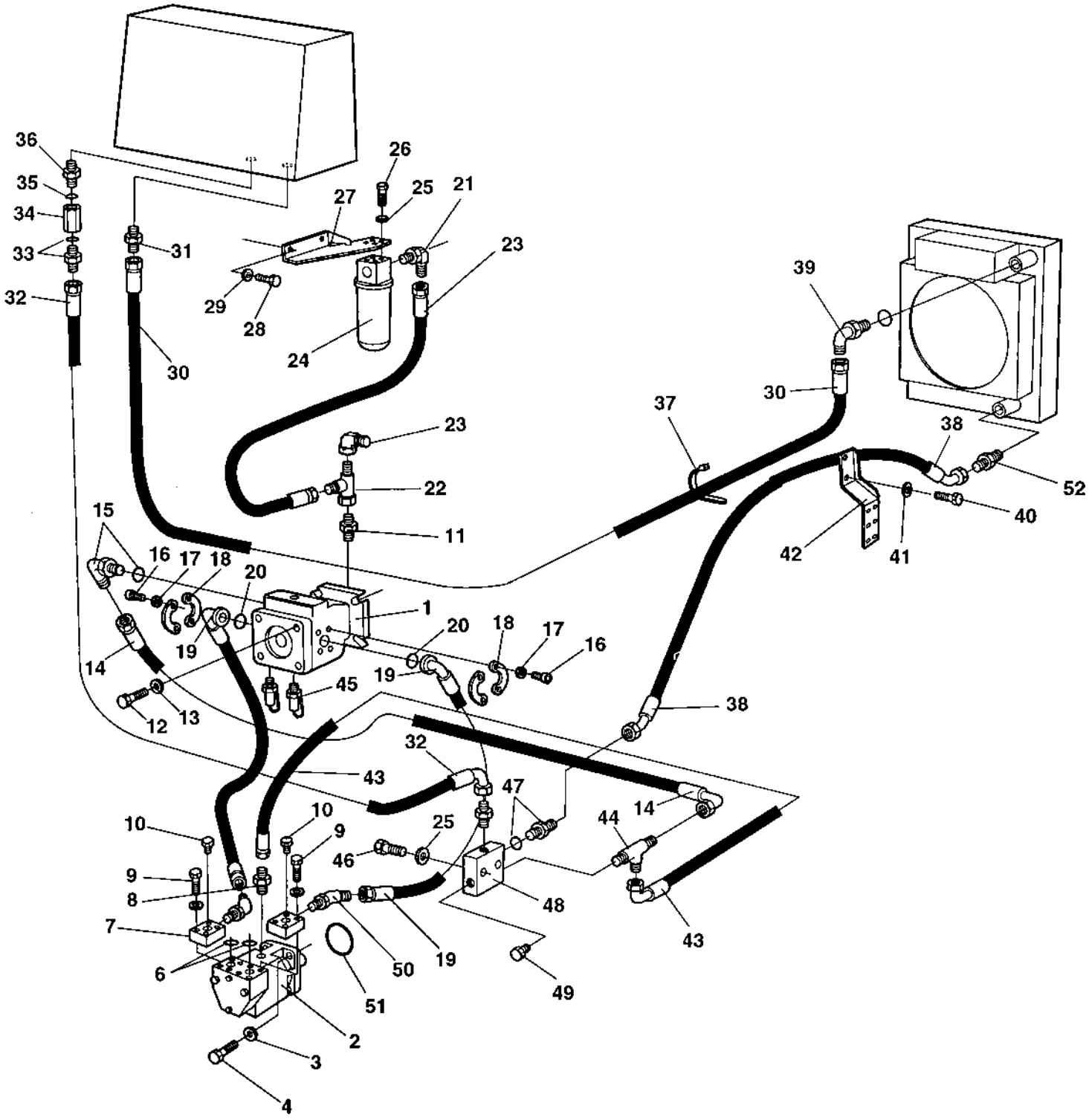
36
35
34
33
32
31
30
26
27
25
21
23
29
28
24
39
30
37
38
52
40
42
41
23
22
11
15
16
17
18
20
1
20
18
17
16
19
14
19
45
12
13
38
32
43
47
14
44
10
10
9
25
46
9
8
7
6
48
43
50
19
51
49
2
3
4

Ref. No.	Part No.	Rem.	Qty	Description	Code
1	380829		1	Propulsion pump	C
2	384598		1	Hydraulic motor	
3	904213		8	Washer	
4	500056		4	Screw M12-1,75x45 8,8	
6	904005		2	O-ring	
7	384784		2	Flange coupling	
8	334138		1	Adapter	
9	900806		8	Screw	
11	334468		1	Adapter	
12	500046		4	Screw	
13	904213		4	Washer	
14	482010		1	Hydraulic hose	D
15	813499		1	Adapter	D
16	502132		8	Screw UNC 7/16" x 22	
17	904638		8	Washer 12x22x2	
18	923384		4	Flange half	
19	483526		2	Hydraulic hose	
20	904005		2	O-ring	
21	234810		1	Elbow 90, O-ring	
22	234243		1	Adapter	
23	334155		1	Connector	
24	359550		1	Hydraulic oil filter, cpl	
	359551		1	.Filter head	
	372229		1	.Filter element Hydraulic	A
25	904637		8	Washer 10x18x2	
26	500028		4	Screw M10-1,5x25 8,8	
27	380490		1	Filter bracket	
28	500021		2	Screw M8-1,25x25 8,8	
29	904229		2	Washer 8,4x16x1,5	
30	483525		1	Hydraulic hose	
31	234909		1	Adapter	
32	482182		1	Hydraulic hose	D
33	923371		1	Adapter	
34	374059		1	Check valve	
35	162008		1	Seal washer	
36	904282		1	Adapter	
37	313102		N	Cable ties L=388 mm	
38	483524		1	Hydraulic hose	
39	334256		1	Adapter	
40	500048		2	Screw M10-1,5x20 8,8	
41	904637		2	Washer 10x18x2	
42	384849		1	Hose clamp	
43	482182		1	Hydraulic hose	D
44	234875		1	Adapter	
45	900229		2	Measuring nipple	D
46	500149		2	Screw M10x70	
47	334140		1	Adapter	
48	345243		1	Connection block	
50	791212		2	Elbow 45	
51	902581		1	O-ring	D
52	234958		1	Connector	

Vibration system

17426

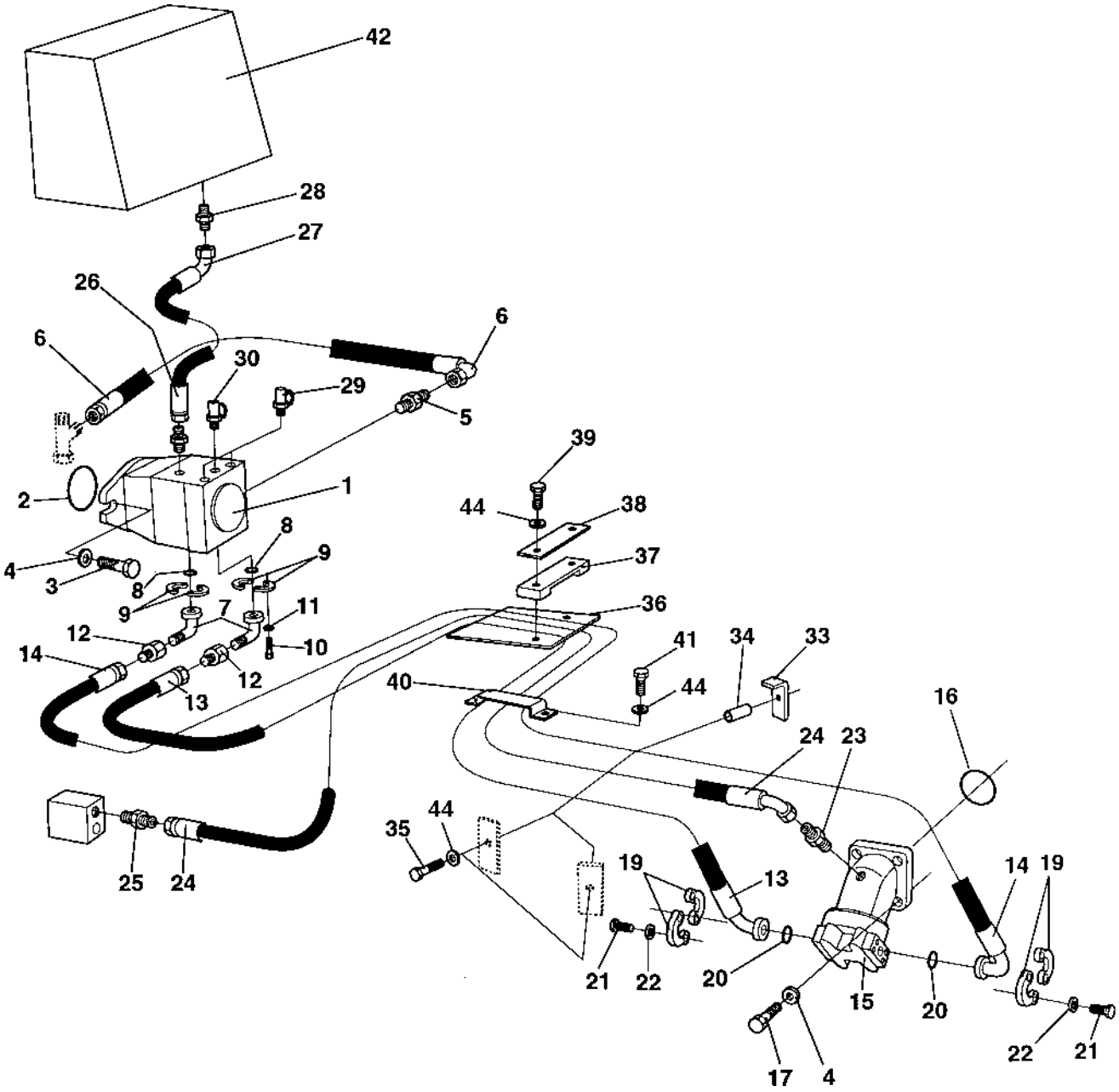

Ref. No.	Part No.	Rem.	Qty	Description	Code
1	384751		1	Vibration pump	C
2	900512		1	O-ring	D
3	502059		2	Screw	
4	904703		2	Washer 13x24x4	
5	234382		1	Adapter	
6	483131		1	Hydraulic hose	
7	900455		2	Flange adapter	
8	904773		2	O-ring	
9	929226		4	Flange half	
10	500030		8	Screw M10-1,5x35H 8,8	
11	904637		8	Washer 10x18x2	
12	234667		2	Reducer	
13	483139		1	Hydraulic hose	
14	483138		1	Hydraulic hose	
15	380144		1	Vibration motor	C
16	160157		1	O-ring	D
17	500194		4	Screw M12x40	
19	900430		4	Flange half	
20	904774		2	O-ring	
21	502019		8	Screw	
22	904229		8	Washer 8,4x16x1,5	
23	813500		1	Elbow 45, O-ring	
24	482766		1	Hydraulic hose	
25	334122		1	Adapter	
26	901155		1	Connector	
27	483132		1	Hydraulic hose	
28	334205		1	Straight connector	
29	901157		2	Measuring nipple	D
30	373774		1	Measuring nipple	D
33	373270		2	Hose clamp	
34	373507		2	Spacer	
35	500091		2	Screw	
36	349211		1	Hose protection	
37	343732		1	Hose clamp	
38	335914		1	Cover plate	
39	500033		2	Screw M10-1,5x60 8,8	
40	373396		1	Hose clamp	
41	500028		2	Screw M10-1,5x25 8,8	
42	372044		1	Hydraulic oil tank (Page 68)	
43	904231		4	Washer 13x24x2	
44	904230		6	Washer 10,5x22x2	

372044 Hydraulic oil tank

16054

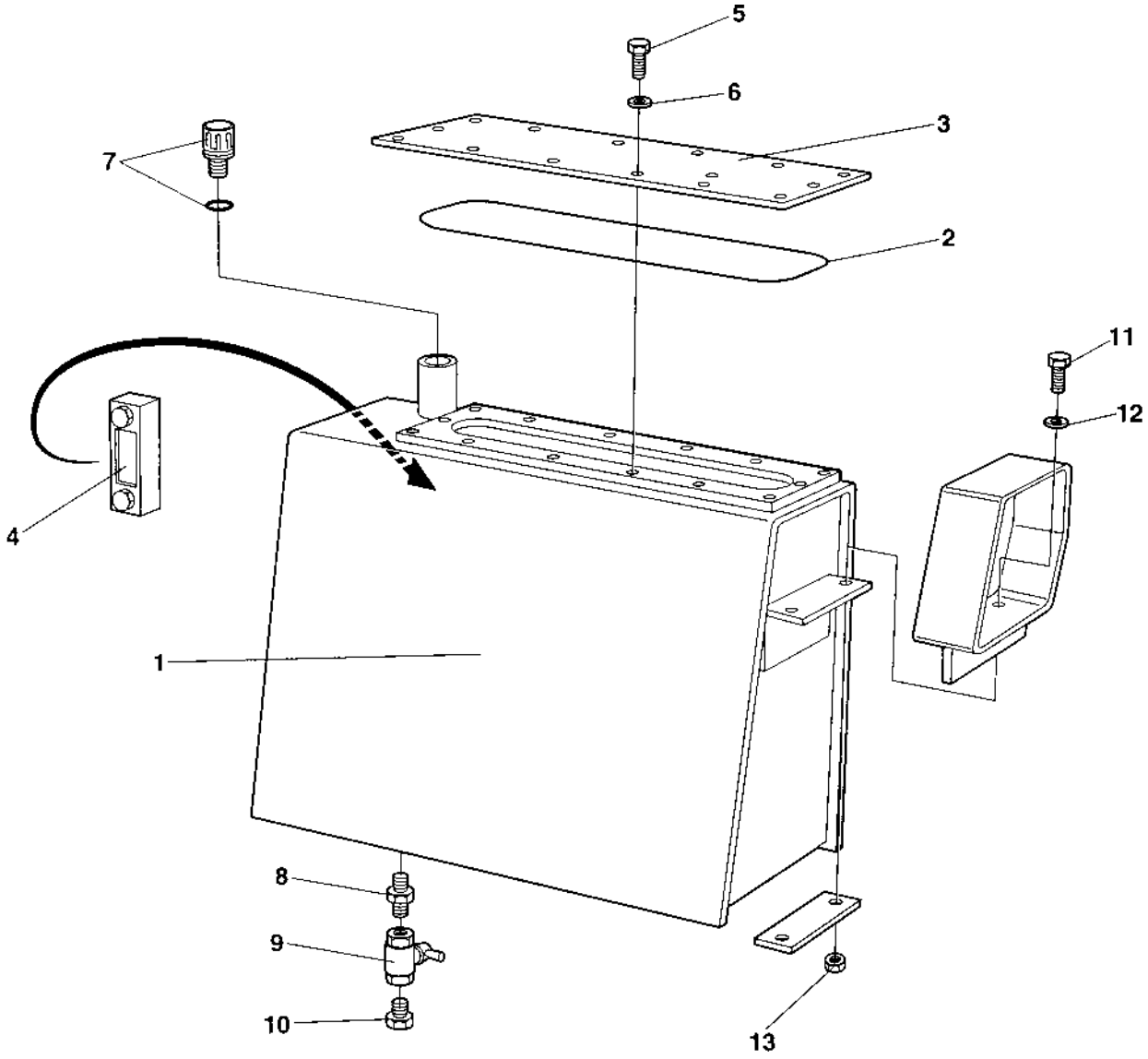

372044 Hydraulic oil tank

Ref. No.	Part No.	Rem.	Qty	Description	Code
			1	Hydraulic oil tank, CPL	
1	372029		1	.Hydraulic oil tank	
2	349880		1	.O-ring	D
3	349879		1	.Cover	
4	989151		1	.Oil level gauge	D
5	500019		14	.Screw M8-1,25x16 8,8	
6	904229		14	.Washer 8,4x16x1,5	
7	357138		1	.Ventilating filter	B
8	813738		1	.Adapter	
9	233304		1	.Ball valve	
10	232122		1	.Plug	
11	500192		4	Screw M10x80	
12	904567		4	Washer	
13	570006		4	Nut M10	

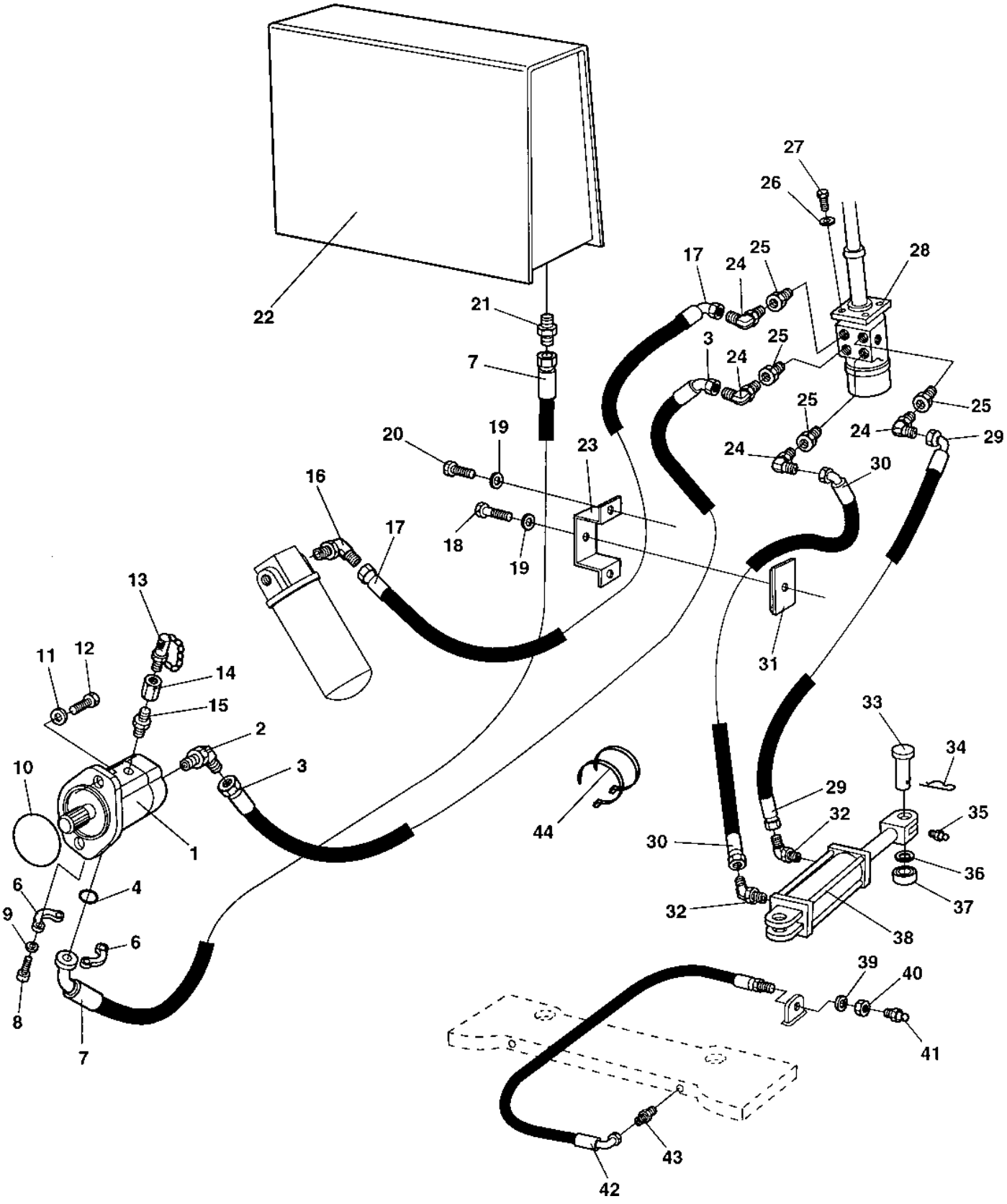
22
21
7
20
19
23
16
17
18
19
13
11
12
14
15
2
3
10
1
6
4
9
6
8
7
44
27
26
17
24
25
28
3
24
25
25
25
24
29
24
30
31
33
34
29
32
35
30
36
32
37
38
39
40
41
43
42

Ref. No.	Part No.	Rem.	Qty	Description	Code
1	385042		1	Steering pump	
2	801244		1	Adapter	
3	482885		1	Hydraulic hose	
4	904005		1	O-ring	
6	232097		2	Flange half	D
7	483528		1	Hydraulic hose	
8	508029		4	Screw M10-1,5x30H 8,8	
9	904637		4	Washer 10x18x2	
10	937055		1	O-ring	
11	904231		4	Washer 13x24x2	
12	500051		4	Screw M12-1,75x25 8,8	
13	910161		1	Measuring nipple	D
14	338304		1	Connector	
15	334199		1	Straight o-ring connector	
16	929123		1	Elbow 90, O-ring	
17	482434		1	Hydraulic hose	
18	904241		1	Screw M8 x 40	
19	904229		3	Washer 8,4x16x1,5	
20	500019		2	Screw M8-1,25x16 8,8	
21	234626		1	Adapter	
22	372044		1	Hydraulic oil tank (Page 68)	
23	372513		1	Hose clamp	
24	334197		4	Elbow 90	
25	334116		4	Straight o-ring connector	
26	904230		4	Washer 10,5x22x2	
27	502034		4	Screw UNC 3/8 - 16	
28	385393		1	Steering valve	
29	482434		1	Hydraulic hose	
30	482525		1	Hydraulic hose	
31	372514		1	Hose clamp	
32	813500		2	Elbow 45, O-ring	
33	347119		1	Shaft	D
34	635061		1	Hair clip	D
35	926214		1	Grease fitting	D
36	904234		1	Washer 25x45x4	
37	813316		2	Ball bushing	D
38	375031		1	Hydraulic cylinder (Page 72)	C
39	904231		1	Washer 13x24x2	
40	903831		1	Nut	
41	926214		1	Grease fitting	D
42	903812		1	Hydraulic hose	
43	371669		1	Straight connector	
44	313102		N	Cable ties L=388 mm	

375031 Hydraulic cylinder

16490

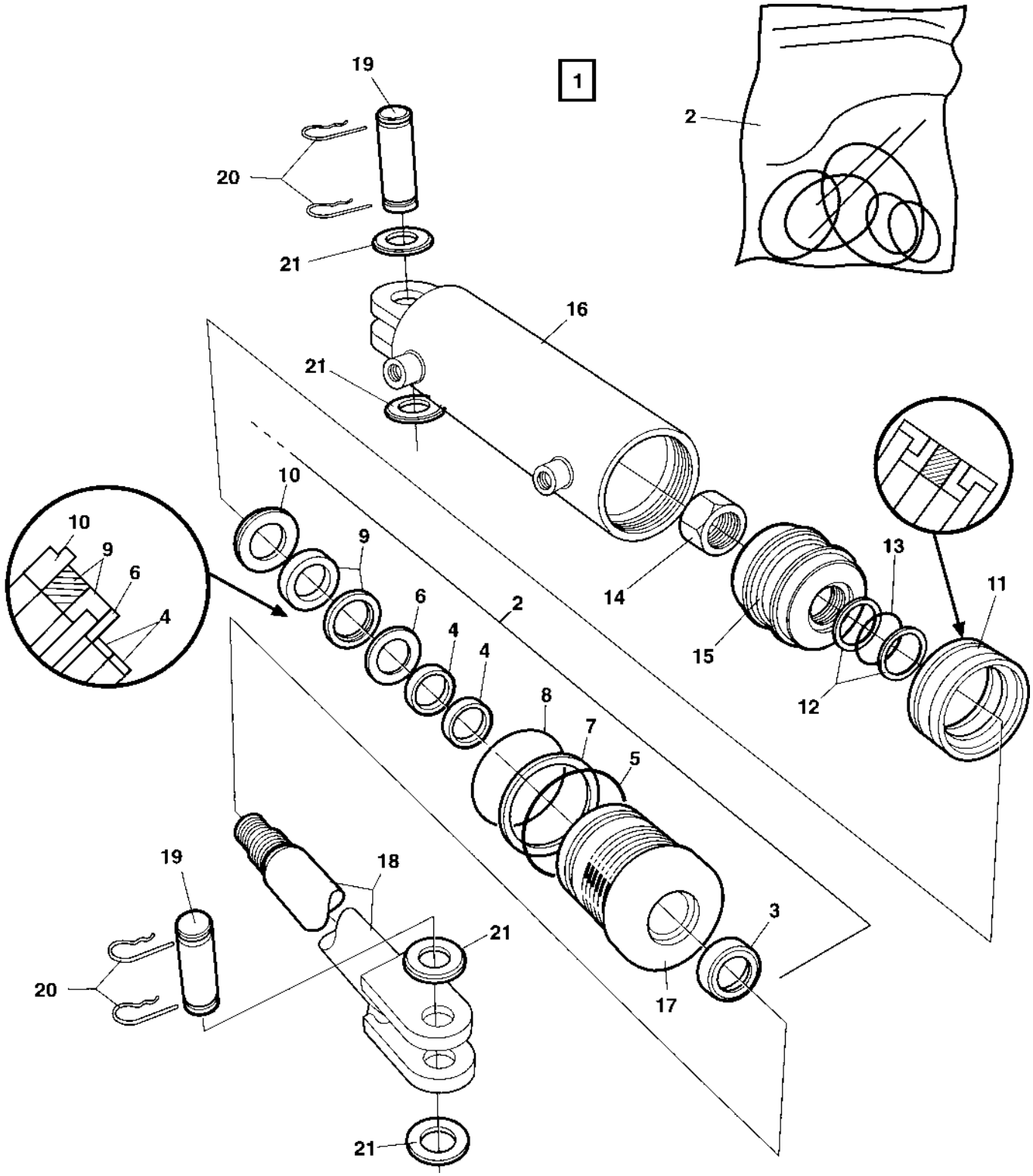

375031 Hydraulic cylinder

Ref. No.	Part No.	Rem.	Qty	Description	Code
1			1	Steering cylinder, cpl	
2	904145		1	.Seal kit	D
3			1	..Seal	D
4			2	..Seal	D
5			1	..O-ring	D
6			1	..Back-up ring	D
7			1	..Back-up ring	D
8			1	..O-ring	D
9			1	..Seal	D
10			1	..Retaining ring	D
11			1	..Seal	D
12			2	..Back-up ring	D
13			1	..O-ring	D
14			1	..Lock nut	D
15	904143		1	.Piston block	
16	936267		1	.Cylinder	
17	903619		1	.Steering	
18	936268		1	.Piston rod	
19	347119		2	.Shaft	D
20	635061		4	.Hair clip	D
21	600016		4	.Washer 26x45x4	

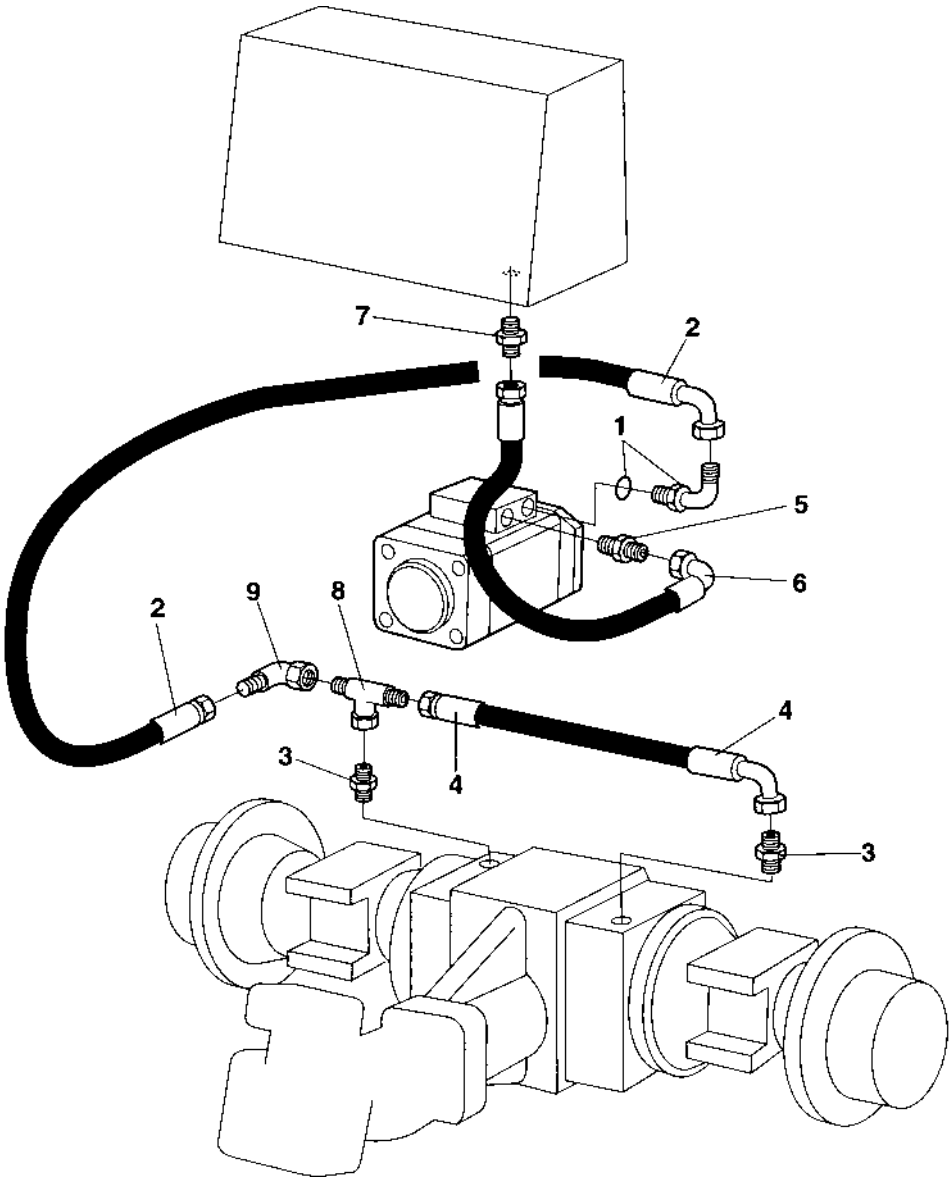
7
2
1
5
6
2
9
8
4
3
4
3

Ref. No.	Part No.	Rem.	Qty	Description	Code
1	334389		1	Connector	
2	482543		1	Hydraulic hose	
3	900552		2	Adapter	
4	483552		1	Hydraulic hose	D
5	234843		1	Adapter	
6	482516		1	Hydraulic hose	
7	334205		1	Straight connector	
8	234888		1	Tee-connector	
9	334524		2	Connector Model Antal kollas	

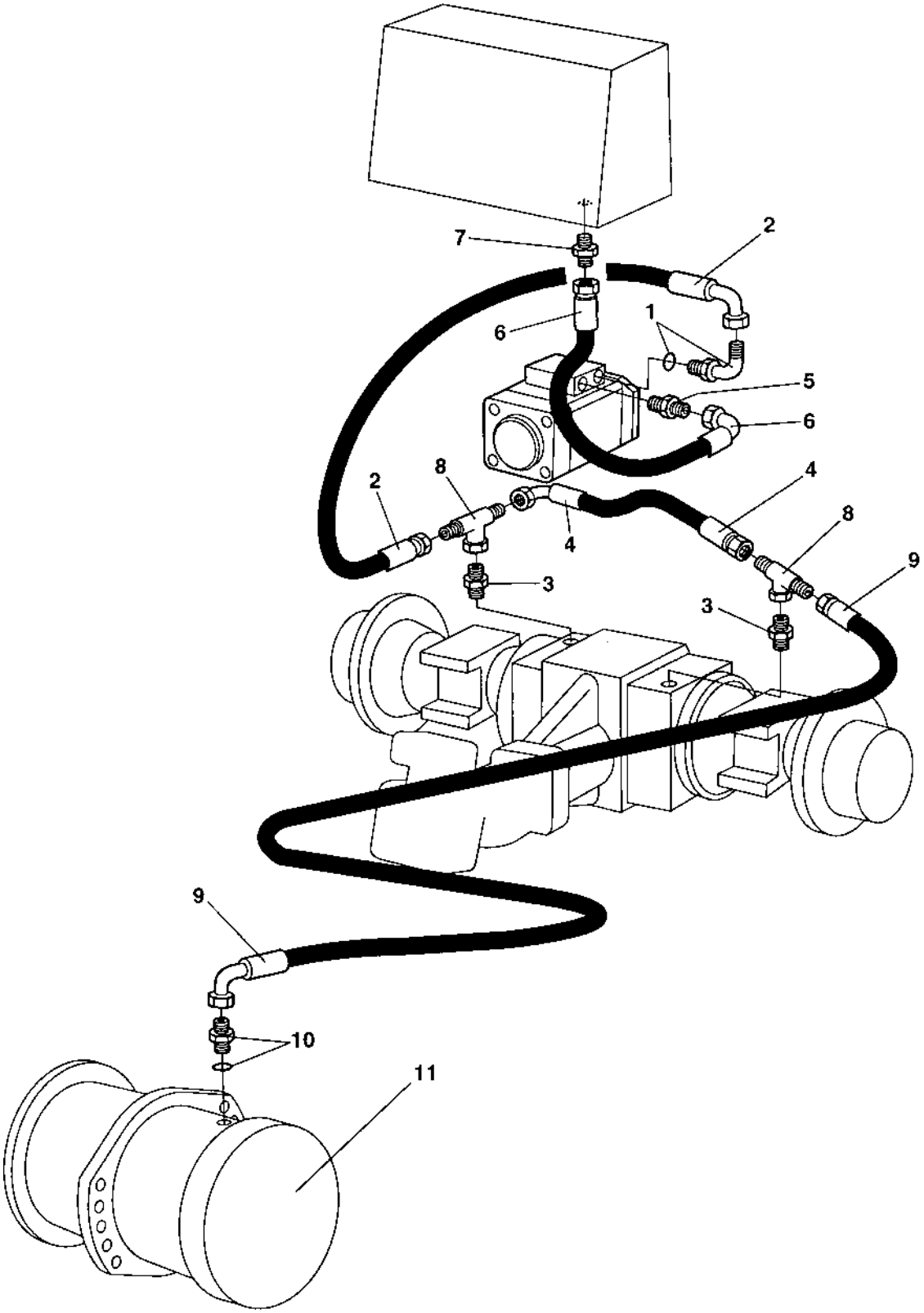
7
2
6
1
5
6
2
8
4
4
8
9
3
3
9
10
11

Ref. No.	Part No.	Rem.	Qty	Description	Code
1	334389		1	Connector	
2	482543		1	Hydraulic hose	
3	900552		2	Adapter	
4	483552		1	Hydraulic hose	D
5	234843		1	Adapter	
6	482516		1	Hydraulic hose	
7	334205		1	Straight connector	
8	234888		2	Tee-connector	
9	483134		1	Hydraulic hose	
10	234233		1	Adapter	
11	372250		1	Propulsion motor (Page 78)	C

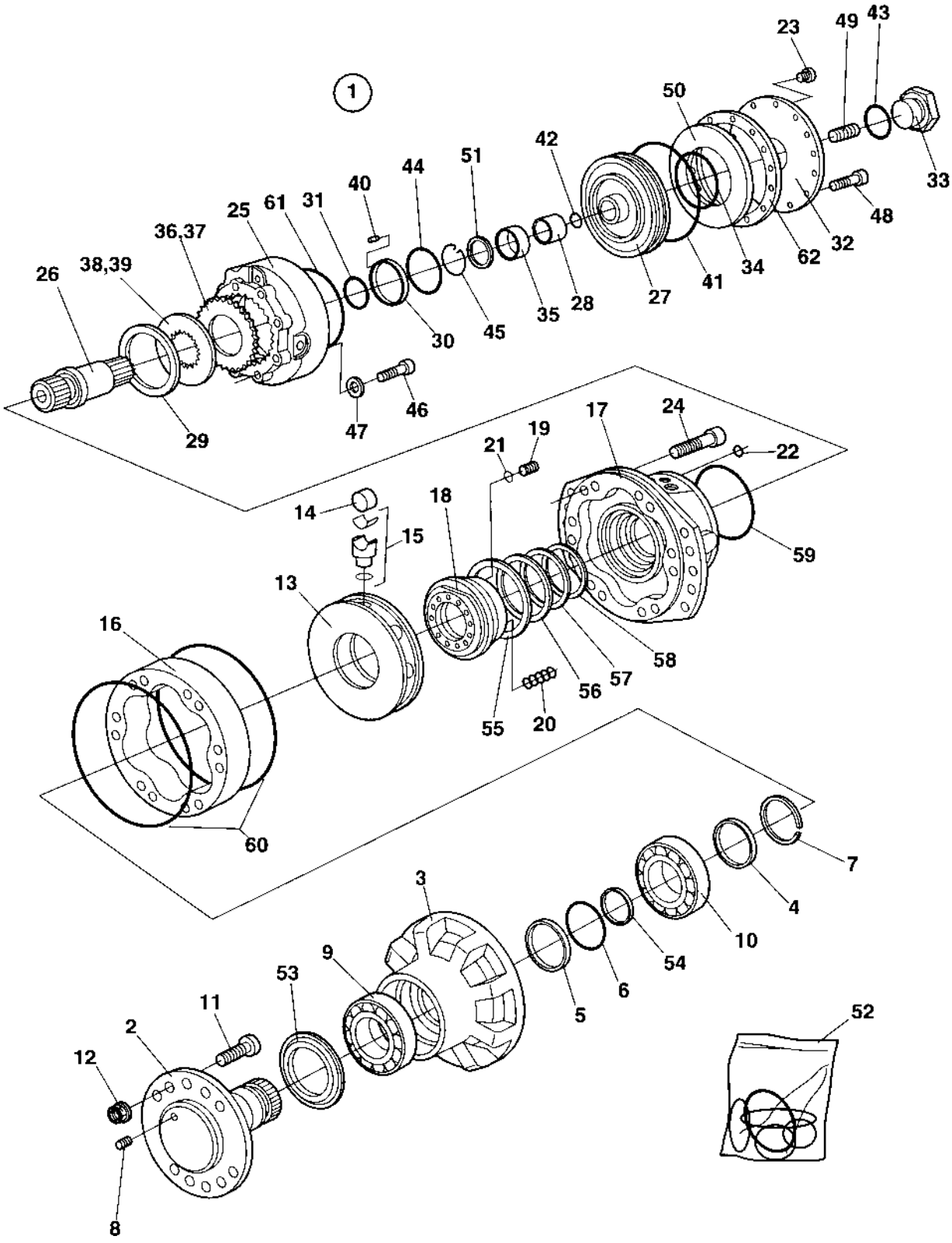
1
23
49
43
50
42
44
51
40
25
61
31
36,37
38,39
26
29
30
45
35
28
27
41
34
62
32
48
33
47
46
17
24
19
21
22
14
18
15
59
13
16
58
57
56
55
20
60
7
4
3
10
54
9
53
6
5
11
2
12
52
8

372250 Propulsion motor

Ref. No.	Part No.	Rem.	Qty	Description	Code
1			1	Propulsion motor, Cpl	C
2	937286		1	.Shaft	
3	937287		1	.Housing	
4	938693		1	.Washer T=1.9mm	
	938694		1	.Washer T=2.1mm	
	938695		1	.Washer T=2.3mm	
	938696		1	.Washer T=2.5mm	
	938697		1	.Washer T=2.15mm	
5	937289		1	.Seal ring	
6	936459		1	.O-ring	
7	937290		1	.Split ring	
8	936436		1	.Plug	
9	937291		1	.Bearing	
10	937292		1	.Bearing	
11	936727		10	.Stud M22	
12	936728		10	.Nut M22	
13	937295		1	.Cylinder block	
14	937296		10	.Roller	
15	937297		10	.Piston	
16	937298		1	.Piston cam	
17	937299		1	.Housing	
18	937300		1	.Ring	
19	937301		1	.Pin	
20	936453		14	.Spring	
21	937306		1	.O-ring	
22	937307		1	.O-ring	
23	902399		1	.Plug	
24	937309		16	.Screw	
25	937311		1	.Brake housing	
26	937312		1	.Brake shaft	
27	937313		1	.Brake piston	
28	937314		1	.Brake pad	
29	937315		1	.Washer	
30	937316		1	.Seal ring	
31	937318		1	.O-ring	
32	937319		1	.Cover	
33	903295		1	.Plug	
34	936763		1	.Washer	
35	937321		1	.Bush	
36	937322		18	.Outer plate	
37	937323		14	.Inner plate	
38	937324		1	.Shim 130x105x0.1	
39	937325		1	.Shim 130x105x0.5	
40	937326		3	.Pin	
41	937327		1	.Seal ring	
42	937328		1	.O-ring	
43	903327		1	.O-ring	
44	937329		1	.Piston seal	
45	937330		1	.Circlip	
46	937331		8	.Screw	
47	936773		8	.Washer	
48	936483		24	.Screw	
49	936775		1	.Screw	
50	937332		1	.Spring	
51	937333		1	.Washer	
52	937334		1	.Seal kit	
53	937293		1	..Face seal	
54	937294		1	..Shaft seal	
55	937302		1	..Seal	
56	937303		1	..Seal	
57	937304		1	..Seal	
58	937305		1	..Seal	

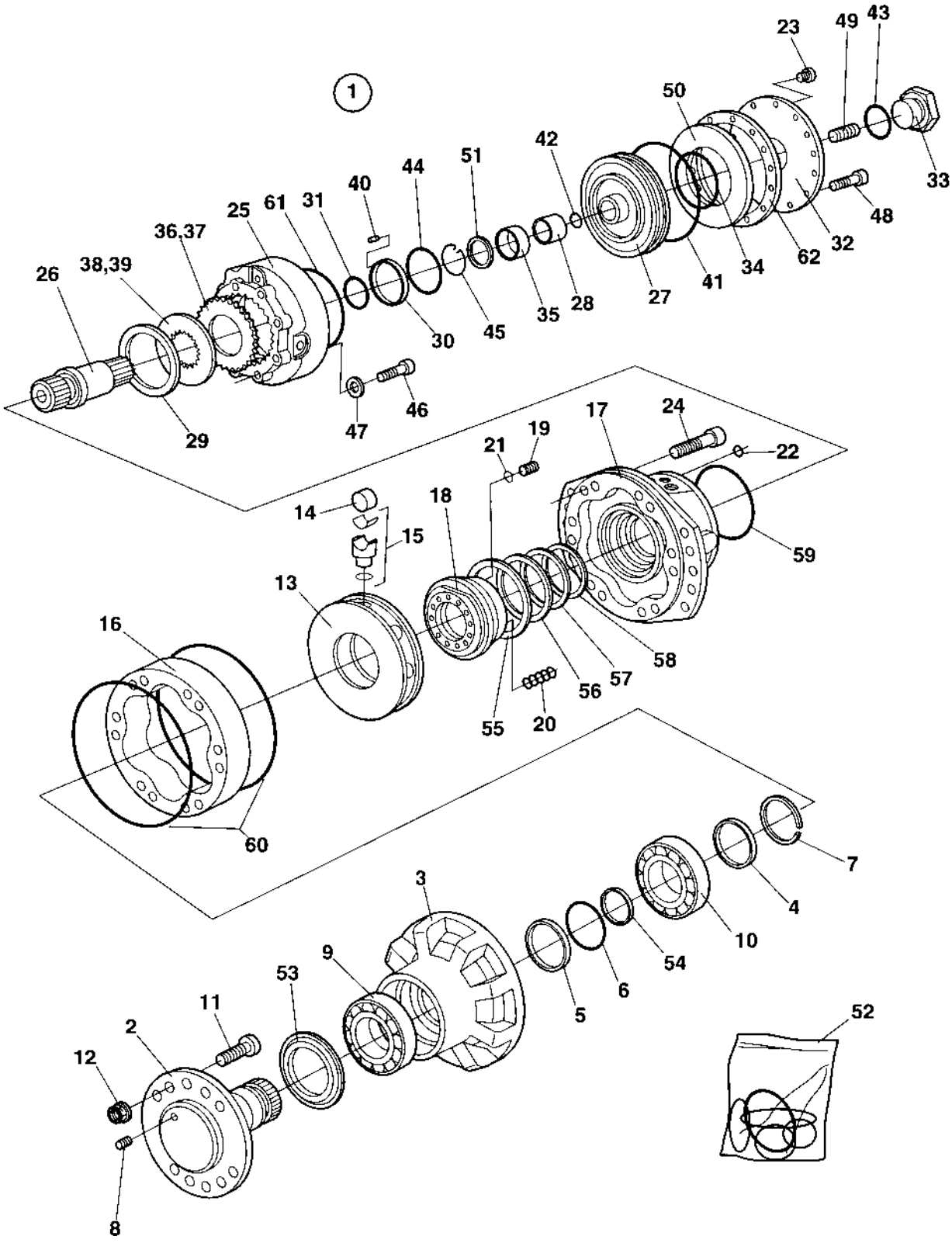
1
23
49
43
50
42
44
51
40
25
61
31
36,37
38,39
26
29
30
45
35
28
27
41
34
62
32
48
33
47
46
17
24
19
21
22
14
18
15
59
13
16
58
57
56
55
20
60
7
4
3
10
54
9
53
6
5
11
2
12
52
8

Ref. No.	Part No.	Rem.	Qty	Description	Code
59	937308		1	..O-ring	
60	937310		2	..O-ring	
61	937317		1	..Seal	
62	937320		1	..Gasket	

Variable rear axle motor Option

17464

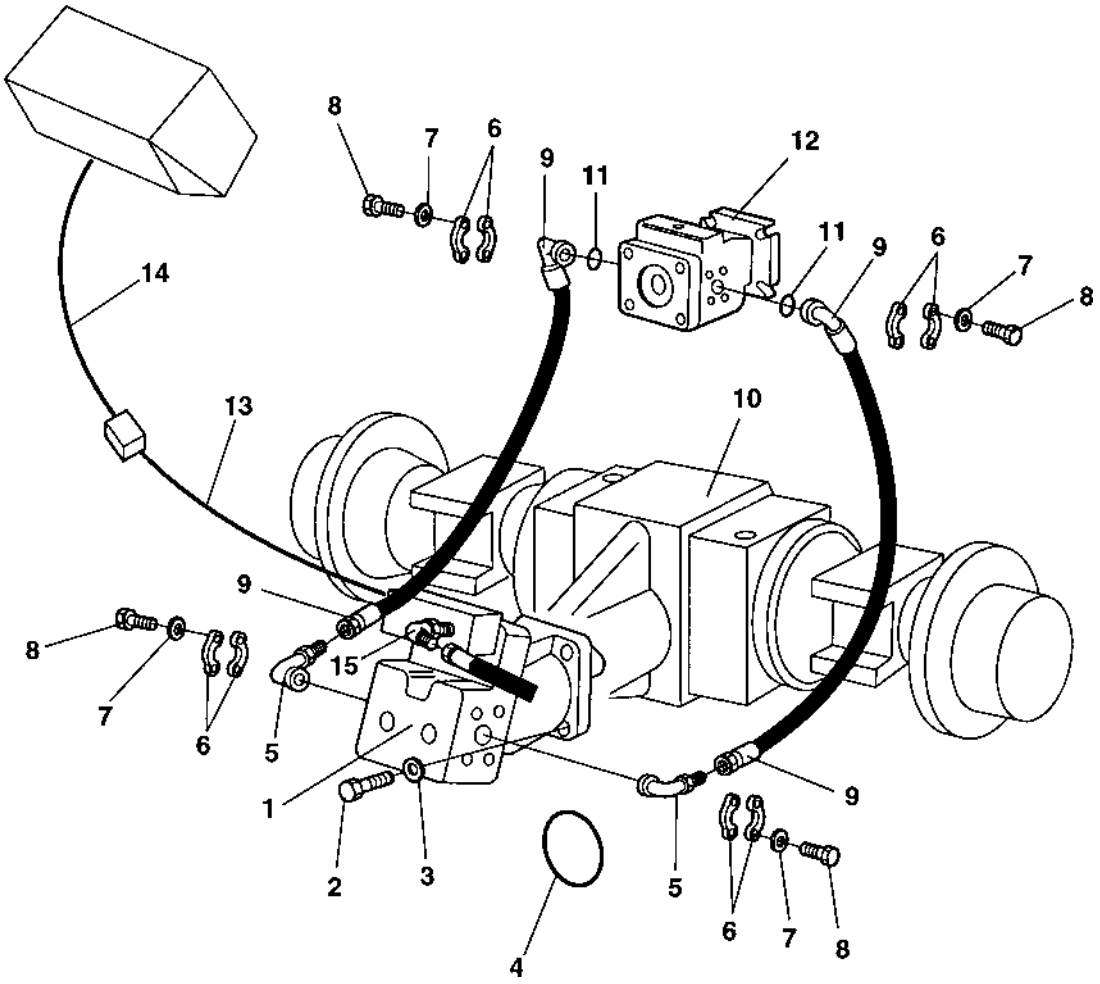

Variable rear axle motor Option

Ref. No.	Part No.	Rem.	Qty	Description	Code
1	383973		1	Propulsion motor	
2	500263		4	Screw M18x60	
3	904793		4	Washer	
4	160157		1	O-ring Model Kontroleras	D
5	791213		2	Flange fitting 90	
6	923384		8	Flange half	
7	904638		16	Washer 12x22x2	
8	502132		16	Screw UNC 7/16" x 22	
9	483551		2	Hydraulic hose	
10	383855		1	Rear axle (Page 84)	
11	904005		2	O-ring	
12	380829		1	Propulsion pump	C
13	380577		1	Wiring harness	
14	380700		1	Wiring harness	
15	791230		2	Elbow 45	

383855 Rear axle

17503

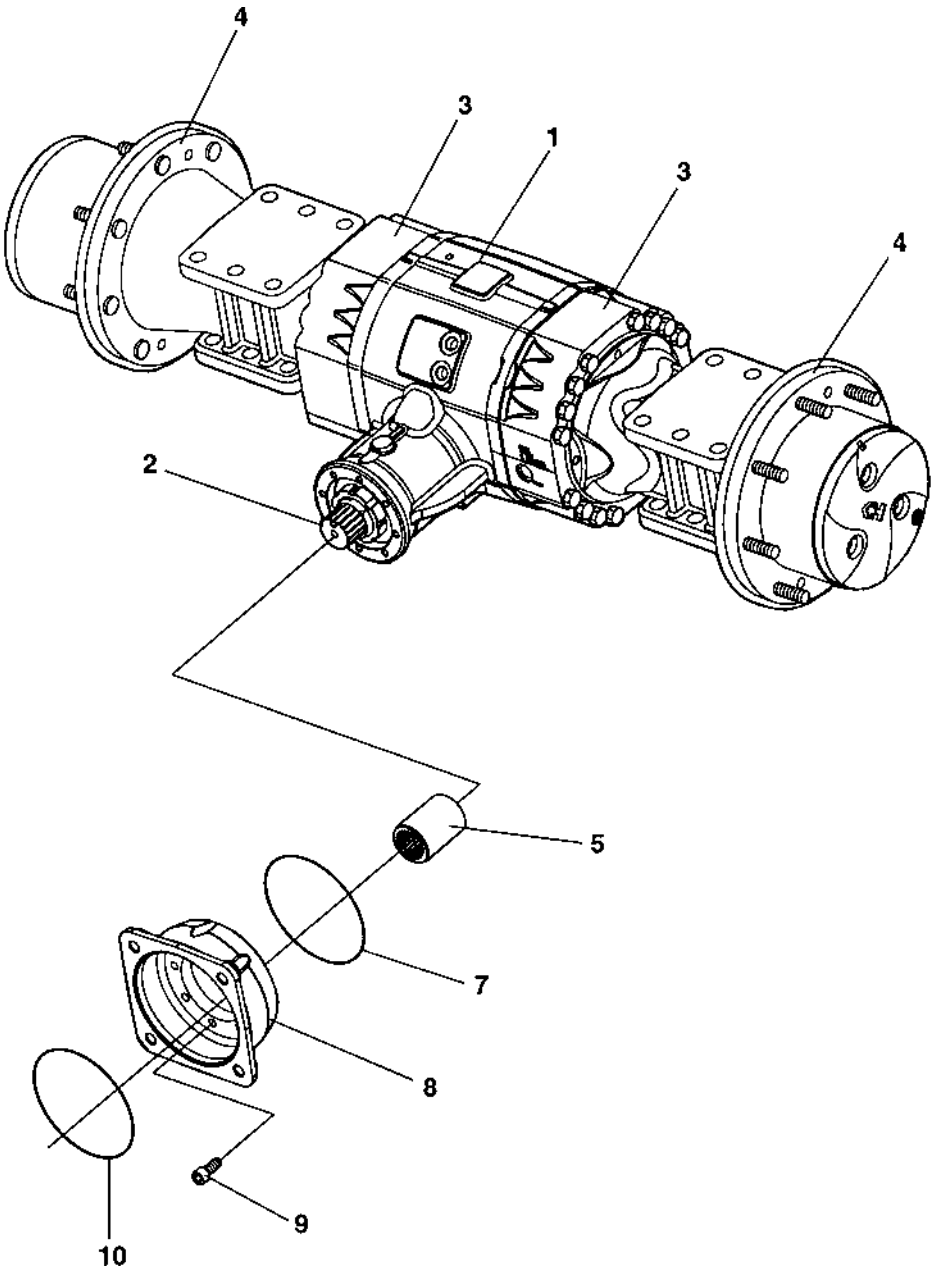

Ref. No.	Part No.	Rem.	Qty	Description	Code
1			1	Housing (Page 86)	
2			2	Differential with limited slip (Page 88)	
3			1	Brakes (Page 90)	
4			2	Planet gear (Page 92)	
5	901834		1	Splined sleeve	
7	929648		1	O-ring	D
8	909583		1	Flange	
9	909582		8	Screw	
10	909584		1	O-ring	D

Housing

17490

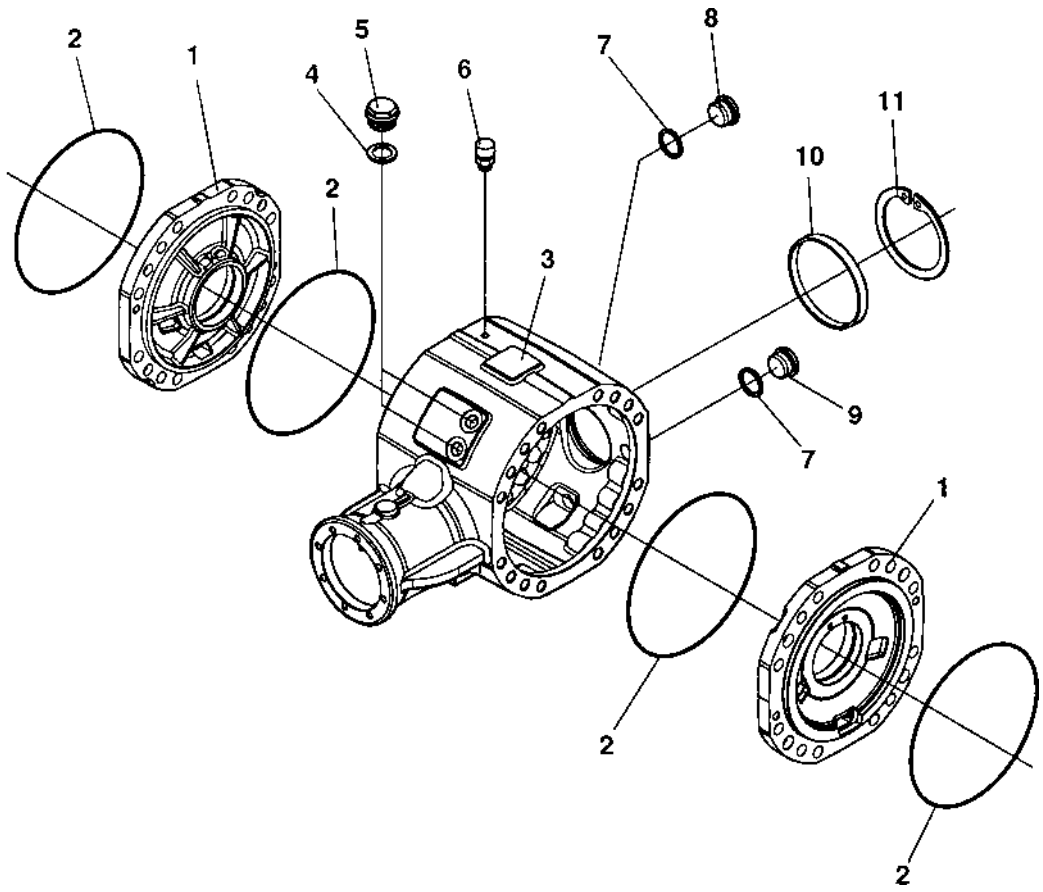

Housing

Ref. No.	Part No.	Rem.	Qty	Description	Code
1	938980		2	Cover	
2	938981		4	O-ring	
3	938982		1	Housing	
4	938983		2	Seal washer	
5	909544		4	Screw	
6	938984		1	Vent nipple	
7	909607		2	Seal	D
8	938985		1	Magnet plug	
9	909596		1	Plug	
10	938986		1	Plug	
11	938987		1	Circlip	

Differential with limited slip

17491

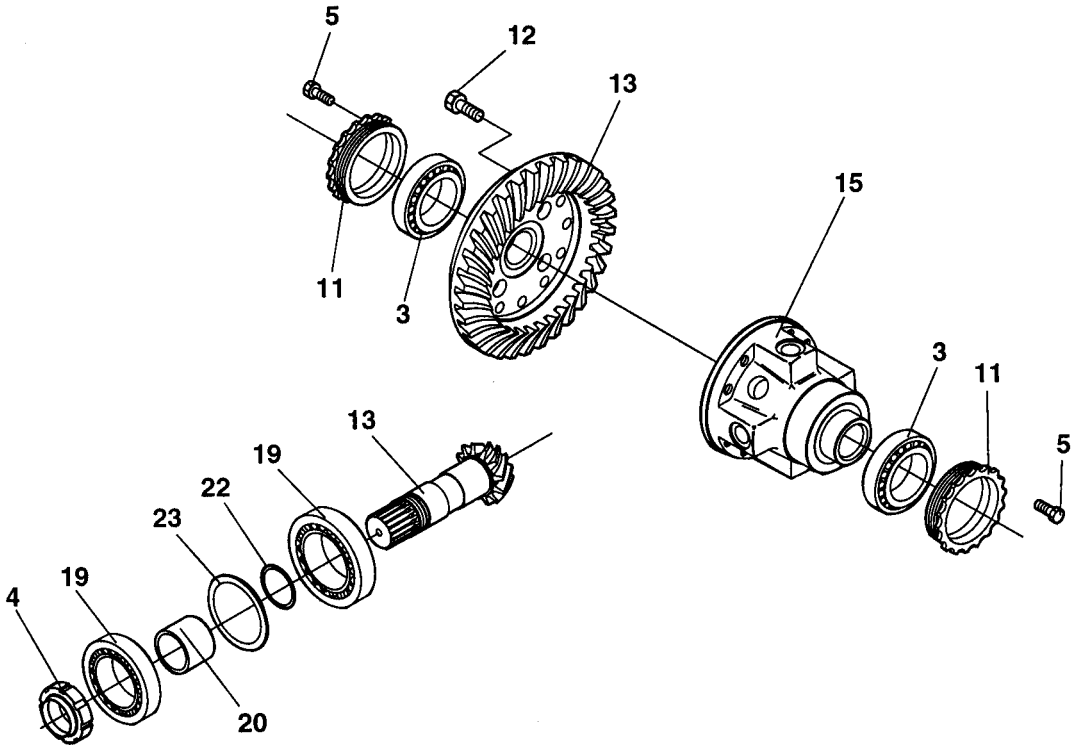

Ref. No.	Part No.	Rem.	Qty	Description	Code
3	936023		2	Bearing	
4	938988		1	Ring nut	
5	938989		2	Screw	
11	938990		2	Ring nut	
12	938991		12	Screw	
13	938992		1	Gear set	
15	938994		1	Limited slip disc	
19	926116		2	Bearing	
20	938995		1	Spacer	
22	936052		N	Shim 0.10mm	
	936053		N	Shim 0.15mm	
	936054		N	Shim 0.20mm	
	936055		N	Shim 0.40mm	
	936056		N	Shim 0.50mm	
23	938996		N	Shim 0,20 mm	
	938997		N	Shim 0,30 mm	
	938998		N	Shim 0,15 mm	
	938999		N	Shim 0,10 mm	

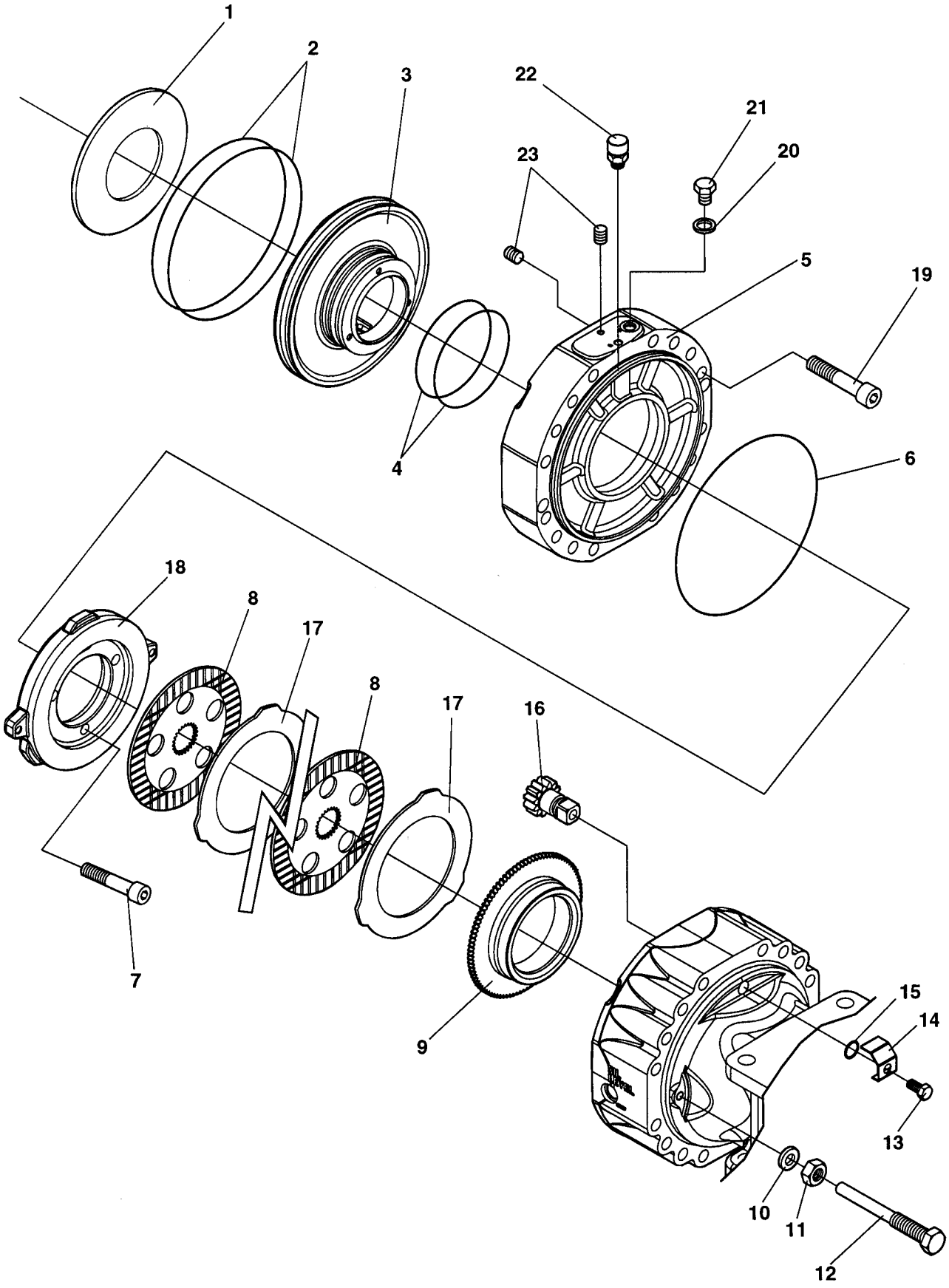
1
2
3
22
21
20
23
5
19
4
6
18
8
17
8
17
16
7
9
15
14
13
10
11
12

Ref. No.	Part No.	Rem.	Qty	Description	Code
1	909616		2	Spring	
2	939021		4	O-ring	
3	939022		2	Piston	
4	939023		4	O-ring	
5	939024		2	Cover	
6	939025		2	O-ring	
7	939026		6	Screw	
8	939027		8	Brake disc	
9	939028		2	Ring	
10	939029		4	Lock washer	
11	900957		4	Nut	
12	939030		4	Adjusting bolt	
13	909547		2	Screw	
14	939031		2	Plate	
15	939032		2	O-ring	
16	936097		2	Pinion	
17	939033		8	Brake disc	
18	939034		2	Disc	
19	939035		4	Screw	
20	939036		2	Seal washer	
21	939037		2	Screw	
22	939038		2	Vent nipple	
23	939039		4	Stop screw	

Planet gear

17493

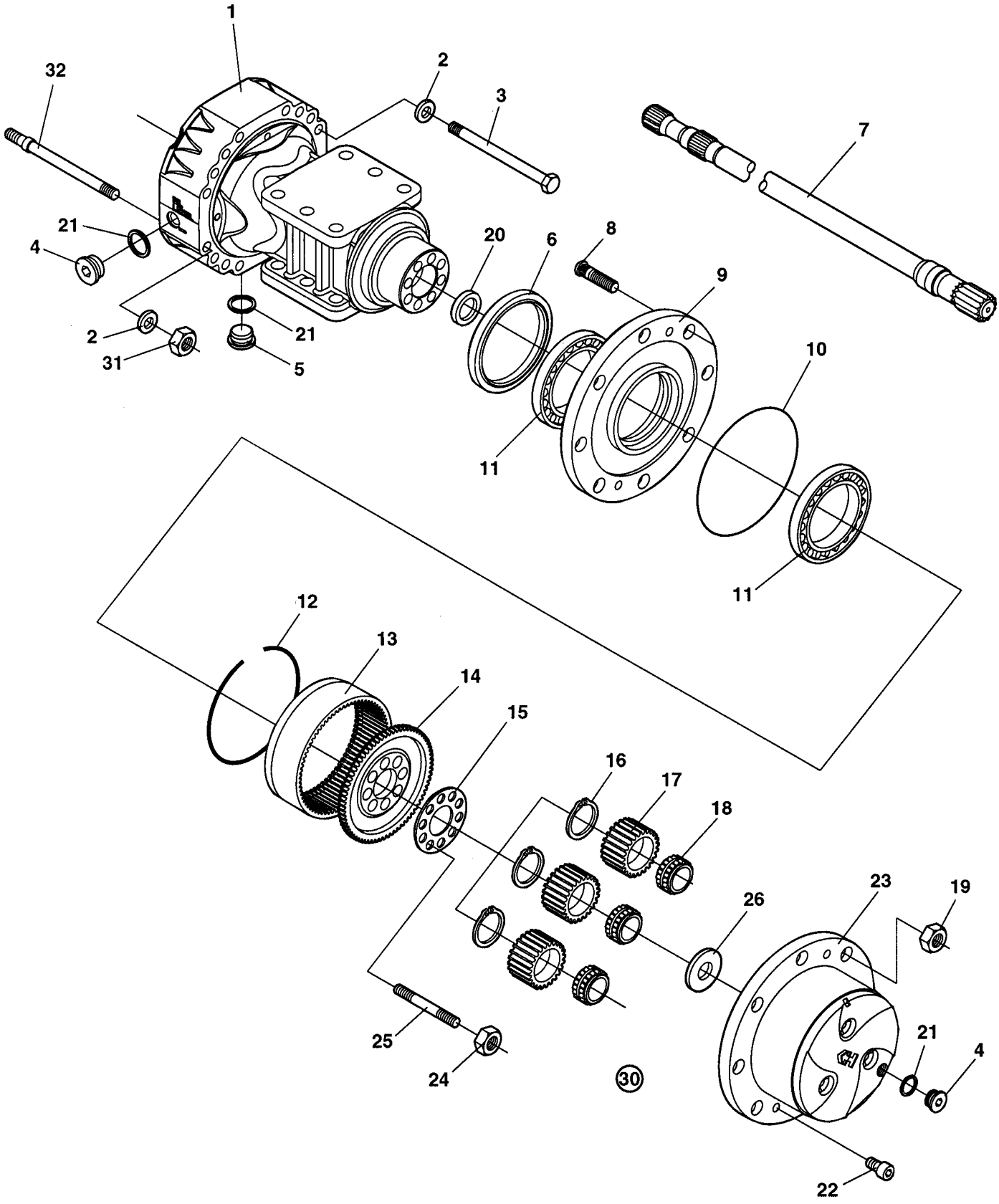

Planet gear

Ref. No.	Part No.	Rem.	Qty	Description	Code
1	939002		1	Housing	
2	939003		16	Spring washer	
3	939004		12	Screw	
4	909596		2	Plug	
5	939005		1	Magnet plug	
6	939006		1	Seal	
7	939007		1	Shaft	
8	926781		8	Wheel screw	
9	939008		1	Wheel hub	
10	936020		1	O-ring	D
11	939009		2	Bearing	
12		1	1		
13		1	1		
14		1	1		
15	939010		1	Locking plate	
16	939011	1	3	Circlip	
17	939012	1	3	Planet gear	
18	939013	1	3	Bearing	
19	901987		8	Wheel nut	
20	939014		1	Seal	
21	909607		3	Seal	D
22	939015		2	Screw	
23		1	1		
24	939016		8	Nut	
25	939017		8	Stud	
26		1	1		
30	939018		1	Planet gear carrier	
31	939019		4	Nut	
32	939020		4	Stud	

1) Included in ref. 30

Central test panel hydraulic Option

17470

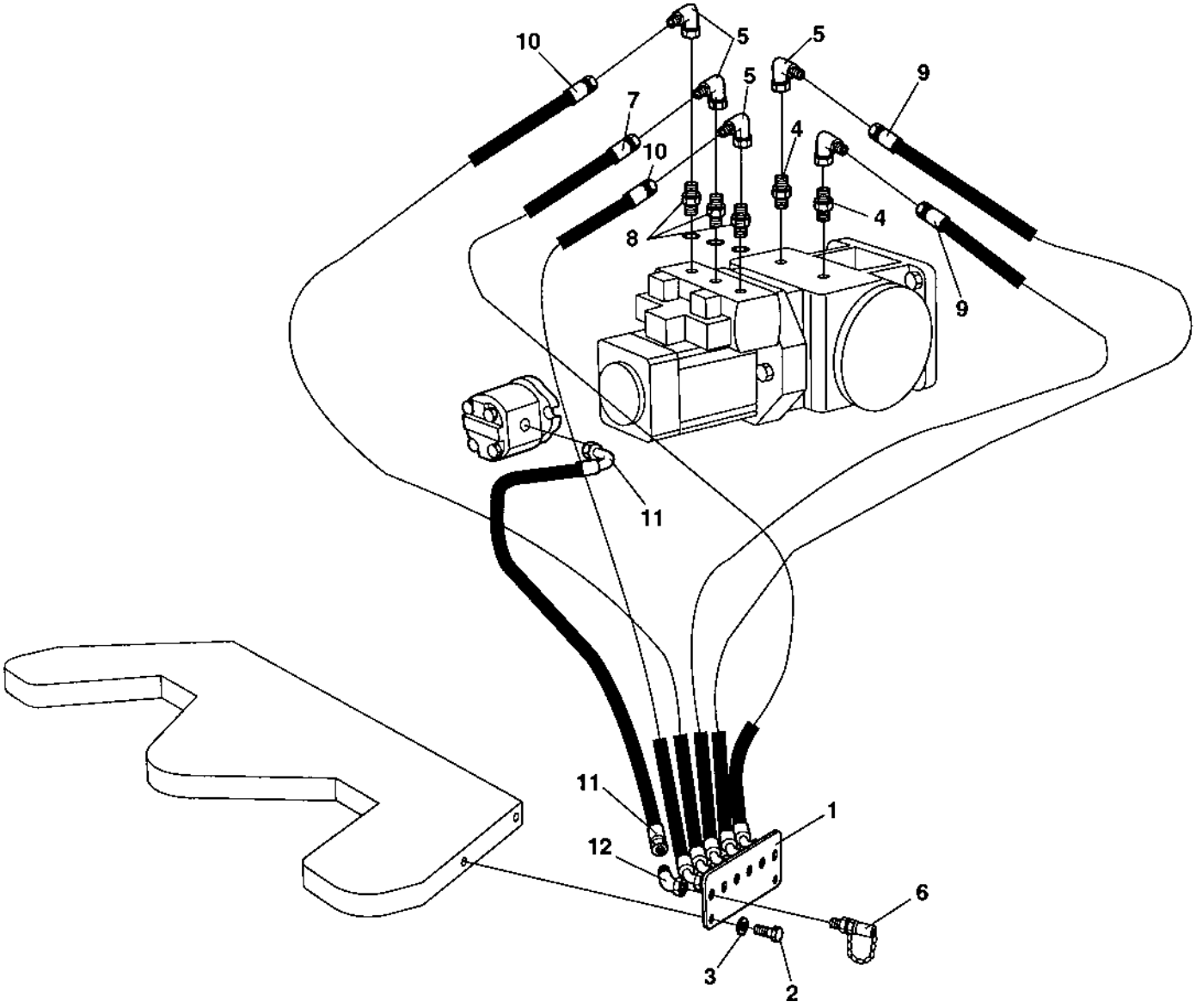

Central test panel hydraulic Option

Ref. No.	Part No.	Rem.	Qty	Description	Code
1	374028		1	Test panel	
2	500053		2	Screw M8-1,25x20 8,8	
3	904229		2	Washer 8,4x16x1,5	
4	234388		2	Connector	
5	334196		5	Elbow 90	
6	356348		6	Fitting	D
7	482342		1	Hydraulic hose	
8	902125		3	Connector	
9	483188		2	Hydraulic hose	
10	483445		2	Hydraulic hose	
11	483547		1	Hydraulic hose	
12	234622		1	Elbow 45	

Ref. No.	Part No.	Rem.	Qty	Description	Code
10				Electrical system (Page 98)	
20				Control panel (Page 100)	
40				Working lights Option (Page 102)	
50				Rotating beacon Option (Page 104)	
60				Back-up alarm Option (Page 106)	
70				Compaction meter Option (Page 108)	

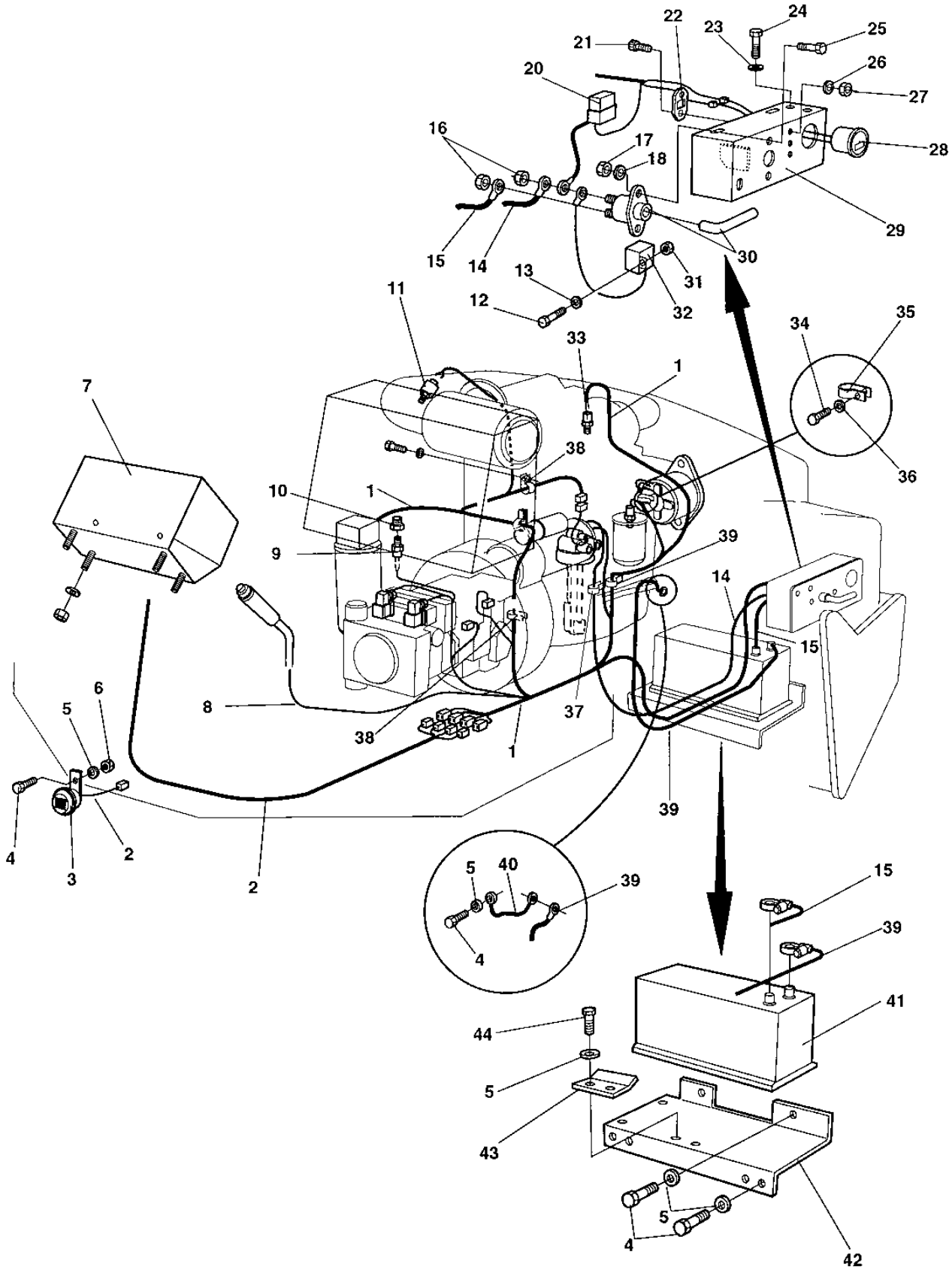
22
24
23
25
21
26
20
27
16
17
28
18
29
15
14
13
30
31
12
32
11
33
34
35
7
1
38
36
10
1
9
39
14
15
8
37
38
1
6
5
39
4
2
3
2
5
40
39
4
15
39
41
44
5
43
5
4
42

Ref. No.	Part No.	Rem.	Qty	Description	Code
1	384916		1	Cable harness	
2	380281		1	Cable harness	
3	999027		1	Horn	D
4	500053		11	Screw M8-1,25x20 8,8	
5	904229		17	Washer 8,4x16x1,5	
6	570005		3	Nut M8	
7			1	Control panel (Page 100)	
8	357583		1	Cable harness	
9	903631		1	Temperature sensor Hydraulic oil	D
10	813434		1	Reducer	
11	929023		1	Indicator	D
12	500040		2	Screw M6-1x20 8,8	
13	904639		2	Washer	
14	791141		1	Battery cable	
15	348347		1	Battery cable	
16	902285		2	Lock nut M6	
17	902285		2	Lock nut M6	
18	904639		2	Washer	
20	904037		1	Fuse 30A	D
21	500006		2	Screw	
22	904036		1	Fuse holder	
23	904229		3	Washer 8,4x16x1,5	
24	500053		3	Screw M8-1,25x20 8,8	
25	500040		2	Screw M6-1x20 8,8	
26	904228		1	Washer 6,4x12x1,5	
27	902284		2	Nut	
28	801567		1	Hour meter	
29	380087		1	Holder	
30	903640		1	Battery switch	D
31	902285		1	Lock nut M6	
32	904448		1	Relay	D
33	903632		1	Temperature sensor Engine	D
34	500048		1	Screw M10-1,5x20 8,8	
35	921132		1	Clamp	
36	904230		1	Washer 10,5x22x2	
37	921116		2	Clamp	
38	921080		1	Clamp	
39	904020		1	Battery cable	
40	903760		1	Connection cable	
41	470020		1	Battery	
42	371277		1	Battery shelf	
43	356500		1	Battery holder	
44	500047		2	Screw M8-1,25x35 8,8	

Control panel

16932

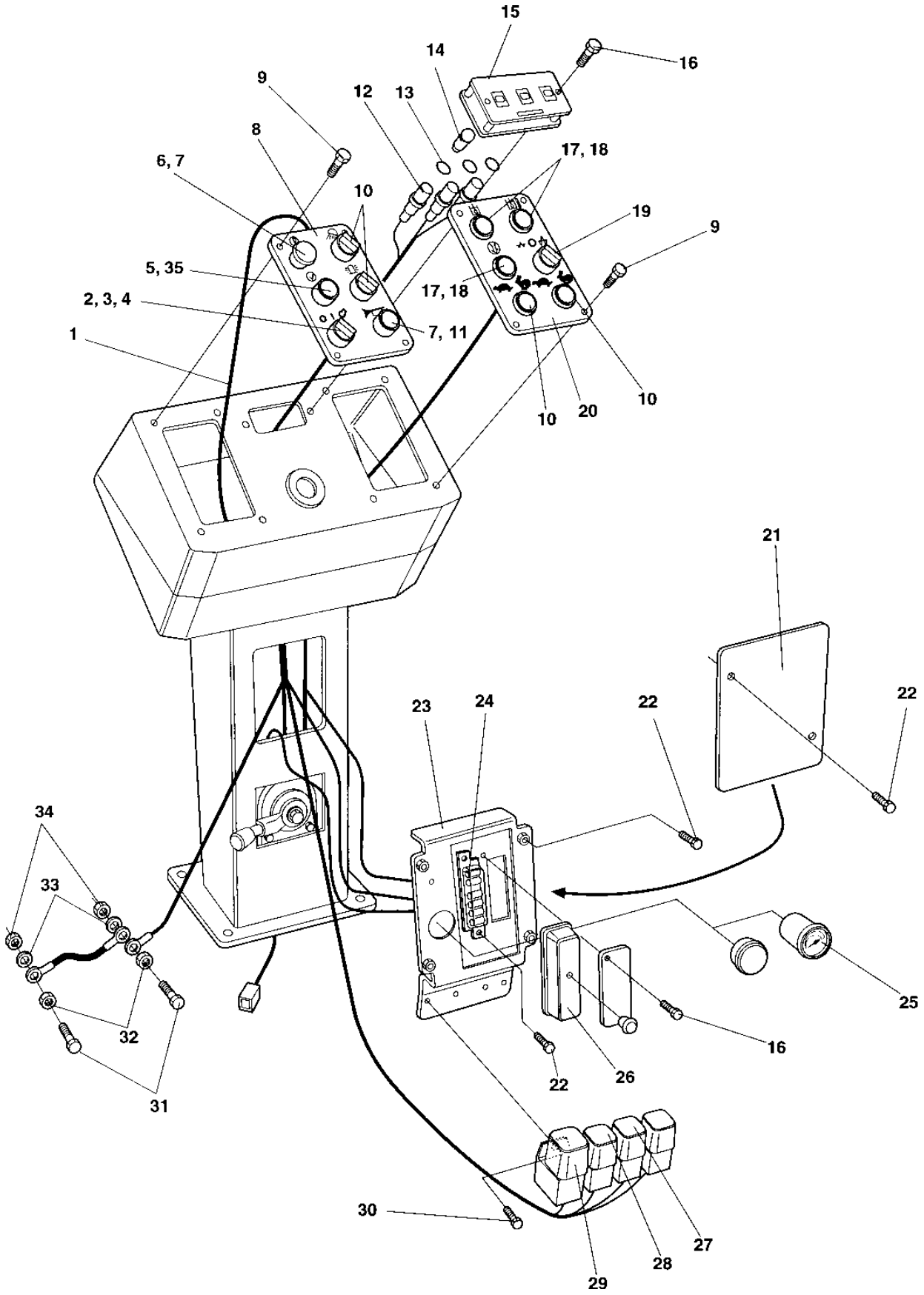

Control panel

Ref. No.	Part No.	Rem.	Qty	Description	Code
1	380281		1	Cable harness	
2	932050		1	Switch	
3	930154		1	Connector	
4	930182		1	Contact block	D
5	932032		1	Push button	D
6	930200		1	Emergency stop	D
7	930163		6	Contact piece	D
8	380278		1	Control panel left	
9	902224		8	Screw	
10	911456		4	Hole plug	
11	932032		1	Push button	D
12	902225		3	Lamp socket 2-POL	
13	160269		3	O-ring	
14	985125		3	Bulb 12V	B
15	357585		1	Display panel	
16	901767		6	Screw	
17	985146		3	Lamp, red	D
18	985012		3	Bulb	D
19	930153		1	Switch	D
20	380277		1	Control panel right	
21	371344		1	Cover	
22	541702		6	Screw M6x12	
23	371326		1	Distribution control plate	
24	901226		4	Fuse 7.5A	D
25	355263		1	Fuel gauge	D
26	903820		2	Fuse box	D
	901240		6	Connector	
27	287597		1	Relay	D
28	287598		1	Relay	D
29	382782		1	Relay, VBS	D
30	902223		3	Screw	
31	500075		2	Screw M6-1x25 8,8	
32	586002		2	Lock nut M6	
33	904228		2	Washer 6,4x12x1,5	
34	570004		2	Nut M6	
35	930163		1	Contact piece	D

Working lights Option

16982

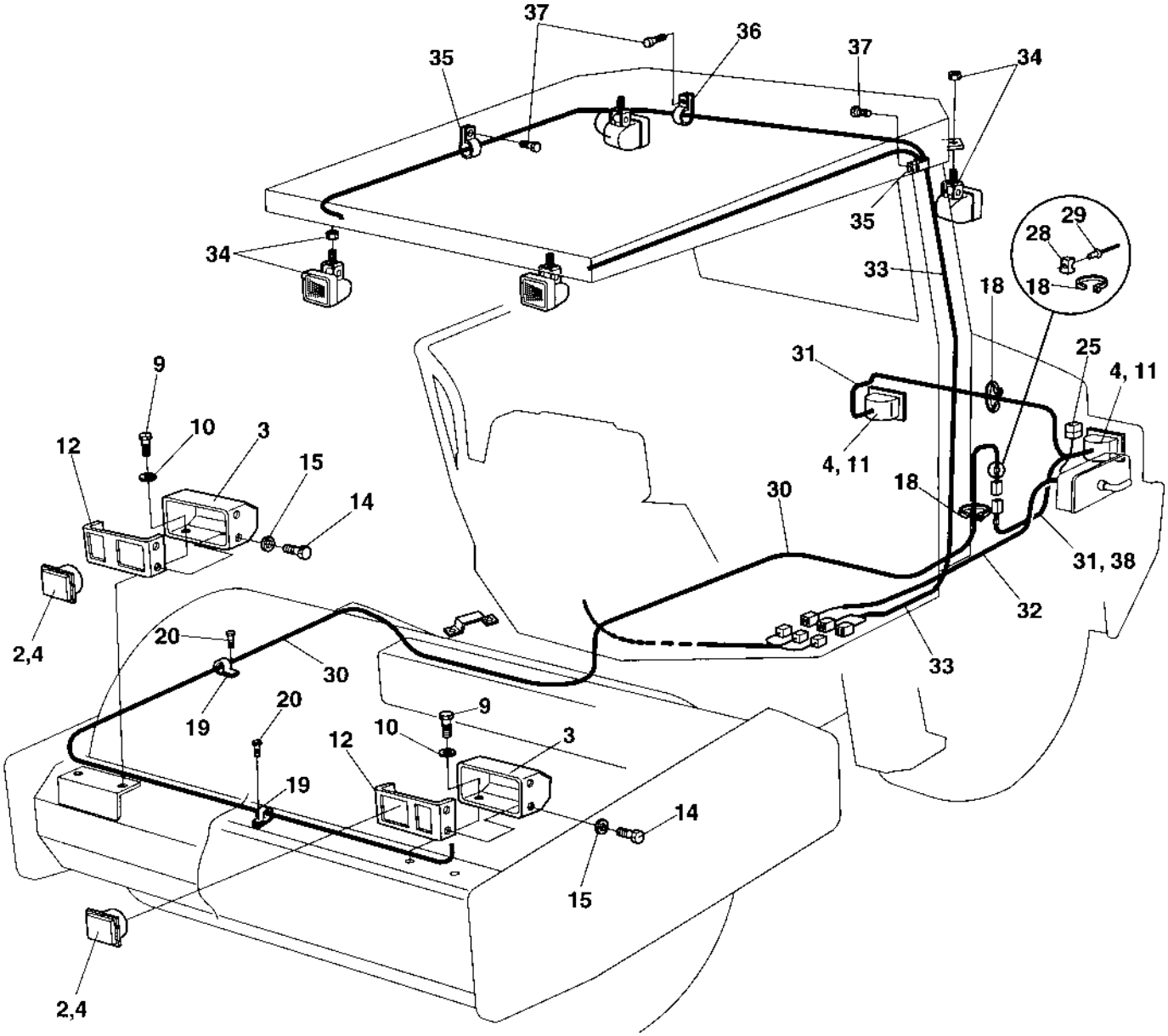

Ref. No.	Part No.	Rem.	Qty	Description	Code
2	902227		2	Head light	
3	374029		2	Lamp shield	
4	901369		4	Bulb 55w H3	B
9	500043		6	Screw M10x16H 8,8	
10	904230		6	Washer 10,5x22x2	
11	904314		2	Work lamp	
12	374030		2	Bracket	
14	500040		8	Screw M6-1x20 8,8	
15	904228		8	Washer 6,4x12x1,5	
18	925802		N	Cable ties L=142 mm	
19	921039		8	Pipe clamp	
20	541703		8	Screw M6x16	
25	904038		1	Fuse 40A	D
28	904543		7	Cable tie holder	
29	903436		7	Blind rivet	
30	373184		1	Cable harness	
31	381435		1	Cable harness	
32	373184		1	Cable harness	
33	372758		1	Cable harness	
34	904314		4	Work lamp	
35	921039		10	Pipe clamp	
36	921031		3	Clamp	
37	541702		13	Screw M6x12	
38	921072		1	Clamp	

Rotating beacon Option

16981

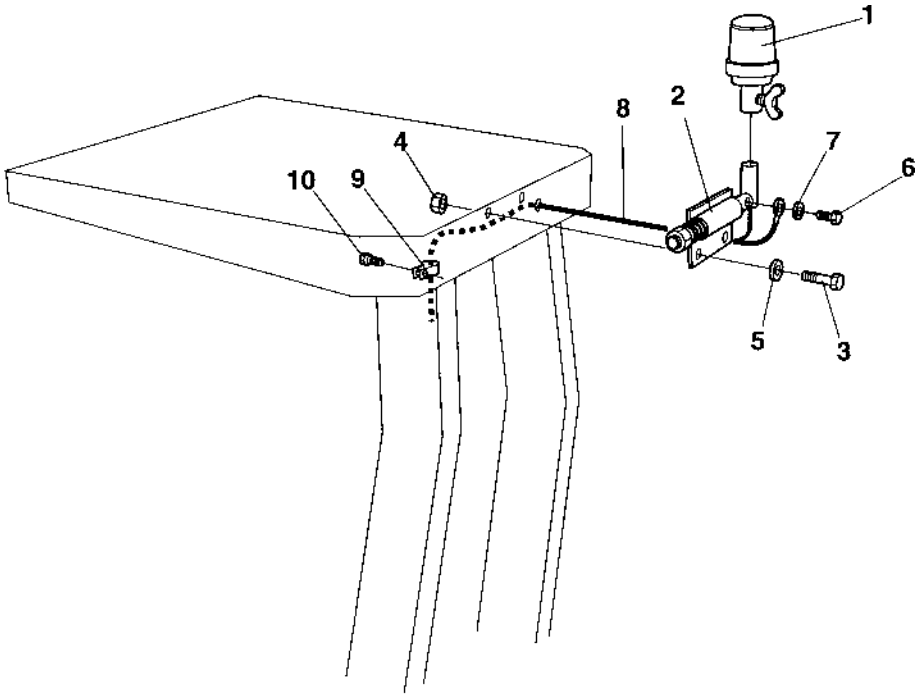

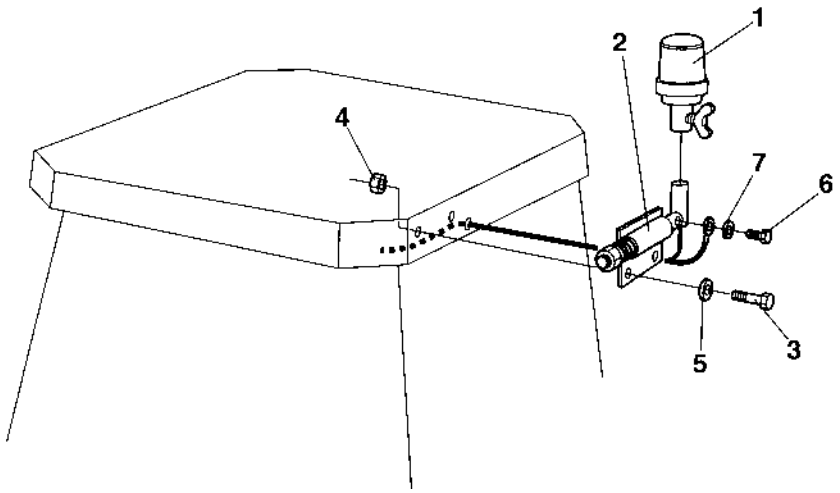

Rotating beacon Option

Ref. No.	Part No.	Rem.	Qty	Description	Code
1	999011		1	Rotating beacon	D
2	358452		1	Lamp holder	
3	500021		2	Screw M8-1,25x25 8,8	
4	586003		2	Lock nut M8	
5	904229		2	Washer 8,4x16x1,5	
6	500013		1	Screw M6-1x16 8,8	
7	904228		1	Washer 6,4x12x1,5	
8	374398		1	Cable harness	
9	921039		1	Pipe clamp	
10	541702		1	Screw M6x12	

Back-up alarm Option

17429

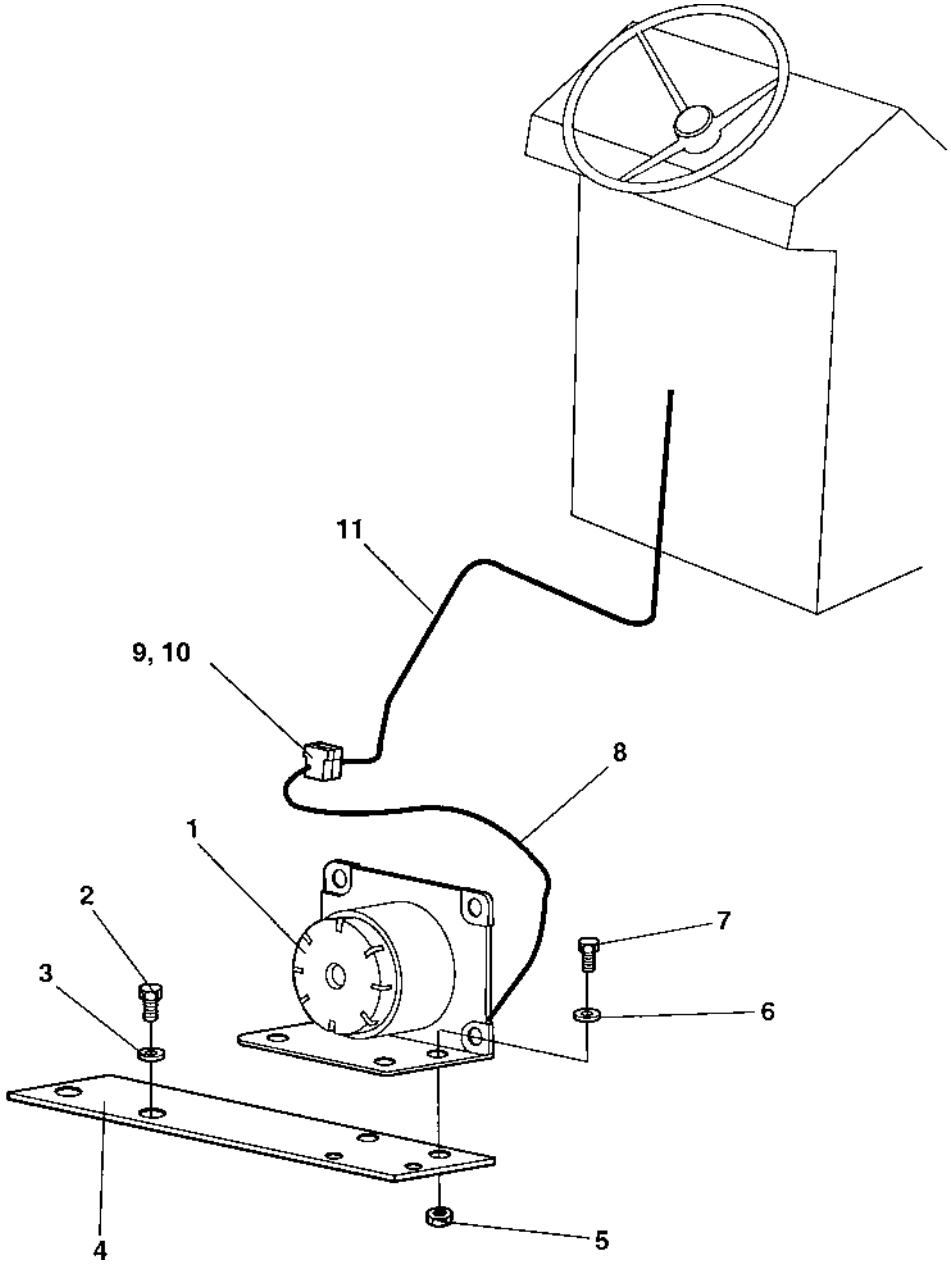

Back-up alarm Option

Ref. No.	Part No.	Rem.	Qty	Description	Code
1	900798		1	Back-up alarm	
2	500053		2	Screw M8-1,25x20 8,8	
3	904229		2	Washer 8,4x16x1,5	
4	380800		1	Bracket	
5	586001		2	Lock nut M5	
6	904281		2	Washer 5,3x10x1	
7	500006		2	Screw	
8	904212	A	1	Conduit	
9	901766		1	Connector 2-POL	D
10	903897		2	Push-on terminal male	
11	380798		1	Cable harness	

A) L=0,150 M

Compaction meter Option

17358

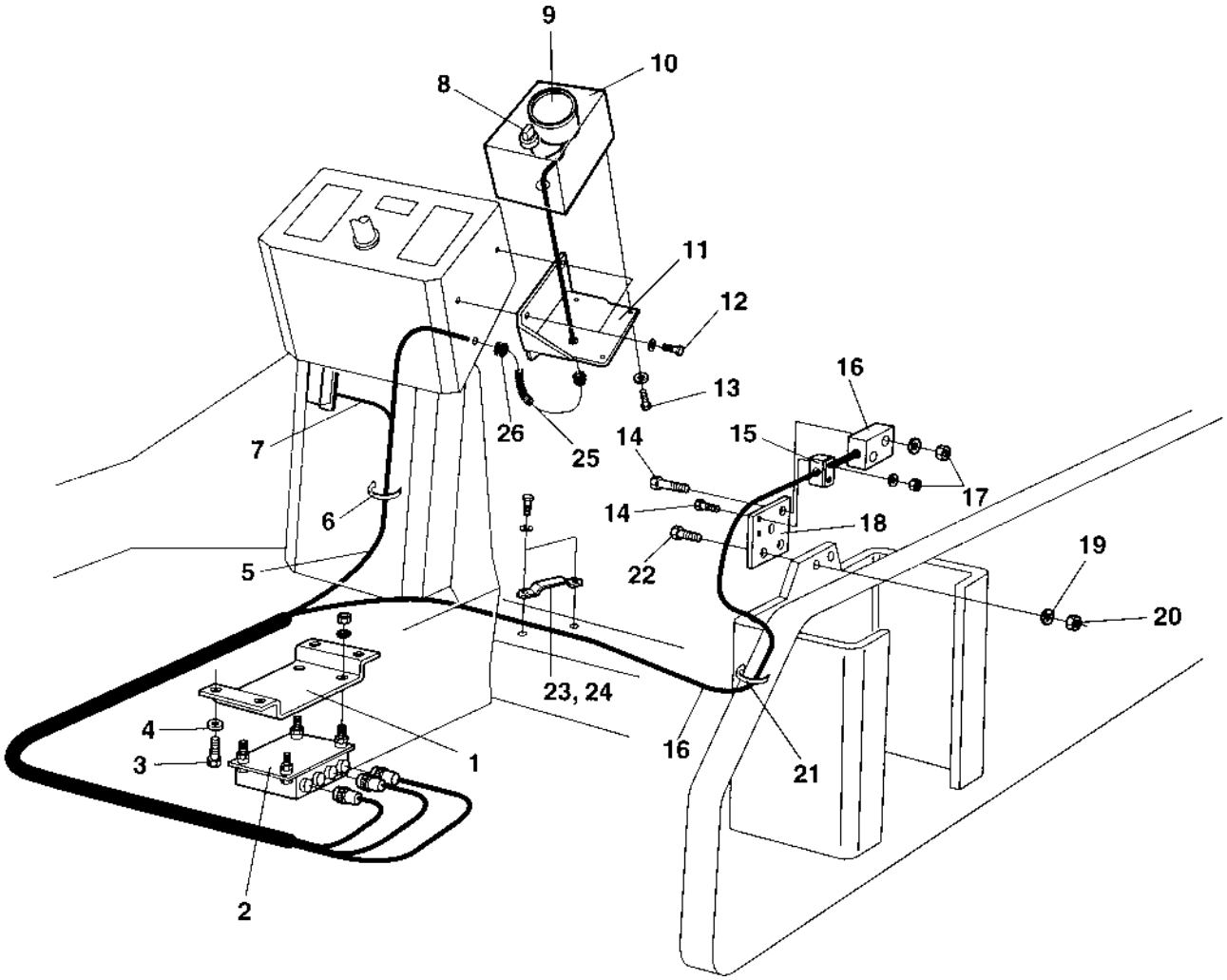

Ref. No.	Part No.	Rem.	Qty	Description	Code
1	372836		1	Bracket	
2	372008		1	Processor comp.meter	
3	500053		4	Screw M8-1,25x20 8,8	
4	904229		4	Washer 8,4x16x1,5	
5	372784		1	Wiring harness	
6	313102		N	Cable ties L=388 mm	
7	381351		1	Wiring harness	
8	930151		1	Switch	D
9	383452		1	Compaction meter	
10	373096		1	Instrument box	
11	383326		1	Bracket	
12	904206		3	Screw M6x16	
13	541526		4	Screw	
14	500079		4	Screw M6-1x50 8,8	
15	902496		1	Clamp	
16	348213		1	Sensor, cpl	
17	902285		7	Lock nut M6	
18	373140		1	Bracket	
19	904231		2	Washer 13x24x2	
20	902288		2	Nut	
21	313041		N	Cable ties L=186 mm	
22	500194		2	Screw M12x40	
23	373016		1	Hose clamp	
24	349435		1	Rubber part	
25	901190	A	1	Conduit	
26	903192		2	Grommet	

A) L=230mm

Ref. No.	Part No.	Rem.	Qty	Description	Code
10				Drivers platform (Page 112)	
20				Control panel (Page 114)	
50				Steering column, cpl (Page 116)	
80				Canopy Option (Page 118)	
90				Rops and fops (Page 120)	
100				Cab mounting (Page 122)	
130				Cab Screens (Page 124)	
140				Cab, door, left side (Page 128)	
150				Cab Interior rear mirror (Page 130)	
160				Cab Exterior rear mirror (Page 132)	
170				Wiper arm with blade, front (Page 134)	
180				Cab Work light (Page 136)	
190				Cab Electric (Page 138)	

Drivers platform

17430

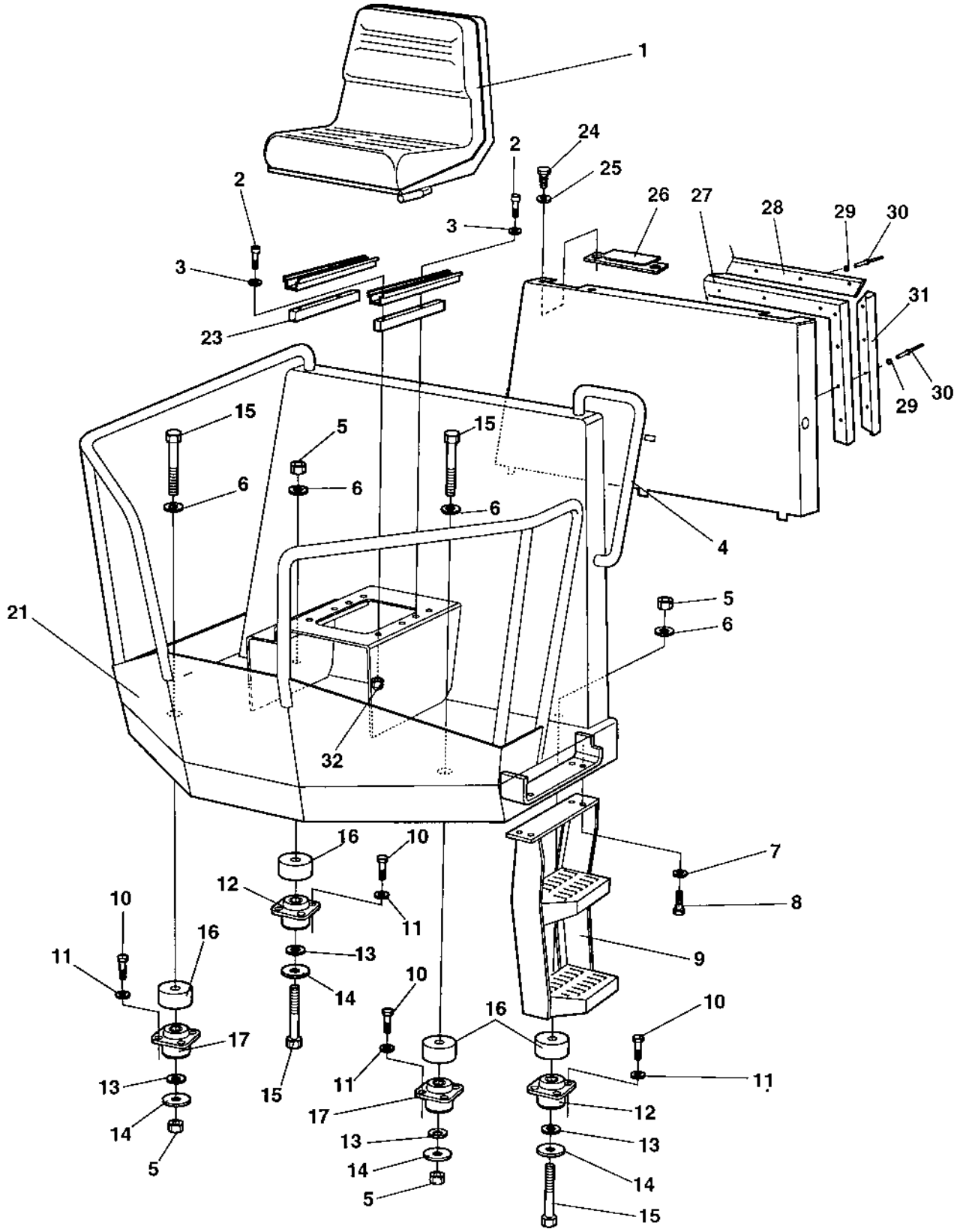

Ref. No.	Part No.	Rem.	Qty	Description	Code
1	380208		1	Drivers seat	
	348331		1	Seat cover	D
	370234	A	1	Drivers seat	
	936283		1	.Seat switch	D
	380889		1	.Wiring harness	
	909535	B,C	1	.Sliding rail	D
	909536	D	1	.Sliding rail	D
2	508006		4	Screw	
3	904229		4	Washer 8,4x16x1,5	
4	380123		1	Grab handle	
5	901145		4	Lock nut	
6	904233		4	Washer 21,0x36x3	
7	904230		8	Washer 10,5x22x2	
8	500029		4	Screw M10-1,5x30 8,8	
9	376255		1	Step	
10	500111		16	Screw M12x55 8,8	
11	904231		16	Washer 13x24x2	
12	372757		2	Shock absorber	D
13	903290		4	Washer 21x36x6	
14	347512		4	Washer	
15	500226		4	Screw M20-2.5x180	
16	374471		4	Spacer	
17	373400		2	Shock absorber	D
21	380113		1	Platform	
23	382397		2	Spacer	
24	500053		4	Screw M8-1,25x20 8,8	
25	904229		8	Washer 8,4x16x1,5	
26	380727		2	Cover	
27	372494	E	1	Rubber strip	
28	372785		1	List	
29	927974		13	Washer	
30	904433		13	Blind rivet	
31	382582		2	List	
32	902286		2	Lock nut M8	

A) Option
B) With handle
C) Left
D) Right
E) L=2,4 M

Control panel

17263

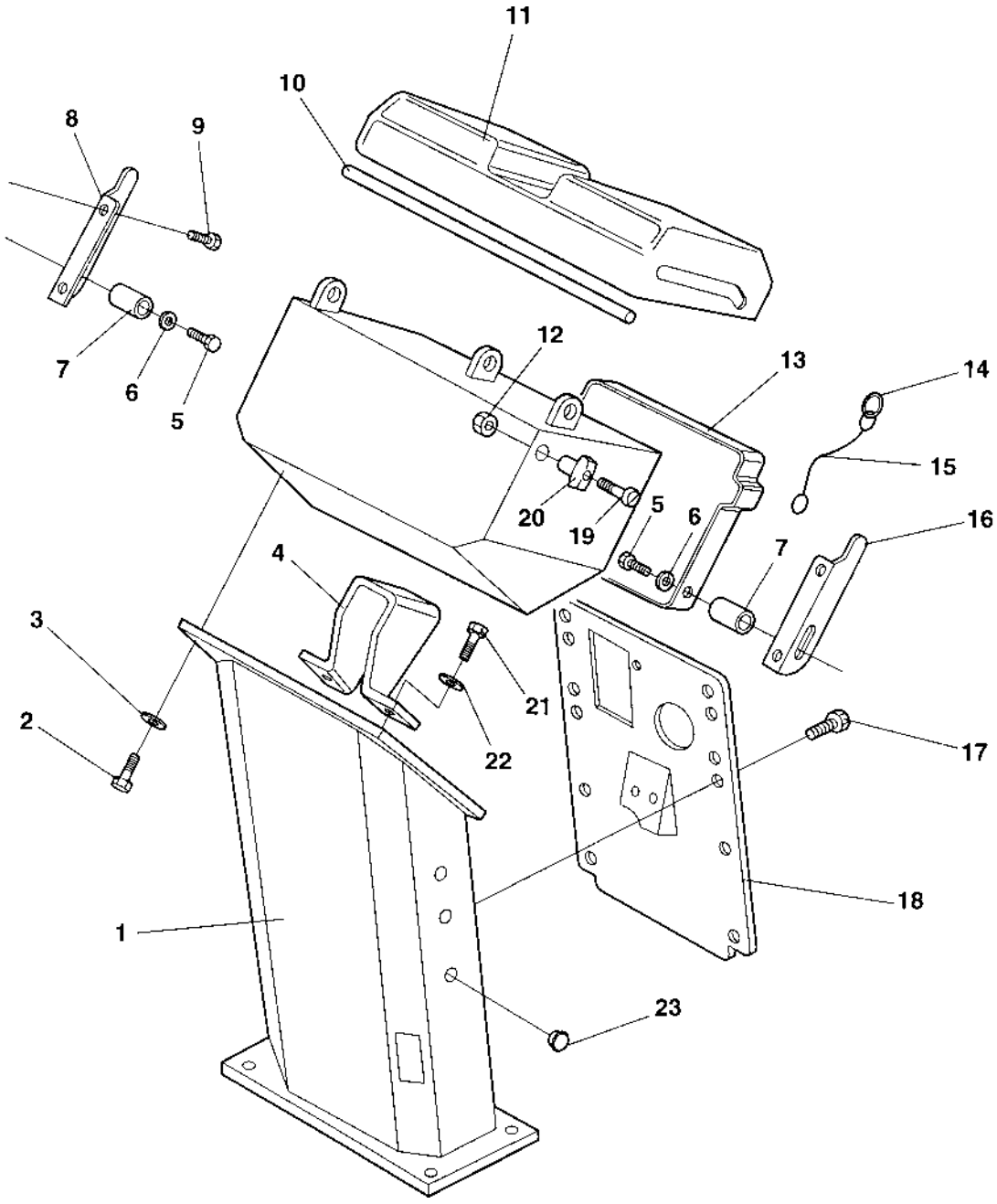

Control panel

Ref. No.	Part No.	Rem.	Qty	Description	Code
1	358142		1	Control panel	
2	500040		4	Screw M6-1x20 8,8	
3	904228		4	Washer 6,4x12x1,5	
4	357316		1	Bracket	
5	902164		2	Screw	
6	929602		4	Washer	
7	902163		2	Parallel pin	
8	357427		1	Cover holder	
9	901767		4	Screw	
10	902379	A	1	Edge trim	
11	357424		1	Cover	
	358881		1	Padlock	
12	586002		2	Lock nut M6	
13	357425		1	Instruction book holder	
14	358254		1	Key-ring	
15	357643		1	Wire	
16	357426		1	Cover holder	
17	541702		8	Screw M6x12	
18	358143		1	Cover	
19	924875		2	Screw M6x35	
20	357855		2	Bushing	
21	500021		4	Screw M8-1,25x25 8,8	
22	904640		4	Washer 8.4x22x3	
23	902919		4	Plug	

A) L=200 mm

Steering column, cpl

16953-2

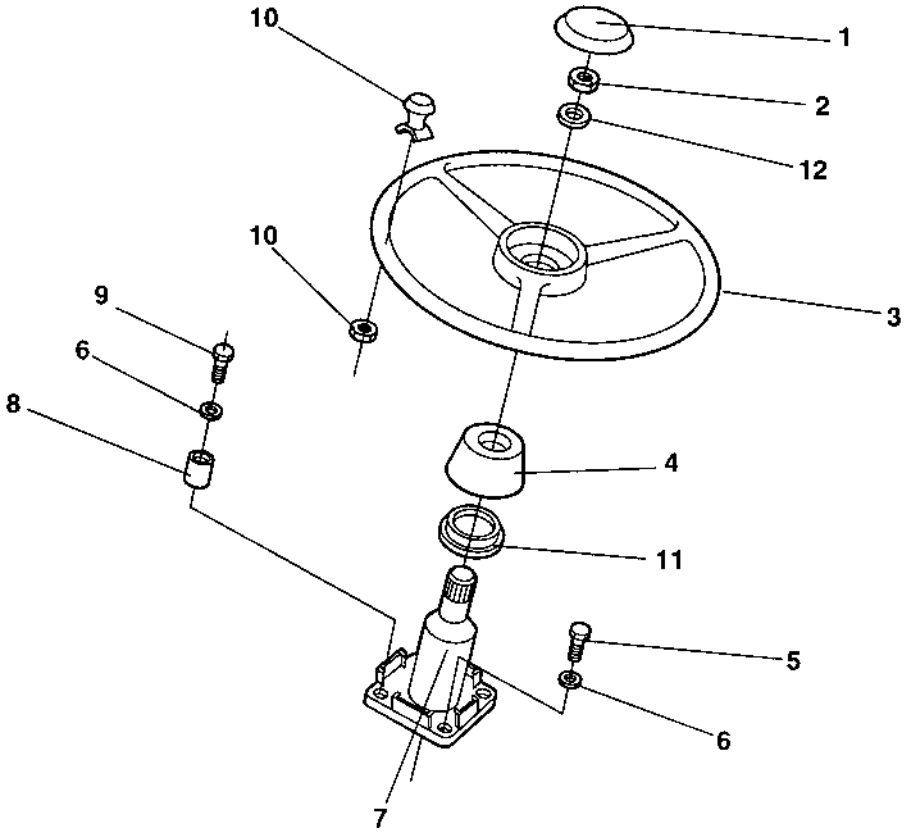

Steering column, cpl

Ref. No.	Part No.	Rem.	Qty	Description	Code
1	902186		1	Cover plate	
2			1	Nut	
3	902183		1	Steering wheel	
4	902185		1	Insert adapter	
5	500048		2	Screw M10-1,5x20 8,8	
6	904230		4	Washer 10,5x22x2	
7	902123		1	Steering column	
8	355869		2	Spacer sleeve	
9	500030		2	Screw M10-1,5x35H 8,8	
10	902184		1	Turning knob	D
11	928830		1	Rubber washer	
12	904793		1	Washer	

Canopy Option

17483

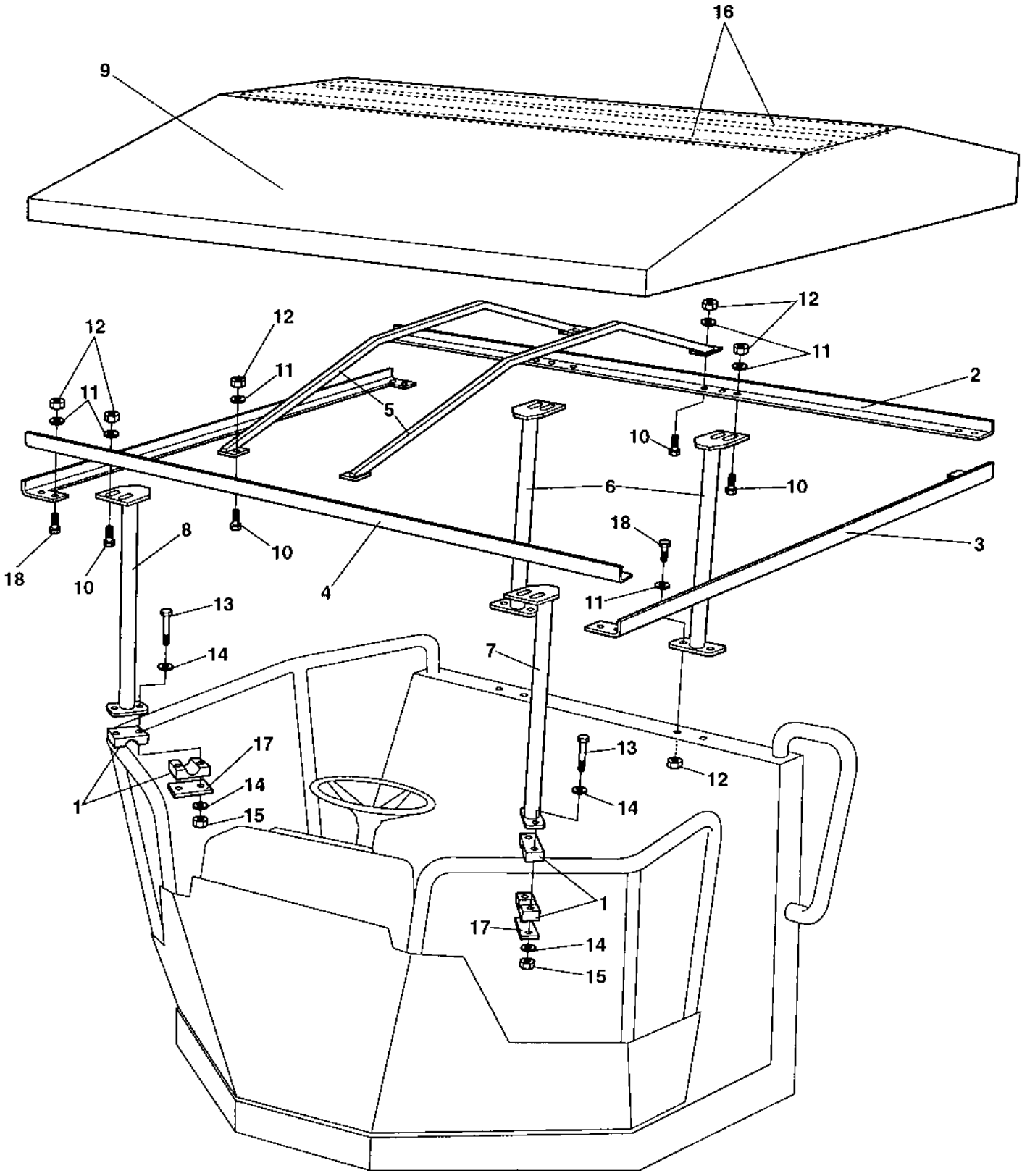

Canopy Option

Ref. No.	Part No.	Rem.	Qty	Description	Code
1	904340		2	Pipe clamp	
2	373746		1	Canopy profile	
3	373747		2	Canopy profile	
4	373748		1	Canopy profile	
5	373749		4	Canopy rib	
6	373750		2	Canopy anchor	
7	380963		1	Canopy anchor	
8	380964		1	Canopy anchor	
9	373906		1	Roof	
10	500021		16	Screw M8-1,25x25 8,8	
11	904229		44	Washer 8,4x16x1,5	
12	586003		22	Lock nut M8	
13	500153		4	Screw	
14	904228		8	Washer 6,4x12x1,5	
15	586002		4	Lock nut M6	
16	373907		2	Lath	
17	924791		2	Cover plate	
18	500022		8	Screw M8-1,25x30 8,8	

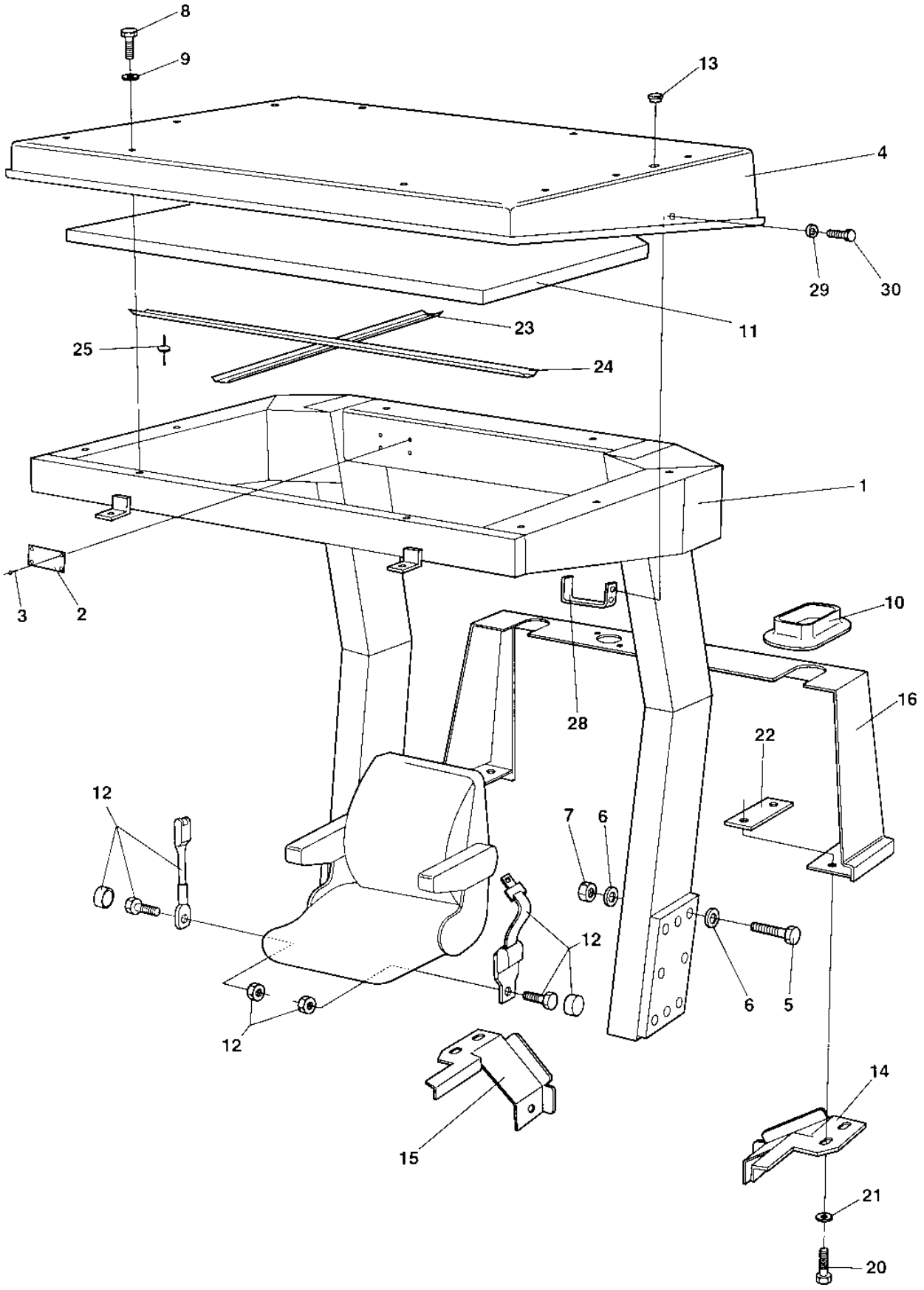
8
9
13
4
29
30
11
23
25
24
1
3
2
10
28
16
22
12
7
6
12
6
5
12
15
14
21
20

Ref. No.	Part No.	Rem.	Qty	Description	Code
1	373943		1	Rops	
2	370803		1	.Sign, rops	
3	624016		4	.Blind rivet	
4	372745		1	Fops roof	
5	500226		12	Screw M20-2.5x180	
6	904233		12	Washer 21,0x36x3	
7	570015		12	Nut M20	
8	500239		19	Screw M8-1.25x50	
9	904734		19	Washer 8,4x26x4	
10	372489		2	Rubber seal	
11	372678		1	Absorbent	
12	370766		1	Safety belt	
	383200	A	1	Safety belt	
			2	.Screw	
			2	.Nut	
			2	.Cap	
13	904180		4	Plug	
14	381353		1	Holder plate	
15	381352		1	Holder plate	
16	373799		1	Protection cover	
20	500022		8	Screw M8-1,25x30 8,8	
21	904640		8	Washer 8.4x22x3	
22	381330		2	Holder	
23	376489		1	Absorbent holder	
24	376488		1	Absorbent holder	
25	904619		12	Blind rivet	
28	383225		2	Hook	
29	904734		4	Washer 8,4x26x4	
30	500100		4	Screw M8x18	

A) Option 3"

Cab mounting

16966

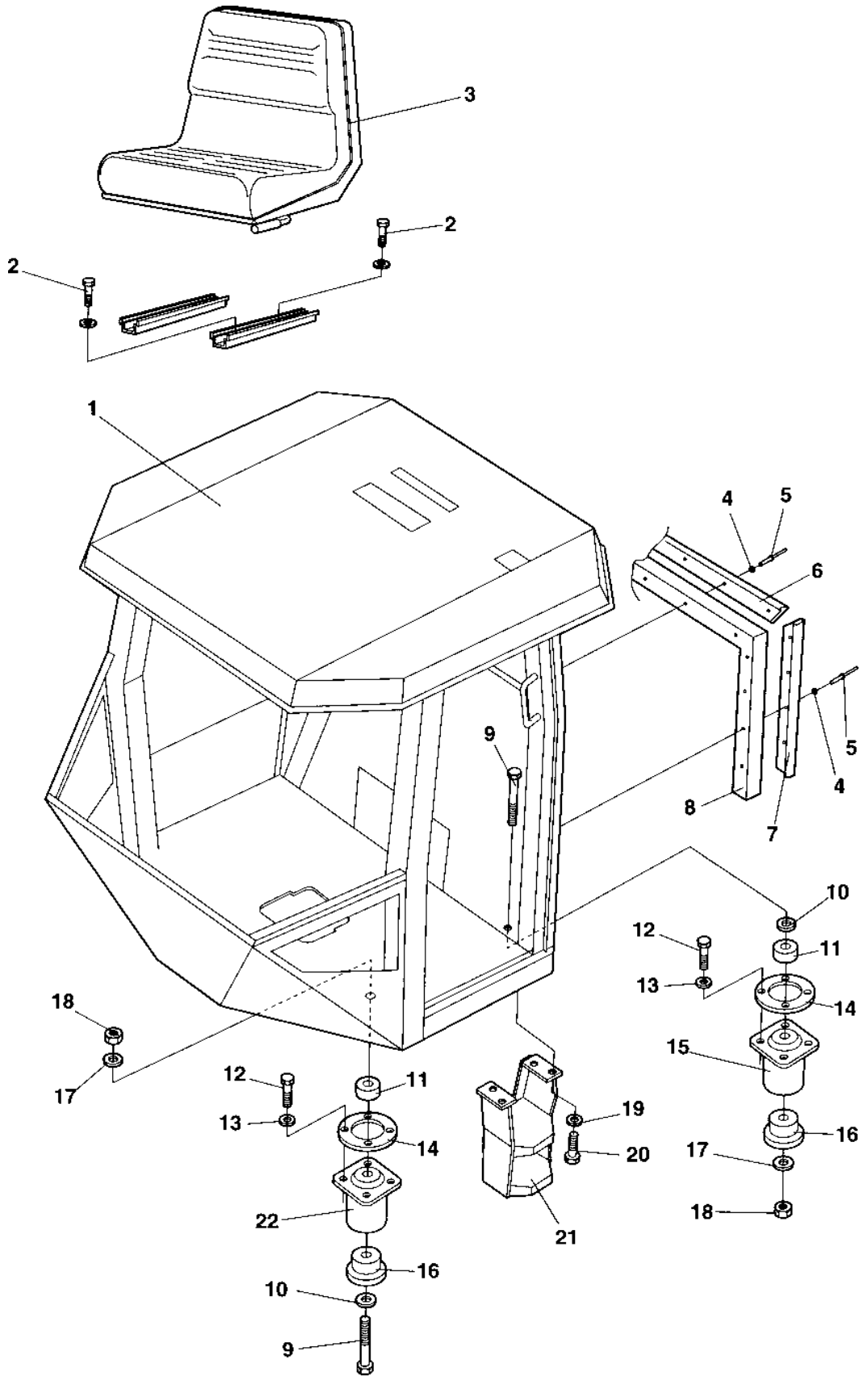

Cab mounting

Ref. No.	Part No.	Rem.	Qty	Description	Code
1	380656		1	Cab	
2	508005		4	Screw	
3	370234		1	Drivers seat	
	936283		1	.Seat switch	D
	909535	E,F	1	.Sliding rail	D
	909536	G	1	.Sliding rail	D
4	927974		13	Washer	
5	904433		13	Blind rivet	
6	372785		1	List	
7	372786		2	List	
8	372494	A	N	Rubber strip	
9	903905		4	Screw	
10	904233		4	Washer 21,0x36x3	
11	370258		4	Spacer washer	
12	500121		16	Screw M12x65 8,8	
13	904231		16	Washer 13x24x2	
14	359998		4	Back-up ring	
15	374606	B	2	Shock absorber Green	D
16	372457		4	Back-up ring	
17	903290		4	Washer 21x36x6	
18	901145		4	Lock nut	
19	904230		4	Washer 10,5x22x2	
20	500029		4	Screw M10-1,5x30 8,8	
21	376255		1	Step	
22	374607	C	2	Shock absorber Yellow	D

A) L=2400 mm
B) Rear
C) Front
E) With handle
F) Left
G) Right

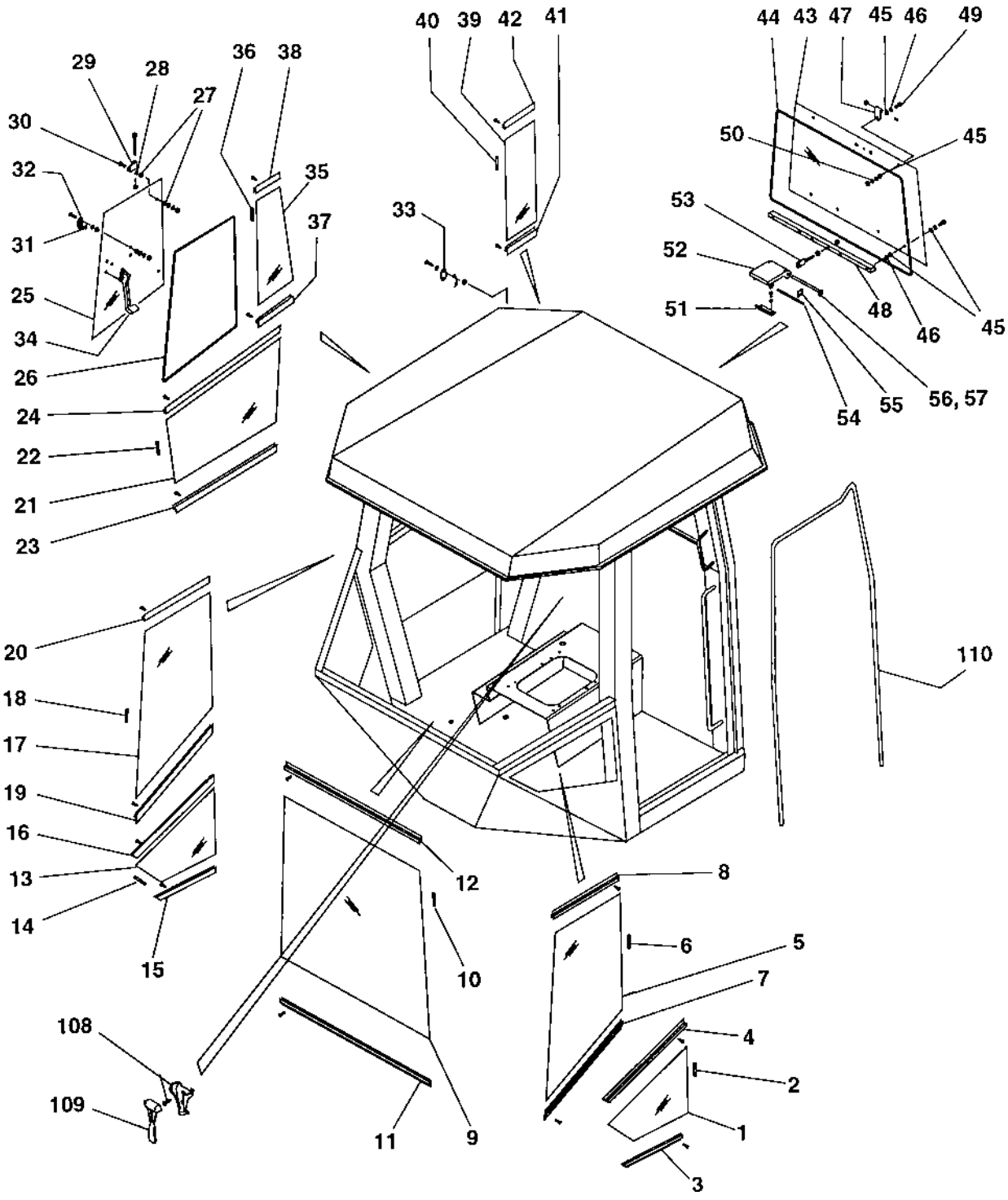
40
39
42
41
44
43
47
45
46
49
29
28
36
38
27
30
32
35
37
31
25
34
26
24
22
21
23
33
50
45
53
52
51
48
46
45
54
55
56, 57
20
18
17
19
16
13
14
15
12
10
8
6
5
7
4
2
1
3
11
9
108
109
110

Ref. No.	Part No.	Rem.	Qty	Description	Code
1	937380		1	Screen	
2	908545		XL	Seal list	
3	935278		1	List	
4	935279		1	List	
5	937381		1	Screen, left	
6	908545		XL	Seal list	
7	935280		1	List	
8	935281		1	List	
9	937382		1	Screen	
10	908545	B	1	Seal list	
11	935282		1	List	
12	935283		1	List	
13	937383		1	Screen	
14	908545		XL	Seal list	
15	935284		1	List	
16	935285		1	List	
17	937384		1	Screen	
18	908545	A	1	Seal list	
19	935286		1	List	
20	935287		1	List	
21	937385		1	Screen	
22	908545	A	1	Seal list	
23	935288		1	List	
24	935289		1	List	
25	937386		1	Screen	
26	908499	B	1	Rubber list	
27	935271		8	Washer, Flexible	
28	935272		8	Washer, Black	
29	935273		2	Hinge	
30	935274		2	Screw	
31	935275		1	Rubber washer	
32	935276		1	Bracket	
33	935277		1	Lock pin	
34	935290		1	Window lock, right	
35	937387		1	Screen	
36	908545	A	1	Seal list	
37	935291		1	List	
38	935292		1	List	
39	937388	A	1	Screen	
40	908545	A	1	Seal list	
41	935293		1	List	
42	935294		1	List	
43	937389		1	Screen	
44	908499	C	1	Rubber list	
45	935271		12	Washer, Flexible	
46	935272		12	Washer, Black	
47	935273		2	Hinge	
48	935295		1	Screen holder	
49	935274		6	Screw	
50	935296		2	Washer	
51	935297		1	Bracket	
52	935298		2	Bracket	
53	935299		1	Bolt	
54	935300		1	Shaft	
55	935301		2	Lock	
56	935302		1	Rod	
57	935303		1	Ring	
108	908506		1	Holder	

A) L=1 m
B) L=2 m
C) L=3 m

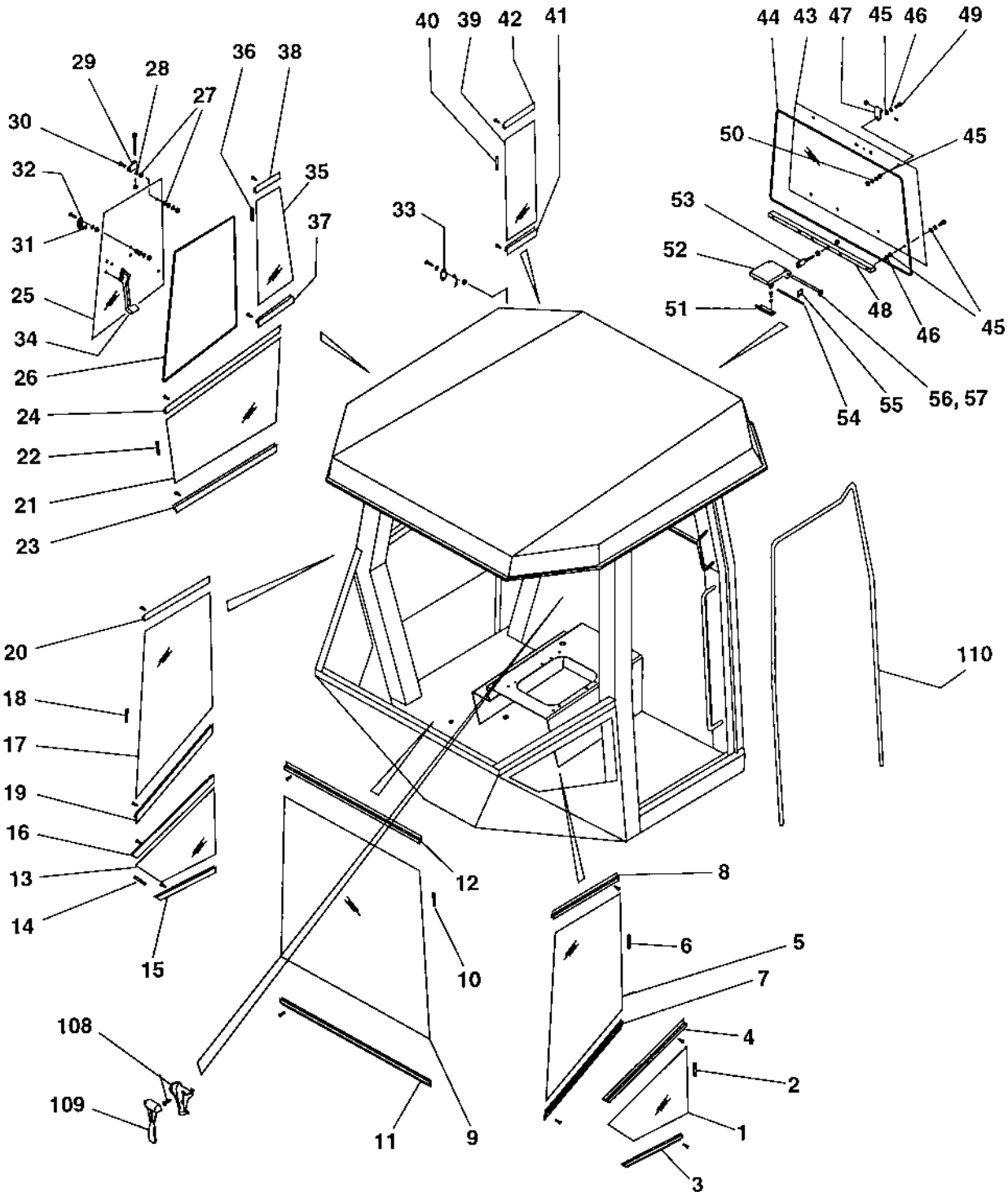
40
39
42
41
44
43
47
45
46
49
29
28
36
38
27
30
50
45
32
35
53
33
37
52
31
25
51
48
46
45
34
54
55
56, 57
26
24
22
21
23
20
110
18
17
19
16
13
14
15
12
8
6
5
7
10
4
108
2
109
1
11
9
3

Ref. No.	Part No.	Rem.	Qty	Description	Code
109	908507		1	Emergency hammer	
110	908499	D	1	Rubber list	

D) L=5 m

Cab, door, left side

16967-1

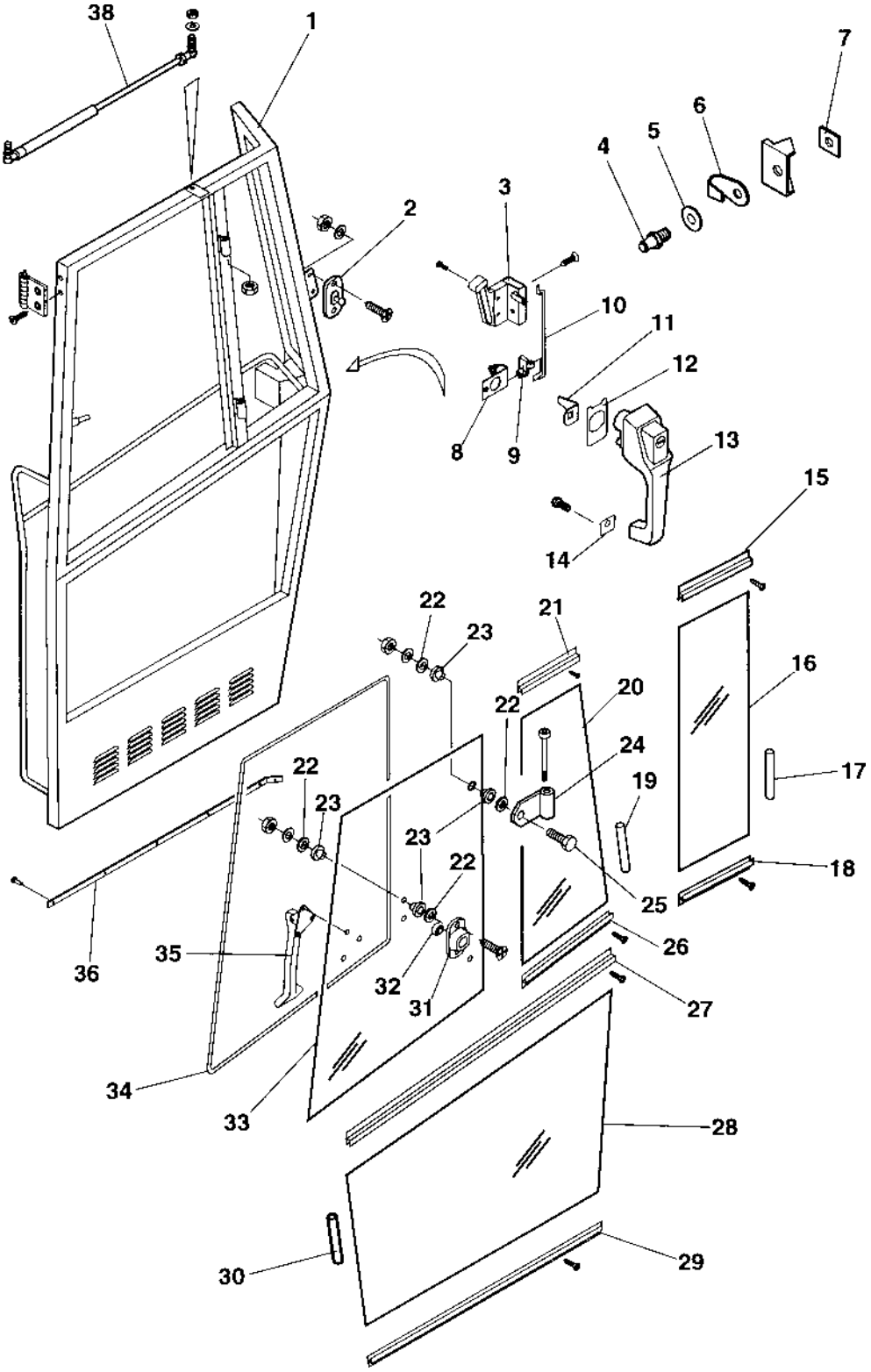

Cab, door, left side

Ref. No.	Part No.	Rem.	Qty	Description	Code
1	938045		1	Door frame	
2	935277		1	Lock pin	
3	938017		1	Lock	
4	908580		1	Lock pin	
5	908581		1	Washer	
6	908582		1	Cover	
7	908583		1	Bracket	
8	935248		1	Turning mechanism	
9	935249		1	Retainer	
10	935250		1	Rod	
11	935247		1	Leader	
12	935246		1	Seal	
13	935244		1	Door handle with key	
14	935245		1	Seal	
15	935268		1	List	
16	937391		1	Screen	
17	908545	A	1	Seal list	
18	935267		1	List	
19	908545	A	1	Seal list	
20	937392		1	Screen	
21	935270		1	List	
22	935272		8	Washer, Black	
23	935271		8	Washer, Flexible	
24	935273		2	Hinge	
25	935274		2	Screw	
26	935269		1	List	
27	935266		1	List	
28	937390		1	Screen	
29	935265		1	List	
30	908545	A	1	Seal list	
31	935276		1	Bracket	
32	935275		1	Rubber washer	
33	937393		1	Screen	
34	908499	B	1	Rubber list	
35	935253		1	Lock	
36	938101		XL	Brush profile	
38	938018		1	Gas spring	

A) L=1 m
B) L=2 m

Cab Interior rear mirror

16008

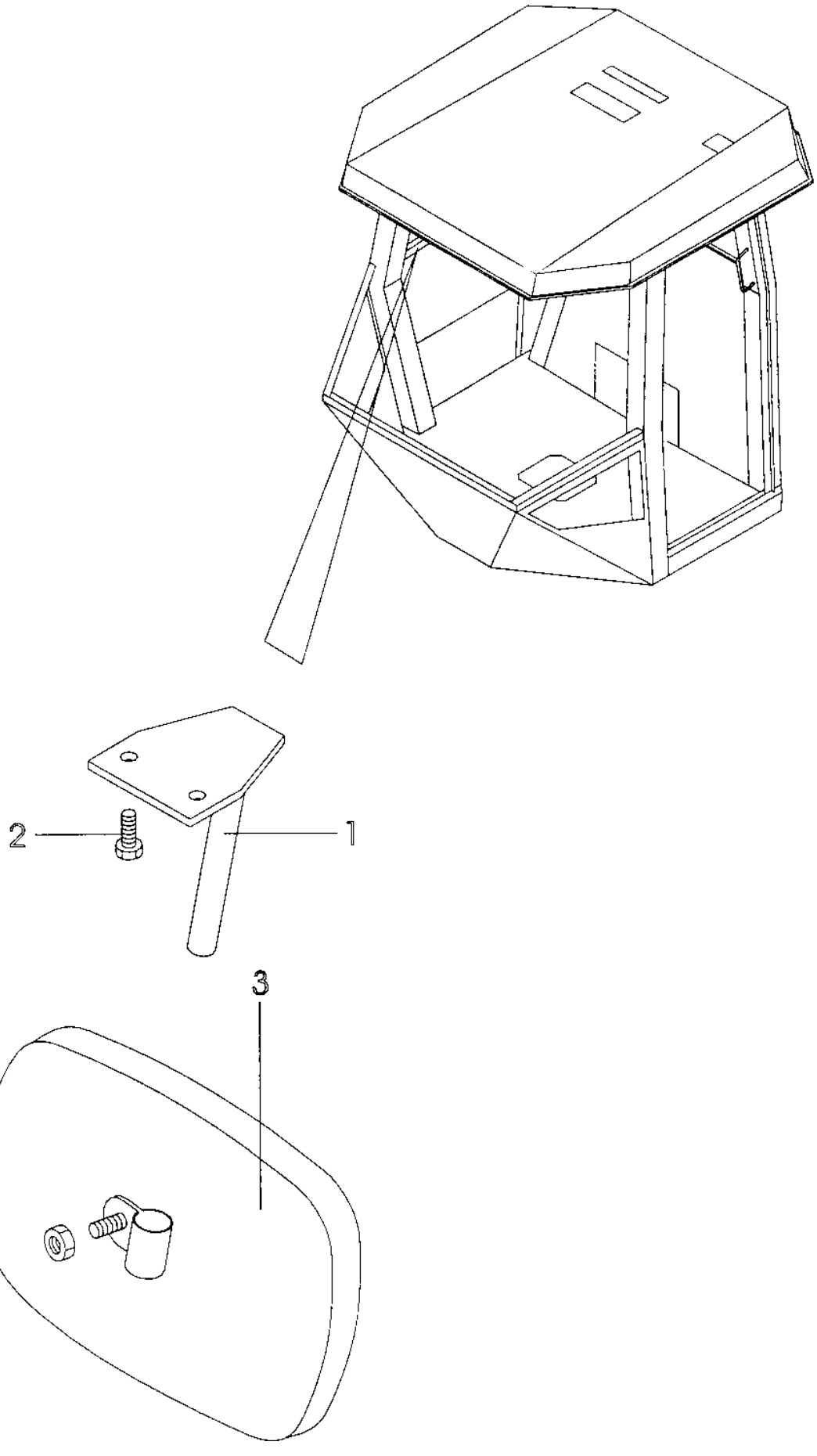

Cab Interior rear mirror

Ref. No.	Part No.	Rem.	Qty	Description	Code
1	908623		1	Bracket	
2	535005		2	Screw M5x12	
3	908624		1	Rear mirror	

Cab Exterior rear mirror

16009

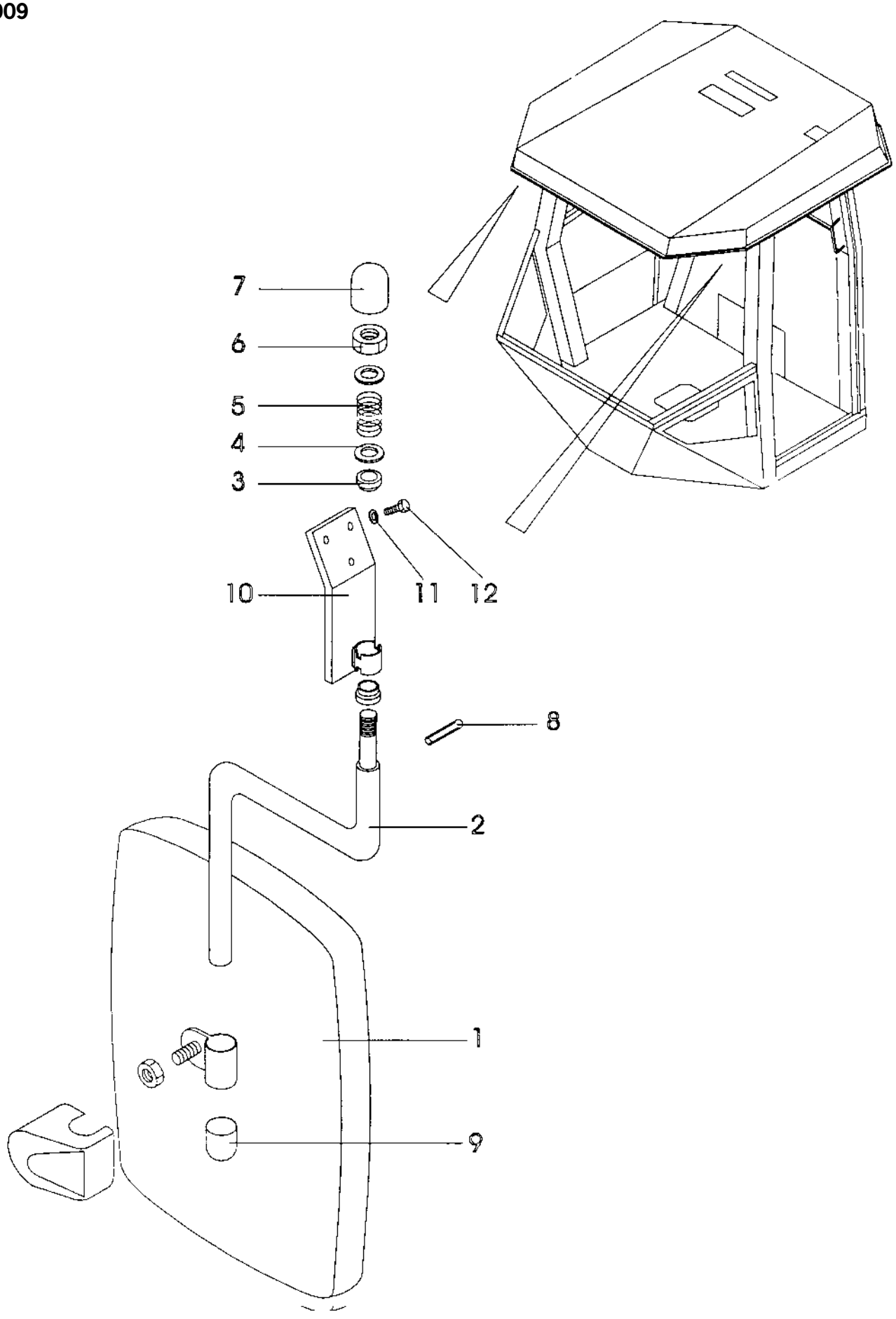

Cab Exterior rear mirror

Ref. No.	Part No.	Rem.	Qty	Description	Code
	371730	A	2	Rear mirror	
1	908265		1	.Rear mirror	
2	908355		1	.Arm	
3	908625		1	.Sleeve	
4	904232		1	.Washer 17x30x3	
5	908626		1	.Spring	
6	586021		1	.Nut M16	
7	908627		1	.Cap	
8	629066		1	.Spirol pin	
9	908628		1	.Cap	
10	908361		1	.Bracket	
11	904229		6	Washer 8,4x16x1,5	
12	500019		6	Screw M8-1,25x16 8,8	

A) Option

Wiper arm with blade, front

16968

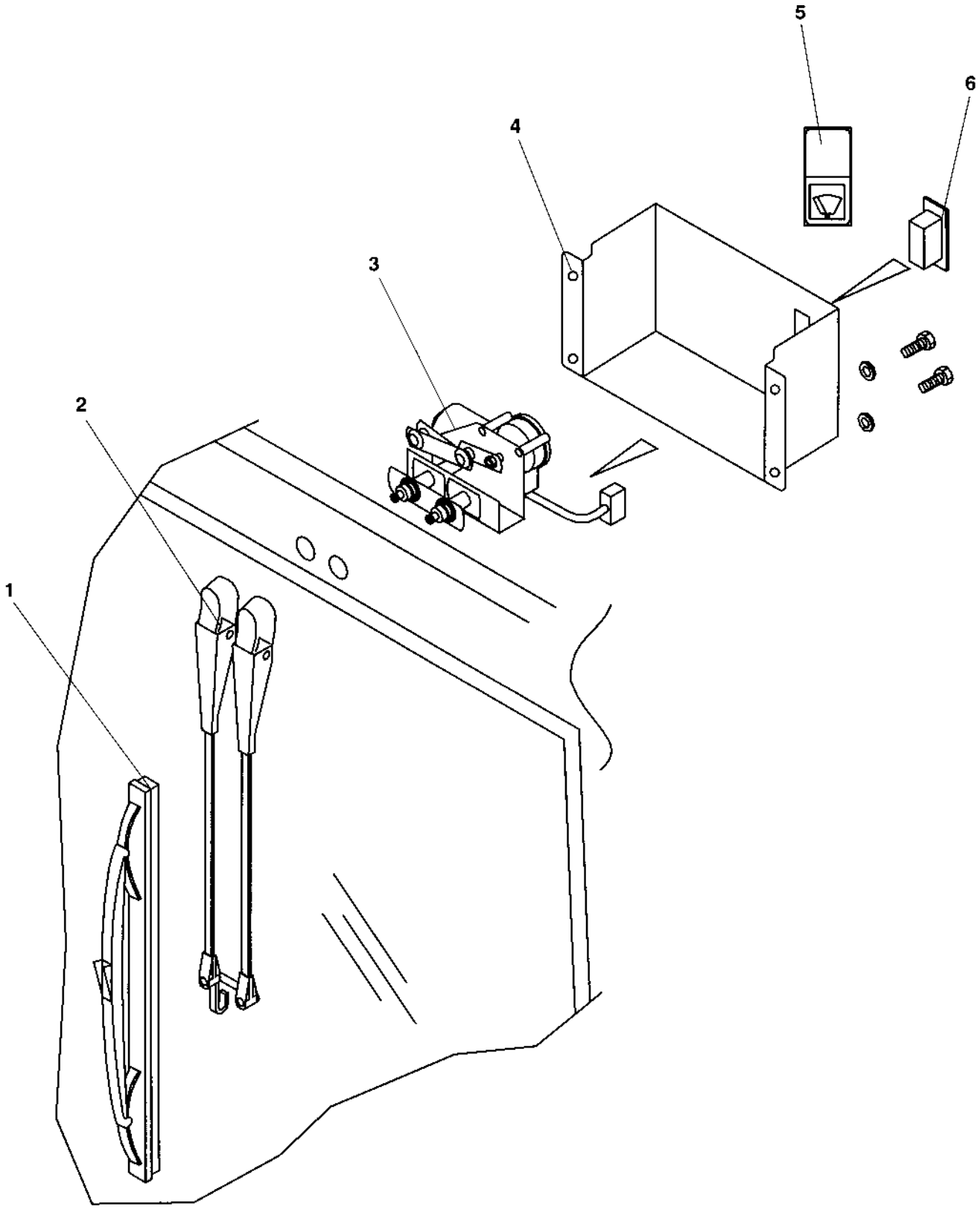

Wiper arm with blade, front

Ref. No.	Part No.	Rem.	Qty	Description	Code
1	905306		1	Wiper blade	
2	905305		1	Wiper arm	
3	905304		1	Wiper motor	
4	937871		1	Cover	
5	908605		1	Symbol wiper	
6	908617		1	Switch	

Cab Work light

16007A

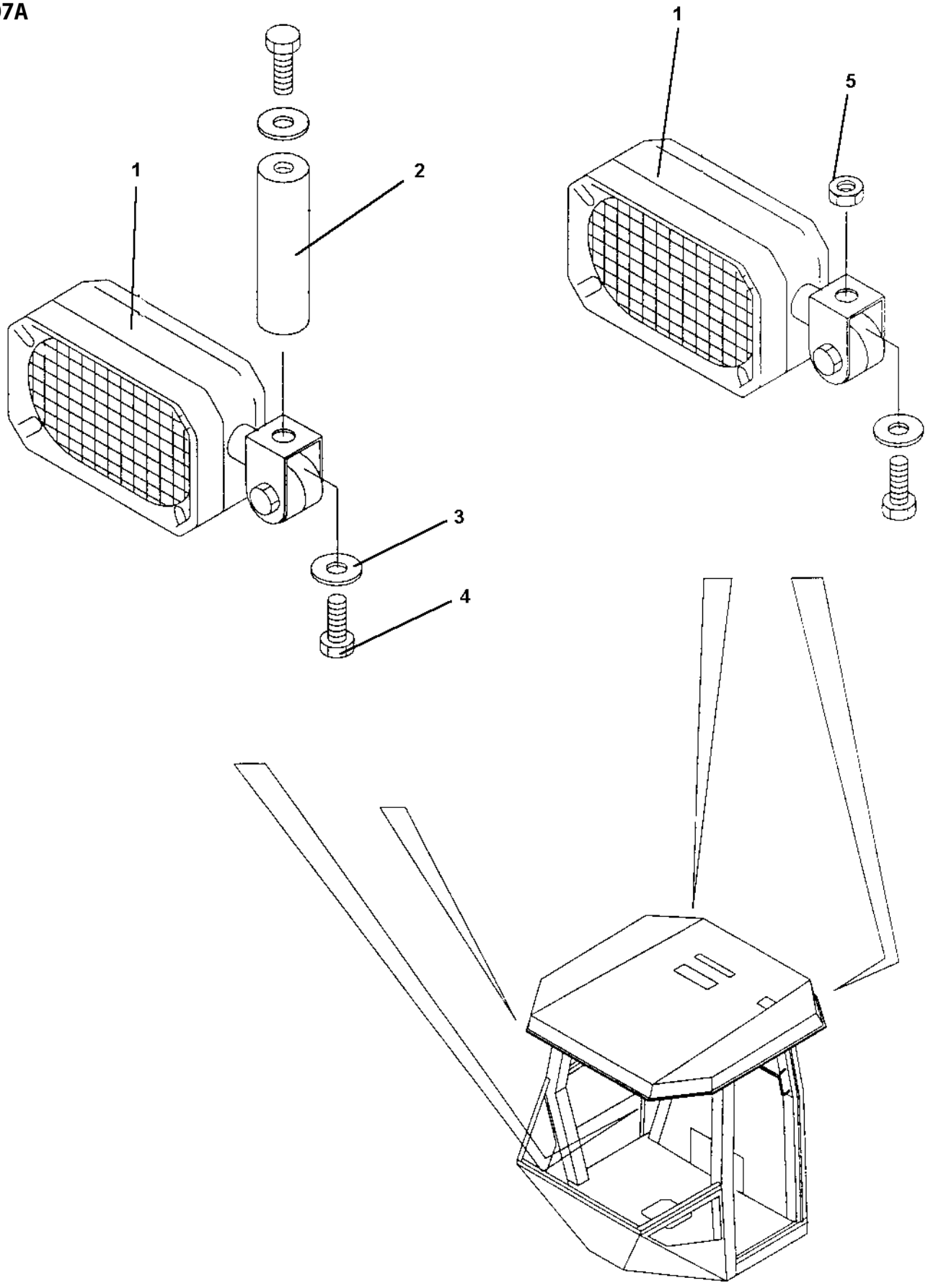

Cab Work light

Ref. No.	Part No.	Rem.	Qty	Description	Code
1	908267		4	Working light	D
2	908359		2	Distance	
3	904229		4	Washer 8,4x16x1,5	
4	500019		4	Screw M8-1,25x16 8,8	
5	586003		2	Lock nut M8	

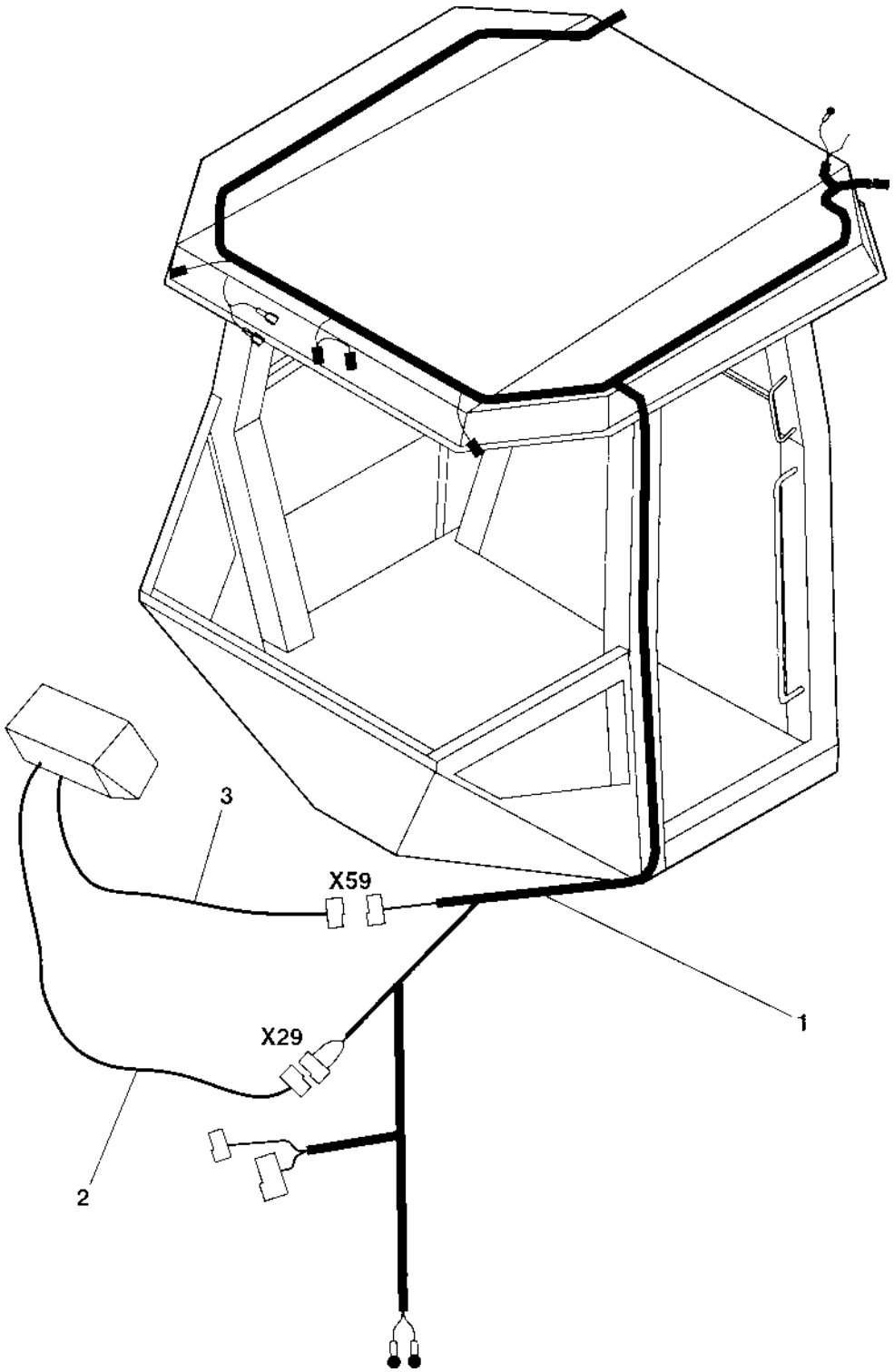
3
X59
1
X29
2

Ref. No.	Part No.	Rem.	Qty	Description	Code
1	937870	A	1	Wiring harness	
2	384403	B	1	Wiring harness	
3	384402	C	1	Wiring harness	

A) Main supply
B) Horn
C) Windshield wiper

Ref. No.	Part No.	Rem.	Qty	Description	Code
10				Decals (Page 142)	
20				Decals (Page 144)	

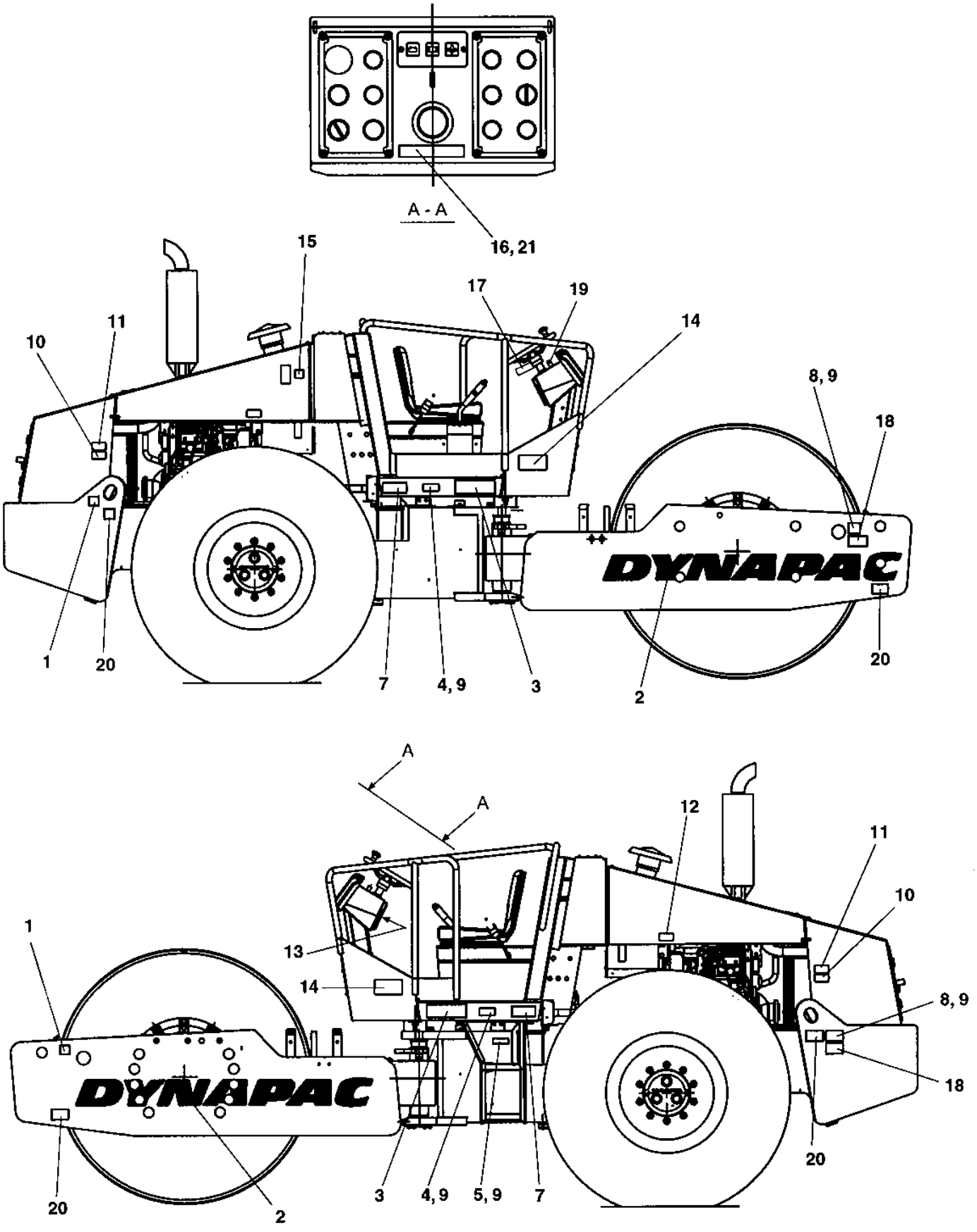
A - A
16, 21
15
17
19
11
10
14
8, 9
18
1
20
7
4, 9
3
2
20
A
A
12
11
10
1
13
14
8, 9
18
20
20
2
3
4, 9
5, 9
7

Ref. No.	Part No.	Rem.	Qty	Description	Code
1	588176		2	Decal "LIFT POINT"	
2	904098		2	Decal "Svedala Dynapac" L=1600 mm	
3	791161		2	Decal "MODEL CODE"	
4	383859		2	Reflector, yellow	B
5	358090		1	Product plate ce	
7	903459		2	Decal "SAFETY"	
8	904870		2	Lifting sign	
9	624015		16	Blind rivet	
10	903424		2	Decal "SAFETY"	
11	903423		2	Decal "SAFETY"	
12	991990		2	Decal "TYRE PRESSURE"	
13	903425		1	Decal "SAFETY MANUAL"	
14	903422		2	Decal "SAFETY"	
15	272373		1	Decal "HYDRAULIC OIL"	
16	386084SE		1	Decal "WARNING" Swedish	
	386084EN		1	Decal "WARNING" English	
	386084DE		1	Decal "WARNING" German	
	386084IT		1	Decal "WARNING" Italiian	
	386084ES		1	Decal "WARNING" Spanish	
	386084FR		1	Decal "WARNING" French	
	386084NO		1	Decal "WARNING" Norwegian	
	386084DK		1	Decal "WARNING" Danish	
	386084FI		1	Decal "WARNING" Finnish	
	386084PT		1	Decal "WARNING" Portuguese	
	386084NL		1	Decal "WARNING" Dutch	
	386084GR		1	Decal "WARNING" Greek	
	386084IS		1	Decal "WARNING" Icelandic	
	386084CN		1	Decal "WARNING" Chinese	
	386084BR		1	Decal "WARNING" Brazil	
17	384159		1	Instructions Loading-Unloading	
18	908229		2	Safety decal	
19	358881		1	Padlock	
20	382751		4	Decal "TIE DOWN POINT"	
21	624017		4	Blind rivet	

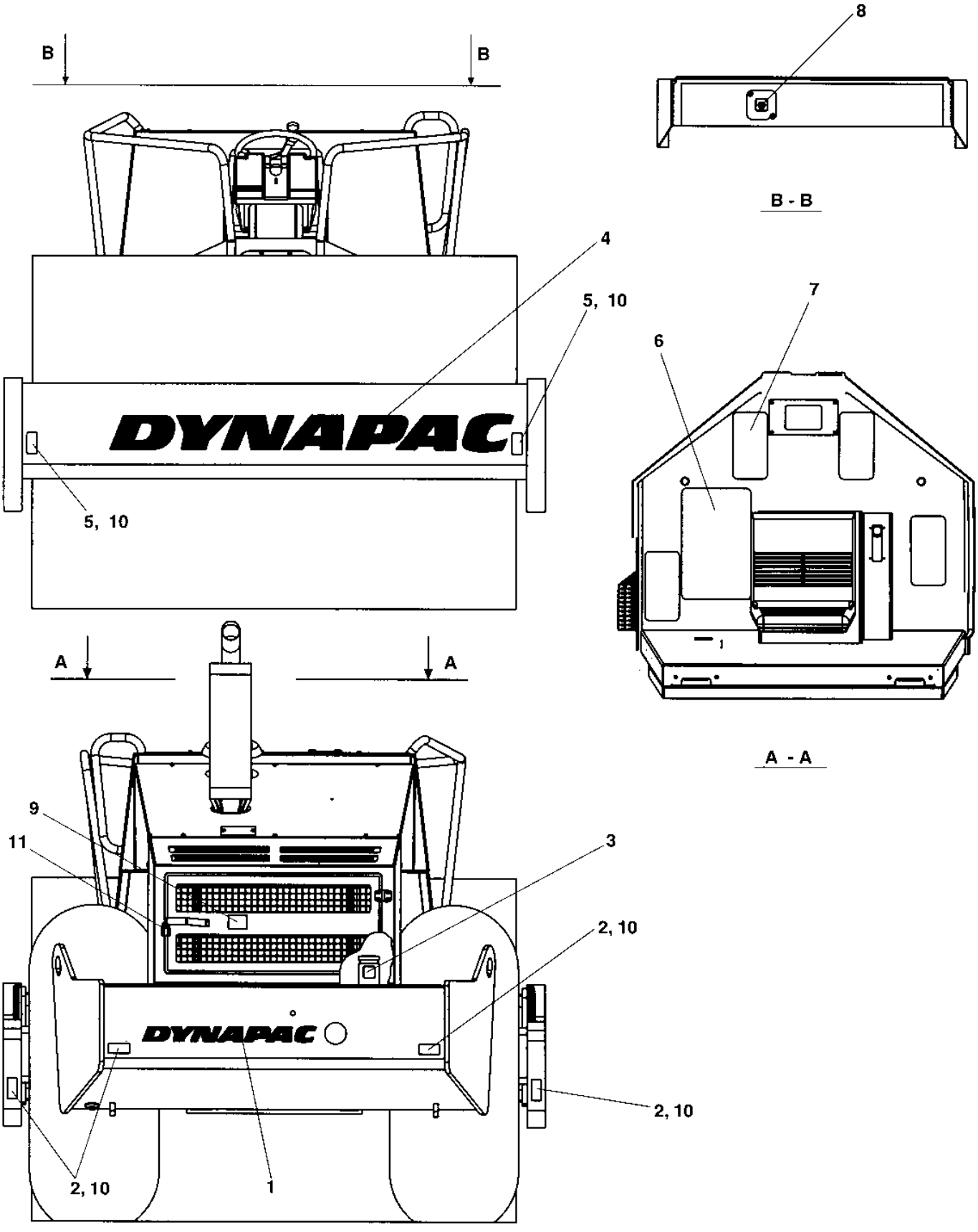
B
B
8
B - B
4
5, 10
7
6
DYNAPAC
5, 10
1
A
A
A - A
9
11
3
2, 10
DYNAPAC
2, 10
2, 10
1

Decals

Ref. No.	Part No.	Rem.	Qty	Description	Code
1	904093		1	Decal "Svedala Dynapac" L=1200 mm	
2	929076		4	Reflector, red	B
3	991658		1	Decal "FUEL"	
4	904098		1	Decal "Svedala Dynapac" L=1600 mm	
5	383860		2	Reflector, white	B
6	373364		1	Slip protection	
7	373363		4	Slip protection	D
8	272372		1	Decal "HYDRAULIC OIL"	
9	904835		1	Decal "BATTERY POWER"	
10	624015		12	Blind rivet	
11	358881		1	Padlock	

Ref. No.	Part No.	Rem.	Qty	Description	Code
10				Standard equipment (Page 148)	

15639-1

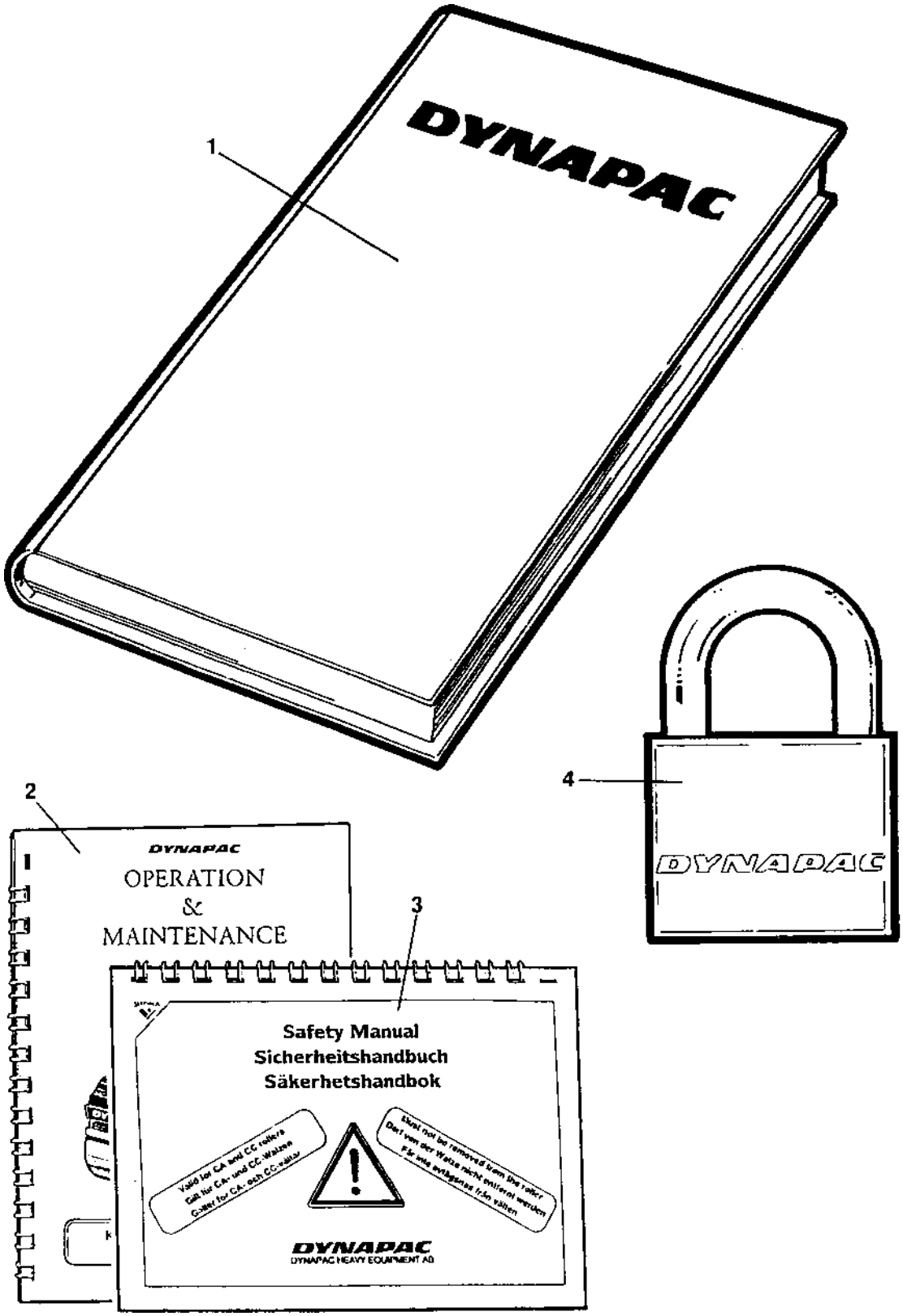
1
DYNAPAC
2
DYNAPAC
OPERATION
&
MAINTENANCE
3
Safety Manual
Sicherheitshandbuch
Säkerhetshandbok
DYNAPAC
DYNAPAC HEAVY EQUIPMENT AB
4
DYNAPAC

Ref. No.	Part No.	Rem.	Qty	Description	Code
1			1	Documentation OM150	
			1	.Warranty registration card	
			1	.Operating instruction O150	
			1	.Maintenance instruction M150	
			1	.Spare parts catalogue SCA150	
			1	.Instruction manual Cummins 4BT 3.9C	
2			1	.Operating / maintenance instruction OM150	
3			1	.Safety manual RSAFE	
4	358881		1	Padlock	
5	385422		1	Brake release kit	

Ref. No.	Part No.	Rem.	Qty	Description	Code
10				Tool equipment (Page 152)	
20				Pad shell (Page 154)	
30				Scraper (Page 156)	

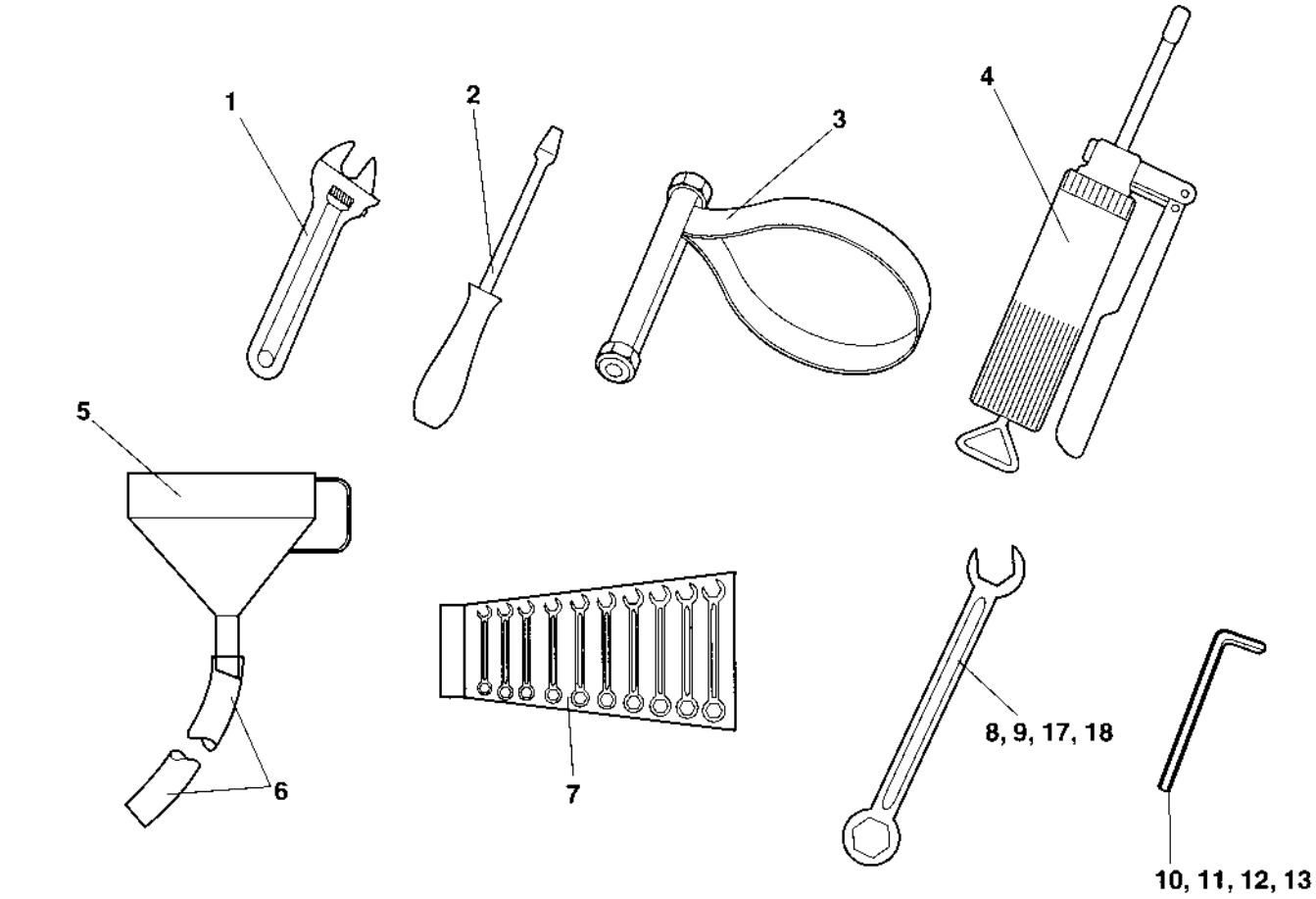
1
2
3
4
5
6
7
8, 9, 17, 18
10, 11, 12, 13

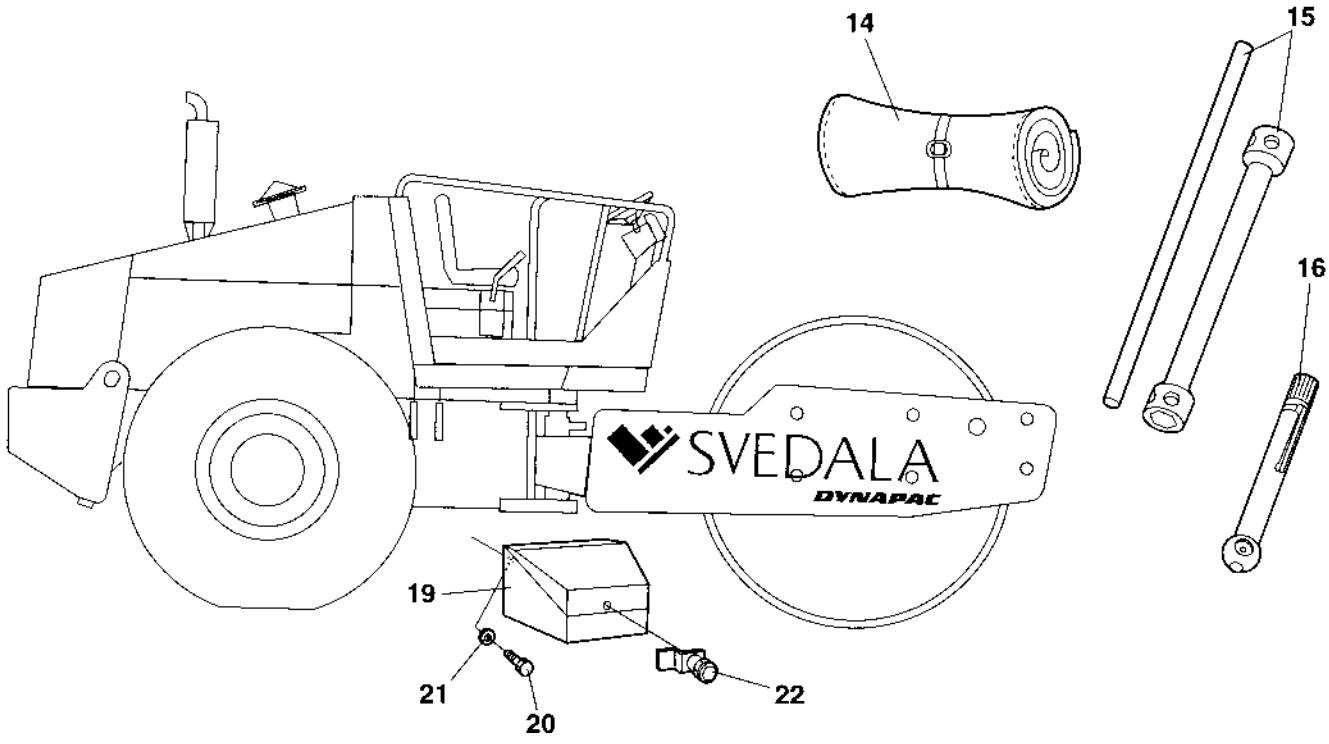
14
15
16
SVEDALA
DYNAPAC
19
21
20
22

Ref. No.	Part No.	Rem.	Qty	Description	Code
1	485011		1	Adjustable wrench	
2	485019		1	Screw driver	
3	902610		1	Belt pliers	
4	311016		1	Grease gun	
5	485040		1	Filling funnel	
6	244026	A	1	Plastic hose	
7	901212	B	1	Open end spanner	
8	901213		1	Open end spanner 24 mm	
9	902578		1	Open end spanner 22 mm	
10	485005		1	Allen wrench 1/4"	
11	485037		1	Allen wrench 3/8"	
12	485388		1	Allen wrench 6 mm	
13	485006		1	Allen wrench 8 mm	
14	277992		1	Tool bag	
15	901380		1	Wheel nut key 30/32 mm	
16	901220		1	Pressure gauge	
17	901214		1	Open end spanner 30 mm	
18	901215		1	Open end spanner 32 mm	
19	372837		1	Tool box	
20	500019		3	Screw M8-1,25x16 8,8	
21	904640		3	Washer 8.4x22x3	
22	372658		1	Lock	

A) L=400 mm
B) Kit

Pad shell

17506

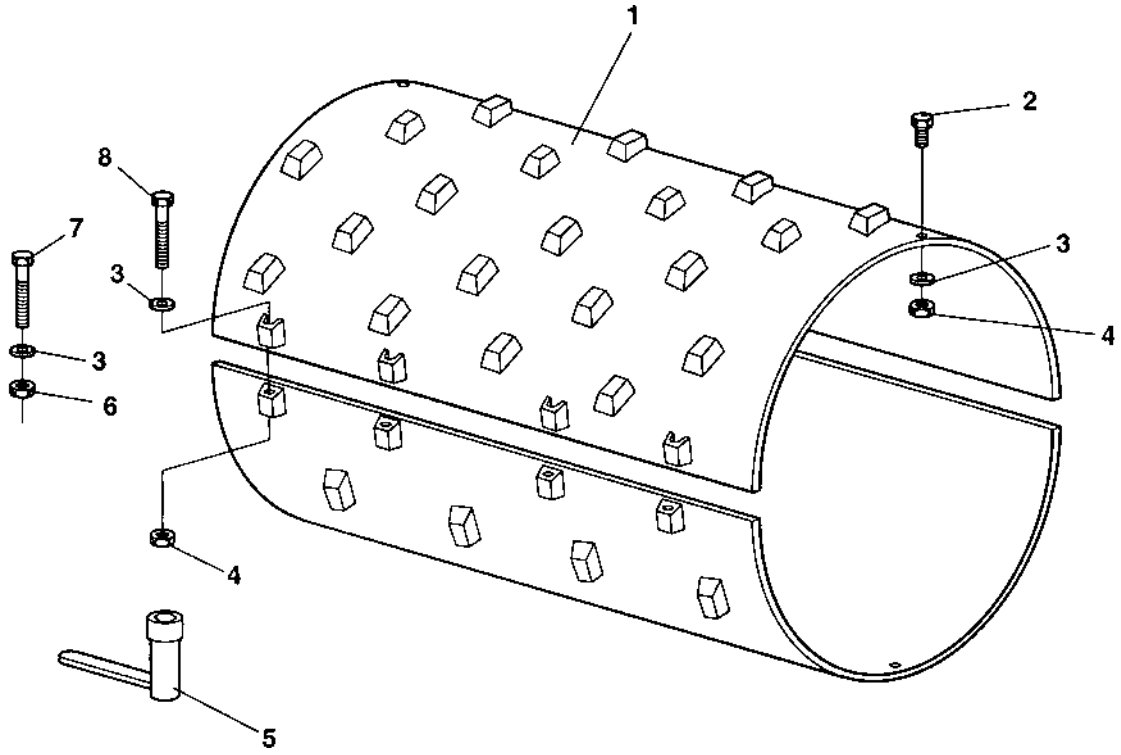

Pad shell

Ref. No.	Part No.	Rem.	Qty	Description	Code
1	385346		2	Pad shell	
2	500134		4	Screw M16x60	
3	904232		16	Washer 17x30x3	
4	586021		12	Nut M16	
5	385504		1	Hexagon sleeve	
6	570008		4	Nut M16	
7	385505		4	Mounting screw	
8	500094		8	Screw	

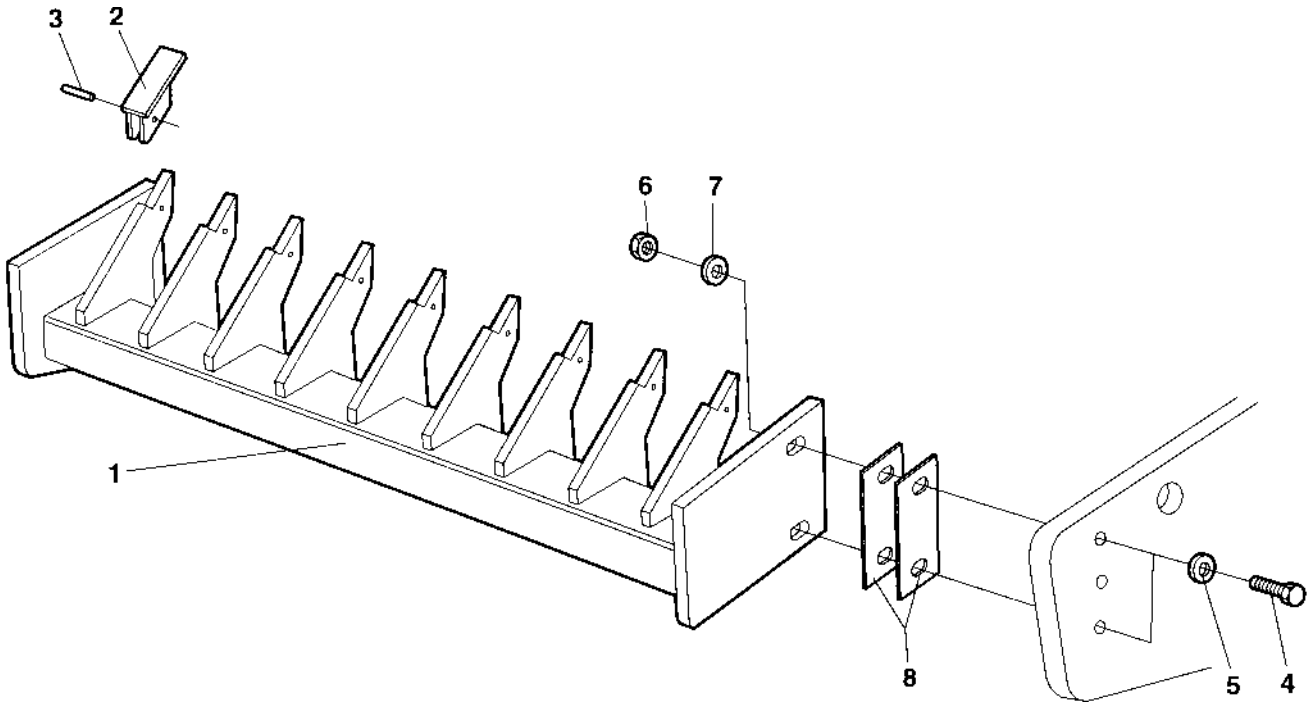
3
2
6
7
1
8
5
4

Ref. No.	Part No.	Rem.	Qty	Description	Code
1	815680		1	Scraper	
2	801656		20	Tooth	B
3	801631		20	Flexible pin 56,5x40	B
4	500210		4	Screw	
5	904233		4	Washer 21,0x36x3	
6	586022		4	Lock nut M20	
7	903290		4	Washer 21x36x6	
8	815681		4	Shim T=3 mm	

NUMERICAL INDEX

Part Number	Page
100040	15,23
114036	31
116041	31
160105	31
160157	67,83
160269	101
160344	31
160362	31
162008	65
162017	31
162018	31
167023	31
167032	15,23
202028	37
202043	37
232041	21
232097	71
232122	69
233304	69
234233	77
234243	65
234382	67
234388	95
234622	95
234626	71
234667	67
234810	65
234843	75,77
234875	65
234888	75,77
234909	65
234958	65
244026	153
244054	41
272372	145
272373	143
277992	153
287597	101
287598	101
310008	15
311016	153
313001	41
313004	37
313008	37
313010	37
313036	43
313041	37,41 ,109
313075	37
313102	65,71 ,109
330171	41
334116	71
334122	61,67
334138	65
334140	65
334155	65
334196	95
334197	71
334199	71
334205	67,75 ,77
334256	65
334389	75,77
334468	65
334524	75
335914	61,67
336742	31
337042	23
337045	15,23
338304	71
343159	23
343318	31
343322	31
343462	31
343561	31
343732	61,67
343744	31
343775	19
343801	31
343872	61
343907	31
345243	65
345871	15,23
345872	15,23
345873	15,23
345874	15,23
345875	15,23
347119	19,71 ,73
347512	35,113
348213	109
348309	39
348331	113
348347	99
349211	61,67
349435	109
349715	31
349879	69
349880	69
355263	101
355869	117
356348	95
356500	99
357138	13,69
357316	115
357424	115
357425	115
357426	115
357427	115
357488	19
357583	99
357585	101
357643	115
357855	115
358090	143
358142	115
358143	115
358254	115
358452	105
358881	115,143 ,145,149
359403	35
359550	65
359551	65
359998	123
370229	35
370231	31
370234	113,123
370258	35,123
370365	31
370766	121
370803	121
371277	99
371326	101
371344	101
371594	47
371669	71
371730	133
371773	37
371774	37
371937	47
371938	47
371939	47
371941	47
371942	47
371943	47
372008	109
372029	69
372044	59,67 ,69,71
372229	7,13,65
372250	59,77 ,79,81
372457	123
372479	19
372489	121
372494	113,123
372513	71
372514	71
372634	31
372638	31
372639	31
372640	31
372641	31
372658	153
372678	121
372745	121
372757	113
372758	103
372784	109
372785	113,123
372786	123
372836	109
372837	153
372983	35
372984	35
373016	109
373096	109
373140	109
373184	103
373270	61,67
373363	145
373364	145
373395	61
373396	67
373400	113
373421	23
373423	61
373460	19,41
373507	67
373574	41
373617	47
373618	47
373746	119
373747	119
373748	119
373749	119
373750	119
373758	21
373774	67
373799	121
373906	119
373907	119
373943	121
374028	95
374029	103
374030	103
374059	65
374398	105
374471	113
374606	123
374607	123
374836	31
374864	37
374869	19
374900	23
374907	31
375031	59,71 ,73
375152	35
376255	113,123
376340	25
376348	25
376349	25
376354	25
376366	25
376488	121
376489	121
380012	25
380087	99

NUMERICAL INDEX

Part Number	Page	Part Number	Page	Part Number	Page
380109	25	384784	65	485011	153
380113	113	384789	45,47	485019	153
380123	113		,49	485037	153
380144	67	384790	59,61	485040	153
380157	39		,63	485388	153
380161	39	384796	37	499266	39
380208	113	384797	37	500006	41,99
380277	101	384798	37		,107
380278	101	384802	35	500012	37
380281	99,101	384803	35	500013	105
380490	65	384811	37	500018	23,37
380577	83	384814	37	500019	37,39
380656	123	384819	37		,41,69
380700	83	384821	37		,71,133
380727	113	384822	37		,137,153
380755	25	384828	39	500021	35,37
380798	107	384846	41		,65,105
380800	107	384849	65		,115,119
380829	65,83	384868	43	500022	25,35
380889	113	384895	41		,119,121
380963	119	384909	43	500023	25
380964	119	384916	99	500028	31,39
380993	15,23	385042	71		,61,65
381081	41	385234	35		,67
381297	25	385306	37	500029	19,35
381330	25,121	385346	155		,43,113
381347	25	385393	71		,123
381348	25	385422	149	500030	35,61
381351	109	385504	155		,67,117
381352	121	385505	155	500031	25,35
381353	121	385764	27	500033	61,67
381413	37	386084BR	143	500037	23
381435	103	386084CN	143	500040	25,41
381989	25	386084DE	143		,99,103
382397	113	386084DK	143		,115
382406	25	386084EN	143	500043	19,103
382411	25	386084ES	143	500046	31,65
382582	113	386084FI	143	500047	25,99
382751	143	386084FR	143	500048	21,37
382782	101	386084GR	143		,65,99
383200	121	386084IS	143		,117
383225	121	386084IT	143	500051	71
383326	109	386084NL	143	500053	25,27
383452	109	386084NO	143		,41,95
383855	59,83	386084PT	143		,99,107
	,85	386084SE	143		,109,113
383859	143	450066	25	500056	35,65
383860	145	450067	25	500075	37,101
383973	83	470020	99	500076	31
384159	143	482010	65	500077	61
384198	37	482182	65	500079	109
384402	139	482342	95	500091	67
384403	139	482434	71	500094	155
384442	19	482516	75,77	500100	121
384443	19	482525	71	500111	113
384468	35	482543	75,77	500121	123
384498	15,23	482766	67	500133	25,31
384598	65	482885	71	500134	155
384601	43	483131	67	500149	65
384602	43	483132	67	500153	119
384675	27	483133	61	500192	69
384678	27	483134	77	500194	31,35
384681	27	483138	67		,67,109
384683	27	483139	67	500208	31
384689	27	483188	95	500209	21,31
384690	27	483445	95	500210	157
384691	27	483524	65	500226	113,121
384693	43	483525	65	500228	35
384696	43	483526	65	500239	121
384703	25	483528	71	500263	83
384707	25	483547	95	500287	23
384713	35	483551	83	500295	47
384714	43	483552	75,77	502019	67
384724	37	483553	61	502034	71
384751	67	483554	61	502059	67
384774	39	485005	153	502132	65,83
384776	25	485006	153	508005	123

NUMERICAL INDEX

Part Number	Page
508006	113
508019	31
508029	35,71
527002	31
535005	131
541526	109
541702	101,103
	,105,115
541703	103
570004	101
570005	37,99
570006	69
570007	31
570008	155
570015	21,31
	,121
570103	35
586001	107
586002	25,101
	,115,119
586003	27,43
	,105,119
	,137
586011	25
586019	35
586021	133,155
586022	31,35
	,157
588176	143
600016	73
624015	143,145
624016	121
624017	143
629066	133
635061	19,71
	,73
747282	41
791129	41
791141	99
791161	143
791170	39
791212	65
791213	83
791230	83
791231	61
801244	71
801567	99
801631	157
801656	157
813315	41
813316	71
813391	19
813434	99
813499	65
813500	61,67
	,71
813738	69
813791	39
815056	31
815680	157
815681	157
900229	65
900247	41
900248	41
900430	67
900455	67
900512	67
900552	75,77
900775	31
900798	107
900806	65
900957	55,91
901145	47,113
	,123
901155	67
901157	67
901190	109
901212	153
901213	153
901214	153
901215	153
901220	153
901226	101
901240	101
901369	103
901380	153
901766	107
901767	101,115
901833	49
901834	85
901987	57,93
902123	117
902125	95
902163	115
902164	115
902166	25,37
902183	117
902184	117
902185	117
902186	117
902223	101
902224	101
902225	101
902227	103
902284	99
902285	25,37
	,41,99
	,109
902286	113
902288	109
902379	25,115
902399	63,79
902496	109
902578	153
902581	65
902610	153
902919	115
903192	109
903290	21,113
	,123,157
903295	79
903327	79
903422	143
903423	143
903424	143
903425	143
903436	103
903459	143
903619	73
903631	99
903632	99
903640	99
903714	37
903760	99
903812	71
903820	101
903831	71
903897	107
903905	123
903985	47
904004	61
904005	65,71
	,83
904020	99
904036	99
904037	99
904038	103
904059	39
904060	39
904093	145
904098	143,145
904143	73
904145	73
904180	121
904206	109
904212	107
904213	65
904228	25,37
	,41,99
	,101,103
	,105,115
	,119
904229	23,35
	,37,39
	,41,65
	,67,69
	,71,95
	,99,105
	,107,109
	,113,119
	,133,137
904230	19,31
	,37,67
	,71,99
	,103,113
	,117,123
904231	23,25
	,31,67
	,71,109
	,113,123
904232	31,133
	,155
904233	21,31
	,35,47
	,113,121
	,123,157
904234	71
904241	71
904281	25,41
	,107
904282	65
904314	103
904340	119
904346	41
904369	37
904433	113,123
904448	99
904486	37
904504	25
904543	103
904556	37
904557	19,35
904567	25,69
904619	121
904637	35,39
	,43,61
	,65,67
	,71
904638	35,65
	,83
904639	99
904640	25,27
	,43,115
	,121,153
904663	7,9,11
	,13,15
904703	67
904718	27
904734	121
904773	67
904774	67
904793	83,117
904835	145
904870	143
905304	135
905305	135
905306	135
908229	143
908265	133
908267	137
908355	133

NUMERICAL INDEX

Part Number	Page	Part Number	Page	Part Number	Page
908359	137	930182	101	937289	79
908361	133	930200	101	937290	63,79
908399	39	932032	101	937291	63,79
908450	11,13	932050	101	937292	63,79
	,39	935244	129	937293	63,79
908451	13,39	935245	129	937294	63,79
908452	39	935246	129	937295	79
908499	125,127	935247	129	937296	79
	,129	935248	129	937297	79
908506	125	935249	129	937298	63,79
908507	125	935250	129	937299	79
908545	125,129	935253	129	937300	79
908580	129	935265	129	937301	79
908581	129	935266	129	937302	79
908582	129	935267	129	937303	79
908583	129	935268	129	937304	79
908605	135	935269	129	937305	79
908617	135	935270	129	937306	79
908623	131	935271	125,129	937307	63,79
908624	131	935272	125,129	937308	79
908625	133	935273	125,129	937309	79
908626	133	935274	125,129	937310	79
908627	133	935275	125,129	937311	79
908628	133	935276	125,129	937312	79
909535	113,123	935277	125,129	937313	79
909536	113,123	935278	125	937314	79
909544	51,87	935279	125	937315	79
909547	55,91	935280	125	937316	79
909582	85	935281	125	937317	79
909583	85	935282	125	937318	79
909584	85	935283	125	937319	79
909596	51,57	935284	125	937320	79,81
	,87,93	935285	125	937321	79
909607	51,57	935286	125	937322	79
	,87,93	935287	125	937323	79
909616	55,91	935288	125	937324	79
909630	49	935289	125	937325	79
909631	49	935290	125	937326	79
909632	49	935291	125	937327	79
910161	71	935292	125	937328	79
910995	23	935293	125	937329	79
911456	101	935294	125	937330	79
921031	103	935295	125	937331	79
921039	103,105	935296	125	937332	79
921050	41	935297	125	937333	79
921072	37,103	935298	125	937334	79
921080	99	935299	125	937380	125
921116	99	935300	125	937381	125
921132	99	935301	125	937382	125
922552	31	935302	125	937383	125
923371	65	935303	125	937384	125
923384	65,83	936020	57,93	937385	125
924791	119	936023	53,89	937386	125
924875	25,115	936052	89	937387	125
925802	103	936053	53,89	937388	125
926116	53,89	936054	53,89	937389	125
926214	15,23	936055	53,89	937390	129
	,71	936056	53,89	937391	129
926736	31	936097	55,91	937392	129
926781	57,93	936267	73	937393	129
926985	37	936268	73	937870	139
927974	113,123	936283	113,123	937871	135
928830	117	936436	79	938017	129
929023	99	936453	63,79	938018	129
929050	47	936459	79	938045	129
929076	145	936483	79	938101	129
929123	71	936727	61,63	938558	5,15
929226	61,67		,79	938693	63,79
929447	31	936728	61,63	938694	63,79
929602	115		,79	938695	63,79
929648	49,85	936763	79	938696	63,79
929712	49	936773	79	938697	63,79
929863	15	936775	79	938980	51,87
930151	109	936789	63	938981	51,87
930153	101	937055	71	938982	51,87
930154	101	937286	63,79	938983	51,87
930163	101	937287	79	938984	51,87

NUMERICAL INDEX

Part Number	Page
938985	51,87
938986	51,87
938987	51,87
938988	53,89
938989	53,89
938990	53,89
938991	53,89
938992	53,89
938994	53,89
938995	53,89
938996	53,89
938997	53,89
938998	53,89
938999	53,89
939002	57,93
939003	57,93
939004	57,93
939005	57,93
939006	57,93
939007	57,93
939008	57,93
939009	57,93
939010	57,93
939011	57,93
939012	57,93
939013	57,93
939014	57,93
939015	57,93
939016	57,93
939017	57,93
939018	57,93
939019	57,93
939020	57,93
939021	55,91
939022	55,91
939023	55,91
939024	55,91
939025	55,91
939026	55,91
939027	55,91
939028	55,91
939029	55,91
939030	55,91
939031	55,91
939032	55,91
939033	55,91
939034	55,91
939035	55,91
939036	55,91
939037	55,91
939038	55,91
939039	55,91
939046	63
939047	63
939048	63
939049	63
939050	63
939051	63
939052	63
939053	63
939054	63
939055	63
939056	63
939057	63
939058	63
939059	63
939060	63
939061	63
939062	63
939066	35
939067	35
939068	7,9,11 ,13,35
939069	35
939070	13
939071	35
939072	35
939073	35
939074	35
939075	5,7
939076	5,9
939077	5,11
939078	5,13
985012	101
985125	101
985146	101
989151	69
991658	145
991990	143
999011	105
999027	99