RUTHZIL TRATOR COMERCIAL DE PEÇAS LTDA 11 97083-6812 ROLANDO

DYNAPAC CA152STD

SPARE PARTS CATALOGUE

SCA152STD-1EN5

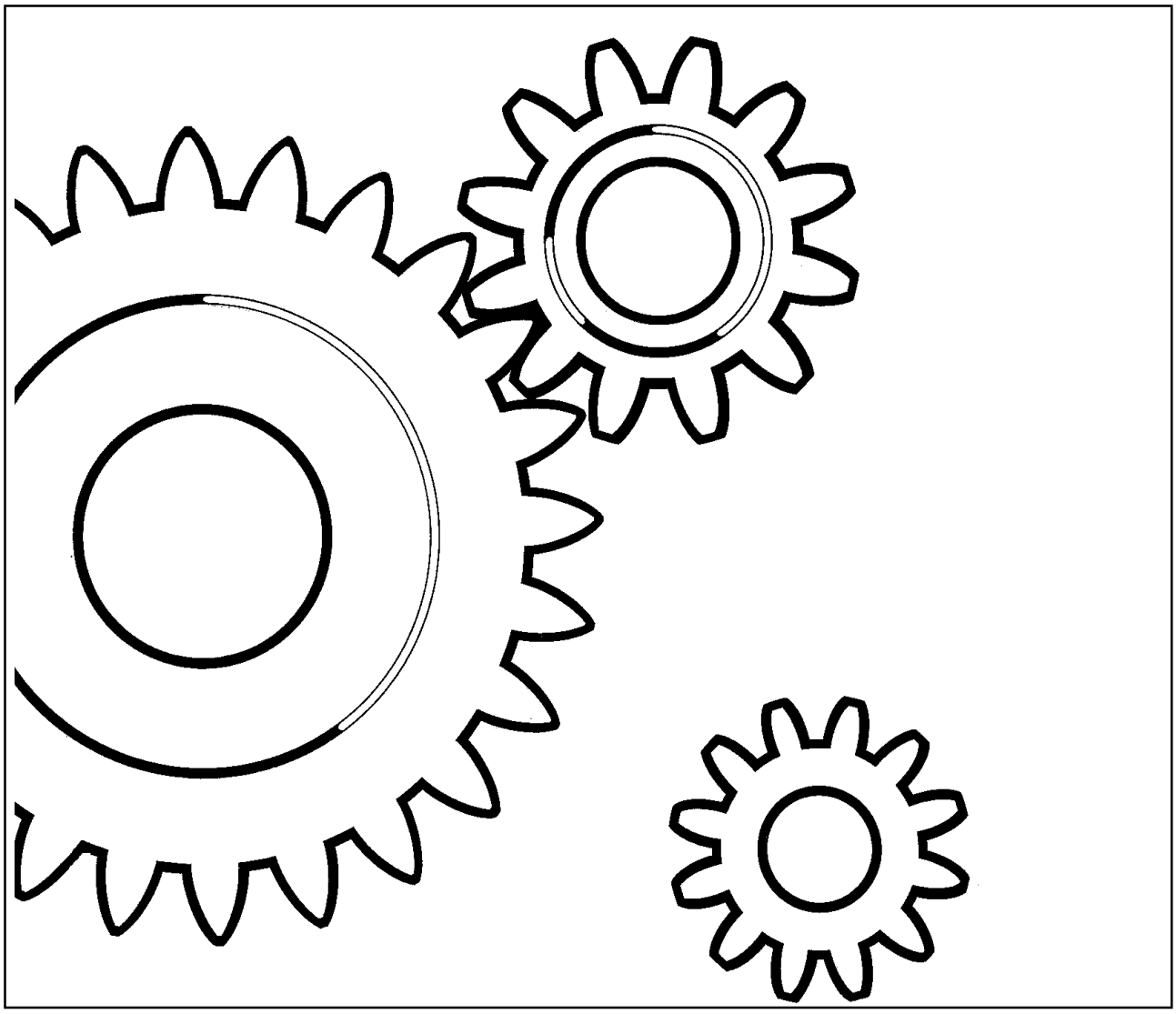

DYNAPAC
Metso Dynapac AB
Box 504, SE-371 23 Karlskrona, Sweden
Phone: +46 455 30 60 00, Fax: +46 455 30 60 10
www.dynapac.com

DYNAPAC

Vibratory Roller
CA152STD

Spare Parts Catalogue
SCA152STD-1EN5

Valid from roller serial number:

**64120237*-*

Diesel engines:

CUMMINS 4BT 3.9C Elite

Published catalogue issues valid for these rollers:

Catalogue	*Issue date*	*Valid for serial numbers*
SCA152STD-1EN1	*1999-07*	*Replaced by SCA152STD-1EN2*
SCA152STD-1EN2	*2000-03*	*Replaced by SCA152STD-1EN3*
SCA152STD-1EN3	*2001-05*	*Replaced by SCA152STD-1EN4*
SCA152STD-1EN4	*2002-10*	*Replaced by SCA152STD-1EN5*
SCA152STD-1EN5	*2003-04*	**64120237*-*



We reserve the right to change specifications without notice.
Printed in Sweden.

DYNAPAC

RESERVDELSBESTÄLLNING

Följande uppgifter ska lämnas vid beställning av reservdelar för att undvika leveransfel:

1. Maskintyp.
2. Vältens serienummer.
3. Antal av önskad reservdel.
4. Reserdelens artikelnummer.
5. Reservdelens benämning.
6. Måttuppgifter vid beställning av metervara.

ORDERING SPARE PARTS

To avoid errors in delivery, please give the following information when ordering spare parts:

1. Type of machine.
2. Roller serial number.
3. Quantity required.
4. Part number.
5. Parts denomination.
6. Dimensions when ordering per length.

ERSATZTEILBESTELLUNG

Zur Vermeidung von Fehllieferungen sind bei der Bestellung von Ersatzteilen folgende Angaben zu machen:

1. Maschinentyp.
2. Herstellungsnummer.
3. Bestellmenge. (Quantity)
4. Ersatzteilnummer. (Part Nº)
5. Ersatzteilbenennung. (Denomination)
6. Massangaben bei Bestellung von Meterware.

ORDINI DI RICAMBI

Per evitare errori nelle consegne di ricambi, Vi preghiamo di comunicarci le seguenti informazioni al momento dell 'ordinazione:

1. Tipo di macchina.
2. Numero di serie della macchina.
3. Quantità dei pezzi desiderati. (Quantity)
4. Numero di codice del pezzo. (Part Nº)
5. Descrizione del pezzo di ricambio. (Denomination)
6. Misura, in caso di ordine per metro.

PEDIDO DE RECAMBIOS

Para evitar errores en las entregas, deberán indicarse los siguientes datos al hacer un pedido de recambios:

1. Tipo de máquina.
2. Número de serie.
3. Cantidad de piezas deseadas. (Quantity)
4. Número de artículo de la pieza de recambio. (Part Nº)
5. Denominación de la pieza. (Denomination)
6. Indíquese la medida al solicitar un artículo que se expide por metros.

COMMANDE DE PIECES DE RECHANGE

Les indications suivantes doivent être fournies lors de la commande de piéces de rechange, afin d'éviter toute erreur de livraison:

1. Type de machine.
2. Numéro de série.
3. Quantité désirée de pièce de rechange. (Quantity)
4. Numéro de la piéce de rechange. (Part Nº)
5. Dénomination de la piéce de rechange. (Denomination)
6. Longueur en cas de commande au mètre.

YOUR AGENT/DEALER:

DYNAPAC

Text pages

The text pages is structured as the picture on the right.

1. This is the remarks for specific items and the descriptions of the remarks is at the bottom of the parts list.
2. Parts indicated by a dot and moved to the right are included when buying the assembled unit above.
3. Spare parts and service code for a specific part, mainly for internal use at Dynapac. "A" = Service part, "B" = Fast moving part, "C" = Suggested exchanged part and "D" = Regular spare part.

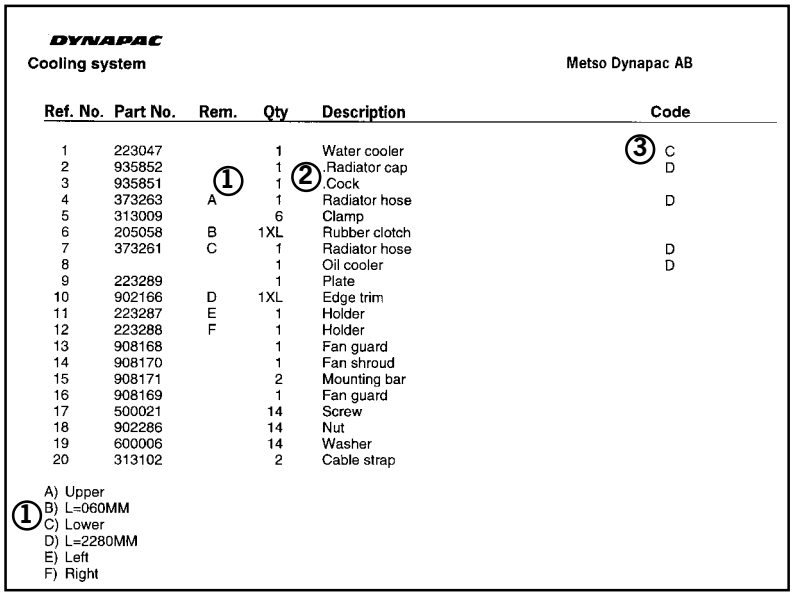

DYNAPAC

Cooling system — Metso Dynapac AB

Ref. No.	Part No.	Rem.	Qty	Description	Code
1	223047		1	Water cooler	③ C
2	935852		1	Radiator cap	D
3	935851	①	1	② Cock	
4	373263	A	1	Radiator hose	D
5	313009		6	Clamp	
6	205058	B	1XL	Rubber clotch	
7	373261	C	1	Radiator hose	D
8			1	Oil cooler	D
9	223289		1	Plate	
10	902166	D	1XL	Edge trim	
11	223287	E	1	Holder	
12	223288	F	1	Holder	
13	908168		1	Fan guard	
14	908170		1	Fan shroud	
15	908171		2	Mounting bar	
16	908169		1	Fan guard	
17	500021		14	Screw	
18	902286		14	Nut	
19	600006		14	Washer	
20	313102		2	Cable strap	

① A) Upper
B) L=060MM
C) Lower
D) L=2280MM
E) Left
F) Right

Changes

PARTS INFO	SERVICE INFO	GROUP	PAGE	NOTES

Notes

Notes

DYNAPAC

PÄRMETIKETT

För att undvika fel vid reservdelsbeställning finns här nedan två etiketter som passar i fickorna på pärmarnas ryggar. På dessa kan man se från vilket vältnummer av aktuell maskin reservdelskatalogen gäller. Gör så här:

1. Tag denna sida ur pärmen.
2. Klipp ut etiketten till **VÄNSTER** (1) och sätt in den i fickan på **DENNA** pärmens rygg.
3. Finns det en etikett till **HÖGER** (2), kan denna användas på pärmen för **FÖREGÅENDE** utgåva av denna katalog.
4. Kasta detta papper.

BINDER LABEL

To avoid errors when ordering spare parts use the labels below to identify the catalogues on the back of the binder. The label contain the serial number range for which the catalogue is valid. Do like this:

1. Remove this page from the binder.
2. Cut out the **LEFT** label (1) and put it on **THIS** binders back.
3. If there is a label to the **RIGHT** (2), it can be used on the binder for **PRECEDING** issue of this catalogue.
4. Throw away this paper.

KATALOG-BESCHRIFTUNG

Zur Vermeidung von Fehlen bei der Ersatzteilbestellung benutzen Sie bitte die unteren Beschriftungen, um die Kataloge auf der Rückseite zu kennzeichen. Auf der Beschriftung ist angegaben, für welche Maschinennummern der jeweilige Katalog gültig ist. Ablauf:

1. Nehmen Sie dieses Blatt aus dem Katalog.
2. Schneiden Sie die **LINKE** Beschriftung (1) aus. Schieben Sie die Beschriftung in die tasche auf **DEM** Katalogrücke.
3. Sollte die Beschriftung unten **RECHTS** (2) mitgeliefert werden, kennzeichen Sie damit bitte die **ÄLTERE** Ausführung dieses Kataloges.
4. Den Rest dieses Blattes bitte vernichten.

ETICHETTA POSTA SUL RACCOGLITORE

Per evitare errori quando ordinate pezzi di ricambio, usate le etichette in calce che servono ad identificare i cataloghi sul retro del raccoglitore. L'etichetta indica il numero di matricola delle maccine prese in considerazione nel catalogo.

1. Rimuovete questa pagina dal raccoglitore.
2. Ritagliate l'etichetta posta a **SINISTRA** (1) e ponetela sul retro **DEL** raccoglitore.
3. Se trovate anche un'etichetta sulla **DESTRA** (2), ritagliatela e ponetela sul raccoglitore relativo alla **PRECEDENTE** edizione del catalogo.
4. Distruggete questo foglio.

ETIQUETA PARA LA CARPETA

Para evitar errores al pedir repuestos utilicen las etiquetas abajo descritas para identificar los catálogos en la parte trasera de la carpeta. En la etiqueta se ven los números de referencia de la serie para la cual es válido el catálogo. Instrucciones:

1. Quitar esta página de la carpeta.
2. Corta la etiqueta **IZQUIERDA** (1) y ponerla est **ESTA** carpeta en la parte trasera.
3. Si hay una etiqueta en la parte **DERECHA** (2) se puede utilizar en la carpeta para el catálogo que **PRECEDE** a esta.
4. Tirar esta hoja.

ETIQUETAGE DU CATALOGUE

Afin d'éviter des erreurs lors de commandes de pièces de rechange, nous vous conseillons d'apposer les marquages ci-dessous à l'arrière du classeur, pour identifier les catalogues. Ce marquage indique les numéros de série pour lesquels le catalogue est adapté. Il convient de procéder de la façon suivante:

1. Retirez cette page du classeur.
2. Découpez l'étiquette de **GAUCHE** (1), et apposez-la à l'arrière de **CE** catalogue.
3. Si il y a une étiquette à **DROITE** (2), vous pourrez l'apposer sur le classeur de l'edition **PRECEDENTE** du catalogue.
4. Détruire cetta feuille.

1.



CA152STD

Catalogue **SCA152STD-1EN5**

Valid **from** serial number:

***64120237*-**

TABLE OF CONTENTS

Page

CA152STD SN 64120237 - 2

Service kits 4

938466 Service kit 50 h 6
938527 Service kit 250/750 h 8
938520 Service kit 500 h 10
938467 Service kit 1000 h 12

Repair kits 14

938558 Steering hitch kit 16
938895 Eccentric shaft kit Up to 64X20417 18
938896 Eccentric shaft kit From 64X20418 20
938891 Drum rotation kit 22
938875 Shock absorber kit, drum 24

Frame 26

Frames 28
Scraper 30
Scrapers urethan rubber Option Up to 64X21171 32
Scrapers urethan rubber Option From 64X21172 34
Scrapers spring steel Option 36
Hitch 38
Structure Up to 64X20862 40
Structure From 64X20863 44
Hood latch control Option 48
Noise suppression, hood Option 50
Noise suppression, air inlet Option 52

Drum 54

Drum 56

Engine 58

Engine Cummins 4BT 3.9C Elite Up to 64X21254 60
Engine Cummins 4BT 3.9C Elite From 64X21255 64
Cooling system Up to 64X20633 68
Cooling system From 64X20634 72
372374 Radiator 74
Combustion air system 76
Fuel system Up to 64X21291 78
Fuel system From 64X21292 80
Exhaust system 82

Transmission 84

Rear axle and wheels Up to 64X21151 86
371593 Rear axle Limited Slip 88
Differential with limited slip 90
Differential housing and brakes 92
Planet gear 94
372940 Rear axle No-spin, Option 96
Differential with No-Spin 98
Differential housing and brakes 92
Planet gear 94
Rear axle and wheels From 64X21152 100
383855 Rear axle Limited Slip 102
Housing 104

Differential with limited slip 106
Brakes 108
Planet gear 110
384801 Rear axle No-spin, Option 112
Differential with No-Spin 114
Differential housing and brakes 116
Planet gear 110

Hydraulic system 118

Propulsion system 120
373277 Propulsion pump Up to 64X20747 122
373361 Propulsion motor Up to 64X21151 128
Vibration system 132
373132 Vibration pump Up to 64X20954 134
373664 Vibration motor Up to 64X20427 136
Steering system 138
373610 Steering pump Up to 64X20418 140
374995 Steering pump From 64X20419 Up to 64X20782 142
381727 Steering pump From 64X20783 144
359139 Pilot valve 146
373410 Hydraulic cylinder Up to 64X20331 148
375031 Hydraulic cylinder From 64X20332 150
Brake system 152
Hydraulic oil tank 154
Central test panel hydraulic 156

Electrical equipment 158

Electrical system 160
Relay and Fuses 162
Instrument box 164
Instrument panel Main Up to 64X20703 166
Instrument panel Main From 64X20704 168
Instrument panel Upper left 170
Instrument panel Upper right 172
Instrument panel Lower left 174
Instrument panel Lower right 176
Emergency stop panel 178
Driving lights Option 180
Working lights Option 182
Rotating beacon Option 184
Compaction meter Option 186
Speedometer and frequency meter Option Up to 64X21151 188
Speedometer and frequency meter Option From 64X21152 190
Tachograph Option 192
Back-up alarm Option 194
Protection cover, Head light Option 196

Drivers platform 198

Drivers platform 200
Drivers platform, for cab Up to 64X21217 204
Drivers platform, for cab From 64X21218 206
Drivers seat Standard platform 208
Drivers seat Turn-over platform Up to 64X20701 210
Drivers seat Turn-over platform From 64X20702 212
Drivers seat Turn-over in cab Up to 64X20701 214
Drivers seat Turn-over in cab From 64X20702 216
359918 Steering column 218
Steering system Up to 64X20701 220

TABLE OF CONTENTS

Page

Steering system From 64X20702 222
Turning Controls 224
Turning Carrier 226
Forward and reverse control Up to 64X20747 228
Forward and reverse control From 64X20748 Up to 64X20921 230
Forward and reverse control From 64X20922 232
Speed limiter Option 234
Engine controls 236
Rops and fops 238
Cab Up to 64X21217 240
Cab Interior 242
Cab Inside panels 246
Cab Screens 248
Cab Wipers front and rear 252
Cab Water tank, wipers 254
Cab Door 256
Cab Heater and fan system Up to 64X20581 260
Cab Heater and fan system From 64X20582 262
Cab Wiring harness 264
Cab Roof mounted, elect. switches 266
Cab Interior, rear mirror 268
Cab Sun curtain 270
Cab 383030 From 64X21218 272
Cab Interior 274
Cab Inside panels 276
Cab Screens 278
Cab Door 282
Cab Wipers front and rear 284
Cab Mirror, Sun curtain 286
Cab Electric 288
Cab Heater system 290
385434 Cab heater, cpl 292
Cab Cable harness 294
Cab Work lights 296
Cab Exterior, rear mirror 298
Radio and cassette player Option 300
Simple Cab mounting Option 302
Simple Cab mounting Electric, Option 304

Decals 306

Decals 308
Decals 310

Standard equipment 312

Standard equipment 314

Optional equipment 316

Tool equipment 318
Sign SMV, First aid box 320
Canopy 322
Levelling blade, metal parts 324
Levelling blade, hydraulic parts 326
Levelling blade control 328
Air conditioner assembly Up to 64X21217 330
370889 Air conditioner unit 332
Air conditioner assembly 336
Condensor assembly From 64X21218 338
Compressor assembly From 64X21218 340

Evaporator assambly From 64X21218 ---- 342
Roof hatch From 64X21218 ---- 344


50
60
90
91
70
30
20
CA 152
DYNAPAC
DYNAPAC
80
10
40

Ref. No.	Part No.	Rem.	Qty	Description	Code
1				Service kits (Page 4)	
2				Repair kits (Page 14)	
10				Frame (Page 26)	
20				Drum (Page 54)	
30				Engine (Page 58)	
40				Transmission (Page 84)	
50				Hydraulic system (Page 118)	
60				Electrical equipment (Page 158)	
70				Drivers platform (Page 198)	
80				Decals (Page 306)	
90				Standard equipment (Page 312)	
91				Optional equipment (Page 316)	

Ref. No.	Part No.	Rem.	Qty	Description	Code
1	938466			Service kit 50 h (Page 6)	
2	938527			Service kit 250/750 h (Page 8)	
3	938520			Service kit 500 h (Page 10)	
4	938467			Service kit 1000 h (Page 12)	

938466 Service kit 50 h

17363

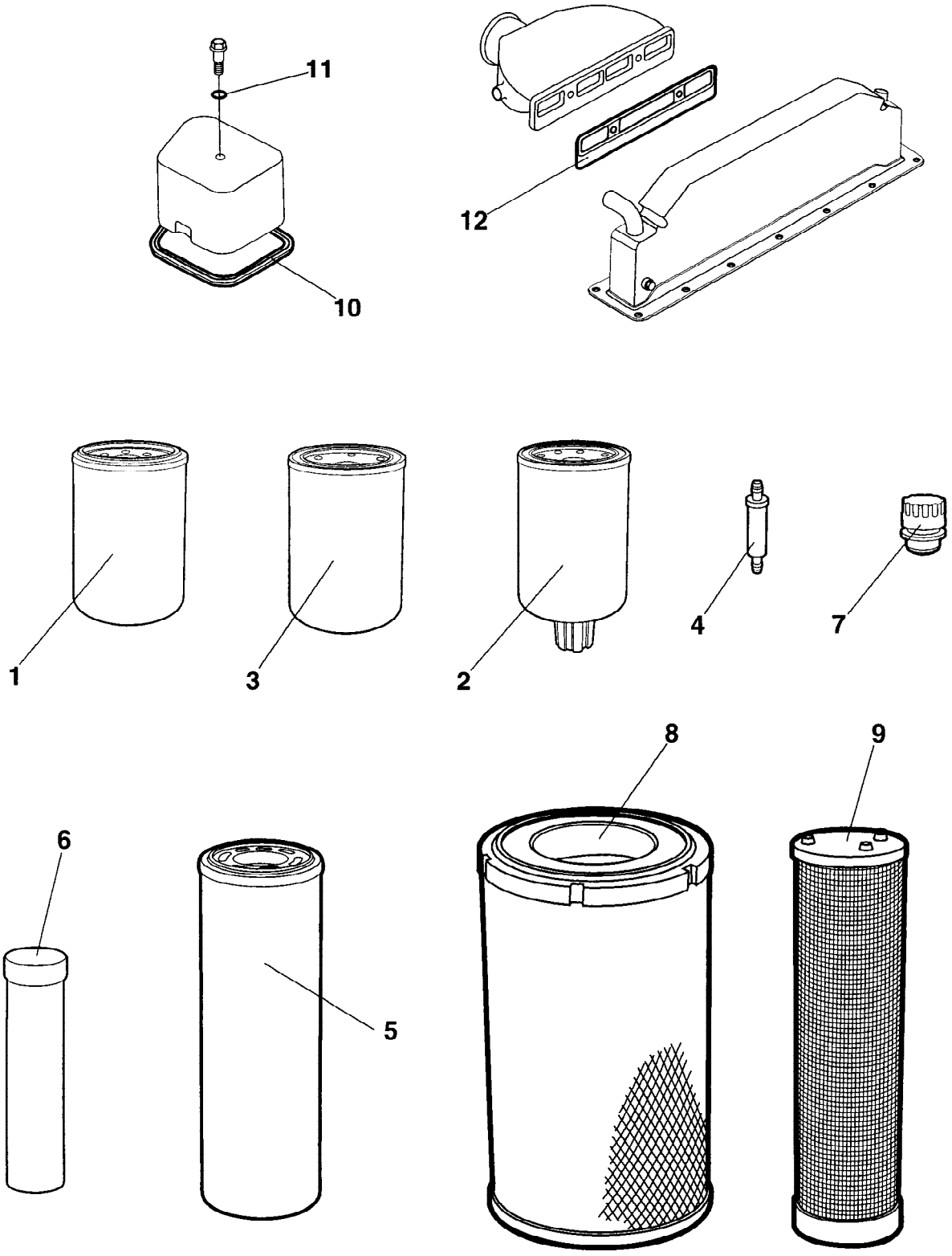

938466 Service kit 50 h

Ref. No.	Part No.	Rem.	Qty	Description	Code
1	212373		1	Oil filter	A
2	900827	1	1	Fuel filter	A
3	900829		1	Fuel filter	A
4	929322		1	Fuel strainer	A
5	372229		2	Filter element Hydraulic	A
6	904663		1	Lube grease	

1) With water separator.

938527 Service kit 250/750 h

17363

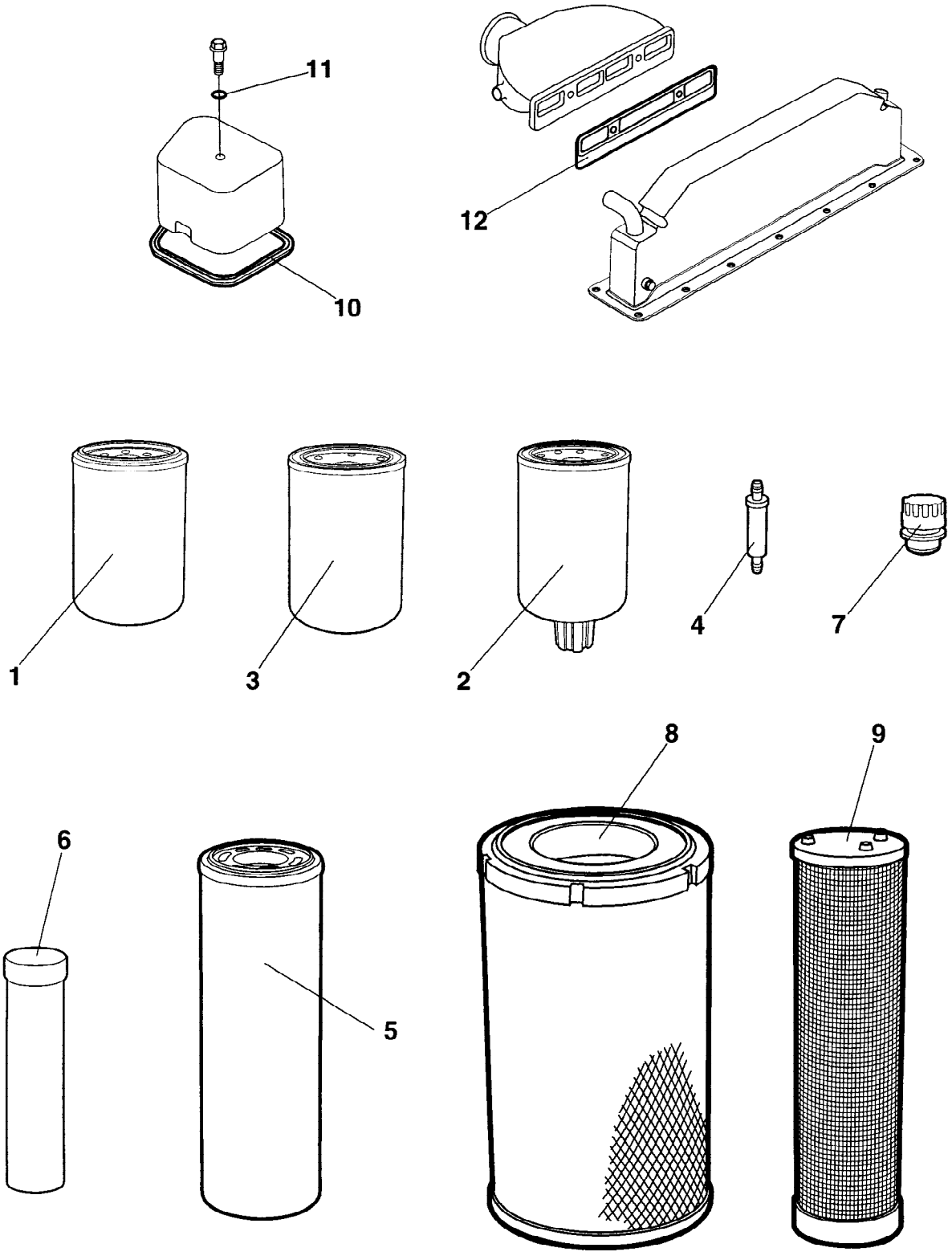

938527 Service kit 250/750 h

Ref. No.	Part No.	Rem.	Qty	Description	Code
1	212373		1	Oil filter	A
6	904663		1	Lube grease	

938520 Service kit 500 h

17363

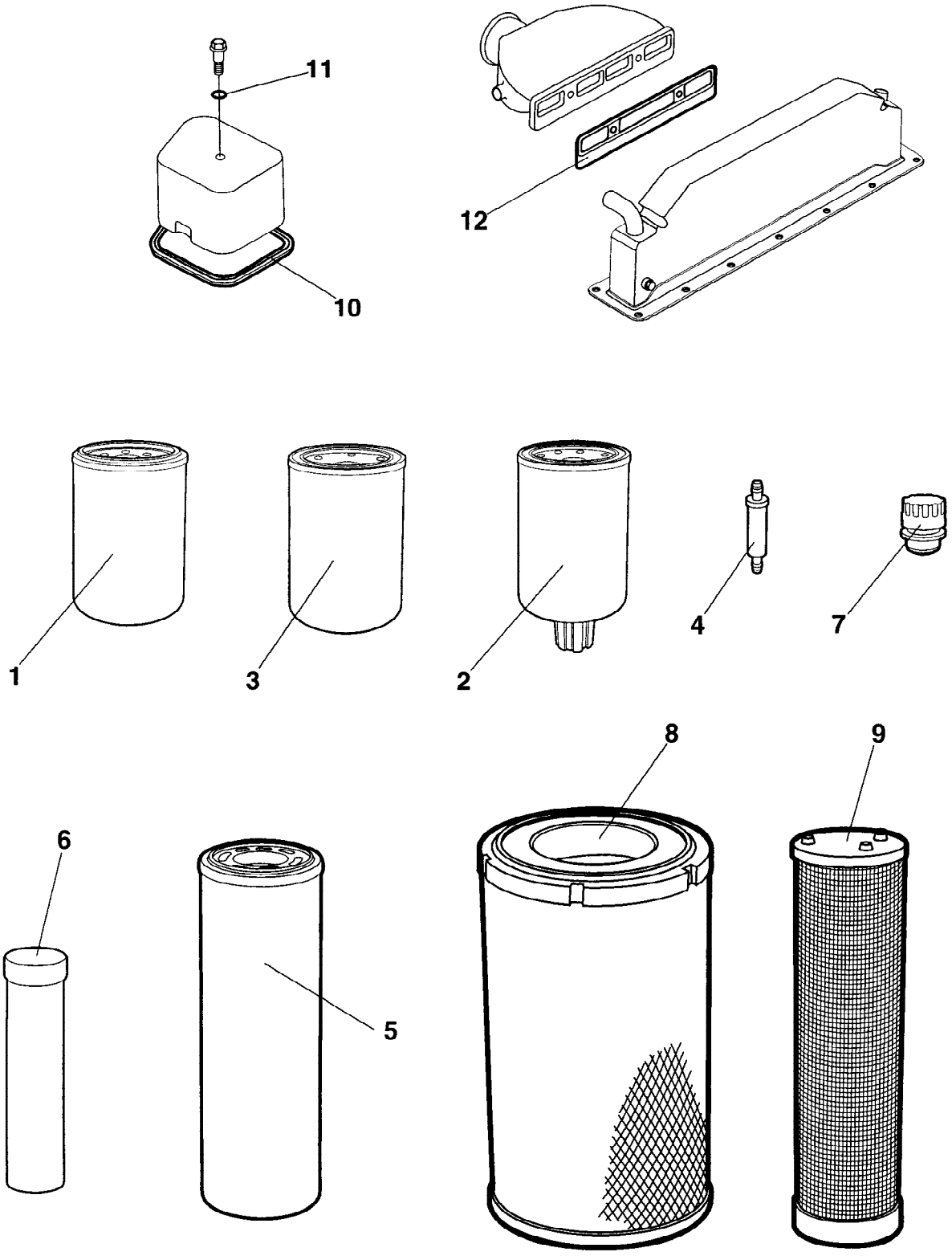

938520 Service kit 500 h

Ref. No.	Part No.	Rem.	Qty	Description	Code
1	212373		1	Oil filter	A
2	900827		1	Fuel filter	A
3	900829		1	Fuel filter	A
4	929322		1	Fuel strainer	A
6	904663		1	Lube grease	
8	908450	1	1	Air filter	A

1) Main

938467 Service kit 1000 h

17363

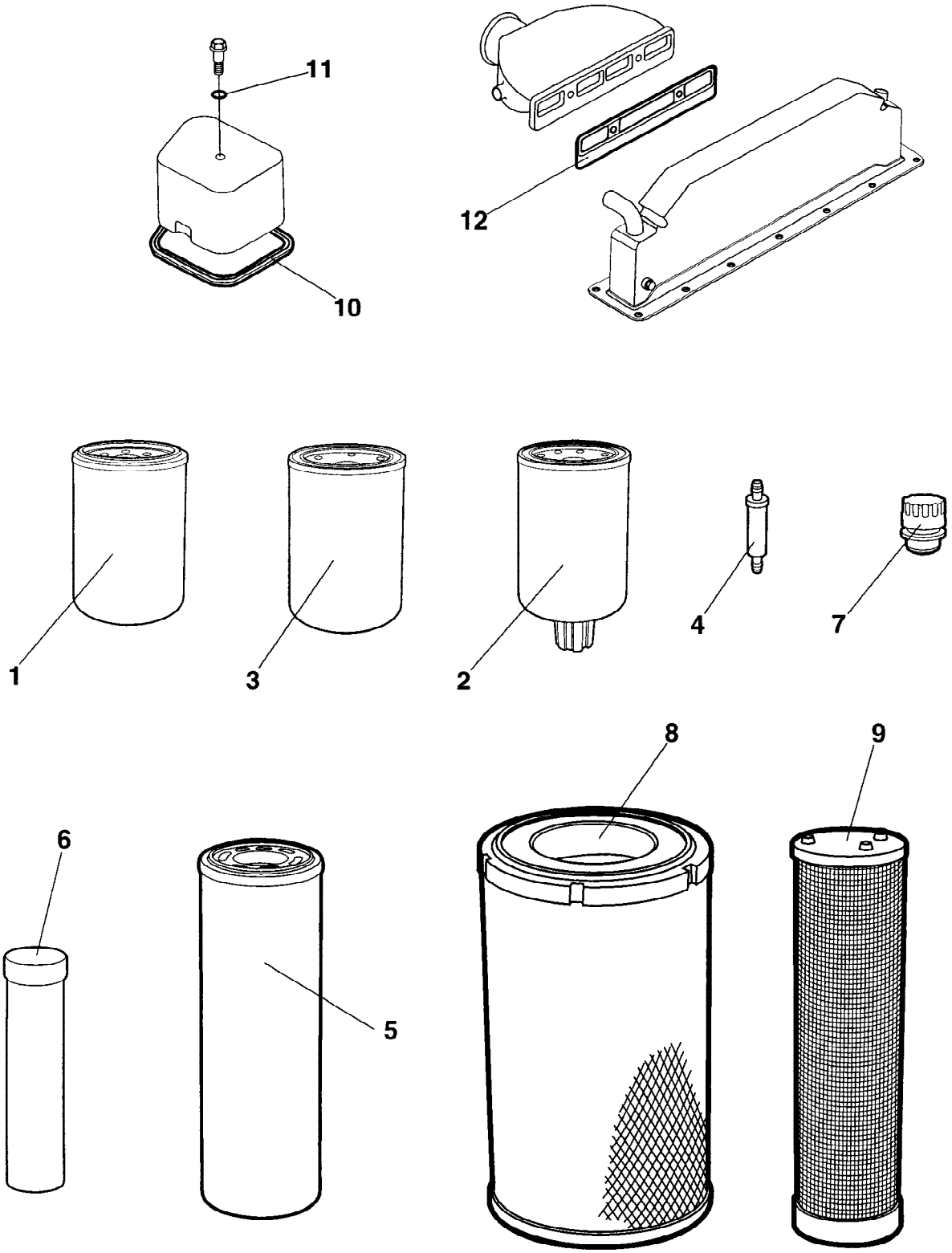

938467 Service kit 1000 h

Ref. No.	Part No.	Rem.	Qty	Description	Code
1	212373		1	Oil filter	A
2	900827	1	1	Fuel filter	A
3	900829		1	Fuel filter	A
4	929322		1	Fuel strainer	A
5	372229		1	Filter element Hydraulic	A
6	904663		1	Lube grease	
7	357138		1	Ventilating filter	B
8	908450	2	1	Air filter	A
9	908451	3	1	Air filter	A
10	938514		4	Valve cover gasket	
11	938516		4	Gasket	
12	938517	4	1	Gasket, inlet pipe	

1) With water separator
2) Main
3) Safety
4) For Cummins BTA-version only.

Ref. No.	Part No.	Rem.	Qty	Description	Code
5	938558		0	Steering hitch kit (Page 16)	
10	938895		0	Eccentric shaft kit Up to 64X20417 (Page 18)	
15	938896		0	Eccentric shaft kit From 64X20418 (Page 20)	
20	938891		0	Drum rotation kit (Page 22)	
30	938875		0	Shock absorber kit, drum (Page 24)	

938558 Steering hitch kit

938558

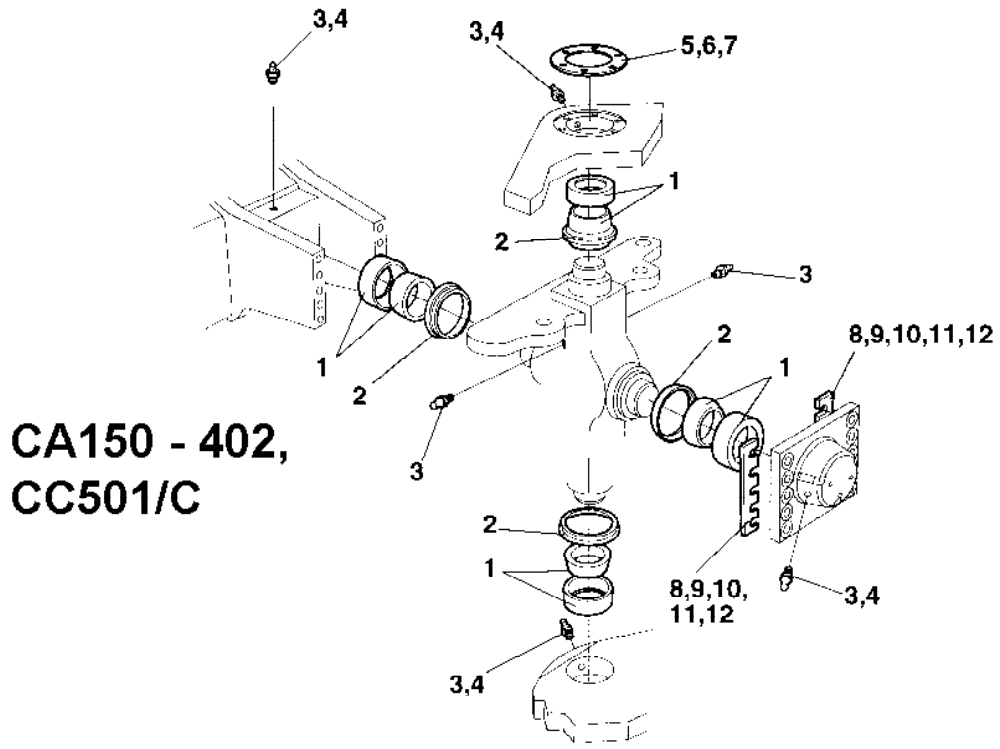

CA150 - 402,
CC501/C

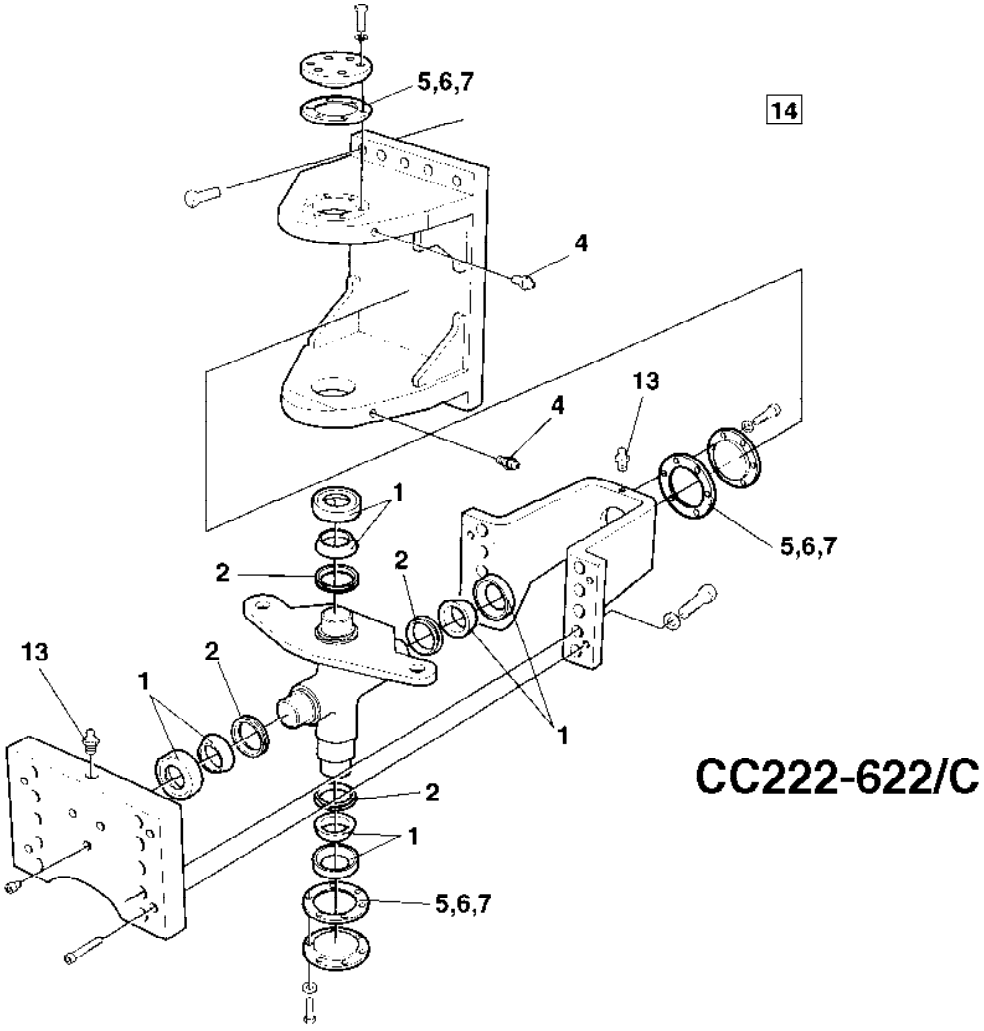

CC222-622/C

938558 Steering hitch kit

Ref. No.	Part No.	Rem.	Qty	Description	Code
1	100040		4	Axial ball bearing	D
2	167032		4	Lip-type oil seal	D
3	310008	2	3	Grease nipple	D
4	926214		2	Grease fitting	D
5	337045		3	Shim T=1,0 mm	D
6	345874		3	Shim T=0,35 mm	D
7	345875		3	Shim T=0,10 mm	D
8	345871	1	2	Shim T=1,0 mm	D
9	345872	1	2	Shim T=0,35 mm	D
10	345873	1	2	Shim T=0,10 mm	D
11	380993	1	2	Shim T = 2,0 mm	D
12	384498	1	2	Shim T = 0,15 mm	D
13	929863	3	1	Grease nipple	D
14	904663		1	Lube grease	
15			1	Instructions	

1) Valid for CA152-402 and CC501/C
2) Valid for CC501/C
3) Valid for CC222/232/322/422/432/522/622/C

938895 Eccentric shaft kit

VALS1

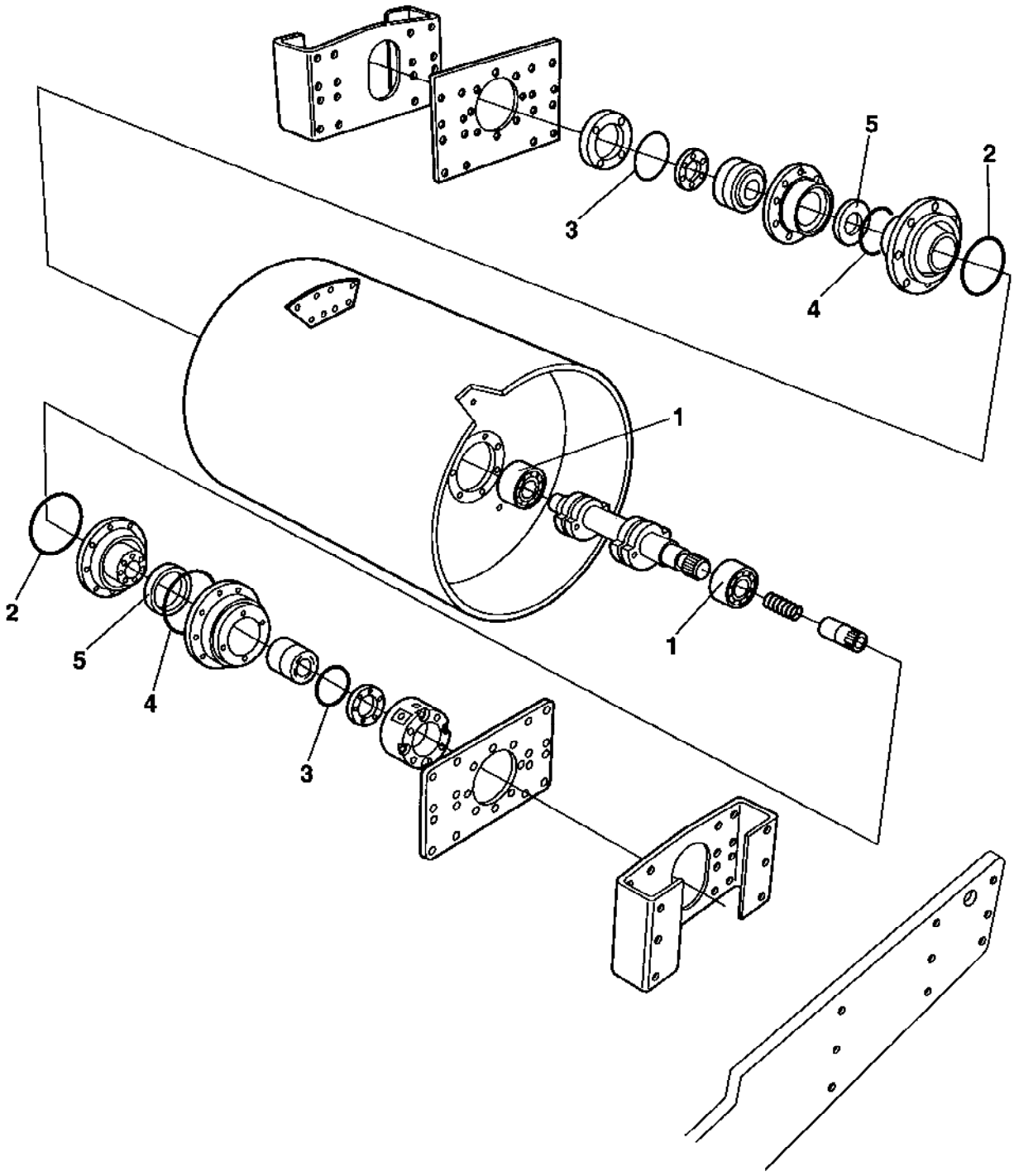

938895 Eccentric shaft kit

Ref. No.	Part No.	Rem.	Qty	Description	Code
1	114036		2	Spherical roller bearing	D
2	160107		2	O-ring	D
3	160105		2	O-ring	D
4	929447		2	V-ring	D
5	167023		2	Seal ring	D

938896 Eccentric shaft kit

VALS1

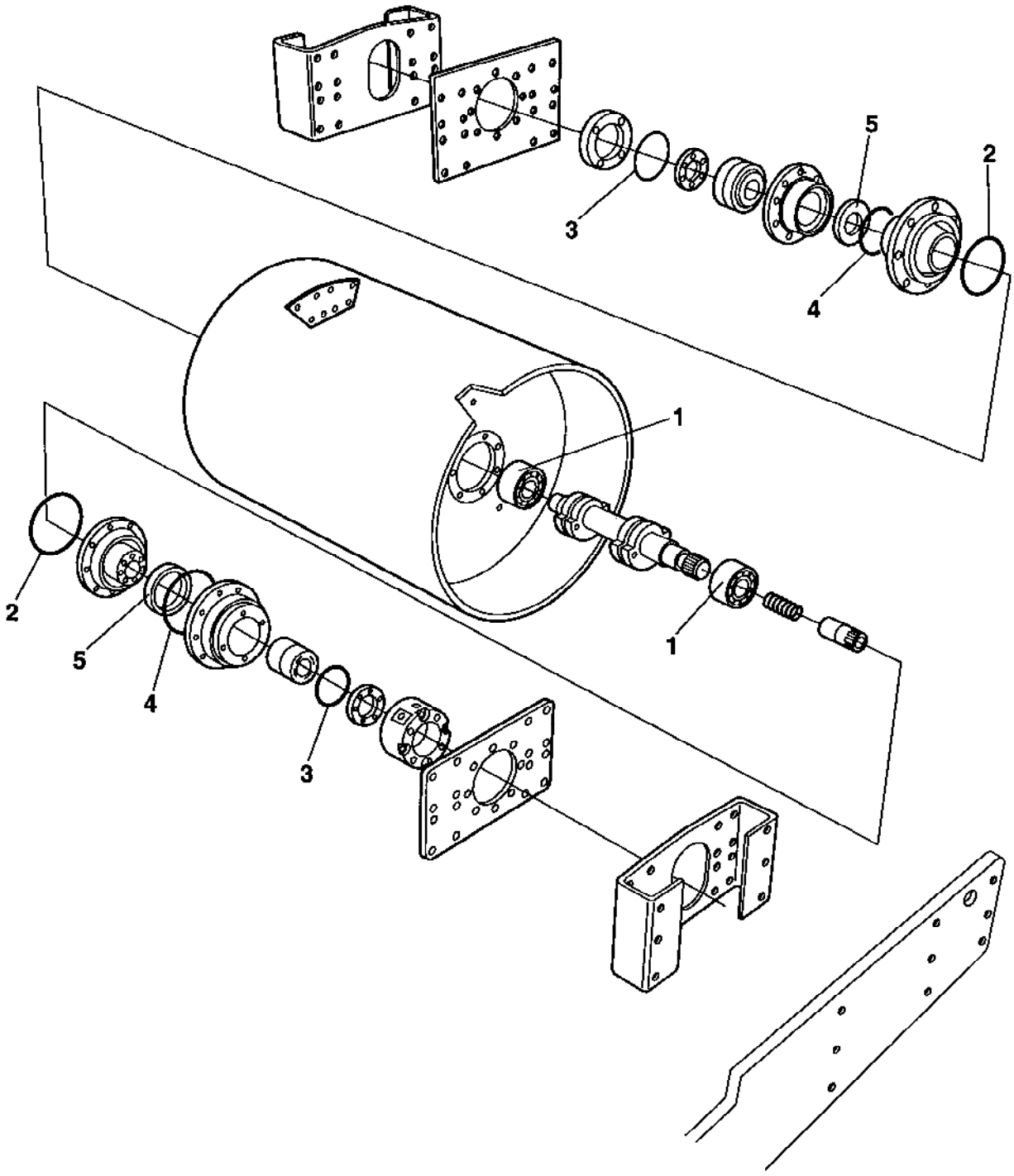

938896 Eccentric shaft kit

Ref. No.	Part No.	Rem.	Qty	Description	Code
1	114036		2	Spherical roller bearing	D
2	160344		2	O-ring	D
3	160105		2	O-ring	D
4	929447		2	V-ring	D
5	167023		2	Seal ring	D

938891 Drum rotation kit

RAMLAGER

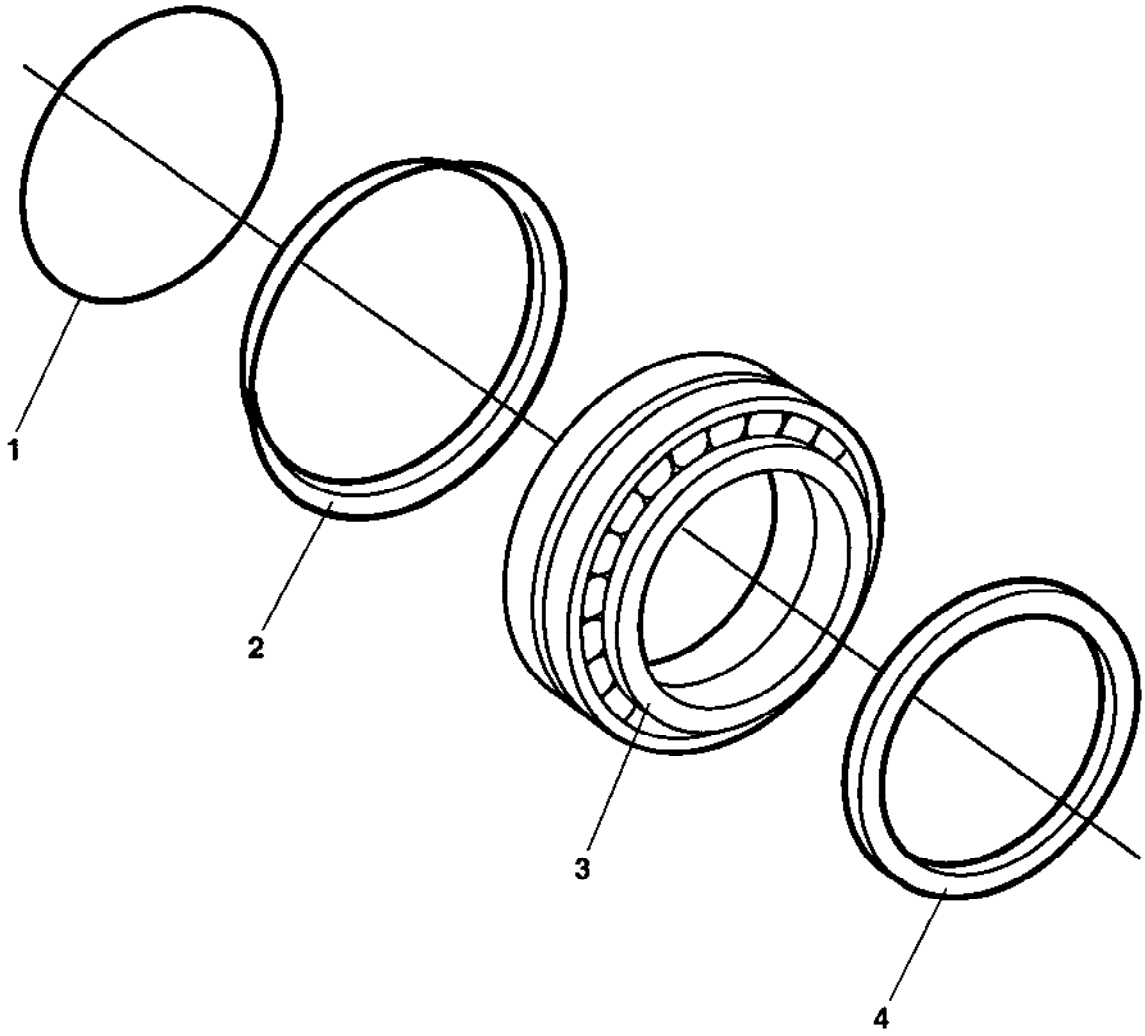

938891 Drum rotation kit

Ref. No.	Part No.	Rem.	Qty	Description	Code
1	160105		1	O-ring	D
2	929447		1	V-ring	D
3	116041		1	Taper roller bearing	D
4	167023		1	Seal ring	D

938875 Shock absorber kit, drum

SHOCK ABSORB.

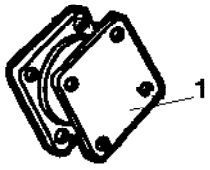

938875 Shock absorber kit, drum

Ref. No.	Part No.	Rem.	Qty	Description	Code
1	336742		8	Shock absorber	B

Ref. No.	Part No.	Rem.	Qty	Description	Code
10				Frames (Page 28)	
20				Scraper (Page 30)	
25				Scrapers urethan rubber Option Up to 64X21171 (Page 32)	
26				Scrapers urethan rubber Option From 64X21172 (Page 34)	
30				Scrapers spring steel Option (Page 36)	
40				Hitch (Page 38)	
50				Structure Up to 64X20862 (Page 40)	
51				Structure From 64X20863 (Page 44)	
60				Hood latch control Option (Page 48)	
70				Noise suppression, hood Option (Page 50)	
80			1	Noise suppression, air inlet Option (Page 52)	

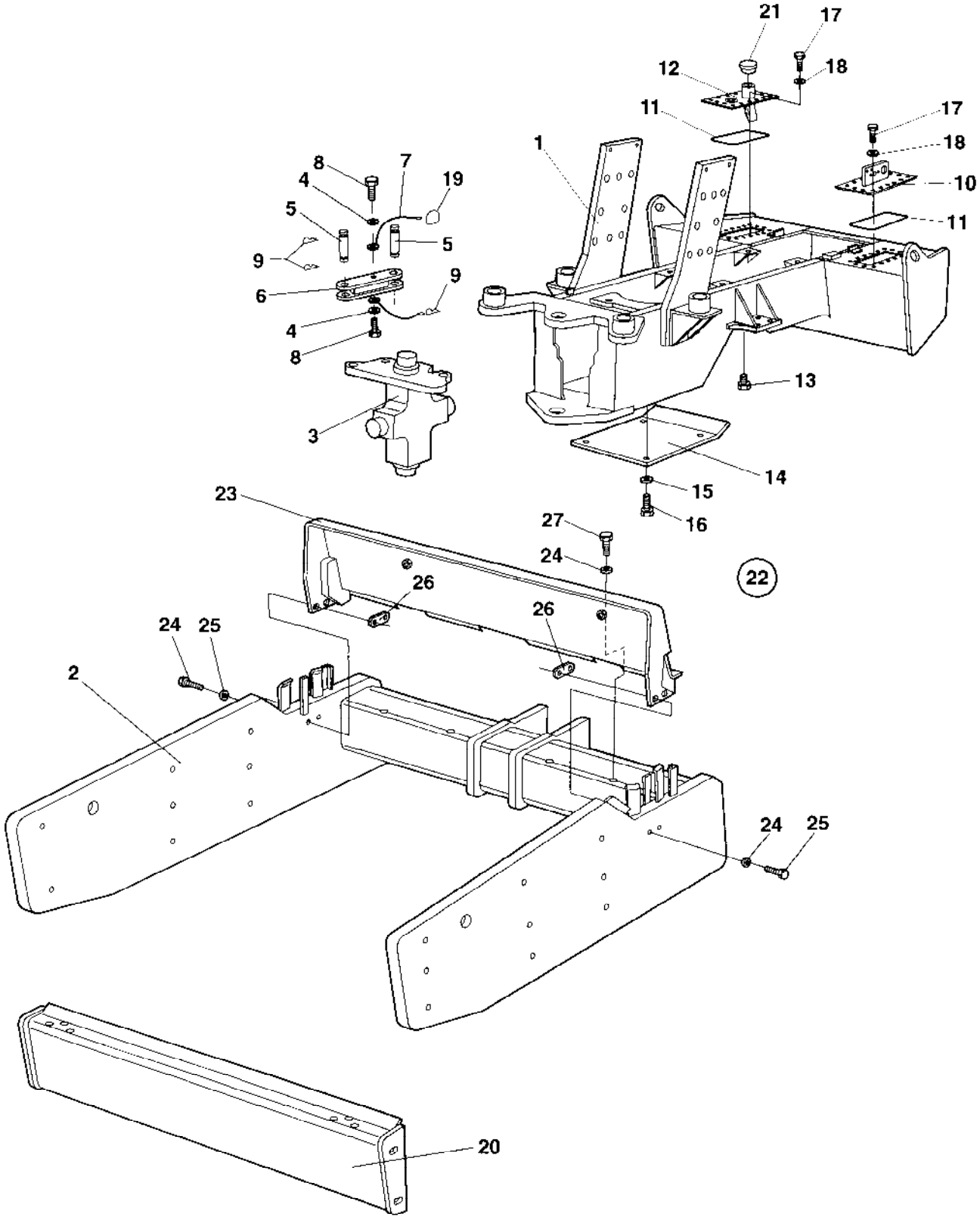
21
17
12
18
11
17
18
10
11
1
8
7
19
4
5
5
9
9
6
4
8
3
13
14
15
16
23
27
24
22
26
26
24
25
2
24
25
20

Ref. No.	Part No.	Rem.	Qty	Description	Code
1	372383		1	Tractor frame Up to 64X21151	
	383888		1	Tractor frame From 64X21152	
2	373108		1	Drum frame	
3			1	Hitch (Page 38)	
4	904230		2	Washer 10,5x22x2	
5	347119		2	Shaft	D
6	372938		1	Safety rod Up to 64X20424	
	374869	A	1	Safety rod From 64X20425	
7	343775		2	Wire	
8	500043		2	Screw M10x16H 8,8	
9	635061		3	Hair clip	D
10	373495		1	Cover Up to 64X20728	
	381605		1	Cover From 64X20729	
11	372709		2	O-ring	D
12	372022		1	Cover Up to 64X20728	
	380445		1	Cover From 64X20729 Up to 64X21291	
	386252		1	Cover From 64X21292	
13	813391		1	Magnetic plug	D
14	372479		1	Protective plate	
15	904557		4	Washer 10,5x22x4	
16	500029		4	Screw M10-1,5x30 8,8	
17	500188		32	Screw M8-1,25x14 8,8	
18	904229		32	Washer 8,4x16x1,5	
19	357488		1	Spring	
20			1	Scraper beam	
21			1	Fuel cap	
22			1	Drum shroud Option	
23	374662		1	.Drum shroud	
24	500192		4	.Screw M10x80	
25	904567		8	.Washer 10,5x28x6	
26	376045		2	.Holder	
27	500029		4	.Screw M10-1,5x30 8,8	

A) Mounted on the left side of the unit from S/N *64X20425*.

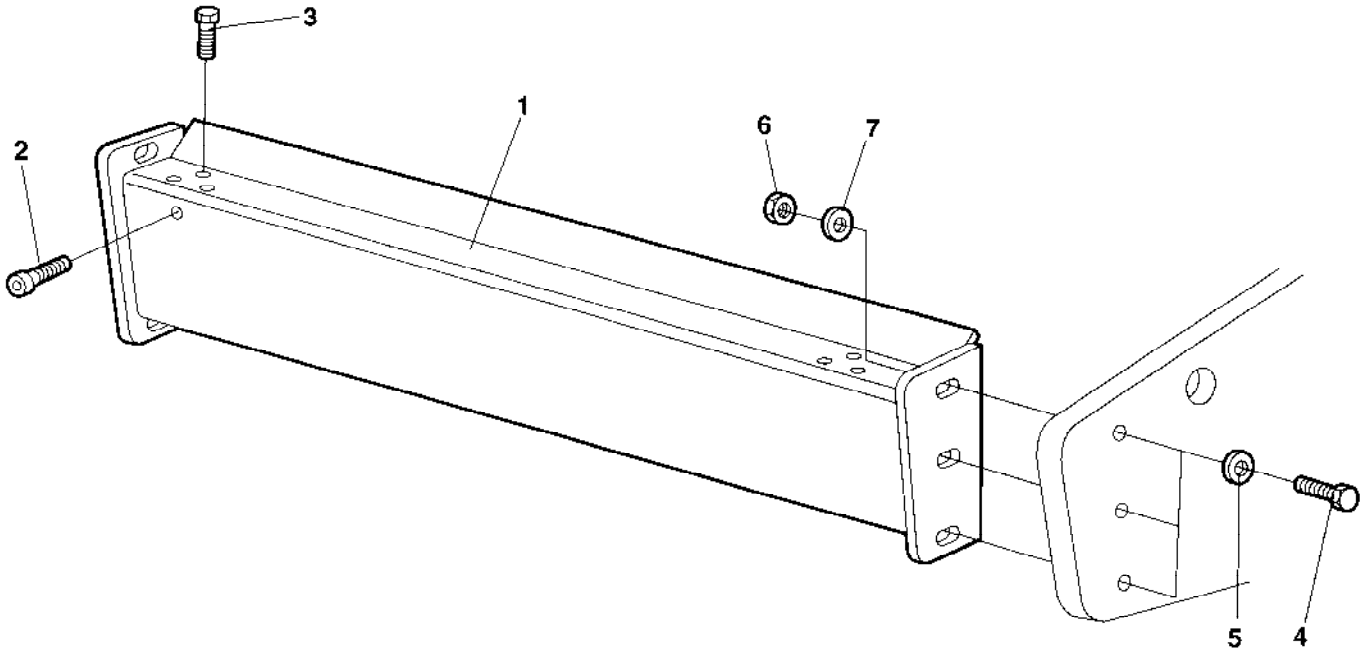
3
1
6
7
2
5
4

Ref. No.	Part No.	Rem.	Qty	Description	Code
1	373758		1	Scraper beam	
2	232041		1	.Filter plug	D
3	500048		6	.Screw M10-1,5x20 8,8	
4	500209		4	Screw M20-2,5x90 8,8	
5	904233		4	Washer 21x36x3	
6	586022		4	Lock nut M20-8	
7	903290		4	Washer 21x36x6	

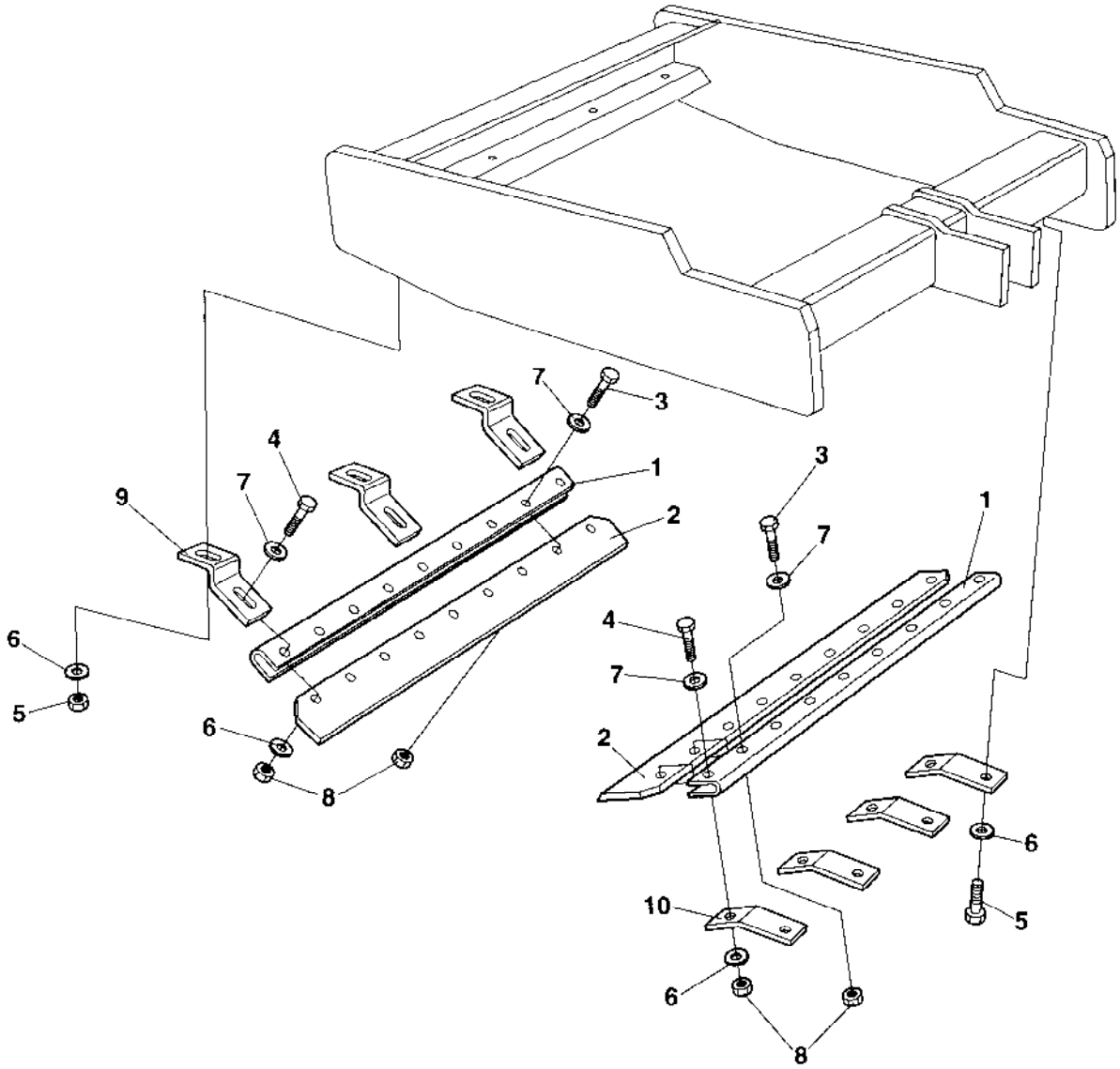
7
3
4
1
9
7
2
3
1
7
6
4
7
5
6
2
8
6
10
5
6
8

Scrapers urethan rubber Option

Ref. No.	Part No.	Rem.	Qty	Description	Code
1	357626		2	Scraper bracket	
2	374362		2	Scraper	B
3	500194		11	Screw M12x40	
4	500049		7	Screw M12-1,75x60 8.8	
5	500046		14	Screw M12x30H 8,8 FZB	
6	904213		17	Washer 13x30x4	
7	904231		33	Washer 13x24x2	
8	586019		18	Lock nut M12	
9	358025		3	Scraper bracket	
10	358026		4	Scraper bracket	

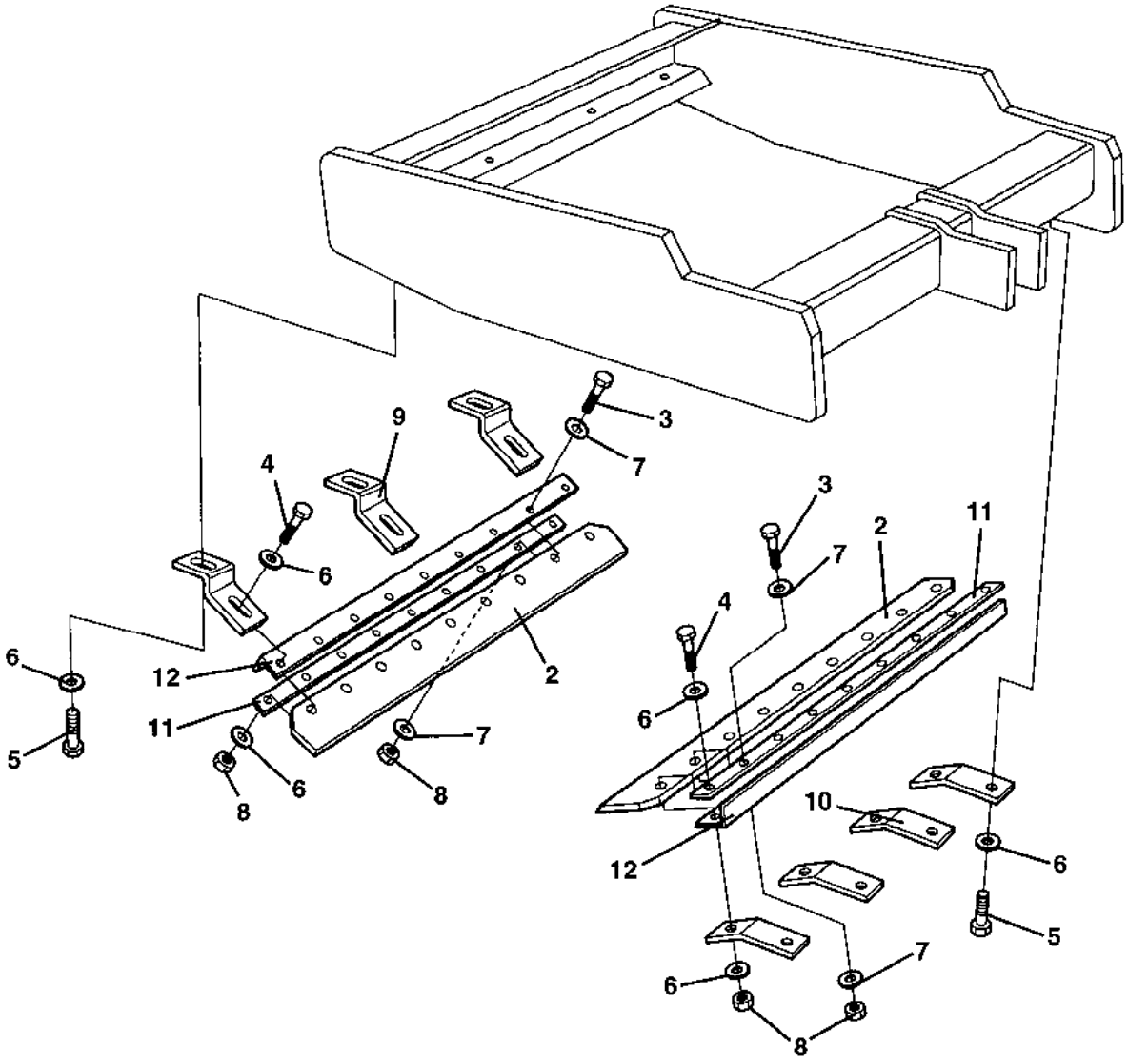
9
3
7
4
6
12
11
6
5
8
6
8
7
2
3
7
2
11
4
6
10
12
6
5
7
6
8

Scrapers urethan rubber Option

Ref. No.	Part No.	Rem.	Qty	Description	Code
2	374362		2	Scraper	B
3	500056		11	Screw M12-1,75x45 8,8	
4	500049		7	Screw M12-1,75x60 8.8	
5	500046		14	Screw M12x30H 8,8 FZB	
6	904213		28	Washer 13x30x4	
7	904231		22	Washer 13x24x2	
8	586019		18	Lock nut M12	
9	358025		3	Scraper bracket	
10	358026		4	Scraper bracket	
11	370100		2	Scraper bracket	
12	370101		2	Scraper bracket	

Scrapers spring steel Option

17237

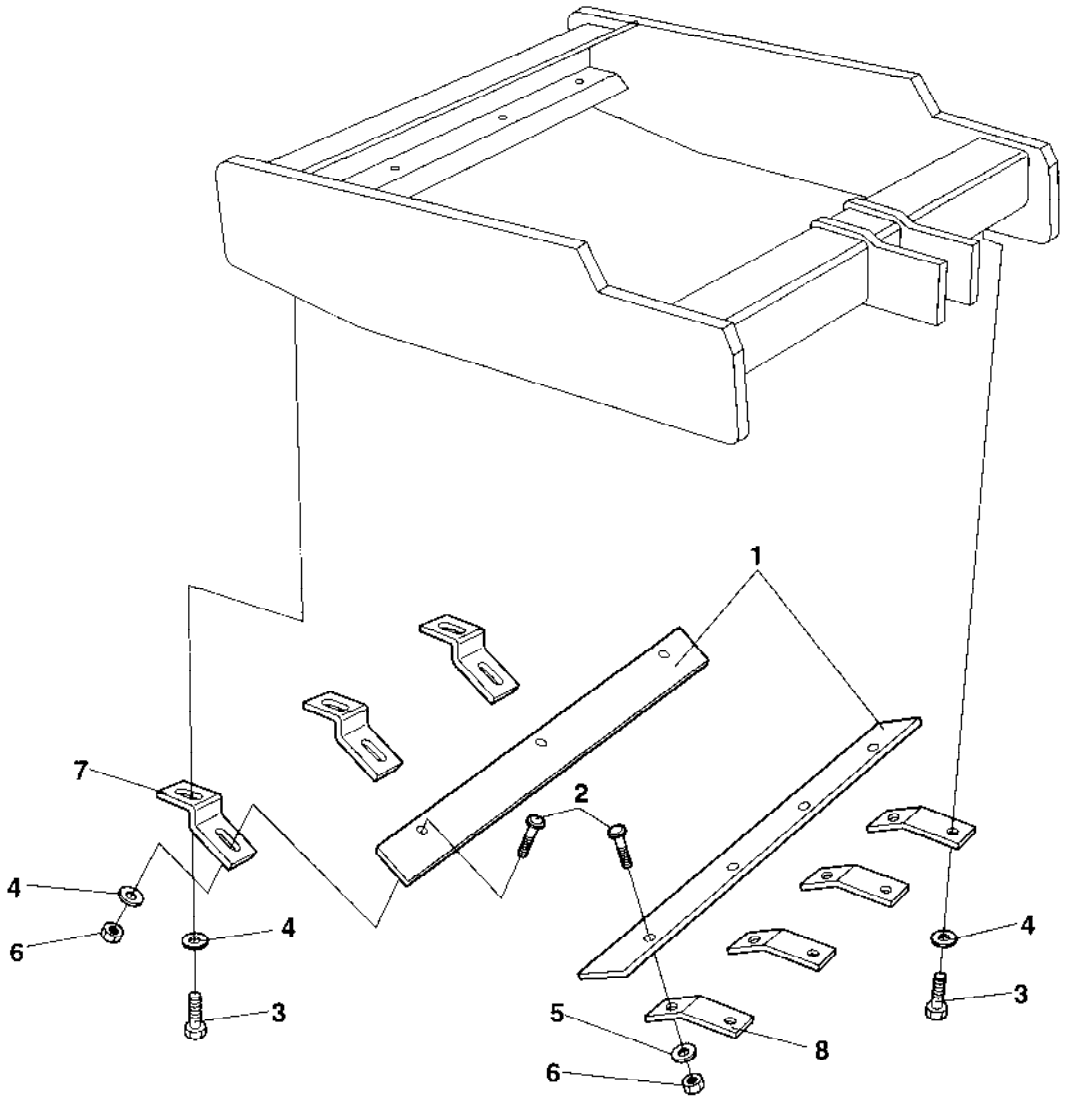

Scrapers spring steel Option

Ref. No.	Part No.	Rem.	Qty	Description	Code
1	358031		2	Scraper	B
2	904342		7	Screw	
3	500046		7	Screw M12x30H 8,8 FZB	
4	904213		10	Washer 13x30x4	
5	904231		4	Washer 13x24x2	
6	586019		7	Lock nut M12	
7	358025		3	Scraper bracket	
8	358026		4	Scraper bracket	

Hitch

16083

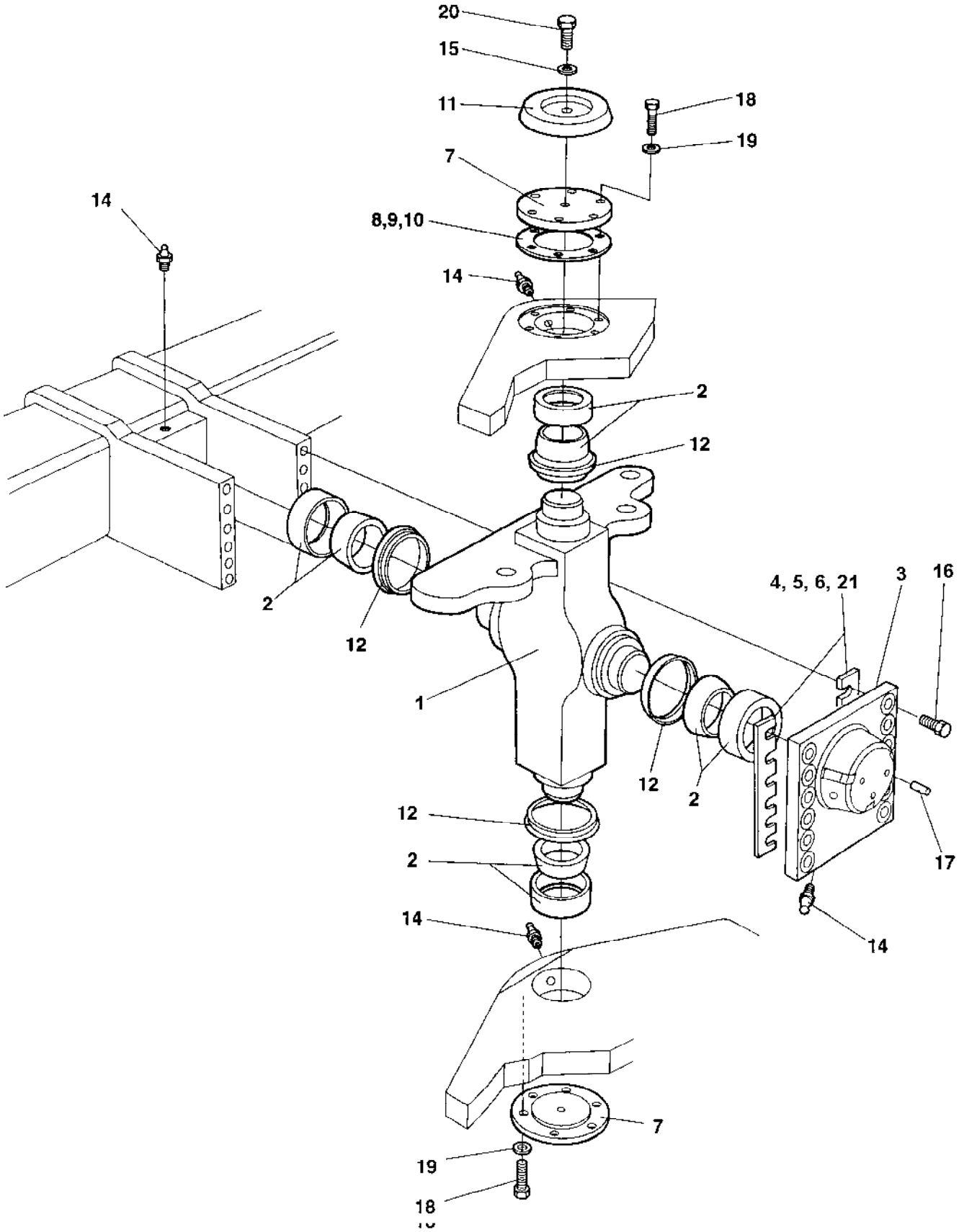
20
15
11
18
19
7
8,9,10
14
14
2
12
2
12
1
4, 5, 6, 21
3
16
12
2
12
2
14
17
14
7
19
18

Ref. No.	Part No.	Rem.	Qty	Description	Code
1	372957		1	Hitch Up to 64X20424	
	374900		1	Hitch From 64X20425	
2	100040		4	Axial ball bearing	D
3	373421		1	Bearing cover	
4	345871	N		Shim T=1,0 mm	D
5	345872	N		Shim T=0,35 mm	D
6	345873	N		Shim T=0,10 mm	D
7	337042		2	Bearing cover	
8	337045	N		Shim T=1,0 mm	D
9	345874	N		Shim T=0,35 mm	D
10	345875	N		Shim T=0,10 mm	D
11	343159		1	Cover	
12	167032		4	Lip-type oil seal	D
14	926214		4	Grease fitting	D
15	904229		1	Washer 8,4x16x1,5	
16	500287		12	Screw	
17	910995		3	Stop screw	
18	500037		12	Screw M12-1,75x35 8,8	
19	904231		12	Washer 13x24x2	
20	500018		1	Screw M8-1,25x12 8,8	
21	380993	N		Shim T = 2,0 mm	D
	384498	N		Shim T = 0,15 mm	D

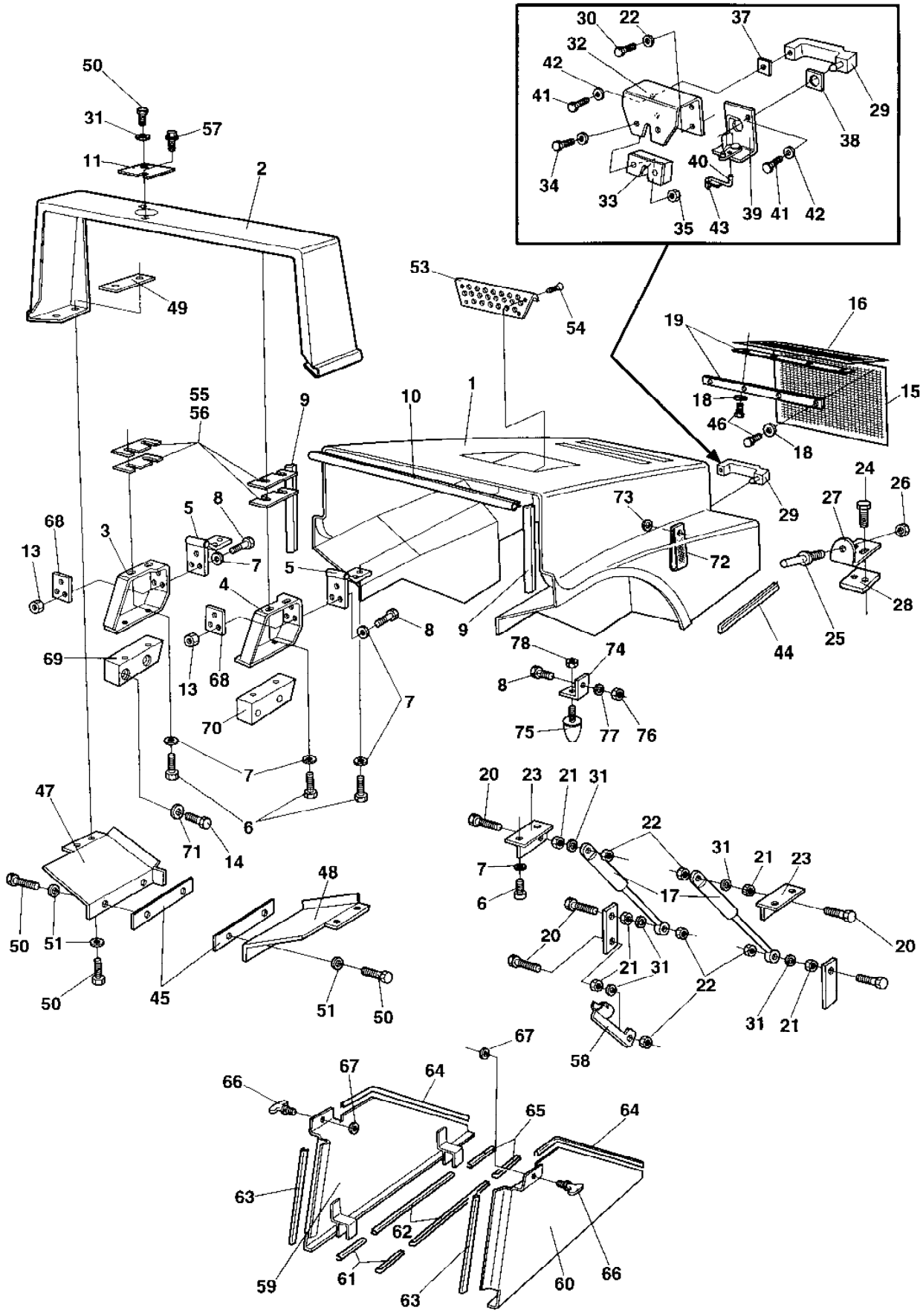
30
22
37
32
42
41
29
38
40
34
33
39
41
42
35
43
50
31
57
11
2
49
53
54
16
19
15
18
46
18
55
56
9
10
1
29
24
26
27
73
72
68
3
5
8
7
13
5
4
8
9
28
25
44
69
13
68
78
74
8
70
7
75
77
76
7
6
47
71
14
48
50
51
45
51
50
50
20
23
21
31
22
7
6
17
31
21
23
20
20
21
31
22
31
21
58
67
67
64
66
65
64
63
62
59
61
63
60
66

Ref. No.	Part No.	Rem.	Qty	Description	Code
1	374158		1	Hood	
2	374025		1	Protection hood	
3	372063	A	1	Clamp Up to 64X20189	
	374797	A	1	Clamp From 64X20190	
4	372064	B	1	Clamp Up to 64X20189	
	374798	B	1	Clamp From 64X20190	
5	371366		2	Hinge	D
6	500028		14	Screw M10-1,5x25 8,8	
7	603023		24	Washer M10 Up to 64X20189	
	904557		20	Washer 10,5x22x4 From 64X20190	
8	500030		8	Screw M10-1,5x35H 8,8	
9	902166	C	2XL	Edge trim	
10	902166	D	1XL	Edge trim	
11	373955		1	Cover	
13	902287		6	Nut Up to 64X20189	
14	500161		4	Screw M10-1,5x45 8,8 Up to 64X20189	
	500133		4	Screw M12x70 From 64X20190	
15	375121		1	Grid	
16	374160		1	Grid	
17	904242		2	Gas spring Up to 64X20191	D
	904458		2	Gas spring From 64X20192 Up to 64X20796	D
	382384		2	Gas spring From 64X20797	D
	904459	P	2	Gas spring Up to 64X20796	
	382387	P	2	Gas spring From 64X20797	
18	927974		17	Washer	
19	202047	E	NXL	Rubber strip	
20	904241		5	Screw M8 x 40 Up to 64X20191	
	904241		1	Screw M8 x 40 From 64X20192	
21	570005		5	Nut M8 Up to 64X20191	
	570005		1	Nut M8 From 64X20192	
22	902286		8	Lock nut M8 Up to 64X20191	
	902286		4	Lock nut M8 From 64X20192	
23	372608		2	Bracket	
24	927637		2	Screw	
25	373958		1	Lock pin	
26	902288		1	Nut	
27	374197		1	Clamp	
28	374198		1	Holder plate	
29	371390		1	Grab handle	
30	927637		3	Screw	
31	600006		5	Washer Up to 64X20191	
	904556		1	Washer 8,4x16x3,0 From 64X20192	
32	373960		1	Bracket	
33	371381		1	Lock	D
	902866	F	1	.Key Marked "455"	D
34	535053		2	Screw	
35	902284		2	Nut M5	

A) Right
B) Left
C) L = 0.94 M
D) L = 0.63 M
E) L = 4.17 M
F) Key nr. 455
P) With noise suppression mounted, Option

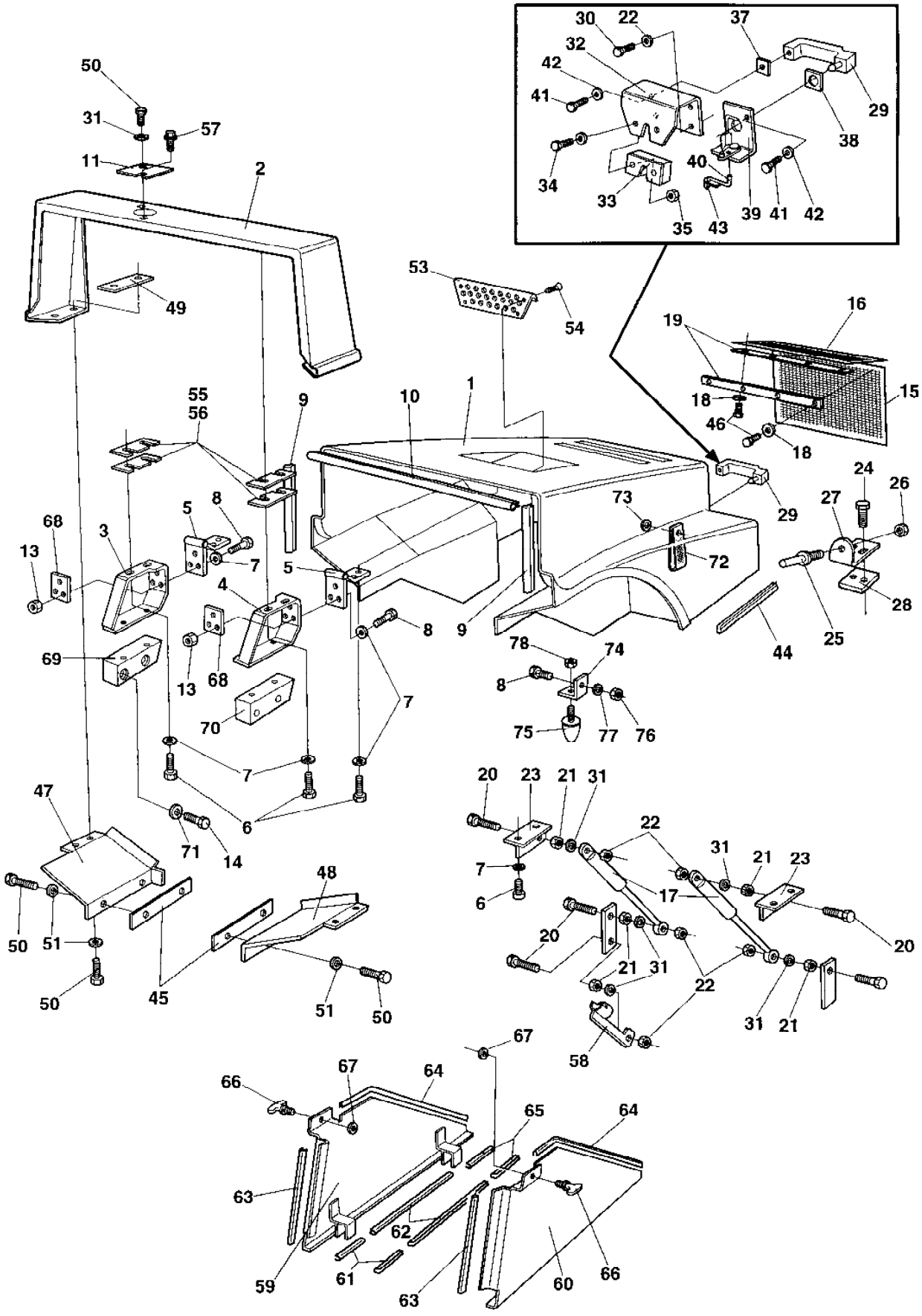
30
22
37
32
42
41
29
38
34
33
40
39
41
42
35
43
50
31
57
11
2
49
53
54
16
19
15
18
46
18
55
56
9
10
1
29
24
26
27
28
25
44
73
72
68
3
13
5
8
7
4
8
9
69
13
68
70
78
74
8
75
77
76
7
7
6
47
71
14
48
50
51
50
45
51
50
20
23
21
31
22
7
6
17
31
21
23
20
20
21
31
22
31
21
58
67
67
64
66
65
64
63
62
59
61
63
60
66

Ref. No.	Part No.	Rem.	Qty	Description	Code
37	903937		1	Rubber gasket	
38	903936		1	Rubber gasket	
39	371449		1	Lock device	
40	371452		1	Coupling link	
41	508018		2	Screw	
42	904228		2	Washer 6,4x12x1,5	
43	371569		1	Lock device	
44	902166	G	1XL	Edge trim	
45	374339		2	Spacer	
46	904244		17	Screw	
47	373204	A	1	Holder plate	
48	373203	B	1	Holder plate	
49	373309		2	Holder plate	
50	500021		9	Screw M8-1,25x25 8,8	
51	904640		8	Washer 8,4x22x3	
53	372575		1	Grid	
54	901767		4	Screw	
55	373956		N	Shim	
56	373957		N	Shim	
57	500505		1	Screw	
58	373745		1	Safety rod Up to 64X20796	
	382382		1	Safety rod From 64X20797	
59	374145	J	1	Cover, right	
60	374142	J	1	Cover, left	
61	202056	K	2XL	.Edge trim	
62	202056	L	2XL	.Edge trim	
63	202056	M	2XL	.Edge trim	
64	904076	N	2XL	.Edge trim	
65	202056	O	2XL	.Edge trim	
66	904075		2	Quick lock	
67	926985		2	Quick lock washer	
68	374799		2	Holder plate From 64X20190	
69	374800	A	1	Holder From 64X20190	
70	374801	B	1	Holder From 64X20190	
71	904231		4	Washer 13x24x2 From 64X20190	
72	374854		1	Grab handle From 64X20192	
73	904640		1	Washer 8,4x22x3 From 64X20192	
74	908136		2	Bracket	
75	925629		2	Shock absorber	
76	902287		2	Nut	
77	904230		2	Washer 10,5x22x2	
78	570005		2	Nut M8	

A) Right
B) Left
G) L = 0.64 M
J) Option
K) L = 0.14 M
L) L = 0.61 M
M) L = 0.325 M
N) L = 0.9 M
O) L = 0.17 M

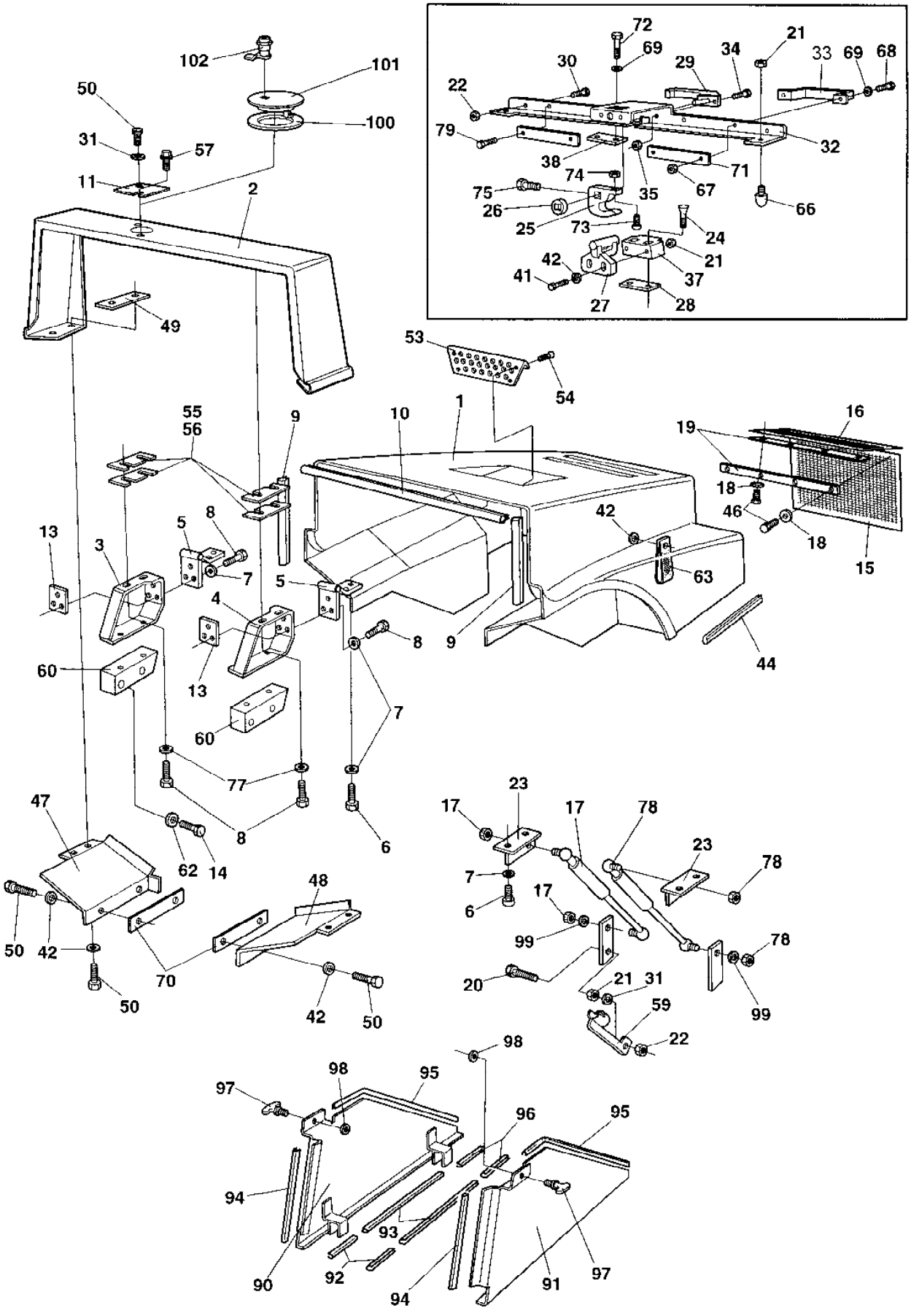
102
101
100
50
31
57
11
2
49
72
69
30
29
34
21
33
69
68
22
79
32
38
74
71
75
35
67
26
66
25
73
24
42
21
41
37
27
28
53
54
1
55
56
9
10
16
19
18
46
18
15
42
63
8
5
7
13
3
5
4
8
9
44
60
13
7
60
77
8
6
47
62
14
48
50
42
70
50
42
50
23
17
17
78
23
78
7
6
17
99
78
20
21
31
59
99
22
98
98
95
97
96
95
94
93
90
92
94
91
97

Ref. No.	Part No.	Rem.	Qty	Description	Code
1	374158		1	Hood	
2	374025		1	Protection hood	
3	374797	A	1	Clamp	
4	374798	B	1	Clamp	
5	371366		2	Hinge	D
6	500028		10	Screw M10-1,5x25 8,8	
7	904557		16	Washer 10,5x22x4	
8	500030		10	Screw M10-1,5x35H 8,8	
9	902166	C	2XL	Edge trim	
10	902166	D	1XL	Edge trim	
11	373955		1	Cover	
13	374799		2	Holder plate	
14	500133		4	Screw M12x70	
15	375121		1	Grid	
16	374160		1	Grid	
17	382384	Q	1	Gas spring	D
	382387	S	1	Gas spring	
18	927974		15	Washer	
19	202047	E	NXL	Rubber strip	
20	904241		1	Screw M8 x 40	
21	570005		5	Nut M8	
22	902286		3	Lock nut M8	
23	372608		2	Bracket	
24	903732		2	Screw	
25	382130		1	Hook	
26	382335		1	Spacer sleeve	
27	382131		1	Lock clamp	
28	374198		1	Holder plate	
29	382165		1	Locking handle	
30	927637		2	Screw	
31	904556		2	Washer 8,4x16x3,0	
32	382129		1	Holder plate	
33	904874		1	Grab handle	D
34	535011		2	Screw	
35	902284		2	Nut M5	
37	382132		1	Holder	
38	382336		1	Holder	
41	500026		2	Screw M8-1,25x60 8,8	
42	904640		11	Washer 8,4x22x3	
44	902166	G	2XL	Edge trim	
46	904244		13	Screw	
47	373204	A	1	Holder plate	
48	373203	B	1	Holder plate	
49	373309		2	Holder plate	
50	500021		9	Screw M8-1,25x25 8,8	
53	372575		1	Grid	

A) Right
B) Left
C) L = 0.940 m
D) L = 0.630 m
E) Total length = 4.170 m
G) L = 0.320 m
Q) Right side
S) With noise suppression mounted, Option

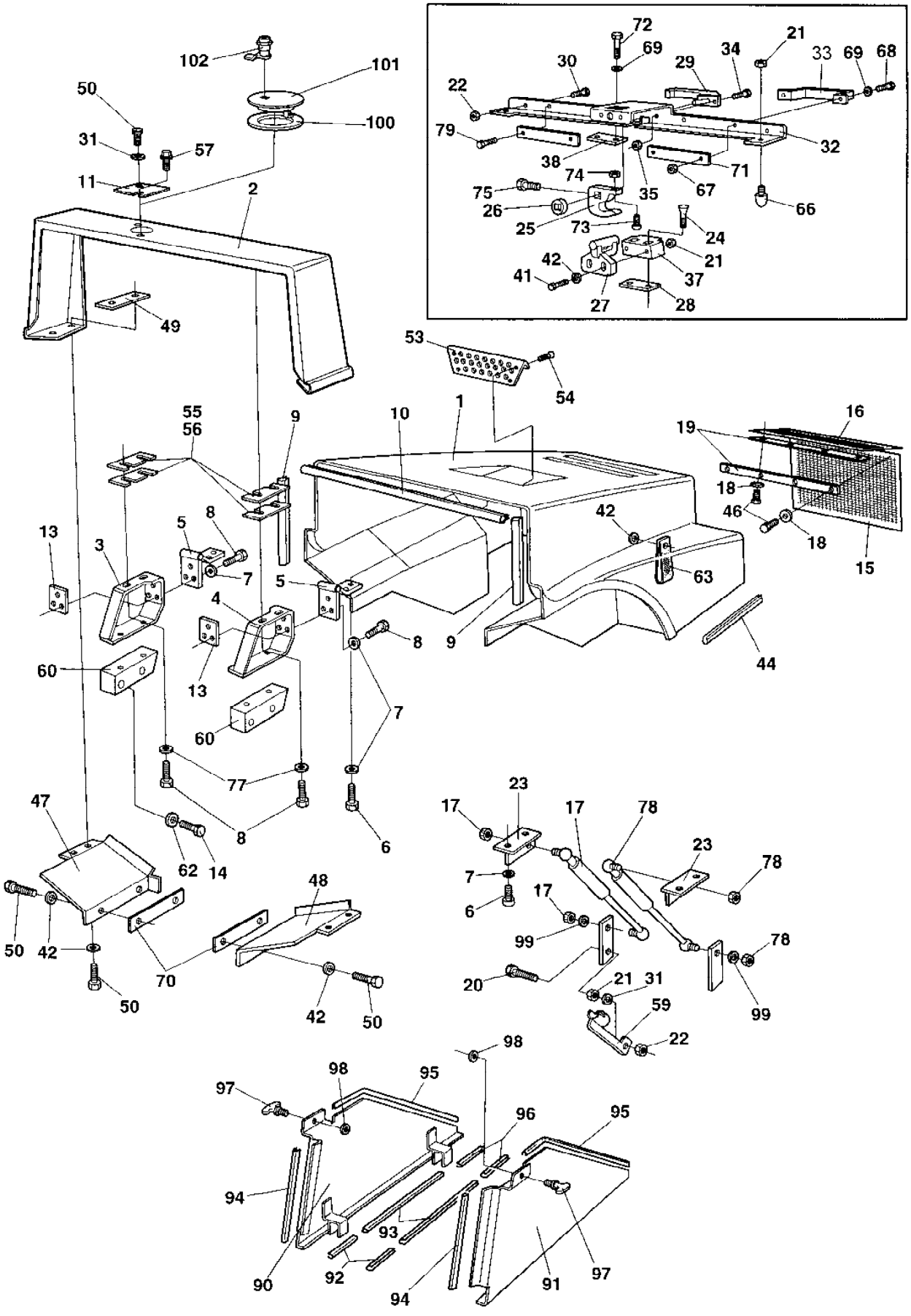
102
101
100
50
31
57
11
2
49
72
69
30
29
34
21
33
69
68
22
79
32
38
74
71
35
67
75
26
66
25
73
24
42
21
41
37
27
28
53
54
1
55
56
9
10
16
19
18
46
18
15
42
63
13
3
5
8
7
5
4
8
9
44
60
13
7
60
77
47
8
6
62
14
48
50
42
70
50
42
50
23
17
17
78
23
78
7
6
17
99
78
20
21
31
59
99
22
98
98
95
97
96
95
94
93
90
92
94
91
97

Ref. No.	Part No.	Rem.	Qty	Description	Code
54	901767		4	Screw	
55	373956		N	Shim	
56	373957		N	Shim	
57	500505		1	Screw	
59	382382		1	Safety rod	
60	381989		2	Holder	
62	904231		4	Washer 13x24x2	
63	374854		1	Grab handle	
66	925629		2	Shock absorber	
67	902285		2	Lock nut M6	
68	500088		2	Screw M6x40	
69	904228		4	Washer 6,4x12x1,5	
70	374339		2	Spacer	
71	382355		2	Holder plate	
72	500013		2	Screw M6-1x16 8,8	
73	500040		1	Screw M6-1x20 8,8	
74	570004		1	Nut M6	
75	500018		1	Screw M8-1,25x12 8,8	
77	904567		4	Washer 10,5x28x6	
78	382384	R	1	Gas spring	D
	382387	S	1	Gas spring	
79	541507		2	Screw	
90	374145	K	1	Cover, right	
91	374142	K	1	Cover, left	
92	202056	L	2XL	.Edge trim	
93	202056	M	2XL	.Edge trim	
94	202056	N	2XL	.Edge trim	
95	904076	O	2XL	.Edge trim	
96	202056	P	2XL	.Edge trim	
97	904075		2	Quick lock	
98	926985		2	Quick lock washer	
99	904230		2	Washer 10,5x22x2	
100	375681	K	1	Gasket	
101	375678	K	1	Cover	
102	372658	K	1	Lock	
	902866		1	.Key Marked "455"	D

K) Option
L) L = 0.140 m
M) L = 0.610 m
N) L = 0.325 m
O) L = 0.900 m
P) L = 0.170 m
R) Left side
S) With noise suppression mounted, Option

Hood latch control Option

17108

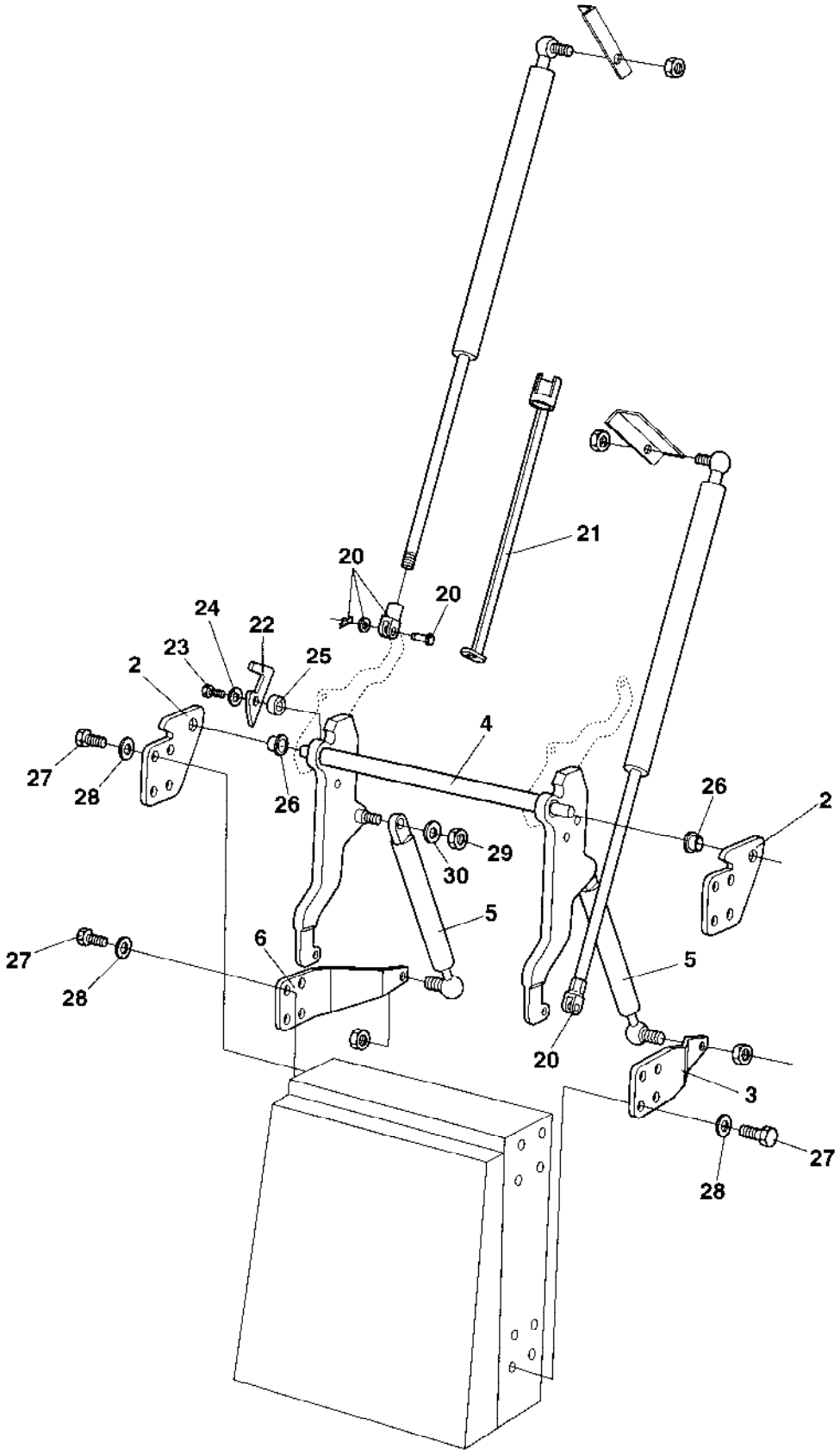

Hood latch control Option

Ref. No.	Part No.	Rem.	Qty	Description	Code
2	374835		2	Holder	
3	374833		1	Lever, right	
4	374831		1	Lever	
5	904413		2	Gas spring	
6	374834		1	Lever, left	
20	416404		2	Yoke	
21	374748		1	Safety rod Up to 64X20808	
	382558		1	Safety rod From 64X20809	
22	374591		1	Lock	
23	500029		1	Screw M10-1,5x30 8,8	
24	904230		1	Washer 10,5x22x2	
25	371767		1	Spacer	
26	904407		2	Flange bearing	
27	500022		16	Screw M8-1,25x30 8,8	
28	904229		16	Washer 8,4x16x1,5	
29	904563		2	Lock nut	
30	904228		2	Washer 6,4x12x1,5	

Noise suppression, hood Option

17551

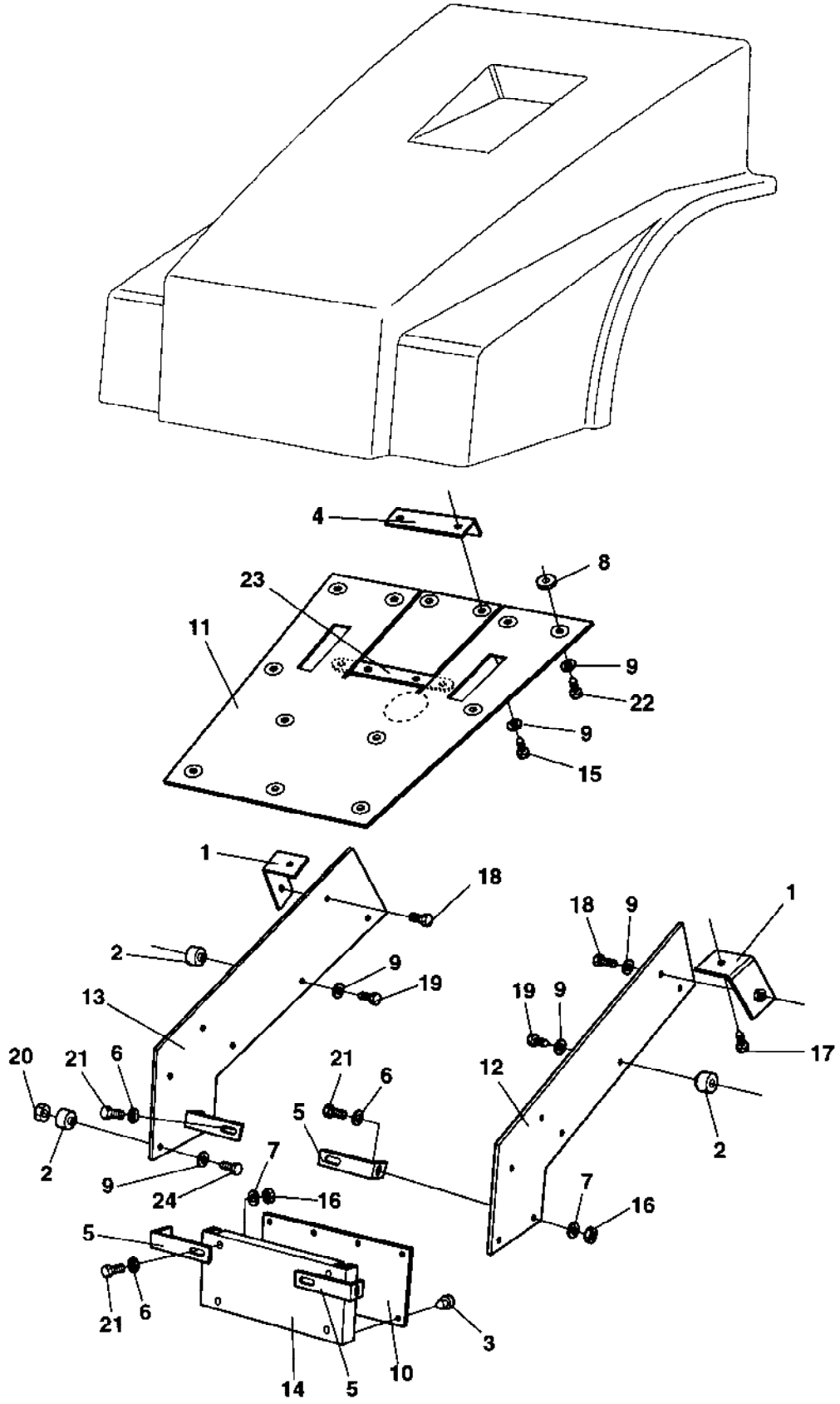

Noise suppression, hood Option

Ref. No.	Part No.	Rem.	Qty	Description	Code
1	374597		4	Bracket	
2	374596		10	Spacer	
3	374725		6	Plug	
4	374753		1	Bracket	
5	374795		4	Holder	
6	904640		8	Washer 8,4x22x3	
7	601003		4	Washer 8,4x25x2	
8	374947		14	Spacer	
9	615076		36	Washer 7,0x25x1,5	
10	374646		1	Absorbent	
11	374735		1	Absorbent	
12	374734		1	Absorbent	
13	374733		1	Absorbent	
14	374568		1	Noise suppression plate	
15	541703		4	Screw M6x16	
16	570005		4	Nut M8	
17	904415		4	Screw	
18	500013		4	Screw M6-1x16 8,8	
19	904414		4	Screw	
20	586001		4	Lock nut M5	
21	500021		8	Screw M8-1,25x25 8,8	
22	904451		14	Screw	
23	374925		1	Bracket	
24	500173		6	Screw	

Noise suppression, air inlet Option

17643

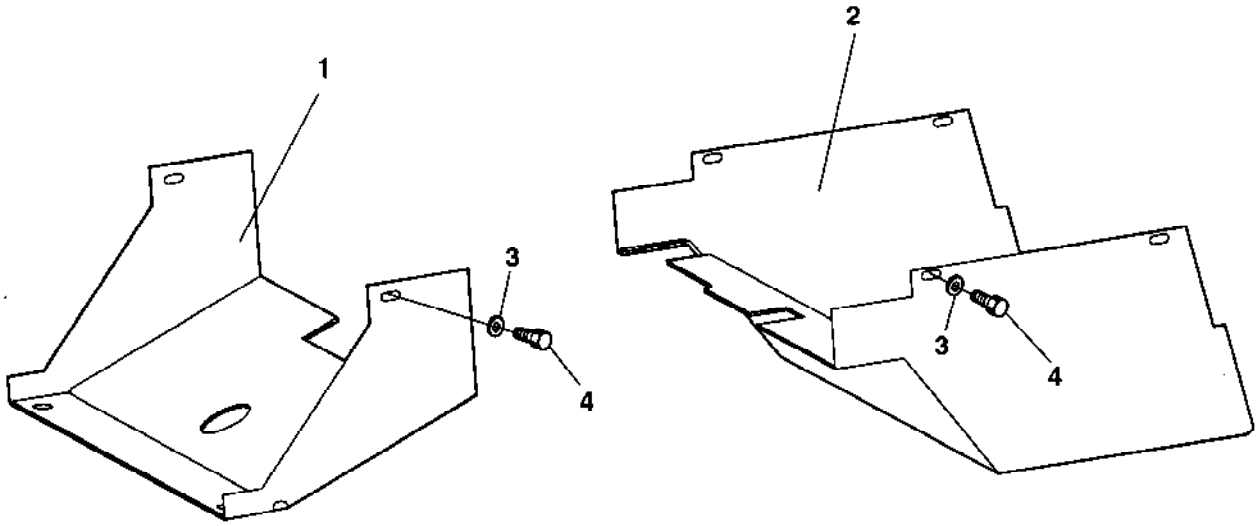

Noise suppression, air inlet Option

Ref. No.	Part No.	Rem.	Qty	Description	Code
1	374660		1	Air leading plate	
2	374659		1	Air leading plate	
3	904640		6	Washer 8,4x22x3	
4	500029		6	Screw M10-1,5x30 8,8	

Ref. No.	Part No.	Rem.	Qty	Description	Code
10				Drum (Page 56)	

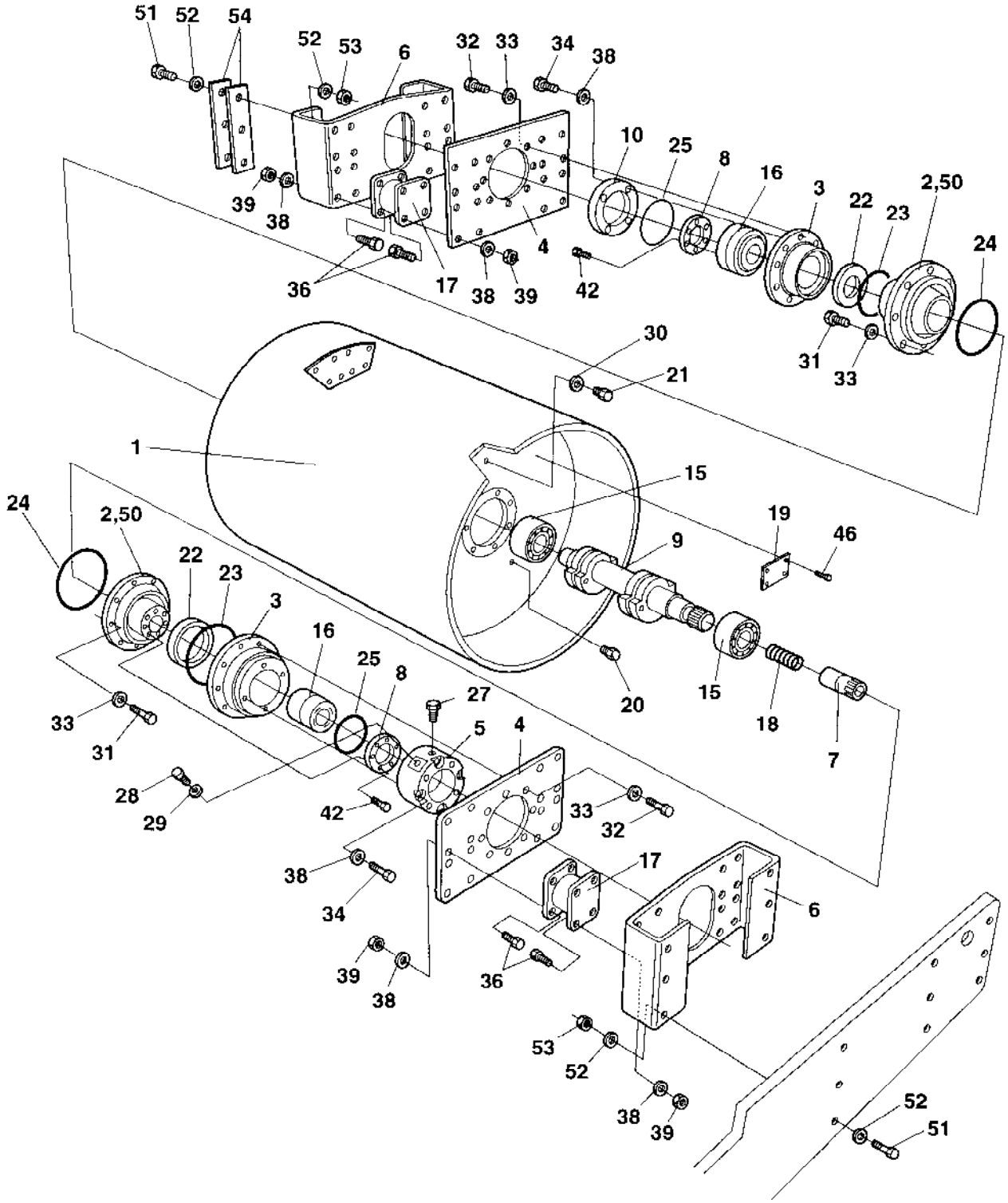
51
52
54
52
53
6
32
33
34
38
10
25
8
16
3
22
23
2,50
24
39
38
4
36
17
38
39
42
30
21
31
33
1
15
19
46
9
24
2,50
22
23
3
16
25
8
27
5
4
20
15
18
7
33
31
28
29
42
33
32
38
34
17
6
39
38
36
53
52
38
39
52
51

Ref. No.	Part No.	Rem.	Qty	Description	Code
1	372633		1	Drum	
2	343897		2	Bearing housing Up to 64X20417	
	374836		2	Bearing housing From 64X20418	
3	343318		2	Bearing housing	D
4	343322		2	Holder plate	
5	343561		1	Motor adapter	
6	372641		2	Holder plate	
7	370365		1	Splined sleeve	
8	343462		2	Bearing cover	
9	372640		1	Eccentric	
10	372642		1	Bearing cover	
15	114036		2	Spherical roller bearing	D
16	116041		2	Taper roller bearing	D
17	336742		8	Shock absorber	B
18	349715		1	Spring	
19	343801		1	Sign plate	
20	922552		1	Oil level glass	
21	343744		1	Magnetic plug M30	D
22	167023		2	Seal ring	D
23	929447		2	V-ring	D
24	160107		2	O-ring Up to 64X20417	D
	160344		2	O-ring From 64X20418	D
25	160105		2	O-ring	D
27	926736		1	Breather M14	B
28	370231		1	Plug	
29	162018		1	Sealing	D
30	162017		1	Seal ring M30	D
31	500102		16	Screw M16x45 Up to 64X20417	
	500076		16	Screw M16x55 From 64X20418	
32	500076		16	Screw M16x55	
33	904232		32	Washer 17x30x3	
34	500133		8	Screw M12x70	
36	500194		64	Screw M12x40	
38	904231		72	Washer 13x24x2	
39	570007		64	Nut	
42	508019		16	Screw M8x25	
46	527002		4	Drive screw	
50	900775		6	Plug	
51	500209		12	Screw M20-2,5x90 8,8	
52	904233		24	Washer 21x36x3	
53	586022		12	Lock nut M20-8	
54	815056		N	Shim	

Ref. No.	Part No.	Rem.	Qty	Description	Code
10				Engine Cummins 4BT 3.9C Elite Up to 64X21254 (Page 60)	
11				Engine Cummins 4BT 3.9C Elite From 64X21255 (Page 64)	
20				Cooling system Up to 64X20633 (Page 68)	
30				Cooling system From 64X20634 (Page 72)	
35	372374			Radiator (Page 74)	
40				Combustion air system (Page 76)	
50				Fuel system Up to 64X21291 (Page 78)	
51				Fuel system From 64X21292 (Page 80)	
60				Exhaust system (Page 82)	

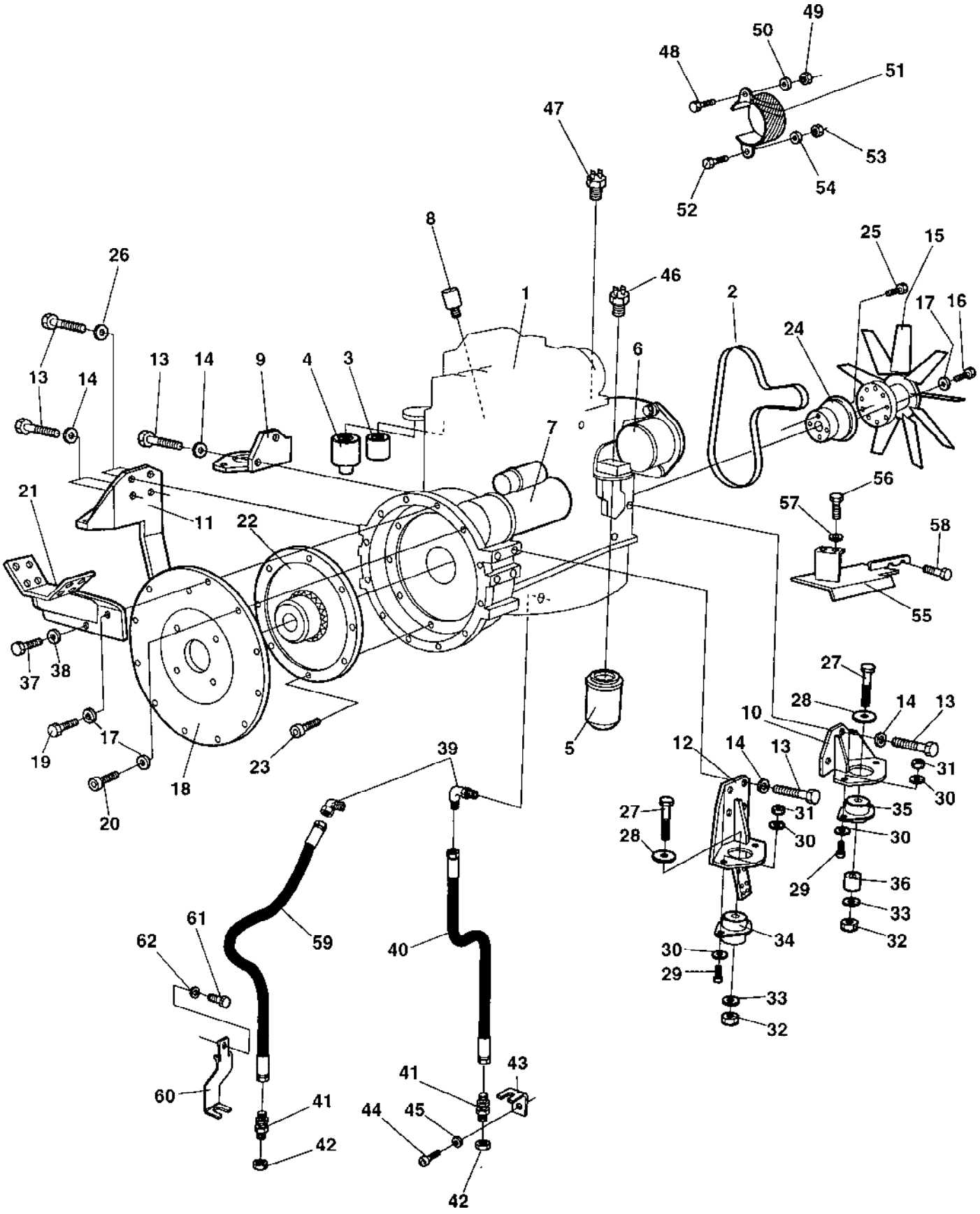
49
50
48
51
47
53
54
52
8
25
15
26
46
1
2
17
16
24
13
14
9
4
3
6
7
56
57
58
21
11
22
55
37
38
27
14
13
28
10
19
17
12
39
31
23
18
5
27
35
30
20
28
30
29
36
61
62
59
40
33
34
30
32
29
33
60
41
43
32
41
44
45
42
42

Ref. No.	Part No.	Rem.	Qty	Description	Code
1	372349		1	Engine	
2	901449		1	.V-belt	B
3	900829		1	.Fuel filter	A
4	900827	A	1	.Fuel filter	A
5	212373		1	.Oil filter	A
6	935950		1	.Alternator	C
7	901448		1	.Starter	C
8	935758		1	.Fuel solenoid	D
9	372492	B	1	Engine bracket	
10	372493	C	1	Engine bracket	
11	371481	D	1	Engine bracket	
12	371482	E	1	Engine bracket	
13	500037		12	Screw M12-1,75x35 8,8	
14	904638		12	Washer 12x22x2	
15	374269		1	Fan Up to 64X20897	
	382717		1	Fan From 64X20898	
16	500161		9	Screw M10-1,5x45 8,8	
17	904637		21	Washer 10x18x2	
18	372772		1	Bracket	
19	508053		2	Screw M10-1,5x35H 8,8	
20	508029		10	Screw M10-1,5x30H 8,8	
21	372358		1	Bracket	
22	370229		1	Coupling	
23	509025		8	Screw 3/8-16UNCx32 8,8	
24	373584		1	Connector	
25	904204		4	Screw	
26	603012		2	Washer	
27	500228		4	Screw M20-2,5x120 8,8	
28	347512		4	Washer	
29	500194		8	Screw M12x40	
30	904231		16	Washer 13x24x2	
31	586019		8	Lock nut M12	
32	586022		4	Lock nut M20-8	
33	904233		4	Washer 21x36x3	
34	372983	F	2	Shock absorber	D
35	372984	G	2	Shock absorber	D
36	370258		2	Spacer washer	
37	508092		1	Screw M8-1,25x20H 8,8	
38	904229		1	Washer 8,4x16x1,5	
39	904210		1	Adapter	
40	353894		1	Drain hose Up to 64X21151	
41	230516		1	Adapter	
42	230384		1	Cap	
43	372357		1	Bracket Up to 64X21151	
44	500154		1	Screw M16-2,0x25 8,8 Up to 64X21151	
45	904232		1	Washer 17x30x3 Up to 64X21151	
46	935044	H	1	Oil pressure switch	D
47	903632		1	Temperature sensor Engine	D
48	904379		1	Screw M10x110H 8,8	
49	586018		1	Lock nut M10	
50	904230		1	Washer 10,5x22x2	

A) With water separator
B) Right rear
C) Left rear
D) Right front
E) Left front
F) Front
G) Rear
H) Oil pressure

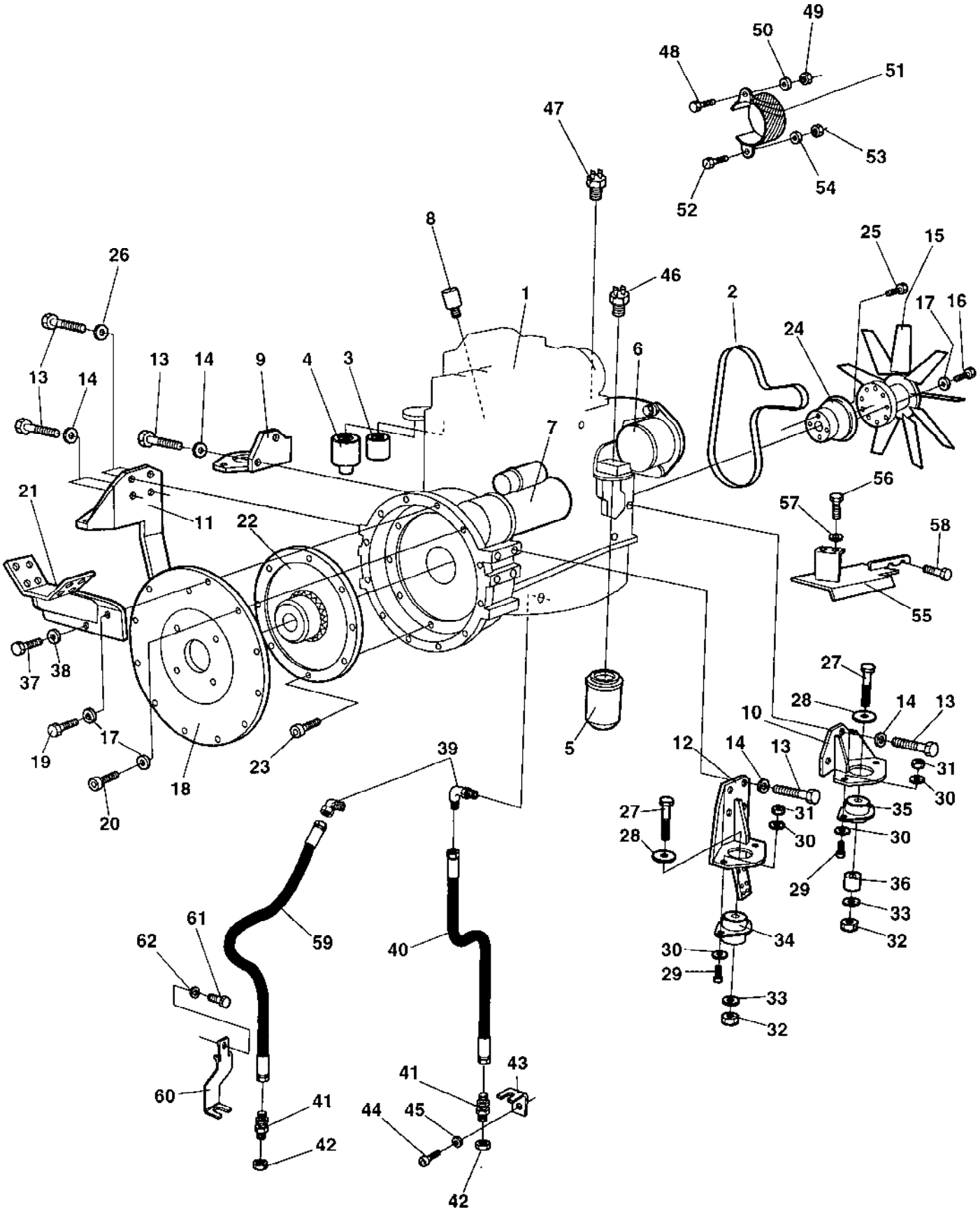
49
50
48
51
47
53
54
52
8
25
15
26
46
1
2
17
16
24
13
14
9
4
3
6
7
56
57
58
21
11
22
55
37
38
27
14
13
28
10
19
17
39
12
14
13
31
23
18
5
27
35
28
30
30
20
29
36
61
33
62
59
40
34
30
29
33
32
60
41
43
41
44
45
42
42

Ref. No.	Part No.	Rem.	Qty	Description	Code
51	380101		1	V-belt cover	
52	904241		1	Screw M8 x 40	
53	586003		1	Lock nut M8	
54	904640		1	Washer 8,4x22x3	
55	383842		1	Thermal guard From 64X21153	
56	500048		2	Screw M10-1,5x20 8,8 From 64X21153	
57	904557		2	Washer 10,5x22x4 From 64X21153	
58		J	2	Screw	
59	375004		1	Drain hose From 64X21152	
60	384721	I	1	Bracket From 64X21152	
61	500100		1	Screw From 64X21152	
62	904640		1	Washer 8,4x22x3 From 64X21152	

I) Mounted on Tractor frame.
J) Existing screw on engine

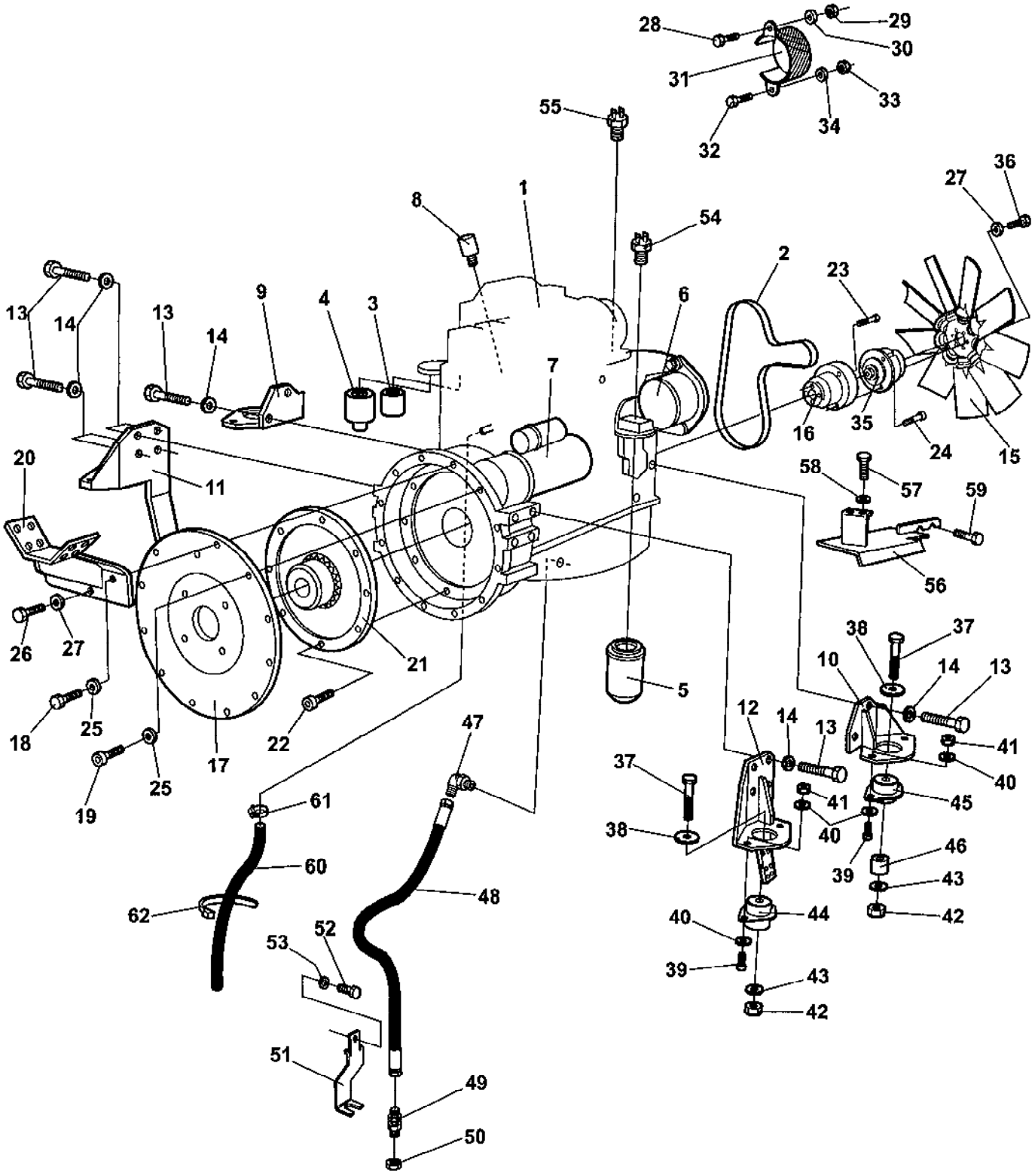
28
29
30
31
33
34
32
55
36
27
8
1
54
2
23
13
14
13
14
9
4
3
6
7
16
35
24
15
20
11
58
57
59
56
26
27
21
5
38
37
10
14
13
18
25
22
17
12
14
13
41
40
37
25
19
61
47
41
45
38
40
60
46
39
43
62
48
40
44
42
52
53
39
43
42
51
49
50

Ref. No.	Part No.	Rem.	Qty	Description	Code
1	372349		1	Engine Up to 64X21324	
	387327		1	Engine From 64X21325	
2	901449		1	.V-belt	B
3	900829		1	.Fuel filter	A
4	900827	A	1	.Fuel filter	A
5	212373		1	.Oil filter	A
6	935950		1	.Alternator	C
7	901448		1	.Starter Up to 64X21355	C
	939505		1	.Starter From 64X21356	C
8	935758		1	.Fuel solenoid	D
9	372492	B	1	Engine bracket Up to 64X21324	
	387264	B	1	Engine bracket From 64X21325	
10	372493	C	1	Engine bracket Up to 64X21324	
	387263	C	1	Engine bracket From 64X21325	
11	371481	D	1	Engine bracket	
12	371482	E	1	Engine bracket	
13	500037		12	Screw M12-1,75x35 8,8 Up to 64X21324	
	500037		14	Screw M12-1,75x35 8,8 From 64X21325	
14	904638		12	Washer 12x22x2 Up to 64X21324	
	904638		14	Washer 12x22x2 From 64X21325	
15	386004		1	Fan	
16	382391		1	Connector	
17	372772		1	Bracket	
18	508053		2	Screw M10-1,5x35H 8,8	
19	508029		10	Screw M10-1,5x30H 8,8	
20	372358		1	Bracket	
21	370229		1	Coupling	
22	509025		8	Screw 3/8-16UNCx32 8,8	
23	791306		4	Screw M12-1,25x60 12,9	
24	508032		3	Screw M12-1,75x50H 8,8	
25	904637		12	Washer 10x18x2	
26	508092		1	Screw M8-1,25x20H 8,8	
27	904229		7	Washer 8,4x16x1,5	
28	904379		1	Screw M10x110H 8,8	
29	586018		1	Lock nut M10	
30	904230		1	Washer 10,5x22x2	
31	380101		1	V-belt cover	
32	904241		1	Screw M8 x 40	
33	586003		1	Lock nut M8	
34	904640		1	Washer 8,4x22x3	
35	382393		1	Fan hub	
36	500047		6	Screw M8-1,25x35 8,8	
37	500228		4	Screw M20-2,5x120 8,8	
38	347512		4	Washer	
39	500194		8	Screw M12x40 Up to 64X21324	
	500037		8	Screw M12-1,75x35 8,8 From 64X21325	
40	904231		16	Washer 13x24x2 Up to 64X21324	
	904638		8	Washer 12x22x2 From 64X21325	
41	586019		8	Lock nut M12	
42	586022		4	Lock nut M20-8 Up to 64X21324	
	901145		4	Lock nut M20-10 From 64X21325	
43	904233		4	Washer 21x36x3	
44	372983	F	2	Shock absorber	D

A) With water separator
B) Right rear
C) Left rear
D) Right front
E) Left front
F) Front

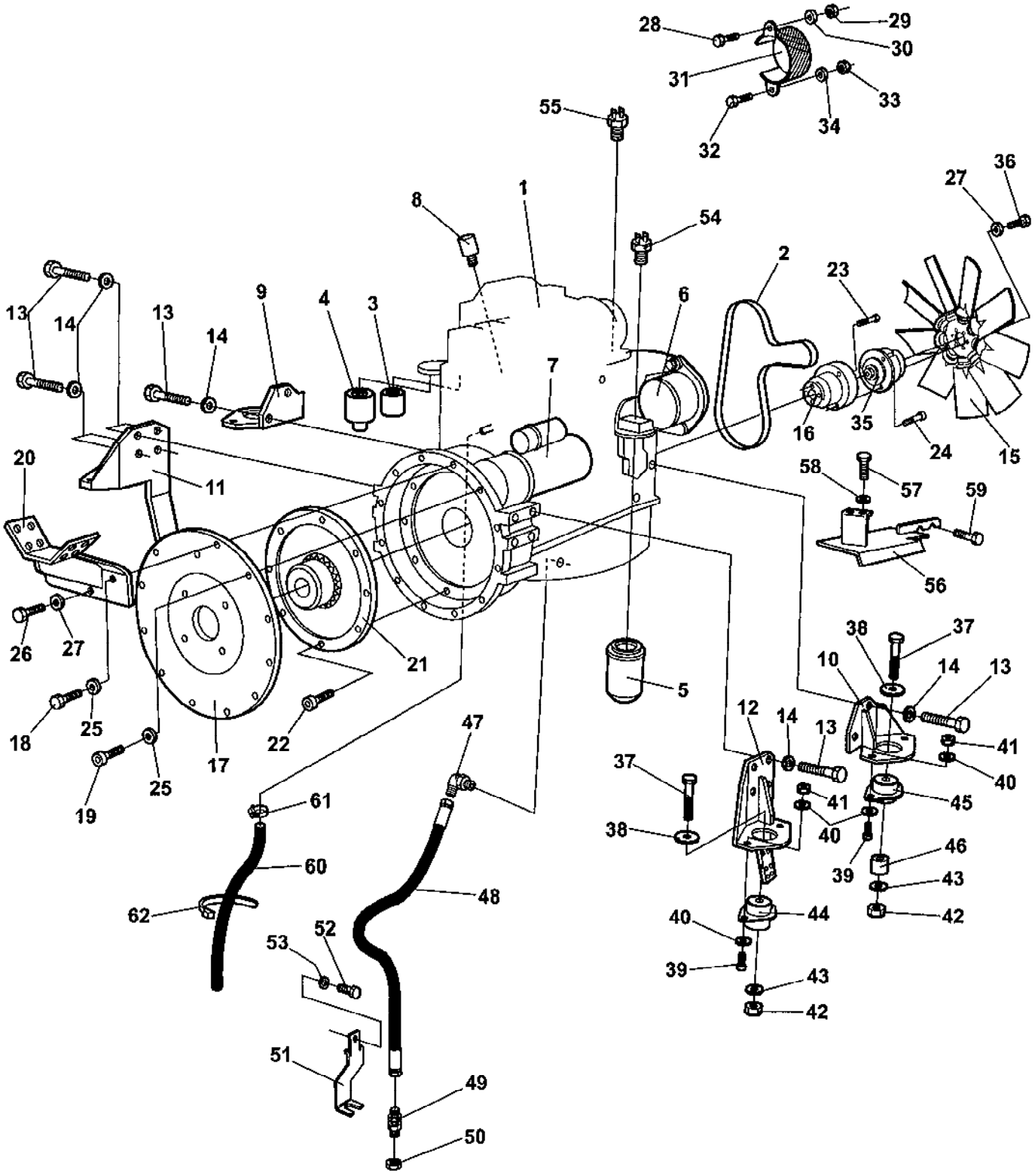
28
29
30
31
33
34
32
55
36
27
8
1
54
2
23
13
14
13
14
9
4
3
6
7
16
35
24
15
20
11
58
57
59
56
26
27
21
5
38
37
10
14
13
18
25
22
12
14
13
41
40
37
25
17
47
41
45
19
61
38
40
46
60
39
43
62
48
40
44
42
52
53
43
39
42
51
49
50

Ref. No.	Part No.	Rem.	Qty	Description	Code
45	372984	G	2	Shock absorber	D
46	370258		2	Spacer washer	
47	904210		1	Adapter	
48	375004		1	Drain hose	
49	230516		1	Adapter	
50	230384		1	Cap	
51	384721		1	Bracket	
52	500100		1	Screw	
53	904640		1	Washer 8,4x22x3	
54	935044		1	Oil pressure switch	D
55	903632		1	Temperature sensor Engine	D
56	383842		1	Thermal guard	
57	500048		2	Screw M10-1,5x20 8,8	
58	904557		2	Washer 10,5x22x4	
59		H	2	Screw	
60	904862		1	Hose From 64X21325	
61	313004		1	Hose clamp From 64X21325	
62	925802		N	Cable ties L=142 mm From 64X21325	

G) Rear
H) Existing on engine

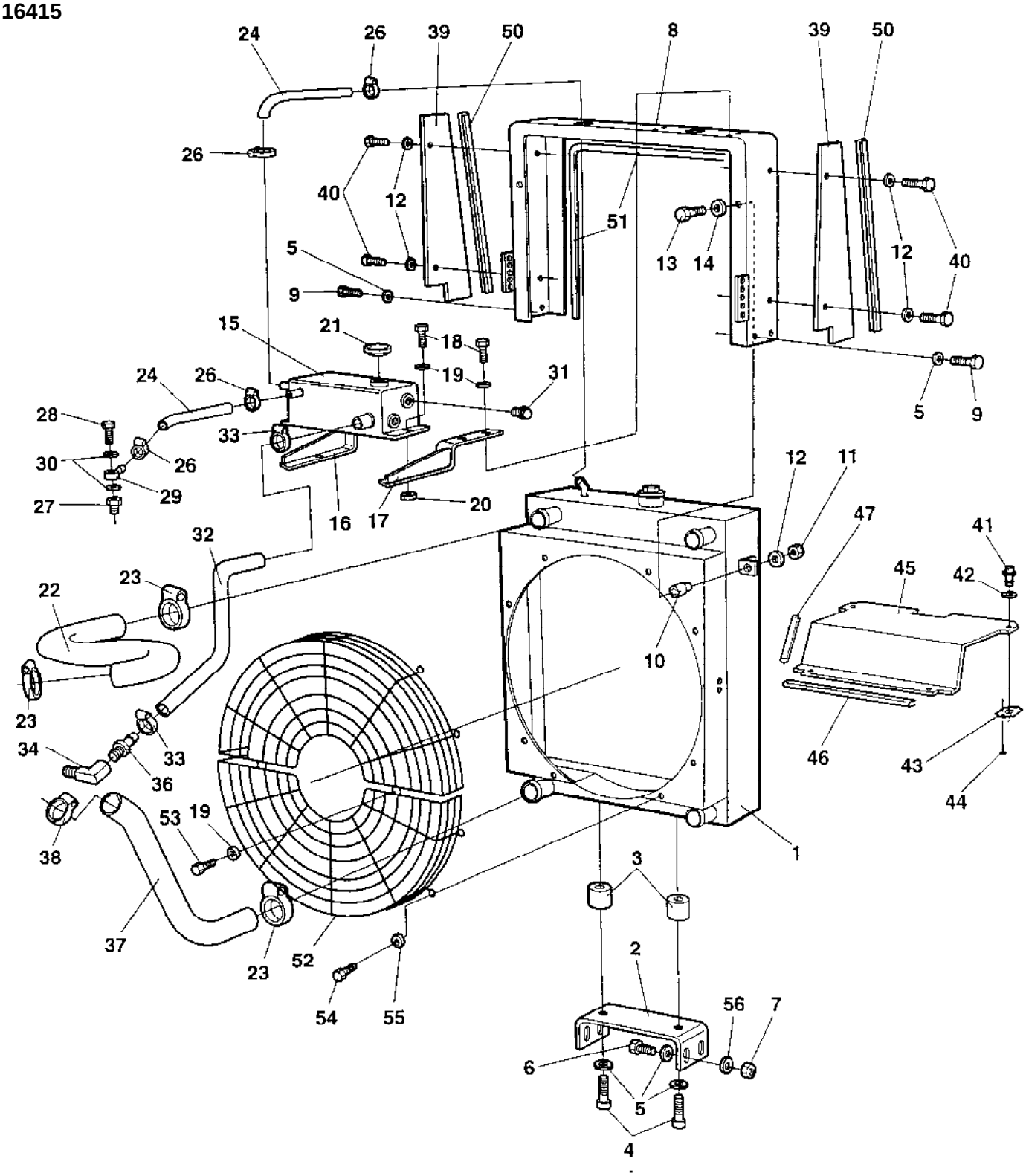
24
26
39
50
8
39
50
26
40
12
51
5
9
13
14
12
40
15
21
18
19
31
24
26
28
33
30
26
29
27
16
17
20
5
9
12
11
47
41
45
42
32
23
22
10
46
43
44
23
34
33
36
38
53
19
37
23
52
54
55
1
3
2
56
7
6
5
4

Ref. No.	Part No.	Rem.	Qty	Description	Code
1	372374		1	Radiator (Page 74)	
2	370938		1	Radiator bracket	
3	371773		2	Shock absorber	
4	500048		2	Screw M10-1,5x20 8,8	
5	904230		10	Washer 10,5x22x2	
6	500031		4	Screw M10-1,5x40 8,8	
7	586018		4	Lock nut M10	
8	371958		1	Cooler frame Up to 64X20248	
	375478		1	Cooler frame From 64X20249 Up to 64X20449	
	376165		1	Cooler frame From 64X20450	
9	500029		4	Screw M10-1,5x30 8,8	
10	371774		2	Shock absorber	
11	586002		2	Lock nut M6	
12	904228		6	Washer 6,4x12x1,5	
13	500012		2	Screw M6x12	
14	615065		2	Washer	
15	371983		1	Expansion tank	
16	372915	A	1	Bracket	
17	372914	B	1	Bracket	
18	500021		6	Screw M8-1,25x25 8,8	
19	904229		12	Washer 8,4x16x1,5	
20	586003		2	Lock nut M8	
21	903714		1	Cap	D
22	373708		1	Coolant hose	D
23	313010		3	Hose clamp	
24	373775		2	Rubber hose	
26	313075		4	Hose clamp	
27	372544		1	Connector	
28	903915		1	Hollow screw	
29	903916		1	Banjo coupling	
30	330328		2	Washer 10x14x1	
31	372597		2	Level glass	
32	373688		1	Coolant hose	D
33	313004		2	Hose clamp	
34	234365		1	Elbow 90	
36	370840		1	Hose connection	
37	373709		1	Coolant hose	D
38	313023		1	Hose clamp	
39	372502		2	Air leading plate	
40	500040		4	Screw M6-1x20 8,8	
41	904297		2	Trunnion Up to 64X20309	
	904486		2	Quick lock From 64X20310	
42	903601		2	Washer Up to 64X20309	
	926985		2	Quick lock washer From 64X20310	
43	903950		2	Lock device Up to 64X20309	
44	624011		4	Pop rivet Up to 64X20309	
45	372503		1	Air inlet Up to 64X20309	
	375467		1	Air inlet From 64X20310	
46	902166	C	1XL	Edge trim Up to 64X20309	
	902166	G	1XL	Edge trim From 64X20310	
47	902166	D	2XL	Edge trim	
50	902166	E	2XL	Edge trim	
51	903953	F	1XL	Edge trim	
52	374221		2	Fan guard	

A) Right
B) Left
C) L = 0.58 M
D) L = 0.185 M
E) L = 0.475 M
F) L = 1.45 M
G) L = 0.584 M

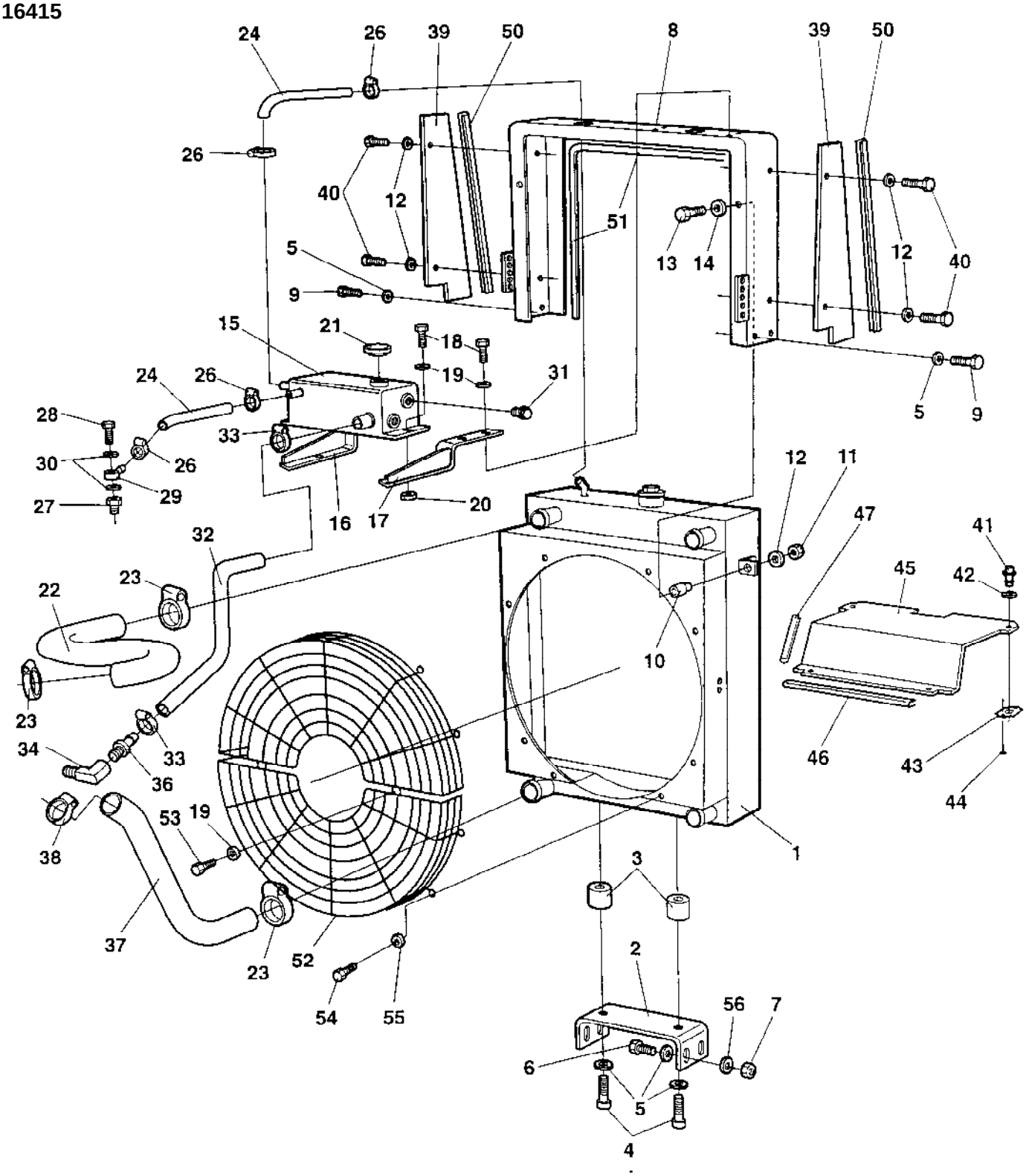
24
26
39
50
8
39
50
26
40
12
51
5
9
13
14
12
40
15
21
18
19
31
24
26
28
33
30
26
29
27
16
17
20
5
9
12
11
47
41
32
23
22
45
42
10
23
34
33
36
46
43
44
38
53
19
1
3
37
23
52
2
54
55
56
7
6
5
4

Ref. No.	Part No.	Rem.	Qty	Description	Code
53	500018		4	Screw M8-1,25x12 8,8	
54	500019		8	Screw M8-1,25x16 8,8	
55	615043		8	Conical spring washer 8,4x18x2	
56	603023		4	Washer M10	

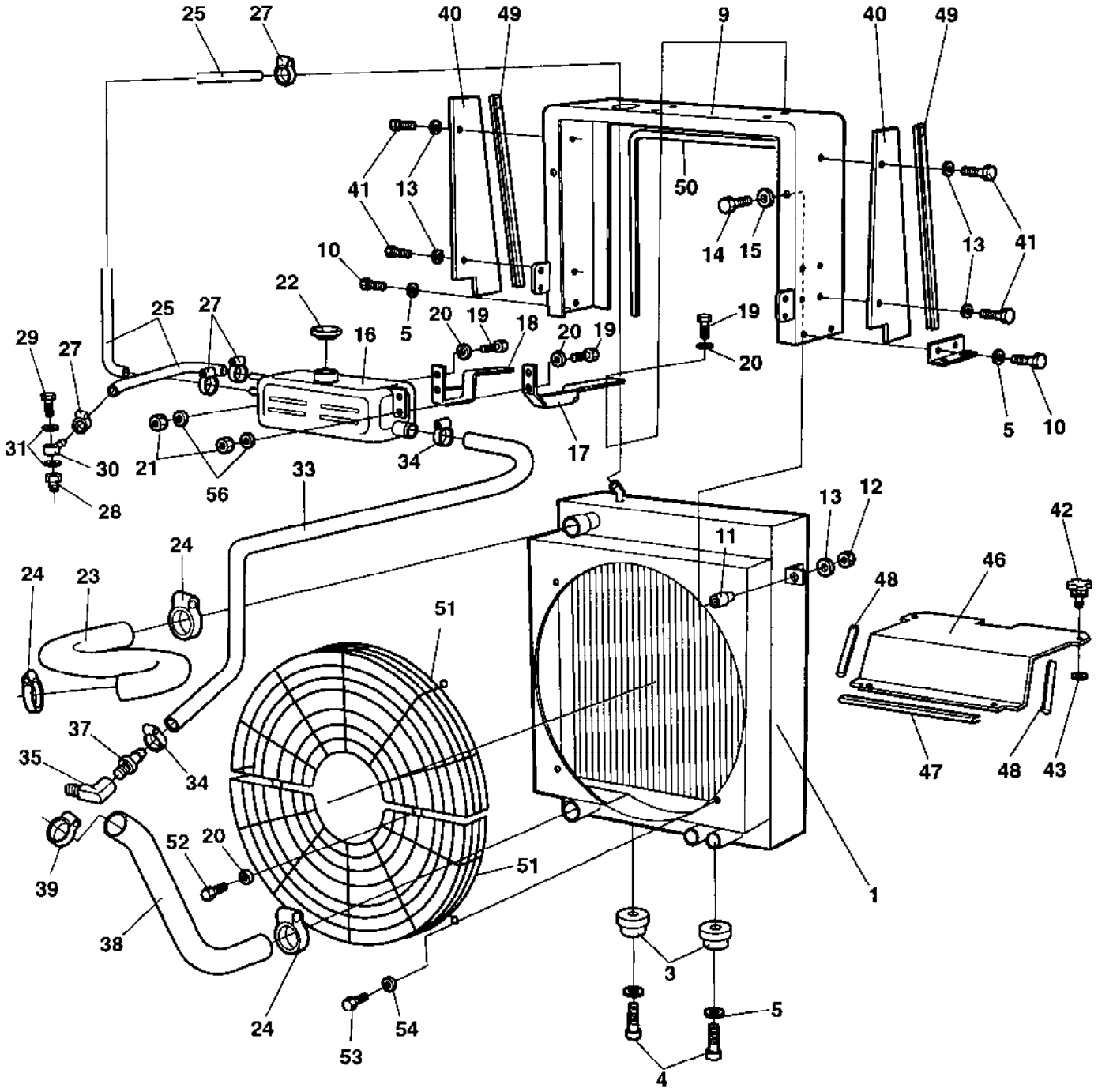
25
27
40
49
9
40
49
41
13
50
14
15
13
41
10
22
25
27
16
5
20
19
18
20
19
19
20
29
27
31
30
28
21
56
33
34
17
5
10
24
24
23
51
13
12
11
42
46
48
37
35
34
52
20
51
39
38
24
53
54
3
5
4
1
47
48
43

Ref. No.	Part No.	Rem.	Qty	Description	Code
1	372374		1	Radiator (Page 74)	
3	371773		2	Shock absorber	
4	500048		2	Screw M10-1,5x20 8,8	
5	904230		6	Washer 10,5x22x2	
9	380335		1	Cooler frame	
10	500029		4	Screw M10-1,5x30 8,8	
11	371774		2	Shock absorber	
12	586002		2	Lock nut M6	
13	904228		6	Washer 6,4x12x1,5	
14	500012		2	Screw M6x12	
15	904228		2	Washer 6,4x12x1,5	
16	374864		1	Expansion tank	
17	380069	A	1	Bracket	
18	380068	B	1	Bracket	
19	500022		8	Screw M8-1,25x30 8,8	
20	904229		16	Washer 8,4x16x1,5	
21	586003		4	Lock nut M8	
22	903714		1	Cap	D
23	373708		1	Coolant hose	D
24	313010		3	Hose clamp	
25	381462	C	NXL	Rubber hose	
27	313075		1	Hose clamp	
28	372544		1	Connector	
29	903915		1	Hollow screw	
30	903916		1	Banjo coupling	
31	330328		2	Washer 10x14x1	
33	380054		1	Coolant hose	D
34	313004		2	Hose clamp	
35	234365		1	Elbow 90	
37	370840		1	Hose connection	
38	373709		1	Coolant hose	D
39	313023		1	Hose clamp	
40	372502		2	Air leading plate	
41	500040		4	Screw M6-1x20 8,8	
42	904486		2	Quick lock	
43	926985		2	Quick lock washer	
46	375467		1	Air inlet	
47	902166	D	1XL	Edge trim	
48	902166	E	2XL	Edge trim	
49	902166	F	2XL	Edge trim	
50	903953	G	1XL	Edge trim	
51	374221		2	Fan guard Up to 64X21254	
	386137		2	Fan guard From 64X21255	
52	500018		4	Screw M8-1,25x12 8,8	
53	500019		8	Screw M8-1,25x16 8,8	
54	904640		8	Washer 8,4x22x3	
56	381413		2	Washer	

A) Left
B) Right
C) Length as required, total length 0.8 M
D) L = 0.584 M
E) L = 0.185 M
F) L = 0.475 M
G) L = 1.450 M

372374 Radiator

16416

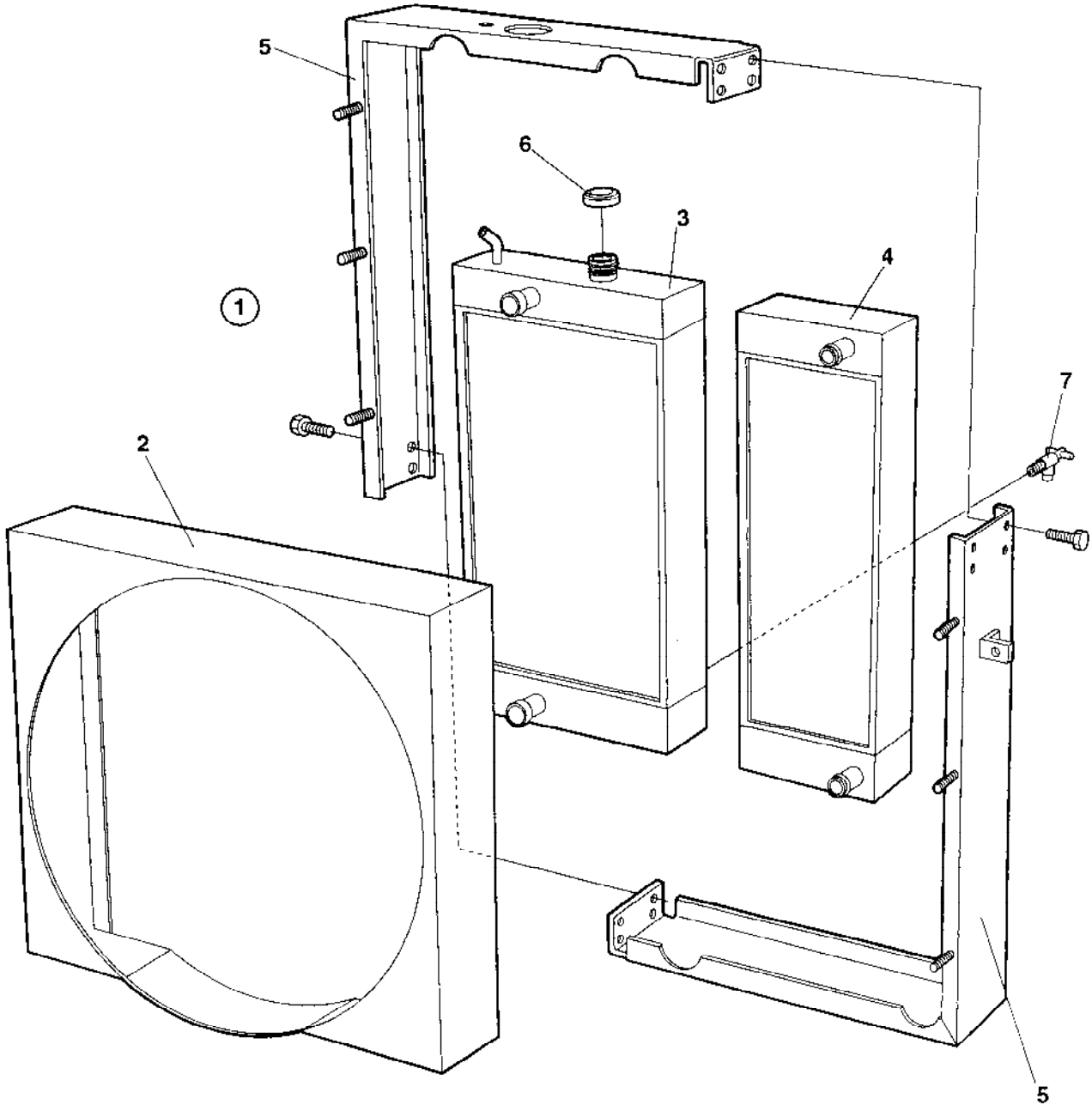

372374 Radiator

Ref. No.	Part No.	Rem.	Qty	Description	Code
1			1	Radiator, cpl	
2	936245		1	.Fan cover	
3	936243		1	.Water radiator	C
4	936246		1	.Oil cooler	C
5	936244		1	.Frame	
6	908292		1	.Radiator cover Up to 64X20449	D
7	937394		1	.Drain cock	

Combustion air system

16417

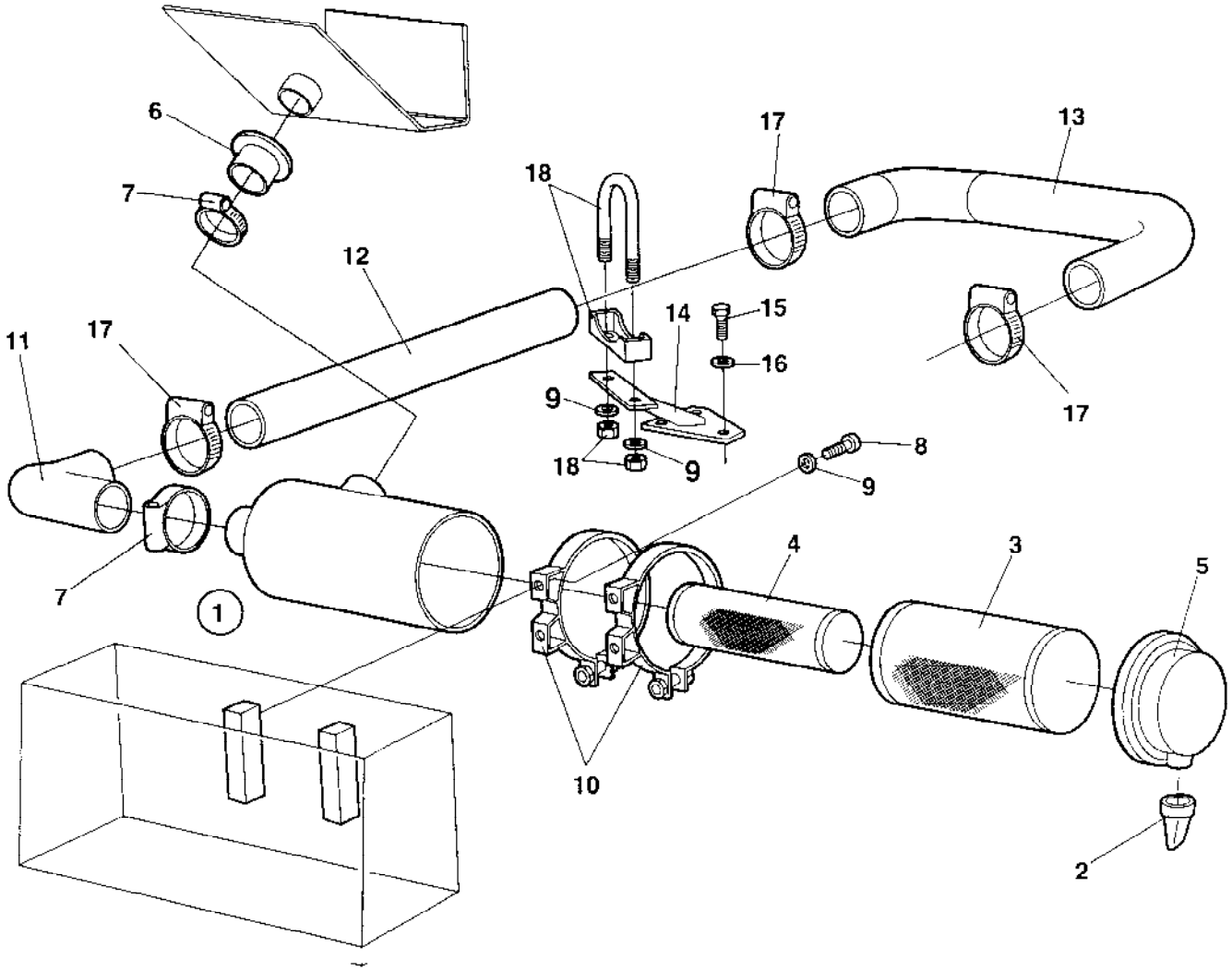

Ref. No.	Part No.	Rem.	Qty	Description	Code
1	370953		1	Air cleaner	
2	908399		1	.Vacuator valve	D
3	908450	A	1	.Air filter	A
4	908451	B	1	.Air filter	A
5	908452		1	.Cover	
6	348309		1	Rubber bushing	
7	904060		2	Hose clamp	
8	500019		4	Screw M8-1,25x16 8,8	
9	600006		6	Washer Up to 64X20409	
	904229		6	Washer 8,4x16x1,5 From 64X20410 Up to 64X20782	
	904229		4	Washer 8,4x16x1,5 From 64X20783	
10	813791		2	Mounting band	
11	373579		1	Air inlet hose	D
12	372193		1	Air inlet pipe	
13	373580		1	Air inlet hose	D
14	373695		1	Bracket Up to 64X20409	
	376025		1	Bracket From 64X20410	
15	500028		3	Screw M10-1,5x25 8,8	
16	600008		3	Washer Up to 64X20409	
	904230		3	Washer 10,5x22x2 From 64X20410	
17	904059		3	Hose clamp Up to 64X20782	
	904929		3	Hose clamp From 64X20783	
18	313093		1	Pipe clamp	

A) Main
B) Safety

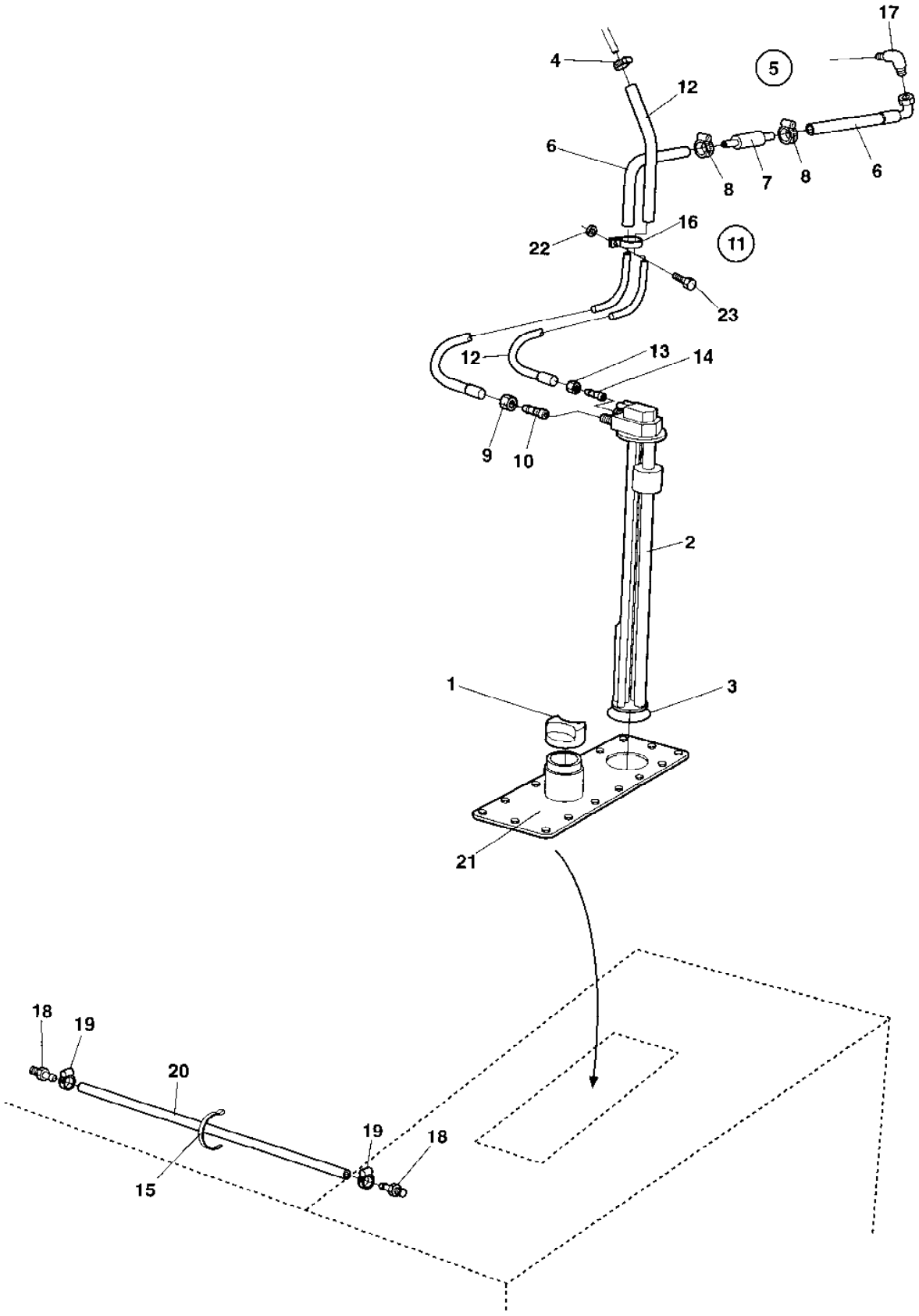
17
4
5
12
6
8
7
8
6
22
16
11
23
12
13
14
9
10
2
1
3
21
18
19
20
19
18
15

Ref. No.	Part No.	Rem.	Qty	Description	Code
1	373460		1	Fuel cap	D
	380436	C	1	Fuel cap	
2	359485		1	Level sender Up to 64X20739	D
	382023		1	Level sender From 64X20740 Up to 64X21218	D
	386058		1	Level sender From 64X21219	D
3	903712		1	.O-ring Up to 64X20544	D
	904707		1	.O-ring From 64X20545	D
4	313001		1	Hose clamp	
5	374679		1	Fuel hose	D
6	205126	A	NXL	.Fuel hose	D
7	929322		1	.Fuel strainer	A
8	313108		2	.Hose clamp	
9	903685		1	.Hose connection socket	
10	903683		1	.Hose connection	
11	374681		1	Fuel hose	D
12	205129	A	NXL	.Fuel hose	D
13	903684		1	.Hose connection socket	
14	904211		1	.Hose connection	
15	313041		1	Cable ties L=186 mm	
16	921050		1	Clamp	
17	234619		1	Adapter	
18	373574		2	Hose connection	
19	313002		2	Hose clamp	
20	244054	B	1XL	Hose reinforced	
21			1	Cover	
22	603018		2	Washer 10x18x4	
23	500022		1	Screw M8-1,25x30 8,8	

A) Length as required
B) L = 0.67 M
C) For Italien

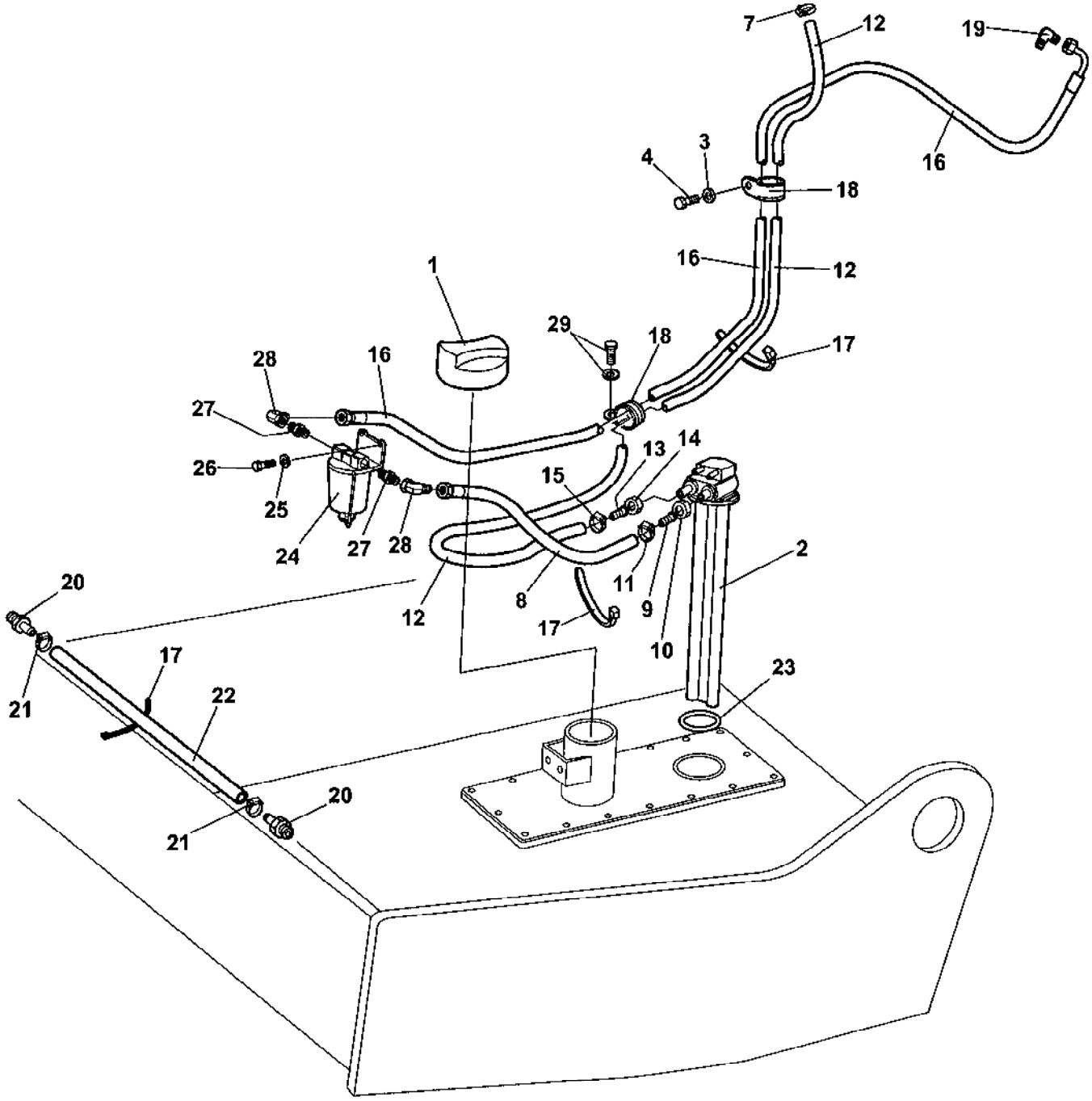
7
12
19
4
3
16
18
16
12
1
29
18
17
28
16
27
26
25
24
27
28
13
14
15
2
20
12
8
17
11
9
10
23
17
22
21
20
21

Ref. No.	Part No.	Rem.	Qty	Description	Code
1	373460		1	Fuel cap	D
	380436	B	1	Fuel cap	
2	386058		1	Level sender	D
3	603018		2	Washer 10x18x4	
4	500022		1	Screw M8-1,25x30 8,8	
7	313001		1	Hose clamp	
8	386404		1	Fuel hose	D
9	903683		1	.Hose connection	
10	903685		1	.Hose connection socket	
11	313001		1	.Hose clamp	
12	374681		1	Fuel hose	D
13	904211		1	.Hose connection	
14	903684		1	.Hose connection socket	
15	313001		1	.Hose clamp	
16	386416		1	Fuel hose	D
17	313041		N	Cable ties L=186 mm	
18	921050		2	Clamp	
19	234619		1	Adapter	
20	373574		2	Hose connection	
21	313002		2	Hose clamp	
22	244054	A	1XL	Hose reinforced	
23	904707		1	O-ring	D
24	900247		1	Fuel filter	A
25	904229		2	Washer 8,4x16x1,5	
26	500019		2	Screw M8-1,25x16 8,8	
27	900249		2	Straight connector	
28	334524		2	Connector	
29				Existing	

A) L=0,65M
B) For Italy

Exhaust system

16419

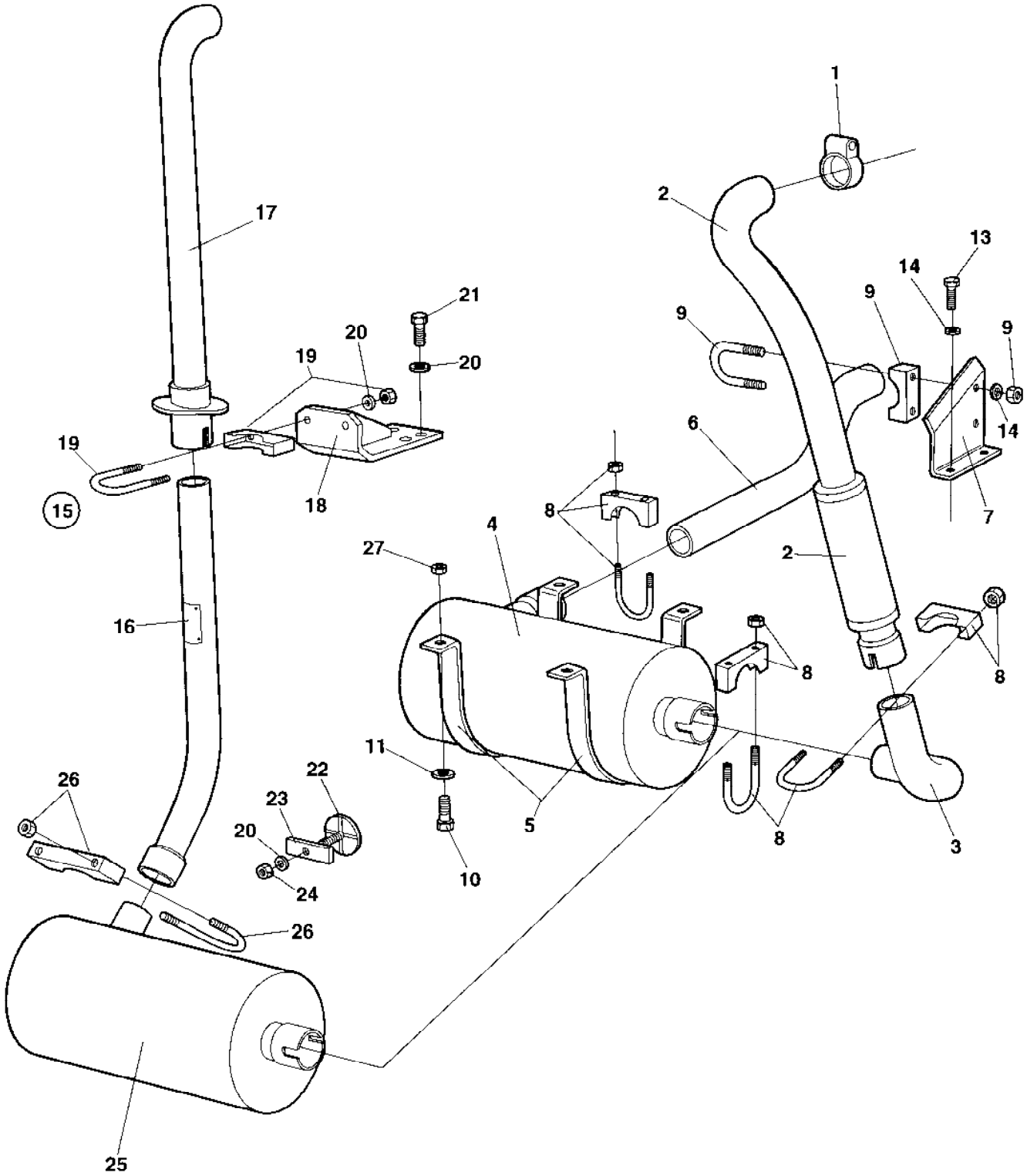

Exhaust system

Ref. No.	Part No.	Rem.	Qty	Description	Code
1	929185		1	Clamp	D
2	372429		1	Exhaust hose	
3	372431		1	Exhaust pipe	
4	373624		1	Muffler	D
5	373625		2	Clamp	
6	372432		1	Exhaust pipe	
7	371172		1	Bracket	
8	313094		3	Pipe clamp	
9	313093		1	Pipe clamp	
10	500031		4	Screw M10-1,5x40 8,8	
11	904230		4	Washer 10,5x22x2	
13	500053		2	Screw M8-1,25x20 8,8	
14	904640		4	Washer 8,4x22x3	
15		A	1	Exhaust pipe, cpl	
16	374536		1	.Exhaust pipe	
17	374537		1	.Exhaust pipe	
18	375103		1	.Bracket	
19	313094		1	.Pipe clamp	
20	600006		5	.Washer	
21	500053		2	.Screw M8-1,25x20 8,8	
22	372722		1	.Cover plate	
23	372725		1	.Holder	
24	586003		1	.Lock nut M8	
25		B	1	Muffler	
26		C	1	Clamp	
27	902287		4	Nut	

A) Lengthened, option
B) See item 4
C) See item 8

Ref. No.	Part No.	Rem.	Qty	Description	Code
10				Rear axle and wheels Up to 64X21151 (Page 86)	
20				Rear axle and wheels From 64X21152 (Page 100)	

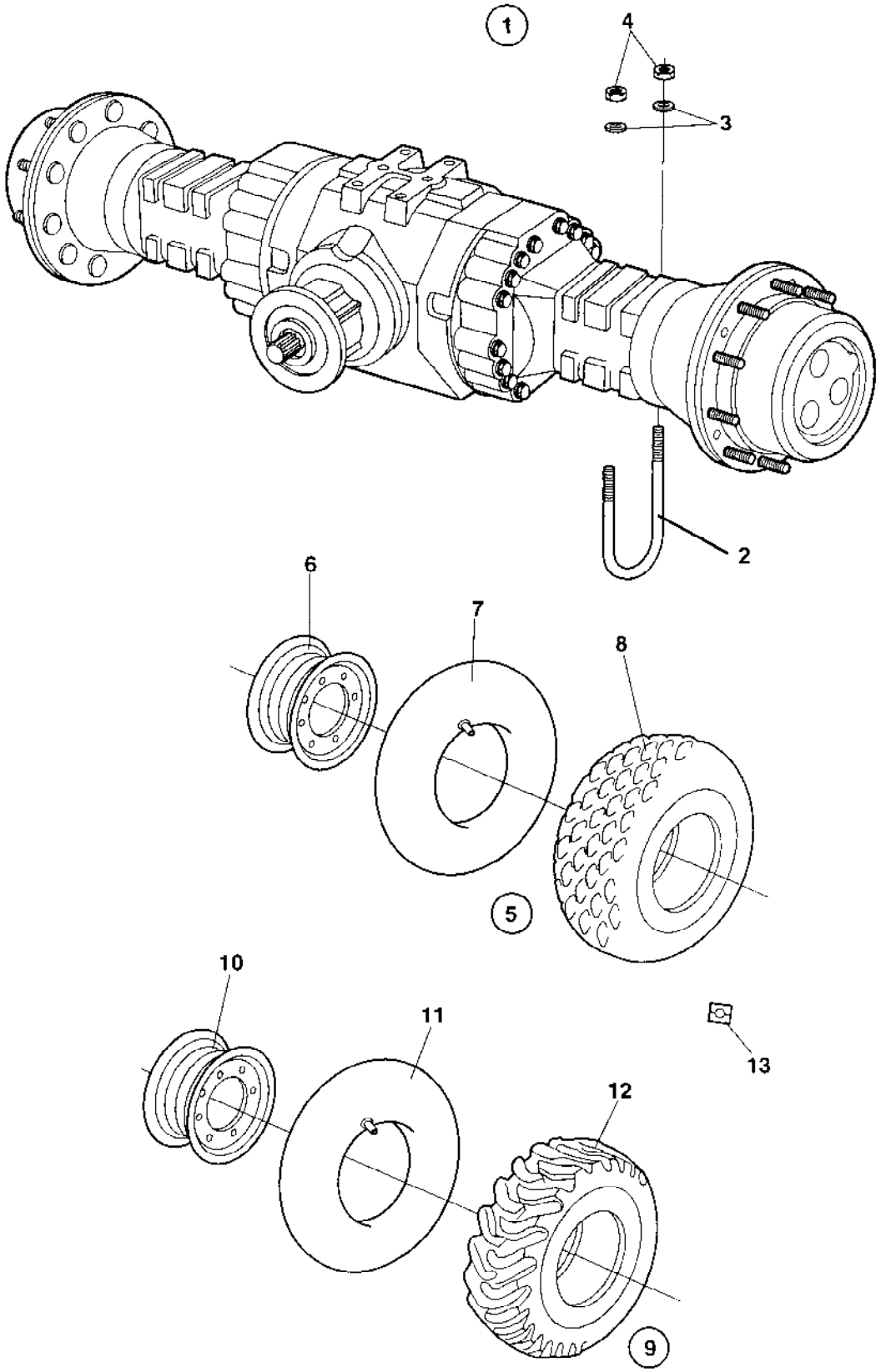
1
4
3
2
6
7
8
5
10
11
13
12
9

Ref. No.	Part No.	Rem.	Qty	Description	Code
1	371593		1	Rear axle Limited Slip (Page 88)	
	372940		1	Rear axle No-spin, Option (Page 96)	
2	373469		4	U-bolt	
3	600014		8	Washer	
4	901145		8	Lock nut M20-10	
5	371937		2	Wheel, cpl	
	371941	A	2	Wheel, cpl	
	382217	F	1	Wheel, cpl	
6	371594		1	.Rim	
7	929050		1	.Tube	D
8	373617		1	.Tyre	D
	900429	F	1	Tyre and tube	D
9	371938	B	1	Tractor tyre, cpl	
	371939	C	1	Tractor tyre, cpl	
	371942	D	1	Tractor tyre, cpl	
	371943	E	1	Tractor tyre, cpl	
10	371594		1	.Rim	
11	929050		1	.Tube	D
12	373618		1	.Tyre	D
13	903985		1	Decal "SAFETY", "TYRE IN BALLAST"	

A) Liquid filled tyres, option
B) Left, option
C) Right
D) Liquid filled tyres, left
E) Liquid filled tyres, right
F) All-weather

371593 Rear axle Limited Slip

16422

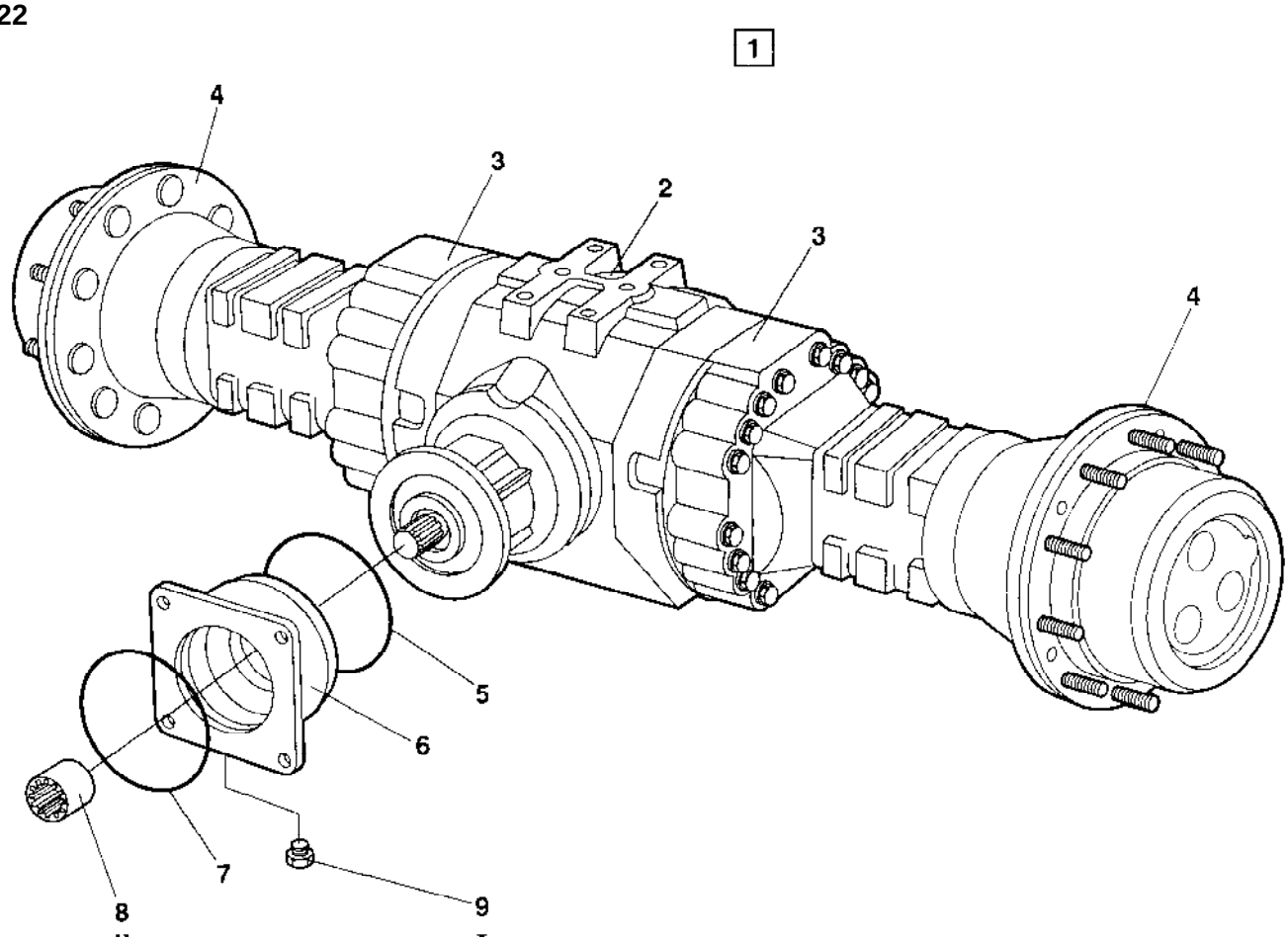

371593 Rear axle Limited Slip

Ref. No.	Part No.	Rem.	Qty	Description	Code
1			1	Rear axle	
2			1	.Differential with limited slip (Page 90)	
3			2	.Differential housing and brakes (Page 92)	
4			2	.Planet gear (Page 94)	
5	936058		1	.O-ring	D
6	936059		1	.Flange	
7	909584		1	.O-ring	D
8	936060		1	.Splined sleeve	D
9	926810		1	.Magnetic plug	

Differential with limited slip

16423

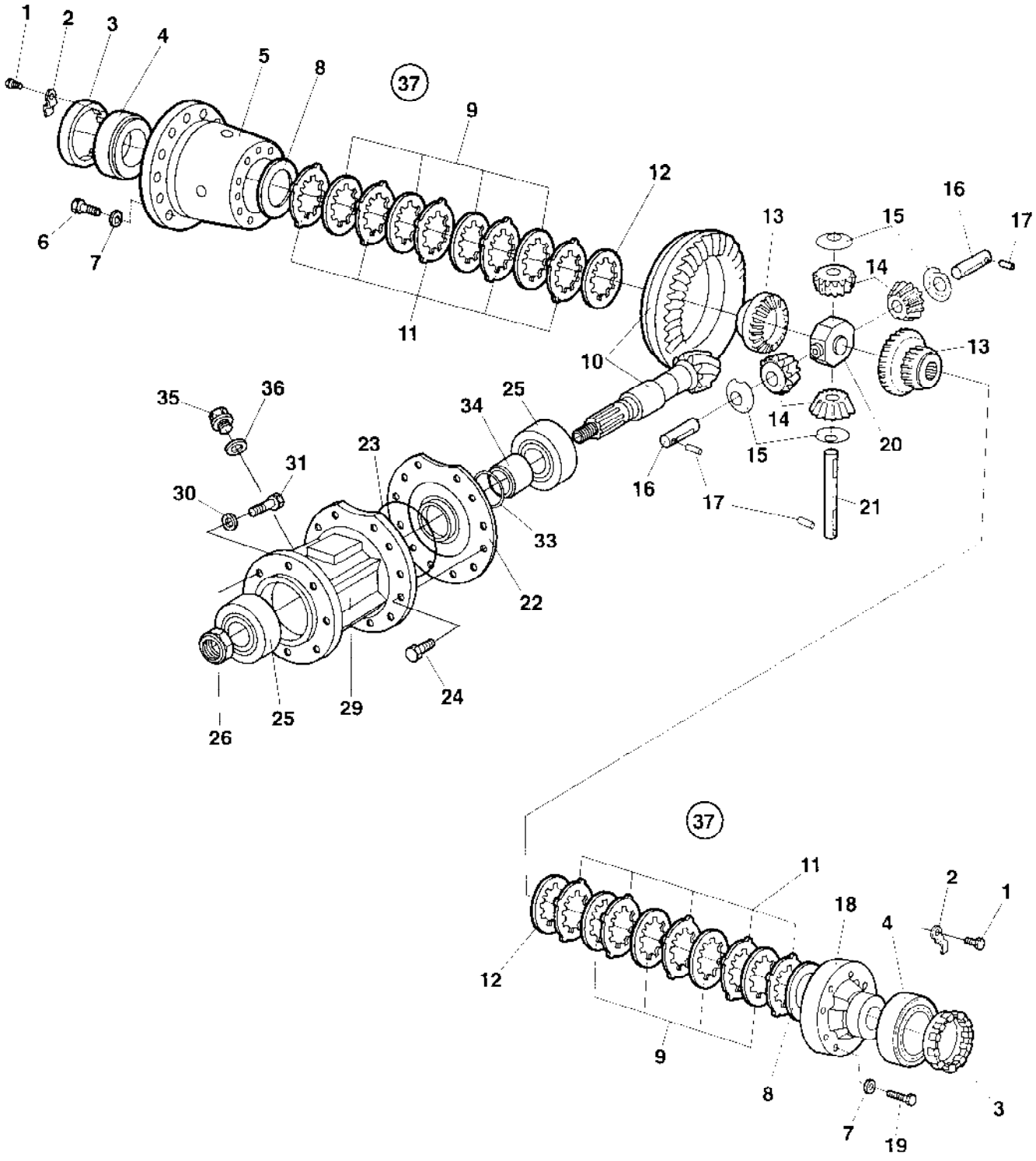

Differential with limited slip

Ref. No.	Part No.	Rem.	Qty	Description	Code
1	909547		2	Screw	
2	936021		2	Lock plate	
3	936022		2	Ring nut	
4	936023		2	Bearing	
5	936024		1	Differential carrier	
6	936025		16	Screw	
7	936026		24	Washer	
8	936027		2	Shim 0.10mm	
	936028		2	Shim 0.20mm	
	936029		2	Shim 0.30mm	
9		A	8	Limited slip disc	
10	936031		1	Bevel gear set	
11		A	10	Limited slip disc	
12		A	2	Limited slip disc	
13	936034		2	Differential side gear	
14	936035		4	Differential pinion	
15	936036		4	Friction washer	
16	936037		2	Pin	
17	936038		3	Pin	
18	936039		1	Cover	
19	936040		8	Screw	
20	936041		1	Shaft retainer	
21	936042		1	Pin	
22	936043		1	Shim 0.15mm	
	936044		1	Shim 0.20mm	
	936045		1	Shim 0.50mm	
	936046		1	Shim 0.10mm	
23	936047		1	O-ring	D
24	936048		12	Screw	
25	926116		2	Bearing	
26	936049		1	Ring nut	
29	936050		1	Cover	
30	936051		8	Washer	
31	909582		8	Screw	
33	936052		1	Shim 0.10mm	
	936053		1	Shim 0.15mm	
	936054		1	Shim 0.20mm	
	936055		1	Shim 0.40mm	
	936056		1	Shim 0.50mm	
34	936057		1	Spacer	
35	909544		2	Screw	
36	909537		2	Washer	
37	936108	1	2	Limited slip disc kit	D

1) 1 kit include item 9, 11 and 12 for 1 side,2 kits are needed for 1 axle.
A) Use itm 37

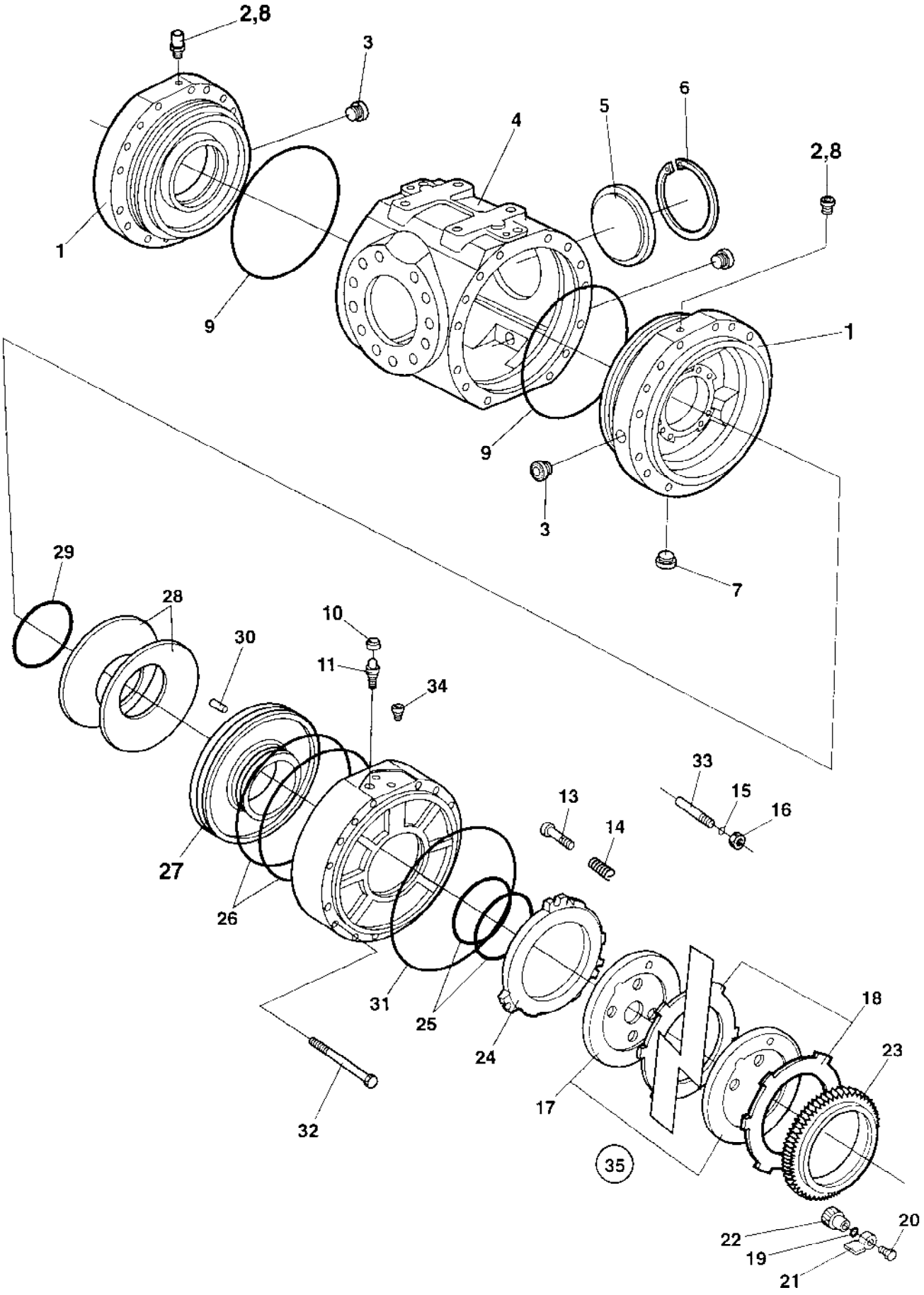
2,8
3
6
5
4
2,8
1
9
1
9
3
7
29
28
10
30
11
34
33
15
16
13
14
27
26
31
25
24
18
23
17
32
35
22
20
19
21

Ref. No.	Part No.	Rem.	Qty	Description	Code
1	936018		2	Intermediate housing	
2	900926		1	Breather	D
3	926732		2	Magnetic plug	
4	936019		1	Housing	
5	909542		1	Plug	
6	929617		1	Lock ring	
7	926810		3	Magnetic plug	
8	909540		1	Plug	
9	936020		2	O-ring	D
10	936087		2	Plug	
11	936088		2	Bolt	
12	936089		2	Intermediate cover	
13	936090		6	Screw	
14	936091		6	Spring	
15	936092		6	Washer	
16	936093		6	Nut	
17		A	10	Brake disc	
18		A	10	Brake disc	
19	929691		2	O-ring	D
20	900937		2	Screw	
21	936096		2	Lock plate	
22	936097		2	Pinion	
23	936098		2	Ring	
24	936099		2	Brake disc	
25	936100		4	O-ring	D
26	936101		4	O-ring	D
27	936102		2	Piston	
28	936103		4	Spring	
29	936104		2	Circlip	
30	936105		2	Pin	
31	936106		4	O-ring	D
32	909625		4	Screw	
33	936107		6	Adjusting bolt	
34	909615		4	Breather	
35	936109	1	2	Brake disc kit	D

1) 1 kit incl. item 17 and 18 for one side. 2 kits are needed for one axle.
A) Use item 35

Planet gear

16425

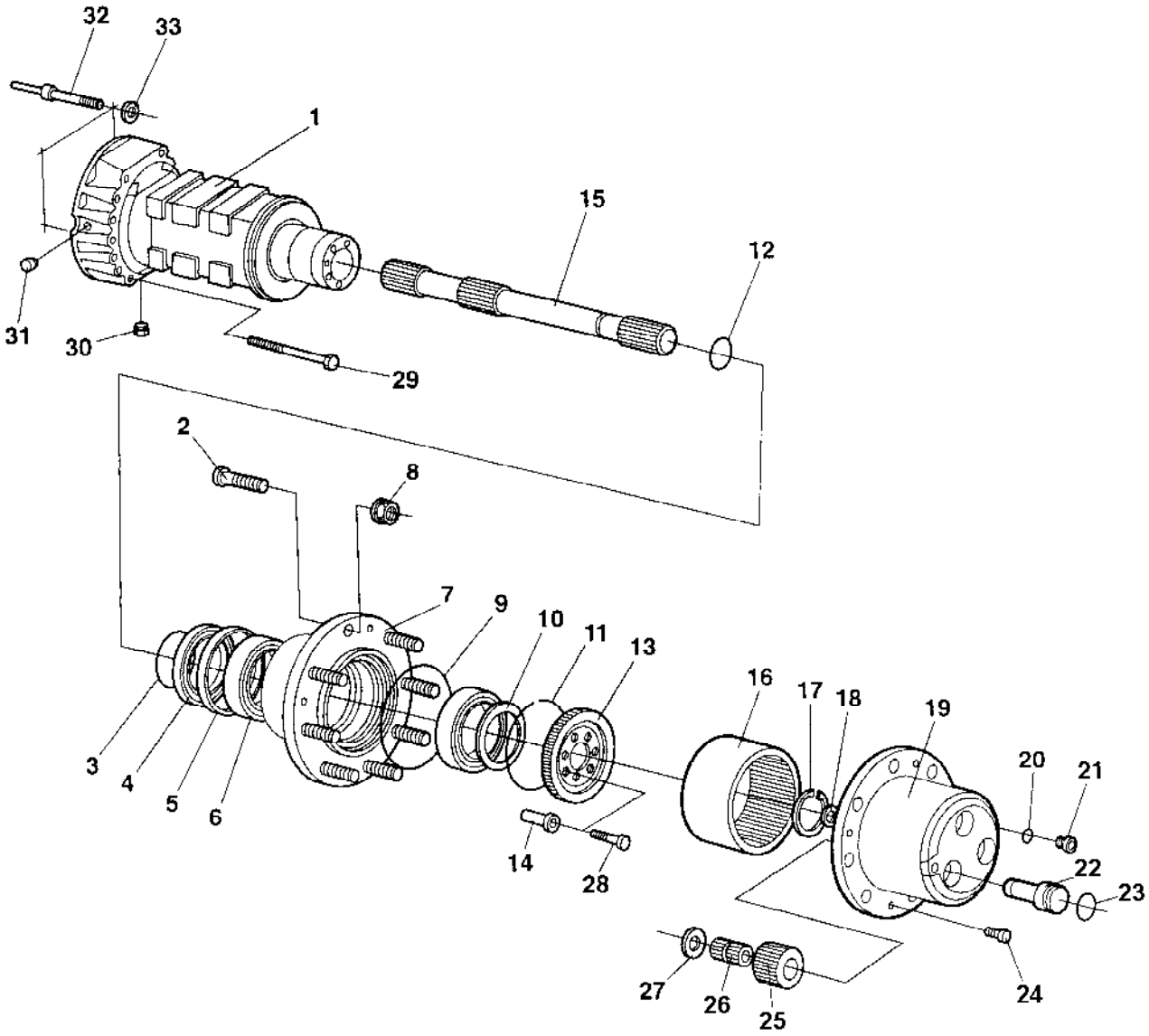

Planet gear

Ref. No.	Part No.	Rem.	Qty	Description	Code
1	936061		2	Housing	
2	926781		16	Wheel screw	
3	936062		2	O-ring	D
4	936063		2	Spacer	
5	926185		2	Seal	D
6	936064		4	Bearing	
7	936065		2	Hub	
8	901987		16	Wheel nut	
9	936066		2	O-ring	D
10	936067		2	Shim 0.15mm	
	936068		2	Shim 0.20mm	
	936069		2	Shim 0.50mm	
	936070		2	Shim 0.30mm	
	936071		2	Shim 0.10mm	
11	936072		2	Snap ring	
12	936073		2	Seal	D
13	936074		2	Flange	
14	909605		16	Bushing	
15	936075		2	Shaft	
16	936076		2	Ring gear	
17	936077		2	Circlip	
18	909598		2	Friction washer	
19	936078		2	Planet carrier	
20	909607		2	Seal	D
21	909596		2	Plug	
22	936079		6	Pin	
23	936080		6	O-ring	D
24	929661		4	Screw	
25	936081		6	Planet gear	
26	936082		12	Bearing	
27	936083		6	Washer	
28	909589		16	Screw	
29	936084		24	Bolt	
30	926810		2	Magnetic plug	
31	926732		2	Magnetic plug	
32	936085		4	Stud	
33	936086		4	Nut	

372940 Rear axle No-spin, Option

16422

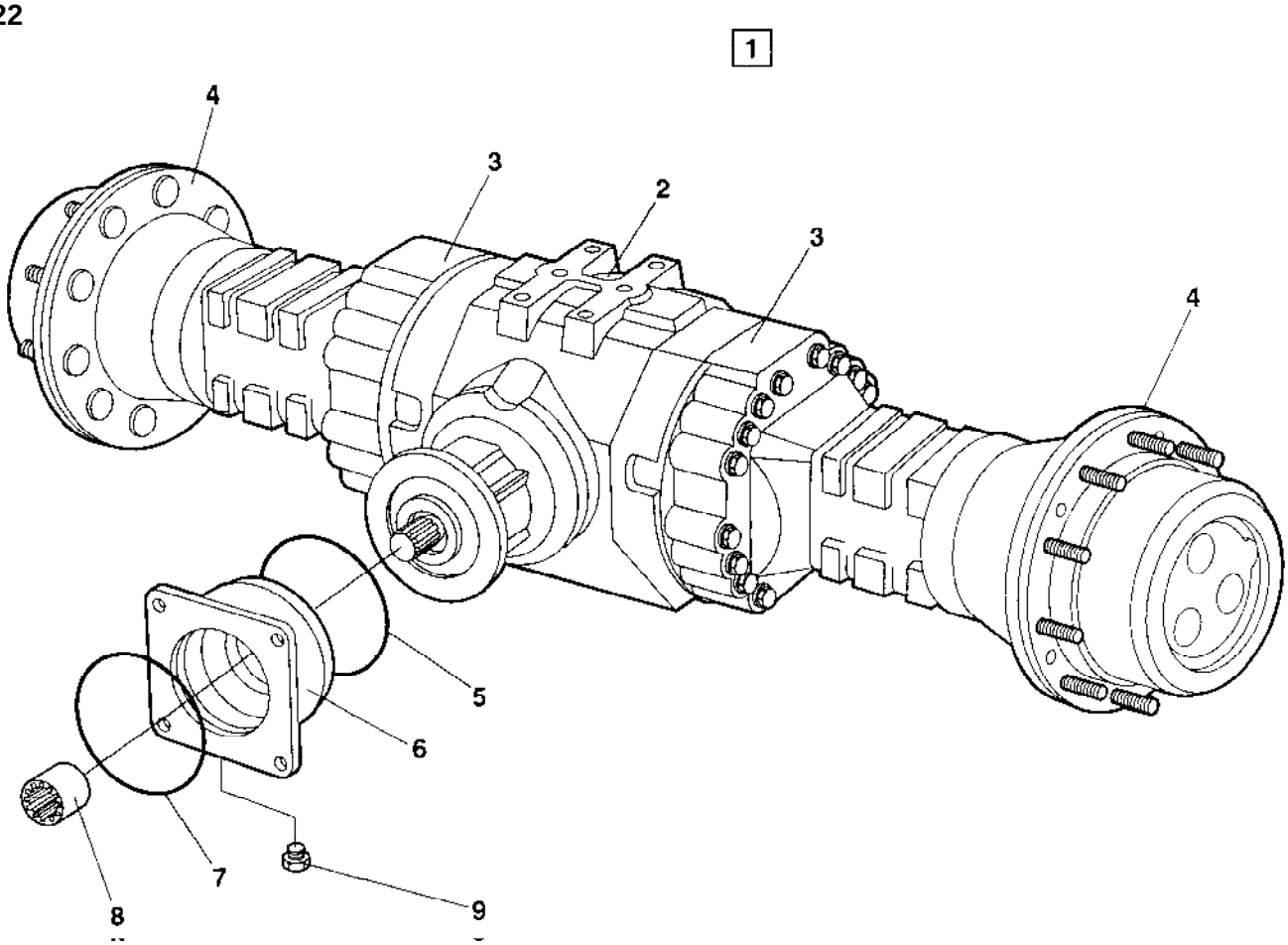

372940 Rear axle No-spin, Option

Ref. No.	Part No.	Rem.	Qty	Description	Code
1			1	Rear axle	
2			1	.Differential with No-Spin (Page 98)	
3			2	.Differential housing and brakes (Page 92)	
4			2	.Planet gear (Page 94)	
5	936058		1	.O-ring	D
6	936059		1	.Flange	
7	909584		1	.O-ring	D
8	936060		1	.Splined sleeve	D
9	926810		1	.Magnetic plug	

Differential with No-Spin

17702

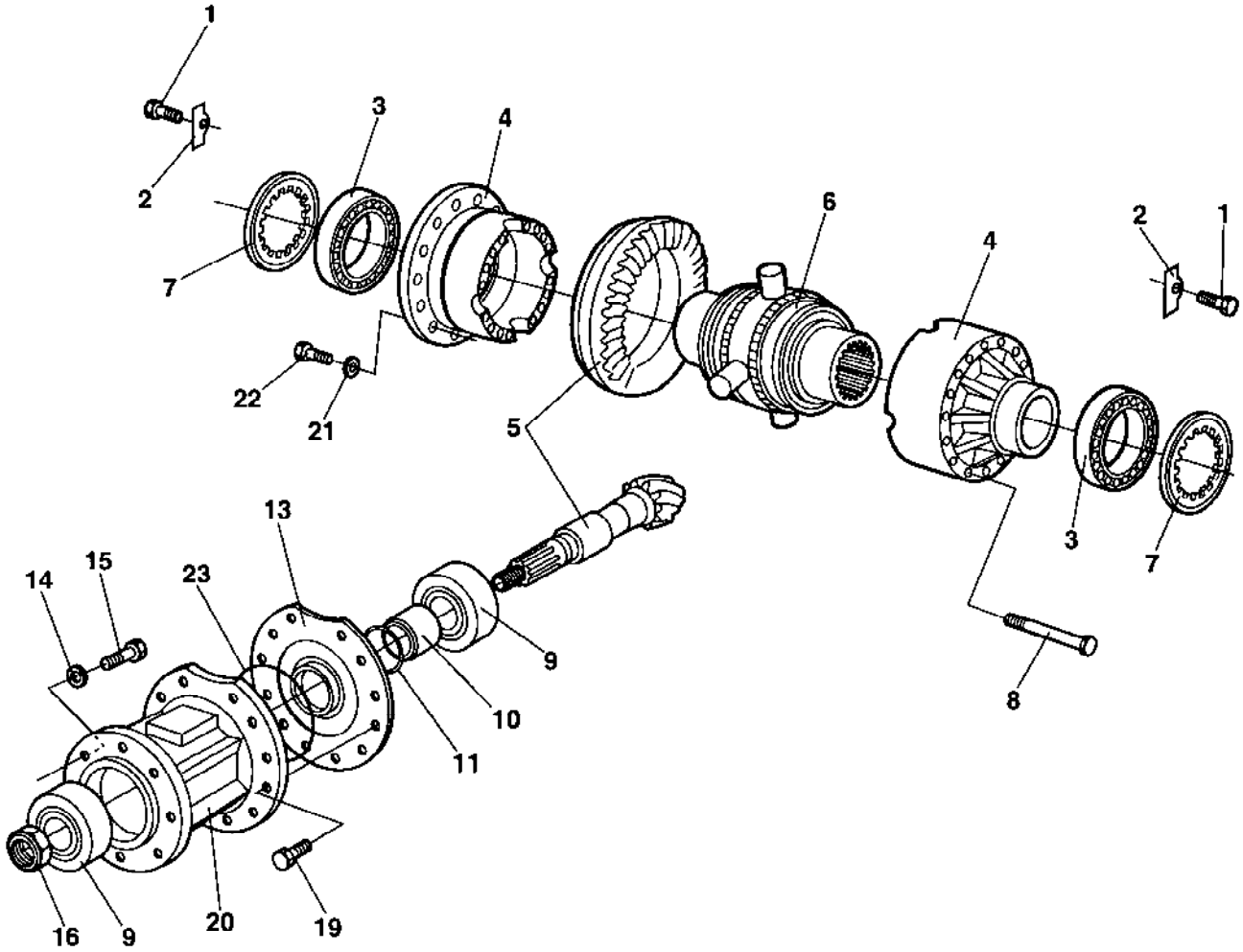

Differential with No-Spin

Ref. No.	Part No.	Rem.	Qty	Description	Code
1	909547		2	Screw	
2	936021		2	Lock plate	
3	936023		2	Bearing	
4	939388		1	Differential carrier	
5	936031		1	Bevel gear set	
6			1	Splined sleeve	
7	936022		2	Ring nut	
8			16	Splined sleeve	
9	926116		2	Bearing	
10	936057		1	Spacer	
11	936052		1	Shim 0.10mm	
	936053		1	Shim 0.15mm	
	936054		1	Shim 0.20mm	
	936055		1	Shim 0.40mm	
	936056		1	Shim 0.50mm	
13	936043		1	Shim 0.15mm	
	936044		1	Shim 0.20mm	
	936045		1	Shim 0.50mm	
	936046		1	Shim 0.10mm	
14	936051		8	Washer	
15	900256		8	Screw	
16	936049		1	Ring nut	
19	936048		12	Screw	
20	936050		1	Cover	
21	936026		16	Washer	
22	936025		16	Screw	
23	936047		1	O-ring	D

Rear axle and wheels

17484

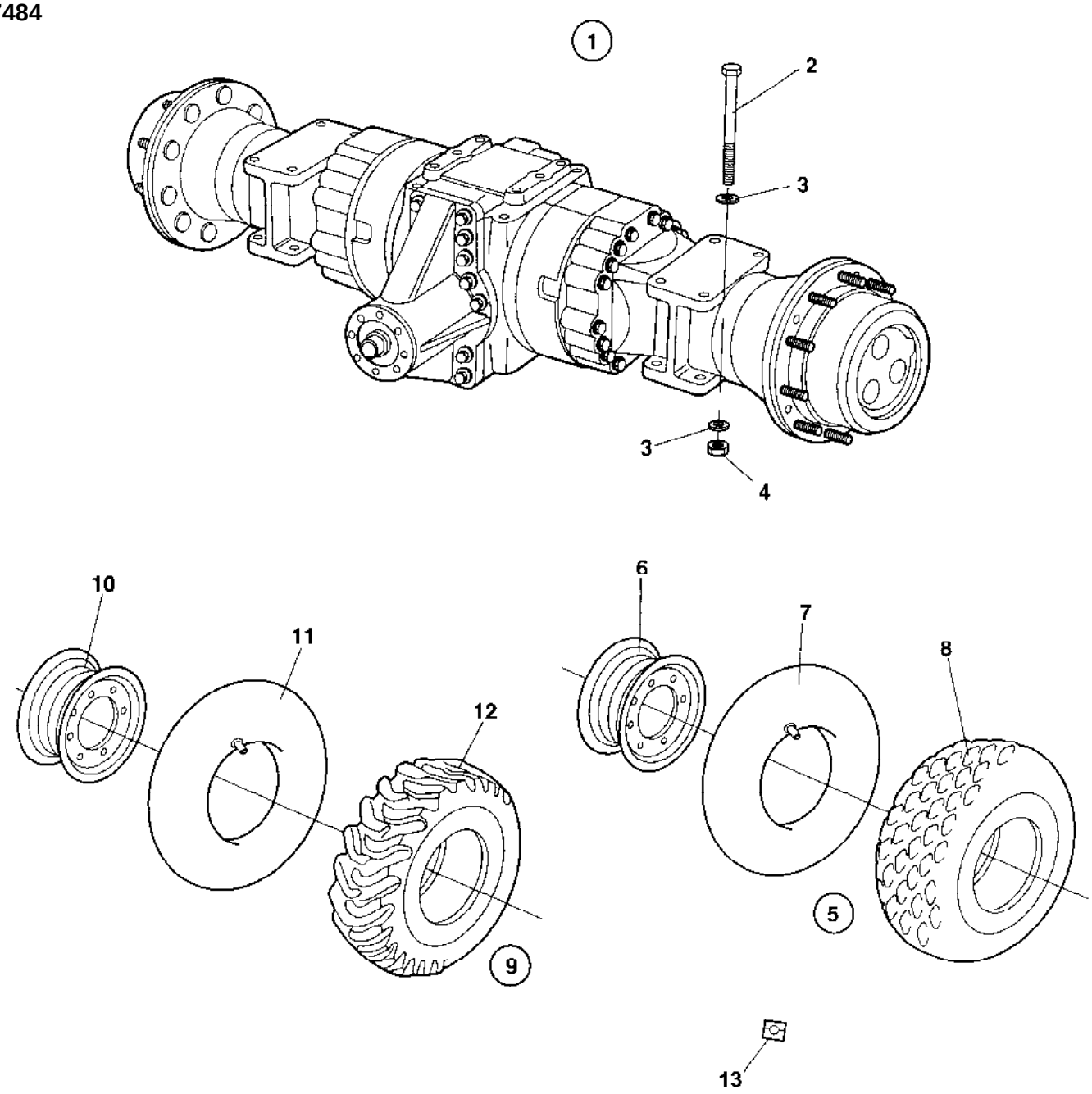

Ref. No.	Part No.	Rem.	Qty	Description	Code
1	383855		1	Rear axle Limited Slip (Page 102)	
	384801		1	Rear axle No-spin, Option (Page 112)	
2	500295		8	Screw M20x240	
3	904233		16	Washer 21x36x3	
4	901145		8	Lock nut M20-10	
5	371937		2	Wheel, cpl	
	371941	A	2	Wheel, cpl	
	382217	F	1	Wheel, cpl	
6	371594		1	.Rim	
7	929050		1	.Tube	D
8	373617		1	.Tyre	D
	900429	F	1	Tyre and tube	D
9	371938	B	1	Tractor tyre, cpl	
	371939	C	1	Tractor tyre, cpl	
	371942	D	1	Tractor tyre, cpl	
	371943	E	1	Tractor tyre, cpl	
10	371594		1	.Rim	
11	929050		1	.Tube	D
12	373618		1	.Tyre	D
13	903985		1	Decal "SAFETY", "TYRE IN BALLAST"	

A) Liquid filled tyres, option
B) Left, option
C) Right
D) Liquid filled tyres, left
E) Liquid filled tyres, right
F) All-weather

383855 Rear axle Limited Slip

17503

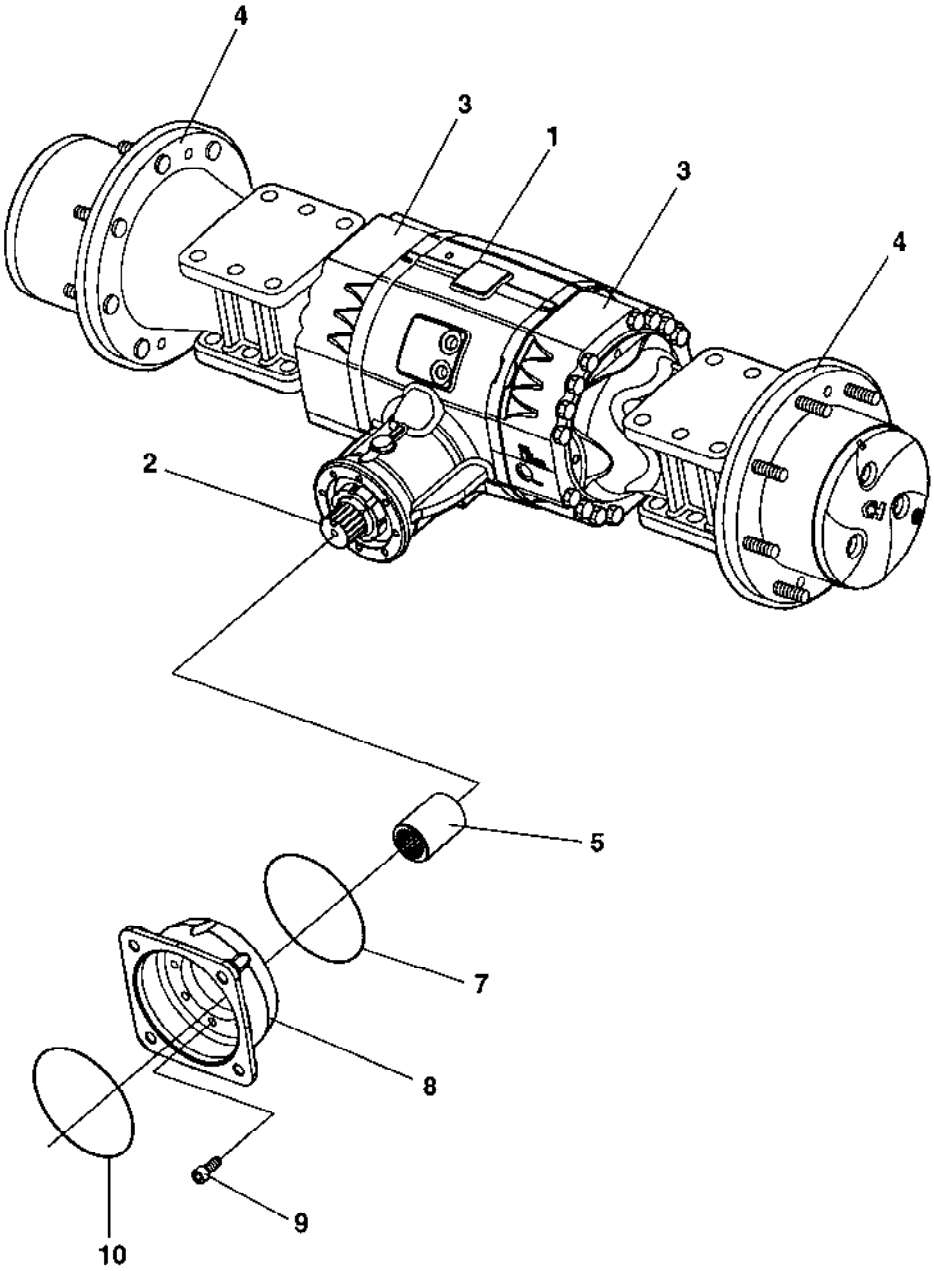

383855 Rear axle Limited Slip

Ref. No.	Part No.	Rem.	Qty	Description	Code
1			1	Housing (Page 104)	
2			2	Differential with limited slip (Page 106)	
3			1	Brakes (Page 108)	
4			2	Planet gear (Page 110)	
5	901834		1	Splined sleeve	
7	929648		1	O-ring	D
8	909583		1	Flange	
9	909582		8	Screw	
10	909584		1	O-ring	D

Housing

17490

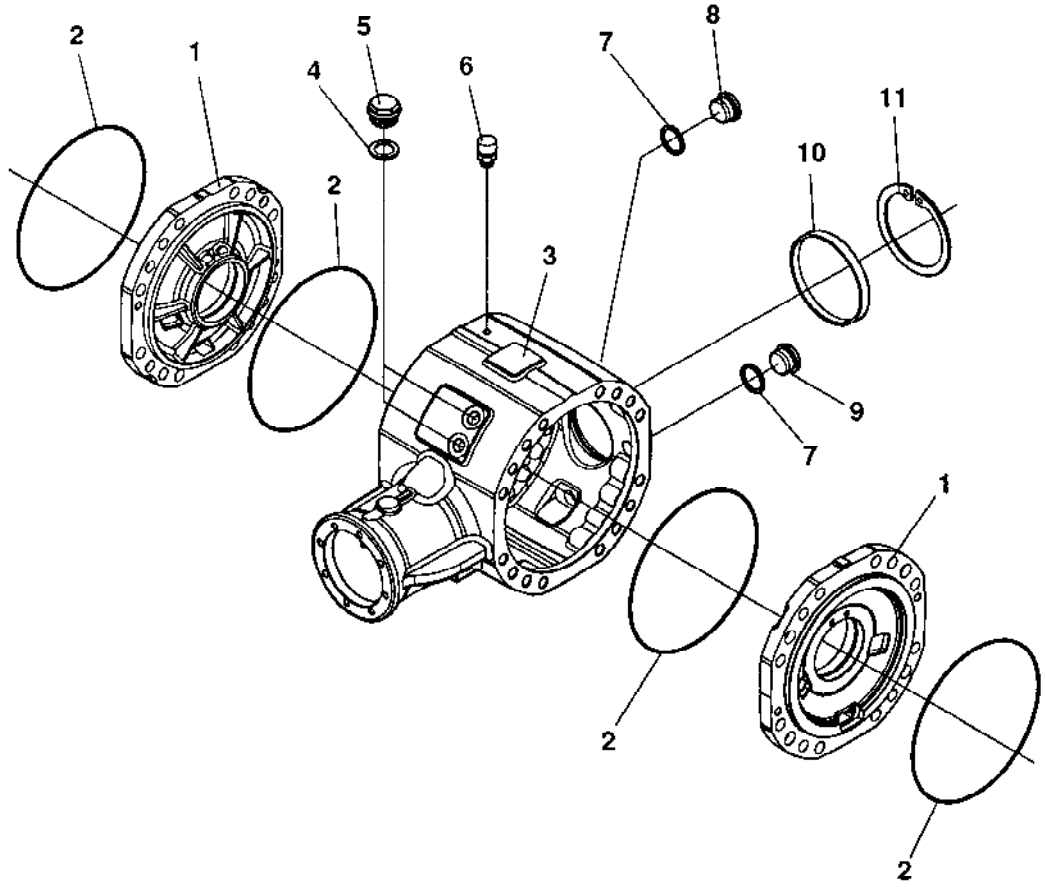

Housing

Ref. No.	Part No.	Rem.	Qty	Description	Code
1	938980		2	Cover	
2	938981		4	O-ring	
3	938982		1	Housing	
4	938983		2	Seal washer	
5	909544		4	Screw	
6	938984		1	Vent nipple	
7	909607		2	Seal	D
8	938985		1	Magnetic plug	
9	909596		1	Plug	
10	938986		1	Plug	
11	938987		1	Circlip	

Differential with limited slip

17491

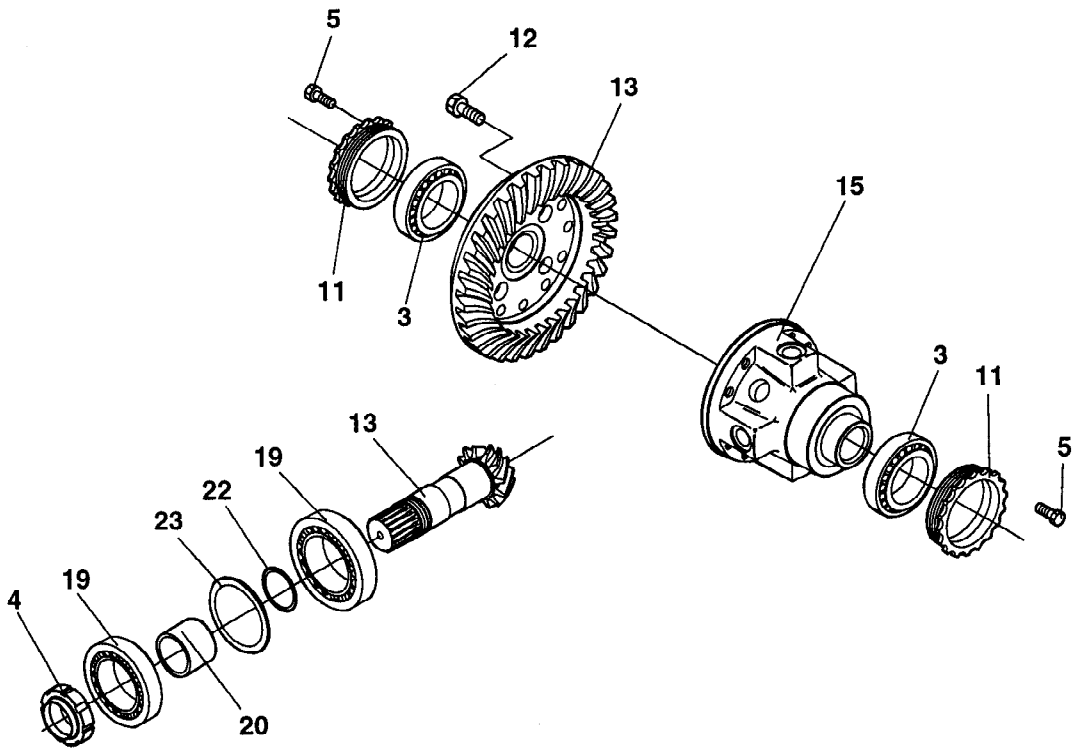

Differential with limited slip

Ref. No.	Part No.	Rem.	Qty	Description	Code
3	936023		2	Bearing	
4	938988		1	Ring nut	
5	938989		2	Screw	
11	938990		2	Ring nut	
12	938991		12	Screw	
13	938992		1	Gear set	
15	938994		1	Limited slip disc	
19	926116		2	Bearing	
20	938995		1	Spacer	
22	936052		N	Shim 0.10mm	
	936053		N	Shim 0.15mm	
	936054		N	Shim 0.20mm	
	936055		N	Shim 0.40mm	
	936056		N	Shim 0.50mm	
23	938996		N	Shim 0,20 mm	
	938997		N	Shim 0,30 mm	
	938998		N	Shim 0,15 mm	
	938999		N	Shim 0,10 mm	

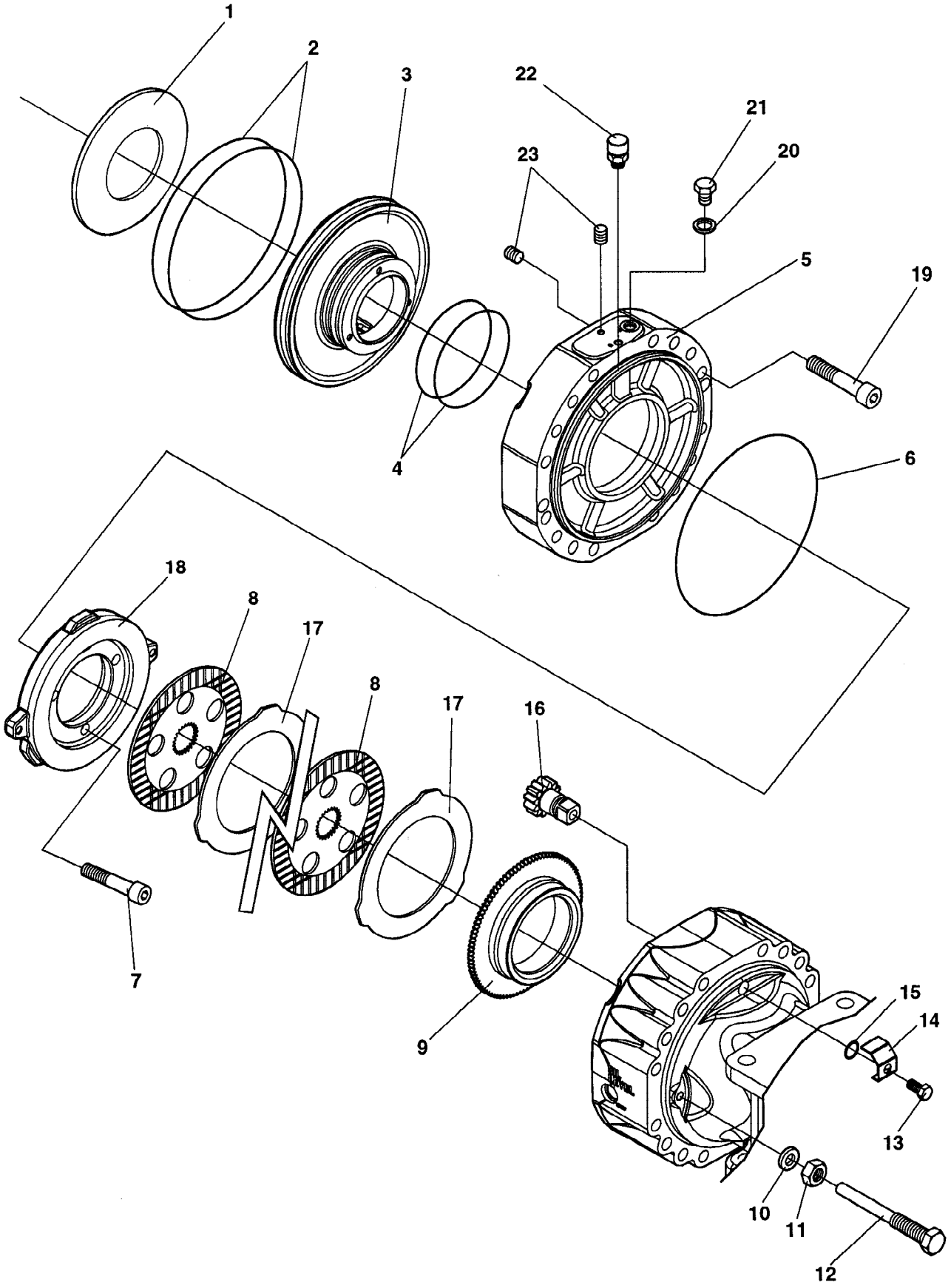
1
2
3
22
21
23
20
5
19
4
6
18
8
17
8
17
16
7
9
15
14
13
10
11
12

Ref. No.	Part No.	Rem.	Qty	Description	Code
1	909616		2	Spring	
2	939021		4	O-ring	
3	939022		2	Piston	
4	939023		4	O-ring	
5	939024		2	Cover	
6	939025		2	O-ring	
7	939026		6	Screw	
8	939027		8	Brake disc	
9	939028		2	Ring	
10	939029		4	Lock washer	
11	900957		4	Nut	
12	939030		4	Adjusting bolt	
13	909547		2	Screw	
14	939031		2	Plate	
15	939032		2	O-ring	
16	936097		2	Pinion	
17	939033		8	Brake disc	
18	939034		2	Disc	
19	939035		4	Screw	
20	939036		2	Seal washer	
21	939037		2	Screw	
22	939038		2	Vent nipple	
23	939039		4	Stop screw	

Planet gear

17493

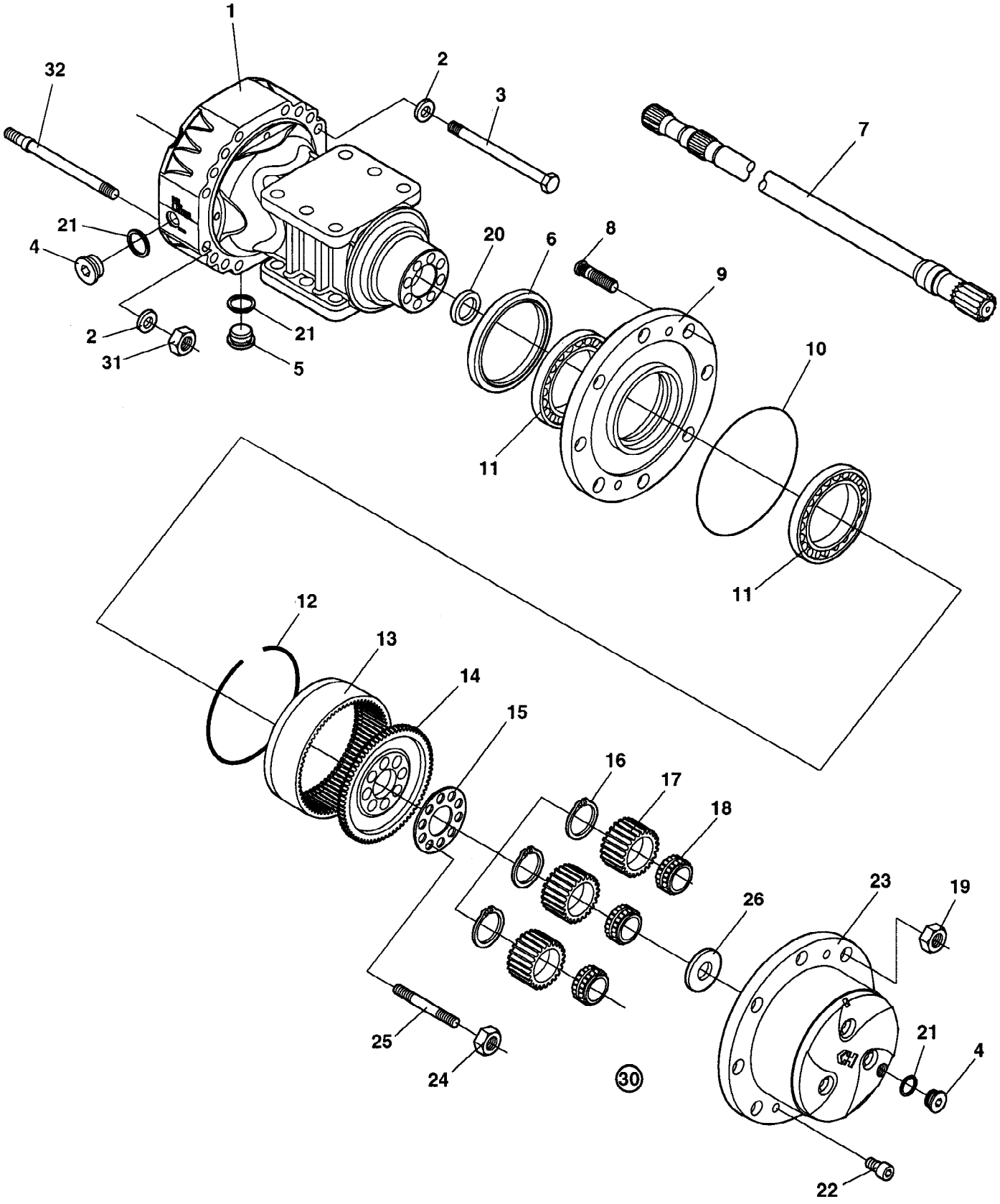

Planet gear

Ref. No.	Part No.	Rem.	Qty	Description	Code
1	939002		2	Housing	
2	939003		32	Spring washer	
3	939004		24	Screw	
4	909596		4	Plug	
5	938985		2	Magnetic plug	
6	939006		2	Seal	
7	939007		2	Shaft	
8	926781		16	Wheel screw	
9	939008		2	Wheel hub	
10	936020		2	O-ring	D
11	939009		4	Bearing	
12	939384	1	2	Circlip	
13	939385	1	2	Ring gear	
14	939386	1	2	Ring gear support	
15	939010		2	Locking plate	
16	939011	1	6	Circlip	
17	939012	1	6	Planet gear	
18	939013	1	6	Bearing	
19	901987		16	Wheel nut	
20	939014		2	Seal	
21	330333		6	Copper washer	D
22	939015		4	Screw	
23	939387	1	2	Planet gear carrier	
24	939016		16	Nut	
25	939017		16	Stud	
26	939270	1	2	Washer	
30	939018		2	Planet gear carrier Cpl.	
31	939019		8	Nut	
32	939020		8	Stud	

1) Included in ref. 30

384801 Rear axle No-spin, Option

17503

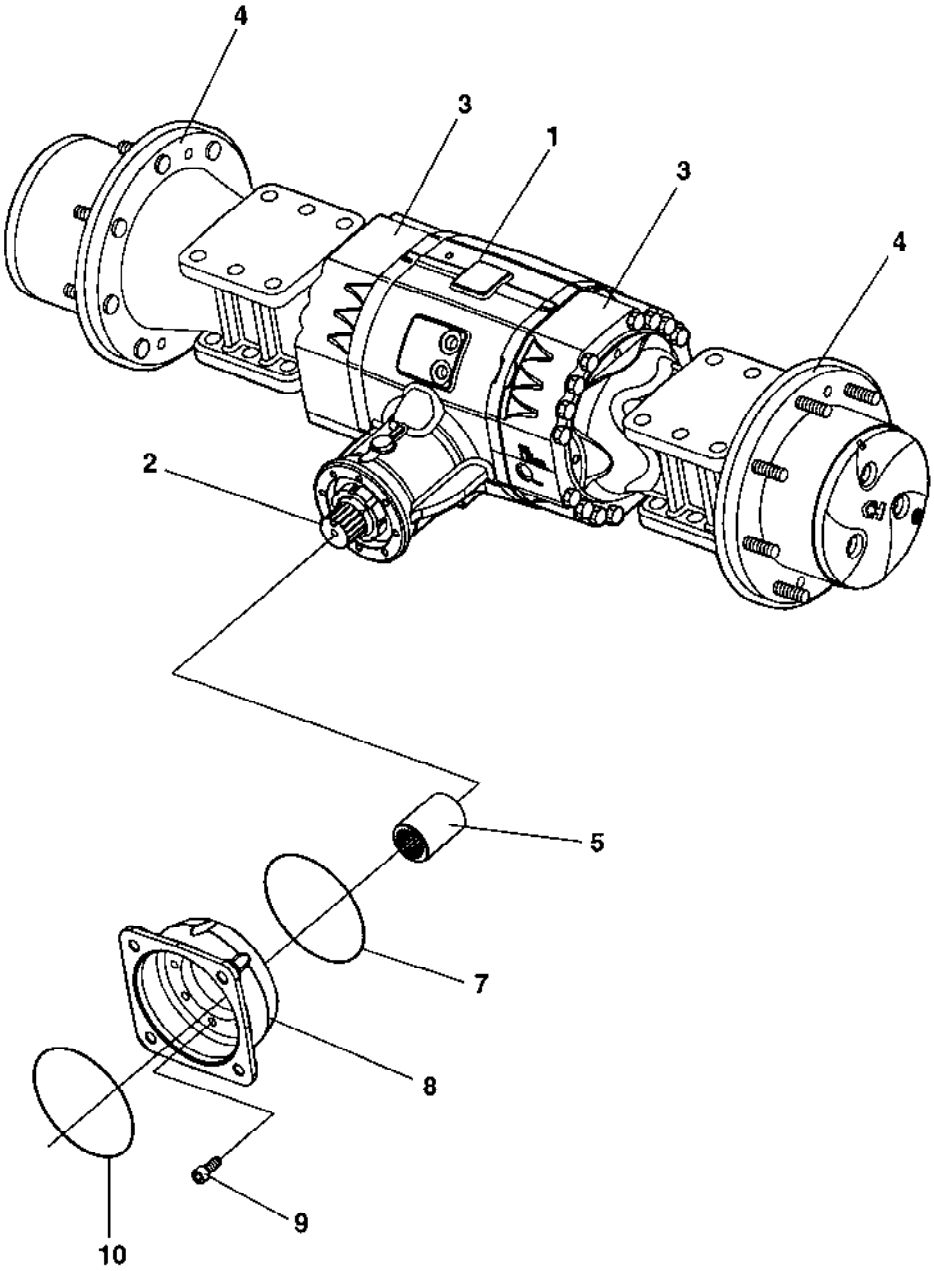

384801 Rear axle No-spin, Option

Ref. No.	Part No.	Rem.	Qty	Description	Code
			1	Rear axle	
1			1	.Differential with No-Spin (Page 114)	
2			1	.Not valid for this Rear axle	
3			2	.Differential housing and brakes (Page 116)	
4			2	.Planet gear (Page 110)	
5	901834		1	.Splined sleeve	
7	929648		1	.O-ring	D
8	909583		1	.Flange	
9	909582		8	.Screw	
10	909584		1	.O-ring	D

Differential with No-Spin

17703

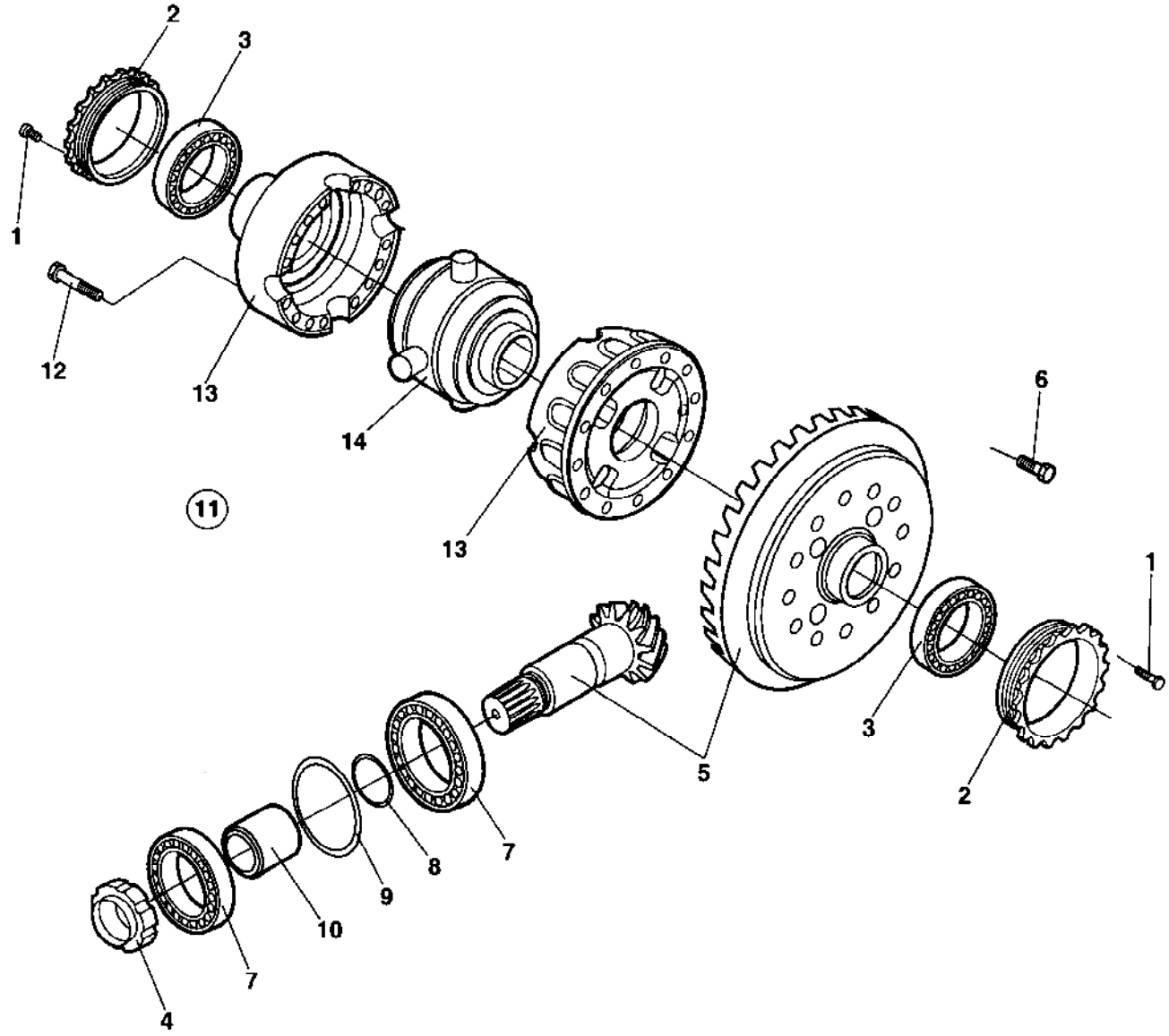

Differential with No-Spin

Ref. No.	Part No.	Rem.	Qty	Description	Code
1	938989		2	Screw	
2	938990		2	Ring nut	
3	936023		2	Bearing	
4	938988		1	Ring nut	
5	938992		1	Gear set	
6	938991		12	Screw	
7	926116		2	Bearing	
8	936053		1	Shim 0.15mm	
	936054		1	Shim 0.20mm	
	936055		1	Shim 0.40mm	
	936056		1	Shim 0.50mm	
9	938996		1	Shim 0,20 mm	
	938997		1	Shim 0,30 mm	
	938998		1	Shim 0,15 mm	
	938999		1	Shim 0,10 mm	
10	938995		1	Spacer	
11	939383		1	No-Spin differential kit	
12	939380		16	.Bolt	
13	939381		1	.Differential carrier	
14	939382		1	.No-spin differential	

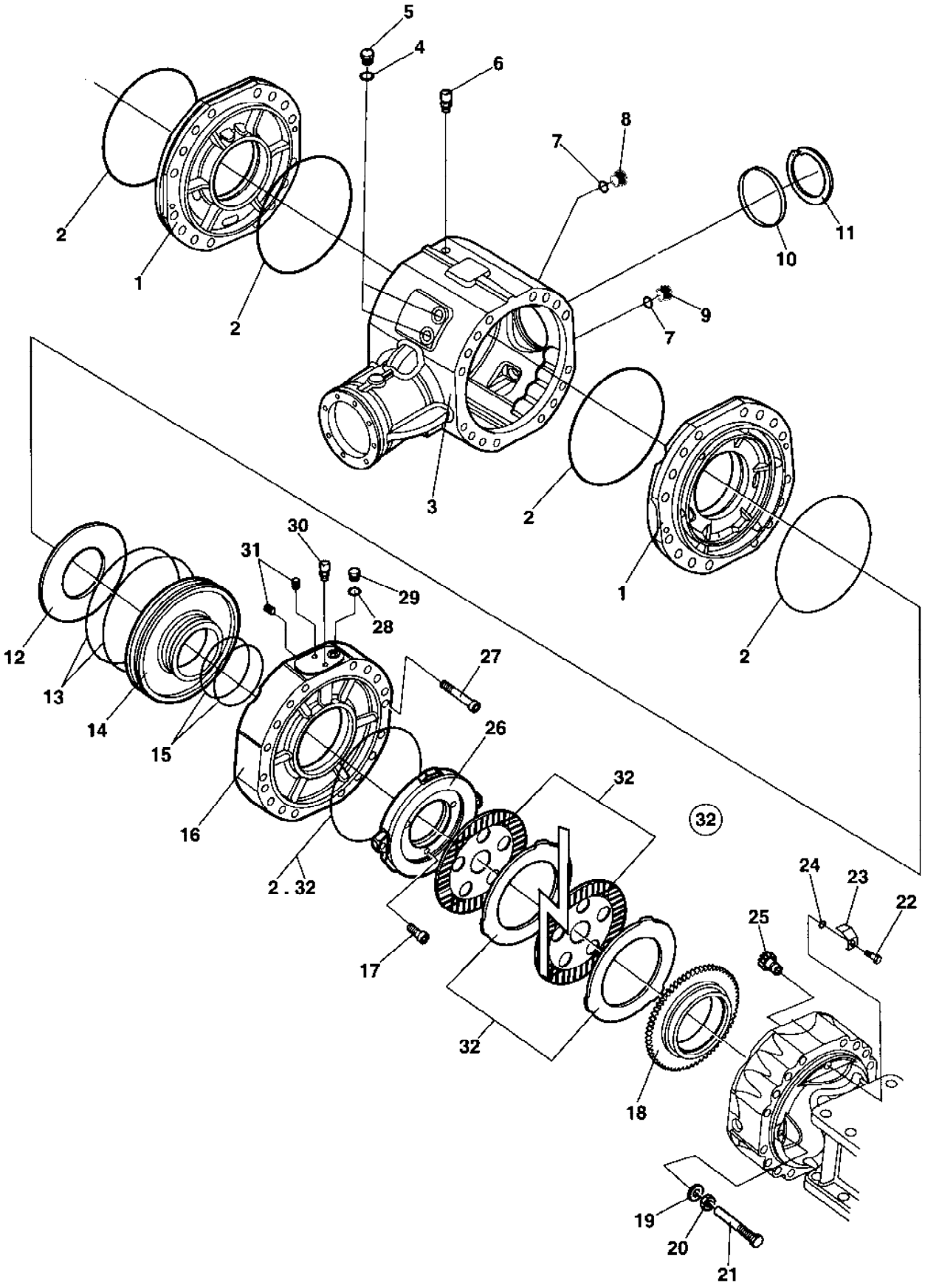
5
4
6
8
7
11
10
2
1
2
9
7
3
2
1
2
30
31
29
28
12
27
13
14
15
26
16
32
32
2 . 32
24
23
22
25
17
32
18
19
20
21

Ref. No.	Part No.	Rem.	Qty	Description	Code
1	938980		2	Cover	
2	938981		6	O-ring	
3	938982		1	Housing	
4	938983		2	Seal washer	
5	909544		2	Screw	
6	938984		1	Vent nipple	
7	330333		2	Copper washer	D
8	938985		1	Magnetic plug	
9	909596		1	Plug	
10	938986		1	Plug	
11	938987		1	Circlip	
12	909616		2	Spring	
13	939021		4	O-ring	
14	939022		2	Piston	
15	939023		4	O-ring	
16	939024		2	Cover	
17	939026		6	Screw	
18	939028		2	Ring	
19	926847		4	Seal washer	
20	900957		4	Nut	
21	939030		4	Adjusting bolt	
22	900937		2	Screw	
23	939031		2	Plate	
24	929691		2	O-ring	D
25	936097		2	Pinion	
26	939034		2	Disc	
27	939035		4	Screw	
28	939036		2	Seal washer	
29	939282		2	Bolt	
30	938984		2	Vent nipple	
31	939281		4	Bolt	
32			2	Splined sleeve	
			8	.Brake disc	
			8	.Brake disc	
	938981		2	.O-ring	

Ref. No.	Part No.	Rem.	Qty	Description	Code
100				Propulsion system (Page 120)	
200				Vibration system (Page 132)	
300				Steering system (Page 138)	
400				Brake system (Page 152)	
450				Hydraulic oil tank (Page 154)	
500				Central test panel hydraulic (Page 156)	

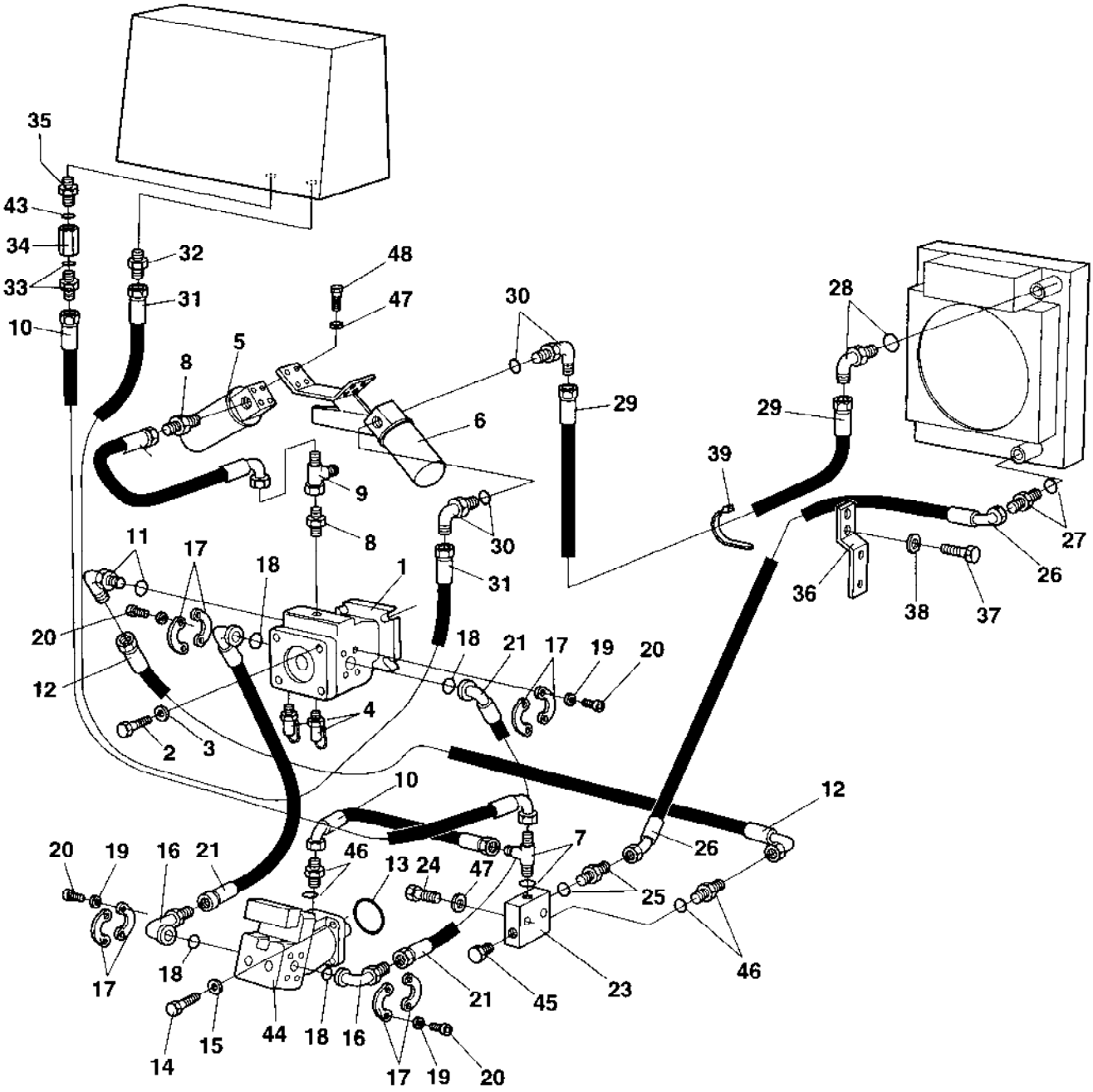
35
43
34
33
10
32
31
48
47
30
28
8
5
6
29
29
9
39
8
30
27
11
17
18
1
31
26
36
38
37
20
18
21
17
19
20
12
4
2
3
10
12
20
19
16
21
46
13
24
47
7
26
25
46
17
18
44
18
16
21
45
23
14
15
17
19
20

Ref. No.	Part No.	Rem.	Qty	Description	Code
1	373277		1	Propulsion pump Up to 64X20747 (Page 122)	C
	380829		1	Propulsion pump From 64X20748	C
	938251	E	1	.Control valve, cpl	
	938252	E	1	..Solenoid valve	
	938253	E	1	..Neutral start switch	
2	500046		4	Screw M12x30H 8,8 FZB	
3	904213		4	Washer 13x30x4	
4	900229		2	Measuring nipple	D
5	359550	D	1	Hydraulic oil filter, cpl	
	372229		1	.Filter element Hydraulic	A
6	372435	C	1	Hydraulic oil filter, cpl	
	372229		1	.Filter element Hydraulic	A
7	234875		1	Adapter	
8	334468		2	Adapter	
9	234243		1	Adapter	
10	482182		3	Hydraulic hose	D
11	813499		1	Adapter	D
12	482010		1	Hydraulic hose	D
13	902581		1	O-ring	D
14	500263		4	Screw M18x60	
15	604012		4	Washer 19,3x31,3x4	
16	900604		2	Adapter	
17	923384		8	Flange half	
18	904005		4	O-ring	
19	904638		16	Washer 12x22x2	
20	502132		16	Screw UNC 7/16" x 22	
21	483483		2	Hydraulic hose	
23	345243		1	Connection block	
24	500109		2	Screw M10-1,5x65 8,8	
25	334140		1	Adapter	
26	483183		1	Hydraulic hose	
27	234958		1	Connector	
28	334256		1	Adapter	
29	483182		1	Hydraulic hose	
30	334163		2	Adapter	
31	483128		1	Hydraulic hose	
32	234909		1	Adapter	
33	923371		1	Adapter	
34	374059		1	Check valve	
35	904282		1	Adapter	
36	372048		1	Hose clamp	
37	500035		2	Screw	
38	904231		2	Washer 13x24x2	
39	313102		1	Cable ties L=388 mm	
43	162008		1	Seal washer	
44	373361		1	Propulsion motor Up to 64X21151 (Page 128)	C
	383973		1	Propulsion motor From 64X21152	
45	232222		1	Plug	
46	334138		2	Adapter	
47	904230		10	Washer 10,5x22x2	
48	500028		8	Screw M10-1,5x25 8,8	

C) Return
D) Suction
E) Valid for 380829

373277 Propulsion pump

16659

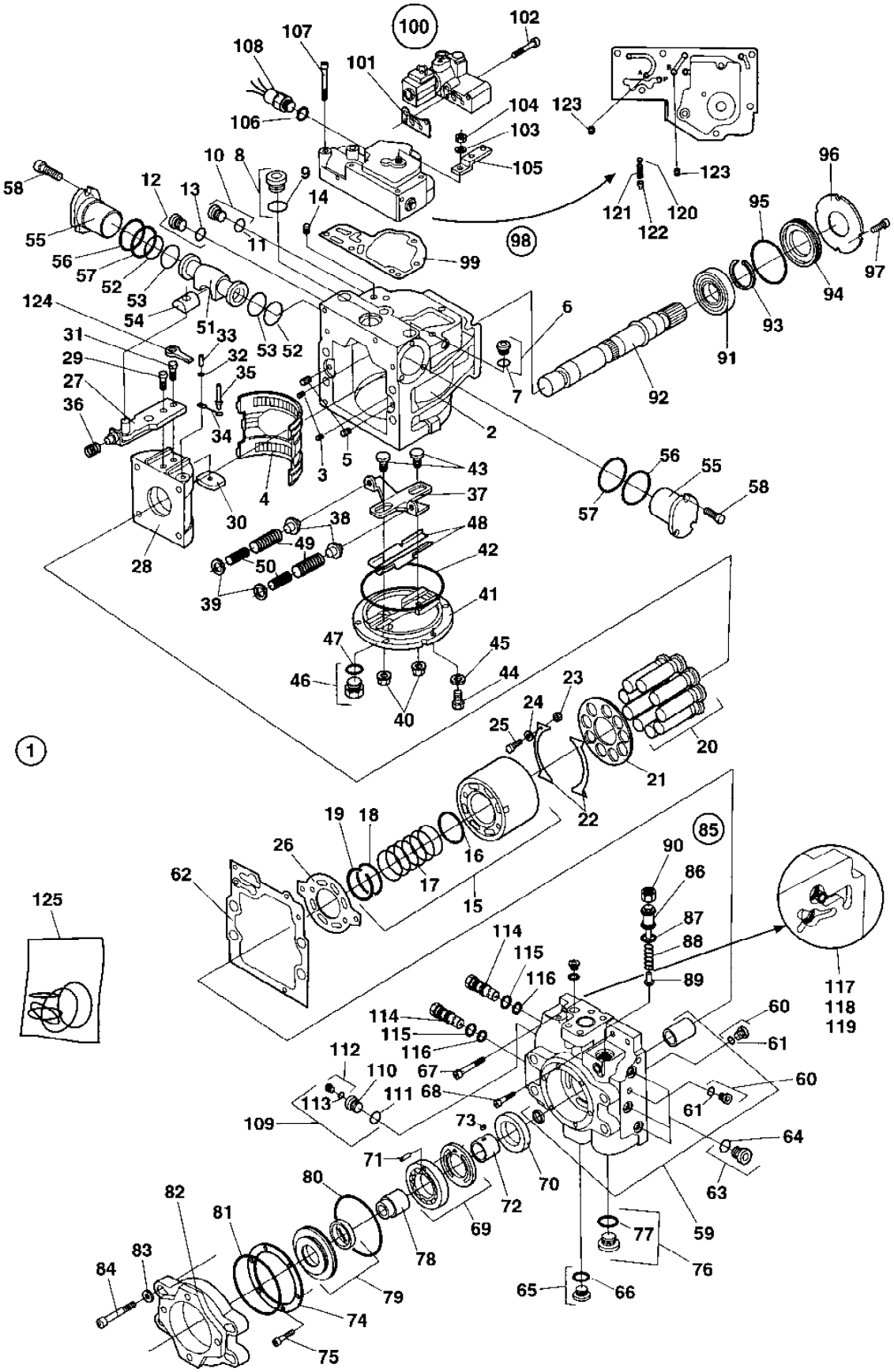

373277 Propulsion pump

Ref. No.	Part No.	Rem.	Qty	Description	Code
1			1	Propulsion pump , Cpl	
2	909373		1	.Housing	
3	909374		2	.Pin	
4	901718		1	.Bearing	D
5	813822		2	.Pin	
6	909375		2	.Plug, cpl	
7	909349	1	2	..O-ring	
8	902928		1	.Plug	
9	901453	1	1	..O-ring	
10	908432		1	.Plug	
11	923087	1	1	..O-ring	D
12	908432		1	.Plug	
13	923087	1	1	..O-ring	D
14	901454		1	.Filter element	D
15	212353		1	.Rotating group, cpl	D
16	909376		1	..Spacer	
17	909377		1	..Spring	
18	909378		1	..Spring retainer	
19	909379		1	..Retainer ring	
20	909239		9	.Piston, cpl	
21	901721		1	.Pressure plate	D
22	901722		2	.Retainer guide	D
23	909380		4	.Spacer	
24	909381		4	.Washer	
25	909382		4	.Screw	
26	937136		1	.Valve plate	
27	909384		1	.Servo arm, cpl	
28	909385		1	.Swash plate	
29	909386		1	.Screw	
30	909387		1	.Guide	
31	909388		1	.Screw	
32	909389		1	.Washer	
33	909390		1	.Pin	
34	909391		1	.Link	
35	909392		1	.Pin	
36	909393		1	.Spring	
37	909395		1	.Lever	
38	909396		2	.Spring retainer	
39	908378		2	.Washer	
40	909398	1	2	.Seal lock nut	
41	937138		1	.Cover	
42	909399	1	1	.O-ring	
43	936552		2	.Guide post	
44	936553		6	.Screw	
45	909401		6	.Washer	
46	902928		1	.Plug	
47	901453	1	1	..O-ring	
48	937139		1	.Guide assy.	
49	909402		2	.Spring	
50	909403		2	.Spring	
51	909404		1	.Piston	
52	909405	1	2	.O-ring	
53	909406	1	2	.Piston ring	
54	909407		1	.Guide	
55	909408		2	.Servo sleeve	
56	909409		2	.O-ring	
57	909410		2	.O-ring	
58	909411		6	.Screw	
59	937141		1	.End cap, cpl	

1) Includes in seal kit, item 125

373277 Propulsion pump

16659

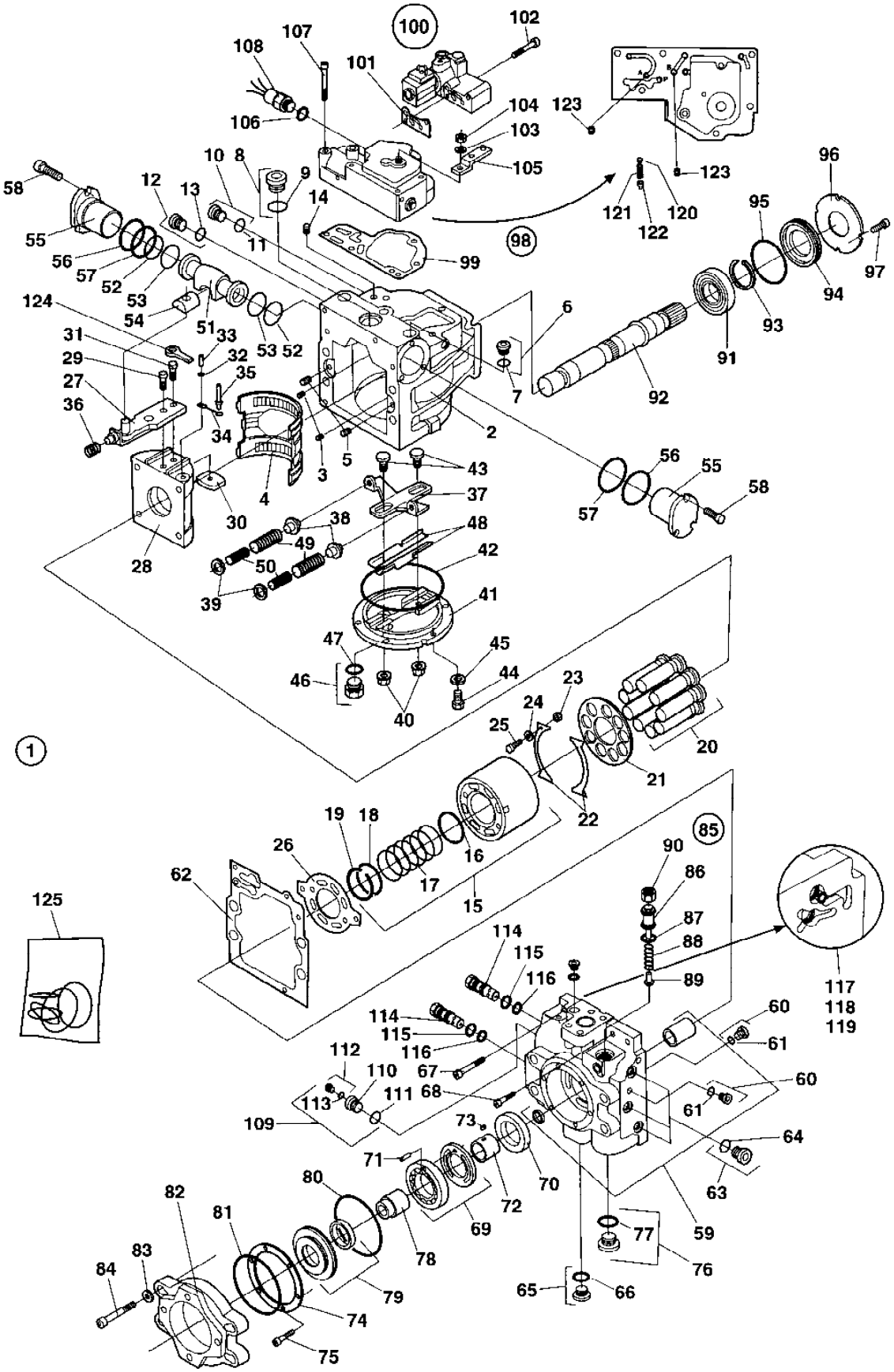

Ref. No.	Part No.	Rem.	Qty	Description	Code
60	909375		2	.Plug, cpl	
61	909349	1	2	..O-ring	
62	937142	1	1	.Gasket	
63	358388		3	.Plug	
64	923087	1	3	..O-ring	D
65	908432		1	.Plug	
66	923087	1	1	..O-ring	D
67	937143		1	.Screw	
68	937144		1	.Screw	
69	908215		1	.Kit charge pump	
70	937145		1	.Spacer	
71	937146		1	.Pin	
72	908216		1	.Shaft	
73	937147		1	.Key	
74	935857		1	.Retaining plate	
75	909411		6	.Screw	
76	936567		1	.Plug, cpl	
77	936568	1	1	..O-ring	
78	937149		1	.Coupling sleeve	
79	908217		1	.Cover assy	
80	937150	1	1	.O-ring	
81	909399	1	1	.O-ring	
82	937151		1	.Adapter	
83	937152		4	.Washer	
84	937153		4	.Screw	
85	936583		1	.Pressure relief valve, cpl	
86	903574	A	1	..Screw	
87	926658	1	1	..O-ring	D
88	901463		1	..Spring	D
89	901464		1	..Valve cone	D
90	902959		1	..Nut	
91	901725		1	.Bearing	D
92	937159		1	.Shaft	
93	901727		1	.Snap ring	D
94	909256		1	.Seal carrier	
95	909257	1	1	.O-ring	
96	901728		1	.Carrier seal	D
97	908773		3	.Screw	
98	909424		1	.Control valve, cpl	
99	909425	1	1	..Gasket	
100	908445		1	..Control valve, assy	
	909641		1	...Solenoid valve	D
	909642		1	...Solenoid	D
101	909430	1	1	...Gasket	
102	909431		2	...Screw	
103	909428		1	..Washer	
104	909429		1	..Nut	
105	909432		1	..Control lever	
106	909433	1	1	..O-ring	
107	909434		6	..Screw	
108	909367		1	..Neutral start switch	D
109	937161		1	.Filtration manifold kit, cpl	
110	937162		1	..Reducer	
111	936568	1	1	..O-ring	
112	908432		1	..Plug	
113	923087	1	1	...O-ring	D
114	903576		2	.Valve	D
115	907163	1	2	.O-ring	
116	936579	1	2	.O-ring	

1) Includes in seal kit, item 125
A) Not sold seperately. Replaced by PN 936583.

373277 Propulsion pump

16659

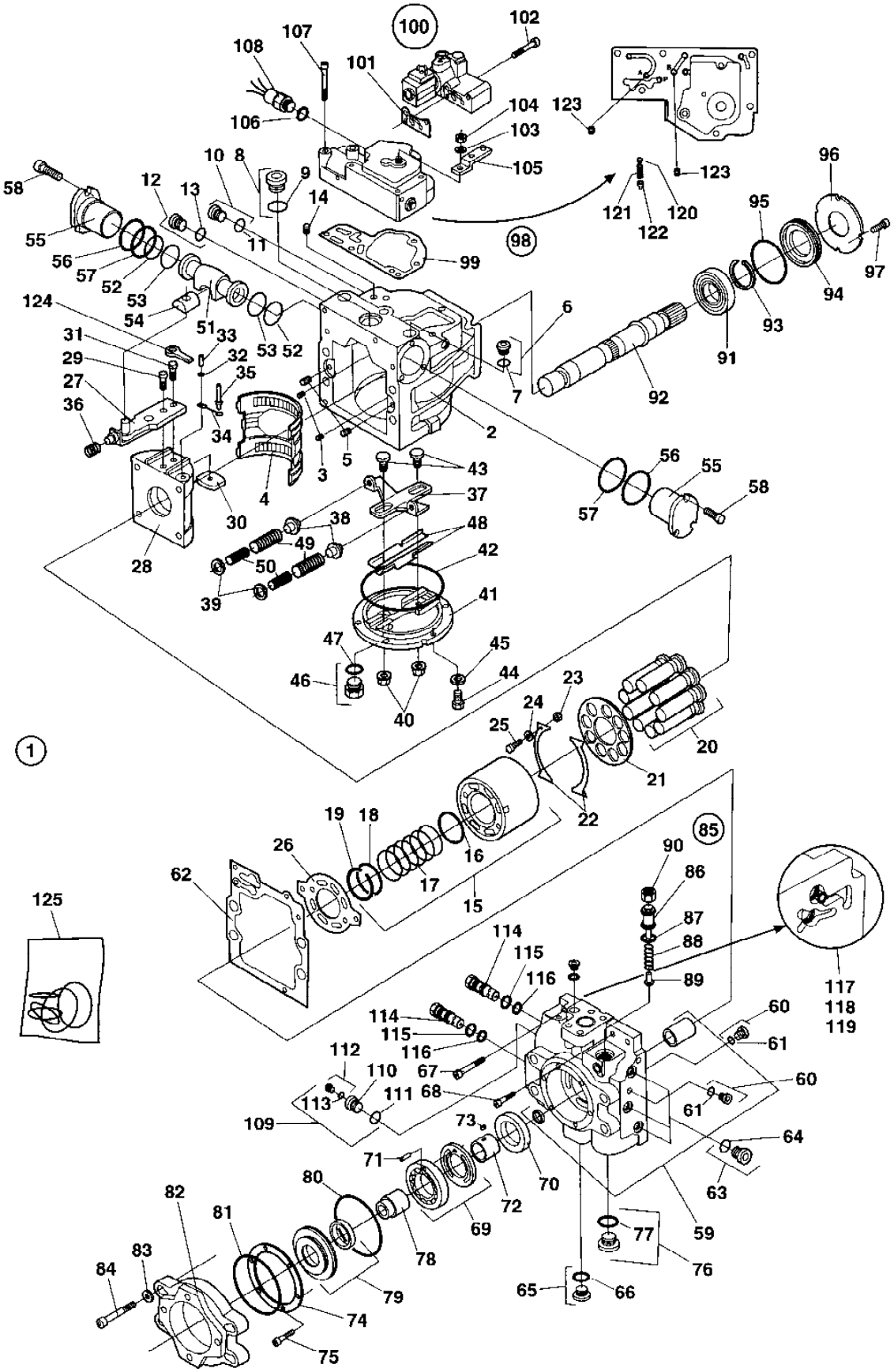

373277 Propulsion pump

Ref. No.	Part No.	Rem.	Qty	Description	Code
117	901475		2	.Valve	D
118	909349	1	2	.O-ring	
119	901476		2	.Plug	D
120	937164		1	.Orifice 0.81	
121	909436		1	.Spring	
122	908448		1	.Spring retainer	
123	908439		2	.Orifice 0.8M6x8	D
124	936580		1	.Link	
125	901731		1	Seal kit	D

1) Includes in seal kit, item 125

373361 Propulsion motor

16654

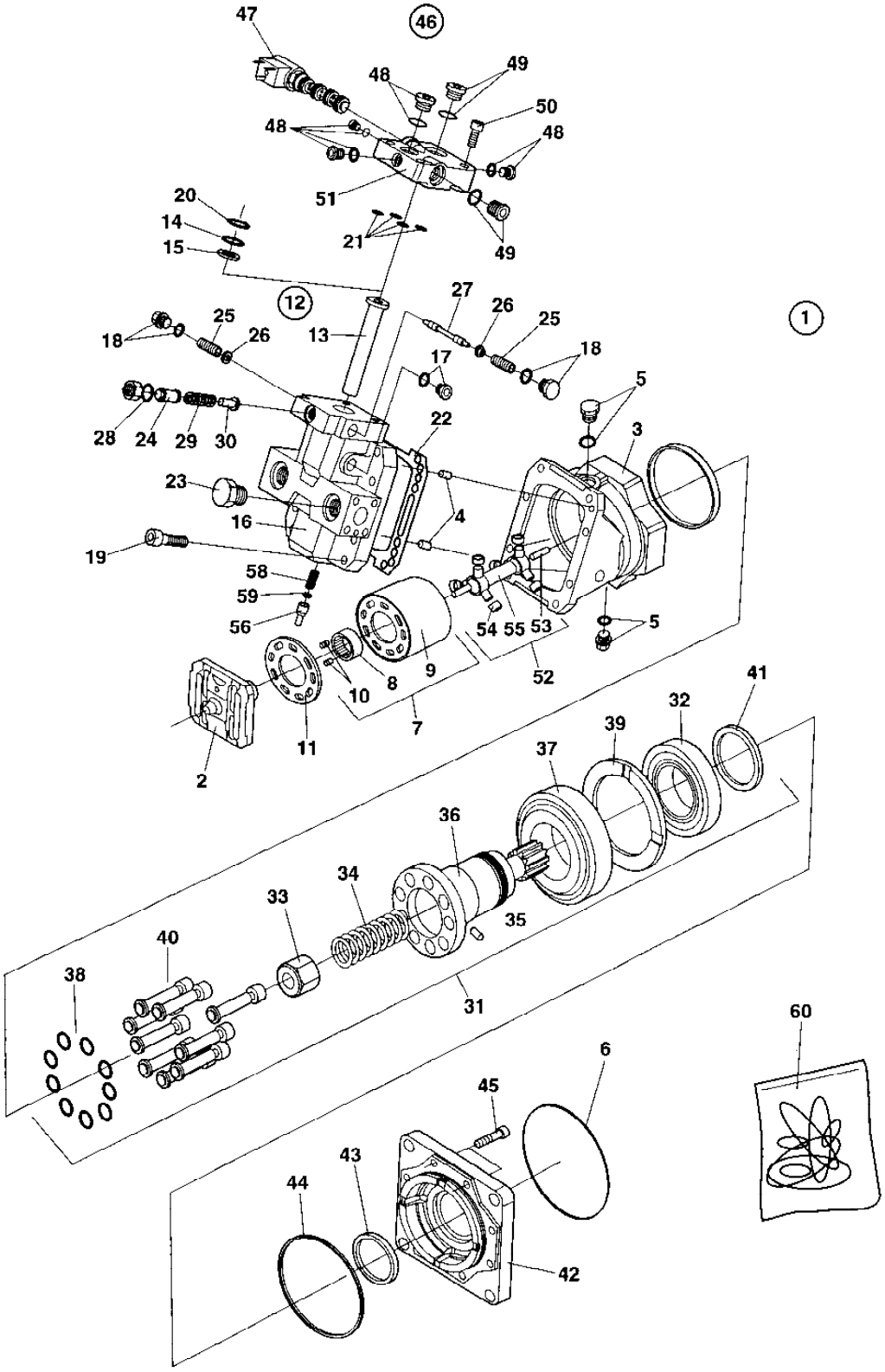

373361 Propulsion motor

Ref. No.	Part No.	Rem.	Qty	Description	Code
1			1	Hydraulic motor, Cpl	D
2	935521		1	.Valve segment	
3	908422		1	.Housing	
4	813822		2	.Pin	
5	902928		2	.Plug	
	901453	1	2	..O-ring	
6	902581	1	1	.O-ring	D
7	902929		1	.Cylinder block	
8			1	..Bush	
9			1	..Cylinder block	
10			2	..Pin	
11	902930		1	.Bearing plate	D
12	935527		1	.Piston assembly	
13	935526		1	..Piston	
14	935525	1	1	..O-ring	D
15	935524	1	1	..Seal plug	D
16	935530		1	.End cap	
17	908432		1	.Plug	
18	935741		2	.Plug, cpl	
19	902944		8	.Screw	
20	935531	1	1	.O-ring	D
21	908443	1	5	.Rect. seal	
22	908427	1	1	.Gasket	D
23	902928		2	.Plug	
	901453	1	2	..O-ring	
24			1	.Adapter	
25	935749		2	.Spring	
26	935750		2	.Spring retainer	
27	935533		1	.Spool	
28	813618	1	1	.O-ring	D
29			1	.Spring	D
30			1	.Valve cone	D
31	902960		1	.Shaft, cpl	
32			1	..Roller bearing	
33			1	..Spring guide	
34			1	..Spring	
35			1	..Pin	
36			1	..Shaft	
37			1	..Roller bearing	
38			9	..Piston ring	
39			1	..Spacer	
40			9	..Piston	
41			1	..Nut	
42	902961		1	.Flange	
43	935536	1	1	.Seal	D
44	935664	1	1	.O-ring	D
45	902962		8	.Screw	
46	935543		1	.Electric hydraulic control	
47	908435		1	..Solenoid valve assy	
48	908426		4	..Plug, cpl	
49	908432		2	..Plug	
50	935544		4	..Screw	
51	935545		1	..Valve housing	
52	902984		1	.Shaft, cpl	
53			2	..Pin	
54			6	..Roller	
55			1	..Shaft	
56	902996		1	.Cap	
57	936593		2	.Orifice	
58	937363		1	.Shaft	

1) Included in seal kit item 60

373361 Propulsion motor

16654

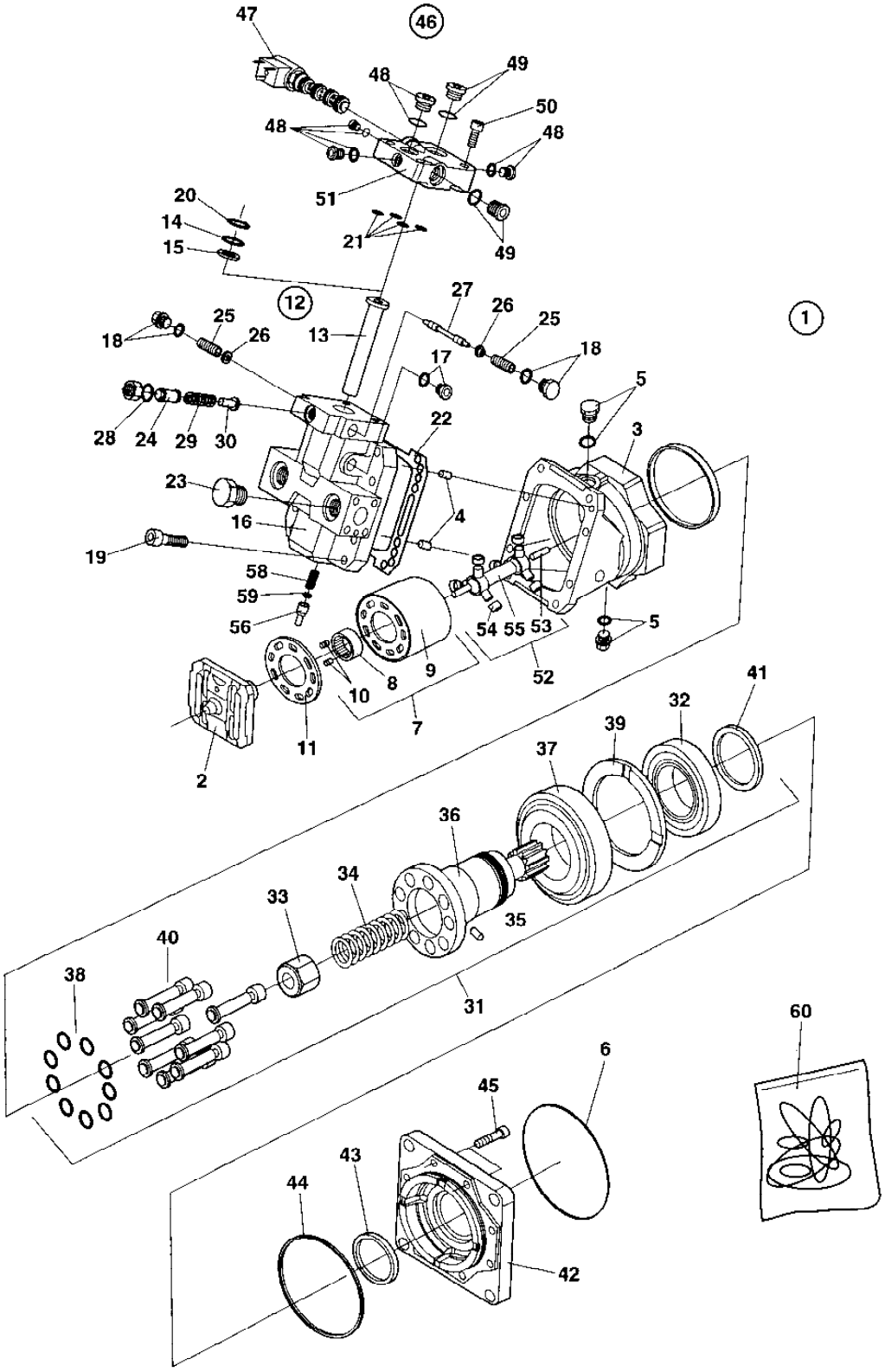

Ref. No.	Part No.	Rem.	Qty	Description	Code
59	909525	1	1	.Nut	
60	935520		1	Seal kit	D

1) Included in seal kit item 60

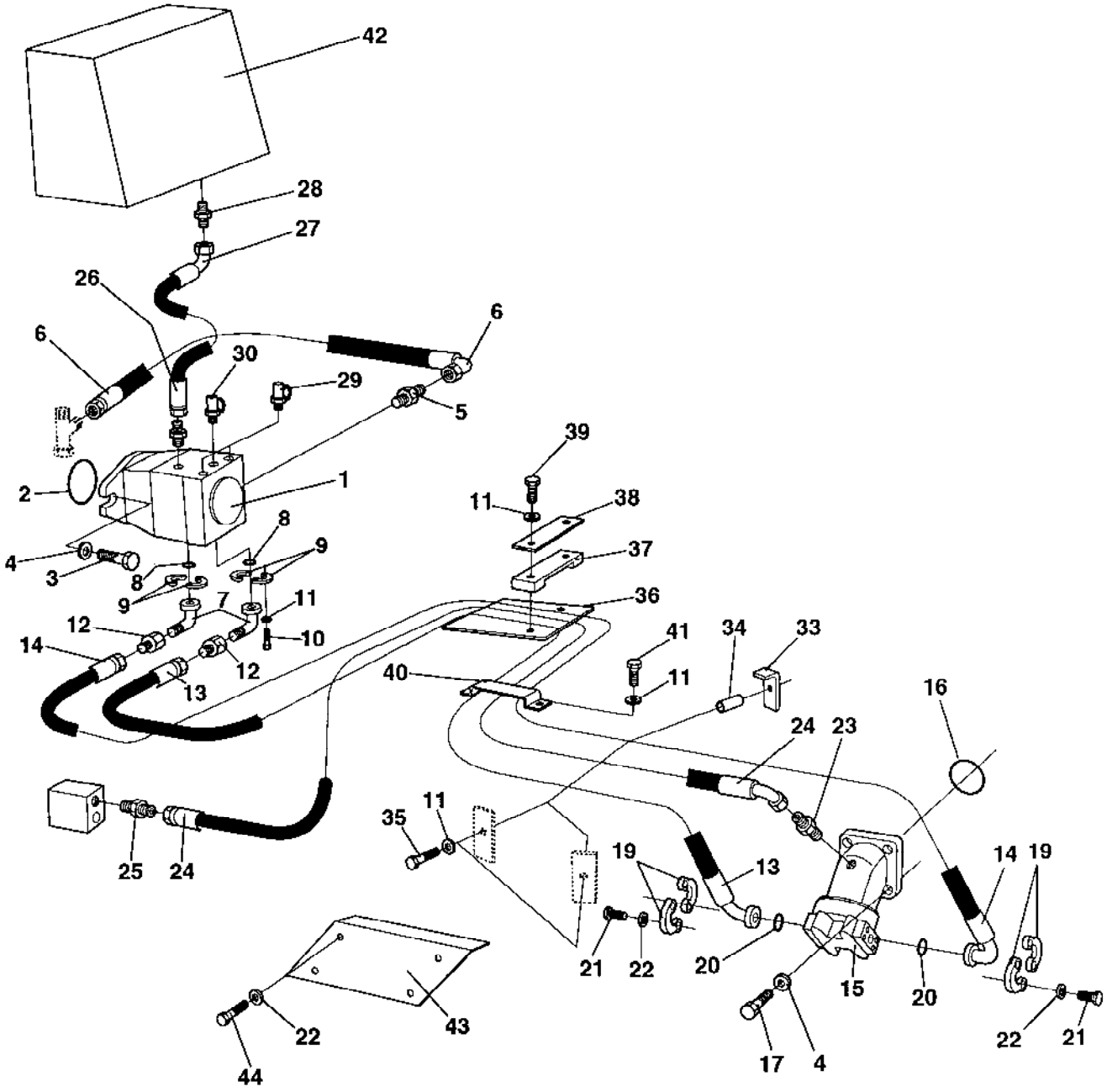
42
28
27
26
6
6
30
29
5
39
2
1
11
38
8
37
4
3
8
9
9
36
7
11
12
41
34
33
10
14
12
40
11
13
16
24
23
35
11
19
14
19
13
25
24
21
22
20
15
20
22
21
43
22
17
4
44

Ref. No.	Part No.	Rem.	Qty	Description	Code
1	373132		1	Vibration pump Up to 64X20954 (Page 134)	C
	383957		1	Vibration pump From 64X20955	C
2	900512		1	O-ring	D
3	502059		2	Screw	
4	904231		6	Washer 13x24x2	
5	234382		1	Adapter	
6	483131		1	Hydraulic hose	
7	900455		2	Flange adapter	
8	904773		2	O-ring	
9	929226		4	Flange half	
10	500030		8	Screw M10-1,5x35H 8,8	
11	904230		14	Washer 10,5x22x2	
12	234667		2	Reducer	
13	483139		1	Hydraulic hose	
14	483138		1	Hydraulic hose	
15	373664		1	Vibration motor Up to 64X20427 (Page 136)	C
	380144		1	Vibration motor From 64X20428	C
16	160157		1	O-ring	D
17	500194		4	Screw M12x40	
19	900430		4	Flange half	
20	904774		2	O-ring	
21	502019		8	Screw	
22	904229		12	Washer 8,4x16x1,5	
23	334121		1	Adapter Up to ECN00463	
	813500		1	Elbow 45, O-ring From ECN463	
24	482766		1	Hydraulic hose	
25	334122		1	Adapter	
26	901155		1	Connector	
27	483132		1	Hydraulic hose	
28	334205		1	Straight connector	
29	901157		2	Measuring nipple	D
30	373774		1	Measuring nipple	D
33	373270		2	Hose clamp	
34	373507		2	Spacer	
35	500091		2	Screw M10-1,5x50 8,8	
36	349211		1	Hose protection	
37	343732		1	Hose clamp	
38	335914		1	Cover plate	
39	500033		2	Screw M10-1,5x60 8,8	
40	373396		1	Hose clamp	
41	500028		2	Screw M10-1,5x25 8,8	
42				Hydraulic oil tank (Page 154)	
43	373134		1	Cover	
44	500019		4	Screw M8-1,25x16 8,8	

373132 Vibration pump

16660

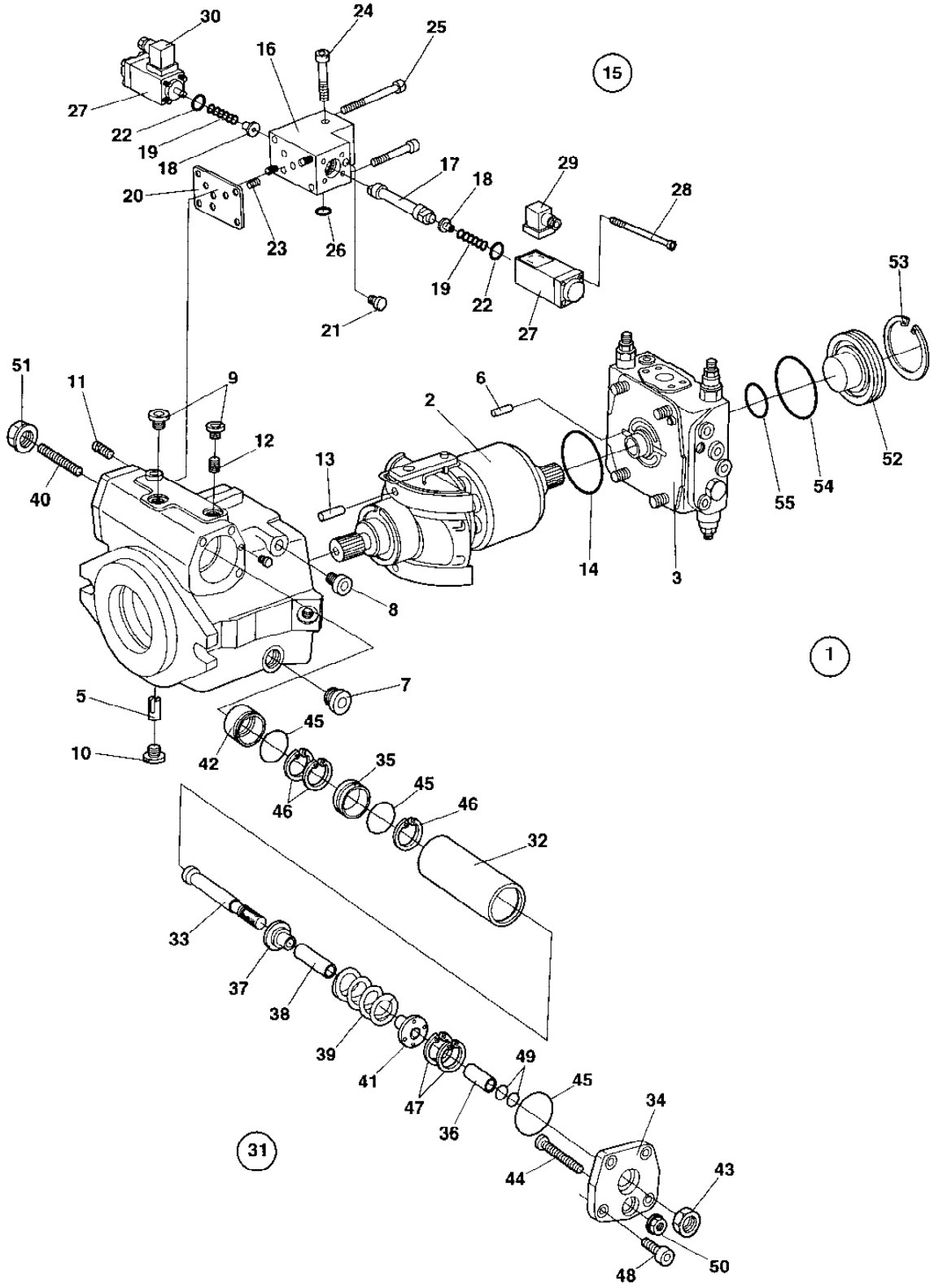

373132 Vibration pump

Ref. No.	Part No.	Rem.	Qty	Description	Code
1			1	Vibration motor, cpl	
	937671		1	.Seal kit	
2			1	.Rotary group, cpl	
3	937211		1	.Valve block, cpl	
4	937214		1	.Housing	
5	935158		1	.Pin	
6	937215		1	.Pin	
7	935219	1	1	.Plug	
8	902724	1	1	.Plug	
9	936803	1	3	.Plug	
10	902624	1	1	.Screw	
11	909514		1	.Pin	
12	936308		2	.Orifice	
13	902792		2	.Pin	
14	935159	1	1	.O-ring	
15	937213		1	.Control valve, cpl	
16	936683		1	..Housing	
17	937252		1	..Piston	
18	936685		2	..Spring collar	
19	936686		2	..Spring	
20	935218	1	1	..Gasket	D
21	936687		2	..Pin	
22	937253		2	..O-ring	
23	936688		1	..Pin	
24	927358		3	..Screw	
25	908383		2	..Screw	
26	936418	1	1	..O-ring	D
27	212522		2	..Solenoid	D
28	901413		8	..Screw	
29	927354		1	..Socket	D
30	927355		1	..Socket	D
31	937210		1	.Hydraulic control, cpl	
32	937217		1	..Piston	
33	937218		1	..Rod	
34	937219		1	..Cover	
35	937220		1	..Bush	
36	937221		1	..Ring	
37	937228		1	..Spring collar	
38	937229		1	..Bush	
39	937232		1	..Spring	
40	937233		1	..Pin	
41	937234		1	..Spring collar	
42	937235		1	..Bush	
43	937236		1	..Nut	
44	937237		1	..Pin	
45	902642	1	3	..O-ring	D
46	937238		3	..V-ring	
47	902637		1	..Sealing	D
48	902688		4	..Screw	
49	937239	1	1	..O-ring	
50	936421	1	1	..Seal lock nut	
51	936393	1	1	..Seal lock nut	
52	937247		1	.Cover	
53	937248		1	.Retaining ring	
54	937249	1	1	.O-ring	
55	937250	1	1	.O-ring	

1) Included in seal kit, see item 1.

373664 Vibration motor

16639

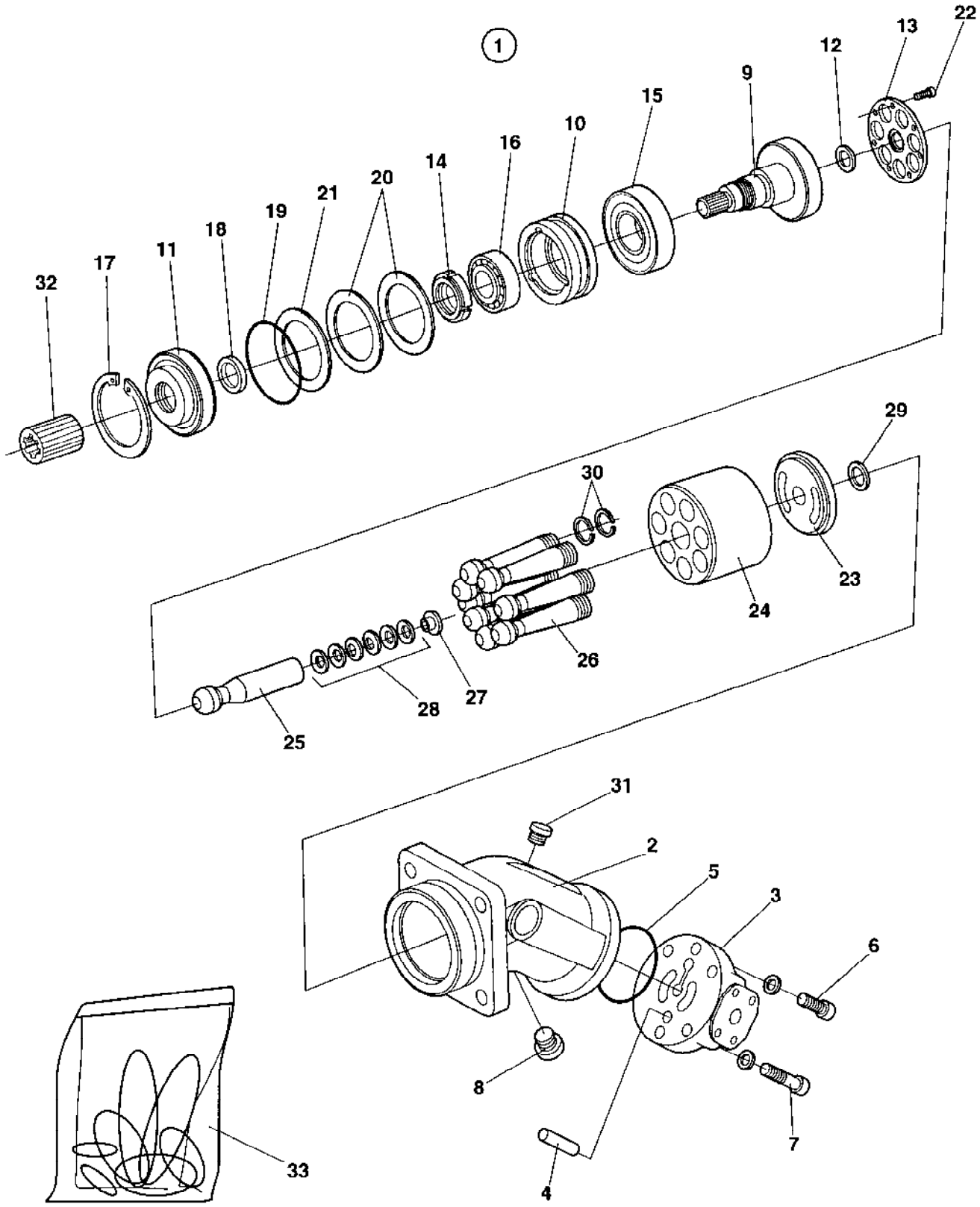

373664 Vibration motor

Ref. No.	Part No.	Rem.	Qty	Description	Code
			1	Vibration motor, cpl	
1	373430		1	.Vibration motor	
2	937256		1	..Housing	
3	937257		1	..Plate	
4	903475		1	..Pin	
5	937258	1	1	..O-ring	
6	902655		2	..Screw	
7	927350		4	..Screw	
8	937259	1	1	..Screw	
9	901384		1	..Shaft	
10	937260		1	..Bearing ring	
11	937261		1	..Cover	
12	937262		1	..Washer	
13	903495		1	..Retainer plate	
14	937263		1	..Ring nut	
15	901385		1	..Bearing	
16	901386		1	..Bearing	
17	901387		1	..Snap ring	
18	937264	1	1	..Seal ring	
19	937265	1	1	..O-ring	
20	901389		2	..Shim T=0,1 mm	
21	901390		1	..Shim T=0,3 mm	
22	903494		7	..Screw	
23	903493		1	..Pressure plate	
24	937266		1	..Cylinder	
25	937267		1	..Pin	
26	937268		7	..Piston	
27	937269		1	..Spring collar	
28	937270		6	..Cup spring	
29	937271		1	..Washer	
30	937272		14	..Steel seal ring	
31	937273		1	..Screw	
32	340863		1	.Splined sleeve	D
33	937672		1	.Seal kit	

1) Included in seal kit, item 33

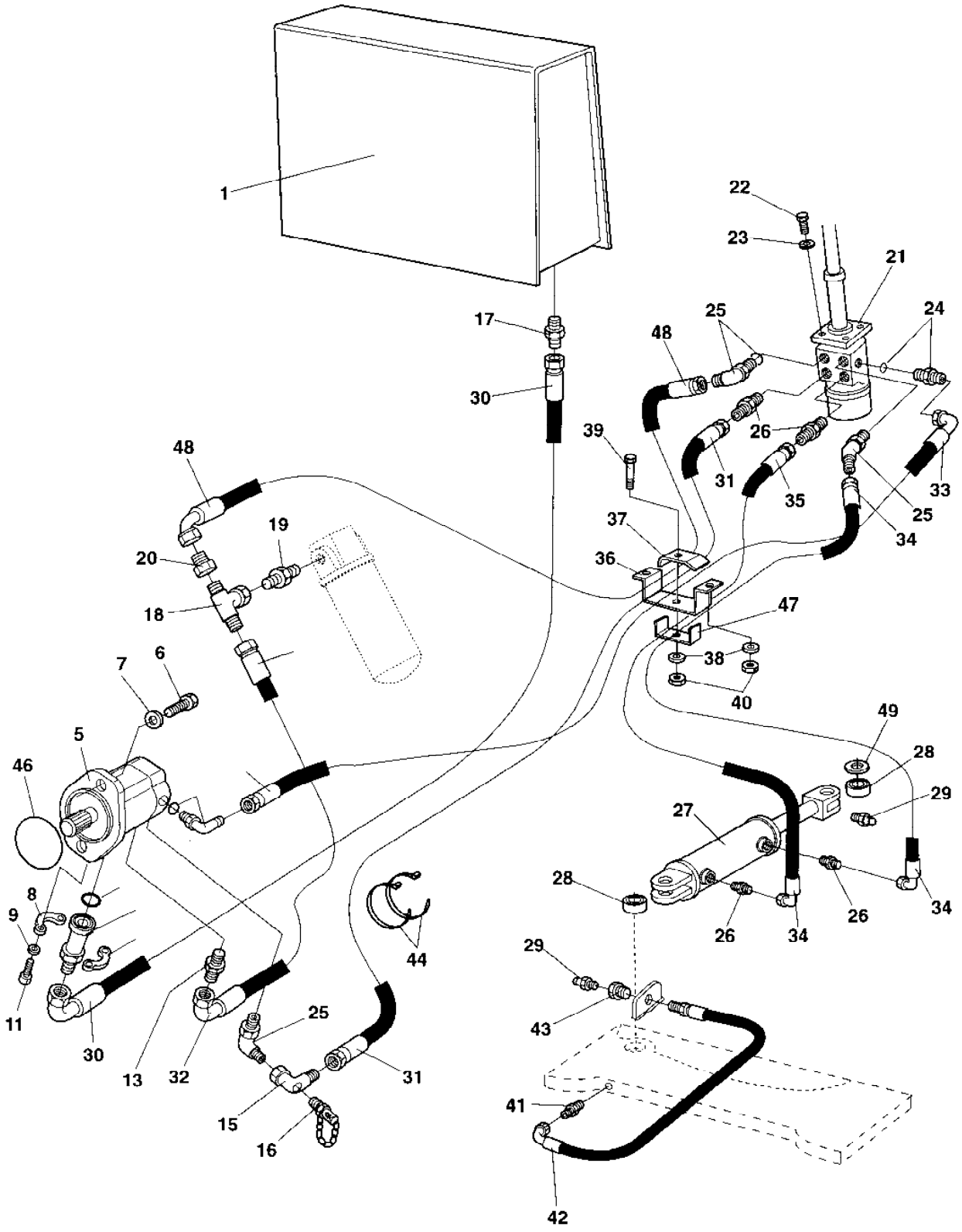
1
22
23
21
17
25
24
48
30
26
39
31
35
33
48
19
25
34
20
37
36
18
47
7
6
38
40
49
5
28
46
29
27
8
28
9
26
34
26
34
29
44
43
25
11
30
13
32
31
41
15
16
42

Ref. No.	Part No.	Rem.	Qty	Description	Code
1				Hydraulic oil tank (Page 154)	
5	373610		1	Steering pump Up to 64X20418 (Page 140)	C
	374995		1	Steering pump From 64X20419 Up to 64X20782 (Page 142)	C
	381727		1	Steering pump From 64X20783 (Page 144)	C
6	500133		2	Screw M12x70	
7	904231		3	Washer 13x24x2	
8	232097		2	Flange half	D
9	904637		4	Washer 10x18x2	
10	904005		1	O-ring	
11	508029		4	Screw M10-1,5x30H 8,8	
12	372625		1	Connector	
13	334158		1	Adapter	
14	334203		1	Elbow 90, O-ring	
15	372628		1	Adapter Up to 64X20418	
	375669		1	Adapter From 64X20419	
16	910161		1	Measuring nipple	D
17	234626		1	Adapter	
18	234900		1	T-connector	
19	334468		1	Adapter	
20	234667		1	Reducer	
21	359139		1	Pilot valve (Page 146)	C
22	502034		4	Screw UNC 3/8 - 16	
23	904230		4	Washer 10,5x22x2	
24	334143		1	Straight connector	
25	813500		2	Elbow 45, O-ring Up to 64X20418	
	813500		3	Elbow 45, O-ring From 64X20419	
26	334121		4	Adapter	
27	373410		1	Hydraulic cylinder Up to 64X20331 (Page 148)	C
	375031		1	Hydraulic cylinder From 64X20332 (Page 150)	C
28	813316		2	Ball bushing	D
29	926214		2	Grease fitting	D
30	483050		1	Hydraulic hose	
31	482858		1	Hydraulic hose	
32	483107		1	Hydraulic hose	
33	483108		1	Hydraulic hose	
34	483186		1	Hydraulic hose	
35	482828		1	Hydraulic hose	
36	372513		1	Hose clamp	
37	373985		1	Hose clamp	
38	904229		3	Washer 8,4x16x1,5	
39	500189		1	Screw	
40	586003		3	Lock nut M8	
41	371669		1	Straight connector	
42	903812		1	Hydraulic hose	
43	903831		1	Nut	
44	313102		N	Cable ties L=388 mm	
46	909743		1	Gasket	
	937055		1	O-ring	
47	373984		1	Hose clamp	
48	338486		1	Hydraulic hose	
49	904234		1	Washer 25x45x4	

373610 Steering pump

15954

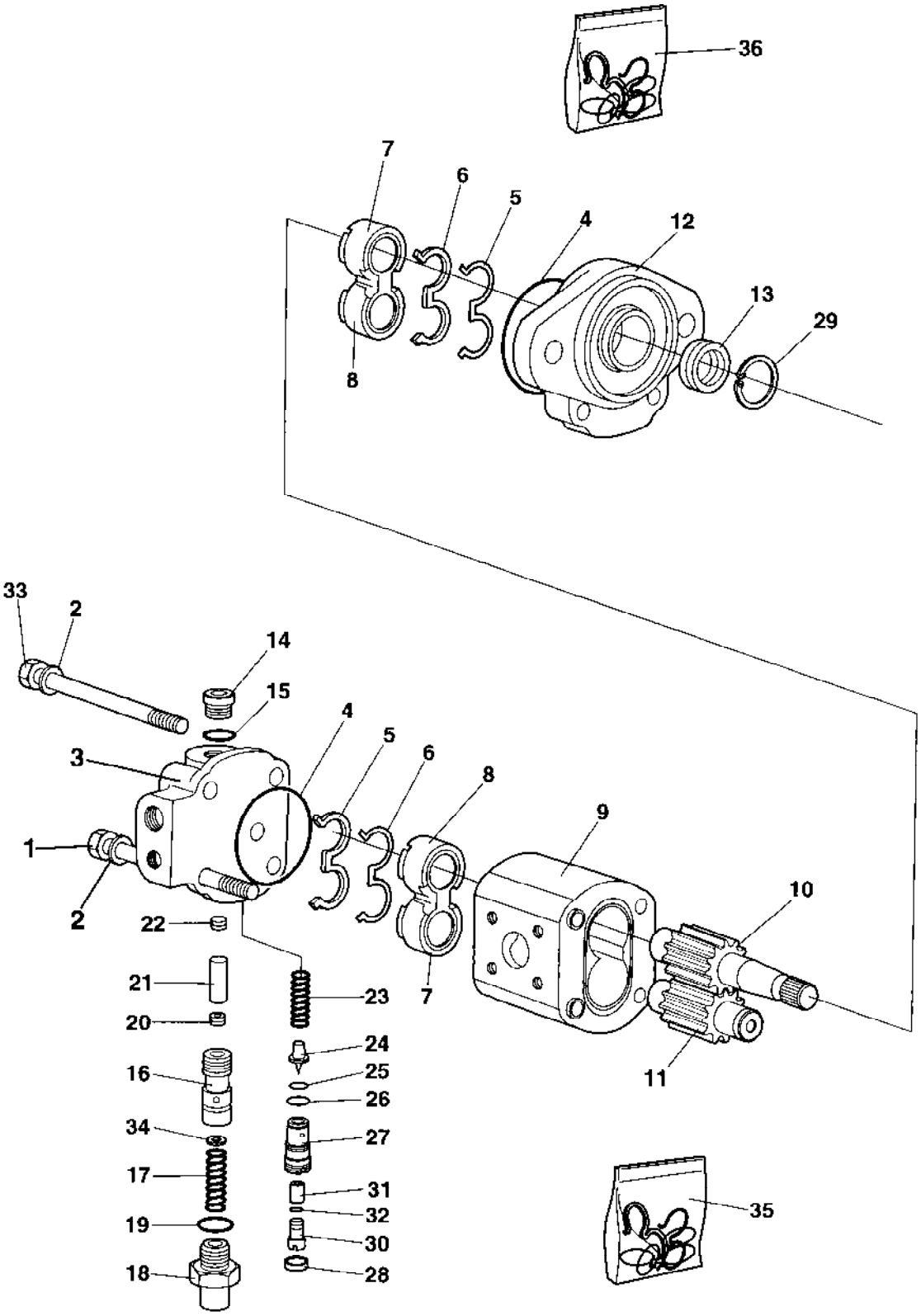

373610 Steering pump

Ref. No.	Part No.	Rem.	Qty	Description	Code
			1	Steering pump, cpl	
1			2	.Bolt	
2			4	.Washer	
3			1	.End cap	
4		1	2	.O-ring	
5		1	2	.Seal	
6		1	2	.Back-up seal	
7			2	.Bush	
8			2	.Bush	
9			1	.Housing	
10			1	.Drive gear	
11			1	.Idler gear	
12			1	.Flange	
13		1	1	.Shaft seal	
14			1	.Plug	
15		2	1	.Seal	
16			1	.Spool	
17			1	.Spring	
18			1	.Spring seal	
19		2	1	.Seal	
20			1	.Sleeve	
21			1	.Filter	
22			1	.Plug	
23			1	.Spring	
24			1	.Valve	
25		2	1	.Seal	
26		2	1	.Seal	
27			1	.Valve seat	
28		2	1	.Plug	
29		1	1	.Circlip	
30			1	.Plug	
31			1	.Filter	
32			1	.Seal	
33			2	.Bolt	
34			N	.Shim	
35	935373		1	.Pump seal kit	
36	908421		1	.Valve seal kit	

1) Included in seal kit, item 35.
2) Included in seal kit, item 36.

374995 Steering pump

16768

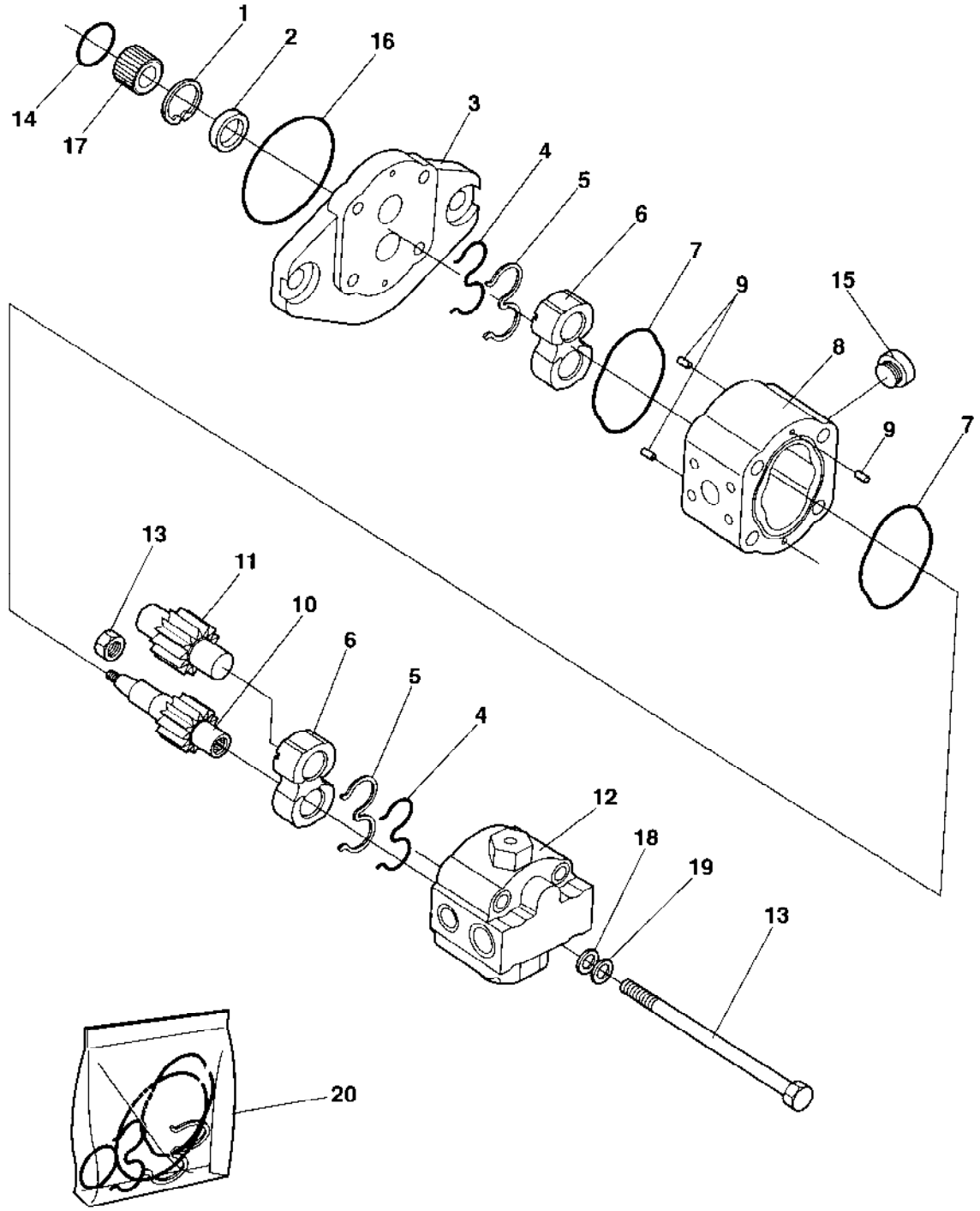

374995 Steering pump

Ref. No.	Part No.	Rem.	Qty	Description	Code
			1	Steering pump, cpl	
1			1	.Retaining ring	
2	937896	1	1	.Sealing	
3			1	.Flange	
4	937897	1	2	.Back-up ring	
5	937898	1	2	.Seal	
	937899	1	2	.O-ring	
6			2	.Bushing	
7	937900	1	2	.O-ring	
8			1	.Housing	
9			3	.Pin	
10			1	.Drive shaft	
11			1	.Gear	
12			1	.Cover	
13			2	.Screw	
14	937901	1	1	.O-ring	
15			1	.Plug	
16	937902	1	1	.O-ring	
17			1	.Sleeve	
18			4	.Washer	
19			4	.Washer	
20	937813		1	Seal kit	

1) Included in seal kit item 20.

381727 Steering pump

17068

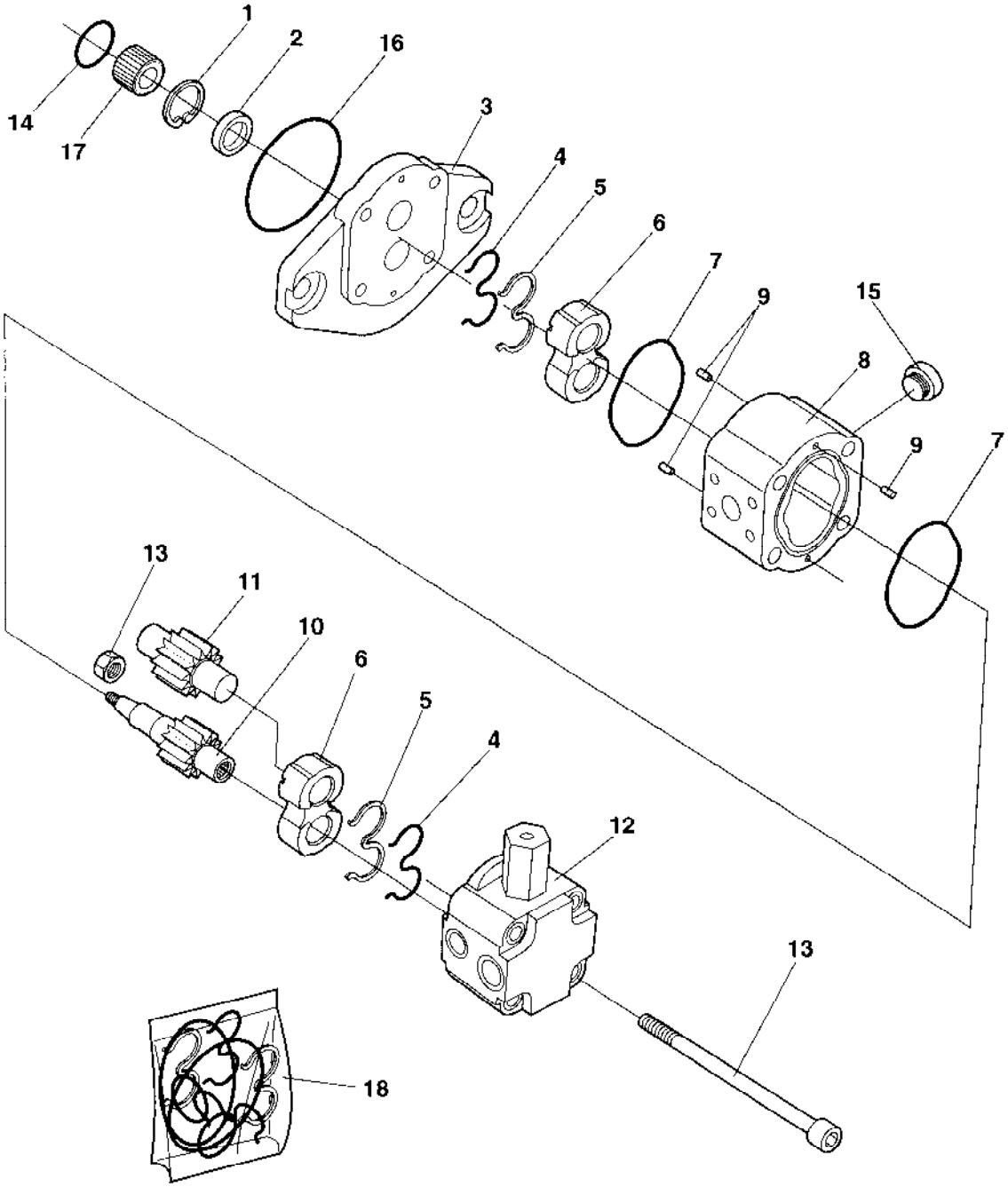

381727 Steering pump

Ref. No.	Part No.	Rem.	Qty	Description	Code
			1	Steering pump, cpl	
1			1	.Snap ring	
2	937896	1	1	.Sealing	
3			1	.Flange	
4	937897	1	2	.Back-up ring	
5	937898	1	2	.Seal	
6			2	.Bearing block	
7	937900	1	2	.O-ring	
8			1	.Housing	
9			3	.Pin	
10			1	.Drive gear	
11			1	.Idler gear	
12			1	.Cover	
13			4	.Screw	
14	937901	1	1	.O-ring	
15			1	.Plug	
16	937902	1	1	.O-ring	
17			1	.Coupling	
18	937813		1	.Seal kit	

1) Included in Seal kit item 18.

359139 Pilot valve

15710

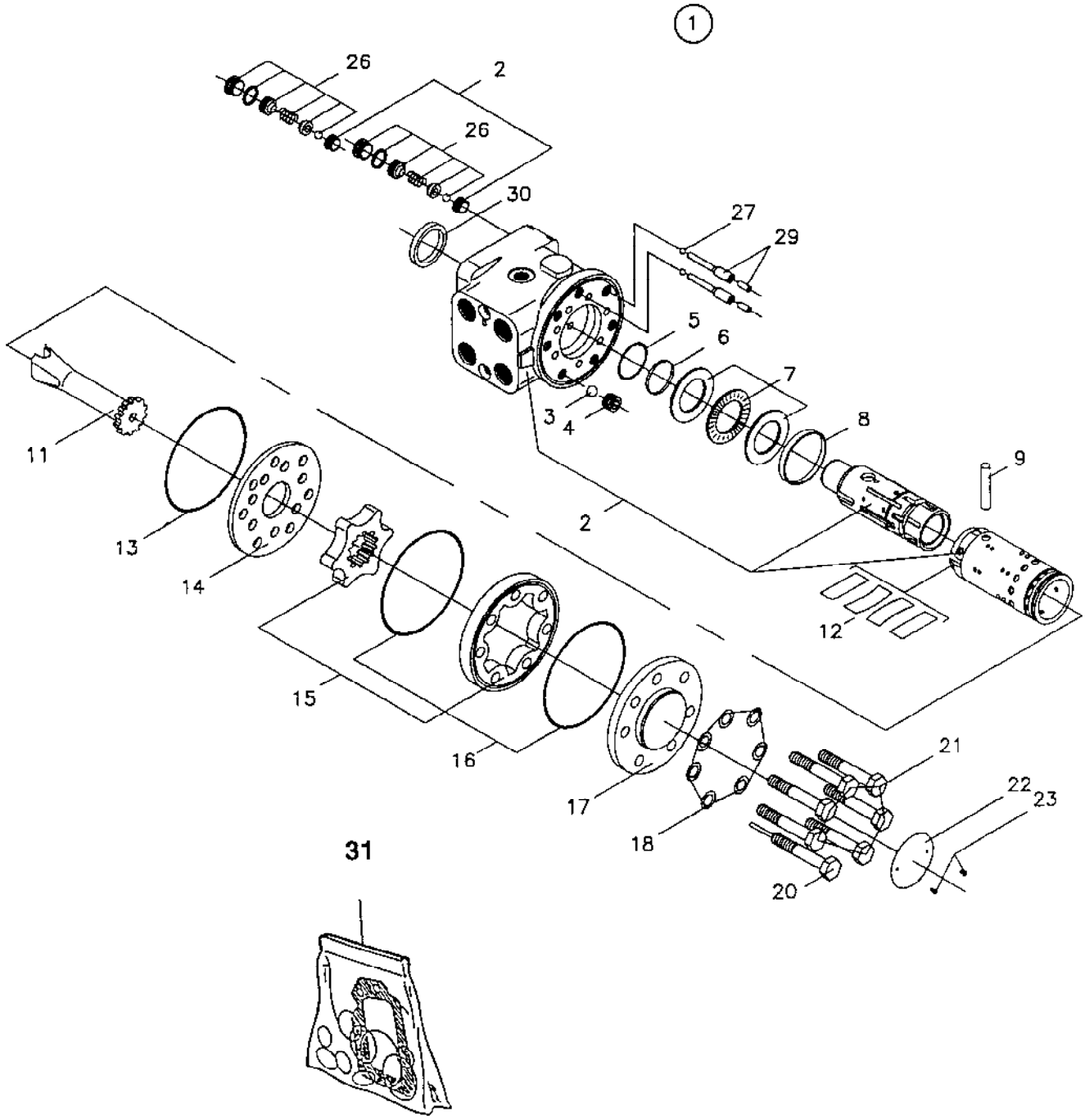

359139 Pilot valve

Ref. No.	Part No.	Rem.	Qty	Description	Code
1			1	Pilot valve, cpl	
2			1	.Housing, cpl	
3	480468		1	.Ball	
4	480446		1	.Threaded bushing	D
5		1	1	.O-ring	D
6		1	1	.Seal ring	D
7	911620		1	.Bearing	D
8	480449		1	.Ring	
9	480447		1	.Cross pin	
11	902861		1	.Cardan shaft	
12	909211		1	.Set of springs	
13		1	1	.O-ring	
14	902862		1	.Valve plate	
15	909212		1	.Gear wheel set	
16		1	2	.O-ring	
17	480450		1	.End cap	
18		1	7	.Washer	
20	909213		1	.Screw with pin	
21	909214		6	.Screw	
22			1	.Plate	
23			2	.Screw	
26	929012		2	.Shock valve 22,5-24,0 MPa	
27	929013		2	.Ball	
29	929014		2	.Rolled pin	
30		1	1	.Dust seal ring	
31	480457		1	.Spare parts kit	D

1) Includes in seal kit item 31.

373410 Hydraulic cylinder

15947

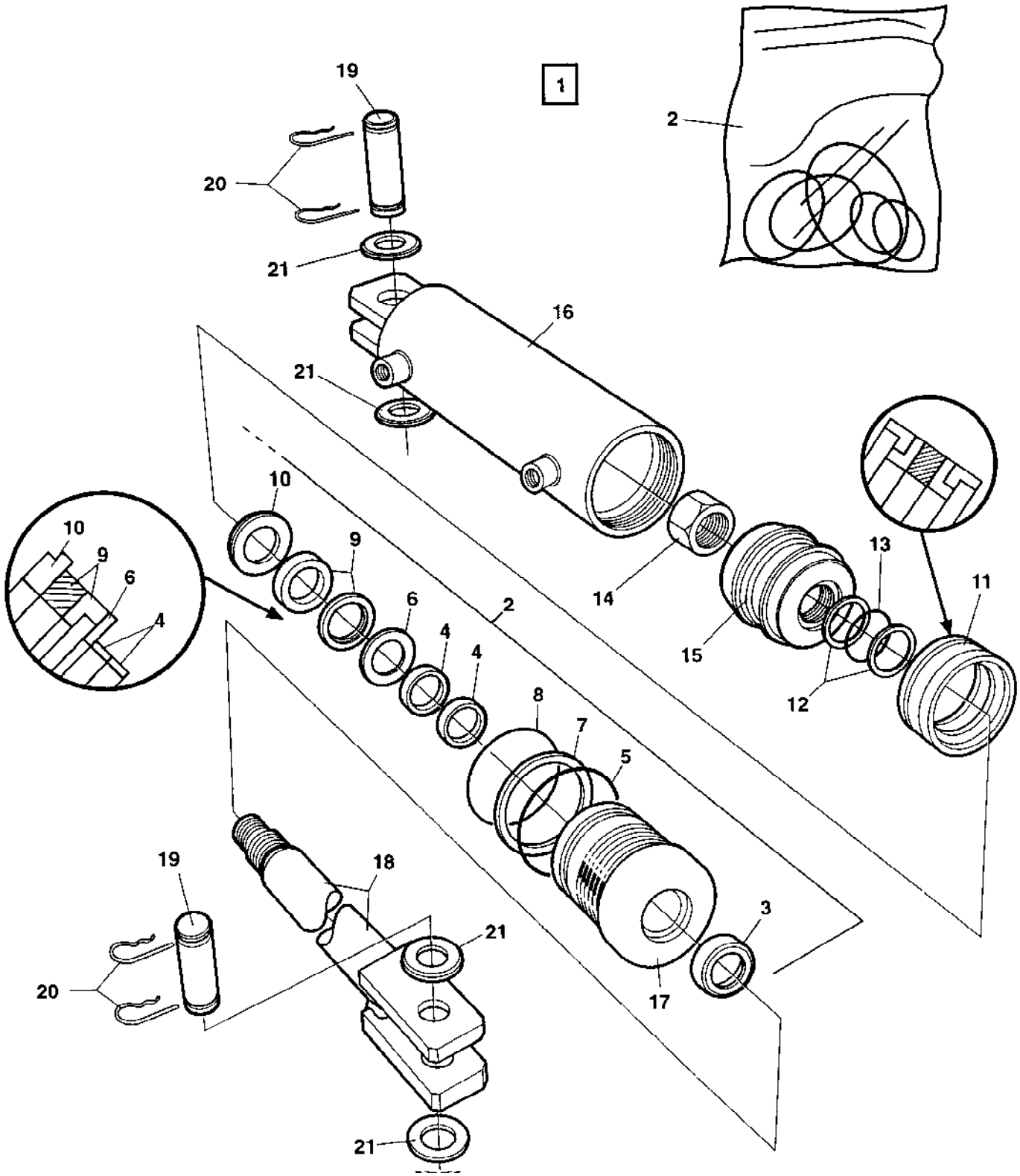

373410 Hydraulic cylinder

Ref. No.	Part No.	Rem.	Qty	Description	Code
1			1	Steering cylinder, cpl	D
2	904145		1	.Seal kit	D
3			1	..Seal	D
4			2	..Seal	D
5			1	..O-ring	D
6			1	..Back-up ring	D
7			1	..Back-up ring	D
8			1	..O-ring	D
9			1	..Seal	D
10			1	..Retainer ring	D
11			1	..Seal	D
12			2	..Back-up ring	D
13			1	..O-ring	D
14			1	..Lock nut	D
15	904143		1	..Piston block	
16	903618		1	..Cylinder tube	
17	903619		1	..Steering	
18	904144		1	..Piston rod	
19	347119		2	..Shaft	D
20	635061		4	..Hair clip	D
21	600016		4	..Washer 26x45x4	

375031 Hydraulic cylinder

16490

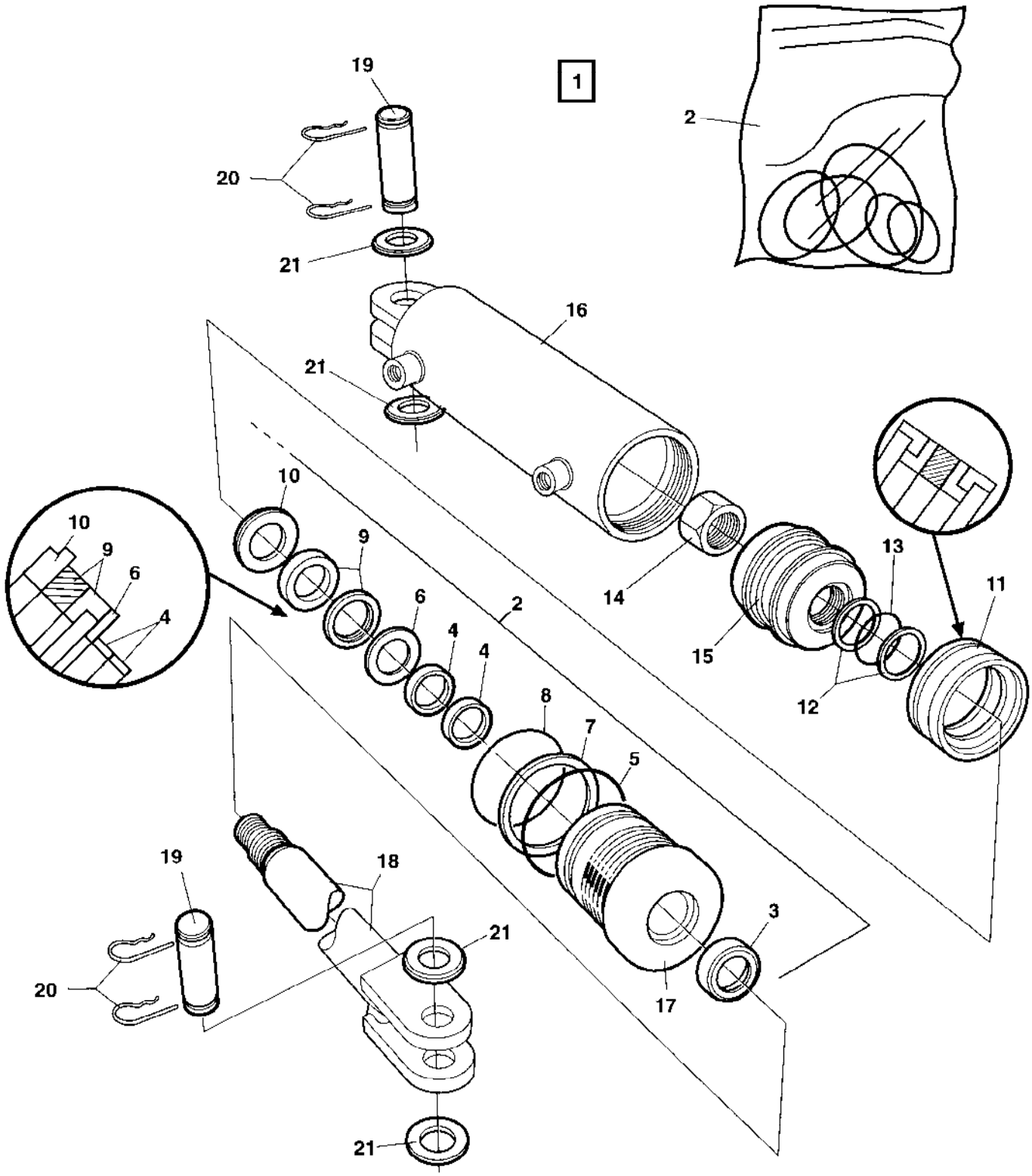

375031 Hydraulic cylinder

Ref. No.	Part No.	Rem.	Qty	Description	Code
1			1	Steering cylinder, cpl	
2	904145		1	.Seal kit	D
3			1	..Seal	D
4			2	..Seal	D
5			1	..O-ring	D
6			1	..Back-up ring	D
7			1	..Back-up ring	D
8			1	..O-ring	D
9			1	..Seal	D
10			1	..Retaining ring	D
11			1	..Seal	D
12			2	..Back-up ring	D
13			1	..O-ring	D
14			1	..Lock nut	D
15	904143		1	.Piston block	
16	936267		1	.Cylinder	
17	903619		1	.Steering	
18	936268		1	.Piston rod	
19	347119		2	.Shaft	D
20	635061		4	.Hair clip	D
21	600016		4	.Washer 26x45x4	

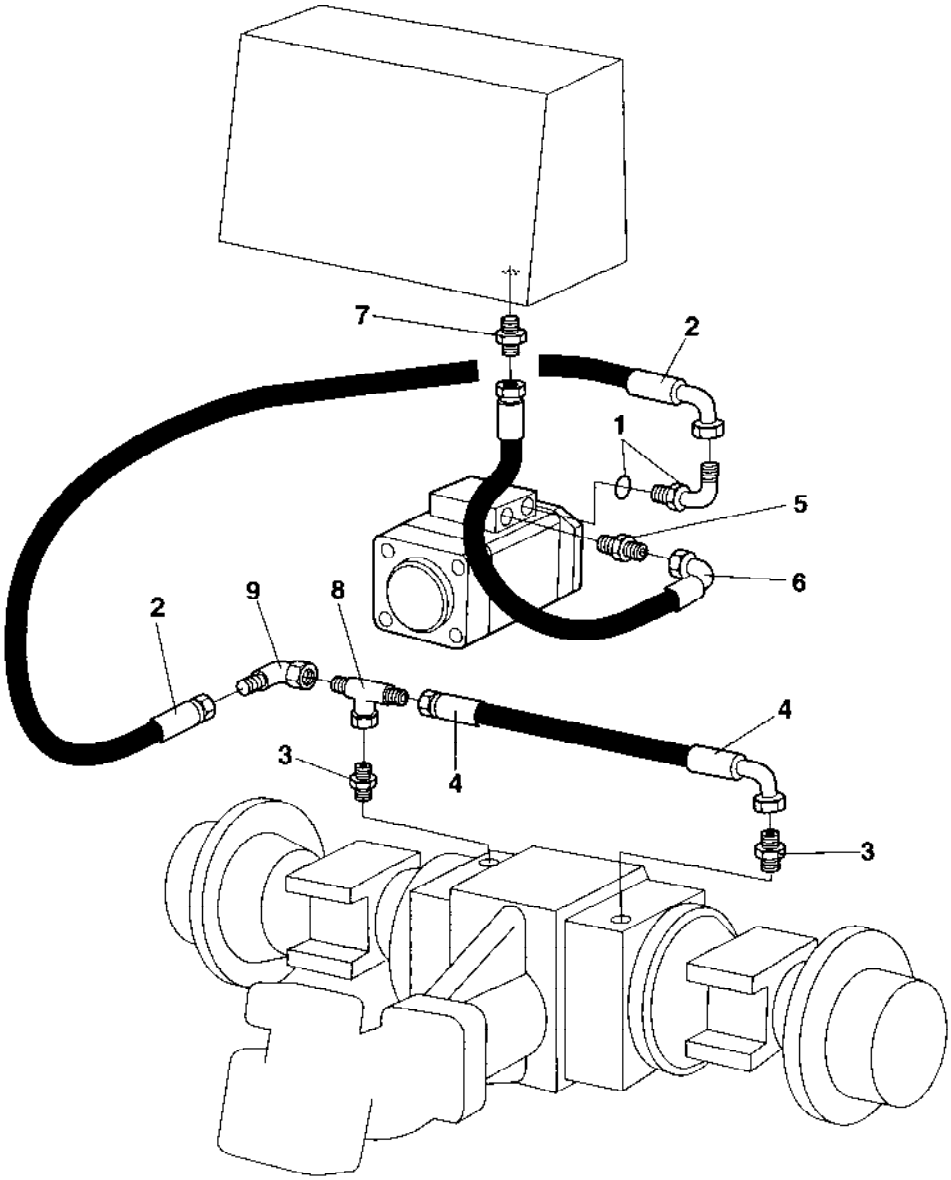
7
2
1
5
6
2
9
8
4
3
4
3

Ref. No.	Part No.	Rem.	Qty	Description	Code
1	334389		1	Connector	
2	482056		1	Hydraulic hose	
3	900552		2	Adapter	
4	482399		1	Hydraulic hose	D
5	234843		1	Adapter	
6	482516		1	Hydraulic hose	
7	334205		1	Straight connector	
8	234888		1	Tee-connector	
9	334524		1	Connector	

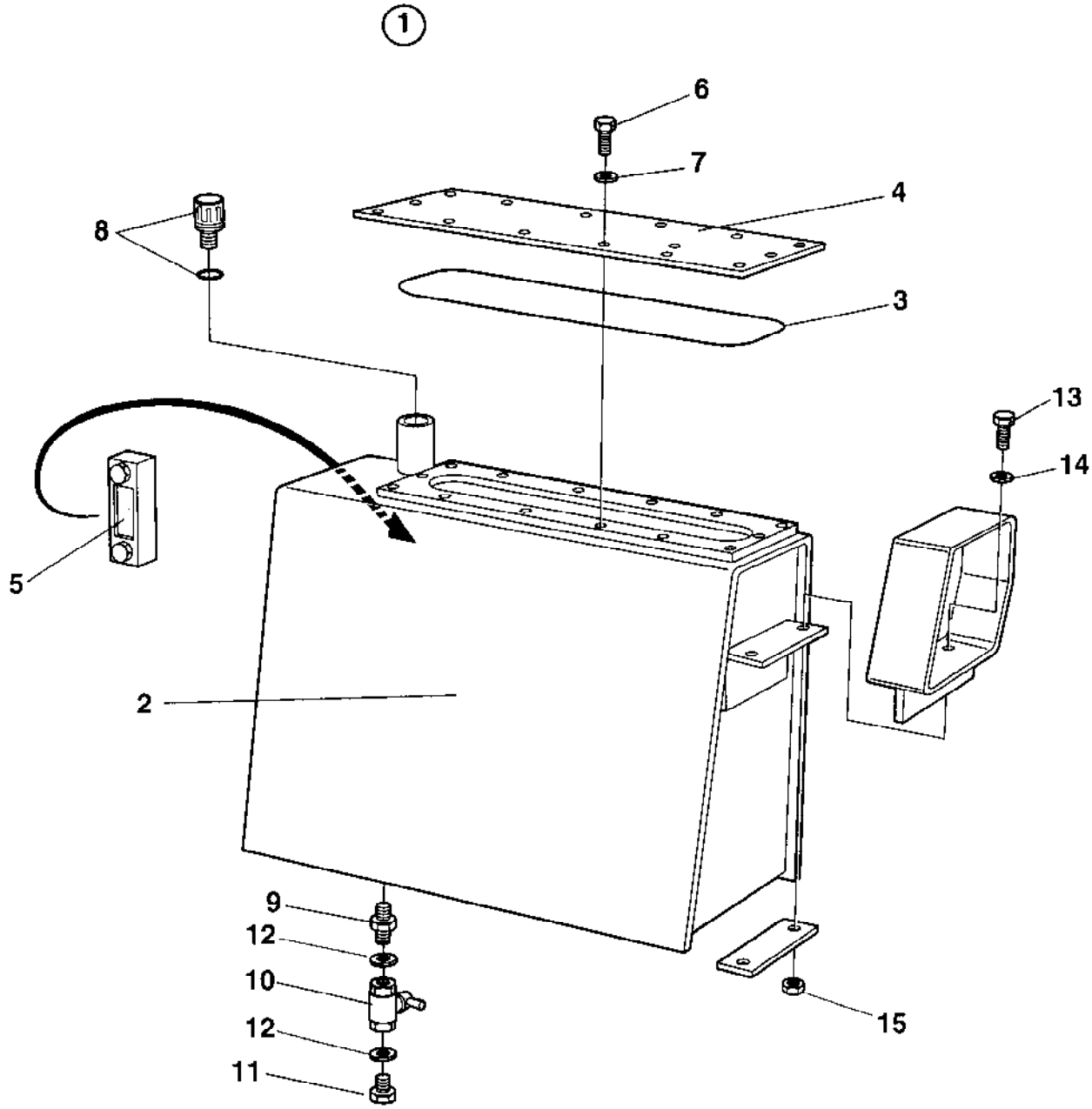
1
6
7
4
8
3
13
14
5
2
9
12
10
12
11
15

Ref. No.	Part No.	Rem.	Qty	Description	Code
1	372044		1	Hydraulic oil tank, CPL	
2	372029		1	.Hydraulic oil tank	
3	349880		1	.O-ring	D
4	349879		1	.Cover	
5	989151		1	.Oil level gauge	D
6	500019		14	.Screw M8-1,25x16 8,8	
7	904229		14	.Washer 8,4x16x1,5	
8	357138		1	.Ventilating filter	B
9	813738	1	1	.Adapter 3/4NPTF Up to 64X21161	
	791119		1	.Adapter G3/4 From 64X21162	
10	233304		1	.Ball valve	
11	232122	2	1	.Plug 3/4NPTF Up to 64X21161	
	232039		1	.Plug G3/4 From 64X21162	
12	791120		2	.Sealing washer G3/4 From 64X21162	
13	500192		4	Screw M10x80	
14	904567		4	Washer 10,5x28x6	
15	570006		4	Nut M10	

1) Can be replaced by Adapter P/N 791119 X 1 if Sealing washer P/N 791120 X 2 is changed simultaneously
.

2) Can be replaced by Plug P/N 232039 X1 if Sealing washer P/N 791120 X 2 is changed simultaneously.

Central test panel hydraulic

17370

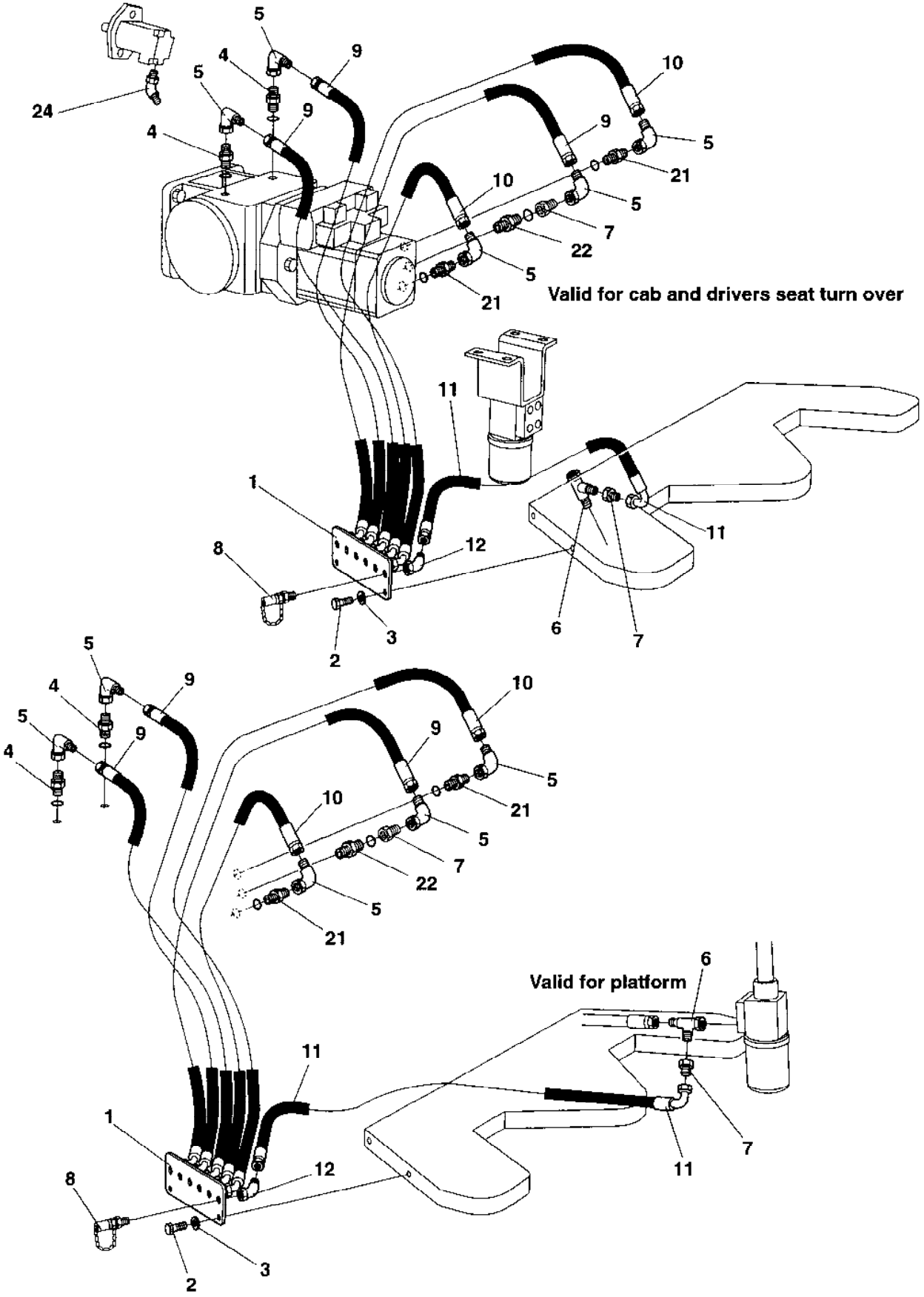

Central test panel hydraulic

Ref. No.	Part No.	Rem.	Qty	Description	Code
1	374028		1	Test panel	
2	500053		2	Screw M8-1,25x20 8,8	
3	904229		2	Washer 8,4x16x1,5	
4	234388		2	Connector	
5	334196		5	Elbow 90	
6	334135		1	T-connector	
7	334264		2	Reducing	
8	356348		6	Measuring nipple	D
9	483207		3	Hydraulic hose	
10	483188		2	Hydraulic hose	
11	482726		1	Hydraulic hose	
12	234622		1	Elbow 45	
21	902125		2	Connector	
22	925723		1	Connector	
24	813500		1	Elbow 45, O-ring Up to 64X20418	
	334197		1	Elbow 90 From 64X20419	

Ref. No.	Part No.	Rem.	Qty	Description	Code
100				Electrical system (Page 160)	
150				Relay and Fuses (Page 162)	
200				Instrument box (Page 164)	
300				Instrument panel Main Up to 64X20703 (Page 166)	
310				Instrument panel Main From 64X20704 (Page 168)	
325				Instrument panel Upper left (Page 170)	
350				Instrument panel Upper right (Page 172)	
375				Instrument panel Lower left (Page 174)	
400				Instrument panel Lower right (Page 176)	
500				Emergency stop panel (Page 178)	
550				Driving lights Option (Page 180)	
560				Working lights Option (Page 182)	
570				Rotating beacon Option (Page 184)	
580				Compaction meter Option (Page 186)	
590				Speedometer and frequency meter Option Up to 64X21151 (Page 188)	
595				Speedometer and frequency meter Option From 64X21152 (Page 190)	
600				Tachograph Option (Page 192)	
610				Back-up alarm Option (Page 194)	
620				Protection cover, Head light Option (Page 196)	

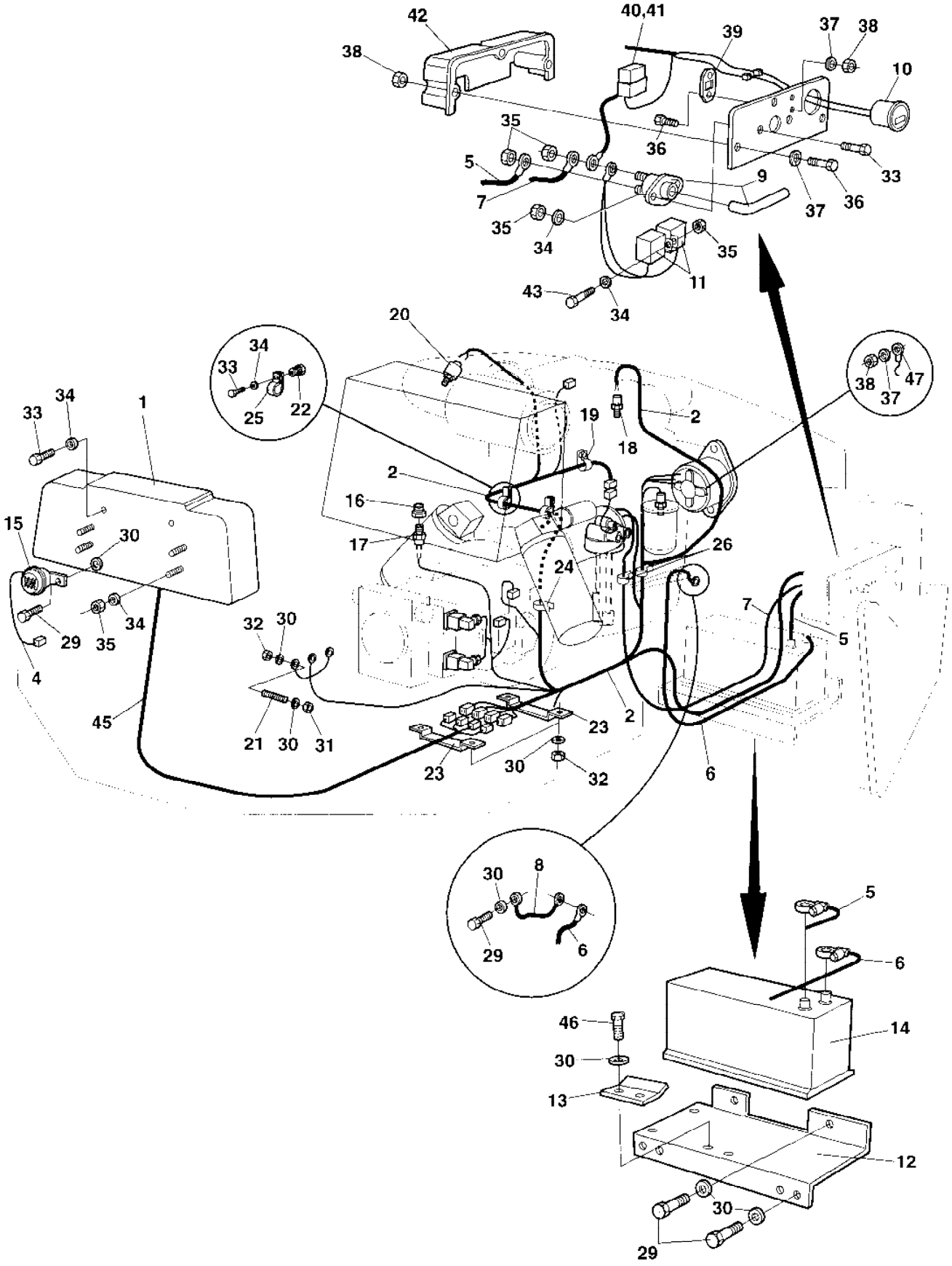
42
38
40,41
39
37
38
10
35
36
5
9
33
7
37
36
35
34
35
11
43
34
20
34
33
25
22
38
37
47
1
33
34
19
2
18
2
16
17
26
24
15
30
7
5
29
35
34
32
30
4
45
21
30
31
23
2
23
30
32
6
30
8
29
6
5
6
46
14
30
13
12
30
29

Ref. No.	Part No.	Rem.	Qty	Description	Code
1			1	Control panel	
2	373542		1	Cable harness Up to 64X20703	
	381618		1	Cable harness From 64X20704	
4	372997		1	Cable harness	
5	904283		1	Battery cable	
6	904020		1	Battery cable	
7	904284		1	Connection cable	
8	903760		1	Connection cable	
9	930150		1	Battery switch	D
	928021		1	.Key	D
10	801567		1	Hour meter Up to 64X20703	
11	904448	A	2	Relay	D
12	371277		1	Battery shelf	
13	356500		1	Battery holder	
14	470021		1	Battery	
15	999027		1	Horn	D
16	813434		1	Reducer	
17	903631		1	Temperature sensor Hydraulic oil	D
18	903632		1	Temperature sensor Engine	D
19	921072		1	Clamp	
20	929023		1	Indicator	D
21	903768		3	Threaded stud	
22	372664		2	Reduction nipple	
23	372649		2	Cable holder	
24	921132		1	Clamp	
25	921031		2	Clamp	
26	921116		2	Clamp	
29	500053		6	Screw M8-1,25x20 8,8	
30	904229		18	Washer 8,4x16x1,5	
31	570005		3	Nut M8	
32	586003		7	Lock nut M8	
33	500040		6	Screw M6-1x20 8,8	
34	904639		12	Washer 6,7x14x1,5	
35	586002		8	Lock nut M6	
36	500184		5	Screw M5-0,8x14 8,8	
37	904281		8	Washer 5,3x10x1 Up to 64X20892	
	904281		9	Washer 5,3x10x1 From 64X20893	
38	586001		5	Lock nut M5 Up to 64X20892	
	586001		6	Lock nut M5 From 64X20893	
39	904036		1	Fuse holder	
40	904032		1	Fuse holder	
41	904037		1	Fuse 30A	D
42	373605		1	Cover	
43	500075		2	Screw M6-1x25 8,8	
45	372202		1	Cable harness Up to 64X20703	
	381615		1	Cable harness From 64X20704	
46	500047		2	Screw M8-1,25x35 8,8	
47	904933		1	Connection cable From 64X20893	

A) Start- and Fuel shut-off relay

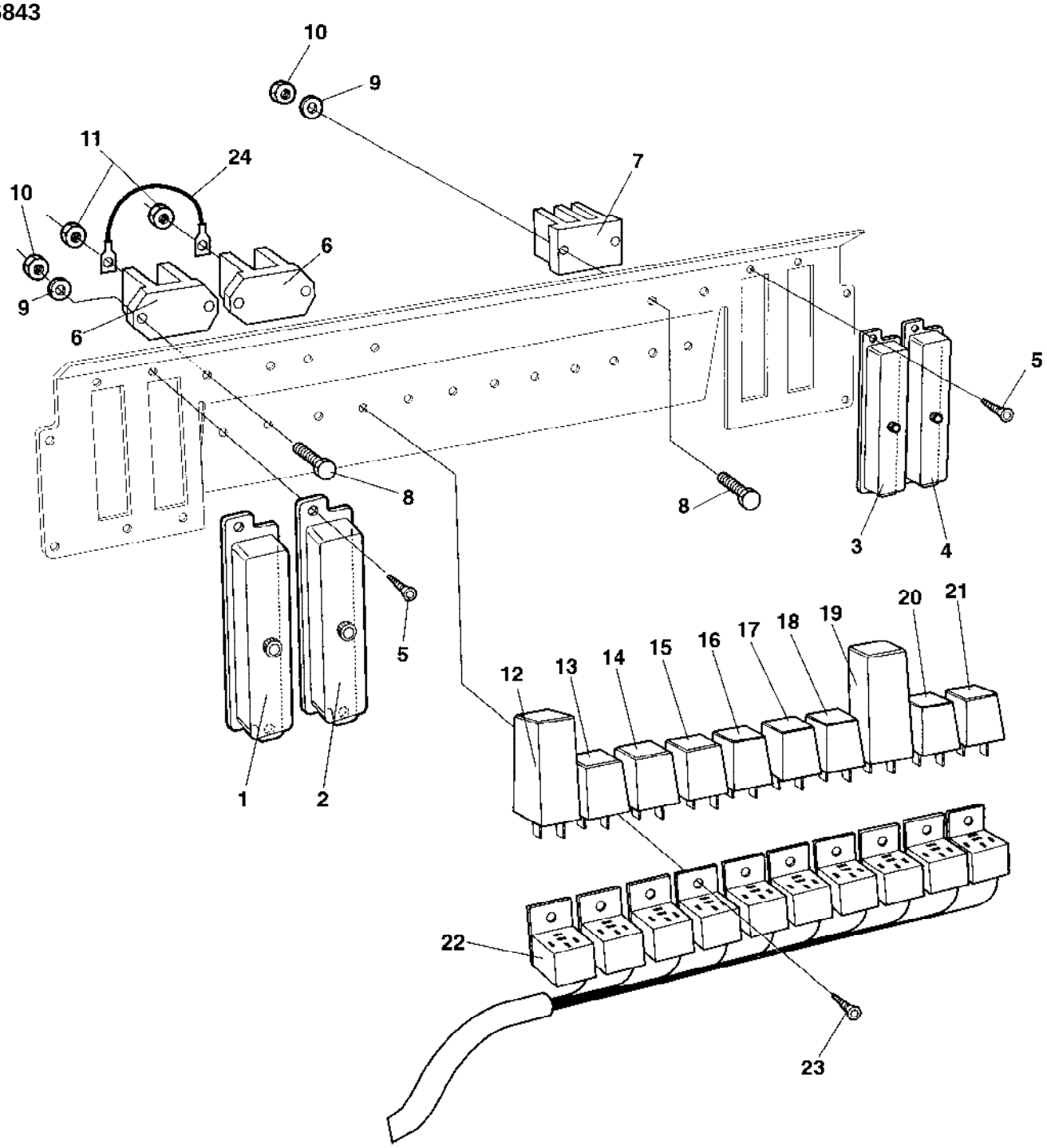
10
9
11
24
7
10
6
9
6
5
8
8
3
4
5
1
2
12
13
14
15
16
17
18
19
20
21
22
23

Ref. No.	Part No.	Rem.	Qty	Description	Code
1	901256		1	Fuse box	
	908110		1	.Cover	
	901224		N	Fuse 3A	D
	901225		N	Fuse 5A	D
	901226		N	Fuse 7.5A	D
	901227		N	Fuse 10A	D
	903741		N	Fuse 20A	D
2	901256		1	Fuse box	
	901240		1	Connector	
3	901256		1	Fuse box	
4	901256		1	Fuse box	
5	901767		8	Screw	
6	903627		2	Junction block	
7	903625		1	Junction block	
8	533013		6	Screw M4x20	
9	600002		6	Washer	
10	923976		6	Nut	
11	570004		2	Nut M6	
12	370233		1	Relay, VBS Up to 64X20850	D
	382782		1	Relay, VBS From 64X20851	D
13	287598	A	1	Relay	D
14	287597	B	1	Relay	D
15	287597	C	1	Relay Up to 64X20703	D
16	287597	D	1	Relay	D
17	287597	E	1	Relay	D
18	287597	F	1	Relay	D
19	904989		1	Flash relay	D
20	287598	G	1	Relay	D
21	287598	H	1	Relay	D
22	357562		10	Relay holder	
23	902223		10	Screw Up to 64X20703	
	902223		9	Screw From 64X20704	
24	903970		1	Cable	

A) Main relay
B) Horn relay
C) Hour meter relay
D) Fuel level relay
E) Back-up alarm relay
F) Lights relay
G) Brake light relay
H) Air Condition relay

Instrument box

17021

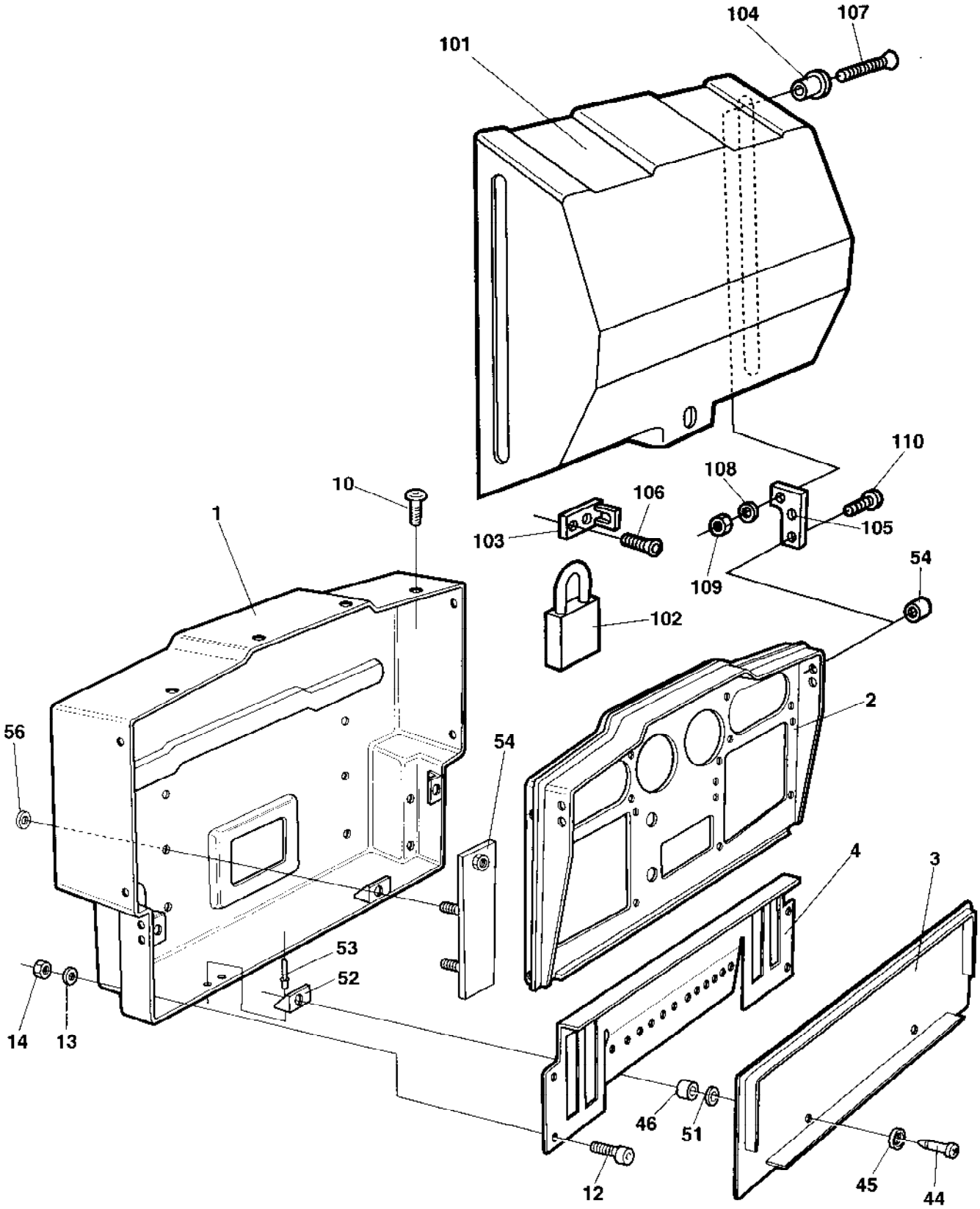

Instrument box

Ref. No.	Part No.	Rem.	Qty	Description	Code
1	374098		1	Instrument box	
2	374379		1	Control panel	
3	359845		1	Cover	
4	370165		1	Relay bracket	
10	903658		8	Screw	
12	500040		4	Screw M6-1x20 8,8	
13	904228		4	Washer 6,4x12x1,5	
14	902285		4	Lock nut M6	
44	903599		4	Trunnion	
45	903600		4	Rubber washer	
46	903601		4	Washer	
51	903678		4	Rubber washer	
52	903602		4	Lock device	
53	903436		8	Blind rivet	
54	374099		2	Bracket	
56	903961		4	Washer	
100		A	1	Control panel cover	
101	372103		1	Cover	
102	358881		1	Pad lock	
103	372104		1	Eyelet	
104	357855		2	Bushing	
105	372105		2	Bracket	
106	904207		2	Screw	
107	904208		2	Screw	
108	904228		2	Washer 6,4x12x1,5	
109	586002		2	Lock nut M6	
110	903658		4	Screw	

A) Option

Instrument panel Main

15990

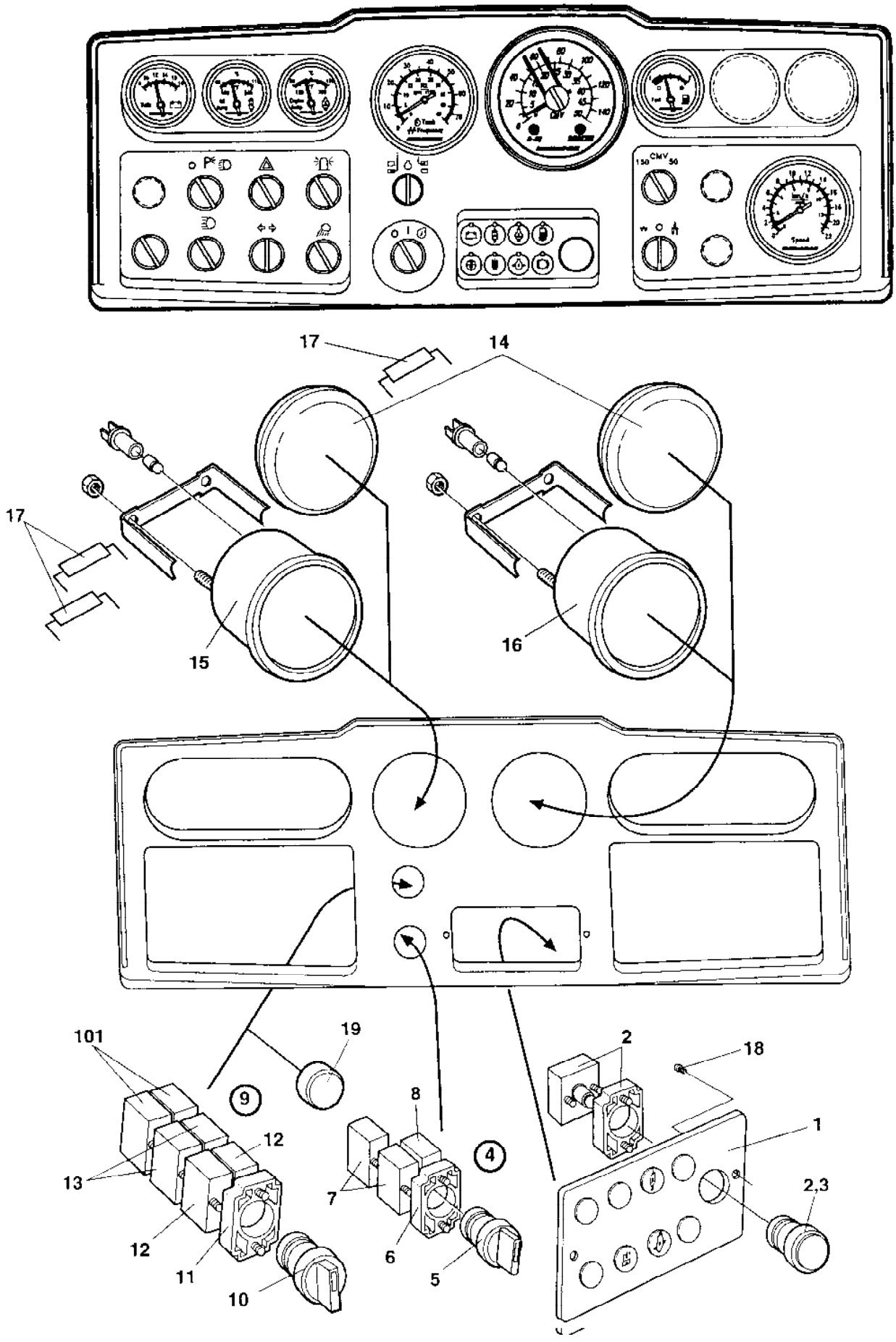

Instrument panel Main

Ref. No.	Part No.	Rem.	Qty	Description	Code
1	370170		1	Display	D
2	985146	A	1	Pilot lamp cpl Red	D
3	985012		1	Bulb	D
4		B	1	Switch	D
5	932050		1	.Switch	
6	903876		1	.Connector	
7	930154		2	.Contact piece	
8	930163		1	.Contact piece	D
9			1	Frequency/tacho selector	D
10	932058		1	.Switch	D
11	903876		1	.Connector	
12	930163		2	.Contact piece	D
13	930154		2	.Contact piece	
14	345139		2	Hole plug	
15	371275		1	Tachometer and frequency meter	
			1	Bulb	
			1	Sensor	
16	372663		1	Speedometer	
			1	Bulb	
			1	Sensor	
17	357526		2	Resistor	
18	903657		2	Screw	
19	911456		1	Hole plug	
101	930163	C	2	Contact piece	D

A) Main warning
B) Start
C) Option tachograph

Instrument panel Main

17020

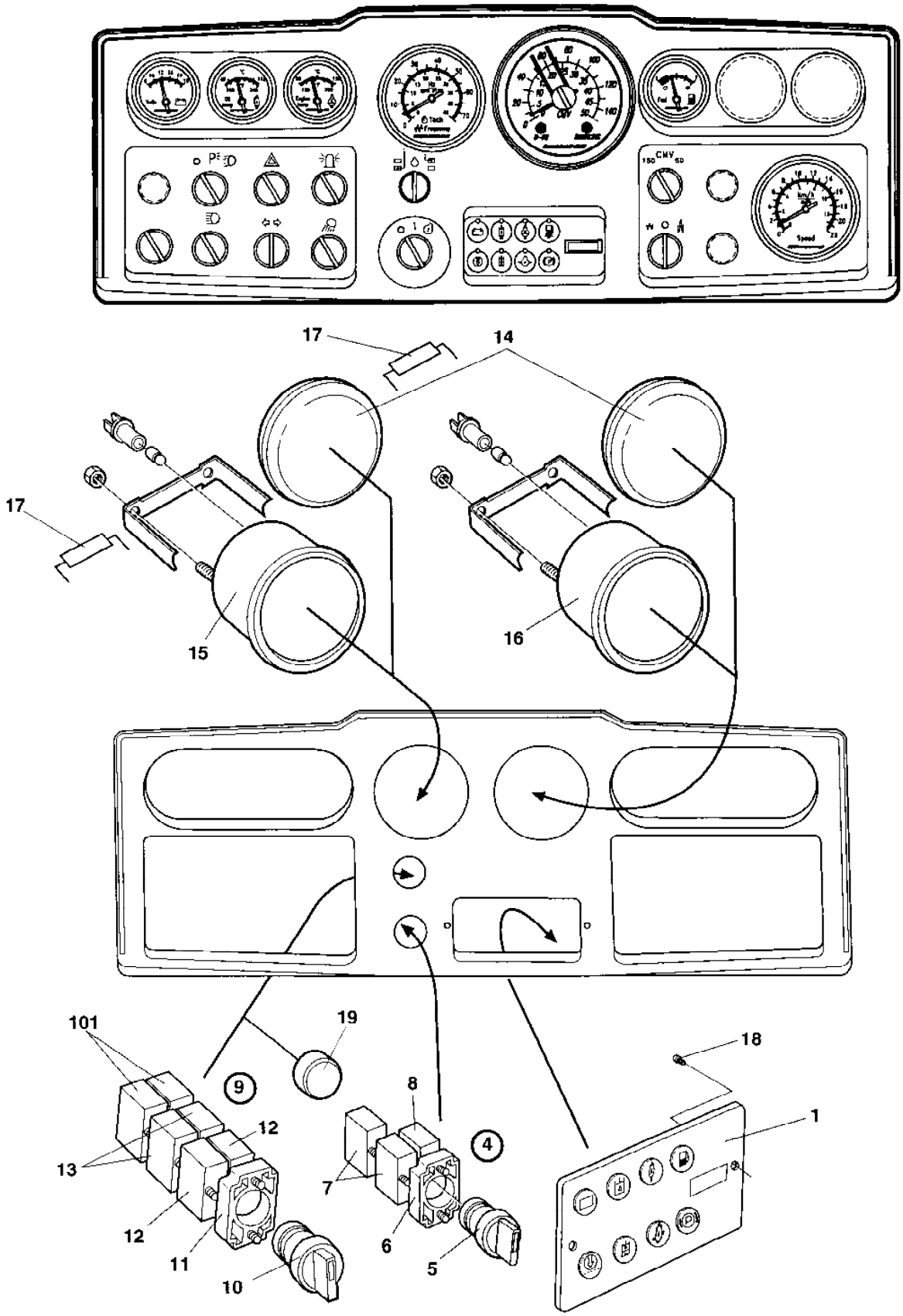

Instrument panel Main

Ref. No.	Part No.	Rem.	Qty	Description	Code
1	380660		1	Display	D
4		B	1	Switch	D
5	932050		1	.Switch	
6	903876		1	.Connector	
7	930154		2	.Contact piece	
8	930163		1	.Contact piece	D
9			1	.Frequency/tacho selector	D
10	932058		1	.Switch	D
11	903876		1	.Connector	
12	930163		2	.Contact piece	D
13	930154		2	.Contact piece	
14	345139		2	Hole plug	
15	371275		1	Tachometer and frequency meter	
			1	Bulb	
			1	Sensor	
16	372663		1	Speedometer	
			1	Bulb	
			1	Sensor	
17	357526		2	Resistor	
18	903657		2	Screw	
19	911456		1	Hole plug	
101	930163	C	2	Contact piece	D

B) Start
C) Option tachograph

Instrument panel Upper left

15989

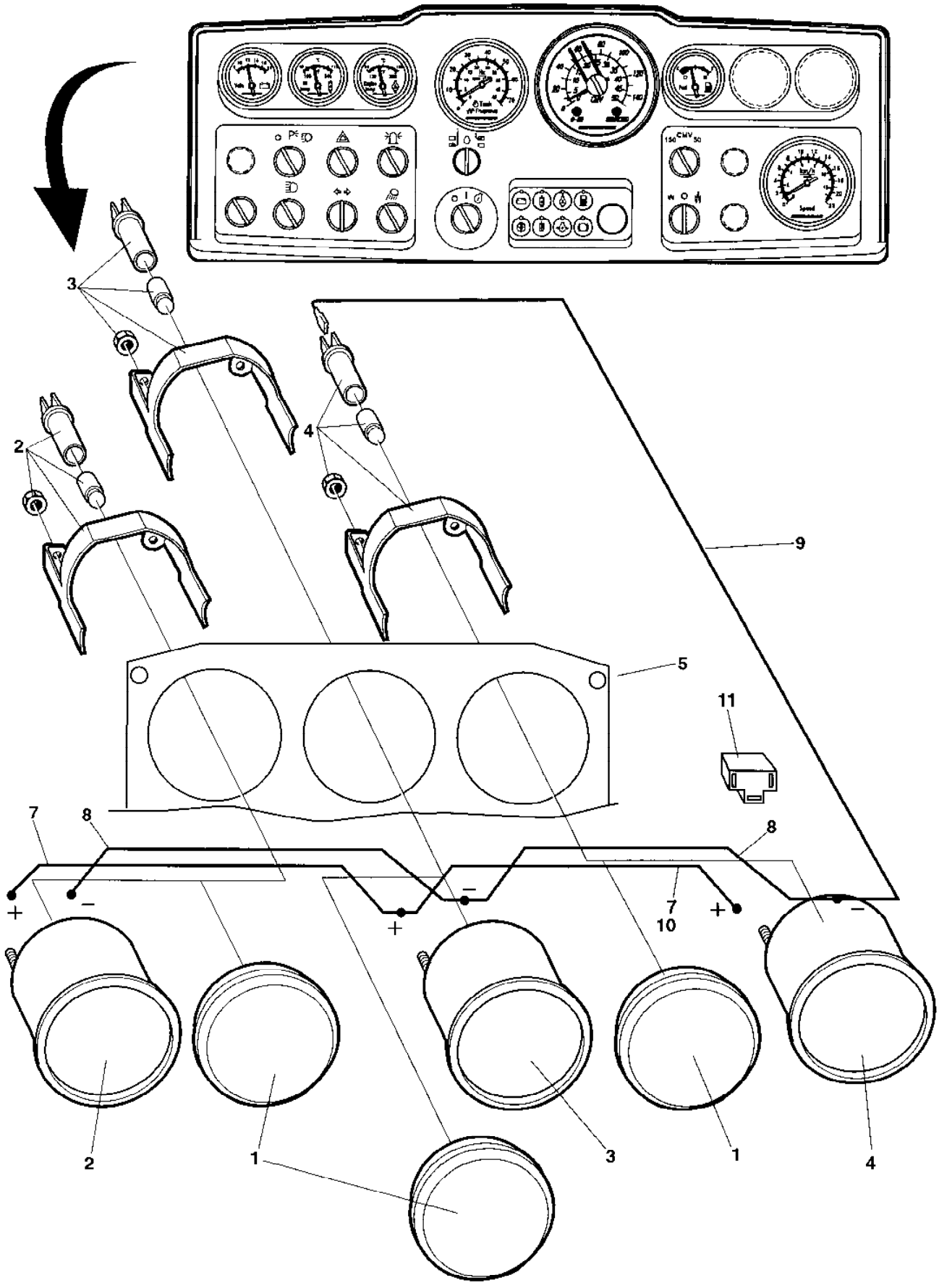

Instrument panel Upper left

Ref. No.	Part No.	Rem.	Qty	Description	Code
1	345870		3	Plug	
2	359340		1	Volt meter	D
	355258		1	.Lamp holder	
	985012		1	.Bulb	D
3	359341		1	Temperature meter hydraulic oil Option	D
	355258		1	.Lamp holder	
	985012		1	.Bulb	D
4	359342		1	Water temperature gauge Up to 64X20716	
	355258		1	.Lamp holder Up to 64X20716	
	985012		1	.Bulb Up to 64X20716	D
	381874		1	Water temperature gauge Option From 64X20717	
	904890		1	.Lamp holder From 64X20717	
	904889		1	.Bulb From 64X20717	
5			1	Control panel plate	
7	343550		2	Connection cable Up to 64X20716	
	343550		1	Connection cable From 64X20717	
8	903927		2	Cable	
9	904016		3	Cable	
10	343551		1	Cable From 64X20717	
11	904819		1	Contact From 64X20717	
12			1		

Instrument panel Upper right

15991

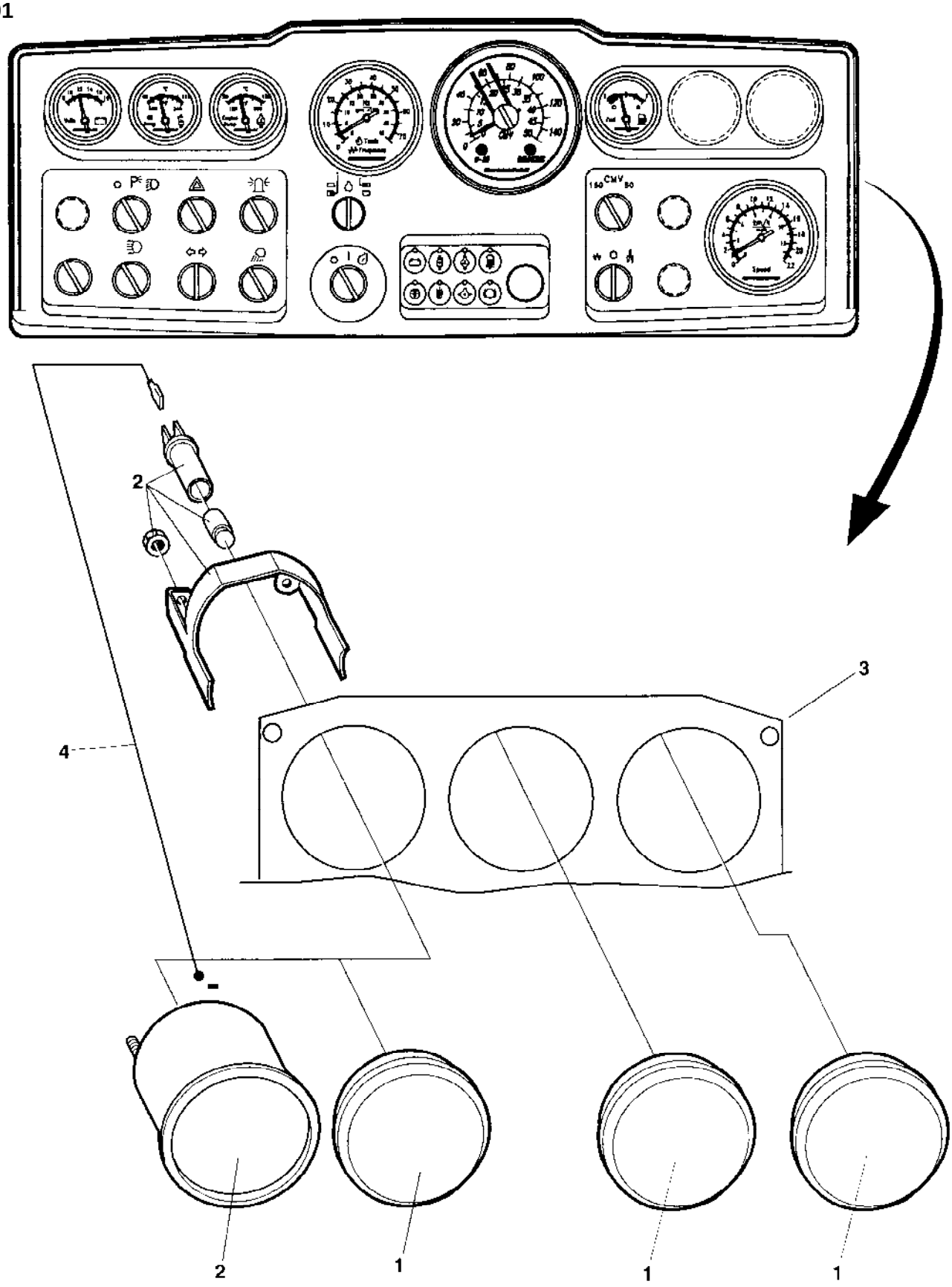

Instrument panel Upper right

Ref. No.	Part No.	Rem.	Qty	Description	Code
1	345870		3	Plug	
2	359343		1	Fuel gauge	D
	355258		1	.Lamp holder	
	985012		1	.Bulb	D
			1	Fuel level sender	D
			2	Water level sender	D
3			1	Control panel plate	D
4	904016		1	Cable	

Instrument panel Lower left

17035

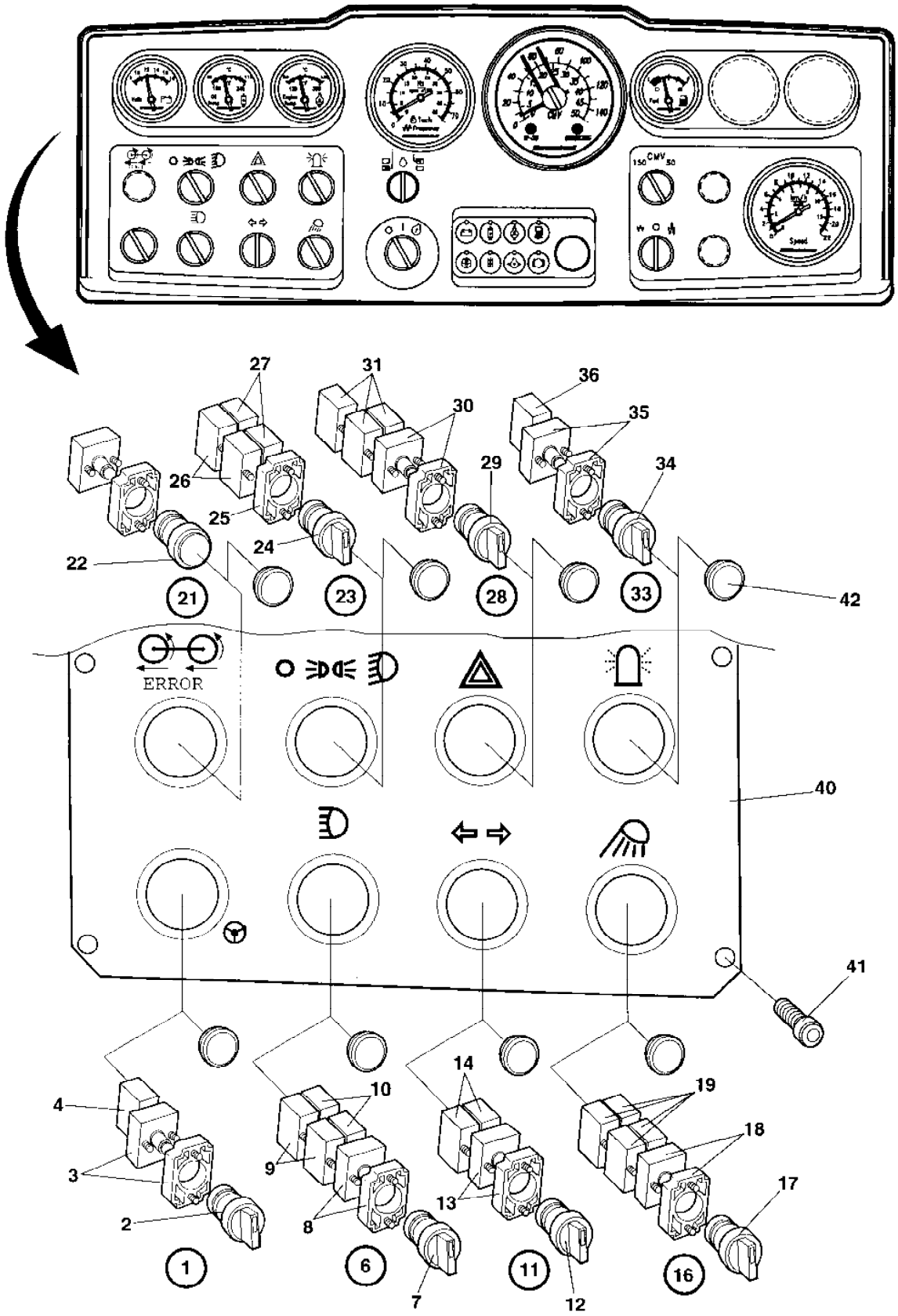

Instrument panel Lower left

Ref. No.	Part No.	Rem.	Qty	Description	Code
6		C	1	Switch, cpl	
7	932057	M	1	Switch	
8	903875		1	.Flange with light	
	985012		1	Bulb	D
9	930154		2	.Contact piece	
10	930163		2	.Contact piece	D
11		D	1	Switch, cpl	D
12	930161	E	1	.Switch	D
13	903875		1	.Flange with light	
	985012		1	Bulb	D
14	930163		2	.Contact piece	D
16		F	1	Switch, cpl	D
17	930166	B	1	.Switch	D
18	903875		1	.Flange with light	
	985012		1	Bulb	D
19	930163		4	.Contact piece	D
21	985146	A	1	Pilot lamp cpl Red	D
	985012		1	Bulb	D
22	932034	G	1	.Lamp glass	
23		H	1	Switch, cpl	
24	932058	I	1	.Switch	D
25	903876		1	.Connector	
26	930154		2	.Contact piece	
27	930163		2	.Contact piece	D
28		J	1	Switch, cpl	D
29	932056	G	1	.Switch	D
30	903875		1	.Flange with light	
	985012		1	Bulb	D
31	930163		3	.Contact piece	D
33		L	1	.Switch, cpl	D
34	930166	B	1	.Switch	D
35	903875		1	.Flange with light	
	985012		1	Bulb	D
36	930163		1	.Contact piece	D
40	372665		1	Control panel plate	
41	903657		6	Screw	
42	911456	K	-	Hole plug	

A) Anti spin
B) Yellow
C) Main beam
D) Direction indicator
E) Green
F) Working light
G) Red
H) Parking/dipped beam
I) Black
J) Hazard flasher
K) Quantity as required
L) Rotating beacon
M) Blue

Instrument panel Lower right

16026

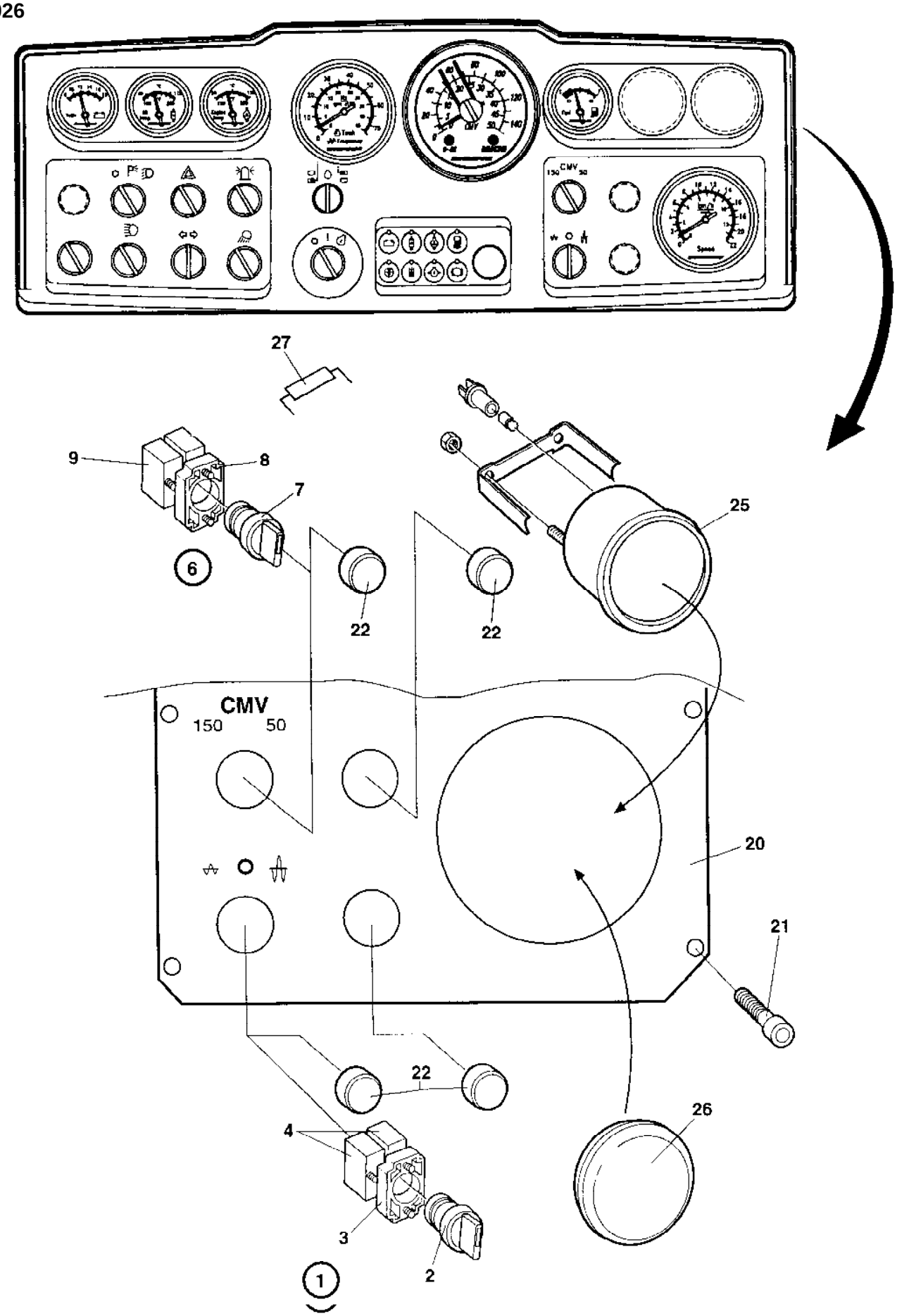

Instrument panel Lower right

Ref. No.	Part No.	Rem.	Qty	Description	Code
1		A	1	Switch, cpl	
2	932058	B	1	.Switch	D
3	903876		1	.Connector	
4	930163		2	.Contact piece	D
6		C	1	Switch, cpl	D
7	930192	B	1	.Switch	D
8	903876		1	.Connector	
9	930163		1	.Contact piece	D
20	372666		1	Control panel plate	
21	903657		6	Screw	
22	911456		4	Hole plug	
25	372663		1	Speedometer	
			1	Bulb	
			1	Sensor	
26	345139		1	Hole plug	
27	357526		1	Resistor	

A) Amplitude selector
B) Black
C) Cmv selector

Emergency stop panel

15963-1

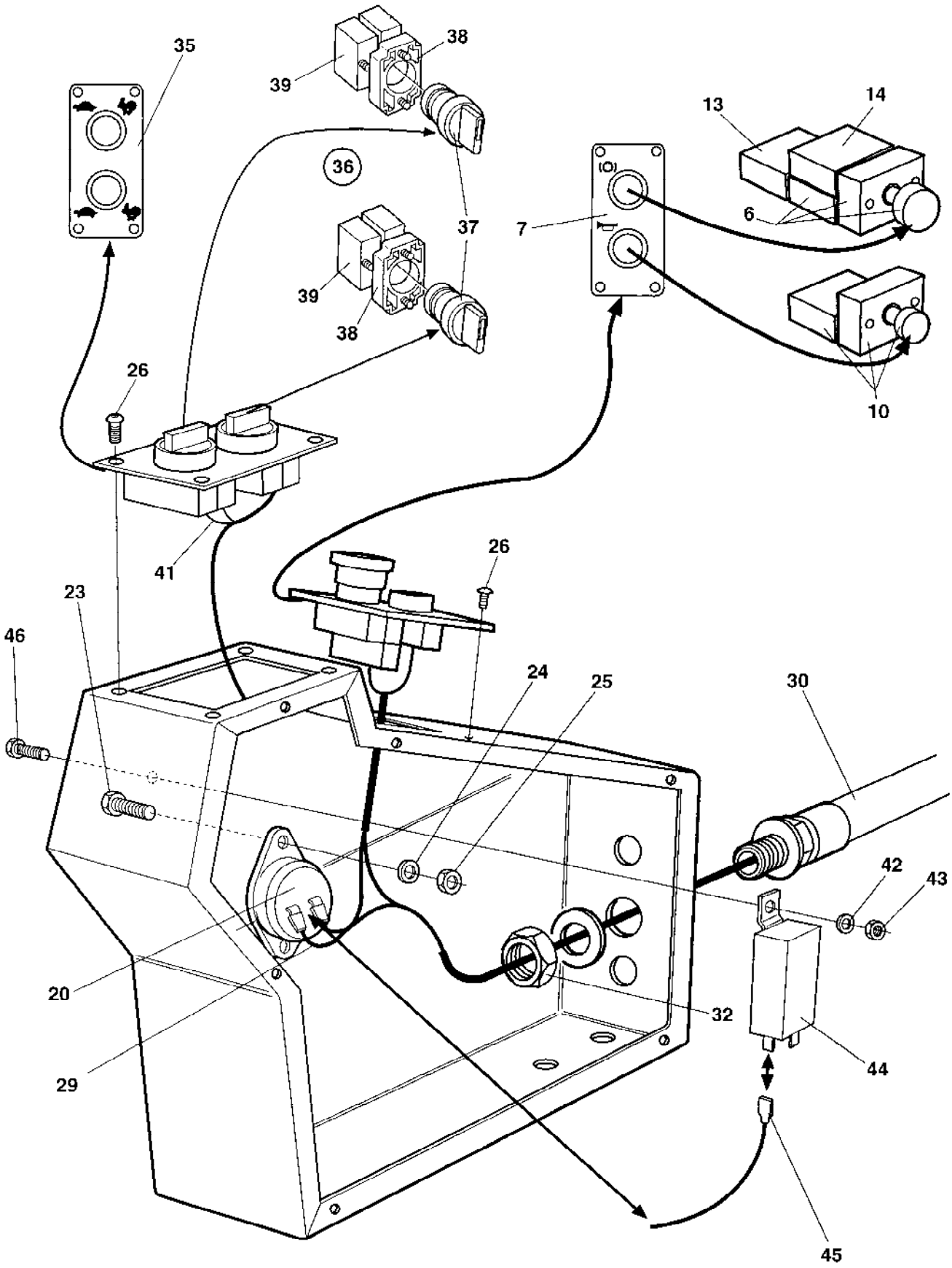

Emergency stop panel

Ref. No.	Part No.	Rem.	Qty	Description	Code
6	930200		1	Emergency stop	D
	930154		1	.Contact piece	
7	359941		1	Control panel plate	
10	932032	A	1	Push button	D
	930163		1	.Contact piece	D
13	930154		1	Contact piece	
14	930163		1	Contact piece	D
20	355301		1	Buzzer	D
23	500086		1	Screw	
24	904698		1	Washer 4,3x8x0,8	
25	570002		1	Nut M4	
26	904206		8	Screw	
29	960792		1	Cable	
30	372204		1	Cable harness	
32	791253		1	Nut	
35	372749		1	Control panel plate	
36		B	2	Switch, cpl	
37	930192	C	1	.Switch	D
38	903876		1	.Connector	
39	930163		1	.Contact piece	D
41	343551		1	Cable	
42	904228		1	Washer 6,4x12x1,5	
43	586002		1	Lock nut M6	
44	904704	D	1	Relay	
45	380708	D	1	Cable harness	
46	904206		1	Screw	

A) Horn
B) Speed low/high
C) Black
D) Interlock, Option

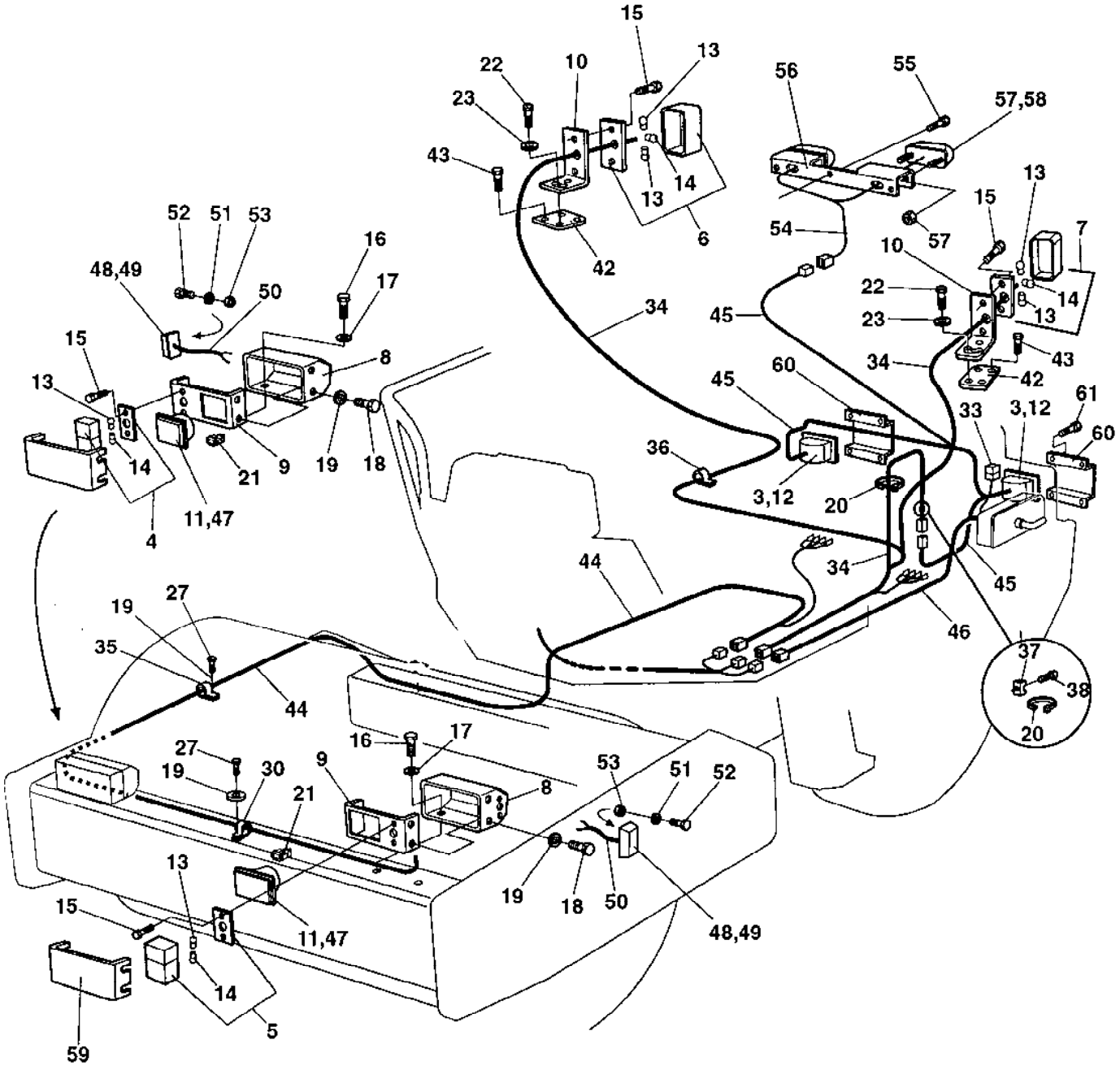
15
13
22
10
23
43
14
13
6
42
56
55
57,58
54
57
15
13
7
10
22
14
13
23
43
34
42
45
60
61
33
3,12
60
36
3,12
20
34
45
44
46
37
38
20
52
51
53
16
48,49
17
50
15
13
8
14
21
9
19
18
4
11,47
19
27
35
44
27
16
17
19
30
9
53
51
52
21
8
13
19
18
50
48,49
15
11,47
14
5
59

Ref. No.	Part No.	Rem.	Qty	Description	Code
3	902227		2	Work lamp	
4	904316	A	1	Direction lamp	
	937107		1	.Lamp glass	
5	904315	B	1	Direction lamp	
	937106		1	.Lamp glass	
6	904318	C	1	Direction lamp	
	937109		1	.Lamp glass	
7	904317	D	1	Direction lamp	
	937108		1	.Lamp glass	
8	374029		2	Lamp shield	
9	374030		2	Bracket	
10	374089		2	Bracket	
11	900790		2	Bulb 60/55w H4	B
12	901369		2	Bulb 55w H3	B
13	928502		6	Bulb 21w	B
14	985014		4	Bulb 5w	B
15	533010		8	Screw	
16	500043		6	Screw M10x16H 8,8	
17	904230		6	Washer 10,5x22x2	
18	500040		8	Screw M6-1x20 8,8	
19	904228		12	Washer 6,4x12x1,5	
20	925802		11	Cable ties L=142 mm	
21	903899		2	Connector	
22	500019		4	Screw M8-1,25x16 8,8	
23	904229		4	Washer 8,4x16x1,5	
27	500012		12	Screw M6x12	
28	313041		N	Cable ties L=186 mm	
30	921031		6	Clamp	
33	904038		1	Fuse 40A	D
34	374168		1	Cable harness	
35	921036		8	Clamp	
36	901028		6	Clamp	
37	904543		3	Cable tie holder	
38	903852		3	Screw	
42			0	Not valid for this model	
43			0	Not valid for this model	
44	374518		1	Cable harness	
45	374519		1	Cable harness	
46	374478		1	Cable harness	
47	902066		2	Head light	
	904313	E	2	Head light	
48	902064		2	Direction lights	
49	985013		2	Bulb 12V,5W	B
50	374526		2	Cable harness	
51	904281		4	Washer 5,3x10x1	
52	926611		4	Screw	
53	586001		4	Lock nut M5	
54	374196		1	Cable harness	
55	903969		3	Screw	
56	374184		1	Licence plate light bracket	
57	929455		2	Licence plate light	
58	985013		2	Bulb 12V,5W	B
59	374120		2	Protection cover	
60	374327		2	Protection cover	
61	541535		8	Screw	

A) Front right
B) Front left
C) Rear right
D) Rear left
E) Left hand asymmet.

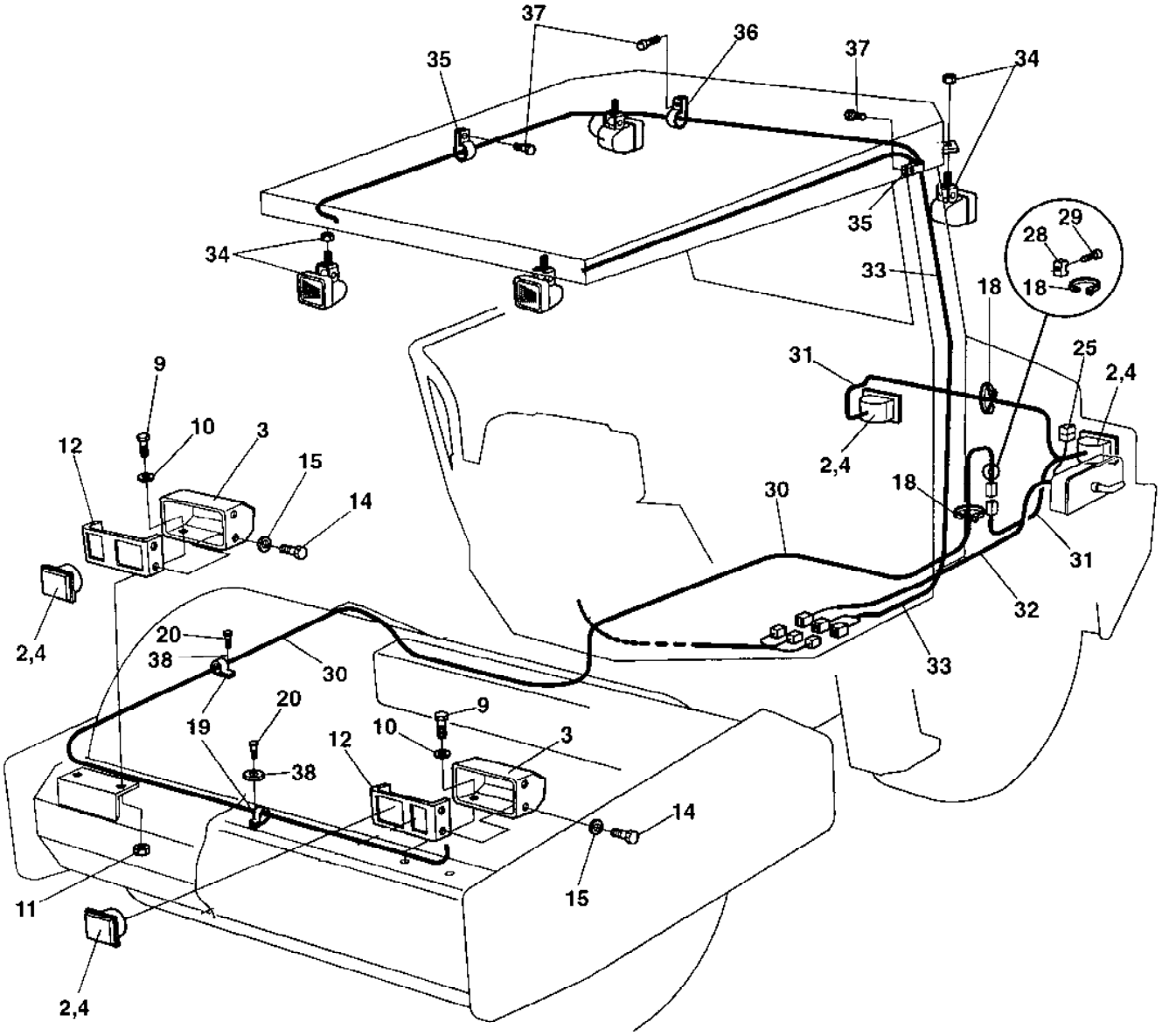
37
36
37
34
35
35
34
29
28
18
18
33
31
25
2,4
2,4
18
30
31
32
33
9
10
3
12
15
14
2,4
20
38
30
19
20
9
10
12
3
38
14
15
11
2,4

Ref. No.	Part No.	Rem.	Qty	Description	Code
2	902227		4	Work lamp	
3	374029		2	Lamp shield	
4	901369		4	Bulb 55w H3	B
9	500043		6	Screw M10x16H 8,8	
10	904230		6	Washer 10,5x22x2	
11			0	Not valid for this model	
12	374030		2	Bracket	
14	500040		8	Screw M6-1x20 8,8	
15	904228		9	Washer 6,4x12x1,5	
18	925802		9	Cable ties L=142 mm	
19	921039		12	Pipe clamp	
20	500012		12	Screw M6x12	
25	904038		1	Fuse 40A	D
28	904543		3	Cable tie holder	
29	903852		3	Screw	
30	374475		1	Cable harness	
31	374476		1	Cable harness	
32	374478		1	Cable harness	
33	372758		1	Cable harness	
34	904314		4	Work lamp	
35	921039		8	Pipe clamp	
36	921031		5	Clamp	
37	541702		13	Screw M6x12	
38	904228		12	Washer 6,4x12x1,5	

Rotating beacon Option

16850

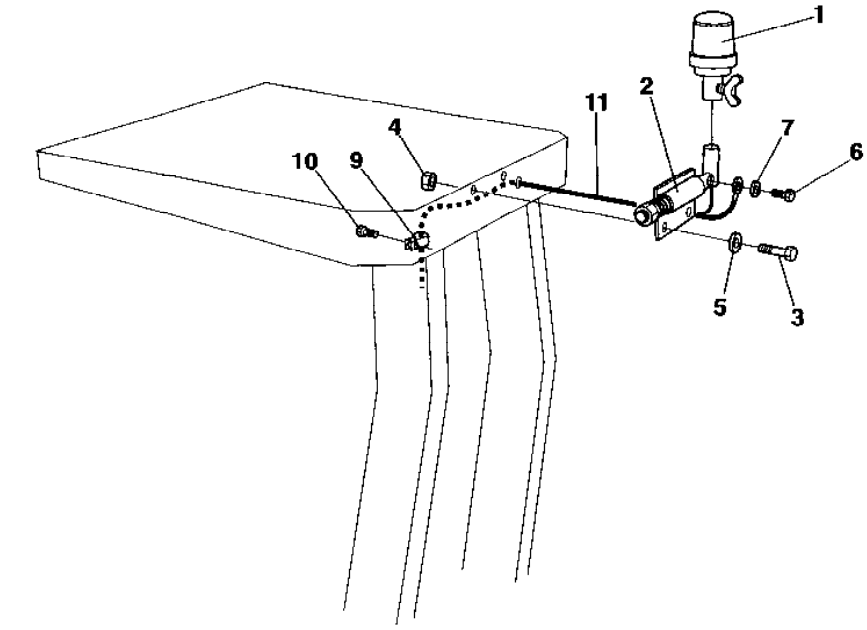

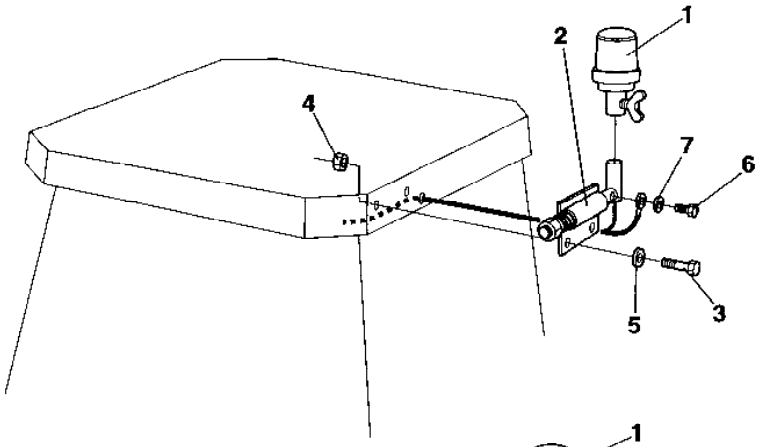

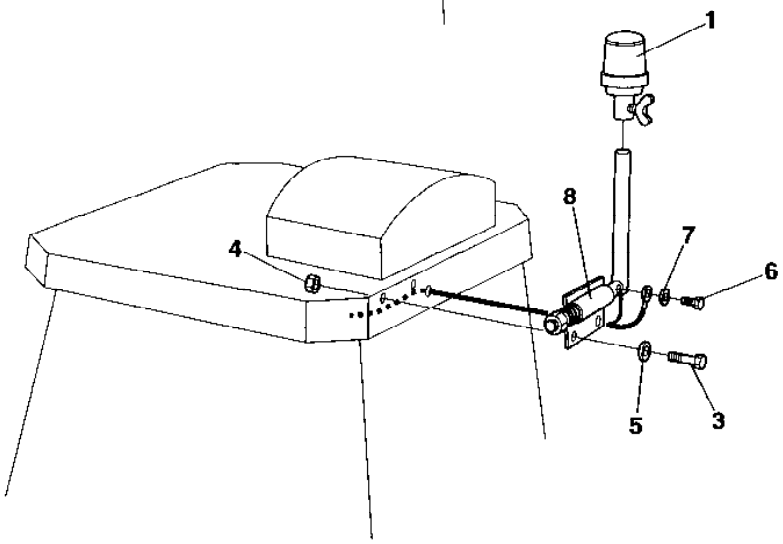

Rotating beacon Option

Ref. No.	Part No.	Rem.	Qty	Description	Code
1	999011		1	Rotating beacon	D
2	358452		1	Lamp holder	
3	500021		2	Screw M8-1,25x25 8,8	
4	586003		2	Lock nut M8	
5	904229		2	Washer 8,4x16x1,5	
6	500013		1	Screw M6-1x16 8,8	
7	904228		1	Washer 6,4x12x1,5	
8	371364		1	Lamp holder	
9	921039		1	Pipe clamp	
10	541702		1	Screw M6x12	
11	374398		1	Cable harness	

Compaction meter Option

17096

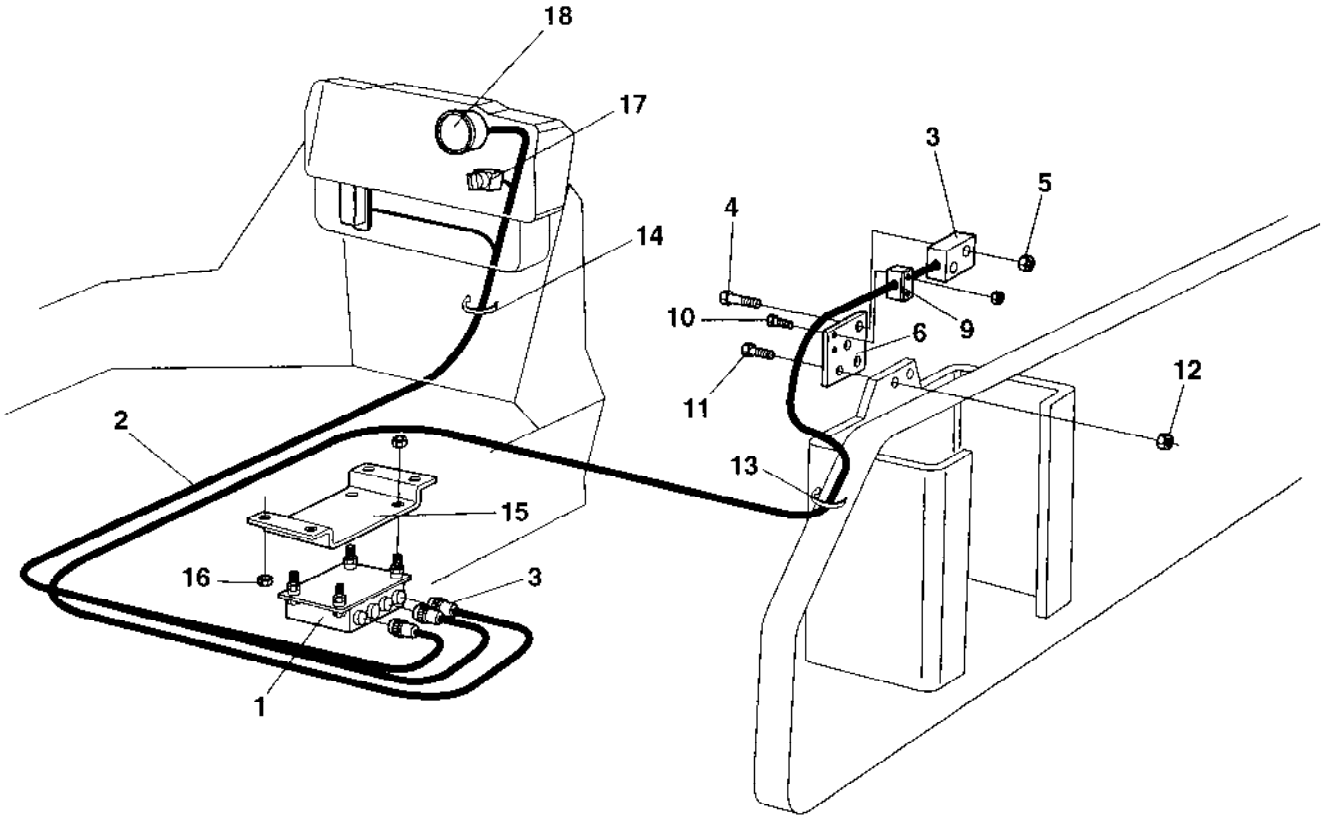

Compaction meter Option

Ref. No.	Part No.	Rem.	Qty	Description	Code
1	372008		1	Processor comp.meter	
2	372784		1	Cable harness	
3	348213		1	Sensor, cpl	
4	500079		2	Screw M6-1x50 8,8	
5	902285		4	Lock nut M6	
6	373140		1	Bracket	
9	902496		1	Clamp	
10	500079		2	Screw M6-1x50 8,8	
11	500194		2	Screw M12x40	
12	902288		2	Nut	
13	313102		15	Cable ties L=388 mm	
14	313041		15	Cable ties L=186 mm	
15	372836		1	Bracket	
16	902286		4	Lock nut M8	
17	930151		1	Switch	D
18	383452		1	Compaction meter	
	904890		2	.Lamp holder	
	904889		2	.Bulb	

Speedometer and frequency meter Option

17095

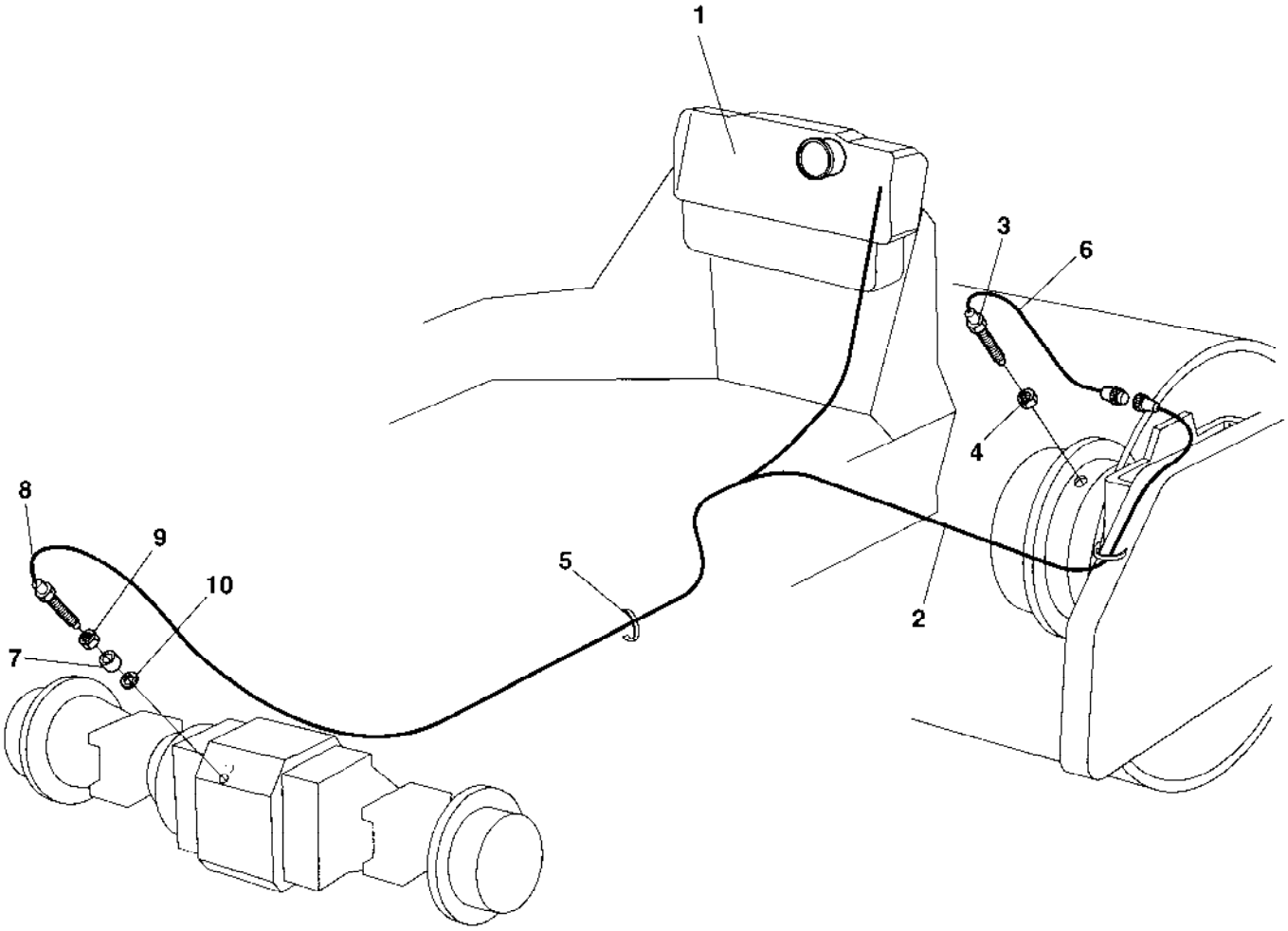

Speedometer and frequency meter Option

Ref. No.	Part No.	Rem.	Qty	Description	Code
1			1	Control panel	
2	372205		1	Cable harness	
3	372618	A	1	Sensor 3/4-16	
4	801669		1	.Thru-seal nut	
5	313041		N	Cable ties L=186 mm	
6	925802		N	Cable ties L=142 mm	
7	371727		2	Sleeve	
8	371189	B	1	Sender	D
9	903770		1	.Nut	
10	903769		1	.Sealing	

A) Tacho/Frequency meter
B) Speedometer

Speedometer and frequency meter Option

17385

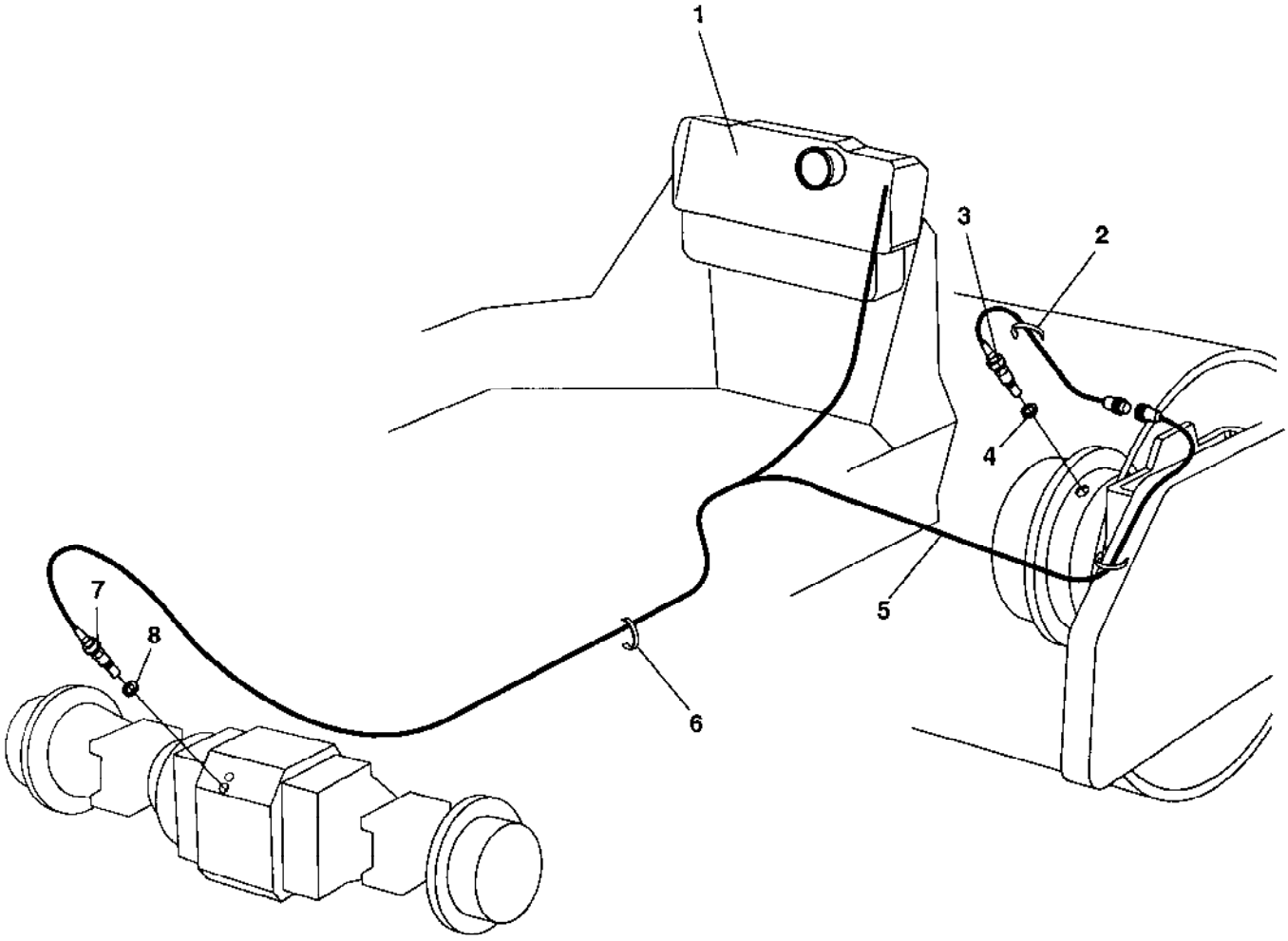

Speedometer and frequency meter Option

Ref. No.	Part No.	Rem.	Qty	Description	Code
1			1	Control panel	
2	925802		N	Cable ties L=142 mm	
3	372618	A	1	Sensor 3/4-16	
4	801669		1	.Thru-seal nut	
5	372205		1	Cable harness	
6	313041		N	Cable ties L=186 mm	
7	384783	B	1	Sensor	
8	900700		1	.Copper washer	

A) Tacho/Frequency meter
B) Speedometer

Tachograph Option

17127

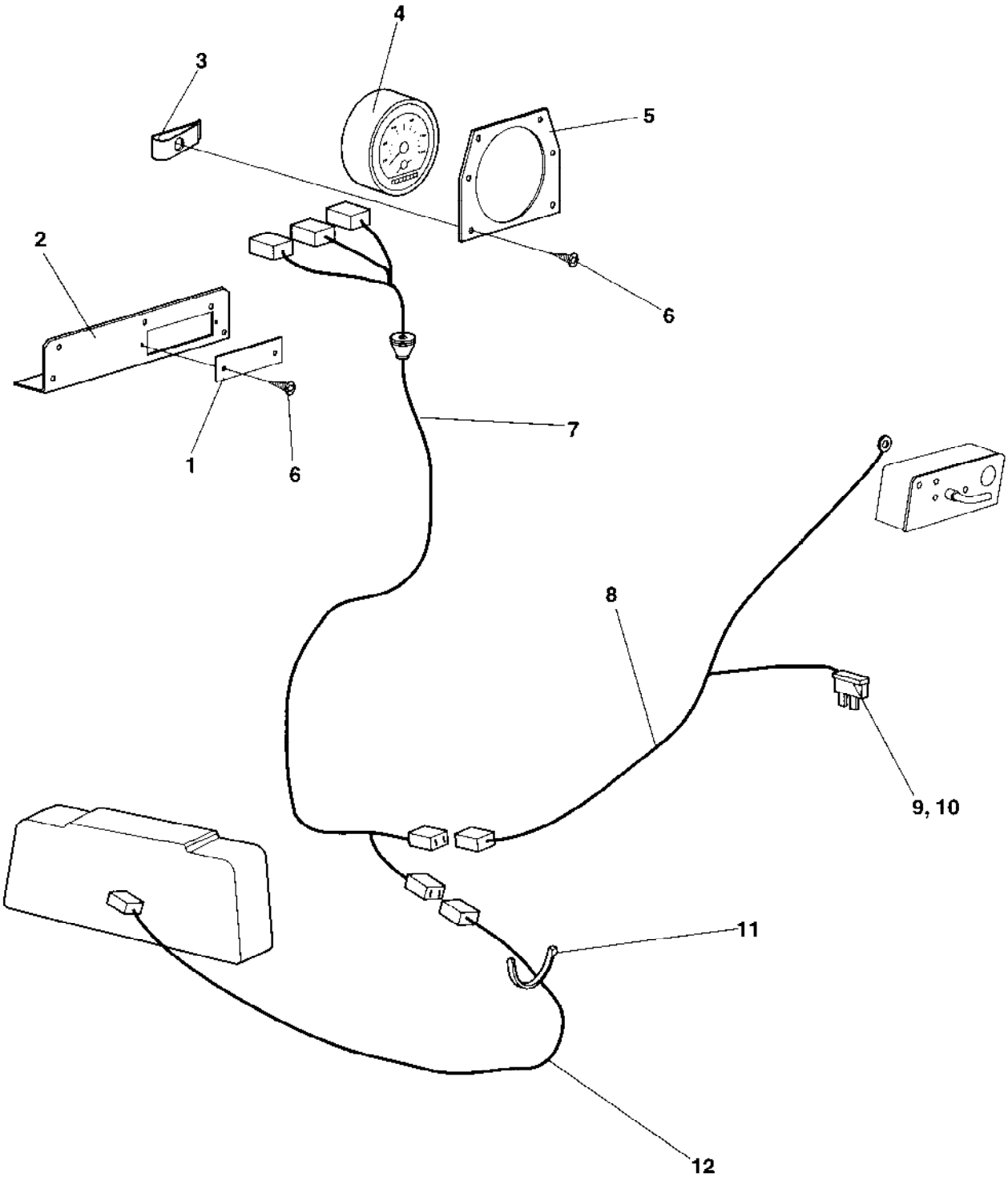

Ref. No.	Part No.	Rem.	Qty	Description	Code
1	374463		1	Cover plate	
2	935603		1	Cover plate	
3	904775		14	Quick lock nut	
4	901209		1	Tachograph	
5	372967		1	Holder plate	
6	903969		16	Screw	
7	372497		1	Cable harness	
8	372495		1	Cable harness	
9	904015		1	.Fuse holder	
10	904140		1	.Fuse 0.5A	
11	313041		10	Cable ties L=186 mm	
12	372496		1	Cable harness	

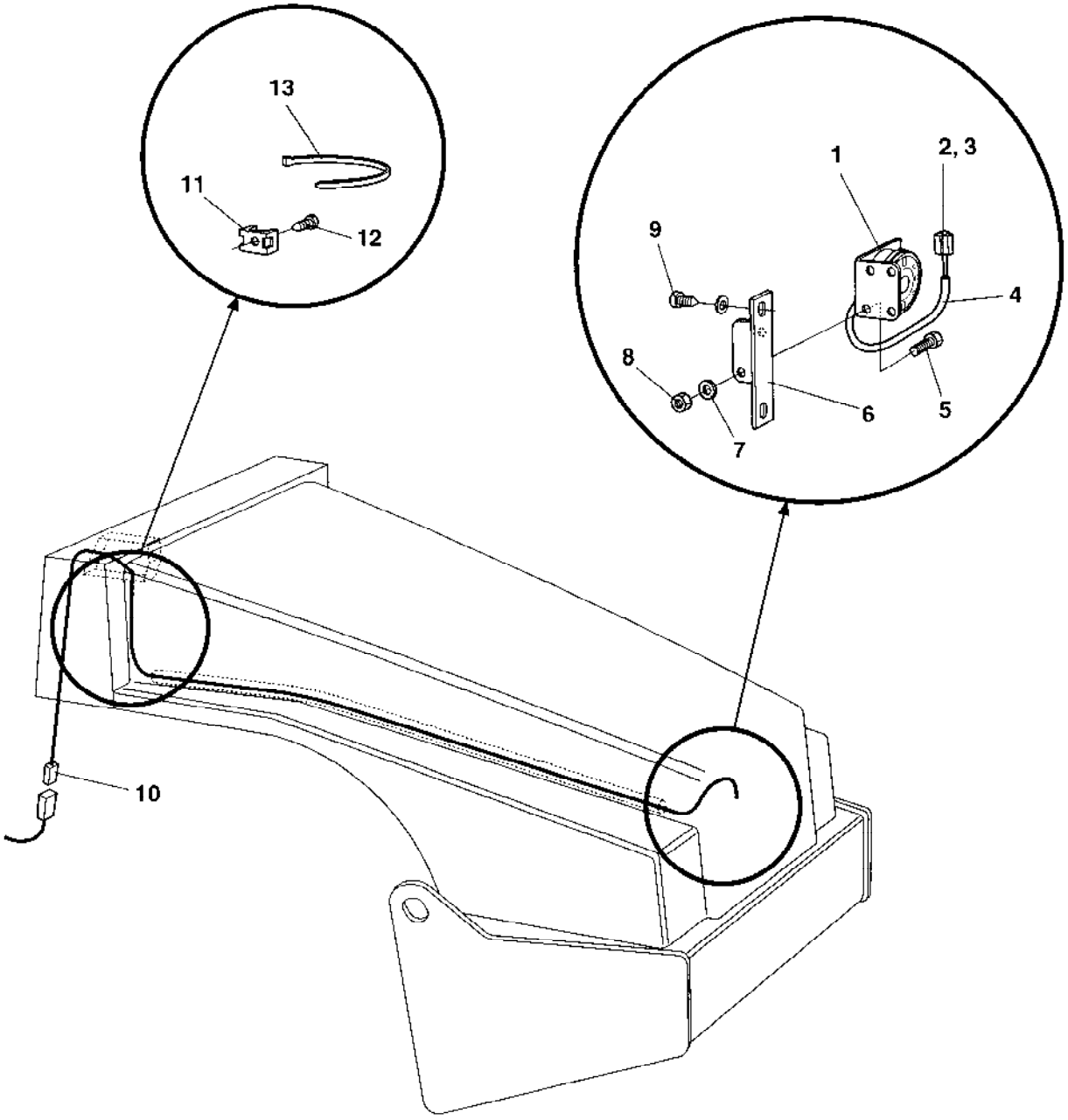
13
11
12
1
2, 3
9
4
8
6
5
7
10

Back-up alarm Option

Ref. No.	Part No.	Rem.	Qty	Description	Code
1	900798		1	Back-up alarm	
2	901766		1	Connector 2-POL	D
3	903897		2	Push-on terminal male	
4	244002	A	1	Plastic hose	
5	500004		2	Screw M5 0,8x12 8,8	
6	374140		1	Bracket	
7	904281		2	Washer 5,3x10x1	
8	586001		2	Lock nut M5	
9	903969		2	Screw	
10	373286		1	Cable harness	
11	904543		3	Cable tie holder	
12	903852		3	Screw	
13	925802		N	Cable ties L=142 mm	

A) L=150 mm

Protection cover, Head light Option

17344

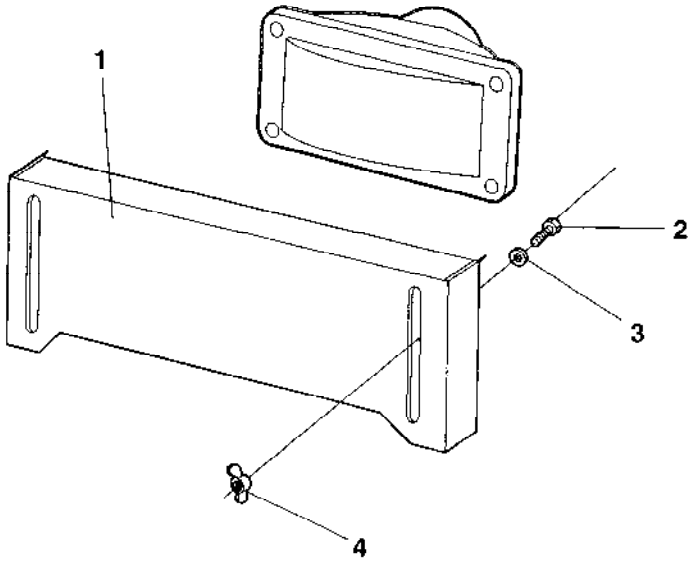

Protection cover, Head light Option

Ref. No.	Part No.	Rem.	Qty	Description	Code
1	376068		1	Protecting plate	
2	500013		2	Screw M6-1x16 8,8	
3	904228		2	Washer 6,4x12x1,5	
4	582006		2	Wing nut	

Ref. No.	Part No.	Rem.	Qty	Description	Code
10				Drivers platform (Page 200)	
15				Drivers platform, for cab Up to 64X21217 (Page 204)	
16				Drivers platform, for cab From 64X21218 (Page 206)	
17				Drivers seat Standard platform (Page 208)	
20				Drivers seat Turn-over platform Up to 64X20701 (Page 210)	
21				Drivers seat Turn-over platform From 64X20702 (Page 212)	
25				Drivers seat Turn-over in cab Up to 64X20701 (Page 214)	
26				Drivers seat Turn-over in cab From 64X20702 (Page 216)	
27	359918			Steering column (Page 218)	C
28				Steering system Up to 64X20701 (Page 220)	
29				Steering system From 64X20702 (Page 222)	
30				Turning Controls (Page 224)	
40				Turning Carrier (Page 226)	
50				Forward and reverse control Up to 64X20747 (Page 228)	
51				Forward and reverse control From 64X20748 Up to 64X20921 (Page 230)	
52				Forward and reverse control From 64X20922 (Page 232)	
55				Speed limiter Option Up to 64X21303 (Page 234)	
59				Speed limiter Option From 64X21304	
60				Engine controls (Page 236)	
90				Rops and fops (Page 238)	
94				Cab Up to 64X21217 (Page 240)	
96				Cab 383030 From 64X21218 (Page 272)	
200				Cab Work lights (Page 296)	
220				Cab Exterior, rear mirror (Page 298)	
260				Radio and cassette player Option (Page 300)	
500				Simple Cab mounting Option (Page 302)	
510				Simple Cab mounting Electric, Option (Page 304)	

Drivers platform

16012-2

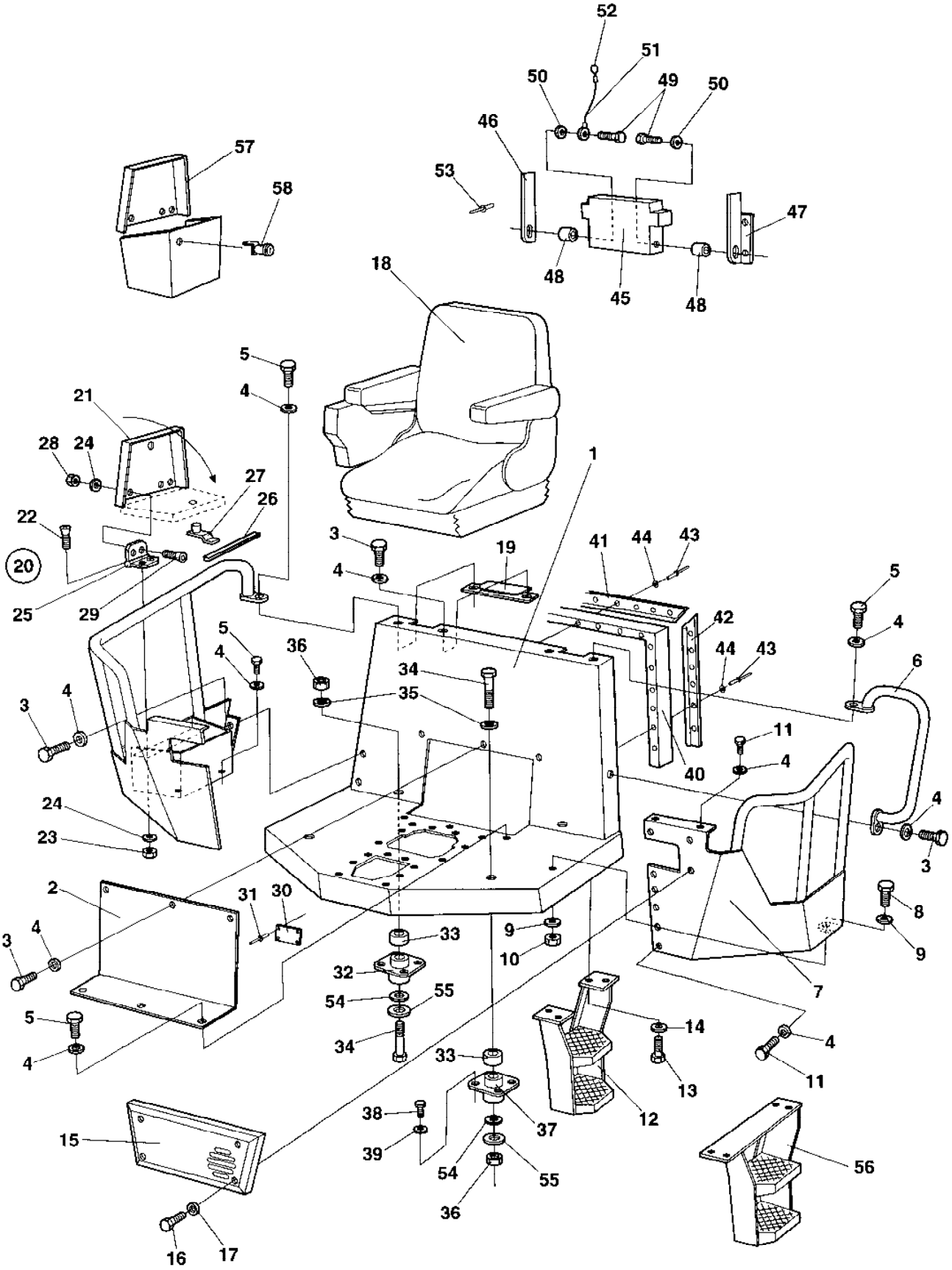

Ref. No.	Part No.	Rem.	Qty	Description	Code
1	371100		1	Platform	
2	372053		1	Cover	
3	500053		10	Screw M8-1,25x20 8,8	
4	904229		22	Washer 8,4x16x1,5	
5	500021		7	Screw M8-1,25x25 8,8	
6	371202	A	1	Hand rail	
7	371967	A	1	Operator protection	
8	500031		5	Screw M10-1,5x40 8,8	
9	904557		10	Washer 10,5x22x4	
10	570006		5	Nut M10	
11	500019		7	Screw M8-1,25x16 8,8	
12	372716	1	1	Step	
13	500029		4	Screw M10-1,5x30 8,8	
14	904230		4	Washer 10,5x22x2	
15	371268		1	Protection cover Up to 64X21151	
	382849		1	Protection cover From 64X21152	
16	500017		4	Screw Up to 64X21151	
	904206		4	Screw From 64X21152	
17	904228		4	Washer 6,4x12x1,5 Up to 64X21151	
	904941	H	4	Spacer screw From 64X21152	
18			0	Drivers seat Standard platform (Page 208)	
			0	Drivers seat Turn-over platform Up to 64X20701 (Page 210)	
			0	Drivers seat Turn-over platform From 64X20702 (Page 212)	
			0	Forward and reverse control Up to 64X20747 (Page 228)	
			0	Forward and reverse control From 64X20748 Up to 64X20921 (Page 230)	
			0	Forward and reverse control From 64X20922 (Page 232)	
			0	Engine controls (Page 236)	
19	380727		2	Cover	
20	371966	B	1	Operator protection	
21	372972	1	1	.Cover	
22	535015		4	.Screw	
23	586002		4	.Lock nut M6	
24	904228		8	.Washer 6,4x12x1,5	
25	903907		2	.Hinge	
26	202028	C	1	.Edge trim	
27	372658	1	1	.Lock	
	902866	D	1	..Key Marked "455"	D
28	581018		4	.Nut	
29	535013		4	.Screw	
30	343801		1	Sign plate	
31	903962		4	Blind rivet	
32	372757	E	2	Shock absorber	D
33	374471		4	Spacer	
34	500226		4	Screw M20-2.5x180 8,8	
35	904233		8	Washer 21x36x3	
36	586022		4	Lock nut M20-8	
37	370255	F	2	Shock absorber	D
38	500111		16	Screw M12x55 8,8	
39	904231		16	Washer 13x24x2	
40	372494	G	1XL	Rubber strip	

1) Old version
A) Left
B) Right
C) Length as required
D) Key nr. 455
E) Rear
F) Front
G) L = 2.400 m
H) Mounted on the inside of item 15, Protection cover P/N 382849.

Drivers platform

16012-2

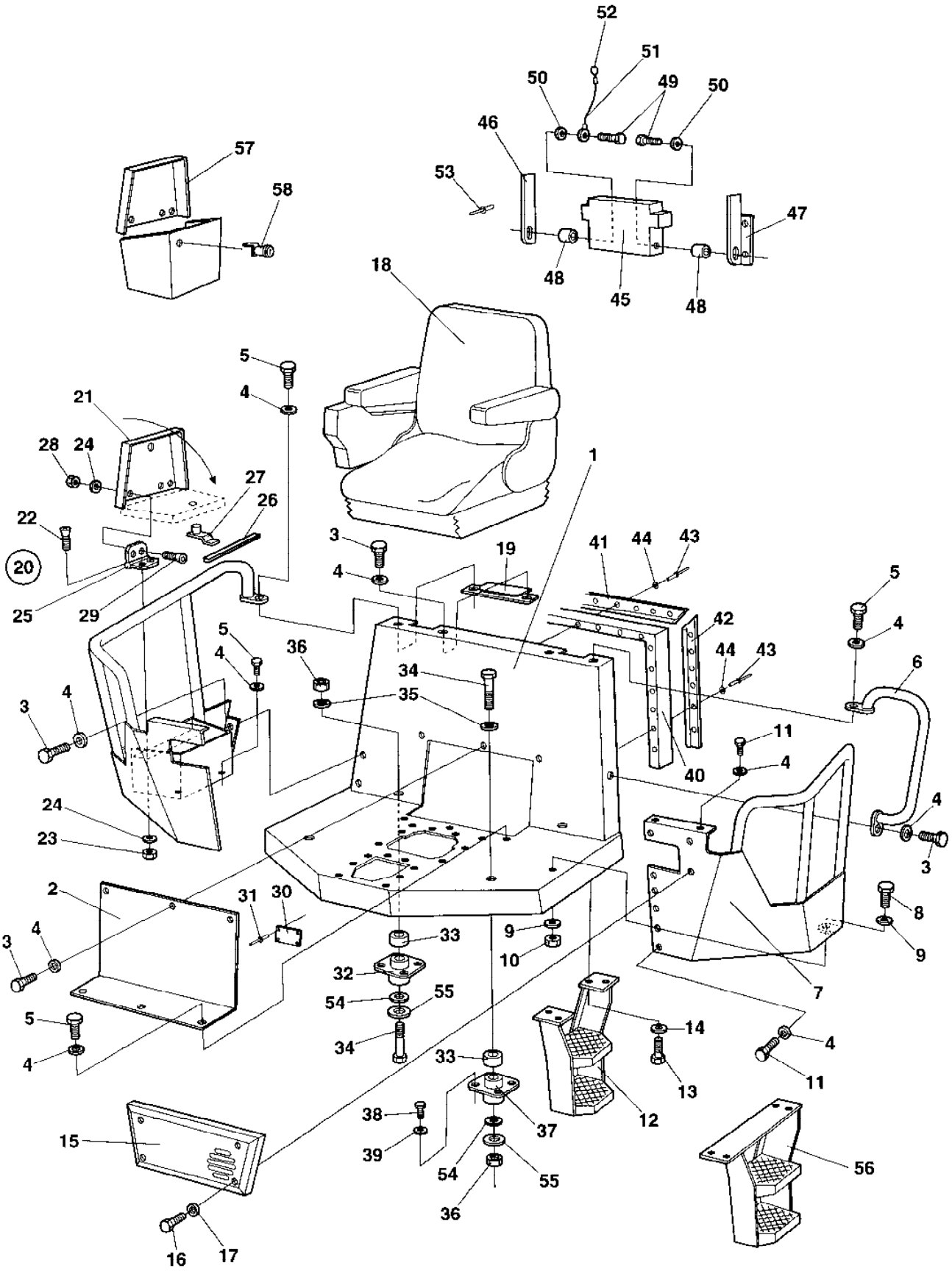

Ref. No.	Part No.	Rem.	Qty	Description	Code
41	372785		1	List	
42	372786		2	List	
43	904433		13	Blind rivet	
44	927974		13	Washer	
45	357425		1	Instruction book holder Up to 64X20980	
46	357426		1	Cover holder Up to 64X20980	
47	357427		1	Cover holder Up to 64X20980	
48	902163		2	Parallel pin Up to 64X20980	
49	902164		2	Screw Up to 64X20980	
50	929602		2	Washer Up to 64X20980	
51	357643		1	Wire Up to 64X20980	
	384584	I	1	Wire From 64X20981	
52	358254		1	Key-ring Up to 64X20980	
53	903436		4	Blind rivet Up to 64X20980	
	904855	I	4	Blind rivet From 64X20981	
54	903290		4	Washer 21x36x6	
55	347512		4	Washer	
56	376255	2	1	Step	
57	376079	2	1	Cover	
58	376118	2	1	Lock	
59	902866		1	.Key Marked "455"	D

2) New version

I) Mounted in the Operators manual box on the right side of the driver seat.

Drivers platform, for cab

16023-1

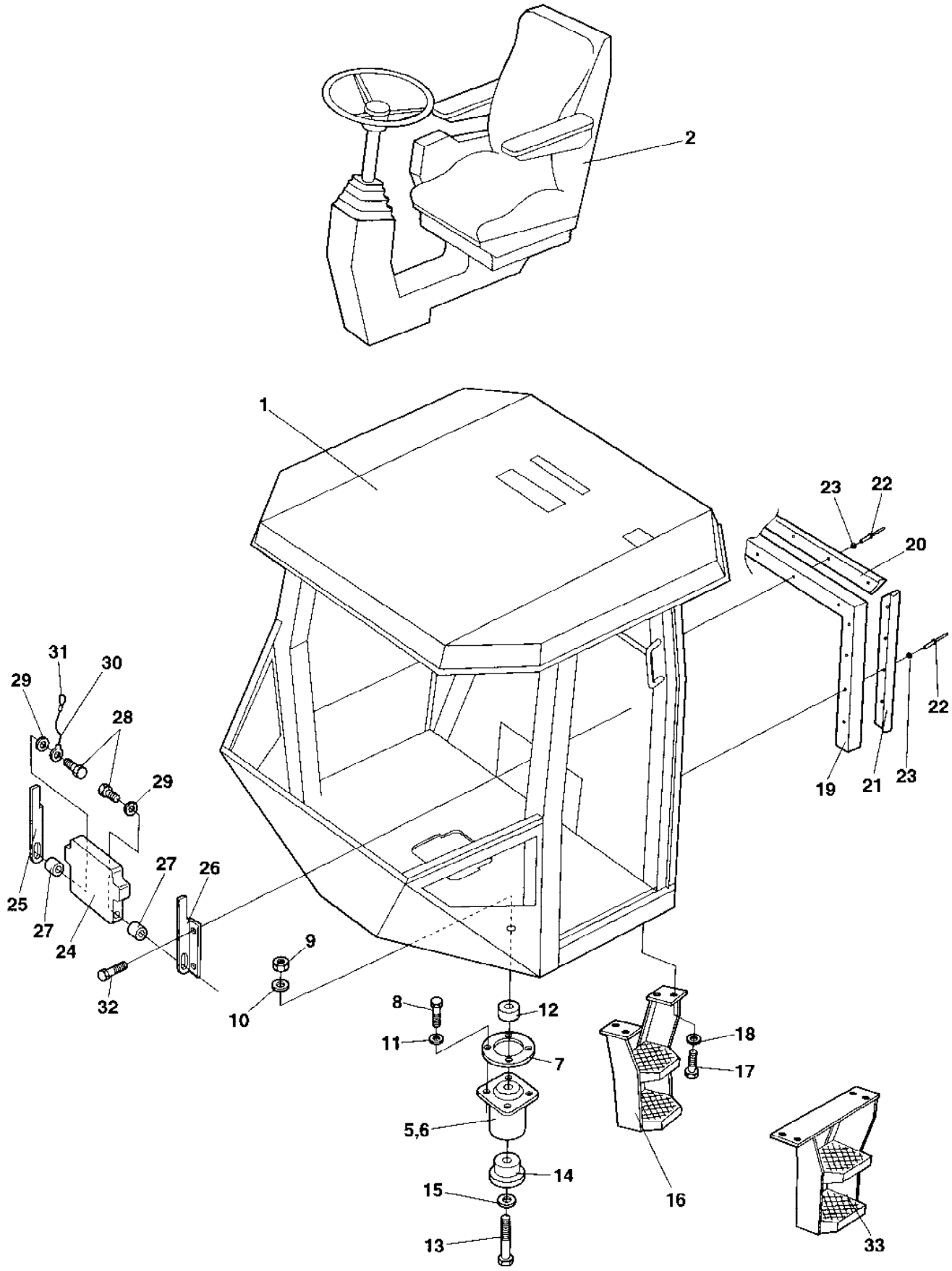

Drivers platform, for cab

Ref. No.	Part No.	Rem.	Qty	Description	Code
1			0	Cab (Page 240)	
2			0	Drivers seat Turn-over in cab Up to 64X20701 (Page 214)	
			0	Drivers seat Turn-over in cab From 64X20702 (Page 216)	
			0	Forward and reverse control Up to 64X20747 (Page 228)	
			0	Forward and reverse control From 64X20748 Up to 64X20921 (Page 230)	
			0	Forward and reverse control From 64X20922 (Page 232)	
			0	Engine controls (Page 236)	
5	374606	B	2	Shock absorber Green	D
6	374607	C	2	Shock absorber Yellow	D
7	359998		4	Back-up ring	
8	500121		16	Screw M12x65 8,8	
9	901145		4	Lock nut M20-10	
10	904233		4	Washer 21x36x3	
11	904231		16	Washer 13x24x2	
12	370258		4	Spacer washer	
13	903905		4	Screw	
14	372457		4	Back-up ring	
15	903290		4	Washer 21x36x6	
16	372716	1	1	Step	
17	500029	1	4	Screw M10-1,5x30 8,8	
	500029	2	6	Screw M10-1,5x30 8,8	
18	904230	1	4	Washer 10,5x22x2	
	904230	2	6	Washer 10,5x22x2	
19	372494	A	1XL	Rubber strip	
20	372785		1	List	
21	372786		2	List	
22	904433		13	Blind rivet	
23	927974		13	Washer	
24	357425		1	Instruction book holder	
25	357426		1	Cover holder	
26	357427		1	Cover holder	
27	902163		2	Parallel pin	
28	902164		2	Screw	
29	929602		2	Washer	
30	357643		1	Wire	
31	358254		1	Key-ring	
32	526007		4	Screw	
33	376255	2	1	Step	

1) Old version
2) New version
A) L = 2,400 m
B) Rear
C) Front

Drivers platform, for cab

17650

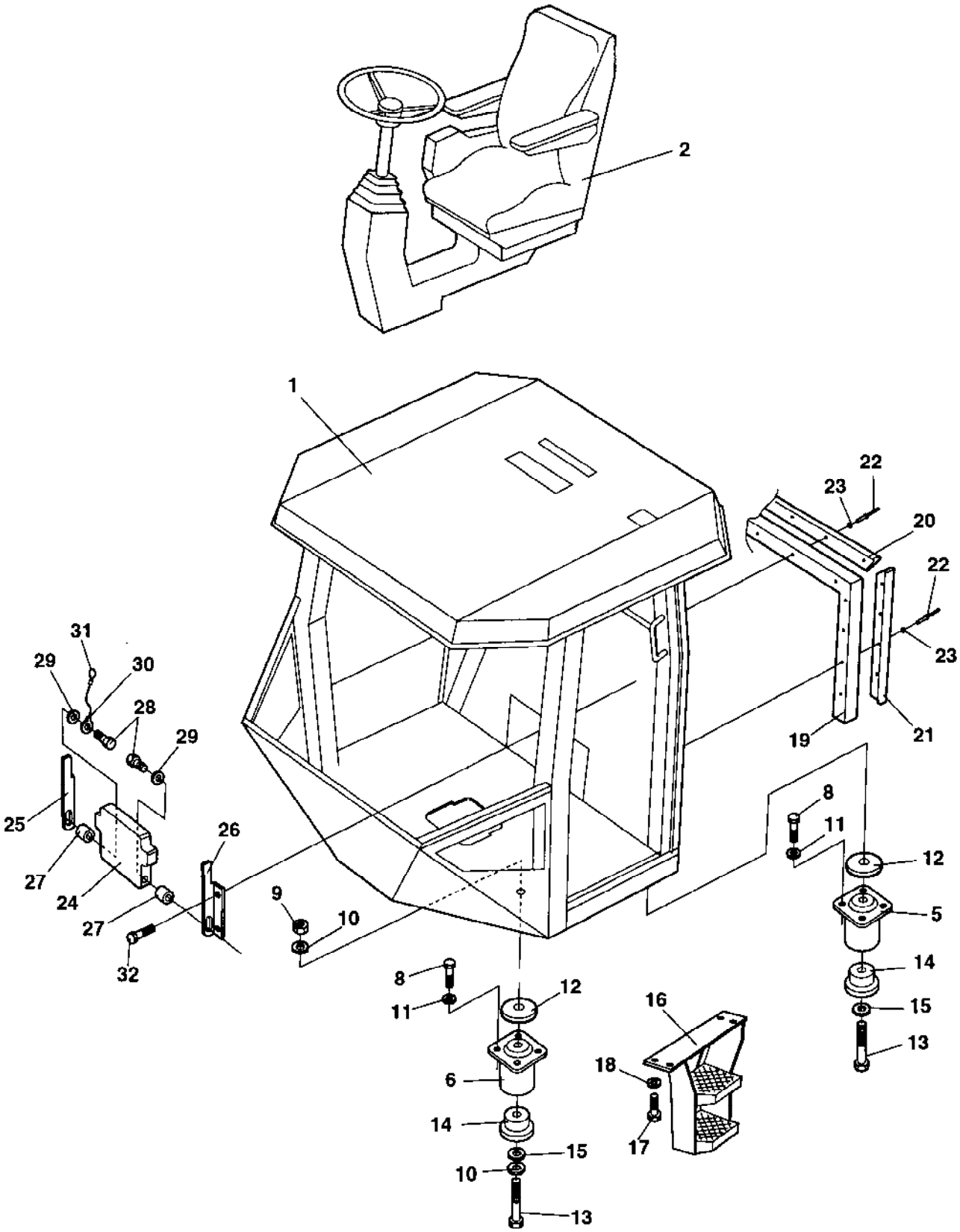

Drivers platform, for cab

Ref. No.	Part No.	Rem.	Qty	Description	Code
1			1	Cab 383030 (Page 272)	
2				Drivers seat Turn-over in cab (Page 216)	
				Forward and reverse control (Page 232)	
				Engine controls (Page 236)	
5	374606		2	Shock absorber Green	D
6	374607		2	Shock absorber Yellow	D
8	500195		16	Screw M12-1,75x50 8.8	
9	901145		4	Lock nut M20-10	
10	904233		6	Washer 21x36x3	
11	904231		16	Washer 13x24x2	
12	384759		4	Spacer	
13	791218		4	Screw M20x200	
14	372457		4	Back-up ring	
15	903290		4	Washer 21x36x6	
16	376255		1	Step	
17	500029		6	Screw M10-1,5x30 8,8	
18	904230		6	Washer 10,5x22x2	
19	372494	A	1XL	Rubber strip	
20	372785		1	List	
21	372786		2	List	
22	904433		13	Blind rivet	
23	927974		13	Washer	
24	357425		1	Instruction book holder	
25	357426		1	Cover holder	
26	357427		1	Cover holder	
27	902163		2	Parallel pin	
28	902164		2	Screw	
29	929602		2	Washer	
30	357643		1	Wire	
31	358254		1	Key-ring	
32	526007		4	Screw	

A) L = 2,400 m

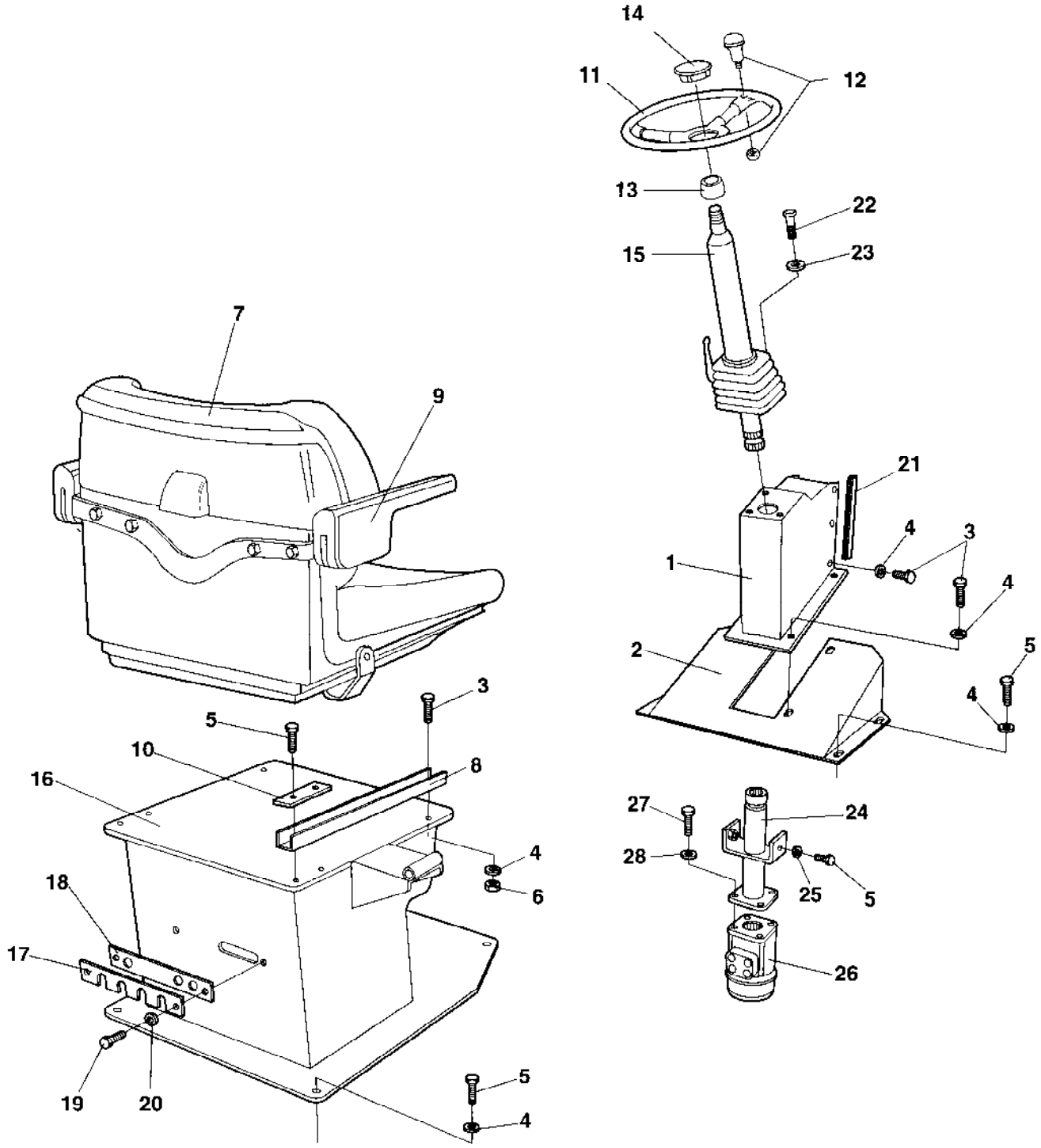
14
11
12
13
22
15
23
7
9
21
4
3
1
4
2
5
4
3
5
10
8
16
4
6
18
17
19
20
5
4
27
24
28
25
5
26

Ref. No.	Part No.	Rem.	Qty	Description	Code
1	371968		1	Steering console	
2	371213		1	Foot rest	
3	500053		12	Screw M8-1,25x20 8,8	
4	904229		24	Washer 8,4x16x1,5	
5	500021		14	Screw M8-1,25x25 8,8	
6	570005		6	Nut M8	
7	370234		1	Drivers seat	
8		A	1	Slide rail	
9			1	Arm rest, left	
			1	Arm rest, right	
10	370235		2	Holder plate	
11	372964		1	Steering wheel, cpl	
			1	.Steering wheel	
12	935614		1	.Turning knob	D
13			1	.Insert adapter	D
14	935613		1	.Cover plate	
15	359918		1	Steering column (Page 218)	C
16	371270		1	Seat frame	
17	359914		1	Cover	
18	359915		1	Grommet	
19	500075		2	Screw M6-1x25 8,8	
20	904228		2	Washer 6,4x12x1,5	
21	202028	B	2XL	Edge trim	
22	500029		3	Screw M10-1,5x30 8,8	
23	904557		3	Washer 10,5x22x4	
24	370977		1	Linkage shaft	
25	904640		2	Washer 8,4x22x3	
26			1	Steering valve	
27	502034		4	Screw UNC 3/8 - 16	
28	904230		4	Washer 10,5x22x2	

A) One pair
B) L = 0.290 m

Drivers seat Turn-over platform

15987-1

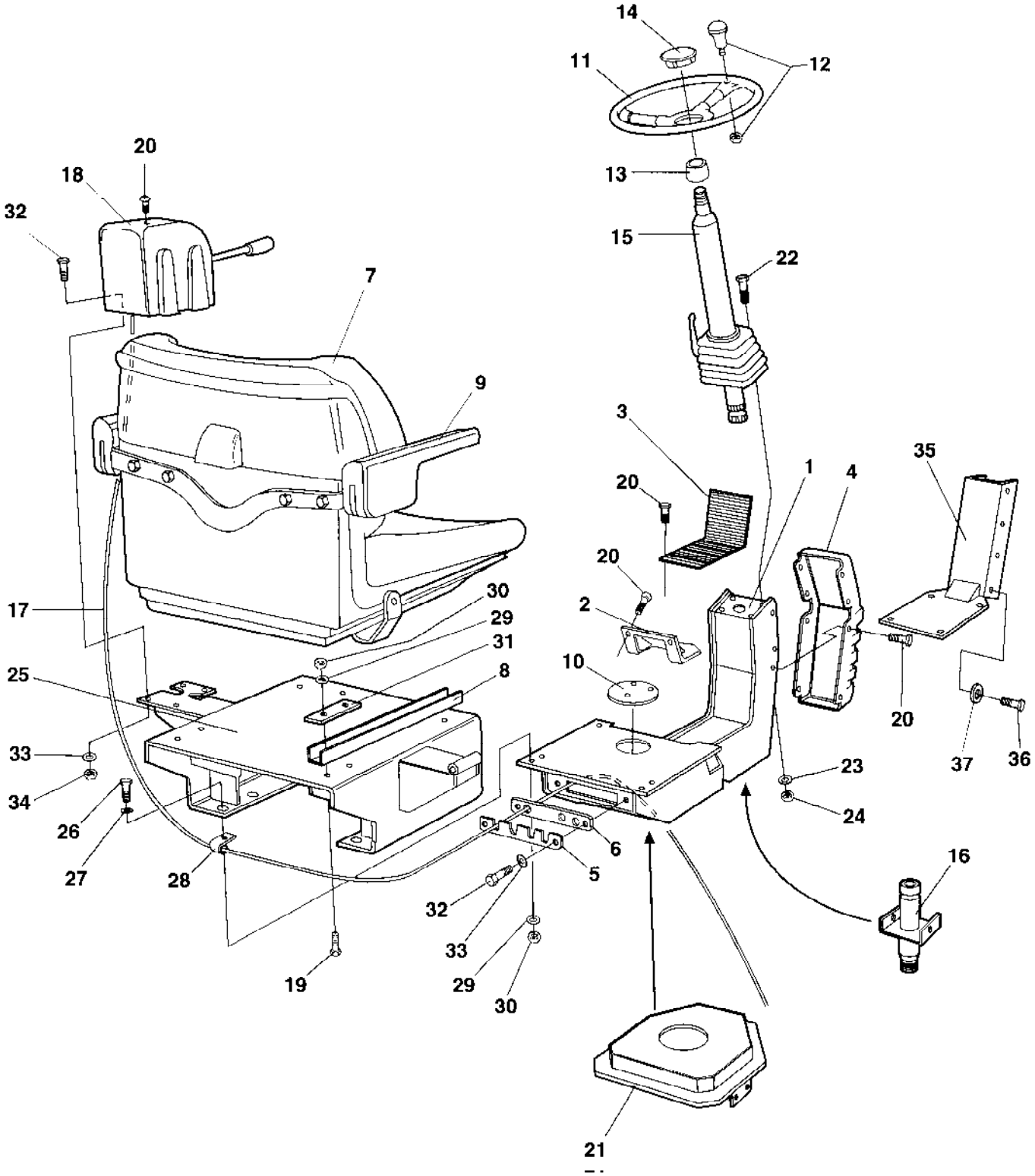

Ref. No.	Part No.	Rem.	Qty	Description	Code
1	359900		1	Seat frame	
2	359908		1	Bearing cover	
3	359911		1	Rubber mat	
4	359574		1	Cover	
5	359914		1	Cover	
6	359915		1	Grommet	
7	370234		1	Drivers seat	
8		A	1	Slide rail	
9			1	Arm rest, left	
			1	Arm rest, right	
10	359920		1	Plug	
11	372964		1	Steering wheel, cpl	
			1	.Steering wheel	
12	935614		1	.Turning knob	D
13			1	.Insert adapter	D
14	935613		1	.Cover plate	
15	359918		1	Steering column (Page 218)	C
16			0	Steering system (Page 220)	
17			0	Turning Controls (Page 224)	
18	359419		1	Control cover	
19	500053		6	Screw M8-1,25x20 8,8	
20	904206		14	Screw	
21			0	Turning Carrier (Page 226)	
22	500028		3	Screw M10-1,5x25 8,8	
23	904557		3	Washer 10,5x22x4	
24	570006		3	Nut M10	
25	370211		1	Seat frame	
26	500021		6	Screw M8-1,25x25 8,8	
27	904229		6	Washer 8,4x16x1,5	
28	921104		2	Clamp	
29	904229		18	Washer 8,4x16x1,5	
30	570005		12	Nut M8	
31	370235		2	Holder plate	
32	500040		6	Screw M6-1x20 8,8	
33	904228		6	Washer 6,4x12x1,5	
34	586002		4	Lock nut M6	
35	371407		1	Cover	
36	500021		12	Screw M8-1,25x25 8,8	
37	904229		12	Washer 8,4x16x1,5	
100	348331		1	Seat cover	D

A) One pair

Drivers seat Turn-over platform

17036

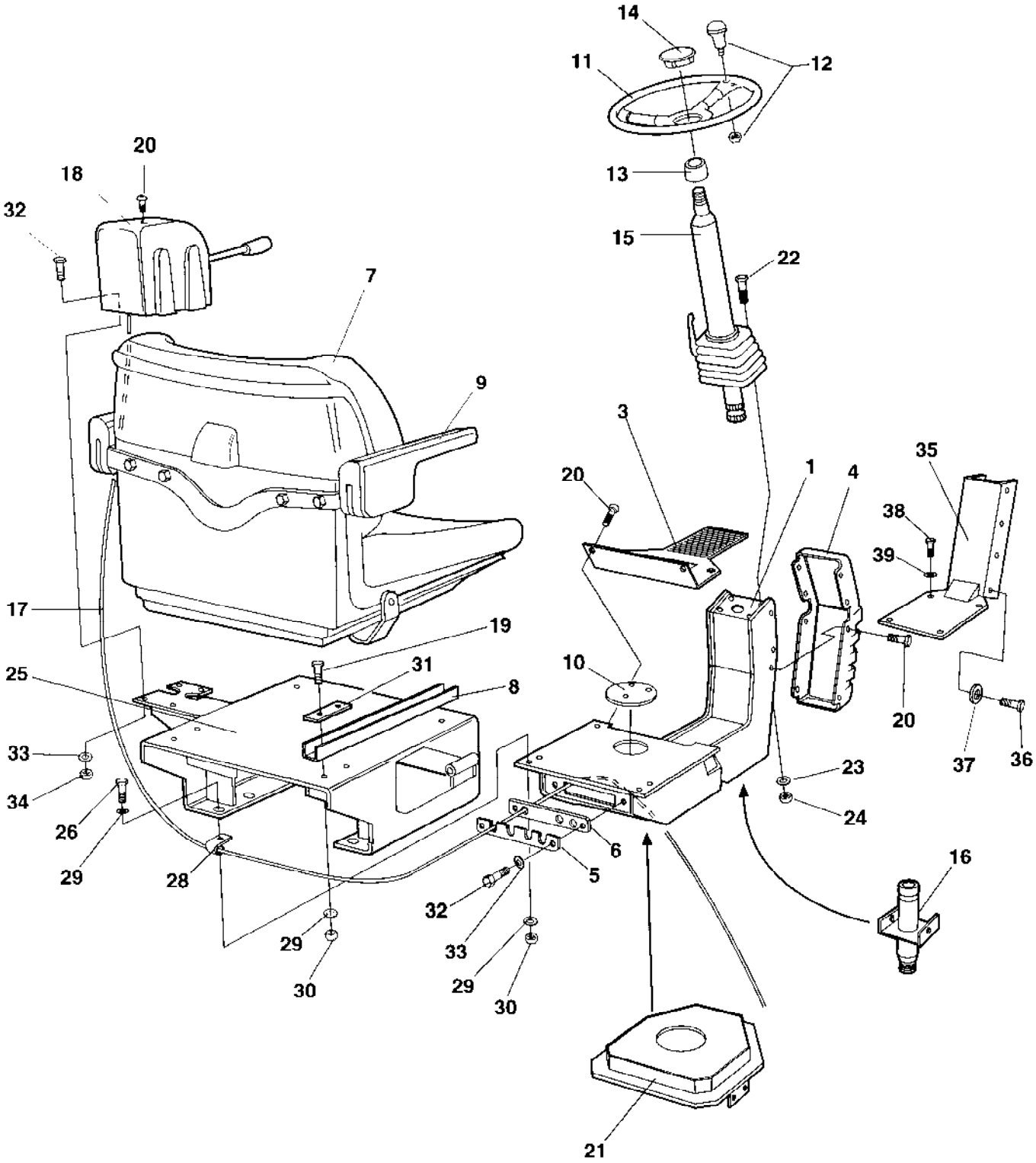

Drivers seat Turn-over platform

Ref. No.	Part No.	Rem.	Qty	Description	Code
1	359900		1	Seat frame	
3	381400		1	Bearing cover	
4	359574		1	Cover	
5	359914		1	Cover	
6	359915		1	Grommet	
7	370234		1	Drivers seat	
8		A	1	Slide rail	
9			1	Arm rest, left	
			1	Arm rest, right	
10	359920		1	Plug	
11	372964		1	Steering wheel, cpl	
			1	.Steering wheel	
12	935614		1	.Turning knob	D
13			1	.Insert adapter	D
14	935613		1	.Cover plate	
15	359918		1	Steering column (Page 218)	C
16			0	Steering system (Page 222)	
17			0	Turning Controls (Page 224)	
18	359419		1	Control cover	
19	500053		6	Screw M8-1,25x20 8,8	
20	904206		16	Screw	
21			0	Turning Carrier (Page 226)	
22	500028		3	Screw M10-1,5x25 8,8	
23	904557		3	Washer 10,5x22x4	
24	570006		3	Nut M10	
25	370211		1	Seat frame	
26	500021		6	Screw M8-1,25x25 8,8	
27	603019		6	Washer	
28	921104		1	Clamp	
29	904229		18	Washer 8,4x16x1,5	
30	570005		12	Nut M8	
31	370235		2	Holder plate	
32	500040		6	Screw M6-1x20 8,8	
33	904228		6	Washer 6,4x12x1,5	
34	586002		4	Lock nut M6	
35	371407		1	Cover	
36	500019		8	Screw M8-1,25x16 8,8	
37	904229		12	Washer 8,4x16x1,5	
38	500021		4	Screw M8-1,25x25 8,8	
39	904229		1	Washer 8,4x16x1,5	
100	348331		1	Seat cover	D

A) One pair

Drivers seat Turn-over in cab

15985

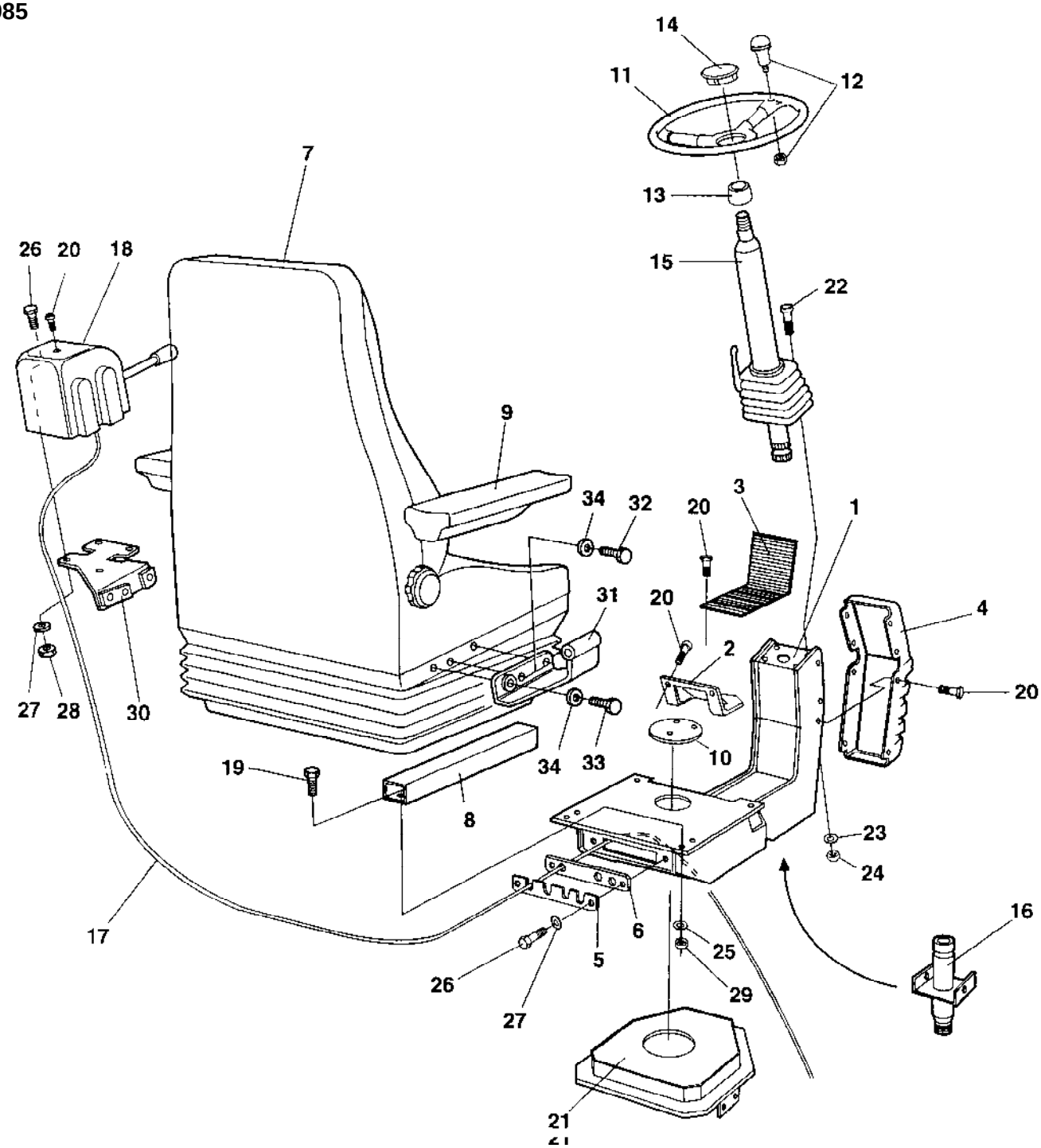

Drivers seat Turn-over in cab

Ref. No.	Part No.	Rem.	Qty	Description	Code
1	359900		1	Seat frame	
2	359908		1	Bearing cover	
3	359911		1	Rubber mat	
4	359574		1	Cover	
5	359914		1	Cover	
6	359915		1	Grommet	
7	359917		1	Drivers seat	
8		A	1	Slide rail	
9			1	Arm rest, left	
			1	Arm rest, right	
10	359920		1	Plug	
11	372964		1	Steering wheel, cpl	
			1	.Steering wheel	
12	935614		1	.Turning knob	D
13			1	.Insert adapter	D
14	935613		1	.Cover plate	
15	359918		1	Steering column (Page 218)	C
16			0	Steering system (Page 220)	
17			0	Turning Controls (Page 224)	
18	359419		1	Control cover	
19	500053		6	Screw M8-1,25x20 8,8	
20	904206		14	Screw	
21			0	Turning Carrier (Page 226)	
22	500028		3	Screw M10-1,5x25 8,8	
23	904557		3	Washer 10,5x22x4	
24	570006		3	Nut M10	
25	904229		6	Washer 8,4x16x1,5	
26	500040		6	Screw M6-1x20 8,8	
27	904228		6	Washer 6,4x12x1,5	
28	586002		4	Lock nut M6	
29	570005		6	Nut M8	
30	359972		1	Control cable holder	
31	359971		1	Control cable holder	
32	500031		4	Screw M10-1,5x40 8,8	
33	903914		2	Screw	
34	904230		6	Washer 10,5x22x2	

A) One pair

Drivers seat Turn-over in cab

17037

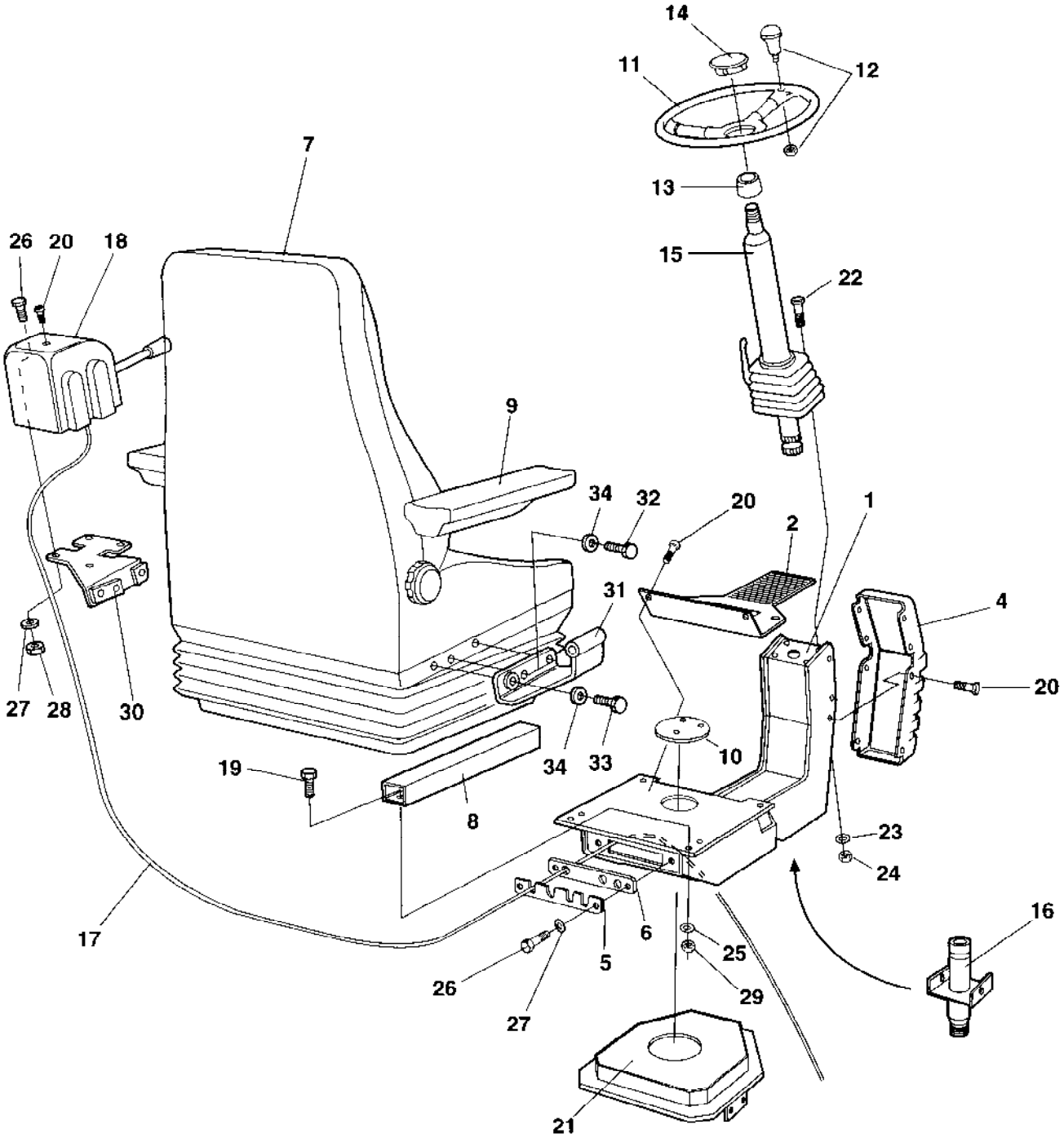

Drivers seat Turn-over in cab

Ref. No.	Part No.	Rem.	Qty	Description	Code
1	359900		1	Seat frame	
2	381400		1	Bearing cover	
4	359574		1	Cover	
5	359914		1	Cover	
6	359915		1	Grommet	
7	359917		1	Drivers seat	
8		A	1	Slide rail	
9			1	Arm rest, left	
			1	Arm rest, right	
10	359920		1	Plug	
11	372964		1	Steering wheel, cpl	
			1	.Steering wheel	
12	935614		1	.Turning knob	D
13			1	.Insert adapter	D
14	935613		1	.Cover plate	
15	359918		1	Steering column (Page 218)	C
16			0	Steering system (Page 222)	
17			0	Turning Controls (Page 224)	
18	359419		1	Control cover	
19	500053		6	Screw M8-1,25x20 8,8	
20	904206		14	Screw	
21			0	Turning Carrier (Page 226)	
22	500028		3	Screw M10-1,5x25 8,8	
23	904557		3	Washer 10,5x22x4	
24	570006		3	Nut M10	
25	904229		6	Washer 8,4x16x1,5	
26	500040		6	Screw M6-1x20 8,8	
27	904228		6	Washer 6,4x12x1,5	
28	586002		4	Lock nut M6	
29	570005		6	Nut M8	
30	359972		1	Control cable holder	
31	359971		1	Control cable holder	
32	500031		4	Screw M10-1,5x40 8,8	
33	903914		2	Screw	
34	904230		6	Washer 10,5x22x2	

A) One pair

359918 Steering column

15944

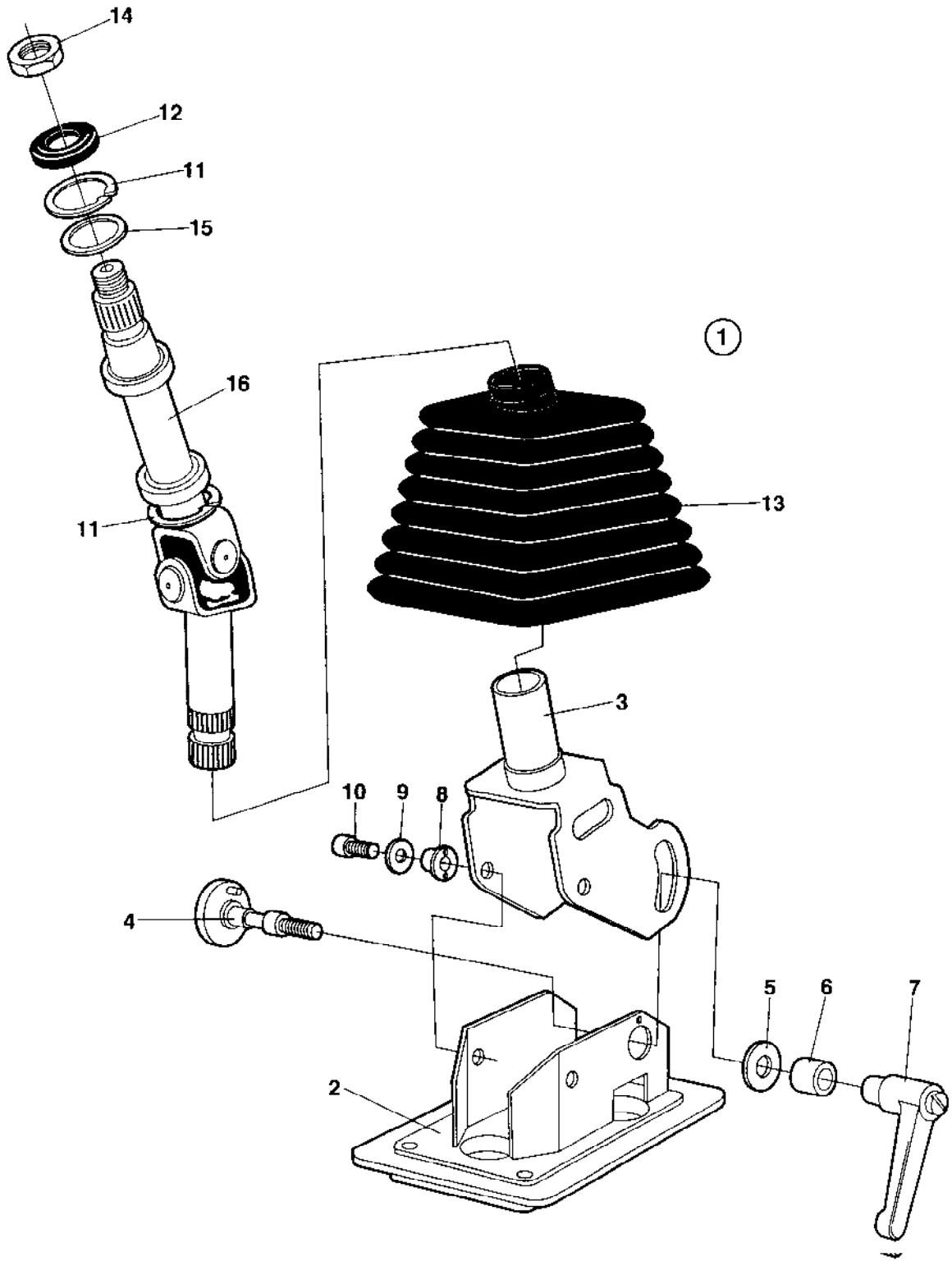

359918 Steering column

Ref. No.	Part No.	Rem.	Qty	Description	Code
1			1	Steering column, cpl	
2	935229	A	1	.Frame	
3	935230	B	1	.Frame	
4	935231		1	.Screw	
5	935232		1	.Washer	
6	935233		1	.Sleeve	
7	935234		1	.Lever	
8	935235		2	.Washer	
9	935236		2	.Washer	
10	935237		2	.Screw	
11	935238		2	.Retainer ring	
12	935239		1	.Seal	
13	935240		1	.Bellows	
14	935241		1	.Nut	
15	935242		1	.Washer	
16	935243		1	.Cardan shaft	

A) Lower
B) Upper

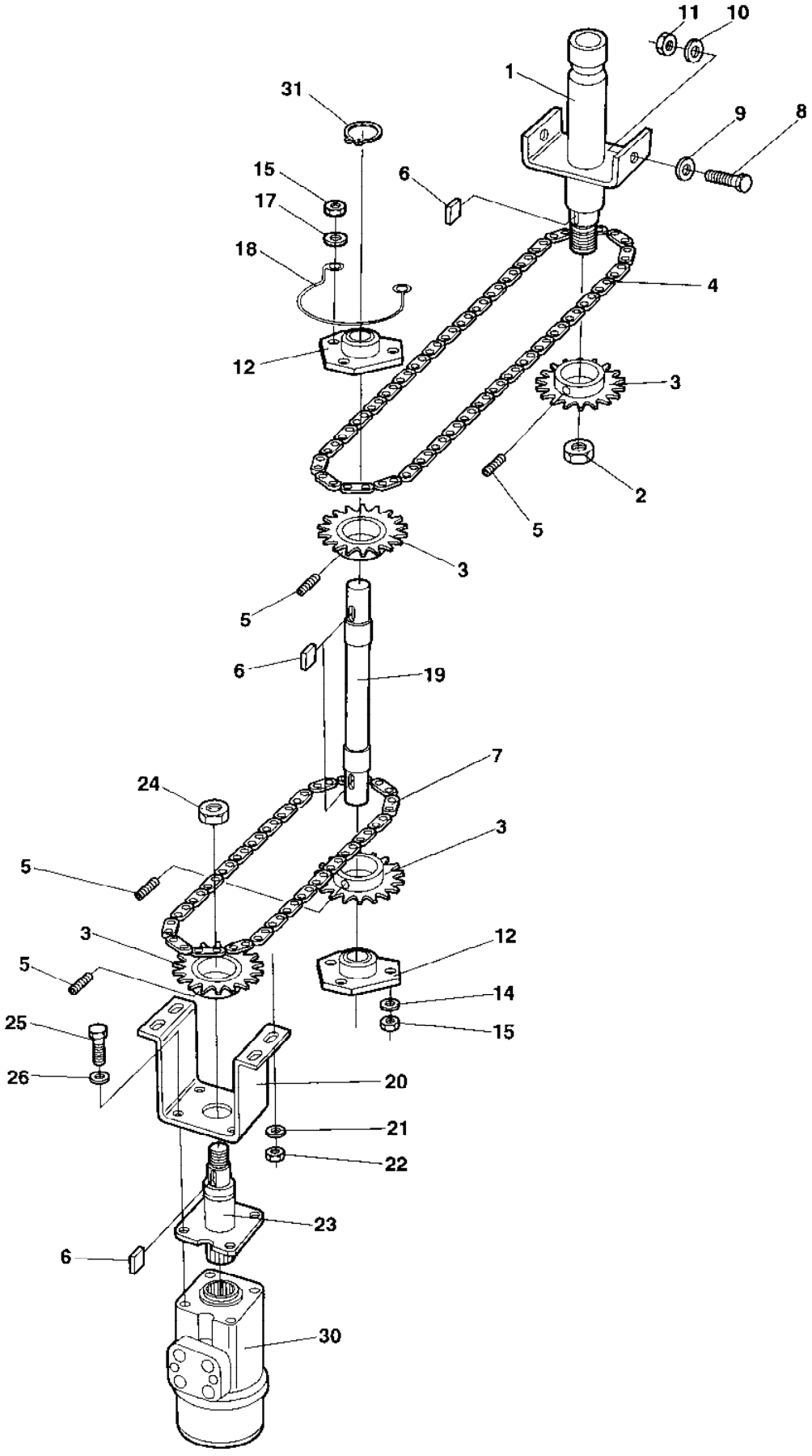
11
10
1
31
9
8
15
6
17
18
4
12
3
2
5
3
5
6
19
7
24
3
5
3
12
5
14
15
25
26
20
21
22
23
6
30

Ref. No.	Part No.	Rem.	Qty	Description	Code
1	359919		1	Shaft	
2			1	.Nut	
3	359916		4	Chain wheel	D
4	359921		1	Chain	D
5	516051		4	Set screw	
6	350009		4	Flat key	D
7	372653	A	1	Chain	
	372654	B	1	Chain	
8	500021		2	Screw M8-1,25x25 8,8	
9	904734		2	Washer 8,4x26x4	
10	904229		2	Washer 8,4x16x1,5	
11	586003		2	Lock nut M8	
12	903917	C	2	Bearing outer	
	903918	D	2	Bearing inner	
14	904228		4	Washer 6,4x12x1,5	
15	586002		6	Lock nut M6	
17	603001		2	Washer	
18	372672		1	Chain guard	
19	374933	A	1	Shaft	
	374934	B	1	Shaft	
20	371214	E	1	Bracket	
21	904640		4	Washer 8,4x22x3	
22	586003		4	Lock nut M8	
23	370978		1	Linkage shaft	
24			1	.Nut	
25	502036		4	Screw	
26	904230		4	Washer 10,5x22x2	
30			1	Steering valve	
31	150004		1	Retainer ring	

A) For cab
B) For platform
C) Outer
D) Inner
E) Steering valve

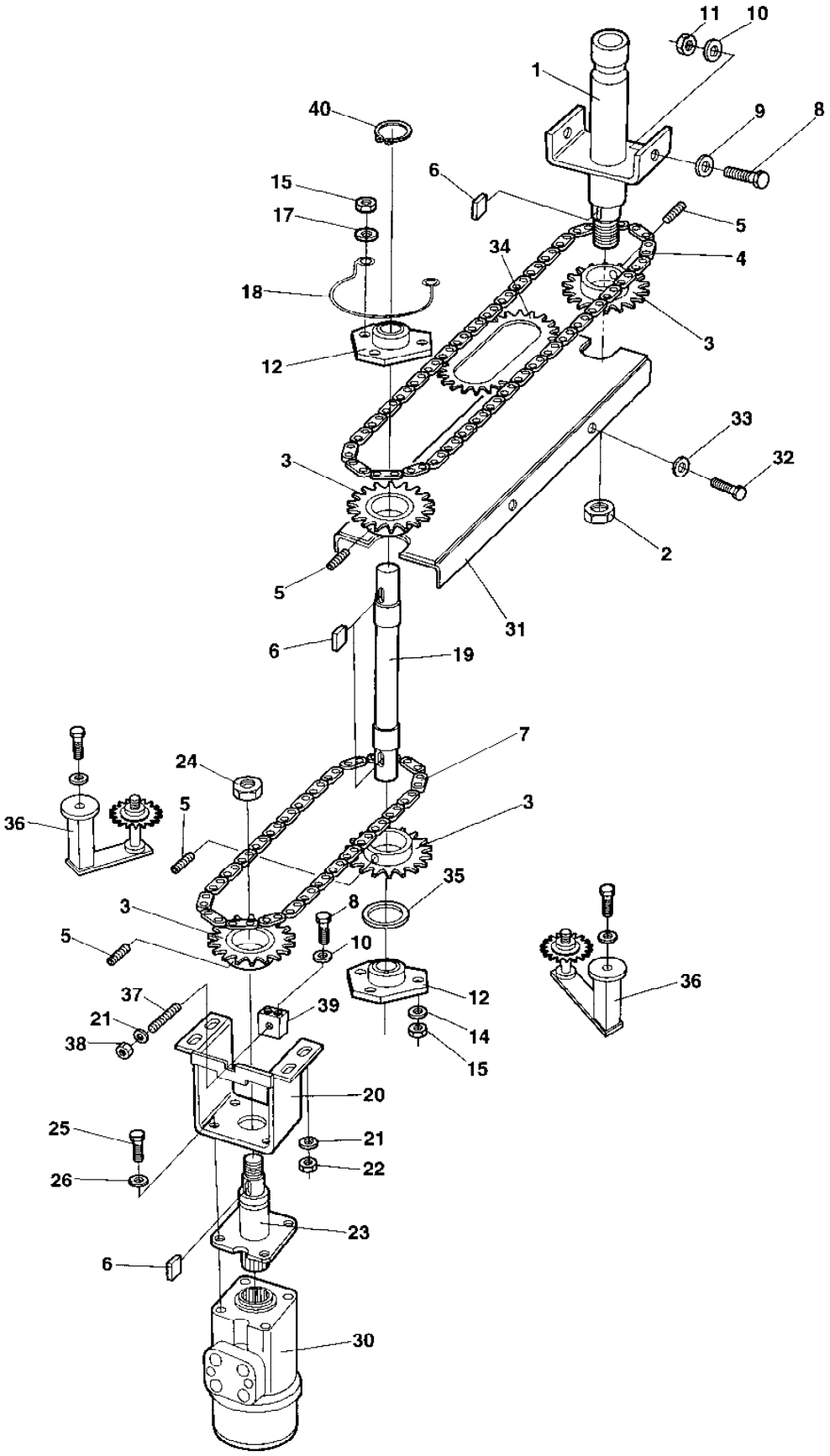
11
10
1
40
9
8
15
6
17
5
34
4
18
3
12
33
3
32
2
5
31
6
19
7
24
5
3
36
35
3
8
5
10
36
37
12
21
39
14
38
15
20
25
21
22
26
23
6
30

Ref. No.	Part No.	Rem.	Qty	Description	Code
1	359919		1	Shaft	
2			1	.Nut	
3	359916		4	Chain wheel	D
4	359921		1	Chain	D
5	516051		4	Set screw	
6	350009		4	Flat key	D
7	372653	A	1	Chain	
	372654	B	1	Chain	
8	500021		3	Screw M8-1,25x25 8,8	
9	904734		2	Washer 8,4x26x4	
10	904229		3	Washer 8,4x16x1,5	
11	586003		2	Lock nut M8	
12	903917	C	2	Bearing outer	
	903918	D	2	Bearing inner	
14	904228		4	Washer 6,4x12x1,5	
15	586002		6	Lock nut M6	
17	603001		2	Washer	
18	372672		1	Chain guard	
19	374933	A	1	Shaft	
	374934	B	1	Shaft	
20	381567	E	1	Bracket	
21	904640		5	Washer 8,4x22x3	
22	586003		4	Lock nut M8	
23	370978		1	Linkage shaft	
24			1	.Nut	
25	502036		4	Screw	
26	904230		4	Washer 10,5x22x2	
30			1	Steering valve	
31	381403		1	Chain supporter	
32	500040		4	Screw M6-1x20 8,8	
33	904735		4	Washer	
34	904800		1	Chain tensioner Up to 64X20827	
35	904214		1	Washer	
36	904739		2	Chain tensioner	
37	904802		1	Threaded stud	
38	586003		1	Lock nut M8	
39	381571		1	Bracket	
40	150004		1	Retainer ring	

A) For cab
B) For platform
C) Outer
D) Inner
E) Steering valve

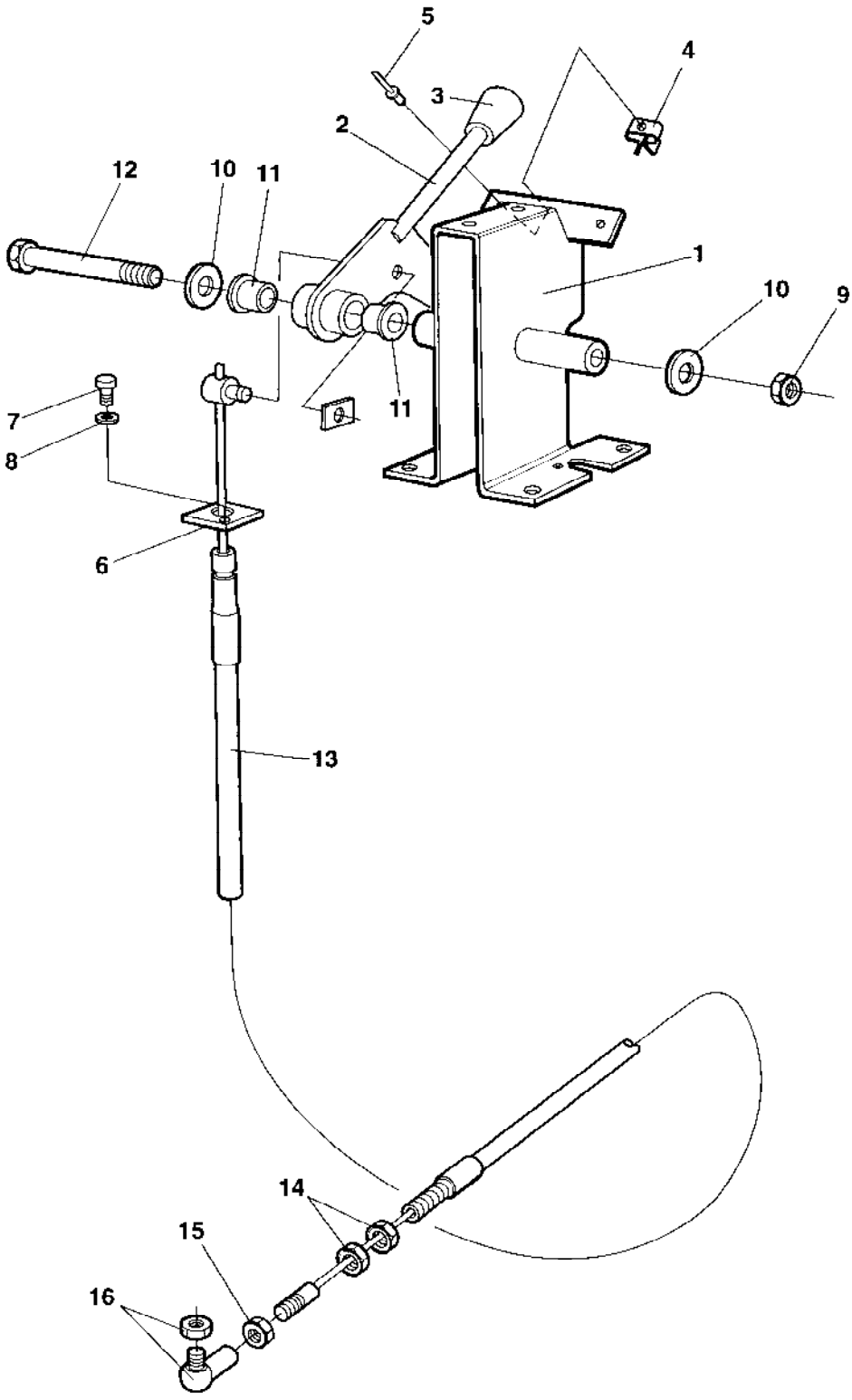
5
4
3
2
12
10
11
1
10
9
11
7
8
6
13
14
15
16

Ref. No.	Part No.	Rem.	Qty	Description	Code
1	935771		1	Framing	
2	909745		1	Lever	
3	908190		1	Ball knob	
4	908189		1	Lever lock	
5	624016		1	Blind rivet	
6	908188		1	Cable holder	
7	533024		1	Screw	
8	615041		1	Washer 5,3x11	
9	586002		1	Lock nut M6	
10	928381		2	Washer 6,4x18x1,6	
11	908187		2	Plain bearing	
12	500169		1	Screw	
13	935774	A	1	Cable, cpl	D
14	927233		2	.Nut	
15	570004		1	.Nut M6	
16	416034		1	Ball joint	D

A) Turning

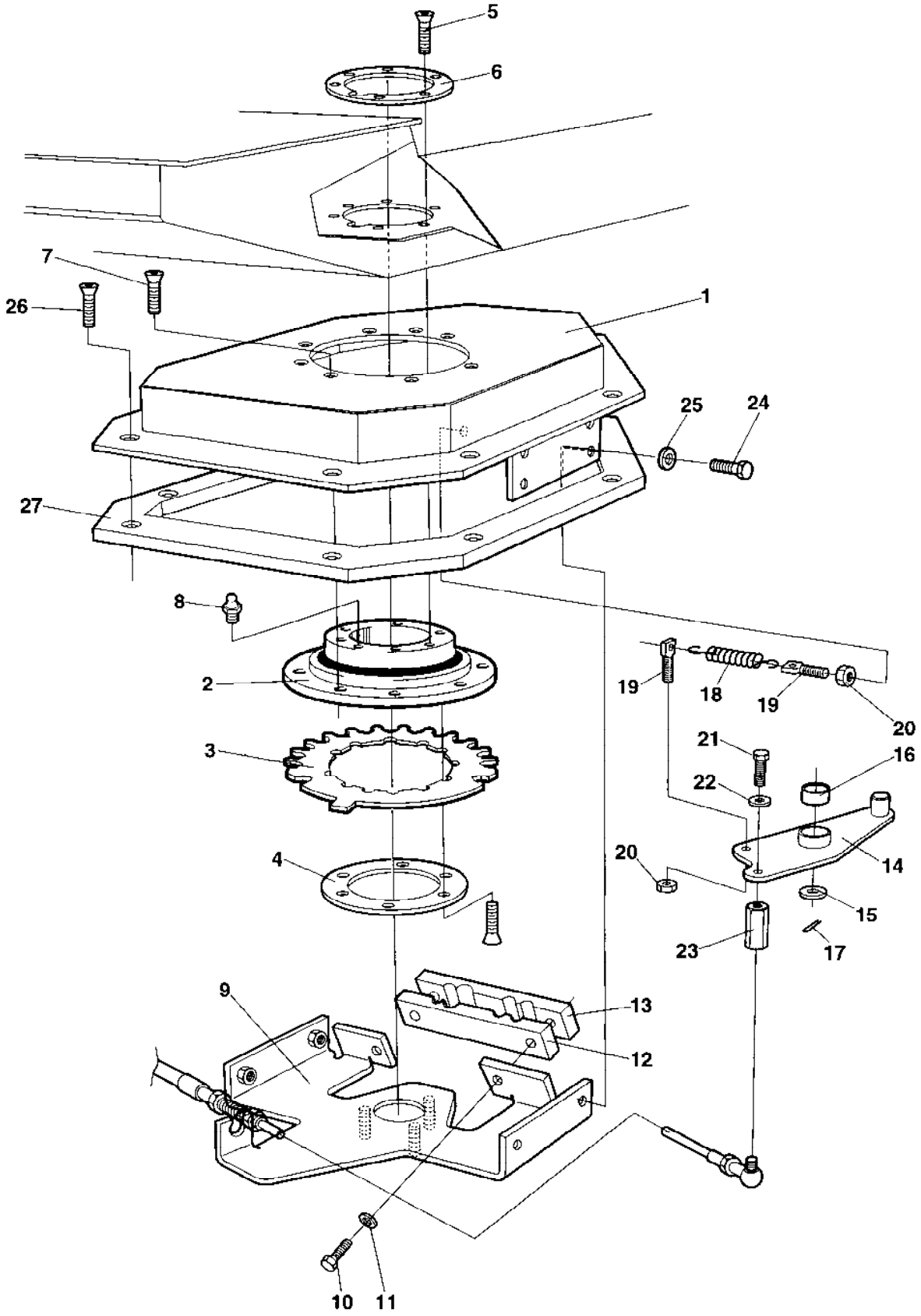
5
6
7
26
1
25
24
27
8
2
19
18
19
20
21
16
22
3
4
20
14
15
23
17
9
13
12
10
11

Ref. No.	Part No.	Rem.	Qty	Description	Code
1	371374		1	Bearing housing	
2	359125		1	Ball bearing	
3	370955		1	Locking disc	
4	372966	A	1	Lock ring	
5	902520		12	Screw	
6	372965	B	1	Lock ring	
7	513003		8	Screw	
8	926214		1	Grease fitting	D
9	371418		1	Bracket	
10	508056		2	Screw M8x40	
11	904229		2	Washer 8,4x16x1,5	
12	372961		1	Clamp	
13	372671		1	Clamp	
14	374417	C	1	Coupling link	
15	904231		1	Washer 13x24x2	
16	359820		1	Bushing	
17	630035		1	Split pin	D
18	359043		1	Spring	D
19	359818		2	Spring collar	
20	573008		2	Nut M8	
21	500013		1	Screw M6-1x16 8,8	
22	904228		1	Washer 6,4x12x1,5	
23	373547	D	1	Spacer	
	372459	E	1	Spacer	
24	500021		4	Screw M8-1,25x25 8,8	
25	904556		4	Washer 8,4x16x3,0	
26	513013	D	8	Screw	
	903644	E	8	Screw	
27	372083	F	1	Spacer	

A) Lower
B) Upper
C) For turning
D) Platform
E) Cab
F) Only for cab

Forward and reverse control

16129-1

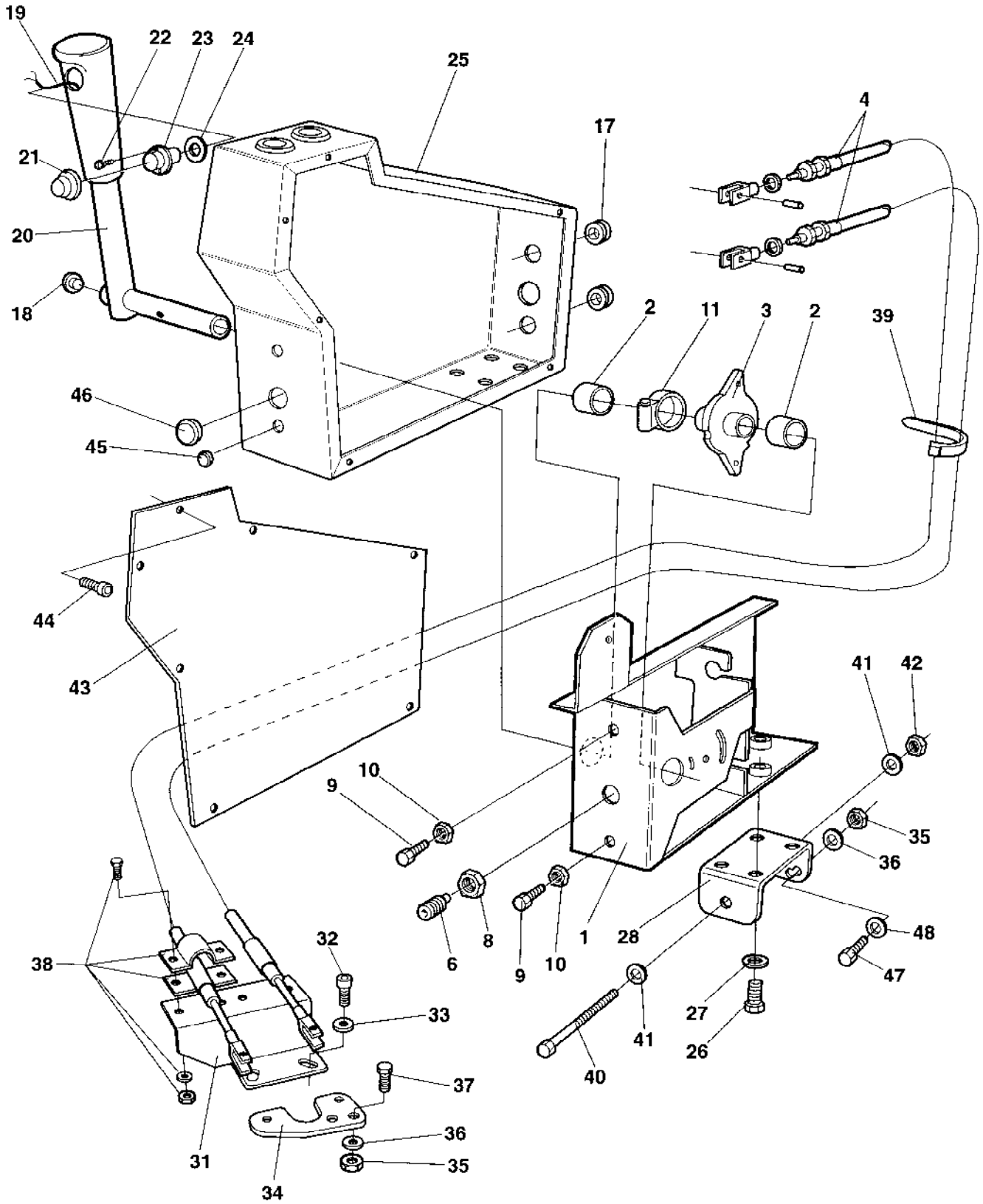

Ref. No.	Part No.	Rem.	Qty	Description	Code
1	909747		1	Framing	
2	908200		2	Bearing	
3	909748		1	Cam disc	
4	935225	A	2	Cable	
	573004		4	.Nut	
	908193		2	.Fork	
6	922325		1	Spring ball plunger	D
8	573004		1	Nut	
9	533038		2	Screw	
10	570004		2	Nut M6	
11	313147		1	Hose clip	
17	909122		2	Grommet	
18	902203		1	Plug	
19	372782		1	Cable harness	
20	359575		1	Control lever	
21	348481		1	Cover	D
22	371009		2	Screw	
23	928497		1	Push button	D
24	359940		1	Washer	
25	372322		1	Control cover	
26	500053		2	Screw M8-1,25x20 8,8	
27	904229		2	Washer 8,4x16x1,5	
28	381676	B	1	Bracket	
31	359932		1	Control bracket	
32	903799		3	Screw M6 x 70	
33	904228		3	Washer 6,4x12x1,5	
34	372568		1	Control bracket	
35	586003		3	Lock nut M8	
36	904229		3	Washer 8,4x16x1,5	
37	500021		2	Screw M8-1,25x25 8,8	
38	465013		2	Clamp	D
39	313041		N	Cable ties L=186 mm	
40	500267		1	Screw	
41	904231		2	Washer 13x24x2	
42	586019		1	Lock nut M12	
43	372321		1	Cover	
44	903658		7	Screw	
45	900986		2	Plug	
46	287373		1	Plug	
47	508092		1	Screw M8-1,25x20H 8,8	
48	904229	C	1	Washer 8,4x16x1,5	

A) Forward/reverse
B) Regarding "double hole". Upper hole for standard seat. Lower hole for accessorie seat.
C) Only in use on standard seat

Forward and reverse control

17042

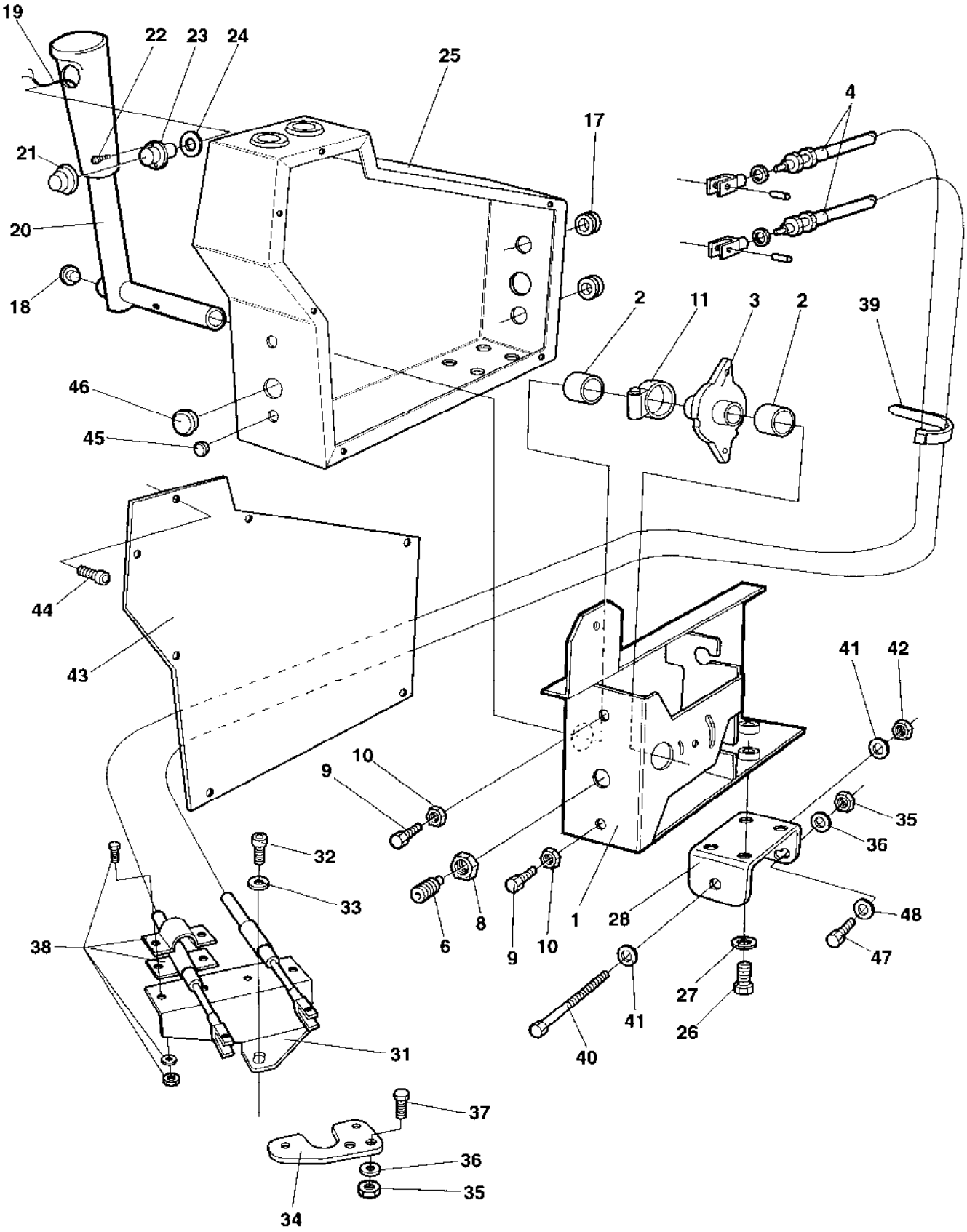

Ref. No.	Part No.	Rem.	Qty	Description	Code
1	909747		1	Framing	
2	908200		2	Bearing	
3	909748		1	Cam disc	
4	935225	A	2	Cable	
	573004		4	.Nut	
	908193		2	.Fork	
6	922325		1	Spring ball plunger	D
8	573004		1	Nut	
9	533038		2	Screw	
10	570004		2	Nut M6	
11	313147		1	Hose clip	
17	909122		2	Grommet	
18	902203		1	Plug	
19	372782		1	Cable harness	
20	359575		1	Control lever	
21	348481		1	Cover	D
22	371009		2	Screw	
23	928497		1	Push button	D
24	359940		1	Washer	
25	372322		1	Control cover	
26	500053		2	Screw M8-1,25x20 8,8	
27	904229		2	Washer 8,4x16x1,5	
28	381676	B	1	Bracket	
31	381775		1	Control bracket	
32	904812		2	Screw M6x65	
33	904228		2	Washer 6,4x12x1,5	
34	372568		1	Control bracket	
35	586003		3	Lock nut M8	
36	904229		3	Washer 8,4x16x1,5	
37	500021		2	Screw M8-1,25x25 8,8	
38	465013		2	Clamp	D
39	313041		N	Cable ties L=186 mm	
40	500267		1	Screw	
41	904231		2	Washer 13x24x2	
42	586019		1	Lock nut M12	
43	372321		1	Cover	
44	903658		7	Screw	
45	900986		2	Plug	
46	287373		1	Plug	
47	508092		1	Screw M8-1,25x20H 8,8	
48	904229	C	1	Washer 8,4x16x1,5	

A) Forward/reverse
B) Regarding "double hole". Upper hole for standard seat. Lower hole for accessorie seat.
C) Only in use on standard seat

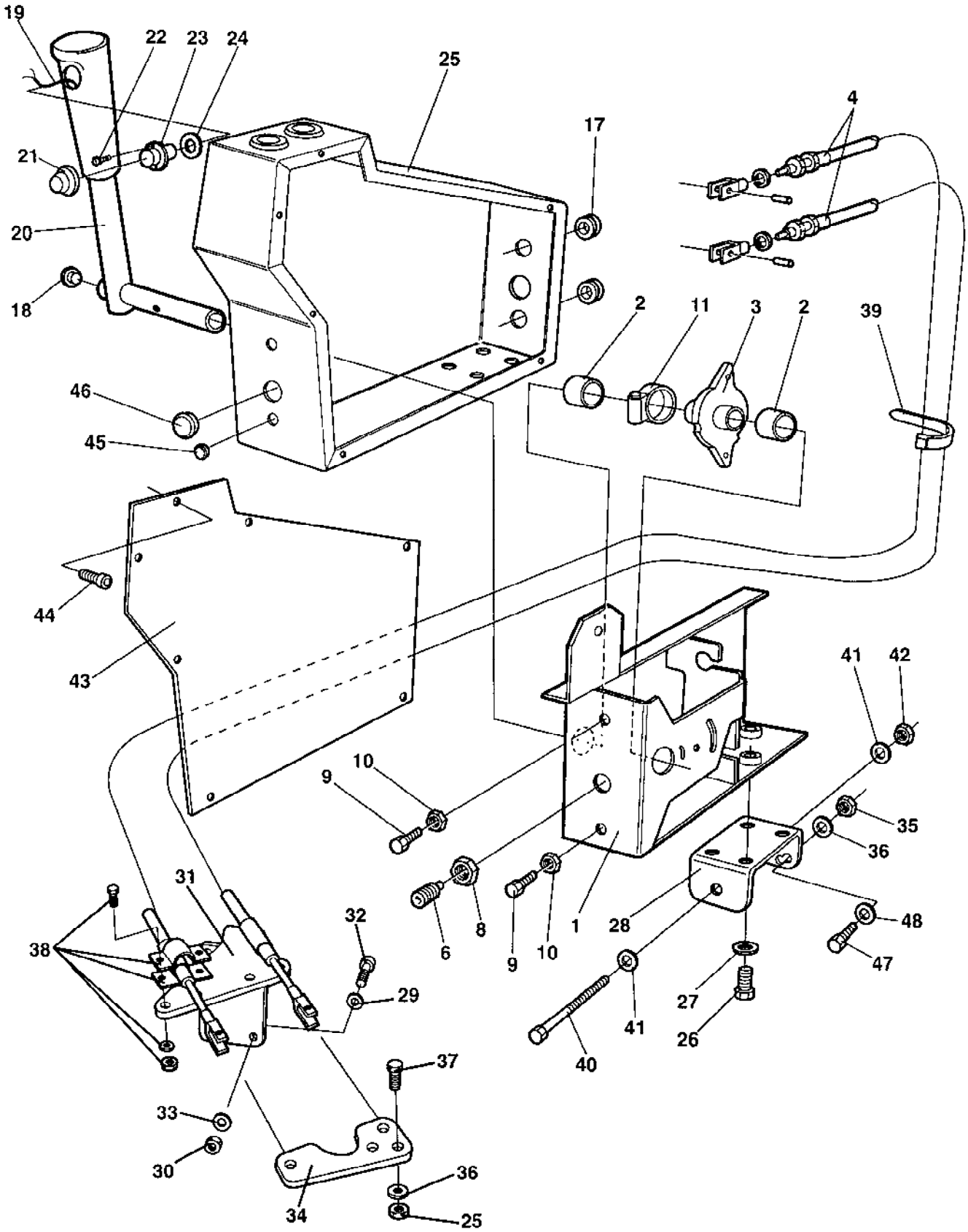
19
22
23
24
25
17
4
21
20
18
2
11
3
2
39
46
45
44
43
41
42
10
9
35
36
31
32
38
6
8
1
28
48
9
10
47
29
27
41
26
40
37
33
30
36
34
25

Ref. No.	Part No.	Rem.	Qty	Description	Code
1	909747		1	Framing	
2	908200		2	Bearing	
3	909748		1	Cam disc	
4	935225	A	2	Cable	
	573004		4	.Nut	
	908193		2	.Fork	
6	922325		1	Spring ball plunger	D
8	573004		1	Nut	
9	533038		2	Screw	
10	570004		2	Nut M6	
11	313147		1	Hose clip	
17	909122		2	Grommet	
18	902203		1	Plug	
19	372782		1	Cable harness	
20	359575		1	Control lever	
21	348481		1	Cover	D
22	371009		2	Screw	
23	928497		1	Push button	D
24	359940		1	Washer	
25	372322		1	Control cover	
26	500053		2	Screw M8-1,25x20 8,8	
27	904229		2	Washer 8,4x16x1,5	
28	381676	B	1	Bracket	
29	904228		3	Washer 6,4x12x1,5	
30	904556		3	Washer 8,4x16x3,0	
31	382881		1	Control bracket	
32	791110		3	Screw M6x25	
33	904229		3	Washer 8,4x16x1,5	
34	372568		1	Control bracket	
35	586003		3	Lock nut M8	
36	904229		3	Washer 8,4x16x1,5	
37	500021		2	Screw M8-1,25x25 8,8	
38	465013		2	Clamp	D
39	313041		N	Cable ties L=186 mm	
40	500267		1	Screw	
41	904231		2	Washer 13x24x2	
42	586019		1	Lock nut M12	
43	372321		1	Cover	
44	903658		7	Screw	
45	900986		2	Plug	
46	287373		1	Plug	
47	508092		1	Screw M8-1,25x20H 8,8	
48	904229	C	1	Washer 8,4x16x1,5	

A) Forward/reverse
B) Regarding "double hole". Upper hole for standard seat. Lower hole for accessorie seat.
C) Only in use on standard seat

Speed limiter Option

16114-1

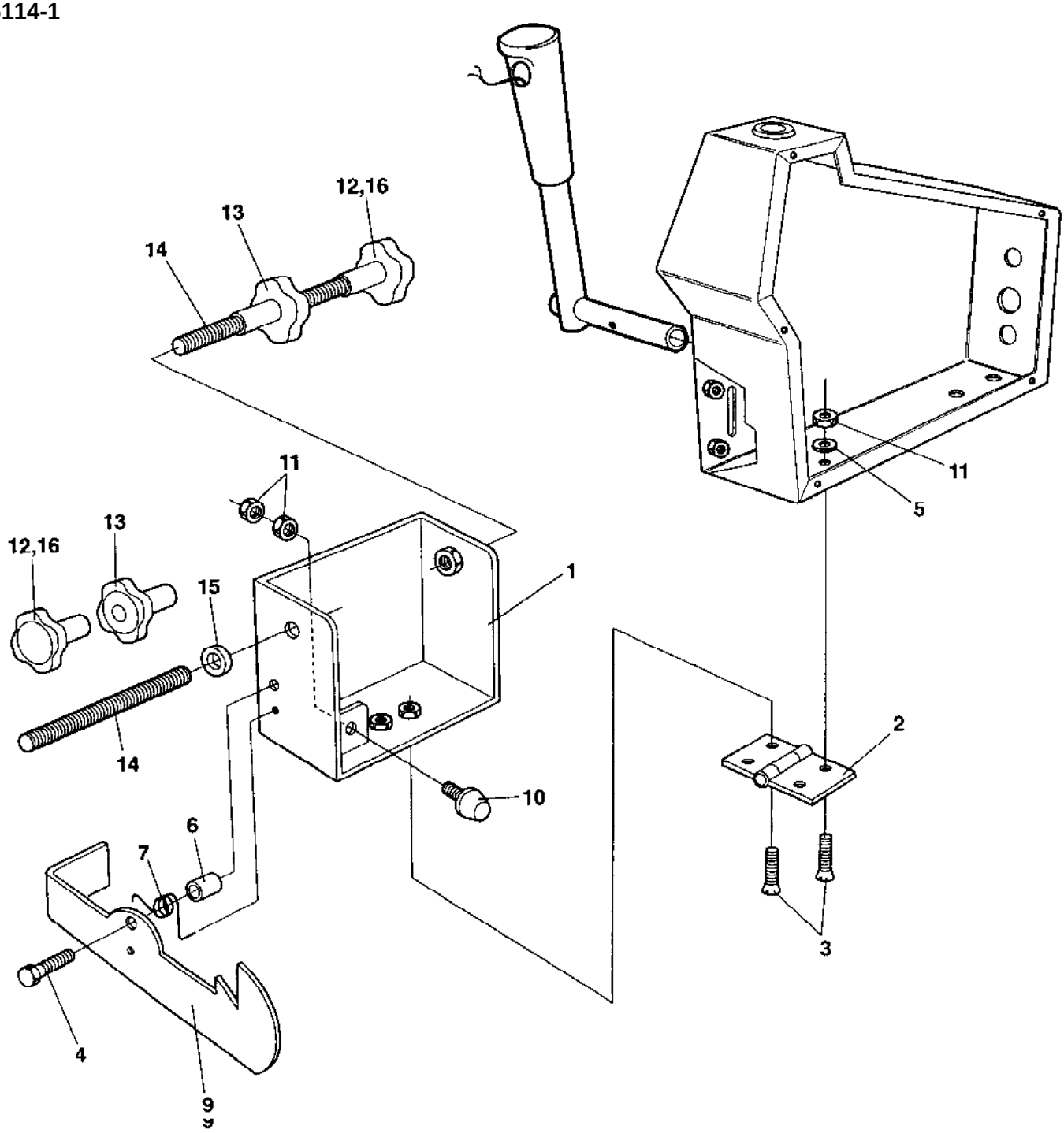

Speed limiter Option

Ref. No.	Part No.	Rem.	Qty	Description	Code
1	373928		1	Holder	
2	903907		1	Hinge	
3	513012		4	Screw	
4	500015		1	Screw M6-1x30 8,8	
5	904228		4	Washer 6,4x12x1,5	
6	373934		1	Spacer	
7	373930		1	Spring	
8	586002		1	Lock nut M6	
9	373929		1	Hook	
10	359887		1	Shock absorber	
11	570004		3	Nut M6	
12	904339		2	Knob	
13	904338		2	Knob	
14	904332		2	Threaded stud	
15	904567		1	Washer 10,5x28x6	
16	901128	A	1	Lock fluid	

A) Loctite 270

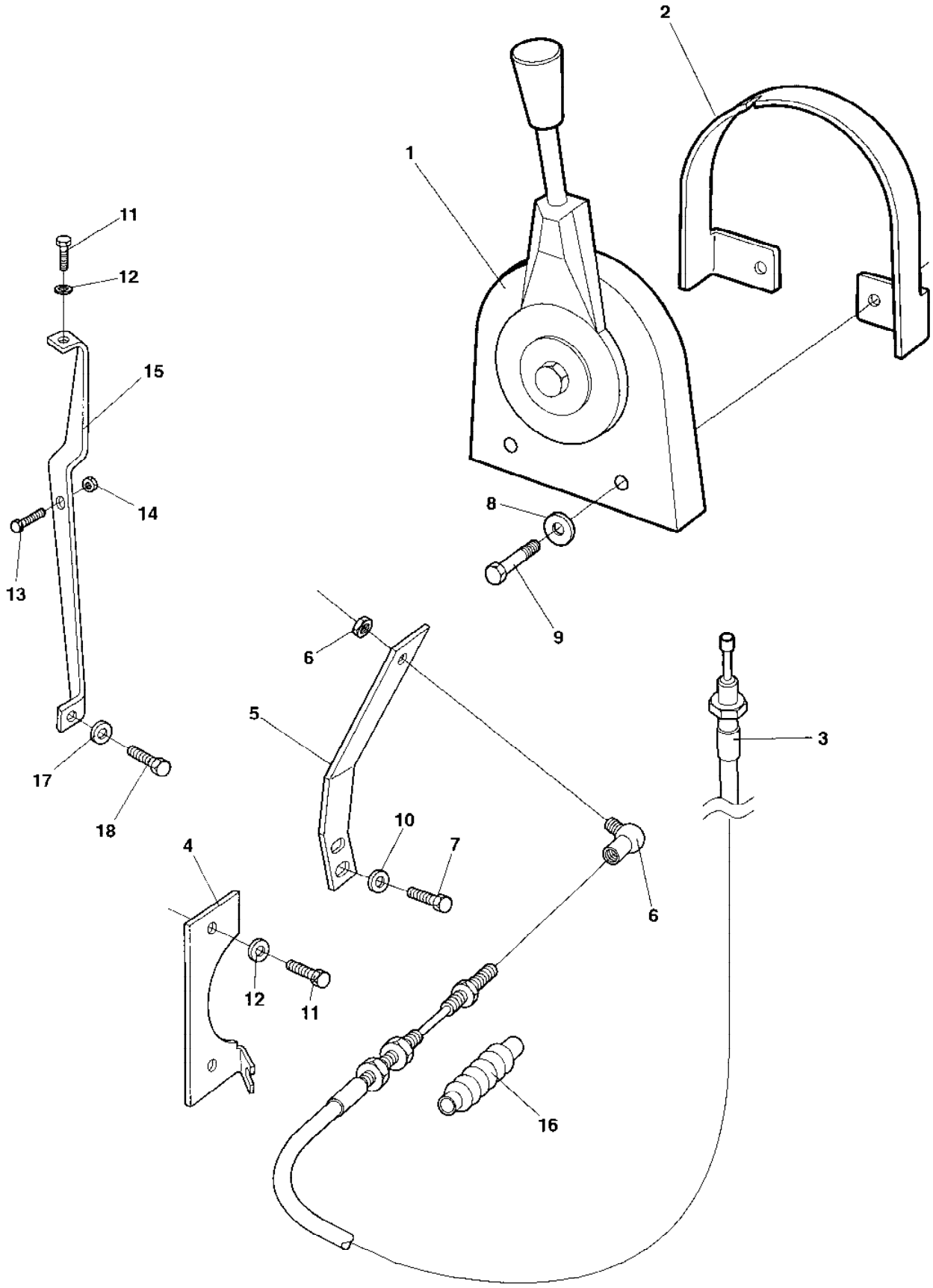
2
1
11
12
15
14
13
8
9
6
5
3
17
18
10
7
4
6
12
11
16

Ref. No.	Part No.	Rem.	Qty	Description	Code
1	902192		1	Control Up to 64X20771	D
	382213		1	Control From 64X20772	
2	902194		1	Yoke Up to 64X20771	
	382225		1	Yoke From 64X20772	
3	372616		1	Cable	
4	374064		1	Bracket	
5	374065		1	Control lever	
6	416034		1	Ball joint	D
7	500013		2	Screw M6-1x16 8,8	
8	904228		2	Washer 6,4x12x1,5	
9	500015		2	Screw M6-1x30 8,8	
10	603010		2	Washer	
11	500040		2	Screw M6-1x20 8,8 From 64X20501	
12	904228		2	Washer 6,4x12x1,5 From 64X20501	
13	923987		1	Stop screw From 64X20501	
14	573003		1	Nut From 64X20501	
15	375507		1	Bracket From 64X20501	
16	382349		1	Bellows From 64X20772	
17	904229		1	Washer 8,4x16x1,5 From 64X20501	
18	500021		1	Screw M8-1,25x25 8,8 From 64X20501	

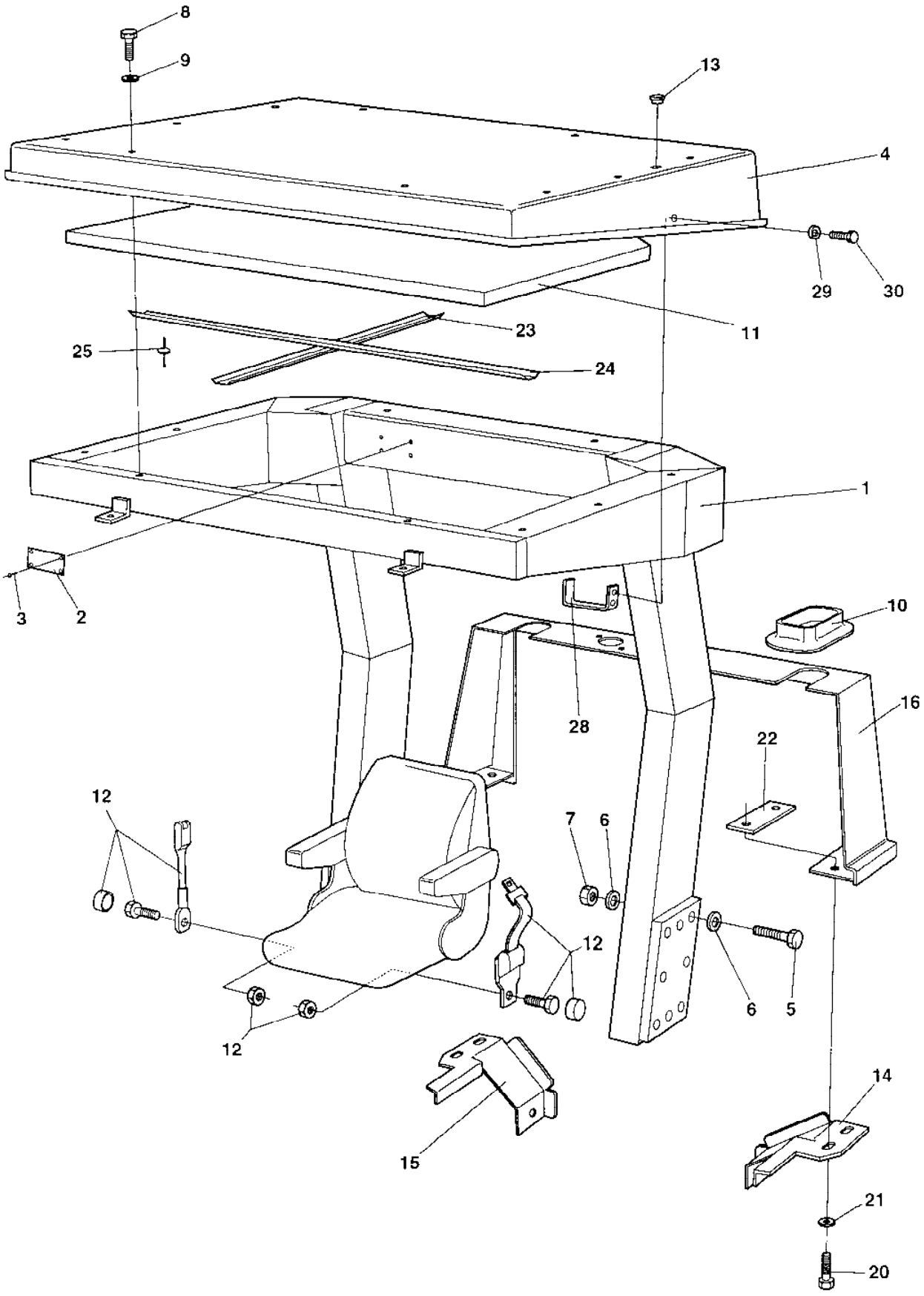
8
9
13
4
29
30
11
23
25
24
1
3
2
10
28
16
22
12
7
6
12
6
5
12
14
15
21
20

Ref. No.	Part No.	Rem.	Qty	Description	Code
1	373943		1	Rops	
2	370803		1	.Sign, rops	
3	624016		4	.Blind rivet	
4	372745		1	Fops roof	
5	923814		12	Screw M20-2.5X200 Up to 64X20425	
	500226		12	Screw M20-2.5x180 8,8 From 64X20426	
6	904233		12	Washer 21x36x3 Up to 64X20425	
7	570015		12	Nut M20 Up to 64X20425	
8	500230		10	Screw M8-1.25x35	
	500239		19	Screw M8-1.25x50	
9	603009		10	Washer	
	904734		19	Washer 8,4x26x4	
10	372489		2	Rubber seal	
11	372678		1	Absorbent	
12	370766		1	Safety belt	
	383200	A	1	Safety belt	
			2	.Screw	
			2	.Nut	
			2	.Cap	
13	904180		4	Plug	
14	373854		1	Holder plate	
15	373855		1	Holder plate	
16	373799		1	Protection cover	
20	500021		4	Screw M8-1,25x25 8,8	
21	603019		4	Washer	
22			2	Holder plate	
23	376489		1	Absorbent holder	
24	376488		1	Absorbent holder	
25	904619		12	Blind rivet	
28	383225		1	Hook From 64X20954	
29	904734		4	Washer 8,4x26x4 From 64X20954	
30	500100		4	Screw From 64X20954	

A) Option 3"

Ref. No.	Part No.	Rem.	Qty	Description	Code
100				Cab Interior (Page 242)	
110				Cab Inside panels (Page 246)	
130				Cab Screens (Page 248)	
140				Cab Wipers front and rear (Page 252)	
150				Cab Water tank, wipers (Page 254)	
160				Cab Door (Page 256)	
170				Cab Heater and fan system Up to 64X20581 (Page 260)	
175				Cab Heater and fan system From 64X20582 (Page 262)	
180				Cab Wiring harness (Page 264)	
190				Cab Roof mounted, elect. switches (Page 266)	
210				Cab Interior, rear mirror (Page 268)	
230				Cab Sun curtain (Page 270)	

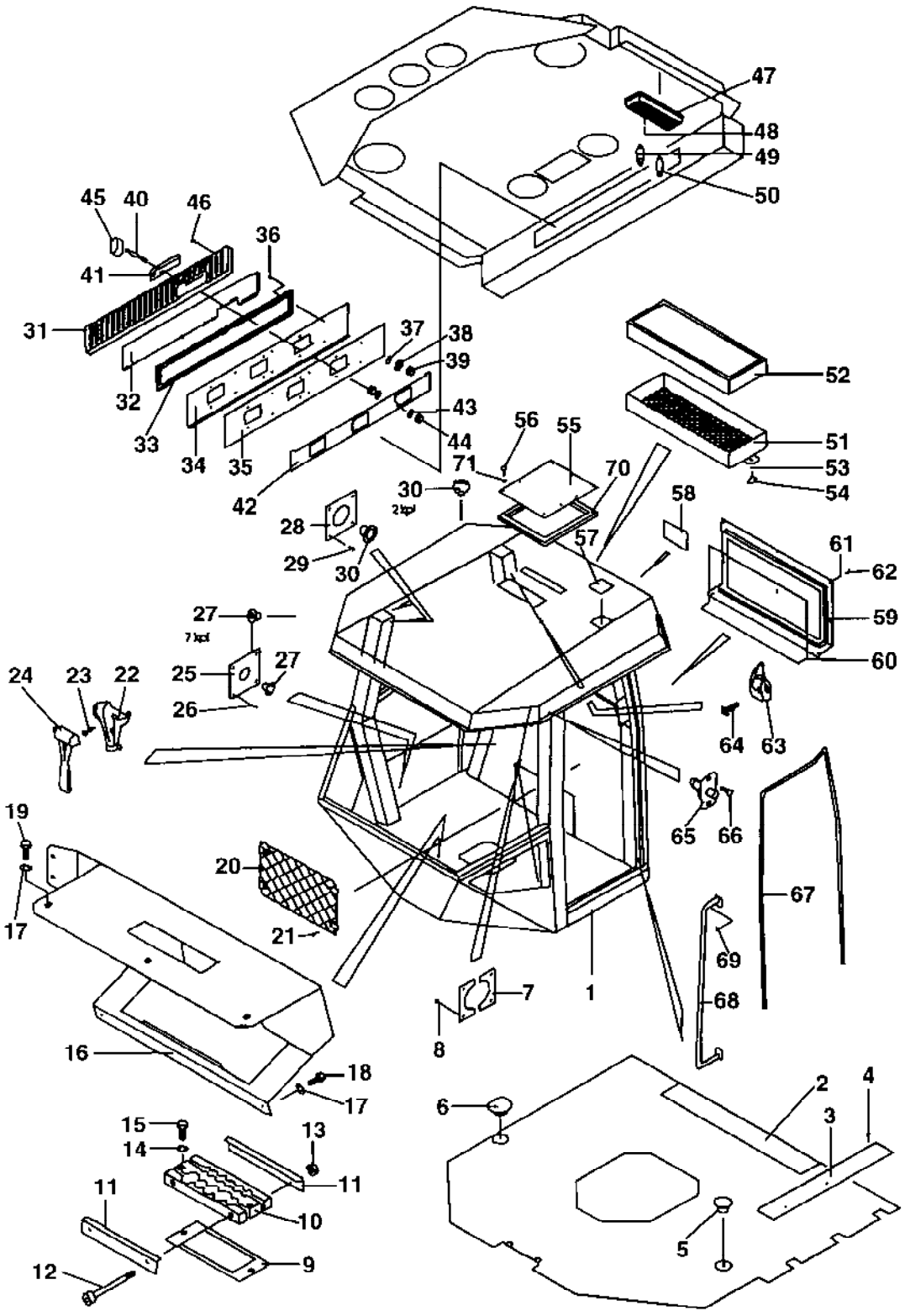
47
48
49
50
45
40
46
36
41
31
37
38
39
32
33
34
35
43
44
42
56
55
71
70
30
2 kpl
28
29
30
52
51
53
54
58
57
61
62
59
60
27
7 kpl
27
25
26
24
23
22
64
63
65
66
19
17
20
21
67
69
68
7
1
8
16
18
17
6
2
4
3
15
14
13
11
11
10
9
12
5

Ref. No.	Part No.	Rem.	Qty	Description	Code
1	372400		1	Cab, cpl	
	935576		1	.Cab frame	
2	935577		1	.Floor material	
3	935578		1	.Edge trim	
4	903808		3	.Screw	
5	908512	A	1	.Cover	
6	935579	B	1	.Cover	
7	935580		2	.Bracket	
8			4	.Screw	
9	935581		1	.Metal gasket	
10	935582		1	.Grommet kit	
11	935583		2	.Holder plate	
12			2	.Screw	
13	586003		2	.Lock nut M8	
14	600006		2	.Washer	
15			2	.Screw	
16	935584		1	.Panel plate	
17	600006		5	.Washer	
18			2	.Screw	
19			3	.Screw	
20	908508		1	.Document holder	
21			4	.Screw	
22	908506		1	.Holder	
23			2	.Screw	
24	908507		1	.Emergency hammer	
25	935585		1	.Bracket	
26			4	.Screw	
27	909510		8	.Grommet	
28	935586		1	.Bracket	
29			8	.Screw	
30	908496		3	.Grommet	
31	908516		1	.Ventilating grid	
32	908517		1	.Recirculation filter	
33	908518		1	.Ventilating frame	
34	908519		1	.Grid support	
35	935587		1	.Plate	
36	903809		6	.Screw	
37			12	.Washer	
38	908520		12	.Sleeve	
39	570002		12	.Nut M4	
40	908521		1	.Bar	
41	908522		1	.Tape	
42	908523		1	.Screen	
43	600004		2	.Washer	
44	570005		2	.Nut M8	
45	908524		1	.Knob	
46			12	.Screw	
47	908515		1	.Inner light	
48	903809		2	.Screw	
49	985117		1	.Bulb	
50	985051		1	.Bulb 12V,10W	B
51	908501		1	.Filter frame	
52	908502		1	.Filter	A
53	908503		2	.O-ring	
54	908504		2	.Handle	
55	908494		1	.Cover plate Up to 64X20663	
	938019		1	.Cover plate From 64X20664	
56	500012		10	.Screw M6x12 Up to 94X20663	

A) Left
B) Right

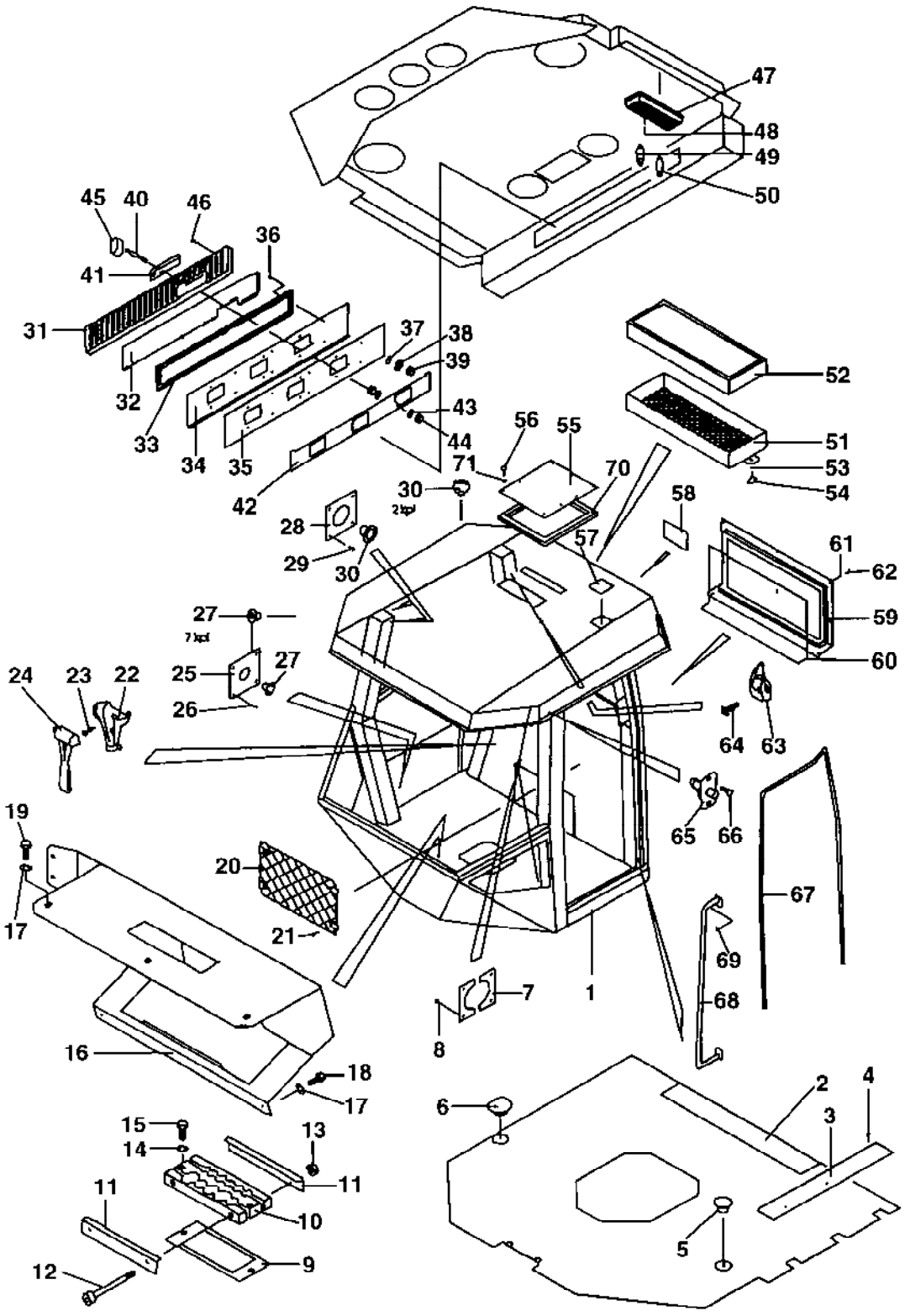
47
48
49
50
45
40
46
36
41
31
37
38
39
32
33
34
35
43
44
42
56
55
71
70
30
2 kpl
28
29
30
52
51
53
54
58
57
61
62
59
60
27
7 kpl
27
25
26
24
23
22
64
63
65
66
19
17
20
21
67
69
68
7
1
8
16
18
17
6
2
4
3
15
14
13
11
11
10
9
12
5

Ref. No.	Part No.	Rem.	Qty	Description	Code
56	500018		4	.Screw M8-1,25x12 8,8 From 64X20664	
57	935588		1	.Plug	
58	935589	C	1	.Decal	
59	935590		1	.Cover plate	
60	908587		1	.Edge trim	
61	600006		8	.Washer	
62			8	.Screw	
63	908505		1	.Hook	
64			2	.Screw	
65	908500		1	.Door switch	
66	901315		2	.Screw	
67	908499		1	.Rubber list	
68	935591		1	.Handle	
69			2	.Screw	
70	938023		1	.Gasket From 64X20664	
71	904228		10	.Washer 6,4x12x1,5 Up to 64X20663	
	904229		4	.Washer 8,4x16x1,5 From 64X20664	

C) Emergency exit

Cab Inside panels

15998

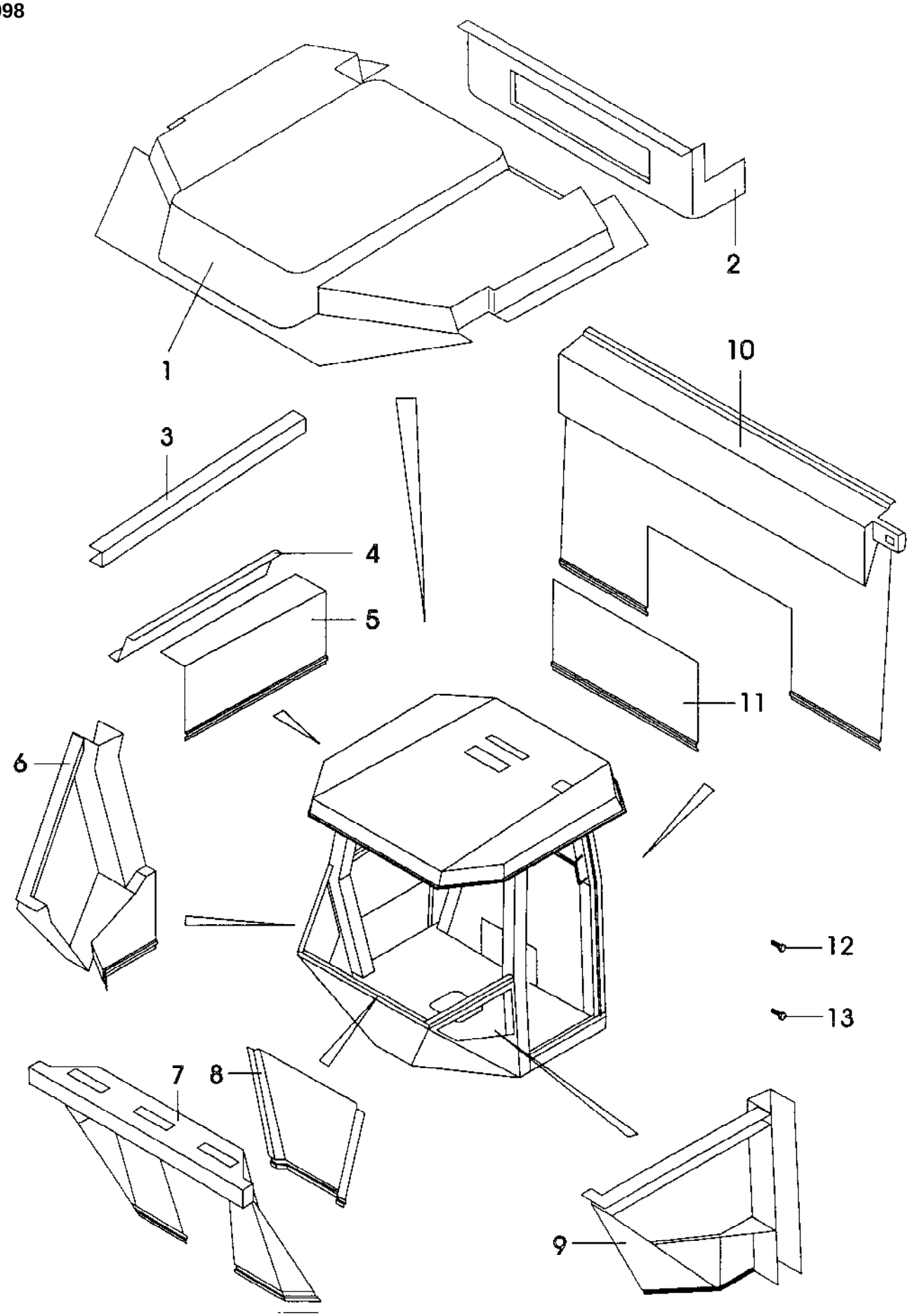

Cab Inside panels

Ref. No.	Part No.	Rem.	Qty	Description	Code
1	935592		1	.Panel	
2	935593		1	.Panel	
3	935594		1	.Panel	
4	935595		1	.Panel	
5	935596		1	.Panel plate	
6	935597		1	.Panel	
7	935598		1	.Panel	
8	935599		1	.Panel	
9	935600		1	.Panel	
10	935601		1	.Panel Up to 64X20663	
	938044		1	.Panel From 64X20664	
11	935602		1	.Panel	
12			50	.Screw	
13			40	.Screw	

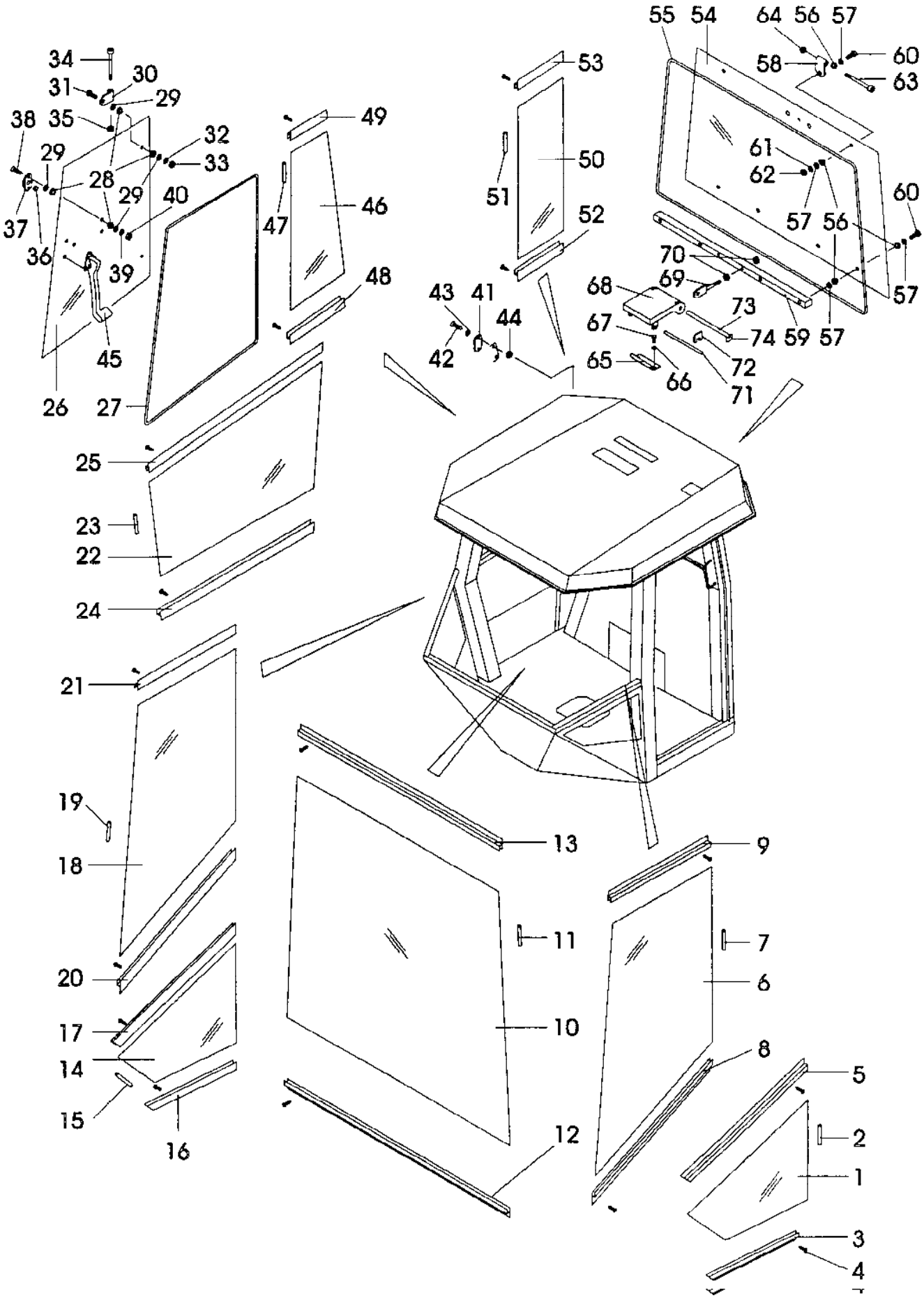
55 54 64 56 57 60
58 63
53 61
50 62
51 52 60
57 56
70 57
69
68 73
67 74 59 57
65 72
66 71
43 41 44
42
49
47 46
48
34 30
31 29
38 35 32
29 33
28 29 40
37 36 39
45
26 27
25
23
22
24
21
19
18
20
17
14
15 16
13 9
11 7
6
10 8
5
2
1
12
3
4

Ref. No.	Part No.	Rem.	Qty	Description	Code
1	909455	I	1	.Screen Up to 64X20581	
	937380	J	1	.Screen From 64X20582	
2	908545	A	1	.Seal list	
3	935278		1	.List	
4	937932		26	.Screw	
5	935279		1	.List	
6	909453	I	1	.Screen, left Up to 64X20581	
	937381	J	1	.Screen, left From 64X20582	
7	908545	B	1	.Seal list	
8	935280		1	.List	
9	935281		1	.List	
10	909452	I	1	.Screen Up to 64X20581	
	937382	J	1	.Screen From 64X20582	
11	908545	C	1	.Seal list	
12	935282		1	.List	
13	935283		1	.List	
14	909456	I	1	.Screen Up to 64X20851	
	937383	J	1	.Screen From 64X20582	
15	908545	A	1	.Seal list	
16	935284		1	.List	
17	935285		1	.List	
18	909454	I	1	.Screen Up to 64X20581	
	937384	J	1	.Screen From 64X20582	
19	908545	B	1	.Seal list	
20	935286		1	.List	
21	935287		1	.List	
22	909458	I	1	.Screen Up to 64X20581	
	937385	J	1	.Screen From 64X20582	
23	908545	D	1	.Seal list	
24	935288		1	.List	
25	935289		1	.List	
26	909460	I	1	.Screen, right Up to 64X20581	
	937386	J	1	.Screen From 64X20582	
27	908499	E	1	.Rubber list	
28	935271		8	.Washer, Flexible	
29	935272		8	.Washer, Black	
30	935273		2	.Hinge	
31	935274		2	.Screw	
32	600006		2	.Washer	
33	586003		2	.Lock nut M8	
34			2	.Screw	
35			2	.Nut	
36	935275		1	.Rubber washer	
37	935276		1	.Bracket	
38	936600		2	.Screw	
39	936601		2	.Washer	
40	936602		2	.Nut M5	
41	935277		1	.Lock pin	
42			2	.Screw	
43			2	.Washer	
44			2	.Nut	

A) L=800MM
B) L=1900MM
C) L=2100MM
D) L=1100MM
E) L=2700MM
I) Bronze
J) Green

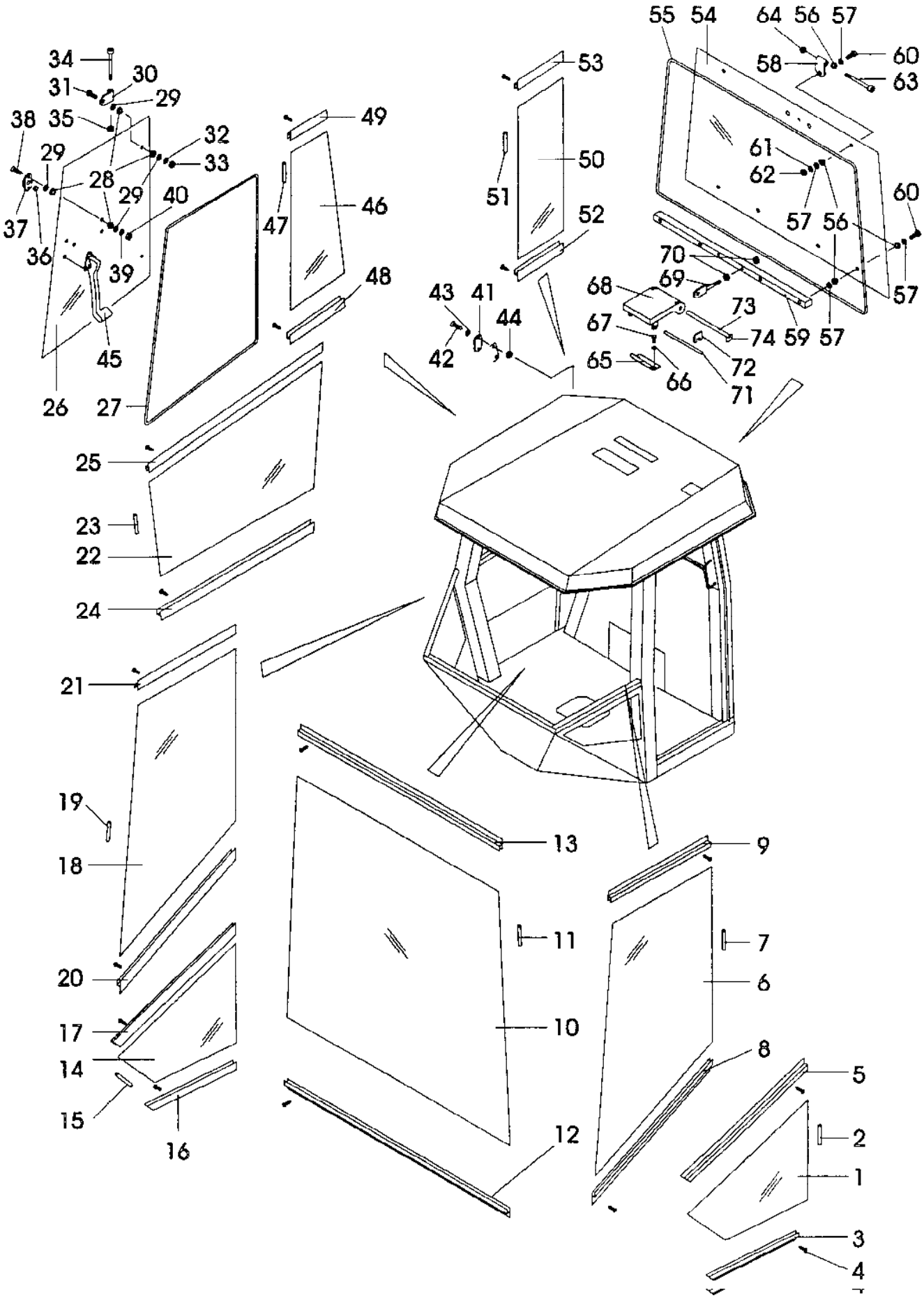
55 54 64 56 57
60
58
63
53
49
34
30
31
29
38 35
32
29
33
28
29
40
37
36
39
45
47
46
48
26
27
50
51
52
61
62
60
57 56
70
69
68
73
67
74 59 57
43 41
44
42
65
66
72
71
25
23
22
24
21
19
18
20
17
14
15
16
13
11
10
12
9
7
6
8
5
2
1
3
4

Ref. No.	Part No.	Rem.	Qty	Description	Code
45	935290		1	.Window lock, right	
46	909459	I	1	.Screen Up to 64X20581	
	937387	J	1	.Screen From 64X20582	
47	908545	F	1	.Seal list	
48	935291		1	.List	
49	935292		1	.List	
50	909457	I	1	.Screen Up to 64X20581	
	937388	J	1	.Screen From 64X20582	
51	908545	F	1	.Seal list	
52	935293		1	.List	
53	935294		1	.List	
54	909451	I	1	.Screen Up to 64X20581	
	937389	J	1	.Screen From 64X20582	
55	908499	G	1	.Rubber list	
56	935271		12	.Washer, Flexible	
57	935272		12	.Washer, Black	
58	935273		2	.Hinge	
59	935295		1	.Screen holder	
60	935274		6	.Screw	
61	935296		2	.Washer	
62	586003		2	.Lock nut M8	
63			2	.Screw	
64			2	.Nut	
65	935297		1	.Bracket	
66	600006		2	.Washer	
67			2	.Screw	
68	935298		1	.Bracket	
69	935299		2	.Bolt	
70	570004		4	.Nut M6	
71	935300		1	.Shaft	
72	935301		2	.Lock	
73	935302		1	.Rod	
74	935303	H	1	.Ring	

F) L=1400MM
G) L=3300MM
H) L=35MM
I) Bronze
J) Green

Cab Wipers front and rear

16001

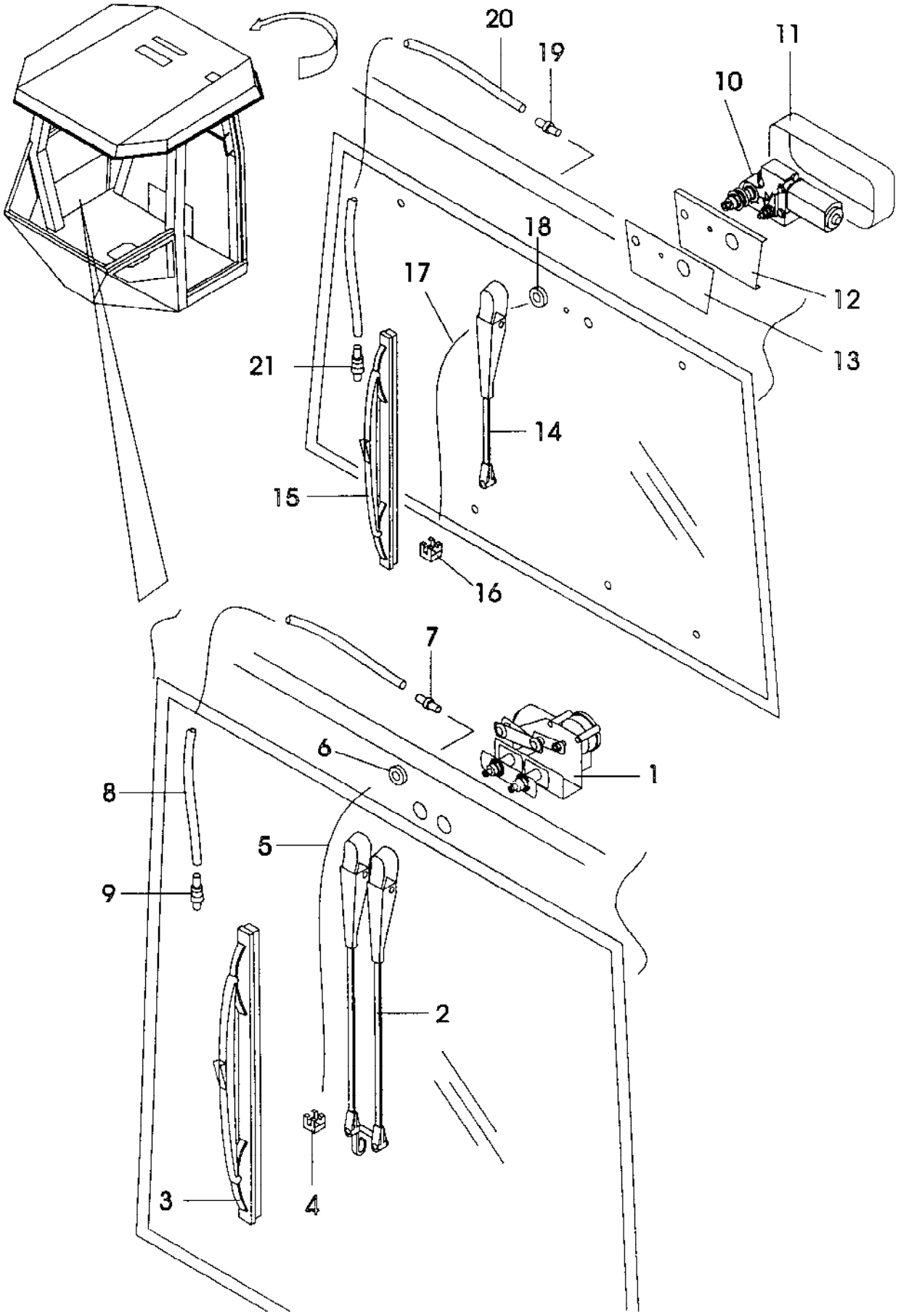

Cab Wipers front and rear

Ref. No.	Part No.	Rem.	Qty	Description	Code
1	905304	A	1	.Wiper motor	
2	905305		1	.Wiper arm	
3	905306		1	.Wiper blade	
4	908559		1	.Nozzle	
5	908560	C	1XL	.Rubber hose	
6	909510		1	.Grommet	
7	908561		1	.Grommet	
8	908563	D	1XL	.Plastic hose	
9	908564		1	.Check valve	
10	905307	B	1	.Wiper motor	
11	905308		1	.Protecting cover	
12	905309		1	.Holder plate	
13	905310		1	.Shim	
14	905311		1	.Wiper arm	
15	905312		1	.Wiper blade	
16	938256		1	.Nozzle	
17	908560		1	.Rubber hose	
18	908497		1	.Grommet	
19	908561		1	.Grommet	
20	908563		1	.Plastic hose	
21	908564		1	.Check valve	

A) Front
B) Rear
C) L=1000MM
D) L=10000MM

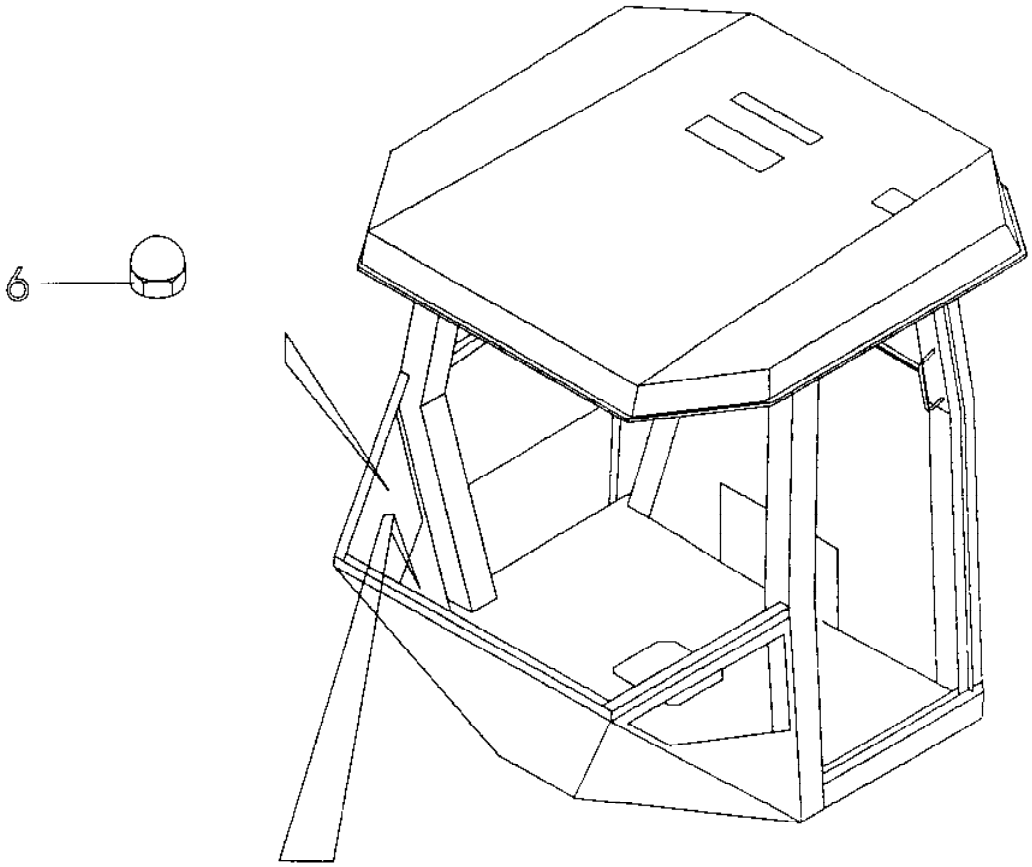
6

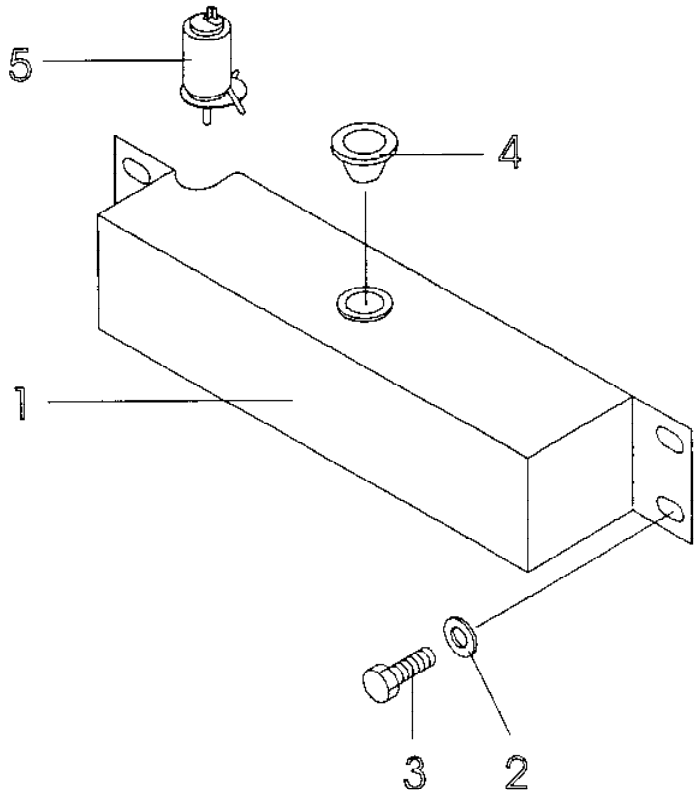
5
4
1
3
2

Ref. No.	Part No.	Rem.	Qty	Description	Code
1	935334		1	.Water reservoir	
2	600004		4	.Washer	
3	500040		4	.Screw M6-1x20 8,8	
4	908496		1	.Grommet	
5	935335		1	.Pump	
6	935336		1	.Cap Up to 64X20594	
	904114		1	.Fuel cap From 64X20595	D

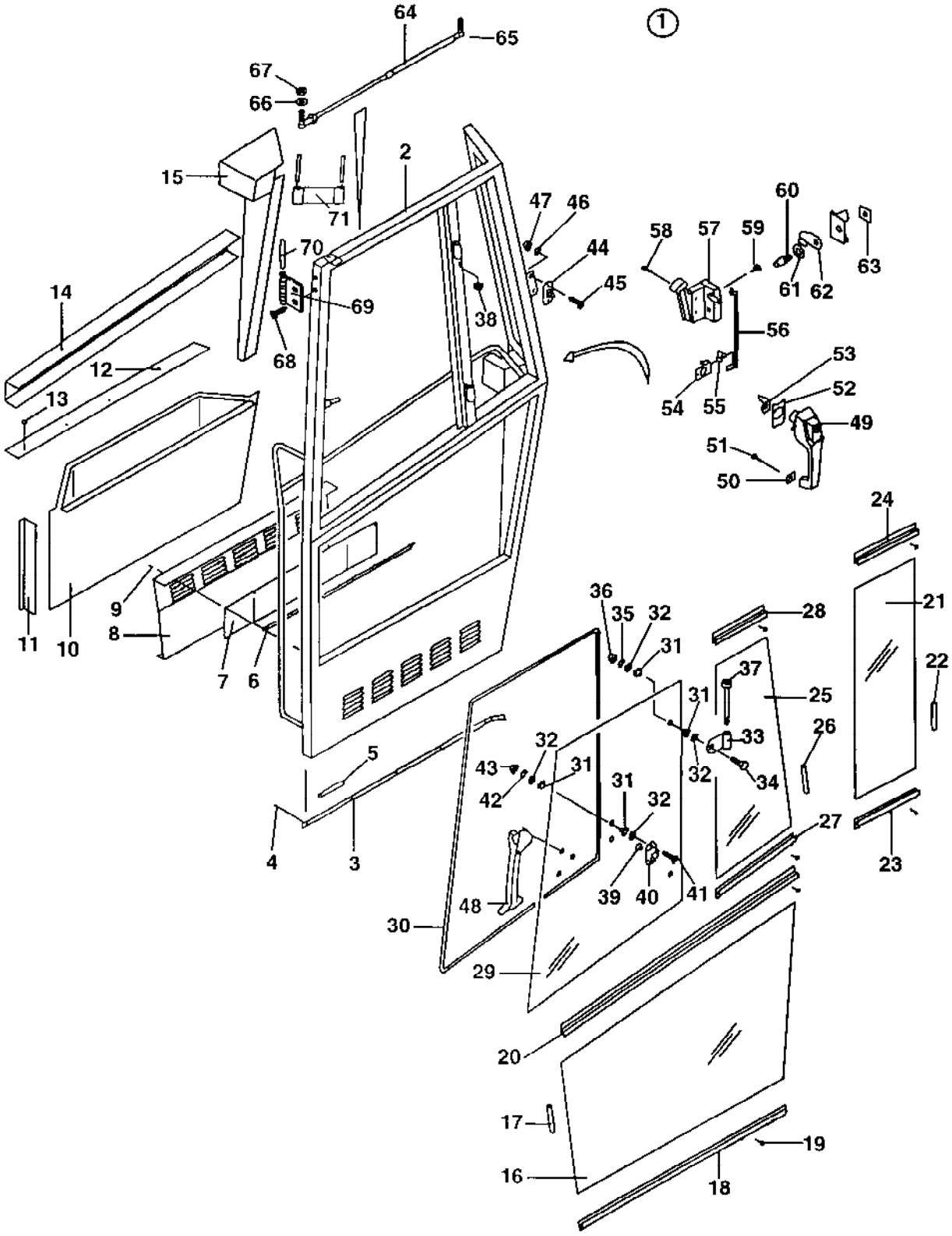
1
64
65
67
66
2
15
71
47
46
58
57
59
60
63
70
44
61
62
14
69
45
38
56
12
68
53
54
55
52
13
49
51
50
24
9
36
35
32
28
21
11
10
8
31
37
22
7
6
31
25
32
33
26
5
43
31
32
34
42
31
32
27
4
3
39
40
41
23
48
30
29
20
17
19
16
18

Ref. No.	Part No.	Rem.	Qty	Description	Code
1	936927		1	Door cpl Up to 64X20663	
	938224		1	Door cpl From 64X20664	
2	935254		1	.Door frame Up to 64X20663	
	938016		1	.Door frame From 64X20664	
3	935255		1	.List	
4			6	.Rivet	
5	908987	A	1XL	.Seal	
6	935256		1	.List	
7	935257		1	.Ventilating grill	
8	935258		1	.Panel plate	
9	935259		10	.Screw	
10	935260		1	.Panel	
11	935261		1	.Panel	
12	935262		1	.Support list	
13			15	.Screw	
14	935263		1	.Panel	
15	935264		1	.Panel Up to 64X20663	
	938043		1	.Panel From 64X20664	
16	909464	G	1	.Screen Up to 64X20581	
	937390	H	1	.Screen From 64X20582	
17	908545	B	1XL	.Seal list	
18	935265		1	.List	
19			14	.Screw	
20	935266		1	.List	
21	909461	G	1	.Screen Up to 64X20581	
	937391	H	1	.Screen From 64X20582	
22	908545	C	1XL	.Seal list	
23	935267		1	.List	
24	935268		1	.List	
25	909462	G	1	.Screen Up to 64X20581	
	937392	H	1	.Screen From 64X20582	
26	908545	C	1XL	.Seal list	
27	935269		1	.List	
28	935270		1	.List	
29	909463	G	1	.Screen Up to 64X20581	
	937393	H	1	.Screen From 64X20582	
30	908499	D	1XL	.Rubber list	
31	935271		8	.Washer, Flexible	
32	935272		8	.Washer, Black	
33	935273		2	.Hinge	
34	935274		2	.Screw	
35	600006		2	.Washer	
36	586003		2	.Lock nut M8	
37			2	.Screw	
38			2	.Nut	
39	935275		1	.Rubber washer	
40	935276		1	.Bracket	
41	936600		2	.Screw	
42	936601		2	.Washer	
43	936602		2	.Nut M5	
44	935277		1	.Lock pin	
45			2	.Screw	
46			2	.Washer	
47			2	.Nut	

A) L=750MM
B) L=1100MM
C) L=1400MM
D) L=2700MM
G) Bronze
H) Green

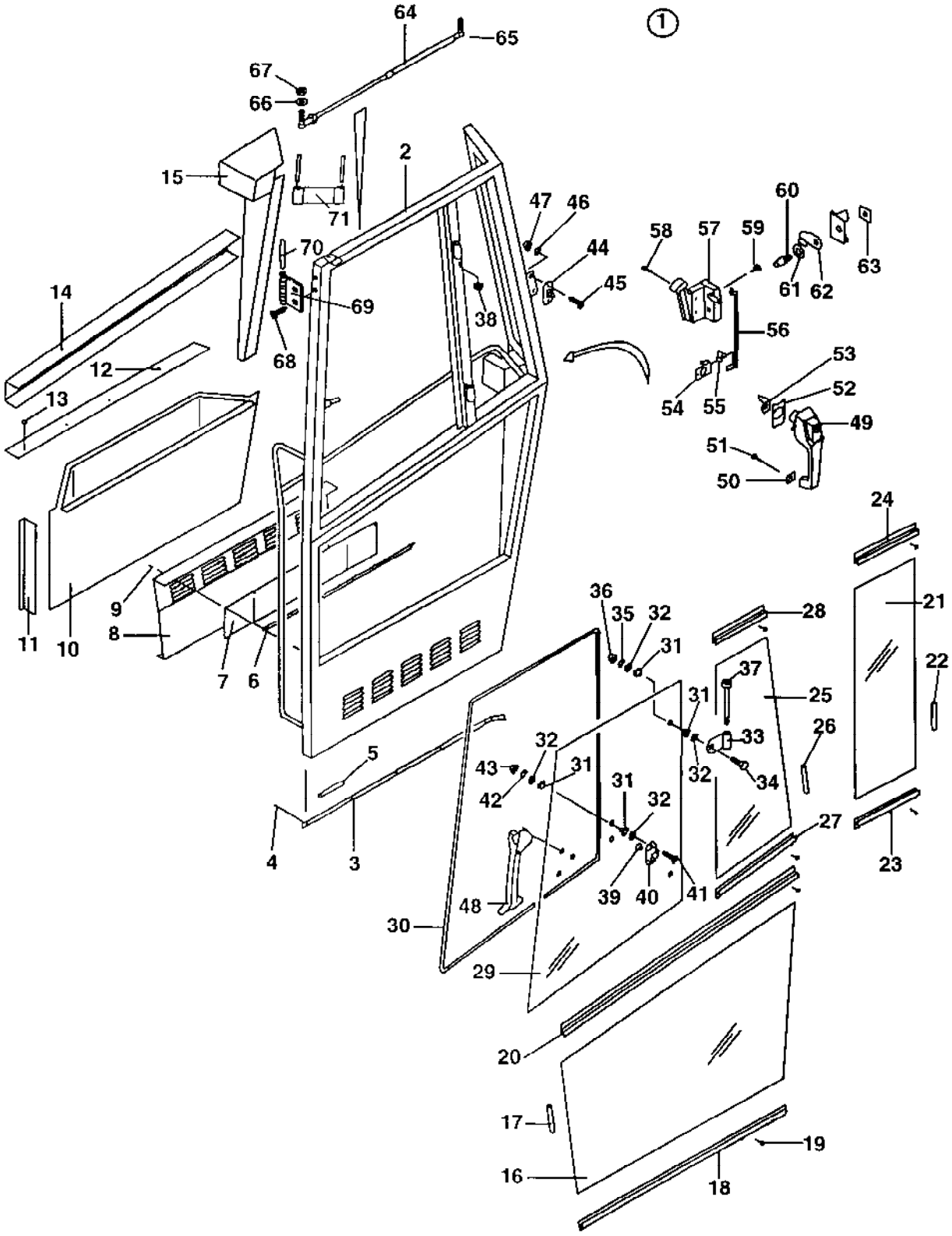
①
64
65
67
66
2
15
71
47
46
58
57
59
60
63
61
62
44
45
70
69
38
14
68
56
12
53
54
55
52
13
49
51
50
24
21
9
36
35
32
28
22
11
10
8
31
37
7
6
31
25
33
26
32
43
31
32
34
5
42
31
32
27
4
3
48
39
40
41
23
30
29
20
17
19
16
18

Ref. No.	Part No.	Rem.	Qty	Description	Code
48	935253		1	.Lock	
49	935244		1	.Door handle with key	
50	935245		1	.Seal	
51	500012		2	.Screw M6x12	
52	935246		1	.Seal	
53	935247		1	.Leader	
54	935248		1	.Turning mechanism	
55	935249		1	.Retainer	
56	935250		1	.Rod	
57	935251		1	.Lock Up to 64X20663	
	938017		1	.Lock From 64X20664	
	902866	E	1	..Key Marked "455"	D
58	937890		2	.Screw	
59	937891		2	.Screw	
60	908580		1	.Lock pin	
61	908581		1	.Washer	
62	908582		1	.Cover	
63	908583		1	.Bracket	
64	935252		1	.Gas spring Up to 64X20663	
	938018		1	.Gas spring From 64x20664	
65	937121		2	..Ball joint	
66	600006		1	.Washer	
67	586003		1	.Lock nut M8	
68	513025		4	.Screw	
69	937056		1	.Hinge, cpl	
70	937057		1	..Pin	
71	938024		1	.Door stop From 64x20664	

E) Key nr. 455

Cab Heater and fan system

16004

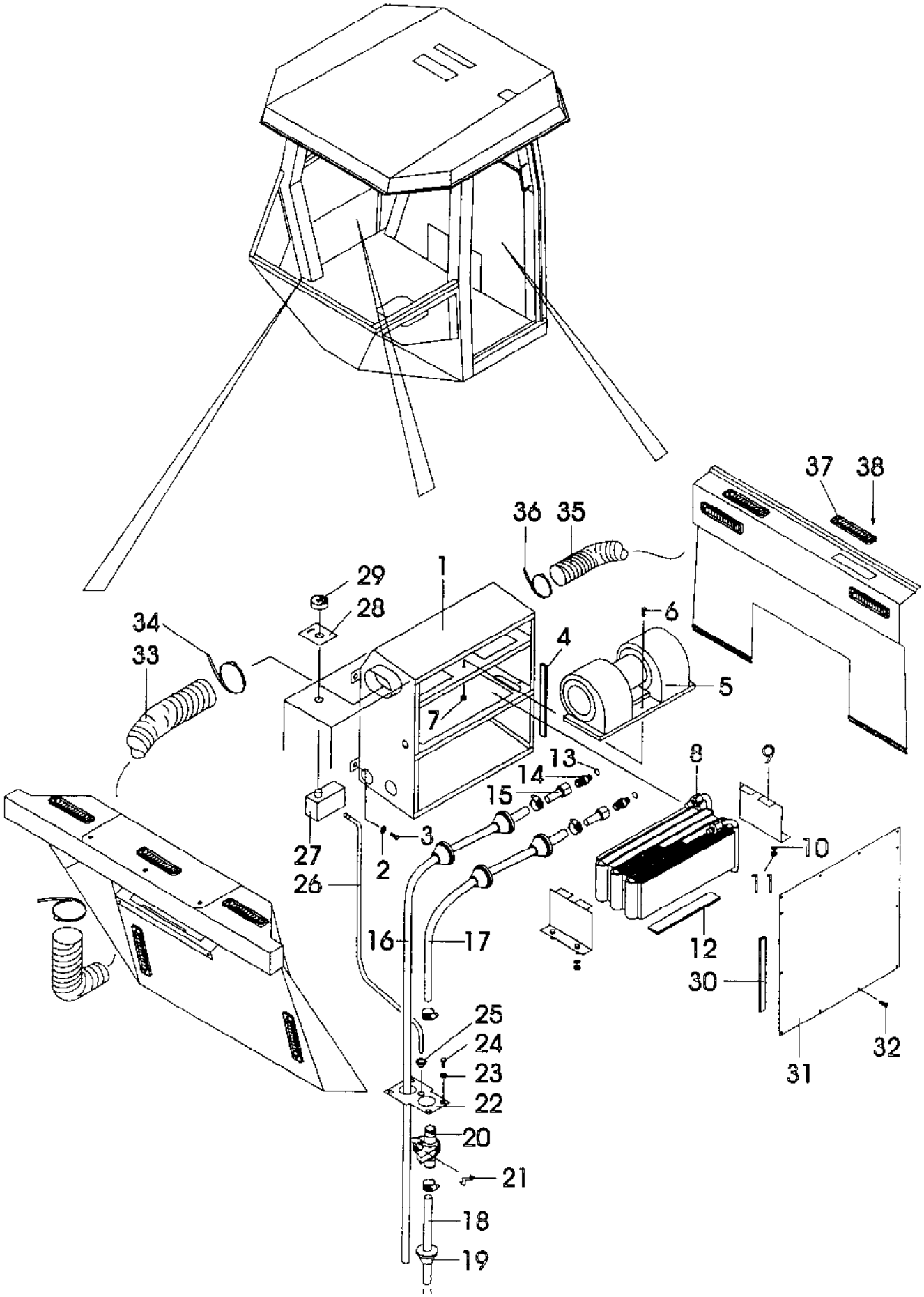

Ref. No.	Part No.	Rem.	Qty	Description	Code
1	935555		1	.Heater	
2	600006		3	.Washer	
3			3	.Screw	
4	935556	A	1XL	.Sealing	
5	908595		1	.Fan, cpl	
6			1	.Screw	
7			1	.Nut	
8	908585		1	.Radiator	
9	935557		2	.Heater element bracket	
10	600004		4	.Washer	
11	570005		4	.Nut M8	
12	908587	D	1XL	.Edge trim	
13	908588		2	.O-ring	
14	908589		2	.Connector	
15	935558		2	.Adapter	
16	935559		1	.Hose	
17	935560		1	.Hose	
18	935561		1	.Hose	
19	908497		1	.Grommet	
20	935562		1	.Valve	
21	935563		1	.Bracket	
22	935564		1	.Plate	
23	600006		4	.Washer	
24			4	.Screw	
25	935565		1	.Grommet	
26	935566		1	.Cable	
27	935567		1	.Adjustment device	
28	935568		1	.Decal	
29	935569		1	.Button	
30	935556	A	1XL	.Sealing	
31	935571		1	.Cover plate	
32			14	.Screw	
33	908599	B	1XL	.Hose	
34	908600		2	.Clamp	
35	935572	C	1XL	.Hose	
36	935570		1	.Clamp	
37	908598		11	.Nozzle	
38	903806		22	.Screw	

A) L=1000MM
B) L=1200MM
C) L=800MM
D) L=2000MM

Cab Heater and fan system

17052

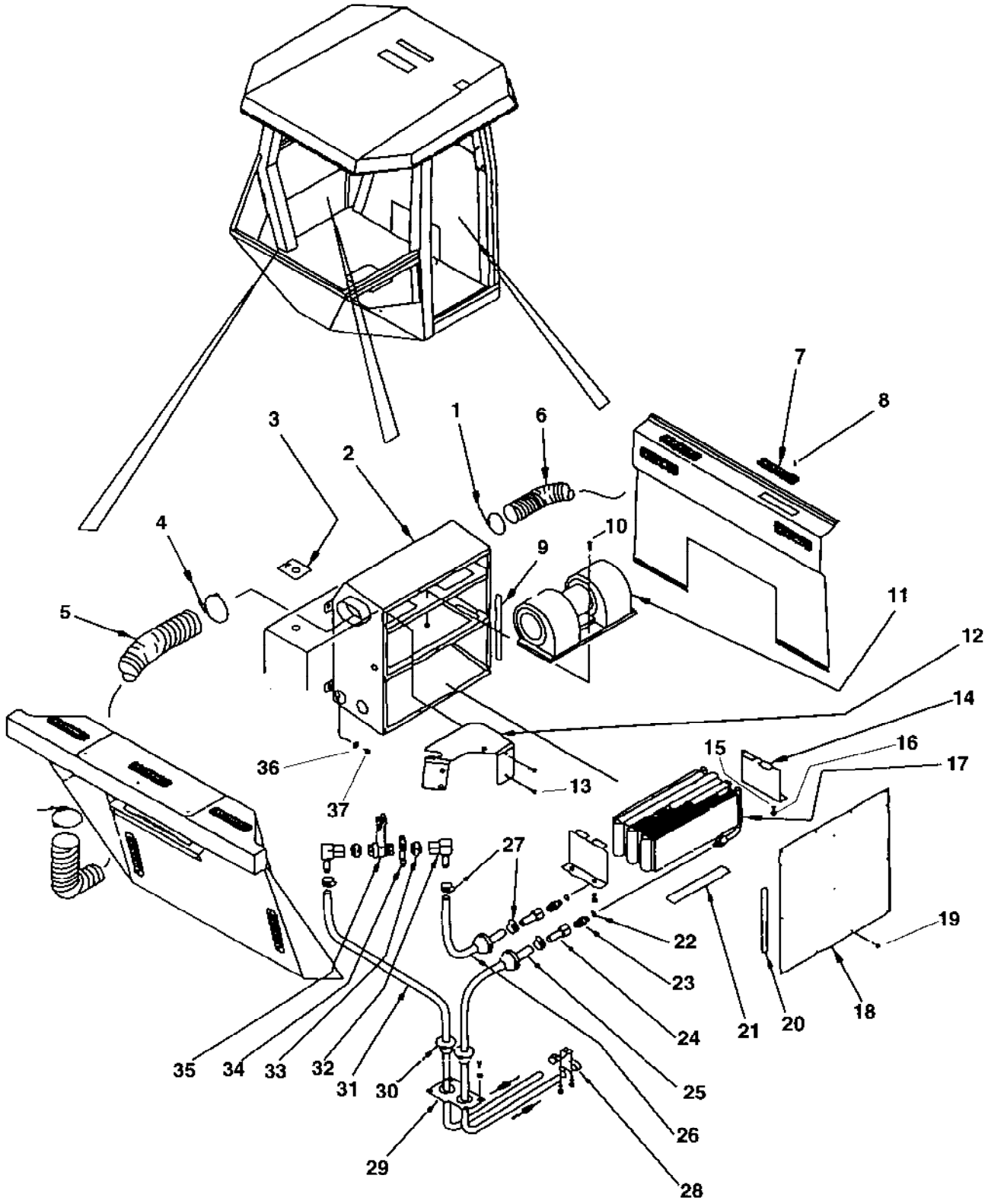

Ref. No.	Part No.	Rem.	Qty	Description	Code
1	935570		1	.Clamp	
2	935555		1	.Heater	
3	937756		1	.Decal, Cab heater	
4	908600		2	.Clamp	
5	908599		1	.Hose	
6	935572		1	.Hose	
7	908598		11	.Nozzle	
8				.Screw	
9	935556		1	.Sealing	
10				.Screw	
11	908595		1	.Fan, cpl	
12	937739		1	.Valve bracket	
13				.Screw	
14	935557		2	.Heater element bracket	
15				.Washer	
16				.Nut	
17	908585		1	.Radiator	
18	935571		1	.Cover plate	
19				.Screw	
20	935556		1	.Sealing	
21	908587	A	1XL	.Edge trim	
22	908588		2	.O-ring	
23	908589		2	.Connector	
24	935558		2	.Adapter	
25	937737	B	1XL	.Hose	
26	937737	C	1XL	.Hose	
27	313003		4	.Hose clamp 15-24	D
28	921028		4	.Clamp	
29	935564		1	.Plate	
30	908496		4	.Grommet	
31	937737	D	1XL	.Hose	
32	937742		2	.Connector	
33	937741		2	.Connector	
34	923984		1	.Clamp	
35	937738		1	.Ball valve	
36				.Washer	
37				.Screw	

A) L=2000mm
B) L=3600mm
C) L=700mm
D) L=2800mm

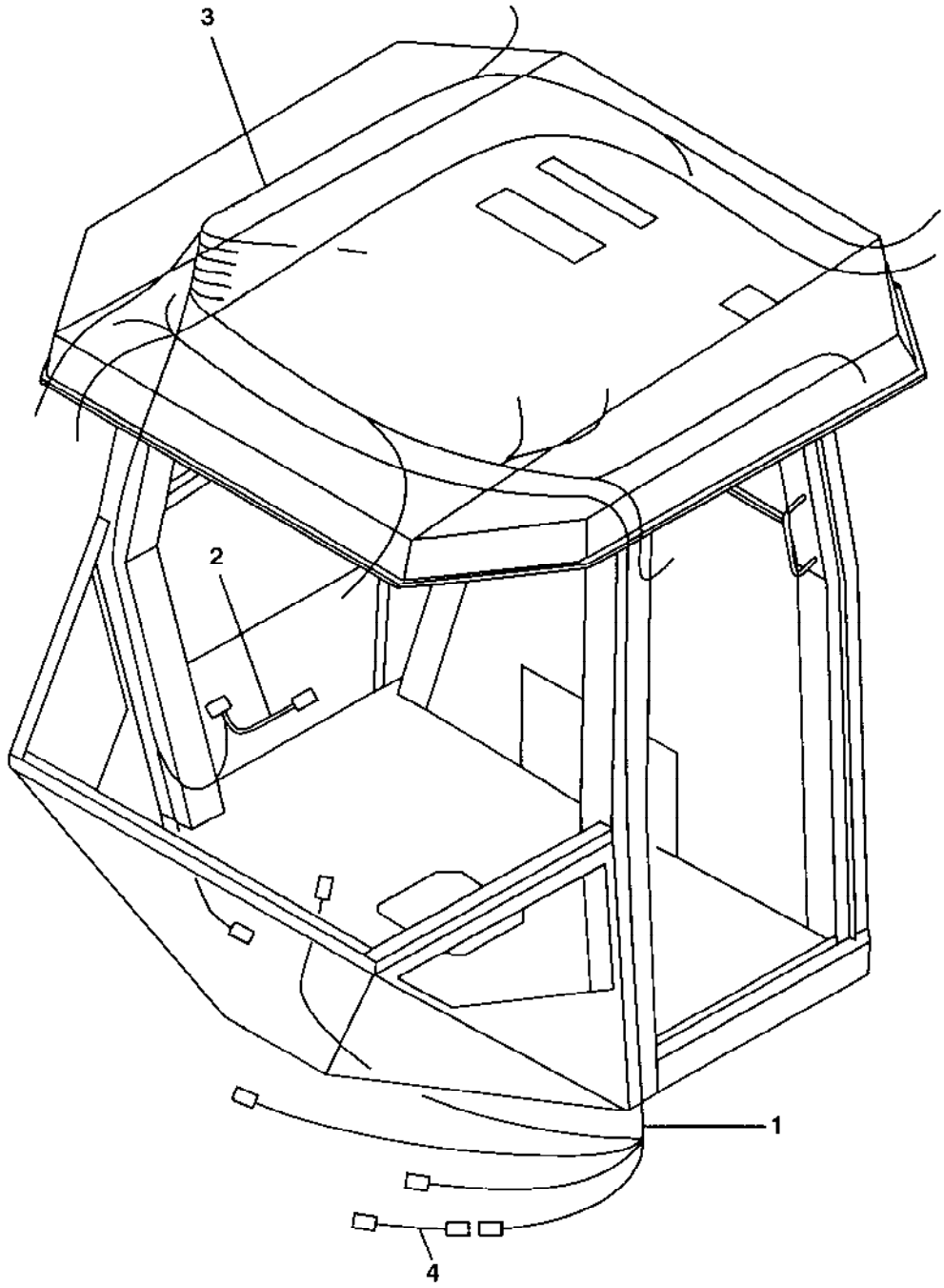
3
2
1
4

Cab Wiring harness

Ref. No.	Part No.	Rem.	Qty	Description	Code
1	935573	A	1	.Cable harness Up to 64X20663	
	938020		1	.Cable harness From 64X20664	
2	935574	B	1	.Cable harness Up to 64X20663	
	938021		1	.Cable harness From 64X20664	
3	935575		1	.Cable harness	
4	937285		1	.Cable harness	

A) Main supply
B) A/C system

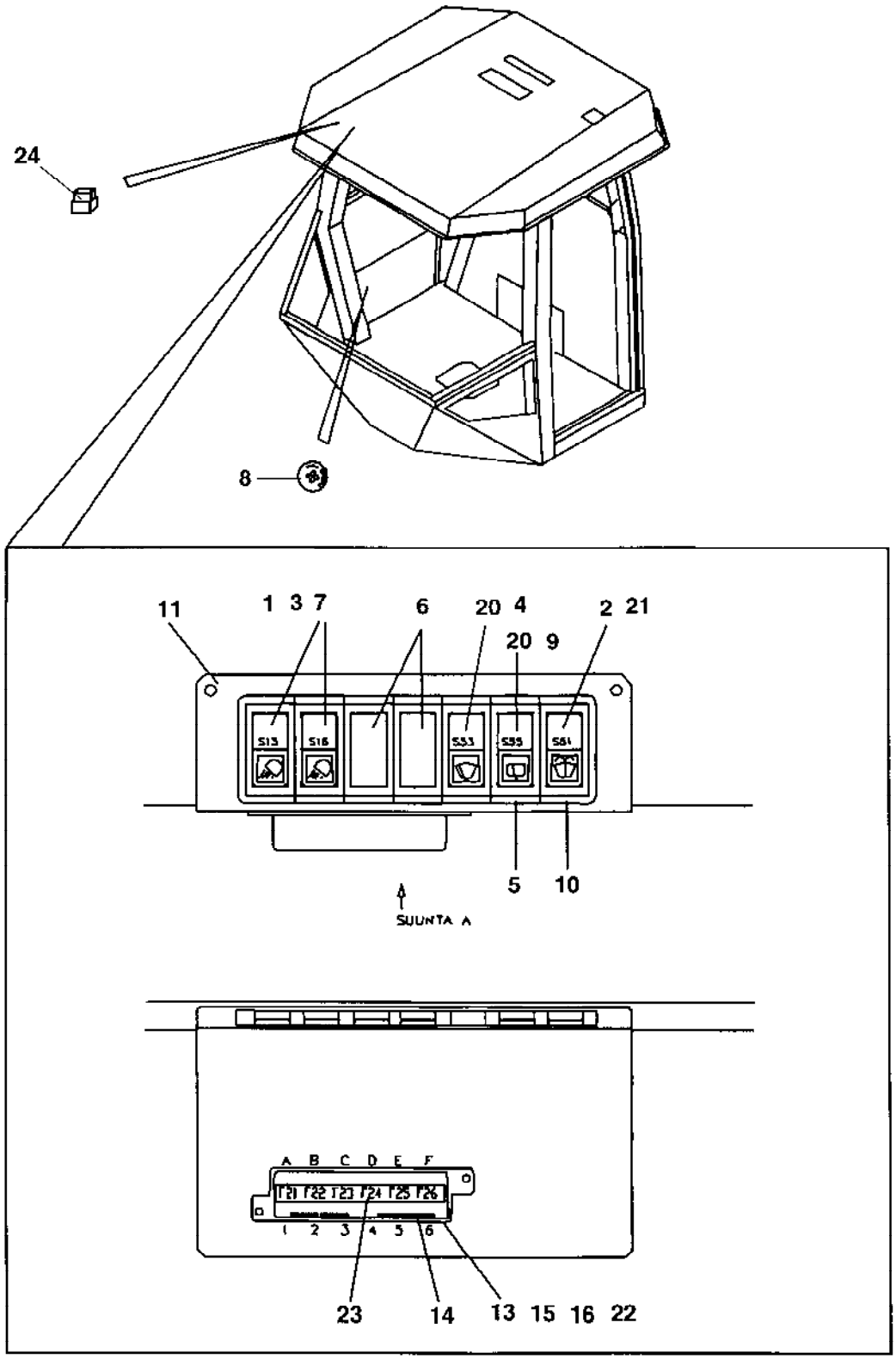
24
8
11
1 3 7
6
20 4
20 9
2 21
S13
S16
S53
S55
S61
5
10
SUUNTA A
A B C D E F
1 2 3 4 5 6
23
14
13 15 16 22

Cab Roof mounted, elect. switches

Ref. No.	Part No.	Rem.	Qty	Description	Code
1	908602		2	.Switch	
2	908603		1	.Switch	
3	908604		2	.Symbol work lights	
4	908605		1	.Symbol wiper	
5	908606		5	.Modular panel	
6	908607		2	.Cover	
7	908608		2	.Socket with bulb	
8	908609		1	.Switch	
9			1	.Symbol	
10	908610		2	.Modular panel	
11	908611		1	.Bracket	
13	908613		1	.Fuse box	
14			4	.Connector	
15	901228		2	.Fuse 15A	B
16	901229		1	.Fuse 25A	B
20	908617		2	.Switch	
21	908618		1	.Symbol washer	
22			3	.Fuse 10A	
23			1	.Decal Fuse nr.	
24	938022		1	.Relay From 64X20664	

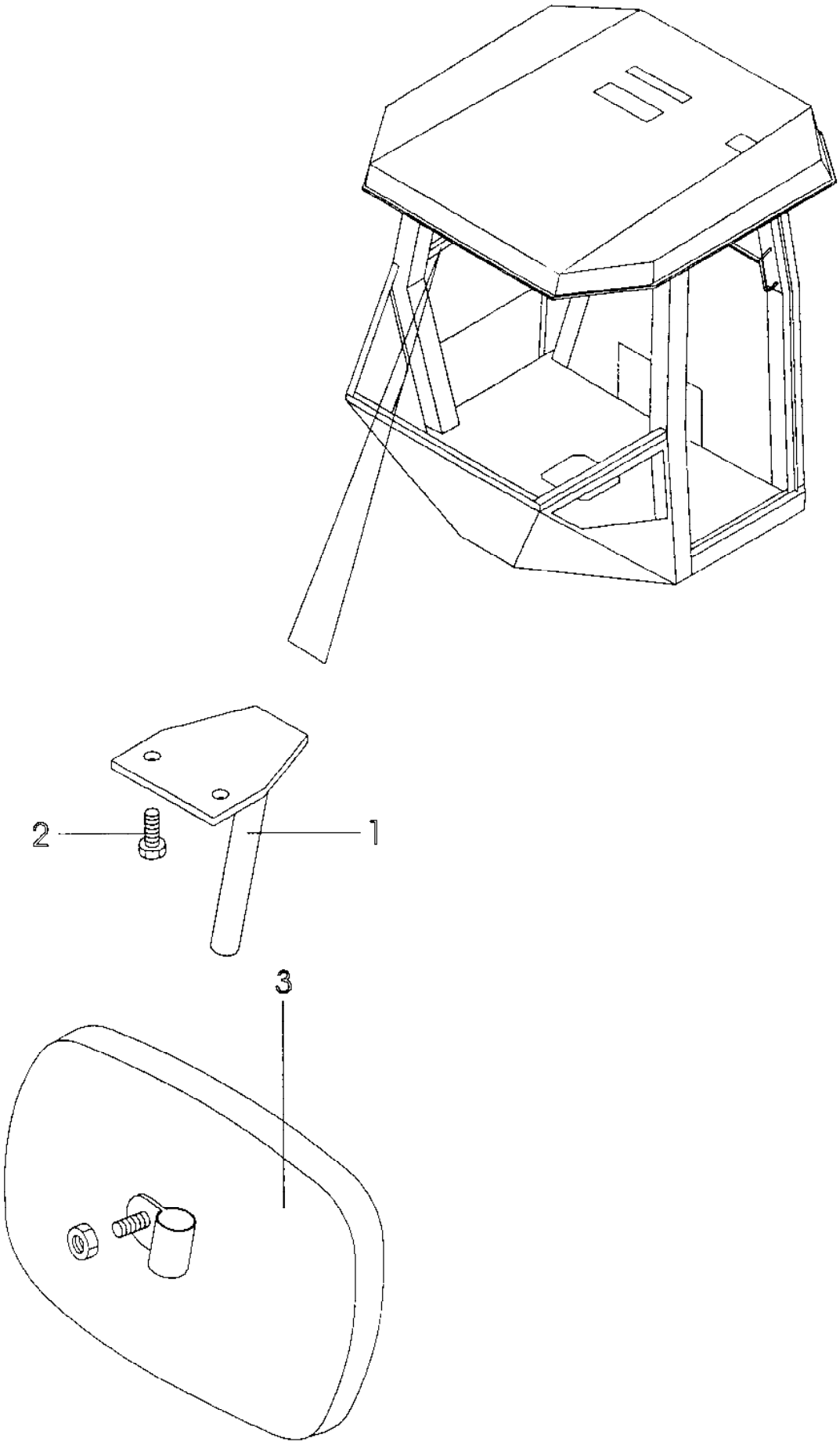
2
1
3

Cab Interior, rear mirror

Ref. No.	Part No.	Rem.	Qty	Description	Code
1	908623		1	.Bracket	
2	535005		2	.Screw M5x12	
3	908624	A	1	.Rear mirror	

A) Interior

Cab Sun curtain

15999

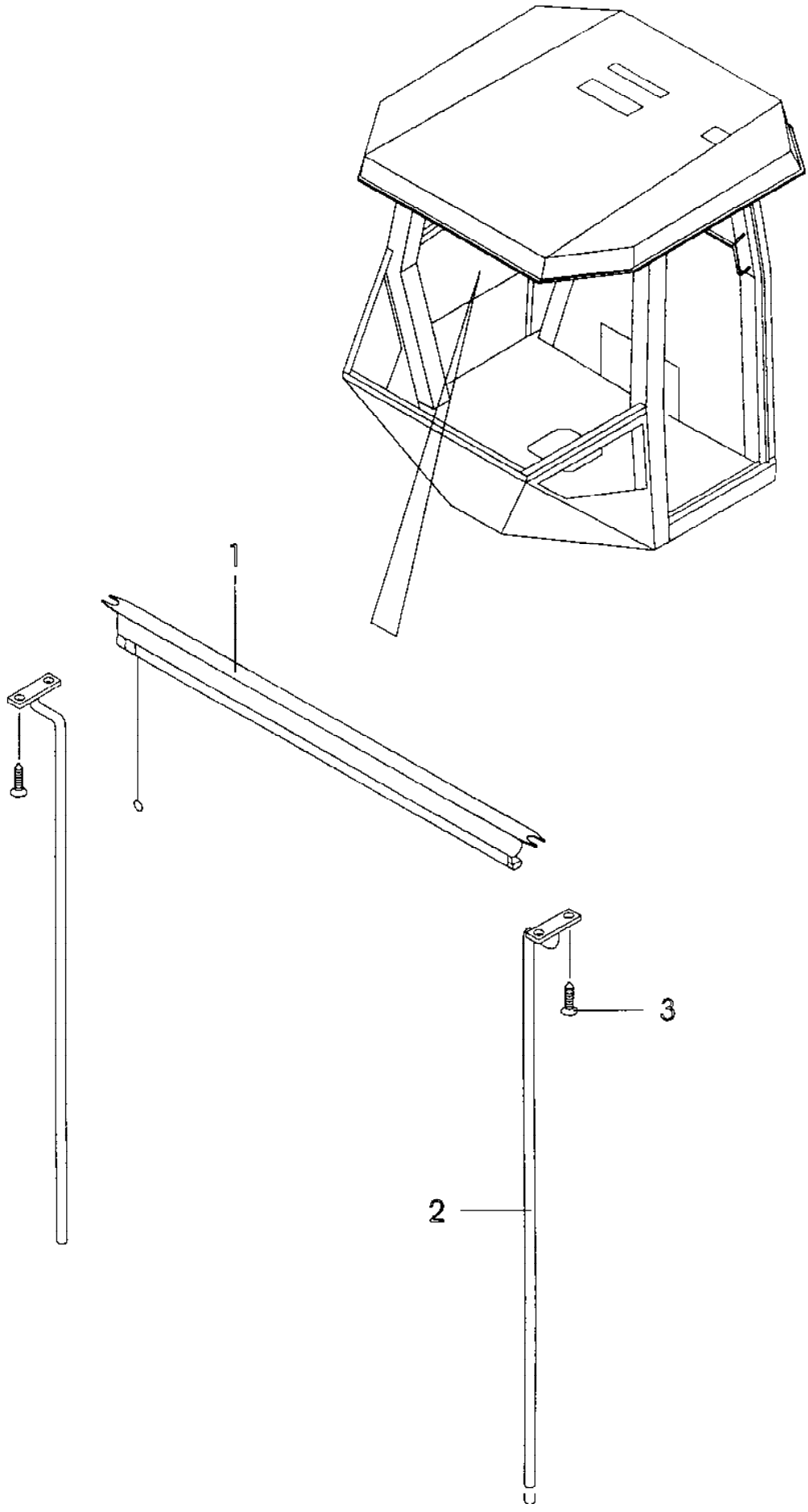

Cab Sun curtain

Ref. No.	Part No.	Rem.	Qty	Description	Code
1	908356		1	.Sun curtain	
2	935337		2	.Bar	
3	903803		4	.Screw	

Ref. No.	Part No.	Rem.	Qty	Description	Code
300				Cab Interior (Page 274)	
310				Cab Inside panels (Page 276)	
320				Cab Screens (Page 278)	
330				Cab Door (Page 282)	
340				Cab Wipers front and rear (Page 284)	
350				Cab Mirror, Sun curtain (Page 286)	
360				Cab Electric (Page 288)	
370				Cab Heater system (Page 290)	
380	385434			Cab heater, cpl (Page 292)	
390				Cab Cable harness (Page 294)	

Cab Interior

17678

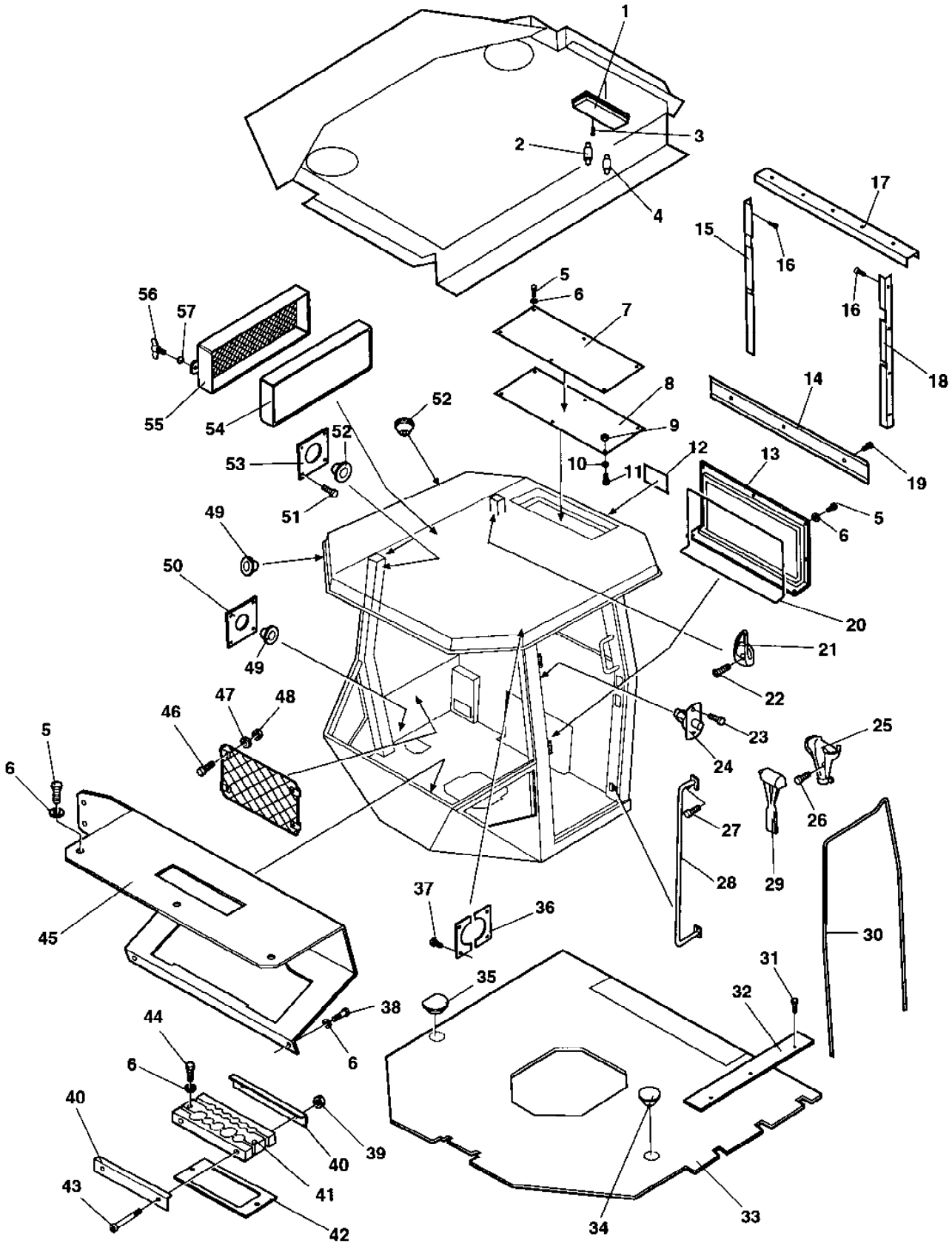

Ref. No.	Part No.	Rem.	Qty	Description	Code
1	908515		1	Inner light	
2	985013		1	Bulb 12V,5W	B
3	541535		2	Screw	
4	985051		1	Bulb 12V,10W	B
5	500053		22	Screw M8-1,25x20 8,8	
6	904229		31	Washer 8,4x16x1,5	
7	938678		1	Cover	
8	938679		1	Cover	
9	586003		18	Lock nut M8	
10	904229		31	Washer 8,4x16x1,5	
11	500053		22	Screw M8-1,25x20 8,8	
12	935589		1	Decal	
13	935590		1	Cover plate	
14	938675		1	List	
15	938672		1	List	
16	938671		4	Screw	
17	938674		1	List	
18	938673		1	List	
19	938671		3	Screw	
20	908587	A	2	Edge trim	
21	908505		1	Hook	
22	938676		2	Screw	
23	925784		2	Screw M4x10 8,8	
24	908500		1	Door switch	
25	908506		1	Holder	
26	938670		2	Screw	
27	938677		2	Screw	
28	935591		1	Handle	
29	908507		1	Emergency hammer	
30	908499	B	1	Rubber list	
31	535007		9	Screw M5x16	
32	935578		1	Edge trim	
33	935577		1	Floor material	
34	908512		1	Cover	
35	935579		1	Cover	
36	935580		2	Bracket	
37	500004		16	Screw M5 0,8x12 8,8	
38	500018		6	Screw M8-1,25x12 8,8	
39	586003		10	Lock nut M8	
40	935583		2	Holder plate	
41	935582		1	Grommet kit	
42	935581		1	Metal gasket	
43	500115		2	Screw M8-1,25x90 8.8	
44	500047		2	Screw M8-1,25x35 8,8	
45	935584		1	Panel plate	
46	535007		4	Screw M5x16	
47	904281		4	Washer 5,3x10x1	
48	586001		4	Lock nut M5	
49	909510		9	Grommet	
50	935585		1	Bracket	
51	500004		16	Screw M5 0,8x12 8,8	
52	908496		5	Grommet	
53	935586		2	Bracket	
54	908502		1	Filter	A
55	908501		1	Filter frame	
56	908504		2	Handle	
57	908503		2	O-ring	

A) L=2 M
B) L=5,0 M

Cab Inside panels

17679

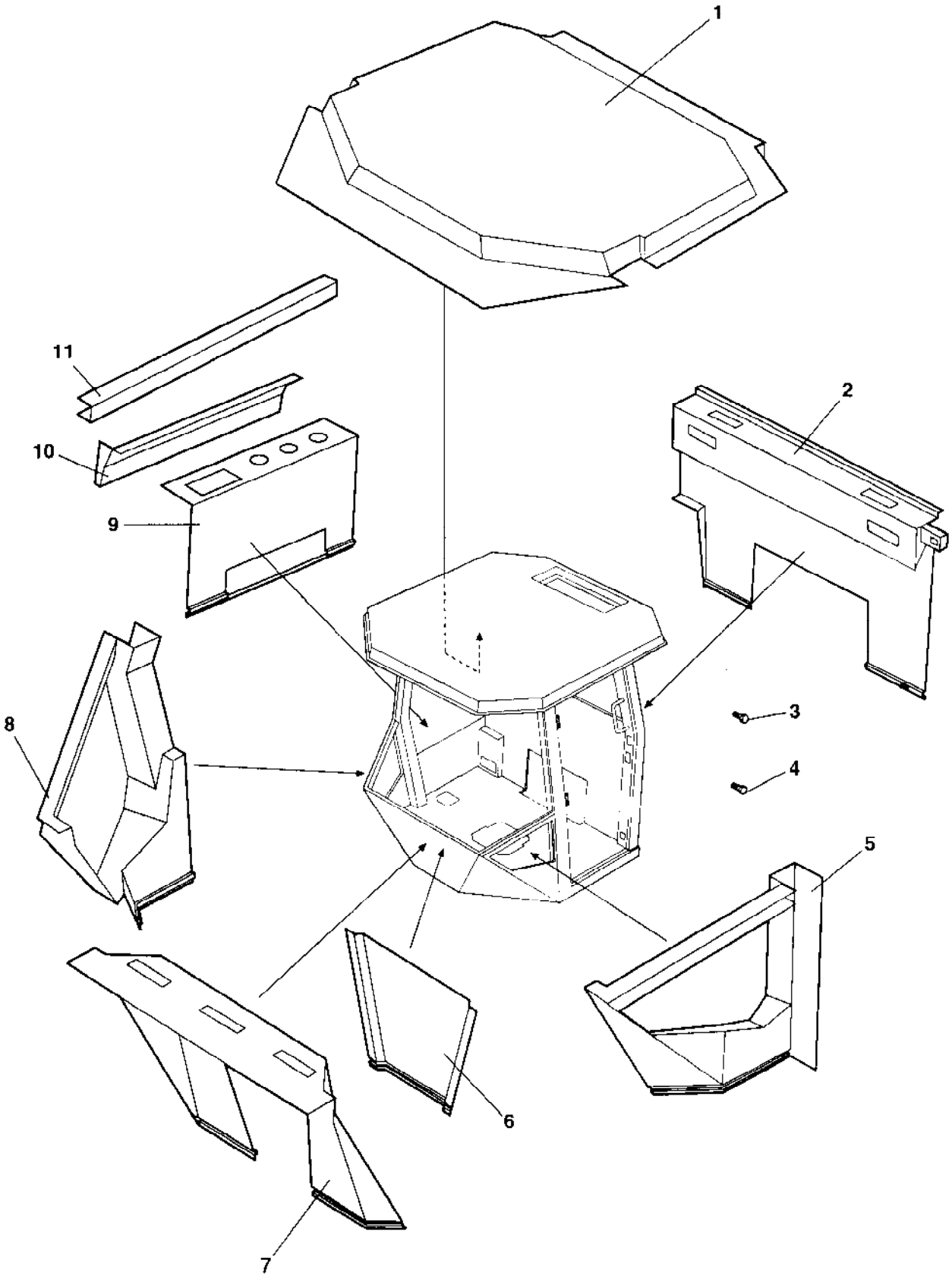

Cab Inside panels

Ref. No.	Part No.	Rem.	Qty	Description	Code
1	938681		1	Panel	
2	938685		1	Panel	
3	938677		50	Screw	
4	937932			Screw	
5	935600		1	Panel	
6	935599		1	Panel	
7	935598		1	Panel	
8	938684		1	Panel	
9	938683		1	Panel	
10	938682		1	Panel	
11	935594		1	Panel	

Cab Screens

17680

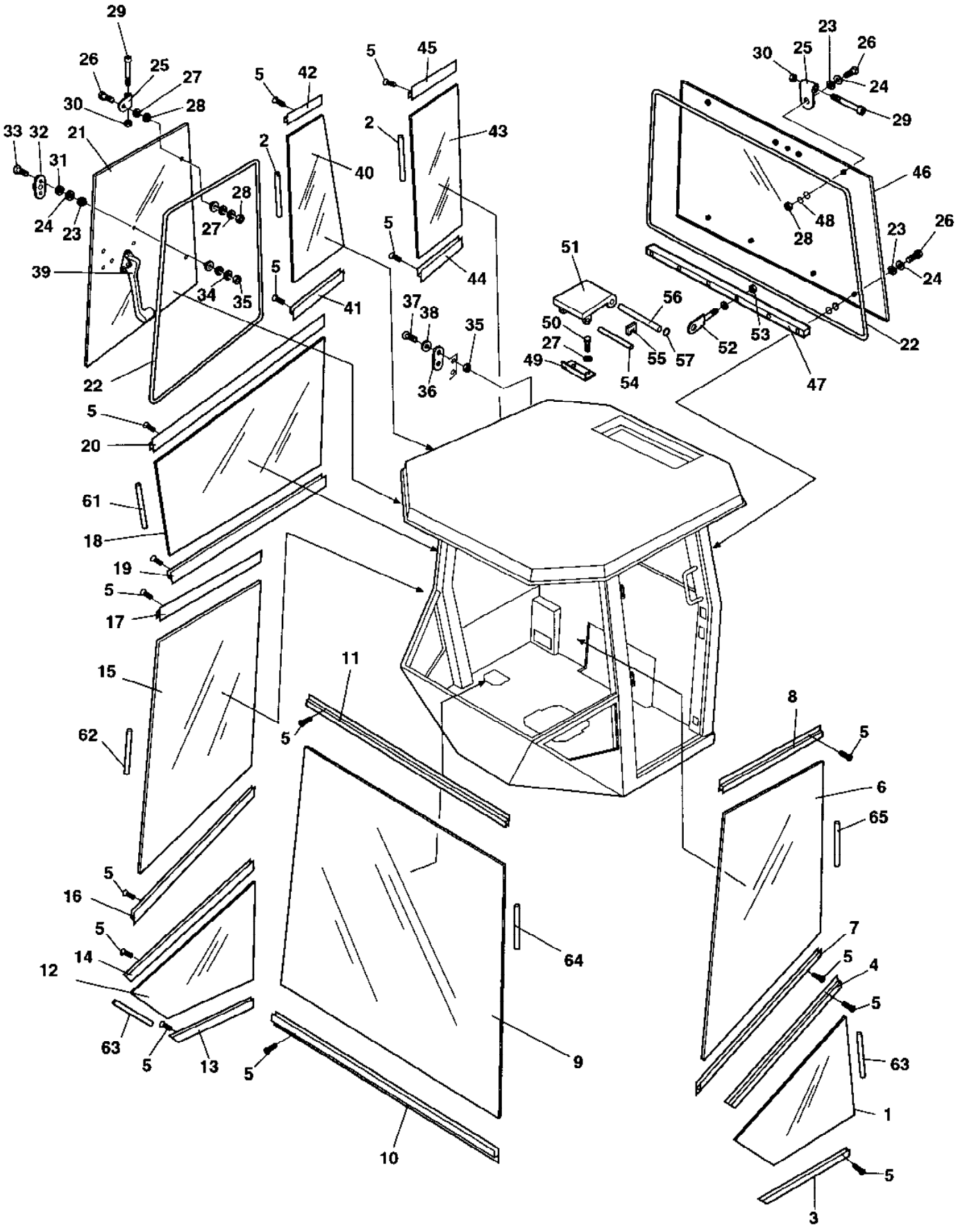

Ref. No.	Part No.	Rem.	Qty	Description	Code
1	937380		1	Screen	
2	908545	A	2	Seal list	
3	935278		1	List	
4	935279		1	List	
5	937932		80	Screw	
6	937381		1	Screen, left	
8	935281		1	List	
9	937382		1	Screen	
10	935282		1	List	
11	935283		1	List	
12	937383		1	Screen	
13	935284		1	List	
14	935285		1	List	
15	937384		1	Screen	
16	935286		1	List	
17	935287		1	List	
18	937385		1	Screen	
19	935288		1	List	
20	935289		1	List	
21	938290		1	Screen	
22	908499	B	1	Rubber list	
23	935271		20	Washer, Flexible	
24	935272		20	Washer, Black	
25	9335273		4	Hinge	
26	935274		8	Screw	
27	936277		4	Washer	
28	586003		18	Lock nut M8	
29	936934		4	Screw M10x100	
30	936935		4	Nut M10	
31	935275		2	Rubber washer	
32	935276		2	Bracket	
33	936600		2	Screw	
34	936601		2	Washer	
35	936602		4	Nut M5	
36	935277		2	Lock pin	
37	535007		9	Screw M5x16	
38	904281		6	Washer 5,3x10x1	
39	935290		1	Window lock, right	
40	938291		1	Screen	
41	935291		1	List	
42	938658		1	List	
43	938292		1	Screen	
44	935293		1	List	
45	938659		1	List	
46	937389		1	Screen	
47	935295		1	Screen holder	
48	935296		2	Washer	
49	935297		1	Bracket	
50	500019		7	Screw M8-1,25x16 8,8	
51	935298		2	Bracket	
52	935299		2	Bolt	
53	570004		4	Nut M6	
54	935300		1	Shaft	
55	935301		2	Lock	

A) L=1,4 m
B) L=2,7 m

Cab Screens

17680

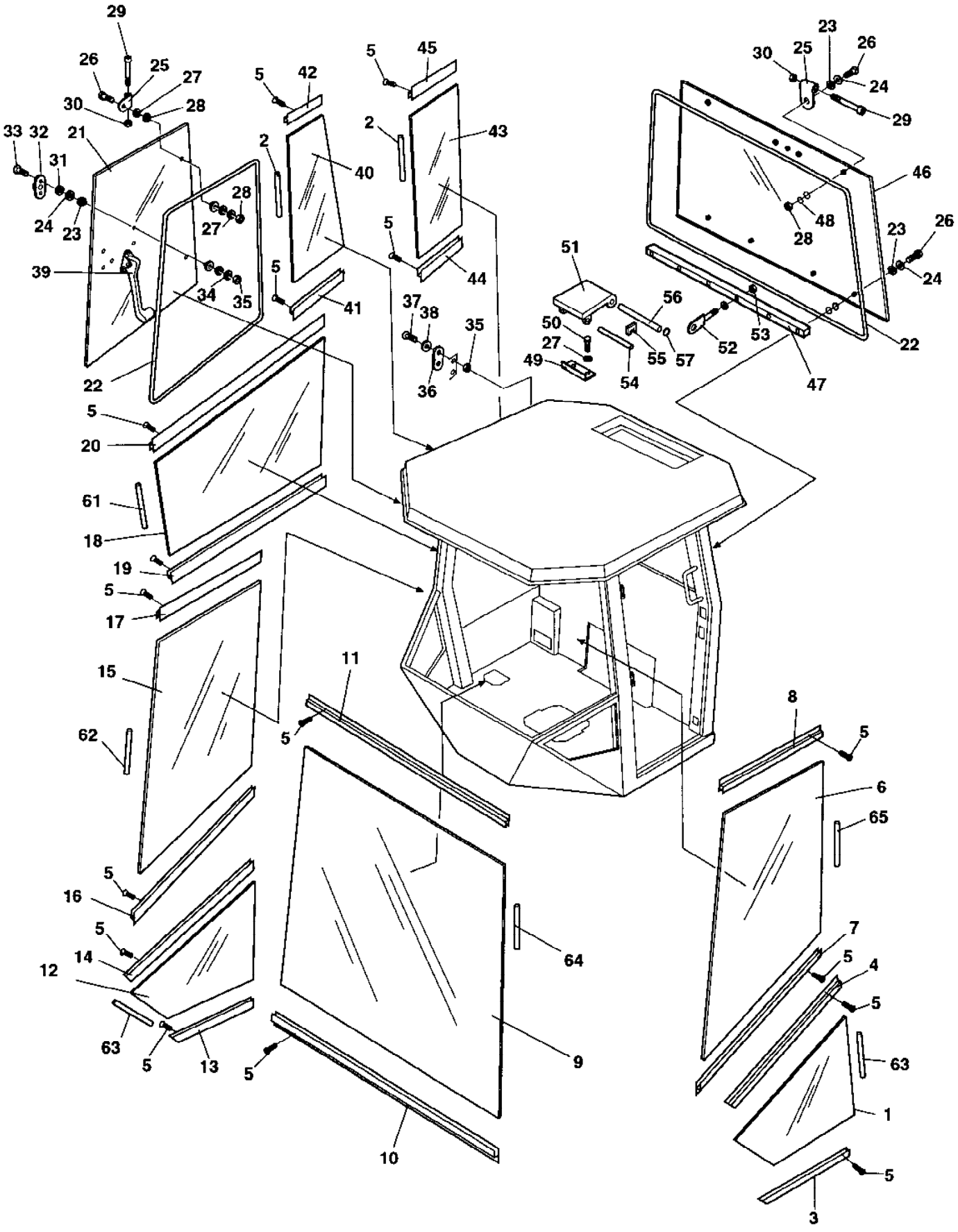

Ref. No.	Part No.	Rem.	Qty	Description	Code
56	935302		1	Rod	
57	935303		1	Ring	
61	908545	C	1	Seal list	
62	908545	D	1	Seal list	
63	908545	E	2	Seal list	
64	908545	F	1	Seal list	
65	908545	G	1	Seal list	

C) L=1,1 M
D) L=1,9 M
E) L=0,8 M
F) L=2,1 M
G) L=0,9 M

Cab Door

17681

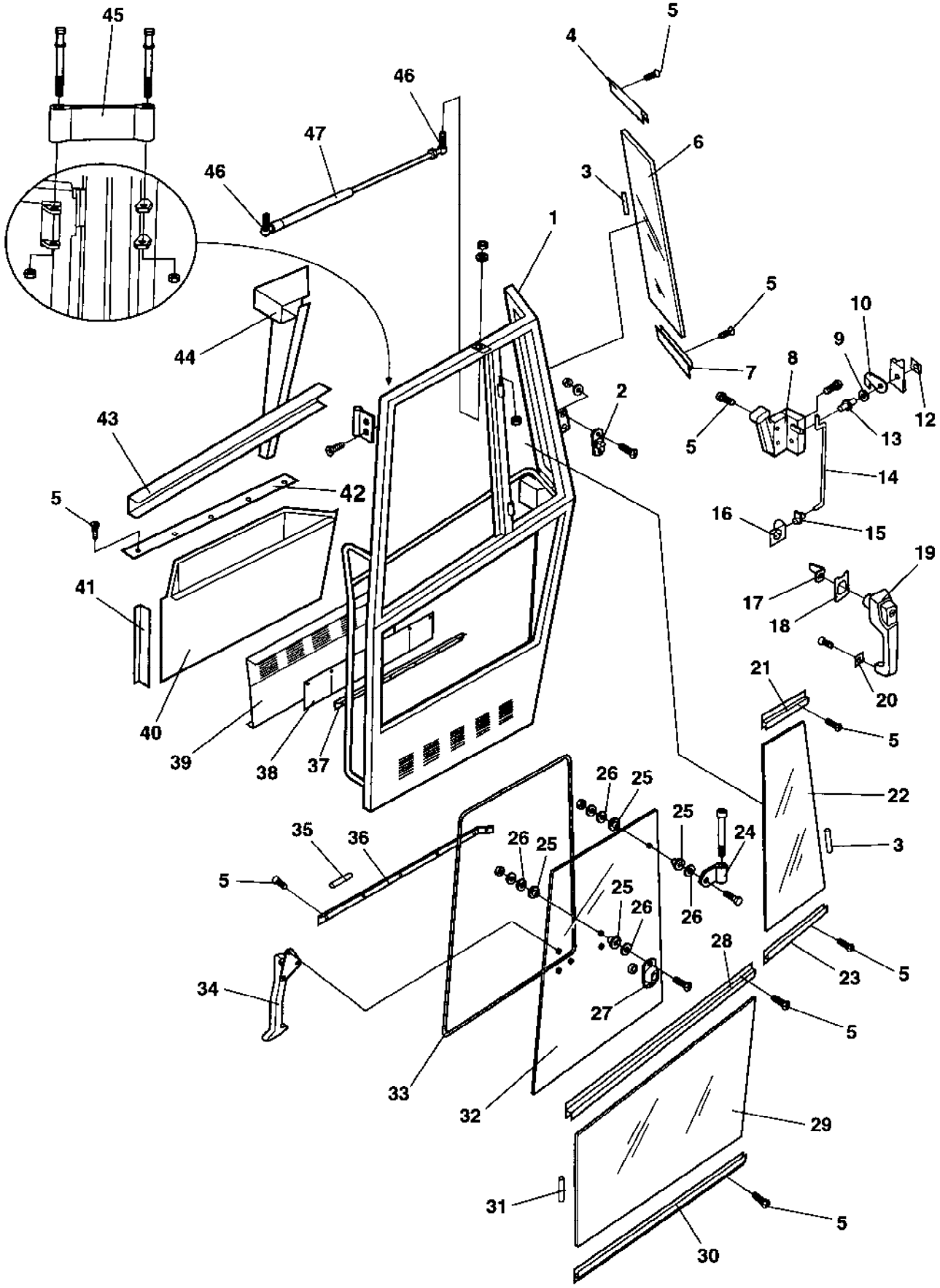

Ref. No.	Part No.	Rem.	Qty	Description	Code
1	938016		1	Door frame	
2	935277		2	Lock pin	
3	908545	A	2	Seal list	
4	935268		1	List	
5	937932		80	Screw	
6	937391		1	Screen	
7	935267		1	List	
8	938017		1	Lock	
9	908581		1	Washer	
10	908582		1	Cover	
12	908583		1	Bracket	
13	908580		1	Lock pin	
14	935250		1	Rod	
15	935249		1	Retainer	
16	935248		1	Turning mechanism	
17	935247		1	Leader	
18	935246		1	Seal	
19	935244		1	Door handle with key	
20	935245		1	Seal	
21	935270		1	List	
22	937392		1	Screen	
23	935269		1	List	
24	935273		2	Hinge	
25	935271		4	Washer, Flexible	
26	935272		4	Washer, Black	
27	935276		1	Bracket	
28	935266		1	List	
29	937390		1	Screen	
30	935265		1	List	
31	908545	B	1	Seal list	
32	937393		1	Screen	
33	908499		1	Rubber list	
34	935253		1	Lock	
35	908987	C	1	Seal	
36	935255		1	List	
37	935256		1	List	
38	935257		1	Ventilating grill	
39	935258		1	Panel plate	
40	935260		1	Panel	
41	935261		1	Panel	
42	935262		1	Support list	
43	935263		1	Panel	
44	938043		1	Panel	
45	938024		1	Door stop	
46	937121		2	Ball joint	
47	938018		1	Gas spring	

A) L=1,4 M
B) L=1,1 M
C) L=0,75 M

Cab Wipers front and rear

17682

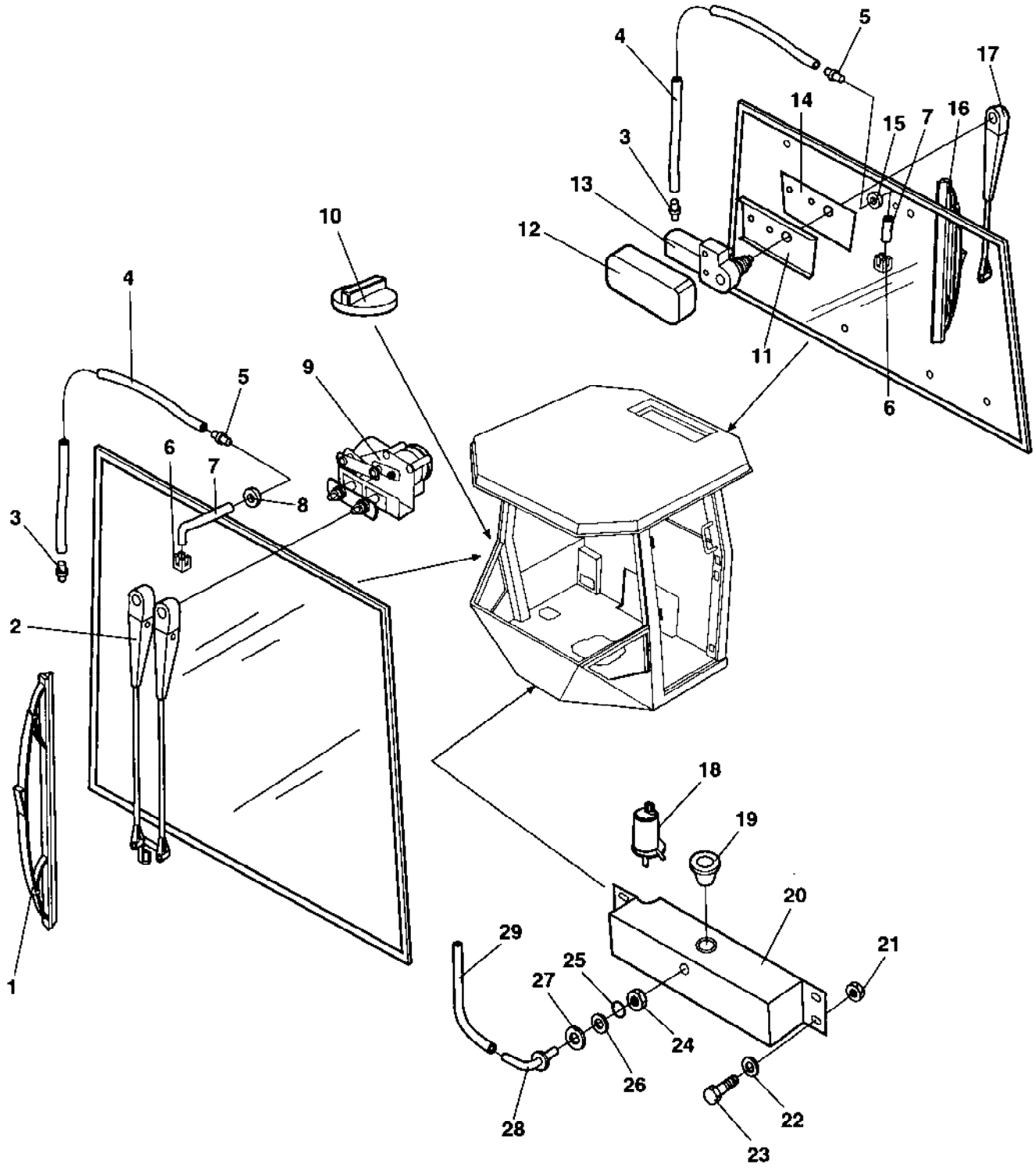

Cab Wipers front and rear

Ref. No.	Part No.	Rem.	Qty	Description	Code
1	905306		1	Wiper blade	
2	905305		1	Wiper arm	
3	908564		2	Check valve	
4	908563	A	2	Plastic hose	
5	908561		2	Grommet	
6	908559		2	Nozzle	
7	908560	B	2	Rubber hose	
8	909510		1	Grommet	
9	905304		1	Wiper motor	
10	904114		1	Fuel cap	D
11	905309		1	Holder plate	
12	905308		1	Protecting cover	
13	905307		1	Wiper motor	
14	905310		1	Shim	
15	908497		1	Grommet	
16	905312		1	Wiper blade	
17	905311		1	Wiper arm	
18	935335		1	Pump	
19	938660		1	Grommet	
20	935334		1	Water reservoir	
21	586002		4	Lock nut M6	
22	904228		4	Washer 6,4x12x1,5	
23	500075		4	Screw M6-1x25 8,8	
24	938661		1	Nut	
25	938662		1	O-ring	
26	938664		1	Washer	
27	938663		1	Washer	
28	938665		1	Adapter	
29	938666		1	Hose	

A) L=5,0 M
B) L=1.0 M

Cab Mirror, Sun curtain

17683

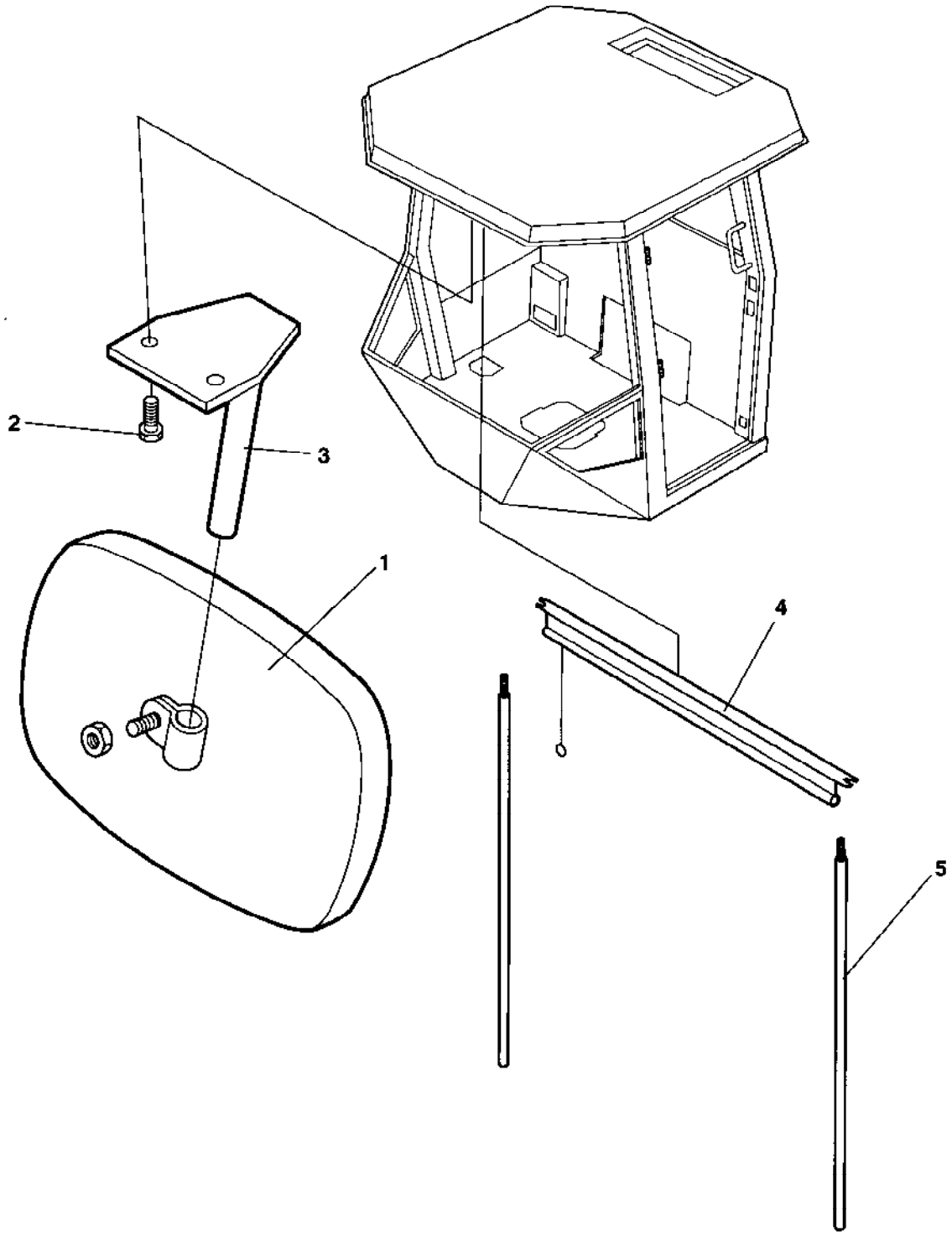

Cab Mirror, Sun curtain

Ref. No.	Part No.	Rem.	Qty	Description	Code
1	908624		1	Rear mirror	
2	500006		2	Screw M5x16	
3	908623		1	Bracket	
4	938667		1	Sun curtain	
5	938668		1	Sun curtain, bar kit	

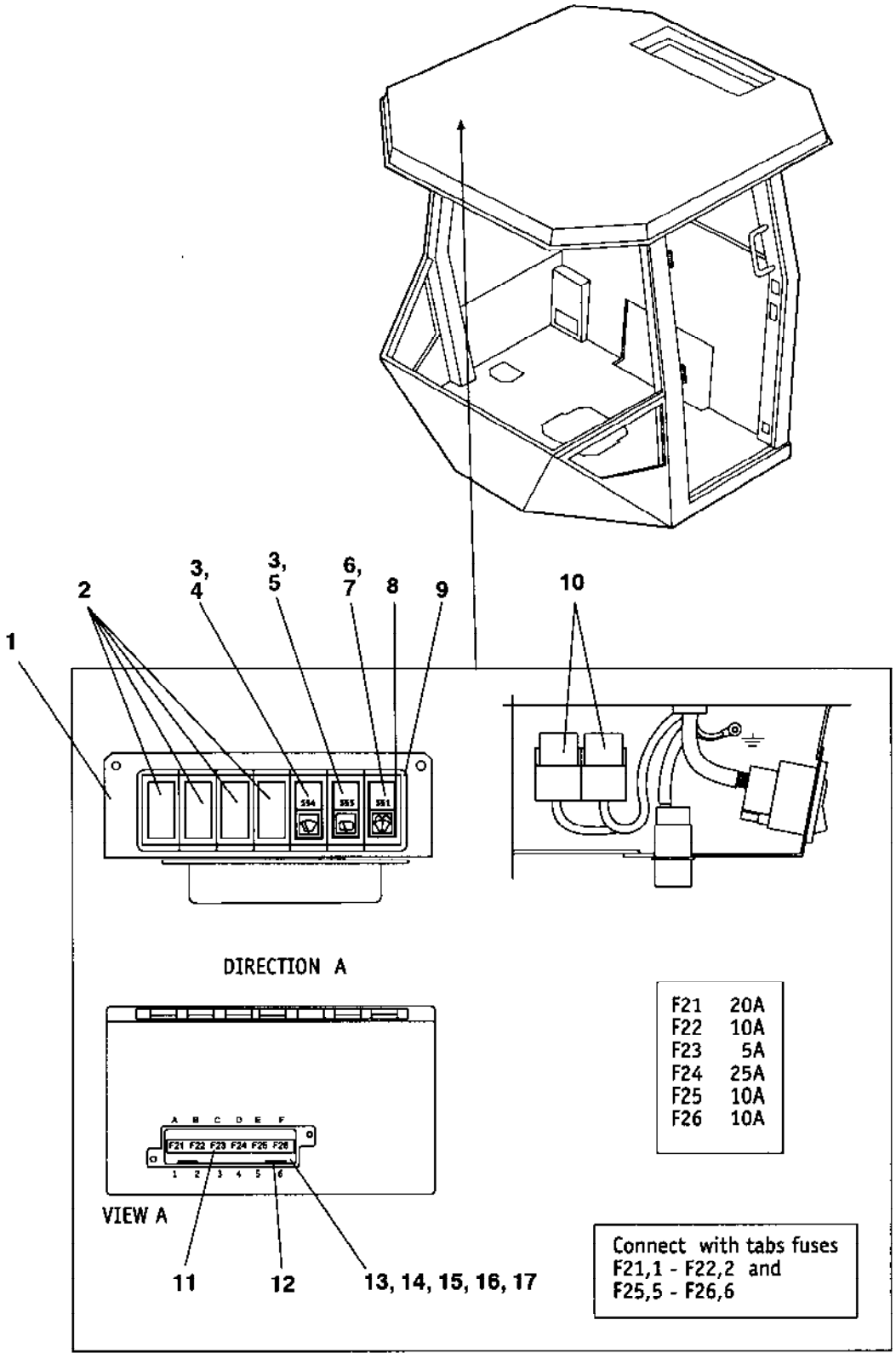
1
2
3, 4
3, 5
6, 7
8
9
10
DIRECTION A
VIEW A
A B C D E F
F21 F22 F23 F24 F25 F26
1 2 3 4 5 6
11
12
13, 14, 15, 16, 17
F21 20A
F22 10A
F23 5A
F24 25A
F25 10A
F26 10A
Connect with tabs fuses
F21,1 - F22,2 and
F25,5 - F26,6

Ref. No.	Part No.	Rem.	Qty	Description	Code
1	908611		1	Bracket	
2	908607		4	Cover	
3	908617		2	Switch	
4	908605		1	Symbol wiper	
5	938687		1	Symbol wiper	
6	908618		1	Symbol washer	
7	908603		1	Switch	
8	908610		2	Modular panel	
9	908606		5	Modular panel	
10	938022		1	Relay	
11	938688		1	Decal	
12	901240		2	Connector	
13	908613		1	Fuse box	
14	901225		1	Fuse 5A	D
15	903741		1	Fuse 20A	D
16	901229		1	Fuse 25A	B
17	901227		3	Fuse 10A	D

Cab Heater system

17685

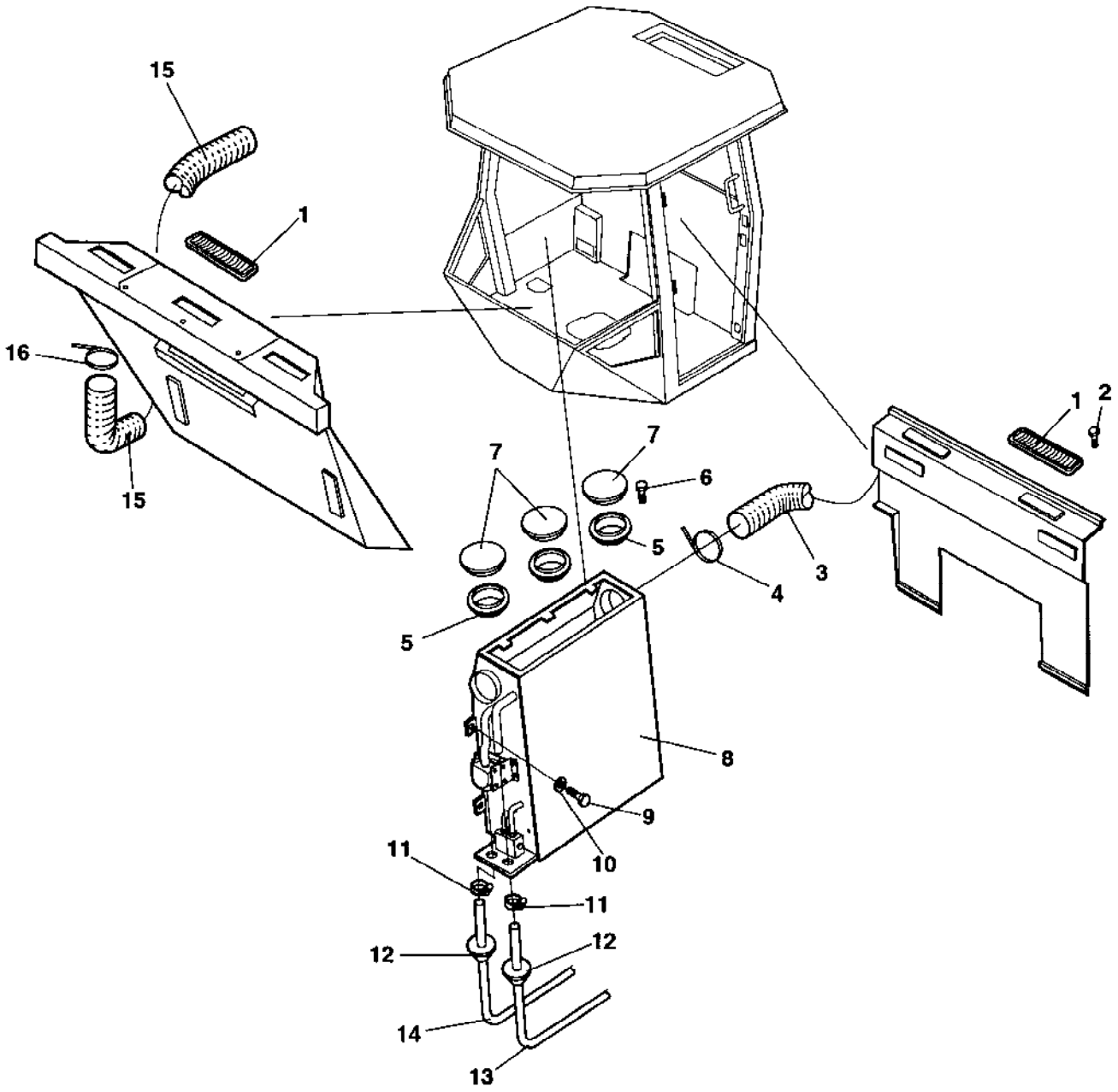

Ref. No.	Part No.	Rem.	Qty	Description	Code
1	908598		11	Nozzle	
2	938680		22	Screw	
3	935572		1	Hose	
4	935570		1	Clamp	
5	385443		3	Ring	
6	938691		9	Screw	
7	385442		3	Air nozzle	
8	385434		1	Cab heater, cpl (Page 292)	
9	500015		7	Screw M6-1x30 8,8	
10	904229		7	Washer 8,4x16x1,5	
11	313003		2	Hose clamp 15-24	D
12	908496		5	Grommet	
13	937737	A	1	Hose	
14	937737	B	1	Hose	
15	908599		1	Hose	
16	908600		2	Clamp	

A) L=3,6 M
B) L=2,8 M

385434 Cab heater, cpl

17686

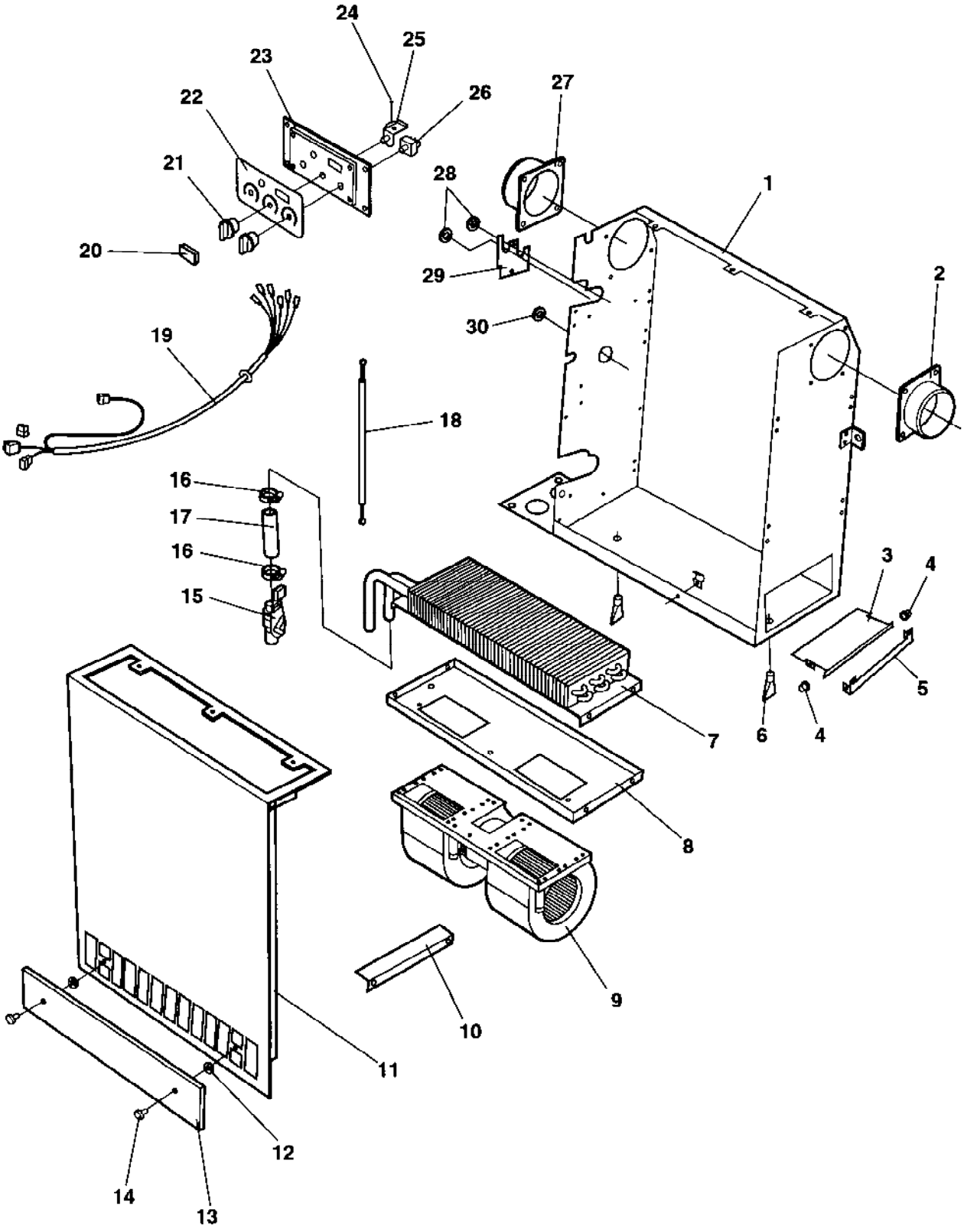

385434 Cab heater, cpl

Ref. No.	Part No.	Rem.	Qty	Description	Code
1	938625		1	Casing	
2	938633		1	Hose adapter	
3	938629		1	Cover	
4	938635		2	Sleeve	
5	938630		1	Bracket	
6	938636		2	Drain valve	
7	938639		1	Heater coil	
8	938627		1	Fan bracket	
9	938638		1	Fan	
10	938641		1	Coil bracket	
11	938626		1	Cover	
12	938643		1	Plug	
13	938640		1	Cover	
14	938634		2	Knob	
15	938642		1	Control valve	
16	313003		2	Hose clamp 15-24	D
17	384881		1	Hose	
18	938645		1	Bowden cable	
19	938647		1	Cable harness	
20	938643		1	Plug	
21	938620		2	Knob	
22	938618		1	Decal	
23	938617		1	Control panel	
24	385134		1	Lock washer	
25	938621		1	Rotary control	
26	938622		1	Switch	
27	938632		1	Hose adapter	
28	384927		2	Grommet	
29	938628		1	Cover	
30	938644		1	Cap	

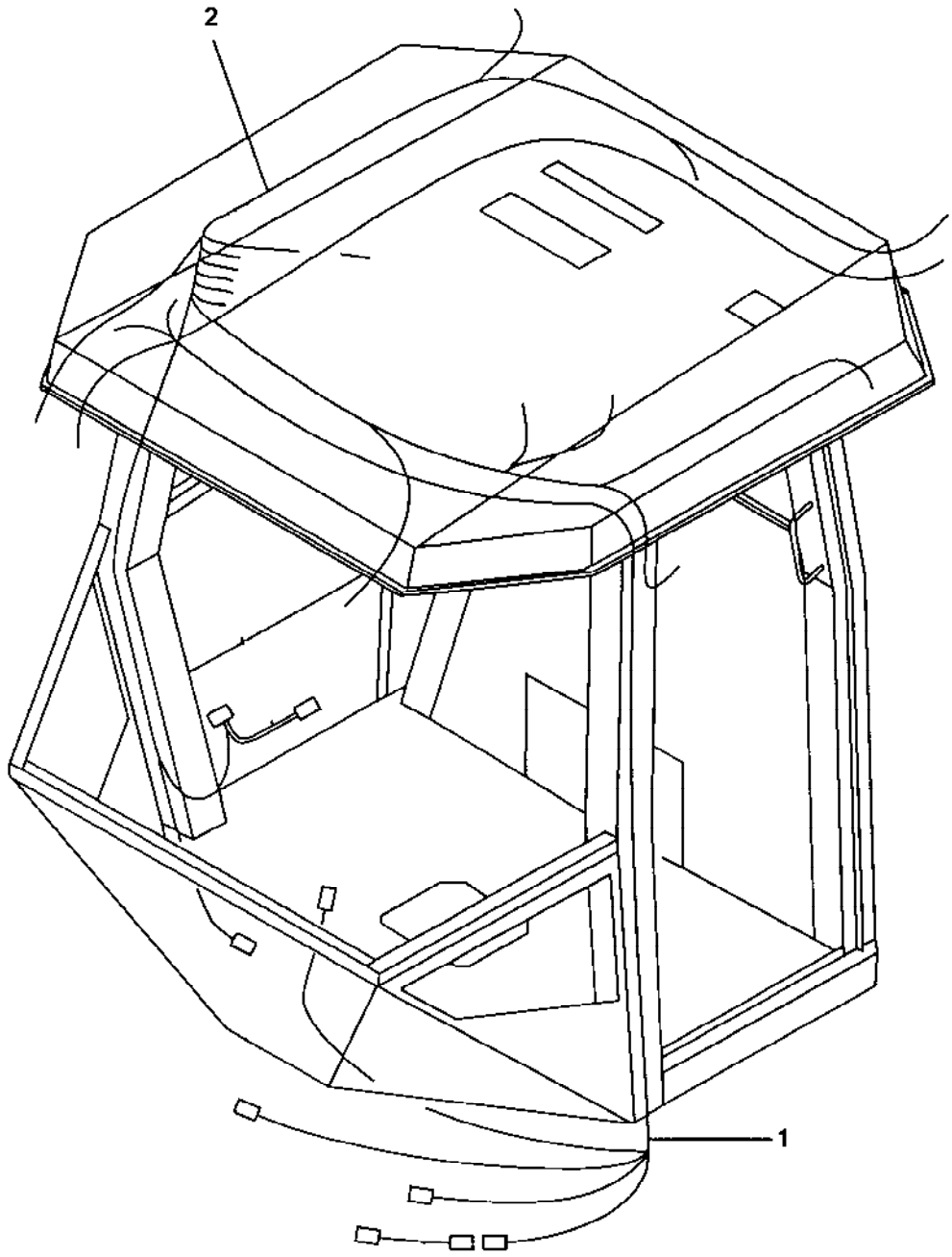
2
1

Cab Cable harness

Ref. No.	Part No.	Rem.	Qty	Description	Code
1	938689		1	Cable harness	
2	938690		1	Cable harness	

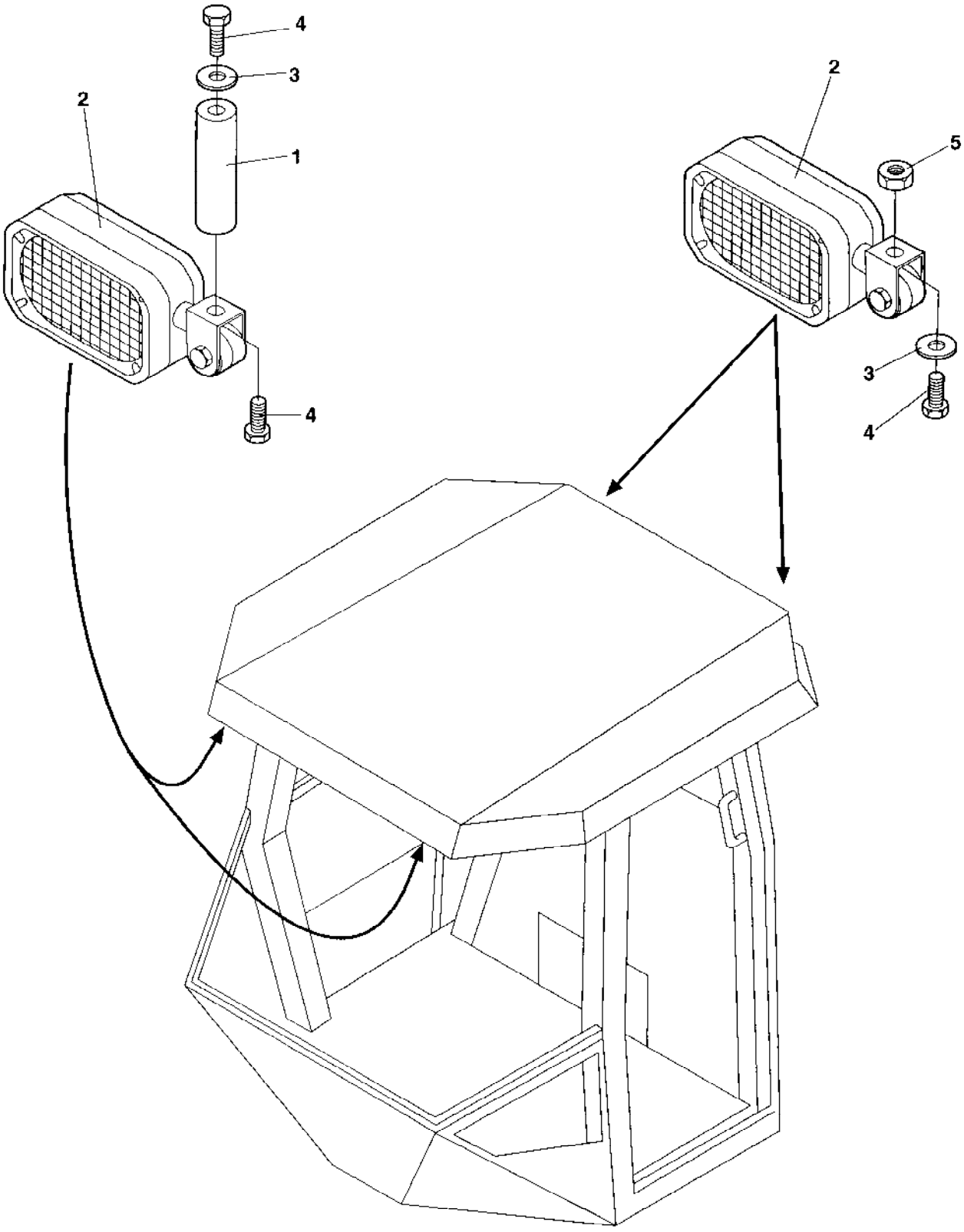
4
3
2
1
4
2
5
3
4

Ref. No.	Part No.	Rem.	Qty	Description	Code
1	908359		2	Distance	
2	908267		4	Working light	D
3	904229		4	Washer 8,4x16x1,5	
4	500019		6	Screw M8-1,25x16 8,8	
5	586003		2	Lock nut M8	

Cab Exterior, rear mirror

16009

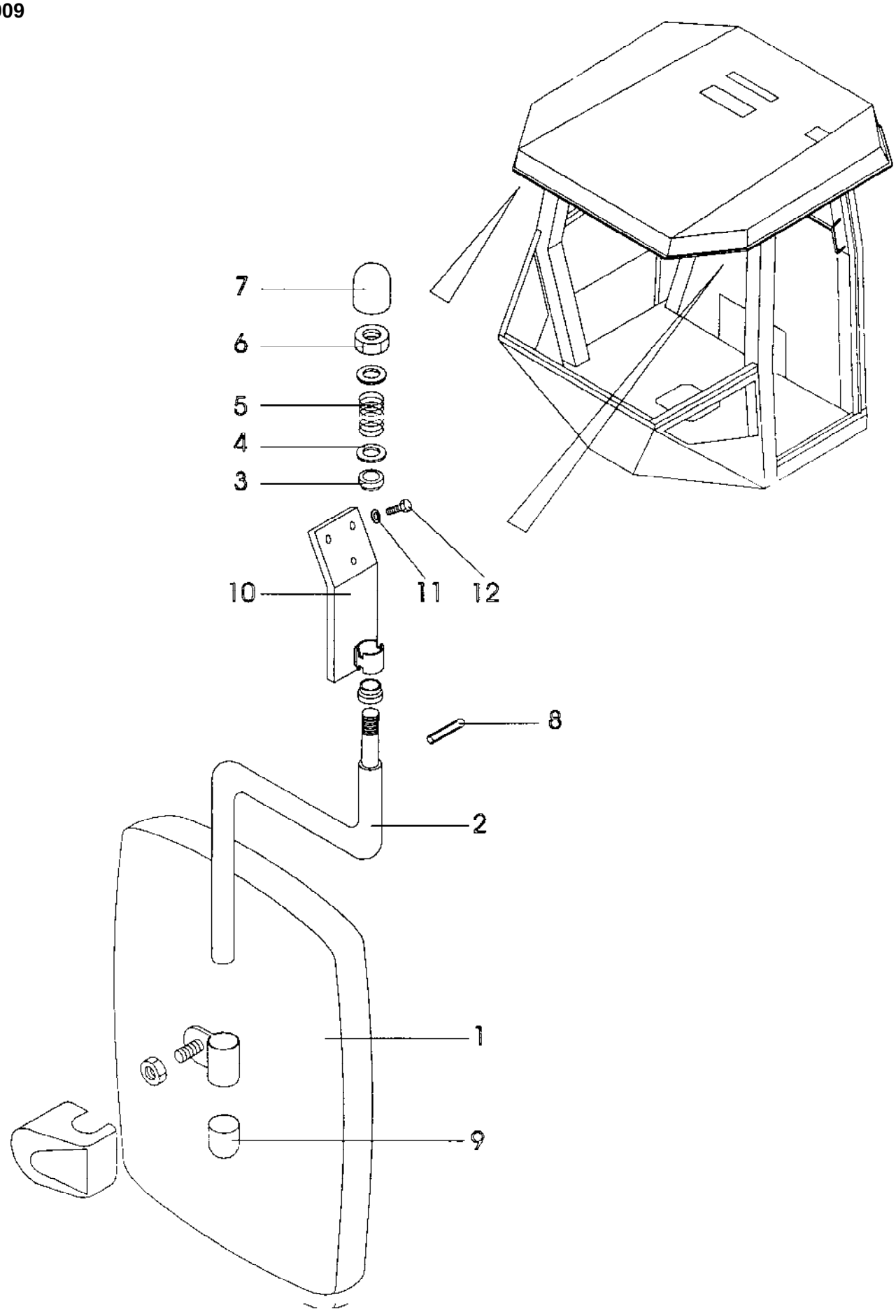

Ref. No.	Part No.	Rem.	Qty	Description	Code
	371730		2	Rear mirror	
1	908265		1	.Rear mirror	
2	908355		1	.Arm	
3	908625		1	.Sleeve	
4	904232		1	.Washer 17x30x3	
5	908626		1	.Spring	
6	586021		1	.Nut M16	
7	908627		1	.Cap	
8	629066		1	.Spirol pin	
9	908628		1	.Cap	
10	908361		1	.Bracket	
11	904229		6	Washer 8,4x16x1,5	
12	500019		6	Screw M8-1,25x16 8,8	

Radio and cassette player Option

15883-1

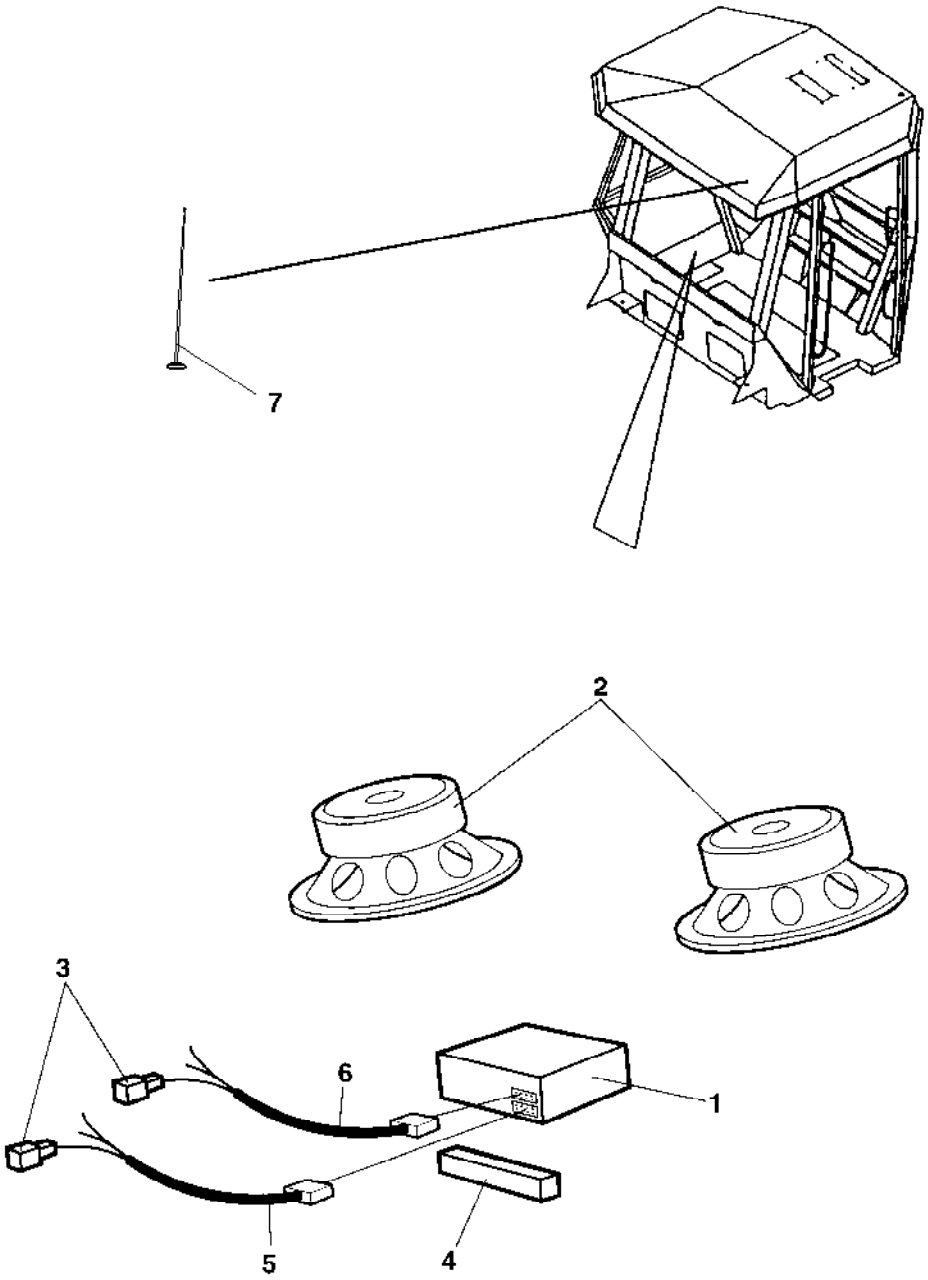

Radio and cassette player Option

Ref. No.	Part No.	Rem.	Qty	Description	Code
1	904939		1	Car stereo	
2	904940	A	1	Loud speaker	
3	927403	B	7	Terminal	
4	202043	C	1XL	Rubber strip	
5	904969		1	Power connection	
6	904970		1	Speaker connection	
7	937165		1	Antenna	

A) 2 pcs
B) Female
C) L=0.2 m

Simple Cab mounting Option

16966

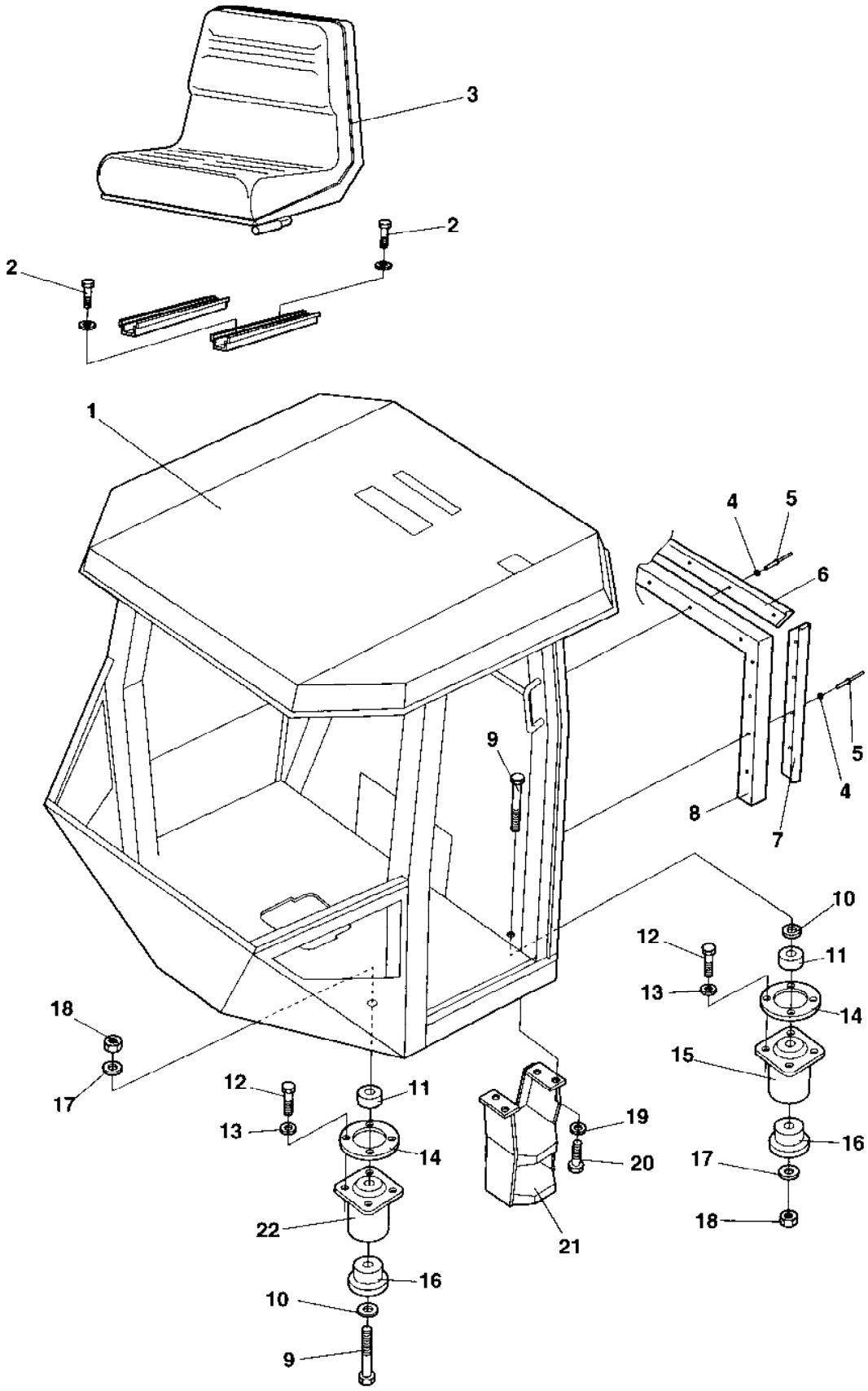

Simple Cab mounting Option

Ref. No.	Part No.	Rem.	Qty	Description	Code
1	380656		1	Cab	
2	508005		4	Screw	
3	370234		1	Drivers seat	
	936283		1	.Seat switch	D
	909535	E,F	1	.Sliding rail	D
	909536	G	1	.Sliding rail	D
4	927974		13	Washer	
5	904433		13	Blind rivet	
6	372785		1	List	
7	372786		2	List	
8	372494	A	N	Rubber strip	
9	903905		4	Screw	
10	904233		4	Washer 21x36x3	
11	370258		4	Spacer washer	
12	500121		16	Screw M12x65 8,8	
13	904231		16	Washer 13x24x2	
14	359998		4	Back-up ring	
15	374606	B	2	Shock absorber Green	D
16	372457		4	Back-up ring	
17	903290		4	Washer 21x36x6	
18	901145		4	Lock nut M20-10	
19	904230		4	Washer 10,5x22x2	
20	500029		4	Screw M10-1,5x30 8,8	
21	376255		1	Step	
22	374607	C	2	Shock absorber Yellow	D

A) L=2400 mm
B) Rear
C) Front
E) With handle
F) Left
G) Right

Simple Cab mounting Electric, Option

17377

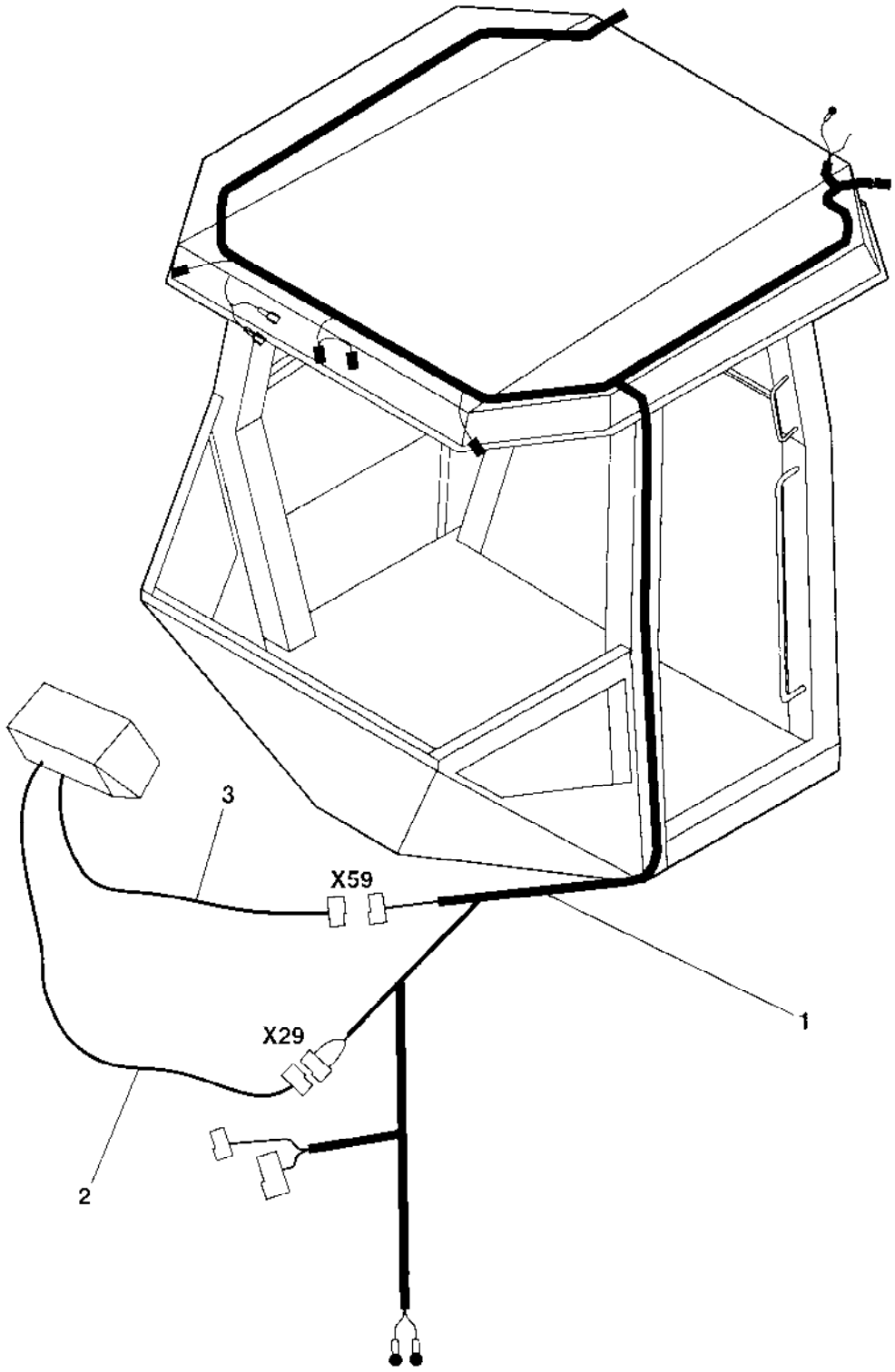

Simple Cab mounting Electric, Option

Ref. No.	Part No.	Rem.	Qty	Description	Code
1	937870	A	1	Cable harness	
2	384403	B	1	Cable harness	
3	384402	C	1	Cable harness	

A) Main supply
B) Horn
C) Windshield wiper

Ref. No.	Part No.	Rem.	Qty	Description	Code
10				Decals (Page 308)	
20				Decals (Page 310)	

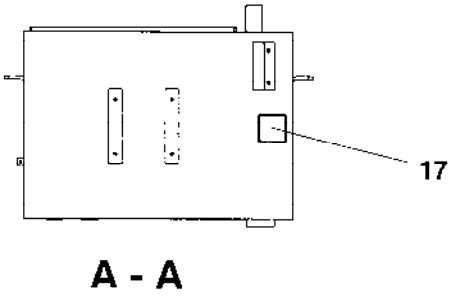
17
A - A

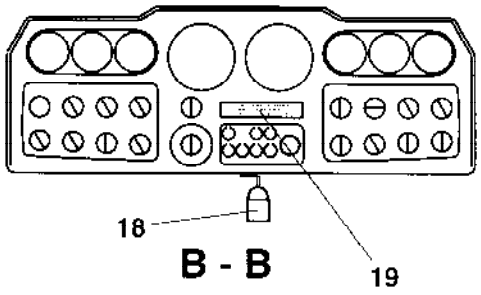
18
19
B - B

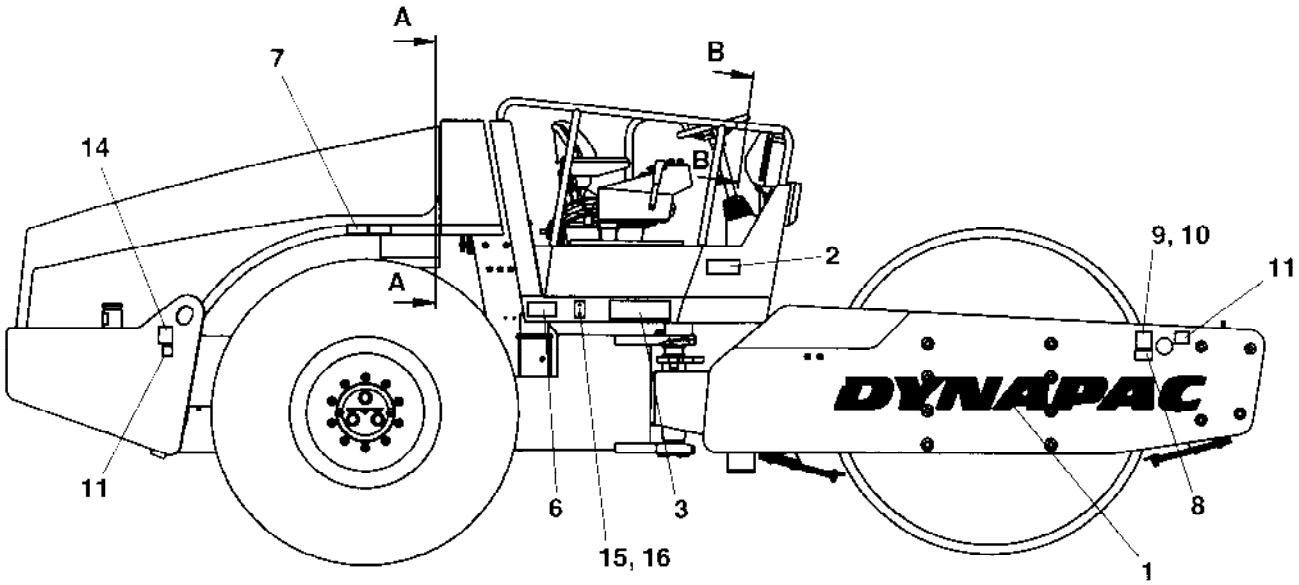
A
B
7
14
2
9, 10
11
11
6
3
15, 16
8
1

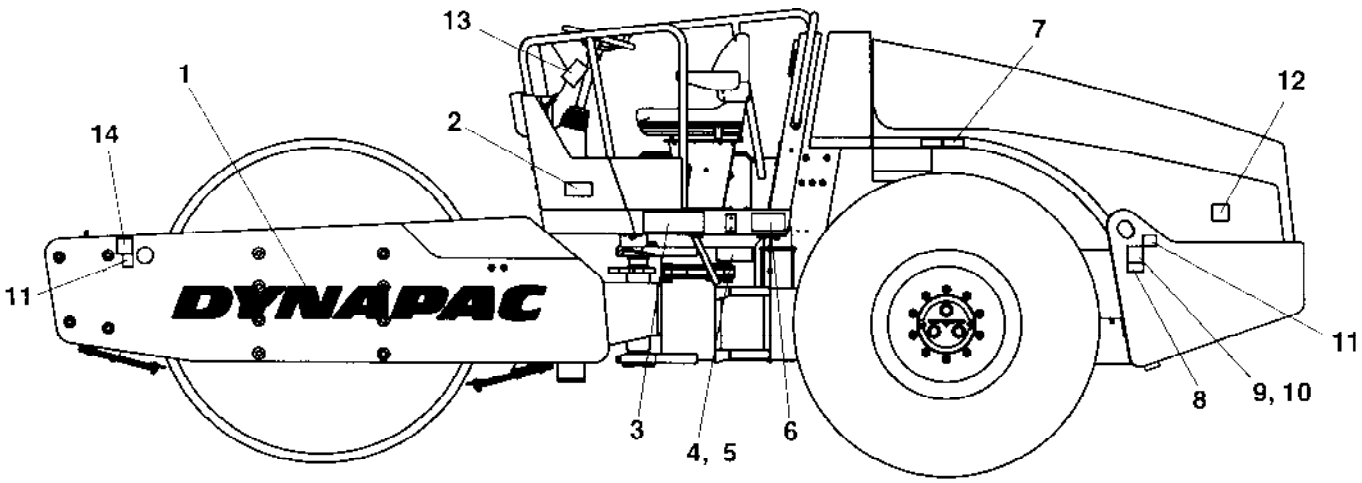
13
7
1
12
14
2
11
11
3
4, 5
6
8
9, 10

Ref. No.	Part No.	Rem.	Qty	Description	Code
1	904098		2	Decal "DYNAPAC" L=1350 mm	
2	903422		2	Decal "SAFETY"	
3	904240		2	Decal "MODEL CODE"	
4	960787SE		1	Product identification plate	
5	902915		4	Screw	
6	903459		2	Decal "SAFETY"	
7	349220		2	Decal "TYRE PRESSURE"	
8	908229		2	Safety decal	
9	904870		2	Lifting sign	
10	624016		8	Blind rivet	
11	382751		4	Decal "TIE DOWN POINT"	
12	904835		1	Decal "BATTERY POWER"	
13	384160		1	Loading/Unloading instruction	
14	588176		2	Decal "LIFT POINT"	
15	383859		2	Reflector, yellow	B
16	624015		4	Blind rivet	
17	272373		1	Decal "HYDRAULIC OIL"	
18	358881		1	Pad lock	
19	349248SE		1	Decal "WARNING" Swedish	
	349248EN		1	Decal "WARNING" English	
	349248DE		1	Decal "WARNING" German	
	349248IT		1	Decal "WARNING" Italian	
	349248ES		1	Decal "WARNING" Spanish	
	349248FR		1	Decal "WARNING" French	
	349248NO		1	Decal "WARNING" Norwegian	
	349248DK		1	Decal "WARNING" Danish	
	349248FI		1	Decal "WARNING" Finnish	
	349248PT		1	Decal "WARNING" Portuguese	
	349248NL		1	Decal "WARNING" Dutch	
	349248GR		1	Decal "WARNING" Greek	
	349248IS		1	Decal "WARNING" Icelandic	
	349248CN		1	Decal "WARNING" Chinese	

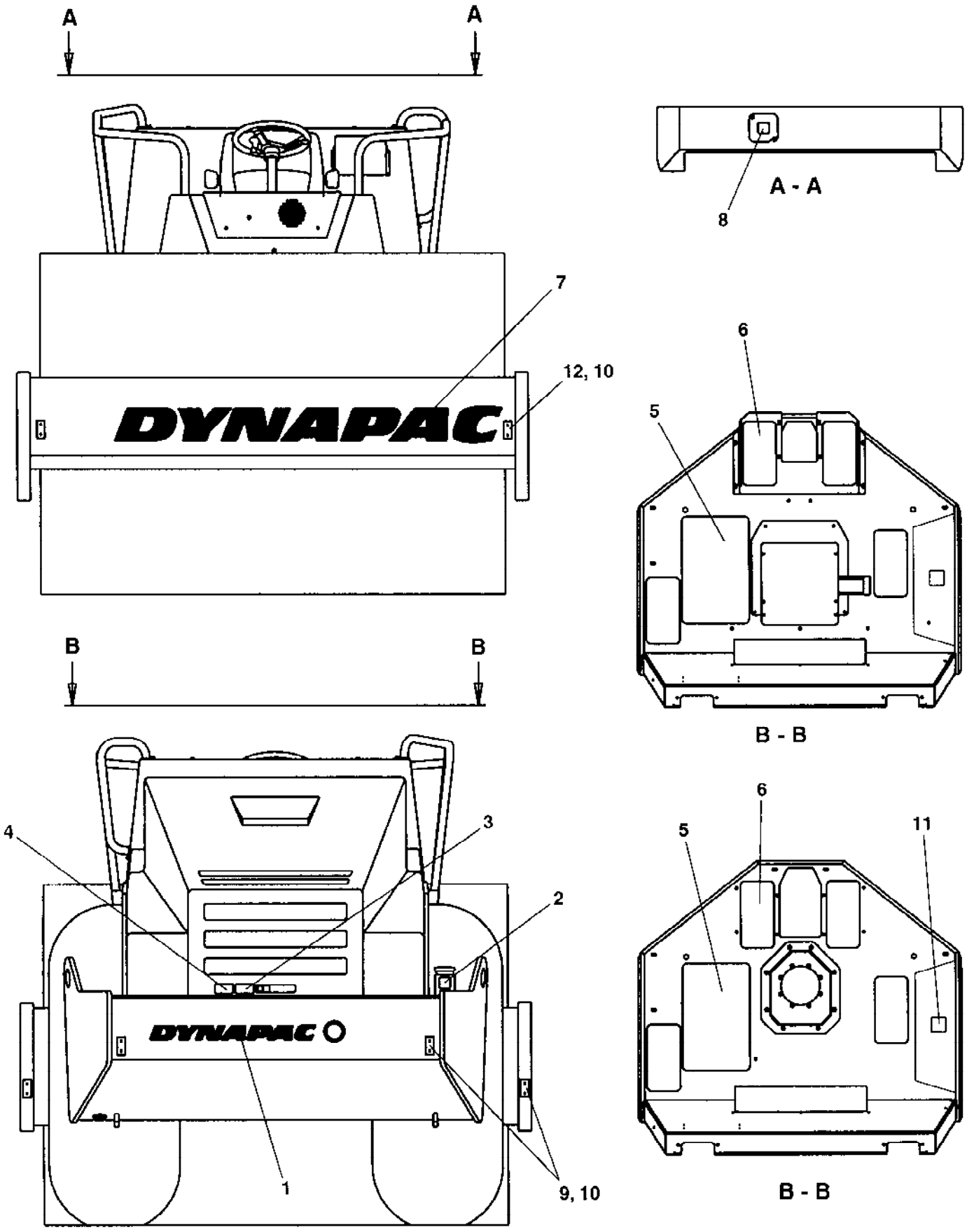
A
A
A - A
8
7
12, 10
DYNAPAC
6
5
B
B
B - B
4
3
2
DYNAPAC
1
9, 10
6
5
11
B - B

Decals

Ref. No.	Part No.	Rem.	Qty	Description	Code
1	904069		1	Decal "DYNAPAC" L=760 m	
2	991658		1	Decal "FUEL"	
3	903423		1	Decal "SAFETY"	
4	903424		1	Decal "SAFETY"	
5	373364		1	Slip protection	
6	373363		4	Slip protection	D
7	904098		1	Decal "DYNAPAC" L=1350 mm	
8	272372		1	Decal "HYDRAULIC OIL"	
9	929076		4	Reflector, red	B
10	624015		12	Blind rivet	
11	903425		1	Decal "SAFETY MANUAL"	
12	383860		2	Reflector, white	B

Ref. No.	Part No.	Rem.	Qty	Description	Code
100				Standard equipment (Page 314)	

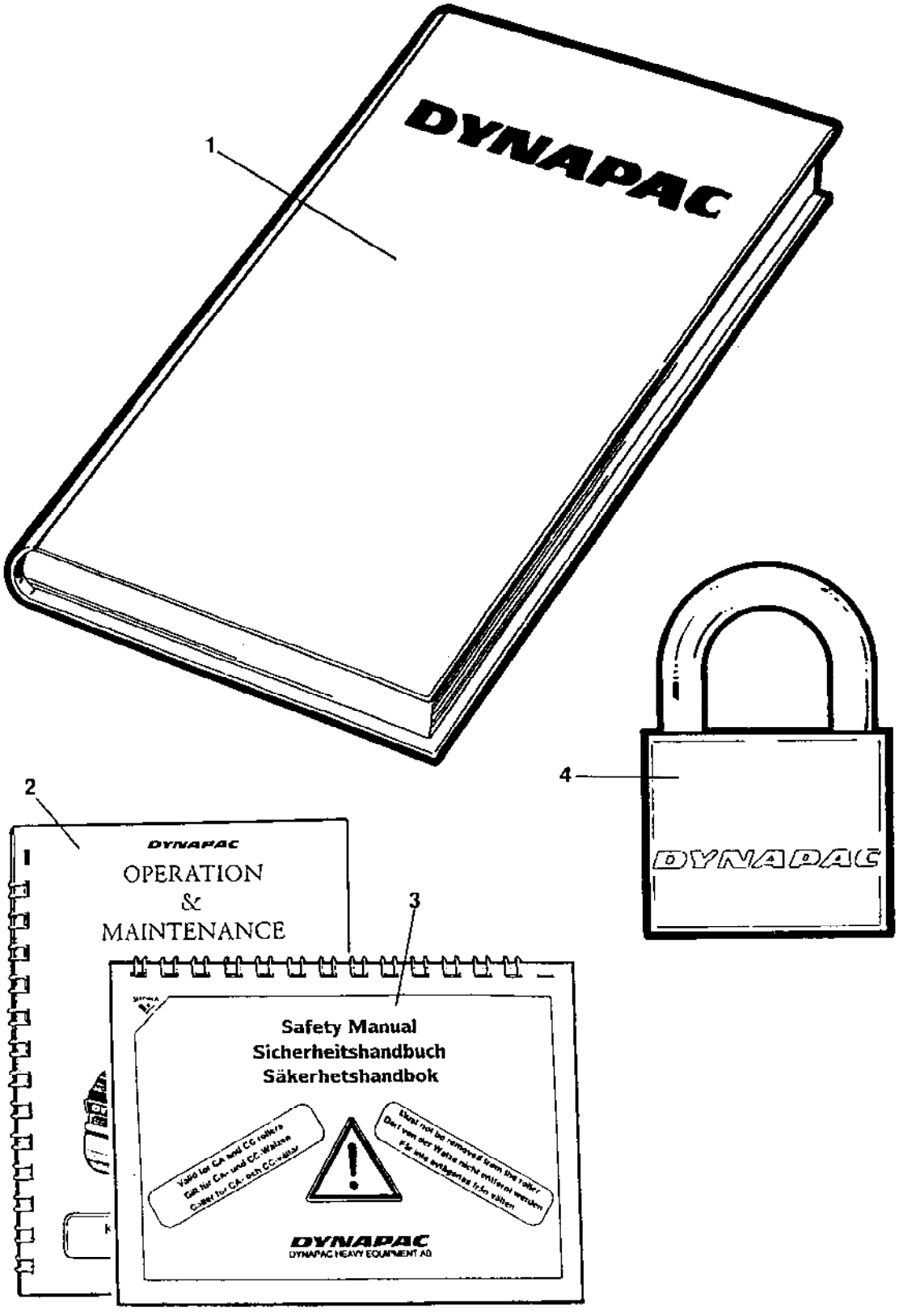
1
DYNAPAC
2
DYNAPAC
OPERATION
&
MAINTENANCE
3
Safety Manual
Sicherheitshandbuch
Säkerhetshandbok
DYNAPAC
DYNAPAC HEAVY EQUIPMENT AB
4
DYNAPAC

Ref. No.	Part No.	Rem.	Qty	Description	Code
1			1	Documentation OM152	
			1	.Warranty registration card	
			1	.Operating instruction O152	
			1	.Maintenance instruction M152	
			1	.Spare parts catalogue SCA152	
			1	.Instruction manual Cummins 4BT 3.9C	
2			1	.Operating / maintenance instruction OM152	
3			1	.Safety manual RSAFE	
4	358881		1	Pad lock	

Ref. No.	Part No.	Rem.	Qty	Description	Code
10				Tool equipment (Page 318)	
20				Sign SMV, First aid box (Page 320)	
30				Canopy (Page 322)	
40				Levelling blade, metal parts (Page 324)	
50				Levelling blade, hydraulic parts (Page 326)	
60				Levelling blade control (Page 328)	
70				Air conditioner assembly Up to 64X21217 (Page 330)	
80				Air conditioner assembly (Page 336)	
90				Condensor assembly From 64X21218 (Page 338)	
100				Compressor assembly From 64X21218 (Page 340)	
110				Evaporator assambly From 64X21218 (Page 342)	
120				Roof hatch From 64X21218 (Page 344)	

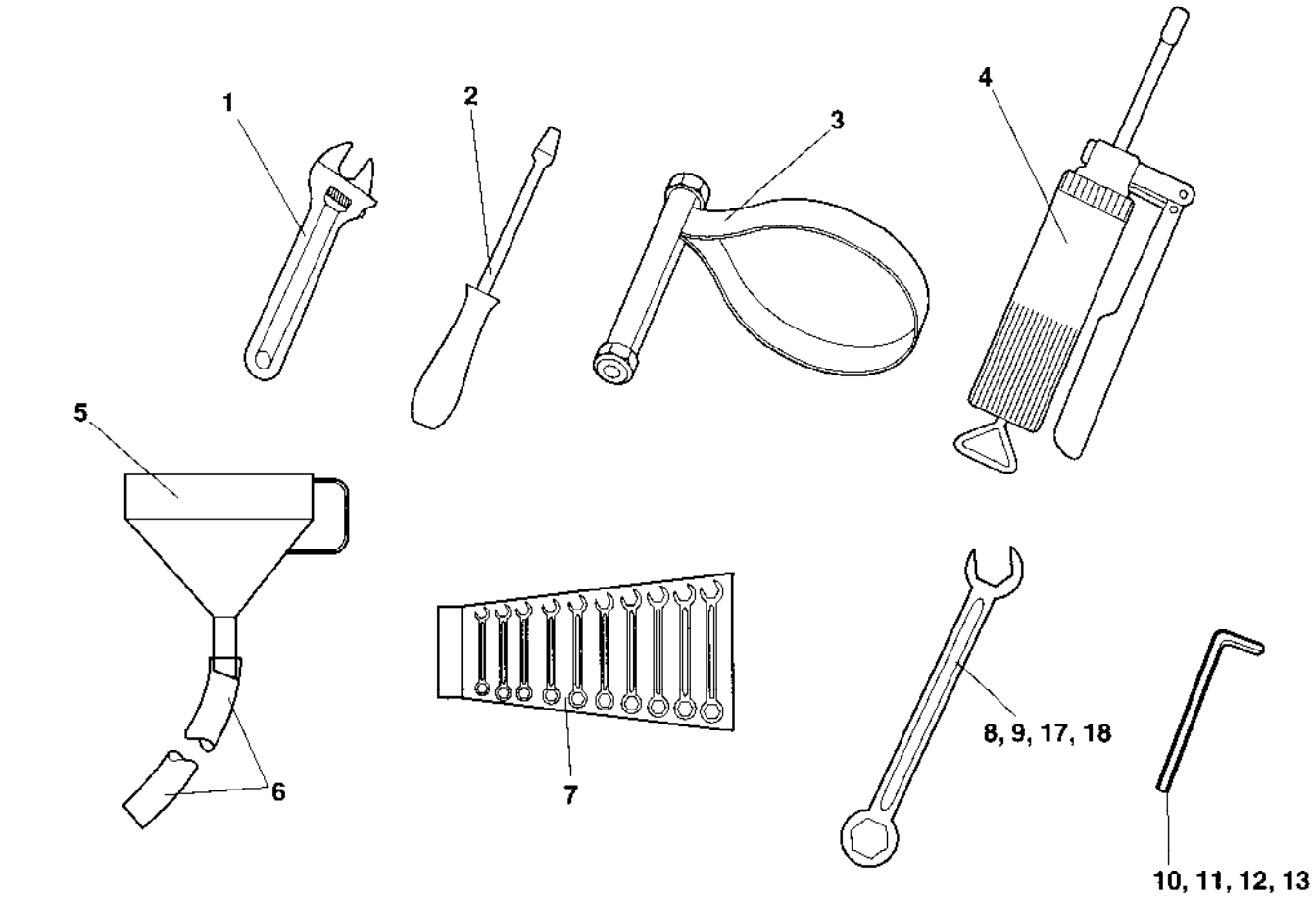
1
2
3
4
5
6
7
8, 9, 17, 18
10, 11, 12, 13

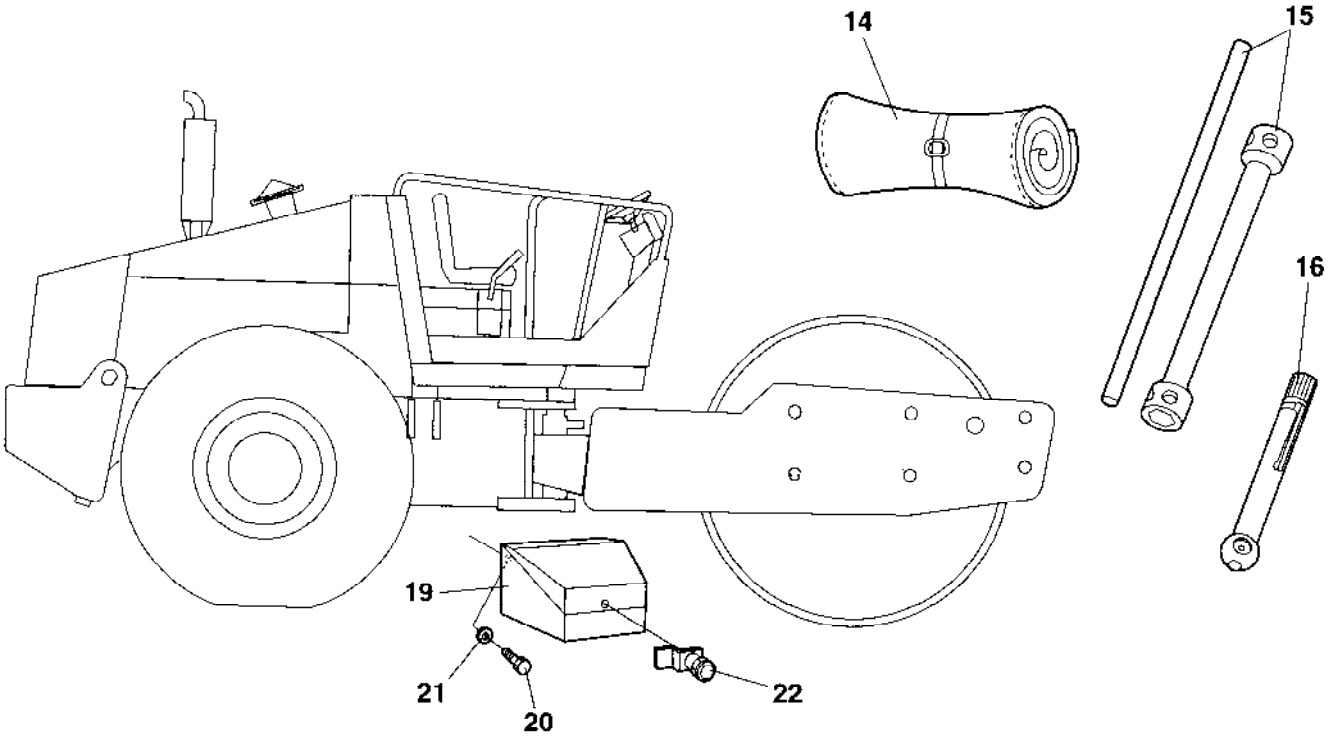
14
15
16
19
21
20
22

Ref. No.	Part No.	Rem.	Qty	Description	Code
1	485011		1	Adjustable wrench	
2	485019		1	Screw driver	
3	902610		1	Belt pliers	
4	311016		1	Grease gun	
5	485040		1	Filling funnel	
6	244026	A	1	Plastic hose	
7	901212	B	1	Open end spanner	
8	901213		1	Open end spanner 24 mm	
9	902578		1	Open end spanner 22 mm	
10	485005		1	Allen wrench 1/4"	
11	485037		1	Allen wrench 3/8"	
12	485388		1	Allen wrench 6 mm	
13	485006		1	Allen wrench 8 mm	
14	277992		1	Tool bag	
15	901380		1	Wheel nut key 30/32 mm	
16	901220		1	Pressure gauge	
17	901214		1	Open end spanner 30 mm	
18	901215		1	Open end spanner 32 mm	
19	372837		1	Tool box	
20	500019		3	Screw M8-1,25x16 8,8	
21	904640		3	Washer 8,4x22x3	
22	372658		1	Lock	

A) L=400 mm
B) Kit

Sign SMV, First aid box

17113

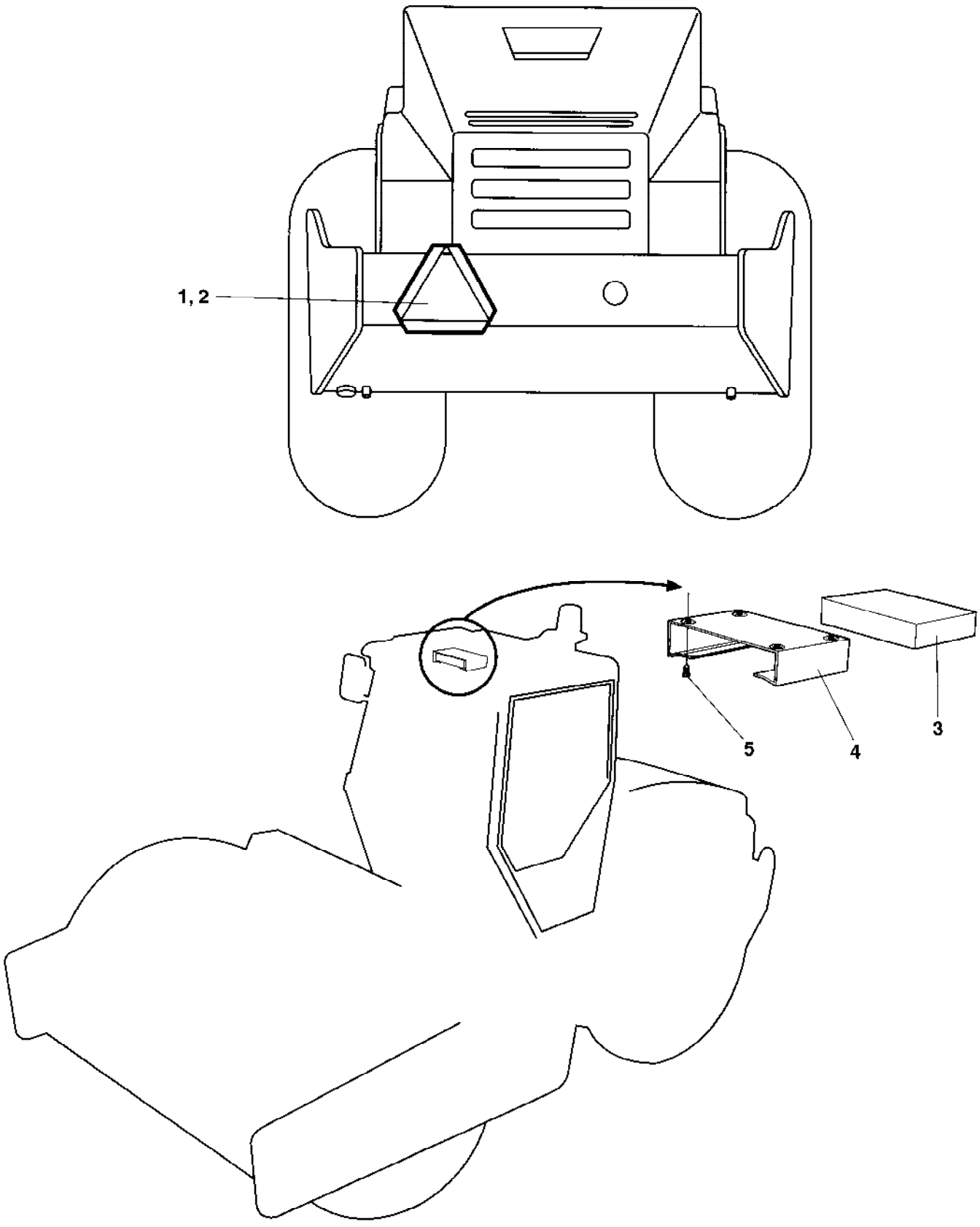

Sign SMV, First aid box

Ref. No.	Part No.	Rem.	Qty	Description	Code
1	476019		1	SMV sign	D
2	624005		6	Pop rivet	
3	902508		1	First aid kit	
4	371837		1	Holder	
5	903969		4	Screw	

Canopy

17121

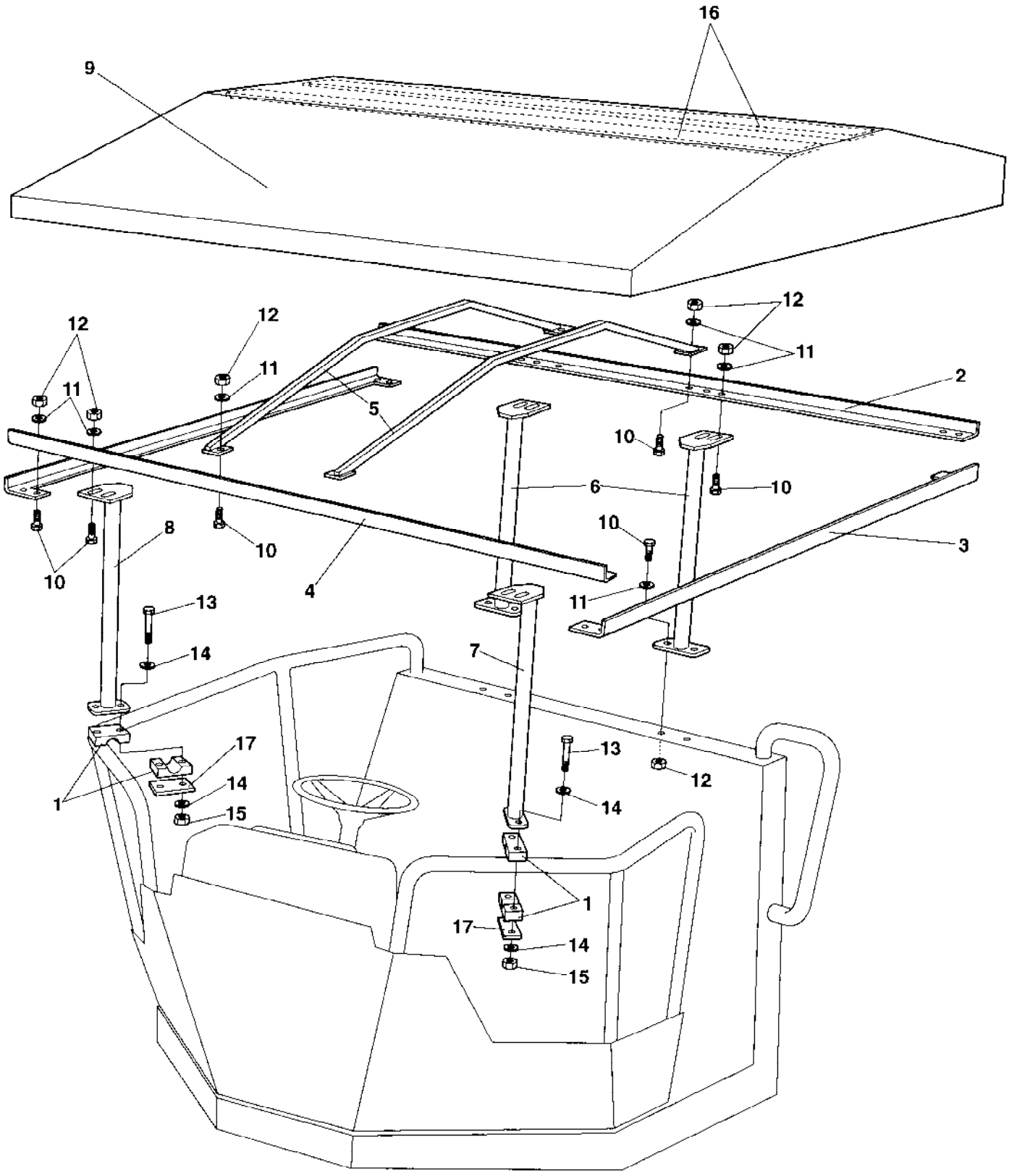

Canopy

Ref. No.	Part No.	Rem.	Qty	Description	Code
1	904340		2	Pipe clamp	
2	373746		1	Canopy profile	
3	373747		2	Canopy profile	
4	373748		1	Canopy profile	
5	373749		4	Canopy rib	
6	373750		2	Canopy anchor	
7	373752		1	Canopy anchor	
8	373756		1	Canopy anchor	
9	373906		1	Roof	
10	500021		24	Screw M8-1,25x25 8,8	
11	904229		44	Washer 8,4x16x1,5	
12	586003		20	Lock nut M8	
13	500153		4	Screw	
14	904228		8	Washer 6,4x12x1,5	
15	586002		4	Lock nut M6	
16	373907		2	Lath	
17	924791		2	Cover plate	

Levelling blade, metal parts

17347

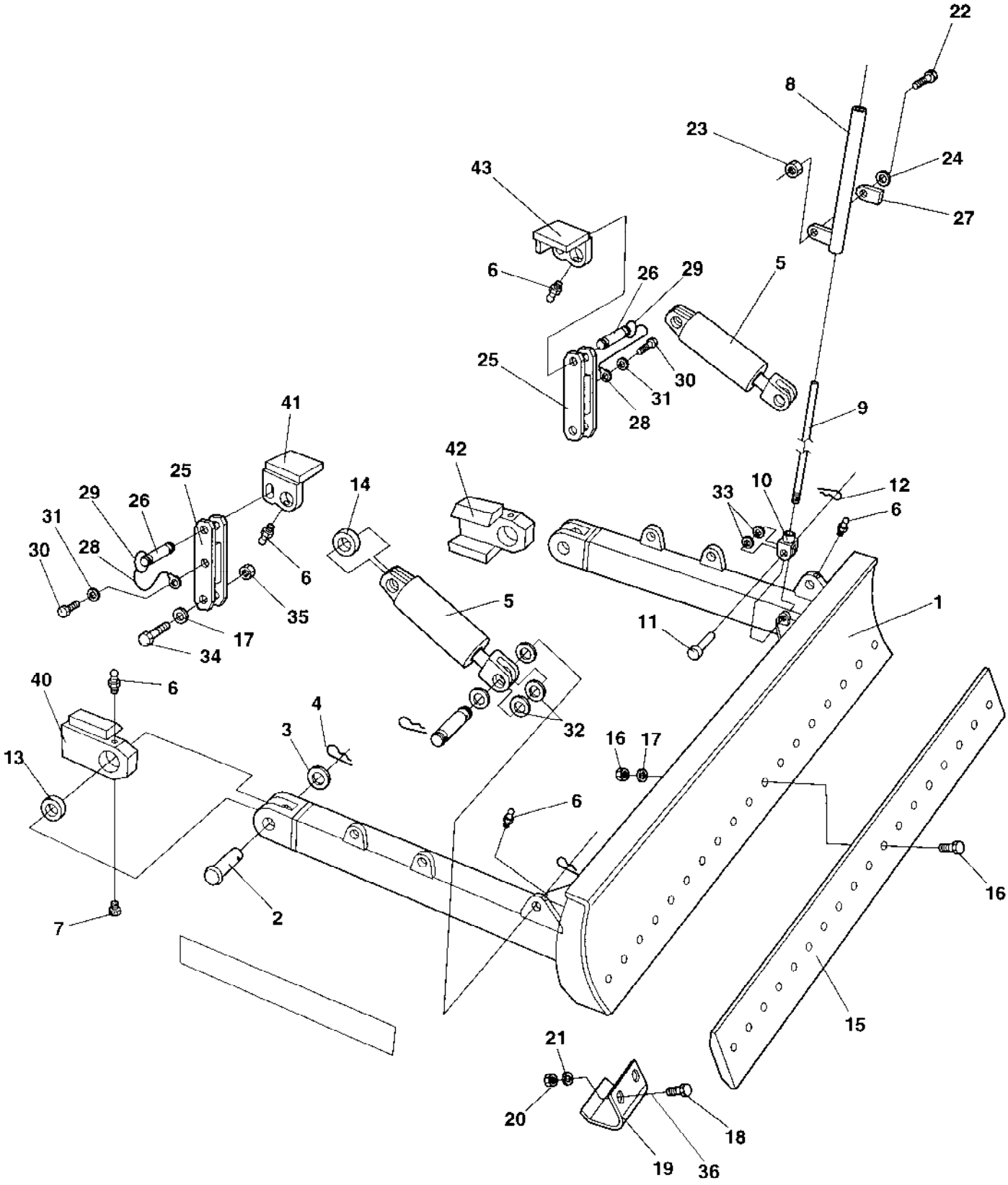

Levelling blade, metal parts

Ref. No.	Part No.	Rem.	Qty	Description	Code
1	815190		1	Dozer blade	
2	346214		2	Clevis pin	
3	600019		2	Washer	
4	630020		2	Pin	
5	373410		2	Hydraulic cylinder Up to 64X20353 (Page 148)	C
	375031		2	Hydraulic cylinder From 64X20354 (Page 150)	C
6	926214		6	Grease fitting	D
7	500044		2	Screw M6x8	
8	349542		1	Indicator guide	
9	349541		1	Level indicator	
10	415193		1	Yoke	
11	550038		1	Clevis pin	
12	630008		1	Pin	D
13	100071		2	Bearing	D
14	813316		4	Ball bushing	D
15	801250		1	Blade	B
16	801251		15	Screw with nut	
17	904233		15	Washer 21x36x3	
18	500265		4	Screw M20x55	
19	349539		2	Shoe	B
20	586022		4	Lock nut M20-8	
21	903290		4	Washer 21x36x6	
22	500194		1	Screw M12x40	
23	586019		1	Lock nut M12	
24	904231		1	Washer 13x24x2	
25	370358		2	Safety rod	
26	347119		4	Shaft	D
27	375589		1	Metal part	
28	343775		2	Wire	
29	357488		2	Spring	
30	500043		2	Screw M10x16H 8,8	
31	904230		4	Washer 10,5x22x2	
32	600016		6	Washer 26x45x4	
33	904231		2	Washer 13x24x2	
34	500209		2	Screw M20-2,5x90 8,8	
35	586022		2	Lock nut M20-8	
36	904233		4	Washer 21x36x3	
40	380476		1	Bracket	
41	374759		1	Cylinder bracket	
42	380477		1	Bracket	
43	374760		1	Cylinder bracket	

Levelling blade, hydraulic parts

17133

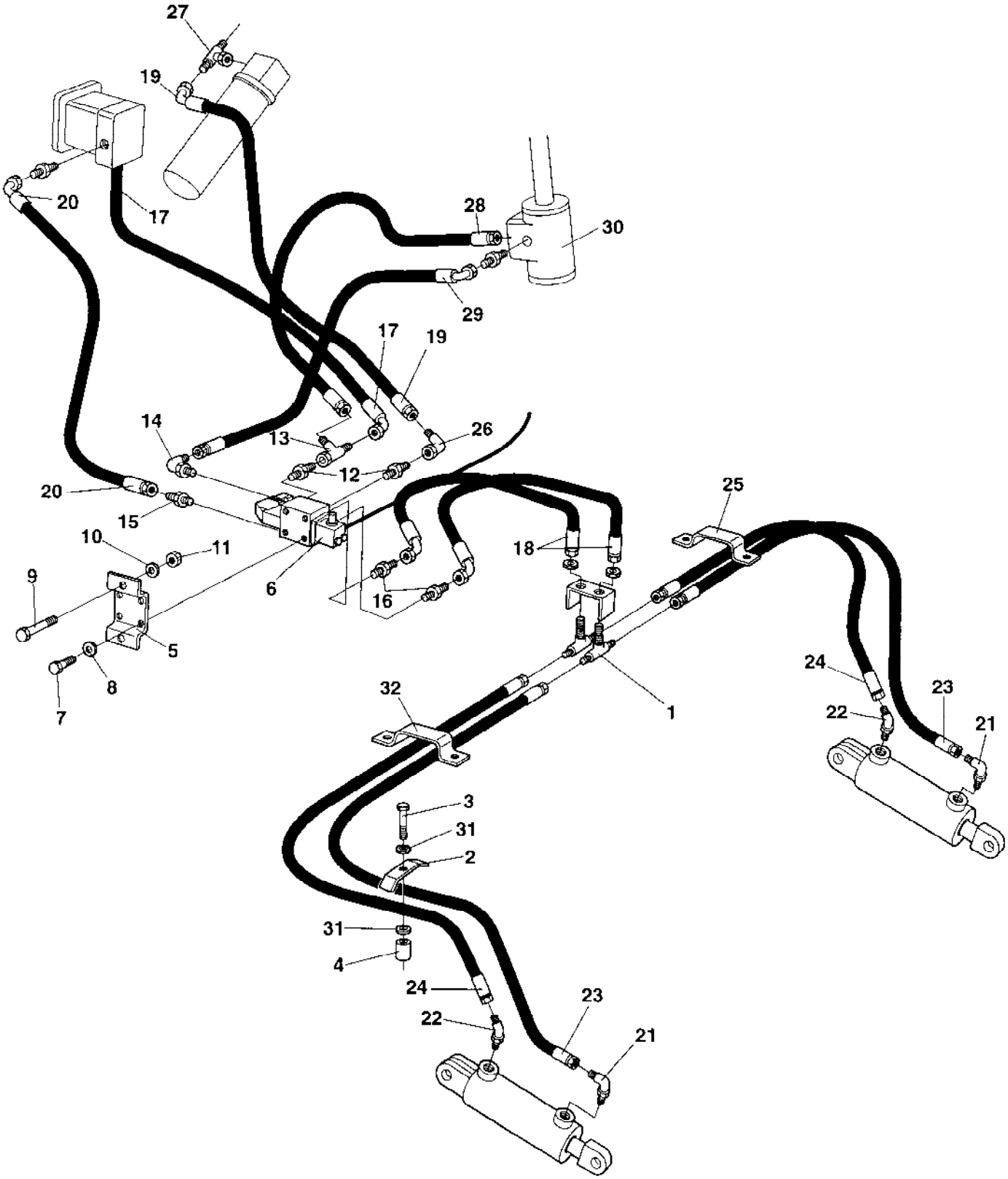

Levelling blade, hydraulic parts

Ref. No.	Part No.	Rem.	Qty	Description	Code
1	801199		2	Adapter	
2	346230		4	Clamp	
3	500022		4	Screw M8-1,25x30 8,8	
4	356273		4	Spacer sleeve	
5	374813		1	Bracket	
6	375000		1	Hydraulic valve	
7	500019		4	Screw M8-1,25x16 8,8	
8	904229		4	Washer 8,4x16x1,5	
9	500032		2	Screw M10 x 55	
10	904230		2	Washer 10,5x22x2	
11	902287		2	Nut	
12	334190		2	Connector	
13	334135		1	T-connector	
14	234481		1	Connector From 64X20424	
15	234219		1	Connector	
16	334116		2	Straight o-ring connector	
17	482813		1	Hydraulic hose	
18	482525		2	Hydraulic hose	
19	482828		1	Hydraulic hose	
20	482571	C	1	Hydraulic hose Up to 64X20423	D
	381010103		1	Hydraulic hose From 64X20424	
21	813444		2	Elbow 90, O-ring	
22	813500		2	Elbow 45, O-ring	
23	483285		2	Hydraulic hose	
24	483284		2	Hydraulic hose	
25	373395		1	Hose clamp	
26	334197		1	Elbow 90 From 64X20424	
27	234953		1	Tee-connector From 64X20424	
28	482890	A	1	Hydraulic hose	
	483109	B	1	Hydraulic hose	
29	482836	A	1	Hydraulic hose	
	482728	B	1	Hydraulic hose	
30	376110		1	Pilot valve	
31	904229		8	Washer 8,4x16x1,5	
32	373016		1	Hose clamp	

A) Used on the standard platform model.
B) Used on the drivers seat-turnover model.
C) 482571 is interchaneable to 381010103 togheter with 234481

Levelling blade control

17134

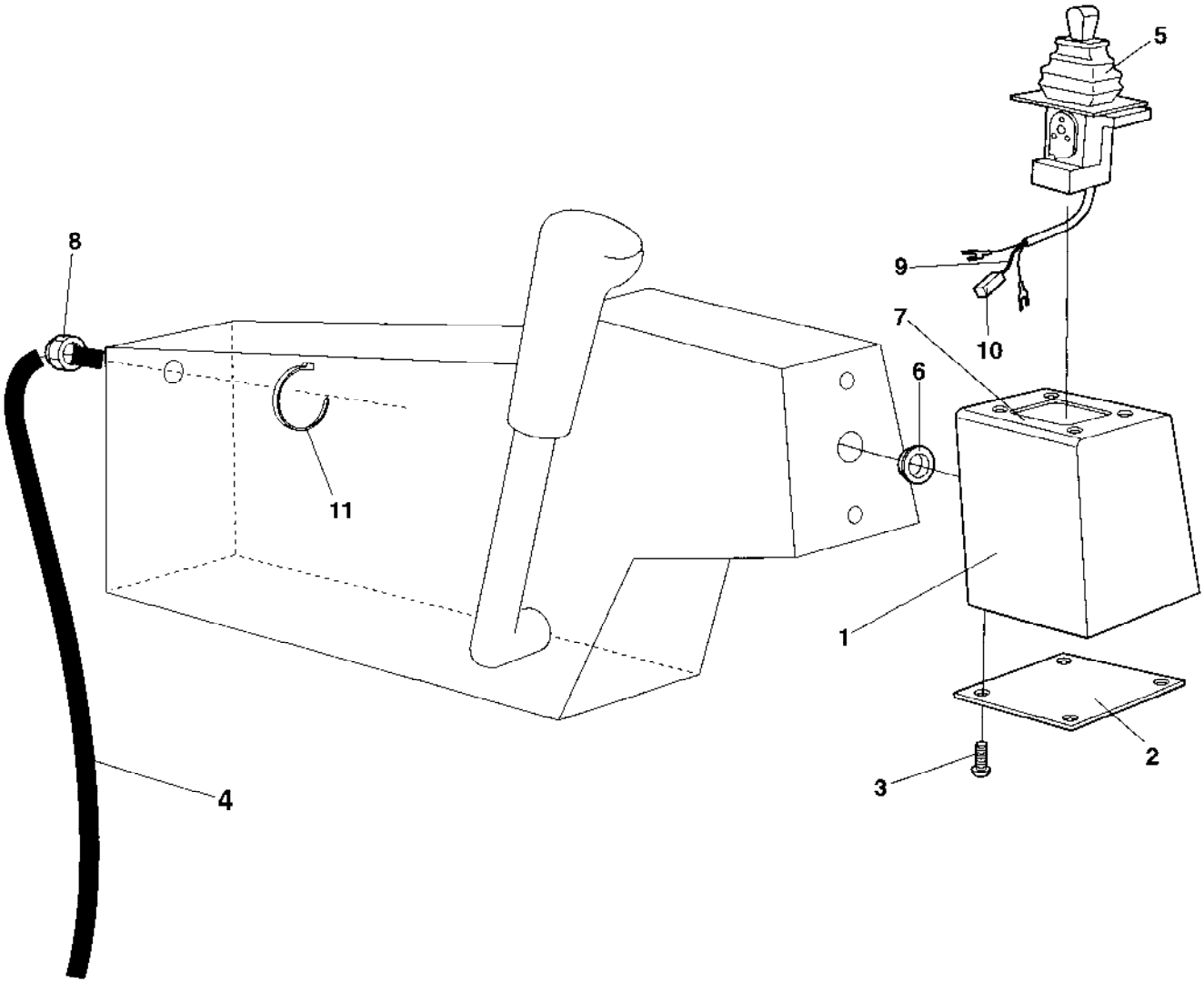

Ref. No.	Part No.	Rem.	Qty	Description	Code
1	374816		1	Cover	
2	375105		1	Cover plate	
3	903658		10	Screw	
4	374842		1	Cable harness	
5	375205		1	Control	
	904865		1	.Rubber bellows	
	938207		1	.Knob	
6	909152		1	Rubber grommet	
7	374838		1	Decal	
8	904302		1	Lock nut	
9	343552		1	Connection wire	
10	930154		1	Contact piece	
11	313068		5	Cable ties L=92 mm	

Air conditioner assembly

17311

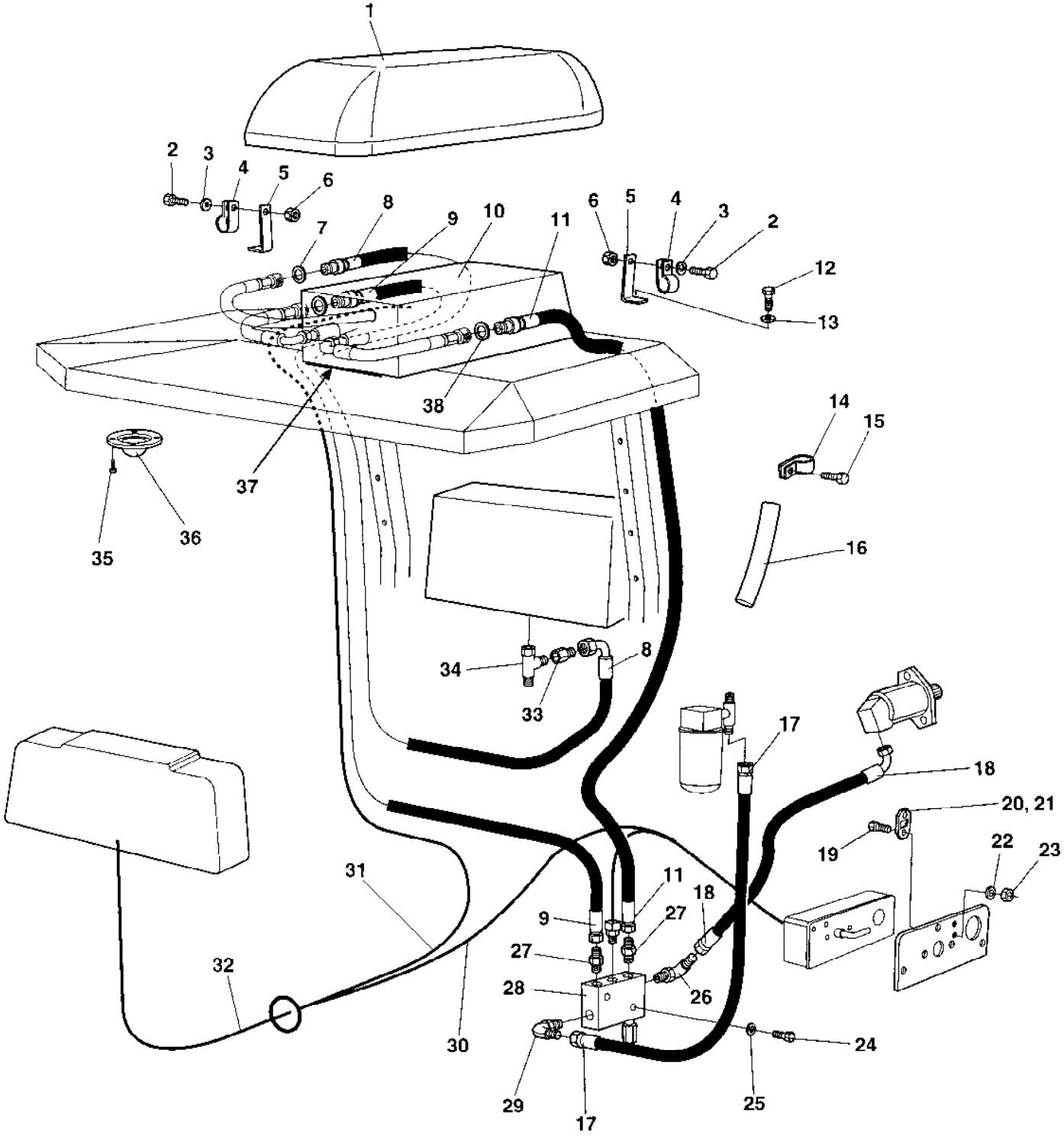

Air conditioner assembly

Ref. No.	Part No.	Rem.	Qty	Description	Code
1	370758		1	Air cover	
2	541703		3	Screw M6x16	
3	904228		2	Washer 6,4x12x1,5	
4	921045		3	Pipe clamp	
5	344944		1	Bracket	
6	586002		2	Lock nut M6	
7	162004		1	Sealing	
8	370922		1	Hydraulic hose	
9	381683		1	Hydraulic hose	
10	370889		1	Air conditioner unit (Page 332)	
11	381682		1	Hydraulic hose	
12	500022		2	Screw M8-1,25x30 8,8	
13	904229		8	Washer 8,4x16x1,5	
14	921044		2	Clamp	
15	500021		6	Screw M8-1,25x25 8,8	
16	357459		1	Rubber cloth	
17	381011727		1	Hydraulic hose	
18	483480		1	Hydraulic hose	
19	500004		2	Screw M5 0,8x12 8,8	
20	904036		1	Fuse holder	
21	904037		1	Fuse 30A	D
22	904281		2	Washer 5,3x10x1	
23	570003		2	Nut	
24	500024		2	Screw	
25	904229		2	Washer 8,4x16x1,5	
26	234131		1	Elbow 45, O-ring	
27	334158		2	Adapter	
28	370720		1	Direction control valve	
29	334604		1	Connector	
30	374513		1	Cable harness	
31	374219		1	Cable harness	
32	374218		1	Cable harness	
33	334461		1	Reducing	
34	334135		1	T-connector	
35	904523		20	Screw	
36	908513		5	Nozzle	
37	938023		1	Gasket	
38	162006		2	Seal ring	

370889 Air conditioner unit

17083

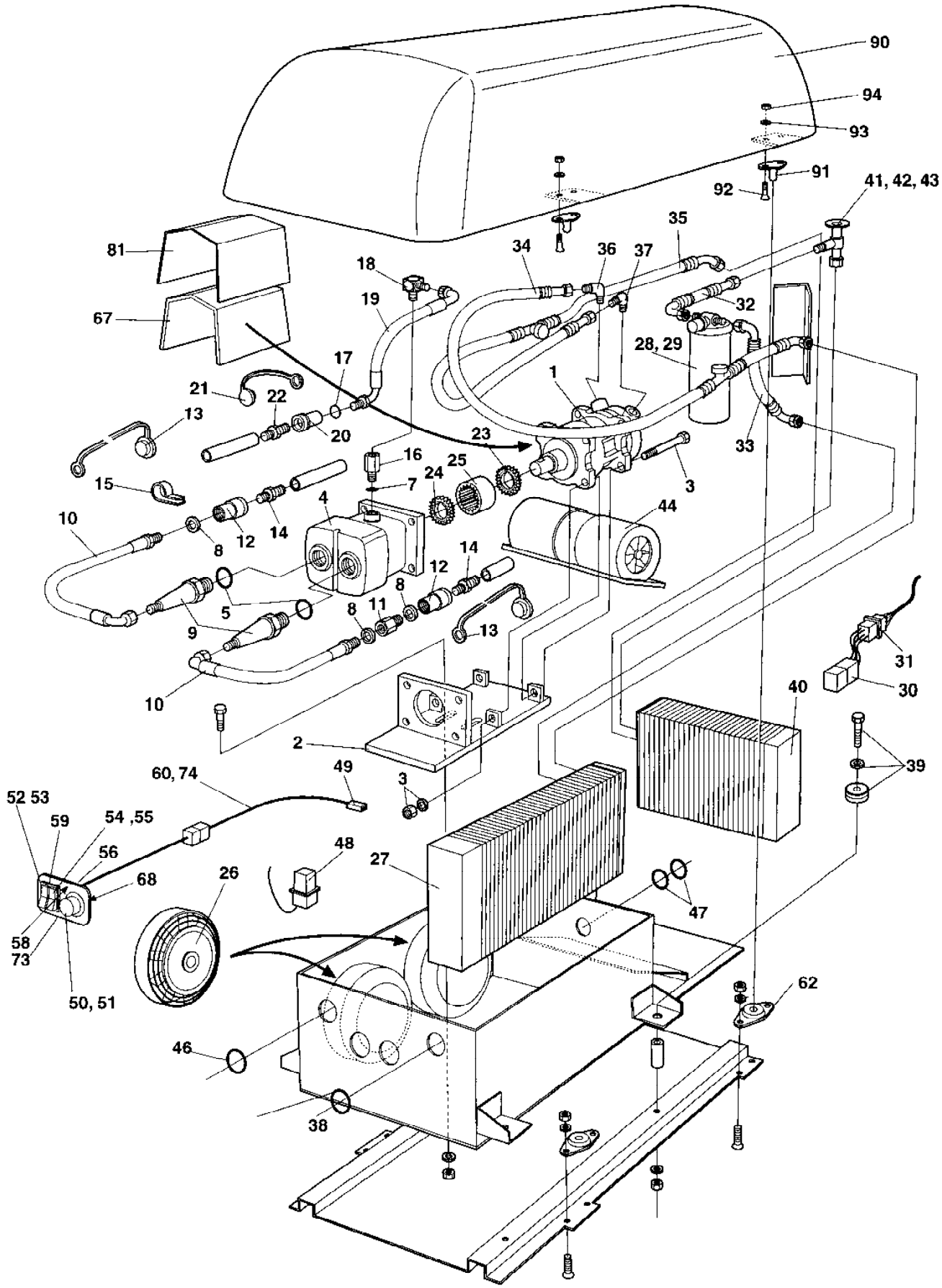

370889 Air conditioner unit

Ref. No.	Part No.	Rem.	Qty	Description	Code
1	935045		1	Compressor	
	938311		1	.Hose connection Vertical	
2	935046		2	Bracket	
3	935047		1	Screw, set	
4	935048		1	Hydraulic motor	
5	935049		2	O-ring	
6	935050		2	Connector	
7	935051		2	Connector	
8	935052		5	Sealing	
9	935053		2	Adapter	
10	935054		2	Hydraulic hose	
11	935055		1	Adapter	
12	935056		2	Connection	
13	935057		2	Dust cover	
14	935058		2	Connection	
15	935059		2	Rubber clamp	
16	935060		1	Connection	
17	935061		2	Sealing	
18	935062		1	Adapter	
19	935063		1	Hydraulic hose	
20	935064		1	Connection	
21	935065		1	Dust cover	
22	935066		1	Connection	
23	935067		1	Flange	
24	935068		1	Flange	
25	908676		1	Sleeve	
26	935069		2	Condensor fan	
27	908677		1	Condensor	
28	908678		1	Drying filter	
29	908679		1	Clamp	
30	908680		2	Relay	
31	908681		2	Relay socket	
32	908682		1	Hose	
33	908683		1	Hose	
34	908684		1	Hose	
35	908685		1	Hose	
36	935070		1	Connection	
37	935071		1	Connection	
38	908686		5	Grommet	
39	908687		4	Flange	
40	908688		1	Evaporator	
41	908689		1	Expansion valve	
42	908690		1	Clamp	
43	908691		1	O-ring	
44	908692		1	Evaporator fan	
45	908705		1	Connector	
46	935072		1	Grommet	
47	908664		2	Grommet	
48	935073		2	Electric connection	
49	908694		1	Connection	
50	936711		1	Potentiometer	
51	908696		1	Switch	
52	908697		1	Switch fan	
53	908698		1	Symbol cool-fan	
54	908699		1	Switch fan	
55	908700		1	Symbol fan	
56	908701		2	Isolator	
57	908702		1	Grommet	
58	908703		1	Decal	
59	908704		2	Switch panel	

370889 Air conditioner unit

17083

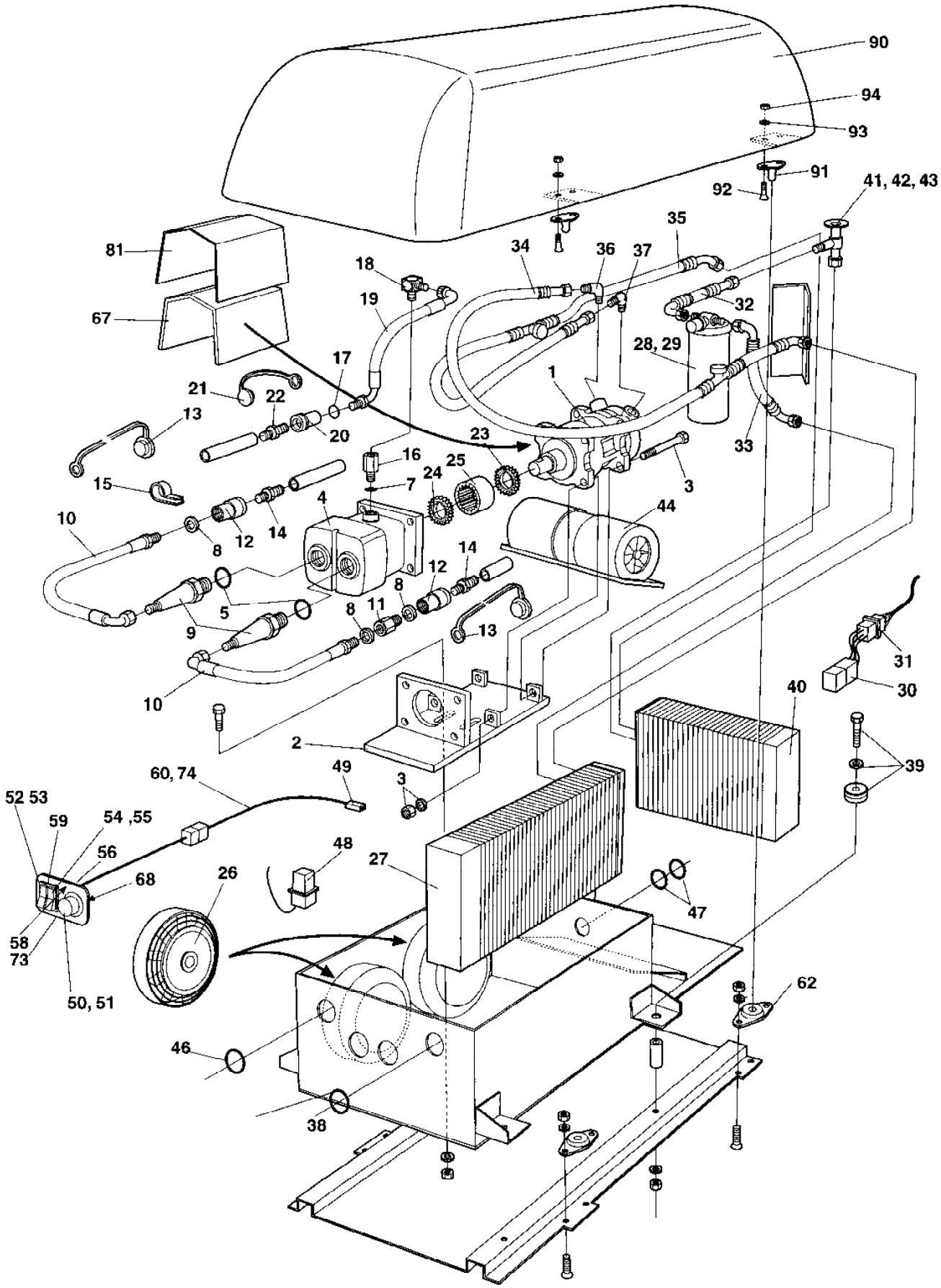

370889 Air conditioner unit

Ref. No.	Part No.	Rem.	Qty	Description	Code
60	935074	A	N	Protecting hose	
61	935075		1	Gasket	
62	935076		4	Quick fastener	
63	935077		4	Bracket	
64	908706		1	Rubber clamp	
65	908663		1	Rubber plug	
66	935078		1	Adapter	
67	935079		1	Cover	
68	935080		1	Diode	
69	935081		1	Switch panel	
70	935082		1	Decal "WARNING"	
71	935083		1	Decal "INSTRUCTIONS"	
72	935084		1	Decal, 12V	
73	903969		2	Screw	
74	370917		1	Cable harness	
90	370758		1	Air cover	
91	450067		4	.Door bumper	D
92	535008		4	.Screw	
93	904281		4	.Washer 5,3x10x1	
94	586001		4	.Lock nut M5	

A) L=1200 mm

Air conditioner assembly

17674

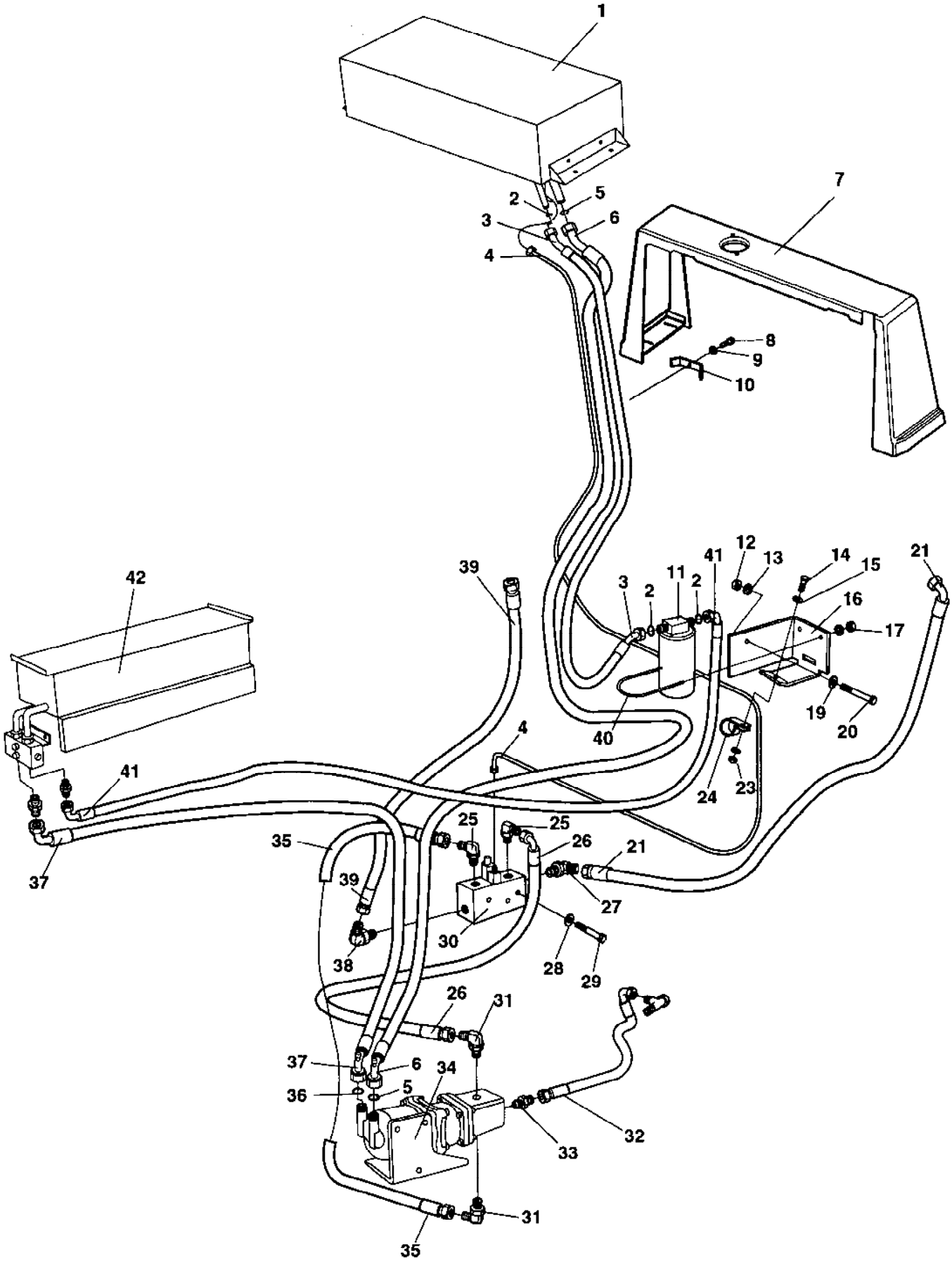

Ref. No.	Part No.	Rem.	Qty	Description	Code
1			1	Condensor assembly (Page 338)	
2	384877		4	O-ring	
3	384876		1	Hose	
4	384190		1	Cable harness	
5	384878		4	O-ring	
6	384874		1	Hose	
7	385152		1	Protecting cover	
8	500023		3	Screw	
9	904229		3	Washer 8,4x16x1,5	
10	346230		3	Clamp	
11	383424		1	Drying filter	
12	570006		1	Nut M10	
13	904567		1	Washer 10,5x28x6	
14	500013		1	Screw M6-1x16 8,8	
15	904228		4	Washer 6,4x12x1,5	
16	383409		1	Holder	
	904165		1	Safety decal	
17	586003		2	Lock nut M8	
19	904230		1	Washer 10,5x22x2	
20	500192		1	Screw M10x80	
21	483480		1	Hydraulic hose	
23	570004		1	Nut M6	
24	921056		2	Clamp	
25	334604		3	Connector	
26	483548		1	Hydraulic hose	
27	234131		1	Elbow 45, O-ring	
28	904229		2	Washer 8,4x16x1,5	
29	500239		2	Screw M8-1.25x50	
30	370720		1	Direction control valve	
31	234990		2	Elbow 90	
32	482328		1	Hydraulic hose	
33	234659		1	Straight o-ring connector	
34			1	Compressor assembly (Page 340)	
35	483548		1	Hydraulic hose	
36	384879		2	O-ring	
37	384873		1	Hose	
38	334135		1	T-connector	
39	381011727		1	Hydraulic hose	
40	313093		1	Pipe clamp	
41	384875		1	Hose	
42			1	Evaporator assambly (Page 342)	

Condensor assembly

17676

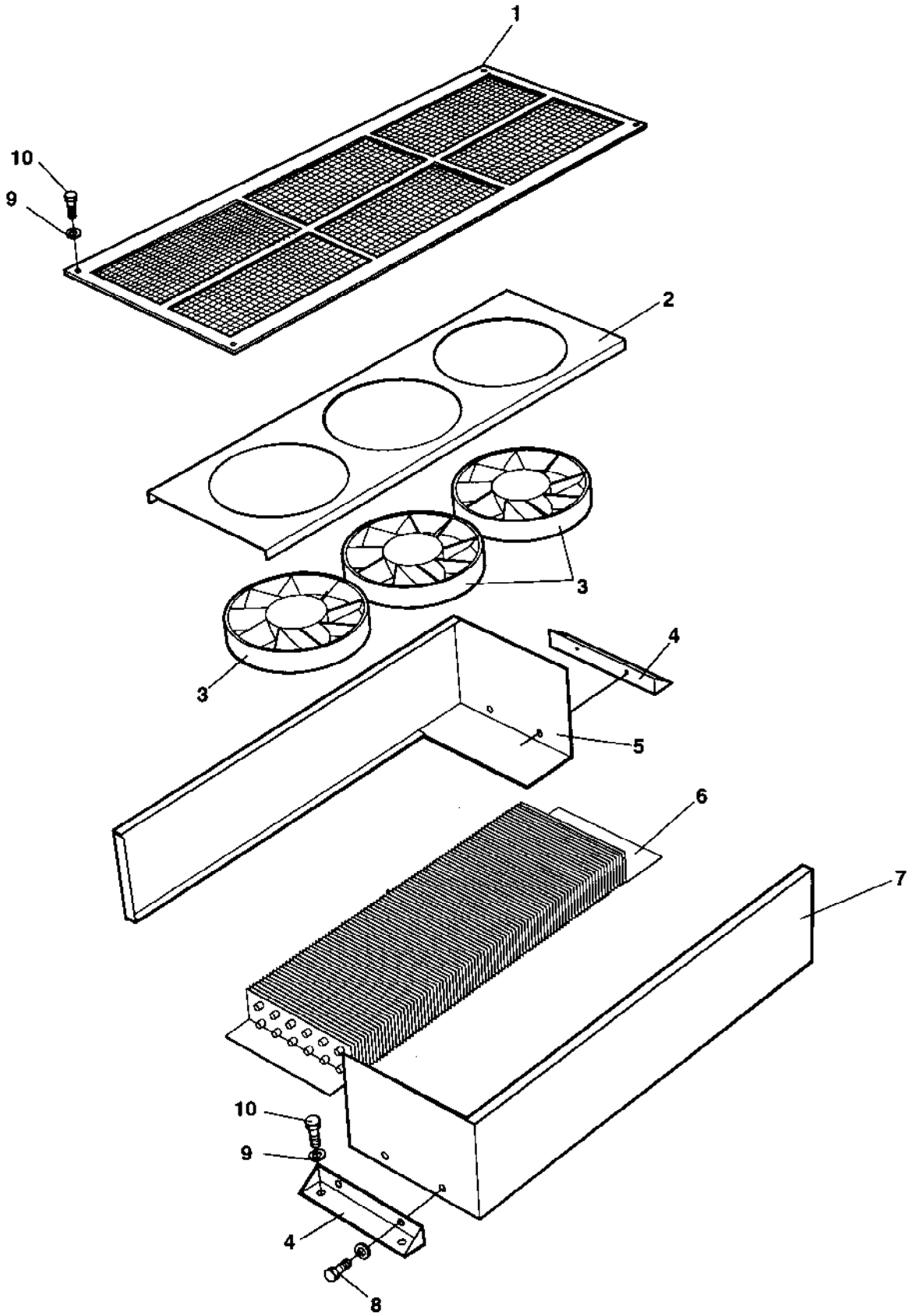

Condensor assembly

Ref. No.	Part No.	Rem.	Qty	Description	Code
1	384589		1	Cover	
2	938599		1	Fan bracket	
3	938603		3	Fan	
4	938600		2	Condensor bracket	
5	938598		1	Cover	
6	938602		1	Condensor Coil	
7	938597		1	Cover	
8	901832		4	Screw	
9	500022		6	Screw M8-1,25x30 8,8	
10	904229		6	Washer 8,4x16x1,5	

Compressor assembly

17675

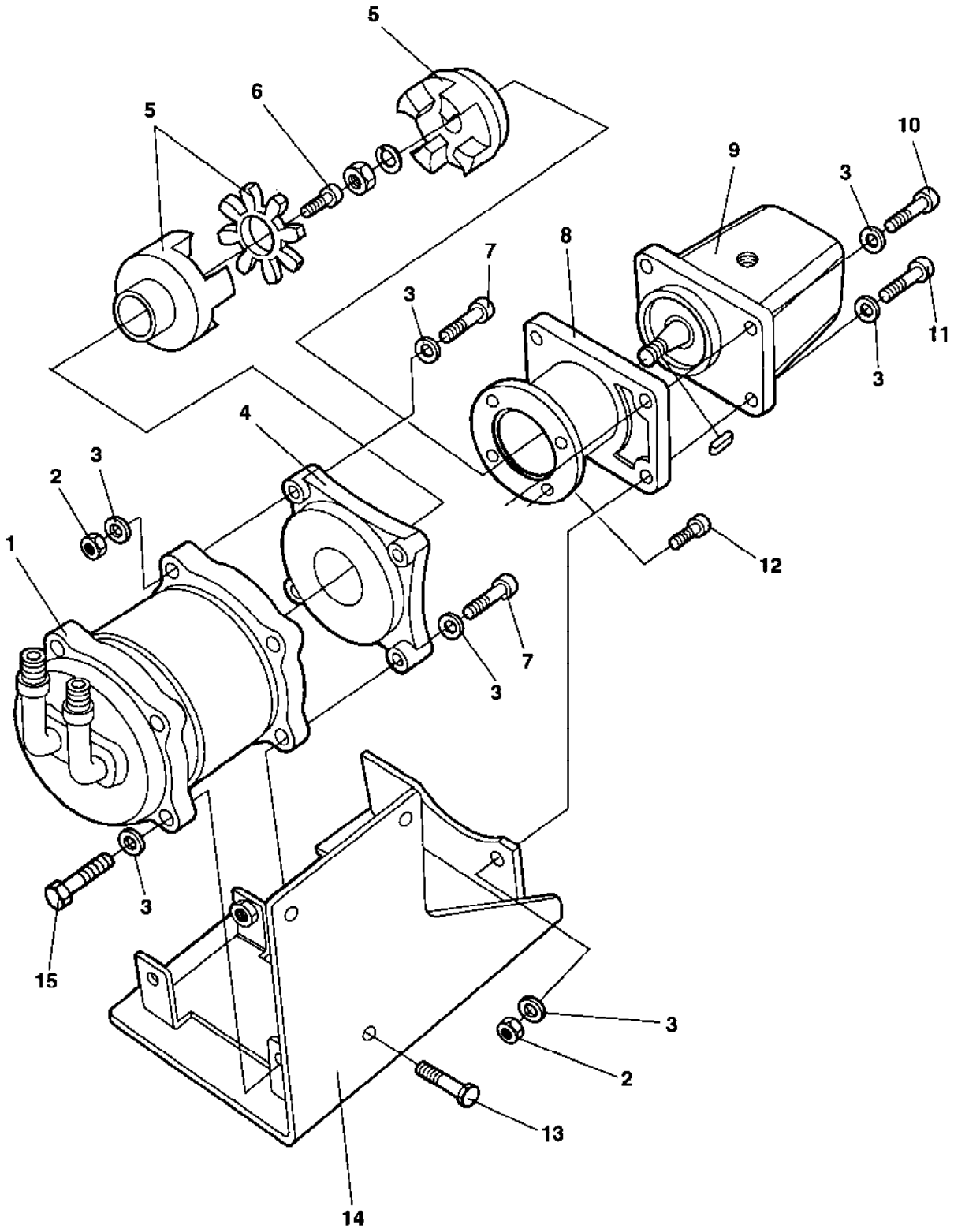

Compressor assembly

Ref. No.	Part No.	Rem.	Qty	Description	Code
1	383417		1	Compressor	
2	570005		4	Nut M8	
3	904229		14	Washer 8,4x16x1,5	
4	383419		1	Connector	
5	383422		1	Coupling	
6	508001		1	Screw	
7	500026		4	Screw M8-1,25x60 8,8	
8	383418		1	Connector	
9	383420		1	Hydraulic motor	
10	508027		2	Screw	
11	508057		2	Screw	
12	508092		4	Screw M8-1,25x20H 8,8	
13	500067		3	Screw	
14	383410		1	Bracket	
15	500047		2	Screw M8-1,25x35 8,8	

Evaporator assambly

17677

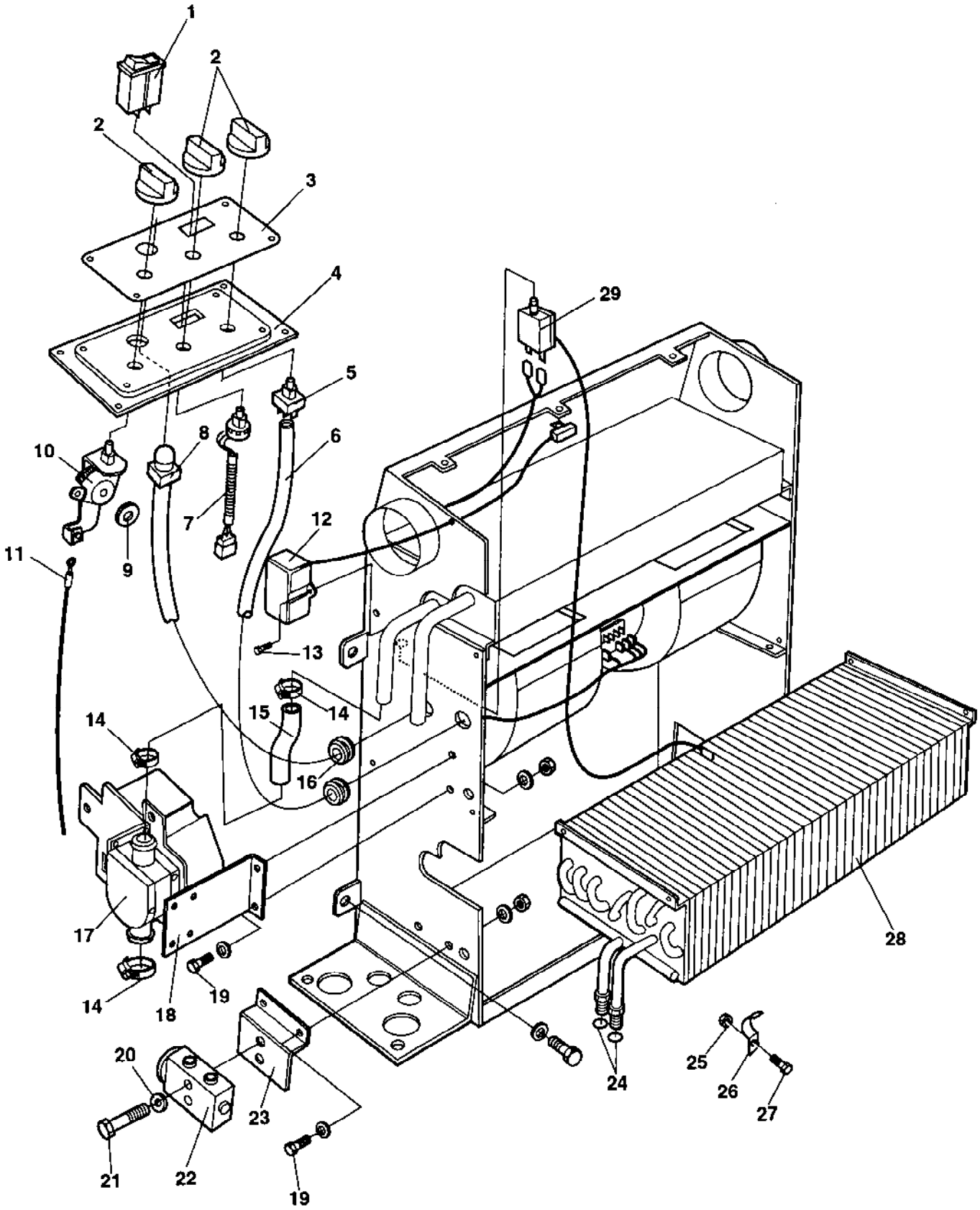

Evaporator assambly

Ref. No.	Part No.	Rem.	Qty	Description	Code
1	938619		1	Switch	
2	938620		3	Knob	
3	938618		1	Decal	
4	938617		1	Control panel	
5	938622		1	Switch	
6	938631		1	Cable harness	
7	938623		1	Potentiometer	
8	938624		1	Sensor	
9	385134		1	Lock washer	
10	938621		1	Rotary control	
11	384762		1	Wire	
12	384187		1	Ecc-Box	
13	791144		6	Screw	
14	313003		3	Hose clamp 15-24	D
15	384881		1	Hose	
16	384927		1	Grommet	
17	383425		1	Electronic valve	
18	384174		1	Holder	
19	903782		4	Screw	
20	904228		2	Washer 6,4x12x1,5	
21	500061		2	Screw	
22	384176		1	Valve	
23	384177		1	Holder	
24	384878		2	O-ring	
25	923976		1	Nut	
26	384880		1	Wire clamp	
27	500086		1	Screw	
28	383414		1	Evaporator	
29	384897		1	Thermostat	

Roof hatch

17374

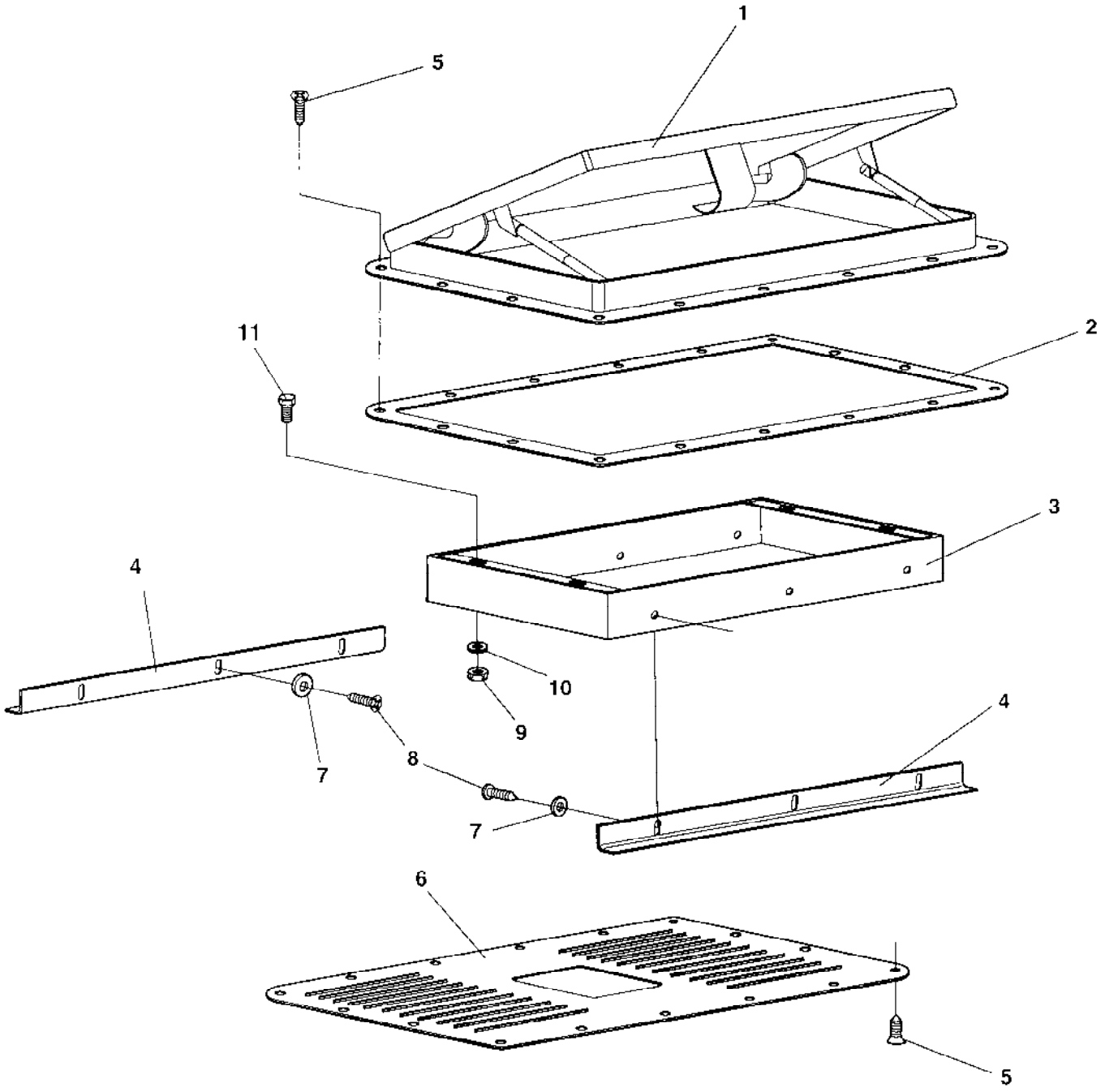

Roof hatch

Ref. No.	Part No.	Rem.	Qty	Description	Code
1	382702		1	Roof hatch Up to 64X21151	
	384958		1	Roof hatch From 64X21152	
2	382701		1	Gasket Up to 64X21151	
	384954		1	Support plate From 64X21152	
3	382699		1	Inner roof insert	
4	383002		2	Inner roof holder	
5	904906		32	Screw	
6	382700		1	Inner cover	
7	601001		6	Washer	
8	903852		6	Screw	
9	570004		4	Nut M6	
10	904228		4	Washer 6,4x12x1,5	
11	500040		4	Screw M6-1x20 8,8	

NUMERICAL INDEX

Part Number	Page
100040	17,39
100071	325
114036	19,21 ,57
116041	23,57
150004	221,223
160105	19,21 ,23,57
160107	19,57
160157	133
160344	21,57
162004	331
162006	331
162008	121
162017	57
162018	57
167023	19,21 ,23,57
167032	17,39
202028	201,209
202043	301
202047	41,45
202056	41,45
205126	79
205129	79
212353	123
212373	7,9,11 ,13,61 ,65
212522	135
230384	61,65
230516	61,65
232039	155
232041	31
232097	139
232122	155
232222	121
233304	155
234131	331,337
234219	327
234243	121
234365	69,73
234382	133
234388	157
234481	327
234619	79,81
234622	157
234626	139
234659	337
234667	133,139
234843	153
234875	121
234888	153
234900	139
234909	121
234953	327
234958	121
234990	337
244002	195
244026	319
244054	79,81
272372	311
272373	309
277992	319
287373	229,231 ,233
287597	163
287598	163
310008	17
311016	319
313001	79,81
313002	79,81
313003	263,291 ,293,343
313004	65,69 ,73
313010	69,73
313023	69,73
313041	79,81 ,181,187 ,189,191 ,193,229 ,231,233
313068	329
313075	69,73
313093	77,83 ,337
313094	83
313102	121,139 ,187
313108	79
313147	229,231 ,233
330328	69,73
330333	111,117
334116	327
334121	133,139
334122	133
334135	157,327 ,331,337
334138	121
334140	121
334143	139
334158	139,331
334163	121
334190	327
334196	157
334197	157,327
334203	139
334205	133,153
334256	121
334264	157
334389	153
334461	331
334468	121,139
334524	81,153
334604	331,337
335914	133
336742	25,57
337042	39
337045	17,39
338486	139
340863	137
343159	39
343318	57
343322	57
343462	57
343550	171
343551	171,179
343552	329
343561	57
343732	133
343744	57
343775	29,325
343801	57,201
343897	57
344944	331
345139	167,169 ,177
345243	121
345870	171,173
345871	17,39
345872	17,39
345873	17,39
345874	17,39
345875	17,39
346214	325
346230	327,337
347119	29,149 ,151,325
347512	61,65 ,201
348213	187
348309	77
348331	211,213
348481	229,231 ,233
349211	133
349220	309
349248CN	309
349248DE	309
349248DK	309
349248EN	309
349248ES	309
349248FI	309
349248FR	309
349248GR	309
349248IS	309
349248IT	309
349248NL	309
349248NO	309
349248PT	309
349248SE	309
349539	325
349541	325
349542	325
349715	57
349879	155
349880	155
350009	221,223
353894	61
355258	171,173
355301	179
356273	327
356348	157
356500	161
357138	13,155
357425	201,205 ,207
357426	201,205 ,207
357427	201,205 ,207
357459	331
357488	29,325
357526	167,169 ,177
357562	163
357626	33
357643	201,205 ,207
357855	165
358025	33,35 ,37
358026	33,35 ,37
358031	37
358254	201,205 ,207
358388	123
358452	185
358881	165,309 ,315
359043	227
359125	227
359139	139,147
359340	171
359341	171
359342	171
359343	173
359419	211,213 ,215,217
359485	79
359550	121
359574	211,213 ,215,217
359575	229,231 ,233

NUMERICAL INDEX

Part Number	Page	Part Number	Page	Part Number	Page
359818	227	371374	227	372513	139
359820	227	371381	41	372544	69,73
359845	165	371390	41	372568	229,231
359887	235	371407	211,213		,233
359900	211,213	371418	227	372575	41,45
	,215,217	371449	41	372597	69
359908	211,215	371452	41	372608	41,45
359911	211,215	371481	61,65	372616	237
359914	209,211	371482	61,65	372618	189,191
	,213,215	371569	41	372625	139
	,217	371593	87,89	372628	139
359915	209,211	371594	87,101	372633	57
	,213,215	371669	139	372640	57
	,217	371727	189	372641	57
359916	221,223	371730	299	372642	57
359917	215,217	371767	49	372649	161
359918	199,209	371773	69,73	372653	221,223
	,211,213	371774	69,73	372654	221,223
	,215,217	371837	321	372658	45,201
	,219	371937	87,101		,319
359919	221,223	371938	87,101	372663	167,169
359920	211,213	371939	87,101		,177
	,215,217	371941	87,101	372664	161
359921	221,223	371942	87,101	372665	175
359932	229	371943	87,101	372666	177
359940	229,231	371958	69	372671	227
	,233	371966	201	372672	221,223
359941	179	371967	201	372678	239
359971	215,217	371968	209	372709	29
359972	215,217	371983	69	372716	201,205
359998	205,303	372008	187	372722	83
370100	35	372022	29	372725	83
370101	35	372029	155	372745	239
370165	165	372044	155	372749	179
370170	167	372048	121	372757	201
370211	211,213	372053	201	372758	183
370229	61,65	372063	41	372772	61,65
370231	57	372064	41	372782	229,231
370233	163	372083	227		,233
370234	209,211	372103	165	372784	187
	,213,303	372104	165	372785	201,205
370235	209,211	372105	165		,207,303
	,213	372193	77	372786	201,205
370255	201	372202	161		,207,303
370258	61,65	372204	179	372836	187
	,205,303	372205	189,191	372837	319
370358	325	372229	7,13,121	372914	69
370365	57	372321	229,231	372915	69
370720	331,337		,233	372938	29
370758	331,333	372322	229,231	372940	87,97
370766	239		,233	372957	39
370803	239	372349	61,65	372961	227
370840	69,73	372357	61	372964	209,211
370889	331,333	372358	61,65		,213,215
	,335	372374	59,69		,217
370917	333		,73,75	372965	227
370922	331	372383	29	372966	227
370938	69	372400	243	372967	193
370953	77	372429	83	372972	201
370955	227	372431	83	372983	61,65
370977	209	372432	83	372984	61,65
370978	221,223	372435	121	372997	161
371009	229,231	372457	205,207	373016	327
	,233		,303	373108	29
371100	201	372459	227	373132	133,135
371172	83	372479	29	373134	133
371189	189	372489	239	373140	187
371202	201	372492	61,65	373203	41,45
371213	209	372493	61,65	373204	41,45
371214	221	372494	201,205	373270	133
371268	201		,207,303	373277	121,123
371270	209	372495	193		,125,127
371275	167,169	372496	193	373286	195
371277	161	372497	193	373309	41,45
371364	185	372502	69,73	373361	121,129
371366	41,45	372503	69		,131

NUMERICAL INDEX

Part Number	Page	Part Number	Page	Part Number	Page
373363	311	374197	41	375205	329
373364	311	374198	41,45	375467	69,73
373395	327	374218	331	375478	69
373396	133	374219	331	375507	237
373410	139,149	374221	69,73	375589	325
	,325	374269	61	375669	139
373421	39	374327	181	375678	45
373430	137	374339	41,45	375681	45
373460	79,81	374362	33,35	376025	77
373469	87	374379	165	376045	29
373495	29	374398	185	376068	197
373507	133	374417	227	376079	201
373542	161	374463	193	376110	327
373547	227	374471	201	376118	201
373574	79,81	374475	183	376165	69
373579	77	374476	183	376255	201,205
373580	77	374478	181,183		,207,303
373584	61	374513	331	376488	239
373605	161	374518	181	376489	239
373610	139,141	374519	181	380054	73
373617	87,101	374526	181	380068	73
373618	87,101	374536	83	380069	73
373624	83	374537	83	380101	61,65
373625	83	374568	51	380144	133
373664	133,137	374591	49	380335	73
373688	69	374596	51	380436	79,81
373695	77	374597	51	380445	29
373708	69,73	374606	205,207	380476	325
373709	69,73		,303	380477	325
373745	41	374607	205,207	380656	303
373746	323		,303	380660	169
373747	323	374646	51	380708	179
373748	323	374659	53	380727	201
373749	323	374660	53	380829	121
373750	323	374662	29	380993	17,39
373752	323	374679	79	381010103	327
373756	323	374681	79,81	381011727	331,337
373758	31	374725	51	381400	213,217
373774	133	374733	51	381403	223
373775	69	374734	51	381413	73
373799	239	374735	51	381462	73
373854	239	374748	49	381567	223
373855	239	374753	51	381571	223
373906	323	374759	325	381605	29
373907	323	374760	325	381615	161
373928	235	374795	51	381618	161
373929	235	374797	41,45	381676	229,231
373930	235	374798	41,45		,233
373934	235	374799	41,45	381682	331
373943	239	374800	41	381683	331
373955	41,45	374801	41	381727	139,145
373956	41,45	374813	327	381775	231
373957	41,45	374816	329	381874	171
373958	41	374831	49	381989	45
373960	41	374833	49	382023	79
373984	139	374834	49	382129	45
373985	139	374835	49	382130	45
374025	41,45	374836	57	382131	45
374028	157	374838	329	382132	45
374029	181,183	374842	329	382165	45
374030	181,183	374854	41,45	382213	237
374059	121	374864	73	382217	87,101
374064	237	374869	29	382225	237
374065	237	374900	39	382335	45
374089	181	374925	51	382336	45
374098	165	374933	221,223	382349	237
374099	165	374934	221,223	382355	45
374120	181	374947	51	382382	41,45
374140	195	374995	139,143	382384	41,45
374142	41,45	375000	327	382387	41,45
374145	41,45	375004	61,65	382391	65
374158	41,45	375031	139,151	382393	65
374160	41,45		,325	382558	49
374168	181	375103	83	382699	345
374184	181	375105	329	382700	345
374196	181	375121	41,45	382701	345

NUMERICAL INDEX

Part Number	Page	Part Number	Page	Part Number	Page
382702	345	465013	233	500021	185,201
382717	61	470021	161		,209,211
382751	309	476019	321		,213,221
382782	163	480446	147		,223,227
382849	201	480447	147		,229,231
382881	233	480449	147		,233,237
383002	345	480450	147		,239,323
383200	239	480457	147		,331
383225	239	480468	147	500022	49,73
383409	337	482010	121		,79,81
383410	341	482056	153		,327,331
383414	343	482182	121		,339
383417	341	482328	337	500023	337
383418	341	482399	153	500024	331
383419	341	482516	153	500026	45,341
383420	341	482525	327	500028	41,45
383422	341	482571	327		,77,121
383424	337	482726	157		,133,211
383425	343	482728	327		,213,215
383452	187	482766	133		,217
383842	61,65	482813	327	500029	29,49
383855	101,103	482828	139,327		,53,69
383859	309	482836	327		,73,201
383860	311	482858	139		,205,207
383888	29	482890	327		,209,303
383957	133	483050	139	500030	41,45
383973	121	483107	139		,133
384160	309	483108	139	500031	69,83
384174	343	483109	327		,201,215
384176	343	483128	121		,217
384177	343	483131	133	500032	327
384187	343	483132	133	500033	133
384190	337	483138	133	500035	121
384402	305	483139	133	500037	39,61
384403	305	483182	121		,65
384498	17,39	483183	121	500040	45,69
384584	201	483186	139		,73,161
384589	339	483188	157		,165,181
384721	61,65	483207	157		,183,211
384759	207	483284	327		,213,215
384762	343	483285	327		,217,223
384783	191	483480	331,337		,237,255
384801	101,113	483483	121		,345
384873	337	483548	337	500043	29,181
384874	337	485005	319		,183,325
384875	337	485006	319	500044	325
384876	337	485011	319	500046	33,35
384877	337	485019	319		,37,121
384878	337,343	485037	319	500047	65,161
384879	337	485040	319		,275,341
384880	343	485388	319	500048	31,61
384881	293,343	500004	195,275		,65,69
384897	343		,331		,73
384927	293,343	500006	287	500049	33,35
384954	345	500012	69,73	500053	83,157
384958	345		,181,183		,161,201
385134	293,343		,243,257		,209,211
385152	337	500013	45,51		,213,215
385434	273,291		,185,197		,217,229
	,293		,227,237		,231,233
385442	291		,337		,275
385443	291	500015	235,237	500056	35
386004	65		,291	500061	343
386058	79,81	500017	201	500067	341
386137	73	500018	39,45	500075	161,209
386252	29		,69,73		,285
386404	81		,243,275	500076	57
386416	81	500019	69,73	500079	187
387263	65		,77,81	500086	179,343
387264	65		,133,155	500088	45
387327	65		,181,201	500091	133
415193	325		,213,279	500100	61,65
416034	225,237		,297,299		,239
416404	49		,319,327	500102	57
450067	333	500021	41,45	500109	121
465013	229,231		,51,69	500111	201

NUMERICAL INDEX

Part Number	Page
500115	275
500121	205,303
500133	41,45 ,57,139
500153	323
500154	61
500161	41,61
500169	225
500173	51
500184	161
500188	29
500189	139
500192	29,155 ,337
500194	33,57 ,61,65 ,133,187 ,325
500195	207
500209	31,57 ,325
500226	201,239
500228	61,65
500230	239
500239	239,337
500263	121
500265	325
500267	229,231 ,233
500287	39
500295	101
500505	41,45
502019	133
502034	139,209
502036	221,223
502059	133
502132	121
508001	341
508005	303
508018	41
508019	57
508027	341
508029	61,65 ,139
508032	65
508053	61,65
508056	227
508057	341
508092	61,65 ,229,231 ,233,341
509025	61,65
513003	227
513012	235
513013	227
513025	257
516051	221,223
526007	205,207
527002	57
533010	181
533013	163
533024	225
533038	229,231 ,233
535005	269
535007	275,279
535008	333
535011	45
535013	201
535015	201
535053	41
541507	45
541535	181,275
541702	183,185
541703	51,331
550038	325
570002	179,243
570003	331
570004	45,163 ,225,229 ,231,233 ,235,249 ,279,337 ,345
570005	41,43 ,45,51 ,161,209 ,211,213 ,215,217 ,243,261 ,341
570006	155,201 ,211,213 ,215,217 ,337
570007	57
570015	239
573003	237
573004	229,231 ,233
573008	227
581018	201
582006	197
586001	51,161 ,181,195 ,275,333 ,335
586002	69,73 ,161,165 ,179,201 ,211,213 ,215,217 ,221,223 ,225,235 ,285,323 ,331
586003	61,65 ,69,73 ,83,139 ,161,185 ,221,223 ,229,231 ,233,243 ,249,257 ,275,279 ,297,323 ,337
586018	61,65 ,69
586019	33,35 ,37,61 ,65,229 ,231,233 ,325
586021	299
586022	31,57 ,61,65 ,201,325
588176	309
600002	163
600004	243,255 ,261
600006	41,77 ,83,243 ,249,257 ,261
600008	77
600014	87
600016	149,151 ,325
600019	325
601001	345
601003	51
603001	221,223
603009	239
603010	237
603012	61
603018	79,81
603019	213,239
603023	41,69 ,71
604012	121
615041	225
615043	69
615065	69
615076	51
624005	321
624011	69
624015	309,311
624016	225,239 ,309
629066	299
630008	325
630020	325
630035	227
635061	29,149 ,151
791110	233
791119	155
791120	155
791144	343
791218	207
791253	179
791306	65
801199	327
801250	325
801251	325
801567	161
801669	189,191
813316	139,325
813391	29
813434	161
813444	327
813499	121
813500	133,139 ,157,327
813618	129
813738	155
813791	77
813822	123,129
815056	57
815190	325
900229	121
900247	81
900249	81
900256	99
900429	87,101
900430	133
900455	133
900512	133
900552	153
900604	121
900700	191
900775	57
900790	181
900798	195
900827	7,11,13 ,61,65
900829	7,11,13 ,61,65
900926	93
900937	93,117
900957	109,117
900986	229,231 ,233
901028	181
901128	235
901145	65,87

NUMERICAL INDEX

Part Number	Page
901145	101,205 ,207,303
901155	133
901157	133
901209	193
901212	319
901213	319
901214	319
901215	319
901220	319
901224	163
901225	163,289
901226	163
901227	163,289
901228	267
901229	267,289
901240	163,289
901256	163
901315	243
901369	181,183
901380	319
901384	137
901385	137
901386	137
901387	137
901389	137
901390	137
901413	135
901448	61,65
901449	61,65
901453	123,129
901454	123
901463	123
901464	123
901475	123
901476	123
901718	123
901721	123
901722	123
901725	123
901727	123
901728	123
901731	123,125 ,127
901766	195
901767	41,45 ,163
901832	339
901834	103,113
901987	95,111
902064	181
902066	181
902125	157
902163	201,205 ,207
902164	201,205 ,207
902166	41,45 ,69,73
902192	237
902194	237
902203	229,231 ,233
902223	163
902227	181,183
902284	41,45
902285	45,165 ,187
902286	41,45 ,187
902287	41,83 ,327
902288	41,187
902496	187
902508	321
902520	227
902578	319
902581	121,129
902610	319
902624	135
902637	135
902642	135
902655	137
902688	135
902724	135
902792	135
902861	147
902862	147
902866	41,45 ,47,201 ,203,257
902915	309
902928	123,129
902929	129
902930	129
902944	129
902959	123
902960	129
902961	129
902962	129
902984	129
902996	129
903290	31,201 ,205,207 ,303,325
903422	309
903423	311
903424	311
903425	311
903436	165,201
903459	309
903475	137
903493	137
903494	137
903495	137
903574	123
903576	123
903599	165
903600	165
903601	69,165
903602	165
903618	149
903619	149,151
903625	163
903627	163
903631	161
903632	61,65 ,161
903644	227
903657	167,169 ,175,177
903658	165,229 ,231,233 ,329
903678	165
903683	79,81
903684	79,81
903685	79,81
903712	79
903714	69,73
903732	45
903741	163,289
903760	161
903768	161
903769	189
903770	189
903782	343
903799	229
903803	271
903806	261
903808	243
903809	243
903812	139
903831	139
903852	181,183 ,195,345
903875	175
903876	167,169 ,175,177 ,179
903897	195
903899	181
903905	205,303
903907	201,235
903914	215,217
903915	69,73
903916	69,73
903917	221,223
903918	221,223
903927	171
903936	41
903937	41
903950	69
903953	69,73
903961	165
903962	201
903969	181,193 ,195,321 ,333
903970	163
903985	87,101
904005	121,139
904015	193
904016	171,173
904020	161
904032	161
904036	161,331
904037	161,331
904038	181,183
904059	77
904060	77
904069	311
904075	41,45
904076	41,45
904098	309,311
904114	255,285
904140	193
904143	149,151
904144	149
904145	149,151
904165	337
904180	239
904204	61
904206	179,201 ,211,213 ,215,217
904207	165
904208	165
904210	61,65
904211	79,81
904213	33,35 ,37,121
904214	223
904228	41,45 ,49,69 ,73,165 ,179,181 ,183,185 ,197,201 ,209,211 ,213,215 ,217,221 ,223,227 ,229,231 ,233,235 ,237,243 ,285,323 ,331,337

NUMERICAL INDEX

Part Number	Page
904228	343,345
904229	29,39
	,49,61
	,65,69
	,73,77
	,81,133
	,139,155
	,157,161
	,181,185
	,201,209
	,211,213
	,215,217
	,221,223
	,227,229
	,231,233
	,237,243
	,245,275
	,291,297
	,299,323
	,327,331
	,337,339
	,341
904230	29,41
	,45,49
	,61,65
	,69,73
	,77,83
	,121,133
	,139,181
	,183,201
	,205,207
	,209,215
	,217,221
	,223,303
	,325,327
	,337
904231	33,35
	,37,39
	,41,45
	,57,61
	,65,121
	,133,139
	,201,205
	,207,227
	,229,231
	,233,303
	,325
904232	57,61
	,299
904233	31,57
	,61,65
	,101,201
	,205,207
	,239,303
	,325
904234	139
904240	309
904241	41,45
	,61,65
904242	41
904244	41,45
904281	161,181
	,195,275
	,279,331
	,333
904282	121
904283	161
904284	161
904297	69
904302	329
904313	181
904314	183
904315	181
904316	181
904317	181
904318	181
904332	235
904338	235
904339	235
904340	323
904342	37
904379	61,65
904407	49
904413	49
904414	51
904415	51
904433	201,205
	,207,303
904448	161
904451	51
904458	41
904459	41
904486	69,73
904523	331
904543	181,183
	,195
904556	41,45
	,227,233
904557	29,41
	,45,61
	,65,201
	,209,211
	,213,215
	,217
904563	49
904567	29,45
	,155,235
	,337
904619	239
904637	61,65
	,139
904638	61,65
	,121
904639	161
904640	41,45
	,51,53
	,61,63
	,65,73
	,83,209
	,221,223
	,319
904663	7,9,11
	,13,17
904698	179
904704	179
904707	79,81
904734	221,223
	,239
904735	223
904739	223
904773	133
904774	133
904775	193
904800	223
904802	223
904812	231
904819	171
904835	309
904855	201
904862	65
904865	329
904870	309
904874	45
904889	171,187
904890	171,187
904906	345
904929	77
904933	161
904939	301
904940	301
904941	201
904969	301
904970	301
904989	163
905304	253,285
905305	253,285
905306	253,285
905307	253,285
905308	253,285
905309	253,285
905310	253,285
905311	253,285
905312	253,285
907163	123
908110	163
908136	41
908187	225
908188	225
908189	225
908190	225
908193	229,231
	,233
908200	229,231
	,233
908215	123
908216	123
908217	123
908229	309
908265	299
908267	297
908292	75
908355	299
908356	271
908359	297
908361	299
908378	123
908383	135
908399	77
908421	141
908422	129
908426	129
908427	129
908432	123,129
908435	129
908439	123
908443	129
908445	123
908448	123
908450	11,13
	,77
908451	13,77
908452	77
908494	243
908496	243,255
	,263,275
	,291
908497	253,261
	,285
908499	243,249
	,257,275
	,279,283
908500	243,275
908501	243,275
908502	243,275
908503	243,275
908504	243,275
908505	243,275
908506	243,275
908507	243,275
908508	243
908512	243,275
908513	331
908515	243,275
908516	243
908517	243
908518	243
908519	243
908520	243

NUMERICAL INDEX

Part Number	Page
908521	243
908522	243
908523	243
908524	243
908545	249,257 ,279,281 ,283
908559	253,285
908560	253,285
908561	253,285
908563	253,285
908564	253,285
908580	257,283
908581	257,283
908582	257,283
908583	257,283
908585	261,263
908587	243,261 ,263,275
908588	261,263
908589	261,263
908595	261,263
908598	261,263 ,291
908599	261,263 ,291
908600	261,263 ,291
908602	267
908603	267,289
908604	267
908605	267,289
908606	267,289
908607	267,289
908608	267
908609	267
908610	267,289
908611	267,289
908613	267,289
908617	267,289
908618	267,289
908623	269,287
908624	269,287
908625	299
908626	299
908627	299
908628	299
908663	333
908664	333
908676	333
908677	333
908678	333
908679	333
908680	333
908681	333
908682	333
908683	333
908684	333
908685	333
908686	333
908687	333
908688	333
908689	333
908690	333
908691	333
908692	333
908694	333
908696	333
908697	333
908698	333
908699	333
908700	333
908701	333
908702	333
908703	333
908704	333
908705	333
908706	333
908773	123
908987	257,283
909122	229,231 ,233
909152	329
909211	147
909212	147
909213	147
909214	147
909239	123
909256	123
909257	123
909349	123
909367	123
909373	123
909374	123
909375	123
909376	123
909377	123
909378	123
909379	123
909380	123
909381	123
909382	123
909384	123
909385	123
909386	123
909387	123
909388	123
909389	123
909390	123
909391	123
909392	123
909393	123
909395	123
909396	123
909398	123
909399	123
909401	123
909402	123
909403	123
909404	123
909405	123
909406	123
909407	123
909408	123
909409	123
909410	123
909411	123
909424	123
909425	123
909428	123
909429	123
909430	123
909431	123
909432	123
909433	123
909434	123
909436	123
909451	249
909452	249
909453	249
909454	249
909455	249
909456	249
909457	249
909458	249
909459	249
909460	249
909461	257
909462	257
909463	257
909464	257
909510	243,253
909510	275,285
909514	135
909525	129
909535	303
909536	303
909537	91
909540	93
909542	93
909544	91,105 ,117
909547	91,99 ,109
909582	91,103 ,113
909583	103,113
909584	89,97 ,103,113
909589	95
909596	95,105 ,111,117
909598	95
909605	95
909607	95,105
909615	93
909616	109,117
909625	93
909641	123
909642	123
909743	139
909745	225
909747	229,231 ,233
909748	229,231 ,233
910161	139
910995	39
911456	167,169 ,175,177
911620	147
921028	263
921031	161,181 ,183
921036	181
921039	183,185
921044	331
921045	331
921050	79,81
921056	337
921072	161
921104	211,213
921116	161
921132	161
922325	229,231 ,233
922552	57
923087	123
923371	121
923384	121
923814	239
923976	163,343
923984	263
923987	237
924791	323
925629	41,45
925723	157
925784	275
925802	65,67 ,181,183 ,189,191 ,195
926116	91,99 ,107,115
926185	95
926214	17,39 ,139,227 ,325

NUMERICAL INDEX

Part Number	Page
926611	181
926658	123
926732	93,95
926736	57
926781	95,111
926810	89,93
	,95,97
926847	117
926985	41,45
	,69,73
927233	225
927350	137
927354	135
927355	135
927358	135
927403	301
927637	41,45
927974	41,45
	,201,205
	,207,303
928021	161
928381	225
928497	229,231
	,233
928502	181
929012	147
929013	147
929014	147
929023	161
929050	87,101
929076	311
929185	83
929226	133
929322	7,11,13
	,79
929447	19,21
	,23,57
929455	181
929602	201,205
	,207
929617	93
929648	103,113
929661	95
929691	93,117
929863	17
930150	161
930151	187
930154	167,169
	,175,179
	,329
930161	175
930163	167,169
	,175,177
	,179
930166	175
930192	177,179
930200	179
932032	179
932034	175
932050	167,169
932056	175
932057	175
932058	167,169
	,175,177
9335273	279
935044	61,65
935045	333
935046	333
935047	333
935048	333
935049	333
935050	333
935051	333
935052	333
935053	333
935054	333
935055	333
935056	333
935057	333
935058	333
935059	333
935060	333
935061	333
935062	333
935063	333
935064	333
935065	333
935066	333
935067	333
935068	333
935069	333
935070	333
935071	333
935072	333
935073	333
935074	333
935075	333
935076	333
935077	333
935078	333
935079	333
935080	333
935081	333
935082	333
935083	333
935084	333
935158	135
935159	135
935218	135
935219	135
935225	229,231
	,233
935229	219
935230	219
935231	219
935232	219
935233	219
935234	219
935235	219
935236	219
935237	219
935238	219
935239	219
935240	219
935241	219
935242	219
935243	219
935244	257,283
935245	257,283
935246	257,283
935247	257,283
935248	257,283
935249	257,283
935250	257,283
935251	257
935252	257
935253	257,283
935254	257
935255	257,283
935256	257,283
935257	257,283
935258	257,283
935259	257
935260	257,283
935261	257,283
935262	257,283
935263	257,283
935264	257
935265	257,283
935266	257,283
935267	257,283
935268	257,283
935269	257,283
935270	257,283
935271	249,257
	,279,283
935272	249,257
	,279,283
935273	249,257
	,283
935274	249,257
	,279
935275	249,257
	,279
935276	249,257
	,279,283
935277	249,257
	,279,283
935278	249,279
935279	249,279
935280	249
935281	249,279
935282	249,279
935283	249,279
935284	249,279
935285	249,279
935286	249,279
935287	249,279
935288	249,279
935289	249,279
935290	249,279
935291	249,279
935292	249
935293	249,279
935294	249
935295	249,279
935296	249,279
935297	249,279
935298	249,279
935299	249,279
935300	249,279
935301	249,279
935302	249,279
935303	249,251
	,279
935334	255,285
935335	255,285
935336	255
935337	271
935373	141
935520	129,131
935521	129
935524	129
935525	129
935526	129
935527	129
935530	129
935531	129
935533	129
935536	129
935543	129
935544	129
935545	129
935555	261,263
935556	261,263
935557	261,263
935558	261,263
935559	261
935560	261
935561	261
935562	261
935563	261
935564	261,263
935565	261
935566	261
935567	261
935568	261
935569	261

NUMERICAL INDEX

Part Number	Page
935570	261,263,291
935571	261,263
935572	261,263,291
935573	265
935574	265
935575	265
935576	243
935577	243,275
935578	243,275
935579	243,275
935580	243,275
935581	243,275
935582	243,275
935583	243,275
935584	243,275
935585	243,275
935586	243,275
935587	243
935588	243
935589	243,275
935590	243,275
935591	243,275
935592	247
935593	247
935594	247,277
935595	247
935596	247
935597	247
935598	247,277
935599	247,277
935600	247,277
935601	247
935602	247
935603	193
935613	209,211,213,215,217
935614	209,211,213,215,217
935664	129
935741	129
935749	129
935750	129
935758	61,65
935771	225
935774	225
935857	123
935950	61,65
936018	93
936019	93
936020	93,111
936021	91,99
936022	91,99
936023	91,99,107,115
936024	91
936025	91,99
936026	91,99
936027	91
936028	91
936029	91
936031	91,99
936034	91
936035	91
936036	91
936037	91
936038	91
936039	91
936040	91
936041	91
936042	91
936043	91,99
936044	91,99
936045	91,99
936046	91,99
936047	91,99
936048	91,99
936049	91,99
936050	91,99
936051	91,99
936052	91,99,107
936053	91,99,107,115
936054	91,99,107,115
936055	91,99,107,115
936056	91,99,107,115
936057	91,99
936058	89,97
936059	89,97
936060	89,97
936061	95
936062	95
936063	95
936064	95
936065	95
936066	95
936067	95
936068	95
936069	95
936070	95
936071	95
936072	95
936073	95
936074	95
936075	95
936076	95
936077	95
936078	95
936079	95
936080	95
936081	95
936082	95
936083	95
936084	95
936085	95
936086	95
936087	93
936088	93
936089	93
936090	93
936091	93
936092	93
936093	93
936096	93
936097	93,109,117
936098	93
936099	93
936100	93
936101	93
936102	93
936103	93
936104	93
936105	93
936106	93
936107	93
936108	91
936109	93
936243	75
936244	75
936245	75
936246	75
936267	151
936268	151
936277	279
936283	303
936308	135
936393	135
936418	135
936421	135
936552	123
936553	123
936567	123
936568	123
936579	123
936580	123
936583	123
936593	129
936600	249,257,279
936601	249,257,279
936602	249,257,279
936683	135
936685	135
936686	135
936687	135
936688	135
936711	333
936803	135
936927	257
936934	279
936935	279
937055	139
937056	257
937057	257
937106	181
937107	181
937108	181
937109	181
937121	257,283
937136	123
937138	123
937139	123
937141	123
937142	123
937143	123
937144	123
937145	123
937146	123
937147	123
937149	123
937150	123
937151	123
937152	123
937153	123
937159	123
937161	123
937162	123
937164	123
937165	301
937210	135
937211	135
937213	135
937214	135
937215	135
937217	135
937218	135
937219	135
937220	135
937221	135
937228	135
937229	135
937232	135
937233	135
937234	135
937235	135
937236	135
937237	135
937238	135

NUMERICAL INDEX

Part Number	Page	Part Number	Page	Part Number	Page
937239	135	938224	257	938683	277
937247	135	938251	121	938684	277
937248	135	938252	121	938685	277
937249	135	938253	121	938687	289
937250	135	938256	253	938688	289
937252	135	938290	279	938689	295
937253	135	938291	279	938690	295
937256	137	938292	279	938691	291
937257	137	938311	333	938875	15,25
937258	137	938466	5,7	938891	15,23
937259	137	938467	5,13	938895	15,19
937260	137	938514	13	938896	15,21
937261	137	938516	13	938980	105,117
937262	137	938517	13	938981	105,117
937263	137	938520	5,11	938982	105,117
937264	137	938527	5,9	938983	105,117
937265	137	938558	15,17	938984	105,117
937266	137	938597	339	938985	105,111
937267	137	938598	339		,117
937268	137	938599	339	938986	105,117
937269	137	938600	339	938987	105,117
937270	137	938602	339	938988	107,115
937271	137	938603	339	938989	107,115
937272	137	938617	293,343	938990	107,115
937273	137	938618	293,343	938991	107,115
937285	265	938619	343	938992	107,115
937363	129	938620	293,343	938994	107
937380	249,279	938621	293,343	938995	107,115
937381	249,279	938622	293,343	938996	107,115
937382	249,279	938623	343	938997	107,115
937383	249,279	938624	343	938998	107,115
937384	249,279	938625	293	938999	107,115
937385	249,279	938626	293	939002	111
937386	249	938627	293	939003	111
937387	249	938628	293	939004	111
937388	249	938629	293	939006	111
937389	249,279	938630	293	939007	111
937390	257,283	938631	343	939008	111
937391	257,283	938632	293	939009	111
937392	257,283	938633	293	939010	111
937393	257,283	938634	293	939011	111
937394	75	938635	293	939012	111
937671	135	938636	293	939013	111
937672	137	938638	293	939014	111
937737	263,291	938639	293	939015	111
937738	263	938640	293	939016	111
937739	263	938641	293	939017	111
937741	263	938642	293	939018	111
937742	263	938643	293	939019	111
937756	263	938644	293	939020	111
937813	143,145	938645	293	939021	109,117
937870	305	938647	293	939022	109,117
937890	257	938658	279	939023	109,117
937891	257	938659	279	939024	109,117
937896	143,145	938660	285	939025	109
937897	143,145	938661	285	939026	109,117
937898	143,145	938662	285	939027	109
937899	143	938663	285	939028	109,117
937900	143,145	938664	285	939029	109
937901	143,145	938665	285	939030	109,117
937902	143,145	938666	285	939031	109,117
937932	249,277	938667	287	939032	109
	,279,283	938668	287	939033	109
938016	257,283	938670	275	939034	109,117
938017	257,283	938671	275	939035	109,117
938018	257,283	938672	275	939036	109,117
938019	243	938673	275	939037	109
938020	265	938674	275	939038	109
938021	265	938675	275	939039	109
938022	267,289	938676	275	939270	111
938023	243,331	938677	275,277	939281	117
938024	257,259	938678	275	939282	117
	,283	938679	275	939380	115
938043	257,283	938680	291	939381	115
938044	247	938681	277	939382	115
938207	329	938682	277	939383	115

NUMERICAL INDEX

Part Number	Page	Part Number	Page	Part Number	Page
939384	111				
939385	111				
939386	111				
939387	111				
939388	99				
939505	65				
960787SE	309				
960792	179				
985012	167,171 ,173,175				
985013	181,275				
985014	181				
985051	243,275				
985117	243				
985146	167,175				
989151	155				
991658	311				
999011	185				
999027	161				