**Vibratory Roller**
**CA152D**

DYNAPAC
Part of the Atlas Copco Group

# Spare Parts Catalogue

## SCA152D-4EN2

*Valid from roller serial number:*
***10000105**x0A000001 -*

RUTHZIL TRATOR COMERCIAL DE PEÇAS LTDA 11 97083-6812 ROLANDO




*Diesel engines:*
*Cummins QSB 3.3*

*Published catalogue issues valid for these rollers:*

| *Catalogue* | *Issue date* | *Valid for serial numbers* |
|---|---|---|
| *SCA152D-4EN1* | *2010-03* | *Replaced by SCA152D-4EN2* |
| *SCA152D-4EN2* | *2011-10* | ***See above*** |



We reserve the right to change specifications without notice.
Printed in Sweden.

DYNAPAC
Part of the Atlas Copco Group

## RESERVDELSBESTÄLLNING

Följande uppgifter ska lämnas vid beställning av reservdelar för att undvika leveransfel:

1. Maskintyp.
2. Vältens serienummer.
3. Antal av önskad reservdel.
4. Reserdelens artikelnummer.
5. Reservdelens benämning.
6. Måttuppgifter vid beställning av metervara.

## ORDERING SPARE PARTS

To avoid errors in delivery, please give the following information when ordering spare parts:

1. Type of machine.
2. Roller serial number.
3. Quantity required.
4. Part number.
5. Parts denomination.
6. Dimensions when ordering per length.

## ERSATZTEILBESTELLUNG

Zur Vermeidung von Fehllieferungen sind bei der Bestellung von Ersatzteilen folgende Angaben zu machen:

1. Maschinentyp.
2. Herstellungsnummer.
3. Bestellmenge. (Quantity)
4. Ersatzteilnummer. (Part Nº)
5. Ersatzteilbenennung. (Denomination)
6. Massangaben bei Bestellung von Meterware.

## ORDINI DI RICAMBI

Per evitare errori nelle consegne di ricambi, Vi preghiamo di comunicarci le seguenti informazioni al momento dell 'ordinazione:

1. Tipo di macchina.
2. Numero di serie della macchina.
3. Quantità dei pezzi desiderati. (Quantity)
4. Numero di codice del pezzo. (Part Nº)
5. Descrizione del pezzo di ricambio. (Denomination)
6. Misura, in caso di ordine per metro.

## PEDIDO DE RECAMBIOS

Para evitar errores en las entregas, deberán indicarse los siguientes datos al hacer un pedido de recambios:

1. Tipo de máquina.
2. Número de serie.
3. Cantidad de piezas deseadas. (Quantity)
4. Número de artículo de la pieza de recambio. (Part Nº)
5. Denominación de la pieza. (Denomination)
6. Indíquese la medida al solicitar un artículo que se expide por metros.

## COMMANDE DE PIECES DE RECHANGE

Les indications suivantes doivent être fournies lors de la commande de piéces de rechange, afin d'éviter toute erreur de livraison:

1. Type de machine.
2. Numéro de série.
3. Quantité désirée de pièce de rechange. (Quantity)
4. Numéro de la piéce de rechange. (Part Nº)
5. Dénomination de la piéce de rechange. (Denomination)
6. Longueur en cas de commande au mètre.

## YOUR AGENT/DEALER:

# Text pages

The text pages is structured as the picture on the right.

1. This is the remarks for specific items and the descriptions of the remarks is at the bottom of the parts list.

2. Parts indicated by a dot and moved to the right are included when buying the assembled unit above.

3. Spare parts Class code for a specific part.
"A" = 3 or more units/year,
"B" = 2 or more units/year,
"C" = 1 or more units/year,
"D" = at least 1 unit/year.

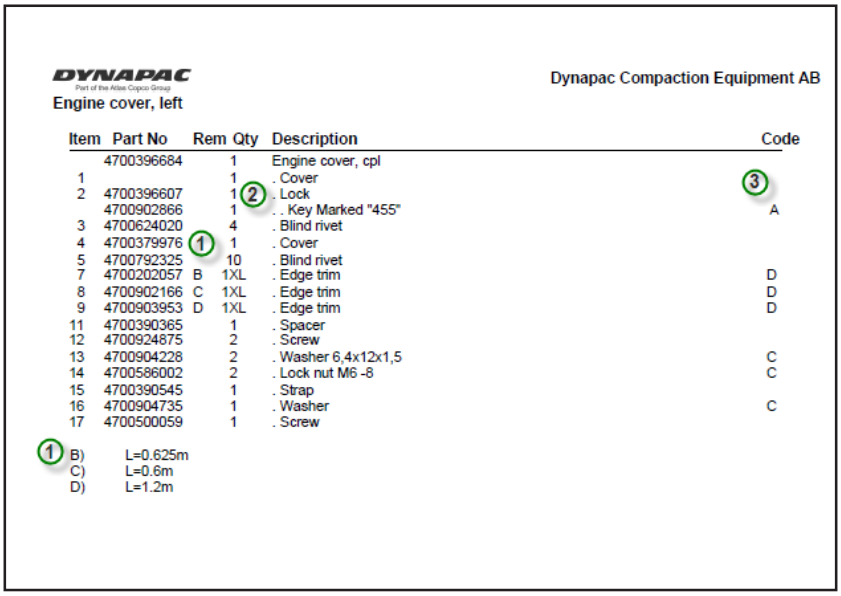

DYNAPAC
Part of the Atlas Copco Group

Dynapac Compaction Equipment AB

Engine cover, left

| Item | Part No | Rem | Qty | Description | Code |
|---|---|---|---|---|---|
| | 4700396684 | | 1 | Engine cover, cpl | |
| 1 | | | 1 | . Cover | 3 |
| 2 | 4700396607 | | 1 | . Lock | |
| | 4700902866 | | 1 | . . Key Marked "455" | A |
| 3 | 4700624020 | | 4 | . Blind rivet | |
| 4 | 4700379976 | | 1 | . Cover | |
| 5 | 4700792325 | | 10 | . Blind rivet | |
| 7 | 4700202057 | B | 1XL | . Edge trim | D |
| 8 | 4700902166 | C | 1XL | . Edge trim | D |
| 9 | 4700903953 | D | 1XL | . Edge trim | D |
| 11 | 4700390365 | | 1 | . Spacer | |
| 12 | 4700924875 | | 2 | . Screw | |
| 13 | 4700904228 | | 2 | . Washer 6,4x12x1,5 | C |
| 14 | 4700586002 | | 2 | . Lock nut M6 -8 | C |
| 15 | 4700390545 | | 1 | . Strap | |
| 16 | 4700904735 | | 1 | . Washer | C |
| 17 | 4700500059 | | 1 | . Screw | |

1 B) L=0.625m
C) L=0.6m
D) L=1.2m

# Changes

| PARTS INFO | SERVICE INFO | GROUP | PAGE | NOTES |
|---|---|---|---|---|
| | | | | |
| | | | | |
| | | | | |
| | | | | |
| | | | | |
| | | | | |
| | | | | |
| | | | | |

# Notes

# Notes

DYNAPAC

## PÄRMETIKETT

För att undvika fel vid reservdelsbeställning finns här nedan två etiketter som passar i fickorna på pärmarnas ryggar. På dessa kan man se från vilket vältnummer av aktuell maskin reservdelskatalogen gäller. Gör så här:

1. Tag denna sida ur pärmen.
2. Klipp ut etiketten till **VÄNSTER** (1) och sätt in den i fickan på **DENNA** pärmens rygg.
3. Finns det en etikett till **HÖGER** (2), kan denna användas på pärmen för **FÖREGÅENDE** utgåva av denna katalog.
4. Kasta detta papper.

## BINDER LABEL

To avoid errors when ordering spare parts use the labels below to identify the catalogues on the back of the binder. The label contain the serial number range for which the catalogue is valid. Do like this:

1. Remove this page from the binder.
2. Cut out the **LEFT** label (1) and put it on **THIS** binders back.
3. If there is a label to the **RIGHT** (2), it can be used on the binder for **PRECEDING** issue of this catalogue.
4. Throw away this paper.

## KATALOG-BESCHRIFTUNG

Zur Vermeidung von Fehlen bei der Ersatzteilbestellung benutzen Sie bitte die unteren Beschriftungen, um die Kataloge auf der Rückseite zu kennzeichen. Auf der Beschriftung ist angegaben, für welche Maschinennummern der jeweilige Katalog gültig ist. Ablauf:

1. Nehmen Sie dieses Blatt aus dem Katalog.
2. Schneiden Sie die **LINKE** Beschriftung (1) aus. Schieben Sie die Beschriftung in die tasche auf **DEM** Katalogrücke.
3. Sollte die Beschriftung unten **RECHTS** (2) mitgeliefert werden, kennzeichen Sie damit bitte die **ÄLTERE** Ausführung dieses Kataloges.
4. Den Rest dieses Blattes bitte vernichten.

## ETICHETTA POSTA SUL RACCOGLITORE

Per evitare errori quando ordinate pezzi di ricambio, usate le etichette in calce che servono ad identificare i cataloghi sul retro del raccoglitore. L'etichetta indica il numero di matricola delle maccine prese in considerazione nel catalogo.

1. Rimuovete questa pagina dal raccoglitore.
2. Ritagliate l'etichetta posta a **SINISTRA** (1) e ponetela sul retro **DEL** raccoglitore.
3. Se trovate anche un'etichetta sulla **DESTRA** (2), ritagliatela e ponetela sul raccoglitore relativo alla **PRECEDENTE** edizione del catalogo.
4. Distruggete questo foglio.

## ETIQUETA PARA LA CARPETA

Para evitar errores al pedir repuestos utilicen las etiquetas abajo descritas para identificar los catálogos en la parte trasera de la carpeta. En la etiqueta se ven los números de referencia de la serie para la cual es válido el catálogo. Instrucciones:

1. Quitar esta página de la carpeta.
2. Corta la etiqueta **IZQUIERDA** (1) y ponerla est **ESTA** carpeta en la parte trasera.
3. Si hay una etiqueta en la parte **DERECHA** (2) se puede utilizar en la carpeta para el catálogo que **PRECEDE** a esta.
4. Tirar esta hoja.

## ETIQUETAGE DU CATALOGUE

Afin d'éviter des erreurs lors de commandes de pièces de rechange, nous vous conseillons d'apposer les marquages ci-dessous à l'arrière du classeur, pour identifier les catalogues. Ce marquage indique les numéros de série pour lesquels le catalogue est adapté. Il convient de procéder de la façon suivante:

1. Retirez cette page du classeur.
2. Découpez l'étiquette de **GAUCHE** (1), et apposez-la à l'arrière de **CE** catalogue.
3. Si il y a une étiquette à **DROITE** (2), vous pourrez l'apposer sur le classeur de l'edition **PRECEDENTE** du catalogue.
4. Détruire cetta feuille.

**1 .**




**CA152D**

Catalogue **SCA152D-4EN2**
Valid **from** serial number:
***10000105x0A000001***

TABLE OF CONTENTS Page


CA152D SN 10000105x 0A000001 - 2

Service kits 4

Service kits 6

4700950399 Service kit 50 h 8

4700939076 Service kit 250 / 750 h 10

4700950401 Service kit 500 h 12

4700950402 Service kit 1000 h 14

Repair kits 16

4700938558 Steering hitch kit 18

4700938898 Eccentric shaft kit 20

4700938891 Drum rotation kit 22

4700938876 Shock absorber kit, drum 24

4700940663 F/R control button kit 26

Frame 28

Frames 30

Scraper 32

Scrapers urethan rubber Option 34

Scrapers spring steel Option 36

Hitch 38

Structure 40

Noise suppressed hood, air inlet Option 44

Covers mount 46

Drum 48

Drum 50

Engine 52

Engine Cummins QSB3.3 54

Cooling system 56

Combustion air system 60

Fuel system 62

Exhaust system 64

Exhaust pipe, Lenghthened Option 66

Transmission 68

Rear axle and wheels 70

4700383855 Rear axle Limited Slip 72

Housing 74

Differential with limited slip 76

Brakes 78

Planet gear 80

## TABLE OF CONTENTS

Page

4700384801 Rear axle No-spin, Option ..... 82
Differential with No-Spin ..... 84
Differential housing and brakes ..... 86
Planet gear ..... 80

**Hydraulic system ..... 88**

Propulsion system, Front ..... 90
4700372250 Propulsion motor ..... 92

Propulsion system, Rear ..... 94
4700380829 Propulsion pump ..... 96

Vibration system ..... 102
4700384751 Vibration pump ..... 104
4700380144 Hydraulic motor, vibration ..... 106

Steering system ..... 108
4700359139 Pilot valve ..... 110
4700392002 Steering cylinder ..... 112

Brake system ..... 114

Hydraulic oil tank ..... 116

Central test panel hydraulic Option ..... 118

Central test panel hydraulic Option ..... 120

**Electrical equipment ..... 122**

Electric system ..... 124

Relay and Fuses ..... 128

Instrument box ..... 130

Instrument panel Main ..... 132

Instrument panel Upper left ..... 134

Instrument panel Upper right ..... 136

Instrument panel Lower left ..... 138

Instrument panel Lower right ..... 140

Emergency stop panel ..... 142

Emergency and Parking brake panel ..... 144

Driving lights Option ..... 146

Working lights Option ..... 148

Rotating beacon Option ..... 150

Compaction meter Option ..... 152

Speedometer and frequency meter Option ..... 154

Tachograph, platform Option ..... 156

Tachograph , cab Option ..... 158

Tachograph, simple cab Option ..... 160

Back-up alarm Option ..... 162

Protecting cover, Headlight Option ..... 164

Field computer assembly Option ..... 166

## TABLE OF CONTENTS

Page


Compaction Analyzer Option ... 168
Geodynamic Compaction indicator Option ... 170
GPS Option ... 172
GPS Option ... 174
Engine pre-heater, Cab Option ... 176
Engine pre-heater, Platform Option ... 178

**Drivers platform ... 180**

Drivers platform ... 182
Drivers platform, for cab ... 184
Drivers seat Standard platform ... 186
Drivers seat Turn-over platform ... 188
Drivers seat Turn-over in cab ... 190
Steering column ... 192
Steering system ... 194
Turning Controls ... 196
Turning Carrier ... 198
Forward and reverse control ... 200
Speed limiter Option ... 202
Rops and fops ... 204
Cab 4700383030 ... 206
Cab Interior ... 208
Cab Inside panels ... 210
Cab Screens ... 212
Cab Door ... 216
Cab Wipers front and rear ... 220
Cab Mirror, Sun curtain ... 222
Cab Electric ... 224
Cab Heater system ... 226
4700385434 Cab heater, cpl ... 228
Cab Cable harness ... 230
Cab 4700392479 ... 232
Cab Screens ... 234
Cab Door, left side ... 238
Cab Interior rear mirror ... 240
Wiper arm with blade, front ... 242
Cab Electric ... 244
Cab mounting ... 246
Cab Work lights ... 248
Cab Exterior, rear mirror ... 250
Cab, 12V contact ... 252
Radio and cassette/cd player Option ... 254
Bracket, Steering valve vibration isolated Option ... 256

**Decals ... 258**

TABLE OF CONTENTS

Page

Decals ... 260
Decals ... 262

**Standard equipment ... 264**

Standard equipment ... 266

**Optional equipment ... 268**

Tool equipment ... 270
SMV-sign, First aid box ... 272
Canopy ... 274
Levelling blade, metal parts ... 276
Condensor assembly ... 278
Evaporator assembly ... 280
Roof hatch ... 282
Fire extinguisher assembly ... 284
Fire extinguisher Platform ... 286
Fire extinguisher Cab ... 288
Dy-Mic ... 290
Air conditioner assembly ... 292
Evaporator assembly ... 280
4700383413 Condensor, cpl ... 294
Air conditioner assembly, simple cab ... 296
Air conditioner and heater unit ... 300
4700383413 Condensor, cpl ... 294


50
60
90
91
70
30
20
80
10
40
DYNAPAC
CA 152
DYNAPAC

**CA152D SN 10000105x 0A000001 -**


| Item | Part No | Rem | Qty | Description | Code |
|---|---|---|---|---|---|
| 1 | | | | **Service kits ( Page 4 )** | |
| 2 | | | | **Repair kits ( Page 16 )** | |
| 10 | | | | **Frame ( Page 28 )** | |
| 20 | | | | **Drum ( Page 48 )** | |
| 30 | | | | **Engine ( Page 52 )** | |
| 40 | | | | **Transmission ( Page 68 )** | |
| 50 | | | | **Hydraulic system ( Page 88 )** | |
| 60 | | | | **Electrical equipment ( Page 122 )** | |
| 70 | | | | **Drivers platform ( Page 180 )** | |
| 80 | | | | **Decals ( Page 258 )** | |
| 90 | | | | **Standard equipment ( Page 264 )** | |
| 91 | | | | **Optional equipment ( Page 268 )** | |

## Service kits

| Item | Part No | Rem | Qty | Description | Code |
|---|---|---|---|---|---|
| -1 | | | | **Service kits ( Page 6 )** | |
| 1 | 4700950399 | | | **Service kit 50 h ( Page 8 )** | |
| 2 | 4700939076 | | | **Service kit 250 / 750 h ( Page 10 )** | |
| 3 | 4700950401 | | | **Service kit 500 h ( Page 12 )** | |
| 4 | 4700950402 | | | **Service kit 1000 h ( Page 14 )** | |

## Service kits

| Item | Part No | Rem | Qty | Description | Code |
|---|---|---|---|---|---|
| 1 | 4700950399 | | | **Service kit 50 h ( Page 8 )** | |
| 2 | 4700939076 | | | **Service kit 250 / 750 h ( Page 10 )** | |
| 3 | 4700950401 | | | **Service kit 500 h ( Page 12 )** | |
| 4 | 4700950402 | | | **Service kit 1000 h ( Page 14 )** | |

# 4700950399 Service kit 50 h

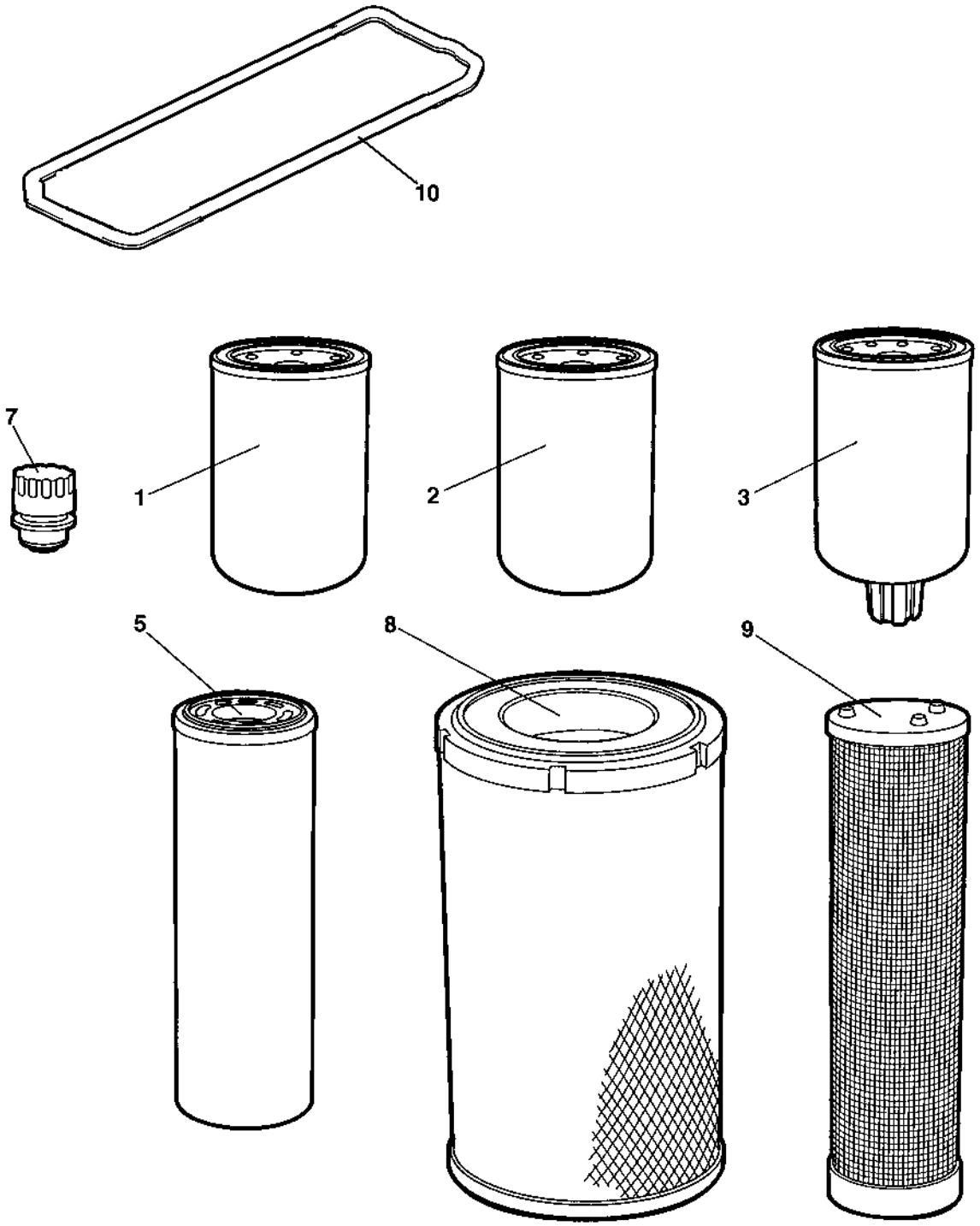

## 4700950399 Service kit 50 h

| Item | Part No | Rem | Qty | Description | Code |
|---|---|---|---|---|---|
| | 4700950399 | | | **Service kit 50 h ( Page 8 )** | |
| 1 | 4700939068 | | 1 | Oil filter element | A |
| 2 | 4700950302 | | 1 | Fuel filter element | A |
| 3 | 4700950301 | | 1 | Pre-fuel filter element | A |
| 5 | 4700372229 | | 2 | Hydraulic oil filter element | A |

# 4700939076 Service kit 250 / 750 h

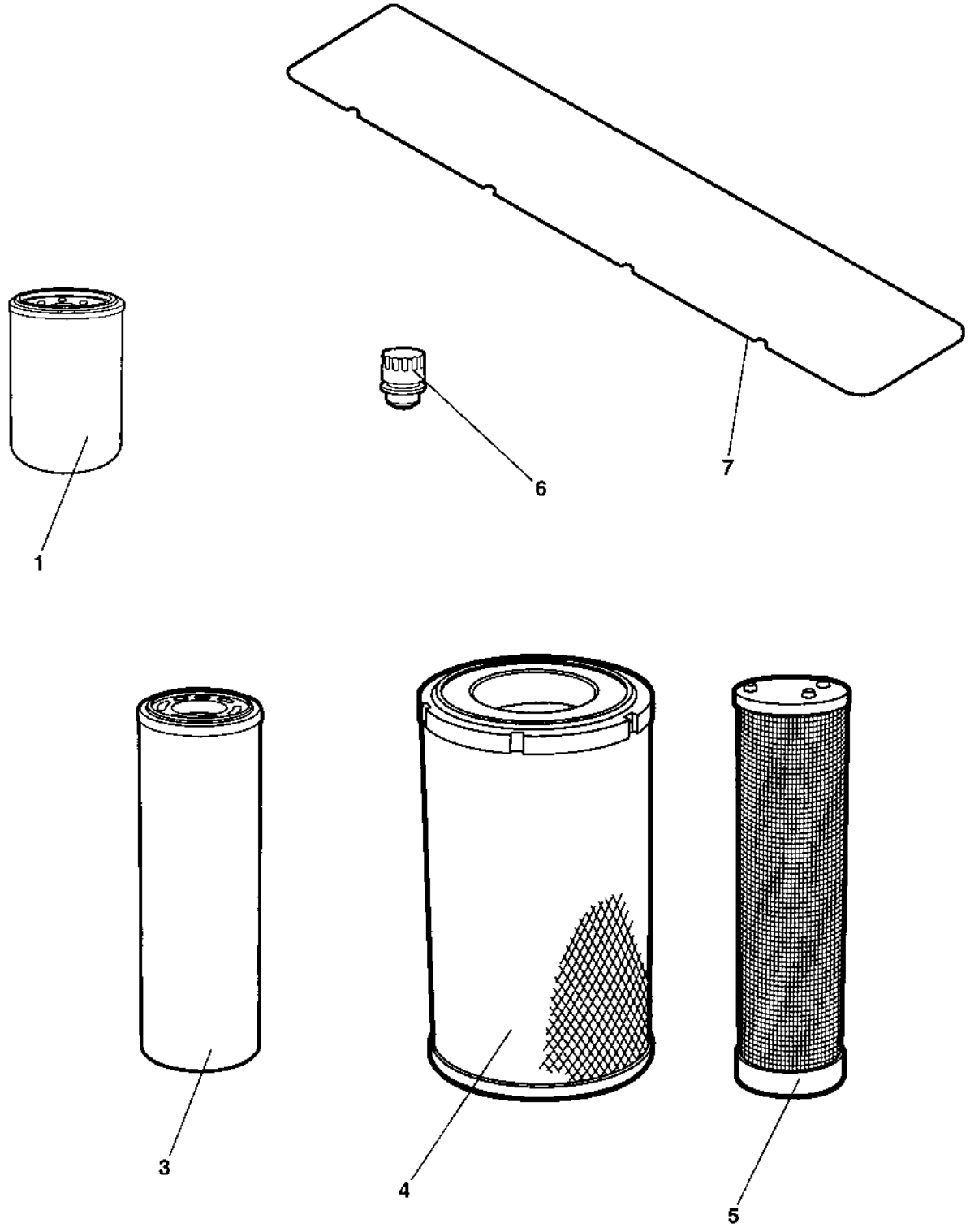

## 4700939076 Service kit 250 / 750 h

| Item | Part No | Rem | Qty | Description | Code |
|---|---|---|---|---|---|
| | 4700939076 | | | **Service kit 250 / 750 h ( Page 10 )** | |
| 1 | 4700939068 | | 1 | Oil filter element | A |

# 4700950401 Service kit 500 h

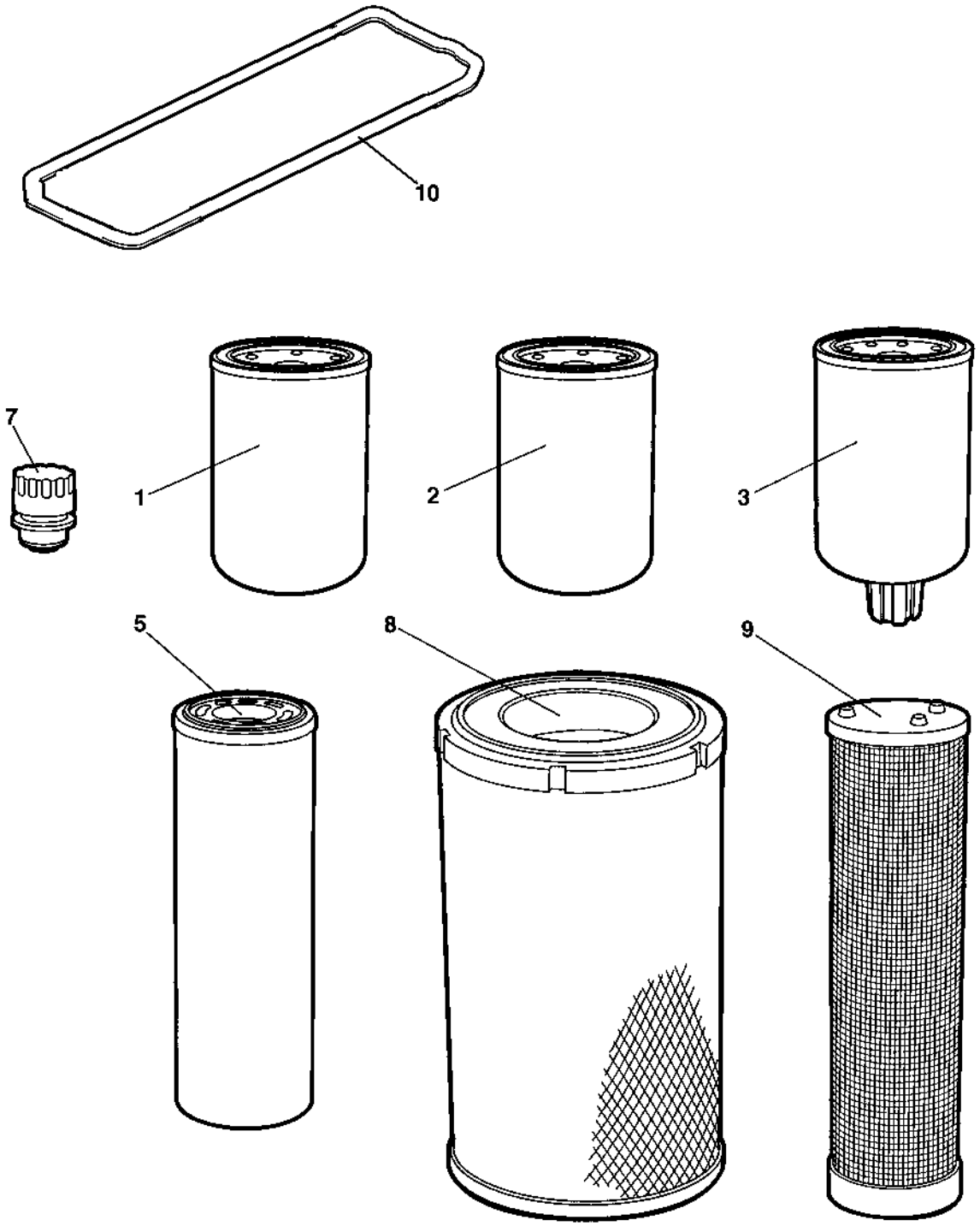

## 4700950401 Service kit 500 h

| Item | Part No | Rem | Qty | Description | Code |
|---|---|---|---|---|---|
| | 4700950401 | | | **Service kit 500 h ( Page 12 )** | |
| 1 | 4700939068 | | 1 | Oil filter element | A |
| 2 | 4700950302 | | 1 | Fuel filter element | A |
| 3 | 4700950301 | | 1 | Pre-fuel filter element | A |
| 8 | 4700394686 | | 1 | Air filter element, main | A |

# 4700950402 Service kit 1000 h

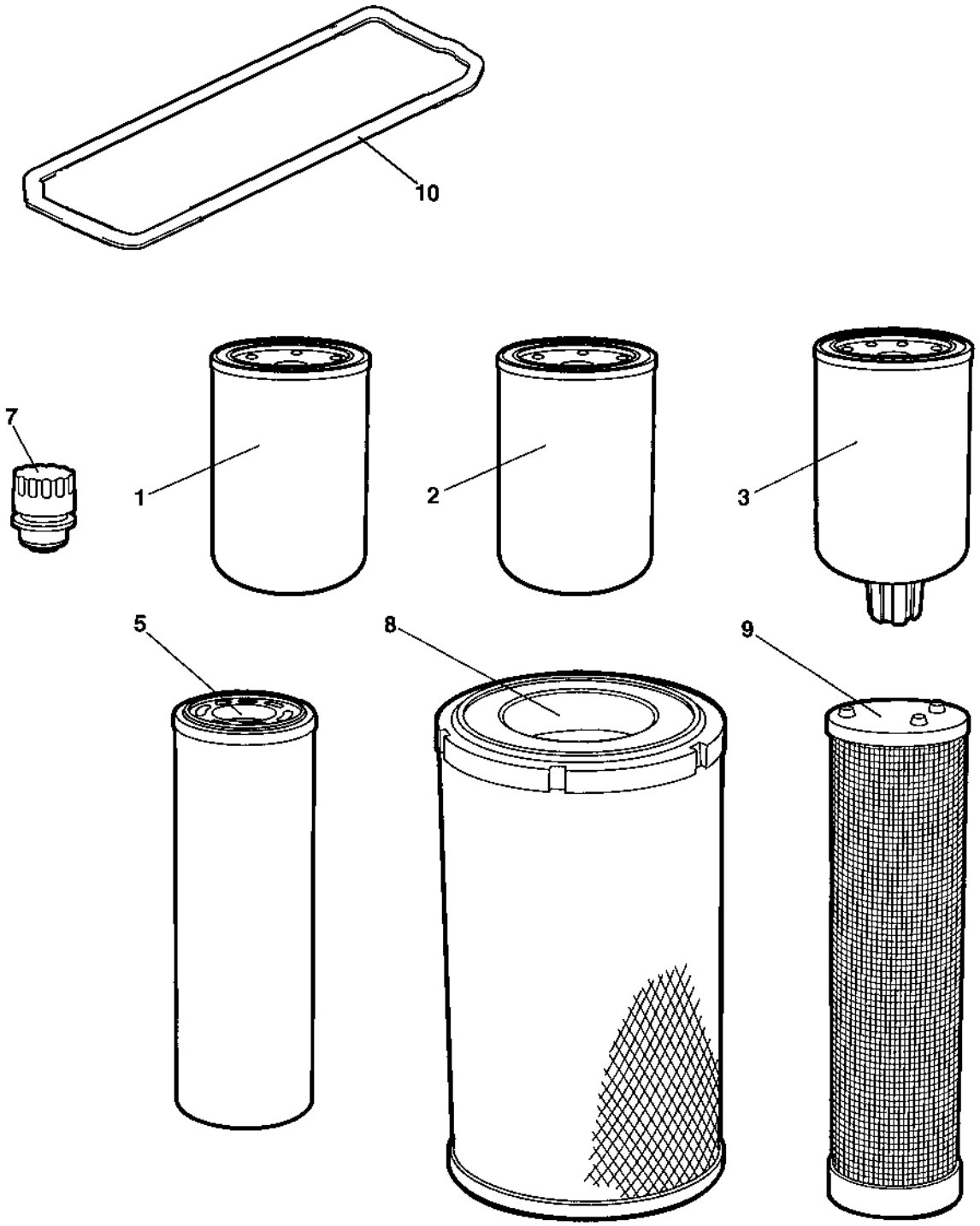

## 4700950402 Service kit 1000 h

| Item | Part No | Rem | Qty | Description | Code |
|---|---|---|---|---|---|
| | 4700950402 | | | **Service kit 1000 h ( Page 14 )** | |
| 1 | 4700939068 | | 1 | Oil filter element | A |
| 2 | 4700950302 | | 1 | Fuel filter element | A |
| 3 | 4700950301 | | 1 | Pre-fuel filter element | A |
| 5 | 4700372229 | | 2 | Hydraulic oil filter element | A |
| 7 | 4700357138 | | 1 | Ventilating filter | A |
| 8 | 4700394686 | | 1 | Air filter element, main | A |
| 9 | 4700394687 | | 1 | Air filter element, safety | A |
| 10 | 4700939070 | | 1 | Gasket, valve cover | B |

## Repair kits

| Item | Part No | Rem | Qty | Description | Code |
|---|---|---|---|---|---|
| 5 | 4700938558 | | 0 | **Steering hitch kit ( Page 18 )** | A |
| 10 | 4700938898 | | 0 | **Eccentric shaft kit ( Page 20 )** | |
| 20 | 4700938891 | | 0 | **Drum rotation kit ( Page 22 )** | A |
| 30 | 4700938876 | | 0 | **Shock absorber kit, drum ( Page 24 )** | |
| 40 | 4700940663 | | 0 | **F/R control button kit ( Page 26 )** | |

# 4700938558 Steering hitch kit

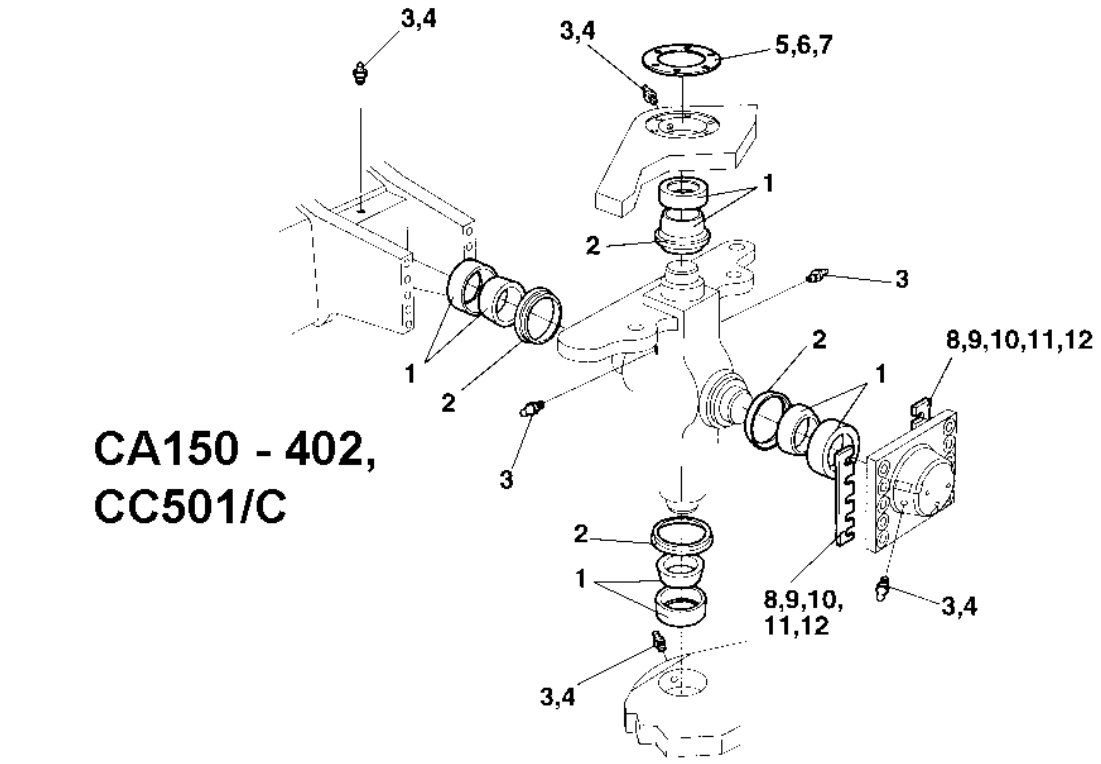


CA150 - 402,
CC501/C

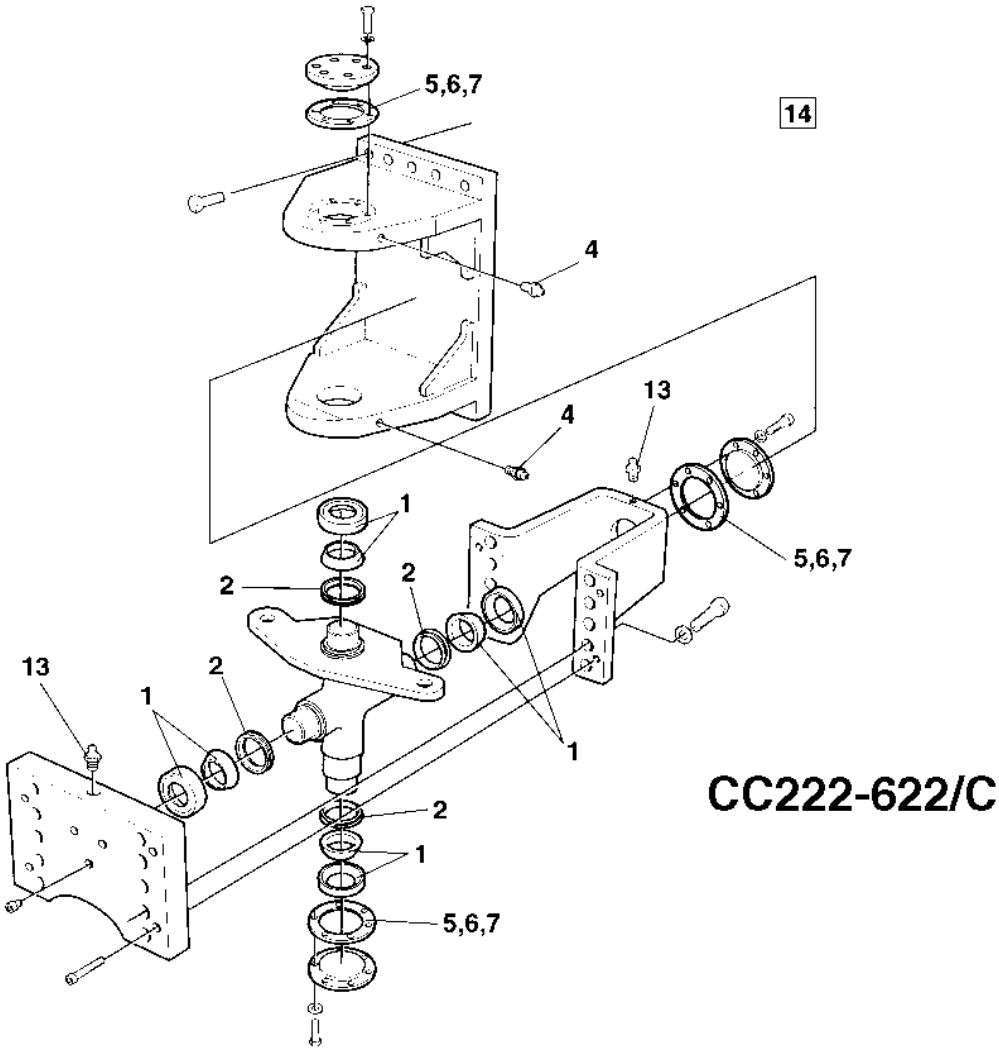


CC222-622/C

## 4700938558 Steering hitch kit

| Item | Part No | Rem | Qty | Description | | Code |
|---|---|---|---|---|---|---|
| | 4700938558 | | | **Steering hitch kit ( Page 18 )** | | A |
| 1 | 4700100040 | | 4 | Axial ball bearing | | B |
| 2 | 4700167032 | | 4 | Lip-type oil seal | | C |
| 3 | 4700310008 | 2 | 3 | Grease nipple | | C |
| 4 | 4700926214 | | 2 | Grease fitting | | C |
| 5 | 4700337045 | | 3 | Shim | T=1,0 mm | C |
| 6 | 4700345874 | | 3 | Shim | T=0,35 mm | C |
| 7 | 4700345875 | | 3 | Shim | T=0,10 mm | C |
| 8 | 4700345871 | 1 | 2 | Shim | T=1,0 mm | C |
| 9 | 4700345872 | 1 | 2 | Shim | T=0,35 mm | C |
| 10 | 4700345873 | 1 | 2 | Shim | T=0,10 mm | C |
| 11 | 4700380993 | 1 | 2 | Shim | T = 2,0 mm | C |
| 12 | 4700384498 | 1 | 2 | Shim | T = 0,15 mm | C |
| 13 | 4700929863 | 3 | 1 | Grease nipple | | C |
| 14 | 4700904663 | | 1 | Lube grease " DYNAPAC special approved " | | A |
| 15 | | | 1 | Instructions | | |

1) Valid for CA150-402 and CC501/C
2) Valid for CC501/C
3) Valid for CC222/232/322/422/432/522/622/C

# 4700938898 Eccentric shaft kit

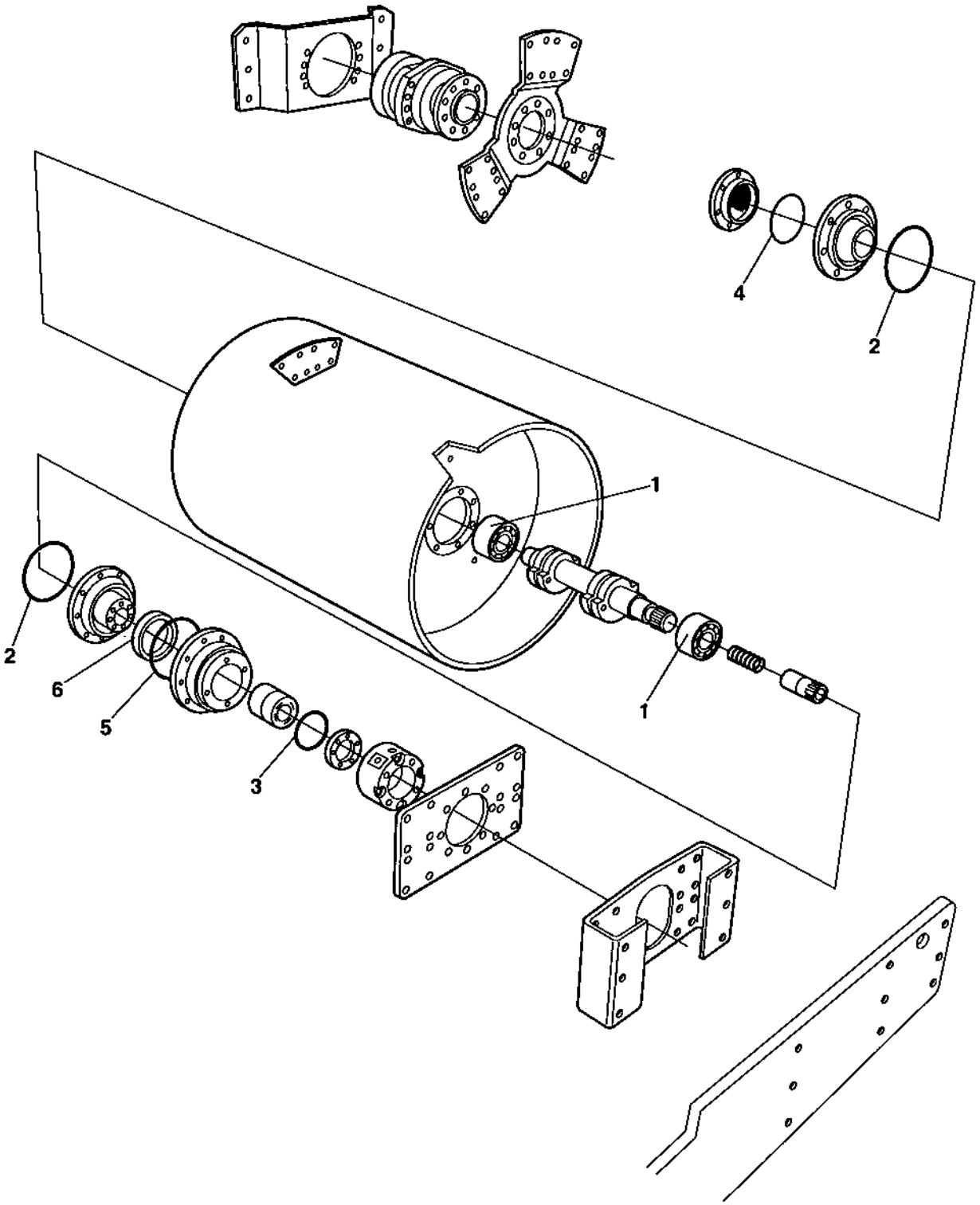

## 4700938898 Eccentric shaft kit

| Item | Part No | Rem | Qty | Description | Code |
|---|---|---|---|---|---|
| | 4700938898 | | | **Eccentric shaft kit ( Page 20 )** | |
| 1 | 4700114036 | | 2 | Spherical roller bearing | B |
| 2 | 4700160344 | | 2 | O-ring 70 | C |
| 3 | 4700160105 | | 1 | O-ring 70 | C |
| 4 | 4700160362 | | 1 | O-ring | D |
| 5 | 4700929447 | | 1 | V-ring | B |
| 6 | 4700167023 | | 1 | Seal ring | B |

## 4700938891 Drum rotation kit

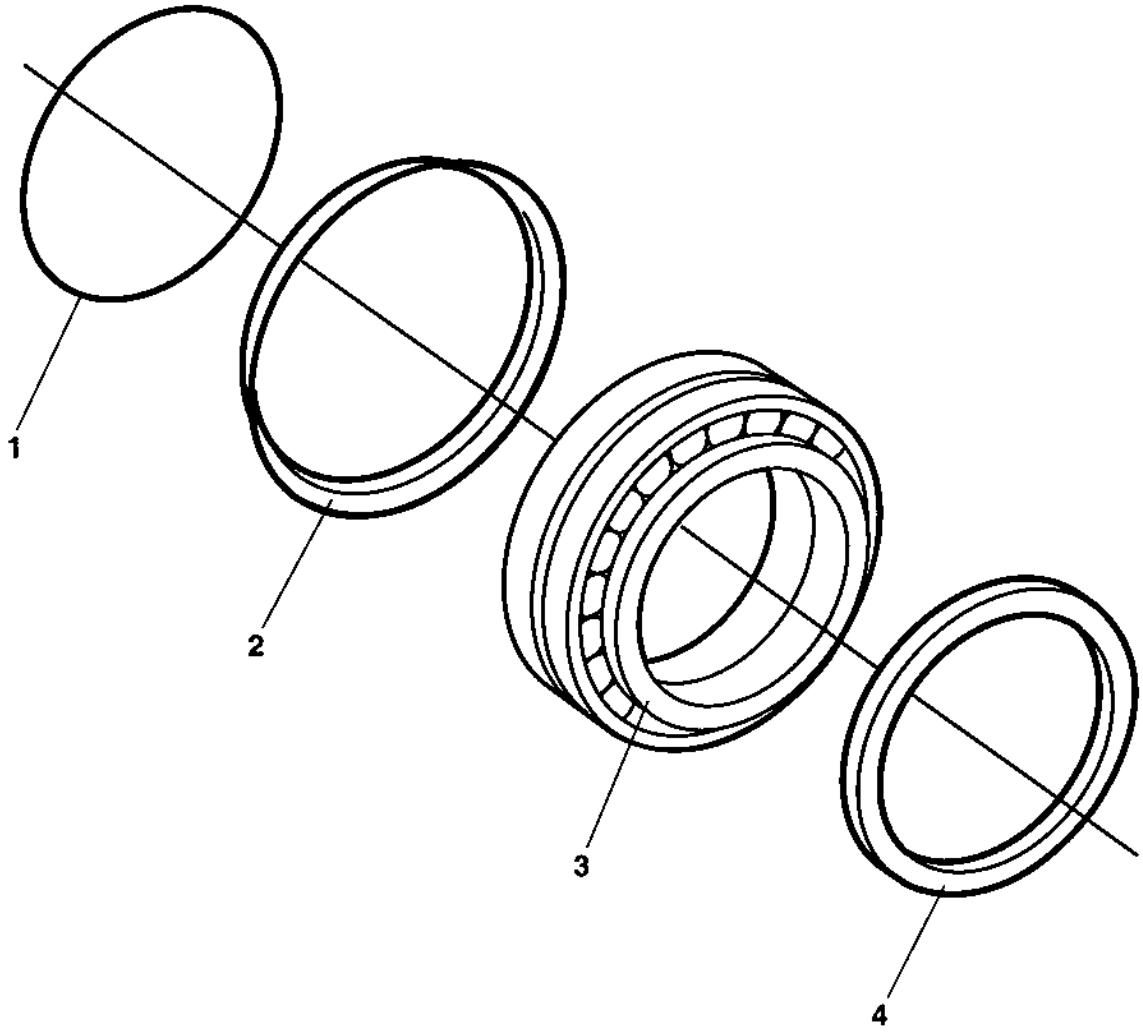

## 4700938891 Drum rotation kit

| Item | Part No | Rem | Qty | Description | Code |
|---|---|---|---|---|---|
| | 4700938891 | | | **Drum rotation kit ( Page 22 )** | A |
| 1 | 4700160105 | | 1 | O-ring 70 | C |
| 2 | 4700929447 | | 1 | V-ring | B |
| 3 | 4700116041 | | 1 | Taper roller bearing | B |
| 4 | 4700386272 | | 1 | Sealing | B |

# 4700938876 Shock absorber kit, drum

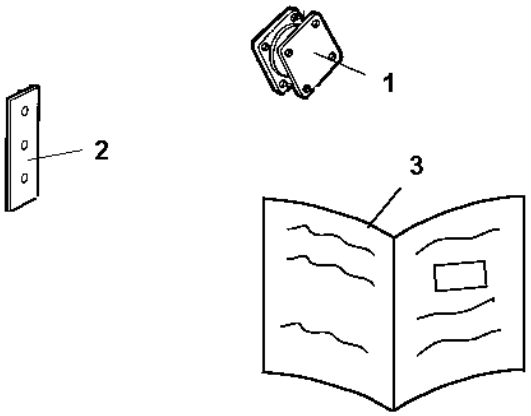

## 4700938876 Shock absorber kit, drum

| Item | Part No | Rem | Qty | Description | Code |
|---|---|---|---|---|---|
| | 4700938876 | | | **Shock absorber kit, drum ( Page 24 )** | |
| 1 | 4700336742 | | 10 | Shock absorber | B |
| 2 | 4700815056 | | 4 | Shim | D |
| 3 | 4812156170 | | 1 | Instructions | |

# 4700940663 F/R control button kit

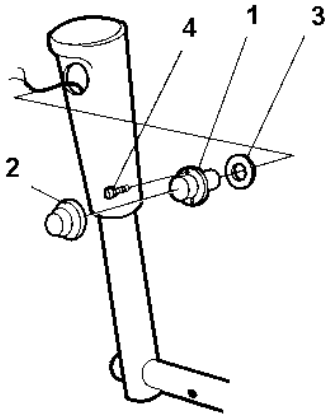

## 4700940663 F/R control button kit

| Item | Part No | Rem | Qty | Description | Code |
|---|---|---|---|---|---|
| 1 | 4700928497 | | 1 | Push button | B |
| 2 | 4700348481 | | 1 | Cover | B |
| 3 | 4700359940 | | 1 | Washer | C |
| 4 | 4700371009 | | 2 | Screw | D |

## Frame

## Frame

| Item | Part No | Rem | Qty | Description | Code |
|---|---|---|---|---|---|
| 10 | | | | **Frames ( Page 30 )** | |
| 20 | | | | **Scraper ( Page 32 )** | |
| 25 | | | | **Scrapers urethan rubber Option ( Page 34 )** | |
| 30 | | | | **Scrapers spring steel Option ( Page 36 )** | |
| 40 | | | | **Hitch ( Page 38 )** | |
| 50 | | | | **Structure ( Page 40 )** | |
| 70 | | | | **Noise suppressed hood, air inlet Option ( Page 44 )** | |
| 90 | | | | **Covers mount ( Page 46 )** | |

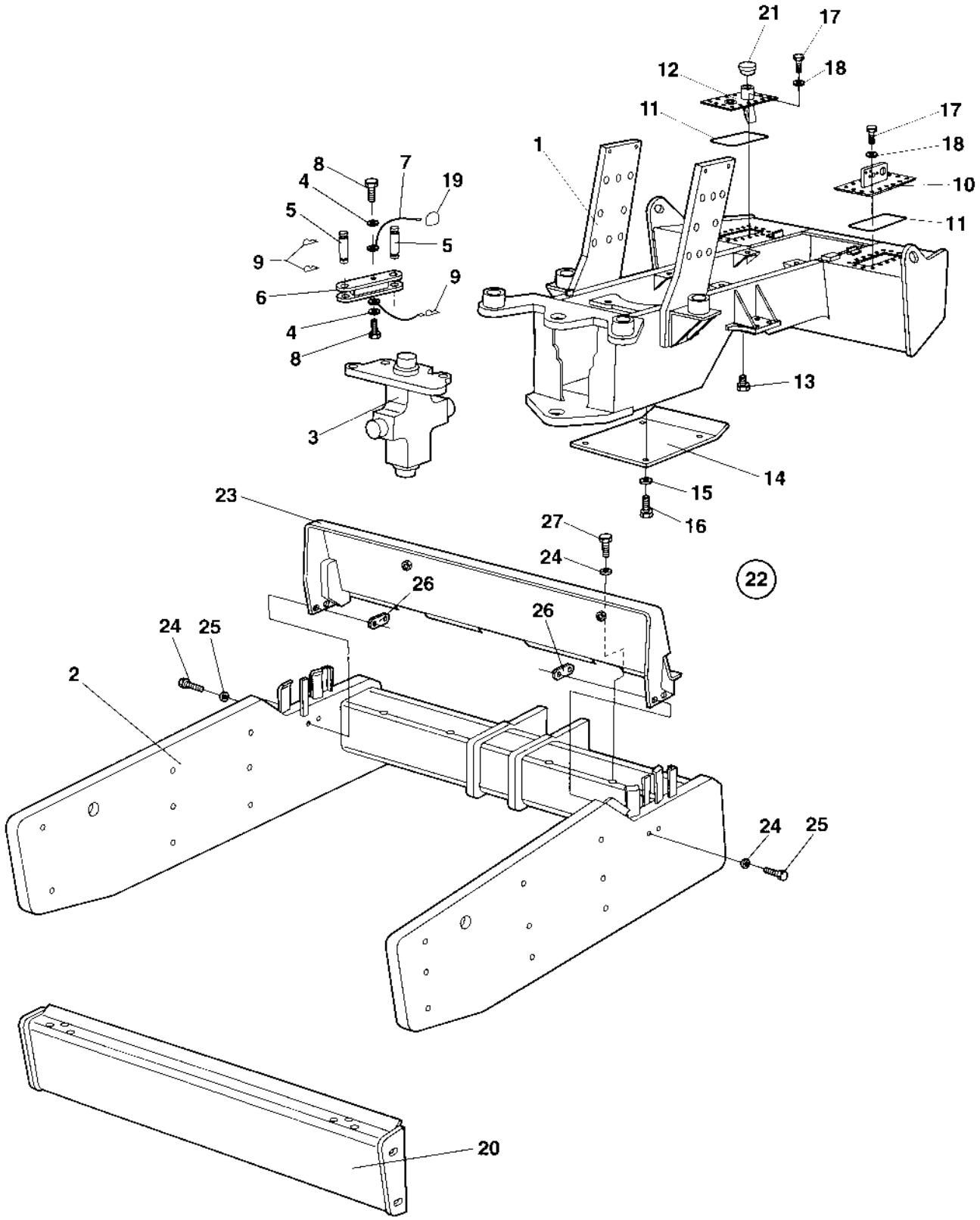
21
17
12
18
11
17
18
10
11
1
8
7
19
4
5
5
9
9
6
4
8
3
13
14
15
16
23
27
24
22
26
26
24
25
2
24
25
20

## Frames

| Item | Part No | Rem | Qty | Description | Code |
|---|---|---|---|---|---|
| 1 | 4700394605 | | 1 | Tractor frame | |
| 2 | 4700373108 | | 1 | Drum frame | D |
| 3 | | | 1 | **Hitch ( Page 38 )** | |
| 4 | 4700904230 | | 2 | Steel plain washer | C |
| 5 | 4700347119 | | 2 | Shaft | C |
| 6 | 4700374869 | | 1 | Safety rod | D |
| 7 | 4700343775 | | 2 | Wire | D |
| 8 | 4700500043 | | 2 | Screw M10x16H 8,8 | D |
| 9 | 4700635061 | | 3 | Hair clip | B |
| 10 | 4812110986 | | 1 | Cover | D |
| 11 | 4700372709 | | 2 | O-ring | D |
| 12 | 4700388186 | | 1 | Cover | D |
| 13 | 4700813391 | | 1 | Magnetic plug | D |
| 14 | 4700372479 | | 1 | Protecting plate | D |
| 15 | 4700904557 | | 4 | Steel plain washer | C |
| 16 | 4700500029 | | 4 | Hexagon head screw | C |
| 17 | 4700500188 | | 32 | Screw M8-1,25x14 8,8 | D |
| 18 | 4700904229 | | 32 | Steel plain washer 8,4x16x1,5 | C |
| 19 | 4700357488 | | 1 | Spring | D |
| 20 | | | 1 | Scraper beam | |
| 21 | | | 1 | Fuel cap | |
| 22 | | | 1 | Drum shroud Option | |
| 23 | 4700374662 | | 1 | . Drum shroud | D |
| 24 | 4700500192 | | 4 | . Screw M10x80 | C |
| 25 | 4700904567 | | 8 | . Washer 10,5x28x6 HB305 | C |
| 26 | 4700376045 | | 2 | . Holder | D |
| 27 | 4700500029 | | 4 | . Hexagon head screw | C |

## Scraper

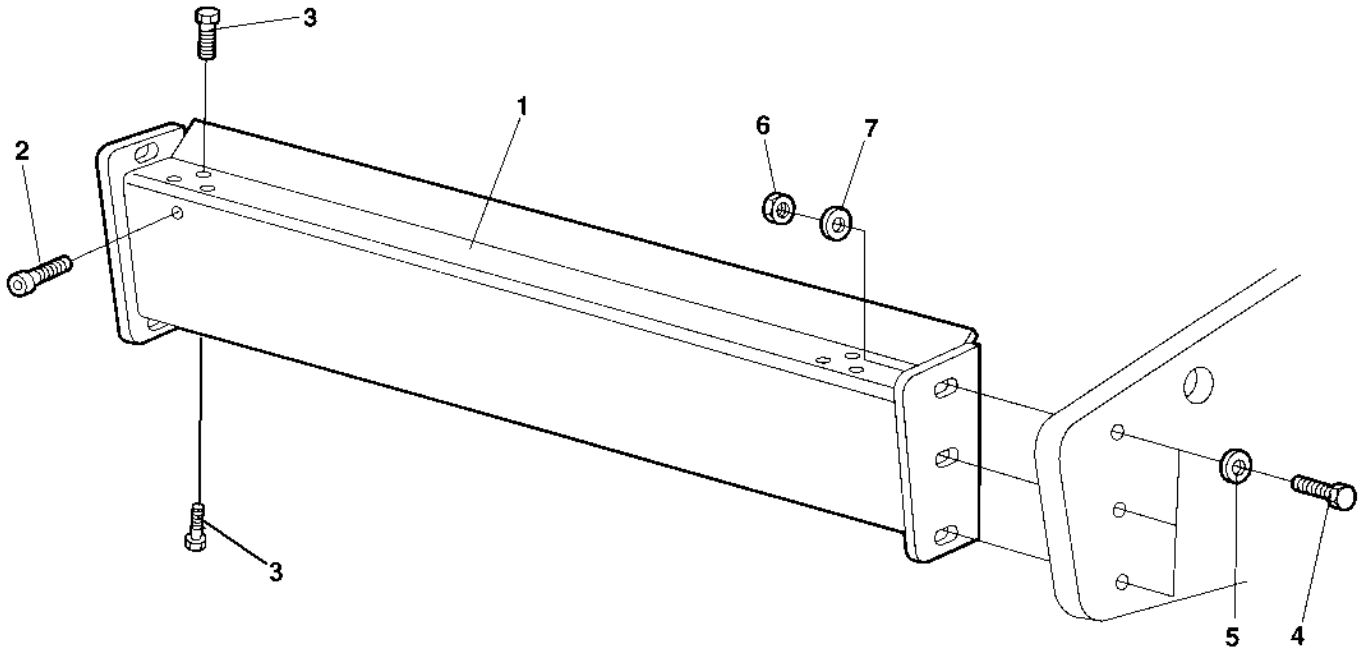

## Scraper

| Item | Part No | Rem | Qty | Description | Code |
|---|---|---|---|---|---|
| 1 | 4700373758 | | 1 | Scraper beam | D |
| 2 | 4700232041 | | 1 | . Filter plug | D |
| 3 | 4700500048 | | 12 | . Screw M10-1,5x20 8,8 | C |
| 4 | 4700925208 | | 4 | Screw M20x90 | D |
| 5 | 4700904233 | | 4 | Washer 21x36x3 | C |
| 6 | 4700586022 | | 4 | Lock nut M20-8 | C |
| 7 | 4700904559 | | 4 | Washer 25x45x8 | C |

## Scrapers urethan rubber Option

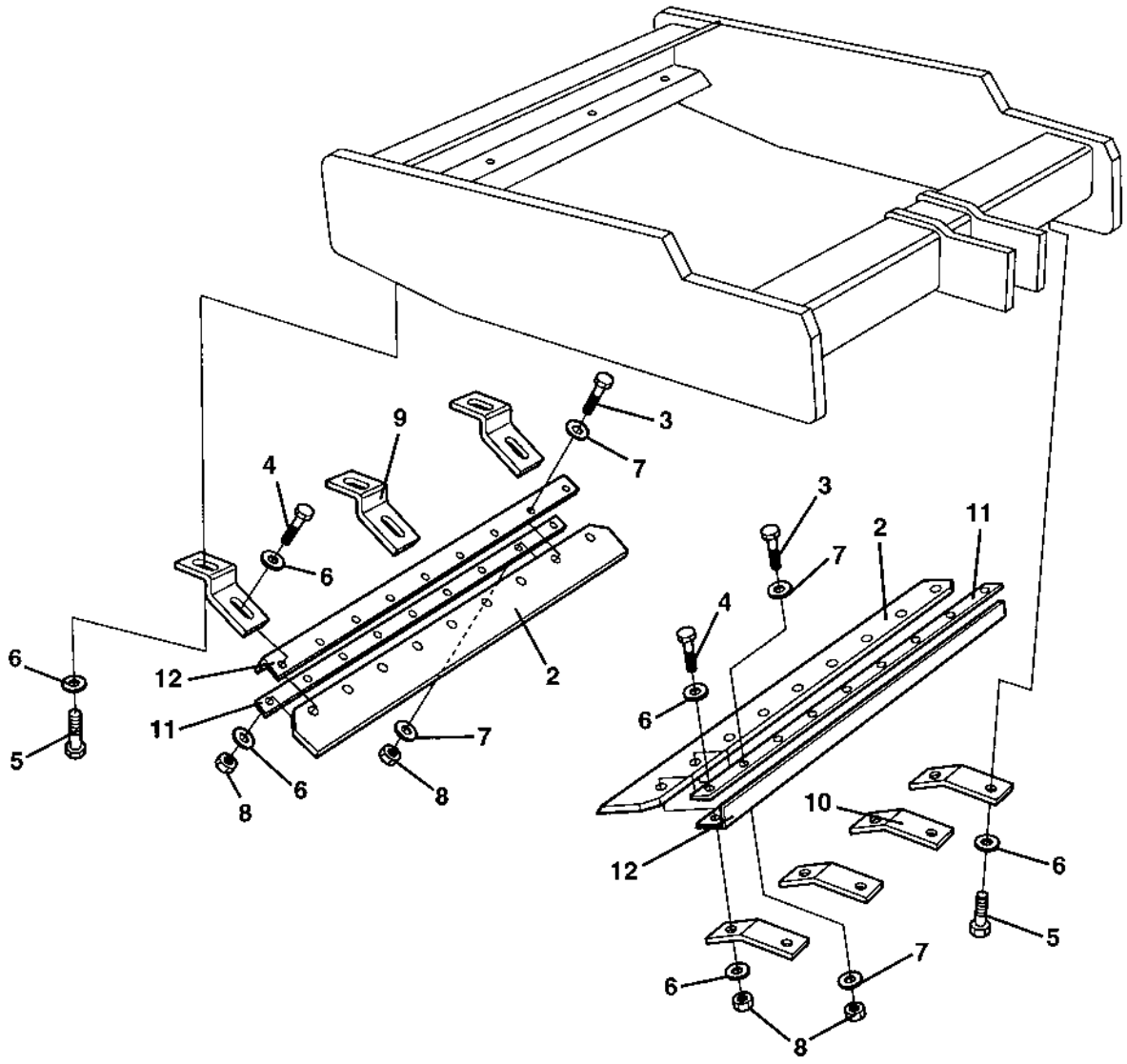

## Scrapers urethan rubber Option

| Item | Part No | Rem Qty | Description | Code |
|---|---|---|---|---|
| 2 | 4700374362 | 2 | Scraper | A |
| 3 | 4700500056 | 11 | Screw | |
| 4 | 4700500049 | 7 | Screw | C |
| 5 | 4700500046 | 14 | Screw M12x025H | C |
| 6 | 4700904213 | 28 | Washer | C |
| 7 | 4700904231 | 22 | Washer 13x24x2 300 HV | C |
| 8 | 4700586019 | 18 | Lock nut | C |
| 9 | 4700358025 | 3 | Scraper bracket | D |
| 10 | 4700358026 | 4 | Scraper bracket | D |
| 11 | 4700370100 | 2 | Scraper bracket | D |
| 12 | 4700370101 | 2 | Scraper bracket | D |

## Scrapers spring steel Option

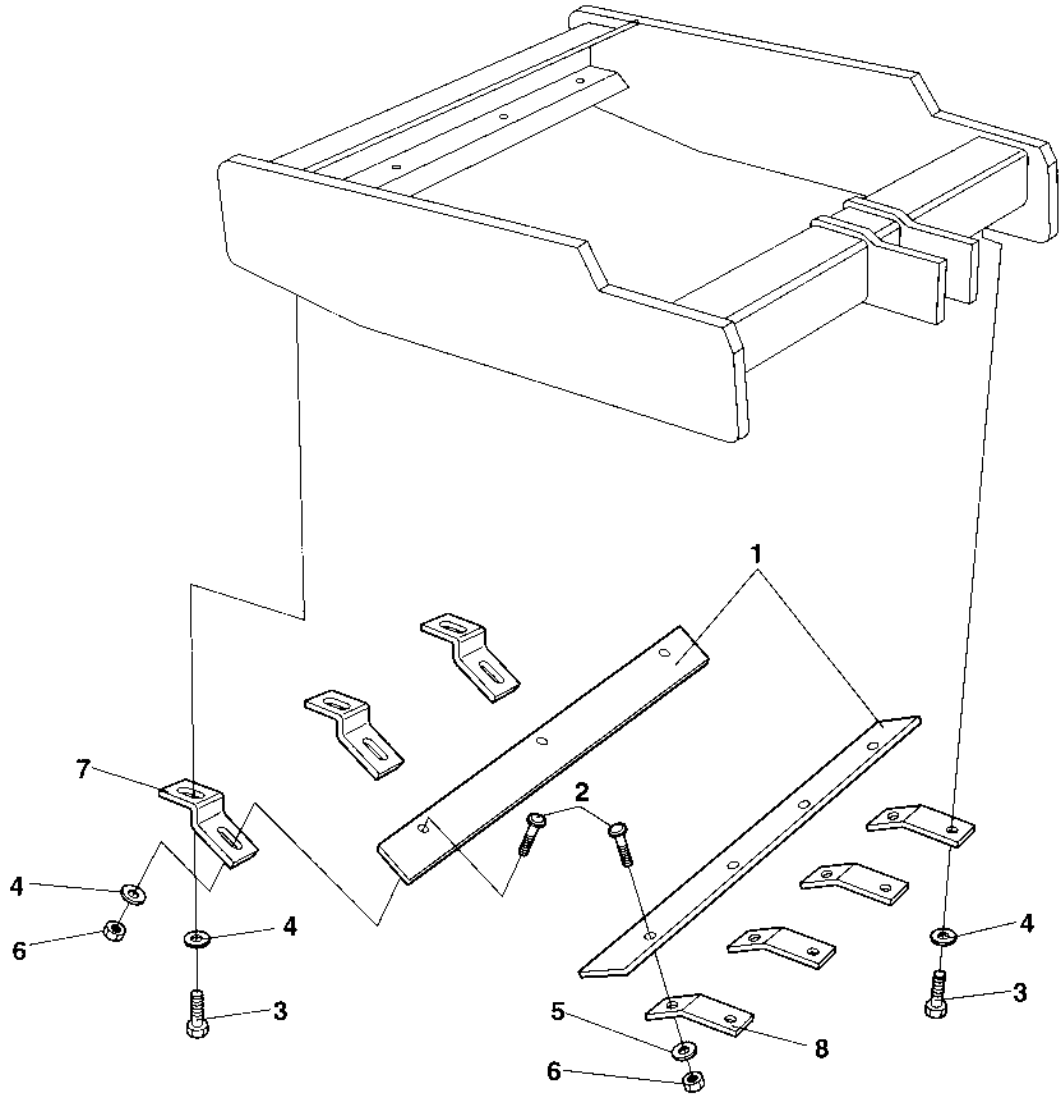

## Scrapers spring steel Option

| Item | Part No | Rem | Qty | Description | Code |
|---|---|---|---|---|---|
| 1 | 4700358031 | | 2 | Scraper | B |
| 2 | 4700904342 | | 7 | Screw M12x45 | |
| 3 | 4700500037 | | 14 | Screw | C |
| 4 | 4700904213 | | 17 | Washer | C |
| 5 | 4700904231 | | 4 | Washer 13x24x2 300 HV | C |
| 6 | 4700586019 | | 7 | Lock nut | C |
| 7 | 4700358025 | | 3 | Scraper bracket | D |
| 8 | 4700358026 | | 4 | Scraper bracket | D |

# Hitch

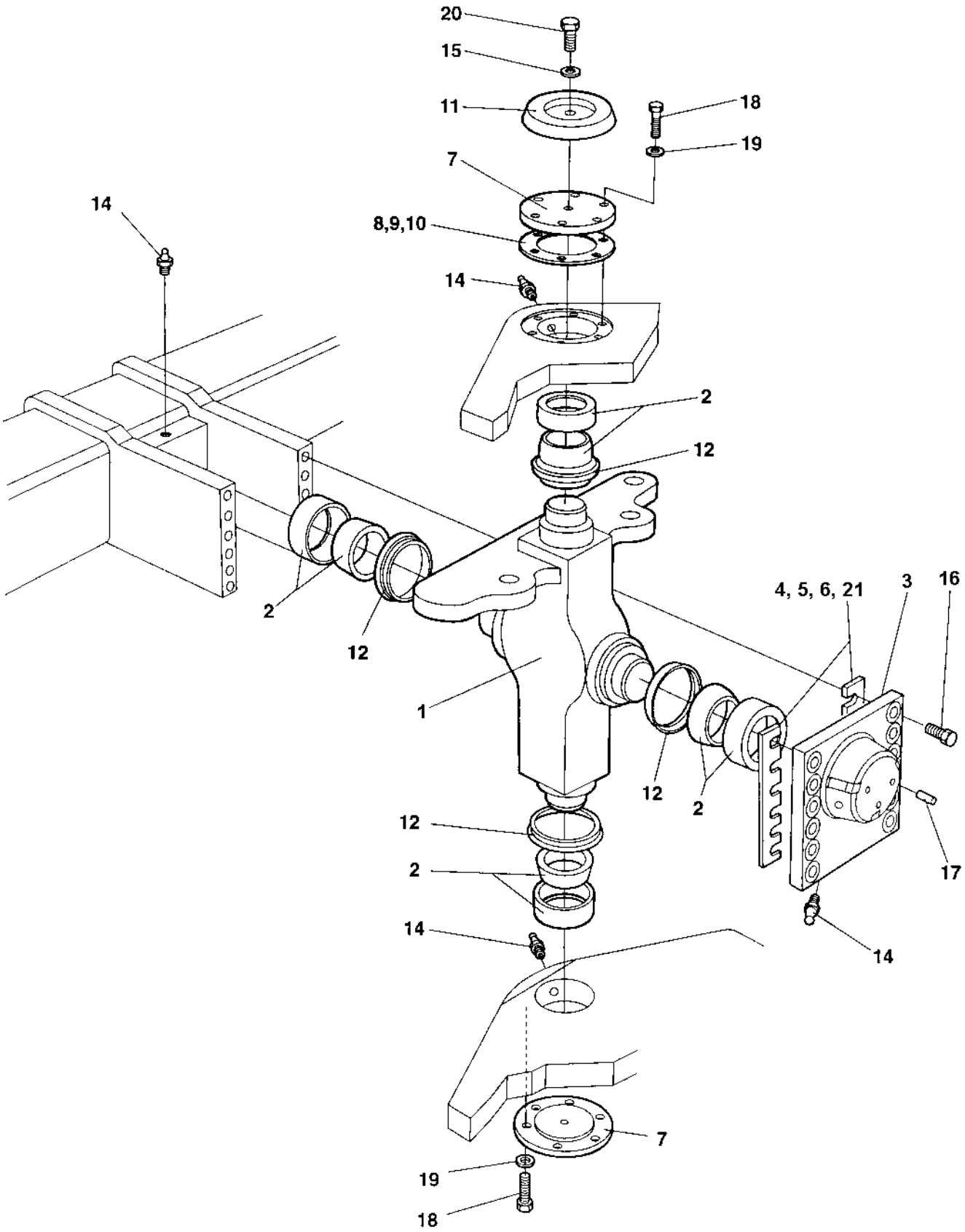
20
15
11
18
19
7
8,9,10
14
14
2
12
2
12
1
4, 5, 6, 21
3
16
12
2
12
2
14
17
14
7
19
18

## Hitch

| Item | Part No | Rem | Qty | Description | | Code |
|---|---|---|---|---|---|---|
| 1 | 4700374900 | | 1 | Hitch | | D |
| 2 | 4700100040 | | 4 | Axial ball bearing | | B |
| 3 | 4700373421 | | 1 | Bearing cover | | D |
| 4 | 4700345871 | N | | Shim | T=1,0 mm | C |
| 5 | 4700345872 | N | | Shim | T=0,35 mm | C |
| 6 | 4700345873 | N | | Shim | T=0,10 mm | C |
| 7 | 4700337042 | | 2 | Bearing cover | | D |
| 8 | 4700337045 | N | | Shim | T=1,0 mm | C |
| 9 | 4700345874 | N | | Shim | T=0,35 mm | C |
| 10 | 4700345875 | N | | Shim | T=0,10 mm | C |
| 11 | 4700343159 | | 1 | Cover | | D |
| 12 | 4700167032 | | 4 | Lip-type oil seal | | C |
| 14 | 4700926214 | | 4 | Grease fitting | | C |
| 15 | 4700904229 | | 1 | Steel plain washer 8,4x16x1,5 | | C |
| 16 | 4700500287 | | 12 | Screw M20x80 10,9 | | C |
| 17 | 4700910995 | | 3 | Stop screw | | C |
| 18 | 4700500037 | | 12 | Screw | | C |
| 19 | 4700904231 | | 12 | Washer 13x24x2 300 HV | | C |
| 20 | 4700500018 | | 1 | Screw M8-1,25x12 8,8 | | C |
| 21 | 4700380993 | N | | Shim | T = 2,0 mm | C |
| | 4700384498 | N | | Shim | T = 0,15 mm | C |

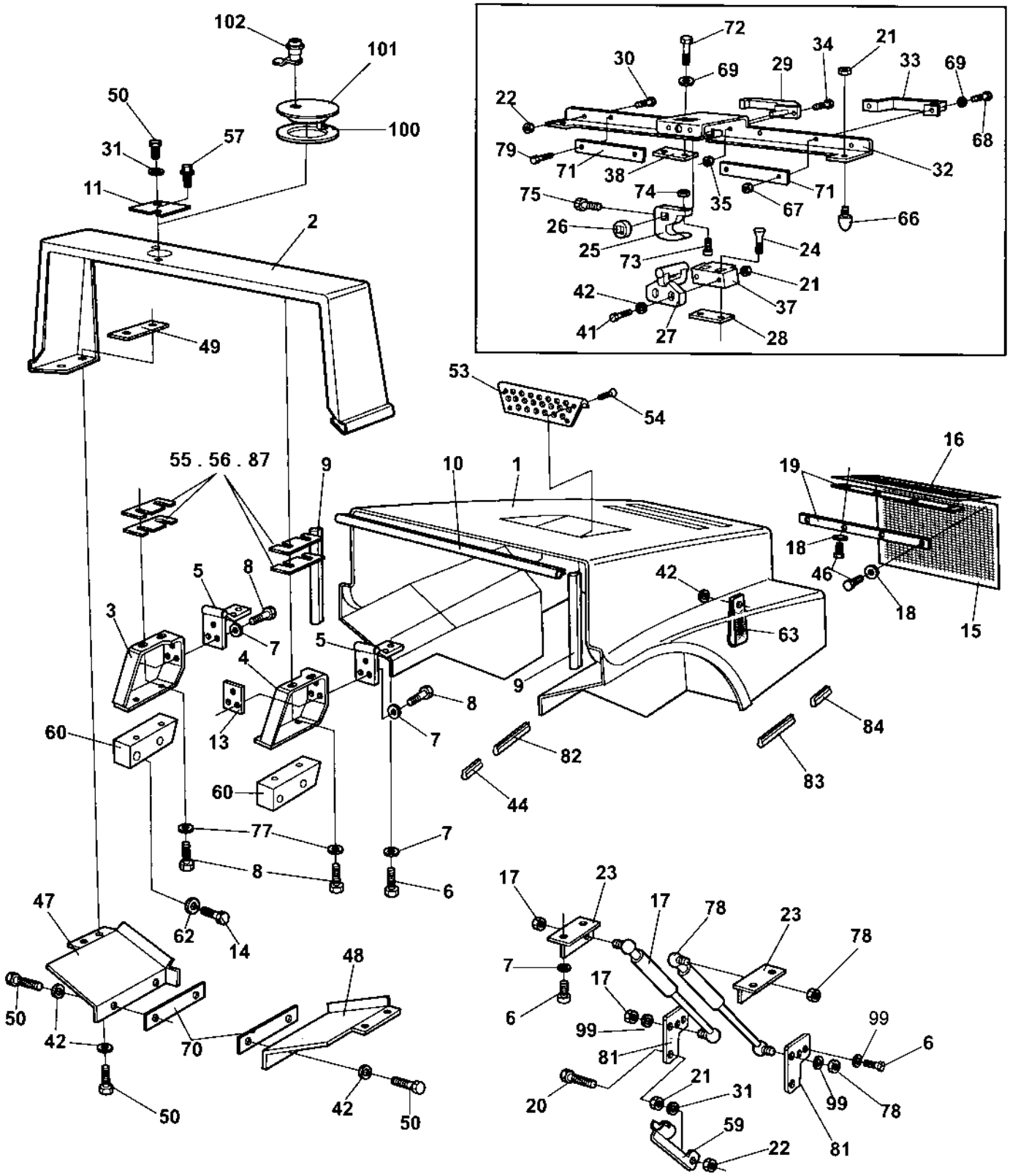
102
101
100
50
57
31
11
2
49
72
30
69
29
34
21
33
69
22
68
79
71
38
32
75
74
35
71
67
26
66
25
73
24
21
42
37
41
27
28
53
54
16
19
18
46
18
15
55 . 56 . 87
9
10
1
42
63
5
8
3
7
5
4
8
9
84
60
13
7
82
83
44
60
77
7
8
6
47
62
14
48
50
42
70
42
50
50
17
23
17
78
23
78
7
17
6
99
81
99
6
21
31
20
99
78
59
22
81

## Structure

| Item | Part No | Rem | Qty | Description | Code |
|---|---|---|---|---|---|
| 1 | 4700394882 | | 1 | Engine hood | |
| 2 | 4700385152 | | 1 | Protecting cover | D |
| 3 | 4700374797 | A | 1 | Clamp | D |
| 4 | 4700374798 | B | 1 | Clamp | D |
| 5 | 4700371366 | | 2 | Hinge | D |
| 6 | 4700500028 | | 14 | Screw | C |
| 7 | 4700904557 | | 13 | Steel plain washer | C |
| 8 | 4700500030 | | 7 | Screw M10x035H 8.8 A3K | C |
| 9 | 4700902166 | C | 2XL | Edge trim | D |
| 10 | 4700902166 | D | 1XL | Edge trim | D |
| 11 | 4700373955 | | 1 | Cover | D |
| 13 | 4700374799 | | 1 | Holder plate | C |
| 14 | 4700500133 | | 4 | Screw | C |
| 15 | 4700375121 | | 1 | Grid | D |
| 16 | 4700374160 | | 1 | Grid | D |
| 17 | 4700382384 | Q | 1 | Gas spring | B |
| | 4700382387 | S | 1 | Gas spring | B |
| 18 | 4700927974 | | 16 | Washer | C |
| 19 | 4700202047 | E | NXL | Rubber strip | D |
| 20 | 4700904241 | | 1 | Screw | C |
| 21 | 4700570005 | | 5 | Nut M8 | C |
| 22 | 4700902286 | | 3 | Hexagon lock nut with flange | C |
| 23 | 4700372608 | | 2 | Bracket | D |
| 24 | 4700903732 | | 2 | Screw | |
| 25 | 4700382130 | | 1 | Hook | |
| 26 | 4700382335 | | 1 | Spacer sleeve | |
| 27 | 4700382131 | | 1 | Lock clamp | |
| 28 | 4700380109 | | 1 | Holder | D |
| 29 | 4700382165 | | 1 | Locking handle | |
| | 4700902866 | | 1 | . Key Marked "455" | |
| 30 | 4700927637 | | 2 | Hexagon socket countersunk screw | D |
| 31 | 4700904556 | | 2 | Washer 8,4x16x3,0 | C |
| 32 | 4700382129 | | 1 | Holder plate | D |
| 33 | 4700904874 | | 1 | Grab handle | D |
| 34 | 4700535011 | | 2 | Screw | D |
| 35 | 4700902284 | | 2 | Nut M5 | C |
| 37 | 4700382132 | | 1 | Holder | D |
| 38 | 4700382336 | | 1 | Holder | D |
| 41 | 4700500026 | | 2 | Screw M8-1,25x60 8,8 | |
| 42 | 4700904640 | | 11 | Washer 8,4x22x3 | C |
| 44 | 4700902166 | G | 1XL | Edge trim | D |
| 46 | 4700904244 | | 14 | Screw | |
| 47 | 4700373204 | A | 1 | Holder plate | D |
| 48 | 4700373203 | B | 1 | Holder plate | D |
| 49 | 4700373309 | | 2 | Holder plate | D |
| 50 | 4700500021 | | 9 | Screw M8-1,25x25 8.8 | C |
| 53 | 4700372575 | | 1 | Grid | D |

A) Right
B) Left
C) L = 0.940 m
D) L = 0.630 m
E) Total length = 4.910 m
G) L = 0.055 m
Q) Right side
S) With noise suppression mounted, Option

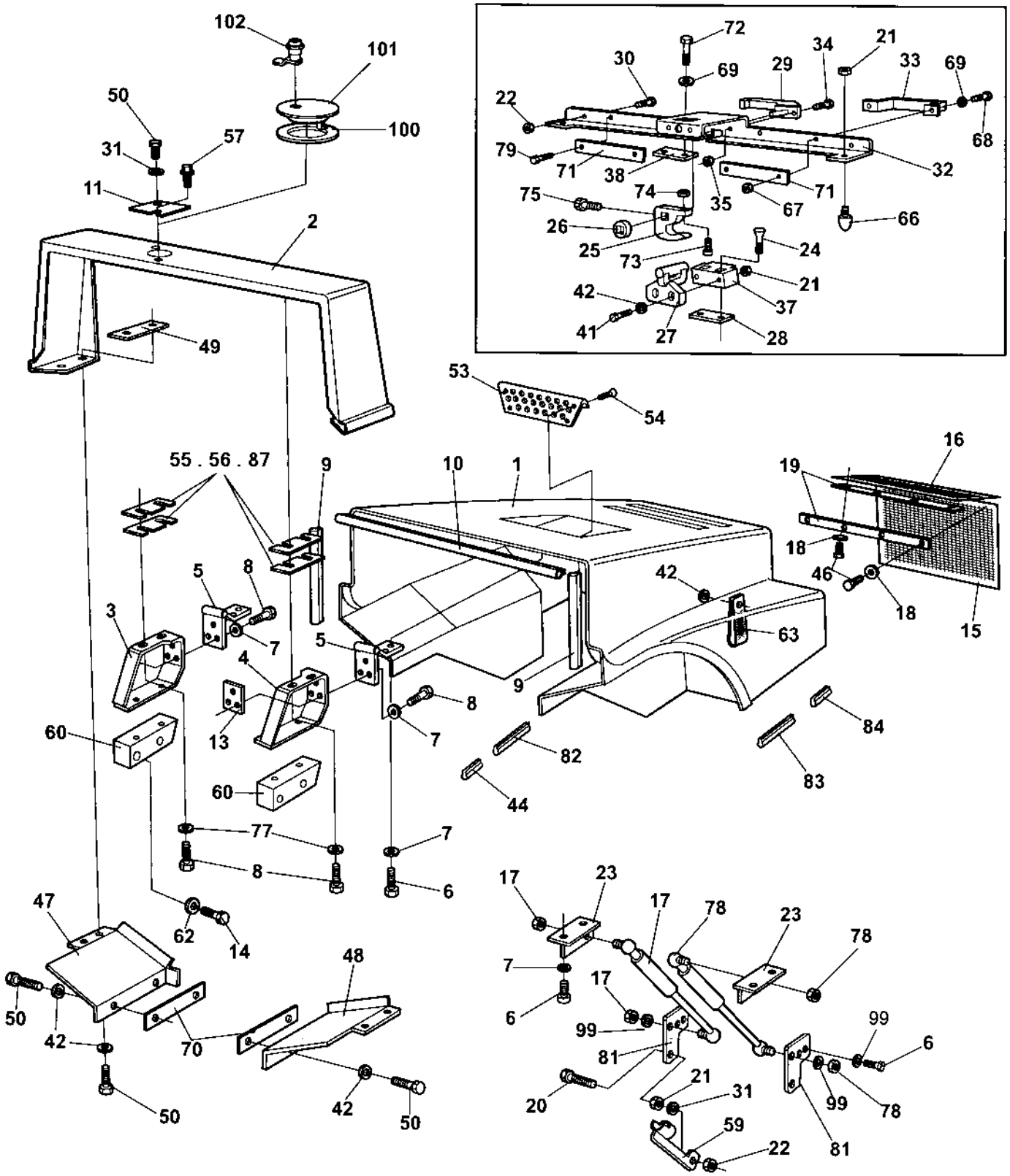
102
101
100
50
57
31
11
2
49
72
30
69
29
34
21
33
69
22
68
79
71
38
32
75
74
35
71
67
26
66
25
73
24
21
42
37
41
27
28
53
54
16
19
18
46
18
15
55 . 56 . 87
9
10
1
42
63
5
8
3
7
5
4
8
9
84
60
13
7
82
83
44
60
77
7
8
6
47
62
14
48
50
42
70
42
50
50
17
23
17
78
23
78
7
17
6
99
81
99
6
21
31
20
99
78
59
22
81

## Structure

| Item | Part No | Rem | Qty | Description | Code |
|---|---|---|---|---|---|
| 54 | 4700901767 | | 4 | Screw ST3,5x9,5 Black | |
| 55 | 4700373956 | | N | Shim | C |
| 56 | 4700373957 | | N | Shim | C |
| 57 | 4700500505 | | 2 | Screw M8x20 8.8 | C |
| 59 | 4700382382 | | 1 | Safety rod | |
| 60 | 4700381989 | | 2 | Holder | D |
| 62 | 4700904231 | | 4 | Washer 13x24x2 300 HV | C |
| 63 | 4700374854 | | 1 | Grab handle | D |
| 66 | 4700925629 | | 2 | Shock absorber | |
| 67 | 4700902285 | | 2 | Hexagon lock nut with flange | C |
| 68 | 4700500088 | | 2 | Screw M6x40 | |
| 69 | 4700904228 | | 4 | Washer 6,4x12x1,5 | C |
| 70 | 4700374339 | | 2 | Spacer | D |
| 71 | 4700382355 | | 2 | Holder plate | D |
| 72 | 4700500013 | | 2 | Screw M6-1x16 8,8 | C |
| 73 | 4700500040 | | 1 | Screw M6-1x20 8,8 | C |
| 74 | 4700570004 | | 1 | Nut M6X1,00 -8 A2K | C |
| 75 | 4700500018 | | 1 | Screw M8-1,25x12 8,8 | C |
| 77 | 4700904567 | | 4 | Washer 10,5x28x6 HB305 | C |
| 78 | 4700382384 | R | 1 | Gas spring | B |
| | 4700382387 | S | 1 | Gas spring | B |
| 79 | 4700541507 | | 2 | Screw | D |
| 81 | 4700394993 | | 1 | Metal part | D |
| 82 | 4700902166 | T | 1XL | Edge trim | D |
| 83 | 4700902166 | U | 1XL | Edge trim | D |
| 84 | 4700902166 | V | 1XL | Edge trim | D |
| 87 | 4812110773 | | N | Shim | |
| 99 | 4700904230 | | 8 | Steel plain washer | C |
| 100 | 4700375681 | K | 1 | Gasket | D |
| 101 | 4700375678 | K | 1 | Cover | D |
| 102 | 4700372658 | K | 1 | Lock | D |
| | 4700902866 | | 1 | . Key Marked "455" | |

K) Option
R) Left side
S) With noise suppression mounted, Option
T) L=0,300M
U) L=0,250M
V) L=0,050M

## Noise suppressed hood, air inlet Option

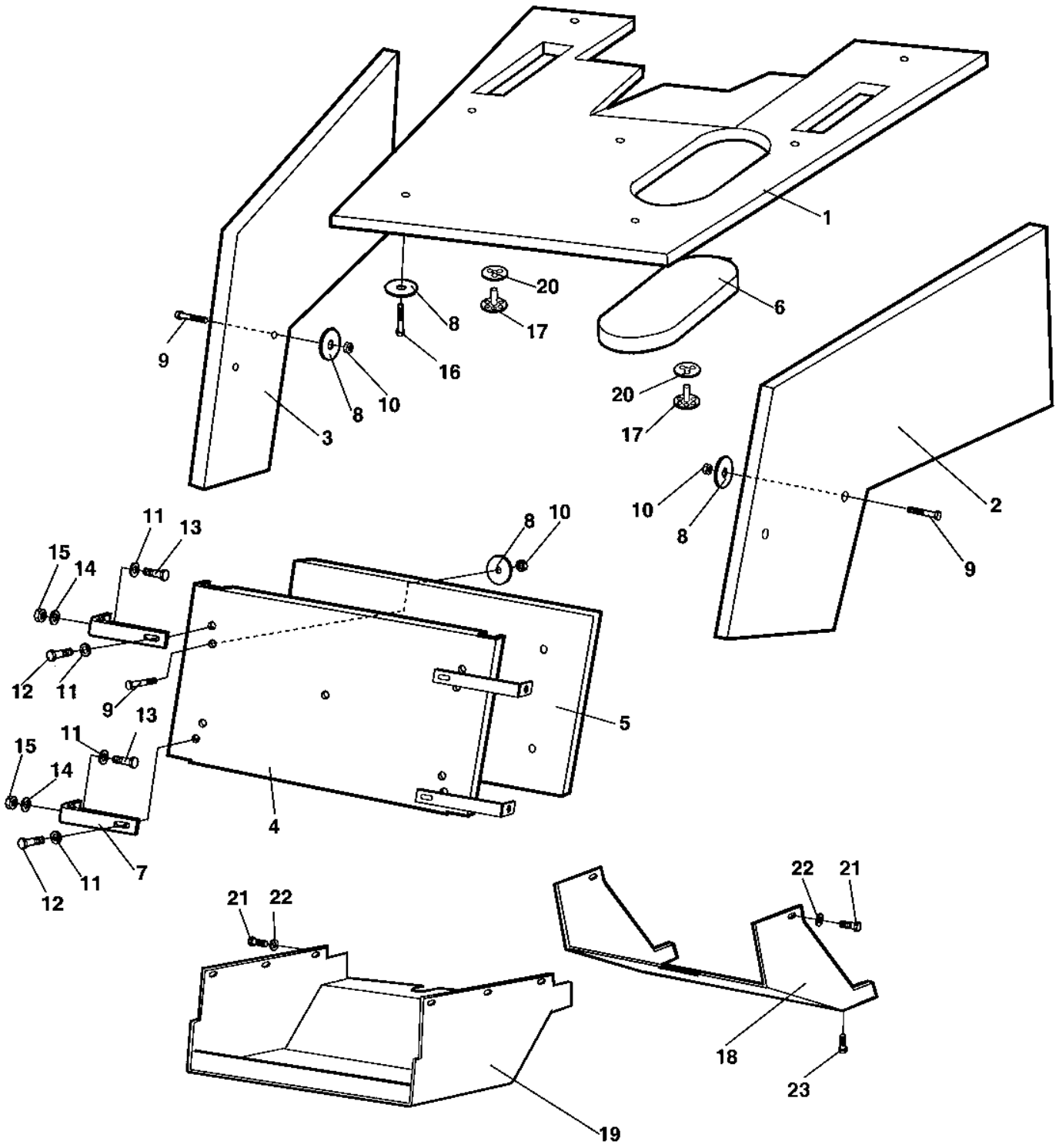

## Noise suppressed hood, air inlet Option

| Item | Part No | Rem | Qty | Description | Code |
|---|---|---|---|---|---|
| 1 | 4700387738 | | 1 | Absorbent | D |
| 2 | 4700387736 | | 1 | Absorbent | D |
| 3 | 4700387737 | | 1 | Absorbent | D |
| 4 | 4700387519 | | 1 | Noise suppression plate | D |
| 5 | 4700387520 | | 1 | Absorbent | D |
| 6 | 4700374559 | | 1 | Absorbent | D |
| 7 | 4700374795 | | 4 | Holder | D |
| 8 | 4700904355 | | 16 | Washer 0,7 x 80 | |
| 9 | 4700904209 | | 9 | Screw | C |
| 10 | 4700586002 | | 9 | Lock nut M6 -8 | C |
| 11 | 4700904640 | | 8 | Washer 8,4x22x3 | C |
| 12 | 4700500053 | | 4 | Screw M8x20H 8.8 | C |
| 13 | 4700500022 | | 4 | Screw M8x30H 8.8 A2K | C |
| 14 | 4700601003 | | 4 | Washer 8,4x25x2 | C |
| 15 | 4700586003 | | 4 | Lock nut M8 | C |
| 16 | 4700904356 | | 7 | Screw 5 x 38 | |
| 17 | 4700791233 | | 3 | Holder | D |
| 18 | 4700374660 | | 1 | Air leading plate | D |
| 19 | 4700374659 | | 1 | Air leading plate | D |
| 20 | 4700791234 | | 3 | Insulating washer | C |
| 21 | 4700500053 | | 6 | Screw M8x20H 8.8 | C |
| 22 | 4700904640 | | 6 | Washer 8,4x22x3 | C |
| 23 | 4700500030 | | 2 | Screw M10x035H 8.8 A3K | C |

## Covers mount

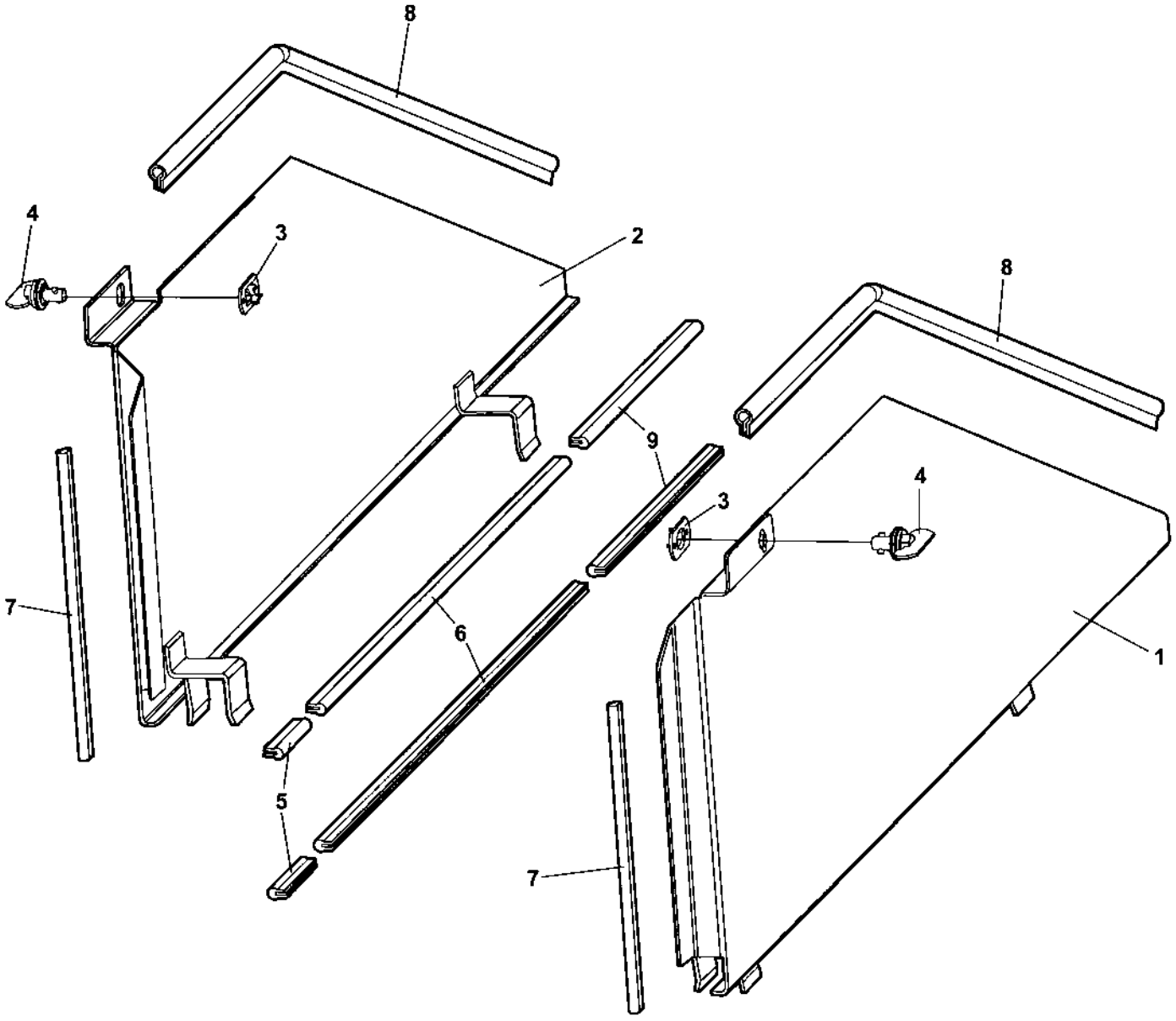

## Covers mount

| Item | Part No | Rem | Qty | Description | Code |
|---|---|---|---|---|---|
| 1 | 4700374142 | | 1 | Cover, left | D |
| 2 | 4700374145 | | 1 | Cover, right | D |
| 3 | 4700926985 | | 2 | Quick lock washer | C |
| 4 | 4700904075 | | 2 | Quick lock | |
| 5 | 4700202056 | A | 2XL | Edge trim | D |
| 6 | 4700202056 | B | 2XL | Edge trim | D |
| 7 | 4700202056 | C | 2XL | Edge trim | D |
| 8 | 4700202056 | D | 2XL | Edge trim | D |
| 9 | 4700202056 | E | 2XL | Edge trim | D |

A) L=0,140M
B) L=0,610M
C) L=0,325M
D) L=0,900M
E) L=0,170M

## Drum

| Item | Part No | Rem | Qty | Description | Code |
|---|---|---|---|---|---|
| 10 | | | | **Drum ( Page 50 )** | |

## Drum

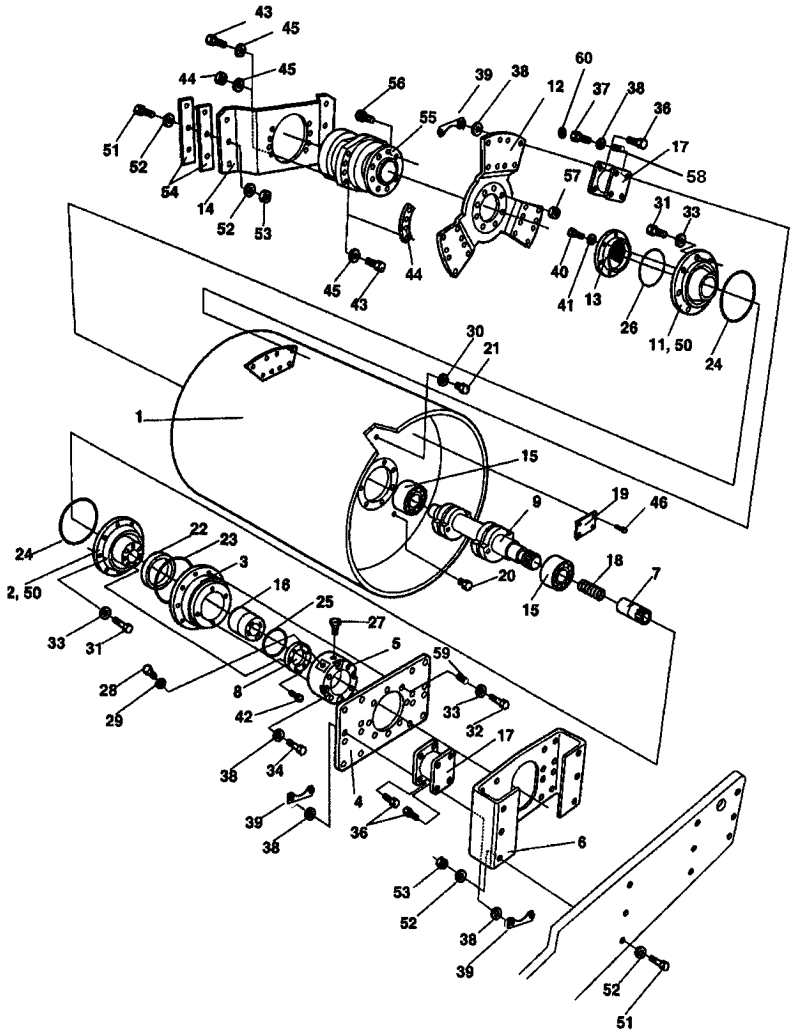
43
45
45
44
56
39
38
12
60
37
38
36
17
58
55
51
52
54
14
52
53
57
31
33
40
41
13
26
11, 50
24
45
43
44
30
21
1
15
19
46
9
24
22
23
3
2, 50
16
25
27
5
59
18
7
20
15
33
31
28
29
8
42
33
32
17
38
34
4
36
39
38
6
53
52
38
39
52
51

## Drum

| Item | Part No | Rem | Qty | Description | Code |
|---|---|---|---|---|---|
| 1 | 4700372634 | | 1 | Drum | D |
| 2 | 4700374836 | | 1 | Bearing housing | D |
| 3 | 4700343318 | | 1 | Bearing housing | D |
| 4 | 4700343322 | | 1 | Holder plate | D |
| 5 | 4700343561 | | 1 | Motor adapter | D |
| 6 | 4700372641 | | 1 | Holder plate | D |
| 7 | 4700370365 | | 1 | Splined sleeve | D |
| 8 | 4700343462 | | 1 | Bearing cover | D |
| 9 | 4700372640 | | 1 | Eccentric | D |
| 11 | 4700374907 | | 1 | Bearing housing | D |
| 12 | 4700386286 | | 1 | Drive disc | D |
| 13 | 4700343907 | | 1 | Bearing cover | D |
| 14 | 4700372639 | | 1 | Holder plate | D |
| 15 | 4700114036 | | 2 | Spherical roller bearing | B |
| 16 | 4700116041 | | 1 | Taper roller bearing | B |
| 17 | 4700336742 | | 10 | Shock absorber | B |
| 18 | 4700349715 | | 1 | Spring | D |
| 19 | 4700343801 | | 1 | Sign plate | D |
| 20 | 4700922552 | | 1 | Oil level glass | B |
| 21 | 4700343744 | | 1 | Magnetic plug | C |
| 22 | 4700167023 | | 1 | Seal ring | B |
| 23 | 4700929447 | | 1 | V-ring | B |
| 24 | 4700160344 | | 2 | O-ring 70 | C |
| 25 | 4700160105 | | 1 | O-ring 70 | C |
| 26 | 4700160362 | | 1 | O-ring | D |
| 27 | 4700926736 | | 1 | Breather | C |
| 28 | 4700370231 | | 1 | Plug | C |
| 29 | 4700162018 | | 1 | Sealing | B |
| 30 | 4700162017 | | 1 | Seal ring | B |
| 31 | 4700500076 | | 16 | Screw M16x55 | D |
| 32 | 4811000109 | | 8 | Screw | D |
| 33 | 4700904232 | | 24 | Washer | C |
| 34 | 4700500133 | | 4 | Screw | C |
| 36 | 4812110444 | | 56 | Hexagon head screw w Tuflok M12x40H 8.8 A3K | C |
| 37 | 4812110815 | | 24 | Hexagon head screw M12x45H 8.8 | C |
| 38 | 4700904231 | | 84 | Washer 13x24x2 300 HV | C |
| 39 | 4700383436 | | 28 | Holder | D |
| 40 | 4700500028 | | 6 | Screw | C |
| 41 | 4700904230 | | 6 | Steel plain washer | C |
| 42 | 4700508019 | | 8 | Screw M8x25 8.8 | C |
| 43 | 4700500208 | | 8 | Screw M20x80 | D |
| 44 | 4700570015 | | 8 | Nut M20 | D |
| | 4700385720 | 2 | 2 | Mounting plate | D |
| 45 | 4700904233 | | 16 | Washer 21x36x3 | C |
| 46 | 4700527002 | | 4 | Drive screw | C |
| 50 | 4700900775 | | 6 | Plug | C |
| 51 | 4700500209 | | 12 | Screw M20-2,5x90 8,8 | D |
| 52 | 4700904233 | | 24 | Washer 21x36x3 | C |
| 53 | 4700586022 | | 12 | Lock nut M20-8 | C |
| 54 | 4700815056 | | N | Shim | D |
| 55 | | 1 | 1 | Hydraulic motor | |
| 56 | | 1 | 10 | . Bolt | |
| 57 | | 1 | 10 | . Nut | |
| 58 | 4812110346 | | 24 | Spacer | C |
| 59 | 4700376688 | | 8 | Spacer sleeve | D |
| 60 | 4811000127 | | 24 | Cover cap | B |

1) See Hydraulic pages - Propulsion system, Front.
2) Replaces 8 pcs of nuts P/N 4700570015.

## Engine

| Item | Part No | Rem | Qty | Description | Code |
|---|---|---|---|---|---|
| 10 | | | | **Engine Cummins QSB3.3 ( Page 54 )** | |
| 20 | | | | **Cooling system ( Page 56 )** | |
| 30 | | | | **Combustion air system ( Page 60 )** | |
| 40 | | | | **Fuel system ( Page 62 )** | |
| 50 | | | | **Exhaust system ( Page 64 )** | |
| 60 | | | | **Exhaust pipe, Lenghthened Option ( Page 66 )** | |

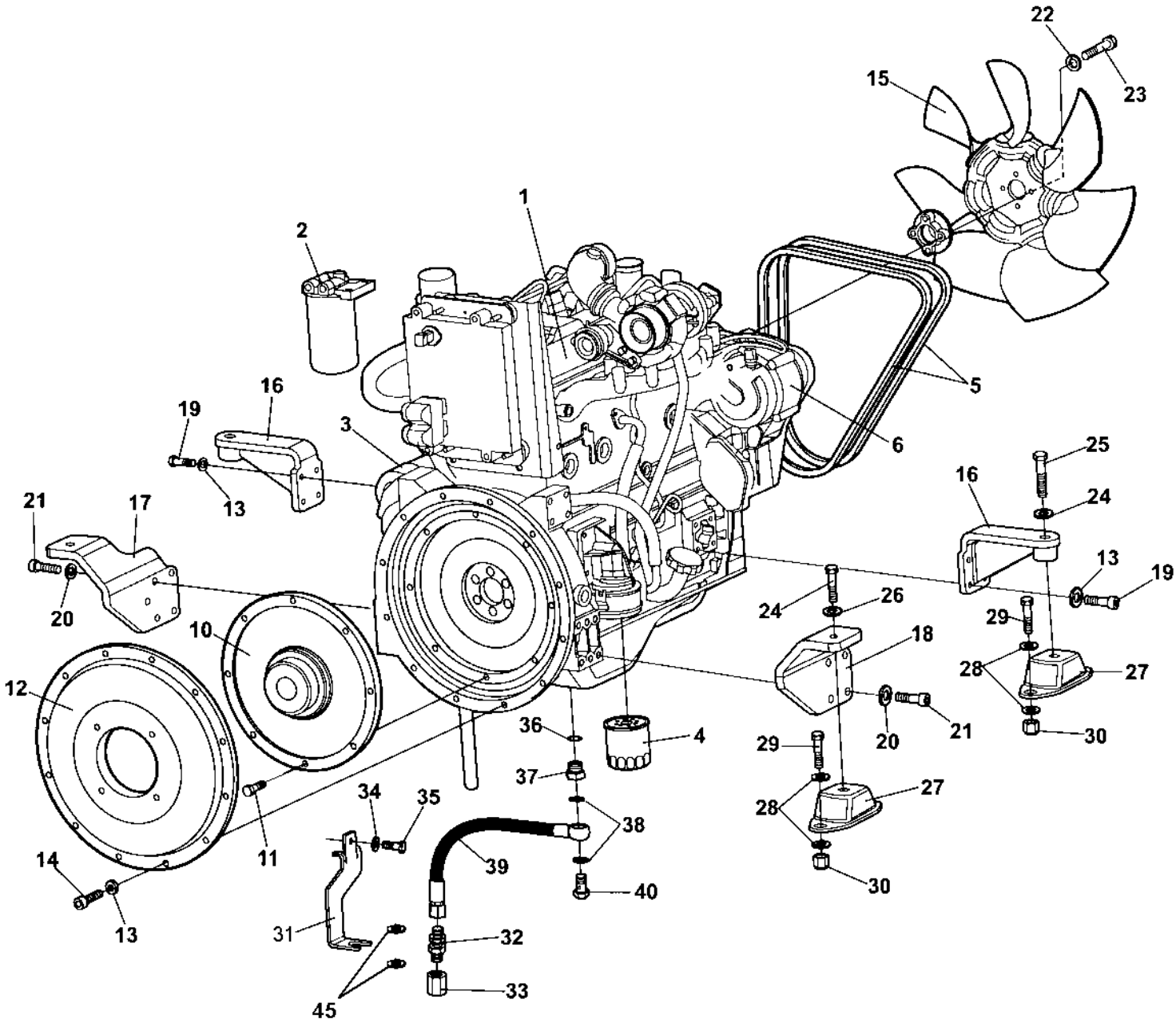
22
23
15
1
2
5
6
16
19
3
13
21
17
20
10
12
11
14
13
34
35
31
45
36
37
4
38
39
40
32
33
24
26
18
29
28
27
30
20
21
16
25
24
13
19
29
28
27
30

## Engine Cummins QSB3.3

| Item | Part No | Rem | Qty | Description | Code |
|---|---|---|---|---|---|
| 1 | 4700394347 | | 1 | Engine Cummins QSB3.3 | D |
| 2 | 4700950302 | | 1 | . Fuel filter element | A |
| 3 | 4700950303 | | 1 | . Starter | D |
| 4 | 4700939068 | | 1 | . Oil filter element | A |
| 5 | 4700950315 | | 1 | . V-belt | A |
| 6 | 4700950304 | | 1 | . Alternator | C |
| 10 | 4700370229 | | 1 | Coupling, cpl | D |
| 11 | 4700500030 | | 8 | Screw M10x035H 8.8 A3K | C |
| 12 | 4700359403 | | 1 | Pump bracket | D |
| 13 | 4700904637 | | 20 | Washer | C |
| 14 | 4700508029 | | 12 | Screw M10-1,5x30H 8,8 | C |
| 15 | 4700395957 | | 1 | Fan | D |
| 16 | 4700394610 | | 2 | Engine bracket | D |
| 17 | 4700394611 | | 1 | Engine bracket | D |
| 18 | 4700394612 | | 1 | Engine bracket | D |
| 19 | 4700500029 | | 8 | Hexagon head screw | C |
| 20 | 4700904638 | | 8 | Washer 12x22x2 | C |
| 21 | 4700508079 | | 8 | Screw M12-1,75x35H 8,8 | |
| 22 | 4700904229 | | 4 | Steel plain washer 8,4x16x1,5 | C |
| 23 | 4700500025 | | 4 | Screw M8-1,25x50 8,8 | D |
| 24 | 4700904232 | | 4 | Washer | C |
| 25 | 4700500165 | | 2 | Screw M16-2,0x75 8,8 | D |
| 26 | 4700500076 | | 2 | Screw M16x55 | D |
| 27 | 4700387129 | | 4 | Shock absorber | D |
| 28 | 4700904703 | | 16 | Washer | B |
| 29 | 4700500194 | | 8 | Screw | C |
| 30 | 4700586019 | | 8 | Lock nut | C |
| 31 | 4700384721 | | 1 | Bracket | D |
| 32 | 4700230515 | | 1 | Connector | C |
| 33 | 4700330383 | | 1 | Cap hydraulic | |
| 34 | 4700904640 | | 1 | Washer 8,4x22x3 | C |
| 35 | 4700500100 | | 1 | Screw | C |
| 36 | 4700162019 | | 1 | Seal ring | D |
| 37 | 4700379480 | | 1 | Reducer | |
| 38 | 4700330331 | | 2 | Washer 18,2x23,9x1,5 | C |
| 39 | 4700393116 | | 1 | Hose | D |
| 40 | 4700904292 | | 1 | Hollow screw | |
| 45 | 4700904793 | | 1 | Washer 19x34x3 | C |

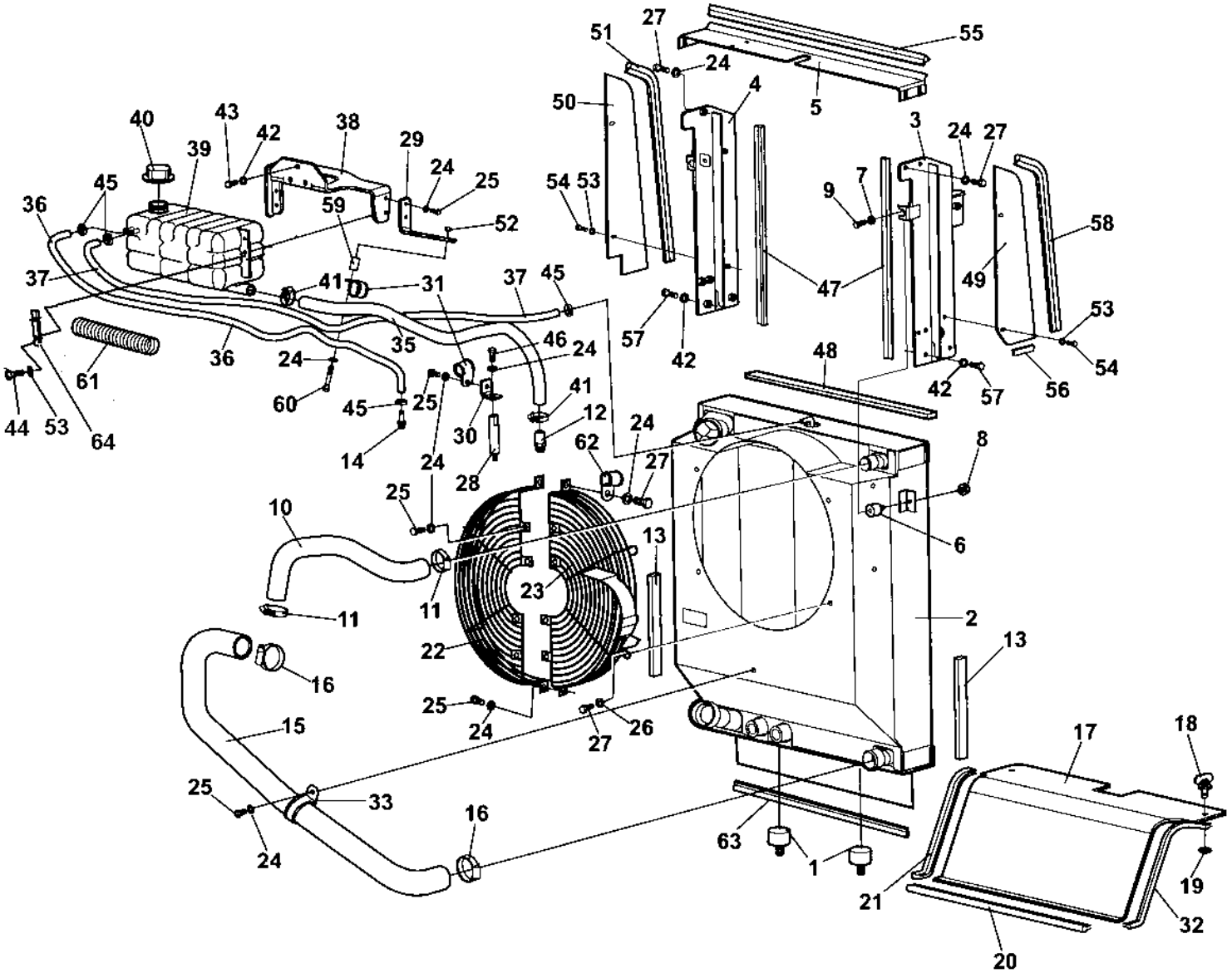
51
27
55
24
4
5
50
3
24
27
40
43
42
38
29
39
45
36
24
25
59
54
53
9
7
58
52
37
41
31
37
45
47
49
53
57
42
48
46
24
35
36
24
61
60
45
25
41
12
30
62
24
27
14
24
28
25
10
8
6
13
23
11
11
2
22
13
16
25
24
27
26
15
17
18
25
33
16
63
1
24
21
19
32
20
44
53
64

## Cooling system

| Item | Part No | Rem | Qty | Description | Code |
|---|---|---|---|---|---|
| 1 | 4700904551 | | 2 | Shock absorber | |
| 2 | 4700394497 | | 1 | Radiator | D |
| | 4700950334 | | 1 | . Water cooler | D |
| | 4700950335 | | 1 | . Oil cooler | D |
| | 4700950336 | | 1 | . Combustion air cooler | D |
| | 4700950337 | | 1 | . Fan housing | D |
| 3 | 4700394629 | | 1 | Cooler frame, left | D |
| 4 | 4700394630 | | 1 | Cooler frame, right | D |
| 5 | 4700394631 | | 1 | Cooler frame, top | D |
| 6 | 4700371774 | | 2 | Shock absorber | D |
| 7 | 4700904639 | | 2 | Washer 6,7x14x1,5 | C |
| 8 | 4700902285 | | 2 | Hexagon lock nut with flange | C |
| 9 | 4700500012 | | 2 | Screw M6x12 | C |
| 10 | 4700394620 | | 1 | Hose | D |
| 11 | 4700313008 | | 2 | Hose clamp | D |
| 12 | | | | Not valid for this model | |
| 13 | 4700202041 | A | 2XL | Rubber strip | D |
| 14 | 4700792544 | | 1 | Connector | D |
| 15 | 4812110438 | | 1 | Coolant hose | |
| 16 | 4700313010 | | 2 | Hose clamp | C |
| 17 | 4700394863 | | 1 | Air inlet | D |
| 18 | 4700904486 | | 2 | Quick lock | |
| 19 | 4700926985 | | 2 | Quick lock washer | C |
| 20 | 4700902166 | B | 1XL | Edge trim | D |
| 21 | 4700902166 | C | 1XL | Edge trim | D |
| 22 | 4700384814 | | 1 | Fan guard | D |
| 23 | 4700385306 | | 1 | Fan guard | D |
| 24 | 4700904229 | | 17 | Steel plain washer 8,4x16x1,5 | C |
| 25 | 4700500018 | | 7 | Screw M8-1,25x12 8,8 | C |
| 26 | 4700904556 | | 4 | Washer 8,4x16x3,0 | C |
| 27 | 4700500019 | | 9 | Hexagon head screw M8x16H 8,8 | C |
| 28 | 4700393855 | | 1 | Distance screw | D |
| 29 | 4700393476 | | 1 | Bracket | D |
| 30 | 4700908136 | | 1 | Bracket | D |
| 31 | 4700921050 | | 2 | Clamp | C |
| 32 | 4700904076 | D | 1XL | Edge trim | D |
| 33 | 4700904352 | | 1 | Clamp | |
| 35 | 4812110440 | | 1 | Coolant hose | |
| 36 | 4700246069 | G | 1XL | Fuel hose 3/8" | C |
| 37 | 4700246069 | G | 1XL | Fuel hose 3/8" | C |
| 38 | 4700392170 | | 1 | Holder | D |
| 39 | 4700392313 | | 1 | Expansion tank | |
| 40 | 4700903714 | | 1 | Cap | |
| 41 | 4700313035 | | 2 | Hose clamp | D |
| 42 | 4700904230 | | 7 | Steel plain washer | C |
| 43 | 4700500030 | | 3 | Screw M10x035H 8.8 A3K | C |
| 44 | 4700500075 | | 4 | Screw M6-1,0x25 8.8 | C |

A) L = 0,25 m
B) L = 0,58 m
C) L = 0,33 m
D) L = 0,37 m
G) L = 1,56 m

# Cooling system

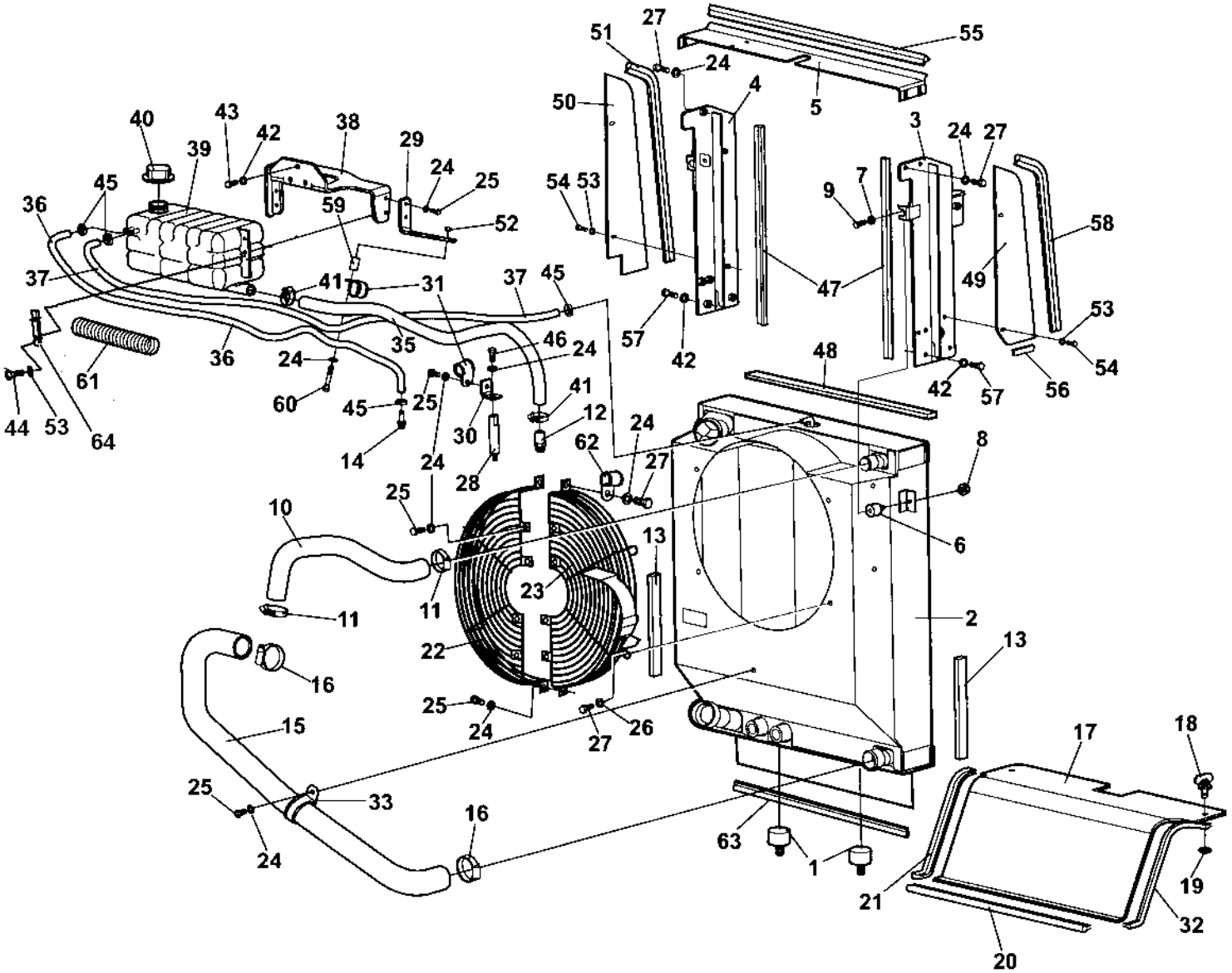

## Cooling system

| Item | Part No | Rem | Qty | Description | Code |
|---|---|---|---|---|---|
| 45 | 4700313001 | | 4 | Hose clamp | C |
| 46 | 4700500053 | | 1 | Screw M8x20H 8.8 | C |
| 47 | 4700902166 | H | 1XL | Edge trim | D |
| 48 | 4700791597 | I | 1XL | Rubber strip | |
| 49 | 4700394865 | | 1 | Air inlet | D |
| 50 | 4700394998 | | 1 | Air inlet | D |
| 51 | 4700904076 | J | 1XL | Edge trim | D |
| 52 | 4700586003 | | 1 | Lock nut M8 | C |
| 53 | 4700904228 | | 8 | Washer 6,4x12x1,5 | C |
| 54 | 4700500040 | | 6 | Screw M6-1x20 8,8 | C |
| 55 | 4700904076 | K | 1XL | Edge trim | D |
| 56 | 4700287724 | L | 1XL | Edge trim | |
| 57 | 4700500028 | | 4 | Screw | C |
| 58 | 4700904076 | M | 1XL | Edge trim | D |
| 59 | 4700357211 | | 1 | Spacer | D |
| 60 | 4700500025 | | 1 | Screw M8-1,25x50 8,8 | D |
| 61 | 4700904623 | N | 1XL | Hose guard | D |
| 62 | 4700902558 | | 1 | Clamp | D |
| 63 | 4700904076 | O | 1XL | Edge trim | D |
| 64 | 4700381413 | | 2 | Washer | |

H) L = 1,00 m
I) L = 0,71 m
J) L = 0,58 m
K) L = 0,73 m
L) L = 0,07 m
M) L = 0,52 m
N) L =0,20 m
O) L = 0,495 m

## Combustion air system

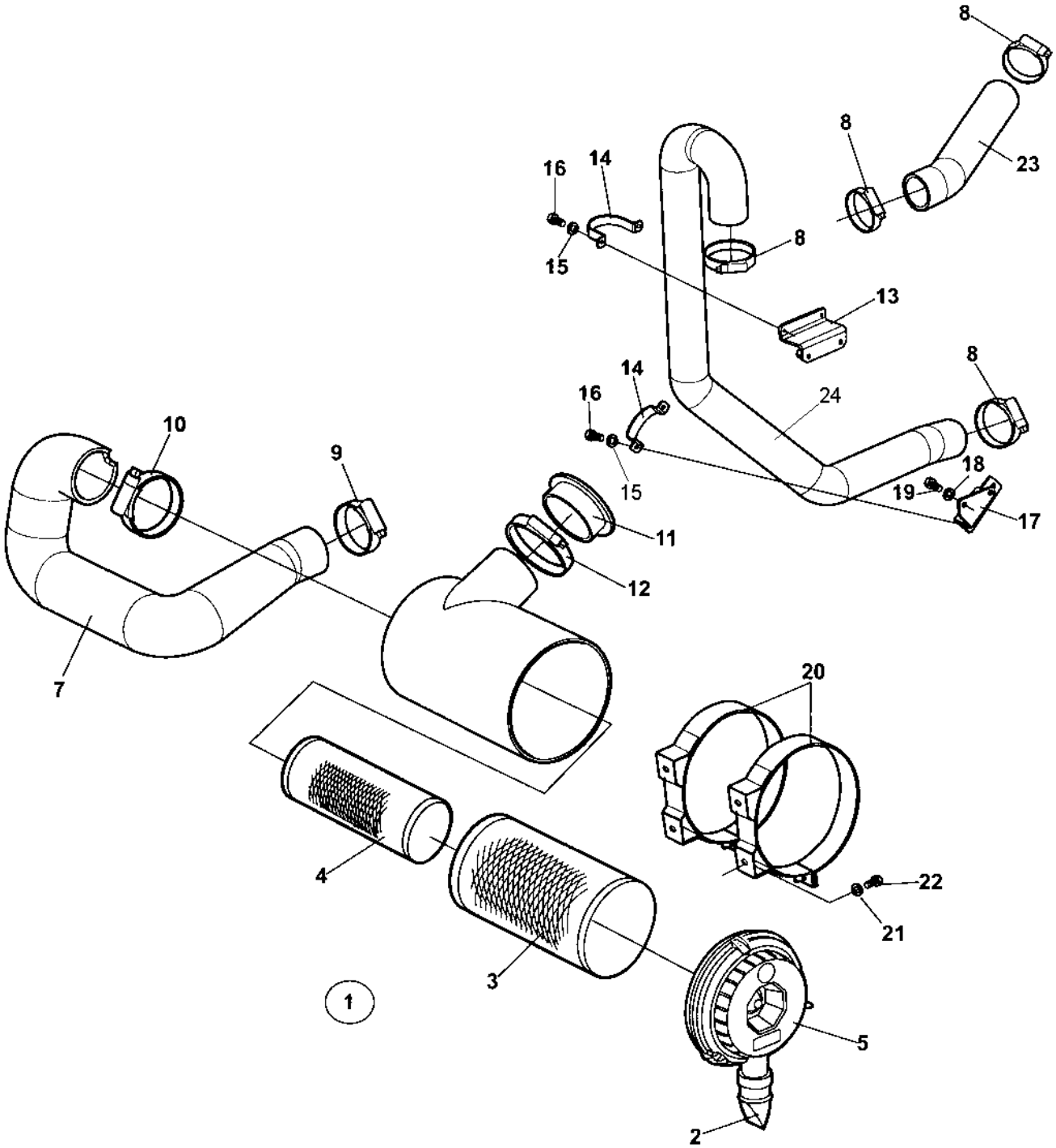

## Combustion air system

| Item | Part No | Rem | Qty | Description | Code |
|---|---|---|---|---|---|
| 1 | 4700394679 | | 1 | Air cleaner | D |
| 2 | 4700908399 | | 1 | . Vacuator valve | A |
| 3 | 4700394686 | | 1 | . Air filter element, main | A |
| 4 | 4700394687 | | 1 | . Air filter element, safety | A |
| 5 | 4700395022 | | 1 | . Cover | D |
| 7 | 4700395525 | | 1 | Air inlet hose | D |
| 8 | 4700386966 | | 4 | Hose clamp 2.3/4"-3.5/8" | B |
| 9 | 4700392810 | | 1 | Hose clamp | D |
| 10 | 4700389600 | | 1 | Hose clamp | D |
| 11 | 4700348309 | | 1 | Rubber bushing | D |
| 12 | 4700904060 | | 1 | Hose clamp | C |
| 13 | 4700394918 | | 1 | Bracket | D |
| 14 | 4700393097 | | 2 | Clamp | D |
| 15 | 4700904228 | | 4 | Washer 6,4x12x1,5 | C |
| 16 | 4700500040 | | 4 | Screw M6-1x20 8,8 | C |
| 17 | 4700394921 | | 1 | Bracket | D |
| 18 | 4700904230 | | 2 | Steel plain washer | C |
| 19 | 4700500048 | | 2 | Screw M10-1,5x20 8,8 | C |
| 20 | 4700813791 | | 2 | Mounting band | D |
| 21 | 4700904229 | | 4 | Steel plain washer 8,4x16x1,5 | C |
| 22 | 4700500019 | | 4 | Hexagon head screw M8x16H 8,8 | C |
| 23 | 4812110517 | | 1 | Charge air hose | D |
| 24 | 4700394616 | | 1 | Charge air hose | D |

## Fuel system

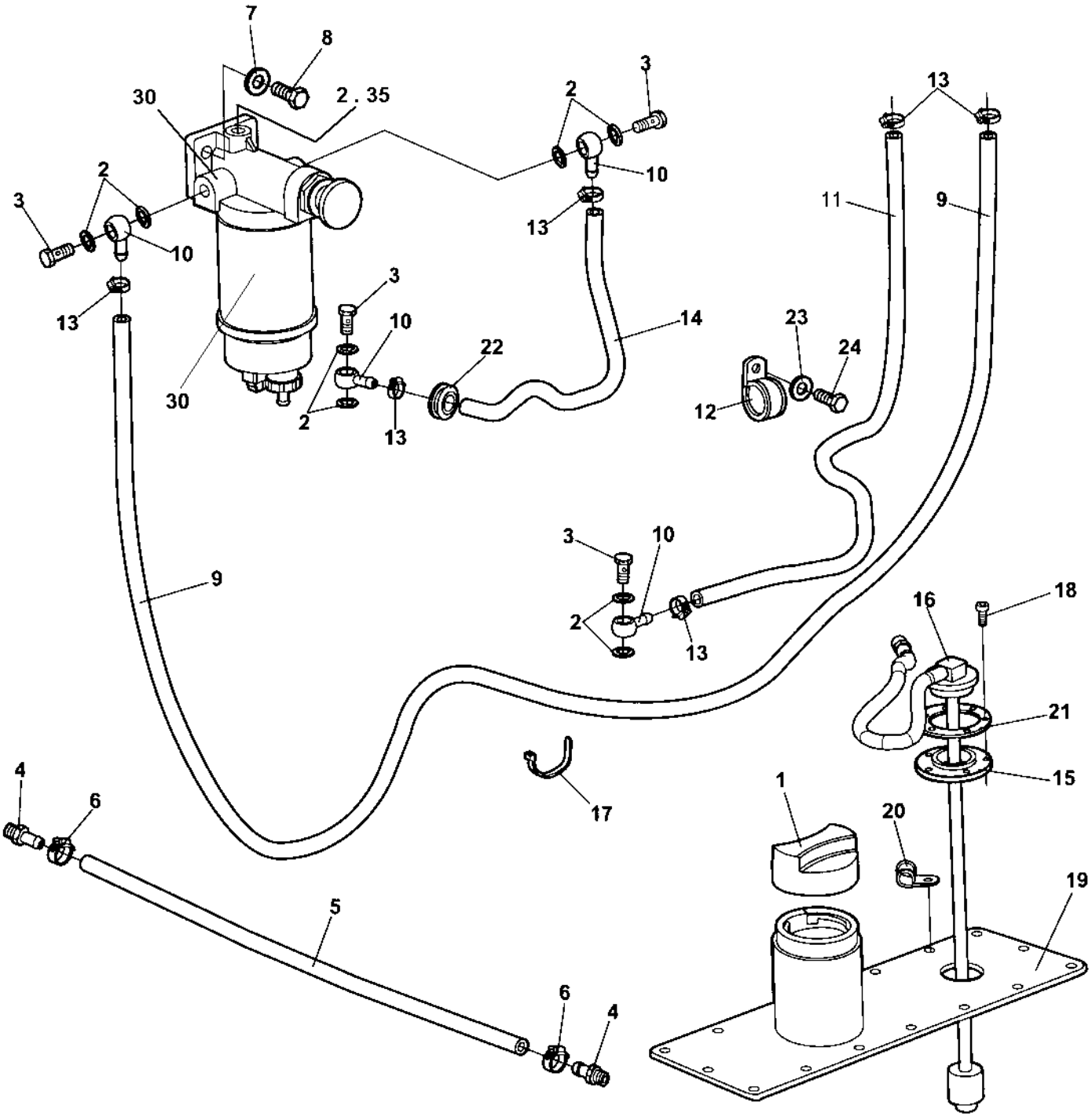
7
8
30
2 . 35
3
2
10
13
11
9
3
2
10
13
3
10
22
14
23
24
12
30
2
13
3
10
2
13
9
16
18
21
15
1
20
19
17
4
6
5
6
4

## Fuel system

| Item | Part No | Rem | Qty | Description | Code |
|---|---|---|---|---|---|
| 1 | 4700373460 | | 1 | Fuel cap | D |
| 2 | 4700747282 | | 9 | Copper washer | C |
| 3 | 4700330171 | | 4 | Hollow screw | C |
| 4 | 4700373574 | | 2 | Hose connection | D |
| 5 | 4700244054 | A | 1XL | Hose reinforced | C |
| 6 | 4700313002 | | 2 | Hose clamp 13-20 mm | |
| 7 | 4700904230 | | 2 | Steel plain washer | C |
| 8 | 4700500029 | | 2 | Hexagon head screw | C |
| 9 | 4700904985 | B | 1XL | Fuel hose | C |
| 10 | 4700330170 | | 4 | Banjo nipple | D |
| 11 | 4700904985 | C | 1XL | Fuel hose | C |
| 12 | 4700791513 | | 1 | Pipe clamp | D |
| 13 | 4700313001 | | 6 | Hose clamp | C |
| 14 | 4700904985 | D | 1XL | Fuel hose | C |
| 15 | 4700370745 | | 1 | Flange, cpl | C |
| 16 | 4700387112 | | 1 | Fuel sender | C |
| 17 | 4700313041 | | | Cable ties | B |
| 18 | 4700904206 | | 5 | Screw | C |
| 19 | 4700388186 | | 1 | Cover | D |
| 20 | 4700904346 | | 1 | Clamp | D |
| 21 | 4700372718 | | 1 | Lid | D |
| 22 | 4700903192 | | 1 | Grommet | |
| 23 | 4700904557 | | 1 | Steel plain washer | C |
| 24 | 4700500029 | | 1 | Hexagon head screw | C |
| 30 | 4812155851 | | 1 | Pre-fuel filter, cpl | |
| | 4700950301 | | 1 | . Pre-fuel filter element | A |
| 35 | 4700903190 | | 1 | Steel plug | |

A) L=0,650M
B) L=2,250M
C) L=1,050M
D) L=0,440M

# Exhaust system

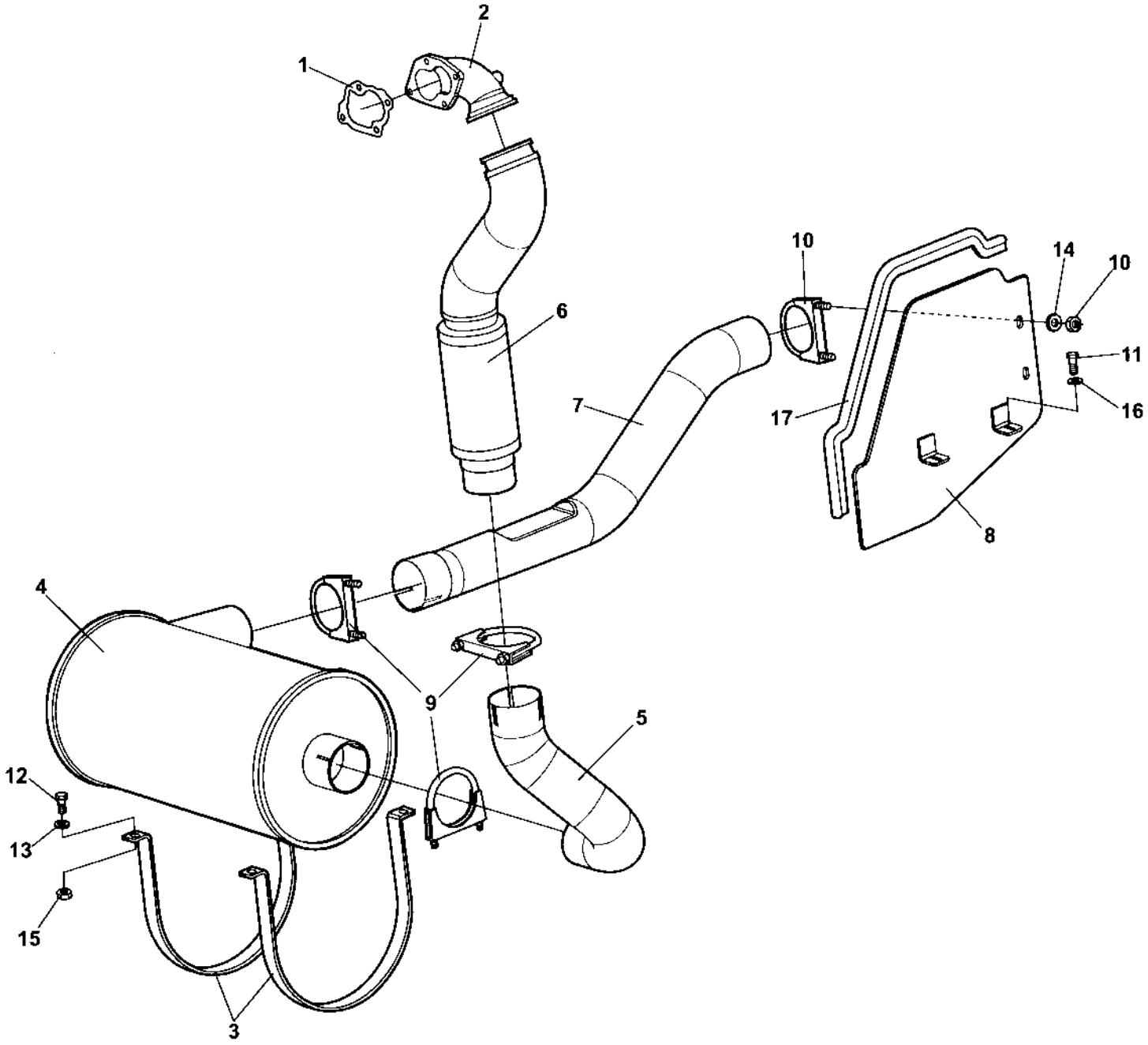

## Exhaust system

| Item | Part No | Rem | Qty | Description | Code |
|---|---|---|---|---|---|
| 1 | 4700395108 | | 1 | Gasket | D |
| 2 | 4700391962 | | 1 | Exhaust pipe | D |
| 3 | 4700373625 | | 2 | Clamp | D |
| 4 | 4700373624 | | 1 | Muffler | D |
| 5 | 4700394793 | | 1 | Exhaust pipe | D |
| 6 | 4700394618 | | 1 | Exhaust pipe | D |
| 7 | 4700394794 | | 1 | Exhaust pipe | D |
| 8 | 4700394883 | | 1 | Bracket | D |
| 9 | 4700313094 | | 3 | Pipe clamp | C |
| 10 | 4700313093 | | 1 | Pipe clamp | D |
| 11 | 4700500053 | | 2 | Screw M8x20H 8.8 | C |
| 12 | 4700500031 | | 4 | Screw M10x040 8.8 | C |
| 13 | 4700904230 | | 4 | Steel plain washer | C |
| 14 | 4700904640 | | 2 | Washer 8,4x22x3 | C |
| 15 | 4700902287 | | 4 | Nut | C |
| 16 | 4700904556 | | 2 | Washer 8,4x16x3,0 | C |
| 17 | 4700902166 | A | 1XL | Edge trim | D |

A) L=0,600M

# Exhaust pipe, Lenghthened Option

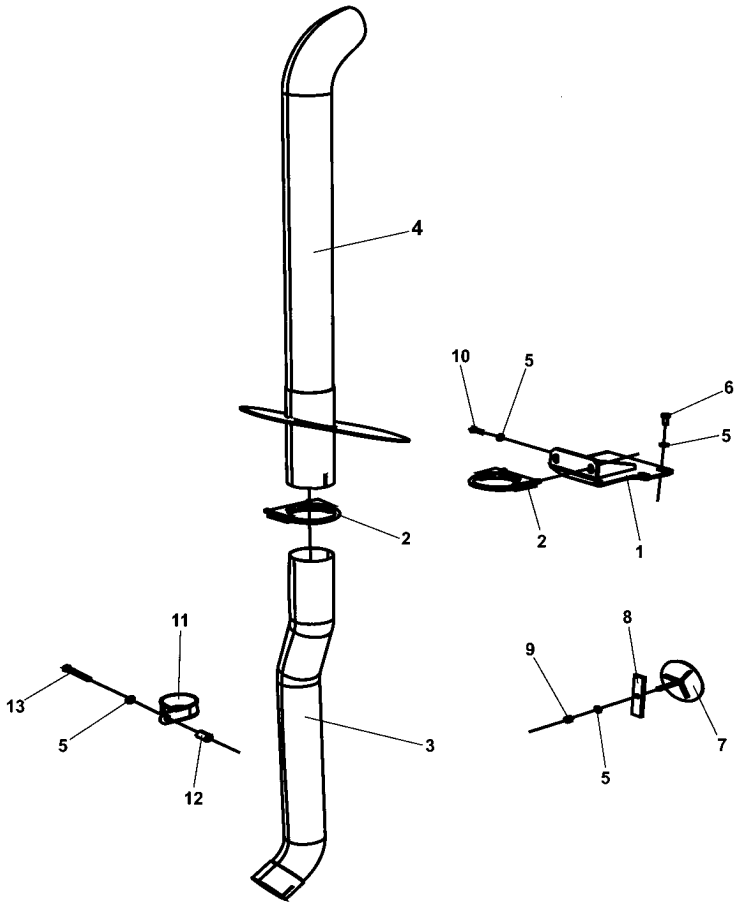

## Exhaust pipe, Lenghthened Option

| Item | Part No | Rem | Qty | Description | Code |
|---|---|---|---|---|---|
| 1 | 4700395001 | | 1 | Bracket | |
| 2 | 4700313094 | | 2 | Pipe clamp | C |
| 3 | 4700395033 | | 1 | Exhaust pipe | |
| 4 | 4700374537 | | 1 | Exhaust pipe | D |
| 5 | 4700904229 | | 6 | Steel plain washer 8,4x16x1,5 | C |
| 6 | 4700500053 | | 2 | Screw M8x20H 8.8 | C |
| 7 | 4700372722 | | 1 | Cover plate | D |
| 8 | 4700372725 | | 1 | Holder | D |
| 9 | 4700586003 | | 1 | Lock nut M8 | C |
| 10 | 4700500021 | | 2 | Screw M8-1,25x25 8.8 | C |
| 11 | 4700904352 | | 1 | Clamp | |
| 12 | 4700373507 | | 1 | Spacer | |
| 13 | 4700500189 | | 1 | Screw | C |

## Transmission

| Item | Part No | Rem | Qty | Description | Code |
|---|---|---|---|---|---|
| 25 | | | | **Rear axle and wheels ( Page 70 )** | |
| 30 | 4700383855 | | | **Rear axle Limited Slip ( Page 72 )** | |
| 40 | 4700384801 | | | **Rear axle No-spin, Option ( Page 82 )** | |

## Rear axle and wheels

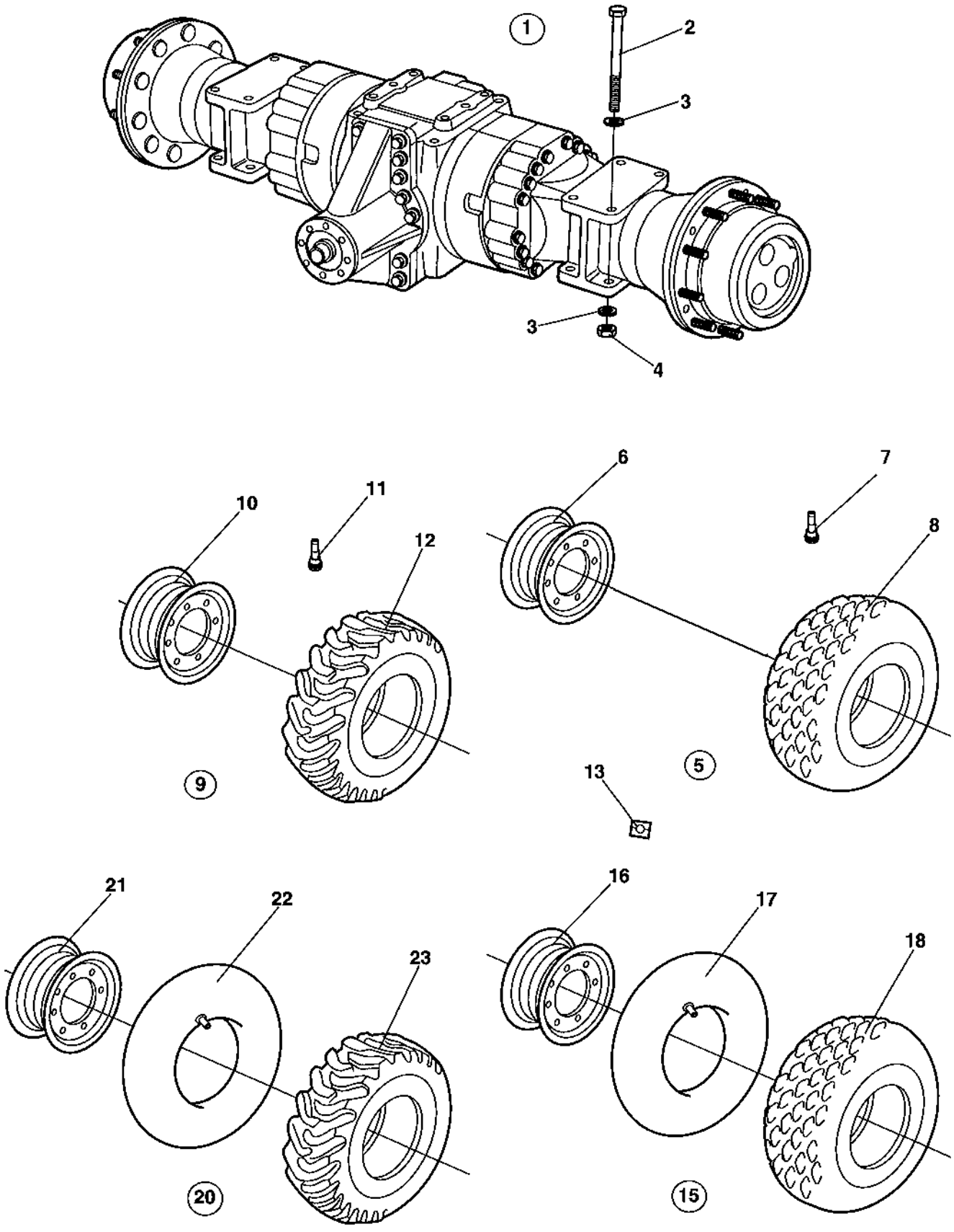

## Rear axle and wheels

| Item | Part No | Rem | Qty | Description | Code |
|---|---|---|---|---|---|
| 1 | 4700383855 | | 1 | **Rear axle Limited Slip ( Page 72 )** | |
| | 4700384801 | | 1 | **Rear axle No-spin, Option ( Page 82 )** | |
| 2 | 4700500295 | | 8 | Screw M20x240 | D |
| 3 | 4700904233 | | 16 | Washer 21x36x3 | C |
| 4 | 4700901145 | | 8 | Lock nut M20-10 | |
| 5 | 4700394647 | | 2 | Wheel, cpl | |
| | 4700394649 | A | 2 | Wheel, cpl | |
| 6 | 4700394644 | | 1 | . Rim | D |
| 7 | 4700792261 | | 1 | . Air charging valve Straight | B |
| 8 | 4700394645 | | 1 | . Tyre | |
| 9 | 4700390814 | B | 1 | Tractor tyre, cpl | |
| | 4700390813 | C | 1 | Tractor tyre, cpl | |
| | 4700390816 | D | 1 | Tractor tyre, cpl | |
| | 4700390815 | E | 1 | Tractor tyre, cpl | |
| 10 | 4700394644 | | 1 | . Rim | D |
| 11 | 4700792261 | | 1 | . Air charging valve Straight | B |
| 12 | 4700390812 | | 1 | . Tyre | D |
| 13 | 4700903985 | H | 1 | Decal "SAFETY", "TYRE IN BALLAST" | |
| 15 | 4700382217 | F | 2 | Wheel, cpl | D |
| 16 | 4700371594 | | 1 | . Rim | D |
| 17 | 4700929050 | | 1 | . Tube | D |
| 18 | 4700900429 | | 1 | . Tyre and tube | D |
| 20 | 4700197956 | B,G | 1 | Tractor tyre, cpl | D |
| | 4700197957 | C,G | 1 | Tractor tyre, cpl | D |
| 21 | 4700371594 | | 1 | . Rim | D |
| 22 | 4700929050 | | 1 | . Tube | D |
| 23 | 4700373618 | | 1 | . Tyre | D |

A) Liquid filled tyres, option
B) Left
C) Right
D) Liquid filled tyres, left, option
E) Liquid filled tyres, right, option
F) All-weather tyres, option, Goodyear branded.
G) For Brazilian market.
H) Used with Liquid filled tyres.

## 4700383855 Rear axle Limited Slip

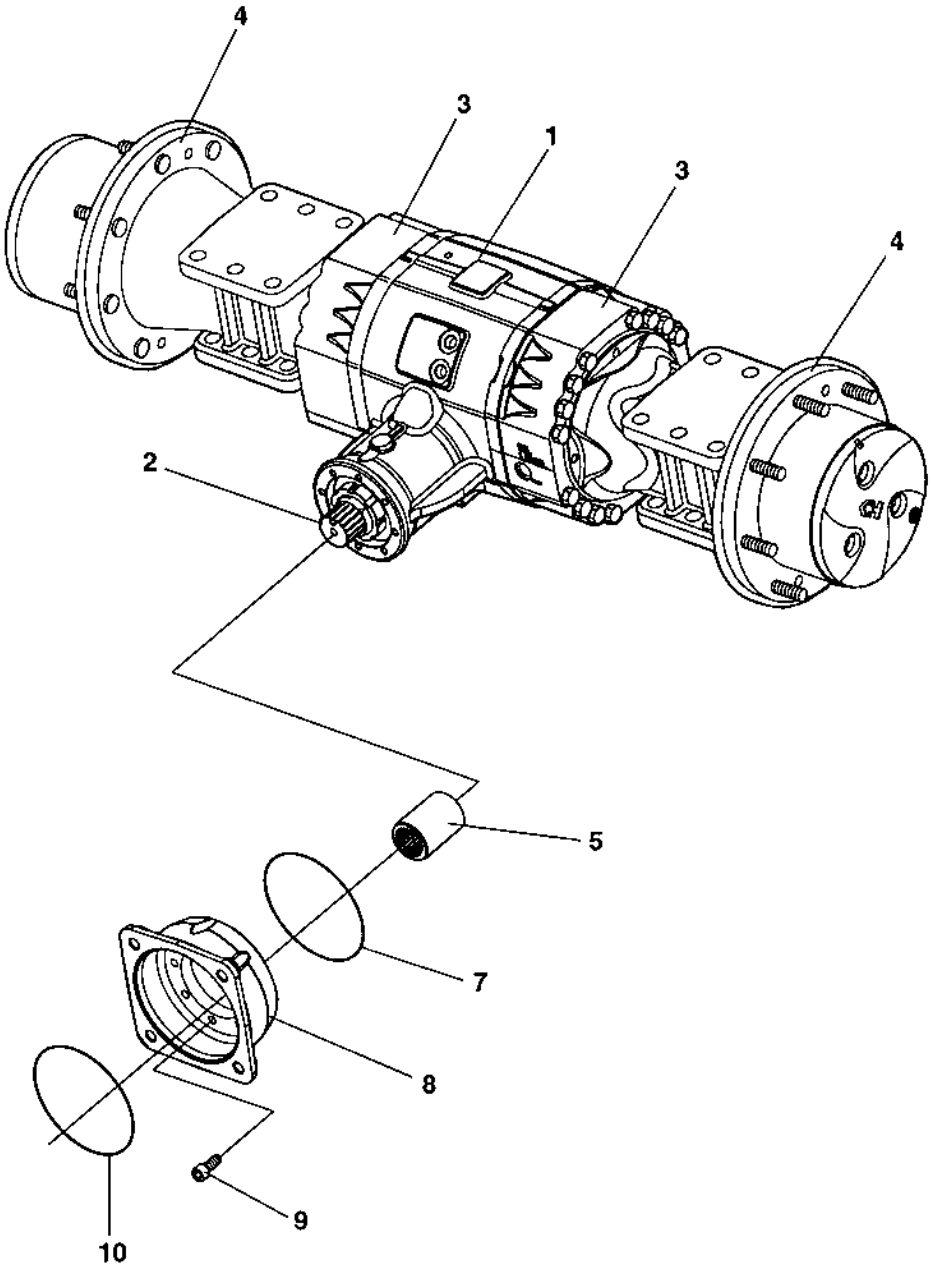

## 4700383855 Rear axle Limited Slip

| Item | Part No | Rem | Qty | Description | Code |
|---|---|---|---|---|---|
| 1 | | | 1 | **Housing ( Page 74 )** | |
| 2 | | | 2 | **Differential with limited slip ( Page 76 )** | |
| 3 | | | 1 | **Brakes ( Page 78 )** | |
| 4 | | | 2 | **Planet gear ( Page 80 )** | |
| 5 | 4700901834 | | 1 | Splined sleeve | |
| 7 | 4700929648 | | 1 | O-ring | D |
| 8 | 4700900255 | | 1 | Flange | D |
| 9 | 4700909582 | | 8 | Screw | |
| 10 | 4700909584 | | 1 | O-ring | D |

## Housing

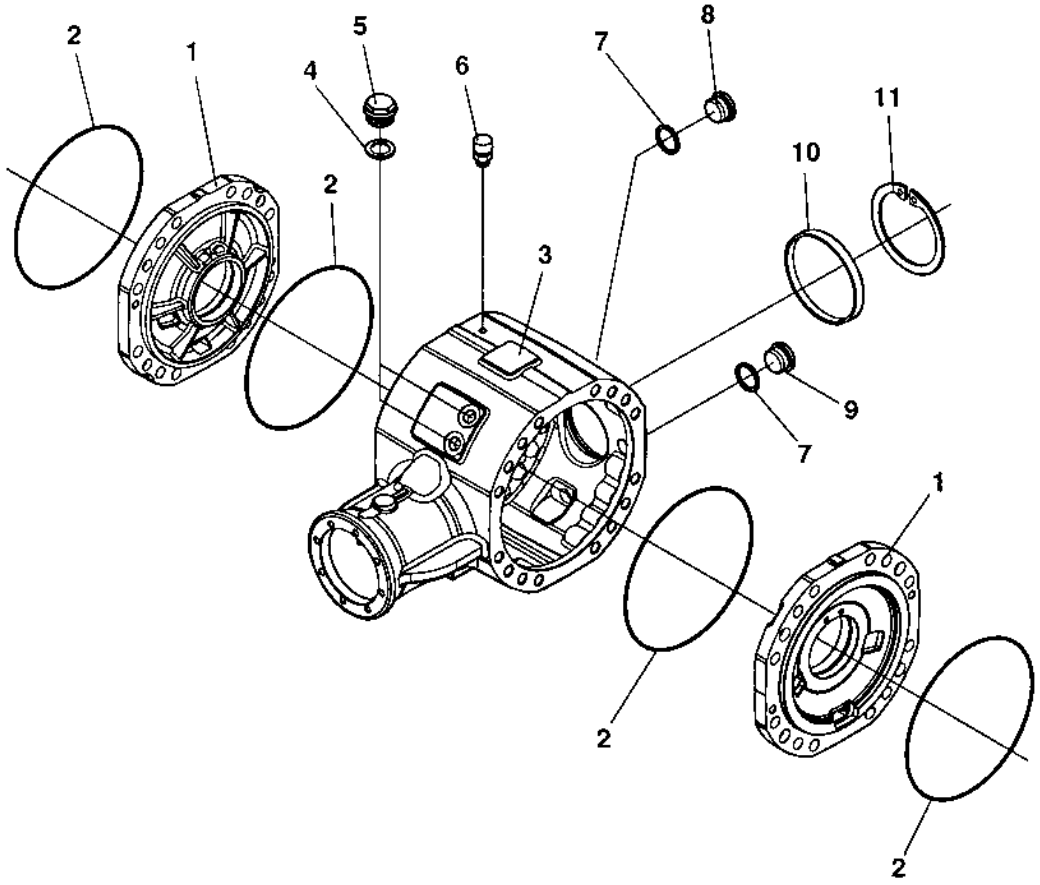

## Housing

| Item | Part No | Rem | Qty | Description | Code |
|---|---|---|---|---|---|
| 1 | 4700938980 | | 2 | Cover | D |
| 2 | 4700938981 | | 4 | O-ring | D |
| 3 | 4700938982 | | 1 | Housing | D |
| 4 | 4700938983 | | 2 | Sealing washer | |
| 5 | 4700909544 | | 4 | Screw | |
| 6 | 4700938984 | | 1 | Vent nipple | |
| 7 | 4700330333 | | 2 | Copper washer | D |
| 8 | 4700939350 | | 1 | Magnetic plug | |
| 9 | 4700909596 | | 1 | Plug | C |
| 10 | 4700938986 | | 1 | Plug | |
| 11 | 4700938987 | | 1 | Circlip | |

## Differential with limited slip

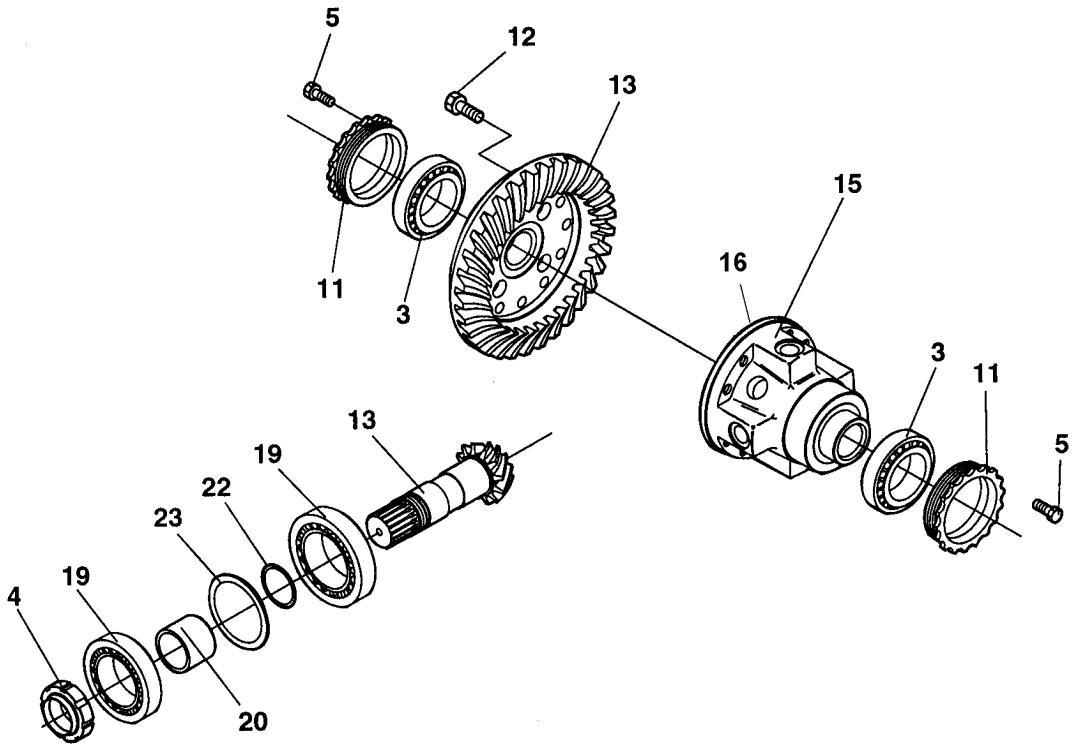

## Differential with limited slip

| Item | Part No | Rem | Qty | Description | | Code |
|---|---|---|---|---|---|---|
| 3 | 4700936023 | | 2 | Bearing | | |
| 4 | 4700938988 | | 1 | Ring nut | | |
| 5 | 4700938989 | | 2 | Bolt | | |
| 11 | 4700938990 | | 2 | Ring nut | | |
| 12 | 4700938991 | | 12 | Bolt | | D |
| 13 | 4700938992 | | 1 | Gear set | | |
| 15 | 4700938994 | | 1 | Limited slip differential cpl | | |
| 16 | 4700938993 | | 2 | Disc kit | | D |
| 19 | 4700926116 | | 2 | Bearing | | D |
| 20 | 4700938995 | | 1 | Spacer | | |
| 22 | 4700936052 | | N | Shim | 0.10mm | |
| | 4700936053 | | N | Shim | 0.15mm | |
| | 4700936054 | | N | Shim | 0.20mm | |
| | 4700936055 | | N | Shim | 0.40mm | |
| | 4700936056 | | N | Shim | 0.50mm | |
| 23 | 4700938996 | | N | Shim | 0,20 mm | |
| | 4700938997 | | N | Shim | 0,30 mm | |
| | 4700938998 | | N | Shim | 0,15 mm | |
| | 4700938999 | | N | Shim | 0,10 mm | |

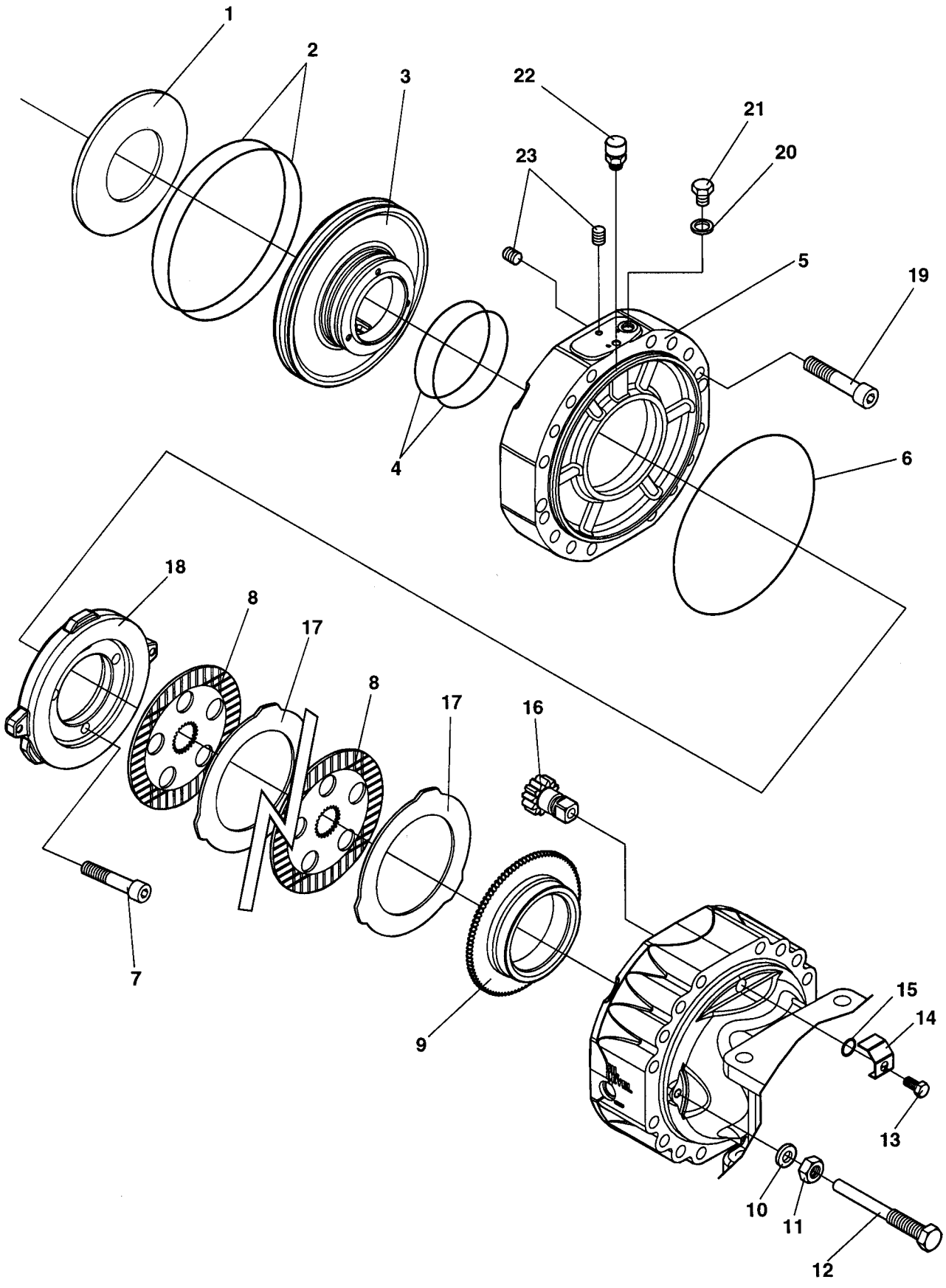
1
2
3
22
21
20
23
5
19
6
4
18
8
17
8
17
16
7
9
15
14
13
10
11
12

## Brakes

| Item | Part No | Rem | Qty | Description | Code |
|---|---|---|---|---|---|
| 1 | 4700909616 | | 2 | Spring | |
| 2 | 4700939021 | | 4 | O-ring | |
| 3 | 4700939022 | | 2 | Piston | |
| 4 | 4700939023 | | 4 | O-ring | |
| 5 | 4700939024 | | 2 | Cover | |
| 6 | 4700939025 | | 2 | O-ring | |
| 7 | 4700939026 | | 6 | Screw | C |
| 8 | 4700939027 | | 8 | Brake disc | |
| 9 | 4700939028 | | 2 | Ring | |
| 10 | 4700939029 | | 4 | Lock washer | |
| 11 | 4700900957 | | 4 | Nut | D |
| 12 | 4700939030 | | 4 | Adjusting bolt | |
| 13 | 4700909547 | | 2 | Screw | |
| 14 | 4700939031 | | 2 | Plate | |
| 15 | 4700939032 | | 2 | O-ring | |
| 16 | 4700936097 | | 2 | Pinion | |
| 17 | 4700939033 | | 8 | Brake disc | |
| 18 | 4700939034 | | 2 | Disc | |
| 19 | 4700939035 | | 4 | Screw | C |
| 20 | 4700939036 | | 2 | Sealing washer | C |
| 21 | 4700939037 | | 2 | Screw | |
| 22 | 4700939038 | | 2 | Vent nipple | |
| 23 | 4700939039 | | 4 | Stop screw | |

# Planet gear

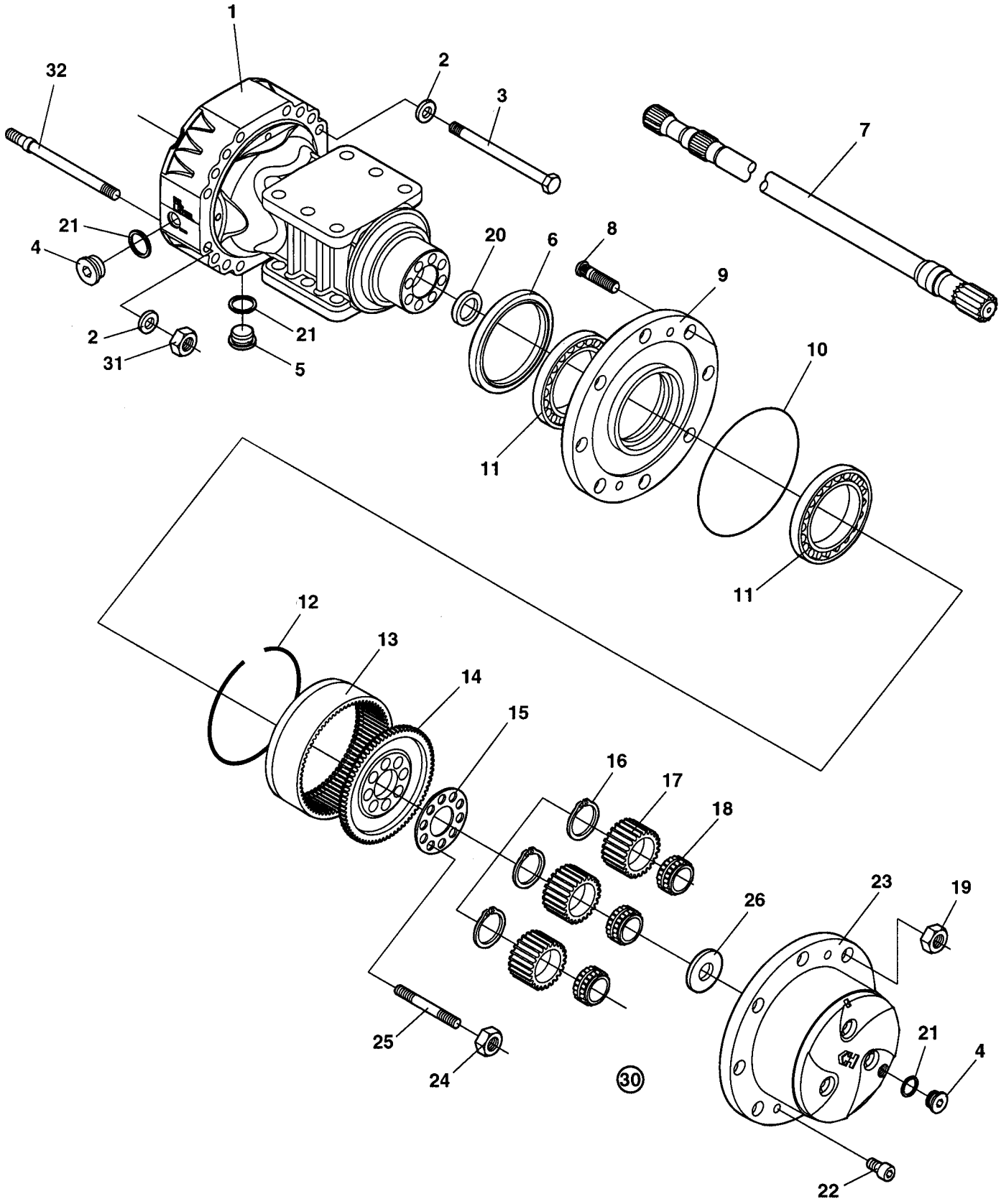
1
32
2
3
7
21
4
20
6
8
9
2
21
31
5
10
11
11
12
13
14
15
16
17
18
23
19
26
25
24
30
21
4
22

## Planet gear

| Item | Part No | Rem | Qty | Description | Code |
|---|---|---|---|---|---|
| 1 | 4700939002 | | 2 | Housing | |
| 2 | 4700939003 | | 32 | Spring washer | C |
| 3 | 4700939004 | | 24 | Screw | |
| 4 | 4700909596 | | 4 | Plug | C |
| 5 | 4700939350 | | 2 | Magnetic plug | |
| 6 | 4700939006 | | 2 | Seal | |
| 7 | 4700939007 | | 2 | Shaft | |
| 8 | 4700926781 | | 16 | Wheel screw | |
| 9 | 4700939008 | | 2 | Wheel hub | |
| 10 | 4700936020 | | 2 | O-ring | D |
| 11 | 4700939009 | | 4 | Bearing | |
| 12 | 4700939384 | 1 | 2 | Circlip | |
| 13 | 4700939385 | 1 | 2 | Ring gear | |
| 14 | 4700939386 | 1 | 2 | Ring gear support | |
| 15 | 4700939010 | | 2 | Lock plate | |
| 16 | 4700939011 | 1 | 6 | Circlip | |
| 17 | 4700939012 | 1 | 6 | Planet gear | |
| 18 | 4700939013 | 1 | 6 | Bearing | |
| 19 | 4700901987 | | 16 | Wheel nut | |
| 20 | 4700939014 | | 2 | Seal | |
| 21 | 4700330333 | | 6 | Copper washer | D |
| 22 | 4700939015 | | 4 | Screw | |
| 23 | 4700939387 | 1 | 2 | Planet gear carrier | |
| 24 | 4700939016 | | 16 | Nut | D |
| 25 | 4700939017 | | 16 | Stud | D |
| 26 | 4700939270 | 1 | 2 | Washer | |
| 30 | 4700939018 | | 2 | Planet gear carrier Cpl. | |
| 31 | 4700939019 | | 8 | Nut | D |
| 32 | 4700939020 | | 8 | Stud | |

1) Included in ref. 30

# 4700384801 Rear axle No-spin, Option

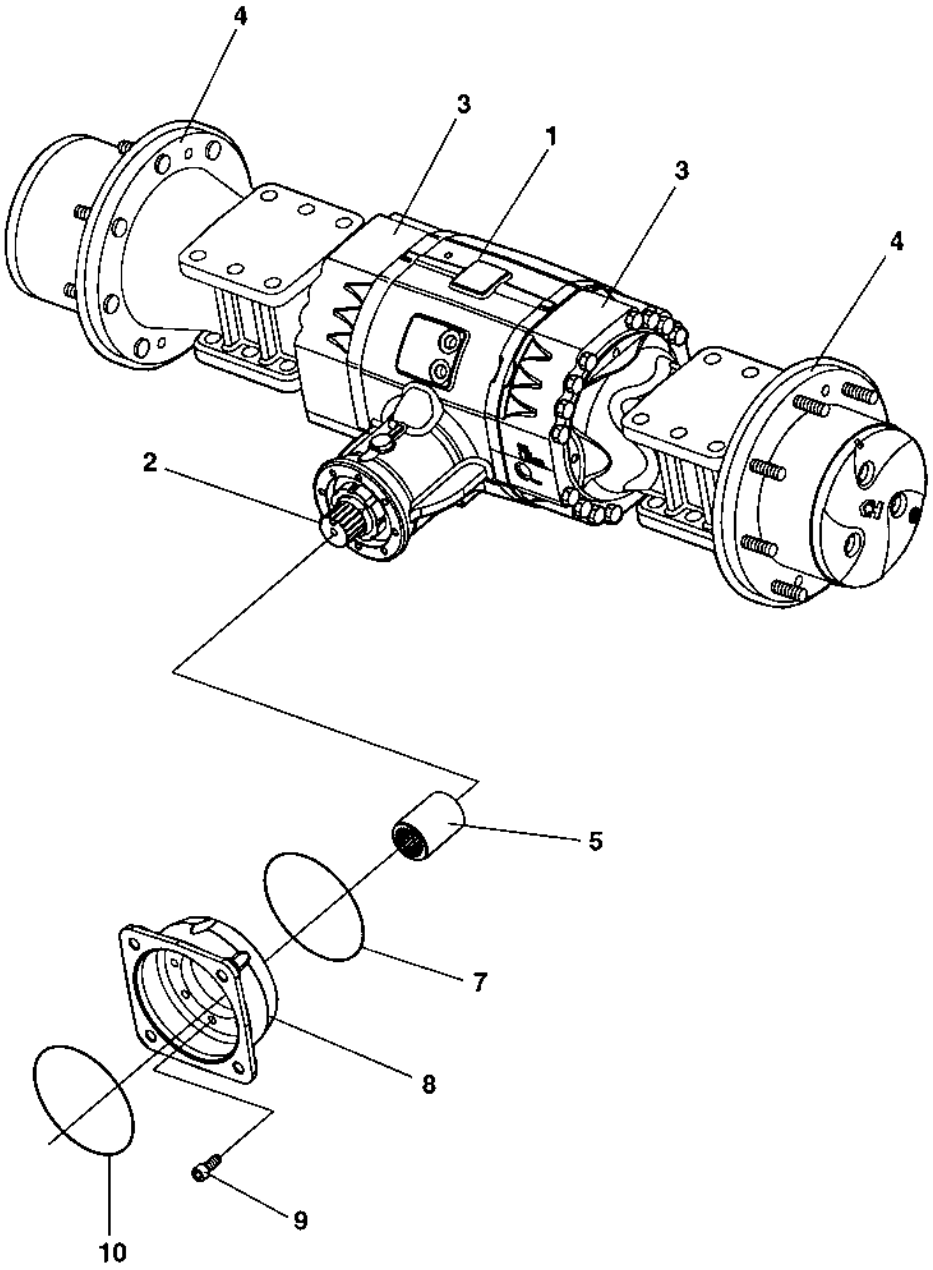

## 4700384801 Rear axle No-spin, Option

| Item | Part No | Rem | Qty | Description | Code |
|---|---|---|---|---|---|
| | | | 1 | Rear axle | |
| 1 | | | 1 | **. Differential with No-Spin ( Page 84 )** | |
| 2 | | | 1 | . Not valid for this Rear axle | |
| 3 | | | 2 | **. Differential housing and brakes ( Page 86 )** | |
| 4 | | | 2 | **. Planet gear ( Page 80 )** | |
| 5 | 4700901834 | | 1 | . Splined sleeve | |
| 7 | 4700929648 | | 1 | . O-ring | D |
| 8 | 4700900255 | | 1 | . Flange | D |
| 9 | 4700909582 | | 8 | . Screw | |
| 10 | 4700909584 | | 1 | . O-ring | D |

## Differential with No-Spin

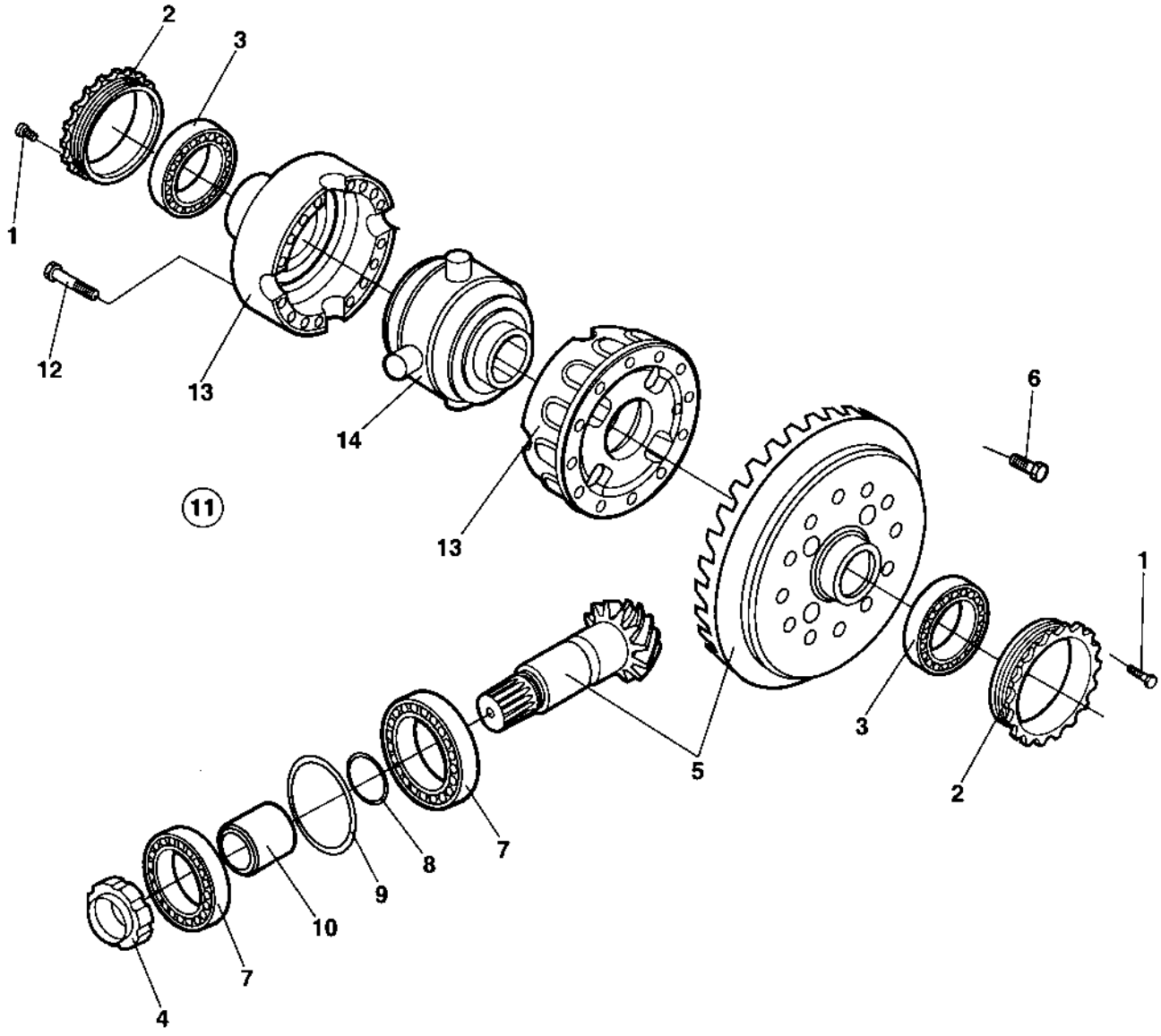

## Differential with No-Spin

| Item | Part No | Rem | Qty | Description | | Code |
|---|---|---|---|---|---|---|
| 1 | 4700938989 | | 2 | Bolt | | |
| 2 | 4700938990 | | 2 | Ring nut | | |
| 3 | 4700936023 | | 2 | Bearing | | |
| 4 | 4700938988 | | 1 | Ring nut | | |
| 5 | 4700938992 | | 1 | Gear set | | |
| 6 | 4700938991 | | 12 | Bolt | | D |
| 7 | 4700926116 | | 2 | Bearing | | D |
| 8 | 4700936053 | | 1 | Shim | 0.15mm | |
| | 4700936054 | | 1 | Shim | 0.20mm | |
| | 4700936055 | | 1 | Shim | 0.40mm | |
| | 4700936056 | | 1 | Shim | 0.50mm | |
| 9 | 4700938996 | | 1 | Shim | 0,20 mm | |
| | 4700938997 | | 1 | Shim | 0,30 mm | |
| | 4700938998 | | 1 | Shim | 0,15 mm | |
| | 4700938999 | | 1 | Shim | 0,10 mm | |
| 10 | 4700938995 | | 1 | Spacer | | |
| 11 | 4700939383 | | 1 | No-Spin differential kit | | |
| 12 | 4700939380 | | 16 | . Bolt | | |
| 13 | 4700939381 | | 1 | . Differential carrier | | |
| 14 | 4700939382 | | 1 | . No-spin differential | | |

# Differential housing and brakes

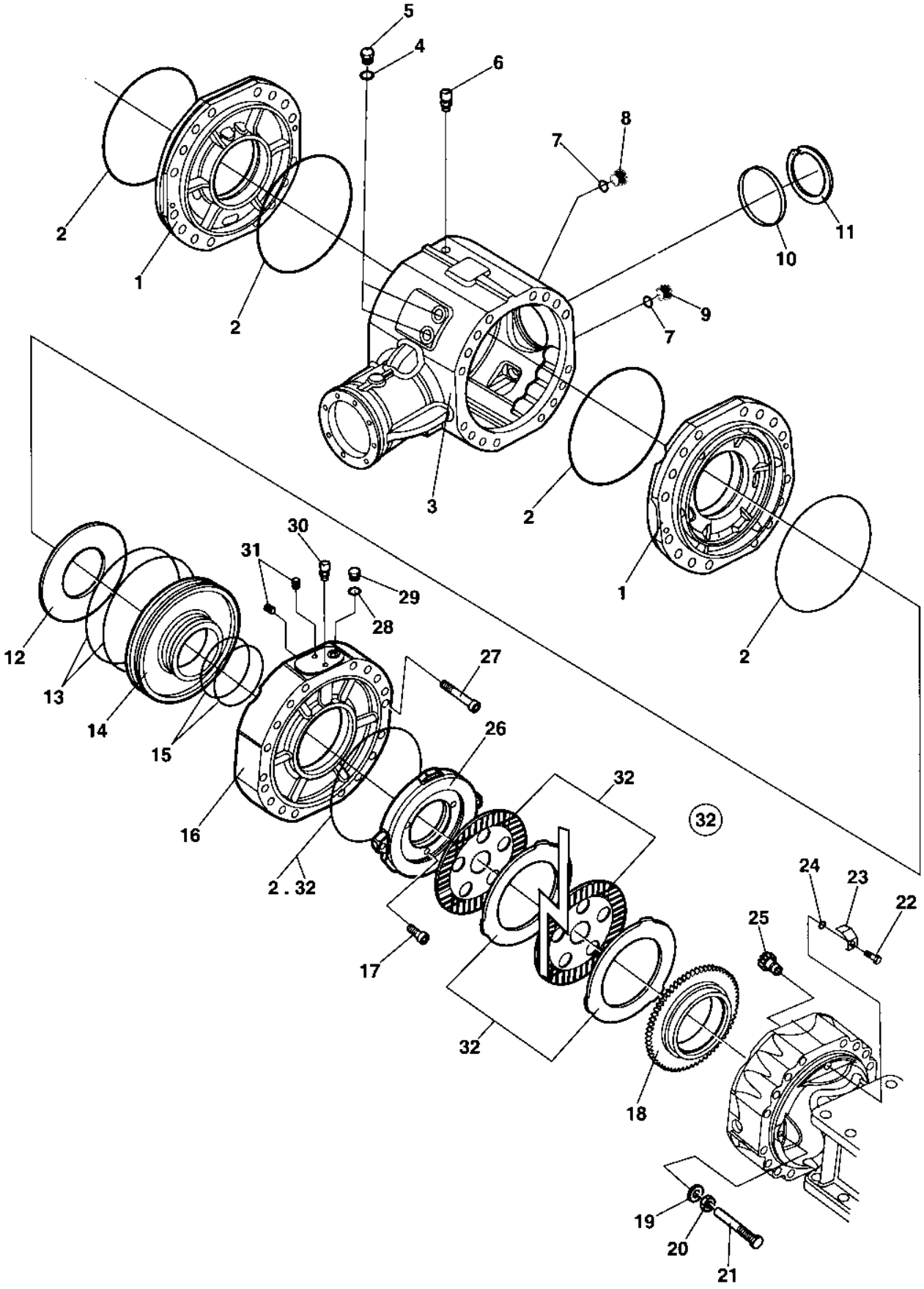

## Differential housing and brakes

| Item | Part No | Rem | Qty | Description | Code |
|---|---|---|---|---|---|
| 1 | 4700938980 | | 2 | Cover | D |
| 2 | 4700938981 | | 6 | O-ring | D |
| 3 | 4700938982 | | 1 | Housing | D |
| 4 | 4700938983 | | 2 | Sealing washer | |
| 5 | 4700909544 | | 2 | Screw | |
| 6 | 4700938984 | | 1 | Vent nipple | |
| 7 | 4700330333 | | 2 | Copper washer | D |
| 8 | 4700939350 | | 1 | Magnetic plug | |
| 9 | 4700909596 | | 1 | Plug | C |
| 10 | 4700938986 | | 1 | Plug | |
| 11 | 4700938987 | | 1 | Circlip | |
| 12 | 4700909616 | | 2 | Spring | |
| 13 | 4700939021 | | 4 | O-ring | |
| 14 | 4700939022 | | 2 | Piston | |
| 15 | 4700939023 | | 4 | O-ring | |
| 16 | 4700939024 | | 2 | Cover | |
| 17 | 4700939026 | | 6 | Screw | C |
| 18 | 4700939028 | | 2 | Ring | |
| 19 | 4700926847 | | 4 | Sealing washer | |
| 20 | 4700900957 | | 4 | Nut | D |
| 21 | 4700939030 | | 4 | Adjusting bolt | |
| 22 | 4700900937 | | 2 | Screw | D |
| 23 | 4700939031 | | 2 | Plate | |
| 24 | 4700929691 | | 2 | O-ring | D |
| 25 | 4700936097 | | 2 | Pinion | |
| 26 | 4700939034 | | 2 | Disc | |
| 27 | 4700939035 | | 4 | Screw | C |
| 28 | 4700939036 | | 2 | Sealing washer | C |
| 29 | 4700939282 | | 2 | Bolt | |
| 30 | 4700938984 | | 2 | Vent nipple | |
| 31 | 4700939281 | | 4 | Bolt | C |
| 32 | 4700939391 | | 2 | Brake disc kit | |
| | | | 8 | . Brake disc | |
| | | | 8 | . Brake disc | |
| | 4700938981 | | 2 | . O-ring | D |

## Hydraulic system

| Item | Part No | Rem | Qty | Description | Code |
|---|---|---|---|---|---|
| 5 | | | | **Propulsion system, Front ( Page 90 )** | |
| 10 | | | | **Propulsion system, Rear ( Page 94 )** | |
| 20 | | | | **Vibration system ( Page 102 )** | |
| 30 | | | | **Steering system ( Page 108 )** | |
| 40 | | | | **Brake system ( Page 114 )** | |
| 47 | | | | **Hydraulic oil tank ( Page 116 )** | |
| 50 | | | | **Central test panel hydraulic Option ( Page 118 )** | |
| 55 | | | | **Central test panel hydraulic Option ( Page 120 )** | |

# Propulsion system, Front

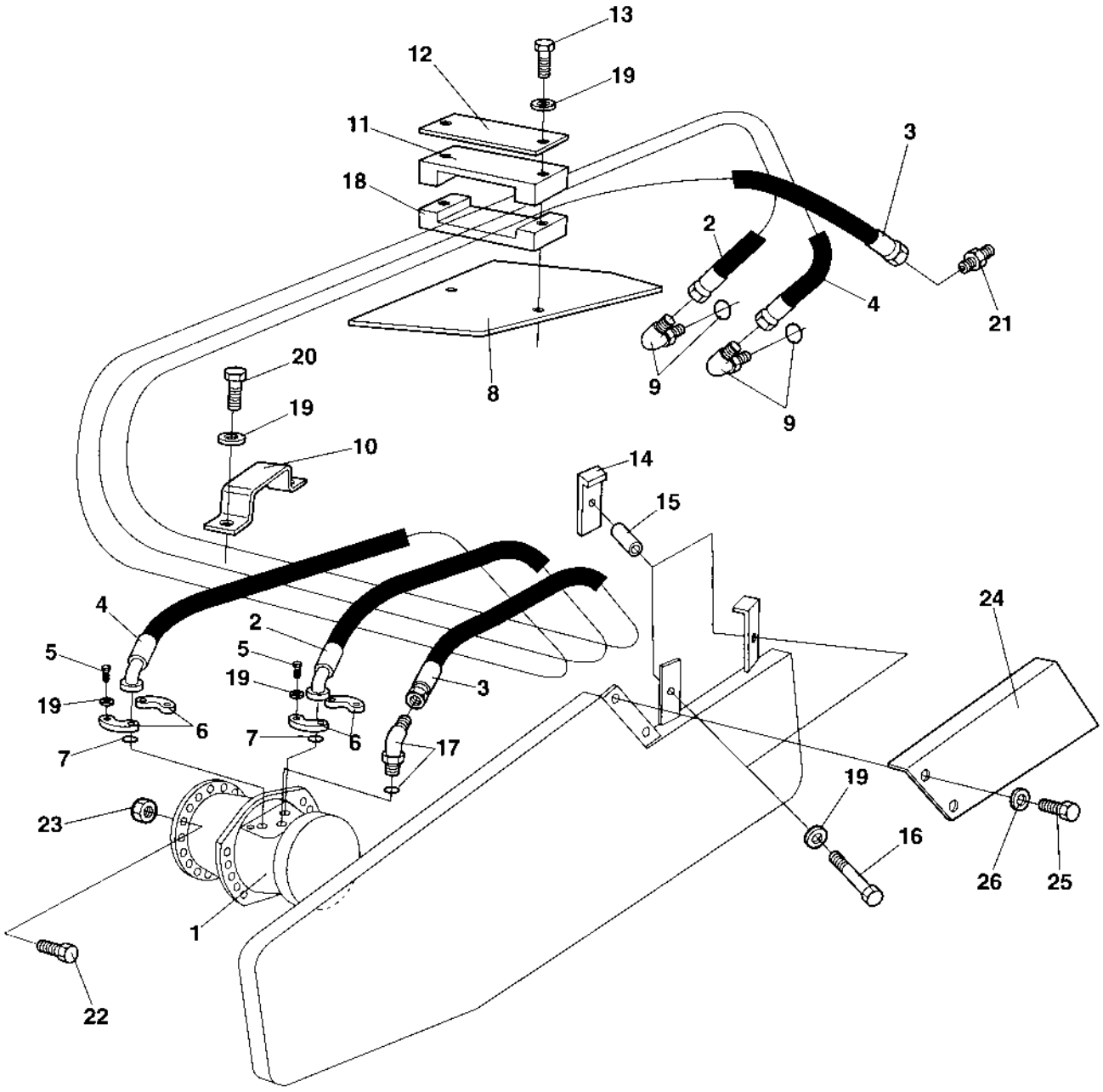

## Propulsion system, Front

| Item | Part No | Rem | Qty | Description | Code |
|---|---|---|---|---|---|
| 1 | 4700372250 | | 1 | **Propulsion motor ( Page 92 )** | C |
| 2 | 4700483521 | | 1 | Hydraulic hose | D |
| 3 | 4700483133 | | 1 | Hydraulic hose | D |
| 4 | 4700483522 | | 1 | Hydraulic hose | D |
| 5 | 4700500030 | | 8 | Screw M10x035H 8.8 A3K | C |
| 6 | 4700929226 | | 4 | Flange half | C |
| 7 | 4700904004 | | 2 | O-ring | C |
| 8 | 4700349211 | | 1 | Hose protection | D |
| 9 | 4700334132 | | 2 | Elbow 45, O-ring | C |
| 10 | 4700373395 | | 1 | Hose clamp | D |
| 11 | 4700343732 | | 1 | Hose clamp | |
| 12 | 4700335914 | | 1 | Cover plate | D |
| 13 | 4700500077 | | 2 | Screw | D |
| 14 | 4700373270 | | 2 | Hose clamp | D |
| 15 | 4700373423 | | 2 | Spacer | D |
| 16 | 4700500033 | | 2 | Screw M10-1,5x60 8,8 | D |
| 17 | 4700813500 | | 1 | Elbow 45, O-ring | C |
| 18 | 4700343872 | | 1 | Hose clamp | D |
| 19 | 4700904230 | | 14 | Steel plain washer | C |
| 20 | 4700500028 | | 2 | Screw | C |
| 21 | 4700334122 | | 1 | Adapter | D |
| 22 | 4700936727 | | 10 | Stud M22 | |
| 23 | 4700936728 | | 10 | Nut M22 | |
| 24 | 4700373136 | | 1 | Cover | D |
| 25 | 4700500019 | | 4 | Hexagon head screw M8x16H 8,8 | C |
| 26 | 4700904229 | | 4 | Steel plain washer 8,4x16x1,5 | C |

# 4700372250 Propulsion motor

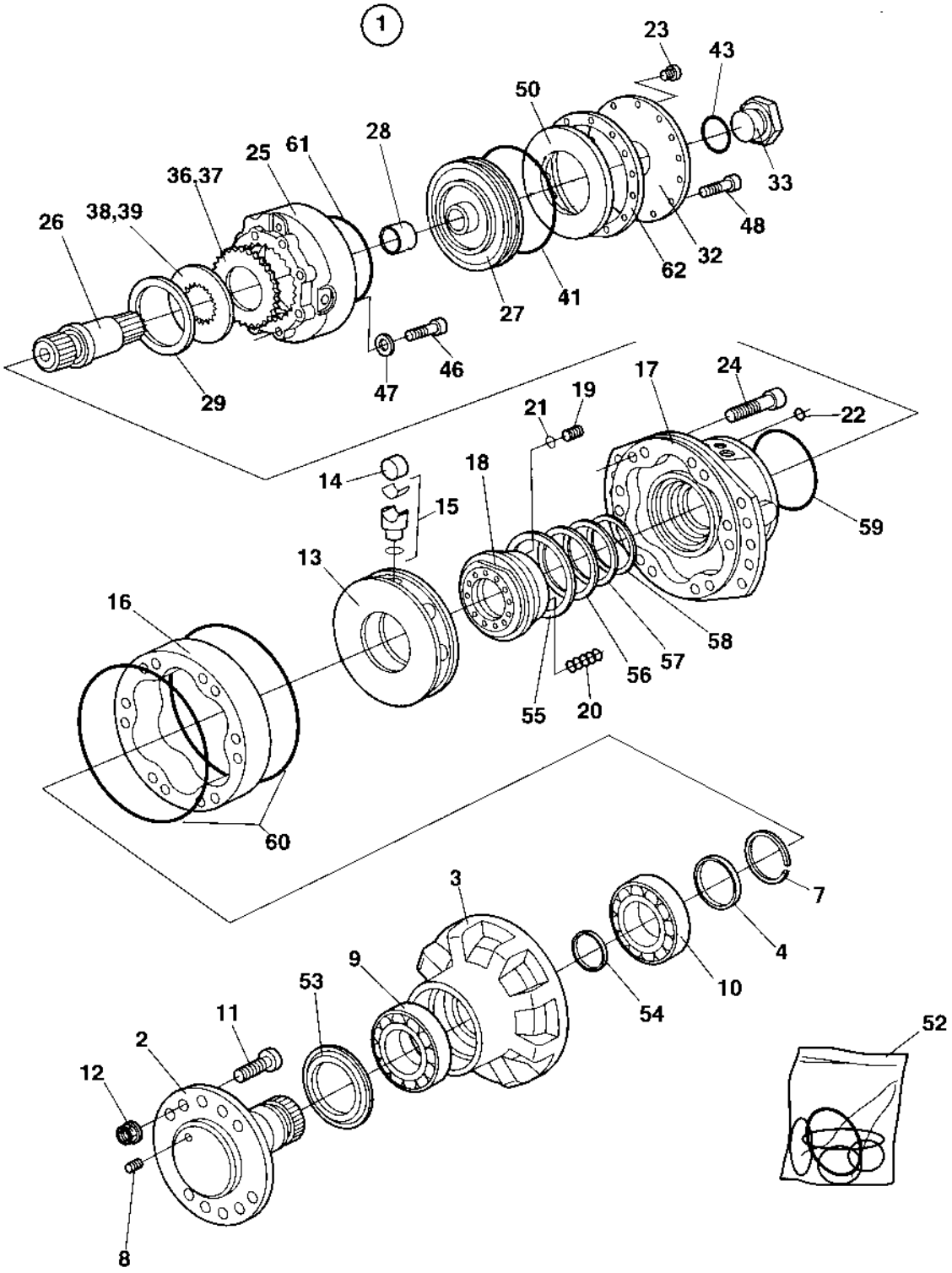

## 4700372250 Propulsion motor

| Item | Part No | Rem | Qty | Description | | Code |
|---|---|---|---|---|---|---|
| 1 | | | 1 | Propulsion motor, Cpl | | |
| 2 | 4700937286 | | 1 | . Shaft | | |
| 3 | 4700939047 | | 1 | . Housing | | |
| 4 | 4700938693 | | 1 | . Washer T=1.9mm | | |
| | 4700938694 | | 1 | . Washer T=2.1mm | | |
| | 4700938695 | | 1 | . Washer T=2.3mm | | |
| | 4700938696 | | 1 | . Washer T=2.5mm | | |
| | 4700938697 | | 1 | . Washer T=2.15mm | | |
| 7 | 4700937290 | | 1 | . Split ring | | |
| 8 | 4700939219 | | 1 | . Plug | | |
| 9 | | | 1 | . Bearing | | |
| 10 | | | 1 | . Bearing | | |
| 11 | 4700936727 | | 10 | . Stud M22 | | |
| 12 | 4700936728 | | 10 | . Nut M22 | | |
| 13 | 4700939048 | | 1 | . Cylinder block | | |
| 14 | 4700939049 | | 10 | . Roller | | |
| 15 | 4700939050 | | 10 | . Piston | | |
| 16 | 4700937298 | | 1 | . Piston cam | | |
| 17 | 4700939051 | | 1 | . Housing | | |
| 18 | 4700939052 | | 1 | . Distributor ring | | |
| 19 | 4700939053 | | 1 | . Stop pin | | |
| 20 | 4700936453 | | 14 | . Spring | | |
| 21 | 4700937306 | | 1 | . O-ring | | |
| 22 | 4700937307 | | 1 | . O-ring | | |
| 23 | 4700936789 | | 1 | . Plug | | |
| 24 | | | 16 | . Screw | | |
| 25 | | | 1 | . Brake housing | | |
| 26 | | | 1 | . Brake shaft | | |
| 27 | | | 1 | . Brake piston | | |
| 28 | 4700945972 | | 1 | . Brass bushing | | D |
| 32 | 4700937319 | | 1 | . Cover | | |
| 33 | 4700903295 | | 1 | . Plug | | |
| 36 | 4700937322 | | 20 | . Brake disc, outer | | |
| 37 | 4700937323 | | 18 | . Brake disc, inner | | |
| 38 | 4700937324 | | 1 | . Shim | 130x105x0,1 | |
| 39 | 4700937325 | | 1 | . Shim | 130x105x0.5 | |
| 41 | 4700937327 | | 1 | . Seal ring | | |
| 43 | 4700903327 | | 1 | . O-ring | | |
| 46 | | | 8 | . Screw | | |
| 47 | 4700936773 | | 8 | . Washer | | |
| 48 | 4700936483 | | 24 | . Screw | | |
| 50 | 4700937332 | | 1 | . Spring | | |
| 52 | 4700937334 | | 1 | . Seal kit | | |
| 53 | 4700937293 | | 1 | . . Face seal | | |
| 54 | 4700937294 | | 1 | . . Shaft seal | | |
| 55 | 4700937302 | | 1 | . . Seal | | |
| 56 | 4700937303 | | 1 | . . Seal | | |
| 57 | 4700937304 | | 1 | . . Seal | | |
| 58 | 4700937305 | | 1 | . . Seal | | |
| 59 | 4700939058 | | 1 | . . SQ. seal ring | | |
| 60 | 4700937310 | | 2 | . . O-ring | | |
| 61 | 4700945970 | | 1 | . . Outer sealing | | |
| 62 | 4700945971 | | 1 | . . Gasket | | D |

# Propulsion system, Rear

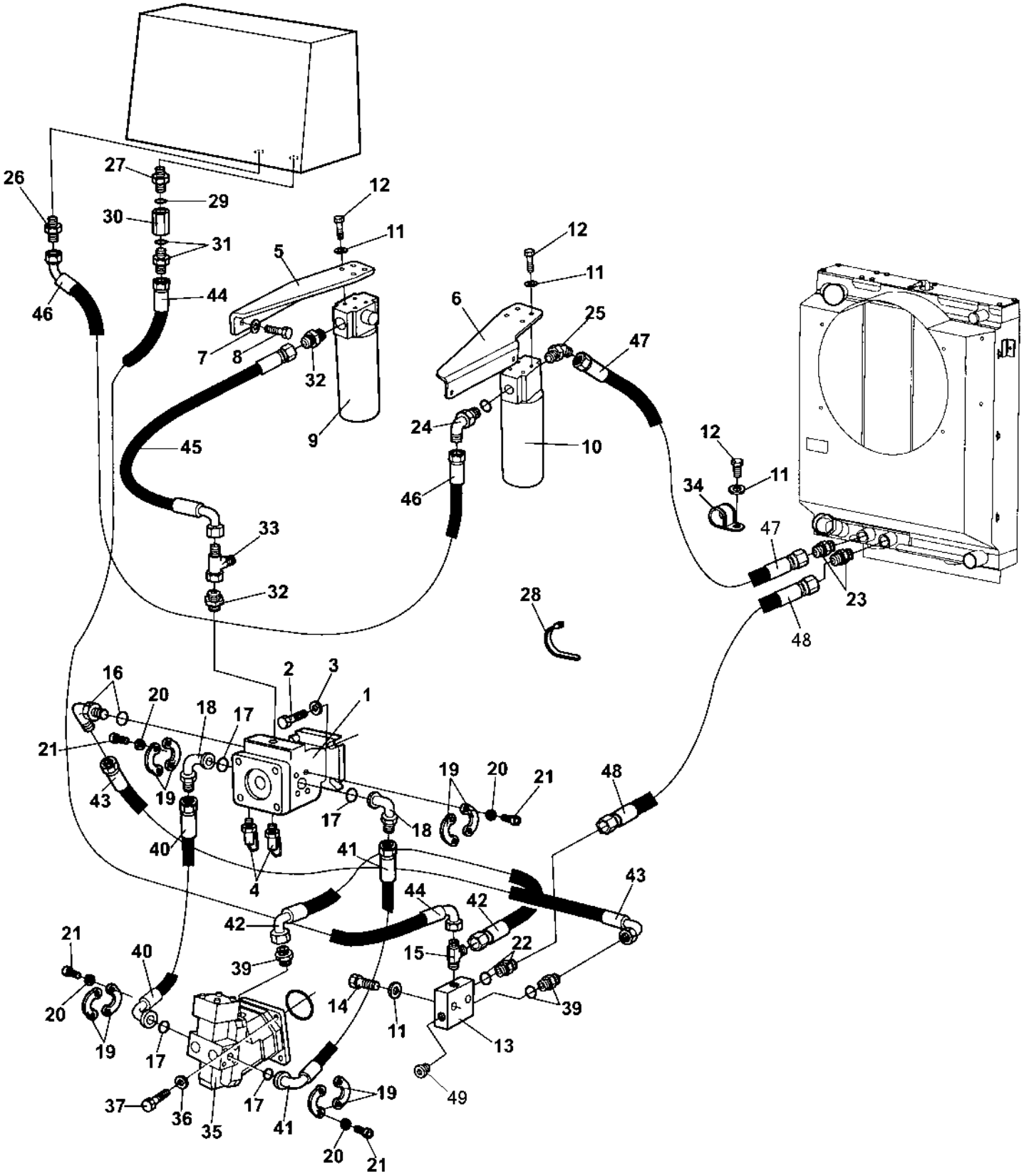

## Propulsion system, Rear

| Item | Part No | Rem | Qty | Description | Code |
|---|---|---|---|---|---|
| 1 | 4700380829 | | 1 | **Propulsion pump ( Page 96 )** | C |
| 2 | 4700500046 | | 4 | Screw M12x025H | C |
| 3 | 4700904213 | | 4 | Washer | C |
| 4 | 4700900229 | | 2 | Measuring nipple | C |
| 5 | 4700379482 | | 1 | Filter bracket | D |
| 6 | 4700380490 | | 1 | Filter bracket | D |
| 7 | 4700904229 | | 4 | Steel plain washer 8,4x16x1,5 | C |
| 8 | 4700500021 | | 4 | Screw M8-1,25x25 8.8 | C |
| 9 | 4700359550 | | 1 | Hydraulic oil filter, cpl | A |
| | 4700359551 | | 1 | . Filter head | A |
| | 4700359552 | | 1 | . Cleaning filter element Maximum 50 hours use | A |
| | 4700372229 | | 1 | . Hydraulic oil filter element | A |
| 10 | 4700372435 | | 1 | Hydraulic oil filter, cpl | A |
| | 4700372436 | | 1 | . Filter head | D |
| | 4700359552 | | 1 | . Cleaning filter element Maximum 50 hours use | A |
| | 4700372229 | | 1 | . Hydraulic oil filter element | A |
| 11 | 4700904230 | | 11 | Steel plain washer | C |
| 12 | 4700500028 | | 9 | Screw | C |
| 13 | 4700345243 | | 1 | Connection block | |
| 14 | 4700500109 | | 2 | Screw M10-1,5x65 8,8 | D |
| 15 | 4700234875 | | 1 | Tee-connector o-ring | |
| 16 | 4700813499 | | 1 | Elbow 90, O-ring | D |
| 17 | 4700904005 | | 4 | O-ring | B |
| 18 | 4700791213 | | 2 | Flange fitting 90 | D |
| 19 | 4700923384 | | 8 | Flange half | C |
| 20 | 4700904638 | | 16 | Washer 12x22x2 | C |
| 21 | 4700502132 | | 16 | Screw UNC 7/16" x 22 | D |
| 22 | 4700334140 | | 1 | Straight conector | |
| 23 | 4700234958 | | 2 | Connector | |
| 24 | 4700334163 | | 1 | Adapter | |
| 25 | 4700234354 | | 1 | Adapter with O-ring | |
| 26 | 4700234909 | | 1 | Straight connector | |
| 27 | 4700904282 | | 1 | Adapter | |
| 28 | 4700313102 | | | Cable ties | |
| 29 | 4700160028 | | 1 | O-ring | D |
| 30 | 4700374059 | | 1 | Check valve | C |
| 31 | 4700923371 | | 1 | Adapter | C |
| 32 | 4700334468 | | 2 | Adapter | C |
| 33 | 4700234243 | | 1 | T-connector | C |
| 34 | 4700904352 | | 1 | Clamp | |
| 35 | 4700383973 | | 1 | Propulsion motor | D |
| 36 | 4700904793 | | 4 | Washer 19x34x3 | C |
| 37 | 4700500263 | | 4 | Screw M18x60 | D |
| 39 | 4700334138 | | 2 | Adapter | C |
| 40 | 4700483558 | | 1 | Hydraulic hose | D |
| 41 | 4700483558 | | 1 | Hydraulic hose | D |
| 42 | 4700482182 | | 1 | Hydraulic hose | D |
| 43 | 4700482010 | | 1 | Hydraulic hose | D |
| 44 | 4700482182 | | 1 | Hydraulic hose | D |
| 45 | 4700482391 | | 1 | Hydraulic hose | D |
| 46 | 4700483128 | | 1 | Hydraulic hose | D |
| 47 | 4700483027 | | 1 | Hydraulic hose | D |
| 48 | 4700483123 | | 1 | Hydraulic hose | D |
| 49 | | | 1 | Not used on this model | |

# 4700380829 Propulsion pump

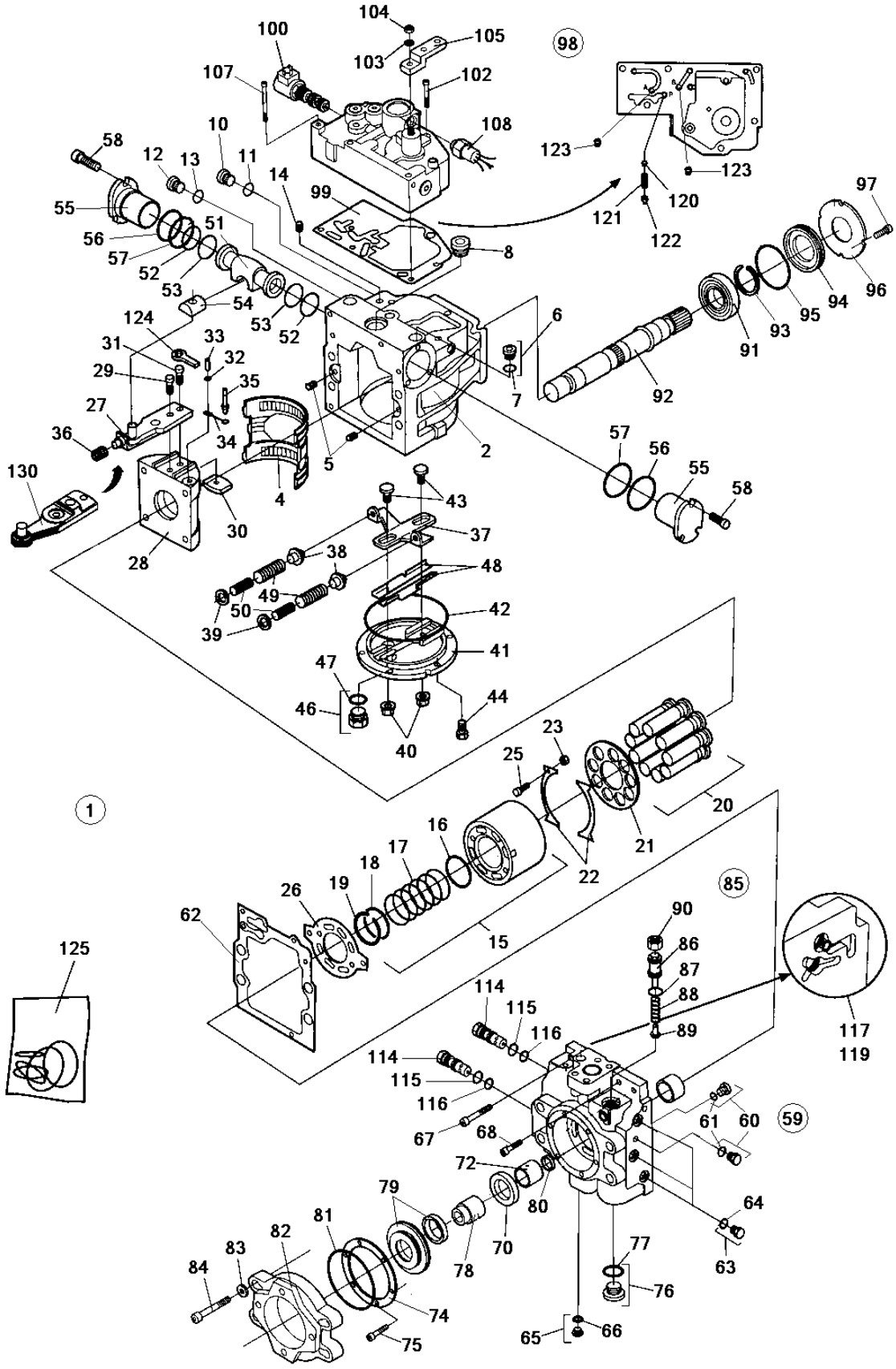

## 4700380829 Propulsion pump

| Item | Part No | Rem | Qty | Description | Code |
|---|---|---|---|---|---|
| 1 | | | 1 | Propulsion pump , Cpl | |
| 2 | 4700909373 | | 1 | . Housing | D |
| | | 2 | 1 | Housing | |
| 4 | 4700901718 | | 1 | . Bearing | D |
| | | 2 | 1 | Bearing | |
| 5 | 4700813822 | | 2 | . Pin | D |
| 6 | 4700909375 | | 2 | . Plug, cpl | C |
| 7 | 4700813617 | 1 | 2 | . . O-ring | D |
| 8 | 4700902928 | | 1 | . Plug | C |
| 10 | 4700908432 | | 1 | . Plug | C |
| 11 | 4700923087 | 1 | 1 | . . O-ring | C |
| 12 | 4700908432 | | 1 | . Plug | C |
| 13 | 4700923087 | 1 | 1 | . . O-ring | C |
| 14 | 4700901454 | | 1 | . Filter element | D |
| 15 | 4700212353 | | 1 | . Rotating group, cpl | C |
| 16 | 4700909376 | | 1 | . . Spacer | C |
| 17 | 4700909377 | | 1 | . . Spring | C |
| 18 | 4700909378 | | 1 | . . Spring retainer | C |
| 19 | 4700909379 | | 1 | . . Retaining ring | C |
| 20 | 4700909239 | | 9 | . Piston, cpl | C |
| 21 | 4700901721 | | 1 | . Pressure plate | D |
| 22 | 4700901722 | | 2 | . Retainer guide | D |
| 23 | | | 4 | . Spacer | |
| 25 | 4700937830 | | 4 | . Screw | D |
| 26 | 4700937136 | | 1 | . Valve plate | D |
| 27 | 4700909384 | | 1 | . Servo arm, cpl | C |
| 28 | 4700909385 | | 1 | . Swash plate | D |
| | | 2 | 1 | Swash plate | |
| 29 | 4700909386 | | 1 | . Screw | C |
| | | 2 | 1 | Screw | |
| 30 | 4700909387 | | 1 | . Guide | |
| 31 | 4700909388 | | 1 | . Screw | C |
| 32 | 4700909389 | | 1 | . Washer | C |
| 33 | 4700909390 | | 1 | . Pin | C |
| 34 | | | 1 | . Link | |
| 35 | | | 1 | . Pin | |
| 36 | | | 1 | . Spring | |
| 37 | 4700909395 | | 1 | . Lever | D |
| 38 | 4700909396 | | 2 | . Spring retainer | C |
| 39 | 4700908378 | | 2 | . Washer | C |
| 40 | 4700909398 | 1 | 2 | . Seal lock nut | B |
| 41 | 4700937138 | | 1 | . Cover | D |
| | | 2 | 1 | Cover | |
| 42 | 4700909399 | 1 | 1 | . O-ring | C |
| 43 | 4700936552 | | 2 | . Guide post | D |
| 44 | 4700936553 | | 6 | . Screw | C |
| 46 | 4700902928 | | 1 | . Plug | C |
| 47 | 4700901453 | 1 | 1 | . . O-ring | C |
| 48 | 4700937139 | | 1 | . Guide assy. | D |
| 49 | 4700909402 | | 2 | . Spring | C |
| 50 | 4700909403 | | 2 | . Spring | C |
| 51 | 4700937140 | | 1 | . Piston, cpl | D |
| 52 | 4700909405 | 1 | 2 | . O-ring | C |
| 53 | 4700909406 | 1 | 2 | . Piston ring | C |
| 54 | | | 1 | . Guide | |
| 55 | | | 2 | . Servo sleeve | |

1) Includes in seal kit, item 125
2) Valid with item 130

# 4700380829 Propulsion pump

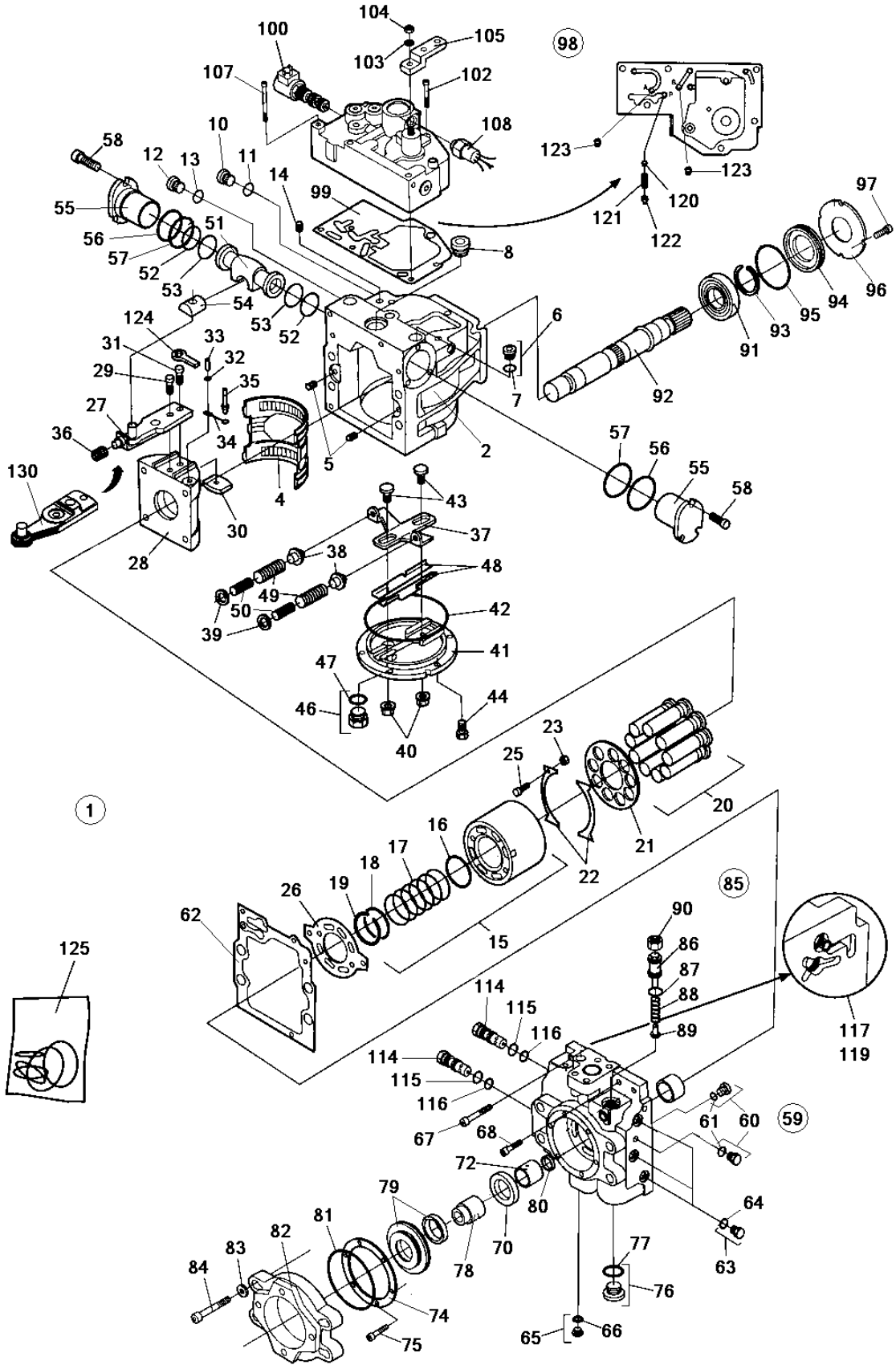

## 4700380829 Propulsion pump

| Item | Part No | Rem | Qty | Description | Code |
|---|---|---|---|---|---|
| 56 | 4700909409 | | 2 | . O-ring | C |
| 57 | 4700909410 | | 2 | . O-ring | C |
| 58 | | | 6 | . Screw | |
| 59 | 4700937141 | | 1 | . End cap, cpl | D |
| 60 | 4700909375 | | 2 | . Plug, cpl | C |
| 61 | 4700813617 | 1 | 2 | . . O-ring | D |
| 62 | 4700937142 | 1 | 1 | . Gasket | D |
| 63 | 4700358388 | | 3 | . Plug | C |
| 64 | 4700923087 | 1 | 3 | . . O-ring | C |
| 65 | 4700908432 | | 1 | . Plug | C |
| 66 | 4700923087 | 1 | 1 | . . O-ring | C |
| 67 | 4700937143 | | 1 | . Screw | D |
| 68 | | | 1 | . Screw | |
| 70 | 4700937145 | | 1 | . Spacer | D |
| 72 | | | 1 | . Shaft | |
| 74 | 4700935857 | | 1 | . Retaining plate | |
| 75 | 4700909411 | | 6 | . Screw | C |
| 76 | 4700936567 | | 1 | . Plug, cpl | |
| 77 | 4700936568 | 1 | 1 | . . O-ring | |
| 78 | 4700937149 | | 1 | . Coupling sleeve | D |
| 79 | 4700908217 | | 1 | . Cover assembly | D |
| 80 | 4700903052 | 1 | 1 | . Bushing | |
| 81 | 4700909399 | 1 | 1 | . O-ring | C |
| 82 | | | 1 | . Adapter | |
| 83 | | | 4 | . Washer | |
| 84 | 4700937153 | | 4 | . Screw | D |
| 85 | 4700950565 | | 1 | . Pressure relief valve, cpl | |
| 86 | | A | 1 | . . Screw | |
| 87 | 4700926658 | 1 | 1 | . . O-ring | C |
| 88 | | | 1 | . . Spring | |
| 89 | | | 1 | . . Valve cone | |
| 90 | | | 1 | . . Nut | |
| 91 | 4700901725 | | 1 | . Bearing | D |
| 92 | 4700937159 | | 1 | . Shaft | D |
| 93 | 4700901727 | | 1 | . Snap ring | D |
| 94 | 4700212346 | | 1 | . Shaft seal | B |
| | | 2 | 1 | Shaft seal | |
| 95 | 4700909257 | 1 | 1 | . O-ring | C |
| 96 | 4700901728 | | 1 | . Carrier seal | D |
| 97 | 4700908773 | | 3 | . Screw | D |
| 98 | 4700938251 | | 1 | . Control valve, cpl | |
| 99 | 4700938755 | 1 | 1 | . . Gasket | |
| 100 | 4700938252 | | 1 | . . Solenoid valve | |
| 102 | | | 1 | . . . Screw | |
| 103 | 4700909428 | | 1 | . . Washer | C |
| 104 | 4700909429 | | 1 | . . O-ring | C |
| 105 | 4700909432 | | 1 | . . Control lever | D |
| 107 | 4700937857 | | 5 | . . Screw | D |
| 108 | 4700938253 | | 1 | . . Neutral start switch | |
| 114 | 4700945951 | | 2 | . Valve | D |
| 115 | 4700907163 | 1 | 2 | . O-ring | D |
| 116 | 4700936579 | 1 | 2 | . O-ring | C |
| 117 | 4700901475 | | 2 | . Valve | D |
| 119 | 4700813828 | | 2 | . Plug | D |
| 120 | 4700901482 | | 1 | . Orifice | D |
| 121 | 4700909436 | | 1 | . Spring | C |

1) Includes in seal kit, item 125
2) Valid with item 130
A) Not sold seperately. Replaced by PN 4700936583.

# 4700380829 Propulsion pump

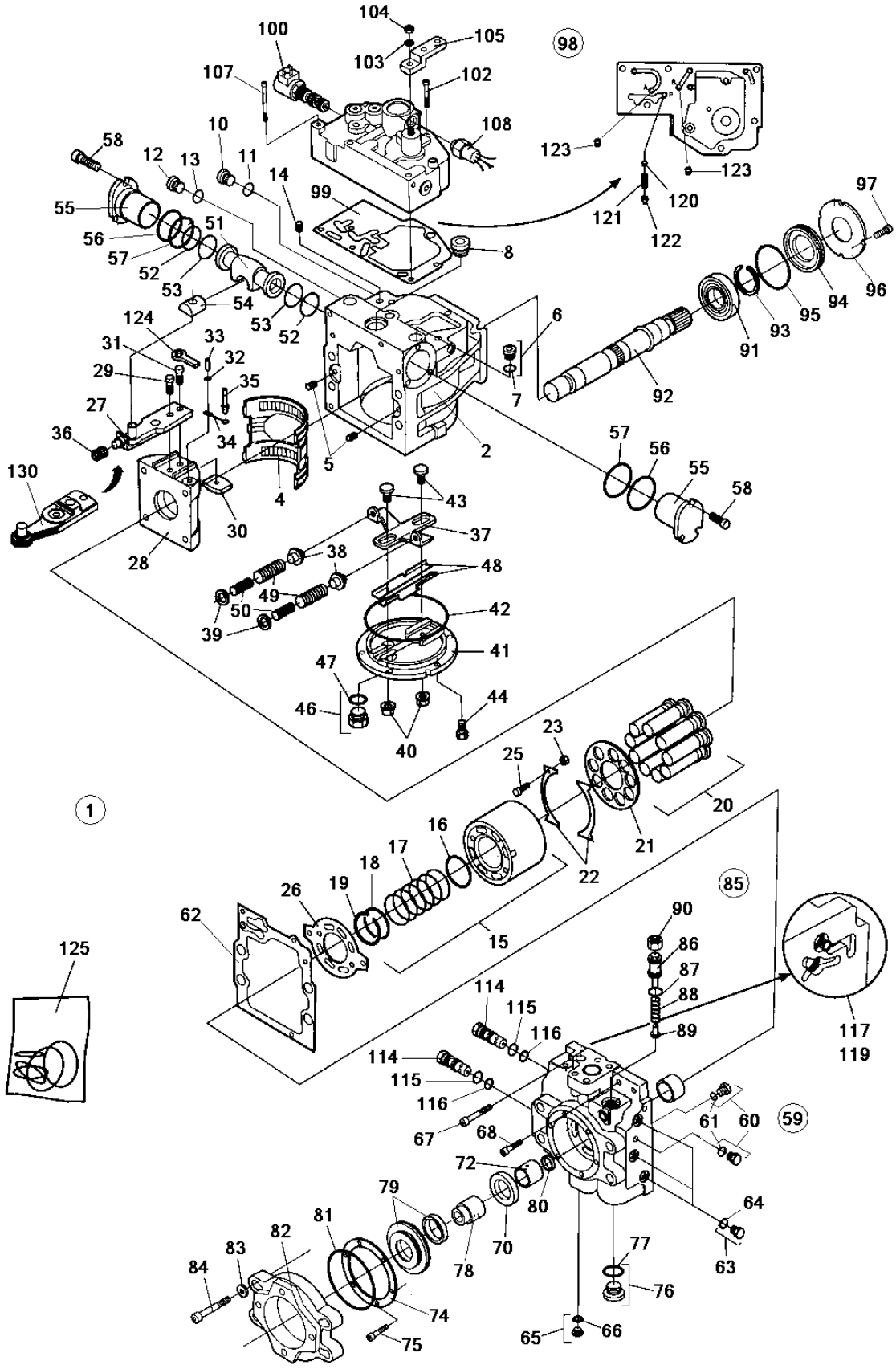

## 4700380829 Propulsion pump

| Item | Part No | Rem | Qty | Description | Code |
|---|---|---|---|---|---|
| 122 | 4700908448 | | 1 | . Spring retainer | C |
| 123 | 4700908439 | | 2 | . Orifice 0.8M6x8 | D |
| 124 | | | 1 | . Link | |
| 125 | 4700945906 | | 1 | Seal kit | D |
| 130 | | | 1 | Servo arm | |

## Vibration system

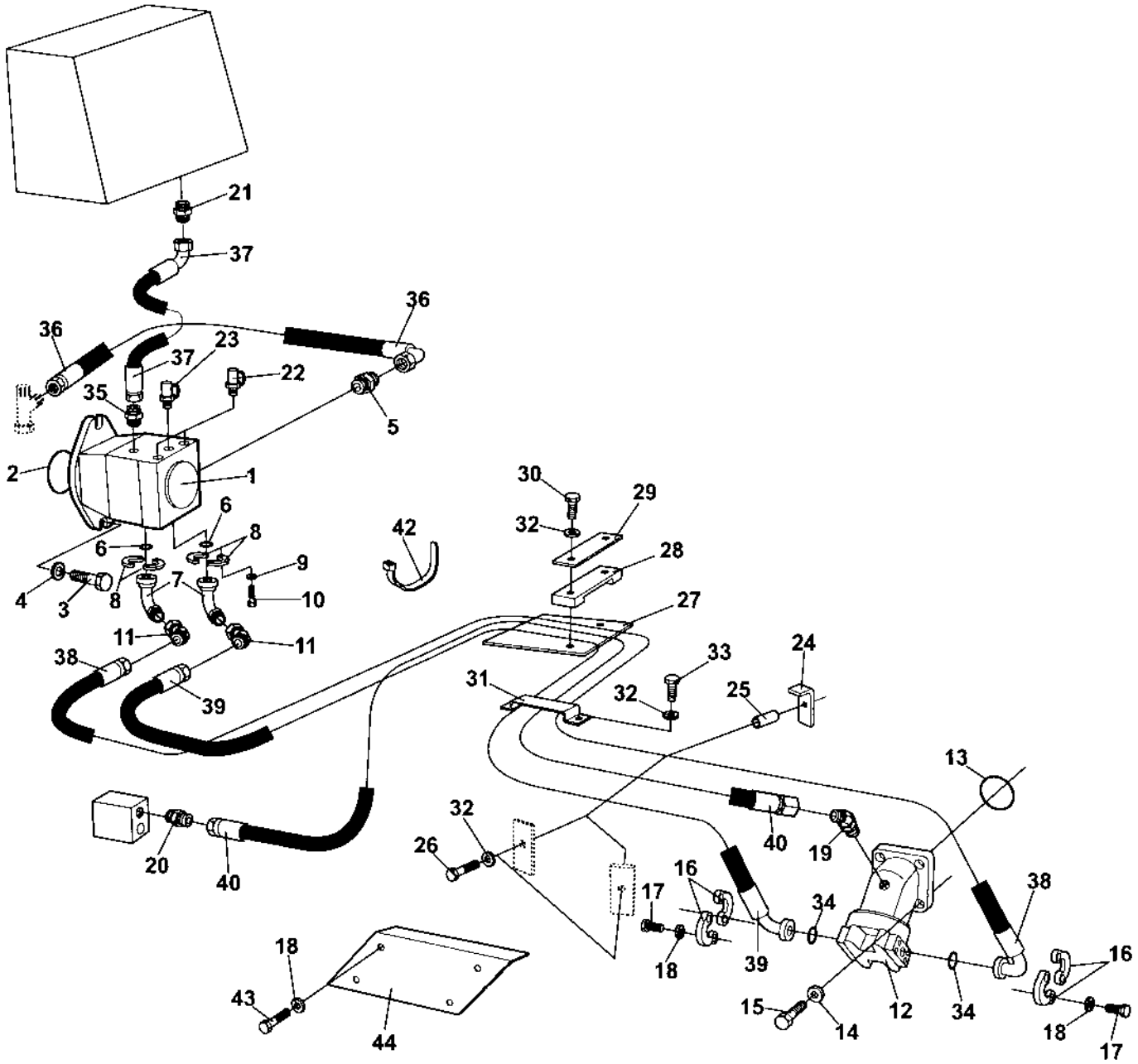

## Vibration system

| Item | Part No | Rem | Qty | Description | Code |
|---|---|---|---|---|---|
| 1 | 4700384751 | | 1 | **Vibration pump ( Page 104 )** | D |
| 2 | 4700160279 | | 1 | O-ring | C |
| | 4700160234 | | 1 | O-ring 94,9x2,62 | D |
| 3 | 4700502059 | | 2 | Screw 1/2"-13UNCx1.1/2" 8.8 | C |
| 4 | 4700904703 | | 2 | Washer | B |
| 5 | 4700234382 | | 1 | Adapter | |
| 6 | 4700904773 | | 2 | O-ring | D |
| 7 | 4700904767 | | 2 | Flange adapter | C |
| 8 | 4700929226 | | 4 | Flange half | C |
| 9 | 4700904637 | | 8 | Washer | C |
| 10 | 4700500030 | | 8 | Screw M10x035H 8.8 A3K | C |
| 11 | 4700904781 | | 2 | Adapter | C |
| 12 | 4700380144 | | 1 | **Hydraulic motor, vibration ( Page 106 )** | C |
| 13 | 4700160157 | | 1 | O-ring | D |
| 14 | 4700904231 | | 4 | Washer 13x24x2 300 HV | C |
| 15 | 4700500194 | | 4 | Screw | C |
| 16 | 4700900430 | | 4 | Flange half | C |
| 17 | 4700502019 | | 8 | Screw | C |
| 18 | 4700904229 | | 12 | Steel plain washer 8,4x16x1,5 | C |
| 19 | 4700813500 | | 1 | Elbow 45, O-ring | C |
| 20 | 4700334122 | | 1 | Adapter | D |
| 21 | 4700334205 | | 1 | Straight connector | D |
| 22 | 4700901157 | | 2 | Measuring nipple | C |
| 23 | 4700373774 | | 1 | Measuring nipple | D |
| 24 | 4700373270 | | 2 | Hose clamp | D |
| 25 | 4700373507 | | 2 | Spacer | |
| 26 | 4700500091 | | 2 | Screw | C |
| 27 | 4700349211 | | 1 | Hose protection | D |
| 28 | 4700343732 | | 1 | Hose clamp | |
| 29 | 4700335914 | | 1 | Cover plate | D |
| 30 | 4700500033 | | 2 | Screw M10-1,5x60 8,8 | D |
| 31 | 4700373396 | | 1 | Hose clamp | D |
| 32 | 4700904230 | | 6 | Steel plain washer | C |
| 33 | 4700500028 | | 2 | Screw | C |
| 34 | 4700904774 | | 2 | O-ring | D |
| 35 | 4700903925 | | 1 | Connector | |
| 36 | 4700483131 | | 1 | Hydraulic hose | D |
| 37 | 4700482727 | | 1 | Hydraulic hose | D |
| 38 | 4700484131 | | 1 | Hydraulic hose | D |
| 39 | 4700483350 | | 1 | Hydraulic hose | D |
| 40 | 4700482766 | | 1 | Hydraulic hose | D |
| 42 | 4700313102 | | | Cable ties | |
| 43 | 4700500019 | | 4 | Hexagon head screw M8x16H 8,8 | C |
| 44 | 4700373134 | | 1 | Cover | D |

# 4700384751 Vibration pump

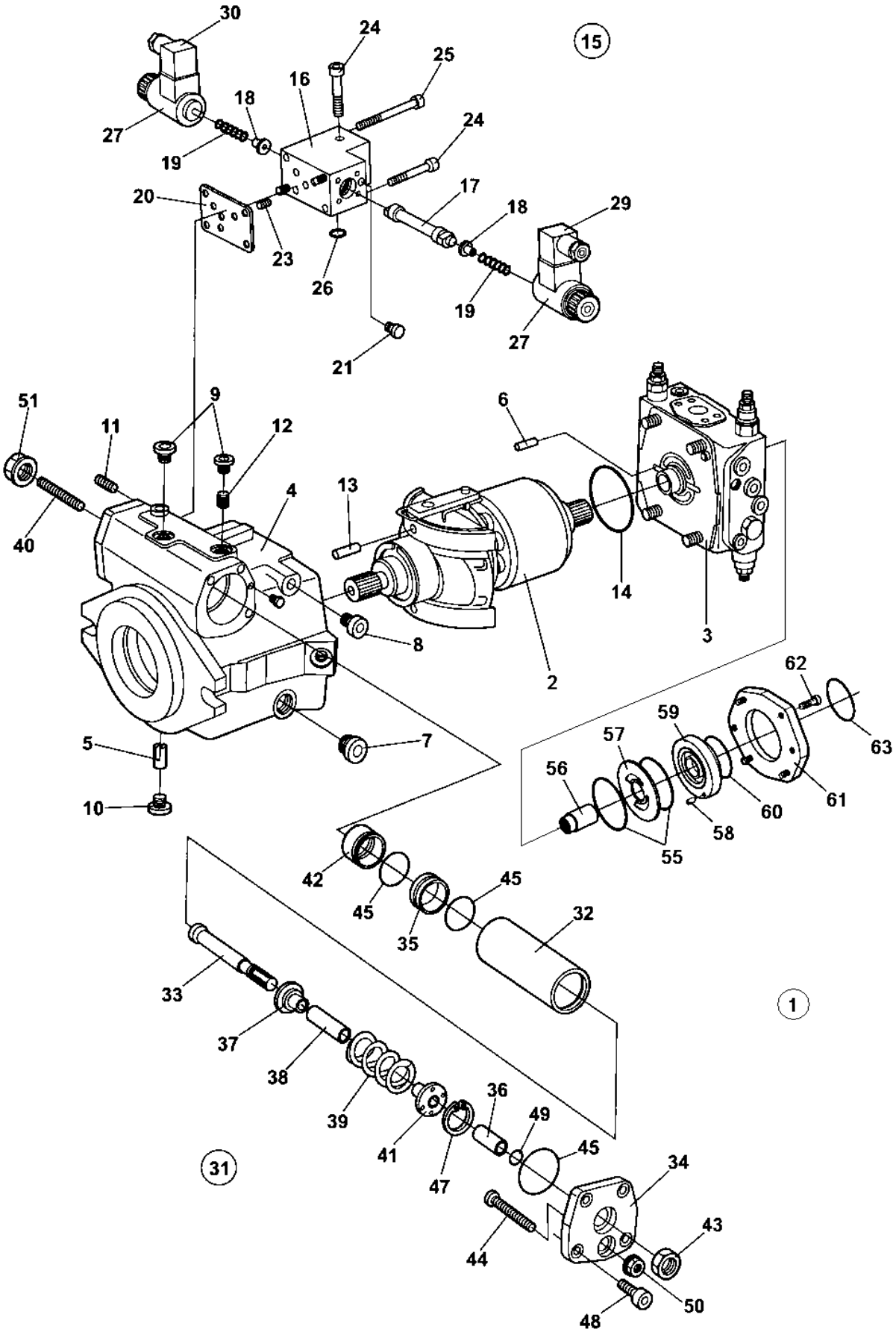

## 4700384751 Vibration pump

| Item | Part No | Rem | Qty | Description | Code |
|---|---|---|---|---|---|
| 1 | | | 1 | Hydraulic motor, vibration | |
| | 4700940674 | | 1 | . Seal kit | D |
| 2 | | | 1 | **. Rotary group, cpl** | |
| 3 | 4700937211 | | 1 | **. Valve block, cpl** | |
| 4 | | | 1 | . Housing | |
| 5 | 4700935158 | | 1 | . Pin | |
| 6 | 4700937215 | | 1 | . Pin | |
| 7 | 4700935219 | 1 | 1 | . Plug | |
| 8 | 4700902724 | 1 | 1 | . Plug | |
| 9 | 4700902625 | 1 | 3 | . Plug | |
| 10 | 4700902624 | 1 | 1 | . Screw | |
| 11 | 4700909514 | | 1 | . Double break-off pin | |
| 12 | 4700936308 | | 2 | . Orifice | |
| 13 | 4700902792 | | 2 | . Pin | |
| 14 | 4700935159 | 1 | 1 | . O-ring | |
| 15 | 4700940506 | | 1 | . Control valve, cpl | D |
| 16 | | | 1 | . . Housing | |
| 17 | | | 1 | . . Piston | |
| 18 | 4700945776 | | 2 | . . Spring collar | D |
| 19 | 4700936686 | | 2 | . . Spring | |
| 20 | | 1 | 1 | . . Gasket | |
| 21 | | | 2 | . . Pin | |
| 23 | 4700909514 | | 1 | . . Double break-off pin | |
| 24 | 4700927358 | | 3 | . . Screw | D |
| 25 | 4700908383 | | 2 | . . Screw | D |
| 26 | | 1 | 1 | . . O-ring | |
| 27 | 4700940505 | | 2 | . . Solenoid | B |
| 29 | | | 1 | . . Socket | |
| 30 | | | 1 | . . Socket | |
| 31 | | | 1 | . Hydraulic control, cpl | |
| 32 | | | 1 | . . Piston | |
| 33 | 4700937218 | | 1 | . . Rod | |
| 34 | 4700937219 | | 1 | . . Cover | |
| 35 | | | 1 | . . Guide ring | |
| 36 | | | 1 | . . Ring | |
| 37 | | | 1 | . . Spring collar | |
| 38 | | | 1 | . . Bush | |
| 39 | 4700937232 | | 1 | . . Spring | |
| 40 | 4700937195 | | 1 | . . Pin | |
| 41 | | | 1 | . . Spring collar | |
| 42 | | | 1 | . . Guide ring | |
| 43 | 4700937236 | | 1 | . . Nut | |
| 44 | 4700937237 | | 1 | . . Pin | |
| 45 | 4700902642 | 1 | 3 | . . O-ring | D |
| 47 | | | 1 | . . Retaining ring | |
| 48 | 4700902688 | | 4 | . . Screw | |
| 49 | 4700936394 | 1 | 1 | . . O-ring | |
| 50 | 4700936421 | 1 | 1 | . . Seal lock nut | |
| 51 | 4700936393 | 1 | 1 | . . Seal lock nut | |
| 55 | 4700935192 | 1 | 2 | . O-ring | |
| 56 | | | 1 | . Coupling | |
| 57 | 4700935187 | | 1 | . Wear plate | |
| 58 | 4700935190 | | 1 | . Cylindrical pin | |
| 59 | | 1 | 1 | . Seal ring | |
| 60 | | 1 | 1 | . O-ring | |
| 61 | | | 1 | . Flange | |
| 62 | | | 4 | . Screw | |
| 63 | 4700939168 | 1 | 1 | . O-ring | |

1) Included in seal kit, see item 1.

# 4700380144 Hydraulic motor, vibration

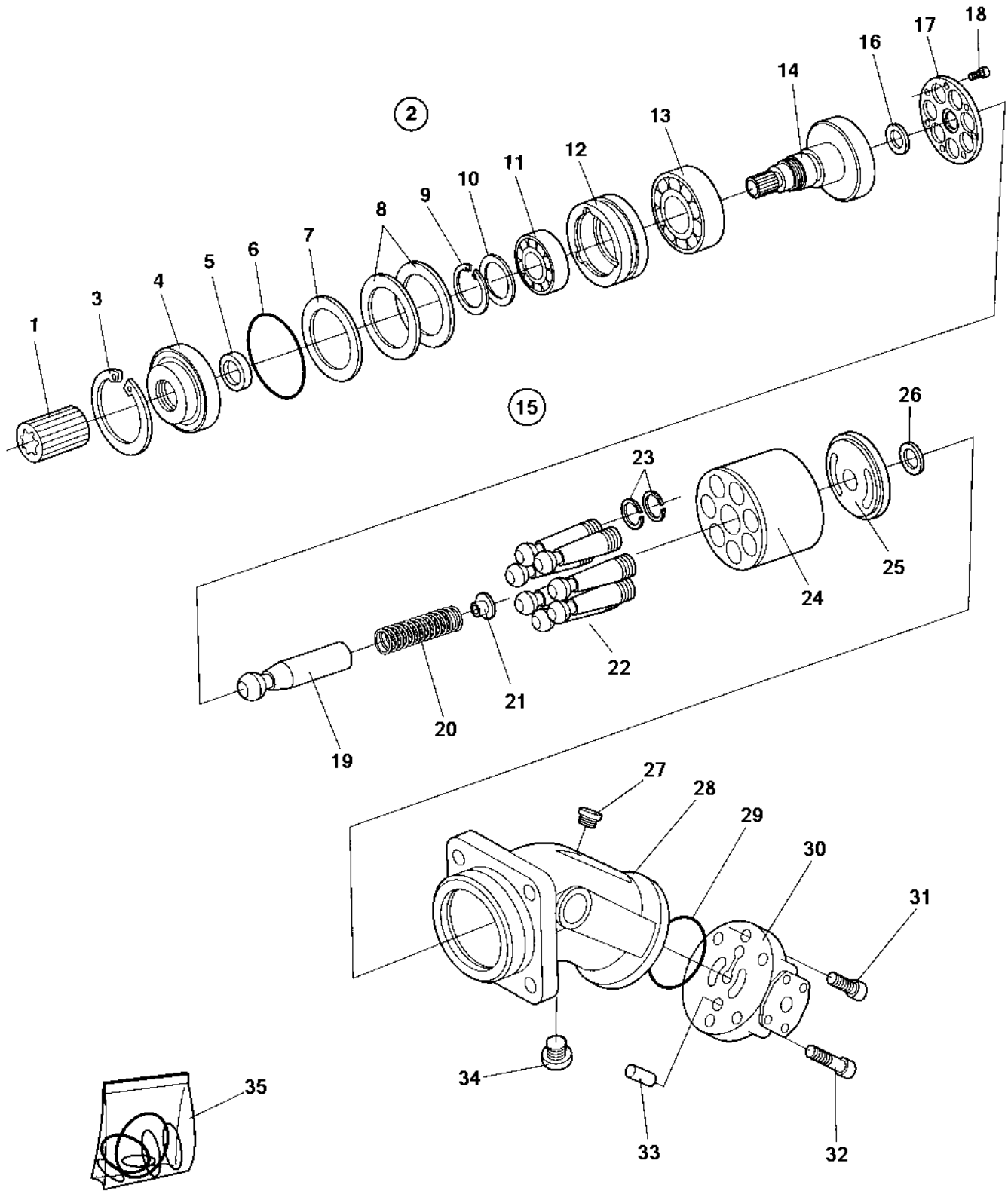

## 4700380144 Hydraulic motor, vibration

| Item | Part No | Rem | Qty | Description | | Code |
|---|---|---|---|---|---|---|
| | | | 1 | Hydraulic motor, vibration | | |
| 1 | 4700340863 | | 1 | . Splined sleeve | | D |
| 2 | 4700380077 | | 1 | . Hydraulic motor, vibration | | C |
| 3 | 4700901387 | | 1 | . . Snap ring | | D |
| 4 | 4700937261 | | 1 | . . Cover | | |
| 5 | 4700937264 | 1 | 1 | . . Seal ring | | |
| 6 | 4700937265 | 1 | 1 | . . O-ring | | |
| 7 | 4700901390 | | 1 | . . Shim | T=0,3 mm | D |
| 8 | 4700901389 | | 2 | . . Shim | T=0,1 mm | D |
| 9 | 4700938042 | | 1 | . . Retaining ring | | |
| 10 | 4700938041 | | 1 | . . Back-up plate | | |
| 11 | 4700901386 | | 1 | . . Bearing | | D |
| 12 | 4700937260 | | 1 | . . Bearing ring | | |
| 13 | 4700901385 | | 1 | . . Bearing | | D |
| 14 | 4700938040 | | 1 | . . Shaft | | |
| 15 | | | 1 | . Rotary group, hydr.section | | |
| 16 | | | 1 | . . Washer | | |
| 17 | | | 1 | . . Retaining plate | | |
| 18 | | | 7 | . . Screw | | |
| 19 | | | 1 | . . Pin | | |
| 20 | | | 1 | . . Spring | | |
| 21 | | | 1 | . . Spring collar | | |
| 22 | | | 7 | . . Piston | | |
| | | | 1 | . . . Piston | | |
| 23 | | | 2 | . . . Sealing ring | | |
| 24 | | | 1 | . . Cylinder | | |
| 25 | | | 1 | . . Pressure plate | | |
| 26 | | | 1 | . . Washer | | |
| 27 | 4700937995 | | 1 | . . Screw | | |
| 28 | 4700937256 | | 1 | . . Housing | | |
| 29 | 4700937258 | 1 | 1 | . . O-ring | | |
| 30 | 4700937257 | | 1 | . . Plate | | |
| 31 | 4700902655 | | 2 | . . Screw | | |
| 32 | 4700927350 | | 4 | . . Screw | | D |
| 33 | 4700937993 | | 1 | . . Pin | | |
| 34 | 4700937259 | 1 | 1 | . . Screw | | |
| 35 | 4700937673 | | 1 | . Seal kit | | |

1) Included in seal kit, item 34

## Steering system

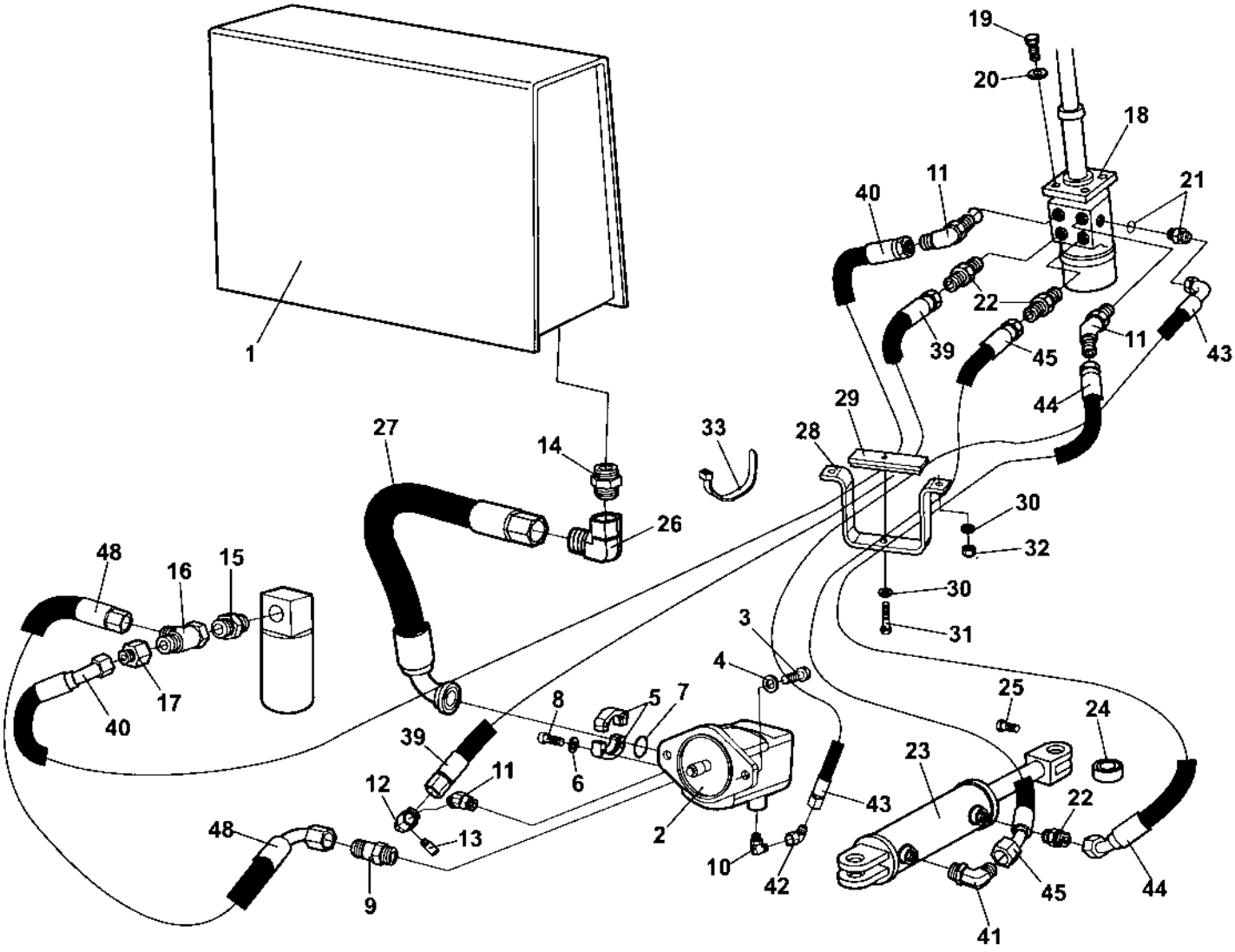

## Steering system

| Item | Part No | Rem | Qty | Description | Code |
|---|---|---|---|---|---|
| 1 | | | | **Hydraulic oil tank** | |
| 2 | 4700394635 | | 1 | Steering pump | D |
| 3 | 4700500046 | | 2 | Screw M12x025H | C |
| 4 | 4700904231 | | 2 | Washer 13x24x2 300 HV | C |
| 5 | 4700232097 | | 2 | Flange half | C |
| 6 | 4700904637 | | 4 | Washer | C |
| 7 | 4700904005 | | 1 | O-ring | B |
| 8 | 4700508029 | | 4 | Screw M10-1,5x30H 8,8 | C |
| 9 | 4700385538 | | 1 | Connector | C |
| 10 | 4700334203 | | 1 | Elbow 90, O-ring | C |
| 11 | 4700813500 | | 3 | Elbow 45, O-ring | C |
| 12 | 4700375669 | | 1 | Adapter | C |
| 13 | 4700910161 | | 1 | Measuring nipple | C |
| 14 | 4700234626 | | 1 | Adapter | C |
| 15 | 4700334468 | | 1 | Adapter | C |
| 16 | 4700234243 | | 1 | T-connector | C |
| 17 | 4700234667 | | 1 | Reducer | |
| 18 | 4700359139 | | 1 | **Pilot valve ( Page 110 )** | C |
| 19 | 4700502034 | | 4 | Screw UNC 3/8 - 16 | D |
| 20 | 4700904230 | | 4 | Steel plain washer | C |
| 21 | 4700334143 | | 1 | Straight connector | C |
| 22 | 4700334121 | | 3 | Straight connector | C |
| 23 | 4700392002 | | 1 | **Steering cylinder ( Page 112 )** | C |
| 24 | 4700379630 | | 2 | Radial spherical plain bearing | D |
| 25 | 4700500044 | | 1 | Screw M6x8 | C |
| 26 | 4700234152 | | 1 | Adapter | |
| 27 | 4700483504 | | 1 | Hydraulic hose | D |
| 28 | 4700372513 | | 1 | Hose clamp | D |
| 29 | 4700372514 | | 1 | Hose clamp | D |
| 30 | 4700904229 | | 3 | Steel plain washer 8,4x16x1,5 | C |
| 31 | 4700500023 | | 1 | Screw M8-1,25x40 8,8 | C |
| 32 | 4700586003 | | 2 | Lock nut M8 | C |
| 33 | 4700313102 | | | Cable ties | |
| 39 | 4700484128 | | 1 | Hydraulic hose | D |
| 40 | 4700338486 | | 1 | Hydraulic hose | D |
| 41 | 4700813444 | | 1 | Elbow 90, O-ring | C |
| 42 | 4700334196 | | 1 | Elbow 90 | C |
| 43 | 4700482730 | | 1 | Hydraulic hose | D |
| 44 | 4700482538 | | 1 | Hydraulic hose | D |
| 45 | 4700483147 | | 1 | Hydraulic hose | D |
| 48 | 4700482404 | | 1 | Hydraulic hose | D |

# 4700359139 Pilot valve

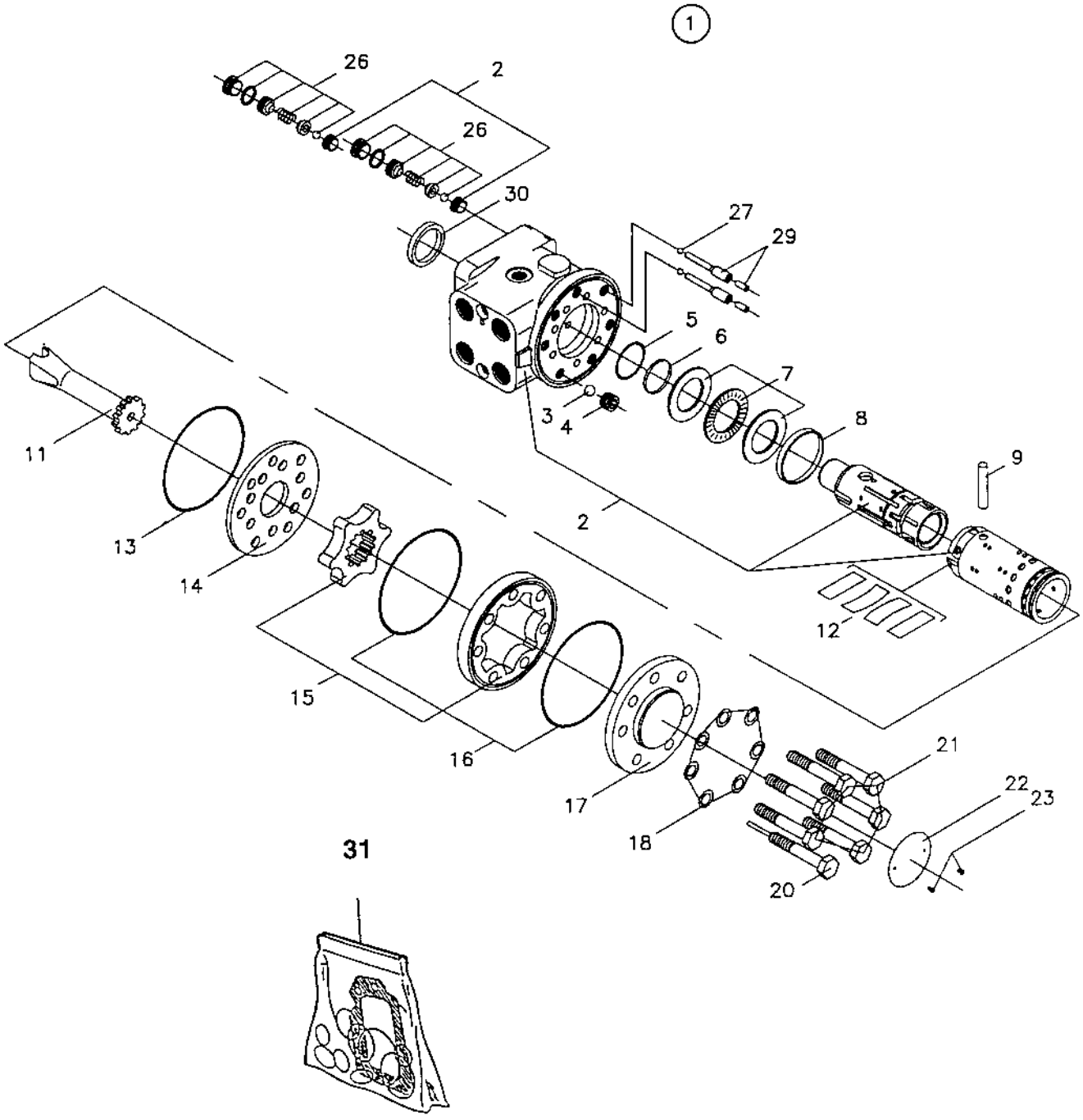

## 4700359139 Pilot valve

| Item | Part No | Rem | Qty | Description | Code |
|---|---|---|---|---|---|
| 1 | | | 1 | Pilot valve, cpl | |
| 2 | | | 1 | . Housing, cpl | |
| 3 | 4700480468 | | 1 | . Ball | D |
| 4 | 4700480446 | | 1 | . Threaded bushing | D |
| 5 | | 1 | 1 | . O-ring | |
| 6 | | 1 | 1 | . Seal ring | |
| 7 | 4700911620 | | 1 | . Bearing | B |
| 8 | 4700480449 | | 1 | . Ring | D |
| 9 | 4700480447 | | 1 | . Cross pin | C |
| 11 | 4700902861 | | 1 | . Cardan shaft | C |
| 12 | 4700909211 | | 1 | . Set of springs | C |
| 13 | | 1 | 1 | . O-ring | |
| 14 | 4700902862 | | 1 | . Valve plate | C |
| 15 | 4700909212 | | 1 | . Gear wheel set | C |
| 16 | | 1 | 2 | . O-ring | |
| 17 | 4700480450 | | 1 | . End cap | D |
| 18 | | 1 | 7 | . Washer | |
| 20 | 4700909213 | | 1 | . Screw with pin | C |
| 21 | 4700909214 | | 6 | . Screw | C |
| 22 | | | 1 | . Plate | |
| 23 | | | 2 | . Screw | |
| 26 | 4700929012 | | 2 | . Shock valve 22,5-24,0 MPa | C |
| 27 | 4700929013 | | 2 | . Ball | D |
| 29 | 4700929014 | | 2 | . Rolled pin | D |
| 30 | | 1 | 1 | . Dust seal ring | |
| 31 | 4700480457 | | 1 | . Spare parts kit | C |

1) Includes in seal kit item 31.

# 4700392002 Steering cylinder

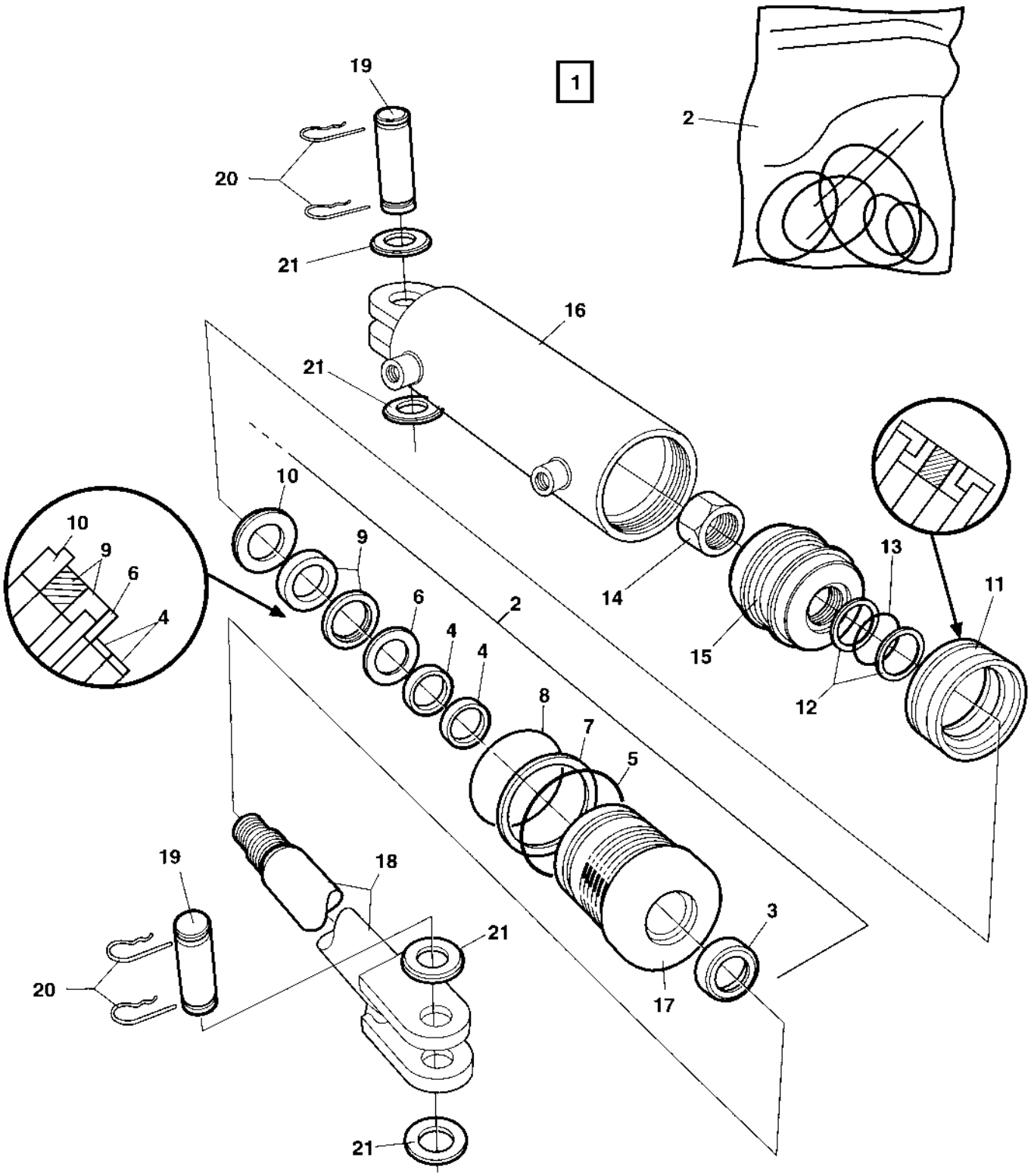

## 4700392002 Steering cylinder

| Item | Part No | Rem | Qty | Description | Code |
|---|---|---|---|---|---|
| 1 | 4700392002 | | 1 | **Steering cylinder ( Page 112 )** | C |
| 2 | 4700392100 | | 1 | . Seal kit | B |
| 3 | | | 1 | . . Seal | |
| 4 | | | 2 | . . Seal | |
| 5 | | | 1 | . . O-ring | |
| 6 | | | 1 | . . Back-up ring | |
| 7 | | | 1 | . . Back-up ring | |
| 8 | | | 1 | . . O-ring | |
| 9 | | | 1 | . . Seal | |
| 10 | | | 1 | . . Retaining ring | |
| 11 | | | 1 | . . Seal | |
| 12 | | | 2 | . . Back-up ring | |
| 13 | | | 1 | . . O-ring | |
| 14 | 4700392104 | | 1 | . Lock nut | |
| 15 | | | 1 | . Piston block | |
| 16 | | | 1 | . Cylinder | |
| 17 | | | 1 | . Steering | |
| 18 | 4700392105 | | 1 | . Piston rod | D |
| 19 | 4700392103 | | 2 | . Shaft | C |
| 20 | 4700635061 | | 4 | . Hair clip | B |
| 21 | 4700600016 | | 4 | . Washer 26x45x4 | B |

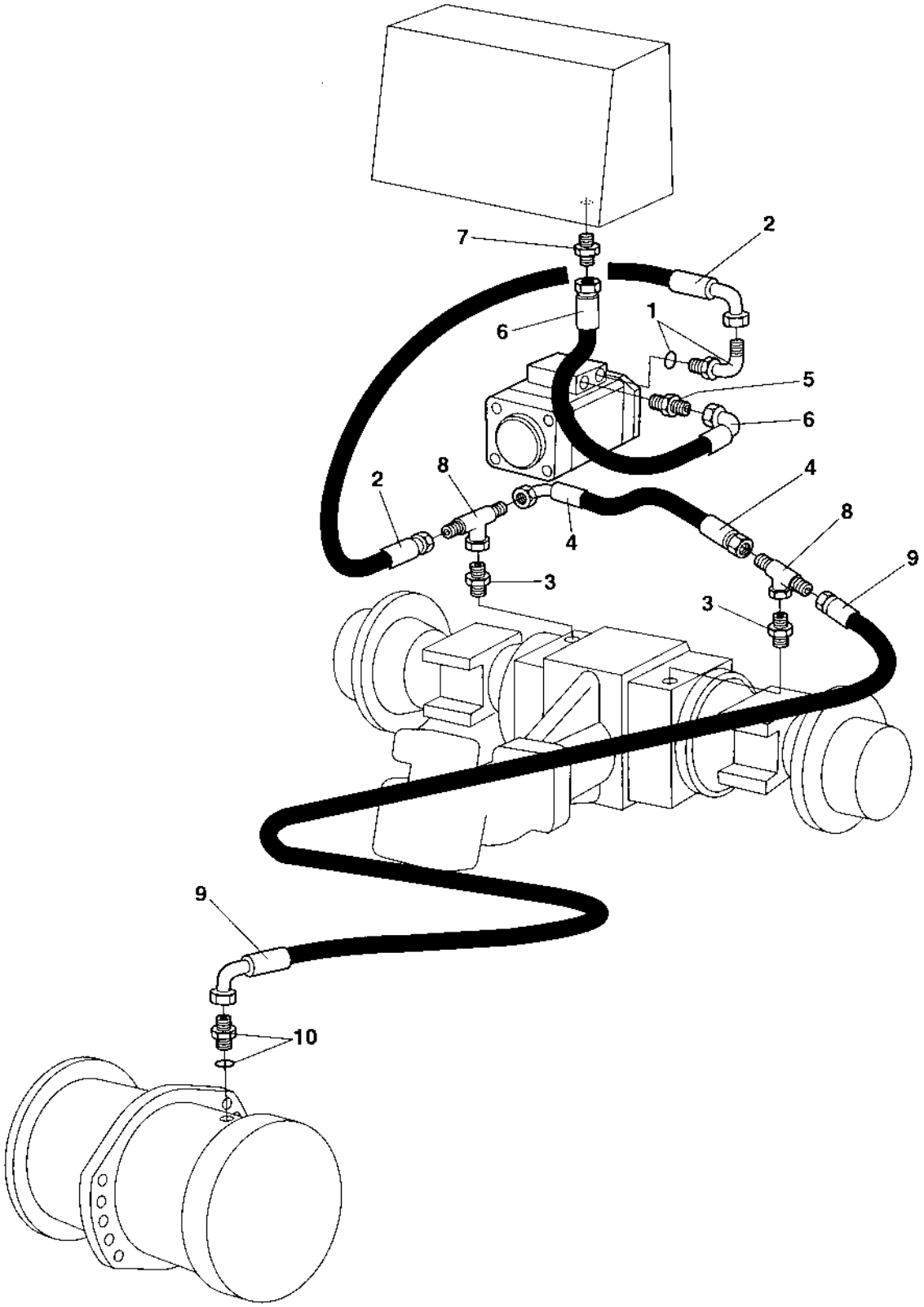
7
2
6
1
5
6
2
8
4
8
4
9
3
3
9
10

## Brake system

| Item | Part No | Rem | Qty | Description | Code |
|---|---|---|---|---|---|
| 1 | 4700334389 | | 1 | Connector | D |
| 2 | 4700482056 | A | 1 | Hydraulic hose | D |
| | 4700482543 | B | 1 | Hydraulic hose | D |
| 3 | 4700900552 | | 2 | Adapter | C |
| 4 | 4700482399 | | 1 | Hydraulic hose | D |
| 5 | 4700234843 | | 1 | Adapter | |
| 6 | 4700482474 | | 1 | Hydraulic hose | D |
| 7 | 4700334205 | | 1 | Straight connector | D |
| 8 | 4700234888 | | 2 | Tee-connector | D |
| 9 | 4700483134 | | 1 | Hydraulic hose | D |
| 10 | 4700234233 | | 1 | Adapter | C |
| 11 | 4700334524 | | 1 | Connector | C |

A) L= 600 MM
B) L=1000 MM

# Hydraulic oil tank

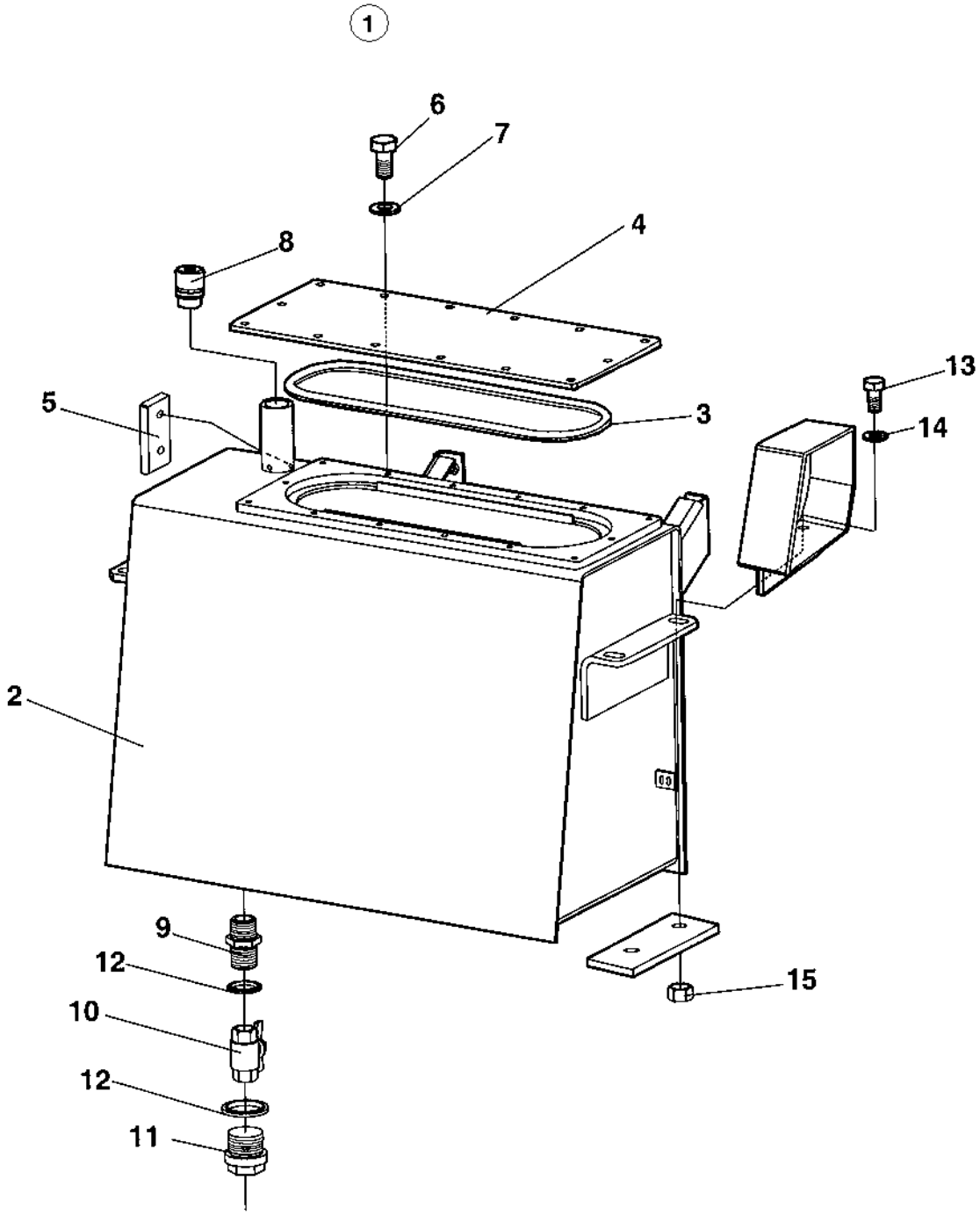

## Hydraulic oil tank

| Item | Part No | Rem | Qty | Description | Code |
|---|---|---|---|---|---|
| 1 | 4700389151 | | 1 | Hydraulic oil tank, cpl | D |
| 2 | 4700389152 | | 1 | . Hydraulic oil tank | D |
| 3 | 4700349880 | | 1 | . O-ring | C |
| 4 | 4700349879 | | 1 | . Cover | D |
| 5 | 4700989151 | | 1 | . Oil level glass | C |
| 6 | 4700500019 | | 14 | . Hexagon head screw M8x16H 8,8 | C |
| 7 | 4700904229 | | 14 | . Steel plain washer 8,4x16x1,5 | C |
| 8 | 4700357138 | | 1 | . Ventilating filter | A |
| 9 | 4700791119 | | 1 | . Adapter G3/4 | D |
| 10 | 4700233304 | | 1 | . Ball valve | C |
| 11 | 4700232039 | | 1 | . Plug G3/4 | C |
| 12 | 4700791120 | | 2 | . Sealing washer | |
| 13 | 4700500192 | | 4 | Screw M10x80 | C |
| 14 | 4700904567 | | 4 | Washer 10,5x28x6 HB305 | C |
| 15 | 4700570006 | | 4 | Nut | B |

# Central test panel hydraulic Option

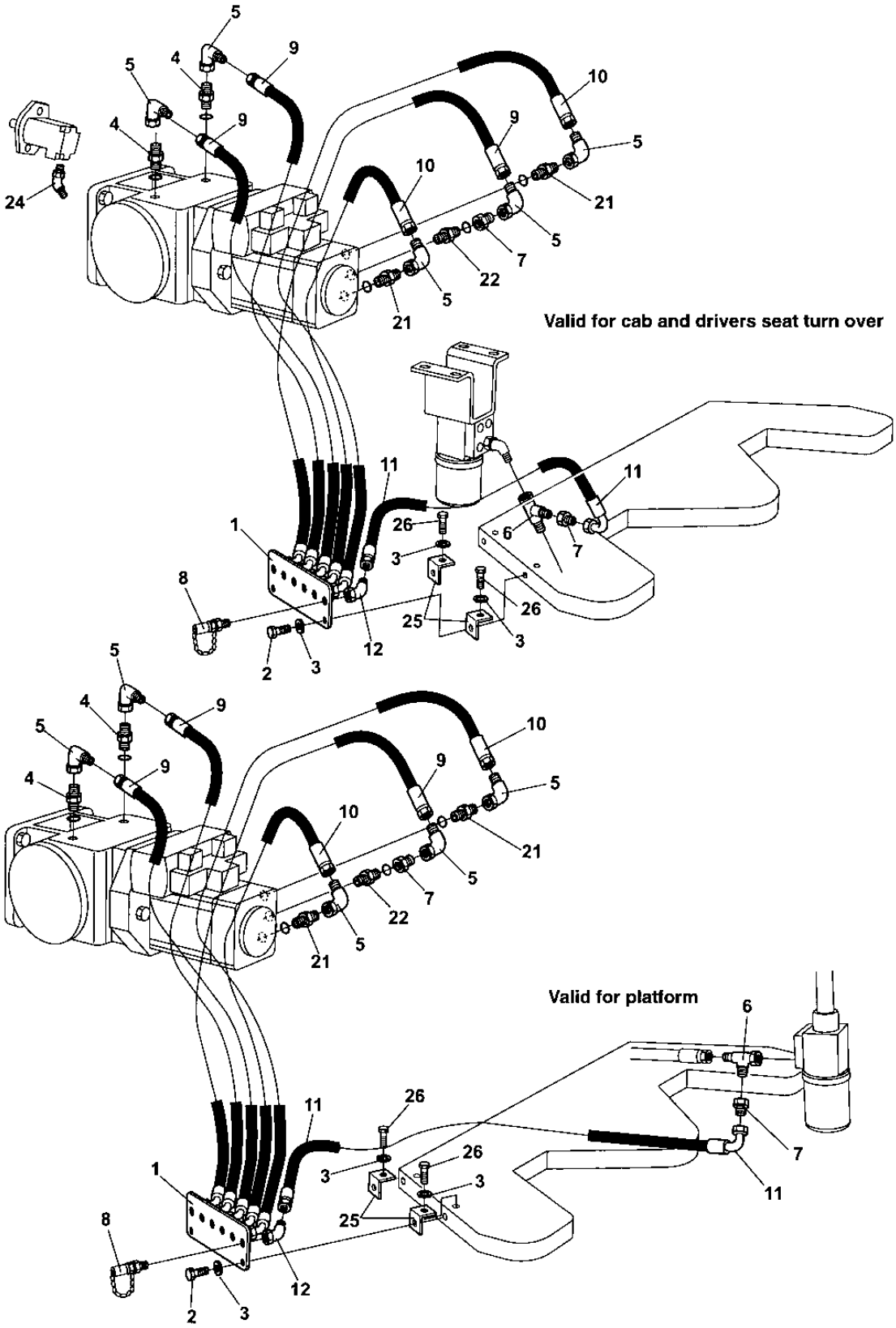

## Central test panel hydraulic Option

| Item | Part No | Rem | Qty | Description | Code |
|---|---|---|---|---|---|
| 1 | 4700374028 | | 1 | Test panel | D |
| 2 | 4700500053 | | 2 | Screw M8x20H 8.8 | C |
| 3 | 4700904229 | | 4 | Steel plain washer 8,4x16x1,5 | C |
| 4 | 4700234388 | | 2 | Connector | C |
| 5 | 4700334196 | | 5 | Elbow 90 | C |
| 6 | 4700334135 | | 1 | Tee-connector | C |
| 7 | 4700334264 | | 2 | Reducing | D |
| 8 | 4700356348 | | 6 | Measuring nipple | D |
| 9 | 4700483207 | | 3 | Hydraulic hose | D |
| 10 | 4700483188 | | 2 | Hydraulic hose | D |
| 11 | 4700482726 | | 1 | Hydraulic hose | D |
| 12 | 4700234622 | | 1 | Elbow 45 | C |
| 13 | 4700313102 | | | Cable ties | |
| 21 | 4700902125 | | 2 | Connector | |
| 22 | 4700925723 | | 1 | Connector | C |
| 24 | 4700334197 | | 1 | Elbow 90 | C |
| 25 | 4700908136 | | 2 | Bracket | D |
| 26 | 4700500018 | | 2 | Screw M8-1,25x12 8,8 | C |

# Central test panel hydraulic Option

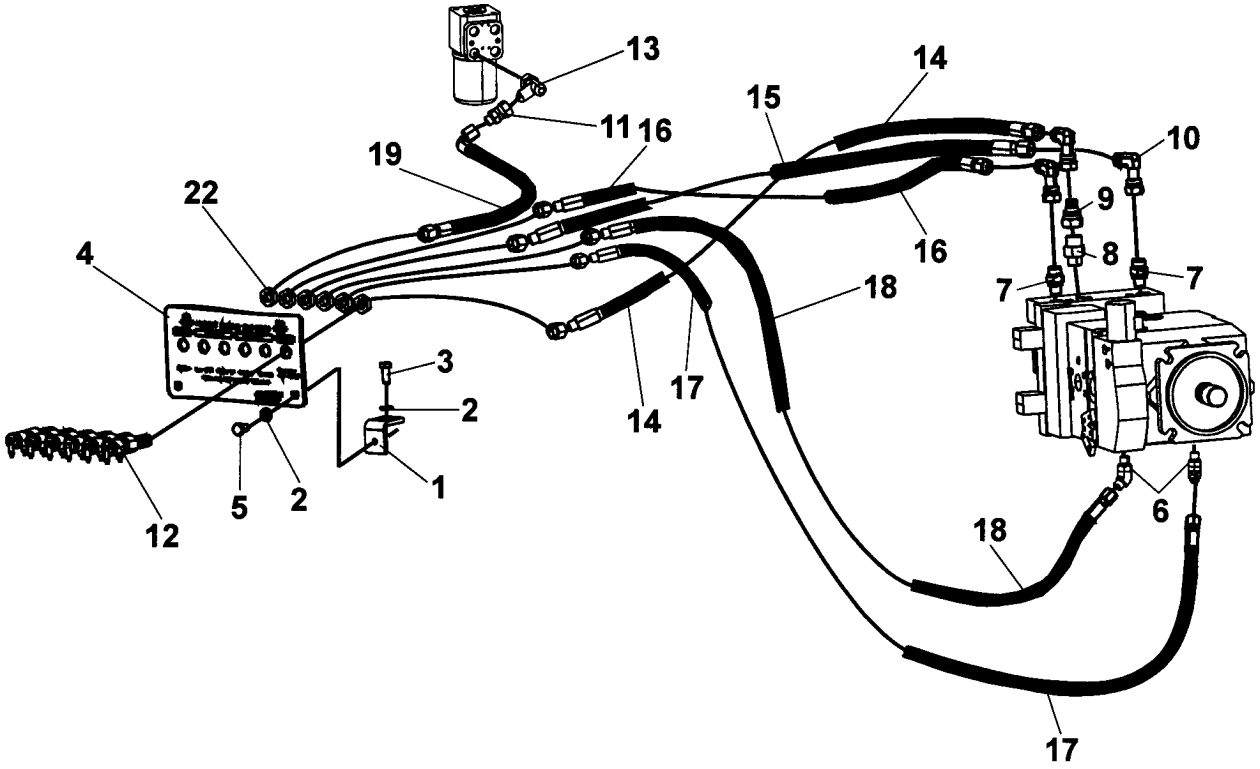

## Central test panel hydraulic Option

| Item | Part No | Rem | Qty | Description | Code |
|---|---|---|---|---|---|
| 1 | 4700908136 | | 2 | Bracket | D |
| 2 | 4700904229 | | 4 | Steel plain washer 8,4x16x1,5 | C |
| 3 | 4700500053 | | 2 | Screw M8x20H 8.8 | C |
| 4 | 4812113146 | | 1 | Test panel | D |
| 5 | 4700500018 | | 2 | Screw M8-1,25x12 8,8 | C |
| 6 | 4812116050 | | 2 | Connector 45 | D |
| 7 | 4700791538 | | 2 | Straight connector | C |
| 8 | 4700791412 | | 1 | Straight o-ring connector | D |
| 9 | 4700792823 | | 1 | Reducer | D |
| 10 | 4812113110 | | 3 | Elbow 90 | D |
| 11 | 4811000332 | | 1 | Reducer | D |
| 12 | 4812110422 | | 6 | Measuring nipple | C |
| 13 | 4700334135 | | 1 | Tee-connector | C |
| 14 | 4811000360 | | 1 | Hydraulic hose | |
| 15 | 4811000361 | | 1 | Hydraulic hose | |
| 16 | 4811000361 | | 1 | Hydraulic hose | |
| 17 | 4811000362 | | 1 | Hydraulic hose | |
| 18 | 4811000369 | | 1 | Hydraulic hose | |
| 19 | 4811000363 | | 1 | Hydraulic hose | |
| 22 | 4700792450 | | 6 | Nut | D |

## Electrical equipment

| Item | Part No | Rem | Qty | Description | Code |
|---|---|---|---|---|---|
| 100 | | | | Electric system ( Page 124 ) | |
| 150 | | | | Relay and Fuses ( Page 128 ) | |
| 200 | | | | Instrument box ( Page 130 ) | |
| 300 | | | | Instrument panel Main ( Page 132 ) | |
| 325 | | | | Instrument panel Upper left ( Page 134 ) | |
| 350 | | | | Instrument panel Upper right ( Page 136 ) | |
| 375 | | | | Instrument panel Lower left ( Page 138 ) | |
| 380 | | | | Instrument panel Lower right ( Page 140 ) | |
| 510 | | | | Emergency stop panel ( Page 142 ) | |
| 530 | | | | Emergency and Parking brake panel ( Page 144 ) | |
| 550 | | | | Driving lights Option ( Page 146 ) | |
| 565 | | | | Working lights Option ( Page 148 ) | |
| 570 | | | | Rotating beacon Option ( Page 150 ) | |
| 580 | | | | Compaction meter Option ( Page 152 ) | |
| 596 | | | | Speedometer and frequency meter Option ( Page 154 ) | |
| 605 | | | | Tachograph, platform Option ( Page 156 ) | |
| 607 | | | | Tachograph , cab Option ( Page 158 ) | |
| 608 | | | | Tachograph, simple cab Option ( Page 160 ) | |
| 615 | | | | Back-up alarm Option ( Page 162 ) | |
| 620 | | | | Protecting cover, Headlight Option ( Page 164 ) | |
| 630 | | | | Field computer assembly Option ( Page 166 ) | |
| 640 | | | | Compaction Analyzer Option ( Page 168 ) | |
| 650 | | | | Geodynamic Compaction indicator Option ( Page 170 ) | |
| 660 | | | | GPS Option ( Page 172 ) | |
| | | | | GPS Option ( Page 174 ) | |
| 670 | | | | Engine pre-heater, Cab Option ( Page 176 ) | |
| 671 | | | | Engine pre-heater, Platform Option ( Page 178 ) | |

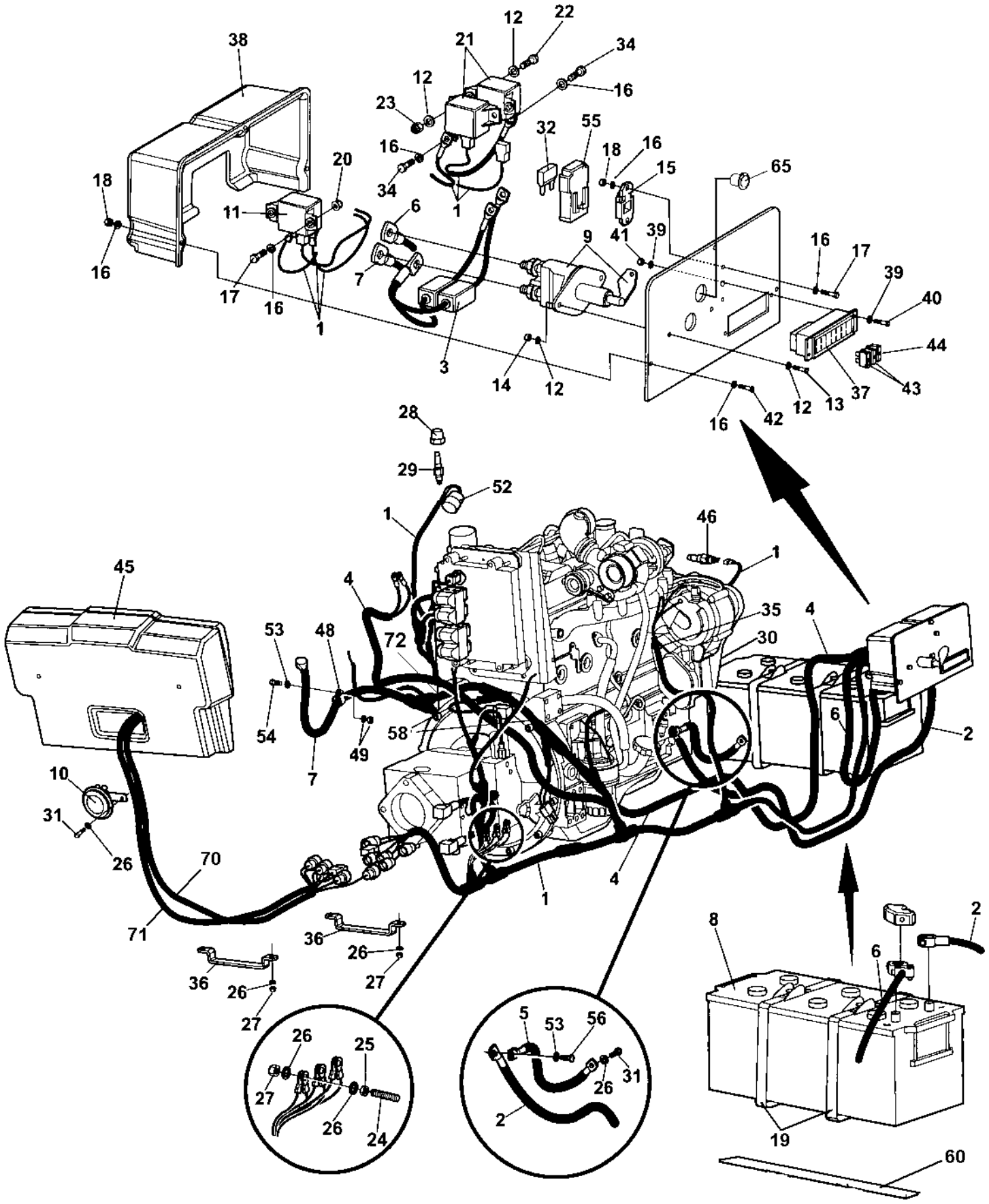
38
12
22
21
34
12
16
23
32
55
16
18
16
15
65
20
18
11
6
1
34
9
41
39
16
17
39
40
44
16
17
7
16
1
3
14
12
43
37
13
12
42
16
28
29
52
1
46
1
45
4
35
4
53
48
72
30
6
2
54
49
58
7
10
31
26
70
71
36
26
27
36
26
27
1
4
8
2
6
19
60
26
25
27
26
24
5
53
56
26
31
2

## Electric system

| Item | Part No | Rem | Qty | Description | Code |
|---|---|---|---|---|---|
| 1 | 4700394854 | | 1 | Cable harness | D |
| 2 | 4700792677 | | 1 | Battery cable | D |
| | 4700382842 | | 1 | Battery cable For cab versions only | |
| 3 | 4700387427 | | 1 | Cable harness | D |
| 4 | 4700392937 | | 1 | Cable harness | D |
| 5 | 4700791525 | | 1 | Connection cable, coarse | D |
| 6 | 4700791503 | | 1 | Battery cable | C |
| 7 | 4700791141 | | 1 | Battery cable | D |
| 8 | 4700792682 | | 1 | Battery | D |
| 9 | 4700903640 | | 1 | Battery switch | D |
| | 4700903641 | | 1 | . Key | D |
| 10 | 4700999027 | | 1 | Horn | C |
| 11 | 4700791183 | A | 1 | Relay | A |
| 12 | 4700904228 | | 8 | Washer 6,4x12x1,5 | C |
| 13 | 4700500013 | | 2 | Screw M6-1x16 8,8 | C |
| 14 | 4700570004 | | 2 | Nut M6X1,00 -8 A2K | C |
| 15 | 4700904036 | | 1 | Fuse holder | D |
| 16 | 4700904281 | | 16 | Washer 5,3x10x1 300HV | C |
| 17 | 4700500060 | | 4 | Screw M5-0,8x20 8.8 | C |
| 18 | 4700586001 | | 5 | Lock nut | C |
| 19 | 4700389662 | | 2 | Strap | |
| 20 | 4700902284 | | 2 | Nut M5 | C |
| 21 | 4700791183 | | 2 | Relay | A |
| 22 | 4700500075 | | 2 | Screw M6-1,0x25 8.8 | C |
| 23 | 4700586002 | | 2 | Lock nut M6 -8 | C |
| 24 | 4700903768 | | 3 | Threaded stud | C |
| 25 | 4700570005 | | 3 | Nut M8 | C |
| 26 | 4700904229 | | 12 | Steel plain washer 8,4x16x1,5 | C |
| 27 | 4700586003 | | 7 | Lock nut M8 | C |
| 28 | 4700813434 | | 1 | Reducer | C |
| 29 | 4700903631 | | 1 | Temperature sensor Hydraulic oil | B |
| 30 | 4700960727 | | 2 | Clamp | |
| 31 | 4700500053 | | 2 | Screw M8x20H 8.8 | C |
| 32 | 4700904038 | | 1 | Fuse 40A | A |
| 33 | 4700313041 | | | Cable ties | B |
| 34 | 4700500004 | | 4 | Screw M5 0,8x12 8,8 | C |
| 35 | 4700921080 | | 1 | Clamp | C |
| 36 | 4700372649 | | 2 | Cable holder | D |
| 37 | 4700791185 | | 1 | Fuse box | |
| 38 | 4700373891 | | 1 | Cover | D |
| 39 | 4700904698 | | 2 | Washer 4,3x8x0,8 | C |
| 40 | 4700533010 | | 2 | Screw | D |
| 41 | 4700923976 | | 2 | Nut | C |
| 42 | 4700500184 | | 3 | Screw M5-0,8x14 8,8 | D |
| 43 | 4700901225 | | 2 | Fuse 5A | A |
| 44 | 4700901230 | | 1 | Fuse 30A | A |
| | 4700901227 | | 1 | Fuse 10A | A |
| 45 | | | 1 | Control panel | |
| 46 | 4700903632 | | 1 | Temperature sensor Engine | |
| 48 | 4700921104 | | 1 | Clamp | C |
| 49 | 4700904557 | | 2 | Steel plain washer | C |
| 52 | 4700929023 | | 1 | Indicator | B |
| 53 | 4700904637 | | 2 | Washer | C |
| 54 | 4700500030 | | 1 | Screw M10x035H 8.8 A3K | C |
| 55 | 4700904032 | | 1 | Fuse holder | D |
| 56 | 4700500029 | | 1 | Hexagon head screw | C |
| 58 | 4700921132 | | 2 | Clamp | C |
| 60 | 4812110818 | | 2 | Rubber cloth | |

A) Replaces P/N 4700904448 as Start relay from January 2009.

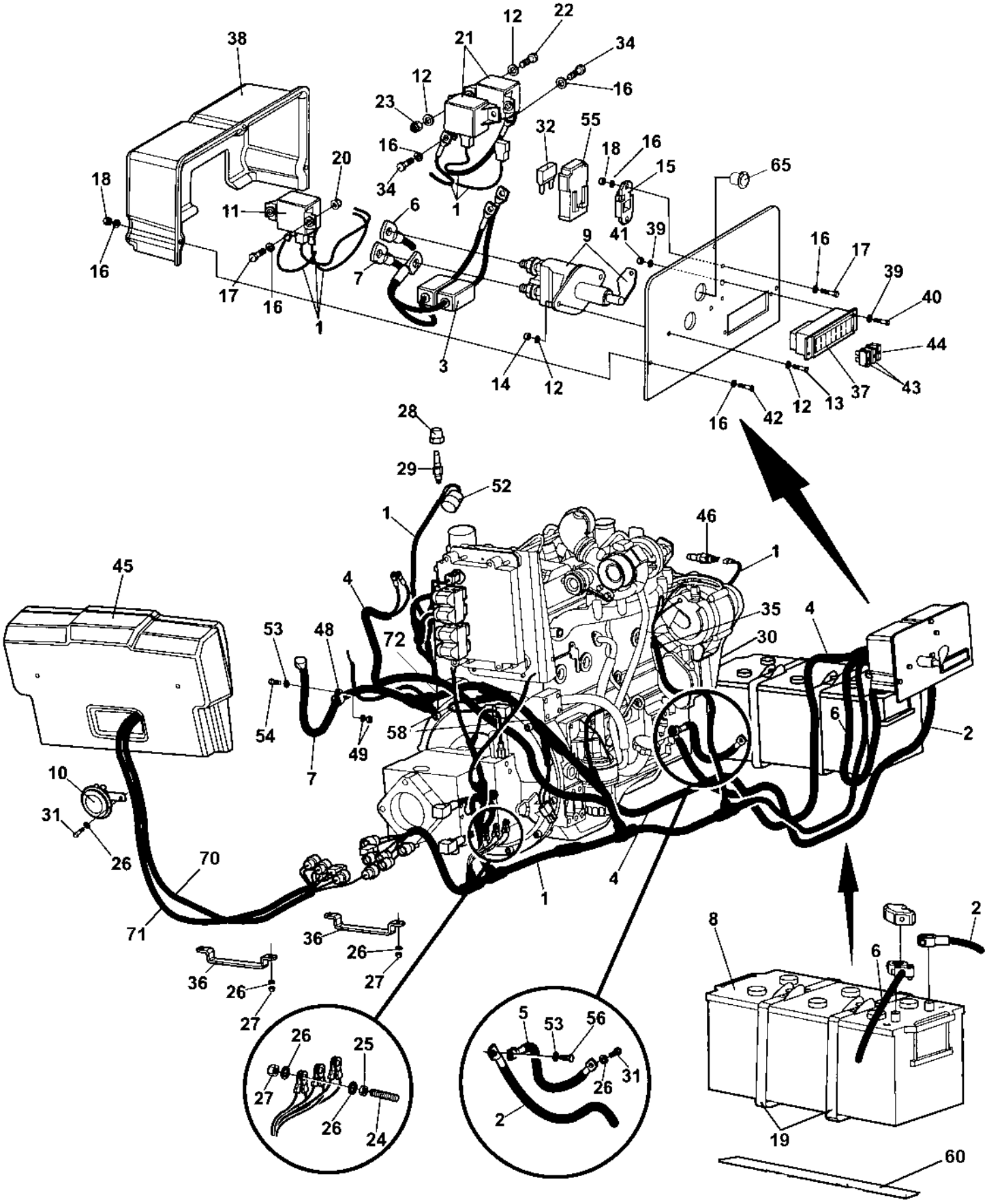
38
12
22
21
34
12
16
23
32
55
16
18
16
15
65
20
18
11
6
1
34
41
39
9
16
17
39
40
44
16
17
7
16
1
3
14
12
16
42
12
13
37
43
28
29
52
1
46
1
45
4
35
4
53
48
72
30
6
2
54
49
58
7
10
31
26
70
71
36
26
27
36
26
27
1
4
8
2
6
19
60
26
25
27
26
24
5
53
56
26
31
2

## Electric system

| Item | Part No | Rem | Qty | Description | Code |
|---|---|---|---|---|---|
| 65 | 4812110560 | | 1 | Power socket 12V | D |
| 70 | 4812110866 | | 1 | Cable harness | D |
| 71 | 4812110867 | | 1 | Cable harness | D |

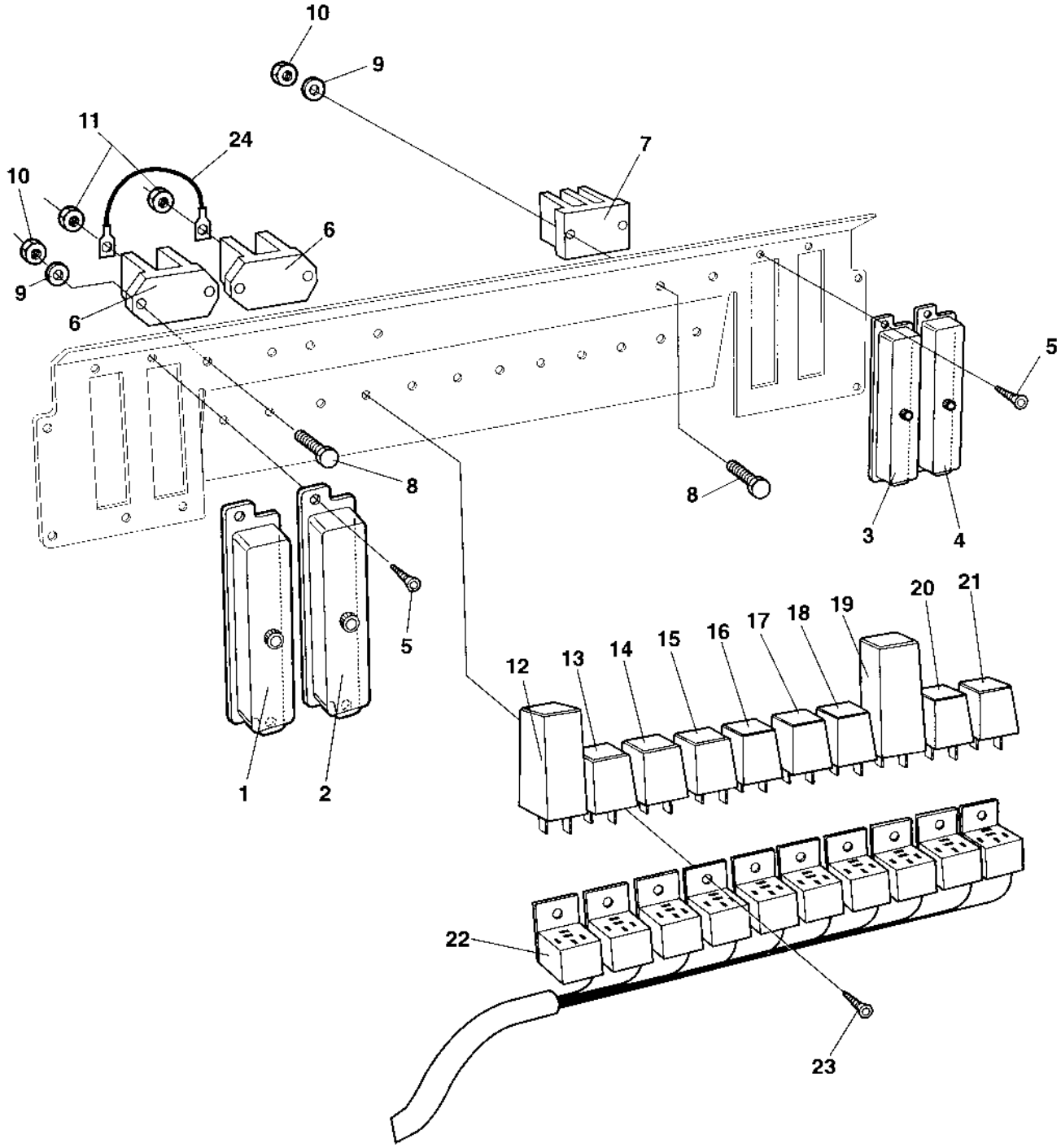
10
9
11
24
7
10
6
9
6
5
8
8
3
4
5
1
2
12
13
14
15
16
17
18
19
20
21
22
23

## Relay and Fuses

| Item | Part No | Rem | Qty | Description | Code |
|---|---|---|---|---|---|
| 1 | 4700901256 | | 1 | Fuse box | D |
| | 4700908110 | | 1 | . Cover | D |
| | 4700901224 | | N | Fuse 3A | A |
| | 4700901225 | | N | Fuse 5A | A |
| | 4700901226 | | N | Fuse 7,5A | |
| | 4700901227 | | N | Fuse 10A | A |
| | 4700903741 | | N | Fuse 20A Yellow Medium | A |
| 2 | 4700901256 | | 1 | Fuse box | D |
| | 4700901240 | | 1 | Connector | B |
| 3 | 4700901256 | | 1 | Fuse box | D |
| 4 | 4700901256 | | 1 | Fuse box | D |
| 5 | 4700901767 | | 8 | Screw ST3,5x9,5 Black | |
| 6 | 4700392930 | | 2 | Junction box | D |
| 7 | 4700903625 | | 1 | Junction block | C |
| 8 | 4700533013 | | 6 | Screw M4x20 | D |
| 9 | 4700600002 | | 6 | Washer | D |
| 10 | 4700923976 | | 6 | Nut | C |
| 11 | 4700570004 | | 2 | Nut M6X1,00 -8 A2K | C |
| 12 | 4700382782 | | 1 | Relay, VBS | A |
| 13 | 4700791138 | A | 1 | Relay | A |
| 14 | 4700903956 | B | 1 | Relay | A |
| 15 | | | 0 | Not used on this model | |
| 16 | 4700903956 | D | 1 | Relay | A |
| 17 | 4700903956 | E | 1 | Relay | A |
| 18 | 4700903956 | F | 1 | Relay | A |
| 19 | 4700904989 | | 1 | Flash relay Option | A |
| 20 | 4700791138 | G | 1 | Relay | A |
| 21 | 4700287598 | H | 1 | Relay 12V-30A | A |
| 22 | 4700357562 | | 10 | Relay holder | D |
| 23 | 4700902223 | | 9 | Screw | D |
| 24 | 4700903970 | | 1 | Cable | B |

A) Main relay
B) Horn relay
D) Fuel level relay
E) Back-up alarm relay
F) Lights relay
G) Brake light relay
H) Air Condition relay

# Instrument box

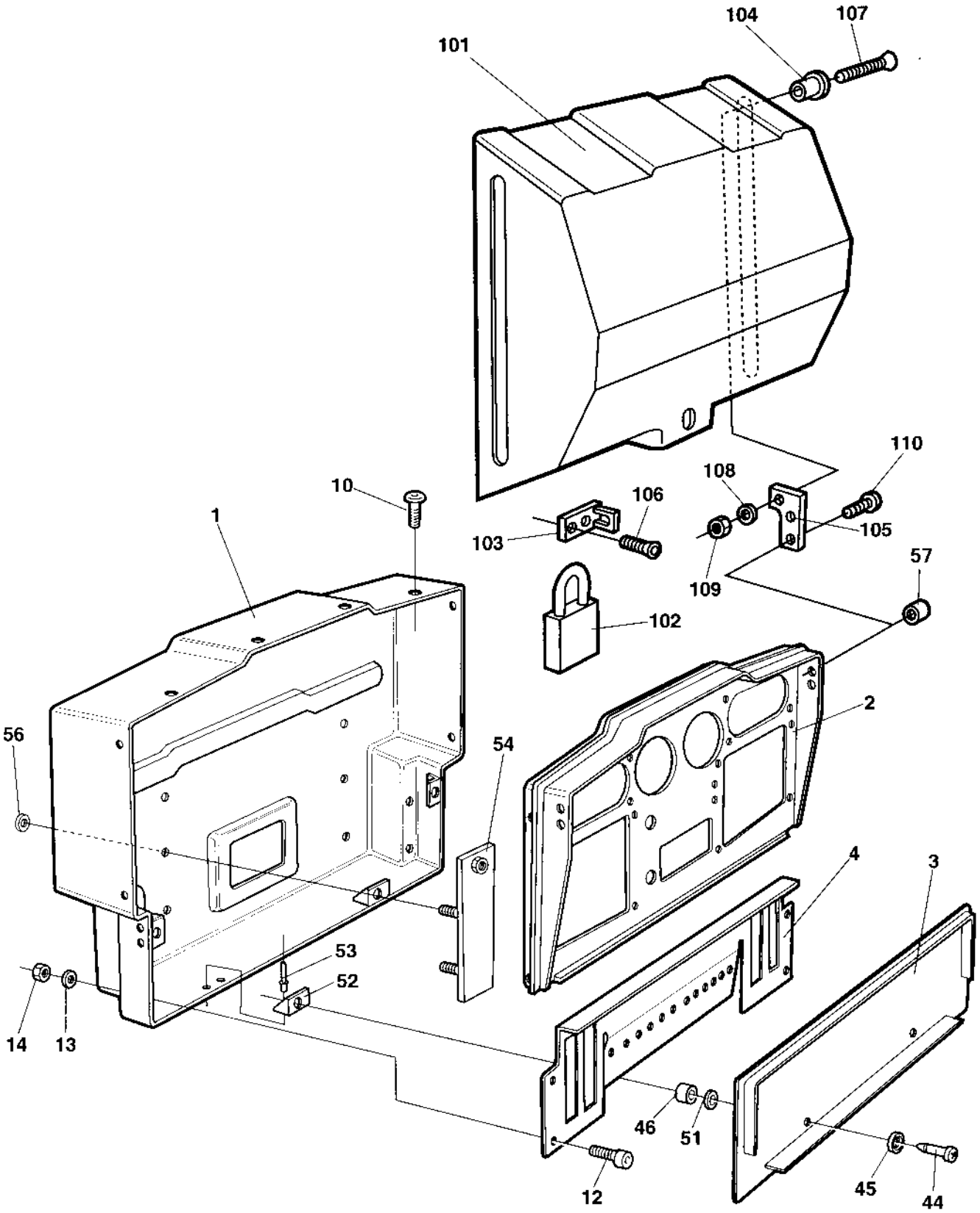

## Instrument box

| Item | Part No | Rem | Qty | Description | Code |
|---|---|---|---|---|---|
| 1 | 4700374098 | | 1 | Instrument box | D |
| 2 | 4700374379 | | 1 | Control panel | D |
| 3 | 4700359845 | | 1 | Cover | D |
| 4 | 4700370165 | | 1 | Relay bracket | D |
| 10 | 4700903658 | | 8 | Screw M5x10 | C |
| 12 | 4700500040 | | 4 | Screw M6-1x20 8,8 | C |
| 13 | 4700904228 | | 4 | Washer 6,4x12x1,5 | C |
| 14 | 4700902285 | | 4 | Hexagon lock nut with flange | C |
| 44 | 4700903599 | | 4 | Trunnion | D |
| 45 | 4700903600 | | 4 | Rubber washer | C |
| 46 | 4700903601 | | 4 | Washer | C |
| 51 | 4700903678 | | 4 | Rubber washer | C |
| 52 | 4700903602 | | 4 | Locking device | D |
| 53 | 4700903436 | | 8 | Blind rivet | D |
| 54 | 4700374099 | | 2 | Bracket | D |
| 56 | 4700903961 | | 4 | Washer | C |
| 57 | 4700903653 | | 4 | Plug | C |
| 100 | | A | 1 | Control panel cover | |
| 101 | 4700372103 | | 1 | Cover | D |
| 102 | 4700358881 | | 1 | Pad lock | D |
| 103 | 4700372104 | | 1 | Eyelet | C |
| 104 | 4700357855 | | 2 | Bushing | C |
| 105 | 4700372105 | | 2 | Bracket | D |
| 106 | 4700904207 | | 2 | Screw | C |
| 107 | 4700904208 | | 2 | Screw | C |
| 108 | 4700904228 | | 2 | Washer 6,4x12x1,5 | C |
| 109 | 4700586002 | | 2 | Lock nut M6 -8 | C |
| 110 | 4700903658 | | 4 | Screw M5x10 | C |

A) Option

# Instrument panel Main

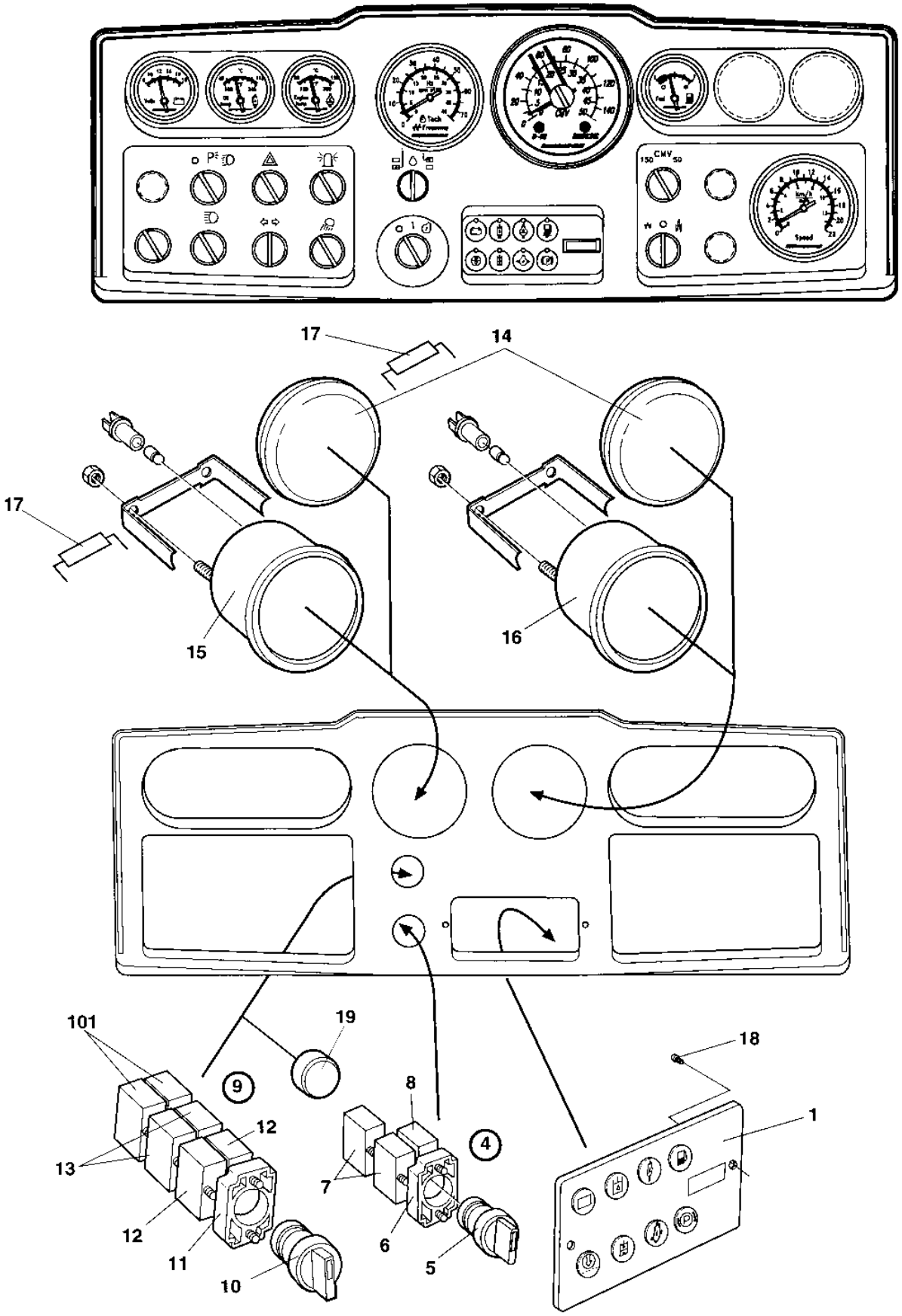

## Instrument panel Main

| Item | Part No | Rem | Qty | Description | Code |
|---|---|---|---|---|---|
| 1 | 4700380660 | | 1 | Display | D |
| 4 | | B | 1 | Switch | |
| 5 | 4700932050 | | 1 | . Switch | B |
| 6 | 4700903876 | | 1 | . Connector | C |
| 7 | 4700930154 | | 2 | . Contact piece, NC | B |
| 8 | 4700930163 | | 1 | . Contact piece, NO | B |
| 9 | | | 1 | . Frequency/tacho selector | |
| 10 | 4700932058 | | 1 | . Switch | B |
| 11 | 4700903876 | | 1 | . Connector | C |
| 12 | 4700930163 | | 2 | . Contact piece, NO | B |
| 13 | 4700930154 | | 2 | . Contact piece, NC | B |
| 14 | 4700345139 | | 2 | Hole plug | C |
| 15 | 4700371275 | | 1 | Tachometer and frequency meter | B |
| | | | 1 | Bulb | |
| 16 | 4700375629 | | 1 | Speedometer | B |
| | 4700900871 | | 1 | . Bulb holder with bulb | A |
| 17 | 4700357526 | | 2 | Resistor | D |
| 18 | 4700903657 | | 2 | Screw | C |
| 19 | 4700911456 | | 1 | Hole plug | C |
| 101 | 4700930163 | C | 2 | Contact piece, NO | B |

B) Start
C) Option tachograph

# Instrument panel Upper left

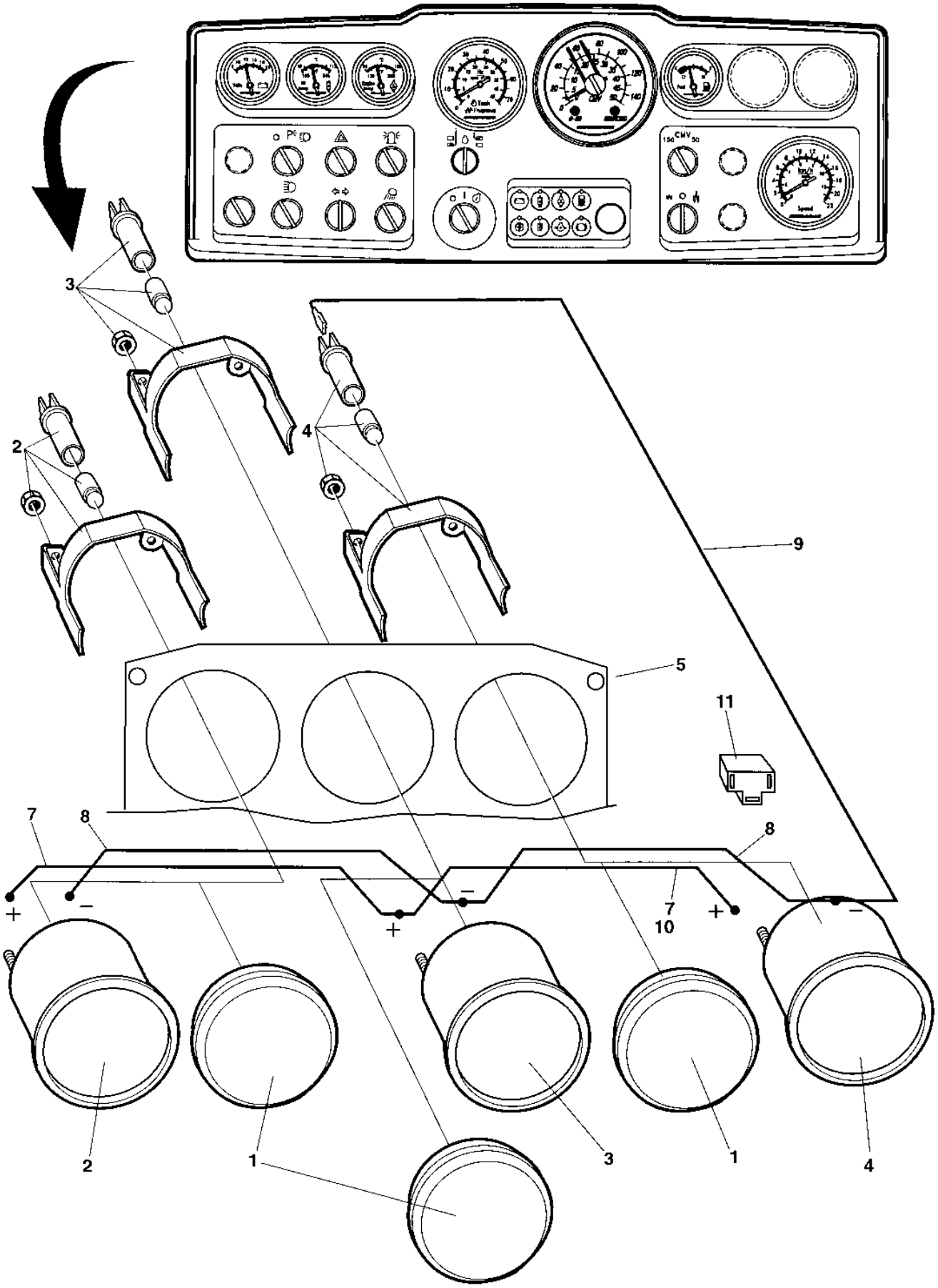

## Instrument panel Upper left

| Item | Part No | Rem | Qty | Description | Code |
|---|---|---|---|---|---|
| 1 | 4700345870 | | 3 | Plug | C |
| 2 | 4700359340 | | 1 | Volt meter | B |
| | 4700355258 | | 1 | . Lamp holder | D |
| | 4700985012 | | 1 | . Bulb | B |
| 3 | 4700359341 | | 1 | Temperature meter, hydraulic oil | B |
| | 4700355258 | | 1 | . Lamp holder | D |
| | 4700985012 | | 1 | . Bulb | B |
| 4 | 4700381874 | | 1 | Water temperature gauge | D |
| | 4700904890 | | 1 | . Lamp holder | D |
| | 4700904889 | | 1 | . Bulb | D |
| 5 | | | 1 | Control panel plate | |
| 7 | 4700343550 | | 1 | Connection cable | B |
| 8 | 4700903927 | | 2 | Cable | B |
| 9 | 4700904016 | | 3 | Cable | B |
| 10 | 4700343551 | | 1 | Cable | B |
| 11 | 4700904819 | | 1 | Contact | D |
| | | | 1 | | |

# Instrument panel Upper right

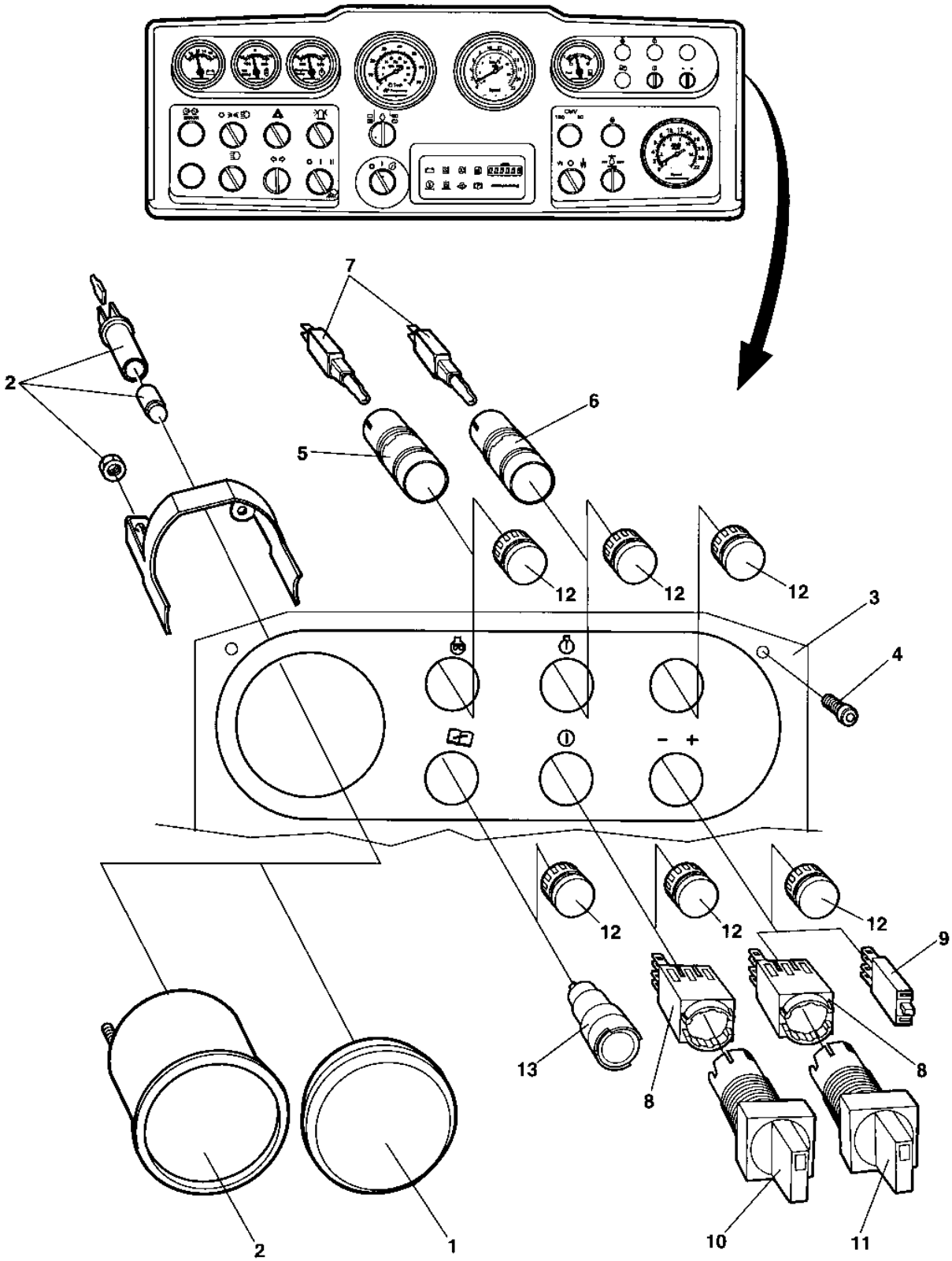

## Instrument panel Upper right

| Item | Part No | Rem | Qty | Description | Code |
|---|---|---|---|---|---|
| 1 | 4700345870 | | 1 | Plug | C |
| 2 | 4700359343 | | 1 | Fuel gauge | B |
| | 4700355258 | | 1 | . Lamp holder | D |
| | 4700985012 | | 1 | . Bulb | B |
| 3 | 4700386189 | | 1 | Control panel plate | D |
| 4 | 4700903657 | | 6 | Screw | C |
| 5 | 4700792319 | A | 1 | Pilot lamp Yellow | D |
| 6 | 4700792319 | B | 1 | Pilot lamp Yellow | D |
| 7 | 4700792315 | | 2 | Illuminated block yellow | D |
| 8 | 4700792314 | | 2 | Connector | C |
| 9 | 4700792313 | | 1 | Connector | D |
| 10 | 4700792317 | D | 1 | Switch | D |
| 11 | 4700792318 | E | 1 | Switch | D |
| 12 | 4700792320 | | 6 | Plug | D |
| 13 | | | | Not used on this model | |

A) Pre-heater lamp.
B) Fault alarm lamp.
D) Diagnostic "ON".
E) Error code scroll switch.

# Instrument panel Lower left

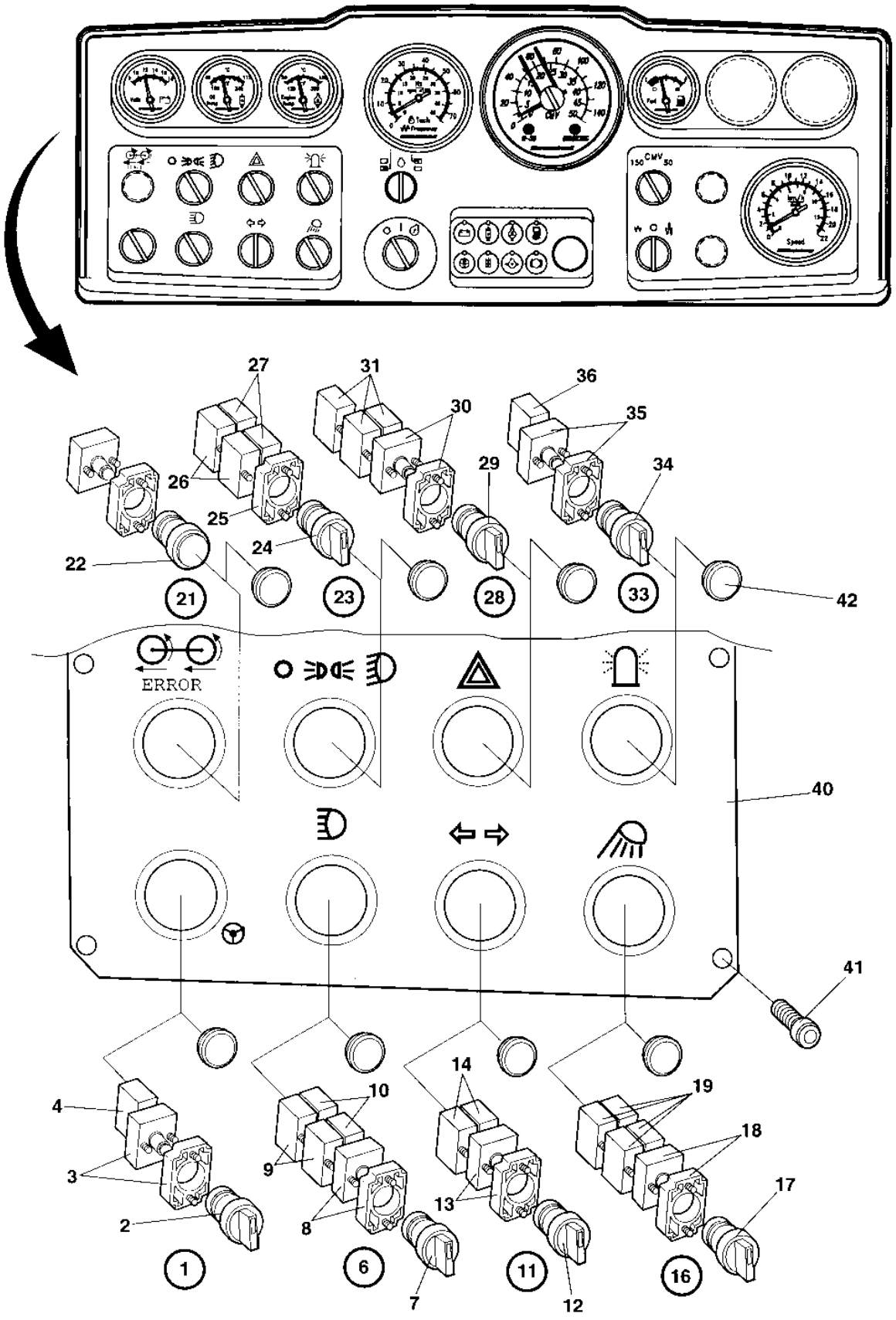

## Instrument panel Lower left

| Item | Part No | Rem | Qty | Description | Code |
|---|---|---|---|---|---|
| 6 | | C | 1 | Switch, cpl | |
| 7 | 4700932057 | M | 1 | Switch | B |
| 8 | 4700903875 | | 1 | . Flange with light | C |
| | 4700985012 | | 1 | Bulb | B |
| 9 | 4700930154 | | 2 | . Contact piece, NC | B |
| 10 | 4700930163 | | 2 | . Contact piece, NO | B |
| 11 | | D | 1 | Switch, cpl | |
| 12 | 4700930161 | E | 1 | . Switch | B |
| 13 | 4700903875 | | 1 | . Flange with light | C |
| | 4700985012 | | 1 | Bulb | B |
| 14 | 4700930163 | | 2 | . Contact piece, NO | B |
| 16 | | F | 1 | Switch, cpl | |
| 17 | 4700930166 | B | 1 | . Switch | B |
| 18 | 4700903875 | | 1 | . Flange with light | C |
| | 4700985012 | | 1 | Bulb | B |
| 19 | 4700930163 | | 4 | . Contact piece, NO | B |
| 21 | 4700985146 | A | 1 | Pilot lamp cpl Red | B |
| | 4700985012 | | 1 | Bulb | B |
| 22 | 4700932034 | G | 1 | . Lamp glass, Red | |
| 23 | | H | 1 | Switch, cpl | |
| 24 | 4700932058 | I | 1 | . Switch | B |
| 25 | 4700903876 | | 1 | . Connector | C |
| 26 | 4700930154 | | 2 | . Contact piece, NC | B |
| 27 | 4700930163 | | 2 | . Contact piece, NO | B |
| 28 | | J | 1 | Switch, cpl | |
| 29 | 4700932056 | G | 1 | . Switch | B |
| 30 | 4700903875 | | 1 | . Flange with light | C |
| | 4700985012 | | 1 | Bulb | B |
| 31 | 4700930163 | | 3 | . Contact piece, NO | B |
| 33 | | L | 1 | . Switch, cpl | |
| 34 | 4700930166 | B | 1 | . Switch | B |
| 35 | 4700903875 | | 1 | . Flange with light | C |
| | 4700985012 | | 1 | Bulb | B |
| 36 | 4700930163 | | 1 | . Contact piece, NO | B |
| 40 | 4700372665 | | 1 | Control panel plate | D |
| 41 | 4700903657 | | 6 | Screw | C |
| 42 | 4700911456 | K | - | Hole plug | C |

A) Anti spin
B) Yellow
C) Main beam
D) Direction indicator
E) Green
F) Working light
G) Red
H) Parking/dipped beam
I) Black
J) Hazard flasher
K) Quantity as required
L) Rotating beacon
M) Blue

# Instrument panel Lower right

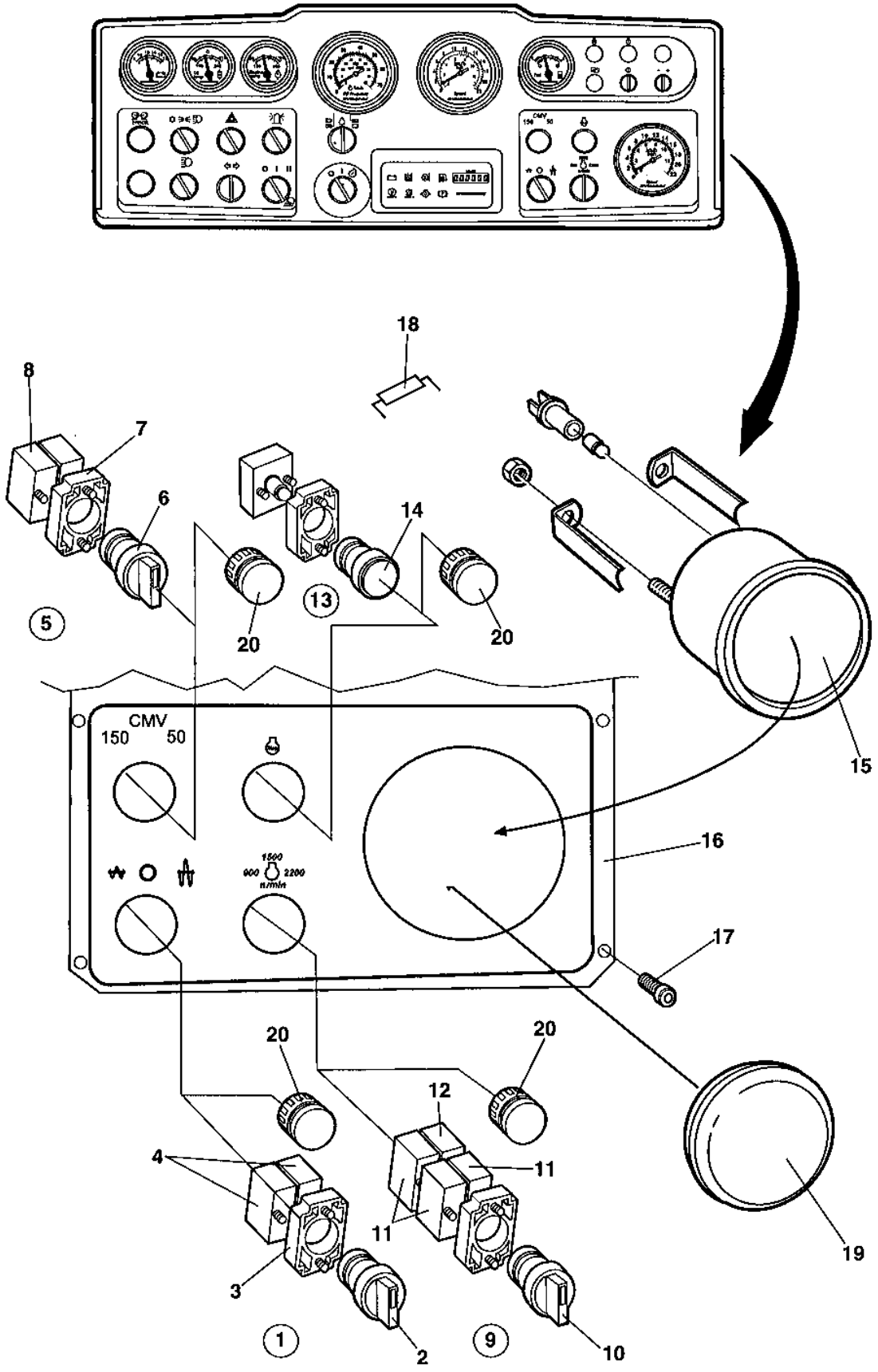

## Instrument panel Lower right

| Item | Part No | Rem | Qty | Description | Code |
|---|---|---|---|---|---|
| 1 | | A | 1 | Switch, cpl | |
| 2 | 4700932058 | B | 1 | . Switch | B |
| 3 | 4700903876 | | 1 | . Connector | C |
| 4 | 4700930163 | | 2 | . Contact piece, NO | B |
| 5 | | C | 1 | Switch, cpl | |
| 6 | 4700930192 | B | 1 | . Switch | B |
| 7 | 4700903876 | | 1 | . Connector | C |
| 8 | 4700930163 | | 1 | . Contact piece, NO | B |
| 9 | | D | 1 | Switch, cpl | |
| 10 | 4700930153 | B | 1 | . Switch | D |
| 11 | 4700930163 | | 3 | . Contact piece, NO | B |
| 12 | 4700930154 | | 1 | . Contact piece, NC | B |
| 13 | 4700985146 | | 1 | Pilot lamp cpl Red | B |
| | 4700985012 | | 1 | Bulb | B |
| 14 | 4700932034 | | 1 | Lamp glass, Red | |
| 15 | 4700372663 | | 1 | Speedometer | B |
| | | | 1 | Bulb | |
| 16 | 4700386189 | | 1 | Control panel plate | D |
| 17 | 4700903657 | | 6 | Screw | C |
| 18 | 4700357526 | | 1 | Resistor | D |
| 19 | 4700345139 | | 1 | Hole plug | C |
| 20 | 4700911456 | | 4 | Hole plug | C |

A) Amplitude selector
B) Black
C) Cmv selector
D) Rev selector.

## Emergency stop panel

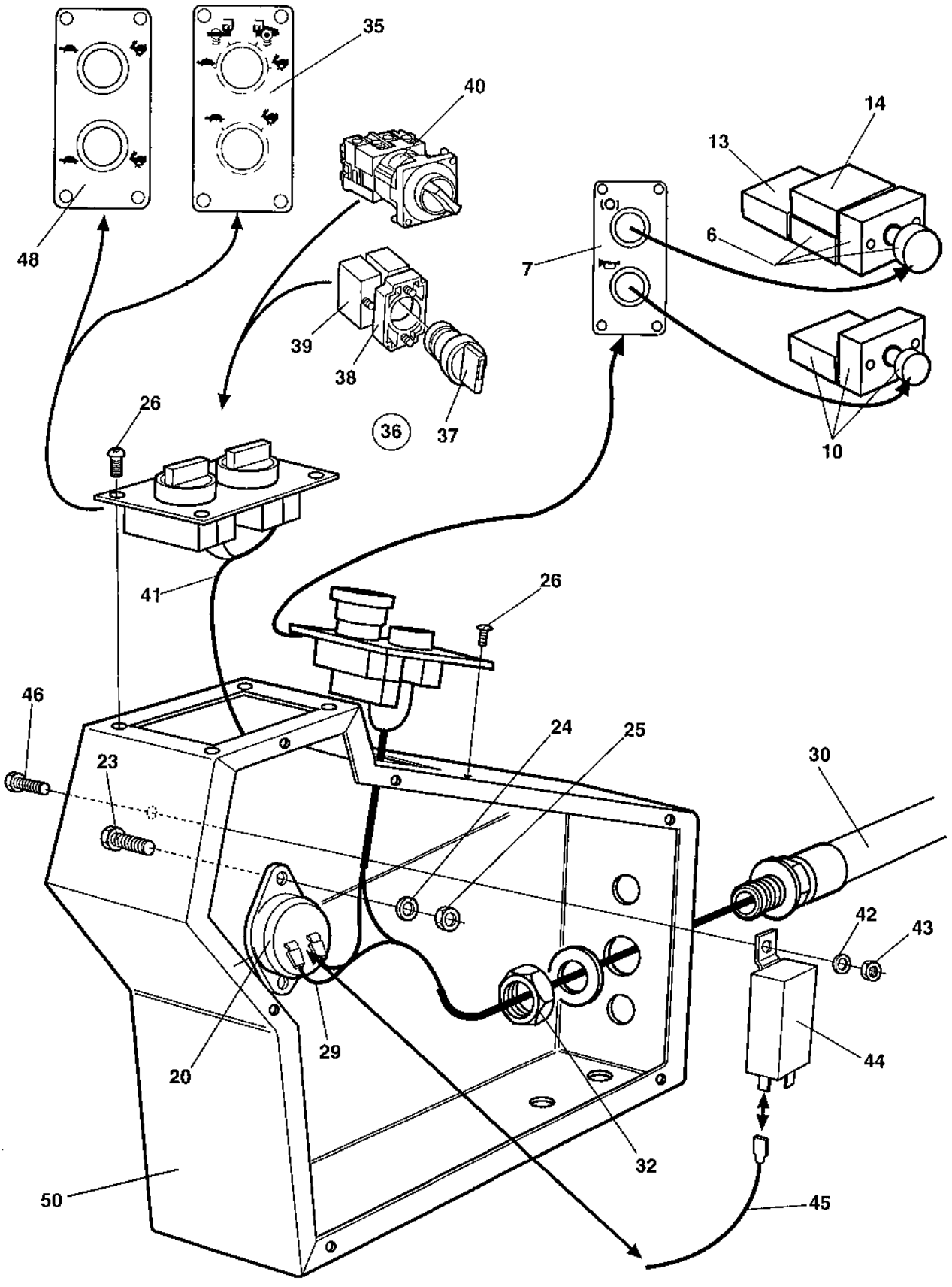

## Emergency stop panel

| Item | Part No | Rem | Qty | Description | Code |
|---|---|---|---|---|---|
| | | A | | | |
| | | A | | | |
| | | A | | | |
| | | A | | | |
| | | A | | | |
| 20 | 4700355301 | | 1 | Buzzer | B |
| 23 | 4700500086 | | 1 | Screw | D |
| 24 | 4700904698 | | 1 | Washer 4,3x8x0,8 | C |
| 25 | 4700570002 | | 1 | Nut M4 | C |
| 26 | 4700904206 | | 8 | Screw | C |
| | 4700903658 | | 8 | Screw M5x10 | C |
| 29 | 4700960792 | | 1 | Cable | B |
| 30 | 4812110865 | | 1 | Cable harness | C |
| 32 | 4700791253 | | 1 | Nut | D |
| 35 | 4700389075 | | 1 | Control panel plate | D |
| 36 | | F | 2 | Switch, cpl | |
| 37 | 4700930192 | C | 1 | . Switch | B |
| 38 | 4700903876 | | 1 | . Connector | C |
| 39 | 4700930163 | | 1 | . Contact piece, NO | B |
| 40 | 4700389119 | B | 1 | Switch | D |
| 41 | 4700343550 | E | 1 | Connection cable | B |
| 42 | 4700904228 | | 1 | Washer 6,4x12x1,5 | C |
| 43 | 4700586002 | | 1 | Lock nut M6 -8 | C |
| 44 | 4700792548 | D | 1 | Delay relay | A |
| 45 | | | | Not valid for this model | |
| 46 | 4700904206 | | 1 | Screw | C |
| 48 | 4700372749 | E | 1 | Control panel plate | D |
| 50 | 4812110972 | | 1 | Control cover | D |

A) Se section: "Emergency and Parking brake panel".
B) Option. Traction control, 4-way switch.
C) Black
D) Interlock
E) Option.
F) One switch is option and used together with item 48.

# Emergency and Parking brake panel

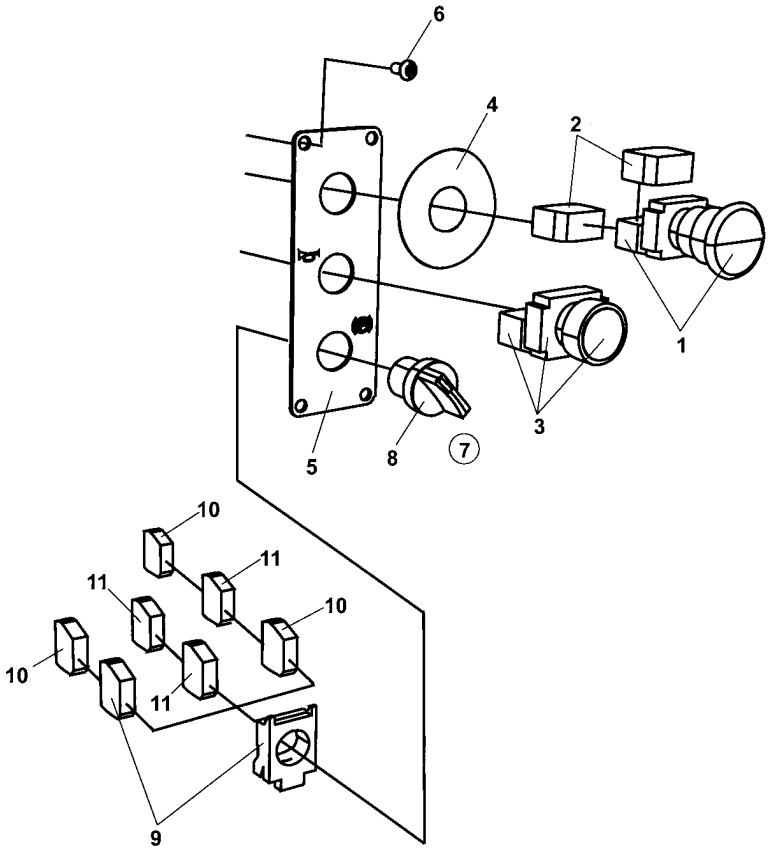

## Emergency and Parking brake panel

| Item | Part No | Rem | Qty | Description | Code |
|---|---|---|---|---|---|
| 1 | 4700930200 | | 1 | Emergency stop | B |
| | 4700930154 | | 1 | . Contact piece, NC | B |
| 2 | 4700930154 | | 2 | Contact piece, NC | B |
| 3 | 4700932032 | A | 1 | Push button | B |
| | 4700930163 | | 1 | . Contact piece, NO | B |
| 4 | 4812110967 | B | 1 | Decal | D |
| 5 | 4812110960 | | 1 | Control panel plate | D |
| 6 | 4700903658 | | 4 | Screw M5x10 | C |
| 7 | | | 1 | Parking brake switch Cpl. | |
| 8 | 4700791722 | | 1 | . Switch, black | D |
| 9 | 4700389840 | | 1 | . Connector w. Fixing collar N/C | C |
| 10 | 4700791736 | | 3 | . Connector N/O | C |
| 11 | 4700791723 | | 3 | . Connector N/C | B |

A) Horn
B) Yellow

## Driving lights Option

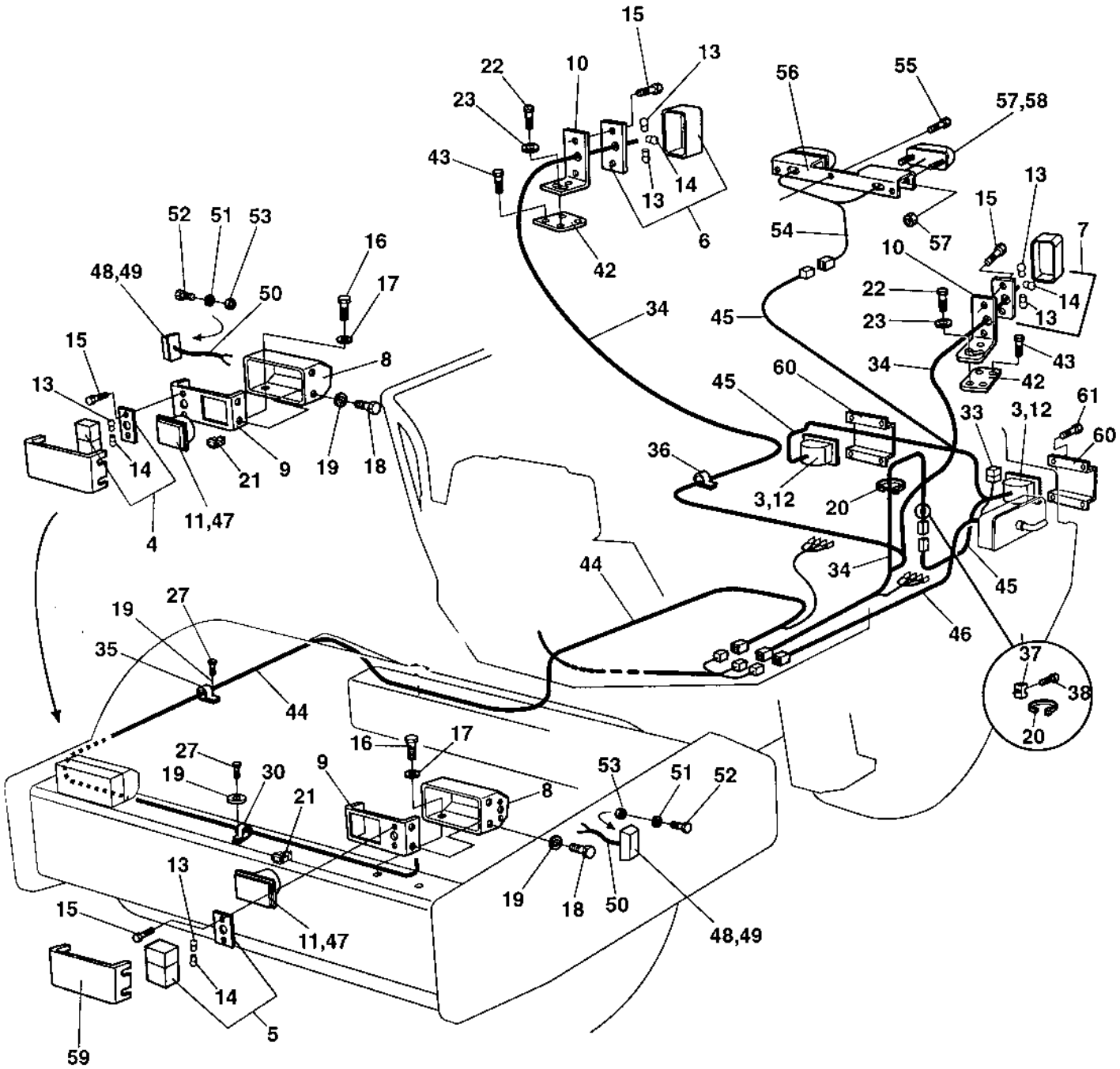

## Driving lights Option

| Item | Part No | Rem | Qty | Description | Code |
|---|---|---|---|---|---|
| 3 | 4700902227 | | 2 | Work light | B |
| 4 | 4700904316 | A | 1 | Direction lamp Right | B |
| | 4700937107 | | 1 | . Lamp glass | B |
| 5 | 4700904315 | B | 1 | Direction lamp Left | B |
| | 4700937106 | | 1 | . Lamp glass | B |
| 6 | 4700904318 | C | 1 | Direction lamp Right | B |
| | 4700937109 | | 1 | . Lamp glass | B |
| 7 | 4700904317 | D | 1 | Direction lamp Left | B |
| | 4700937108 | | 1 | . Lamp glass | B |
| 8 | 4700374029 | | 2 | Lamp shield | D |
| 9 | 4700374030 | | 2 | Bracket | D |
| 10 | 4700374089 | | 2 | Bracket | D |
| 11 | 4700900790 | | 2 | Bulb 60/55w H4 | B |
| 12 | 4700901369 | | 2 | Bulb 55w H3 | B |
| 13 | 4700928502 | | 6 | Bulb 21w | B |
| 14 | 4700985014 | | 4 | Bulb 5w | B |
| 15 | 4700533010 | | 8 | Screw | D |
| 16 | 4700500043 | | 6 | Screw M10x16H 8,8 | D |
| 17 | 4700904230 | | 6 | Steel plain washer | C |
| 18 | 4700500040 | | 8 | Screw M6-1x20 8,8 | C |
| 19 | 4700904228 | | 12 | Washer 6,4x12x1,5 | C |
| 20 | 4700925802 | | 11 | Cable ties L=142 mm | C |
| 21 | 4700903899 | | 2 | Connector | |
| 22 | 4700500019 | | 4 | Hexagon head screw M8x16H 8,8 | C |
| 23 | 4700904229 | | 4 | Steel plain washer 8,4x16x1,5 | C |
| 27 | 4700500012 | | 12 | Screw M6x12 | C |
| 28 | 4700313041 | | N | Cable ties | B |
| 30 | 4700921031 | | 6 | Clamp | C |
| 33 | 4700904038 | | 1 | Fuse 40A | A |
| 34 | 4700374168 | | 1 | Cable harness | D |
| 35 | 4700921036 | | 8 | Clamp | C |
| 36 | 4700901028 | | 6 | Clamp | D |
| 37 | 4700904543 | | 3 | Cable tie holder | |
| 38 | 4700903852 | | 3 | Screw ST4,2x13 | C |
| 42 | | | 0 | Not used on this model | |
| 43 | | | 0 | Not used on this model | |
| 44 | 4700374518 | | 1 | Cable harness | D |
| 45 | 4700374519 | | 1 | Cable harness | D |
| 46 | 4700396864 | | 1 | Cable harness | D |
| 47 | 4700902066 | | 2 | Headlight | B |
| | 4700904313 | E | 2 | Headlight | B |
| 48 | 4700902064 | | 2 | Direction lights | B |
| 49 | 4700985013 | | 2 | Bulb 12V,5W | B |
| 50 | 4700374526 | | 2 | Cable harness | D |
| 51 | 4700904281 | | 4 | Washer 5,3x10x1 300HV | C |
| 52 | 4700926611 | | 4 | Screw | C |
| 53 | 4700586001 | | 4 | Lock nut | C |
| 54 | 4700374196 | | 1 | Cable harness | D |
| 55 | 4700903969 | | 3 | Screw ST4,8x19 Black | C |
| 56 | 4700374184 | | 1 | Licence plate light bracket | D |
| 57 | 4700929455 | | 2 | Licence plate light | D |
| 58 | 4700985013 | | 2 | Bulb 12V,5W | B |
| 59 | 4700374120 | | 2 | Protecting cover | D |
| 60 | 4700374327 | | 2 | Protecting cover | D |
| 61 | 4700903969 | | 8 | Screw ST4,8x19 Black | C |

A) Front right
B) Front left
C) Rear right
D) Rear left
E) Left hand asymmet.

# Working lights Option

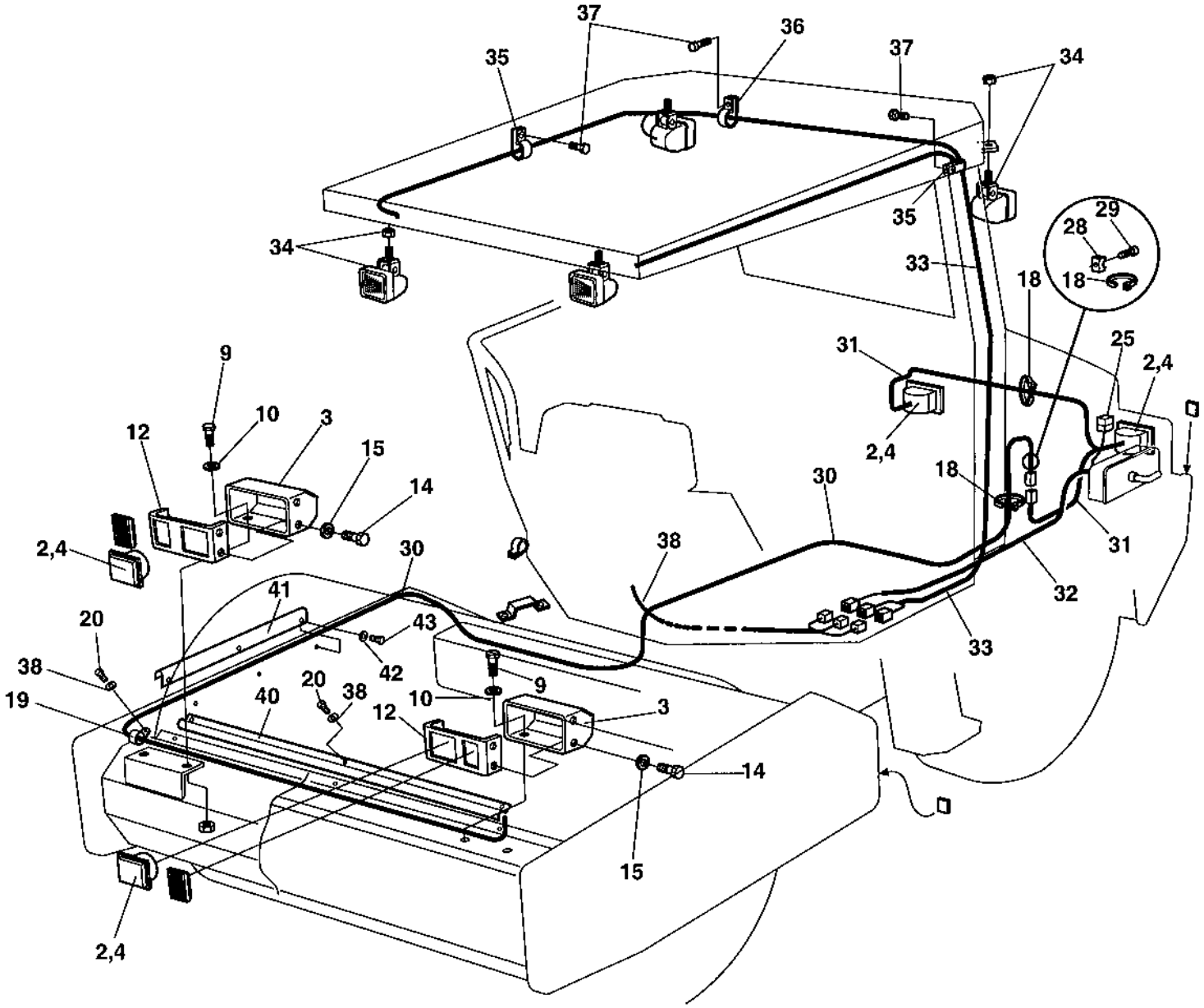

## Working lights Option

| Item | Part No | Rem | Qty | Description | Code |
|---|---|---|---|---|---|
| 2 | 4700902227 | | 4 | Work light | B |
| 3 | 4700374029 | | 2 | Lamp shield | D |
| 4 | 4700901369 | | 4 | Bulb 55w H3 | B |
| 9 | 4700500043 | | 6 | Screw M10x16H 8,8 | D |
| 10 | 4700904230 | | 6 | Steel plain washer | C |
| 11 | | | 0 | Not used on this model | |
| 12 | 4700374030 | | 2 | Bracket | D |
| 14 | 4700500040 | | 8 | Screw M6-1x20 8,8 | C |
| 15 | 4700904228 | | 9 | Washer 6,4x12x1,5 | C |
| 18 | 4700925802 | | 9 | Cable ties L=142 mm | C |
| 19 | 4700921039 | | 1 | Pipe clamp | |
| 20 | 4700500012 | | 8 | Screw M6x12 | C |
| 25 | 4700904038 | | 1 | Fuse 40A | A |
| 28 | 4700904543 | | 3 | Cable tie holder | |
| 29 | 4700903852 | | 3 | Screw ST4,2x13 | C |
| 30 | 4700374475 | | 1 | Cable harness | D |
| 31 | 4700374476 | | 1 | Cable harness | D |
| 32 | 4700396864 | | 1 | Cable harness | D |
| 33 | 4700372758 | | 1 | Cable harness | D |
| 34 | 4812110216 | | 4 | Work lamp | C |
| | 4700904230 | | 4 | Steel plain washer | C |
| | 4700586018 | | 4 | Hexagon lock nut | C |
| 35 | 4700921039 | | 8 | Pipe clamp | |
| 36 | 4700921031 | | 5 | Clamp | C |
| 37 | 4700541702 | | 13 | Screw M6x12 | C |
| 38 | 4700904228 | | 8 | Washer 6,4x12x1,5 | C |
| 40 | 4700388626 | | 1 | Cable holder | D |
| 41 | 4700388465 | | 1 | Cable holder | D |
| 42 | 4700904229 | | 3 | Steel plain washer 8,4x16x1,5 | C |
| 43 | 4700500019 | | 3 | Hexagon head screw M8x16H 8,8 | C |

**Rotating beacon** **Option**

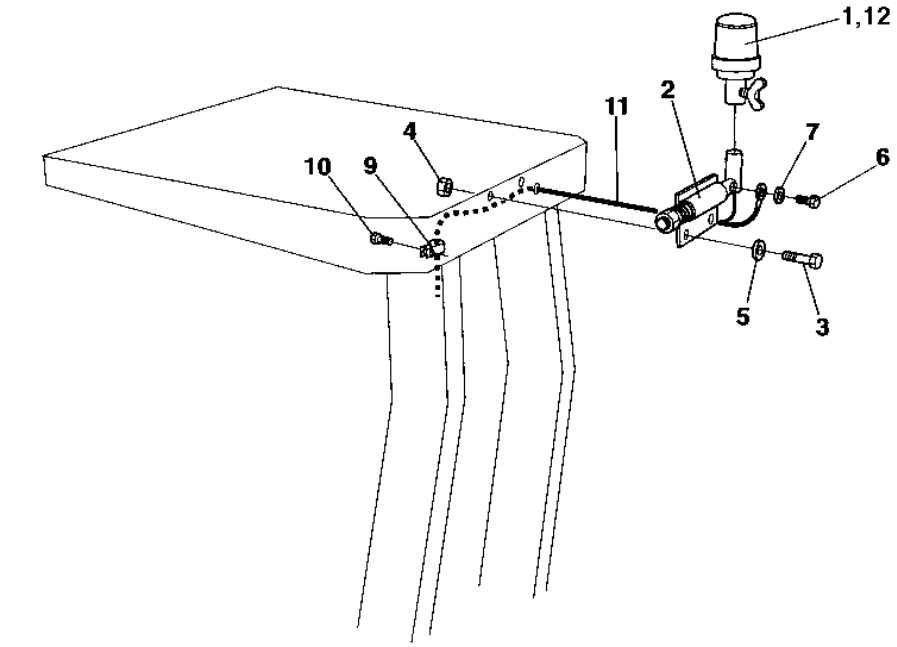


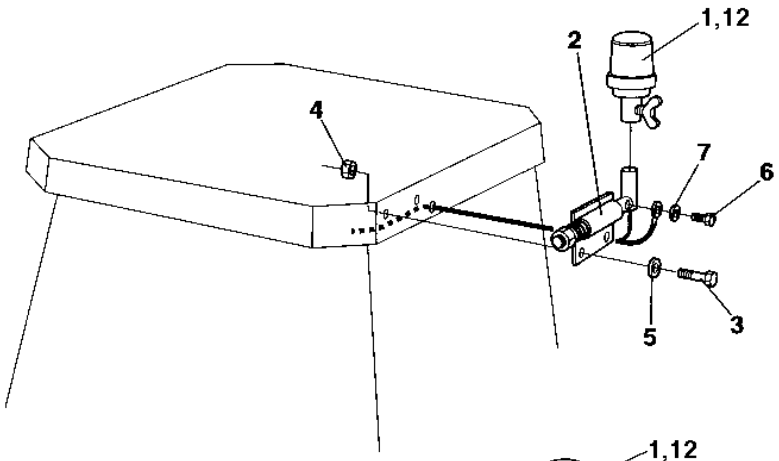


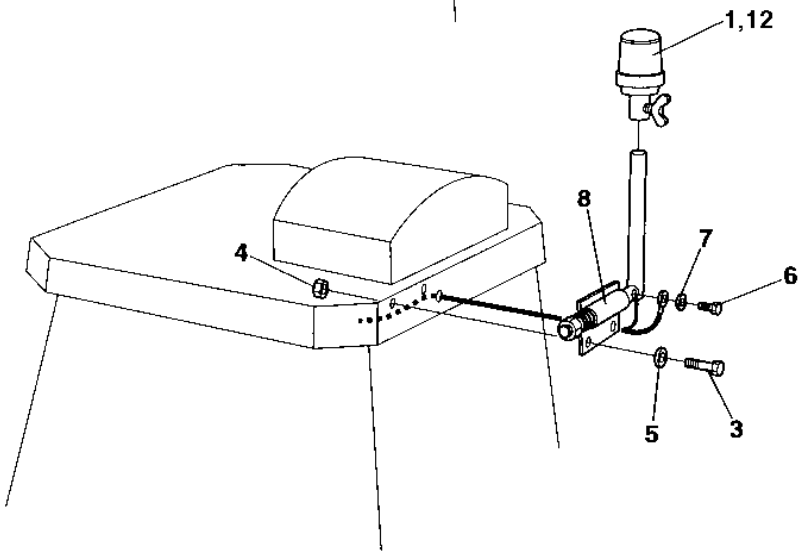

## Rotating beacon Option

| Item | Part No | Rem | Qty | Description | Code |
|---|---|---|---|---|---|
| 1 | 4700999011 | 1 | 1 | Rotating beacon | B |
| 2 | 4700358452 | | 1 | Lamp holder | D |
| 3 | 4700500021 | | 2 | Screw M8-1,25x25 8.8 | C |
| 4 | 4700586003 | | 2 | Lock nut M8 | C |
| 5 | 4700904229 | | 2 | Steel plain washer 8,4x16x1,5 | C |
| 6 | 4700500013 | | 1 | Screw M6-1x16 8,8 | C |
| 7 | 4700904228 | | 1 | Washer 6,4x12x1,5 | C |
| 8 | 4700371364 | | 1 | Lamp holder | D |
| 9 | 4700921039 | | 1 | Pipe clamp | |
| 10 | 4700541702 | | 1 | Screw M6x12 | C |
| 11 | 4700374398 | | 1 | Cable harness | D |
| 12 | 4700389577 | 2 | 1 | Rotating beacon 12V | B |

1) Replaced by item 12, P/N 4700389577
2) Replaces item 1, P/N 4700999011.

## Compaction meter Option

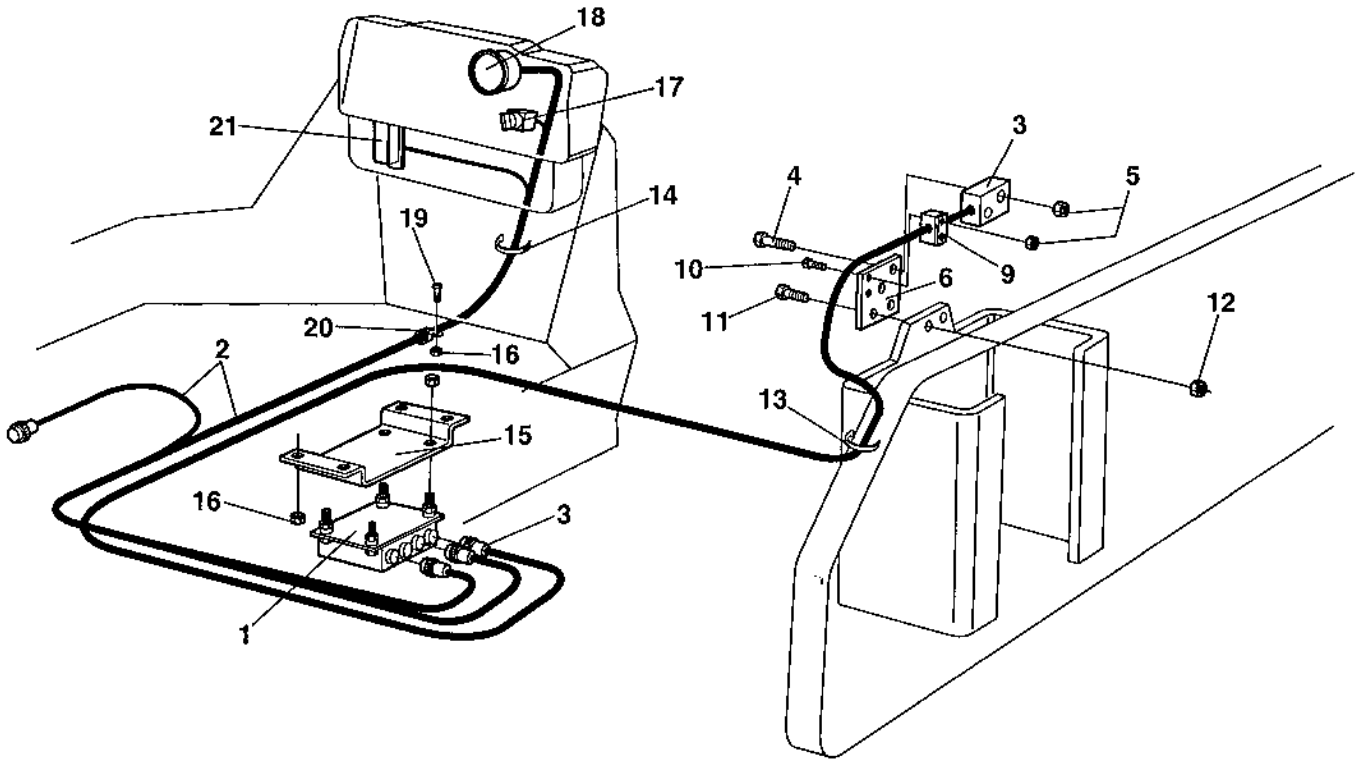

## Compaction meter Option

| Item | Part No | Rem | Qty | Description | Code |
|---|---|---|---|---|---|
| 1 | 4700388210 | | 1 | Processor comp.meter | D |
| 2 | 4700388211 | | 1 | Cable harness | D |
| 3 | 4700348213 | | 1 | Sensor, cpl | C |
| 4 | 4700500079 | | 2 | Screw M6-1x50 8,8 | C |
| 5 | 4700902285 | | 4 | Hexagon lock nut with flange | C |
| 6 | 4700373140 | | 1 | Bracket | D |
| 9 | 4700902496 | | 1 | Clamp | D |
| 10 | 4700500079 | | 2 | Screw M6-1x50 8,8 | C |
| 11 | 4700500194 | | 2 | Screw | C |
| 12 | 4700902288 | | 2 | Nut M12 | D |
| 13 | 4700313102 | | 15 | Cable ties | |
| 14 | 4700313041 | | 15 | Cable ties | B |
| 15 | 4700372836 | | 1 | Bracket | D |
| 16 | 4700902286 | | 5 | Hexagon lock nut with flange | C |
| 17 | 4700930151 | | 1 | Switch | B |
| 18 | 4700383452 | | 1 | Compaction meter | D |
| | 4700904890 | | 2 | . Lamp holder | D |
| | 4700904889 | | 2 | . Bulb | D |
| 19 | 4700500047 | | 1 | Hexagon head screw | C |
| 20 | 4700921072 | | 1 | Clamp | |
| 21 | 4700901224 | | 1 | Fuse 3A | A |

## Speedometer and frequency meter Option

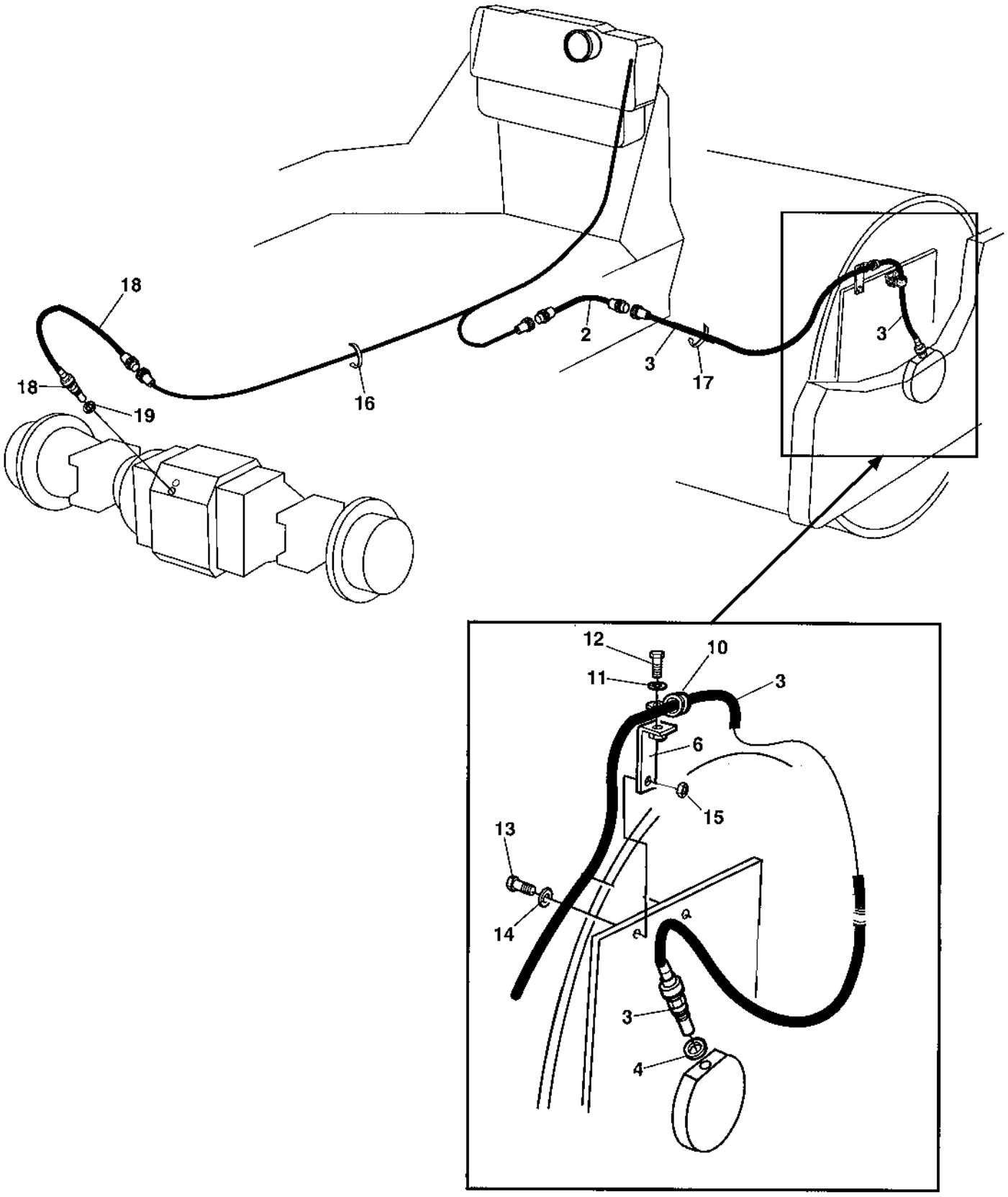

## Speedometer and frequency meter Option

| Item | Part No | Rem | Qty | Description | Code |
|---|---|---|---|---|---|
| 2 | 4700376937 | | 1 | Cable harness | D |
| 3 | 4700376935 | A | 1 | Sensor | B |
| 6 | 4700376938 | | 1 | Holder | D |
| 10 | 4700921078 | | 1 | Clamp | |
| 11 | 4700904228 | | 1 | Washer 6,4x12x1,5 | C |
| 12 | 4700500013 | | 1 | Screw M6-1x16 8,8 | C |
| 13 | 4812111053 | | 1 | Screw M12x55 8.8 A3K | |
| 14 | 4700904213 | | 1 | Washer | C |
| 15 | 4700570007 | | 1 | Hexagon nut M12 | C |
| 16 | 4700313041 | | N | Cable ties | B |
| 17 | 4700313102 | | N | Cable ties | |
| 18 | 4700384783 | B | 1 | Sensor | D |
| 19 | 4700900700 | | 1 | . Copper washer | D |

A) Tacho/Frequency meter
B) Speedometer

# Tachograph, platform Option

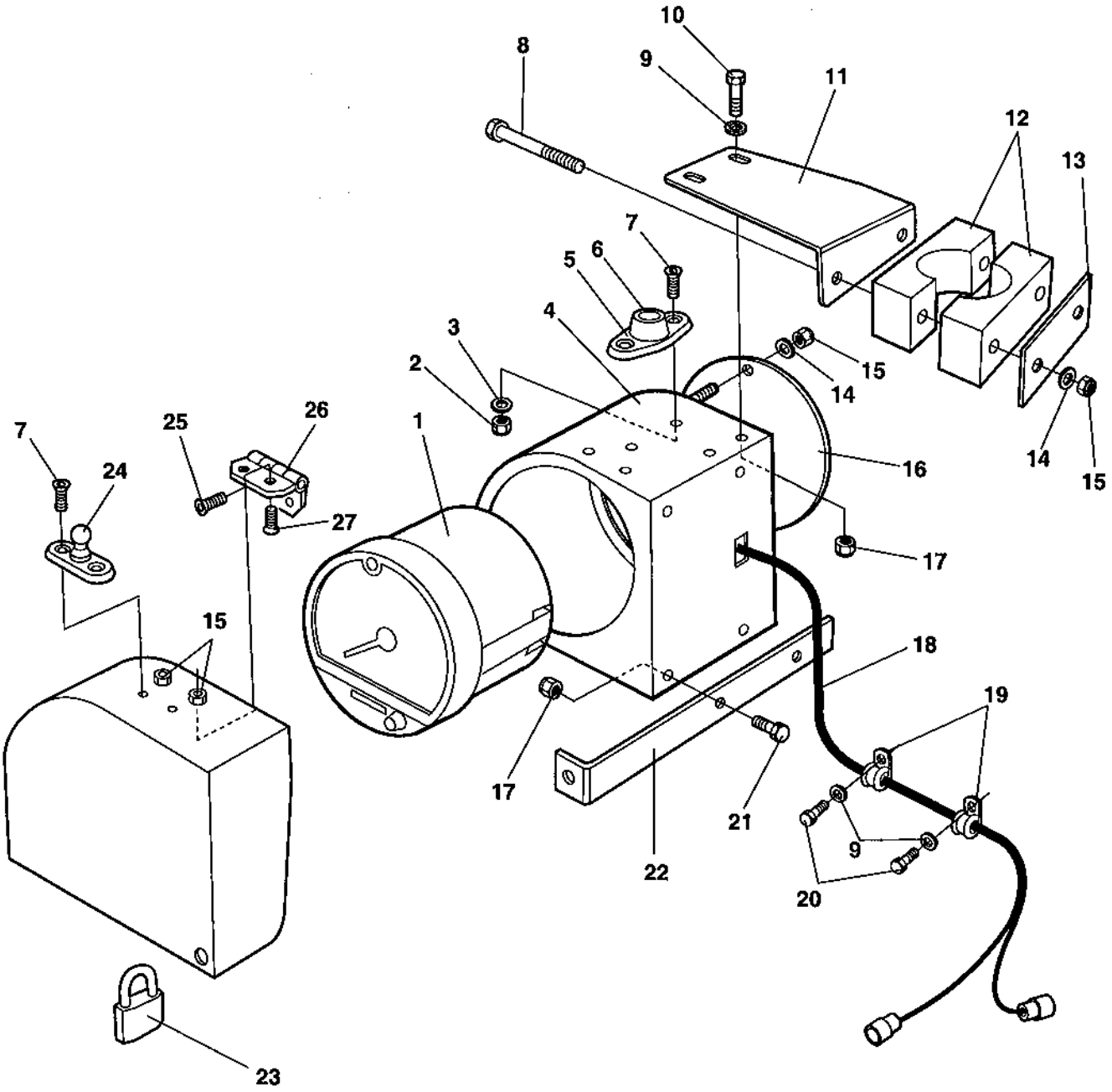

## Tachograph, platform Option

| Item | Part No | Rem | Qty | Description | Code |
|---|---|---|---|---|---|
| 1 | 4700901209 | | 1 | Tachograph | B |
| 2 | 4700923976 | | 4 | Nut | C |
| 3 | 4700904698 | | 4 | Washer 4,3x8x0,8 | C |
| 4 | 4700355132 | | 1 | Tachograph box | D |
| 5 | 4700904907 | | 1 | Door bumper | D |
| 6 | 4700904908 | | 1 | Rubber part | D |
| 7 | 4700535004 | | 4 | Screw M4x16 | D |
| 8 | 4700500292 | | 2 | Screw M6x75 | D |
| 9 | 4700904281 | | 12 | Washer 5,3x10x1 300HV | C |
| 10 | 4700500006 | | 2 | Screw M5x16 | C |
| 11 | 4700382549 | | 1 | Bracket | D |
| 12 | 4700904340 | | 1 | Pipe clamp | |
| 13 | 4700924791 | | 1 | Cover plate | |
| 14 | 4700904228 | | 8 | Washer 6,4x12x1,5 | C |
| 15 | 4700586002 | | 6 | Lock nut M6 -8 | C |
| 16 | 4700355135 | | 1 | Tachograph cover | D |
| 17 | 4700586001 | | 6 | Lock nut | C |
| 18 | 4700372497 | | 1 | Cable harness | D |
| 19 | 4700921031 | | 3 | Clamp | C |
| 20 | 4700500006 | | 3 | Screw M5x16 | C |
| 21 | 4700500060 | | 1 | Screw M5-0,8x20 8.8 | C |
| 22 | 4700385551 | | 1 | Holder plate | D |
| 23 | 4700358881 | | 1 | Pad lock | D |
| 24 | 4700904909 | | 1 | Door bumper | D |
| 25 | 4700535014 | | 2 | Screw | D |
| 26 | 4700903907 | | 1 | Hinge | C |
| 27 | 4700535013 | | 2 | Screw | D |

# Tachograph , cab Option

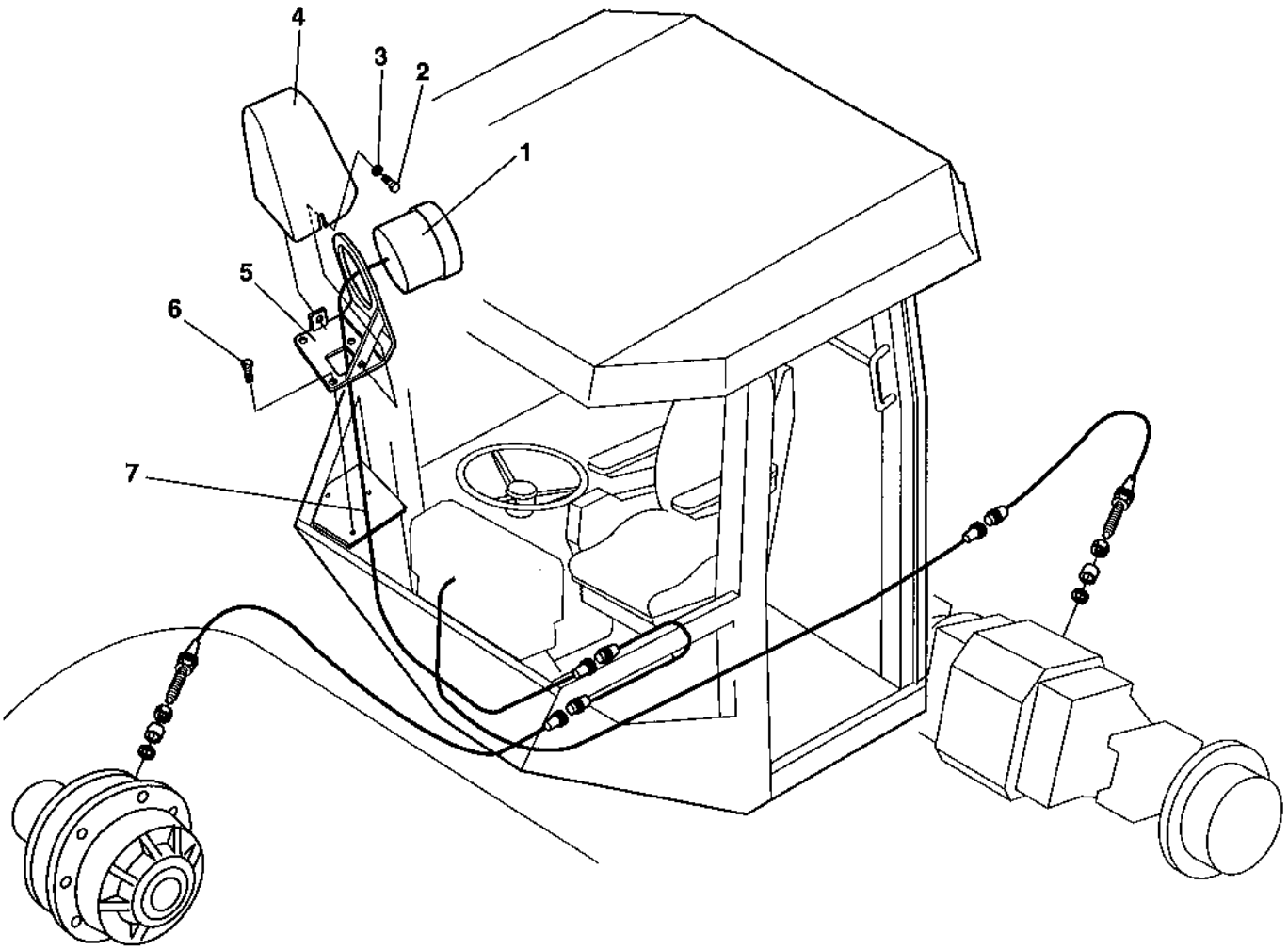

## Tachograph , cab Option

| Item | Part No | Rem | Qty | Description | Code |
|---|---|---|---|---|---|
| 1 | 4700901209 | | 1 | Tachograph | B |
| 2 | 4700500004 | | 2 | Screw M5 0,8x12 8,8 | C |
| 3 | 4700904281 | | 2 | Washer 5,3x10x1 300HV | C |
| 4 | 4700385527 | | 1 | Cover | D |
| 5 | 4700385526 | | 1 | Holder plate | D |
| 6 | 4700541704 | | 3 | Screw | D |
| 7 | 4700385542 | | 1 | Cable harness | D |

# Tachograph, simple cab Option

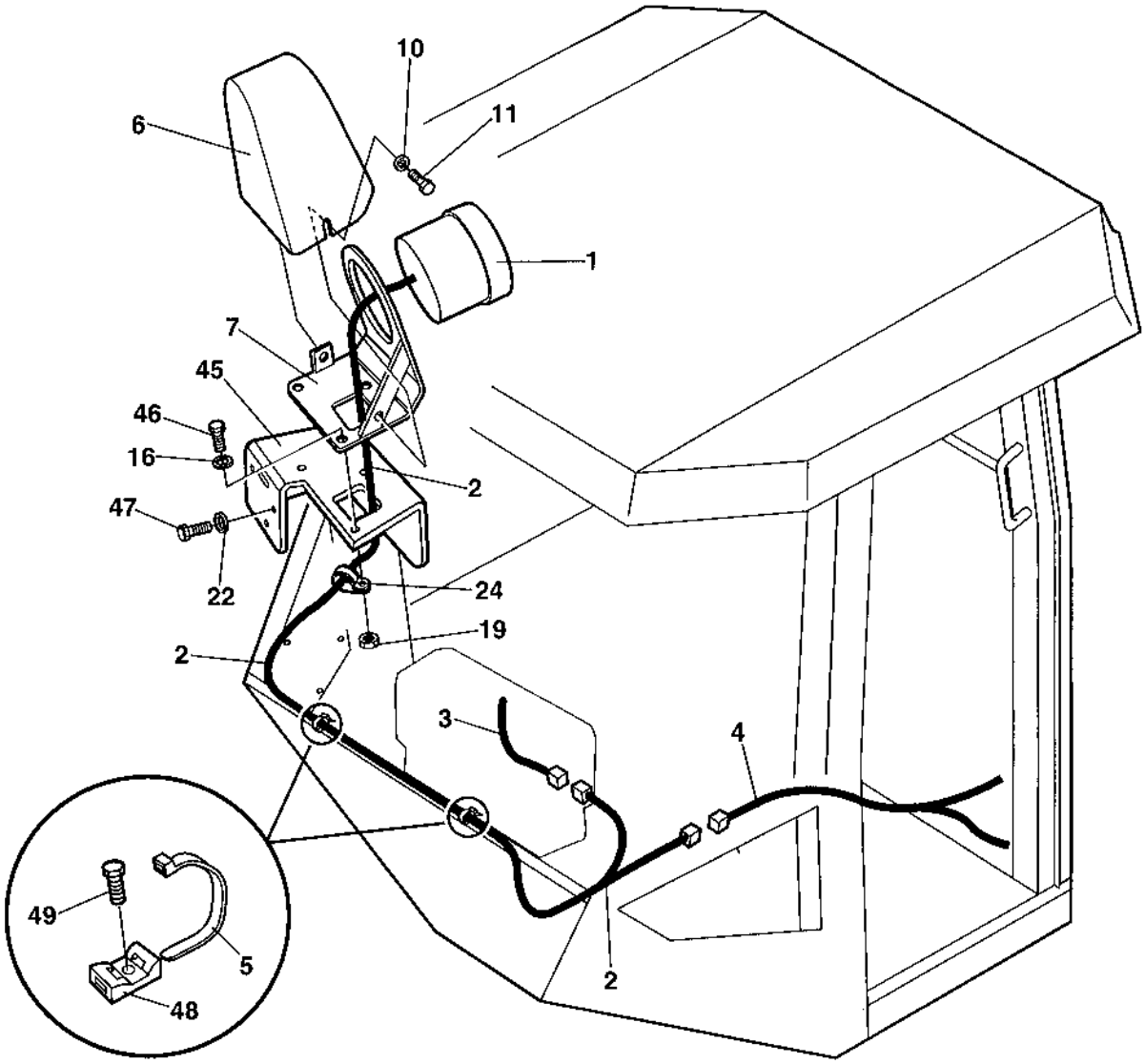

## Tachograph, simple cab Option

| Item | Part No | Rem | Qty | Description | Code |
|---|---|---|---|---|---|
| 1 | 4700901209 | | 1 | Tachograph | B |
| 2 | 4700372497 | | 1 | Cable harness | D |
| | 4700908496 | | 1 | . Grommet | D |
| | 4700903717 | | 1 | . Resistor 470 ohm, 0.5w | |
| 3 | 4700372496 | | 1 | Cable harness | D |
| 4 | 4700372495 | | 1 | Cable harness | D |
| | 4700904015 | | 1 | . Fuse holder | D |
| | 4700904140 | | 1 | . Fuse 0.5A | A |
| 5 | 4700313041 | | N | Cable ties | B |
| 6 | 4700385527 | | 1 | Cover | D |
| 7 | 4700385526 | | 1 | Holder plate | D |
| 10 | 4700904281 | | 2 | Washer 5,3x10x1 300HV | C |
| 11 | 4700500004 | | 2 | Screw M5 0,8x12 8,8 | C |
| 16 | 4700904228 | | 3 | Washer 6,4x12x1,5 | C |
| 19 | 4700586002 | | 1 | Lock nut M6 -8 | C |
| 22 | 4700904229 | | 3 | Steel plain washer 8,4x16x1,5 | C |
| 24 | 4700921031 | | 1 | Clamp | C |
| 45 | 4700378110 | | 1 | Bracket | D |
| 46 | 4700500075 | | 3 | Screw M6-1,0x25 8.8 | C |
| 47 | 4700500053 | | 3 | Screw M8x20H 8.8 | C |
| 48 | 4700904543 | | 2 | Cable tie holder | |
| 49 | 4700903852 | | 2 | Screw ST4,2x13 | C |

## Back-up alarm Option

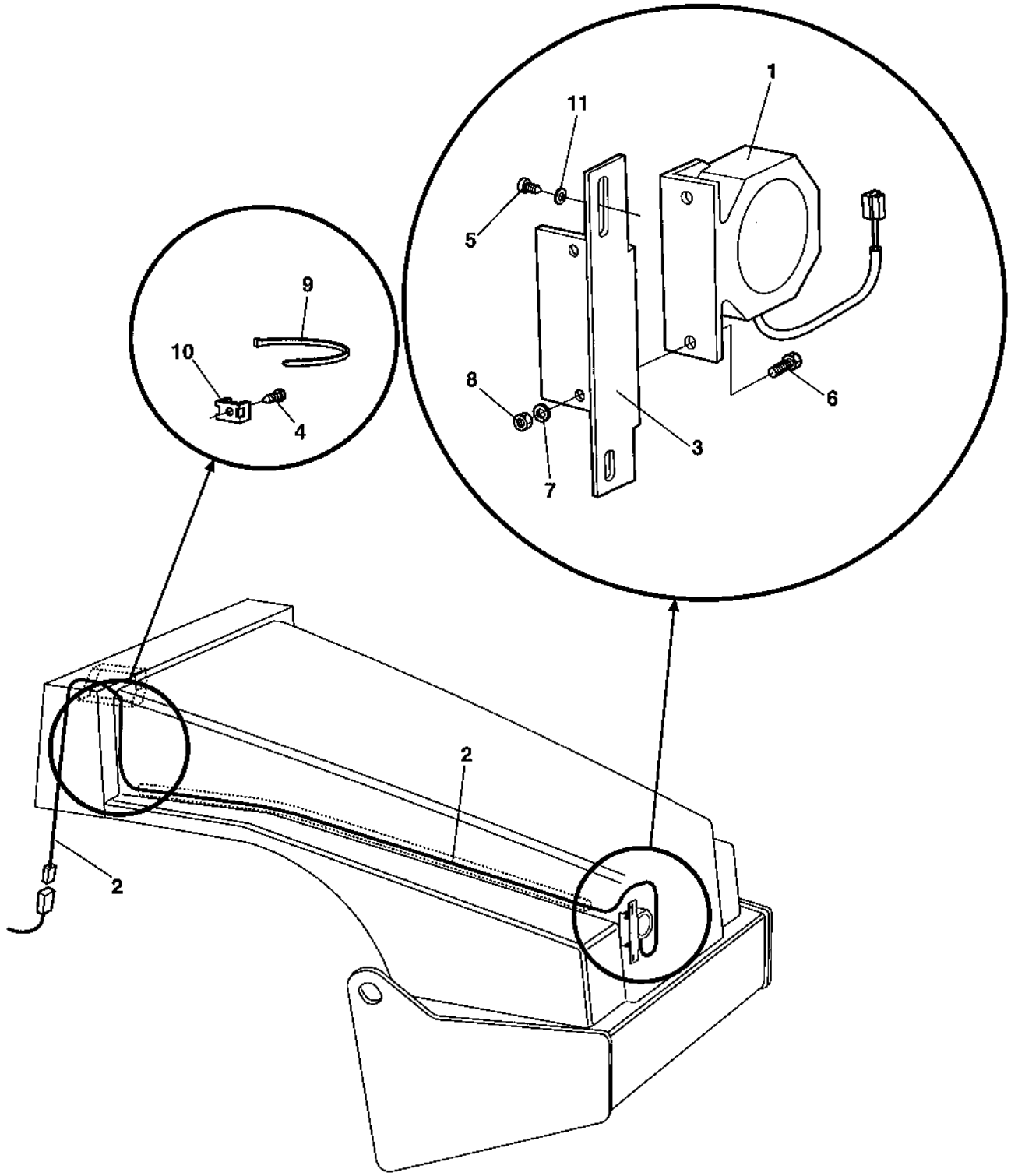

## Back-up alarm Option

| Item | Part No | Rem | Qty | Description | Code |
|---|---|---|---|---|---|
| 1 | 4700904910 | | 1 | Back-up alarm | B |
| 2 | 4700373286 | A | 1 | Cable harness | D |
| 3 | 4700376896 | | 1 | Bracket | D |
| 4 | 4700903852 | | 3 | Screw ST4,2x13 | C |
| 5 | 4812110748 | | 2 | Screw KX-PT K50X18 A2K | |
| 6 | 4700500013 | | 2 | Screw M6-1x16 8,8 | C |
| 7 | 4700904228 | | 2 | Washer 6,4x12x1,5 | C |
| 8 | 4700586002 | | 2 | Lock nut M6 -8 | C |
| 9 | 4700925802 | | N | Cable ties L=142 mm | C |
| 10 | 4700904543 | | 3 | Cable tie holder | |
| 11 | | B | | Existing washer | |

A) Not valid for machines equiped with working/driving lights.
B) Use existing washers on grid.

# Protecting cover, Headlight Option

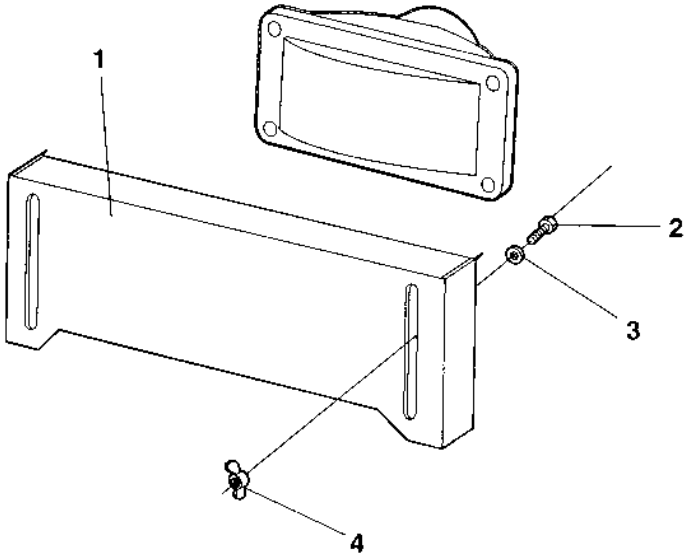

## Protecting cover, Headlight Option

| Item | Part No | Rem | Qty | Description | Code |
|---|---|---|---|---|---|
| 1 | 4700376068 | | 1 | Protecting plate | D |
| 2 | 4700500013 | | 2 | Screw M6-1x16 8,8 | C |
| 3 | 4700904228 | | 2 | Washer 6,4x12x1,5 | C |
| 4 | 4700582006 | | 2 | Wing nut | D |

## Field computer assembly Option

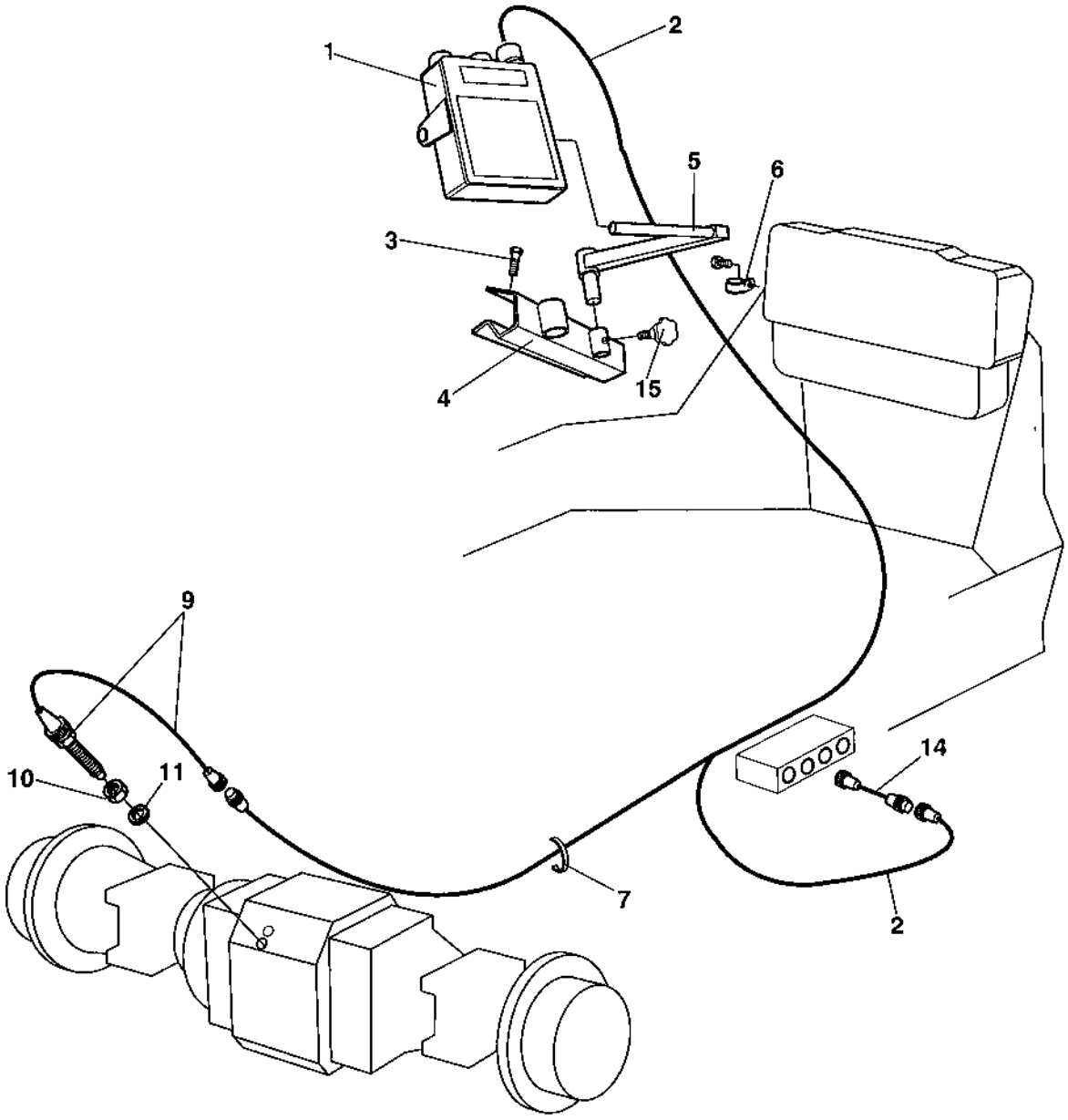

## Field computer assembly Option

| Item | Part No | Rem | Qty | Description | Code |
|---|---|---|---|---|---|
| 1 | 4700373860 | | 1 | Field computer | D |
| 2 | 4700384070 | | 1 | Cable harness | D |
| 3 | 4700541703 | | 5 | Screw M6x16 | D |
| 4 | 4700373979 | | 1 | Bracket | D |
| 5 | 4700373980 | | 1 | Lever | D |
| 6 | 4700921065 | | 2 | Clamp | C |
| 7 | 4700313041 | | N | Cable ties | B |
| 9 | | A | 1 | Sensor | |
| 10 | | | 1 | . Nut | |
| 11 | | | 1 | . Sealing | |
| 14 | 4700389786 | | 1 | Cable harness | D |
| 15 | 4700499162 | | 1 | Hand knob | D |

A) See section "Speedometer and Frequency meter".

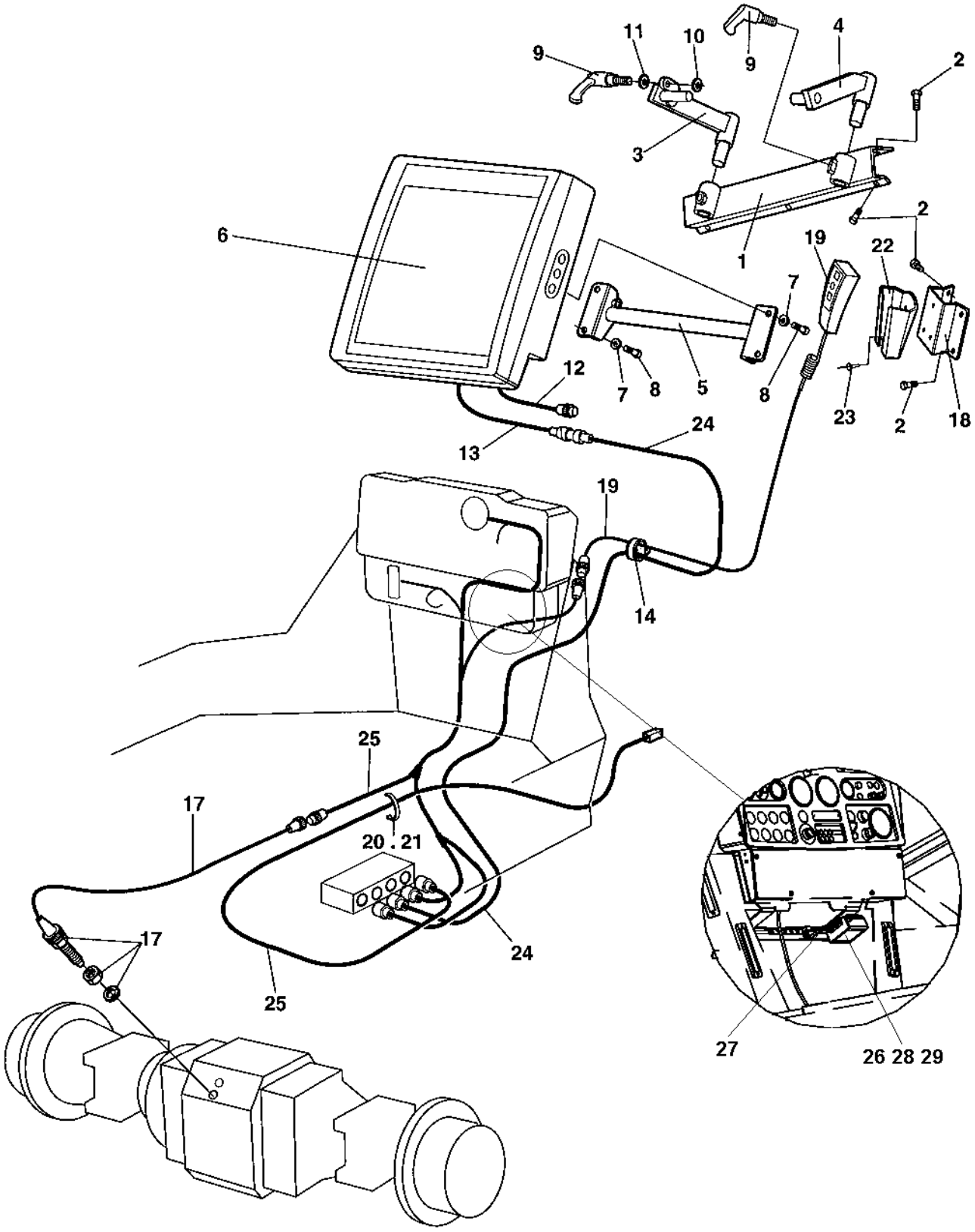
11
10
9
4
2
9
3
6
2
19
22
1
7
12
7
8
5
8
23
2
18
24
13
19
14
25
17
20 . 21
17
24
25
27
26 28 29

## Compaction Analyzer Option

| Item | Part No | Rem | Qty | Description | Code |
|---|---|---|---|---|---|
| 1 | 4700387968 | | 1 | Holder | D |
| 2 | 4700938686 | | 10 | Screw | |
| 3 | 4700387969 | | 1 | Lever | D |
| 4 | 4700388189 | | 1 | Lever | D |
| 5 | 4700387571 | | 1 | Computer holder | D |
| 6 | 4700388209 | | 1 | Computer | D |
| 7 | 4700904228 | | 4 | Washer 6,4x12x1,5 | C |
| 8 | 4700500013 | | 4 | Screw M6-1x16 8,8 | C |
| 9 | 4700791452 | | 3 | Lock handle | D |
| 10 | 4700904640 | | 1 | Washer 8,4x22x3 | C |
| 11 | 4700904229 | | 1 | Steel plain washer 8,4x16x1,5 | C |
| 12 | 4700390962 | A | 1 | Cable harness | D |
| 13 | 4700388213 | | 1 | Cable harness | D |
| 14 | 4700921046 | | 5 | Clamp | |
| 17 | | B | | Sensor | |
| 18 | 4700389591 | | 1 | Bracket | D |
| 19 | 4700388212 | | 1 | Control box | D |
| 20 | 4700313041 | | N | Cable ties | B |
| 21 | 4700313102 | | N | Cable ties | |
| 22 | 4700387941 | | 1 | Control box holder | D |
| 23 | 4700624021 | | 3 | Pop rivet | D |
| 24 | 4700389570 | | 1 | Cable harness | D |
| 25 | | C | | Cable harness | |
| 26 | 4811000244 | | 1 | Power converter | |
| 27 | 4812112481 | | 1 | Cable harness | |
| 28 | 4700904653 | | 3 | Screw M5x16 A2-70 | C |
| 29 | 4700586001 | | 3 | Lock nut | C |

A) Connected to 12V contact on Cab.
B) See section " Speedometer and Frequency meter".
C) See section "Compaction meter".

## Geodynamic Compaction indicator Option

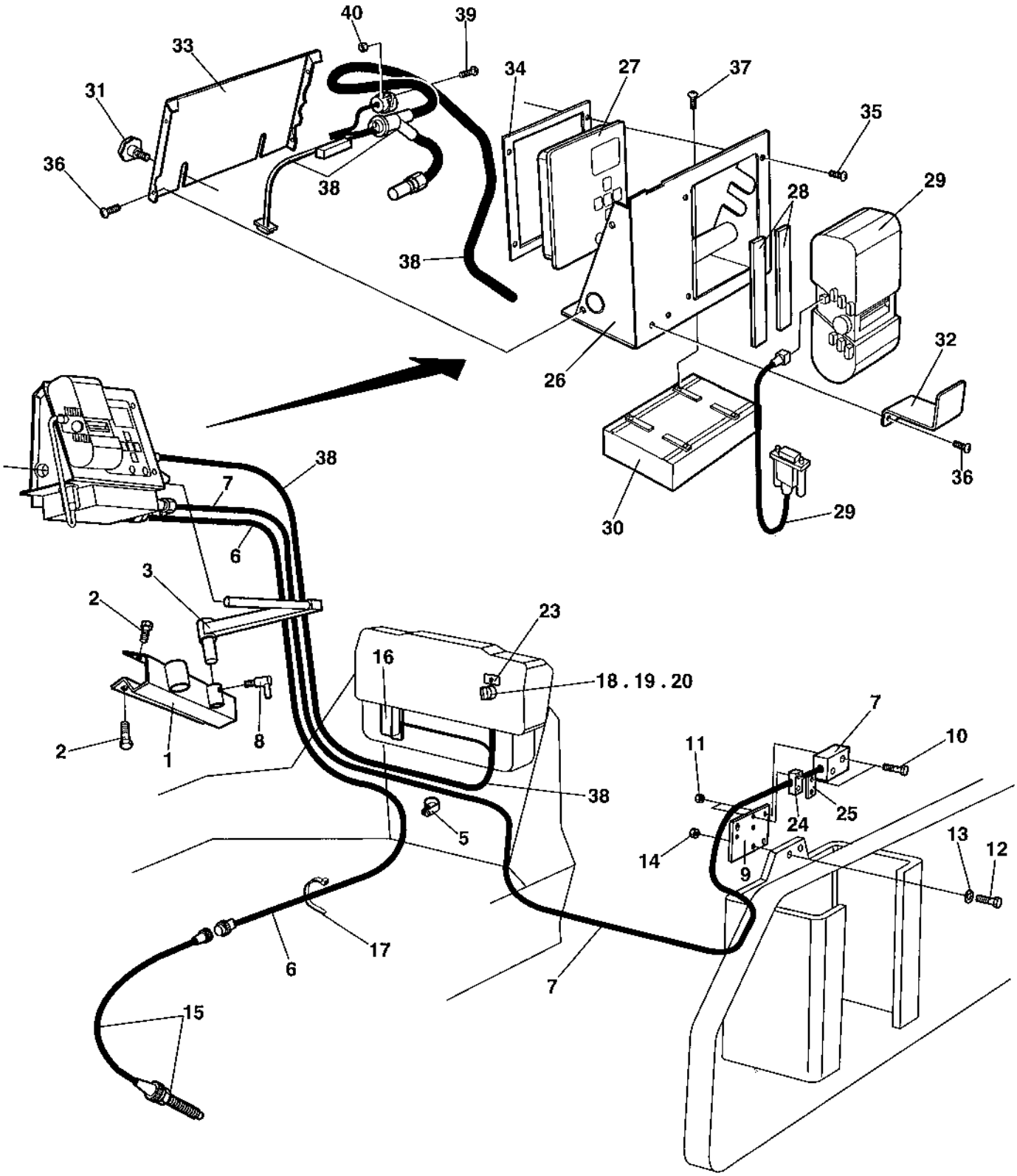

## Geodynamic Compaction indicator Option

| Item | Part No | Rem | Qty | Description | Code |
|---|---|---|---|---|---|
| 1 | 4700373979 | | 1 | Bracket | D |
| 2 | 4700541703 | | 5 | Screw M6x16 | D |
| 3 | 4700373980 | | 1 | Lever | D |
| 5 | 4700921046 | | 3 | Clamp | |
| 6 | 4700386645 | | 1 | Cable harness | D |
| 7 | 4700386646 | | 1 | Cable harness with sensor | D |
| 8 | 4700791452 | | 1 | Lock handle | D |
| 9 | 4700373140 | | 1 | Bracket | D |
| 10 | 4700500016 | | 4 | Screw M6x55 8.8 A2K | C |
| 11 | 4700902285 | | 4 | Hexagon lock nut with flange | C |
| 12 | 4700500194 | | 2 | Screw | C |
| 13 | 4700904231 | | 2 | Washer 13x24x2 300 HV | C |
| 14 | 4700902288 | | 2 | Nut M12 | D |
| 15 | | A | 1 | Sensor | |
| 16 | 4700901224 | | 1 | Fuse 3A | A |
| 17 | 4700313041 | | N | Cable ties | B |
| 18 | 4700932056 | | 1 | Switch | B |
| 19 | 4700930165 | | 1 | Contact block | B |
| 20 | 4700985012 | | 1 | Bulb | B |
| 23 | 4700387283 | | 1 | Decal | D |
| 24 | 4700791453 | | 1 | Pipe clamp block | |
| 25 | 4700791454 | | 1 | Cover plate | |
| 26 | 4700386298 | | 1 | Holder | D |
| 27 | 4700387280 | | 1 | Display unit | D |
| 28 | 4700926911 | B | 2XL | Rubber strip | D |
| 29 | 4700387282 | | 1 | Printer | D |
| | | | 1 | . Printer cable | |
| 30 | 4700387281 | | 1 | Processor | D |
| 31 | 4700499162 | | 1 | Hand knob | D |
| 32 | 4700386300 | | 1 | Holder | D |
| 33 | 4700386301 | | 1 | Cover plate | D |
| 34 | 4700386299 | | 1 | Display holder | D |
| 35 | 4700791171 | | 4 | Screw | D |
| 36 | 4700904206 | | 6 | Screw | C |
| 37 | 4700904289 | | 4 | Screw | C |
| 38 | 4700386647 | C | 1 | Cable harness | D |
| 39 | 4700900528 | | 2 | Screw | D |
| 40 | 4700928927 | | 2 | Lock nut | D |

A) See section "Speedometer and Frequencymeter".
B) L=0,240MM
C) C1-cable

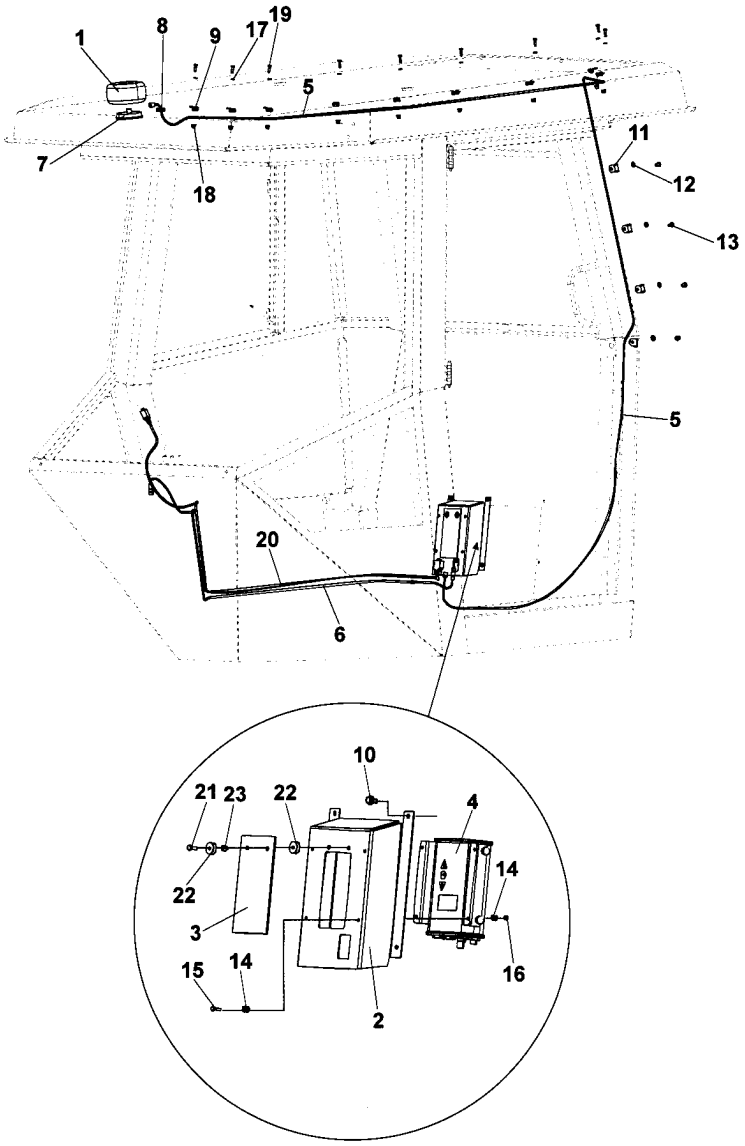
1
8
9
17
19
5
7
18
11
12
13
5
20
6
10
21
23
22
4
14
22
3
15
14
16
2

## GPS Option

| Item | Part No | Rem | Qty | Description | Code |
|---|---|---|---|---|---|
| 1 | 4812113058 | | 1 | Antenna | |
| 2 | 4812113556 | | 1 | Bracket | |
| 3 | 4812113564 | | 1 | Rubber cloth | |
| 4 | 4812113157 | | 1 | Reciever | |
| 5 | 4812113158 | | 1 | Antenna lead | |
| 6 | 4812113159 | | 1 | Cable Communication | |
| 7 | 4812113160 | | 1 | Bracket | |
| 8 | 4700791475 | | 1 | Grommet | D |
| 9 | 4700791388 | | 9 | Clamp | D |
| 10 | 4700541705 | | 5 | Screw | D |
| 11 | 4700904780 | | 4 | Hose clamp | D |
| 12 | 4700904229 | | 4 | Steel plain washer 8,4x16x1,5 | C |
| 13 | 4700500042 | | 4 | Screw | |
| 14 | 4700904698 | | 8 | Washer 4,3x8x0,8 | C |
| 15 | 4700500086 | | 4 | Screw | D |
| 16 | 4700570002 | | 4 | Nut M4 | C |
| 17 | 4700904228 | | 9 | Washer 6,4x12x1,5 | C |
| 18 | 4700902285 | | 9 | Hexagon lock nut with flange | C |
| 19 | 4700500040 | | 1 | Screw M6-1x20 8,8 | C |
| 20 | 4812113171 | | 1 | Cable Power | |
| 21 | 4700500004 | | 2 | Screw M5 0,8x12 8,8 | C |
| 22 | 4700927974 | | 4 | Washer | C |
| 23 | 4700586001 | | 2 | Lock nut | C |

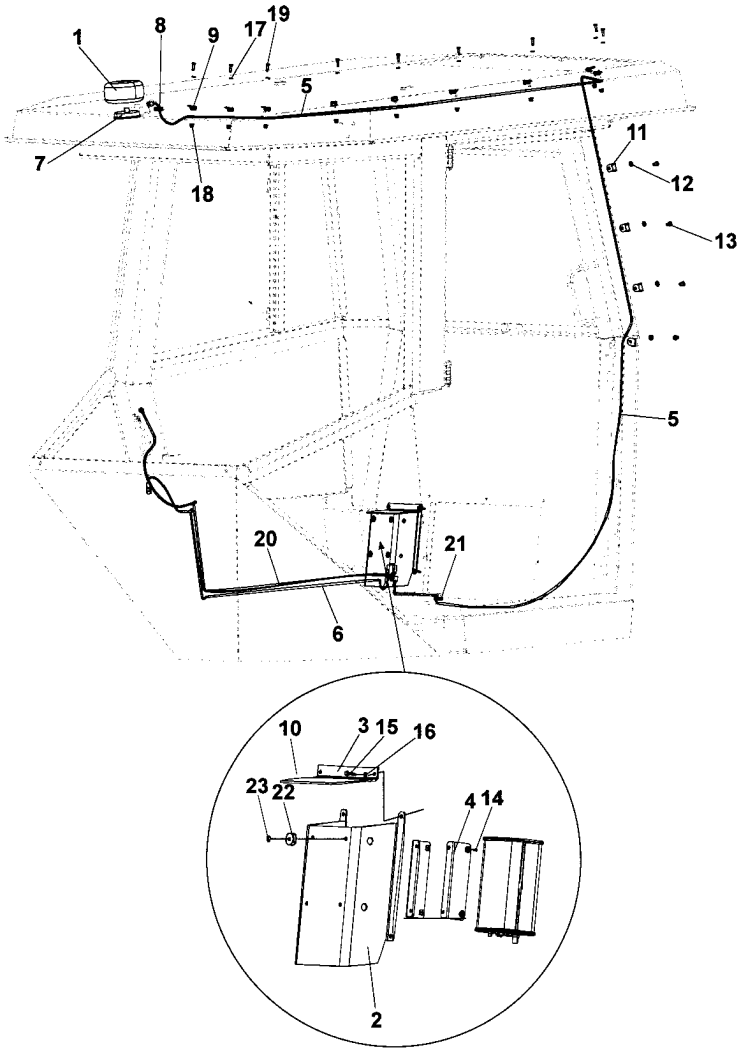
1
8
9
17
19
5
7
18
11
12
13
5
20
21
6
10
3
15
16
23
22
4
14
2

## GPS Option

| Item | Part No | Rem | Qty | Description | Code |
|---|---|---|---|---|---|
| 1 | 4812113058 | | 1 | Antenna | |
| 2 | 4812114185 | | 1 | Bracket | |
| 3 | 4812114190 | | 1 | Rubber cloth | |
| 4 | 4812114146 | | 1 | Reciever | |
| 5 | 4812113158 | | 1 | Antenna lead | |
| 6 | 4812113159 | | 1 | Cable Communication | |
| 7 | 4812113160 | | 1 | Bracket | |
| 8 | 4700791475 | | 1 | Grommet | D |
| 9 | 4700791388 | | 9 | Clamp | D |
| 10 | 4811000395 | | 1 | Bracket | D |
| 11 | 4700904780 | | 4 | Hose clamp | D |
| 12 | 4700904229 | | 4 | Steel plain washer 8,4x16x1,5 | C |
| 13 | 4700500042 | | 4 | Screw | |
| 14 | 4700533008 | | 4 | Screw M8x10H 4,8 A2K | D |
| 15 | 4811000457 | | 4 | Thread rolling screw | D |
| 16 | 4700601001 | | 2 | Washer | C |
| 17 | 4700904228 | | 9 | Washer 6,4x12x1,5 | C |
| 18 | 4700902285 | | 9 | Hexagon lock nut with flange | C |
| 19 | 4700500040 | | 1 | Screw M6-1x20 8,8 | C |
| 20 | 4812114184 | | 1 | Cable Power | |
| 21 | 4700909130 | | 1 | Grommet | C |
| 22 | 4700927974 | | 4 | Washer | C |
| 23 | 4700923253 | | 4 | Rivet | C |

# Engine pre-heater, Cab Option

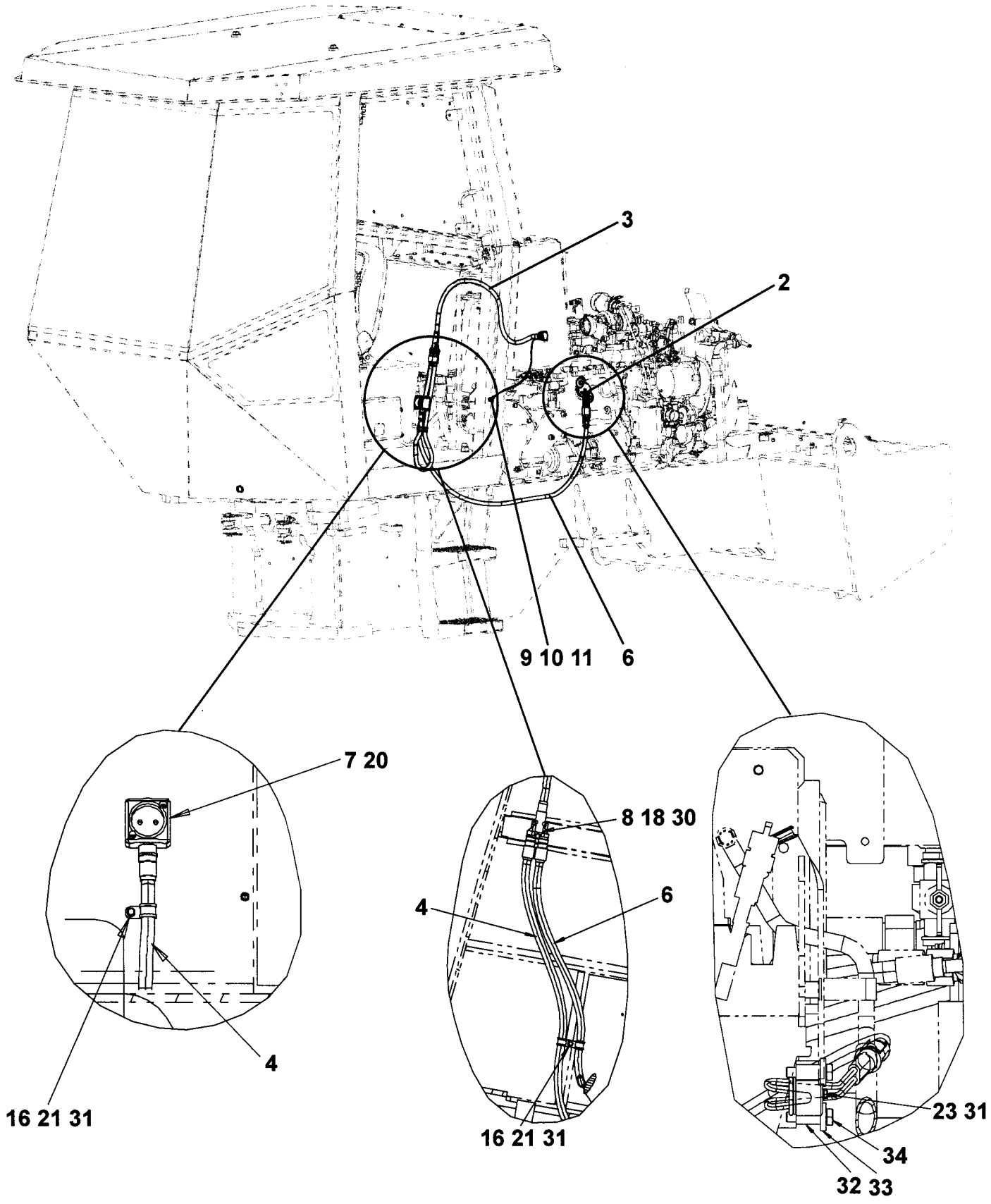

## Engine pre-heater, Cab Option

| Item | Part No | Rem | Qty | Description | Code |
|---|---|---|---|---|---|
| 2 | 4700396042 | | 1 | Heater | |
| 3 | 4700396045 | | 1 | Cable | |
| 4 | 4700396046 | | 1 | Cable | |
| 5 | 4700396048 | | 1 | Cable | |
| 6 | 4700396047 | | 1 | Cable | |
| 7 | 4700396044 | | 1 | Connector | |
| 8 | 4700396043 | | 1 | Branching | |
| 9 | 4700960051 | | 1 | Connector | |
| 10 | 4700904229 | | 1 | Steel plain washer 8,4x16x1,5 | C |
| 11 | 4700500042 | | 1 | Screw | |
| 16 | 4700921046 | | 3 | Clamp | |
| 18 | 4700904228 | | 1 | Washer 6,4x12x1,5 | C |
| 20 | 4700533016 | | 2 | Screw | D |
| 21 | 4700904281 | | 2 | Washer 5,3x10x1 300HV | C |
| 23 | 4700586001 | | 1 | Lock nut | C |
| 30 | 4700500015 | | 1 | Screw M6X30 8.8 | C |
| 31 | 4700500004 | | 3 | Screw M5 0,8x12 8,8 | C |
| 32 | 4700373507 | | 2 | Spacer | |
| 33 | 4700904567 | | 2 | Washer 10,5x28x6 HB305 | C |
| 34 | 4700500031 | | 2 | Screw M10x040 8.8 | C |

## Engine pre-heater, Platform Option

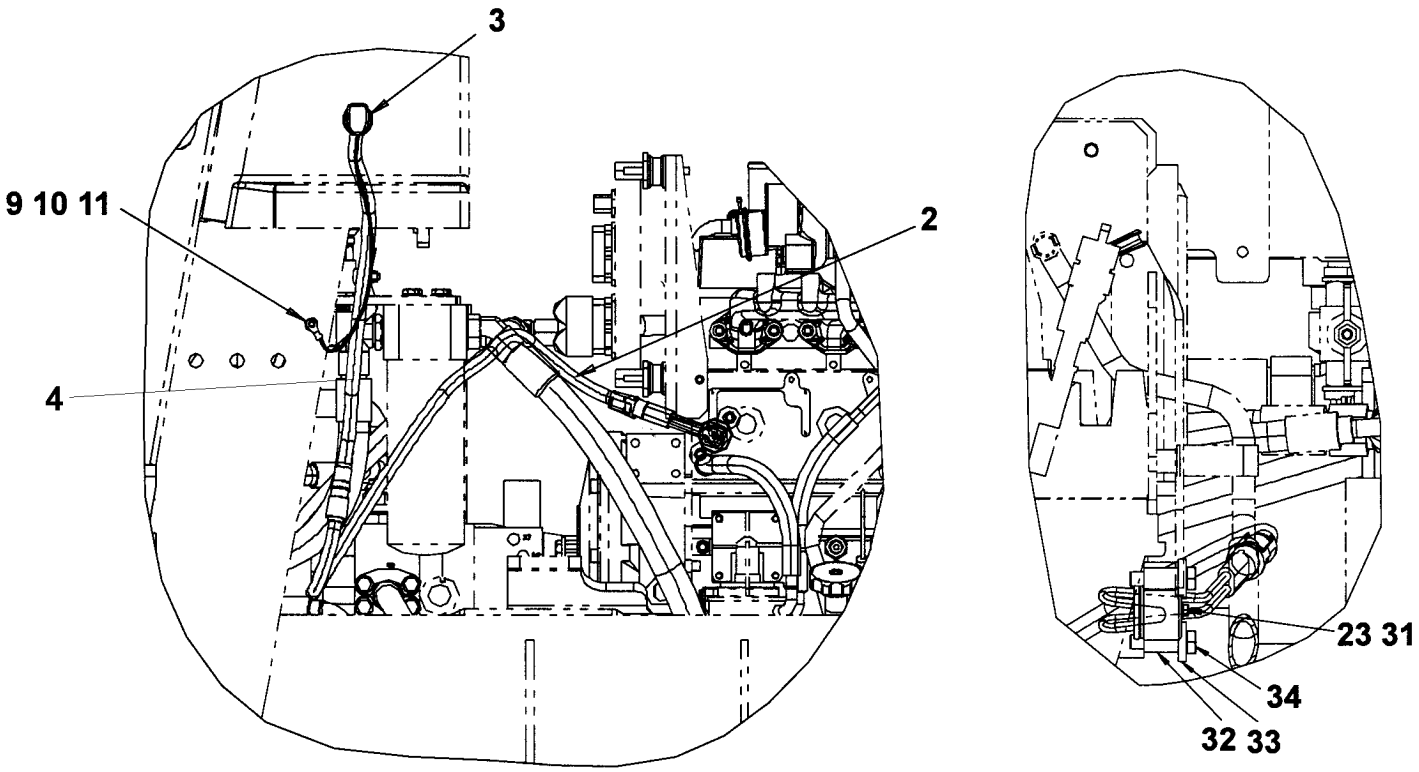

## Engine pre-heater, Platform Option

| Item | Part No | Rem | Qty | Description | Code |
|---|---|---|---|---|---|
| 2 | 4700396042 | | 1 | Heater | |
| 3 | 4700396045 | | 1 | Cable | |
| 4 | 4700396046 | | 1 | Cable | |
| 5 | 4700396048 | | 1 | Cable | |
| 9 | 4700960051 | | 1 | Connector | |
| 10 | 4700904229 | | 1 | Steel plain washer 8,4x16x1,5 | C |
| 11 | 4700500042 | | 1 | Screw | |
| 23 | 4700586001 | | 1 | Lock nut | C |
| 31 | 4700500004 | | 3 | Screw M5 0,8x12 8,8 | C |
| 32 | 4700373507 | | 2 | Spacer | |
| 33 | 4700904567 | | 2 | Washer 10,5x28x6 HB305 | C |
| 34 | 4700500031 | | 2 | Screw M10x040 8.8 | C |

# Drivers platform

| Item | Part No | Rem | Qty | Description | Code |
|---|---|---|---|---|---|
| 10 | | | | **Drivers platform ( Page 182 )** | |
| 16 | | | | **Drivers platform, for cab ( Page 184 )** | |
| 18 | | | | **Drivers seat Standard platform ( Page 186 )** | |
| 22 | | | | **Drivers seat Turn-over platform ( Page 188 )** | |
| 26 | | | | **Drivers seat Turn-over in cab ( Page 190 )** | |
| 27 | | | | **Steering column ( Page 192 )** | D |
| 29 | | | | **Steering system ( Page 194 )** | |
| 30 | | | | **Turning Controls ( Page 196 )** | |
| 40 | | | | **Turning Carrier ( Page 198 )** | |
| 52 | | | | **Forward and reverse control ( Page 200 )** | |
| 59 | | | | **Speed limiter Option ( Page 202 )** | |
| 90 | | | | **Rops and fops ( Page 204 )** | |
| 96 | | | | **Cab 4700383030 ( Page 206 )** | |
| 100 | | | | **Cab 4700392479 ( Page 232 )** | |
| 120 | | | | **Cab mounting ( Page 246 )** | |
| 200 | | | | **Cab Work lights ( Page 248 )** | |
| 220 | | | | **Cab Exterior, rear mirror ( Page 250 )** | |
| 230 | | | | **Cab, 12V contact ( Page 252 )** | |
| 260 | | | | **Radio and cassette/cd player Option ( Page 254 )** | |
| 270 | | | | **Bracket, Steering valve vibration isolated Option ( Page 256 )** | |

# Drivers platform

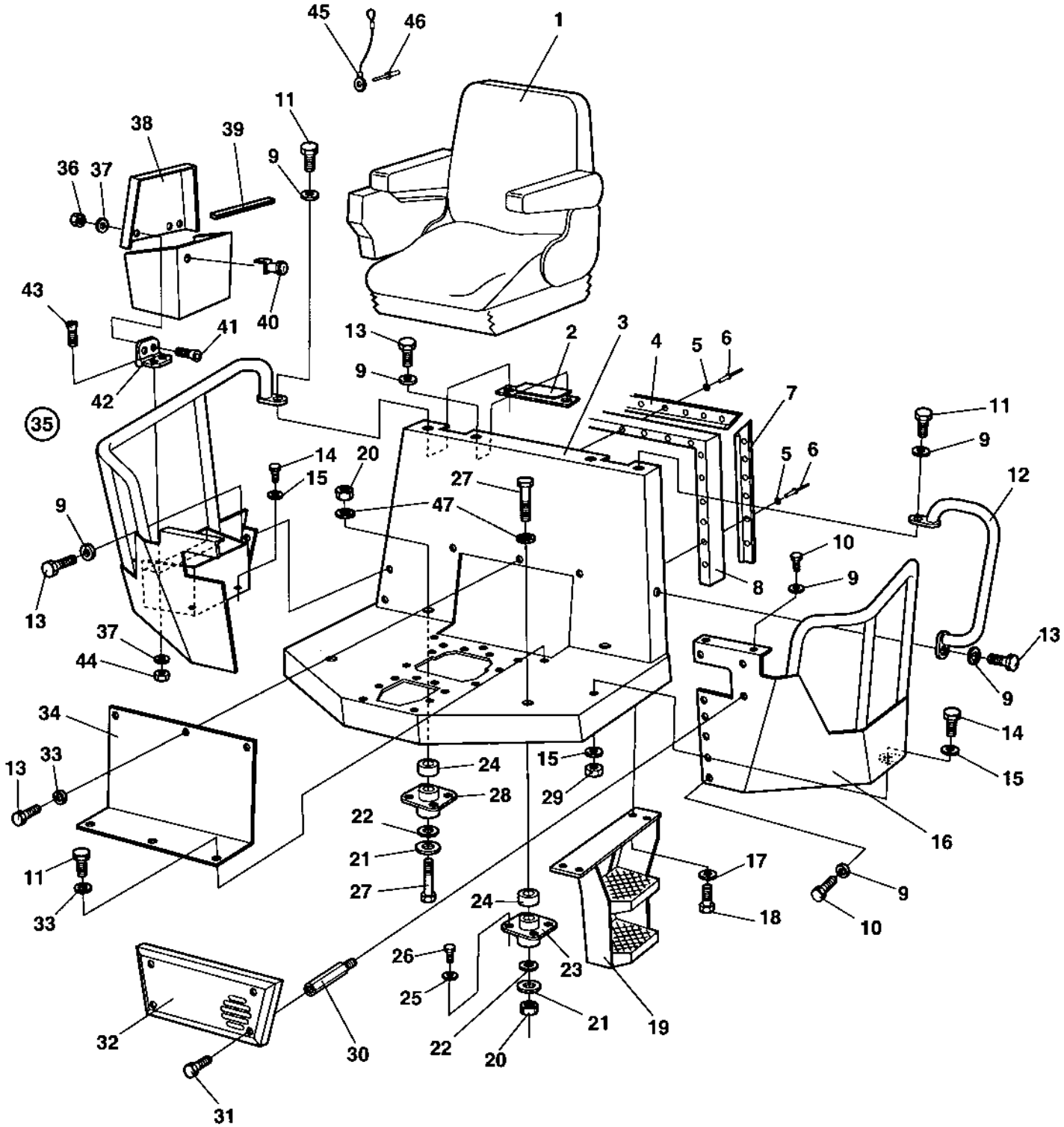

## Drivers platform

| Item | Part No | Rem | Qty | Description | Code |
|---|---|---|---|---|---|
| 1 | | | 1 | **Drivers seat Standard platform ( Page 186 )** | |
| | | | 1 | **Drivers seat Turn-over platform ( Page 188 )** | |
| | | | 1 | **Forward and reverse control** | |
| 2 | 4700380727 | | 2 | Cover | D |
| 3 | 4700371100 | | 1 | Platform | |
| 4 | 4700372785 | | 1 | List | D |
| 5 | 4700927974 | | 13 | Washer | C |
| 6 | 4700904433 | | 13 | Blind rivet | |
| 7 | 4700372786 | | 2 | List | D |
| 8 | 4700372494 | A | 1 | Rubber strip | D |
| 9 | 4700904229 | | 22 | Steel plain washer 8,4x16x1,5 | C |
| 10 | 4700500019 | | 7 | Hexagon head screw M8x16H 8,8 | C |
| 11 | 4700500021 | | 7 | Screw M8-1,25x25 8.8 | C |
| 12 | 4700371202 | B | 1 | Hand rail | D |
| 13 | 4700500053 | | 10 | Screw M8x20H 8.8 | C |
| 14 | 4700500031 | | 5 | Screw M10x040 8.8 | C |
| 15 | 4700904557 | | 10 | Steel plain washer | C |
| 16 | 4700371967 | B | 1 | Operator protection | D |
| 17 | 4700904230 | | 6 | Steel plain washer | C |
| 18 | 4700500029 | | 9 | Hexagon head screw | C |
| 19 | 4700376255 | | 1 | Step | D |
| 20 | 4700586022 | | 4 | Lock nut M20-8 | C |
| 21 | 4700347512 | | 4 | Washer | D |
| 22 | 4700903290 | | 4 | Washer 21x36x6 | C |
| 23 | 4700370255 | C | 2 | Shock absorber | A |
| 24 | 4700374471 | | 4 | Spacer | D |
| 25 | 4700904231 | | 16 | Washer 13x24x2 300 HV | C |
| 26 | 4700500195 | | 16 | Screw | C |
| 27 | 4700500226 | | 4 | Screw M20-2.5x180 8,8 | D |
| 28 | 4700372757 | D | 2 | Shock absorber | D |
| 29 | 4700570006 | | 5 | Nut | B |
| 30 | 4700904941 | | 4 | Spacer screw | D |
| 31 | 4700904206 | | 4 | Screw | C |
| 32 | 4700382849 | | 1 | Protecting cover | D |
| 33 | 4700904640 | | 18 | Washer 8,4x22x3 | C |
| 34 | 4700372053 | | 1 | Cover | D |
| 35 | 4700371966 | E | 1 | Operator protection | D |
| 36 | 4700581018 | | 4 | . Nut | D |
| 37 | 4700904228 | | 8 | . Washer 6,4x12x1,5 | C |
| 38 | 4700376079 | | 1 | . Cover | D |
| 39 | 4700202028 | F | 1 | . Edge trim | D |
| 40 | 4700376118 | | 1 | . Lock | D |
| | 4700902866 | | 2 | . . Key Marked "455" | |
| 41 | 4700535013 | | 4 | . Screw | D |
| 42 | 4700903907 | | 2 | . Hinge | C |
| 43 | 4700535015 | | 4 | . Screw | D |
| 44 | 4700586002 | | 4 | . Lock nut M6 -8 | C |
| 45 | 4700384584 | | 1 | Wire | |
| 46 | 4700904855 | | 1 | Blind rivet | D |
| 47 | 4700904233 | | 4 | Washer 21x36x3 | C |

A) L = 2.400 m
B) Left
C) Front
D) Rear
E) Right
F) L=0,736 m

# Drivers platform, for cab

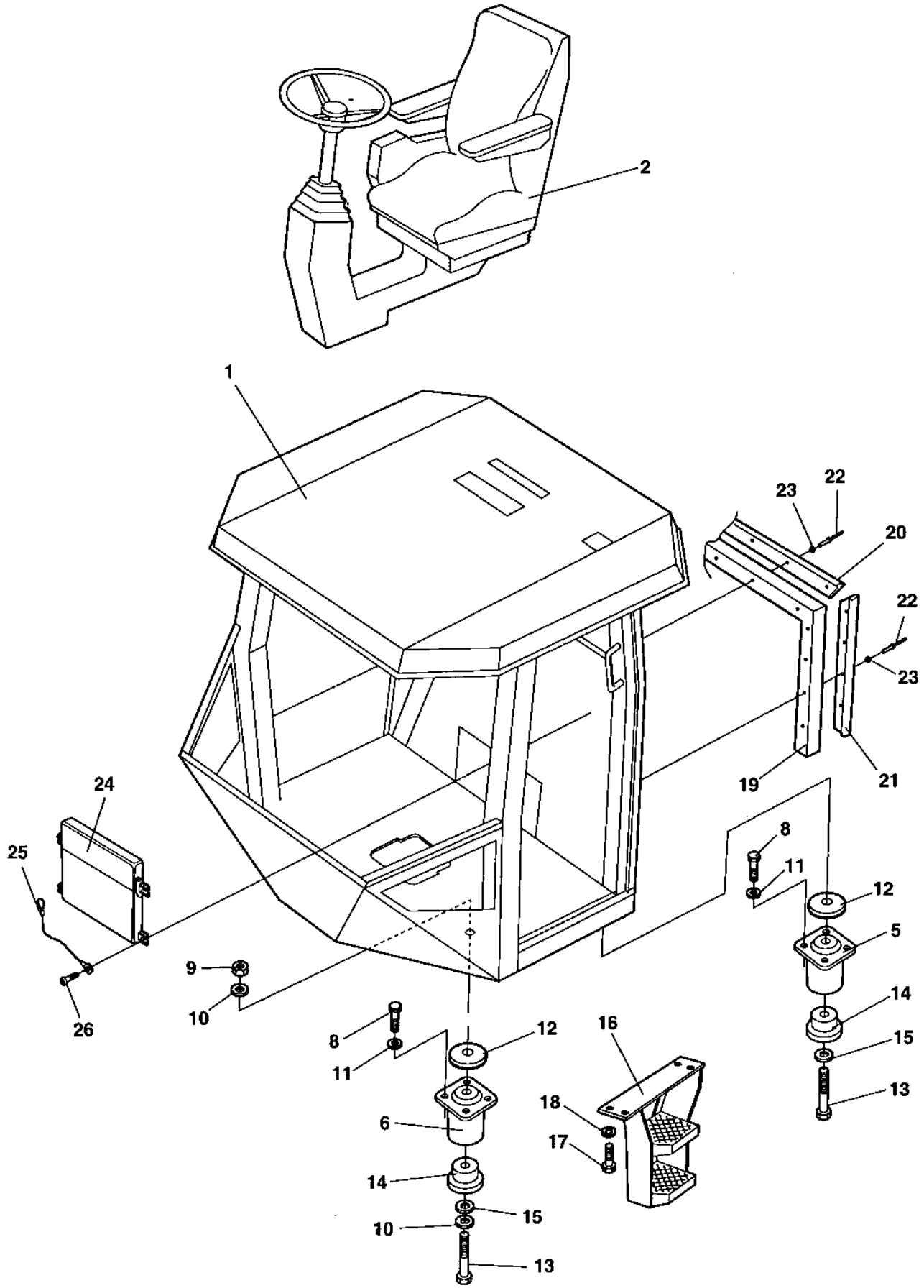

## Drivers platform, for cab

| Item | Part No | Rem | Qty | Description | | Code |
|---|---|---|---|---|---|---|
| 1 | | | 1 | **Cab 4700383030 ( Page 206 )** | | |
| 2 | | | | **Drivers seat Turn-over in cab Forward and reverse control** | | |
| 5 | 4700374606 | | 2 | Shock absorber | Green | D |
| 6 | 4700374607 | | 2 | Shock absorber | Yellow | D |
| 8 | 4700500195 | | 16 | Screw | | C |
| 9 | 4700901145 | | 4 | Lock nut M20-10 | | |
| 10 | 4700904233 | | 6 | Washer 21x36x3 | | C |
| 11 | 4700904231 | | 16 | Washer 13x24x2 300 HV | | C |
| 12 | 4700384759 | | 4 | Spacer | | D |
| 13 | 4700791218 | | 4 | Screw M20x200 | | D |
| 14 | 4700372457 | | 4 | Back-up ring | | C |
| 15 | 4700903290 | | 4 | Washer 21x36x6 | | C |
| 16 | 4700376255 | | 1 | Step | | D |
| 17 | 4700500029 | | 6 | Hexagon head screw | | C |
| 18 | 4700904230 | | 6 | Steel plain washer | | C |
| 19 | 4700372494 | A | 1XL | Rubber strip | | D |
| 20 | 4700372785 | | 1 | List | | D |
| 21 | 4700372786 | | 2 | List | | D |
| 22 | 4700904433 | | 13 | Blind rivet | | |
| 23 | 4700927974 | | 13 | Washer | | C |
| 24 | 4700383705 | | 1 | Instruction book holder | | D |
| 25 | 4700357643 | | 1 | Wire | | D |
| 26 | 4700791226 | | 4 | Screw | | C |

A) L = 2,400 m

# Drivers seat Standard platform

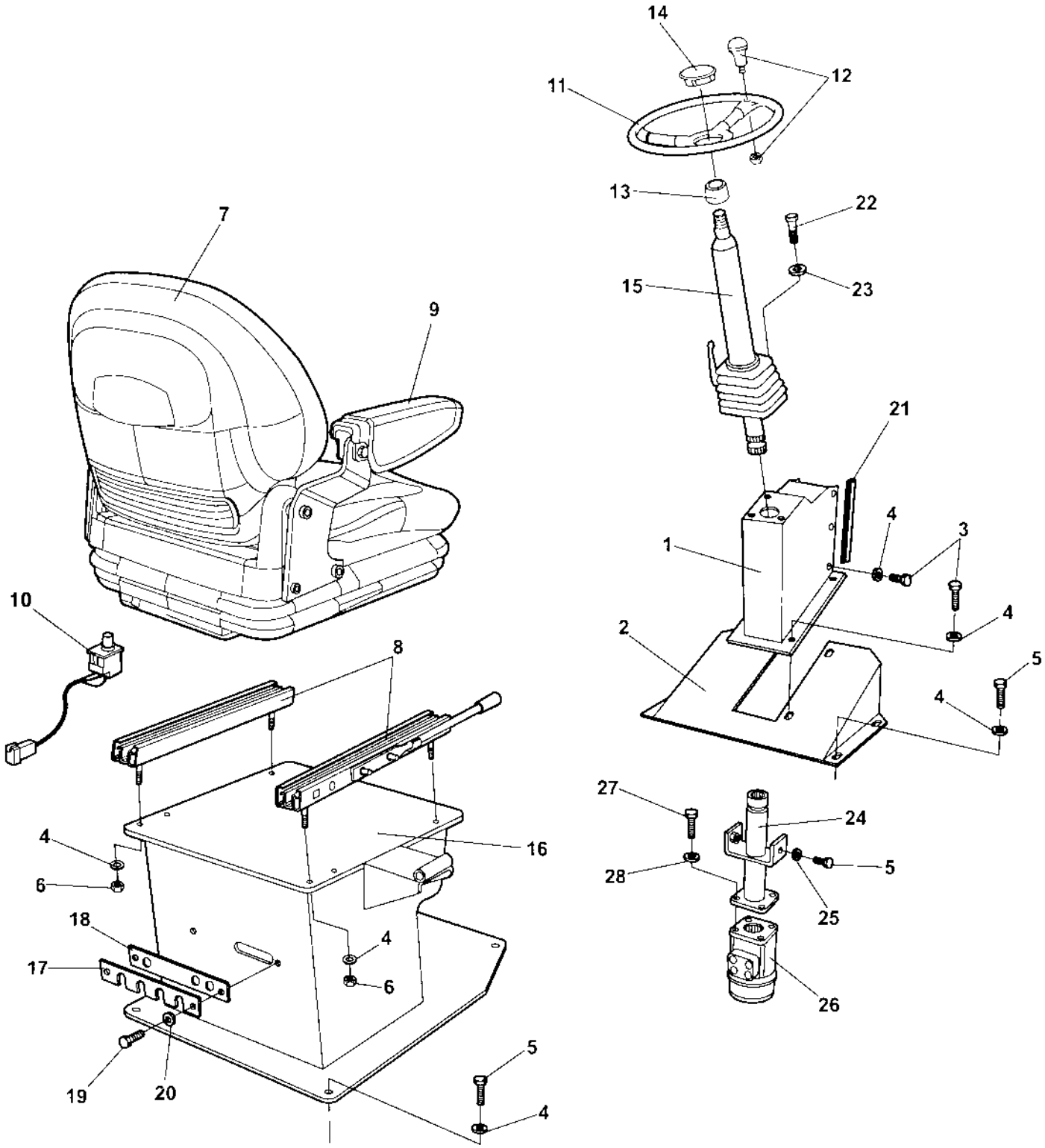

## Drivers seat Standard platform

| Item | Part No | Rem | Qty | Description | Code |
|---|---|---|---|---|---|
| 1 | 4700371968 | | 1 | Steering console | D |
| 2 | 4700371213 | | 1 | Foot rest | D |
| 3 | 4700500053 | | 10 | Screw M8x20H 8.8 | C |
| 4 | 4700904229 | | 18 | Steel plain washer 8,4x16x1,5 | C |
| 5 | 4700500021 | | 10 | Screw M8-1,25x25 8.8 | C |
| 6 | 4700570005 | | 6 | Nut M8 | C |
| 7 | 4700377518 | | 1 | Drivers seat, cpl | D |
| 8 | 4700945661 | C | 1 | . Adjuster kit | D |
| 9 | 4700390963 | A | 1 | . Arm rest kit | D |
| 10 | 4700945622 | | 1 | . Seat switch | B |
| 11 | 4700372964 | | 1 | Steering wheel, cpl | D |
| | | | 1 | . Steering wheel | |
| 12 | 4700935614 | | 1 | . Turning knob | D |
| 13 | | | 1 | . Insert adapter | |
| 14 | 4700935613 | | 1 | . Cover | D |
| 15 | | | 1 | **Steering column ( Page 192 )** | D |
| 16 | 4700391179 | | 1 | Seat frame | D |
| 17 | 4700359914 | | 1 | Cover | D |
| 18 | 4700359915 | | 1 | Grommet | D |
| 19 | 4700500075 | | 2 | Screw M6-1,0x25 8.8 | C |
| 20 | 4700904228 | | 2 | Washer 6,4x12x1,5 | C |
| 21 | 4700202028 | B | 2XL | Edge trim | D |
| 22 | 4700500029 | | 3 | Hexagon head screw | C |
| 23 | 4700904557 | | 3 | Steel plain washer | C |
| 24 | 4700370977 | | 1 | Linkage shaft | D |
| 25 | 4700904640 | | 2 | Washer 8,4x22x3 | C |
| 26 | | | 1 | Steering valve | |
| 27 | 4700502034 | | 4 | Screw UNC 3/8 - 16 | D |
| 28 | 4700904230 | | 4 | Steel plain washer | C |

A) One pair
B) L = 0.290 m
C) Left and right sliding rail.

# Drivers seat Turn-over platform

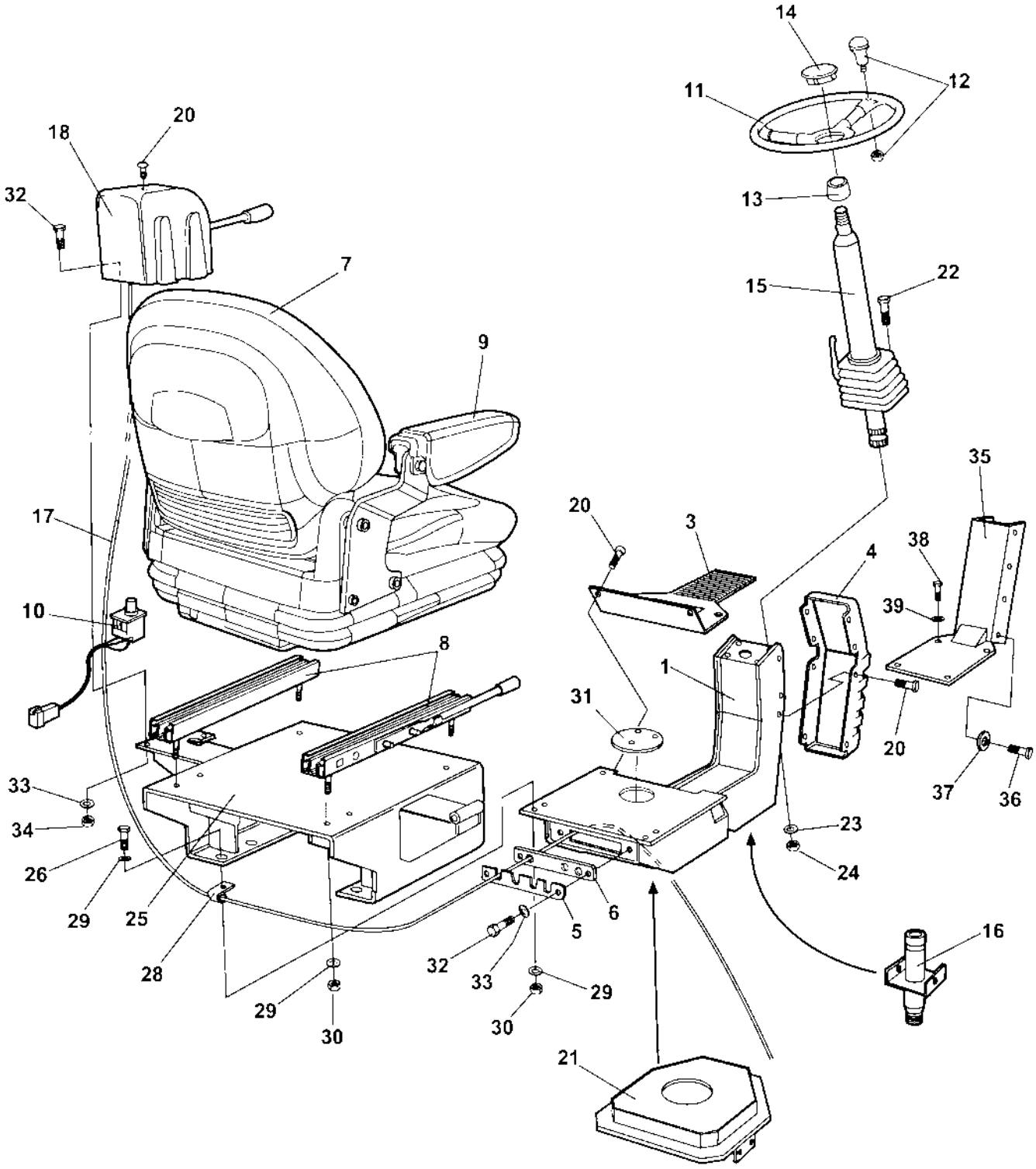

## Drivers seat Turn-over platform

| Item | Part No | Rem | Qty | Description | Code |
|---|---|---|---|---|---|
| 1 | 4700359900 | | 1 | Seat frame | D |
| 3 | 4700381400 | | 1 | Bearing cover | D |
| 4 | 4700359574 | | 1 | Cover | D |
| 5 | 4700359914 | | 1 | Cover | D |
| 6 | 4700359915 | | 1 | Grommet | D |
| 7 | 4700377518 | | 1 | Drivers seat, cpl | D |
| 8 | 4700945661 | B | 1 | . Adjuster kit | D |
| 9 | 4700390963 | A | 1 | . Arm rest kit | D |
| 10 | 4700945622 | | 1 | . Seat switch | B |
| 11 | 4700372964 | | 1 | Steering wheel, cpl | D |
| | | | 1 | . Steering wheel | |
| 12 | 4700935614 | | 1 | . Turning knob | D |
| 13 | | | 1 | . Insert adapter | |
| 14 | 4700935613 | | 1 | . Cover | D |
| 15 | | | 1 | **Steering column ( Page 192 )** | D |
| 16 | | | 0 | **Steering system ( Page 194 )** | |
| 17 | | | 0 | **Turning Controls ( Page 196 )** | |
| 18 | 4700359419 | | 1 | Control cover | D |
| 20 | 4700904206 | | 16 | Screw | C |
| 21 | | | 0 | **Turning Carrier ( Page 198 )** | |
| 22 | 4700500028 | | 3 | Screw | C |
| 23 | 4700904557 | | 3 | Steel plain washer | C |
| 24 | 4700570006 | | 3 | Nut | B |
| 25 | 4700391346 | | 1 | Seat frame | D |
| 26 | 4700500021 | | 6 | Screw M8-1,25x25 8.8 | C |
| 27 | 4700603019 | | 6 | Washer | D |
| 28 | 4700921104 | | 1 | Clamp | C |
| 29 | 4700904229 | | 16 | Steel plain washer 8,4x16x1,5 | C |
| 30 | 4700570005 | | 12 | Nut M8 | C |
| 31 | 4700359920 | | 1 | Plug | C |
| 32 | 4700500040 | | 6 | Screw M6-1x20 8,8 | C |
| 33 | 4700904228 | | 6 | Washer 6,4x12x1,5 | C |
| 34 | 4700586002 | | 4 | Lock nut M6 -8 | C |
| 35 | 4700371407 | | 1 | Cover | D |
| 36 | 4700500019 | | 8 | Hexagon head screw M8x16H 8,8 | C |
| 37 | 4700904229 | | 12 | Steel plain washer 8,4x16x1,5 | C |
| 38 | 4700500021 | | 4 | Screw M8-1,25x25 8.8 | C |
| 39 | 4700904229 | | 1 | Steel plain washer 8,4x16x1,5 | C |
| 100 | 4700348331 | | 1 | Seat cover | D |

A) One pair
B) Left and right sliding rail.

# Drivers seat Turn-over in cab

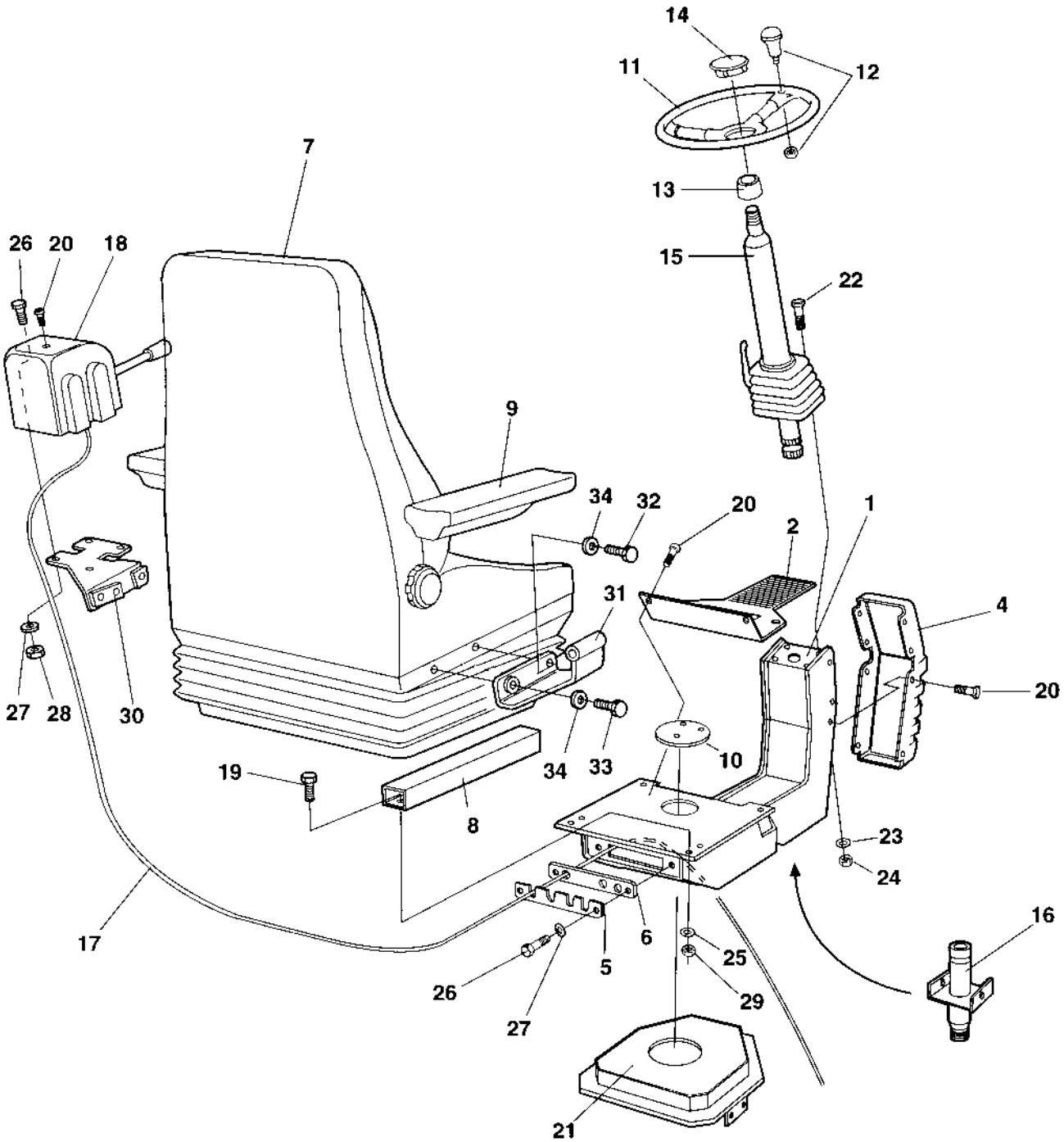

## Drivers seat Turn-over in cab

| Item | Part No | Rem | Qty | Description | Code |
|---|---|---|---|---|---|
| 1 | 4700359900 | | 1 | Seat frame | D |
| 2 | 4700381400 | | 1 | Bearing cover | D |
| 4 | 4700359574 | | 1 | Cover | D |
| 5 | 4700359914 | | 1 | Cover | D |
| 6 | 4700359915 | | 1 | Grommet | D |
| 7 | 4700359917 | | 1 | Drivers seat | D |
| | 4700937892 | | 1 | . Seat switch | B |
| 8 | 4700938047 | A | 1 | Slide rail | |
| 9 | 4700937621 | | 1 | Arm rest, left | D |
| | 4700937620 | | 1 | Arm rest, right | D |
| 10 | 4700359920 | | 1 | Plug | C |
| 11 | 4700372964 | | 1 | Steering wheel, cpl | D |
| | | | 1 | . Steering wheel | |
| 12 | 4700935614 | | 1 | . Turning knob | D |
| 13 | | | 1 | . Insert adapter | |
| 14 | 4700935613 | | 1 | . Cover | D |
| 15 | 4700359918 | | 1 | **Steering column** | D |
| 16 | | | 0 | **Steering system ( Page 194 )** | |
| 17 | | | 0 | **Turning Controls ( Page 196 )** | |
| 18 | 4700359419 | | 1 | Control cover | D |
| 19 | 4700500053 | | 6 | Screw M8x20H 8.8 | C |
| 20 | 4700904206 | | 14 | Screw | C |
| 21 | | | 0 | **Turning Carrier ( Page 198 )** | |
| 22 | 4700500028 | | 3 | Screw | C |
| 23 | 4700904557 | | 3 | Steel plain washer | C |
| 24 | 4700570006 | | 3 | Nut | B |
| 25 | 4700904229 | | 6 | Steel plain washer 8,4x16x1,5 | C |
| 26 | 4700500040 | | 6 | Screw M6-1x20 8,8 | C |
| 27 | 4700904228 | | 6 | Washer 6,4x12x1,5 | C |
| 28 | 4700586002 | | 4 | Lock nut M6 -8 | C |
| 29 | 4700570005 | | 6 | Nut M8 | C |
| 30 | 4700359972 | | 1 | Control cable holder | D |
| 31 | 4700359971 | | 1 | Control cable holder | D |
| 32 | 4700500031 | | 2 | Screw M10x040 8.8 | C |
| 33 | 4700903914 | | 2 | Screw | C |
| 34 | 4700904230 | | 4 | Steel plain washer | C |

A) One pair

## Steering column

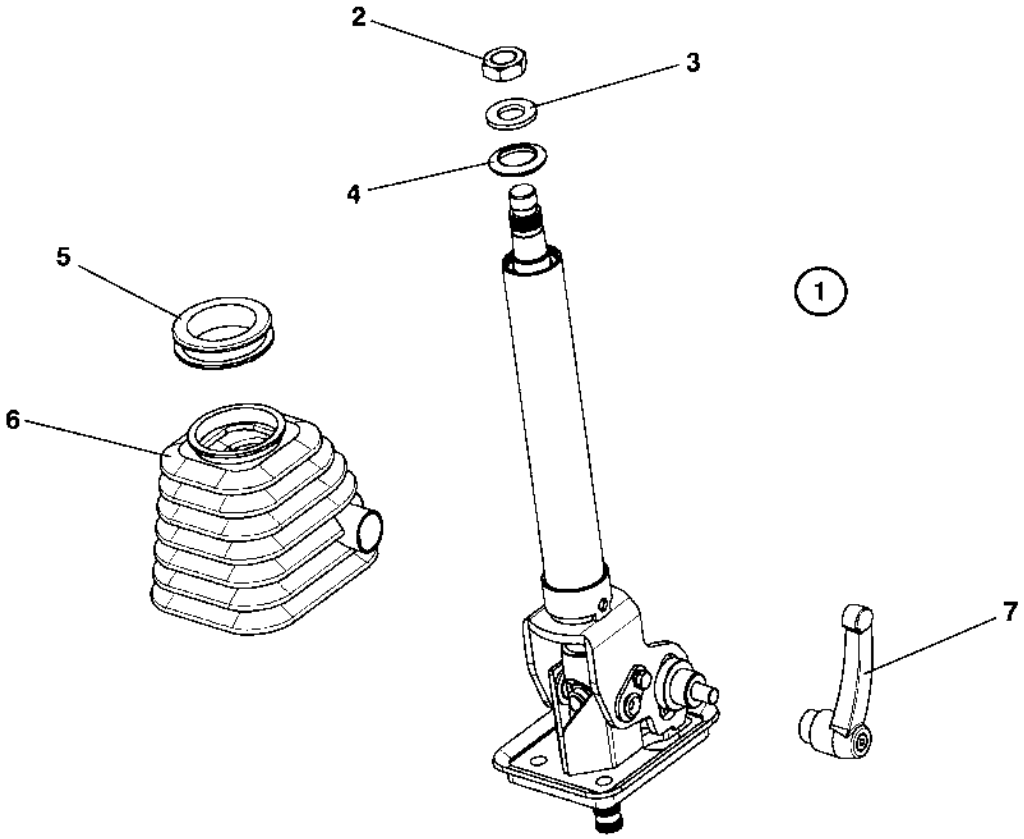

## Steering column

| Item | Part No | Rem | Qty | Description | Code |
|---|---|---|---|---|---|
| 1 | | | | Steering column | D |
| 2 | 4700945632 | | 1 | . Nut | C |
| 3 | 4700945633 | | 1 | . Washer | C |
| 4 | 4700945634 | | 1 | . Rubber cap | C |
| 5 | 4700945635 | | 1 | . Bellows ring | C |
| 6 | 4700945636 | | 1 | . Bellows | C |
| 7 | 4700945637 | | 1 | . Locking handle | D |

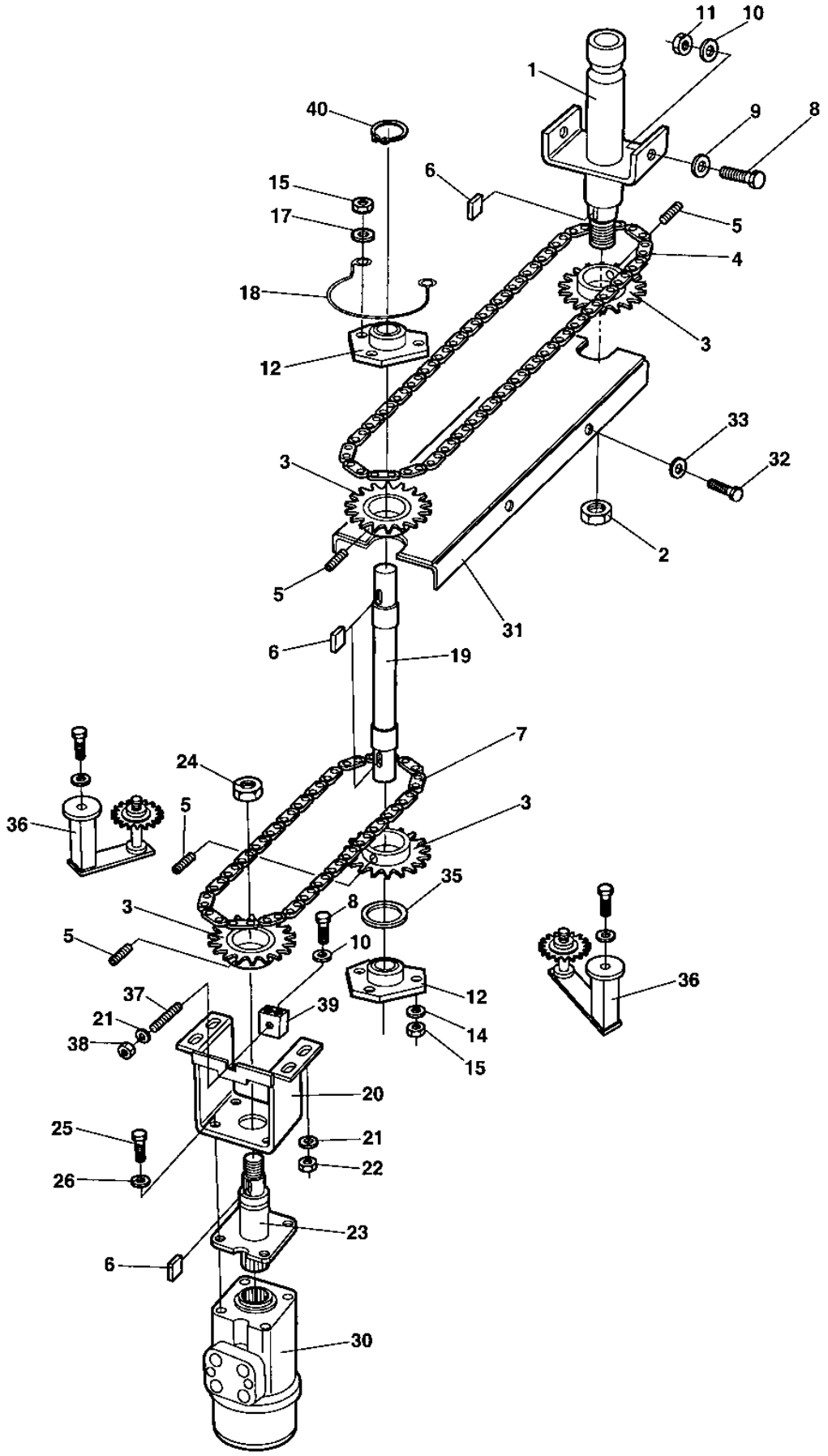
11
10
1
40
9
8
6
15
17
5
4
18
3
12
33
32
3
2
5
31
6
19
7
24
36
5
3
35
3
8
5
10
12
36
37
39
21
14
38
15
20
25
21
26
22
23
6
30

## Steering system

| Item | Part No | Rem | Qty | Description | Code |
|---|---|---|---|---|---|
| 1 | 4700359919 | | 1 | Shaft | C |
| 2 | | | 1 | . Nut | |
| 3 | 4700359916 | | 4 | Chain wheel | D |
| 4 | 4700359921 | | 1 | Chain | D |
| 5 | 4700516051 | | 4 | Set screw | C |
| 6 | 4700350009 | | 4 | Flat key | C |
| 7 | 4700372653 | A | 1 | Chain | D |
| | 4700372654 | B | 1 | Chain | D |
| 8 | 4700500021 | | 3 | Screw M8-1,25x25 8.8 | C |
| 9 | 4700904734 | | 2 | Steel plain washer | |
| 10 | 4700904229 | | 3 | Steel plain washer 8,4x16x1,5 | C |
| 11 | 4700586003 | | 2 | Lock nut M8 | C |
| 12 | 4700903917 | C | 2 | Bearing outer | B |
| | 4700903918 | D | 2 | Bearing inner | B |
| 14 | 4700904228 | | 4 | Washer 6,4x12x1,5 | C |
| 15 | 4700586002 | | 6 | Lock nut M6 -8 | C |
| 17 | 4700603001 | | 2 | Washer | C |
| 18 | 4700372672 | | 1 | Chain guard | D |
| 19 | 4700374933 | A | 1 | Shaft | C |
| | 4700374934 | B | 1 | Shaft | D |
| 20 | 4700381567 | E | 1 | Bracket | D |
| 21 | 4700904640 | | 5 | Washer 8,4x22x3 | C |
| 22 | 4700586003 | | 4 | Lock nut M8 | C |
| 23 | 4700370978 | | 1 | Linkage shaft | D |
| 24 | | | 1 | . Nut | |
| 25 | 4700502036 | | 4 | Screw 3/8"-16UNCx11/4"8.8 | C |
| 26 | 4700904230 | | 4 | Steel plain washer | C |
| 30 | | | 1 | Steering valve | |
| 31 | 4700381403 | | 1 | Chain supporter | D |
| 32 | 4700500040 | | 4 | Screw M6-1x20 8,8 | C |
| 33 | 4700904735 | | 4 | Washer | C |
| 35 | 4700904214 | | 1 | Washer 15x30x4 300 HV | C |
| 36 | 4700904739 | | 2 | Chain tensioner | D |
| 37 | 4700904802 | | 1 | Threaded stud | D |
| 38 | 4700586003 | | 1 | Lock nut M8 | C |
| 39 | 4700381571 | | 1 | Bracket | D |
| 40 | 4700150004 | | 1 | Retaining ring | D |

A) For cab
B) For platform
C) Outer
D) Inner
E) Steering valve

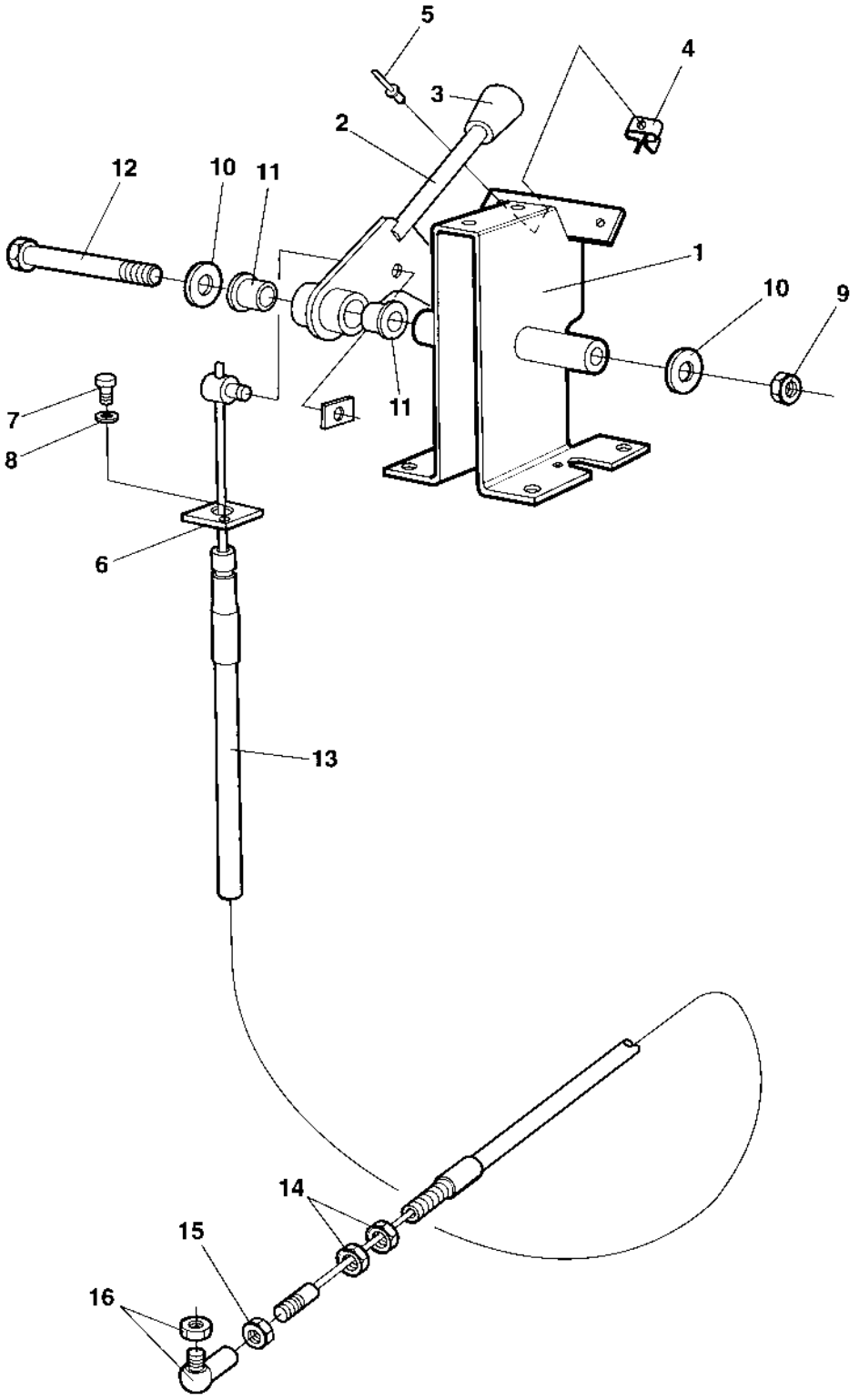
5
4
3
2
12
10
11
1
10
9
11
7
8
6
13
14
15
16

## Turning Controls

| Item | Part No | Rem | Qty | Description | Code |
|---|---|---|---|---|---|
| 1 | 4700935771 | | 1 | Framing | D |
| 2 | 4700909745 | | 1 | Lever | D |
| 3 | 4700908190 | | 1 | Ball knob | D |
| 4 | 4700908189 | | 1 | Lever lock | D |
| 5 | 4700624016 | | 1 | Blind rivet | D |
| 6 | 4700908188 | | 1 | Cable holder | D |
| 7 | 4700533024 | | 1 | Screw | D |
| 8 | 4700615041 | | 1 | Washer 5,3x11 | C |
| 9 | 4700586002 | | 1 | Lock nut M6 -8 | C |
| 10 | 4700928381 | | 2 | Washer 6,4x18x1,6 | C |
| 11 | 4700908187 | | 2 | Plain bearing | B |
| 12 | 4700500169 | | 1 | Screw | C |
| 13 | 4700935774 | A | 1 | Cable, cpl | D |
| 14 | 4700927233 | | 2 | . Nut | C |
| 15 | 4700570004 | | 1 | . Nut M6X1,00 -8 A2K | C |
| 16 | 4700416034 | | 1 | Ball joint | C |

A) Turning

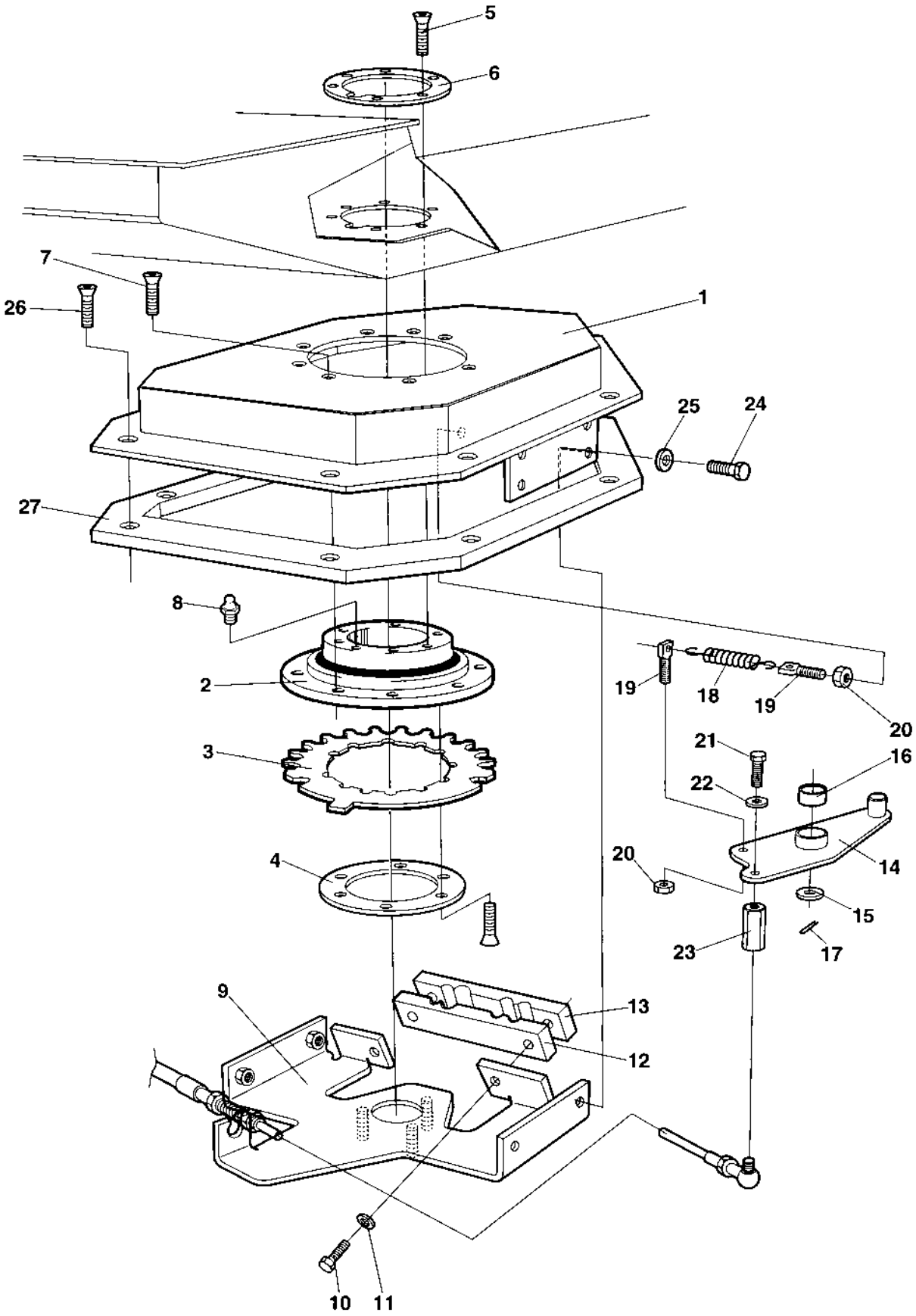
5
6
7
26
1
25
24
27
8
2
19
18
19
20
21
16
22
3
20
14
4
15
23
17
9
13
12
10
11

## Turning Carrier

| Item | Part No | Rem | Qty | Description | Code |
|---|---|---|---|---|---|
| 1 | 4700371374 | | 1 | Bearing housing | D |
| 2 | 4700359125 | | 1 | Ball bearing | B |
| 3 | 4700370955 | | 1 | Locking disc | D |
| 4 | 4700372966 | A | 1 | Lock ring | C |
| 5 | 4700902520 | | 12 | Screw | C |
| 6 | 4700372965 | B | 1 | Lock ring | C |
| 7 | 4700513003 | | 8 | Screw | C |
| 8 | 4700926214 | | 1 | Grease fitting | C |
| 9 | 4700371418 | | 1 | Bracket | D |
| 10 | 4700508056 | | 2 | Screw M8x40 | D |
| 11 | 4700904229 | | 2 | Steel plain washer 8,4x16x1,5 | C |
| 12 | 4700372961 | | 1 | Clamp | D |
| 13 | 4700372671 | | 1 | Clamp | D |
| 14 | 4700374417 | C | 1 | Coupling link | C |
| 15 | 4700904231 | | 1 | Washer 13x24x2 300 HV | C |
| 16 | 4700359820 | | 1 | Bushing | D |
| 17 | 4700630035 | | 1 | Split pin | C |
| 18 | 4700359043 | | 1 | Spring | D |
| 19 | 4700359818 | | 2 | Spring collar | D |
| 20 | 4700573008 | | 2 | Nut M8 | C |
| 21 | 4700500013 | | 1 | Screw M6-1x16 8,8 | C |
| 22 | 4700904228 | | 1 | Washer 6,4x12x1,5 | C |
| 23 | 4700373547 | D | 1 | Spacer | D |
| | 4700372459 | E | 1 | Spacer | D |
| 24 | 4700500021 | | 4 | Screw M8-1,25x25 8.8 | C |
| 25 | 4700904556 | | 4 | Washer 8,4x16x3,0 | C |
| 26 | 4700513013 | D | 8 | Screw | D |
| | 4700903644 | E | 8 | Screw | C |
| 27 | 4700372083 | F | 1 | Spacer | D |

A) Lower
B) Upper
C) For turning
D) Platform
E) Cab
F) Only for cab

## Forward and reverse control

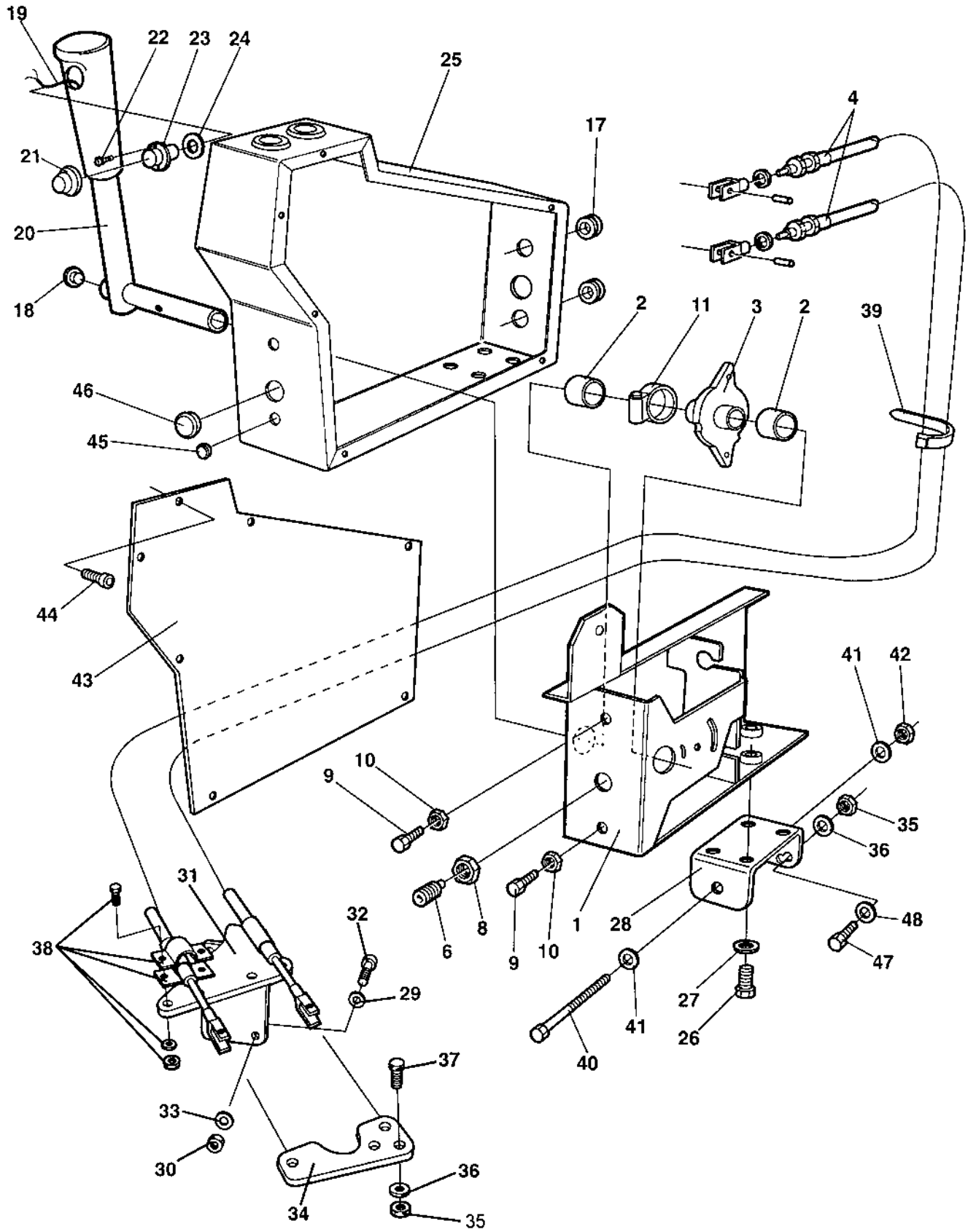

## Forward and reverse control

| Item | Part No | Rem | Qty | Description | Code |
|---|---|---|---|---|---|
| 1 | 4700909747 | | 1 | Framing | D |
| 2 | 4700908200 | | 2 | Bearing | B |
| 3 | 4700909748 | | 1 | Cam disc | C |
| 4 | 4700935225 | A | 2 | Cable | |
| | 4700573004 | | 4 | . Nut | C |
| | 4700908193 | | 2 | . Fork | D |
| 6 | 4700922325 | | 1 | Spring ball plunger | C |
| 8 | 4700573004 | | 1 | Nut | C |
| 9 | 4700533038 | | 2 | Screw | D |
| 10 | 4700570004 | | 2 | Nut M6X1,00 -8 A2K | C |
| 11 | 4700313147 | | 1 | Hose clip | C |
| 17 | 4700909122 | | 2 | Grommet | C |
| 18 | 4700902203 | | 1 | Plug | C |
| 19 | 4700372782 | | 1 | Cable harness | D |
| 20 | 4700359575 | | 1 | Control lever | D |
| 21 | 4700348481 | | 1 | Cover | B |
| 22 | 4700371009 | | 2 | Screw | D |
| 23 | 4700928497 | | 1 | Push button | B |
| 24 | 4700395325 | | 1 | Washer | D |
| 25 | 4700372322 | | 1 | Control cover | D |
| 26 | 4700500053 | | 2 | Screw M8x20H 8.8 | C |
| 27 | 4700904229 | | 2 | Steel plain washer 8,4x16x1,5 | C |
| 28 | 4700381676 | B | 1 | Bracket | D |
| 29 | 4700904228 | | 3 | Washer 6,4x12x1,5 | C |
| 30 | 4700904228 | | 3 | Washer 6,4x12x1,5 | C |
| 31 | 4700382881 | | 1 | Control bracket | D |
| 32 | 4700791110 | | 3 | Screw M6x25 | D |
| 33 | 4700904228 | | 6 | Washer 6,4x12x1,5 | C |
| 34 | 4700372568 | | 1 | Control bracket | D |
| 35 | 4700586003 | | 3 | Lock nut M8 | C |
| 36 | 4700904229 | | 3 | Steel plain washer 8,4x16x1,5 | C |
| 37 | 4700500021 | | 2 | Screw M8-1,25x25 8.8 | C |
| 38 | 4700465013 | | 2 | Clamp | C |
| 39 | 4700313041 | | N | Cable ties | B |
| 40 | 4700500267 | | 1 | Screw M12x120 8,8 FZB | D |
| 41 | 4700904231 | | 2 | Washer 13x24x2 300 HV | C |
| 42 | 4700586019 | | 1 | Lock nut | C |
| 43 | 4700372321 | | 1 | Cover | D |
| 44 | 4700903658 | | 7 | Screw M5x10 | C |
| 45 | 4700900986 | | 2 | Plug | D |
| 46 | 4700287373 | | 1 | Plug | |
| 47 | 4700508092 | | 1 | Screw | C |
| 48 | 4700904229 | C | 1 | Steel plain washer 8,4x16x1,5 | C |

A) Forward/reverse
B) Regarding "double hole". Upper hole for standard seat. Lower hole for accessorie seat.
C) Only in use on standard seat

# Speed limiter Option

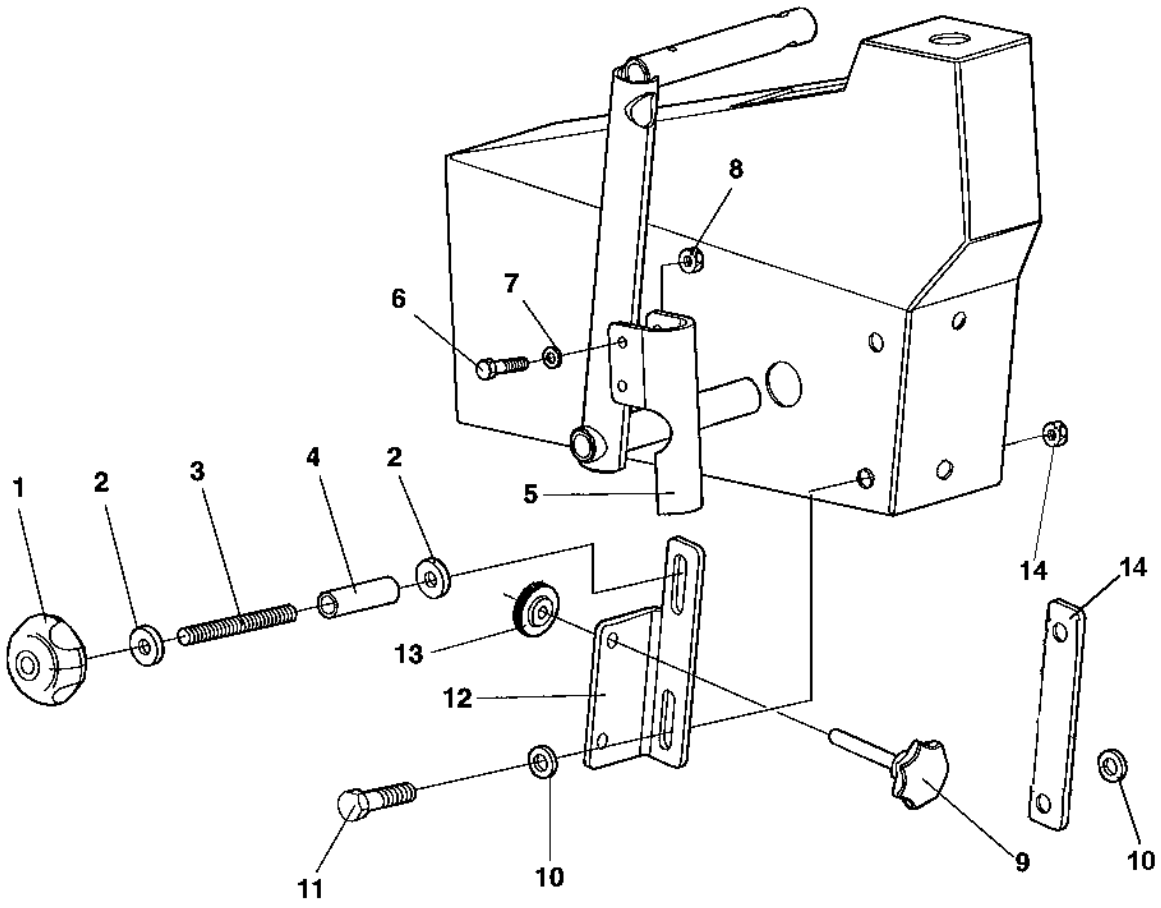

## Speed limiter Option

| Item | Part No | Rem | Qty | Description | Code |
|---|---|---|---|---|---|
| 1 | 4700904290 | | 1 | Hand knob | D |
| 2 | 4700904640 | | 2 | Washer 8,4x22x3 | C |
| 3 | 4700791313 | | 1 | Threaded stud M8x85 | D |
| 4 | 4700386003 | | 1 | Spacer sleeve | C |
| 5 | 4700386002 | | 1 | Lever holder | D |
| 6 | 4700500186 | | 2 | Screw | C |
| 7 | 4700904228 | | 4 | Washer 6,4x12x1,5 | C |
| 8 | 4700586002 | | 2 | Lock nut M6 -8 | C |
| 9 | 4700791314 | | 1 | Handle knob | D |
| 10 | 4700904556 | | 2 | Washer 8,4x16x3,0 | C |
| 11 | 4700500022 | | 1 | Screw M8x30H 8.8 A2K | C |
| 12 | 4700385994 | | 1 | Bracket | D |
| 13 | 4700791312 | | 2 | Letter nut | D |
| 14 | 4700586003 | | 2 | Lock nut M8 | C |
| | 4812116352 | | 1 | Bracket | |

## Rops and fops

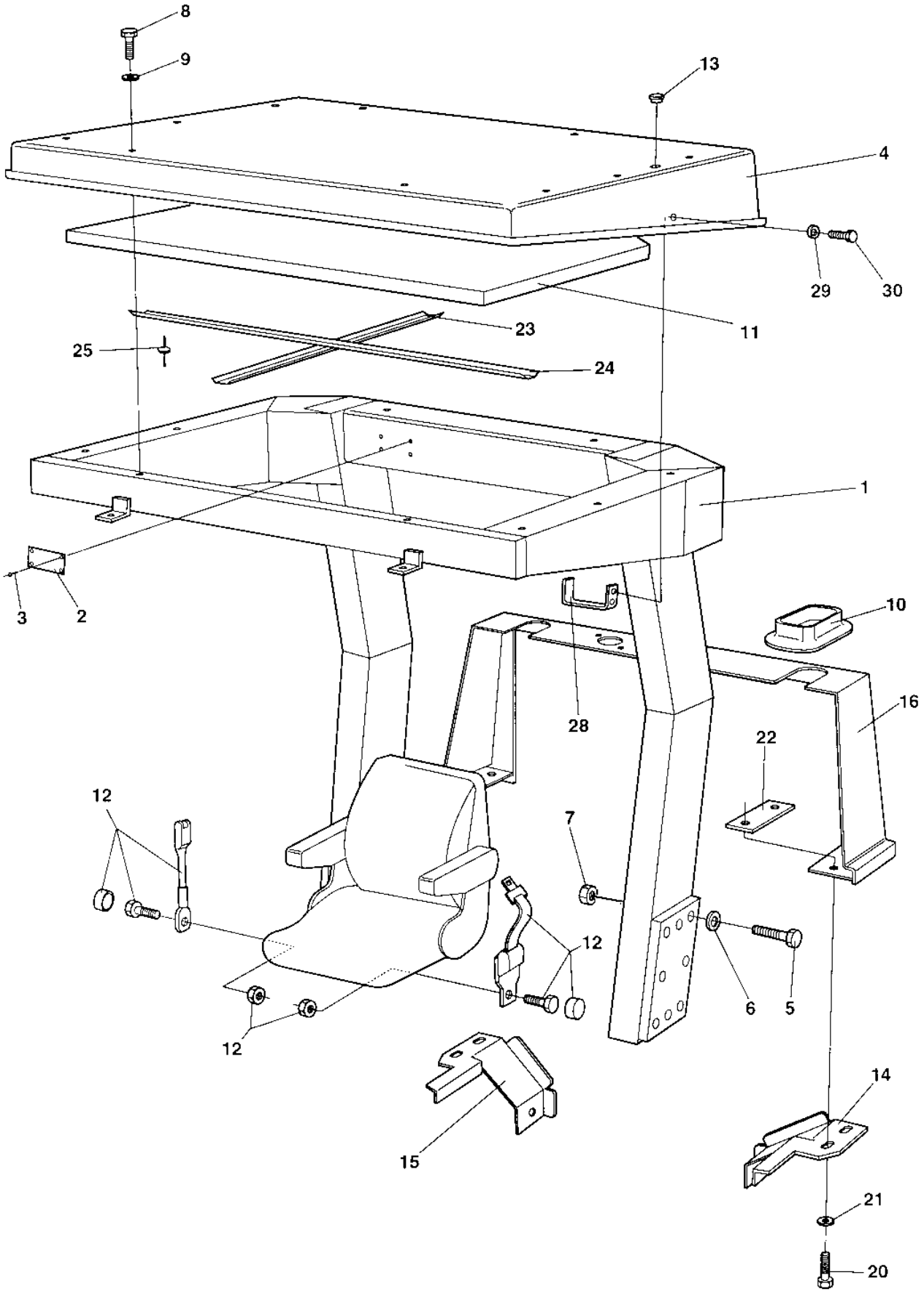

## Rops and fops

| Item | Part No | Rem | Qty | Description | Code |
|---|---|---|---|---|---|
| 1 | 4700373943 | | 1 | Rops | D |
| 2 | 4700370803 | | 1 | . Sign, rops | D |
| 3 | 4700624016 | | 4 | . Blind rivet | D |
| 4 | 4700372745 | | 1 | Fops roof | D |
| 5 | 4700500226 | | 12 | Screw M20-2.5x180 8,8 | D |
| 6 | | | 12 | Not used on this model | |
| 7 | | | 12 | Not used on this model | |
| 8 | 4700500230 | | 10 | Screw M8-1.25x35 | |
| | 4700500239 | | 19 | Screw M8x50H 8,8 | C |
| 9 | 4700603009 | | 10 | Washer | C |
| | 4700904734 | | 19 | Steel plain washer | |
| 10 | 4700372489 | | 2 | Rubber seal | D |
| 11 | 4700372678 | | 1 | Absorbent | D |
| 12 | 4700377677 | | 1 | Seat belt 2" | B |
| | 4700383200 | A | 1 | Seat belt 3" | B |
| | | | 2 | . Screw | |
| | | | 2 | . Nut | |
| | | | 2 | . Cap | |
| 13 | 4700904180 | | 4 | Plug | C |
| 14 | 4700373854 | | 1 | Holder plate | D |
| 15 | 4700373855 | | 1 | Holder plate | D |
| 16 | 4700373799 | | 1 | Protecting cover | D |
| 20 | 4700500021 | | 4 | Screw M8-1,25x25 8.8 | C |
| 21 | 4700603019 | | 4 | Washer | D |
| 22 | | | 2 | Holder plate | |
| 23 | 4700376489 | | 1 | Absorbent holder | D |
| 24 | 4700376488 | | 1 | Absorbent holder | D |
| 25 | 4700904619 | | 12 | Blind rivet | C |
| 28 | 4700383225 | | 1 | Hook | D |
| 29 | 4700904734 | | 4 | Steel plain washer | |
| 30 | 4700500100 | | 4 | Screw | C |

A) Option 3"

## Cab 4700383030

| Item | Part No | Rem | Qty | Description | Code |
|---|---|---|---|---|---|
| 300 | | | | **Cab Interior ( Page 208 )** | |
| 310 | | | | **Cab Inside panels ( Page 210 )** | |
| 320 | | | | **Cab Screens ( Page 212 )** | |
| 330 | | | | **Cab Door ( Page 216 )** | |
| 340 | | | | **Cab Wipers front and rear ( Page 220 )** | |
| 350 | | | | **Cab Mirror, Sun curtain ( Page 222 )** | |
| 360 | | | | **Cab Electric ( Page 224 )** | |
| 370 | | | | **Cab Heater system ( Page 226 )** | |
| 380 | 4700385434 | | | **Cab heater, cpl ( Page 228 )** | |
| 390 | | | | **Cab Cable harness ( Page 230 )** | |

## Cab Interior

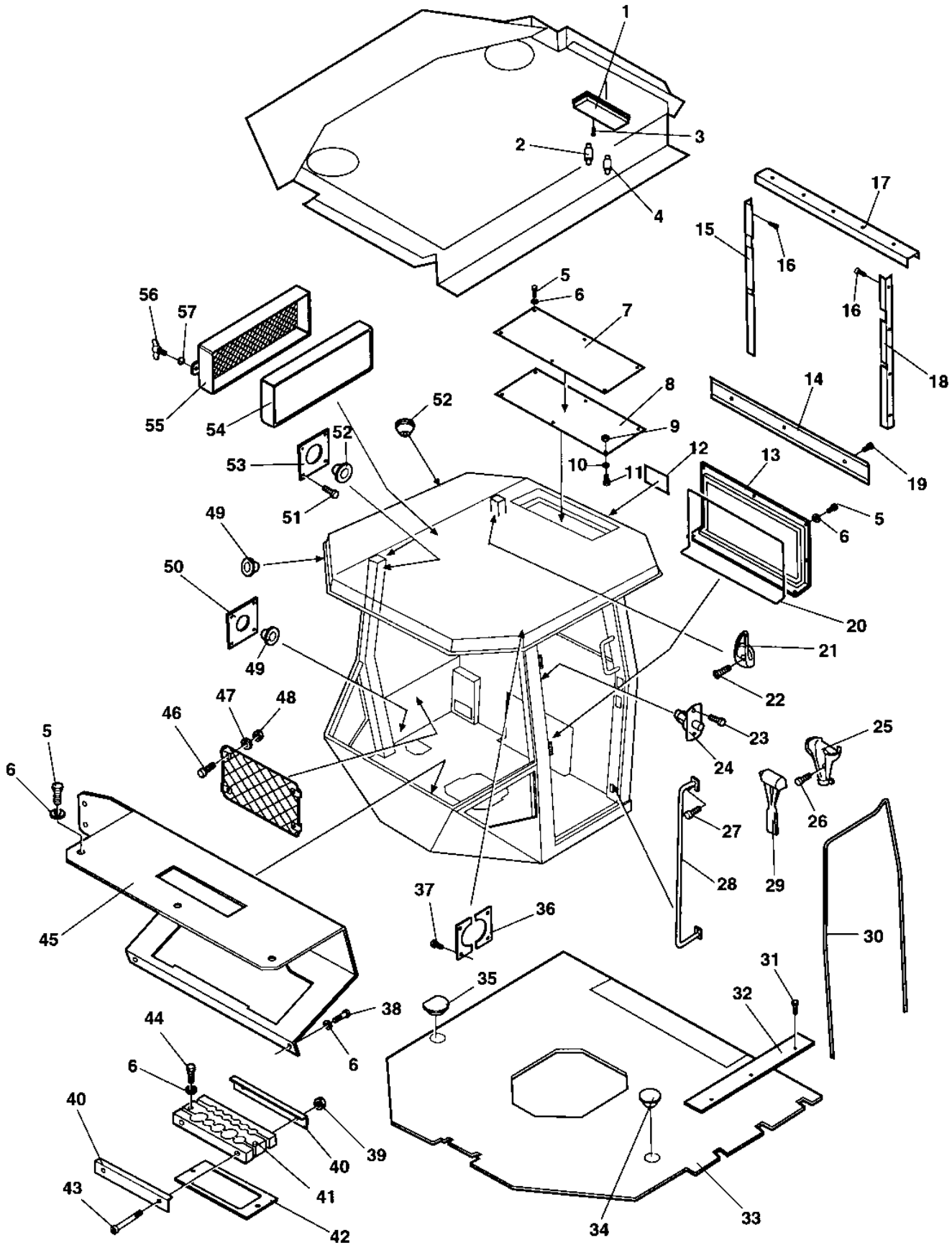

## Cab Interior

| Item | Part No | Rem | Qty | Description | Code |
|---|---|---|---|---|---|
| 1 | 4700908515 | | 1 | Inner light | D |
| 2 | 4700985013 | | 1 | Bulb 12V,5W | B |
| 3 | 4700541535 | | 2 | Screw | D |
| 4 | 4700985051 | | 1 | Bulb 12V,10W | B |
| 5 | 4700500053 | | 22 | Screw M8x20H 8.8 | C |
| 6 | 4700904229 | | 31 | Steel plain washer 8,4x16x1,5 | C |
| 7 | 4700938678 | | 1 | Cover | D |
| 8 | 4700938679 | | 1 | Cover | D |
| 9 | 4700586003 | | 18 | Lock nut M8 | C |
| 10 | 4700904229 | | 31 | Steel plain washer 8,4x16x1,5 | C |
| 11 | 4700500053 | | 22 | Screw M8x20H 8.8 | C |
| 12 | 4700935589 | | 1 | Decal | D |
| 13 | 4700935590 | | 1 | Cover plate | |
| 14 | 4700938675 | | 1 | List | |
| 15 | 4700938672 | | 1 | List | |
| 16 | 4700938671 | | 4 | Screw | |
| 17 | 4700938674 | | 1 | List | |
| 18 | 4700938673 | | 1 | List | |
| 19 | 4700938671 | | 3 | Screw | |
| 20 | 4700908587 | A | 2 | Edge trim | D |
| 21 | 4700908505 | | 1 | Hook | D |
| 22 | 4700938676 | | 2 | Screw | C |
| 23 | 4700925784 | | 2 | Screw | |
| 24 | 4700908500 | | 1 | Door switch | B |
| 25 | 4700908506 | | 1 | Emergency hammer | D |
| 26 | 4700938670 | | 2 | Screw | |
| 27 | 4700938677 | | 2 | Screw | C |
| 28 | 4700935591 | | 1 | Handle | |
| 29 | 4700908507 | | 1 | Holder | D |
| 30 | 4700908499 | B | 1 | Rubber list | D |
| 31 | 4700535007 | | 9 | Screw M5x16 | D |
| 32 | 4700935578 | | 1 | Edge trim | |
| 33 | 4700935577 | | 1 | Floor material | |
| 34 | 4700908512 | | 1 | Cover | D |
| 35 | 4700935579 | | 1 | Cover | |
| 36 | 4700935580 | | 2 | Bracket | |
| 37 | 4700500004 | | 16 | Screw M5 0,8x12 8,8 | C |
| 38 | 4700500018 | | 6 | Screw M8-1,25x12 8,8 | C |
| 39 | 4700586003 | | 10 | Lock nut M8 | C |
| 40 | 4700935583 | | 2 | Holder plate | |
| 41 | 4700935582 | | 1 | Grommet kit | |
| 42 | 4700935581 | | 1 | Metal gasket | |
| 43 | 4700500115 | | 2 | Screw M8-1,25x90 8.8 | C |
| 44 | 4700500047 | | 2 | Hexagon head screw | C |
| 45 | 4700935584 | | 1 | Panel plate | |
| 46 | 4700535007 | | 4 | Screw M5x16 | D |
| 47 | 4700904281 | | 4 | Washer 5,3x10x1 300HV | C |
| 48 | 4700586001 | | 4 | Lock nut | C |
| 49 | 4700909510 | | 9 | Grommet | C |
| 50 | 4700935585 | | 1 | Bracket | |
| 51 | 4700500004 | | 16 | Screw M5 0,8x12 8,8 | C |
| 52 | 4700908496 | | 5 | Grommet | D |
| 53 | 4700935586 | | 2 | Bracket | |
| 54 | 4700908502 | | 1 | Filter | A |
| 55 | 4700908501 | | 1 | Filter frame | D |
| 56 | 4700908504 | | 2 | Handle | D |
| 57 | 4700908503 | | 2 | O-ring | D |

A) L=2 M
B) L=5,0 M

## Cab Inside panels

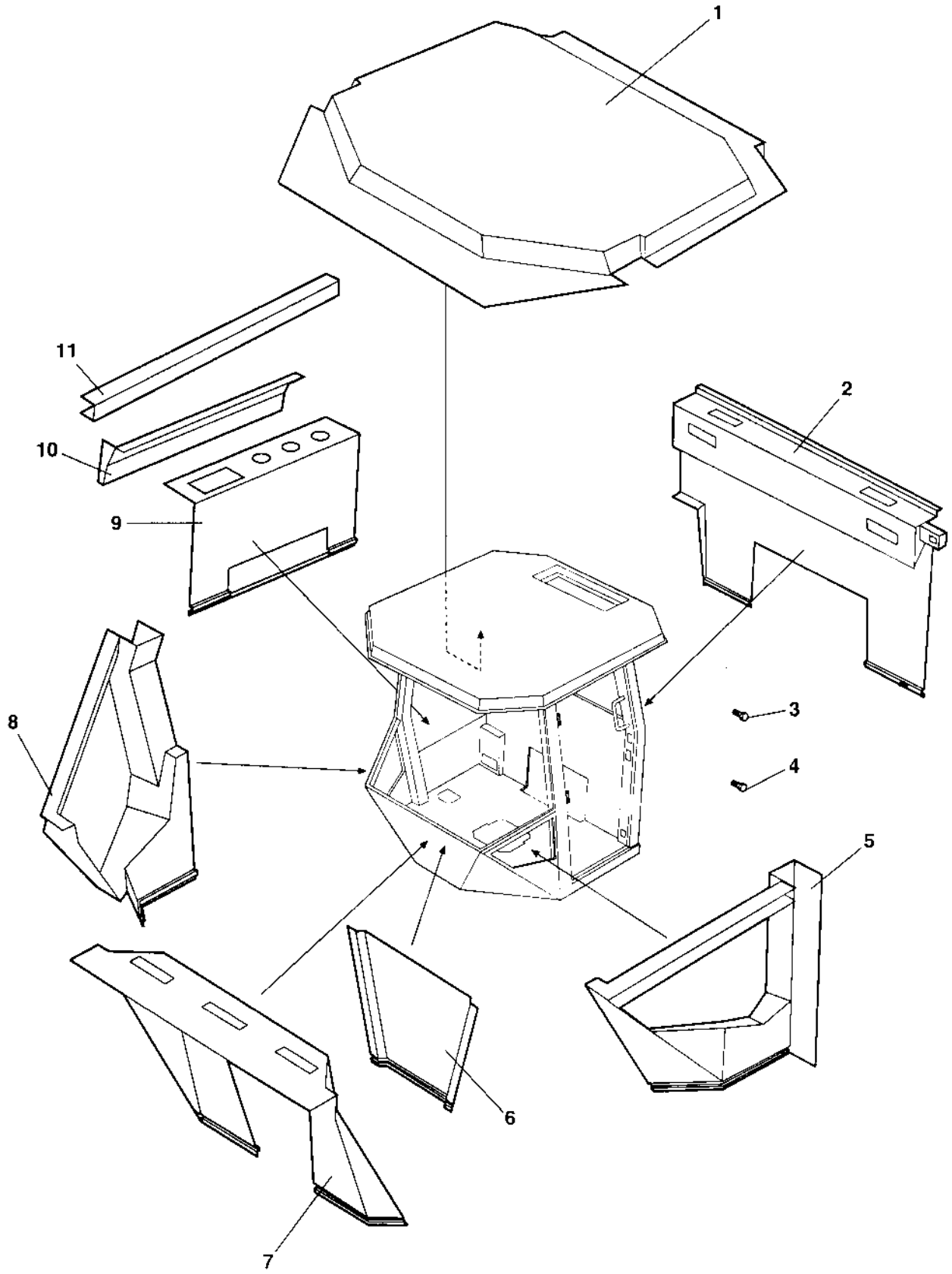

## Cab Inside panels

| Item | Part No | Rem | Qty | Description | Code |
|---|---|---|---|---|---|
| 1 | 4700938681 | | 1 | Panel | |
| 2 | 4700938685 | | 1 | Panel | |
| 3 | 4700938677 | | 50 | Screw | C |
| 4 | 4700937932 | | | Screw | D |
| 5 | 4700935600 | | 1 | Panel | |
| 6 | 4700935599 | | 1 | Panel | |
| 7 | 4700935598 | | 1 | Panel | |
| 8 | 4700938684 | | 1 | Panel | |
| 9 | 4700938683 | | 1 | Panel | |
| 10 | 4700938682 | | 1 | Panel | |
| 11 | 4700935594 | | 1 | Panel | |

## Cab Screens

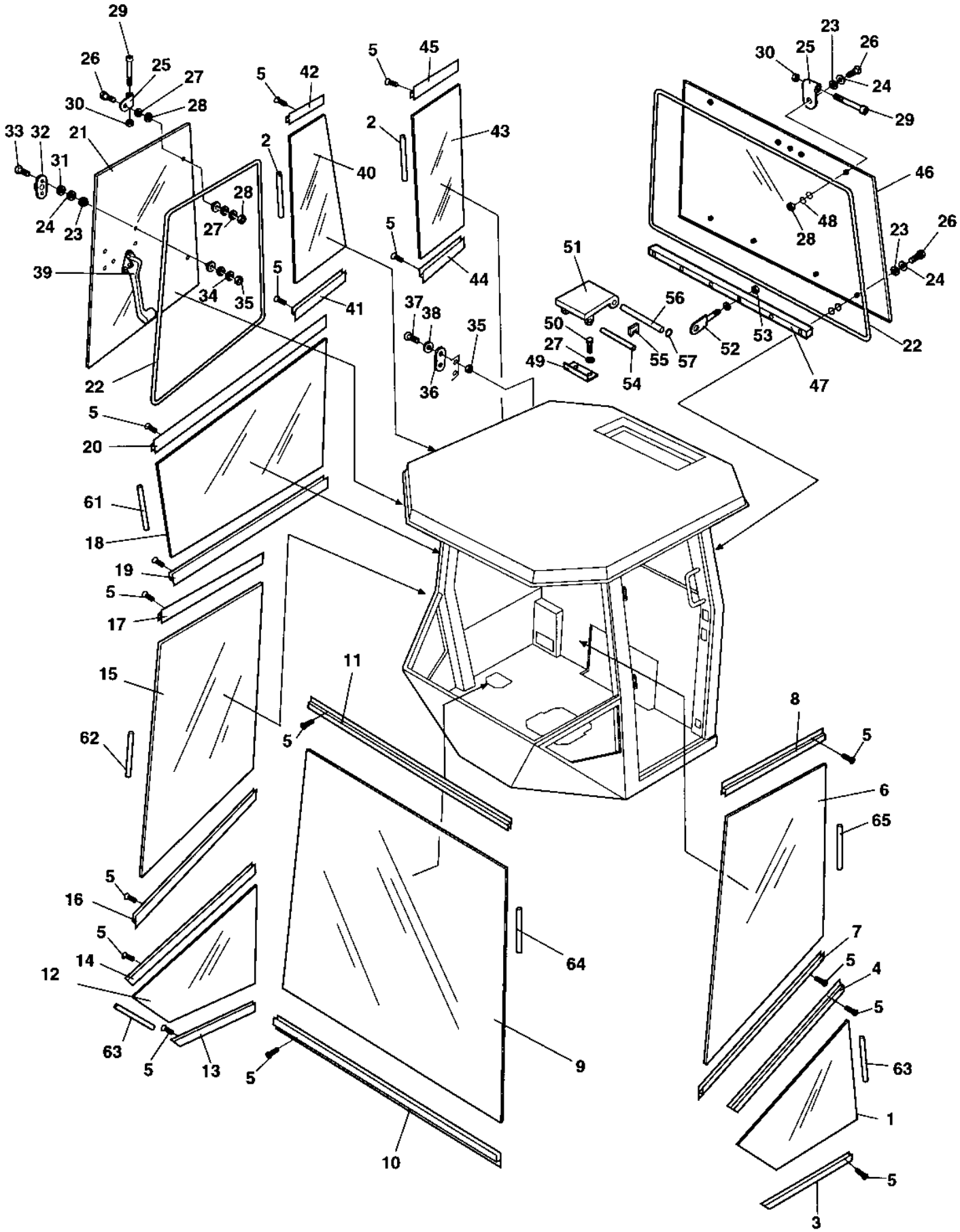
29
26
25
27
30
28
33
32
21
31
24
23
39
34
35
28
27
5
42
2
40
41
5
45
2
43
5
44
37
38
35
36
51
50
27
49
56
55
57
54
52
53
23
26
30
25
24
29
46
48
28
23
26
24
22
47
22
5
20
61
18
19
5
17
15
62
11
5
5
16
5
14
12
63
5
13
5
64
9
10
8
5
6
65
7
5
4
5
63
1
5
3

## Cab Screens

| Item | Part No | Rem | Qty | Description | Code |
|---|---|---|---|---|---|
| 1 | 4700937380 | | 1 | Screen | |
| 2 | 4700908545 | A | 2 | Seal list | B |
| 3 | 4700935278 | | 1 | List | |
| 4 | 4700935279 | | 1 | List | |
| 5 | 4700937932 | | 80 | Screw | D |
| 6 | 4700937381 | | 1 | Screen, left | |
| 7 | 4700935280 | | 1 | List | |
| 8 | 4700935281 | | 1 | List | |
| 9 | 4700937382 | | 1 | Screen | |
| 10 | 4700935282 | | 1 | List | |
| 11 | 4700935283 | | 1 | List | |
| 12 | 4700937383 | | 1 | Screen | |
| 13 | 4700935284 | | 1 | List | |
| 14 | 4700935285 | | 1 | List | |
| 15 | 4700937384 | | 1 | Screen | |
| 16 | 4700935286 | | 1 | List | |
| 17 | 4700935287 | | 1 | List | |
| 18 | 4700937385 | | 1 | Screen | |
| 19 | 4700935288 | | 1 | List | |
| 20 | 4700935289 | | 1 | List | |
| 21 | 4700938290 | | 1 | Screen | |
| 22 | 4700908499 | B | 1 | Rubber list | D |
| 23 | 4700935271 | | 20 | Washer, Flexible rubber | |
| 24 | 4700935272 | | 20 | Washer, Black | |
| 25 | 4709335273 | | 4 | Hinge | |
| 26 | 4700935274 | | 8 | Screw | |
| 27 | 4700936277 | | 4 | Washer | C |
| 28 | 4700586003 | | 18 | Lock nut M8 | C |
| 29 | 4700936934 | | 4 | Screw M10x100 | |
| 30 | 4700936935 | | 4 | Nut M10 | |
| 31 | 4700935275 | | 2 | Rubber washer | |
| 32 | 4700935276 | | 2 | Bracket | |
| 33 | 4700936600 | | 2 | Screw | |
| 34 | 4700936601 | | 2 | Washer | |
| 35 | 4700936602 | | 4 | Nut M5 | |
| 36 | 4700935277 | | 2 | Lock pin | |
| 37 | 4700535007 | | 9 | Screw M5x16 | D |
| 38 | 4700904281 | | 6 | Washer 5,3x10x1 300HV | C |
| 39 | 4700935290 | | 1 | Window lock, right | |
| 40 | 4700938291 | | 1 | Screen | |
| 41 | 4700935291 | | 1 | List | |
| 42 | 4700938658 | | 1 | List | |
| 43 | 4700938292 | | 1 | Screen | |
| 44 | 4700935293 | | 1 | List | |
| 45 | 4700938659 | | 1 | List | |
| 46 | 4700937389 | | 1 | Screen | |
| 47 | 4700935295 | | 1 | Screen holder | |
| 48 | 4700935296 | | 2 | Washer | |
| 49 | 4700935297 | | 1 | Bracket | |
| 50 | 4700500019 | | 7 | Hexagon head screw M8x16H 8,8 | C |
| 51 | 4700935298 | | 2 | Bracket | |
| 52 | 4700935299 | | 2 | Bolt | |
| 53 | 4700570004 | | 4 | Nut M6X1,00 -8 A2K | C |

A) L=1,4 m
B) L=2,7 m

## Cab Screens

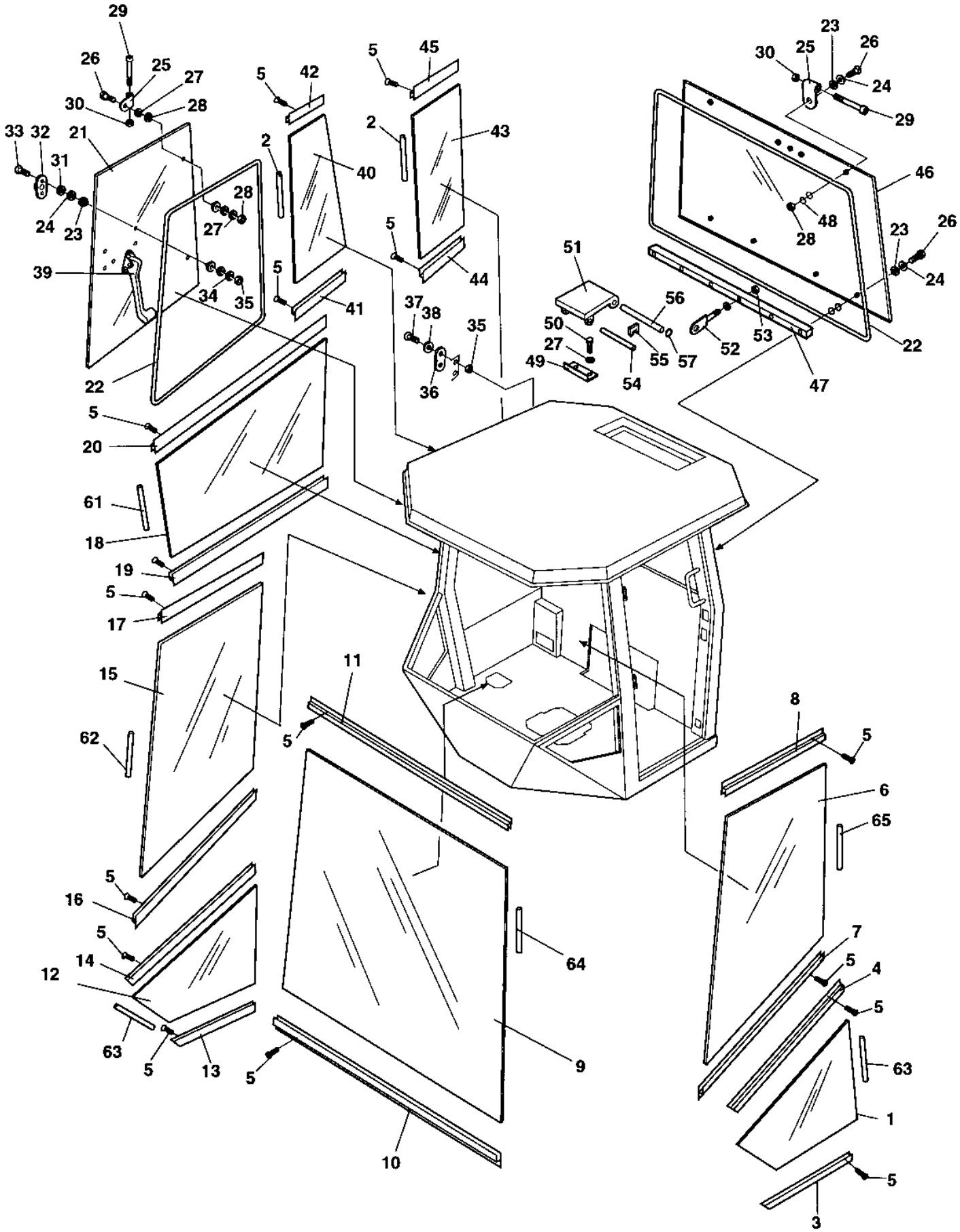
29
26
25
27
30
28
33
32
21
31
24
23
39
34
35
28
27
5
42
2
40
41
5
45
2
43
5
44
37
38
35
36
51
56
50
27
49
55
57
54
52
53
23
26
30
25
24
29
46
48
28
23
26
24
22
47
22
5
20
61
18
19
5
17
15
62
11
5
8
5
6
65
5
16
5
14
12
63
5
13
5
64
9
10
7
5
4
5
63
1
5
3

## Cab Screens

| Item | Part No | Rem | Qty | Description | Code |
|---|---|---|---|---|---|
| 54 | 4700935300 | | 1 | Shaft | |
| 55 | 4700935301 | | 2 | Lock | |
| 56 | 4700935302 | | 1 | Rod | |
| 57 | 4700935303 | | 1 | Ring | |
| 61 | 4700908545 | C | 1 | Seal list | B |
| 62 | 4700908545 | D | 1 | Seal list | B |
| 63 | 4700908545 | E | 2 | Seal list | B |
| 64 | 4700908545 | F | 1 | Seal list | B |
| 65 | 4700908545 | G | 1 | Seal list | B |

C) L=1,1 M
D) L=1,9 M
E) L=0,8 M
F) L=2,1 M
G) L=0,9 M

# Cab Door

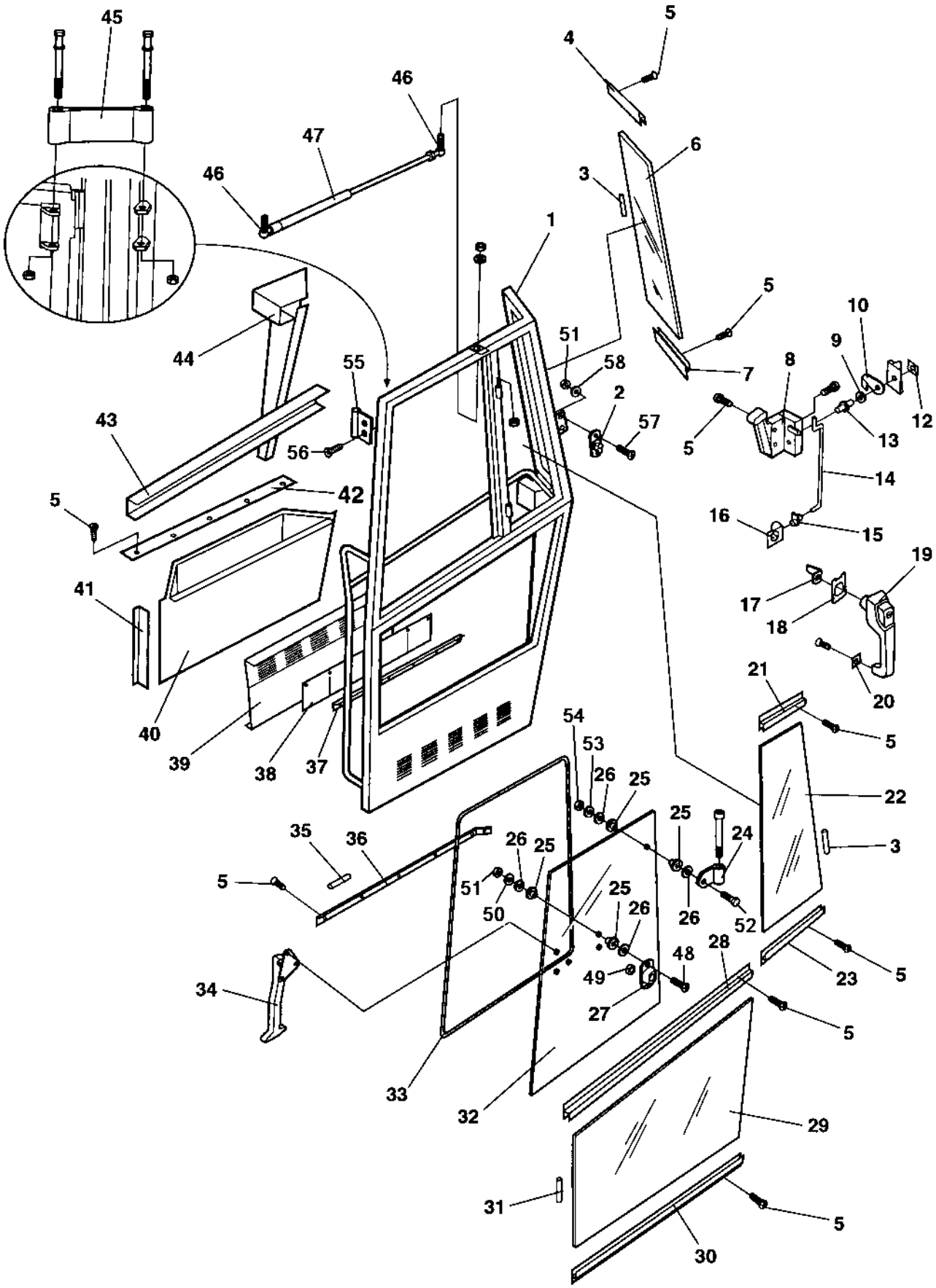
45
46
47
46
44
43
56
55
42
5
41
40
39
38
37
1
4
5
6
3
5
7
8
9
10
12
13
14
15
16
19
17
18
20
21
5
22
3
5
23
28
5
48
49
27
24
26
52
25
26
25
54
53
26
25
51
50
25
26
35
36
5
34
33
32
29
31
5
30
51
58
2
57
5

## Cab Door

| Item | Part No | Rem | Qty | Description | Code |
|---|---|---|---|---|---|
| | 4700938224 | | 1 | Door, cpl | |
| 1 | 4700938016 | | 1 | . Door frame | |
| 2 | 4700935277 | | 2 | . Lock pin | |
| 3 | 4700908545 | A | 2 | . Seal list | B |
| 4 | 4700935268 | | 1 | . List | |
| 5 | 4700937932 | | 80 | . Screw | D |
| 6 | 4700937391 | | 1 | . Screen | |
| 7 | 4700935267 | | 1 | . List | |
| 8 | 4700938017 | | 1 | . Lock | |
| 9 | 4700908581 | | 1 | . Washer | C |
| 10 | 4700908582 | | 1 | . Cover | D |
| 12 | 4700908583 | | 1 | . Bracket | D |
| 13 | 4700908580 | | 1 | . Lock pin | C |
| 14 | 4700935250 | | 1 | . Rod | |
| 15 | 4700935249 | | 1 | . Retainer | |
| 16 | 4700935248 | | 1 | . Turning mechanism | |
| 17 | 4700935247 | | 1 | . Leader | |
| 18 | 4700935246 | | 1 | . Seal | |
| 19 | 4700935244 | | 1 | . Door handle with key | D |
| 20 | 4700935245 | | 1 | . Seal | |
| 21 | 4700935270 | | 1 | . List | |
| 22 | 4700937392 | | 1 | . Screen | |
| 23 | 4700935269 | | 1 | . List | |
| 24 | 4700935273 | | 2 | . Hinge | |
| 25 | 4700935271 | | 4 | . Washer, Flexible rubber | |
| 26 | 4700935272 | | 4 | . Washer, Black | |
| 27 | 4700935276 | | 1 | . Bracket | |
| 28 | 4700935266 | | 1 | . List | |
| 29 | 4700937390 | | 1 | . Screen | |
| 30 | 4700935265 | | 1 | . List | |
| 31 | 4700908545 | B | 1 | . Seal list | B |
| 32 | 4700937393 | | 1 | . Screen | |
| 33 | 4700908499 | | 1 | . Rubber list | D |
| 34 | 4700935253 | | 1 | . Lock | |
| 35 | 4700908987 | C | 1 | . Seal | B |
| 36 | 4700935255 | | 1 | . List | |
| 37 | 4700935256 | | 1 | . List | |
| 38 | 4700935257 | | 1 | . Ventilating grill | |
| 39 | 4700935258 | | 1 | . Panel plate | |
| 40 | 4700935260 | | 1 | . Panel | |
| 41 | 4700935261 | | 1 | . Panel | |
| 42 | 4700935262 | | 1 | . Support list | |
| 43 | 4700935263 | | 1 | . Panel | |
| 44 | 4700938043 | | 1 | . Panel | |
| 45 | 4700938024 | | 1 | . Door stop | |
| 46 | 4700937121 | | 2 | . Ball joint | D |
| 47 | 4700938018 | | 1 | . Gas spring | |
| 48 | 4700936600 | | 2 | . Screw | |
| 49 | 4700935275 | | 1 | . Rubber washer | |
| 50 | 4700936601 | | 2 | . Washer | |
| 51 | 4700936602 | | 4 | . Nut M5 | |
| 52 | 4700935274 | | 2 | . Screw | |
| 53 | 4700600006 | | 2 | . Washer | C |
| 54 | 4700586003 | | 2 | . Lock nut M8 | C |
| 55 | 4700937056 | | 1 | . Hinge, cpl | D |
| | 4700937057 | | 1 | . . Pin | D |
| 56 | 4700513025 | | 4 | . Screw | D |

A) L=1,4 M
B) L=1,1 M
C) L=0,75 M

# Cab Door

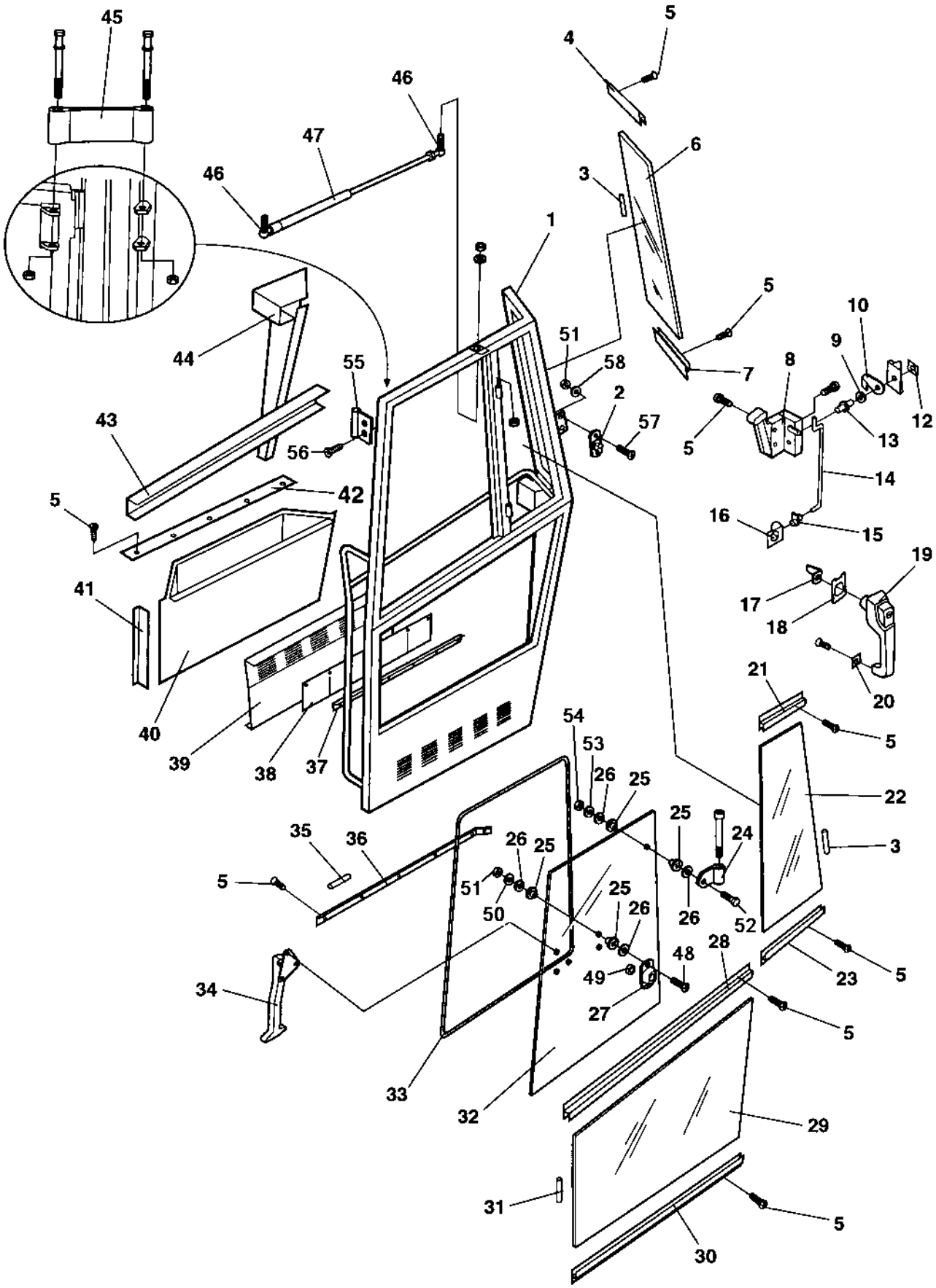
45
46
47
46
44
43
56
55
42
5
41
40
39
38
37
1
4
5
6
3
5
7
8
9
10
12
13
14
15
16
19
17
18
20
21
5
22
3
5
23
28
5
48
49
27
24
26
52
25
26
25
54
53
26
25
51
50
25
26
35
36
5
34
33
32
29
31
5
30
51
58
2
57
5

## Cab Door

| Item | Part No | Rem | Qty | Description | Code |
|---|---|---|---|---|---|
| 57 | 4700938318 | | 2 | . Screw | |
| 58 | 4700938319 | | 2 | . Washer | |

# Cab Wipers front and rear

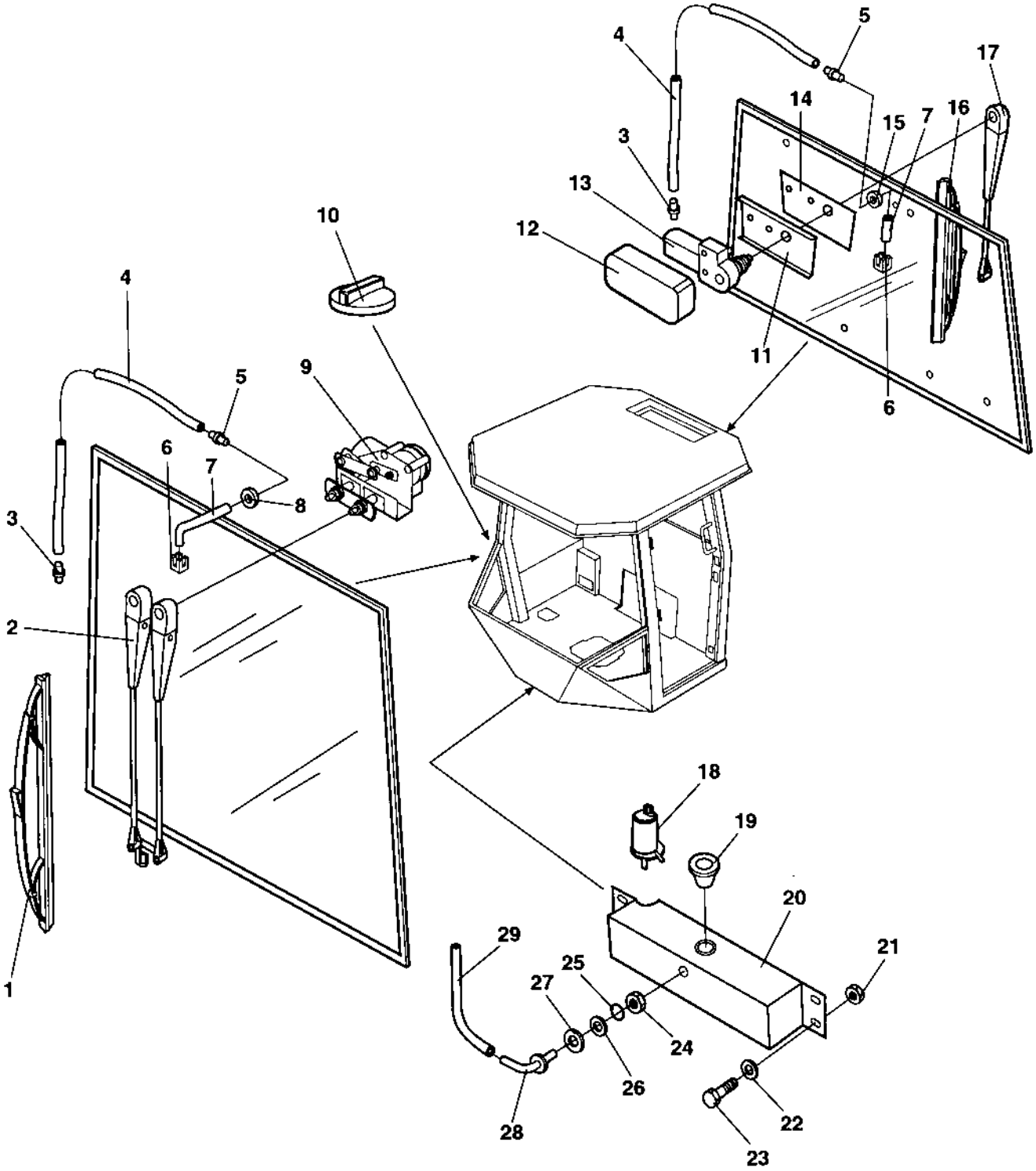

## Cab Wipers front and rear

| Item | Part No | Rem | Qty | Description | Code |
|---|---|---|---|---|---|
| 1 | 4700905306 | | 1 | Wiper blade | B |
| 2 | 4700905305 | | 1 | Wiper arm | C |
| 3 | 4700908564 | | 2 | Check valve | C |
| 4 | 4700908563 | A | 2 | Plastic hose | D |
| 5 | 4700938136 | | 2 | Elbow adapter 90 | |
| 6 | 4700908559 | | 2 | Nozzle | A |
| 7 | 4700908560 | B | 2 | Rubber hose | D |
| 8 | 4700909510 | | 1 | Grommet | C |
| 9 | 4700905304 | | 1 | Wiper motor | C |
| 10 | 4700904114 | | 1 | Fuel cap | D |
| 11 | 4700905309 | | 1 | Holder plate | D |
| 12 | 4700905308 | | 1 | Protecting cover | D |
| 13 | 4700905307 | | 1 | Wiper motor | C |
| 14 | 4700905310 | | 1 | Shim | C |
| 15 | 4700908497 | | 1 | Grommet | D |
| 16 | 4700905312 | | 1 | Wiper blade | B |
| 17 | 4700905311 | | 1 | Wiper arm | C |
| 18 | 4700935335 | | 1 | Pump | |
| 19 | 4700938660 | | 1 | Grommet | C |
| 20 | 4700935334 | | 1 | Water reservoir | |
| 21 | 4700586002 | | 4 | Lock nut M6 -8 | C |
| 22 | 4700904228 | | 4 | Washer 6,4x12x1,5 | C |
| 23 | 4700500075 | | 4 | Screw M6-1,0x25 8.8 | C |
| 24 | 4700938661 | | 1 | Nut | |
| 25 | 4700938662 | | 1 | O-ring | |
| 26 | 4700938664 | | 1 | Washer | |
| 27 | 4700938663 | | 1 | Washer | |
| 28 | 4700938665 | | 1 | Adapter | |
| 29 | 4700938666 | | 1 | Hose | |

A) L=5,0 M
B) L=1.0 M

# Cab Mirror, Sun curtain

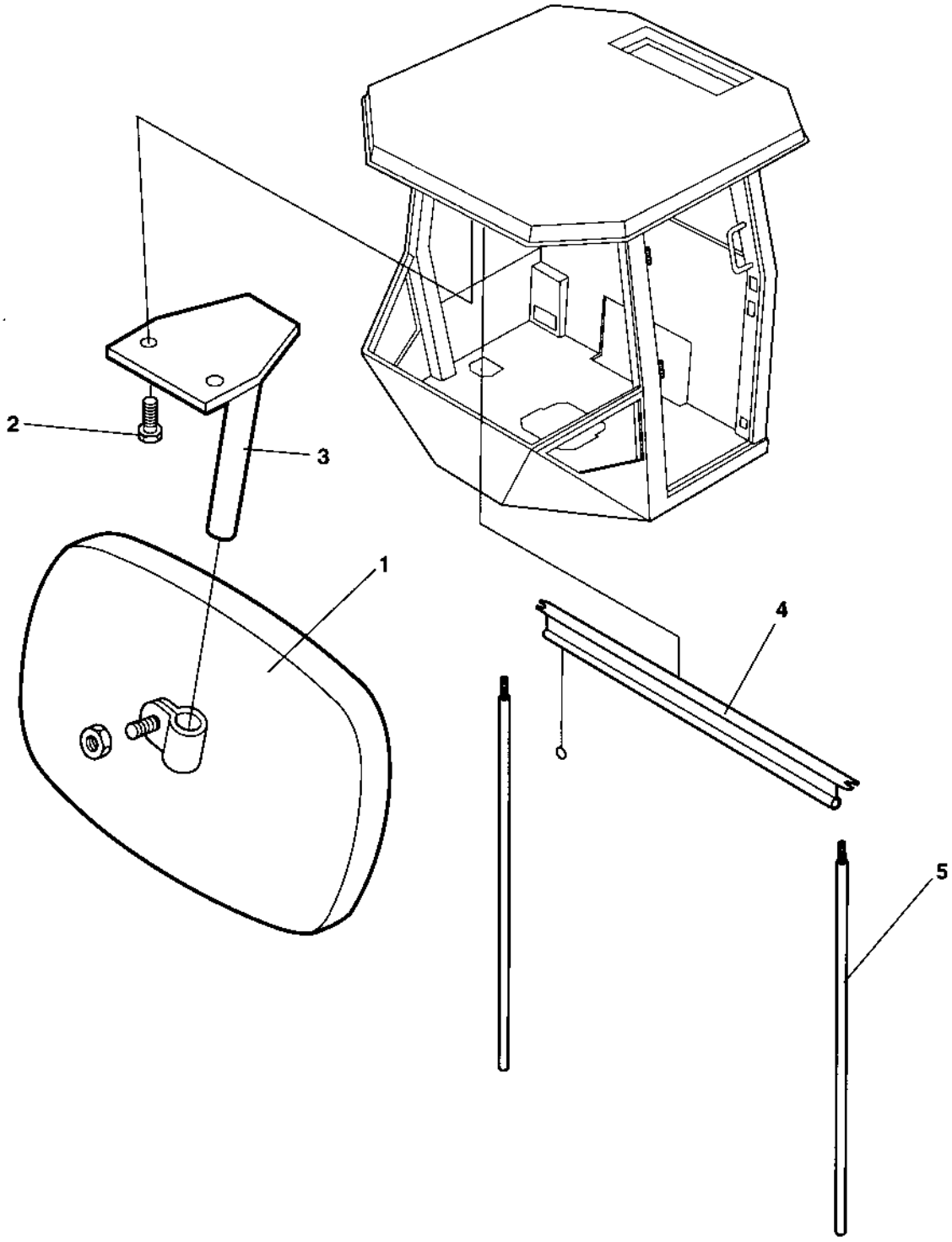

## Cab Mirror, Sun curtain

| Item | Part No | Rem | Qty | Description | Code |
|---|---|---|---|---|---|
| 1 | 4700908624 | | 1 | Rear mirror | D |
| 2 | 4700500006 | | 2 | Screw M5x16 | C |
| 3 | 4700908623 | | 1 | Bracket | D |
| 4 | 4700938667 | | 1 | Sun curtain | |
| 5 | 4700938668 | | 1 | Sun curtain, bar kit | |

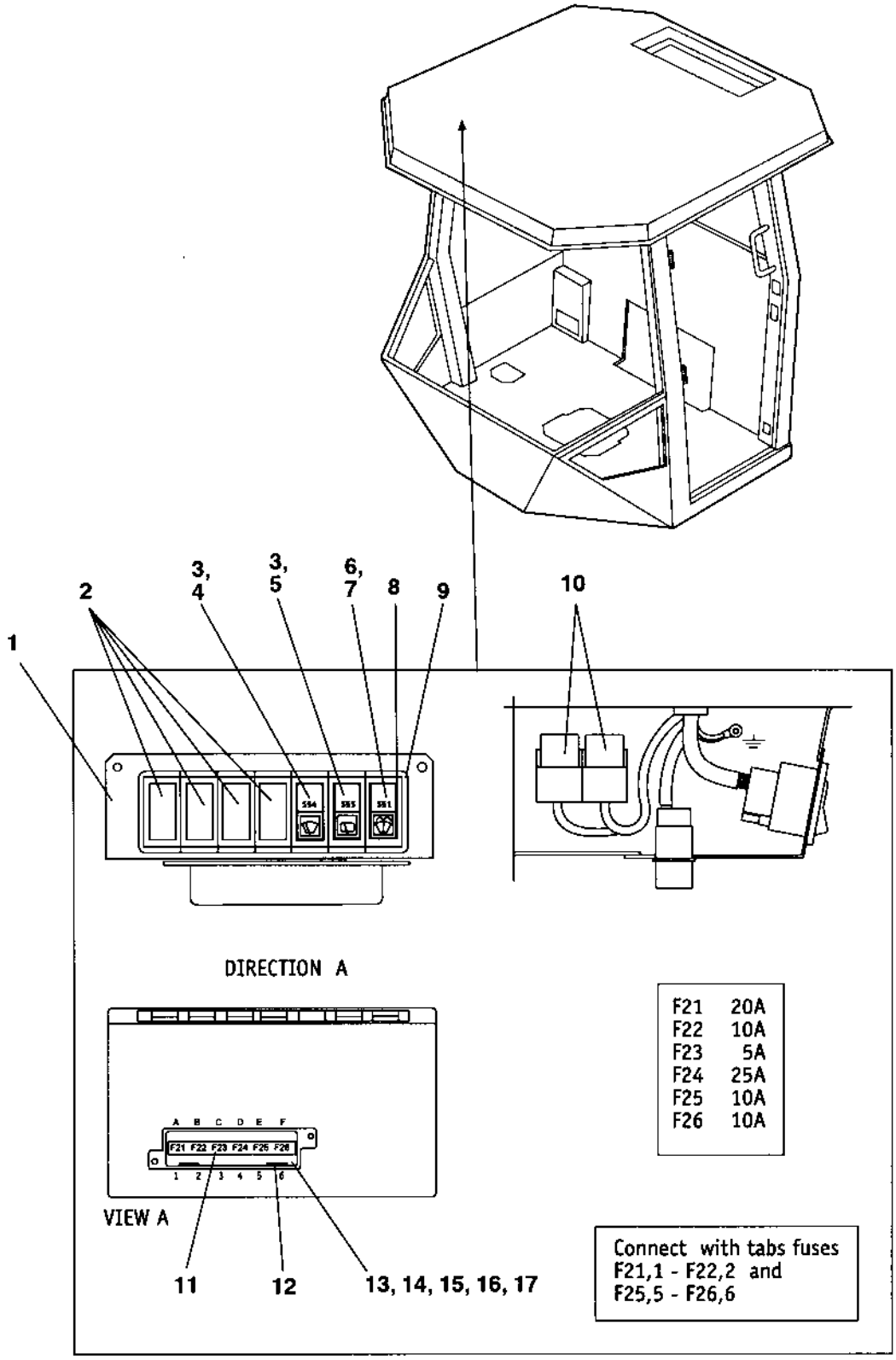
1
2
3, 4
3, 5
6, 7
8
9
10
DIRECTION A
F21 20A
F22 10A
F23 5A
F24 25A
F25 10A
F26 10A
A B C D E F
F21 F22 F23 F24 F25 F26
1 2 3 4 5 6
VIEW A
11
12
13, 14, 15, 16, 17
Connect with tabs fuses
F21,1 - F22,2 and
F25,5 - F26,6

## Cab Electric

| Item | Part No | Rem | Qty | Description | Code |
|---|---|---|---|---|---|
| 1 | 4700908611 | | 1 | Bracket | D |
| 2 | 4700908607 | | 4 | Cover | D |
| 3 | 4700908617 | | 2 | Switch | B |
| 4 | 4700908605 | | 1 | Symbol, wiper | D |
| 5 | 4700938687 | | 1 | Symbol, wiper | D |
| 6 | 4700908618 | | 1 | Symbol, washer | D |
| 7 | 4700908603 | | 1 | Switch | B |
| 8 | 4700908610 | | 2 | Modular panel | D |
| 9 | 4700908606 | | 5 | Modular panel | D |
| 10 | 4700938022 | | 1 | Relay | |
| 11 | 4700938688 | | 1 | Decal | |
| 12 | 4700901240 | | 2 | Connector | B |
| 13 | 4700908613 | | 1 | Fuse box | D |
| 14 | 4700901225 | | 1 | Fuse 5A | A |
| 15 | 4700903741 | | 1 | Fuse 20A Yellow Medium | A |
| 16 | 4700901229 | | 1 | Fuse 25A | A |
| 17 | 4700901227 | | 3 | Fuse 10A | A |

# Cab Heater system

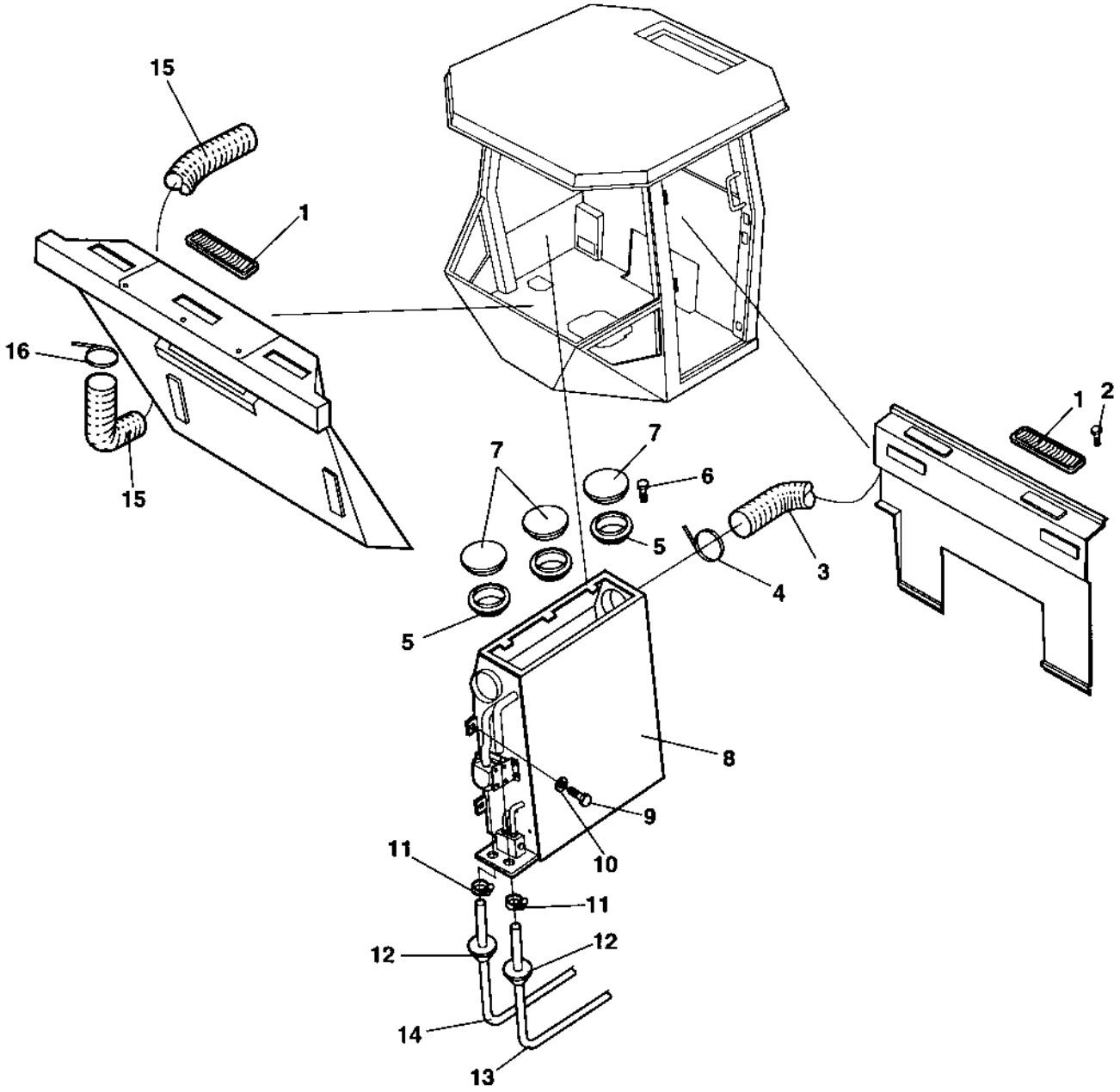

## Cab Heater system

| Item | Part No | Rem | Qty | Description | Code |
|---|---|---|---|---|---|
| 1 | 4700908598 | | 11 | Nozzle | A |
| 2 | 4700938680 | | 22 | Screw | |
| 3 | 4700935572 | | 1 | Hose | |
| 4 | 4700935570 | | 1 | Clamp | |
| 5 | 4700385443 | | 3 | Ring | D |
| 6 | 4700938691 | | 9 | Screw | C |
| 7 | 4700385442 | | 3 | Air nozzle | D |
| 8 | 4700385434 | | 1 | **Cab heater, cpl ( Page 228 )** | |
| 9 | 4700500015 | | 7 | Screw M6X30 8.8 | C |
| 10 | 4700904229 | | 7 | Steel plain washer 8,4x16x1,5 | C |
| 11 | 4700313003 | | 2 | Hose clamp | D |
| 12 | 4700908496 | | 5 | Grommet | D |
| 13 | 4700937737 | A | 1 | Hose | |
| 14 | 4700937737 | B | 1 | Hose | |
| 15 | 4700908599 | | 1 | Hose | C |
| 16 | 4700908600 | | 2 | Clamp | D |

A) L=3,6 M
B) L=2,8 M

# 4700385434 Cab heater, cpl

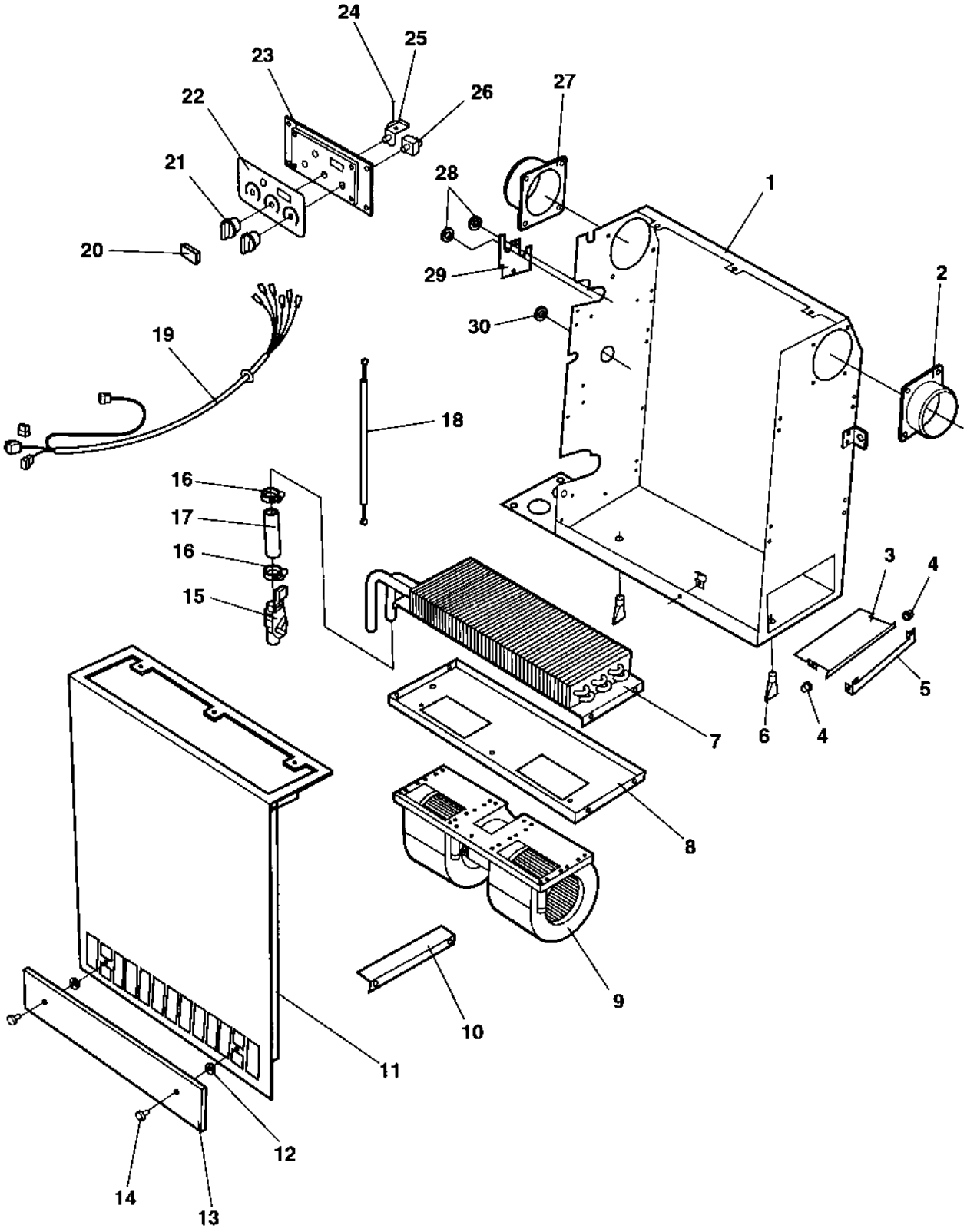

## 4700385434 Cab heater, cpl

| Item | Part No | Rem | Qty | Description | Code |
|---|---|---|---|---|---|
| 1 | 4700938625 | | 1 | Casing | |
| 2 | 4700938633 | | 1 | Hose adapter | |
| 3 | 4700938629 | | 1 | Cover | |
| 4 | 4700938635 | | 2 | Sleeve | |
| 5 | 4700938630 | | 1 | Bracket | |
| 6 | 4700938636 | | 2 | Drain valve | C |
| 7 | 4700938639 | | 1 | Heater coil | |
| 8 | 4700938627 | | 1 | Fan bracket | |
| 9 | 4700938638 | | 1 | Fan | C |
| 10 | 4700938641 | | 1 | Coil bracket | |
| 11 | 4700938626 | | 1 | Cover | |
| 12 | 4700938643 | | 1 | Plug | C |
| 13 | 4700938640 | | 1 | Cover | |
| 14 | 4700938634 | | 2 | Knob | D |
| 15 | 4700939693 | A | 1 | Heater control valve | |
| 16 | 4700313003 | | 2 | Hose clamp | D |
| 17 | 4700384881 | | 1 | Hose | D |
| 18 | 4700938645 | | 1 | Bowden cable | |
| 19 | 4700938647 | | 1 | Cable harness | C |
| 20 | 4700938643 | | 1 | Plug | C |
| 21 | 4700938620 | | 2 | Knob | D |
| 22 | 4700938618 | | 1 | Decal | D |
| 23 | 4700938617 | | 1 | Control panel | D |
| 24 | 4700385134 | | 1 | Lock washer | D |
| 25 | 4700938621 | | 1 | Rotary control | |
| 26 | 4700938622 | | 1 | Switch | B |
| 27 | 4700938632 | | 1 | Hose adapter | C |
| 28 | 4700384927 | | 2 | Grommet | D |
| 29 | 4700938628 | | 1 | Cover | |
| 30 | 4700938644 | | 1 | Cap | C |

A) Replaces Heater control valve P/N 4700938642.

# Cab Cable harness

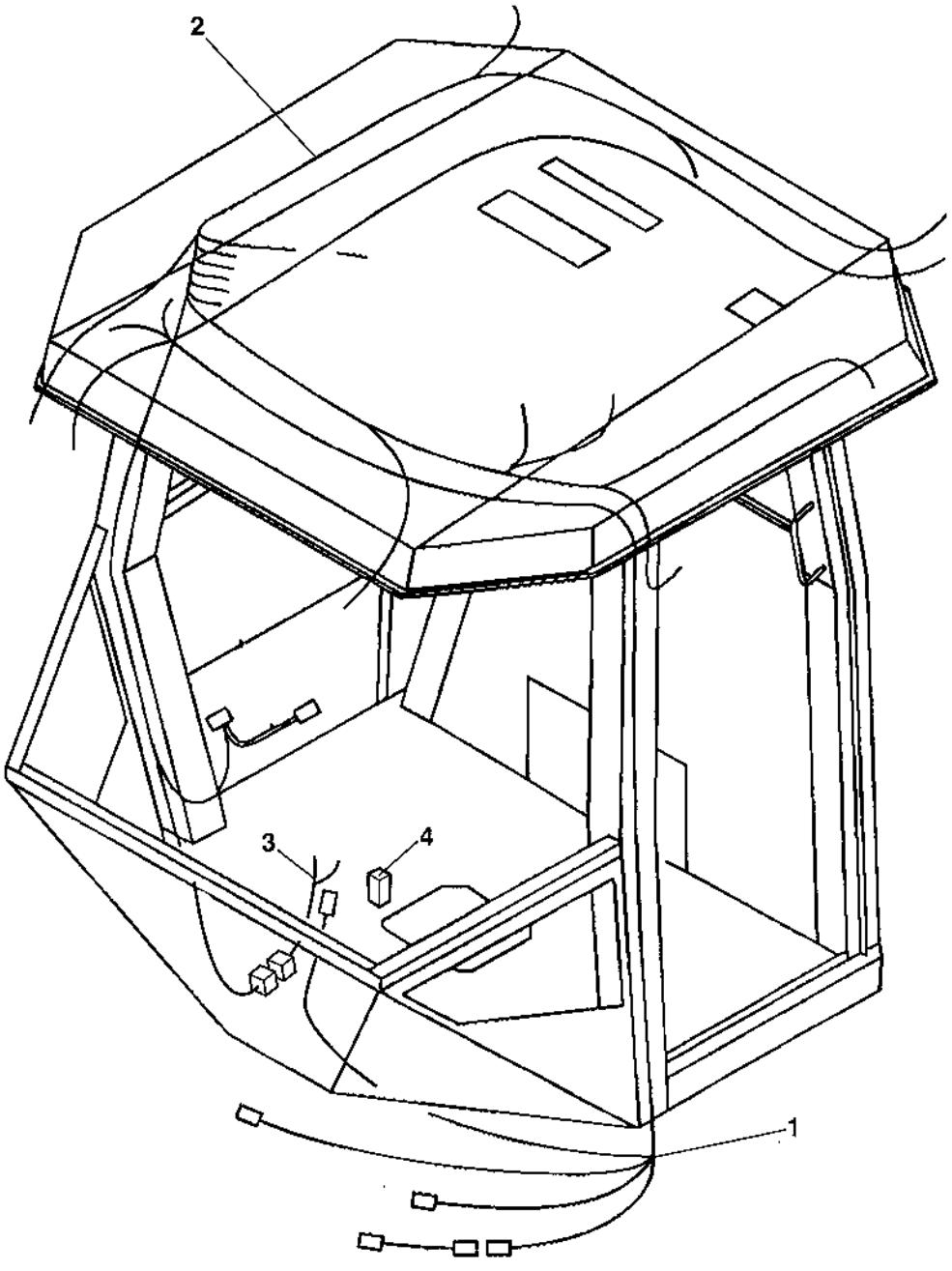

## Cab Cable harness

| Item | Part No | Rem | Qty | Description | Code |
|---|---|---|---|---|---|
| 1 | 4700938689 | | 1 | Cable harness | |
| 2 | 4700938690 | | 1 | Cable harness | |
| 3 | 4700388981 | A | 1 | Cable harness | D |
| 4 | 4700901227 | A | 1 | Fuse 10A | A |

A) Used together with 12V contact.

## Cab 4700392479

| Item | Part No | Rem | Qty | Description | Code |
|---|---|---|---|---|---|
| 130 | | | | **Cab Screens ( Page 234 )** | |
| 140 | | | | **Cab Door, left side ( Page 238 )** | |
| 150 | | | | **Cab Interior rear mirror ( Page 240 )** | |
| 170 | | | | **Wiper arm with blade, front ( Page 242 )** | |
| 180 | | | | **Cab Electric ( Page 244 )** | |

# Cab Screens

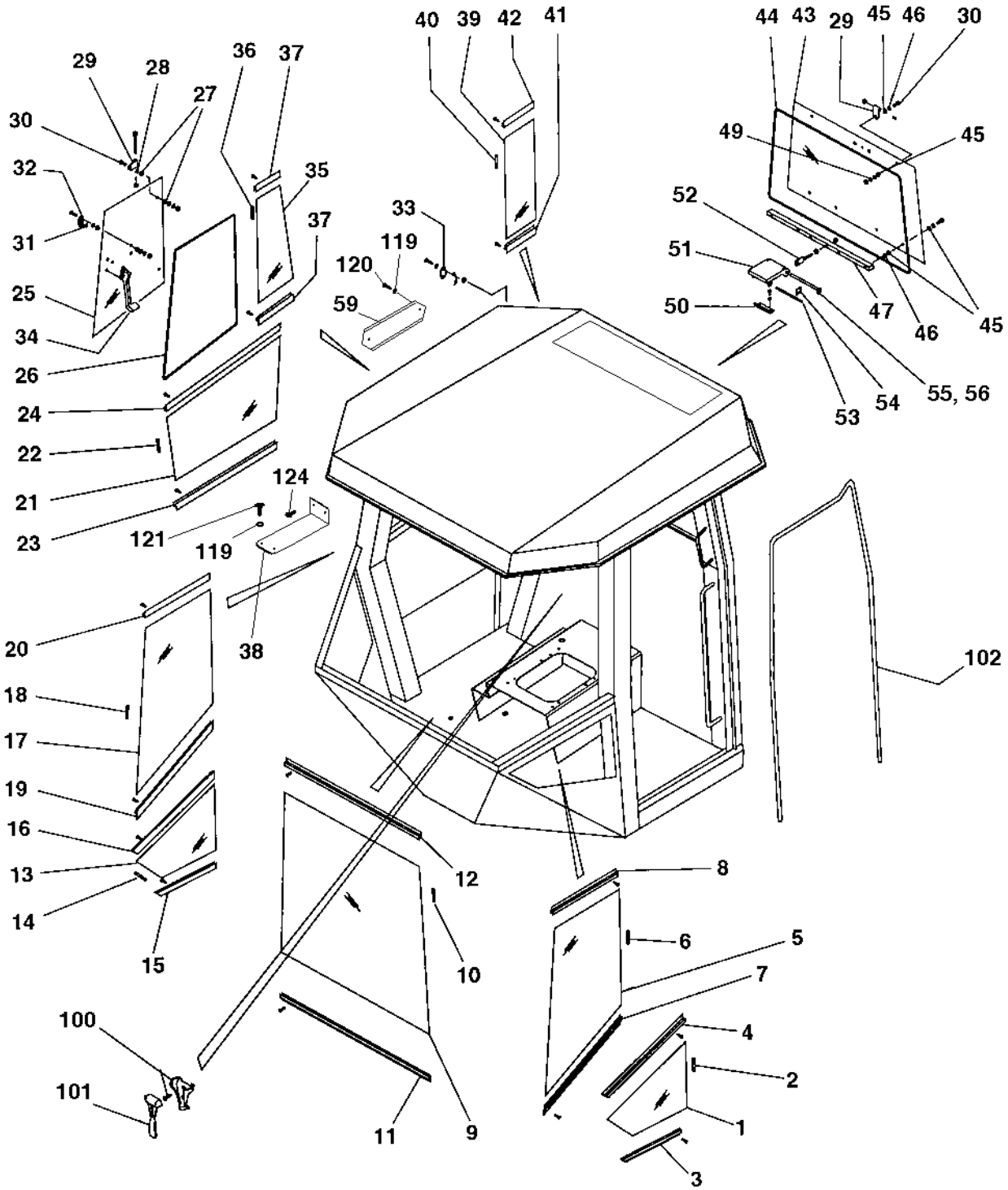
40 39 42 41
44 43 29 45 46 30
29 28 27
36 37
30
32
31
25
34
26
24
22
21
23
35
37
33
119
120
59
49
45
52
51
50
47
46
45
53
54
55, 56
124
121
119
38
20
18
17
19
16
13
14
15
12
10
8
6
5
7
4
2
1
3
100
101
11
9
102

## Cab Screens

| Item | Part No | Rem | Qty | Description | Code |
|---|---|---|---|---|---|
| 1 | 4700937380 | | 1 | Screen | |
| 2 | 4700908545 | | XL | Seal list | B |
| 3 | 4700935278 | | 1 | List | |
| 4 | 4700935279 | | 1 | List | |
| 5 | 4700937381 | | 1 | Screen, left | |
| 6 | 4700908545 | | XL | Seal list | B |
| 7 | 4700935280 | | 1 | List | |
| 8 | 4700935281 | | 1 | List | |
| 9 | 4700937382 | | 1 | Screen | |
| 10 | 4700908545 | D | 1 | Seal list | B |
| 11 | 4700935282 | | 1 | List | |
| 12 | 4700935283 | | 1 | List | |
| 13 | 4700937383 | | 1 | Screen | |
| 14 | 4700908545 | | XL | Seal list | B |
| 15 | 4700935284 | | 1 | List | |
| 16 | 4700935285 | | 1 | List | |
| 17 | 4700937384 | | 1 | Screen | |
| 18 | 4700908545 | C | 1 | Seal list | B |
| 19 | 4700935286 | | 1 | List | |
| 20 | 4700935287 | | 1 | List | |
| 21 | 4700937385 | | 1 | Screen | |
| 22 | 4700908545 | A | 1 | Seal list | B |
| 23 | 4700935288 | | 1 | List | |
| 24 | 4700935289 | | 1 | List | |
| 25 | 4700938290 | | 1 | Screen | |
| 26 | 4700908499 | E | 1 | Rubber list | D |
| 27 | 4700935271 | | 8 | Washer, Flexible rubber | |
| 28 | 4700935272 | | 8 | Washer, Black | |
| 29 | 4700935273 | | 4 | Hinge | |
| 30 | 4700935274 | | 4 | Screw | |
| 31 | 4700935275 | | 1 | Rubber washer | |
| 32 | 4700935276 | | 1 | Bracket | |
| 33 | 4700935277 | | 1 | Lock pin | |
| 34 | 4700935290 | | 1 | Window lock, right | |
| 35 | 4700938291 | | 1 | Screen | |
| 36 | 4700908545 | B | 1 | Seal list | B |
| 37 | 4700935291 | | 1 | List | |
| 38 | 4700379608 | | 1 | Cover | D |
| 39 | 4700938292 | | 1 | Screen | |
| 40 | 4700908545 | B | 1 | Seal list | B |
| 41 | 4700935293 | | 1 | List | |
| 42 | 4700938659 | | 1 | List | |
| 43 | 4700937389 | | 1 | Screen | |
| 44 | 4700908499 | F | 1 | Rubber list | D |
| 45 | 4700935271 | | 12 | Washer, Flexible rubber | |
| 46 | 4700935272 | | 12 | Washer, Black | |
| 47 | 4700935295 | | 1 | Screen holder | |
| 49 | 4700935296 | | 2 | Washer | |
| 50 | 4700935297 | | 1 | Bracket | |
| 51 | 4700935298 | | 2 | Bracket | |
| 52 | 4700935299 | | 1 | Bolt | |
| 53 | 4700935300 | | 1 | Shaft | |
| 54 | 4700935301 | | 2 | Lock | |

A) L=1100 mm
B) L=1400 mm
C) L=1900 mm
D) L=2100 mm
E) L=2700 mm
F) L=3300 mm

# Cab Screens

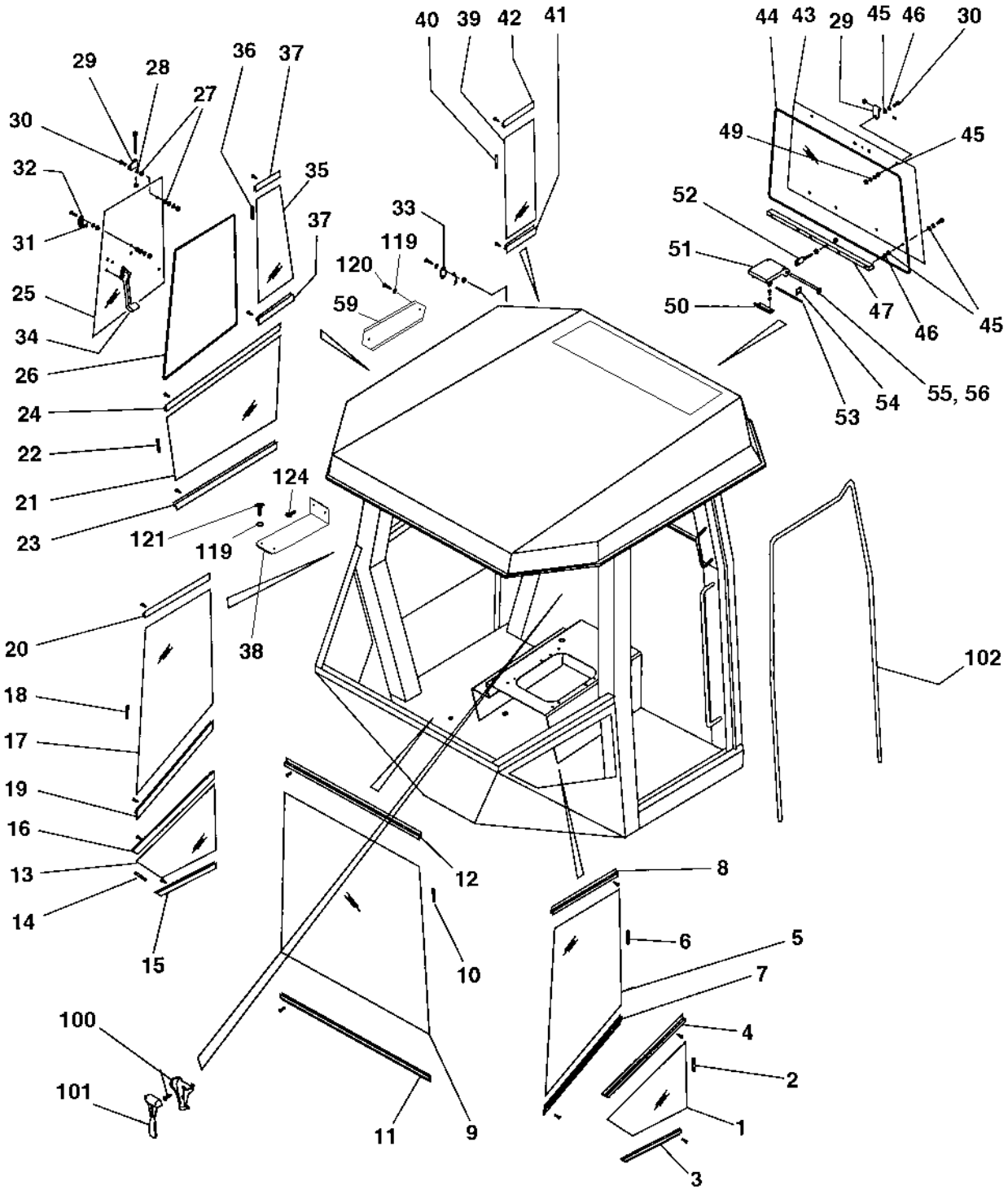
40 39 42 41
44 43 29 45 46 30
29 28 27
36 37
30
32
31
25
34
26
24
22
21
23
35
37
33
119
120
59
49
45
52
51
50
47
46
45
53
54
55, 56
124
121
119
38
20
18
17
19
16
13
14
15
12
10
8
6
5
7
4
2
1
3
100
101
11
9
102

## Cab Screens

| Item | Part No | Rem | Qty | Description | Code |
|---|---|---|---|---|---|
| 55 | 4700935302 | | 1 | Rod | |
| 56 | 4700935303 | | 1 | Ring | |
| 59 | 4700379236 | | 1 | Cover | D |
| 100 | 4700908506 | | 1 | Emergency hammer | D |
| 101 | 4700908507 | | 1 | Holder | D |
| 102 | 4700908499 | G | 1 | Rubber list | D |
| 119 | 4700904229 | | 16 | Steel plain washer 8,4x16x1,5 | C |
| 120 | 4700500019 | | 14 | Hexagon head screw M8x16H 8,8 | C |
| 121 | 4700500053 | | 2 | Screw M8x20H 8.8 | C |
| 124 | 4700903782 | | 2 | Screw M5x12 | C |

G) L=5 m

# Cab Door, left side

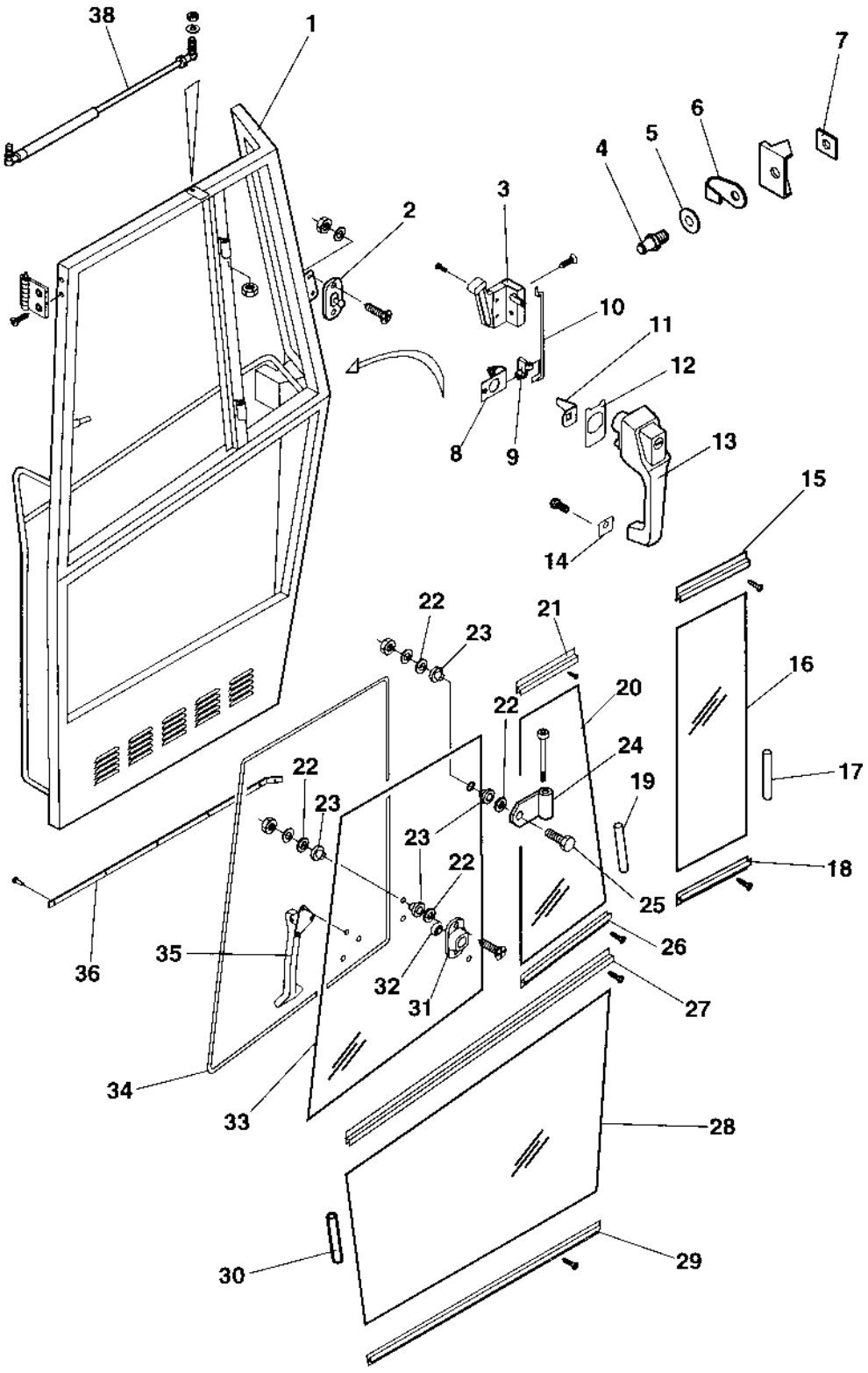

## Cab Door, left side

| Item | Part No | Rem | Qty | Description | Code |
|---|---|---|---|---|---|
| | 4700940678 | | 1 | Door, cpl | D |
| 1 | 4700390927 | | 1 | . Door frame | D |
| 2 | 4700935277 | | 1 | . Lock pin | |
| 3 | 4700938017 | | 1 | . Lock | |
| 4 | 4700908580 | | 1 | . Lock pin | C |
| 5 | 4700908581 | | 1 | . Washer | C |
| 6 | 4700908582 | | 1 | . Cover | D |
| 7 | 4700908583 | | 1 | . Bracket | D |
| 8 | 4700935248 | | 1 | . Turning mechanism | |
| 9 | 4700935249 | | 1 | . Retainer | |
| 10 | 4700935250 | | 1 | . Rod | |
| 11 | 4700935247 | | 1 | . Leader | |
| 12 | 4700935246 | | 1 | . Seal | |
| 13 | 4700935244 | | 1 | . Door handle with key | D |
| 14 | 4700935245 | | 1 | . Seal | |
| 15 | 4700935268 | | 1 | . List | |
| 16 | 4700937391 | | 1 | . Screen | |
| 17 | 4700908545 | A | 1 | . Seal list | B |
| 18 | 4700935267 | | 1 | . List | |
| 19 | 4700908545 | A | 1 | . Seal list | B |
| 20 | 4700937392 | | 1 | . Screen | |
| 21 | 4700935270 | | 1 | . List | |
| 22 | 4700935272 | | 8 | . Washer, Black | |
| 23 | 4700935271 | | 8 | . Washer, Flexible rubber | |
| 24 | 4700935273 | | 2 | . Hinge | |
| 25 | 4700935274 | | 2 | . Screw | |
| 26 | 4700935269 | | 1 | . List | |
| 27 | 4700935266 | | 1 | . List | |
| 28 | 4700937390 | | 1 | . Screen | |
| 29 | 4700935265 | | 1 | . List | |
| 30 | 4700908545 | B | 1 | . Seal list | B |
| 31 | 4700935276 | | 1 | . Bracket | |
| 32 | 4700935275 | | 1 | . Rubber washer | |
| 33 | 4700937393 | | 1 | . Screen | |
| 34 | 4700908499 | C | 1 | . Rubber list | D |
| 35 | 4700935253 | | 1 | . Lock | |
| 36 | 4700938101 | | XL | . Brush profile | |
| 38 | 4700938018 | | 1 | . Gas spring | |

A) L=1400 mm
B) L=1100 mm
C) L=2700 mm

# Cab Interior rear mirror

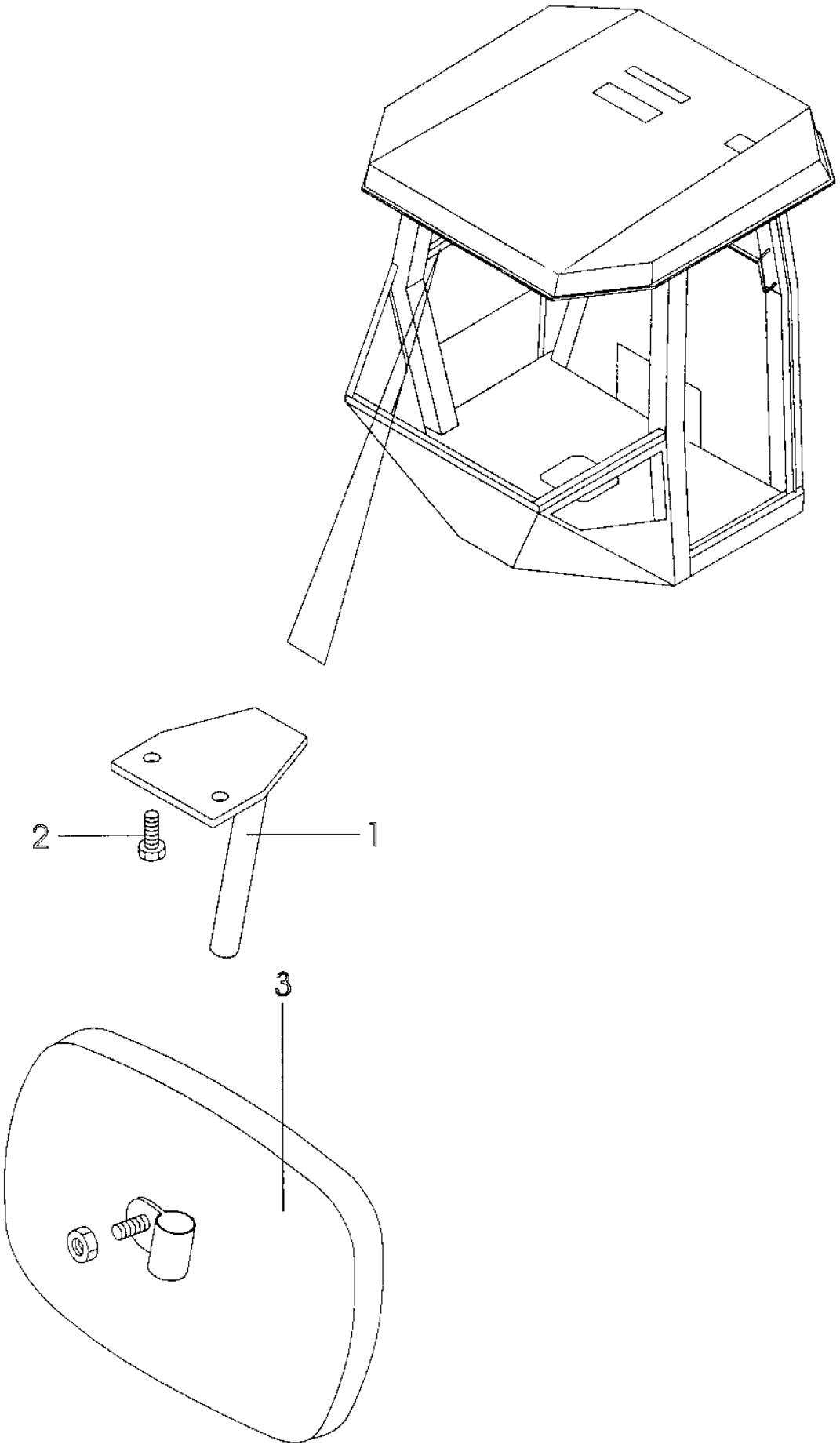

## Cab Interior rear mirror

| Item | Part No | Rem | Qty | Description | Code |
|---|---|---|---|---|---|
| 1 | 4700908623 | | 1 | Bracket | D |
| 2 | 4700535005 | | 2 | Screw M5x12 | D |
| 3 | 4700908624 | | 1 | Rear mirror | D |

# Wiper arm with blade, front

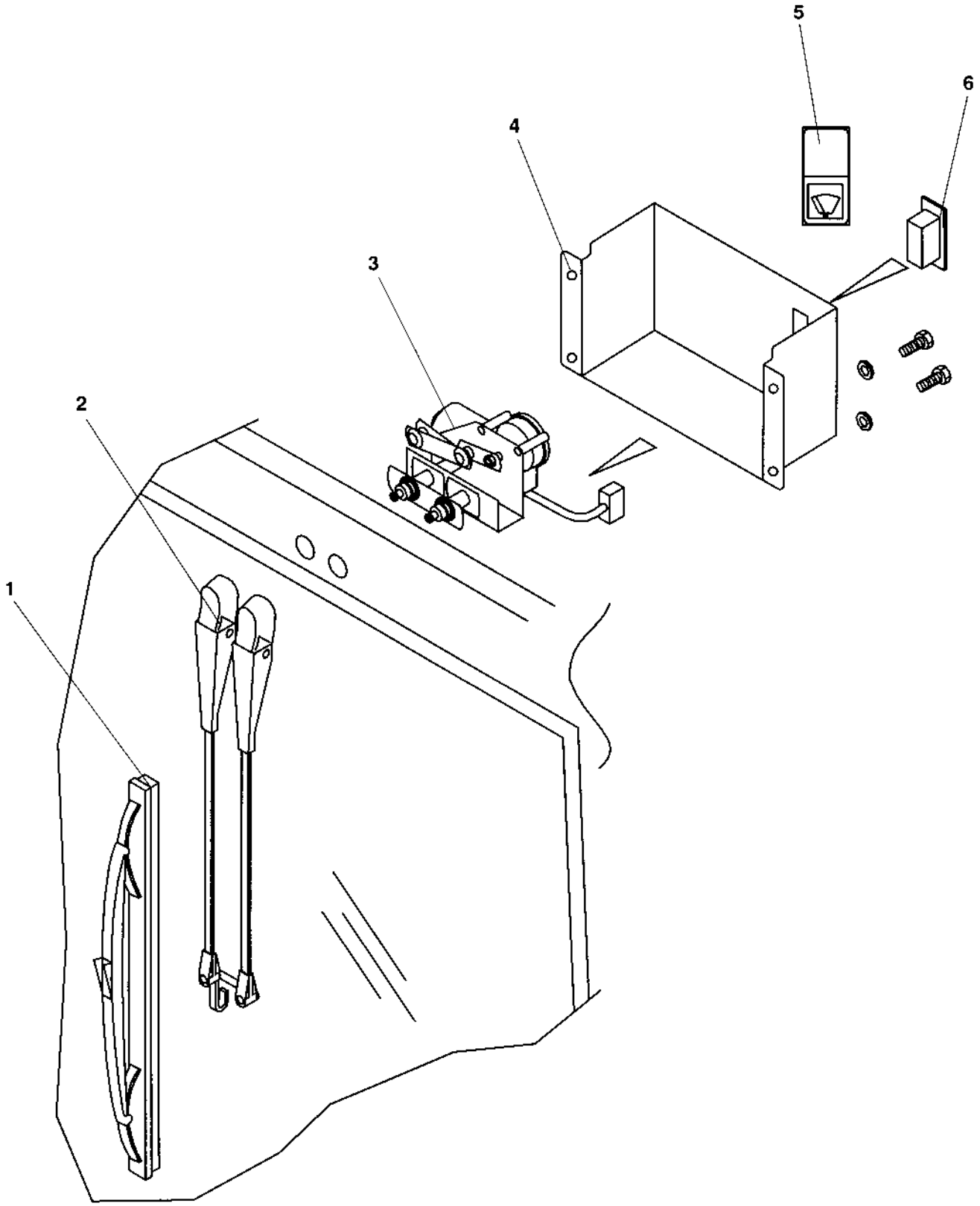

## Wiper arm with blade, front

| Item | Part No | Rem | Qty | Description | Code |
|---|---|---|---|---|---|
| 1 | 4700905306 | | 1 | Wiper blade | B |
| 2 | 4700905305 | | 1 | Wiper arm | C |
| 3 | 4700905304 | | 1 | Wiper motor | C |
| 4 | 4700937871 | | 1 | Cover | D |
| 5 | 4700908605 | | 1 | Symbol, wiper | D |
| 6 | 4700908617 | | 1 | Switch | B |

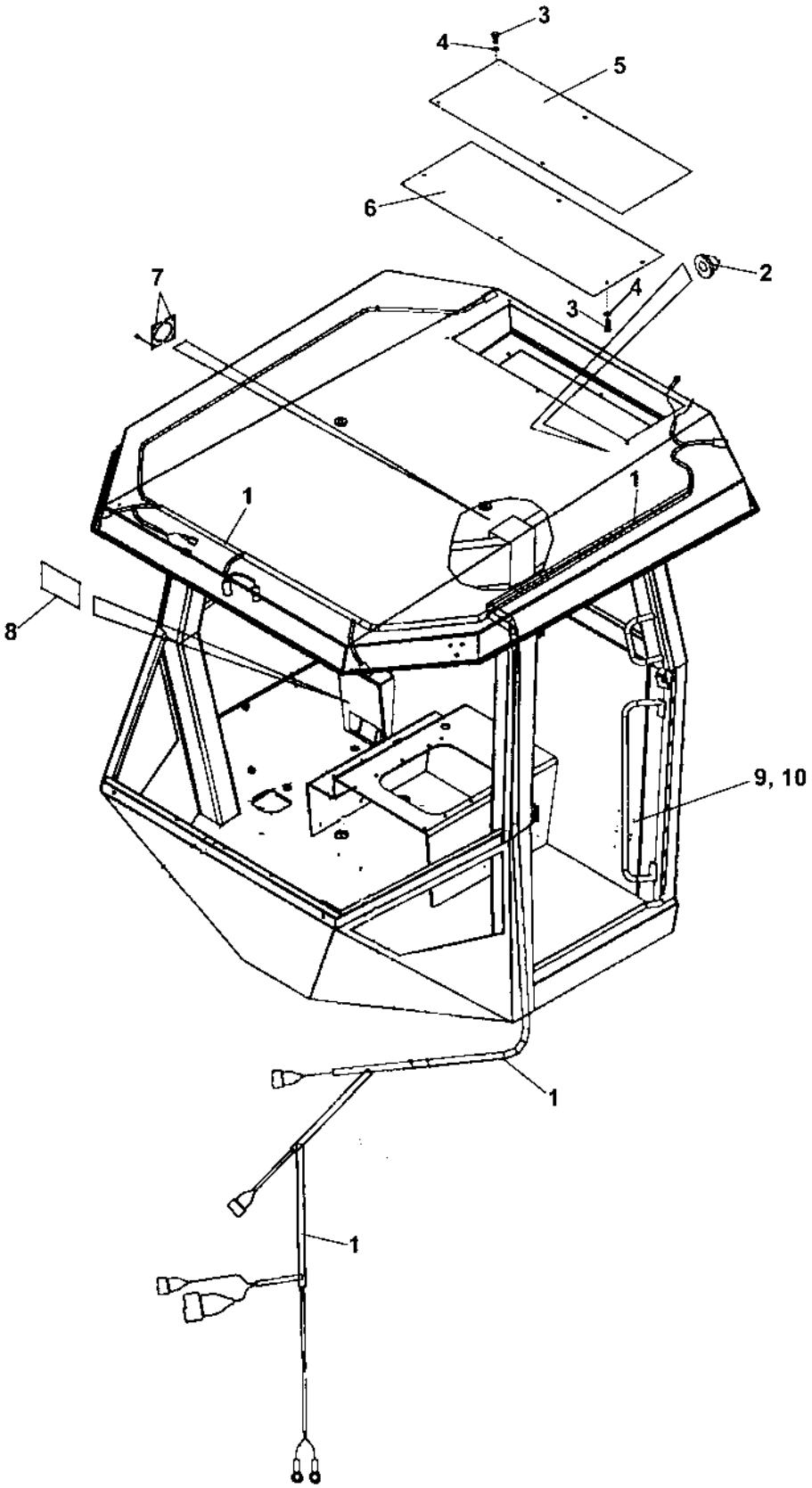
3
4
5
6
2
7
4
3
1
1
8
9, 10
1
1

## Cab Electric

| Item | Part No | Rem | Qty | Description | Code |
|---|---|---|---|---|---|
| 1 | 4700937870 | | 1 | Cable harness | D |
| 2 | 4700791378 | | 2 | Grommet | D |
| 3 | 4700500019 | | 12 | Hexagon head screw M8x16H 8,8 | C |
| 4 | 4700904229 | | 12 | Steel plain washer 8,4x16x1,5 | C |
| 5 | 4700938678 | | 1 | Cover | D |
| 6 | 4700938679 | | 1 | Cover | D |
| 7 | 4700935580 | | 2 | Bracket | |
| 8 | 4700391219 | | 1 | Gasket | D |
| 9 | | | 1 | Sign, rops | |
| 10 | | | 1 | Sign, fops | |

# Cab mounting

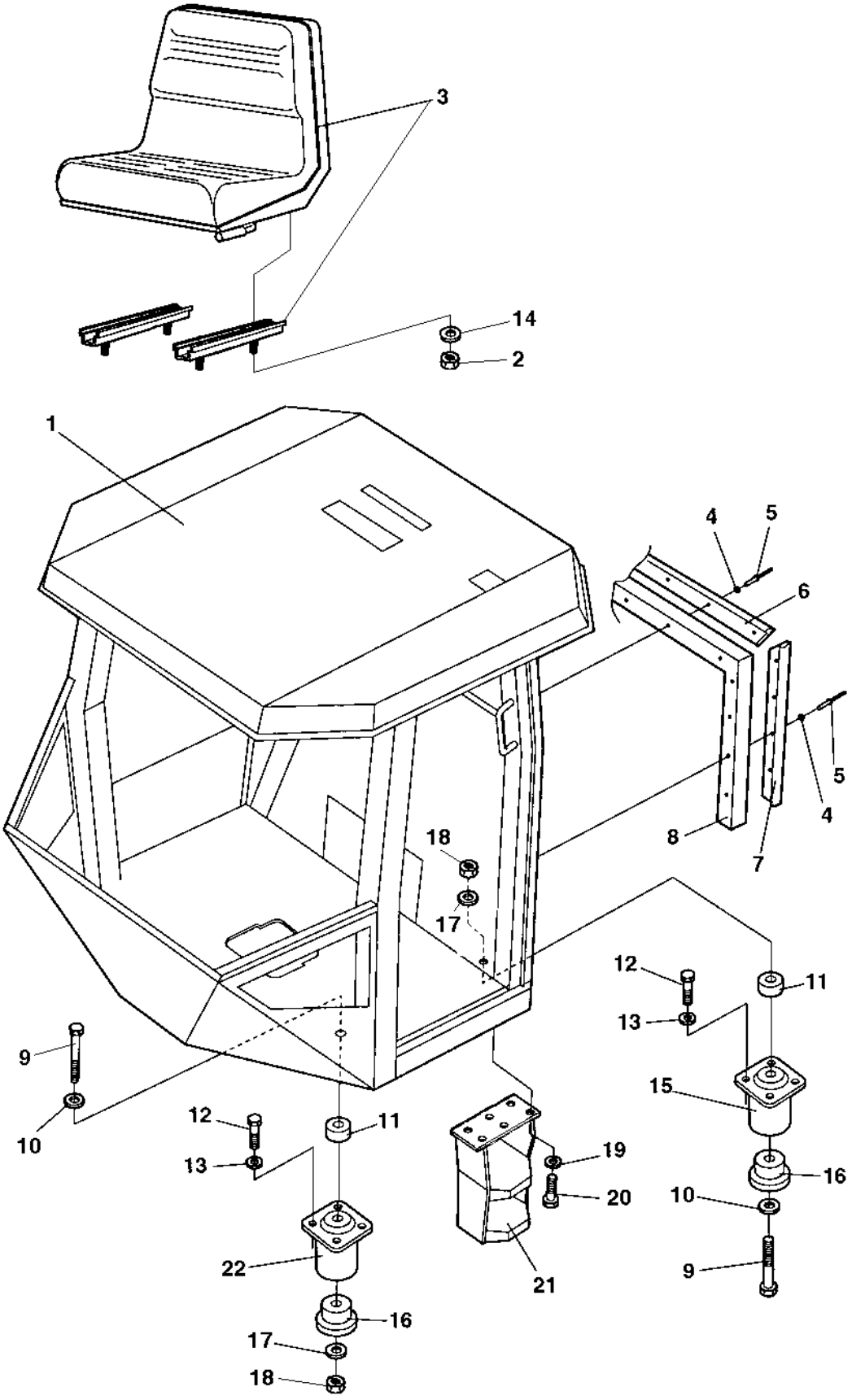

## Cab mounting

| Item | Part No | Rem | Qty | Description | Code |
|---|---|---|---|---|---|
| 1 | | | | **Cab 4700392479 ( Page 232 )** | |
| 2 | 4700570005 | | 4 | Nut M8 | C |
| 3 | 4700377556 | | 1 | Drivers seat, cpl | D |
| | 4700377518 | D | 1 | Drivers seat, cpl | D |
| 4 | 4700927974 | | 13 | Washer | C |
| 5 | 4700904433 | | 13 | Blind rivet | |
| 6 | 4700372785 | | 1 | List | D |
| 7 | 4700382582 | | 2 | List | D |
| 8 | 4700372494 | A | N | Rubber strip | D |
| 9 | 4700791218 | | 4 | Screw M20x200 | D |
| 10 | 4700904233 | | 4 | Washer 21x36x3 | C |
| 11 | 4700384759 | | 4 | Spacer | D |
| 12 | 4700500195 | | 16 | Screw | C |
| 13 | 4700904231 | | 16 | Washer 13x24x2 300 HV | C |
| 14 | 4700904229 | | 4 | Steel plain washer 8,4x16x1,5 | C |
| 15 | 4700374606 | B | 2 | Shock absorber Green | D |
| 16 | 4700372457 | | 4 | Back-up ring | C |
| 17 | 4700903290 | | 4 | Washer 21x36x6 | C |
| 18 | 4700901145 | | 4 | Lock nut M20-10 | |
| 19 | 4700904230 | | 6 | Steel plain washer | C |
| 20 | 4700500029 | | 6 | Hexagon head screw | C |
| 21 | 4700376255 | | 1 | Step | D |
| 22 | 4700374607 | C | 2 | Shock absorber Yellow | D |
| 23 | 4700382397 | | 2 | Spacer | D |

A) L=2400 mm
B) Rear
C) Front
D) Option

# Cab Work lights

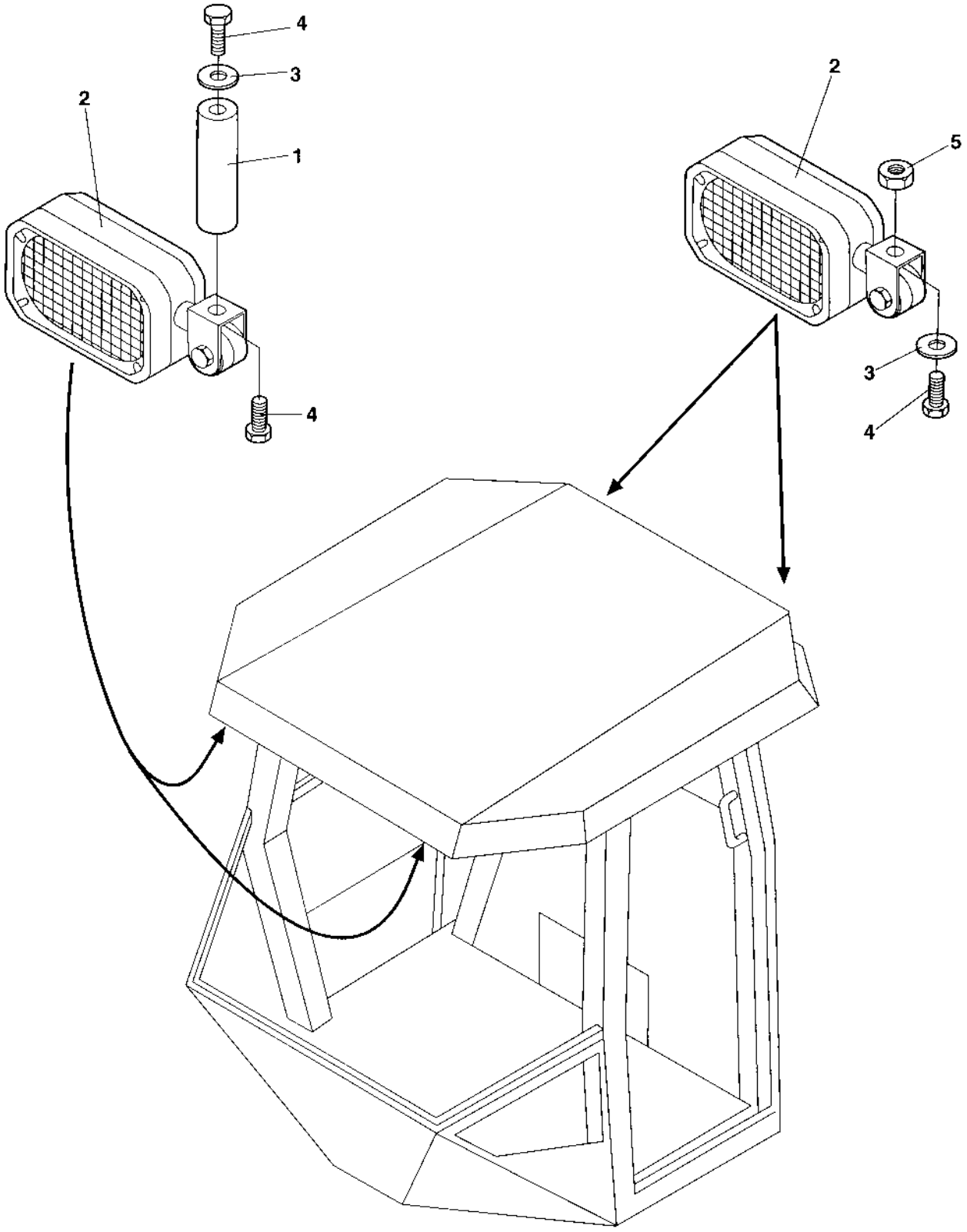

## Cab Work lights

| Item | Part No | Rem | Qty | Description | Code |
|---|---|---|---|---|---|
| 1 | 4700908359 | | 2 | Distance | D |
| 2 | 4700908267 | | 4 | Working light | B |
| 3 | 4700904229 | | 4 | Steel plain washer 8,4x16x1,5 | C |
| 4 | 4700500019 | | 6 | Hexagon head screw M8x16H 8,8 | C |
| 5 | 4700586003 | | 2 | Lock nut M8 | C |

# Cab Exterior, rear mirror

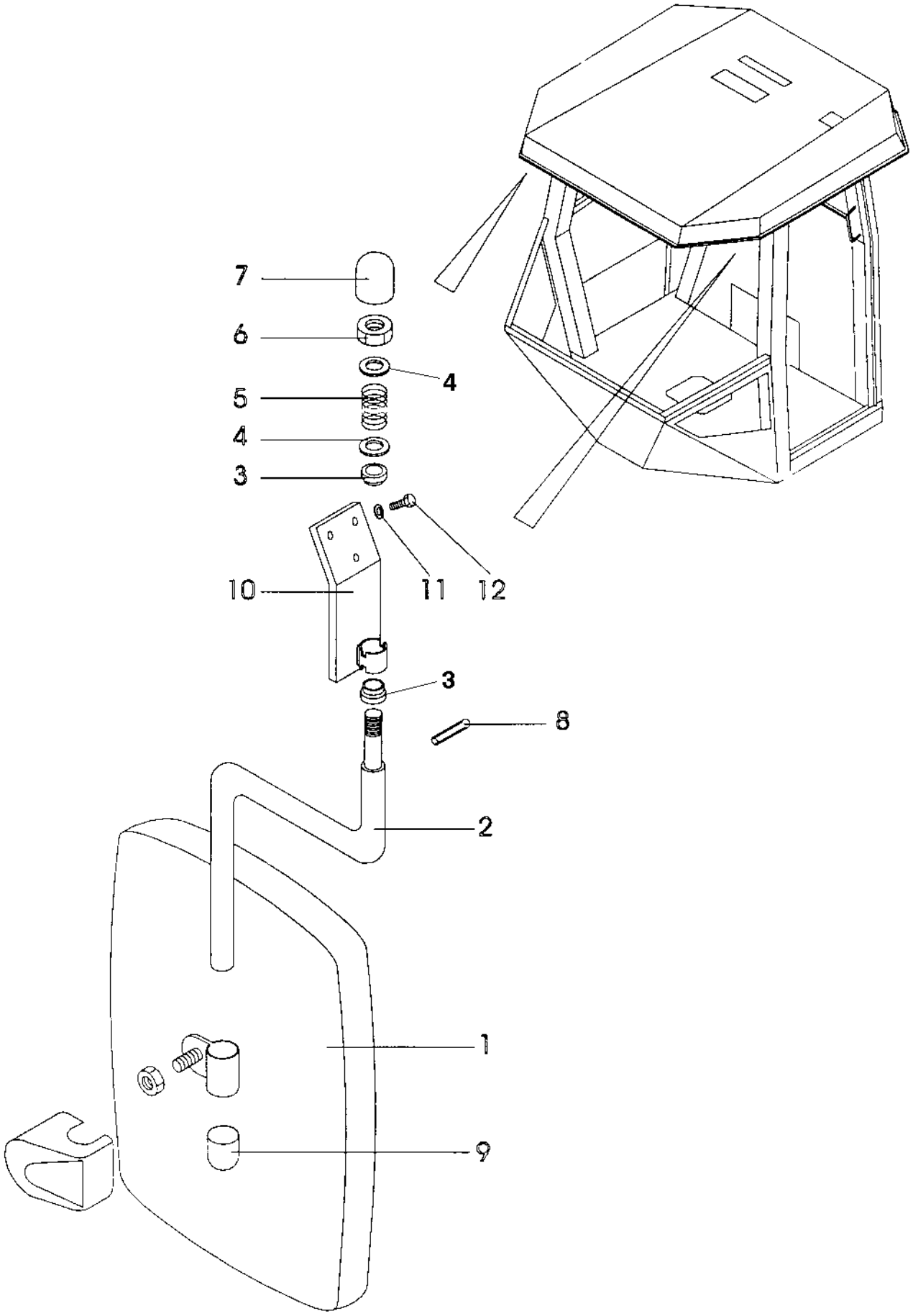

## Cab Exterior, rear mirror

| Item | Part No | Rem | Qty | Description | Code |
|---|---|---|---|---|---|
| 1 | 4700371730 | A | 2 | Rear view mirror, cpl | D |
| | 4700908265 | | 1 | . Rear view mirror | D |
| 2 | 4700908355 | | 1 | . Arm | D |
| 3 | 4700908625 | | 2 | . Sleeve | C |
| 4 | 4700904232 | | 2 | . Washer | C |
| 5 | 4700908626 | | 1 | . Spring | D |
| 6 | 4700586021 | | 1 | . Nut M16 | |
| 7 | 4700908627 | | 1 | . Cap | C |
| 8 | 4700629066 | | 1 | . Spirol pin | D |
| 9 | 4700908628 | | 1 | . Cap | C |
| 10 | 4700908361 | | 1 | . Bracket | D |
| 11 | 4700904229 | | 6 | Steel plain washer 8,4x16x1,5 | C |
| 12 | 4700500019 | | 6 | Hexagon head screw M8x16H 8,8 | C |

A) Option

# Cab, 12V contact

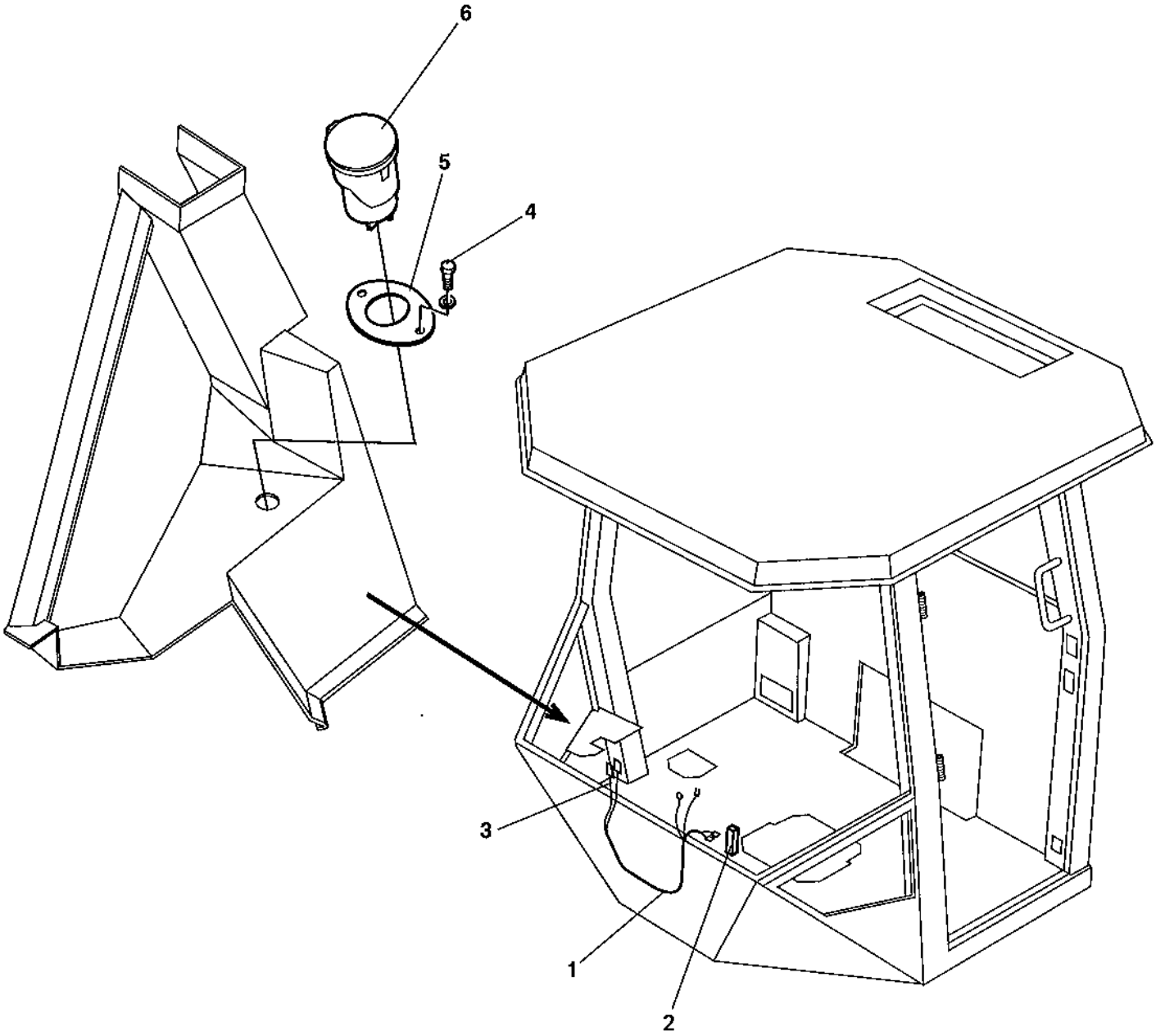

## Cab, 12V contact

| Item | Part No | Rem | Qty | Description | Code |
|---|---|---|---|---|---|
| 1 | 4700388981 | | 1 | Cable harness | D |
| 2 | 4700901227 | | 1 | Fuse 10A | A |
| 3 | 4700939603 | | 1 | Cable harness | |
| 4 | 4700938691 | | 2 | Screw | C |
| 5 | 4700939521 | | 1 | Sign 12V | |
| 6 | 4700939522 | | 1 | Contact 12V | |

## Radio and cassette/cd player Option

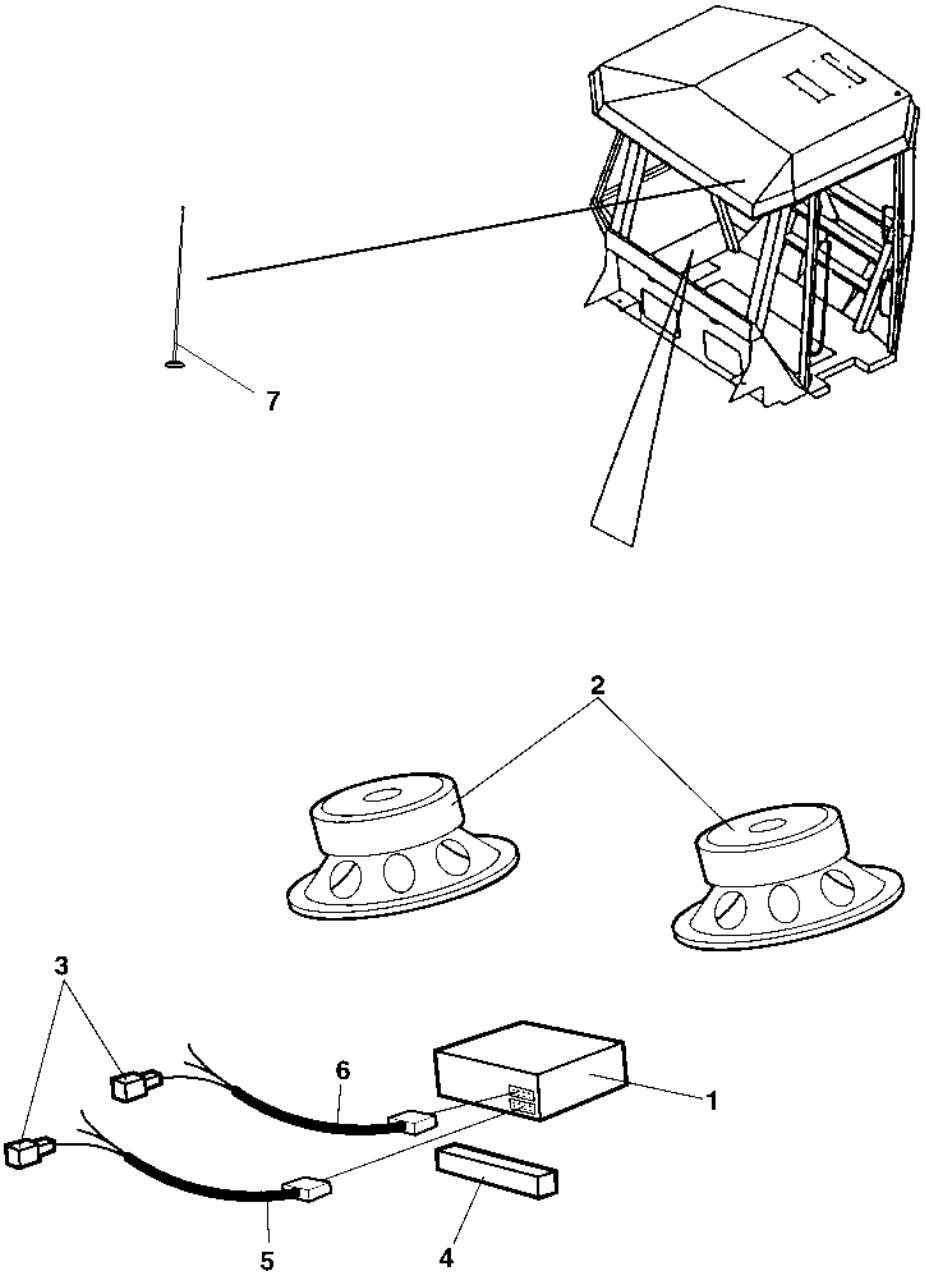

## Radio and cassette/cd player Option

| Item | Part No | Rem | Qty | Description | Code |
|---|---|---|---|---|---|
| 1 | 4700904939 | | 1 | Radio and cassette player | D |
| | 4700791967 | | 1 | Radio and cd player | D |
| 2 | 4700791968 | A | 1 | Loud speakers | |
| 3 | 4700927403 | B | 7 | Terminal | D |
| 4 | 4700202043 | C | 1XL | Rubber strip | D |
| 5 | 4700904969 | | 1 | Power connection | D |
| 6 | 4700904970 | | 1 | Speaker connection | D |
| 7 | 4700937165 | | 1 | Antenna | D |

A) 2 pcs
B) Female
C) L=0.2 m

# Bracket, Steering valve vibration isolated Option

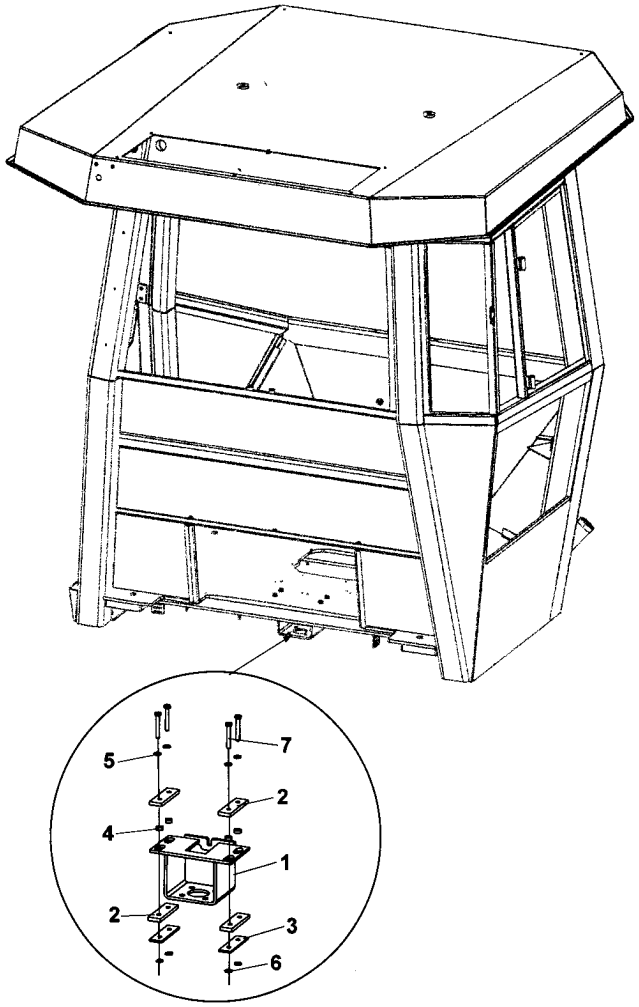

## Bracket, Steering valve vibration isolated Option

| Item | Part No | Rem | Qty | Description | Code |
|---|---|---|---|---|---|
| 1 | 4812114277 | | 1 | Bracket | |
| 2 | 4812114369 | | 4 | Rubber cloth | |
| 3 | 4812114371 | | 2 | Flat bar | |
| 4 | 4700904984 | A | 4 | Fuel hose | C |
| 5 | 4700904229 | | 8 | Steel plain washer 8,4x16x1,5 | C |
| 6 | 4700586003 | | 4 | Lock nut M8 | C |
| 7 | 4700500067 | | 4 | Screw M8-1,25x55 8,8 | C |

A) L = 0,3 m

## Decals

## Decals

| Item | Part No | Rem | Qty | Description | Code |
|---|---|---|---|---|---|
| 10 | | | | **Decals ( Page 260 )** | |
| 20 | | | | **Decals ( Page 262 )** | |

## Decals

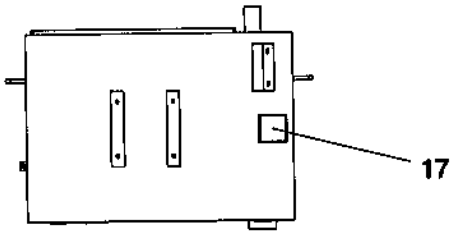
17

A - A

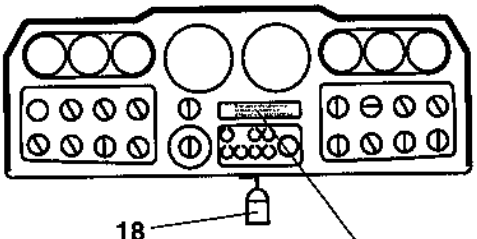
18
19

B - B

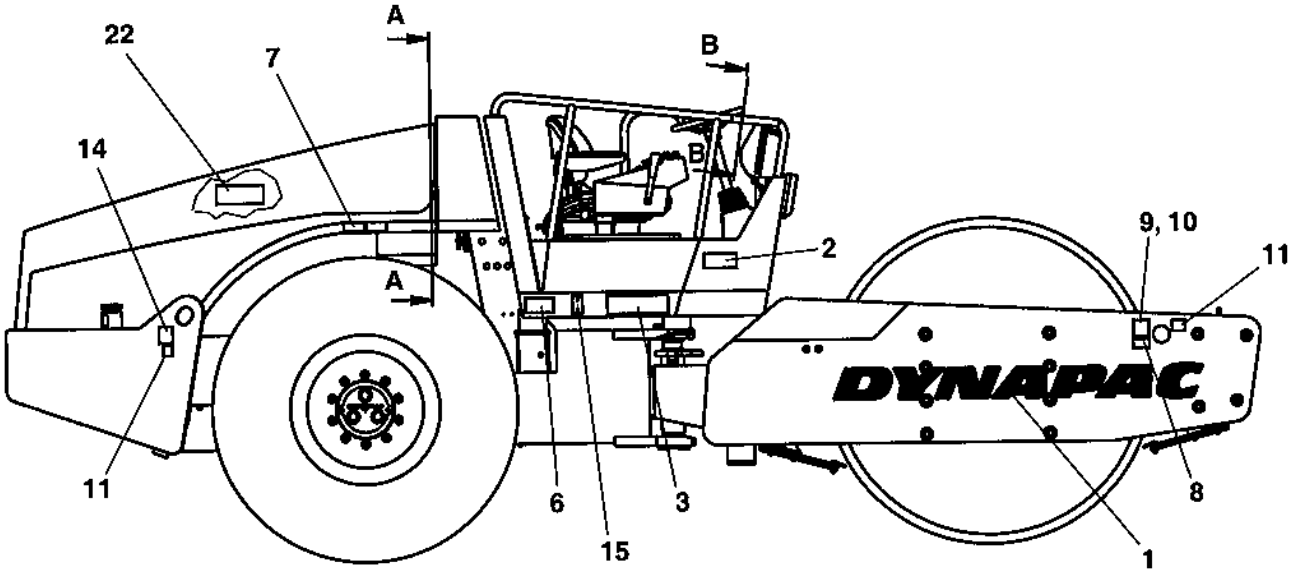
A
B
22
7
14
B
2
9, 10
11
A
DYNAPAC
11
6
3
8
15
1

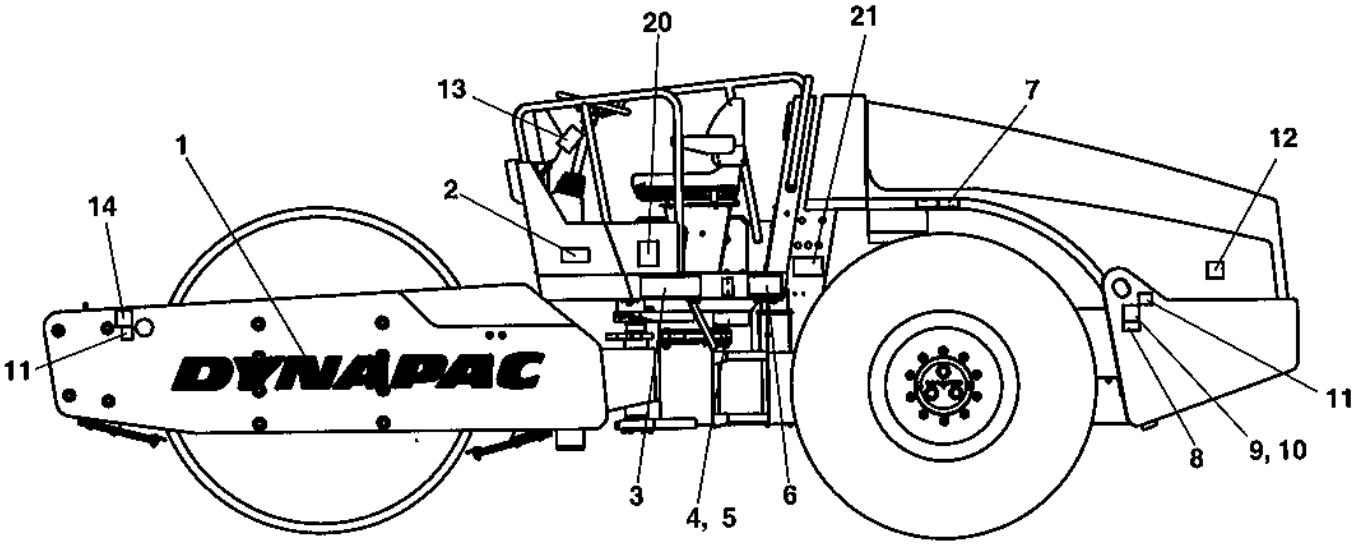
20
21
13
7
1
12
2
14
DYNAPAC
11
11
8
9, 10
3
4, 5
6

## Decals

| Item | Part No | Rem | Qty | Description | Code |
|---|---|---|---|---|---|
| 1 | 4700904098 | | 2 | Decal "DYNAPAC" L=1350 mm | |
| 2 | 4700903422 | | 2 | Decal "SAFETY" | D |
| 3 | 4700904240 | | 2 | Decal "MODEL CODE" White | |
| | 4700904321 | | 2 | Decal "MODEL CODE" Red | |
| 4 | 47960787SE | | 1 | Product identification plate | |
| | | A,F | 1 | Product identification plate CE | |
| 5 | 4700624005 | | 4 | Blind rivet 3,2x6,1 | C |
| 6 | 4700903459 | | 2 | Decal "SAFETY" | D |
| 7 | 4700385080 | | 2 | Decal "TYRE PRESSURE" 150-170kPa/21-24psi | D |
| 8 | 4700908229 | | 2 | Safety decal | D |
| 9 | 4700904870 | | 2 | Lifting sign | D |
| 10 | 4700624005 | | 8 | Blind rivet 3,2x6,1 | C |
| 11 | 4700382751 | | 4 | Decal "TIE DOWN POINT" | D |
| 12 | 4700904835 | | 1 | Decal "BATTERY POWER" | D |
| 13 | 4700384160 | | 1 | Loading/Unloading instruction | D |
| 14 | 4700588176 | | 2 | Decal "LIFT POINT" | D |
| 15 | 4700377744 | | 2 | Reflector, yellow | D |
| 17 | 4700272373 | | 1 | Decal "HYDRAULIC OIL" | D |
| 18 | 4700358881 | | 1 | Pad lock | D |
| 19 | 47386084SE | B,E | 1 | Warning plate Swedish | |
| | 47386084EN | B,E | 1 | Warning plate English | |
| | 47386084DE | B,E | 1 | Warning plate German | |
| | 47386084IT | B,E | 1 | Warning plate Italian | |
| | 47386084ES | B,E | 1 | Warning plate Spanish | |
| | 47386084FR | B,E | 1 | Warning plate French | |
| | 47386084NO | B,E | 1 | Warning plate Norwegian | |
| | 47386084DK | B,E | 1 | Warning plate Danish | |
| | 47386084FI | B,E | 1 | Warning plate Finnish | |
| | 47386084PT | B,E | 1 | Warning plate Portuguese | |
| | 47386084NL | B,E | 1 | Warning plate Dutch | |
| | 47386084GR | B,E | 1 | Warning plate Greek | |
| | 47386084IS | B,E | 1 | Warning plate Icelandic | |
| | 47386084CN | B,E | 1 | Warning plate Chinese | |
| | 47386084BR | B,E | 1 | Warning plate Brazil | |
| 20 | 4700791272 | | 1 | Decal "Sound power level" 102dB, Option | D |
| | 4700791275 | | 1 | Decal "Sound power level" 105dB | D |
| | 4700791276 | | 1 | Decal "Sound power level" 106dB | D |
| 21 | 4700791094 | | 1 | Decal "RUS 127 approved" Option | D |
| 22 | 4700791642 | | 1 | Decal "WARNING" Use of starting fluid prohib. | D |

A) With CE-Mark
B) Include country code when ordering.
E) Use Blind rivet P/N 4700624017 x 2 when mounting.
F) Not available as sparepart

## Decals

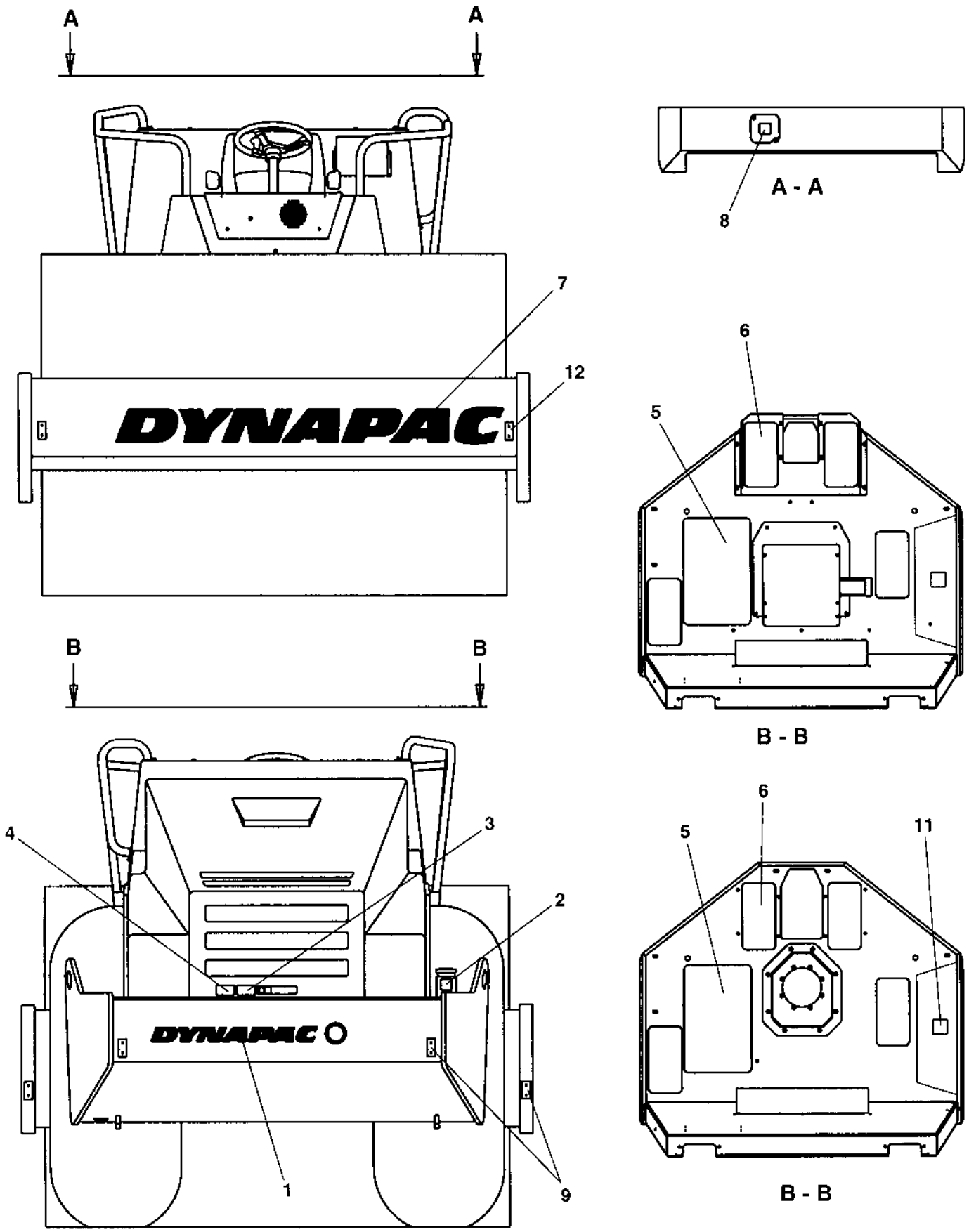

## Decals

| Item | Part No | Rem | Qty | Description | Code |
|---|---|---|---|---|---|
| 1 | 4700904069 | | 1 | Decal "DYNAPAC" L=760 mm | D |
| 2 | 4700991658 | | 1 | Decal "FUEL" | D |
| 3 | 4700903423 | | 1 | Decal "SAFETY" | D |
| 4 | 4700903424 | | 1 | Decal "HOT SURFACE" | D |
| 5 | 4700373364 | | 1 | Slip protection | D |
| 6 | 4700373363 | | 4 | Slip protection | |
| 7 | 4700904098 | | 1 | Decal "DYNAPAC" L=1350 mm | |
| 8 | 4700272372 | | 1 | Decal "HYDRAULIC OIL" | D |
| | 4700904601 | | 1 | Decal "BIO HYDRAULIC OIL" | D |
| | 4700792772 | | 1 | Decal "BIO HYDRAULIC OIL" PANOLIN | D |
| 9 | 4700377742 | | 4 | Reflector, red | D |
| 11 | 4700903425 | | 1 | Decal "SAFETY MANUAL" | D |
| 12 | 4700377743 | | 2 | Reflector, white | D |

## Standard equipment

| Item | Part No | Rem | Qty | Description | Code |
|---|---|---|---|---|---|
| 100 | | | | **Standard equipment ( Page 266 )** | |

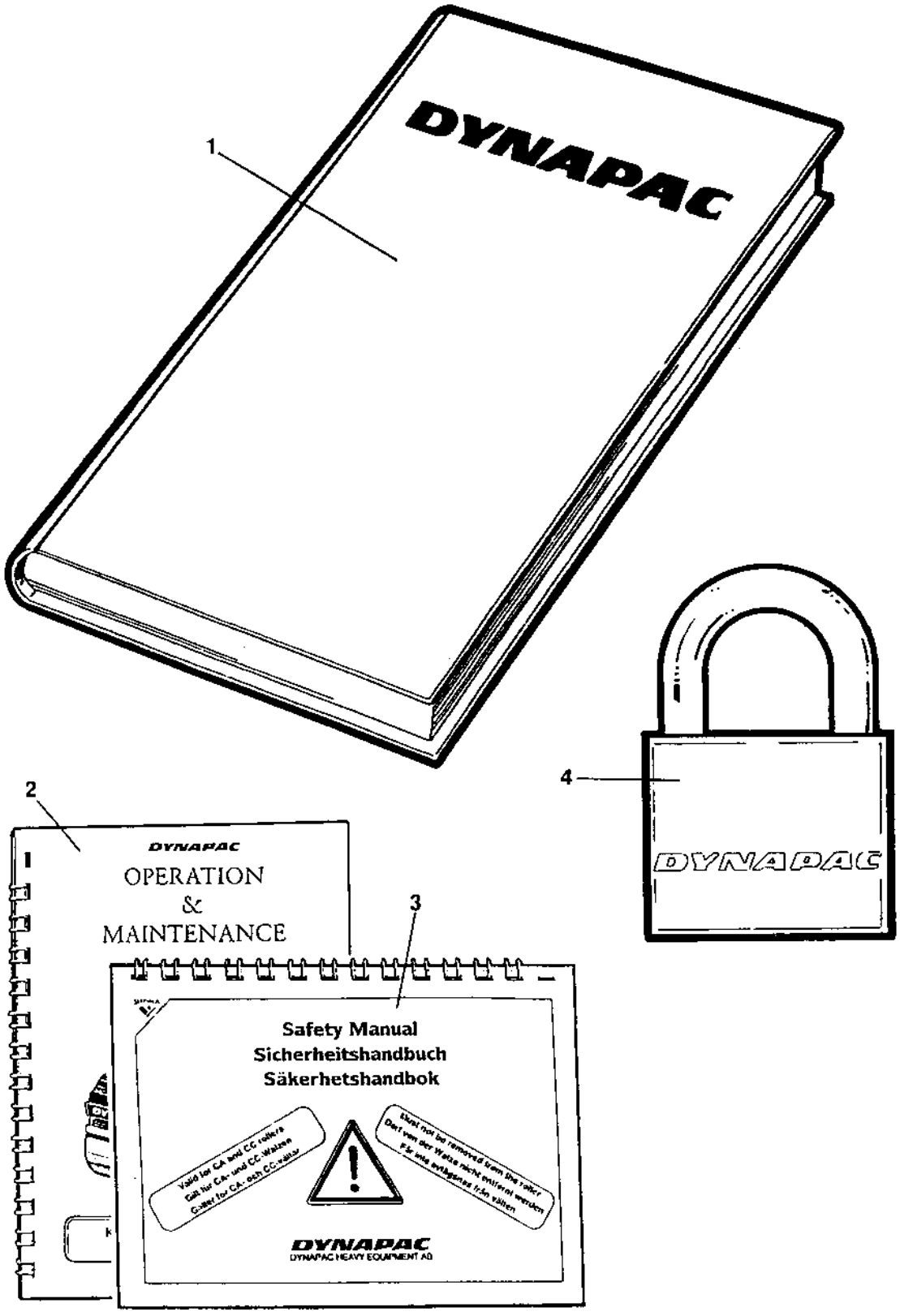
1
DYNAPAC
2
DYNAPAC
OPERATION
&
MAINTENANCE
3
Safety Manual
Sicherheitshandbuch
Säkerhetshandbok
DYNAPAC
DYNAPAC HEAVY EQUIPMENT AB
4
DYNAPAC

## Standard equipment

| Item | Part No | Rem | Qty | Description | Code |
|---|---|---|---|---|---|
| 1 | | | 1 | Documentation ISCA152D | |
| | | | 1 | . Warranty registration card | |
| | | | 1 | . Spare parts catalogue SCA152D | |
| | | | 1 | . Instruction manual Cummins QSB 3.3 | |
| 2 | | | 1 | . Operation / maintenance instruction ICA152 | |
| 3 | | | 1 | . Safety manual RSAFE | |
| 4 | 4700358881 | | 1 | Pad lock | D |

## Optional equipment

| Item | Part No | Rem | Qty | Description | Code |
|---|---|---|---|---|---|
| 10 | | | | Tool equipment ( Page 270 ) | |
| 20 | | | | SMV-sign, First aid box ( Page 272 ) | |
| 30 | | | | Canopy ( Page 274 ) | |
| 40 | | | | Levelling blade, metal parts ( Page 276 ) | |
| 90 | | | | Condensor assembly ( Page 278 ) | |
| 110 | | | | Evaporator assembly ( Page 280 ) | |
| 120 | | | | Roof hatch ( Page 282 ) | |
| 130 | | | | Fire extinguisher assembly ( Page 284 ) | |
| 131 | | | | Fire extinguisher Platform ( Page 286 ) | |
| 132 | | | | Fire extinguisher Cab ( Page 288 ) | |
| 140 | | | | Dy-Mic ( Page 290 ) | |
| 150 | | | | Air conditioner assembly ( Page 292 ) | |
| 155 | | | | Air conditioner assembly, simple cab ( Page 296 ) | |

# Tool equipment

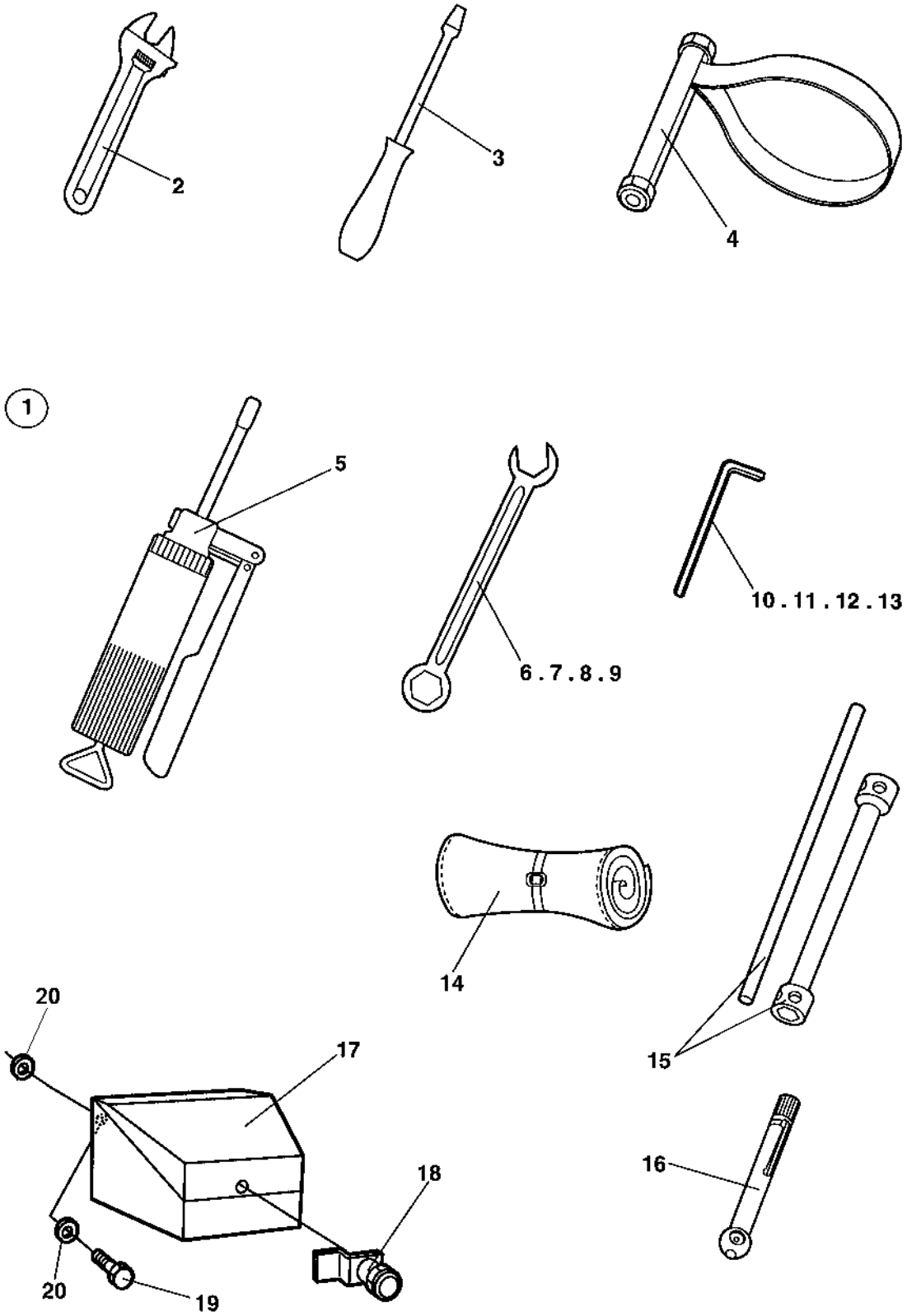

## Tool equipment

| Item | Part No | Rem | Qty | Description | Code |
|---|---|---|---|---|---|
| 1 | 4700355890 | | 1 | Tool set Cpl | D |
| 2 | | | 1 | . Adjustable wrench | |
| 3 | | | 1 | . Screw driver | |
| 4 | 4700902610 | | 1 | . Belt pliers | D |
| 5 | 4700311016 | | 1 | . Grease gun | D |
| 6 | | | 1 | . Open end spanner 10mm | |
| 7 | | | 1 | . Open end spanner 13mm | |
| 8 | | | 1 | . Open end spanner 16mm | |
| 9 | | | 1 | . Open end spanner 18mm | |
| 10 | | | 1 | . Allen wrench 10mm | |
| 11 | | | 1 | . Allen wrench 12mm | |
| 12 | | | 1 | . Allen wrench 6mm | |
| 13 | | | 1 | . Allen wrench 8mm | |
| 14 | | | 1 | . Tool bag | |
| 15 | | | 1 | . Wheel nut key 30/32mm | |
| 16 | 4700901220 | | 1 | . Pressure gauge | B |
| 17 | 4700372837 | | 1 | Tool box | D |
| 18 | 4700372658 | | 1 | . Lock | D |
| 19 | 4700500021 | | 3 | Screw M8-1,25x25 8.8 | C |
| 20 | 4700904640 | | 6 | Washer 8,4x22x3 | C |

## SMV-sign, First aid box

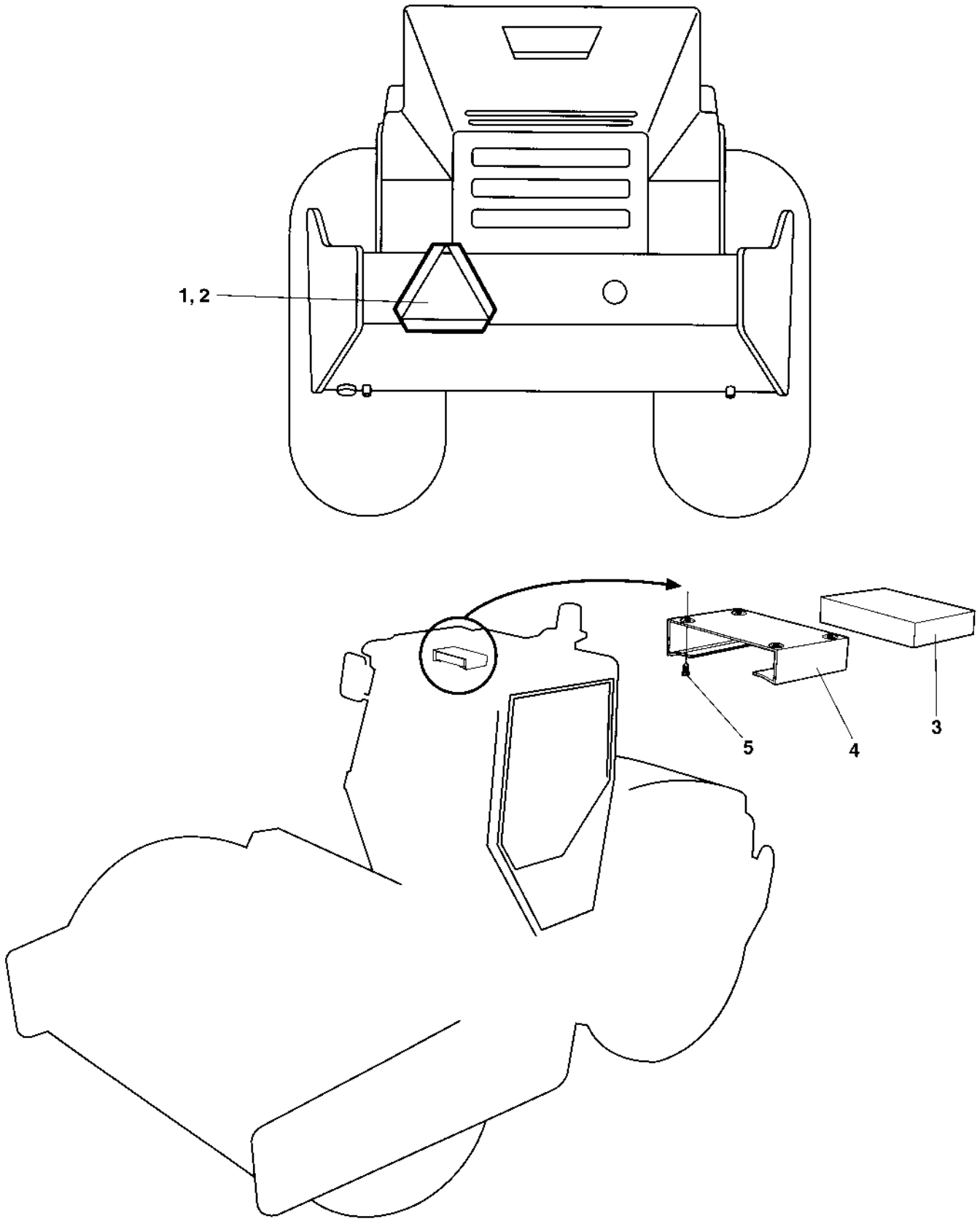

## SMV-sign, First aid box

| Item | Part No | Rem | Qty | Description | Code |
|---|---|---|---|---|---|
| 1 | 4700476019 | | 1 | SMV-sign | D |
| 2 | 4700624005 | | 6 | Blind rivet 3,2x6,1 | C |
| 3 | 4700902508 | | 1 | First aid kit | D |
| 4 | 4700371837 | | 1 | Holder | D |
| 5 | 4700903969 | | 4 | Screw ST4,8x19 Black | C |

# Canopy

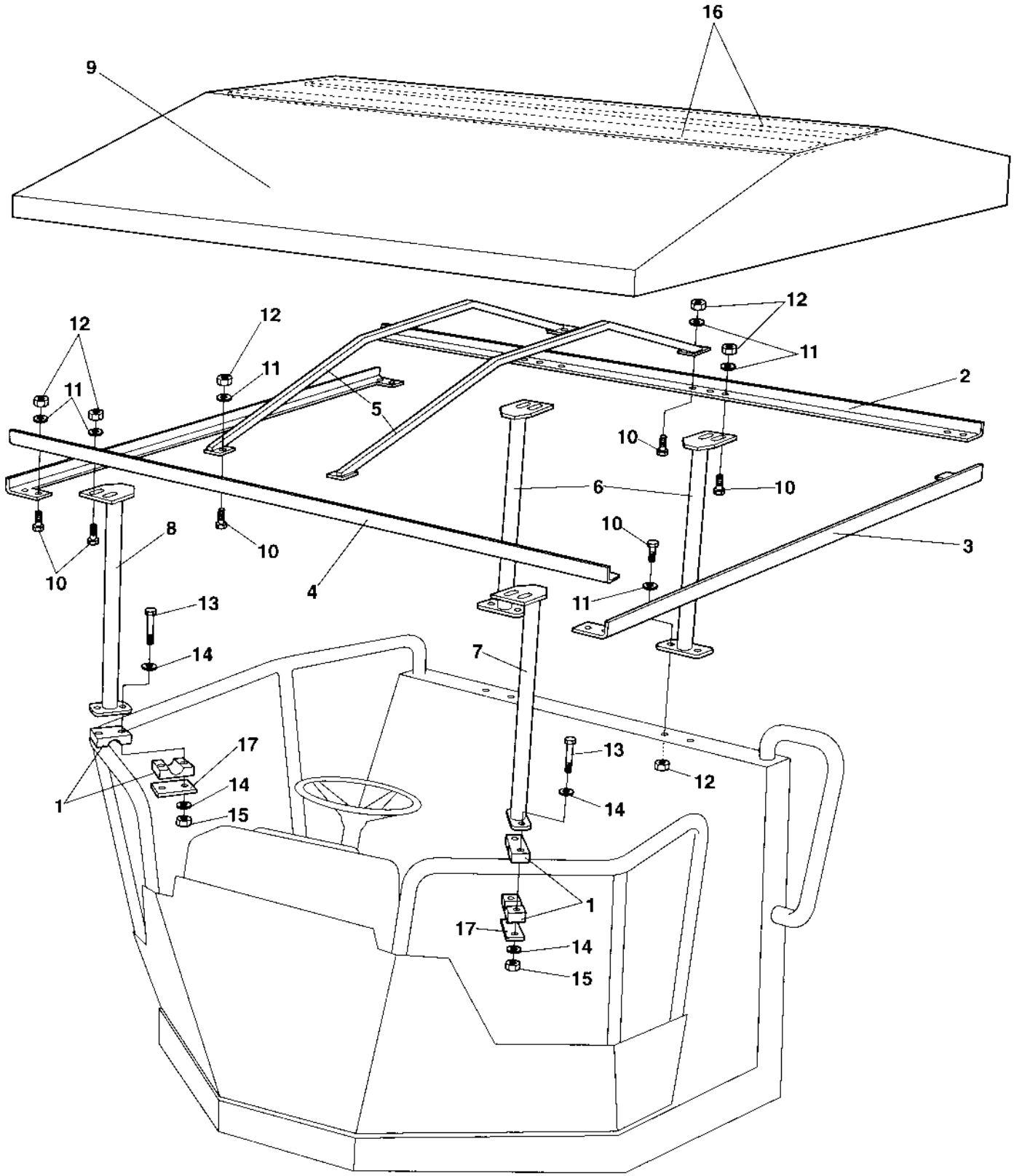
16
9
12
12
11
11
12
11
2
5
10
6
10
10
8
10
10
3
4
11
13
14
7
17
14
15
1
13
12
14
1
17
14
15

## Canopy

| Item | Part No | Rem Qty | Description | Code |
|---|---|---|---|---|
| 1 | 4700904340 | 2 | Pipe clamp | |
| 2 | 4700373746 | 1 | Canopy profile | D |
| 3 | 4700373747 | 2 | Canopy profile | D |
| 4 | 4700373748 | 1 | Canopy profile | D |
| 5 | 4700373749 | 4 | Canopy rib | D |
| 6 | 4700373750 | 2 | Canopy anchor | D |
| 7 | 4700373752 | 1 | Canopy anchor | D |
| 8 | 4700373756 | 1 | Canopy anchor | D |
| 9 | 4700373906 | 1 | Roof | D |
| 10 | 4700500021 | 24 | Screw M8-1,25x25 8.8 | C |
| 11 | 4700904229 | 44 | Steel plain washer 8,4x16x1,5 | C |
| 12 | 4700586003 | 20 | Lock nut M8 | C |
| 13 | 4700500153 | 4 | Screw | C |
| 14 | 4700904228 | 8 | Washer 6,4x12x1,5 | C |
| 15 | 4700586002 | 4 | Lock nut M6 -8 | C |
| 16 | 4700373907 | 2 | Lath | D |
| 17 | 4700924791 | 2 | Cover plate | |

# Levelling blade, metal parts

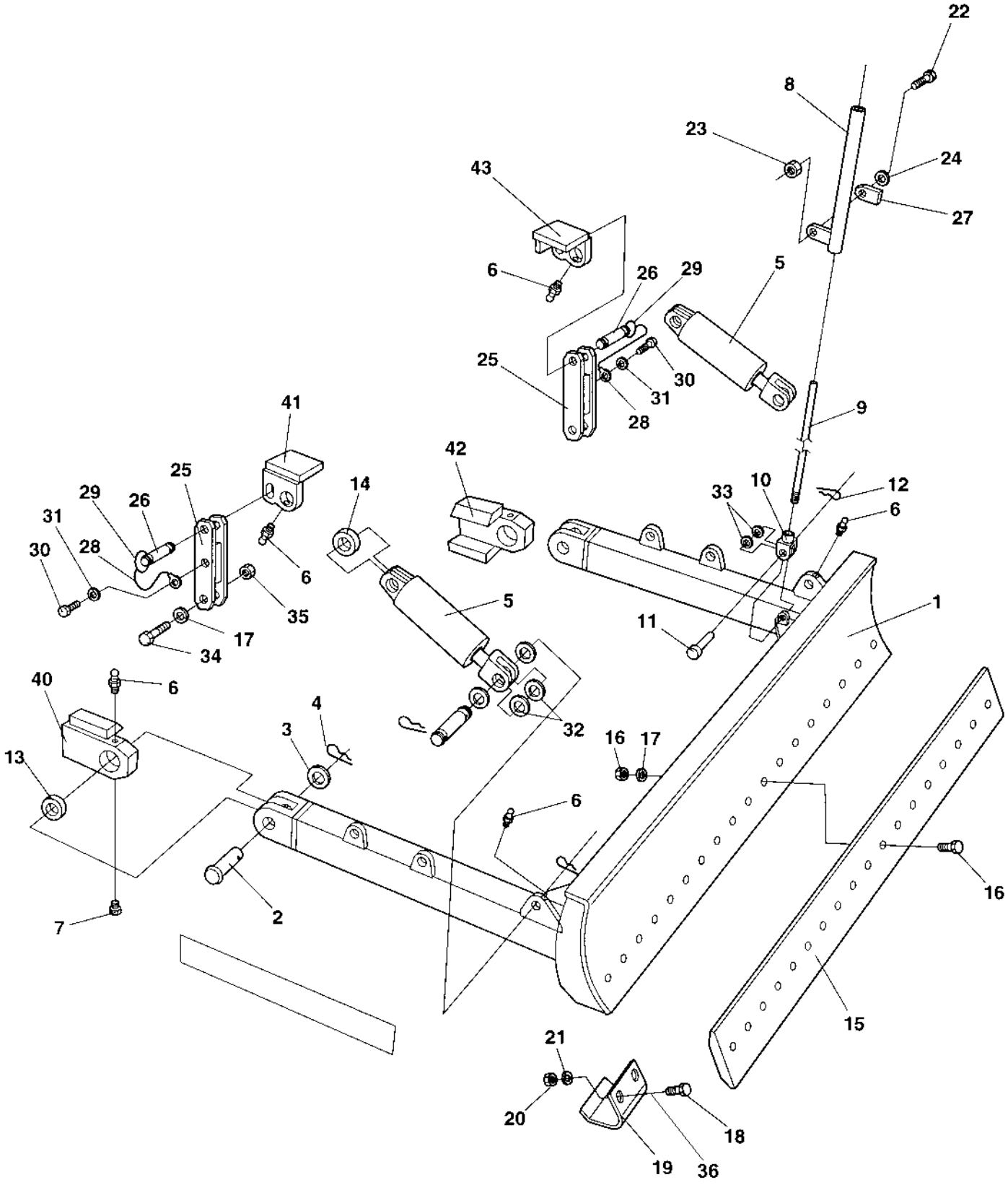

## Levelling blade, metal parts

| Item | Part No | Rem | Qty | Description | Code |
|---|---|---|---|---|---|
| 1 | 4700815190 | | 1 | Dozer blade | D |
| 2 | 4700346214 | | 2 | Clevis pin | D |
| 3 | 4700600019 | | 2 | Washer | C |
| 4 | 4700630020 | | 2 | Pin | D |
| 5 | 4700375031 | | 2 | **Steering cylinder** | C |
| | 4700373410 | | | **Hydraulic cylinder** | C |
| | 4700375031 | | | **Steering cylinder** | C |
| 6 | 4700926214 | | 6 | Grease fitting | C |
| 7 | 4700500044 | | 2 | Screw M6x8 | C |
| 8 | 4700349542 | | 1 | Indicator guide | D |
| 9 | 4700349541 | | 1 | Level indicator | D |
| 10 | 4700415193 | | 1 | Yoke | D |
| 11 | 4700550038 | | 1 | Clevis pin | D |
| 12 | 4700630008 | | 1 | Pin | D |
| 13 | 4700100071 | | 2 | Radial spherical plain bearing | D |
| 14 | 4700813316 | | 4 | Ball bushing | C |
| 15 | 4700801250 | | 1 | Blade | D |
| 16 | 4700801251 | | 15 | Screw with nut | D |
| 17 | 4700904233 | | 15 | Washer 21x36x3 | C |
| 18 | 4700500265 | | 4 | Screw | C |
| 19 | 4700349539 | | 2 | Shoe | D |
| 20 | 4700586022 | | 4 | Lock nut M20-8 | C |
| 21 | 4700903290 | | 4 | Washer 21x36x6 | C |
| 22 | 4700500194 | | 1 | Screw | C |
| 23 | 4700586019 | | 1 | Lock nut | C |
| 24 | 4700904231 | | 1 | Washer 13x24x2 300 HV | C |
| 25 | 4700370358 | | 2 | Safety rod | D |
| 26 | 4700347119 | | 4 | Shaft | C |
| 27 | 4700375589 | | 1 | Metal part | D |
| 28 | 4700343775 | | 2 | Wire | D |
| 29 | 4700357488 | | 2 | Spring | D |
| 30 | 4700500043 | | 2 | Screw M10x16H 8,8 | D |
| 31 | 4700904230 | | 4 | Steel plain washer | C |
| 32 | 4700600016 | | 6 | Washer 26x45x4 | B |
| 33 | 4700904231 | | 2 | Washer 13x24x2 300 HV | C |
| 34 | 4700500209 | | 2 | Screw M20-2,5x90 8,8 | D |
| 35 | 4700586022 | | 2 | Lock nut M20-8 | C |
| 36 | 4700904233 | | 4 | Washer 21x36x3 | C |
| 40 | 4700380476 | | 1 | Bracket | D |
| 41 | 4700374759 | | 1 | Cylinder bracket | D |
| 42 | 4700380477 | | 1 | Bracket | D |
| 43 | 4700374760 | | 1 | Cylinder bracket | D |

## Condensor assembly

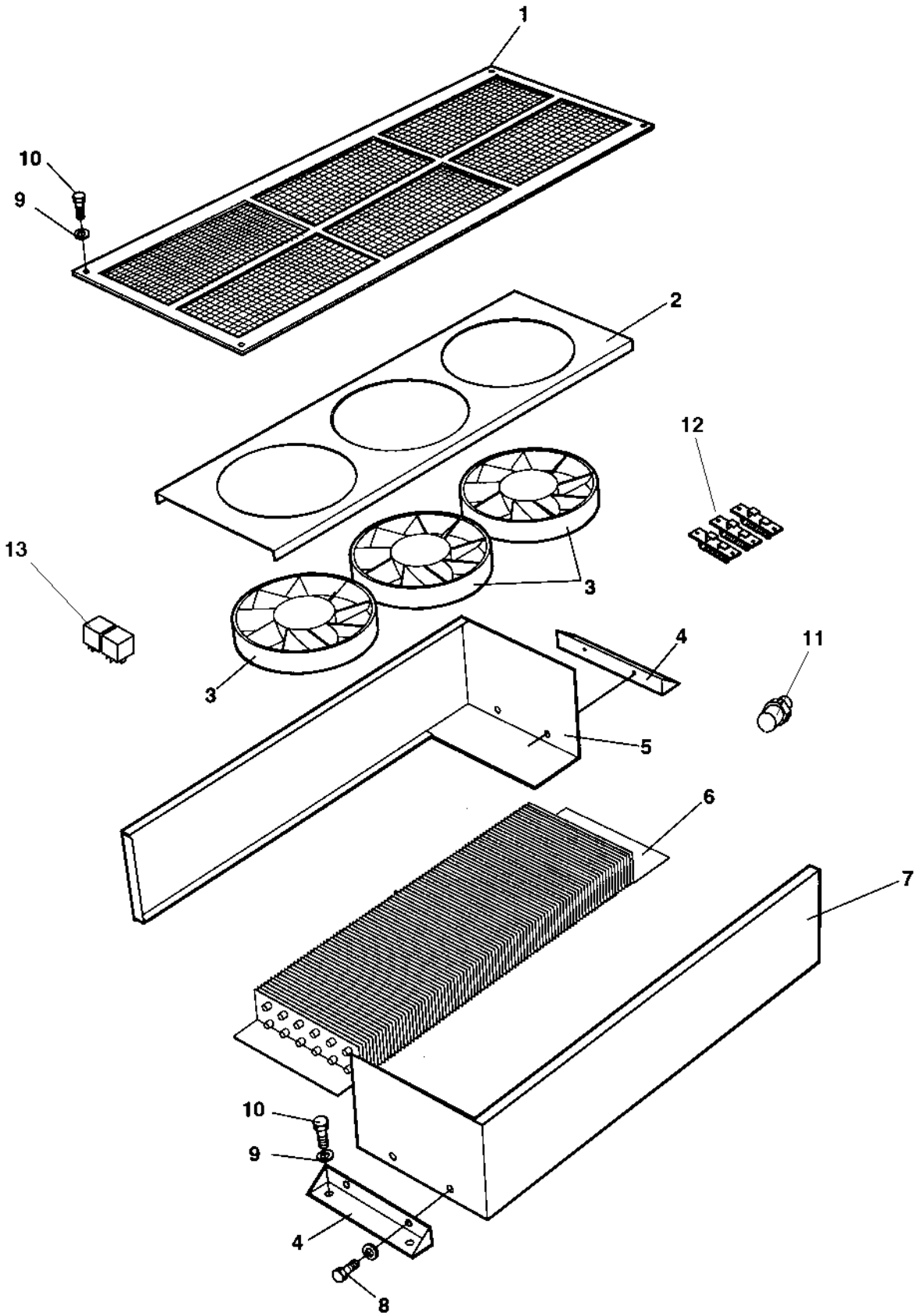

## Condensor assembly

| Item | Part No | Rem | Qty | Description | Code |
|---|---|---|---|---|---|
| 1 | 4700384589 | | 1 | Cover | D |
| 2 | 4700938599 | | 1 | Fan bracket | D |
| 3 | 4700938603 | | 3 | Fan | C |
| 4 | 4700938600 | | 2 | Condensor bracket | D |
| 5 | 4700938598 | | 1 | Cover | D |
| 6 | 4700938602 | | 1 | Condensor Coil | B |
| 7 | 4700938597 | | 1 | Cover | D |
| 8 | 4700901832 | | 4 | Screw | C |
| 9 | 4700500022 | | 6 | Screw M8x30H 8.8 A2K | C |
| 10 | 4700904229 | | 6 | Steel plain washer 8,4x16x1,5 | C |
| 11 | 4700938605 | | 1 | Pressure switch | B |
| 12 | 4700938606 | | 3 | Resistor | B |
| 13 | 4700287598 | | 2 | Relay 12V-30A | A |

# Evaporator assembly

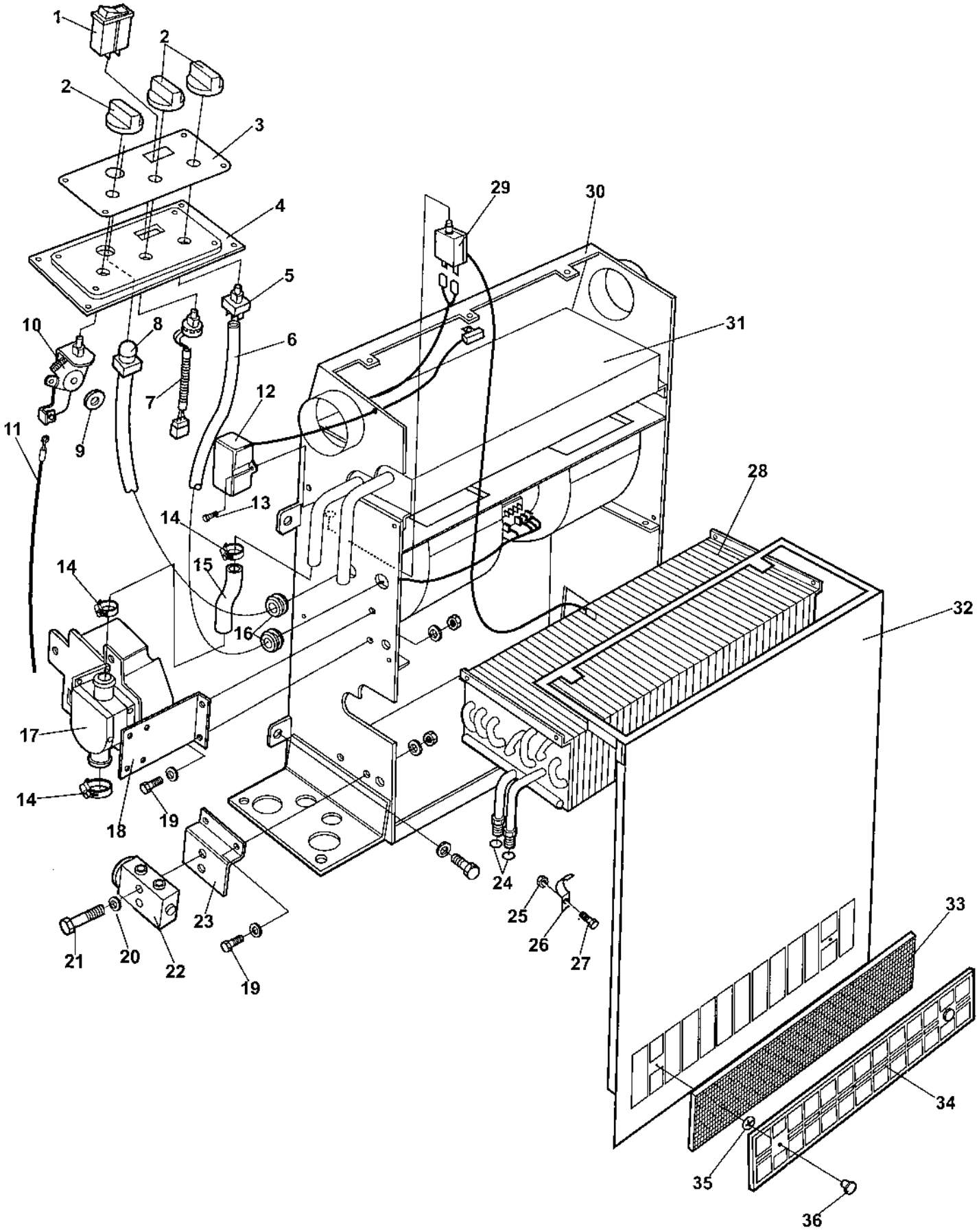

## Evaporator assembly

| Item | Part No | Rem | Qty | Description | Code |
|---|---|---|---|---|---|
| 1 | 4700938619 | | 1 | Switch | B |
| 2 | 4700938620 | | 3 | Knob | D |
| 3 | 4700938618 | | 1 | Decal | D |
| 4 | 4700938617 | | 1 | Control panel | D |
| 5 | 4700938622 | | 1 | Switch | B |
| 6 | 4700938631 | | 1 | Cable harness | C |
| 7 | 4700938623 | | 1 | Potentiometer | B |
| 8 | 4700938624 | | 1 | Sensor | B |
| 9 | 4700385134 | | 1 | Lock washer | D |
| 10 | 4700938621 | | 1 | Rotary control | |
| 11 | 4700384762 | | 1 | Wire | D |
| 12 | 4700384187 | | 1 | Ecc-Box | D |
| 13 | 4700791144 | | 6 | Screw | D |
| 14 | 4700313003 | | 3 | Hose clamp | D |
| 15 | 4700384881 | | 1 | Hose | D |
| 16 | 4700384927 | | 1 | Grommet | D |
| 17 | 4700383425 | | 1 | Electronic valve | D |
| 18 | 4700384174 | | 1 | Holder | D |
| 19 | 4700903782 | | 4 | Screw M5x12 | C |
| 20 | 4700904228 | | 2 | Washer 6,4x12x1,5 | C |
| 21 | 4700500061 | | 2 | Screw M6-1X35 8,8 | C |
| 22 | 4700384176 | | 1 | Expansion valve | C |
| 23 | 4700384177 | | 1 | Holder | D |
| 24 | 4700384878 | | 2 | O-ring Size 8 | C |
| 25 | 4700923976 | | 1 | Nut | C |
| 26 | 4700384880 | | 1 | Wire clamp | D |
| 27 | 4700500086 | | 1 | Screw | D |
| 28 | 4700383414 | | 1 | Evaporator | D |
| 29 | 4700384897 | | 1 | Thermostat | B |
| 30 | 4700938625 | | 1 | Casing | |
| 31 | 4700938639 | | 1 | Heater coil | |
| 32 | 4700938626 | | 1 | Cover | |
| 33 | 4700384761 | | 1 | Air filter element | A |
| 34 | 4700384760 | | 1 | Filter grill | D |
| 35 | 4700939413 | | 2 | Star lock | |
| 36 | 4700938634 | | 2 | Knob | D |

# Roof hatch

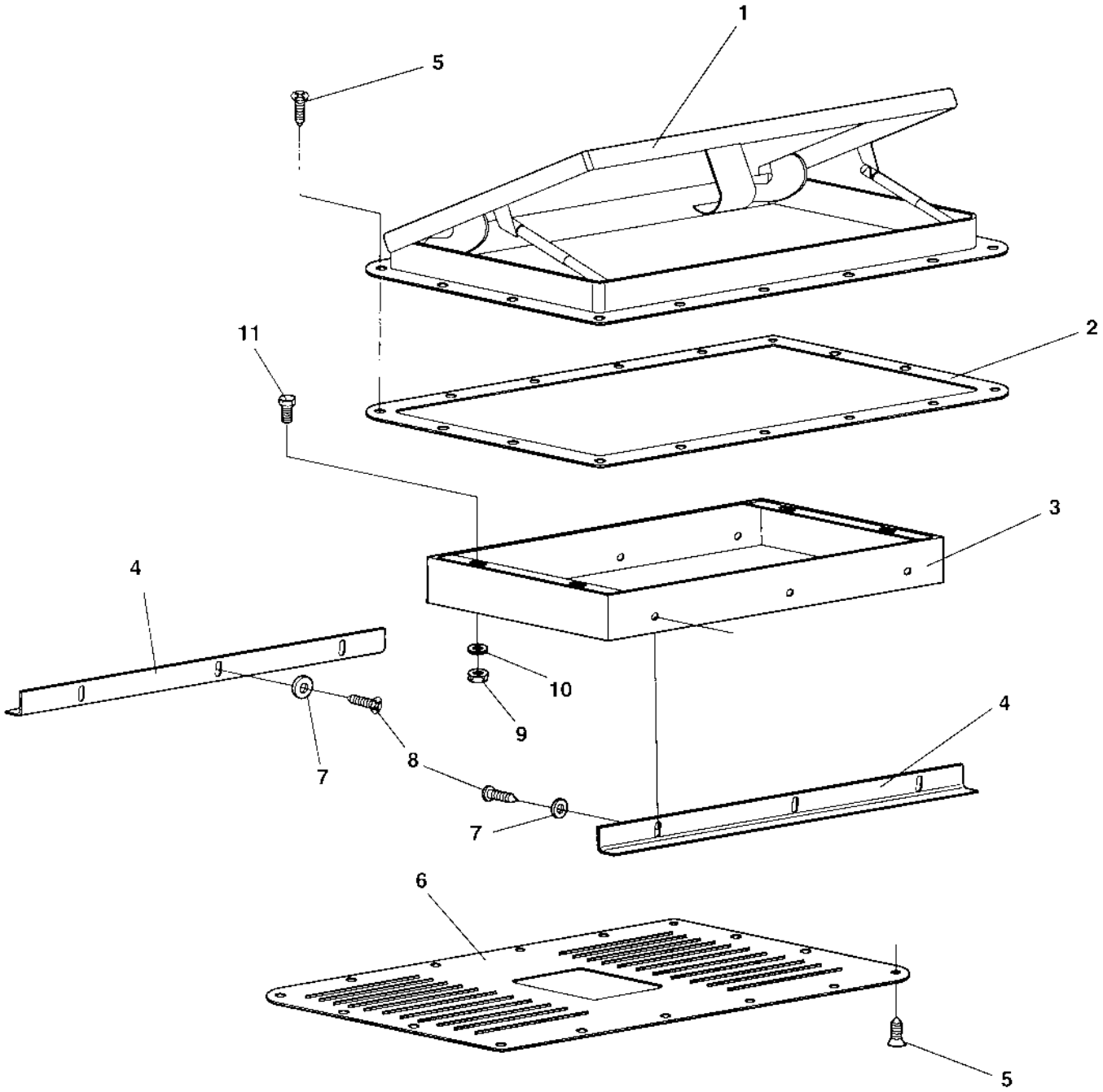

## Roof hatch

| Item | Part No | Rem | Qty | Description | Code |
|---|---|---|---|---|---|
| 1 | 4700384958 | | 1 | Roof hatch | D |
| 2 | 4700384954 | | 1 | Support plate | D |
| 3 | 4700382699 | | 1 | Inner roof insert | D |
| 4 | 4700383002 | | 2 | Inner roof holder | D |
| 5 | 4700904906 | | 32 | Screw | D |
| 6 | 4700382700 | | 1 | Inner cover | D |
| 7 | 4700601001 | | 6 | Washer | C |
| 8 | 4700903852 | | 6 | Screw ST4,2x13 | C |
| 9 | 4700570004 | | 4 | Nut M6X1,00 -8 A2K | C |
| 10 | 4700904228 | | 4 | Washer 6,4x12x1,5 | C |
| 11 | 4700500040 | | 4 | Screw M6-1x20 8,8 | C |

## Fire extinguisher assembly

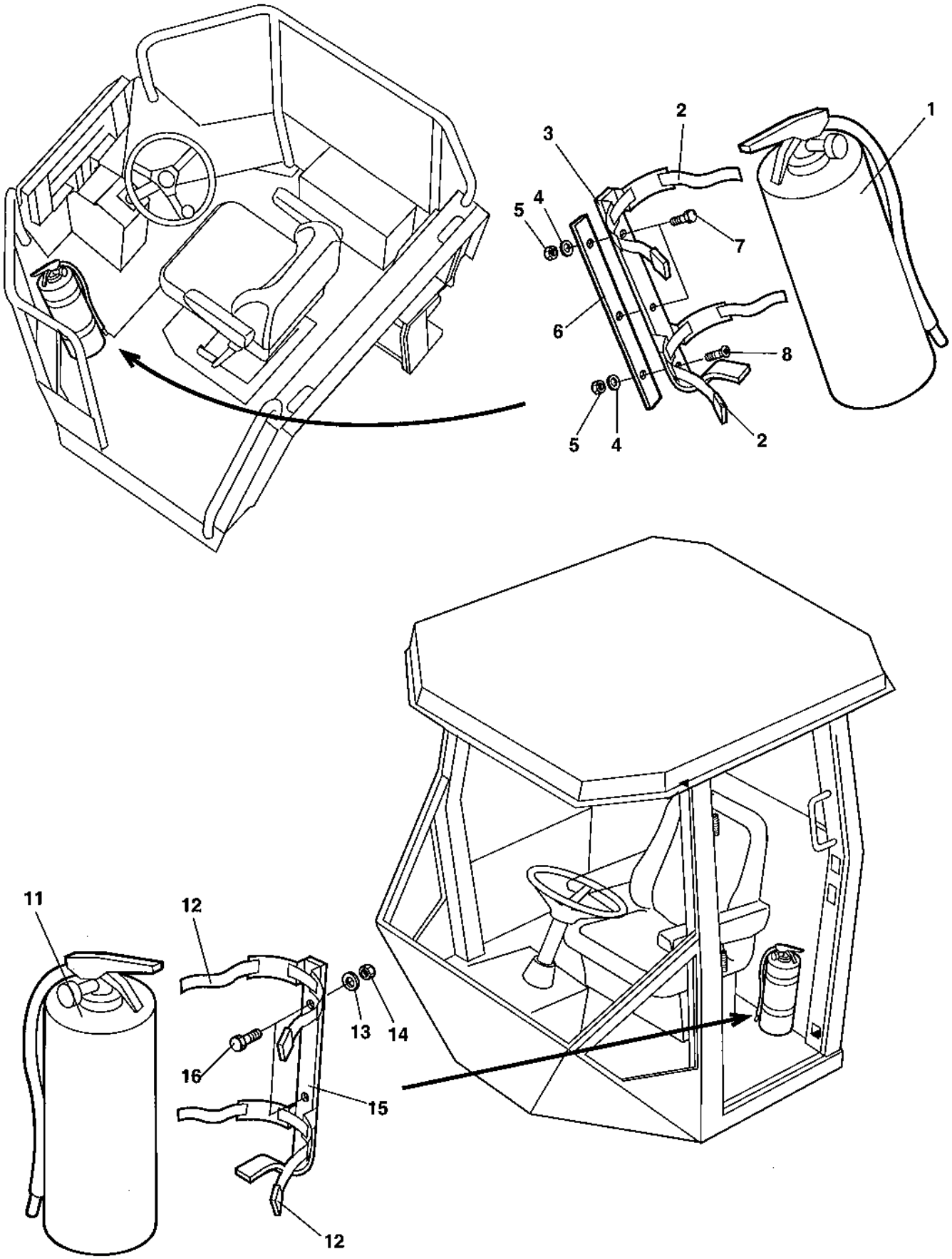

## Fire extinguisher assembly

| Item | Part No | Rem Qty | Description | Code |
|---|---|---|---|---|
| 1 | | NA | Fire extinguisher 4 Kg | |
| 2 | 4700791102 | 2 | Toggle fastener belt | D |
| 3 | 4700904994 | 1 | Bracket | D |
| 4 | 4700904230 | 5 | Steel plain washer | C |
| 5 | 4700570006 | 3 | Nut | B |
| 6 | 4700383932 | 1 | Bracket | D |
| 7 | 4700500029 | 2 | Hexagon head screw | C |
| 8 | 4700513025 | 1 | Screw | D |
| 11 | | NA | Fire extinguisher 4 Kg | |
| 12 | 4700791102 | 2 | Toggle fastener belt | D |
| 13 | 4700904230 | 4 | Steel plain washer | C |
| 14 | 4700570006 | 2 | Nut | B |
| 15 | 4700904994 | 1 | Bracket | D |
| 16 | 4700500028 | 2 | Screw | C |

## Fire extinguisher Platform

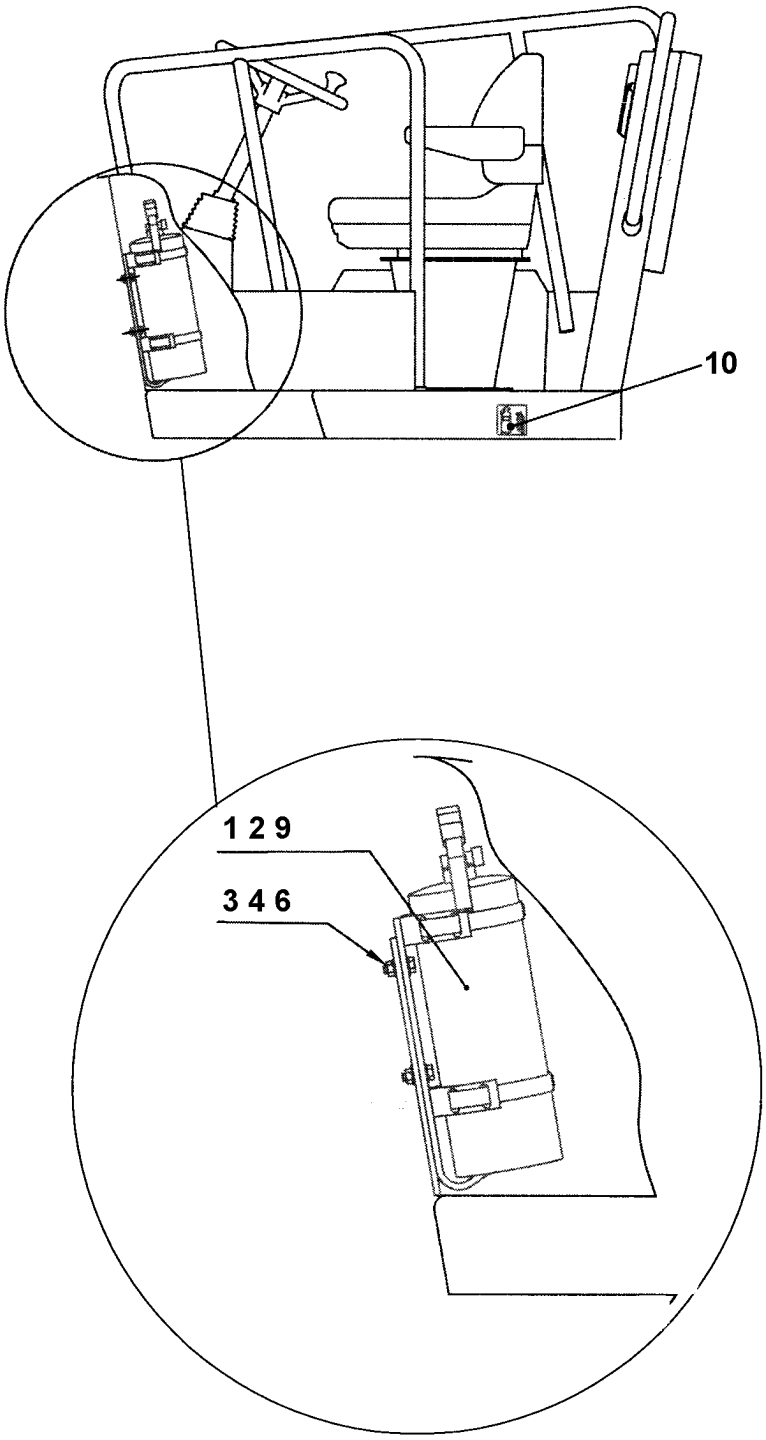

## Fire extinguisher Platform

| Item | Part No | Rem | Qty | Description | Code |
|---|---|---|---|---|---|
| 1 | | | 1 | Fire extinguisher | |
| 2 | 4700378860 | | 1 | Holder | D |
| 3 | 4700570005 | | 2 | Nut M8 | C |
| 4 | 4700904229 | | 4 | Steel plain washer 8,4x16x1,5 | C |
| 6 | 4700500022 | | 2 | Screw M8x30H 8.8 A2K | C |
| 9 | 4700378861 | | 2 | Strap | D |
| 10 | 4700792634 | | 1 | Decal fire extinguisher | D |

# Fire extinguisher Cab

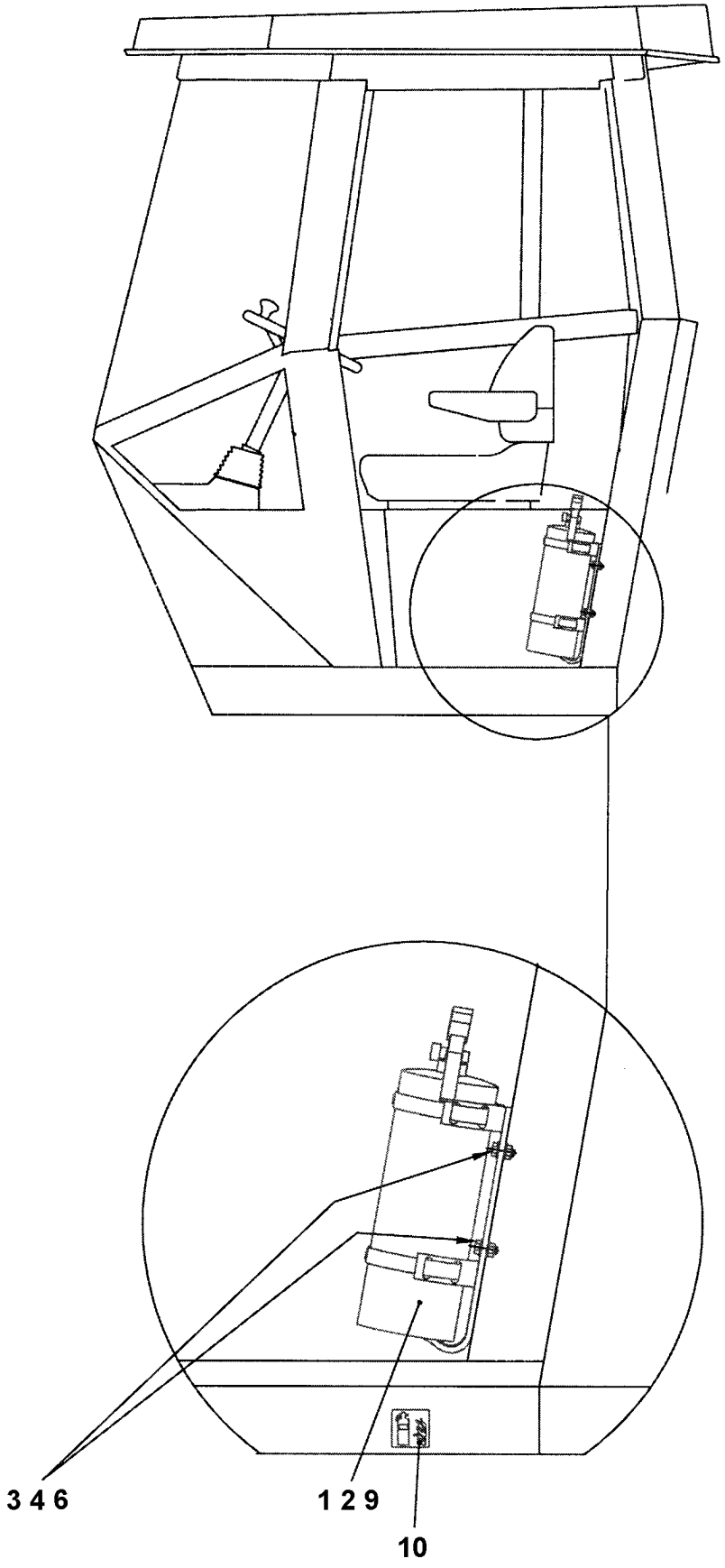

## Fire extinguisher Cab

| Item | Part No | Rem | Qty | Description | Code |
|---|---|---|---|---|---|
| 1 | | | 1 | Fire extinguisher | |
| 2 | 4700378860 | | 1 | Holder | D |
| 3 | 4700570005 | | 2 | Nut M8 | C |
| 4 | 4700904229 | | 4 | Steel plain washer 8,4x16x1,5 | C |
| 6 | 4700500022 | | 2 | Screw M8x30H 8.8 A2K | C |
| 9 | 4700378861 | | 2 | Strap | D |
| 10 | 4700792634 | | 1 | Decal fire extinguisher | D |

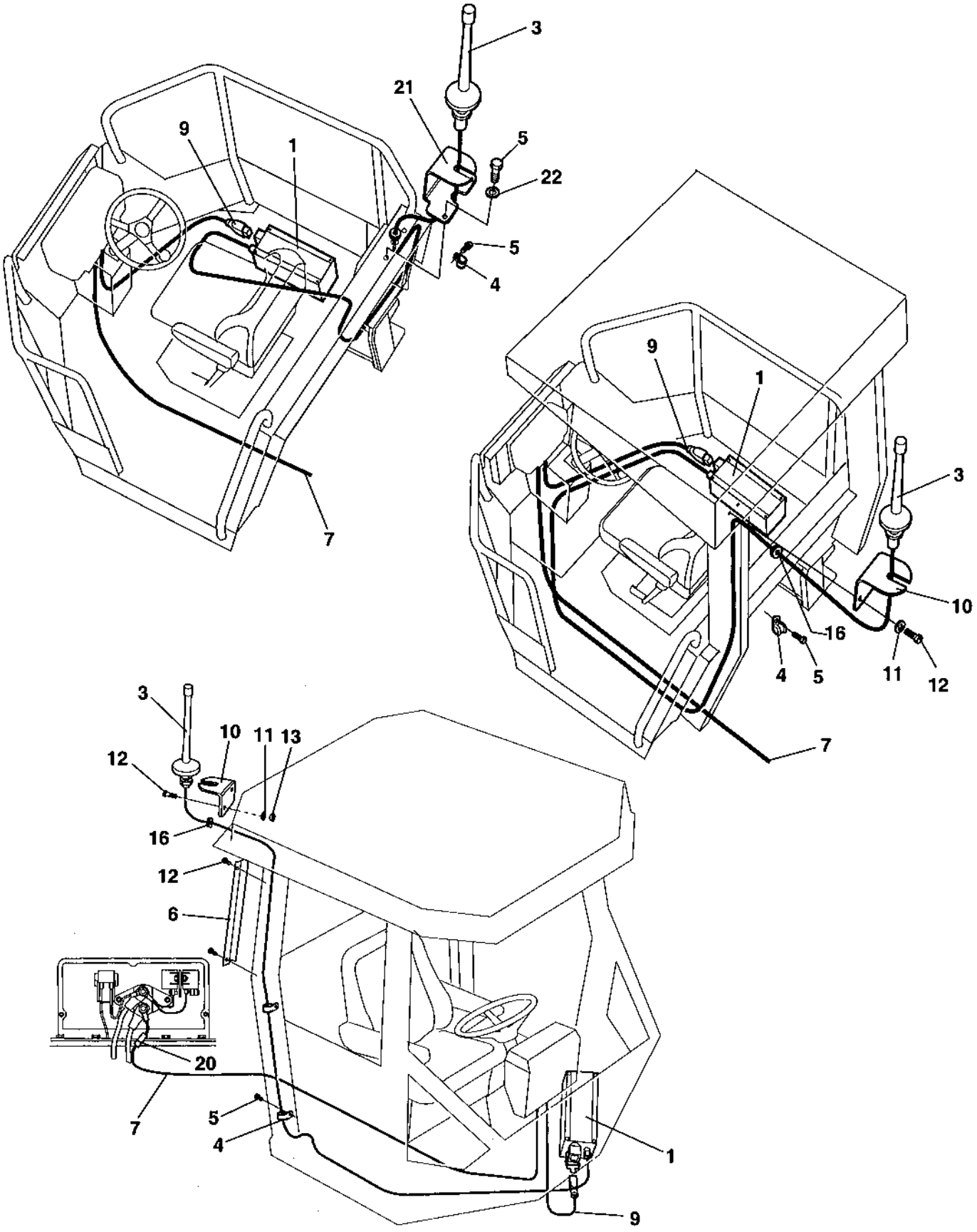
3
21
9
1
5
22
5
4
7
9
1
3
10
16
4
5
11
12
7
3
10
11
13
12
16
12
6
20
7
5
4
1
9

## Dy-Mic

| Item | Part No | Rem | Qty | Description | Code |
|---|---|---|---|---|---|
| 1 | 4700386390 | | 1 | Communicator box | D |
| | 4700508002 | | 4 | Screw M6x16 | D |
| 3 | 4700386391 | | 1 | Antenna Cpl | D |
| | 4700791393 | | 1 | . Antenna mast | D |
| 4 | 4700921039 | | 4 | Pipe clamp | |
| 5 | 4700904415 | | 4 | Screw | |
| 6 | 4700386512 | | 1 | Cable holder | D |
| 7 | 4700386533 | | 1 | Cable harness | D |
| 8 | 4700930154 | | 3 | Contact piece, NC | B |
| 9 | 4700386392 | | 1 | Cable harness | D |
| 10 | 4700386506 | | 1 | Antenna holder | D |
| 11 | 4700904228 | | 4 | Washer 6,4x12x1,5 | C |
| 12 | 4700500040 | | 4 | Screw M6-1x20 8,8 | C |
| 13 | 4700586002 | | 2 | Lock nut M6 -8 | C |
| 16 | 4700909122 | | 1 | Grommet | C |
| 17 | 4700313102 | | N | Cable ties | |
| 18 | 4700313041 | | N | Cable ties | B |
| 20 | 4700901224 | | 1 | Fuse 3A | A |
| 21 | 4700386507 | | 1 | Antenna holder | D |
| 22 | 4700904281 | | 2 | Washer 5,3x10x1 300HV | C |

# Air conditioner assembly

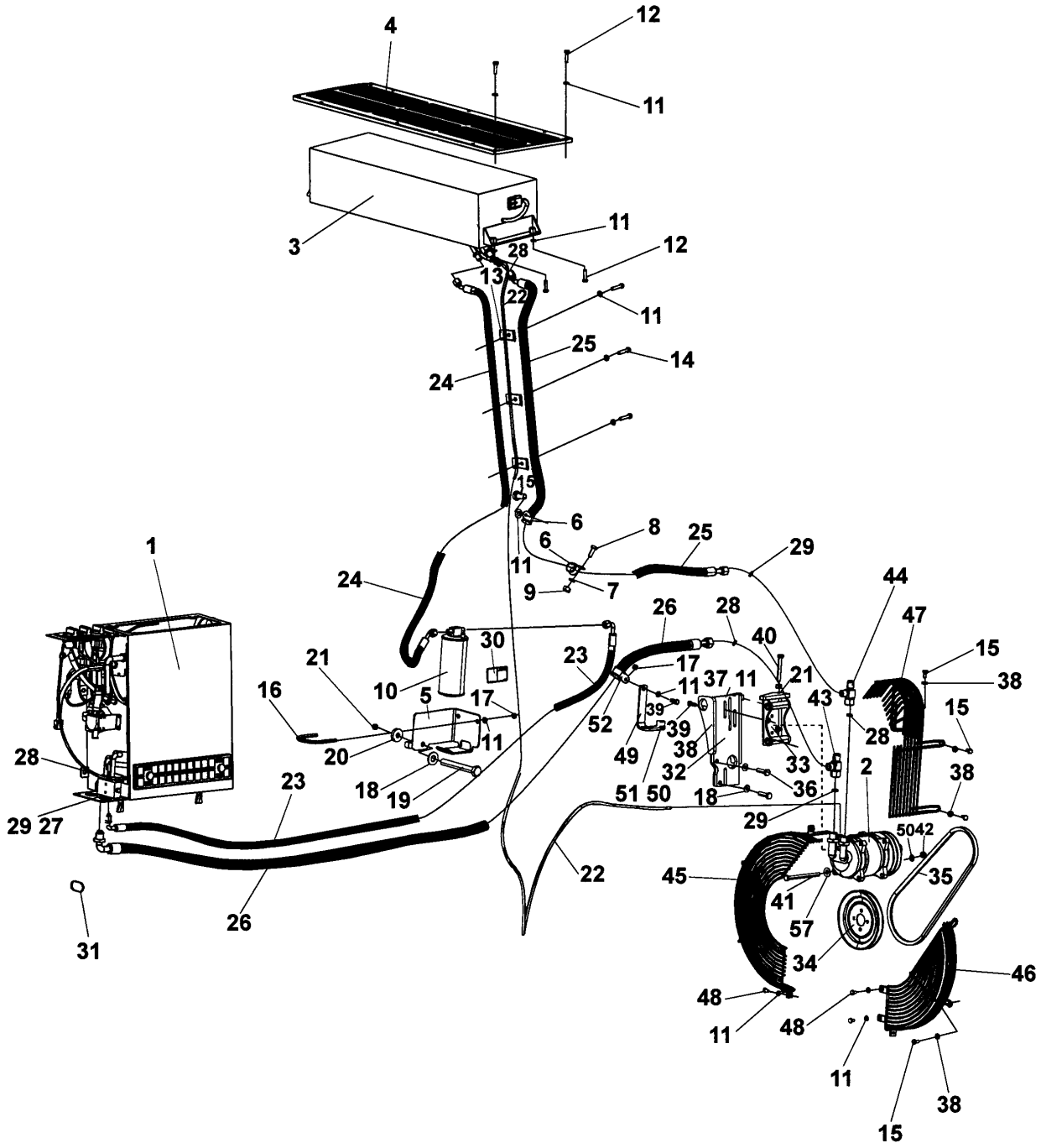

## Air conditioner assembly

| Item | Part No | Rem | Qty | Description | Code |
|---|---|---|---|---|---|
| 1 | | | 1 | **Evaporator assembly ( Page 280 )** | |
| 2 | 4700384147 | | 1 | Compressor | C |
| 3 | 4700383413 | | 1 | **Condensor, cpl ( Page 294 )** | |
| 4 | 4700384589 | | 1 | Cover | D |
| 5 | 4700393954 | | 1 | Holder | D |
| 6 | 4700921056 | | 2 | Clamp | C |
| 7 | 4700904228 | | 2 | Washer 6,4x12x1,5 | C |
| 8 | 4700500013 | | 1 | Screw M6-1x16 8,8 | C |
| 9 | 4700570004 | | 1 | Nut M6X1,00 -8 A2K | C |
| 10 | 4700393955 | | 1 | Drying filter | D |
| 11 | 4700904229 | | 22 | Steel plain washer 8,4x16x1,5 | C |
| 12 | 4700500022 | | 10 | Screw M8x30H 8.8 A2K | C |
| 13 | 4700346230 | | 3 | Clamp | D |
| 14 | 4700500023 | | 3 | Screw M8-1,25x40 8,8 | C |
| 15 | 4700500019 | | 9 | Hexagon head screw M8x16H 8,8 | C |
| 16 | 4700313093 | | 1 | Pipe clamp | D |
| 17 | 4700570005 | | 3 | Nut M8 | C |
| 18 | 4700904230 | | 3 | Steel plain washer | C |
| 19 | 4700500192 | | 1 | Screw M10x80 | C |
| 20 | 4700904567 | | 1 | Washer 10,5x28x6 HB305 | C |
| 21 | 4700570006 | | 2 | Nut | B |
| 22 | 4700395338 | | 1 | Cable harness | |
| 23 | 4700384875 | | 1 | Hose | C |
| 24 | 4700384876 | | 1 | Hose | C |
| 25 | 4700395484 | | 1 | Hose | |
| 26 | 4700395483 | | 1 | Hose | |
| 27 | 4700384877 | | 4 | O-ring Size 6 | C |
| 28 | 4700384878 | | 3 | O-ring Size 8 | C |
| 29 | 4700384879 | | 3 | O-ring Size 10 | C |
| 30 | 4700904165 | | 1 | Safety decal Toxic gases | D |
| 31 | 4700313102 | | N | Cable ties | |
| 32 | 4700397471 | | 1 | Compressor bracket | D |
| 33 | 4700397470 | | 1 | Compressor bracket | D |
| 34 | 4700395192 | | 1 | V-belt pulley | D |
| 35 | 4812115376 | | 1 | V-belt | A |
| 36 | 4700500030 | | 2 | Screw M10x035H 8.8 A3K | C |
| 37 | 4700500047 | | 1 | Hexagon head screw | C |
| 38 | 4700904556 | | 9 | Washer 8,4x16x3,0 | C |
| 39 | 4700500021 | | 3 | Screw M8-1,25x25 8.8 | C |
| 40 | 4700500241 | | 1 | Screw | C |
| 41 | 4700928664 | | 2 | Screw | D |
| 42 | 4700791172 | | 2 | Hexagon lock nut | D |
| 43 | 4700395413 | | 1 | Connector | |
| 44 | 4700395414 | | 1 | Connector | |
| 45 | 4700395078 | | 1 | Fan guard | D |
| 46 | 4700395085 | | 1 | Fan guard | D |
| 47 | 4700395086 | | 1 | Belt guard | D |
| 48 | 4700500018 | | 3 | Screw M8-1,25x12 8,8 | C |
| 49 | 4700395482 | | 1 | Clamp | |
| 50 | 4700904637 | | 4 | Washer | C |
| 51 | 4700500048 | | 2 | Screw M10-1,5x20 8,8 | C |
| 52 | 4700921044 | | 1 | Clamp | C |
| 57 | 4700904557 | | 2 | Steel plain washer | C |

# 4700383413 Condensor, cpl

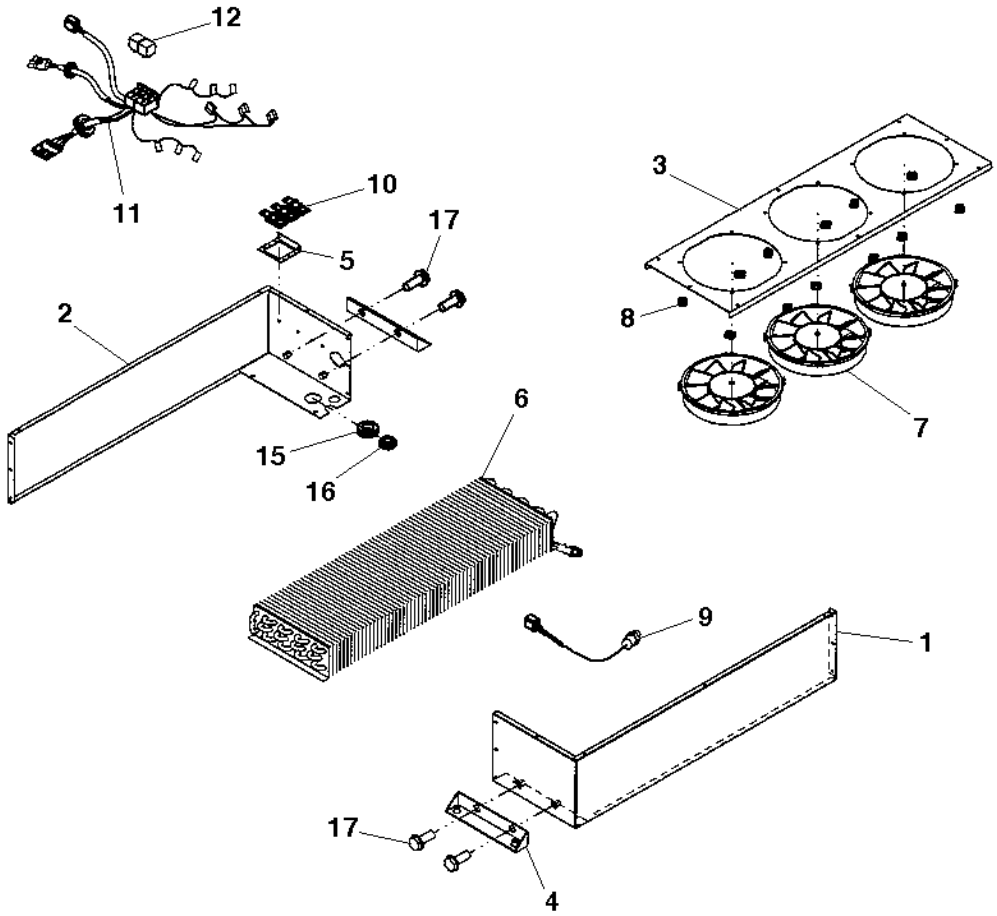

## 4700383413 Condensor, cpl

| Item | Part No | Rem | Qty | Description | Code |
|---|---|---|---|---|---|
| 1 | 4700938597 | | 1 | Cover | D |
| 2 | 4700938598 | | 1 | Cover | D |
| 3 | 4700938599 | | 1 | Fan bracket | D |
| 4 | 4700938600 | | 2 | Condensor bracket | D |
| 5 | 4700938601 | | 1 | Resistor bracket | D |
| 6 | 4700938602 | | 1 | Condensor Coil | B |
| 7 | 4700938603 | | 3 | Fan | C |
| 8 | 4700938604 | | 12 | Clip | D |
| 9 | 4700938605 | | 1 | Pressure switch | B |
| 10 | 4700938606 | | 3 | Resistor | B |
| 11 | 4700938607 | A | 1 | Cable harness | D |
| | 4812155890 | B | 1 | Cable harness | |
| 12 | 4700287598 | | 2 | Relay 12V-30A | A |
| | 4700287598 | C | 3 | Relay 12V-30A | A |
| 15 | 4700938608 | | 1 | Grommet | D |
| 16 | 4700938609 | | 1 | Grommet | |
| 17 | 4700901832 | | 4 | Screw | C |

A) Replaced by Cable harness P/N 4812155890.
B) Cable harness withh 3 Relays, replaces Cable harness P/N 4700938607.
C) Used with Cable harness 4812155890.

# Air conditioner assembly, simple cab

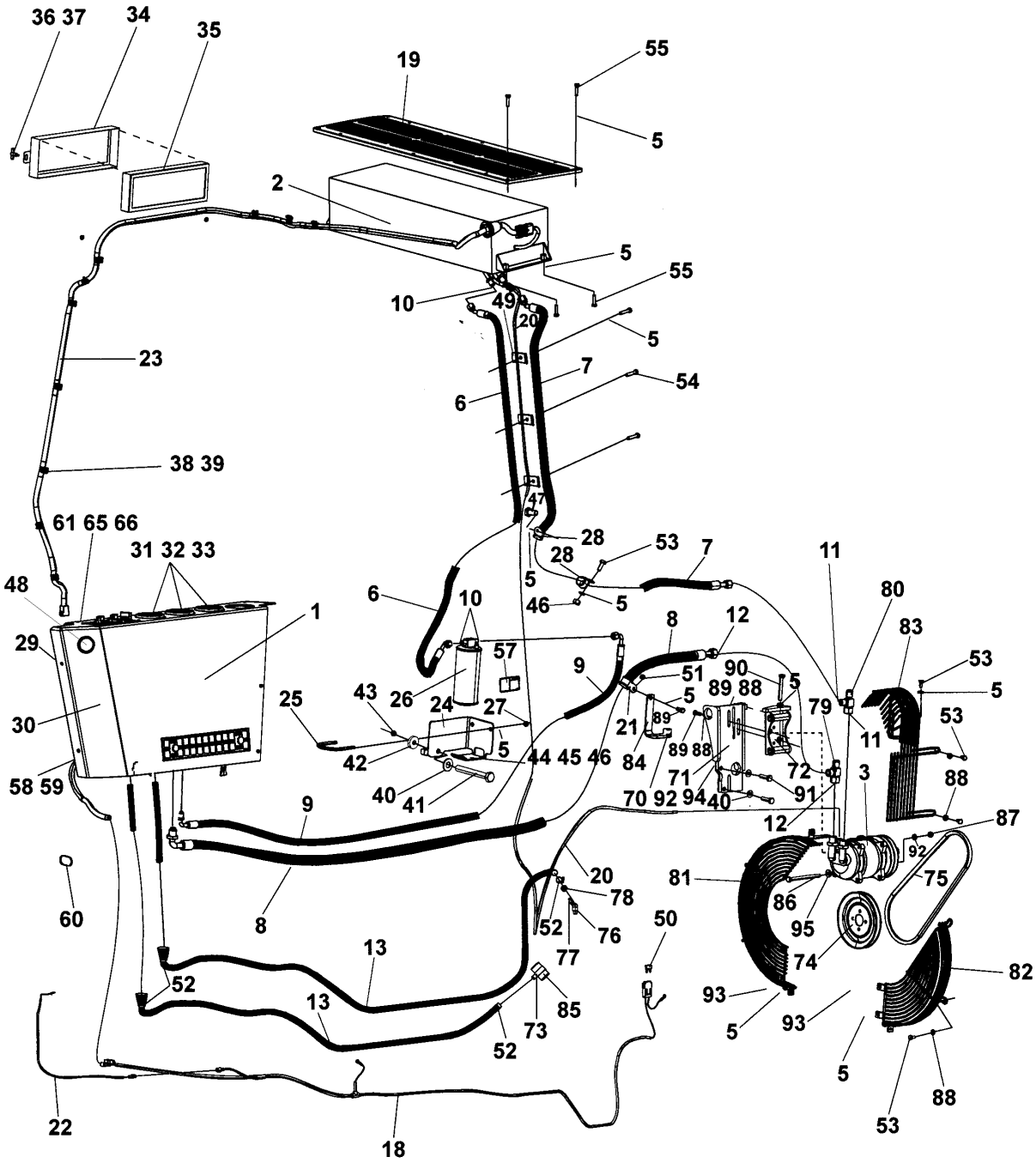

## Air conditioner assembly, simple cab

| Item | Part No | Rem | Qty | Description | Code |
|---|---|---|---|---|---|
| 1 | | | 1 | **Air conditioner and heater unit ( Page 300 )** | |
| 2 | 4700384147 | | 1 | Compressor | C |
| 3 | 4700383413 | | 1 | **Condensor, cpl ( Page 294 )** | |
| 5 | 4700904229 | | 27 | Steel plain washer 8,4x16x1,5 | C |
| 6 | 4700384876 | | 1 | Hose | C |
| 7 | 4700395484 | | 1 | Hose | |
| 8 | 4700395483 | | 1 | Hose | |
| 9 | 4700384875 | | 1 | Hose | C |
| 10 | 4700384877 | | 4 | O-ring Size 6 | C |
| 11 | 4700384878 | | 3 | O-ring Size 8 | C |
| 12 | 4700384879 | | 3 | O-ring Size 10 | C |
| 13 | 4700937737 | A | 2 | Hose | |
| 18 | 4700387466 | | 1 | Cable harness | D |
| 19 | 4700384589 | | 1 | Cover | D |
| 20 | 4700395338 | | 1 | Cable harness | |
| 21 | 4700921044 | | 1 | Clamp | C |
| 22 | 4700387467 | | 1 | Cable harness | D |
| 23 | 4700379275 | | 1 | Cable harness | D |
| 24 | 4700393954 | | 1 | Holder | D |
| 25 | 4700313093 | | 1 | Pipe clamp | D |
| 26 | 4700393955 | | 1 | Drying filter | D |
| 27 | 4700586003 | | 2 | Lock nut M8 | C |
| 28 | 4700921056 | | 2 | Clamp | C |
| 29 | 4700379285 | | 1 | Panel | D |
| 30 | 4700379286 | | 1 | Panel | D |
| 31 | 4700385443 | | 3 | Ring | D |
| 32 | 4700938691 | | 13 | Screw | C |
| 33 | 4700385442 | | 3 | Air nozzle | D |
| 34 | 4700908501 | | 3 | Filter frame | D |
| 35 | 4700908502 | | 1 | Filter | A |
| 36 | 4700908504 | | 2 | Handle | D |
| 37 | 4700908503 | | 2 | O-ring | D |
| 38 | 4700904543 | | 10 | Cable tie holder | |
| 39 | 4700903852 | | 10 | Screw ST4,2x13 | C |
| 40 | 4700904230 | | 3 | Steel plain washer | C |
| 41 | 4700500192 | | 5 | Screw M10x80 | C |
| 42 | 4700904567 | | 1 | Washer 10,5x28x6 HB305 | C |
| 43 | 4700570006 | | 2 | Nut | B |
| 44 | 4700904228 | | 2 | Washer 6,4x12x1,5 | C |
| 45 | 4700500013 | | 1 | Screw M6-1x16 8,8 | C |
| 46 | 4700570004 | | 1 | Nut M6X1,00 -8 A2K | C |
| 47 | 4700500053 | | 1 | Screw M8x20H 8.8 | C |
| 48 | 4700345870 | | 1 | Plug | C |
| 49 | 4700346230 | | 3 | Clamp | D |
| 50 | 4700904039 | | 1 | Fuse 50A Red High | A |
| 51 | 4700570005 | | 1 | Nut M8 | C |
| 52 | 4700313004 | | 4 | Hose clamp | D |
| 53 | 4700500019 | | 13 | Hexagon head screw M8x16H 8,8 | C |
| 54 | 4700500023 | | 3 | Screw M8-1,25x40 8,8 | C |
| 55 | 4700500022 | | 10 | Screw M8x30H 8.8 A2K | C |
| 57 | 4700904165 | | 1 | Safety decal Toxic gases | D |
| 58 | 4700935586 | B | 1 | Bracket | |
| 59 | 4700500004 | B | 4 | Screw M5 0,8x12 8,8 | C |
| 60 | 4700313102 | | N | Cable ties | |
| 61 | 4700379332 | B | 1 | Holder | D |
| 65 | 4700792187 | B | 7 | Screw M5x14 | |
| 66 | 4700792248 | B | 5 | Screw 4,2 X25 | D |
| 70 | 4700500048 | | 2 | Screw M10-1,5x20 8,8 | C |

A) L = 3,60 m
B) Not shown in illustration

# Air conditioner assembly, simple cab

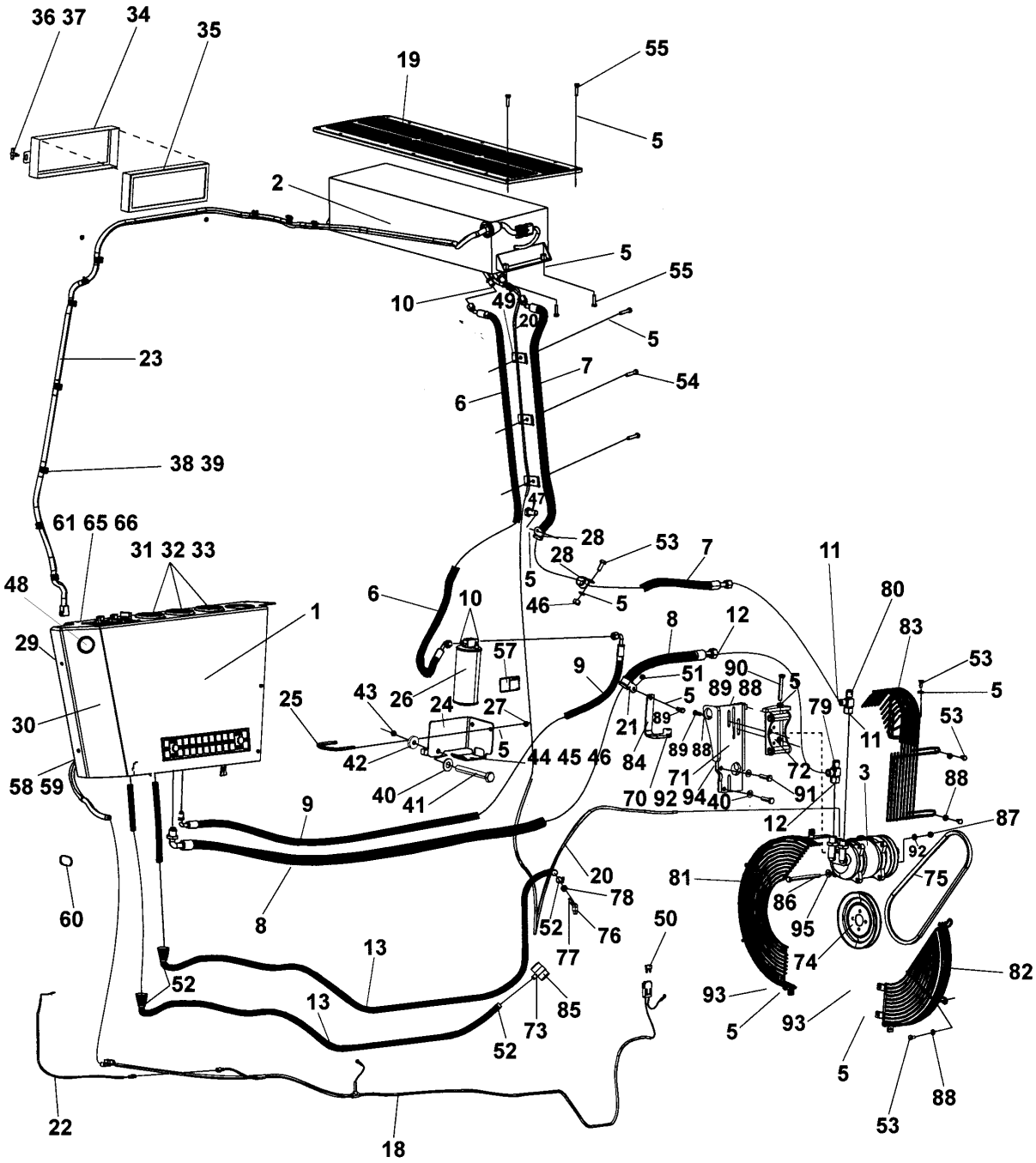

## Air conditioner assembly, simple cab

| Item | Part No | Rem | Qty | Description | Code |
|---|---|---|---|---|---|
| 71 | 4700395075 | | 1 | Compressor bracket | D |
| 72 | 4700395074 | | 1 | Compressor bracket | D |
| 73 | 4700379609 | | 1 | T-connector | D |
| 74 | 4700395192 | | 1 | V-belt pulley | D |
| 75 | 4812115376 | | 1 | V-belt | A |
| 76 | 4812112835 | | 1 | Connector | D |
| 77 | 4700395175 | | 1 | Hose connection | D |
| 78 | 4700379607 | | 1 | Hose connection | D |
| 79 | 4700395413 | | 1 | Connector | |
| 80 | 4700395414 | | 1 | Connector | |
| 81 | 4700395078 | | 1 | Fan guard | D |
| 82 | 4700395085 | | 1 | Fan guard | D |
| 83 | 4700395086 | | 1 | Belt guard | D |
| 84 | 4700395482 | | 1 | Clamp | |
| 85 | 4700313010 | | 2 | Hose clamp | C |
| 86 | 4700792797 | | 2 | Hexagon socket head cap screw m | C |
| 87 | 4700586018 | | 2 | Hexagon lock nut | C |
| 88 | 4700904556 | | 10 | Washer 8,4x16x3,0 | C |
| 89 | 4700500021 | | 4 | Screw M8-1,25x25 8.8 | C |
| 90 | 4700500241 | | 1 | Screw | C |
| 91 | 4700500030 | | 2 | Screw M10x035H 8.8 A3K | C |
| 92 | 4700904637 | | 2 | Washer | C |
| 93 | 4700500018 | | 3 | Screw M8-1,25x12 8,8 | C |
| 94 | 4700500047 | | 1 | Hexagon head screw | C |
| 95 | 4700904557 | | 2 | Steel plain washer | C |

# Air conditioner and heater unit

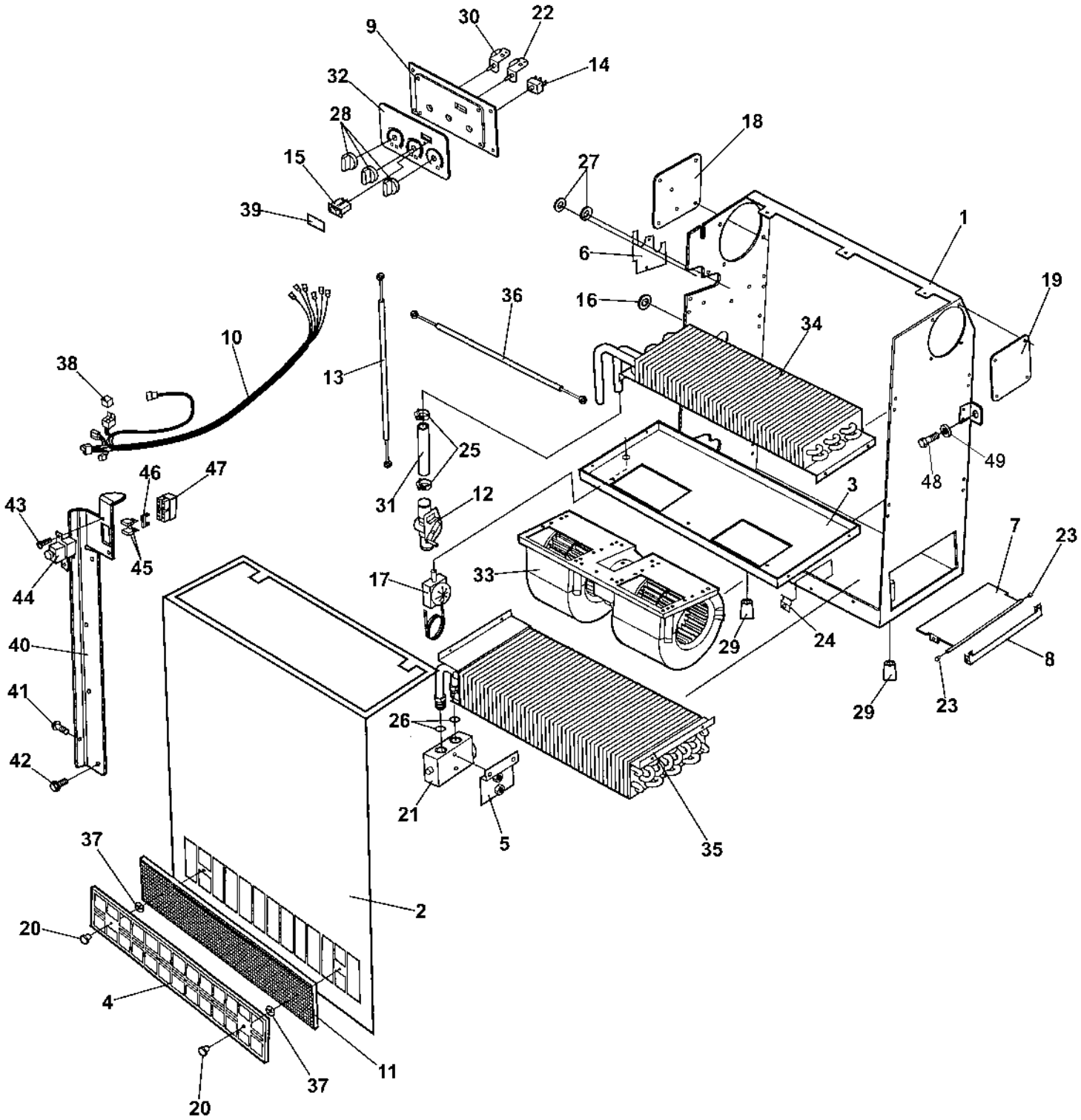

## Air conditioner and heater unit

| Item | Part No | Rem | Qty | Description | Code |
|---|---|---|---|---|---|
| 1 | 4700938625 | | 1 | Casing | |
| 2 | 4700938626 | | 1 | Cover | |
| 3 | 4700938627 | | 1 | Fan bracket | |
| 4 | 4700384760 | | 1 | Filter grill | D |
| 5 | 4700384177 | | 1 | Holder | D |
| 6 | 4700938628 | | 1 | Cover | |
| 7 | 4700938629 | | 1 | Cover | |
| 8 | 4700938630 | | 1 | Bracket | |
| 9 | 4700945174 | | 1 | Panel | D |
| 10 | 4700945175 | | 1 | Cable harness | D |
| 11 | 4700384761 | | 1 | Air filter element | A |
| 12 | 4700939693 | | 1 | Heater control valve | |
| 13 | 4700938645 | | 1 | Bowden cable | |
| 14 | 4700938622 | | 1 | Switch | B |
| 15 | 4700938619 | | 1 | Switch | B |
| 16 | 4700938644 | | 1 | Cap | C |
| 17 | 4700384897 | | 1 | Thermostat | B |
| 18 | 4700945176 | | 1 | Cover plate | D |
| 19 | 4700945177 | | 1 | Cover plate | D |
| 20 | 4700938634 | | 2 | Knob | D |
| 21 | 4700384176 | | 1 | Expansion valve | C |
| 22 | 4700938621 | | 2 | Rotary control | |
| 23 | 4700938635 | | 2 | Sleeve | |
| 24 | 4700384880 | | 1 | Wire clamp | D |
| 25 | 4700313003 | | 2 | Hose clamp | D |
| 26 | 4700384878 | | 2 | O-ring Size 8 | C |
| 27 | 4700384927 | | 2 | Grommet | D |
| 28 | 4700938620 | | 3 | Knob | D |
| 29 | 4700938636 | | 2 | Drain valve | C |
| 30 | 4700385134 | | 2 | Lock washer | D |
| 31 | 4700384881 | | 1 | Hose | D |
| 32 | 4700945178 | | 1 | Panel overlay | D |
| 33 | 4700938638 | | 1 | Fan | C |
| 34 | 4700938639 | | 1 | Heater coil | |
| 35 | 4700383414 | | 1 | Evaporator | D |
| 36 | 4700384762 | | 1 | Wire | D |
| 37 | 4700939413 | | 2 | Star lock | |
| 38 | 4700287597 | | 1 | Relay | D |
| 39 | 4700938643 | | 1 | Plug | C |
| 40 | 4700379332 | A | 1 | Holder | D |
| 41 | 4700792187 | A | 2 | Screw M5x14 | |
| 42 | 4700541703 | A | 4 | Screw M6x16 | D |
| 43 | 4700901767 | A | 2 | Screw ST3,5x9,5 Black | |
| 44 | 4700792091 | A | 1 | Fuse holder | C |
| 45 | 4700903741 | A | 2 | Fuse 20A Yellow Medium | A |
| 46 | 4700901240 | A | 1 | Connector | B |
| 47 | 4700901699 | A | 1 | Connector | D |
| 48 | 4700500019 | | 5 | Hexagon head screw M8x16H 8,8 | C |
| 49 | 4700904229 | | 5 | Steel plain washer 8,4x16x1,5 | C |

A) Only valid for simple cab

# NUMERICAL INDEX


| Part Number | Page | Part Number | Page | Part Number | Page |
|---|---|---|---|---|---|
| 4700100040 | 19,39 | 4700313041 | 63,125,147,153 | 4700348309 | 61 |
| 4700100071 | 277 | | 155,161,167,169 | 4700348331 | 189 |
| 4700114036 | 21,51 | | 171,201,291 | 4700348481 | 27,201 |
| 4700116041 | 23,51 | 4700313093 | 65,293,297 | 4700349211 | 91,103 |
| 4700150004 | 195 | 4700313094 | 65,67 | 4700349539 | 277 |
| 4700160028 | 95 | 4700313102 | 95,103,109,119 | 4700349541 | 277 |
| 4700160105 | 21,23,51 | | 153,155,169,291 | 4700349542 | 277 |
| 4700160157 | 103 | | 293,297 | 4700349715 | 51 |
| 4700160234 | 103 | 4700313147 | 201 | 4700349879 | 117 |
| 4700160279 | 103 | 4700330170 | 63 | 4700349880 | 117 |
| 4700160344 | 21,51 | 4700330171 | 63 | 4700350009 | 195 |
| 4700160362 | 21,51 | 4700330331 | 55 | 4700355132 | 157 |
| 4700162017 | 51 | 4700330333 | 75,81,87 | 4700355135 | 157 |
| 4700162018 | 51 | 4700330383 | 55 | 4700355258 | 135,137 |
| 4700162019 | 55 | 4700334121 | 109 | 4700355301 | 143 |
| 4700167023 | 21,51 | 4700334122 | 91,103 | 4700355890 | 271 |
| 4700167032 | 19,39 | 4700334132 | 91 | 4700356348 | 119 |
| 4700197956 | 71 | 4700334135 | 119,121 | 4700357138 | 15,117 |
| 4700197957 | 71 | 4700334138 | 95 | 4700357211 | 59 |
| 4700202028 | 183,187 | 4700334140 | 95 | 4700357488 | 31,277 |
| 4700202041 | 57 | 4700334143 | 109 | 4700357526 | 133,141 |
| 4700202043 | 255 | 4700334163 | 95 | 4700357562 | 129 |
| 4700202047 | 41 | 4700334196 | 109,119 | 4700357643 | 185 |
| 4700202056 | 47 | 4700334197 | 119 | 4700357855 | 131 |
| 4700212346 | 99 | 4700334203 | 109 | 4700358025 | 35,37 |
| 4700212353 | 97 | 4700334205 | 103,115 | 4700358026 | 35,37 |
| 4700230515 | 55 | 4700334264 | 119 | 4700358031 | 37 |
| 4700232039 | 117 | 4700334389 | 115 | 4700358388 | 99 |
| 4700232041 | 33 | 4700334468 | 95,109 | 4700358452 | 151 |
| 4700232097 | 109 | 4700334524 | 115 | 4700358881 | 131,157,261,267 |
| 4700233304 | 117 | 4700335914 | 91,103 | 4700359043 | 199 |
| 4700234152 | 109 | 4700336742 | 25,51 | 4700359125 | 199 |
| 4700234233 | 115 | 4700337042 | 39 | 4700359139 | 109,111 |
| 4700234243 | 95,109 | 4700337045 | 19,39 | 4700359340 | 135 |
| 4700234354 | 95 | 4700338486 | 109 | 4700359341 | 135 |
| 4700234382 | 103 | 4700340863 | 107 | 4700359343 | 137 |
| 4700234388 | 119 | 4700343159 | 39 | 4700359403 | 55 |
| 4700234622 | 119 | 4700343318 | 51 | 4700359419 | 189,191 |
| 4700234626 | 109 | 4700343322 | 51 | 4700359550 | 95 |
| 4700234667 | 109 | 4700343462 | 51 | 4700359551 | 95 |
| 4700234843 | 115 | 4700343550 | 135,143 | 4700359552 | 95 |
| 4700234875 | 95 | 4700343551 | 135 | 4700359574 | 189,191 |
| 4700234888 | 115 | 4700343561 | 51 | 4700359575 | 201 |
| 4700234909 | 95 | 4700343732 | 91,103 | 4700359818 | 199 |
| 4700234958 | 95 | 4700343744 | 51 | 4700359820 | 199 |
| 4700244054 | 63 | 4700343775 | 31,277 | 4700359845 | 131 |
| 4700246069 | 57 | 4700343801 | 51 | 4700359900 | 189,191 |
| 4700272372 | 263 | 4700343872 | 91 | 4700359914 | 187,189,191 |
| 4700272373 | 261 | 4700343907 | 51 | 4700359915 | 187,189,191 |
| 4700287373 | 201 | 4700345139 | 133,141 | 4700359916 | 195 |
| 4700287597 | 301 | 4700345243 | 95 | 4700359917 | 191 |
| 4700287598 | 129,279,295 | 4700345870 | 135,137,297 | 4700359918 | 191 |
| 4700287724 | 59 | 4700345871 | 19,39 | 4700359919 | 195 |
| 4700310008 | 19 | 4700345872 | 19,39 | 4700359920 | 189,191 |
| 4700311016 | 271 | 4700345873 | 19,39 | 4700359921 | 195 |
| 4700313001 | 57,63 | 4700345874 | 19,39 | 4700359940 | 27 |
| 4700313002 | 63 | 4700345875 | 19,39 | 4700359971 | 191 |
| 4700313003 | 227,229,281,301 | 4700346214 | 277 | 4700359972 | 191 |
| 4700313004 | 297 | 4700346230 | 293,297 | 4700370100 | 35 |
| 4700313008 | 57 | 4700347119 | 31,277 | 4700370101 | 35 |
| 4700313010 | 57,299 | 4700347512 | 183 | 4700370165 | 131 |
| 4700313035 | 57 | 4700348213 | 153 | 4700370229 | 55 |

# NUMERICAL INDEX


| Part Number | Page | Part Number | Page | Part Number | Page |
|---|---|---|---|---|---|
| 4700370231 | 51 | 4700372678 | 205 | 4700373980 | 167,171 |
| 4700370255 | 183 | 4700372709 | 31 | 4700374028 | 119 |
| 4700370358 | 277 | 4700372718 | 63 | 4700374029 | 147,149 |
| 4700370365 | 51 | 4700372722 | 67 | 4700374030 | 147,149 |
| 4700370745 | 63 | 4700372725 | 67 | 4700374059 | 95 |
| 4700370803 | 205 | 4700372745 | 205 | 4700374089 | 147 |
| 4700370955 | 199 | 4700372749 | 143 | 4700374098 | 131 |
| 4700370977 | 187 | 4700372757 | 183 | 4700374099 | 131 |
| 4700370978 | 195 | 4700372758 | 149 | 4700374120 | 147 |
| 4700371009 | 27,201 | 4700372782 | 201 | 4700374142 | 47 |
| 4700371100 | 183 | 4700372785 | 183,185,247 | 4700374145 | 47 |
| 4700371202 | 183 | 4700372786 | 183,185 | 4700374160 | 41 |
| 4700371213 | 187 | 4700372836 | 153 | 4700374168 | 147 |
| 4700371275 | 133 | 4700372837 | 271 | 4700374184 | 147 |
| 4700371364 | 151 | 4700372961 | 199 | 4700374196 | 147 |
| 4700371366 | 41 | 4700372964 | 187,189,191 | 4700374327 | 147 |
| 4700371374 | 199 | 4700372965 | 199 | 4700374339 | 43 |
| 4700371407 | 189 | 4700372966 | 199 | 4700374362 | 35 |
| 4700371418 | 199 | 4700373108 | 31 | 4700374379 | 131 |
| 4700371594 | 71 | 4700373134 | 103 | 4700374398 | 151 |
| 4700371730 | 251 | 4700373136 | 91 | 4700374417 | 199 |
| 4700371774 | 57 | 4700373140 | 153,171 | 4700374471 | 183 |
| 4700371837 | 273 | 4700373203 | 41 | 4700374475 | 149 |
| 4700371966 | 183 | 4700373204 | 41 | 4700374476 | 149 |
| 4700371967 | 183 | 4700373270 | 91,103 | 4700374518 | 147 |
| 4700371968 | 187 | 4700373286 | 163 | 4700374519 | 147 |
| 4700372053 | 183 | 4700373309 | 41 | 4700374526 | 147 |
| 4700372083 | 199 | 4700373363 | 263 | 4700374537 | 67 |
| 4700372103 | 131 | 4700373364 | 263 | 4700374559 | 45 |
| 4700372104 | 131 | 4700373395 | 91 | 4700374606 | 185,247 |
| 4700372105 | 131 | 4700373396 | 103 | 4700374607 | 185,247 |
| 4700372229 | 9,15,95 | 4700373410 | 277 | 4700374659 | 45 |
| 4700372250 | 91,93 | 4700373421 | 39 | 4700374660 | 45 |
| 4700372321 | 201 | 4700373423 | 91 | 4700374662 | 31 |
| 4700372322 | 201 | 4700373460 | 63 | 4700374759 | 277 |
| 4700372435 | 95 | 4700373507 | 67,103,177,179 | 4700374760 | 277 |
| 4700372436 | 95 | 4700373547 | 199 | 4700374795 | 45 |
| 4700372457 | 185,247 | 4700373574 | 63 | 4700374797 | 41 |
| 4700372459 | 199 | 4700373618 | 71 | 4700374798 | 41 |
| 4700372479 | 31 | 4700373624 | 65 | 4700374799 | 41 |
| 4700372489 | 205 | 4700373625 | 65 | 4700374836 | 51 |
| 4700372494 | 183,185,247 | 4700373746 | 275 | 4700374854 | 43 |
| 4700372495 | 161 | 4700373747 | 275 | 4700374869 | 31 |
| 4700372496 | 161 | 4700373748 | 275 | 4700374900 | 39 |
| 4700372497 | 157,161 | 4700373749 | 275 | 4700374907 | 51 |
| 4700372513 | 109 | 4700373750 | 275 | 4700374933 | 195 |
| 4700372514 | 109 | 4700373752 | 275 | 4700374934 | 195 |
| 4700372568 | 201 | 4700373756 | 275 | 4700375031 | 277 |
| 4700372575 | 41 | 4700373758 | 33 | 4700375121 | 41 |
| 4700372608 | 41 | 4700373774 | 103 | 4700375589 | 277 |
| 4700372634 | 51 | 4700373799 | 205 | 4700375629 | 133 |
| 4700372639 | 51 | 4700373854 | 205 | 4700375669 | 109 |
| 4700372640 | 51 | 4700373855 | 205 | 4700375678 | 43 |
| 4700372641 | 51 | 4700373860 | 167 | 4700375681 | 43 |
| 4700372649 | 125 | 4700373891 | 125 | 4700376045 | 31 |
| 4700372653 | 195 | 4700373906 | 275 | 4700376068 | 165 |
| 4700372654 | 195 | 4700373907 | 275 | 4700376079 | 183 |
| 4700372658 | 43,271 | 4700373943 | 205 | 4700376118 | 183 |
| 4700372663 | 141 | 4700373955 | 41 | 4700376255 | 183,185,247 |
| 4700372665 | 139 | 4700373956 | 43 | 4700376488 | 205 |
| 4700372671 | 199 | 4700373957 | 43 | 4700376489 | 205 |
| 4700372672 | 195 | 4700373979 | 167,171 | 4700376688 | 51 |

# NUMERICAL INDEX


| Part Number | Page | Part Number | Page | Part Number | Page |
|---|---|---|---|---|---|
| 4700376896 | 163 | 4700382849 | 183 | 4700386286 | 51 |
| 4700376935 | 155 | 4700382881 | 201 | 4700386298 | 171 |
| 4700376937 | 155 | 4700383002 | 283 | 4700386299 | 171 |
| 4700376938 | 155 | 4700383200 | 205 | 4700386300 | 171 |
| 4700377518 | 187,189,247 | 4700383225 | 205 | 4700386301 | 171 |
| 4700377556 | 247 | 4700383413 | 293,295,297 | 4700386390 | 291 |
| 4700377677 | 205 | 4700383414 | 281,301 | 4700386391 | 291 |
| 4700377742 | 263 | 4700383425 | 281 | 4700386392 | 291 |
| 4700377743 | 263 | 4700383436 | 51 | 4700386506 | 291 |
| 4700377744 | 261 | 4700383452 | 153 | 4700386507 | 291 |
| 4700378110 | 161 | 4700383705 | 185 | 4700386512 | 291 |
| 4700378860 | 287,289 | 4700383855 | 69,71,73 | 4700386533 | 291 |
| 4700378861 | 287,289 | 4700383932 | 285 | 4700386645 | 171 |
| 4700379236 | 237 | 4700383973 | 95 | 4700386646 | 171 |
| 4700379275 | 297 | 4700384070 | 167 | 4700386647 | 171 |
| 4700379285 | 297 | 4700384147 | 293,297 | 4700386966 | 61 |
| 4700379286 | 297 | 4700384160 | 261 | 4700387112 | 63 |
| 4700379332 | 297,301 | 4700384174 | 281 | 4700387129 | 55 |
| 4700379480 | 55 | 4700384176 | 281,301 | 4700387280 | 171 |
| 4700379482 | 95 | 4700384177 | 281,301 | 4700387281 | 171 |
| 4700379607 | 299 | 4700384187 | 281 | 4700387282 | 171 |
| 4700379608 | 235 | 4700384498 | 19,39 | 4700387283 | 171 |
| 4700379609 | 299 | 4700384584 | 183 | 4700387427 | 125 |
| 4700379630 | 109 | 4700384589 | 279,293,297 | 4700387466 | 297 |
| 4700380077 | 107 | 4700384721 | 55 | 4700387467 | 297 |
| 4700380109 | 41 | 4700384751 | 103,105 | 4700387519 | 45 |
| 4700380144 | 103,107 | 4700384759 | 185,247 | 4700387520 | 45 |
| 4700380476 | 277 | 4700384760 | 281,301 | 4700387571 | 169 |
| 4700380477 | 277 | 4700384761 | 281,301 | 4700387736 | 45 |
| 4700380490 | 95 | 4700384762 | 281,301 | 4700387737 | 45 |
| 4700380660 | 133 | 4700384783 | 155 | 4700387738 | 45 |
| 4700380727 | 183 | 4700384801 | 69,71,83 | 4700387941 | 169 |
| 4700380829 | 95,97,99,101 | 4700384814 | 57 | 4700387968 | 169 |
| 4700380993 | 19,39 | 4700384875 | 293,297 | 4700387969 | 169 |
| 4700381400 | 189,191 | 4700384876 | 293,297 | 4700388186 | 31,63 |
| 4700381403 | 195 | 4700384877 | 293,297 | 4700388189 | 169 |
| 4700381413 | 59 | 4700384878 | 281,293,297,301 | 4700388209 | 169 |
| 4700381567 | 195 | 4700384879 | 293,297 | 4700388210 | 153 |
| 4700381571 | 195 | 4700384880 | 281,301 | 4700388211 | 153 |
| 4700381676 | 201 | 4700384881 | 229,281,301 | 4700388212 | 169 |
| 4700381874 | 135 | 4700384897 | 281,301 | 4700388213 | 169 |
| 4700381989 | 43 | 4700384927 | 229,281,301 | 4700388465 | 149 |
| 4700382129 | 41 | 4700384954 | 283 | 4700388626 | 149 |
| 4700382130 | 41 | 4700384958 | 283 | 4700388981 | 231,253 |
| 4700382131 | 41 | 4700385080 | 261 | 4700389075 | 143 |
| 4700382132 | 41 | 4700385134 | 229,281,301 | 4700389119 | 143 |
| 4700382165 | 41 | 4700385152 | 41 | 4700389151 | 117 |
| 4700382217 | 71 | 4700385306 | 57 | 4700389152 | 117 |
| 4700382335 | 41 | 4700385434 | 207,227,229 | 4700389570 | 169 |
| 4700382336 | 41 | 4700385442 | 227,297 | 4700389577 | 151 |
| 4700382355 | 43 | 4700385443 | 227,297 | 4700389591 | 169 |
| 4700382382 | 43 | 4700385526 | 159,161 | 4700389600 | 61 |
| 4700382384 | 41,43 | 4700385527 | 159,161 | 4700389662 | 125 |
| 4700382387 | 41,43 | 4700385538 | 109 | 4700389786 | 167 |
| 4700382397 | 247 | 4700385542 | 159 | 4700389840 | 145 |
| 4700382549 | 157 | 4700385551 | 157 | 4700390812 | 71 |
| 4700382582 | 247 | 4700385720 | 51 | 4700390813 | 71 |
| 4700382699 | 283 | 4700385994 | 203 | 4700390814 | 71 |
| 4700382700 | 283 | 4700386002 | 203 | 4700390815 | 71 |
| 4700382751 | 261 | 4700386003 | 203 | 4700390816 | 71 |
| 4700382782 | 129 | 4700386189 | 137,141 | 4700390927 | 239 |
| 4700382842 | 125 | 4700386272 | 23 | 4700390962 | 169 |

# NUMERICAL INDEX


| Part Number | Page | Part Number | Page | Part Number | Page |
|---|---|---|---|---|---|
| 4700390963 | 187,189 | 4700395192 | 293,299 | 4700500006 | 157,223 |
| 4700391179 | 187 | 4700395325 | 201 | 4700500012 | 57,147,149 |
| 4700391219 | 245 | 4700395338 | 293,297 | 4700500013 | 43,125,151,155 |
| 4700391346 | 189 | 4700395413 | 293,299 | | 163,165,169,199 |
| 4700391962 | 65 | 4700395414 | 293,299 | | 293,297 |
| 4700392002 | 109,113 | 4700395482 | 293,299 | 4700500015 | 177,227 |
| 4700392100 | 113 | 4700395483 | 293,297 | 4700500016 | 171 |
| 4700392103 | 113 | 4700395484 | 293,297 | 4700500018 | 39,43,57,119,121 |
| 4700392104 | 113 | 4700395525 | 61 | | 209,293,299 |
| 4700392105 | 113 | 4700395957 | 55 | 4700500019 | 57,61,91,103,117 |
| 4700392170 | 57 | 4700396042 | 177,179 | | 147,149,183,189 |
| 4700392313 | 57 | 4700396043 | 177 | | 213,237,245,249 |
| 4700392810 | 61 | 4700396044 | 177 | | 251,293,297,301 |
| 4700392930 | 129 | 4700396045 | 177,179 | 4700500021 | 41,67,95,151,183 |
| 4700392937 | 125 | 4700396046 | 177,179 | | 187,189,195,199 |
| 4700393097 | 61 | 4700396047 | 177 | | 201,205,271,275 |
| 4700393116 | 55 | 4700396048 | 177,179 | | 293,299 |
| 4700393476 | 57 | 4700396864 | 147,149 | 4700500022 | 45,203,279,287 |
| 4700393855 | 57 | 4700397470 | 293 | | 289,293,297 |
| 4700393954 | 293,297 | 4700397471 | 293 | 4700500023 | 109,293,297 |
| 4700393955 | 293,297 | 4700415193 | 277 | 4700500025 | 55,59 |
| 4700394347 | 55 | 4700416034 | 197 | 4700500026 | 41 |
| 4700394497 | 57 | 4700465013 | 201 | 4700500028 | 41,51,59,91,95 |
| 4700394605 | 31 | 4700476019 | 273 | | 103,189,191,285 |
| 4700394610 | 55 | 4700480446 | 111 | 4700500029 | 31,55,63,125,183 |
| 4700394611 | 55 | 4700480447 | 111 | | 185,187,247,285 |
| 4700394612 | 55 | 4700480449 | 111 | 4700500030 | 41,45,55,57,91 |
| 4700394616 | 61 | 4700480450 | 111 | | 103,125,293,299 |
| 4700394618 | 65 | 4700480457 | 111 | 4700500031 | 65,177,179,183 |
| 4700394620 | 57 | 4700480468 | 111 | | 191 |
| 4700394629 | 57 | 4700482010 | 95 | 4700500033 | 91,103 |
| 4700394630 | 57 | 4700482056 | 115 | 4700500037 | 37,39 |
| 4700394631 | 57 | 4700482182 | 95 | 4700500040 | 43,59,61,131,147 |
| 4700394635 | 109 | 4700482391 | 95 | | 149,173,175,189 |
| 4700394644 | 71 | 4700482399 | 115 | | 191,195,283,291 |
| 4700394645 | 71 | 4700482404 | 109 | 4700500042 | 173,175,177,179 |
| 4700394647 | 71 | 4700482474 | 115 | 4700500043 | 31,147,149,277 |
| 4700394649 | 71 | 4700482538 | 109 | 4700500044 | 109,277 |
| 4700394679 | 61 | 4700482543 | 115 | 4700500046 | 35,95,109 |
| 4700394686 | 13,15,61 | 4700482726 | 119 | 4700500047 | 153,209,293,299 |
| 4700394687 | 15,61 | 4700482727 | 103 | 4700500048 | 33,61,293,297 |
| 4700394793 | 65 | 4700482730 | 109 | 4700500049 | 35 |
| 4700394794 | 65 | 4700482766 | 103 | 4700500053 | 45,59,65,67,119 |
| 4700394854 | 125 | 4700483027 | 95 | | 121,125,161,183 |
| 4700394863 | 57 | 4700483123 | 95 | | 187,191,201,209 |
| 4700394865 | 59 | 4700483128 | 95 | | 237,297 |
| 4700394882 | 41 | 4700483131 | 103 | 4700500056 | 35 |
| 4700394883 | 65 | 4700483133 | 91 | 4700500060 | 125,157 |
| 4700394918 | 61 | 4700483134 | 115 | 4700500061 | 281 |
| 4700394921 | 61 | 4700483147 | 109 | 4700500067 | 257 |
| 4700394993 | 43 | 4700483188 | 119 | 4700500075 | 57,125,161,187 |
| 4700394998 | 59 | 4700483207 | 119 | | 221 |
| 4700395001 | 67 | 4700483350 | 103 | 4700500076 | 51,55 |
| 4700395022 | 61 | 4700483504 | 109 | 4700500077 | 91 |
| 4700395033 | 67 | 4700483521 | 91 | 4700500079 | 153 |
| 4700395074 | 299 | 4700483522 | 91 | 4700500086 | 143,173,281 |
| 4700395075 | 297 | 4700483558 | 95 | 4700500088 | 43 |
| 4700395078 | 293,299 | 4700484128 | 109 | 4700500091 | 103 |
| 4700395085 | 293,299 | 4700484131 | 103 | 4700500100 | 55,205 |
| 4700395086 | 293,299 | 4700499162 | 167,171 | 4700500109 | 95 |
| 4700395108 | 65 | 4700500004 | 125,159,161,173 | 4700500115 | 209 |
| 4700395175 | 299 | | 177,179,209,297 | 4700500133 | 41,51 |

# NUMERICAL INDEX


| Part Number | Page | Part Number | Page | Part Number | Page |
|---|---|---|---|---|---|
| 4700500153 | 275 | 4700570004 | 201,213,283,293 | 4700791233 | 45 |
| 4700500165 | 55 | | 297 | 4700791234 | 45 |
| 4700500169 | 197 | 4700570005 | 41,125,187,189 | 4700791253 | 143 |
| 4700500184 | 125 | | 191,247,287,289 | 4700791272 | 261 |
| 4700500186 | 203 | | 293,297 | 4700791275 | 261 |
| 4700500188 | 31 | 4700570006 | 117,183,189,191 | 4700791276 | 261 |
| 4700500189 | 67 | | 285,293,297 | 4700791312 | 203 |
| 4700500192 | 31,117,293,297 | 4700570007 | 155 | 4700791313 | 203 |
| 4700500194 | 55,103,153,171 | 4700570015 | 51 | 4700791314 | 203 |
| | 277 | 4700573004 | 201 | 4700791378 | 245 |
| 4700500195 | 183,185,247 | 4700573008 | 199 | 4700791388 | 173,175 |
| 4700500208 | 51 | 4700581018 | 183 | 4700791393 | 291 |
| 4700500209 | 51,277 | 4700582006 | 165 | 4700791412 | 121 |
| 4700500226 | 183,205 | 4700586001 | 125,147,157,169 | 4700791452 | 169,171 |
| 4700500230 | 205 | | 173,177,179,209 | 4700791453 | 171 |
| 4700500239 | 205 | 4700586002 | 45,125,131,143 | 4700791454 | 171 |
| 4700500241 | 293,299 | | 157,161,163,183 | 4700791475 | 173,175 |
| 4700500263 | 95 | | 189,191,195,197 | 4700791503 | 125 |
| 4700500265 | 277 | | 203,221,275,291 | 4700791513 | 63 |
| 4700500267 | 201 | 4700586003 | 45,59,67,109,125 | 4700791525 | 125 |
| 4700500287 | 39 | | 151,195,201,203 | 4700791538 | 121 |
| 4700500292 | 157 | | 209,213,217,249 | 4700791597 | 59 |
| 4700500295 | 71 | | 257,275,297 | 4700791642 | 261 |
| 4700500505 | 43 | 4700586018 | 149,299 | 4700791722 | 145 |
| 4700502019 | 103 | 4700586019 | 35,37,55,201,277 | 4700791723 | 145 |
| 4700502034 | 109,187 | 4700586021 | 251 | 4700791736 | 145 |
| 4700502036 | 195 | 4700586022 | 33,51,183,277 | 4700791967 | 255 |
| 4700502059 | 103 | 4700588176 | 261 | 4700791968 | 255 |
| 4700502132 | 95 | 4700600002 | 129 | 4700792091 | 301 |
| 4700508002 | 291 | 4700600006 | 217 | 4700792187 | 297,301 |
| 4700508019 | 51 | 4700600016 | 113,277 | 4700792248 | 297 |
| 4700508029 | 55,109 | 4700600019 | 277 | 4700792261 | 71 |
| 4700508056 | 199 | 4700601001 | 175,283 | 4700792313 | 137 |
| 4700508079 | 55 | 4700601003 | 45 | 4700792314 | 137 |
| 4700508092 | 201 | 4700603001 | 195 | 4700792315 | 137 |
| 4700513003 | 199 | 4700603009 | 205 | 4700792317 | 137 |
| 4700513013 | 199 | 4700603019 | 189,205 | 4700792318 | 137 |
| 4700513025 | 217,285 | 4700615041 | 197 | 4700792319 | 137 |
| 4700516051 | 195 | 4700624005 | 261,273 | 4700792320 | 137 |
| 4700527002 | 51 | 4700624016 | 197,205 | 4700792450 | 121 |
| 4700533008 | 175 | 4700624021 | 169 | 4700792544 | 57 |
| 4700533010 | 125,147 | 4700629066 | 251 | 4700792548 | 143 |
| 4700533013 | 129 | 4700630008 | 277 | 4700792634 | 287,289 |
| 4700533016 | 177 | 4700630020 | 277 | 4700792677 | 125 |
| 4700533024 | 197 | 4700630035 | 199 | 4700792682 | 125 |
| 4700533038 | 201 | 4700635061 | 31,113 | 4700792772 | 263 |
| 4700535004 | 157 | 4700747282 | 63 | 4700792797 | 299 |
| 4700535005 | 241 | 4700791094 | 261 | 4700792823 | 121 |
| 4700535007 | 209,213 | 4700791102 | 285 | 4700801250 | 277 |
| 4700535011 | 41 | 4700791110 | 201 | 4700801251 | 277 |
| 4700535013 | 157,183 | 4700791119 | 117 | 4700813316 | 277 |
| 4700535014 | 157 | 4700791120 | 117 | 4700813391 | 31 |
| 4700535015 | 183 | 4700791138 | 129 | 4700813434 | 125 |
| 4700541507 | 43 | 4700791141 | 125 | 4700813444 | 109 |
| 4700541535 | 209 | 4700791144 | 281 | 4700813499 | 95 |
| 4700541702 | 149,151 | 4700791171 | 171 | 4700813500 | 91,103,109 |
| 4700541703 | 167,171,301 | 4700791172 | 293 | 4700813617 | 97,99 |
| 4700541704 | 159 | 4700791183 | 125 | 4700813791 | 61 |
| 4700541705 | 173 | 4700791185 | 125 | 4700813822 | 97 |
| 4700550038 | 277 | 4700791213 | 95 | 4700813828 | 99 |
| 4700570002 | 143,173 | 4700791218 | 185,247 | 4700815056 | 25,51 |
| 4700570004 | 43,125,129,197 | 4700791226 | 185 | 4700815190 | 277 |

# NUMERICAL INDEX


| Part Number | Page | Part Number | Page | Part Number | Page |
|---|---|---|---|---|---|
| 4700900229 | 95 | 4700902508 | 273 | 4700903985 | 71 |
| 4700900255 | 73,83 | 4700902520 | 199 | 4700904004 | 91 |
| 4700900429 | 71 | 4700902558 | 59 | 4700904005 | 95,109 |
| 4700900430 | 103 | 4700902610 | 271 | 4700904015 | 161 |
| 4700900528 | 171 | 4700902624 | 105 | 4700904016 | 135 |
| 4700900552 | 115 | 4700902625 | 105 | 4700904032 | 125 |
| 4700900700 | 155 | 4700902642 | 105 | 4700904036 | 125 |
| 4700900775 | 51 | 4700902655 | 107 | 4700904038 | 125,147,149 |
| 4700900790 | 147 | 4700902688 | 105 | 4700904039 | 297 |
| 4700900871 | 133 | 4700902724 | 105 | 4700904060 | 61 |
| 4700900937 | 87 | 4700902792 | 105 | 4700904069 | 263 |
| 4700900957 | 79,87 | 4700902861 | 111 | 4700904075 | 47 |
| 4700900986 | 201 | 4700902862 | 111 | 4700904076 | 57,59 |
| 4700901028 | 147 | 4700902866 | 41,43,183 | 4700904098 | 261,263 |
| 4700901145 | 71,185,247 | 4700902928 | 97 | 4700904114 | 221 |
| 4700901157 | 103 | 4700903052 | 99 | 4700904140 | 161 |
| 4700901209 | 157,159,161 | 4700903190 | 63 | 4700904165 | 293,297 |
| 4700901220 | 271 | 4700903192 | 63 | 4700904180 | 205 |
| 4700901224 | 129,153,171,291 | 4700903290 | 183,185,247,277 | 4700904206 | 63,143,171,183 |
| 4700901225 | 125,129,225 | 4700903295 | 93 | | 189,191 |
| 4700901226 | 129 | 4700903327 | 93 | 4700904207 | 131 |
| 4700901227 | 125,129,225,231 | 4700903422 | 261 | 4700904208 | 131 |
| | 253 | 4700903423 | 263 | 4700904209 | 45 |
| 4700901229 | 225 | 4700903424 | 263 | 4700904213 | 35,37,95,155 |
| 4700901230 | 125 | 4700903425 | 263 | 4700904214 | 195 |
| 4700901240 | 129,225,301 | 4700903436 | 131 | 4700904228 | 43,59,61,125,131 |
| 4700901256 | 129 | 4700903459 | 261 | | 143,147,149,151 |
| 4700901369 | 147,149 | 4700903599 | 131 | | 155,157,161,163 |
| 4700901385 | 107 | 4700903600 | 131 | | 165,169,173,175 |
| 4700901386 | 107 | 4700903601 | 131 | | 177,183,187,189 |
| 4700901387 | 107 | 4700903602 | 131 | | 191,195,199,201 |
| 4700901389 | 107 | 4700903625 | 129 | | 203,221,275,281 |
| 4700901390 | 107 | 4700903631 | 125 | | 283,291,293,297 |
| 4700901453 | 97 | 4700903632 | 125 | 4700904229 | 31,39,55,57,61 |
| 4700901454 | 97 | 4700903640 | 125 | | 67,91,95,103,109 |
| 4700901475 | 99 | 4700903641 | 125 | | 117,119,121,125 |
| 4700901482 | 99 | 4700903644 | 199 | | 147,149,151,161 |
| 4700901699 | 301 | 4700903653 | 131 | | 169,173,175,177 |
| 4700901718 | 97 | 4700903657 | 133,137,139,141 | | 179,183,187,189 |
| 4700901721 | 97 | 4700903658 | 131,143,145,201 | | 191,195,199,201 |
| 4700901722 | 97 | 4700903678 | 131 | | 209,227,237,245 |
| 4700901725 | 99 | 4700903714 | 57 | | 247,249,251,257 |
| 4700901727 | 99 | 4700903717 | 161 | | 275,279,287,289 |
| 4700901728 | 99 | 4700903732 | 41 | | 293,297,301 |
| 4700901767 | 41,129,301 | 4700903741 | 129,225,301 | 4700904230 | 31,43,51,57,61 |
| 4700901832 | 279,295 | 4700903768 | 125 | | 63,65,91,95,103 |
| 4700901834 | 73,83 | 4700903782 | 237,281 | | 109,147,149,183 |
| 4700901987 | 81 | 4700903852 | 147,149,161,163 | | 185,187,191,195 |
| 4700902064 | 147 | | 283,297 | | 247,277,285,293 |
| 4700902066 | 147 | 4700903875 | 139 | | 297 |
| 4700902125 | 119 | 4700903876 | 133,139,141,143 | 4700904231 | 35,37,39,43,51 |
| 4700902166 | 41,43,57,59,65 | 4700903899 | 147 | | 103,109,171,183 |
| 4700902203 | 201 | 4700903907 | 157,183 | | 185,199,201,247 |
| 4700902223 | 129 | 4700903914 | 191 | | 277 |
| 4700902227 | 147,149 | 4700903917 | 195 | 4700904232 | 51,55,251 |
| 4700902284 | 41,125 | 4700903918 | 195 | 4700904233 | 33,51,71,183,185 |
| 4700902285 | 43,57,131,153 | 4700903925 | 103 | | 247,277 |
| | 171,173,175 | 4700903927 | 135 | 4700904240 | 261 |
| 4700902286 | 41,153 | 4700903956 | 129 | 4700904241 | 41 |
| 4700902287 | 65 | 4700903961 | 131 | 4700904244 | 41 |
| 4700902288 | 153,171 | 4700903969 | 147,273 | 4700904281 | 125,147,157,159 |
| 4700902496 | 153 | 4700903970 | 129 | | 161,177,209,213 |

# NUMERICAL INDEX


| Part Number | Page | Part Number | Page | Part Number | Page |
|---|---|---|---|---|---|
| 4700904281 | 291 | 4700904906 | 283 | 4700908563 | 221 |
| 4700904282 | 95 | 4700904907 | 157 | 4700908564 | 221 |
| 4700904289 | 171 | 4700904908 | 157 | 4700908580 | 217,239 |
| 4700904290 | 203 | 4700904909 | 157 | 4700908581 | 217,239 |
| 4700904292 | 55 | 4700904910 | 163 | 4700908582 | 217,239 |
| 4700904313 | 147 | 4700904939 | 255 | 4700908583 | 217,239 |
| 4700904315 | 147 | 4700904941 | 183 | 4700908587 | 209 |
| 4700904316 | 147 | 4700904969 | 255 | 4700908598 | 227 |
| 4700904317 | 147 | 4700904970 | 255 | 4700908599 | 227 |
| 4700904318 | 147 | 4700904984 | 257 | 4700908600 | 227 |
| 4700904321 | 261 | 4700904985 | 63 | 4700908603 | 225 |
| 4700904340 | 157,275 | 4700904989 | 129 | 4700908605 | 225,243 |
| 4700904342 | 37 | 4700904994 | 285 | 4700908606 | 225 |
| 4700904346 | 63 | 4700905304 | 221,243 | 4700908607 | 225 |
| 4700904352 | 57,67,95 | 4700905305 | 221,243 | 4700908610 | 225 |
| 4700904355 | 45 | 4700905306 | 221,243 | 4700908611 | 225 |
| 4700904356 | 45 | 4700905307 | 221 | 4700908613 | 225 |
| 4700904415 | 291 | 4700905308 | 221 | 4700908617 | 225,243 |
| 4700904433 | 183,185,247 | 4700905309 | 221 | 4700908618 | 225 |
| 4700904486 | 57 | 4700905310 | 221 | 4700908623 | 223,241 |
| 4700904543 | 147,149,161,163 | 4700905311 | 221 | 4700908624 | 223,241 |
| | 297 | 4700905312 | 221 | 4700908625 | 251 |
| 4700904551 | 57 | 4700907163 | 99 | 4700908626 | 251 |
| 4700904556 | 41,57,65,199,203 | 4700908110 | 129 | 4700908627 | 251 |
| | 293,299 | 4700908136 | 57,119,121 | 4700908628 | 251 |
| 4700904557 | 31,41,63,125,183 | 4700908187 | 197 | 4700908773 | 99 |
| | 187,189,191,293 | 4700908188 | 197 | 4700908987 | 217 |
| | 299 | 4700908189 | 197 | 4700909122 | 201,291 |
| 4700904559 | 33 | 4700908190 | 197 | 4700909130 | 175 |
| 4700904567 | 31,43,117,177 | 4700908193 | 201 | 4700909211 | 111 |
| | 179,293,297 | 4700908200 | 201 | 4700909212 | 111 |
| 4700904601 | 263 | 4700908217 | 99 | 4700909213 | 111 |
| 4700904619 | 205 | 4700908229 | 261 | 4700909214 | 111 |
| 4700904623 | 59 | 4700908265 | 251 | 4700909239 | 97 |
| 4700904637 | 55,103,109,125 | 4700908267 | 249 | 4700909257 | 99 |
| | 293,299 | 4700908355 | 251 | 4700909373 | 97 |
| 4700904638 | 55,95 | 4700908359 | 249 | 4700909375 | 97,99 |
| 4700904639 | 57 | 4700908361 | 251 | 4700909376 | 97 |
| 4700904640 | 41,45,55,65,169 | 4700908378 | 97 | 4700909377 | 97 |
| | 183,187,195,203 | 4700908383 | 105 | 4700909378 | 97 |
| | 271 | 4700908399 | 61 | 4700909379 | 97 |
| 4700904653 | 169 | 4700908432 | 97,99 | 4700909384 | 97 |
| 4700904663 | 19 | 4700908439 | 99 | 4700909385 | 97 |
| 4700904698 | 125,143,157,173 | 4700908448 | 99 | 4700909386 | 97 |
| 4700904703 | 55,103 | 4700908496 | 161,209,227 | 4700909387 | 97 |
| 4700904734 | 195,205 | 4700908497 | 221 | 4700909388 | 97 |
| 4700904735 | 195 | 4700908499 | 209,213,217,235 | 4700909389 | 97 |
| 4700904739 | 195 | | 237,239 | 4700909390 | 97 |
| 4700904767 | 103 | 4700908500 | 209 | 4700909395 | 97 |
| 4700904773 | 103 | 4700908501 | 209,297 | 4700909396 | 97 |
| 4700904774 | 103 | 4700908502 | 209,297 | 4700909398 | 97 |
| 4700904780 | 173,175 | 4700908503 | 209,297 | 4700909399 | 97,99 |
| 4700904781 | 103 | 4700908504 | 209,297 | 4700909402 | 97 |
| 4700904793 | 55,95 | 4700908505 | 209 | 4700909403 | 97 |
| 4700904802 | 195 | 4700908506 | 209,237 | 4700909405 | 97 |
| 4700904819 | 135 | 4700908507 | 209,237 | 4700909406 | 97 |
| 4700904835 | 261 | 4700908512 | 209 | 4700909409 | 97 |
| 4700904855 | 183 | 4700908515 | 209 | 4700909410 | 99 |
| 4700904870 | 261 | 4700908545 | 213,215,217,235 | 4700909411 | 99 |
| 4700904874 | 41 | | 239 | 4700909428 | 99 |
| 4700904889 | 135,153 | 4700908559 | 221 | 4700909429 | 99 |
| 4700904890 | 135,153 | 4700908560 | 221 | 4700909432 | 99 |

# NUMERICAL INDEX


| Part Number | Page | Part Number | Page | Part Number | Page |
|---|---|---|---|---|---|
| 4700909436 | 99 | 4700928927 | 171 | 4700935275 | 213,217,235,239 |
| 4700909510 | 209,221 | 4700929012 | 111 | 4700935276 | 213,217,235,239 |
| 4700909514 | 105 | 4700929013 | 111 | 4700935277 | 213,217,235,239 |
| 4700909544 | 75,87 | 4700929014 | 111 | 4700935278 | 213,235 |
| 4700909547 | 79 | 4700929023 | 125 | 4700935279 | 213,235 |
| 4700909582 | 73,83 | 4700929050 | 71 | 4700935280 | 213,235 |
| 4700909584 | 73,83 | 4700929226 | 91,103 | 4700935281 | 213,235 |
| 4700909596 | 75,81,87 | 4700929447 | 21,23,51 | 4700935282 | 213,235 |
| 4700909616 | 79,87 | 4700929455 | 147 | 4700935283 | 213,235 |
| 4700909745 | 197 | 4700929648 | 73,83 | 4700935284 | 213,235 |
| 4700909747 | 201 | 4700929691 | 87 | 4700935285 | 213,235 |
| 4700909748 | 201 | 4700929863 | 19 | 4700935286 | 213,235 |
| 4700910161 | 109 | 4700930151 | 153 | 4700935287 | 213,235 |
| 4700910995 | 39 | 4700930153 | 141 | 4700935288 | 213,235 |
| 4700911456 | 133,139,141 | 4700930154 | 133,139,141,145 | 4700935289 | 213,235 |
| 4700911620 | 111 | | 291 | 4700935290 | 213,235 |
| 4700921031 | 147,149,157,161 | 4700930161 | 139 | 4700935291 | 213,235 |
| 4700921036 | 147 | 4700930163 | 133,139,141,143 | 4700935293 | 213,235 |
| 4700921039 | 149,151,291 | | 145 | 4700935295 | 213,235 |
| 4700921044 | 293,297 | 4700930165 | 171 | 4700935296 | 213,235 |
| 4700921046 | 169,171,177 | 4700930166 | 139 | 4700935297 | 213,235 |
| 4700921050 | 57 | 4700930192 | 141,143 | 4700935298 | 213,235 |
| 4700921056 | 293,297 | 4700930200 | 145 | 4700935299 | 213,235 |
| 4700921065 | 167 | 4700932032 | 145 | 4700935300 | 213,235 |
| 4700921072 | 153 | 4700932034 | 139,141 | 4700935301 | 215,235 |
| 4700921078 | 155 | 4700932050 | 133 | 4700935302 | 215,235 |
| 4700921080 | 125 | 4700932056 | 139,171 | 4700935303 | 215,237 |
| 4700921104 | 125,189 | 4700932057 | 139 | 4700935334 | 221 |
| 4700921132 | 125 | 4700932058 | 133,139,141 | 4700935335 | 221 |
| 4700922325 | 201 | 4700935158 | 105 | 4700935570 | 227 |
| 4700922552 | 51 | 4700935159 | 105 | 4700935572 | 227 |
| 4700923087 | 97,99 | 4700935187 | 105 | 4700935577 | 209 |
| 4700923253 | 175 | 4700935190 | 105 | 4700935578 | 209 |
| 4700923371 | 95 | 4700935192 | 105 | 4700935579 | 209 |
| 4700923384 | 95 | 4700935219 | 105 | 4700935580 | 209,245 |
| 4700923976 | 125,129,157,281 | 4700935225 | 201 | 4700935581 | 209 |
| 4700924791 | 157,275 | 4700935244 | 217,239 | 4700935582 | 209 |
| 4700925208 | 33 | 4700935245 | 217,239 | 4700935583 | 209 |
| 4700925629 | 43 | 4700935246 | 217,239 | 4700935584 | 209 |
| 4700925723 | 119 | 4700935247 | 217,239 | 4700935585 | 209 |
| 4700925784 | 209 | 4700935248 | 217,239 | 4700935586 | 209,297 |
| 4700925802 | 147,149,163 | 4700935249 | 217,239 | 4700935589 | 209 |
| 4700926116 | 77,85 | 4700935250 | 217,239 | 4700935590 | 209 |
| 4700926214 | 19,39,199,277 | 4700935253 | 217,239 | 4700935591 | 209 |
| 4700926611 | 147 | 4700935255 | 217 | 4700935594 | 211 |
| 4700926658 | 99 | 4700935256 | 217 | 4700935598 | 211 |
| 4700926736 | 51 | 4700935257 | 217 | 4700935599 | 211 |
| 4700926781 | 81 | 4700935258 | 217 | 4700935600 | 211 |
| 4700926847 | 87 | 4700935260 | 217 | 4700935613 | 187,189,191 |
| 4700926911 | 171 | 4700935261 | 217 | 4700935614 | 187,189,191 |
| 4700926985 | 47,57 | 4700935262 | 217 | 4700935771 | 197 |
| 4700927233 | 197 | 4700935263 | 217 | 4700935774 | 197 |
| 4700927350 | 107 | 4700935265 | 217,239 | 4700935857 | 99 |
| 4700927358 | 105 | 4700935266 | 217,239 | 4700936020 | 81 |
| 4700927403 | 255 | 4700935267 | 217,239 | 4700936023 | 77,85 |
| 4700927637 | 41 | 4700935268 | 217,239 | 4700936052 | 77 |
| 4700927974 | 41,173,175,183 | 4700935269 | 217,239 | 4700936053 | 77,85 |
| | 185,247 | 4700935270 | 217,239 | 4700936054 | 77,85 |
| 4700928381 | 197 | 4700935271 | 213,217,235,239 | 4700936055 | 77,85 |
| 4700928497 | 27,201 | 4700935272 | 213,217,235,239 | 4700936056 | 77,85 |
| 4700928502 | 147 | 4700935273 | 217,235,239 | 4700936097 | 79,87 |
| 4700928664 | 293 | 4700935274 | 213,217,235,239 | 4700936277 | 213 |

# NUMERICAL INDEX


| Part Number | Page | Part Number | Page | Part Number | Page |
|---|---|---|---|---|---|
| 4700936308 | 105 | 4700937303 | 93 | 4700938600 | 279,295 |
| 4700936393 | 105 | 4700937304 | 93 | 4700938601 | 295 |
| 4700936394 | 105 | 4700937305 | 93 | 4700938602 | 279,295 |
| 4700936421 | 105 | 4700937306 | 93 | 4700938603 | 279,295 |
| 4700936453 | 93 | 4700937307 | 93 | 4700938604 | 295 |
| 4700936483 | 93 | 4700937310 | 93 | 4700938605 | 279,295 |
| 4700936552 | 97 | 4700937319 | 93 | 4700938606 | 279,295 |
| 4700936553 | 97 | 4700937322 | 93 | 4700938607 | 295 |
| 4700936567 | 99 | 4700937323 | 93 | 4700938608 | 295 |
| 4700936568 | 99 | 4700937324 | 93 | 4700938609 | 295 |
| 4700936579 | 99 | 4700937325 | 93 | 4700938617 | 229,281 |
| 4700936600 | 213,217 | 4700937327 | 93 | 4700938618 | 229,281 |
| 4700936601 | 213,217 | 4700937332 | 93 | 4700938619 | 281,301 |
| 4700936602 | 213,217 | 4700937334 | 93 | 4700938620 | 229,281,301 |
| 4700936686 | 105 | 4700937380 | 213,235 | 4700938621 | 229,281,301 |
| 4700936727 | 91,93 | 4700937381 | 213,235 | 4700938622 | 229,281,301 |
| 4700936728 | 91,93 | 4700937382 | 213,235 | 4700938623 | 281 |
| 4700936773 | 93 | 4700937383 | 213,235 | 4700938624 | 281 |
| 4700936789 | 93 | 4700937384 | 213,235 | 4700938625 | 229,281,301 |
| 4700936934 | 213 | 4700937385 | 213,235 | 4700938626 | 229,281,301 |
| 4700936935 | 213 | 4700937389 | 213,235 | 4700938627 | 229,301 |
| 4700937056 | 217 | 4700937390 | 217,239 | 4700938628 | 229,301 |
| 4700937057 | 217 | 4700937391 | 217,239 | 4700938629 | 229,301 |
| 4700937106 | 147 | 4700937392 | 217,239 | 4700938630 | 229,301 |
| 4700937107 | 147 | 4700937393 | 217,239 | 4700938631 | 281 |
| 4700937108 | 147 | 4700937620 | 191 | 4700938632 | 229 |
| 4700937109 | 147 | 4700937621 | 191 | 4700938633 | 229 |
| 4700937121 | 217 | 4700937673 | 107 | 4700938634 | 229,281,301 |
| 4700937136 | 97 | 4700937737 | 227,297 | 4700938635 | 229,301 |
| 4700937138 | 97 | 4700937830 | 97 | 4700938636 | 229,301 |
| 4700937139 | 97 | 4700937857 | 99 | 4700938638 | 229,301 |
| 4700937140 | 97 | 4700937870 | 245 | 4700938639 | 229,281,301 |
| 4700937141 | 99 | 4700937871 | 243 | 4700938640 | 229 |
| 4700937142 | 99 | 4700937892 | 191 | 4700938641 | 229 |
| 4700937143 | 99 | 4700937932 | 211,213,217 | 4700938643 | 229,301 |
| 4700937145 | 99 | 4700937993 | 107 | 4700938644 | 229,301 |
| 4700937149 | 99 | 4700937995 | 107 | 4700938645 | 229,301 |
| 4700937153 | 99 | 4700938016 | 217 | 4700938647 | 229 |
| 4700937159 | 99 | 4700938017 | 217,239 | 4700938658 | 213 |
| 4700937165 | 255 | 4700938018 | 217,239 | 4700938659 | 213,235 |
| 4700937195 | 105 | 4700938022 | 225 | 4700938660 | 221 |
| 4700937211 | 105 | 4700938024 | 217 | 4700938661 | 221 |
| 4700937215 | 105 | 4700938040 | 107 | 4700938662 | 221 |
| 4700937218 | 105 | 4700938041 | 107 | 4700938663 | 221 |
| 4700937219 | 105 | 4700938042 | 107 | 4700938664 | 221 |
| 4700937232 | 105 | 4700938043 | 217 | 4700938665 | 221 |
| 4700937236 | 105 | 4700938047 | 191 | 4700938666 | 221 |
| 4700937237 | 105 | 4700938101 | 239 | 4700938667 | 223 |
| 4700937256 | 107 | 4700938136 | 221 | 4700938668 | 223 |
| 4700937257 | 107 | 4700938224 | 217 | 4700938670 | 209 |
| 4700937258 | 107 | 4700938251 | 99 | 4700938671 | 209 |
| 4700937259 | 107 | 4700938252 | 99 | 4700938672 | 209 |
| 4700937260 | 107 | 4700938253 | 99 | 4700938673 | 209 |
| 4700937261 | 107 | 4700938290 | 213,235 | 4700938674 | 209 |
| 4700937264 | 107 | 4700938291 | 213,235 | 4700938675 | 209 |
| 4700937265 | 107 | 4700938292 | 213,235 | 4700938676 | 209 |
| 4700937286 | 93 | 4700938318 | 217 | 4700938677 | 209,211 |
| 4700937290 | 93 | 4700938319 | 219 | 4700938678 | 209,245 |
| 4700937293 | 93 | 4700938558 | 17,19 | 4700938679 | 209,245 |
| 4700937294 | 93 | 4700938597 | 279,295 | 4700938680 | 227 |
| 4700937298 | 93 | 4700938598 | 279,295 | 4700938681 | 211 |
| 4700937302 | 93 | 4700938599 | 279,295 | 4700938682 | 211 |

# NUMERICAL INDEX


| Part Number | Page | Part Number | Page | Part Number | Page |
|---|---|---|---|---|---|
| 4700938683 | 211 | 4700939028 | 79,87 | 4700945906 | 101 |
| 4700938684 | 211 | 4700939029 | 79 | 4700945951 | 99 |
| 4700938685 | 211 | 4700939030 | 79,87 | 4700945970 | 93 |
| 4700938686 | 169 | 4700939031 | 79,87 | 4700945971 | 93 |
| 4700938687 | 225 | 4700939032 | 79 | 4700945972 | 93 |
| 4700938688 | 225 | 4700939033 | 79 | 4700950301 | 9,13,15,63 |
| 4700938689 | 231 | 4700939034 | 79,87 | 4700950302 | 9,13,15,55 |
| 4700938690 | 231 | 4700939035 | 79,87 | 4700950303 | 55 |
| 4700938691 | 227,253,297 | 4700939036 | 79,87 | 4700950304 | 55 |
| 4700938693 | 93 | 4700939037 | 79 | 4700950315 | 55 |
| 4700938694 | 93 | 4700939038 | 79 | 4700950334 | 57 |
| 4700938695 | 93 | 4700939039 | 79 | 4700950335 | 57 |
| 4700938696 | 93 | 4700939047 | 93 | 4700950336 | 57 |
| 4700938697 | 93 | 4700939048 | 93 | 4700950337 | 57 |
| 4700938755 | 99 | 4700939049 | 93 | 4700950399 | 5,7,9 |
| 4700938876 | 17,25 | 4700939050 | 93 | 4700950401 | 5,7,13 |
| 4700938891 | 17,23 | 4700939051 | 93 | 4700950402 | 5,7,15 |
| 4700938898 | 17,21 | 4700939052 | 93 | 4700950565 | 99 |
| 4700938980 | 75,87 | 4700939053 | 93 | 4700960051 | 177,179 |
| 4700938981 | 75,87 | 4700939058 | 93 | 4700960727 | 125 |
| 4700938982 | 75,87 | 4700939068 | 9,11,13,15,55 | 4700960792 | 143 |
| 4700938983 | 75,87 | 4700939070 | 15 | 4700985012 | 135,137,139,141 |
| 4700938984 | 75,87 | 4700939076 | 5,7,11 | | 171 |
| 4700938986 | 75,87 | 4700939168 | 105 | 4700985013 | 147,209 |
| 4700938987 | 75,87 | 4700939219 | 93 | 4700985014 | 147 |
| 4700938988 | 77,85 | 4700939270 | 81 | 4700985051 | 209 |
| 4700938989 | 77,85 | 4700939281 | 87 | 4700985146 | 139,141 |
| 4700938990 | 77,85 | 4700939282 | 87 | 4700989151 | 117 |
| 4700938991 | 77,85 | 4700939350 | 75,81,87 | 4700991658 | 263 |
| 4700938992 | 77,85 | 4700939380 | 85 | 4700999011 | 151 |
| 4700938993 | 77 | 4700939381 | 85 | 4700999027 | 125 |
| 4700938994 | 77 | 4700939382 | 85 | 4709335273 | 213 |
| 4700938995 | 77,85 | 4700939383 | 85 | 47386084BR | 261 |
| 4700938996 | 77,85 | 4700939384 | 81 | 47386084CN | 261 |
| 4700938997 | 77,85 | 4700939385 | 81 | 47386084DE | 261 |
| 4700938998 | 77,85 | 4700939386 | 81 | 47386084DK | 261 |
| 4700938999 | 77,85 | 4700939387 | 81 | 47386084EN | 261 |
| 4700939002 | 81 | 4700939391 | 87 | 47386084ES | 261 |
| 4700939003 | 81 | 4700939413 | 281,301 | 47386084FI | 261 |
| 4700939004 | 81 | 4700939521 | 253 | 47386084FR | 261 |
| 4700939006 | 81 | 4700939522 | 253 | 47386084GR | 261 |
| 4700939007 | 81 | 4700939603 | 253 | 47386084IS | 261 |
| 4700939008 | 81 | 4700939693 | 229,301 | 47386084IT | 261 |
| 4700939009 | 81 | 4700940505 | 105 | 47386084NL | 261 |
| 4700939010 | 81 | 4700940506 | 105 | 47386084NO | 261 |
| 4700939011 | 81 | 4700940663 | 17,27 | 47386084PT | 261 |
| 4700939012 | 81 | 4700940674 | 105 | 47386084SE | 261 |
| 4700939013 | 81 | 4700940678 | 239 | 47960787SE | 261 |
| 4700939014 | 81 | 4700945174 | 301 | 4811000109 | 51 |
| 4700939015 | 81 | 4700945175 | 301 | 4811000127 | 51 |
| 4700939016 | 81 | 4700945176 | 301 | 4811000244 | 169 |
| 4700939017 | 81 | 4700945177 | 301 | 4811000332 | 121 |
| 4700939018 | 81 | 4700945178 | 301 | 4811000360 | 121 |
| 4700939019 | 81 | 4700945622 | 187,189 | 4811000361 | 121 |
| 4700939020 | 81 | 4700945632 | 193 | 4811000362 | 121 |
| 4700939021 | 79,87 | 4700945633 | 193 | 4811000363 | 121 |
| 4700939022 | 79,87 | 4700945634 | 193 | 4811000369 | 121 |
| 4700939023 | 79,87 | 4700945635 | 193 | 4811000395 | 175 |
| 4700939024 | 79,87 | 4700945636 | 193 | 4811000457 | 175 |
| 4700939025 | 79 | 4700945637 | 193 | 4812110216 | 149 |
| 4700939026 | 79,87 | 4700945661 | 187,189 | 4812110346 | 51 |
| 4700939027 | 79 | 4700945776 | 105 | 4812110422 | 121 |

# NUMERICAL INDEX


| Part Number | Page | Part Number | Page | Part Number | Page |
|---|---|---|---|---|---|
| 4812110438 | 57 | | | | |
| 4812110440 | 57 | | | | |
| 4812110444 | 51 | | | | |
| 4812110517 | 61 | | | | |
| 4812110560 | 125 | | | | |
| 4812110748 | 163 | | | | |
| 4812110773 | 43 | | | | |
| 4812110815 | 51 | | | | |
| 4812110818 | 125 | | | | |
| 4812110865 | 143 | | | | |
| 4812110866 | 127 | | | | |
| 4812110867 | 127 | | | | |
| 4812110960 | 145 | | | | |
| 4812110967 | 145 | | | | |
| 4812110972 | 143 | | | | |
| 4812110986 | 31 | | | | |
| 4812111053 | 155 | | | | |
| 4812112481 | 169 | | | | |
| 4812112835 | 299 | | | | |
| 4812113058 | 173,175 | | | | |
| 4812113110 | 121 | | | | |
| 4812113146 | 121 | | | | |
| 4812113157 | 173 | | | | |
| 4812113158 | 173,175 | | | | |
| 4812113159 | 173,175 | | | | |
| 4812113160 | 173,175 | | | | |
| 4812113171 | 173 | | | | |
| 4812113556 | 173 | | | | |
| 4812113564 | 173 | | | | |
| 4812114146 | 175 | | | | |
| 4812114184 | 175 | | | | |
| 4812114185 | 175 | | | | |
| 4812114190 | 175 | | | | |
| 4812114277 | 257 | | | | |
| 4812114369 | 257 | | | | |
| 4812114371 | 257 | | | | |
| 4812115376 | 293,299 | | | | |
| 4812116050 | 121 | | | | |
| 4812116352 | 203 | | | | |
| 4812155851 | 63 | | | | |
| 4812155890 | 295 | | | | |
| 4812156170 | 25 | | | | |