ILLUSTRATED PARTS MANUAL

OUTUBRO 1987

RUTHZIL TRATOR COMERCIAL DE PEÇAS LTDA 11 97083-6812 ROLANDO CITRANGULO

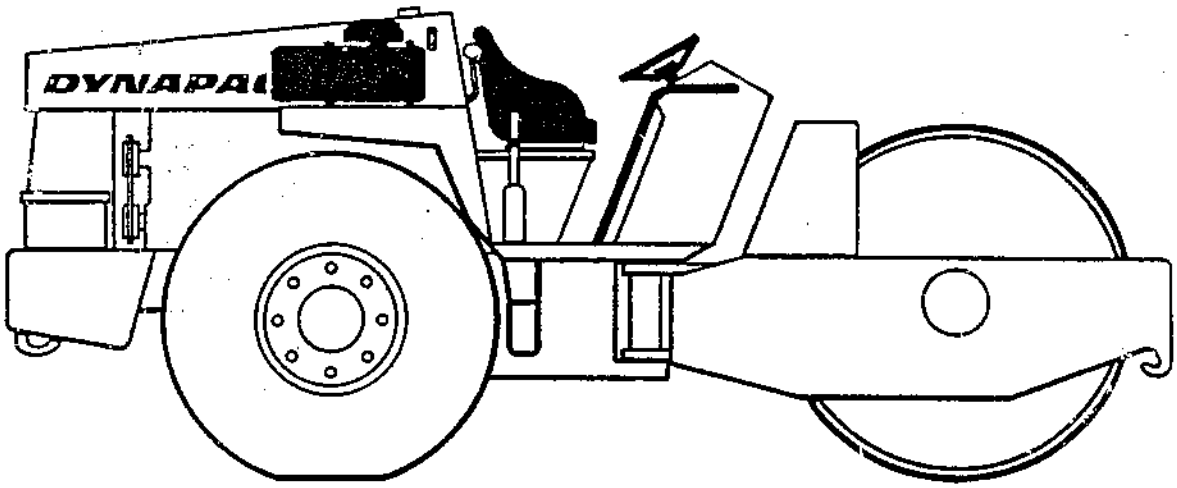

DYNAPAC

CA25 CA25A CA25S CA25D CA25PD

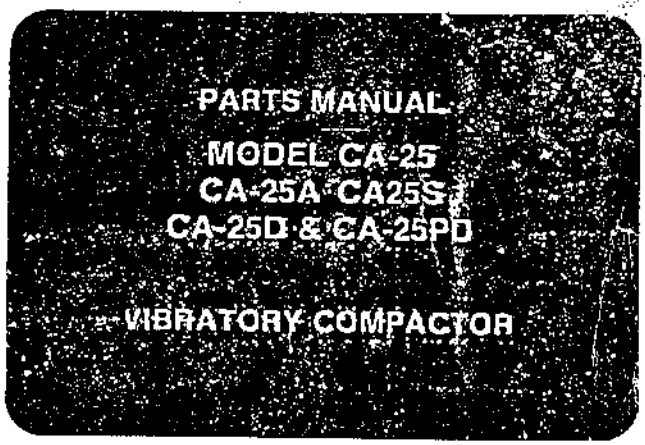

Order No. 829019

DYNAPAC MFG INC • KELLY PLACE • STANHOPE, N.J. 07874

Reprinted October 1987
PA-25-PL

INTRODUCTION

1. This manual provides information for identifying and ordering all replaceable parts and assemblies for the DYNAPAC Model CA-25 Self-Propelled Vibratory Compactor, manufactured by Dynapac Mfg Inc, Kelly Place, Stanhope, New Jersey 07874, U.S.A.

2. Using the Parts List.

   The table of contents at the front of this manual lists the major assemblies and systems.

   The Index Number column in the parts list contains reference numbers which correspond to those shown on the exploded views.

   Parts which are indented in the Description column are part of the preceding assembly or subassembly.

   The Quantity column indicates the quantity of each part required on a machine except when the parts are indented, in which case the quantity shown is the number required for the preceding assembly or subassembly.

EXAMPLE:

INDEX NUMBER	PART NUMBER	DESCRIPTION	QUANTITY
--	335567	Valve, Steering Assembly	1
1	814146	Seal, 1 1/4" OD x 1" ID	1
2	911582	Ring, Retaining	1

3. Terms and Abbreviations Used

   A. Right hand and left hand (R.H., L.H.) sides of the compactor are identified as viewed when sitting in the operator's seat with the engine behind and facing in the direction of forward travel. See illustration.

   B. Bolts and screws, etc, which are hex head and/or heat treated are indicated as HH and HT respectively.

   C. NSS identifies parts which are "not sold separately".

   D. A/R identifies parts to be ordered in quantities "as required".

4. Ordering Parts

   All orders to your DYNAPAC Dealer for parts should include the model and serial numbers of the compactor, the complete description, correct part number, quantity required, method of shipment and shipping address. When ordering parts for complete vendor units or subassemblies, please include all data appearing on the identification plate.

ILLUSTRATION:

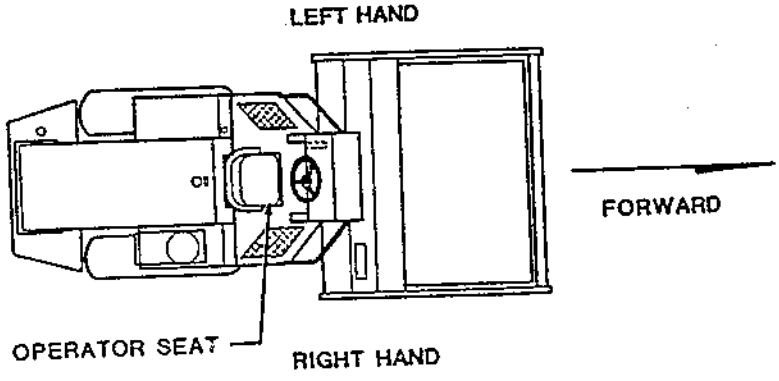

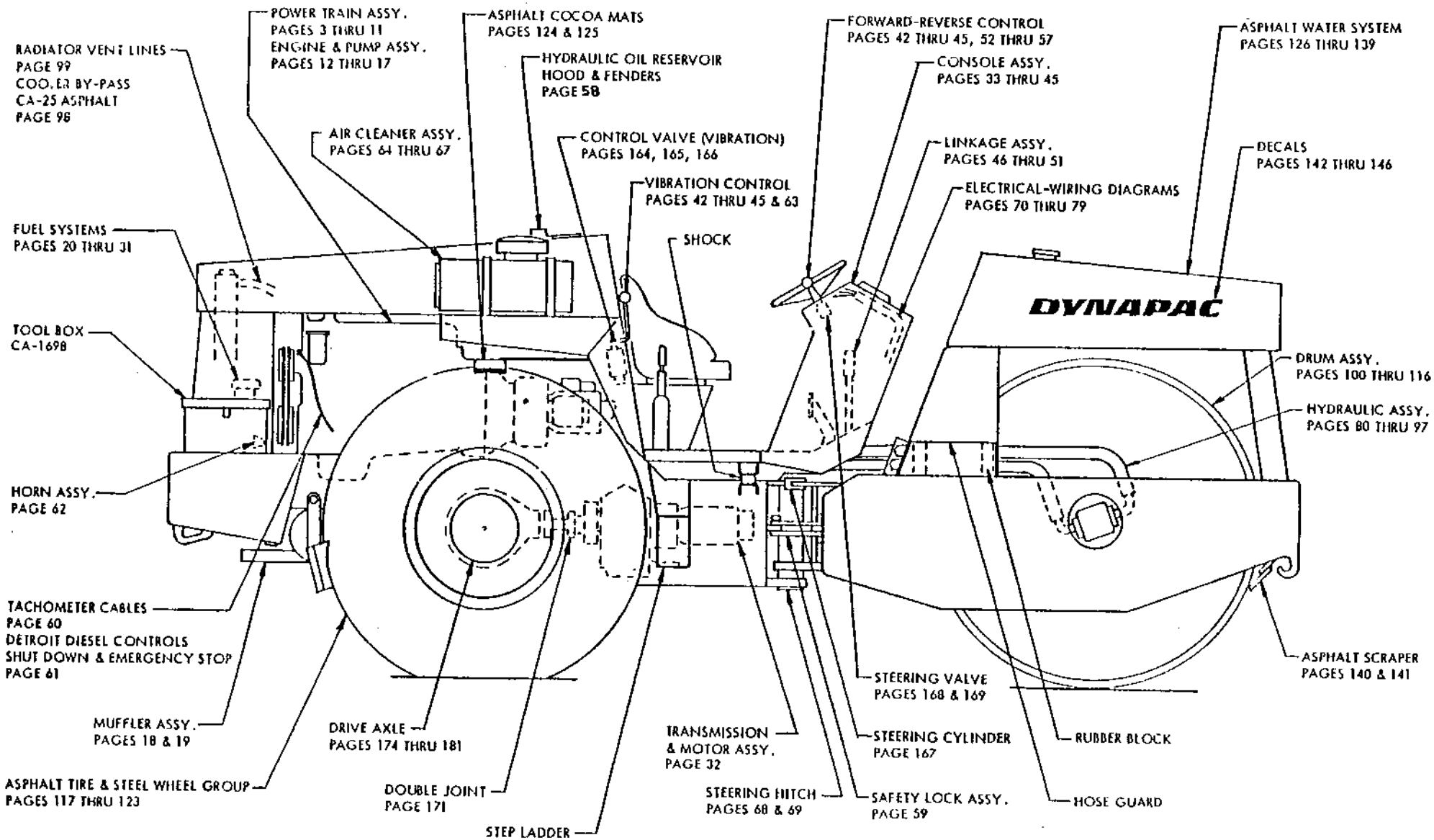

CA-25 GENERAL ARRANGEMENT

REF	IDENTIFICATION	SERVICE
	10 HOUR / DAILY	
1	ENGINE COOLANT	CHECK LEVEL BEFORE STARTING
4	ENGINE OIL	CHECK LEVEL SAE 30*
6	HYDRAULIC OIL	CHECK LEVEL AT SIGHT GAUGE
7	HYDRAULIC OIL FILTER	CHECK FILTER GAUGE AT OPERATING TEMP.
8	PARKING BRAKE	CHECK ADJUSTMENT
10	FOOT BRAKE	CHECK ADJUSTMENT
11	SHOCK MOUNTS AND BOLTS	CHECK FOR CRACKS AND LOOSE OR MISSING BOLTS
16	FUEL SUPPLY	CHECK LEVEL, FILL AT END OF DAY WITH NO 2 DIESEL FUEL
17	FAN BELTS	CHECK FOR PROPER TENSION*
	50 HOUR / WEEKLY	
5	AIR CLEANER	CLEAN ELEMENT (REPLACEMENT 801011) DAILY IN DUSTY CONDITIONS
9	BATTERY	CHECK LEVEL–USE DISTILLED WATER BOOST ONLY WITH 12-VOLT BATTERY
13	DRUM BEARING OIL LEVEL	VIEW OIL HALF WAY ON SIGHT GLASS (DO NOT OVER FILL)
14	DRUM BEARING OIL INDICATOR	POSITION DRUM TO ALIGN BAR WITH TOP OF FRAME TO CHECK OIL LEVEL
19	WHEEL LUGS	CHECK TIGHTNESS 400 FT/LB TORQUE
22	TIRE PRESSURE	16 PSI MINIMUM 22 PSI MAXIMUM
23	UNIVERSAL JOINT	2 SHOTS MPG 2 PLACES
26	STEERING LINK	5 SHOTS MPG 2 PLACES
27	STEERING CYLINDERS	3 SHOTS MPG 4 PLACES
	100 HOUR / MONTHLY	
4	ENGINE OIL	DRAIN AND FILL SAE 30*
7	HYDRAULIC OIL FILTER	REPLACE (801010)*
10	BRAKE MASTER CYLINDER	CHECK FLUID LEVEL (H.D. BRAKE FLUID)
15	FUEL TANK	DRAIN WATER FROM BOTTOM OF TANK
18	PRIMARY FUEL FILTER	FLUSH ELEMENT AND CASE*
18	ENGINE OIL FILTERS	REPLACE*
20	AXLE DIFFERENTIAL	CHECK OIL LEVEL SAE 90 EP
21	PLANETARY HUBS	CHECK OIL LEVEL (2 PLACES) SAE 90 EP
24	TRANSMISSION	CHECK OIL LEVEL SAE 90 EP
25	PUMP DRIVE	CHECK OIL LEVEL SAE 90 EP
29	TORQUE HUB	CHECK OIL LEVEL SAE 90 EP
	1000 HOUR / YEARLY	
3	FUEL FILTER	REPLACE
6	HYDRAULIC OIL	DRAIN AND FILL 55 GAL MOBIL 300 OR EQUIVALENT*
12	DRUM BEARING OIL	DRAIN AND FILL 7 GAL PER SIDE SAE 90 EP
20	AXLE DIFFERENTIAL	DRAIN AND FILL SAE 90 EP 13¾ QTS
21	PLANETARY HUBS	DRAIN AND FILL SAE 90 EP 3 PTS
24	TRANSMISSION	DRAIN AND FILL SAE 90 EP 3 QTS
25	PUMP DRIVE	DRAIN AND FILL SAE 90 EP 4¼ QTS
28	FRAME BEARINGS	PERMANENTLY LUBRICATED–NEEDS NO SCHEDULED REGREASING
29	TORQUE HUB	DRAIN AND FILL 3 QTS SAE 90 EP

DYNAPAC

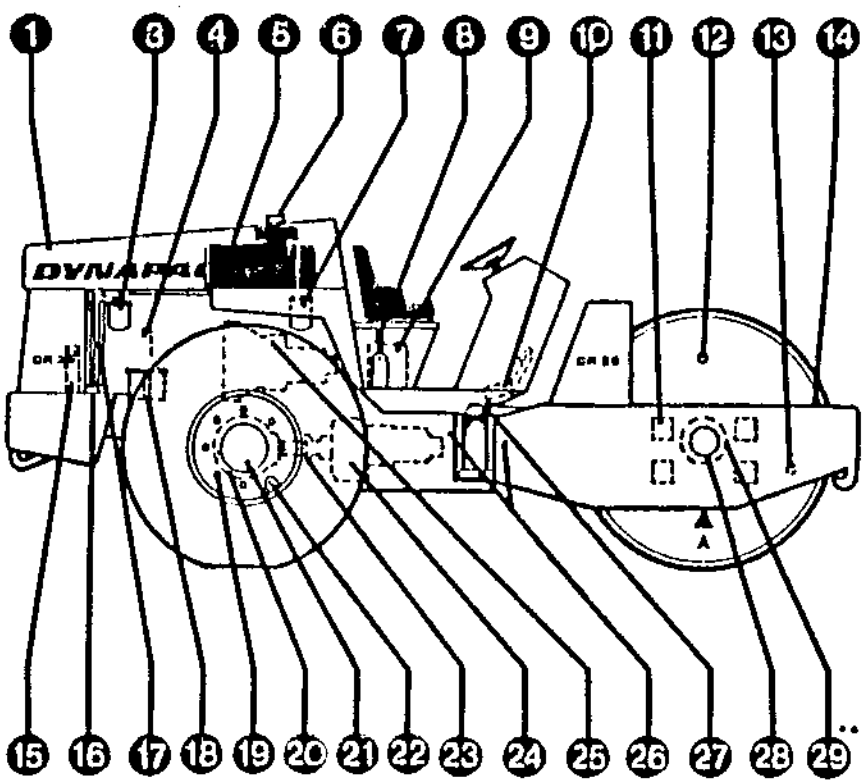

IMPORTANT-BLOCK FRAME AT POINT Ⓐ BEFORE TIEDOWN FOR TRANSPORTATION BY RAIL OR TRUCK

*REFER TO SERVICE MANUAL FOR SPECIFIC INFORMATION

**CA 25D, CA 25PD

INDEX
CA-25 MODELS

	Description		Page No. by Model Designation				
			CA-25	CA-25A	CA-25S	CA-25D	CA-25PD
	Introduction & Index		i-iii	i-iii	i-iii	i-iii	i-iii
A	General Arrangement		1	1	1	1	1
B	Air Cleaner Assembly		65	65	65	65	65
C	Blade Control Valve						204
	Cab						
	Cleaner Bar Pad Drum		185		185	185	185
	Cocoa Mat-Wheel						108
	Console Assembly			125			
	Control Assembly (Fwd/Rev & Vib)		35	39	35	35	35
	Control Levers			45			
	Control Valve-Vibration		52-53	55	52-53	52-53	52-53
	Cooler By-Pass		164	166	164	164	164
D				98			
	Decals						
	Double Joint		143	146	144	145	145
	Dual Amplitude Control Valve		171	171	171	171	171
	Drive Axle		205-208		205-208	205-208	205-208
	Drive Hub Assembly		179	179	179	179	179
	Drive Hub/Drive Plate Assy.					173	173
	Drum Assembly					110	110
	Drum Drive Assy. (Staffa/Fairfield)		111	111	112	116	116
	Drum Module Assembly					105	105
E			100-102	100-101A	103	105	105
	Electrical Wiring Diagrams	CAT	70	71	70	70	70
		Detroit	73	74	73	73	73
		Cummins	78	79	78	78	78
	Engine Emergency Shutdown	Detroit	61	61	61	61	61
	Engine & Pump Assembly	CAT	13	13	13	13	13
		Detroit	15	15	15	15	15
		Cummins	17	17	17	17	17
	Exhaust & Muffler Assy.	CAT	18	18	18	18	18
		Detroit	6	6	6	6	6
F		Cummins	19	19	19	19	19
	Fuel System	CAT	21	21	21	21	21
		Detroit	27	27	27	27	27
H		Cummins	31	31	31	31	31
	Headlights		183	183	183	183	183
	Heater & Defroster		193		193	193	193
	Horn Assembly		62	62	62	62	62
	Hydraulic Assembly		83	88	83		
	Hydraulic Circuit, Dual Amplitude Vib.		85		85	85	85
	Hydraulic Circuit, Drum Drive					93	93
	Hydraulic Circuit, Strike-Off Blade						97
	Hydraulic Circuit, Vibration Pilot			91			
	Hydraulic Cylinder, Strike-Off Blade						203-203B
	Hydraulic Oil Filter		170	170	170	170	170
	Hyd. Oil Reservoir, Hood & Fender Assy.		58	58	58	58	58
	Hydraulic Schematic		80	80	80	80	80

Revised 9-20-83

INDEX
CA-25 MODELS

	Description		Page No. by Model Designation				
			CA-25	CA-25A	CA-25S	CA-25D	CA-25PD
L							
	Linkage Assembly		46	51	46	46	46
	Lubrication Chart		2	2	2	2	2
M							
	Mat & Scraper Assembly			117			
	Motor & Bracket Assy. (Staffa)					109	109
N							
	Noise Reduction Assy.		187	187	187	187	187
P							
	Pedestal Assembly			41			
	Power Train Assembly	CAT	5	5	5	5	5
		Detroit	6	6	6	6	6
		Cummins	11	11	11	11	11
	Pump Drive		150	150	150	150	150
R							
	Radiator & Cooler Assy.		11A	11A	11A	11A	11A
	Radiator Vent Lines		99	99	99	99	99
	Rollover Protection Structure		202-202B		202-202B	202-202B	202-202B
S							
	Safety Lock Assembly		59	59	59	59	59
	Scraper Assembly, Drum			141			
	Scraper, Rubber Tire			121			
	Scraper, Steel Wheel			123			
	Seat Belt		194		194	194	194
	Speed Control			200			
	Speedometer & Components			199&209			
	Steering Cylinder		167	167	167	167	167
	Steering Hitch		69	69	69	69	69
	Steering Valve		168A-169	168-169	168-169	168-169	168-169
T							
	Tachometer Cables		60	60	60	60	60
	Traction Motor, Axle		155	155	155	155	155
	Traction Motor, Drum (Staffa)					157	157
	Traction Motor, Drum (Fairfield)					158	158
	Traction Pump		153	153	153	153	153
	Transmission & Motor Assy.		32	32	32	32	32
	Transmission, 3-Speed		149	149	149	149	149
U							
	Umbrella		201	201	201	201	201
V							
	Vibration Control Linkage		63		63	63	63
	Vibration Motor		161	161	161	161	161
	Vibration & Steering Pump		162	162	162-163B	162	162-163B
	Vibrometer & Components			211			
W							
	Water System Assembly			126			
	Water System Electrical			131			
	Water System Solvent Tank			139			
	Wheel & Tire Assembly		119	119	119	119	119

POWER TRAIN ASSEMBLY (CAT)

INDEX NUMBER	PART NUMBER	DESCRIPTION	QUANTITY
1	335540	Radiator Guard	1
2		Engine & Pump Assembly (See Page 13)	1
3		Trans. & Motor Assembly (See Page 32)	1
4		Fuel System (See Page 21-to s/n 1031)	1
-		Fuel System (See Page 23-s/n 1032 to 1717)	1
-		Fuel System (See Page 25-from s/n 1718)	1
5	826558	Frame (From S/N 2969 To 2972, 2977 & Up)	1
-	335537	Frame (To 2968, 2973 To 2976)	1
-	826585	Frame (CA-25A From S/N 2969 to 2972, 2977 & Up)	1
-	826242	Frame (CA-25A To 2968, 2973 To 2976)	1
9	825155	Tube Support	2
10	813314	Fuel Level Sender	1
11	813315	Gasket	1
12		Radiator & Cooler Assembly (See Pg. 11A).	
13		Axle (See Page 174 thru 181)	
14		Hydraulic Cylinder-Steering (See Pg. 167)	
15	335572	L.H. Axle Brake Line	1
16	335573	R.H. Axle Brake Line	1
17	813316	Bearing	2
18	813303	Double Joint	1
19	892197	Oil Dipstick	1
* 22	813308	Hose-Outlet	2
23	825885	Hose Water Pump	1
24	813311	Clamp	4
25	313064	Clamp	2
26	813313	Clamp	2
27	813310	Strap Tee	1
↓	337202	LOWER RAD HOSE	

POWER TRAIN ASSEMBLY (CAT)

INDEX NUMBER	PART NUMBER	DESCRIPTION	QUANTITY
29	813317	Neoprene Strip - 15½" Lg.	1
30	502314	Capscrew, HH/HT (From S/N 2715)	8
--	502229	Capscrew, HH/HT (To S/N 2714)	8
31	586050	Locknut, (From S/N 2715)	8
--	571024	Hex Nut, (To S/N 2714)	16
33	825127	Front Engine Support	1
34	825128	Rear Engine Support	1
35	893399	Voltage Regulator	1
37	310025	Grease Fitting	2
38	825309	Spacer	2
40	502060	Capscrew, HH	2
41	586049	Locknut	2
42	602017	Plain Washer SAE	2
43		Muffler Assembly (See Page 18)	1
44	615033	Washer, Flat (From S/N 2715)	16
45	815272	Mounting Bracket, RH Cylinder	1
46	815273	Mounting Bracket, LH Cylinder	1
A	502004	Capscrew	2
B	502018	Capscrew	1
C	502037	Capscrew	6
D	502029	Capscrew	10
E	502079	Capscrew	4
F	604026	Lockwasher	4
G	604028	Lockwasher	6
K	604030	Lockwasher	10
M	604032	Lockwasher	4
N	604033	Lockwasher	10*
P	571001	Hex Nut	2
R	571003	Hex Nut	7
S	571005	Hex Nut	10
T	571006	Hex Nut	4
U	600011	Plain Washer	4
V	502138	Capscrew, HH	2
W	550028	Rd. Hd. Screw	5
AA	604019	Lockwasher	5
BB	604027	Lockwasher	1

* Quantity of 8 used on Axle up to S/N 2714

POWER TRAIN ASSEMBLY
CAT

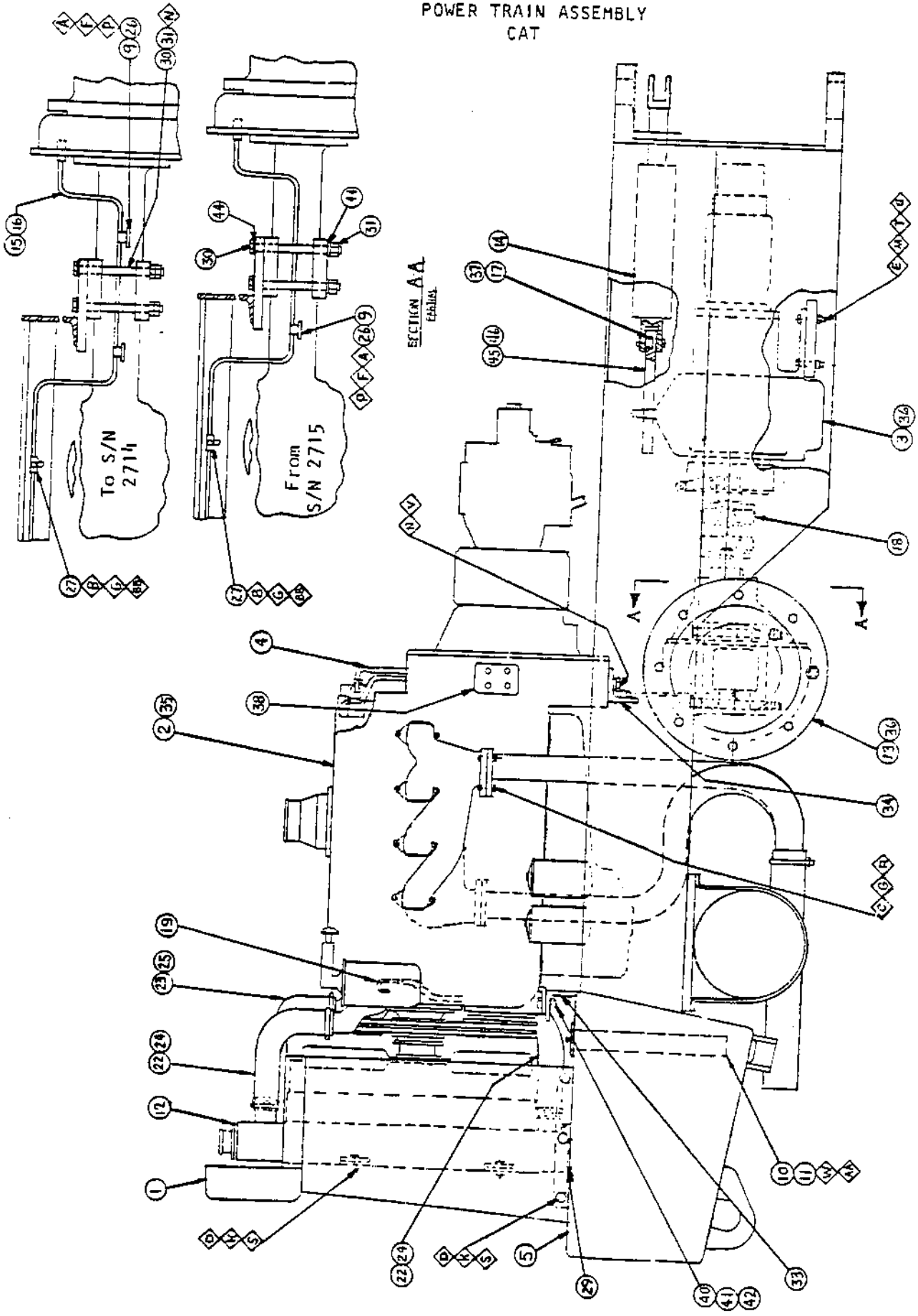

POWER TRAIN ASSEMBLY
DETROIT

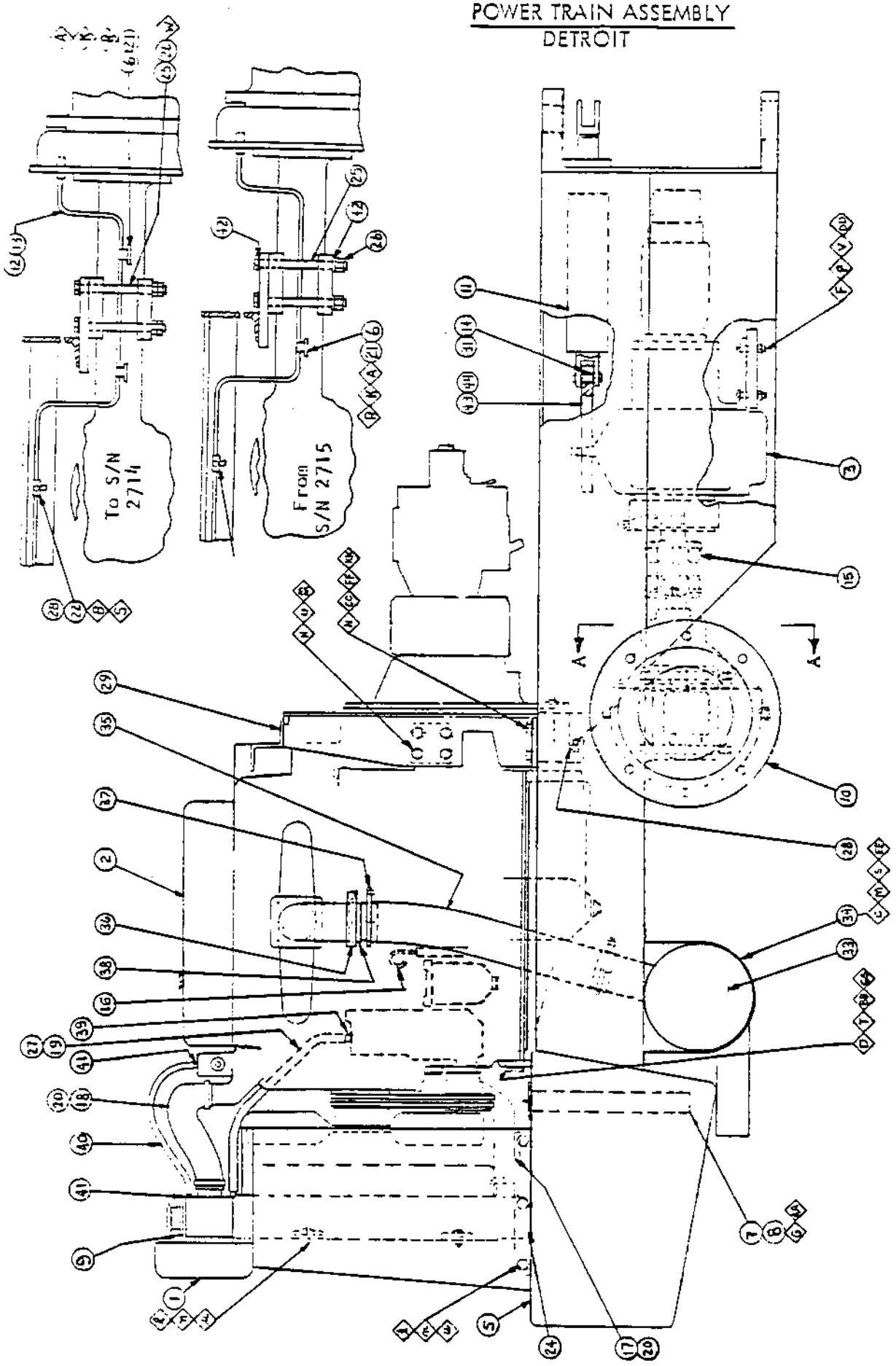

POWER TRAIN ASSEMBLY (DETROIT)

INDEX NUMBER	PART NUMBER	DESCRIPTION	QUANTITY
1	335540	Radiator Guard	1
2		Engine & Pump Assembly (See Page 15)	1
3		Trans. & Motor Assembly (See Page 32)	1
4		Fuel System (See Page 27)	1
5	826572	Frame (From S/N 2969 to 2972, 2977 & Up)	1
-	825707	Frame (To 2968, 2973 To 2976)	1
-	826586	Frame (CA-25A From S/N 2969 To 2972, 2977 & Up)	1
-	826242	Frame (CA-25A To 2968, 2973 To 2976)	1
6	825155	Tube Support	2
7	813314	Fuel Level Sender	1
8	813315	Gasket	1
9		Radiator & Cooler Assembly (See Page 11A)	
10		Axle (See Page 174 thru 181)	1
11		Hydraulic Cylinder - Steering (See Page 167)	2
12	335572	L.H. Axle Brake Line	1
13	335573	R.H. Axle Brake Line	1
14	813316	Bearing	2
15	813303	Double Joint	1
17	826449	Hose-Inlet	1
18	745015	Hose-Outlet	1
19	753010	Hose - 38" Lg.	1
20	813311	Clamp	4
21	813313	Clamp	2
22	813310	Strap Tee	1
24	813317	Neoprene Strip - 15½" Lg.	1
25	502314	Capscrew, HH/HT (From S/N 2715)	8
--	502229	Capscrew, HH/HT (To S/N 2714)	8
26	586050	Locknut, (From S/N 2715)	8
--	571024	Hex Nut, (To S/N 2714)	16
27	313064	Clamp	2
28	825711	Tee Support Bracket	1
29	825695	Reservoir Support Rear	1
31	310022	Grease Fitting	2
33	801058	Muffler	1
34	815069	Muffler Strap	1

INDEX NUMBER	PART NUMBER	DESCRIPTION	QUANTITY
35	745016	Flexible Pipe	1
36	313056	Clamp	1
37	921097	Pipe Clamp	2
38	745017	Flared Adapter	1
39	814058	Nipple TOE	1
40		Vent Line - Radiator (See Page 99)	1
41	334179	Connector	2
42	615033	Washer, Flat (From S/N 2715)	16
43	815272	Mounting Bracket, RH Cylinder	1
44	815273	Mounting Bracket, LH Cylinder	1
A	502004	Capscrew	2
B	502035	Capscrew	1
C	502037	Capscrew	4
D	509077	Capscrew	2
E	502059	Capscrew	10
F	502079	Capscrew	4
G	550028	Rd. Hd. Screw	5
K	571001	Hex Nut	2
M	571003	Hex Nut	4
N	571005	Hex Nut	22
P	571006	Hex Nut	4
R	604026	Lockwasher	2
S	604028	Lockwasher	5
T	604029	Lockwasher	2
U	604030	Lockwasher	18
V	604032	Lockwasher	4
W	604033	Lockwasher (To S/N 2714)	8
AA	604019	Lockwasher	5
BB	600069	Plain Washer	4
CC	600010	Plain Washer	4
DD	600011	Plain Washer	4
EE	605006	Bevel Washer	4
FF	605007	Bevel Washer	4
GG	502046	Capscrew	2
KK	502061	Capscrew	4
MM	502062	Capscrew	8

POWER TRAIN ASSEMBLY (CUMMINS)

INDEX NUMBER	PART NUMBER	DESCRIPTION	QUANTITY
1	335540	Radiator Guard	1
2		Engine & Pump Assembly (See Page 17)	1
3		Trans.& Motor Assembly (See Page 32)	1
4		Fuel System (See Page 31)	1
5	335537	Frame	1
6		Muffler & Pipe Assembly L.H. (See Page 19)	1
7		Muffler & Pipe Assembly R.H. (See Page 19)	1
8	753007	Voltage Regulator	1
9	825155	Tube Support	2
10	335694	Front Engine Support	1
12		Radiator & Cooler Assembly (See Page 11A)	
13		Axle (See Page 174 thru 181)	
14		Hydraulic Cylinder - Steering (See Page 167)	2
15	335572	L.H. Axle Brake Line	1
16	335573	R.H. Axle Brake Line	1
17	813316	Bearing	2
18	813303	Double Joint	1
21	753008	Hose Inlet	1
22	753009	Hose Outlet	1
23	753010	Hose Water Pump - 34" Lg.	1
24	813311	Clamp	6
26	813313	Clamp	2
27	813310	Strap Tee	1
29	813317	Neoprene Strip - 15½" Lg.	1
30	502142	Capscrew HH/HT	8
31	571024	Hex Nut HT	16

POWER TRAIN ASSEMBLY (CUMMINS)

INDEX NUMBER	PART NUMBER	DESCRIPTION	QUANTITY
33	310025	Grease Fitting	2
34	813314	Fuel Level Sender	1
35	814056	Nipple TOE	1
37	814058	Nipple TOE	1
38	813315	Gasket	1
40	502016	Capscrew HH/HT	1
41	825696	Throttle Cable Bracket (From s/n 445)	1
42	813360	Cable Clip	1
A	502004	Capscrew	2
B	502035	Capscrew	1
C	502058	Capscrew	4
D	502075	Capscrew	2
E	502079	Capscrew	4
F	550028	Rd. Hd. Screw	7
G	502037	Capscrew	4
H	604026	Lockwasher	2
K	604028	Lockwasher	13
L	604030	Lockwasher	14
M	604032	Lockwasher	6
N	600011	Plain Washer	5
P	502035	Capscrew	8
R	502059	Capscrew	10
S	571001	Hex Nut	2
T	571003	Hex Nut	6
U	571005	Hex Nut	14
V	571006	Hex Nut	6
W	604019	Lockwasher	7
X	604027	Lockwasher	1

POWER TRAIN ASSEMBLY
CUMMINS

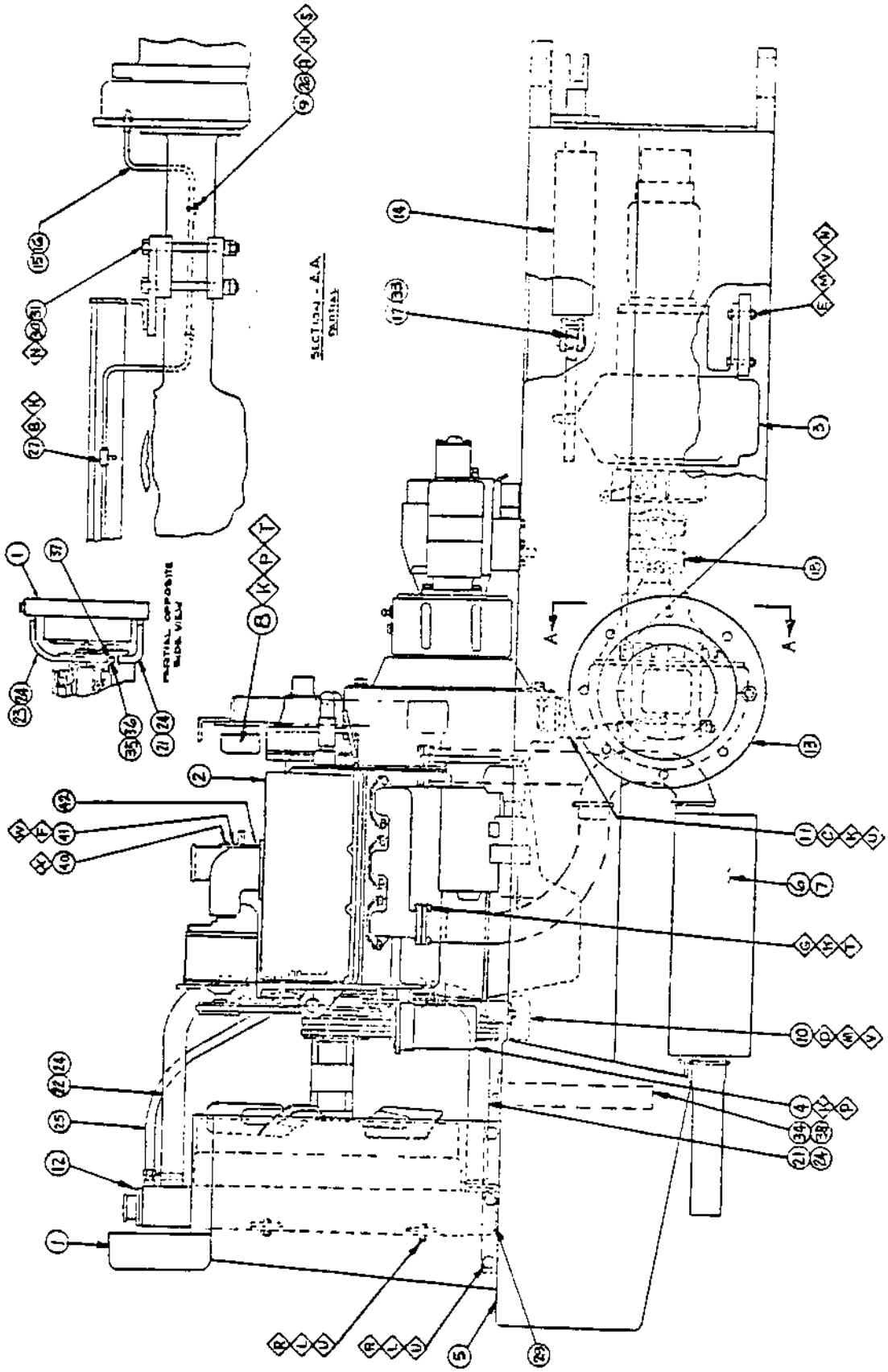

RADIATOR & COOLER ASSEMBLY

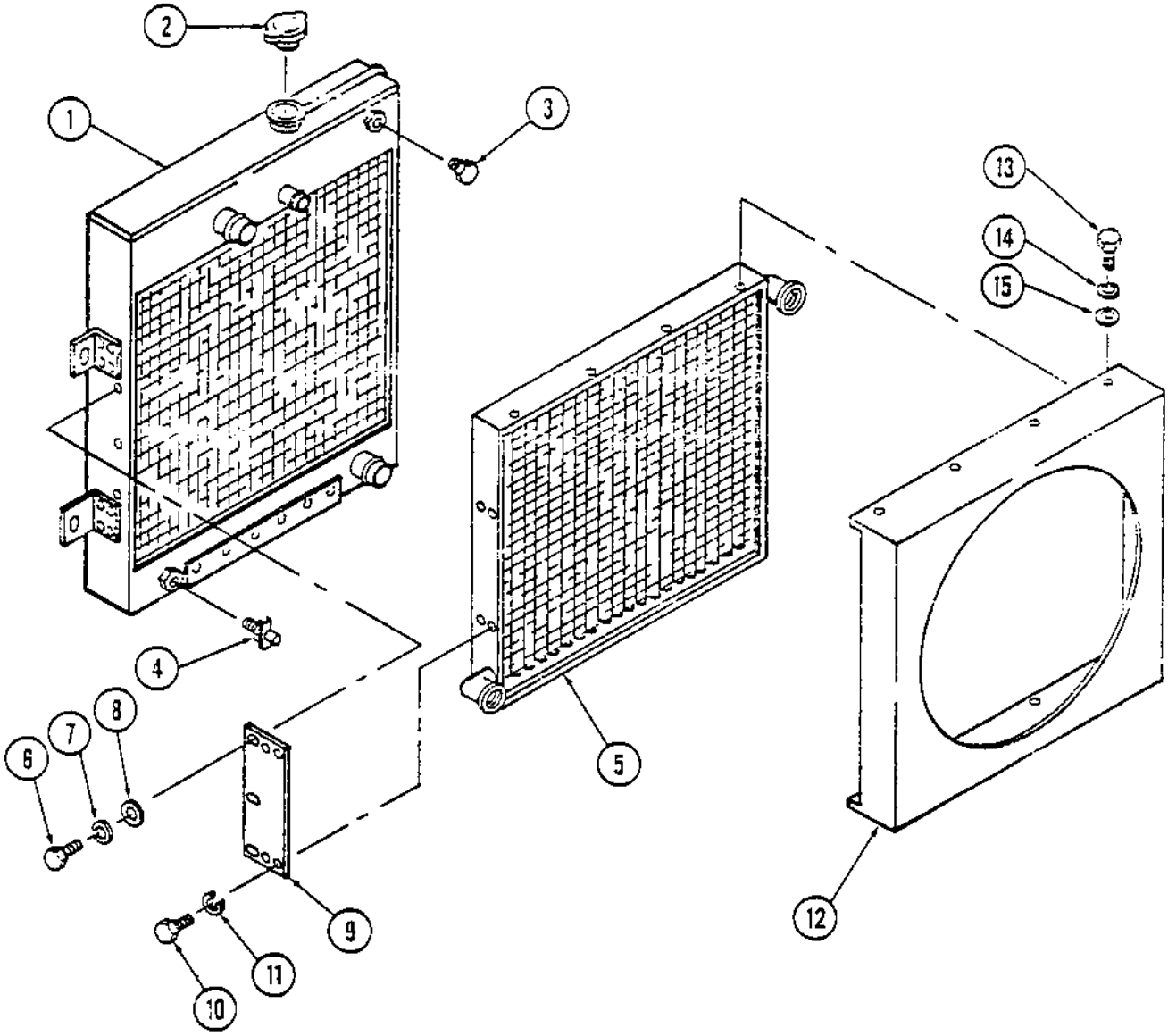

INDEX NUMBER	PART NUMBER	DESCRIPTION	QUANTITY
1	801590	Radiator	1
2	893488	Cap, Radiator	1
3	801291	Plug, Pipe (Cat. eng. only)	1
4	813306	Petcock, Drain	1
5	801137	Cooler, Oil	1
6	502031	Capscrew, HH	6
7	604028	Lockwasher	6
8	600007	Washer, Flat	6
9	826261	Bracket, Radiator	1
10	502014	Capscrew, HH	8
11	604027	Lockwasher	8
12	801485	Shroud, Fan	1
13	502002	Capscrew, HH	8
14	604026	Lockwasher	8
15	600005	Washer, Flat	8

ENGINE & PUMP ASSEMBLY (CAT)

INDEX NUMBER	PART NUMBER	DESCRIPTION	QUANTITY
1	752016	Air Intake Adapter	1
2	814275	Drive Plate	1
3	335545	Special Washer	4
5	801151	Blower Fan (Standard) e.c.a. 972	1
6	813460	Starter - 12V - 35 Amp	1
7	752046	Alternator	1
-	893399	Regulator	1
8		Pump Drive (See Page 150)	1
9		Pump Vibration (See Page 162)	
10		Pump Hydrostatic (See Page 153)	
11	752026	V-Belt (set of 2)	1
12	752018	Fan Spacer	1
13		Engine - Cat. 3145 (to s/n 1031)	1
-	801091	Engine - Cat. 3208 (from s/n 1032)	1
14	989078	Temperature Sender (from s/n 1777)	1
-	813447	Temperature Sender (to s/n 691)	1
-	989036	Temperature Sender (from s/n 692 to s/n 1776)	1
15	811532	Tachometer Adapter (to s/n 184)	1
-	813466	Tachometer Adapter (from s/n 185)	1
18	813647	"O" Ring	2
19	502033	Capscrew HH/HT	8
20	813462	Pressure Switch	1
22	813465	Hex Bushing	1
23	813605	Adapter Sleeve (See Page 150)	1
24	813602	Adapter Sleeve (See Page 150)	1

SUCTION FAN 2N 2363

ENGINE & PUMP ASSEMBLY (CAT)

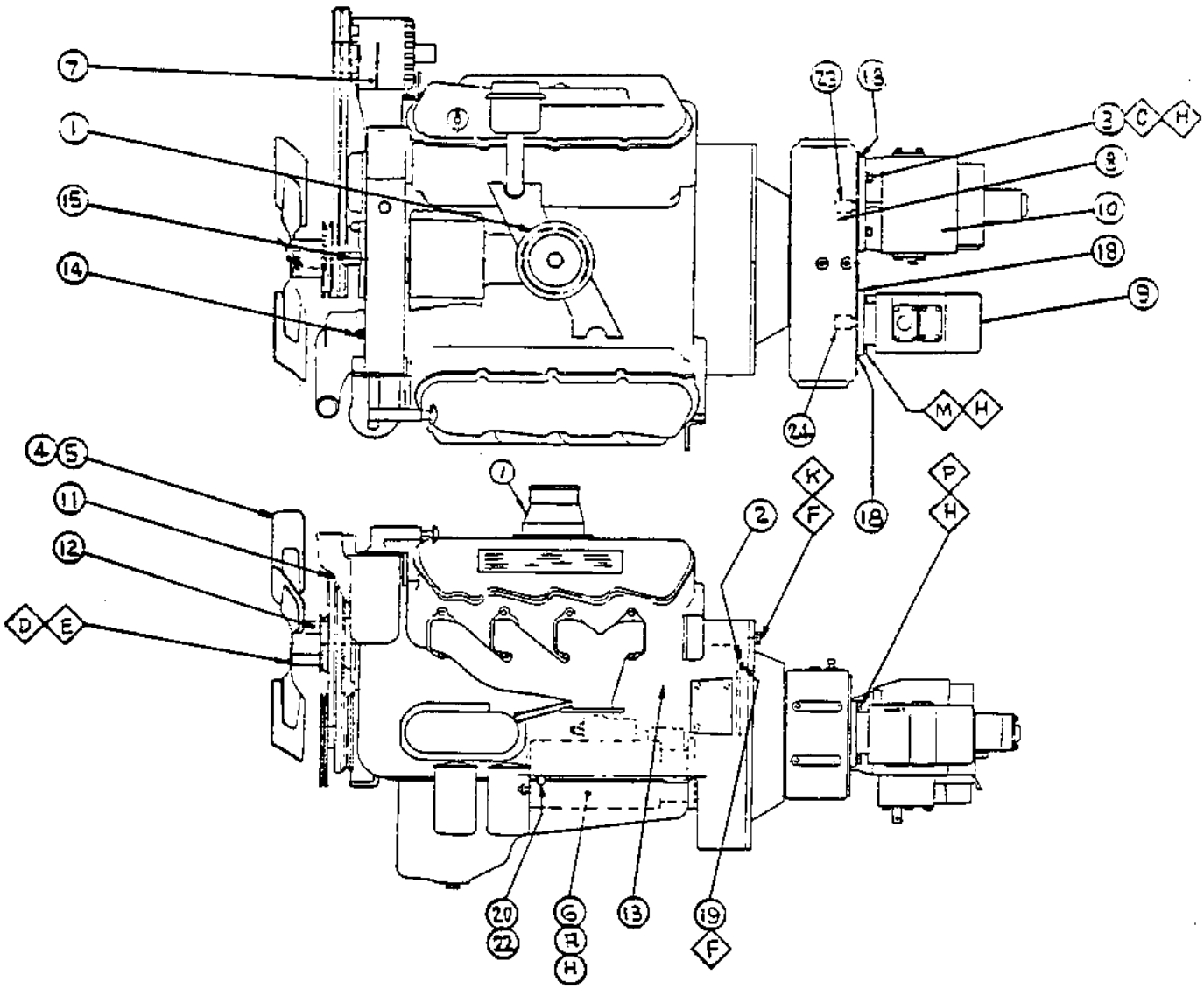

INDEX NUMBER	PART NUMBER	DESCRIPTION	QUANTITY
A	502076	Capscrew HH	3
C	502059	Capscrew HH	4
D	503054	Capscrew HH	4
E	604027	Spring Lockwasher	4
F	604028	Spring Lockwasher	20
H	604030	Spring Lockwasher	8
K	502036	Capscrew HH	12
M	502057	Capscrew HH	2
N	604032	Lockwasher	3
P	502058	Capscrew	2

ENGINE & PUMP ASSEMBLY (DETROIT)

INDEX NUMBER	PART NUMBER	DESCRIPTION	QUANTITY
1	801049	Engine	1
2	480695	Drive Plate	1
3	335545	Special Washer	1
4		Pump Drive (See Page 150)	1
5		Pump Vibration (See Page 162)	
6		Pump Hydrostatic (See Page 153)	
8	813647	"O" Ring	2
9	502033	Capscrew HH/HT	8
10	813605	Adapter Sleeve (See Page 150)	1
11	813602	Adapter Sleeve (See Page 150)	1
12	989078	Temp Sender (from s/n 1777 & up)	1
-	989055	Temp Sender (from s/n 1776 & down)	1
13	813462	Pressure Switch	1
14	815035	Throttle Link	1
15	745018	Fan Spacer	2
17	745020	Tachometer Adapter	1

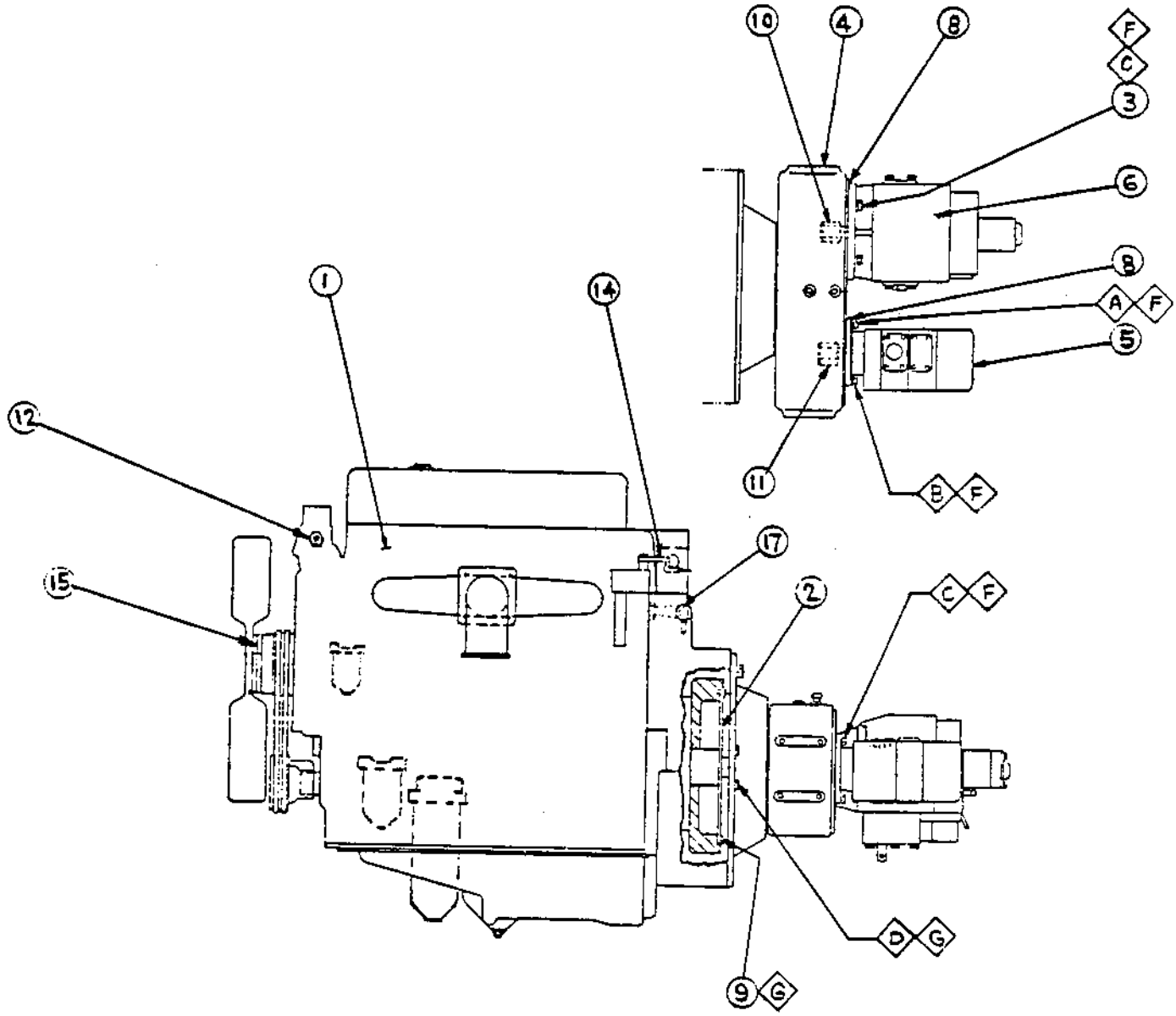

INDEX NUMBER	PART NUMBER	DESCRIPTION	QUANTITY
A	502058	Capscrew HH	2
B	502057	Capscrew HH	2
C	502059	Capscrew HH	4
D	502036	Capscrew HH	12
F	604030	Spring Lockwasher	8
G	604028	Spring Lockwasher	20
H	502016	Capscrew HH	1
K	604027	Lockwasher	1

ENGINE & PUMP ASSEMBLY (CUMMINS)

INDEX NUMBER	PART NUMBER	DESCRIPTION	QUANTITY
1		Pump Hydrostatic (See Page 153)	1
2		Pump Vibration (See Page 162)	1
3		Pump Drive (See Page 150)	1
6	911148	Starter	1
7	NSS	Alternator 42 Amp	1
8	814048	Drive Plate	1
9	335545	Special Washer	1
11	989078	Temp Sender (from s/n 1777 & up)	1
-	813447	Temp Sender (to s/n 691)	1
-	989036	Temp Sender (from s/n 692 to s/n 1776)	1
12	811532	Tach Adapter (to s/n 184)	1
-	813466	Tach Adapter (from s/n 185)	1
15	[illegible] 813647	"O" Ring	2
16	502035	Capscrew HH/HT	8
17	813462	Pressure Switch	1
19	989019	Ammeter	1
21	334545	Close Nipple	1
22	337534	Coupling	1
23	813605	Adapter Sleeve (See Page 150)	1
24	813602	Adapter Sleeve (See Page 150)	1
5	651073	FAN	

ENGINE & PUMP ASSEMBLY (CUMMINS)

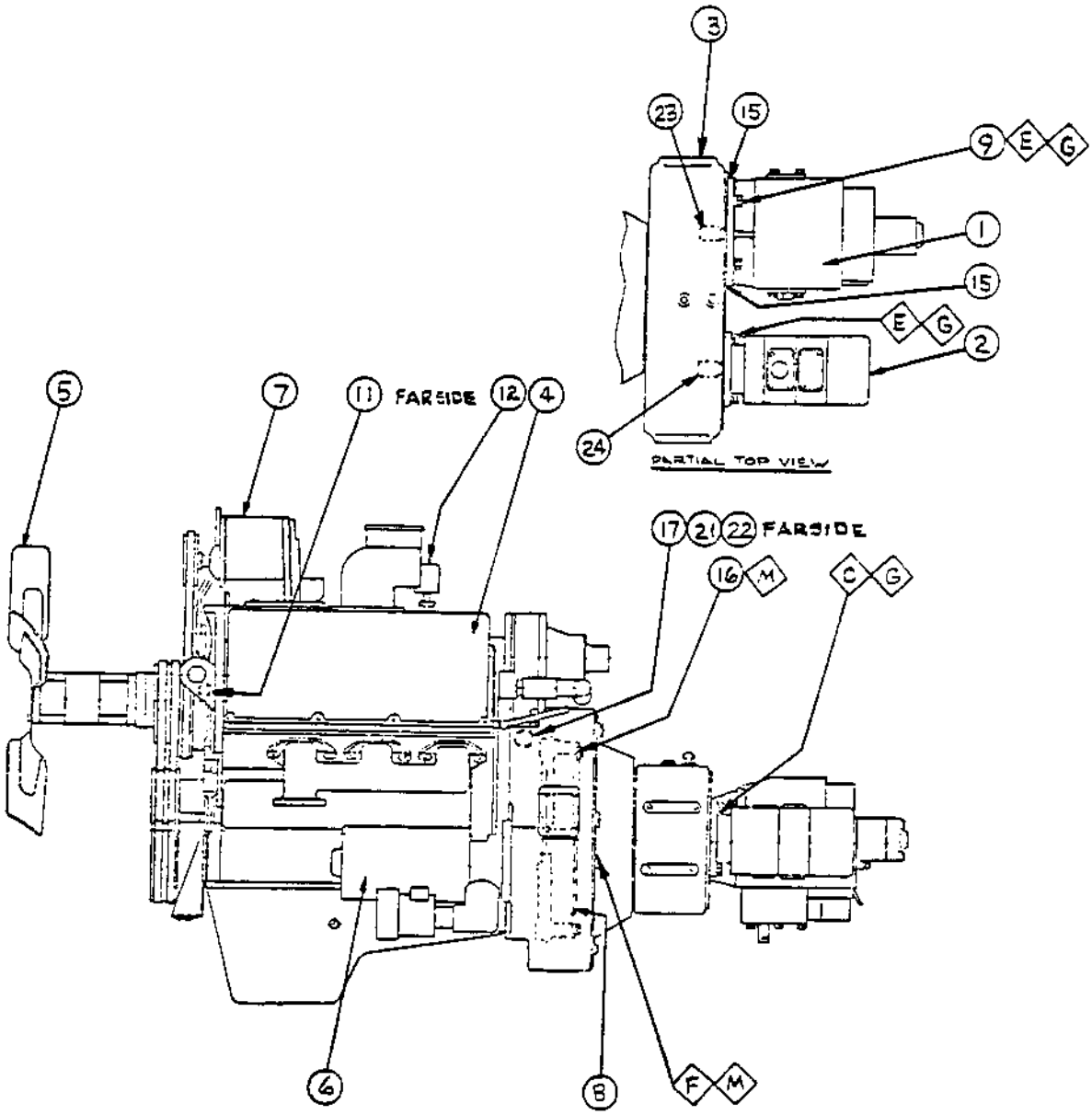

INDEX NUMBER	PART NUMBER	DESCRIPTION	QUANTITY
C	502057	Capscrew HH	2
E	502059	Capscrew HH	6
F	502036	Capscrew HH	12
G	604030	Lockwasher	8
M	604027	Lockwasher	20

MUFFLER ASSEMBLY (CAT)
(FROM S/N 636)

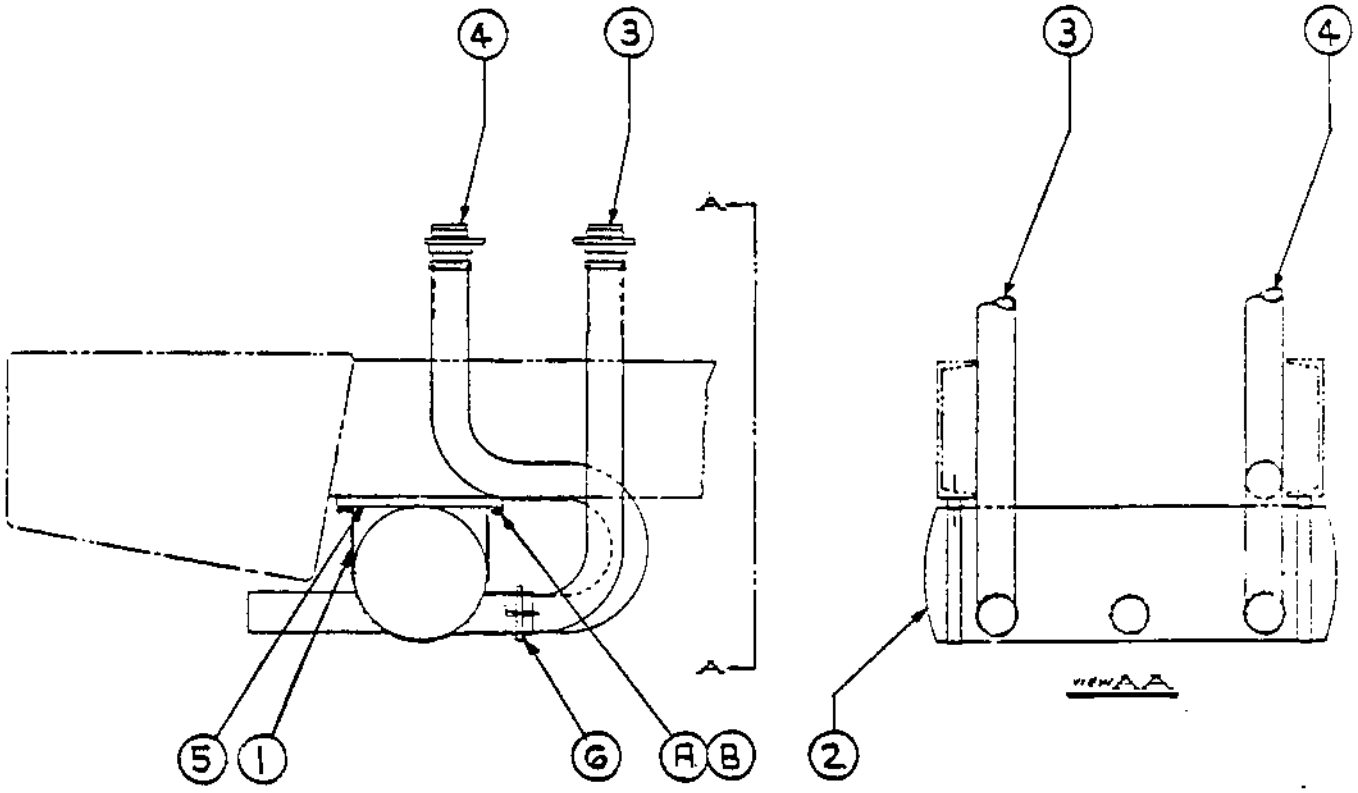

INDEX NUMBER	PART NUMBER	DESCRIPTION	QUANTITY
1	815069	Muffler Strap	2
2	752039	Muffler	1
3	825791	R.H. Exhaust Assembly	1
4	825792	L.H. Exhaust Assembly	1
5	825779	Spacer	2
6	814261	Clamp	2
A	502033	Hex Hd. Capscrew	4
B	604028	Lockwasher	4

MUFFLER ASSEMBLY (CUMMINS)

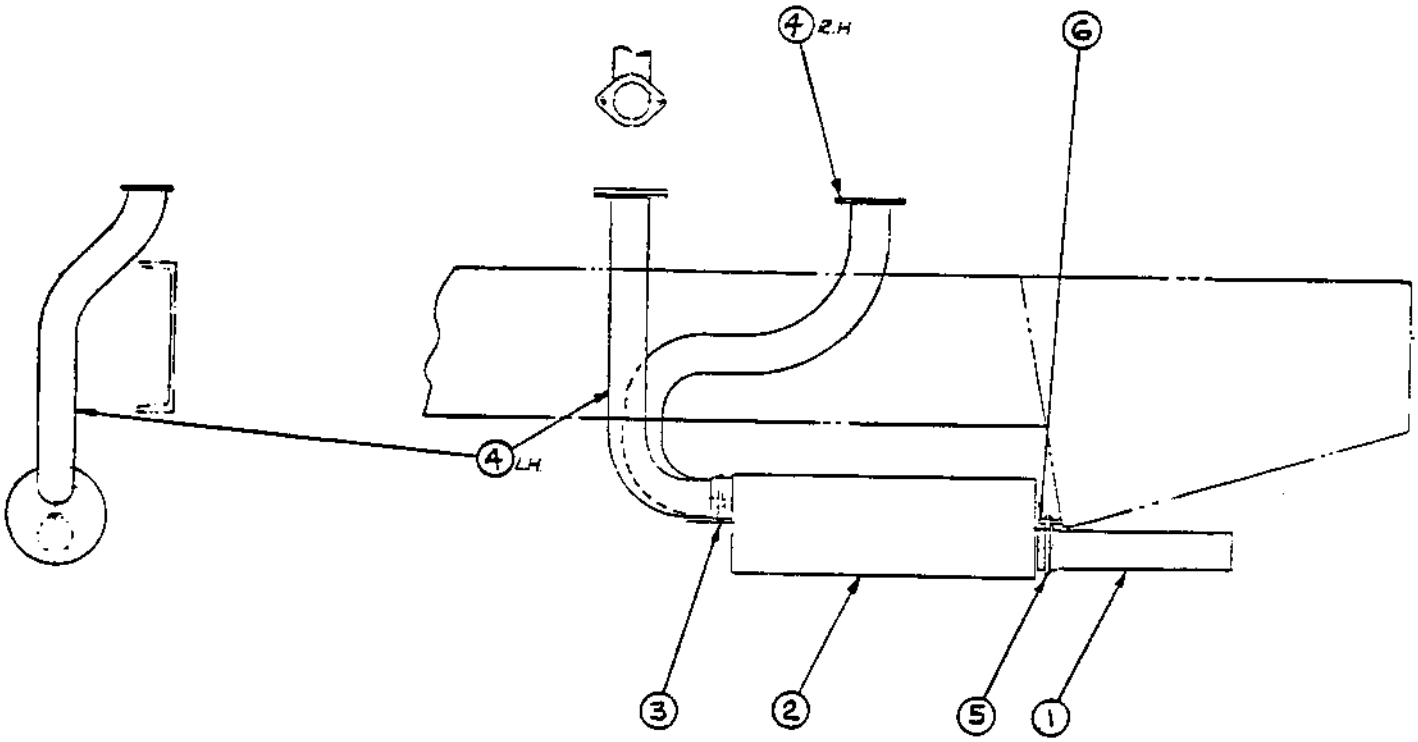

INDEX NUMBER	PART NUMBER	DESCRIPTION	QUANTITY
1	620097	C.D. Mech. Tube - 9" Lg.	1
2	814051	Muffler	1
3	813312	Clamp	2
4	335706	Exhaust Pipe L.H.	1
-	335702	Exhaust Pipe R.H.	1
5	335704	U-Bolt	1
6	825332	Bracket	1

FUEL SYSTEM CAT.
(D3145 TO S/N 1031)

INDEX NUMBER	PART NUMBER	DESCRIPTION	QUANTITY
1	334305	Male Conn.	2
2	482008	Hose Assembly	1
3	482007	Hose Assembly	1
4	813321	Elbow 90°	3
5	892294	Hose Assembly	1
6	334174	Str. Elbow 90°	1
7	*752014	Fuel Filter	1
8	813467	Cap Assembly	1
9	801650	Clamp	3
10	825199	Filter Bracket	1
11	813325	Pipe Red. Bushing	1
14	335544	Clamps	2
7a	752047	FUEL FILTER ELEMENT	
A	502002	Capscrew HH	2
B	604026	Lockwasher	2
E	502016	Capscrew HH	2
F	571002	Nut	2
G	604027	Lockwasher	2

* 9N2341 sold by CAT. only.

FUEL SYSTEM
CAT
(D3145)
(to s/n 1031)

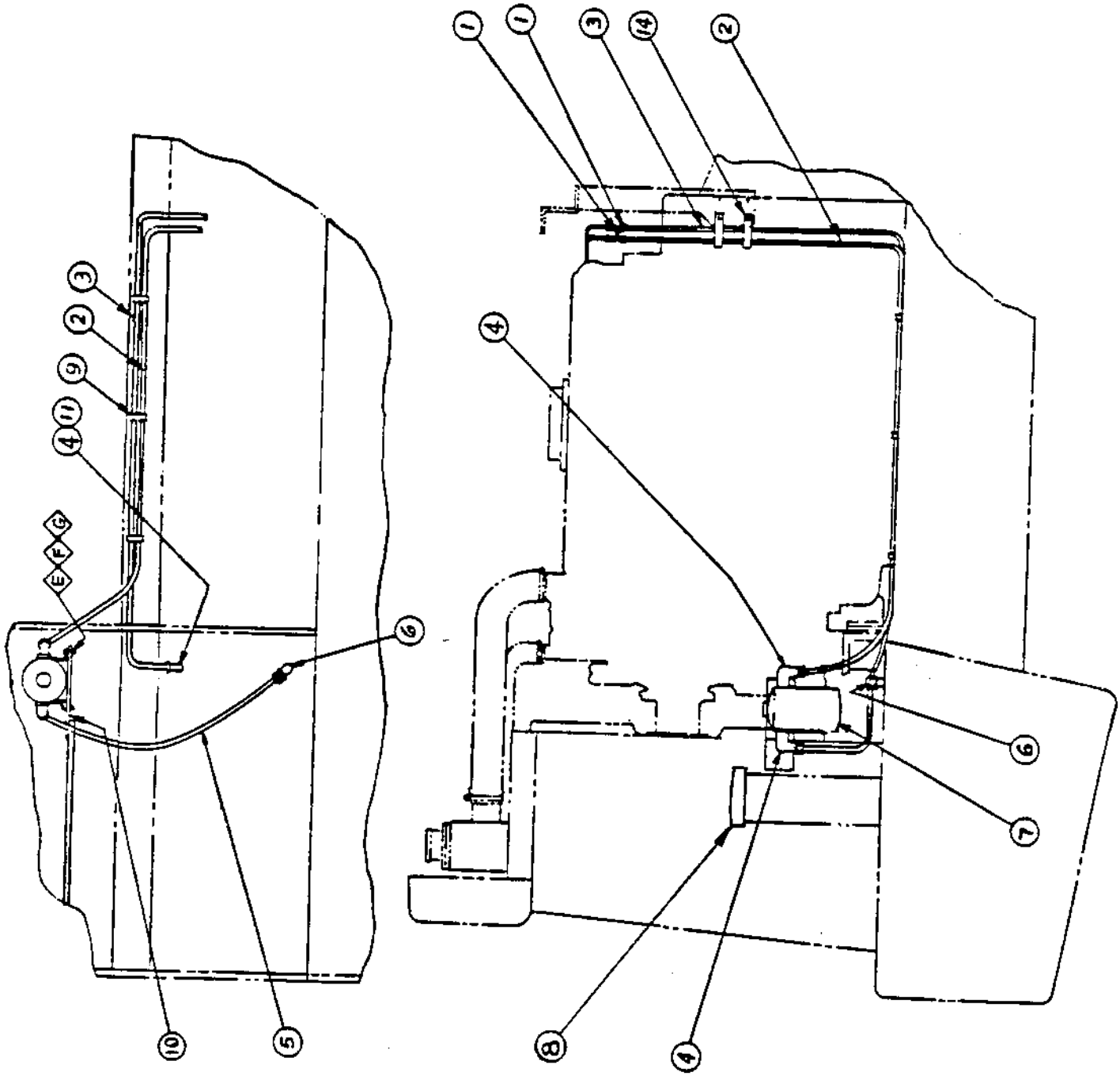

FUEL SYSTEM (CAT)
(S/N 1032 TO S/N 1717)

INDEX NUMBER	PART NUMBER	DESCRIPTION	QUANTITY
1	331087	Elbow 90°	2
**2	482008	Hose Assembly	1
3	482007	Hose Assembly	1
4	334314	Elbow 90°	2
5	893491	Hose Assembly	1
6	334174	Str. Elbow 90°	1
7	921124	Clamp	3
8	334305	Male Connector	1
9	335544	Clamp	2
*10	752014	Fuel Filter	1
***11	813467	Cap Assembly	1
A	502002	Capscrew HH	6
B	604026	Lockwasher	6

*Not required after s/n 1131
**Not required after s/n 1135
***Also used on the following s/n's 1732, 1739, 1755, 1757, 1764, 1774 & 1777

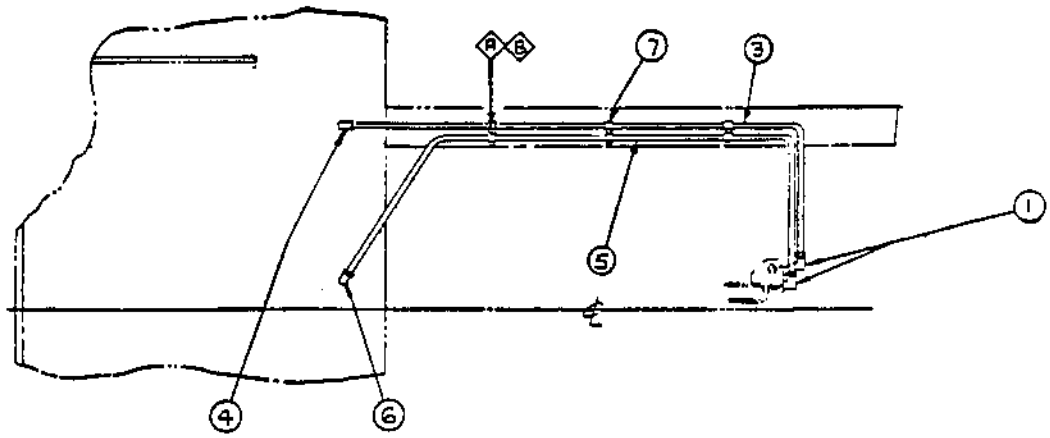
A
B
7
3
5
1
4
6

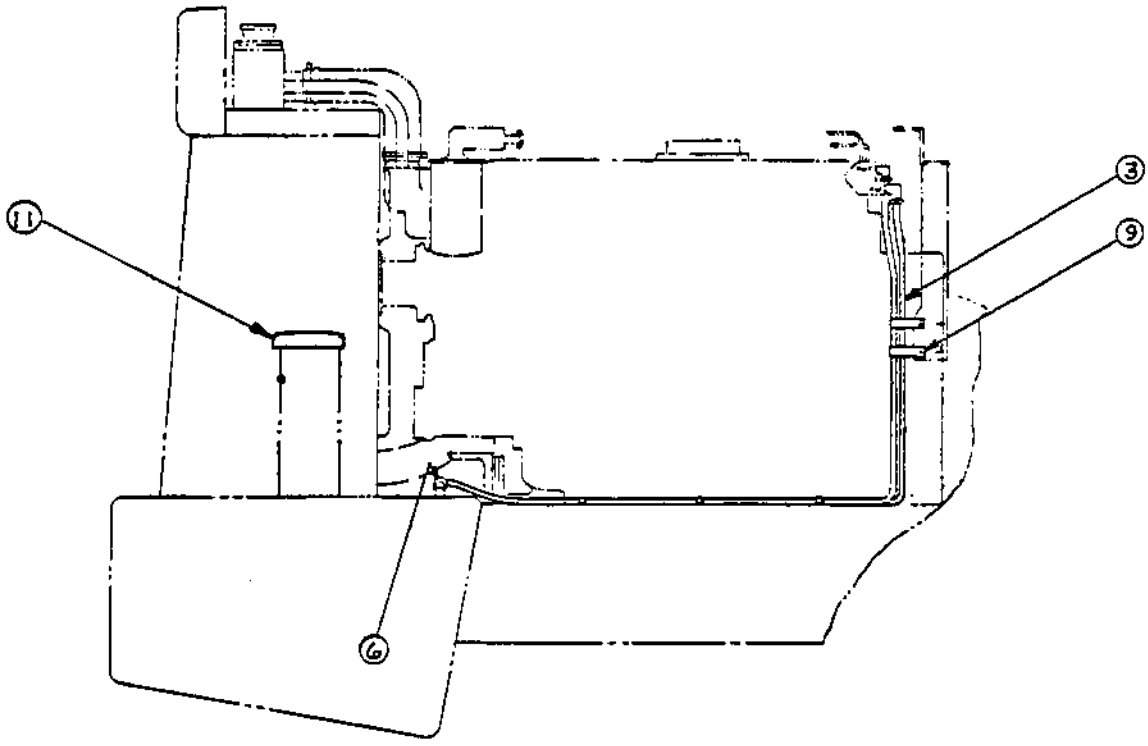
11
3
9
6

FUEL SYSTEM (CAT)
(FROM S/N 1718)

INDEX NUMBER	PART NUMBER	DESCRIPTION	QUANTITY
1	331087	Elbow 90°	2
3	482007	Hose Assembly	1
5	482008	Hose Assembly	1
7	813514	Clamp	6
9	335544	Clamps	2
10	815597	Fuel Pipe	1
11	893186	Elbow 90°	1
12	334314	Elbow 90°	1
13	826262	Filler & Cover	1
*14	80153305	Cap	1
*15	850145	Gasket	1
*16	801266	Silicone Caulking Compound Clear	A/R
17	813391	Magnetic Plug	1
18	334453	Bushing, Reducer	1
19	923297	Petcock	1
A	502002	Capscrew HH	3
B	604026	Lockwasher	3
C	502036	Capscrew HH	8
D	801272	Sealing Washer	8

*s/n 1718 to 1731, 1733 to 1738, 1740 to 1754, 1756, 1758 to 1763, 1765 to 1773, 1775, 1776, and 1778 and up.

FUEL SYSTEM
CAT
(D3208)
(from s/n 1718)

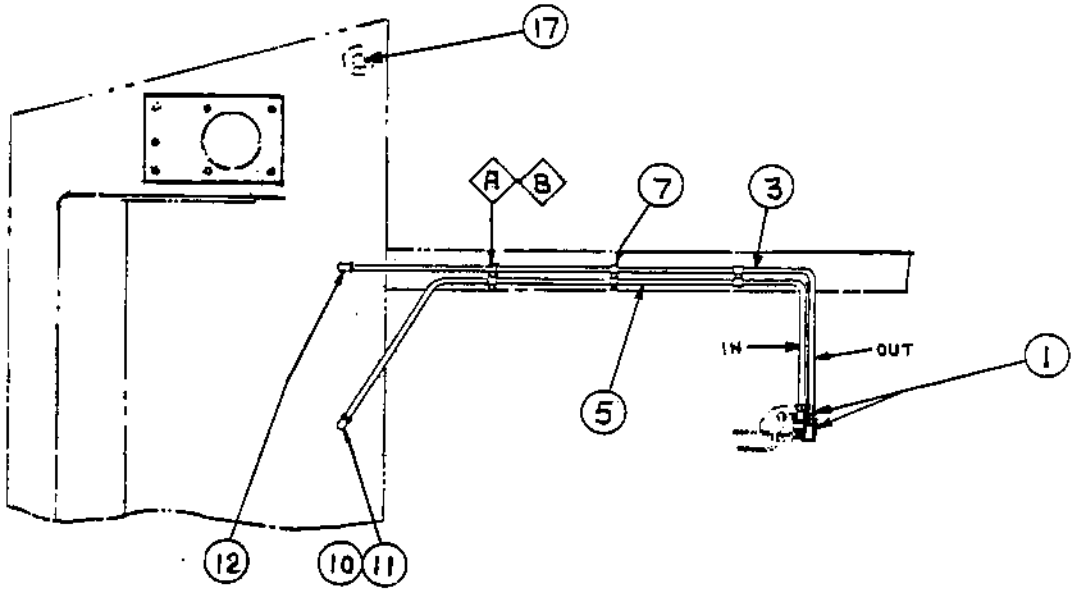

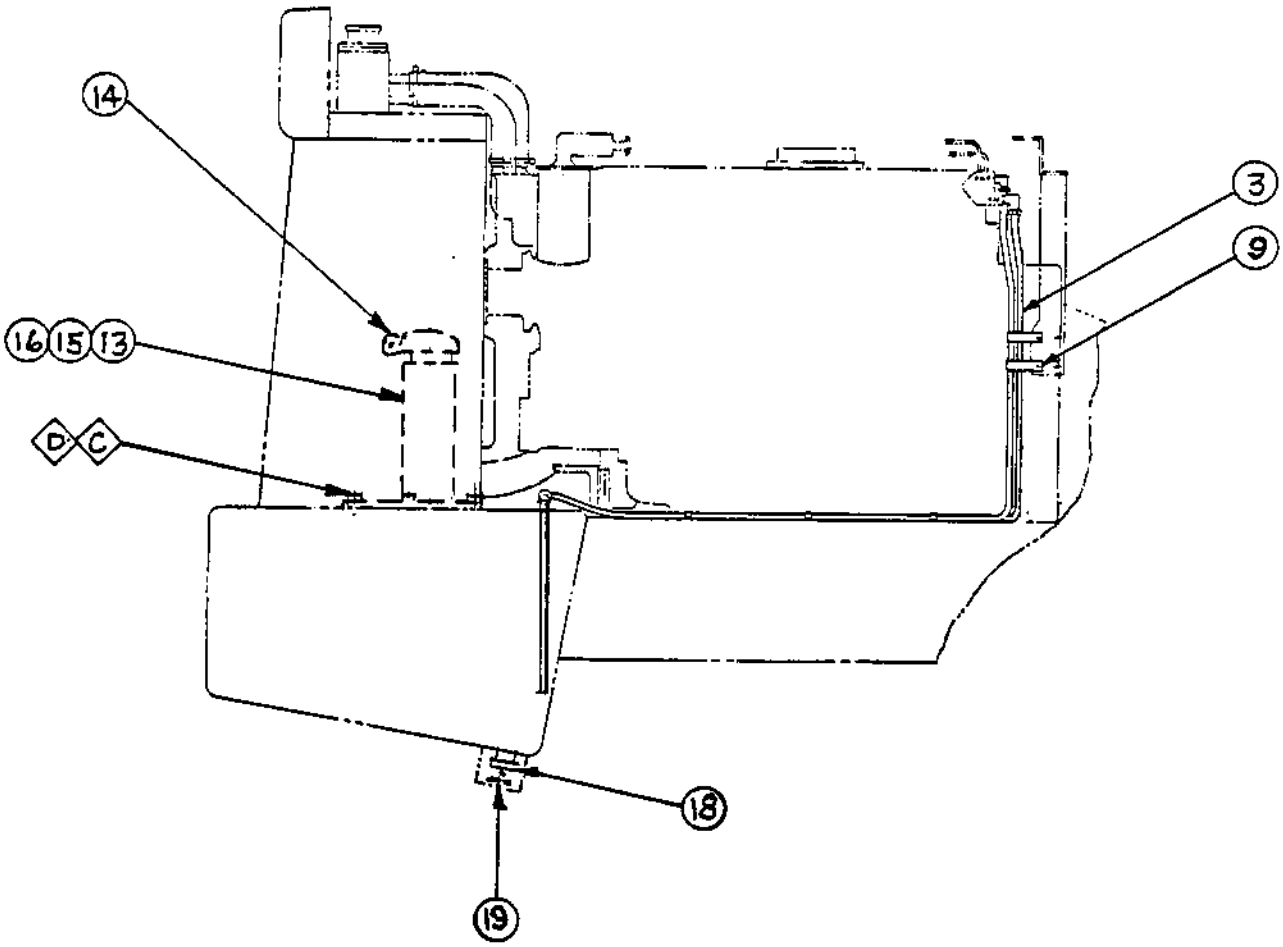

Fuel System With Water Separator
(CAT ENGINE)

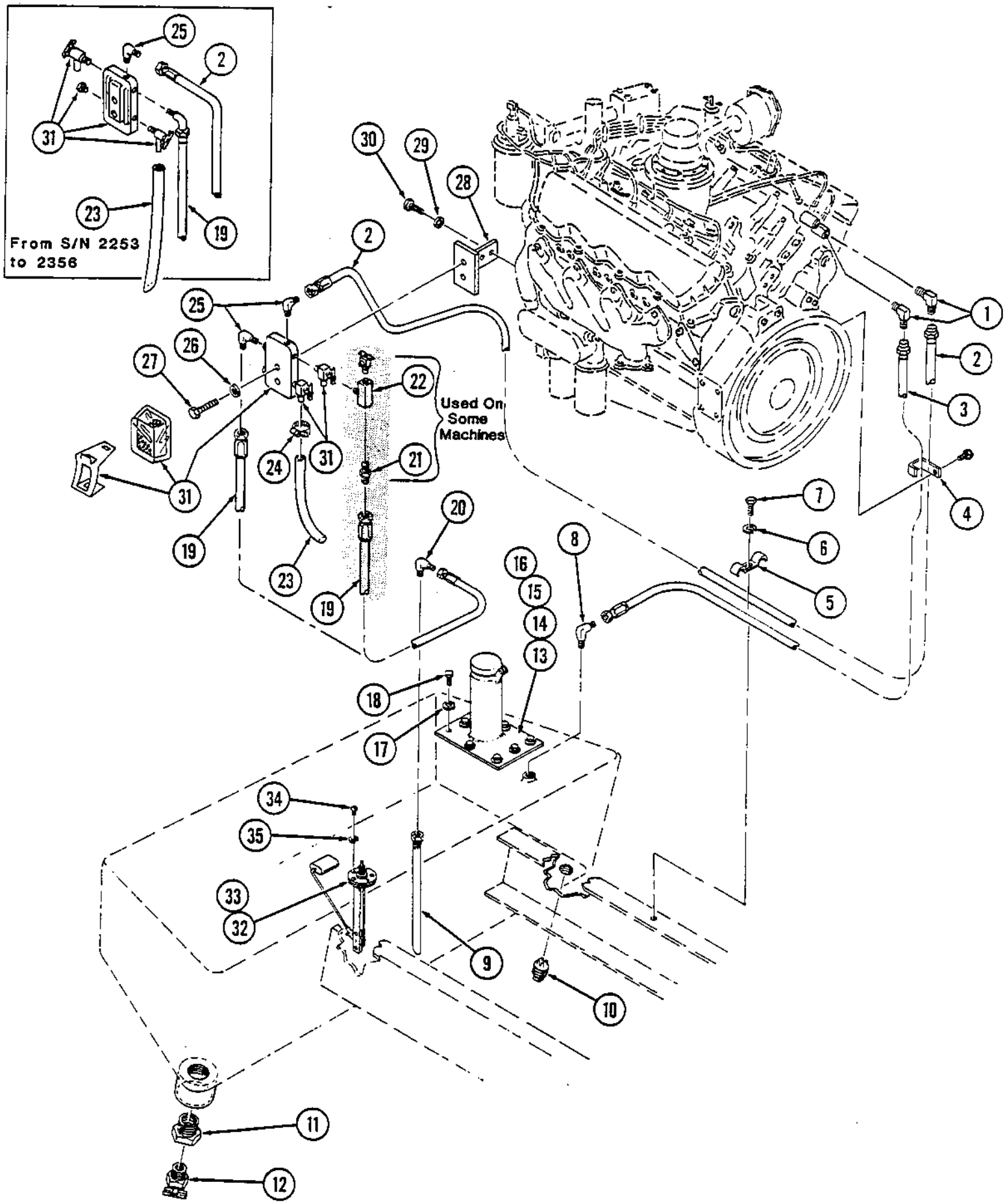

Fuel System With Water Separator
(CAT ENGINE)

INDEX NUMBER	PART NUMBER	DESCRIPTION	QUANTITY
1	331087	Elbow, 90°	2
2	826199	Hose, Separator to Engine	1
3	84212729	Hose, Return to Tank	1
4	335544	Clamp, Fuel Line	2
5	801650	Clamp, Fuel Line	3
6	604026	Lockwasher	3
7	502002	Capscrew, HH	3
8	334314	Elbow, 90°	1
9	815597	Pipe, Fuel	1
10	813391	Plug, Magnetic	1
11	334453	Bushing, Reducer	1
12	923297	Petcock, Drain	1
13	826262	Cover Assembly, Fuel Tank	1
14	80153305	Cap, Fuel Tank Cover	1
15	850145	Gasket	1
16	801266	Caulking, Silicone	A/R
17	801272	Washer, Sealing	8
18	502036	Capscrew, HH	8
19	826198	Hose, Tank to Separator	1
20	893186	Elbow, 90°	1
21	*234276	Adapter (Used on Some Machines)	1
22	*234759	Tee Section (Used on Some Machines	1
23	244041	Tube, Clear - 18" Lg.	1
24	313075	Clamp, Hose	1
25	*234619	Elbow, 90°	2
26	604028	Lockwasher	2
27	502035	Capscrew, HH	2
28	826197	Bracket, Separator Mounting	1
29	604029	Lockwasher	2
30	502053	Capscrew, HH	2
31	~~HSS~~ 801771 923245 ELEMENT	Separator Assembly, Water (Supplied with Eng.)	1 1
32	813314	Fuel Sender	1
33	813315	Gasket	1
34	550028	Screw, Rd. Hd.	5
35	604019	Lockwasher	5

*Up to S/N 2252 used a quantity of 2, later models also used 2 90° elbows, parts should be changed to match this illustration to keep drain petcocks away from fan side of engine.

FUEL SYSTEM (DETROIT)
(TO S/N 1717)

INDEX NUMBER	PART NUMBER	DESCRIPTION	QUANTITY
2	825743	Return Pipe	1
3	813322	90° Elbow	1
**4	813327	Female Swivel	1
**5	813326	Male Pipe	1
6	334549	90° Elbow	1
**7	334181	Female Swivel	1
**8	334372	Male Swivel	1
9	234619	90° Elbow	1
*10	813467	Cap Assembly	1
A	826537	Hose Assy. Fuel Supply	1
B	826538	Hose Assy, Fuel Return	1

*also used on the following s/n's 1732, 1739, 1755, 1756, 1757, 1764, 1774 & 1777

**Items 4, 5, 7 and 8 not needed with new Fuel Hose Assembly A and B.

FUEL SYSTEM
DETROIT
(to s/n 1717)

(to s/n 1717)

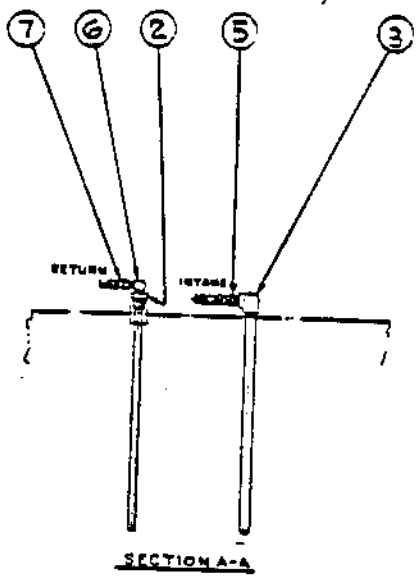

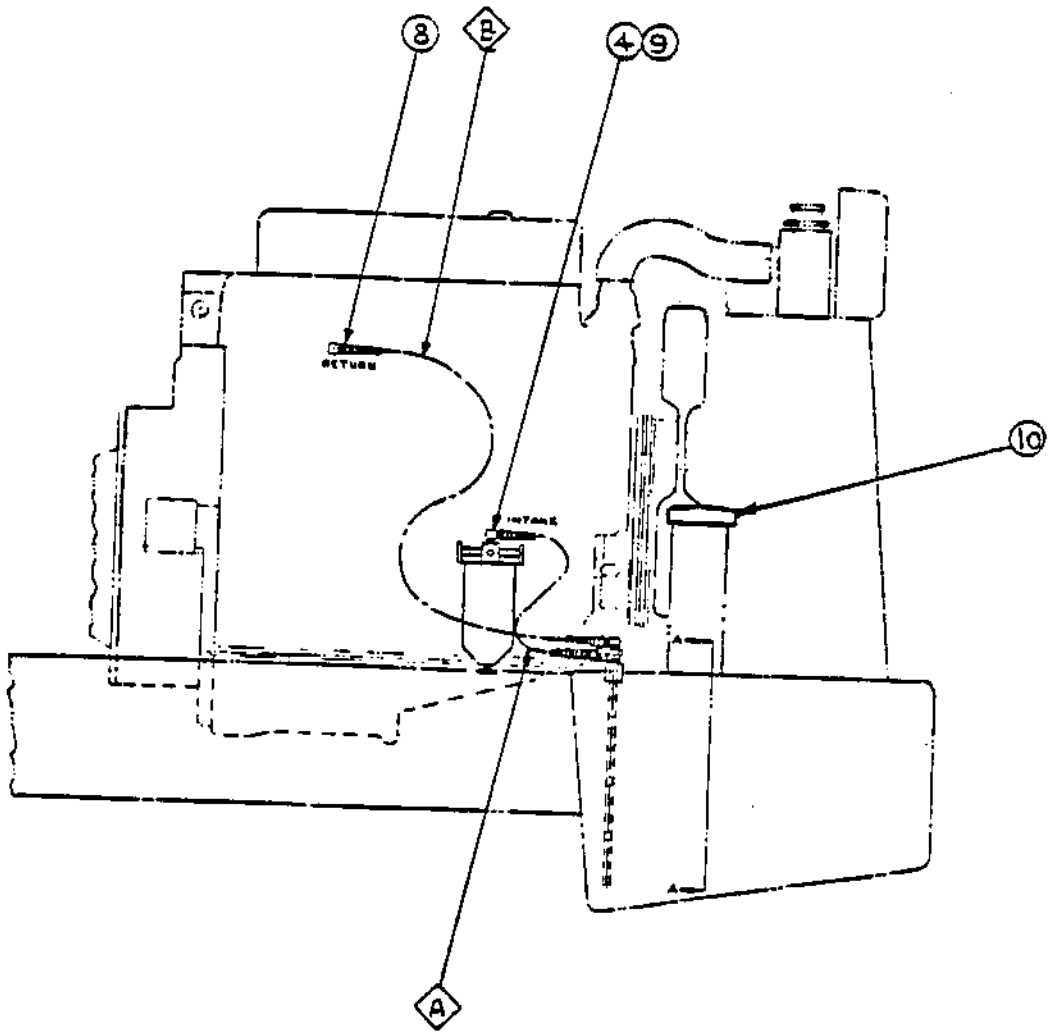

FUEL SYSTEM (DETROIT)
(FROM S/N 1718 & UP)

INDEX NUMBER	PART NUMBER	DESCRIPTION	QUANTITY
3	813320	90° Elbow	1
**4	813327	Female Swivel	1
**5	813326	Male Pipe	1
6	334549	90° Elbow	1
**7	334181	Female Swivel	1
**8	334372	Male Swivel	1
9	234619	90° Elbow	1
10	815597	Fuel Pipe	2
11	334288	Bushing	1
*13	826262	Filler & Cover	1
*14	80153305	Cap	1
*15	850145	Gasket	1
*16	801266	Silicone Caulking Compound Clear	A/R
17	813391	Magnetic Plug	1
18	334453	Bushing, Reducer	1
19	923297	Petcock	1
A	826537	Hose Assy. Fuel Supply	1
B	826538	Hose Assy. Fuel Return	1
C	502036	Capscrew HH	8
D	615077	Sealing Washer	8

*s/n 1718 to 1731, 1733 to 1738, 1740 to 1754, 1758 to 1763, 1765 to 1774, 1775, 1776 and 1778 and up.

**Items 4, 5, 7 and 8 not needed with new Fuel Hose Assembly A & B

FUEL SYSTEM
DETROIT
(from s/n 1718 & up)

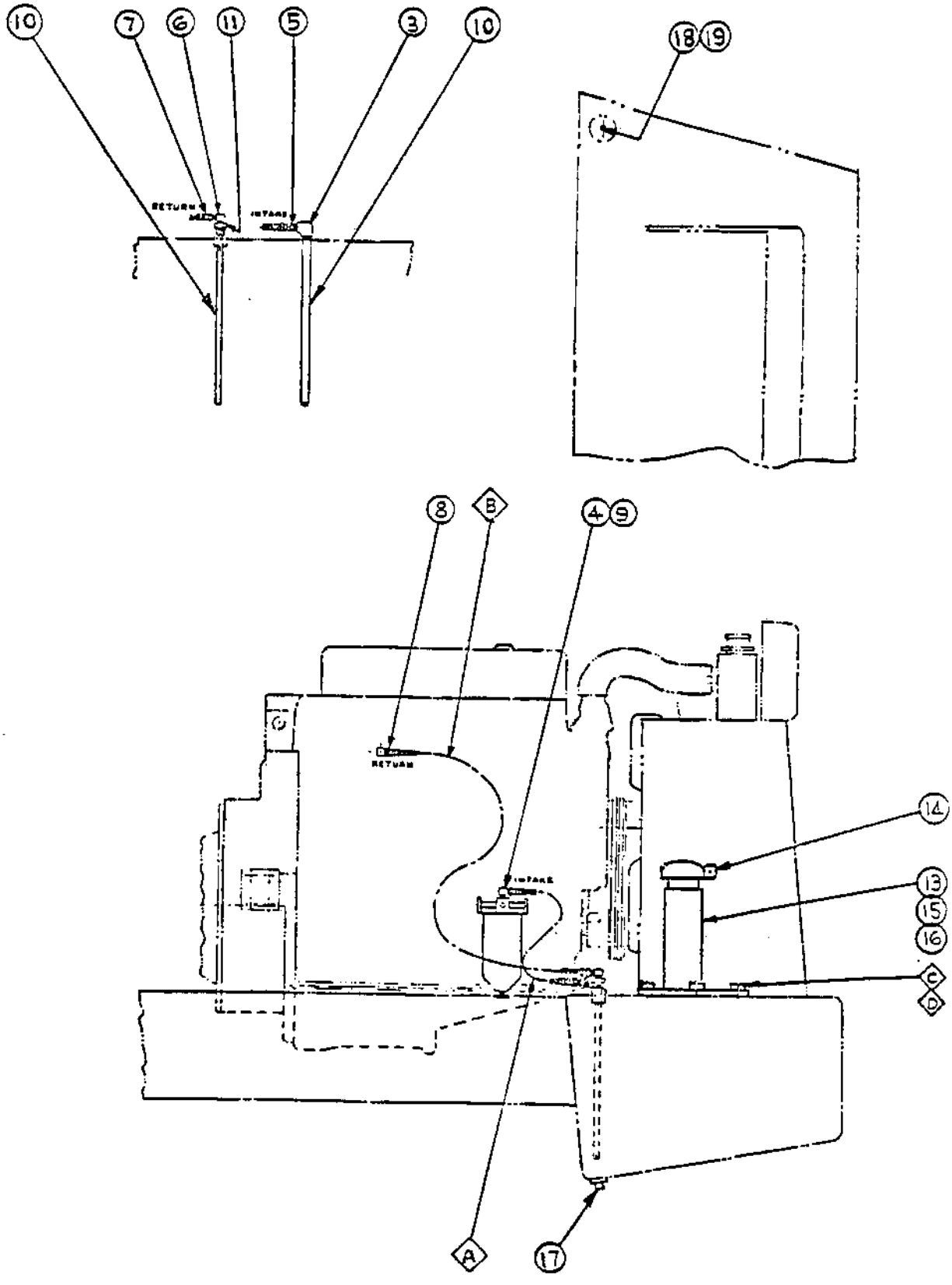

FUEL SYSTEM (CUMMINS)

INDEX NUMBER	PART NUMBER	DESCRIPTION	QUANTITY
1	814061	Elbow 90°	2
2	814062	Adapter Union	1
3	891401	Hose - 16" Lg.	1
-	814065	Male End	1
-	814066	Female Swivel	1
4	891401	Hose - 16" Lg.	1
-	814065	Male End	1
-	814066	Female Swivel	1
5	891401	Hose - 20" Lg.	1
-	814065	Male Swivel	1
-	814066	Female Swivel	1
7	335700	Filter Bracket	1
A	502035	Capscrew HH	6
B	604028	Lockwasher	6

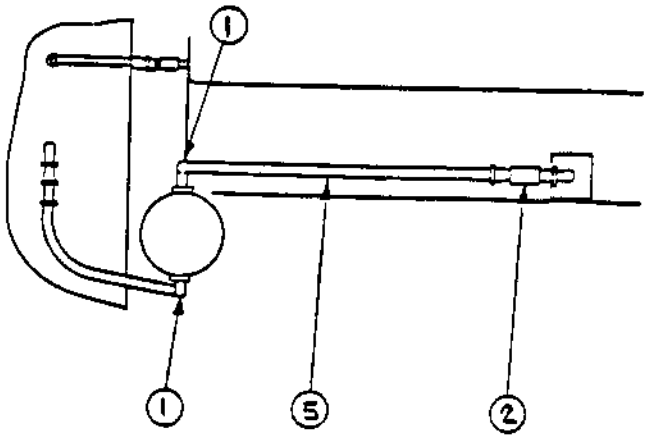
1
1
5
2

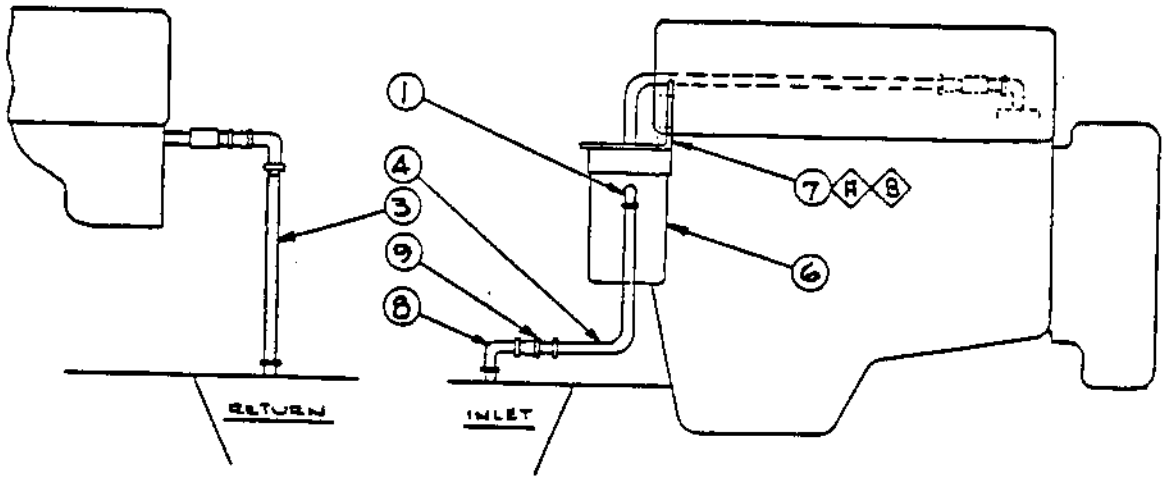
1
4
3
9
8
7
A
B
6
RETURN
INLET

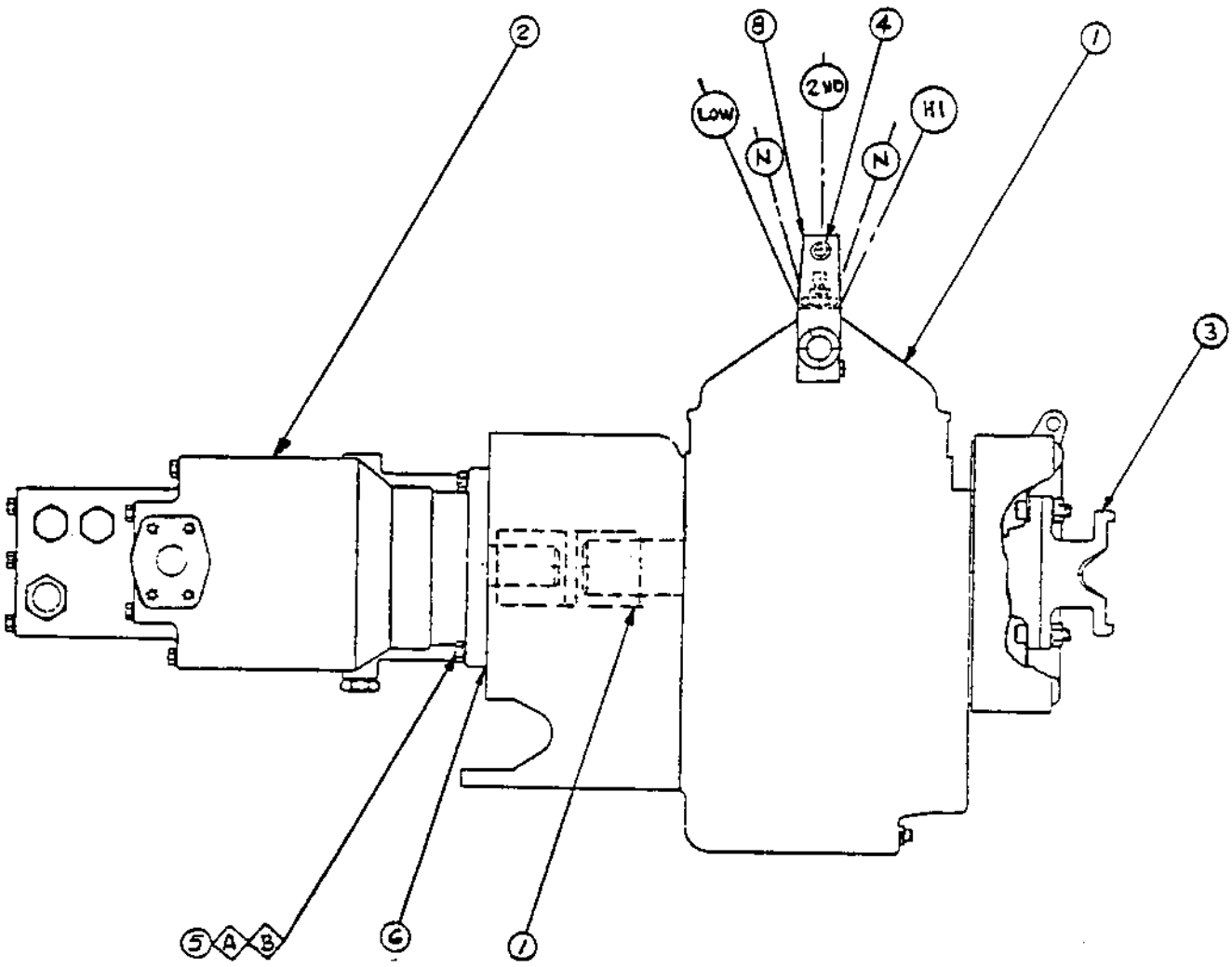

INDEX NUMBER	PART NUMBER	DESCRIPTION	QUANTITY
1	801065	Transmission w/brake (See Page 149)	1
*2	335557	Hyd. Motor (See Page 155)	1
3	813318	Flange Yoke	1
4	813319	Bushing	1
5	335545	Special Washer	4
6	813478	"O" Ring	1
7	813652	Coupling	1
8	825912	Transmission Lever	1
A	502059	Capscrew HH	4
B	604030	Spring Lockwasher	4

*Models CA-25, CA-25A, CA-25D, CA-25PD, CA-25S

CONSOLE ASSEMBLY
SINGLE SEAT CA-25

INDEX NUMBER	PART NUMBER	DESCRIPTION	QUANTITY
1	335576	Console	1
2	335583	Battery Bracket (to s/n 444)	1
-	335496	Battery Bracket (from s/n 445)	1
3	335584	Cover Plate (to s/n 444)	1
-	335497	Cover Plate (from s/n 445)	1
4	815228	Shield (to s/n 1226)	1
-	337843	Switch Bracket (from s/n 1227)	1
5	335585	Clevis	1
6	335586	Brake Pedal	1
7	335587	Plywood	1
8	813512	Push Rod	1
9		Linkage Assembly (See Page 46)	1
10		Steering Valve (See Page 169)	1
11	335563	Steering Column	1
12	470023	Battery	1
13	813330	Hold Down Bolts	2
14	813331	Brake Lever	1
15	813332	Master Cylinder	1
-	813497	Repair Kit, Master Cylinder	1
16	813333	Brake Conn.	1
17	813334	Connector	1
18	813335	Spring	1
19	813336	Steering Wheel	1
20	813337	Plug Button	1
21	813338	Seat (s/n 143 to 317 & 1121 & up)	1
-	813779	Seat (from s/n 318 to 1120 Bench Seat)	1
22	813339	Bushing	2
23	813340	Special TL Control (Complete Assembly to s/n 880)	1
-	457073	Control Lever (See Page 53 - from s/n 881 to 1226)	1
-	457086	Control Lever (See Page 56 - from s/n 1227)	1
24	550037	Clevis Pin 3/8	1
25	813342	Wheel Nut	1
26	813343	Tachometer	1
27	*	Neutral Start Switch (See Pages 52 to 55)	1
28	813411	Ignition Switch	1
29	989019	Ammeter	1

*Note: Neutral Start Switch Kit available to update machines prior to s/n 1227. Kit Part No. 815392.

CONSOLE ASSEMBLY
SINGLE SEAT CA-25

INDEX NUMBER	PART NUMBER	DESCRIPTION	QUANTITY
30	801607	Water Temp. (From S/N 1777 & Up)	1
-	989014	Water Temp. (To S/N 691)	1
-	989037	Water Temp. (From S/N 692 to 1776)	1
31	989016	Fuel Gauge (To S/N 691)	1
-	989079	Fuel Gauge (From S/N 692)	1
32	989014	Oil Temp. Gauge (To S/N 691)	1
-	989077	Oil Temp. Gauge (From S/N 692)	1
33	813348	Grommet	1
34	813349	Knob	1
35	985060	Light, Pilot	1
37	813351	Washer, Brass	1
38	985086	Bulb	1
39	813344	Washer, Brass	1
40	457087	Actuator (From S/N 1227)	1
41	985061	Light, Brake Pilot	1
42	801411	U-Channel, Rubber 22 1/2" Length	2
43	825314	Brake Line (To S/N 164)	1
-	335574	Brake Line (From S/N 165)	1
44	826282	Strip, Insulation	1
45	826223	Handrail, LH	1
46	826222	Handrail, RH	1
47	335582	Instrument Guard	1
48	842136	Washer, Flat	2
49	450099	Mount, Shock	2
50	842137	Washer, Flat	2
51	502084	Capscrew, HH	2
52	586056	Lock Nut, Elast	2
53	600011	Washer, Flat	2
A	502033	Capscrew, HH	8
B	502036	Capscrew, HH	2
C	502046	Capscrew, HH	2
D	210301	Set Screw, Cup Point	1 *
E	550090	Capscrew, HH, Plated	1*
F	604021	Lockwasher, Plated	1*
G	571003	Hex Nut	2
H	550054	Capscrew, HH	2**
K	604028	Lockwasher	13
M	604019	Lockwasher	2**
N	600007	Washer, Flat	2
P	600010	Washer, Flat	1
R	630045	Pin, Cotter	1
S	600028	Washer, Flat	2**
T	503065	Capscrew, HH	1
U	586007	Lock Nut	1
W	502018	Capscrew, HH	4
X	571002	Hex Nut	4
Y	604027	Lockwasher	4
Z	571019	Hex Nut	2**

* To S/N 1226
** From S/N 1227

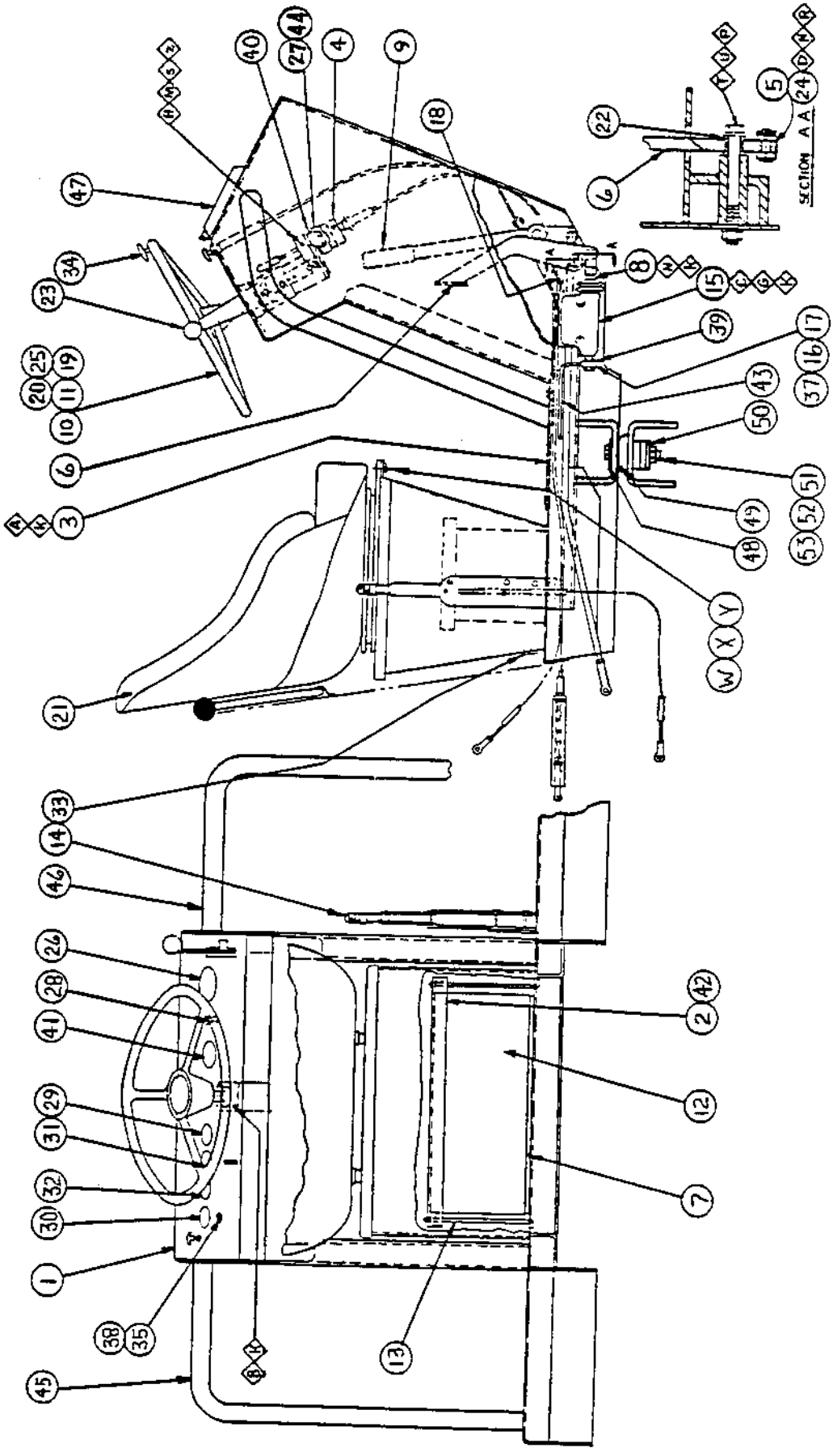

CONSOLE ASSEMBLY
SINGLE SEAT

CONSOLE ASSEMBLY
DUAL SEAT CA-25 ASPHALT

INDEX NUMBER	PART NUMBER	DESCRIPTION	QUANTITY
1		Linkage Assembly (See Page 51)	1
2		Pedestal Assembly (See Page 41)	1
3	825821	Console	1
4	*465030	Seat (from s/n 1583)	2
5	*850629	Seat Support	2
6	465024	Spring	2
7	82584501	Railing-Right	1
8	82584502	Railing-Left	1
9	813332	Master Cylinder	1
-	813497	Repair Kit, Master Cylinder	1
10	813333	Brake Conn.	1
11	813334	Connector Bolt	1
12	813351	Brass Washer	1
13	813344	Brass Washer	1
14	813512	Push Rod	1
15	825865	Brake Pedal	1
16	825846	Brake Pedal	1
17	813339	Bushing	2
18	335585	Clevis	1
19	550037	Clevis Pin-3/8	1
20	826408	Pillow Block	2
21	825838	Shaft-Brake	1
22	415193	Yoke-½	2
23	550038	Clevis Pin ½	2
24	825847	Conn. Rod	1
25	~~813335~~ 813335	Spring	2
26	335587	Plywood	1
27	813330	Hold Down Bolts	2
28	470023	Battery	1
29	335496	Battery Bracket	1
30	801411	Rubber U-Channel - 22½" Lg.	2
31	499224	Weather Strip Adhesive	A/R
32	475033	Padlock Handle	2
33	353061	Adj. Latch	2
34	825835	Supp. Dash Panel	1
35	825837	Access Cover	1
36	825834	Cover	1
37	825836	Dash Panel	1
38	850141	Instrument Guard	1
39	450101	Shock Mount	3
40	813343	Tachometer	1

*When Ordering Seat Prior to S/N 1583 Order Items 4 & 5.

CONSOLE ASSEMBLY
DUAL SEAT CA-25 ASPHALT

INDEX NUMBER	PART NUMBER	DESCRIPTION	QUANTITY
41	989019	Ammeter	1
42	989079	Fuel Gauge	1
43	989077	Oil Temp Gauge	1
44	801607	Water Temp Gauge (from s/n 1777 & up)	1
-	989037	Water Temp Gauge (to s/n 1776)	1
45	985060	Light-Pilot	1
46	985086	Bulb	1
47	985061	Brake Pilot Light	1
48	813411	Ignition Switch	1
49	813348	Grommet	2
50	821398	Fuse Bracket	1
51	850193	Fuse Cover	1
52	801530	Latch (from s/n 1677)	2
53	801343	Switch (from s/n 1677)	1
54	825888	Master Cyl. Brake Line	1
55	813313	Clamp	2
56	813349	Wheel Spinner	1
57	821361	Thumb Screw Wrench (from s/n 1677)	1
58	801531	Fuse Clip (from s/n 1677)	2
59		Control Valve (See Page 166 or 205)	1
60	821127	Switch Mounting Bracket (from s/n 1677)	1
61	930046	Switch	2
62	615060	CRC Urethane	A/R
63	821399	Spacer	2

CONSOLE ASSEMBLY
DUAL SEAT CA-25 ASPHALT

INDEX NUMBER	PART NUMBER	DESCRIPTION	QUANTITY
A	635035	Roll Pin Steel	1
B	586007	Locknut	1
C	801235	Mach. Collar	1
D	503091	Capscrew HH	1
E	502046	Capscrew HH	2
F	502039	Capscrew HH	7
G	502036	Capscrew HH	18
H	502035	Capscrew HH	7
K	502004	Capscrew HH	3
M	550078	Fl. Hd. Slot Screw	2
N	600010	Plain Washer	1
O	604028	Lockwasher	33
P	604027	Lockwasher	4
R	604026	Lockwasher	14
S	604019	Lockwasher	4
T	220714	Jam Nut	1
U	571003	Hex Nut	18
W	571002	Hex Nut	4
X	571001	Hex Nut	9
Y	813370	Hex Nut	2
AA	630045	Cotter Pin	1
BB	630008	Cotter Pin	2
CC	536055	Fl. Hd. Slot Screw	2
DD	600007	Plain Washer	4
EE	574011	Jam Nut	3
FF	550096	Rd. Hd. Screw (from s/n 1677)	2
GG	604024	Lockwasher (from s/n 1677)	2
HH	571021	Hex Nut (from s/n 1677)	2
KK	550068	Capscrew HH	2
MM	571022	Hex Nut	2
NN	604021	Lockwasher	2
OO	600030	Plain Washer	2
PP	502004	Capscrew HH (from s/n 1677)	2
QQ	536041	Capscrew, Rd. Hd.	2
RR	571019	Hex Nut	2

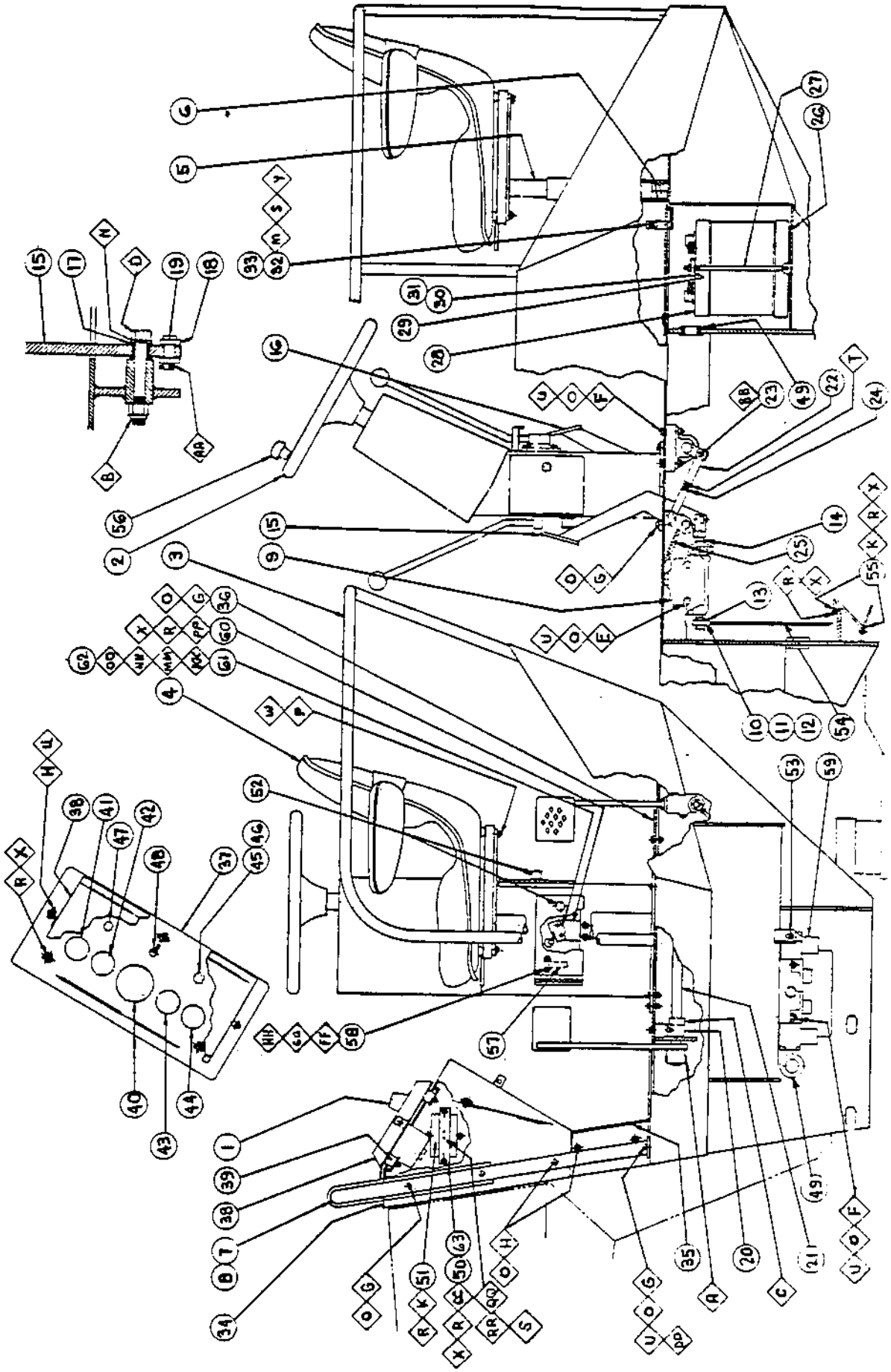

CA-25 ASPHALT
CONSOLE ASSEMBLY
DUAL SEAT

PEDESTAL ASSEMBLY
DUAL SEAT CA-25 ASPHALT

INDEX NUMBER	PART NUMBER	DESCRIPTION	QUANTITY
1	826264	Pedestal Base	1
2	826294	Pedestal	1
3	100056	Bushing	1
4	300221	Belleville Springs	2
5	100057	Bushing	1
6	850201	Pin	1
7	635015	Rollpin	1
8		Steering Valve (See Page 169)	1
9	335563	Steering Column	1
10	813336	Steering Wheel	1
11	813342	Wheel Nut	1
12	813349	Wheel Spinner	1
13	813337	Plug Button	1
14	814266	Switch	2
15	334121	Connector	1
16	813435	Elbow 90°	2
17	813444	Elbow 90°	1
18	85017233	Hose Assembly	1
19	334314	Elbow 90°	2
20	813437	Bushing	2
21	234270	Nipple	1
22	480202	Relief Valve	1
23	234318	Elbow 45°	1
24	234365	Elbow 90°	1
25	334425	Tee	1
27		Fwd./Rev. & Vib. Cont. Assy. (see Pg. 43)	1
28	82587302	Hose Assembly (out)	1
29	82587301	Hose Assembly (R)	1
30	82587303	Hose Assembly (L) (in)	2
31	100053	Bushing (not illustrated - to s/n 1676)	1
32	334197	Swivel El. 90°	1
33	801343	Switch (s/n 1638, 1641 & up)	1
34	801549	Switch Reset (s/n 1677 & up)	1
35	801551	Buzzer (s/n 1677 & up)	1

CA-25 ASPHALT
PEDESTAL ASSEMBLY
DUAL SEAT

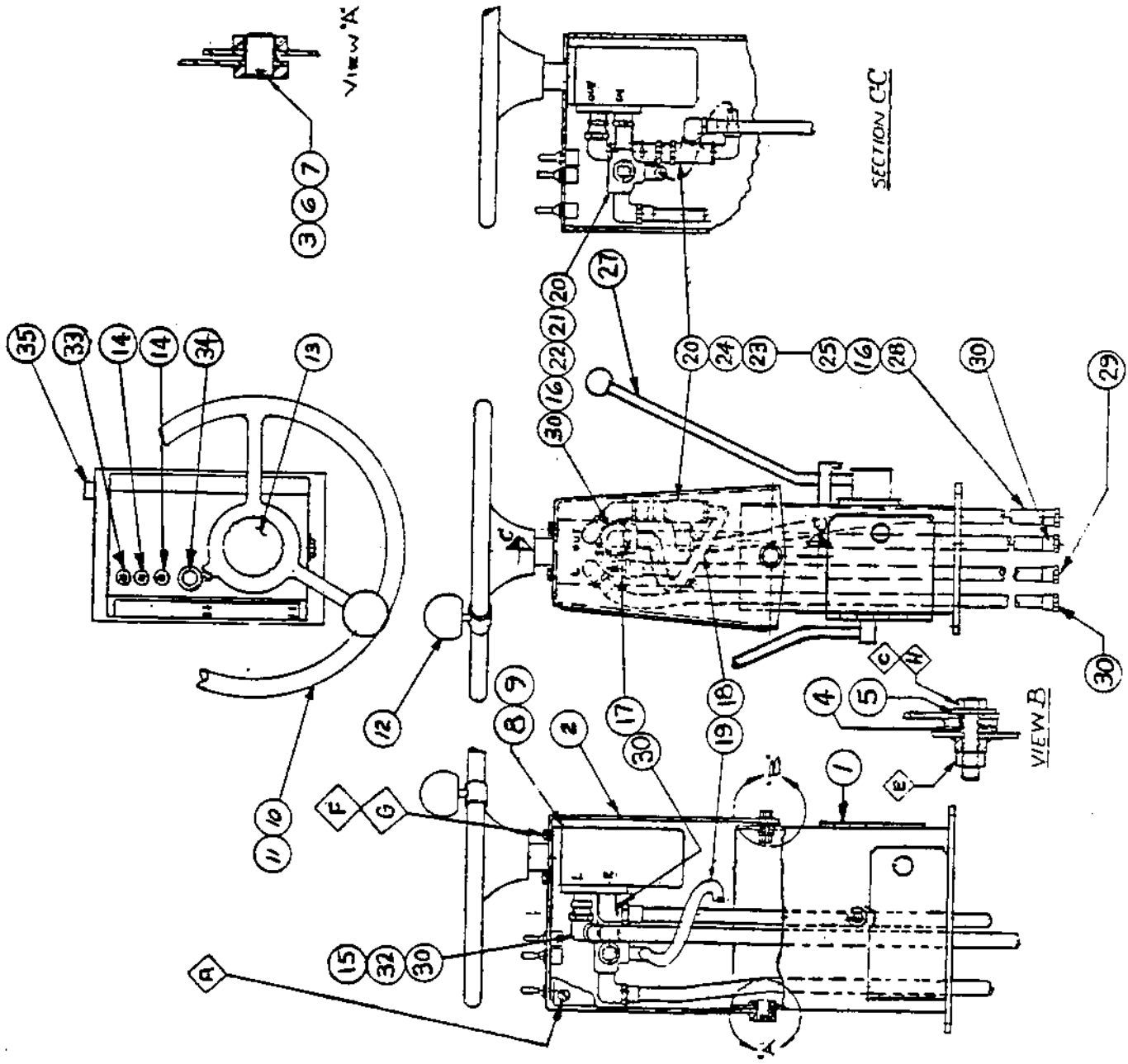

INDEX NUMBER	PART NUMBER	DESCRIPTION	QUANTITY
A	536054	Flat Head Screw	6
C	502061	Capscrew HH	1
E	586049	Locknut	1
F	502036	Capscrew HH	2
G	604028	Lockwasher	2
H	600010	Plain Washer	1

FWD./REV. & VIB. CONT. ASSY.
DUAL SEAT CA-25 ASPHALT
(TO S/N 1676)

INDEX NUMBER	PART NUMBER	DESCRIPTION	QUANTITY
1	-	Pedestal	
2		Lever Control (See Page 55)	1
3	825813	Vib. Cont. Cover	1
4	930046	Switch	2
5	825814	Cam #1	1
6	825815	Cam #2	2
7	825816	Guide, Cam #2	1
8	825817	Mounting Block, Cam #2	1
9	825818	Spacer Cam #1	1
10	825819	Switch Mounting Angle	1
11	825820	Stop Block	2
12	550035	Thumb Screw	2
13	825883	Stop Nut	2
14	615060	CRC Urethane Seal	A/R
A	600030	Plain Washer	4
C	502002	Capscrew HH	3
D	502282	Capscrew HH	1
E	604026	Lockwasher	4
F	550070	Capscrew HH	2
G	550074	Capscrew HH	2
H	550073	Capscrew HH	2
J	604019	Lockwasher	2
K	600028	Plain Washer	8
L	550072	Capscrew HH	4
M	571022	Hex Nut	4
N	604021	Lockwasher	4
P	893529	Capscrew HH	2
R	572009	Hex Nut	2

CA-25 ASPHALT

FORWARD, REVERSE & VIBRATION CONTROL ASSEMBLY

DUAL SEAT

to s/n 1676

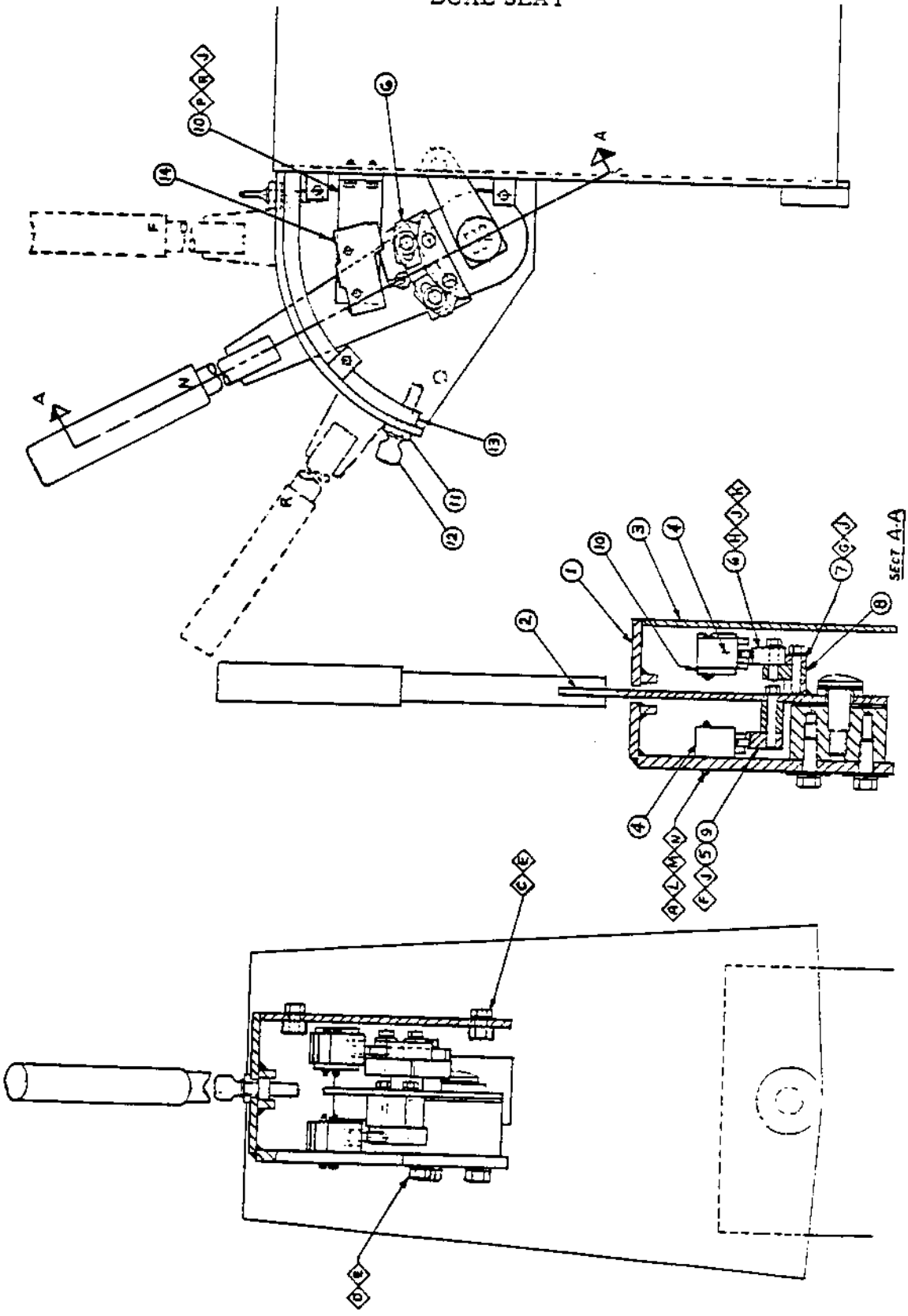

FWD./REV. & VIB. CONT. ASSY.
DUAL SEAT CA-25 ASPHALT
(FROM S/N 1677)

INDEX NUMBER	PART NUMBER	DESCRIPTION	QUANTITY
1	850654	Control Shaft	1
2	821124	Lever	1
3	850655	Control Lever	1
4	850687	Bushing Housing	1
5	821128	Washer	2
6	821129	Friction Disc	1
7	821130	Stop Block	2
8	821131	Stop Nut	2
9	825814	Cam #1	1
10	825815	Cam #2	2
11	825816	Guide, Cam #2	1
12	312061	Ball Handle	2
13	100077	Flange Bushing	1
14	100076	Bushing	1
15	550107	Thumb Screw	2
16	300013	Belleville Sp. Washer	2
30	635037	Roll Pin	1
31	635038	Roll Pin	1
32	572005	Hex Nut	1
33	574009	Hex Jam Nut	1
34	502035	Capscrew HH	3
35	604028	Lockwasher	3
36	821402	Thumb Screw (shoulder type)	2
37	600028	Plain Washer	2
38	229001	Capscrew HH	2
39	604019	Lockwasher	2

CA-25 ASPHALT DUAL SEAT
FORWARD, REVERSE & VIBRATION CONTROL ASSEMBLY

From s/n 1677

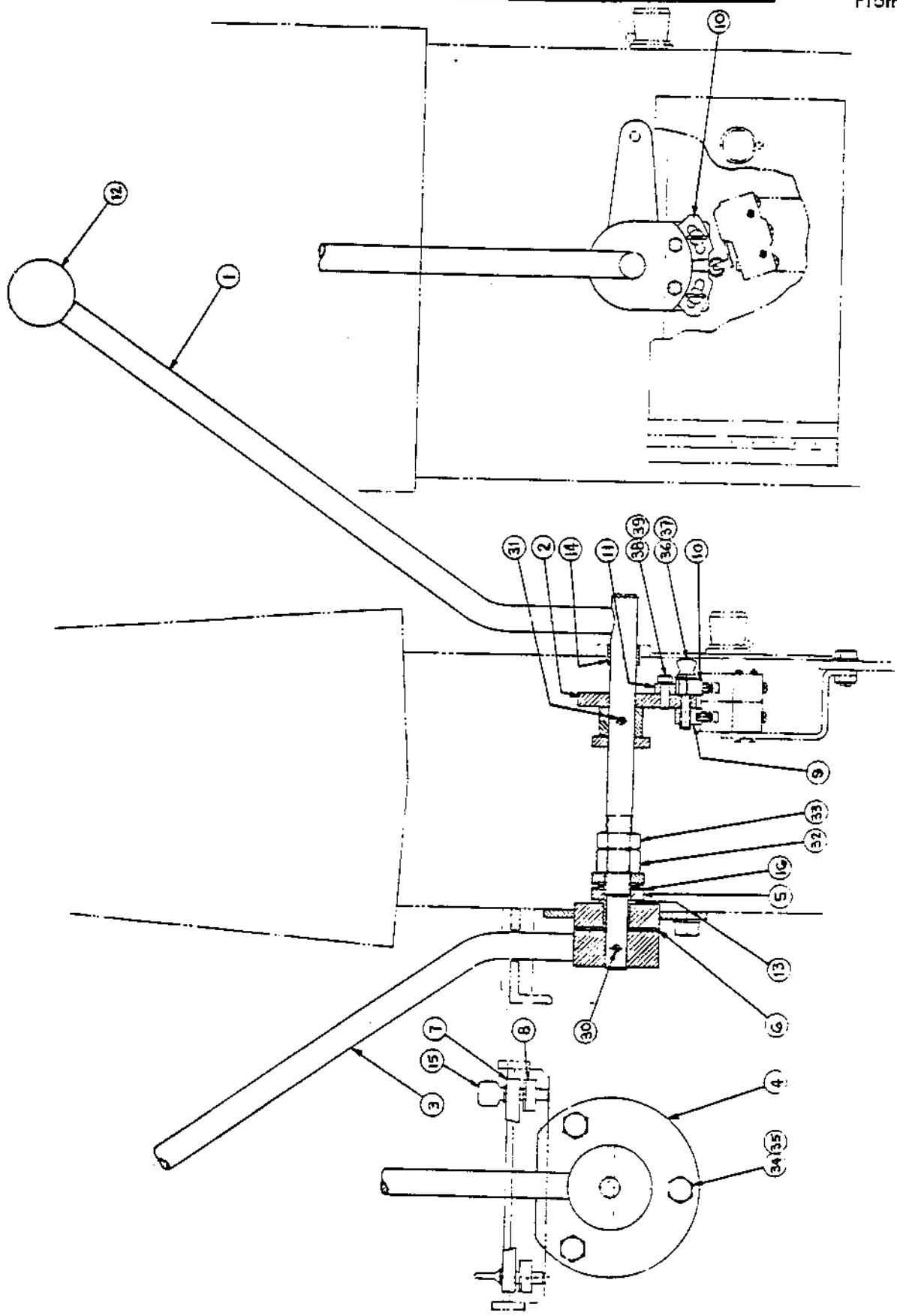

CA-25 ASPHALT
FORWARD, REVERSE & VIBRATION CONTROL ASSEMBLY
DUAL SEAT

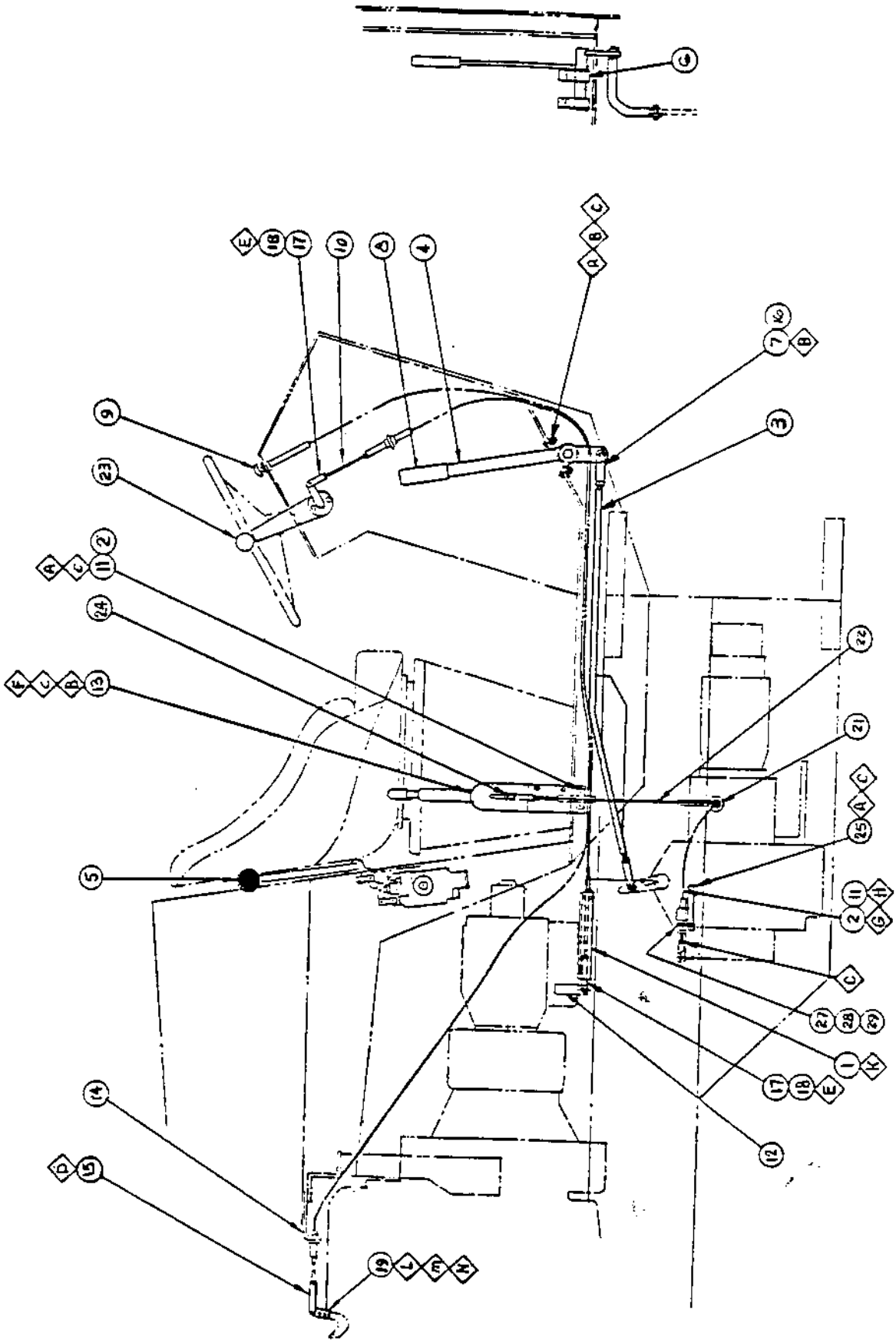

LINKAGE ASSEMBLY
SINGLE SEAT

LINKAGE ASSEMBLY
SINGLE SEAT

INDEX NUMBER	PART NUMBER	DESCRIPTION	QUANTITY
1	335589	Anchor Bracket	1
2	813353	Clamp	2
3	825222	Connecting Rod (to s/n 254)	1
-	335590	Connecting Rod (from s/n 255)	1
4	825411	Trans. Control Lever	1
5		Vibr. Control Link (See Page 63)	1
6	826408	Pillow Block	2
7	813355	Yoke - 3/8	2
8	219002	Grip	1
9	813357	Cable (Throttle) (to s/n 880)	1
-	456039	Cable (Throttle) (from s/n 881)	1
10	813358	Cable (Fwd/Rev) (to s/n 880)	1
-	456040	Cable (Fwd/Rev) (from s/n 881)	1
11	813359	Link Spacer	2
12	335593	Modified Lever	1
13	813331	Brake Lever	1
14	825939	Cable Bracket (from s/n 1032)	1
-	813360	Cable Bracket (to s/n 1031)	1
15	813361	Yoke	1
16	813362	Clevis Pin	2
17	813363	Yoke ¼	1
18	813364	Clevis Pin	1
19	825977	Lever Attachment (from s/n 1032)	1
19A	813365	Terminal Eye	1
20	813366	Terminal Eye (to s/n 880)	1
21	813367	Grommet	1
22	813368	Cable (s/n 143-317 & 1121 & up)	1
-	456023	Cable (from s/n 318 to 1120)	1
23		Control Lever (See Page 52 thru 57)	1
24	813369	Yoke 5/16	1
25	335594	Brake Cable Bracket	1
27	930061	Brake Switch	1
28	335483	Switch Actuator	1
29	517057	Soc. Hd. Set Screw	1
30	100053	Bushing	1

9. THROTTLE HANDLE, 891141.

LINKAGE ASSEMBLY
SINGLE SEAT

INDEX NUMBER	PART NUMBER	DESCRIPTION	QUANTITY
A	502035	Capscrew HH	8
B	571003	Hex Nut	10
C	604028	Lockwasher	10
D	572009	Hex Nut	2
E	589010	Hex Nut	2
F	502039	Capscrew HH	2
G	502018	Capscrew HH	2
H	604027	Lockwasher	2
K	502012	Capscrew HH	3
L	502006	Capscrew HH	2
M	604026	Lockwasher	2
N	571001	Hex Nut	2

LINKAGE ASSEMBLY
DUAL SEAT CA-25 ASPHALT

INDEX NUMBER	PART NUMBER	DESCRIPTION	QUANTITY
A	635035	Roll-Pin Steel	1
B	502035	Capscrew HH	6
C	604028	Lockwasher	11
D	502018	Capscrew HH	2
E	604027	Lockwasher	2
F	502038	Capscrew HH	2
G	571003	Hex Nut	4
H	517057	Soc. Hd. SS/HT	1
K	502012	Capscrew	3
L	630007	Cotter Pin	2
M	630046	Cotter Pin	2
N	572004	Hex Nut	2
O	801235	Mach. Collar	1
P	502041	Capscrew HH	2
Q	502006	Capscrew HH	2
R	604026	Lockwasher	2
S	571001	Hex Nut	2

LINKAGE ASSEMBLY
DUAL SEAT CA-25 ASPHALT

INDEX NUMBER	PART NUMBER	DESCRIPTION	QUANTITY
1	825843	Trans. Shift Lever	1
2	219002	Grip	1
3	825842	Lever-Trans. Link	1
4	826408	Pillow Block	2
5	825848	Conn. Rod.	1
6	415193	Yoke ½	2
7	550038	Clevis Pin	2
8	415121	Brake Lever	1
9	335594	Brake Cable Bracket	1
10	335483	Switch Actuator	1
11	813363	Yoke ⅜	2
12	456048	Cable	1
13	813353	Clamp	2
14	813359	Link Spacer	1
15	825906	Anchor Bracket	1
16	801528	Fwd./Rev. Cable (from s/n 1677)	1
-	456050	Fwd./Rev. Cable (to s/n 1676)	1
17	335593	Modified Lever	1
18	813364	Clevis Pin	2
19	801651	Throttle Control	1
20	825939	Cable Bracket	1
21	813361	Yoke	1
22	813355	Yoke 3/8	2
23	813362	Clevis Pin	2
24	85021001	Spacers	2
25	930061	Brake Switch	1
26	825977	Lever Attachment (from s/n 1032)	1
27	801529	Bushing (from s/n 1677)	1

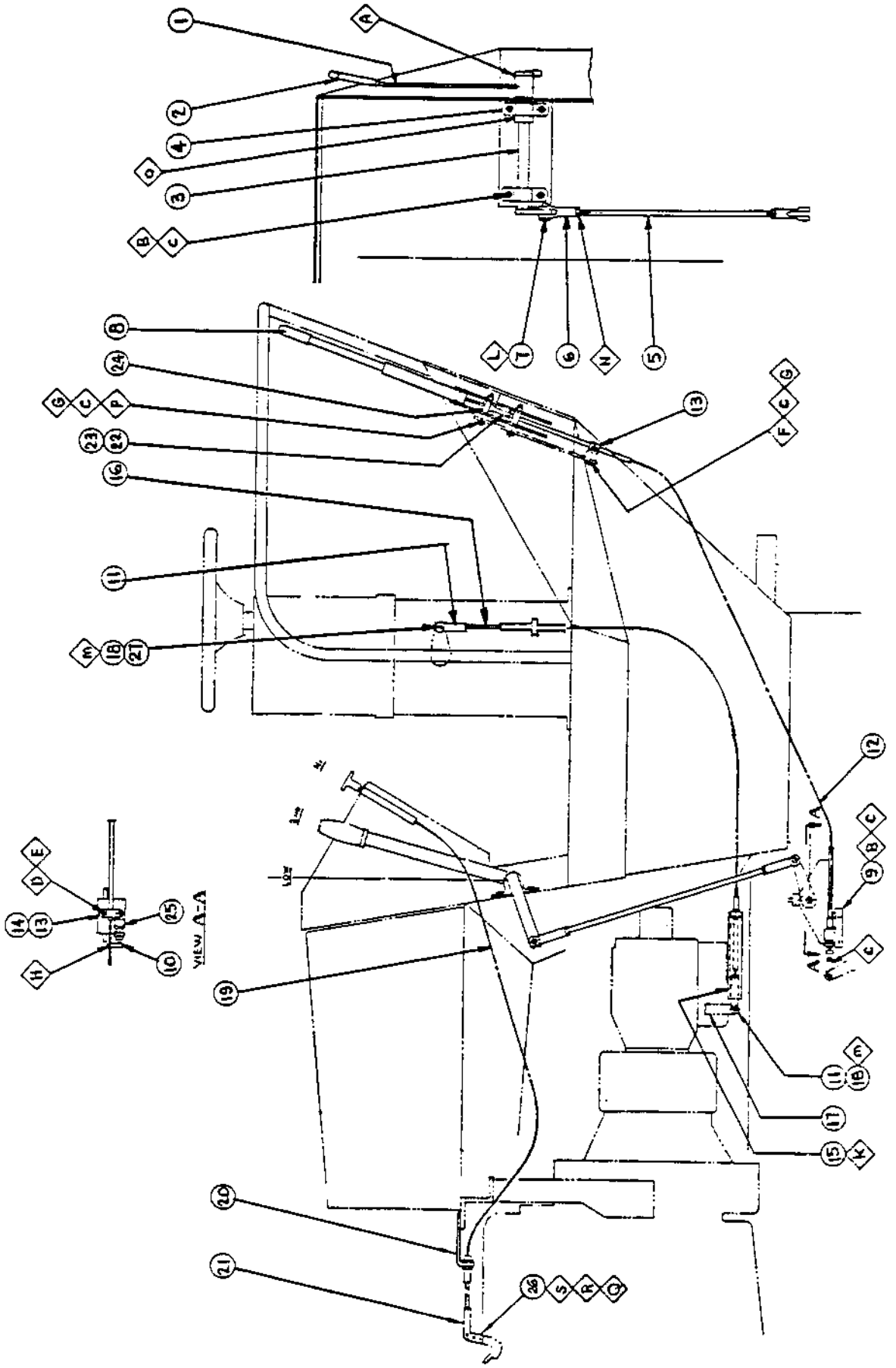

CA-25 ASPHALT
LINKAGE ASSEMBLY
DUAL SEAT

CONTROL, FWD/REV. & THROTTLE
(TO S/N 880)

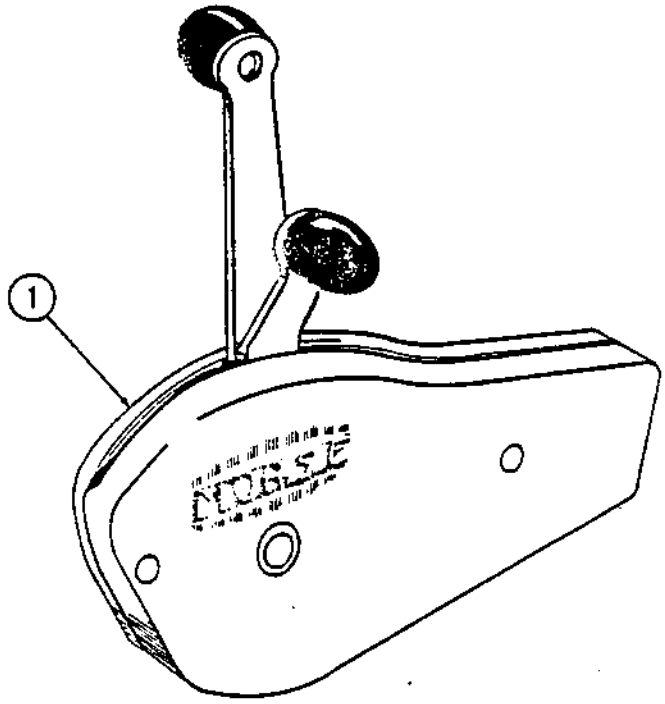

Index Number	Part Number	Description	Quantity
1	813340	Control, FWD/REV & Throttle Assy.	1

FOR CABLE SEE PAGE 47.

THROTTLE, FWD/REV. CONTROL
(To s/n 880)

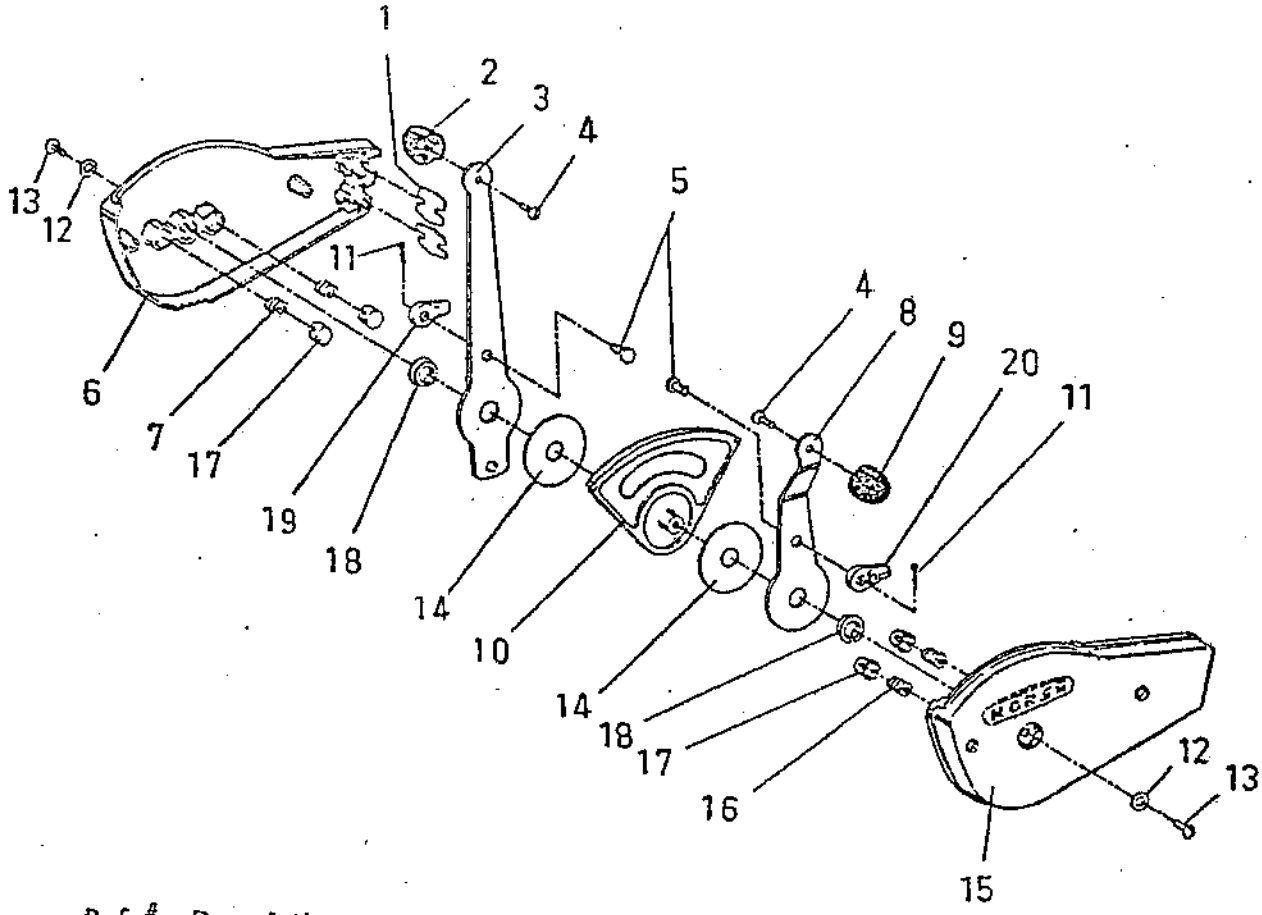

Ref.#	Description	Part No.	Req'd.
-	Control	E61054 (813340	1
1	Cable Attachment	A31983	2
2	Handle Knob-Red	A41485-2	1
3	Forward-Reverse Lever	B31989-1	1
4	Screw	#10-24 x 5/8	2
5	Bolt	A32023	2
6	Housing	E31986-1	1
7	Spring	A32006	2
8	Throttle Lever	A31994	1
9	Handle Knob-Black	A41485-1	1
10	Intermediate Plate	B31883	1
11	Cotter Pin	5/64 x 5/8	2
12	Lockwasher-Internal Tooth	1/4"	2
13	Screw	1/4"-20 NC x 5/8	2
14	Disc	A31984	2
15	Housing	E31993-1	1
16	Spring	A33490	2
17	Brake Shoe	A32005	4
18	Bearing	A51404-186	2
19	Connecting Link, Fwd/Rev.	A37639	1
20	Connecting Link, Throttle	A31980	1

CA-25A ASPHALT CONTROL ASSEMBLY

(to s/n 1676)

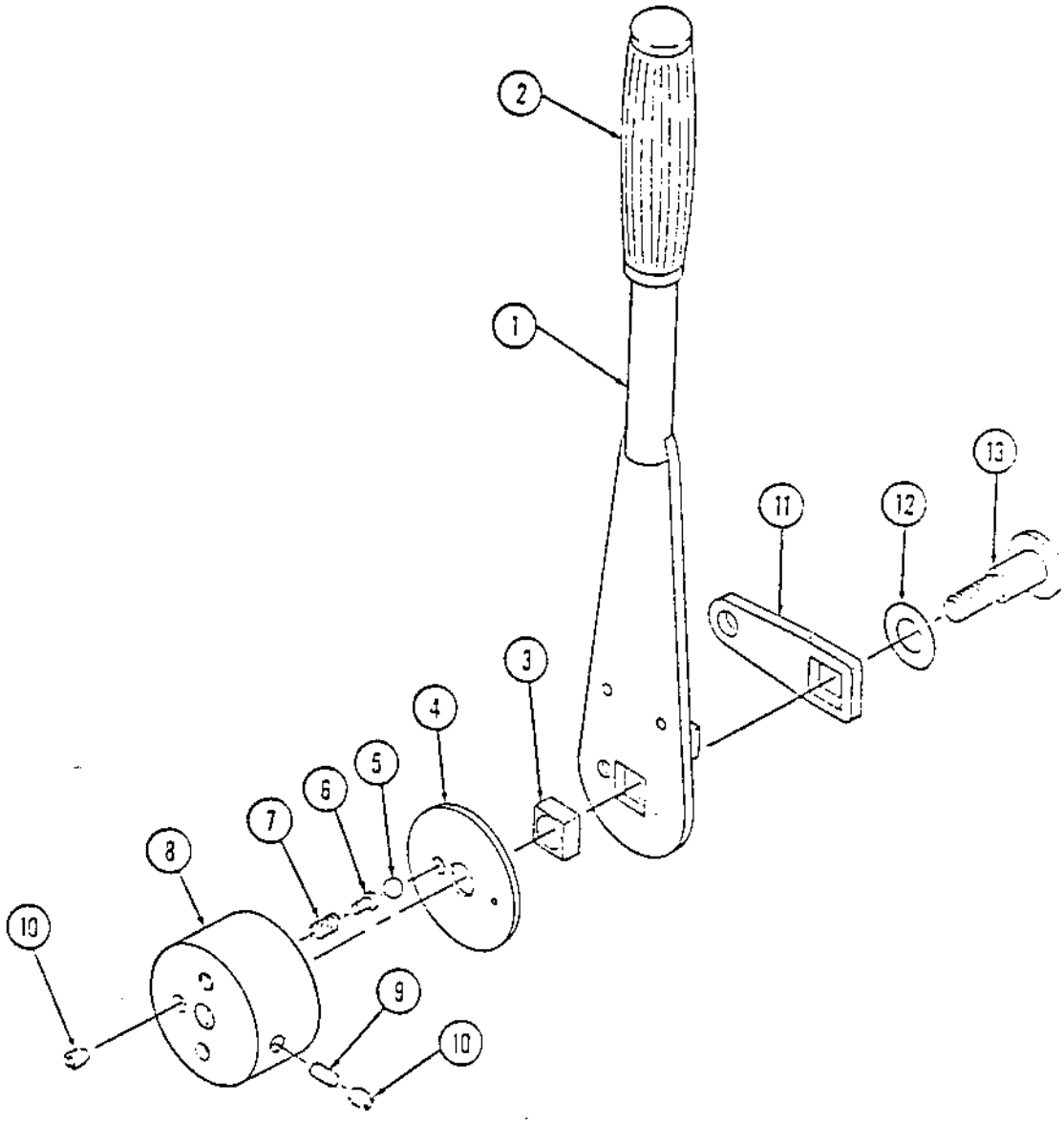

CONTROL ASSEMBLY
(FROM S/N 1227)

INDEX NUMBER	PART NUMBER	DESCRIPTION	QUANTITY
-	457086	Control, Forward/Reverse Assy.	1
1	891813	Lever, Input	1
2	891816	Grip, Handle	1
3		Lever, Input (Repl. by 1 & 2)	
4	891815	Ball, Input Lever (used with Item 3)	1
5	891790	Washer	1
6	891791	Bolt, Hex	1
7	891806	Square, Locking	1
8	891814	Washer, Nylon 2" O.D.	1
9	891788	Ball	1
10	891198	Cap	1
11	891787	Spring	1
12	891803	Drum, Center	1
13	891804	Plug, Brass	1
14	891196	Setscrew, Allen Hd.	2
15	891811	Lever, Output, Actuator	1
16	891802	Lever, Output	1
17	604020	Lockwasher	2
18	517057	Screw, Rd. Hd.	2
19	891586	Washer, Nylon 1" O.D.	1
20	891805	Bolt, Centering	1
21	930099	Switch, Micro	1
22	457087	Actuator	1
23	893394	Screw, Rd. Hd. Brass	2
24	337843	Bracket, Mount, Switch	1
25	600028	Flatwasher	2
26	604024	Lockwasher, Int. Tooth	2
27	571021	Nut, Hex Brass	2

CONTROL ASSEMBLY

(from s/n 1227)

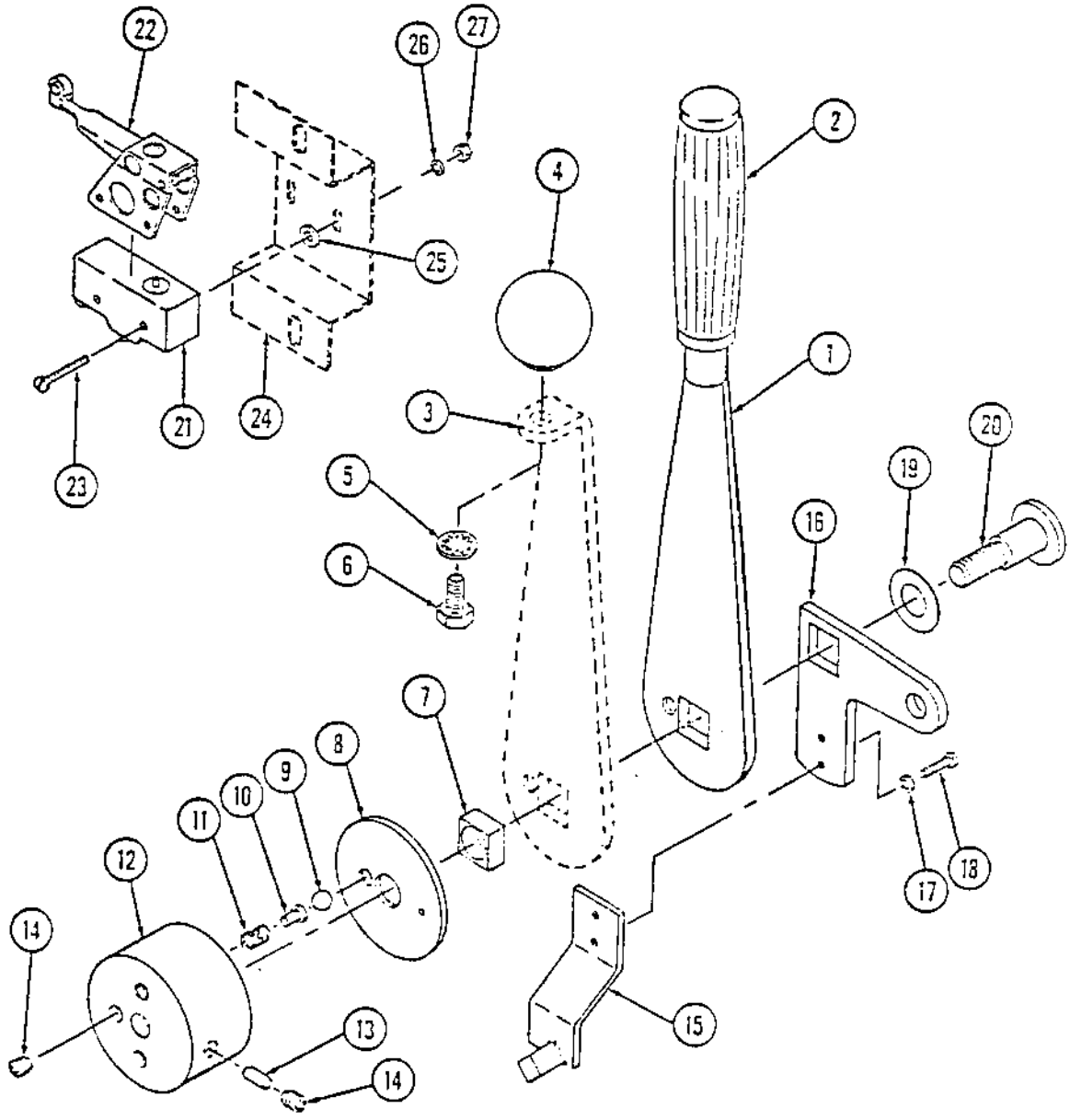

HYDRAULIC OIL RESERVOIR
HOOD & FENDERS

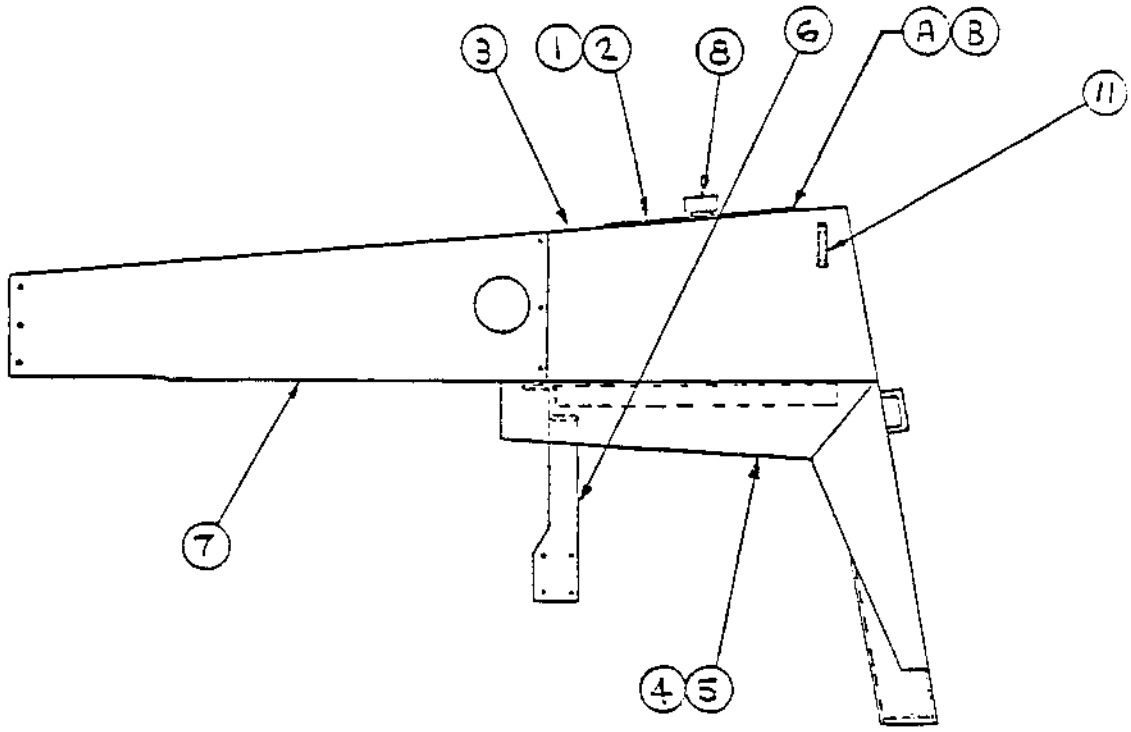

INDEX NUMBER	PART NUMBER	DESCRIPTION	QUANTITY
1	335534	Gasket	1
2	335533	Reservoir Cover	1
3	335526	Reservoir	1
4	825160	Fender LH	1
5	825161	Fender RH	1
6	825182	Reservoir Support Rear	1
7	335529	Hood	1
8	499432	Filler Cap Assembly	1
11	813377	Oil Lever Gauge	1
A	502035	Capscrew HH	12
B	801272	Sealing Washer	12

SAFETY LOCK

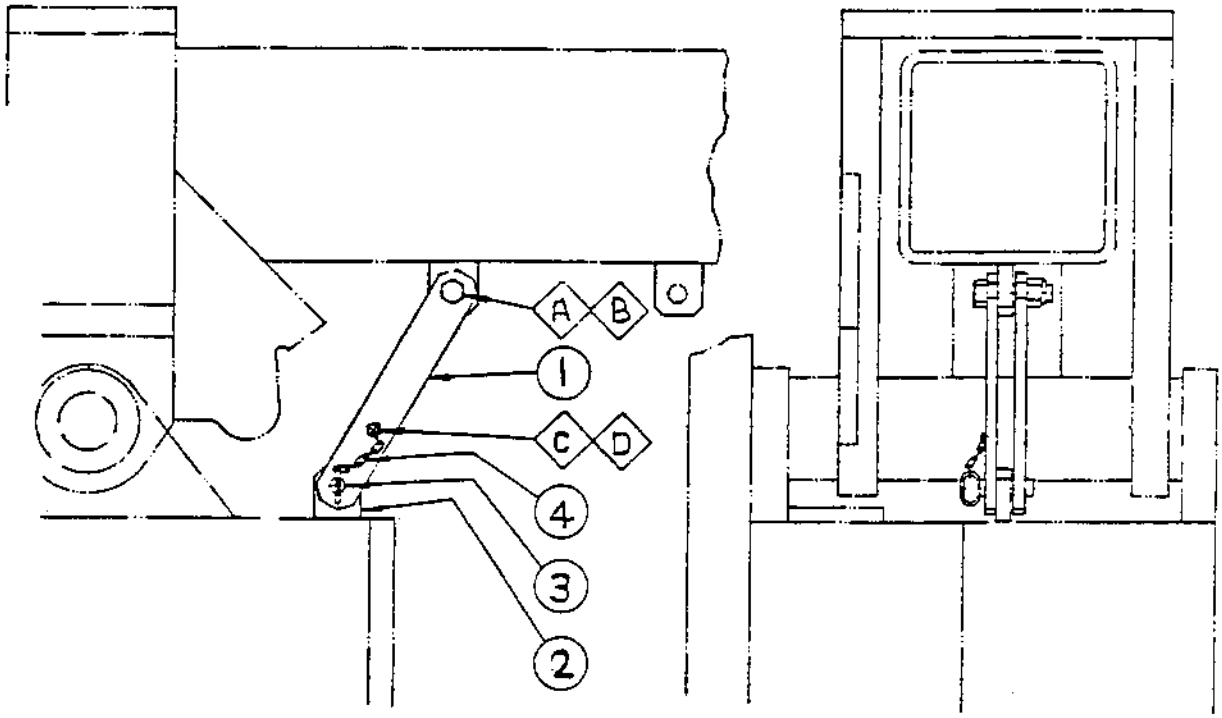

INDEX NUMBER	PART NUMBER	DESCRIPTION	QUANTITY
1	815215	Safety Lock	1
2	815256	Mounting Pad	1
3	635019	Hitch Pin Cotterless	1
4	418021	Brass Jack Chain	1
A	502124	Capscrew HH	1
B	586050	Locknut	1
C	502031	Capscrew HH	1
D	600007	Flat Washer	1

TACHOMETER CABLE
(FROM S/N 185)

(from s/n 185)

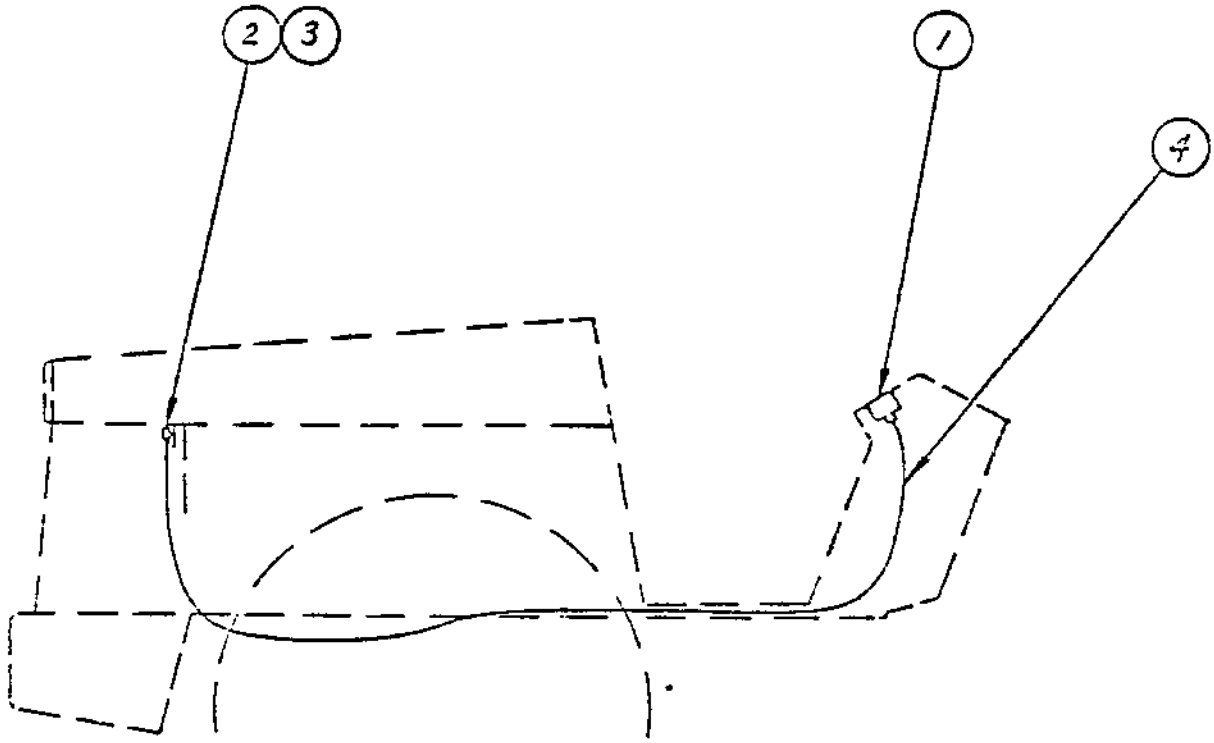

INDEX NUMBER	PART NUMBER (CA-25) All Models	PART NUMBER (CA-25A)	DESCRIPTION	QUANTITY
1	813343	813343	Tachometer	1
2	813466	813466	Adapter (Cat. Eng.)	1
-	745020	745020	Adapter (G.M. Eng.)	1
3	813396	813396	Tachometer Key (Cat. Eng.)	1
-	*457083		Tachometer Key (G.M. Eng.)	1
4	813395	814054	Tachometer Cable (Cat. Eng.)	1
-	*456060	801190	Tachometer Cable (G.M. Eng.)	1
-	814054		Tachometer Cable (Cummins Eng.)	1

*Tachometer Key should be ordered with Tachometer Cable.

CONTROLS
ENGINE SHUT DOWN & EMERGENCY STOP
(DETROIT)

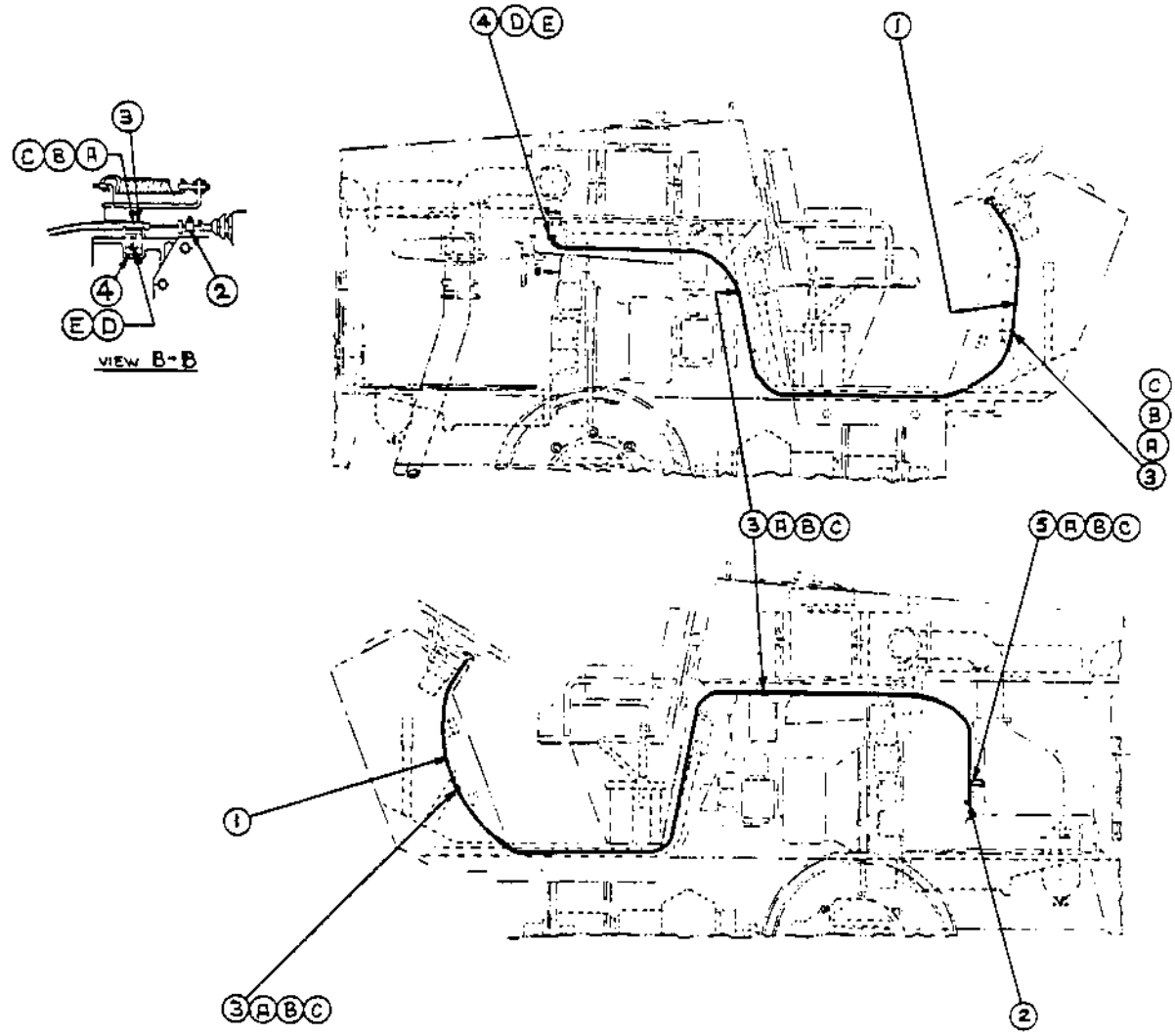

INDEX NUMBER	PART NUMBER	DESCRIPTION	QUANTITY (To S/N 1918)	QUANTITY (From S/N 1919)
1	456069	Push-Pull Control	2	1
2	801186	Throttle Stop	2	1
3	813313	Clamp	6*	3*.. 1**
4	815506	Cable Bracket	1	1
5	801377	Clamp	1	
A	502002	Capscrew	6*	3*.. 1**
B	604026	Lockwasher	6*	3*.. 1**
C	571001	Nut	6	3 .. 1**
D	550080	Round Hd. Screw		1
E	604019	Lockwasher		1

*(Single Seat)
**(Dual Seat)

HORN

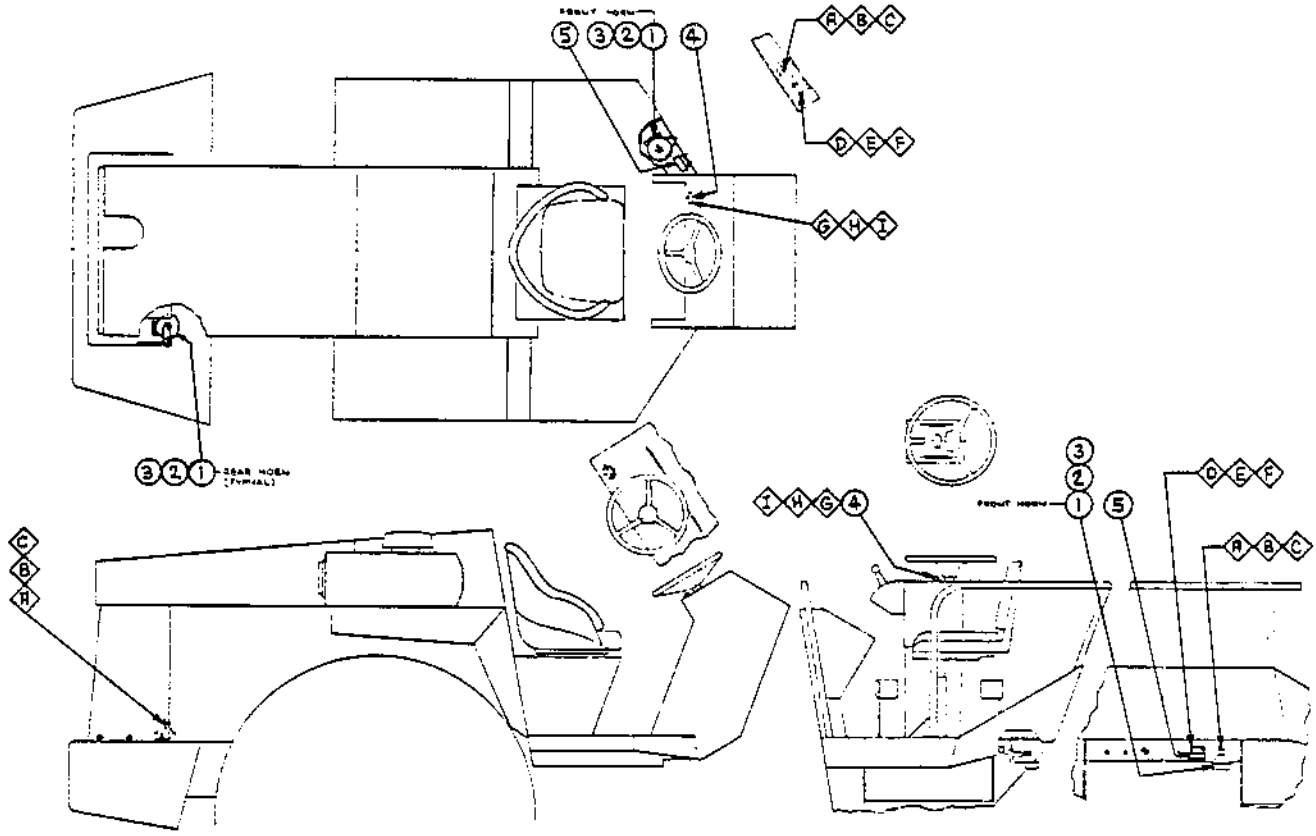

CA-25

CA-25 ASPHALT
(DUAL SEAT)

INDEX NUMBER	PART NUMBER	DESCRIPTION	QUANTITY
1	999023	Horn	2
2	999024	Horn Bracket	2
3	999025	Nut	2
4	842160	Horn Button	1
5	975037	Relay	1
A	503045	Capscrew HH	2
B	604032	Lockwasher	2
C	571002	Hex Nut	2
D	502004	Capscrew HH	2
E	604026	Lockwasher	2
F	571001	Hex Nut	2
G	229001	Capscrew HH (plated)	2
H	604019	Lockwasher (plated)	2
I	572009	Hex Nut (plated)	2

VIBRATION CONTROL LINKAGE
(SINGLE SEAT)

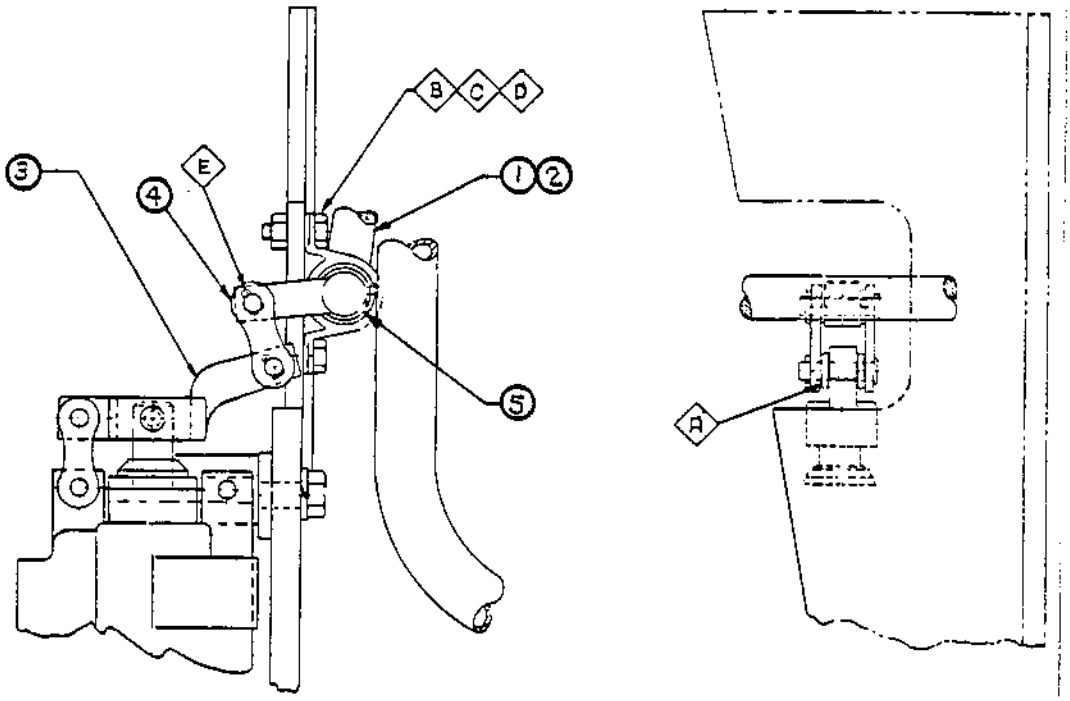

INDEX NUMBER	PART NUMBER	DESCRIPTION	QUANTITY
1	335760	Lever Assembly (s/n 318-1120)	1
-	825914	Lever Assembly (s/n 148-317 & 1121 & up)	1
2	813712	Knob	2
3	335761	Lever	1
4	813714	Conn. Link Assembly	1
5	813786	Pillow Block (Supplied with Item 1)	2
A	801234	Washer	2
B	550079	Machine Screw F.H.	4
C	604023	Lockwasher	4
D	813799	Nut	4
E	630034	Cotter Pin	1

AIR CLEANER ASSEMBLY (CAT)

INDEX NUMBER	PART NUMBER	DESCRIPTION	QUANTITY
1		Air Cleaner (See Page 67)	1
2	826207	Air Cleaner Tube (from s/n 1531)	1
3	921121	Clamp	1
5	801178	Rubber Elbow 90° (from s/n 1531)	1
6	801177	Rubber Elbow 45° (from s/n 1531)	1
A	502035	Capscrew HH	2
B	502037	Capscrew HH	2
C	604028	Lockwasher	2
D	571003	Hex Nut	4

AIR CLEANER ASSEMBLY (CUMMINS)

INDEX NUMBER	PART NUMBER	DESCRIPTION	QUANTITY
1		Air Cleaner (See Page 67)	1
2	753004	Air Cleaner Tube	1
3	745022	Rubber Elbow 45°	1
4	801178	Rubber Elbow 90°	1
5	921121	Clamp	4
A	502035	Capscrew HH	2
B	502037	Capscrew HH	2
C	604028	Lockwasher	4
D	571003	Hex Nut	4

AIR CLEANER ASSEMBLY (DETROIT)

INDEX NUMBER	PART NUMBER	DESCRIPTION	QUANTITY
1		Air Cleaner (See Page 67)	1
2	826219	Air Cleaner Tube (from s/n 1531)	1
3	826208	Elbow, Air Cleaner (from s/n 1531)	1
5	921121	Clamp	4
6	801177	Rubber Elbow 45° (from s/n 1531)	1
7	801179	Hump Hose (from s/n 1531)	1
A	502035	Capscrew HH	2
B	502037	Capscrew HH	2
C	604028	Lockwasher	4
D	571003	Hex Nut	4
E	502018	Capscrew HH	4
F	604027	Lockwasher	4

AIR CLEANER ASSEMBLY

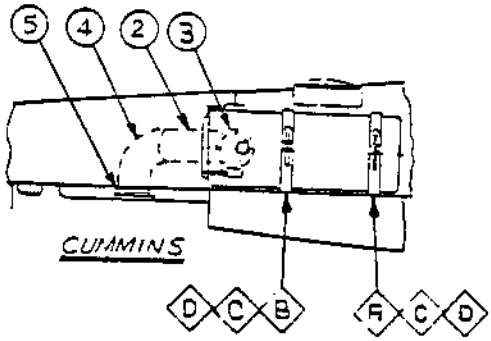

CUMMINS

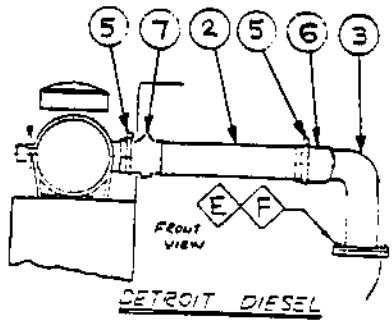

DETROIT DIESEL

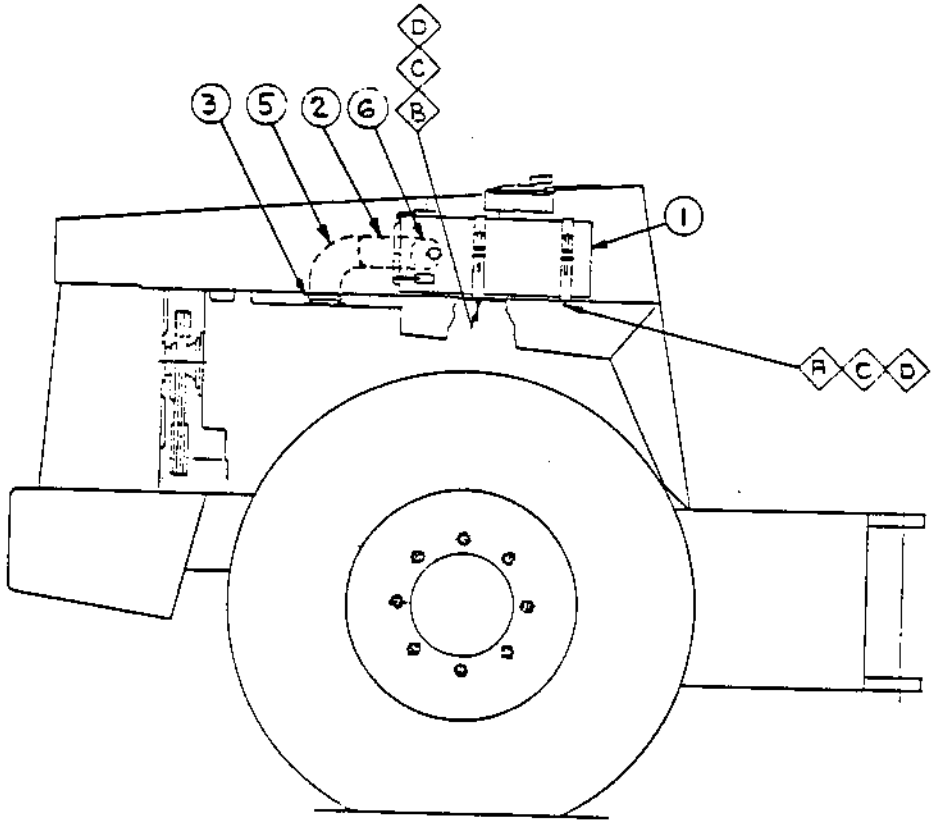

CATERPILLAR

AIR CLEANER ASSEMBLY

INDEX NUMBER	PART NUMBER	DESCRIPTION	QUANTITY
1	335559	Air Cleaner Assembly	1
-	813792	Cap Assembly	1
2	891525	Cap	1
3	891530	Clamp	1
4	813791	Band, Mounting	2
5	499243	Cup, Dust, Horizontal	1
6	891522	Valve, Vacuator	1
7	499242	Clamp Assembly	2
8	499239	Body, Lower Assembly	1
-	891432	Kit, Gasket	1
9	499240	O-Ring	2
10	499249	Gasket, Element	1
11	499238	Gasket, Cover, Inner	1
12	499250	Gasket, Washer	1
13	499248	Gasket, Cover	1
14	499237	Body, Upper, Assembly	1
15	499246	Spring, Clip, Cover	3
16	499236	Cap, Restriction	1
17	335656	Element, Cleaner, Air	1
18	499241	Cover, Inner	1
19	499245	Screw, Thumb	1
20	499247	Cover, Assembly	1
21	801174	Indicator, Service	1

AIR CLEANER ASSEMBLY

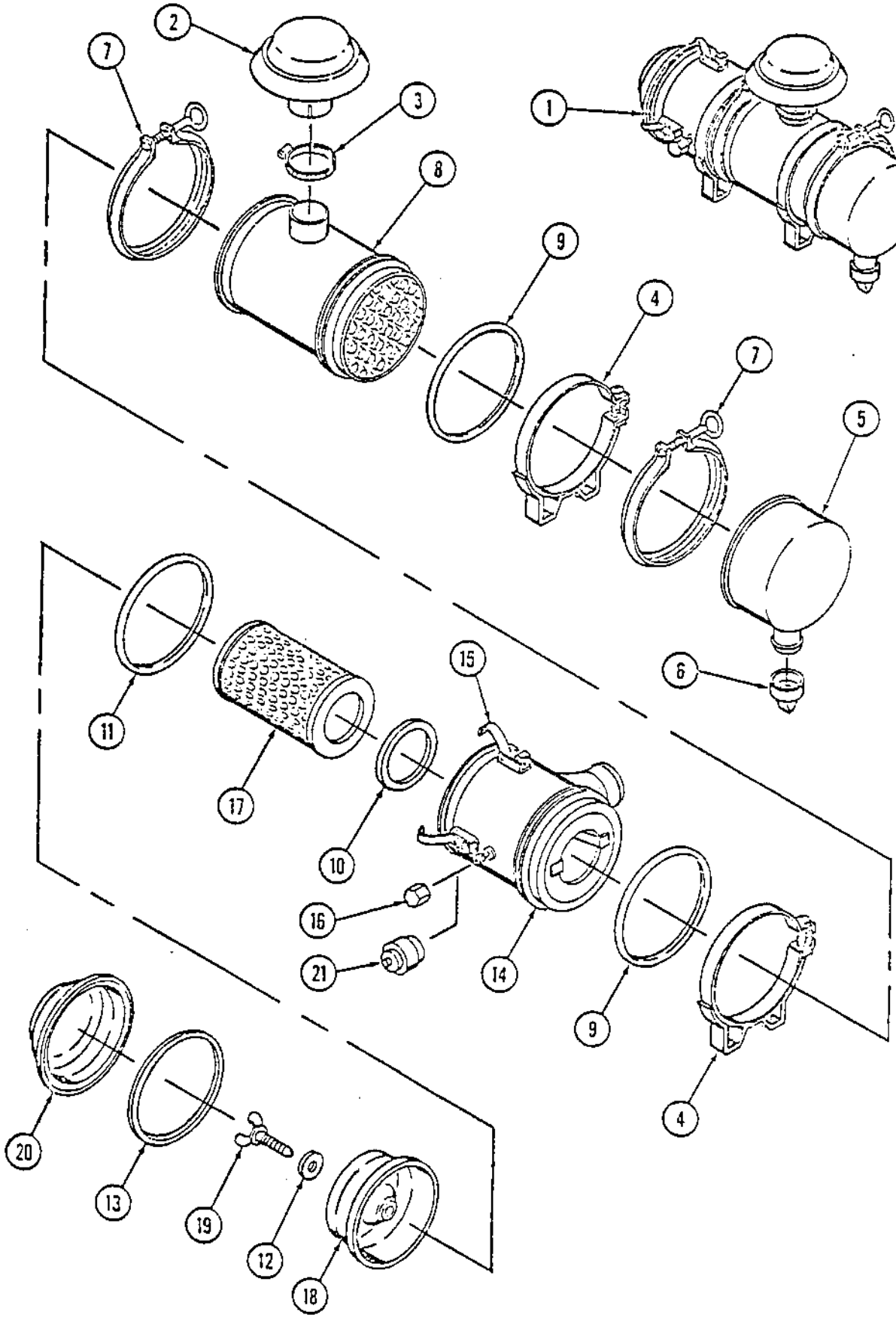

STEERING HITCH ASSEMBLY

(To S/N 2968, 2973 to 2976)

INDEX NUMBER	PART NUMBER	DESCRIPTION	QUANTITY
1	335622	Steering Hitch	1
2	335624	Pin	1
3	335625	Pin	1
4	825176	Spacer	1
5	335626	Spacer	1
6	813468	Locknut	2
7	813469	Lockwasher	2
8	813316	Bearing	2
9	801605	Bearing Assembly	4
11	310022	Grease Fitting	4
12	813473	O-Ring	4
14	826025	Hitch Lockplate	1
15	826026	Hitch Lockplate	1
16	850179	Hitch Lockplate	1
17	850251	Hitch Lockplate	1
18	826451	Ear, Left Hand	1
19	826450	Ear, Right Hand	1
20	433562201	Back Plate, Hitch	1
21	825984	Flange,Pivot(2596 to 2968,2973 to 2976)	1
--	825909	Flange,Pivot(to 2588,2590,2591, 2593 to 2595)	1
A	502141	Capscrew HH	4
B	604034	Lockwasher	4
C	923126	Dowel Pin	2
D	502060	Capscrew HH	2
E	600010	Flat Washer	1
F	604030	Lockwasher	2
G	571005	Hex Nut	2

STEERING HITCH ASSEMBLY

(To S/N 2968, 2973 to 2976)

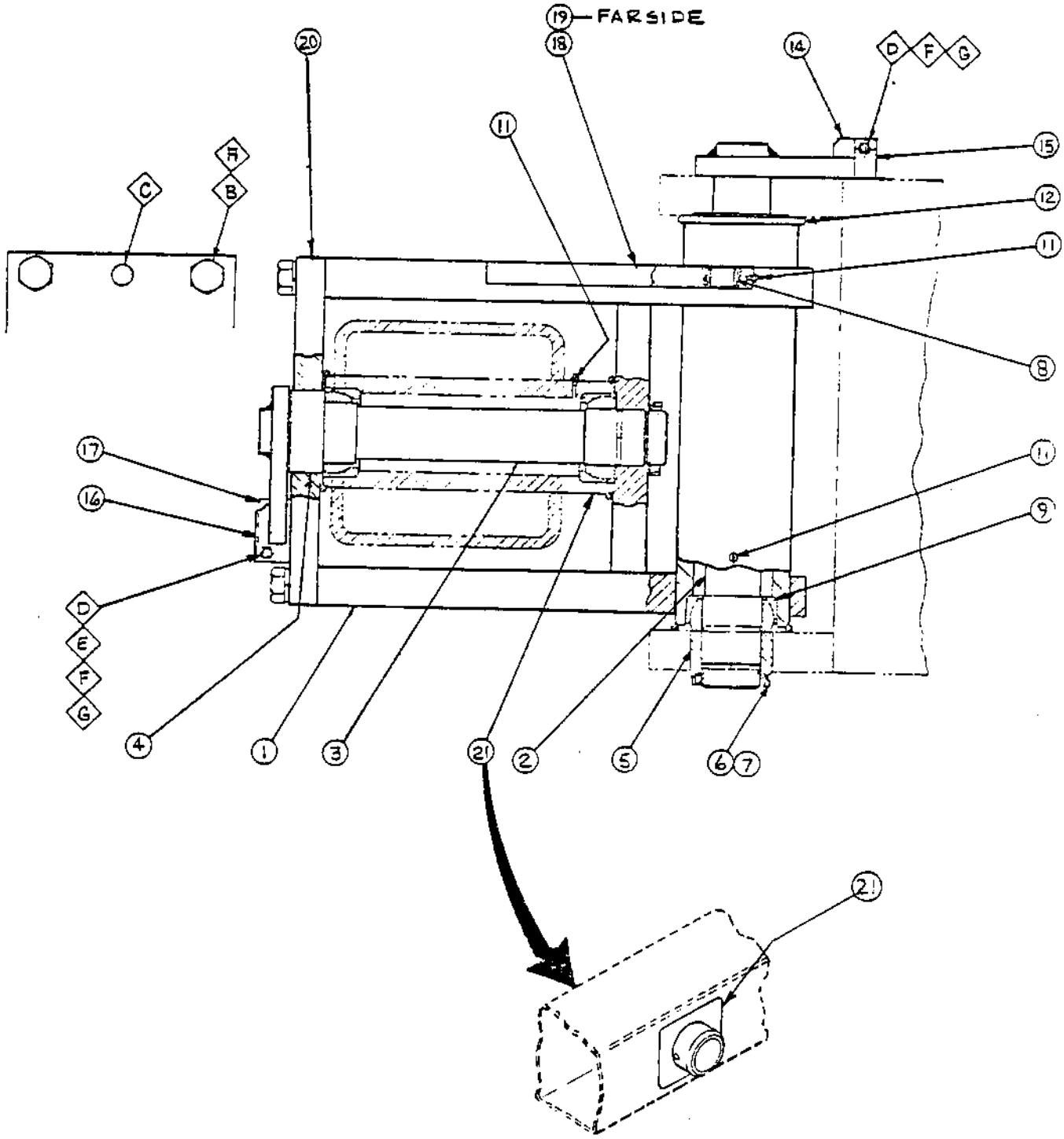

STEERING HITCH ASSEMBLY
(From S/N 2969 To 2972, 2977 And Up)

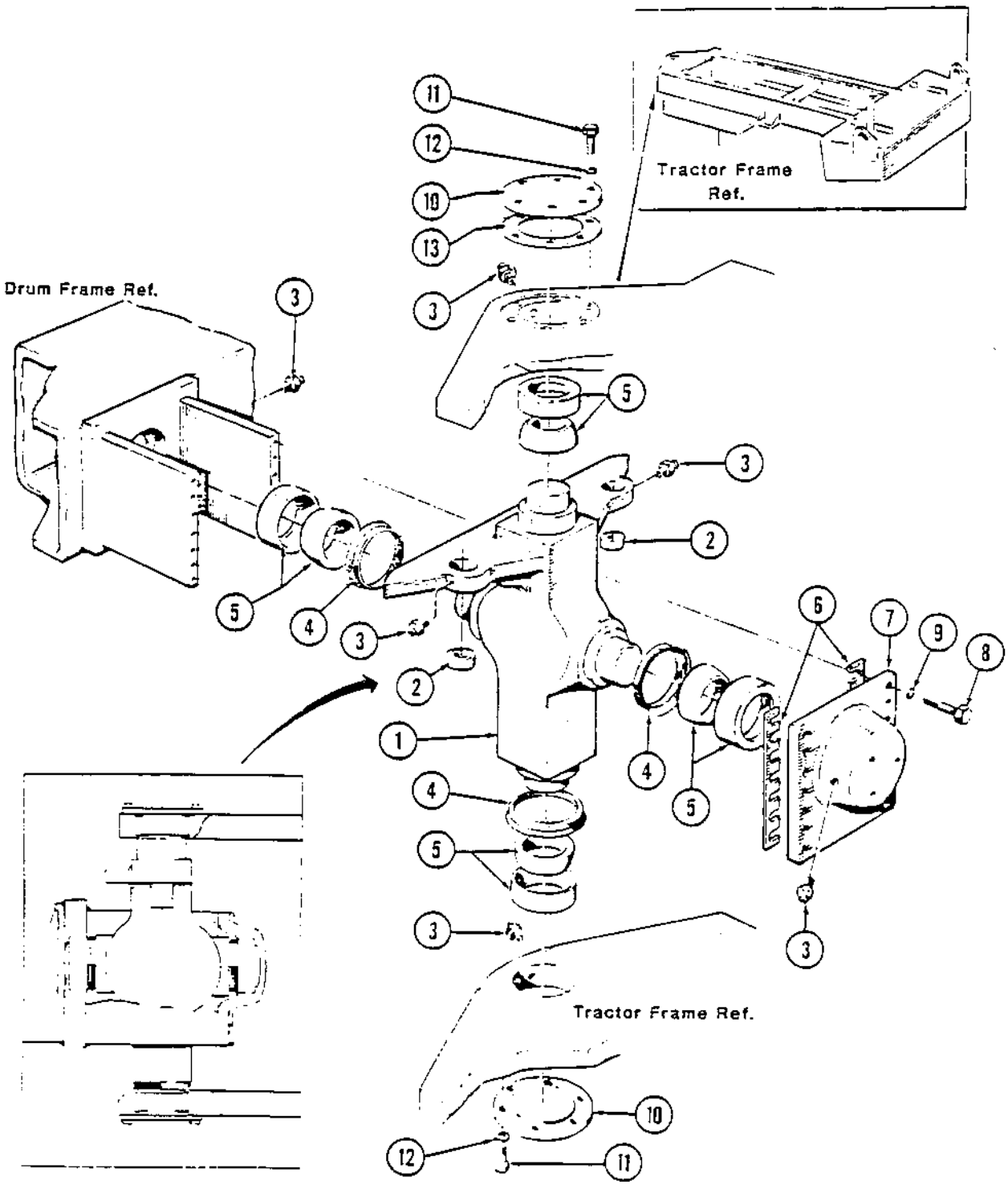

STEERING HITCH ASSEMBLY
(FROM S/N 2969 To 2972, 2977 And Up)

INDEX NUMBER	PART NUMBER	DESCRIPTION	QUANTITY
1	343597	Link, Steering Hitch	1
2	813316	Bearing, Steering Cylinder	2
3	310035	Fitting, Lubrication	6
4	167032	V-Ring	3
5	801605	Bearing Assembly	4
6	337044	Shim, 1.0 mm	A/R
-	433704401	Shim, .035 mm	A/R
-	433704402	Shim, 0.1 mm	A/R
7	337043	Cover, Steering Link	1
8	502210	Capscrew, HH	14
9	604033	Lockwasher	14
10	337042	Cover, Top & Bottom	2
11	502058	Capscrew, HH	12
12	615045	Lockwasher	12
13	337045	Shim, 1.0 mm	A/R
-	433704501	Shim, .035 mm	A/R
-	433704502	Shim, 0.1 mm	A/R

CA-25 ELECTRICAL DIAGRAM
CAT

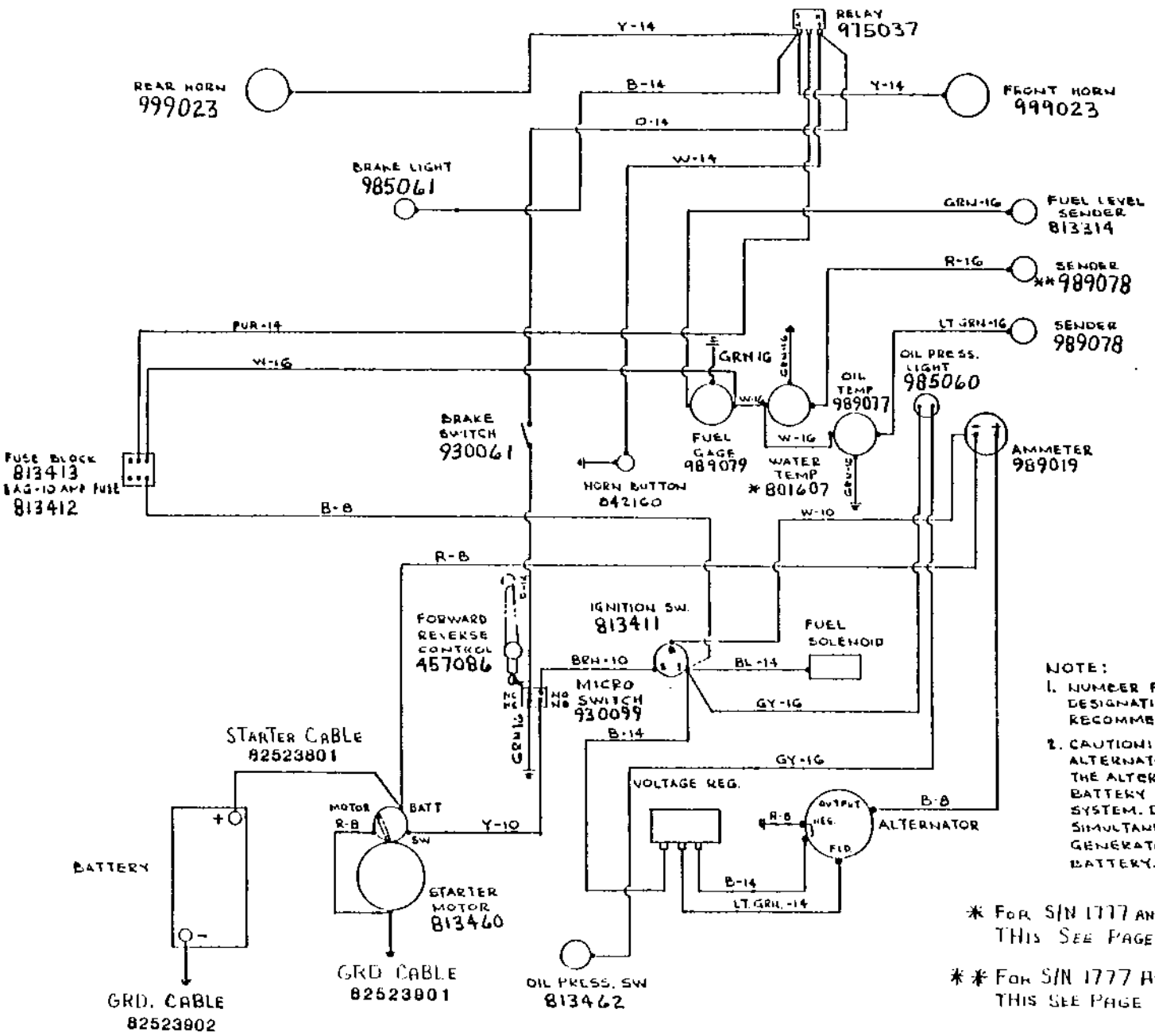

COLOR CODE

B	BLACK
W	WHITE
R	RED
O	ORANGE
LT GRN.	LIGHT GREEN
Y	YELLOW
BL	BLUE
GRN	GREEN
GY	GREY
BRN	BROWN
PUR	PURPLE

MAIN WIRE HARNESS #825226

NOTE:
1. NUMBER FOLLOWING COLOR DESIGNATION INDICATES RECOMMENDED WIRE SIZE
2. CAUTION! DO NOT POLARIZE ALTERNATOR. DO NOT OPERATE THE ALTERNATOR WITHOUT A BATTERY CONNECTED TO THE SYSTEM. DO NOT OPERATE SIMULTANEOUSLY WITH A D.C. GENERATOR TO CHARGE BATTERY.

* FOR S/N 1777 AND UP. FOR S/N'S BEFORE THIS SEE PAGE 34

** FOR S/N 1777 AND UP. FOR S/N'S BEFORE THIS SEE PAGE 12

CA-25 (ASPHALT) ELECTRICAL DIAGRAM
CAT

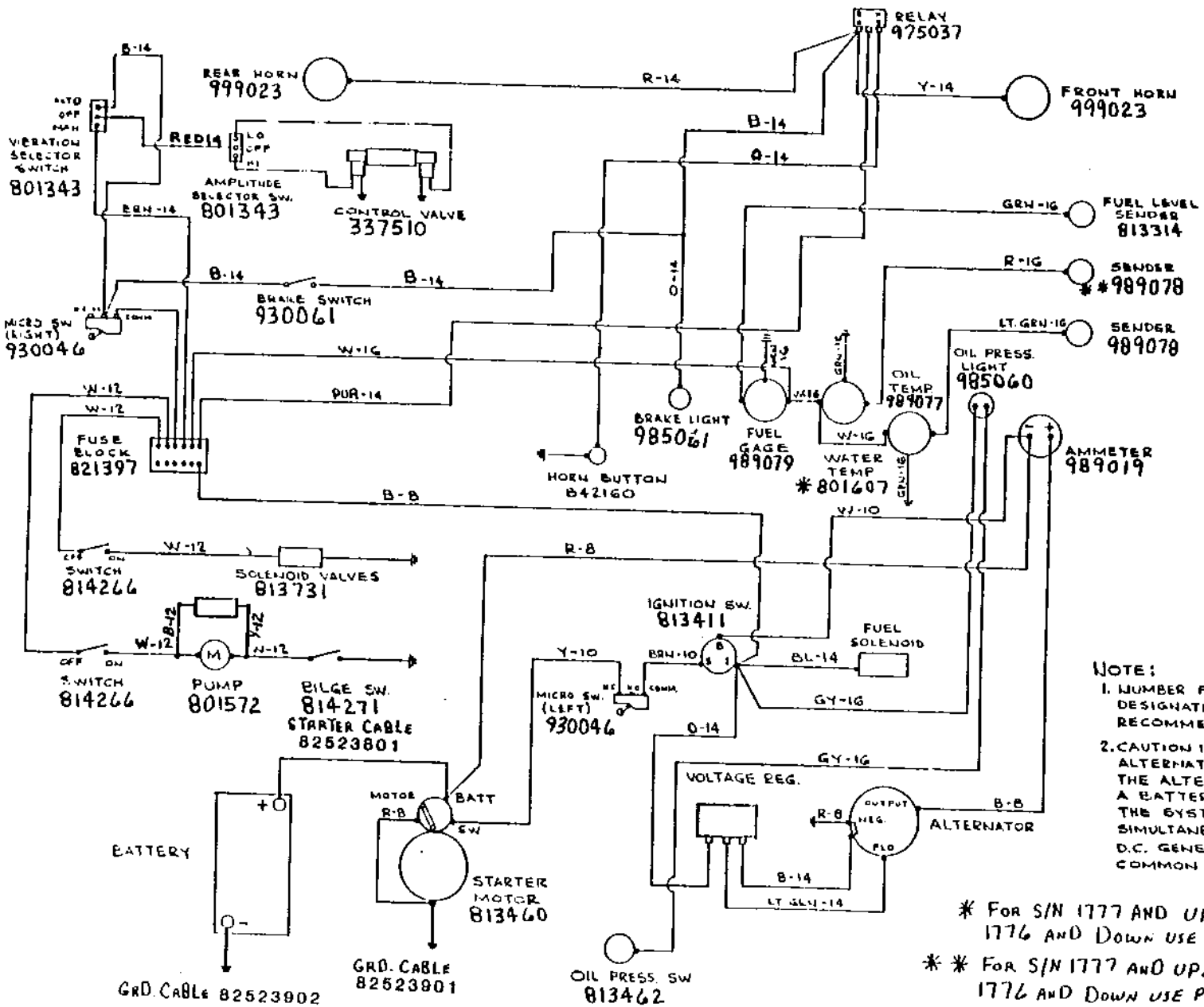

COLOR CODE	
B	BLACK
W	WHITE
R	RED
O	ORANGE
LT. GRN	LIGHT GREEN
Y	YELLOW
BL	BLUE
GRN	GREEN
GY	GREY
BRN	BROWN
PUR	PURPLE

MAIN WIRE HARNESS #825898

NOTE:
1. NUMBER FOLLOWING COLOR DESIGNATION INDICATES RECOMMENDED WIRE SIZE.
2. CAUTION ! DO NOT POLARIZE ALTERNATOR. DO NOT OPERATE THE ALTERNATOR WITHOUT A BATTERY CONNECTED TO THE SYSTEM. DO NOT OPERATE SIMULTANEOUSLEY WITH A D.C. GENERATOR TO CHARGE COMMON BATTERY.

* FOR S/N 1777 AND UP. FOR S/N'S 1776 AND DOWN USE P/N 989037

** FOR S/N 1777 AND UP. FOR S/N'S 1776 AND DOWN USE P/N 989036

to s/n 1676

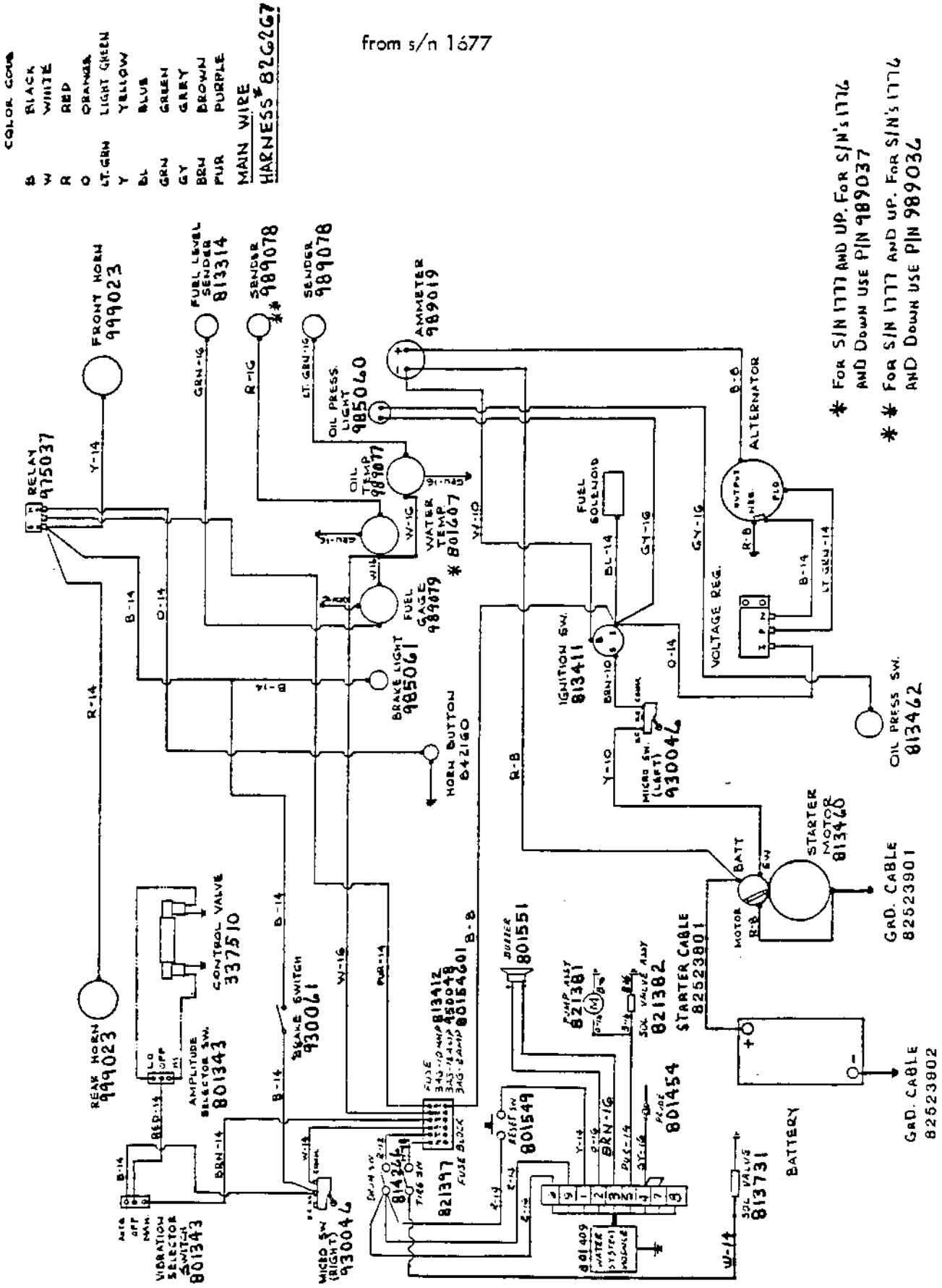

CA-25 ASPHALT ELECTRICAL DIAGRAM

CAT

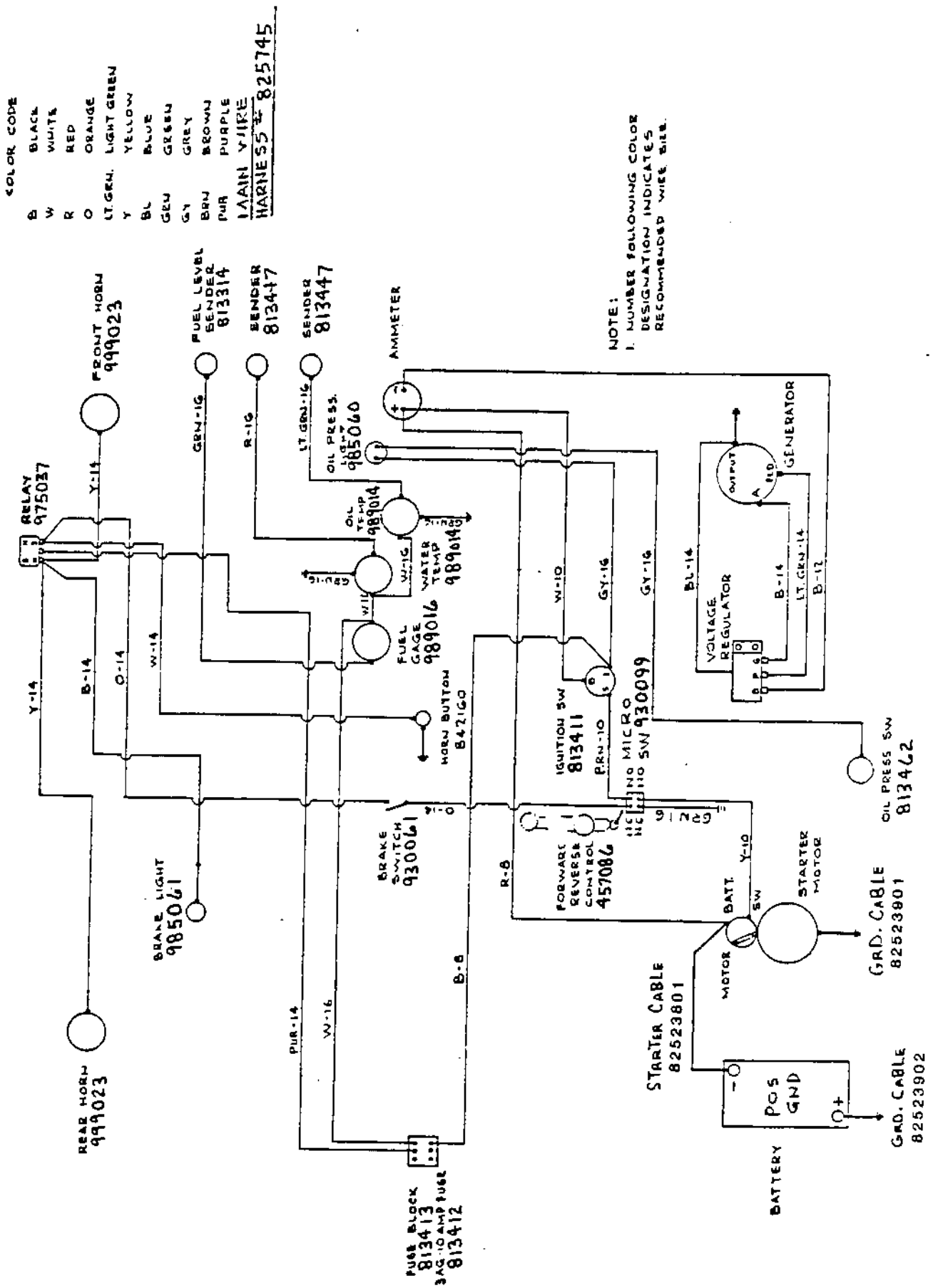

CA-25 ELECTRICAL DIAGRAM
DETROIT (WITH GENERATOR)

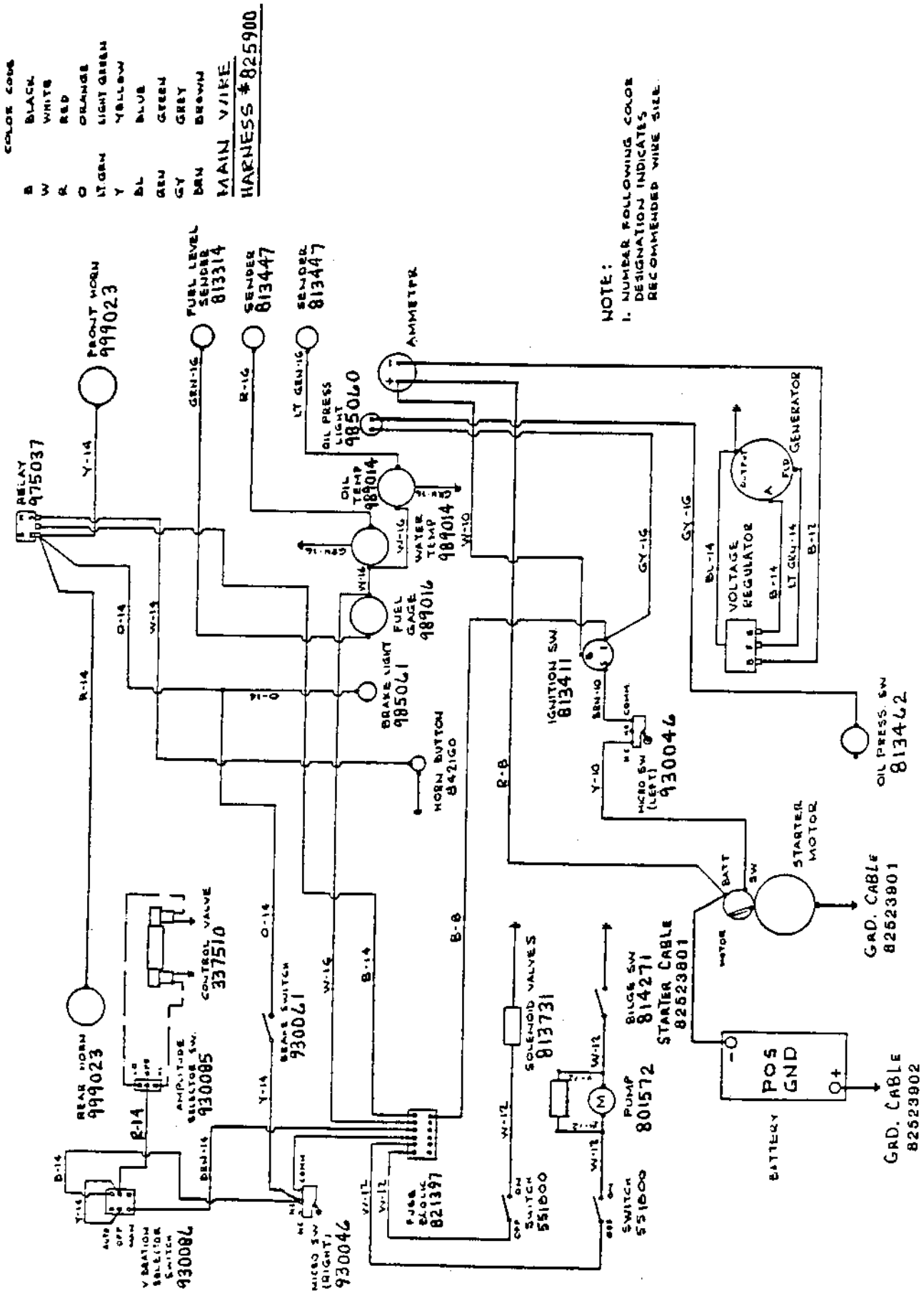

Page 74
Rev. 1-11-83

CA-25 (ASPHALT) ELECTRICAL DIAGRAM
DETROIT (WITH GENERATOR)

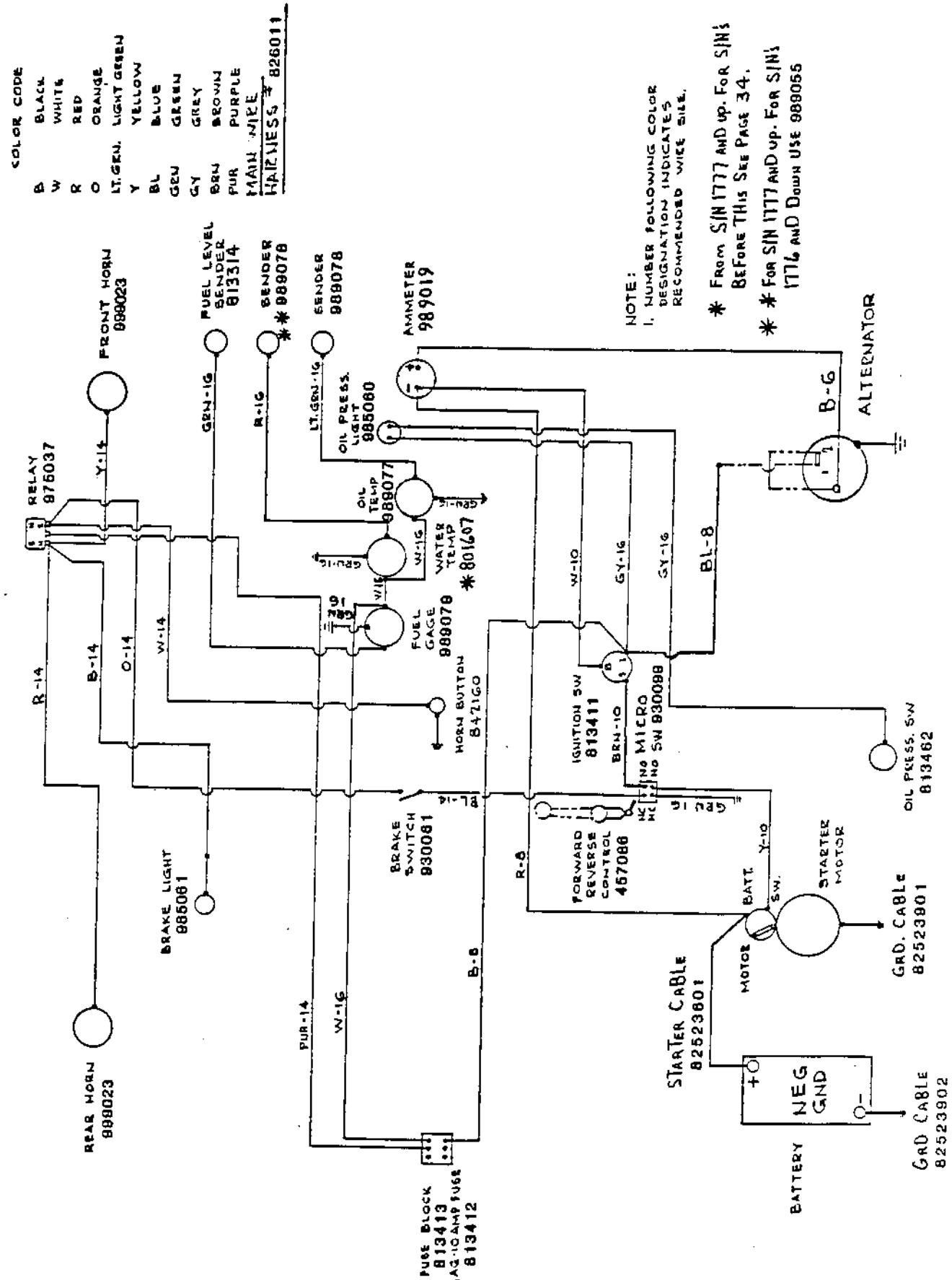

CA-25 ELECTRICAL DIAGRAM
DETROIT (WITH ALTERNATOR)

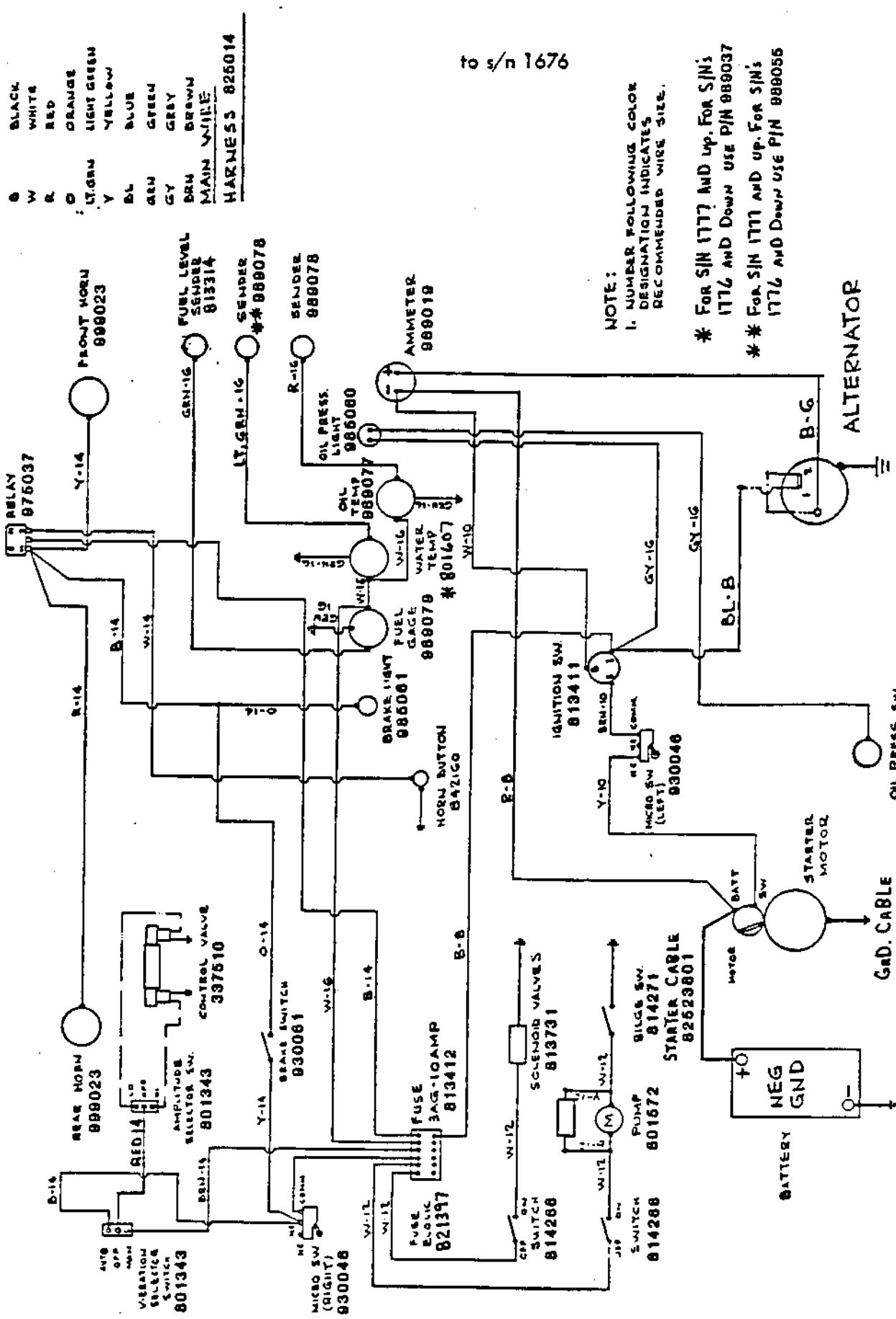

Page 76
Rev. 7-9-81

CA-25 (ASPHALT) ELECTRICAL DIAGRAM
DETROIT (WITH ALTERNATOR)

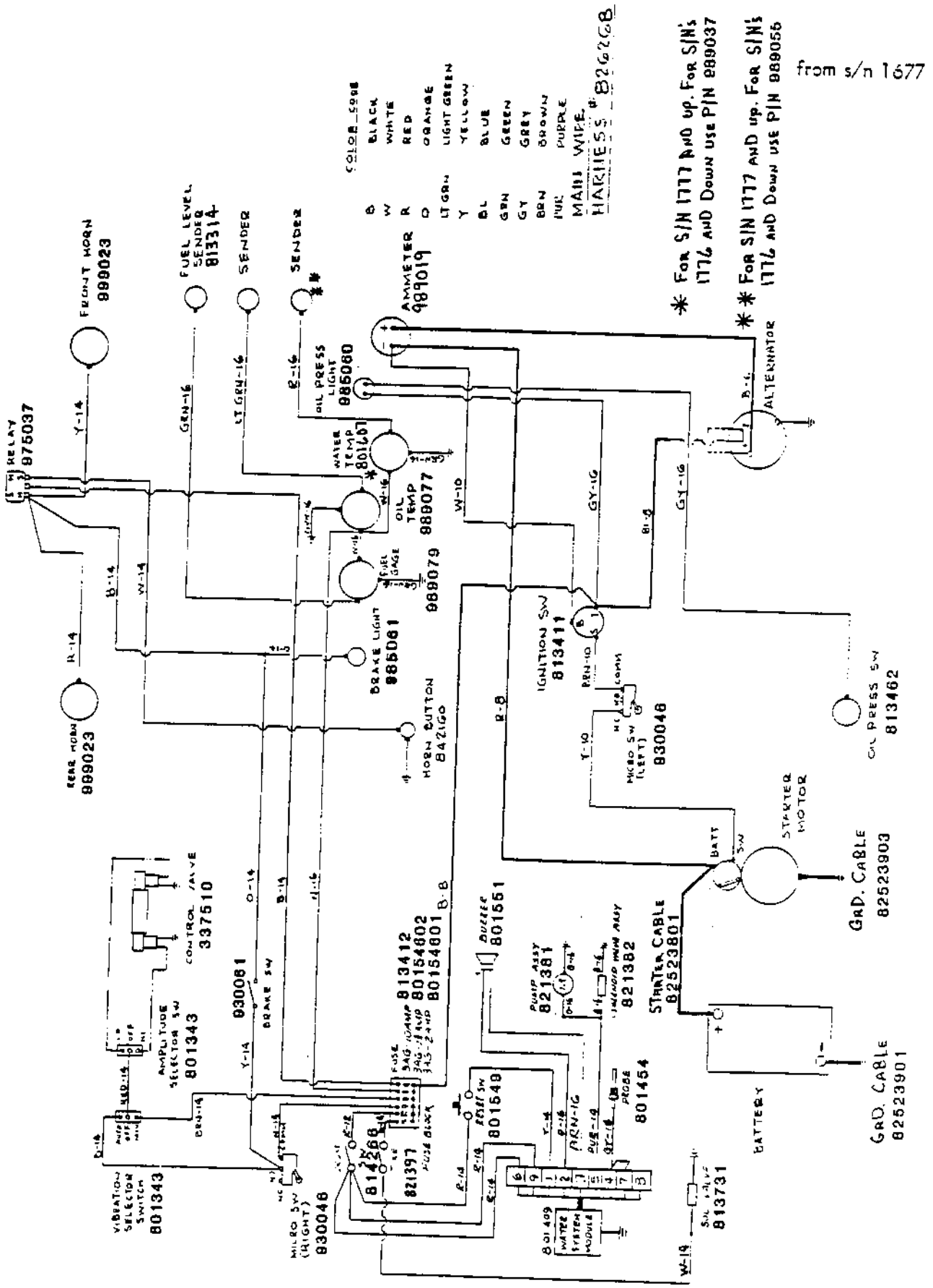

CA-25 (ASPHALT) ELECTRICAL DIAGRAM
DETROIT (WITH ALTERNATOR)

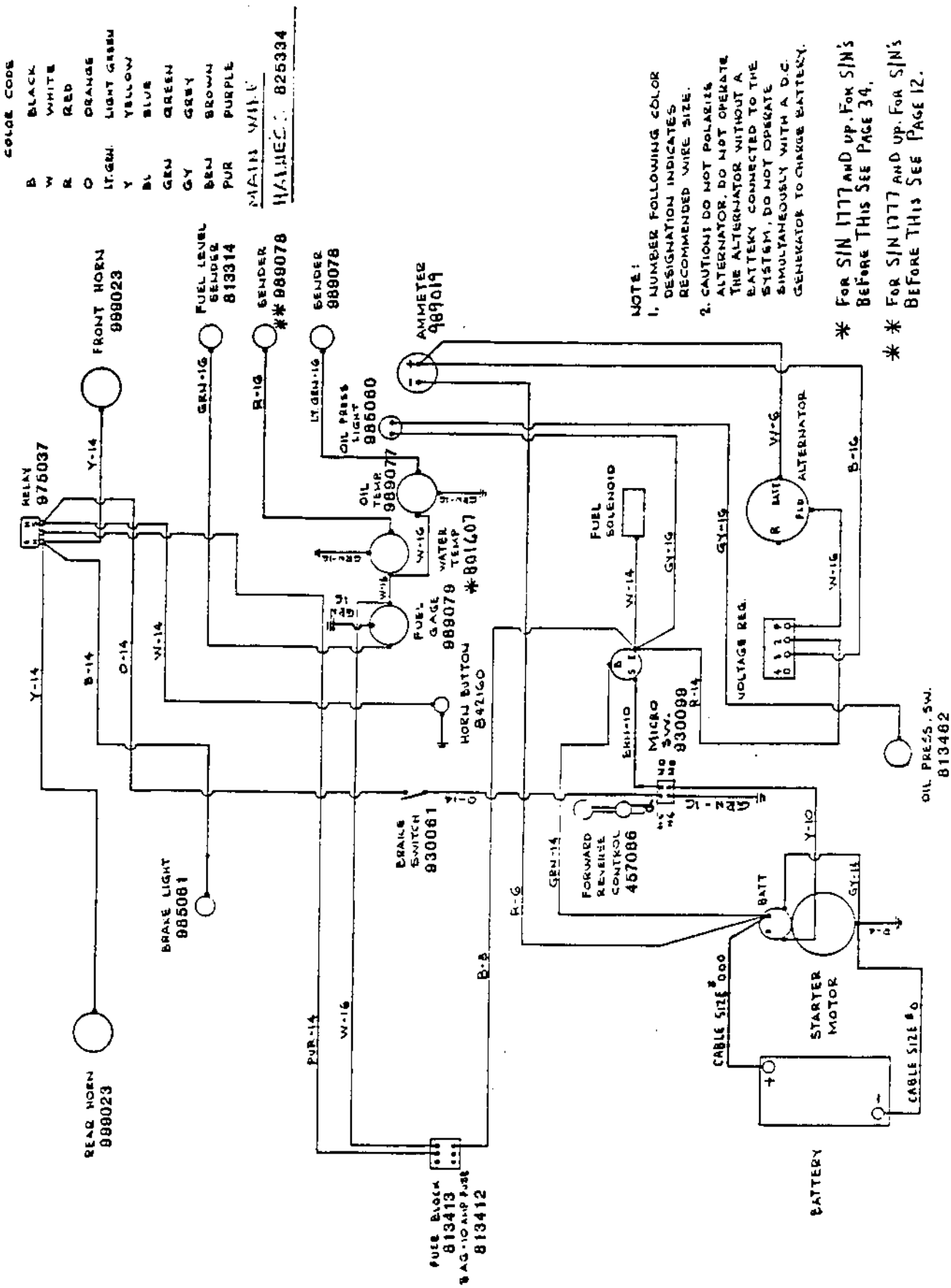

CA-25 ELECTRICAL DIAGRAM
CUMMINS

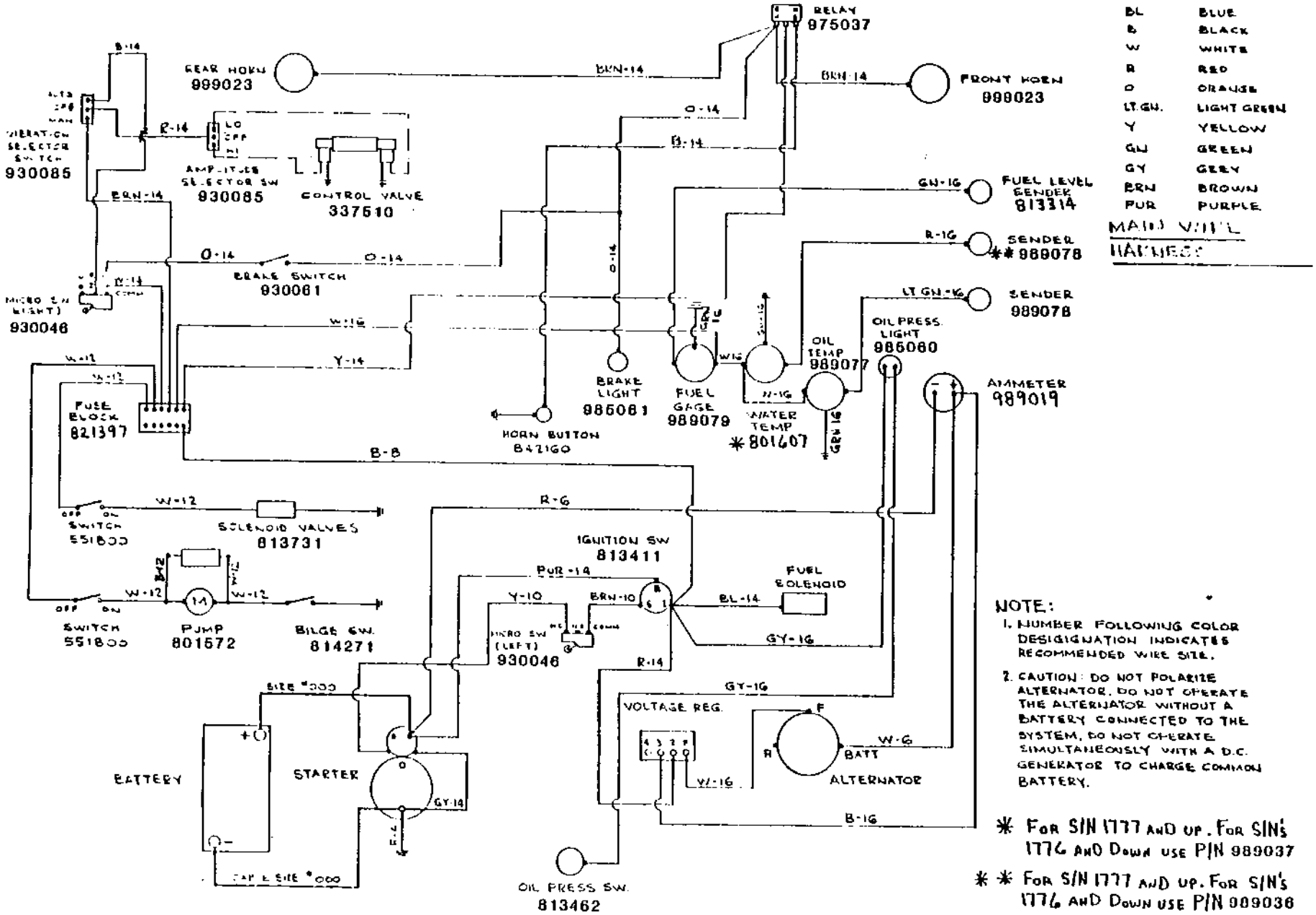

COLOR CODE

BL	BLUE
B	BLACK
W	WHITE
R	RED
O	ORANGE
LT.GN.	LIGHT GREEN
Y	YELLOW
GN	GREEN
GY	GREY
BRN	BROWN
PUR	PURPLE

MAIN WIRE HARNESS

NOTE:

1. NUMBER FOLLOWING COLOR DESIGIGNATION INDICATES RECOMMENDED WIRE SIZE.
2. CAUTION: DO NOT POLARIZE ALTERNATOR. DO NOT OPERATE THE ALTERNATOR WITHOUT A BATTERY CONNECTED TO THE SYSTEM. DO NOT OPERATE SIMULTANEOUSLY WITH A D.C. GENERATOR TO CHARGE COMMON BATTERY.

* FOR S/N 1777 AND UP. FOR S/N's 1776 AND DOWN USE P/N 989037

** FOR S/N 1777 AND UP. FOR S/N's 1776 AND DOWN USE P/N 989036

CA-25 (ASPHALT) ELECTRICAL DIAGRAM
CUMMINS

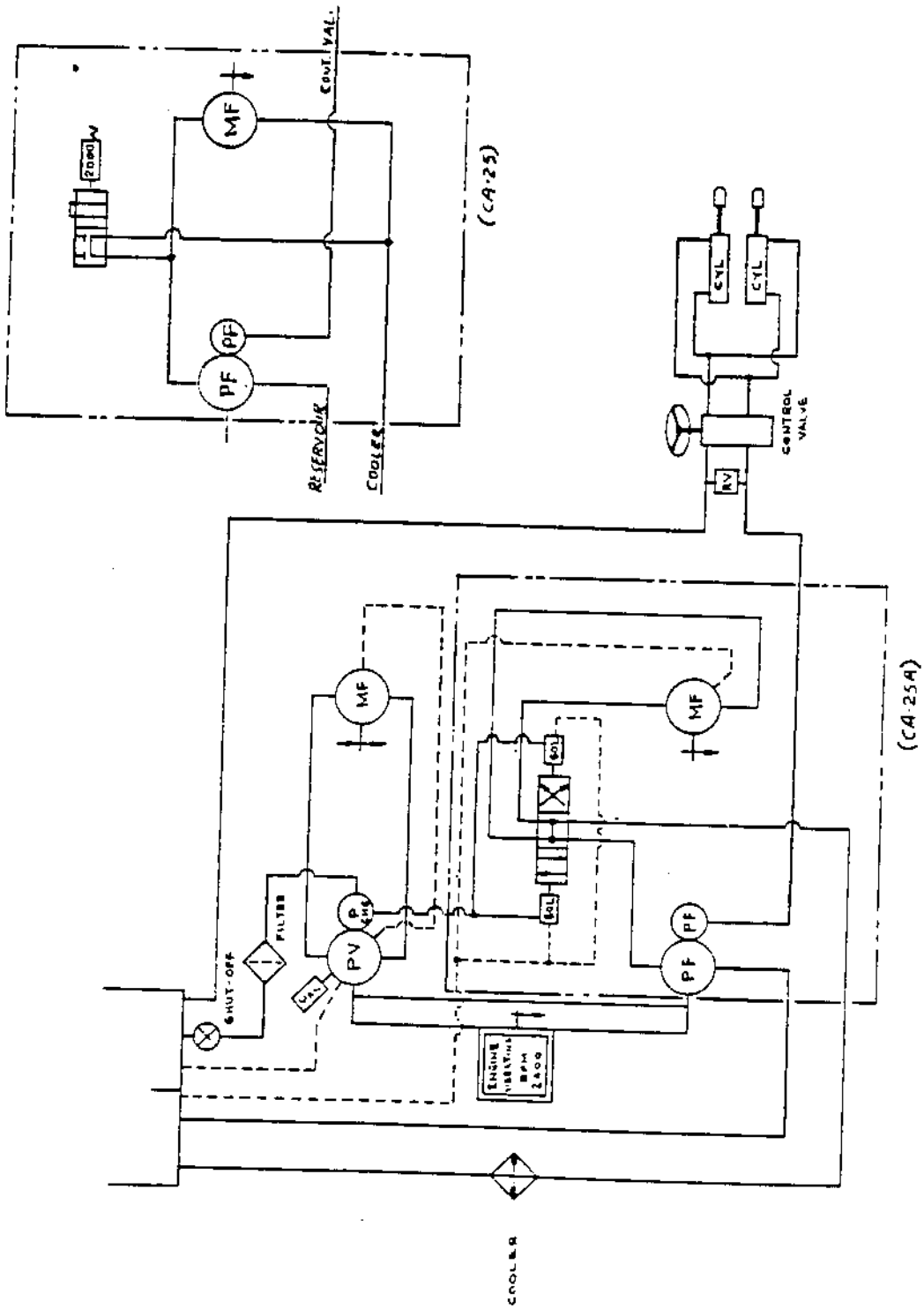

HYDRAULIC SCHEMATIC

HYDRAULIC ASSEMBLY
(CA-25)

INDEX NUMBER	PART NUMBER	DESCRIPTION	QUANTITY
1	813424	Split Flange	5
2	813429	O-Ring	5
3	82522726	Hose Assembly	1
4	82522701	Hose Assembly	1
5	813447	Temp Sender (to s/n 691)	1
-	989078	Temp Sender (fron s/n 692)	1
6	82522702	Hose Assembly	1
7	234395	Elbow 90°	1
8	813449	Hex Bushing	2
9		Filter (See Page 170)	1
10	813738	Nipple	1
11	813451	Gate Valve	1
12	82522703	Hose Assembly	1
13	85021601	Swivel Elbow 90°	2
13A	334117	Male Connector	2
14	814251	Adapter	1
15	82522704	Hose Assembly	2
16	234371	Tee-Branch	3
17	333560305	Hose Assembly (to s/n 214)	1
-	32522721	Hose Assembly (from s/n 215)	1
18	333560306	Hose Assembly (to s/n 214)	1
-	32522722	Hose Assembly (from s/n 215)	1
19	813438	Close Nipple	2
20	333560320	Hose Assembly (to s/n 214)	1
-	82522724	Hose Assembly (from s/n 215)	1
21	813437	Adapter	1
22	333560307	Hose Assembly (to s/n 214)	1
-	82522723	Hose Assembly (from s/n 215)	1
23	814242	Tee-Branch	1
25	82522708	Hose Assembly	1
26	82522709	Hose Assembly	1
26A	813425	Hex Bushing (To S/N 3123)	1
26C	813391	Magnetic Plug	3
27	82522710	Hose Assembly (To S/N 3123)	1
28	813417	Tee	1
29	82522711	Hose Assembly	1
30	801623	Elbow 90° Swivel	1
31	82549305	Hose Assembly	1
32	813416	Split Flange Assembly	2
33	813430	O-Ring	3
34	333560313	Hose Assembly (to s/n 253)	1
-	82522725	Hose Assembly (from s/n 254)	1

HYDRAULIC ASSEMBLY
(CA-25)

INDEX NUMBER	PART NUMBER	DESCRIPTION	QUANTITY
35	813420	Nipple	1
36	891866	Adapter	1
37	480202	Relief Valve (from s/n 445)	1
38	82522714	Hose Assembly	1
40	335555	Sump Filter (not required after s/n 254).	1
41	813426	Str. Elbow 90°	1
42	813427	Hex Bushing	2
43	813468	Male Connector	1
45	813422	Plug	2
46	813433	Flange	1
47	813443	"O" Ring	1
48	813423	Hex Plug	2
49	813431	Elbow 45° (To S/N 3123)	1
50	813434	Hex Bushing	1
51	*813435	Elbow 90°	2
53	*482167	Hose Assembly (Replaces 82522728)	1
54	813453	Elbow 45°	1
55	813456	Swivel Adapter	1
56	160144	"O" Ring	1
57	813439	Tee	1
58	813455	Adapter	1
59	813483	Adapter	1
60	335602	Modified Tee	1
65	813416	Flange (To S/N 3123)	1
66	334121	"O" Ring Connector	3
68	82522727	Hose Assembly	1
69	814250	Check Valve	1
70	**923811	Insert, 45°	1
71	**923810	Hose, 9" Length	1
72	**813311	Clamp	2
73	**923812	Insert, 45° Flanged	1
A	509039	Capscrew, Soc. Hd	4
B	604028	Lockwasher	4

*NOTE: When replacing Hose P/N 482167 item 53, check item 37 Relief Valve for an item 13A Male Connector where this Hose connects. If there is a Male Connector order one of item 51, P/N 813435 90° Elbow and replace the Connector.

**NOTE: These parts are used on CA-25 PD's and CA-25 Supers from S/N 3124 & Up.

CA-25
TRACTION CIRCUIT

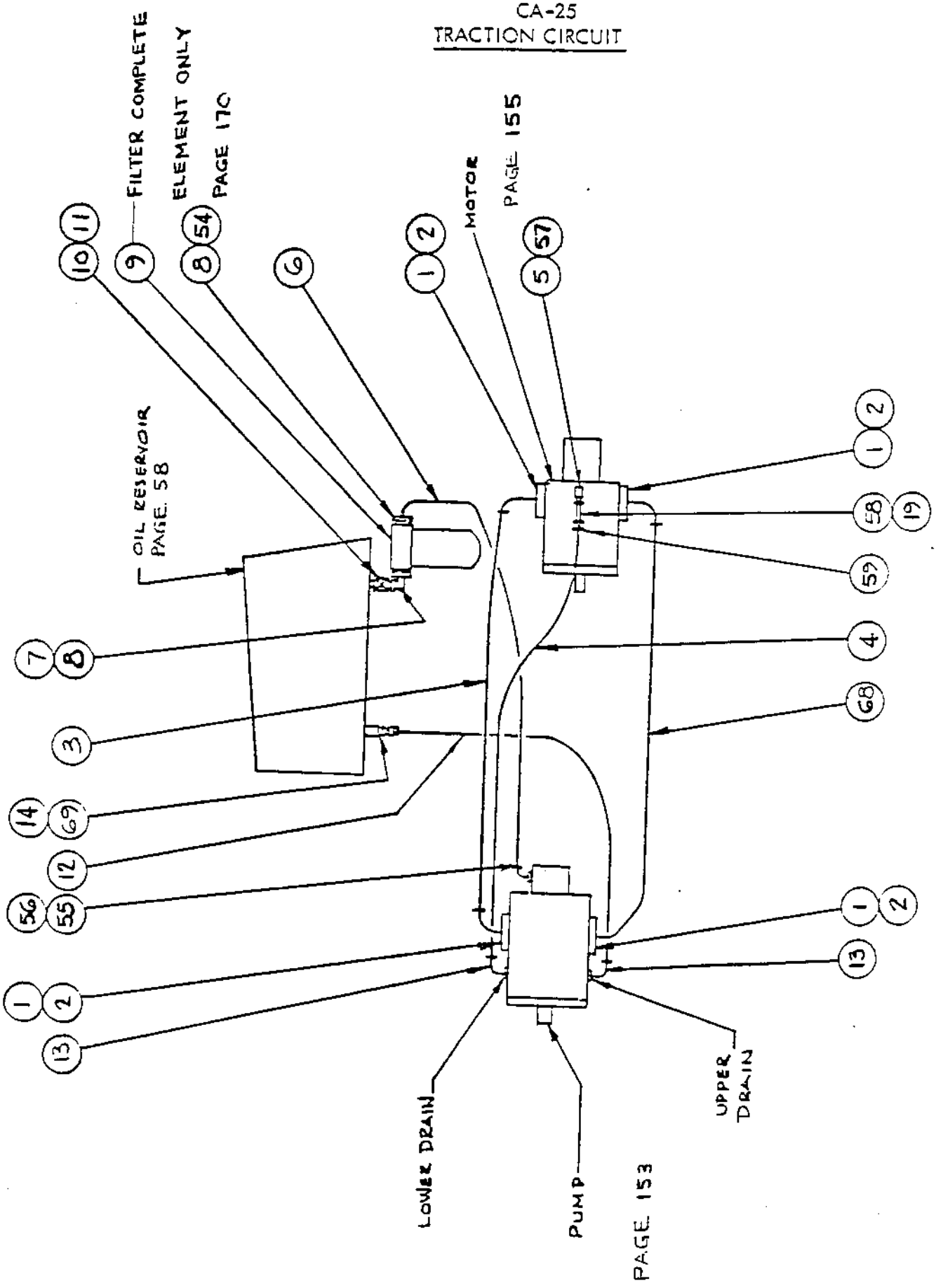

CA-25
STEERING CIRCUIT

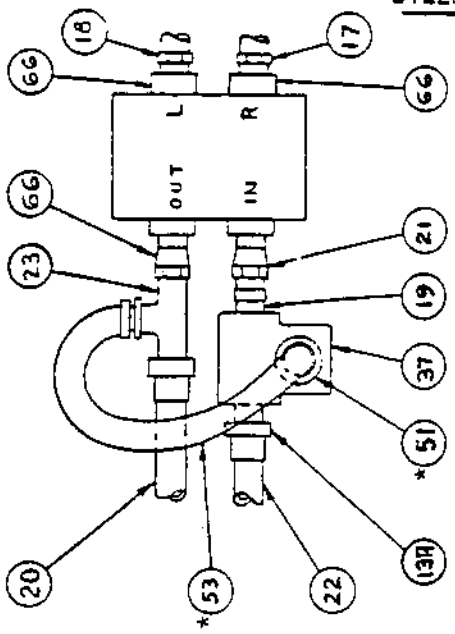

DETAIL-A

*Check note on Parts page 82.

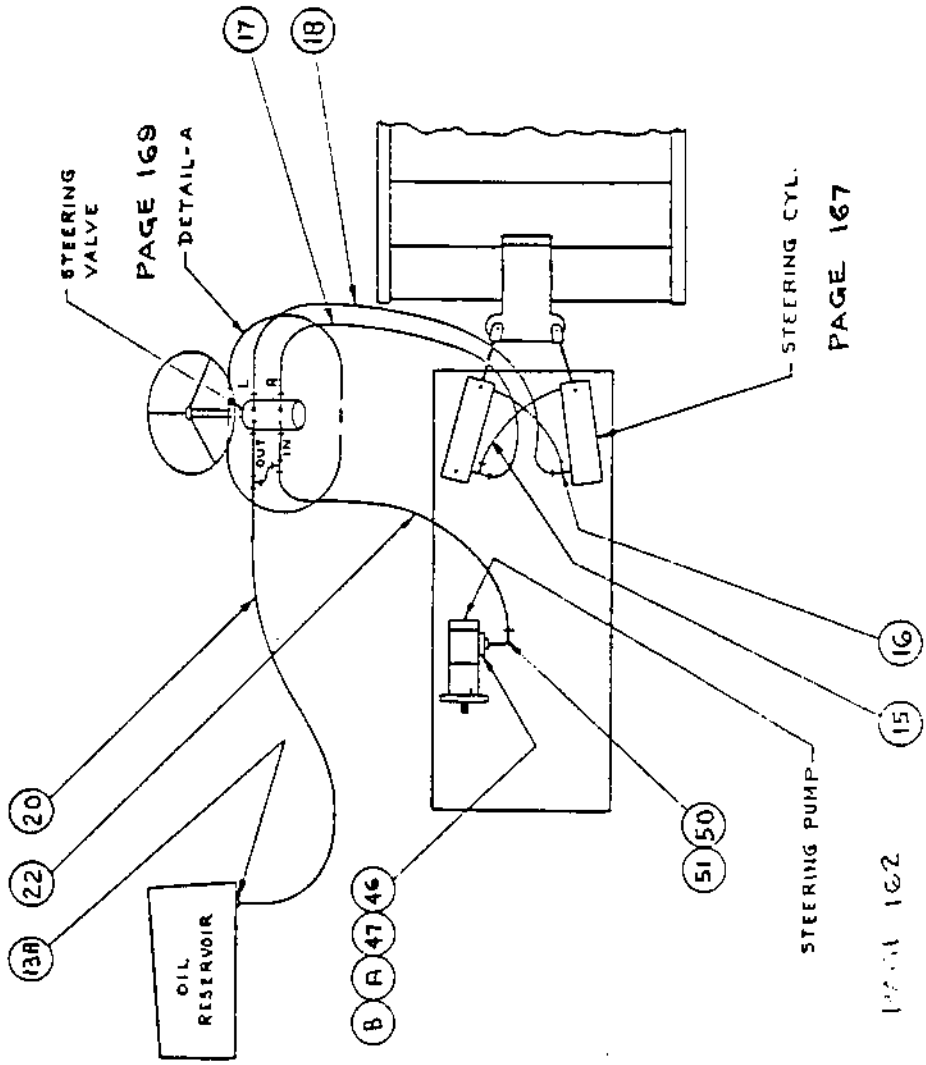

CA-25
VIBRATION CIRCUIT

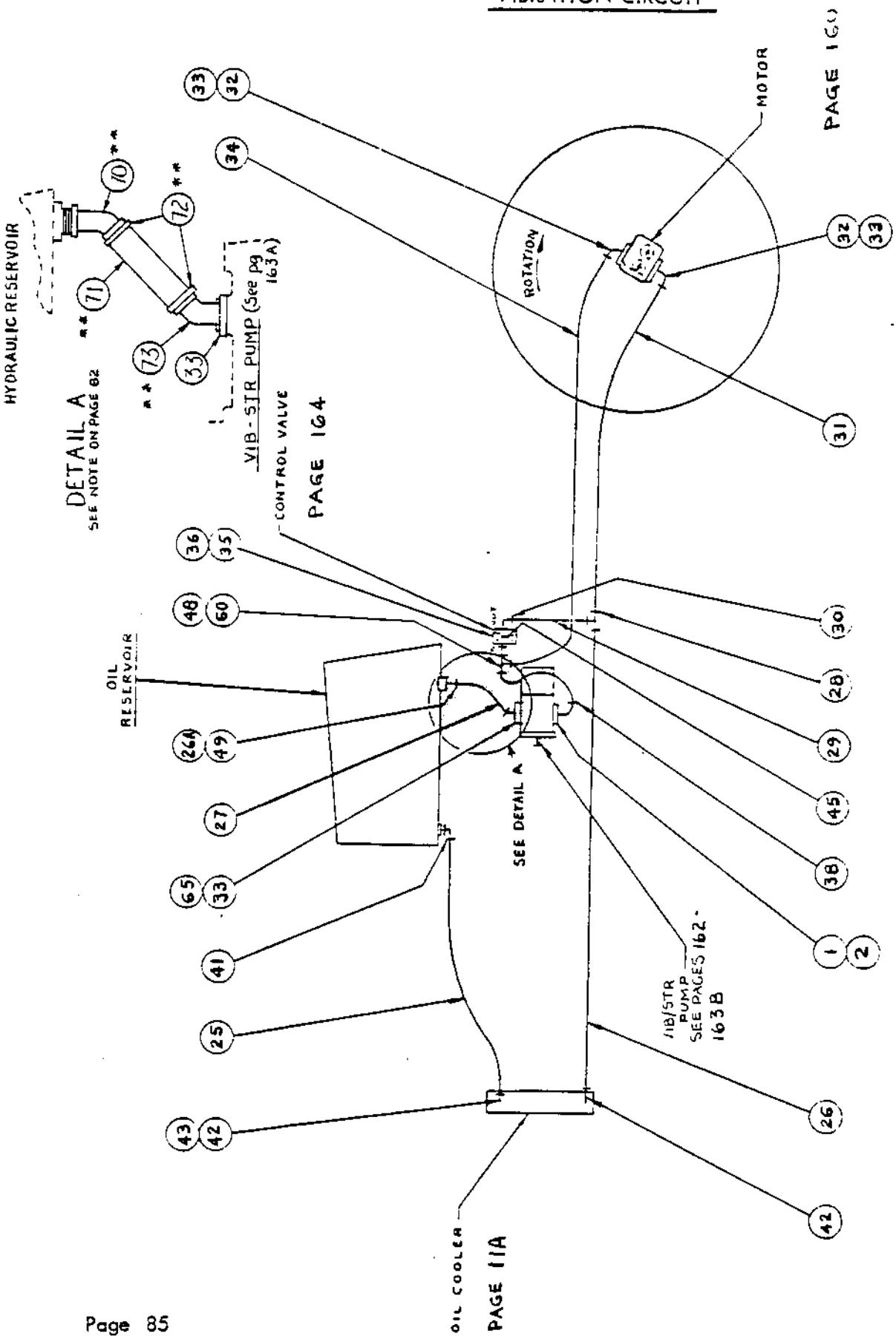

HYDRAULIC VIBRATION CIRCUIT
(Dual Amplitude)

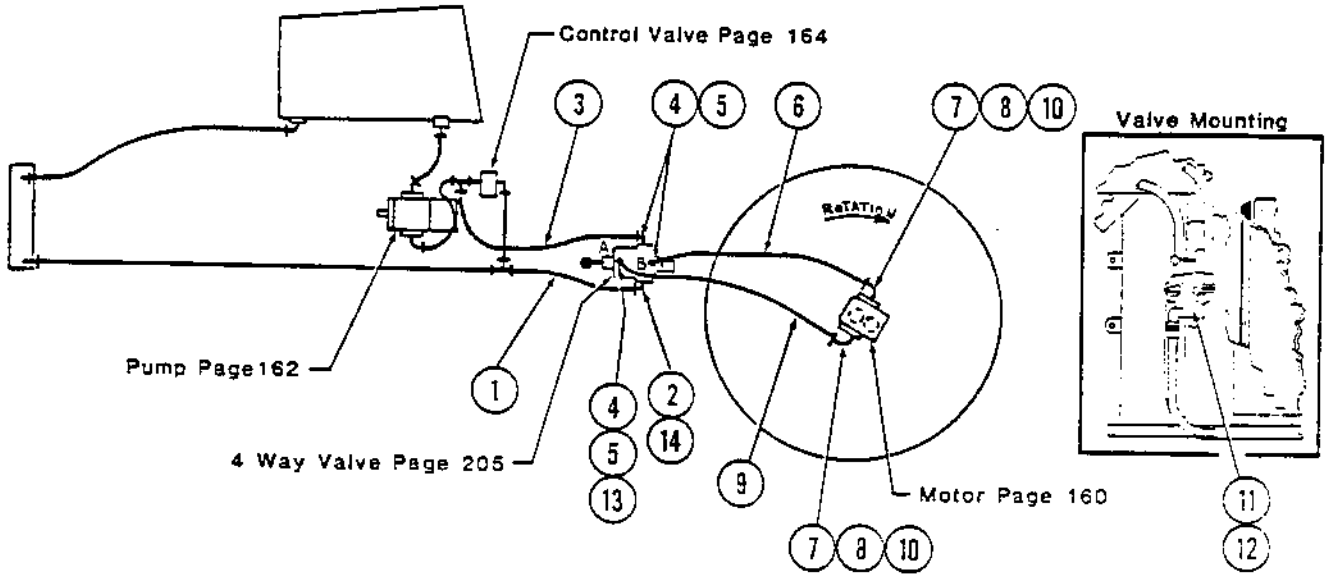

INDEX NUMBER	PART NUMBER	DESCRIPTION	QUANTITY
1	82549312	Hose Assembly (From S/N 2782)	1
-	82549303	Hose Assembly (To S/N 2781)	1
2	234279	Elbow, 90° (From S/N 2782)	1
-	813719	Elbow, 90° (To S/N 2781)	1
3	82549311	Hose Assembly (From S/N 2782)	1
-	82549302	Hose Assembly (To S/N 2781)	1
4	334163	Elbow, 90°	3
5	160154	O-Ring	1
6	82549306	Hose Assembly	1
7	813416	Flange Kit	2
8	160186	O-Ring	1
9	82549305	Hose Assembly	1
10	234308	Elbow, 90°	2
11	502068	Capscrew, HH	3
12	604030	Lockwasher	3
13	801269	Elbow, 45° Swivel (From S/N 2782)	2
14	813427	Bushing, Hex (From S/N 2782)	1

HYDRAULIC ASSEMBLY
(CA-25 ASPHALT)

INDEX NUMBER	PART NUMBER	DESCRIPTION	QUANTITY
1	813424	Split Flange	5
2	813429	O-Ring	5
3	82522726	Hose Assembly	1
4	82522701	Hose Assembly	1
5	989078	Temp. Sender	1
6	82522702	Hose Assembly	1
7	234395	Elbow 90°	1
8	813449	Hex Bushing	2
9		Filter (See Page 170)	1
10	813738	Nipple	1
11	813451	Gate Valve	1
12	82522703	Hose Assembly	1
13	85021601	Swivel Elbow 90°	2
14	814251	Elbow 90°	1
15	82522704	Hose Assembly	2
16	234371	Tee-Branch	2
17	813434	Hex Bushing	1
18	813435	Elbow 90°	1
19	813438	Close Nipple	1
20	334117	Male Connector	1
21	813433	Flange	1
22	813443	O-Ring	1
23	82587311	Hose Assembly (from s/n 1677)	1
-	82587304	Hose Assembly	1
24	82587312	Hose Assembly (from s/n 1677)	1
-	82587305	Hose Assembly	1
25	82587310	Hose Assembly	1
26	82587307	Hose Assembly	1
27	82522710	Hose Assembly	1
28	813391	Magnetic Plug	2
29	813430	O-Ring	1
30	813416	Flange	1
31	813425	Hex Bushing	1
32	813431	Elbow 45°	1
33	813427	Hex Bushing	2
34	813428	Male Connector	2
35	813426	Str. Elbow 90°	1
36	813721	Elbow 90°	2
37	82587306	Hose Assembly	1
38	82587308	Hose Assembly	1
39	82587309	Hose Assembly	1

HYDRAULIC ASSEMBLY
(CA-25 ASPHALT)

INDEX NUMBER	PART NUMBER	DESCRIPTION	QUANTITY	
40	334453	Bushing	1	
41	234377	Nipple	1	
42	234373	Tee	1	
43	813721	Elbow 90°	1	
44	234322	Elbow 90°	1	
45	234336	Tee	1	
46	234335	Elbow	1	
47	234435	Connector	1	3*
48	234327	Elbow 45°	1	
49	570201	Copper Tubing	1	
50	921102	Clamp	1	
51	912114	Clamp	3	
52		Cooler By Pass Assembly (See Page 98)	1	
53	814250	Check Valve	1	
54	334128	Elbow 90°	1	
55	813456	Swivel Adapter	1	
56	160144	O-Ring	1	
57	813439	Tee	1	
58	813445	Adapter	1	
59	813483	Adapter	1	
60	82522727	Hose Assembly	1	
61		Hydraulic Schematic (See Page 80)	1	
62	825904	Elbow 90°	1	
63	332127	Pipe Plug	2	
64	82587313	Hose Assembly (from s/n 1677)	2	
65	921103	Clamp	2	
66		Vibration Valve Pilot Circuit (See Page 91)	1	
67	825922	Elbow 90°	1	
68	813721	Elbow 90° (from s/n 1677)	2	
69	801453	Valve Quick Stop (from s/n 1677)	1	
70	234662	Elbow, 45°	1	
A	509039	Capscrew Soc. Hd.	4	
B	813484	Lockwasher Hi-Collar	4	
C	502036	Capscrew HH	4	
D	604028	Lockwasher	4	6*
E	571003	Hex Nut	4	6*
F	502018	Capscrew HH	1	
G	604027	Lockwasher	1	
H	571002	Hex Nut	1	
I	600007	Plain Washer (from s/n 1677)	2	
J	502046	Capscrew HH (from s/n 1677)	2	

*from s/n 1677

CA-25 ASPHALT
TRACTION CIRCUIT

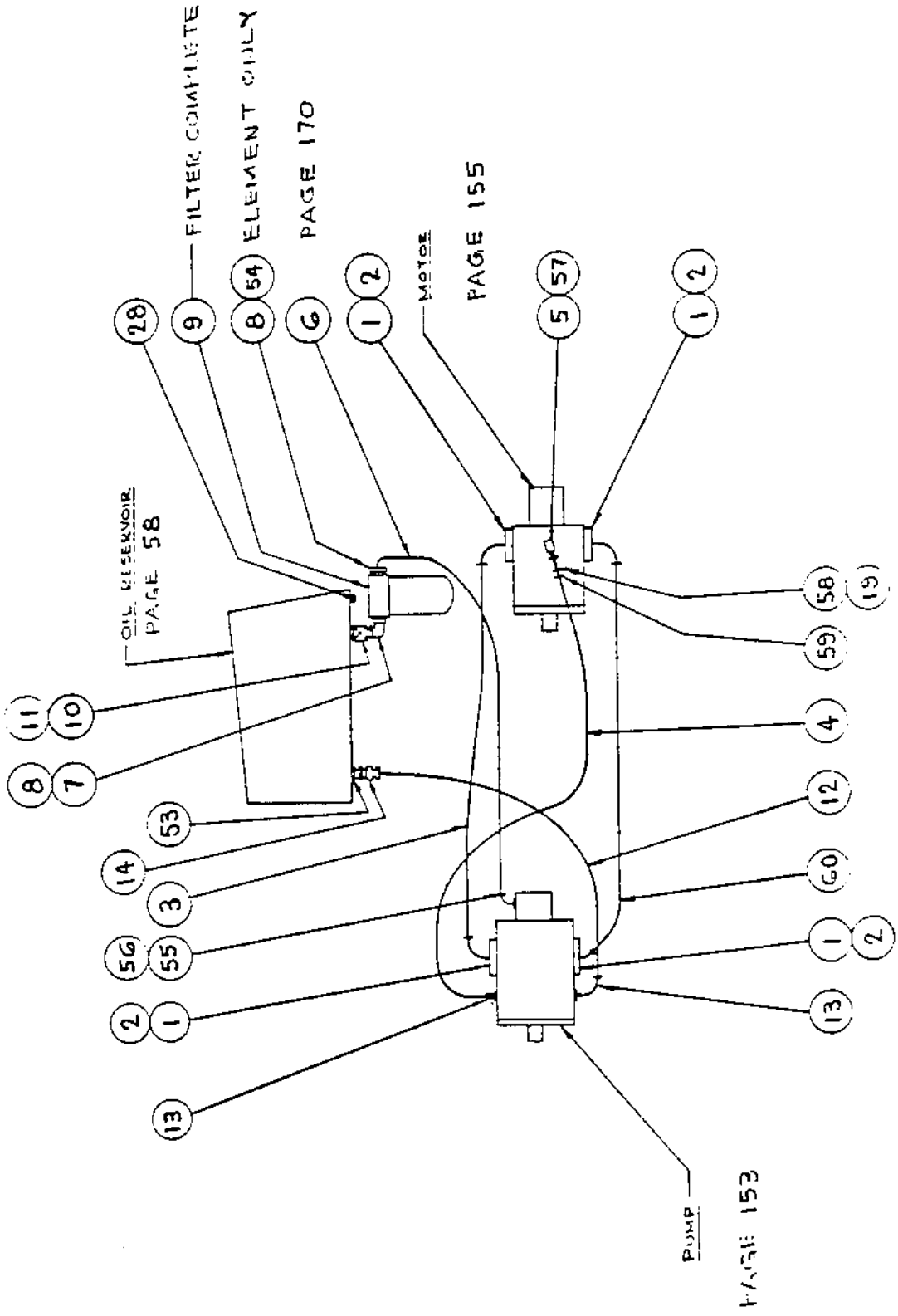

CA-25 ASPHALT
STEERING CIRCUIT

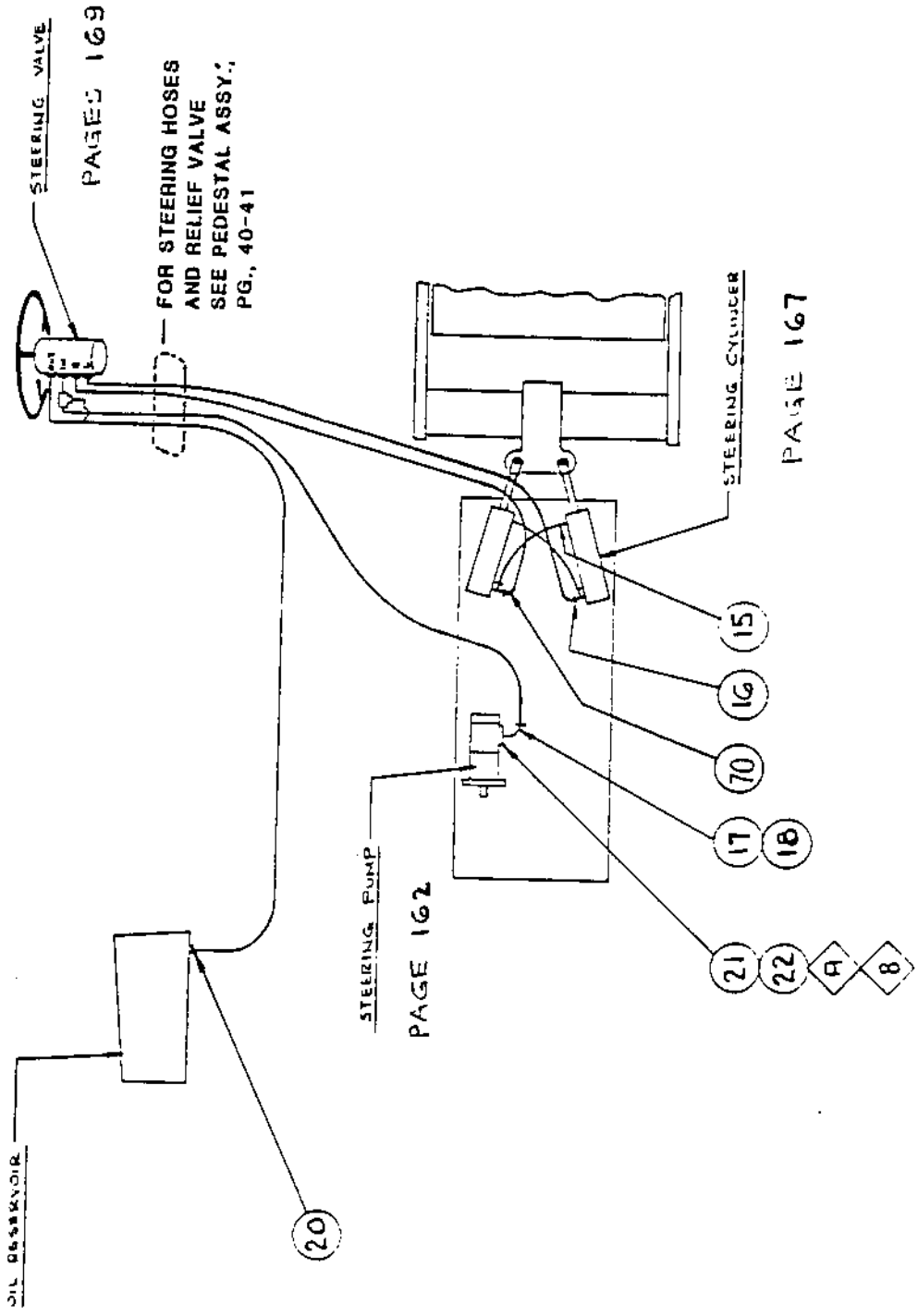

CA-25 ASPHALT
VIBRATION CIRCUIT

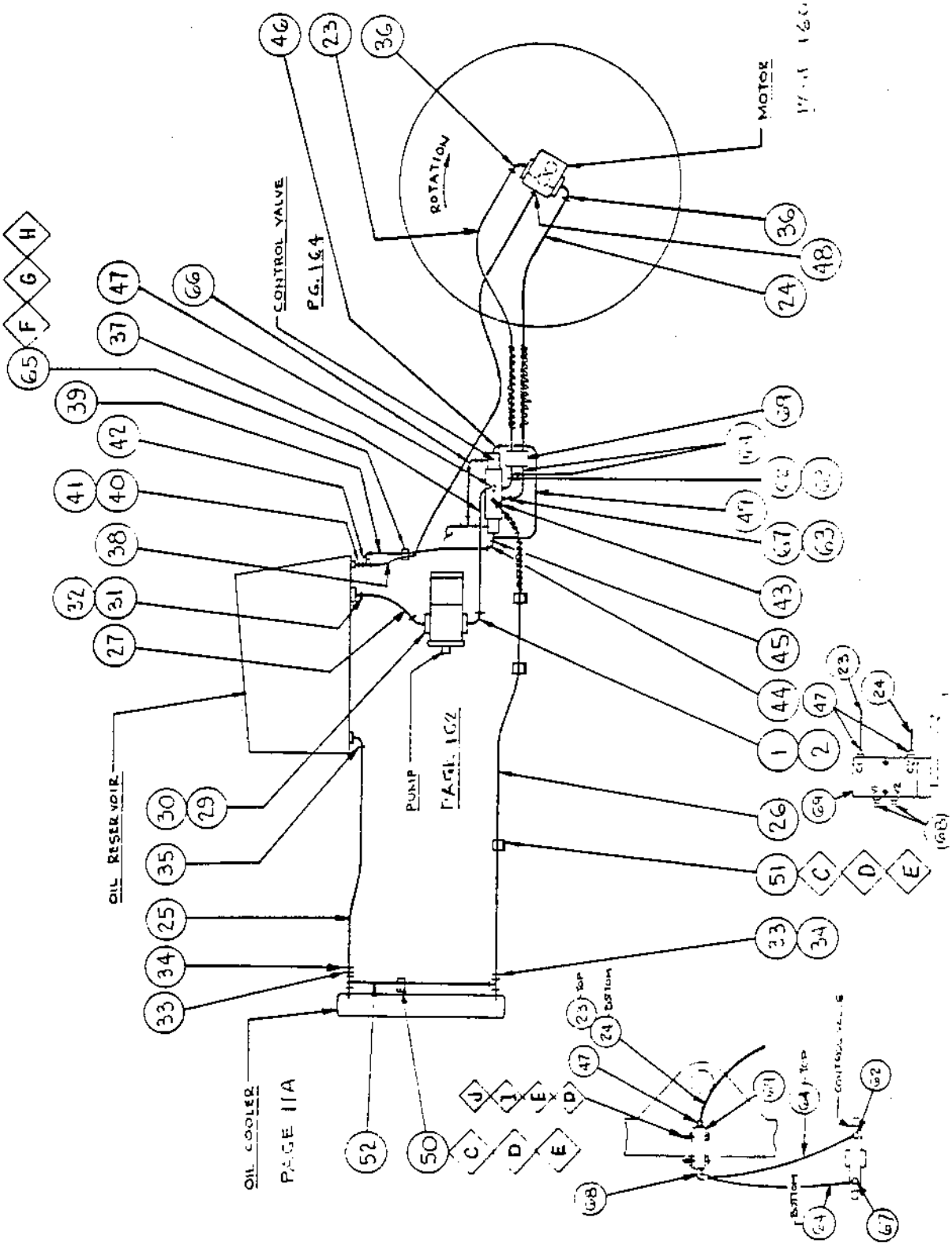

VIBRATION VALVE PILOT CIRCUIT
(CA-25 ASPHALT)

SEE PAGE 166

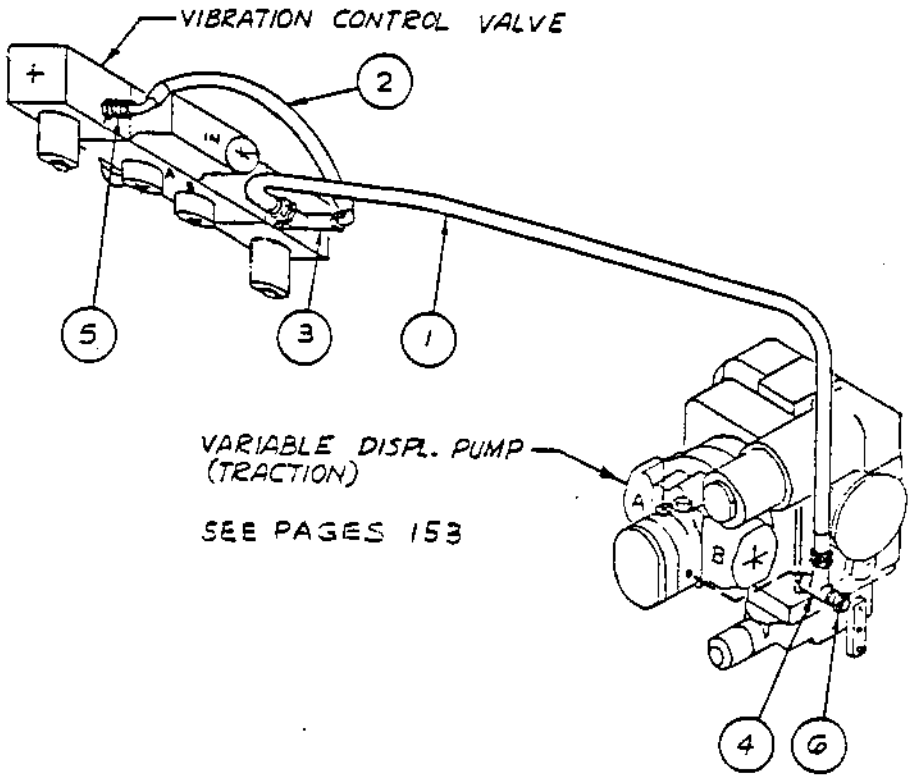

INDEX NUMBER	PART NUMBER	DESCRIPTION	QUANTITY
1	84218205	Hose Assembly	1
2	84218202	Hose Assembly	1
3	234333	Tee	1
4	334359	Tee	1
5	234358	Adapter	1
6	332125	Cap Unit	1

HYDRAULIC COMPONENTS
CA-25D, CA-25PD (TO S/N 1533)

INDEX NUMBER	PART NUMBER	DESCRIPTION	QUANTITY
1	813493	Relief Valve	2
3	335632	Plate	5
4	335674	Stud	1
5	825911	Rubber Block	4
6	*813797	"O" Ring	2
7	*510010	Capscrew Soc. Hd.	2
8	*510009	Capscrew Soc. Hd.	4
9	*335668	Adapter Flange	1
10	*813537	Flange Kit	2
11	*813484	Hi Collar Lockwasher	4
12		Hyd. Motor (to s/n 1158) (See Page 157)	1
-		Hyd. Motor (from s/n 1159) (See Pg. 157).	1
13	813500	45° Adj. Elbow	1
14	813429	"O" Ring	2
15	335669	Adapter	2
16	813499	90° Adj. Elbow	2
17	82540306	Hose (to s/n 1158)	2
-	82540307	Hose (from s/n 1159)	2
18	334441	Adapter	2
19	82540305	Hose	1
20	334117	Strt. Adapter	1
21	813503	Red. Bushing	1
22	514014	Capscrew Soc. Hd.	8
A	571003	Nut	6
B	502043	Capscrew HH	6
C	604028	Lockwasher	8
D	502137	Capscrew HH	1
E	571002	Hex Nut	1
F	604027	Lockwasher	2

*Parts not required after s/n 1158.

CA-25D, CA-25PD
DRUM DRIVE CIRCUIT

(to s/n 1533)

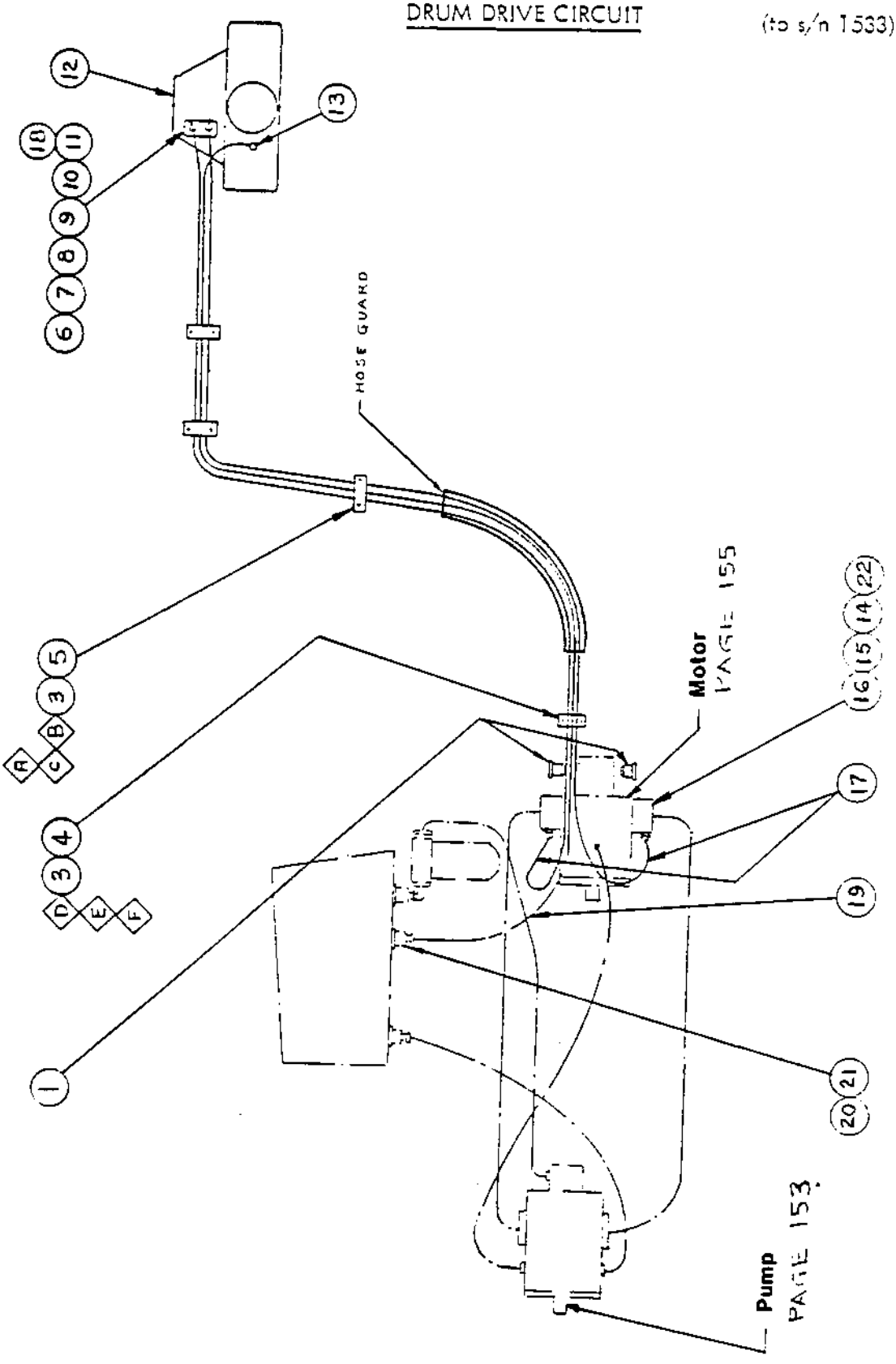

HYDRAULIC COMPONENTS
CA-25D, CA-25PD (FROM S/N 1534)

INDEX NUMBER	PART NUMBER	DESCRIPTION	QUANTITY
1	335632	Plate	4
3	825911	Rubber Block	4
4	814061	90° Elbow	1
5	813429	O-Ring	2
6	335669	Adapter	2
7	813721	90° Adj. Elbow	2
8	333567608	Hose Assy.	1
9	333567609	Hose Assy.	1
10	333567610	Hose Assy.	1
11	334117	Str. Adapter	1
12	813503	Red. Bushing	1
13	232097	Flange Kit	2
15		Pump Traction (See Page 153)	1
19	514014	Capscrew Socket H	3
20	502043	Capscrew HH	8
21	604028	Lockwasher	8

CA-25D, CA-25PD
DRUM DRIVE CIRCUIT

(from s/n 1534)

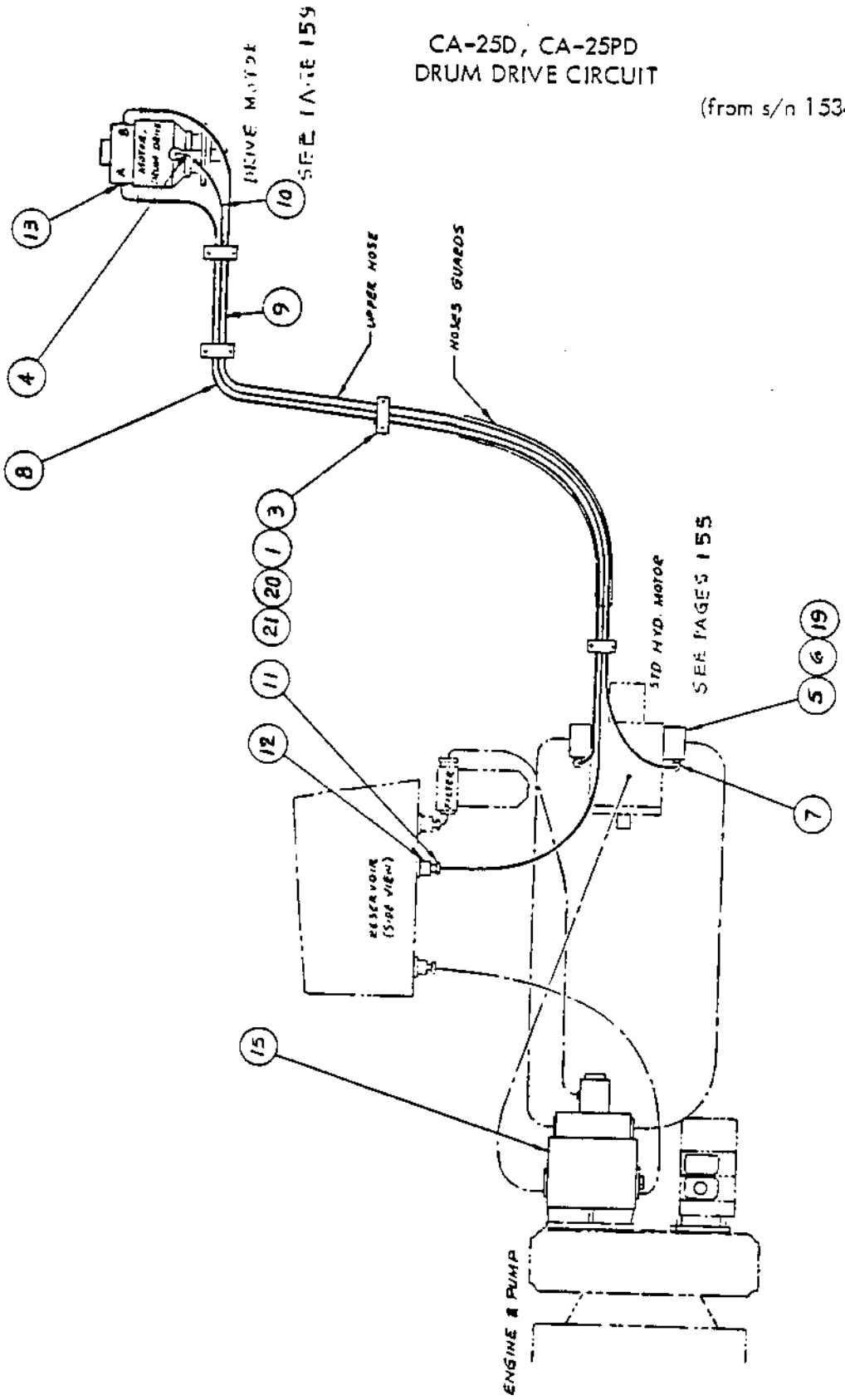

HYDRAULIC ASSEMBLY
STRIKE OFF BLADE

INDEX NUMBER	PART NUMBER	DESCRIPTION	QUANTITY
1	82596501	Hose Assy.	1
2	82596502	Hose Assy.	1
3	82596503	Hose Assy.	1
4	82596504	Hose Assy.	2
5	82596505	Hose Assy.	2
6	813445	45° Elbow	1
7	801198	90° Elbow	2
8	801199	Bulkhead Tee	2
9	813435	90° Elbow	6
10	334197	90° Swivel Elbow	2

STRIKE OFF BLADE CIRCUIT

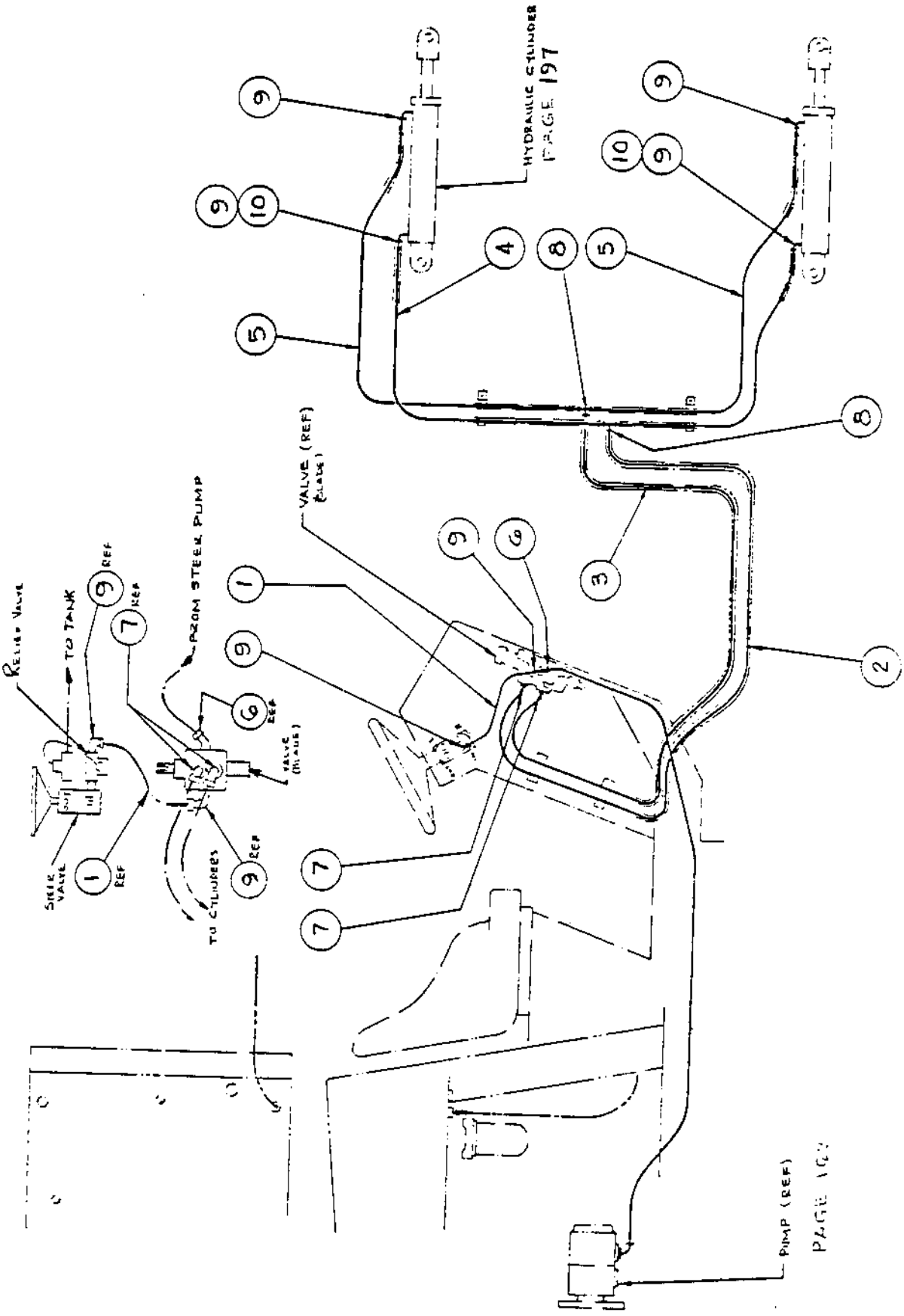

COOLER BY-PASS
CA-25 ASPHALT

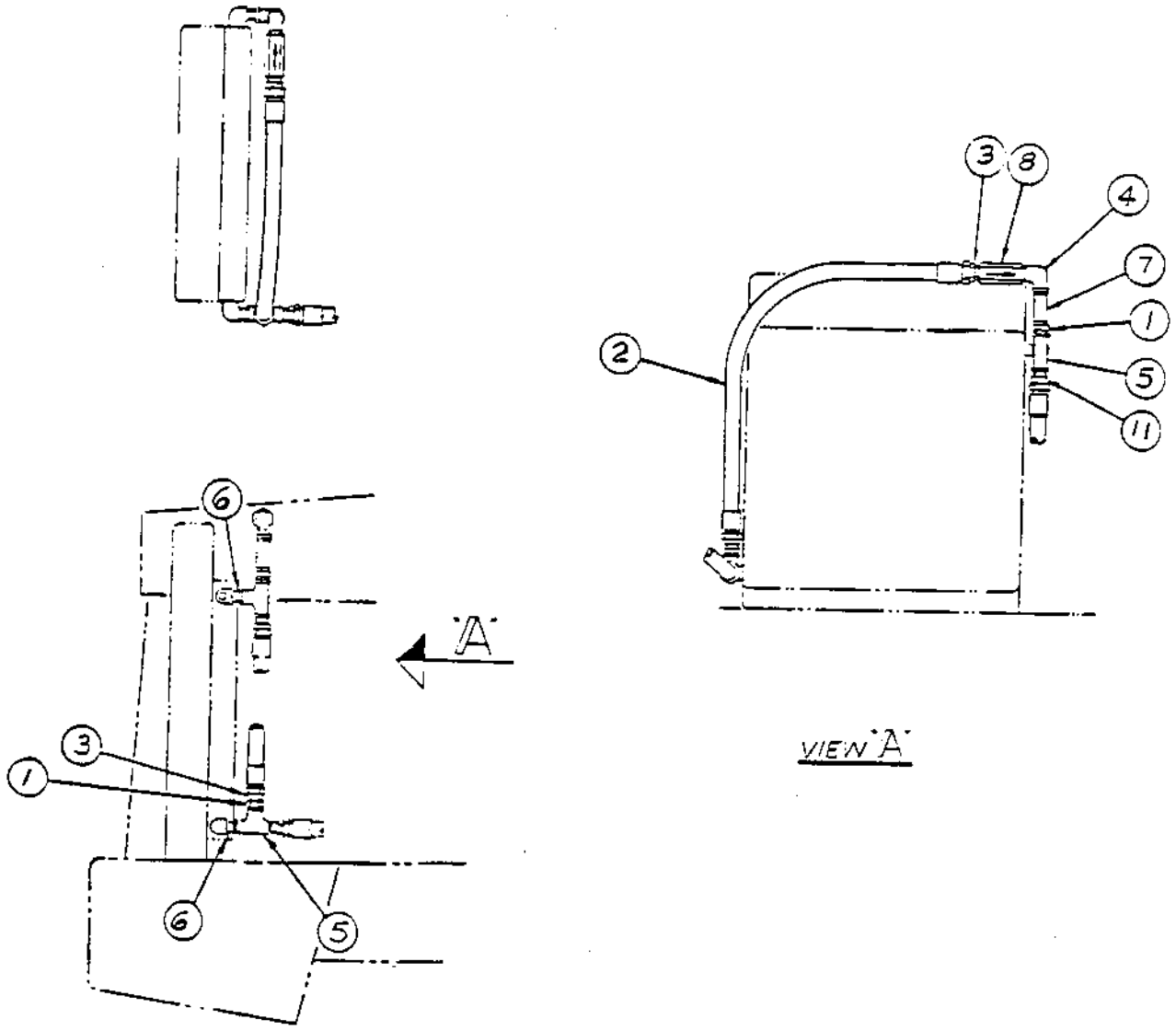

INDEX NUMBER	PART NUMBER	DESCRIPTION	QUANTITY
1	813449	Bushing	2
2	84212716	Hose Assembly	1
3	334157	Connector	2
4	334422	Elbow 90°	1
5	330373	Tee	2
6	334283	Nipple	2
7	334301	Nipple	1
8	233085	Check Valve	1

RADIATOR VENT LINES

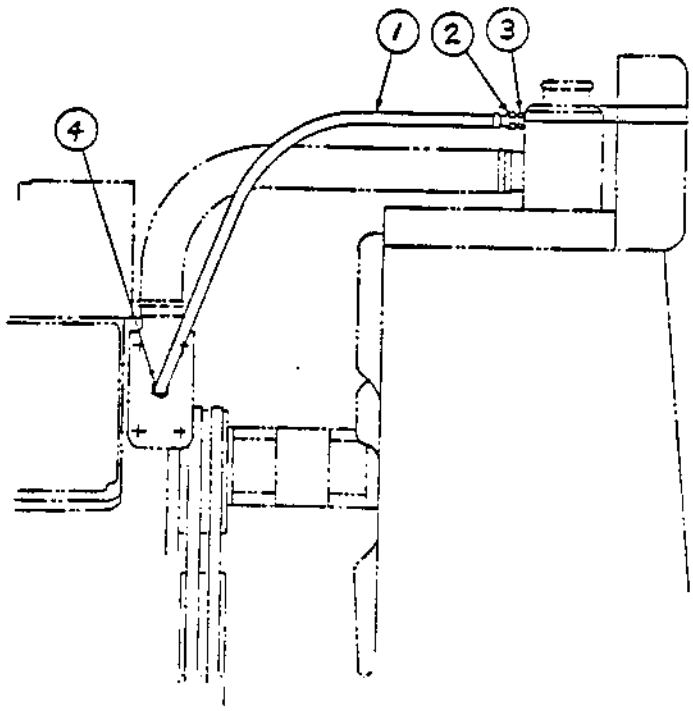

RADIATOR VENT LINES (CUMMINS)

INDEX NUMBER	PART NUMBER	DESCRIPTION	QUANTITY
1	814064	Hose, 20" Lg.	1
2	334181	Swivel, Female	2
3	334179	Connector	1
4	234358	Connector	1

RADIATOR VENT LINES (DETROIT)

1	814064	Hose	1
2	334181	Swivel, Female End	2

DRUM MODULE
(TO S/N 1533)

INDEX NUMBER	PART NUMBER (CA-25)	PART NUMBER (CA-25A)	DESCRIPTION	QUANTITY
1			Drum Assembly (See Page 111)	1
2	825645	825803	Frame	1
3			Steering Hitch (See Page 68)	1
5		33548901	Shim (1/16)	A/R
6		825657	Shim (1/8)	A/R
7		502148	Capscrew HH	8
8		813475	Elastic Stop Nut	8
9	825295	825804	Scraper	1

DRUM MODULE
(From S/N 1534 to 2968, 2973 to 2976)

INDEX NUMBER	PART NUMBER (CA-25)	PART NUMBER (CA-25A)	DESCRIPTION	QUANTITY
1			Drum Assembly (See Page 111)	1
2	826143	826144	Frame	1
3			Steering Hitch (See Page 68)	1
5		335627	Shim (1/16)	A/R
6		825191	Shim (1/8)	A/R
7		502098	Capscrew HH	8
8		813475	Elastic Stop Nut	8
9		826040	Scraper Bracket	1
A		502098	Capscrew	4
B		571007	Hex Nut	4
C		604033	Lockwasher	12
D		600013	Plain Washer	4

DRUM MODULE

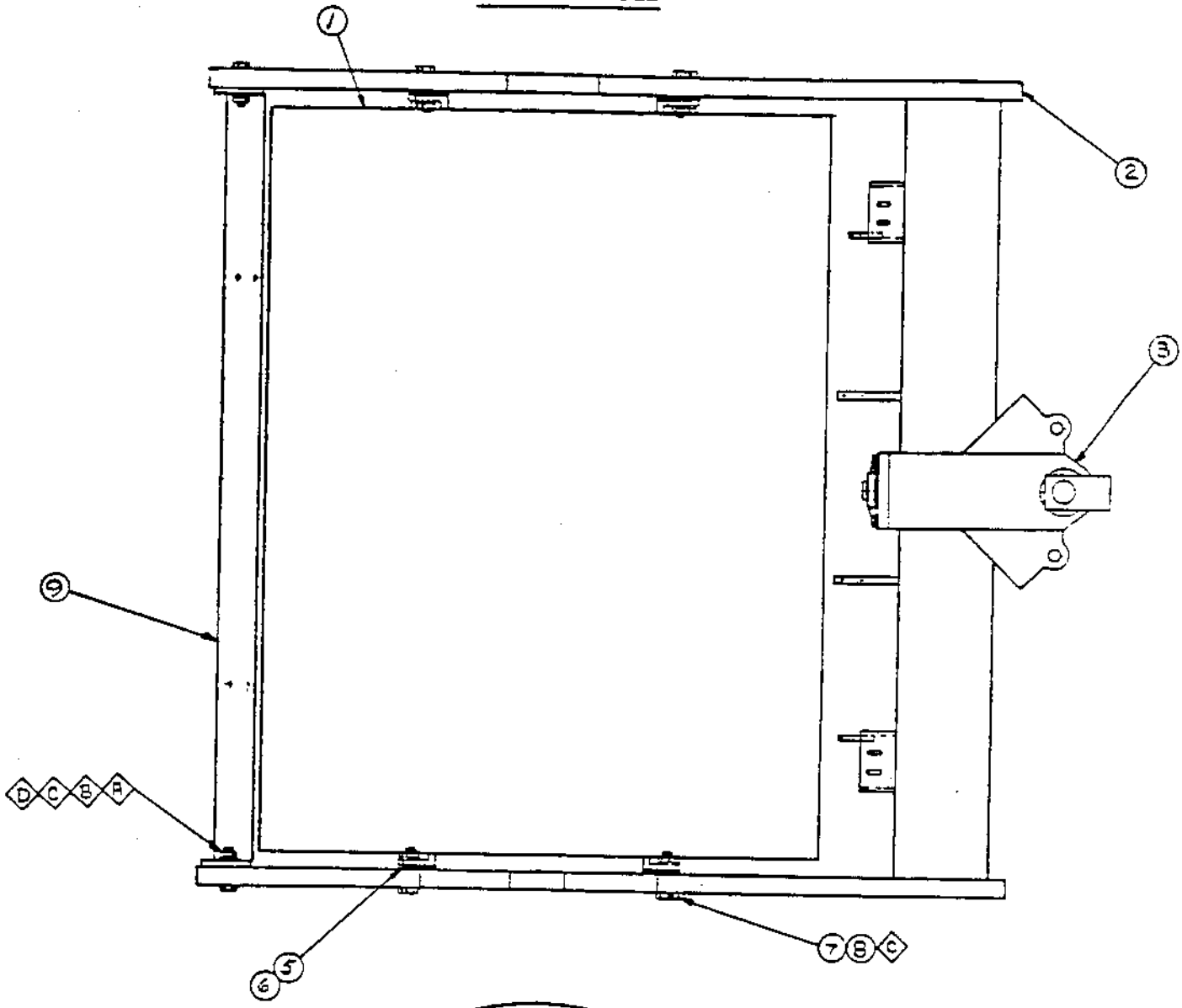

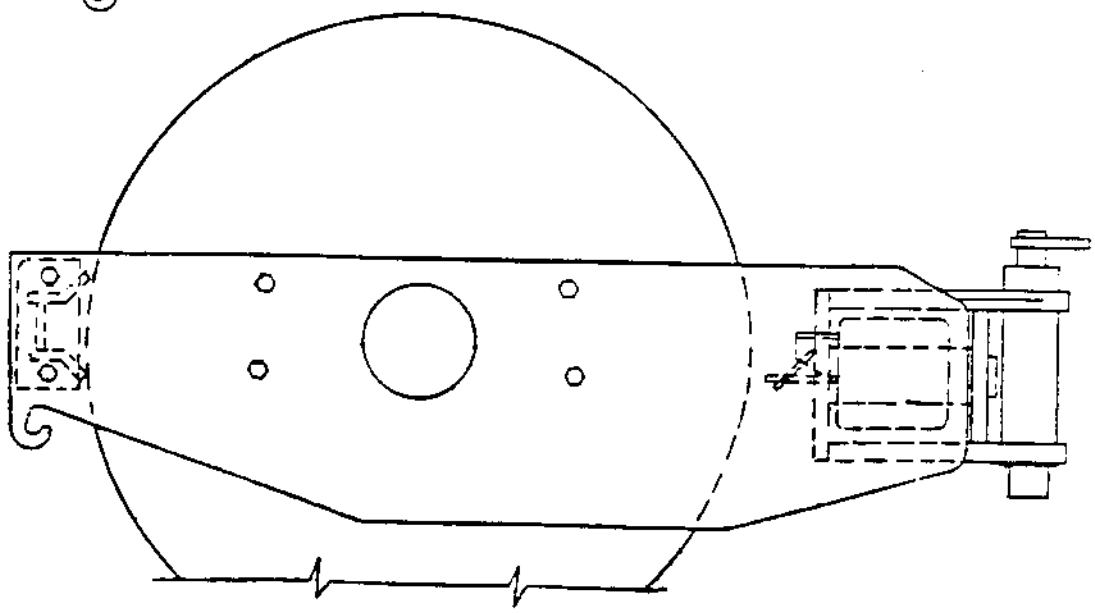

DRUM MODULE CA-25 & CA-25A
(From S/N 2969 to 2972, 2977 and up)

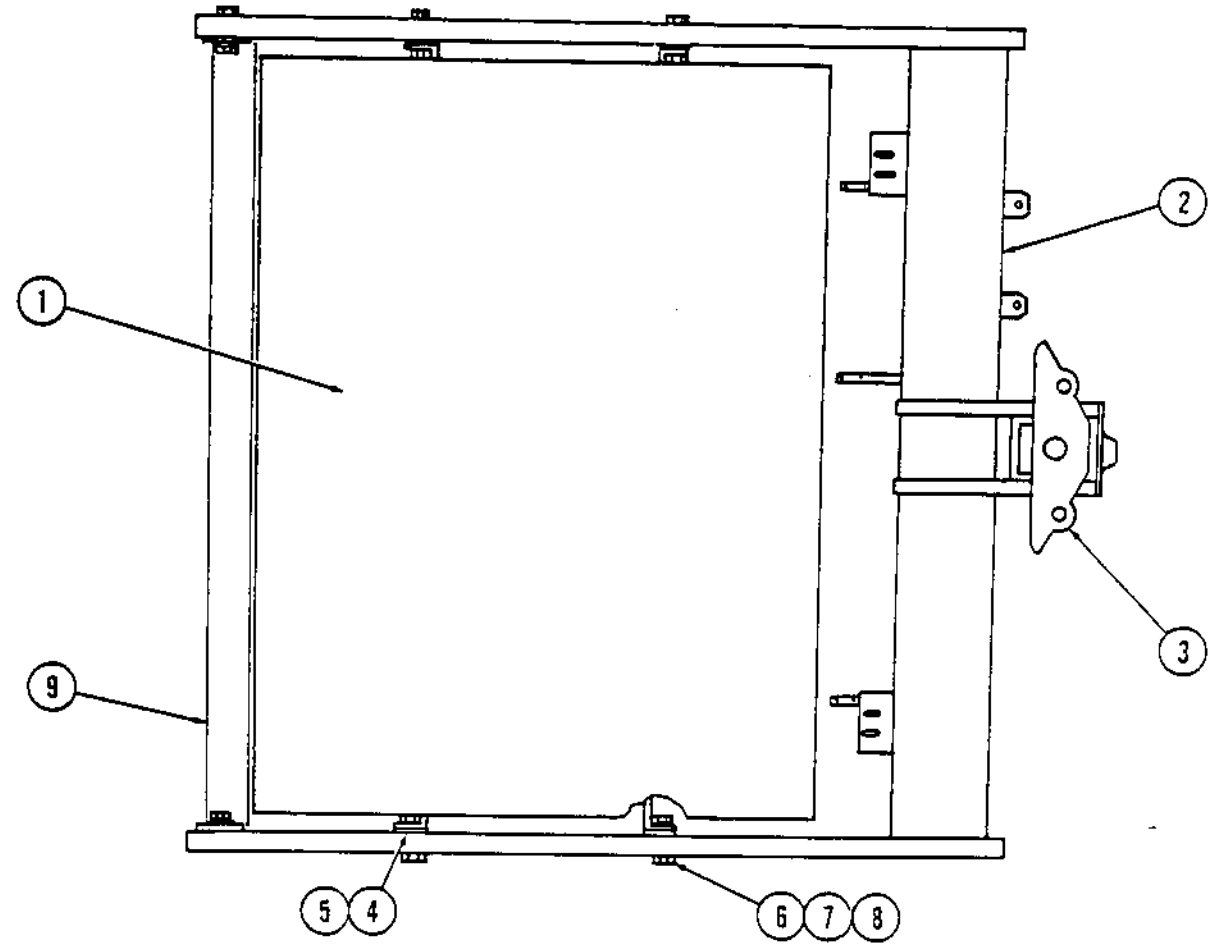

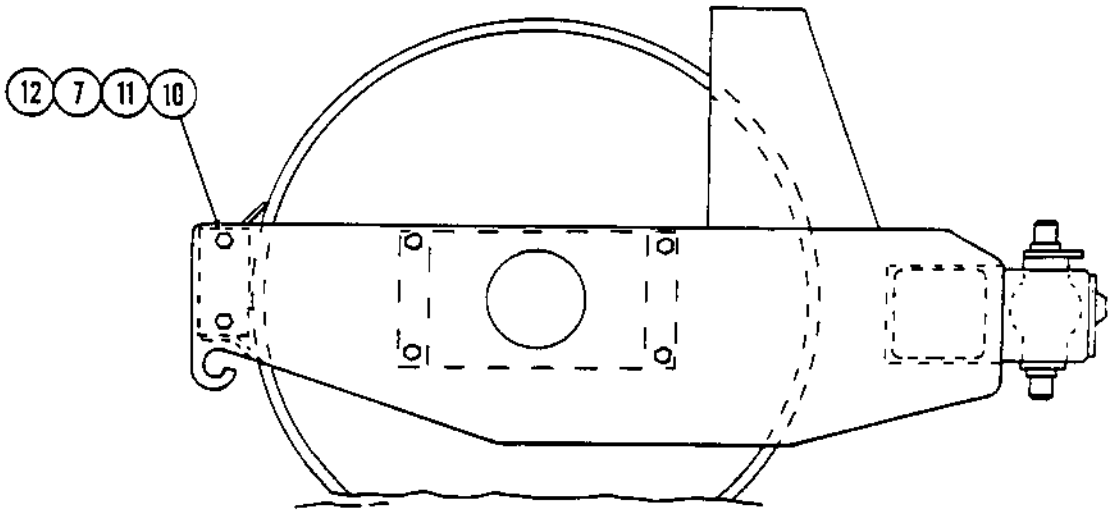

DRUM MODULE CA-25 & CA-25A
(FROM S/N 2969 to 2972, 2977 and UP)

INDEX NUMBER	PART NUMBER MODEL CA-25	PART NUMBER MODEL CA-25A	DESCRIPTION	QUANTITY
1			Drum Assembly (See Page 111)	1
2	826583	826571	Frame, Drum	1
3			Hitch, Steering, (See Page 69)	1
4	335627	335627	Shim, 1/16	2
5	825191	825191	Shim, 1/8	2
6	502148	502148	Capscrew, HH	8
7	604033	604033	Lockwasher	12
8	586050	586050	Nut, Elastic Stop	8
9	826040	825804	Bracket, Scraper	1
10	502098	502098	Capscrew, HH	4
11	600013	600013	Washer, Flat	4
12	571007	571007	Hex Nut	4

DRUM MODULE
(DUAL AMPLITUDE)

INDEX NUMBER	PART NUMBER	DESCRIPTION	QUANTITY
1		Drum Assembly (See Page 111)	1
2	826560	Frame, Drum (From S/N 2969 to 2972, 2977 and up)	1
-	826143	Frame, Drum (From 1534 to 2968, 2973 to 2976)	1
3		Hitch, Steering (See Page 68 to 69A)	1
4		Valve, Dual Amplitude (See Page 205 to 208)	1
5	502068	Capscrew, HH	2
6	604030	Lockwasher	2
7	335627	Shim, 1/16	2
8	825191	Shim, 1/8	2
9	502148	Capscrew, HH	8
10	586050	Nut, Elastic Stop	8
11	826040	Bracket, Scraper	1
12	502098	Capscrew, HH	4
13	600013	Washer, Flat	4
14	604033	Lockwasher	4
15	571007	Hex Nut	4

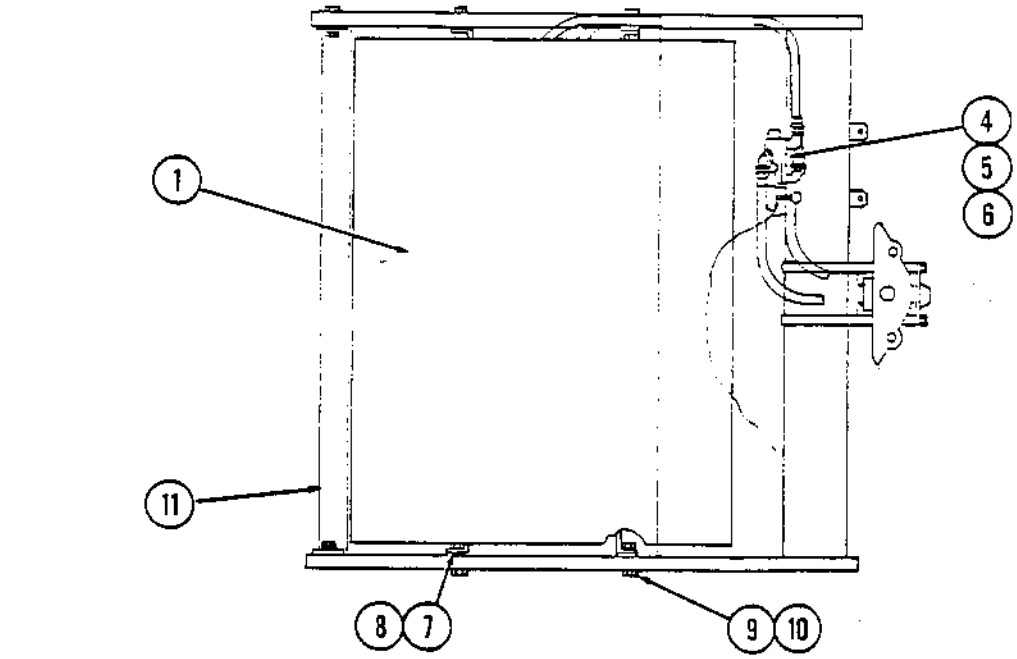

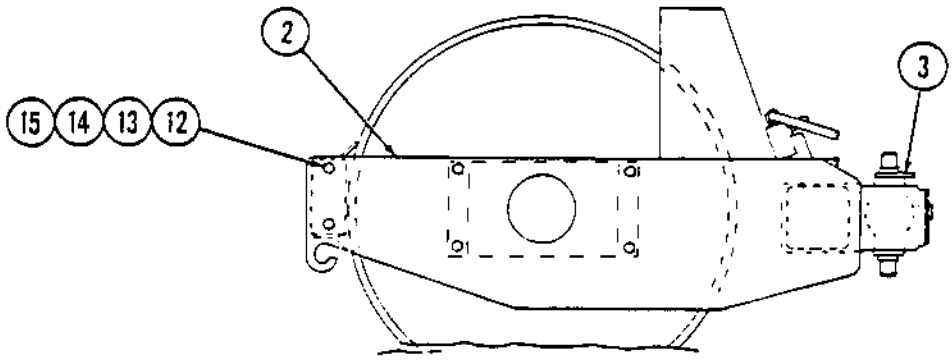

DRUM MODULE
CA-25S

INDEX NUMBER	PART NUMBER	DESCRIPTION	QUANTITY
1		Drum Assy. (See Page 112)	1
2	826583	Frame,(From S/N 2969 to 2972, 2977 & up)	1
-	826143	Frame,(S/N 1534 to 2968, 2973 to 2976)	1
3		Steering Hitch (See Page 68 to 69A)	1
5	335627	Shim	A/R
6	825191	Shim	A/R
7	502148	Capscrew HH/HT/T	12
8	586050	Elastic Stop Nut	12
9	826040	Scraper Bracket	1
10		Steering Cylinder (See Page 167)	2
11		Pump Traction (See Page 153)	1
12		Motor, Traction, Axle (See Page 155)	1
13		Pump, Vib & Steering (See Page 162)	1
14	600013	Plain Washer	4
15	604033	Lockwasher	16
16	571007	Hex Nut	4
17	502098	Capscrew HH	4

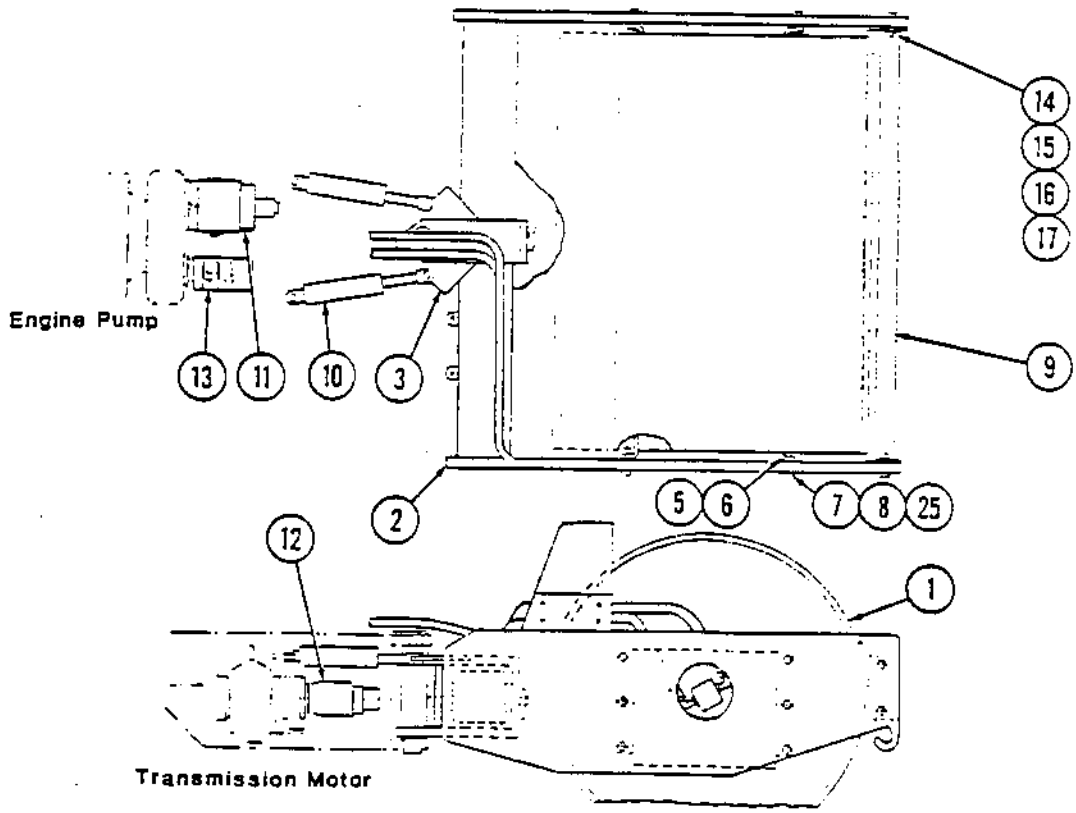

DRUM DRIVE
CA-25D, CA-25PD (TO S/N 1533)

INDEX NUMBER	PART NUMBER	DESCRIPTION	QUANTITY
1		Drum Assembly (See Page 114)	1
3		Motor & Bracket (from s/n 673) (See Page 109)	1
5	335672	Motor Guard	1
7		Hydraulic Assembly (See Page 93)	1
8		Cleaner Bar Assembly (See Page 108)	1
11	825854	Shock Mt. Drive Plate (from s/n 673)	1
12	801187	Shock	6
14	450073	Shock	4
15	335485	Shock Mt. Frame	1
16	813478	O-Ring	1
17		Motor Vibration (See Page 160)	1
18	502058	Capscrew HH/HT	4
21	502148	Capscrew HH/HT	4
A	502059	Capscrew HH/HT	4
B	571005	Hex Nut	24
C	604030	Lockwasher	84
D	503034	Capscrew HH/HT	32
F	502060	Capscrew HH	24
G	503033	Capscrew HH	24

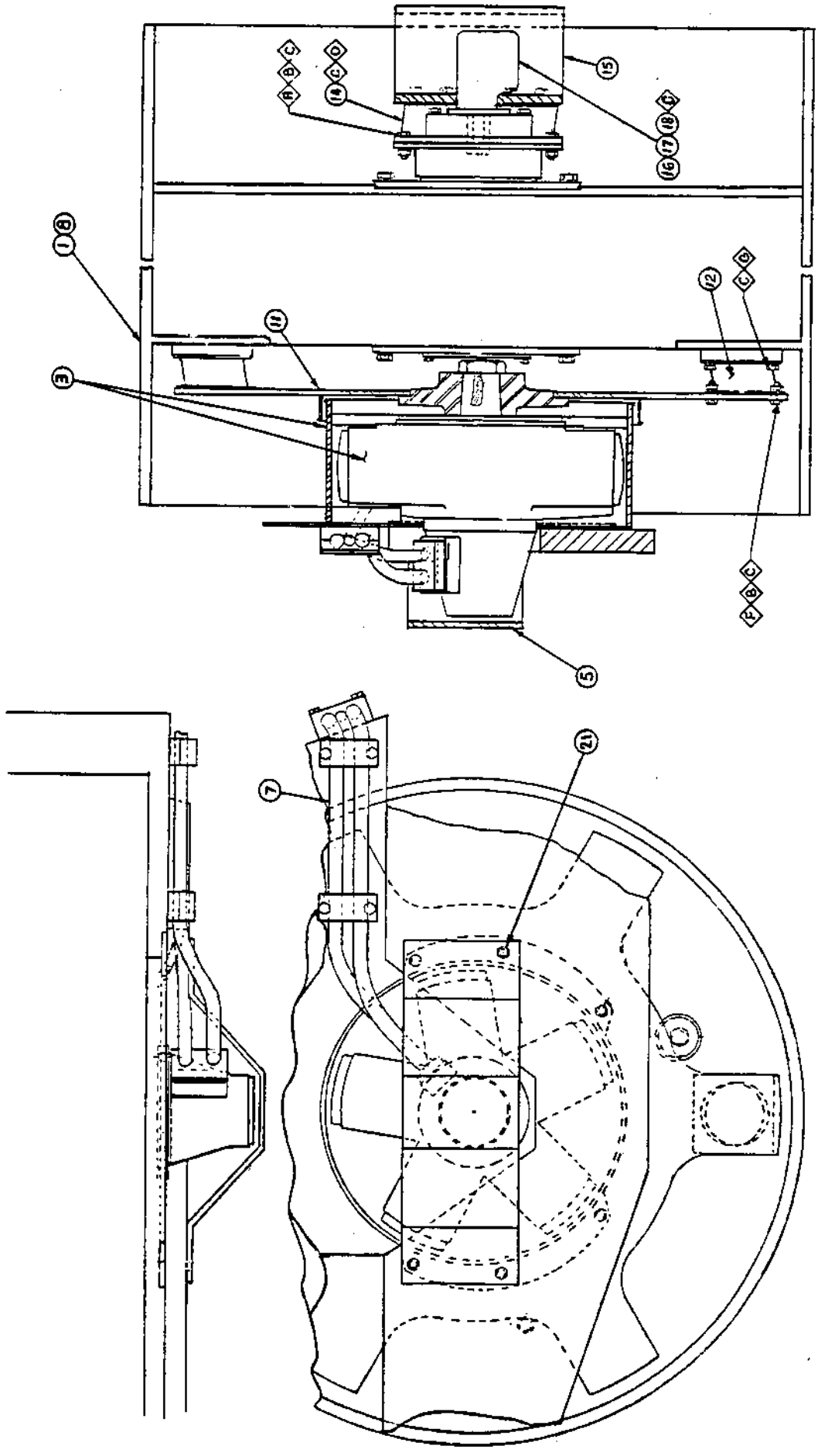

CA-25D, CA-25PD
DRUM DRIVE

DRUM DRIVE
CA-25D, CA-25PD, (FROM S/N 1534)

INDEX NUMBER	PART NUMBER	DESCRIPTION	QUANTITY
1		Drum Assembly (See Page 114)	1
3		Drive Hub Assembly (See Page 110)	1
4	826148	Motor Guard	1
7		Hydraulic Assembly (See Page 95)	1
10		Motor Vibration (See Pgs 160 & 161)	1
11	813478	O-Ring	1
12		Cleaner Bar Assy. (See Page 108)	1
13	450122*	Shock	6
-	801187	Shock	6
14	343034*	Frame, Shock Mount	1
-	826145	Frame, Shock Mount	1
15	450122*	Shock	4
-	450073	Shock	4
17	335545	Special Washer	4
18		Drive Motor,Drum (See Page 159)	1
19	801413	O-Ring (s/n 1602&Up)	1
27	586049	Locknut	80
28	604030	Spring Lockwasher	8
29	503034	Capscrew HH	32
30	502028	Capscrew HH/HT	4
31	502060	Capscrew HH	80
32	502059	Capscrew HH/HT	4
33	604033	Lockwasher	8
34	571007	Hex Nut	8
35	502124	Capscrew HH	4
36	502097	Capscrew HH	4
37	335659	PAD.	

* Note: These parts are used on the following s/n machines;
2915, 2916, 2918, 2937, 3003 and 3076 and up.

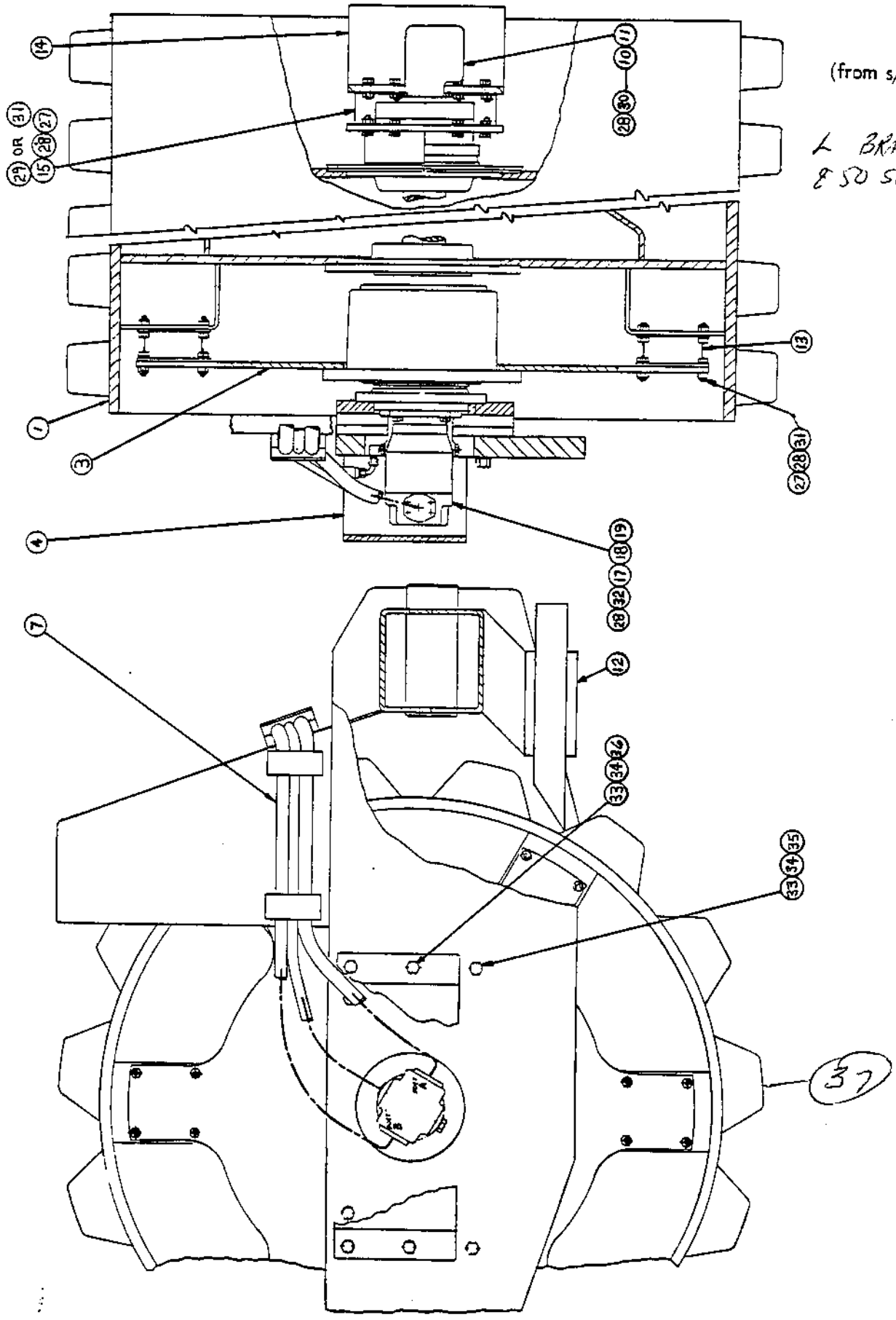

CA-25D, CA-25PD
DRUM DRIVE

CLEANER BAR ASSEMBLY

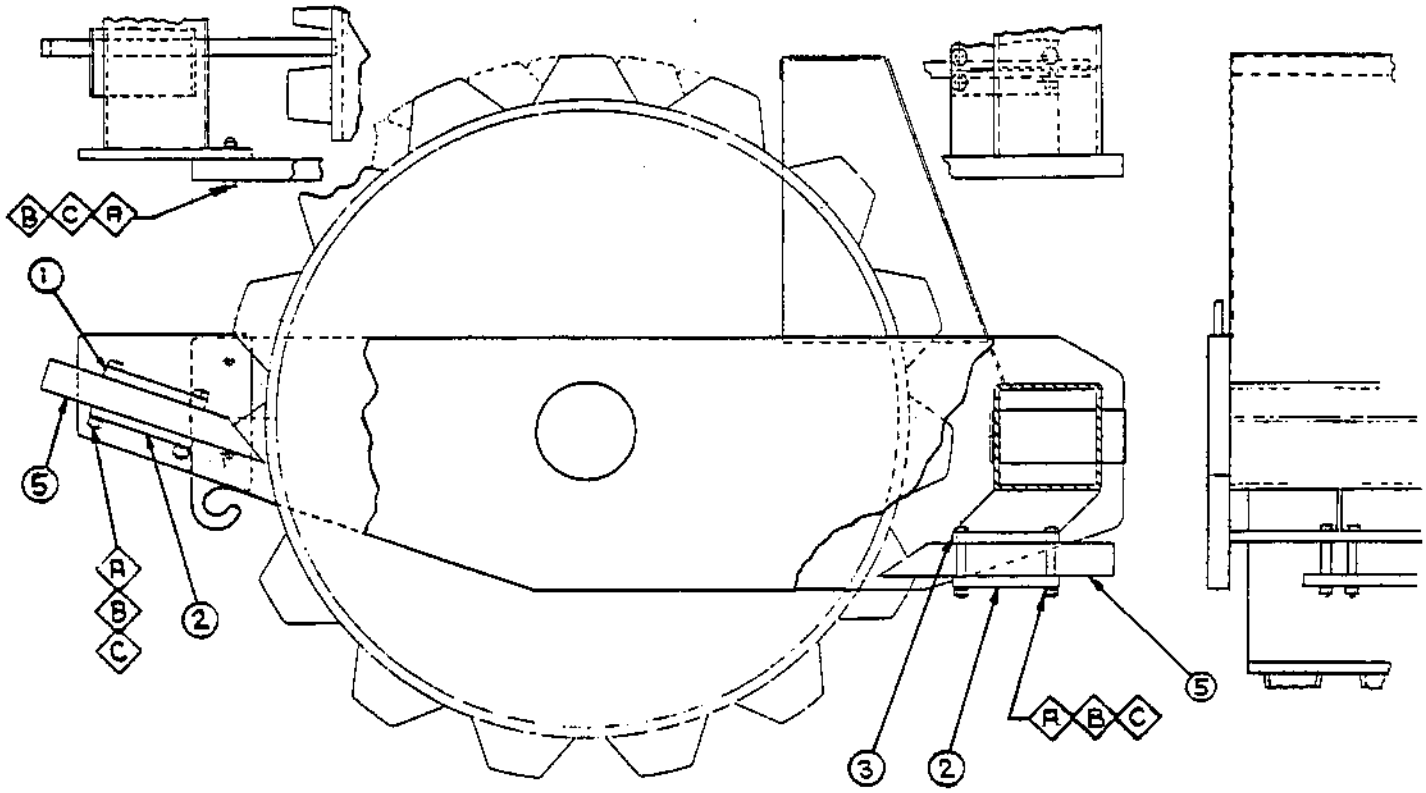

INDEX NUMBER	PART NUMBER	DESCRIPTION	QUANTITY
1	335688	Front Mounting Plate	1
2	335686	Clamp	2
3	335687	Rear Mounting Plate	1
5	335693	Cleaner Bar	18
A	502101	Capscrew HH	72
B	571007	Hex Nut	76
C	604033	Spring Lockwasher	76
D	502098	Capscrew HH	4

CLEANER BAR ASSEMBLY (REPLACEABLE TEETH)

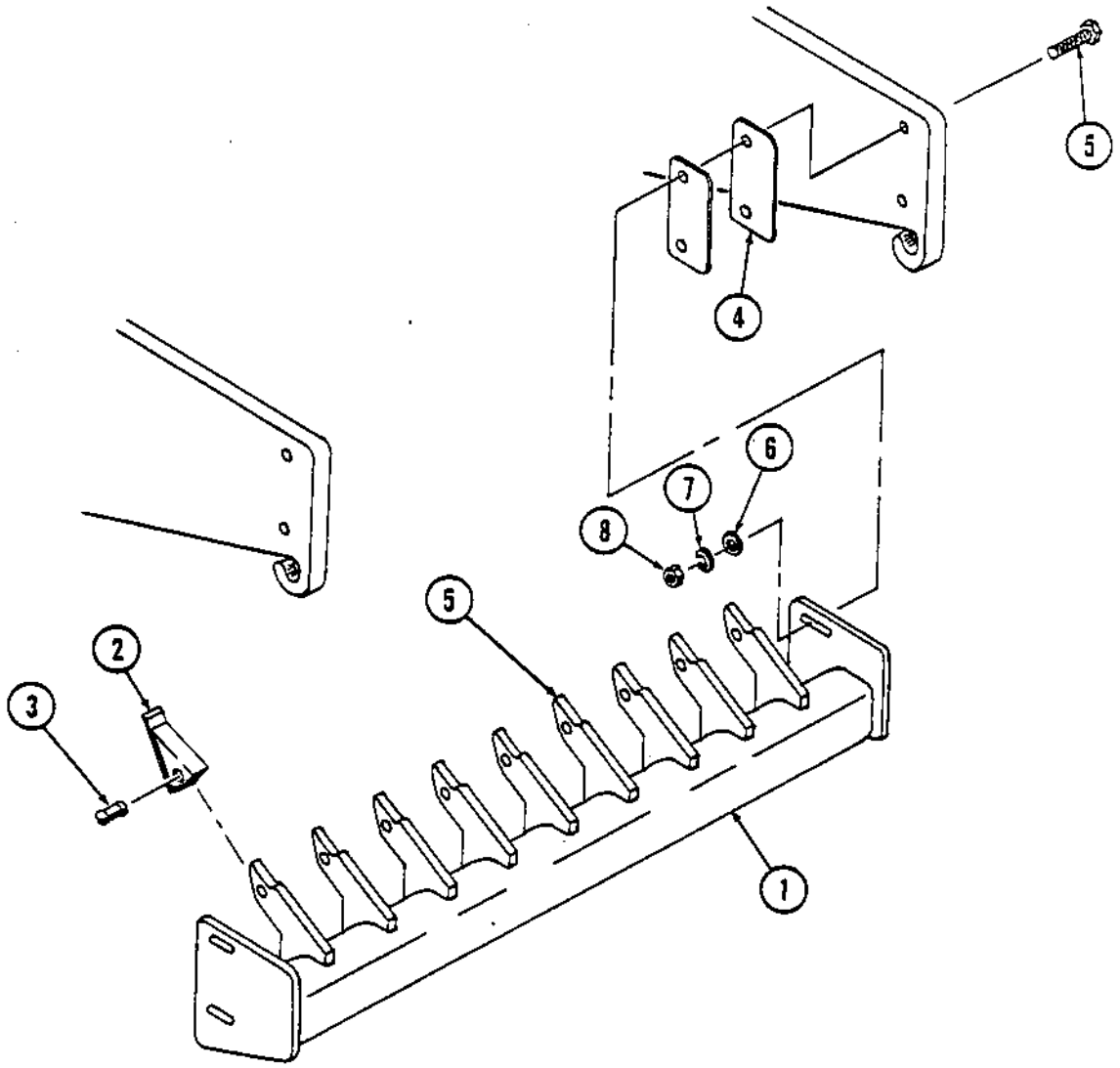

INDEX NUMBER	PART NUMBER	DESCRIPTION	QUANTITY
1	826285	Cleaner Bar	1
2	801630	Tooth	18
3	801631	Lock	18
4	826319	Shim	4
5	826325	Nose Piece	9
5	502148	Capscrew HH	4
6	600013	Flat Washer	4
7	604033	Lockwasher	4
8	571007	Hex Nut	4

MOTOR & BRACKET ASSEMBLY
CA-25D & CA-25PD (TO S/N 1533)

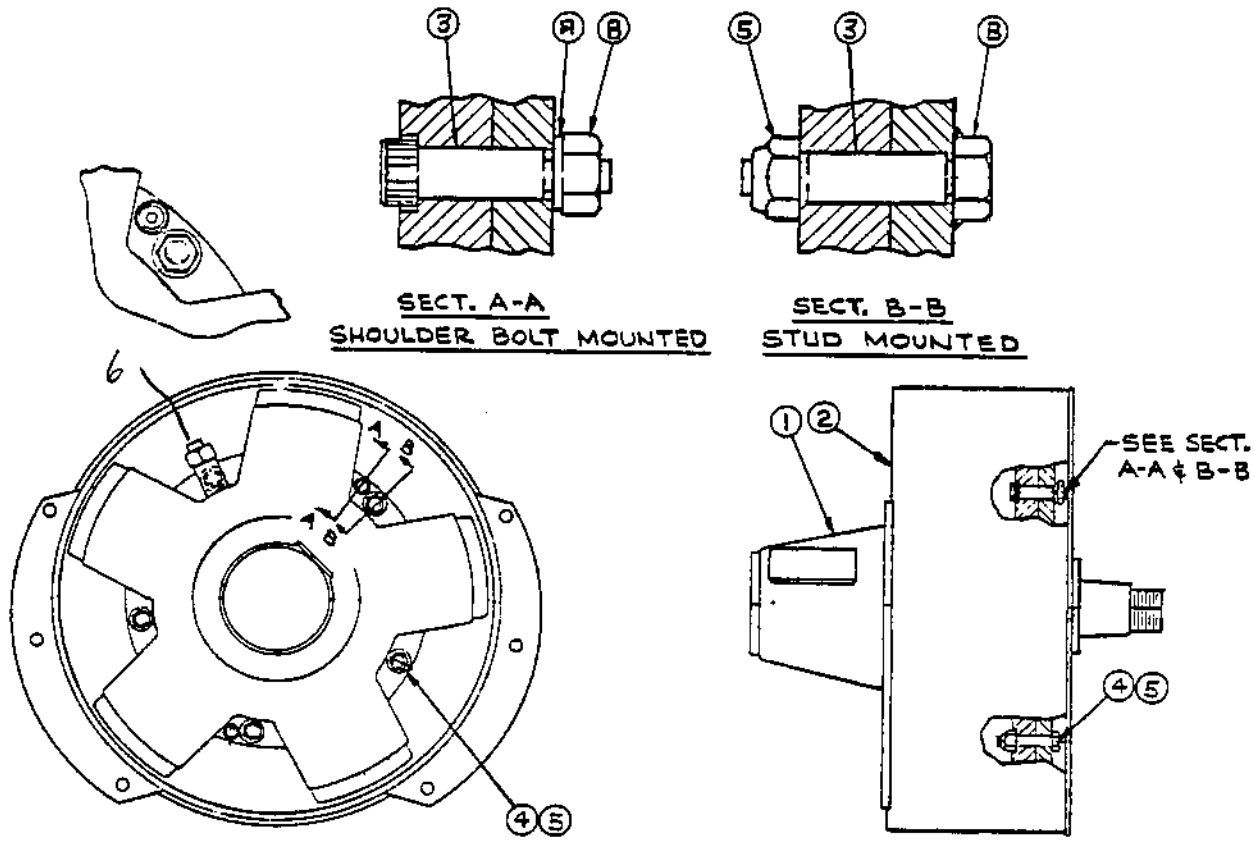

INDEX NUMBER	PART NUMBER	DESCRIPTION	QUANTITY
1		Motor, Drum Drive (See Page 157)	1
2	335665	Motor Mounting Assembly	1
3	550088	Shoulder Bolt	2*
-	850424	Motor Stud	2**
4	502097	Capscrew HH	5*
-		Capscrew HH	3**
5	571007	Locknut	5
6	893465.	ROLLER VALVE	1 ***
A	604032	Lockwasher	2*
B	571006	Nut	2*
-	571007	Nut	2**

*Shoulder Bolt Mounted
**Stud Mounted
*** TO S/N 1158 AS ORIGINAL EQUIPT

CA 25 D.

704 DUAL AMP.

CC 5-019

CC 5-020.

SOME EARLIER MACHINES WERE SOLD WITH DUAL AMPLITUDE CENTRICS. USE ABOVE PART NUMBERS

NEW STYLE CC5-370 - 850370
CC5 371 850371

DRIVE HUB/DRIVE PLATE ASSY.
CA-25D, CA-25PD (FROM S/N 1534)

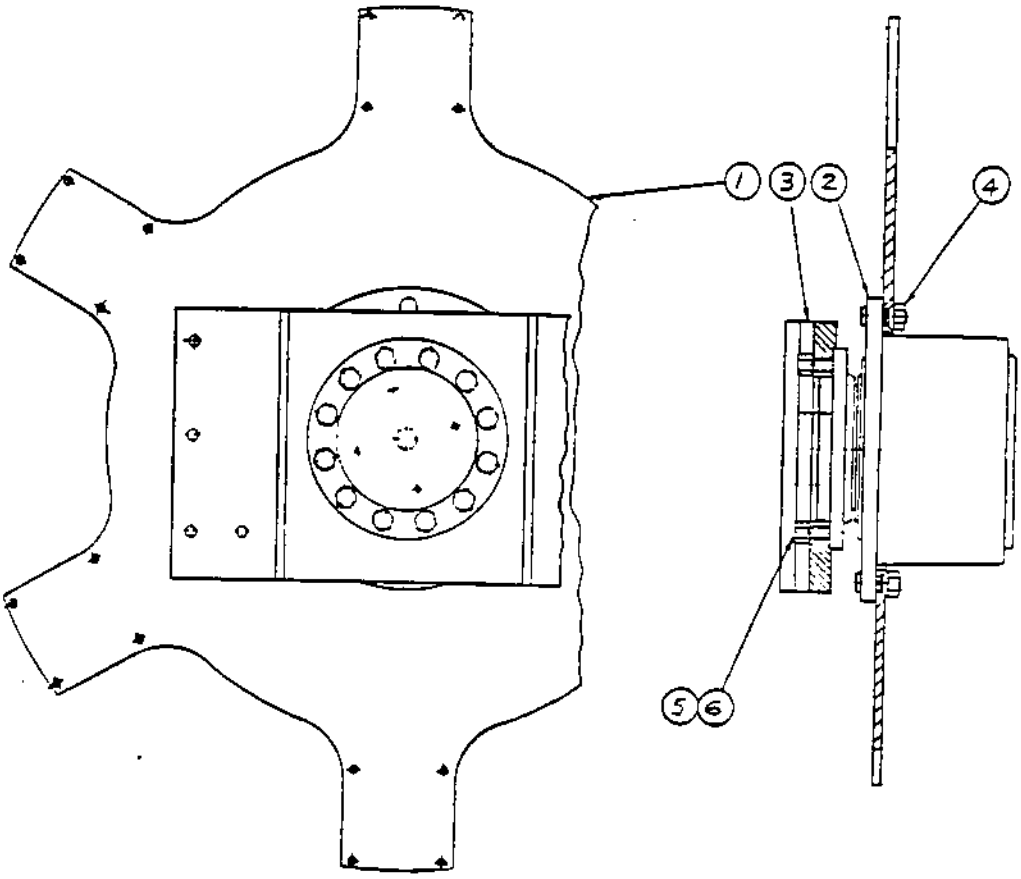

INDEX NUMBER	PART NUMBER	DESCRIPTION	QUANTITY
1	826005	Drive Plate	1
2		Drive Hub Assembly (See Page 173)	1
3	826146	Drive Hub Mounting Bracket	1
4	813694	Hex Nut	12
5	503056	Capscrew	12
6	604033	Lockwasher	12

DRUM ASSEMBLY
CA-25 & CA-25A

INDEX NUMBER	PART NUMBER CA-25	PART NUMBER CA-25A	DESCRIPTION	QUAN.
1	335504	825798	Drum	1
2		826563*	Housing, Frame Bearing (See Note)	2
-		335491	Housing, Frame Bearing	2
3		826564*	Housing, Outer Bearing (See Note)	2
-		335513	Housing, Outer Bearing	2
4	825937**	825935***	Eccentric Shaft LH	1
5		335514	Inner Bearing Housing	2
6		850064**	Rubber Bushing	2
7	825938**	825936***	Eccentric Shaft RH	1
8		335522	Plug Coupling	1
9		826567* +	Adapter, Motor (See Note)	1
-		335523 +	Adapter, Motor	1
10		825180	Bearing Clamp	1
11		826568*	Cover (See Note)	1
-		335614	Cover	1
12		335524	Bearing Clamp	1
13	801037**	801037**	Drive Shaft	1
14		116041*	Bearing (See Note)	2
-		335561	Bearing	2
15		114036	Bearing	4
16		813479	Sq. Hd. Plug	6
17		813697	Seal	2
18		813480	Splined Coupling	1
19		813481	Seal	2
20		813482	Oil Eye Plug	2
21		813483	Magnetic Plug	2
22		801236	Sealing Capscrew HH	12
23		801237	Sealing Capscrew HH	24
24		502061	Capscrew HH	12
25		502035	Capscrew HH	12
29		615033	Plain Washer	36
30			Motor Vib. (See Page 160)	1
31		502058	Capscrew HH	4
32		450122*	Shock (See Note)	8
-		450073	Shock	8
33		813478	O-Ring	1
34		343034*	Bracket, Shock Mount (See Note)	2
-		826145****	Bracket, Shock Mount	2
-		335485	Bracket, Shock Mount (To S/N 1533)	2
35		502060*	Capscrew, HH (See Note)	64
-		503034	Capscrew, HH	64
36		586049*	Locknut, Hex (See Note)	64
37		801176	Sq. Hd. Plug	1
38		332112	Breather	1
A		604030	Lockwasher	80
B		813484	Lockwasher Hi-Collar	12

*Note: These parts are used on the following s/n machines; 2915, 2916, 2918, 2937, 3003, 3039, 3061 and up.

** CA-25 from s/n 1042 *** CA-25A from s/n 1064 on prior serial nos. eccentrics, dri shaft and bushings must be replaced as an assembly. They are not interchangeable separate parts. **** From s/n 1534 to 2914, 2917, 2919 to 2936, 2938 to 3002 and 3004 to 3075.

+If machine is equipped with a Vibrometer see page 212.

DRUM ASSEMBLY

CA-25 & CA-25A

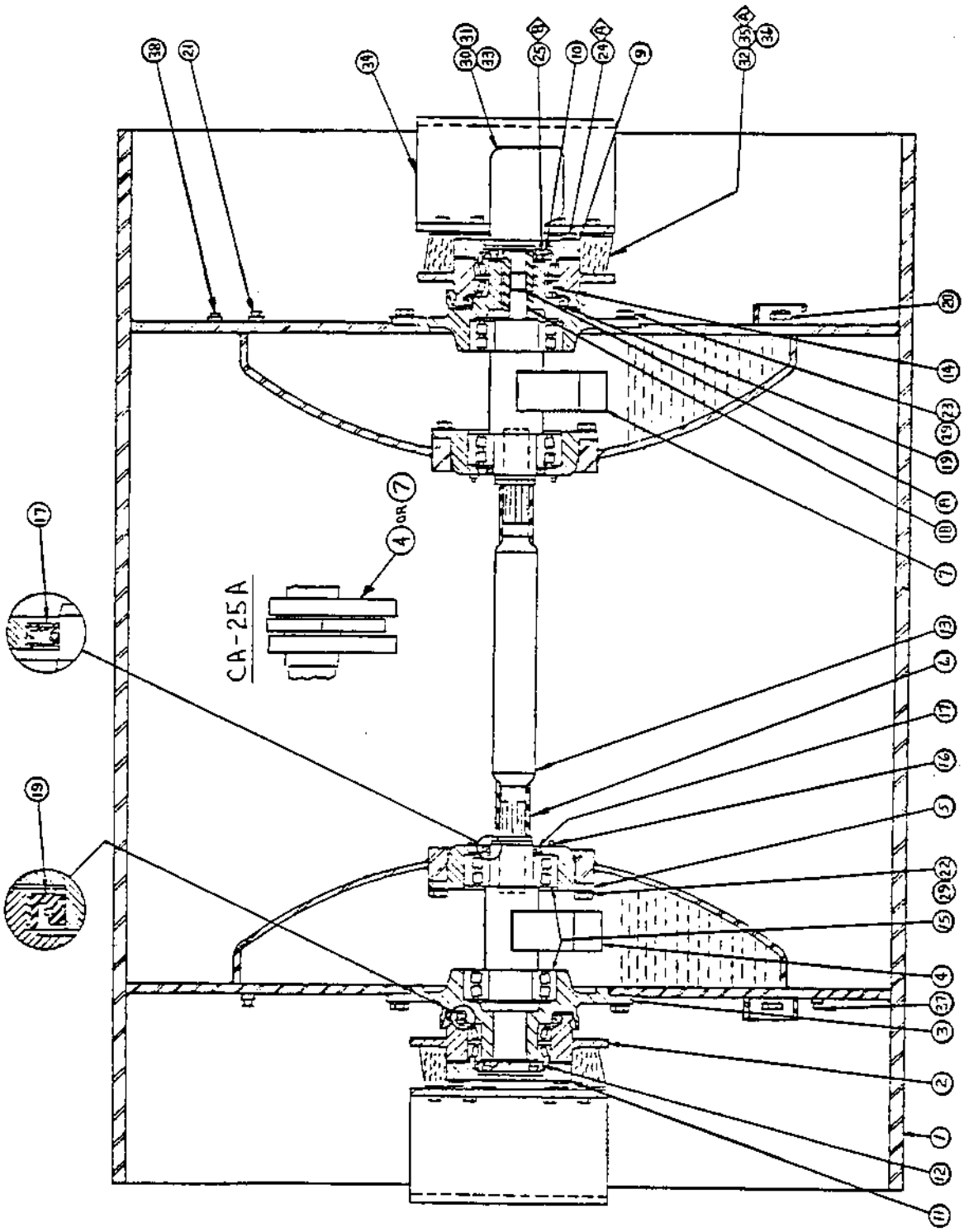

DRUM ASSEMBLY
CA-25S

INDEX NUMBER	PART NUMBER	DESCRIPTION	QUANTITY
1	825617	Drum	1
2	826563*	Housing, Frame Bearing (See Note)	2
-	335491	Housing, Frame Bearing	2
3	826564*	Housing, Outer Bearing (See Note)	2
-	335513	Housing, Outer Bearing	2
4	825806	Eccentric Shaft LH	1
5	335514	Inner Bearing Housing	2
6	850064	Rubber Bushing	2
7	825807	Eccentric Shaft RH	1
8	335522	Plug Coupling	1
9	826567*+	Adapter, Motor (See Note)	1
-	335523 +	Adapter, Motor	1
10	825180	Bearing Clamp	1
11	826568*	Cover (See Note)	1
-	335614	Cover	1
12	335524	Bearing Clamp	1
13	801037	Drive Shaft	1
14	116041*	Bearing (See Note)	2
-	335561	Bearing	2
15	114036	Bearing	4
16	813479	Sq. Hd. Plug	6
17	813697	Seal	2
18	813480	Splined Coupling	1
19	813481	Seal	2
20	813482	Oil Eye Plug	2
21	813483	Magnetic Plug	2
22	801236	Sealing Capscrew HH	12
23	801237	Sealing Capscrew HH	24
24	502061	Capscrew HH/HT	12
25	502035	Capscrew Socket HD	12
29	615033	Plain Washer	36
30		Motor, Vibration (See Page 161)	1
31	502058	Capscrew HH	4
32	450122*	Shock, (See Note)	8
-	450073	Shock	8
33	813478	O-Ring	1
34	343034*	Bracket, Shock Mount (See Note)	2
-	826145	Bracket, Shock Mount	2
35	502060*	Capscrew, HH	64
-	502058	Capscrew, HH	64
36	502049	Locknut	64
37	801176	Sq. Hd. Plug	1
38	332112	Breather	1
A	604030	Lockwasher	68
B	813484	Lockwasher, Hi-Collar	12

*Note: These parts are used on the following s/n machines: 2915, 2916, 2918, 2937 3003,.3039, 3061, 3076 and up.

+If machine is equipped with a Vibrometer see page 212.

DRUM ASSEMBLY

CA-25S

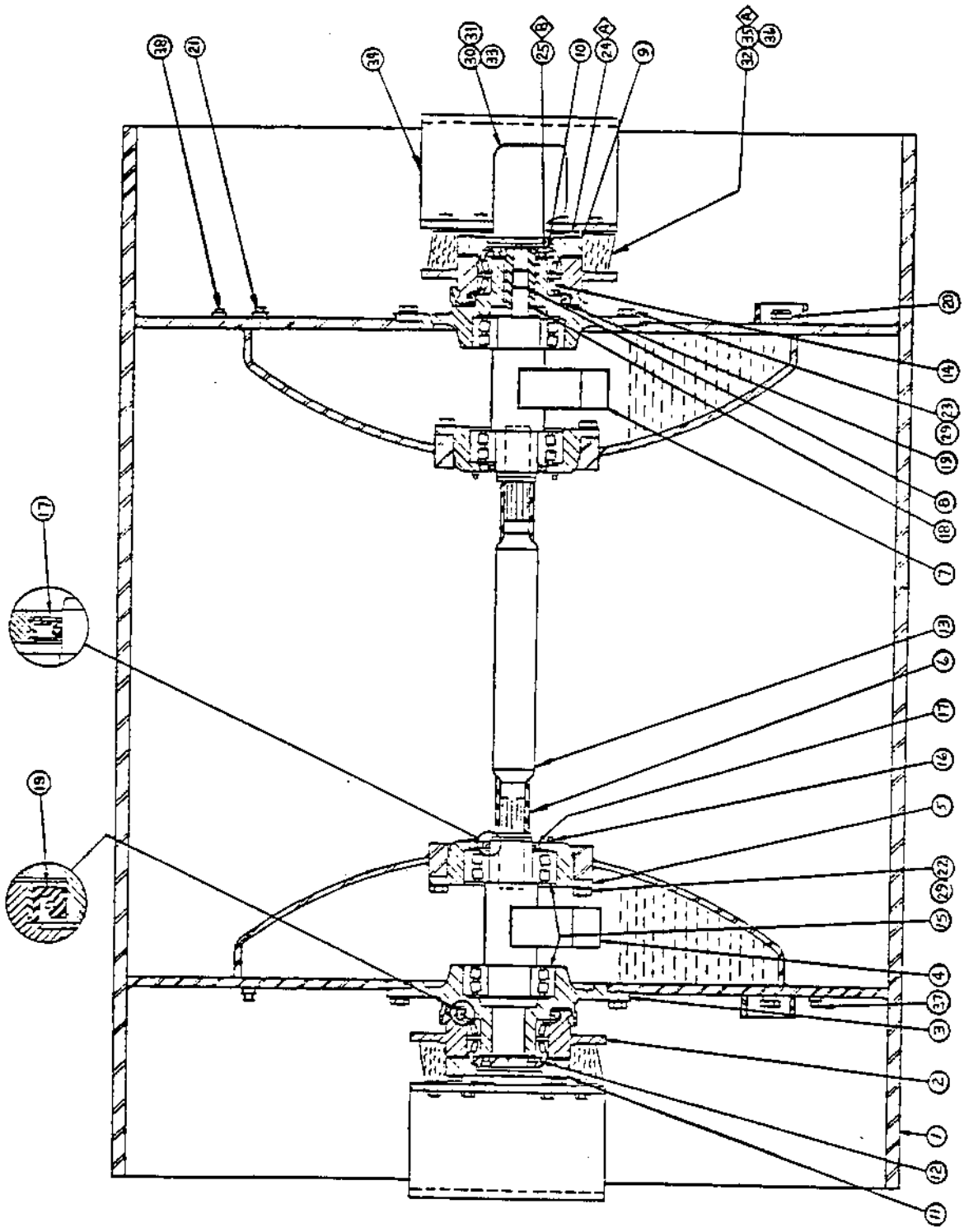

DRUM ASSEMBLY
(CA-25D & CA-25PD to S/N 1533)

INDEX NUMBER	PART NUMBER (CA-25D)	PART NUMBER (CA-25PD)	DESCRIPTION	QUANTITY
			Drum Drive Assy. See Pg. 109	
1	825365	825508	Drum	1
2	335491		Frame Bearing Housing	1
3	335513		Outer Bearing Housing	1
4	825937	825806	Eccentric Shaft LH	1
5	335514		Inner Bearing Housing	2
6	850064		Rubber Bushing	2
7	825938	825807	Eccentric Shaft RH	1
8	335522		Pipe Coupling	1
9	335523 *		Motor Adapter	1
10	825180		Bearing Clamp	1
11	335664		Outer Bearing Housing	1
12	335661		Bearing Cover	1
13	801037		Drive Shaft	1
14	335561		Bearing	1
15	114036		Bearing	4
16	813479		Sq. Hd. Plug	6
17	813697		Seal	2
18	813480		Splined Coupling	1
19	813481		Seal	1
20	813482		Oil Eye Plug	2
21	813483		Magnetic Plug	2
22	801236		Sealing Capscrew HH	12
23	801237		Sealing Capscrew HH	24
24	502061		Capscrew HH	6
25	502035		Capscrew Socket HD	6
29	615033		Plain Washer	36
30	509012		Capscrew HH/HT	6
A	604030		Lockwasher	6
B	813484		Hi-Collar Lockwasher	6
C	604028		Lockwasher	6

* If machine is equipped with a Vibrometer see page 212.

DRUM ASSEMBLY

(CA-25D & CA-25PD to s/n 1533)

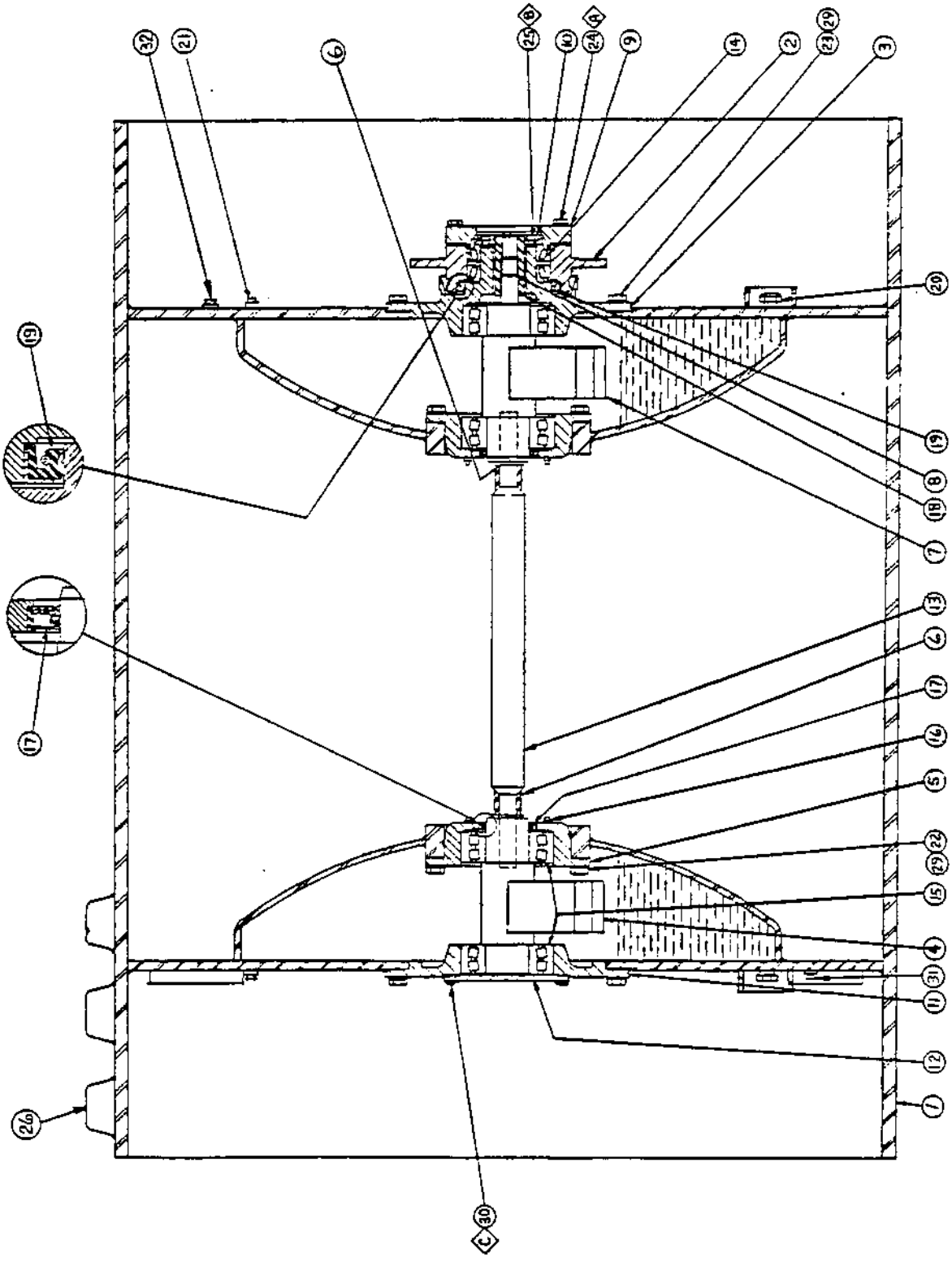

DRUM ASSEMBLY
(CA-25D & CA-25PD From s/n 1534)

INDEX NUMBER	PART NUMBER (CA-25D)	(CA-25PD)	DESCRIPTION	QUANTITY
			Drum Drive Assy. See Pg. 106	
1	826155	826158	Drum	1
2	826563*		Housing, Frame Bearing	1
-	335491		Housing, Frame Bearing	1
3	826564*		Housing, Outer Bearing	1
-	335513		Housing, Outer Bearing	1
4	825937	825806	Eccentric Shaft LH	1
5	335514		Inner Bearing Housing	2
6	850064		Rubber Bushing	2
7	825938	825807	Eccentric Shaft RH	1
8	335522		Pipe Coupling	1
9	826567* +		Adapter, Motor	1
-	335523 +		Adapter, Motor	1
10	825180		Bearing Clamp	1
11	335664		Outer Bearing Housing	1
12	335661		Bearing Cover	1
13	801037	342939	Drive Shaft	1
14	116041*		Bearing	1
-	335561		Bearing	1
15	114036		Bearing	4
16	813479		Sq. Hd. Plug	6
17	813697		Seal	2
18	813480		Splined Coupling	1
19	813481		Seal	1
20	813482		Oil Eye Plug	2
21	813483		Magnetic Plug	2
22	801236		Sealing Capscrew HH	12
23	801237		Sealing Capscrew HH	24
24	502061		Capscrew HH	6
25	502035		Capscrew Socket HD	6
26		335659	L.P. Drum Pad	150
29	615033		Plain Washer	36
30	502035		Capscrew HH	6
31	801176		Sq. Hd. Plug	1
32	332112		Breather	1
A	604030		Lockwasher	6
B	813484		Hi-Collar Lockwasher	6
C	604028		Lockwasher	6

*Note: These parts are used on the following s/n machines;
2915, 2916, 2918, 2937, 3003, 3039, 3061, 3076 and up.

+ If machine is equipped with a Vibrometer see page 212.

MAP 6

DRUM ASSEMBLY

(CA-25D & CA-25PD From s/n 1534)

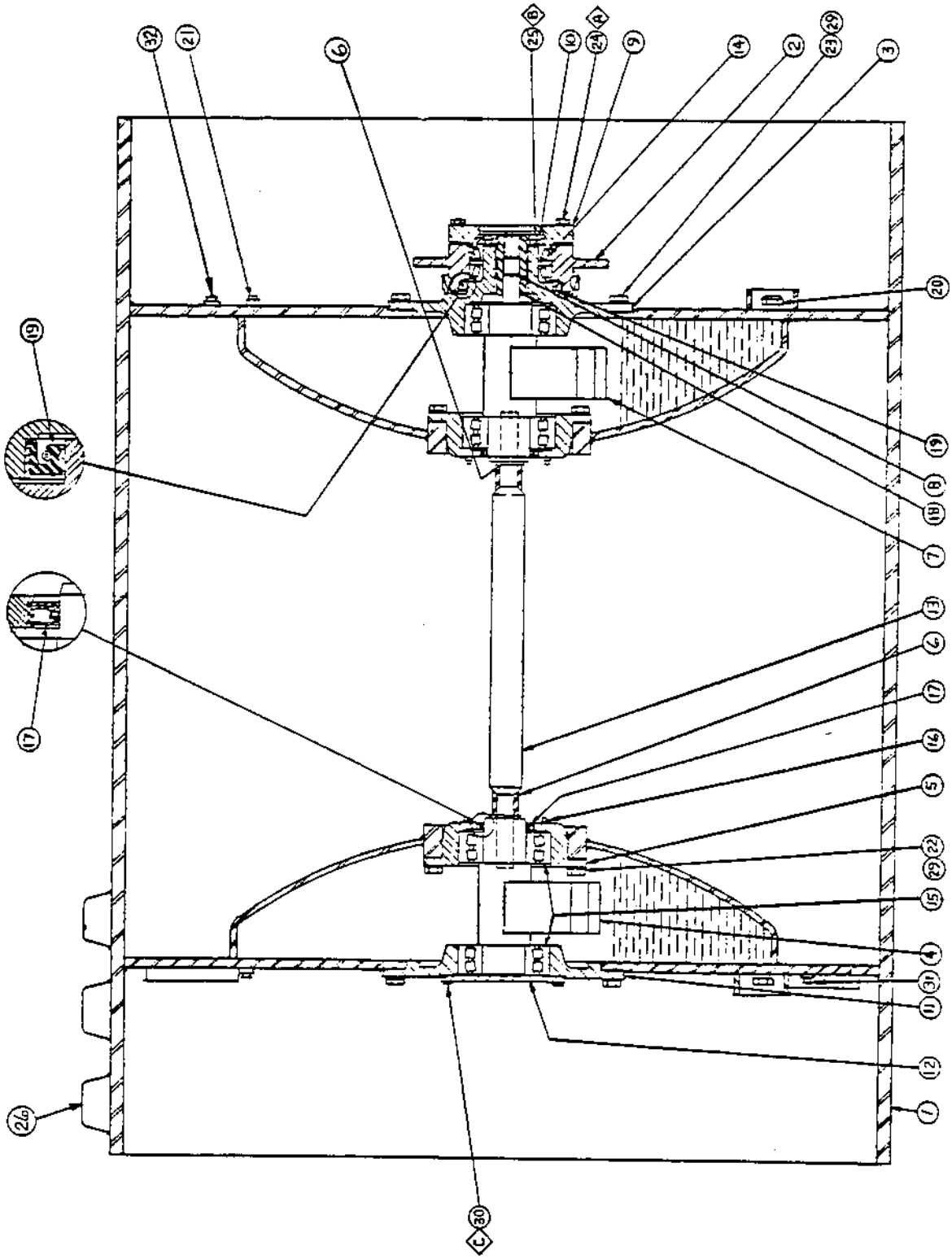

MAT, SCRAPER & WHEEL ASSEMBLY
CA-25A

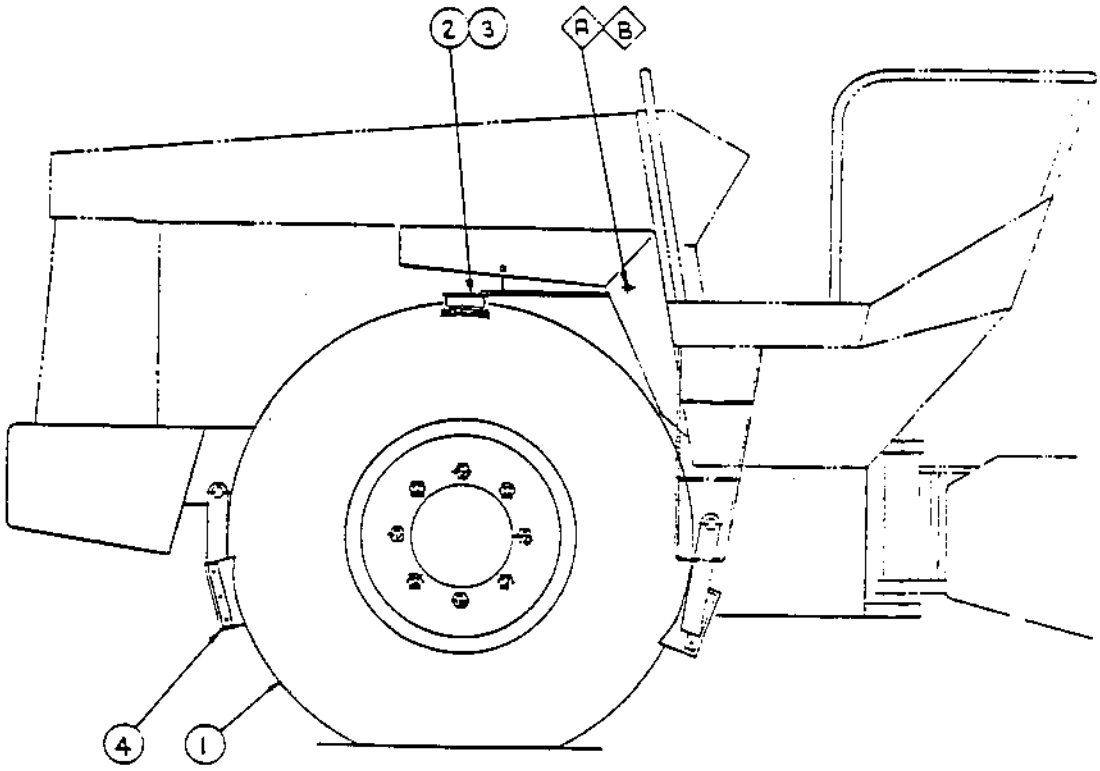

INDEX NUMBER	PART NUMBER	DESCRIPTION	QUANTITY
		ASPHALT TIRE GROUP	
1		Wheel & Tire Assembly (See Page 119)	2
2		R.H. Mat Frame Assembly (See Page 125) ..	1
3		L.H. Mat Frame Assembly (See Page 125) ..	1
4		Tire Scraper Assembly (See Page 121)	1
A	502059	Capscrew HH	2
B	586049	Locknut	2
		STEEL WHEEL GROUP	
1		Wheel & Scraper Assembly (See Page 123) .	1
2		R.H. Mat Frame Assembly (See Page 125) ..	1
3		L.H. Mat Frame Assembly (See Page 125) ..	1
A	502059	Capscrew HH	2
B	586049	Locknut	2

WHEEL & TIRE ASSEMBLY
CA-25 (TRACTION)

INDEX NUMBER	PART NUMBER	DESCRIPTION	QUANTITY
1	*825016	Wheel	1
-	**335463	Wheel	1
2	813379	Tire & Tube	1
3	813380	Tube/w TR 218A	1
4	813382	Rim Nut	1

WHEEL & TIRE ASSEMBLY
CA-25A (ASPHALT)

1	*825455	Wheel	1
-	** 335461	Wheel	1
2	813700	Tire & Tube	1
3	892130	Tube	1
4	813382	Rim Nut	1

WHEEL & CLEATED TIRE ASSEMBLY
CA-25PD (TRACTION)

1	**335463	Wheel	1
2	801462	Tire & Tube	1
3	813380	Tube	1
4	813382	Rim Nut	1

NOTE: When ordering tire specify tread design.

Wide Axle - * to s/n 581, from s/n 1117 to 1202, 1206 to 1217 & 1219
Narrow Axle - ** from s/n 582 to 1116, 1203 to 1205, 1220 and up

CA-25
WHEEL & TIRE ASSEMBLY

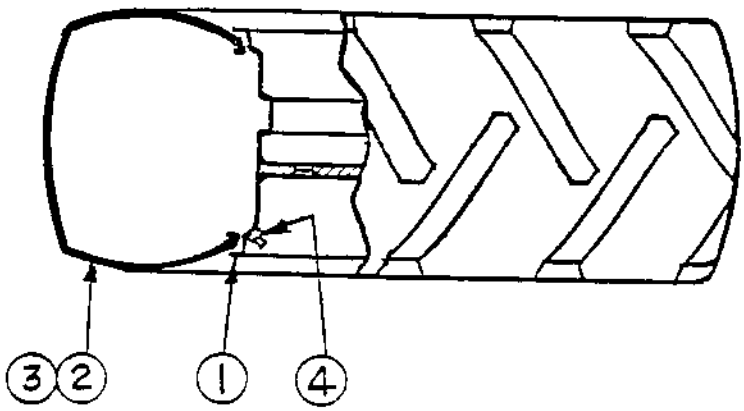

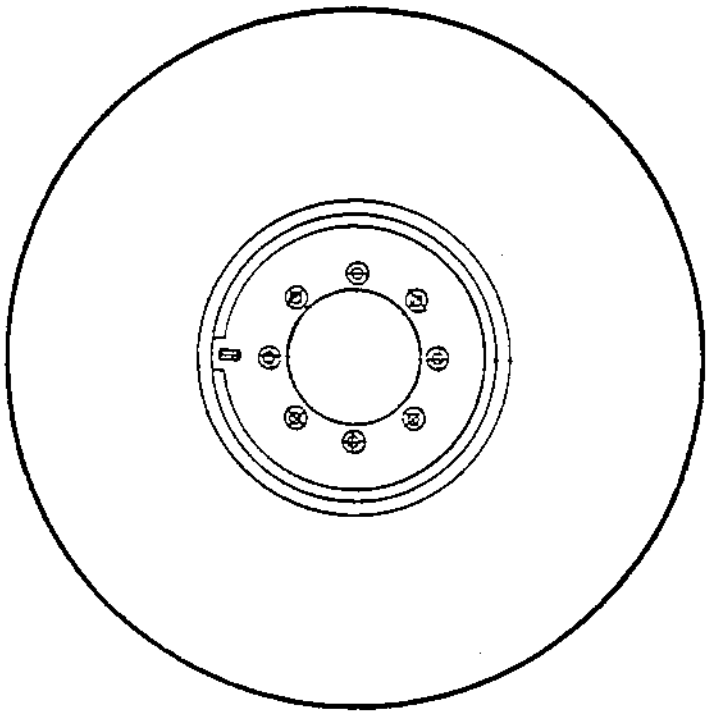

SCRAPER ASSEMBLY
ASPHALT TIRE

INDEX NUMBER	PART NUMBER	DESCRIPTION	QUANTITY
1	335745	Scraper-Nylon	4
2	335746	Scraper Bracket	2
3	825753	Scraper Clamp	4
4	813485	U-Bolt	4
5	813754	Set Collar	8
6	825793	Torque Arm	4
7	635020	Hair Pin-Clip	4
8	813757	Spring	4
9	NSS	Brass Jack Chain (5 links)	4
10	825795	Scraper Bracket RH	1
11	825796	Scraper Bracket LH	1
A	604028	Lockwasher	20
B	502033	HH Capscrew	8
C	502036	HH Capscrew	12
D	571003	Nut	12
E	600010	Plain Washer	4
F	503003	HH Capscrew	4
G	572001	Nut	4
H	600005	Plain Washer	4
I	604026	Lockwasher	4

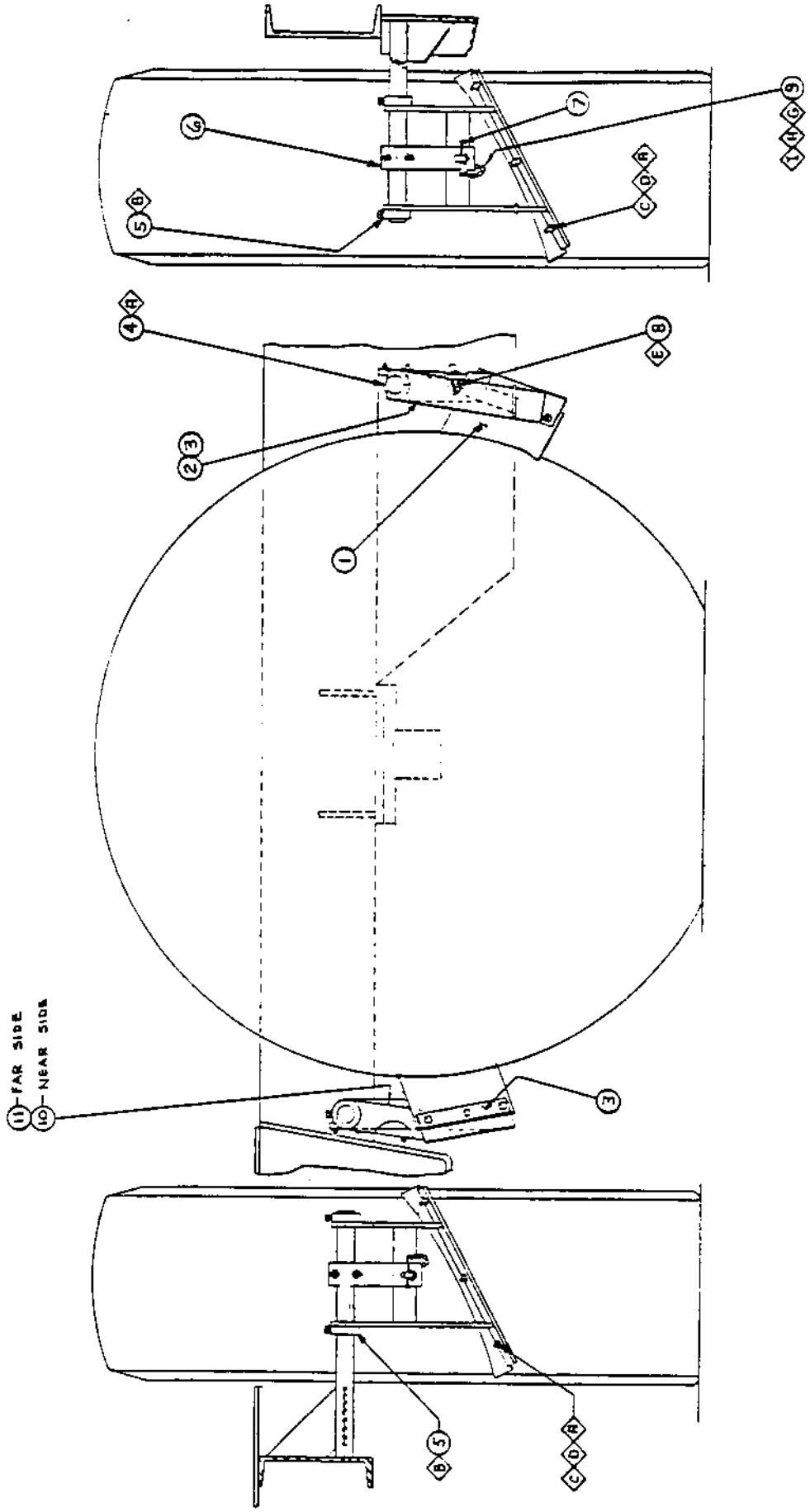

CA-25 ASPHALT
RUBBER TIRE SCRAPER - ASPHALT

STEEL WHEEL & SCRAPER ASSEMBLY

INDEX NUMBER	PART NUMBER	DESCRIPTION	QUANTITY
1	825762	Scraper (Steel)	4
2	825761	Scraper Bracket	4
3	825766	Scraper Clamp	4
4	813485	U-Bolt	4
5	813754	Set Collar	8
6	825793	Torque Arm	4
7	635020	Har Pin Clip	4
8	813757	Spring	4
9	NSS	Brass Jack Chain (5 links)	4
11	825751	Wheel Assembly	2
A	604028	Lockwasher	24
B	502033	Capscrew HH	8
C	502036	Capscrew HH	16
D	571003	Nut	16
E	600010	Plain Washer	4
F	503003	Capscrew HH	4
G	572001	Nut	4
H	600005	Plain Washer	4
I	604026	Lockwasher	4

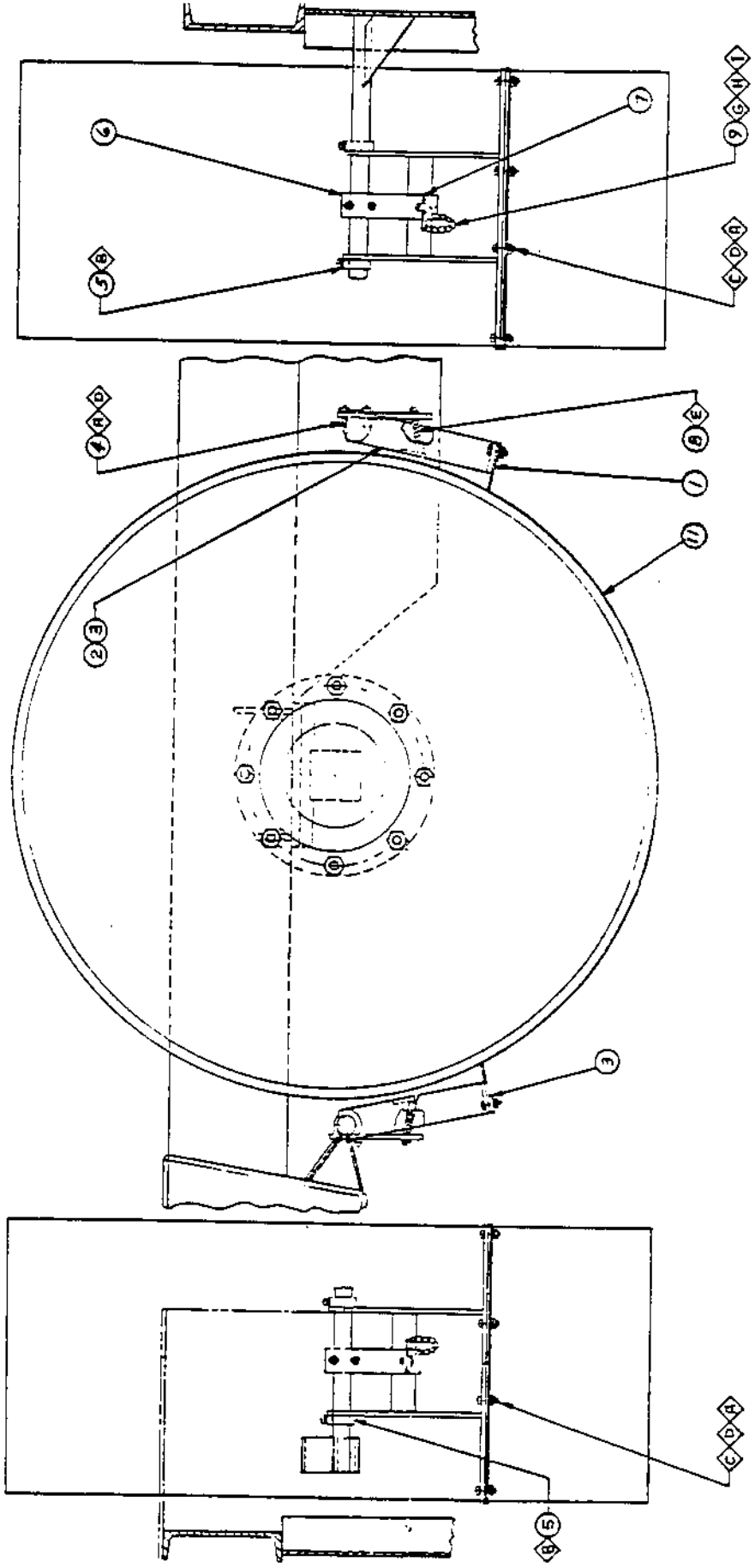

CA-25 ASPHALT
STEEL WHEEL SCRAPER

COCOA MAT ASSEMBLY
ASPHALT TIRE

INDEX NUMBER	PART NUMBER	DESCRIPTION	QUANTITY
1	825594	Cocoa Mat Frame, LH	1
2	825593	Cocoa Mat Frame, RH	1
3	335741	Water Tube, RH	1
-	825592	Water Tube, LH	1
4	813708	Hog Ring	16
5	550040	U-Bolt	2
6	499400	Cocoa Mat	1
7	813711	Drain Plug	1
A	604026	Lockwasher	4

COCOA MAT ASSEMBLY
STEEL WHEEL

INDEX NUMBER	PART NUMBER	DESCRIPTION	QUANTITY
1	825755	Cocoa Mat Frame, LH	1
2	825754	Cocoa Mat Frame, RH	1
3	825757	Water Tube, RH	1
-	825756	Water Tube, LH	1
4	813708	Hog Ring	20
5	550040	U-Bolt	2
6	801191	Cocoa Mat	1
7	813711	Drain Plug	1
A	604026	Lockwasher	4

COCOA MAT ASSEMBLY

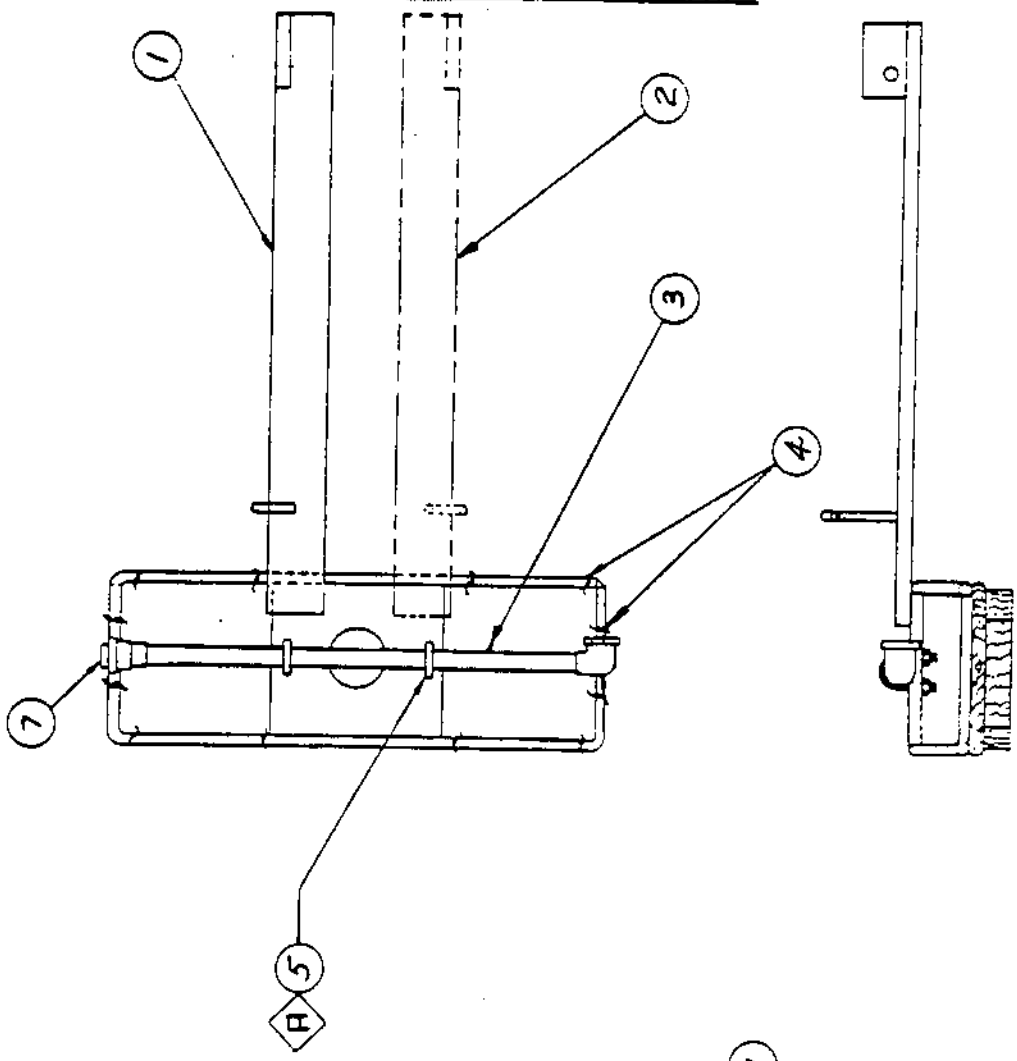

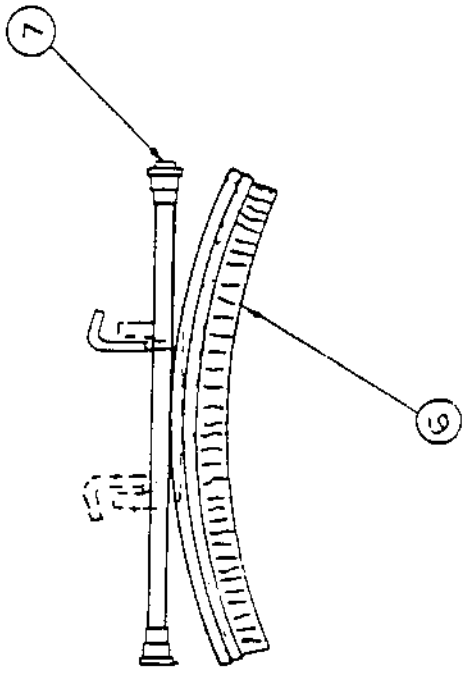

WATER SYSTEM ASSEMBLY
CA-25A (TO S/N 1676)

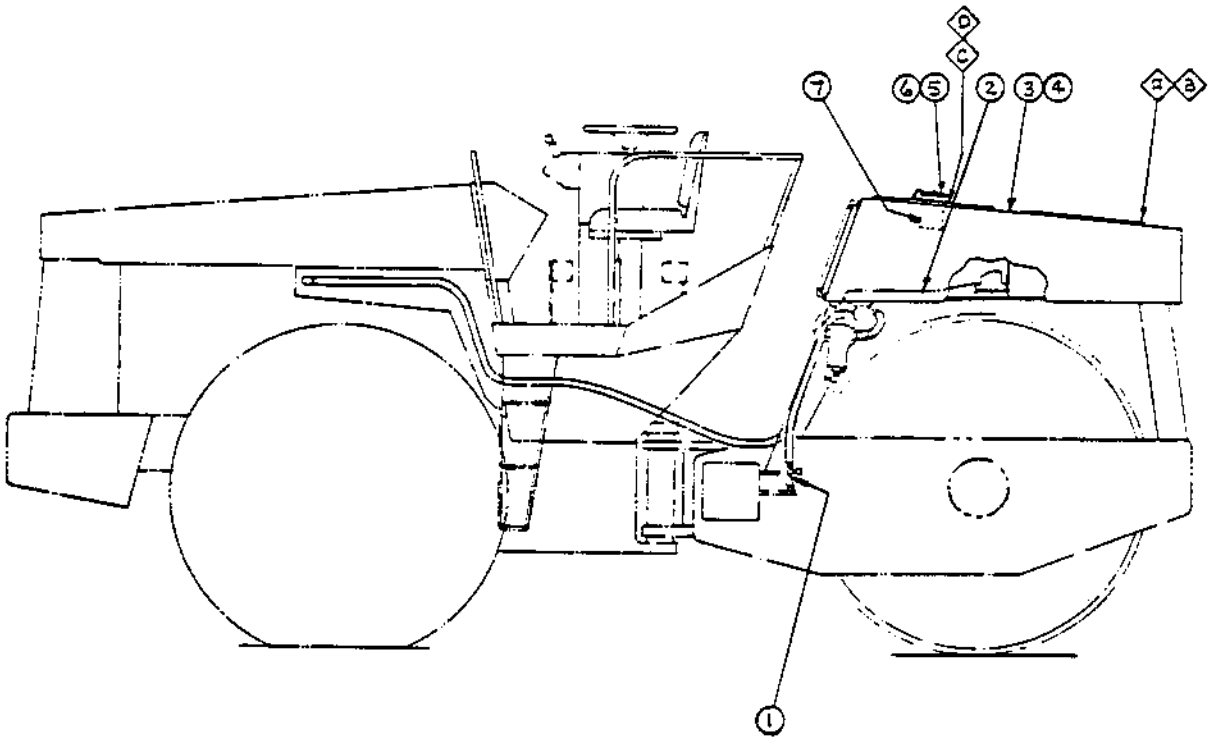

INDEX NUMBER	PART NUMBER	DESCRIPTION	QUANTITY
1		Water Lines & Components (To S/N 1617) (See Page 129)	1
2		Elec. Schematic & Comp. (See Page 131)	1
3	850277	Front Tank Assembly	1
4	335718	Gasket	2
5	825400	Filler Cap	1
6	820124	Gasket	1
7	336488	Strainer	1
A	503002	Capscrew HH	48
B	604026	Lockwasher	48
C	510020	Screw SH	6
D	604019	Lockwasher	6

WATER LINES & COMPONENTS
CA-25A (TO S/N 1617)

INDEX NUMBER	PART NUMBER	DESCRIPTION	QUANTITY
1	813722	Close Nipple	1
2	813439	Tee	1
3	813724	Valve	5
4	813725	Ell Hose Insert	2
5	333104	Petcock	1
6	813728	Clamp	10
7	813726	Ell Hose Insert	2
8	842130	Strainer Modification	
-	801311	Strainer	2
-	891069	Strainer Screen	2
9	813485	U-Bolt	1
10	344353	Hex Adapter	1
11	813731	Solenoid Valve	1
12	813727	5/8 Clear Tube - 16" Lg.	1
13	813434	Bushing	1
14	813732	Hose Insert	1
15	813727	5/8 Clear Tube - 54" Lg.	1
16	313062	Tube Clamp	2
17	813727	5/8 Clear Tube	1
18	813733	Ell Hose Insert	2
20	244041	3/8 Clear Tube	1
21	813727	5/8 Clear Tube	1
22	801572	Pump	1
-	892996	Kit, Impeller Rebuild	1
23	813741	Clamp	4
24	813727	5/8 Clear Tube - 28" Lg.	1
25	814270	Female Swivel	2
26	813738	Hex Nipple	2
27	850283	Water Pump Clamp	2
28	334422	St. Ell	1
29	850301	Sprinkler Bar	1
30	233084	Check Valve	1
31	499318	Strainer	1
-	892758	Strainer Screen	1
32	813451	Gate Valve	1
33	850364	Modified Valve	1
34	813742	Split Eyelet	8
35	813744	Nozzle	8
36	813485	U-Bolt	1
37	234366	Elbow 90°	1

WATER LINES & COMPONENTS
CA-25A (TO S/N 1617)

INDEX NUMBER	PART NUMBER	DESCRIPTION	QUANTITY
38	814271	Bilge Switch	1
39	203037	Rubber Strip	2
40	234257	Nipple	2
41	233076	Ball Valve	2
42	334364	Street Elbow 45°	1
43	334324	Female Swivel	5
44	234395	90° Elbow	1
45	334394	Hex Nipple	1
46	850365	Strainer Shim	1
47	813727	5/8 Clear Tube - 9" Lg.	1
48	334353	Hex Nipple	3
A	502140	Capscrew HH	6
B	604026	Lockwasher	10
C	571001	Hex Nut	8
D	502282	Capscrew HH	6
E	600005	Plain Washer	2
F	550067	Capscrew HH	4
G	604019	Lockwasher	4
H	571019	Hex Nut	4
I	600007	Plain Washer	2

WATER LINES & COMPONENTS
CA-25A (TO S/N 1617)

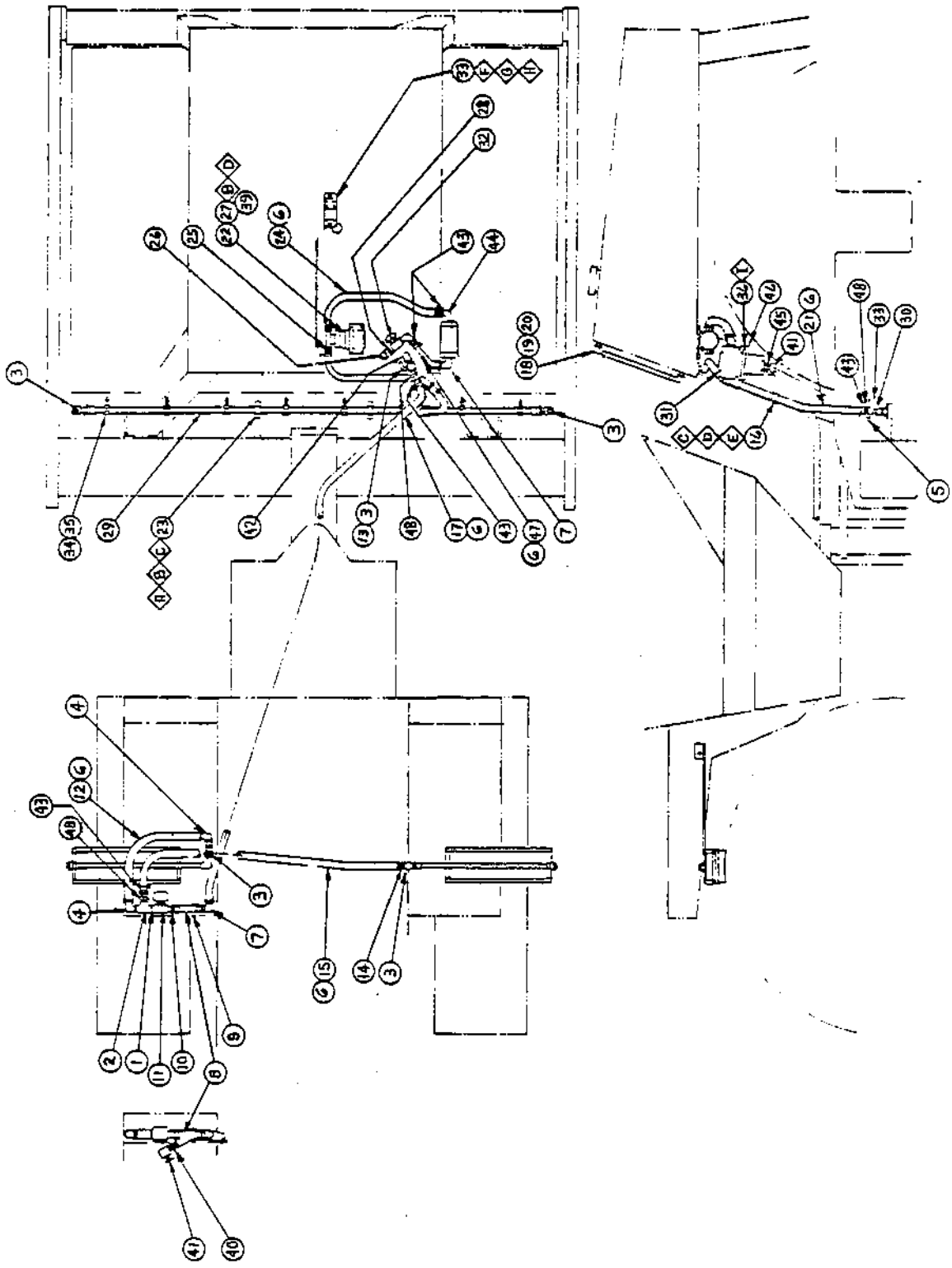

ELECTRICAL SCHEMATIC & COMPONENTS
WATER SYSTEM CA-25A (TO S/N 1676)

INDEX NUMBER	PART NUMBER	DESCRIPTION	QUANTITY
1	930046	Switch	2
3	814266	Switch	2
4	801343	Switch	2
5	813716	Clamp	6
6	801213	Clamp	3
7	82588402	Wire Assembly	1
8	80133103	Loom	1
9	82588403	Wire Assembly	1
10	80133103	Loom	1
11	813486	Ty-Wrap	12
12	499224	Adhesive	A/R
13	82588405	Wire Assembly	1
15	82588407	Wire Assembly	1
16	80133103	Loom	1
17	82588408	Wire Assembly	1
18	80133103	Loom	1
19	82588409	Wire Assembly	1
20	80133103	Loom	1
21	82588410	Wire Assembly	1
22	80133103	Loom	1
24	80133103	Loom	1
25	814274	Inline Connector	2
26	813717	Pigtail	1
27	814263	Terminal	1
28	814265	Connector	2
29	960137	Terminal	2
30	960132	Terminal	2
31	960138	Y Connector	2
33	80143912	Wire Str. Black - 47" Lg.	1
34	80144612	Wire Str. Yellow - 47" Lg.	1
A	550054	Capscrew HH (plated)	3
B	604019	Lockwasher (plated)	3
C	571019	Hex Nut (plated)	3

ELECTRICAL SCHEMATIC & COMPONENTS
WATER SYSTEM CA-25A (TO S/N 1676)

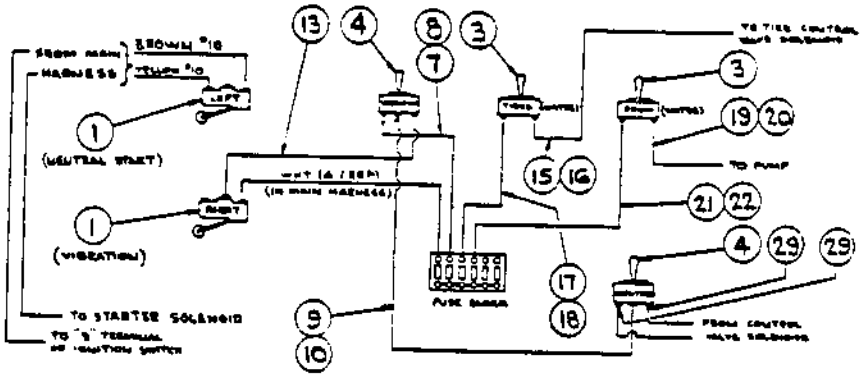

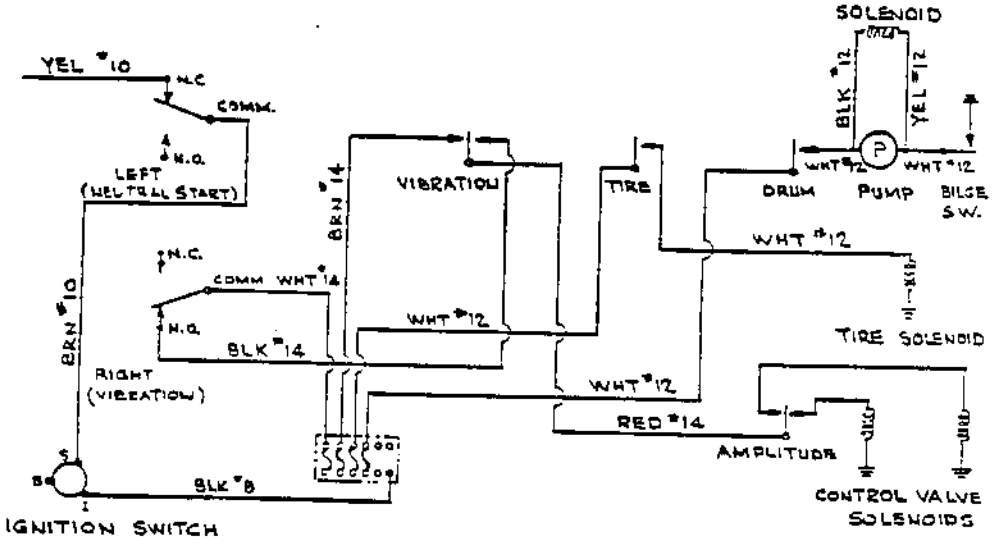

SCHEMATIC DIAGRAM

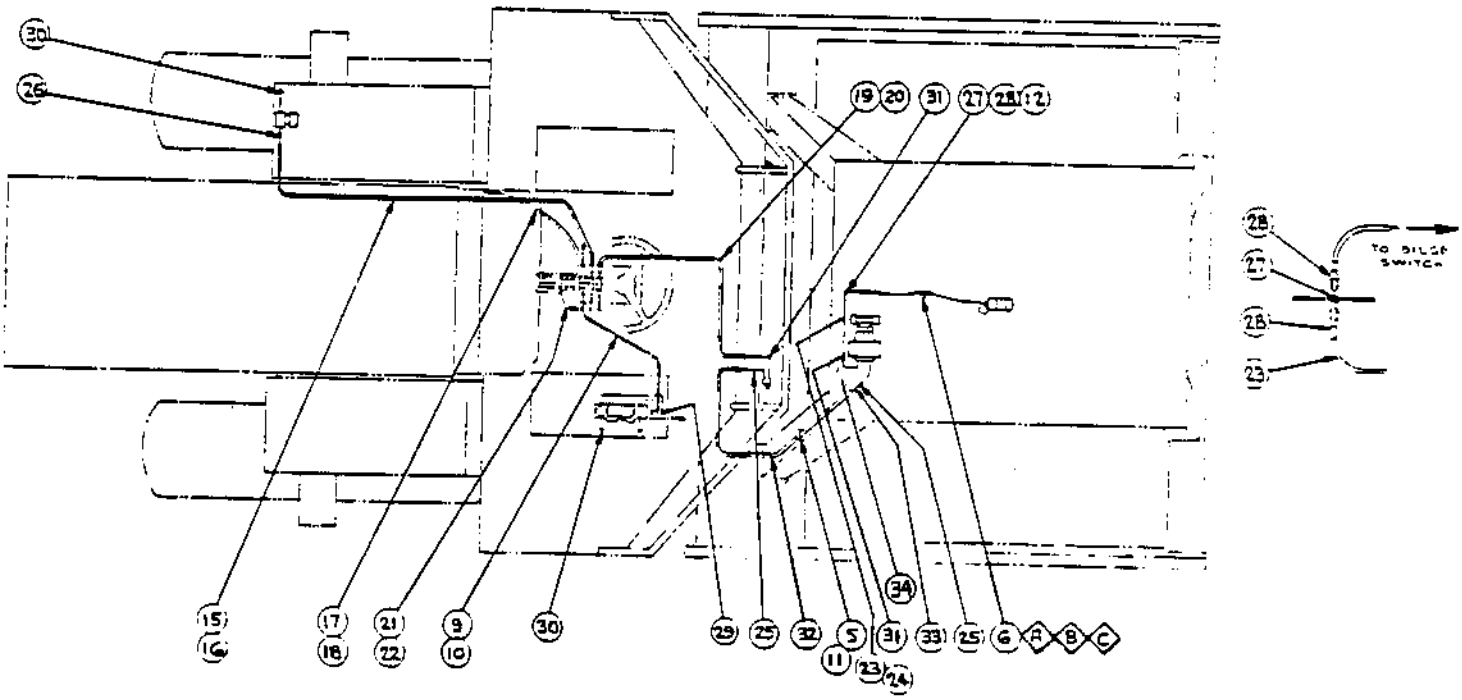

WATER SYSTEM ASSEMBLY
CA-25A (FROM S/N 1677)

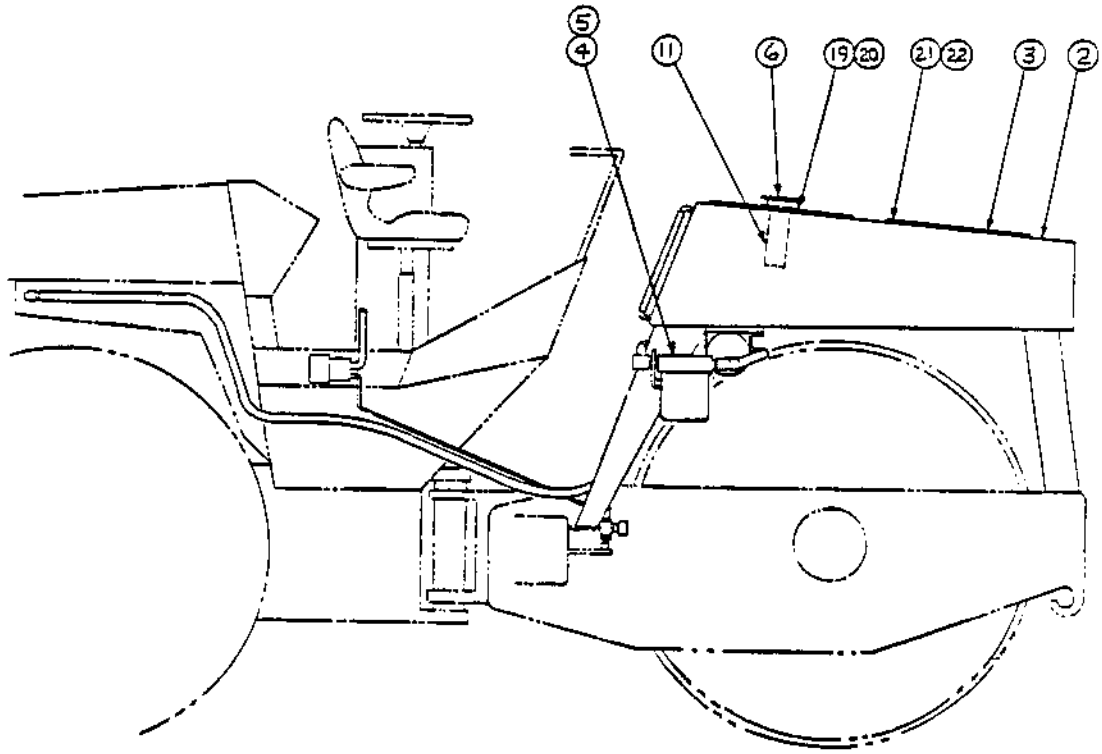

INDEX NUMBER	PART NUMBER	DESCRIPTION	QUANTITY
2	850699	Front Tank Assy.	1
3	335718	Gasket	2
4		Water Lines & Comp. (from s/n 1618) (See Page 135)	
5		Electrical Sch. & Comp. (from s/n 1677) (See Page 137)	
6	801533	Filler Cap Assy.	1
-	499427	Filler Cap	1
-	80153302	Filler Neck	1
-	80153301	Gasket	1
11	336488	Strainer	1
19	604019	Lockwasher Pltd.	6
20	510020	Capscrew Sl. Hd. Pltd.	6
21	604026	Lockwasher Pltd.	48
22	503002	Capscrew HH Pltd.	48

WATER LINES WITH COMPONENTS
CA-25A (FROM S/N 1618)

INDEX NUMBER	PART NUMBER	DESCRIPTION	QUANTITY
1	813722	Close Nipple	1
2	813439	Tee	1
3	813724	Valve	5
4	813725	Ell Hose Insert	6
5	333104	Petcock	1
6	813728	Clamp	12
7	813726	Ell Hose Insert	1
8	842130	Strainer (Modified)	1
-	891069	Strainer Screen	1
9	813485	U-Bolt	1
10	334353	Hex Adapter	1
11	821382	Solenoid Valve (See Item 33)	1
12	813727	5/8 Clear Tube - 16" Lg.	1
13	813434	Bushing	1
14	813732	Hose Insert	3
15	813727	5/8 Clear Tube - 54" Lg.	1
16	313062	Tube Clamp	2
17	813727	5/8 Clear Tube	1
18	813733	Ell Hose Insert	2
20	244041	3/8 Clear Tube - 15" Lg.	1
21	813727	5/8 Clear Tube - 47" Lg.	1
22	821381	Pump Assy.	1
-	892996	Impeller Kit	1
23	813741	Clamp	3
24	813727	5/8 Clear Tube - 22½" Lg.	1
25	850647	Bracket-Filter Mounting	1
27	850283	Water Pump Clamp	2
28	234365	St. Ell	1
29	850301	Sprinkler Bar	1
30	813438	Hex Nipple	1
31	821146	Filter	1
-	892185	Element	1
32	233088	Combo Valve	1
33	821382	Solenoid Valve	1
-	892376	Coil, Solenoid	1
-	892124	Rebuild Kit (less coil)	1
34	813742	Split Eyelet	8
35	813744	Nozzle	8
36	233130	Petcock	1
37	234366	Elbow 90°	1

WATER LINES WITH COMPONENTS
CA-25A (FROM S/N 1618)

INDEX NUMBER	PART NUMBER	DESCRIPTION	QUANTITY
39	203037	Rubber Strip	2
40	234257	Pipe Nipple	2
41	233076	Ball Valve	1
42	334364	Street Elbow 45°	1
43			
44	234318	45° Elbow	1
45	801454	Probe	1
46	801452	Plastic Ball	1
47	813727	5/8 Clear Tube - 12½" Lg.	1
48	334353	Hex Nipple	1
A	502140	Capscrew HH	6
B	604026	Lockwasher	10
C	571001	Hex Nut	8
D	502282	Capscrew HH	6
E	600005	Plain Washer	2
G	604019	Lockwasher	1
H	571019	Hex Nut	1
J	502035	Capscrew HH	2
K	571003	Hex Nut	2
L	604028	Lockwasher	2

WATER LINES WITH COMPONENTS
CA-25A (FROM S/N 1618)

FRONT

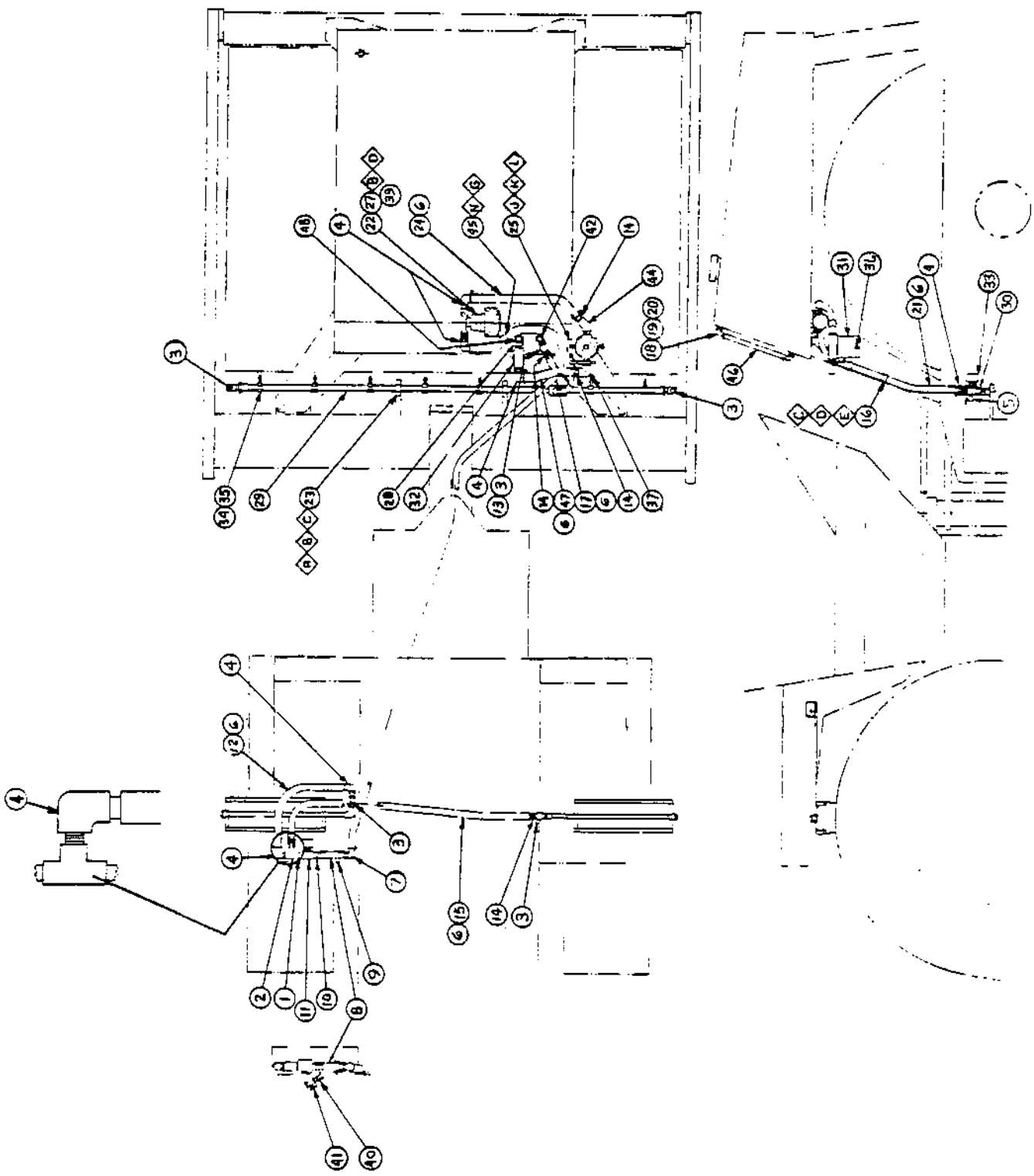

ELECTRICAL SCHEMATIC & COMPONENTS
WATER SYSTEM CA-25A (FROM S/N 1677)

INDEX NUMBER	PART NUMBER	DESCRIPTION	QUANTITY
1	801409	Water System Control Module	1
2	826291	Wiring Harness	1
3	826314	Wiring Harness	1
4	826315	Wiring Harness	1
5	85031121	Wire Assy.	1
6	85031123	Wire Assy.	1
9	813716	Clamp	2
10	813486	Ty-Rap	12
11	813717	Pigtail	1
12	80149038	Terminal, Ring	3
13	80154601	Fuse	1
14	80154602	Fuse	1
15	80149008	Terminal, Ring	2
16	826316	Wiring Harness	1
22	502004	Capscrew HH	2
23	571001	Hex Nut	2
24	604026	Lockwasher	2
25	600005	Flat Washer	2

ELECTRICAL SCHEMATIC & COMPONENTS
WATER SYSTEM
ASPHALT

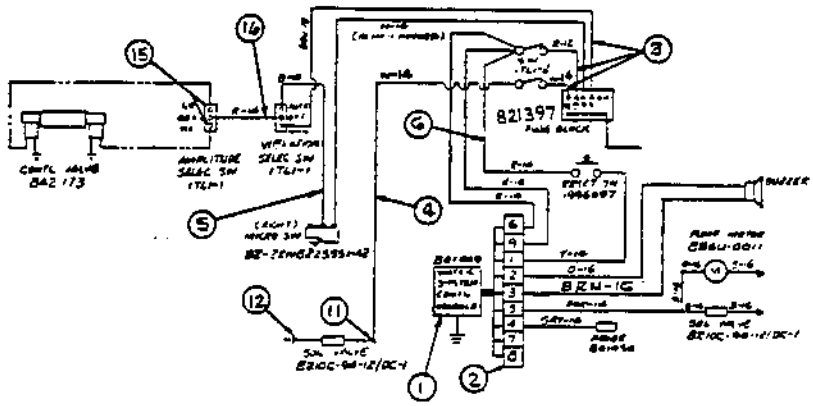

SCHEMATIC DIAGRAM

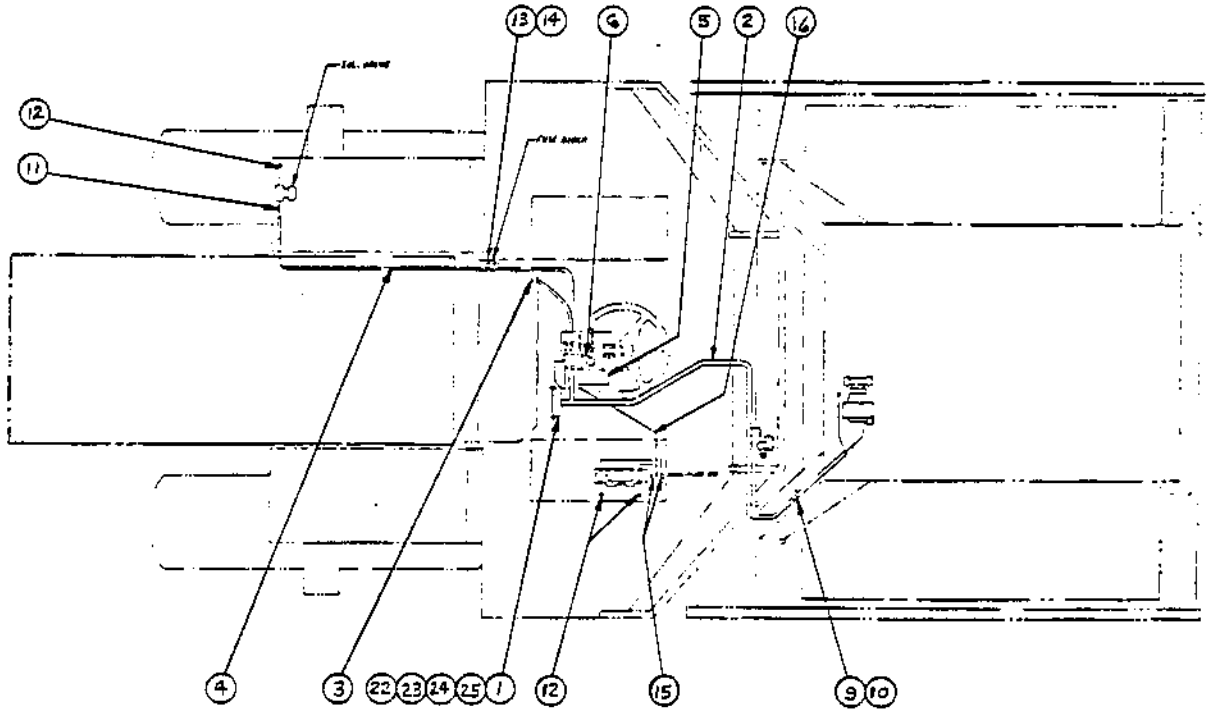

SOLVENT TANK ASSEMBLY
CA-25A

INDEX NUMBER	PART NUMBER	DESCRIPTION	QUANTITY
1	335752	Solvent Tank	1
2	813439	Tee	2
3	813722	Close Nipple	1
4	813724	Valve	3
5	813732	Hose Insert	2
6	813725	Ell Hose Insert	1
7	813733	Ell Hose Insert	2
8	232115	Plug	1
9	244041	3/8 Clear Tube - 7" Lg.	1
10	813728	Clamp	4
12	234365	Street Elbow	1
13	234317	Nipple	1
14	334353	Hex Nipple	1
15	334324	Female Swivel	1
16	813768	Neck, Filler	1
17	813769	Cap, Sol. Tank	1
A	502059	HH Capscrew	6
B	571005	Nut	6
C	604030	Lockwasher	6
D	600010	Flat Washer	6

SOLVENT TANK ASSEMBLY

CA-25 ASPHALT

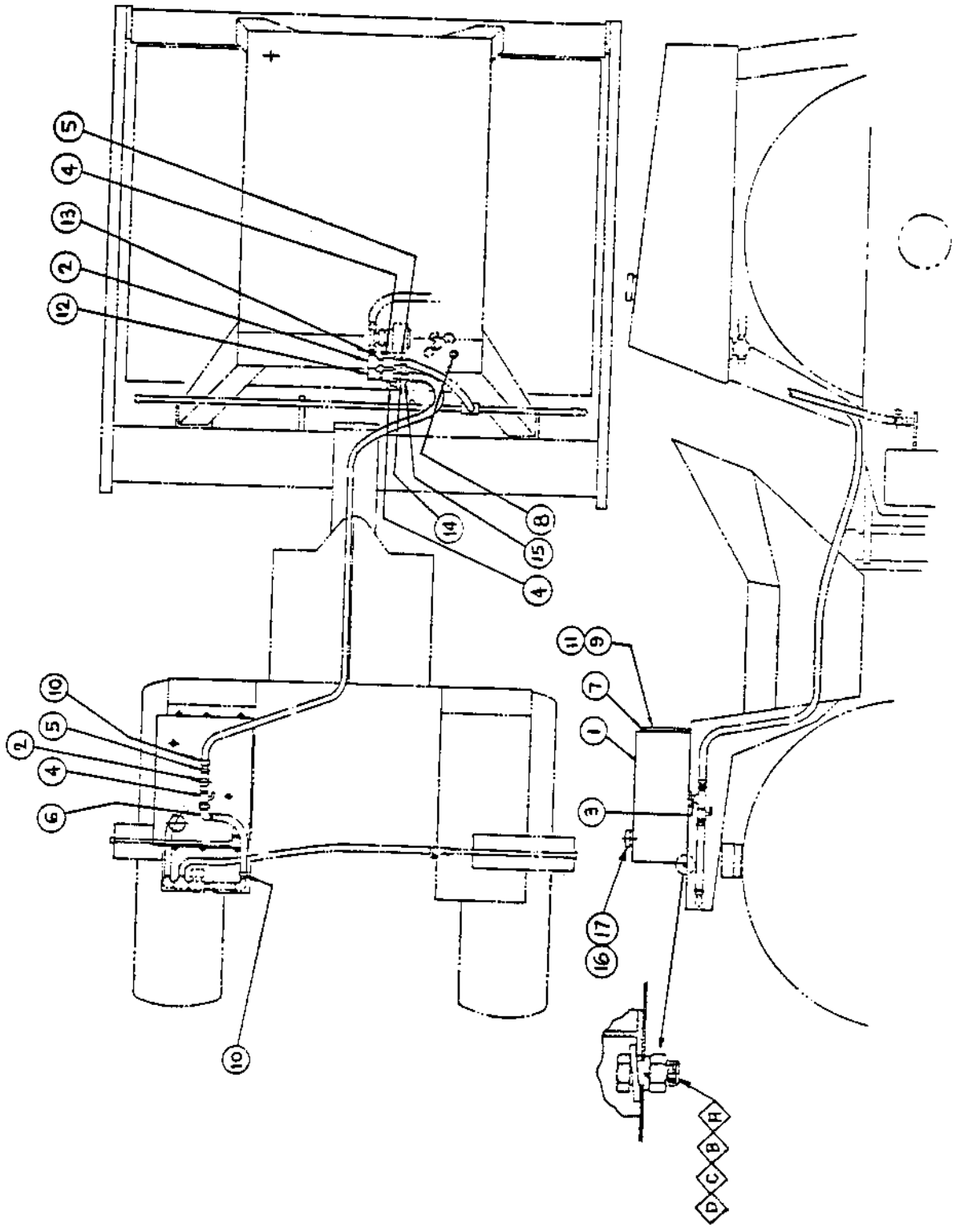

SCRAPER SUB ASSEMBLY
CA-25A

INDEX NUMBER	PART NUMBER	DESCRIPTION	QUANTITY
1	850347	Scraper Bracket	2
2	850348	Scraper Clamp	2
3	850357	Scraper-Rubber	2
4	850345	Scraper Mounting Bracket	4
5	850346	Scraper Mounting Bracket	4
A	502063	Capscrew HH	22
B	571005	Locknut Hex	22
C	502110	Capscrew HH	8
D	600010	Plain Washer	8
E	586045	Locknut	8

SCRAPER SUB ASSEMBLY
CA-25A

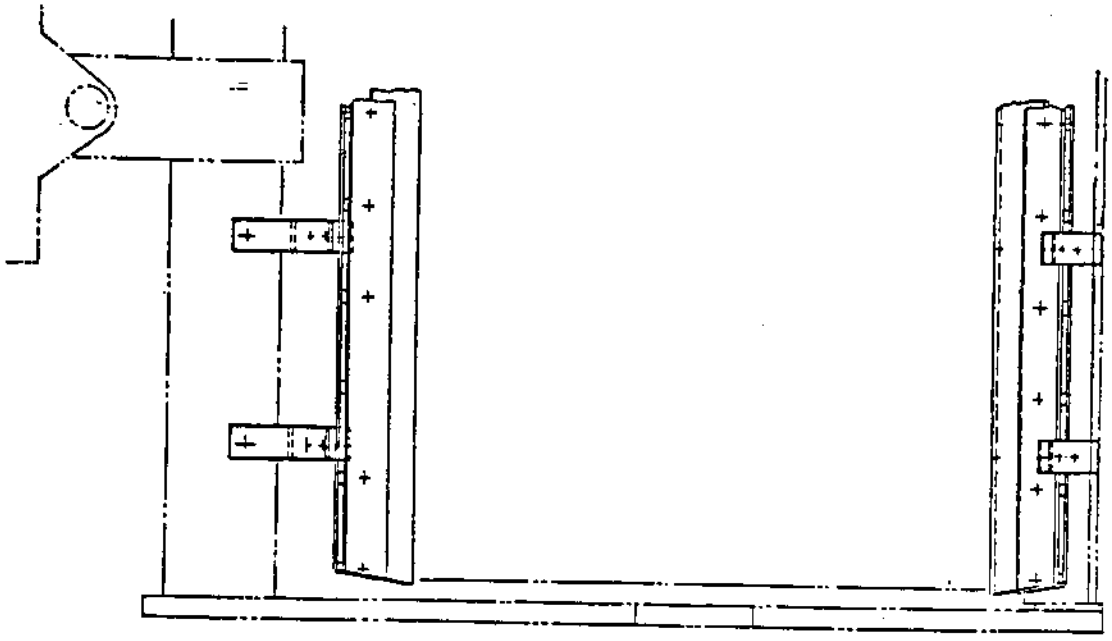

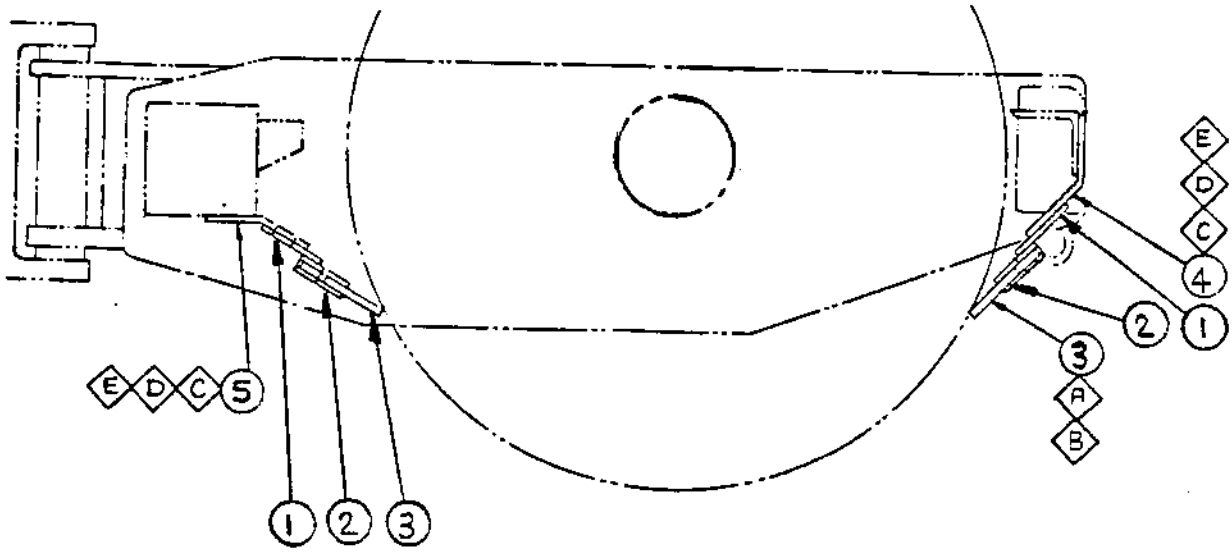

DECALS

CA-25, CA-25S, CA-25SD, CA-25D and CA-25PD

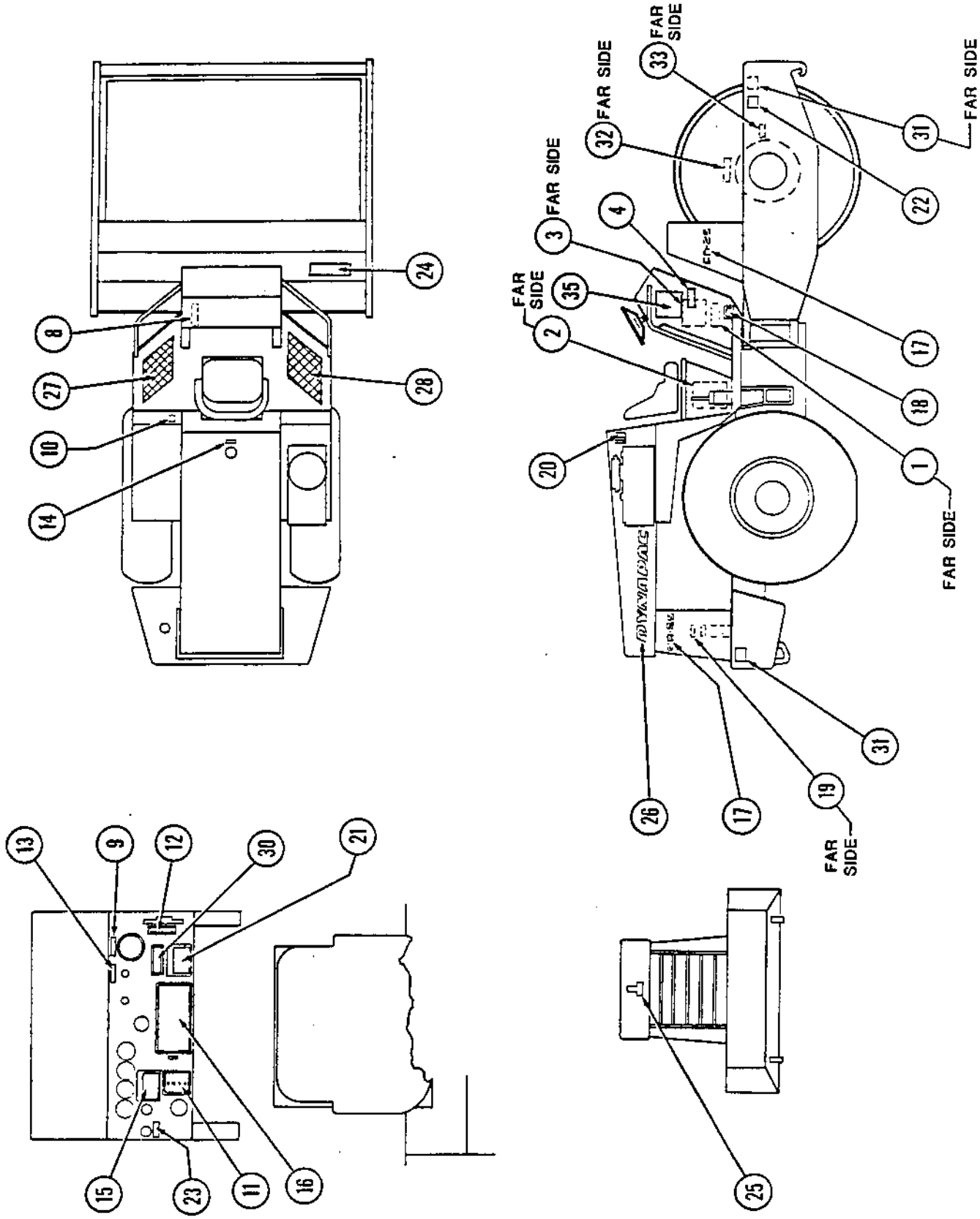
FAR SIDE
FAR SIDE
FAR SIDE

DECALS
CA-25

INDEX NUMBER	PART NUMBER	DESCRIPTION	QUANTITY
-	826123	Decal Kit	1
*1		Name Plate	1
*2	801458	Safety Precaution Plate	1
3		Towing Decal	1
4		Brake, Safety	1
8		Transmission Selector	1
9		Tachometer Speed	1
10		Vibration	2
11		Transmission Speed	1
12		Motion Control	1
13		Ignition Switch	1
14		Hydraulic Oil	1
15		Towing, Oil Temp, Tire Pressure	1
16		Operating Instructions	1
17		Identification	4
18		Warning	2
19		Diesel Fuel	1
20		Hydraulic Oil Level	1
21		Transmission Shift Warning	1
22		Drum Oil Level	1
23		Throttle	1
24		Lube Chart	1
25	80110807	Group Symbol	1
26	309100502	Dynapac Decal	2
27	825680	Safety Walk LH	1
28	825676	Safety Walk RH	1
30		Vibration Frequency	1
31		Tie Down & Blocking	2
32		Brake, Safety	1
35	826788	Plate, Operating Safety	1

NOTE: Decals are not sold separately but must be purchased as a Kit. Exceptions are Decals listed with a part number.

* Not included in Decal Kit.

DECALS

INDEX NUMBER	PART NUMBER (CA-25S)	PART NUMBER (CA-25SD)	DESCRIPTION	QUANTITY
-	826127	826389	Decal Kit	1
*1			Name Plate	1
*2	801458	801458	Safety Precaution Plate	1
3			Towing Decal	1
4			Brake, Safety	1
8			Transmission Selector	1
9			Tachometer Speed	2
10			Vibration	1
11			Transmission Speed	1
12			Motion Control	1
13			Ignition Switch	1
14			Hydraulic Oil	1
15			Towing, Oil Temp, Tire Pressure	1
16			Operating Instructions	1
17			Identification	4
18			Warning	2
19			Diesel Fuel	1
20			Hydraulic Oil Level	1
21			Transmission Shift Warning	1
22			Drum Oil Level	1
23			Throttle	1
24			Lube Chart	1
25	80110807	80110807	Group Symbol	1
26	309100502	309100502	Dynapac Decal	2
27	825680	825680	Safety Walk LH	1
28	825676	825676	Safety Walk RH	1
30			Vibration Frequency	1
31			Tie Down & Blocking	2
32			Oil Fill	1
33			Oil Level	1
35	826788	826788	Plate, Operating Safety	1

NOTE: Decals are not sold separately but must be purchased with a Kit. Exceptions are Decals listed with a part number.

* Not included in Decal Kit.

DECALS

INDEX NUMBER	PART NUMBER (CA-25D)	PART NUMBER (CA-25PD)	DESCRIPTION	QUANTITY
-	826125	826126	Decal Kit	1
*1			Name Plate	1
*2	801458	801458	Safety Precaution Plate	1
3			Towing Decal	1
4			Brake, Safety	1
8			Transmission Selector	1
9			Tachometer Speed	1
10			Vibration	2
11			Transmission Speed	1
12			Motion Control	1
13			Ignition Switch	1
14			Hydraulic Oil	1
15			Towing, Oil Temp, Tire Pressure	1
16			Operating Instructions	1
17			Identification	4
18			Warning	2
19			Diesel Fuel	1
20			Hydraulic Oil Level	1
21			Transmission Shift Warning	1
22			Drum Oil Level	1
23			Throttle	1
24			Lube Chart	1
25	80110807	80110807	Group Symbol	1
26	309100502	309100502	Dynapac Decal	2
27	825680	825680	Safety Walk LH	1
28	825676	825676	Safety Walk RH	1
30			Vibration Frequency	1
31			Tie Down & Blocking	2
32			Oil Fill	1
33			Oil Level	1
*34		82523536	Blade Position (For PDB Model Only)	1
35	826788	826788	Plate, Operating Safety	1

NOTE: Decals are not sold separately but must be purchased in a Kit. Exceptions are Decals listed with a part number.

* Not included in Decal Kit.

DECALS
CA-25A

INDEX NUMBER	PART NUMBER	DESCRIPTION	QUANTITY
-	826124	Decal Kit	1
*1		Name Plate	1
*2	801458	Safety Precaution Plate	1
3		Towing Decal	1
4		Brake, Safety	1
6		Water Pump	1
8		Transmission Selector	1
10		Vibration	1
11		Transmission Speed	1
13		Ignition Switch	1
14		Hydraulic Oil	1
15		Towing, Oil Temp, Tire Pressure	1
16		Operating Instructions	1
17		Identification	4
18		Warning	2
19		Diesel Fuel	1
20		Hydraulic Oil Level	1
21		Transmission Shift Warning	1
22		Drum Oil Level	1
23		Throttle	1
24		Lube Chart	1
25	80110807	Group Symbol	1
26	309100502	Dynapac Decal	1
27	825675	Safety Walk	4
29		Amplitude Control	1
30		Vibration Frequency	1
31		Tie Down & Blocking	2
34		Tire Pick-Up	1
36		Working Speed	1
37		Fuses	1
38		Water	2
39		Wet System	1
40	80110806	Group Symbol	1
41	826788	Plate, Operating Safety	1

NOTE: Decals are not sold separately but must be purchased in a Kit. Exceptions are Decals listed with a part number.

* Not included in Decal Kit.

DECALS
CA-25A

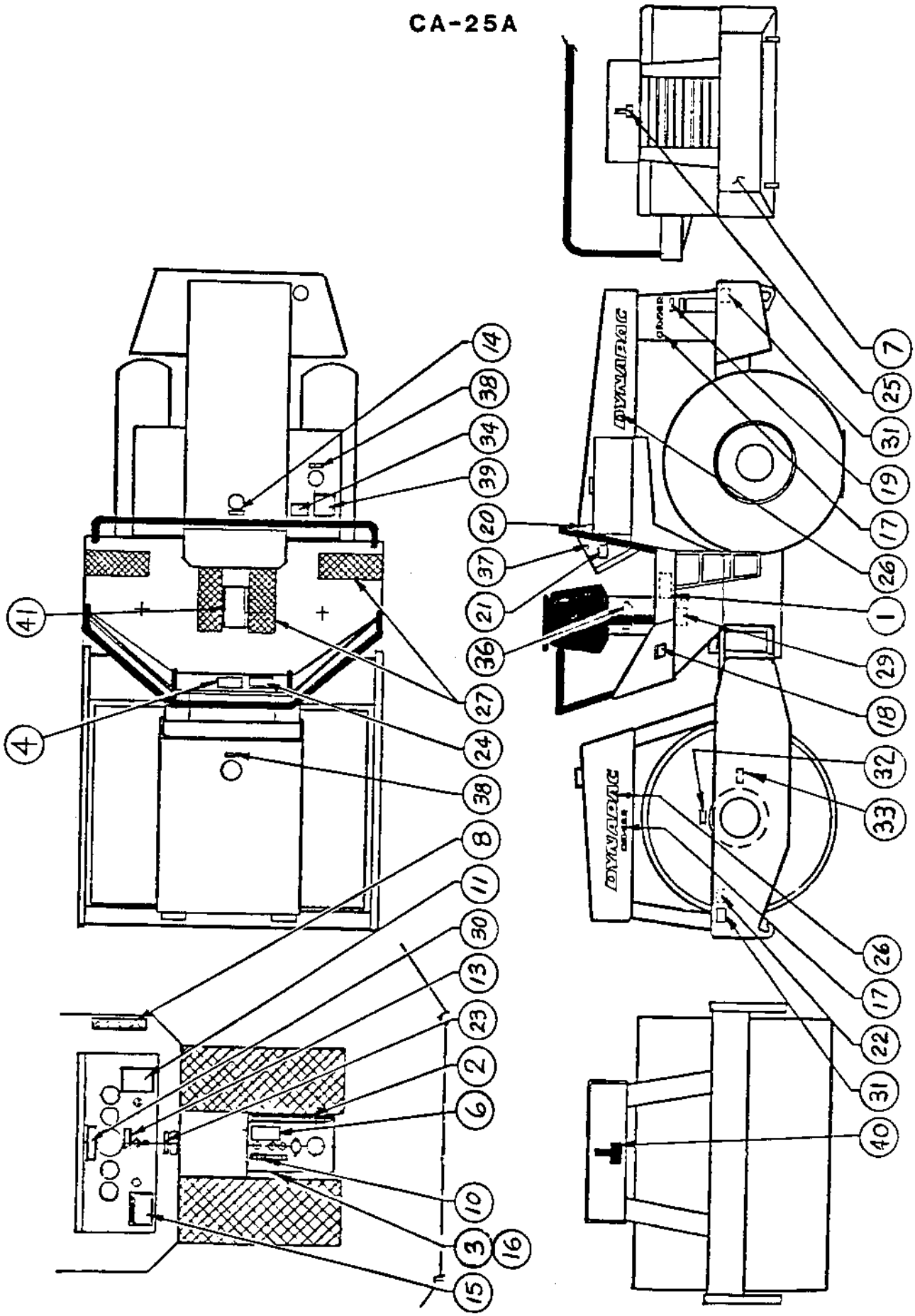

3 SPEED TRANSMISSION

INDEX NUMBER	PART NUMBER	DESCRIPTION	QUANTITY
-	801065	Transmission Assembly, 3 Speed	-
1	813804	Case	1
2	926336	Drain Plug, Magnetic	1
3	813479	Oil Level Plug	1
4	813658	Bearing, Counter Front	1
5	813596	Gear, Counter Lo	1
6	813659	Bearing, Counter Rear	1
7	813575	Snap Ring	2
8	813578	Gear, Counter, 2nd	1
9	813577	Gear, Counter Driven	1
10	*813579	Shaft Kit, (To S/N 704, 706 & 707)	1
--	814288	Main Shaft(From S/N 705, 708 & Up)	1
11	813580	Gear, Main Shaft 2nd(To S/N 704,706, 707)	1
--	814290	Gear, Main Shaft 2nd(From S/N 705,708 & Up)	1
12	416216	Bearing, Gear Bore (To S/N 704, 706 & 707)	32
--	814285	Bearing, Gear Bore(From S/N 705,708 & Up)	39
13	813581	Gear, Main Shaft Lo	1
14	813582	Washer, Lo Gear	1
15	813660	Bearing, Output	1
16	416213	Bearing, Pilot(To S/N 704, 706 & 707)	1
--	814284	Bearing, Pilot (From S/N 705, 708 & Up)	1
17	813583	Cover, Rear	1
18	813671	Oil Seal, Rear	1
19	813584	Gasket, Rear Cover	1
20	502035	Capscrew	16
21	813690	Washer, Dynaseal	6
22	813572	Drum, Brake	1
23	813571	Brake Flange	1
24	813803	Bolt, Brake Flange	4
25	604029	Lockwasher	4
26	572008	Nut	4
27	813594	Gasket, Flange	1
28	813667	Washer, Brake Flange	1
29	813672	O-Ring, Flange	1
30	813644	Nut, Brake Flange	1
31	630059	Cotter Pin	1
32	892574	Shift Cap Assembly	1
33	813805	Cap	1
34	813670	Oil Seal	1
35	813591	Lever, Inside	1
36	635034	Pin, Roll	1
37	813592	Lever, Shaft	1
38	813686	Pin, Roll	1
39	813589	Rail Shift	1
40	813590	Fork Assembly	1
41	893375	Fork	1

* Includes Parts to update modifications to Transmission.

Rev.2-25-05

INDEX NUMBER	PART NUMBER	DESCRIPTION	QUANTITY
42	813808	Plate Fork	2
43	NSS	Rivet	4
44	892559	Spring, Detent	1
45	813688	Ball, Detent	1
46	813685	Pin, Roll	2
47	NSS	Plug, Expansion	3
50	813595	Remote Lever	1
51	502037	Capscrew	1
52	604028	Lockwasher	13
53	NSS	Bushing, Reducing	1
54	813651	Breather	1
55	813593	Gasket, Cap	1
66	813585	Brake Band Anchor	1
67	813586	Brake Guide Bracket	1
68	813587	Brace Link Anchor	1
69	NSS	Capscrew	1
70	NSS	Lockwasher	6
71	NSS	Hex Nut	1
72	813893	Brake Band Assembly	1
73	813635	Band & Lining Assembly	1
74	813636	Anchor Clip Spring	1
75	813679	Anchor Capscrew	1
76	813637	Bolt, Brake Adj	1
77	813641	Spring, Brake Release	2
78	813610	Nut	2
79	813609	Lockwasher	1
80	813573	Screw, Fillester Head	1
81	813607	Nut	2
82	813608	Lockwasher	1
83	813681	Pin, Rod End	1
84	813640	Brace Link	1
85	813639	Cam Lever	2
86	813811	Cotter Pin	1
87	813680	Pin, Rod End	1
88	813638	Rod End	1
89	813810	Cotter Pin	1
90	813645	Clevis Pin	1
91	NSS	Capscrew, HH	5
92	813597	Front Gasket	1
93	813655	Input Gear (To S/N 704, 706 & 707)	1
--	814289	Input Gear (From S/N 705, 708 & Up)	1
94	813662	Input Bearing	1
95	813576	Snap Ring	1
96	813574	Snap Ring	1
97	813652	Coupling Assembly	1
98	813653	Adapter	1
99	813478	O-Ring (Not included in Assembly)	1

3 SPEED TRANSMISSION

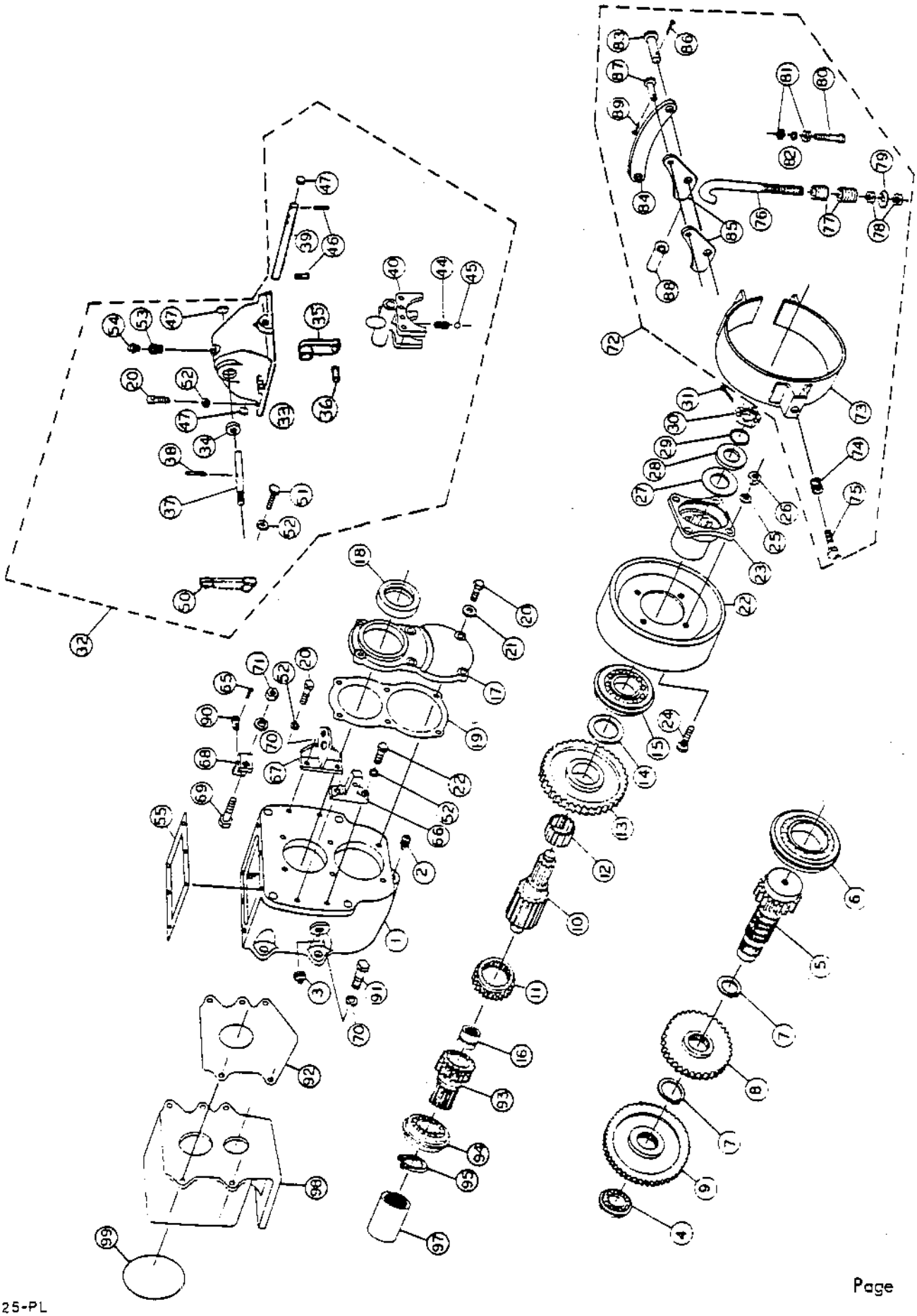

PUMP DRIVE

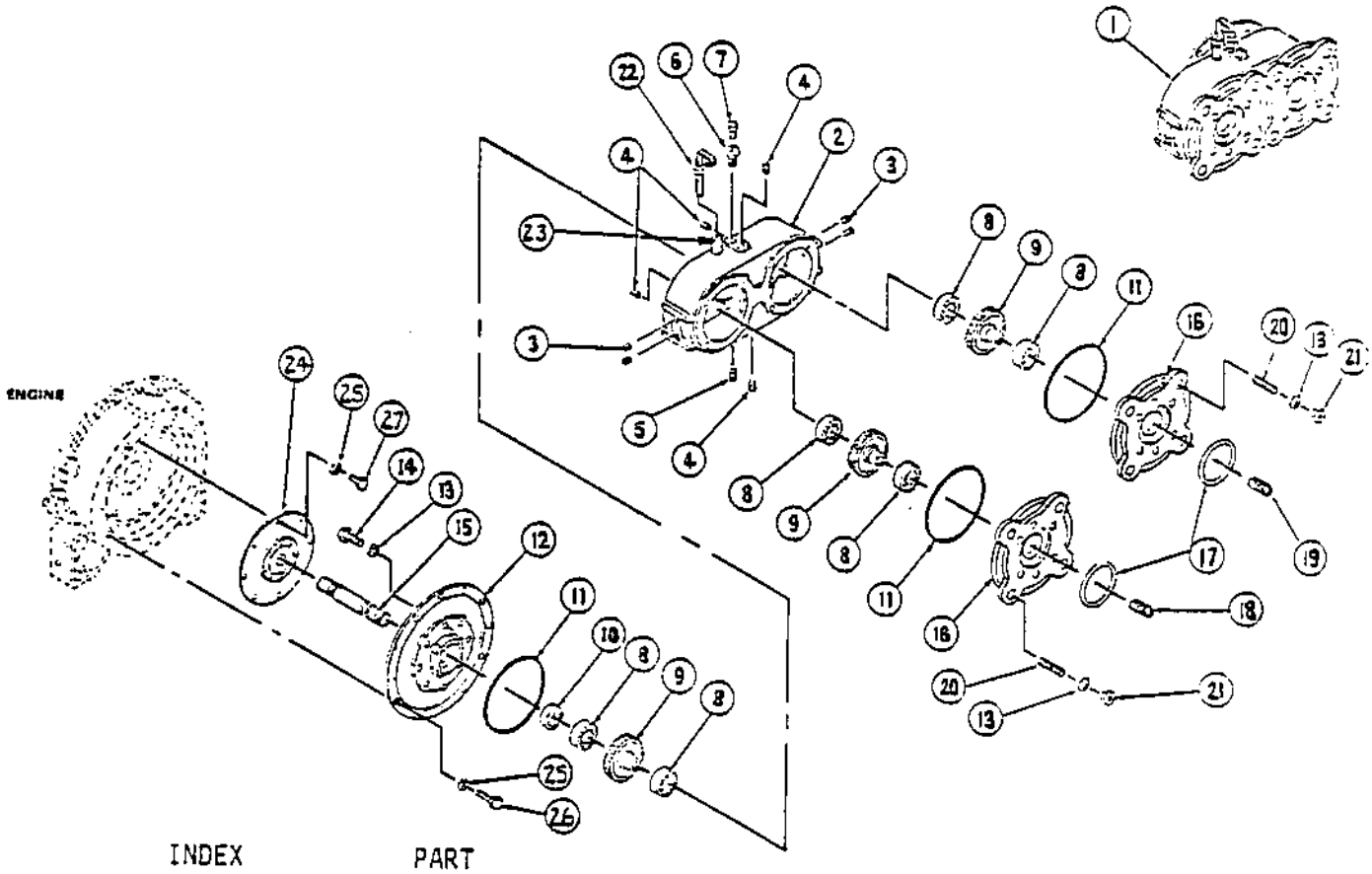

INDEX NUMBER	PART NUMBER	DESCRIPTION	QUANTITY
1	335566	Drive Assembly, Pump	1
2	813598	Housing, Double Pump	1
3	813898	Plug, Oil Level Check	4
4	813899	Plug, Magnetic	7
5	813900	Plug, Drain	1
6	813901	Bushing, Reducing	1
7	813651	Breather	1
8	813649	Bearing	6
9	813601	Gear	3
10	813650	Seal, Oil	1
11	892578	Seal	3
12	813600	Cover, Flywheel Housing SAE #2	1
13	813897	Starwasher	12
14	813895	Capscrew	4
15	813603	Shaft, Drive Gear	1
16	813599	Adapter, "C" Pump	2
17	813647	O-Ring, Pump "C"	2
18	813602	Sleeve, Adapter 13 X 13	1
19	813605	Sleeve, "B" Adapter 13 X 21	1
20	813809	Stud	8
21	813896	Nut	8
22	892575	Dipstick, Oil	1
23	892577	Tube, Dipstick	1
24	814275	Plate Assembly, Drive (Cat Engine)	1
--	480695	Plate Assembly, Drive (G.M. Engine)	1
25	604028	Lockwasher	20
26	502033	Capscrew, HH/HT	8
27	502036	Capscrew, HH	12

18 813605/001 LUVA ENTALHADA 13 X 14

TRACTION PUMP

INDEX NUMBER	PART NUMBER		DESCRIPTION	QUANTITY
-	335556		Pump, Traction (See Note)	1
-		801157	Pump, Traction (See Note)	1
1	813834		Hex Head Screw	4
2	813844		Washer	4
3	893073		Charge Pump Assy.	1
4	813633		Charge Pump Gasket	1
5	813630		Check Valve Assy.	2
5A	813886		Check Valve	2
5B	813614		"O" Ring	2
6	813838		End Cap Screw	3
7	813839		End Cap Screw	5
8	813846		Washer	8
9	480305	911056	End Cap	1
10	813880	481106	Shim	1 A/R
11	813862	481092	End Cap Gasket	1
12	813813	481077	Rear Bearing	1
13	813821		Pin	1
14	813867	911055	Valve Plate	1
15	813878	481105	Bearing Plate	1
16	813822		Pin	2
17	813613		"O" Ring	1
18	813872	481103	Pump Housing	1
19	813833		Hex Head Screw	7
20	813832		Hex Head Screw	2
21	813844		Washer	9
22	813816		Jam Nut	1
23	813847		Washer	1
24	335593		Control Handle	1
25	813888		Spacer	1
26	813820		Cotter Pin	1
27	813844		Washer	1
28	813889		Control Valve Assy.	1
29	813628		Orifice	1
30	813613		"O" Ring	3
31	813890		Pin	1
33	813634		Control Valve Gasket	1
34	813825		Plug	1
35	813826		Hex Head Plug	1
36	813617		"O" Ring	1
37	813835	481082	Hex Head Screw	6
38	813845	813846	Washer	6
39	813857	481086	Trunnion	2

TRACTION PUMP

INDEX NUMBER		PART NUMBER		DESCRIPTION	QUANTITY
40		813858		Shim	A/R
41		813819	481080	"O" Ring	2
42	480318	~~894020~~	894020	Trunnion Bearing	2
43		813863	481090	Drive Shaft	1
44		813815		Front Bearing	1
45		813885		Connecting Link	1
46		813830	480288	Retaining Ring	2
47		813823		Pivot Pin	1
48		480287	481168	Retaining Ring	4
49		813824	892978	Pin	2
50		813623	481093	Front Cover Gasket	1
51		813822		Pin	2
52		813861	481091	Front Cover	1
53		813846		Washer	12
54		813837		Hex Head Screw	12
55		813624		Seal Kit	1
56		813616		"O" Ring	2
57		813625		Seal Spring	6
58		813619		Groove Pin	1
59		813612		"O" Ring	1
60		813622		Seal Retainer	1
61		813621		Retaining Ring	1
62		813840	480289	Socket Head Screw	4
63		813850	480369	Sleeve Retainer	2
64		813828	480353	Plug	4
65		480301	893018	Servo Sleeve	2
66		813818	480342	"O" Ring	2
67		813817	480341	"O" Ring	2
68		813841	480359	Cap Screw	2
69		813843	480366	Washer	2
70		813860	480371	Spring Guide	2
71		813859	893039	Servo Spring	2
72		480303	893017	Servo Piston	2
73		813824	892978	Pin	2
74		813831		Retaining Ring	4
75		813849	481094	Servo Link	2
76		813875	481101	Pilot	1
77		813829	481081	Retaining Ring	1
78		813855	481089	Spring Retainer	1
79		813856		Spring Guide	1
80		480306	481083	Cylinder Block Spring	1
91		892974		O - RING	1
92		911468		COVER	1
93		813885		LINK	

TRACTION PUMP

INDEX NUMBER	PART NUMBER		DESCRIPTION	QUANTITY
81	813854	481088	Spring Seat	1
82	813853	481084	Retainer Spring	9
83	813851	480668	Pin	1
84	813874	911405	Cylinder Block Assy.	1
85	813866	481095	Retainer Guide	1
86	813870	481099	Slipper Retainer	1
87	*813873	*911406	Piston Assy.	9
88	813871	481096	Thrust Plate	1
89	813869	481097	Swashplate	1
90	893080	893080	Kit, Control Valve Spring	1
**	813626	813626	Shaft Seal Kit	1
***	893069	925596	Gasket Kit	1

NOTE: CA-25, CA-25A & CA-25S use 335556 pump.
CA-25D & CA-25PD to s/n 1533 use pump 335556; from s/n 1534 CA-25D & CA-25PD use pump 801157.

*For P/N 813873- Quantity of 9, For P/N 911406 Quantity of 3.
**Kit includes items 51 thru 61.
***Kit includes all gaskets and "O" rings less items 55 thru 61.

**** 893072 - GASKET & O-RING KIT (ITEMS 21 THRU 33) 1

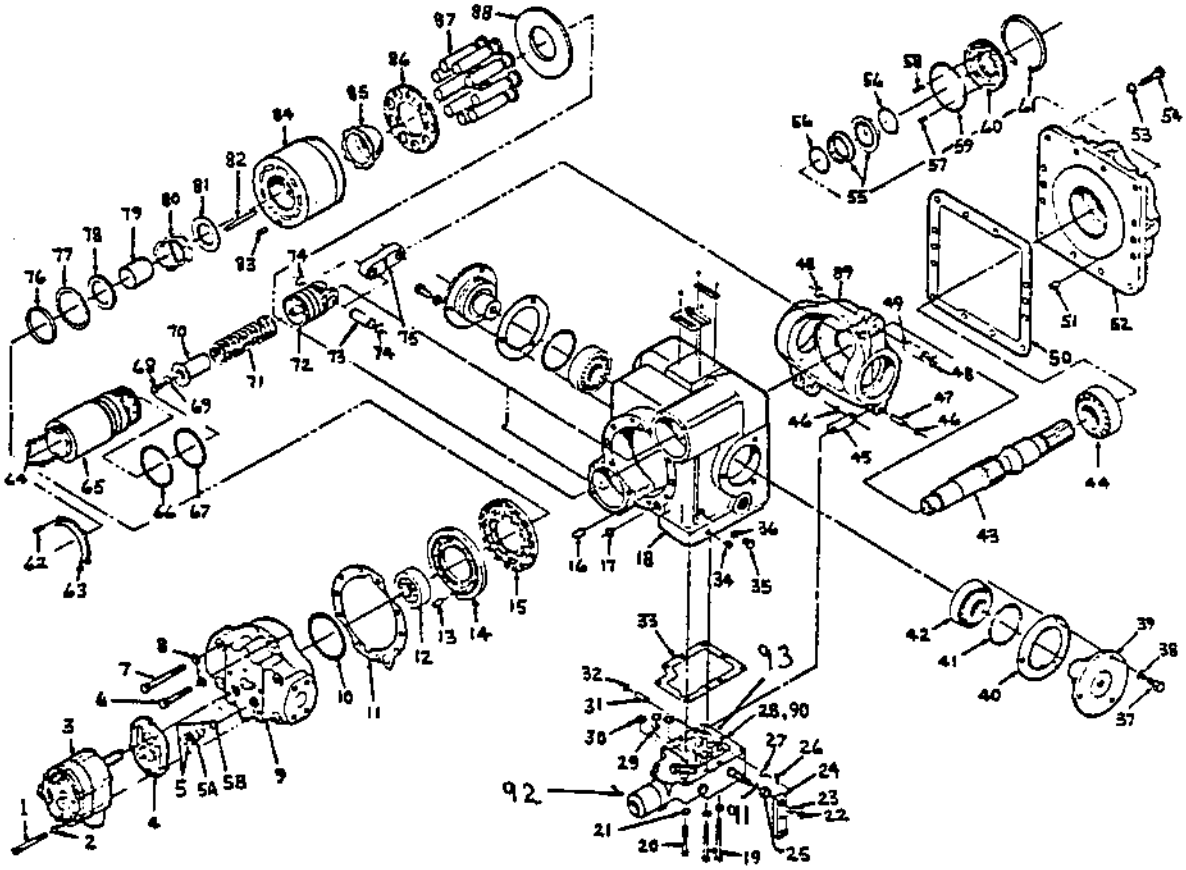

Rev. 2-25-85

TRACTION MOTOR, AXLE

INDEX NUMBER	PART NUMBER	DESCRIPTION	QUANTITY
-	335557	Motor, Complete	1
1	813836	Hex Head Screw	6
2	813845	Washer	6
3		Manifold Assy. (See Page 155A)	1
3A	813627	High Pressure Valve Assy.	2
4	813611	"O" Ring	1
5	813615	"O" Ring	2
6	813620	Back Up Ring	2
7	813839	Hex Head Screw	5
8	813838	Hex Head Screw	3
9	813846	Washer	8
10	813879	End Cap	1
11	813880	Shim	1 A/R
12	813862	End Cap Gasket	1
13	813813	Rear Bearing	1
14	813821	Pin	1
15	813868	Valve Plate	1
16	813878	Bearing Plate	1
17	813875	Pilot	1
18	813829	Retaining Ring	1
19	813855	Spring Retainer	1
20	813856	Spring Guide	1
21	480306	Cylinder Block Spring	1
22	813854	Spring Seat	1
23	813851	Pin	1
24	813874	Cylinder Block Assy.	1
25	813853	Retainer Spring	9
26	813866	Retainer Guide	1
27	813864	Drive Shaft	1
28	813870	Slipper Retainer	1
29	813873	Piston Assembly	9
30	813876	Swashplate	1
31	813815	Front Bearing	1
32	813822	Pin	2
33	813827	Hex Head Plug	1
34	813618	"O" Ring	1
35	813865	Motor Housing	1
36	813881	Nameplate	1
37	480291	Drive Screw	2
38	813821	Pin	1

TRACTION MOTOR, AXLE

INDEX NUMBER	PART NUMBER	DESCRIPTION	QUANTITY
39	813825	Pipe Plug	1
40	813624	Seal	1
41	813626	Seal Kit (Incl. Ref.#40,42,43,44)	1
–	813616	"O" Ring	2
–	813625	Spring Seal	6
–	813612	"O" Ring	1
42	813619	Groove Pin	1
43	813622	Seal Retainer	1
44	813621	Retaining Ring	1

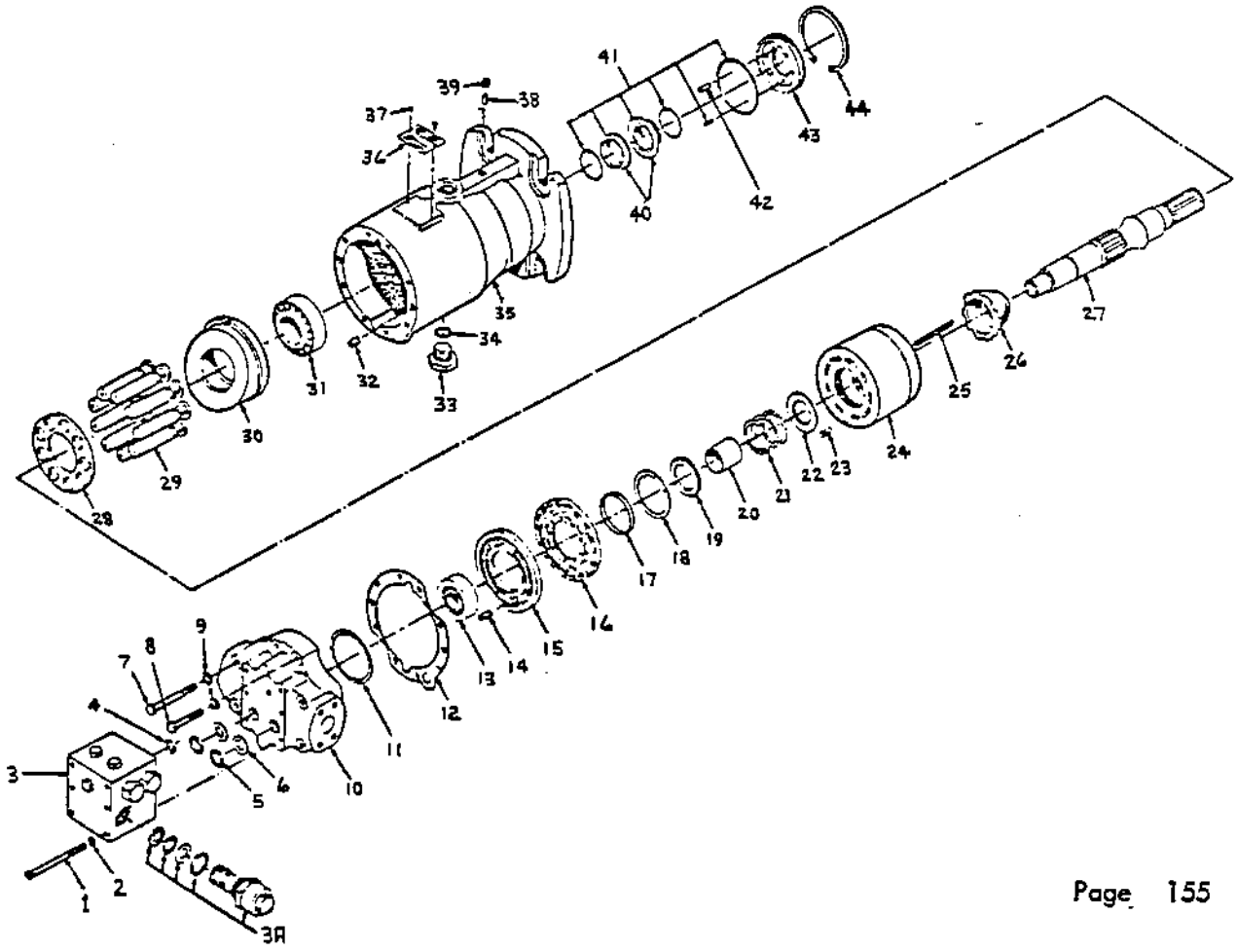

MANIFOLD VALVE ASSEMBLY

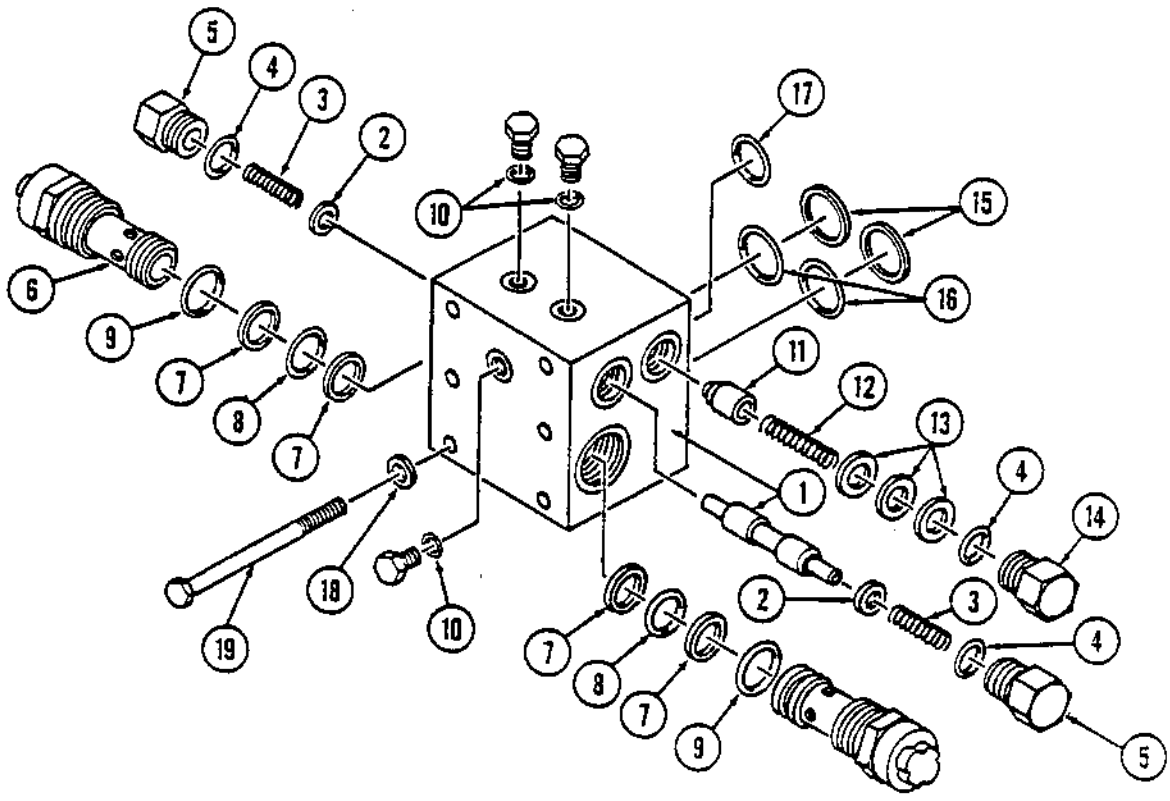

INDEX NUMBER	PART NUMBER	DESCRIPTION	QUANTITY
-	480204	Valve, Manifold Assembly	1
1	NSS	Housing & Shuttle Assembly	1
2	480367	Washer	2
3	480407	Spring, Shuttle Valve	2
4	813618	O-Ring	3
5	480408	Plug, Hex	2
6	813627	Valve, High Pressure Relief	2
7	480355	Ring, Back-Up	2
8	480344	O-Ring	1
9	480348	O-Ring	1
10	813617	O-Ring	3
11	233194	Valve, Charge Relief	1
12	911068	Spring, Charge Relief	1
13	480402	Shims	3
14	480408	Plug, Hex	1
15	813620	Ring, Back-Up	2
16	813615	O-Ring	2
17	813611	O-Ring	1
18	813845	Washer, Plain	6
19	813836	Screw, HH Cap	6

DRUM DRIVE MOTOR
CA-25D, CA-25PD (TO S/N 1533)

INDEX NUMBER	PART NUMBER TO S/N 1158	PART NUMBER FROM S/N 1159 TO 1533	DESCRIPTION	QUANTITY
-	*801063	801101	Motor, Complete	1
A		892355	Motor Case	1
B		814188	Front Cover	1
W		814213	Front Bearing	1
V		814212	Rear Bearing	1
D		814170	Cylinder Head	5
P		814185	Piston Seal Backing Ring	5
Q		814184	Piston Seal Ring	5
M		814182	Con Rod Retaining Ring	2
BK		814189	Shim Plate	1
AF		911132	Plastic Shim .002"	A/R
-		911133	Plastic Shim .005"	A/R
-		911134	Plastic Shim .010"	A/R
AG		893468	Steel Shim .032" Thick	A/R
AA		892656	Shaft Seal	1
AC		814195	"O" Ring - Front Cover	1
Z		893464	"O" Ring - End Cap	5
BP		481073	"O" Ring - Shim Plate	1
AR		892623	S.H.C.S. "Nyloc" - Shim Plate Front Cover	10
AM		814208	S.H.C.S. - Cylinder Head	50
AI		814196	Drain Plug	2
BC		163119	Bonded Seal	3
AZ		892815	Plastic Plug	1
CP		892810	Male Stud Coupling 3/4" O.D.	1
AU		892826	Name Plate	1
G		893467	Crankshaft Assembly	1
AW		891848	Key	1
AY		480616	Nut	1
-	892882	893383	Valve Assembly Complete	1
C	814181	893382	Valve Housing	1
I	481065	892651	Valve Spool	1
J	893470	893471	Valve End Cap	1
R	893472	893473	Valve Seal Ring	12
K	814186	481061	Oldham Coupling	1
Z	893464	892660	"O" Ring - End Cap	1
Y	814202	814202	"O" Ring - Valve Face Ports	5
AE	813797	814202	"O" Ring - Inlet/Output Ports	2
AB	814210	814210	"O" Ring - Spigot	1
AO	814207	911580	S.H.C.S. - Valve End Cap	4
AK	814206	892658	S.H.C.S. - Valve Mounting	5
-	893466		Piston Sub-Assembly Complete	5

$ 16.20.00

Dynapac Ltd.

TO: ALL DYNAPAC "B" DEALERS

ATT: PARTS MANAGER / SERVICE MANAGER

FROM: MIKE CADDEN, PARTS MANAGER

DATE: NOVEMBER 16, 1976. REVISION OF BULLETIN # 12 DATED APRIL 1, 1976.

SUBJECT: DRUM DRIVE MOTOR
MODELS CA15, CA25, CC42

THERE HAS BEEN A DESIGN CHANGE ON THE STAFFA DRUM DRIVE MOTORS ON THE ABOVE MODELS. THE ORIGINAL MOTOR WAS LISTED AS PART# 801063. THE NEW MOTOR IS PART #801101. THE TWO ARE NOT INTERCHANGEABLE DUE TO THE HOSE CONNECTIONS AT THE MOTOR. SHOULD A MOTOR CHANGE BE REQUIRED, WE SUGGEST THE FOLLOWING:

1. WE HAVE A SUPPLY OF REBUILT # 801063 MOTORS IN STOCK AND RECOMMEND AS AFIRST CHOICE FOR A REPLACEMENT. THIS DOES NOT ENTAIL THE PURCHASE OF ADDITIONAL PARTS.

2. IF A COMPLETE CHANGEOVER IS DESIRED, THE CHART BELOW OUTLINES THE PARTS REQUIRED. THE SERIAL NUMBER CUT-OFF OF THE ORIGINAL # 801063 MOTOR IS 15CA441, 25CA1158 AND 42CC309.

PART #	DESCRIPTION	MODEL CA15 QUANTITY	MODEL CA25 QUANTITY	MODEL CC42 QUANTITY
801101	MOTOR	1	1	1
1040-20-12	ADAPTER	2	2	2
815089-36	HOSE	1	--	--
815089-37	HOSE	1	--	--
CA1403-7	HOSE	--	2	--
842127-39	HOSE (F.D)	--	--	1
842127-40	HOSE (F.D)	--	--	1
842127-38	HOSE (R.D)	--	--	2

YOURS TRULY

Michael Cadden

MIKE CADDEN
PARTS MANAGER,
MC/MB
ENCL.

DYNAPAC

Address
5340 MAINGATE DR.
MISSISSAUGA, ONT.
L4W 1R8

Telephone
AREA CODE 416
625-4784

Telex
06-961104
DYNTOR

DRUM DRIVE MOTOR
CA-25D, CA-25PD (To S/N 1533)

INDEX NUMBER	PART NUMBER	DESCRIPTION	QUANTITY
E	481067	Piston	5
F	893463	Con Rod	5
N	481069	Restrictor Screw	5
O	893469	Piston Half Retaining Ring	10
S	814209	Circlip	5
AN	481064	FILTER	5

* Motor 801063 is no longer available, for complete motor replacement use p/n 801101 plus 2 adapters p/n 334441 and 2 hose assemblies p/n 333567607.

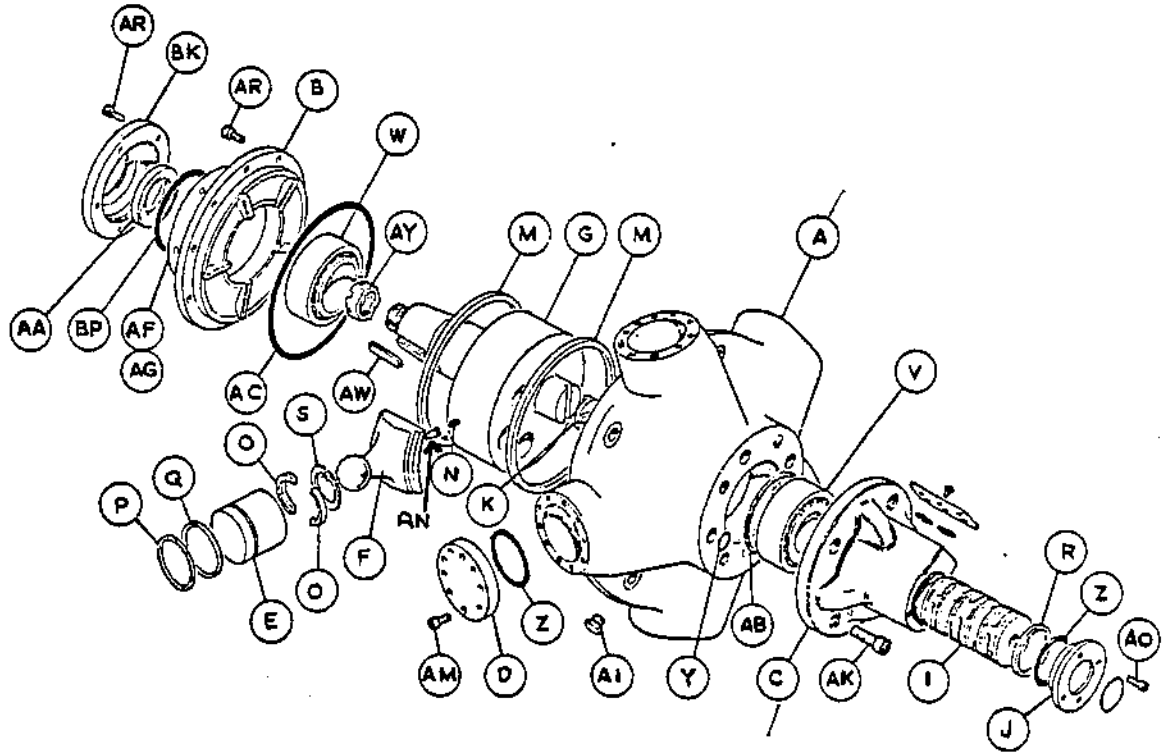

DRUM DRIVE MOTOR
CA-25D, CA-25PD (FROM S/N 1534)

INDEX NUMBER	PART NUMBER	DESCRIPTION	QUANTITY
-	801144	Motor, Complete	1
7	813839	Hex Head Screw	5
8	813838	Hex Head Screw	3
9	813846	Washer	8
10	911061	End Cap	1
11	813880	Shim	A/R
12	813862	End Cap Gasket	1
13	813813	Rear Bearing	1
14	813821	Pin	1
15	893010	Valve Plate	1
16	813878	Bearing Plate	1
17	813875	Pilot	1
18	813829	Retaining Ring	1
19	813855	Spring Retainer	1
20	813856	Spring Guide	1
21	480306	Cylinder Block Spring	1
22	813854	Spring Seat	1
23	813851	Pin	1
24	813874	Cylinder Block Assembly	1
25	911060	Retainer Spring	6
26	813866	Retainer Guide	1
27	911063	Drive Shaft	1
28	813870	Slipper Retainer	1
29	813873	Piston	9
30	813876	Swashplate	1
31	813815	Front Bearing	1
32	813822	Pin	2
33	813827	Hex Head Plug	1
34	813618	"O" Ring	1
35	813865	Motor Housing	1
36	813881	Nameplate	1
37	480291	Drive Screw	2
38	813821	Pin	1
39	813825	Pipe Plug	1
40	813626	Seal Kit(Inc. Item 41, 42, 43, 44	1
41	813624	Seal	1
—	813616	"O" Ring	2
—	813625	Spring Seal	6
—	813612	"O" Ring	1

DRUM DRIVE MOTOR
CA-25D, CA-25PD (FROM S/N 1534)

INDEX NUMBER	PART NUMBER	DESCRIPTION	QUANTITY
42	813619	Groove Pin	1
43	813622	Seal Retainer	1
44	813621	Retaining Ring	1

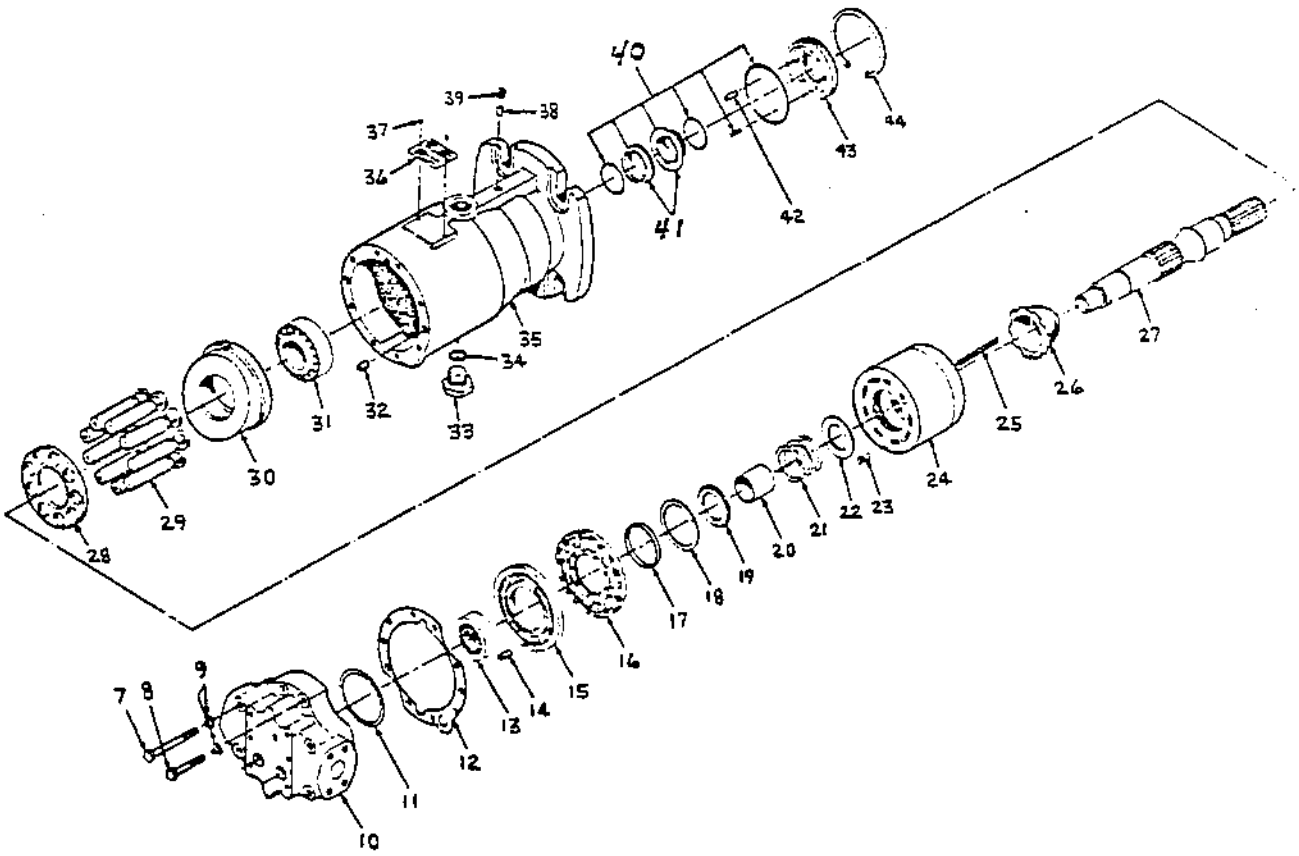

VIBRATION MOTOR

INDEX NUMBER	PART NUMBER		DESCRIPTION	QUANTITY
-	*335553	**335756	Motor, Complete	1
1		813902	Shaft End Cover	1
2		813906	Roller Bearing	2
3		813661	Ring Seal	1
4		813676	Lip Seal	1
5		813674	Bearing	1
6		813678	Snap Ring	1
7		480499	Check Assembly	2
8		813910	Plug	1
9		813643	Seal Retainer	1
15		813923	Port End Cover	1
16		813661	Ring Seal	1
17		813906	Roller Bearing	2
22	813657	814067	Gear Housing	1
23		813683	Thrust Plate	2
24		813669	Gasket Seal	2
25		813646	Pocket Seal	12
26		813914	Closure	2
27	813905	814068	Driven Gear & Shaft	1
28		813916	Capscrew	4
29		813915	Washers	4

**CA-25, CA-25D, CA-25PD & CA-25S use motor P/N 335553.
**CA-25A use motor P/N 335756.

VIBRATION MOTOR
CA-25S & CA-25PD (FROM S/N 1534)

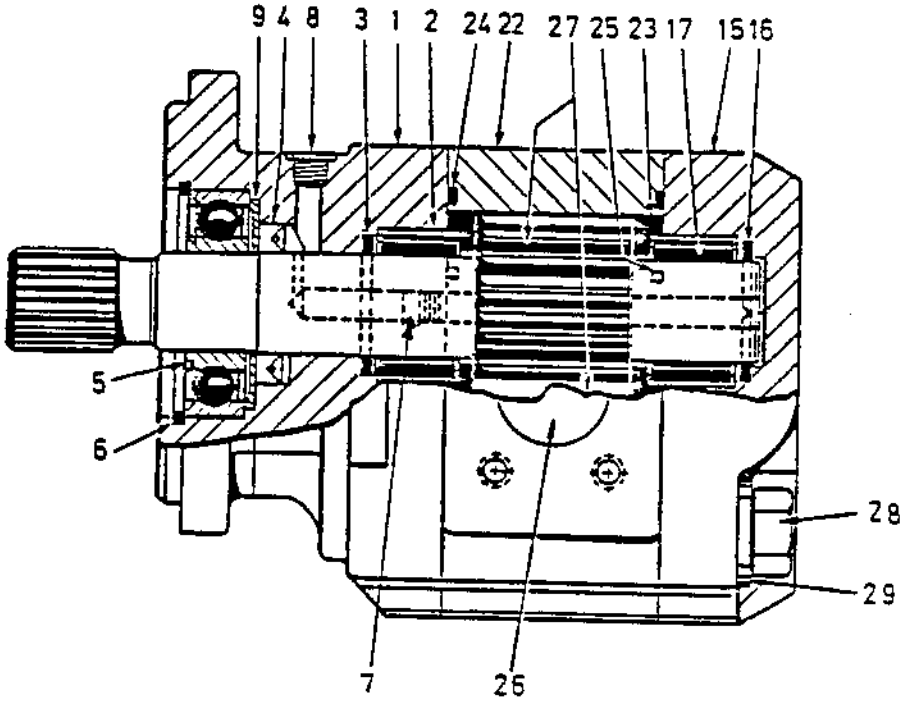

INDEX NUMBER	PART NUMBER	DESCRIPTION	QUANTITY
-	801160	Motor, Complete	1
1	813902	Shaft End Cover	1
2	813906	Roller Bearing	2
3	813661	Ring Seal	1
4	813676	Lip Seal	1
5	813674	Bearing	1
6	813678	Snap Ring	1
7	480499	Check Assembly	2
8	813910	Plug	1
9	813643	Seal Retainer	1
15	813923	Port End Cover	1
16	813661	Ring Seal	1
17	813906	Roller Bearing	2
22	891457	Gear Housing	1
23	813683	Thrust Plate	2
24	813669	Gasket Seal	2
25	813646	Pocket Seal	12
26	813914	Closure	2
27	891498	Driven Gear & Shaft Set	1
28	813916	Capscrew	4
29	813915	Washers	4

VIBRATION & STEERING PUMP

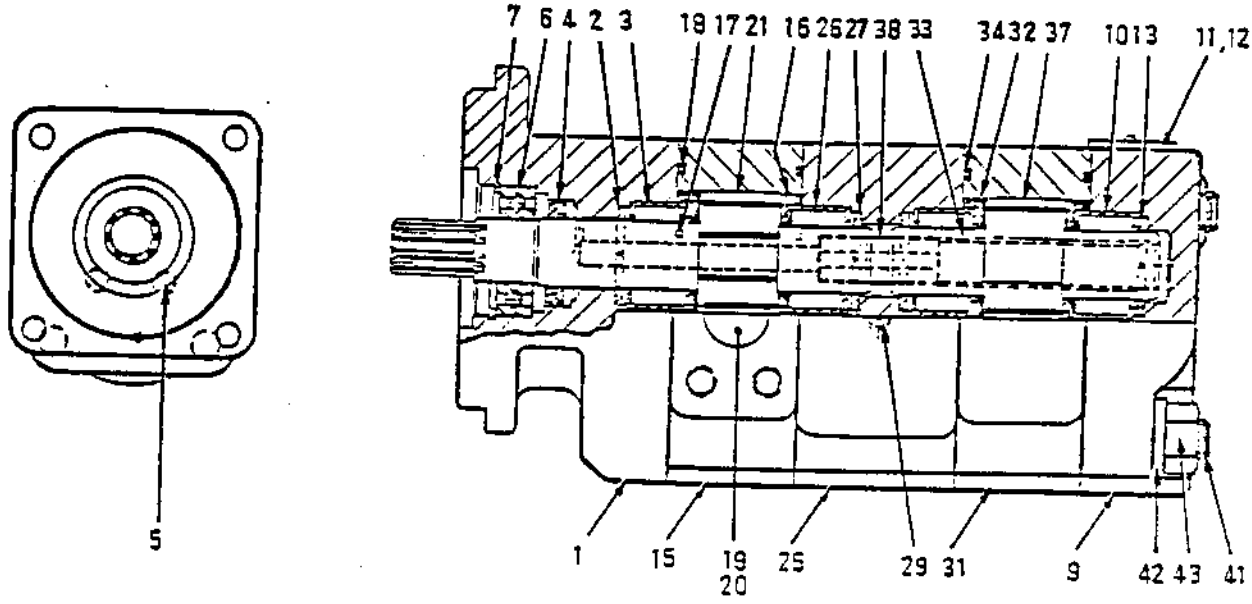

INDEX NUMBER	PART NUMBER		DESCRIPTION	QUANTITY
-	*335565	**801159	Assembly, Vibration & Steering Pump	1
1		813904	Shaft End Cover	1
2		813656	Ring Seal	1
3		813921	Roller Bearing	2
4		813919	Double Lip Seal	1
5		813907	Plug	1
6		813673	Bearing, Ball	1
7		813677	Ring, Retainer	1
9		813920	Port End Cover	1
10		813921	Roller Bearing	2
11		813918	Drive Screw	2
12		813891	Nameplate	1
13		813656	Ring Seal	1
15	813665	891564	Gear Housing	1
16	813642		Thrust Plate	2

VIBRATION & STEERING PUMP

INDEX NUMBER	PART NUMBER		DESCRIPTION	QUANTITY
17		813646	Pocket Seal	12
18		813668	Gasket Seal	2
19		813914	Closure	1
20		813913	Closure	1
21	813894	891120	Gear & Shaft Set	1
25		813909	Bearing Carrier	1
26		813921	Roller Bearing	4
27		813656	Ring Seal	2
28		813912	Closure	1
29		813911	Plug	1
31		813664	Gear Housing	1
32		813642	Thrust Plate	2
33		813646	Pocket Seal	12
34		813668	Gasket Seal	2
37		813908	Gear Set	1
38		813922	Shaft	1
41		813892	Stud	4
42		813915	Washer	4
43		813917	Nut	4

*CA-25, CA-25A & CA-25D use pump p/n 335565, and CA-25PD to s/n 1533.
**CA-25S and CA25PD from S/N 1534 to S/N 3123 used Pump P/N 801159. Pump 801159 is no longer available and has been replaced with Pump 802303. When replacing Pump 801159 with 802303,Hose Kit P/N 826737 is required for initial installation. See Detail A on page 85.

For S/N's 3124 & Up See Pages 163A & 163B.

VIBRATION & STEERING PUMP

(From S/N 3124 and Up)

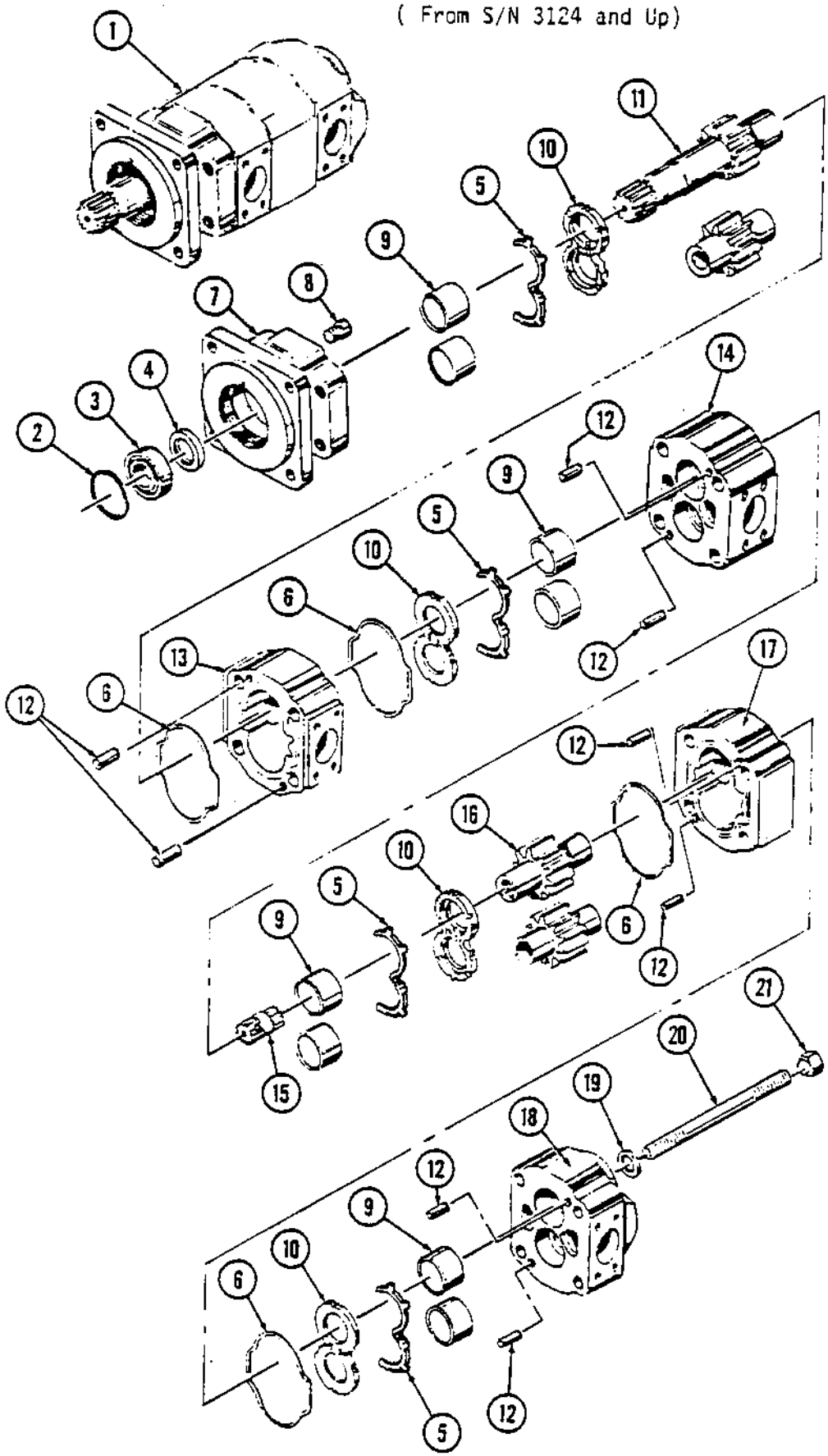

VIBRATION & STEERING PUMP

ITEM NUMBER	PART NUMBER	DESCRIPTION	QUANTITY
1	802303	Assembly, Vibration & Steering Pump	1
2	813677	Ring, Retainer	1
3	813673	Bearing, Ball	1
-	924674	Kit, Vib. & Steering Pump Seal	1
4	813919	Seal, Lip	1
5	924663	Seal, Channel	4
6	813668	Seal, Gasket	4
7	924659	Cover, Shaft End	1
8	813907	Plug	2
9	924660	Bushing	8
10	924662	Plate, Thrust	4
11	924664	Set, Gear	1
12	911650	Pin, Dowel	8
13	924661	Housing, Gear	1
14	924665	Carrier, Bearing	1
15	924671	Shaft, Connecting	1
16	924672	Set, Gear	1
17	924667	Housing, Gear	1
18	924659	Cover, Port End	1
19	813915	Washer	4
20	924673	Stud	4
21	813917	Nut	4

VIBRATION CONTROL VALVE CA-25

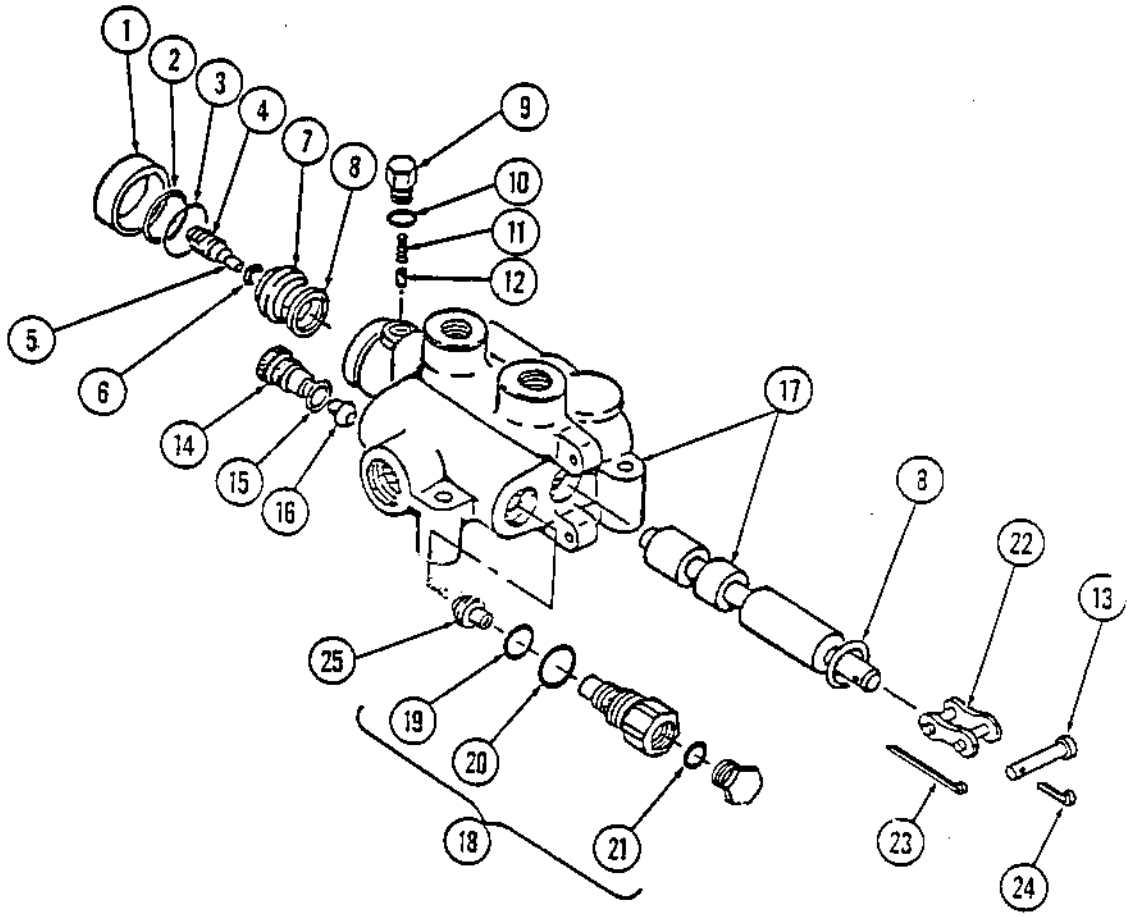

VIBRATION CONTROL VALVE CA-25

INDEX NUMBER	PART NUMBER	DESCRIPTION	QUANTITY
-	335564	Valve Complete	1
1	814090	Cover Rubber	1
2	813086	Snap Ring	1
3	814085	Disc	1
4	814094	Spring	1
5	814082	Bolt	1
6	814127	Lockwasher	1
7	814128	Detent Sleeve	1
8	814089	Seal Ring	2
9	NSS	Plug	1
10	814092	Washer	1
11	814091	Spring	1
12	814093	Pin	1
13	814083	Clevis Pin	1
-	814133	Kit, Check Plug	1
14	NSS	Plug	1
15	NSS	O-Ring	1
16	NSS	Valve Cone	1
17	NSS	Housing & Spindle	1
18	891745	Cartridge, Relief WS (2000 PSI)	1
-	911581	Kit, Seal	1
19	NSS	Seal	1
20	NSS	Seal, O-Ring	1
21	NSS	Cap, O-Ring	1
22	813714	Link, Conn.	1
23	813714	Cotter Pin	1
24	814077	Cotter Pin	1
25	814132	Cone, Valve	1

VIBRATION CONTROL VALVE
(For CA-25A's Up To S/N 732 See Page 205-206)

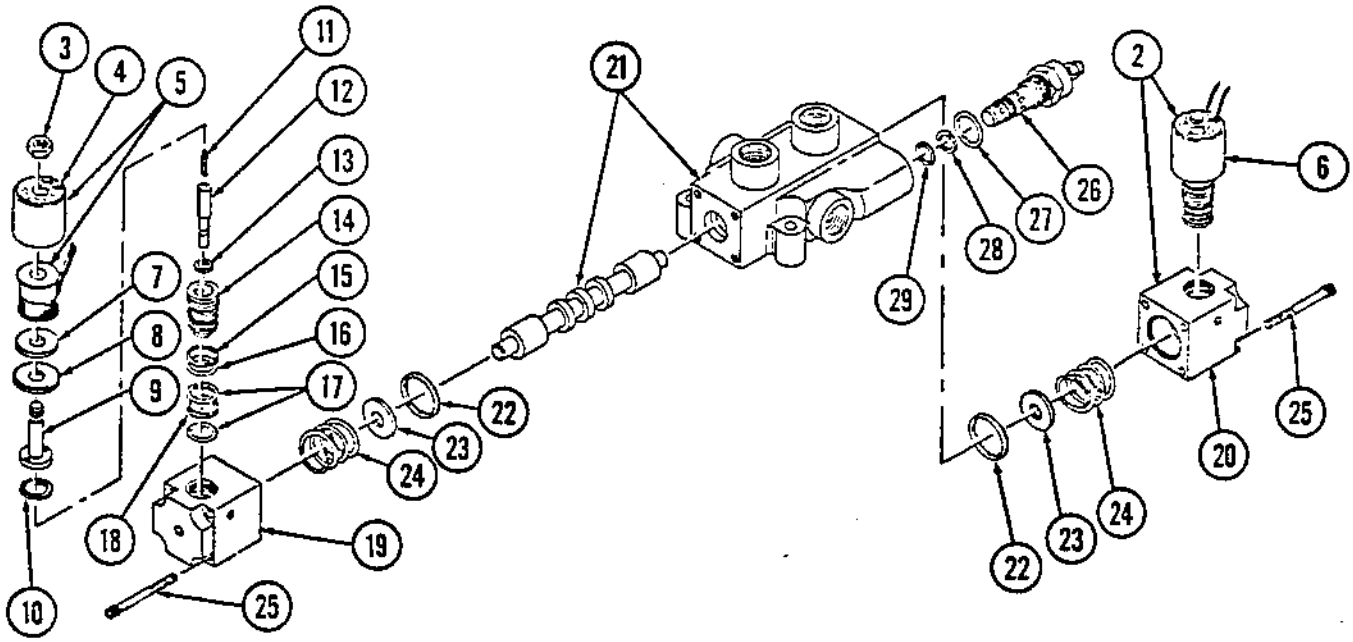

INDEX NUMBER	PART NUMBER	DESCRIPTION	QUANTITY
1	337510	Valve Assembly, (Includes the Following)..	2
2	975048	Solenoid & Block Assembly,(incl. 3-20).	2
3	NSS	Hex Nut.....	1
4	NSS	Nameplate.....	1
5	NSS	Housing / Coil.....	1
6	975049	Solenoid Assembly.....	1
7	NSS	Gasket, Housing.....	1
8	NSS	Washer, Housing.....	1
9	NSS	Sleeve Assembly.....	1
10	NSS	Seal, Flange.....	1
11	NSS	Spring, Piston.....	1
12	NSS	Spool & Piston.....	1
13	NSS	Spacer.....	1
14	NSS	Body, Solenoid Cartridge.....	1
15	481116	Seal, Upper Back-up.....	1
16	481113	O-Ring, Upper Cartridge.....	1
17	481114	O-Ring, Lower Cartridge.....	2
18	481115	Seal, Lower Back-up.....	1
19	NSS	Block, Solenoid, Right Side.....	1
20	NSS	Block, Solenoid, Left Side.....	1
21	NSS	Body, Valve & Spool.....	1
22	481124	O-Ring.....	2
23	481111	Washer, Stop.....	2
24	481112	Spring, Centering.....	2
25	481122	Capscrew, HH.....	8
26	333112	Valve Assembly, Relief, (2000 PSI).....	1
27	481125	O-Ring.....	1
28	481121	Washer, Back-up.....	1
29	481123	O-Ring.....	1

STEERING CYLINDER

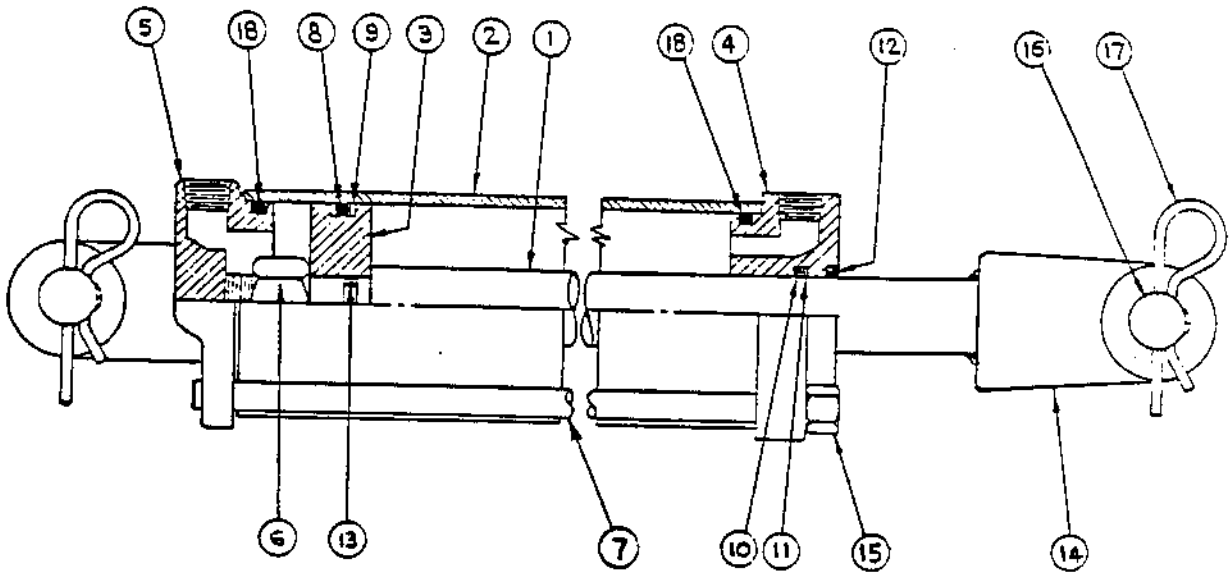

INDEX NUMBER	PART NUMBER		DESCRIPTION	QUANTITY
	To S/N 254	From S/N 255		
-	(* See Note)	335560	Cylinder Assembly...	2
**1	813558	***813540	Piston Rod	1
-		****891827	Piston Rod Assy. (Welded Clevis)	1
2	813538	813538	Tube	1
**3	813559	813539	Piston	1
4	813541	813541	Gland	1
5	813772	813772	Butt	1
**6	813553	813543	Hex Nut	1
7	813567	813773	Tie Rod	4
8	*813546	*813546	O-Ring	1
9	*813549	*813549	B/U Washer	2
10	*813545	*813545	O-Ring	1
11	*813548	*813548	B/U Washer	1
12	*813550	*813550	Wiper	1
13	*813544	*813544	O-Ring	1
**14	416112	***416046	Clevis Assembly	1
15	813552	892303	Hex Nut	4
16	635022	635022	Clevis Pin	2
17	635020	635020	Hairpin Clip	4
18	*813547	*813547	O-Ring	2
		813551	Seal Kit	

*Note: Parts available On Cylinder to S/N 254, For Complete Cylinder Order 335560
**Items not interchangeable between the two cylinders.
***To s/n 1542
****From s/n 1543

STEERING VALVE ASSEMBLY
(EARLIER VALVES WITH VENDOR TAG NO. YS-11 OR 12)

INDEX NUMBER	PART NUMBER	DESCRIPTION	QUANTITY
1	335567	Valve, Steering, Assembly	1
2	814155	Screw, Cap	7
3	481273	Cap, End	1
4	814160	Gerotor Set	2
5	892835	Spacer	1
6	892834	Spacer	1
7	814151	Spline	1
8	814156	Plate	1
9	814150	Drive	1
-	814159	Control Assembly	1
10	NSS	Housing, Valve	1
11	NSS	Sleeve, Control	1
12	NSS	Spool, Control	1
13	814143	Spring, Centering	6
14	892102	Pin, Centering	1
15	814148	Spring, Compression	1
16	892160	Ball, Steel	1
17	814149	Seat, Check	1
18	814167	Plug, Seal	1
19	892113	Seal, O-Ring	1
-	892776	Kit, Seal	1
19	892113	Seal, O-Ring	1
20	892119	Seal, O-Ring	1
21	892271	Seal, Quad Ring	1
22	814146	Seal, Oil	1
-	481272	Kit, Needle Bearing	1
23	NSS	Race, Bearing	2
24	NSS	Bearing, Needle Thrust	1
25	NSS	Locator, Bearing	1
26	814145	Plate, Mounting, Valve Housing	1
27	814165	Screw, Cap	4

STEERING VALVE ASSEMBLY
(EARLIER VALVES WITH VENDOR TAG NO. YS-11 OR 12)

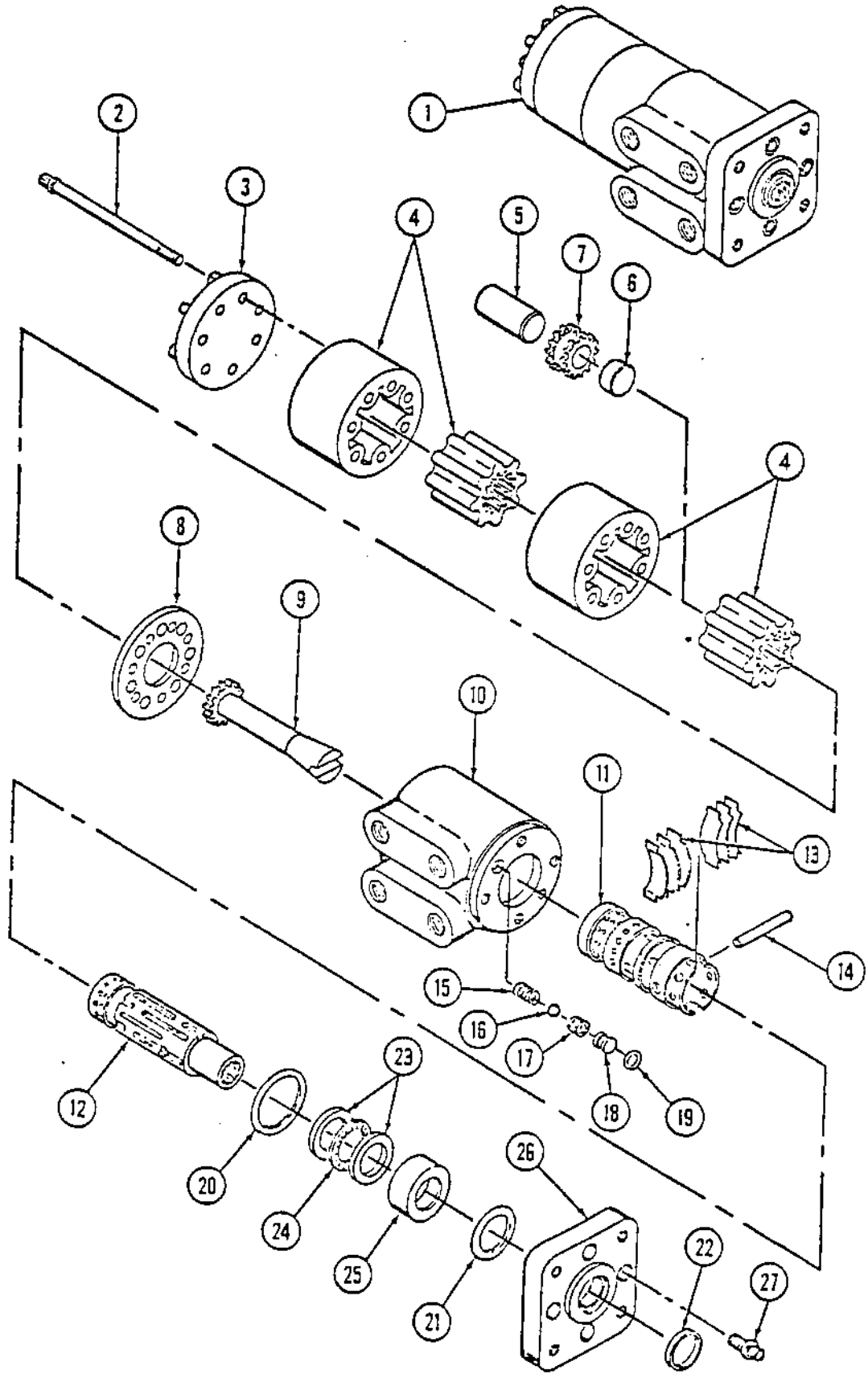

STEERING VALVE ASSEMBLY
(LATER VALVES WITH VENDOR TAG NO. 211-1039)

INDEX NUMBER	PART NUMBER	DESCRIPTION	QUANTITY
-	335567	Valve, Steering Assembly	1
*1	814146	Seal, 1½" OD x 1" ID	1
2	911582	Ring, Retaining	1
3	911069	Bushing, Seal Gland	1
*4	911585	Seal, 2-1/8" OD x 1/8" CS	1
*5	892271	Seal, Quad Ring 1-5/16" OD x 1/8" CS	1
6	911608	Needle Bearing Kit	1
7	NSS	Race, Bearing	2
8	NSS	Bearing, Needle Thrust	1
9	911583	Screw, Set	1
*10	911584	Seal, 5/8" OD x 3/32" CS	1
11	911590	Seat, Check Ball	1
*12	892113	Seal, 7/16" OD x 1/16" CS	1
13	911586	Ball, Check	1
14	911588	Retainer, Check Ball	1
15	911591	Control Parts Assembly	1
16	NSS	Housing	1
17	NSS	Sleeve, Control	1
18	NSS	Spool, Control	1
19	814143	Spring, Centering	6
20	892102	Pin, Centering	1
*21	911587	Seal, 3" OD x 1/16" CS	3
22	911589	Plate, Spacer	1
23	814150	Drive	1
24	911593	Gerotor	1
25	911592	Spacer (s)	1
26	911594	Cap, End	1
27	814155	Screw, Cap	7

*Seal Kit - Contains Parts Indicated by *, Seal Kit P/N 894013.

STEERING VALVE ASSEMBLY
(LATER VALVES WITH VENDOR TAG NO. 211-1039)

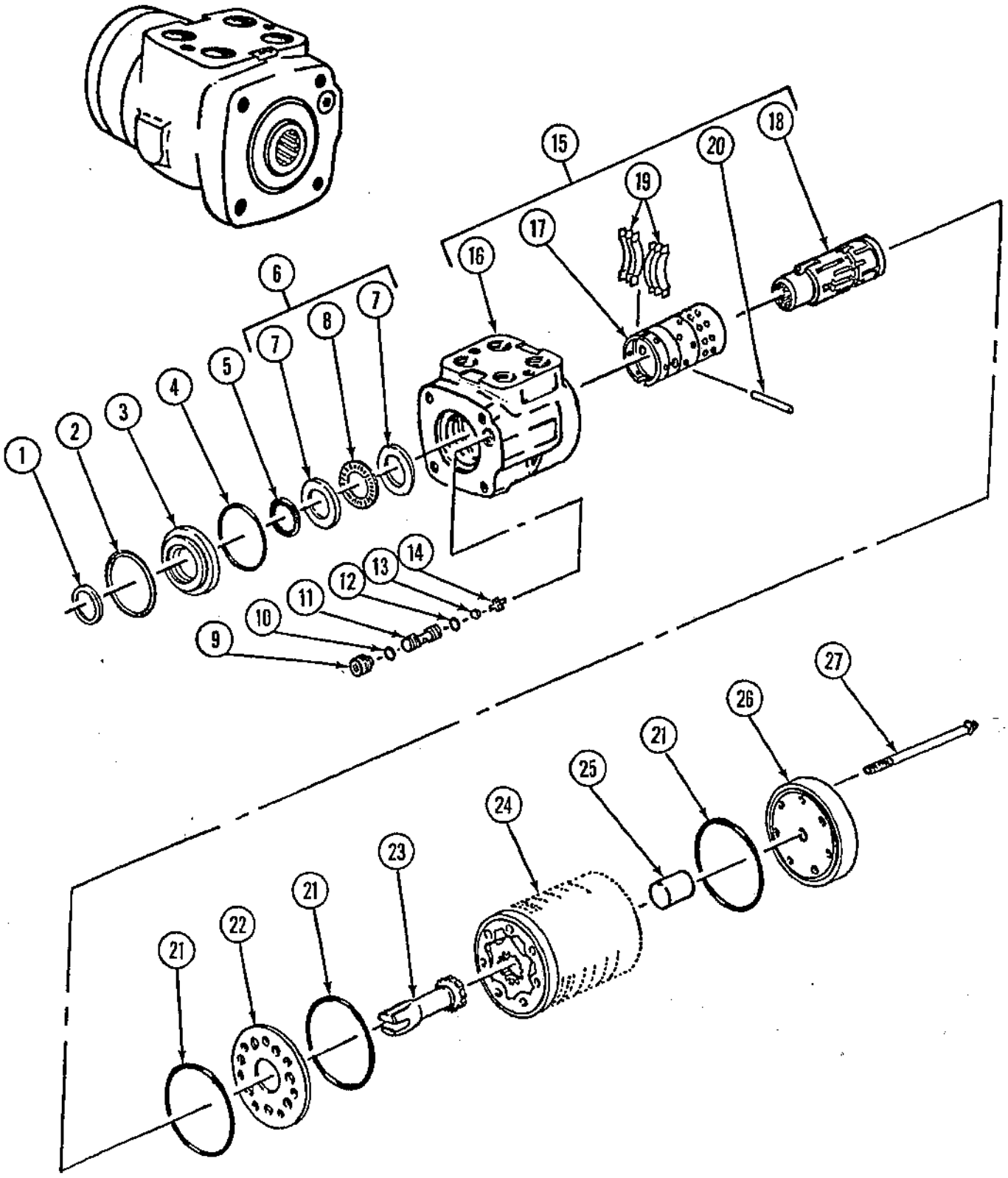

HYDRAULIC OIL FILTER

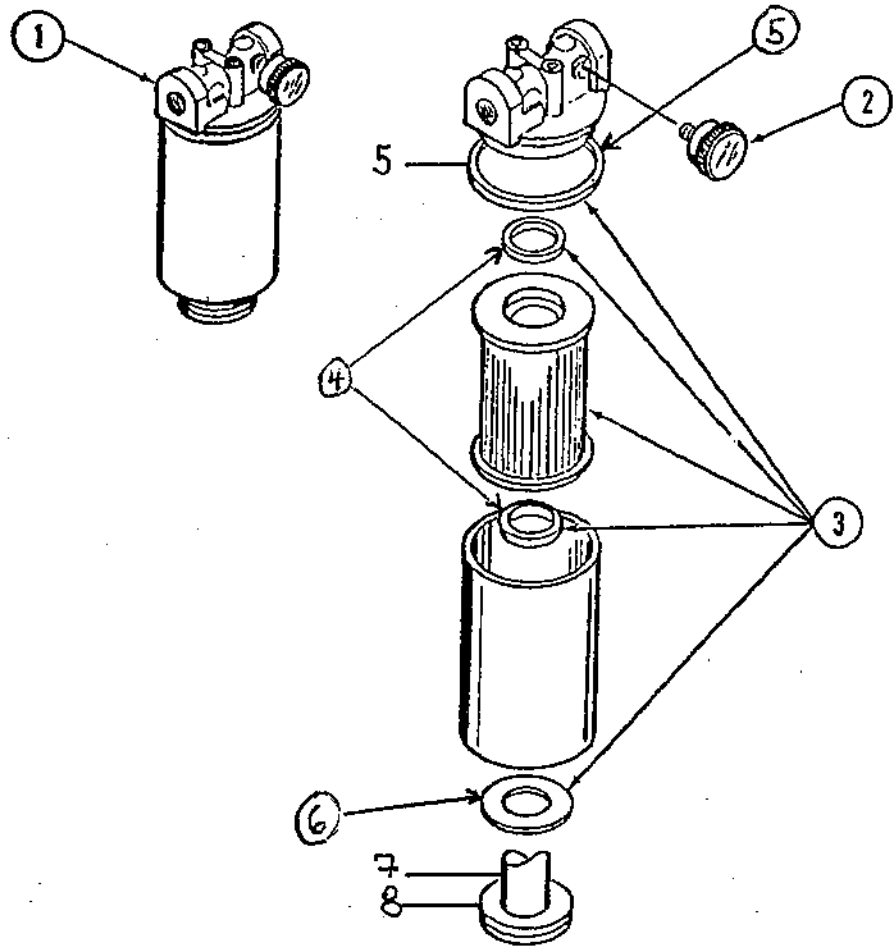

INDEX NUMBER	PART NUMBER	DESCRIPTION	QUANTITY
1	335554	Filter, Assembly	1
2	814118	Gage, Vacuum	1
3	335657	Kit, Element, Filter, Hyd.	1
4	814139	SEAL GASKET	2
5	814117	O-RING GASKET	1
6	814116	GASKET	1
7	814140	WASHER	1
8	814115	SPRING	1

UNIVERSAL JOINT ASSEMBLY

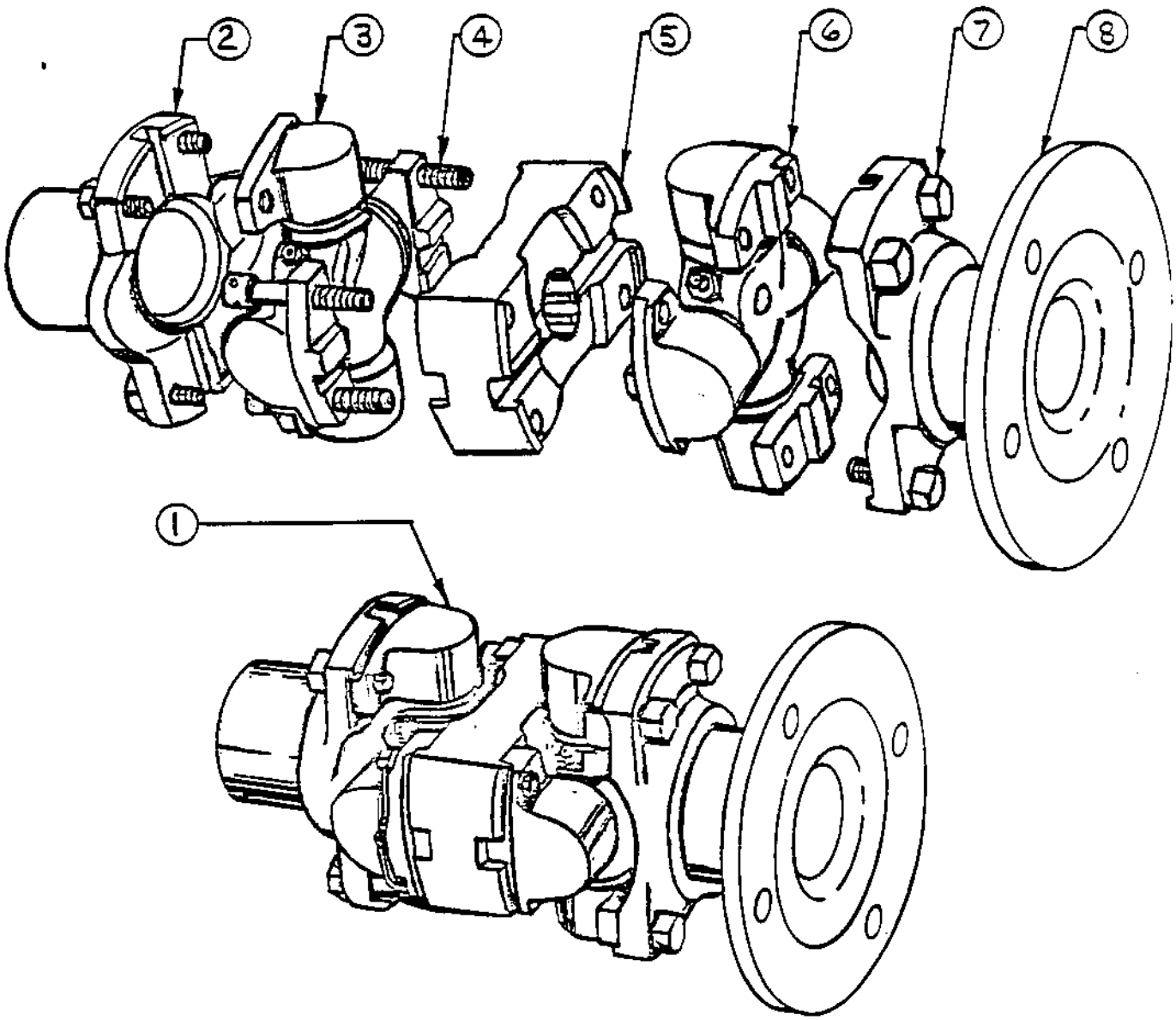

INDEX NUMBER	PART NUMBER	DESCRIPTION	QUANTITY
1	813303	U-Joint Assembly (includes all but Items 2 and 8)	1
2	814016	Fitting Yoke (Axle End)	1
3	813793	Spider & Bearing Assembly	1
4	813796	Capscrew	4
5	813795	Center Plate	1
6	813794	Spider & Bearing Assy. Tapped for Screw	1
7	813304	Capscrew	8
8	813318	Fitting Yoke (Transmission End)	1

DRIVE HUB ASSEMBLY
(CA-25D/CA-25PD from s/n 1534)

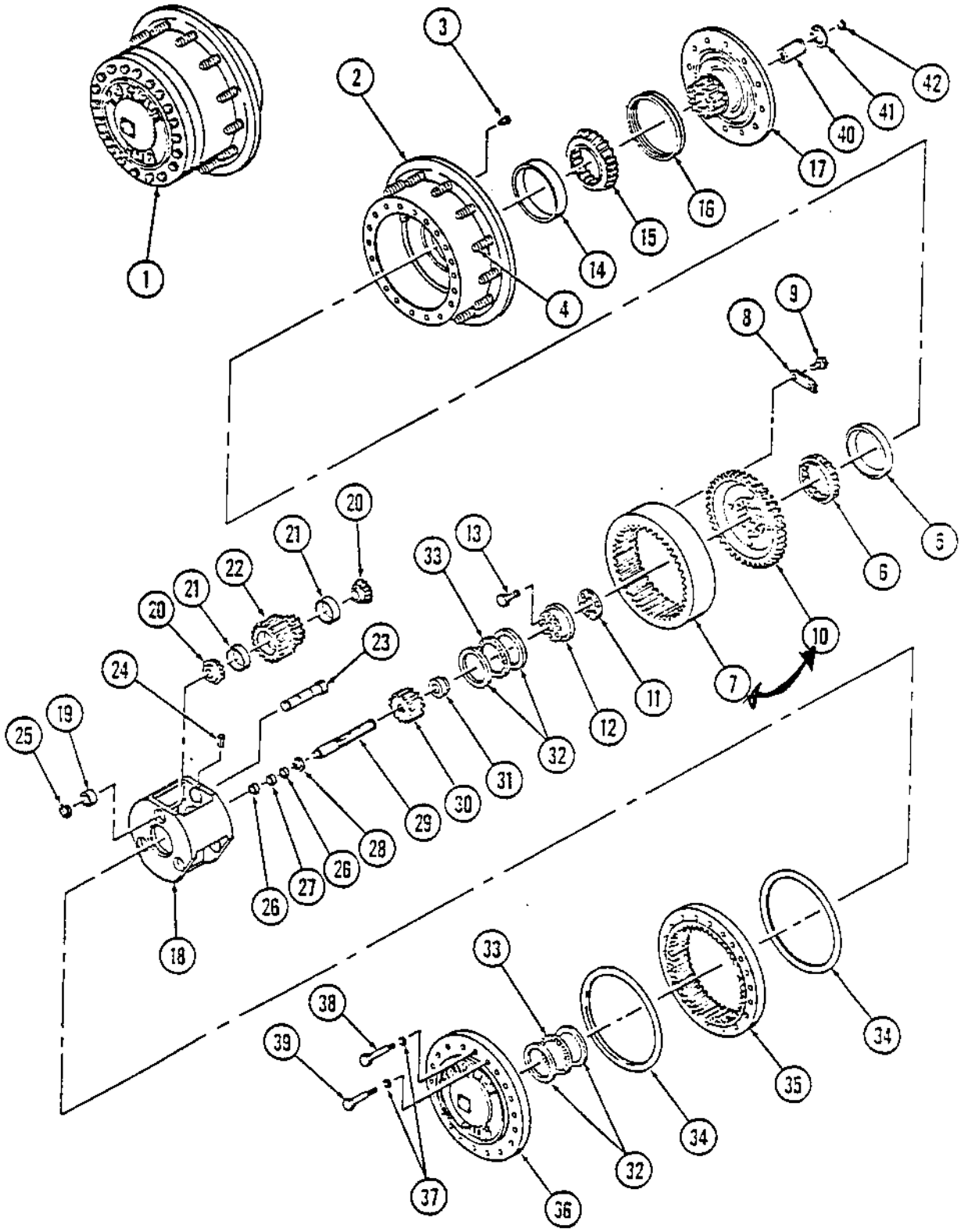

DRIVE HUB ASSEMBLY
(CA-25D/CA-25PD from S/N 1534)

INDEX NUMBER	PART NUMBER	DESCRIPTION	QUANTITY
1	801150	Hub Assembly, Drive	1
-	423470	**Hub Sub-Assembly, Spindle,(For R7C2)	1
-	893446	Hub Sub-Assembly, Spindle	1
2	423473	**Hub, (For R7C2)	1
-	423327	Hub, (See Note**)	1
3	423352	Plug, Magnetic Pipe	2
4	423149	Stud	12
5	423331	Bearing, Cup	1
6	423332	Bearing, Cone	1
7	423321	Gear, Internal	1
8	423312	Plate, Retainer	4
9	423338	Bolt	8
10	423322	Gear, Internal Hub	1
11	423335	Shim Set	1
12	423324	Plate, Bearing	1
13	423339	Bolt	6
14	423334	Bearing Cup	1
15	423330	Bearing Cone	1
16	423471	**Seal Face, (For R7C2)	1
--	423333	Seal Face	1
17	423472	**Spindle, (For R7C2)	1
--	423323	Spindle, (See Note**)	1
--	423315	Carrier, Sub-Assembly	1
18	423319	Carrier	1
--	928151	Kit, Carrier Repair	1
19	893451	*Spacer, (.721/.720)	A/R
--	893452	*Spacer, (.726/.725)	A/R
--	423336	*Spacer, (.809/.808)	A/R
20	423329	Bearing, Cone	6
21	423328	Bearing, Cup	6
22	423320	Gear Assembly,(Includes items 19-25, Matched Set of Three)	1
23	423316	Shaft, Planet	3
24	423346	Pin, Roll	3
25	423345	Ring, Retaining	3
26	423311	Washer, Thrust	2
27	423310	Bearing, Thrust	1
28	423343	Ring, Retaining	1
29	423309	Shaft, Input	1
30	423314	Gear, Input	1
31	423337	Spacer, Thrust	1
32	423318	Washer, Thrust	4
33	423317	Bearing, Thrust	2
34	423340	O-Ring	2
35	423325	Gear, Ring	1
36	892896	Cover	1
37	423351	Washer, Lock	20
38	423348	Bolt, Shoulder	4
39	423347	Bolt	16
40	892475	Coupling	1
41	423344	Ring, Retaining	1
42	423342	Ring, Retaining	1

*Select Spacer for correct fit, use one Spacer per Cluster Gear.
**NOTE: Check Model No. Tag on front of Hub. If first 4 digits of no. are R7C2, use parts marked with **'s. If you need P/N 423327 Hub or 423323 Spindle, an 801150 rebuilt Hub Assy. should be ordered due to Mfg's. modifications. P/N 893446 is no longer available, and is replaced by 423470 Hub. Sub-Assy. which will update your Hub Assy. to an R7C2 Tag level.

* DRIVE HUB ASSEMBLY
(CA-25D/CA-25PD)

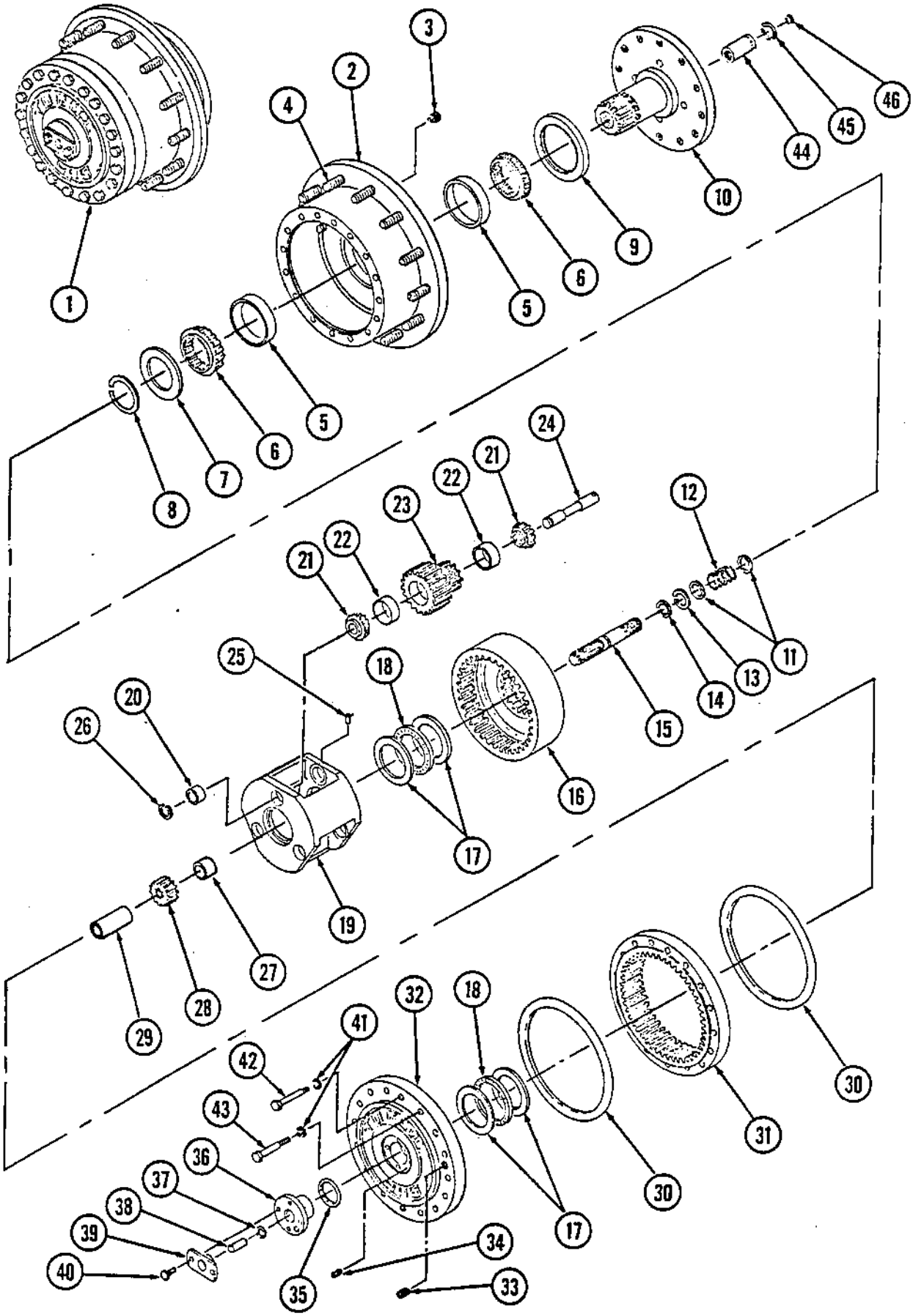

* For S/N's 1468, 1471, 1484, 1488, 1492, 1496, 1516, and 1564 to 1589

*DRIVE HUB ASSEMBLY
(CA-25D/CA-25PD)

INDEX NUMBER	PART NUMBER	DESCRIPTION	QUANTITY
*1	826059	Hub Assembly, Drive (Modified)	1
2	892897	Hub	1
3	423352	Plug, Magnetic Pipe	2
4	423149	Stud	12
5	892899	Bearing Cup	2
6	892900	Bearing Cone	2
7	892919	Shim, Bearing	1
8	911153	Ring, Retaining	1
9	891974	Seal	1
10	892876	Spindle	1
11	423127	Washer	2
12	423130	Spring	1
13	423135	Ring, Retaining	1
14	423343	Ring, Retaining	1
15	892845	Shaft, Input	1
16	892874	Gear, Internal	1
17	423318	Washer, Thrust	4
18	423317	Bearing, Thrust	2
-	423315	Carrier, Sub-Assembly	1
19	423319	Carrier	1
20	893451	**Spacer (.721/.720)	A/R
-	893452	**Spacer (.726/.725)	A/R
-	423336	**Spacer (.809/.808)	A/R
21	423329	Bearing, Cone	6
22	423328	Bearing, Cup	6
23	423320	Gear Assy.(Incl. Items 20-26) Matched Set of 3	1
24	423316	Shaft, Planet	3
25	423346	Pin, Roll	3
26	423345	Ring, Retaining	3
27	892920	Spacer, Thrust	1
28	423314	Gear, Input	1
29	892921	Spacer	1
30	423340	O-Ring	2
31	423325	Gear, Ring	1
32	892895	Cover	1
33	423146	Plug, Pipe	1
34	423145	Plug, Pipe	1
35	423144	O-Ring	1
36	891986	Cap, Cover	1
37	423143	O-Ring	1
38	NSS	Rod, Disconnect (consult factory)	1
39	423125	Cap, Disconnect	1
40	423140	Bolt	4
41	423351	Washer, Lock	20
42	423348	Bolt, Shoulder	4
43	423347	Bolt	16
44	892475	Coupling	1
45	423344	Ring, Retaining	1
46	423342	Ring, Retaining	1

*S/N 1468, 1471, 1484, 1488, 1492, 1496, 1516, and 1564 to 1589.
**Select Spacer For Correct Fit, Use One Spacer Per Cluster Gear.

DRIVE AXLE 335464
(DIFFERENTIAL ASSEMBLY)

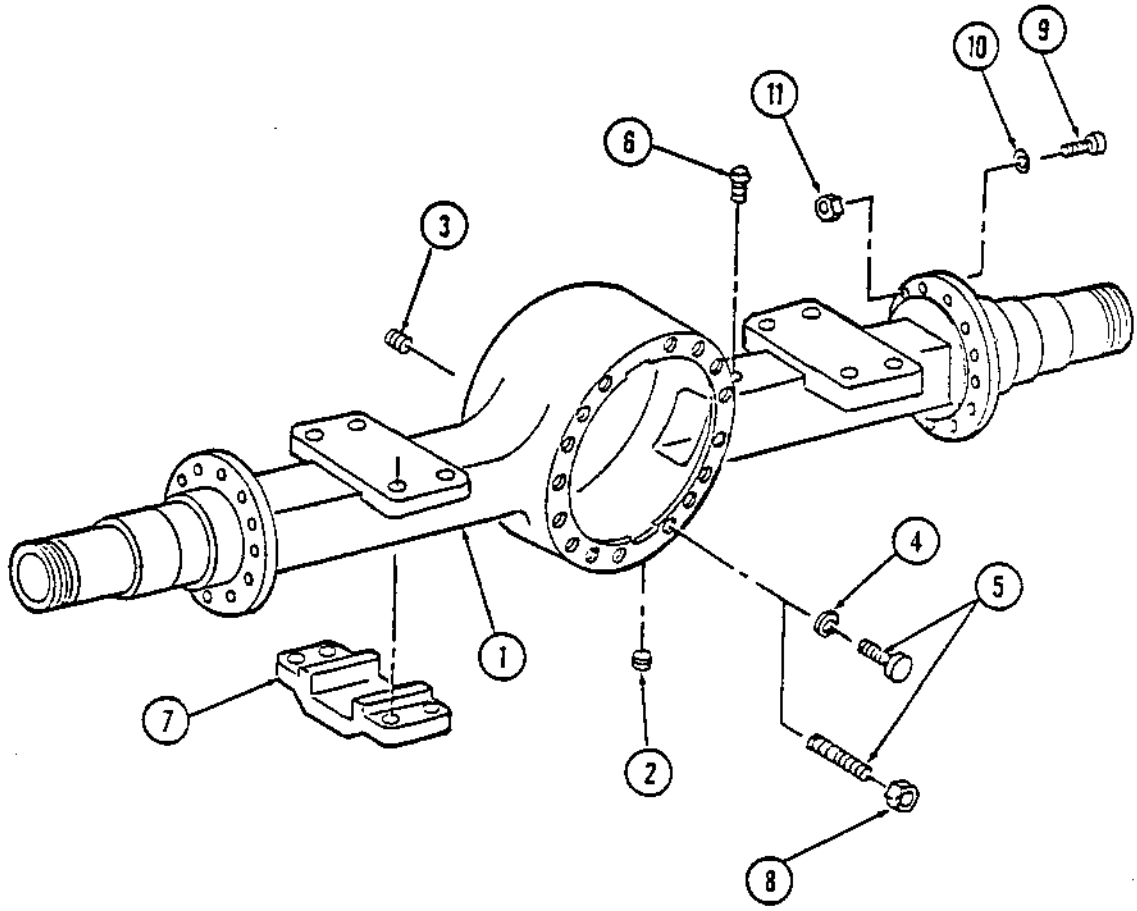

DRIVE AXLE 335464

(HOUSING ASSEMBLY)

Machine Serial Numbers----	445 thru 455 458 thru 581	582 thru 1116, 1203 thru 1205 1218, 1220 thru 1560, 1562 thru 1579, 1651, 1657, 1658, 1663, 1667 thru 1669, & 1674	1117 thru 1202, 1206 thru 1217, & 1219	1561, 1580 thru 1650, 1652 thru 1656, 1659 thru 1662, 1664 thru 1666, 1670 thru 1673, 1675 & up
Axle Tag Numbers----------	PR 65-HX-21	PR 65-HX-25 PR 65-HX-68 PR 65-HX-81	PR 66-HX-11	PR 65-HX-60 PRS-204-H10

Item	Description	Qty.	Part #	Part #	Part #	Part #
1	Housing Assy.	1	814024	814280	911558	910377
2	Plug	1	910999	910999	910999	910999
3	Plug	1	814034	813034	814034	814034
4	Washer	10	416126	416126	416126	Not Used
4	Washer	12	Not Used	Not Used	Not Used	416223
4	Washer	4	Not Used	Not Used	Not Used	416126
5	Stud (Med.)	2	911001	911001	911001	Not Used
5	Stud (Long)	2	911000	911000	911000	Not Used
5	Stud (Short)	6	911002	911002	911002	Not Used
5	Capscrew (Med.)	2	Not Used	Not Used	Not Used	893249
5	Capscrew (Long)	2	Not Used	Not Used	Not Used	911003
5	Capscrew (Short)	12	Not Used	Not Used	Not Used	910386
6	Oil Breather	1	814008	814008	814008	814008
7	Spring Seat	2	900453	900453	900453	900453
8	Nut	10	814032	814032	814032	Not Used
9	Capscrew	20	910383	910383	910383	910383
10	Washer	20	911005	911005	911005	911005
11	Nut	20	416106	416106	416106	416106

DRIVE AXLE 335464
(PLANETARY ASSEMBLY)

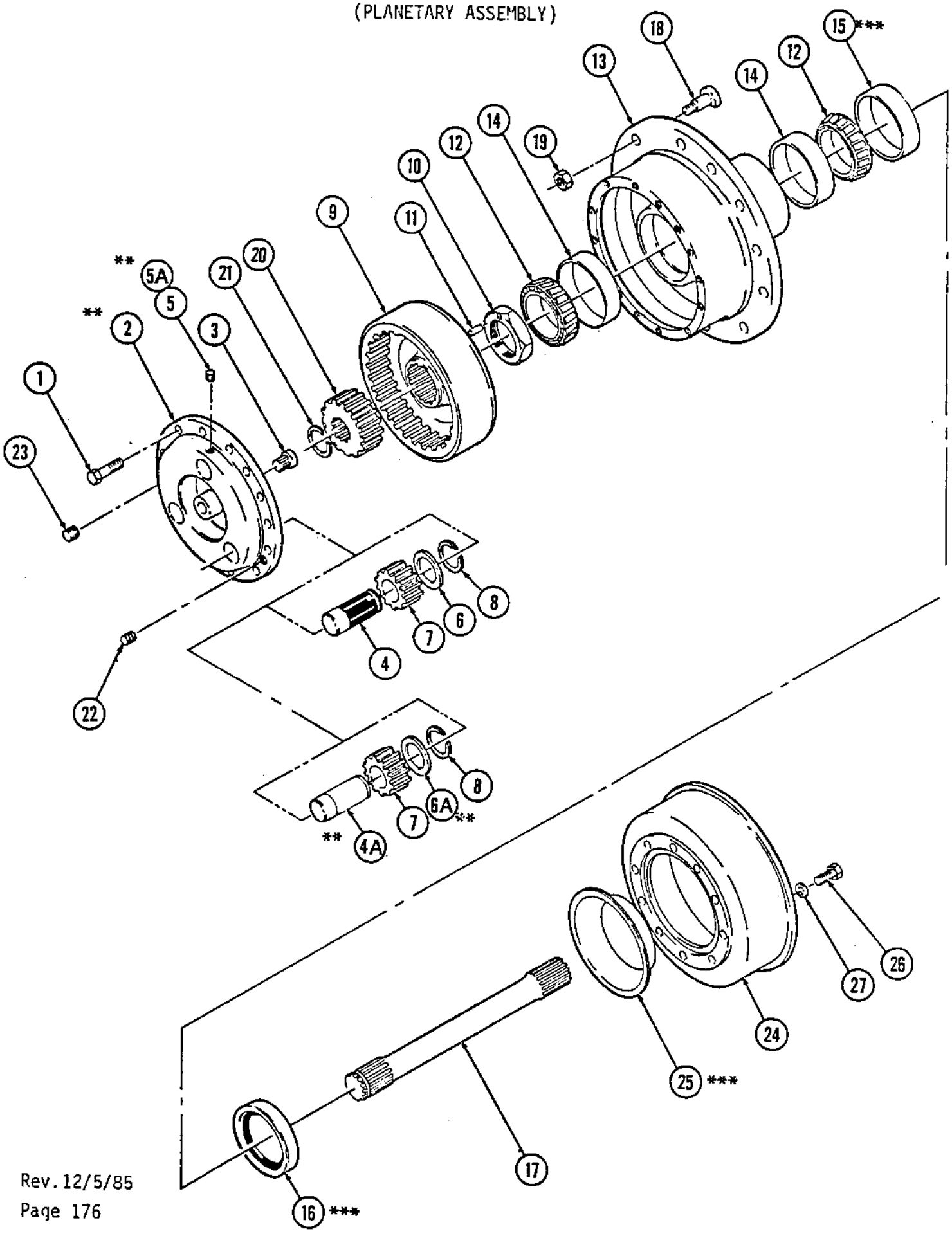

ATT.: Service

DRIVE AXLE 335464
(PLANETARY ASSEMBLY)

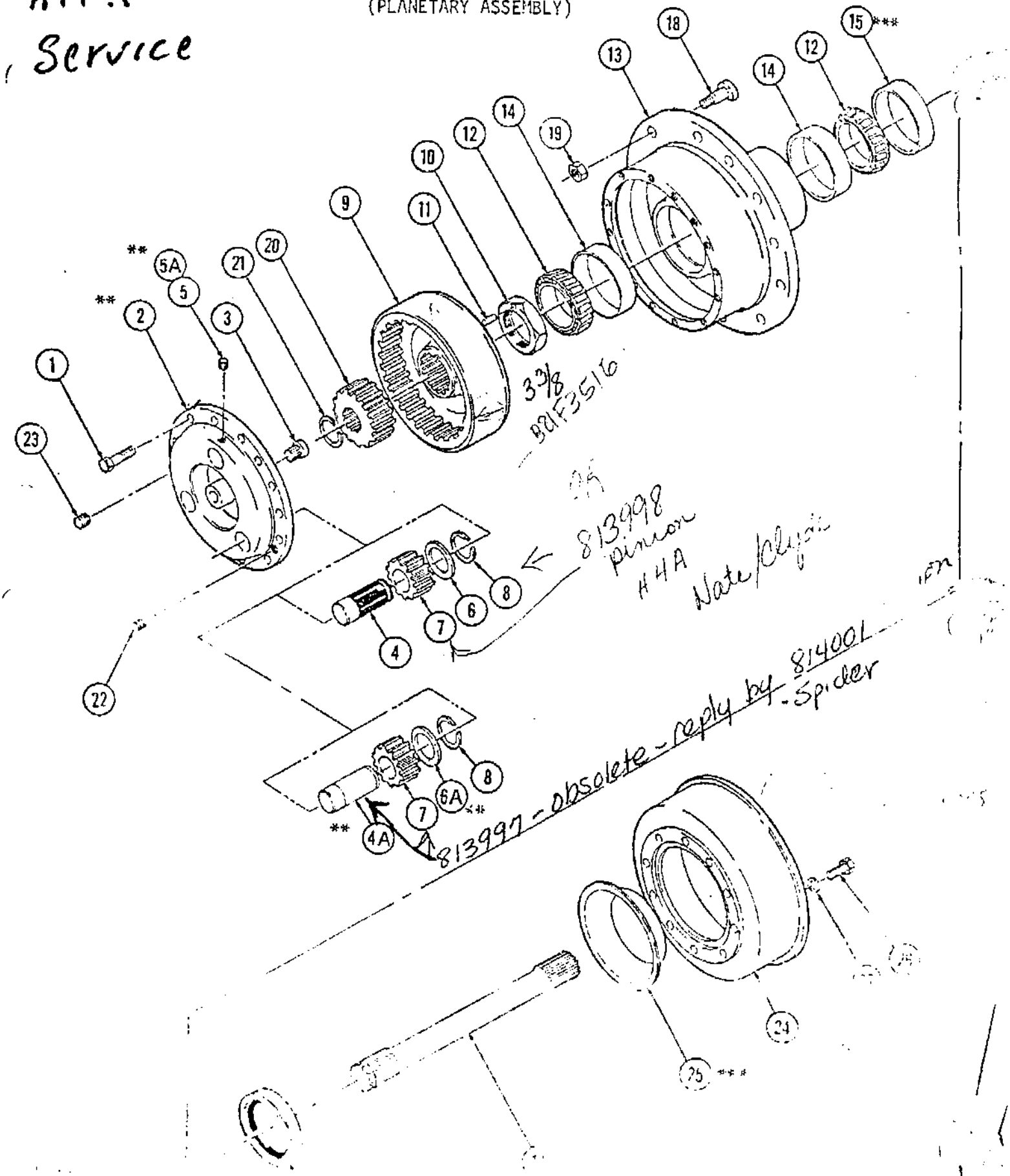

Page 176

DRIVE AXLE 335464
(Planetary Assembly)

		Machine Serial No's.-	445-455, 458-581	582-1116, 1203-1205, 1210,1220 & Up.	1117-1202, 1206-1217& 1219
		Axle Tag No's.-----	PR 65-HX-21	PR 65-HX-25 PR 65-HX-68 PR 65-HX-81 PR-65-HX-60 PRS-204-H10 PRS-204-H29	PR 66-HX-11
ITEM	DESCRIPTION	QTY.	PART#	PART#	PART#
1	Capscrew	32	813936	813936	813936
2	**Spider Assy.(See NOTE)	2	814001	814001	814001
3	Thrust Button	1	416151	416151	416151
4	Shaft	3	923804	923804	923804
5	Setscrew	3	922999	922999	922999
6	Washer, Thrust	3	923805	923805	923805
7	Pinion	6	813998	813998	813998
8	Snap Ring	6	813967	813967	813967
9	Gear	2	813999	813999	813999
10	Nut	2	814011	814011	814011
11	Pin	2	416148	416148	416148
12	Cone	4	814028	814028	814028
13	Hub Assy.	2	814241	814241	814241
14	Cup	2	814027	814027	814027
15	*** Wear Sleeve (See Note)	2	813945	813945	813945
16	*** Oil Seal(See Note)	2	922995	922995	922995
17	Axle Shaft	2	813992	814282	*892491 - SHORT
--	Axle Shaft	-			*892493 - LONG
18	Wheel Stud	16	813939	813939	813939
19	Nut	16	813694	813694	813694
20	Gear	2	814283	814283	814283
21	Snap Ring	2	813966	813966	813966
22	Plug	2	814033	814033	814033
23	Plug	2	814034	814034	814034
24	Brake Drum	2	814240	814240	814240
25	*** Slinger(See Note)	2	813995	813995	813995
26	Capscrew	20	911004	911004	911004
27	Washer	20	813953	813953	813953
28	Oil Seal	1		922995(Use on Axle Tag# PRS-204-H29)	

*Use a quantity of one each.

**NOTE: If item 4,(Planetary Pinion Shaft) has a Black Nylon Coating, your Axle Tag No. should read PRS-204-H29. If Shafts are not coated you will have Parts 4A, 5A & 6A shown on the illustration page. These Parts are no longer available. You must order Spider Assembly 814001 as a replacement which will up-date your Assembly.

***NOTE: Item 25 Slinger is not used on Axle Tag No's PRS-204-H29 & Up. When replacing new style Oil Seal 922995 on Axles with Wear Sleeve Item 15 and Slinger item 25 you can eliminate these two parts due to improved Oil Seal.

DRIVE AXLE 335464
(DIFFERENTIAL ASSEMBLY)

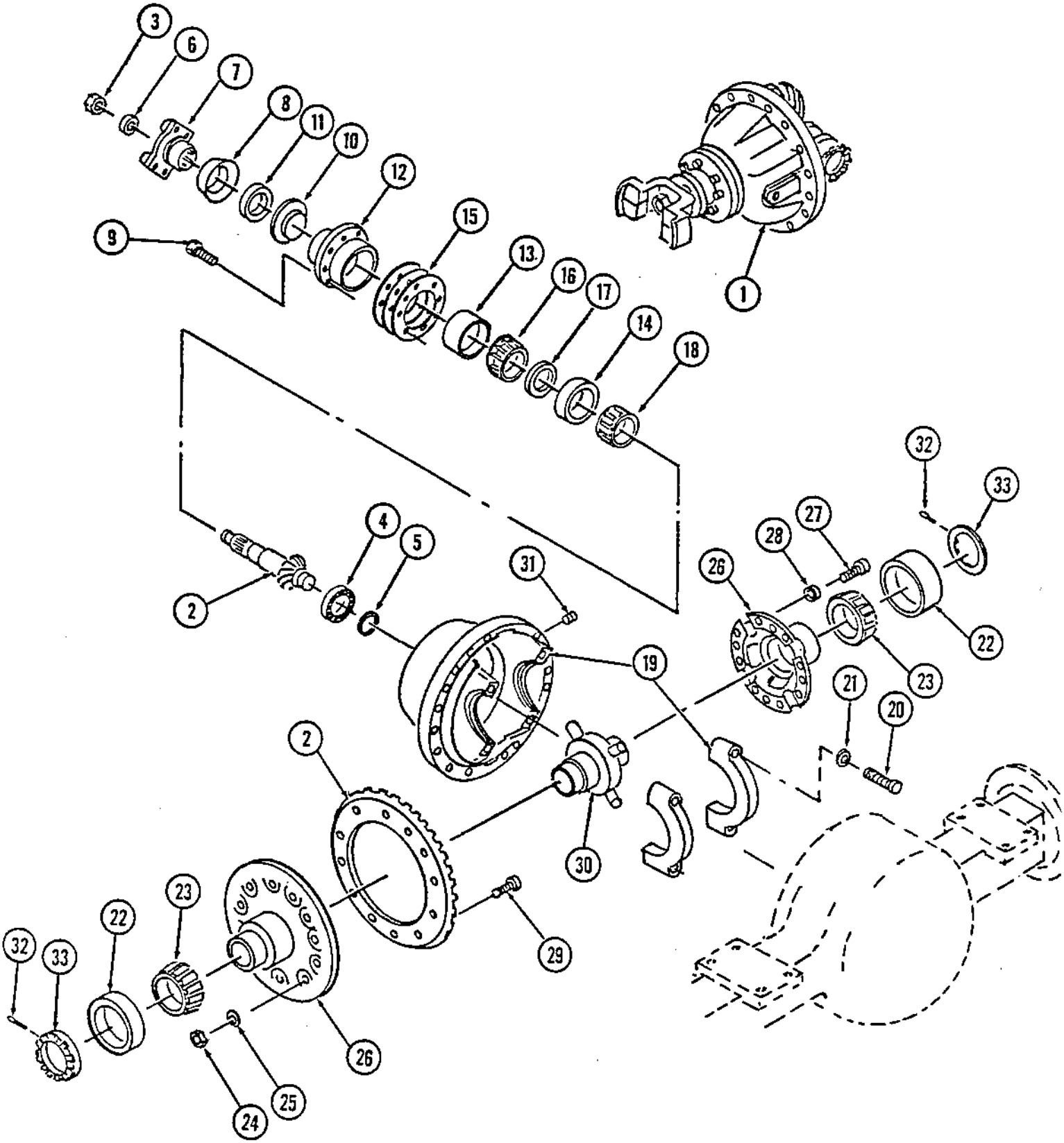

DRIVE AXLE 335464
(DIFFERENTIAL ASSEMBLY)

	Machine Serial Numbers--------	445 thru 455, 458 thru 1202, 1206 thru 1217, & 1219	1203 thru 1205, 1218, 1220 thru 1397	1398 thru 1560, 1562 thru 1579, 1651, 1657, 1658 1663, 1667 thru 1669	1561, 1580 thru 1650, 1652 thru 1656, 1662, 1664 thru 1666, 1670 thru 1673, 1675 & up
	Axle Tag Numbers----------	PR 65-HX-21 PR 65-HX-25 PR 66-HX-11	PR 65-HX-68	PR 65-HX-81	PR 65-HX-60 PRS-204-H10

Item	Description	Qty.	Part #	Part #	Part #	Part #
1	Diff. Assy. Complete	1	813695	813695	813695	890203
2	Bevel Gear & Pinion	1	814018	814018	814018	814018
3	Nut	1	892054	892054	892054	892054
4	Bearing	1	813948	813948	813948	813948
5	Snap Ring	1	813954	813954	813954	813954
6	Washer	1	813949	813949	813949	813949
7	Yoke & Deflector	1	814016	814016	814016	814016
8	Deflector	1	813987	813987	911011	911011
9	Capscrew	8	893249	893249	893249	893249
10	Cover Assy.	1	893128	893128	Not Used	Not Used
11	Oil Seal	1	814009	814009	891067	891067
12	Cage Assy.	1	893221	891089 A3220 W 664	891086	891086
13	Cup Outer	1	814005	814005	814005	814005
14	Cup Inner	1	814025	911010 HM 90 8216	910238	910238
15	Shim (.005) Use	3	892309	892309	892309	892309
15	Shim (.010) As	4	893339	893339	893339	893339
15	Shim (.003) Req'd.	1	892306	892306	892306	892306
16	Cone	1	814004	814004	814004	814004
17	Spacer	Use	813970	813970	813974	813974
17	Spacer		813971	813971	893330	893330
17	Spacer		813972	813972	893331	893331
17	Spacer	Two	813973	813973	893332	893332
17	Spacer		813974	813974	893333	893333
17	Spacer		813975	813975	893334	893334
17	Spacer	As	813976	813976	893335	893335
17	Spacer		813977	813977	893336	893336
17	Spacer		813979	813979	893337	893337
17	Spacer	Req'd.	813978	813978	893338	893338
18	Cone	1	814026	814026	891390	891390
19	Carrier & Cap Assy.	1	893125	893125	893125	911008
20	Capscrew	4	911009	911009	911009	911009
21	Washer	4	813953	813953	813953	813953
22	Cup	2	891415	891415	891415	891415
23	Cone	2	814003	814003	814003	814003
24	Nut	12	814044	814044	814044	814044
25	Washer	12	416223	416223	416223	416223
26	Diff. Case Assy.	1	911007	911007	911007	911007
27	Capscrew	8	813938	813938	813938	813938
28	Washer	8	416223	416223	416223	416223
29	Bolt	12	892104	892104	892104	892104
30	No Spin Assy.	1	814006	814006	814006	814006
31	Plug	1	814034	814034	814034	814034
32	Cotter Pin	2	813946	813946	813946	813946
33	Adjusting Ring	2	813986	813986	813986	813986

DRIVE AXLE 335464
(BRAKE ASSEMBLY)

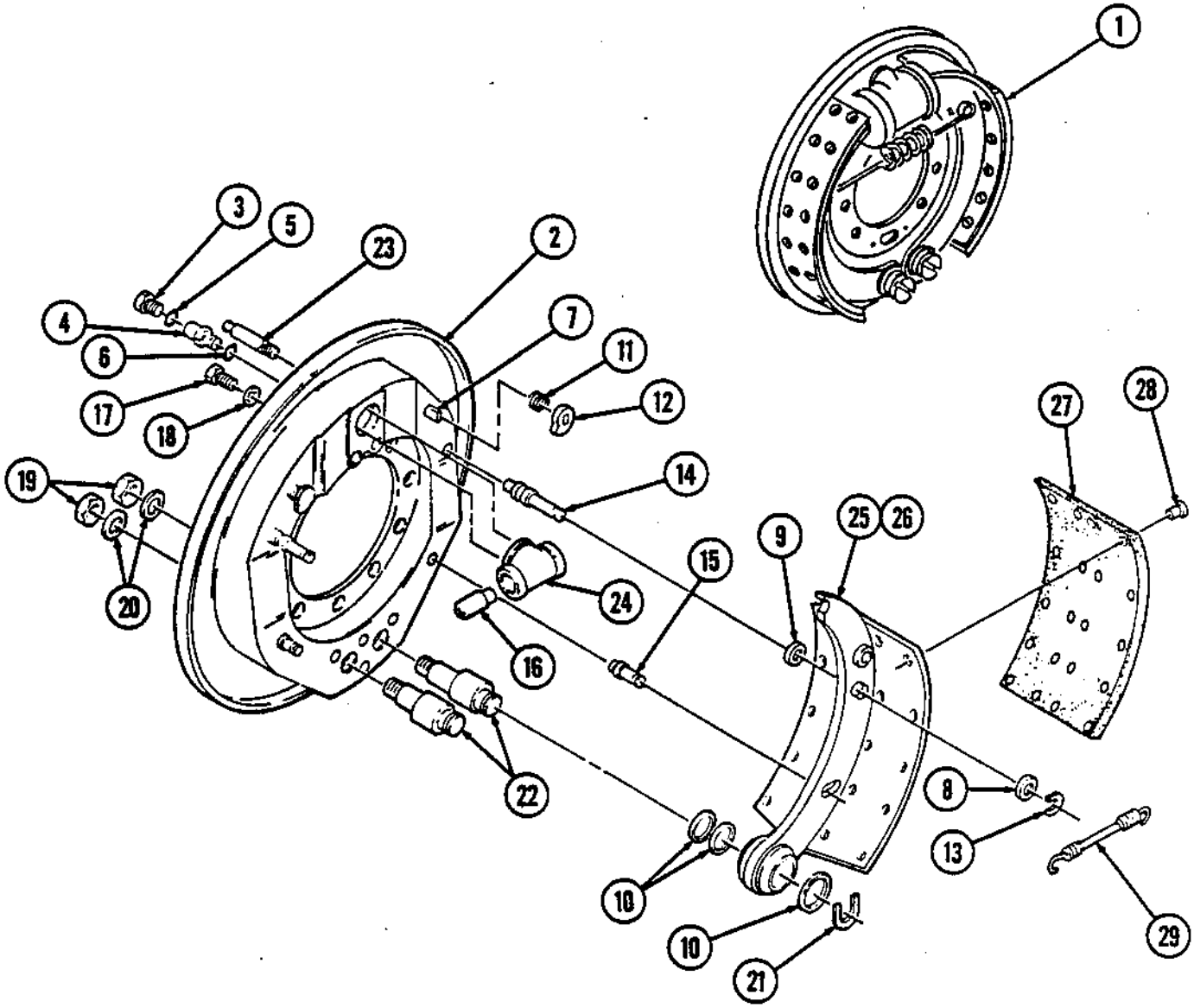

DRIVE AXLE 335464

Machine Serial Numbers---------	445-455,458-1116, 1203-1205, 1218, 1220 & Up.	1117-1202, 1206-1217, & 1219
Axle Tag Numbers----------	PR 65-HX-21 PR 65-HX-25 PR 65-HX-68 PR 65-HX-81 PR 65-HX-60 PRS-204-H10	PR 66-HX-11

ITEM	DESCRIPTION	QTY.	PART #	PART #
1	Brake Assembly	2	814281	911559
2	Brake Shield	1	814014	814014
3	Bolt, Inlet Fitting	1	911012	911012
4	Inlet, Brake Fitting	1	813942	813942
5	Gasket, Inlet Fitting	1	813984	813984
6	Gasket, Inlet Fitting	1	813982	813982
7	Bolt, Adj. Cam	2	814012	814012
8	Washer	2	416147	416147
9	Washer, Guide Pin	8	813913	813913
10	Washer, Anchor Pin	8	813951	813951
11	Spring, Cam Adj.	2	813991	813991
12	Eccentric, Brake Adj.	2	813990	813990
13	Lock Ring, Brake Shoe	4	813962	813962
14	Pin, Guide Shoe (Long)	2	813964	813964
15	Pin, Guide Shoe (Short)	2	813965	813965
16	Push Rod, Wheel Cyl.	2	813957	813957
17	Screw, Wheel Cyl.	2	814036	814036
18	Spring Washer	2	814041	814041
19	Nut	2	813937	911560
20	Lockwasher, Anchor Pin	2	813952	813952
21	Lock, Ring, Anchor Pin	2	813950	813950
22	Bolt, Adj.	2	813958	813958
23	Screw, Bleeder	1	813944	813944
24	Assembly, Wheel Cyl.	1	814022	893514
25	Brake Shoe & Lining	2	814279	893124
26	Brake Shoe	2	814017	415105
--	Kit, Lining & Rivets	2	813969	911562
27	Lining	2	893346 } 813969	NSS
28	Rivet	28	893243 }	911561
29	Spring	1	813988	893348

HEADLIGHTS

INDEX NUMBER	PART NUMBER (CA-25)	PART NUMBER (CA-25 Asphalt)	DESCRIPTION	QUANTITY
1		813495	Headlight	4
2		813526	Switch	2
3	82558301		Wire Assembly	1
4	82558302	85033303	Wire Assembly	1
5		80133103	Loom - 166" Lg.	1
6		813486	Ty-Rap Ties	10
7		814075	Pigtail Terminal	5
8	82558303	85033402	Wire	1
9		80133103	Loom - 38" Lg.	1
10	82558304		Wire Assembly	1
11		80133103	Loom - 68" Lg.	1
12	82558305	85033301	Wire	1
13		85033401	Wire Assembly	1
14	82558306		Wire Assembly	1
16		921137	Clamp	6
17		813528	Clamps	2
A		502004	Capscrew HH	8
B		604026	Lockwasher	8
C		571001	Nut	8

FIELD INSTALLATION KIT 825240 ORDER WITH PAT.

HEADLIGHTS

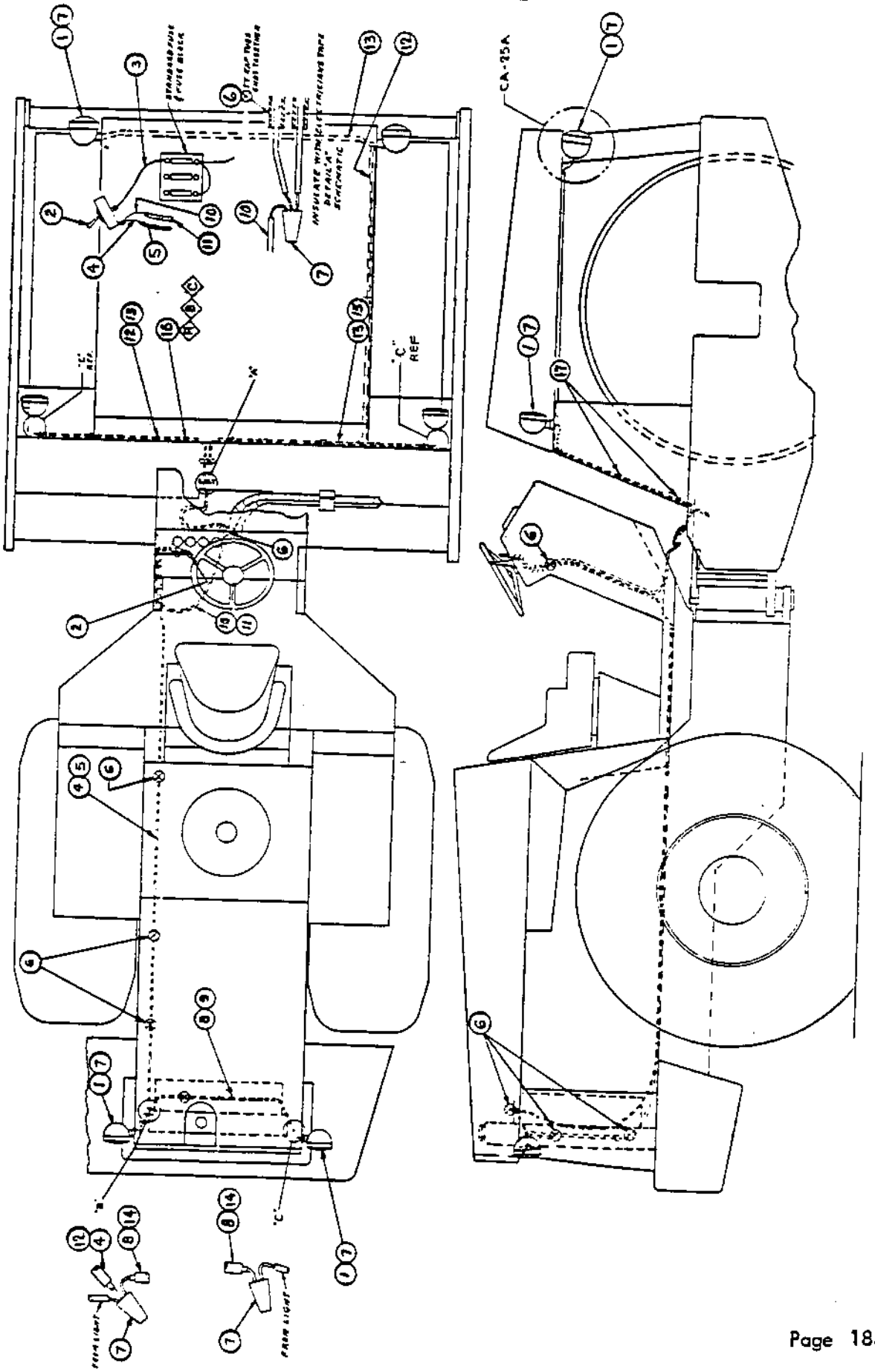

CAB
ALL MODELS

INDEX NUMBER	PART NUMBER	DESCRIPTION	QUANTITY
1	466200	Cab	1
2	499297	Wiper Motor	1
3	499298	Wiper Arm	1
4	499299	Wiper Blade	1
5	825243D	Installation Drawing	1
6	813338	Bucket Seat w/Dual Vibr. Cont.	1
9	815583	Wire Harness	1
10	921013	Clamp	4
13	826250	Wire Harness	1
A	502058	Capscrew HH	8
B	571005	Hex Nut	8
C	604030	Lockwasher	8
D	502034	Capscrew HH	32
E	571003	Hex Nut	32
F	604028	Lockwasher	32
G	600007	Flat Washer	32
H	502004	Capscrew HH	6
J	571001	Hex Nut	6
K	604026	Lockwasher	6
L	550054	Capscrew HH	1
M	571019	Hex Nut	1
N	604019	Lockwasher	1

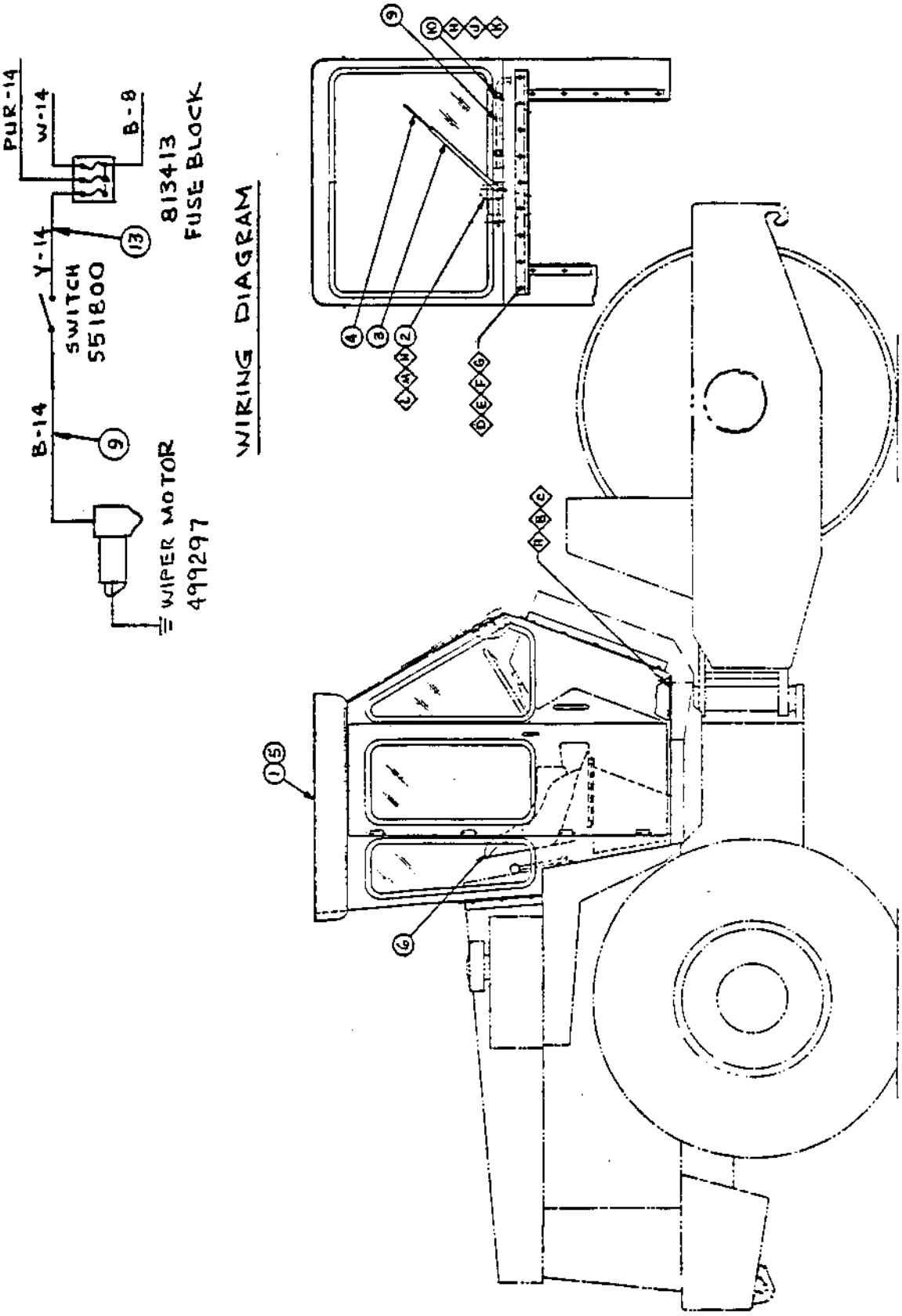
PUR-14
W-14
B-8
813413
FUSE BLOCK
Y-14
SWITCH
551800
B-14
WIPER MOTOR
499297
WIRING DIAGRAM

NOISE REDUCTION KIT

INDEX NUMBER	PART NUMBER	DESCRIPTION	QUANTITY
1	826087	Side Cover Assy. Front RH	1
2	826088	Side Cover Assy. Rear RH	1
3	826089	Side Cover Assy. Front LH	1
4	826090	Side Cover Assy. Rear LH	1
5	826019	Reservoir End Cover (CA-25)	1
6	826094	Tufcote Foam, End Cover (CA-25)	1
7	826097	Tufcote Foam, Hood Top	1
8	826101	Tufcote Foam, Hood RH	1
9	826102	Tufcote Foam, Hood LH	1
10	826103	Air Cleaner Cover Assy.	1
11	850395	Cover Assy. Oil Fill	1
-	842196	Cover	1
-	801201	Pawl Fastener	1
12	826116	Cover Assy. Radiator Fill	1
-	826115	Cover	1
-	801201	Pawl Fastener	1
13	826117	Cover, Side CA-25 All Models	2
-	826227	Cover, Side CA-25A	2
14	826118	Control Lever Hole Cover	1
15	826245	Tufcote Foam	1
17	80123002	Rubber Strip	1
18	80123202	Rubber Strip	1
A	502035	Capscrew HH	15
B	502033	Capscrew HH	32
C	571003	Hex Nut	29
D	600007	Flat Washer	33
E	502016	Capscrew HH	6
F	571002	Hex Nut	6
G	604027	Lockwasher	6
H	600005	Flat Washer	1
I	893529	Capscrew HH	6
K	572009	Hex Nut	6
L	604019	Lockwasher	6
P	604028	Lockwasher	47

NOISE REDUCTION KIT

RIGHT SIDE COVER ASSEMBLY

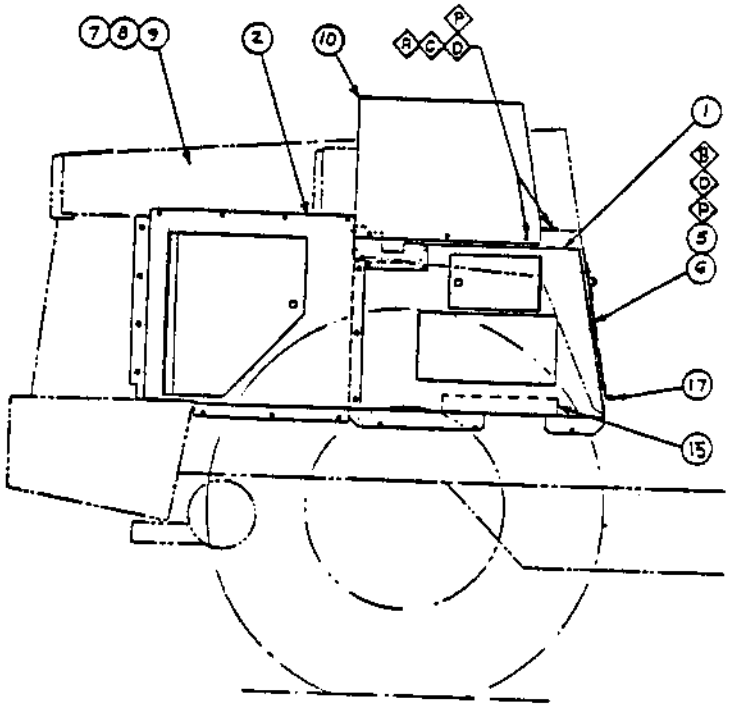

LEFT SIDE COVER ASSEMBLY

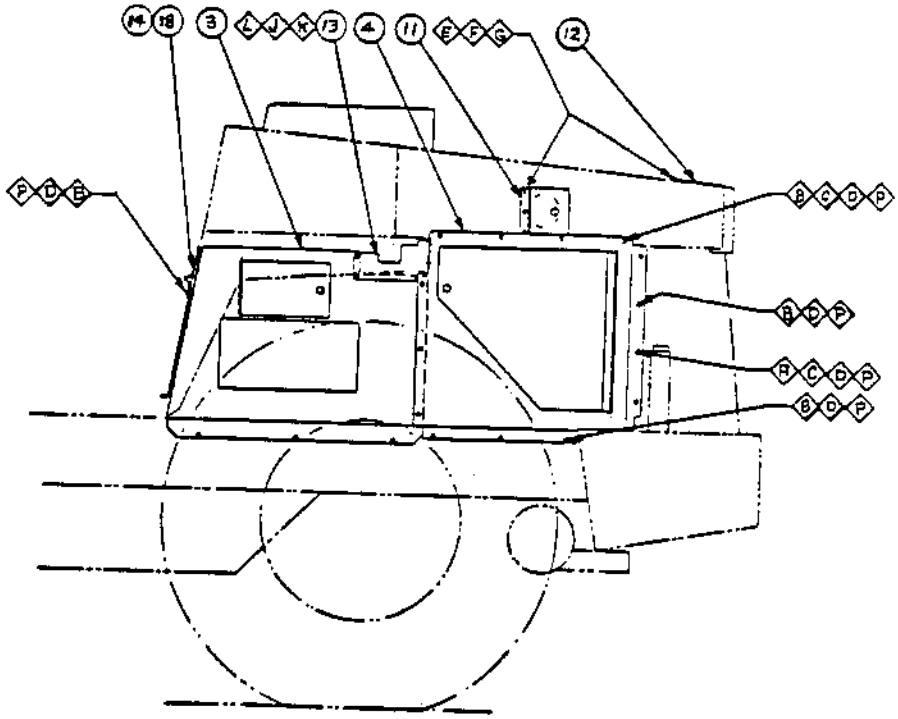

SIDE COVER ASSEMBLY (RH FRONT)

INDEX NUMBER	PART NUMBER	DESCRIPTION	QUANTITY
1	826068	Side Cover RH	1
2	826070	Cover RH (CA-25) All Models	1
-	826225	Cover RH (CA-25A)	1
3	826106	Tufcote Foam RH	1
4	826108	Tufcote Foam	1
5	826109	Tufcote Foam	1
6	826110	Rubber Strip	1
7	826111	Rubber Strip RH	1
8	826112	Rubber Strip RH	1
11	801201	Pawl Fastener	2

SIDE COVER ASSEMBLY (LH FRONT)

INDEX NUMBER	PART NUMBER	DESCRIPTION	QUANTITY
1	826069	Side Cover LH	1
2	826071	Cover LH (CA-25) All Models	1
-	826226	Cover LH (CA-25)	1
3	826107	Tufcote Foam LH	1
4	826108	Tufcote Foam	1
5	826109	Tufcote Foam	1
6	826110	Rubber Strip	1
7	826113	Rubber Strip LH	1
11	801201	Pawl Fastener	2

FRONT SIDE COVER - R.H. & L.H.

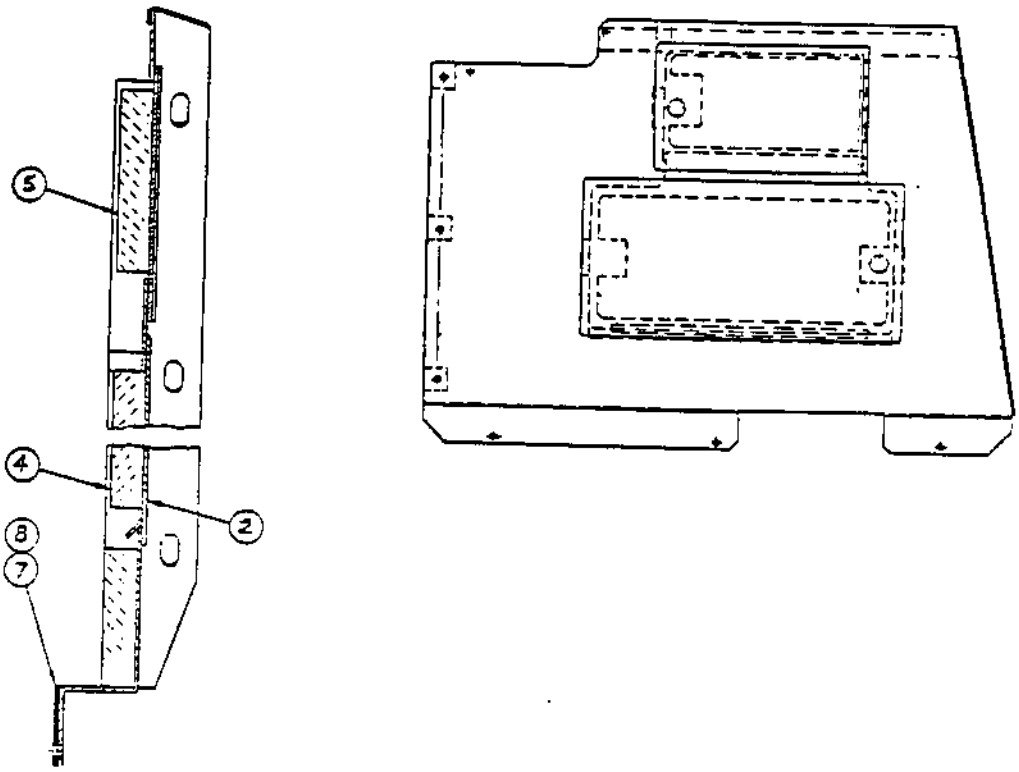

SIDE COVER ASSEMBLY (RH REAR)

INDEX NUMBER	PART NUMBER	DESCRIPTION	QUANTITY
1	826076	Side Cover	1
2	826078	Rubber Strip	1
3	826079	Rubber Strip	1
4	826080	Rubber Strip	1
5	826081	Rubber Strip	1
6	826082	Rubber Strip	1
7	826083	Tufcote Foam	1
8	826084	Tufcote Foam	1
11	475046	Pawl Fastener	1
12	80120406	U Channel, Rubber - 54" Lg.	1

SIDE COVER ASSEMBLY (LH REAR)

INDEX NUMBER	PART NUMBER	DESCRIPTION	QUANTITY
1	826077	Side Cover	1
2	826078	Rubber Strip	1
3	826079	Rubber Strip	1
4	826080	Rubber Strip	1
5	826081	Rubber Strip	1
6	826082	Rubber Strip	1
7	826085	Tufcote Foam	1
8	826086	Tufcote Foam	1
11	475046	Pawl Fastener	1
12	80120401	U Channel, Rubber 64½" Lg.	1

REAR SIDE COVER - R.H. & L.H.

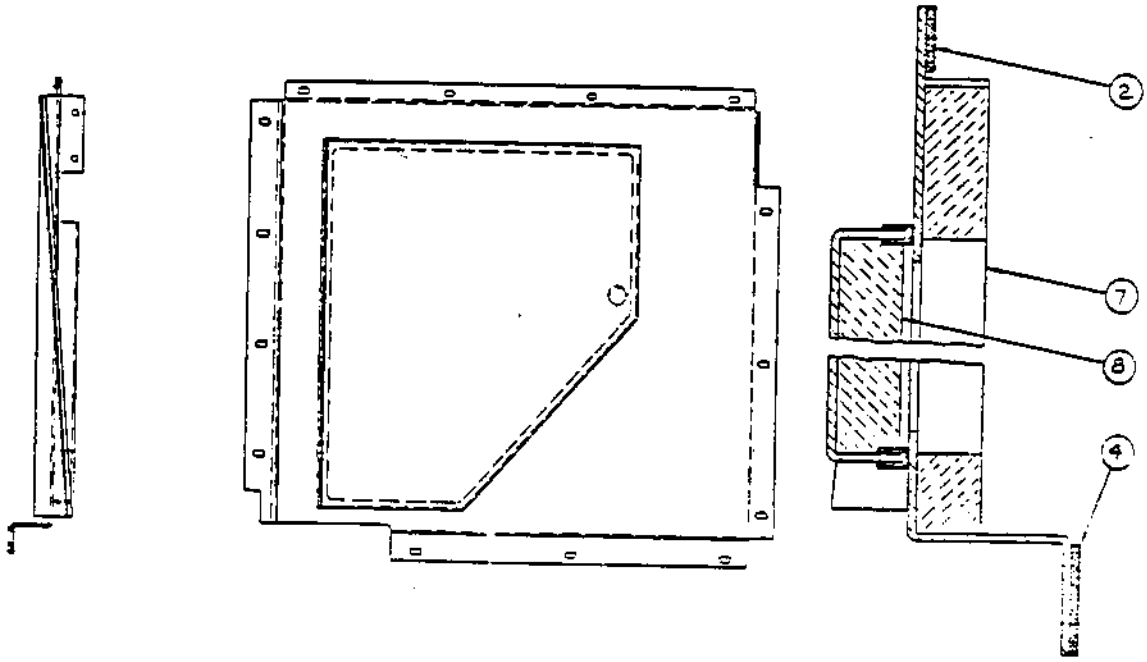

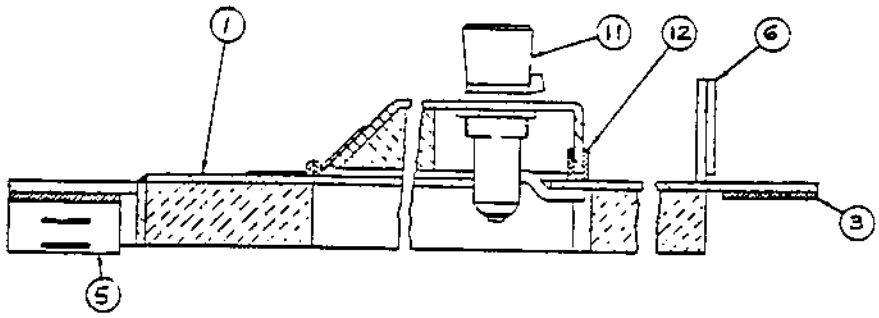

AIR CLEANER COVER

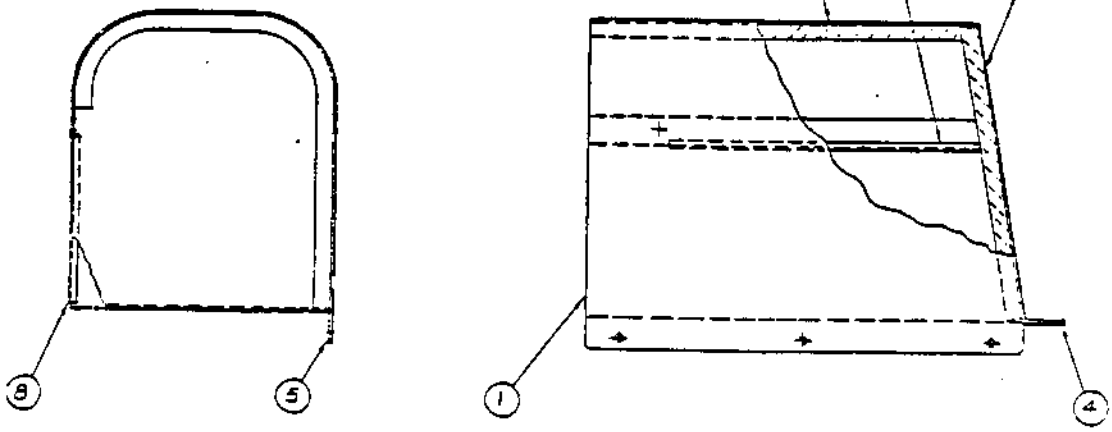

INDEX NUMBER	PART NUMBER	DESCRIPTION	QUANTITY
1	826065	Air Cleaner Cover	1
2	826095	Tufcote Foam	1
3	826096	Tufcote Foam	1
4	826104	Rubber Strip	1
5	826105	Rubber Strip	1
8	80120402	Rubber Channel - 31" Lg.	1

HEATER & DEFROSTER

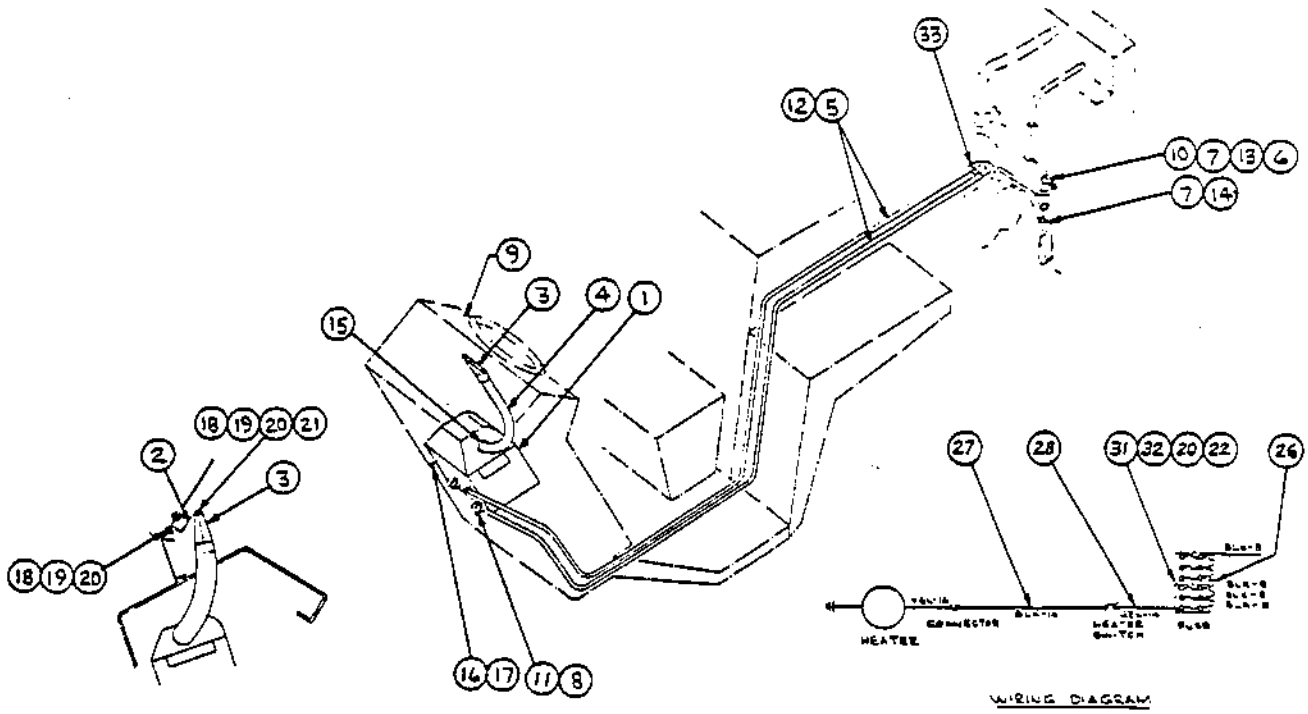

INDEX NUMBER	PART NUMBER	DESCRIPTION	QUANTITY
1	801347	Heater & Defroster	1
2	826171	Nozzle Support	2
3	801219	Defroster Nozzle	1
4	801220	Defroster Hose 2"	2 ft.
5	801221	Heater Hose 5/8	28 ft.
6	893360	Nipple Close	1
7	801741	Elbow 90°	2
8	801348	Pipe 3/8	2
9	801214	Switch	1
10	233088	Shut-Off Valve	1
11	813320	Elbow 90°	2
12	801226	Hose Clamp	4
13	801227	Reducing Bushing	1
14	801228	Reducing Bushing	1
15	801350	Defroster Grommet	1
16	220012	Hex Nut	3
17	604027	Lockwasher	3
18	550074	Machine Screw	4
19	572009	Hex Nut	4
20	604019	Lockwasher	6
21	600028	Flat Washer	2
22	550104	Capscrew HH	2
26	81516504	Wire Assy.	3
27	81517416	Wire Assy.	1
28	82526604	Wire Assy.	1
31	813413	Fuse Block	1
32	813412	Fuse	3
33	813486	Ty-Rap	8

SEAT BELT

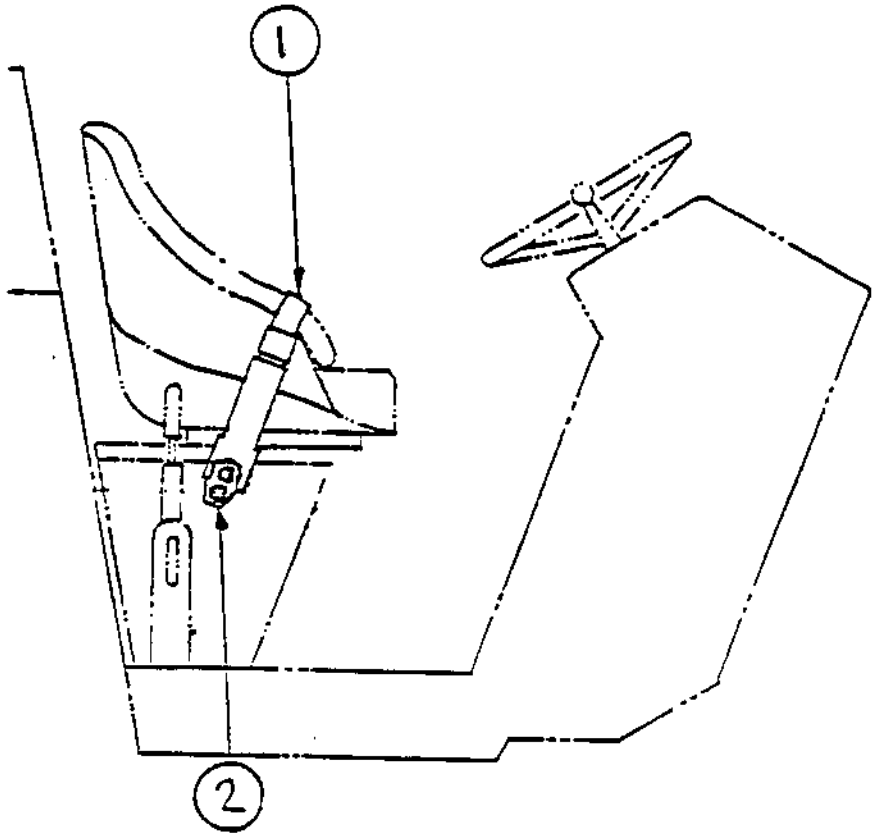

INDEX NUMBER	PART NUMBER	DESCRIPTION	QUANTITY
1	801208	Seat Belt	1
2	826119	Spacer	2

STRIKE OFF BLADE ASSEMBLY

INDEX NUMBER	PART NUMBER	DESCRIPTION	QUANTITY
A	604033	Lockwasher	20
B	571007	Nut	20
C	502062	Capscrew	4
D	600010	Flat Washer	4
E	604030	Lockwasher	4
F	571005	Nut	4
G	813362	Clevis Pin	1
H	517046	Capscrew	4
K	502038	Capscrew	2
L	600007	Flat Washer	7
M	604028	Lockwasher	10
N	502035	Capscrew	6
P	502140	Capscrew	3
Q	571003	Nut	15
R	550047	Clevis Pin	2
S	630051	Cotter Pin	2
T	502040	Capscrew	1
U	550038	Clevis Pin	2
V	630008	Cotter Pin	2
W	630020	Cotter Pin	2
Y	502039	Capscrew	3
Z	502033	Capscrew	2
AA	502008	Capscrew	1
BB	600005	Flat Washer	1
CC	604026	Lockwasher	8

STRIKE OFF BLADE ASSEMBLY

INDEX NUMBER	PART NUMBER	DESCRIPTION	QUANTITY
1		Hydraulic Circuit (See Page 97)	1
2	825943	Strike Off Blade	1
3	825946	Cylinder Pivot RH	1
4	825945	Cylinder Pivot LH	1
5	801192	Bushing	4
6	825983	Blade Pivot Bracket	2
7	100071	Bushing	2
8	815194	Blade Pin	2
9	815263	Washer	2
10	801259	Blade	1
11	801195	Plow Bolt	20
12	815265	Plow Shoe	2
13		Hyd. Cylinder (See Page 203)	2
14	310022	Grease Fitting	4
15		Blade Control Valve (See Page 204)	1
16	826024	Control Valve Lever	1
17	825991	Hose Clamp	4
18	813486	Ty-Rap	12
19	332127	Plug	2
20	310025	Grease Fitting	2
21	825990	Hose Bracket	1
22	815349	Hose Clamp	1
23	801230	Rubber Strip	5
24	825986	Valve Bracket	1
25	826021	Anchor Bracket	1
26	826023	Valve Link	1
27	815351	Hose Clamp	1
28	801197	Hand Grip	1
29	825999	Hose Clamp	2
30	825427	Hose Clamp	2
31	825428	Clamp Liner	2
32	826001	Level Indicator	1
33	826002	Indicator Guide	1
34	825235	Decal Blade Position	1
35	826003	Bracket	1

STRIKE OFF BLADE ASSEMBLY

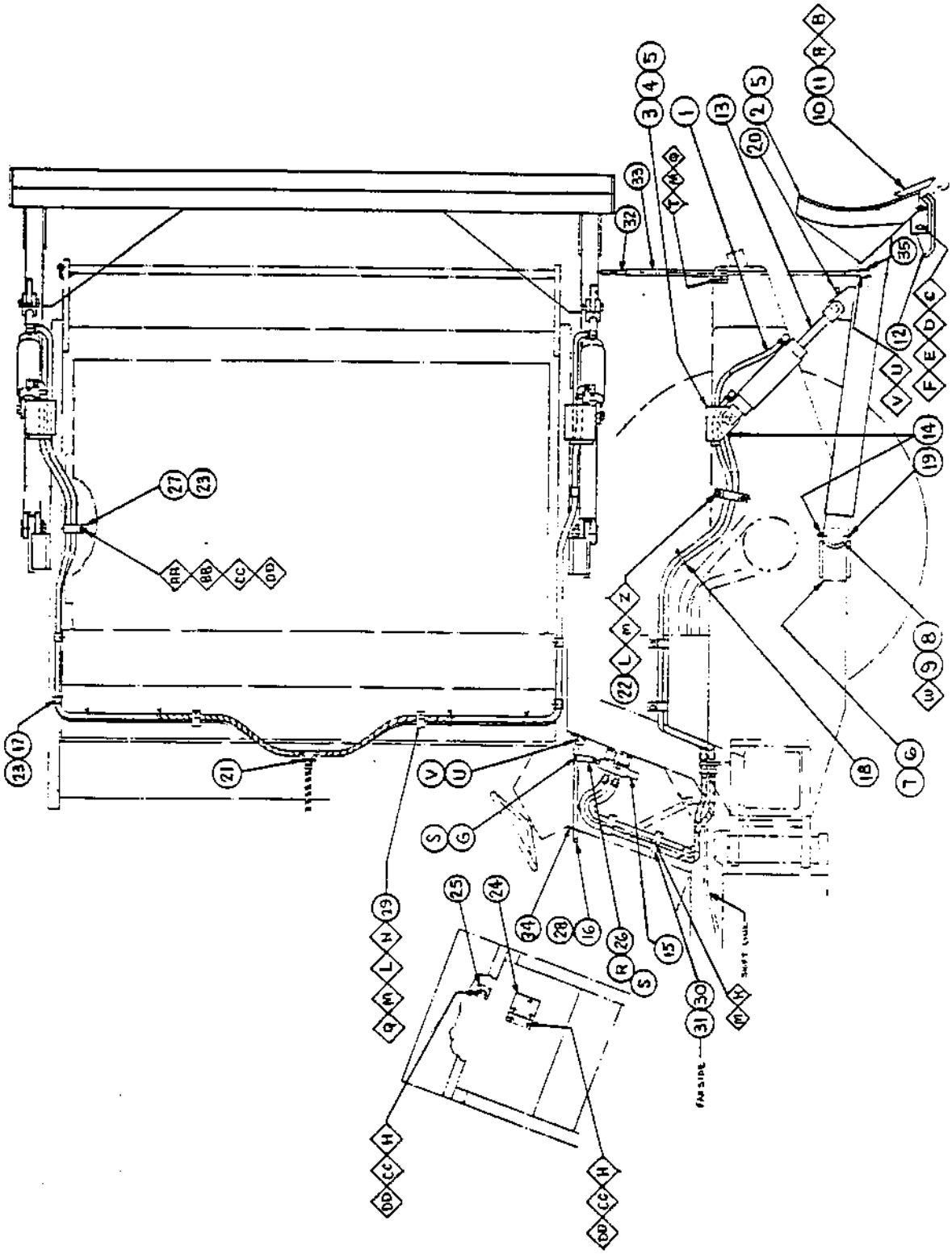

SPEEDOMETER & COMPONENTS
(CA-25 ASPHALT)

INDEX NUMBER	PART NUMBER	DESCRIPTION	QUANTITY
2	826257	Bracket, Generator	1
3	850660	Lever, Generator	1
4	850663	Clamp Speedometer	1
5	850666	Speedometer Mounting Bracket	1
7	850670	Lever Bushing	1
10	801663	Tension Spring	1
11	801634	Grommet	2
12	801371	Speedometer	1
13	NSS	Generator	1
14	NSS	Cable	1
15	813486	Ty-Rap	8
20	801636	Push-On Terminal	1
21	801635	Push-On Terminal	3
25	502016	Capscrew HH	3
26	604027	Lockwasher	3
27	571002	Hex Nut	3
30	571001	Locknut	1
31	604026	Flat Washer	1
33	574013	Hex Jam Nut	2
35	550101	Capscrew RH	2
36	604021	Lockwasher	2

SPEEDOMETER & COMPONENTS
CA-25 ASPHALT

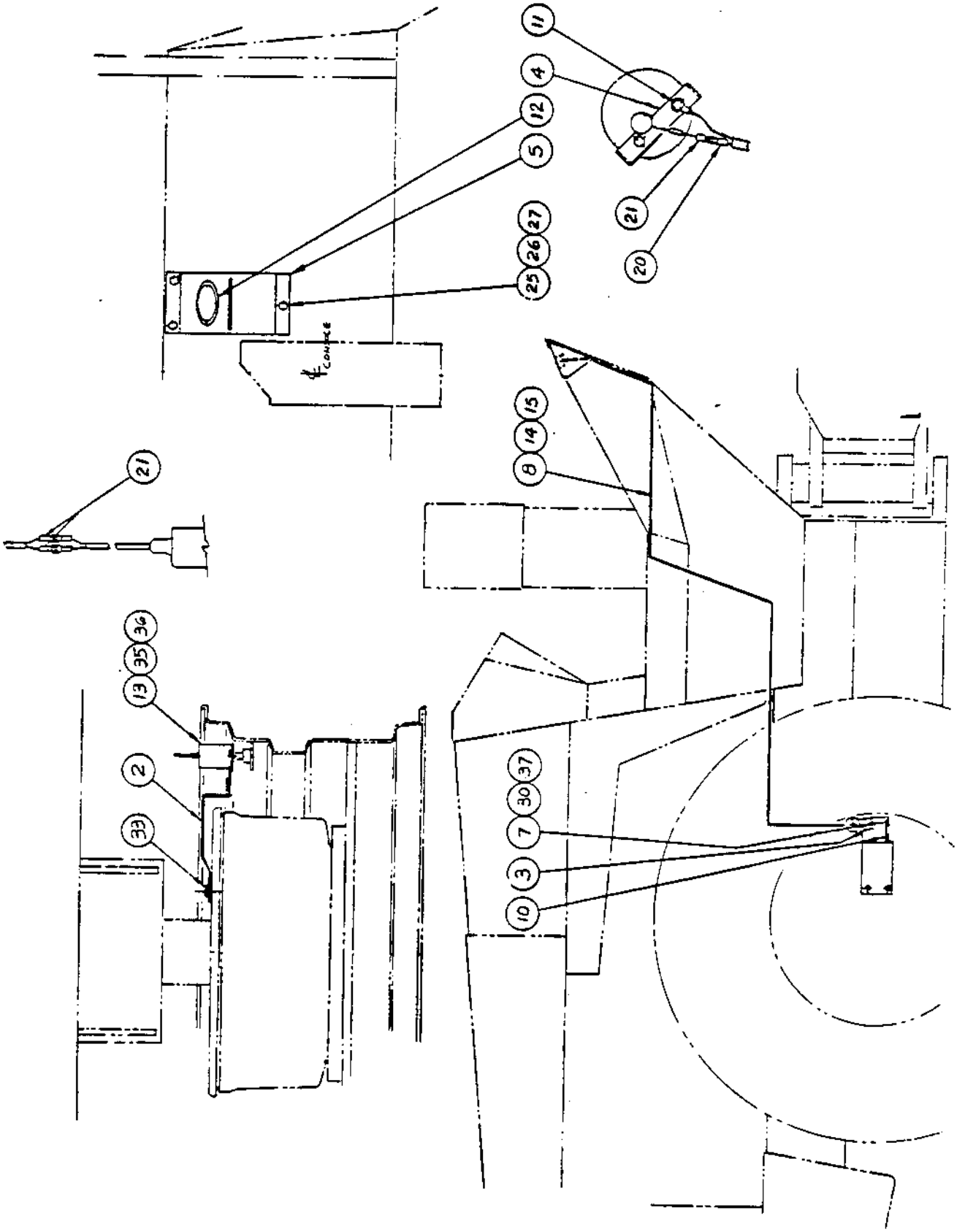

SPEED CONTROL
CA-25 ASPHALT

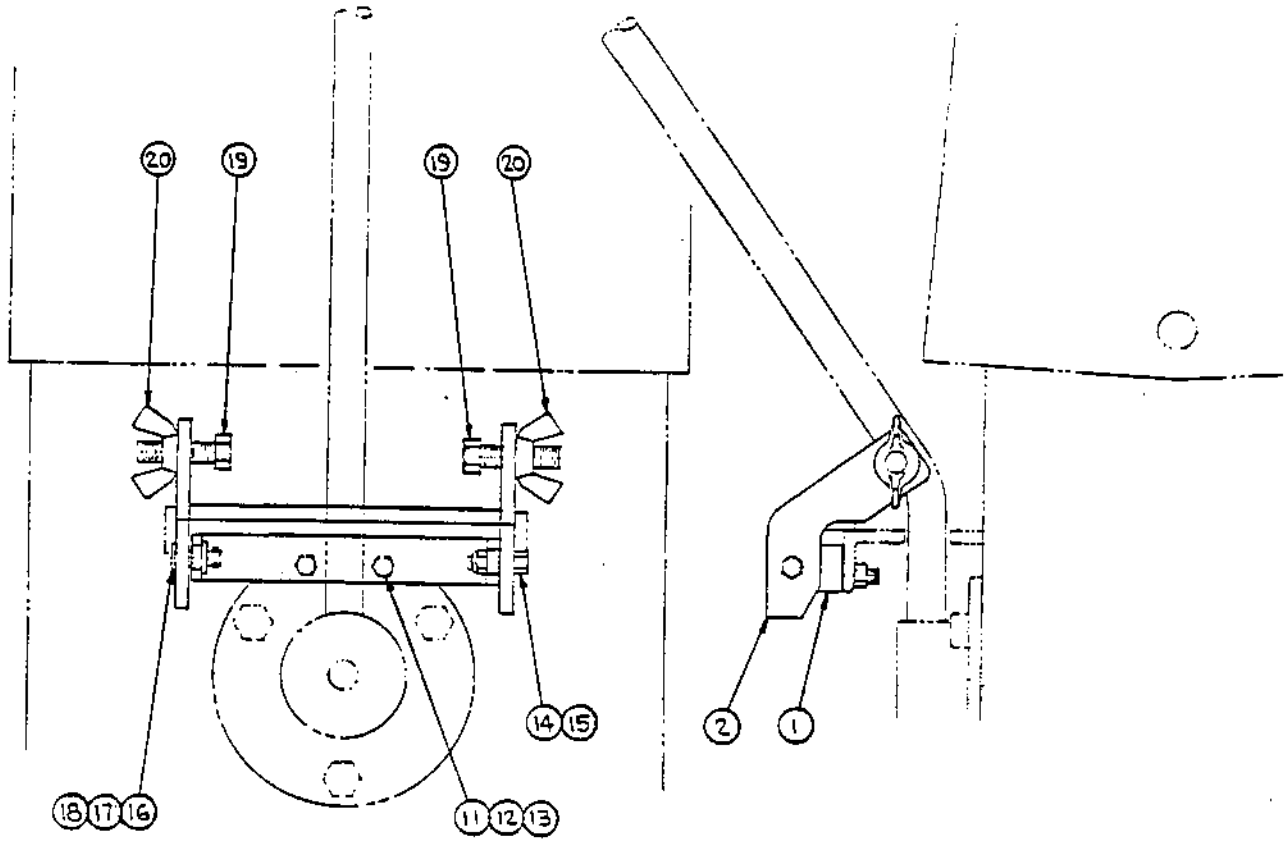

INDEX NUMBER	PART NUMBER	DESCRIPTION	QUANTITY
1	826323	Speed Control Bracket	1
2	826324	Speed Control Lever	1
11	502004	Capscrew HH	2
12	604026	Lockwasher	2
13	571001	Hex Nut	2
14	502006	Capscrew HH	1
15	586040	Hex Locknut	1
16	550108	Clevis Pin (½)	1
17	600005	Flat Washer	1
18	630052	Cotter Pin	1
19	80159403	Capscrew - Brass	2
20	80159401	Wing Nut - Brass	2

UMBRELLA

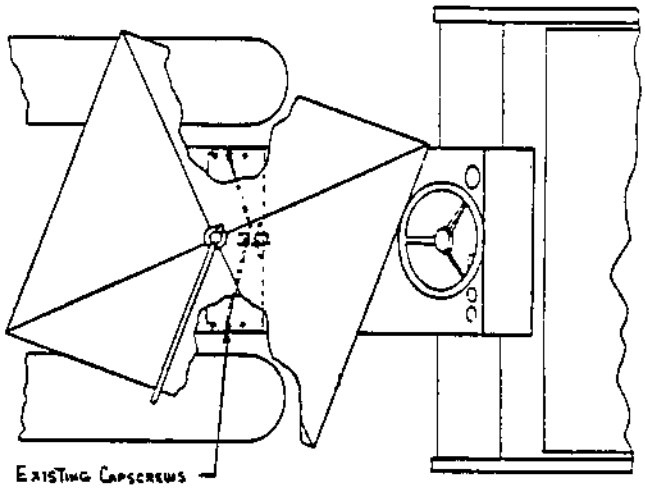

TOP VIEW

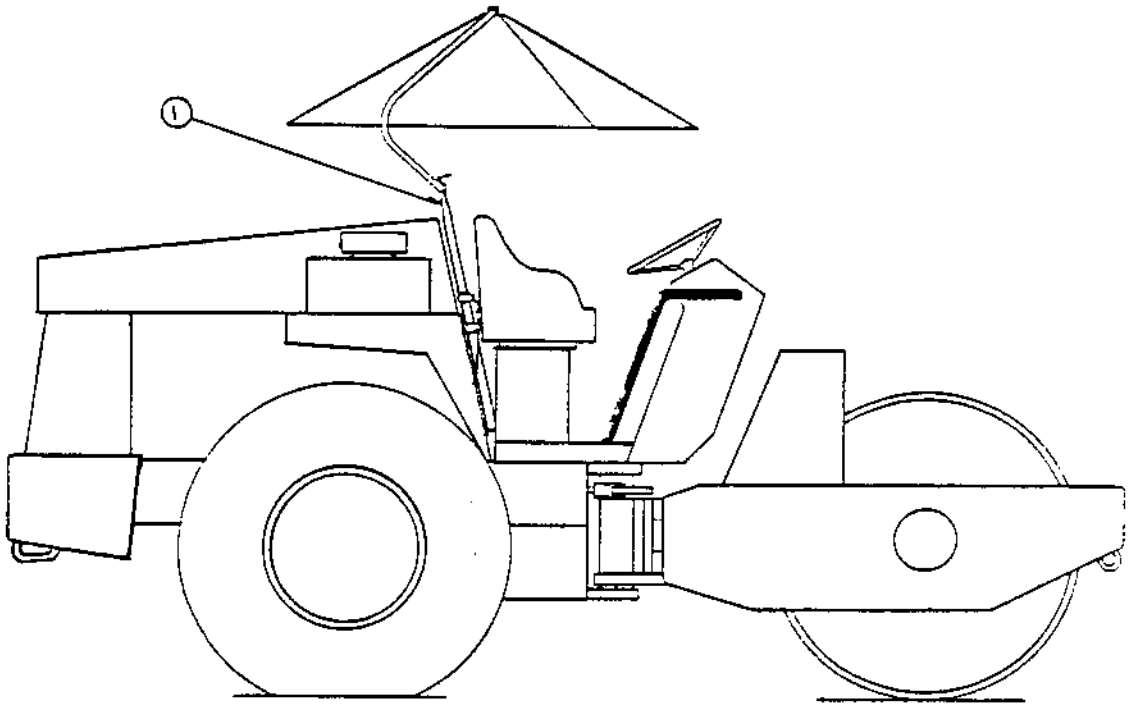

INDEX NUMBER	PART NUMBER	DESCRIPTION	QUANTITY
1	499421	Umbrella	1

CA-25, CA-25D
ROLL OVER PROTECTION STRUCTURE

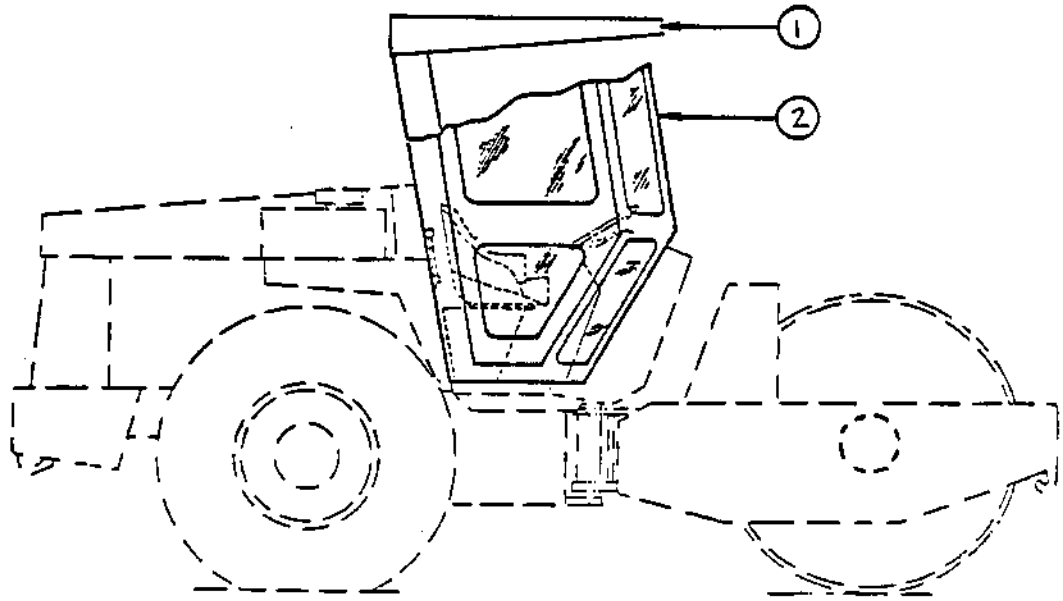

INDEX NUMBER	PART NUMBER	DESCRIPTION	QUANTITY
1	826230	Roll Over Protection Structure	1
2	826229	Enclosed Roll Over Protection Structure .	1

ROLL OVER PROTECTION STRUCTURE

CA-25PDB

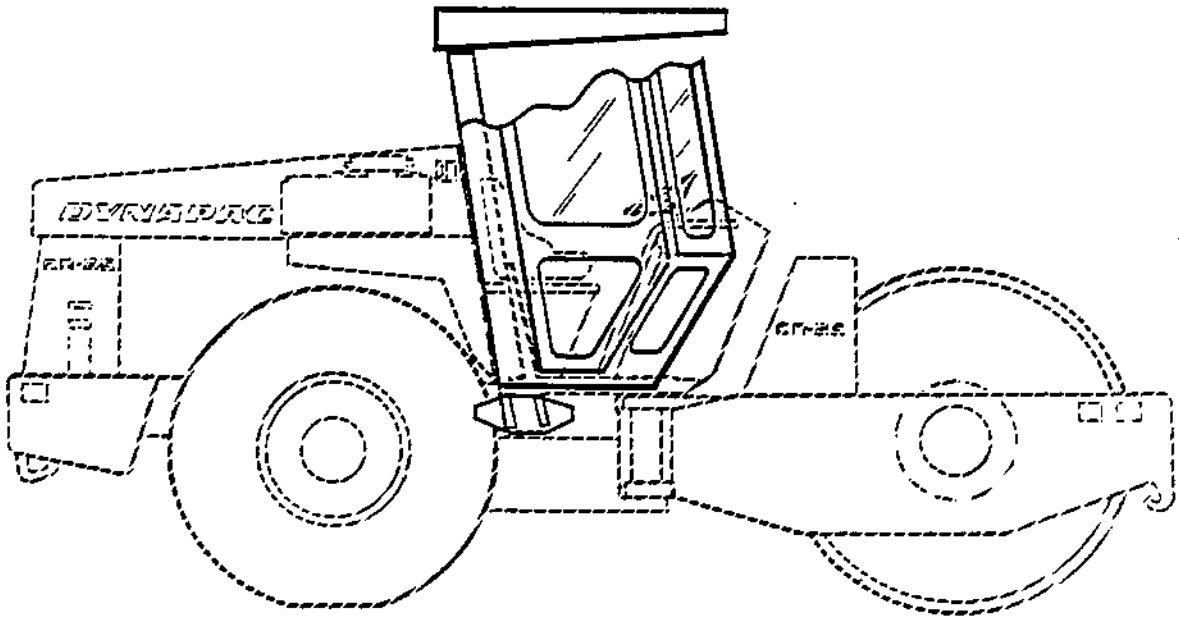

INDEX NUMBER	PART NUMBER	DESCRIPTION	QUANTITY
1	826477	Roll Over Protection Structure	1
2	826484	Enclosed Roll Over Protection Structure .	1

ROLL OVER PROTECTION STRUCTURE

CA-25A

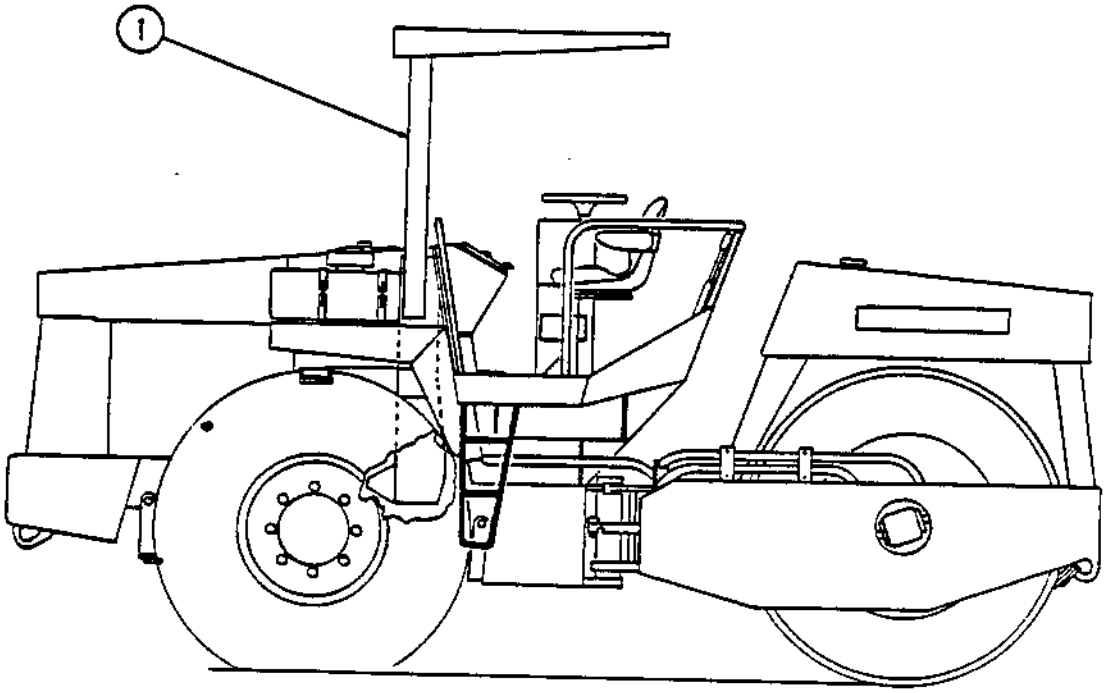

INDEX NUMBER	PART NUMBER	DESCRIPTION	QUANTITY
1	S26437	Roll Over Protection Structure	1

New Release

Page 2028

HYDRAULIC CYLINDER

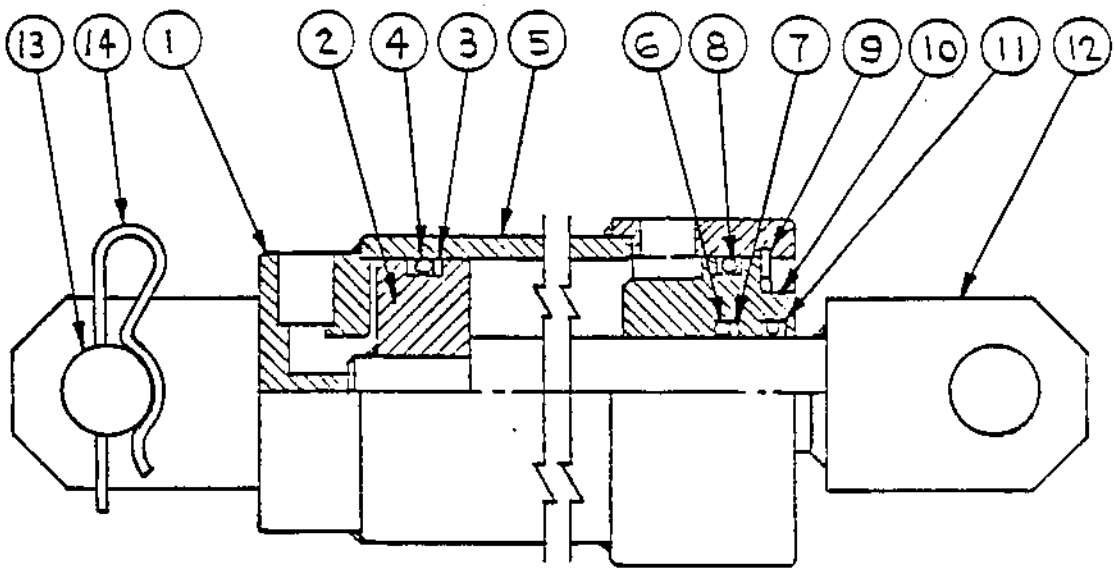

INDEX NUMBER	PART NUMBER	DESCRIPTION	QUANTITY
-	**801155	Cylinder Assembly	2
1	892495	Rear Head	1
2	892498	Piston	1
3	*892499	Washer, Back-Up	2
4	*892500	O-Ring	1
5	892501	Tube	1
6	*911565	O-Ring	1
7	*892503	Washer, Back-Up	1
8	*911564	O-Ring	1
9	911563	Snap Ring	1
10	892496	Bearing	1
11	*911565	O-Ring	1
12	892497	Piston Rod & Clevis Assembly	2
13	635046	Pin, Clevis	2
14	635047	Clip, Hairpin	2
*	801773	Seal Kit, (Includes 3,4,6,7,8 & 11)	1

** NOTE: This Cylinder has been replaced by Cylinder 802298 on page 203B. You can still obtain parts for 801155.

HYDRAULIC CYLINDER

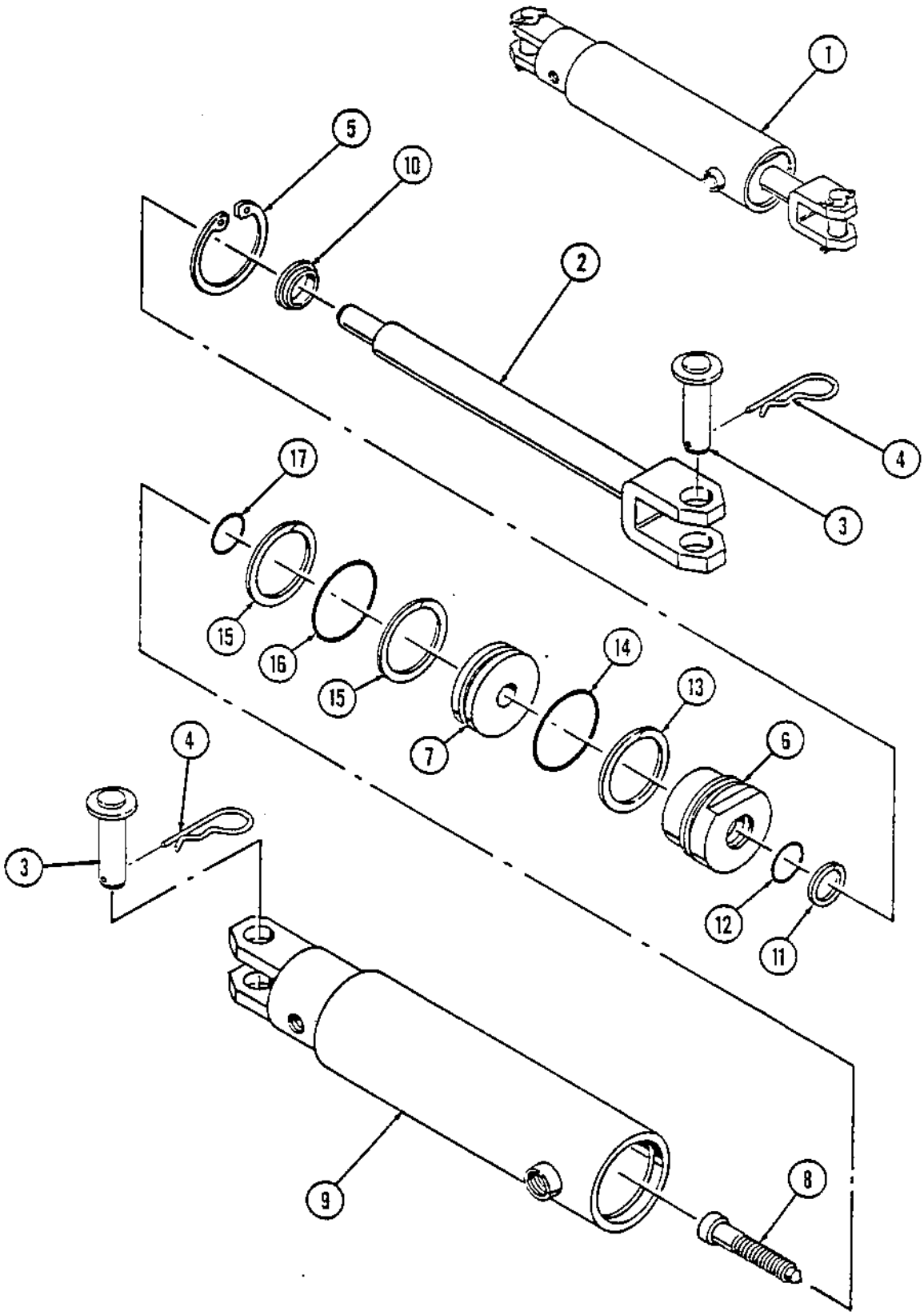

HYDRAULIC CYLINDER

INDEX NUMBER	PART NUMBER	DESCRIPTION	QUANTITY
1	802298	Assembly, Hyd. Steering Cylinder	2
2	922802	Assembly, Piston Rod	1
3	635046	Pin, Clevis	2
4	635047	Clip, Hairpin	2
5	922803	Ring, Snap	1
6	922804	Head, Cylinder	1
7	922805	Piston	1
8	922806	Screw, Piston	1
9	922807	Assembly, Body	1
-	801773	Kit, Seal	1
10	NSS	Seal, Wiper	1
11	NSS	Washer, Back-Up	1
12	NSS	O-Ring	1
13	NSS	Washer, Back-Up	1
14	NSS	O-Ring	1
15	NSS	Washer, Back-Up	2
16	NSS	O-Ring	1
17	NSS	O-Ring, Rod End	1

BLADE CONTROL VALVE

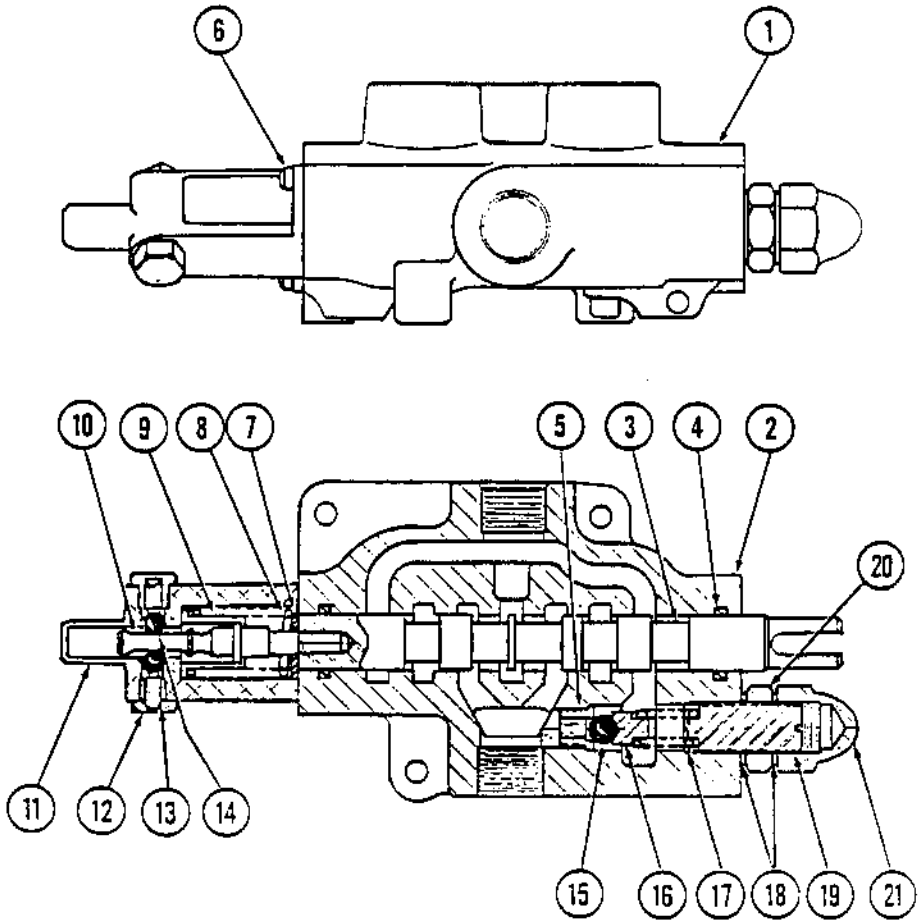

INDEX NUMBER	PART NUMBER	DESCRIPTION	QUANTITY
1	801115	Valve, Blade Control	1
2	NSS	Body, Valve	1
3	NSS	Spool, Valve	1
4	911192	O-Ring	2
5	911566	Seat	1
6	911569	Screw, Cap	2
-	911567	Detent Kit	1
7	NSS	Washer	1
8	NSS	Spring	1
9	NSS	Spacer	1
10	NSS	Spool, Detent	1
11	NSS	Cap, End	1
12	NSS	Screw, Detent	2
13	NSS	Spring	2
14	NSS	Ball, 1/4 Steel	2
-	911568	Relief Valve Kit	1
15	NSS	Ball, 5/16 Steel	1
16	NSS	Retainer	1
17	NSS	Spring	1
18	NSS	Gasket	2
19	NSS	Screw, Adj.	1
20	NSS	Nut	1
21	NSS	Nut, Low Crown	1

DUAL AMPLITUDE CONTROL VALVE
(This Valve Used on CA-25A's up to S/N 732)
On Standard CA-25 to S/N 2616

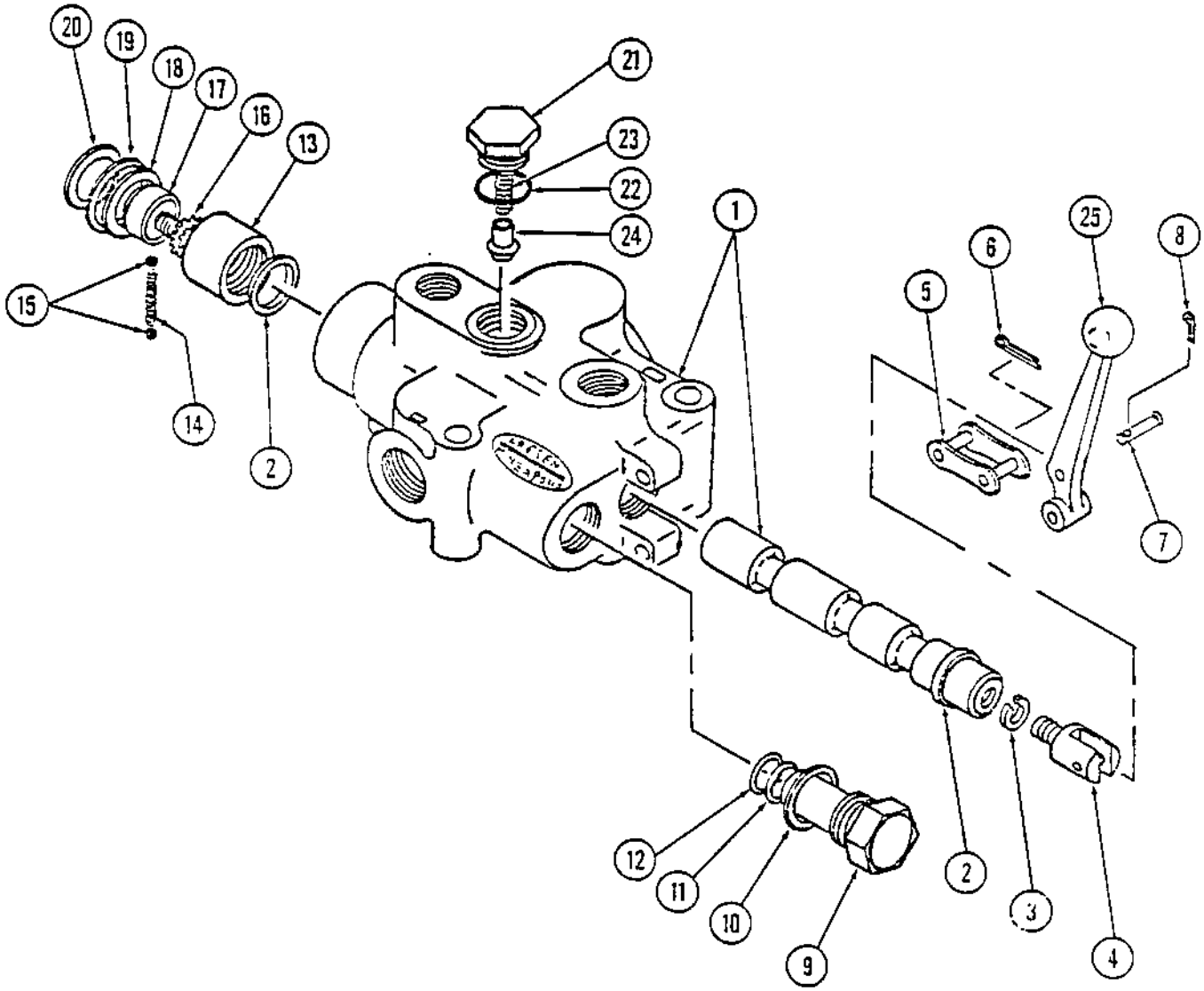

DUAL AMPLITUDE CONTROL VALVE
(THIS VALVE USED ON CA-25A's UP TO S/N 732)
ON STANDARD CA-25 to S/N 2616

INDEX NUMBER	PART NUMBER	DESCRIPTION	QUANTITY
-	335692	Valve Assembly, Amplitude Control	1
1	NSS	Housing, Valve	1
-	NSS	Spool, 4 Way	1
2	814105	Seal, Spool	2
3	814078	Lockwasher, Handle Adapter	1
4	911577	Handle, Adapter	1
5	911576	Link, Handle	1
6	911578	Cotter, Handle Link	1
7	814083	Pin, Handle	1
8	814077	Cotter Pin, Handle	1
-	911575	No-Relief Kit, (includes 9 thru 12)	1
9	NSS	Cap, No Relief	1
10	NSS	O-Ring, Relief Body	1
11	NSS	Washer, Relief Back-Up	1
12	NSS	O-Ring, Relief Seal	1
-	911252	Pre-Position Detent Kit (includes 13 thru 17)	1
13	NSS	Sleeve, Detent	-
14	NSS	Spring, Detent	1
15	NSS	Ball, Detent	2
16	NSS	Lockwasher, Detent Adapter	1
17	NSS	Holder, Detent	1
18	892078	Washer, Stop	1
19	814104	Snap Ring, Bonnet	1
20	814109	Cap Assembly, Bonnet	1
-	911450	Check Plug Kit (includes 21 thru 24)	1
21	NSS	Plug, Check	1
22	NSS	O-Ring, Check Plug	1
23	NSS	Spring, Check Poppet	1
24	NSS	Poppet, Check	1
25	825598	Handle, Control Valve	1

DUAL AMPLITUDE CONTROL VALVE
(From S/N 2617)

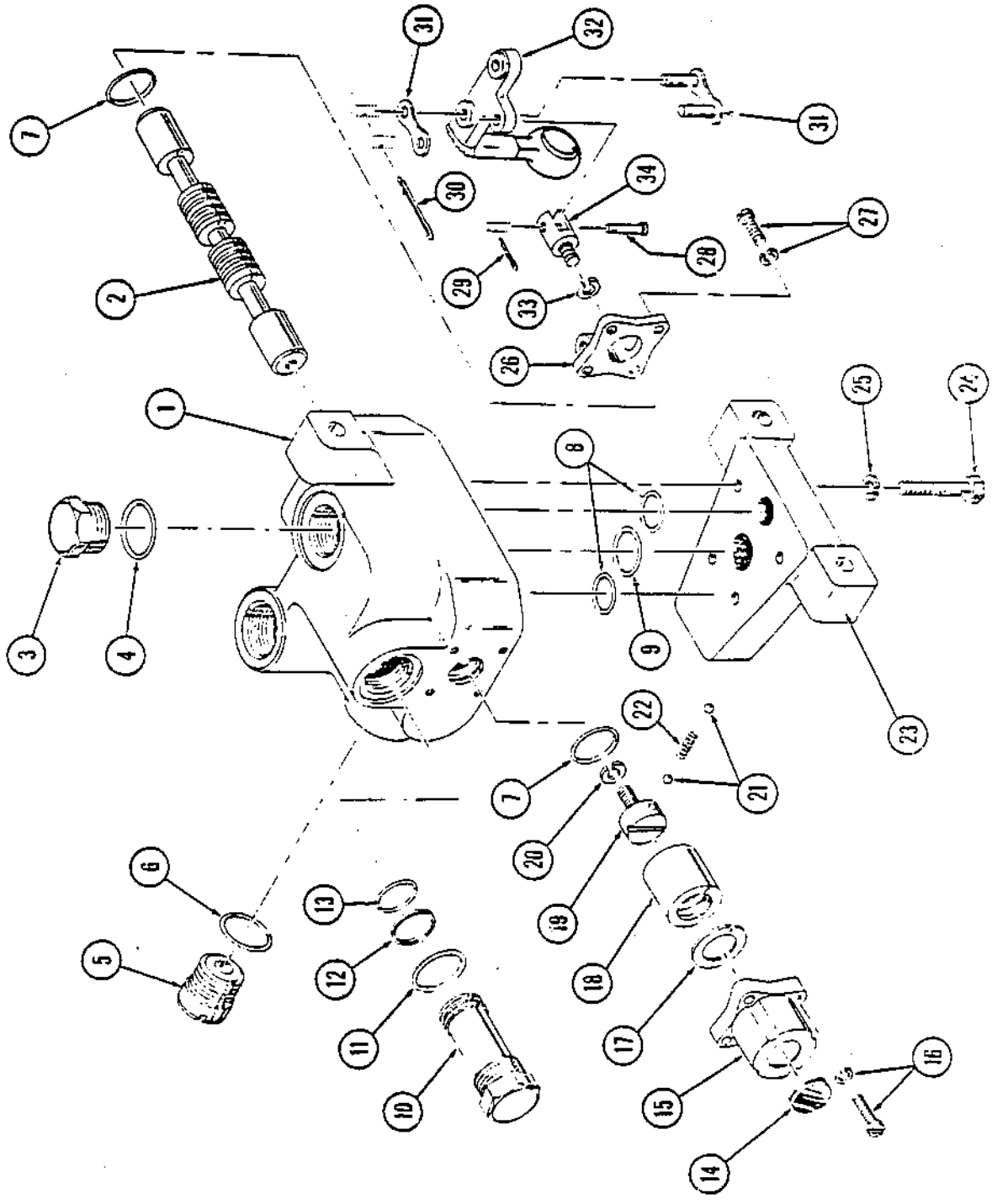

DUAL AMPLITUDE CONTROL VALVE
(From S/N 2617)

INDEX NO	PART NO	DESCRIPTION	QUANTITY
-	826595	Assembly, Valve & Handle(Includes Item 32)	1
-	802026	Valve Assembly, Amplitude Control	1
1	NSS	Housing	1
2	NSS	Spool	1
3	920910	Plug	1
4	920911	O-Ring	1
5	920912	Plug, Check	1
-	920913	Kit, Main, Body Seal, (includes 6 thru 9)	1
6	NSS	O-Ring, Check Plug	1
7	NSS	O-Ring, Main Spool	2
8	NSS	O-Ring, End Cover	2
9	NSS	O-Ring, End Cover	1
-	911575	Kit, Relief Plug, (includes 10 thru 13)	1
10	NSS	Plug	1
11	NSS	O-Ring	1
12	NSS	Washer, Backup	1
13	NSS	O-Ring	1
-	920914	Kit, Detent Replacement (includes 14 thru 22)	1
14	NSS	Diaphragm, Bonnet	1
15	NSS	Bonnet	1
16	NSS	Screw & Washer	4
17	NSS	Spacer	1
18	NSS	Sleeve, Detent	1
19	NSS	Holder, Detent	1
20	NSS	Lockwasher	1
21	NSS	Ball, Detent	2
22	NSS	Spring, Detent	1
23	920915	Cover, End Outlet	1
-	920916	Kit, Bolt (includes 24 & 25)	1
24	NSS	Bolt	4
25	NSS	Lockwasher	4
-	920917	Kit, Handle Assembly (includes 26 thru 32)	1
26	NSS	Bracket, Handle	1
27	NSS	Screw & Washer	4
28	NSS	Pin, Handle	1
29	NSS	Pin, Handle Cotter	1
30	NSS	Pin, Link Cotter	1
31	NSS	Link	1
32	NSS	Handle, Modified (826545)	1
33	920918	Lockwasher	1
34	920919	Adapter, Spool	1

SPEEDOMETER & COMPONENTS

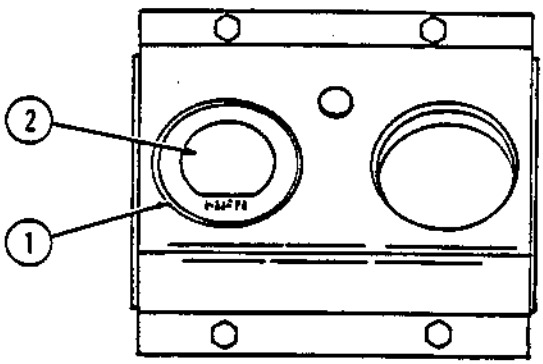

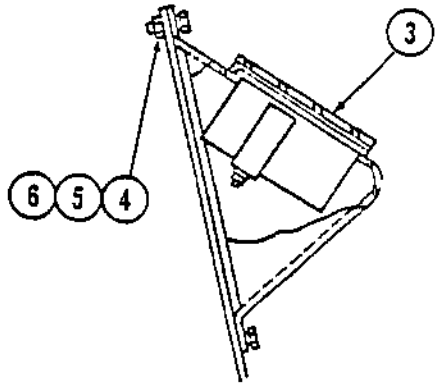

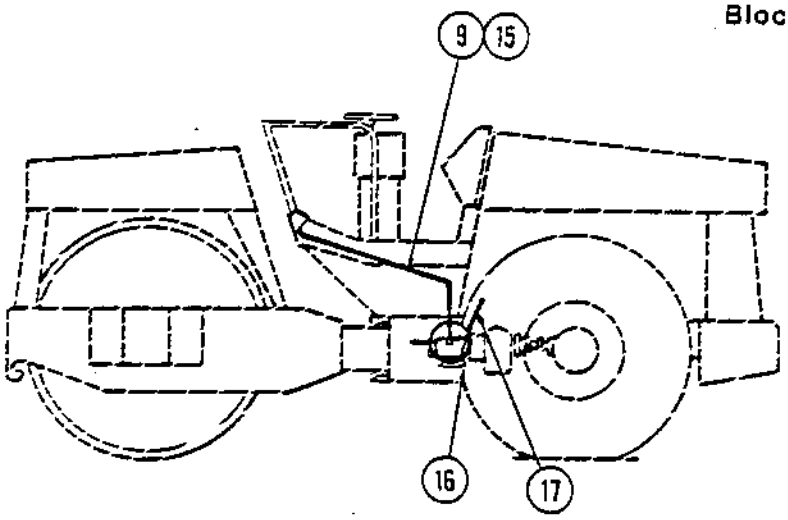

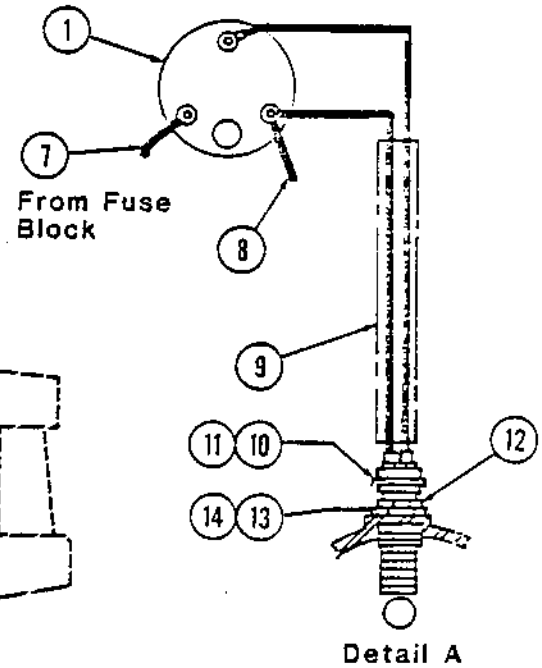

SPEEDOMETER & COMPONENTS

INDEX NO	PART NO	DESCRIPTION	QUANTITY
1	801666	Tachometer	1
2	815704	Decal, Speed	1
3	850819	Guard, Tachometer	1
4	502016	Capscrew	4
5	604027	Lockwasher	4
6	571002	Hex Nut	4
7	850825	Wire Assy. (From Fuse Block)	1
8	850826	Wire Assy.	1
9	826431	Harness Assy. Speedometer	1
10	801667	Sensor	1
11	801668	Boot	1
12	801669	Nut, Tru-Seal	1
13	850769	Bushing	1
14	160144	O-Ring	1
15	313041	Ty-Rap	6
16	813448	Elbow, 90°	1
17	82522733	Hose Assy. Motor Drain	1

VIBROMETER & COMPONENTS

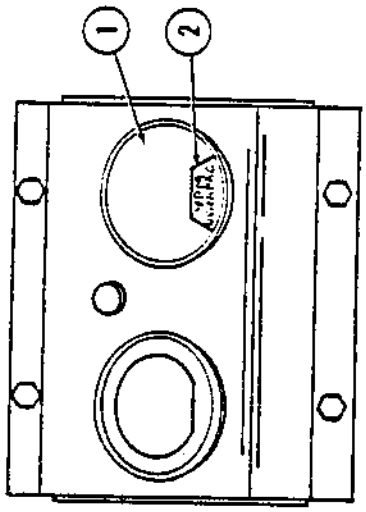

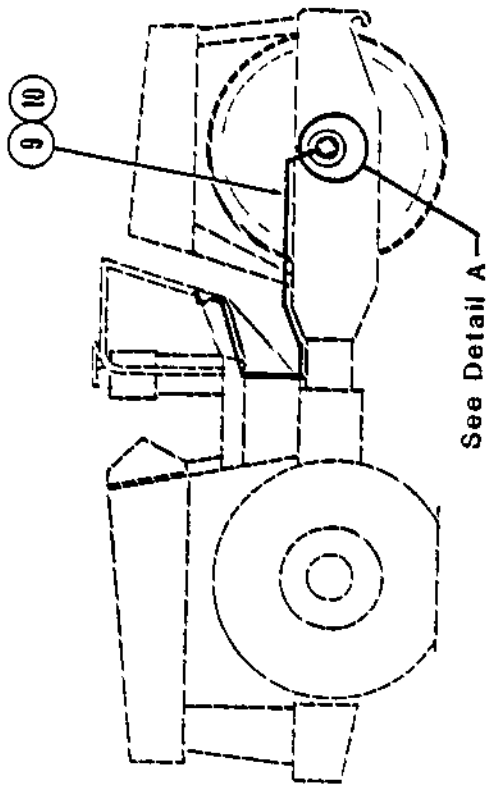

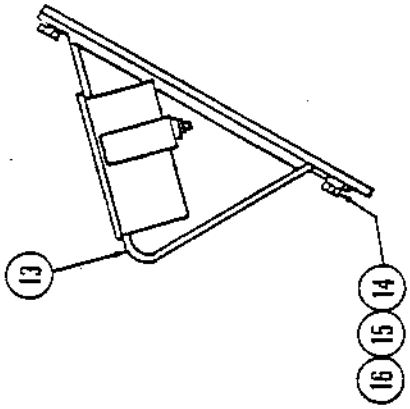

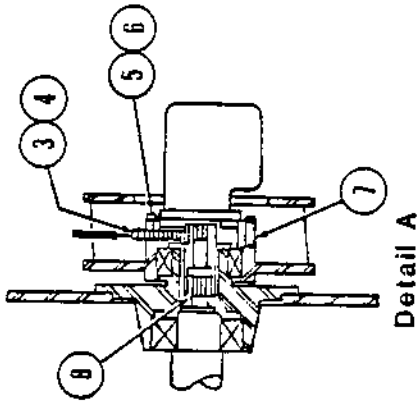

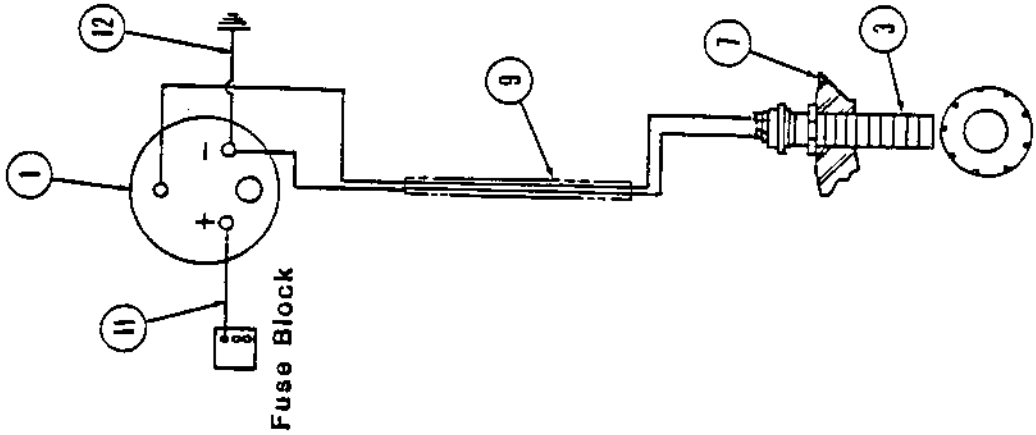

VIBROMETER & COMPONENTS

INDEX NO	PART NO	DESCRIPTION	QUANTITY
1	*801666	Tachometer	1
2	850791	Decal, Vibration	1
3	801705	Sensor	1
4	801668	Boot	1
5	502065	Capscrew, HH	6
6	604030	Lockwasher	6
7	**826781	Adapter Motor	1
-	***850760	Adapter, Motor	1
8	850778	Coupling	1
9	826433	Harness Assy. Vibrometer	1
10	313041	Ty-Rap	5
11	850825	Wire Assy. (Fuse To Tach)	1
12	850826	Wire Assy. (Tach. To Ground)	1

*NOTE: If Vibrometer Assy. is being ordered without a Speedometer Assy. you will need the parts listed below.

13	850790	Bracket, Tach. Mounting	1
14	502016	Capscrew, HH	4
15	604027	Lockwasher	4
16	571002	Hex Nut	4

** NOTE: Motor Adapter for S/N 2915, 2916, 2918, 2937, 3003, 3039, 3061 and 3076 and up if Machine has a Vibrometer.

*** NOTE: Motor Adapter for S/N 2914, 2917, 2919 to 2936, 2938 to 3002, 3004 to 3075 if Machine has a Vibrometer.

DYNAPAC

NUMERICAL INDEX

Page | Issue | Numerical Index

Part No.	Page	Part No.	Page	Part No.	Page	Part No.	Page
100055	40	234356	87	331087	24	334353	133
100053	47	234358	91	331087	25A	334353	134
100056	40	234358	99	332112	111	334353	138
100057	40	234365	40	332112	112	334359	91
100071	196	234365	133	332112	115	334364	128
100076	44	234365	138	332125	91	334364	134
100077	44	234366	127	332127	87	334372	26
114036	111	234366	133	332127	196	334372	28
114036	112	234371	81	333104	127	334394	128
114036	114	234371	86	333104	133	334422	98
114036	115	234373	87	333112	166	334422	127
116041	111	234377	87	333560305	81	334425	40
116041	112	234395	81	333560306	81	334441	92
116041	115	234395	86	333560307	81	334441	197
160144	82	234395	128	333560313	81	334453	24
160144	87	234435	87	333560320	81	334453	25A
160144	210					334453	28

Page	Issue	Numerical Index
1	PA-25-PL	

Part No.	Page	Part No.	Page	Part No.	Page	Part No.	Page
100053	40	234336	87	331087	24	334353	133
100053	47	234358	91	331087	25A	334353	134
100056	40	234358	99	332112	111	334353	138
100057	40	234365	40	332112	112	334359	91
100071	196	234365	133	332112	115	334364	128
100076	44	234365	138	332125	91	334364	134
100077	44	234366	127	332127	87	334372	26
114036	111	234366	133	332127	196	334372	28
114036	112	234371	81	333104	127	334394	128
114036	114	234371	86	333104	133	334422	98
114036	115	234373	87	333112	166	334422	127
116041	111	234377	87	333560305	81	334425	40
116041	112	234395	81	333560306	81	334441	92
116041	115	234395	86	333560307	81	334441	157
160144	82	234395	128	333560313	81	334453	24
160144	87	234435	87	333560320	81	334453	25A
160144	210	234619	25A	333567607	157	334453	29
160154	85A	234619	26	333567608	94	334453	87
160186	85A	234619	28	333567609	94	334545	16
163119	156	234662	87	333567610	94	334549	26
167032	69A	234759	25A	334117	81	334549	28
203037	128	244041	25A	334117	86	335461	118
203037	134	244041	127	334117	92	335463	118
219002	47	244041	133	334117	94	335464	175
219002	50	244041	138	334121	40	335464	177
220012	193	300013	44	334121	82	335464	179
232097	94	300221	40	334128	87	335464	181
232115	138	309100502	143	334157	98	335483	47
233076	128	309100502	144	334163	85A	335483	50
233076	134	309100502	145	334174	20	335485	104
233084	127	309133502	146	334174	22	335485	111
233085	98	310022	7	334179	99	33548901	100
233088	133	310022	68	334181	26	335491	111
233088	193	310022	196	334181	28	335491	112
233130	133	310025	4	334181	99	335491	114
233194	155A	310025	10	334197	40	335491	115
234257	128	310025	196	334197	96	335496	33
234257	134	310035	69A	334283	98	335496	36
234270	40	312061	44	334288	28	335497	33
234276	25A	313041	210	334301	98	335504	111
234279	85A	313041	212	334305	20	335513	111
234308	85A	313056	8	334305	22	335513	112
234317	138	313062	127	334314	22	335513	114
234318	40	313062	133	334314	24	335513	115
234318	134	313064	3	334314	25A	335514	111
234322	87	313064	7	334314	40	335514	112
234327	87	313075	25A	334324	128	335514	114
234333	91	330373	98	334324	138	335514	115
234335	87	331087	22	334353	128	335522	111

Page	Issue	Numerical Index
2	PA-25-PL	

Part No.	Page	Part No.	Page	Part No.	Page	Part No.	Page
335522	112	335572	9	335688	108	416151	177
335522	114	335573	3	335692	206	416213	147
335522	115	335573	7	335693	108	416216	147
335523	111	335573	9	335694	9	416223	175
335523	112	335574	34	335700	30	416223	179
335523	114	335576	33	335702	19	418021	59
335523	115	335582	34	335704	19	423125	173A
335524	111	335583	33	335706	19	423127	173A
335524	112	335584	33	335718	126	423130	173A
335526	58	335585	33	335718	132	423135	173A
335529	58	335585	36	335741	124	423140	173A
335533	58	335586	33	335745	120	423143	173A
335534	58	335587	33	335746	120	423144	173A
335537	3	335587	36	335752	138	423145	173A
335537	9	335589	44	335756	160	423146	173A
335540	3	335590	47	335760	63	423149	172A
335540	7	335593	47	335761	63	423149	173A
335540	9	335593	50	336488	126	423309	172A
335544	20	335593	151	336488	132	423310	172A
335544	22	335594	47	337042	69A	423311	172A
335544	24	335594	50	337043	69A	423312	172A
335544	25A	335602	82	337044	69A	423314	172A
335545	12	335614	111	337045	69A	423314	173A
335545	14	335614	112	337510	71	423315	172A
335545	16	335622	68	337510	72	423315	173A
335545	32	335624	68	337510	74	423316	172A
335545	106	335625	68	337510	76	423316	173A
335553	160	335626	68	337510	77	423317	172A
335554	170	335627	100	337510	79	423317	173A
335555	82	335627	101A	337510	166	423318	172A
335556	151	335627	102	337534	16	423318	173A
335557	32	335627	103	337843	33	423319	172A
335557	154	335632	92	337843	56	423319	173A
335559	66	335632	94	343034	106	423320	172A
335560	167	335656	66	343034	111	423320	173A
335561	111	335657	170	343034	112	423321	172A
335561	112	335659	115	343597	69A	423322	172A
335561	114	335661	114	344353	127	423323	172A
335561	115	335661	115	353061	36	423324	172A
335563	33	335664	114	415105	181	423325	172A
335563	40	335664	115	415121	50	423325	173A
335564	165	335665	109	415193	36	423327	172A
335565	162	335668	92	415193	50	423328	172A
335565	163	335669	92	416046	167	423328	173A
335566	150	335669	94	416106	175	423329	172A
335567	168	335672	104	416112	167	423329	173A
335567	169	335674	92	416126	175	423330	172A
335572	3	335686	108	416147	181	423331	172A
335572	7	335687	108	416148	177	423332	172A

Page	Issue	Numerical Index
3	PA-25-PL	

Part No.	Page	Part No.	Page	Part No.	Page	Part No.	Page
423333	172A	456048	50	480402	155A	481272	168
423334	172A	456050	50	480407	155A	481273	168
423335	172A	456060	60	480408	155A	482007	20
423336	172A	456069	61	480499	160	482007	22
423336	173A	457073	33	480499	161	482007	24
423337	172A	457073	53	480616	156	482008	20
423338	172A	457083	60	480668	153	482008	22
423339	172A	457086	33	480695	14	482008	24
423340	172A	457086	56	480695	150	482167	82
423340	173A	457086	70	481061	156	499224	36
423342	172A	457086	73	481065	156	499224	130
423342	173A	457086	75	481067	157	499236	66
423343	172A	457086	78	481069	157	499237	66
423343	173A	457087	34	481073	156	499238	66
423344	172A	457087	56	481080	152	499239	66
423344	173A	457098	53	481081	152	499240	66
423345	172A	457108	54	481082	151	499241	66
423345	173A	465024	36	481083	152	499242	66
423346	172A	465030	36	481084	153	499243	66
423346	173A	466200	184	481086	151	499245	66
423347	172A	470023	33	481088	153	499246	66
423347	173A	470023	36	481089	152	499247	66
423348	172A	475033	36	481090	152	499248	66
423348	173A	475046	190	481091	152	499249	66
423351	172A	480202	40	481092	151	499250	66
423351	173A	480202	82	481093	152	499297	184
423352	172A	480204	155A	481094	152	499298	184
423352	173A	480287	152	481095	153	499299	184
423470	172A	480288	152	481096	153	499318	127
423471	172A	480289	152	481097	153	499400	124
423472	172A	480291	154	481099	153	499421	201
423473	172A	480291	158	481101	152	499427	132
433562201	68	480301	152	481103	151	499432	58
433704401	69A	480303	152	481105	151	550035	42
433704402	69A	480305	151	481106	151	550037	33
433704501	69A	480306	152	481111	166	550037	36
433704502	69A	480306	154	481112	166	550038	36
450073	104	480306	158	481113	166	550038	50
450073	106	480341	152	481114	166	550040	124
450073	111	480342	152	481115	166	550047	195
450073	112	480344	155A	481116	166	550107	44
450099	34	480348	155A	481119	166	550108	200
450101	36	480353	152	481120	166	551800	74
450122	106	480355	155A	481121	166	551800	79
450122	111	480359	152	481122	166	570201	87
450122	112	480366	152	481123	166	615060	37
456023	47	480367	155A	481124	166	615060	42
456039	47	480369	152	481125	166	615077	28
456040	47	480371	152	481168	152	620097	19

Part No.	Page
630007	49
630008	38
630008	195
630020	195
630045	34
630045	38
630046	49
630051	195
630052	200
630059	147
635015	40
635019	59
635020	120
635020	122
635020	167
635022	167
635034	147
635035	38
635035	49
635037	44
635038	44
635046	203
635046	203B
635047	203
635047	203B
745015	7
745016	8
745017	8
745018	14
745020	14
745020	60
745022	64
752014	20
752014	22
752016	12
752018	12
752026	12
752039	18
752046	12
753004	64
753007	9
753008	9
753009	9
753010	7
753010	9
801037	111
801037	112
801037	114
801037	115

Part No.	Page
801049	14
801058	7
801063	156
801063	157
801065	32
801065	147
801091	12
801101	156
801101	157
80110806	146
80110807	143
80110807	144
80110807	145
80110807	146
801115	204
801137	11A
801144	158
801150	172A
801151	12
801155	203
801157	151
801159	162
801159	163
801160	161
801174	66
801176	111
801176	112
801176	115
801177	64
801178	64
801179	64
801186	61
801187	104
801187	106
801190	60
801191	124
801192	196
801195	196
801197	196
801198	96
801199	96
801201	186
801201	188
80120401	190
80120402	192
80120406	190
801208	194
801213	130
801214	193

Part No.	Page
801219	193
801220	193
801221	193
801226	193
801227	193
801228	193
801230	196
80123002	186
80123202	186
801235	38
801235	49
801236	111
801236	112
801236	114
801236	115
801237	111
801237	112
801237	114
801237	115
801259	196
801266	24
801266	25A
801266	28
801269	85A
801272	24
801272	25A
801272	58
801291	11A
801311	127
80133103	130
80133103	182
801343	37
801343	40
801343	71
801343	72
801343	76
801343	77
801343	130
801347	193
801348	193
801350	193
801371	198
801377	61
801409	72
801409	136
801411	34
801411	36
801413	106
80143912	130

Part No.	Page
80144612	130
801452	134
801453	87
801454	72
801454	77
801454	134
801458	143
801458	144
801458	145
801458	146
801462	118
801485	11A
80149008	136
80149038	136
801528	50
801529	50
801530	37
801531	37
801533	132
80153301	132
80153302	132
80153305	24
80153305	25A
80153305	28
80154601	72
80154601	77
80154601	136
80154602	77
80154602	136
801549	40
801549	72
801549	77
801550	87
801551	40
801551	72
801551	77
801572	71
801572	74
801572	76
801572	79
801572	127
801590	11A
80159401	200
80159403	200
801605	68
801605	69A
801607	34
801607	37
801607	70

Page	Issue	Numerical Index
5	PA-25-PL	

Part No.	Page	Part No.	Page	Part No.	Page	Part No.	Page
801607	71	813312	19	813332	33	813364	50
801607	72	813313	3	813332	36	813365	47
801607	75	813313	7	813333	33	813366	47
801607	76	813313	9	813333	36	813367	47
801607	77	813313	37	813334	33	813368	47
801607	78	813313	61	813334	36	813369	47
801607	79	813314	3	813335	33	813377	58
801623	81	813314	7	813336	33	813379	118
801630	108A	813314	10	813336	40	813380	118
801631	108A	813314	25A	813337	33	813382	118
801634	198	813314	70	813337	40	813391	24
801635	198	813314	71	813338	33	813391	25A
801636	198	813314	72	813338	184	813391	28
801650	20	813314	73	813339	33	813391	81
801650	25A	813314	74	813339	36	813391	86
801651	50	813314	75	813340	33	813395	60
801663	198	813314	76	813340	52	813396	60
801666	210	813314	77	813342	33	813411	33
801666	212	813314	78	813342	40	813411	37
801667	210	813314	79	813343	33	813411	70
801668	210	813315	3	813343	36	813411	71
801668	212	813315	7	813343	60	813411	72
801669	210	813315	10	813344	34	813411	73
801705	212	813315	25A	813344	36	813411	74
801741	193	813315	36	813348	34	813411	75
801773	203	813316	3	813348	37	813411	76
801773	203B	813316	7	813349	34	813411	77
802026	208	813316	9	813349	37	813411	79
802298	203	813316	68	813349	40	813412	70
802298	203B	813316	69A	813351	34	813412	72
802303	163	813317	4	813351	36	813412	73
802303	163B	813317	7	813353	47	813412	75
811532	12	813317	9	813353	50	813412	76
811532	16	813318	32	813355	47	813412	77
813086	165	813318	171	813355	50	813412	78
813303	3	813319	32	813357	47	813412	193
813303	7	813320	28	813358	47	813413	70
813303	9	813320	193	813359	47	813413	73
813303	171	813321	20	813359	50	813413	75
813304	171	813322	26	813360	10	813413	78
813306	11A	813325	20	813360	47	813413	193
813308	3	813326	26	813361	47	813416	81
813310	3	813326	28	813361	50	813416	82
813310	7	813327	26	813362	47	813416	85A
813310	9	813327	28	813362	50	813416	86
813311	3	813330	33	813362	195	813417	81
813311	7	813330	36	813363	47	813420	82
813311	9	813331	33	813363	50	813422	82
813311	82	813331	47	813364	47	813423	82

Page	Issue	Numerical Index
6	PA-25-PL	

Part No.	Page	Part No.	Page	Part No.	Page	Part No.	Page
813424	81	813449	86	813480	112	813546	167
813424	86	813449	98	813480	114	813547	167
813425	81	813451	81	813480	115	813548	167
813425	86	813451	86	813481	111	813549	167
813426	82	813451	127	813481	112	813550	167
813426	86	813453	82	813481	114	813551	167
813427	82	813455	82	813481	115	813552	167
813427	85A	813456	82	813482	111	813553	167
813427	86	813456	87	813482	112	813558	167
813428	86	813460	12	813482	114	813559	167
813429	81	813460	71	813482	115	813567	167
813429	86	813460	72	813483	82	813571	147
813429	92	813462	12	813483	87	813572	147
813429	94	813462	14	813483	111	813573	148
813430	81	813462	16	813483	112	813574	148
813430	86	813462	70	813483	114	813575	147
813431	82	813462	71	813483	115	813576	148
813431	86	813462	72	813484	92	813577	147
813433	82	813462	73	813485	120	813578	147
813433	86	813462	74	813485	122	813579	147
813434	82	813462	75	813485	127	813580	147
813434	86	813462	76	813485	133	813581	147
813434	127	813462	77	813486	130	813583	147
813434	133	813462	78	813486	136	813584	147
813435	40	813462	79	813486	182	813585	148
813435	82	813465	12	813486	193	813586	148
813435	86	813466	12	813486	196	813587	148
813435	96	813466	16	813486	198	813589	147
813437	40	813466	60	813493	92	813590	147
813437	81	813467	16	813495	182	813591	147
813438	81	813467	20	813497	33	813592	147
813438	86	813467	22	813497	36	813593	148
813438	133	813467	26	813499	92	813594	147
813439	82	813468	68	813500	92	813595	148
813439	127	813468	82	813503	92	813596	147
813439	133	813469	68	813503	94	813597	148
813439	138	813473	68	813512	33	813598	150
813443	82	813478	32	813512	36	813599	150
813443	86	813478	104	813514	24	813600	150
813444	40	813478	106	813526	182	813601	150
813445	87	813478	111	813528	182	813602	12
813445	96	813478	112	813537	92	813602	14
813447	12	813478	148	813538	167	813602	16
813447	16	813479	111	813539	167	813602	150
813447	73	813479	112	813540	167	813603	150
813447	74	813479	114	813541	167	813605	12
813447	81	813479	115	813543	167	813605	14
813448	210	813479	147	813544	167	813605	16
813449	81	813480	111	813545	167	813605	150

Page	Issue	Numerical Index
7	PA-25-PL	

Part No.	Page	Part No.	Page	Part No.	Page	Part No.	Page
813607	148	813636	148	813676	160	813727	134
813608	148	813637	148	813676	161	813728	127
813609	148	813638	148	813677	162	813728	133
813610	148	813639	148	813677	163B	813728	138
813611	154	813640	148	813678	160	813731	71
813611	155A	813641	148	813678	161	813731	72
813612	152	813642	162	813679	148	813731	76
813612	155	813642	163	813680	148	813731	77
813612	158	813643	160	813681	148	813731	79
813613	151	813643	161	813683	160	813731	127
813614	151	813644	147	813683	161	813732	127
813615	154	813645	148	813685	148	813732	133
813615	155A	813646	160	813686	147	813732	138
813616	152	813646	161	813688	148	813733	127
813616	155	813646	163	813690	147	813733	133
813616	158	813647	12	813694	177	813733	138
813617	151	813647	14	813695	179	813738	81
813617	155A	813647	150	813697	111	813738	86
813618	154	813649	150	813697	112	813738	127
813618	155A	813650	150	813697	114	813741	127
813618	158	813651	148	813697	115	813741	133
813619	152	813651	150	813700	118	813742	127
813619	155	813652	32	813708	124	813742	133
813619	159	813652	148	813711	124	813744	127
813620	154	813653	148	813712	63	813744	133
813620	155A	813655	148	813714	63	813754	120
813621	152	813656	162	813714	165	813754	122
813621	155	813656	163	813716	130	813757	120
813621	159	813657	160	813716	136	813757	122
813622	152	813658	147	813717	130	813768	138
813622	155	813659	147	813717	136	813769	138
813622	159	813660	147	813719	85A	813772	167
813623	152	813661	160	813721	86	813773	167
813624	152	813661	161	813721	87	813779	33
813624	155	813662	148	813721	94	813786	63
813624	158	813664	163	813722	127	813791	66
813625	152	813665	162	813722	133	813792	66
813625	155	813667	147	813722	138	813793	171
813625	158	813668	163	813724	127	813794	171
813626	153	813668	163B	813724	133	813795	171
813626	155	813669	160	813724	138	813796	171
813626	158	813669	161	813725	127	813797	92
813627	154	813670	147	813725	133	813797	156
813627	155A	813671	147	813725	138	813803	147
813628	151	813672	147	813726	127	813804	147
813630	151	813673	162	813726	133	813805	147
813633	151	813673	163B	813727	127	813808	148
813634	151	813674	160	813727	128	813809	150
813635	148	813674	161	813727	133	813810	148

Page	Issue	Numerical Index
8	PA-25-PL	

Part No.	Page	Part No.	Page	Part No.	Page	Part No.	Page
813811	148	813844	151	813873	154	813913	163
813813	151	813845	151	813873	158	813914	160
813813	154	813845	154	813874	153	813914	161
813813	158	813845	155A	813874	154	813914	163
813815	152	813846	151	813874	158	813915	160
813815	154	813846	152	813875	152	813915	161
813815	158	813846	154	813875	154	813915	163
813816	151	813846	158	813875	158	813915	163B
813817	152	813847	151	813876	154	813916	160
813818	152	813849	152	813876	158	813916	161
813819	152	813850	152	813878	151	813917	163
813820	151	813851	153	813878	154	813917	163B
813821	151	813851	154	813878	158	813918	162
813821	154	813851	158	813879	154	813919	162
813821	158	813853	153	813880	151	813919	163B
813822	151	813853	154	813880	154	813920	162
813822	152	813854	153	813880	158	813921	162
813822	154	813854	154	813881	154	813921	163
813822	158	813854	158	813881	158	813922	163
813823	152	813855	152	813885	152	813923	160
813824	152	813855	154	813886	151	813923	161
813825	151	813855	158	813888	151	813936	177
813825	155	813856	152	813889	151	813937	181
813825	158	813856	154	813890	151	813938	179
813826	151	813856	158	813891	162	813939	177
813827	154	813857	151	813892	163	813942	181
813827	158	813858	152	813893	148	813944	181
813828	152	813859	152	813894	163	813945	177
813829	152	813860	152	813895	150	813946	179
813829	154	813861	152	813896	150	813948	179
813829	158	813862	151	813897	150	813949	179
813830	152	813862	154	813898	150	813950	181
813831	152	813862	158	813899	150	813951	181
813832	151	813863	152	813900	150	813952	181
813833	151	813864	154	813901	150	813953	177
813834	151	813865	154	813902	160	813953	179
813835	151	813865	158	813902	161	813954	179
813836	154	813866	153	813904	162	813957	181
813836	155A	813866	154	813905	160	813958	181
813837	152	813866	158	813906	160	813961	177
813838	151	813867	151	813906	161	813962	181
813838	154	813868	154	813907	162	813963	181
813838	158	813869	153	813907	163B	813964	181
813839	151	813870	153	813908	163	813965	181
813839	154	813870	154	813909	163	813966	177
813839	158	813870	158	813910	160	813967	177
813840	152	813871	153	813910	161	813969	181
813841	152	813872	151	813911	163	813970	179
813483	152	813873	153	813912	163	813971	179

Page	Issue	Numerical Index
9	PA-25-PL	

Part No.	Page	Part No.	Page	Part No.	Page	Part No.	Page
813972	179	814044	179	814159	168	814282	177
813973	179	814048	16	814160	168	814283	177
813974	179	814051	19	814165	168	814284	147
813975	179	814054	60	814167	168	814285	147
813976	179	814056	10	814170	156	814288	147
813977	179	814058	8	814181	156	814289	148
813978	179	814058	10	814182	156	814290	147
813979	179	814061	30	814184	156	815035	14
813982	181	814061	94	814185	156	815069	7
813984	181	814062	30	814186	156	815069	18
813986	179	814064	99	814188	156	81516504	193
813987	179	814065	30	814189	156	81517416	193
813988	181	814066	30	814195	156	815194	196
813990	181	814067	160	814196	156	815215	59
813991	181	814068	160	814202	156	815228	33
813992	177	814075	182	814206	156	815256	59
813995	177	814077	165	814207	156	815263	196
813997	177	814077	206	814208	156	815265	196
813998	177	814078	206	814209	157	815272	4
813999	177	814082	165	814210	156	815272	8
814001	177	814083	165	814212	156	815273	4
814003	179	814083	206	814213	156	815273	8
814004	179	814085	165	814240	177	815349	196
814005	179	814089	165	814241	177	815351	196
814006	179	814090	165	814242	81	815392	33
814008	175	814091	165	814250	82	815506	61
814009	179	814092	165	814250	87	815582	147
814010	177	814093	165	814251	81	815583	184
814011	177	814094	165	814251	86	815597	24
814012	181	814104	206	814261	18	815597	25A
814014	181	814105	206	814263	130	815597	28
814016	171	814109	206	814265	130	815704	210
814016	179	814118	170	814266	40	820124	126
814017	181	814127	165	814266	71	821124	44
814018	179	814128	165	814266	76	821127	37
814022	181	814133	165	814266	77	821128	44
814024	175	814143	168	814266	130	821129	44
814025	179	814143	169	814270	127	821130	44
814026	179	814145	168	814271	71	821131	44
814027	177	814146	168	814271	74	821146	133
814028	177	814146	169	814271	76	821361	37
814032	175	814148	168	814271	79	821381	72
814033	177	814149	168	814271	128	821381	77
814034	175	814150	168	814274	130	821381	133
814034	177	814150	169	814275	12	821382	72
814034	179	814151	168	814275	150	821382	77
814036	181	814155	168	814279	181	821382	133
814037	177	814155	169	814280	175	821397	71
814041	181	814156	168	814281	181	821397	72

Part No.	Page	Part No.	Page	Part No.	Page	Part No.	Page
821397	74	82522727	82	82549306	85A	825804	100
821397	76	82522727	87	82549311	85A	825804	101A
821397	77	82522733	210	82549312	85	825806	112
821397	79	825235	196	825508	114	825806	114
821398	37	82523536	145	82555714	82	825806	115
821399	37	82523801	70	82558301	182	825807	112
821402	44	82523801	71	82558302	182	825807	114
825014	76	82523801	72	82558303	182	825807	115
825016	118	82523801	73	82558304	182	825813	42
825127	4	82523801	74	82558305	182	825814	42
825128	4	82523801	75	82558306	182	825814	44
825155	3	82523801	76	825592	124	825815	42
825155	7	82523801	77	825593	124	825815	44
825155	9	82523901	70	825594	124	825816	42
825160	58	82523901	71	825598	206	825816	44
825161	58	82523901	72	825617	112	825817	42
825176	68	82523901	73	825645	100	825818	42
825180	111	82523901	74	825657	100	825819	42
825180	112	82523901	75	825675	146	825820	42
825180	114	82523901	76	825676	143	825821	36
825180	115	82523901	77	825676	144	825834	36
825182	58	82523902	70	825676	145	825835	36
825191	100	82523902	71	825680	143	825836	36
825191	101A	82523902	72	825680	144	825838	36
825191	102	82523902	73	825680	145	825842	50
825191	103	82523902	74	825695	7	825843	50
825199	20	82523902	75	825696	10	82584501	36
825222	47	82523903	76	825707	7	82584502	36
825226	70	82523903	77	825711	7	825846	36
82522701	81	825243D	184	825743	26	825847	36
82522701	86	82526604	193	825745	73	825848	50
82522702	81	825295	100	825751	122	825854	104
82522702	86	825309	4	825753	120	825865	36
82522703	81	825314	34	825754	124	82587301	40
82522703	86	825332	19	825755	124	82587302	40
82522704	81	825334	78	825756	124	82587303	40
82522704	66	825365	114	825757	124	82587304	86
82522708	81	825400	126	825761	122	82587305	86
82522709	81	82540305	92	825762	122	82587306	86
82522710	81	82540306	92	825766	122	82587307	86
82522710	86	82540307	92	825779	18	82587308	86
82522711	81	825411	47	825791	18	82587309	86
82522721	81	825427	196	825792	18	82587310	86
82522722	81	825428	196	825793	120	82587311	86
82522723	81	825455	118	825793	122	82587312	86
82522724	81	82549302	85A	825795	120	82587313	87
82522725	81	82549303	85A	825796	120	825883	42
82522726	81	82549305	81	825798	111	82588402	130
82522726	86	82549305	85A	825803	100	82488403	130

Page	Issue	Numerical Index
11	PA-25-PL	

Part No.	Page	Part No.	Page	Part No.	Page	Part No.	Page
82588405	130	826021	196	826116	186	826294	40
82588407	130	826023	196	826117	186	826314	135
82588408	130	826024	196	826118	186	826315	136
82588409	130	826025	68	826119	194	826316	136
82588410	130	826026	68	826123	143	826319	108A
825885	3	826040	100	826124	146	826323	200
825888	37	826040	101A	826125	145	826324	200
825898	71	826040	102	826126	145	826325	108A
825900	74	826040	103	826127	144	826389	144
825904	87	826059	172A	826143	100	826408	36
825906	50	826059	173A	826143	102	826408	47
825909	68	826065	192	826143	103	826408	50
825911	92	826068	188	826144	100	826431	210
825911	94	826069	188	826145	106	826433	212
825912	32	826070	188	826145	111	826449	7
825914	63	826071	188	826145	112	826450	68
825922	87	826076	190	826146	110	826451	68
825935	111	826077	190	826148	106	826477	202A
825936	111	826078	190	826155	115	826484	202A
825937	111	826079	190	826158	115	826487	202B
825937	114	826080	190	826171	193	826537	26
825937	115	826081	190	826197	25A	826537	28
825938	111	826082	190	826198	25A	826538	26
825938	114	826083	190	826199	25A	826538	28
825938	115	826084	190	826207	64	826558	3
825939	47	826085	190	826208	64	826560	102
825939	50	826086	190	826219	64	826563	111
825943	196	826087	186	826222	34	826563	112
825945	196	826088	186	826223	34	826563	115
825946	196	826089	186	826225	188	826564	111
82596501	96	826090	186	826226	188	826564	112
82596502	96	826094	186	826227	186	826564	115
82596503	96	826095	192	826229	202	826567	111
82596504	96	826096	192	826230	202	826567	112
82596505	96	826097	186	826242	3	826567	115
825977	47	826101	186	826242	7	826568	111
825977	50	826102	186	826245	186	826568	112
825983	196	826103	186	826250	184	826571	101A
825984	68	826104	192	826257	198	826572	7
825986	196	826105	192	826261	11A	826583	101A
825990	196	826106	188	826262	24	826583	103
825991	196	826107	188	826262	25A	826585	3
825999	196	826108	188	826262	28	826586	7
826001	196	826109	188	826264	40	826595	208
826002	196	826110	188	826267	72	826737	163
826003	196	826111	188	826268	77	826781	212
826005	110	826112	188	826282	34	826788	143
826011	75	826113	188	826285	108A	826788	144
826019	186	826115	186	826291	136	826788	145

Page	Issue	Numerical Index
12	PA-25-PL	

Part No.	Page	Part No.	Page	Part No.	Page	Part No.	Page
826788	146	850347	138	891530	66	892054	179
84212716	98	850348	140	891564	162	892078	206
84212729	25A	850357	140	891580	53	892102	168
842130	127	850364	127	891586	53	892102	169
842130	133	850365	128	891586	54	892104	179
842136	34	850395	186	891586	56	892113	168
842137	34	850424	109	891745	165	892113	169
842160	62	850629	36	891787	53	892119	168
842160	70	850647	133	891787	54	892124	133
842160	71	850654	44	891787	56	892130	118
842160	72	850655	44	891788	53	892160	168
842160	74	850660	198	891788	54	892185	133
842160	75	850663	198	891788	56	892197	3
842160	76	850666	198	891789	53	892271	168
842160	77	850687	44	891790	53	892271	169
842160	78	850670	198	891790	56	892294	20
842160	79	850699	132	891791	53	892303	167
84218202	91	850760	212	891791	56	892306	179
84218205	91	850769	210	891797	54	892309	179
842196	186	850778	212	891800	53	892355	156
850064	111	850790	212	891801	53	892376	133
850064	112	850791	212	891802	56	892475	172A
850064	114	850819	210	891803	53	892475	173A
850064	115	850825	210	891803	54	892491	177
850141	36	850825	212	891803	56	892493	177
850145	24	850826	210	891804	53	892495	203
850145	25A	850826	212	891804	54	892496	203
850145	28	890203	179	891804	56	892497	203
85017233	40	891067	179	891805	53	892498	203
850179	68	891069	127	891805	54	892499	203
850193	37	891069	133	891805	56	892500	203
850201	40	891086	179	891806	53	892501	203
85021001	50	891089	179	891806	54	892503	203
85021601	81	891120	163	891806	56	892559	148
85021601	86	891196	53	891811	56	892574	147
850251	68	891196	54	891812	54	892575	150
850277	126	891196	56	891813	56	892577	150
850283	127	891198	53	891814	53	892578	150
850283	133	891198	54	891814	54	892623	156
850301	127	891198	56	891814	56	892651	156
850301	133	891199	53	891815	53	892656	156
85031121	136	891390	179	891815	56	892658	156
85031123	136	891401	30	891816	54	892660	156
85033301	182	891415	179	891816	56	892716	168
85033303	182	891432	66	891827	167	892758	127
85033401	182	891457	161	891848	156	892810	156
85033402	182	891498	161	891866	82	892815	156
850345	140	891522	66	891974	173A	892826	156
850346	140	891525	66	891976	173A	892834	168

Page	Issue	Numerical Index
13	PA-25-PL	

Part No.	Page	Part No.	Page	Part No.	Page	Part No.	Page
892835	168	893399	12	911133	156	920915	208
892845	173A	893446	172A	911134	156	920916	208
892874	173A	893451	172A	911148	16	920917	208
892876	173A	893451	173A	911153	173A	920918	208
892882	156	893452	172A	911192	204	920919	208
892895	173A	893452	173A	911252	206	921013	184
892896	172A	893463	157	911405	153	921097	8
892897	173A	893464	156	911406	153	921102	87
892899	173A	893466	156	911450	206	921103	87
892900	173A	893467	156	911558	175	921121	64
892919	173A	893468	156	911559	181	921124	22
892920	173A	893469	157	911560	181	921137	182
892921	173A	893470	156	911561	181	922802	203B
892978	152	893471	156	911562	181	922803	203B
892996	127	893472	156	911563	203	922804	203B
892996	133	893473	156	911564	203	922805	203B
893010	158	893488	11A	911565	203	922806	203B
893017	152	893491	22	911566	204	922807	203B
893018	152	893514	181	911567	204	922995	177
893039	152	893517	53	911568	204	922999	177
893069	153	893519	175	911569	204	923126	68
893073	151	894013	169	911575	206	923297	24
893080	153	894020	152	911575	208	923297	25A
893124	181	898078	78	911576	206	923297	28
893125	179	910238	179	911577	206	923804	177
893128	179	910377	175	911578	206	923805	177
893186	24	910383	175	911580	156	923810	82
893186	25A	910386	175	911581	165	923811	82
893221	179	910999	175	911582	169	923812	82
893243	181	911000	175	911583	169	924659	163B
893249	175	911001	175	911584	169	924660	163B
893249	179	911002	175	911585	169	924661	163B
893330	179	911003	175	911586	169	924662	163B
893331	179	911004	177	911587	169	924663	163B
893332	179	911005	175	911588	169	924664	163B
893333	179	911007	179	911589	169	924665	163B
893334	179	911008	179	911590	169	924667	163B
893335	179	911009	179	911591	169	924671	163B
893336	179	911010	179	911592	169	924672	163B
893338	179	911011	179	911593	169	924673	163B
893339	179	911012	181	911594	169	924674	163B
893346	181	911055	151	911608	169	925596	153
893348	181	911056	151	911650	163B	926336	147
893360	193	911060	158	912114	87	930046	37
893375	147	911061	158	920910	208	930046	42
893382	158	911063	158	920911	208	930046	71
893383	156	911068	155A	920912	208	930046	72
893394	56	911069	169	920913	208	930046	74
893399	4	911132	156	920914	208	930046	76

Page	Issue	Numerical Index
14	PA-25-PL	

Part No.	Page	Part No.	Page	Part No.	Page	Part No.	Page
930046	77	985060	77	989055	77		
930046	79	985060	78	989077	34		
930046	130	985060	79	989077	37		
930061	47	985061	34	989077	70		
930061	50	985061	37	989077	71		
930061	70	985061	70	989077	72		
930061	72	985061	71	989077	75		
930061	73	985061	72	989077	76		
930061	74	985061	73	989077	77		
930061	75	985061	74	989077	78		
930061	76	985061	75	989077	79		
930061	77	985061	76	989078	12		
930061	78	985061	77	989078	14		
930061	79	985061	78	989078	16		
930085	74	985061	79	989078	70		
930085	79	985086	34	989078	71		
930086	74	985086	37	989078	72		
930099	56	989014	34	989078	75		
930099	70	989014	73	989078	76		
930099	73	989014	74	989078	78		
930099	75	989016	34	989078	79		
930099	78	989016	73	989078	81		
930102	53	989016	74	989078	86		
950048	72	989019	16	989079	34		
960132	130	989019	33	989079	37		
960137	130	989019	37	989079	70		
960138	130	989019	70	989079	71		
975037	62	989019	71	989079	72		
975037	70	989019	72	989079	75		
975037	71	989019	75	989079	76		
975037	72	989019	76	989079	77		
975037	73	989019	77	989079	78		
975037	74	989019	78	989079	79		
975037	75	989019	79	999023	62		
975037	76	989036	12	999023	70		
975037	77	989036	16	999023	71		
975037	78	989036	71	999023	72		
975037	79	989036	72	999023	73		
975048	166	989036	79	999023	74		
975049	166	989037	34	999023	75		
985060	34	989037	37	999023	76		
985060	37	989037	71	999023	77		
985060	70	989037	72	999023	78		
985060	71	989037	76	999023	79		
985060	72	989037	77	999024	62		
985060	73	989037	79	999025	62		
985060	74	989055	14				
985060	75	989055	75				
985060	76	989055	76				