RUTHZIL TRATOR COMERCIAL DE PEÇAS LTDA 11 97083-6812 ROLANDO CITRANGULO

DYNAPAC
Part of the Atlas Copco Group

ABRIL 2010

Workshop manual
W3023EN3.pdf
Electric circuit diagrams

Vibratory roller
CA250/280/300 Tier I
CA250/260/280 Tier III

From serial number:
CA250/280/300 Tier I
65X23700, 68X23700, 74X20500
10000107x0A000001, 10000113x0A000001, 10000115x0A000001
CA250/260/280 Tier III
65X21200 - 65X21499, 78X20260 - 78X20399, 68X21200 - 68X21516

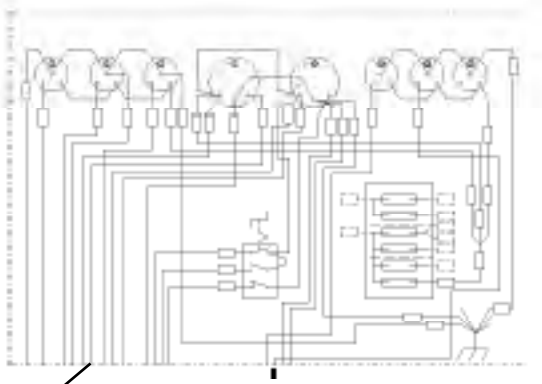

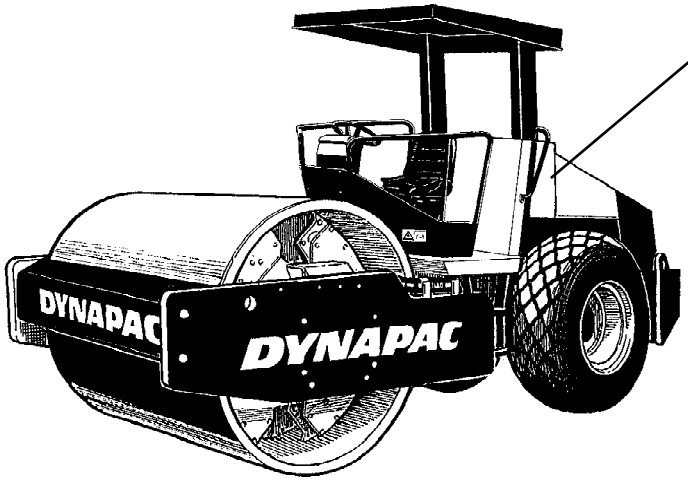

Subject to changes
Printed in Sweden

Table of Contents

Introduction 1
Warning symbols 1
Safety information 1
General 1
Safety regulations 3
Before start 3
Start 3
Jump starting 3
Electrical and hydraulic equipment 4
Type of Electrical circuit diagram 5
DYNAPAC electric wiring standard 5
Wiring system 5
Electrical circuit diagrams 9

Introduction

Warning symbols



WARNING ! Marks a danger or a hazardous procedure that can result in life threatening or serious injury if the warning is ignored.



CAUTION ! Marks a danger or hazardous procedure that can result in damage to the machine or property if the warning is ignored.

Safety information



Ensure good ventilation (extraction of air by fan) where the engine is run indoors.

General

- Familiarize yourself with the equipment on the machine.

- Only operate the machine if you are familiar with how the controls work and how the machine functions.

- Use your safety equipment such as helmet, protective shoes and hearing protection.

- Familiarize yourself with the machine's area of work.

- Only use the machine for its intended purpose.



The safety manual supplied with the machine must be read by all roller operators. Always follow the safety instructions. Do not remove the manual from the machine.

Safety regulations

Before start

- Study and understand the operating instructions before start.
- Check the machine for any serious faults.
- Do not operate the machine with defective instruments, warning lights or control elements.
- All safety devices must be in a secure position.
- Do not carry loose or secure them to the machine.
- Keep oily and inflammable material away from the machine.
- Before entering the driver's cab, check if persons or obstacles are in the way of or underneath the machine.
- Be careful when entering the driver's cab, use the steps.
- Adjust your seat before starting.

Start

- When starting, all operating levers must be in "neutral position".
- Only start the machine from the driver's seat.
- Check the indicating instruments after start to ensure that all functions are in order.
- Do not leave the machine unattended when the engine is running.

Jump starting

Do not connect the negative cable to the negative terminal on the dead battery. A spark can ignite the oxy-hydrogen gas formed around the battery.

Check that the battery used for jump starting has the same voltage as the dead battery.

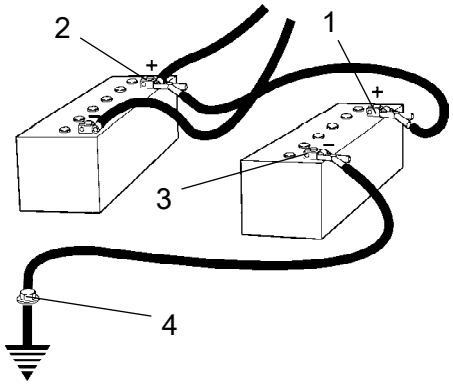

Fig. Jump starting

Turn the ignition and all power consuming equipment off. Switch off the engine on the machine which is providing jump start power.

First connect the jump start battery's positive terminal (1) to the flat battery's positive terminal (2).Then connect the jump start battery's negative terminal (3) to, for example, a bolt (4) or the lifjting eye on the machine with the flat battery.

Start the engine on the power providing machine. Let it run for a while. Now try to start the other machine. Disconnect the cables in the reverse order.

Electrical and hydraulic equipment

Personal safety must be observed when batteries are handled or tested.

A fully equipped medical kit, including eye-wash facilities, should be available and protective clothing, including eye protection, should be worn.

Acid splashes in the eye should be treated immediately with plenty of clean water and neutralized with sodium bicarbonate solution.

Acid splashes on clothing must be treated with an alkali, such as ammonia, if holes are to be avoided.

A safety hazard exist during or after battery charging due to emission of a highly flammable hydrogen gas. Any testing involving production of sparks, e.g. electrical load test, must not be performed until the gas has dispersed from the cell. A similas hazard occurs when a battery is fitted on to a vehicle immediately after the battery has been removed from a charging plant.

Hydraulic equipment is under high pressure. Fluids (fuel, hydraulic oil) which escape under high pressure can penetrate the skin and cause serious injury. Therefore immediately consult a doctor if such injury occurs.

Notice that failure on the hydraulic or electrical system may give the roller an unpredictable and dangerous function.

Type of Electrical circuit diagram

The electronic diagram are made after a new standard in mobile electronics.

The electrical system are divided onto sections that are displayed horisontally on the drawings.

The identification of the cables, connectors and so on are shown in the drawing.

The benefits of this way of displaying an electrical system are that it´s easier to follow the cables and troubleshoot the system.

DYNAPAC electric wiring standard

Wiring system

Cable colours and number marking

1. Cable types and cable colours

For wiring systems in rollers cable types RKUB and RK shall be used.

The following cable colours are to be used :

WH = white

RD = red

VT = violet

GN = green

YE = yellow

BU = blue

BN = brown

BK = black for grounding (chassis)

2. Grouping of conductors

In order to establish a uniform identification of wiring systems within a limited extent of cable colours each circuit has to be associated with one of the following nine (9) groups, using the feature or function of the component.

One cable colour hs to be used for each group. Individual cables within each group are identified by a three (3)-digit code, where the first digit indicates the colour of the cable.

Type of Electrical circuit diagram

The groups are as follows:

Group 1 LIGHTNING

Cable colour: WHITE
Cable marking: 101-199
This group includes all "white lighting"
Example:
- headlights, work lights
- auxiliary headlamps
- instruments, panel and gauge lighting
- cab lamp

Group 2 BATTERY

Cable colour: RED
Cable marking: 201-299
This group of circuits includes all live leads from battery and charging system to the live terminals of the various circuits when all switches are in "off" position with the exception of the main switch and the battery master disconnect switch.

Group 3 ENGINE

Cable colour: VIOLET
Cable marking: 301-399
This group of circuits is concerned with the functioning of the engine, including starter actuation, electrical ignition, engine run, engine stop and transmission.

Group 4 SIGNALS +5V

Cable colour: ORANGE
Cable marking: 401-499

Group 5 ACCESSORIES

Cable colour: GREEN
Cable marking: 501-599
Example:
- windshield wiper
- radio/cd
- heater, ACC

Group 6 COMMUNICATION

Cable colour: YELLOW
Cable marking: 601-699
Optical an accoustical devices.
Example:
- tail/stop/side direction lamp
- rotating beacon
- horn, back alarm, buzzer

Group 7 CONTROL

Cable colour: BLUE
Cable marking: 701-799
This group of circuits is concerned with the control characteristics of the roller actuated by the operator.

Example:
- vibration control
- sprinkler system control
- timer

Group 8 MONITORING

Cable colour: BROWN
Cable marking: 801-899
This group includes all circuits indicating and warning the operator about temperature level, quality, pressure, position, etc.
Example:
- oil pressure lamp
- charging lamp
- fuel level indicator
- oil temperature indicator
- fan belt indicator
- water level, sprinkler system indicator

Group 9 CIRCUIT GROUNDING

Cable colour: BLACK
Cable marking: 901-999, 9000-9999
Negative (-) termination (chassis).

3. Explanation of electrical circuit diagram

The circuit diagram contains 6 pages and some lines on one page may be connected to a component on another page.

In top of the pages, figures 1 to 6 are found and on right of pages, letters A to D are found.

Example

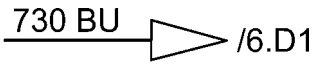

6.D1 means that line (730) continues on page 6 and is found down to left (with coordinates D1 on the page).

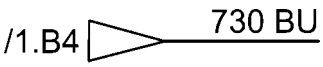

1.B4 mean that the incoming line is found on page 1 with coordinates B4.

Rev.970401

Rev.	Pls.	Change No.	Date	Issued by	Checked

-A7 ECU

-S1 P 0 I II III 58 30a 30b 19b 19a 17a 17b 15 54 50a -S1.X1 -S1.X2 -X.89

-F1.1 15A -F1.1-2 -X.35

-S2 On Off -S2.X1 -S2.X2 -S2.X3 -S2.X4 =Emergency switch

-R1 =Driving -R1.X1

-F10 40A =Main fuse

-F11 40A

-Q1 =Batteriswitch -Q1.X1 -Q1.X2 -Q1.X5 -Q1.X6 -Q1.X7

-G1 =Batteri -X.36 -X.37 -X.38

-M1 =Startmotor -M1.X1 -M1.X2 -M1.X3 -M1.X4

-K1 =Start -K1.X1 -K1.X3 -K1.X4 -K1.X5

-K2 -K2.X1 -K2.X3 -K2.X4

-V1

-G2 D+ B+ W E -G2.X1 -G2.X2 -G2.X4

-Y1 =Fuel solenoid -Y1.X1

-S14 =Parking brake -S14.X1

-Y2 =Break -Y2.X1 -Y2.X2

-X.507 -X.4:10 -S12.X1.2 -X.4 -X.6

-A1.X1 -X.29 -X.9 -F10.X1 -F1.1-2 -F1.7-8:8.1 -K11.X1:30 -K11.X1:86 -X58:1 -X58.1:1 -R1.X1 -Y1.X1 -Y2.X1 -G2.X1 -G2.X2 -G2.X4 -S1.X1 -S1.X2 -S2.X1 -S2.X2 -S2.X3 -S2.X4 -S14.X1 -31A.X1 -31A.X2 -31A.X3 -31A.X4 -31A.X5 -31A.X7 -31A.X8 -31A.X24 -31A.X25 -31B.X1 -K11.X1:30 -K11.X1:86 -X.40 -X.41 -X.503 -X6 -X9 -X.4 -X.5 -X.6 -X.7 -X.8 -X.9 -X.10 -X.11 -X.12 -X.13 -X.14 -X.15 -X.16 -X.17 -X.18 -X.19 -X.20 -X.21 -X.22 -X.23 -X.24 -X.25 -X.26 -X.27 -X.28 -X.29 -X.30 -X.31 -X.32 -X.33 -X.34 -X.35 -X.36 -X.37 -X.38 -X.39 -X.40 -X.41 -X.42 -X.43 -X.44 -X.45 -X.46 -X.47 -X.48 -X.49 -X.50 -X.51 -X.52 -X.53 -X.54 -X.55 -X.56 -X.57 -X.58 -X.59 -X.60 -X.61 -X.62 -X.63 -X.64 -X.65 -X.66 -X.67 -X.68 -X.69 -X.70 -X.71 -X.72 -X.73 -X.74 -X.75 -X.76 -X.77 -X.78 -X.79 -X.80 -X.81 -X.82 -X.83 -X.84 -X.85 -X.86 -X.87 -X.88 -X.89 -X.90 -X.91 -X.92 -X.93 -X.94 -X.95 -X.96 -X.97 -X.98 -X.99 -X.100 -X.101 -X.102 -X.103 -X.104 -X.105 -X.106 -X.107 -X.108 -X.109 -X.110 -X.111 -X.112 -X.113 -X.114 -X.115 -X.116 -X.117 -X.118 -X.119 -X.120 -X.121 -X.122 -X.123 -X.124 -X.125 -X.126 -X.127 -X.128 -X.129 -X.130 -X.131 -X.132 -X.133 -X.134 -X.135 -X.136 -X.137 -X.138 -X.139 -X.140 -X.141 -X.142 -X.143 -X.144 -X.145 -X.146 -X.147 -X.148 -X.149 -X.150 -X.151 -X.152 -X.153 -X.154 -X.155 -X.156 -X.157 -X.158 -X.159 -X.160 -X.161 -X.162 -X.163 -X.164 -X.165 -X.166 -X.167 -X.168 -X.169 -X.170 -X.171 -X.172 -X.173 -X.174 -X.175 -X.176 -X.177 -X.178 -X.179 -X.180 -X.181 -X.182 -X.183 -X.184 -X.185 -X.186 -X.187 -X.188 -X.189 -X.190 -X.191 -X.192 -X.193 -X.194 -X.195 -X.196 -X.197 -X.198 -X.199 -X.200 -X.201 -X.202 -X.203 -X.204 -X.205 -X.206 -X.207 -X.208 -X.209 -X.210 -X.211 -X.212 -X.213 -X.214 -X.215 -X.216 -X.217 -X.218 -X.219 -X.220 -X.221 -X.222 -X.223 -X.224 -X.225 -X.226 -X.227 -X.228 -X.229 -X.230 -X.231 -X.232 -X.233 -X.234 -X.235 -X.236 -X.237 -X.238 -X.239 -X.240 -X.241 -X.242 -X.243 -X.244 -X.245 -X.246 -X.247 -X.248 -X.249 -X.250 -X.251 -X.252 -X.253 -X.254 -X.255 -X.256 -X.257 -X.258 -X.259 -X.260 -X.261 -X.262 -X.263 -X.264 -X.265 -X.266 -X.267 -X.268 -X.269 -X.270 -X.271 -X.272 -X.273 -X.274 -X.275 -X.276 -X.277 -X.278 -X.279 -X.280 -X.281 -X.282 -X.283 -X.284 -X.285 -X.286 -X.287 -X.288 -X.289 -X.290 -X.291 -X.292 -X.293 -X.294 -X.295 -X.296 -X.297 -X.298 -X.299 -X.300 -X.301 -X.302 -X.303 -X.304 -X.305 -X.306 -X.307 -X.308 -X.309 -X.310 -X.311 -X.312 -X.313 -X.314 -X.315 -X.316 -X.317 -X.318 -X.319 -X.320 -X.321 -X.322 -X.323 -X.324 -X.325 -X.326 -X.327 -X.328 -X.329 -X.330 -X.331 -X.332 -X.333 -X.334 -X.335 -X.336 -X.337 -X.338 -X.339 -X.340 -X.341 -X.342 -X.343 -X.344 -X.345 -X.346 -X.347 -X.348 -X.349 -X.350 -X.351 -X.352 -X.353 -X.354 -X.355 -X.356 -X.357 -X.358 -X.359 -X.360 -X.361 -X.362 -X.363 -X.364 -X.365 -X.366 -X.367 -X.368 -X.369 -X.370 -X.371 -X.372 -X.373 -X.374 -X.375 -X.376 -X.377 -X.378 -X.379 -X.380 -X.381 -X.382 -X.383 -X.384 -X.385 -X.386 -X.387 -X.388 -X.389 -X.390 -X.391 -X.392 -X.393 -X.394 -X.395 -X.396 -X.397 -X.398 -X.399 -X.400 -X.401 -X.402 -X.403 -X.404 -X.405 -X.406 -X.407 -X.408 -X.409 -X.410 -X.411 -X.412 -X.413 -X.414 -X.415 -X.416 -X.417 -X.418 -X.419 -X.420 -X.421 -X.422 -X.423 -X.424 -X.425 -X.426 -X.427 -X.428 -X.429 -X.430 -X.431 -X.432 -X.433 -X.434 -X.435 -X.436 -X.437 -X.438 -X.439 -X.440 -X.441 -X.442 -X.443 -X.444 -X.445 -X.446 -X.447 -X.448 -X.449 -X.450 -X.451 -X.452 -X.453 -X.454 -X.455 -X.456 -X.457 -X.458 -X.459 -X.460 -X.461 -X.462 -X.463 -X.464 -X.465 -X.466 -X.467 -X.468 -X.469 -X.470 -X.471 -X.472 -X.473 -X.474 -X.475 -X.476 -X.477 -X.478 -X.479 -X.480 -X.481 -X.482 -X.483 -X.484 -X.485 -X.486 -X.487 -X.488 -X.489 -X.490 -X.491 -X.492 -X.493 -X.494 -X.495 -X.496 -X.497 -X.498 -X.499 -X.500 -X.501 -X.502 -X.503 -X.504 -X.505 -X.506 -X.507 -X.508 -X.509 -X.510 -X.511 -X.512 -X.513 -X.514 -X.515 -X.516 -X.517 -X.518 -X.519 -X.520 -X.521 -X.522 -X.523 -X.524 -X.525 -X.526 -X.527 -X.528 -X.529 -X.530 -X.531 -X.532 -X.533 -X.534 -X.535 -X.536 -X.537 -X.538 -X.539 -X.540 -X.541 -X.542 -X.543 -X.544 -X.545 -X.546 -X.547 -X.548 -X.549 -X.550 -X.551 -X.552 -X.553 -X.554 -X.555 -X.556 -X.557 -X.558 -X.559 -X.560 -X.561 -X.562 -X.563 -X.564 -X.565 -X.566 -X.567 -X.568 -X.569 -X.570 -X.571 -X.572 -X.573 -X.574 -X.575 -X.576 -X.577 -X.578 -X.579 -X.580 -X.581 -X.582 -X.583 -X.584 -X.585 -X.586 -X.587 -X.588 -X.589 -X.590 -X.591 -X.592 -X.593 -X.594 -X.595 -X.596 -X.597 -X.598 -X.599 -X.600 -X.601 -X.602 -X.603 -X.604 -X.605 -X.606 -X.607 -X.608 -X.609 -X.610 -X.611 -X.612 -X.613 -X.614 -X.615 -X.616 -X.617 -X.618 -X.619 -X.620 -X.621 -X.622 -X.623 -X.624 -X.625 -X.626 -X.627 -X.628 -X.629 -X.630 -X.631 -X.632 -X.633 -X.634 -X.635 -X.636 -X.637 -X.638 -X.639 -X.640 -X.641 -X.642 -X.643 -X.644 -X.645 -X.646 -X.647 -X.648 -X.649 -X.650 -X.651 -X.652 -X.653 -X.654 -X.655 -X.656 -X.657 -X.658 -X.659 -X.660 -X.661 -X.662 -X.663 -X.664 -X.665 -X.666 -X.667 -X.668 -X.669 -X.670 -X.671 -X.672 -X.673 -X.674 -X.675 -X.676 -X.677 -X.678 -X.679 -X.680 -X.681 -X.682 -X.683 -X.684 -X.685 -X.686 -X.687 -X.688 -X.689 -X.690 -X.691 -X.692 -X.693 -X.694 -X.695 -X.696 -X.697 -X.698 -X.699 -X.700 -X.701 -X.702 -X.703 -X.704 -X.705 -X.706 -X.707 -X.708 -X.709 -X.710 -X.711 -X.712 -X.713 -X.714 -X.715 -X.716 -X.717 -X.718 -X.719 -X.720 -X.721 -X.722 -X.723 -X.724 -X.725 -X.726 -X.727 -X.728 -X.729 -X.730 -X.731 -X.732 -X.733 -X.734 -X.735 -X.736 -X.737 -X.738 -X.739 -X.740 -X.741 -X.742 -X.743 -X.744 -X.745 -X.746 -X.747 -X.748 -X.749 -X.750 -X.751 -X.752 -X.753 -X.754 -X.755 -X.756 -X.757 -X.758 -X.759 -X.760 -X.761 -X.762 -X.763 -X.764 -X.765 -X.766 -X.767 -X.768 -X.769 -X.770 -X.771 -X.772 -X.773 -X.774 -X.775 -X.776 -X.777 -X.778 -X.779 -X.780 -X.781 -X.782 -X.783 -X.784 -X.785 -X.786 -X.787 -X.788 -X.789 -X.790 -X.791 -X.792 -X.793 -X.794 -X.795 -X.796 -X.797 -X.798 -X.799 -X.800 -X.801 -X.802 -X.803 -X.804 -X.805 -X.806 -X.807 -X.808 -X.809 -X.810 -X.811 -X.812 -X.813 -X.814 -X.815 -X.816 -X.817 -X.818 -X.819 -X.820 -X.821 -X.822 -X.823 -X.824 -X.825 -X.826 -X.827 -X.828 -X.829 -X.830 -X.831 -X.832 -X.833 -X.834 -X.835 -X.836 -X.837 -X.838 -X.839 -X.840 -X.841 -X.842 -X.843 -X.844 -X.845 -X.846 -X.847 -X.848 -X.849 -X.850 -X.851 -X.852 -X.853 -X.854 -X.855 -X.856 -X.857 -X.858 -X.859 -X.860 -X.861 -X.862 -X.863 -X.864 -X.865 -X.866 -X.867 -X.868 -X.869 -X.870 -X.871 -X.872 -X.873 -X.874 -X.875 -X.876 -X.877 -X.878 -X.879 -X.880 -X.881 -X.882 -X.883 -X.884 -X.885 -X.886 -X.887 -X.888 -X.889 -X.890 -X.891 -X.892 -X.893 -X.894 -X.895 -X.896 -X.897 -X.898 -X.899 -X.900 -X.901 -X.902 -X.903 -X.904 -X.905 -X.906 -X.907 -X.908 -X.909 -X.910 -X.911 -X.912 -X.913 -X.914 -X.915 -X.916 -X.917 -X.918 -X.919 -X.920 -X.921 -X.922 -X.923 -X.924 -X.925 -X.926 -X.927 -X.928 -X.929 -X.930 -X.931 -X.932 -X.933 -X.934 -X.935 -X.936 -X.937 -X.938 -X.939 -X.940 -X.941 -X.942 -X.943 -X.944 -X.945 -X.946 -X.947 -X.948 -X.949 -X.950 -X.951 -X.952 -X.953 -X.954 -X.955 -X.956 -X.957 -X.958 -X.959 -X.960 -X.961 -X.962 -X.963 -X.964 -X.965 -X.966 -X.967 -X.968 -X.969 -X.970 -X.971 -X.972 -X.973 -X.974 -X.975 -X.976 -X.977 -X.978 -X.979 -X.980 -X.981 -X.982 -X.983 -X.984 -X.985 -X.986 -X.987 -X.988 -X.989 -X.990 -X.991 -X.992 -X.993 -X.994 -X.995 -X.996 -X.997 -X.998 -X.999 -X.1000

This document will remain the property of Metso Dynapac AB and may not without the permission of the said company be copied, communicated to any third part or used for manufacturing purposes.

Wire area 1.5 mm unless otherwise stated
Ledningsarea 1.5 mm där annat ej anges

Designed TKZ/GE	Approved TKZ/LW	Material Designation	Part No
View E	Date 2007-01-25	Description Circuit diagram Start and stop Kretsschema Start och stopp	Model CA-250 T1
	Reg.		Scale / Sheet / of 1 / 14
DYNAPAC			Rev. / No. 393809

Rev.970401

Rev.	Pls.	Change No.	Date	Issued by	Checked

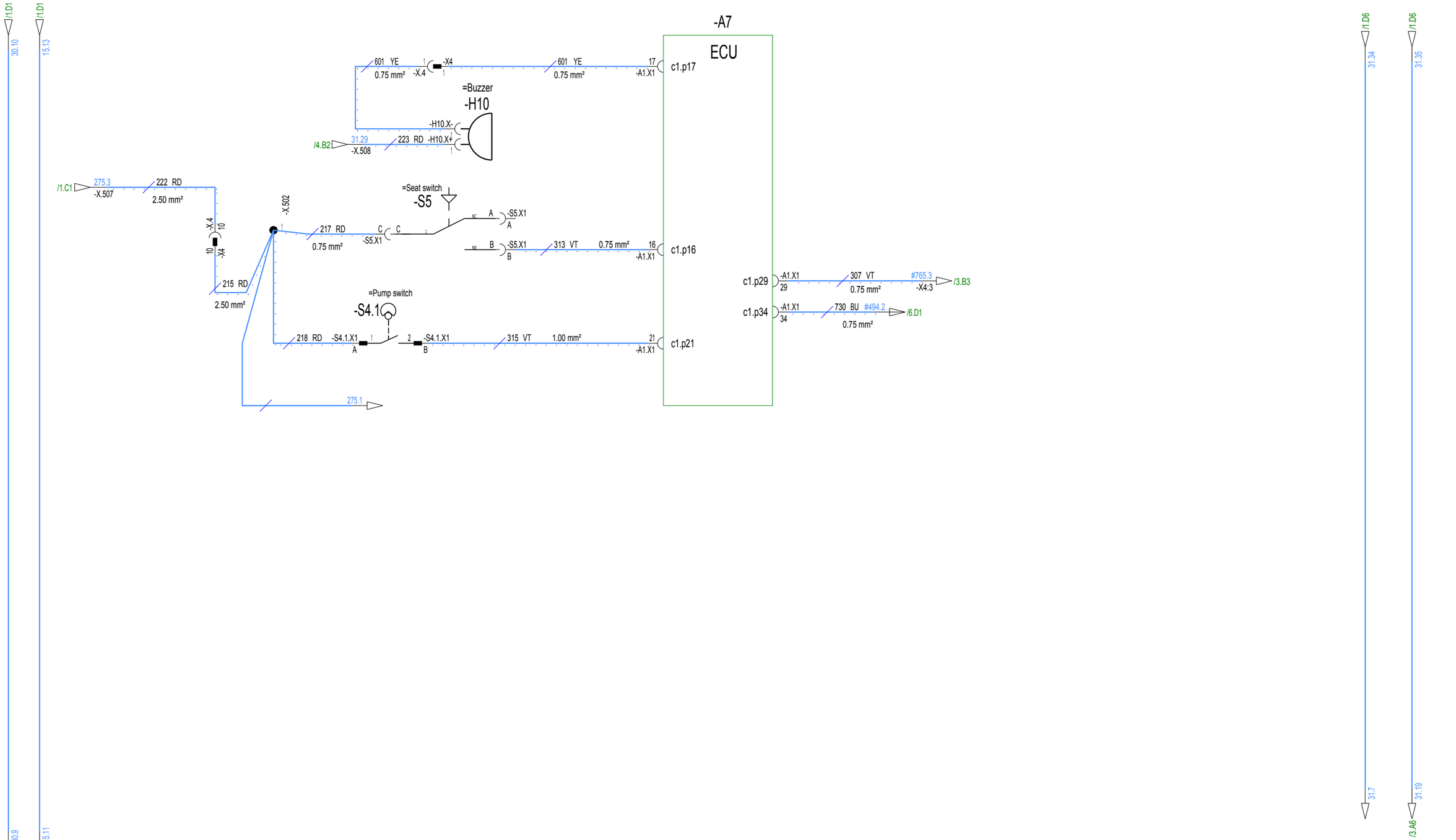

This document will remain the property of Metso Dynapac AB
and may not without the permission of the said company be copied,
communicated to any third part or used for manufacturing purposes.

Designed TKZ/GE	Approved TKZ/LW	Material Designation	Part No
View E	Date 2007-01-25	Description Circuit diagram Start and stop Kretsschema Start och stopp	Model CA-250 T1
	Reg.		Scale / Sheet / of 2 / 14
DYNAPAC			Rev. / No. 393809

Rev.970401

Rev.	Pls.	Change No.	Date	Issued by	Checked

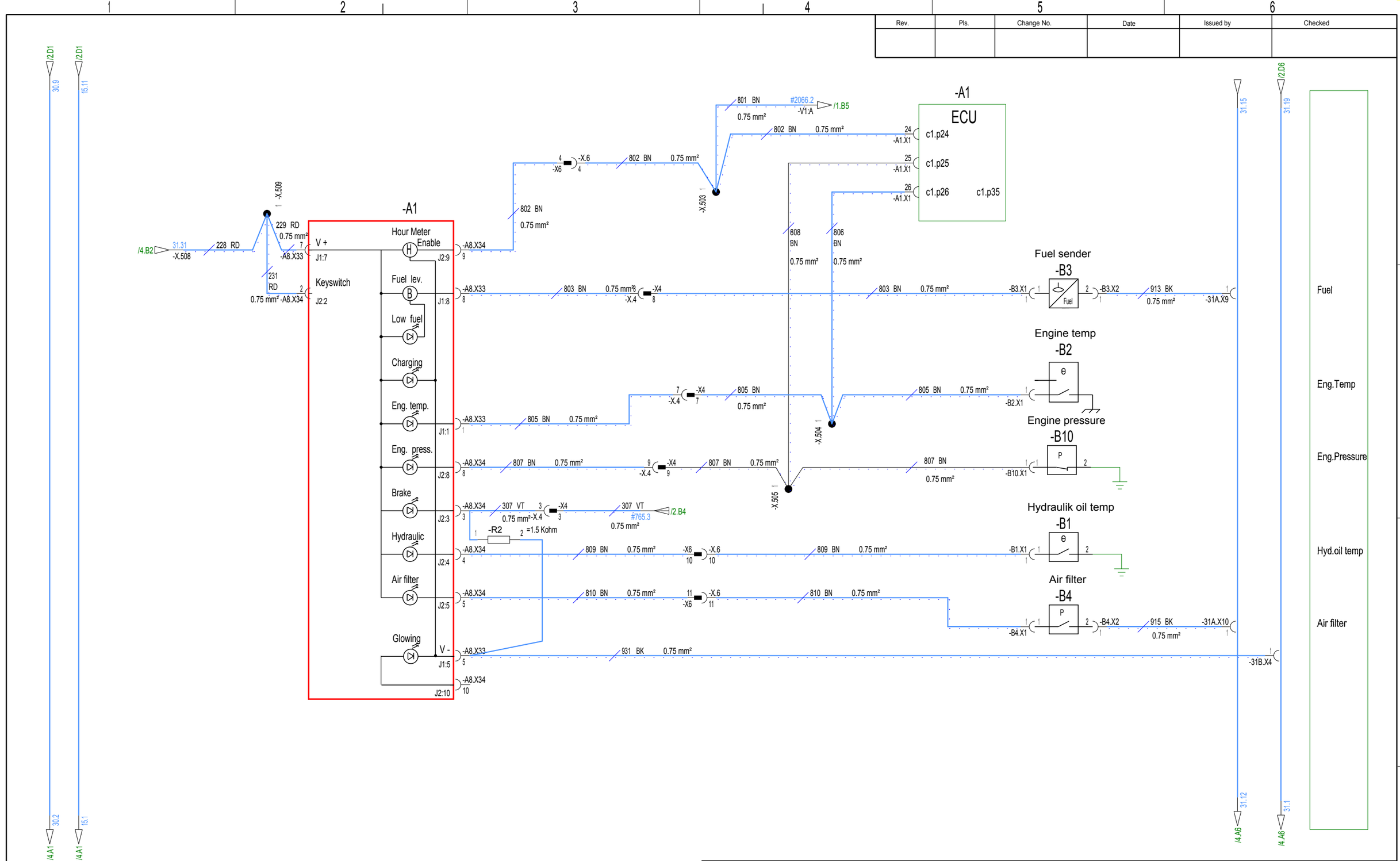

This document will remain the property of Metso Dynapac AB
and may not without the permission of the said company be copied,
communicated to any third part or used for manufacturing purposes.

Wire area 1.5 mm unless otherwise stated
Ledningsarea 1.5 mm där annat ej anges

Designed: TKZ/GE	Approved: TKZ/LW	Material Designation	Part No
View: E	Date: 2007-01-25	Description: Circuit diagram Warning panel Kretsschema Varningspanel	Model: CA-250 T1
	Reg.		Scale / Sheet / of: 3 / 14
DYNAPAC			Rev. / No.: 393809

Rev.970401

Rev.	Pls.	Change No.	Date	Issued by	Checked

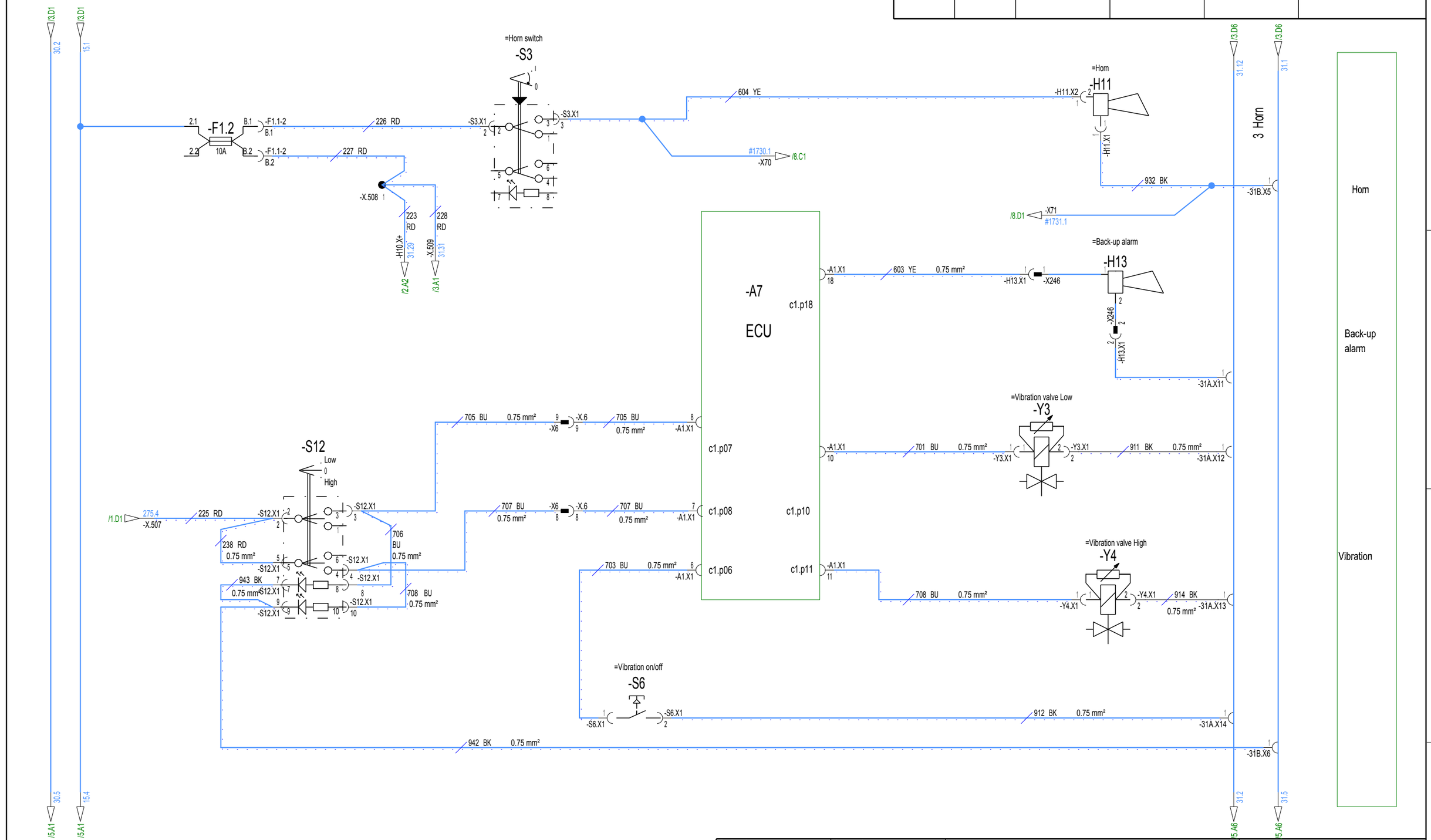

Wire area 1.5 mm unless otherwise stated

Ledningsarea 1.5 mm där annat ej anges

Designed TKZ/GE	Approved TKZ/LW	Material Designation	Part No
View E	Date 2007-01-25	Description	Model CA-250 T1
	Reg.	Circuit diagram Horn vibb and back-up alarm Kretsschema Signalhorn,vibb och back-alarm	Scale / Sheet / of 4 / 14
DYNAPAC			Rev. / No. 393809

This document will remain the property of Metso Dynapac AB and may not without the permission of the said company be copied, communicated to any third part or used for manufacturing purposes.

Rev.970401

Rev.	Pls.	Change No.	Date	Issued by	Checked

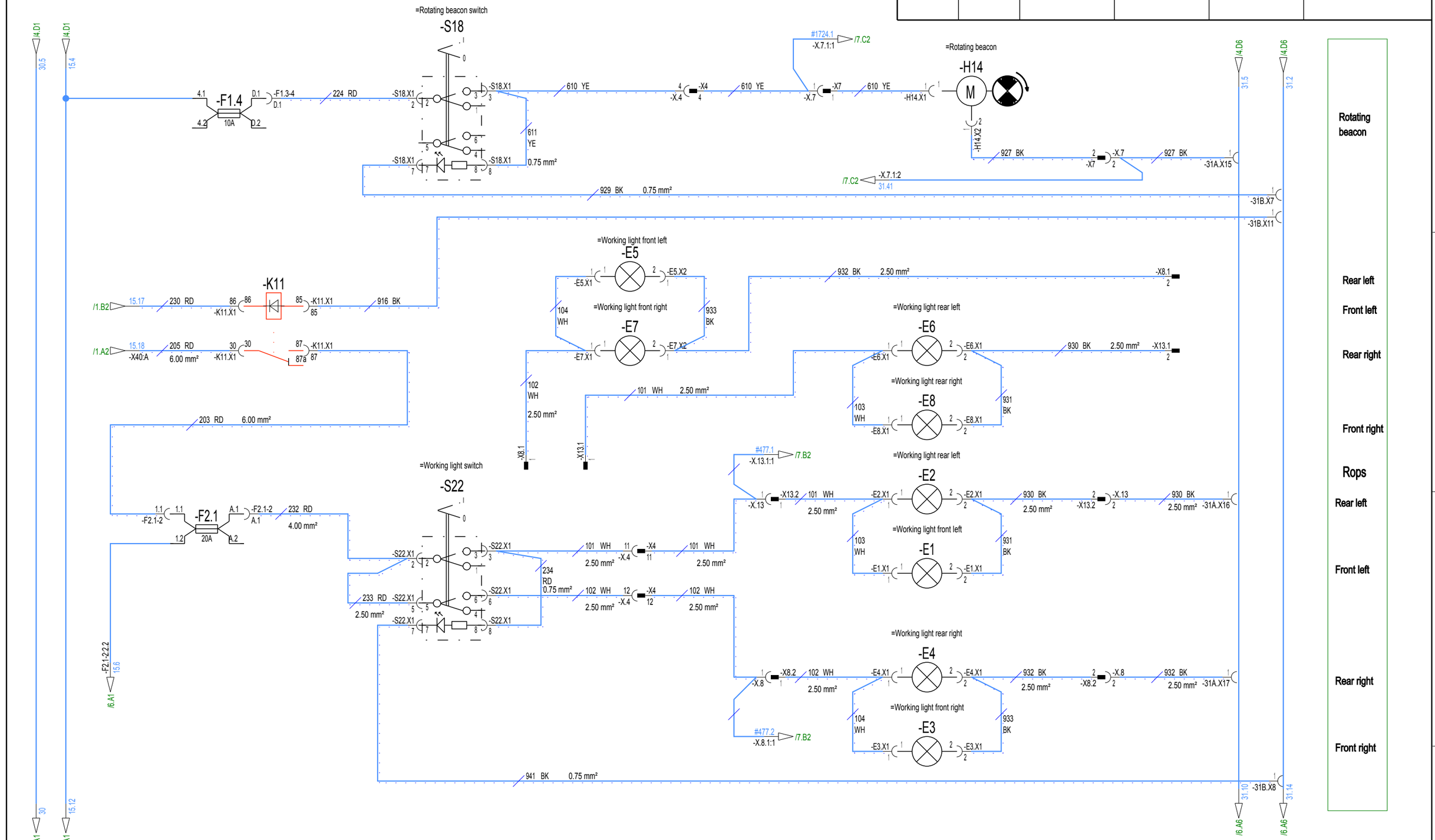

This document will remain the property of Metso Dynapac AB and may not without the permission of the said company be copied, communicated to any third part or used for manufacturing purposes.

Wire area 1.5 mm unless otherwise stated
Ledningsarea 1.5 mm där annat ej anges

Designed TKZ/GE	Approved TKZ/LW	Material Designation	Part No
View E	Date 2007-01-25	Description Circuit diagram Rotating beacom, working light Kretsschema Roterande varningsljus, arbetsbelysning	Model CA-250 T1
	Reg.		Scale / Sheet / of 5 / 14
DYNAPAC			Rev. / No. 393809

Rev.970401

Rev.	Pls.	Change No.	Date	Issued by	Checked

=Head light switch
-S16

-F2.2 20A
-F1.8 10A

=Headlight right
-E10

=Headlight left
-E9

=Position direction right/ front
-E15/-H18

=Position direction left/ front
-E13/-H15

=Direction side right
-H20

=Direction side left
-H17

-E14/H26/-H16

-E16/-H27/-H19

=Flash relay
-K9

=Hazard switch
-S17

=Registration plate lamp
-E17

=Break light relay
-K10

-S21

Headlight Right/ front
Headlight Left/ front
Position/ direction Right/ front
Position/ direction Left/ front
Direction/ side Right
Direction/ side Left
Position Left/ rear
Break light Left/ rear
Direction Left/ rear
Position Right/ rear
Break light Right rear
Direction Right/ rear

Wire area 1.5 mm unless otherwise stated
Ledningsarea 1.5 mm där annat ej anges

This document will remain the property of Metso Dynapac AB and may not without the permission of the said company be copied, communicated to any third part or used for manufacturing purposes.

Designed TKZ/GE	Approved TKZ/LW	Material Designation	Part No
View E	Date 2007-01-25	Description	Model CA-250 T1
	Reg.	Circuit diagram Driving light Kretsschema Trafikbelysning	Scale / Sheet / of 6 / 14
DYNAPAC			Rev. / No. 393809

Rev.970401

Rev.	Pls.	Change No.	Date	Issued by	Checked

/6.D1 30.1

/6.D1 15.20

=Working light rear left

-E6.1

110 WH 2.50 mm²

-X13.3

-E6.X2

-E6.X2

950 BK 2.50 mm² -X13.3

=Working light rear right

111 WH

-E8.1

951 BK

-E8.X2

-E8.X2

/6.D6 31.22

/6.D6 31.20

=Working light Front.Left Cab

-E20

/5.B4 #477.1 -X.13:1

-X.13.1 -X13.4 101 WH -X.41 -X41

-X.519 -X.519

=Working light Rear.Right Cab

103 WH

-E22

-X41 -X.41 -X.520 -X.520

=Working light Front.Right Cab

-E21

/5.C4 #477.2 -X.8:1

-X.8.1 -X8.4 102 WH -X.41 -X41

-X.521 -X.521

=Working light Rear.Right Cab

104 WH

-E23

-X41 -X.41 -X.522 -X.522

-H14.1

M

/5.A4 #1724.1 -X.7:1

-X.7.1 -X7.1 610 YE -X.32 -X32

/5.A4 31.41 -X.7:2

-X.7.1 -X7.1 927 BK -X.32 -X32

/8.A1 30.4

/8.A1 15.5

/8.A6 31.26

/8.A6 31.23

This document will remain the property of Metso Dynapac AB
and may not without the permission of the said company be copied,
communicated to any third part or used for manufacturing purposes.

Designed TKZ/GE	Approved TKZ/LW	Material Designation	Part No
View E	Date 2007-01-25	Description Circuit diagram Working light,Rotating beacon cab Kretsschema Arbetsbelysning, Rot. varningsljus hytt	Model CA-250 T1
	Reg.		Scale / Sheet / of 7 / 14
DYNAPAC			Rev. / No. 393809

Rev.970401

Rev.	Pls.	Change No.	Date	Issued by	Checked

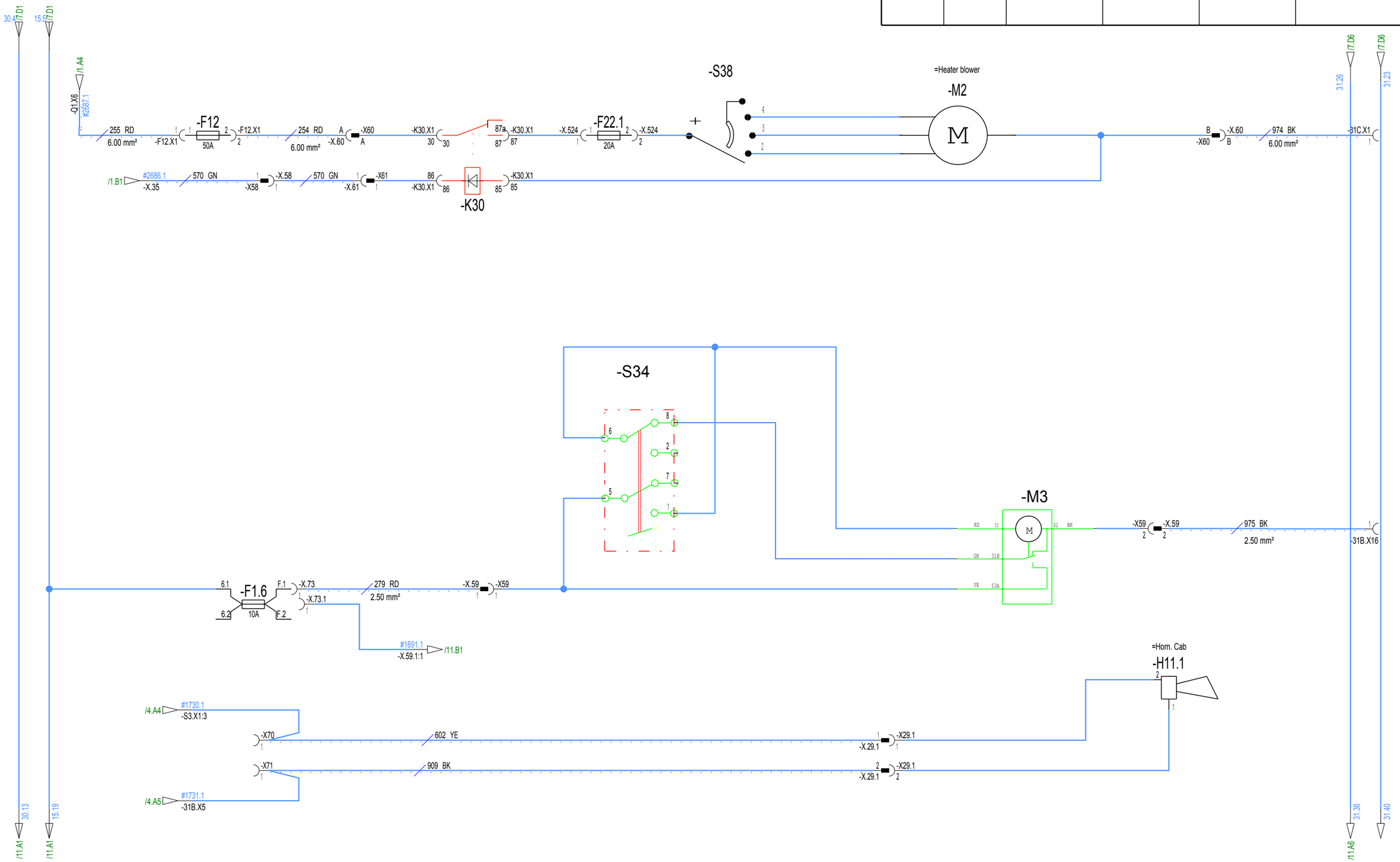

This document will remain the property of Metso Dynapac AB
and may not without the permission of the said company be copied,
communicated to any third part or used for manufacturing purposes.

Designed TKZ/GE	Approved TKZ/LW	Material Designation	Part No
View E	Date 2007-01-25	Description Circuit diagram Simple cab Kretsschema Enkel hytt	Model CA-250 T1
	Reg.		Scale / Sheet of 8 / 14
DYNAPAC			Rev. / No. 393809

Rev.970401

Rev.	Pls.	Change No.	Date	Issued by	Checked

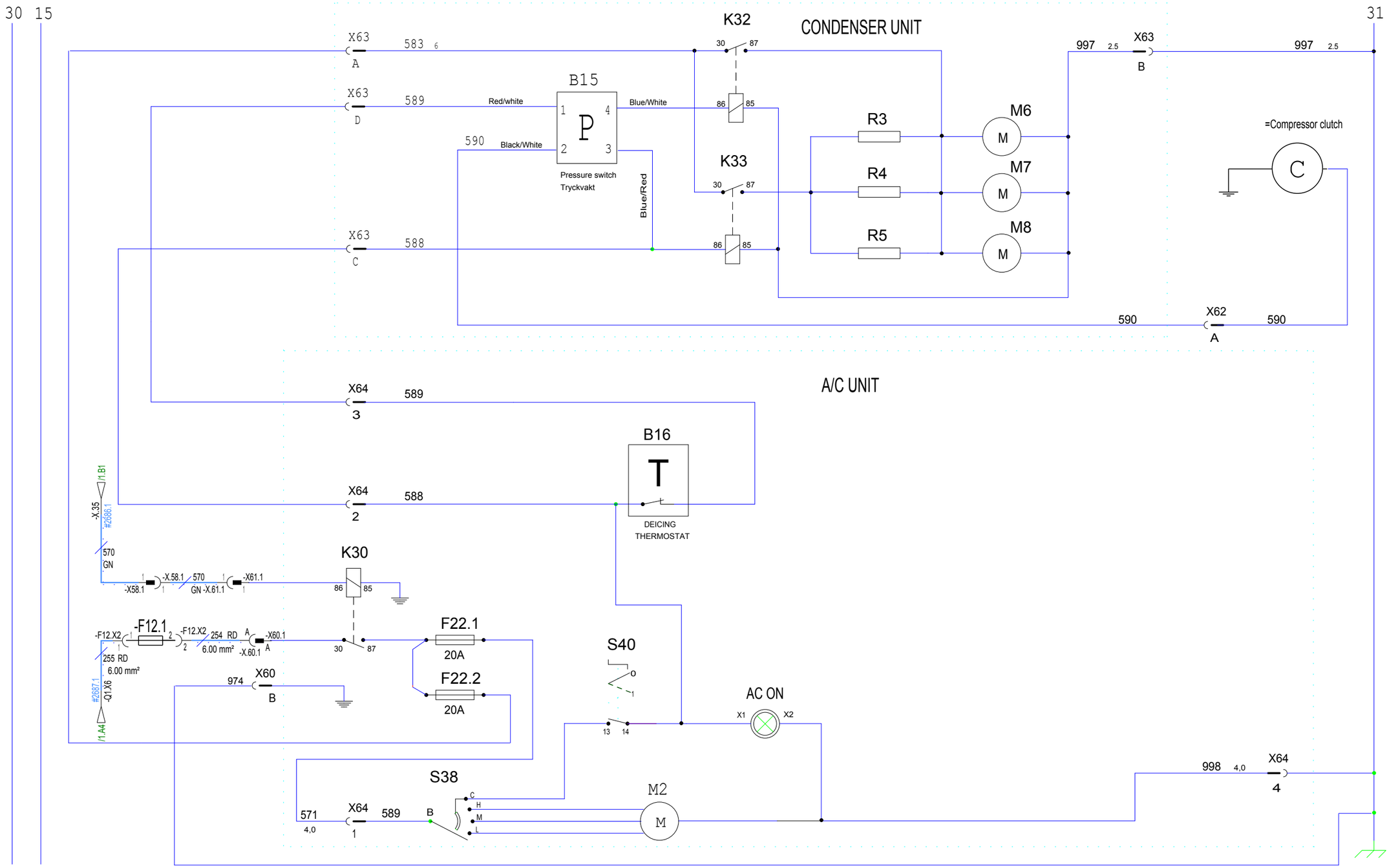

This document will remain the property of Metso Dynapac AB
and may not without the permission of the said company be copied,
communicated to any third part or used for manufacturing purposes.

Designed TZ/GE	Approved TKZ/LW	Material Designation	Part No
View E	Date 2008-04-09	Description Circuit diagram AC Kretsschema AC	Model CA-250 T1
	Reg.		Scale / Sheet / of 9 / 14
DYNAPAC			Rev. / No. 393809

Rev.970401

Rev.	Pls.	Change No.	Date	Issued by	Checked

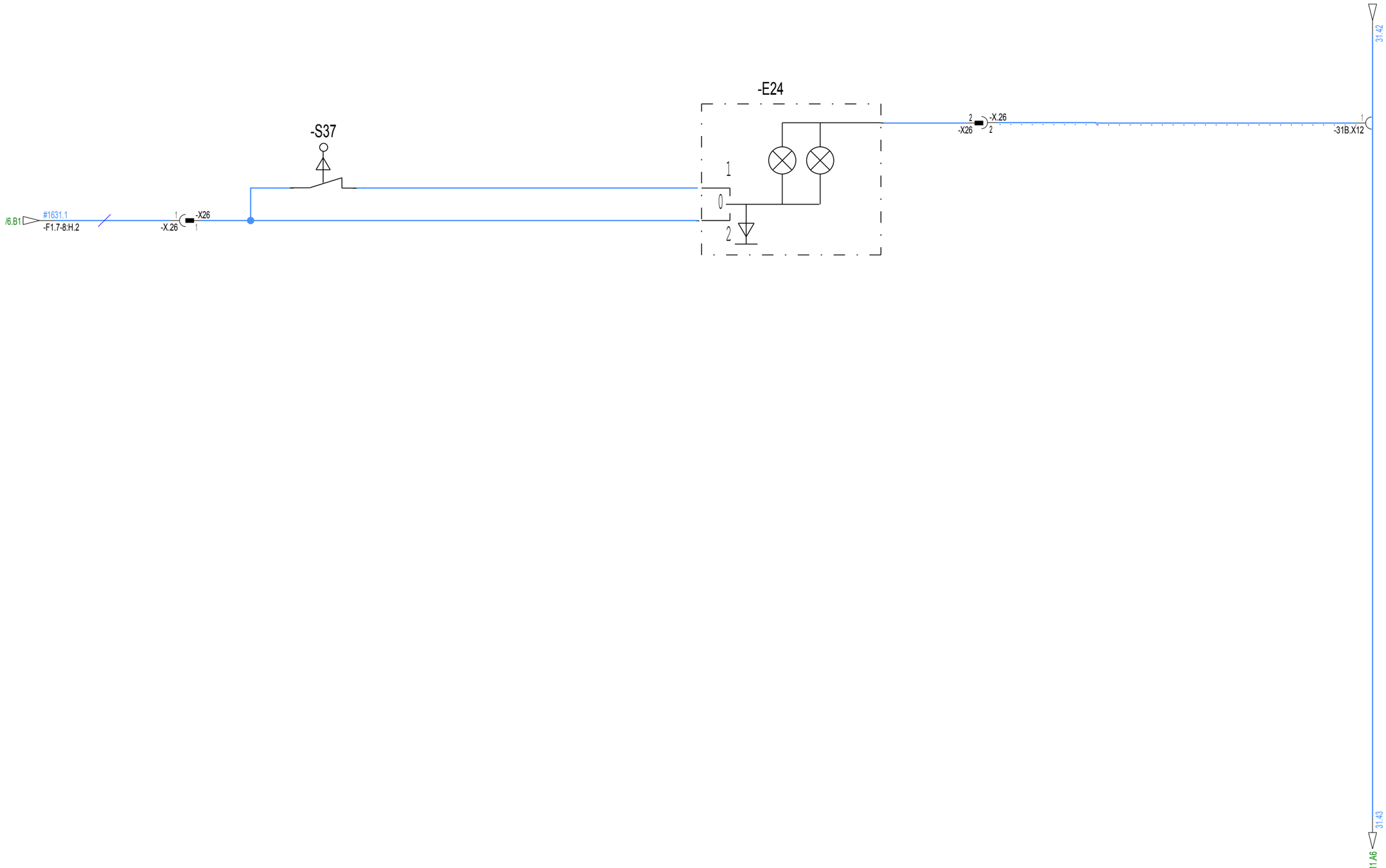

This document will remain the property of Metso Dynapac AB
and may not without the permission of the said company be copied,
communicated to any third part or used for manufacturing purposes.

Designed TKZ/GE	Approved TKZ/LW	Material Designation	Part No
View E	Date 2007-01-25	Description	Model CA-250 T1
	Reg.	Circuit diagram Simple cab CE-mark Kretsschema Enkel hytt CE-märkt	Scale / Sheet / of 10 / 14
DYNAPAC			Rev. / No. 393809

Rev.	Pls.	Change No.	Date	Issued by	Checked

Rev.970401

30.13 /8.D1 15.19 /8.D1

=Wiper rear
-M4
-S36

/8.D6 31.36 /10.D6 31.43

/8.C2 -X.73.1 #1691.1

-S34.1
=Wiper front
-M3.1

-X.59.1 1 -X.59.1 1

2 -X.59.1 2 -X.59.1

=Washer front/rear
-M5
-S35

/12A1 30.4 /12A1 15.5

/12A6 31.6 /12A6 31.28

This document will remain the property of Metso Dynapac AB and may not without the permission of the said company be copied, communicated to any third part or used for manufacturing purposes.

Designed TKZ/GE	Approved TKZ/LW	Material Designation	Part No
View E	Date 2007-01-25	Description	Model CA-250 T1
	Reg.	Circuit diagram Simple cab CE-mark Kretsschema Enkel hytt CE-märkt	Scale / Sheet / of 11 / 14
DYNAPAC			Rev. / No. 393809

Rev.	Pls.	Change No.	Date	Issued by	Checked

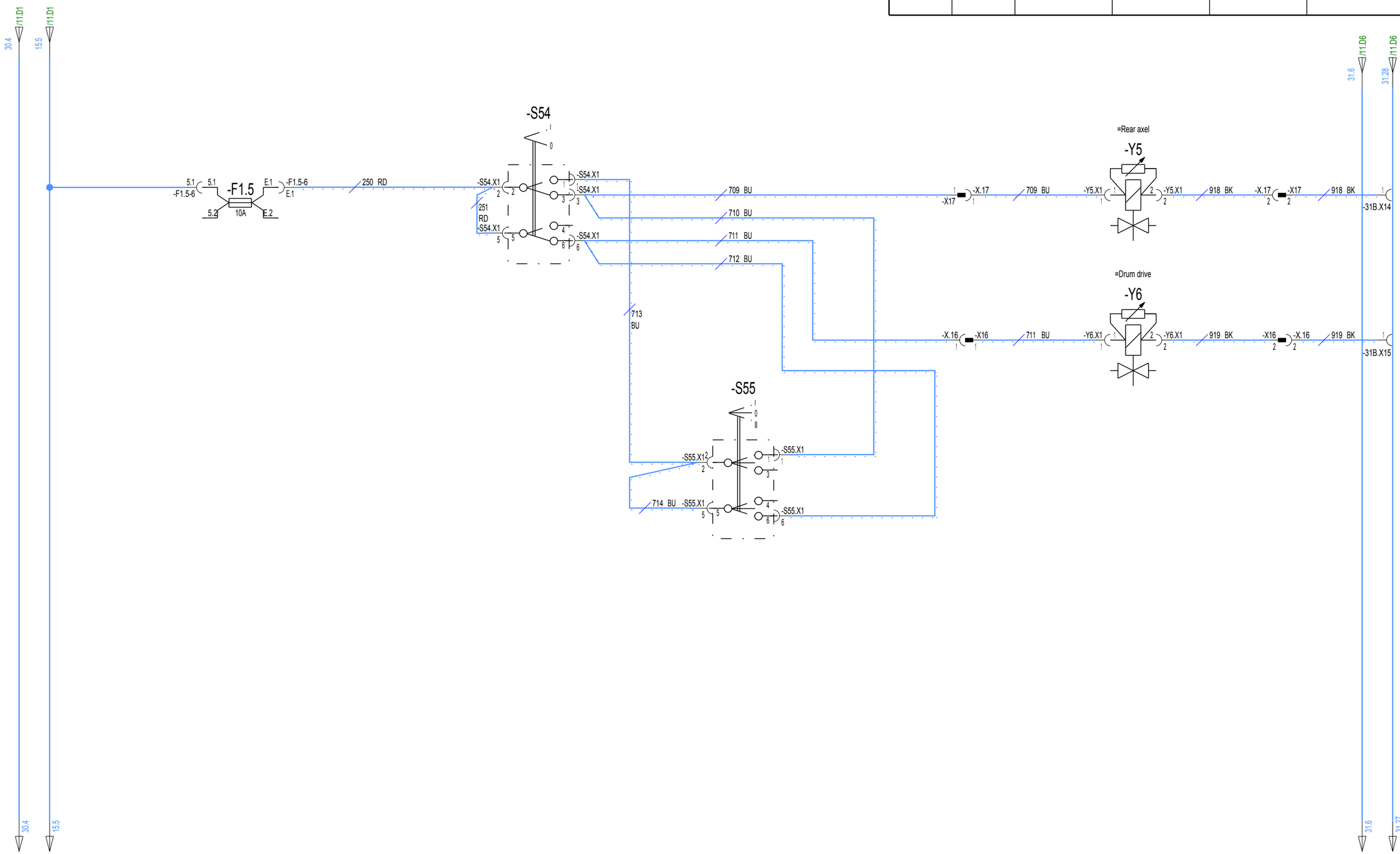

This document will remain the property of Metso Dynapac AB
and may not without the permission of the said company be copied,
communicated to any third part or used for manufacturing purposes.

Designed TKZ/GE	Approved TKZ/LW	Material Designation	Part No
View E	Date 2007-01-25	Description	Model CA-250 T1
	Reg.	Circuit diagram Dual speed Kretsschema Hög/ låg hastighet	Scale / Sheet / of 12 / 14
DYNAPAC			Rev. / No. 393809

Rev.970401

Reference List

Rev.	Pls.	Change No.	Date	Issued by	Checked

Device Name	Description	Sheet Ref.	Device Name	Description	Sheet Ref.
-A1	Warning/Hour/Fuel Instr	/3.B2	-K1	Start relay 75A	/1.B4
-A1.X1	42-pin	/1.B3	-K2	Fuel solenoid relay 75A	/1.B4
-A8.X33	8 Pol MATE-N-LOK	/3.B3	-K9	Flash relay	/6.C1
-A8.X34	10 Pol MATE-N-LOK	/3.A3	-K10	Break light relay 30A	/6.D3
-B1	Hydraulik oil temp	/3.C5	-K11	Light relay 30A	/5.B2
-B2	Engine temp	/3.B5	-K30	Heater relay 30A	/8.A2
-B3	Fuel sender	/3.B5	-K30.1	Heater relay 30A	/9.B2
-B4	Air filter	/3.C5	-M1	Starter	/1.A6
-B10	Engine pressure	/3.B5	-M2	Heater blower	/8.A4
-E1	Working light Rops	/5.C4	-M3	Wiper front	/8.C5
-E2	Working light Rops	/5.C4	-M3.1	Wiper front	/10.B5
-E3	Working light Rops	/5.D4	-M4	Wiper rear	/10.A5
-E4	Working light Rops	/5.C4	-M5	Washer	/10.C5
-E5	Working light	/5.B3	-Q1	Circuit breaker	/1.A5
-E6	Working light	/5.B4	-R1	Potentiometer with movable contact	/1.C2
-E6.1	Working light	/7.A4	-R2	Resistor 1,5 Kohm	/3.C3
-E7	Working light	/5.B3	-R1.X1	3 Pol Plug	/1.C2
-E8	Working light	/5.B4	-S1	Switch ignition	/1.A1
-E8.1	Working light	/7.A4	-S2	Emergency switch Caldaro	/1.B2
-E9	Headlight	/6.A5	-S3	Sw Signal Horn	/4.A3
-E10	Headlight	/6.A5	-S4.1	Neutral position switch pump	/2.B2
-E17	Registration plate lamp	/6.C4	-S5	Seat switch	/2.B3
-E20	Working light Cab	/7.B4	-S6	Vibb on/off	/4.C3
-E21	Working light Cab	/7.B4	-S12	Sw Vibration 3way L-H	/4.C2
-E22	Working light Cab	/7.B4	-S14	Sw Parking brake	/1.C4
-E23	Working light Cab	/7.B4	-S16	Sw Traffic Light	/6.A2
-E24	Inner light	/9.C4	-S17	Sw_Hazard	/6.C3
-E13/-H15	Directio indicator lamp. Front/Left	/6.B5	-S18	Sw Rotating Beacon	/5.A2
-E15/-H18	Directio indicator lamp. Front/Left	/6.A5	-S21	Sw Direction Indicate	/6.B3
-E16/-H27/-H19	Direction-Pos and stop rear right	/6.C5	-S22	Sw Working Light	/5.C2
-E14/H26/-H16	Direction-Pos and stop rear left	/6.C5	-S34	Sw Window wiper	/8.B3
-F1.1	Fuse 15A. Blue	/1.B1	-S34.1	Sw Window wiper	/10.B4
-F1.2	Fuse 10 A. Red	/4.A1	-S35	Sw Window washer	/10.C4
-F1.4	Fuse 10A. Red	/5.A1	-S36	Sw Window wiper rear	/10.A4
-F1.5	Fuse 10A. Red	/11.A1	-S37	Door switch	/9.C2
-F1.6	Fuse 10A. Red	/8.C2	-S38	Sw Fan	/8.A4
-F1.8	Fuse 10A. Red	/6.B1	-S54	Sw Tractin controll	/11.A3
-F2.1	Fuse 20A. Yellow	/5.C1	-S55	Sw Dual speed	/11.B4
-F2.2	Fuse 20A. Yellow	/6.A1	-V1	Diod	/1.B5
-F10	Fuse 40A. Orange	/1.A4	-X4	12 Pol Receptacle	/3.B3
-F11	Fuse 40A. Orange	/1.A4	-X.4	12 Pol Plug	/3.B3
-F20	Fuse 125A. Orange	/1.A4	-X6	12 Pol Receptacle	/3.A3
-F21	Fuse 125A. Orange	/1.A4	-X.6	12 Pol Plug	/3.A3
-F22	Fuse 20A. Yellow	/8.A1	-X7	2 Pol Receptacle	/5.A4
-F22.1	Fuse 20A. Yellow	/9.B1	-X.7	2 Pol Plug	/5.A4
-G1	Battery	/1.A5	-X7.1	2 Pol Receptacle	/7.C2
-G2	Alternator	/1.C6	-X.7.1	2 Pol Plug	/7.C2
-G2.X1	4-pol F 150-series	/1.B6	-X.8	2 Pol Plug	/5.C4
-H10	Buzzer	/2.A3	-X8.1	2 Pol Receptacle	/5.B3
-H11	Horn	/4.A5	-X.8.1	2 Pol Plug	/7.B2
-H11.1	Horn. Cab	/8.C5	-X8.2	2 Pol Receptacle	/5.C4
-H13	Back-up alarm	/4.B5	-X8.4	2 Pol Receptacle	/7.B2
-H14	Rotating Beacon	/5.A4	-X9	2 Pol MTA	/1.A3
-H14.1	Rotating beacon Cab	/7.B5	-X.9	2 Pol MTA	/1.A3
-H17	Side direction indicator lamp	/6.B5	-X11	6 Pol Receptacle	/6.A3
-H20	Side direction indicator lamp	/6.B5	-X.11	6 Pol Plug	/6.A3

Designed: TKZ/GE	Approved: TKZ/LW	Material Designation:	Part No:
View: E	Date: 2007-01-25	Description: Circuit diagram Reference List Kretsschema Apparatlista	Model: CA-250 T1
	Reg.		Scale: / Sheet / of: 13 / 14
DYNAPAC			Rev. / No.: 393809

This drawing will remain the property of Metso Dynapac AB and may not without the permission of the said company be copied, communicated to any third part or used for manufacturing purposes.

Rev.970401

Reference List

Rev.	Pls.	Change No.	Date	Issued by	Checked

Device Name	Description	Sheet Ref.	Device Name	Description	Sheet Ref.
-X12	6 Pol Receptacle	/6.B3			
-X.12	6 Pol Plug	/6.B3			
-X.13	2 Pol Plug	/5.C4			
-X13.1	2 Pol Receptacle	/5.B3			
-X.13.1	2 Pol Plug	/7.B2			
-X13.2	2 Pol Receptacle	/5.C4			
-X13.3	2 Pol Receptacle	/7.A5			
-X13.4	2 Pol Receptacle	/7.B2			
-X16	2 Pol Receptacle	/11.B5			
-X.16	2 Pol Plug	/11.B5			
-X17	2 Pol Receptacle	/11.A5			
-X.17	2 Pol Plug	/11.A5			
-X26	2 Pol Plug Sure-Seal	/9.C2			
-X.26	2 Pol Receptacle Sure-Seal	/9.C1			
-X.29	3 Pol Plug	/1.A2			
-X29.1	2 Pol Receptacle Sure-Seal	/8.C4			
-X.29.1	2 Pol Plug Sure-Seal	/8.C4			
-X32	2 Pol Plug Sure-Seal	/7.C3			
-X.32	2 Pol Receptacle Sure-Seal	/7.C3			
-X40	2 Pol MTA	/1.A3			
-X.40	2 Pol MTA	/1.A3			
-X41	5 Pol Receptacle Sure-Seal	/7.B3			
-X.41	5 Pol Plug Sure -Seal	/7.B3			
-X58	2 Pol Plug Sure-Seal	/8.A2			
-X.58	2 Pol Receptacle Sure-Seal	/8.A2			
-X58.1	2 Pol Plug Sure-Seal	/9.B1			
-X.58.1	2 Pol Receptacle Sure-Seal	/9.B2			
-X59	2 Pol Receptacle Sure-Seal	/8.C3			
-X.59	2 Pol Plug Sure-Seal	/8.C3			
-X.59.1	2 Pol Plug Sure-Seal	/10.B3			
-X60	2 Pol MTA	/8.A6			
-X.60	2 Pol MTA	/8.A6			
-X61	2 Pol Plug Sure-Seal	/8.A2			
-X.61	2 Pol Receptacle Sure-Seal	/8.A2			
-X61.1	2 Pol Plug Sure-Seal	/9.B2			
-X.61.1	2 Pol Receptacle Sure-Seal	/9.B2			
-X62	2-Pol F	/9.B2			
-X70	Sealed splice	/8.C2			
-X71	Sealed splice	/8.D2			
-X.75	1 Pol superseal	/9.B5			
-Y1	Fuel solenoid valve	/1.C5			
-Y2	Break valve	/1.C6			
-Y3	Vibration valve Low	/4.C5			
-Y4	Vibration valve High	/4.C5			
-Y5	Rear axel valve	/11.A5			
-Y6	Drum drive valve	/11.B5			

Designed: TKZ/GE	Approved: TKZ/LW	Material Designation:	Part No:
View: E	Date: 2007-01-25	Description: Circuit diagram Reference List Kretsschema Apparatlista	Model: CA-250 T1
	Reg.		Scale / Sheet / of: 14 / 14
DYNAPAC			Rev. / No.: 393809

This drawing will remain the property of Metso Dynapac AB and may not without the permission of the said company be copied, communicated to any third part or used for manufacturing purposes.

Rev.970401

Rev.	Pls.	Change No.	Date	Issued by	Checked
A	1	08662	081222	TKZ/GE	TKZ/LW

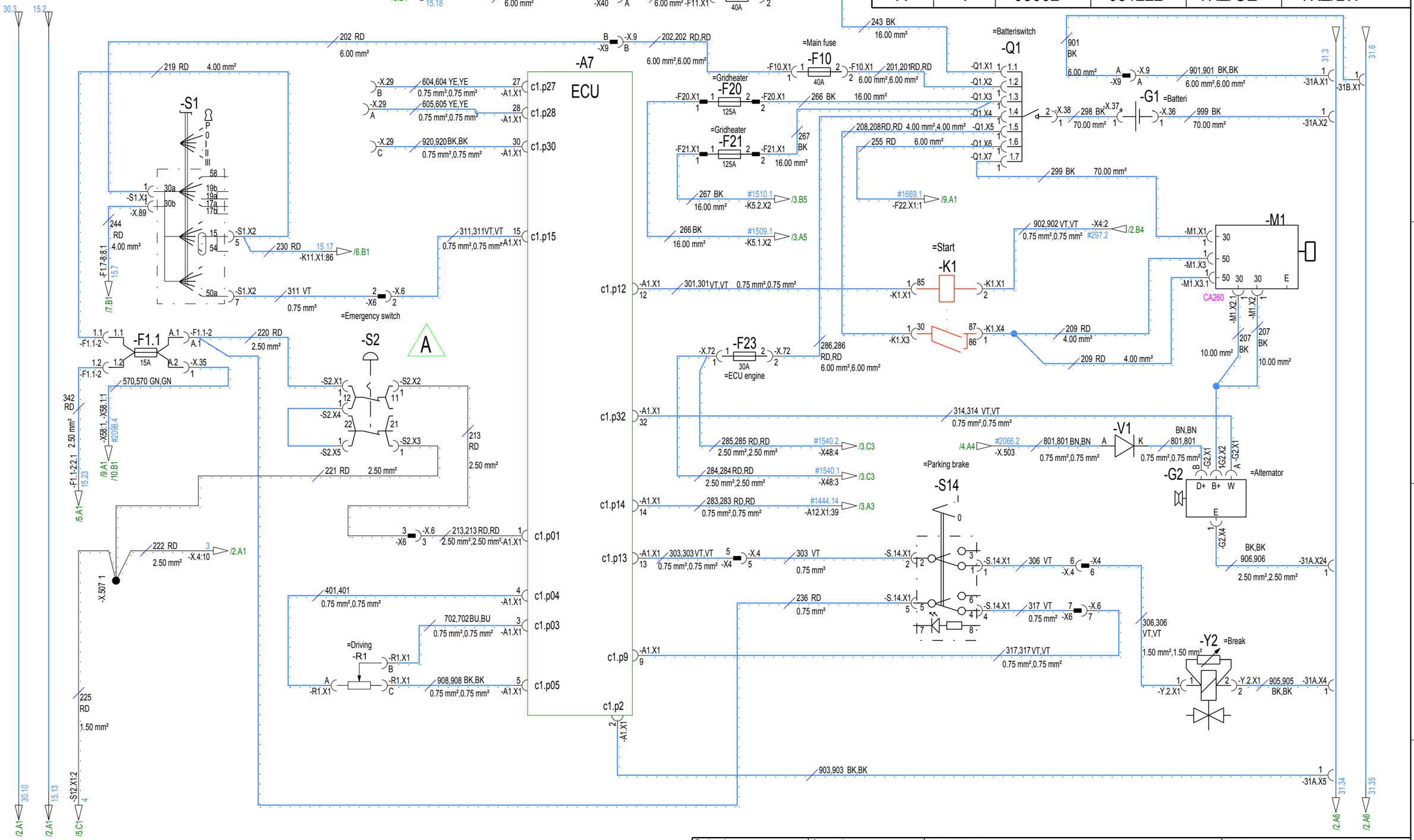

Wire area 1.5 mm unless otherwise stated
Ledningsarea 1.5 mm där annat ej anges

Designed	Approved	Material Designation	Part No
TKZ/GE	TKZ/LW		
View: E	Date: 2006-06-15	Description: Circuit diagram Start and stop / Kretsschema Start och stopp	Model: CA-250 T3
	Reg.		Scale / Sheet / of: 1/14
DYNAPAC			Rev.: A / No.: 392423

This document will remain the property of Metso Dynapac AB and may not without the permission of the said company be copied, communicated to any third part or used for manufacturing purposes.

Rev.970401

Rev.	Pls.	Change No.	Date	Issued by	Checked

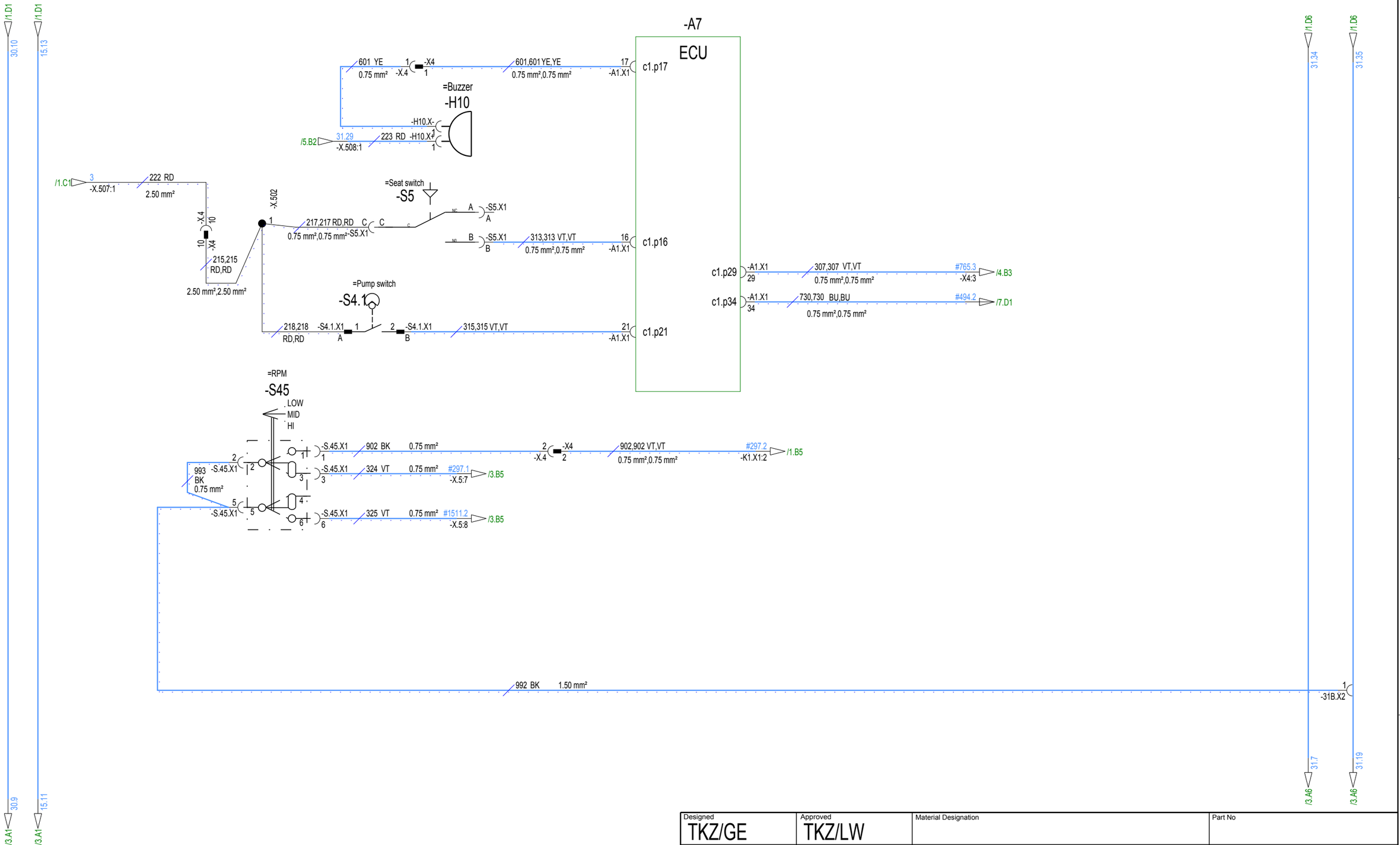

Designed TKZ/GE	Approved TKZ/LW	Material Designation	Part No
View E	Date 2006-06-15	Description Circuit diagram Start and stop Kretsschema Start och stopp	Model CA-250 T3
	Reg.		Scale / Sheet / of 2 / 14
DYNAPAC			Rev. A / No. 392423

This document will remain the property of Metso Dynapac AB and may not without the permission of the said company be copied, communicated to any third part or used for manufacturing purposes.

Rev.970401

Rev.	Pls.	Change No.	Date	Issued by	Checked

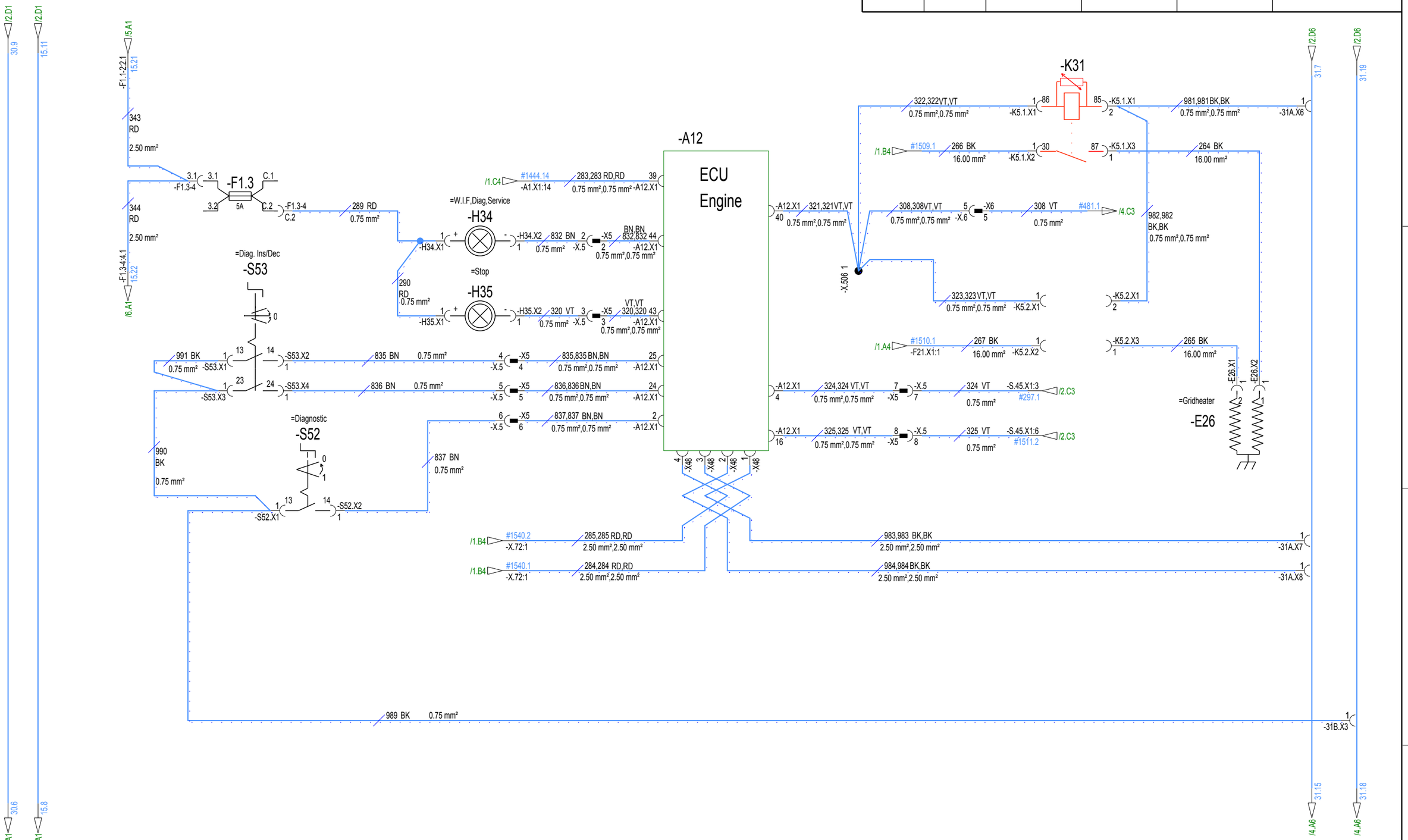

This document will remain the property of Metso Dynapac AB
and may not without the permission of the said company be copied,
communicated to any third part or used for manufacturing purposes.

Designed: TKZ/GE	Approved: TKZ/LW	Material Designation	Part No
View: E	Date: 2006-06-15	Description: Circuit diagram ECU-engine Kretsschema ECU-maskin	Model: CA-250 T3
	Reg.		Scale: A / Sheet / of: 3 / 14
DYNAPAC			Rev.: A / No.: 392423

Rev.	Pls.	Change No.	Date	Issued by	Checked

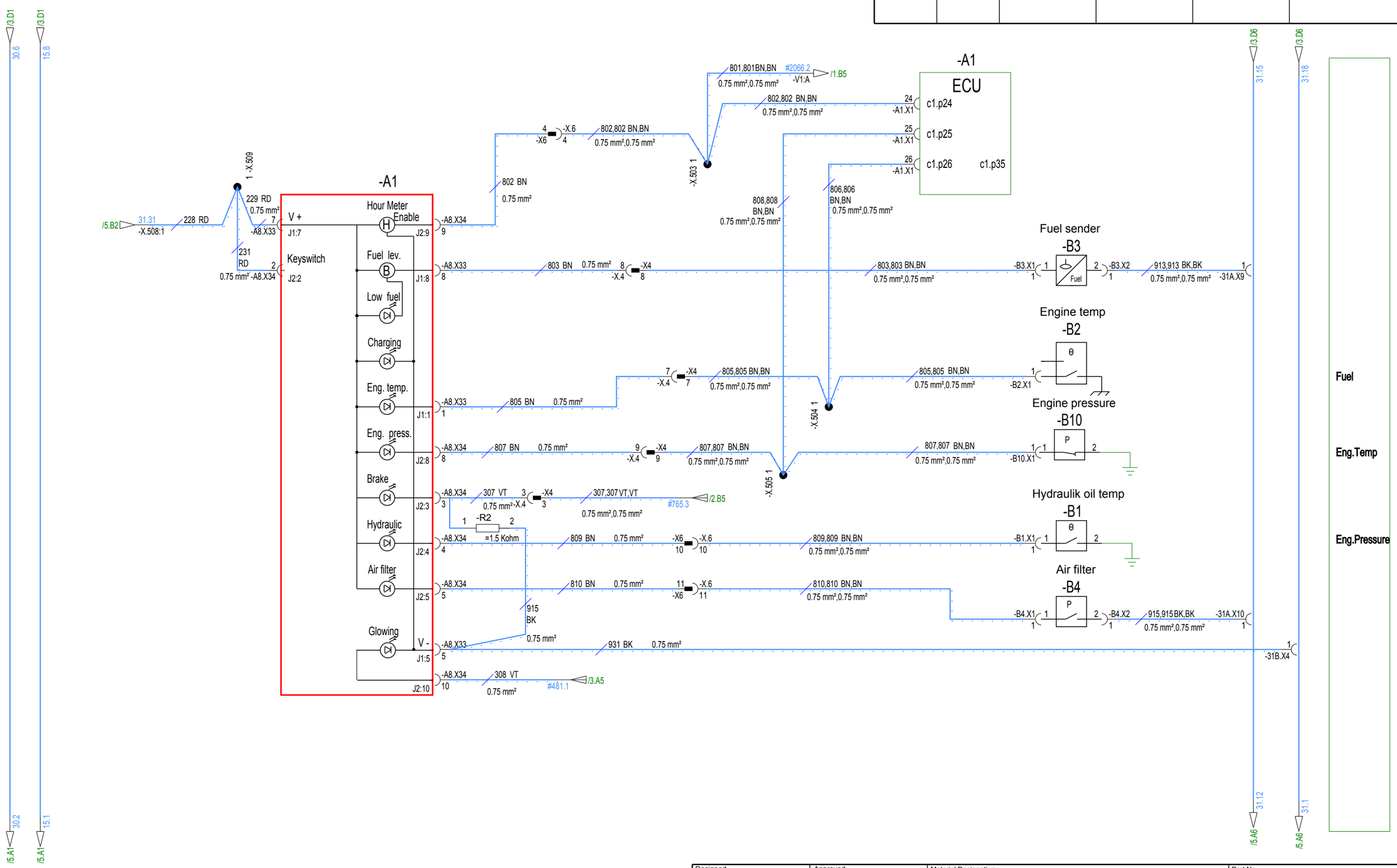

Wire area 1.5 mm unless otherwise stated

Ledningsarea 1.5 mm där annat ej anges

Designed	Approved	Material Designation	Part No
TKZ/GE	TKZ/LW		
View	Date 2006-06-15	Description: Circuit diagram Warning panel Kretsschema Varningspanel	Model CA-250 T3
	Reg.		Scale / Sheet / of 4 / 14
DYNAPAC			Rev. A / No. 392423

This document will remain the property of Metso Dynapac AB and may not without the permission of the said company be copied, communicated to any third part or used for manufacturing purposes.

Rev.970401

Rev.	Pls.	Change No.	Date	Issued by	Checked

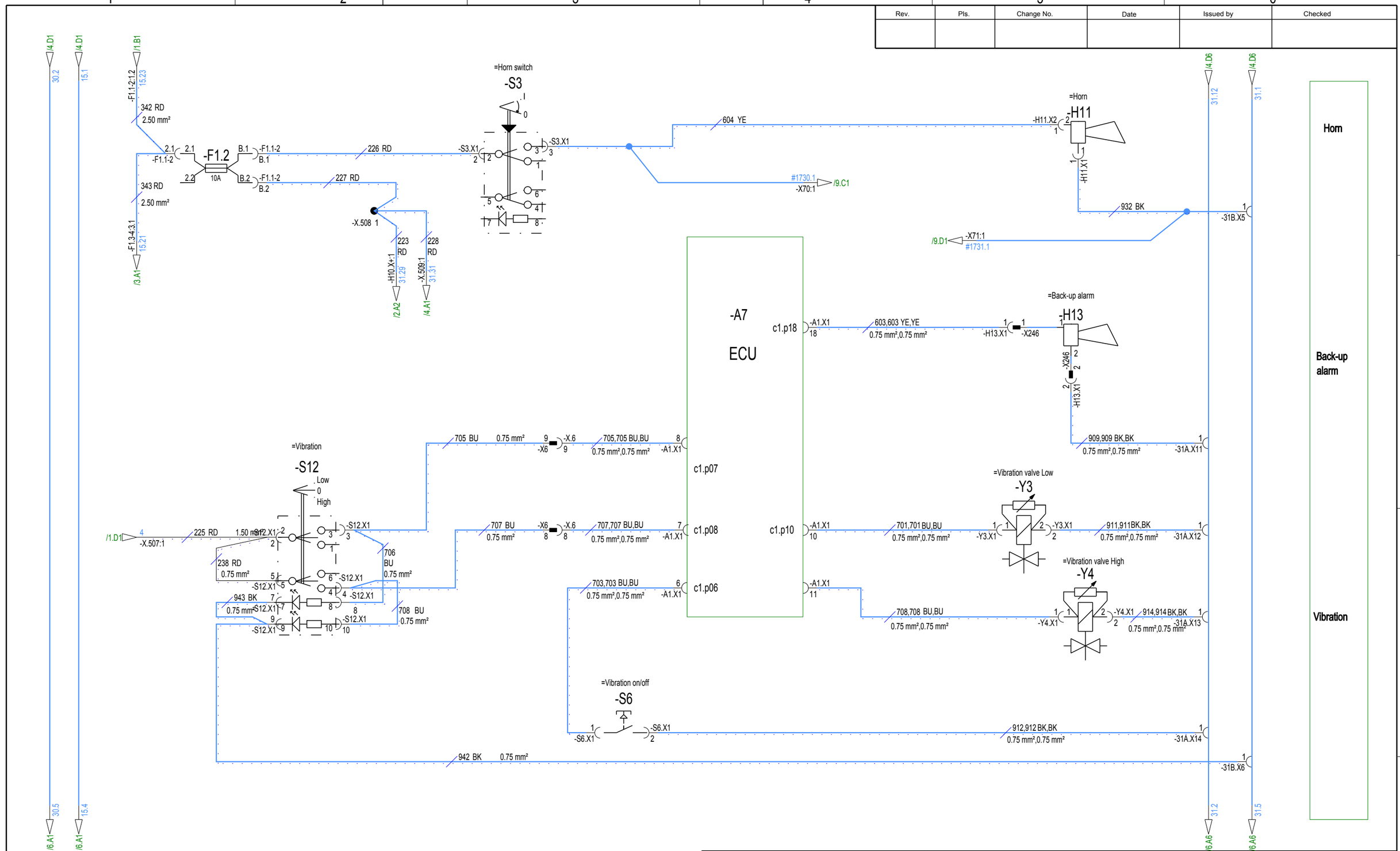

Wire area 1.5 mm unless otherwise stated

Ledningsarea 1.5 mm där annat ej anges

Designed TKZ/GE	Approved TKZ/LW	Material Designation	Part No
View E	Date 2006-06-15	Description Circuit diagram Horn vibb and back-up alarm Kretsschema Signalhorn,vibb och back-alarm	Model CA-250 T3
	Reg.		Scale / Sheet / of 5 / 14
DYNAPAC			Rev. A / No. 392423

This document will remain the property of Metso Dynapac AB and may not without the permission of the said company be copied, communicated to any third part or used for manufacturing purposes.

Rev.970401

Rev.	Pls.	Change No.	Date	Issued by	Checked

=Rotating beacon switch
-S18
=Rotating beacon
-H14
=Working light front left
-E5
=Working light front right
-E7
=Working light rear left
-E6
=Working light rear right
-E8
=Working light rear left
-E2
=Working light front left
-E1
=Working light rear right
-E4
=Working light front right
-E3
=Working light switch
-S22
-K11
-F1.4
-F2.1
-F1.3-4:3.1 /3.B1 15.22
#1724.1 -X.7.1:1 /8.C2
/5.D1 30.5
/5.D1 15.4
/5.D6 31.5
/5.D6 31.2
344 RD 2.50 mm²
345 RD 2.50 mm²
-F1.5-6:5.1 15.24 /12.A1
224 RD
610 YE
610,610 YE,YE
610 YE
927 BK
927,927 BK,BK
611 YE 0.75 mm²
929 BK 0.75 mm²
-X.7.1:2 /8.C2 31.41
-31B.X7
-31B.X11
-31A.X15
/1.B2 15.17 -S1.X2:5
230 RD
916 BK
/1.A2 15.18 -X40:A
205 RD 6.00 mm²
203 RD 6.00 mm²
232 RD 4.00 mm²
-F2.1-2:2.2 15.6 /7.A1
932 BK 2.50 mm²
930 BK 2.50 mm²
-X8.1
-X13.1
104 WH
933 BK
102 WH 2.50 mm²
101 WH 2.50 mm²
103 WH
931 BK
#477.1 -X.13.1:1 /8.B2
#477.2 -X.8.1:1 /8.B2
-X13.2 101 WH 2.50 mm²
930 BK 2.50 mm²
930,930 BK,BK 2.50 mm²,2.50 mm²
-31A.X16
-X8.2 102 WH 2.50 mm²
932 BK 2.50 mm²
932,932 BK,BK 2.50 mm²,2.50 mm²
-31A.X17
234 RD 0.75 mm²
233 RD 2.50 mm²
101 WH 2.50 mm²
102 WH 2.50 mm²
101,101 WH,WH 2.50 mm²,2.50 mm²
102,102 WH,WH 2.50 mm²,2.50 mm²
941 BK 0.75 mm²
-31B.X8
/7.A6 31.10
/7.A6 31.14
/7.A1 30
/7.A1 15.12

Rotating beacon
Front left
Front right
Rear left
Rear right
Rops
Rear left
Front left
Rear right
Front right

Wire area 1.5 mm unless otherwise stated
Ledningsarea 1.5 mm där annat ej anges

This document will remain the property of Metso Dynapac AB
and may not without the permission of the said company be copied,
communicated to any third part or used for manufacturing purposes.

Designed TKZ/GE	Approved TKZ/LW	Material Designation	Part No
View E	Date 2006-06-15	Description	Model CA-250 T3
	Reg.	Circuit diagram Rotating beacom, working light Kretsschema Roterande varningsljus, arbetsbelysning	Scale / Sheet / of 6 / 14
DYNAPAC			Rev. A / No. 392423

Rev.	Pls.	Change No.	Date	Issued by	Checked

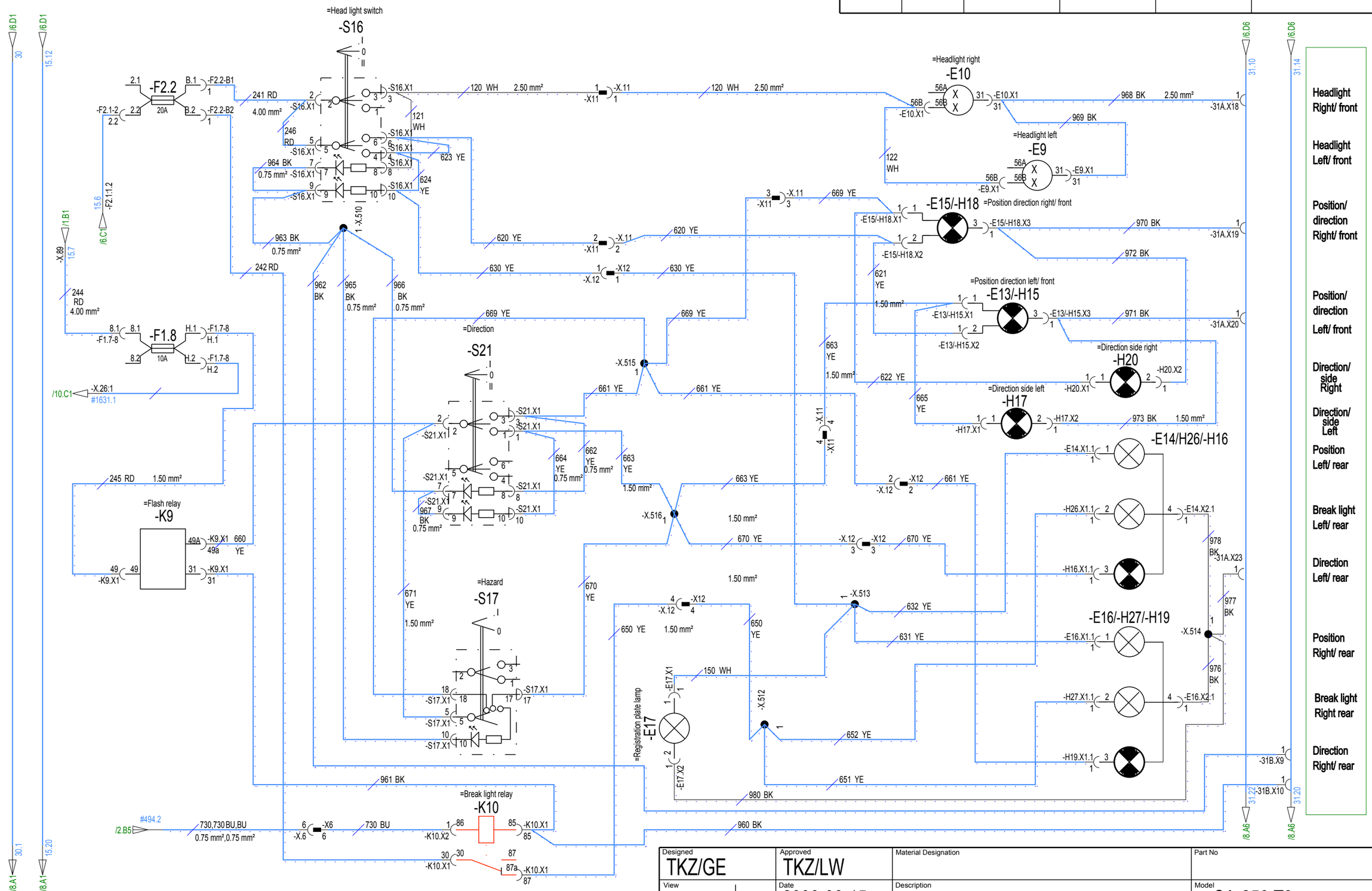

Wire area 1.5 mm unless otherwise stated

Ledningsarea 1.5 mm där annat ej anges

Designed	Approved	Material Designation	Part No
TKZ/GE	TKZ/LW		
View	Date	Description	Model
	2006-06-15	Circuit diagram Driving light Kretsschema Trafikbelysning	CA-250 T3
	Reg.		Scale / Sheet / of 7 / 14
DYNAPAC			Rev. A / No. 392423

This document will remain the property of Metso Dynapac AB and may not without the permission of the said company be copied, communicated to any third part or used for manufacturing purposes.

Rev.970401

Rev.	Pls.	Change No.	Date	Issued by	Checked

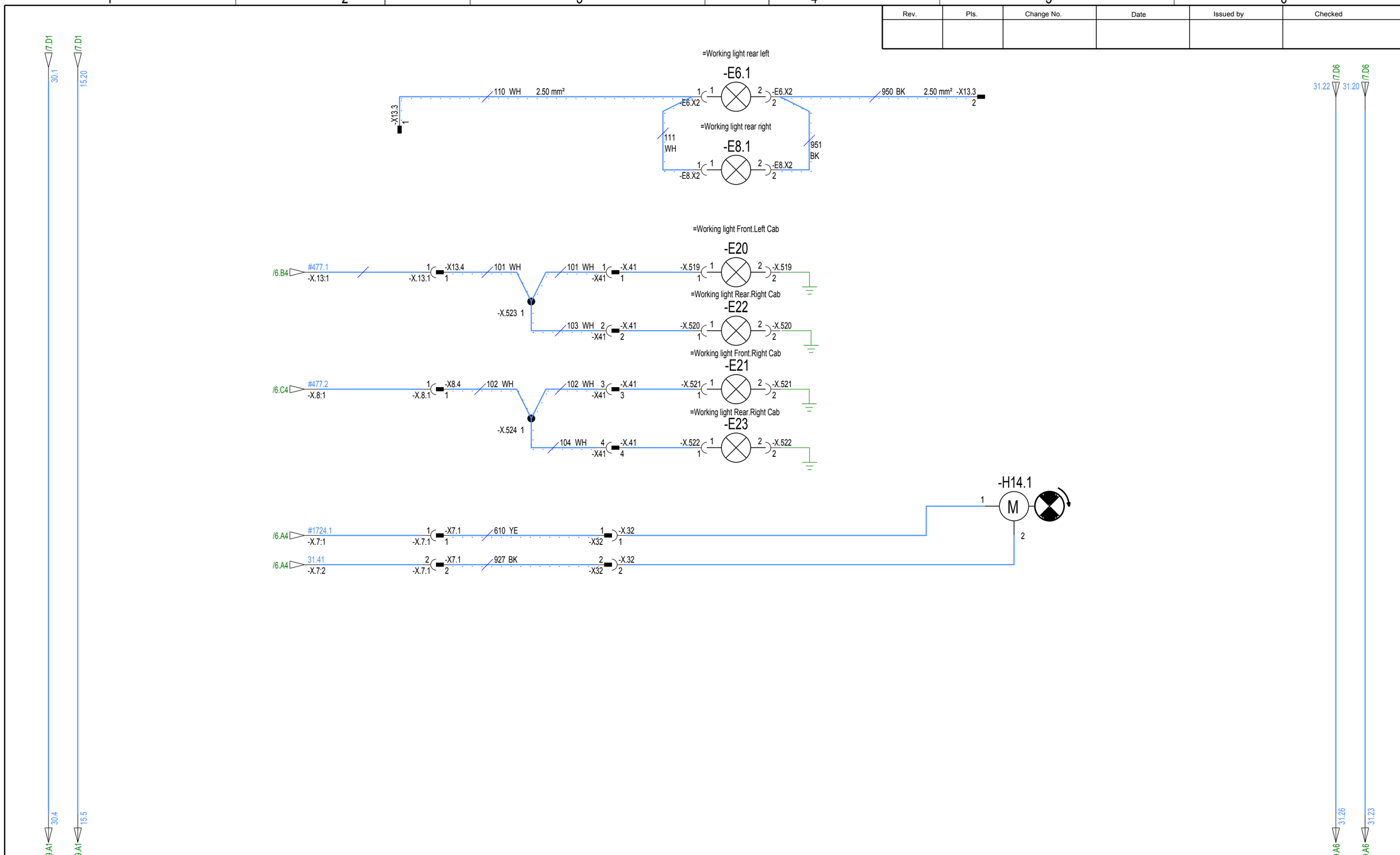

Designed	Approved	Material Designation	Part No
TKZ/GE	TKZ/LW		
View	Date	Description	Model
E	2006-06-15	Circuit diagram Working light,Rotating beacon cab Kretsschema Arbetsbelysning, Rot. varningsljus hytt	CA-250 T3
	Reg.		Scale / Sheet / of 8 / 14
DYNAPAC			Rev. A / No. 392423

This document will remain the property of Metso Dynapac AB and may not without the permission of the said company be copied, communicated to any third part or used for manufacturing purposes.

Rev.970401

Rev.970401

Rev.	Pls.	Change No.	Date	Issued by	Checked

30.4 /8.D1
15.5 /8.D1
/1.A4
-Q1.X6
#1669.1
255 RD
6.00 mm²
-F22.X1
-F22
20A
-F22.X1
254 RD
6.00 mm²
A
-X60
-X60
A
-K30.X1
30
86
85
-K30.X1
87a
87
-S38
+
4
3
2
=Heater blower
-M2
M
B
-X60
-X60
B
974 BK
6.00 mm²
-31C.X1
1
/8.D6
31.26
/8.D6
31.23
/1.B1
#2098.4
-X.35
570 GN
-X58
1
-X.58
1
570 GN
-X.61
1
-X61
1
86
-K30.X1
87
-K30.X1
85
-K30
-S34
8
6
2
7
5
1
0
-1
/12.B1
-F1.5-6.5.1
15.26
346
RD
2.50 mm²
6.1
-F1.5-6
6.1
-F1.6
6.2
10A
F.1
F.2
-X.73
1
-X.73.1
1
279 RD
2.50 mm²
-X.59
1
-X59
1
-M3
RD
53
M
31
BK
GN
31B
YE
53A
-X59
2
-X.59
2
975 BK
2.50 mm²
1
-31B.X16
279 RD
2.50 mm²
#1720.1
-X.59.1:1
/11.B2
=Horn. Cab
-H11.1
2
1
/5.A4
#1730.1
-S3.X1:3
-X70
1
602 YE
1
-X.29.1
-X29.1
1
-X71
1
909 BK
2
-X.29.1
-X29.1
2
/5.A5
#1731.1
-31B.X5:1
/11.A1
30.13
/11.A1
15.19
/11.A6
31.36
/11.A6
31.40

This document will remain the property of Metso Dynapac AB
and may not without the permission of the said company be copied,
communicated to any third part or used for manufacturing purposes.

Designed TKZ/GE	Approved TKZ/LW	Material Designation	Part No
View E	Date 2006-06-15	Description Circuit diagram Simple cab Kretsschema Enkel hytt	Model CA-250 T3
	Reg.		Scale / Sheet / of 9 / 14
DYNAPAC			Rev. A / No. 392423

Rev.970401

Rev.	Pls.	Change No.	Date	Issued by	Checked

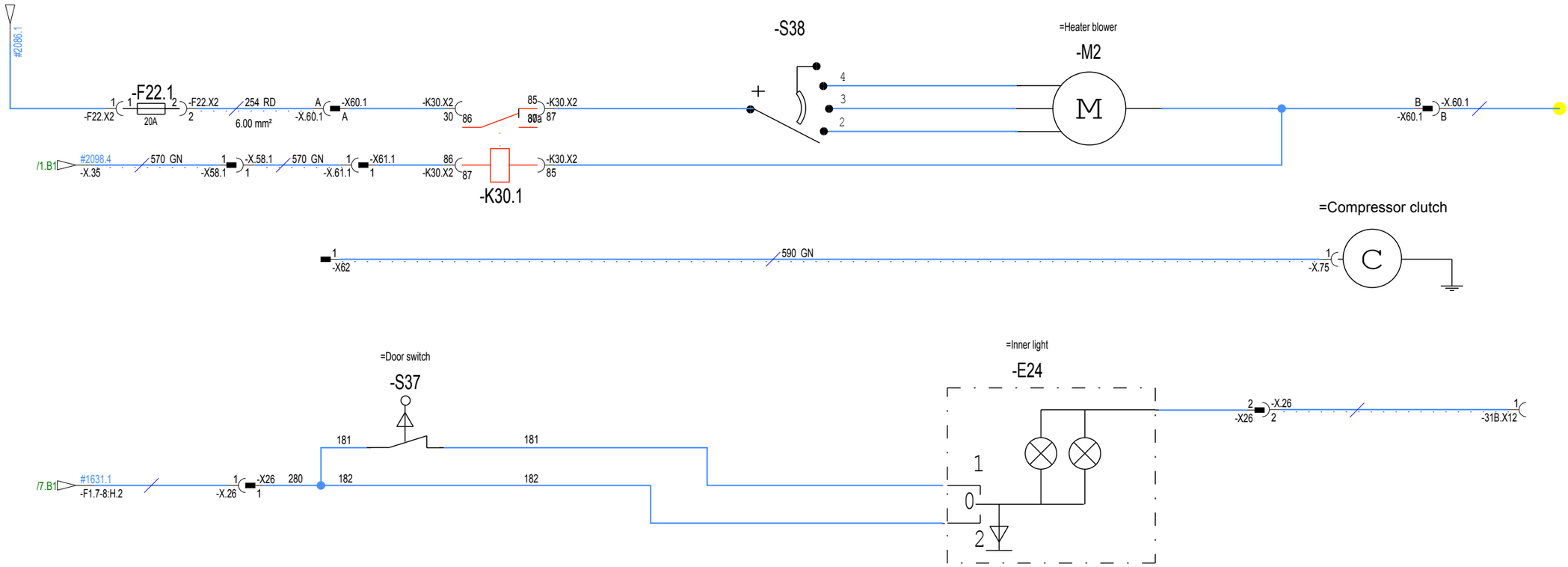

This document will remain the property of Metso Dynapac AB
and may not without the permission of the said company be copied,
communicated to any third part or used for manufacturing purposes.

Designed TKZ/GE	Approved TKZ/LW	Material Designation	Part No
View E	Date 2006-06-15	Description	Model CA-250 T3
	Reg.	Circuit diagram Simple cab CE-mark Kretsschema Enkel hytt CE-märkt	Scale / Sheet / of 10 / 14
DYNAPAC			Rev. A / No. 392423

Rev.	Pls.	Change No.	Date	Issued by	Checked

Rev.970401

30.13 /9.D1 15.19 /9.D1

=Wiper rear
-M4

-S36

=Wiper front
-M3.1

-S34.1

/9.C3 -X.73.1 #1720.1 279 RD 2.50 mm² 1 -X.59.1 -X.59.1 1

2 -X.59.1 -X.59.1 2

/9.D6 31.36 /9.D6 31.40

=Washer front/rear
-M5

-S35

/12.A1 30.4 /12.A1 15.5

/12.A6 31.6 /12.A6 31.28

This document will remain the property of Metso Dynapac AB
and may not without the permission of the said company be copied,
communicated to any third part or used for manufacturing purposes.

Designed TKZ/GE	Approved TKZ/LW	Material Designation	Part No
View E	Date 2006-06-15	Description	Model CA-250 T3
	Reg.	Circuit diagram Simple cab CE-mark Kretsschema Enkel hytt CE-märkt	Scale / Sheet / of 11/14
DYNAPAC			Rev. A / No. 392423

Rev.	Pls.	Change No.	Date	Issued by	Checked

Rev.970401

/11.D1 30.4
/11.D1 15.5

/6.A1
-F1.3-4:4.1 15.24
345
RD
2.50 mm²
5.1 5.1 -F1.5-6 -F1.5 E.1 -X.74 1
5.2 10A E.2
346
RD
2.50 mm²
-F1.5-6:6.1 15.26
/9.B1

250 RD

=Traction control
-S54
I
0
-S54.X1 2 2
-S54.X1 1 1
-S54.X1 3 3
-S54.X1 4 4
-S54.X1 5 5
-S54.X1 6 6
251
RD
-S54.X1

709 BU
710 BU
711 BU
712 BU
713
BU

=Dual speed
-S55
I
0
II
-S55.X1 2 2
-S55.X1 1 1
-S55.X1 3 3
714 BU -S55.X1 5 5
-S55.X1 4 4
-S55.X1 6 6

1 -X17 1 -X.17 709 BU

=Rear axel
-Y5
-Y5.X1 1 1 2 2 -Y5.X1
918 BK -X.17 2 2 -X17 918 BK 1 -31B.X14

-X.16 1 1 -X16 711 BU

=Drum drive
-Y6
-Y6.X1 1 1 2 2 -Y6.X1
919 BK -X16 2 2 -X.16 919 BK 1 -31B.X15

/11.D6 31.6
/11.D6 31.28

30.4
15.5
31.6
31.27

This document will remain the property of Metso Dynapac AB
and may not without the permission of the said company be copied,
communicated to any third part or used for manufacturing purposes.

Designed TKZ/GE	Approved TKZ/LW	Material Designation	Part No
View E	Date 2006-06-15	Description	Model CA-250 T3
	Reg.	Circuit diagram Dual speed Kretsschema Hög/ låg hastighet	Scale / Sheet / of 12 / 14
DYNAPAC			Rev. A / No. 392423

A B C D

Rev.9704011

Reference List

Rev.	Pls.	Change No.	Date	Issued by	Checked

Device Name	Description	Sheet Ref.	Device Name	Description	Sheet Ref.
-A1	Warning/Hour/Fuel Instr	/4.B2	-H14	Rotating beacon Rops	/6.A4
-A1.X1	Connector 42-pin	/1.B3	-H14.1	Rotating beacon Cab	/8.B5
-A8.X33	8 Pol MATE-N-LOK	/4.B3	-H17	Side direction indicator lamp	/7.B5
-A8.X34	10 Pol MATE-N-LOK	/4.A3	-H20	Side direction indicator lamp	/7.B5
-A12.X1	Connector 50-pol	/3.B4	-H34	Pilot lamp 16mm	/3.B3
-B1	Hydraulik oil temp	/4.C5	-H35	Pilot lamp 16mm	/3.B3
-B2	Engine temp	/4.B5	-K1	Start relay 75A	/1.B4
-B3	Fuel sender	/4.B5	-K9	Flash relay	/7.C1
-B4	Air filter	/4.C5	-K10	Relay	/7.D3
-B10	Engine pressure	/4.B5	-K11	Light relay 30A	/6.B2
-E1	Working light Rops	/6.C4	-K30	Heater relay 30A	/9.A2
-E2	Working light Rops	/6.C4	-K30.1	Heater relay 30A	/10.B2
-E3	Working light Rops	/6.D4	-K31	Relay	/3.A5
-E4	Working light Rops	/6.C4	-M1	Starter	/1.B6
-E5	Working light	/6.B3	-M2	Heater blower	/9.A4
-E6	Working light	/6.B4	-M3	Wiper front	/9.C5
-E6.1	Working light	/8.A4	-M3.1	Wiper front	/11.B5
-E7	Working light	/6.B3	-M4	Wiper rear	/11.A5
-E8	Working light	/6.B4	-M5	Washer	/11.C5
-E8.1	Working light	/8.A4	-Q1	Circuit breaker	/1.A5
-E9	Headlight	/7.A5	-R1	Potentiometer with movable contact	/1.C2
-E10	Headlight	/7.A5	-R2	Resistor 1,5 Kohm	/4.C3
-E17	Registration plate lamp	/7.C4	-R1.X1	3-Pol Plug	/1.C2
-E20	Working light Cab	/8.B4	-S1	Switch ignition	/1.A1
-E21	Working light Cab	/8.B4	-S2	Emergency Stop	/1.B2
-E22	Working light Cab	/8.B4	-S2.2	Contact block NC	/1.B2
-E23	Working light Cab	/8.B4	-S3	Sw Signal Horn	/5.A3
-E24	Inner light	/10.C4	-S4.1	Neutral position switch pump	/2.B2
-E26	Glow plug	/3.B6	-S5	Seat switch	/2.B3
-E13/-H15	Direction indicator lamp. Front/Right	/7.B5	-S6	Vibb on/off	/5.C3
-E15/-H18	Directio indicator lamp. Front/Left	/7.A5	-S12	Sw Vibration 3way L-H	/5.C2
-E16/-H27/-H19	Direction-Pos and stop rear right	/7.C5	-S14	Sw Parking brake	/1.C4
-E14/H26/-H16	Direction-Pos and stop rear left	/7.C5	-S16	Sw Traffic Light	/7.A2
-F1.1	Fuse 15 A. Blue	/1.B1	-S17	Sw_Hazard	/7.C3
-F1.2	Fuse 10 A. Red	/5.A1	-S18	Sw Rotating Beacon	/6.A2
-F1.3	Fuse 5A. Tan	/3.A2	-S21	Sw Direction Indicate	/7.B3
-F1.4	Fuse 10A. Red	/6.A1	-S22	Sw Working Light	/6.C2
-F1.5	Fuse 10A. Red	/12.A1	-S34	Sw Window wiper	/9.B3
-F1.6	Fuse 10A. Red	/9.C2	-S34.1	Sw Window wiper	/11.B4
-F1.8	Fuse 10A. Red	/7.B1	-S35	Window washer	/11.C4
-F2.1	Fuse 20A. Yellow	/6.C1	-S36	Sw Window wiper rear	/11.A4
-F2.2	Fuse 20A. Yellow	/7.A1	-S37	Door switch	/10.C2
-F10	Fuse 40A. Orange	/1.A4	-S38	Sw Fan	/9.A4
-F11	Fuse 40A. Orange	/1.A4	-S45	Sw RPM	/2.C2
-F20	Fuse 125A. Orange	/1.A4	-S52	Sw-2way-non locking 16mm	/3.C2
-F21	Fuse 125A. Orange	/1.A4	-S53	Sw-3way-non locking 16mm	/3.B2
-F22	Fuse 20A. Yellow	/9.A1	-S54	Sw Tractin controll	/12.A3
-F22.1	Fuse 20A. Yellow	/10.B1	-S55	Sw Dual speed	/12.B4
-F23	Fuse 30A. Green	/1.B4	-S1.X1	Ignition	/1.A1
-G1	Battery	/1.A5	-S1.X2	Ignition	/1.B2
-G2	Alternator	/1.C6	-S2.X1	Spade terminal	/1.B2
-G2.X1	4-pol F 150-series	/1.B6	-S2.X2	Spade terminal	/1.B2
-H10	Buzzer	/2.A3	-S2.X3	Spade terminal	/1.B2
-H11	Horn	/5.A5	-S2.X4	Spade terminal	/1.B2
-H11.1	Horn. Cab	/9.C5	-S2.X5	Spade terminal	/1.B2
-H13	Back-up alarm	/5.B5	-S4.1.X1	4-Pol	/2.B2

Designed: TKZ/GE	Approved: TKZ/LW	Material Designation:	Part No:
View: E	Date: 2006-06-15	Description: Circuit diagram Reference List Kretsschema Apparatlista	Model: CA-250 T3
	Reg.		Scale / Sheet / of: 13 / 14
DYNAPAC			Rev.: A / No.: 392423

This drawing will remain the property of Metso Dynapac AB and may not without the permission of the said company be copied, communicated to any third part or used for manufacturing purposes.

Rev.9704011

Reference List

Rev.	Pls.	Change No.	Date	Issued by	Checked

Device Name	Description	Sheet Ref.	Device Name	Description	Sheet Ref.
-S5.X1	3-Pol Plug	/2.B3	-X61	2 Pol Plug Sure-Seal	/9.A2
-S6.X1	2-Pol Plug	/5.C3	-X.61	2 Pol Receptacle Sure-Seal	/9.A2
-V1	Diod	/1.B5	-X61.1	2 Pol Plug Sure-Seal	/10.B2
-X4	12 Pol Receptacle	/4.B3	-X.61.1	2 Pol Receptacle Sure-Seal	/10.B2
-X.4	12Pol Plug	/4.B3	-X62	2 Pol F	/10.B2
-X5	12 Pol Receptacle	/3.B4	-X70	Sealed splice	/9.C2
-X.5	12 Pol Plug	/3.B3	-X71	Sealed splice	/9.D2
-X6	12 Pol Receptacle	/4.A3	-X.75	1 Pol superseal	/10.B5
-X.6	12 Pol Plug	/4.A3	-X246	2 Pol Plug Sure-Seal	/5.B5
-X7	2 Pol Receptacle	/6.A4	-Y2	Break valve	/1.C6
-X.7	2 Pol Plug	/6.A4	-Y3	Vibration Valve Low	/5.C5
-X7.1	2 Pol Receptacle	/8.C2	-Y4	Vibration Valve High	/5.C5
-X.7.1	2 Pol Plug	/8.C2	-Y5	Rear axel valve	/12.A5
-X.8	2 Pol Plug	/6.C4	-Y6	Drum drive valve	/12.B5
-X8.1	2 Pol Receptacle	/6.B3			
-X.8.1	2 pol Plug	/8.B2			
-X8.2	2 Pol Receptacle	/6.C4			
-X8.4	2 Pol Receptacle	/8.B2			
-X9	2 Pol MTA	/1.A3			
-X.9	2 Pol MTA	/1.A3			
-X11	6 Pol Receptacle	/7.A3			
-X.11	6 Pol Plug	/7.A3			
-X12	6 Pol Receptacle	/7.B3			
-X.12	6 Pol Plug	/7.B3			
-X.13	2 Pol Plug	/6.C4			
-X13.1	2 Pol Receptacle	/6.B3			
-X.13.1	2 Pol Plug	/8.B2			
-X13.2	2 Pol Receptacle	/6.C4			
-X13.3	2 Pol Receptacle	/8.A5			
-X13.4	2 Pol Receptacle	/8.B2			
-X16	2 Pol Receptacle	/12.B5			
-X.16	2 Pol Plug	/12.B5			
-X17	2 Pol Receptacle	/12.A5			
-X.17	2 Pol Plug	/12.A5			
-X26	2 Pol Plug Sure-Seal	/10.C2			
-X.26	2 Pol Receptacle Sure-Seal	/10.C1			
-X.29	3 Pol Plug	/1.A2			
-X29.1	2 Pol Receptacle Sure-Seal	/9.C4			
-X.29.1	2 Pol Plug Sure-Seal	/9.C4			
-X32	2 Pol Plug Sure-Seal	/8.C3			
-X.32	2 Pol Receptacle Sure-Seal	/8.C3			
-X40	2 Pol MTA	/1.A3			
-X.40	2 Pol MTA	/1.A3			
-X41	5 Pol Receptacle Sure-Seal	/8.B3			
-X.41	5 Pol Plug Sure -Seal	/8.B3			
-X48	4 Pol Plug	/3.B4			
-X58	2 Pol Plug Sure-Seal	/9.A2			
-X.58	2 Pol Receptacle Sure-Seal	/9.A2			
-X58.1	2 Pol Plug Sure-Seal	/10.B1			
-X.58.1	2 Pol Receptacle Sure-Seal	/10.B2			
-X59	2 Pol Receptacle Sure-Seal	/9.C3			
-X.59	2 Pol Plug Sure-Seal	/9.C3			
-X59.1	2 Pol Receptacle Sure-Seal	/11.B3			
-X.59.1	2 Pol Plug Sure-Seal	/11.B3			
-X60	2 Pol MTA	/9.A6			
-X.60	2 Pol MTA	/9.A6			

Designed: TKZ/GE	Approved: TKZ/LW	Material Designation:	Part No:
View: E	Date: 2006-06-15	Description: Circuit diagram Reference List Kretsschema Apparatlista	Model: CA-250 T3
	Reg.		Scale / Sheet / of: 14 /14
DYNAPAC			Rev.: A / No.: 392423

This drawing will remain the property of Metso Dynapac AB and may not without the permission of the said company be copied, communicated to any third part or used for manufacturing purposes.

DYNAPAC

Part of the Atlas Copco Group

Dynapac Compaction Equipment AB
Box 504, SE-371 23 Karlskrona, Sweden

DYNAPAC

Part of the Atlas Copco Group

Dynapac Compaction Equipment AB
Box 504, SE-371 23 Karlskrona, Sweden