RUTHZIL TRATOR COMERCIAL DE PEÇAS LTDA 11 97083-6812 ROLANDO CITRANGULO

ABRIL 2007

CA250 SERVICE TRAINING

DYNAPAC


CA250
DYNAPAC
DYNAPAC


DYNAPAC
DYNAPAC
CA250

CA250 MAIN SPECS

Engine-Make			Cummins
	Model		B3.9C
	Nr of Cyl		4
	BoreXStroke		4.02X4.72"(102X120 mm)
	Displacement		239.3 in3 (3.9 l)
	Power		110 HP (82 Kw) @ 2200 RPM
	Max. Torque		332 lb.Ft (450 N.m)
	Cooling		water
Propulsion-	Pump-	Type	Variable displacement axial piston
		Displacement	4.58 in3 /rev (75 cm3/rev)
		Pressures	
		Charge	290 PSI (2 Mpa)
		High	6090 PSI (42 Mpa)
	Axle motor-	Type	Fixed displacement axial piston
		Displ.	7.9 in3/rev (130 cm3/rev)
	Drum motor	Type	Fixed displacement axial piston
		Displ.	4.58 in3/rev (75 cm3/rev)
	Drum drive gear box	Type	Planetary gears
		Gear Ratio	45.57:1
	Axle	Type	Single reduction differential w/ planetary drives
		Gear ratio	
		Differential	43:6
		Final drive	6.23:1
Tires		Size	23.1X26 (8Ply)
Vibration	Pump	Type	Variable displacement axial piston
		Displacement	2.44 in3/rev (40 cm3/rev)
	Pressure-Charge		290 PSI (2 Mpa)
		High	5800 PSI (40 Mpa)
		Cut off	5400 PSI (37.5 Mpa)
	Motor	Type	Fixed displacement axial piston
		Displacement	1.95 in3/rev (32 cm3/rev)
	Frequency	High Amp	1800 VPM (30 Hz)
		Low Amp	1980 VPM (33 Hz)
Steering	Pump	Type	Gear
	Pressure-Relief		2600 PSI (18 Mpa)
		Shocks	3480 PSI (24 Mpa)
CAPACITIES		Fuel	66 Gallons (250 l)
		Hydraulic tank	13.8 Gallons (52 l)
		Cartridge	2.85 Qts (2.7 l) each
		Differential	3.2 Gallons (12 l)
		Final Drive	1.8 Qts (1.7 l)each

CA250 HYDRAULIC SYSTEM

DYNAPAC

CA250 HYDRAULIC SYSTEM

The hydraulic system of the CA250 (Figure 1) consists of a propulsion pump (1), vibration pump (2), Steering/charge pump(3), fixed displacement axle motor (4) (optional two speed motor (14)),drum drive motor (5) (optional two speed (15)), vibration motor (6), steering control valve (7), steering cylinders (8), charge filter (9), oil cooler (10), tank breather (11), and oil cooler relief (12).

The steering pump works as a charge pump for the propulsion and vibration circuits.

Built in the propulsion pump (Figure 2) we have the cylinder block (1), control servo (2), the pump control valve (3), the orifice/check valve (4), the brake valve (5), the charge pressure relief valve (6), the servo relief valves (7), the multi-function valves (8) and the test ports (9).

When the steering system is not being used, the steering pump flow goes direct to the charging circuit of the propulsion and vibration pumps through the charge filter.

When the engine is running and the brake valve is de-energized (Figure 1) the brakes are connected to the tank (brakes applied) and the charge pump oil is blocked from going to the pump control valve. Even if the pump control valve is moved to stroke the pump, no oil is available to actuate the control servo. It is not possible to stroke the pump.

After the brake valve is energized (Figure 3) the charge pump oil will flow to the brakes releasing them and to the pump control valve.

Moving the pump control valve will direct oil to one side of the control servo stroking the pump (Figure 4). The piston pump starts pumping oil to the motor(s) and the machine will start moving. The shuttle valves of the flushing valves of the propulsion motors are shifted by the high pressure oil opening a passage for the low pressure side oil to flow to the relief valves opening them. The case drain oil of the propulsion pump and propulsion motors returns to the tank through the oil cooler.

The multi-function valves of the propulsion pump have four functions: Tow valve , pressure limiting, high pressure relief valve and refilling valve.

The second nut on top of these valves is the "TOW" valve (Figure 5 & 6). Unscrewing these nuts three turns (More than three turns can disassemble the valves) will open the two valves. During the normal operation of the system if the pressure reaches the setting of the poppet spring (Figures 7 & 8) high pressure oil starts flowing to the control servo starting de-stroking the pump. To prevent high pressure oil from going to the servo, the servo relief valve opens equalizing pressure on both sides of the servo relief (charge pressure). This is called the pressure limit function. If the machine is against a wall and the forward/reverse control is moved to stroke the pump, the motors will not turn, pressure will increase opening the poppet, oil will flow through the orifice of the high pressure spool, and the higher pressure before the orifice will lift the spool opening a passage for the oil to flow to the low pressure side of the circuit (Figures 9 & 10). This is called the high pressure relief function.

To refill the circuit the charge pump oil pushes the check valve up (Figures 11 & 12) opening a passage for the oil to go to the low pressure side of the circuit.

Built in the vibration pump (Figure 13) we have the cylinder block (1), the control servo (2),the control valve (3), the high pressure relief valves (4), the pressure cut off valve (5), the charge pressure test port (6) and the high pressure test ports (7).

When one of the solenoids of the vibration pump control is energized (Figure 14), oil is directed to one side of the control servo, stroking the pump. The piston pump starts pumping oil to the motor driving the motor. At the same time the shuttle valve in the motor shifts opening a passage for the oil on the low pressure side of the circuit to flow through the orifice. This oil cools and lubricates the motor and returns to the tank through the oil cooler.

The high pressure relief valves (Figure 15) consist of a piston (1), a check valve (2), a piston spring (3), a poppet (4), a poppet spring (5), and a pressure adjusting screw (6).

To refill the circuit the charge pump oil (Figure 16) pushes the check valve up opening a passage for the oil to flow to the low pressure side of the circuit.

When pressure in the circuit reaches the setting of poppet spring, the poppet is lifted allowing oil to flow through the orifice of the piston creating a pressure drop through the orifice. The higher pressure on the outside of the piston moves the piston up opening a passage for the oil to flow to the low pressure side of the circuit.

If during the normal operation of the system the pressure reaches the setting of the pressure cut off valve (Figure 18) that valve opens connecting the oil stroking the pump to the return line, de-stroking the pump.

When the steering wheel is turned, oil from the steering/charge pump is directed to the steering cylinders (Figure 18) actuating the, and the return oil from the steering circuit flows to the charge circuit of the propulsion and vibration circuit through the charge filter.

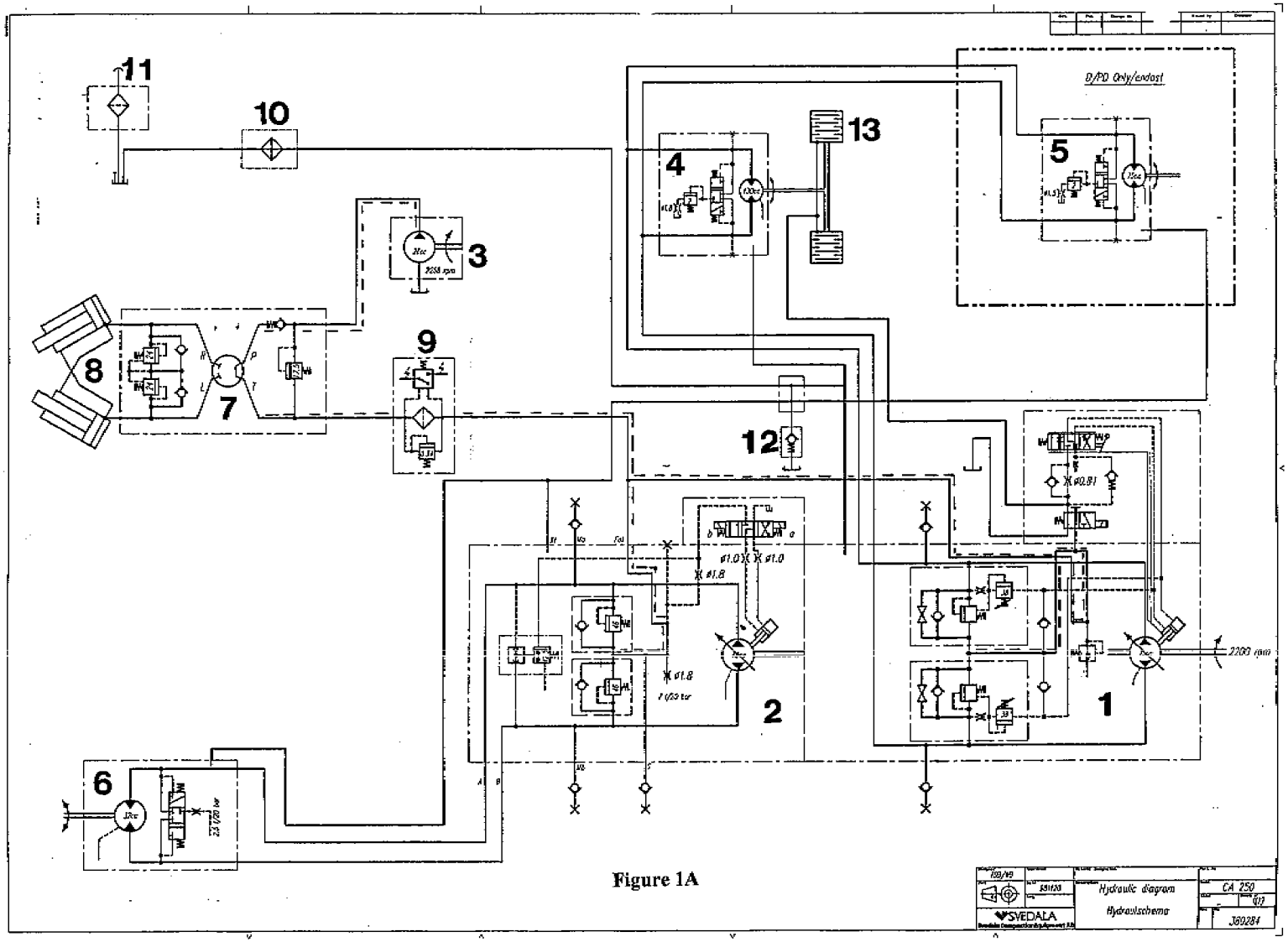

Figure 1A

DYNAPAC

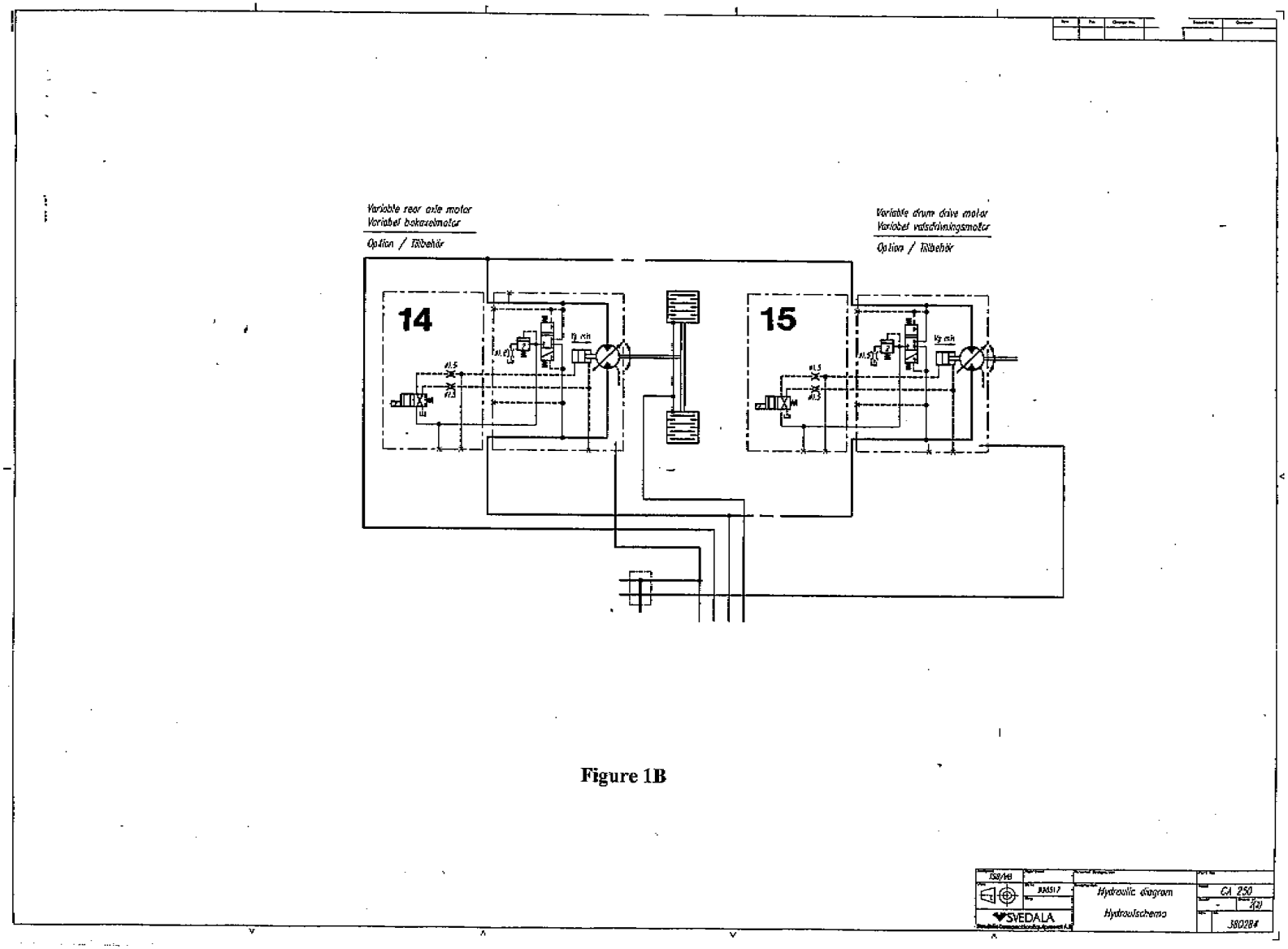

Figure 1B

DYNAPAC

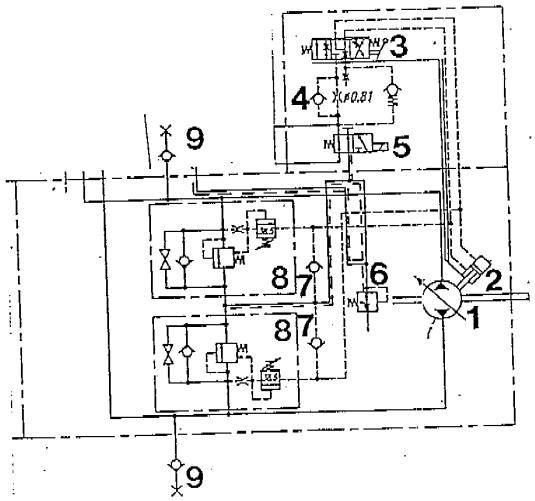

PROPULSION PUMP

1-Cylinder block
2-Control servo
3-Control valve
4-Check valve/orifice
5-Brake valve
6-Charge pressure relief valve
7-Servo relief valve
8-Multi-function valve
9-Test port

Figure 2

DYNAPAC

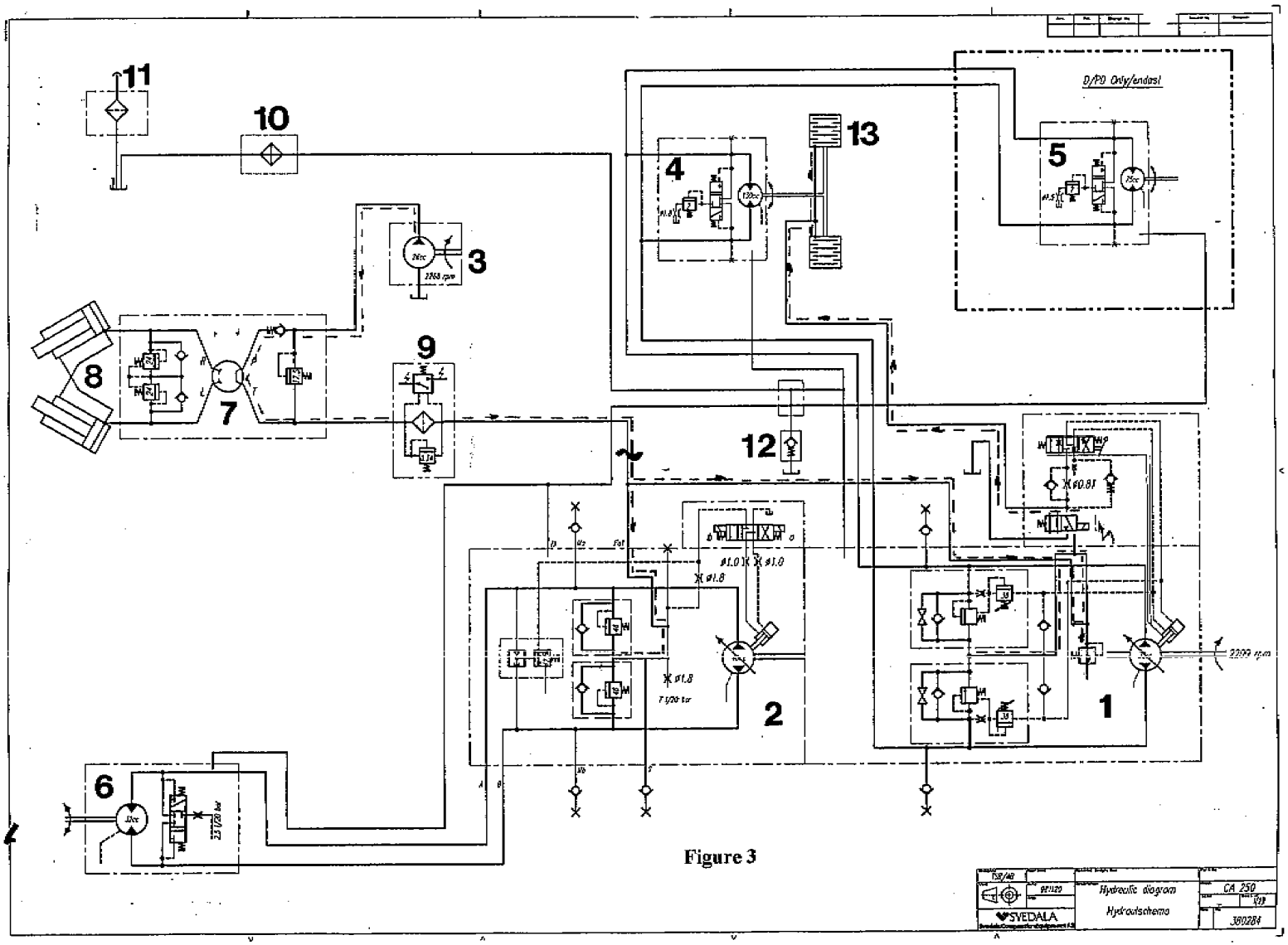

Figure 3

DYNAPAC

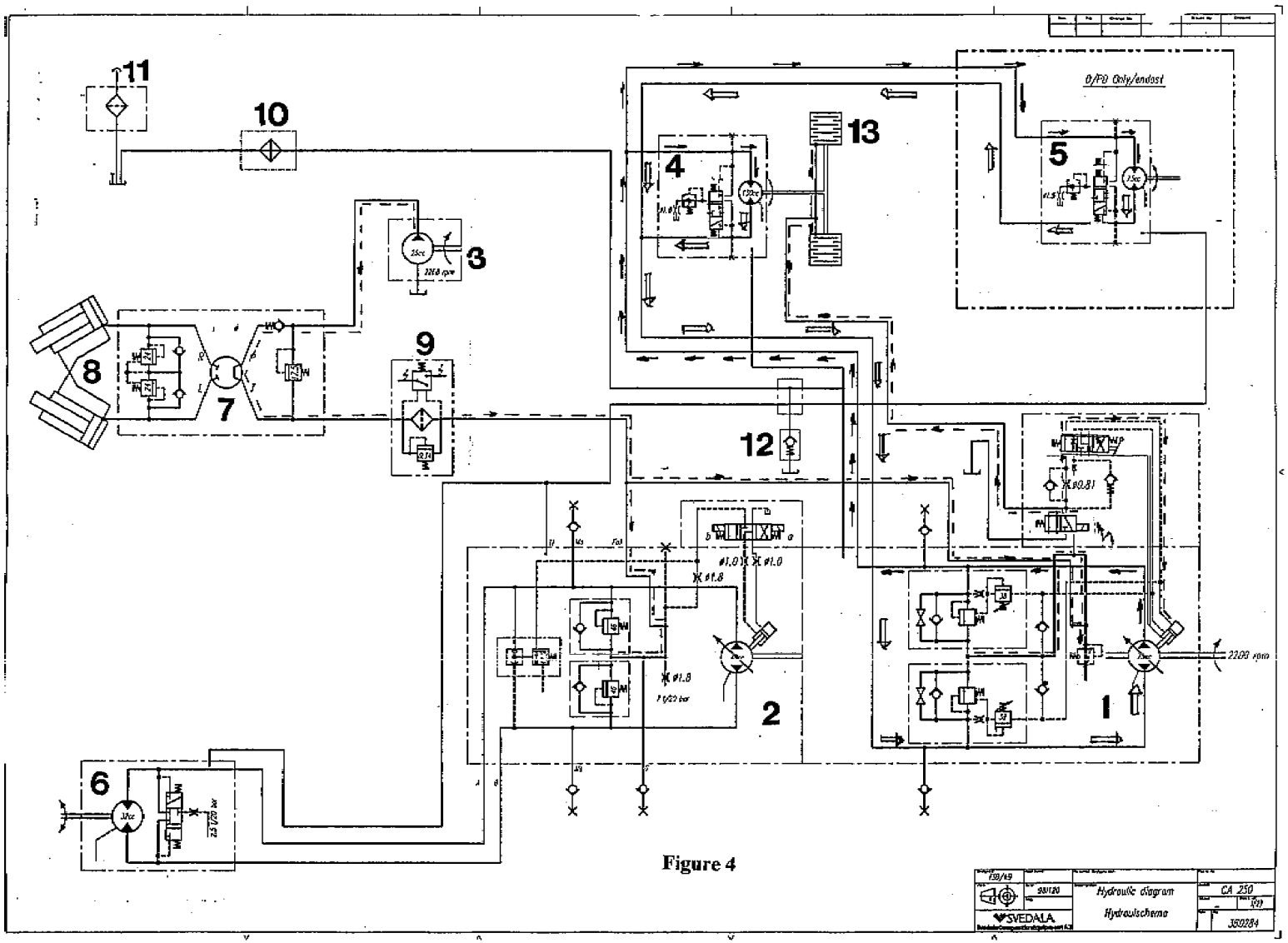

Figure 4

DYNAPAC

SERIES 90 MULTI FUNCTION VALVE

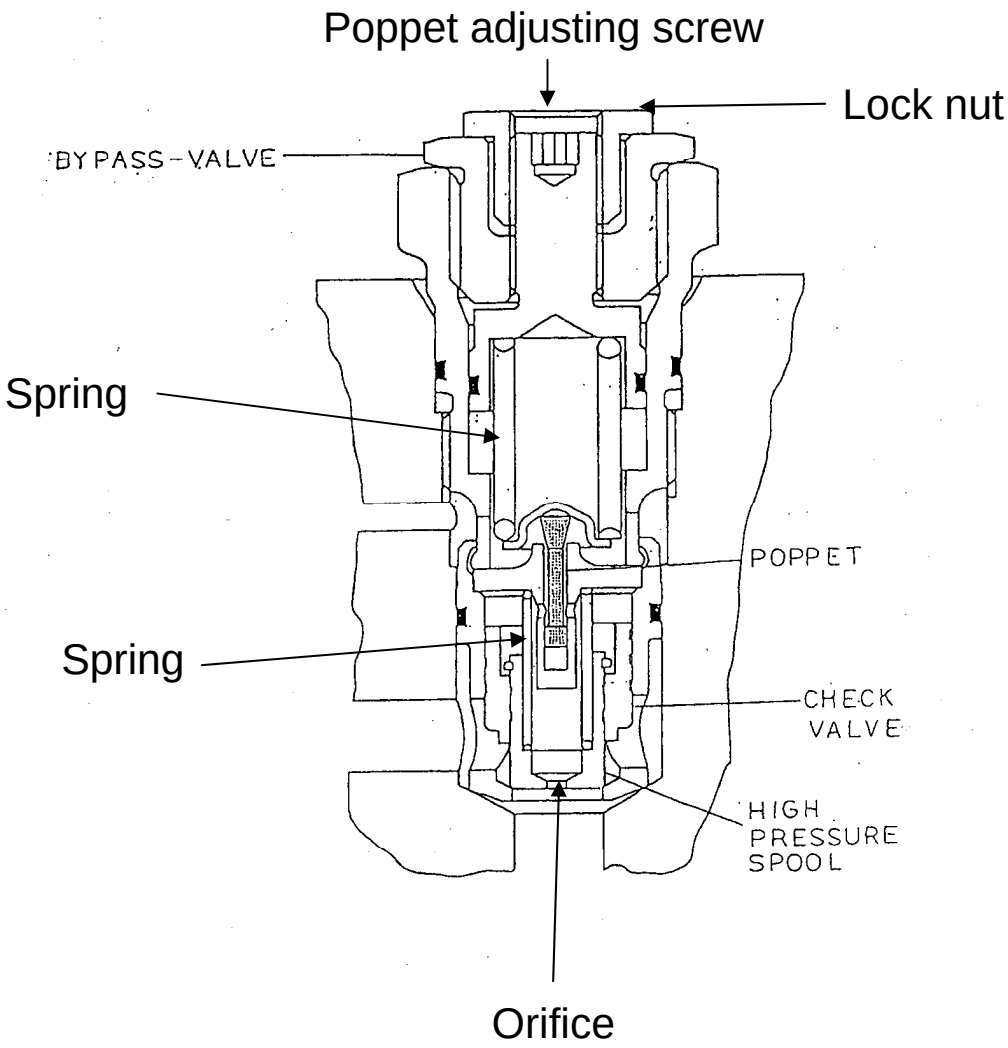

DYNAPAC
Part of the Atlas Copco Group

SERIES 90. MULTI FUNCTION VALVE

By-pass nut (middle nut) was unscrewed 3 full turns

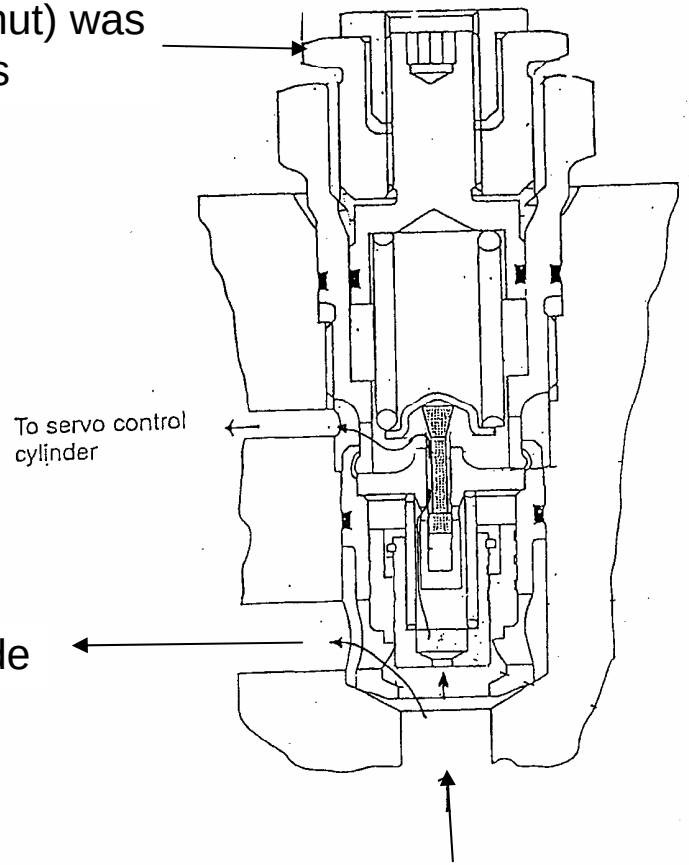

Oil can circulate from one side of the circuit to the other when motors start working as pumps

Circuit low pressure side

By-Pass function

Figure 5

Circuit high pressure side

DYNAPAC
Part of the Atlas Copco Group

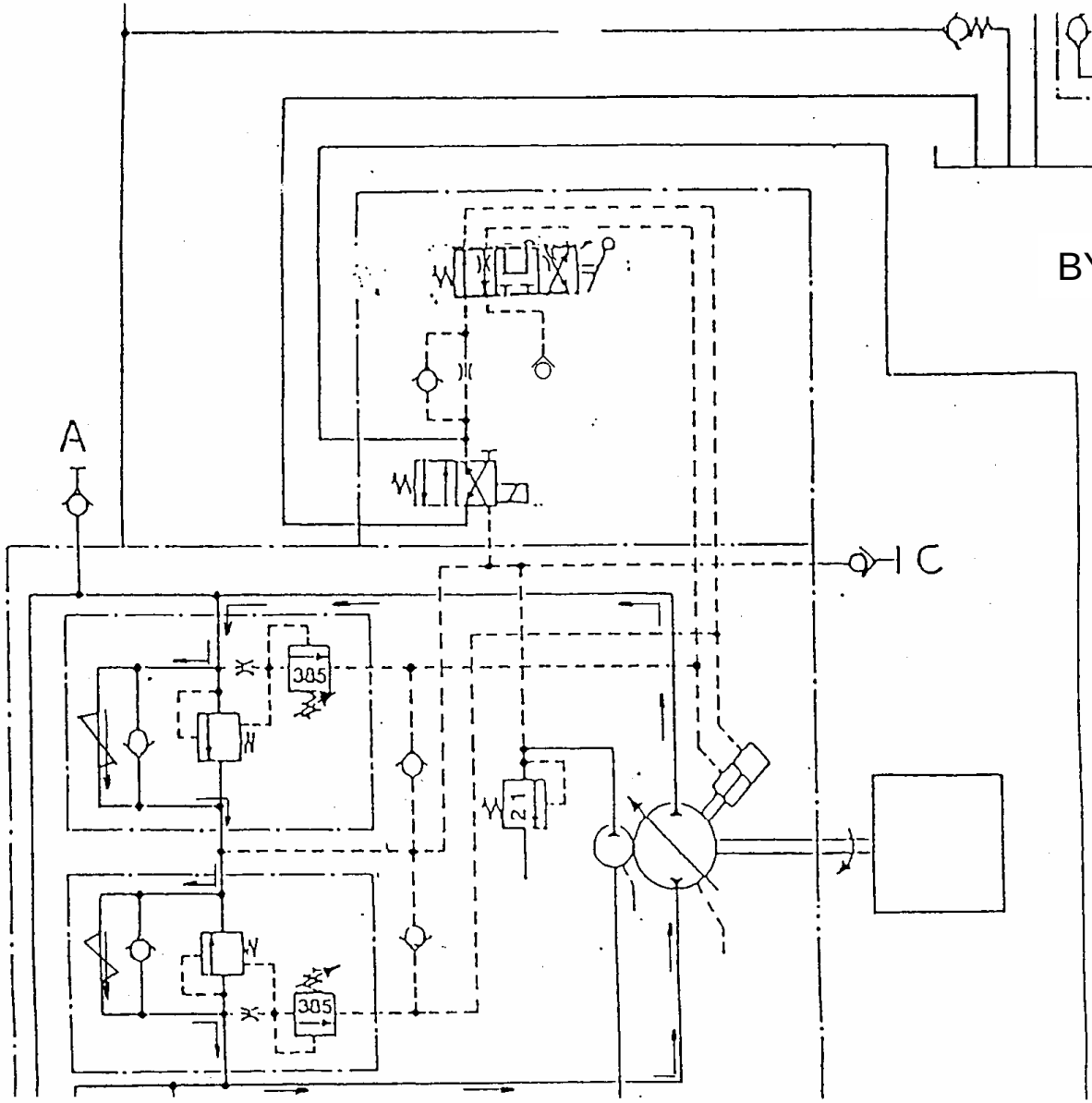

Oil can flow from one side of the circuit to the other

Figure 6

DYNAPAC
Part of the Atlas Copco Group

SERIES 90. MULTI FUNCTION VALVE

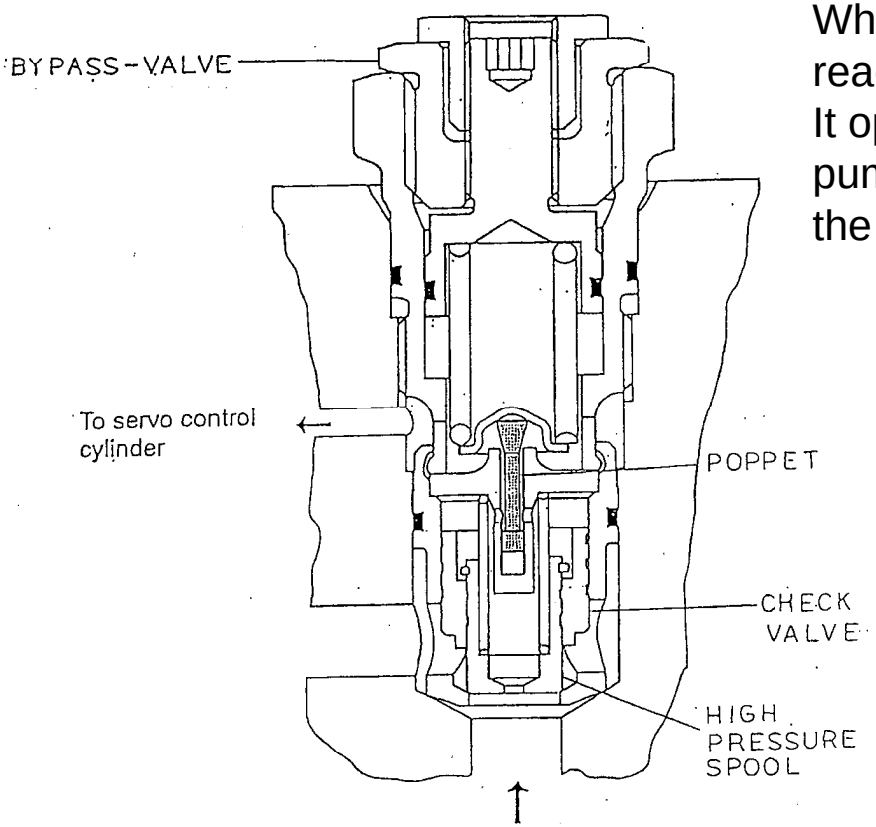

When pressure in the circuit reaches the setting of the poppet, It opens letting oil flow to the pump control servo, de-stroking the pump.

Circuit high pressure side

Figure 7

System pressure control
Pressure limiting function

DYNAPAC
Part of the Atlas Copco Group

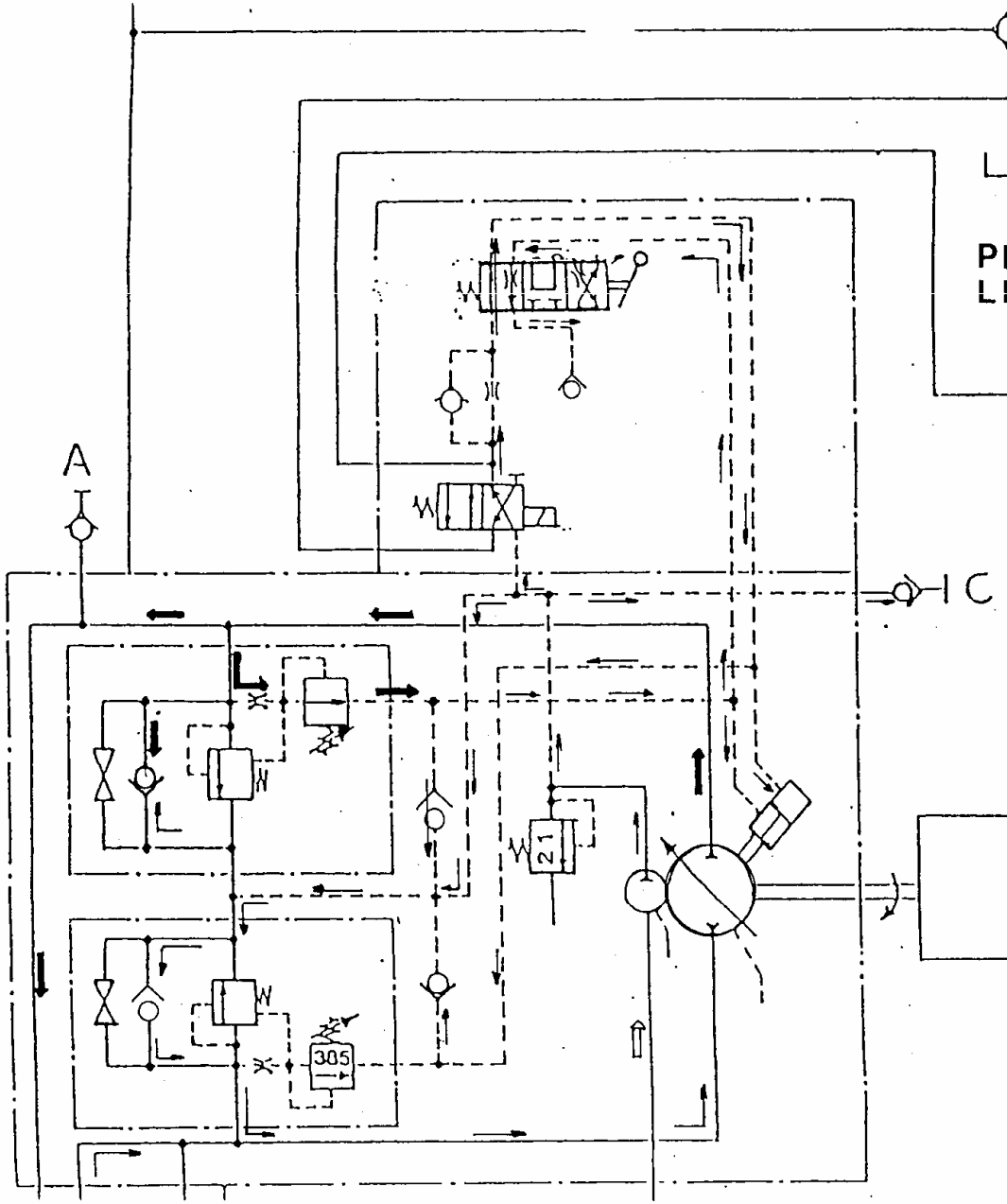

Poppet is opened.
Oil can flow to the control servo.
Pressure under servo relief valve is charge pressure.
Servo relief opens and pressure over it will be charge pressure from that point on, protecting the pump servo.
Oil will go to reduce the displacement of the pump

Figure 8

DYNAPAC
Part of the Atlas Copco Group

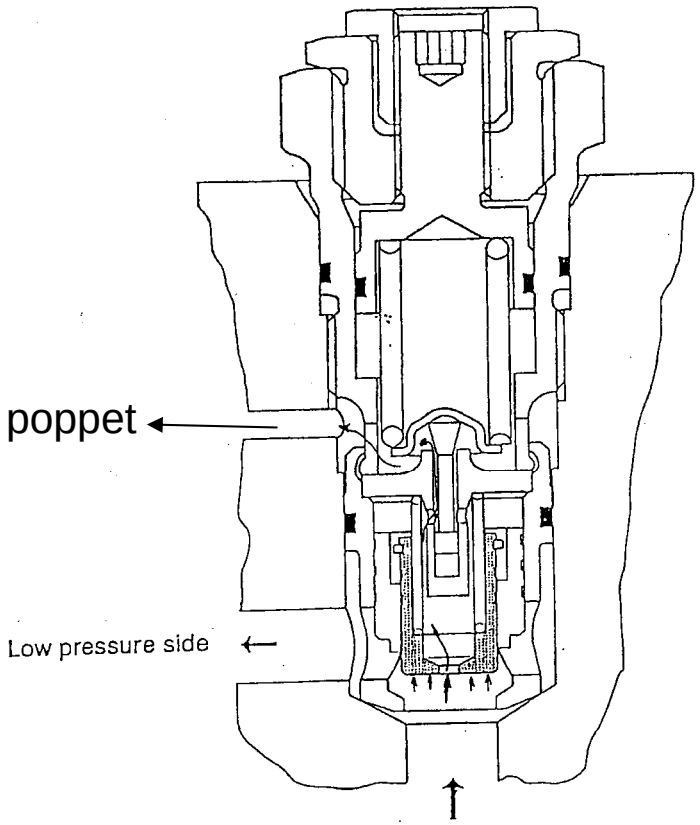

Figure 9

Poppet is open, oil is flowing through the orifice of the high pressure spool.
Due to pressure drop through the orifice, higher pressure before the spool pushes the spool up and opens the passage for the oil to flow from the high pressure side to the low pressure side

Oil is flowing the orifice of the high pressure spool. Due to pressure drop through this orifice, pressure before the orifice pushes the high pressure spool against its spring and opens a passage for the oil to flow to the low pressure side

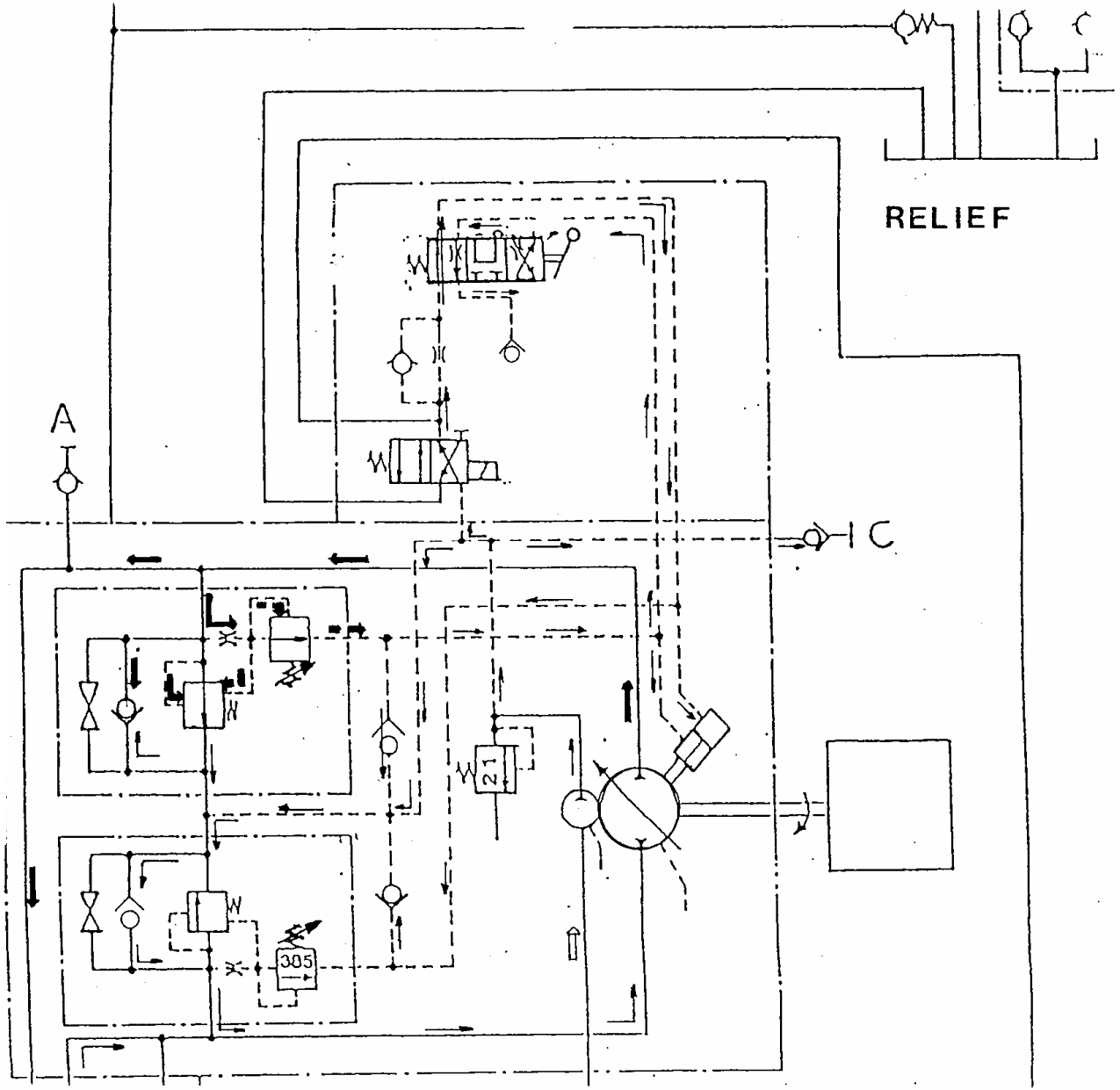

Figure 10

DYNAPAC
Part of the Atlas Copco Group

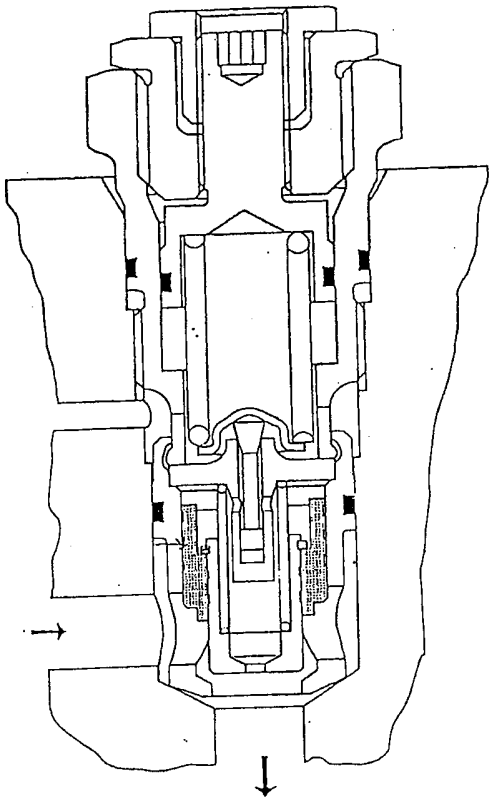

Charge pump Oil →

Circuit low pressure side

Oil from charge pump moves check valve up. Check valve drags the high pressure spool opening a passage for the oil to to the low pressure side

Figure 11

Refilling function

Check valve dragged the high pressure spool and opened a passage for the charge pump oil to go to the low pressure side

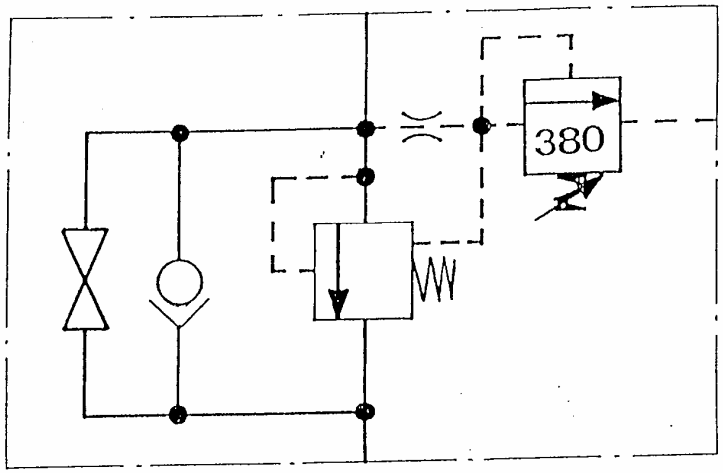

Refill function

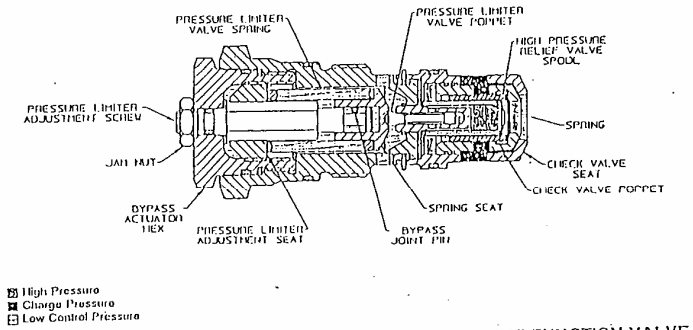

SERIES 90 - MULTI-FUNCTION VALVE

DYNAPAC
Part of the Atlas Copco Group

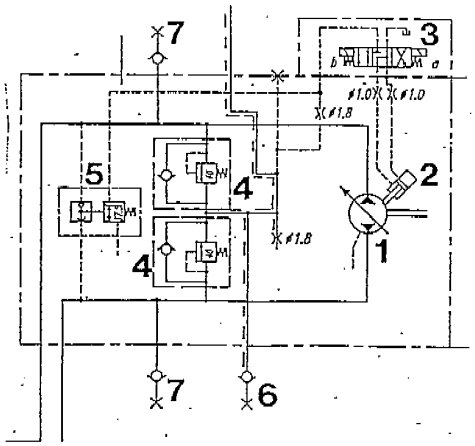

VIBRATION PUMP

1-Cylinder block
2-Control servo
3-Control valve
4-High pressure relief valve
5-Pressure cut off valve
6-Charge pressure test port
7-High pressure test port

Figure 13

DYNAPAC

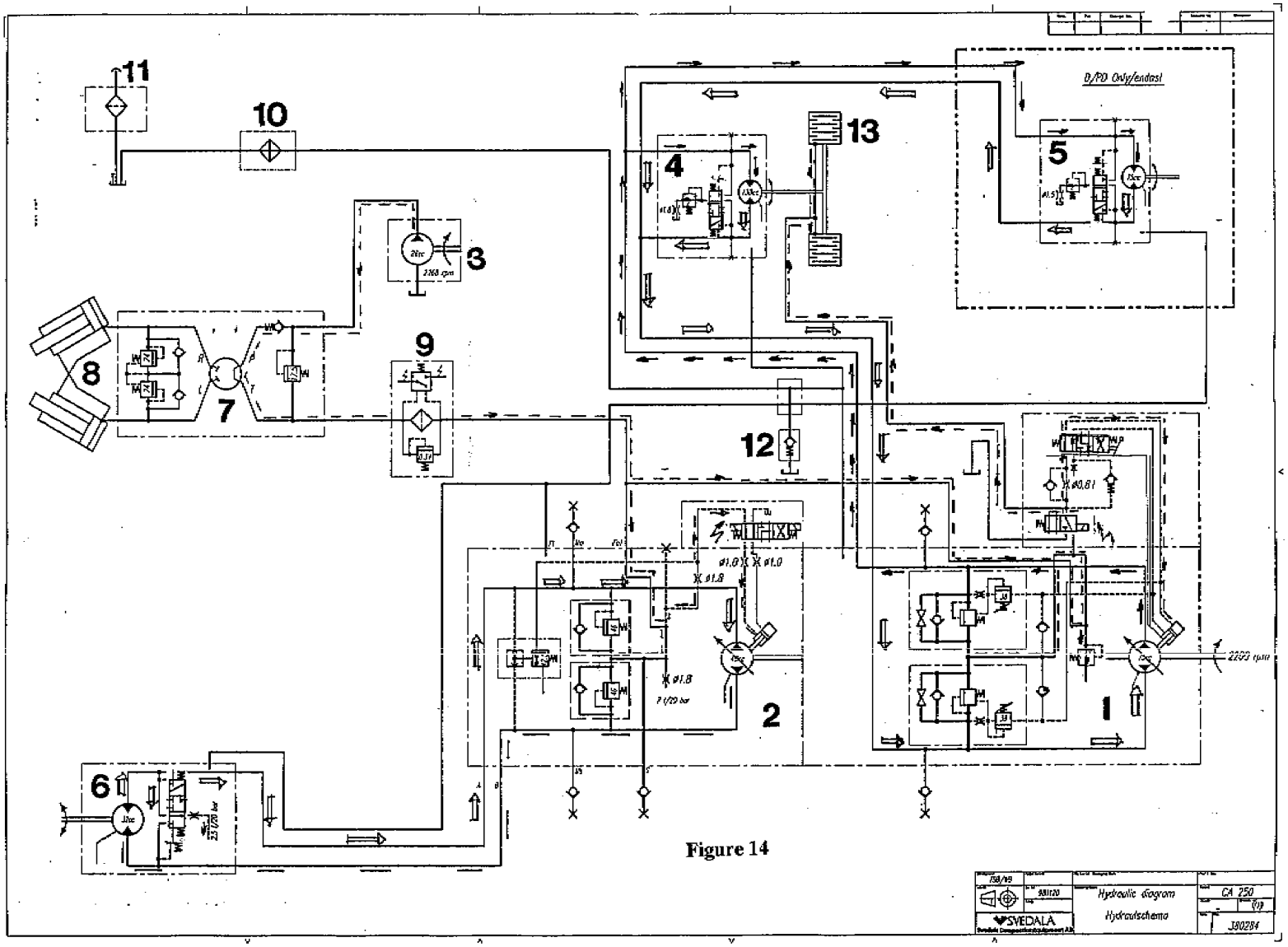

Figure 14

DYNAPAC

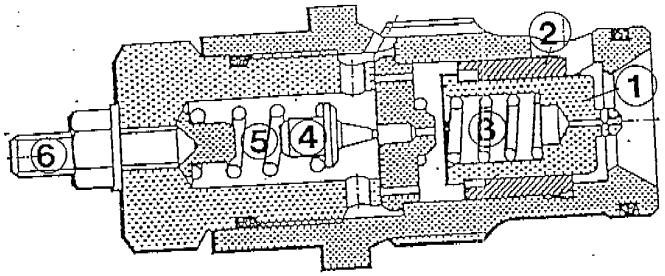

HIGH PRESSURE RELIEF VALVE

1-Piston
2-Check valve
3-Piston spring
4-Poppet
5-Poppet spring
6-Presure adjusting screw

Figure 15

DYNAPAC

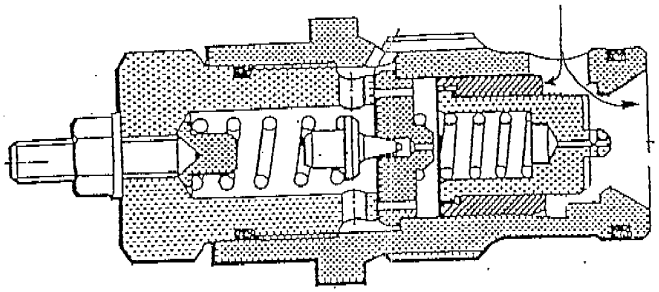

REFILLING FUNCTION

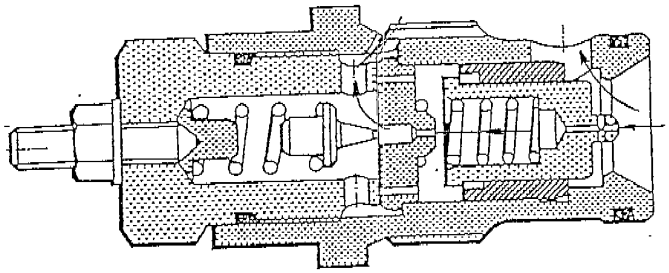

RELIEF FUNCTION

Figure 16

DYNAPAC

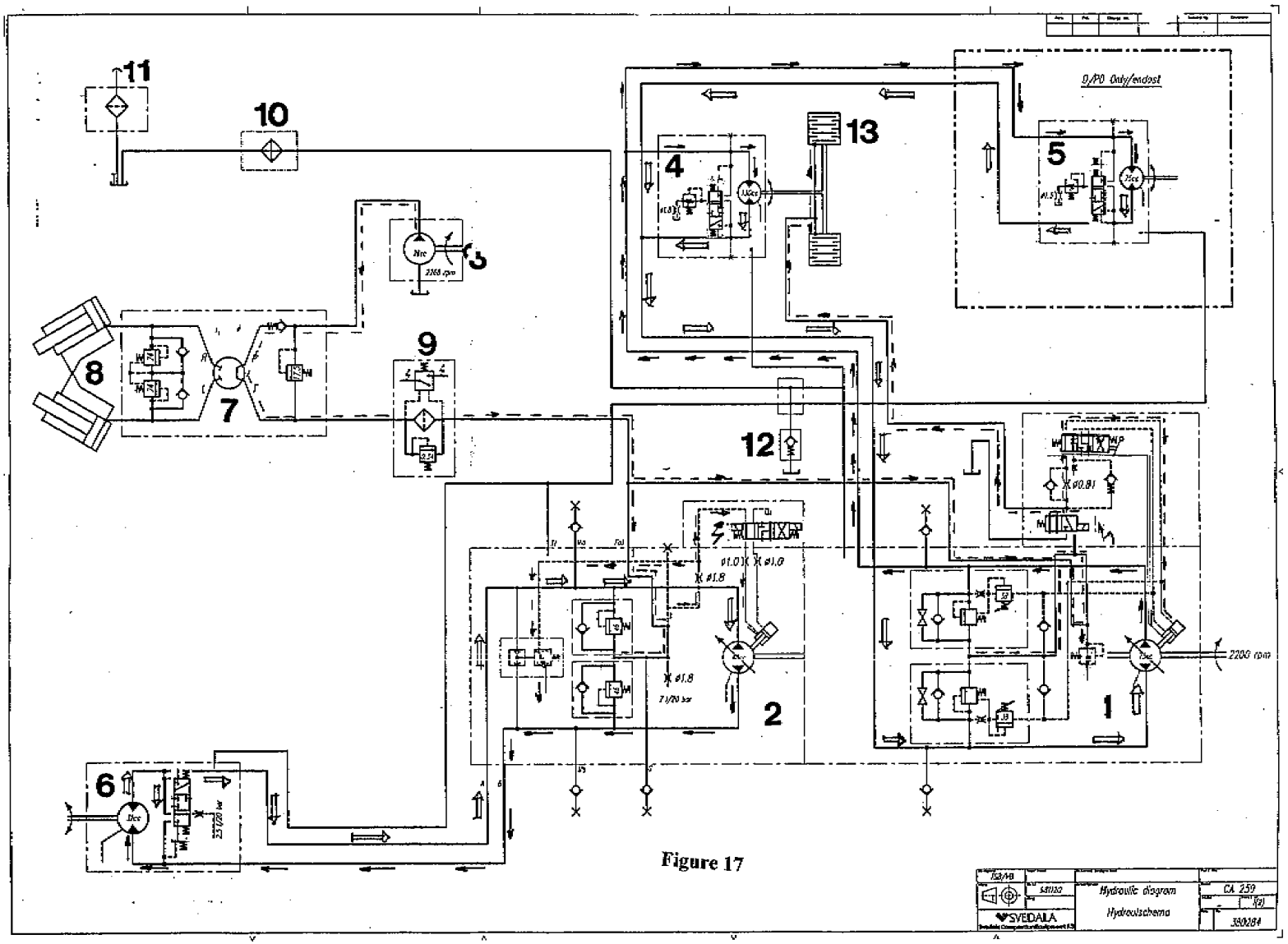

Figure 17

DYNAPAC

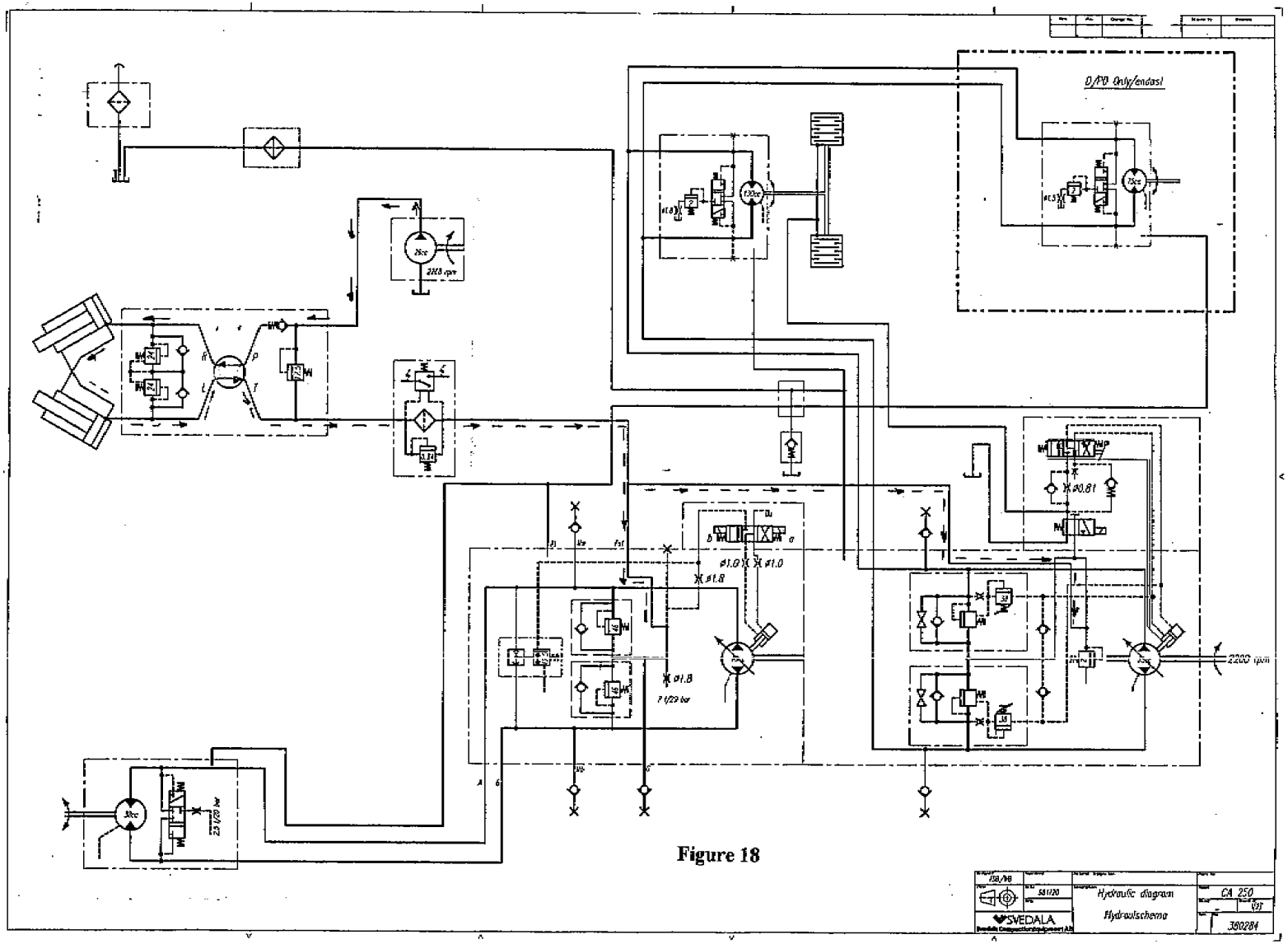

Figure 18

DYNAPAC

CA250 PROPULSION LINES

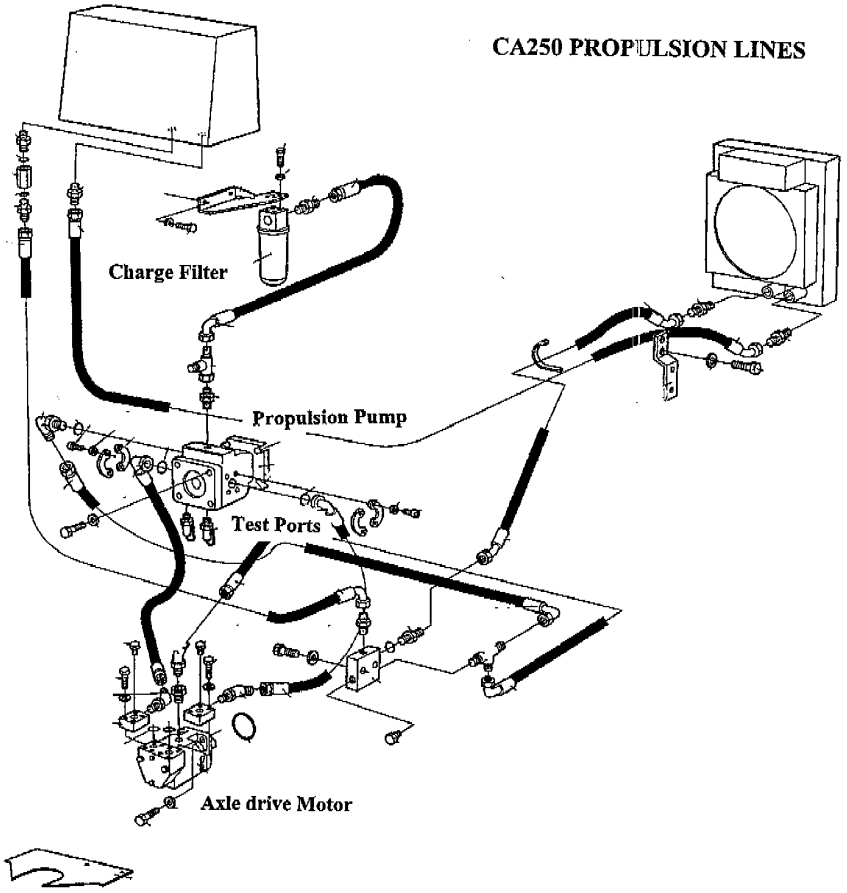

DYNAPAC

CA250 DRUM DRIVE MOTOR

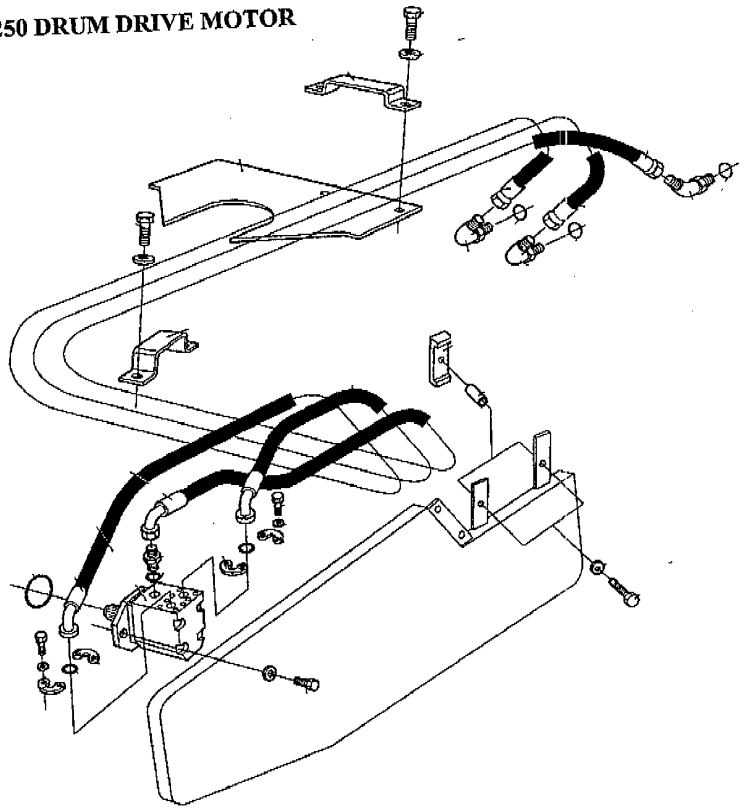

DYNAPAC

CA250 VIBRATION LINES

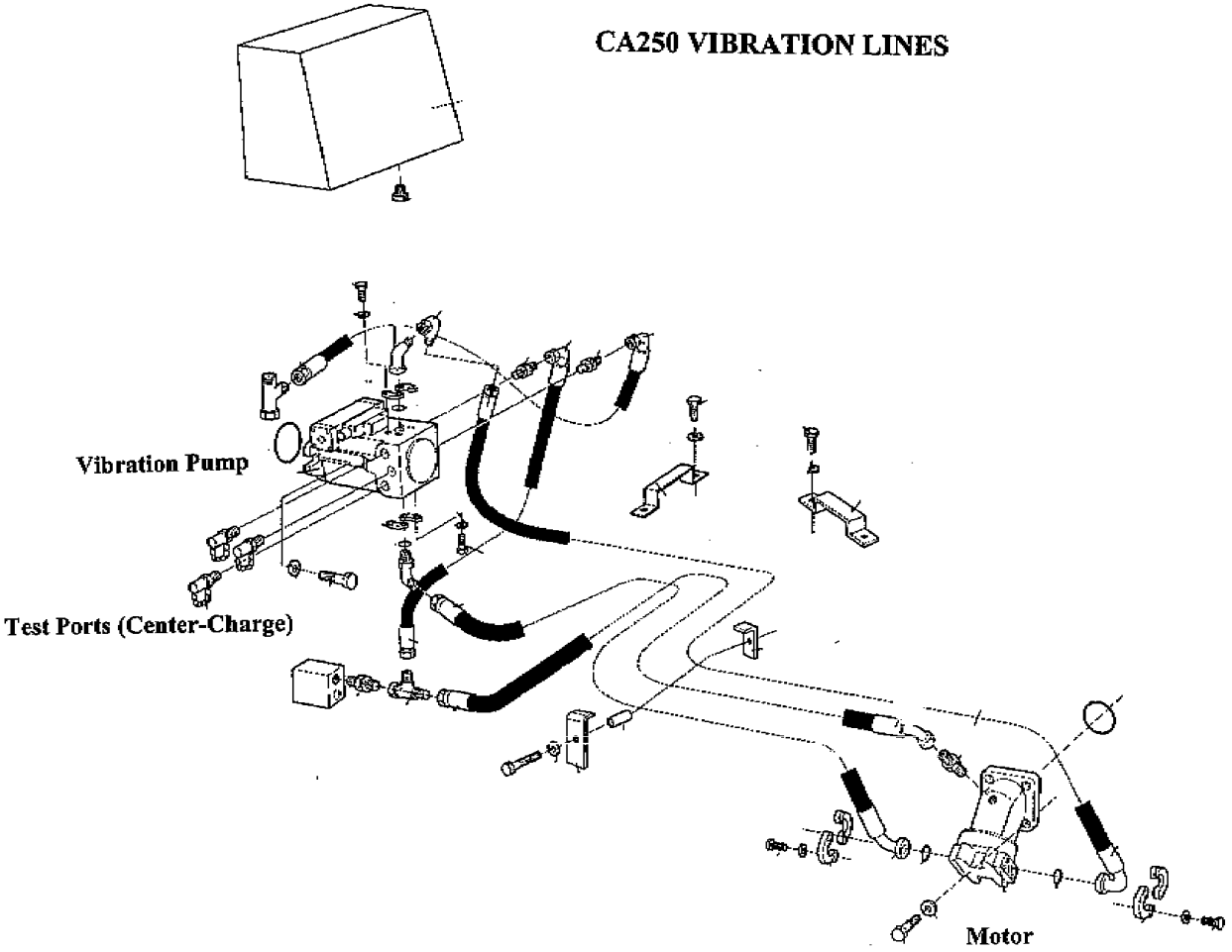

DYNAPAC

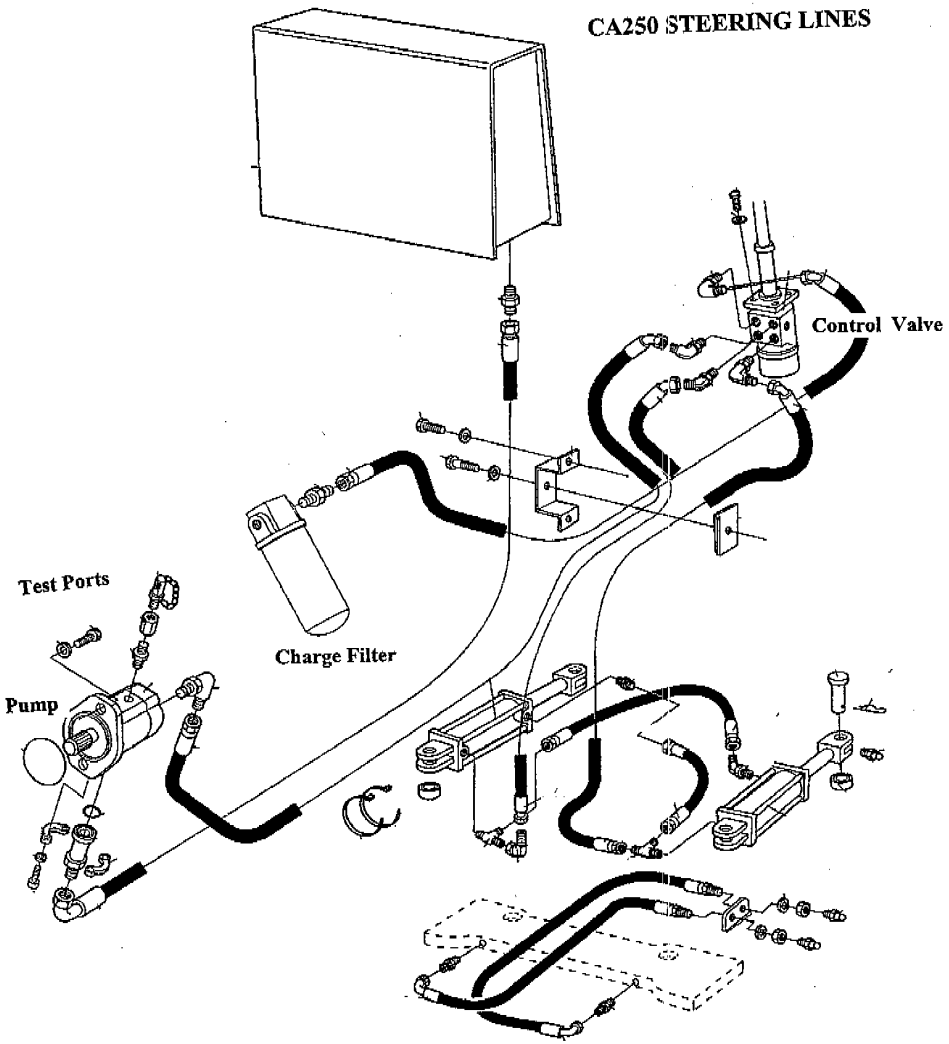
CA250 STEERING LINES
Control Valve
Test Ports
Charge Filter
Pump

DYNAPAC

CA250 BRAKE LINES

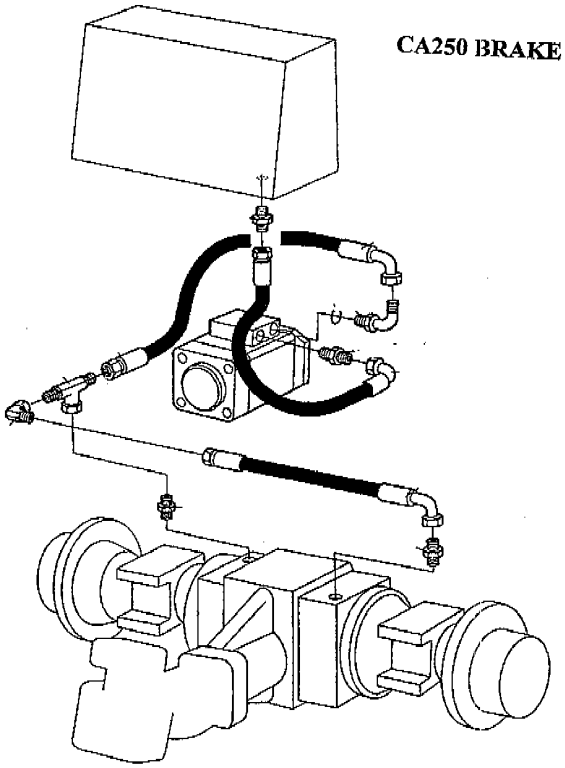

DYNAPAC

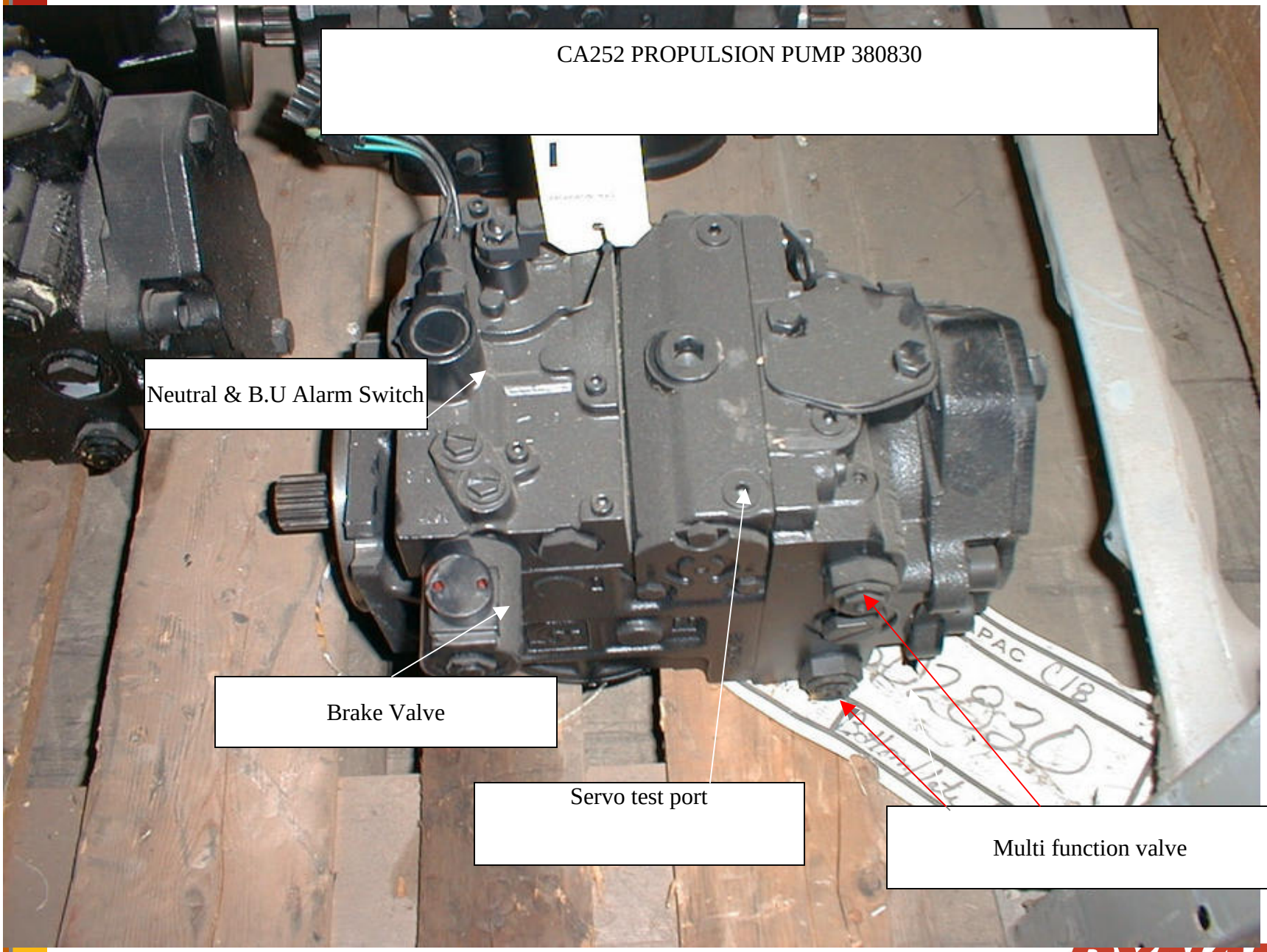
CA252 PROPULSION PUMP 380830
Neutral & B.U Alarm Switch
Brake Valve
Servo test port
Multi function valve

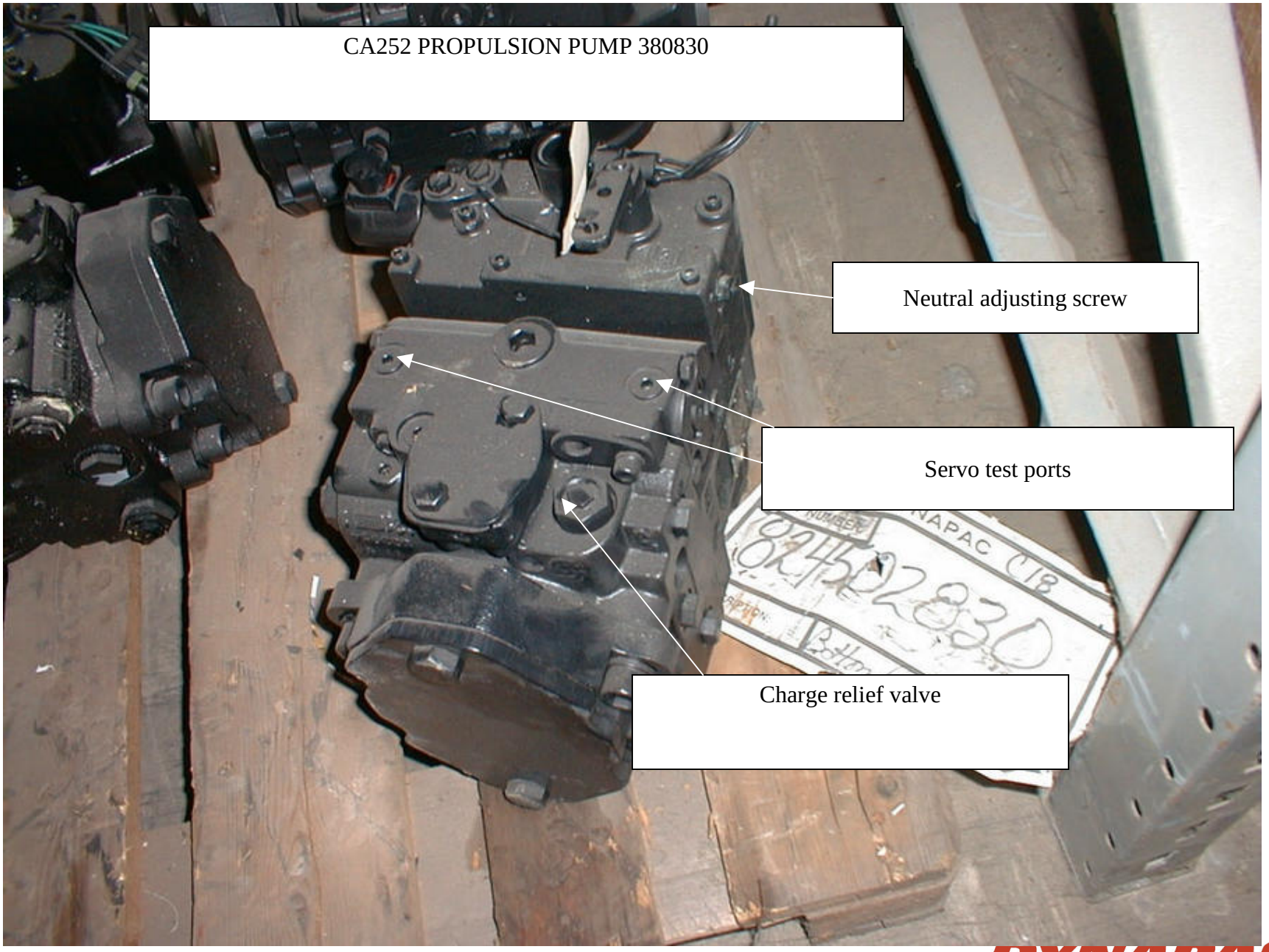
CA252 PROPULSION PUMP 380830
Neutral adjusting screw
Servo test ports
Charge relief valve

VARIABLE DISPLACEMENT PUMP

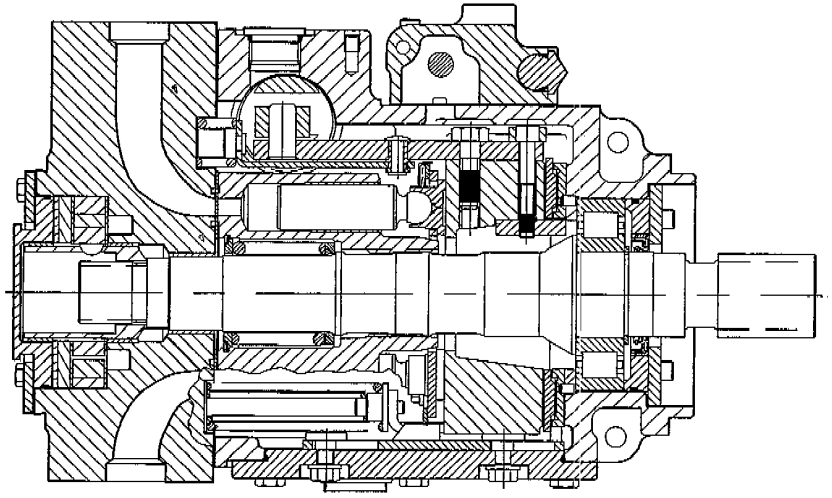

DYNAPAC

CA152 PROP PUMP 380829 Control valve

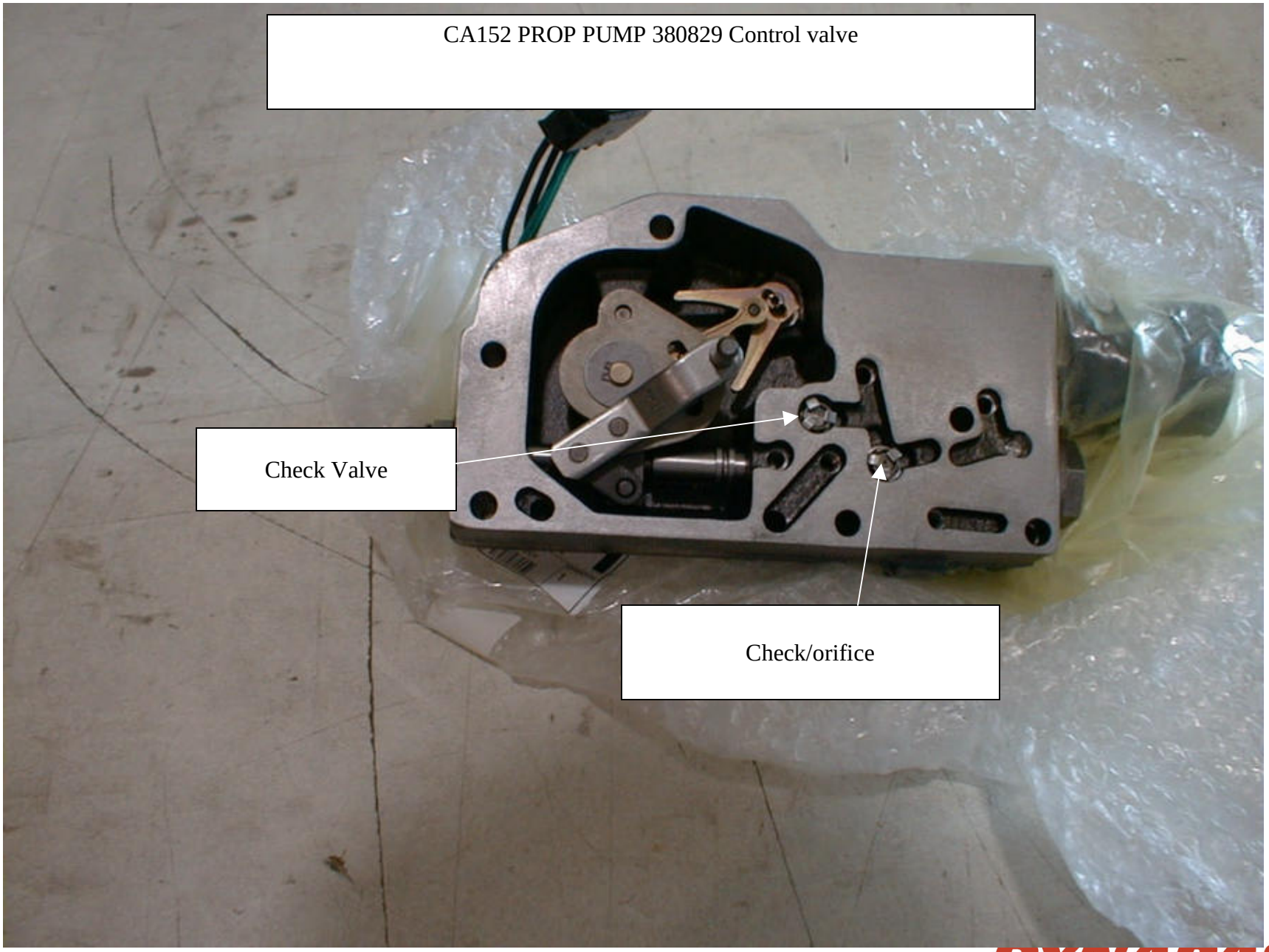

DYNAPAC

PUMP CONTROL VALVE 938251

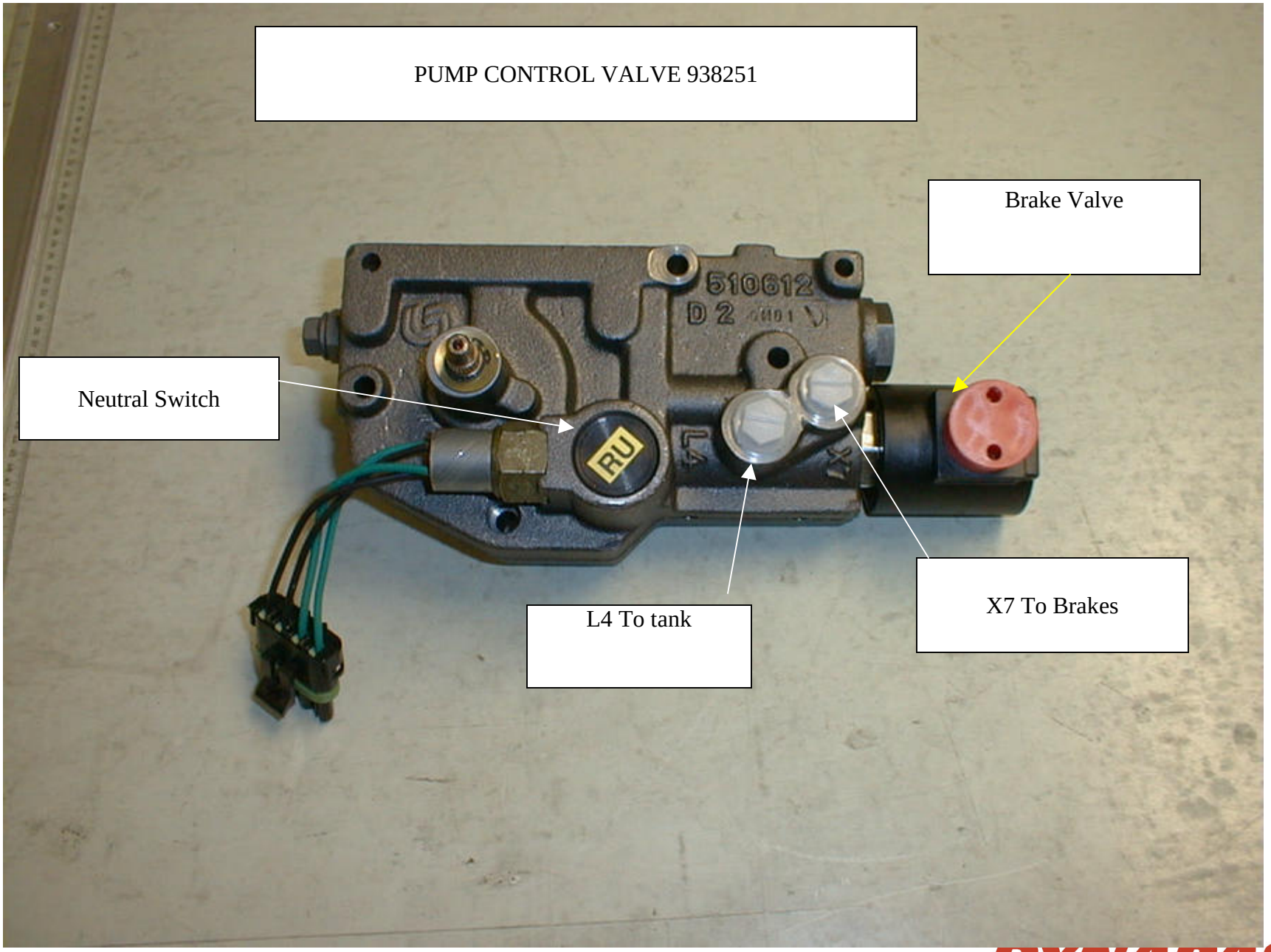

DYNAPAC

PUMP CONTROL VALVE 938251

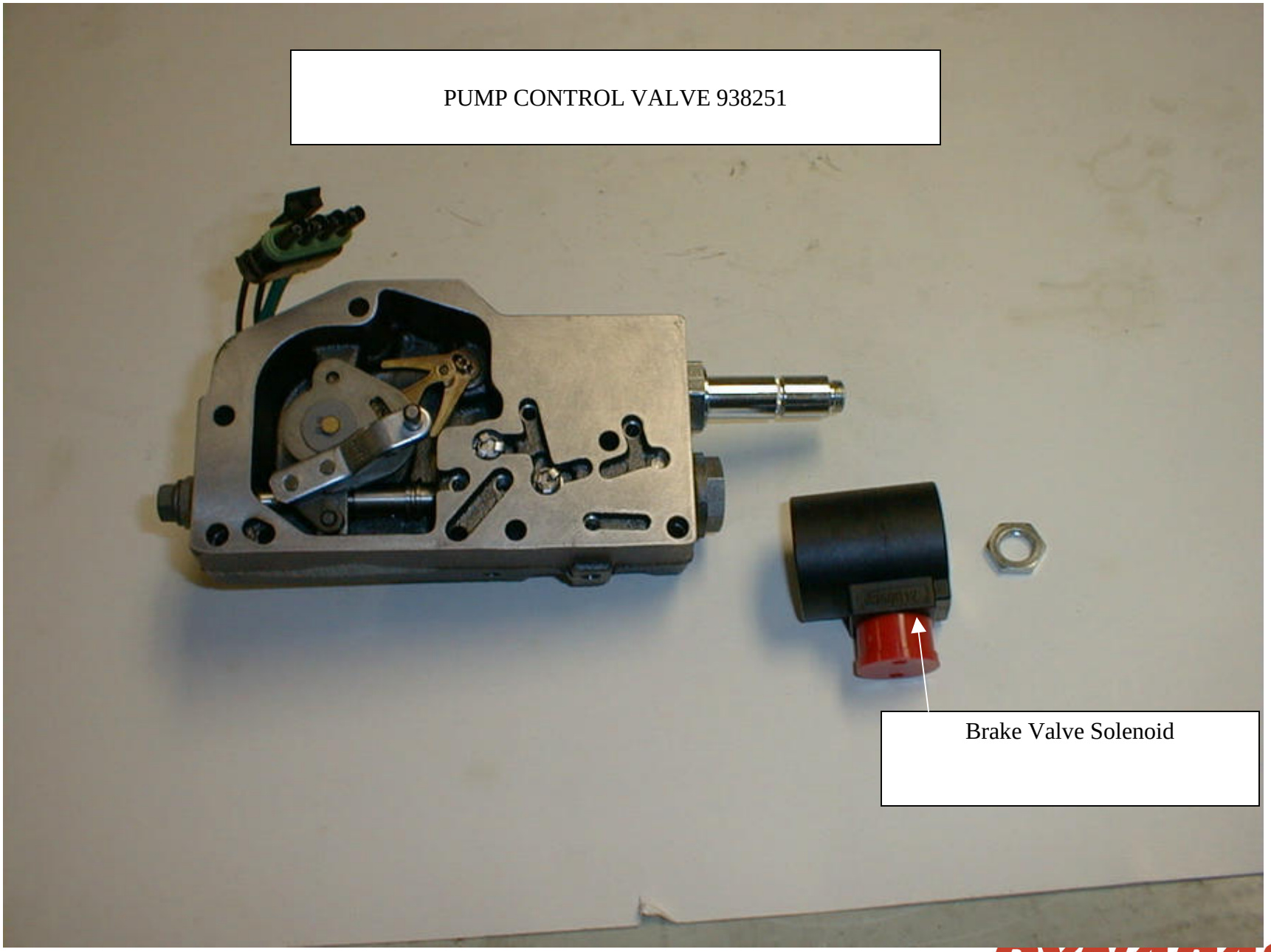

DYNAPAC

PUMP CONTROL VALVE 938251

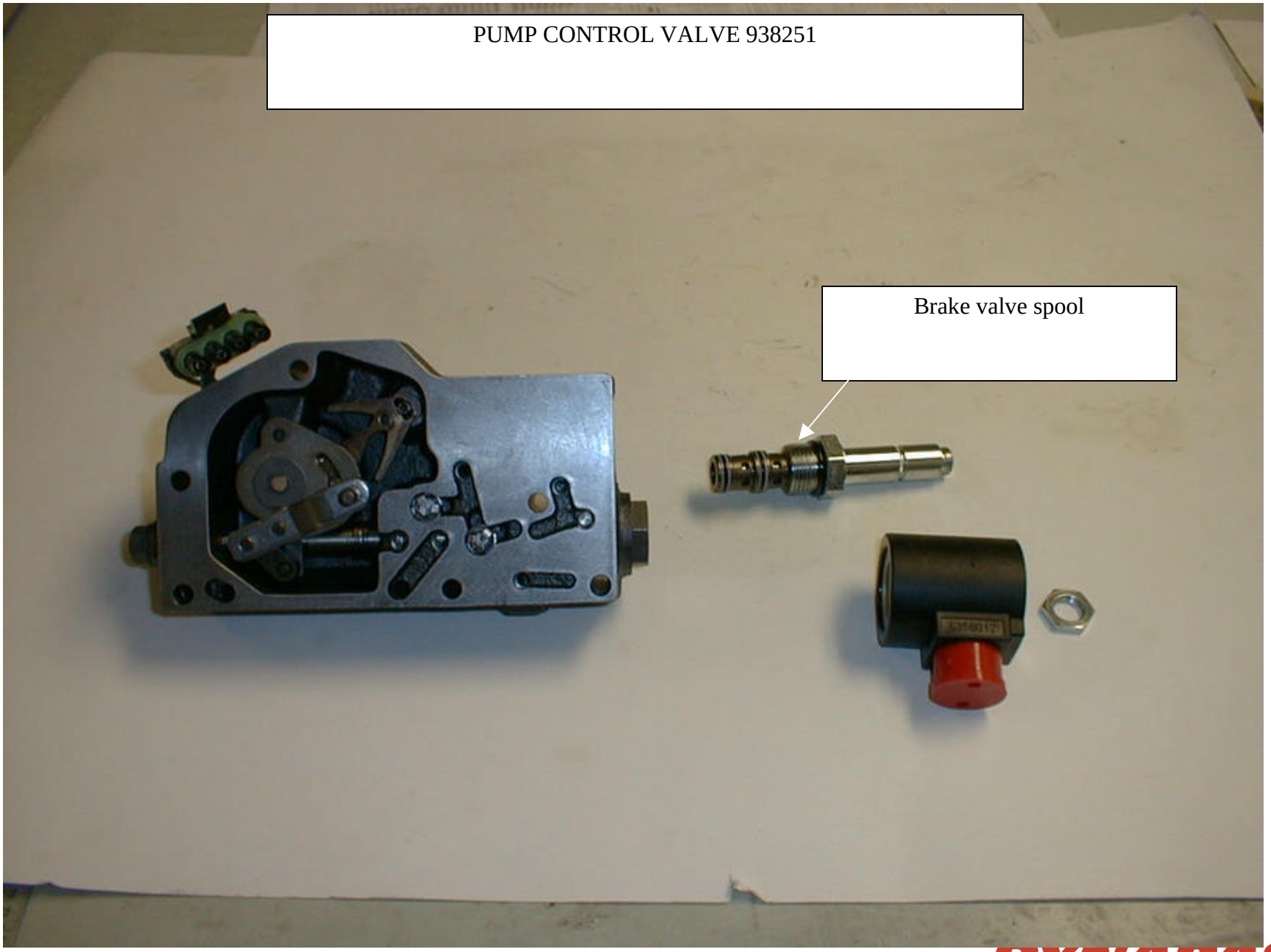

DYNAPAC

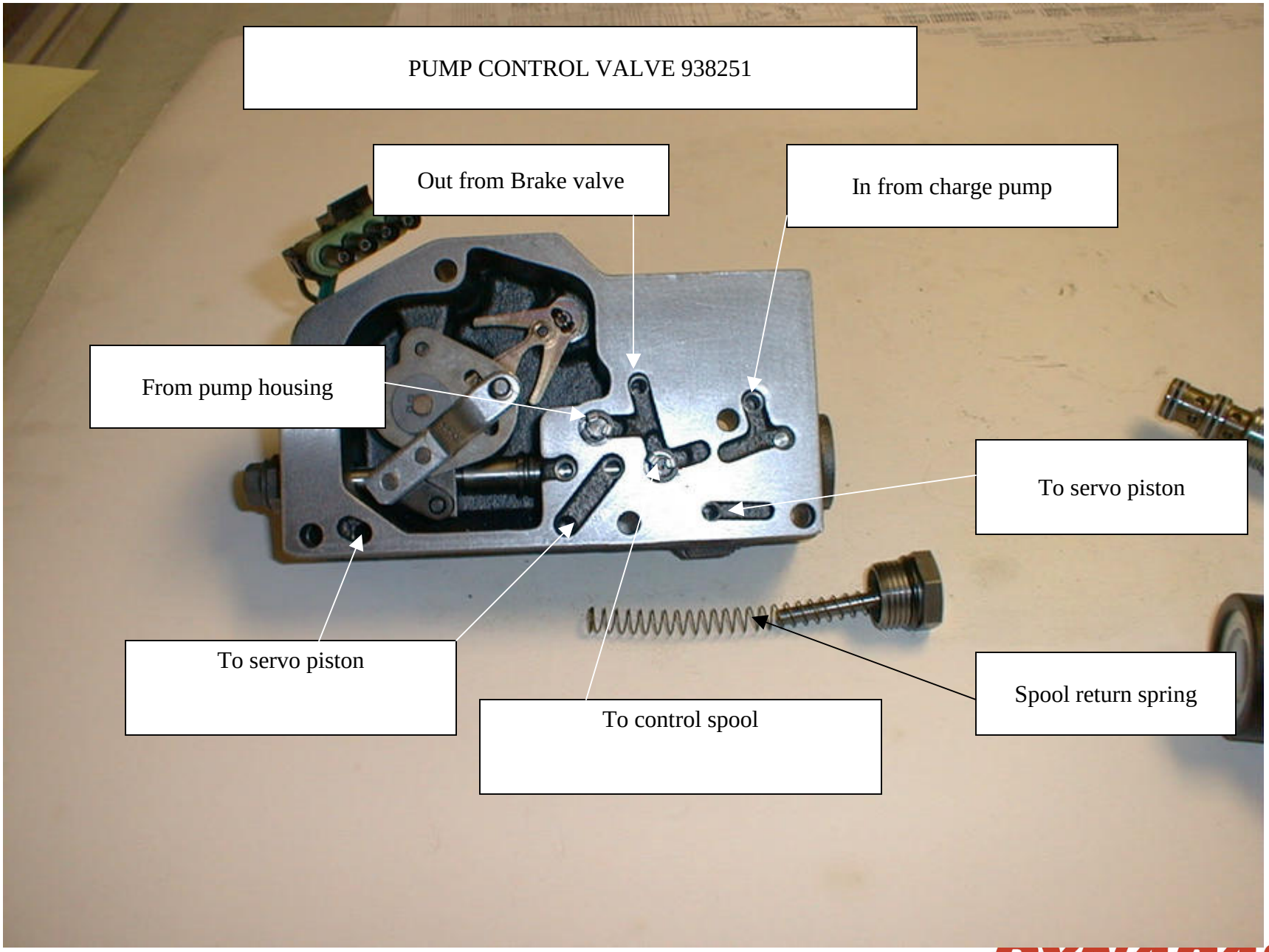
PUMP CONTROL VALVE 938251
Out from Brake valve
In from charge pump
From pump housing
To servo piston
To servo piston
To control spool
Spool return spring

DYNAPAC

CA252 AXLE MOTOR 374137



DYNAPAC

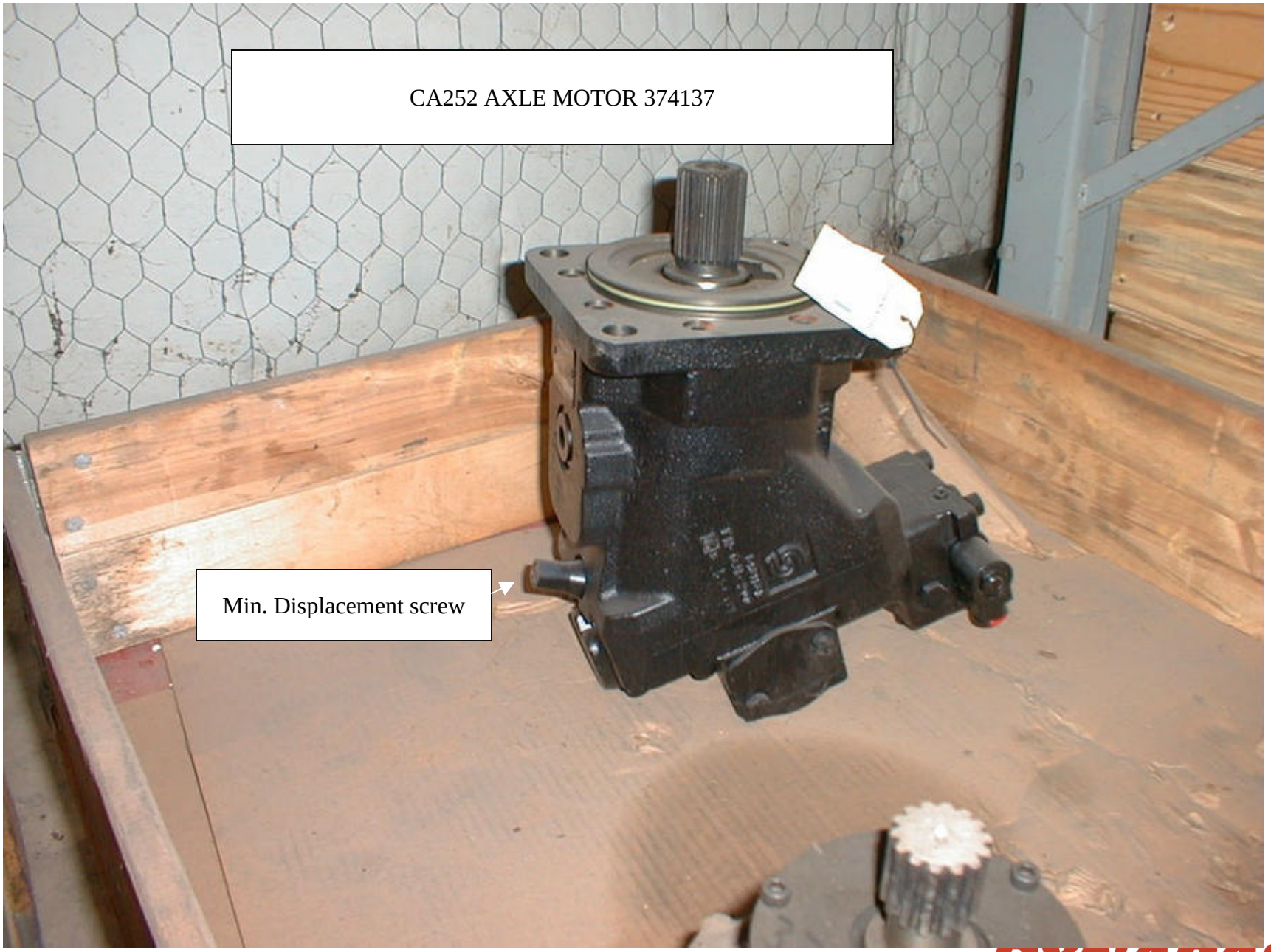
CA252 AXLE MOTOR 374137
Min. Displacement screw

TWO DISPLACEMENT MOTOR

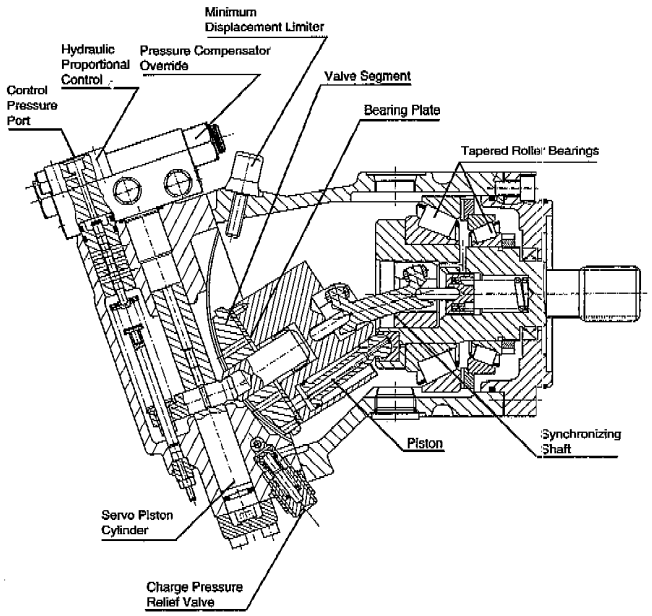

Note: Motors used on DYNAPAC machines do not have the Hydraulic Proportional Control

DRUM DRIVE MOTOR 371509

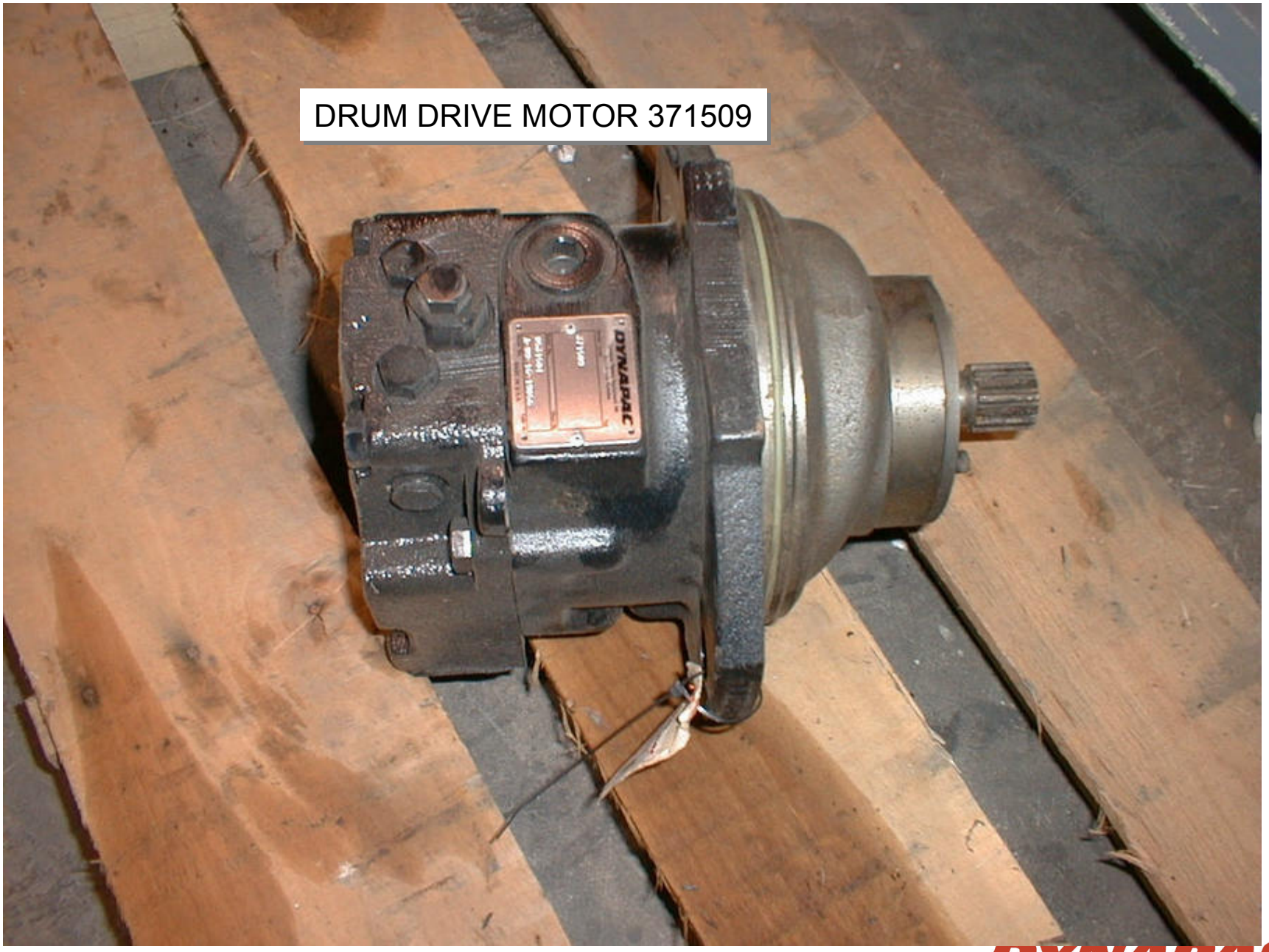

DYNAPAC

FIXED DISPLACEMENT MOTOR

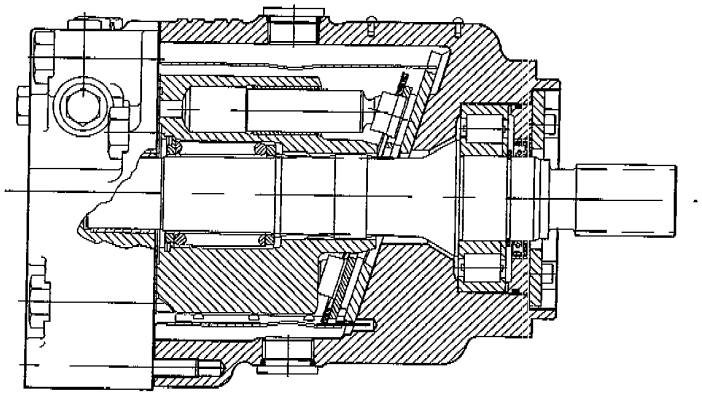

DYNAPAC

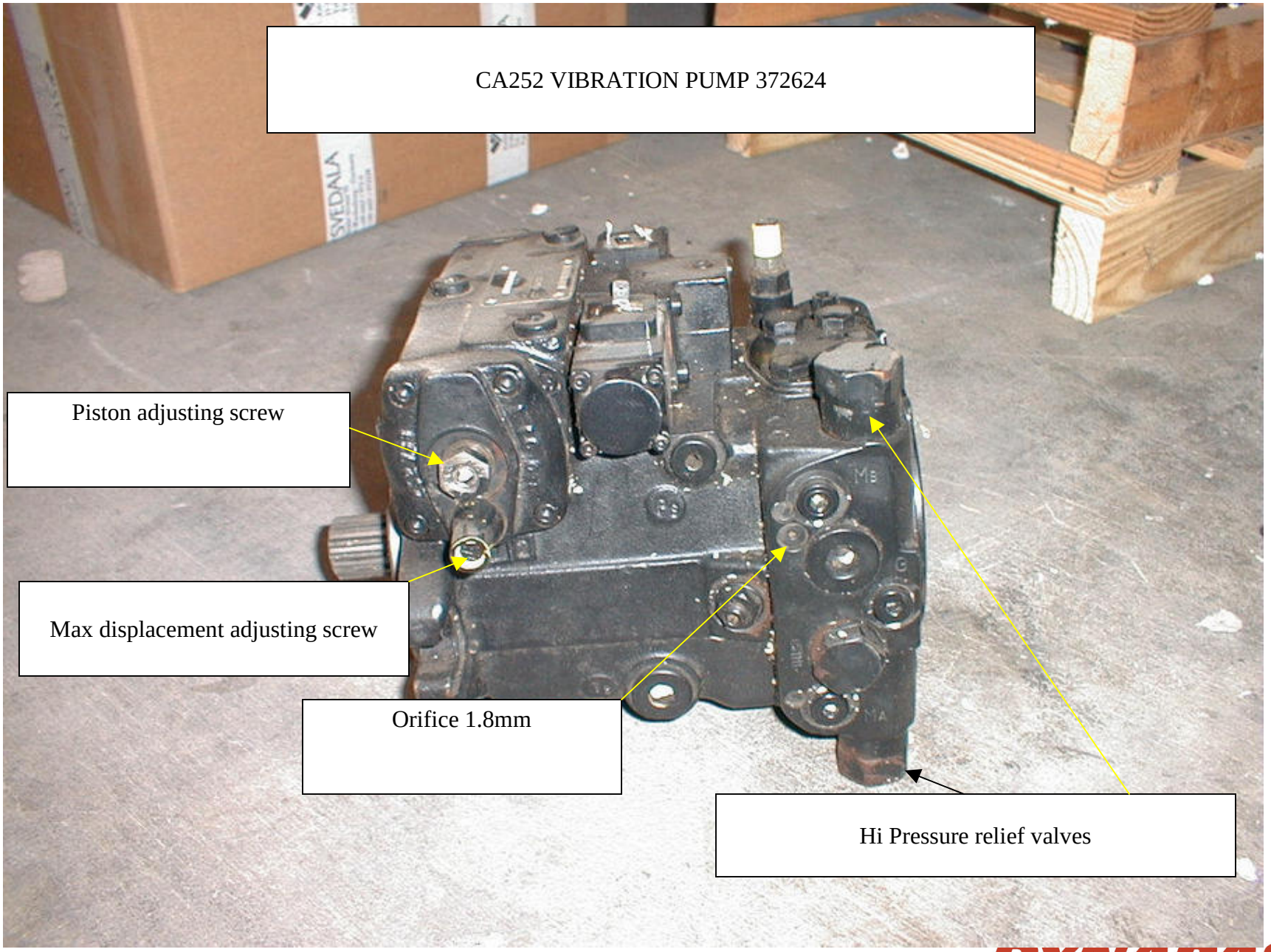
CA252 VIBRATION PUMP 372624
Piston adjusting screw
Max displacement adjusting screw
Orifice 1.8mm
Hi Pressure relief valves

CA252 VIBRATION PUMP 372624

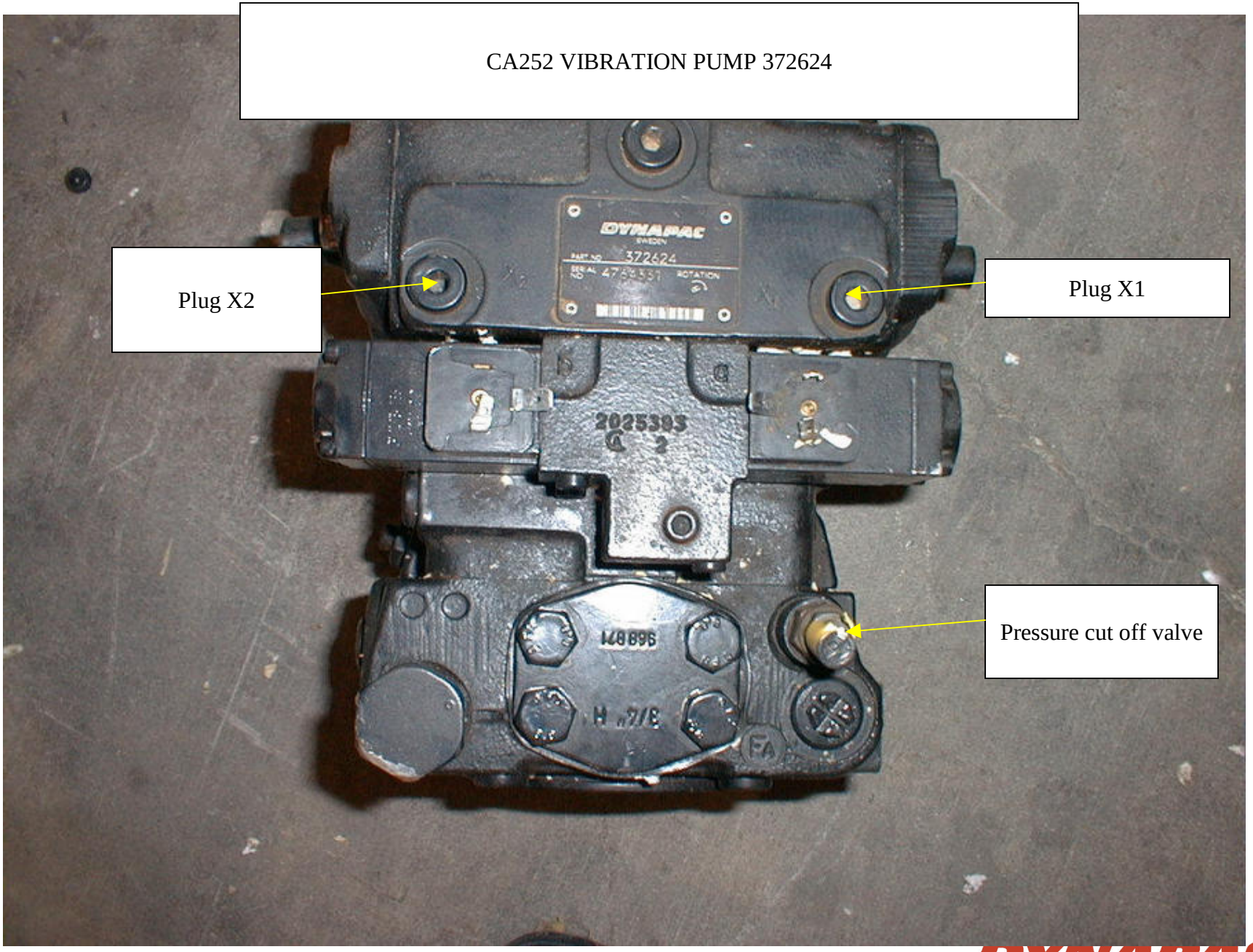

CA252 VIBRATION PUMP 372624



DYNAPAC



DYNAPAC

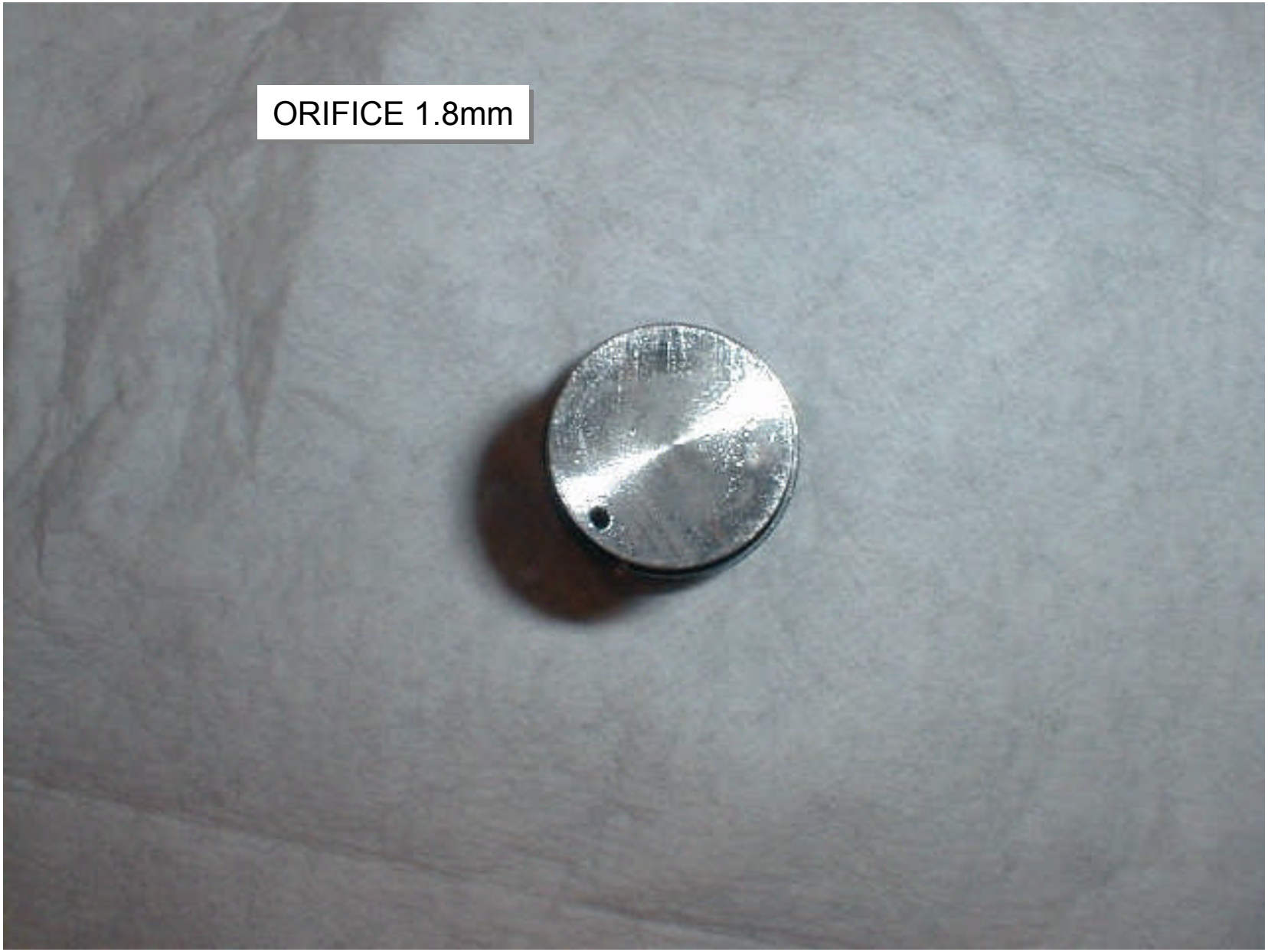

DYNAPAC

CA252 VIBRATION PUMP 372624

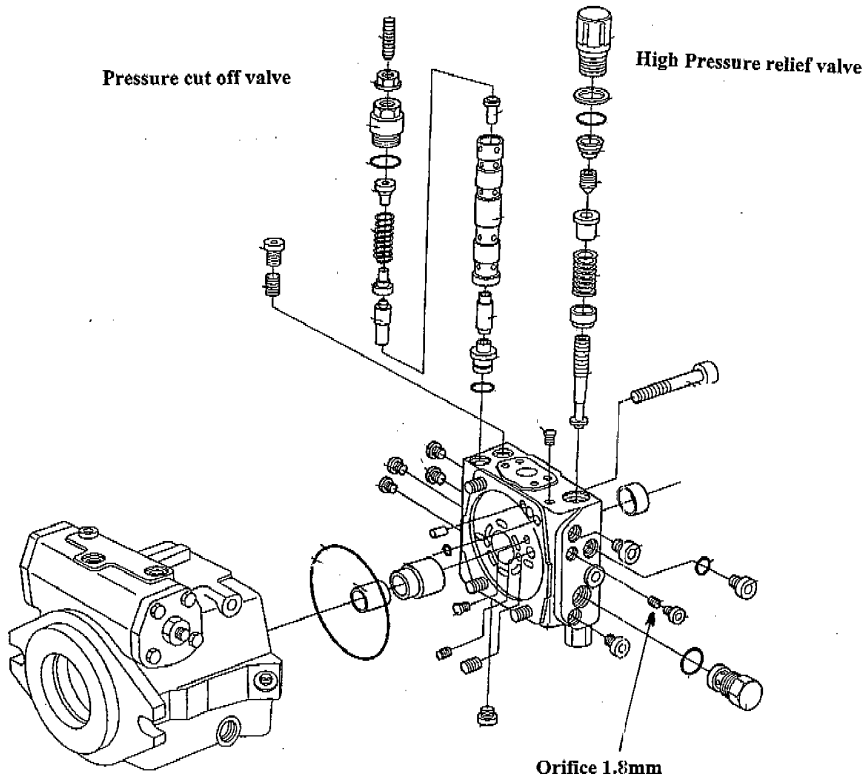

DYNAPAC


VIBRATION MOTOR 380078
DYNAPAC

VIBRATION MOTOR

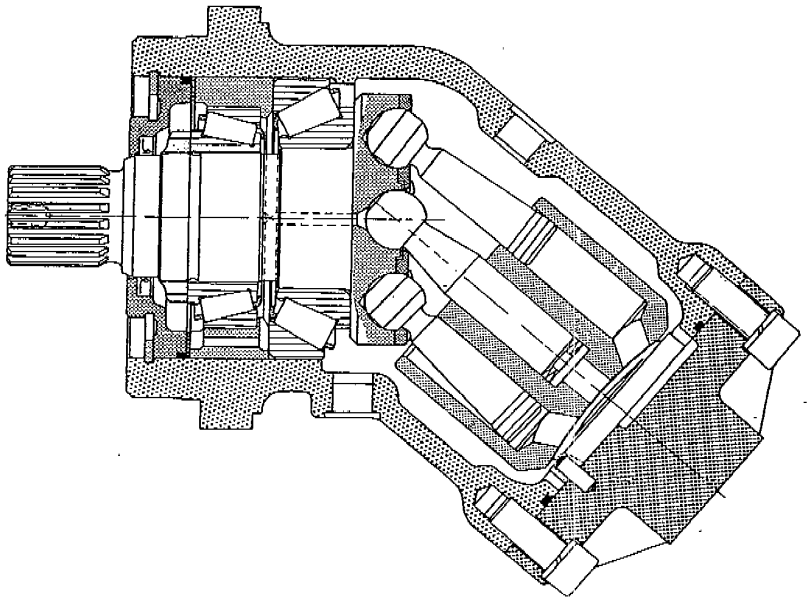

DYNAPAC

CA250 STEERING PUMP 375454

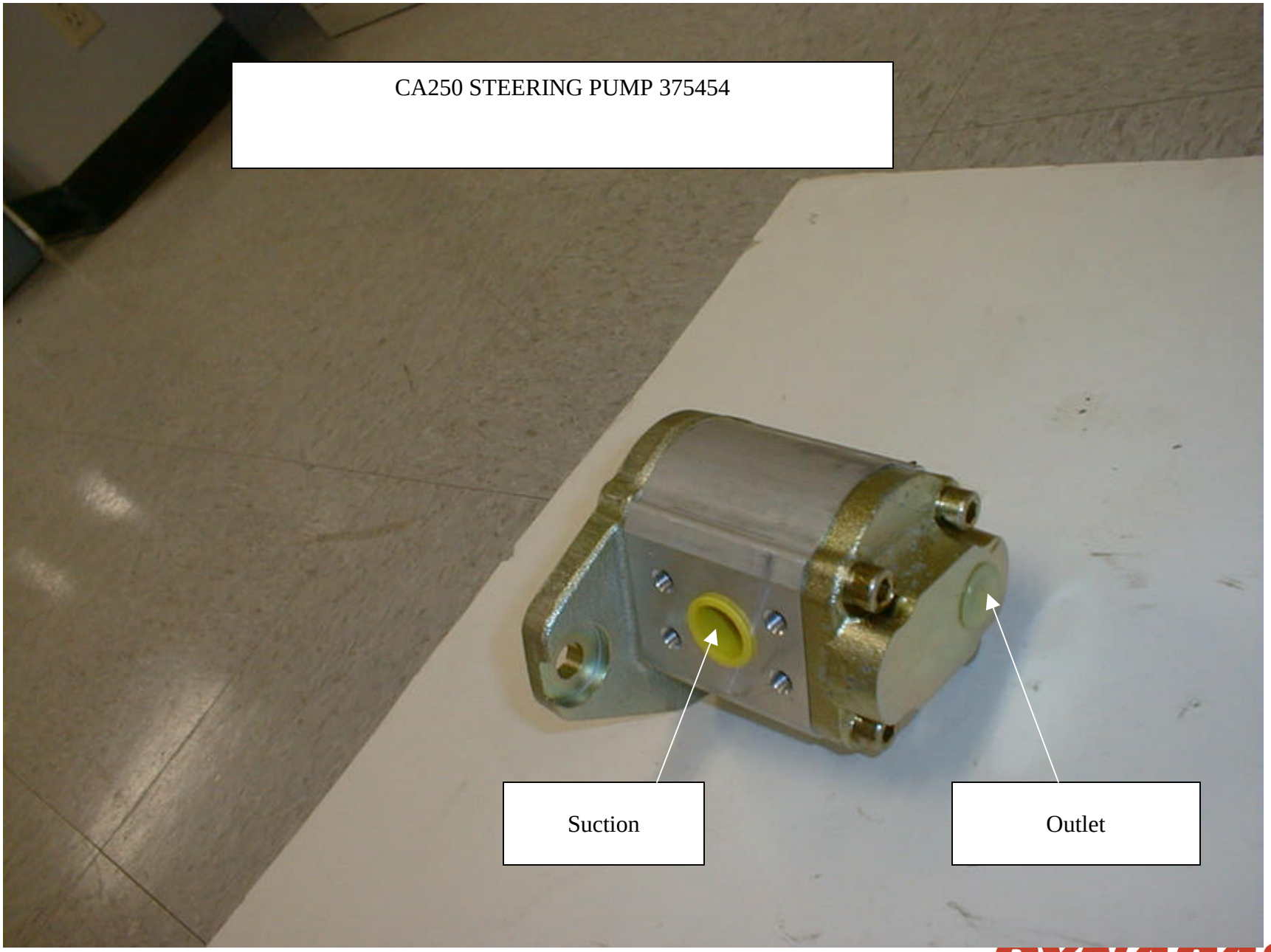

DYNAPAC

Alternative 1

Towing short distance with engine working

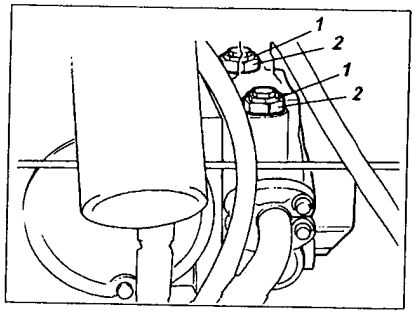

Fig. 37 Propulsion pump
1. Towing valve
2. Locknut

Opening by-pass valves

Hold large nut and unscrew (CCW) middle nut three full turns.
Note: Do not exceed three full turns.

Alternative 2
Towing short distance with engine not working

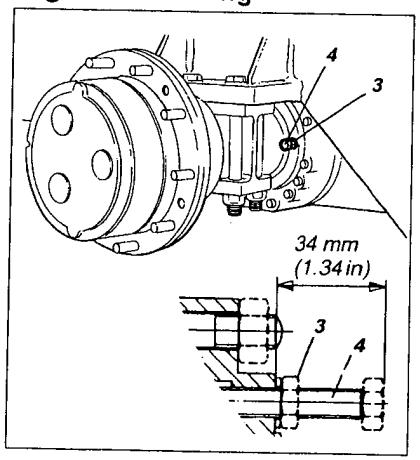

Fig. 38 Rear axle
3. Locknut
4. Adjusting screw

Releasing axle brakes

On both sides of the differential loosen the lock nuts and screw (CW) the releasing screws evenly.

DYNAPAC

CA250 HYDRAULIC CHECK

DYNAPAC

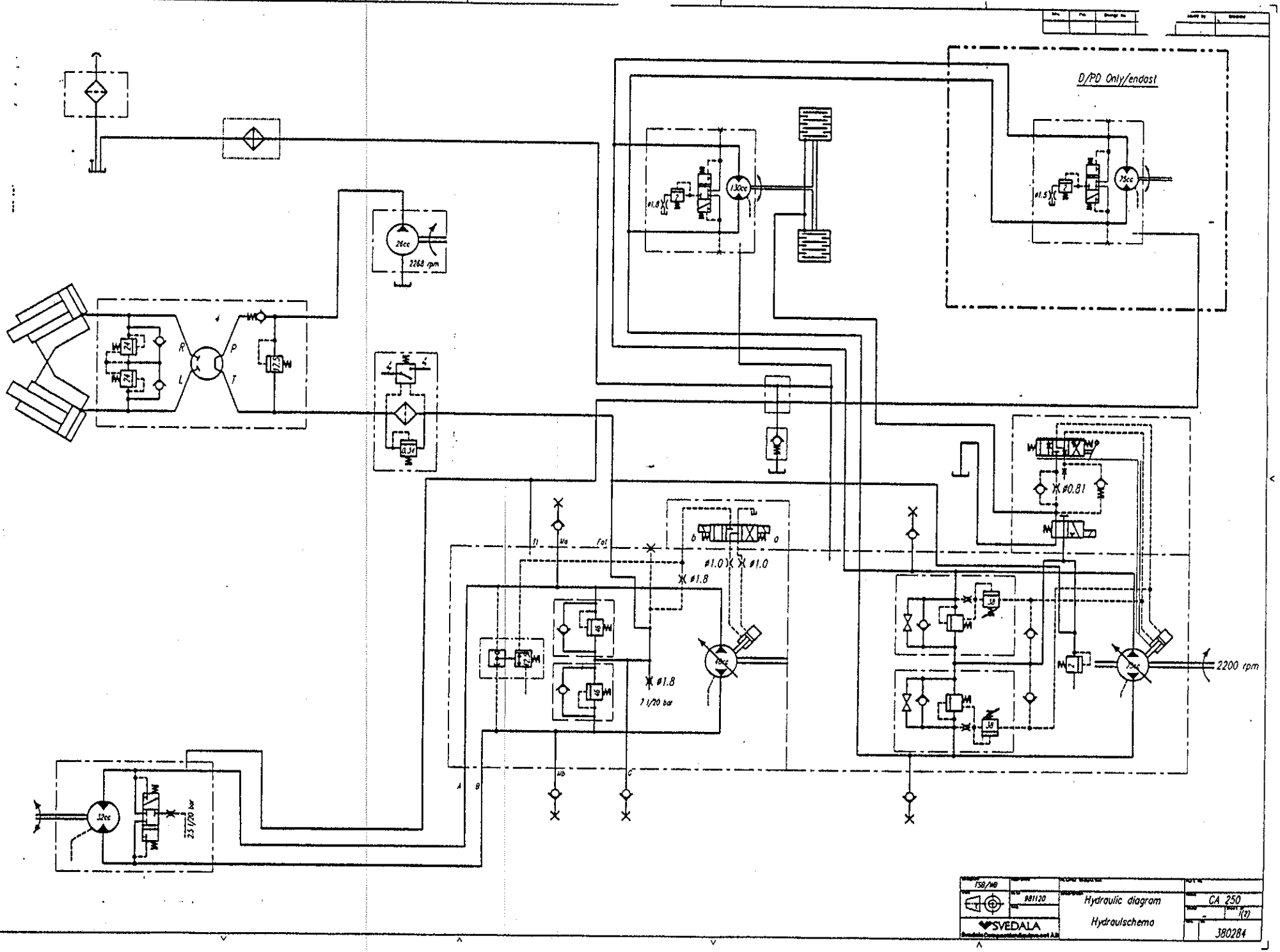

TSB/MB		Hydraulic diagram Hydraulschema	CA 250
	981120		1(1)
SVEDALA			380284

Variable rear axle motor
Variabel bakaxelmotor

Option / Tillbehör

Variable drum drive motor
Variabel valsdrivningsmotor

Option / Tillbehör

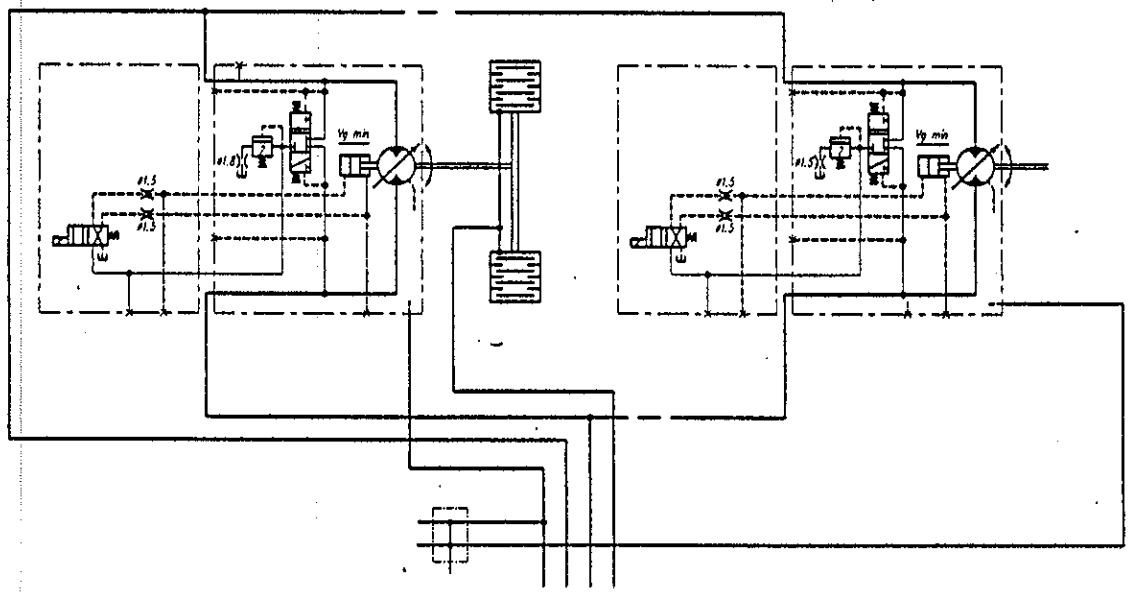

TSB/MB		*Hydraulic diagram*	CA 250
SVEDALA	890517	*Hydraulschema*	380284

CA250

Propulsion System		
	Charge pressure	
	Neutral	340 PSI
	Stroke	320 PSI
	Vib. On	320 PSI
	High pressure relief	5500 PSI
Vibration System		
	Charge pressure	see propulsion
	Pressure cut off valve	6100 PSI
	High pressure relief	6525 PSI
Steering System		
	Main pressure relief	2500 PSI
	Shock valves	3480 PSI

CA250 propulsion system checking

Prop. Pump servo test ports

Ports #6 SAE o-ring

Recommended tools:

799965-Discs	2
904005-O-ring	2
#12JIC Caps	2
#16 JIC Plugs	1
900220-Test Port adapter (-6SAE o-ring)	1
334172-Adapter (4MP-6MJ)	1
334389-Adapter (6MBO90-6MJ)	1
799960-Adapter **4MP-6FJ**	1
799953-Test Hose	2
799954-Gage adapter	3
799900-600 PSI gauge	2
781546-10,000 PSI gauge	2

CA250 VIBRATION SYSTEM CHECKING

Vib. Pump servo test ports

Wrench to remove plugs 6mm Allen

Ports M12X1.5 w/ washer seal

Recommended tools

799955-Test Blocks	2
904003-o-ring	2
502131-Screw (5/16-18X2)	4
571002-Nut (5/16-18)	4
901157-Test Port adapter (M12X1.5)	2

CA250 PROPULSION SYSTEM CHECKING

A-No movement in any direction

Check:
1-Hydraulic oil level
2-Operation of forward/reverse control
3-Charge pressure (pump in neutral)
4-Operation of brake valve
5-Orifices between control valve and servo piston
6-Charge pressure (pump in stroke)
7-Operation of forward/reverse control valve
8-Operation of propulsion pump
9-Operation of propulsion motors.

B-Movement in one direction only

Check:
1-Operation of forward/reverse control
2-high pressure relief valves
3-Operation of pump control valve

C-Erratic response of the propulsion system

Check:
1-Hydraulic oil level
2-Charge pressure (pump in neutral)
3-Operation of pump control valve
4-Orifices between control valve and servo piston.

CA250

PROPULSION SYSTEM CHECKING	Correct	Incorrect
A-NO MOVEMENT IN ANY DIRECTION		
1-Check operation of forward/reverse control	Proceed	Repair
2-Check tank oil level	Proceed	Correct
3-Check charge pressure with engine at normal operating speed and oil at normal operating temperature and pump control in neutral	Proceed	Check: 1-Suction filter 2-Suction line 3-Charge pressure relief valve 4-Charge pump
4-Check operation of brake valve Disconnect line from brake valve to brakes and install a 600 PSI gauge on that line. With engine at normal operating speed, when brake valve is de-energized, gauge should show 0 PSI. When valve is energized gauge should show charge pressure.	Proceed	Check electrical system to be sure that brake Valve is being energized. If brake valve is energized and does not work properly, check brake valve.
5-Check charge pressure with forward/reverse actuated (pump in stroke).	Proceed	Charge pressure dropped more than 50 PSI when pump was stroked. Check pump and motors as described below.
6-Check orifices between control and servo piston.	Proceed	Correct.
7-Check operation of pump control valve. Remove plugs on servo housing and install two 600 PSI gauges. With engine at normal operating speed actuate forward/reverse control into forward. Gauge on forward port should show charge pressure and gauge on reverse port should show case pressure. Actuate control into reverse, gauge on reverse port should show charge pressure and gauge on forward port should show case pressure.	Proceed	Pump should be repaired.

8-Propulsion pump checking Disconnect lines from pump to motor at pump. Plug pump outlet ports. Install two 10,000 PSI gauges on high pressure test ports. Install a 600 PSI gauge on charge pressure test port. With engine at normal operating speed and oil at normal operating temperature, actuate control into forward. Gauge on forward test port should show setting of high pressure relief valve and other two gauges should show charge pressure (not lower than 50 PSI from pressure in neutral). Repeat test actuating control into verse.	Proceed	Repair
9-Axle propulsion motor checking Disconnect lines from axle motor to drum motor at axle motor. Cap adapters of axle motor. Actuate control into forward. Charge pressure should not drop more than 50 PSI when pump is stroked.	Motor O.K.	Repair motor
10-Drum drive motor checking (if axle motor is O.K.) Actuate control into forward. Charge pressure should not drop more than 50 PSI when pump is stroked.	Motor O.K.	Repair motor

B-MOVEMENT IN ONE DIRECTION ONLY

1-Check operation of forward/reverse control	Proceed	Repair
2-Switch the two high pressure relief valves. If problem changes direction, replace the defective relief valve.	Proceed	Repair
3-Check operation of pump control valve. Remover plugs on servo housing and install two 600 PSI gauges. With engine at normal operating speed actuate forward/reverse control into forward. Gauge on forward port should show charge pressure and gauge on reverse port should show case pressure. Actuate control into reverse. Gauge on reverse port should show charge pressure and gauge on forward port should show case pressure.		Repair

C-ERRATIC RESPONSE OF PROPULSION SYSTEM

1-Check hydraulic oil level	Proceed	Correct
2-Check charge pressure with engine at normal operating speed and oil at normal operating temperature	Proceed	Check suction filter Check suction line Check charge pump.
3-Check operation of pump control valve. Remove plugs on servo housing and install two 600 PSI gauges. With engine at normal operating speed actuate forward/reverse control into forward. Gauge on forward port should show charge pressure and gauge on reverse port should show case pressure. Actuate control into reverse. Gauge on reverse port should show charge pressure and gauge on forward port should show case pressure.	Proceed	Repair
4- Check orifices between control valve and servo piston. Remove pump control valve, turn valve upside down and check the orifices.		Correct

CA250 VIBRATION SYSTEM CHECKING

A-No vibration

Check

1-Electrical system
2-Hydraulic oil level
3-Charge pressure(pump in neutral)
4-Charge pressure (pump in stroke)
5-Operation of pump control valve
6-Orifices between control valve and servo
7-Operation of pump

B-Vibration only in one amplitude

1-Electrical system
2-Solenoids
3-High pressure relief
4-Operation of pump control valve

CA250 VIBRATION SYSTEM CHECKING

A-NO VIBRATION IN LOW OR HIGH AMPLITUDE

	Correct	Incorrect
1-Check electrical system	Proceed	Correct
2-Check hydraulic oil level	Proceed	Correct
3-Check charge pressure with engine at normal operating speed and oil at normal operating temperature and pump control in neutral	Proceed	Check: 1-Propulsion and vibration share the same charge pump. See propulsion system.
4-Check charge pressure with pump control in Low or High amplitude	Proceed	Charge pressure dropped more than 50 PSI when pump was stroked. Check pump as described below.
5-Check operation of pump control valve. Remove plugs on servo test ports and install two 600 PSI gauges. With engine at normal operating speed energize high amplitude solenoid. Gauge on high amplitude port should show charge pressure and gauge on low amplitude port should show case pressure. Energize low amplitude solenoid, and gauge on low amplitude port should show charge pressure and gauge on high amplitude port should show case pressure.	Proceed	Correct
6-Check orifices between control valve and servo. Remove plugs X1 & X2 on servo housing. Check orifices.	Proceed	Correct

7-Check operation of pump. Disconnect hoses from pump to vibration motor at motor. Install test blocs on hose fittings. Install a 600 PSI gauge on charge pressure test port and two 10,000 PSI gauges on High and Low amplitude test ports. With engine at normal operating speed energize high amplitude solenoid. Gauge on High amplitude test port should show setting of pressure cut off valve, and gauges on charge pressure test port and Low amplitude test port should show charge pressure (not lower than 50 PSI from pressure in neutral).	Repair motor	Repair pump

B-VIBRATION ONLY IN ONE AMPLITUDE

1-Check electrical system	Proceed	Correct
2-Switch the two control solenoids. If now problem moves to other amplitude, solenoid needs to de replaced.	Proceed	Replace solenoid
3-Switch the two high pressure relief valves. If now problem moves to other amplitude, high pressure relief needs to be replaced.	Proceed	Replace relief
4-Check operation of pump control valve. Remove plugs on servo test ports, and install two 600 PSI gauges. With engine at normal operating speed energize high amplitude solenoid. Gauge on high amplitude test port should show charge pressure, and gauge on low amplitude test port should show case pressure. Energize low amplitude solenoid, gauge on low amplitude test port should show charge pressure and gauge on high amplitude port should show case pressure.		Correct

CA 250 STEERING SYSTEM CHECKING

A-No steering (Propulsion and vibration work)

Check

1-Steering relief valve
2-Operation of cylinders
3-Operation of control valve

B-No steering (No propulsion and vibration)

1-Hydraulic oil level
2-Pump shaft

C-Steering to one side only

1-Steering cylinders
2-Control valve

D-Erratic or hard steering

CA250 STEERING SYSTEM CHECKING

A-NO STEERING (PROPULSION AND VIBRATION WORK)

	Correct	Incorrect
1-Check steering relief valve on control valve	Proceed	Repair
2-Check operation of steering cylinders Disconnect hose from rod end side (and bottom port on other cylinder). Start engine and turn steering wheel to extend the cylinder (retract the other cylinder). If cylinder does not extend (or the other cylinder does not retracts), and oil comes out of open ports, cylinder (s) needs to be repaired.	Proceed	Repair
3-Check operation of steering control valve Disconnect the two hoses from the control valve to the cylinders. Plug off these lines with JIC plugs. Start engine and turn steering wheel to left and right. Gauge installed on test port should show relief valve setting.		Repair

B-NO STEERING (NO PROPULSION AND VIBRATION)

1-Check hydraulic oil level	Proceed	Repair
2-Check pump shaft		Repair

C-STEERING TO ONE SIDE ONLY

1-Check steering cylinders Turn steering wheel full to side that operates. Disconnect hoses from ports being pressurized. Turn steering wheel to the side that does not work. If oil comes out of open ports, cylinder(s) needs to be repaired.	Proceed	Repair
2-Chek operation of steering control valve. (See above).		Repair

D-ERRATIC OR HARD STEERING

1-Check operation of control valve (See above)		Repair

CA250 PROPULSION SYSTEM

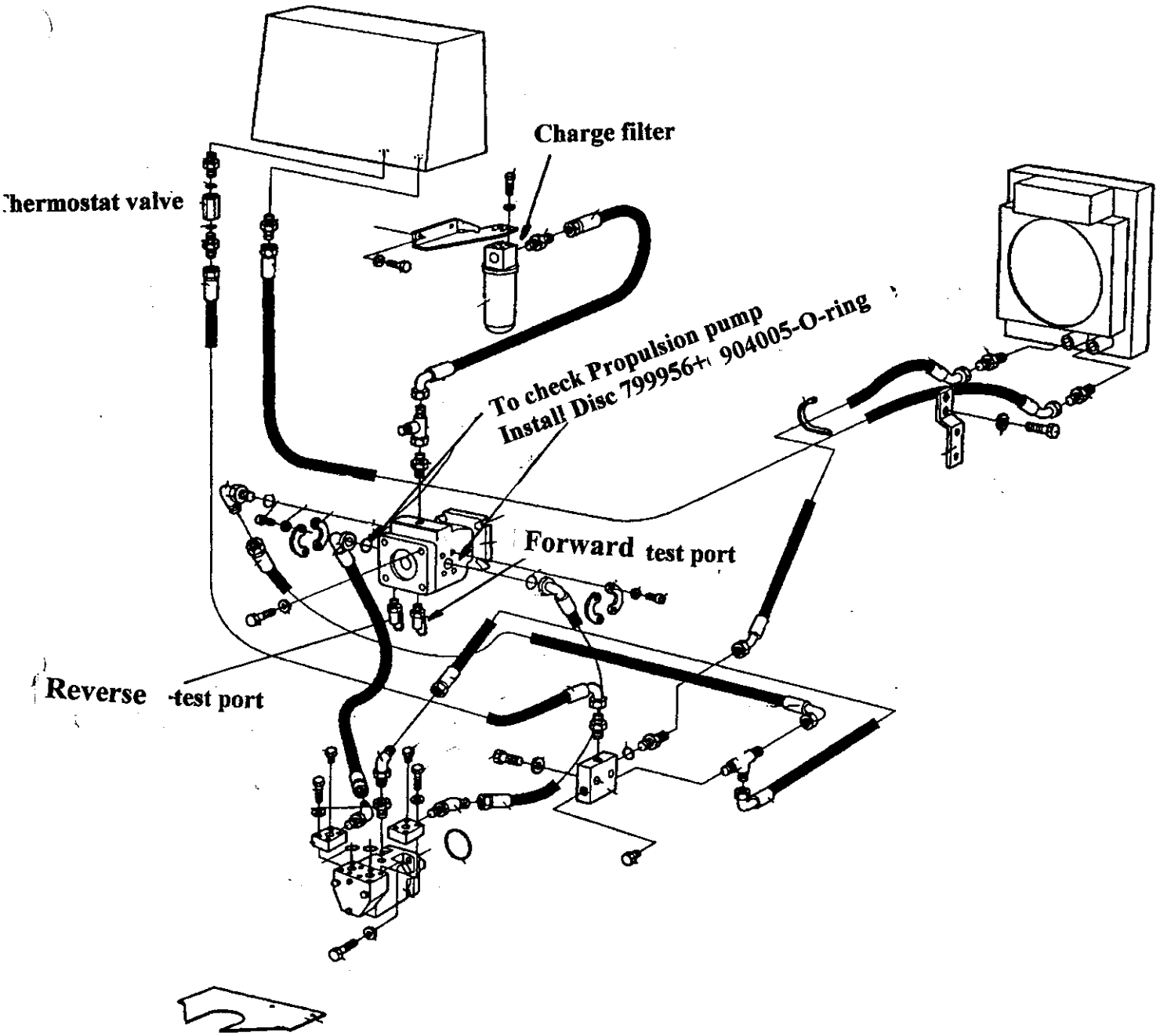

CA250 VIBRATION SYSTEM

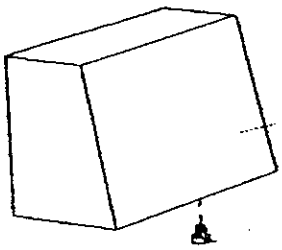

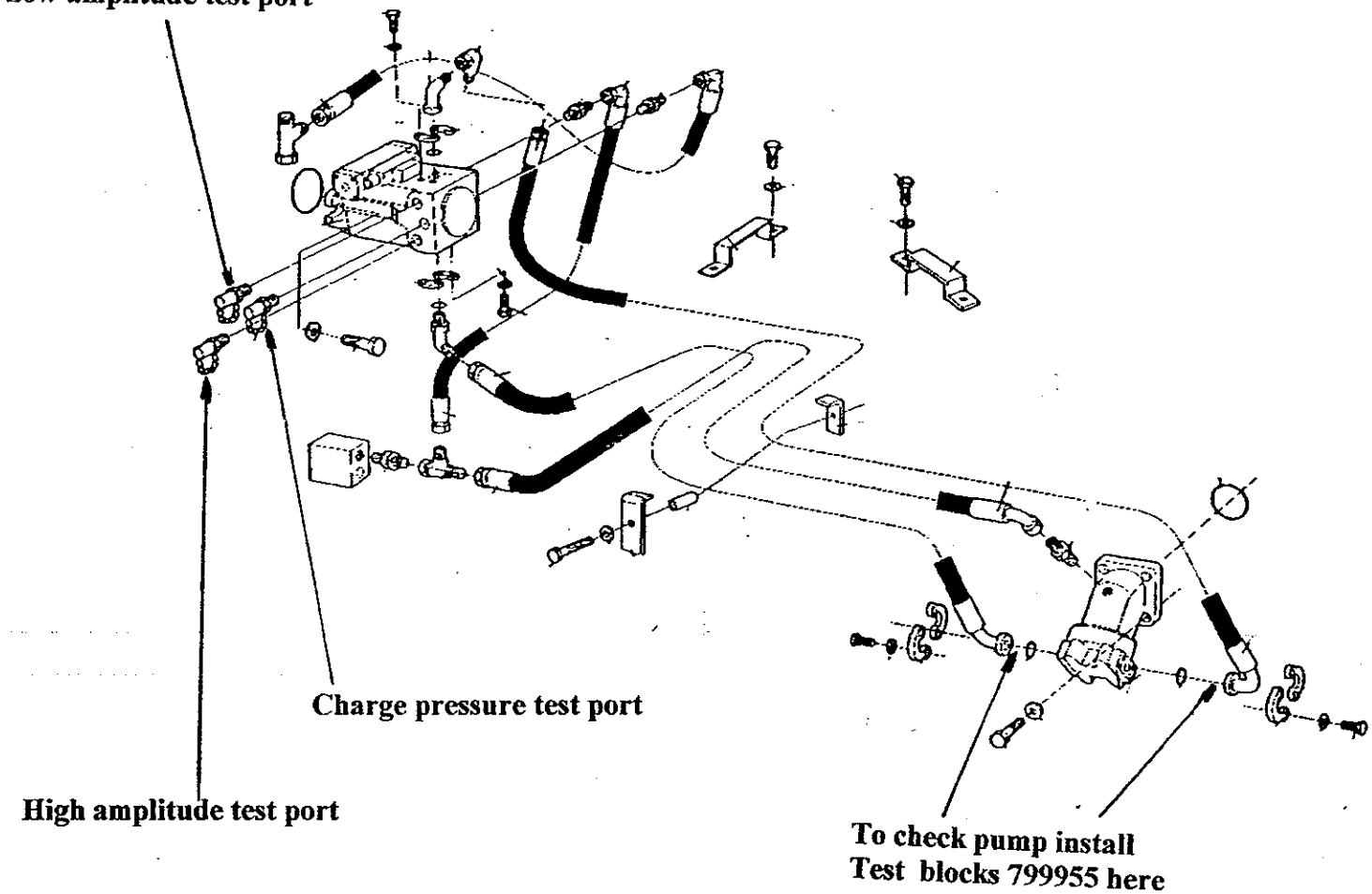

CA250 PROPULSION SYSTEM

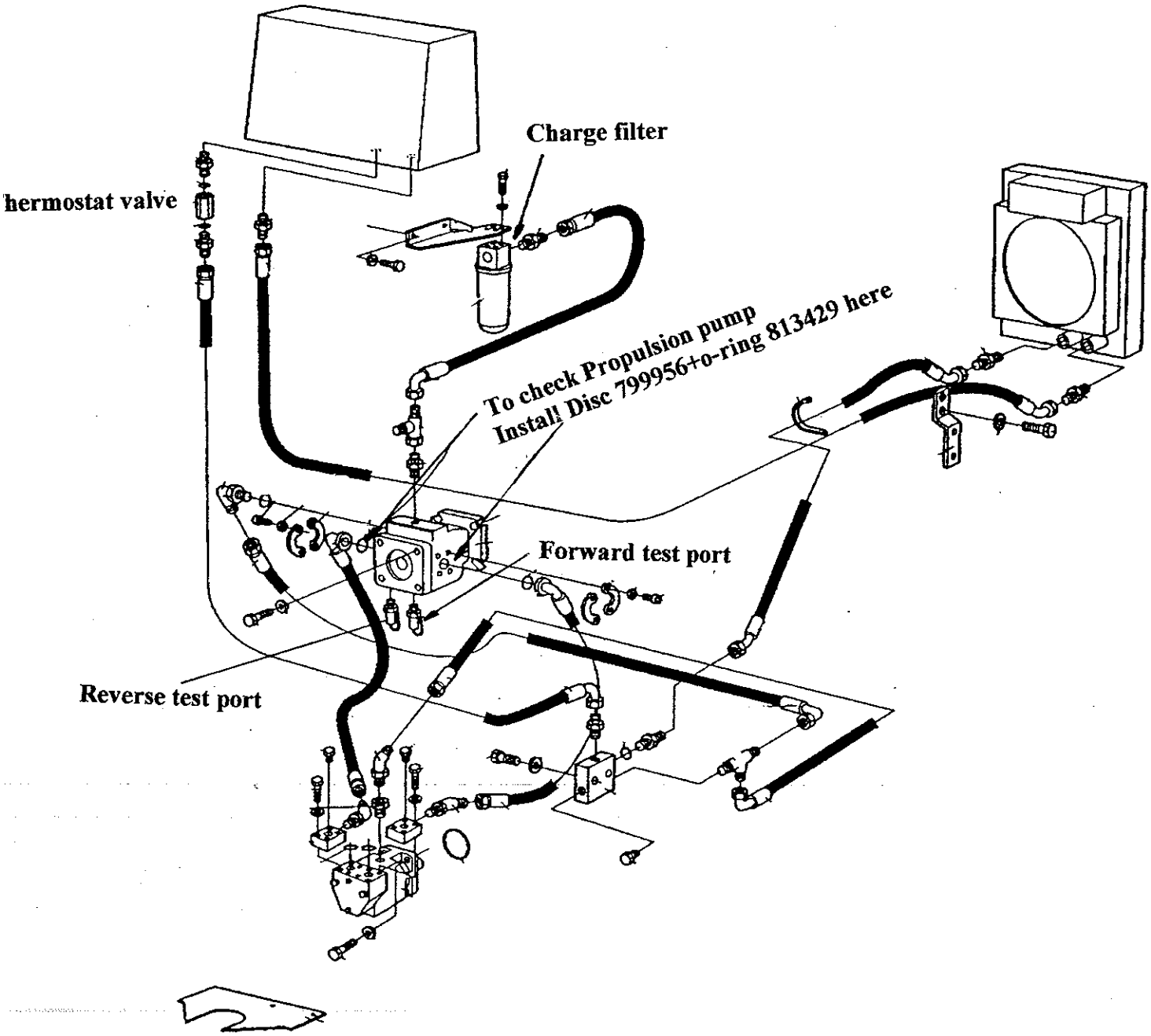

CA250 STEERING SYSTEM

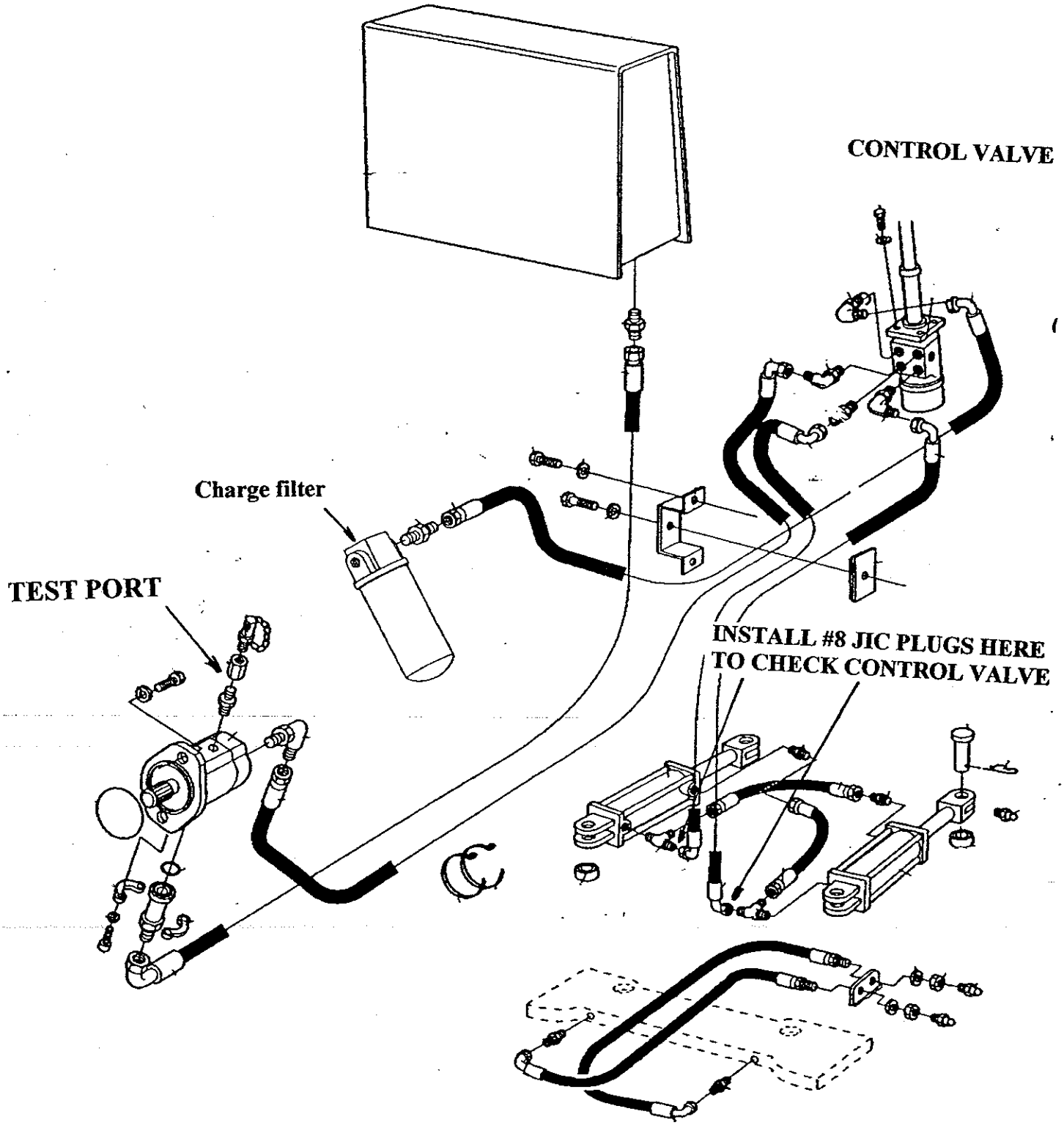

CA250 BRAKES

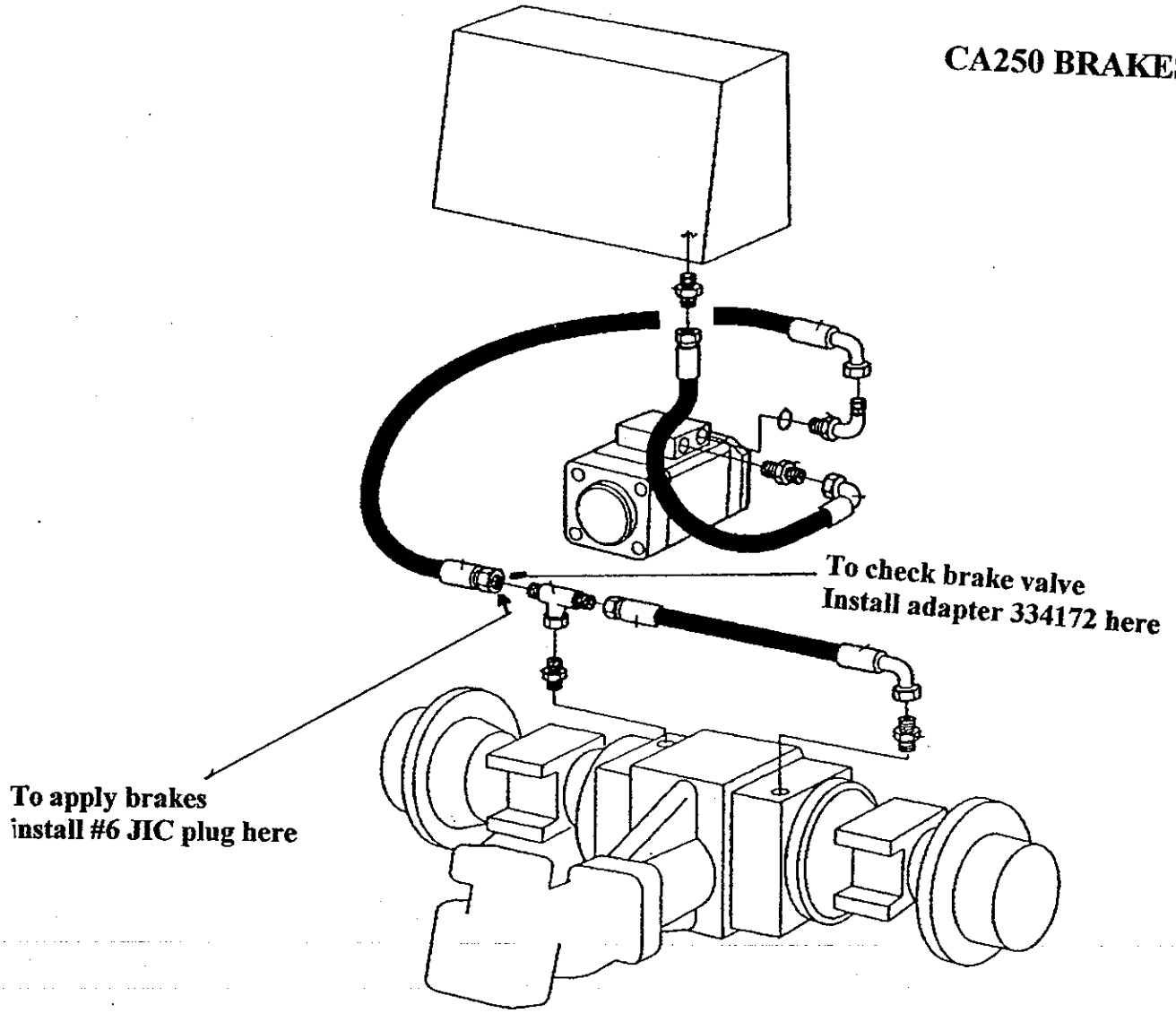

CC422/522/412 CA252/302/262/362/512/602
PROPULSION PUMP

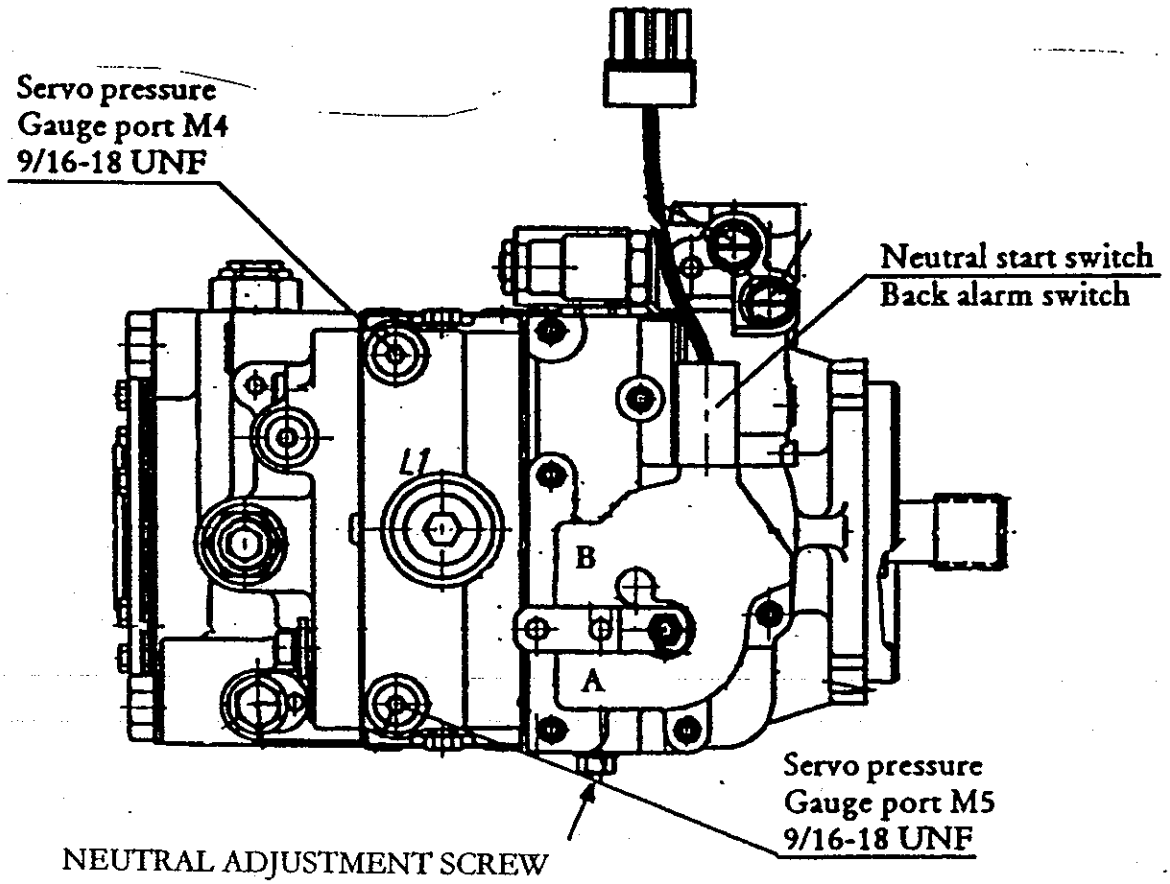

PROPULSION PUMP NEUTRAL ADJUSTMENT

1-Disconnect Forward/Reverse cable from pump control valve.
2-Remove plugs from servo pressure gauge ports (1/4" Allen).
3- Install two 600 PSI gauges. (Use 900229 adapters, 799953 test hoses, and 799954 gauge adapters).
4- Start engine and bring the throttle cable to normal operating position.
5- Read pressure on both gauges. If not the same, use neutral adjustment screw to bring readings to same level. Lock neutral adjustment screw.
6-Stop engine and remove gauges. Re-install plugs on servo pressure gauge ports.

Orificess in Displacement Control

For P/N 37 10 89

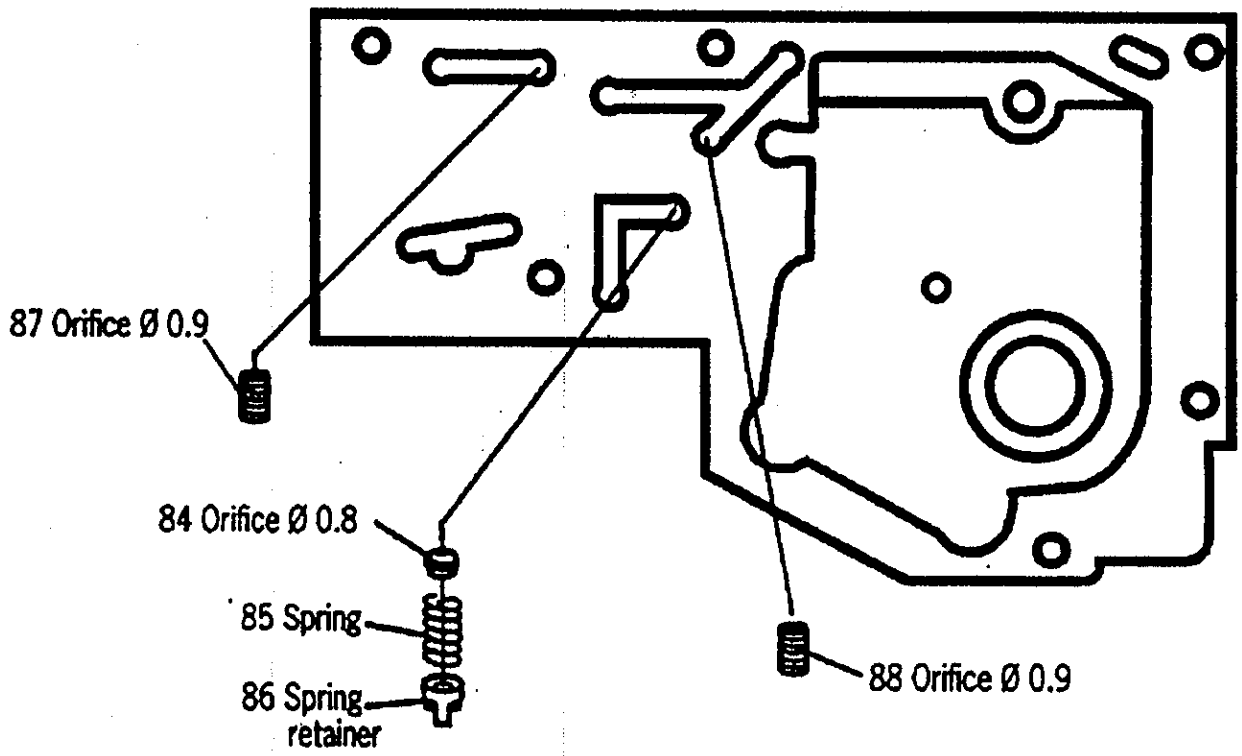

CA250 ELECTRICAL

DYNAPAC

Electrical system

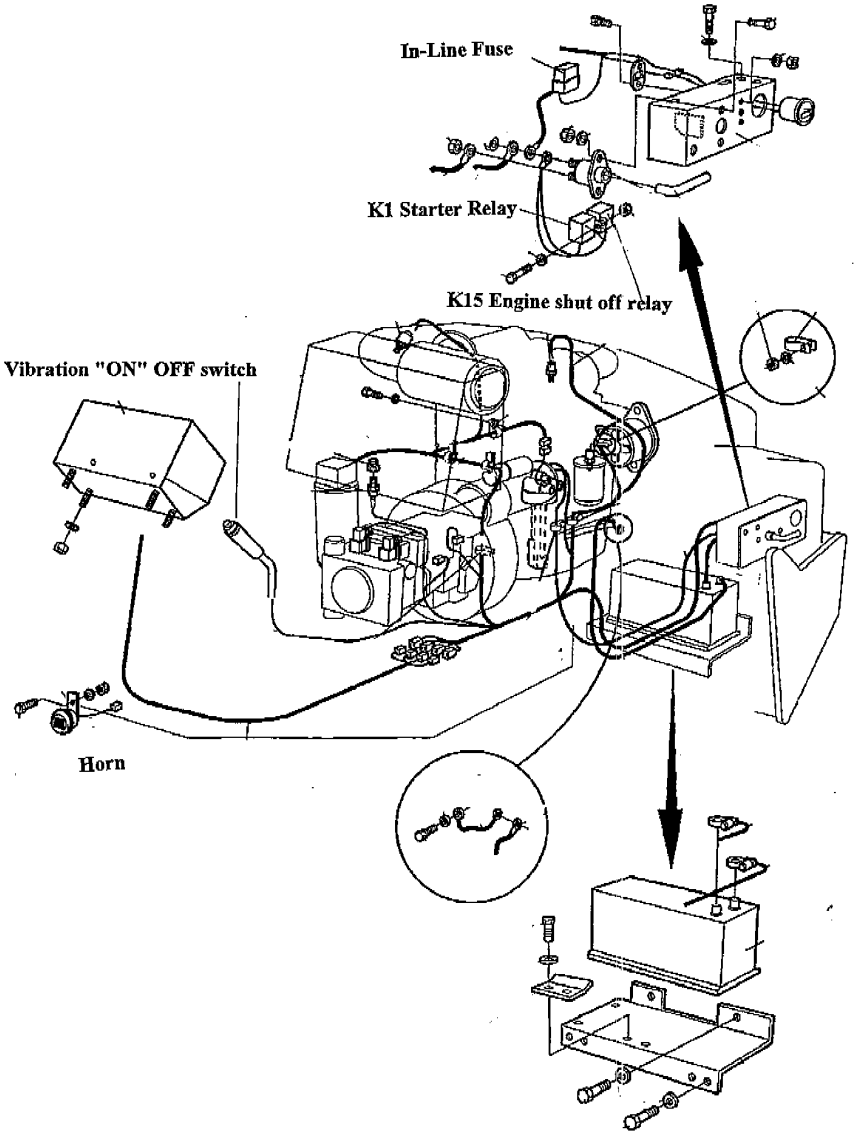

DYNAPAC

CC250 Electrical system S/N 65X20251 and up (Tier II engine)

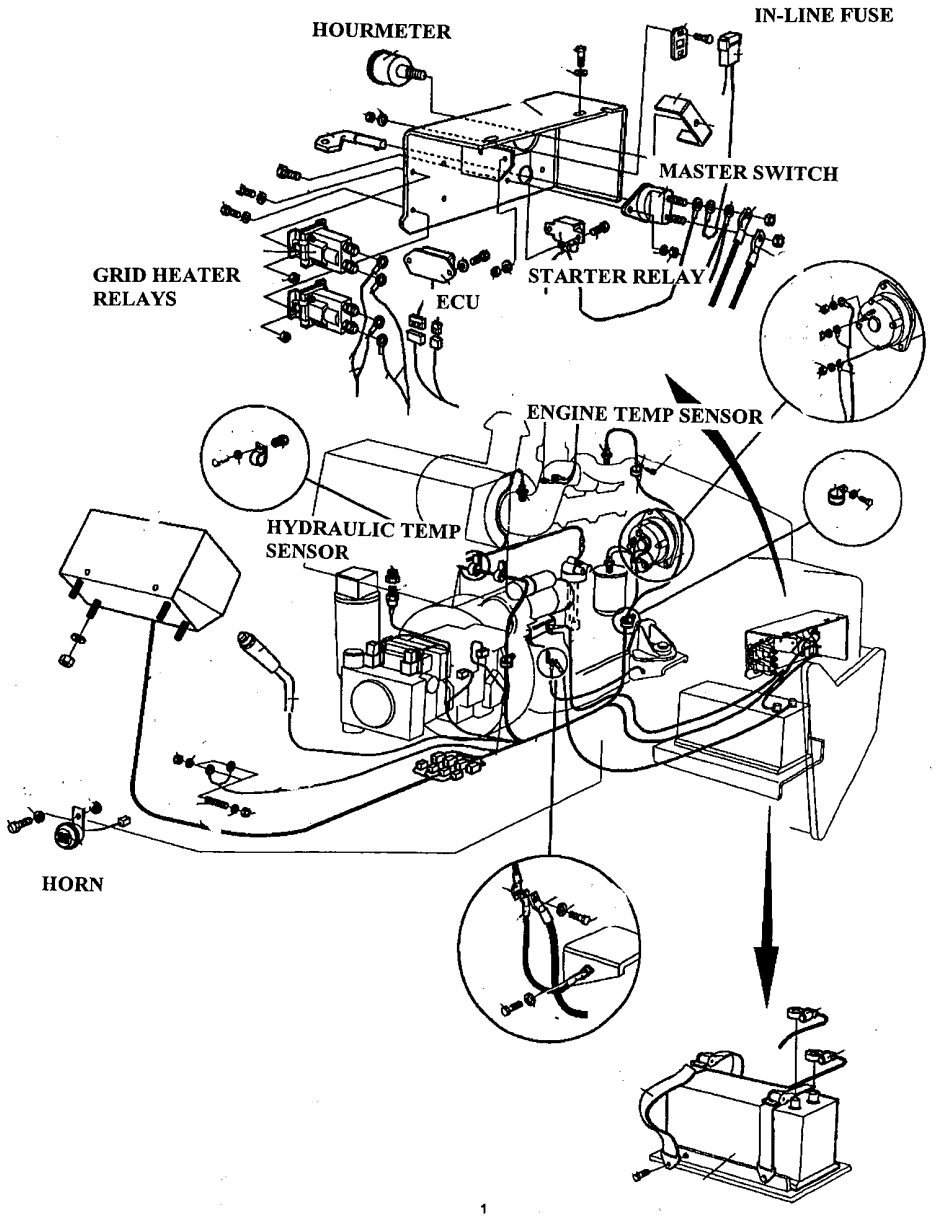

DYNAPAC

CA250 Instrument Panel

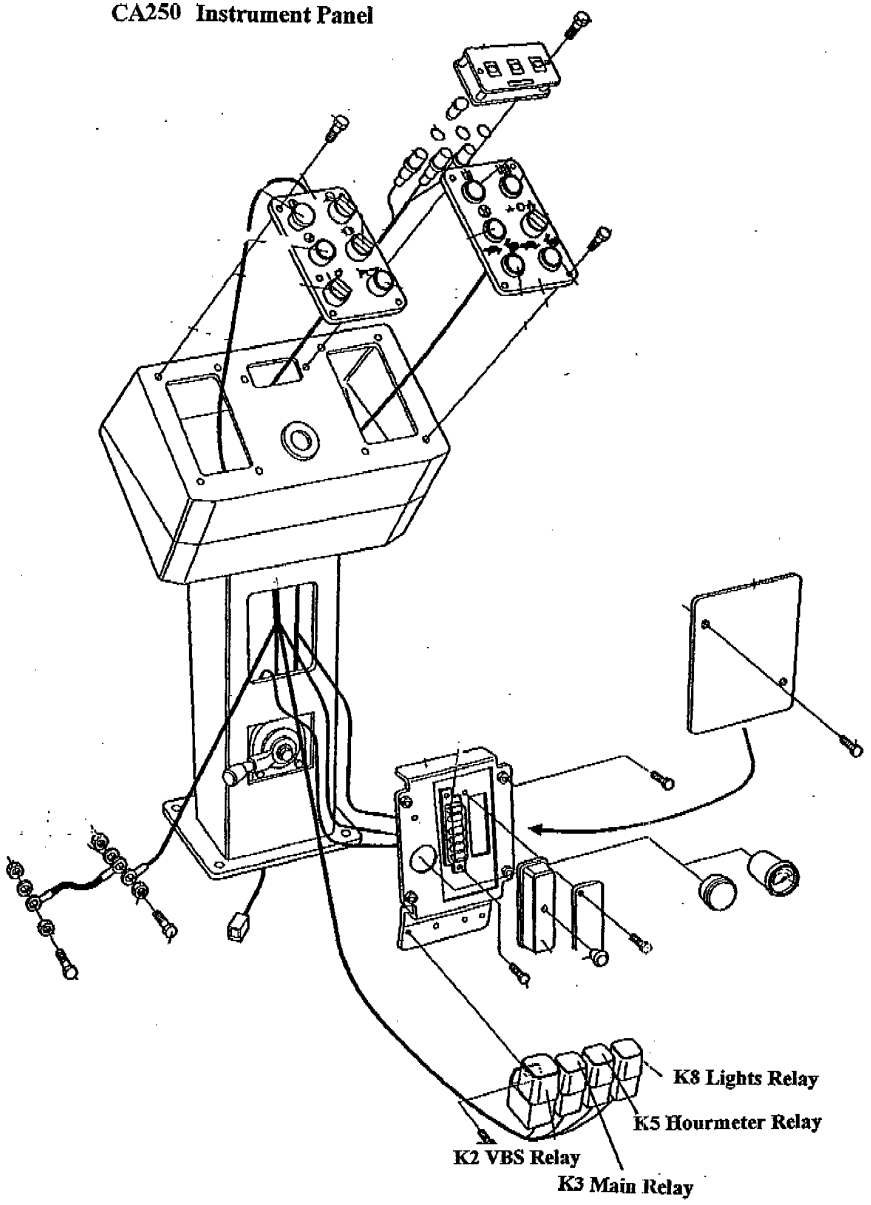

DYNAPAC

CA150/CA250 Fuses & Relays

Fuses

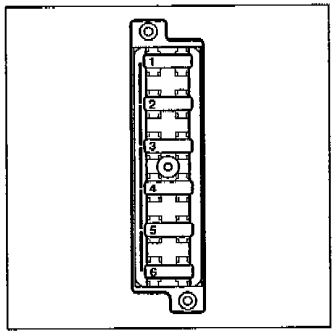

Fuse Box 1

7.5A	1-Hourmeter + Brake switch
7.5A	2-VBS relay
7.5A	3-Warning lights
7.5A	4-Horn
7.5A	5-Fuel Gauge
10A	6-Front wiper, cab

Fuse Box 2

7.5A	1-High speed
3A	2-Compaction meter
7.5A	3-Rotating Beacon
3A	4-B.U.Alarm
20A	5-Working lights
20A	6-Working lights

K1-Starter relay	904448
K2-VBS relay	382782
K3-Main relay	287598
K5-Hourmeter	287597
K8-Lights	287597

DYNAPAC

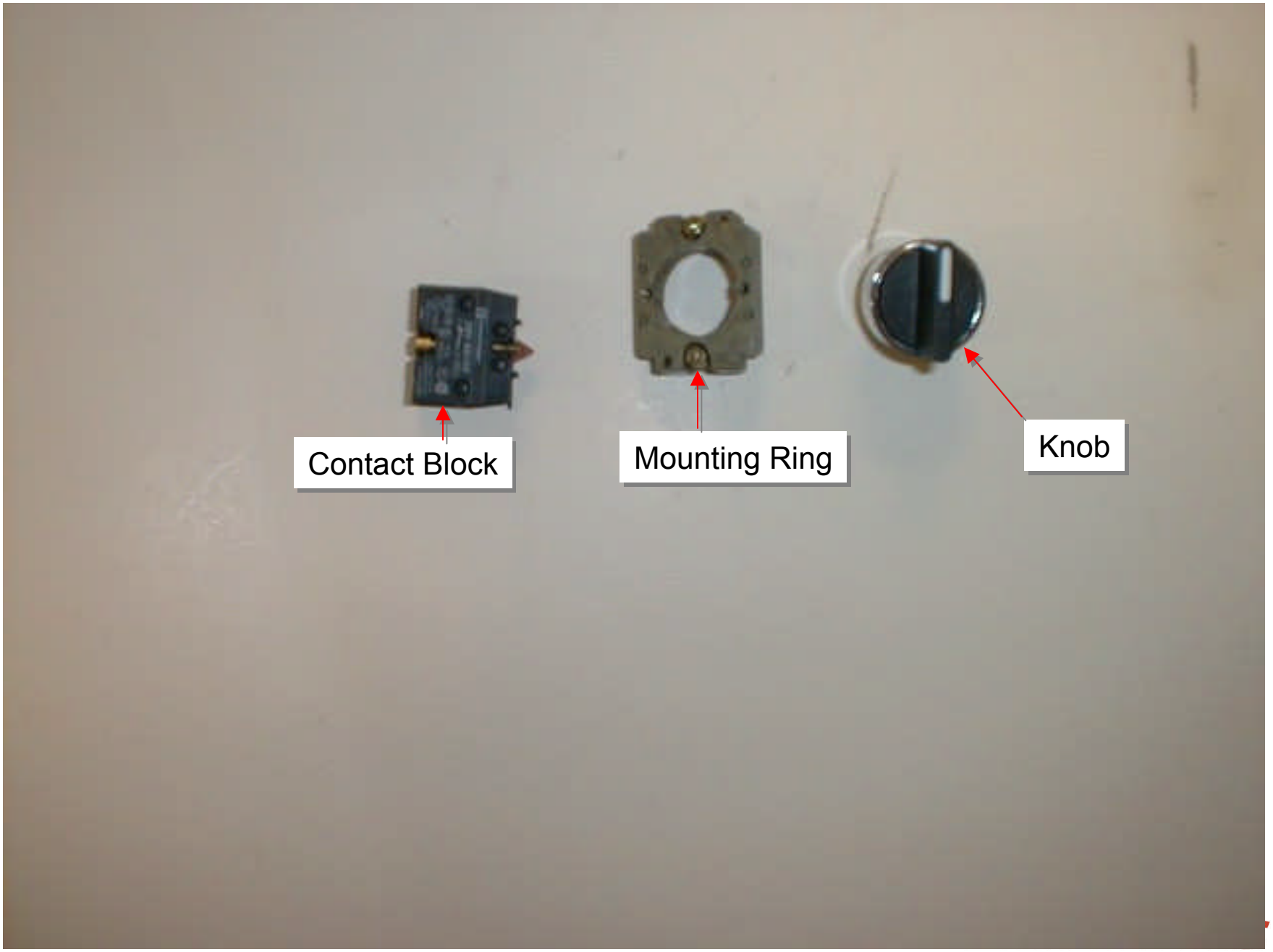
Contact Block
Mounting Ring
Knob

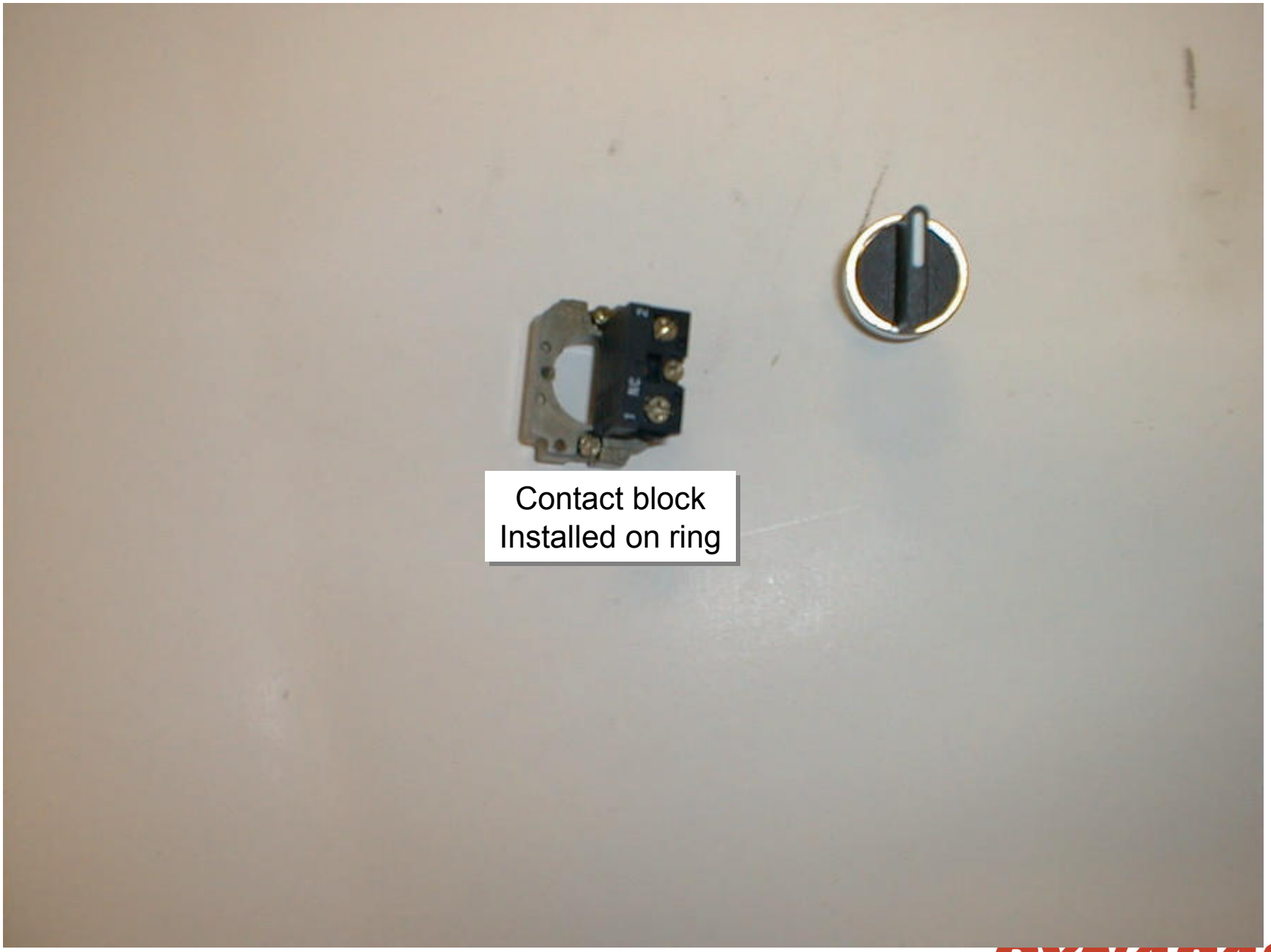

DYNAPAC



Knob locked into ring

DYNAPAC

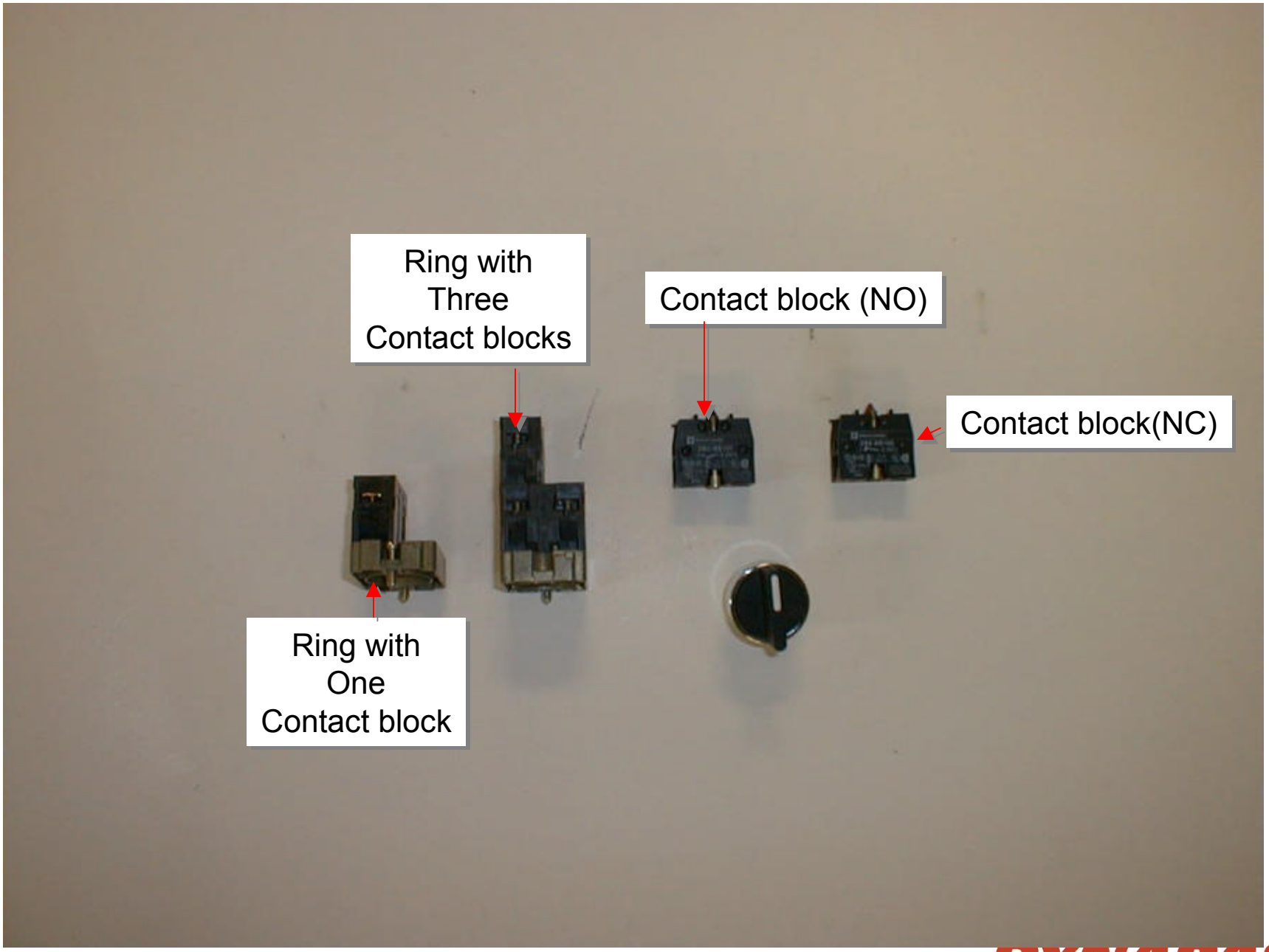
Ring with
Three
Contact blocks
Contact block (NO)
Contact block(NC)
Ring with
One
Contact block

DYNAPAC

Contact Blocks



Normally Closed (NC) 1-2
Contacts are closed when block not actuated. Red pin out.
Contacts are open when block is actuated. Red pin in.



Normally Open (NO) 3-4
Contacts are open when block is not actuated. Green pin out.
Contacts are closed when block is actuated. Green pin in.

DYNAPAC

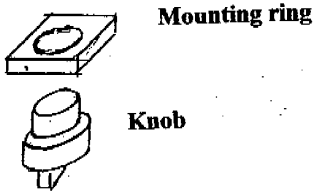

Figure 1

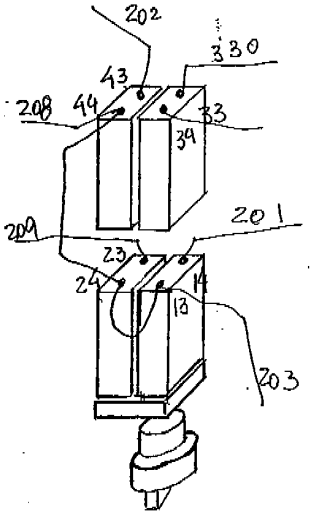

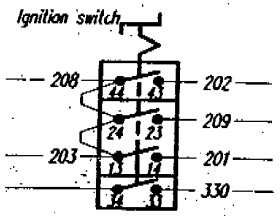

Figure 2

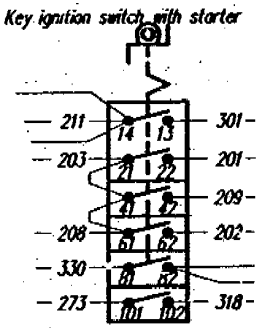

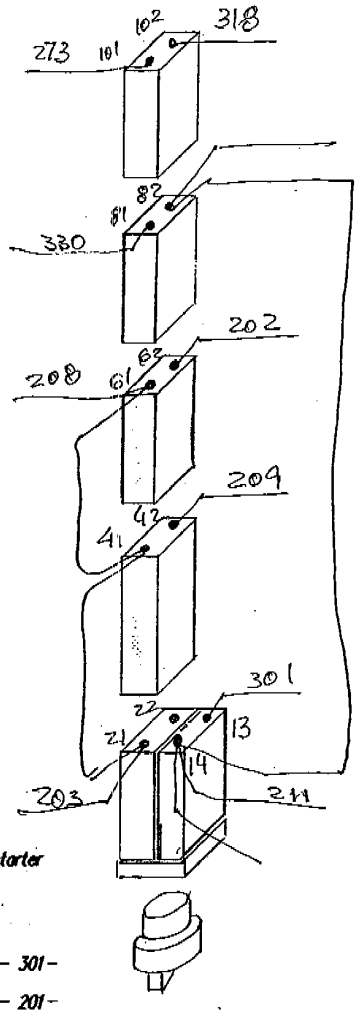

Figure 3

DYNAPAC

Electric Wires 1999 & Up

Group 1		**Lights**
Wire color:	**White**	
Numbers:	**101-199**	
Group 2		**Power wires**
Wire color:	**Red**	
Numbers:	**201-299**	
Group 3		**Engine functions**
Wire color:	**Violet**	
Numbers:	**301-399**	
Group 5		**Accessories(A/C, heater , etc)**
Wire color:	**Green**	
Numbers:	**501-599**	
Group 6-		**Warning devices**
Wire color:	**Yellow**	
Numbers:	**601-699**	
Group 7		**Control circuits**
Wire color:	**Blue**	
Numbers:	**701-799**	
Group 8		**Monitoring circuits**
Wire color:	**Brown**	
Numbers:	**801-899**	
Group 9		**Ground wires**
Color:	**Black**	
Numbers:	**901-999**	

DYNAPAC

Rev.970401

Rev.	Pls.	Change No.	Date	Issued by	Checked
G	34	02424	021007	TZ/GE	TZ/LW

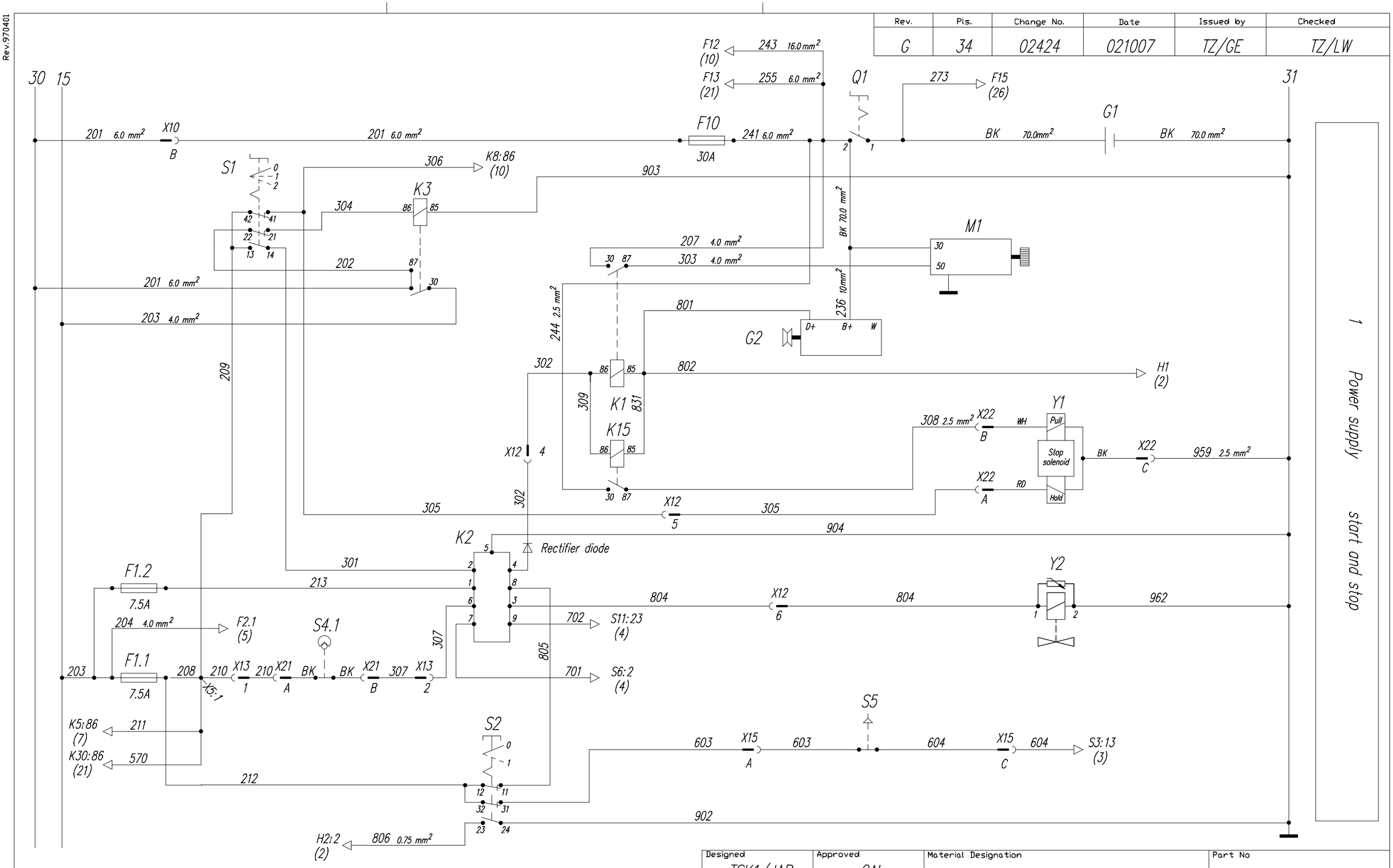

Wire area 1.5 mm² unless otherwise stated
Ledningsarea 1.5 mm² där annat ej anges

Designed: TSK1/JAB	Approved: CN	Material Designation:	Part No:
View: E	Date: 981014	Description: Electric diagram / Elschema	Model: CA 250
	Reg.: RE		Scale: – / Sheet of: 1(12)
DYNAPAC			Rev.: G / No.: 38 02 75

This document will remain the property of Dynapac Heavy Equipment AB and may not without the permission of the said company be copied, communicated to any third part or used for manufacturing purposes.

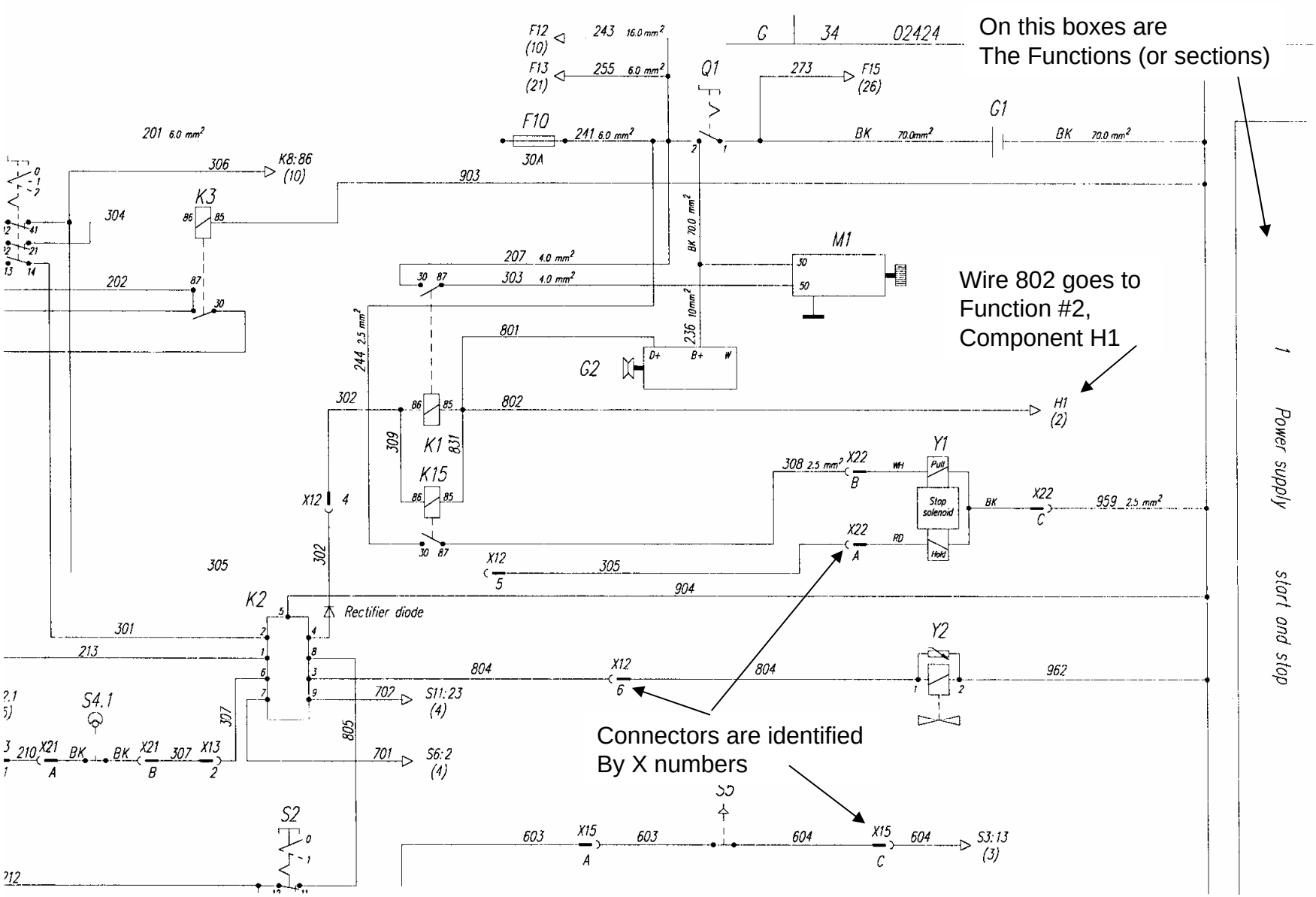
On this boxes are
The Functions (or sections)
Wire 802 goes to
Function #2,
Component H1
Connectors are identified
By X numbers
1 Power supply start and stop
F12 (10)
F13 (21)
F10
30A
Q1
F15 (26)
G1
K3
K8:86 (10)
M1
G2
H1 (2)
K1
K15
K2
Rectifier diode
Y1
Pull
Stop solenoid
Hold
Y2
S4.1
S2
S11:23 (4)
S6:2 (4)
S3:13 (3)
X12
X21
X22
X13
X15

Wire #30 receives power from the Master switch

Wire #15 receives power from the main relay K3,
After Ignition is turned “ON”

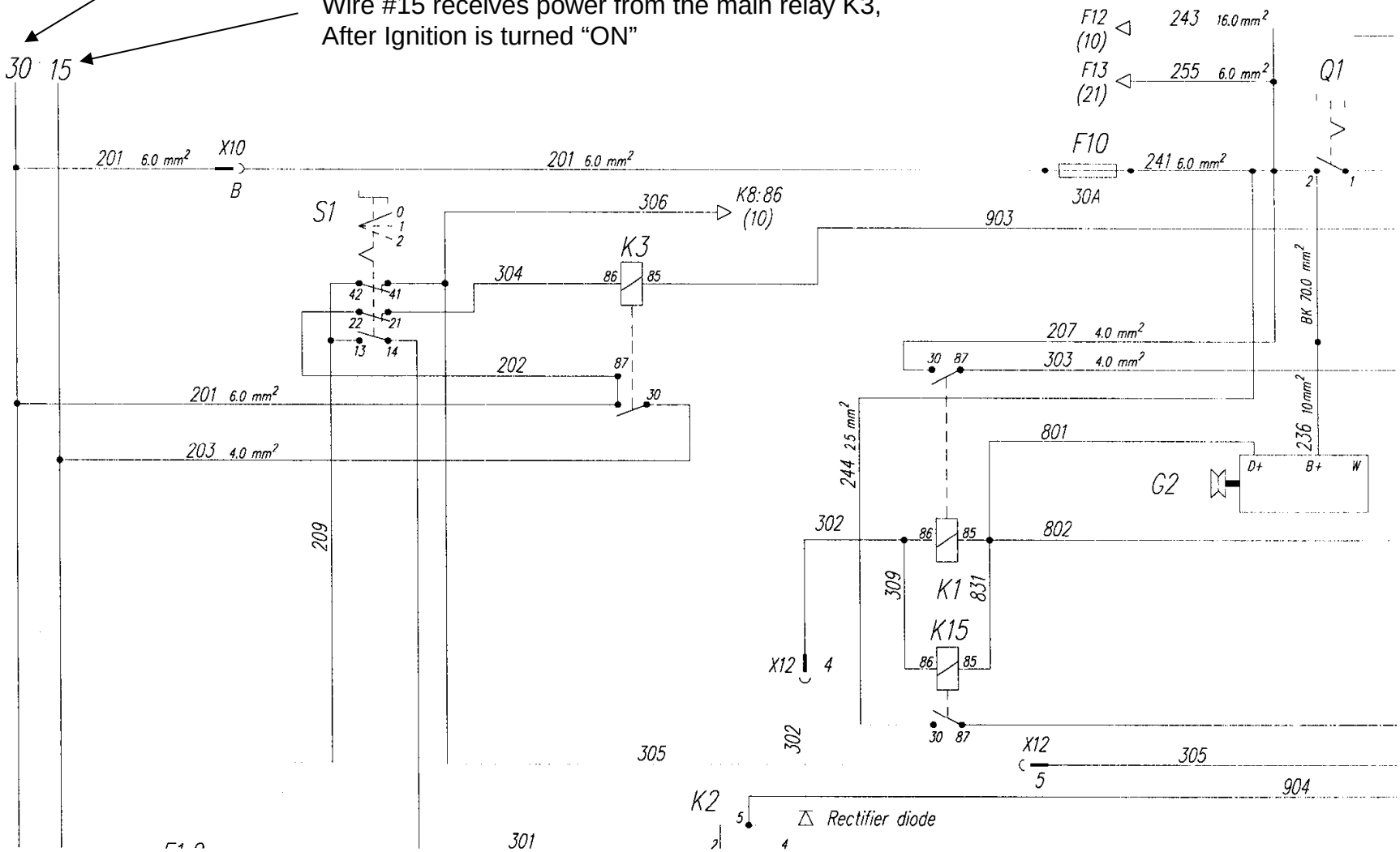

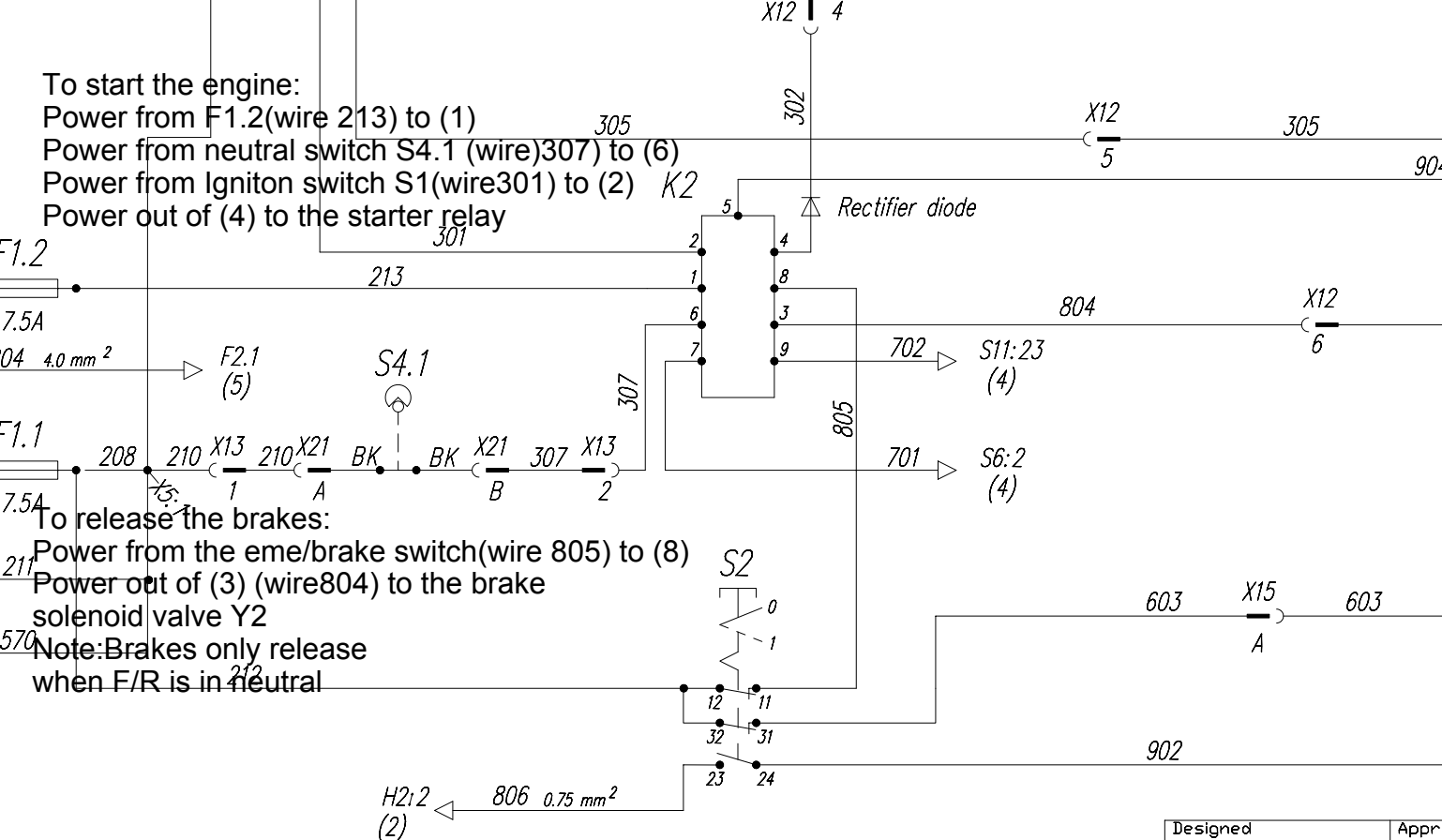
To start the engine:
Power from F1.2(wire 213) to (1)
Power from neutral switch S4.1 (wire)307) to (6)
Power from Igniton switch S1(wire301) to (2)
Power out of (4) to the starter relay
To release the brakes:
Power from the eme/brake switch(wire 805) to (8)
Power out of (3) (wire804) to the brake solenoid valve Y2
Note:Brakes only release when F/R is in neutral
X12 4
302
305
X12 5
305
K2
Rectifier diode
301
213
F1.2
7.5A
804 4.0 mm²
F2.1 (5)
S4.1
307
805
804
X12 6
702
S11:23 (4)
701
S6:2 (4)
F1.1
208
210
X13 1
210
X21 A
BK
BK
X21 B
307
X13 2
7.5A
211
570
212
S2
603
X15 A
603
902
H2 12
806 0.75 mm²
(2)
Designed
Appr

Rev.	Pls.	Change No.	Date	Issued by

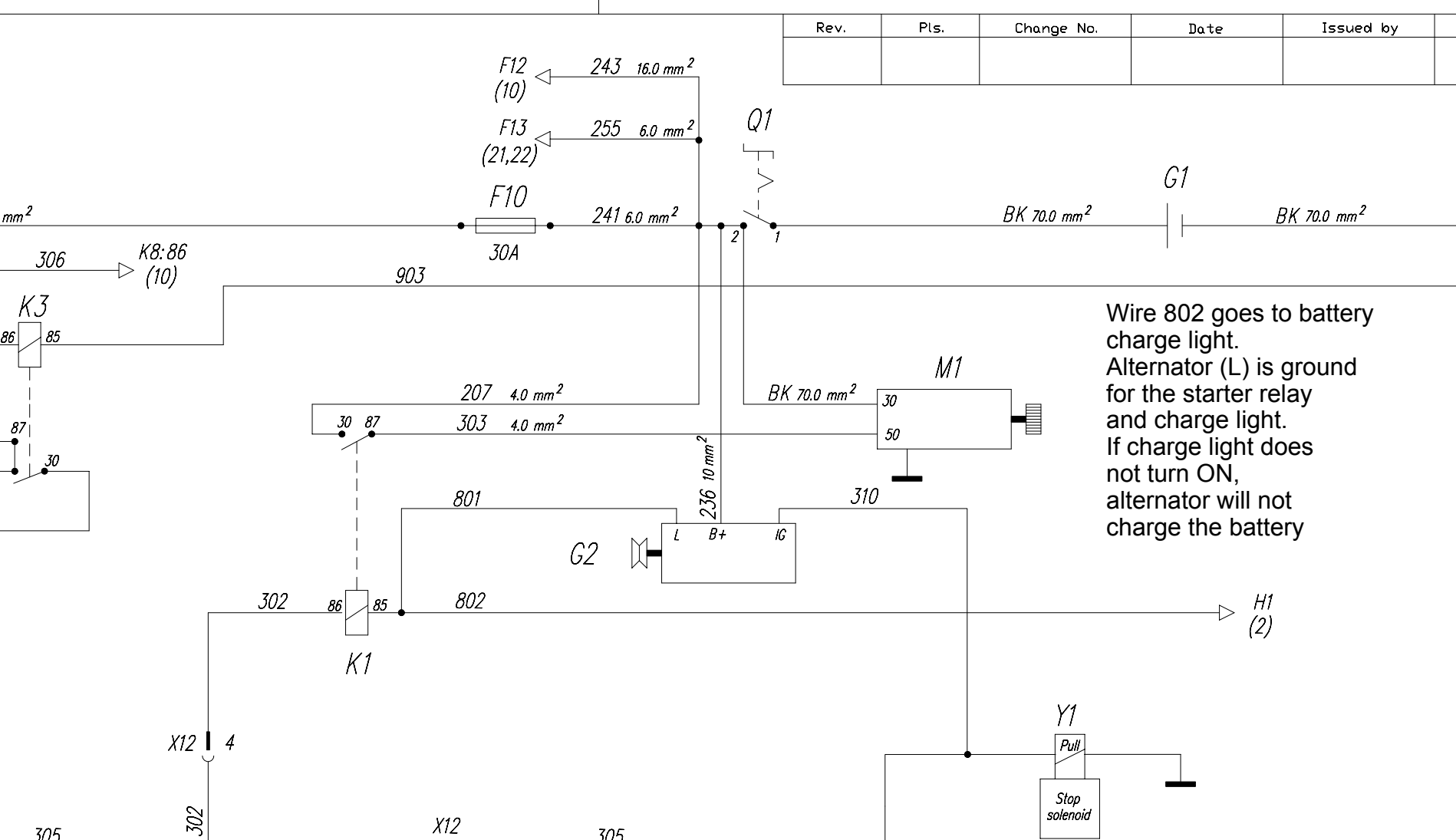

Wire 802 goes to battery charge light.
Alternator (L) is ground for the starter relay and charge light.
If charge light does not turn ON, alternator will not charge the battery

Rev.970401

Rev.	Pls.	Change No.	Date	Issued by	Checked

30 15

31

F1.3
7.5A

215 0.75 mm²

H1 1 2

802 0.75 mm²

X12
1

802 0.75 mm² K1:85 (1)

216 0.75 mm²

H2 1 2

806 0.75 mm² S2:23 (1)

217 0.75 mm²

H3 1 2

808 0.75 mm² X12 7 808 0.75 mm² B2 θ

813 0.75 mm² K5:87 (7)

218 0.75 mm²

H5 X1 X2

812 0.75 mm² X13 9 812 0.75 mm² B5 P

H4 X1 X2

807 0.75 mm² X13 7 807 0.75 mm² B1 θ

H6 X1 X2

811 0.75 mm² X13 8 811 0.75 mm² B4 P 1 2 913 0.75 mm²

834 0.75 mm²
832 0.75 mm²
833 0.75 mm²

S25
13 14
24 23
44 43

G

976 0.75 mm²

2 Warning lamps
Charge
Brake
Engine oil pressure and water temp.
Hydr oil filter pressure
Hydr oil temperature
Air filter
Warn. lamp test

Wire area 1.5 mm² unless otherwise stated
Ledningsarea 1.5 mm² där annat ej anges

Designed TSK1/JAB	Approved CN	Material Designation	Part No
View E	Date 981014	Description Electric diagram	Model CA 250
	Reg. RE		Scale – / Sheet of 2(12)
DYNAPAC		Elschema	Rev. G / No. 38 02 75

This document will remain the property of Dynapac Heavy Equipment AB and may not without the permission of the said company be copied, communicated to any third part or used for manufacturing purposes.

Rev.	Pls.	Change No.	Date	Issued by	Checked

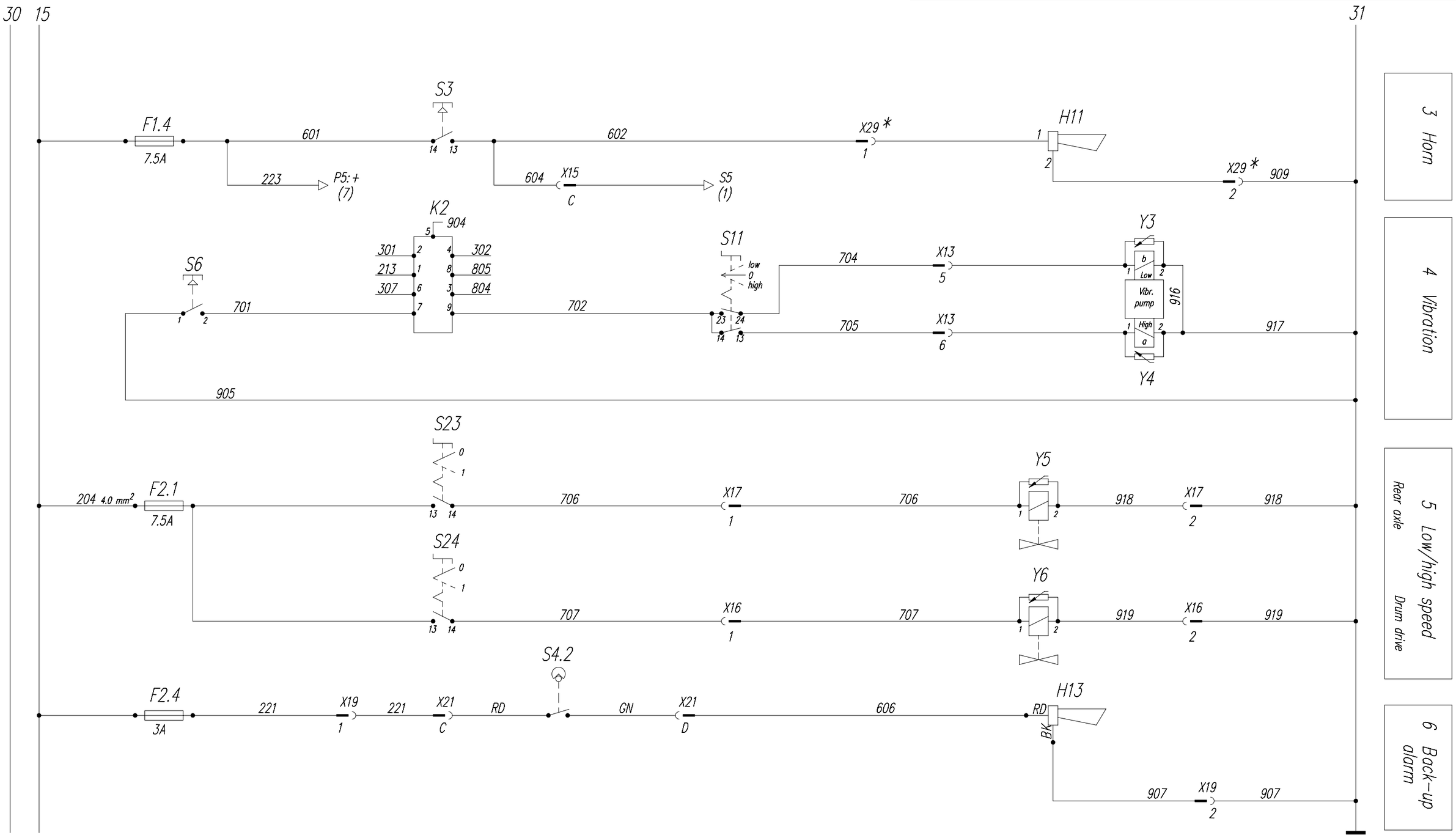

*Exists only if cab is mounted
Finns bara när hytt är monterad

Wire area 1.5 mm² unless otherwise stated
Ledningsarea 1.5 mm² där annat ej anges

Designed	Approved	Material Designation	Part No
TSK1/JAB	CN		
View	Date 981014	Description: Electric diagram	Model: CA 250
	Reg. RE		Scale: – / Sheet of: 3(12)
DYNAPAC		Elschema	Rev.: G / No.: 38 02 75

This document will remain the property of Dynapac Heavy Equipment AB and may not without the permission of the said company be copied, communicated to any third part or used for manufacturing purposes.

Rev.970401

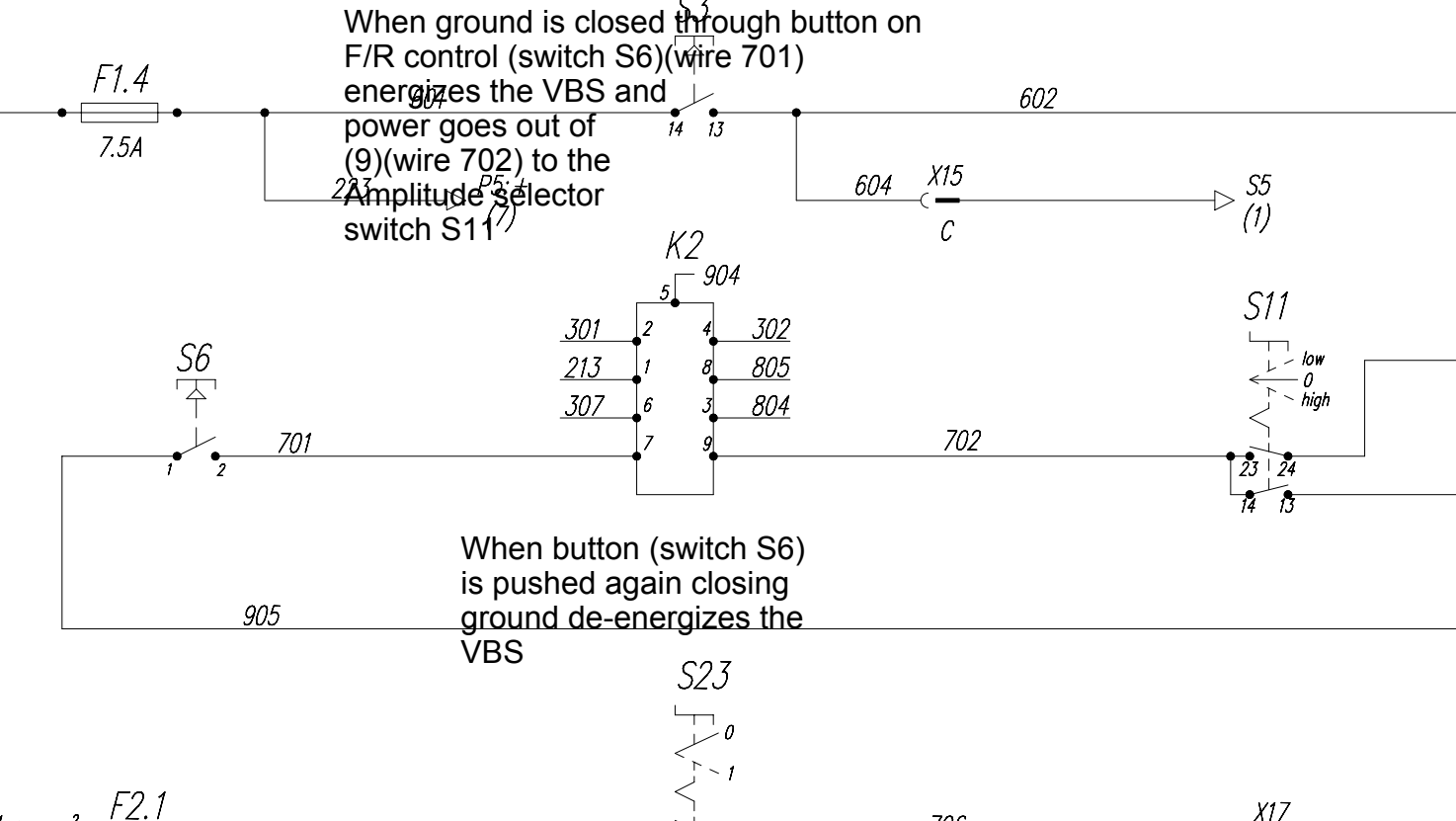
When ground is closed through button on F/R control (switch S6)(wire 701) energizes the VBS and power goes out of (9)(wire 702) to the Amplitude selector switch S11
F1.4
7.5A
904
14
13
602
604
X15
C
S5
(1)
K2
904
5
301
2
4
302
213
1
8
805
307
6
3
804
7
9
S6
1
2
701
702
S11
low
0
high
23
24
14
13
905
When button (switch S6) is pushed again closing ground de-energizes the VBS
S23
0
1
F2.1
X17

Rev.	Pls.	Change No.	Date	Issued by	Checked

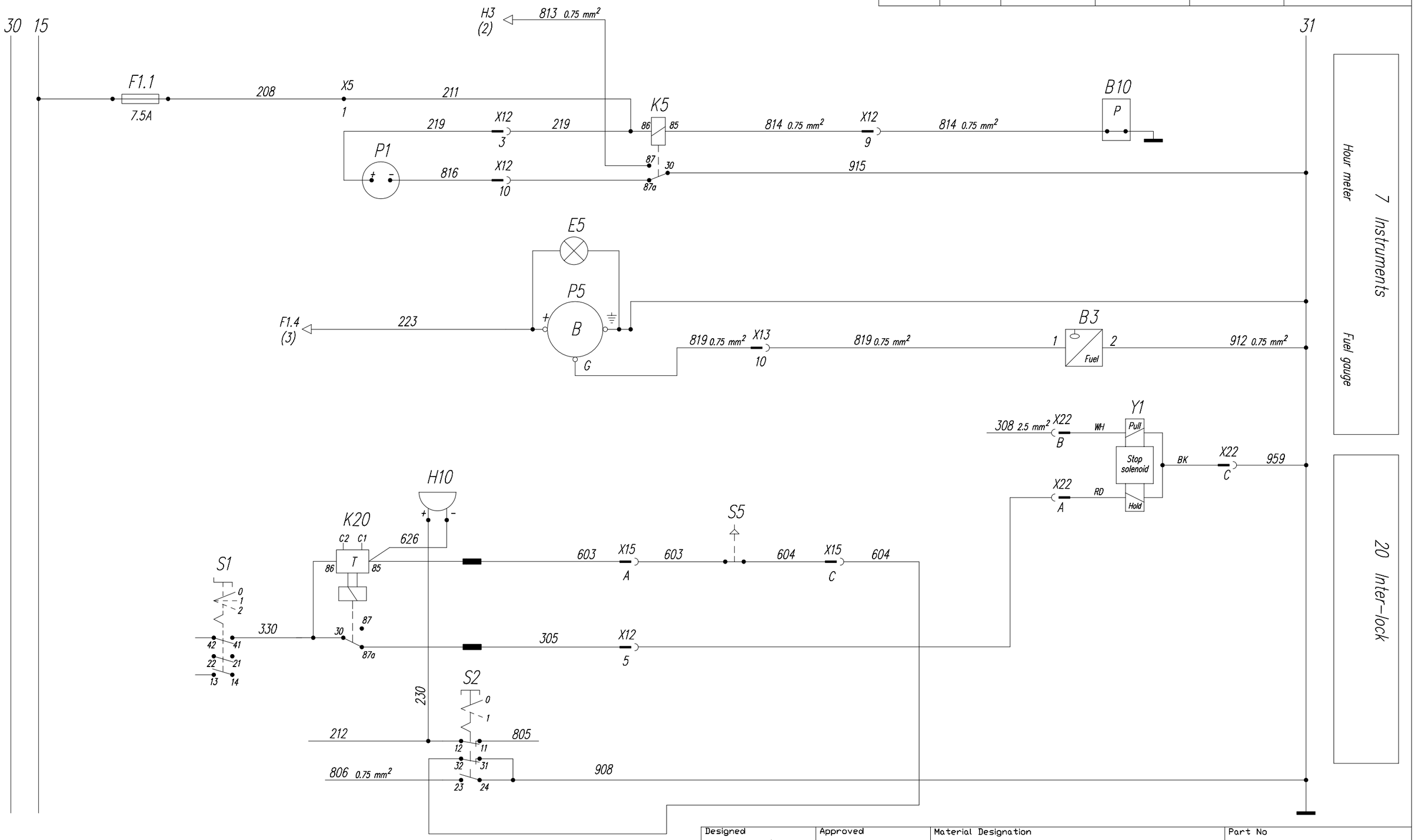

Wire area 1.5 mm² unless otherwise stated
Ledningsarea 1.5 mm² där annat ej anges

Designed	Approved	Material Designation	Part No
TSK1/JAB	CN		
View	Date 981014	Description: Electric diagram	Model CA 250
	Reg. RE		Scale – / Sheet of 4(12)
DYNAPAC		Elschema	Rev. G / No. 38 02 75

This document will remain the property of Dynapac Heavy Equipment AB and may not without the permission of the said company be copied, communicated to any third part or used for manufacturing purposes.

Rev.970401

Seat Switch (S5)
Operator seating-Switch closed
Operator not seating-switch open

Buzzer

Interlock relay (K20)
Delay of 7 seconds

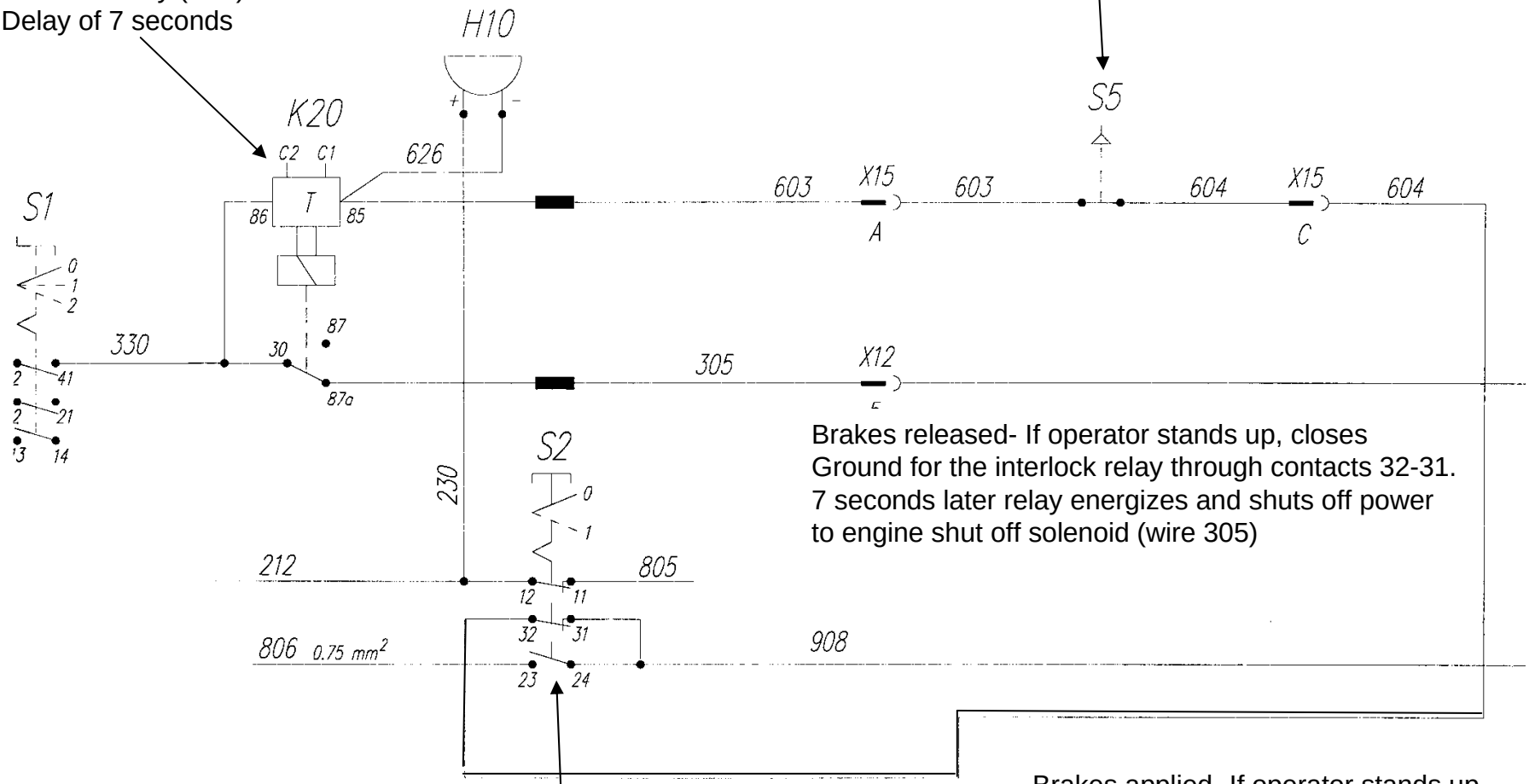

Brakes released- If operator stands up, closes
Ground for the interlock relay through contacts 32-31.
7 seconds later relay energizes and shuts off power
to engine shut off solenoid (wire 305)

Brake switch (S2)
Brakes released- contacts 32-31 –closed
Brakes applied-contacts 32-31-open

Brakes applied- If operator stands up,
There is no ground for the interlock
Relay, because contacts 32-31 are open

Rev.	Pls.	Change No.	Date

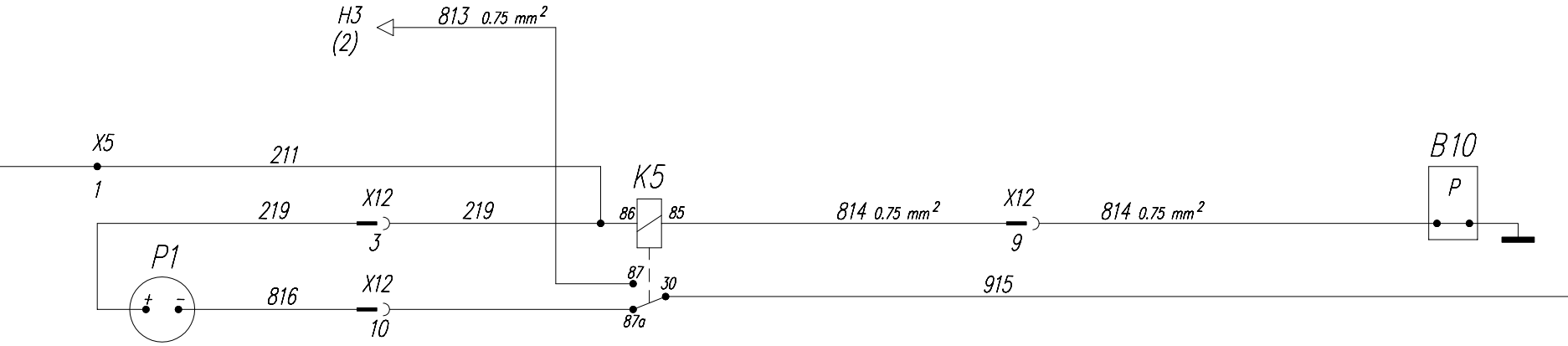

When engine is not running there is no engine oil pressure and oil pressure sensor is closed, energizing the hourmeter relay K5. Terminal 30 close to 87 establishing ground for the low oil pressure light. After engine starts, oil pressure sensor opens and de-energizes relay K5. 30 connects to 87a establishing ground for the hourmeter

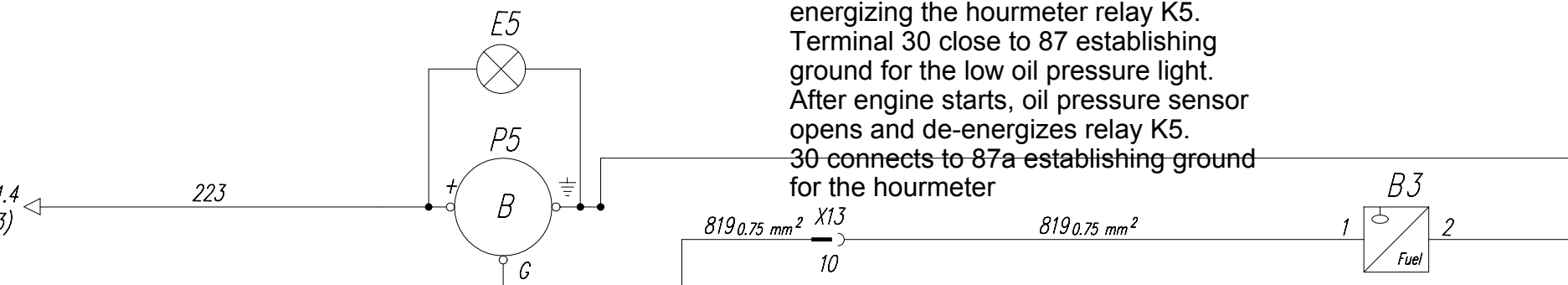

Rev.970401

Rev.	Pls.	Change No.	Date	Issued by	Checked

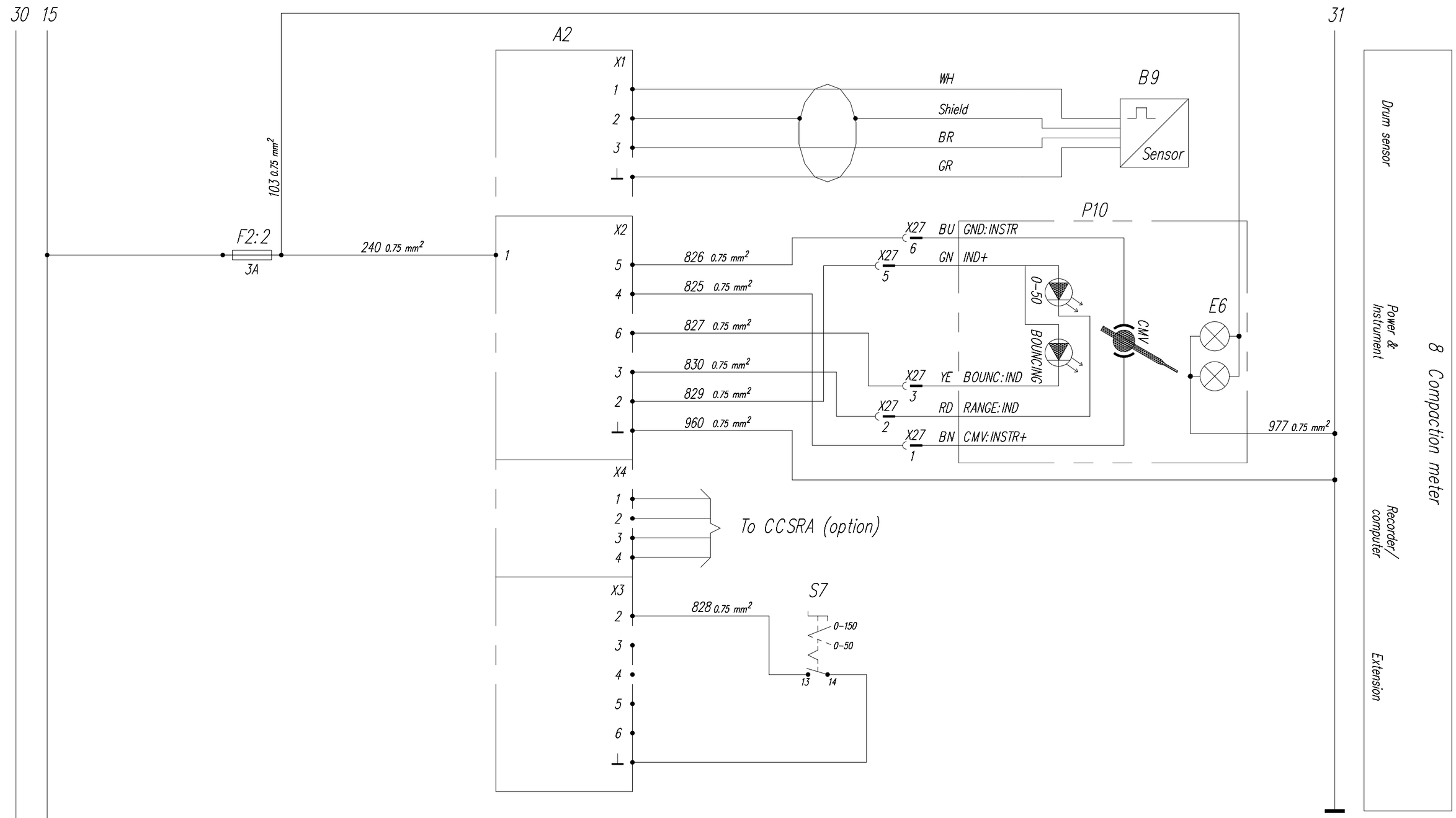

This document will remain the property of Dynapac Heavy Equipment AB and may not without the permission of the said company be copied, communicated to any third part or used for manufacturing purposes.

Wire area 1.5 mm² unless otherwise stated
Ledningsarea 1.5 mm² där annat ej anges

Designed: TSK1/JAB	Approved: CN	Material Designation:	Part No:
View: E	Date: 981014	Description: Electric diagram / Elschema	Model: CA 250
	Reg.: RE		Scale: – / Sheet of: 5(12)
DYNAPAC			Rev.: G / No.: 38 02 75

Rev.970401

Rev.	Pls.	Change No.	Date	Issued by	Checked

30 15

K8

S1:41 (1) 306 86 85 928 31

243 16.0mm² F12 40A 205 6.0 mm² X40 A 205 6.0 mm² 30 87 87a

929 0.75 mm²

S22 X1 0 1 X2 H22

226 6.0 mm² F2.5 20A 227 4.0 mm² 13 14

110 2.5 mm² X41 1 110 E1 1 2 2.5 mm² 931

112 2.5 mm² X41 2 112 E2 1 2 930 2.5 mm²

F2.6 20A 228 4.0 mm² 24 23

111 2.5 mm² X41 3 111 E3 1 2 2.5 mm² 933

113 2.5 mm² X41 4 113 E4 1 2 932 2.5 mm²

X41 1 110 E1 1 2 2.5 mm² 931

X41 2 112 E2 1 2 930 2.5 mm²

X41 3 111 E3 1 2 933 2.5 mm² 932

X41 4 113 E4 1 2 2.5 mm²

S18 0 1 X1 X2 H21

926 0.75 mm²

F2.3 7.5A 229 2.5 mm² 13 14 610 2.5 mm² X32 1 610 2.5 mm²

H14 1 M 2

927 2.5 mm² X32 2 927 2.5 mm²

Q1:2 (1) 255 6.0 mm² F13 20A 254 4.0 mm² X60 A 254 4.0 mm² 30 87a 87 571 4.0 mm²

S38 4 3 2

584 4.0 mm² 583 4.0 mm² 582 4.0 mm²

M2 M 974 4.0 mm² X60 B 974 4.0 mm²

X5:1(F1.1) (1) 570 X61 2 570 86 85 979

M3

575 2 RD 53 M 31 BK 975 2.5 mm² X59 2 975 2.5 mm²

S34 6 8 2 7 1 5 0 1

576 3 GN 31B

278 1 YE 53A

F1.6 10A 278 2.5 mm² X59 1 278 2.5 mm²

Wire area 1.5 mm unless otherwise stated
Ledningsarea 1.5 mm där annat ej anges

10 Working lights
ROPS and cab: L front, L rear, R front, R rear
Machine without ROPS and cab: L front, L rear, R front, R rear

11 Rotating beacon

21 Simple cab
Blower
Wiper front

Designed: TSK1/JAB	Approved: CN	Material Designation	Part No
View: E	Date: 981014	Description: Electric diagram / Elschema	Model: CA 250
	Reg.: RE		Scale: – / Sheet of: 6(12)
DYNAPAC			Rev.: G / No.: 38 02 75

This document will remain the property of Dynapac Heavy Equipment AB and may not without the permission of the said company be copied, communicated to any third part or used for manufacturing purposes.

Rev.	Pls.	Change No.	Date	Issued by	Checked

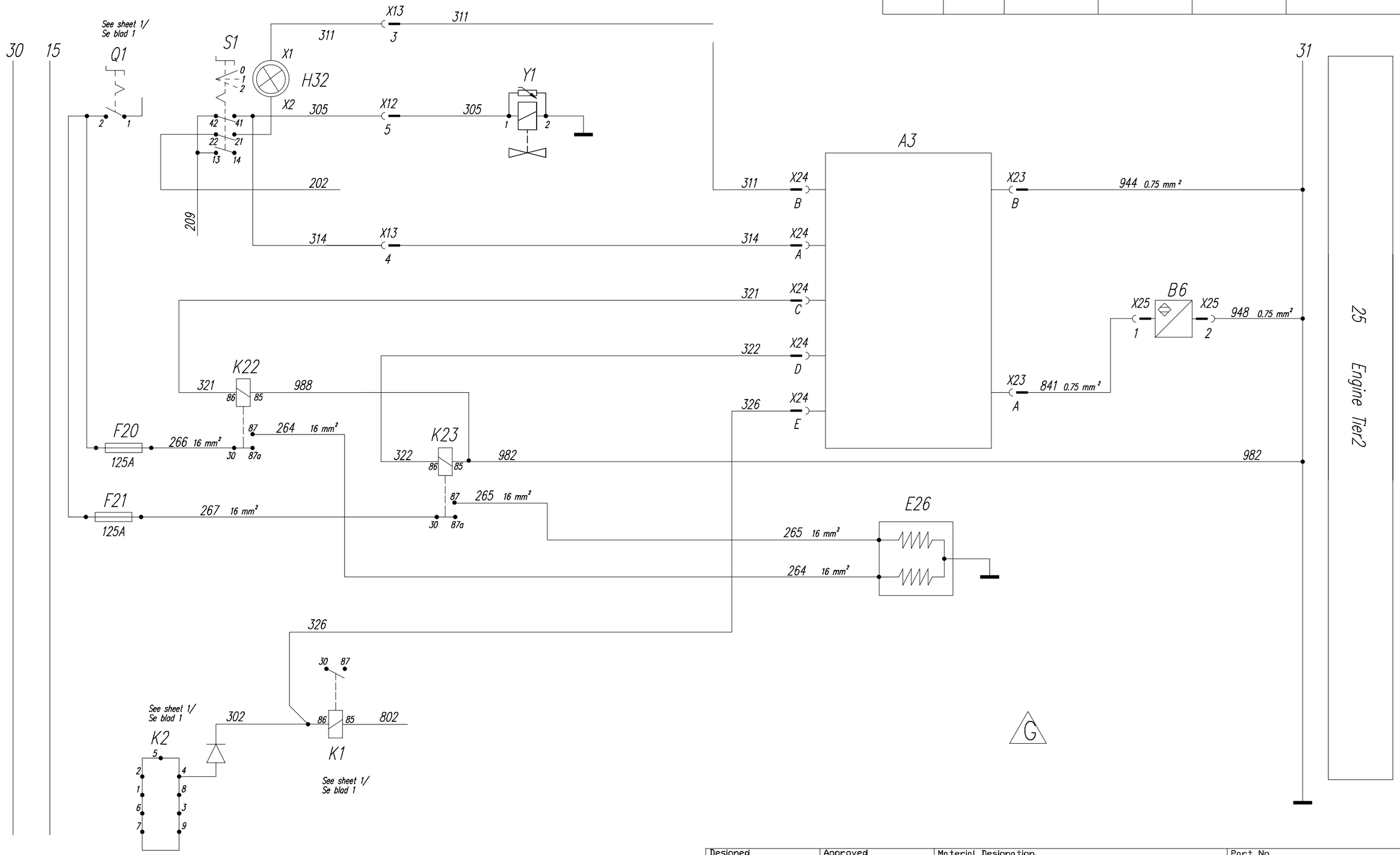

Wire area 1.5 mm² unless otherwise stated
Ledningsarea 1.5 mm² där annat ej anges

Designed: TZ/GE	Approved: TZ/LW	Material Designation	Part No
View: E	Date: 020702	Description: Circuit diagram / Kretsschema	Model: CA250
	Reg.		Scale / Sheet of: 7(12)
DYNAPAC			Rev.: G / No.: 380275

This document will remain the property of Dynapac Heavy Equipment AB and may not without the permission of the said company be copied, communicated to any third port or used for manufacturing purposes.

Rev.	Pls.	Change No.	Date	Issued by	Checked

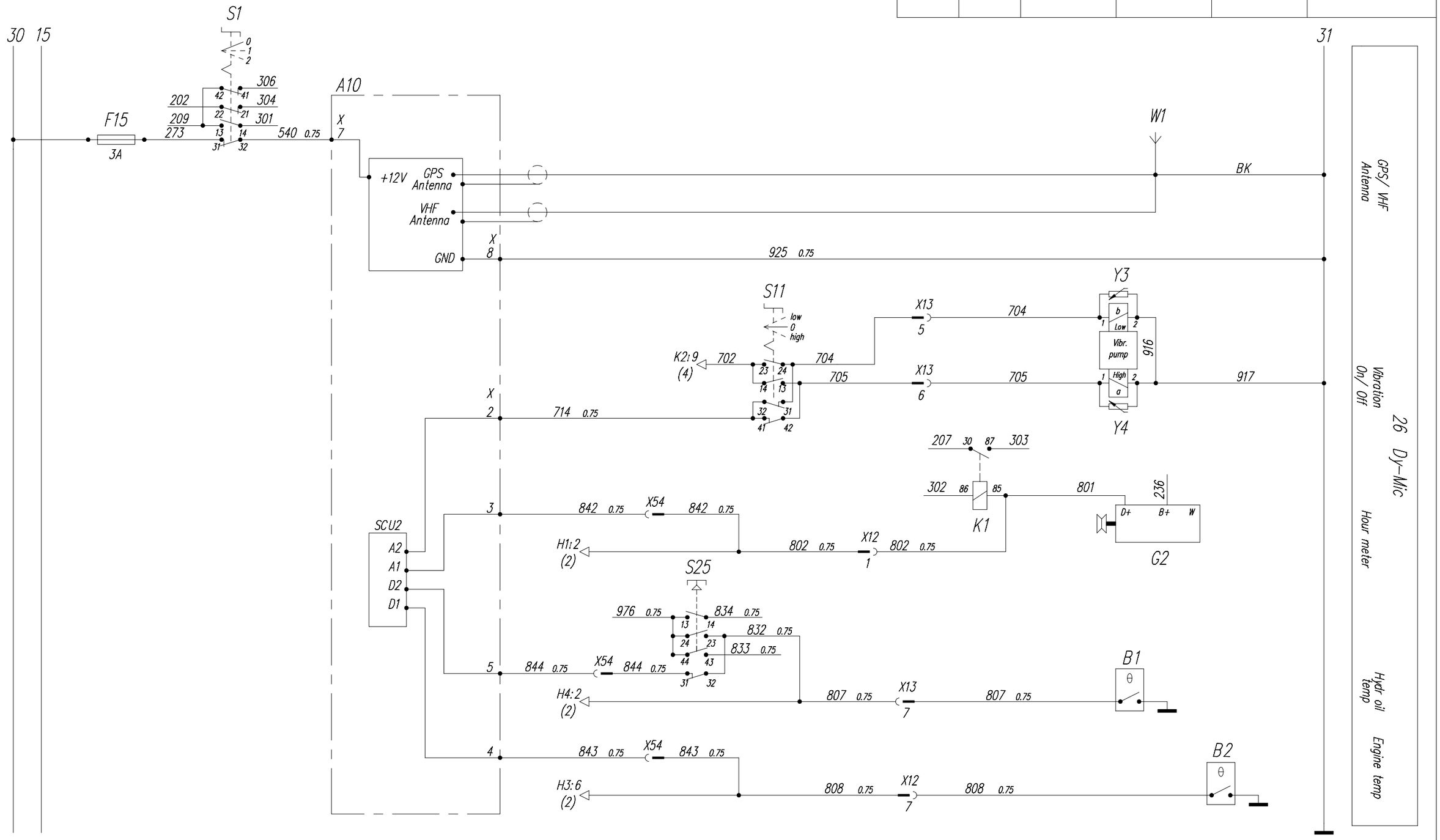

This document will remain the property of Dynapac Heavy Equipment AB and may not without the permission of the said company be copied, communicated to any third part or used for manufacturing purposes.

G

Wire area 1.5 mm² unless otherwise stated
Ledningsarea 1.5 mm² där annat ej anges

Designed: TZ/MK	Approved: TZ/LW	Material Designation	Part No
View: E	Date: 021119	Description: Electric diagram / Elschema	Model: CA 250
	Reg.		Scale / Sheet of: 8(12)
DYNAPAC			Rev.: G / No.: 38 02 75

Rev.970401

Rev.	Pls.	Change No.	Date	Issued by	Checked

	No.	Description	Section	Rated current	Note
	A2	Compaction meter processor unit	8		Option
G	A3	Electronic unit gridheater	25		
G	A10	Data communicator	26		Option
	B1	Hydraulic oil temperature sensor	2,26		
	B2	Engine temperature sensor	2,26		
	B3	Fuel level sensor	7		
	B4	Air filter sensor	2		
	B5	Hydraulic oil pressure filter sensor	2		
G	B6	Tempsensor gridheater	25		
	B9	Compaction meter sensor	8		Option
	B10	Engine oil pressure sensor	7		
	E1	L front working light	10		Option
	E2	L rear working light	10		Option
	E3	R front working light	10		Option
	E4	R rear working light	10		Option
	E5	Instrument light, fuel gauge	7		
	E6	Instrument light, compaction meter indicating instrument	8		Option
G	E26	Gridheater	25		
	F1.1	Hour meter	1,7	7,5A	
	F1.2	VBS relay	1	7,5A	
	F1.3	Warning lamps	2	7,5A	
	F1.4	Horn. Fuel gauge	3,7	7,5A	
	F1.5				
	F1.6	Wiper motor, front	21	10A	Option
	F2.1	High/Low speed	5	7,5A	Option
	F2.2	Compaction meter	8	3A	Option
	F2.3	Rotating beacon	11	7,5A	Option
	F2.4	Back-up alarm	6	3A	Option
	F2.5	Working light, left	10	20A	Option
	F2.6	Working light, right	10	20A	Option
	F10	Mainfuse, power supply	1	30A	
	F12	Mainfuse, power supply lights	10	40A	Option
	F13	Mainfuse, blower	21	20A	Option
G	F15	Data communicator	26	3A	Option
G	F20	Gridheater	25	125A	
G	F21	Gridheater	25	125A	

	No.	Description	Section	Rated current	Note
	G1	Battery	1		
	G2	Alternator	1,26		
	H1	Charge warning lamp	2		
	H2	Brake indicator lamp	2		
	H3	Engine oil press./temp. warning lamp	2		
	H4	Hydraulic oil temperature warning lamp	2		
	H5	Hydraulic oil filter warning lamp	2		
	H6	Air filter warning lamp	2		
	H11	Horn	3		
	H13	Back-up alarm	6		Option
	H14	Rotating beacon	11		Option
	H21	Indicator lamp, rotating beacon	11		Option
	H22	Indicator lamp, working lights	10		Option
G	H32	Wait for start lamp.	25		
	K1	Starter relay	1,25,26		
	K2	VBS relay	1,4,25		
	K3	Main relay	1		
	K5	Hour meter relay	7		Option
	K8	Light relay	10		
	K15	Fuel shut-off relay	1		Option
G	K22	Gridheater relay	25		
G	K23	Gridheater relay	25		
	K30	Blower relay	21		Option
	M1	Starter motor	1		
	M2	Blower motor	21		
	M3	Wiper motor, front	21		
	P1	Hour meter	7		
	P5	Fuel gauge	7		Option
	P10	Comp. meter indicating instrument	8		
	Q1	Battery switch	1,25		Option

This document will remain the property of Dynapac Heavy Equipment AB and may not without the permission of the said company be copied, communicated to any third part or used for manufacturing purposes.

Designed TSK1/JAB	Approved CN	Material Designation	Part No
View E	Date 981014	Description Electric diagram Item designation Elschema Postbeteckning	Model CA 250
	Reg. RE		Scale – / Sheet of 9(12)
DYNAPAC			Rev. G / No. 38 02 75

Rev.970401

Rev.	Pls.	Change No.	Date	Issued by	Checked

	No.	Description	Section	Rated current	Note
	A2	Compaction meter processor unit	8		Option
G	A3	Electronic unit gridheater	25		
G	A10	Data communicator	26		Option
	B1	Hydraulic oil temperature sensor	2,26		
	B2	Engine temperature sensor	2,26		
	B3	Fuel level sensor	7		
	B4	Air filter sensor	2		
	B5	Hydraulic oil pressure filter sensor	2		
G	B6	Tempsensor gridheater	25		
	B9	Compaction meter sensor	8		Option
	B10	Engine oil pressure sensor	7		
	E1	L front working light	10		Option
	E2	L rear working light	10		Option
	E3	R front working light	10		Option
	E4	R rear working light	10		Option
	E5	Instrument light, fuel gauge	7		
	E6	Instrument light, compaction meter indicating instrument	8		Option
G	E26	Gridheater	25		
	F1.1	Hour meter	1,7	7,5A	
	F1.2	VBS relay	1	7,5A	
	F1.3	Warning lamps	2	7,5A	
	F1.4	Horn. Fuel gauge	3,7	7,5A	
	F1.5				
	F1.6	Wiper motor, front	21	10A	Option
	F2.1	High/Low speed	5	7,5A	Option
	F2.2	Compaction meter	8	3A	Option
	F2.3	Rotating beacon	11	7,5A	Option
	F2.4	Back-up alarm	6	3A	Option
	F2.5	Working light, left	10	20A	Option
	F2.6	Working light, right	10	20A	Option
	F10	Mainfuse, power supply	1	30A	
	F12	Mainfuse, power supply lights	10	40A	Option
	F13	Mainfuse, blower	21	20A	Option
G	F15	Data communicator	26	3A	Option
G	F20	Gridheater	25	125A	
G	F21	Gridheater	25	125A	

	No.	Description	Section	Rated current	Note
	G1	Battery	1		
	G2	Alternator	1,26		
	H1	Charge warning lamp	2		
	H2	Brake indicator lamp	2		
	H3	Engine oil press./temp. warning lamp	2		
	H4	Hydraulic oil temperature warning lamp	2		
	H5	Hydraulic oil filter warning lamp	2		
	H6	Air filter warning lamp	2		
	H11	Horn	3		
	H13	Back-up alarm	6		Option
	H14	Rotating beacon	11		Option
	H21	Indicator lamp, rotating beacon	11		Option
	H22	Indicator lamp, working lights	10		Option
G	H32	Wait for start lamp.	25		
	K1	Starter relay	1,25,26		
	K2	VBS relay	1,4,25		
	K3	Main relay	1		
	K5	Hour meter relay	7		Option
	K8	Light relay	10		
	K15	Fuel shut-off relay	1		Option
G	K22	Gridheater relay	25		
G	K23	Gridheater relay	25		
	K30	Blower relay	21		Option
	M1	Starter motor	1		
	M2	Blower motor	21		
	M3	Wiper motor, front	21		
	P1	Hour meter	7		
	P5	Fuel gauge	7		Option
	P10	Comp. meter indicating instrument	8		
	Q1	Battery switch	1,25		Option

This document will remain the property of Dynapac Heavy Equipment AB and may not without the permission of the said company be copied, communicated to any third part or used for manufacturing purposes.

Designed TSK1/JAB	Approved CN	Material Designation	Part No
View E	Date 981014	Description Electric diagram Item designation Elschema Postbeteckning	Model CA 250
	Reg. RE		Scale – / Sheet of 9(12)
DYNAPAC			Rev. G / No. 38 02 75

Rev.970401

Rev.	Pls.	Change No.	Date	Issued by	Checked

No.	Description	Section	Rated current	Note
S1	Ignition switch	1,25,26		
S2	Emergency stop switch	1		
S3	Horn button	3		
S4.1	Neutral start switch	1		
S4.2	Back-up alarm switch	6		Option
S5	Seat switch	1		Option
S6	Vibration on/off switch	4		
S7	CMV range selector switch	8		Option
S11	Vibration low/off/high switch	4,26		
S18	Rotating beacon switch	11		Option
S22	Working light switch	10		Option
S23	Low/high speed switch, rear axle	5		Option
S24	Low/high speed switch, drum drive	5		Option
S25	Warning lamp test button	2,26		
S34	Wiper switch front	21		Option
S38	Blower switch	21		Option
G W1	GPS/ VHF antenna	26		Option
X5	Connecting block, control panel	1,7		
X10	2-ways MTA, Power supply	1		
X12	10-ways Cannon Control panel-engine	1,2,7,25,26		
X13	10-ways Cannon Control panel-engine	1,2,4,7,25,26		
X15	3-ways Deutch Seat switch	1,3		Option
X16	2-ways Cannon Low/high speed drum	5		Option
X17	2-ways Cannon Low/high speed axle	5		Option
X19	2-ways Cannon Back-up alarm	6		Option
X21	4-ways Packard Neutral start switch	1,6		
X22	3-ways Packard Fuel shut-off	1		
X23	2-ways Packard Gridheater	25		
X24	6-ways Packard Gridheater	25		
X25	2-ways Packard Gridheater	25		
X27	6-ways AMP Compaction meter	8		Option
X29	2-ways Cannon Horn on cab	3		Option
X32	2-ways Cannon Rotating beacon	11		Option
X40	2-ways Cannon Working light	10		Option
X41	5-ways Cannon Working light	10		Option
X59	2-ways Cannon Front wiper cab	21		Option
X60	2-ways MTA, Blower	21		Option
X61	2-ways Cannon Blower	21		Option

No.	Description	Section	Rated current	Note
Y1	Engine stop solenoid valve	1		
Y2	Brake valve	1		
Y3	Vibration low valve	4,26		
Y4	Vibration high valve	4,26		
Y5	Low/high speed valve, rear axle	5		Option
Y6	Low/high speed valve, drum drive	5		Option

Section	Divisioning of function
1	Power supply start & stop
2	Warning lamps
3	Horn
4	Vibration control
5	Low/High speed
6	Back-up alarm
7	Instruments
8	Compaction meter
10	Working lights
11	Rotating beacon
21	Simple cab
25	Engine Tier 2
26	Dy-Mic

Coulor code abbreviation and number marking

Abbrev.	Colour	Number marking
WH	White	101-199
RD	Red	201-299
VT	Violet	301-399
GN	Green	501-599
YE	Yellow	601-699
BU	Blue	701-799
BN	Brown	801-899
BK	Black	901-999
GY	Grey	-

Wiring identification

ex: 210 1.5 (RD)

210 Wire No.

1.5 Section (mm^2)

(RD) Colour

This document will remain the property of Dynapac Heavy Equipment AB and may not without the permission of the said company be copied, communicated to any third part or used for manufacturing purposes.

Designed TSK1/JAB	Approved CN	Material Designation	Part No
View E	Date 981014	Description Electric diagram Item designation Elschema Postbeteckning	Model CA 250
	Reg. RE		Scale - / Sheet of 10(12)
DYNAPAC			Rev. G / No. 38 02 75

Rev.970401

		Connection A			Connection B		
Wire No.		Item No.	Connection	Section	Item No.	Connection	Section
103	0.75	F2.2	B	8	E6	:	8
110	2.5	S22	14	10	E1	1	10
111	2.5	S22	23	10	E3	1	10
112	2.5	S22	14	10	E2	1	10
113	2.5	S22	23	10	E4	1	10
201	6.0	F10	:	1	K3	87	1
202	1.5	K3	87	1	S1	22	1
203	4.0	K3	30	1	F1.1	1	1
204	4.0	F1.1	1	1	F2.1	1	7
205	6.0	F12	:	10	K8	30	10
207	4.0	Q1	2	1	K1	30	1
208	1.5	F1.1	A	1	X5	1	1
209	1.5	X5	1	1	S1	13	1
210	1.5	X5	1	1	S4.1	X21:A(BK)	1
211	1.5	X5	1	1	K5	86	7
212	1.5	F1.1	A	1	S2	12	1
213	1.5	F1.2	B	1	K2	1	1
215	0.75	F1.3	C	2	H1	1	2
216	0.75	H1	1	2	H2	1	2
217	0.75	H2	1	2	H3	1	2
218	0.75	H3	1	2	H5	X1	2
219	1.5	K5	86	7	P1	(+)	7
221	1.5	F2.4	D	6	S4.2	X21:C(RD)	6
223	1.5	F1.4	D	3	P5	(+)	7
226	6.0	K8	87	10	F2.5	5	10
227	4.0	F2.5	E	10	S22	13	10
228	4.0	F2.6	F	10	S22	24	10
229	2.5	F2.3	C	11	S18	13	11
236	10.0	G2	B+	1	M1	30	1
240	0.75	F2.2	B	8	A2	1	8
241	6.0	Q1	2	1	F10	1	1
243	16.0	Q1	2	1	F12	1	10
244	2.5	Q1	2	1	K15	30	1
254	4.0	K30	30	21	F13	1	21
255	6.0	Q1	2	1	F13	1	21
G 264	16.0	K22	87	25	E26	1	25
G 265	16.0	K23	87	25	E26	1	25
G 266	16.0	Q1	2	25	K22	1	25
G 267	16.0	Q1	2	25	K23	1	25
278	2.5	F1.6	F	21	S34	5	21
278	1.5	S34	5	21	M3	53A	21

Rev.	Pls.	Change No.	Date	Issued by	Checked

		Connection A			Connection B		
Wire No.		Item No.	Connection	Section	Item No.	Connection	Section
301	1.5	S1	14	1	K2	2	1
302	1.5	K2	4	1	K1	86	1
303	4.0	K1	87	1	M1	50	1
304	1.5	S1	21	1	K3	86	1
305	1.5	S1	41	1	Y1	X22:A(RD)	1
306	1.5	S1	41	1	K8	86	10
307	1.5	S4.1	X21:B(BK)	1	K2	6	1
308	2.5	K15	87	1	Y1	X22:B	1
309	1.5	K1	86	1	K15	86	1
G 311	1.5	H32	X1	25	A3	X24.B	25
G 314	1.5	S1	41	25	A3	X24.A	25
G 321	1.5	K22	86	25	A3	X24.C	25
G 322	1.5	K23	86	25	A3	X24.D	25
G 326	1.5	K1	86	25	A3	X24.E	25
570	1.5	X5	1	1	K30	86	21
571	4.0	K30	87	21	S38	+	21
575	1.5	S34	6	21	M3	53	21
576	1.5	S34	8	21	M3	31B	21
582	4.0	S38	2	21	M2	:	21
583	4.0	S38	3	21	M2	:	21
584	4.0	S38	4	21	M2	:	21
601	1.5	F1.4	D	3	S3	14	3
602	1.5	S3	13	3	H11	1	3
603	1.5	S2	31	1	S5	:	1
604	1.5	S5	:	1	S3	13	3
606	1.5	S4.2	X21:D(GN)	6	H13	(RD)	6
610	2.5	S18	14	11	H14	1	11
701	1.5	S6	2	4	K2	7	4
702	1.5	K2	9	4	S11	23	4
704	1.5	S11	24	4	Y3	1	4
705	1.5	S11	13	4	Y4	1	4
706	1.5	S23	14	5	Y5	1	5
707	1.5	S24	14	5	Y6	1	5

This document will remain the property of Dynapac Heavy Equipment AB and may not without the permission of the said company be copied, communicated to any third part or used for manufacturing purposes.

Designed TSK1/JAB	Approved CN	Material Designation	Part No
View	Date 981014	Description	Model CA 250
	Reg. RE	Electric diagram Wiring chart Elschema Förbindningstabell	Scale / Sheet of 11(12)
DYNAPAC			Rev. G / No. 38 02 75

Rev.970401

Rev.	Pls.	Change No.	Date	Issued by	Checked

	Wire No.		Connection A			Connection B		
			Item No.	Connection	Section	Item No.	Connection	Section
G	714	0.75	A10	X:2	26	S11	41	26
	801	1.5	G2	D+	1	K1	85	1
	802	0.75	K1	85	1	H1	2	2
	804	1.5	K2	3	1	Y2	1	1
	805	1.5	S2	11	1	K2	8	1
	806	0.75	S2	23	1	H2	2	2
	807	0.75	H4	X2	2	B1	:	2
	808	0.75	H3	1	2	B2	:	2
	811	0.75	H6	X2	2	B4	1	2
	812	0.75	H5	X2	2	B5	1	2
	813	0.75	H3	1	2	K5	87	2
	814	0.75	K5	85	7	B10	:	7
	816	1.5	P1	(-)	7	K5	87a	7
	819	0.75	P5	G	7	B3	1	7
	825	0.75	A2.X2	4	8	P10	1	8
	826	0.75	A2.X2	5	8	P10	6	8
	827	0.75	A2.X2	6	8	P10	3	8
	828	0.75	A2.X3	2	8	A2.X3	(-)	8
	829	0.75	A2.X2	2	8	P10	5	8
	830	0.75	A2.X2	3	8	P10	2	8
	831	1.5	K1	85	1	K15	85	1
	832	0.75	H4	X2	2	S25	23	2
	833	0.75	H5	X2	2	S25	43	2
	834	0.75	H6	X2	2	S25	14	2
G	841	0.75	A3	X23.A	25	B6	X25.1	25
G	842	0.75	A10	X:3	26	H1	2	2
G	843	0.75	A10	X:4	26	H3	6	2
G	844	0.75	A10	X:5	26	S25	31	26
	901	6.0	X1	1	1	X3	:	1
	902	1.5	S2	24	1	X2	31	1
	903	1.5	K3	85	1	X2	31	1
	904	1.5	K2	5	1	X2	31	1
	905	1.5	S6	1	4	X2	31	4
	907	1.5	H13	(BK)	6	X1	31	6
	909	1.5	H11	5	3	X1	31	3
	912	0.75	B3	YE	7	X2	31	7

	Wire No.		Connection A			Connection B		
			Item No.	Connection	Section	Item No.	Connection	Section
	913	0.75	B4	2	2	X4	31	2
	915	1.5	K5	30	7	X2	31	7
	916	1.5	Y4	2	4	Y3	2	4
	917	1.5	Y4	2	4	X4	31	4
	918	1.5	Y5	2	5	X1	31	5
	919	1.5	Y6	2	5	X2	31	5
G	925	0.75	A10	X:8	26	X4	31	26
	926	0.75	H21	X1	11	X2	31	11
	927	2.5	H14	2	11	X2	31	11
	928	1.5	K8	85	10	X1	31	10
	929	0.75	H22	X1	10	X1	31	10
	930*	2.5	E2	2	10	X4	31	10
	930	2.5	E2	2	10	X4	31	10
	931*	2.5	E1	2	10	E2	2	10
	931	2.5	E1	2	10	E3	2	10
	932*	2.5	E4	2	10	X4	31	10
	932	2.5	E4	2	10	E2	2	10
	933*	2.5	E3	2	10	E4	2	10
	933	2.5	E3	2	10	X4	31	10
G	944	0.75	A3	X23.B	25		31	25
G	948	0.75	B6	X25.2	25		31	25
	959	2.5	Y1	X22:C(BK)	1	X4	31	1
	960	0.75	A2.X2	(-)	8	X1	31	8
	962	1.5	Y2	2	1	X3	31	1
G	963	1.5	H32	X2	25		31	25
	974	4.0	M2	:	21	X1	31	21
	975	2.5	M3	31	21	X1	31	21
	976	0.75	S25	13	2	X1	31	2
	977	0.75	E6	1	8	X1	31	8
	979	1.5	M2	1	21	K30	85	21
G	982	1.5	K23	85	25	:	31	25
G	988	1.5	K22	85	25	K23	85	25

* Valid for machine without Rops and cab/
Gäller för maskin utan Rops och hytt.

This document will remain the property of Dynapac Heavy Equipment AB and may not without the permission of the said company be copied, communicated to any third part or used for manufacturing purposes.

Designed: TSK1/JAB	Approved: CN	Material Designation	Part No
View: E	Date: 981014	Description: Electric diagram Wiring chart Elschema Förbindningstabell	Model: CA 250
	Reg.: RE		Scale / Sheet of: 12(12)
DYNAPAC			Rev.: G / No.: 38 02 75

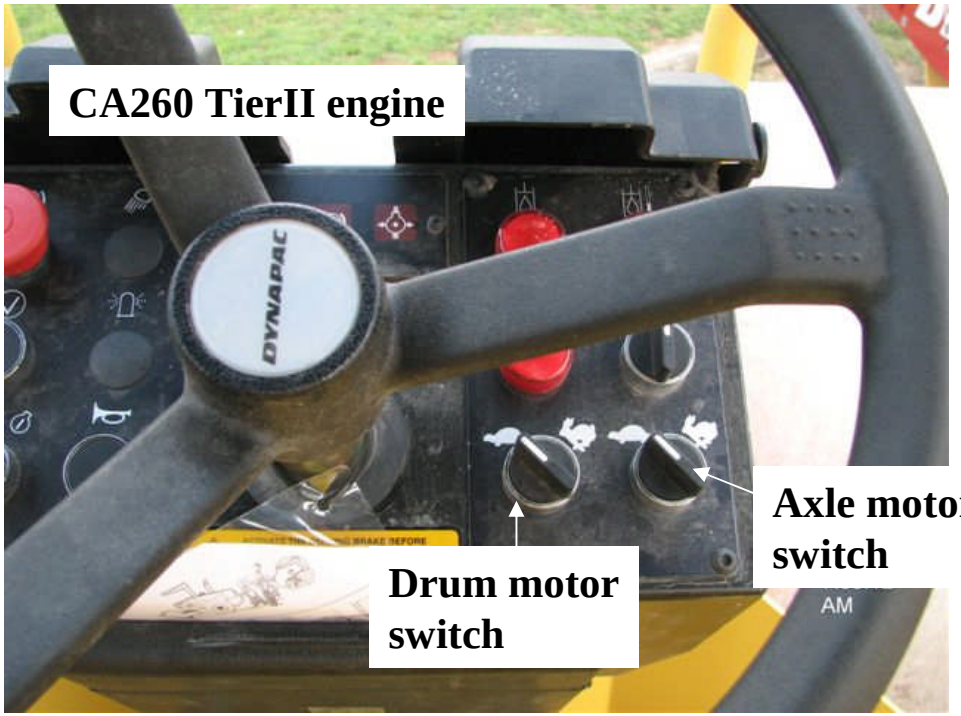

These two switches control de displacement of the axle and drum drive motors.
When the switch is in turtle the motor is in Max. displacement (Low speed), and in Rabbit the motor is in Min. displacement (High speed).

When the machine is climbing in forward, if the drum starts spinning due to lack of traction, the drum motor switch must be moved to the “rabbit” position (Min. displacement).
When the machine is climbing in reverse if the wheels start spinning due to lack of traction, the axle motor switch must be moved to the “rabbit” position (Min. displacement).

DYNAPAC

CA250 IGNITION SWITCH (Tier II)

DYNAPAC

CA250 Ignition Switch

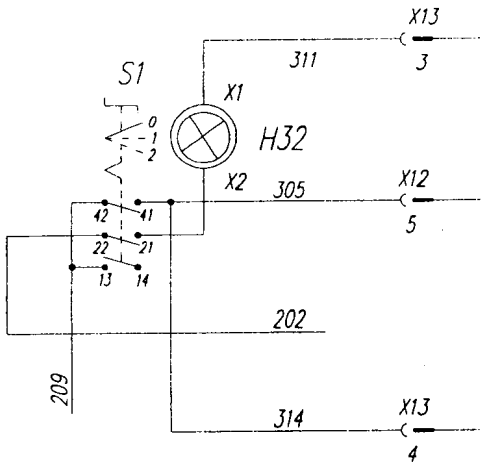

This switch is made of:
791489-Green Knob (3 position)-1
930198-Contact block -1
930154-Contact block (NC) -1

930198-Contact block made of:
Mounting ring w/bulb socket -1
930163-Contact block (NO) (3-4)-1
930154-Contact block (NC) (1-2)-1

On top of the bulb socket there are two columns of contact blocks:
Even # contact blocks 21-22 and 41-42
Odd # column block 13-14

When the knob is in the left position "0:, the two (NC) (1-2) blocks are actuated,so they are Open.
When the knob is in the center position "I", the two (NC) (1-2) blocks are de-actuated,so they are closed, and the (NO) (3-4) block is de-actuated, so it is open.
When knob is turned to the right (spring loaded), the (NC) (1-2) blocks are de-actuated,so they are closed, and the (NO) (3-4) block is actuated,so it is closed. When knob is released, returns to the center position "I".

DYNAPAC

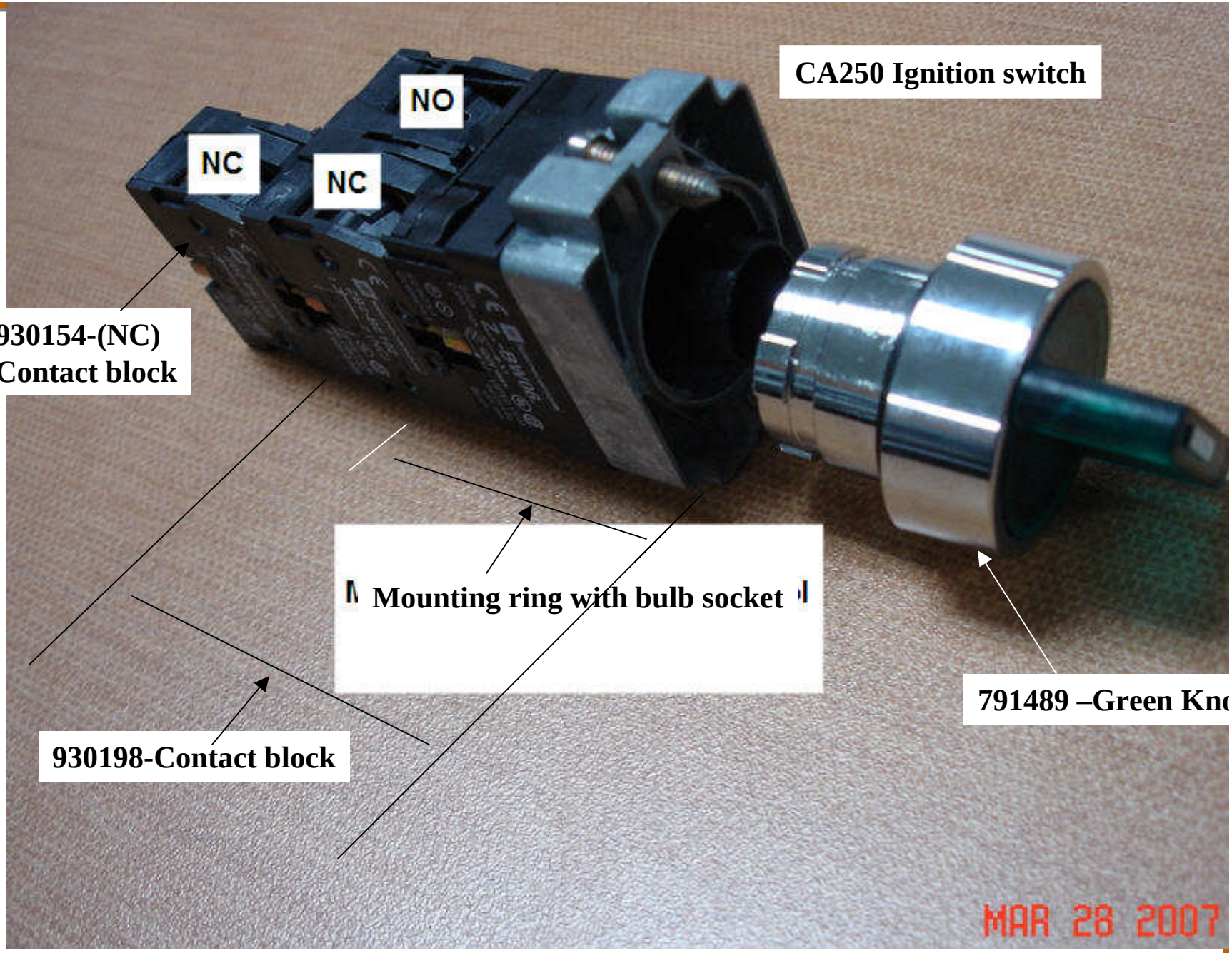
CA250 Ignition switch
NO
NC
NC
930154-(NC)
Contact block
Mounting ring with bulb socket
930198-Contact block
791489 –Green Kn
MAR 28 2007

DYNAPAC

CA250 Ignition switch

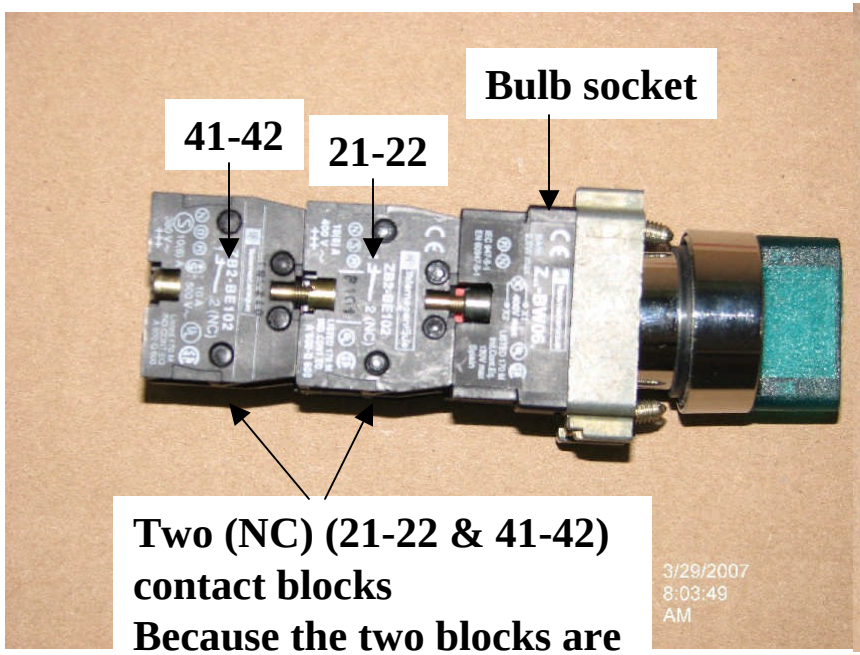

Two (NC) (21-22 & 41-42) contact blocks
Because the two blocks are together, they are actuated at the same time

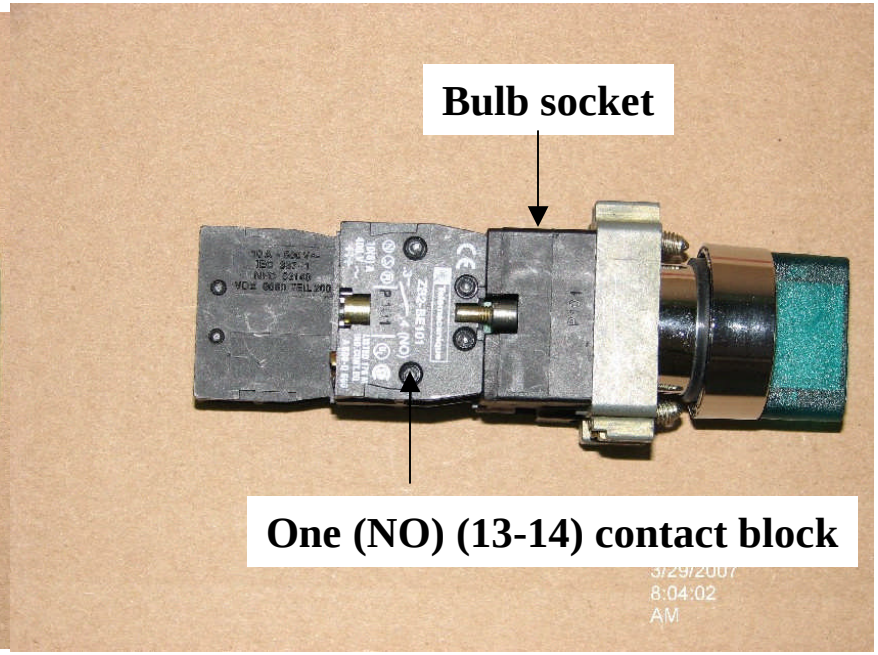

DYNAPAC

CA250 Ignition switch (tier II)



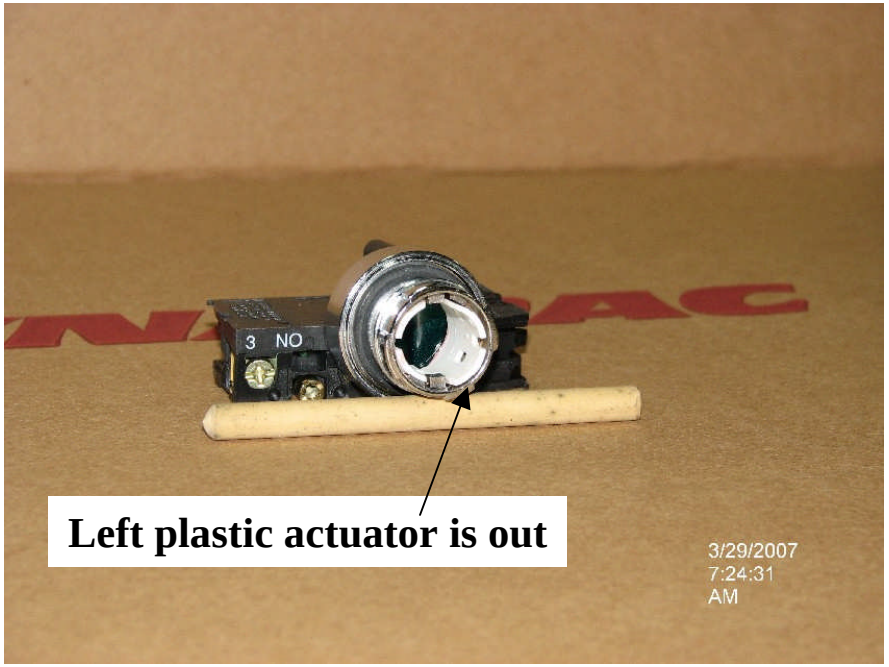

Left plastic actuator is out, actuating the two (NC) (21-22 & 41-42) contact blocks, so they are open.
Right plastic actuator is in not actuating the (NO) (13-14) contact block, so it is open.

DYNAPAC

CA250 Ignition Switch (Tier II)

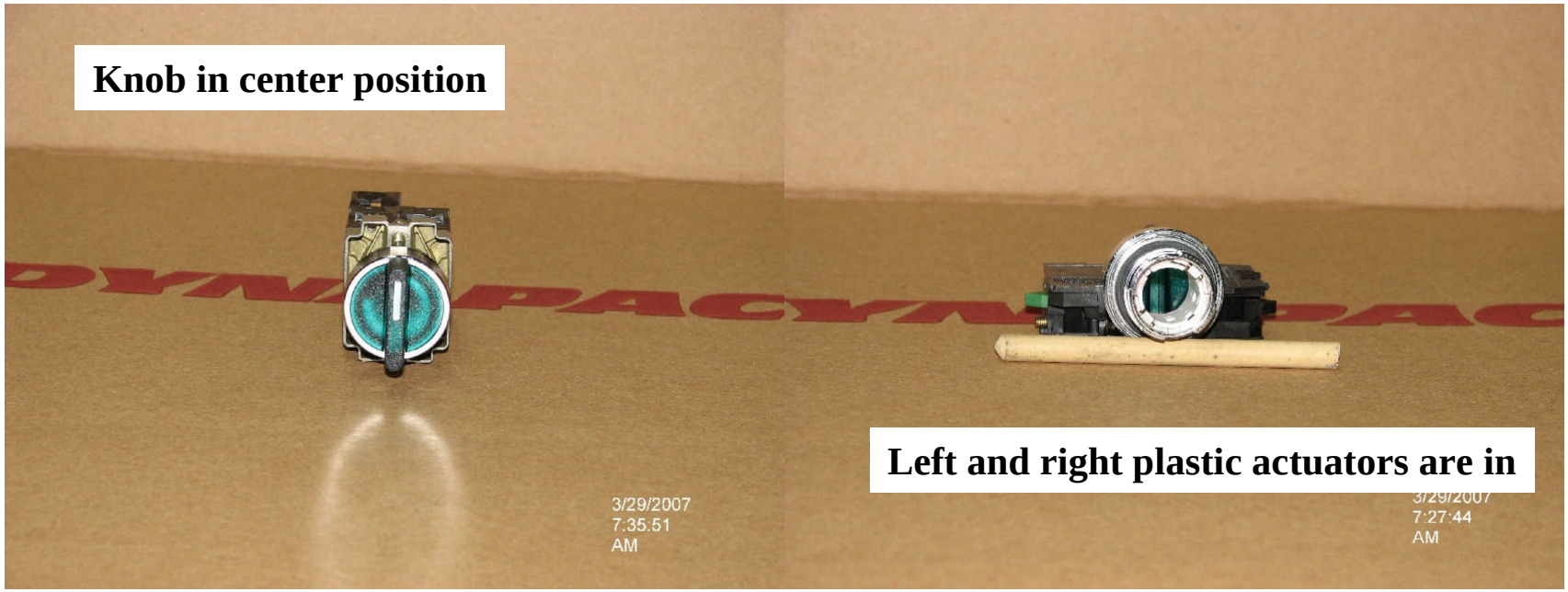

Left plastic actuator is in not actuating the (NC) (21-22 & 41-42) contact blocks, so they are closed.
Right plastic actuator is in not actuating the (NO) (13-14) contact blocks, so it is open.
When knob is turned to the right position, the right plastic actuator will move out actuating the (NO) (13-14) contact block, closing it. The left actuator will not move and the (NC) (21-22 & 41-42) blocks remain de-actuated and closed

DYNAPAC

CA250 Ignition Switch (Tier II)

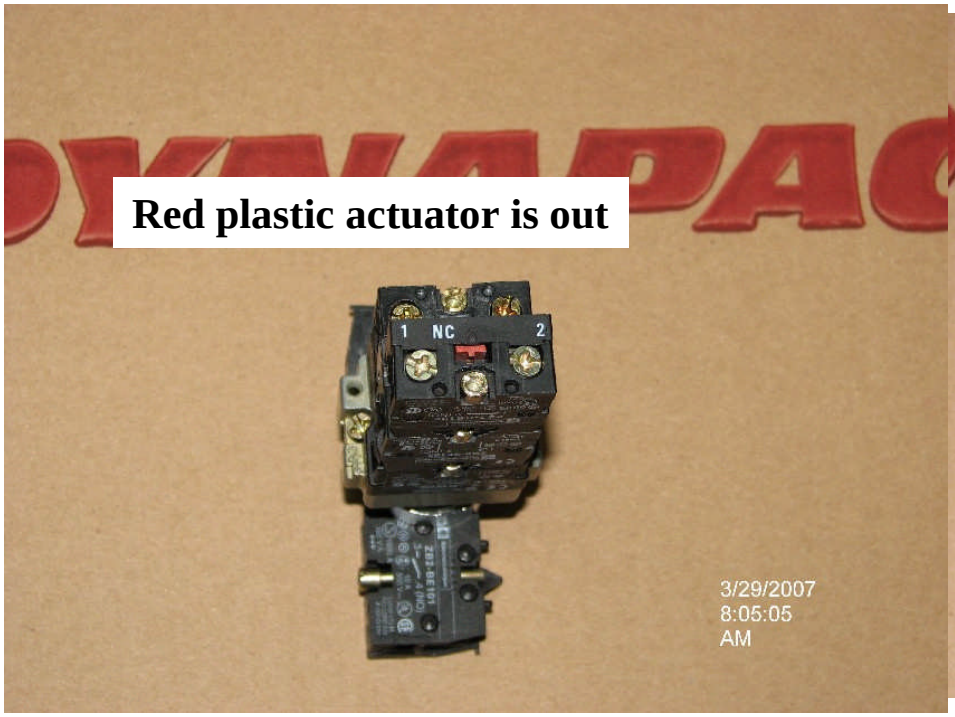

(NC) (21-22 & 41-42) actuated
Contacts open

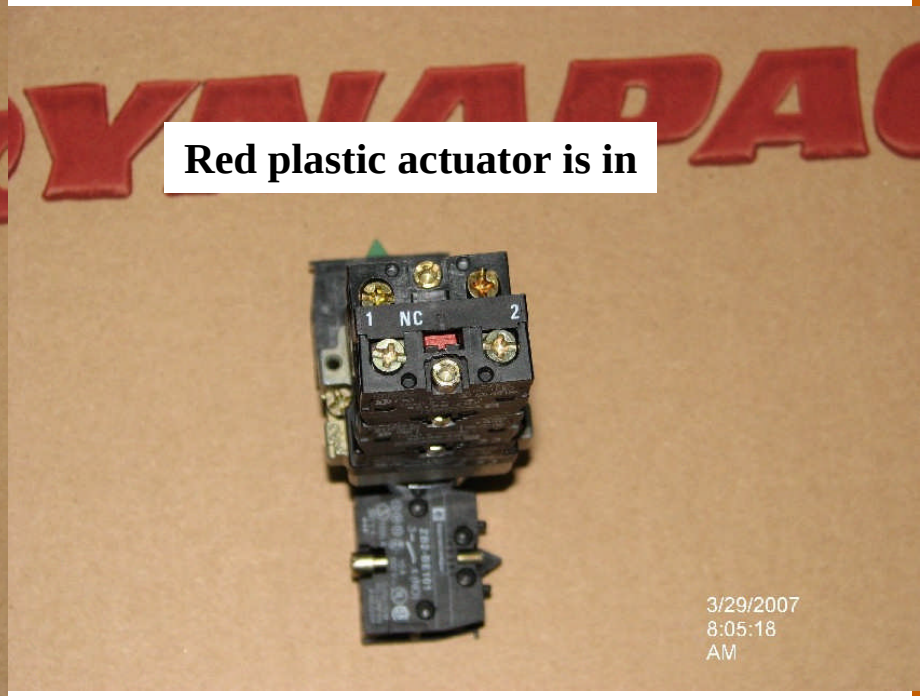

(NC) (21-22 & $1-42) de-actuated
Contacts closed

DYNAPAC

CA250 Ignition Switch (Tier II)



(NO) (13-14) contact block is actuated. Contacts closed.

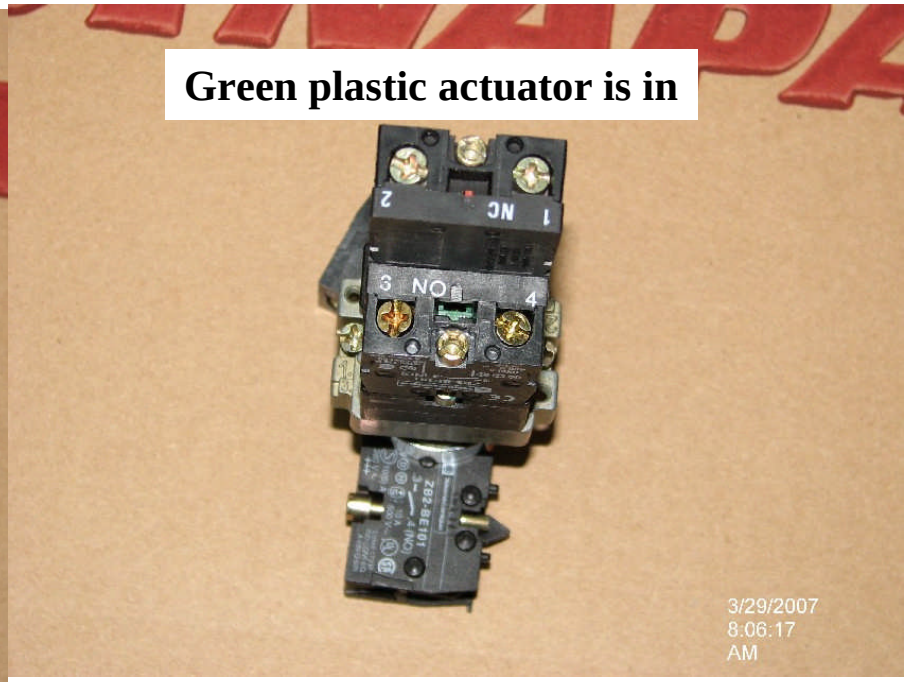

(NO) (13-14) contact block de-actuated Contacts open

DYNAPAC

CA250 Ignition switch

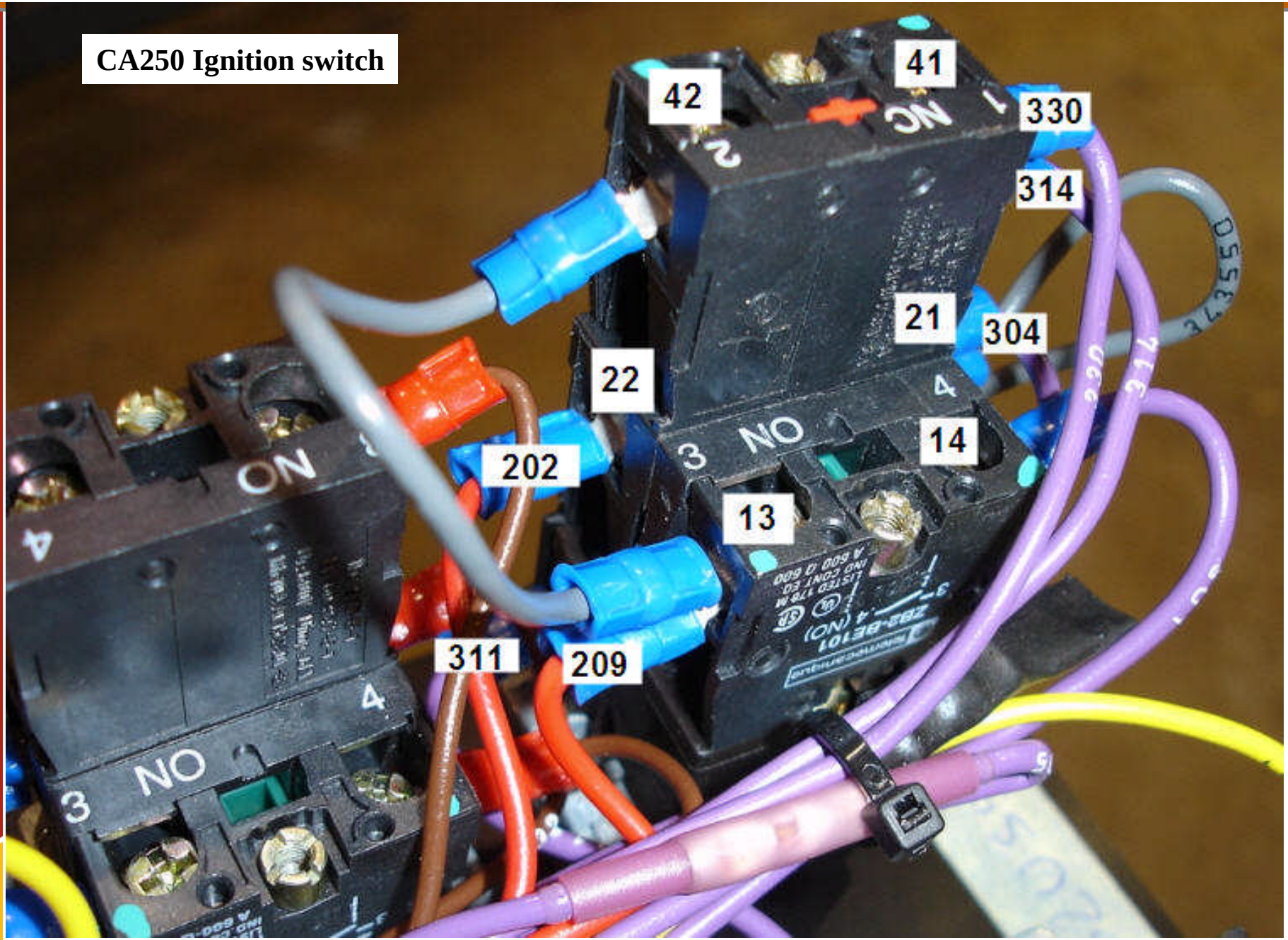

DYNAPAC

CA250 Ignition Switch

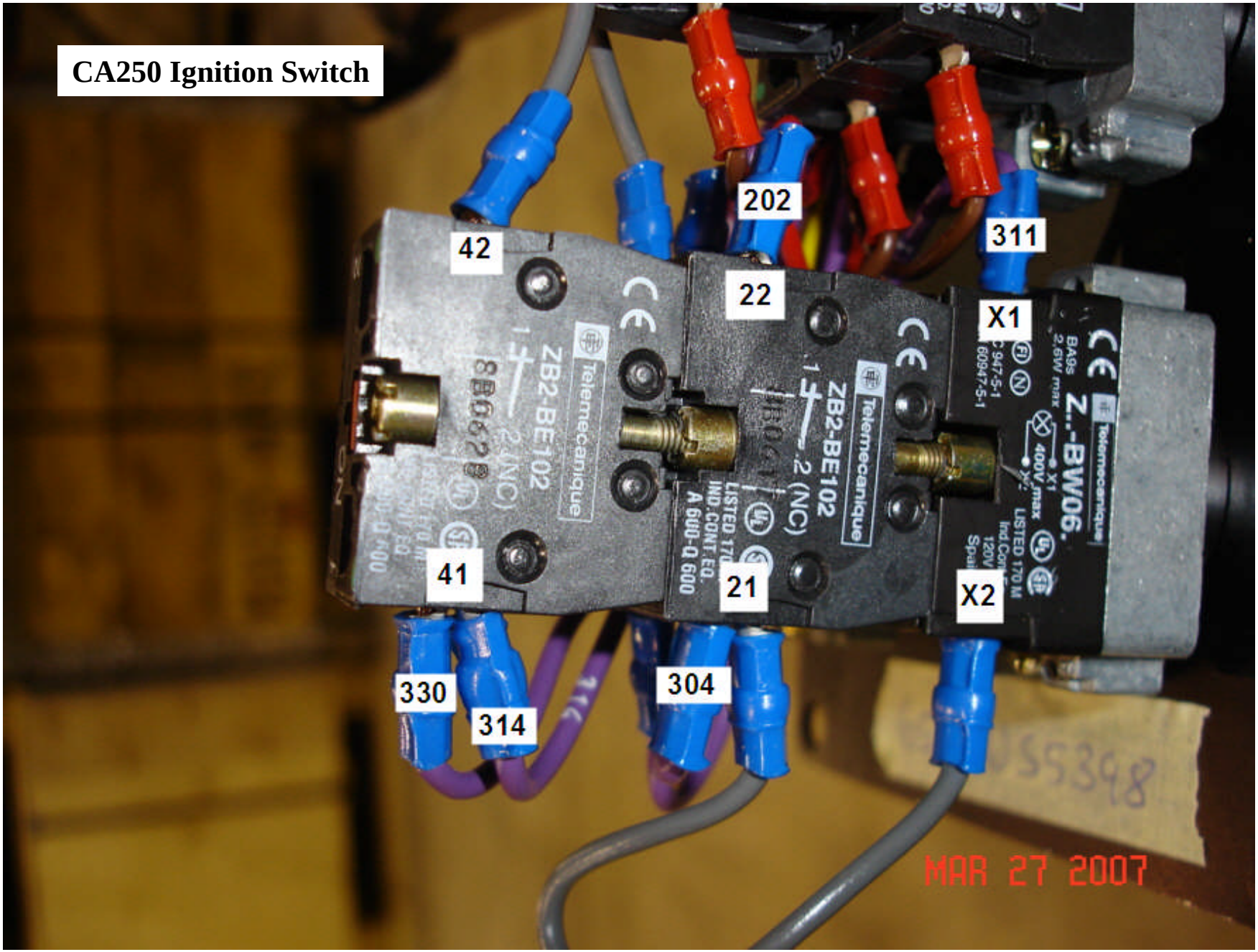

DYNAPAC

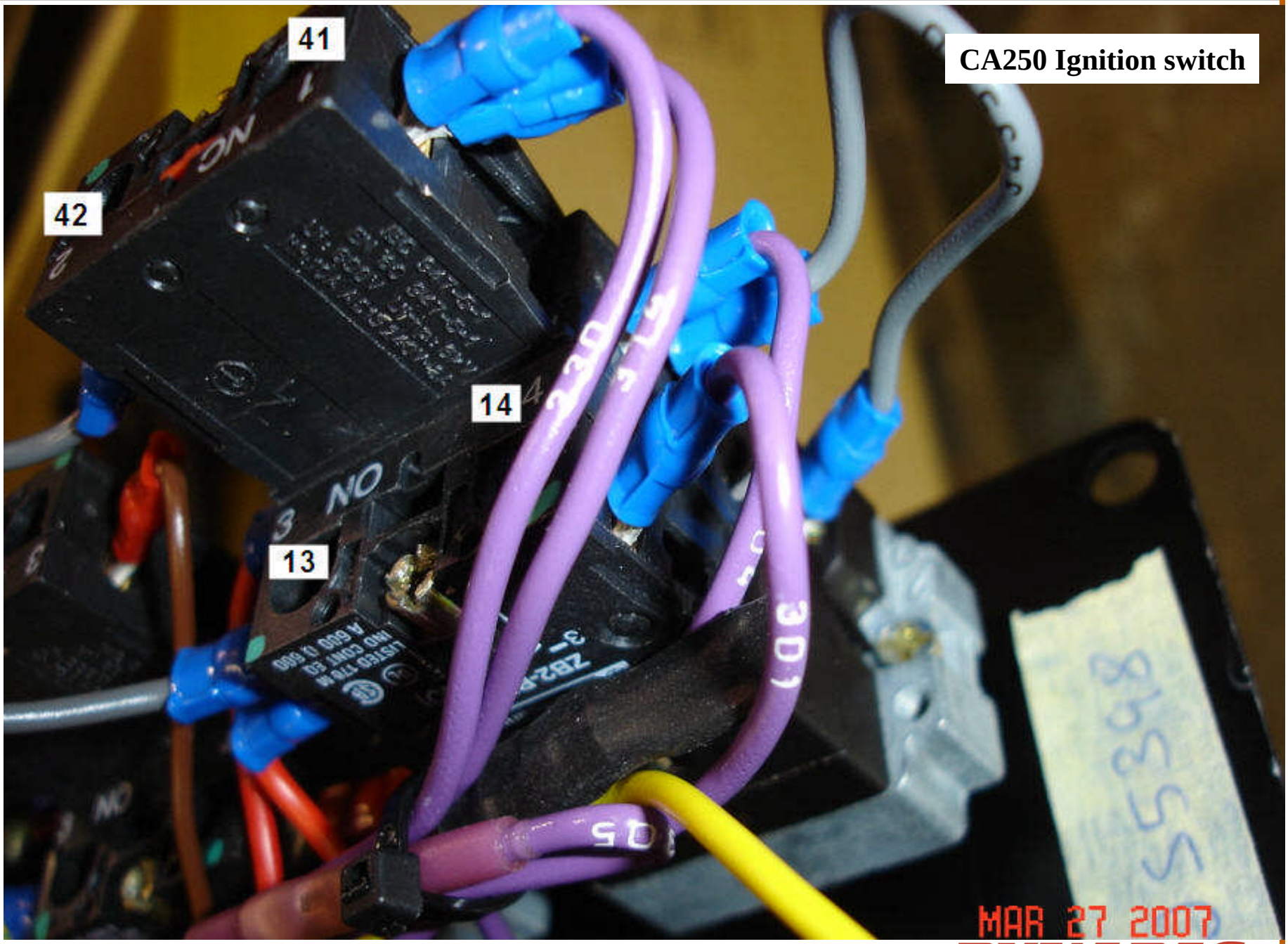
41
42
14
13
CA250 Ignition switch
MAR 27 2007
DYNAPAC

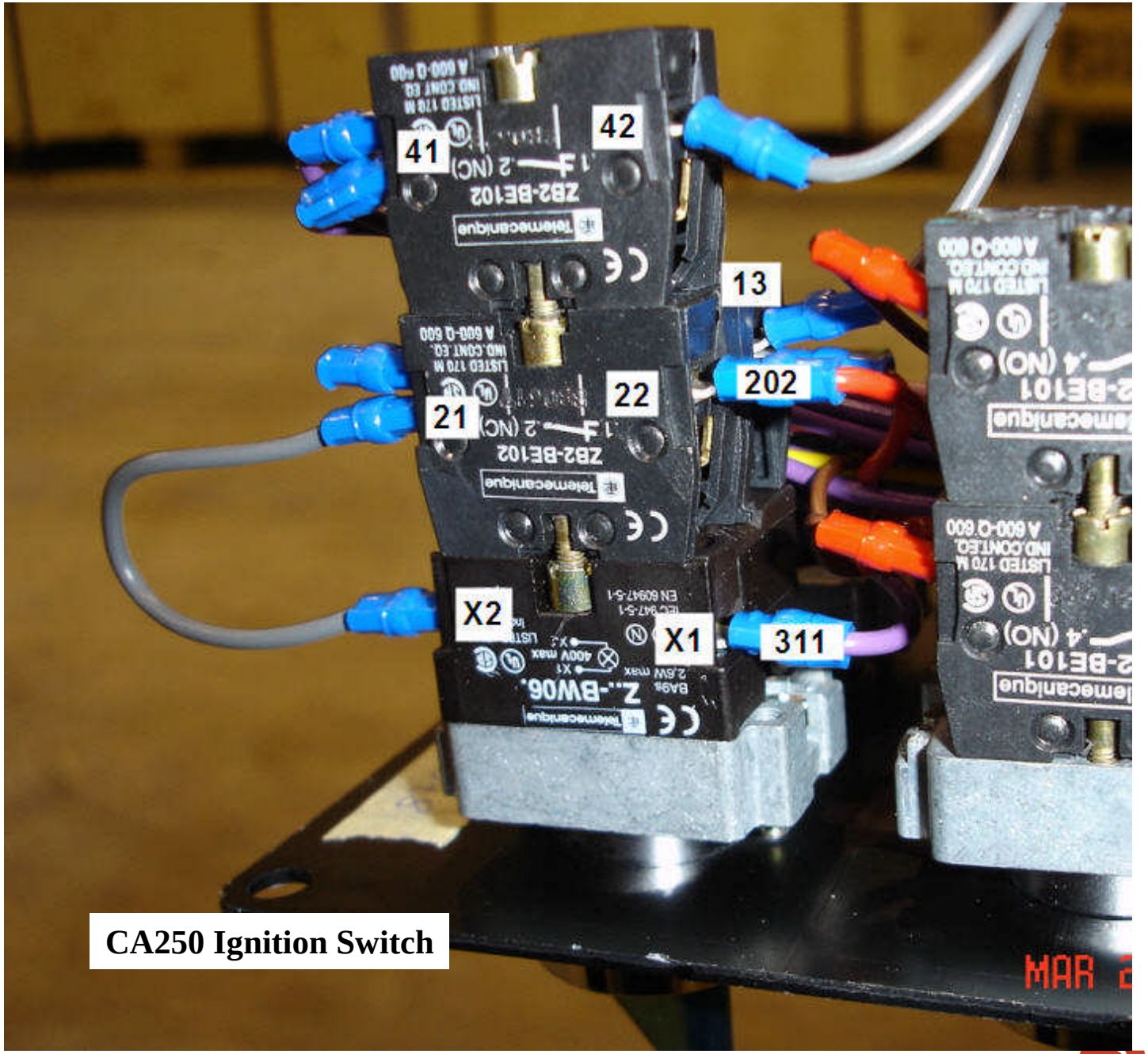

CA250 Ignition Switch

DYNAPAC

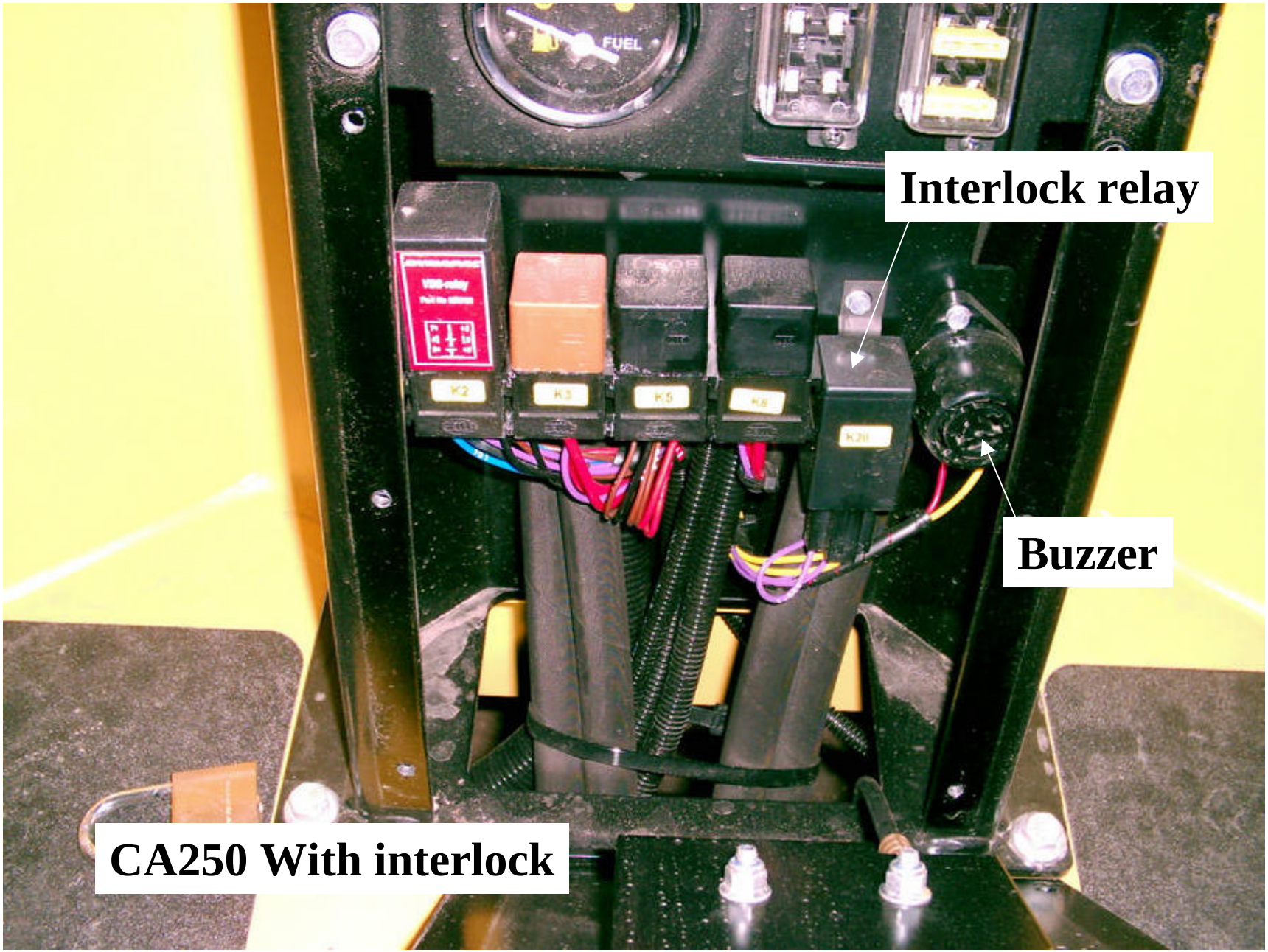

DYNAPAC

904704 Interlock Relay



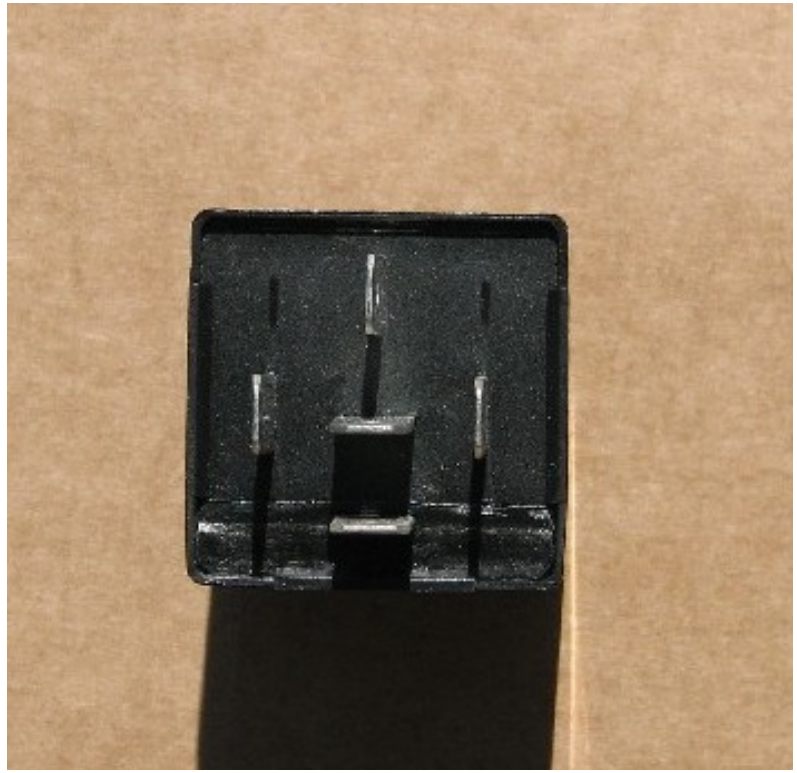

DYNAPAC

EMERGENCY SWITCH

DYNAPAC

CA362 Emergency Switch

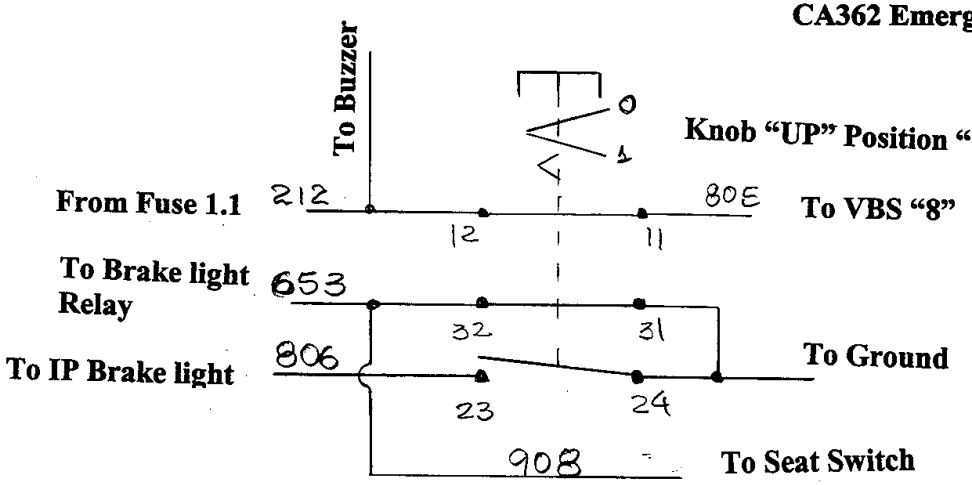

If operator stands up the seat Switch closes, closing ground for the interlock relay energizing it. 7 seconds later engine will be shut off.

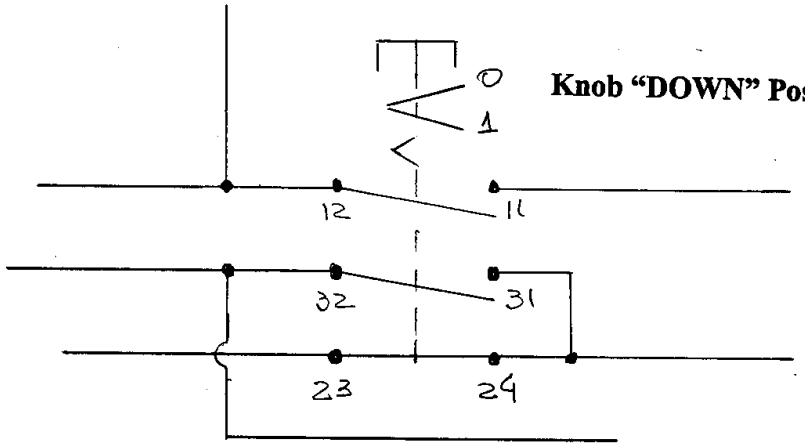

Ground for the seat switch is open (31-32). Operator can stand up and step down. Interlock system will not work.

DYNAPAC

Emergency Switch

(31-32)(NC)
De-actuated

(11-12) (NC)
De-actuated



Knob "UP"
Brakes released

(23-24) (NO)
De-actuated

4/10/2007
2:14:52
PM

DYNAPAC

Emergency Switch

(23-24) (NO) de-actuated (Open)



(31-32) + (11-12)
De-actuated (Closed)

4/10/2007
2:15:29
PM

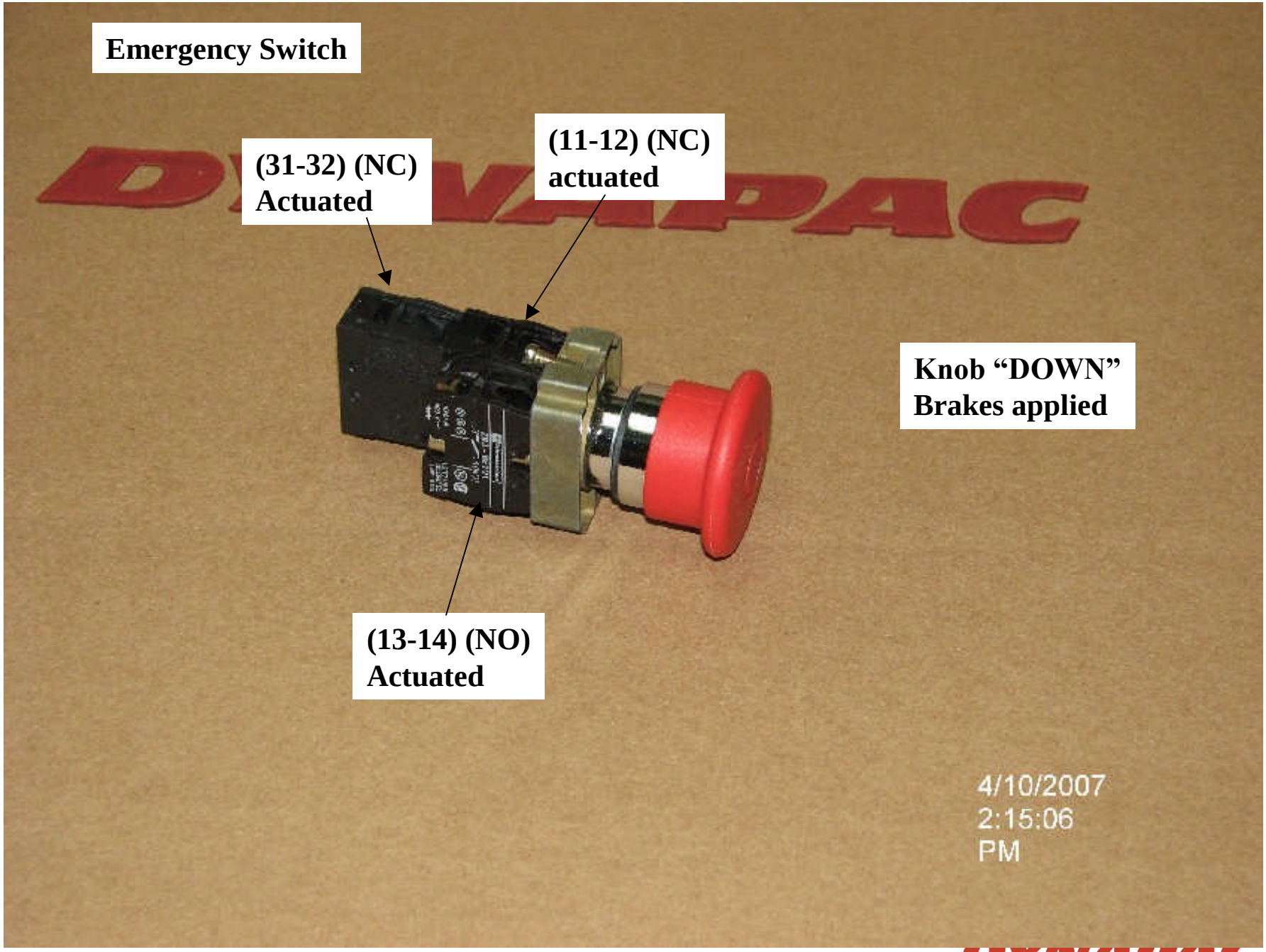
Emergency Switch
(31-32) (NC)
Actuated
(11-12) (NC)
actuated
Knob "DOWN"
Brakes applied
(13-14) (NO)
Actuated
4/10/2007
2:15:06
PM

Emergency Switch

(23-24) Actuated (Closed)



(31-32) + (11-12) Actuated (Open)

4/10/2007
2:15:40
PM

CA Machines axle motor control switch

