Parts Catalogue

ABRIL 2019

CA2500

Vibratory roller

CA2500D/PD s/n 10000167xxA021184 -
Cummins QSF 3.8 (IV/T4F)

RUTHZIL TRATOR COMERCIAL DE PEÇAS LTDA 11 97083-6812 ROLANDO



© 2019 Dynapac Compaction Equipment AB | No. 4812162552| 2019-04

Your Partner on the Road Ahead

dynapac.com

General information

Use only authorized parts. Any damage or malfunction caused by the use of unauthorized parts is not covered by Warranty or Product Liability.
Any unauthorized use or copying of the contents or any part thereof is prohibited. This applies in particular to trademarks, model denominations, part numbers, and drawings.

Instructions for use
This spare parts list contains no safety regulations and is merely intended to assist in the ordering of spare parts.
For information about operating, servicing, or repairing, the relevant Safety and operating instructions must be consulted at all costs.
Please observe the safety instructions listed in the relevant Safety and operating instructions!

CA2500D/PD (IV/T4F) s/n 10000167xxA021184 - 1

Service kits

4812156993 Service kit, 50h Plus 3
4812160777 Service kit, 500h 5
4812160778 Service kit, 500h Plus 7
4812160779 Service kit, 1000h 9
4812160780 Service kit, 1000h Plus 11
4812160781 Start up kit 13
4812160785 Service kit, 2000h 15
4812160786 Service kit, 2000h Plus 17

Repair kits

Eccentric shaft kit 19
4812157275 Drum rotation kit 21
4812158581 Shock absorber kit, drum 23

General - Keys and others

Fuses 25
Keys 27

Frame

Frame, front 29

Scrapers, option

Scrapers, option 31
Scraper module Steel 33
Scraper module Rubber 35
Scraper assy 37
Scraper module PD 39
Scraper module PD Heavy duty 41
Scraper mount 43

Steering hitch module 45
4812114990 Steering hitch, cpl 47
Frame rear 49
Modification kit, Battery door stop (CA) 51
Cover assembly 53
Engine structure 55
Engine hood 57
4812128176 Engine hood, cpl 59
4812118994 Lock handle, cpl 61
Fender module 63
Hinge module 65
Lock handle assy 67
Gas spring module 69
Safety link module 71

Drum

Drum, cpl 73
4812113266 Drum gear 77
4812112198 Hydraulic motor 79
Drum, cpl (HC) 85
Toothed wheel 87

Drum cartridges (D-version)

4812161263 Drum cartridge, vibration side (D version) 89
4812161264 Drum cartridge with shaft nut, vibration side (D version) 91
4812161262 Drum cartridge, drive side (D version) 93

Drum suspension 95
Pad shell, option 97

Engine

Engine mounting 99
4812124295 Engine Cummins QSF 3.8 101

Belt guard module . . . 103
Bracket module . . . 105
Air cleaner module . . . 107
Cooling system . . . 109
Cooler stand module . . . 111
Water cooler and hoses . . . 113
Coolant drainage . . . 115
Expansion tank system . . . 117
Fuel system . . . 119
Fuel hose assembly . . . 121
Fuel tank module . . . 123
Fuel tank . . . 125
Brackets, fuel tank . . . 127
Fuel draining module . . . 129
Exhaust system . . . 131
Urea/DEF equipment system . . . 135
Urea pump and hoses . . . 137
DEF equipment module . . . 139
4812124314 DEF/UREA tank . . . 141
DEF Box . . . 143
Step, DEF box . . . 145

Transmission

Rear axle and wheels . . . 147

4812113340 Rear axle, limited slip

Central housing . . . 149
Differential . . . 151
Input . . . 153
Hub reduction . . . 155
Brakes . . . 157

4812113341 Rear axle No spin

4812113341 Rear axle No spin . . . 159
Differential . . . 161
Central housing and brakes . . . 163
Hub reduction . . . 165

Hydraulic system

Hydraulic system. drum (D) Traction control

Hydraulic system, drum (D) Traction control, dual speed . . . 167
4812120842 Hydraulic motor . . . 169
Hydraulic valve module . . . 173
4812113687 Hydraulic valve . . . 175

Hydraulic system, rear axle Traction control, no slip

Hydraulic system, rear axle Traction control, no slip . . . 177
Hydraulic motor . . . 179
4812122932 Hydraulic motor . . . 181

Hydraulic system, oil tank

Hydraulic system, oil tank . . . 185
Hydraulic oil tank assembly . . . 187
Hydraulic valve module . . . 191
4812120840 Hydraulic valve . . . 193
Connector assy . . . 195
Fan module . . . 197

Hydraulic system, rear frame

Hydraulic system, frame rear . . . 199
Connector kit . . . 201
Connector kit . . . 203

Hydraulic system, engine room
Hydraulic system, engine room . . . 205
Hydraulic propulsion pump module . . . 207
4812122784 Hydraulic pump . . . 209
Hydraulic vibration pump module . . . 215

4812122786 Hydraulic pump, propulsion
4812122786 Hydraulic pump, propulsion . . . 217
Rotary group . . . 219
Hydraulic control . . . 221
Port plate with valves . . . 223
Control module . . . 225
Hydraulic oil filter assy . . . 227
Steering pump, module . . . 229

Hydraulic system, steering
Hydraulic system, steering . . . 231
Hydraulic hoses, steering . . . 233
Steering valve module . . . 235
Hydraulic cylinder . . . 237
4812121946 Hydraulic cylinder . . . 239

Electric system

Electric cables, power supply, 1-pole
Electric cables, power supply, 1-pole . . . 241
Battery module . . . 243
Battery disconnector module . . . 245

Electric cables, power supply, 2-pole, option
Electric cables, power supply, 2-pole, option . . . 247
Battery module . . . See page 243
Battery disconnector, 2-pole . . . 249

Electrical cables, engine - ECU Horn, back-up alarm
Electrical cables, engine - ECU Horn, back-up alarm . . . 251
Standard ECU assembly . . . 253
Power converter module . . . 255
Inclination sensor module . . . 257
Back-up alarm module . . . 259
Back-up alarm module, Quacker . . . 261
Bracket module . . . 263
Horn module . . . 265

Cable harness kit Power supply cab
Cable harness kit Power supply cab . . . 267

Driving & side direction lights, number plate light, option
Driving & side direction lights, number plate light, option . . . 269
Steering column switch module . . . 271
Cable harness kit . . . 273
Registration plate light module . . . 275
Registration plate light . . . 277
Holder, Registration plate light . . . 279

Reversing light, option
Reversing light module . . . 281

Rotating beacon, working light, option
Rotating beacon, working light, option . . . 283
Working light module H3 . . . 285
Rotating beacon module . . . 287
Bracket, Rotating beacon . . . 289

External emergency stop, option
External emergency stop, option . . . 291

Displacement shift
Displacement shift . . . 293

Speed sensor, frequency sensor, option
Speed sensor, frequency sensor, option . . . 295
Pulse sensor module (4-pole) . . . 297
Pulse sensor module (6-pol) . . . 299

Drivers platform

Platform, rops
Platform, rops . . . 301

4812120545 Platform with 4-post ROPS
4812120545 Platform with 4-post ROPS . . . 303
Basic kit Rops, roof, front handrail . . . 305
Rear cover . . . 307
Handrail . . . 309
Cab, basic kit . . . 311
Manual box . . . 313
Decals basic kit . . . 315

Cab symmetric module
Cab symmetric module . . . 317

4812119366 Cab, cpl Comfort
4812119366 Cab, cpl Comfort . . . 319
Screens . . . 321
4812115202 Cab door, cpl . . . 323
4812115200 Sliding screen, left hand . . . 325
Windshield wiper . . . 327
Roof . . . 329
Heater assy . . . 331
Hose kit heater . . . 333
Cab Interior . . . 335
Heater and ac controls . . . 337
Cab cable harness . . . 339
Cab, electrical equipment . . . 341
Emergency hammer, hook . . . 343
Cab, rear cover . . . 345
Cab, front cover . . . 347
Floor mat . . . 349
Step light, front wiper switches . . . 351
Cab, basic kit . . . See page 311
Air channel . . . 353
Sun-blind, inner light . . . 355

4812119367 Cab, cpl Basic
4812119367 Cab, cpl Basic . . . 357
Screens . . . See page 321
4812115202 Cab door, cpl . . . See page 323
4812115200 Sliding screen, left hand . . . See page 325
Windshield wiper . . . See page 327
Roof . . . See page 329
Heater assy . . . See page 331
Hose kit heater . . . See page 333
Cab Interior . . . See page 335
Heater and ac controls . . . See page 337
Cab cable harness . . . See page 339
Cab, electrical equipment . . . See page 341

Emergency hammer, hook . . . See page 343
Cab, rear cover . . . 359
Cab, front cover . . . 361
Wiper switch, front . . . 363
Cab, basic kit . . . See page 311
Manual box . . . See page 313
Decals basic kit . . . See page 315
Rear view mirror . . . 365
Heater hoses . . . 367
Car stereo module, option . . . 369

Drivers seat
Drivers seat . . . 371
Seat frame structure . . . 373
4700391163 Steering column . . . 375
Seat frame adapter module, rotating . . . 377
Seat frame adapter module, fixed . . . 379
Seat comfort, fabric suspensioned . . . 381
Seat, galon suspensioned . . . 383
Floor cassette module . . . 385
Control module . . . 387
Forward reverse control module . . . 389
Display unit . . . 391

Seat belts
Seat belt 2" . . . 393
Seat belt 3" . . . 395
Seat belt 2" with reminder . . . 397
Seat belt 3" with reminder . . . 399
Control panel cover . . . 401

Accessories / Decals
Decals . . . 403
Decals . . . 407
Color Dynapac . . . 409

Options

Cooling box module
Cooling box module . . . 412

Air conditioning
Air conditioning . . . 415
Drying filter module . . . 417
4812114257 Drying filter assy . . . 419
Condensor assembly . . . 421
ACC module . . . 423
4812113624 ACC kit . . . 425
AC module . . . 427
4812113623 Evaporator, cpl . . . 429
Hose kit AC . . . 431
Compressor module . . . 433
Hose assy kit for AC . . . 435

Level sensor module, option
Level sensor module, option . . . 437

SMV-sign
SMV-sign . . . 439

Lunch box
Lunch box . . . 441
Dyn@lyzer . . . 443
Compaction meter (DCM) . . . 445

Dyn@Link module 447
4812013038 GPS module 449
Appendix B:Parts Index 451

CA2500D/PD (IV/T4F) s/n 10000167xxA021184 -



Item	Part No.	Name	Qty	L	SN INFO
0	-	Service kits			
0	-	Repair kits			
0	-	General - Keys and others			
10	-	Service, repair and wear part kits			
20	-	Drum			
30	-	Engine			
40	-	Transmission			
50	-	Hydraulic system			
60	-	Electrical Equipment			
70	-	Drivers platform			
80	-	Decals			
91	-	Optional equipment			

Service kits 4812156993 Service kit, 50h Plus

Item	Part No.	Name	Qty	L	SN INFO
-	4812156993	Service kit, 50h Plus			
6	4812112262	Hydraulic oil filter element	1		
15	4812161887	Dynapac Drum oil 1000 / 5 ltr.	1		
16	4812161883	Dynapac Gear Oil 300 / 5 ltr.	1		

Service kits 4812160777 Service kit, 500h

NO EXPLODED VIEW
AVAILABLE
FOR THIS BOM

Item	Part No.	Name	Qty	L	SN INFO
-	4812160777	Service kit, 500h			
1	4700945145	Oil filter element	1		
2	4812317429	Fuel filter	1		
3	4812160783	Fuel/Water separator filter	1		
4	4700394686	Air filter, main	1		

Service kits 4812160778 Service kit, 500h Plus

NO EXPLODED VIEW
AVAILABLE
FOR THIS BOM

Item	Part No.	Name	Qty	L	SN INFO
-	4812160778	Service kit, 500h Plus			
1	4700945145	Oil filter element	1		
2	4812317429	Fuel filter	1		
3	4812160783	Fuel/Water separator filter	1		
4	4700394686	Air filter, main	1		
5	4812161859	Dynapac Engine 300 / 5 ltr.	3		

Service kits 4812160779 Service kit, 1000h

NO EXPLODED VIEW
AVAILABLE
FOR THIS BOM

Item	Part No.	Name	Qty	L	SN INFO
-	4812160779	Service kit, 1000h			
1	4700945145	Oil filter element	1		
2	4812317429	Fuel filter	1		
3	4812160783	Fuel/Water separator filter	1		
4	4700394686	Air filter, main	1		
5	4812112262	Hydraulic oil filter element	1		
6	4700394687	Air filter, safety	1		
7	4700357138	Ventilating filter	1		

Service kits 4812160780 Service kit, 1000h Plus

NO EXPLODED VIEW
AVAILABLE
FOR THIS BOM

Item	Part No.	Name	Qty	L	SN INFO
-	4812160780	Service kit, 1000h Plus			
1	4700945145	Oil filter element	1		
2	4812317429	Fuel filter	1		
3	4812160783	Fuel/Water separator filter	1		
4	4700394686	Air filter, main	1		
5	4812112262	Hydraulic oil filter element	1		
6	4700394687	Air filter, safety	1		
7	4700357138	Ventilating filter	1		
11	4812161859	Dynapac Engine 300 / 5 ltr.	3		
12	4812161884	Dynapac Gear oil 300 / 20 ltr.	1		
13	4812030096	Dynapac Roller Grease	1		

Service kits 4812160781 Start up kit

NO EXPLODED VIEW
AVAILABLE
FOR THIS BOM

Item	Part No.	Name	Qty	L	SN INFO
-	4812160781	Start up kit			
1	4812156993	Service kit, 50h Plus	1		
2	4812160778	Service kit, 500h Plus	1		
3	4812160780	Service kit, 1000h Plus	1		

Service kits 4812160785 Service kit, 2000h

NO EXPLODED VIEW
AVAILABLE
FOR THIS BOM

Item	Part No.	Name	Qty	L	SN INFO
-	4812160785	Service kit, 2000h			
1	4700945145	Oil filter element	1		
2	4812317429	Fuel filter	1		
3	4812160783	Fuel/Water separator filter	1		
4	4700394686	Air filter, main	1		
5	4812112262	Hydraulic oil filter element	1		
6	4700394687	Air filter, safety	1		
7	4700357138	Ventilating filter	1		
8	4812118814	Oil level glass	2		
9	4812160954	Suction filter (Urea)	1		
10	4812160891	Urea pump filter	1		

Service kits 4812160786 Service kit, 2000h Plus

NO EXPLODED VIEW
AVAILABLE
FOR THIS BOM

Item	Part No.	Name	Qty	L	SN INFO
-	4812160786	Service kit, 2000h Plus			
1	4700945145	Oil filter element	1		
2	4812317429	Fuel filter	1		
3	4812160783	Fuel/Water separator filter	1		
4	4700394686	Air filter, main	1		
5	4812112262	Hydraulic oil filter element	1		
6	4700394687	Air filter, safety	1		
7	4700357138	Ventilating filter	1		
8	4812118814	Oil level glass	2		
9	4812160954	Suction filter (Urea)	1		
10	4812160891	Urea pump filter	1		
11	4812161859	Dynapac Engine 300 / 5 ltr.	3		
12	4812161884	Dynapac Gear oil 300 / 20 ltr.	1		
13	4812030096	Dynapac Roller Grease	1		
14	4812161868	Dynapac Hydraulic 300 / 20 ltr	1		
15	4812161887	Dynapac Drum oil 1000 / 5 ltr.	1		

Repair kits Eccentric shaft kit

Item	Part No.	Name	Qty	L	SN INFO
0	4700945657	Eccentric shaft kit			
1	4700390896	Spherical roller bearing	2		
2	4812121209	Seal ring	1		
3	4700900776	O-ring	1		

Repair kits 4812157275 Drum rotation kit

Item	Part No.	Name	Qty	L	SN INFO
0	4812157275	Drum rotation kit	1		
1	4700116041	Taper roller bearing	1		
2	4700167023	Seal ring	1		
3	4700929447	V-ring	1		
4	4700160105	O-ring 70	1		

Repair kits 4812158581 Shock absorber kit, drum

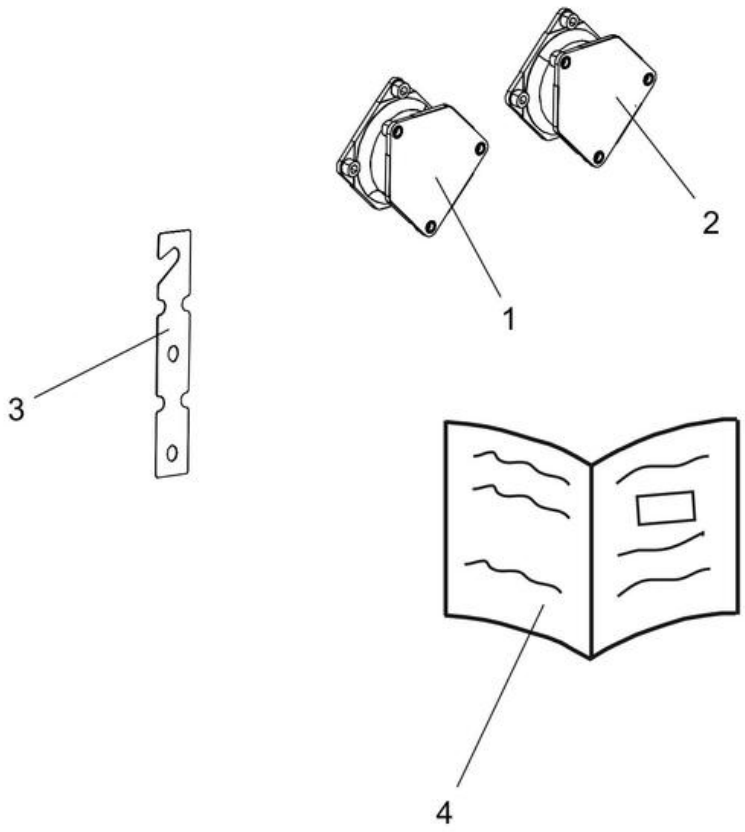

Item	Part No.	Name	Qty	L	SN INFO
0	4812158581	Shock absorber kit, drum	1		
1	4812128927	Shock absorber	6	A	
2	4812113258	Shock absorber	4	B	
3	4812114344	Shim t=1mm	4		
4	4812156170	Instructions	1		

Comments for Page: 4812158581 Shock absorber kit, drum

(L)OCAL REMARKS

A | en_US | Drive side.

B | en_US | Vibration side.

General - Keys and others Fuses

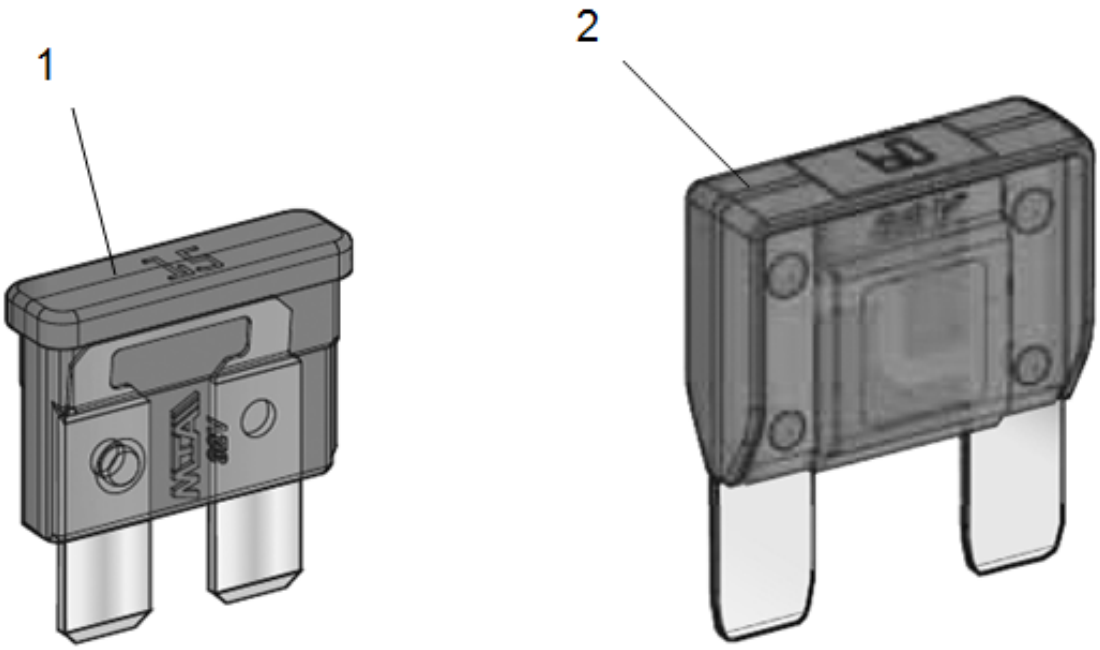

Item	Part No.	Name	Qty	L	SN INFO
1	-	Fuse, blade type Medium			
1	4700901224	Fuse, 3A Violet			
1	4700901225	Fuse 5A Tan			
1	4700901226	Fuse 7.5A Brown			
1	4700901227	Fuse 10A Red			
1	4700901228	Fuse, 15A Blue			
1	4700903741	Fuse 20A Yellow			
1	4700901229	Fuse, 25A Natural			
1	4700901230	Fuse, 30A Green			
2	-	Fuse, blade typ High			
2	4700904294	Fuse 20A Yellow			
2	4700904037	Fuse 30A Green			
2	4700904038	Fuse 40A Orange			
2	4700904039	Fuse 50A Red			
2	4700904040	Fuse 60A Blue			
2	4700904041	Fuse 70A Tan			
2	4700904042	Fuse 80A Natural (White)			

General - Keys and others Keys

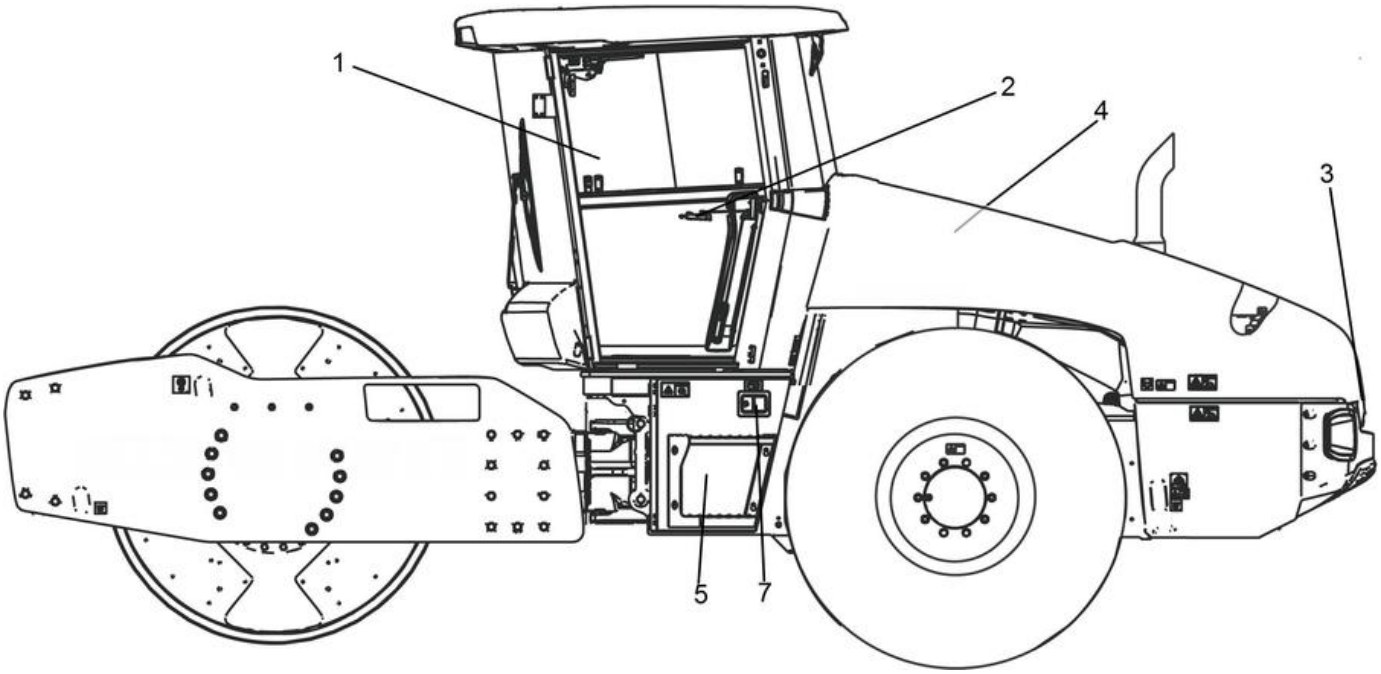

Item	Part No.	Name	Qty	L	SN INFO
1	-	Ignition switch			
1	4700940451	Ignition key			
2	-	Cab door			
2	4812159558	Key (2pcs)			
3	-	Engine hood (handle)			
3	4700902866	Key Marked "455"			
4	-	Engine cover			
4	4700902866	Key Marked "455"			
5	-	Battery switch			
5	4700903641	Battery key			
7	-	Battery space			
7	4700358881	Pad lock			
7	4812161396	Key			

Frame Frame, front

Item	Part No.	Name	Qty	L	SN INFO
1	-	Side plate	1		
2	-	Side plate	1		
3	4700903290	Steel plain washer 21x36x6	38		
4	4700500284	Screw	14		
5	4700927411	Screw	16		
6	4700925208	Screw M20x90	8		
9	4812113513	Crossbeam	1		
11	4812121882	Crossbeam	1		
12	4812112162	Cover	1		
13	4700904228	Washer 6,4x12x1,5	2		
14	4700232041	Air breather	2		
15	4700500013	Screw, M6x16 mm 8.8 A2K	2		
18	4700904230	Steel plain washer	11		
19	4700500028	Steel plain washer	4		
20	4812113607	Bracket	2		
21	4700500028	Steel plain washer	4		
22	4812113885	Protective hood	1		
23	4700902166	Edge trim	1XL	A	
24	4700500161	Screw	3		
25	4700791396	Protective plug	2		

Comments for Page: Frame, front

(L)OCAL REMARKS

A | en_US | L = 0.315m

Scrapers, option Scrapers, option

NO EXPLODED VIEW
AVAILABLE
FOR THIS BOM

Item	Part No.	Name	Qty	L	SN INFO
1	-	Scraper module	4		
2	-	Scraper module Rubber	4		
3	-	Scraper module PD Hardox	18		
4	-	Scraper module PD Heavy duty	2		

Scrapers, option Scraper module Steel

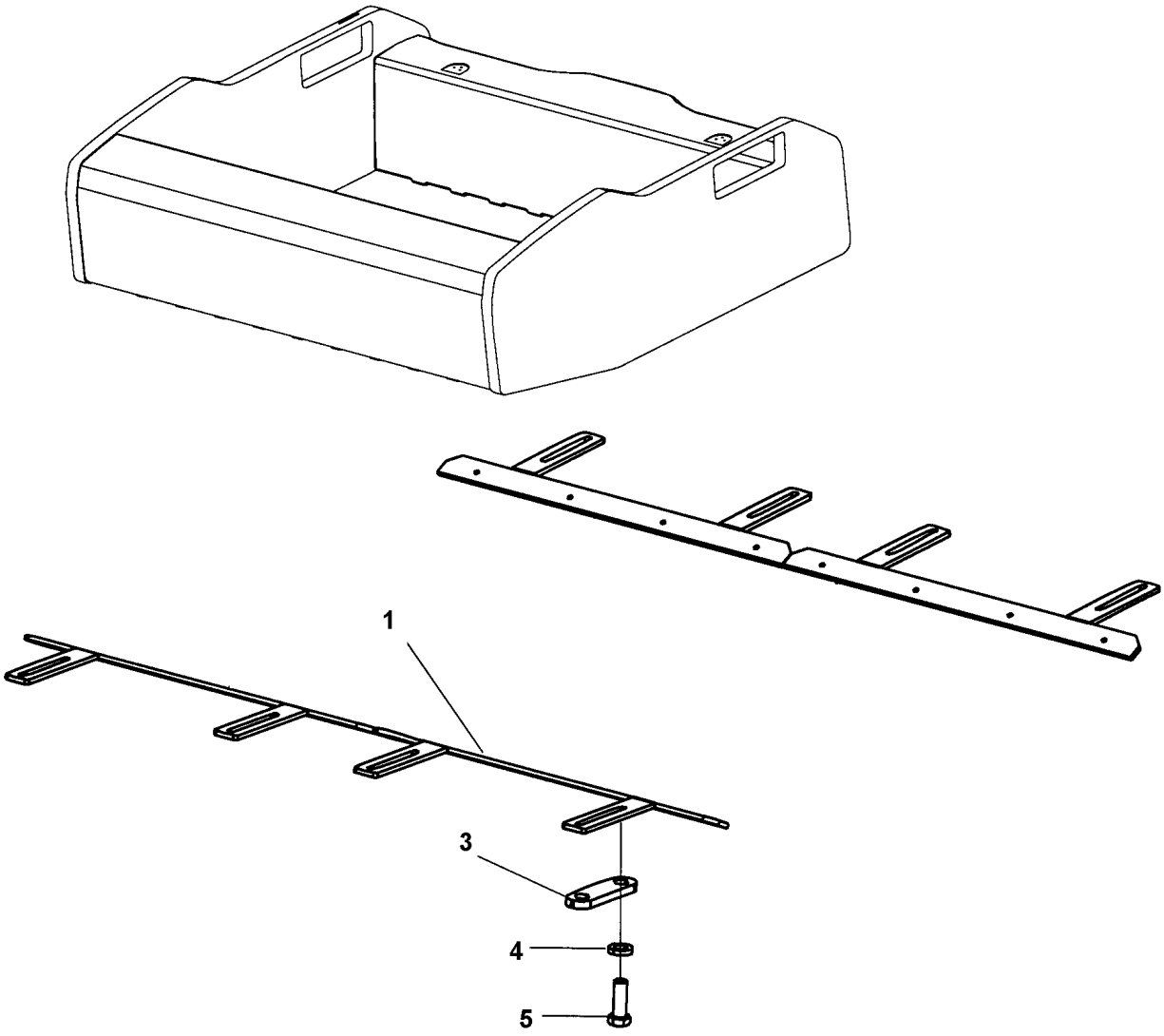

Item	Part No.	Name	Qty	L	SN INFO
1	4812115778	Scraper	1		
3	4812111103	Holder	2		
4	4700904558	Washer, 17x30x6 mm 300 HV	4		
5	4700500102	Hex. screw	4		

Scrapers, option Scraper module Rubber

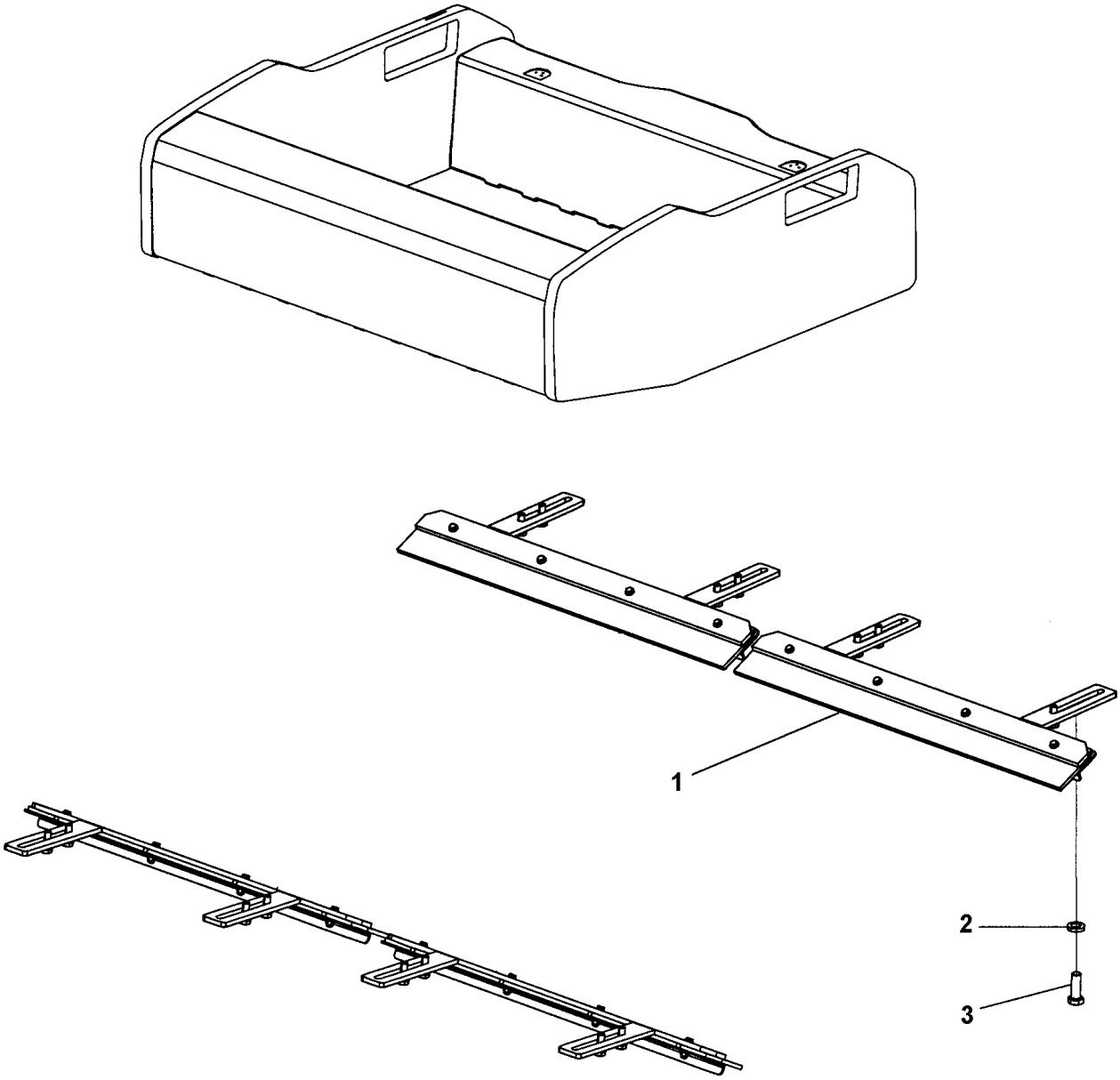

Item	Part No.	Name	Qty	L	SN INFO
1	-	Scraper assy	1		
2	4700904558	Washer, 17x30x6 mm 300 HV	4		
3	4700500102	Hex. screw	4		

Scrapers, option Scraper assy

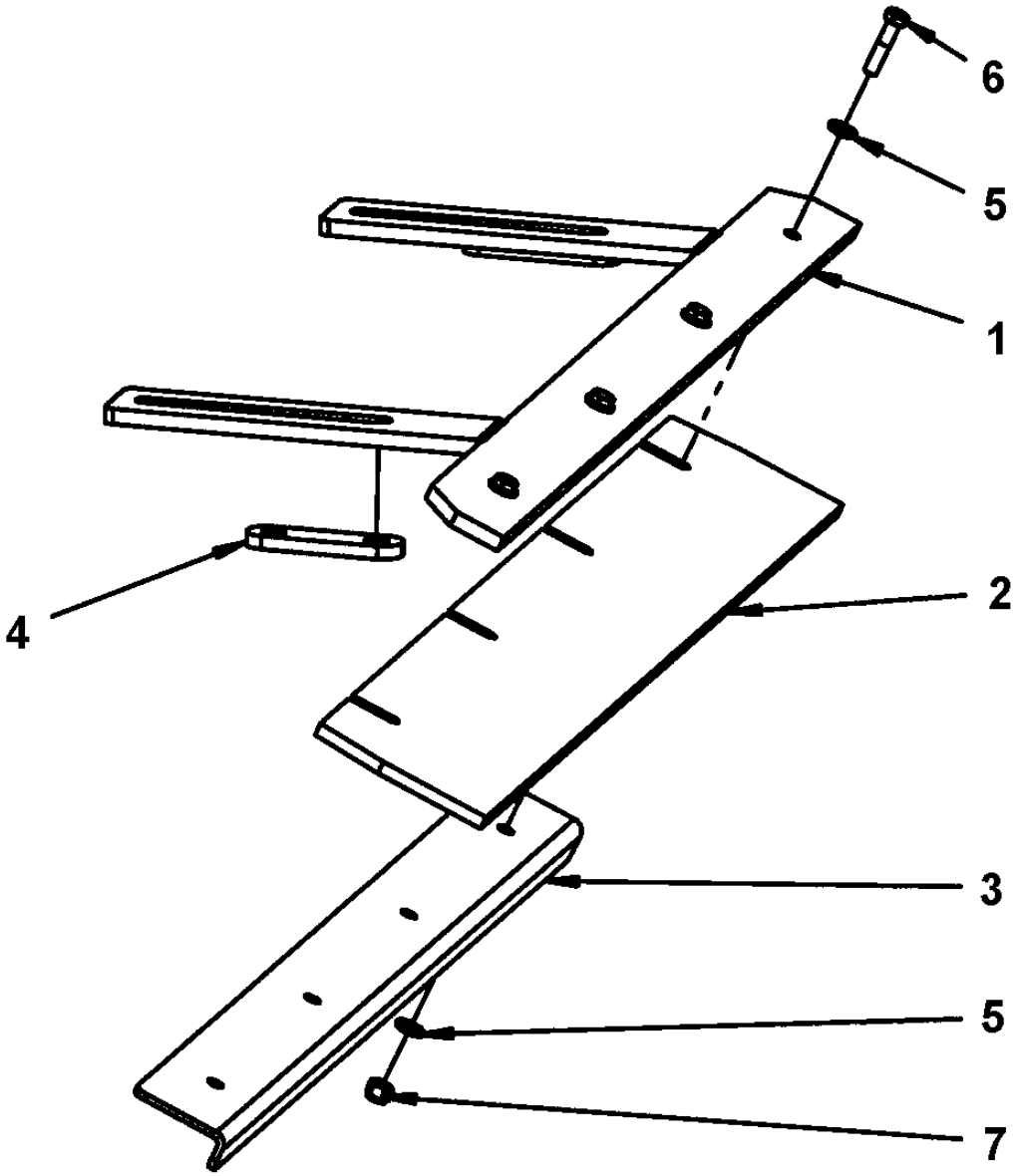

Item	Part No.	Name	Qty	L	SN INFO
1	4812115778	Scraper	1		
2	4812114833	Scraper blade	1		
3	4812111092	Bracket	1		
4	4812111103	Holder	2		
5	4700904230	Steel plain washer	8		
6	4700500161	Screw	4		
7	4700586018	Lock nut M10	4		

Scrapers, option Scraper module PD

Item	Part No.	Name	Qty	L	SN INFO
1	4812115673	Scraper tooth	1		
2	4812111103	Holder	1		
3	4700904558	Washer, 17x30x6 mm 300 HV	2		
4	4812110572	Screw w Tuflok	2		

Scrapers, option Scraper module PD Heavy duty

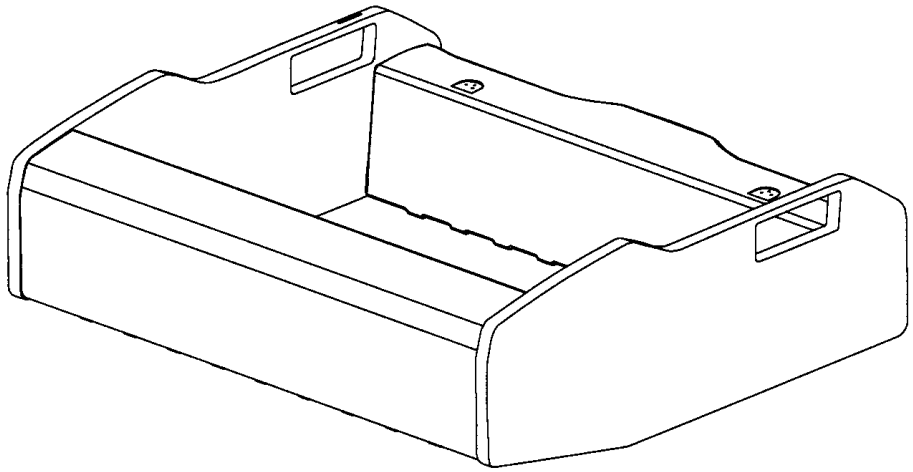

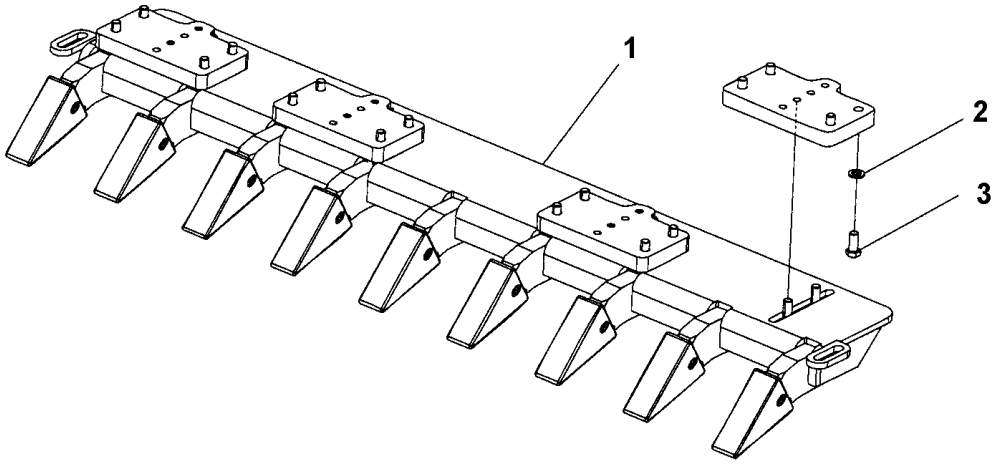

Item	Part No.	Name	Qty	L	SN INFO
1	-	Scraper mount	1		
2	4700904232	Washer 15x30x4 300 HV	16		
3	4700500123	Hex. screw	16		

Scrapers, option Scraper mount

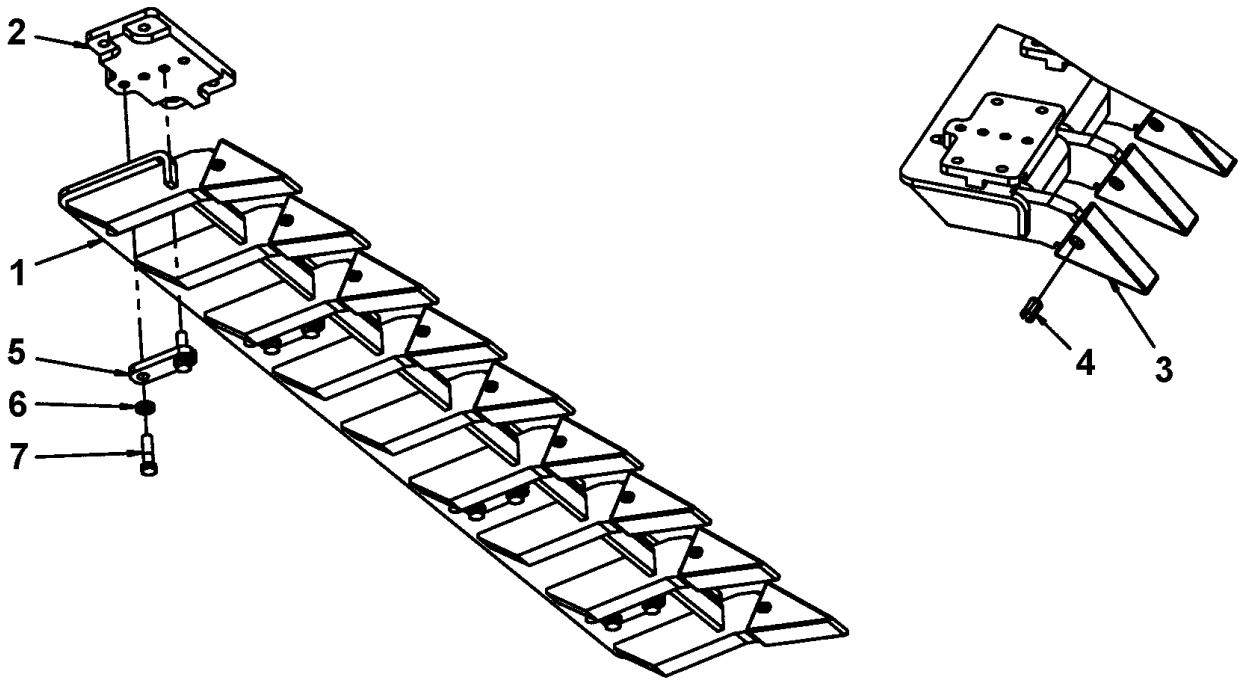

Item	Part No.	Name	Qty	L	SN INFO
1	4812116617	Scraper	1		
2	4812115508	Adapter	4		
3	4700383844	Scraper	9		
4	4700801631	Pin	9		
5	4812118062	Holder	4	A	
6	4700904558	Washer, 17x30x6 mm 300 HV	8		
7	4700500270	Screw M16x60 10,9	8	A	

Comments for Page: Scraper mount

(L)OCAL REMARKS

A | en_US | Item 5 and 7 used together.

Frame Steering hitch module

Item	Part No.	Name	Qty	L	SN INFO
1	4812114990	Steering hitch, cpl	1		
2	4700904233	Steel plain washer 21x36x3	16		
3	4700925208	Screw M20x90	16		
4	4812110366	Spacer	16		
5	4812116821	Radial spherical plain bearing	2		
6	4700151023	Retaining ring	4		
7	4812120661	Sealing strip	4		
8	4700900519	Plug	1		

Frame 4812114990 Steering hitch, cpl

Item	Part No.	Name	Qty	L	SN INFO
1	4812114991	Hitch yoke	1		
2	4812114993	Shaft	1		
3	4812114995	Hitch holder	1		
4	4812114997	Shaft	1		
5	4812117867	Shaft	1		
6	4812115424	Cover cap	1		
7	4812115425	Cover cap	1		
8	4812115467	Spherical plain bearing	2		
9	4812115468	Angular contact spherical	2		
10	4812114999	Bushing	1		
11	4812115422	Disc spring	2		
12	4812115427	Radial lip-type seal	1		
13	4700792516	Sealing, V-ring	1		
14	4700160132	O-ring 70	1		
17	4812115000	Spacer washer	1		
18	4700792394	Screw	10		
19	4812120707	Radial lip-type seal	2		
20	4812120414	Hexagon socket head cap screw w Tuflok	12		
21	4812115423	Spacer washer	1		
22	4700904231	Washer, 13x24x2 mm 300 HV	6		
23	4812120681	Back-up ring	2		
24	0686901038	Protective plug	1		
25	4812119809	Locking pin cpl	1		
26	4812124006	Threaded stud	1		
27	4700904214	Washer 15x30x4 300 HV	1		
28	4812121665	Stop plate	1		
30	4812116680	Shim washer	1		
31	4700904567	Washer, 10.5x28x6 mm	1		
32	4700500028	Steel plain washer	1		
33	4700902919	Plug	6		
35	4812119807	Holder	1		
38	4812121282	Thread forming screw m	8		
39	4812124012	Lock nut M	1		
40	4700160372	O-ring 70	2		

Frame Frame rear

Item	Part No.	Name	Qty	L	SN INFO
1	4812121862	Frame rear	1		
2	4700151023	Retaining ring	4		
3	4812116821	Radial spherical plain bearing	2		
4	4700202057	Rubber edge trim	1,83		
5		Cover assembly	1		
6	4700389857	Threaded plate	3		
7	4700513012	Screw, M6 x 20 mm 10.9 GEOMET®	6		
8	4700624005	Blind rivet 3,2x6,1	4		
11	4812120560	Cover plate	1		
12	4700904557	Washer, 10.5x22x4 mm 300 HV	10		
13	4700500031	Screw M10x40	6		
14	4812117048	Cover plate	1		
15	4700500161	Screw	4		
17	4700500239	Hex. head screw	1		
18	4700570005	Hexagon nut	1		
29	4700926215	Protective plug	2		
30	4700355608	Slip protection	2		
31	4812120160	Holder	2		
32	4812120402	Cover	1		
33	4812120661	Sealing strip	2		
37	4812120363	Edge trim	3,93		
39	4700903586	Nut, M8x1.25 mm A2K	13		
40	4812129511	Modification kit, Battery door stop (CA)	1		To A023441
41	4812129127	Bracket	1		From A023442
42	4700904229	Washer, 8.4x 6x1.5 mm 300HV	2		
43	4700500053	Screw, M8x20 mm 8.8 A2K	2		
44	4812122654	Steel plain washer	1		
45	4700500030	Hexagon head screw	1		
46	4700570006	Hexagon nut	1		

Frame Modification kit, Battery door stop (CA)

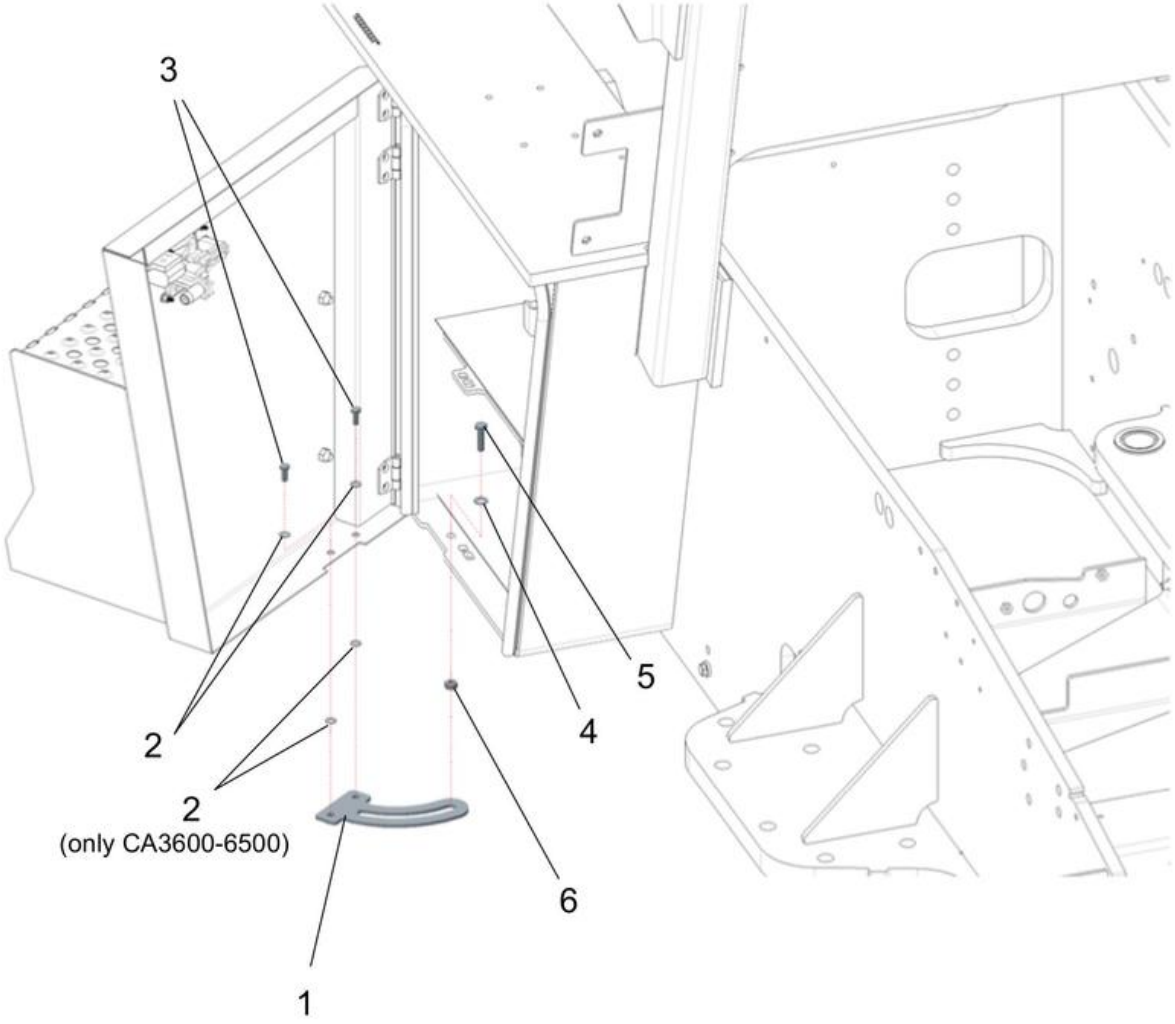

Item	Part No.	Name	Qty	L	SN INFO
0	4812129511	Modification kit, Battery door stop (CA)	1		
1	4812129127	Bracket	1		
2	4700904229	Washer, 8.4x 6x1.5 mm 300HV	4		
3	4700500053	Screw, M8x20 mm 8.8 A2K	2		
4	4812122654	Steel plain washer	1		
5	4700500030	Hexagon head screw	1		
6	4700570006	Hexagon nut	1		
DRW		Instruction document			

Frame Cover assembly

Item	Part No.	Name	Qty	L	SN INFO
1	4812113315	Cover	1		
1.1	4700396839	Hinge	3		
2	4812112059	Step assy	1		
3	4812121914	Lock with bracket	1		
4	4700902285	Nut	4		
5	4700921723	Plug	6		
6	4700508028	Screw, M10x20H	4		
7	4700390365	Spacer	1		
8	4700513017	Screw	2		

Frame Engine structure

Item	Part No.	Name	Qty	L	SN INFO
1	-	Engine Hood	1		
2	-	Fender module	1		
3	-	Hinge module	1		
4	-	Lock handle assy	1		
7	-	Gas spring module	1		
8	-	Safety link module	1		

Frame Engine hood

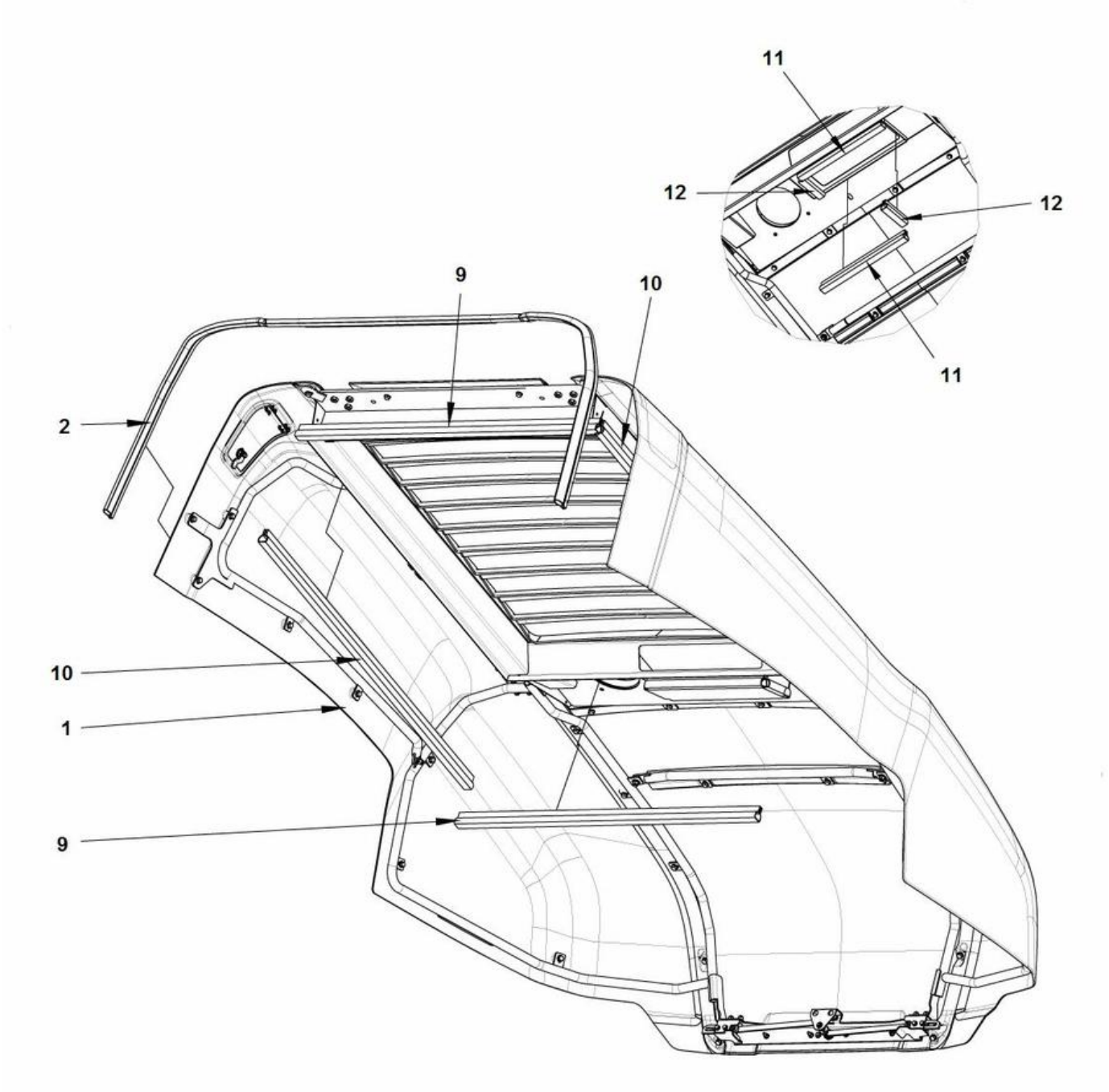

Item	Part No.	Name	Qty	L	SN INFO
1	4812128176	Engine hood, cpl	1		
2	4812114814	Sealing strip	1		
9	4812117839	Sealing strip	1,96		
10	4812117839	Sealing strip	2,44		
11	4812117839	Sealing strip	0,76		
12	4812117839	Sealing strip	0,21		

Frame 4812128176 Engine hood, cpl

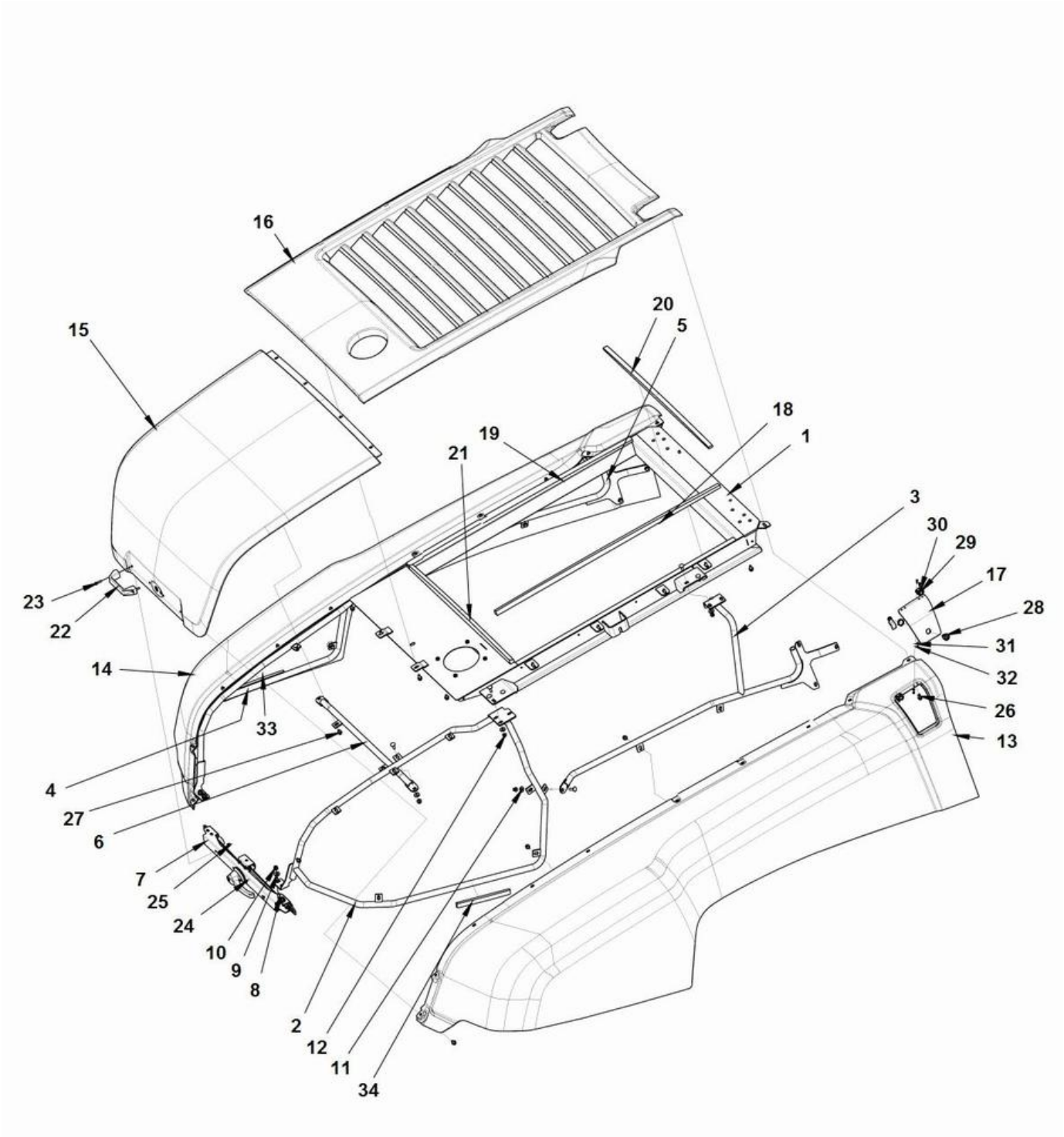

Item	Part No.	Name	Qty	L	SN INFO
1	4812118525	Frame	1		
2	4812114476	Frame side right	1		
3	4812121368	Frame side right	1		
4	4812118859	Frame side left	1		
5	4812118862	Frame side left	1		
6	4812114488	Strut	1		
7	4812118994	Lock handle, cpl	1		
8	4700929191	Cup square neck bolt	18		
9	4700904735	Steel plain washer	4		
10	4700902286	Lock nut, M8x1.25 mm A2K	8		
11	4700904640	Washer, 8.4x 6x1.5 mm 300HV	14		
12	4700586003	Lock nut M8	10		
13	4812128175	Engine hood right	1		
14	4812128177	Engine hood left	1		
15	4812120727	Engine hood	1		
16	4812120729	Engine hood center	1		
17	4812120730	Cover	1		
18	4700792796	Rubber strip 25x20	1,13		
19	4700792796	Rubber strip 25x20	1,13		
20	4700792796	Rubber strip 25x20	0,89		
21	4700792796	Rubber strip 25x20	0,89		
22	4812112404	Grab handle	1		
23	4700500075	Screw, M6-1,0x25 mm 8.8	2		
24	4700903923	Cup square neck bolt	2		
25	4700902285	Nut	4		
26	4700901832	Hexagon screw with flange M8x16	20		
27	4700904755	Screw M8x12 8,8 FZB	24		
28	4812112834	Lock	1		
28	4700902866	Key Marked "455"	2		
29	4812116862	Hinge	2		
30	4812118976	Hex.sock.flat head cap screw	8		
31	4700904698	Plain washer	8		
32	4700923976	Lock nut	8		
33	4700792718	Foam rubber	0,25		
34	4700792718	Foam rubber	0,25		

Frame 4812118994 Lock handle, cpl

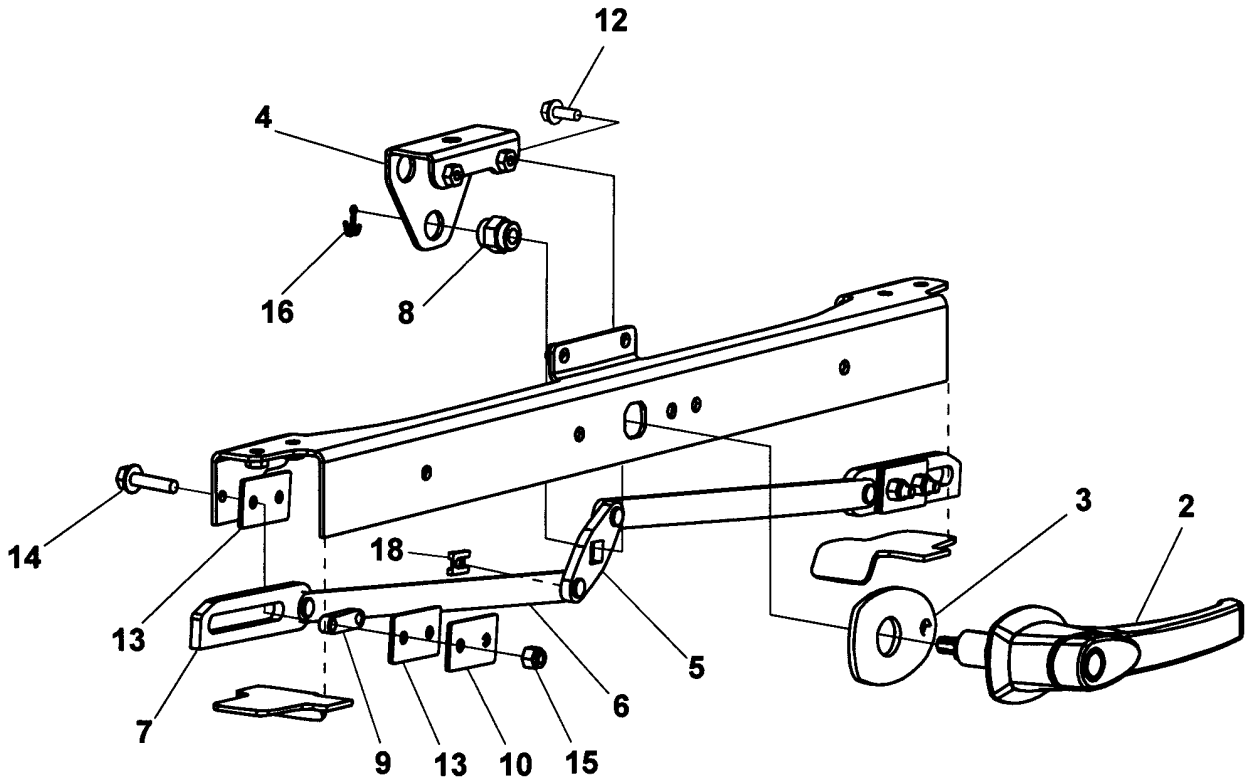

Item	Part No.	Name	Qty	L	SN INFO
-	4812118994	Lock handle, cpl	1		
2	4812112403	Lock handle	1		
2	4700902866	Key Marked "455"	1		
3	4812114828	Spacer washer	1		
4	4812118989	Holder	1		
5	4812114829	Coupling link	1		
6	4812114830	Lock lever	2		
7	4812112843	Lock lever	2		
8	4812114831	Lock nut	1		
9	4812112884	Slide plate	2		
10	4812116793	Thrust washer	2		
12	4700792119	Screw, M6x16 mm 8.8 A2K	2		
13	4812116792	Slide plate	4		
14	4700500502	Hexagon screw with flange M6x25	4		
15	4700586002	Lock nut M6 -8	4		
16	4700630003	Split pin	1		
18	4812117473	Locking clip for shaft	4		

Frame Fender module

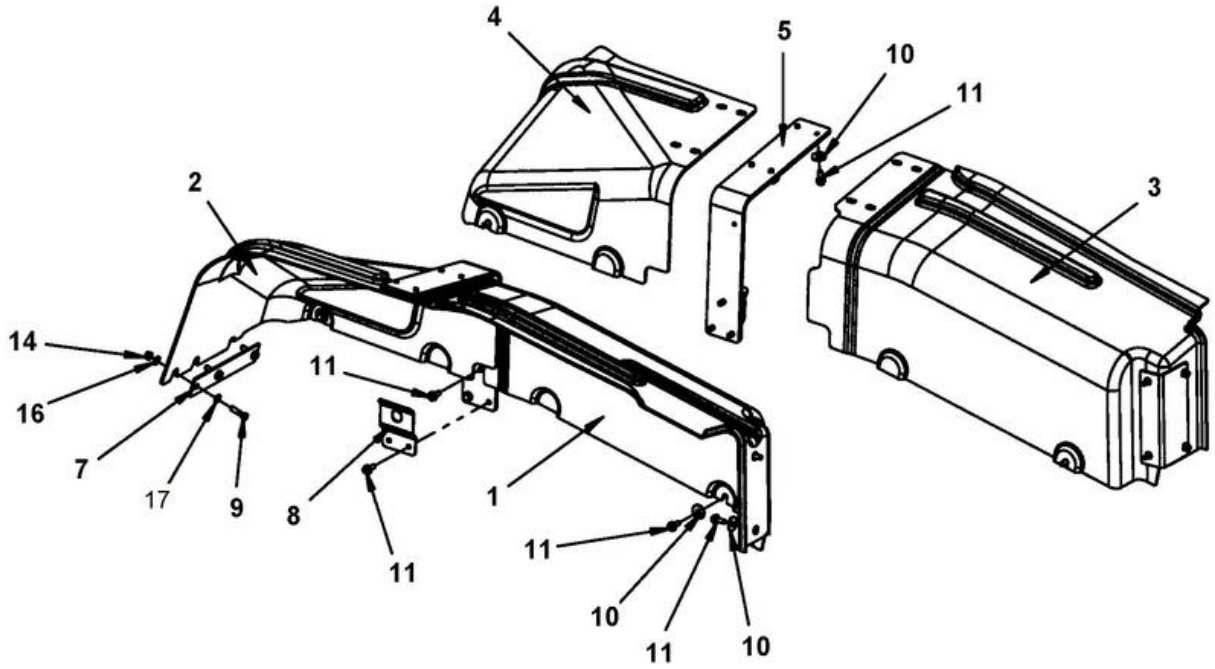

Item	Part No.	Name	Qty	L	SN INFO
1	4812115231	Fender	1		
2	4812115232	Fender	1		
3	4812115233	Fender	1		
4	4812115234	Fender	1		
5	4812115022	Bracket	2		
7	4812123793	Bracket	2		
8	4812116308	Bracket	2		
9	4700500032	Screw M10 x 55	6		
10	4700615061	Steel plain washer	16		
11	4700500509	Screw, M10x25, 8.8	22		
14	4700586018	Lock nut M10	5		
16	4700904230	Steel plain washer	5		
17	4700904557	Washer, 10.5x22x4 mm 300 HV	6		

Frame Hinge module

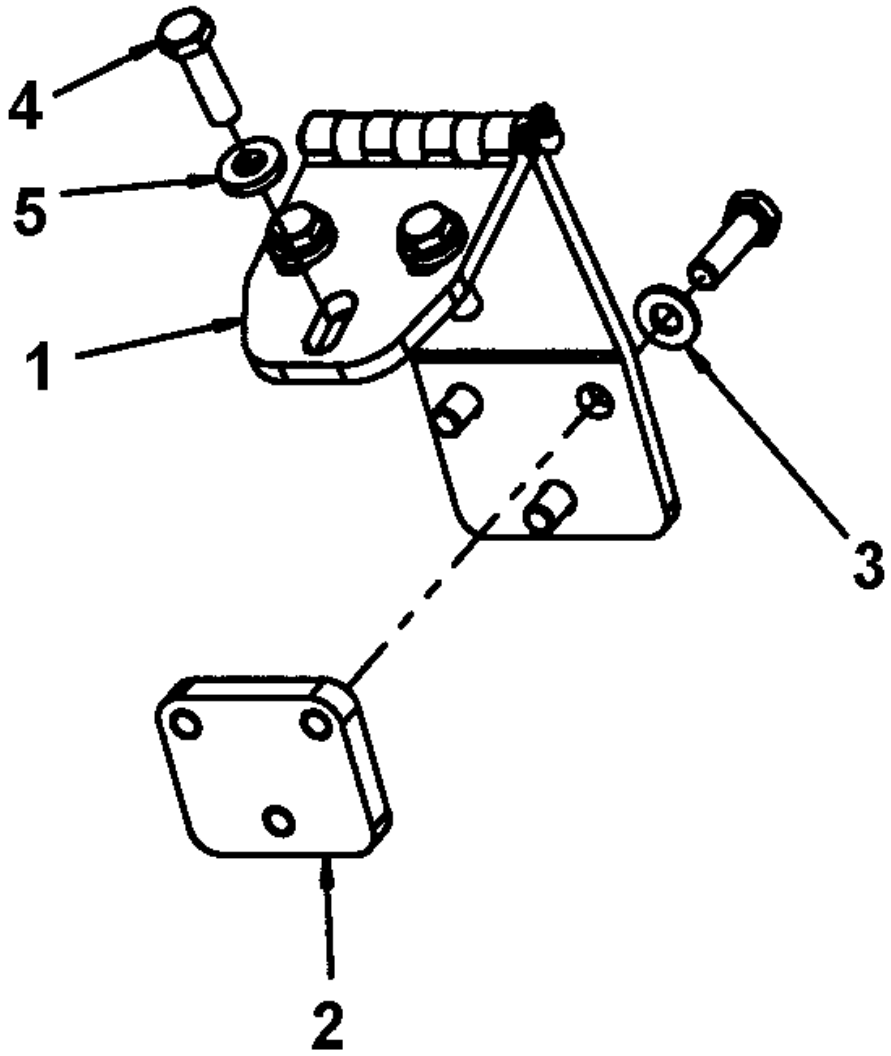

Item	Part No.	Name	Qty	L	SN INFO
1	4812112402	Hinge	2		
2	4700374799	Holder plate	2		
3	4700904230	Steel plain washer	6		
4	4700500030	Hexagon head screw	12		
5	4700904557	Washer, 10.5x22x4 mm 300 HV	6		

Frame Lock handle assy

Item	Part No.	Name	Qty	L	SN INFO
1	4812112845	Holder	1		
2	4812112846	Holder	1		
3	4812114318	Shock absorber	2		
4	4812115010	Lock pin	2		
5	4700904703	Plain washer 13x24x4 mm	1		
6	4700904231	Washer, 13x24x2 mm 300 HV	1		
7	4700904640	Washer, 8.4x 6x1.5 mm 300HV	8		
8	4700500022	Screw	4		
9	4700570005	Hexagon nut	6		
10	4700570007	Nut	2		
11	4700374854	Grab handle	1		
12	4700615050	Washer	1		
13	4700500075	Screw, M6-1,0x25 mm 8.8	1		

Frame Gas spring module

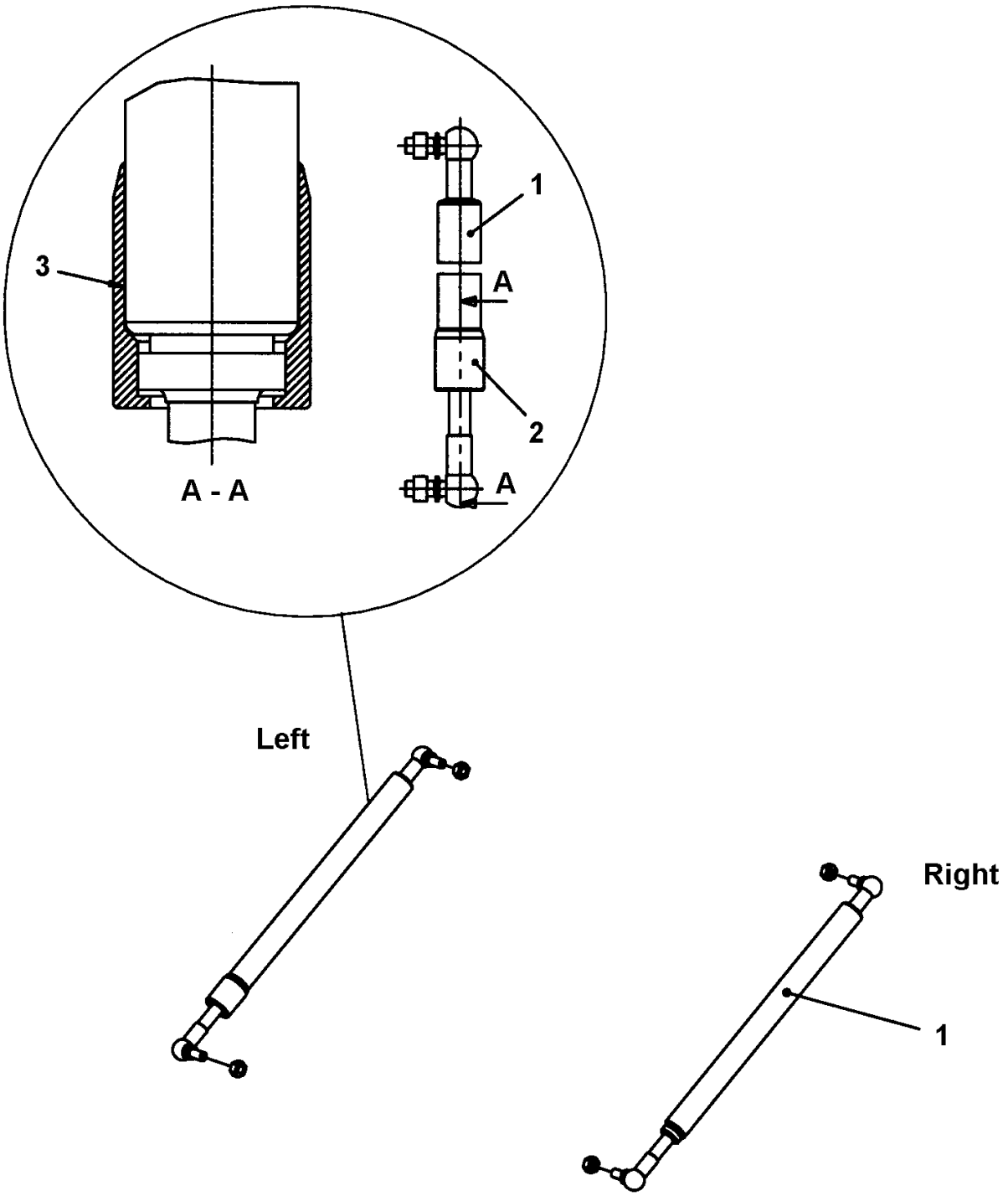

Item	Part No.	Name	Qty	L	SN INFO
1	4812112405	Gas spring	2		
2	4700382383	Gas spring protection	1	A	
3	-	Loctite 638	N		

Comments for Page: Gas spring module

(L)OCAL REMARKS

A | en_US | Only on left side.

Frame Safety link module

Item	Part No.	Name	Qty	L	SN INFO
1	4812112736	Safety link	1		
2	4812112952	Spacer	1		
3	4812112950	Control wire	1		
4	4812118853	Bracket	1		
5	4811000462	Compression spring	1		
7	4812117248	Cable tie with holder	1		
8	4812121201	Compression spring	1		
9	4700313041	Cable ties	2		
10	4700500031	Screw M10x40	1		
11	4700904230	Steel plain washer	1		

Drum Drum, cpl

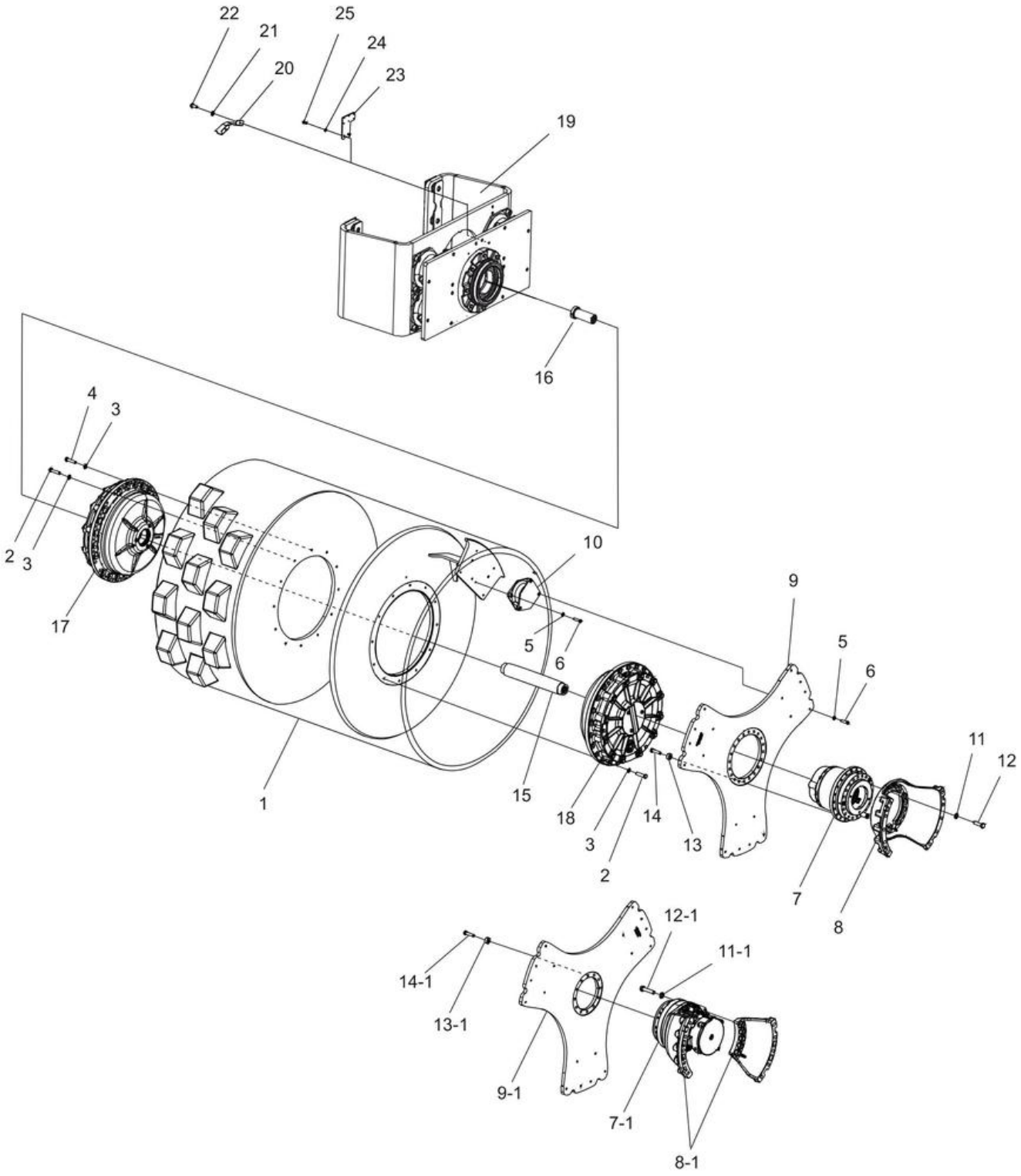

Item	Part No.	Name	Qty	L	SN INFO
1	4812113213	Drum	1	C	
1	4812113224	Drum	1		
1	4812113214	Drum, pad	1	B	
2	4700500082	Screw M16x70 8.8	23		
3	4700904232	Washer 15x30x4 300 HV	24		
4	4700384121	Air breather screw	1		
5	4700904231	Washer, 13x24x2 mm 300 HV	36		
6	4812110644	Hexagon screw w Tuflok M12x50 10.9 GEOMET	36		
7	4812113266	Drum gear	1	H	
7-1	4812112198	Hydraulic motor	1	G	
8	4812113281	Bracket	1		
8-1	4812113283	Bracket	1	G	
9	4812113699	Driving disc	1		
9-1	4812121512	Driving disc	1	G	
10	4812128927	Shock absorber	6		
11	4700904233	Steel plain washer 21x36x3	17		
11-1	4700904260	Washer	10	G	
12	4700947706	Hex. screw	17		
12-1	4812116183	Hexagon head screw	10	G	
13	4700384114	Spacer	28		
13-1	4700384114	Spacer	12	G	
14	4700947699	Screw, M16 x 65 mm 10.9 GEOMET®	20		
14-1	4700947698	Screw	12	G	
15	4812112465	Drive shaft	1		
16	-	Tooth wheel module	1		
17	-	Drum cartridge, vibration side (PD version)	1	B	
17	4812161263	Drum cartridge, vibration side (D version)	1	A	
17	-	Drum cartridge with shaft nut, vibration side (PD version)	1	B	
17	4812161264	Drum cartridge with shaft nut, vibration side (D version)	1	A	
18	-	Drum cartridge, drive side (PD version)	1	B	
18	4812161262	Drum cartridge, drive side (D version)	1	A	
19		Drum suspension	1		
20	4812116029	Protective casing	1	I	
21	4700904556	Steel plain washer 8,4x16x3,0	2	I	
22	4700500053	Screw, M8x20 mm 8.8 A2K	2	I	
23	4812123038	Plate	1	J	
24	4700904231	Washer, 13x24x2 mm 300 HV	2	J	

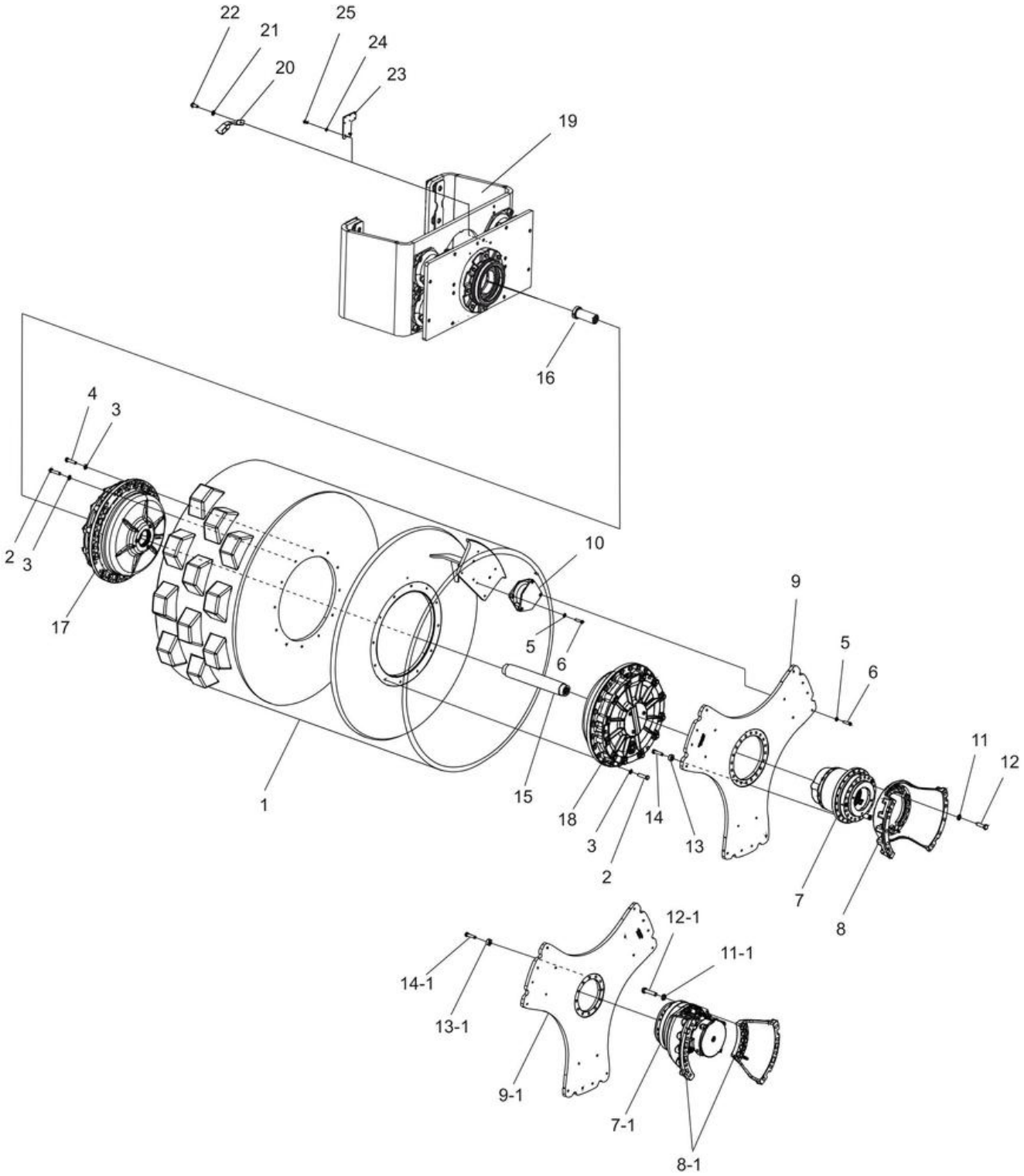
22
21
20
25
24
23
19
16
4
3
2
3
17
10
5
6
9
5
6
11
12
1
15
18
3
2
14
13
7
8
12-1
11-1
14-1
13-1
9-1
7-1
8-1

Item	Part No.	Name	Qty	L	SN INFO
25	4700500051	Hex. screw	2	J	

Comments for Page: Drum, cpl

(L)OCAL REMARKS

A | en_US | For D machines.

B | en_US | For PD machines.

C | en_US | Anti-spin system, option.

G | en_US | Used with smooth drum.

H | en_US | Used with pads drum.

I | en_US | Used with frequency sensor, option.

J | en_US | Used with compaction meter, option.

Drum 4812113266 Drum gear

Item	Part No.	Name	Qty	L	SN INFO
1	4812158777	Cover Assy	1		
2	4812158783	Oil breather plug	2		
3	--	Pad	1		
4	4812158778	O-ring	1		
5	-	Screw	13		
6	-	Sun gear	1		
7	-	Reduction assy	1		
8	-	Reduction assy	1		
9	-	Circlip	5		
10	-	Planetary assy	5		
11	-	Spacer	5		
12	-	Lock nut	1		
13	4812158779	Gear output	1		
14	4812158780	Seal	1		
15	-	Hub	1		
16	-	Brake shaft	1		
17	-	Sintered disc	6		
18	-	Steel disc	5		
19	-	Back-up ring	1		
20	4812158781	O-ring	1		
21	4812158782	O-ring	1		
22	-	Back-up ring	1		
23	-	Brake piston	1		
24	-	Lock nut	20		
25	-	Spring retainer	1		
26	-	Circlip	1		
27	-	Gasket	1		
28	-	Plug	1		
29	-	Extension	1		
30	-	Gasket	3		
31	-	Plug	2		

Drum 4812112198 Hydraulic motor

Item	Part No.	Name	Qty	L	SN INFO
-	4812112198	Hydraulic motor	1		
1	--	Valve poppet	1		
2	--	Screw	4		
3	--	Blanking plate	1		
4	--	Snap ring	1		
5	--	Spring washer	1		
6	--	Piston (brake)	1		
7	--	Brake housing	1		
8	4812158391	Brake disc & shim kit	1		
9	---	Brake disc	32		
10	---	Brake disc	33		
11	---	Shim assy	1		
12	----	Shim	1		
13	----	Shim	1		
14	----	Shim	1		
15	----	Shim	2		
16	--	Screw	10		
17	--	Screw	2		
18	--	Brake shaft	1		
19	4812158390	Multi disc brake seal kit	1	A	
20	---	Seal	2	A	
21	---	Seal	1	A	
22	---	Seal	1	A	
23	---	Seal kit	1	A	
24	----	Seal	1	A	
25	----	Seal	1	A	
26	----	Seal	1	A	
27	---	Shaft seal kit	1	A	
28	----	Brake bushing	1	A	
29	----	Seal	1	A	
30	----	Seal Support	1	A	
31	4812158393	Spool valve kit	1		
32	---	Snap ring	1		
33	---	Washer	1		
34	---	Spring	1		
35	---	Spool	1		
36	4812158392	Motor valve seal kit	1		
37	---	Seal	2	A	

Item	Part No.	Name	Qty	L	SN INFO
38	---	Seal	1	A	
39	---	Seal	2	A	
40	---	Seal kit	1	A	
41	----	Seal	1	A	
42	----	Seal	1	A	
43	----	Seal	1	A	
44	----	Seal	1	A	
45	----	Seal Support	1	A	
46	----	Seal Support	1	A	
47	----	Seal Support	1	A	
48	----	Seal Support	1	A	
49	--	Cylinder block kit	1		
50	---	Clip	10		
51	---	Half moon disc	20		
52	--	Piston kit	10		
53	---	Roller	1		
54	---	Piston bushing	1		
55	---	Piston	1		
56	---	Piston seal	1		
57	--	Screw	1		
58	--	Metallic plug	1		
59	--	Screw	16		
60	--	Cover plate	1		
61	--	Spring kit	1		
62	--	Control plate	1		
63	--	Cylinder block	1		
64	--	Cam	1		
65	4812158388	Roller bearing	1		
66	4812104465	Bearing support	1		
67	4812158387	Roller bearing	1		
68	4812104466	Motor shaft	1		
69	4812158389	Seal kit, bearing	1		
70	---	Roller bearing kit	1		
71	----	Snap ring	1		
72	----	Guide Ring	1		
73	----	Shim	1		
74	---	Seal	2	A	
75	---	Seal	1	A	

Item	Part No.	Name	Qty	L	SN INFO
76	---	Seal	1	A	
77	---	Deflector	1	A	
90	4812158394	Seal kit, cpl	1		

Comments for Page: 4812112198 Hydraulic motor

(L)OCAL REMARKS

A | en_US | Included in seal kit item 90

Drum Drum, cpl (HC)

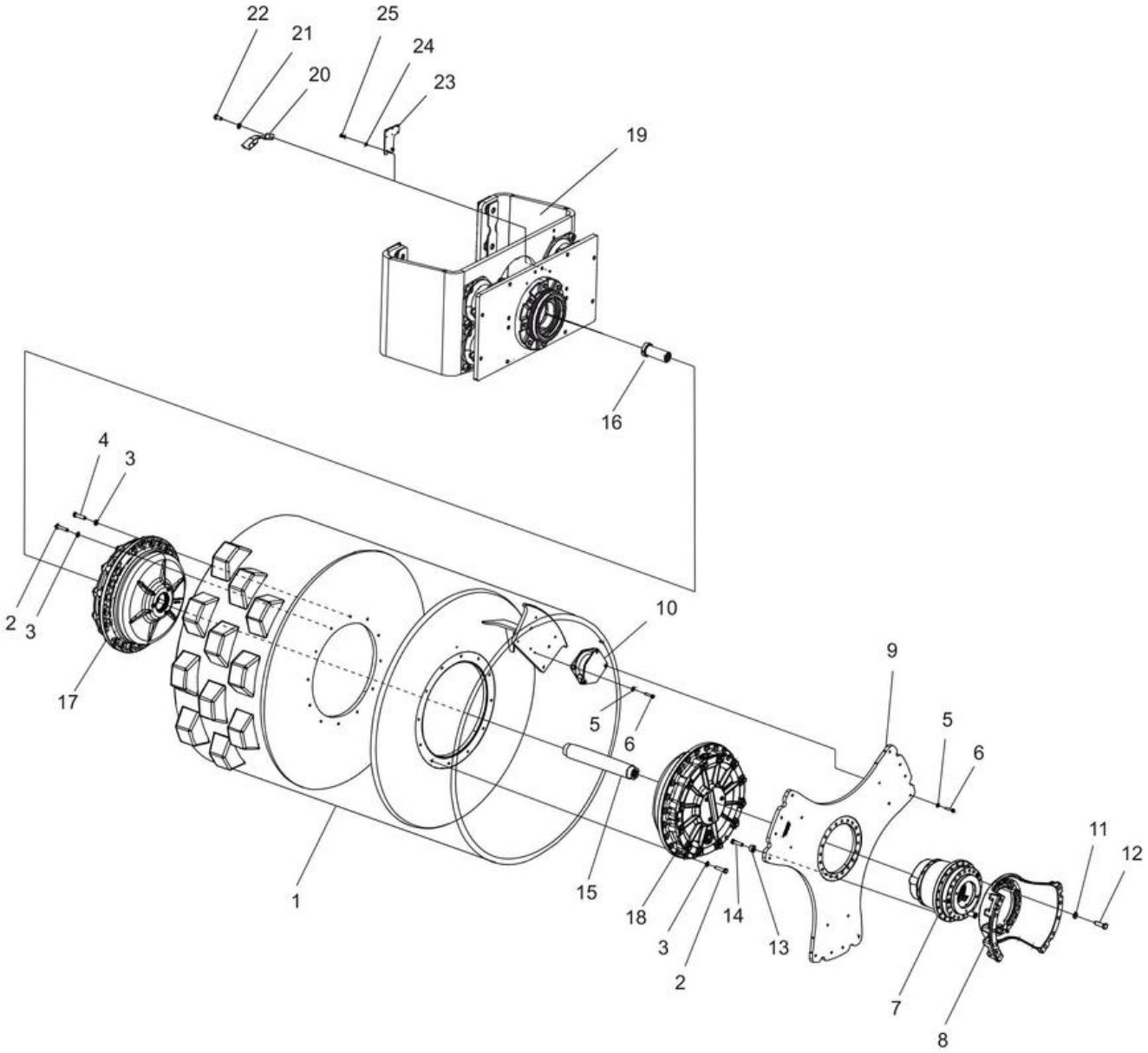

Item	Part No.	Name	Qty	L	SN INFO
1	4812129173	Drum (HC)	1		
1	4812129174	Drum, pad (HC)	1	B	
2	4700500082	Screw M16x70 8.8	23		
3	4700904232	Washer 15x30x4 300 HV	24		
4	4700384121	Air breather screw	1		
5	4700904231	Washer, 13x24x2 mm 300 HV	36		
6	4812110644	Hexagon screw w Tuflok M12x50 10.9 GEOMET	36		
7	4812128022	Drum gear	1		
8	4812111167	Bracket	1		
9	4812128039	Driving disc	1		
10	4812128927	Shock absorber	6		
11	4700904233	Steel plain washer 21x36x3	16		
12	4700929409	Hexagon head screw	16		
13	4812114777	Spacer	16		
14	4700500287	Screw M20x80 10,9	16		
15	4812112465	Drive shaft	1		
16	-	Tooth wheel module	1		
17	-	Drum cartridge, vibration side (PD version)	1	B	
17	4812161263	Drum cartridge, vibration side (D version)	1	A	
17	-	Drum cartridge with shaft nut, vibration side (PD version)	1	B	
17	4812161264	Drum cartridge with shaft nut, vibration side (D version)	1	A	
18	-	Drum cartridge, drive side (PD version)	1	B	
18	4812161262	Drum cartridge, drive side (D version)	1	A	
19		Drum suspension	1		
20	4812116029	Protective casing	1	I	
21	4700904556	Steel plain washer 8,4x16x3,0	2	I	
22	4700500053	Screw, M8x20 mm 8.8 A2K	2	I	
23	4812123038	Plate	1	J	
24	4700904231	Washer, 13x24x2 mm 300 HV	2	J	
25	4700500051	Hex. screw	2	J	

Drum Toothed wheel

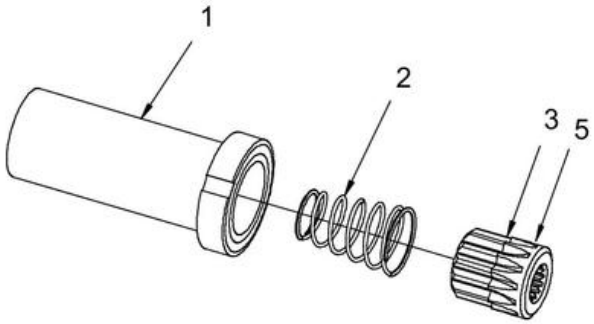

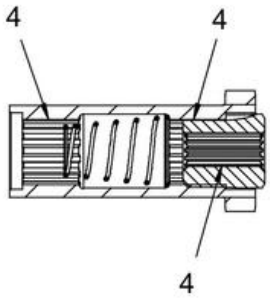

Item	Part No.	Name	Qty	L	SN INFO
1	4812122708	Wheel	1		
2	4700349715	Spring	1		
3	4700340862	Splined sleeve	1		
4	4812030096	Dynapac Roller Grease	N		
5	-	Loctite 638	N		

Drum cartridges (D-version) 4812161263 Drum cartridge, vibration side (D version)

Item	Part No.	Name	Qty	L	SN INFO
1	4812112784	Housing	1		
2	4812112455	Bearing housing	1		
3	4700390896	Spherical roller bearing	2		
4	4700904232	Washer 15x30x4 300 HV	12		
5	4700500082	Screw M16x70 8.8	12		
7	4812121209	Seal ring	1		
8	4700900776	O-ring	1		
9	4700900776	O-ring	1		
10	4700162027	Sealing	3		
11	4700500163	Hex. screw	3		
12	4700162017	Seal ring	3		
13	4700343744	Magnetic plug	2		
15	4700900775	Plug	6		
17	4812118814	Oil level glass	1		
18	4812121671	Eccentric shaft	1		
19	4700380018	SPLINED SHAFT MOUNT	2		
20	4700791156	Screw M10-1,5x55 12,9	16		

Drum cartridges (D-version) 4812161264 Drum cartridge with shaft nut, vibration side (D version)

Item	Part No.	Name	Qty	L	SN INFO
1	4812112784	Housing	1		
2	4812112455	Bearing housing	1		
3	4700390896	Spherical roller bearing	2		
4	4700904232	Washer 15x30x4 300 HV	12		
5	4700500082	Screw M16x70 8.8	12		
7	4812121209	Seal ring	1		
8	4700900776	O-ring	1		
9	4700900776	O-ring	1		
10	4700162027	Sealing	3		
11	4700500163	Hex. screw	3		
12	4700162017	Seal ring	3		
13	4700343744	Magnetic plug	2		
15	4700900775	Plug	6		
17	4812118814	Oil level glass	1		
18	4812121671	Eccentric shaft	1		
19	4700380018	SPLINED SHAFT MOUNT	2		
20	4700791156	Screw M10-1,5x55 12,9	16		
21	4700929447	V-ring	1		
22	4700167023	Seal ring	1		
23	4700343318	Bearing housing	1		
24	4700116041	Taper roller bearing	1		
25	4812112413	Shaft nut	1		

Drum cartridges (D-version) 4812161262 Drum cartridge, drive side (D version)

Item	Part No.	Name	Qty	L	SN INFO
1	4812112784	Housing	1		
2	4812111122	Bearing housing	1		
3	4700390896	Spherical roller bearing	2		
4	4700900776	O-ring	1		
5	4700904232	Washer 15x30x4 300 HV	12		
6	4700500082	Screw M16x70 8.8	12		
7	4700900775	Plug	6		
8	4700162017	Seal ring	3		
9	4700343744	Magnetic plug	2		
11	4700162027	Sealing	6		
12	4700500163	Hex. screw	6		
13	4812121209	Seal ring	1		
15	4700900776	O-ring	1		
16	4812118814	Oil level glass	1		
18	4812121671	Eccentric shaft	1		
19	4700380018	SPLINED SHAFT MOUNT	1		
20	4700791156	Screw M10-1,5x55 12,9	8		

Drum Drum suspension

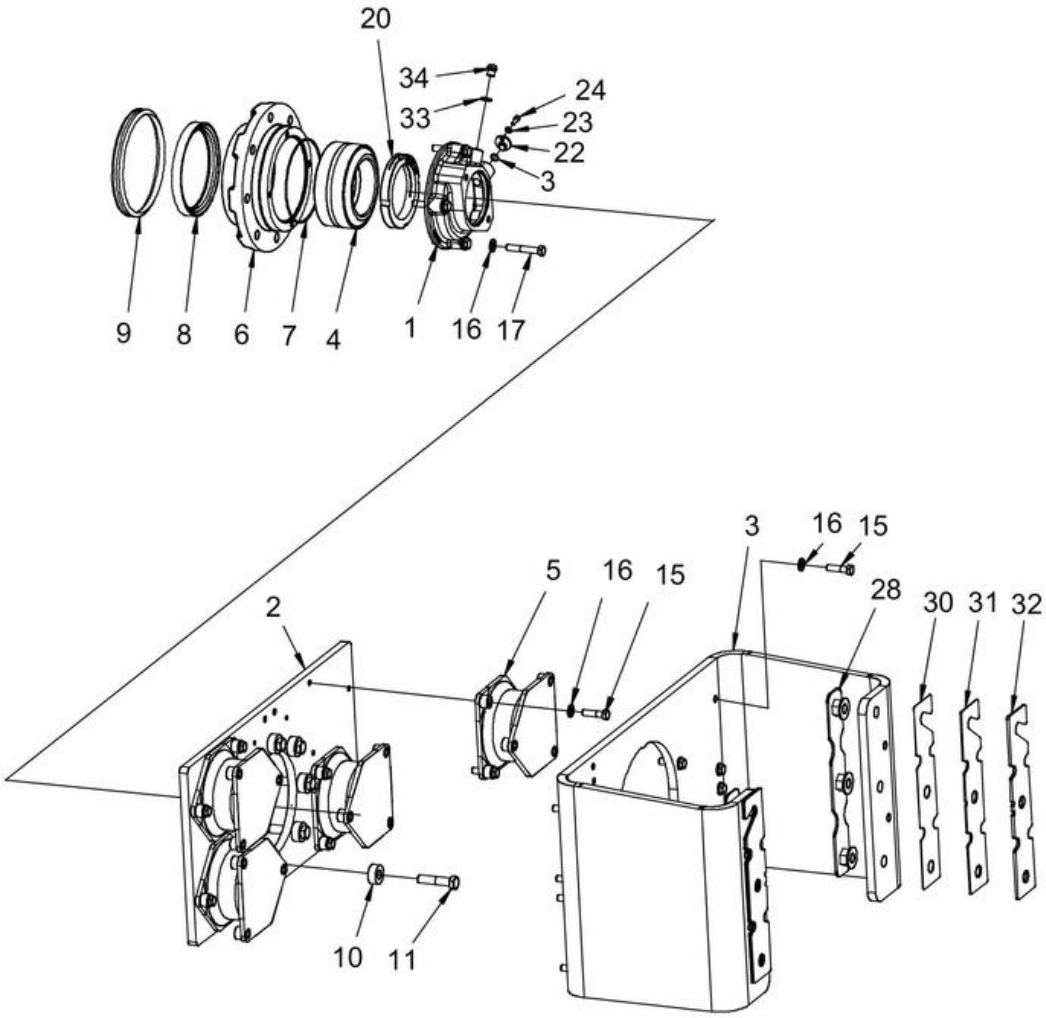

Item	Part No.	Name	Qty	L	SN INFO
1	4812125853	Motor adapter	1		
2	4812121506	Bracket	1		
3	4812121507	Bracket	1		
4	4700116041	Taper roller bearing	1		
5	4812113258	Shock absorber	4		
6	4700343318	Bearing housing	1		
7	4700160105	O-ring 70	1		
8	4700167023	Seal ring	1		
9	4700929447	V-ring	1		
10	4700384114	Spacer	8		
11	4700500082	Screw M16x70 8.8	8		
13	4700160188	O-ring	1		
15	4812110642	Hexagon screw w Tuflok M12x45 10.9 GEOMET	24		
16	4700904231	Washer, 13x24x2 mm 300 HV	28		
17	4700500133	Screw	4		
20	4812112413	Shaft nut	1		
22	4812123007	Plug	1		
23	4700904228	Washer 6,4x12x1,5	1		
24	4700508002	Cylinder screw	1		
28	4812114340	Nut-plate	2		
30	4812114344	Shim t=1mm	N		
31	4812114345	Shim t=3mm	N		
32	4812114346	Shim t=5mm	N		
33	4700162024	Washer sealing	1		
34	4700903190	Steel plug threaded	1		

Drum Pad shell, option

Item	Part No.	Name	Qty	L	SN INFO
KIT	4812117550	Bolt on pad shell kit	1		
1	4812114382	Pad shell	2		
2	4700500207	Hexagon head screw	4		
3	4700586022	Lock nut	12		
4	4700904233	Steel plain washer 21x36x3	12		
5	4700500286	Screw M20-2,5x140 8.8	8		
7	4700382572	Mounting screw	4		
8	4700570015	Lock nut	4		
9	4700382571	Hexagon sleeve	1		

Engine Engine mounting

Item	Part No.	Name	Qty	L	SN INFO
2	4812124295	Diesel engine, Cummins QSF3.8 (89kw) T4F	1		
11	4812112355	Holder	1		
12	4700395816	Plug socket 24V	1		
20	4700355704	Spacer sleeve	4		
21	4812122202	Bracket	2		
22	4700791344	Screw	8		
23	4700902286	Lock nut, M8x1.25 mm A2K	4		
25		Belt guard module			
26		Bracket module			
31	4812112015	Coupling	1		
33	4700372772	Bracket	1		
34	4700508096	Hexagon socket head cap screw	12		
35	4700904637	Washer	12		
37	4700502036	Screw 3/8"-16UNCx11/4"8.8	8		

Engine 4812124295 Engine Cummins QSF 3.8

Item	Part No.	Name	Qty	L	SN INFO
1	4812160892	Alternator	1		
2	4812159499	Starter motor	1		
3	4812160893	Dipstick	1		
4	4812161372	Breather, crankcase	1		
5	4812161373	Breather, oil separator	1		
6	4812159964	Seal, oil	1		
7	4812161374	Seal, oil	1		
8	4812161375	Gasket, front cover	1		
9	4812161376	Seal, oil pan	1		
10	4812161377	Plug, threaded	1		
11	4812161378	Seal, d ring	1		
12	4812160896	Gasket, valve cover	1		
13	4812160895	Cap, filler	1		
14	4812161379	Seal, grommet	1		
15	4812161380	Tube, fuel supply	1		
16	4812161381	Tube, fuel supply	1		
17	4812101815	EGR temperature sensor	1		
18	4812101816	EGR pressure sensor	1		
19	4700929185	Clamp	1		
20	4700940533	Oil pressure sensor	1		
21A	4812160897	Belt, V Ribbed	1		
21B	-	Belt, AC compressor	1		

Engine Belt guard module

Item	Part No.	Name	Qty	L	SN INFO
1	4812122765	Belt guard	1		
2	4812122766	Bracket	1		
3	4812122767	Bracket	1		
4	4812122768	Bracket	1		
5	4700904229	Washer, 8.4x 6x1.5 mm 300HV	8		
6	4700500021	Screw, M8x20 mm 8.8 A2K	4		
7	4812118203	Shock absorber	4		
8	4700928441	Washer, 21 x 45 mm	4		
9	4700500030	Hexagon head screw	4		
10	4700508019	Cylinder screw	4		

Engine Bracket module

Item	Part No.	Name	Qty	L	SN INFO
1	4812121732	Bracket	1		
2	4812121733	Bracket	1		
3	4812121872	Bracket	1		
4	4812114396	Shock absorber	4		
5	4700904558	Washer, 17x30x6 mm 300 HV	9		
6	4700586021	Lock nut	5		
7	4700359989	Spacer sleeve	8		
8	4700904231	Washer, 13x24x2 mm 300 HV	4		
9	4700500056	Screw, M12x45 mm 8.8 A3K	8		
10	4812118287	Strut	1		
11	4812118432	Spacer sleeve	2		
12	4700500107	Screw M16x100 8.8	1		
13	4700500082	Screw M16x70 8.8	1		
14	4700500198	Wheel bolt	2		
15	4700500111	Screw, M12x055, 8.8	2		

Engine Air cleaner module

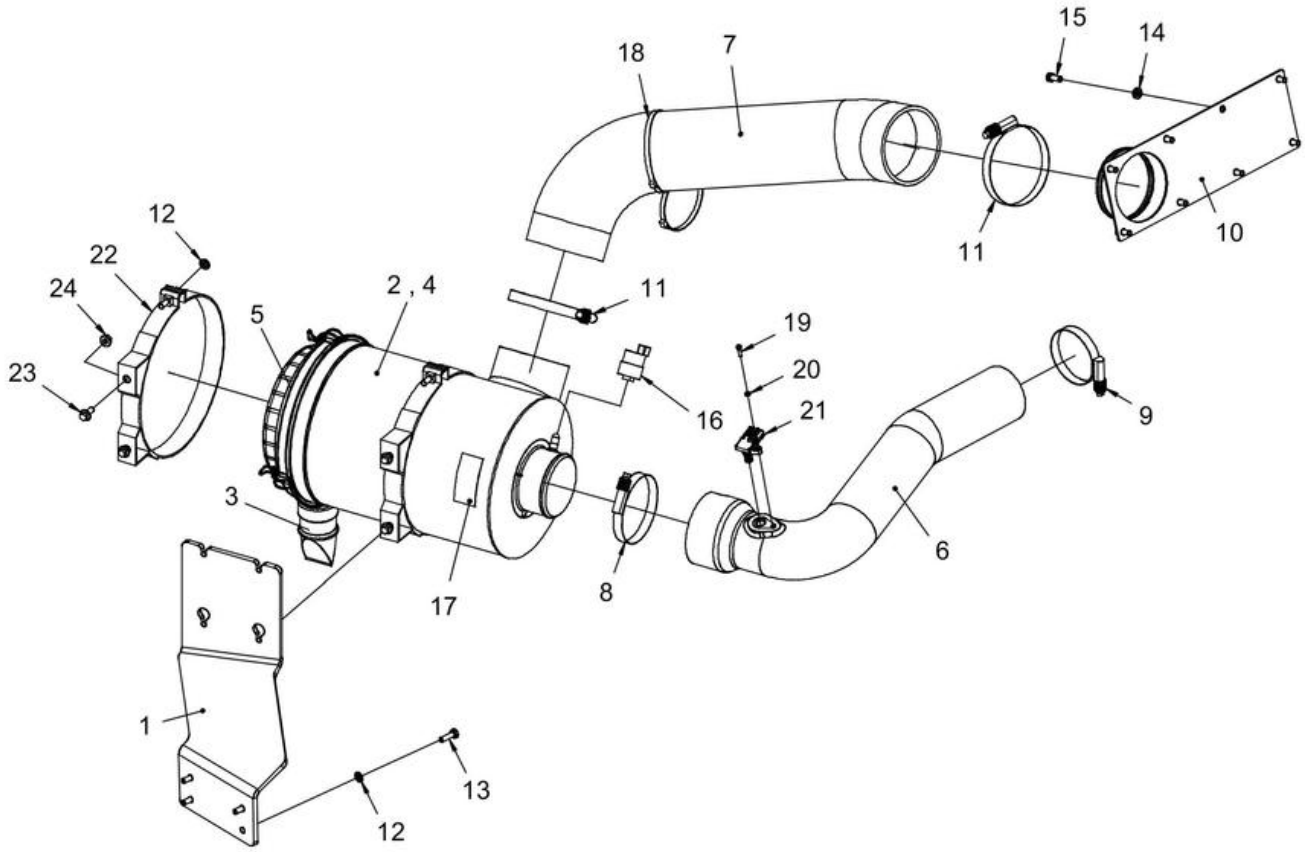

Item	Part No.	Name	Qty	L	SN INFO
1	4812114722	Bracket	1		
2	4700394679	Air cleaner	1		
3	4700908399	Vacuator valve	1		
4	4700394686	Air filter, main	1		
4	4700394687	Air filter, safety	1		
5	4700395022	Cover	1		
6	4812124518	Air intake hose	1		
7	4812114724	Air intake hose	1		
8	4812126188	Clamp	1		
9	4812126568	Clamp	1		
10	4812113573	Air intake duct	1		
11	4700313105	Hose clamp	2		
12	4700904229	Washer, 8.4x 6x1.5 mm 300HV	6		
13	4700500021	Screw, M8x20 mm 8.8 A2K	4		
14	4700904556	Steel plain washer 8,4x16x3,0	8		
15	4700500053	Screw, M8x20 mm 8.8 A2K	8		
16	4700904575	Indicator	1		
17	4700791642	Decal "WARNING" Use of starting fluid prohib.	1		
18	4812117248	Cable tie with holder	1		
19	4700508022	Hexagon socket head cap screw	1		
20	4700904698	Plain washer	1		
21	4812123690	Sensor	1		
22	4700813791	Mounting band	2		
23	4700902041	Screw, M8x25mm 8.8 A2K	4		
24	4700903586	Nut, M8x1.25 mm A2K	4		

Engine Cooling system

Item	Part No.	Name	Qty	L	SN INFO
1	4812121866	Hydraulic oil cooler	1		
2	4812112097	Shock absorber	4		
3	4812121815	Charge air cooler	1		
4	4812112097	Shock absorber	4		
5	4812122151	Charge air hose	1		
6	4812127229	Charge air hose	1		
7	4700392810	Clamp	2		
8	4700386966	Hose clamp 2.3/4"-3.5/8"	1		
9	4700386966	Hose clamp 2.3/4"-3.5/8"	1		
10	4812123010	Holder	1		
11	4812118128	Clamp	1		
12	4812117602	Strip	0,4		
13	4700792119	Screw, M6x16 mm 8.8 A2K	1		
14		Cooler stand module			
15		Water cooler and hoses			
16		Coolant drainage			

Engine Cooler stand module

Item	Part No.	Name	Qty	L	SN INFO
1	4812118494	Cooler stand	1		
2	4812110768	Bracket	1		
3	4812110769	Bracket	1		
4	4812122556	Fan casing	1		
6	4812111264	Cover plate	1		
7	4812113878	Shim	N		
8	4812113879	Shim	N		
9	4700904231	Washer, 13x24x2 mm 300 HV	4		
10	4700500037	Hex. screw	4		
12	4700500053	Screw, M8x20 mm 8.8 A2K	30		
14	4700904556	Steel plain washer 8,4x16x3,0	28		
15	4700904640	Washer, 8.4x 6x1.5 mm 300HV	2		
16	4700392075	Bracket	4		
17	4812112097	Shock absorber	4		
18	4700791460	Edge strip	0,77		
23	4812114465	Grommet with membrane	1		
24	4812113708	Rubber strip	1,24		
25	4812113708	Rubber strip	1,24		
26	4700391299	Rubber strip	0,79		
27	4700391299	Rubber strip	0,85		
28	4700391299	Rubber strip	0,85		
31	4812113820	Cover plate	1		
32	4700288129	Rubber edge trim	0,93		
33	4700288129	Rubber edge trim	0,81		
34	4700903423	Safety label, Rotating engine components	2		
35	4812119127	Grommet with membrane	1		
36	4700383024	Spacer sleeve	4		
37	4700925519	Screw M12x55 10.9 GEOMET	4		
38	4812110930	Nut-plate	2		
39	4700904231	Washer, 13x24x2 mm 300 HV	10		
40	4700947689	Hex. head screw M12	10		

Engine Water cooler and hoses

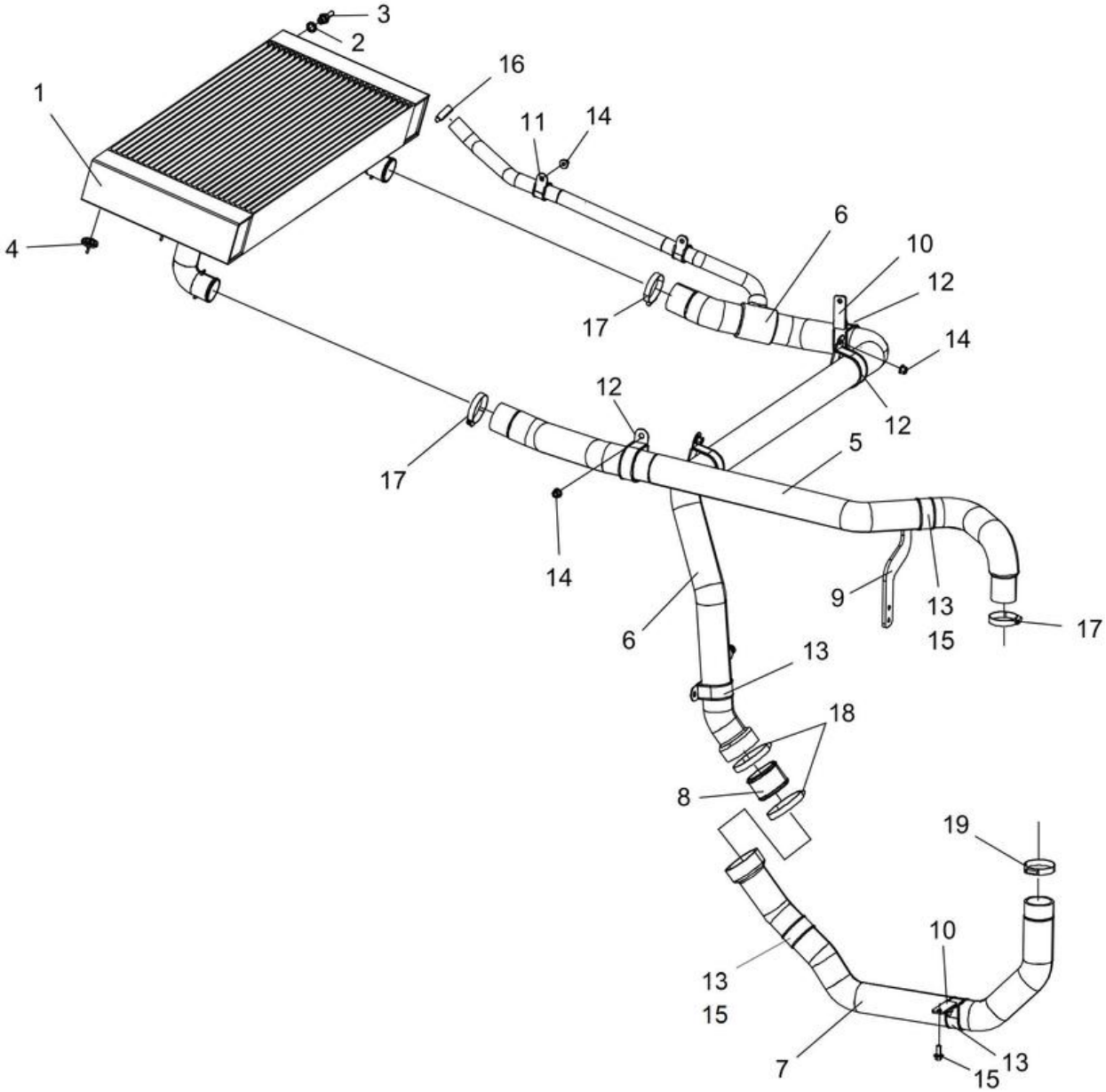

Item	Part No.	Name	Qty	L	SN INFO
1	4812121925	Water cooler	1		
2	4700162004	Sealing	1		
3	4700792322	Hose connection	1		
4	4812112097	Shock absorber	4		
5	4812122106	Coolant hose	1		
6	4812122107	Coolant hose	1		
7	4812122189	Coolant hose	1		
8	4812121626	Pipe	1		
9	4812122188	Bracket	1		
10	4812116107	Holder	2		
11	4700921050	Clamp	2		
12	4700903703	Clamp	4		
13	4700903703	Clamp	4		
14	4700902286	Lock nut, M8x1.25 mm A2K	8		
15	4700500505	Screw, M8x20 mm 8.8 A2K	3		
16	4700313004	Hose clamp 19-29mm	1		
17	4700313010	Hose clamp	3		
18	4700313022	Hose clamp	2		
19	4700313009	Hose clamp	1		

Engine Coolant drainage

Item	Part No.	Name	Qty	L	SN INFO
1	4812125542	Bracket	1		
2	4700500505	Screw, M8x20 mm 8.8 A2K	2		
3	4812122243	Coolant hose	0,5		
4	4700313003	Hose clamp	2		
5	4700792502	Hose connection	1		
6	4700234582	Bulkhead union elbow 90	1		
7	4700230384	Cap	1		
8	4700379992	Plug	1		

Engine Expansion tank system

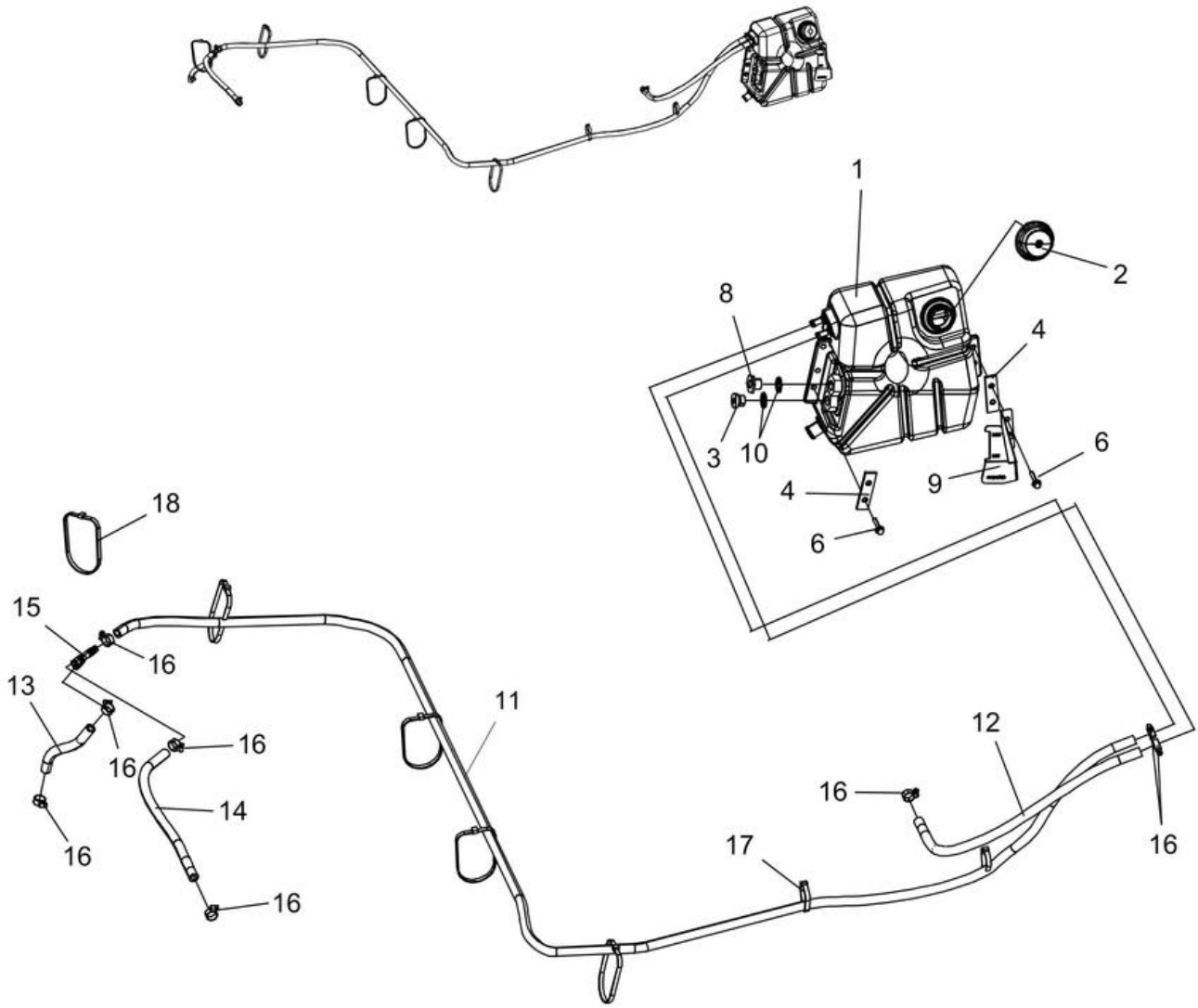

Item	Part No.	Name	Qty	L	SN INFO
1	4812117379	Expansion tank, plastic	1		
2	4700903714	Cooler cap	1		
3	4700792295	Steel plug	1		
4	4700381413	Washer	2		
6	4700500503	Screw, M6x30 mm 8.8 A2K	4		
8	4812124210	Adapter	1		
9	4812120663	Bracket	1		
10	4700160080	O-ring	2		
11	4700904985	Fuel hose, fire-resistant	2,75		
12	4700904985	Fuel hose, fire-resistant	0,52		
13	4700904985	Fuel hose, fire-resistant	0,18		
14	4700904985	Fuel hose, fire-resistant	0,35		
15	4700791267	Hose connection	1		
16	4700313001	Hose clamp, 11-18 x 9 mm	8		
17	4700313102	Cable ties	2		
18	4700313102	Cable ties	5		

Engine Fuel system

Item	Part No.	Name	Qty	L	SN INFO
1		Fuel hose assembly	1		
2		Fuel tank module	1		
3	4812120376	Bracket	1		
4	4700380436	Fuel cap	1		
5	4700904556	Steel plain washer 8,4x16x3,0	3		
6	4700500021	Screw, M8x20 mm 8.8 A2K	3		
7		Draining module	1		

Engine Fuel hose assembly

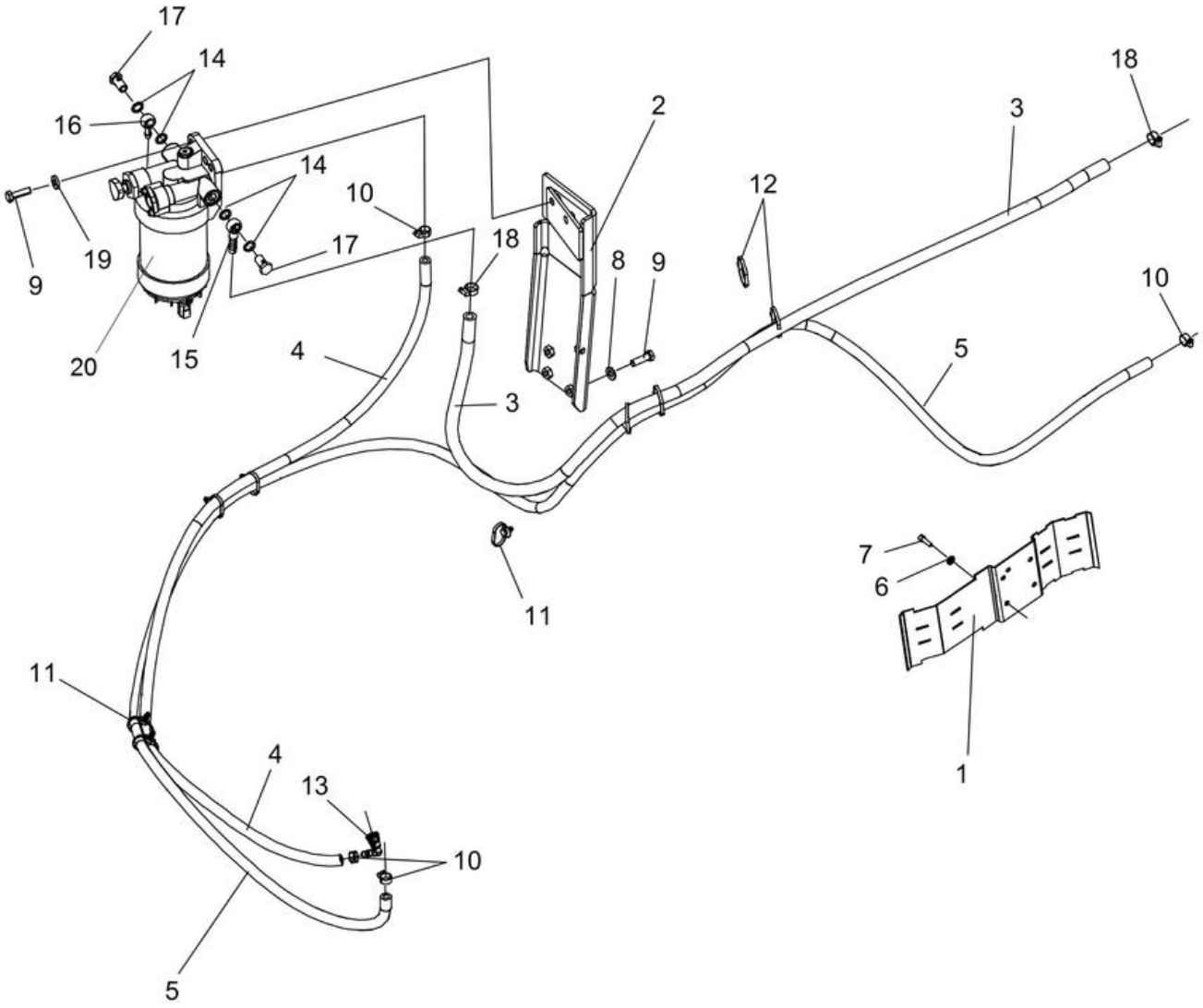

Item	Part No.	Name	Qty	L	SN INFO
1	4812114212	Bracket	1		
2	4812115902	Bracket	1		
3	4700904986	Fuel hose, fire-resistant	1,9		
4	4700904985	Fuel hose, fire-resistant	2,0		
5	4700904985	Fuel hose, fire-resistant	3,5		
6	4700603001	Washer	2		
7	4700508025	Screw, M6x20 mm 8.8 A2K	2		
8	4700904230	Steel plain washer	2		
9	4700500030	Hexagon head screw	4		
10	4700313001	Hose clamp, 11-18 x 9 mm	4		
11	4700792441	Cable tie with holder	5		
12	4700313041	Cable ties	N		
13	4812117789	Quick coupling	1		
14	4700747282	Copper washer	4		
15	4812117397	Banjo coupling	1		
16	4700330170	Banjo coupling	1		
17	4700330171	Hollow screw, M14	2		
18	4700313002	Hose clamp	2		
19	4700904557	Washer, 10.5x22x4 mm 300 HV	2		
20	4812162173	Pre-fuel filter, cpl	1		
20	4812160783	Fuel/Water separator filter	1		

Engine Fuel tank module

Item	Part No.	Name	Qty	L	SN INFO
1		Fuel tank	1		
2		Brackets, fuel tank	1		
3	4700904229	Washer, 8.4x 6x1.5 mm 300HV	8		
4	4700500024	Screw M8x45	16		
5	4700904640	Washer, 8.4x 6x1.5 mm 300HV	16		
6	4700500021	Screw, M8x20 mm 8.8 A2K	8		

Engine Fuel tank

Item	Part No.	Name	Qty	L	SN INFO
1	4812122720	Fuel tank	1		
2	4812114949	Gasket	1		
3	4812114813	Adapter	1		
4	4812114935	Level sensor	1		
5	4700904281	Washer, 5,3x10x1 300HV	5		
6	4700904206	Screw, M6x16 mm	18		
7	4700513012	Screw, M6 x 20 mm 10.9 GEOMET®	5		
8	4812116834	Gasket	2		
9	4812118275	Fuel pipe	1		
10	4812116836	Fuel pipe	1		
12	4812112655	Flange gasket	1		
13	4812112656	Flange connection	1		
14	4812118670	Fuel hose	1		
15	4700313033	Hose clamp	2		
17	4700500009	Hex. screw	5		
19	4812122791	Rubber cloth	1		
20	4700395785	Expansion rivet	3		

Engine Brackets, fuel tank

Item	Part No.	Name	Qty	L	SN INFO
1	4812122396	Bracket	1		
2	4812112344	Bracket	1		
3	4812112639	Spacer	4		
4	4812112761	Rubber cloth	6		
5	4812128304	Bracket	1		
6	4812121993	Bracket	1		
7	4700791806	Stud	1		
8	4700902286	Lock nut, M8x1.25 mm A2K	1		
9	4700926911	Rubber strip	6XL		
10	4812112777	Bracket	2		
11	4812112776	Bracket	2		
12	4812112647	Bracket	1		
13	4812114913	Bracket	1		

Engine Fuel draining module

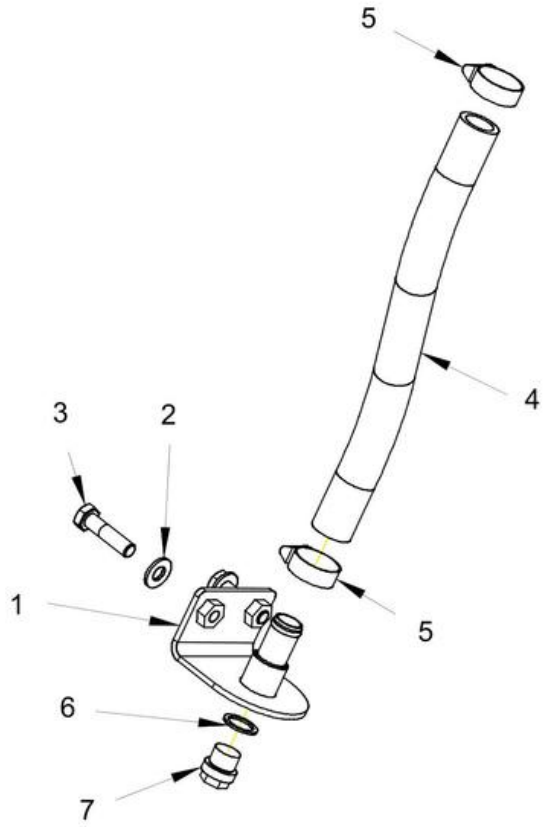

Item	Part No.	Name	Qty	L	SN INFO
1	4812120205	Bracket	1		
2	4700904230	Steel plain washer	2		
3	4700500031	Screw M10x40	2		
4	4700904988	Fuel hose	0,5		
5	4700313006	Hose clamp	2		
6	4700330331	Washer 18,2x23,9x1,5	1		
7	4700232160	Plug screw	1		

Engine Exhaust system

Item	Part No.	Name	Qty	L	SN INFO
1	4812123815	Bracket	1		
2	4812123816	Bracket	1		
3	4812123820	Bracket	2		
4	4700904557	Washer, 10.5x22x4 mm 300 HV	13		
5	4700500029	Steel plain washer	7		
6	4812123821	Clamp	2		
7	4812123600	Diesel Oxidation Catalyst	1		
8	4700904228	Washer 6,4x12x1,5	2		
9	4700500015	Hex. screw	2		
10	4812122624	Bracket	2		
11	4700500033	Screw M10-1,5x60 8,8	4		
12	4812122027	Clamp	2		
13	4812124317	Catalytic converter	1		
14	4812122028	Bend 90	1		
15	4812122942	Mixing pipe	1		
16	4700904229	Washer, 8.4x 6x1.5 mm 300HV	2		
17	4700500019	Hexagon screw	2		
18	4812121795	V-band clamp	2		
19	4812121797	Gasket	2		
20	4812123819	Exhaust pipe	1		
21	4812121796	V-band clamp	3		
22	4812121798	Gasket	3		
23	4812123822	Bracket	1		
24	4700500028	Steel plain washer	2		
25	4700923269	Clamp	1		
26	4700570005	Hexagon nut	3		
27	4700904556	Steel plain washer 8,4x16x3,0	19		
28	4700904241	Screw	8		
29	4700792441	Cable tie with holder	6		
30	4812118499	Bracket	1		
31	4812122030	Exhaust pipe	1		
32	4812125879	Clamp	1		
33	4811000481	Pipe clamp	1		
34	4812123818	Exhaust pipe	1		
35	4812123817	Exhaust pipe	1		
36	4812120857	Gasket	1		
37	4812120858	V-band clamp	1		
38	4700904231	Washer, 13x24x2 mm 300 HV	6		

Item	Part No.	Name	Qty	L	SN INFO
39	4700500056	Screw, M12x45 mm 8.8 A3K	6		
40	4811000481	Pipe clamp	1		
41	4812124003	Holder	1		
42	4700500053	Screw, M8x20 mm 8.8 A2K	2		
50	-	Delivered with diesel engine			

Engine Urea/DEF equipment system

Item	Part No.	Name	Qty	L	SN INFO
1	4812124453	Bracket	1		
2	4812121747	Shut off valve	1		
3	4700904281	Washer, 5,3x10x1 300HV	2		
4	4700500003	Hex. screw	2		
5	4700904228	Washer 6,4x12x1,5	2		
6	4700500040	Screw, M6x20 mm 8.8 A2K	2		
7	4812124167	T-adapter	2		
12	5541574800	Pipe clamp, double	1		
13	4700792500	Stud	1		
14	4812122146	Hose connection	1		
15	4812122243	Coolant hose	0,6		
16	4812122243	Coolant hose	1,15		
17	4812122243	Coolant hose	1,6		
18	4812122244	Coolant hose	1,7		
19	4812122244	Coolant hose	1,9		
20	4812122243	Coolant hose	2,03		
21	4812122243	Coolant hose	2,83		
22	4812122213	Quick coupling	1		
23	4700313003	Hose clamp	10		
24	4700313002	Hose clamp	4		
25	4700160080	O-ring	1		
30	4700792686	Cable tie with holder	1		
31	4700904640	Washer, 8.4x 6x1.5 mm 300HV	1		
32	4700586003	Lock nut M8	1		
33	4812123157	Quick coupling	1		
34	4700313041	Cable ties	4		
40	-	Urea pump and hoses			
41		DEF equipment module			

Engine Urea pump and hoses

Item	Part No.	Name	Qty	L	SN INFO
1	4812121697	Bracket	1		
2	4812121808	Urea pump	1		
2.1	4812160891	Urea pump filter	1		
3	4700904229	Washer, 8.4x 6x1.5 mm 300HV	3		
4	4700500115	Screw	3		
5	4700904556	Steel plain washer 8,4x16x3,0	4		
6	4700500053	Screw, M8x20 mm 8.8 A2K	4		
7	4812122144	Urea hose	1		
8	4812125625	Urea hose	1		
9	4812125626	Urea hose	1		
10	4700792500	Stud	1		
11	4700287295	Clamp	1		
12	4812113941	Hose holder clip	1		
13	4700904640	Washer, 8.4x 6x1.5 mm 300HV	1		
14	4700586003	Lock nut M8	1		
15	4700313041	Cable ties	2		
16	4700792667	Cable tie holder	1		

Engine DEF equipment module

Item	Part No.	Name	Qty	L	SN INFO
1		DEF Box	1		
2	4812124314	DEF/UREA tank	1		
3	4812122326	Holder	1		
4	4812122327	Holder	2		
5	4700791614	Cup square neck bolt M08x030H 8.8	2		
6	4700902286	Lock nut, M8x1.25 mm A2K	2		
7	4812122328	Cover	1		
8	4700904640	Washer, 8.4x 6x1.5 mm 300HV	5		
9	4700500022	Screw	5		
10	4700904556	Steel plain washer 8,4x16x3,0	2		
11	4700500021	Screw, M8x20 mm 8.8 A2K	2		
12	4700377744	Reflector, yellow	1		
14	4812124450	Holder	1		

Engine 4812124314 DEF/UREA tank

Item	Part No.	Name	Qty	L	SN INFO
1	-	Tank	1		
2	4812160955	Drain plug	1		
3	4812160951	Cap	1		
4	4812163192	Multi-function head	1		
5	4812160953	O-ring	1		
6	4812160952	Sensor kit	1		
7	4812160954	Suction filter (Urea)	1		

Engine DEF Box

Item	Part No.	Name	Qty	L	SN INFO
1	4812125078	DEF Box	1		
1.1	4812124447	Protective hood	1		
1.2	4812124448	Cover	1		
1.3	4700389857	Threaded plate	3		
1.4	4700513012	Screw, M6 x 20 mm 10.9 GEOMET®	6		
2	4700202057	Rubber edge trim	1,585		
3	4812121914	Lock with bracket	1		
4	4700902284	Nut M5	4		
5	4812122933	Latch	1		
6	4812122861	Cover	1		
7	4700901832	Hexagon screw with flange M8x16	2		
8	4700202042	Rubber strip	0,06		
9	4700792083	Plug	4		

Engine Step, DEF box

Item	Part No.	Name	Qty	L	SN INFO
1	4812124458	Bracket	1		
2	4812116651	Shaft	1		
3	4812124459	Step	1		
4	4700150008	Circlip	2		
5	4700475064	Lock	1		
6	4700927233	Nut	1		
7	4700792601	Shock absorber	1		
8	4700500021	Screw, M8x20 mm 8.8 A2K	2		
9	4700570005	Hexagon nut	3		
10	4700394806	Extension spring	1		
11	4812114318	Shock absorber	1		
12	4700904230	Steel plain washer	6		
13	4700500029	Steel plain washer	4		
14	4812124460	Bracket	1		
15	4700570006	Hexagon nut	2		

Transmission Rear axle and wheels

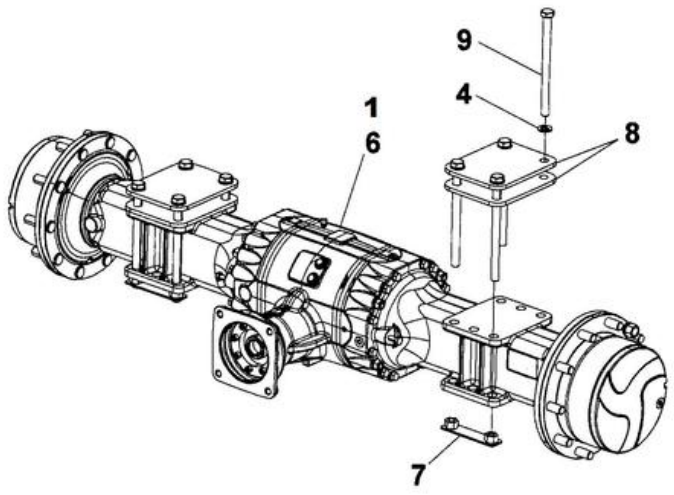

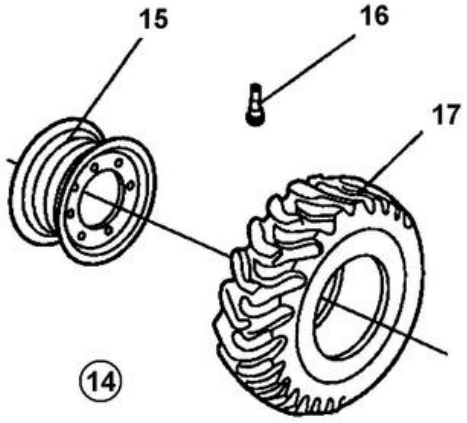

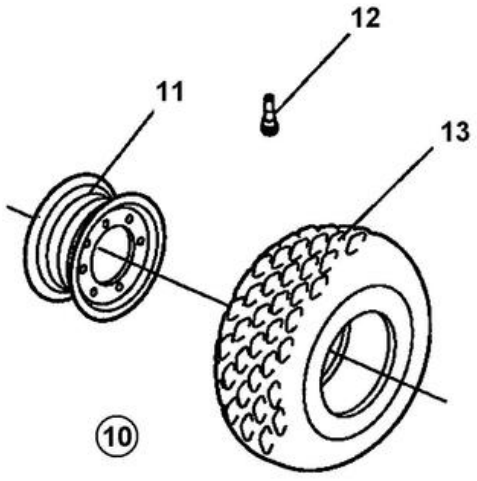

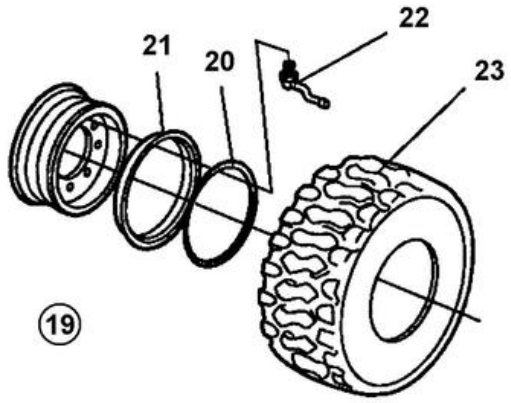



Item	Part No.	Name	Qty	L	SN INFO
1	4812113340	Rear axle, limited slip	1		
2	4812114933	Spacer	4		
3	4812114934	Nut-plate	4		
4	4700904233	Steel plain washer 21x36x3	8		
5	4700904280	Hexagon head screw	8		
6	4812113341	Rear axle No spin	1		
7	4812112393	Nut-plate	4		
8	4812112435	Spacer	4		
9	4700904353	Hexagon head screw	8		
10	-	Wheel, cpl	2	A	
11	4812120674	Rim	1		
12	4700792261	Air charging valve Straight	1		
13	4700390591	Tyre	1		
14	-	Tractor wheel, cpl	2		
15	4812120674	Rim	1		
16	4700792261	Air charging valve Straight	1		
17	4700390589	Tyre	1		
18	-	Wheel, cpl	2	B	
19	4812120676	Rim cpl	1		
20	4700901443	Snap ring	1		
21	4700901444	Side ring	1		
22	4700791175	Air charging valve	1		
22	4700791176	Valve foot	1		
23	4700901218	Tyre	1		
24	4700903985	Decal "SAFETY	4	C	

Comments for Page: Rear axle and wheels

(L)OCAL REMARKS

A | en_US | All-weather wheel.

B | en_US | Premium.

C | en_US | Used with liquid filled tires.

4812113340 Rear axle, limited slip Central housing

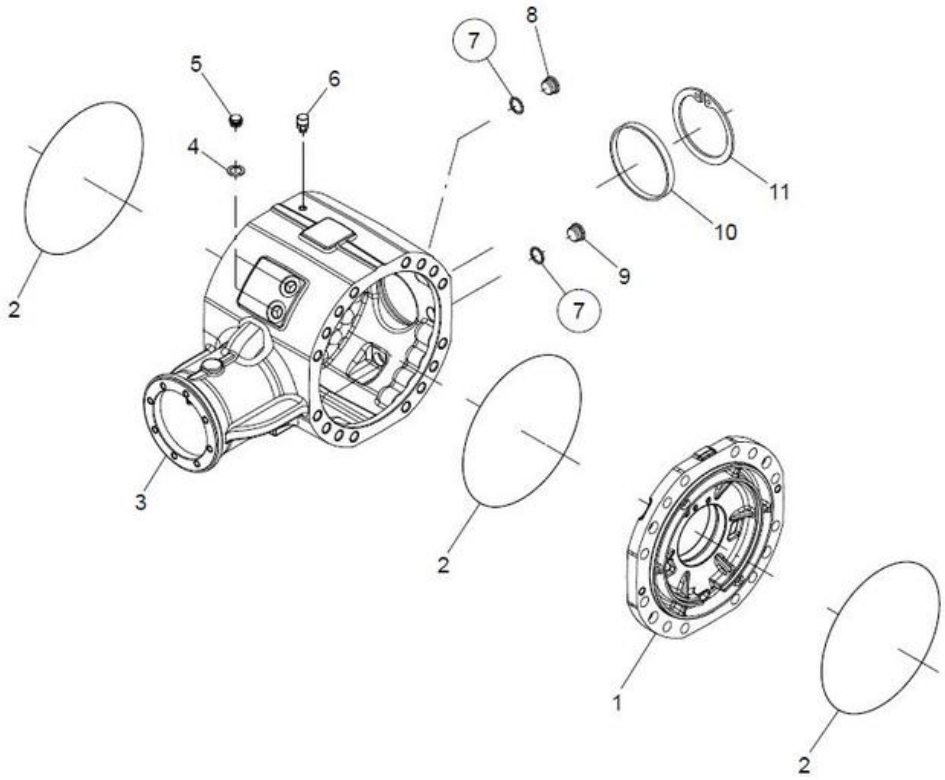

Item	Part No.	Name	Qty	L	SN INFO
1	-	Cover	1		
2	4700909609	O-ring	3		
3	-	Housing	1		
4	4700938983	Seal washer	2		
5	-	Bolt	2		
6	4700938984	Vent nipple	1		
8	4700939348	Plug	1		
9	4700939350	Magnetic plug	1		
10	4700938296	Plug	1		
11	4700929617	Snap ring	1		

4812113340 Rear axle, limited slip Differential

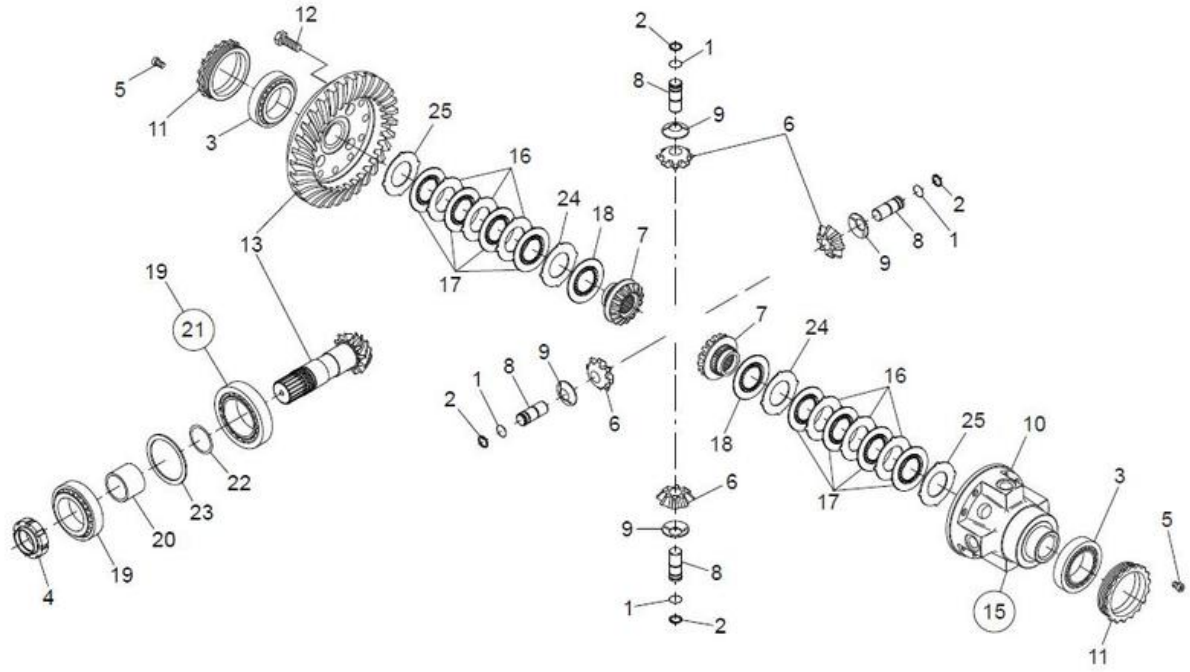

(14) Kit = 16+17+18+24+25

(15) Kit = 1+2+6+7+8+9+10+14

(21) Optional

Item	Part No.	Name	Qty	L	SN INFO
1	-	Circlip	4		
2	-	Circlip	4		
3	4700923341	Roller bearing	2		
4	4700938988	Ring nut	1		
5	4700938989	Bolt	2		
6	4700936035	Differential pinion	4		
7	4812108873	Differential side gear	2		
8	4812108874	Pin	4		
9	-	Fricction washer	4		
10	-	Differencial carrier	1		
11	-	Ring nut	2		
12	4700938991	Bolt	16		
13	-	Bevel gear set	1		
14	4700938993	Disc kit	2		
19	4812157360	Roller bearing	1		
20	-	Spacer	1		
21	4812157361	Roller bearing	1		
22	4812105757	Shim kit	1		
23	4812105758	Shim kit	1		

4812113340 Rear axle, limited slip Input

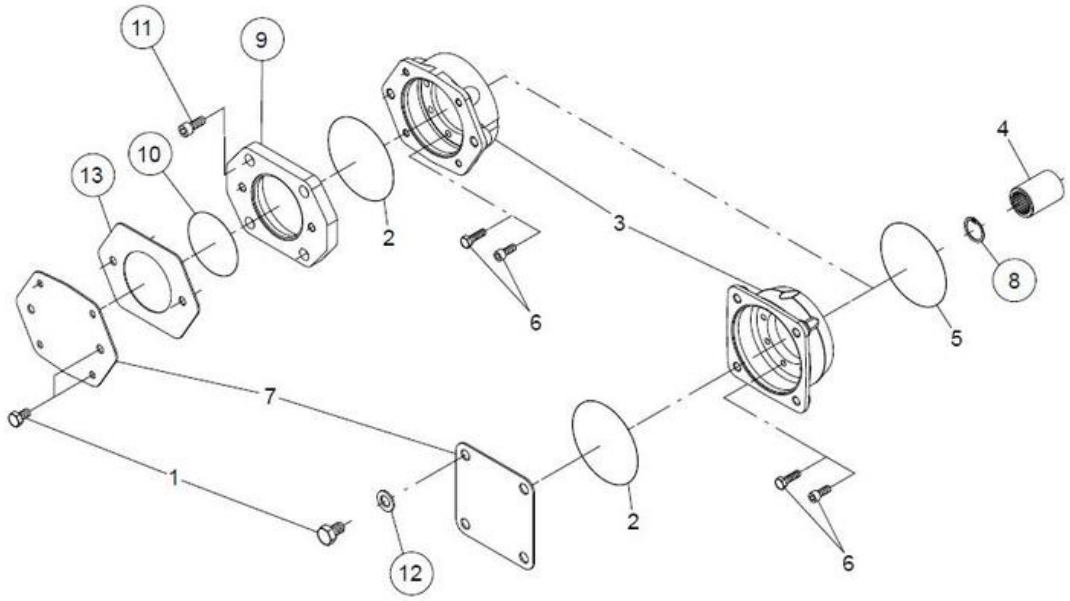

(8) (9) (10) (11) (12) (13) OPTIONAL

Item	Part No.	Name	Qty	L	SN INFO
1	4812108885	Bolt	4		
2	4700909630	O-ring	1		
3	4700950556	Hexagonal Flange	1		Use for Single speed
4	-	Bushing	1		
5	4700929648	O-ring	1		
6	4700929712	Screw	8		
7	4812108886	Sheet	1		
8	-	Circlip	1		

4812113340 Rear axle, limited slip Hub reduction

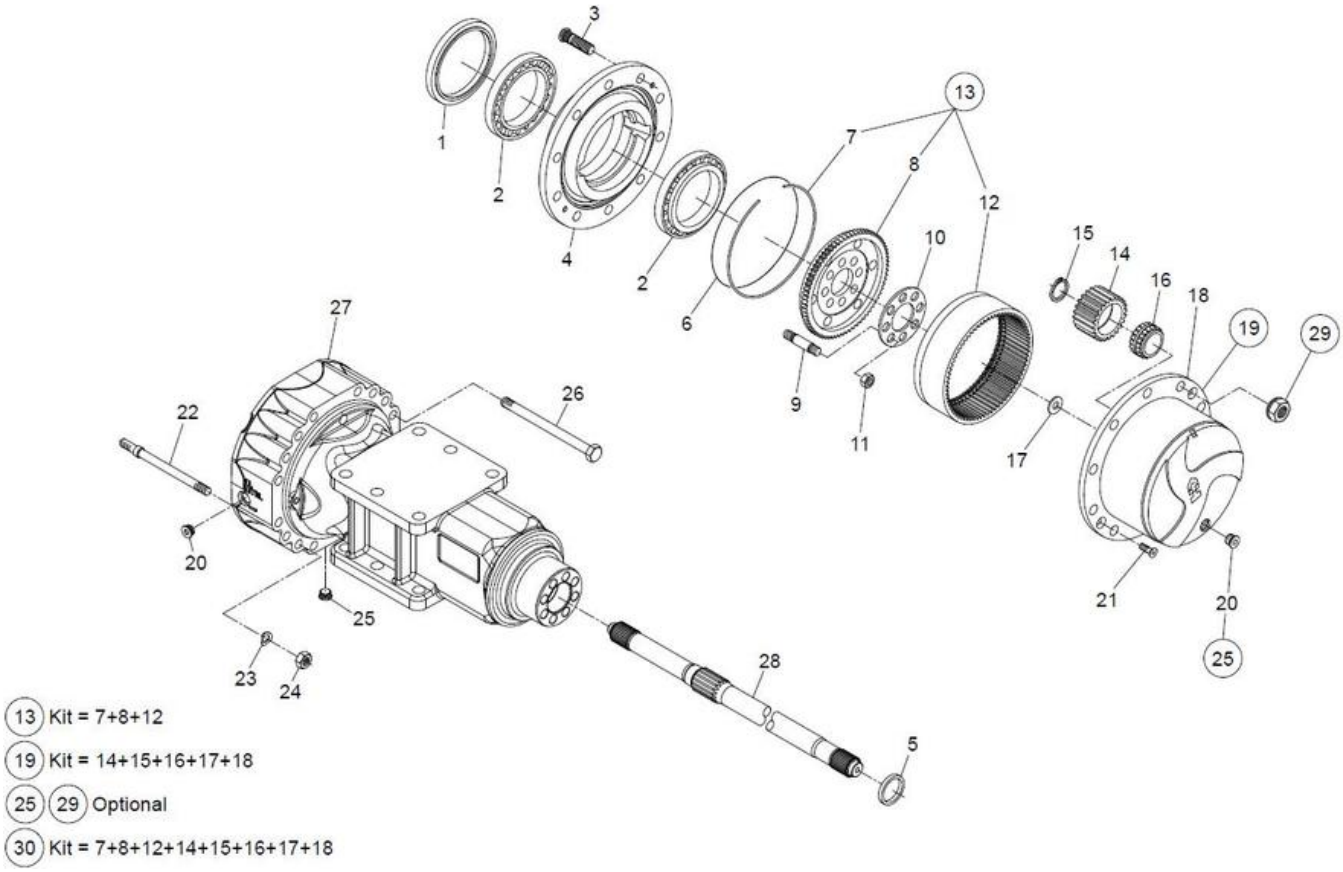

Item	Part No.	Name	Qty	L	SN INFO
1	4700939006	Seal	2		
2	4700939006	Seal	4		
3	4700926781	Wheel screw	20		
4	4812157397	Wheel hub	2		
5	-	Seal	2		
6	-	O-ring	2		
7	4700939267	Circlip	2		
8	-	Ring gear support	2		
9	4812156897	Stud	16		
10	4700939010	Lock plate	2		
11	4700939016	Nut	16		
12	4812156895	Ring gear	2		
13	4812157464	Ring gear support	2		
14	4700939272	Planet gear	6		
15	4700939271	Seal	6		
16	4700939273	Bearing	6		
17	4700939270	Washer	2		
18	4700939274	Planet gear carrier	2		
19	4812157463	Planet gear carrier	2		
20	4700939348	Plug	2		
21	4700939015	Screw	4		
22	4812156899	Stud	8		
23	-	Washer	8		
24	4700939019	Nut	8		
25	4700939350	Magnetic plug	4		
26	4812156894	Bolt	24		
27	-	Axle case	2		
28	4812161354	Half shaft	2		
29	4700901987	Wheel nut	20		
30	4812105793	Planet gear carrier kit (Included 7,8,12,14,15,16,17,18)	2		

4812113340 Rear axle, limited slip Brakes

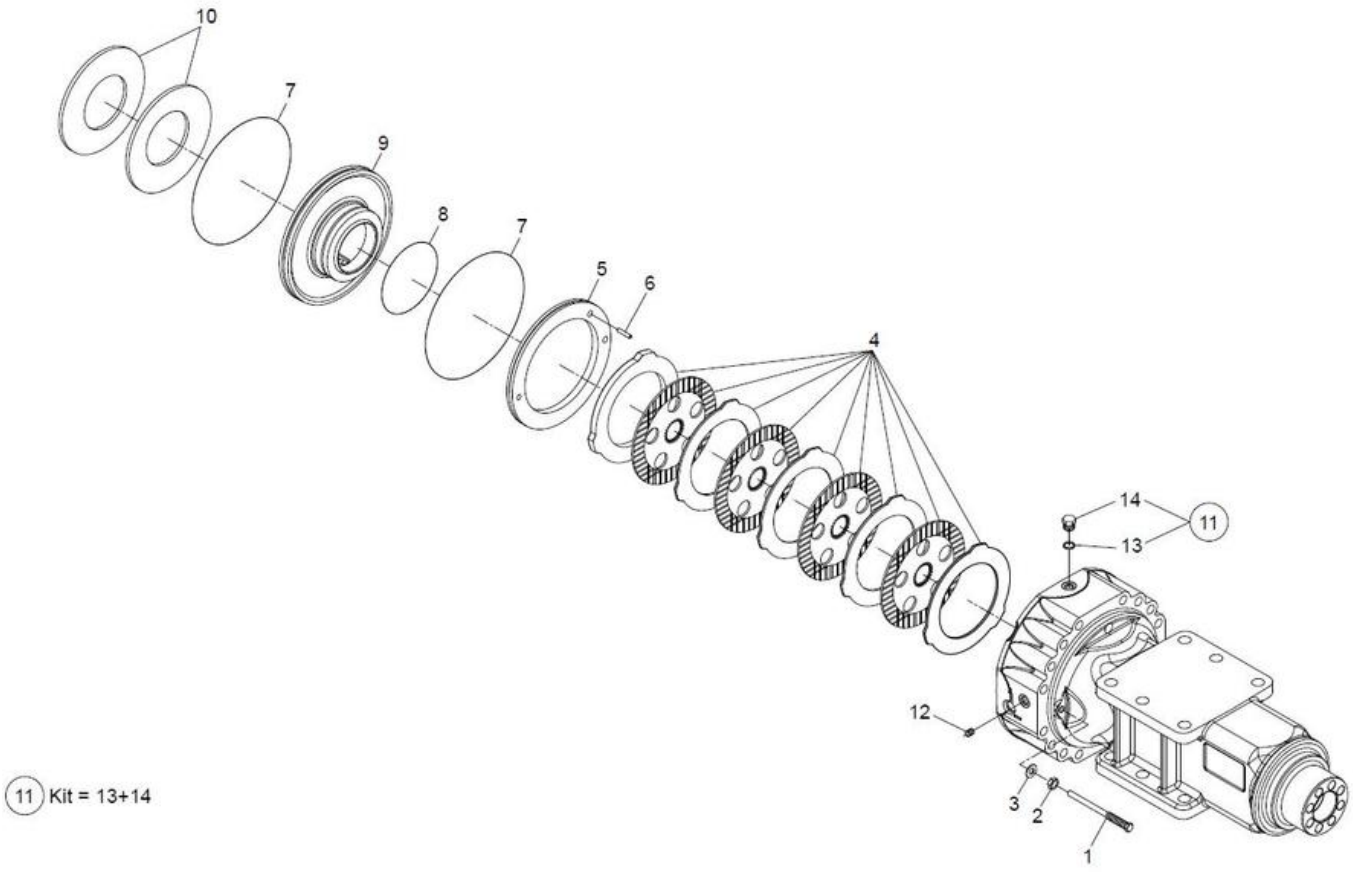

Item	Part No.	Name	Qty	L	SN INFO
1	4700909626	Bolt	4		
2	4700900957	Nut	4		
3	4700926847	Sealing washer	4		
4	4812157465	Brake disc kit	2		
5	4812156955	Ring	2		
6	4812156956	Dowel	2		
7	4700909609	O-ring	4		
8	4812156954	O-ring	2		
9	4812156953	Piston	2		
10	4700909616	Spring	4		
11	4812156958	Plug	2		
12	4812157466	Plug	2		
13	-	Seal washer	2		
14	-	Plug	2		

4812113341 Rear axle No spin 4812113341 Rear axle No spin

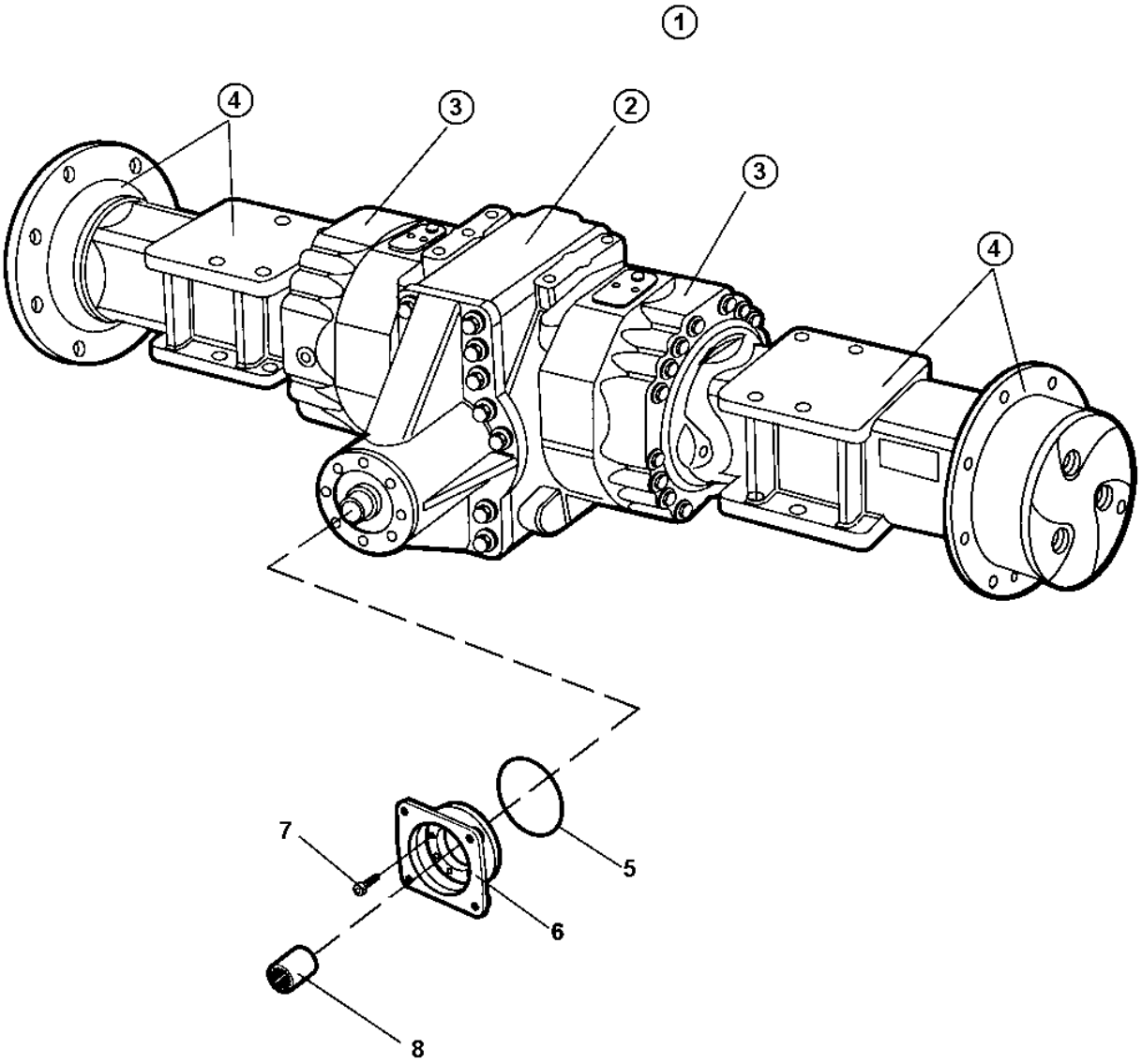

Item	Part No.	Name	Qty	L	SN INFO
1	-	Rear axle	1		
2	-	Differential	1		
3	-	Central housing and brakes	2		
4	-	Hub reduction	2		
5	4700929675	O-ring	1		
6	-	Injector part	1		
7	-	Bolt	8		
8	4812156887	Splined sleeve	1		

4812113341 Rear axle No spin Differential

(15) = Position KIT = 3+5+6

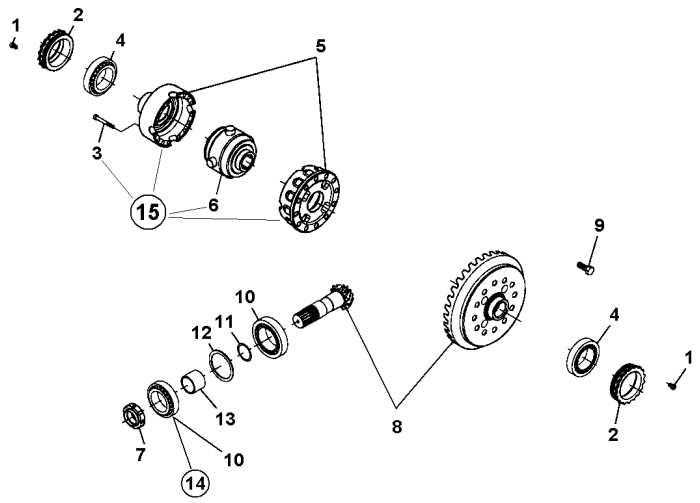

Item	Part No.	Name	Qty	L	SN INFO
1	-	Bolt	2		
2	-	Ring nut	2		
3	-	Bolt	16		
4	4812157358	Taper roller bearing	2		
5	-	Differential carrier	1		
6	-	No spin differential	1		
7	-	Ring nut	1		
8	4812157359	Bevel gear set	1		
9	-	Bolt	16		
10	4812157361	Roller bearing	1		
11	-	Shim	1		
12	-	Shim	1		
13	-	Spacer	1		
14	4812157469	Bearing	1		
15	4812157462	No spin differential kit	1		

4812113341 Rear axle No spin Central housing and brakes

Item	Part No.	Name	Qty	L	SN INFO
1	-	Injector part	2		
2	4700909609	O-ring	8		
3	-	Housing	1		
4	-	Washer	2		
5	-	Bolt	2		
6	4700938984	Vent nipple	1		
8	4812157461	Plug	1		
9	4700939350	Magnetic plug	1		
10	4700938296	Plug	1		
11	-	Snap ring	1		
12	-	Lock nut	2		
14	-	Piston	2		
15	4812156954	O-ring	2		
16	-	Cover	2		
17	-	Dowel	2		
18	4812157465	Brake disc kit	2		
19	4812157466	Plug	2		
20	4812156958	Plug	2		
21	-	Lock washer	4		
22	-	Lock nut	4		
23	-	Bolt	4		

4812113341 Rear axle No spin Hub reduction

Item	Part No.	Name	Qty	L	SN INFO
1	4812156796	Seal	2		
2	4700939009	Bearing	4		
3	4700926781	Wheel screw	20		
4	-	Wheel hub	2		
5	4700901987	Wheel nut	20		
6	4700929612	O-ring	2		
7	-	Circlip	2		
8	-	Ring gear support	2		
9	4700939017	Stud	16		
10	4700939010	Lock plate	2		
11	4700939016	Nut	16		
12	-	Ring gear	2		
14	-	Planet gear	6		
15	-	Snap ring	6		
16	4700939273	Bearing	6		
17	-	Friction washer	2		
18	-	Planet gear carrier	2		
20	4700939348	Plug	2		
21	-	Countersunk bolt	4		
22	-	Plain washer	8		
23	-	Spring washer	8		
24	-	Lock nut	8		
25	4700939350	Magnetic plug	4		
26	-	Bolt	24		
27	-	Axle case	2		
28	4812161354	Half shaft	2		
29	4700939014	Seal	2		
30	4812157463	Planet gear carrier	2		
32	4812157464	Ring gear support	2		

Hydraulic system. drum (D) Traction control Hydraulic system, drum (D) Traction control, dual speed

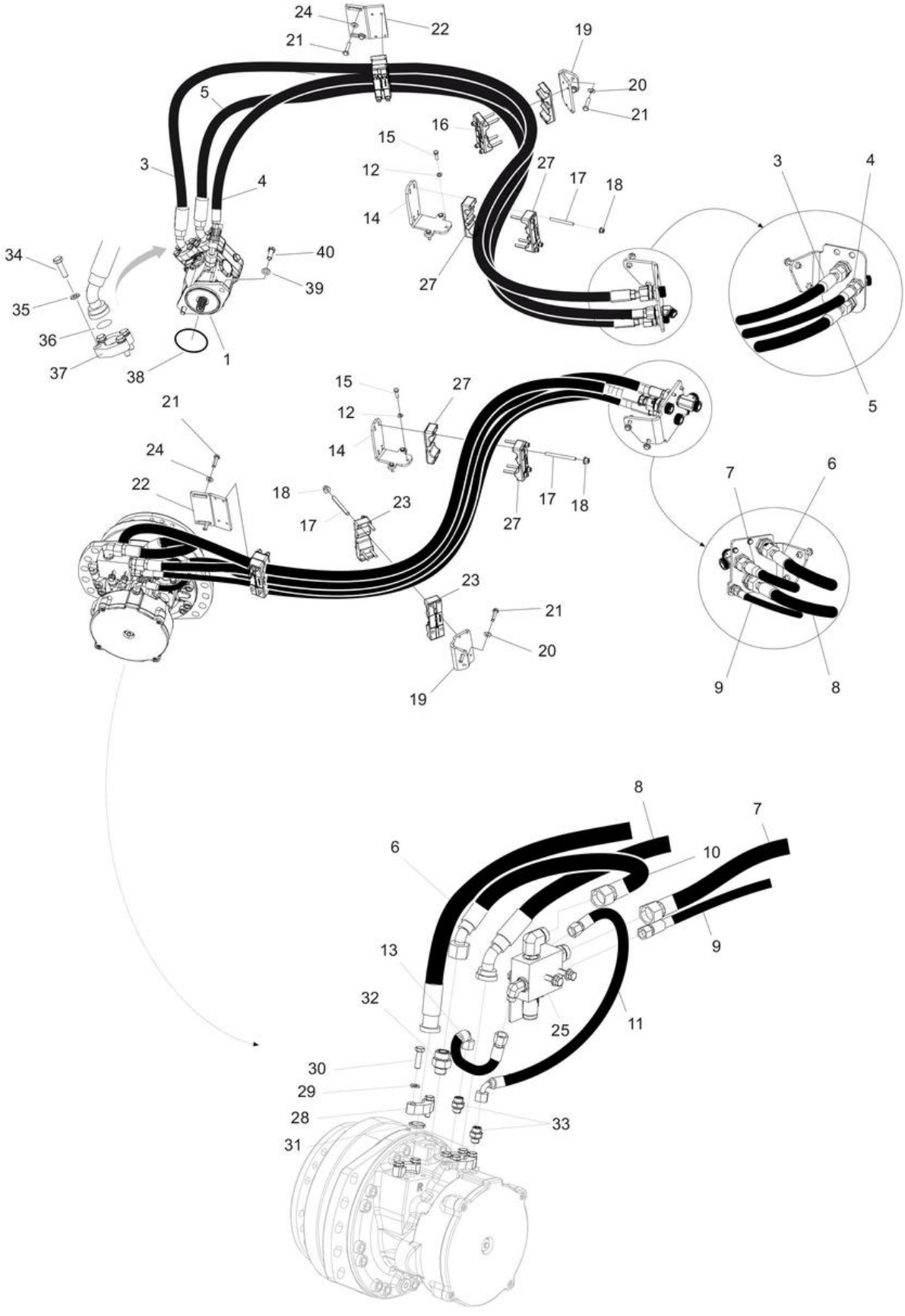

Item	Part No.	Name	Qty	L	SN INFO
1	4812120842	Hydraulic motor	1		
3	4812127142	Hydraulic hose	1		
4	4812123406	Hydraulic hose	1		
5	4812127141	Hydraulic hose	1		
6	4812127152	Hydraulic hose	1		
7	4812114675	Hydraulic hose	1		
8	4812127153	Hydraulic hose	1		
9	4812114677	Hydraulic hose	1		
10	4812114678	Hydraulic hose	1		
11	4812114679	Hydraulic hose	1		
12	4700904229	Washer, 8.4x 6x1.5 mm 300HV	6		
13	4812114680	Hydraulic hose	1		
14	4812117915	Bracket	2		
15	4700500022	Screw	6		
16	4812112304	Hose holder	4		
17	4700791860	Stud	24		
18	4700902286	Lock nut, M8x1.25 mm A2K	24		
19	4812113963	Bracket	2		
20	4700904230	Steel plain washer	4		
21	4700500028	Steel plain washer	8		
22	4812113569	Bracket	2		
23	4812112306	Hose holder	4		
24	4700904557	Washer, 10.5x22x4 mm 300 HV	4		
25	-	Hydraulic valve module	1		
27	4812116857	Hose holder	4		
28	4700929226	Flange half	4		
29	4700904637	Washer	8		
30	4700500030	Hexagon head screw	8		
31	4700904004	O-ring 90	2		
32	4700792336	Straight connector orfs	1		
33	4700791535	Connector	2		
34	4700500030	Hexagon head screw	8		
35	4700904637	Washer	8		
36	4700904004	O-ring 90	2		
37	4700929226	Flange half	4		
38	4700160279	O-ring 70	1		
39	4700904231	Washer, 13x24x2 mm 300 HV	2		
40	4700500037	Hex. screw	2		

Hydraulic system. drum (D) Traction control 4812120842 Hydraulic motor

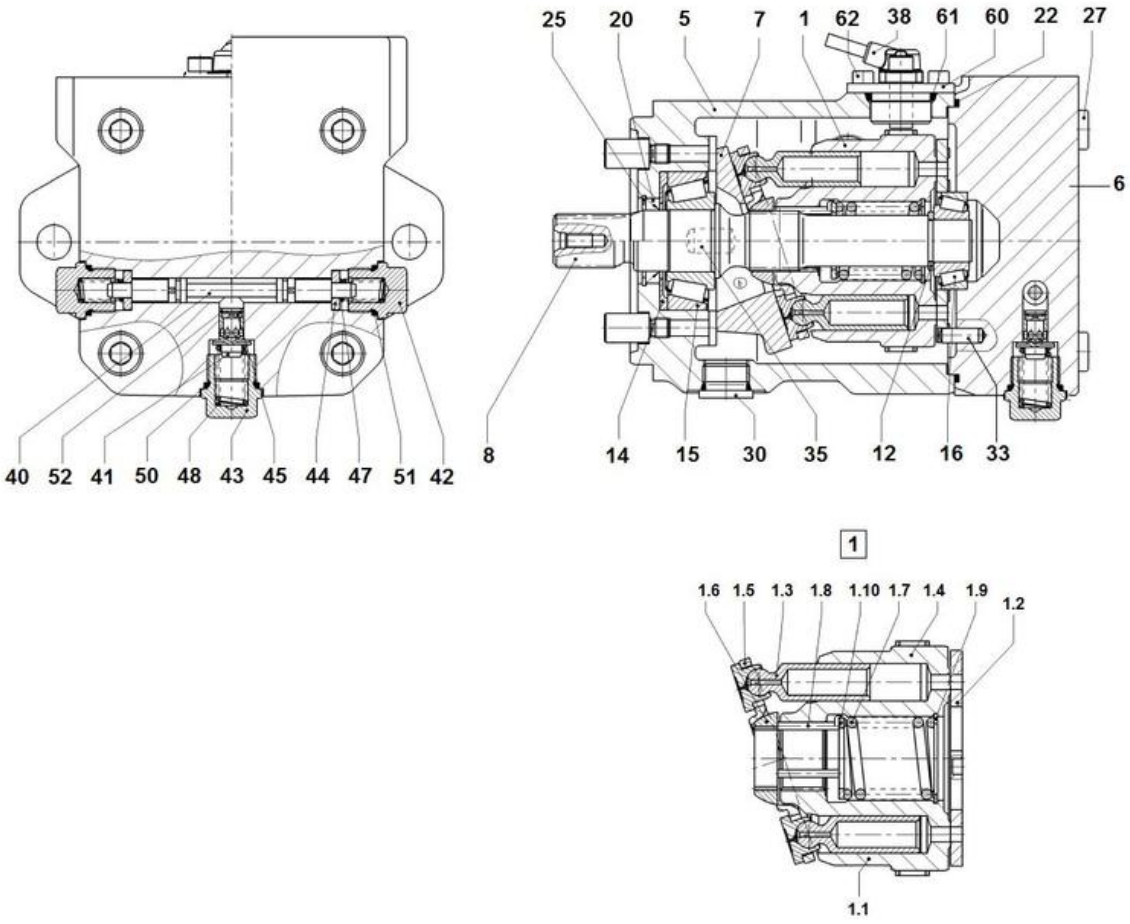

Item	Part No.	Name	Qty	L	SN INFO
1	-	Rotating group	1		
1.1	-	Housing	1		
1.2	-	Control plate	1		
1.3	-	Piston	9		
1.4	-	Cylinder	1		
1.5	4812157499	Retaining plate	1		
1.6	4812157551	Retaining ball	1		
1.7	-	Lock nut	1		
1.8	-	Pressure pin	3		
1.9	4812157552	Seeger v-ring	1		
1.10	-	Backup plate	1		
5	-	Motor housing	1		
6	-	Port plate	1		
7	-	Cam plate	1		
8	-	Drive shaft	1		
12	-	Adjustment shim	1		
14	4812157490	Stop ring	1		
15	4812157491	Bearing	1		
16	4812157492	Bearing	1		
20	4812157493	Shaft sealing ring	1		
22	4812157494	O-ring	1		
25	4812157495	Retaining ring	1		
27	-	Screw	4		
30	-	Screw	1		
33	-	Cylinder pin	1		
35	-	Cylinder pin	2		
38	-	Flange cover	1		
40	-	Spool piston	1		
41	-	Valve piston	1		
42	-	Locking screw	2		
43	-	Locking screw	1		
44	-	Washer	2		
45	-	Orifice	1		
47	-	Pressure spring	2		
48	-	Pressure spring	1		
50	4812157496	O-ring	1		
51	4812157497	O-ring	2		
52	-	Retaining ring	1		

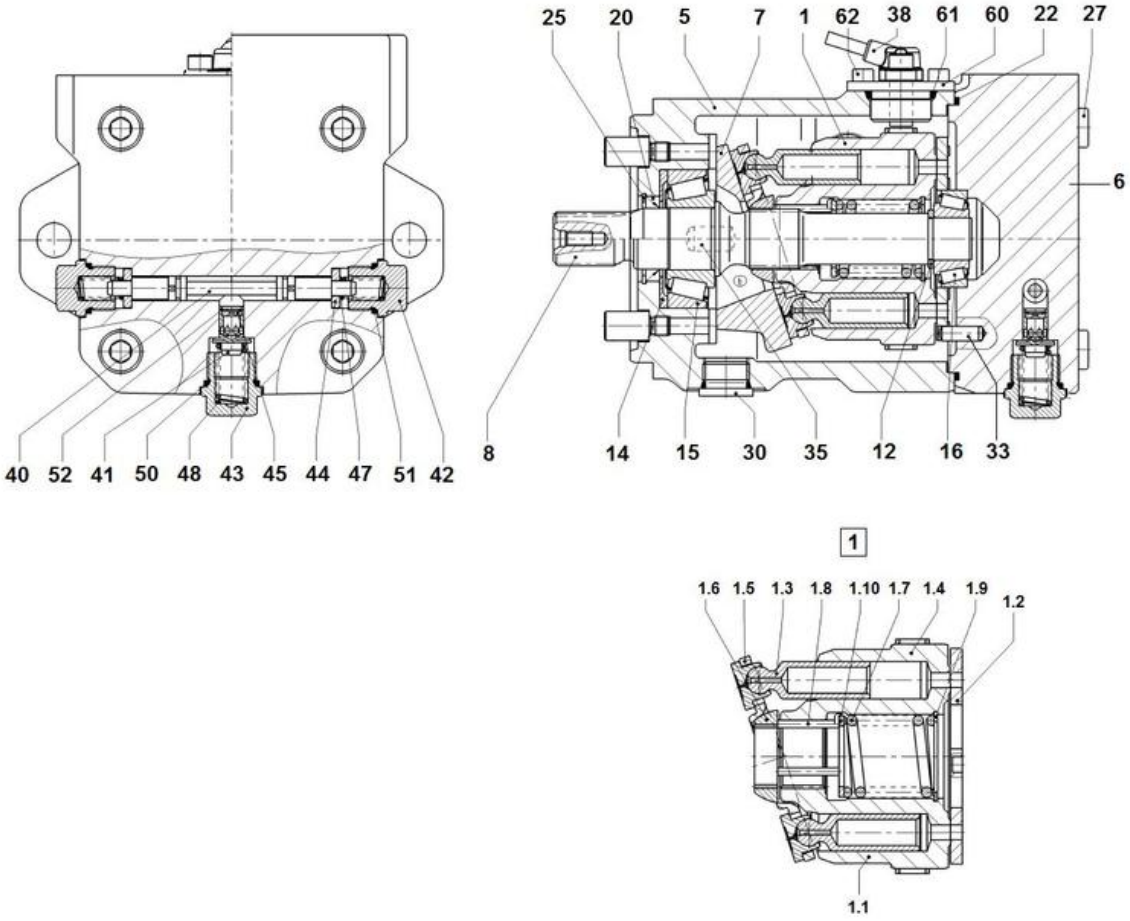
25 20 5 7 1 62 38 61 60 22 27
6
8 14 15 30 35 12 16 33
40 52 41 50 48 43 45 44 47 51 42
1
1.6 1.5 1.3 1.8 1.10 1.7 1.4 1.9 1.2
1.1

Item	Part No.	Name	Qty	L	SN INFO
60	-	Adapter plate	1		
61	4812157851	O-ring	1		
62	-	Screw	2		

Hydraulic system. drum (D) Traction control Hydraulic valve module

Item	Part No.	Name	Qty	L	SN INFO
1	4812113687	Hydraulic valve	1		
2	4700904230	Steel plain washer	2		
3	4700500161	Screw	2	A	
3	4700500091	Screw	2	B	
4	4812115051	Straight connector orfs	1		
5	4700791828	Adapter	1		
6	4812114108	Bracket	1		
7	4700791840	Adapter	2		
8	4700791838	Adapter	1		
9	4700904557	Washer, 10.5x22x4 mm 300 HV	2		
10	4700500043	Screw M10x16	2		

Comments for Page: Hydraulic valve module

(L)OCAL REMARKS

A | en_US | Used with 35mm side plate.

B | en_US | Used with 40mm side plate.

Hydraulic system. drum (D) Traction control 4812113687 Hydraulic valve

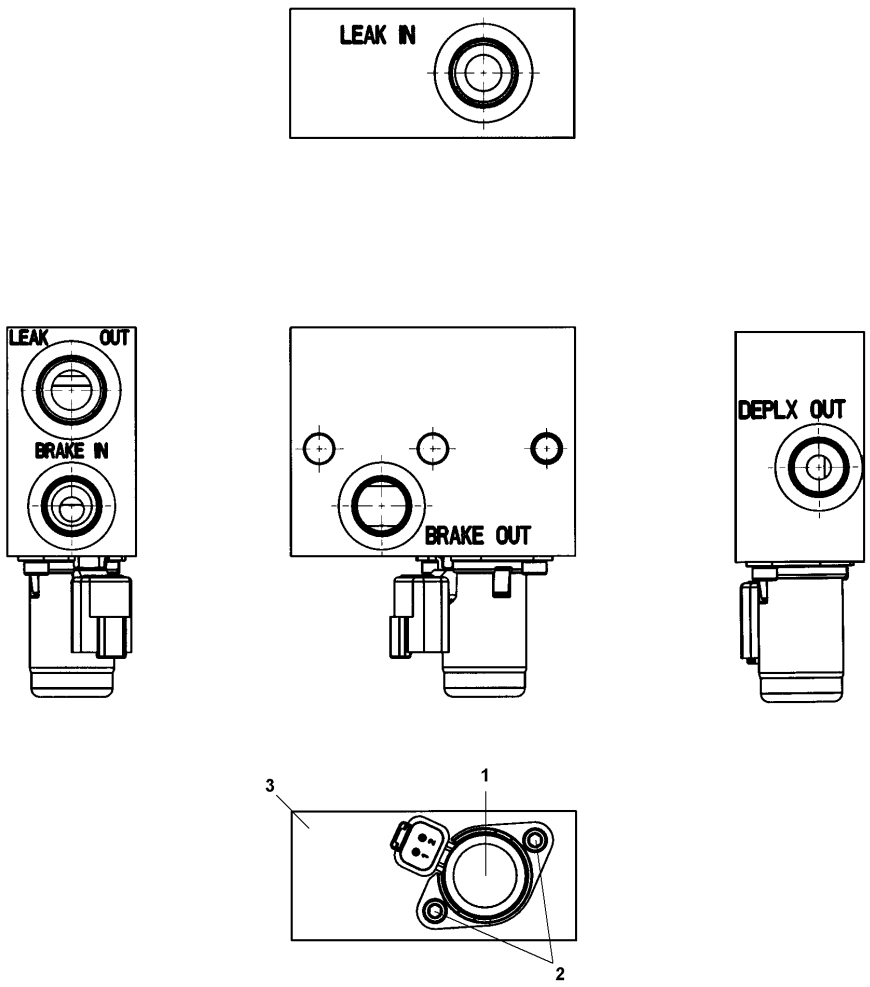

Item	Part No.	Name	Qty	L	SN INFO
1	4812158483	Solenoid valve	1		
2	4812158484	Cap head screw	2		
3	-	Block	1		

Hydraulic system, rear axle Traction control, no slip Hydraulic system, rear axle Traction control, no slip

Item	Part No.	Name	Qty	L	SN INFO
1	-	Hydraulic motor, propulsion	1		
2	4700904793	Steel plain washer	4		
3	4811000310	Hexagon head screw	4		
4	4812127111	Hydraulic hose	2		
5	4812122162	Hydraulic hose	1		
6	4812115350	Hydraulic hose	1		
7	4811000229	Hydraulic hose	1		
8	4811000086	Elbow 90 orfs	2		
9	4700791414	T-connection, O-ring with swivel	1		
10	4700791401	Elbow 90, O-ring with swivel	1		

Hydraulic system, rear axle Traction control, no slip Hydraulic motor

Item	Part No.	Name	Qty	L	SN INFO
1	4812122932	Rear axle motor	1		
2	4700904005	O-ring	2		
3	4700923384	Split flange	4		
4	4700904638	Washer 12x22x2	8		
5	4700928791	Screw, M12x45	8		
6	4700791231	Adapter	1		
7	4700160043	O-ring	1		

Hydraulic system, rear axle Traction control, no slip 4812122932 Hydraulic motor

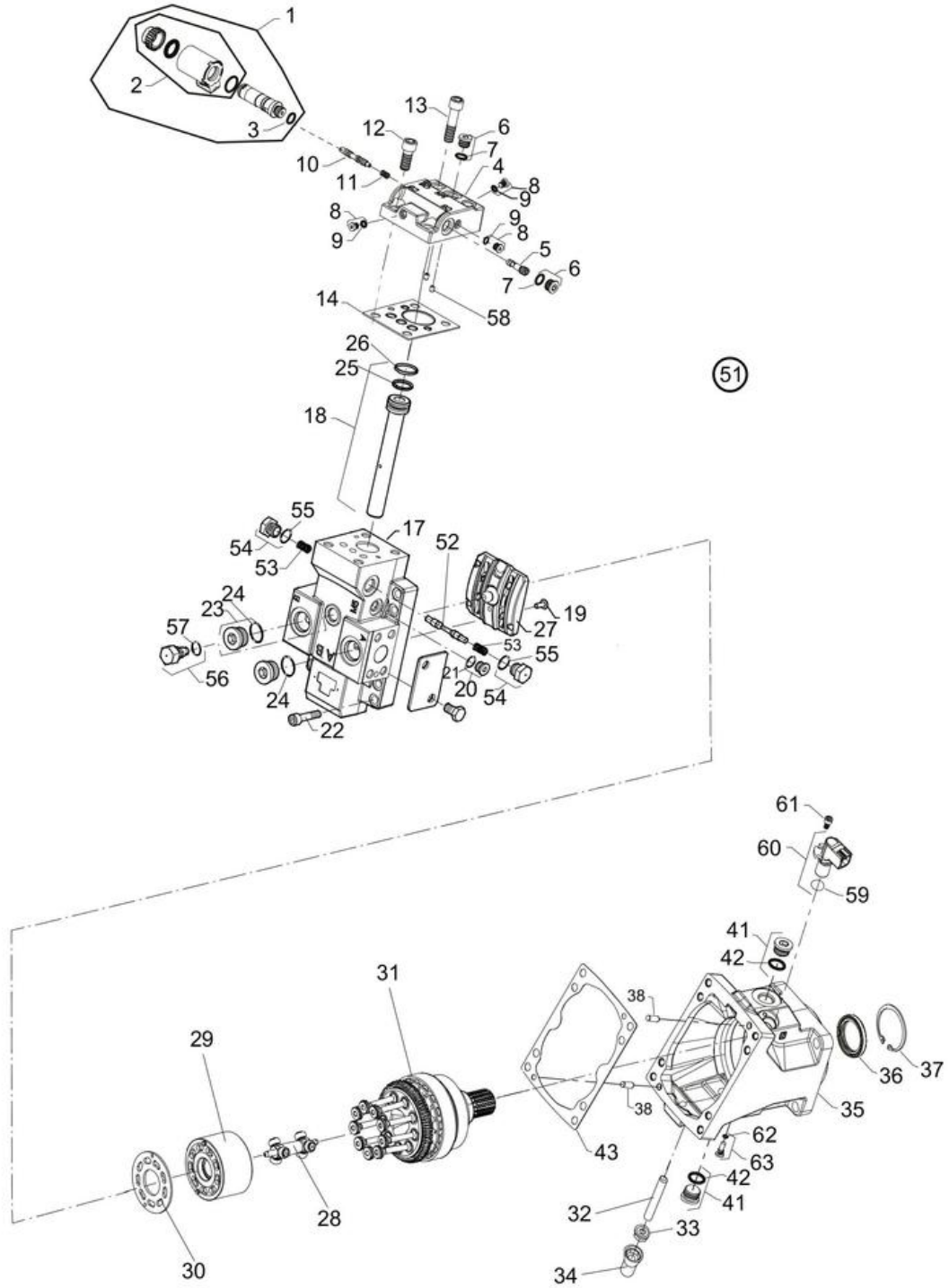

Item	Part No.	Name	Qty	L	SN INFO
1	4812157074	Solenoid On/off, 24 volt	1		
2	--	Coil kit, 24 volt	1		
3	4700923087	O-ring	1		
4	-	Control housing, 2 position	1		
5	4812156999	Shuttle valve assembly	1		
6	-	Plug	2		
7	4700923087	O-ring	2		
8	4700908426	Plug, cpl	3		
9	4700908440	O-ring	3		
10	4812157051	Spool	1		
11	4812157052	Spring	1		
12	4812158452	Screw	2		
13	4700902944	Screw	2		
14	4812157053	Control seal	1		
17	-	End cap	1		
18	4812157076	Servo piston	1		
19	-	Button head screw	1		
20	-	Plug assembly	1		
21	--	O-ring	1		
22	4700902944	Screw	8		
23	4700902928	Plug	2		
24	--	O-ring	2		
25	4700935525	O-ring	1		
26	4700935524	Seal plug	1		
27	4812157077	Valve segment assembly	1		
28	-	Synch shaft assembly	1		
29	-	Cylinder block assembly	1		
30	4700902930	Bearing plate	1		
31	-	Shaft assembly, 14 tooth, DIN	1		
32	-	Set screw, 0-19cc, M12x65mm	1		
33	4700909525	Seal nut	1		
34	4700902996	Plastic cap, green	1		
35	-	Housing, cartridge with speed sensor port	1		
36	-	Lip seal	1		
37	4812157078	Retaining ring	1		
38	-	Pin	2		
41	-	Plug assembly	2		
42	--	O-ring	2		

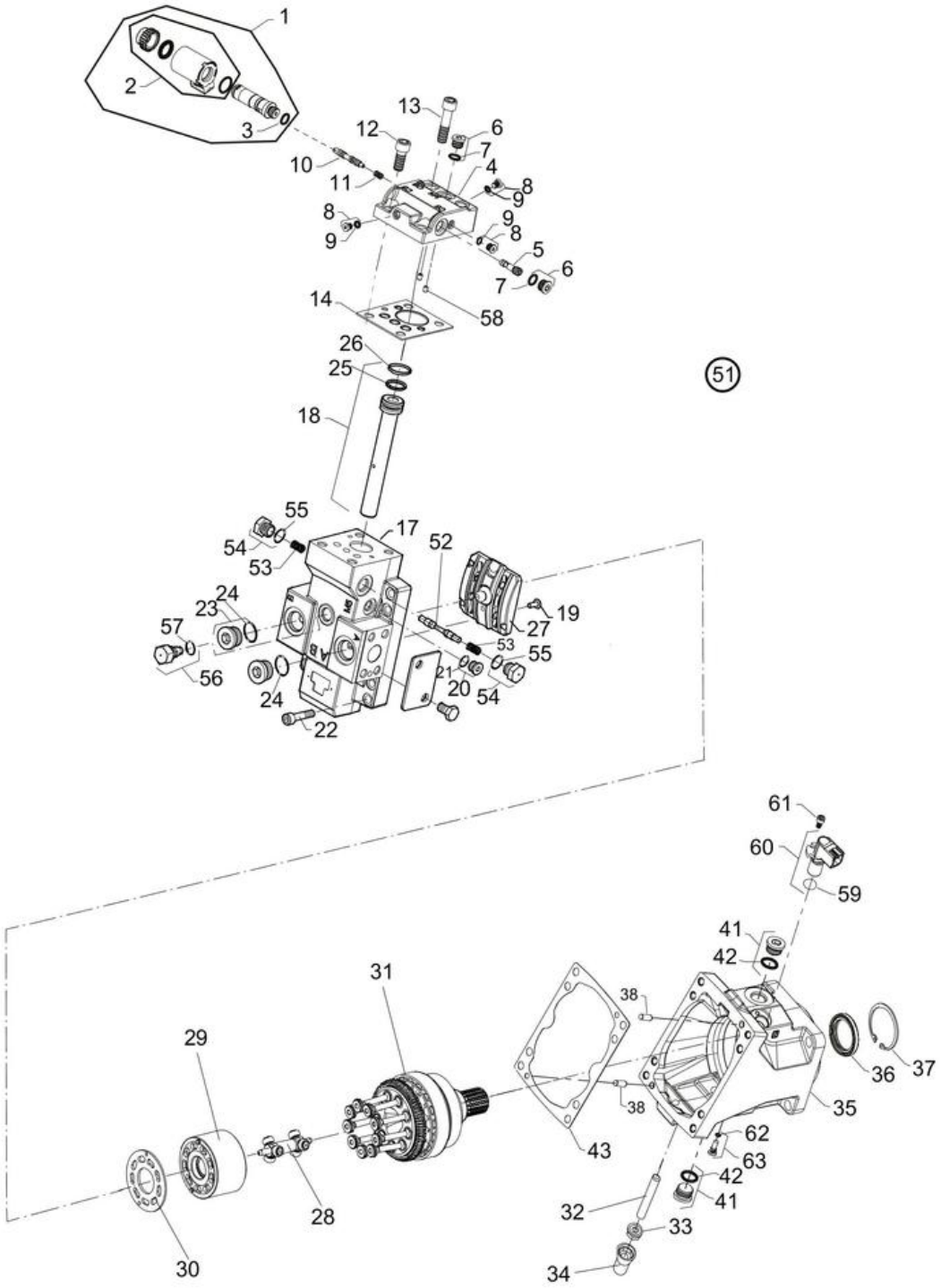
1
2
3
13
12
6
7
10
11
4
8
9
5
14
58
26
25
18
51
55
54
53
17
52
19
27
24
23
57
56
22
20
21
61
60
59
41
42
31
38
29
36
37
35
62
63
43
28
32
33
34
30

Item	Part No.	Name	Qty	L	SN INFO
43	-	Plain washer	1		
50	-	Loop flushing	1		
51	4812158153	Seal kit,cpl	1		
52	4812157060	Spool	1		
53	4812157061	Spring	2		
54	-	Plug assembly	2		
55	--	O-ring	2		
56	4812157062	Loop flushing relief valve 10 l/min	1		
57	4812157063	O-ring	1		
58	-	Orifice plug, 1.2 mm	1		
59	-	O-ring	1		
60	4812157073	Speed sensor	1		
61	-	Screw	1		
62	4700908440	O-ring	1		
63	-	Plug assembly	1		

Hydraulic system, oil tank Hydraulic system, oil tank

Item	Part No.	Name	Qty	L	SN INFO
1	-	Hydraulic oil tank assembly	1		
2	4811000197	Hydraulic hose	1		
3	4812112555	Adapter	2		
4	4812117445	Hydraulic hose uptc	1		
5	4812122168	Hydraulic hose	1		
6	4812124042	Hydraulic hose	1		
7	4812122166	Hydraulic hose	1		
8	4812122174	Hydraulic hose	1		
9	-	Hydraulic valve module	1		
10	-	Connector assy	1		
11	4812122176	Hydraulic hose	1		
12	4812122163	Hydraulic hose	1		
13	4700903703	Clamp	2		
14	-	Fan module	1		
15	4700904229	Washer, 8.4x 6x1.5 mm 300HV	8		
16	4812115064	Elbow connector 90°	2		
17	4700904774	O-ring	4		
18	4812117732	Flange connector	4		
19	4700508048	Hexagon socket head cap screw M	8		
20	4700901832	Hexagon screw with flange M8x16	1		
21	4700903703	Clamp	1		
22	4700500505	Screw, M8x20 mm 8.8 A2K	3		
23	4700923008	Clamp	1		
24	4812122012	Bracket	1		

Hydraulic system, oil tank Hydraulic oil tank assembly

Item	Part No.	Name	Qty	L	SN INFO
1	4812118960	Hydraulic oil tank, cpl	1	A	
2	4700500505	Screw, M8x20 mm 8.8 A2K	9		
3	4700792068	Elbow 90°	1		
4	4811000202	Hydraulic hose	1		
5	4812114205	Hydraulic pipe	1		
6	0570702503	Straight connector	1		
7	4700923008	Clamp	1		
8	4700233304	Ball valve	1		
9	4700232039	Steel plug threaded	1		
10	4700904346	Clamp	2		
11	4700343748	Spacer sleeve	2		
12	4700904229	Washer, 8.4x 6x1.5 mm 300HV	19	D	
13	4700500022	Screw	2		
14	4700500053	Screw, M8x20 mm 8.8 A2K	1		
15	4812112648	Pipe assembly	1		
16	4812116645	Rubber hose	1		
17	4700357138	Ventilating filter	1		
18	4700313009	Hose clamp	2		
20	4700500013	Screw, M6x16 mm 8.8 A2K	2		
21	4700904228	Washer 6,4x12x1,5	2		
22	4700904985	Fuel hose, fire-resistant	1XL	B	
23	4700313001	Hose clamp, 11-18 x 9 mm	2		
24	4700390926	O-ring	1	C	
25	4812118961	Cover	1	C	
26	4700500019	Hexagon screw	16	C	
27	4700792295	Steel plug	1	C	
28	4700792809	Elbow 90 orfs	1		
29	4700791405	Straight o-ring connector	1		
30	4700232118	Flange	2		
31	4700904638	Washer 12x22x2	4		
32	4700508063	Screw, M12x40 mm 8.8	4		
33	4812112556	Connector elbow 90 orfs	1		
34	4700792276	Temperature sensor	1		
35	4812116625	Straight connector Orfs	1		
39	4700160191	O-ring	1		
40	4700330331	Washer 18,2x23,9x1,5	1		
41	4700989151	Oil level glass	1		
42	4700904556	Steel plain washer 8,4x16x3,0	1		

Item	Part No.	Name	Qty	L	SN INFO
43	4700791120	Washer sealing	1		

Comments for Page: Hydraulic oil tank assembly

(L)OCAL REMARKS

A | en_US | Includes item 24, 25, 26, 27 and 12 (16 pcs).

B | en_US | L=0.68m

C | en_US | Part of item 1.

D | en_US | 16 pcs part of item 1.

Hydraulic system, oil tank Hydraulic valve module

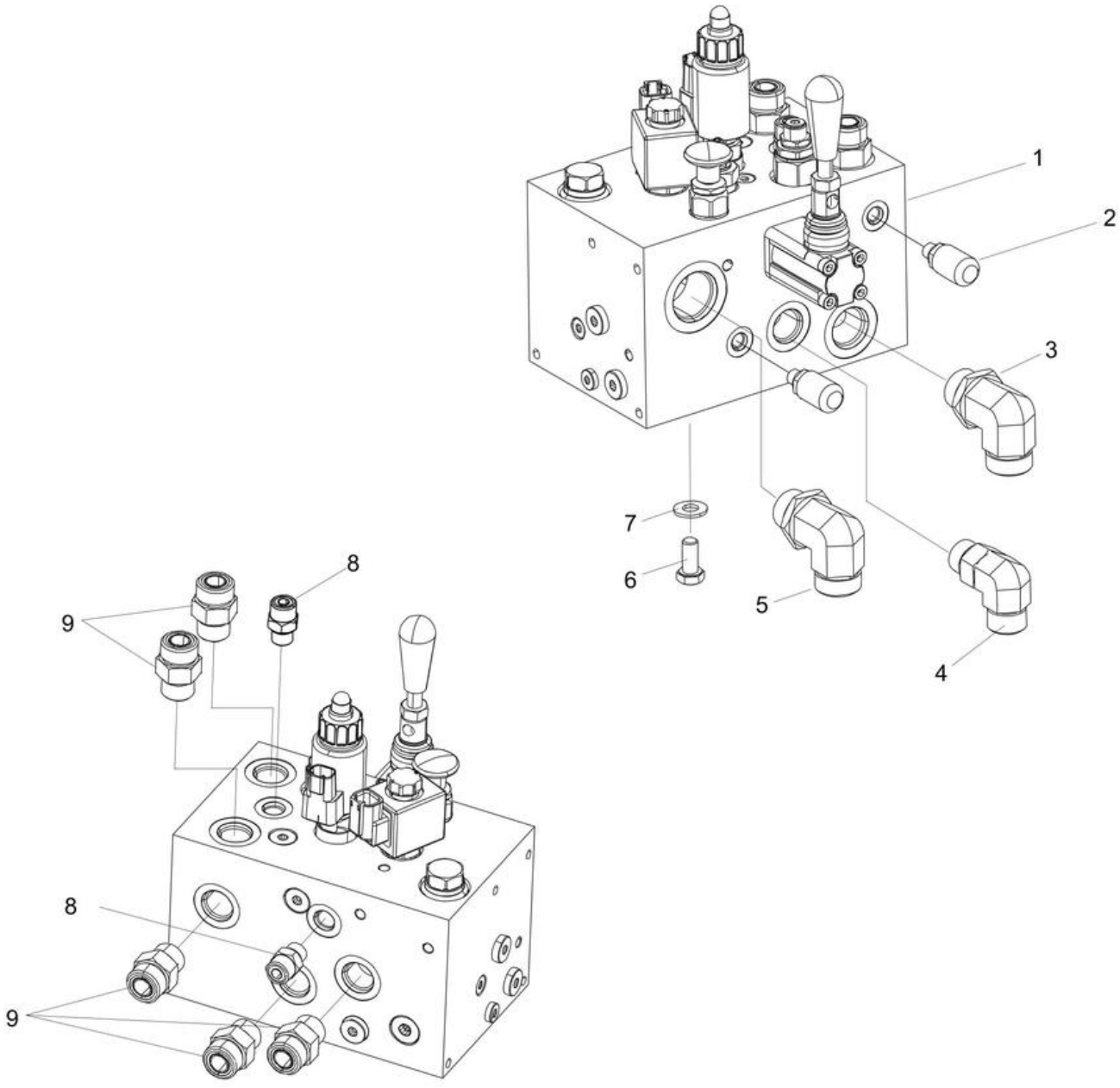

Item	Part No.	Name	Qty	L	SN INFO
1	4812120840	Hydraulic valve	1		
2	4700910162	Measuring nipple	2		
3	4700791231	Adapter	1		
4	4700791843	Elbow 90, O-ring with swivel	1		
5	4700792299	Adapter	1		
6	4700500027	Screw M10-1,55x22 8.8	2		
7	4700904230	Steel plain washer	2		
8	4700791409	Straight connector orfs	2		
9	4700791743	Straight connector orfs	5		

Hydraulic system, oil tank 4812120840 Hydraulic valve

Item	Part No.	Name	Qty	L	SN INFO
0	4812120840	Hydraulic valve	1		
1	4812157654	Pressure compensator	1		
2	-	Pressure relief valve	1		
3	4812157681	Shuttle valve	1		
4	4812157770	Electric 3/2 valve	1		
4	4812157771	Coil	1		
5	4812157682	2/2 Valve	1		
6	4812157772	Hand pump	1		
6	4812157773	Kit manual lever	1		
7	-	Orifice	1		
8	4812157684	Orifice	1		
9	4812157685	Orifice	1		
10	4812157686	Brake pressure relief valve	1		
11	4812157687	Proportional pressure relief valve	1		
11	4812160654	Coil	1		
12	-	Check valve	1		

Hydraulic system, oil tank Connector assy

Item	Part No.	Name	Qty	L	SN INFO
1	4812122014	Bracket	1		
2	4812122015	Bracket	1		
3	4700791807	Stud	4		
4	4700287295	Clamp	8		
5	4700904872	Cover plate	4		
6	4700902286	Lock nut, M8x1.25 mm A2K	4		
7	4700904230	Steel plain washer	2		
8	4700500029	Steel plain washer	2		
9	4700904229	Washer, 8.4x 6x1.5 mm 300HV	2		
10	4700500053	Screw, M8x20 mm 8.8 A2K	2		
11	4700396657	Hose clamp	2		
12	4812113941	Hose holder clip	2		

Hydraulic system, oil tank Fan module

Item	Part No.	Name	Qty	L	SN INFO
2	4700904640	Washer, 8.4x 6x1.5 mm 300HV	4		
3	4700500053	Screw, M8x20 mm 8.8 A2K	4		
4	4812113678	Bracket	1		
5	4812121764	Hydraulic motor	1		
6	4700904229	Washer, 8.4x 6x1.5 mm 300HV	2		
7	4700500021	Screw, M8x20 mm 8.8 A2K	2		
8	4812113679	Fan	1		

Hydraulic system, rear frame Hydraulic system, frame rear

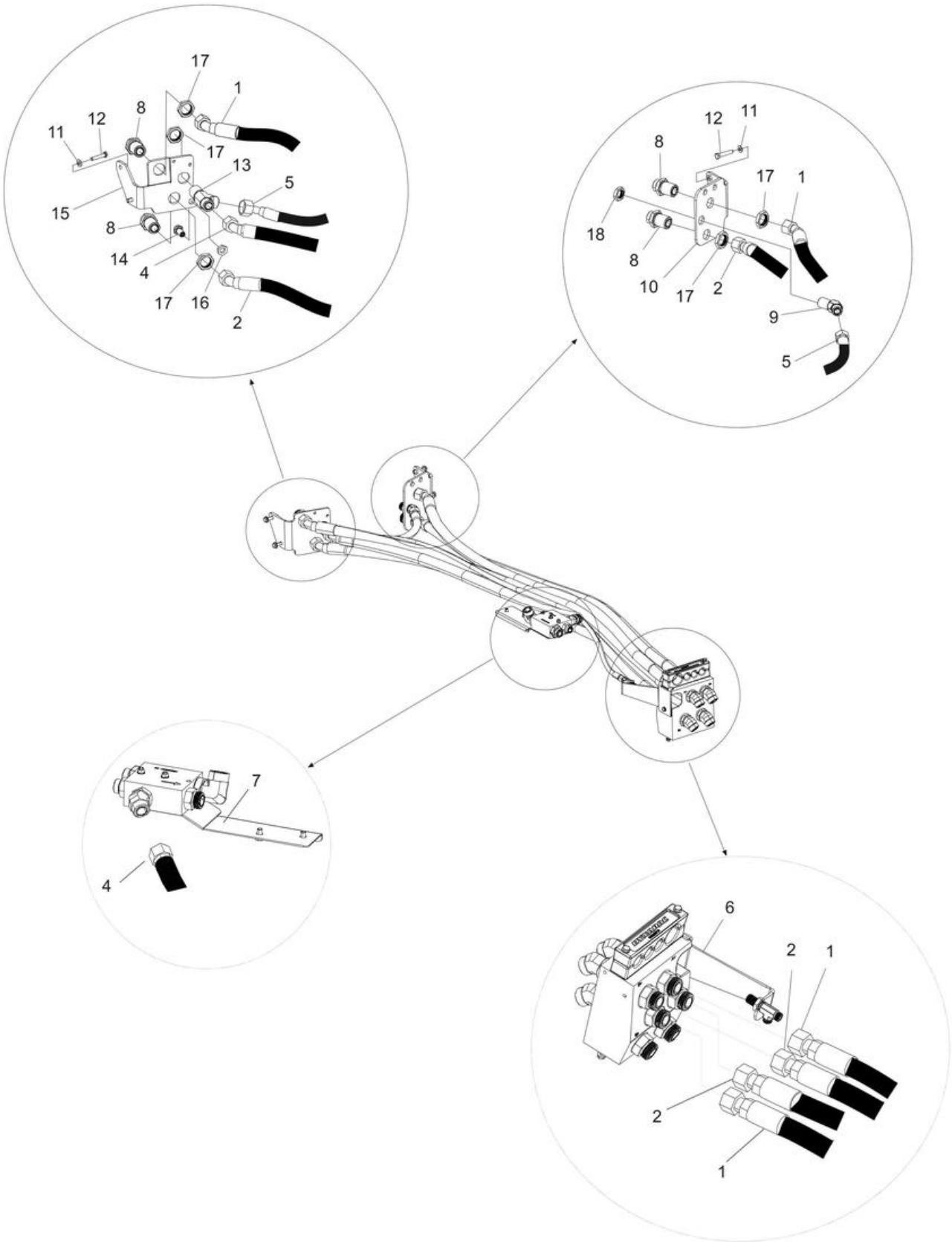

Item	Part No.	Name	Qty	L	SN INFO
1	4812122178	Hydraulic hose	2		
2	4812127103	Hydraulic hose	2		
4	4812122177	Hydraulic hose	1		
5	4811000200	Hydraulic hose	1		
6	-	Connector kit	1		
7	-	Connector kit	1		
8	4812118867	Bulkhead union	1		
9	4812118868	Bulkhead union	1		
10	4812118849	Bracket	1		
11	4700904230	Steel plain washer	4		
12	4700500028	Steel plain washer	4		
13	4812118869	Bulkhead union	1		
14	4812118866	Bulkhead union	1		
15	4812118850	Bracket	1		
16	4700792451	Nut			
17	4812118870	Nut			
18	4700792454	Nut			

Hydraulic system, rear frame Connector kit

Item	Part No.	Name	Qty	L	SN INFO
1	4812111768	Hydraulic block	1		
2	4700792339	Adapter	6		
3	4700791212	Adapter	4		
4	4812111771	Hose holder	2		
5	4812111770	Holder	1		
6	4812114492	Bulkhead union	1		
7	4700904229	Washer, 8.4x 6x1.5 mm 300HV	4		
8	4700500019	Hexagon screw	2		
9	4700500090	Screw	2		
10	4700904640	Washer, 8.4x 6x1.5 mm 300HV	2		
11	4700500021	Screw, M8x20 mm 8.8 A2K	2		

Hydraulic system, rear frame Connector kit

Item	Part No.	Name	Qty	L	SN INFO
1	4700500213	Hexagon head screw M	2		
2	4700904557	Washer, 10.5x22x4 mm 300 HV	2		
3	4700500090	Screw	2		
4	4700904640	Washer, 8.4x 6x1.5 mm 300HV	2		
5	4700791212	Adapter	1		
6	4812121973	Hydraulic block	1		
7	4700791318	Adapter	1		
8	4812121971	Straight connector ORFS	1		
9	4700570005	Hexagon nut	2		
10	4700904229	Washer, 8.4x 6x1.5 mm 300HV	2		
11	4812121972	Connector elbow	1		
12	4700792339	Adapter	1		
13	4812121974	Bracket	1		

Hydraulic system, engine room Hydraulic system, engine room

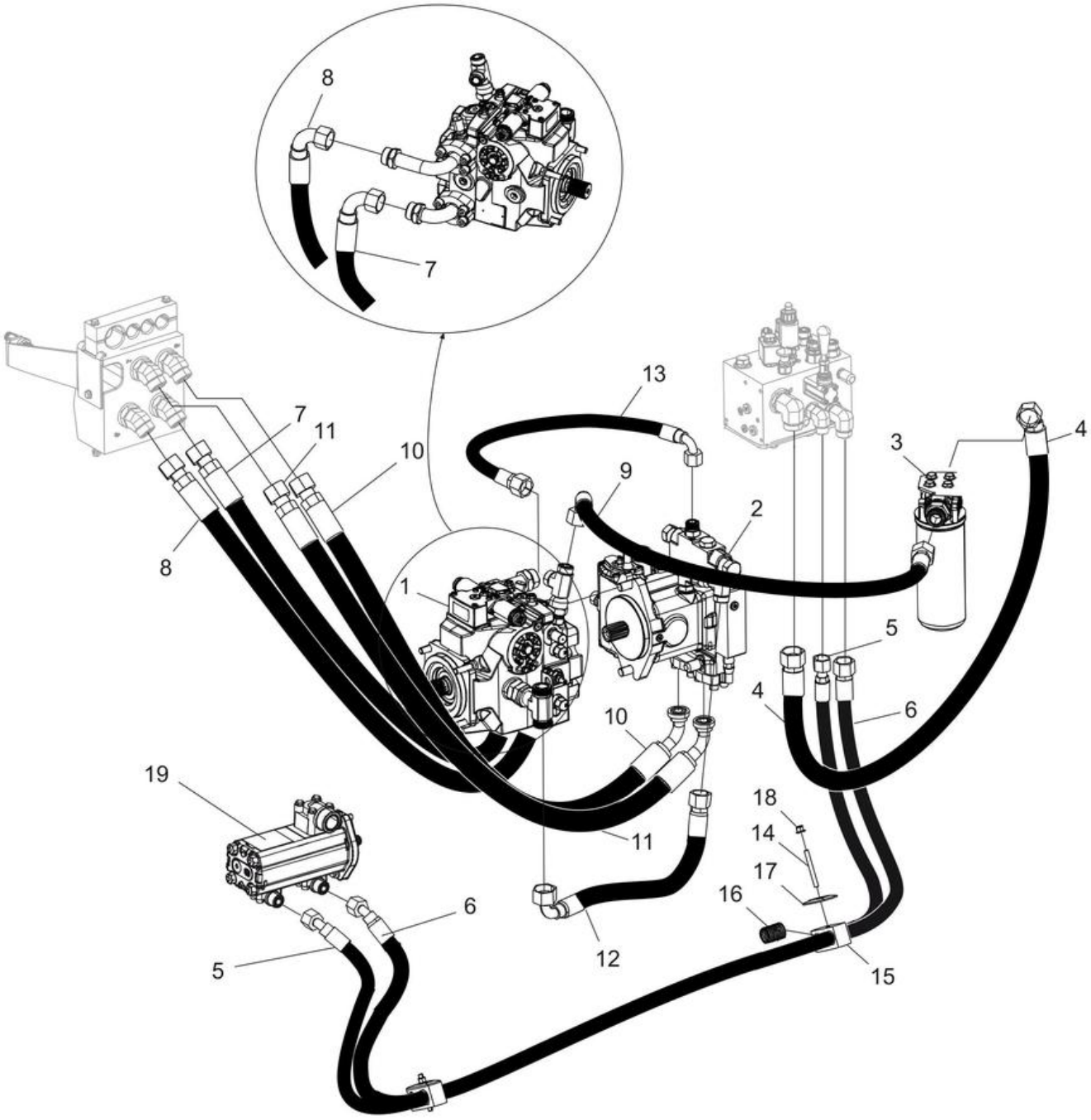

Item	Part No.	Name	Qty	L	SN INFO
1	-	Hydraulic proplusion pump module	1		
2	-	Hydraulic vibration pump module	1		
3	-	Hydraulic oil filter assy	1		
4	4811000212	Hydraulic hose	1		
5	4812122170	Hydraulic hose	1		
6	4812122169	Hydraulic hose	1		
7	4812127107	Hydraulic hose	1		
8	4812127108	Hydraulic hose	1		
9	4812114516	Hydraulic hose	1		
10	4812127087	Hydraulic hose	1		
11	4812127088	Hydraulic hose	1		
12	4812114519	Hydraulic hose	1		
13	4812117324	Hydraulic hose	1		
14	4700791805	Stud	2		
15	4700791711	Pipe clamp	2		
16	4812113941	Hose holder clip	2		
17	4700791712	Cover plate	2		
18	4700902286	Lock nut, M8x1.25 mm A2K	2		
19	-	Steering pump module	1		

Hydraulic system, engine room Hydraulic propulsion pump module

Item	Part No.	Name	Qty	L	SN INFO
1	4812122784	Hydraulic pump, propul pump	1		
2	4700500194	Hexagon head screw w Tuflok M12x40H 8.8 A3K	4		
3	4700904703	Plain washer 13x24x4 mm	4		
4	4812115051	Straight connector orfs	1		
5	4700791213	Flange fitting 90	1		
6	4700900229	Measuring fitting	3		
7	4812112560	Straight connector orfs	1		
8	4812112561	T-adapter	1		
9	4700923384	Split flange	4		
10	4700904005	O-ring	2		
11	4700904638	Washer 12x22x2	8		
12	4700928791	Screw, M12x45	8		
13	4700904496	Adapter	1		
14	4812115965	Flange fitting 90	1		

Hydraulic system, engine room 4812122784 Hydraulic pump

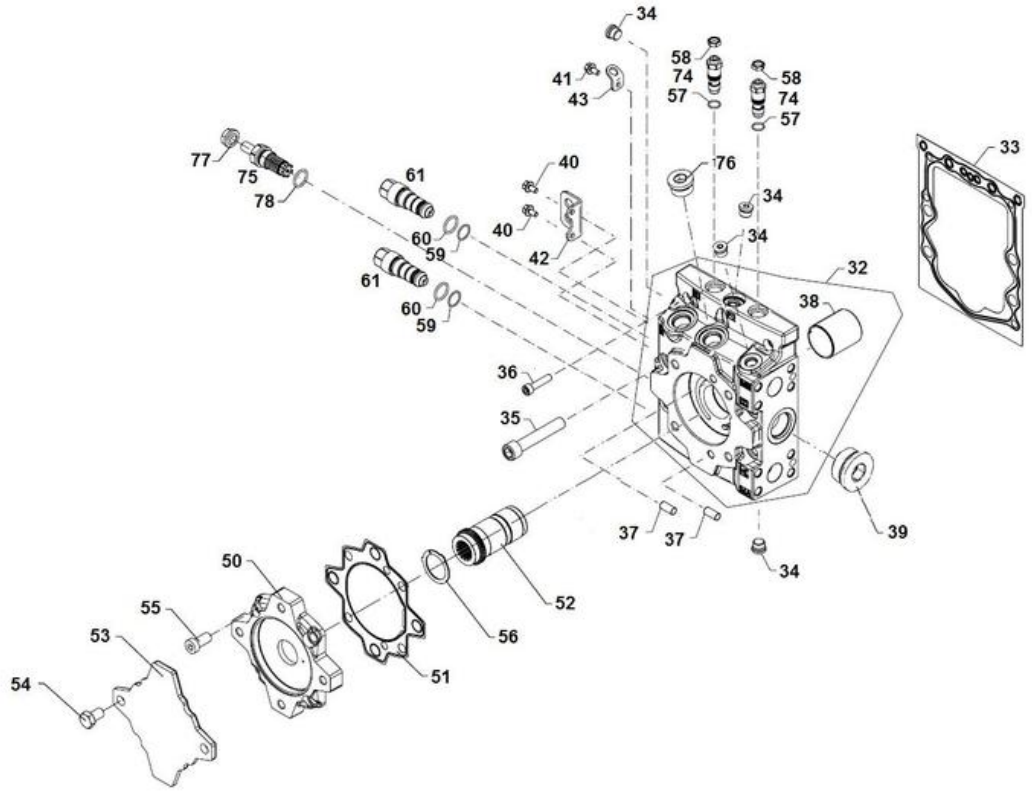

Item	Part No.	Name	Qty	L	SN INFO
1	4812158362	Seal kit, cpl	1		
2	-	Pin	2		
3	-	Plug assy	2		
4	4700902928	Plug	2		
5	-	Screen	2		
6	4812158299	Cylinder block kit	1		
7	4700828142	Spring	1		
8	-	Plate valve	1		
9	-	Guide-slipper retainer	1		
10	-	Retainer-slipper	1		
11	-	Pin-slipper hold down	4		
12	-	Screw	6		
13	4700908774	Sealing nut	1		
14	-	Plug	1		
15	-	Swashplate	1		
16	-	Screen	1		
17	-	Locking ring	1		
18	4812046522	Sealing	1		
19	-	Link	1		
20	-	Screw	6		
21	4812160684	Dowel pin	2		
22	4812157374	Slider block	1		
23	-	O-ring	2		
24	-	Ring piston seal	2		
25	-	Piston-servo assy	1		
26	-	Cylinder-servo assy	1		
27	-	Cylinder-servo assy	1		
28	4812158351	O-ring	1		
29	-	Locking plate	2		
30	-	Screw	4		
31	4812157376	Orifice 1.3, M6x0.75mm	2		
32	-	End cap assy	1		
33	4812158352	End cap gasket	1		
34	4700908432	Plug	4		
35	-	Screw	4		
36	-	Screw	2		
37	-	Pin	2		
38	4812158353	Bearing journal	1		

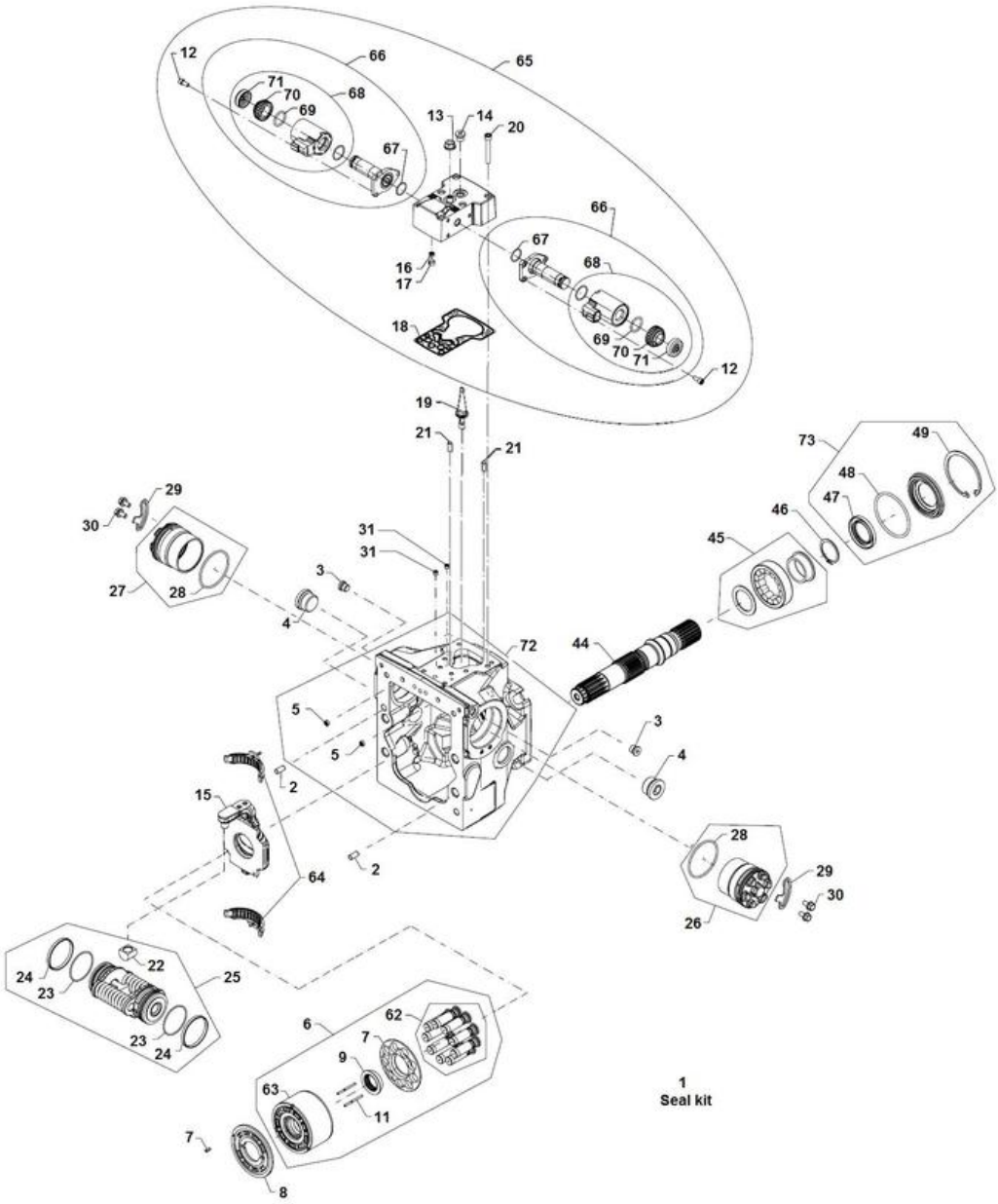
1
Seal kit

Item	Part No.	Name	Qty	L	SN INFO
39	-	Plug	1		
40	-	Screw	2		
41	-	Screw	1		
42	4812104840	Lifting bracket	1		
43	4812106330	Bracket lifting	1		
44	4812158354	Shaft, 21 tooth spline	1		
45	4812104780	Roller bearing	1		
46	4700901727	Snap ring	1		
47	4812104409	O-ring	1		
48	-	O-ring	1		
49	4700828112	Retaining ring	1		
50	-	Adapter	1		
51	4812046524	Sealing	1		
52	-	Coupling	1		
53	-	Adapter	1		
54	-	Screw	2		
55	-	Screw	4		
56	4812157383	Thrust washer	1		
57	4812046535	O-ring	1		
58	4812158358	Nut	1		
59	4812159461	O-ring	1		
60	4812159460	O-ring	1		
61	4812158359	High pressure relief valve, towing valve	2		
62	-	Piston kit	1		
63	-	Cylinder block	1		
64	4812158298	Swashplate bearing kit	1		
65	4812157369	Control unit kit	1		
66	4812157370	Solenoid	2		
67	4812157371	O-ring	2		
68	4812157372	Coil kit 24V	2		
69	-	O-ring	2		
70	-	Screw	2		
71	-	Cap	2		
72	-	Housing kit	1		
73	4812160686	Shaft seal kit	1		
74	4812158360	Pressure limiter kit	2		
75	4812158361	Charge relief valve kit	1		
76	4700909243	Plug	2		

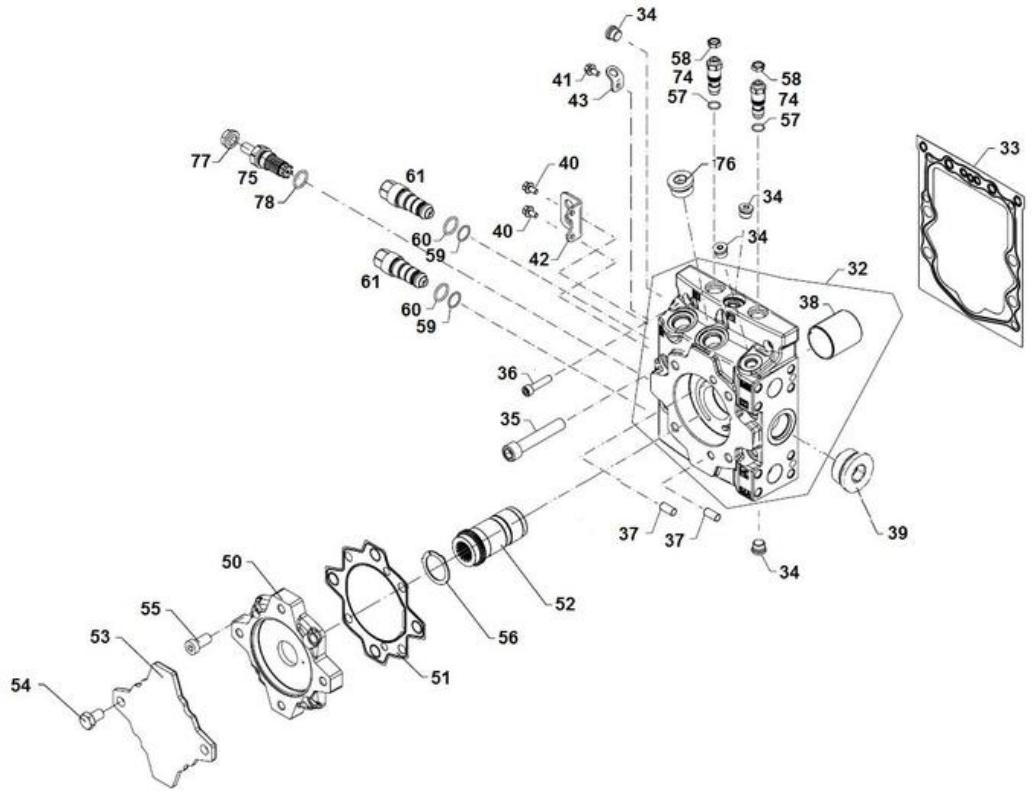
34
58
74
57
41
43
58
74
57
77
75
78
61
60
59
61
60
59
40
40
42
76
34
34
32
38
33
36
35
37
37
39
34
50
55
53
54
52
56
51

Item	Part No.	Name	Qty	L	SN INFO
77	4812157387	Seal nut	1		
78	-	O-ring	1		

Hydraulic system, engine room Hydraulic vibration pump module

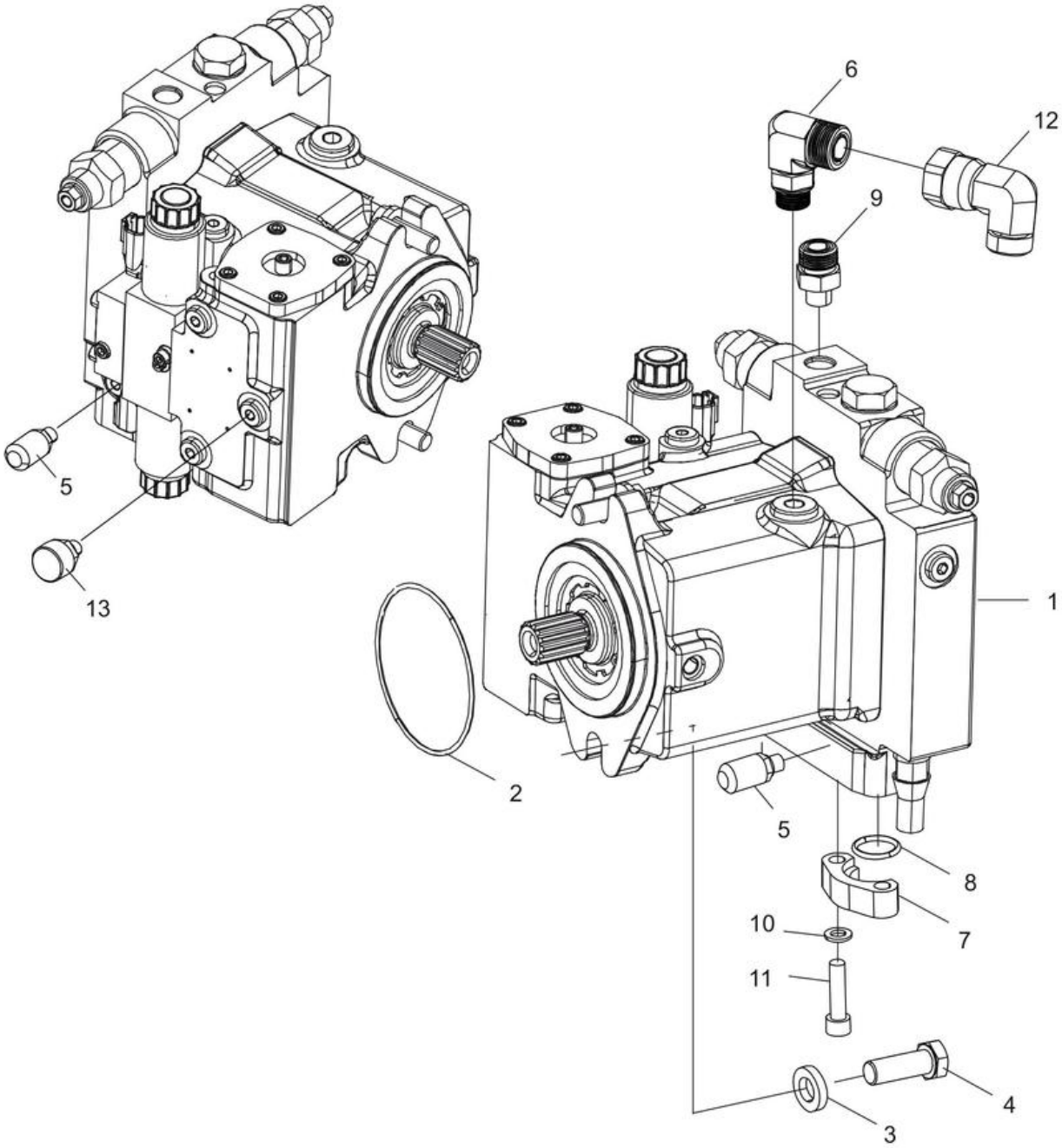

Item	Part No.	Name	Qty	L	SN INFO
1	4812122786	Hydraulic pump	1		
2	4700160234	O-ring	1		
3	4700904703	Plain washer 13x24x4 mm	2		
4	4700500037	Hex. screw	2		
5	4700901157	Measuring nipple	2		
6	4811000417	Connector elbow 90 orfs	1		
7	4700929226	Flange half	4		
8	4700904004	O-ring 90	2		
9	4700792465	Straight connector orfs	1		
10	4700904637	Washer	8		
11	4700508080	Screw	8		
12	4700904584	Connector elbow 90 ORFS	1		
13	4812116781	Oil filling plug	1		

4812122786 Hydraulic pump, propulsion 4812122786 Hydraulic pump, propulsion

Item	Part No.	Name	Qty	L	SN INFO
0	4812122786	Hydraulic pump	1		
1	-	Rotary group	1		
2	-	Hydraulic control	1		
3	-	Port plate with valves	1		
5	-	Control module	1		
10	--	Housing	1		
13	--	Joint pin	1		
14	--	Cylinder pin	1		
20	--	Locking screw	1		
21	--	Locking screw	1		
22	--	Locking screw	3		
27	--	Double break-off plug	2		
28	4812158198	Orifice	2		
31	--	Clamping pin	2		
32	--	Locking screw	1		
41	--	O-ring	1		
49	4700936313	Orifice	1		
98	--	Seal kit	1		

4812122786 Hydraulic pump, propulsion Rotary group

Item	Part No.	Name	Qty	L	SN INFO
1	-	Rotary group, hydraulic section	1		
11	--	Control plate	1		
12	--	Cradle	1		
13	--	Slide ring	1		
14	--	Drive shaft	1		
17	--	Wire	1		
18	--	Joint pin	1		
19	--	Wire	1		
26	4700937182	Bearing liner, 1 pair	1		
31	4700937185	Bearing	1		
32	4700937186	Cradle bearing assembly, 1 set	1		
36	--	Retaining ring	1		
37	4812158774	Seeger-v-ring	2		
38	4700937189	Seal ring	1		
98	4812158775	Seal kit, drive shaft	1		

4812122786 Hydraulic pump, propulsion Hydraulic control

Item	Part No.	Name	Qty	L	SN INFO
1	-	Positioning piston, cpl	1		
2	--	Positioning piston	1		
3	--	Rod	1		
4	--	Cover	1		
5	--	Assembly ring	1		
6	--	Spring collar	1		
7	--	Spacer ring	1		
8	--	Pressure spring	1		
10	--	Spring collar	1		
13	--	O-ring	1		
15	--	Retaining ring	1		
18	4812157097	O-ring	1		
16	-	Socket head screw	4		
17	-	Hexagon nut	1		
30	-	Guide ring	2		
31	-	Rod seal kit	2		
98	-	Seal kit, hydraulic control	1		

4812122786 Hydraulic pump, propulsion Port plate with valves

Item	Part No.	Name	Qty	L	SN INFO
10	4812159755	Pressure overide valve	1		
11	--	Locking screw	1		
12	--	Valve bushing	1		
13	--	Control piston	1		
14	--	Piston	1		
15	--	Valve piston	1		
16	--	Poppet seat	1		
17	--	Pressure spring	1		
18	--	Spring collar	2		
19	--	Adjusting screw	1		
20	4700902783	O-ring	1		
21	--	Sealing nut	1		
30	4812157796	Pressure relief valve	2		
31	--	Locking screw	1		
32	--	Valve collar	1		
33	--	Valve spindle	1		
34	--	Spring loading nut	1		
35	--	Pressure spring	1		
36	--	Spring	1		
37	--	Threaded pin	1		
38	--	Adjustment bolt	1		
39	4700927278	O-ring	1		
40	4812157097	O-ring	1		
41	-	Sealing nut	1		
42	4812157799	Back-up ring	1		
50	-	Locking set	1		
51	--	Locking screw	1		
52	4700927278	O-ring	1		

4812122786 Hydraulic pump, propulsion Control module

Item	Part No.	Name	Qty	L	SN INFO
1		Control module	1		
2	--	Housing	1		
3	--	Control piston w. cyl. pin	1		
4	--	Lever pair	1		
6	--	Eccetric pin	1		
8	--	Shim	1		
9	--	Feedback lever	1		
10	4812157155	Gasket	1		
11	--	Cover with filter	1		
12	--	Draw spring	1		
13	4812156599	Gasket	1		
14	--	Seal plug	2		
15	--	Socket head screw	4		
16	--	Cylinder pin	1		
21	--	Socket head screw	1		
23	--	Shim	N		
27	4812157156	O-ring	1		
28	--	Socket head screw	1		
19	4812156151	Solenoid	2		
98	D967536871	Seal kit	1		

Hydraulic system, engine room Hydraulic oil filter assy

Item	Part No.	Name	Qty	L	SN INFO
1	4812112260	Hydraulic oil filter	1		
1.1	4812112262	Hydraulic oil filter element	1		
1.2	4812160664	Fiction ring, filter head	1		
1.3	4700936898	Sensor Red (RW)	1		
2	4700904230	Steel plain washer	4		
3	4700500048	Screw, M10x20 mm 8.8 A3K	4		
5	4700921161	Pipe clamp	1		
6	4700792339	Adapter	2		

Hydraulic system, engine room Steering pump, module

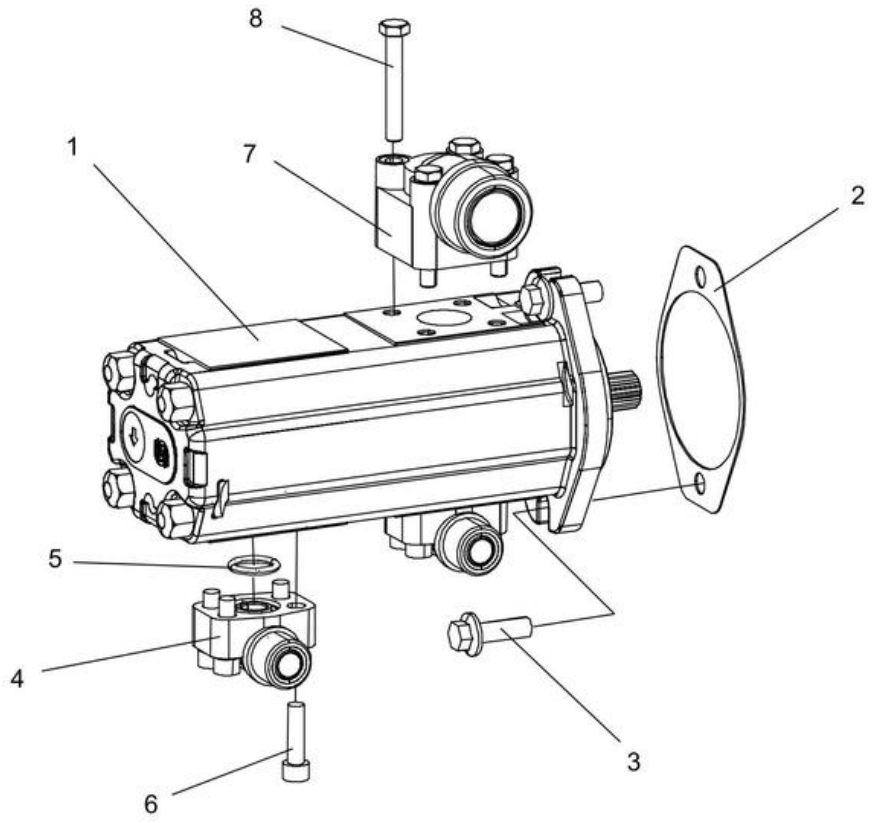

Item	Part No.	Name	Qty	L	SN INFO
1	4812121940	Hydraulic pump, steering ECO	1		
2	4812115511	Gasket	1		
3	4700791343	Screw	2		
4	4812113633	Flange connector	2		
5	4700904774	O-ring	2		
6	4700508048	Hexagon socket head cap screw M	4		
7	4812119629	Flange connector 90	1		
8	4700500067	Screw	4		

Hydraulic system, steering Hydraulic system, steering

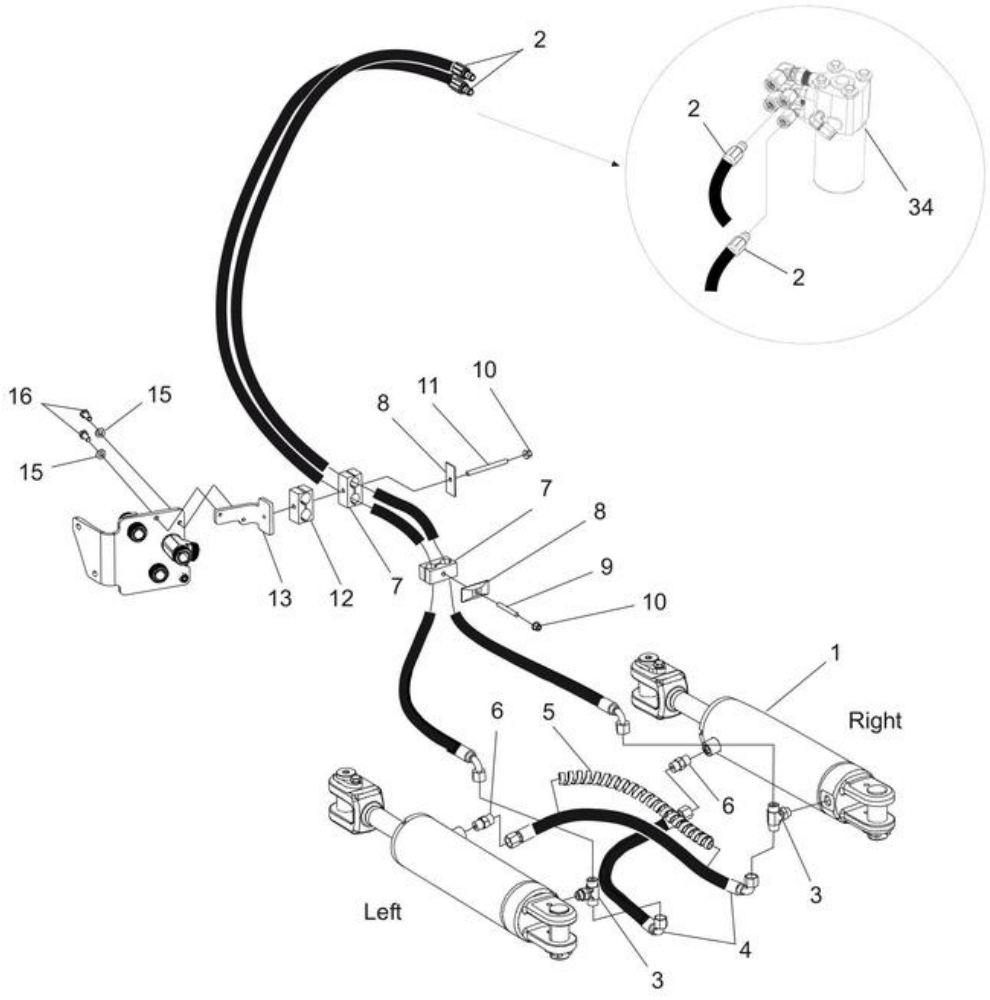

Item	Part No.	Name	Qty	L	SN INFO
1	-	Hydraulic Cylinder	2		
2	4811000207	Hydraulic hose	2		
3	4700792586	T-connector ORFS	2		
4	4811000206	Hydraulic hose	2		
5	4700904623	Hose guard	1XL	A	
6	4700791799	Straight connector orfs	2		
7	4700903456	Pipe clamp	2		
8	4700904872	Cover plate	2		
9	4700792500	Stud	1		
10	4700902286	Lock nut, M8x1.25 mm A2K	2		
11	4700791807	Stud	1		
12	4700287295	Clamp	1		
13	4812113983	Bracket	1		
15	4700904229	Washer, 8.4x 6x1.5 mm 300HV	2		
16	4700500053	Screw, M8x20 mm 8.8 A2K	2		
34	-	Steering valve module	1		

Comments for Page: Hydraulic system, steering

(L)OCAL REMARKS

A | en_US | L=0.4m

Hydraulic system, steering Hydraulic hoses, steering

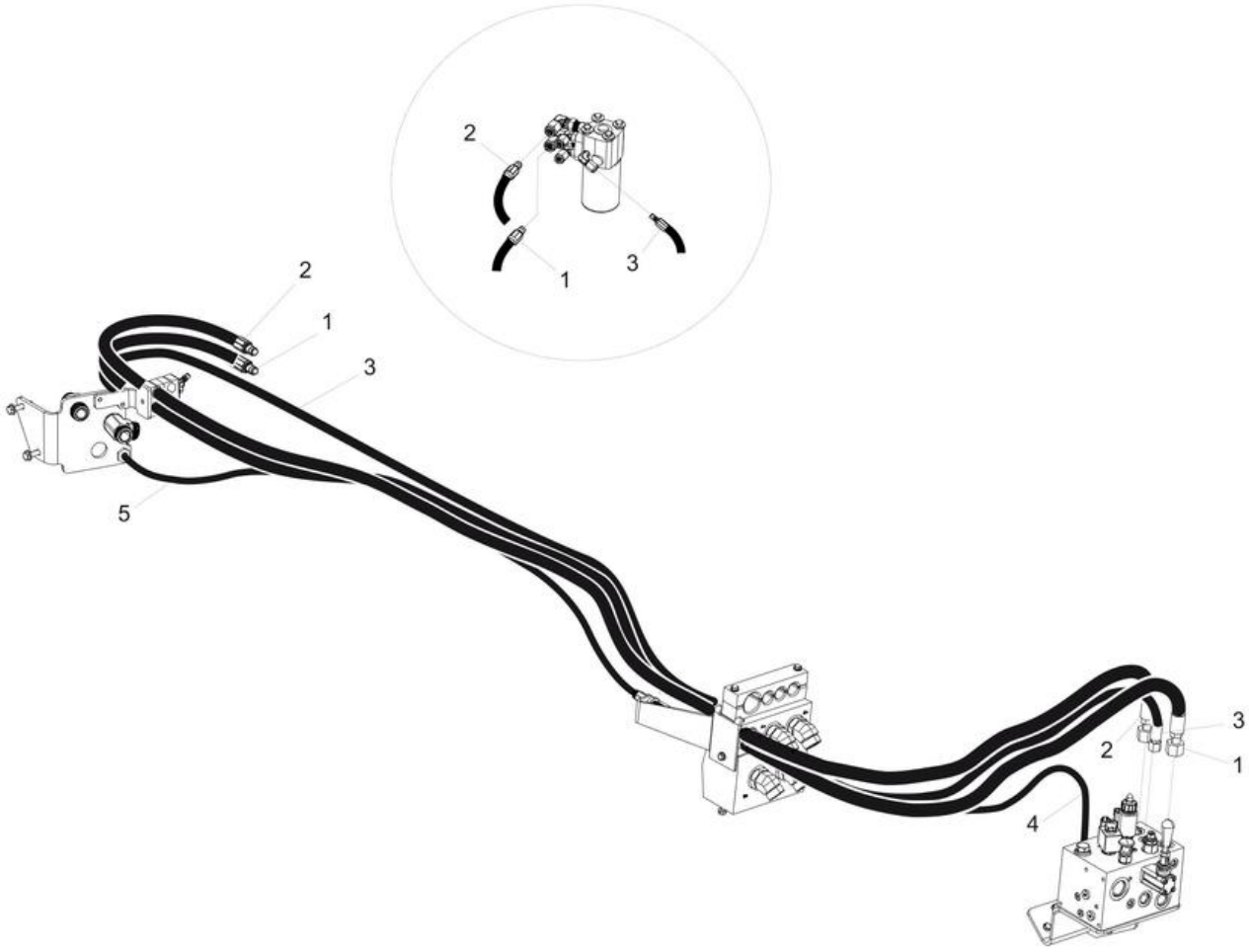

Item	Part No.	Name	Qty	L	SN INFO
1	4812122171	Hydraulic hose	1		
2	4812122172	Hydraulic hose	1		
3	4812122173	Hydraulic hose	1		
4	4812122174	Hydraulic hose	1		
5	4812122175	Hydraulic hose	1		

Hydraulic system, steering Steering valve module

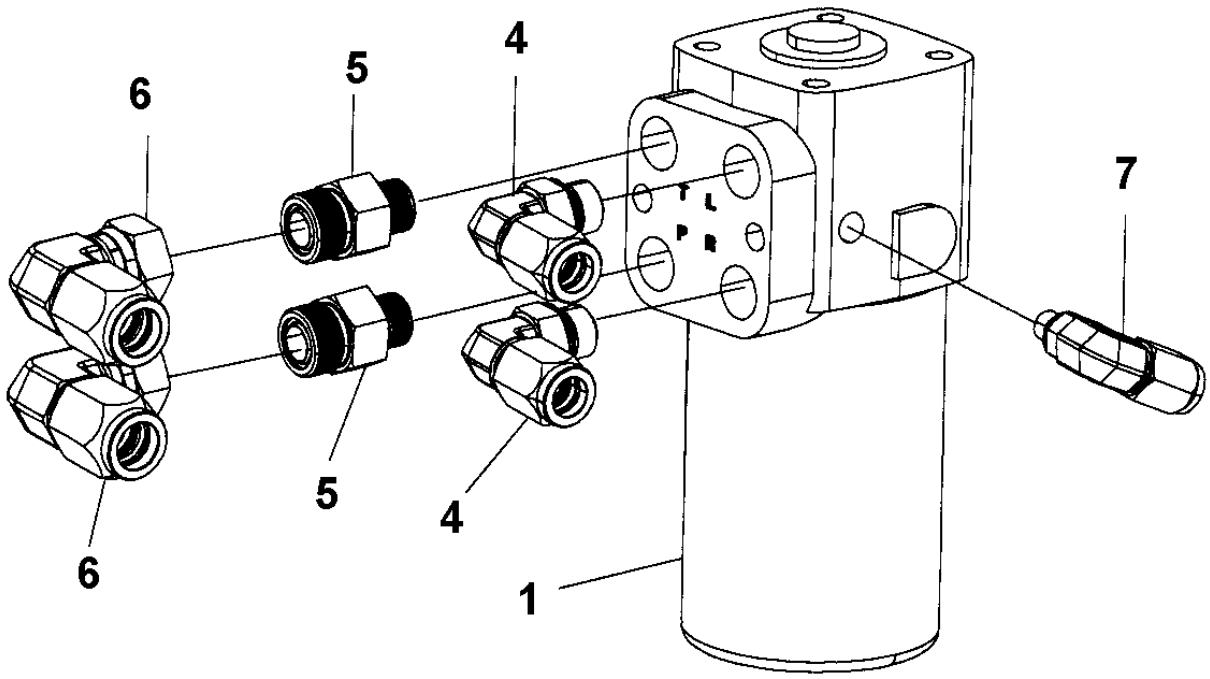

Item	Part No.	Name	Qty	L	SN INFO
1	4812112290	Steering valve	1		
4	4812115063	Elbow connector 90°	2		
5	4811000074	Straight connector orfs	2		
6	4812115064	Elbow connector 90°	2		
7	4812115065	Elbow connector 90°	1		

Hydraulic system, steering Hydraulic cylinder

Item	Part No.	Name	Qty	L	SN INFO
1	4812121946	Hydraulic cylinder	1		
2	4700900994	Lock washer	2		
3	4700500046	Hex. head screw M12x030H	2		
4	4700792083	Plug	2		
5	4812117297	Sealing strip	2		

Hydraulic system, steering 4812121946 Hydraulic cylinder

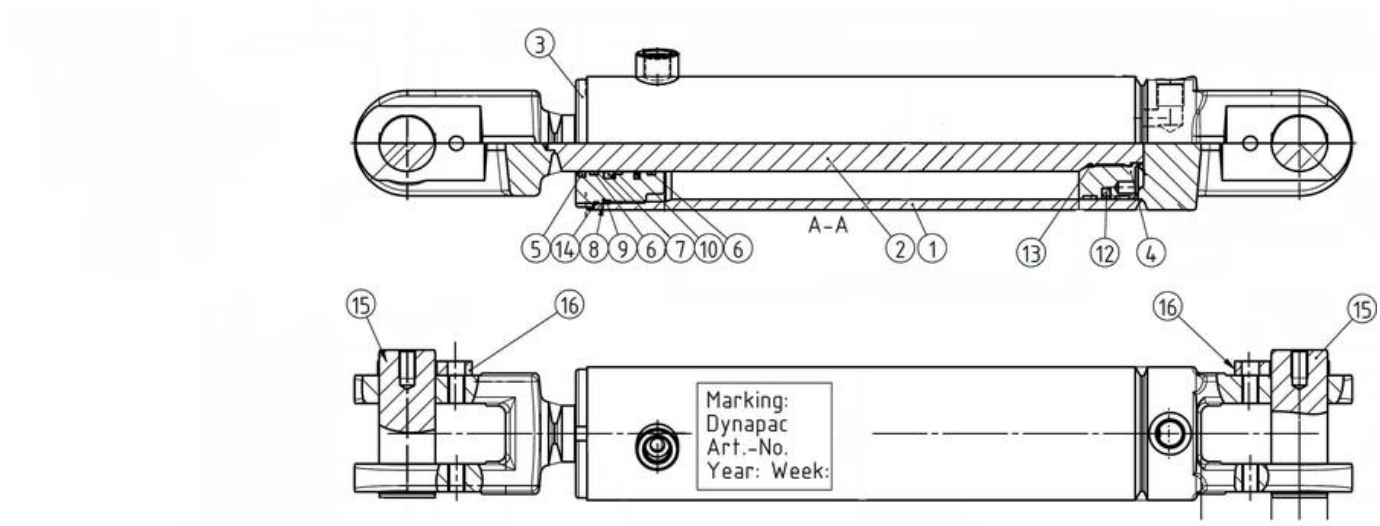

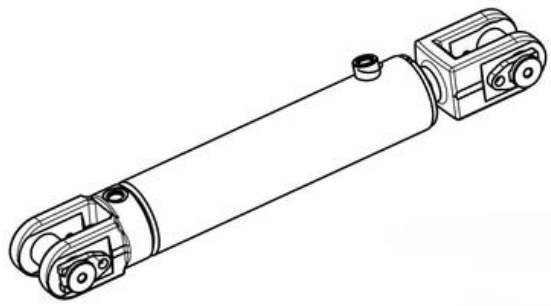

Item	Part No.	Name	Qty	L	SN INFO
0	4812121946	Hydraulic cylinder	1		
1	--	Cylinder pipe	1		
2	--	Piston rod	1		
3	--	Guide block	1		
4	--	Piston	1		
5A	4812160852	Seal kit	1		
5	---	Wiper	1		
6	---	Guide Ring	2		
7	---	Rod seal	1		
8	---	Backup ring	1		
9	---	O-ring	1		
10	---	O-ring	1		
11	---	O-ring	2		
12	---	O-ring	1		
13	---	O-ring	1		
14	---	O-ring	1		
15	4812161153	Pin	2		
16	4812157759	Locking fork	2		

Electric cables, power supply, 1-pole Electric cables, power supply, 1-pole

Item	Part No.	Name	Qty	L	SN INFO
1	-	Battery module	2		
2	-	Battery disconnector module	1		
3	4811000178	Connection cable, coarse	1		
4	4812115998	Connection cable, coarse	1		
5	4700792769	Connection cable, coarse	1		
6	4812120400	Connection cable, coarse	1		
7	4811000176	Battery cable	1		
8	4812118465	Battery cable	1		
9	4700791518	Connection cable, coarse	1		
10	4700792441	Cable tie with holder	N		
11	4700904229	Washer, 8.4x 6x1.5 mm 300HV	1		
12	4812118467	Battery union cable	1		
13	4700570005	Hexagon nut	1		
15	4700904231	Washer, 13x24x2 mm 300 HV	1		
16	4700500046	Hex. head screw M12x030H	1		
17	4700570101	Nut M6	1		
20	4812118154	Spacer	2		
21	4700791450	Fuse 100A Violet High	1		
22	4700904039	Fuse 50A Red	1		
23	4700904037	Fuse 30A Green	2		

Electric cables, power supply, 1-pole Battery module

Item	Part No.	Name	Qty	L	SN INFO
1	-	Battery 12V, 74 Ah (278x175x190)	1		
2	4812123035	Battery holder	1		
3	4700396635	Battery screw	1		
4	4700904229	Washer, 8.4x 6x1.5 mm 300HV	1		
5	4700586003	Lock nut M8	1		
6	4700355608	Slip protection	1		

Electric cables, power supply, 1-pole Battery disconnector module

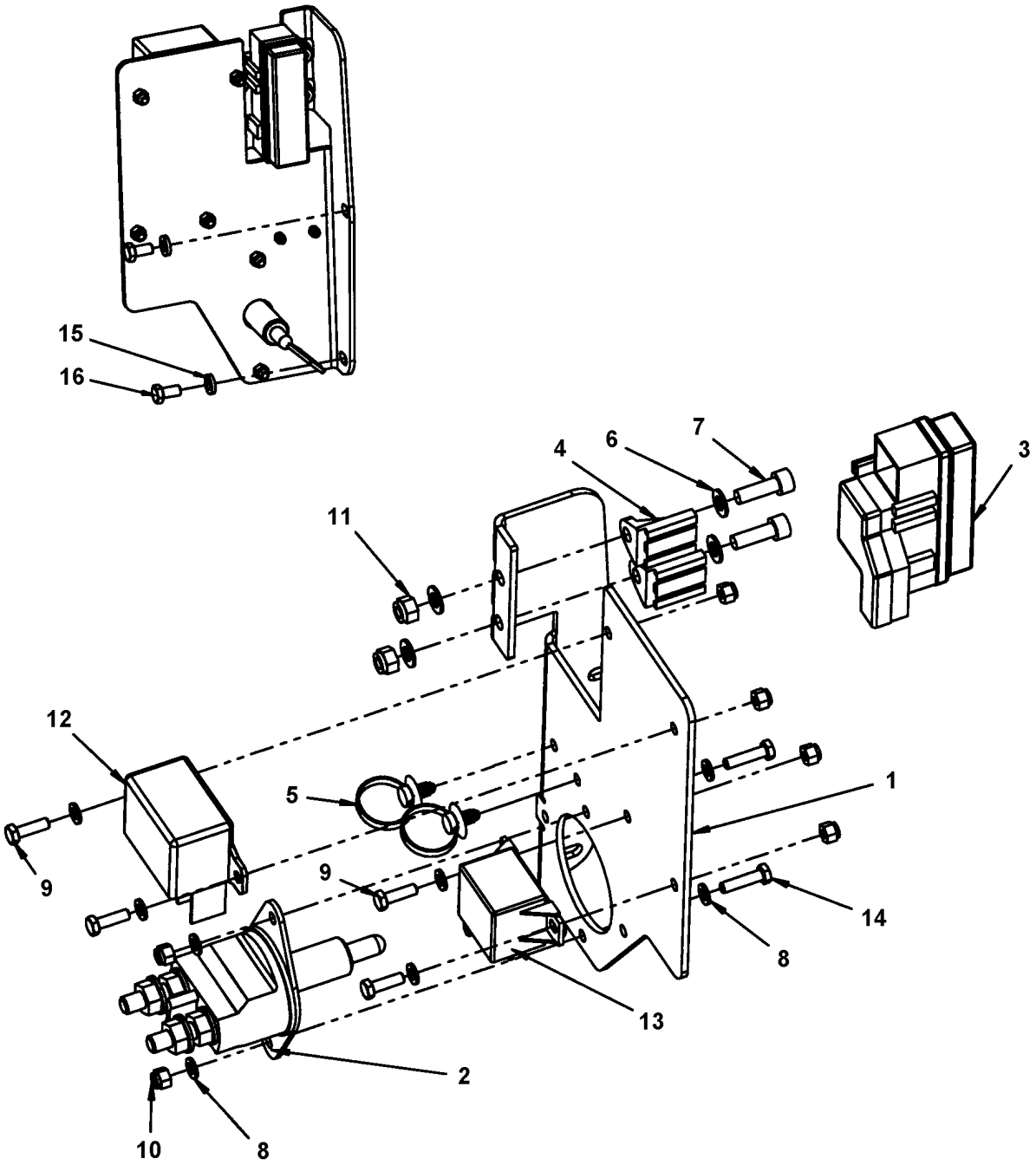

Item	Part No.	Name	Qty	L	SN INFO
1	4812116861	Holder	1		
2	4700903640	Battery switch	1		
2	4700903641	Battery key	1		
3	4812111981	Fuse holder	1		
4	4812112000	Fuse holder	2		
5	4700792441	Cable tie with holder	2		
6	4700904229	Washer, 8.4x 6x1.5 mm 300HV	4		
7	4700508019	Cylinder screw	2		
8	4700904228	Washer 6,4x12x1,5	8		
9	4700500040	Screw, M6x20 mm 8.8 A2K	4		
10	4700586002	Lock nut M6 -8	6		
11	4700586003	Lock nut M8	2		
12	4700792310	Relay 120A	1	B	
13	4700792309	Relay	1	A	
14	4700500075	Screw, M6-1,0x25 mm 8.8	2		
15	4700904556	Steel plain washer 8,4x16x3,0	2		
16	4700500019	Hexagon screw	2		

Comments for Page: Battery disconnector module

(L)OCAL REMARKS

A | en_US | Starter relay.

B | en_US | Grid heater relay.

Electric cables, power supply, 2-pole, option Electric cables, power supply, 2-pole, option

Item	Part No.	Name	Qty	L	SN INFO
1	-	Battery module	2		
2	-	Battery disconnector, 2-pole	1		
3	4812118385	Connection cable, coarse	1		
4	4812115998	Connection cable, coarse	1		
5	4700792769	Connection cable, coarse	1		
6	4812120400	Connection cable, coarse	1		
7	4811000176	Battery cable	1		
8	4700791518	Connection cable, coarse	1		
9	4700792441	Cable tie with holder	N		
10	4700904229	Washer, 8.4x 6x1.5 mm 300HV	1		
11	4812118467	Battery union cable	1		
12	4700570005	Hexagon nut	1		
14	4700904231	Washer, 13x24x2 mm 300 HV	1		
15	4700500046	Hex. head screw M12x030H	1		
16	4700570101	Nut M6	1		
19	4812116362	Battery cable	1		
20	4812123601	Connection cable, coarse	1		
21	4700904557	Washer, 10.5x22x4 mm 300 HV	2		
22	4700791450	Fuse 100A Violet High	1		
23	4700904039	Fuse 50A Red	1		
24	4700904037	Fuse 30A Green	2		

Electric cables, power supply, 2-pole, option Battery disconnector, 2-pole

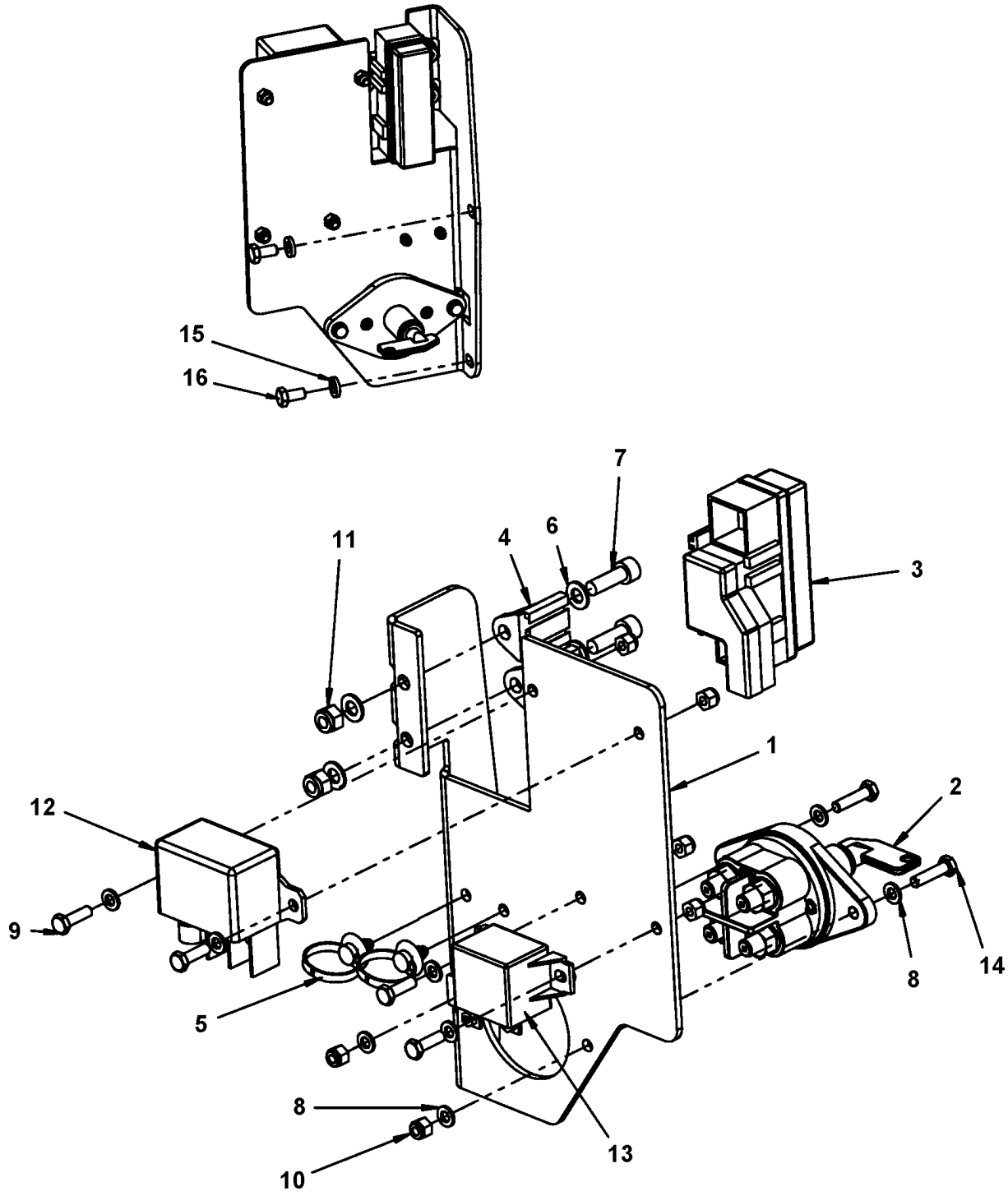

Item	Part No.	Name	Qty	L	SN INFO
1	4812116861	Holder	1		
2	4812116877	Battery switch	1		
3	4812111981	Fuse holder	1		
4	4812112000	Fuse holder	2		
5	4700792441	Cable tie with holder	2		
6	4700904229	Washer, 8.4x 6x1.5 mm 300HV	4		
7	4700508019	Cylinder screw	2		
8	4700904228	Washer 6,4x12x1,5	8		
9	4700500040	Screw, M6x20 mm 8.8 A2K	4		
10	4700586002	Lock nut M6 -8	6		
11	4700586003	Lock nut M8	2		
12	4700792310	Relay 120A	1	B	
13	4700792309	Relay	1	A	
14	4700500075	Screw, M6-1,0x25 mm 8.8	2		
15	4700904556	Steel plain washer 8,4x16x3,0	2		
16	4700500019	Hexagon screw	2		

Comments for Page: Battery disconnector, 2-pole

(L)OCAL REMARKS

A | en_US | Starter relay.

B | en_US | Grid heater relay.

Electrical cables, engine - ECU Horn, back-up alarm Electrical cables, engine - ECU Horn, back-up alarm

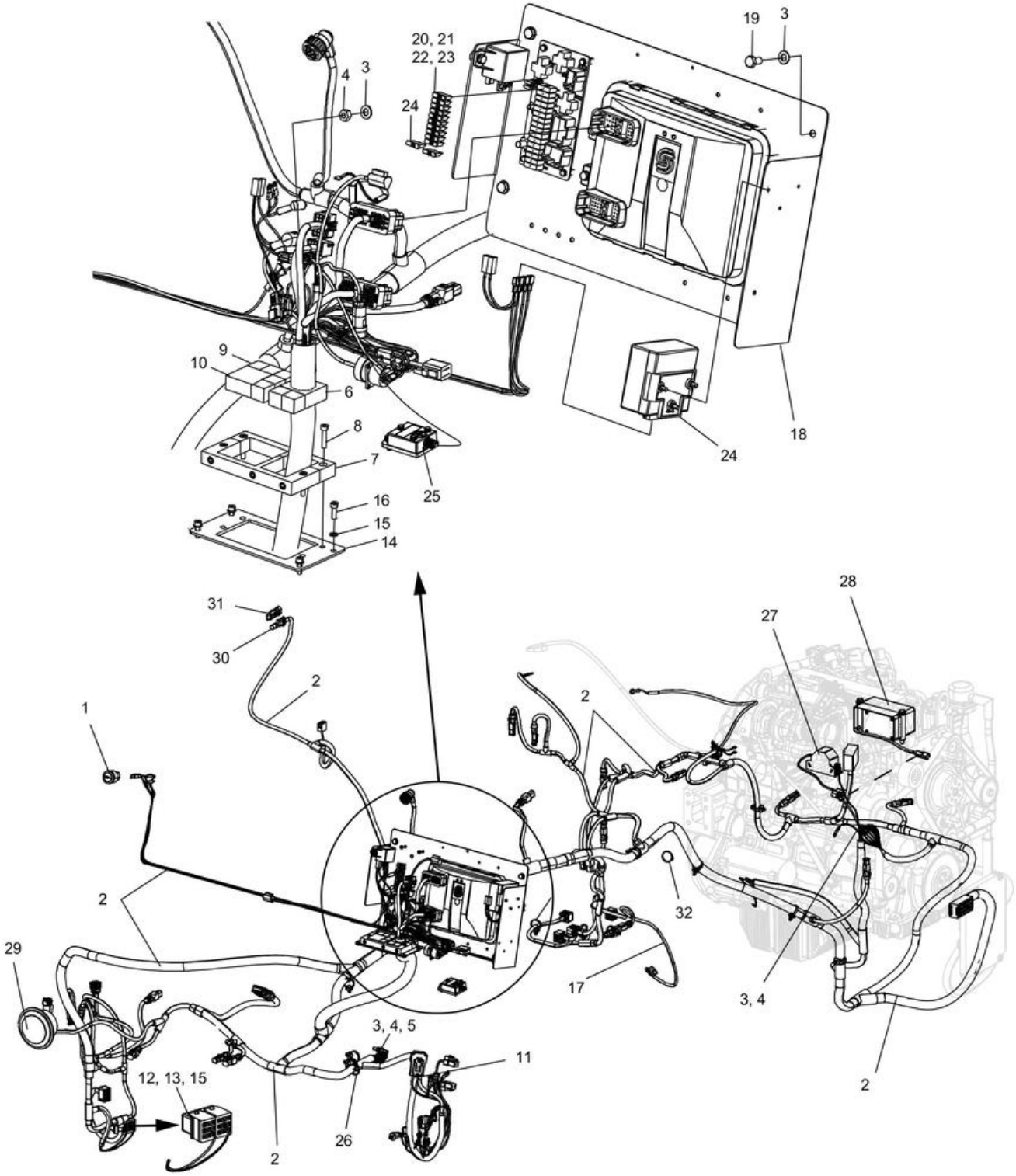

Item	Part No.	Name	Qty	L	SN INFO
1	4812110560	Power socket 12V	1	A	
2	4812121622	Cable harness	1		
3	4700904229	Washer, 8.4x 6x1.5 mm 300HV	7		
4	4700570005	Hexagon nut	4		
5	0248998073	Threaded stud	1		
6	4812112067	Cable entry insert	1		
7	4812112065	Cable entry frame	1		
8	4700508023	Screw	4		
9	4812112066	Cable entry insert	7		
10	4812112070	Cable entry insert	1		
11	4700570101	Nut M6	1		
12	4700792422	Relay 24V 20A	2		
13	4700500041	Hex. screw	2		
14	4812114426	Holder	1		
15	4700904281	Washer, 5,3x10x1 300HV	6		
16	4700926537	Screw	4		
17	4812122500	Cable adapter	1		
18	-	Standard ECU assembly	1		
19	4700500019	Hexagon screw	4		
20	4700901225	Fuse 5A Tan	1		
21	4700901227	Fuse 10A Red	7		
22	4700903741	Fuse 20A Yellow	2		
23	4700901228	Fuse, 15A Blue	1		
24	-	Power converter module	1		
25	-	Inclination sensor module	1		
26	4700792441	Cable tie with holder	N		
27	-	Back-up alarm module	1		
28	-	Back-up alarm module, Quacker	1		
29	-	Horn module	1		
30	4700813423	Hexagon plug	1		
31	4812120672	Plug with resistor	1		
32	4700313041	Cable ties	1		

Comments for Page: Electrical cables, engine - ECU Horn, back-up alarm

(L)OCAL REMARKS

A | en_US | Option.

Electrical cables, engine - ECU Horn, back-up alarm Standard ECU assembly

Item	Part No.	Name	Qty	L	SN INFO
1	4812114619	Mounting plate	1		
2	4700390860	Control unit, main	1		
3	4700792309	Relay	1	A	
4	4700904228	Washer 6,4x12x1,5	4		
5	4700928467	Washer	2		
6	4700500015	Hex. screw	4		
7	4700500013	Screw, M6x16 mm 8.8 A2K	2		
8	4812114655	Circuit board	1		
9	4700904698	Plain washer	4		
10	4700904312	Screw	4		
11	4700792441	Cable tie with holder	2		
15	4700901227	Fuse 10A Red	7		
16	4700903741	Fuse 20A Yellow	2		
17	4700901225	Fuse 5A Tan	1		

Comments for Page: Standard ECU assembly

(L)OCAL REMARKS

A | en_US | Main.

Electrical cables, engine - ECU Horn, back-up alarm Power converter module

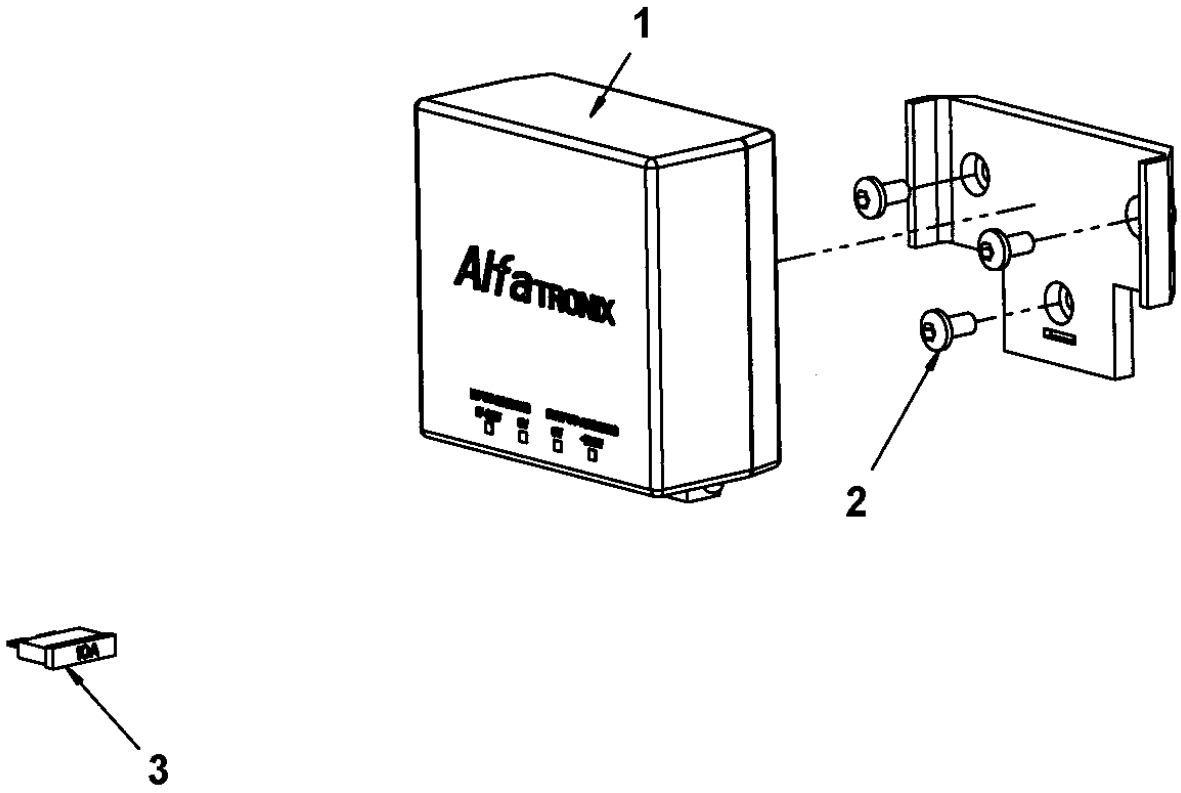

Item	Part No.	Name	Qty	L	SN INFO
1	4812112017	Power converter	1		
2	4700792210	Screw torx	3		
3	4700901227	Fuse 10A Red	1		

Electrical cables, engine - ECU Horn, back-up alarm Inclination sensor module

Item	Part No.	Name	Qty	L	SN INFO
1	4812124239	Bracket	1		
2	4812124238	Inclination sensor	1		
3	4700904698	Plain washer	3		
4	4700904311	Hexagon head screw	3		
5	4700904228	Washer 6,4x12x1,5	2		
6	4700500013	Screw, M6x16 mm 8.8 A2K	2		

Electrical cables, engine - ECU Horn, back-up alarm Back-up alarm module

Item	Part No.	Name	Qty	L	SN INFO
1	4700904911	Back-up alarm	1		
2	4700904228	Washer 6,4x12x1,5	2		
3	4700500013	Screw, M6x16 mm 8.8 A2K	2		

Electrical cables, engine - ECU Horn, back-up alarm Back-up alarm module, Quacker

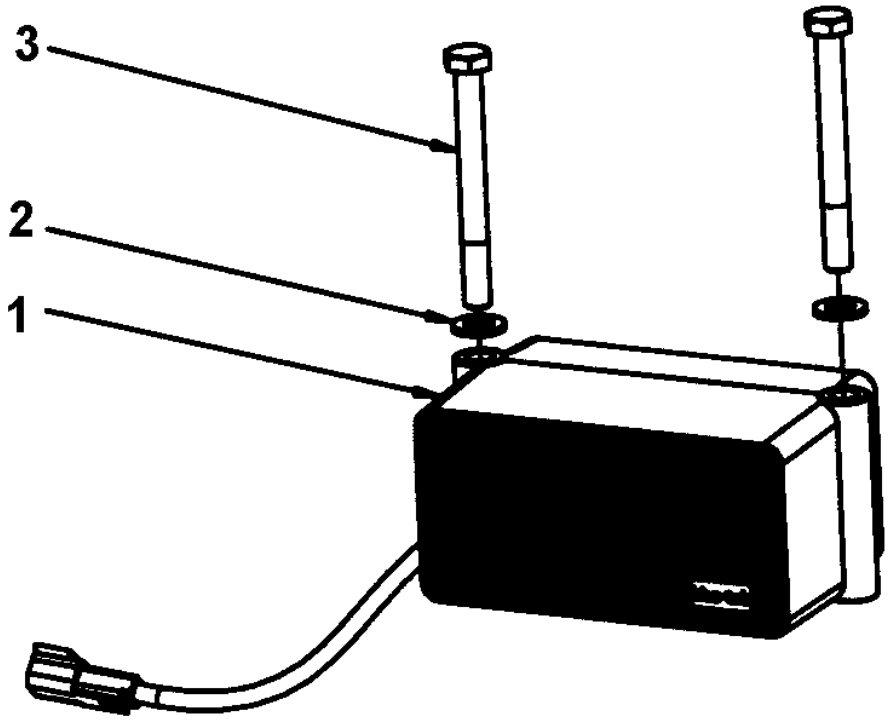

Item	Part No.	Name	Qty	L	SN INFO
1	4812117108	Back-up alarm	1		
2	4700904570	Steel plain washer	2		
3	4700792776	Screw	2		

Electrical cables, engine - ECU Horn, back-up alarm Bracket module

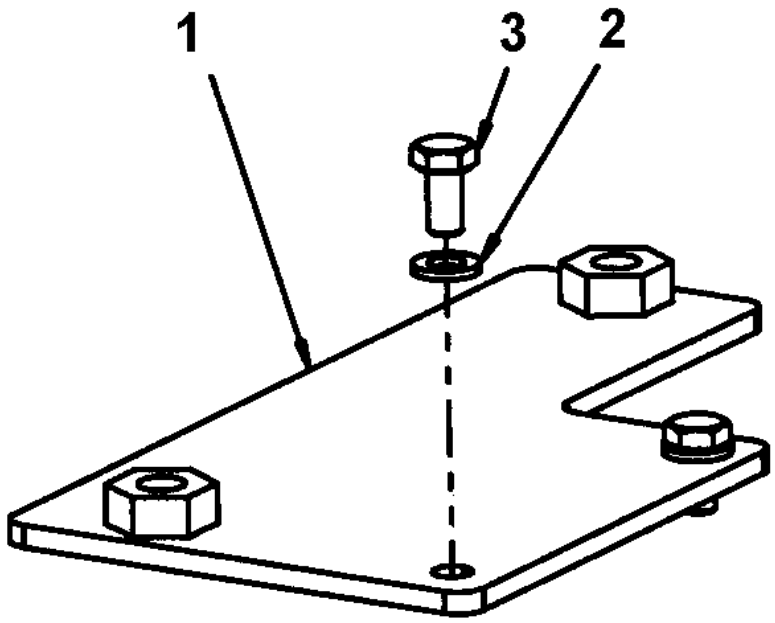

Item	Part No.	Name	Qty	L	SN INFO
1	4812117149	Bracket	1		
2	4700904228	Washer 6,4x12x1,5	2		
3	4700500012	Hex. screw	2		

Electrical cables, engine - ECU Horn, back-up alarm Horn module

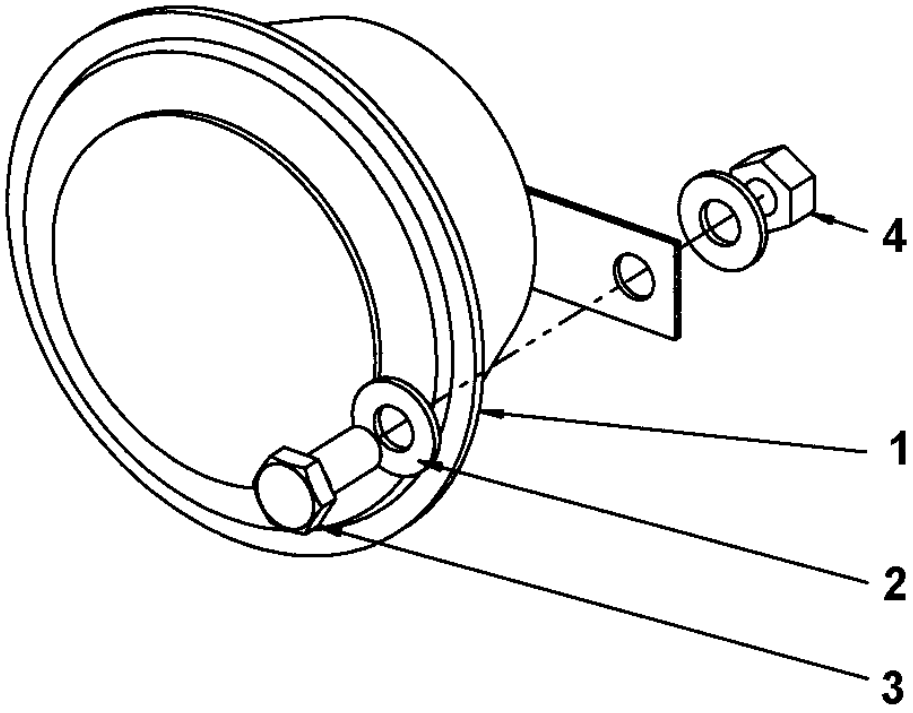

Item	Part No.	Name	Qty	L	SN INFO
1	4812115767	Horn	1		
2	4700904230	Steel plain washer	2		
3	4700500027	Screw M10-1,55x22 8.8	1		
4	4700570006	Hexagon nut	1		

Cable harness kit Power supply cab Cable harness kit Power supply cab

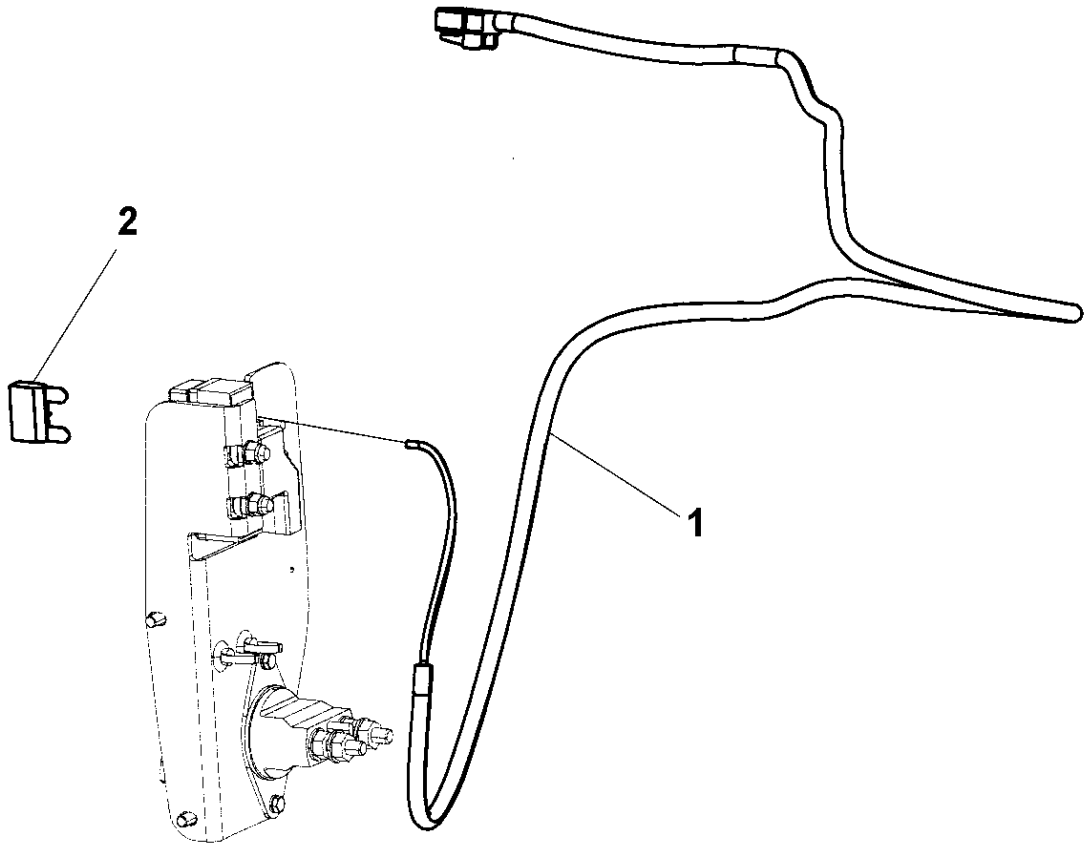

Item	Part No.	Name	Qty	L	SN INFO
1	4812111241	Cable harness	1		
2	4700904037	Fuse 30A Green	1		

Driving & side direction lights, number plate light, option Driving & side direction lights, number plate light, option

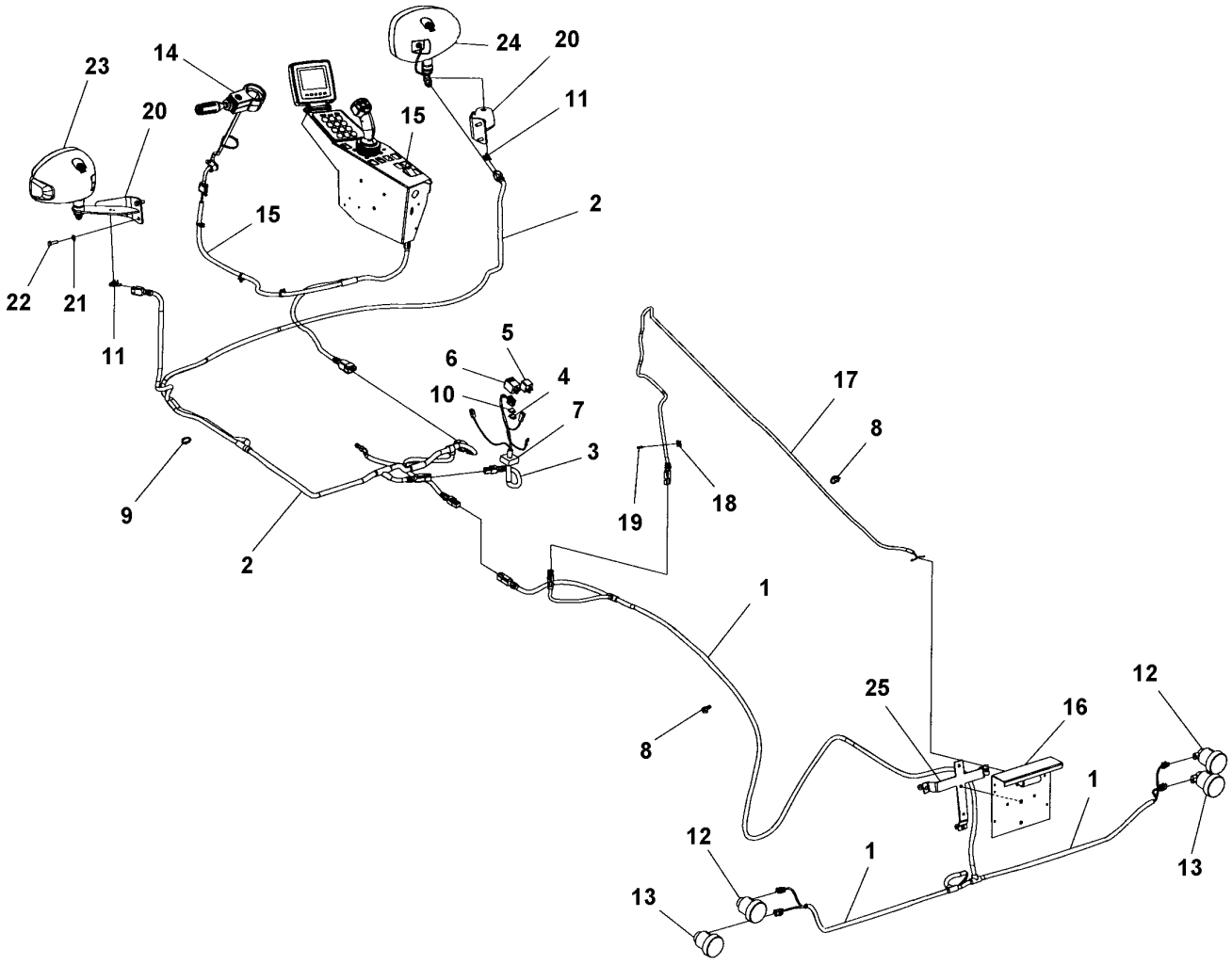

Item	Part No.	Name	Qty	L	SN INFO
1	4812110884	Cable harness	1		
2	4812112374	Cable harness	1		
3	4812114656	Cable harness	1		
4	4700901227	Fuse 10A Red	1		
5	4700792422	Relay 24V 20A	1		
6	4811000163	Flash relay	1		
7	4811000429	Cable entry insert	1		
8	4700792441	Cable tie with holder	26		
9	4700313041	Cable ties	11		
10	4700901226	Fuse 7.5A Brown	1		
11	4812114873	Connector holder	2		
12	4700792520	Direction indicator	2		
13	4700792519	Brake/position light	2		
14	-	Steering column switch module	1		
15	-	Cable harness kit	1		
16	-	Registration plate light module	1		
17	4812112916	Cable harness	1		
18	4700395352	Cable tie holder	5		
19	4700313068	Cable ties, L=92 mm	5		
20	4812112793	Bracket	2		
21	4700904229	Washer, 8.4x 6x1.5 mm 300HV	4		
22	4700500021	Screw, M8x20 mm 8.8 A2K	4		
23	4812113117	Head light, right hand asymmetric	1	A	
23	4812113140	Head light, left hand asymmetric	1	A	
24	4812113118	Head light, right hand asymmetric	1	B	
24	4812113141	Head light, left hand asymmetric	1	B	
25	-	Holder, Registration plate light	1		

Comments for Page: Driving & side direction lights, number plate light, option

(L)OCAL REMARKS

A | en_US | Left

B | en_US | Right

Driving & side direction lights, number plate light, option Steering column switch module

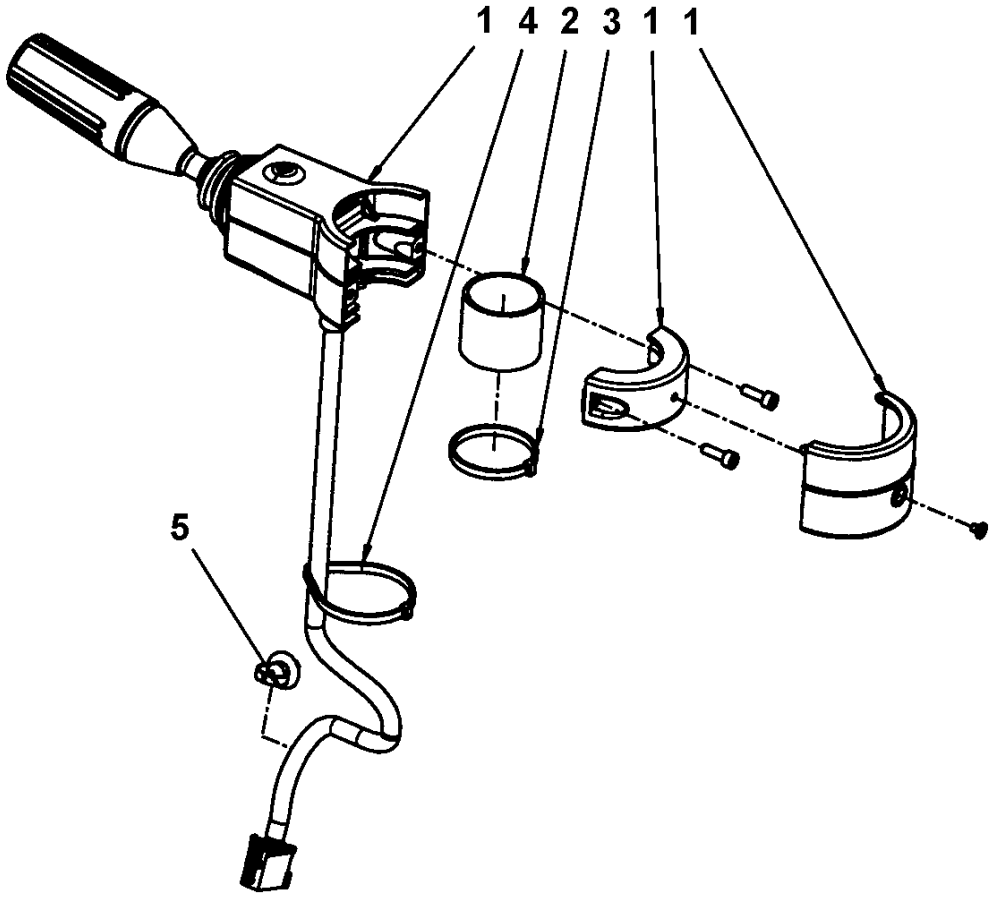

Item	Part No.	Name	Qty	L	SN INFO
1	4700392450	Steering column switch	1		
2	4700392451	Rubber cloth	1		
3	4700313041	Cable ties	1		
4	4700792609	Cable ties	1		
5	4700921080	Clamp	1		

Driving & side direction lights, number plate light, option Cable harness kit

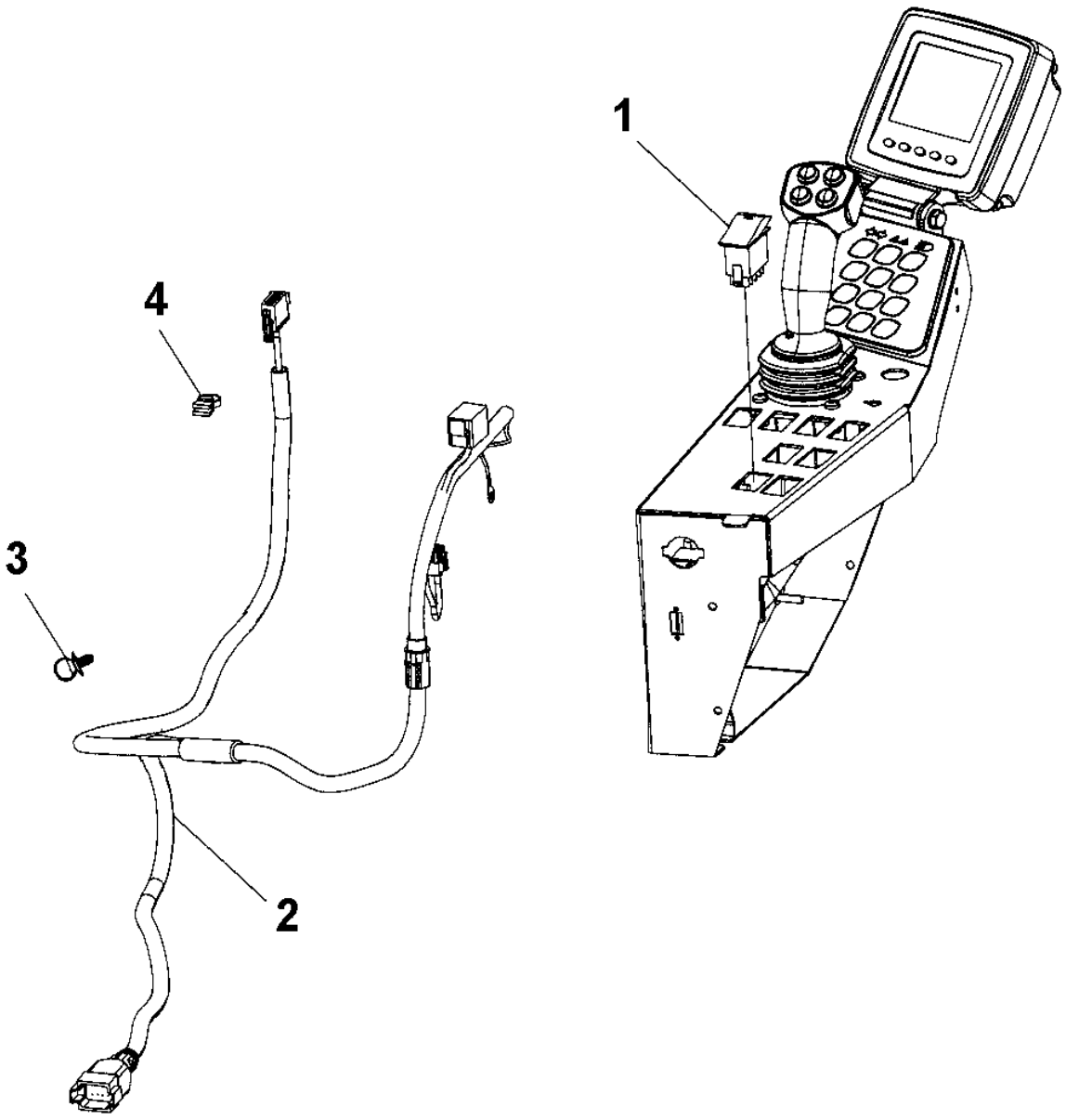

Item	Part No.	Name	Qty	L	SN INFO
1	4700792398	Switch	1		
2	4812111248	Cable harness	1		
3	4700792441	Cable tie with holder	2		
4	4700792537	Cable tie with holder	1		

Driving & side direction lights, number plate light, option Registration plate light module

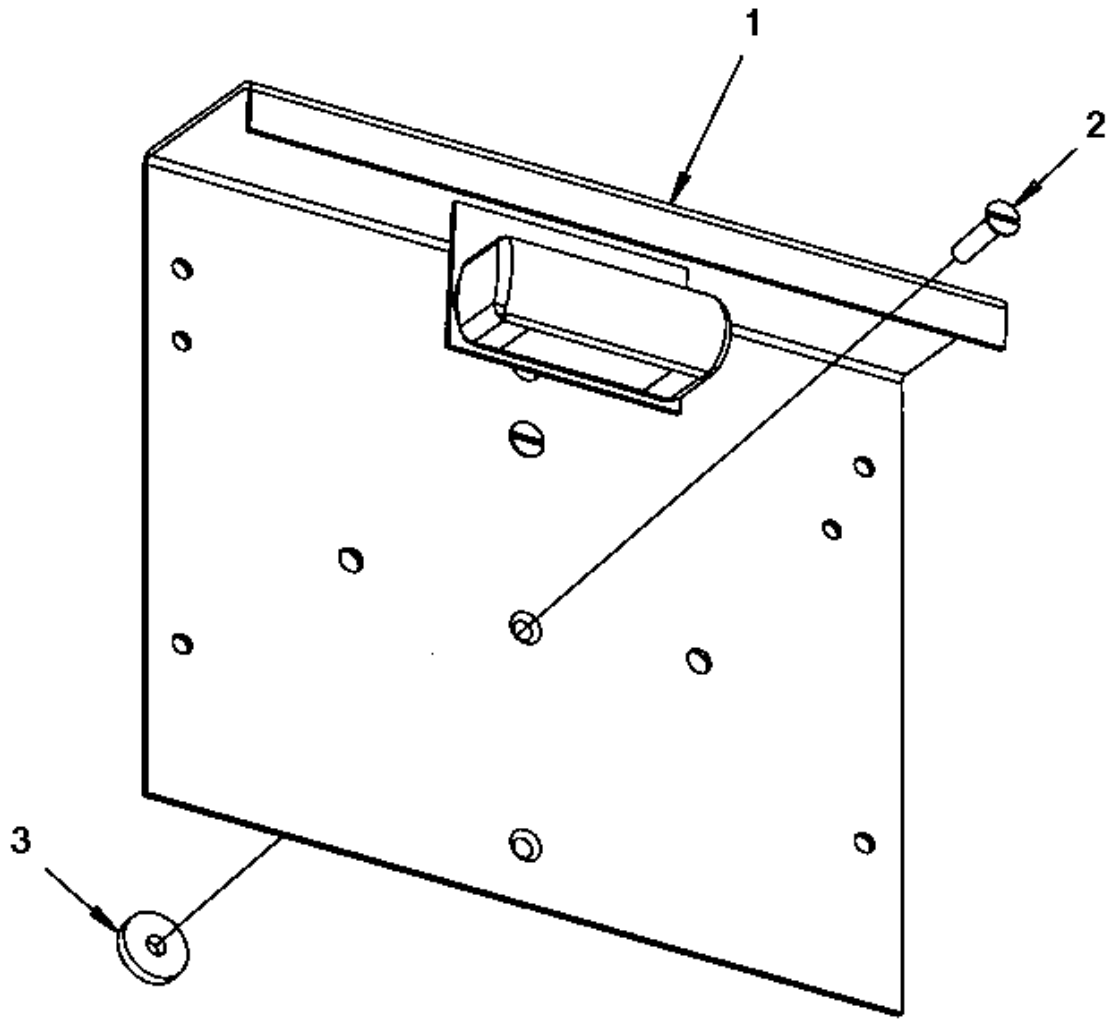

Item	Part No.	Name	Qty	L	SN INFO
1	-	Registration plate light	1		
2	4700928784	Screw	2		
3	4700904735	Steel plain washer	2		

Driving & side direction lights, number plate light, option Registration plate light

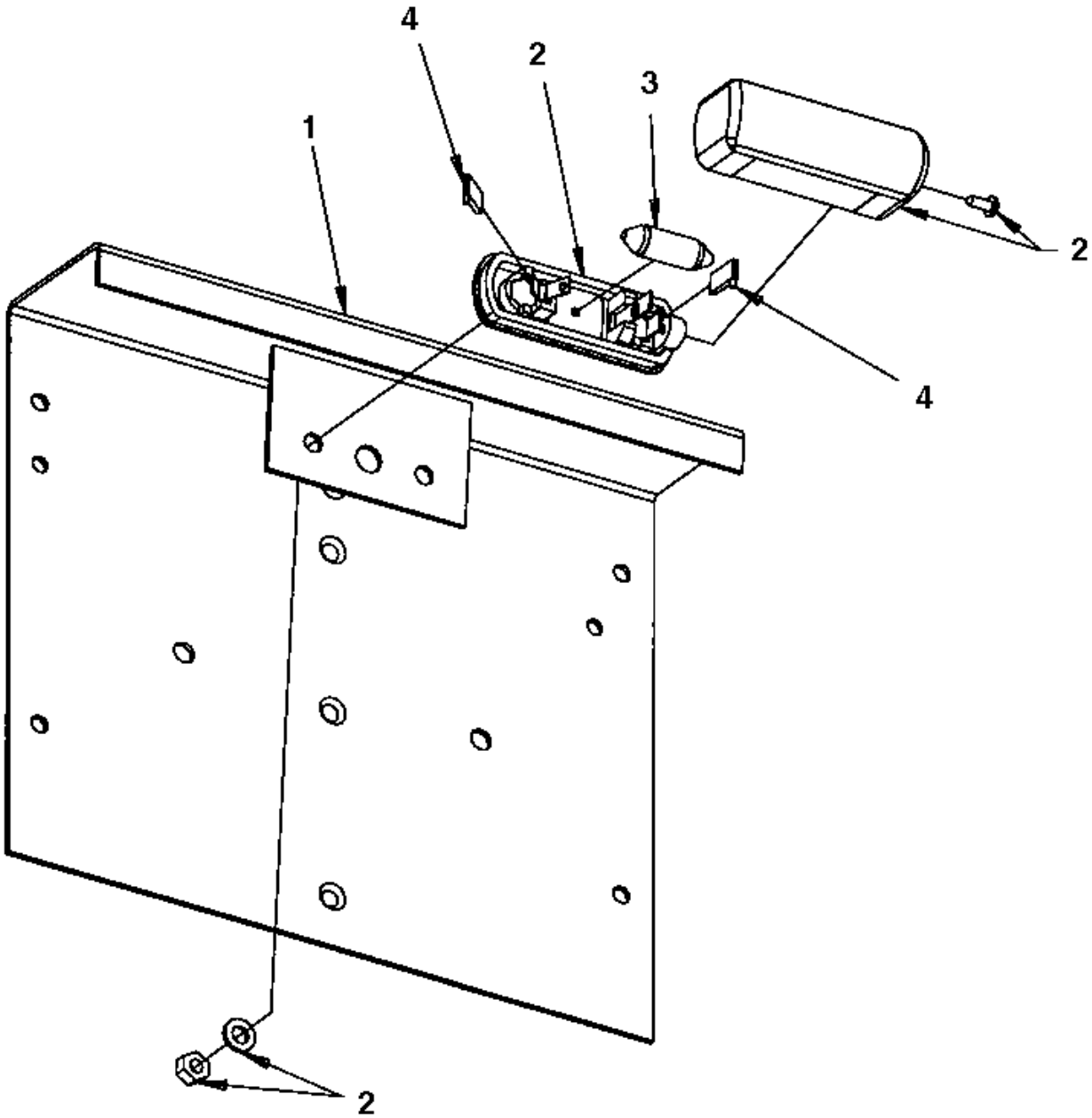

Item	Part No.	Name	Qty	L	SN INFO
1	4700355797	Licence plate holder	1		
2	4700929455	Licence plate light	1		
3	4700792354	Bulb 24V 5W	1		
4	4700792035	Push-on terminal	2		

Driving & side direction lights, number plate light, option Holder, Registration plate light

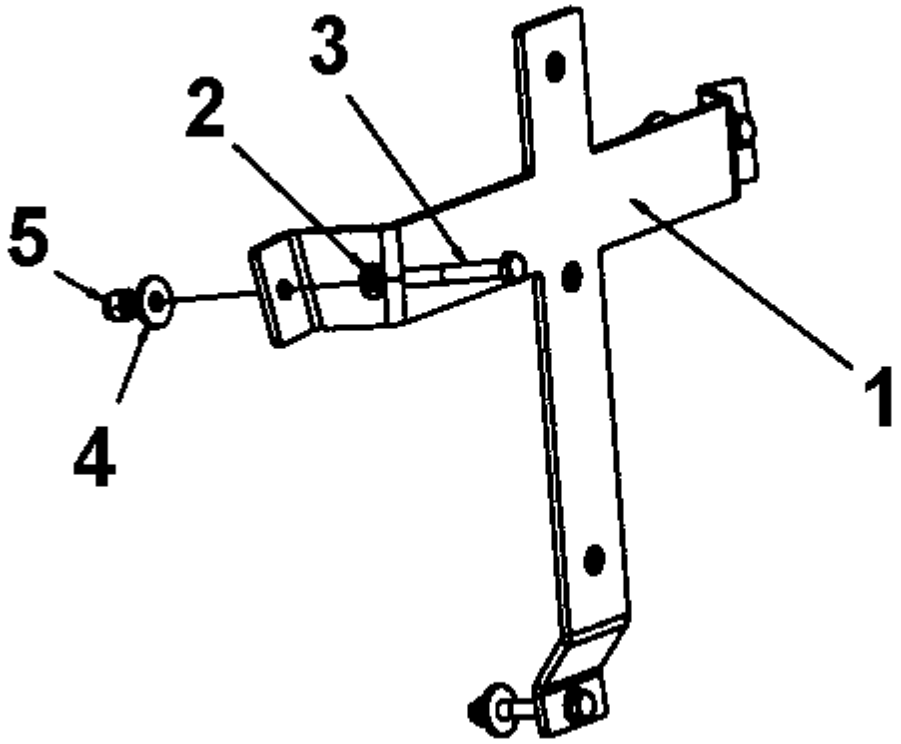

Item	Part No.	Name	Qty	L	SN INFO
1	4812112924	Holder	1		
2	4700904281	Washer, 5,3x10x1 300HV	3		
3	4700500010	Screw	3		
4	4700601001	Washer	3		
5	4700586001	Lock nut	3		

Reversing light, option Reversing light module

Item	Part No.	Name	Qty	L	SN INFO
1	4812120334	Reverse light LED	1		
2	4812120790	Bracket	1		
3	4700904653	Screw M5x16 A2-70	2		
4	4700500006	Screw M5x16	3		
5	4700902284	Nut M5	5		
6	4700601001	Washer	2		

Rotating beacon, working light, option Rotating beacon, working light, option

Item	Part No.	Name	Qty	L	SN INFO
1	4700792397	Switch	1		
2	-	Rotating beacon module	1		
2-1	-	Rotating beacon module	2	A	
3	4812126778	Working light, LED 25W	4		
3	4812126777	Working light, LED 15W	4		
3	-	Working light module H3	4		
4	4812112325	Cable harness	1		
5	4700570005	Hexagon nut	2		
6	4700904229	Washer, 8.4x 6x1.5 mm 300HV	6		
7	4700792667	Cable tie holder	1		
8	4700313041	Cable ties	N		
9	4811000077	Connection cable	1		
10	4812116799	Holder	1		
11	4700586003	Lock nut M8	2		
12	4700500021	Screw, M8x20 mm 8.8 A2K	2		

Comments for Page: Rotating beacon, working light, option

(L)OCAL REMARKS

A | en_US | Dual LED

Rotating beacon, working light, option Working light module H3

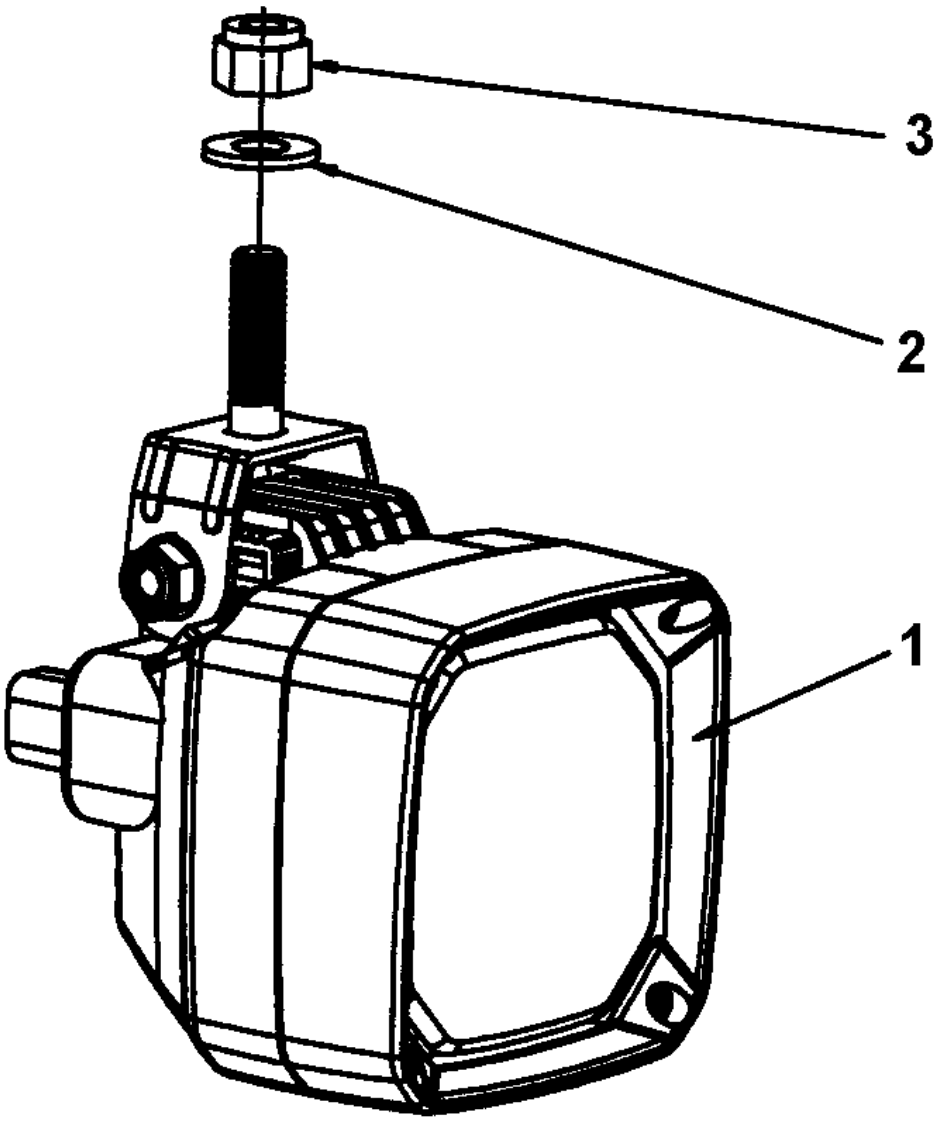

Item	Part No.	Name	Qty	L	SN INFO
1	4812114720	Working light	1		
2	4700904230	Steel plain washer	1		
3	4700586018	Lock nut M10	1		

Rotating beacon, working light, option Rotating beacon module

Item	Part No.	Name	Qty	L	SN INFO
1	-	Bracket, Rotating beacon	1		
2	4700904230	Steel plain washer	2		
3	4700500048	Screw, M10x20 mm 8.8 A3K	2		
4	4812122611	Rotating beacon	1		
5	4812121848	Rotating beacon, LED	1	A	

Comments for Page: Rotating beacon module

(L)OCAL REMARKS

A | en_US | Dual LED

Rotating beacon, working light, option Bracket, Rotating beacon

Item	Part No.	Name	Qty	L	SN INFO
1	4812116622	Bracket	1		
2	4812112460	Bracket	1		
2	4812120468	Bracket	1	A	
3	4700392321	Bracket	1		
3	4812120469	Bracket	1	B	
4	4812115020	Wiring harness	1		
5	4700792410	Hand knob nut	1		
6	4700904640	Washer, 8.4x 6x1.5 mm 300HV	1		
7	4700902286	Lock nut, M8x1.25 mm A2K	1		
8	4700904229	Washer, 8.4x 6x1.5 mm 300HV	2		
9	4700500189	Screw	1		
10	4812112774	Bushing	2		

Comments for Page: Bracket, Rotating beacon

(L)OCAL REMARKS

A | en_US | interchangeable with part 4812120469

B | en_US | interchangeable with part 4812120468

External emergency stop, option External emergency stop, option

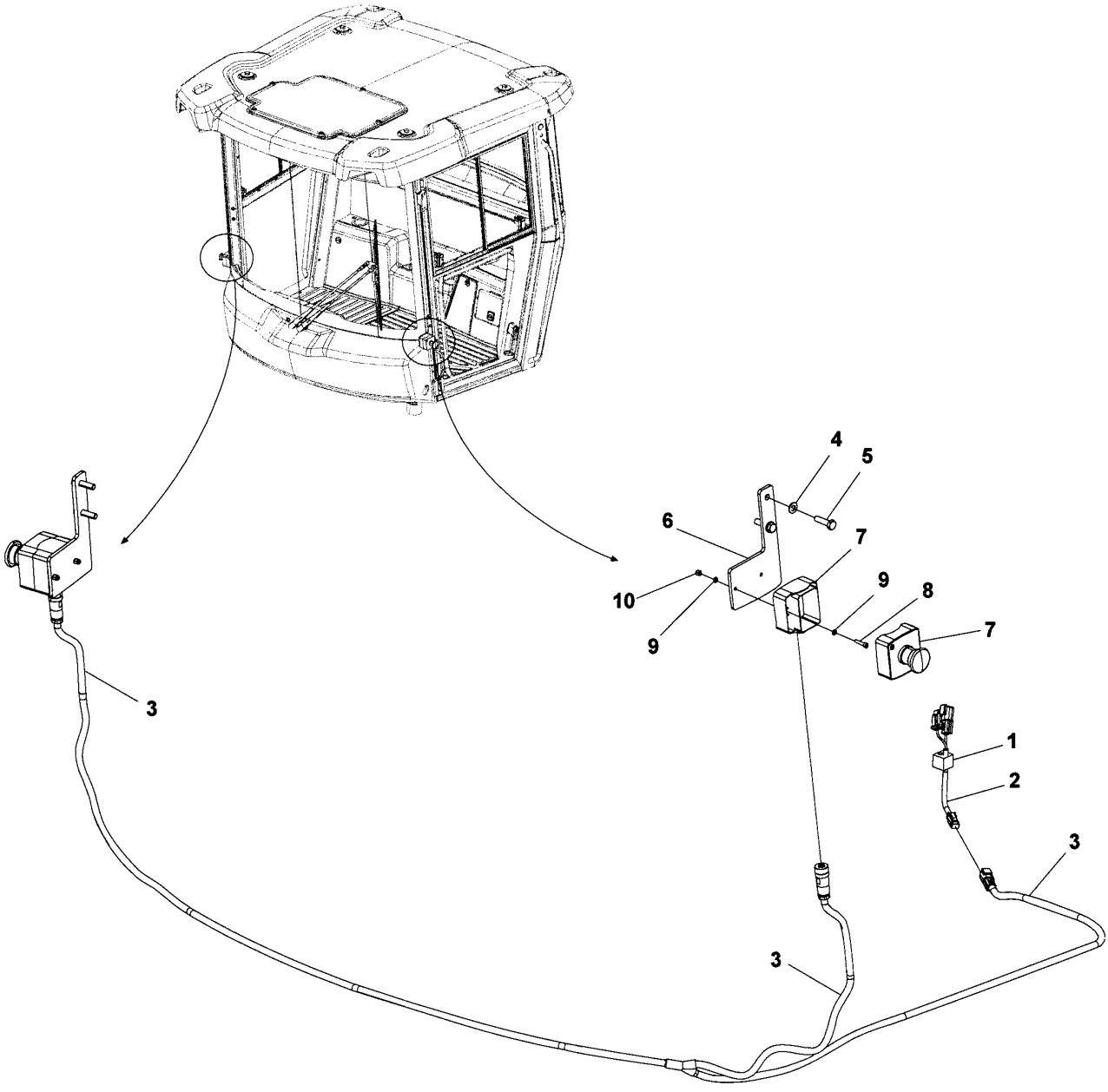

Item	Part No.	Name	Qty	L	SN INFO
1	4812116367	Cable entry frame and inserts	1		
2	4812116346	Cable harness	1		
3	4812116354	Cable harness	1		
4	4700904229	Washer, 8.4x 6x1.5 mm 300HV	4		
5	4700500022	Screw	4		
6	4812116588	Holder	2		
7	4812116587	Emergency stop box	2		
8	4700903386	Screw	4		
9	4700904698	Plain washer	8		
10	4700923976	Lock nut	4		

Displacement shift Displacement shift

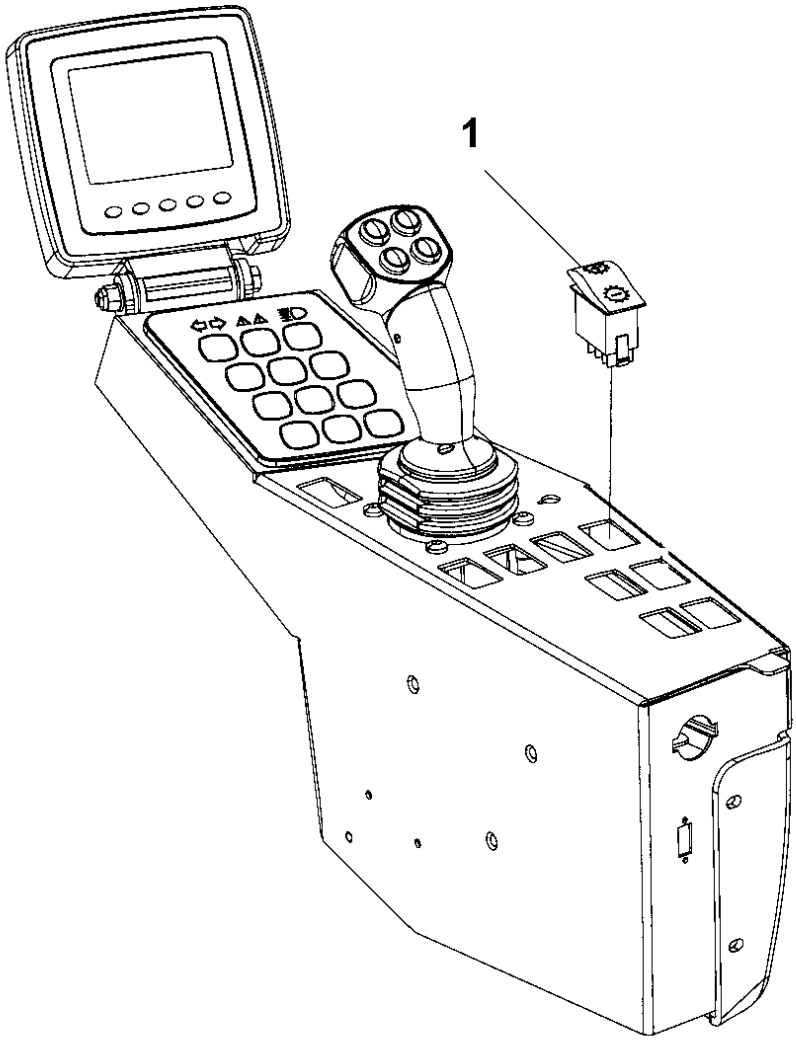

Item	Part No.	Name	Qty	L	SN INFO
1	4812115810	Switch, displacement shift	1		

Speed sensor, frequency sensor, option Speed sensor, frequency sensor, option

Item	Part No.	Name	Qty	L	SN INFO
1	4812112062	Cable harness, displacement	1	A	
2	4812112227	Cable harness, Speed sensor front	1	B, E	
3	4812112231	Cable harness, Speed sensor rear	1	B, E	
4	4812112229	Cable harness	1	C	
5	4812111268	Cable harness, Frequency (6-pol)	1	D	
5	4812123602	Cable harness, Frequency (4-pol)	1	D	
6	4700921078	Clamp	1		
7	4700904228	Washer 6,4x12x1,5	1		
8	4700500015	Hex. screw	1		
9	4700313041	Cable ties	2		
10	-	Pulse sensor module (6-pol)	1	D	
10		Pulse sensor module (4-pol)	1	D	
11	4812112419	Speed sensor cpl	1	B, F	
11	4812115707	Pulse sensor cpl	1	B,G	
12	4700396601	Pulse sensor (6-pol)	2		

Comments for Page: Speed sensor, frequency sensor, option

(L)OCAL REMARKS

A | en_US | Displacement shift front.

B | en_US | Speed sensor.

C | en_US | Displacement shift rear.

D | en_US | Frequency sensor.

E | en_US | Anti-spin, option.

F | en_US | Limited slip.

G | en_US | No spin.

Speed sensor, frequency sensor, option Pulse sensor module (4-pole)

Item	Part No.	Name	Qty	L	SN INFO
1	4812123060	Pulse sensor (4-pol)	1		
2	4700901639	Conduit	0.20		
3	4812128215	Shrink hose	0.23		

Speed sensor, frequency sensor, option Pulse sensor module (6-pol)

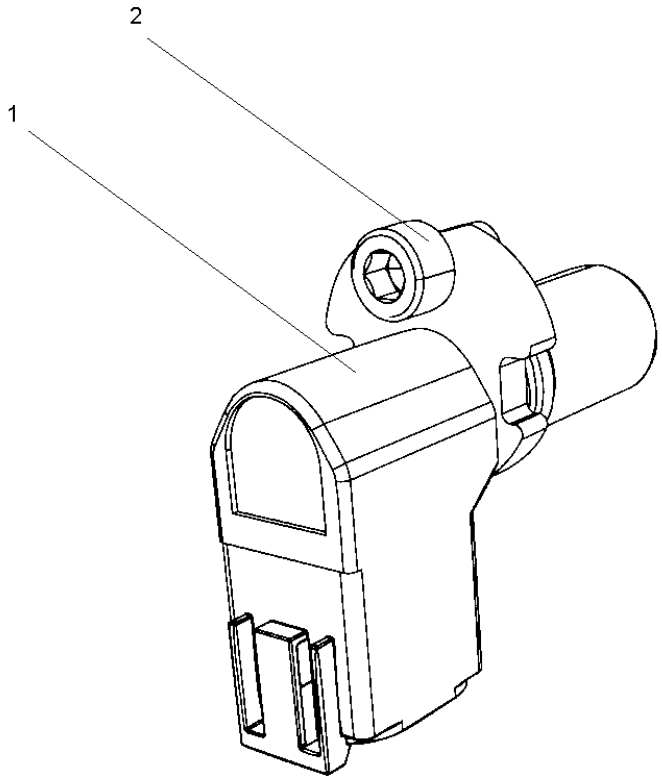

Item	Part No.	Name	Qty	L	SN INFO
1	4700396601	Pulse sensor (6-pol)	1		
2	4700508001	Screw M6x12	1		

Platform, rops Platform, rops

Item	Part No.	Name	Qty	L	SN INFO
1	4812120545	Platform with 4-post ROPS	1		
2	-	Manual Box	1		
3	4812116884	Shock absorber	4		
4	4700904233	Steel plain washer 21x36x3	2		
5	4700903290	Steel plain washer 21x36x6	2		
6	4700927410	Washer	4		
7	4700901145	Lock nut M20-10	4		
8	4700902282	Screw	4		
10	4812116867	Spacer	4		
11	4700359998	Back-up ring	4		
12	4700500056	Screw, M12x45 mm 8.8 A3K	16		
13	4700393525	Holder	8		
14	4812115387	Protective plug	2		

4812120545 Platform with 4-post ROPS 4812120545 Platform with 4-post ROPS

Item	Part No.	Name	Qty	L	SN INFO
1	-	Basic kit Rops, roof, front handrail	1		
2	-	Rear cover	1		
3	-	Handrail	1		
4	4812114568	Floor mat	1		
5		Rops	1		
6	-	Cab, basic kit	1		

4812120545 Platform with 4-post ROPS Basic kit Rops, roof, front handrail

Item	Part No.	Name	Qty	L	SN INFO
1	4812115193	Handrail	1		
3	-	Screw	4		
4	4812115194	Plate	1		
6	-	Screw	4		
7	4700202028	Edge trim	1XL	A	
8	4700202028	Edge trim	1XL	B	
9	4700202028	Edge trim	1XL	C	
10	4700202028	Edge trim	1XL	D	
11	4700202028	Edge trim	1XL	E	
12	4700202028	Edge trim	1XL	F	
13	-	Cap	2		
20	4812115195	Roof	1		
21	4812115164	Rubber strip	1XL	G	
22	4812161165	Foam strip (Xm)	1XL	H	
23	4812115196	Roof plate	1		
24	4812115166	Rubber washer	5		
25	4700601003	Washer, 8,4x25x2 mm	5		
26	4812162571	Screw	5		
27	4812115170	Seal washer	10		
28	4812115171	Washer	4		
29	4812162572	Hexagon screw	4		
30	4700601003	Washer, 8,4x25x2 mm	2		
31	4700947680	Hexagon head screw m	2		
40	4700908505	Hook	1		
41	-	Screw	4		

Comments for Page: Basic kit Rops, roof, front handrail

(L)OCAL REMARKS

A | L=0.508m

B | L=0.133m

C | L=1.415m

D | L=1.43m

E | L=0.856m

F | L=1.515m

G | L=6.7m

H | L=2.513m

4812120545 Platform with 4-post ROPS Rear cover

Item	Part No.	Name	Qty	L	SN INFO
1	4812114563	Rear cover	1		
2	4812114564	Service cover	1		
3	4812114565	Bracket	1		
4	4700601001	Washer	2		
5	4700500004	Screw M5x12 8,8	2		
6	4812114566	Turn fastener	1		
7	4812114567	Speed nut	8		
8	-	Screw	8		
9	-	Socket, 24V	1		

4812120545 Platform with 4-post ROPS Handrail

Item	Part No.	Name	Qty	L	SN INFO
1	4812114569	Handrail	1		
2	-	Screw	4		
3	4700904557	Washer, 10.5x22x4 mm 300 HV	2		
4	4700791172	Lock nut M10 DIN985	2		

4812120545 Platform with 4-post ROPS Cab, basic kit

Item	Part No.	Name	Qty	L	SN INFO
1	4700792103	Blind insert nut	10		
2	4700902379	Edge trim	2XL	A	
4	4812115186	Cover	1		
5	4700929587	Grommet	7		
6	4700909129	Grommet	2		
7	-	Grommet	1		
8	-	Sign, rops	1		
9	-	Screw	4		
10	-	Sign, fops	1		
11	-	Screw	4		

Comments for Page: Cab, basic kit

(L)OCAL REMARKS

A | en_US | L=0.263m

Platform, rops Manual box

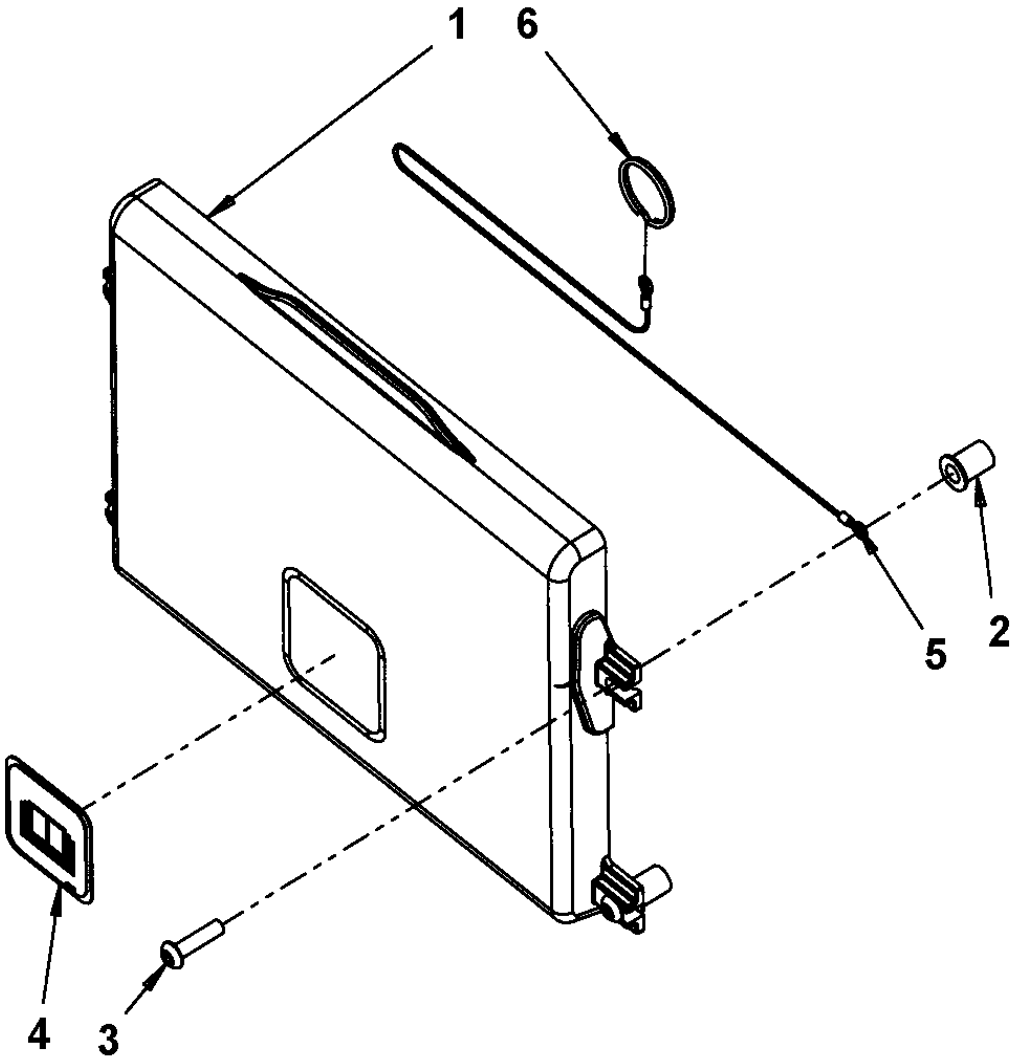

Item	Part No.	Name	Qty	L	SN INFO
1	4700383705	Instruction manual box	1		
2	4700792536	Rubber nut	4		
3	4700792589	Screw	4		
4	4700903425	Safety decal "READ SAFETY INSTRUCTIONS"	1		
5	4700384584	Wire	1		
6	4700358254	Key-ring	1		

Platform, rops Decals basic kit

Item	Part No.	Name	Qty	L	SN INFO
1	4812127986	Decal cosmetic White	1		
2	4812127987	Decal cosmetic White	1		
3	4812127988	Decal cosmetic White	1		
4	4812127989	Decal cosmetic White	1		
5	4812127715	Decal FAYAT DYNAPAC 350 RD	2		

Cab symmetric module Cab symmetric module

Item	Part No.	Name	Qty	L	SN INFO
1	4812119366	Cab, cpl Comfort	1		
1	4812119367	Cab, cpl Basic	1		
2	-	Manual Box	1		
3	4812121000	Shock absorber Green COXIM	2		
4	4700904233	Steel plain washer 21x36x3	2		
5	4700903290	Steel plain washer 21x36x6	2		
6	4700902282	Screw	2		
7	4700901145	Lock nut M20-10	4		
8	4700903633	Screw M20x150 10,9	2		
9	4700359998	Back-up ring	4		
10	4700500056	Screw, M12x45 mm 8.8 A3K	16		
11	4700393525	Holder	8		
12	4812115387	Protective plug	2		
13	4812116884	Shock absorber COXIM	2		
14	4700927410	Washer	2		
15	4812116867	Spacer	2		

4812119366 Cab, cpl Comfort 4812119366 Cab, cpl Comfort

Item	Part No.	Name	Qty	L	SN INFO
1	-	Screens	1		
2	-	Windshield wiper	1		
3	-	Roof	1		
4	-	Hose kit heater	1		
5	-	Cab Interior	1		
6	-	Cab cable harness	1		
7	-	Cab, electrical equipment	1		
8	-	Emergency hammer, hook	1		
9	-	Cab, rear cover	1		
10	-	Cab, front cover	1		
11	-	Floor mat	1		
12	-	Step light, wiper switch	1		
14	-	Cab, basic kit	1		
15		Rops	1		
16	-	Air channel	1		
17	-	Sun-blind, inner light	1		

4812119366 Cab, cpl Comfort Screens

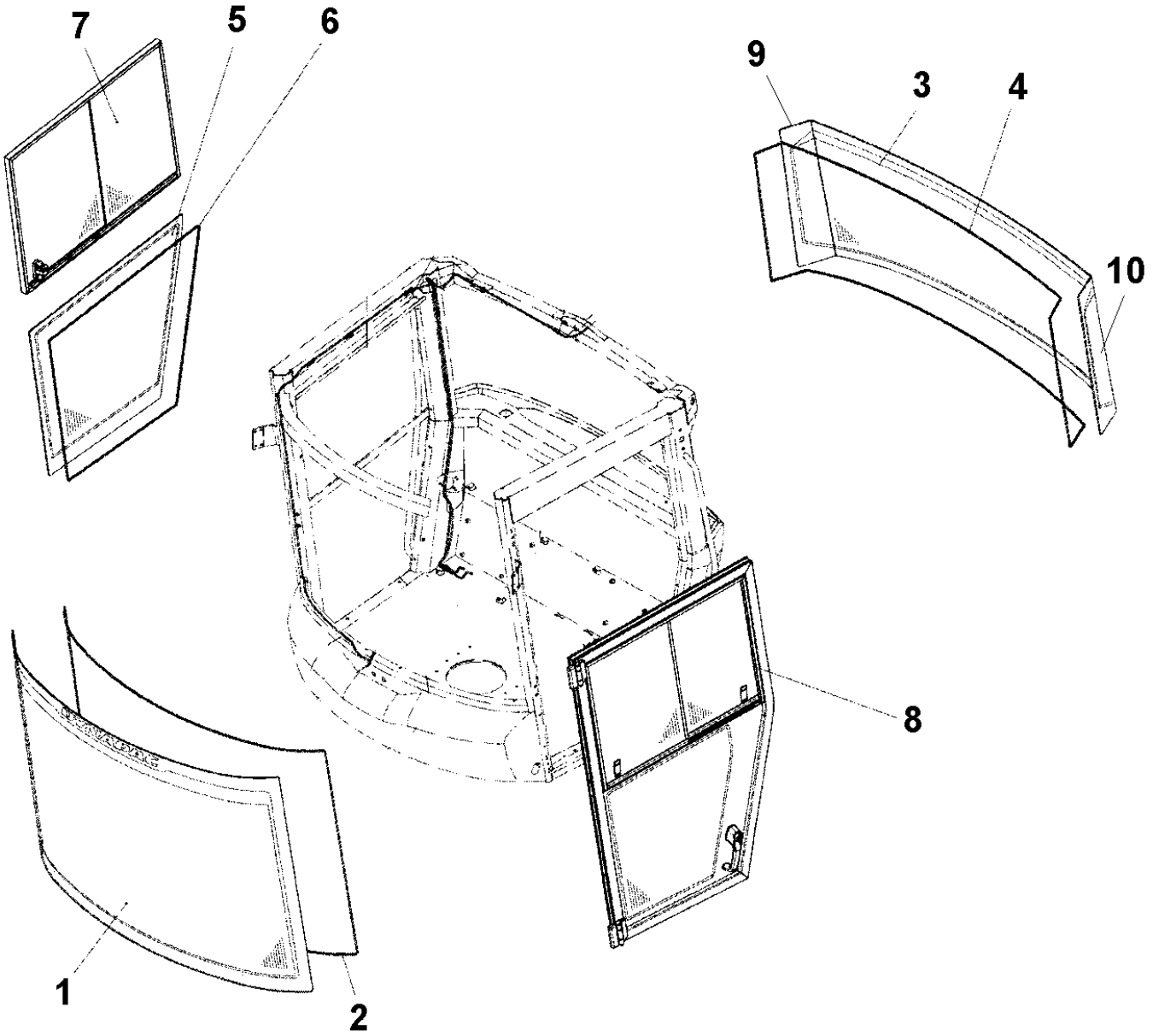

Item	Part No.	Name	Qty	L	SN INFO
1	4812114586	Front screen	1		
2	4812159184	Rubber list	1XL	A	
3	4812158164	Rear screen middle	1		
4	4812159184	Rubber list	1XL	B	
5	4812114587	Side screen	1		
6	4812159184	Rubber list	1XL	C	
7	4812114588	Sliding screen	1		
8	4812115202	Cab door, cpl	1		
9	4812158165	Rear screen right	1		
10	4812158163	Rear screen left	1		

Comments for Page: Screens

(L)OCAL REMARKS

A | en_US | L=5.002m

B | en_US | L=4.779m

C | en_US | L=2.99m

4812119366 Cab, cpl Comfort 4812115202 Cab door, cpl

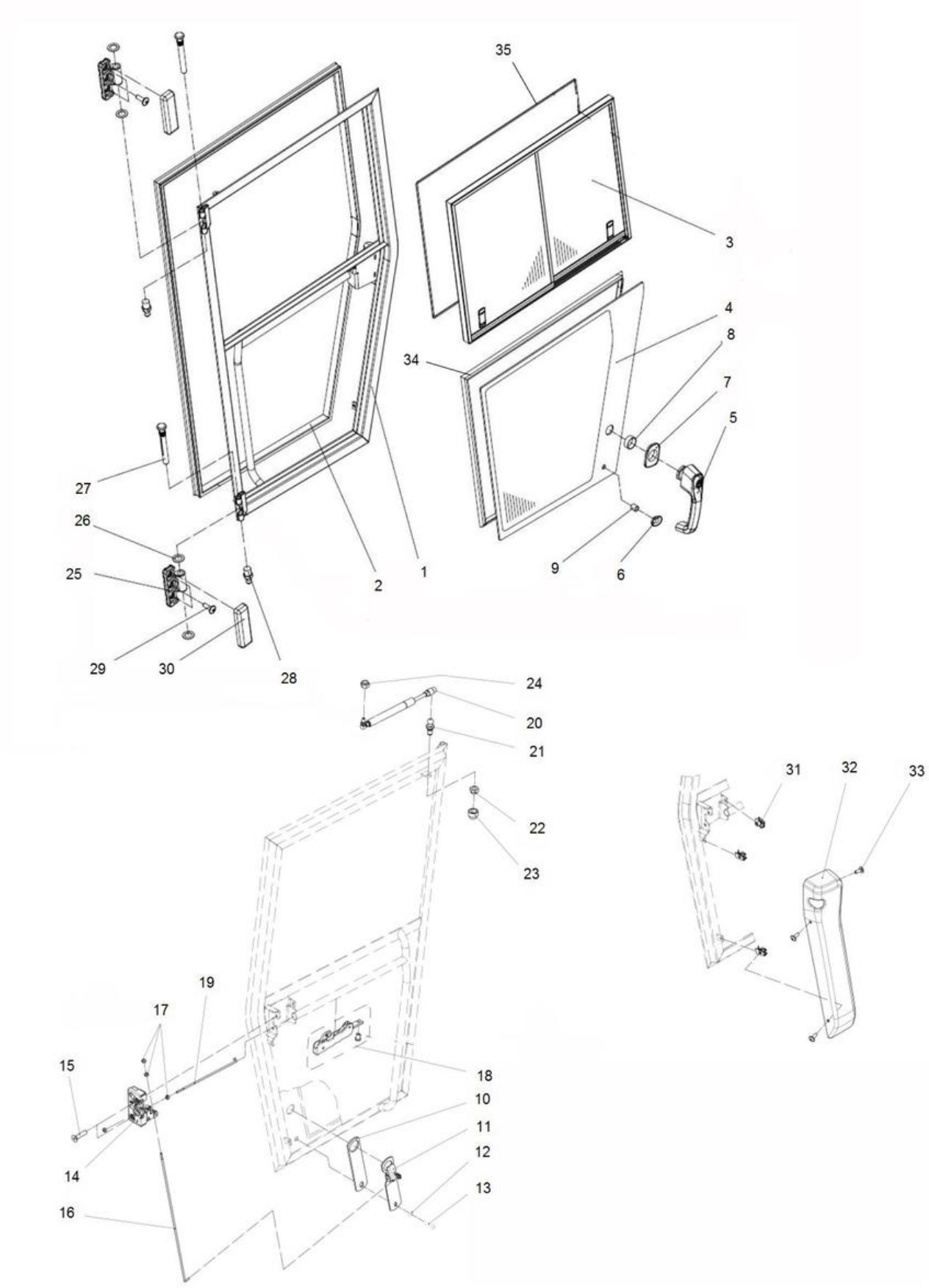

Item	Part No.	Name	Qty	L	SN INFO
1	4812116199	Door	1		
2	4812159183	Rubber list	4.41		
3	4812115200	Sliding screen, left hand	1		
4	4812114593	Screen	1		
5	4812115203	Handle	1		
5	4812159558	Key (2pcs)	1		
6	4812115204	Washer	1		
7	4812115205	Washer	1		
8	4812115206	Washer	1		
9	4812115207	Bushing	1		
10	4812115208	Rubber gasket	1		
11	4812115209	Bracket	1		
12	4700904228	Washer 6,4x12x1,5	1		
13	-	Screw, M6x25	1		
14	4812115210	Lock	1		
15	-	Screw, M8x35	2		
16	4812115211	Lock rod	1		
17	4700570005	Hexagon nut	4		
18	4812115212	Lock handle	1		
19	4812115213	Lock rod	1		
20	4812115214	Gas spring	1		
21	4812115215	Ball stud	1		
22	4700791182	Nut, M8 -8 DIN985	1		
23	-	Protecting cap	1		
24	4700791182	Nut, M8 -8 DIN985	1		
25	4812115216	Hinge	2		
26	-	Gasket	4		
27	4812115217	Pin	2		
28	-	Lubrication nipple	2		
29	-	Screw, M8x25	6		
30	4812115218	Hinge	2		
31	4812161353	Speed nut	3		
32	4812115201	Door cover	1		
33	4812161352	Screw	3		
34	4812161098	Seal list	2,756		
35	4812161099	Seal list	2,77		

4812119366 Cab, cpl Comfort 4812115200 Sliding screen, left hand

Item	Part No.	Name	Qty	L	SN INFO
1	-	Window frame	1		
2	4812115225	Screen	1		
-	4812161251	Sealing bar	1		
3	4812115226	Screen	1		
4	4812160388	Sealing bar	1		
5	4812115219	Handle	1		
6	4812115220	Handle	1		
7	4812159775	Guide	4		
8	4812115223	Bracket	6		
9	4812161156	Strip	1XL	A	
10	4812161155	Strip	1XL	B	
11	4812161156	Strip	1XL	C	
12	4812161155	Strip	1XL	D	
13	4812160877	Window seal	1XL	E	
14	4812160877	Window seal	1XL	F	
15	4812160877	Window seal	1XL	G	
16	4812160877	Window seal	1XL	H	

Comments for Page: 4812115200 Sliding screen, left hand

(L)OCAL REMARKS

A | en_US | L=0.612m

B | en_US | L=0.15m

C | en_US | L=0.613m

D | en_US | L=0.117m

E | en_US | L=0.676m

F | en_US | L=0.643m

G | en_US | L=0.612m

H | en_US | L=0.613m

4812119366 Cab, cpl Comfort Windshield wiper

Item	Part No.	Name	Qty	L	SN INFO
1	4812114606	Bracket	1		
2	-	Gasket	3		
3	-	Screw	3		
4	4812114598	Bolt	1		
5	4812114599	Clamp	1		
6	4812114602	Washer	1		
7	4812114603	Plate	1		
8	4812114600	Wiper motor, front	1		
9	4812114604	Wiper arm w nozzle	1		
10	4812114605	Wiper blade, front	1		
11	4700601003	Washer, 8,4x25x2 mm	2		
12	4700791182	Nut, M8 -8 DIN985	2		
13	-	Spacer	2		
14	-	Gasket	2		
15	4812114601	Wiper motor, rear	1		
16	4812114607	Wiper arm	1		
17	4812114608	Wiper blade, rear	1		
18	4812114610	Nozzle	1		
19	4812114609	Clamp	1		
20	4812114611	Hose	0,42		
21	4812114612	Water tank	1		
21	4812158293	Cap	1		
21	4812160666	Electric washer pump	2		
22	4812161158	Rubber seal	0,20		
23	4812114613	Bracket	1		
24	4700904228	Washer 6,4x12x1,5	7		
25	4700904563	Lock nut M6	3		
26	4812115162	Filling pipe	1		
27	4700313023	Hose clamp	2		
28	4700500013	Screw, M6x16 mm 8.8 A2K	4		
29	4812114611	Hose	0,12		
30	4700908564	Check valve	2		
31	4812114611	Hose	4,40		
32	4700908561	Grommet	2		
33	4812114611	Hose	2,55		
34	4812114611	Hose	0,16		

4812119366 Cab, cpl Comfort Roof

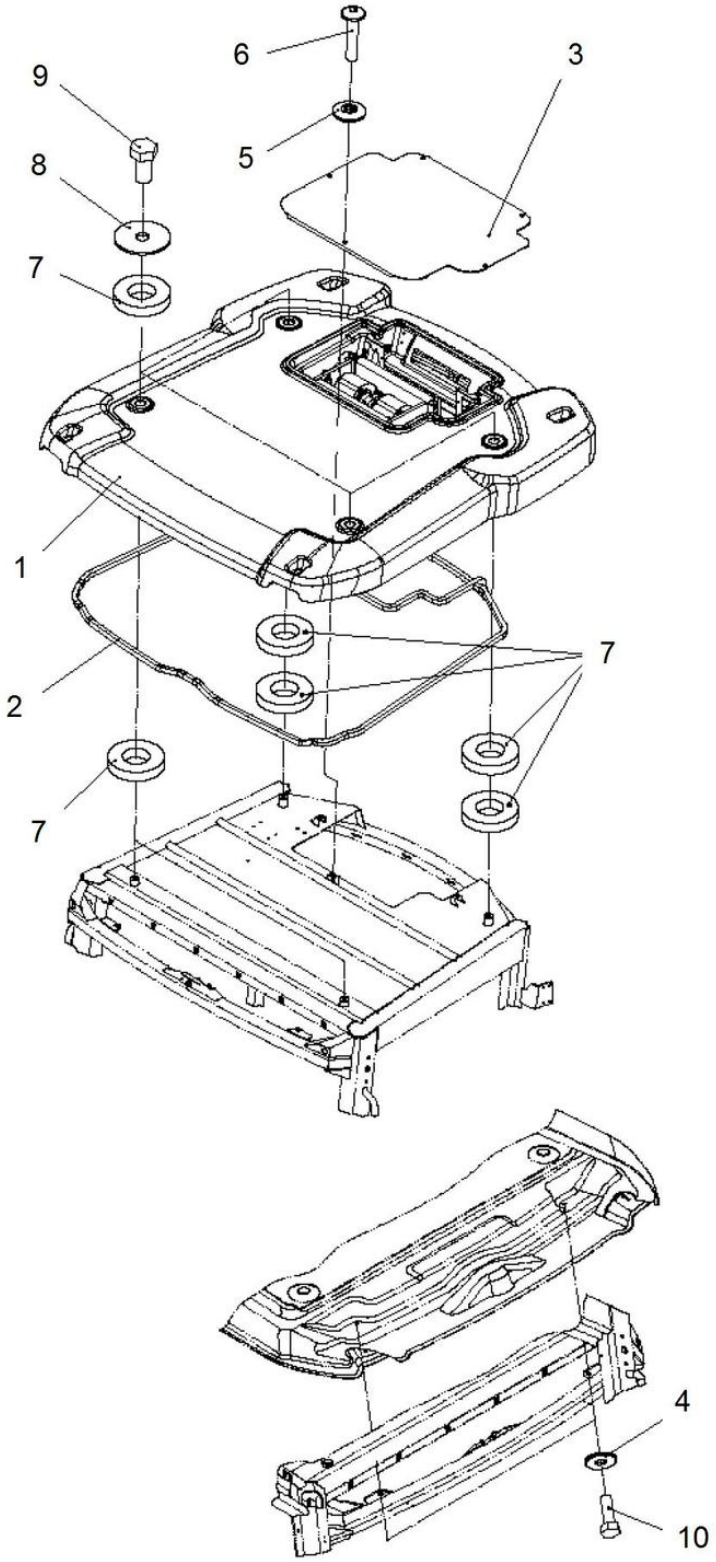

Item	Part No.	Name	Qty	L	SN INFO
1	-	Heater assy	1		
2	4812115164	Rubber strip	1XL	A	
3	4812115165	AC hood	1		
4	4700601003	Washer, 8,4x25x2 mm	2		
5	4812120255	Seal washer	5		
6	4812162571	Screw	5		
7	4812115170	Seal washer	10		
8	4812115171	Washer	4		
9	4812162572	Hexagon screw	4		
10	4700947680	Hexagon head screw m	2		

Comments for Page: Roof

(L)OCAL REMARKS

A | en_US | L=6.7m

4812119366 Cab, cpl Comfort Heater assy

Item	Part No.	Name	Qty	L	SN INFO
1	4812116201	Roof	1		
2	4812161165	Foam strip (Xm)	2,56		
3	-	Grommet	2		
4	4700929587	Grommet	2		
5	4812115228	Grommet	1		
6	4812115229	Bracket	1		
7	4700202028	Edge trim	0,03		
8	4812115186	Cover	1		
9	4700791666	Blind rivet	2		
10	4700904229	Washer, 8.4x 6x1.5 mm 300HV	2		
11	4812158485	Fan 24V	1		
12	4812115230	Bracket	1		
13	4812116192	Bracket	2		
14	4700904229	Washer, 8.4x 6x1.5 mm 300HV	4		
15	-	Hexagon screw	4		
16	4812115164	Rubber strip	0,41		
17	4812116193	Heater coil	1		
18	4812116194	Clip	4		
19	4812116195	Bracket	2		
20	4700500012	Hex. screw	2		
21	4700939693	Heater control valve	1		
22	4700372174	Spacer	1		
23	4700903670	Clamp	1		
24	4700500079	Screw M6-1x50 8,8	1		
25	4700205112	Coolant hose	0,15		
26	4700313004	Hose clamp 19-29mm	4		
27	4812116197	Air filter	2		
28	4812116198	Cover	1		
29	4812161352	Screw	3		
30	4700791475	Grommet	1		
31	-	Grommet	1		

4812119366 Cab, cpl Comfort Hose kit heater

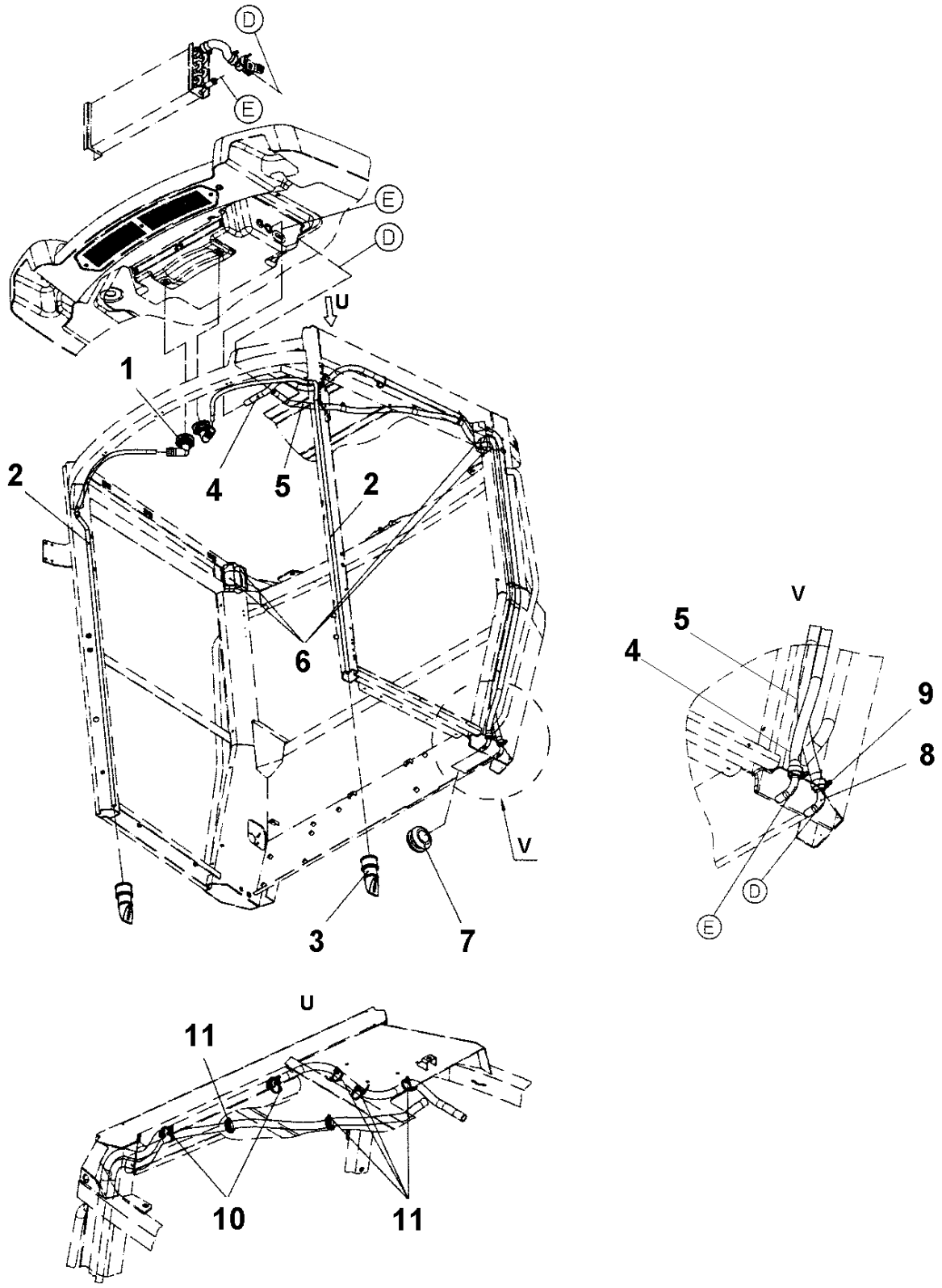

Item	Part No.	Name	Qty	L	SN INFO
1	4812115167	Connector	2		
2	4812115168	Drain hose	2XL	A	
3	4812115169	Drain valve	2		
4	4700205112	Coolant hose	1XL	B	
5	4700205112	Coolant hose	1XL	C	
6	-	Foam	1		
7	-	Grommet	1		
8	4812115172	Connection pipe	2		
9	4700313004	Hose clamp 19-29mm	2		
10	4700313041	Cable ties	2		
11	4700792441	Cable tie with holder	5		

Comments for Page: Hose kit heater

(L)OCAL REMARKS

A | en_US | L=1.96m

B | en_US | L=2.831m

C | en_US | L=2.5m

4812119366 Cab, cpl Comfort Cab Interior

Item	Part No.	Name	Qty	L	SN INFO
1	4812158992	Inner panel, cpl	1		
2	4812160772	Rubber list	2XL	A	
3	4812160771	Seal	1XL	B	
4	4812115175	Bracket	2		
5	4812114567	Speed nut	2		
6	4812120269	Sealing washer	2		
7	4700928381	Washer, 6.4x18x1.6 mm	2		
8	4812162654	Screw	2		
9	4700904228	Washer 6,4x12x1,5	4		
10	4700500012	Hex. screw	4		
11	4812120269	Sealing washer	2		
12	4700928381	Washer, 6.4x18x1.6 mm	2		
13	4700792119	Screw, M6x16 mm 8.8 A2K	2		
14	-	Heater controls	1		
15	-	Screw	4		
16	4812115177	Mirror	1		
17	4812159768	Screw	2		
18	4812159767	Speed nut	2		
19	4812115178	Radio console	1		
20	4811000458	Speed nut	3		
21	-	Screw	3		
22	4812115179	Radio cover	1		
23	4812115180	Air nozzle	6		
24	-	Air inlet cover	2		
25	-	Speaker cover	2		

Comments for Page: Cab Interior

(L)OCAL REMARKS

A | en_US | L=0.525m

B | en_US | L=0.915m

4812119366 Cab, cpl Comfort Heater and ac controls

Item	Part No.	Name	Qty	L	SN INFO
1	-	Panel plate	1		
2	4700377508	Knob	2		
3	4700938622	Switch	1		
4	-	Cover, plastic	2	A	
5	4700377507	Rotary control	1		
6	-	Overlay	1		
7	4700395841	Wire clips	1		
8	4700395842	Wire	1		
9	4700395843	Lock washer	2		
10	4812158482	Thermostat	1		
11	4700950348	Switch, air condition	1	B	
12	4812158481	Switch, flapper	1	B	

Comments for Page: Heater and ac controls

(L)OCAL REMARKS

A | en_US | Cab with only Heater

B | en_US | Cab with AC

4812119366 Cab, cpl Comfort Cab cable harness

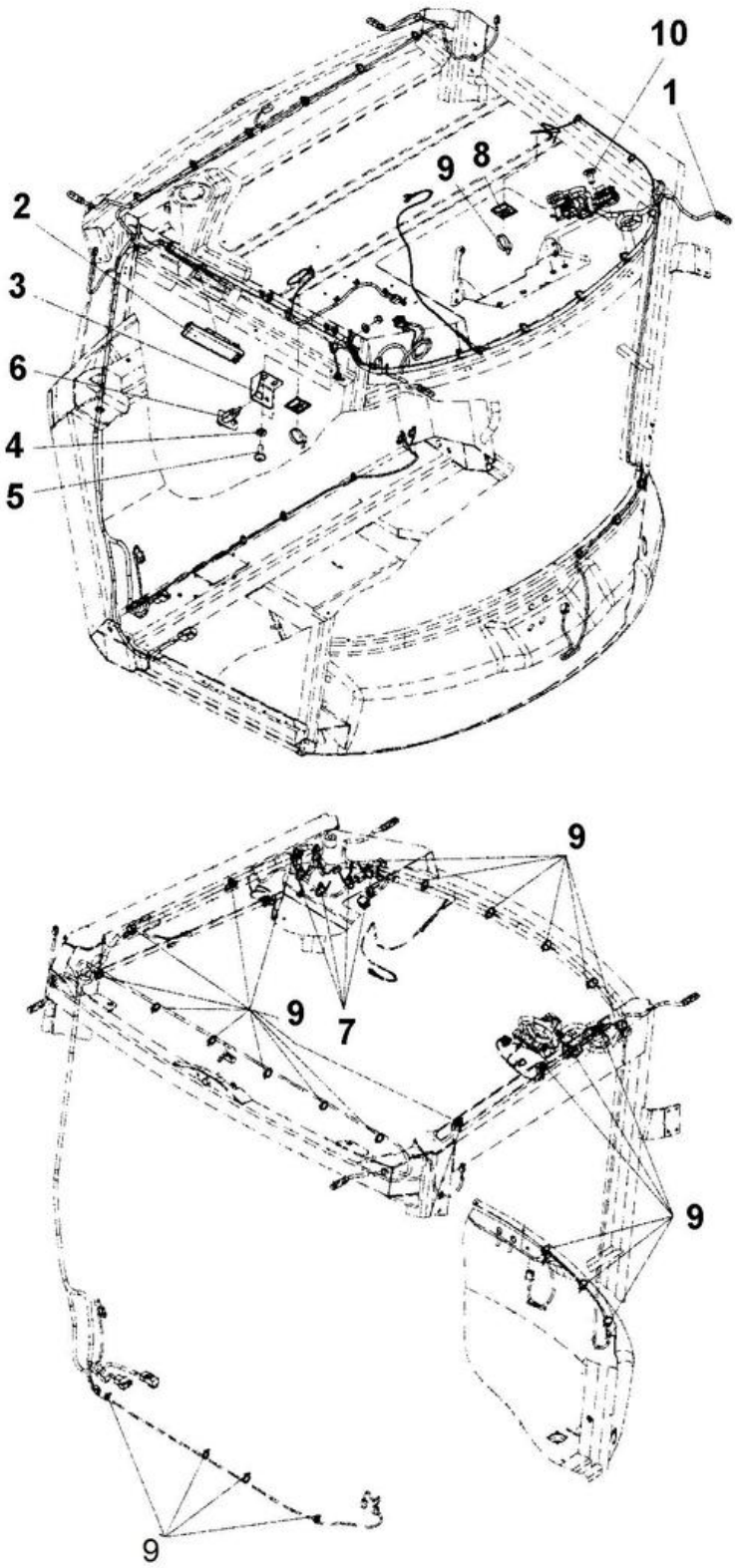

Item	Part No.	Name	Qty	L	SN INFO
1	4812115181	Cable harness	1		
2	4812120257	Inner light	1		
2	4700792715	Bulb, 10W	2		
3	4812115182	Bracket	1		
4	4700904228	Washer 6,4x12x1,5	2		
5	-	Screw	2		
6	4812115183	Door switch	1		
7	4700792441	Cable tie with holder	4		
8	4812161370	Cable support	2		
9	4700313041	Cable ties	28		
10	-	Screw	2		

4812119366 Cab, cpl Comfort Cab, electrical equipment

Item	Part No.	Name	Qty	L	SN INFO
1	4812115184	Bracket	1		
2	4700792309	Relay	1		
3	-	Screw	2		
4	4700904504	Screw M5 x 18	2		
5	4812115185	Bracket	1		
6	-	Screw	3		
7	4812115187	Switch, Windshield wiper, rear	1		
8	4700792505	Switch, Windshield washers	1		
9	4700791185	Fuse box	1		
10	4700901227	Fuse 10A Red	2		
11	4700901228	Fuse, 15A Blue	1		
12	4700791966	Head screw M4 x 12	2		

4812119366 Cab, cpl Comfort Emergency hammer, hook

Item	Part No.	Name	Qty	L	SN INFO
1	4700908505	Hook	2		
2	-	Screw	4		
3	4700908506	Emergency hammer hook	1		
4	-	Screw	2		
5	4700908507	Emergency hammer	1		
6	-	Pin	1		
7	4700903590	Decal emergency exit	1		

4812119366 Cab, cpl Comfort Cab, rear cover

Item	Part No.	Name	Qty	L	SN INFO
1	4812114573	Cover	1		
2	4812114564	Service cover	1		
3	4812114565	Bracket	1		
4	4700601001	Washer	2		
5	4700500004	Screw M5x12 8,8	2		
6	4812114566	Turn fastener	1		
7	4812114567	Speed nut	15		
8	4812161352	Screw	15		
9	4700395816	Plug socket 24V	1		
10	4812114574	Cover	1		
11	4812114575	Bracket	3		
12	4812161352	Screw	3		
13	4812114576	Cover	1		

4812119366 Cab, cpl Comfort Cab, front cover

Item	Part No.	Name	Qty	L	SN INFO
1	4812114570	Cover	1		
2	4812114571	Cover	1		
3	4812114572	Bracket	1		
4	4812161352	Screw	8		
5	4812114567	Speed nut	6		

4812119366 Cab, cpl Comfort Floor mat

Item	Part No.	Name	Qty	L	SN INFO
1	4812115197	Floor mat	1		
2	4812115198	Entrance plate	1		
3	4812161371	Screw	3		

4812119366 Cab, cpl Comfort Step light, front wiper switches

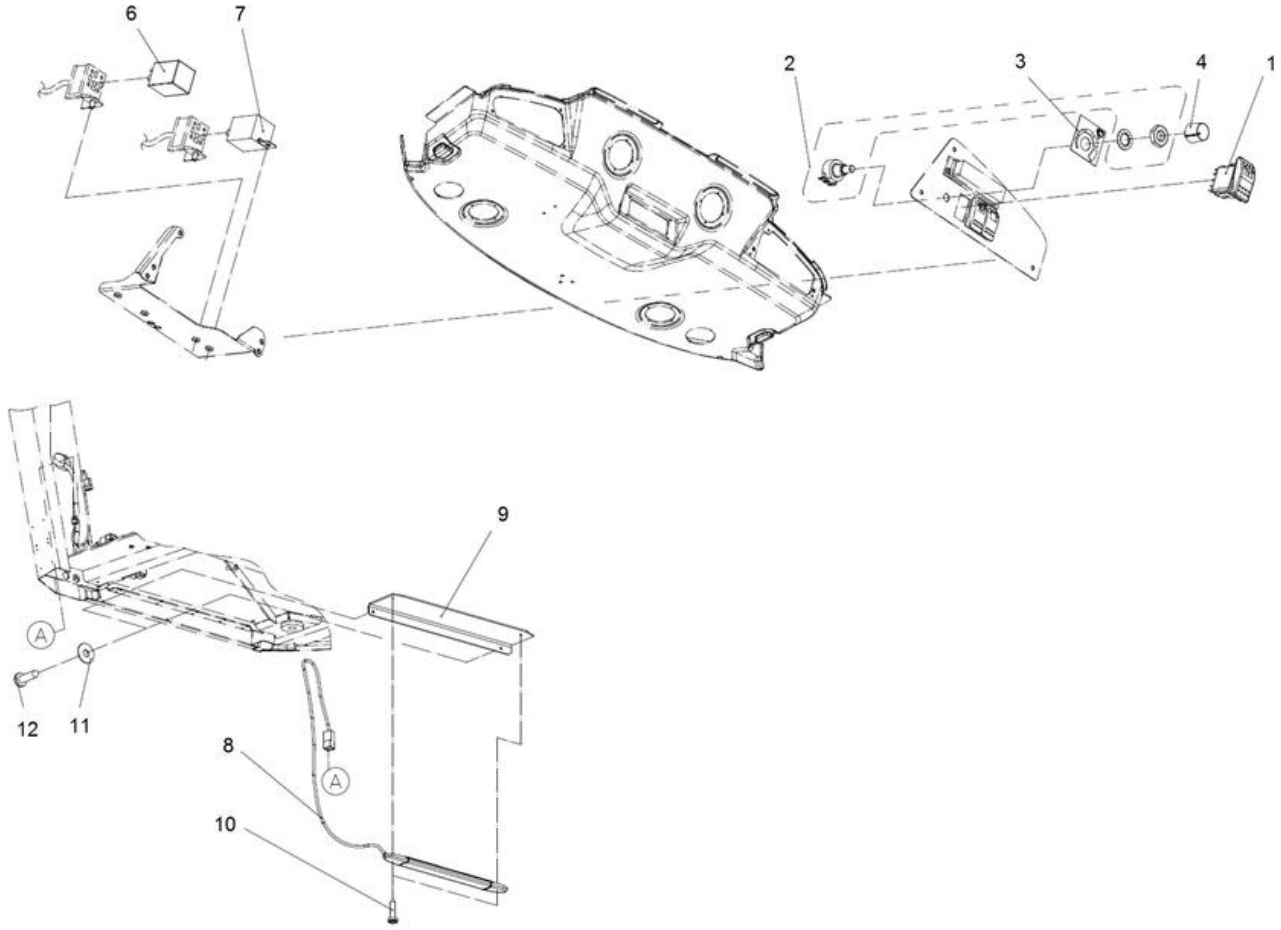

Item	Part No.	Name	Qty	L	SN INFO
1	4812115188	Switch, front wiper	1		
2	4812115189	Potentiometer	1		
3	-	Decal	1		
4	4812158859	Turning knob	1		
6	4812115190	Wiper Interval Relay	1		
7	4812115191	Time control unit	1		
8	4812115199	Step light	1		
9	4812115224	Bracket	1		
10	-	Screw	2		
11	-	Gasket	2		
12	-	Screw	2		

4812119366 Cab, cpl Comfort Air channel

Item	Part No.	Name	Qty	L	SN INFO
1	4812114577	Air channel	1		
2	4812161099	Seal list	2XL	A	
3	4812114578	Air channel	1		
4	-	Screw	4		
5	-	Screw	2		
6	4812114579	Air nozzle	2		
7	4812114580	Cover	1		
8	4812114581	Cover	1		
9	-	Screw	8		

Comments for Page: Air channel

(L)OCAL REMARKS

A | en_US | L=0.195m

4812119366 Cab, cpl Comfort Sun-blind, inner light

Item	Part No.	Name	Qty	L	SN INFO
1	4812114582	Sun-blind	1		
2	4812114583	Bracket	1		
3	4700904228	Washer 6,4x12x1,5	5		
4	4700500012	Hex. screw	2		
5	4812114567	Speed nut	3		
6	4700791171	Screw	3		
7	4812114584	Sun-blind	1		
8	4700904206	Screw, M6x16 mm	2		
9	4812114585	Inner light	1		
10	-	Lock nut	2		
11	-	Screw	2		

4812119367 Cab, cpl Basic 4812119367 Cab, cpl Basic

Item	Part No.	Name	Qty	L	SN INFO
1	-	Screens	1		
2	-	Windshield wiper	1		
3	-	Roof	1		
4	-	Hose kit heater	1		
5	-	Cab Interior	1		
6	-	Cab cable harness	1		
7	-	Cab, electrical equipment	1		
8	-	Emergency hammer, hook	1		
9	-	Cab, rear cover	1		
10	-	Cab, front cover	1		
11	4812114568	Floor mat	1		
12	-	Wiper switch, front	1		
14	-	Cab, basic kit	1		
15		Rops	1		

4812119367 Cab, cpl Basic Cab, rear cover

Item	Part No.	Name	Qty	L	SN INFO
1	4812114563	Rear cover	1		
2	4812114564	Service cover	1		
3	4812114565	Bracket	1		
4	4700601001	Washer	2		
5	4700500004	Screw M5x12 8,8	2		
6	4812114566	Turn fastener	1		
7	4812114567	Speed nut	8		
8	-	Screw	8		
9	-	Socket, 24V	1		

4812119367 Cab, cpl Basic Cab, front cover

Item	Part No.	Name	Qty	L	SN INFO
1	4812117481	Front cover Left	1		
2	4812117482	Front cover Right	1		
3	4812114572	Bracket	1		
4	-	Bracket	1		
5	4812114567	Speed nut	5		
6	-	Screw	9		
7	4700202028	Edge trim	2XL	A	

Comments for Page: Cab, front cover

(L)OCAL REMARKS

A | en_US | L=0.473m

4812119367 Cab, cpl Basic Wiper switch, front

Item	Part No.	Name	Qty	L	SN INFO
1	4812115192	Switch	1		
2	4700921723	Plug	1		

Drivers platform Rear view mirror

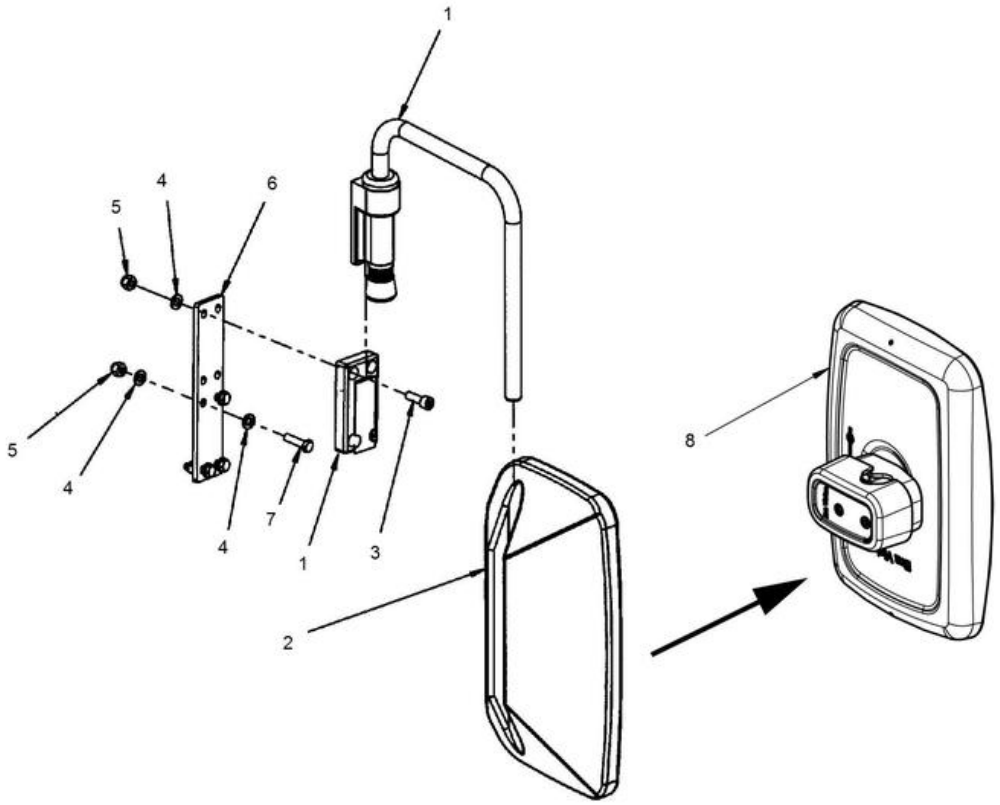

Item	Part No.	Name	Qty	L	SN INFO
1	4812110367	Bracket	1		
2	4700381943	Mirror	1		
2.1	4812161276	Mirror glass	1		
3	4700508019	Cylinder screw	4		
4	4700904229	Washer, 8.4x 6x1.5 mm 300HV	12		
5	4700586003	Lock nut M8	12		
6	4812117964	Bracket	1	A	
7	4700500022	Screw	4		
8	4812125407	Mirror	1		
8.1	-	Mirror glass	1		

Comments for Page: Rear view mirror

(L)OCAL REMARKS

A | en_US | Not used on all models.

Drivers platform Heater hoses

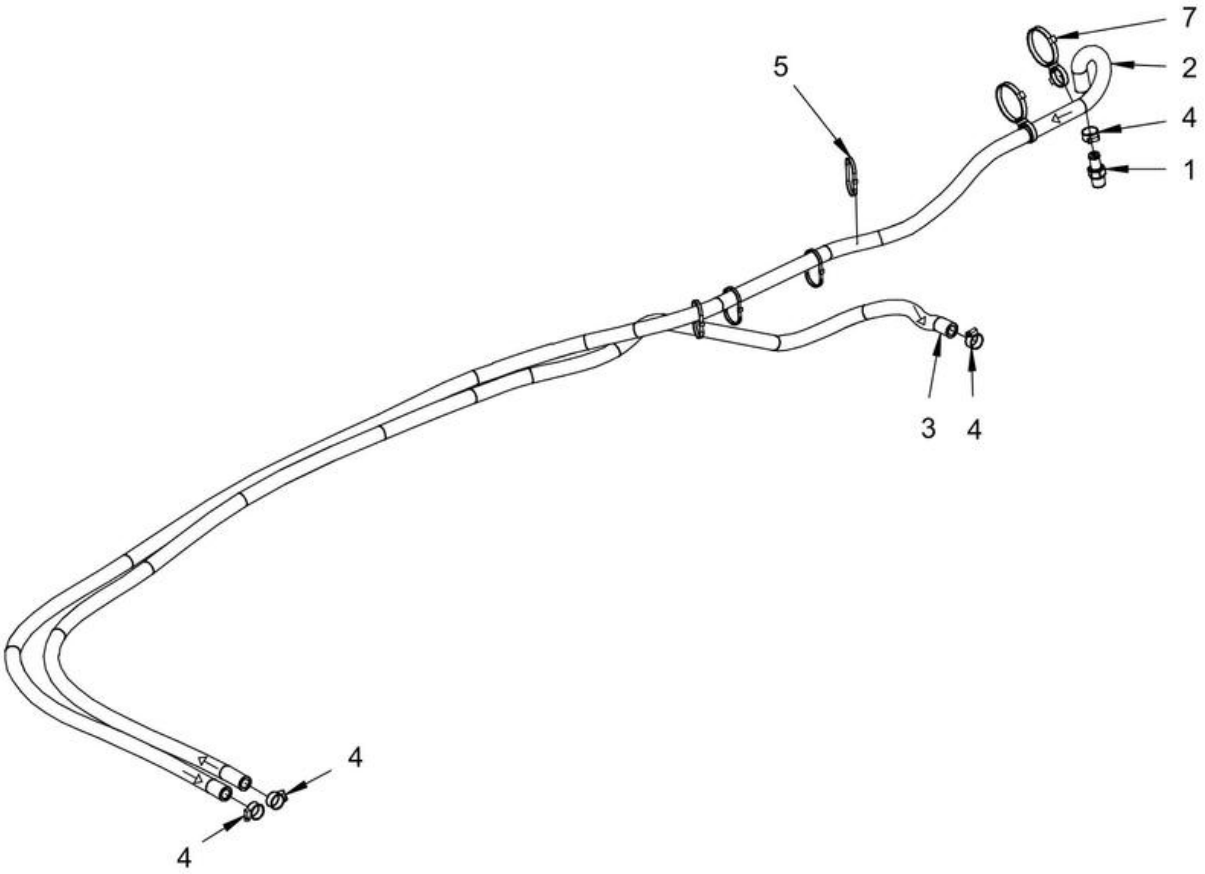

Item	Part No.	Name	Qty	L	SN INFO
1	4700387638	Hose connection	1		
2	4700205112	Coolant hose	3.1		
3	4700205112	Coolant hose	2.5		
4	4700313003	Hose clamp	4		
5	4700313041	Cable ties	N		
7	4812117248	Cable tie with holder	6		

Drivers platform Car stereo module, option

Item	Part No.	Name	Qty	L	SN INFO
1	4811000268	Loud speaker	2		
2	4811000269	Loud speaker cover	2		
3	4811000265	Car stereo	1		
4	4812114194	Antenna	1		
5	4812116986	Spacer frame	1		
6	4812119306	Antenna adapter	1		
7	4700791970	Speed nut	8		
8	4812119327	Tapping screw	8		

Drivers seat Drivers seat

Item	Part No.	Name	Qty	L	SN INFO
1	-	Seat frame structure	1		
2	-	Seat frame adapter module, rotating	1		
2	-	Seat frame adapter module, fixed	1		
3	-	Floor cassette module	1		
4	-	Seat, fabric suspensioned	1		
5	-	Seat, galon suspensioned	1		
6	-	Control module	1		
7	-	Forward reverse control module	1		
8	-	Display unit	1		
9	-	Seat belt 2"	1		
9	-	Seat belt 3"	1	A	
9	-	Seat belt 2" with reminder	1	A	
9	-	Seat belt 3" with reminder	1	A	
11	-	Control panel cover	1		

Comments for Page: Drivers seat

(L)OCAL REMARKS

A | en_US | Option.

Drivers seat Seat frame structure

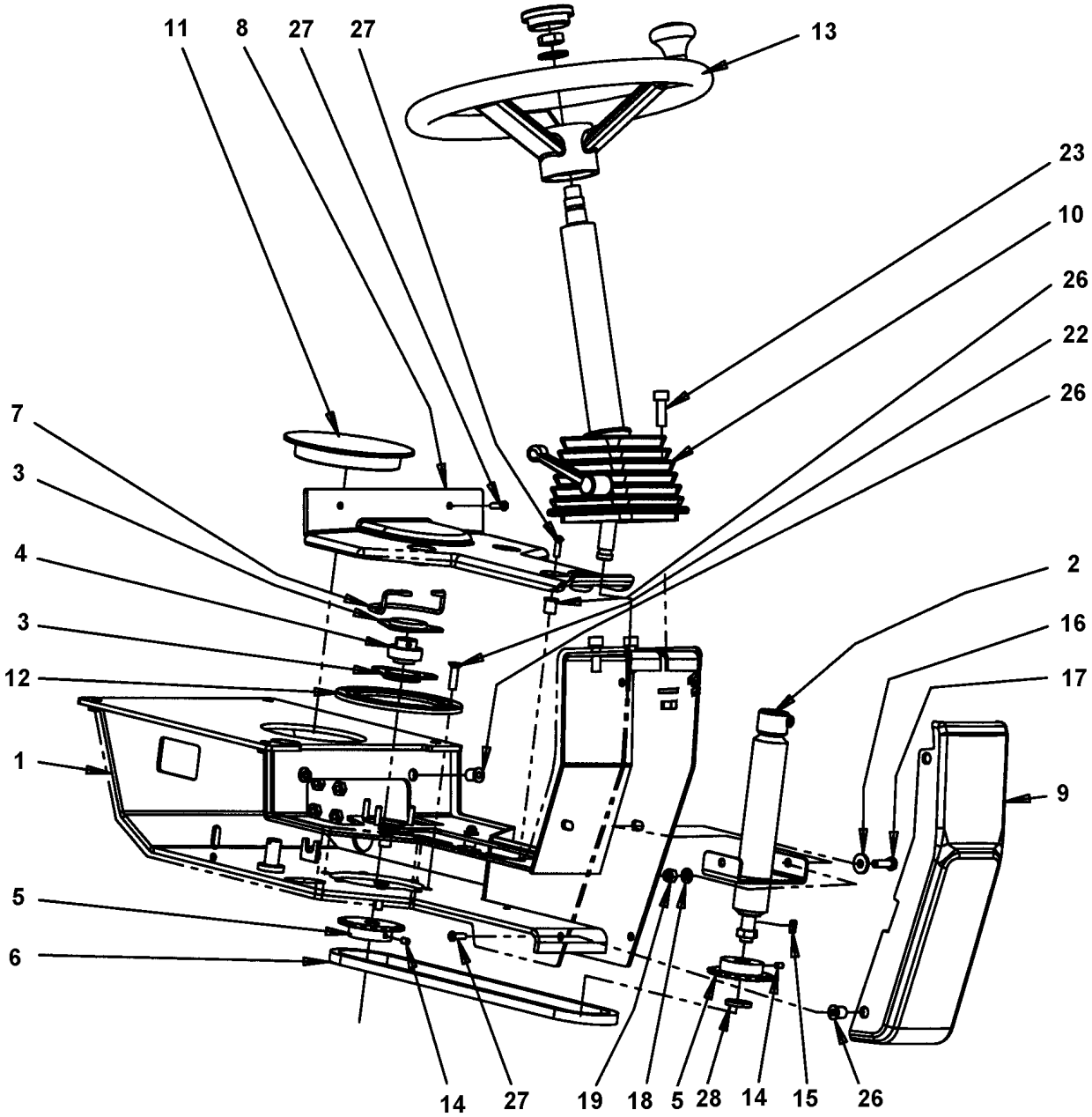

Item	Part No.	Name	Qty	L	SN INFO
1	4700395447	Seat frame	1		
2	4700359919	Shaft	1		
3	4700903917	Bearing outer	2		
4	4700903918	Bearing inner	1		
5	4700359916	Chain wheel	2		
6	4700379718	Chain and connecting link	1		
7	4700372672	Chain guard	1		
8	4700392839	Cover	1		
9	4700392840	Cover	1		
10	4700391163	Steering column	1		
11	4700359920	Plug	1		
12	4700372965	Lock ring	1		
13	4700372964	Steering wheel	1		
14	4700516040	Threaded pin	2		
15	4700350009	Flat key	1		
16	4700904640	Washer, 8.4x 6x1.5 mm 300HV	2		
17	4700500021	Screw, M8x20 mm 8.8 A2K	2		
18	4700904229	Washer, 8.4x 6x1.5 mm 300HV	2		
19	4700586003	Lock nut M8	2		
22	4700902520	Screw	6		
23	4700508029	Cylinder screw	3		
26	4700792539	Rubber nut	10		
27	4700791524	Screw, M6 x 20 mm A2-70	10		
28	4700904214	Washer 15x30x4 300 HV	1		

Drivers seat 4700391163 Steering column

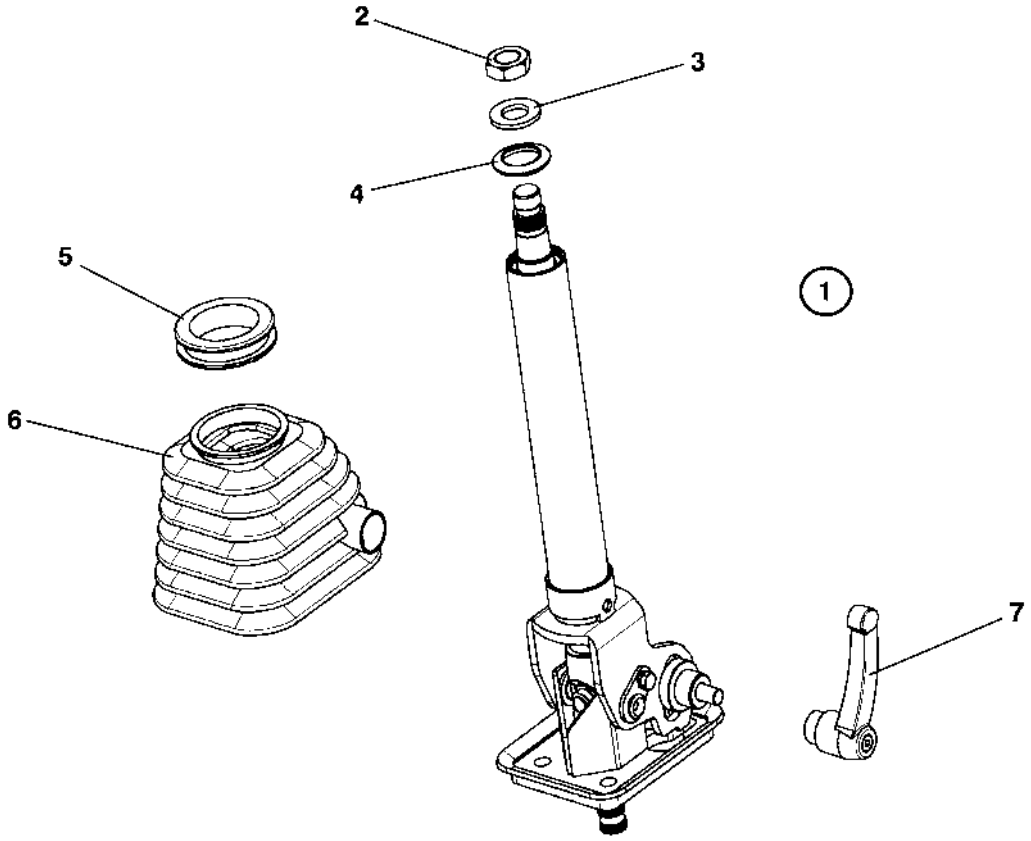

Item	Part No.	Name	Qty	L	SN INFO
1	4700391163	Steering column			
2	4700945632	Nut	1		
3	4700945633	Washer	1		
4	4700945634	Rubber cap	1		
5	4700945635	Bellows ring	1		
6	4700945636	Bellows	1		
7	4700945637	Locking handle	1		

Drivers seat Seat frame adapter module, rotating

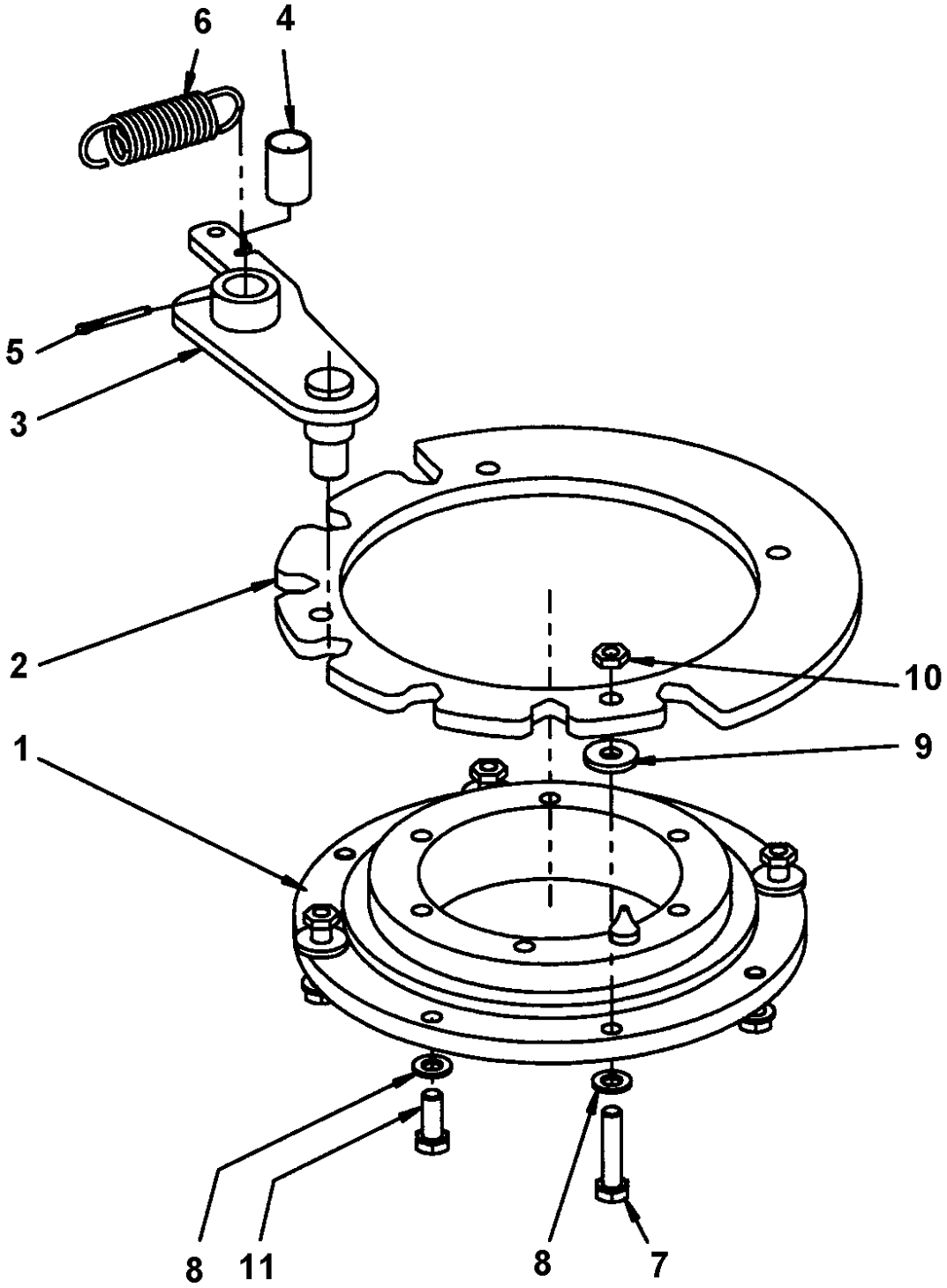

Item	Part No.	Name	Qty	L	SN INFO
1	4700359125	Ball bearing	1		
2	4700379728	Locking disc	1		
3	4812119788	Coupling link	1		
4	4700359819	Bushing	1		
5	4700630008	Pin	1		
6	4700359043	Spring	1		
7	4700792678	Screw	4		
8	4700904229	Washer, 8.4x 6x1.5 mm 300HV	8		
9	4700904640	Washer, 8.4x 6x1.5 mm 300HV	4		
10	4700573008	Nut M8	4		
11	4700947679	Hexagon head screw	4		

Drivers seat Seat frame adapter module, fixed

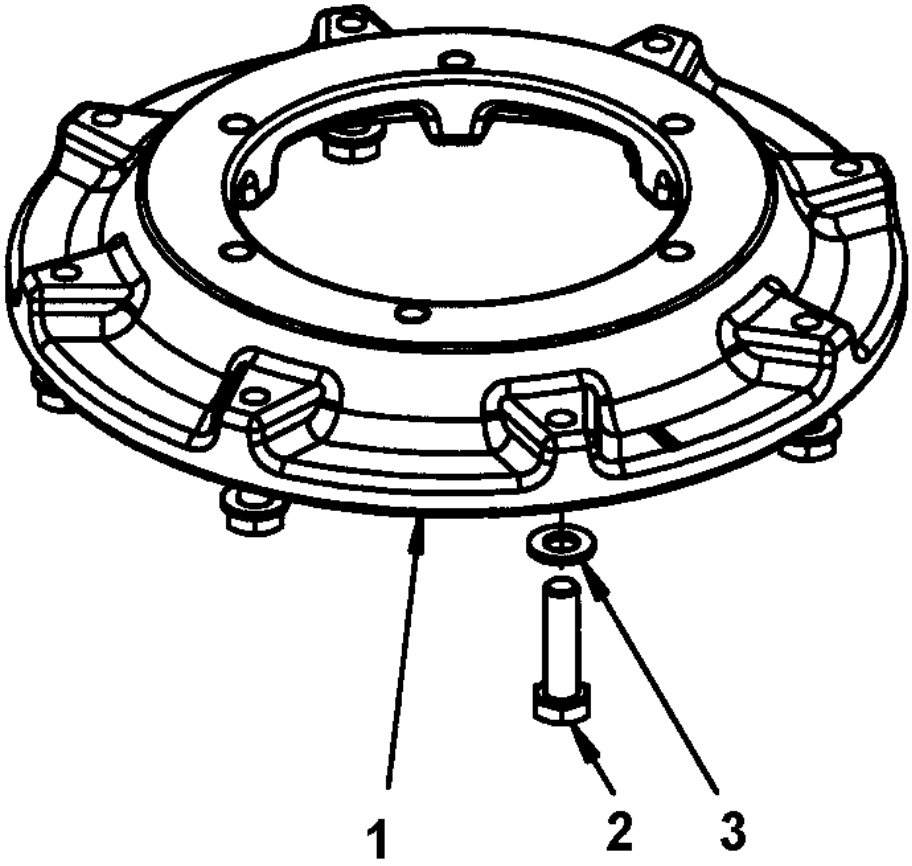

Item	Part No.	Name	Qty	L	SN INFO
1	4812110891	Spacer	1		
2	4700500022	Screw	8		
3	4700904229	Washer, 8.4x 6x1.5 mm 300HV	8		

Drivers seat Seat comfort, fabric suspensioned

Item	Part No.	Name	Qty	L	SN INFO
1	4812116357	Seat, fabric suspensioned	1	A	
1	4700937892	Seat switch	1		
1	4700937620	Arm rest, right	1		
1	4812158367	Arm rest wide, right	1		
1	4700937621	Arm rest, left	1		
2	4812119295	Control bracket	1		
3	4700904230	Steel plain washer	2		
4	4700500028	Steel plain washer	1		
5	4700792527	Screw	3		
8	4700508092	Hex. socket screw	4		

Comments for Page: Seat comfort, fabric suspensioned

(L)OCAL REMARKS

A | en_US | Without seat belt.

Drivers seat Seat, galon suspensioned

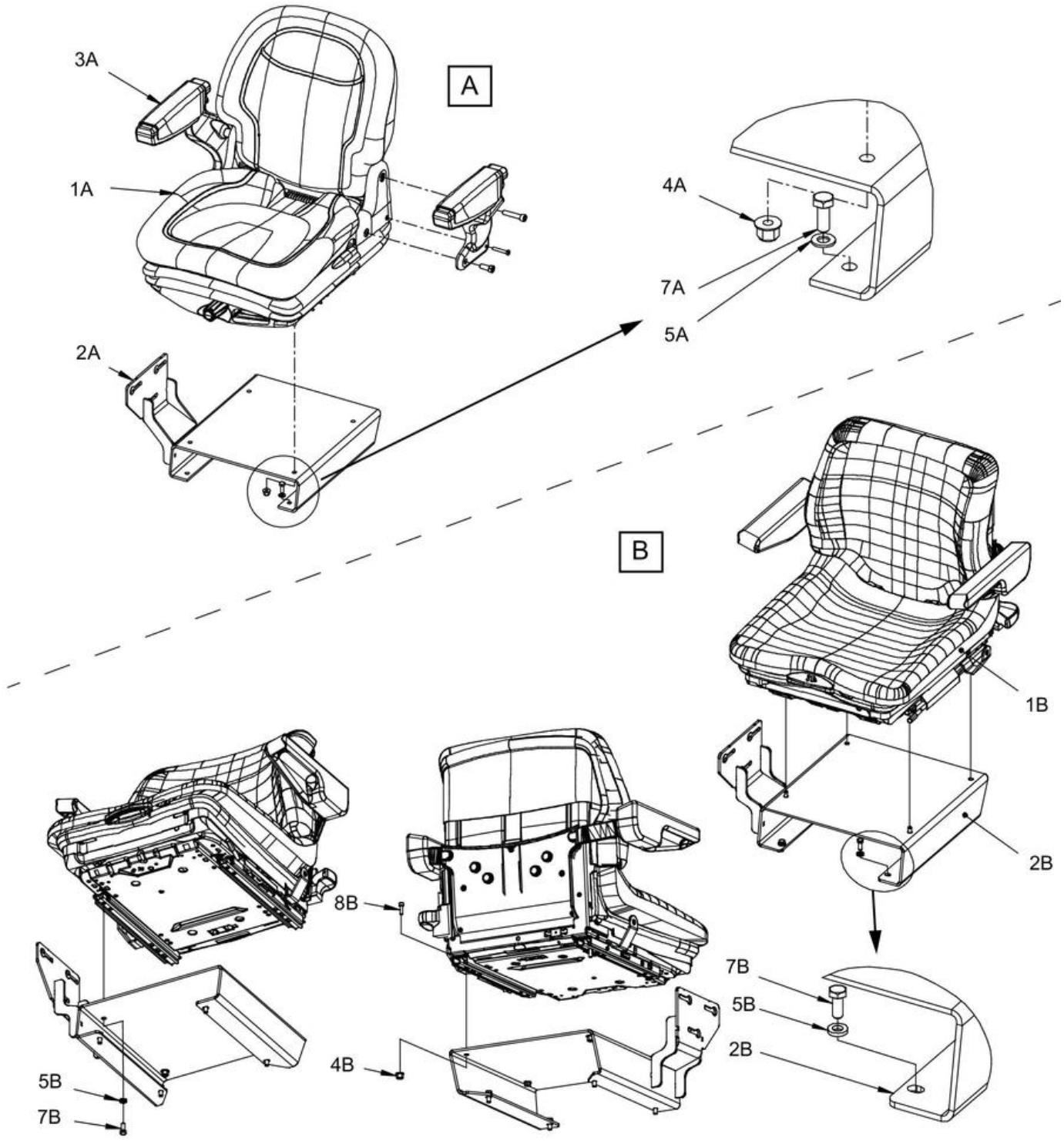

Item	Part No.	Name	Qty	L	SN INFO
1A	4700377518	Seat, galon suspensioned	1		
-	4700945622	Seat switch	1		
-	4700945660	Seat cushion	1		
-	4700945661	Adjuster kit, slide	1	A	
2A	4700390561	Seat frame	1		
3A	4700390963	Arm rest kit	1		
4A	4700902286	Lock nut, M8x1.25 mm A2K	4		
5A	4700904229	Washer, 8.4x 6x1.5 mm 300HV	4		
7A	4700500053	Screw, M8x20 mm 8.8 A2K	4		
1B	4700370234	Seat, galon suspensioned	1		
-	4700909535	Sliding rail with handle	1		
-	4700909536	Sliding rail	1		
-	4700936283	Seat switch	1		
-	4700372696	Arm rest, left	1		
-	4700372697	Arm rest, right	1		
2B	4812126698	Seat frame	1		
4B	4700902286	Lock nut, M8x1.25 mm A2K	2		
5B	4700904556	Steel plain washer 8,4x16x3,0	6		
7B	4700500053	Screw, M8x20 mm 8.8 A2K	6		
8B	4700508025	Screw, M6x20 mm 8.8 A2K	2		

Comments for Page: Seat, galon suspensioned

(L)OCAL REMARKS

A | en_US | Left & right sliding rail

Drivers seat Floor cassette module

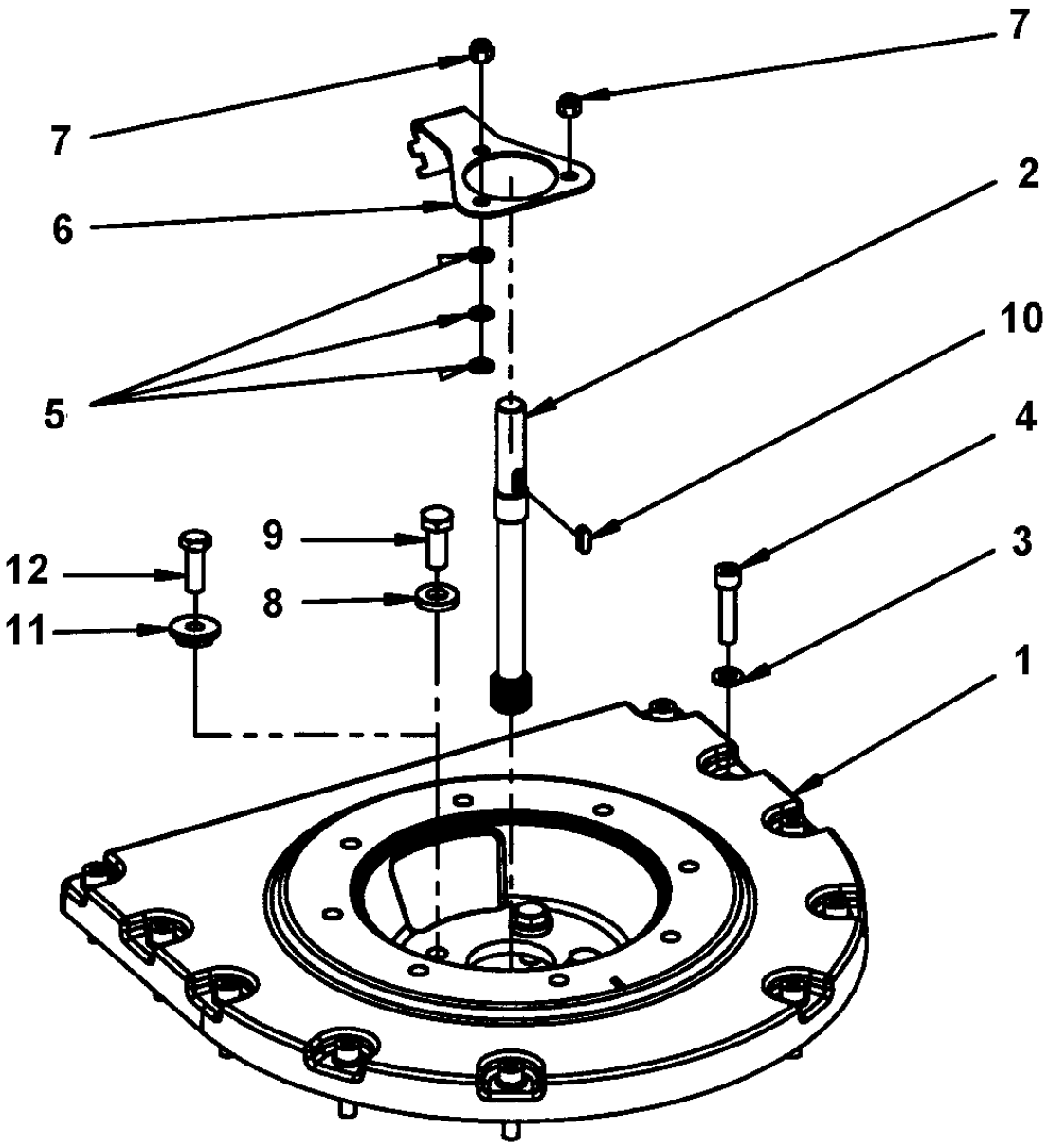

Item	Part No.	Name	Qty	L	SN INFO
1	4812111294	Adapter	1		
2	4812110885	Splined shaft	1		
3	4700904229	Washer, 8.4x 6x1.5 mm 300HV	10		
4	4700508027	Screw	10		
5	4700904228	Washer 6,4x12x1,5	3		
6	4812114172	Bracket	1		
7	4700586002	Lock nut M6 -8	3		
8	4700904557	Washer, 10.5x22x4 mm 300 HV	4		
9	4700500028	Steel plain washer	4		
10	4700350009	Flat key	1		
11	4812113478	Washer	4		
12	4700500029	Steel plain washer	4		

Drivers seat Control module

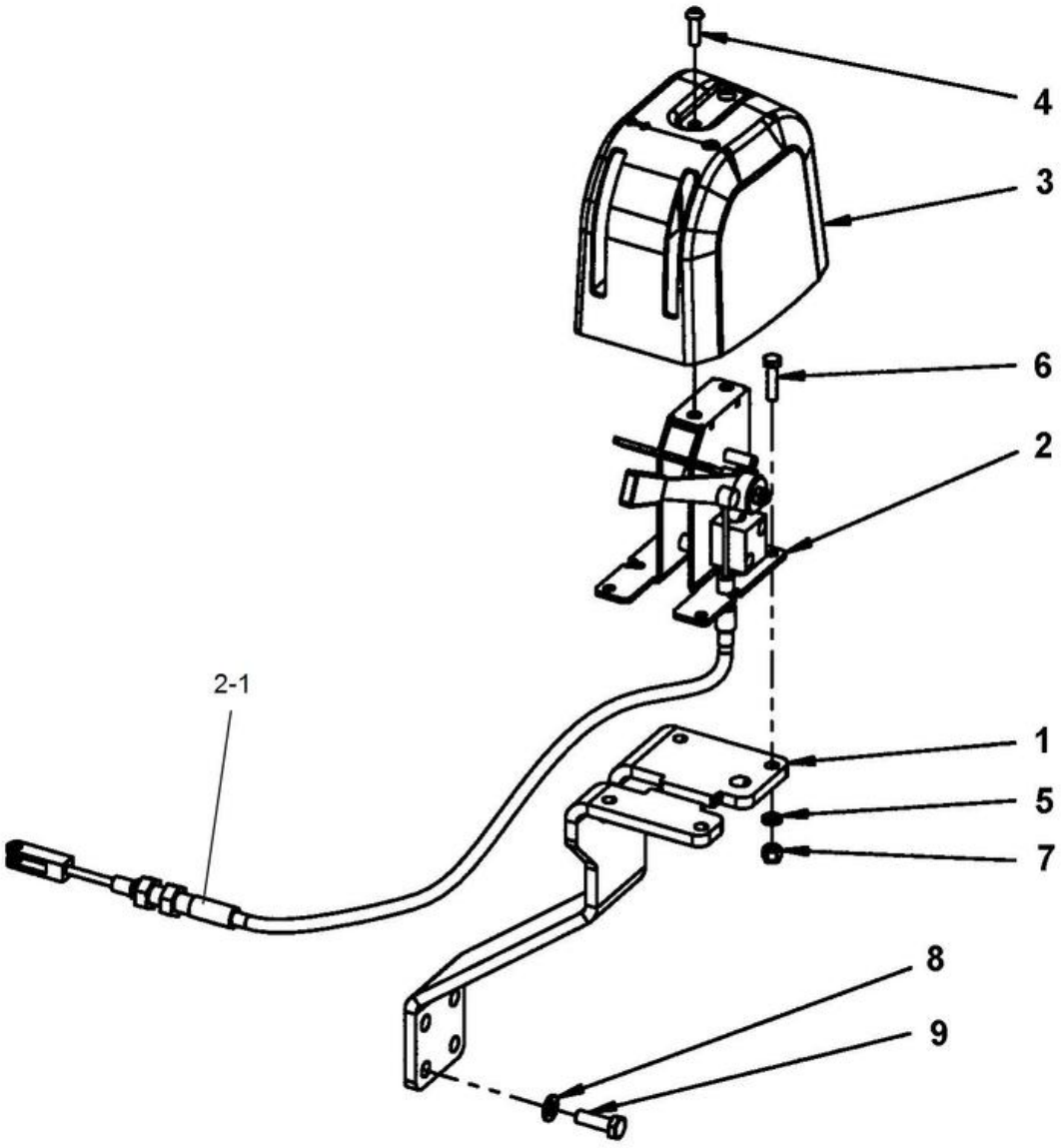

Item	Part No.	Name	Qty	L	SN INFO
1	4812118312	Bracket	1		
2	4812111216	Control, cpl	1		
2-1	4812121331	Cable	1		
3	4700392965	Control cover	1		
4	4700791524	Screw, M6 x 20 mm A2-70	2		
5	4700904228	Washer 6,4x12x1,5	4		
6	4700500075	Screw, M6-1,0x25 mm 8.8	4		
7	4700586002	Lock nut M6 -8	4		
8	4700904229	Washer, 8.4x 6x1.5 mm 300HV	4		
9	4700500021	Screw, M8x20 mm 8.8 A2K	4		

Drivers seat Forward reverse control module

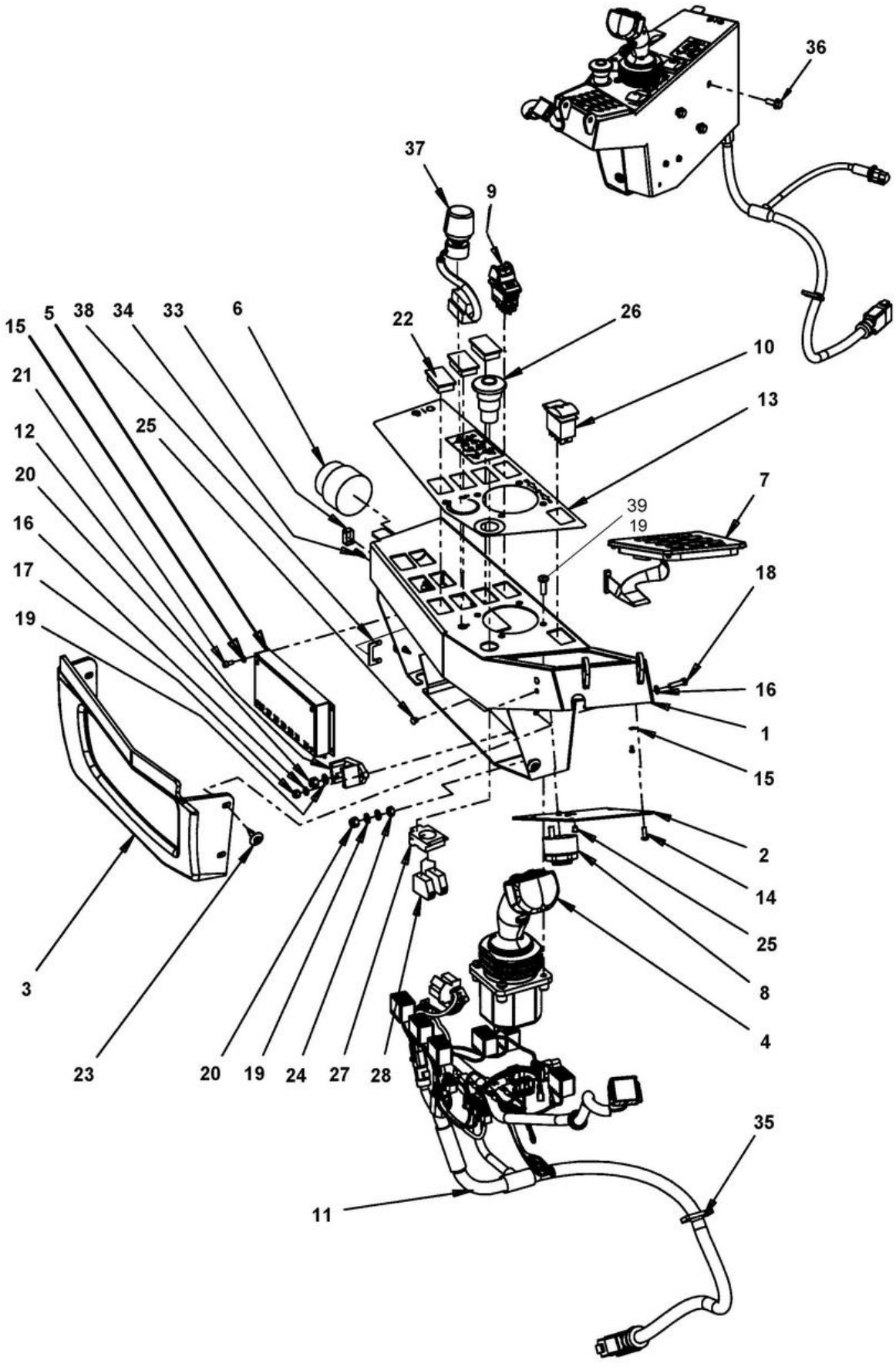

Item	Part No.	Name	Qty	L	SN INFO
1	4812110886	Control box	1		
2	4700391396	Cover	1		
3	4700396662	Cover	1		
4	4812126248	Control handle, 4 switches	1		
5	4812113875	Control unit, I/O	1		
6	4812110901	Ignition switch	1		
6	4700940451	Ignition key	1		
7	4812114803	Membrane switch panel	1		
8	4700385599	Buzzer	1		
9	4812118697	Switch, parking brake	1		
10	4700792414	Switch, RPM	1		
10	4812117490	Switch, green ECO	1		
11	4812118754	Cable harness	1		
12	4700392930	Junction box	1		
13	4812111780	Decal	1		
14	4812119227	Thread rolling screw	4		
15	4700904698	Plain washer	8		
16	4700904281	Washer, 5,3x10x1 300HV	4		
17	4700586001	Lock nut	2		
18	4700500060	Screw M5-0,8x20 8.8	2		
19	4700904228	Washer 6,4x12x1,5	7		
20	4700586002	Lock nut M6 -8	2		
21	4700508017	Cylinder screw	4		
22	4700791588	Panel plug	3		
23	4700395785	Expansion rivet	4		
24	4700570004	Hexagon nut M6	1		
25	4700902804	Plug	5		
26	4700791739	Emergency stop	1		
27	4700791733	Fixing collar	1		
28	4700791723	Connector	2		
33	4812114214	Cover	1		
34	4812114213	Lock screw	2		
35	4700313041	Cable ties	N		
36	4700500505	Screw, M8x20 mm 8.8 A2K	3		
37	4700388737	Potentiometer	1		
37	4700939826	Knob	1		
38	4812119317	Holder	1		
39	4700904650	Button head socket screw, M6x12	4		

Drivers seat Display unit

Item	Part No.	Name	Qty	L	SN INFO
1	4700392717	Display holder	1		
2	4812113786	Display unit	1		
3	4700392719	Cover	1		
4	4700393094	Decal	1		
5	4700904228	Washer 6,4x12x1,5	4		
6	4700586002	Lock nut M6 -8	4		
11	4700903662	Washer	2		
12	4700606004	Plastic washer	2		
13	4700500115	Screw	1		
14	4700586003	Lock nut M8	1		

Seat belts Seat belt 2"

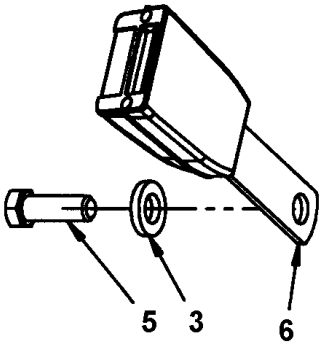

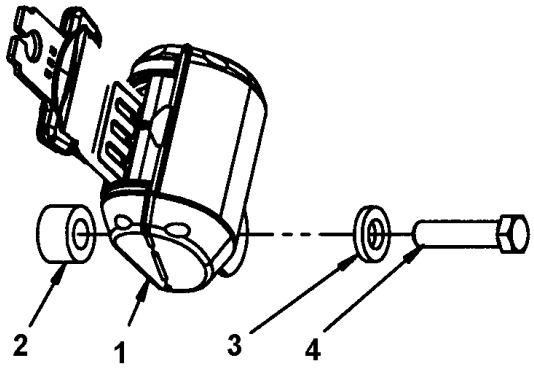

Item	Part No.	Name	Qty	L	SN INFO
1	4812117922	Seat belt 2"	1		
2	4700791572	Spacer washer	1		
3	4700904703	Plain washer 13x24x4 mm	4		
4	4700792527	Screw	1	A	
5	4700928347	Hexagon screw	2	A	
6	4812117924	Buckle	1		

Comments for Page: Seat belt 2"

(L)OCAL REMARKS

A | en_US | Used with seat 4700377518.

Seat belts Seat belt 3"

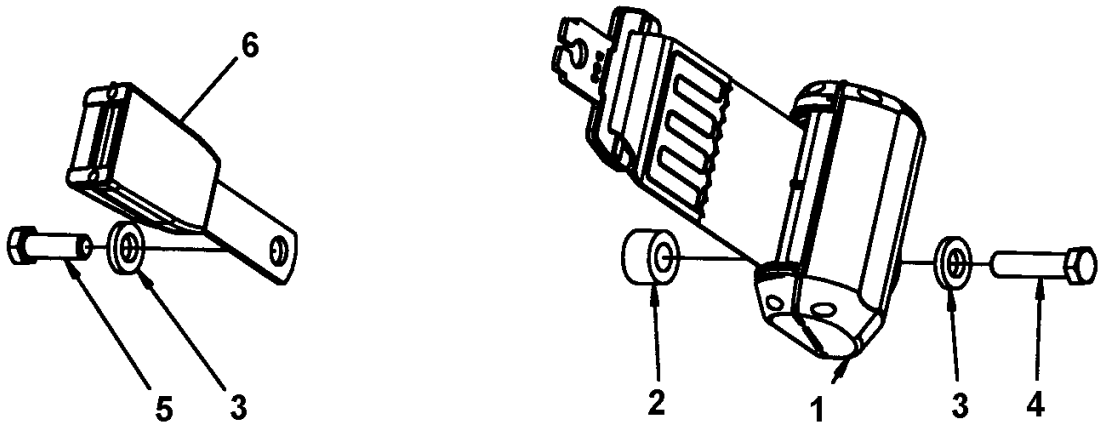

Item	Part No.	Name	Qty	L	SN INFO
1	4812118816	Seat belt 3"	1		
2	4700791572	Spacer washer	1		
3	4700904703	Plain washer 13x24x4 mm	4		
4	4700792527	Screw	1		
5	4700928347	Hexagon screw	2		
6	4812117924	Buckle	1		

Seat belts Seat belt 2" with reminder

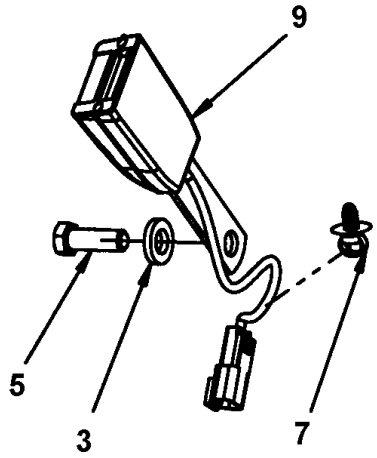

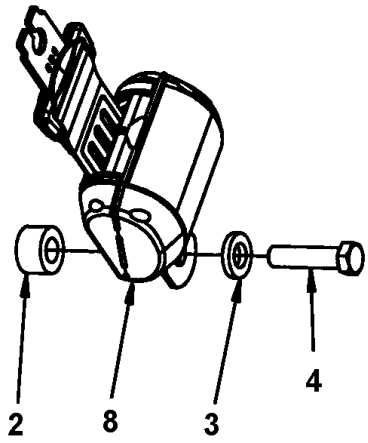

Item	Part No.	Name	Qty	L	SN INFO
2	4700791572	Spacer washer	1		
3	4700904703	Plain washer 13x24x4 mm	4		
4	4700792527	Screw	1		
5	4700928347	Hexagon screw	2		
7	4700792441	Cable tie with holder	1		
8	4812117922	Seat belt 2"	1		
9	4812117925	Buckle with reminder	1		

Seat belts Seat belt 3" with reminder

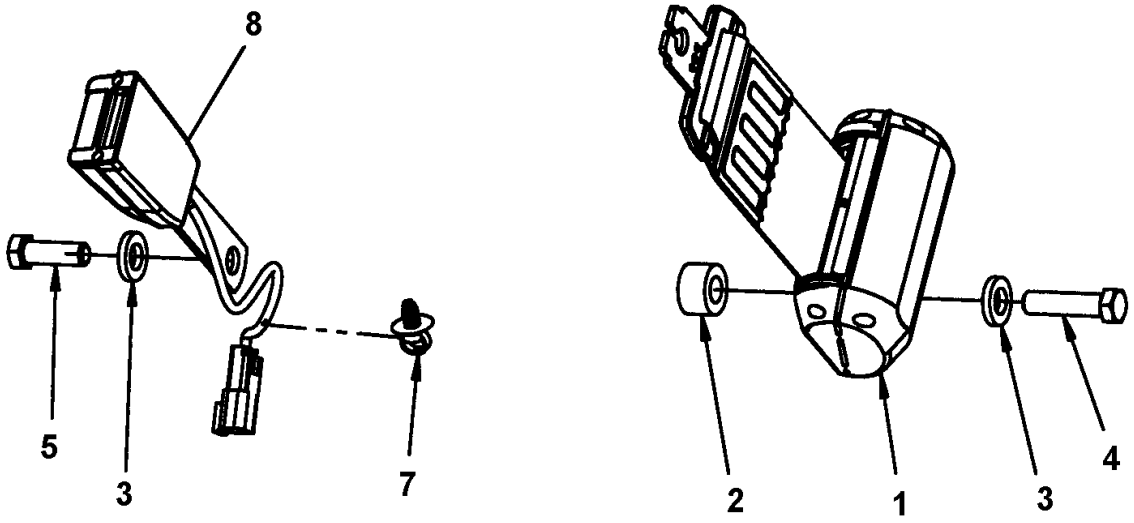

Item	Part No.	Name	Qty	L	SN INFO
1	4812118816	Seat belt 3"	1		
2	4700791572	Spacer washer	1		
3	4700904703	Plain washer 13x24x4 mm	4		
4	4700792527	Screw	1		
5	4700928347	Hexagon screw	2		
7	4700792441	Cable tie with holder	1		
8	4812117925	Buckle with reminder	1		

Drivers seat Control panel cover

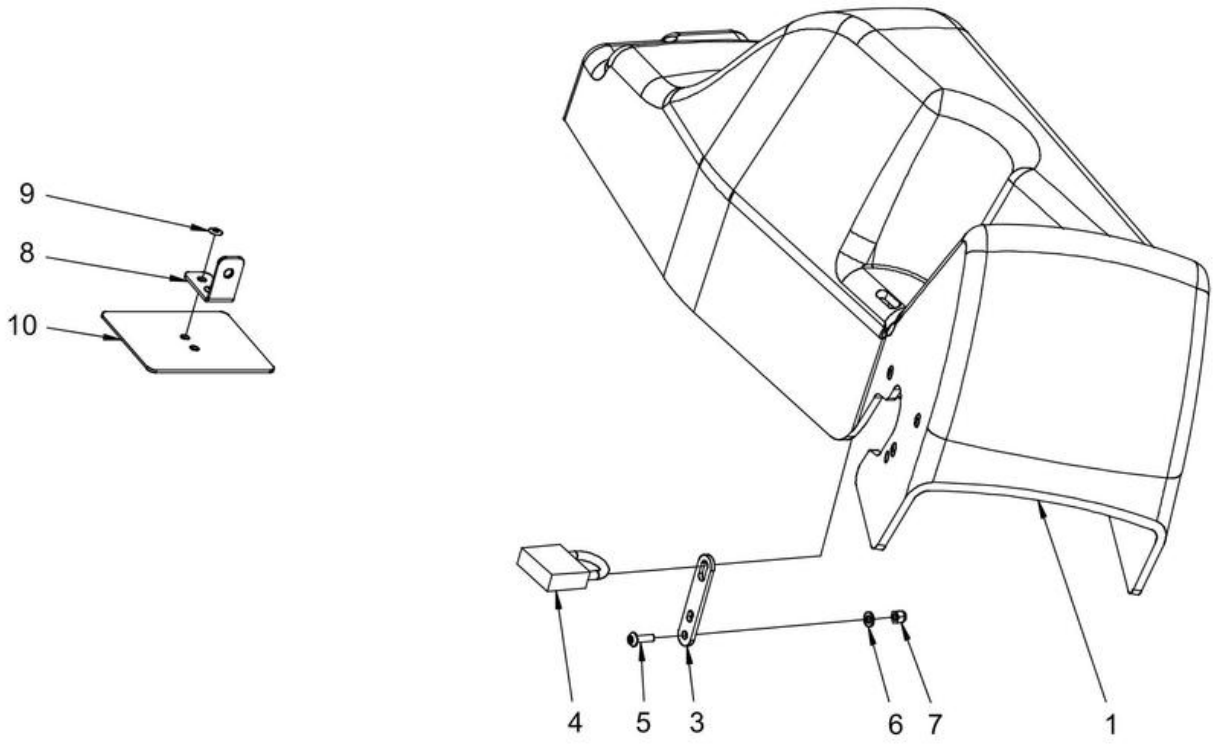

Item	Part No.	Name	Qty	L	SN INFO
1	4812126260	Instrument panel cover	1		
3	4700387545	Latch	1		
4	4700358881	Pad lock	1		
5	4700904653	Screw M5x16 A2-70	2		
6	4700904281	Washer, 5,3x10x1 300HV	4		
7	4700586001	Lock nut	2		
8	4700396670	Bracket	1		
9	4700904619	Blind rivet	2		
10	4812126261	Support plate	1		

Accessories / Decals Decals

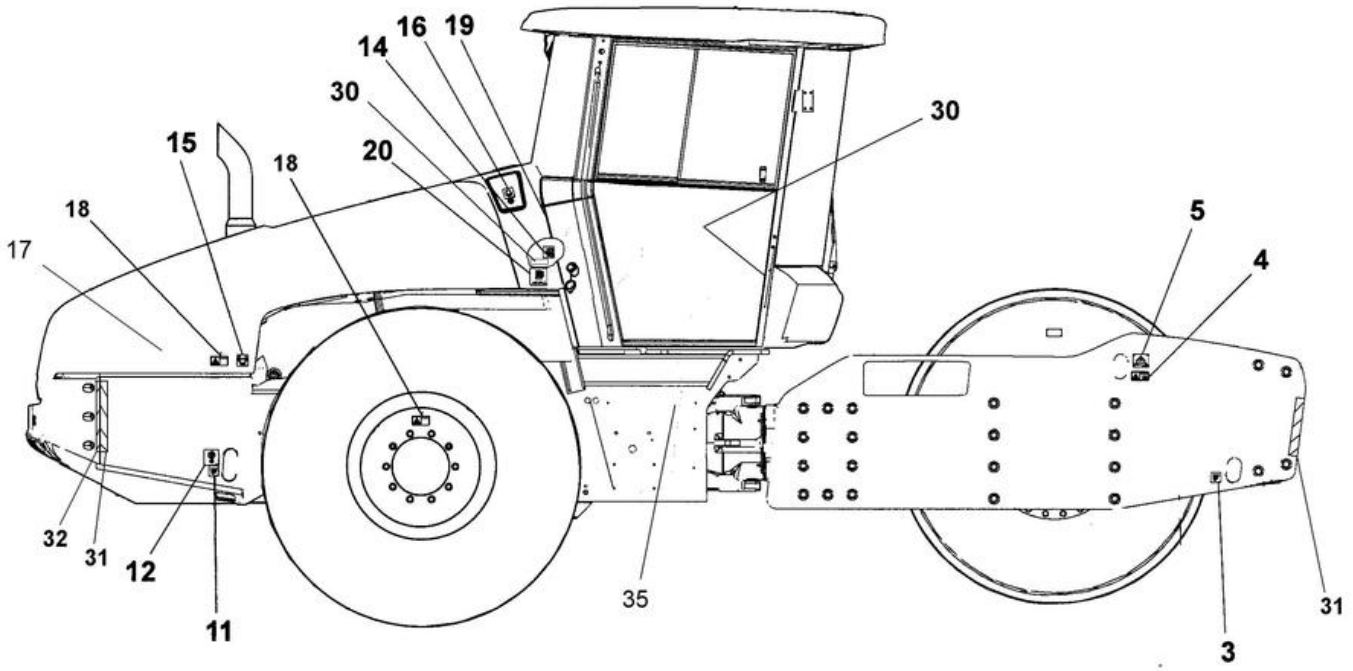

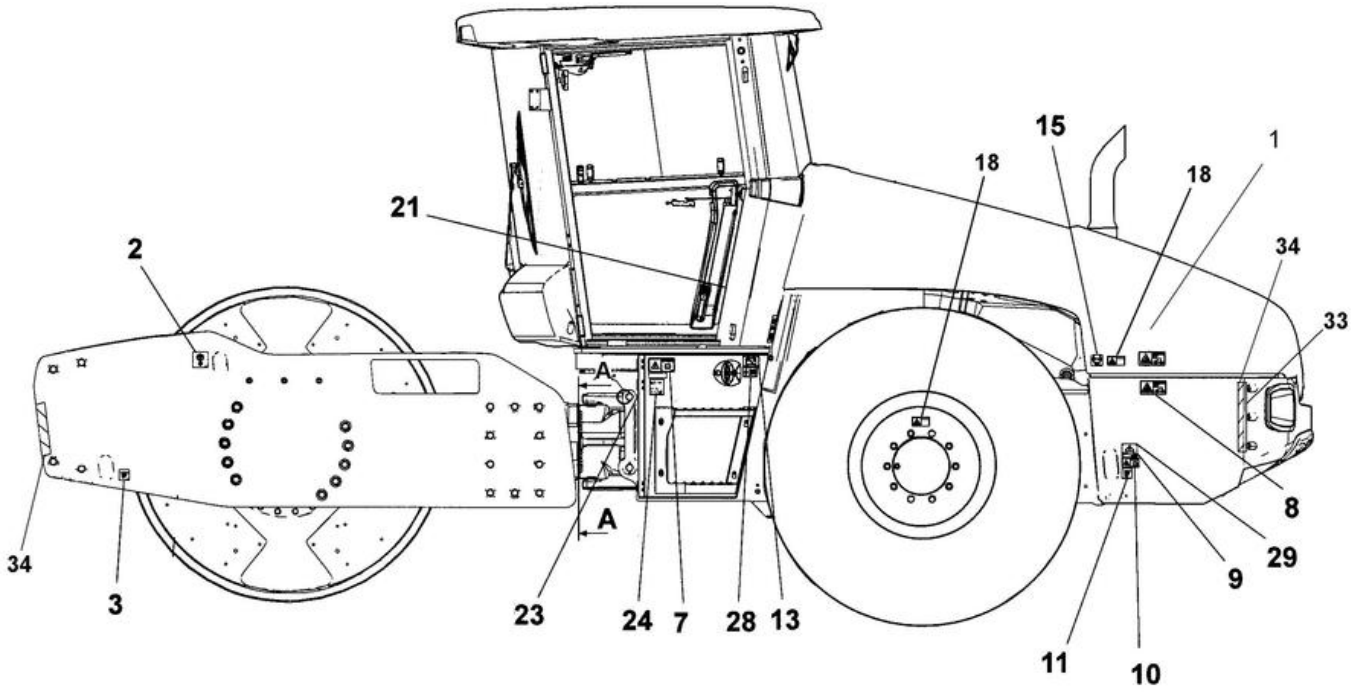

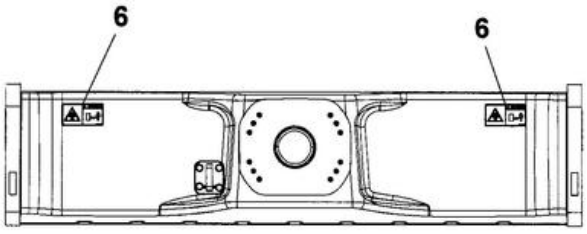

A - A

Item	Part No.	Name	Qty	L	SN INFO
1	4812128529	Decal model code combined, right CA2500D (left side)	1		
1.1		Decal graphic element, right	1		
1.2		Decal "MODEL CODE" CA2500D	1		
1	4812128531	Decal model code combined, right CA2500PD (left side)	1		
1.1		Decal graphic element, right	1		
1.2		Decal "MODEL CODE" CA2500PD	1		
2	4700588176	Decal "LIFT POINT"	1		
3	4700382751	Decal "SECURING POINT/TIE DOWN"	2		
4	4700908229	Safety decal	1		
5	4700904870	Lifting data plate	1		
5	4700624005	Blind rivet 3,2x6,1	4		
6	4700903422	Safety decal "CRUSH AREA"	2		
7	4700903459	Decal "SAFETY"	1		
8	4700904895	Safety decal "Brake release"	1		
9	4700904870	Lifting data plate	1		
10	4700908229	Safety decal	1		
11	4700382751	Decal "SECURING POINT/TIE DOWN"	2		
12	4700588176	Decal "LIFT POINT"	1		
13	4700904835	Decal "BATTERY POWER"	1		
14	4700272373	Decal, hydraulic oil level	1		
15	4700390900	Decal "TYRE PRESSURE" 110kPA/16psi	2	A, B	
15	4700355983	Decal "TYRE PRESSURE" 200kPa/29psi	2	C	
16	4700388449	Decal "ENGINE COOLANT FILL"	1		
17	4812128528	Decal model code combined, left CA2500D (right side)	1		
17.1		Decal graphic element, left	1		
17.2		Decal "MODEL CODE" CA2500D	1		
17	4812128530	Decal model code combined, left CA2500PD (right side)	1		
17.1		Decal graphic element, left	1		
17.2		Decal "MODEL CODE" CA2500PD	1		
18	4700903985	Decal "SAFETY	4		
19	4700272372	Decal "HYDRAULIC OIL"	1		
19	4700792772	Decal "BIO HYDRAULIC OIL" PANOLIN	1		
20	4811000345	Decal "ULTRA LOW SULFUR FUEL ONLY"	1		
21	4700903425	Safety decal "READ SAFETY INSTRUCTIONS"	1		
23	-	Product identification plate	1		
24	4700791273	Decal "Sound power level" 103 dB	1		
28	4700393959	Decal "Battery voltage 24V"	1		

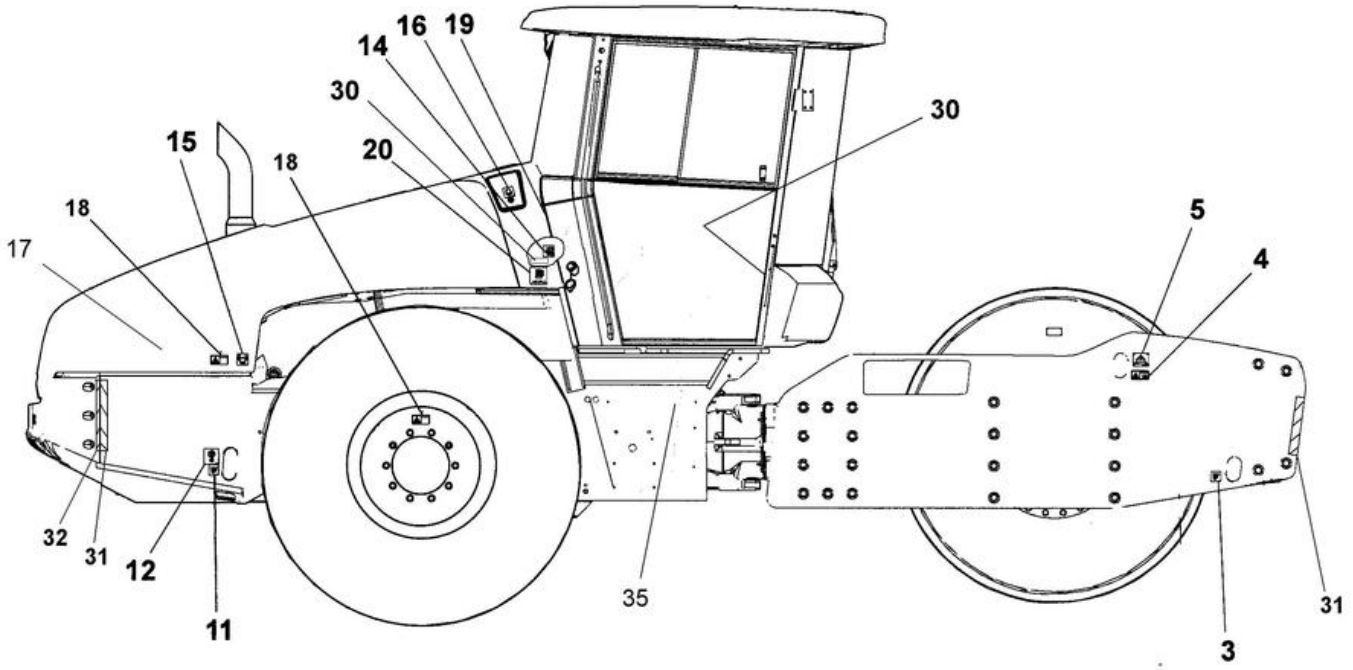
16
19
14
30
15
20
18
18
17
30
5
4
32
31
12
11
35
3
31

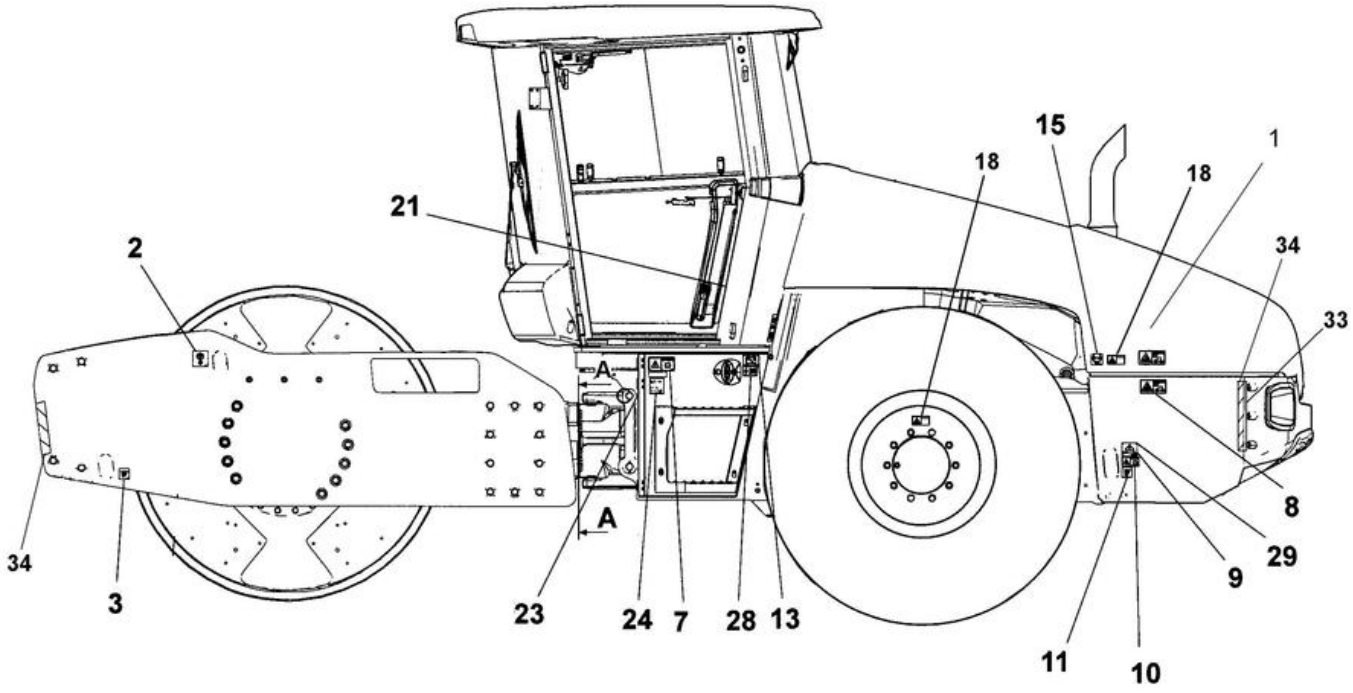
21
15
18
18
1
2
34
33
A
A
8
29
34
3
9
23
24
7
28
13
11
10

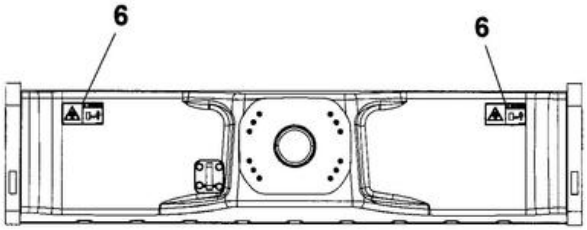
6
6

A - A

Item	Part No.	Name	Qty	L	SN INFO
29	4700624005	Blind rivet 3,2x6,1	4		
30	4811000344	Decal, low sulfur	2		
31	4700904390	Decal "Risk location"	2		
32	4700904389	Decal "Risk location"	1		
33	4700904391	Decal "Risk location"	1		
34	4700904388	Decal "Risk location"	2		
35	4812124070	Decal AdBlue/DEF	1		

Accessories / Decals Decals

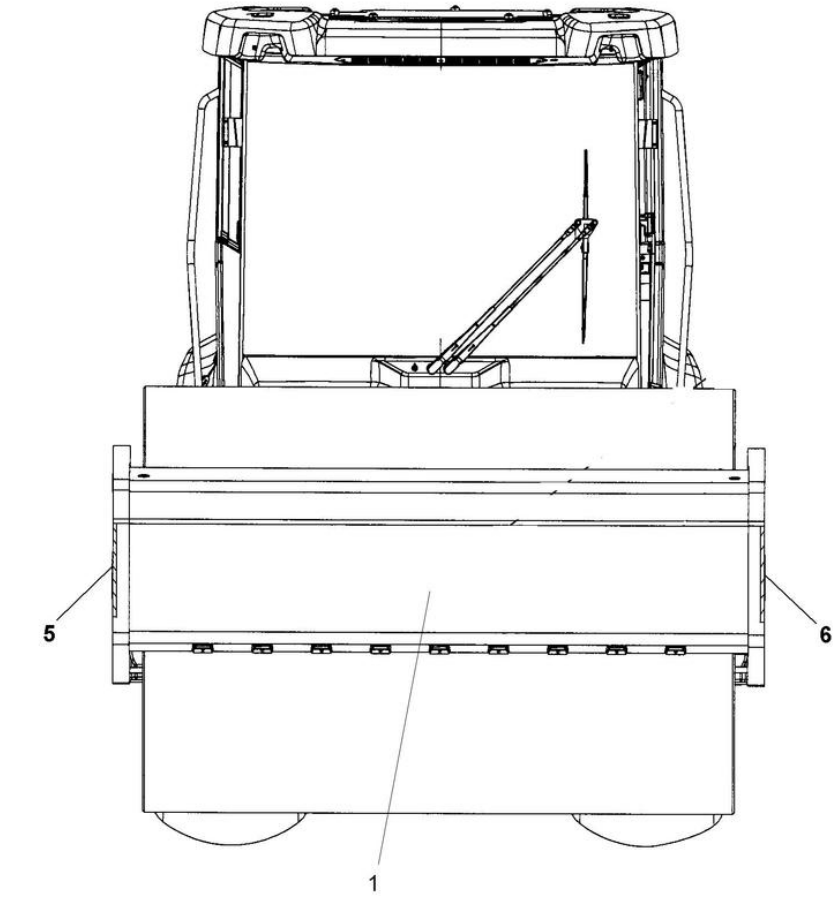

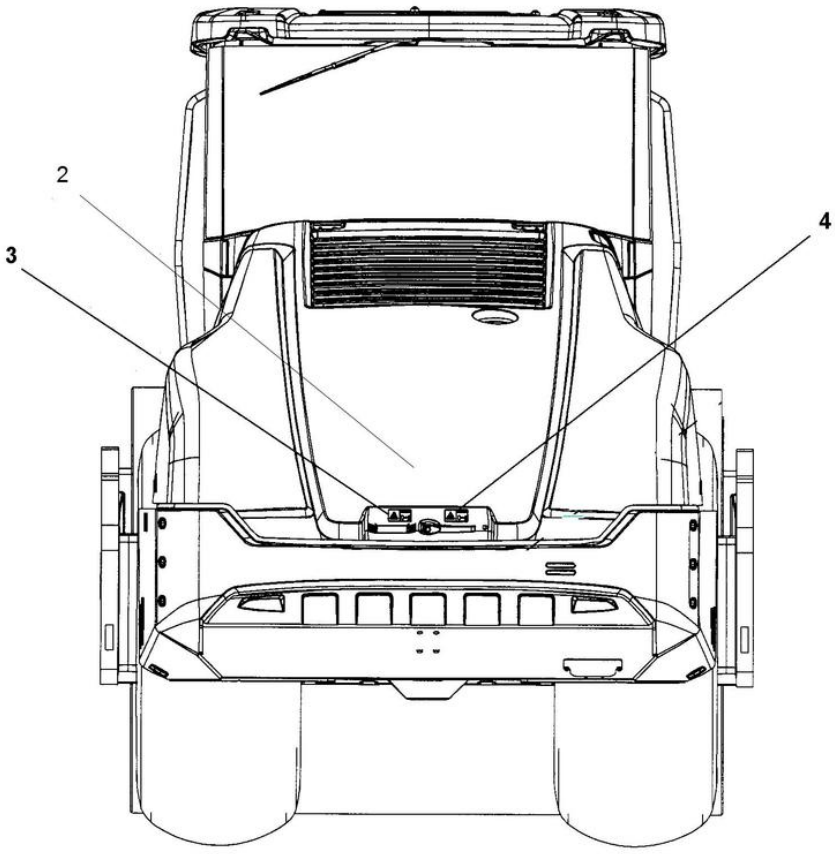

Item	Part No.	Name	Qty	L	SN INFO
1	4812127724	Decal FAYAT DYNAPAC 1300 WH	1		
2	4812127714	Decal FAYAT DYNAPAC 350 WH	1		
3	4700903423	Safety label, Rotating engine components	1		
4	4700903424	Safety label, hot surfaces	1		
5	4700904389	Decal "Risk location"	1		
6	4700904391	Decal "Risk location"	1		

Accessories / Decals Color Dynapac

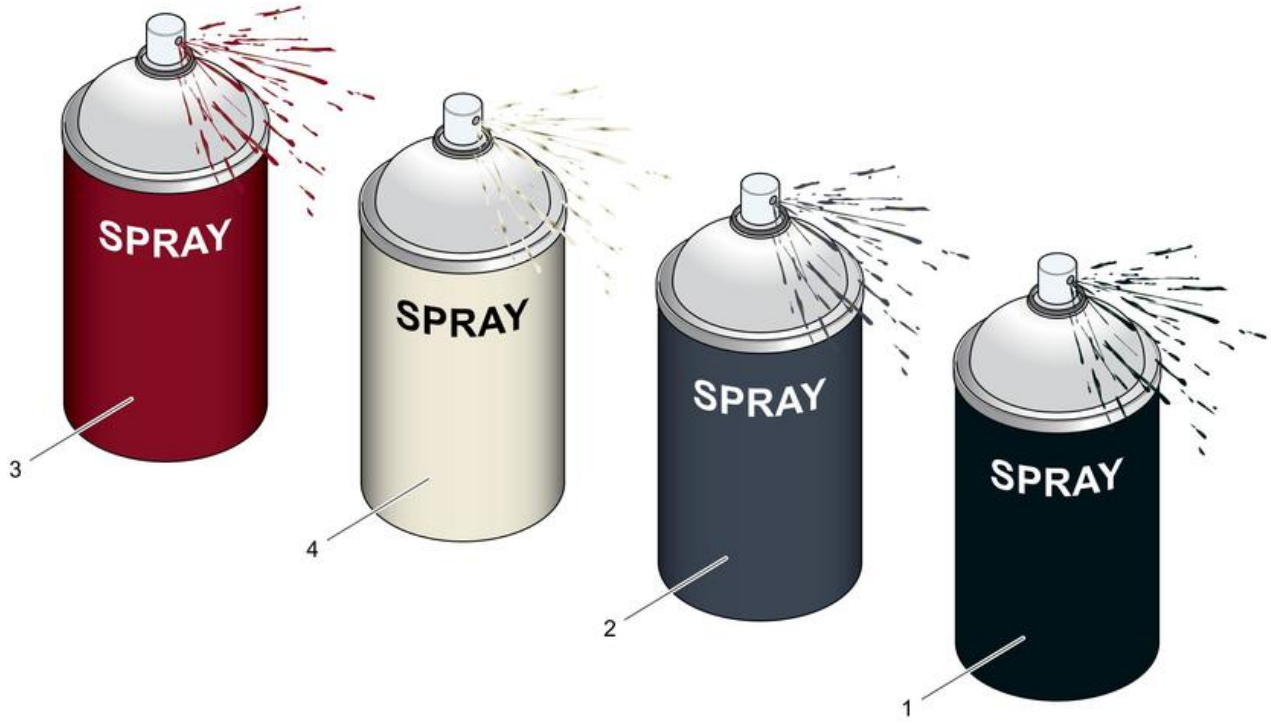

Item	Part No.	Name	Qty	L	SN INFO
1	4812215510	Dynapac color, black	1		
2	4812215511	Dynapac color, grey	1		
3	4812215512	Dynapac color, red	1		
4	4812215516	Dynapac color, white	1		
5	4812007588	Color AC grey	1		
6	4812007591	Color AC yellow	1		


SPRAY
6
SPRAY
5

This page intentionally left blank

Cooling box module Cooling box module

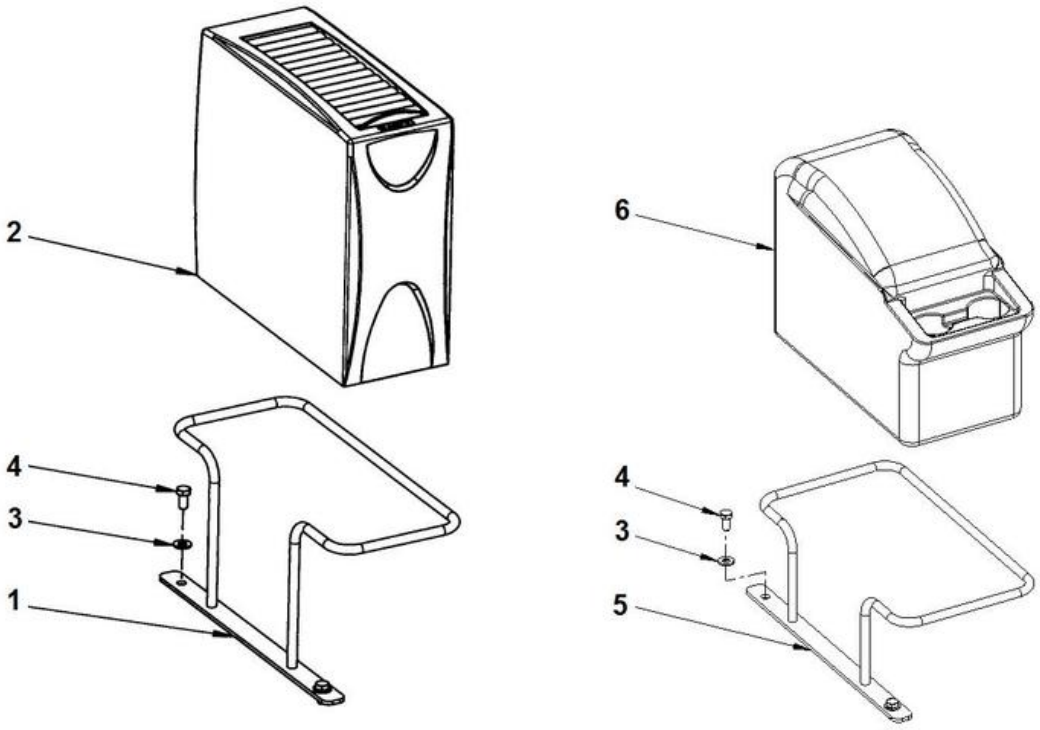

Item	Part No.	Name	Qty	L	SN INFO
1	4812114742	Holder	1		
2	4812118842	Cooling box	1		
2	4812160053	Cable 12V	1		
3	4700904230	Steel plain washer	2		
4	4700500048	Screw, M10x20 mm 8.8 A3K	2		
5	4812126463	Holder	1		
6	4812126487	Cooling box	1		

Air conditioning Air conditioning

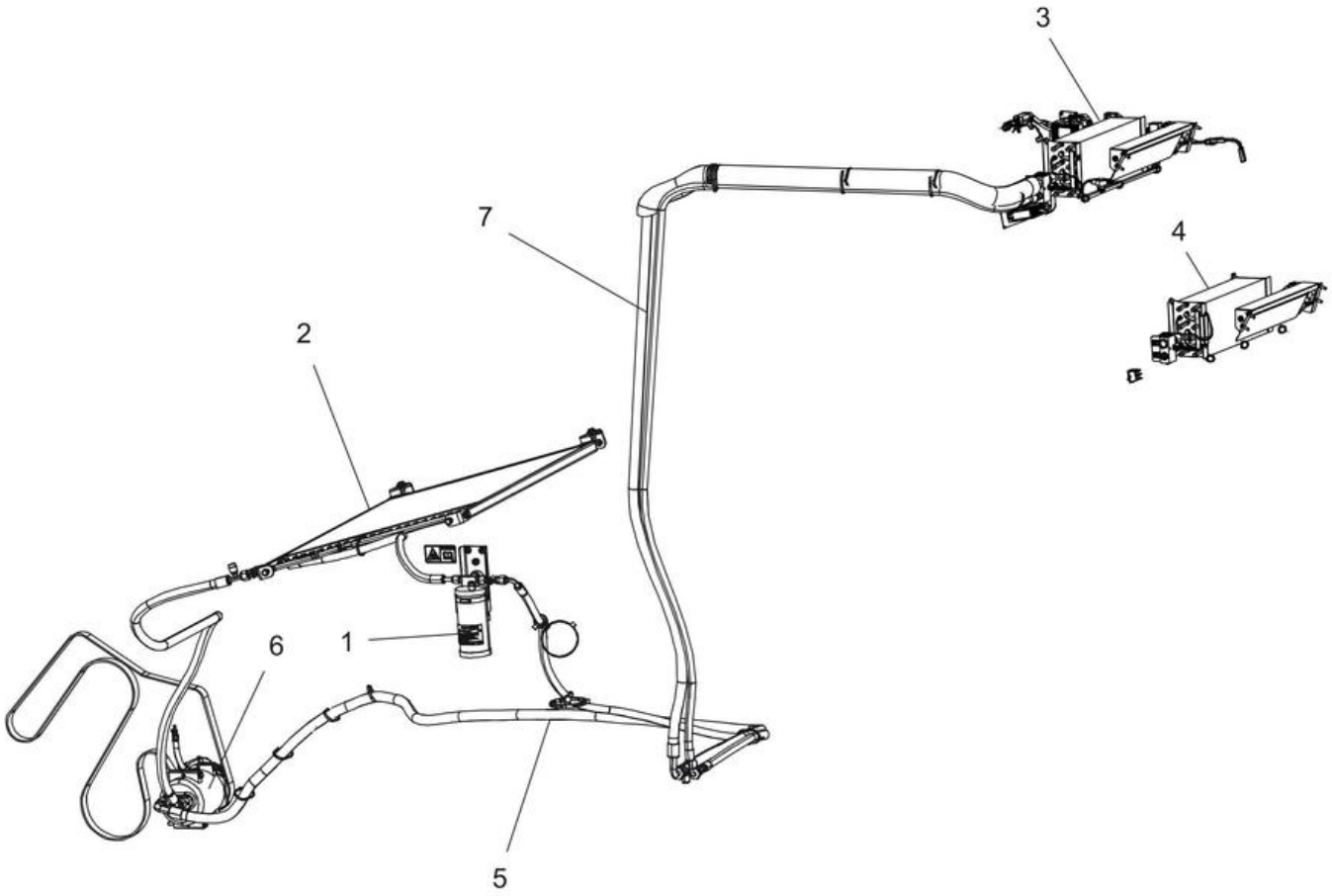

Item	Part No.	Name	Qty	L	SN INFO
1	-	Drying filter module	1		
2	-	Condensor assembly	1		
3	-	ACC module	1		
4	-	AC module	1		
5	-	Hose kit AC	1		
6	-	Compressor module	1		
7	-	Hose assy kit for AC	1		

Air conditioning Drying filter module

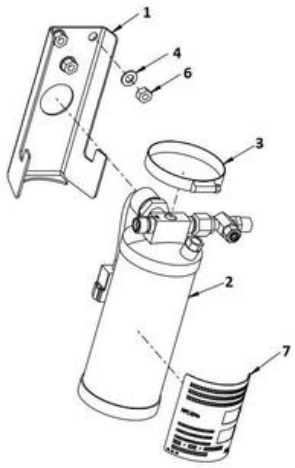

Item	Part No.	Name	Qty	L	SN INFO
1	4812111311	Bracket	1		
2	4812114257	Drying filter assy	1		
3	4700313022	Hose clamp	1		
4	4700904229	Washer, 8.4x 6x1.5 mm 300HV	3		
6	4700570005	Hexagon nut	3		
7	4812126833	Decal, Flourinated gas	1		
8	4812126918	Declaration of conformity	1		

Air conditioning 4812114257 Drying filter assy

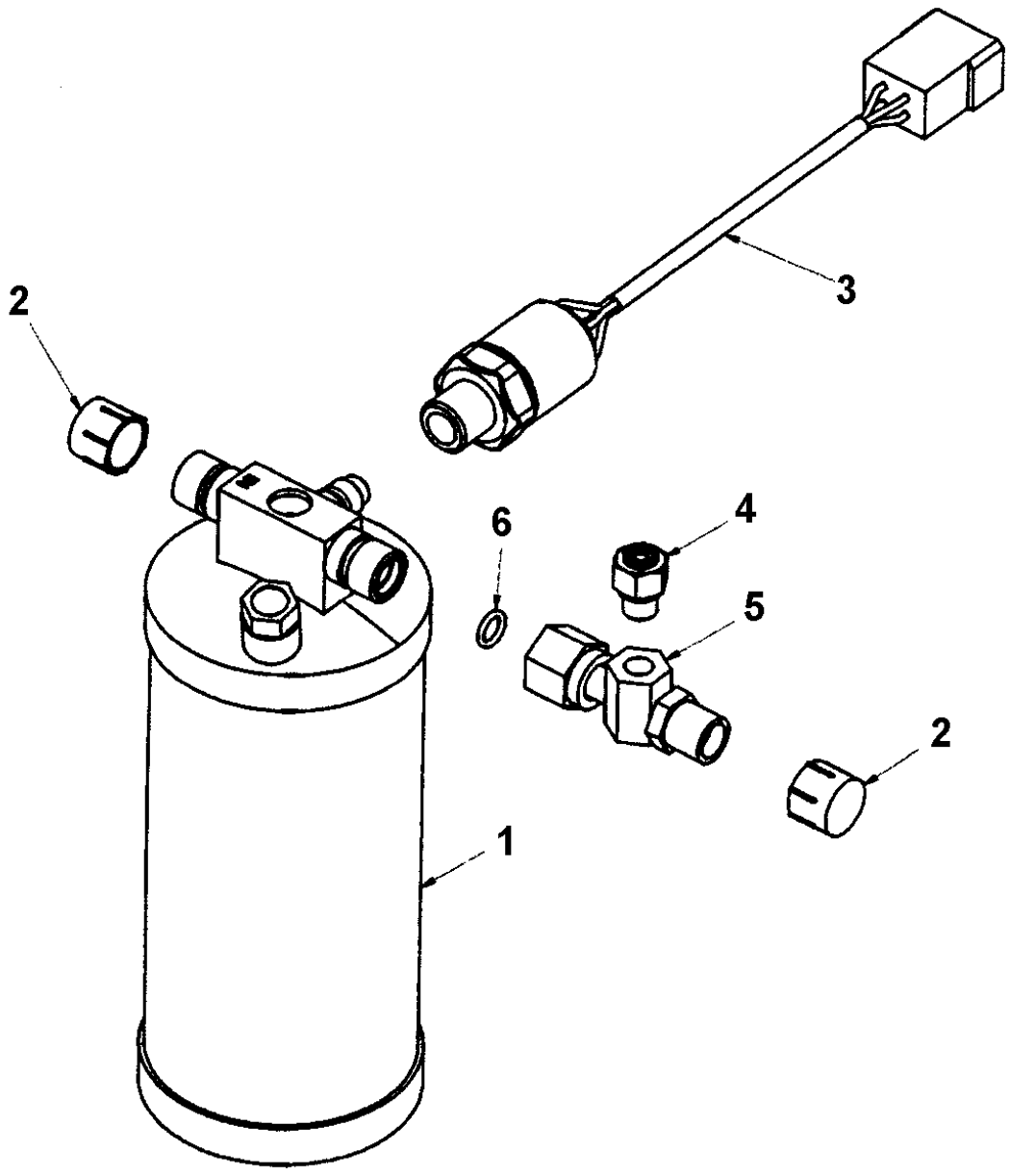

Item	Part No.	Name	Qty	L	SN INFO
1	4812113083	Drying filter	1		
2	-	Plastic cap	2		
3	4812113245	Pressure switch	1		
4	4812114245	Pressure relief valve	1		
5	4812114246	Adapter	1		
6	-	O-ring	1		

Air conditioning Condensor assembly

Item	Part No.	Name	Qty	L	SN INFO
1	4812113032	Condensor	1		
2	4812123800	Bracket	4		
3	4700586003	Lock nut M8	4		
4	4700500021	Screw, M8x20 mm 8.8 A2K	4		
5	4700904556	Steel plain washer 8,4x16x3,0	3		
6	4700904640	Washer, 8.4x 6x1.5 mm 300HV	2		
7	4700904229	Washer, 8.4x 6x1.5 mm 300HV	4		
8	4700500022	Screw	4		
9	4700904556	Steel plain washer 8,4x16x3,0	4		
X	-	Not to be used			

Air conditioning ACC module

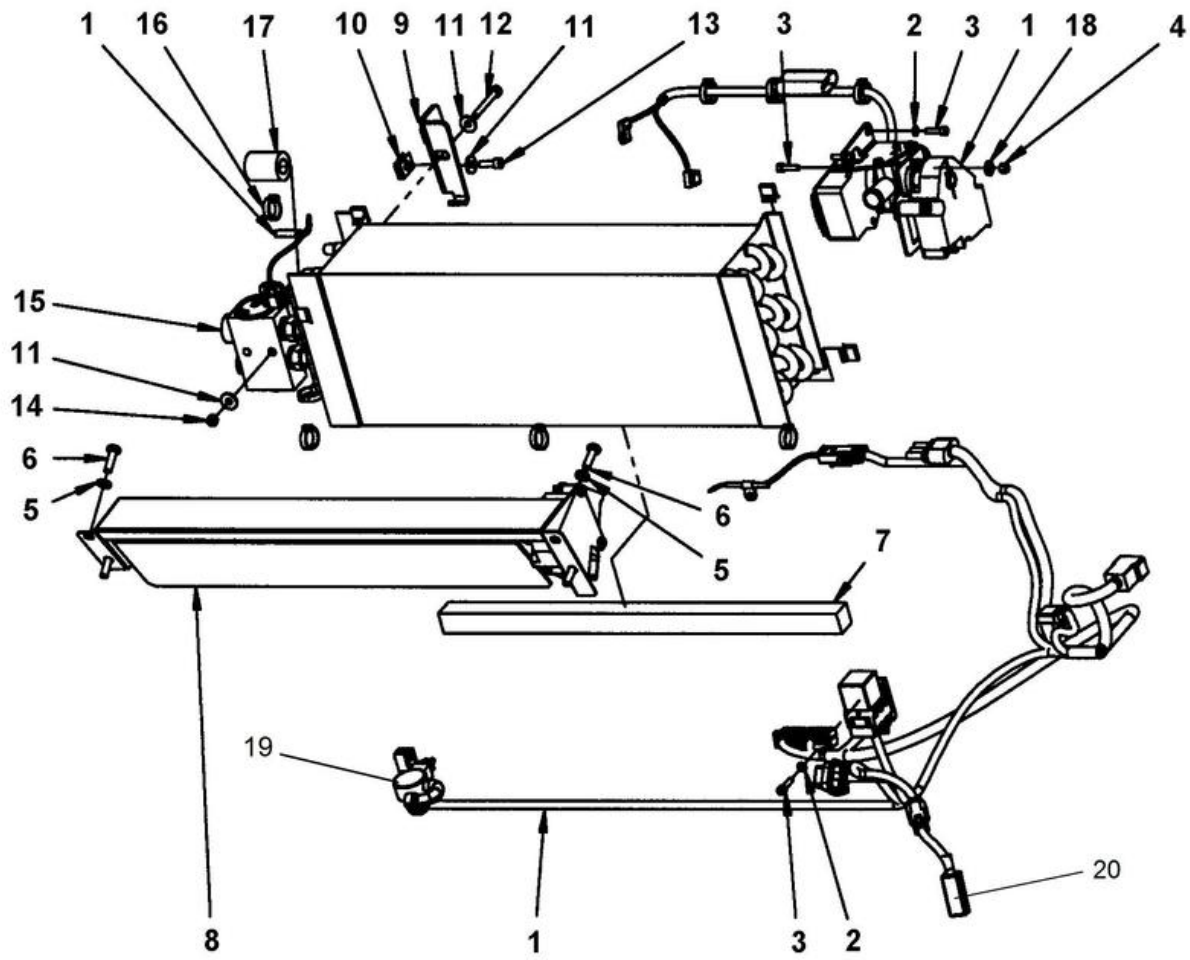

Item	Part No.	Name	Qty	L	SN INFO
1	4812113624	ACC kit	1		
2	4700904698	Plain washer	3		
3	4700508022	Hexagon socket head cap screw	4		
4	4700923976	Lock nut	1		
5	4700904228	Washer 6,4x12x1,5	4		
6	4700500040	Screw, M6x20 mm 8.8 A2K	4		
7	4700792718	Foam rubber	1		
8	4812115013	Air intake	1		
8.1	4812163278	Actuator 24V	1		
9	4812114311	Bracket	1		
10	4811000458	Speed nut	2		
11	4700601001	Washer	4		
12	4700508099	Screw	1		
13	4700926537	Screw	2		
14	4700570003	Hex. nut	1		
15	4812113623	Evaporator, cpl	1		
16	4700313041	Cable ties	10		
17	4812117349	Cork tape	1XL	A	
18	4700904299	Washer	1		
19	4700938624	Sensor, inner temp	1		
20	4812161298	Sensor, outer temp	1		

Comments for Page: ACC module

(L)OCAL REMARKS

A | en_US | L = 0.5m

Air conditioning 4812113624 ACC kit

Item	Part No.	Name	Qty	L	SN INFO
1	4812158289	Micro ECC	1		
1	4812160767	Knob	1		
2	4700383425	Electronic valve	1		
3	-	Bracket	1		
4	-	Panel	1		
5	4812158290	Blower control	1		
6	-	Clip	4		
7	4812158291	Cable harness	1		
8	4812158292	Deicing sensor	1		
9	-	Screw	2		

Air conditioning AC module

Item	Part No.	Name	Qty	L	SN INFO
1	4812113622	Ac kit	1		
1	4700950348	Switch, air condition	1		
1	4812158481	Switch, flapper	1		
1	4812158482	Thermostat	1		
2	4700904228	Washer 6,4x12x1,5	4		
3	4700500040	Screw, M6x20 mm 8.8 A2K	4		
4	4700792718	Foam rubber	1		
5	4812114311	Bracket	1		
6	4811000458	Speed nut	2		
7	4700601001	Washer	4		
8	4700508099	Screw	1		
9	4700926537	Screw	2		
10	4700570003	Hex. nut	1		
11	4812113623	Evaporator, cpl	1		
12	4812115013	Air intake	1		
12.1	4812163278	Actuator 24V	1		
13	4700313041	Cable ties	10		
14	4812117349	Cork tape	1XL	A	

Comments for Page: AC module

(L)OCAL REMARKS

A | en_US | L = 0.5m

Air conditioning 4812113623 Evaporator, cpl

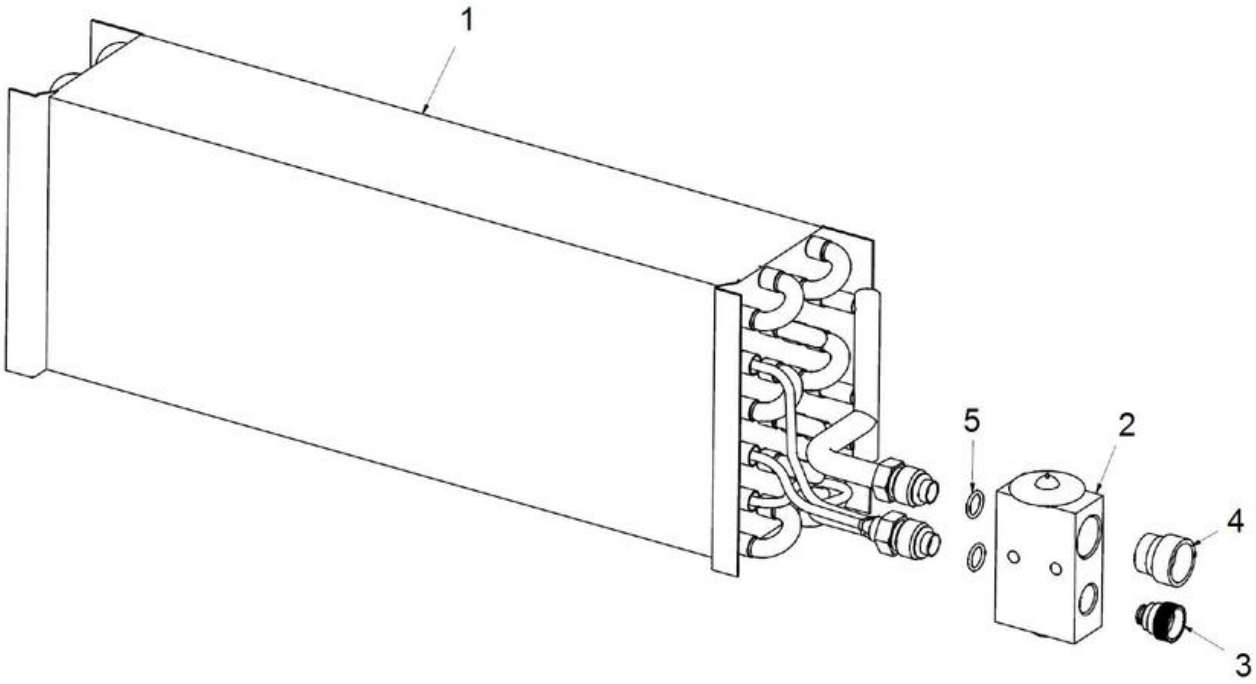

Item	Part No.	Name	Qty	L	SN INFO
1	4812160598	Evaporator coil	1		
2	4700384176	Expansion valve	1		
3	-	Connector plug	1		
4	-	Connector plug	1		
5	4700384878	O-ring Size 8	2		

Air conditioning Hose kit AC

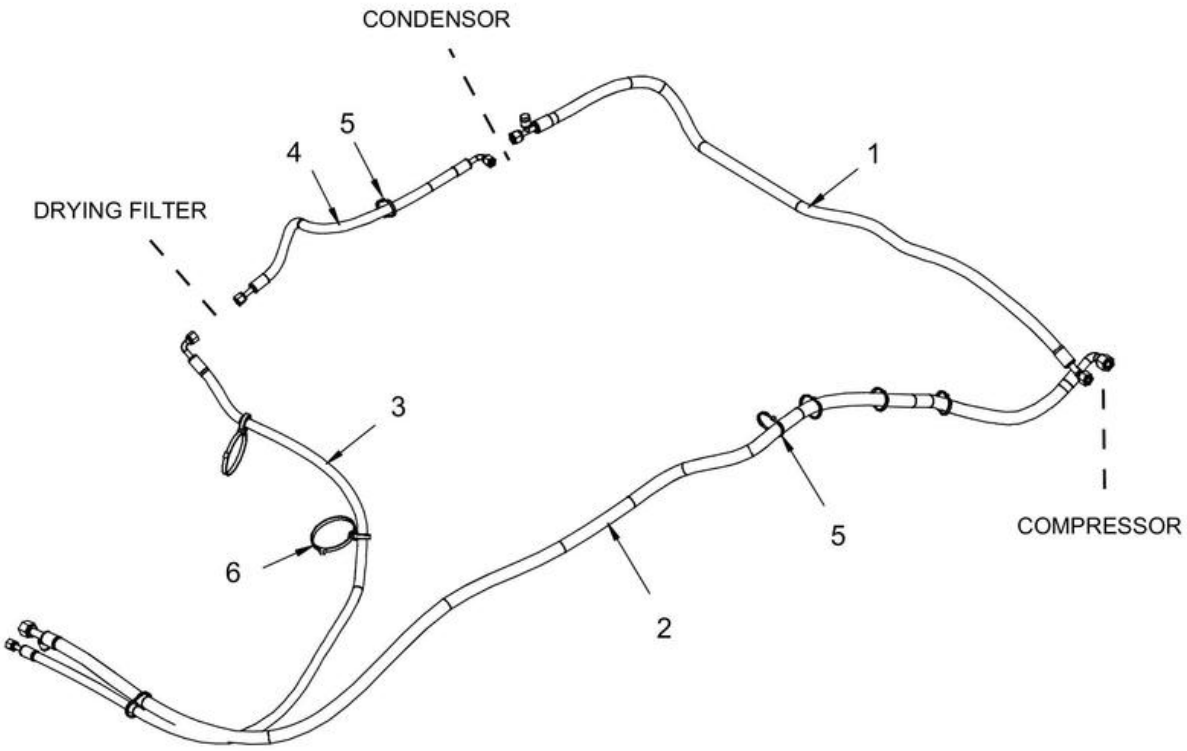

Item	Part No.	Name	Qty	L	SN INFO
1	4812123175	Refrigerant hose	1		
2	4812123176	Refrigerant hose	1		
3	4812113491	Refrigerant hose	1		
4	4812113492	Refrigerant hose	1		
5	4700313041	Cable ties	N		
6	4812117248	Cable tie with holder	2		

Air conditioning Compressor module

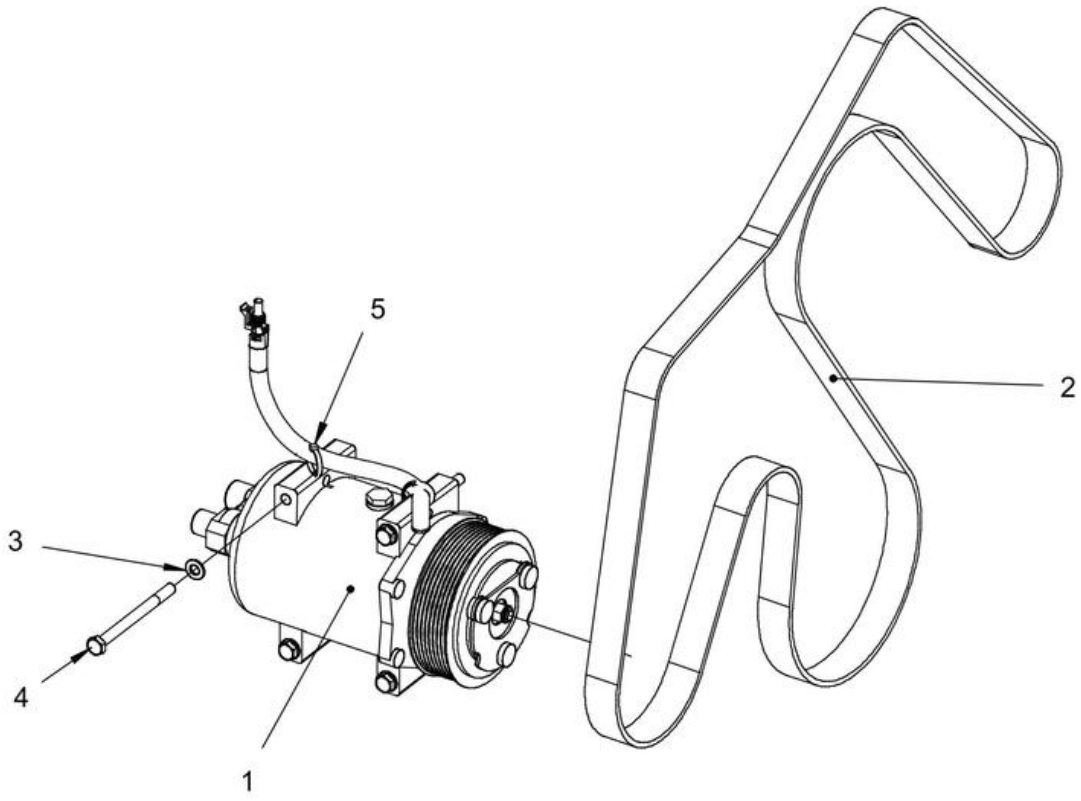

Item	Part No.	Name	Qty	L	SN INFO
1	4812121926	Compressor	1		
1	4700396035	Hose connection	1		
2	4812122380	Belt	1		
3	4700904229	Washer, 8.4x 6x1.5 mm 300HV	4		
4	4700500096	Screw	4		
5	4700925802	Cable ties L=142 mm	N		

Air conditioning Hose assy kit for AC

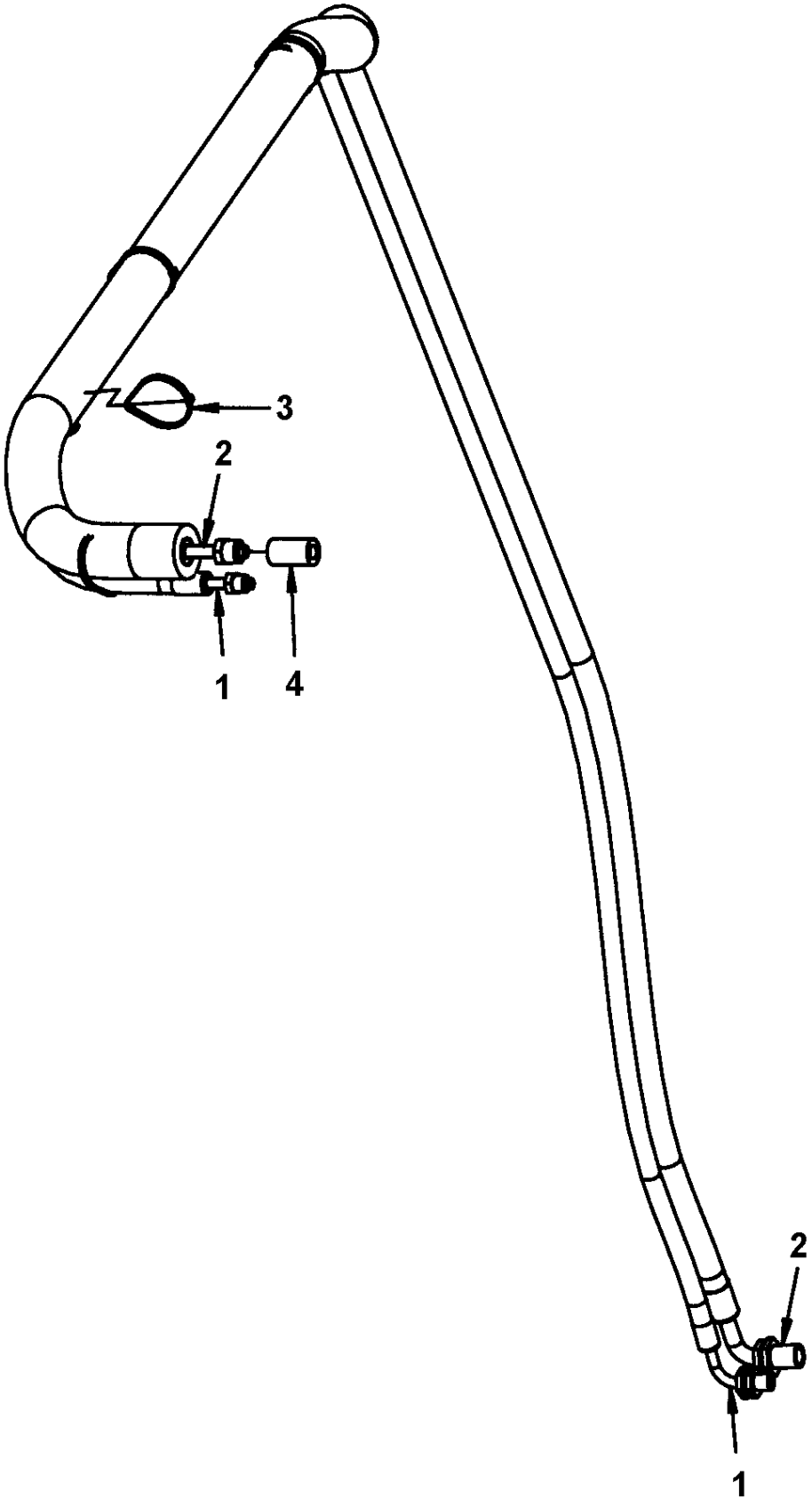

Item	Part No.	Name	Qty	L	SN INFO
1	4812114931	Refrigerant hose	1		
2	4812114932	Refrigerant hose	1		
3	4700792609	Cable ties	7		
4	4812117349	Cork tape	1XL	A	

Comments for Page: Hose assy kit for AC

(L)OCAL REMARKS

A | en_US | L = 0.2m

Level sensor module, option Level sensor module, option

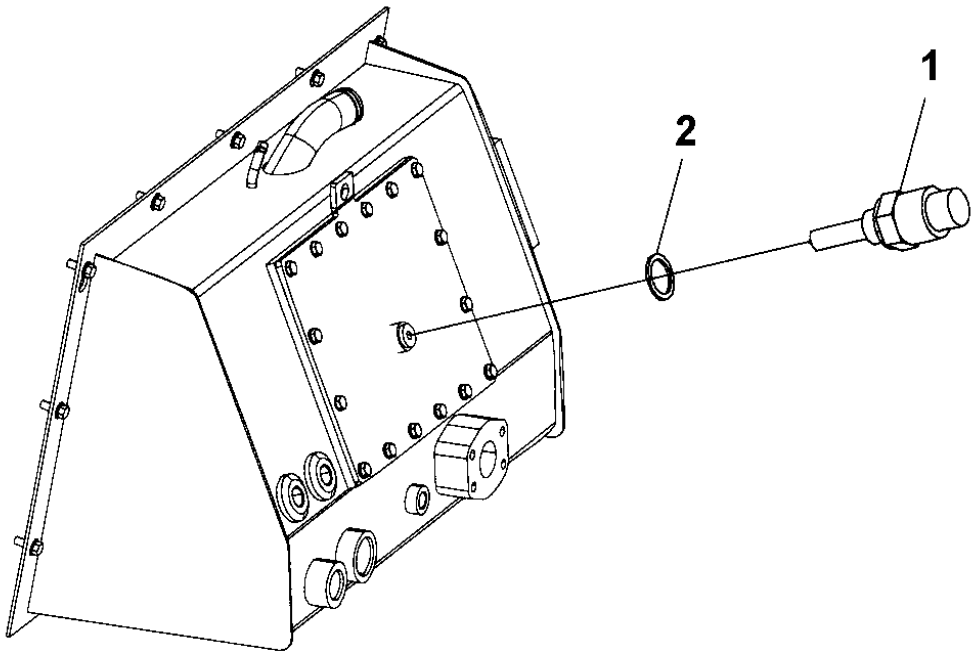

Item	Part No.	Name	Qty	L	SN INFO
1	4812112423	Level sensor	1		
2	4700330331	Washer 18,2x23,9x1,5	1		

SMV-sign SMV-sign

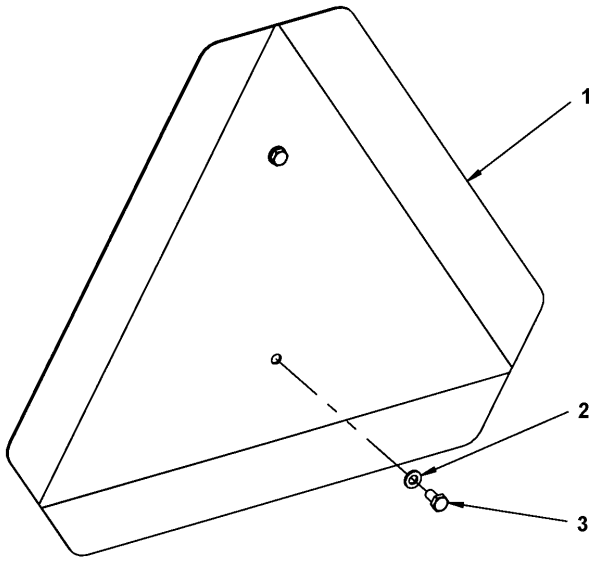

Item	Part No.	Name	Qty	L	SN INFO
1	4700476019	SMV-sign	1		
2	4700904228	Washer 6,4x12x1,5	2		
3	4700500012	Hex. screw	2		

Lunch box Lunch box

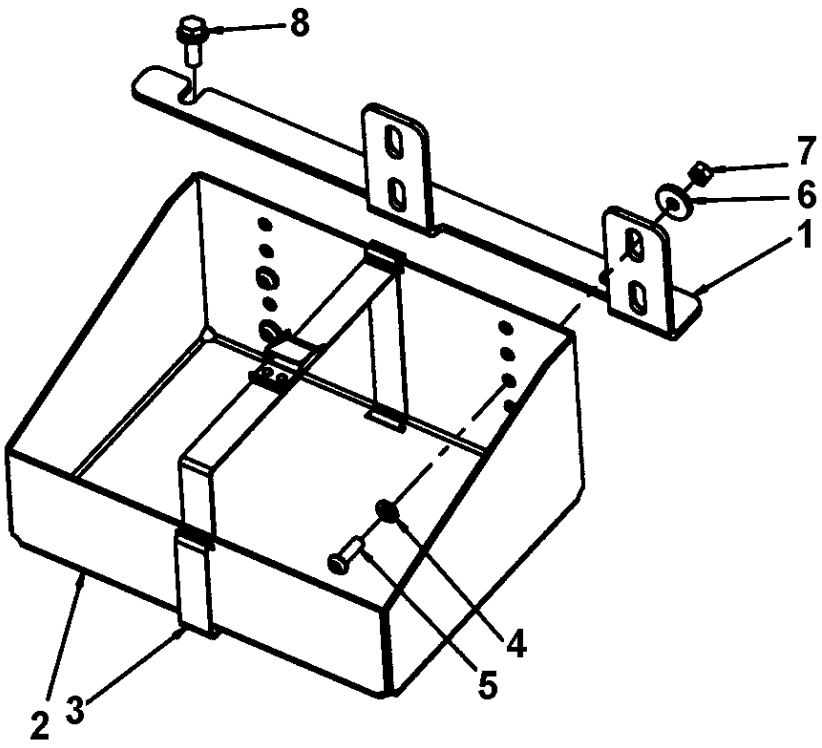

Item	Part No.	Name	Qty	L	SN INFO
1	4812118893	Bracket	1		
2	4700377913	Box	1		
3	4700287643	Metal strapping	1		
4	4700904229	Washer, 8.4x 6x1.5 mm 300HV	4		
5	4700904654	Screw, M8 x 25 mm A2-70	4		
6	4700904734	Washer, 8.4x26x4 mm 300 HV	4		
7	4700570005	Hexagon nut	4		
8	4700500509	Screw, M10x25, 8.8	2		

Options Dyn@lyzer

Item	Part No.	Name	Qty	L	SN INFO
1	4812123488	Computer	1		
2	4812123489	Holder	1		
3	4812123728	Arm	1		
4	4812123727	Ball joint	1		
5	4812123747	Bracket	1		
6	4700904229	Washer, 8.4x 6x1.5 mm 300HV	2		
7	4700500026	Screw M8-1,25x60 mm 8.8	2		
8	4700500019	Hexagon screw	2		
9	4812123524	Wiring harness	1		
10	4700901226	Fuse 7.5A Brown	1		
11	4700792154	Tapping screw ST	4		
12	4812123490	Gateway	1		
13	4700541702	Screw M6x12	4		
14	4812123471	Bracket	1		
15	4812124090	Carrying case	1		
16	4812124091	Rubber insert	1		
17	4812123523	Wiring harness	1		
18	4812123681	Ground cable	1		
19	4812123533	Wiring harness	1		
20	4812123525	Wiring harness	1		
21	4812121818	Bracket	1		
22	4700513016	Hexagon socket countersunk screw M16	1		
23	4812123534	Thread insert	1		
24	4812113160	Bracket	1		
25	4812123491	Antenna	1		
26	4812123699	Wiring harness	1		
27	4700901226	Fuse 7.5A Brown	1		

Options Compaction meter (DCM)

Item	Part No.	Name	Qty	L	SN INFO
1	4812123038	Plate	1		
2	4700904231	Washer, 13x24x2 mm 300 HV	2		
3	4700500051	Hex. screw	2		
4	4700923876	Clamp	1		
5	4812122777	DCM unit	1		
6	4700606003	Washer	4		
7	4812123171	Hexagon socket head cap screw	4		
8	4700904228	Washer 6,4x12x1,5	2		
9	4700500079	Screw M6-1x50 8,8	2		
10	4700923859	Cover plate	1		
11	4700500079	Screw M6-1x50 8,8	2		
12	4700904228	Washer 6,4x12x1,5	2		
13	4700791454	Cover plate	1		
14	4700791453	Pipe clamp block	1		
15	4700500035	Hexagon screw, M12x20H	2		
16	4700904231	Washer, 13x24x2 mm 300 HV	2		
17	4812116181	Bracket	1		
18	4700792441	Cable tie with holder	1		
19	4700313102	Cable ties	1		
20	4812122778	Power supply	1		
21	4700928200	Hexagon socket countersunk screw	4		
22	4700792210	Screw torx	2		
23	4700923976	Lock nut	4		
24	4812122780	Bracket	1		
25	4812116367	Cable entry frame and inserts	1		

Options Dyn@Link module

Item	Part No.	Name	Qty	L	SN INFO
1		FleetLink Advanced			
2	4700901225	Fuse 5A Tan	1		
3	4812124256	Wiring harness	1		
4	4700792609	Cable ties	2		
5	4812013040	GPS module, V2	1		
6	4700792210	Screw torx	2		
7	4812124199	Bracket	1		
8		FleetLink			
9	4700901225	Fuse 5A Tan	1		
10	4812124256	Wiring harness	1		
11	4700792609	Cable ties	2		
12	4812013038	GPS module	1		
13	4700792210	Screw torx	2		
14	4812124199	Bracket	1		

Options 4812013038 GPS module

Item	Part No.	Name	Qty	L	SN INFO
1	4812013160	Socket shell	1		
2	4812013161	Male contact	3		

Appendix B:Parts Index

-- 220, 222
0248998073 252
0570702503 188
0686901038 48
4700116041 . . . . . 22, 92, 96
4700150008 146
4700151023 . . . . . 46, 50
4700160043 180
4700160080 . . . . . 118, 136
4700160105 . . . . . 22, 96
4700160132 48
4700160188 96
4700160191 188
4700160234 216
4700160279 168
4700160372 48
4700162004 114
4700162017 . . . . . 90, 92, 94
4700162024 96
4700162027 . . . . . 90, 92, 94
4700167023 . . . . . 22, 92, 96
4700202028 . . . . . 306, 306, 306, 306, 306, 306, 332, 362
4700202042 144
4700202057 . . . . . 50, 144
4700205112 . . . . . 332, 334, 334, 368, 368
4700230384 116
4700232039 188
4700232041 30
4700232118 188
4700232160 130
4700233304 188
4700234582 116
4700272372 404
4700272373 404
4700287295 . . . . . 138, 196, 232
4700287643 442
4700288129 . . . . . 112, 112
4700313001 . . . . . 118, 122, 188
4700313002 . . . . . 122, 136
4700313003 . . . . . 116, 136, 368
4700313004 . . . . . 114, 332, 334
4700313006 130
4700313009 . . . . . 114, 188
4700313010 114
4700313022 . . . . . 114, 418
4700313023 328
4700313033 126
4700313041 . 72, 122, 136, 138, 252, 270, 272, 284, 296, 334, 340, 368, 390, 424, 428, 432
4700313068 270
4700313102 . . . . . 118, 118, 446
4700313105 108
4700330170 122
4700330171 122
4700330331 . . . . . 130, 188, 438
4700340862 88
4700343318 . . . . . 92, 96
4700343744 . . . . . 90, 92, 94
4700343748 188
4700349715 88
4700350009 . . . . . 374, 386
4700355608 . . . . . 50, 244
4700355704 100
4700355797 278
4700355983 404
4700357138 . . . . . 10, 12, 16, 18, 188
4700358254 314
4700358881 . . . . . 28, 402
4700359043 378
4700359125 378
4700359819 378
4700359916 374
4700359919 374
4700359920 374
4700359989 106
4700359998 . . . . . 302, 318
4700370234 384
4700372174 332
4700372672 374
4700372696 384
4700372697 384
4700372772 100
4700372964 374
4700372965 374
4700374799 66
4700374854 68
4700377507 338
4700377508 338
4700377518 384
4700377744 140
4700377913 442
4700379718 374
4700379728 378
4700379992 116
4700380018 . . . . . 90, 92, 94
4700380436 120
4700381413 118
4700381943 366
4700382383 70
4700382571 98
4700382572 98

4700382751 . . . . . 404, 404
4700383024 112
4700383425 426
4700383705 314
4700383844 44
4700384114 . . . . . 74, 74, 96
4700384121 . . . . . 74, 86
4700384176 430
4700384584 314
4700384878 430
4700385599 390
4700386966 . . . . . 110, 110
4700387545 402
4700387638 368
4700388449 404
4700388737 390
4700389857 . . . . . 50, 144
4700390365 54
4700390561 384
4700390589 148
4700390591 148
4700390860 254
4700390896 . . . . . 20, 90, 92, 94
4700390900 404
4700390926 188
4700390963 384
4700391163 . . . . . 374, 376
4700391299 . . . . . 112, 112, 112
4700391396 390
4700392075 112
4700392321 290
4700392450 272
4700392451 272
4700392717 392
4700392719 392
4700392810 110
4700392839 374
4700392840 374
4700392930 390
4700392965 388
4700393094 392
4700393525 . . . . . 302, 318
4700393959 404
4700394679 108
4700394686 . . . . . 6, 8, 10, 12, 16, 18, 108
4700394687 . . . . . 10, 12, 16, 18, 108
4700394806 146
4700395022 108
4700395352 270
4700395447 374
4700395785 . . . . . 126, 390
4700395816 . . . . . 100, 346
4700395841 338
4700395842 338
4700395843 338
4700396035 434
4700396601 . . . . . 296, 300
4700396635 244
4700396657 196
4700396662 390
4700396670 402
4700396839 54
4700475064 146
4700476019 440
4700500003 136
4700500004 . . . . . 308, 346, 360
4700500006 282
4700500009 126
4700500010 280
4700500012 . . . . . 264, 332, 336, 356, 440
4700500013 . . . . . 30, 188, 254, 258, 260, 328
4700500015 . . . . . 132, 254, 296
4700500019 . . . . . 132, 188, 202, 246, 250, 252, 444
4700500021 104, 108, 120, 124, 140, 146, 198, 202, 270, 284, 374, 388, 422
4700500022 . . . . . 68, 140, 168, 188, 292, 366, 380, 422
4700500024 124
4700500026 444
4700500027 . . . . . 192, 266
4700500028 . . . . . 30, 30, 48, 132, 168, 200, 382, 386
4700500029 . . . . . 132, 146, 196, 386
4700500030 . . . . . 50, 52, 66, 104, 122, 168, 168
4700500031 . . . . . 50, 72, 130
4700500032 64
4700500033 132
4700500035 446
4700500037 . . . . . 112, 168, 216
4700500040 . . . . . 136, 246, 250, 424, 428
4700500041 252
4700500043 174
4700500046 . . . . . 238, 242, 248
4700500048 . . . . . 228, 288, 414
4700500051 . . . . . 76, 86, 446
4700500053 50, 52, 74, 86, 108, 112, 134, 138, 188, 196, 198, 232, 384, 384
4700500056 . . . . . 106, 134, 302, 318
4700500060 390
4700500067 230
4700500075 . . . . . 60, 68, 246, 250, 388
4700500079 . . . . . 332, 446, 446
4700500082 . . . . . 74, 86, 90, 92, 94, 96, 106
4700500090 . . . . . 202, 204

4700500091 174
4700500096 434
4700500102 . . . . . 34, 36
4700500107 106
4700500111 106
4700500115 . . . . . 138, 392
4700500123 42
4700500133 96
4700500161 . . . . . 30, 38, 50, 174
4700500163 . . . . . 90, 92, 94
4700500189 290
4700500194 208
4700500198 106
4700500207 98
4700500213 204
4700500239 50
4700500270 44
4700500284 30
4700500286 98
4700500287 86
4700500502 62
4700500503 118
4700500505 . . . . . 114, 116, 186, 188, 390
4700500509 . . . . . 64, 442
4700502036 100
4700508001 300
4700508002 96
4700508017 390
4700508019 . . . . . 104, 246, 250, 366
4700508022 . . . . . 108, 424
4700508023 252
4700508025 . . . . . 122, 384
4700508027 386
4700508028 54
4700508029 374
4700508048 . . . . . 186, 230
4700508063 188
4700508080 216
4700508092 382
4700508096 100
4700508099 . . . . . 424, 428
4700513012 . . . . . 50, 126, 144
4700513016 444
4700513017 54
4700516040 374
4700541702 444
4700570003 . . . . . 424, 428
4700570004 390
4700570005 . . 50, 68, 132, 146, 204, 242, 248, 252, 284, 324, 418, 442
4700570006 . . . . . 50, 52, 146, 266
4700570007 68
4700570015 98
4700570101 . . . . . 242, 248, 252
4700573008 378
4700586001 . . . . . 280, 390, 402
4700586002 . . . . . 62, 246, 250, 386, 388, 390, 392
4700586003 . . . . . 60, 136, 138, 244, 246, 250, 284, 366, 374, 392, 422
4700586018 . . . . . 38, 64, 286
4700586021 106
4700586022 98
4700588176 . . . . . 404, 404
4700601001 . . . . . 280, 282, 308, 346, 360, 424, 428
4700601003 . . . . . 306, 306, 328, 330
4700603001 122
4700606003 446
4700606004 392
4700615050 68
4700615061 64
4700624005 . . . . . 50, 404, 406
4700630003 62
4700630008 378
4700747282 122
4700791120 190
4700791156 . . . . . 90, 92, 94
4700791171 356
4700791172 310
4700791175 148
4700791176 148
4700791182 . . . . . 324, 324, 328
4700791185 342
4700791212 . . . . . 202, 204
4700791213 208
4700791231 . . . . . 180, 192
4700791267 118
4700791273 404
4700791318 204
4700791343 230
4700791344 100
4700791396 30
4700791401 178
4700791405 188
4700791409 192
4700791414 178
4700791450 . . . . . 242, 248
4700791453 446
4700791454 446
4700791460 112
4700791475 332
4700791518 . . . . . 242, 248
4700791524 . . . . . 374, 388
4700791535 168

4700791572 . . . . . 394, 396, 398, 400
4700791588 390
4700791614 140
4700791642 108
4700791666 332
4700791711 206
4700791712 206
4700791723 390
4700791733 390
4700791739 390
4700791743 192
4700791799 232
4700791805 206
4700791806 128
4700791807 . . . . . 196, 232
4700791828 174
4700791838 174
4700791840 174
4700791843 192
4700791860 168
4700791966 342
4700791970 370
4700792035 278
4700792068 188
4700792083 . . . . . 144, 238
4700792103 312
4700792119 . . . . . 62, 110, 336
4700792154 444
4700792210 . . . . . 256, 446, 448, 448
4700792261 . . . . . 148, 148
4700792276 188
4700792295 . . . . . 118, 188
4700792299 192
4700792309 . . . . . 246, 250, 254, 342
4700792310 . . . . . 246, 250
4700792322 114
4700792336 168
4700792339 . . . . . 202, 204, 228
4700792354 278
4700792394 48
4700792397 284
4700792398 274
4700792410 290
4700792414 390
4700792422 . . . . . 252, 270
4700792441 122, 132, 242, 246, 248, 250, 252, 254, 270, 274, 334, 340, 398, 400, 446
4700792451 200
4700792454 200
4700792465 216
4700792500 . . . . . 136, 138, 232
4700792502 116
4700792505 342
4700792516 48
4700792519 270
4700792520 270
4700792527 . . . . . 382, 394, 396, 398, 400
4700792536 314
4700792537 274
4700792539 374
4700792586 232
4700792589 314
4700792601 146
4700792609 . . . . . 272, 436, 448, 448
4700792667 . . . . . 138, 284
4700792678 378
4700792686 136
4700792715 340
4700792718 . . . . . 60, 60, 424, 428
4700792769 . . . . . 242, 248
4700792772 404
4700792776 262
4700792796 . . . . . 60, 60, 60, 60
4700792809 188
4700801631 44
4700813423 252
4700813791 108
4700828112 212
4700828142 210
4700900229 208
4700900519 46
4700900775 . . . . . 90, 92, 94
4700900776 . . . . . 20, 90, 90, 92, 92, 94, 94
4700900957 158
4700900994 238
4700901145 . . . . . 302, 318
4700901157 216
4700901218 148
4700901224 26
4700901225 . . . . . 26, 252, 254, 448, 448
4700901226 . . . . . 26, 270, 444, 444
4700901227 . . . . . 26, 252, 254, 256, 270, 342
4700901228 . . . . . 26, 252, 342
4700901229 26
4700901230 26
4700901443 148
4700901444 148
4700901639 298
4700901727 212
4700901832 . . . . . 60, 144, 186
4700901987 . . . . . 156, 166
4700902041 108

4700902166 30
4700902282 . . . . . 302, 318
4700902284 . . . . . 144, 282
4700902285 . . . . . 54, 60
4700902286 . 60, 100, 114, 128, 140, 168, 196, 206, 232, 290, 384, 384
4700902379 312
4700902520 374
4700902783 224
4700902804 390
4700902866 . . . . . .28, 28, 60, 62
4700902919 48
4700902928 . . . . . 182, 210
4700902930 182
4700902944 . . . . . 182, 182
4700902996 182
4700903190 96
4700903290 . . . . . 30, 302, 318
4700903386 292
4700903422 404
4700903423 . . . . . 112, 408
4700903424 408
4700903425 . . . . . 314, 404
4700903456 232
4700903459 404
4700903586 . . . . . 50, 108
4700903590 344
4700903633 318
4700903640 246
4700903641 . . . . . 28, 246
4700903662 392
4700903670 332
4700903703 . . . . . 114, 114, 186, 186
4700903714 118
4700903741 . . . . . 26, 252, 254
4700903917 374
4700903918 374
4700903923 60
4700903985 . . . . . 148, 404
4700904004 . . . . . .168, 168, 216
4700904005 . . . . . 180, 208
4700904037 . . . . . 26, 242, 248, 268
4700904038 26
4700904039 . . . . . 26, 242, 248
4700904040 26
4700904041 26
4700904042 26
4700904206 . . . . . 126, 356
4700904214 . . . . . 48, 374
4700904228 . . 30, 96, 132, 136, 188, 246, 250, 254, 258, 260, 264, 296, 324, 328, 336, 340, 356, 386, 388, 390, 392, 424, 428, 440, 446, 446
4700904229 50, 52, 104, 108, 124, 132, 138, 168, 186, 188, 196, 198, 202, 204, 232, 242, 244, 246, 248, 250, 252, 270, 284, 290, 292, 332, 332, 366, 374, 378, 380, 384, 386, 388, 418, 422, 434, 442, 444
4700904230 . 30, 38, 64, 66, 72, 122, 130, 146, 168, 174, 192, 196, 200, 228, 266, 286, 288, 382, 414
4700904231 . 48, 68, 74, 74, 86, 86, 96, 106, 112, 112, 132, 168, 242, 248, 446, 446
4700904232 . . . . . 42, 74, 86, 90, 92, 94
4700904233 . . . . . 46, 74, 86, 98, 148, 302, 318
4700904241 132
4700904260 74
4700904280 148
4700904281 . . . . . 126, 136, 252, 280, 390, 402
4700904294 26
4700904299 424
4700904311 258
4700904312 254
4700904346 188
4700904353 148
4700904388 406
4700904389 . . . . . 406, 408
4700904390 406
4700904391 . . . . . 406, 408
4700904496 208
4700904504 342
4700904556 74, 86, 108, 112, 120, 132, 138, 140, 188, 246, 250, 384, 422, 422
4700904557 . . . . . 50, 64, 66, 122, 132, 168, 174, 204, 248, 310, 386
4700904558 . . . . . 34, 36, 40, 44, 106
4700904563 328
4700904567 48
4700904570 262
4700904575 108
4700904584 216
4700904619 402
4700904623 232
4700904637 . . . . . 100, 168, 168, 216
4700904638 . . . . . .180, 188, 208
4700904640 60, 68, 112, 124, 136, 138, 140, 198, 202, 204, 290, 374, 378, 422
4700904650 390
4700904653 . . . . . 282, 402
4700904654 442
4700904698 . . . . . .60, 108, 254, 258, 292, 390, 424
4700904703 . . . . . .68, 208, 216, 394, 396, 398, 400
4700904734 442
4700904735 . . . . . 60, 276
4700904755 60
4700904774 . . . . . 186, 230
4700904793 178

4700904835 404
4700904870 . . . . . 404, 404
4700904872 . . . . . 196, 232
4700904895 404
4700904911 260
4700904985 . . . . . 118, 118, 118, 118, 122, 122, 188
4700904986 122
4700904988 130
4700908229 . . . . . 404, 404
4700908399 108
4700908426 182
4700908432 210
4700908440 . . . . . 182, 184
4700908505 . . . . . 306, 344
4700908506 344
4700908507 344
4700908561 328
4700908564 328
4700908774 210
4700909129 312
4700909243 212
4700909525 182
4700909535 384
4700909536 384
4700909609 . . . . . 150, 158, 164
4700909616 158
4700909626 158
4700909630 154
4700910162 192
4700921050 114
4700921078 296
4700921080 272
4700921161 228
4700921723 . . . . . 54, 364
4700923008 . . . . . 186, 188
4700923087 . . . . . 182, 182
4700923269 132
4700923341 152
4700923384 . . . . . 180, 208
4700923859 446
4700923876 446
4700923976 . . . . . 60, 292, 424, 446
4700925208 . . . . . 30, 46
4700925519 112
4700925802 434
4700926215 50
4700926537 . . . . . 252, 424, 428
4700926781 . . . . . 156, 166
4700926847 158
4700926911 128
4700927233 146
4700927278 . . . . . 224, 224
4700927410 . . . . . 302, 318
4700927411 30
4700928200 446
4700928347 . . . . . 394, 396, 398, 400
4700928381 . . . . . 336, 336
4700928441 104
4700928467 254
4700928784 276
4700928791 . . . . . 180, 208
4700929185 102
4700929191 60
4700929226 . . . . . 168, 168, 216
4700929409 86
4700929447 . . . . . 22, 92, 96
4700929455 278
4700929587 . . . . . 312, 332
4700929612 166
4700929617 150
4700929648 154
4700929675 160
4700929712 154
4700935524 182
4700935525 182
4700936035 152
4700936283 384
4700936313 218
4700936898 228
4700937182 220
4700937185 220
4700937186 220
4700937189 220
4700937620 382
4700937621 382
4700937892 382
4700938296 . . . . . 150, 164
4700938622 338
4700938624 424
4700938983 150
4700938984 . . . . . 150, 164
4700938988 152
4700938989 152
4700938991 152
4700938993 152
4700939006 . . . . . 156, 156
4700939009 166
4700939010 . . . . . 156, 166
4700939014 166
4700939015 156
4700939016 . . . . . 156, 166
4700939017 166

4700939019 156
4700939267 156
4700939270 156
4700939271 156
4700939272 156
4700939273 . . . . . 156, 166
4700939274 156
4700939348 . . . . . 150, 156, 166
4700939350 . . . . . 150, 156, 164, 166
4700939693 332
4700939826 390
4700940451 . . . . . 28, 390
4700940533 102
4700945145 . . . . . 6, 8, 10, 12, 16, 18
4700945622 384
4700945632 376
4700945633 376
4700945634 376
4700945635 376
4700945636 376
4700945637 376
4700945657 20
4700945660 384
4700945661 384
4700947679 378
4700947680 . . . . . 306, 330
4700947689 112
4700947698 74
4700947699 74
4700947706 74
4700950348 . . . . . 338, 428
4700950556 154
4700989151 188
4811000074 236
4811000077 284
4811000086 178
4811000163 270
4811000176 . . . . . 242, 248
4811000178 242
4811000197 186
4811000200 200
4811000202 188
4811000206 232
4811000207 232
4811000212 206
4811000229 178
4811000265 370
4811000268 370
4811000269 370
4811000310 178
4811000344 406
4811000345 404
4811000417 216
4811000429 270
4811000458 . . . . . 336, 424, 428
4811000462 72
4811000481 . . . . . 132, 134
4812007588 410
4812007591 410
4812013038 448
4812013040 448
4812013160 450
4812013161 450
4812030096 . . . . . 12, 18, 88
4812046522 210
4812046524 212
4812046535 212
4812101815 102
4812101816 102
4812104409 212
4812104465 82
4812104466 82
4812104780 212
4812104840 212
4812105757 152
4812105758 152
4812105793 156
4812106330 212
4812108873 152
4812108874 152
4812108885 154
4812108886 154
4812110366 46
4812110367 366
4812110560 252
4812110572 40
4812110642 96
4812110644 . . . . . 74, 86
4812110768 112
4812110769 112
4812110884 270
4812110885 386
4812110886 390
4812110891 380
4812110901 390
4812110930 112
4812111092 38
4812111103 . . . . . 34, 38, 40
4812111122 94
4812111167 86
4812111216 388
4812111241 268

4812111248 274
4812111264 112
4812111268 296
4812111294 386
4812111311 418
4812111768 202
4812111770 202
4812111771 202
4812111780 390
4812111981 . . . . . 246, 250
4812112000 . . . . . 246, 250
4812112015 100
4812112017 256
4812112059 54
4812112062 296
4812112065 252
4812112066 252
4812112067 252
4812112070 252
4812112097 . . . . . 110, 110, 112, 114
4812112162 30
4812112198 . . . . . 74, 80
4812112227 296
4812112229 296
4812112231 296
4812112260 228
4812112262 . . . . . 4, 10, 12, 16, 18, 228
4812112268 . . . . . 304, 320, 358
4812112290 236
4812112304 168
4812112306 168
4812112325 284
4812112344 128
4812112355 100
4812112374 270
4812112393 148
4812112402 66
4812112403 62
4812112404 60
4812112405 70
4812112413 . . . . . 92, 96
4812112419 296
4812112423 438
4812112435 148
4812112455 . . . . . 90, 92
4812112460 290
4812112465 . . . . . 74, 86
4812112555 186
4812112556 188
4812112560 208
4812112561 208
4812112639 128
4812112647 128
4812112648 188
4812112655 126
4812112656 126
4812112736 72
4812112761 128
4812112774 290
4812112776 128
4812112777 128
4812112784 . . . . . 90, 92, 94
4812112793 270
4812112834 60
4812112843 62
4812112845 68
4812112846 68
4812112884 62
4812112916 270
4812112924 280
4812112950 72
4812112952 72
4812113032 422
4812113083 420
4812113117 270
4812113118 270
4812113140 270
4812113141 270
4812113160 444
4812113213 74
4812113214 74
4812113224 74
4812113245 420
4812113258 . . . . . 24, 96
4812113266 74
4812113281 74
4812113283 74
4812113314 50
4812113315 54
4812113340 148
4812113341 148
4812113478 386
4812113491 432
4812113492 432
4812113513 30
4812113569 168
4812113573 108
4812113576-121634 110
4812113607 30
4812113622 428
4812113623 . . . . . 424, 428
4812113624 424

4812113630 110
4812113633 230
4812113678 198
4812113679 198
4812113687 174
4812113699 74
4812113708 . . . . . 112, 112
4812113786 392
4812113820 112
4812113875 390
4812113878 112
4812113879 112
4812113885 30
4812113941 . . . . . 138, 196, 206
4812113963 168
4812113983 232
4812114108 174
4812114172 386
4812114194 370
4812114205 188
4812114212 122
4812114213 390
4812114214 390
4812114245 420
4812114246 420
4812114257 418
4812114311 . . . . . 424, 428
4812114318 . . . . . 68, 146
4812114340 96
4812114344 . . . . . 24, 96
4812114345 96
4812114346 96
4812114382 98
4812114396 106
4812114426 252
4812114465 112
4812114476 60
4812114488 60
4812114492 202
4812114516 206
4812114519 206
4812114563 . . . . . 308, 360
4812114564 . . . . . 308, 346, 360
4812114565 . . . . . 308, 346, 360
4812114566 . . . . . 308, 346, 360
4812114567 . . . . . 308, 336, 346, 348, 356, 360, 362
4812114568 . . . . . 304, 358
4812114569 310
4812114570 348
4812114571 348
4812114572 . . . . . 348, 362
4812114573 346
4812114574 346
4812114575 346
4812114576 346
4812114577 354
4812114578 354
4812114579 354
4812114580 354
4812114581 354
4812114582 356
4812114583 356
4812114584 356
4812114585 356
4812114586 322
4812114587 322
4812114588 322
4812114593 324
4812114598 328
4812114599 328
4812114600 328
4812114601 328
4812114602 328
4812114603 328
4812114604 328
4812114605 328
4812114606 328
4812114607 328
4812114608 328
4812114609 328
4812114610 328
4812114611 . . . . . 328, 328, 328, 328, 328
4812114612 328
4812114613 328
4812114619 254
4812114655 254
4812114656 270
4812114675 168
4812114677 168
4812114678 168
4812114679 168
4812114680 168
4812114720 286
4812114722 108
4812114724 108
4812114742 414
4812114777 86
4812114803 390
4812114813 126
4812114814 58
4812114828 62
4812114829 62

4812114830 62
4812114831 62
4812114833 38
4812114873 270
4812114913 128
4812114931 436
4812114932 436
4812114933 148
4812114934 148
4812114935 126
4812114949 126
4812114990 46
4812114991 48
4812114993 48
4812114995 48
4812114997 48
4812114999 48
4812115000 48
4812115010 68
4812115013 . . . . . 424, 428
4812115020 290
4812115022 64
4812115051 . . . . . 174, 208
4812115063 236
4812115064 . . . . . 186, 236
4812115065 236
4812115162 328
4812115164 . . . . . 306, 330, 332
4812115165 330
4812115166 306
4812115167 334
4812115168 334
4812115169 334
4812115170 . . . . . 306, 330
4812115171 . . . . . 306, 330
4812115172 334
4812115175 336
4812115177 336
4812115178 336
4812115179 336
4812115180 336
4812115181 340
4812115182 340
4812115183 340
4812115184 342
4812115185 342
4812115186 . . . . . 312, 332
4812115187 342
4812115188 352
4812115189 352
4812115190 352
4812115191 352
4812115192 364
4812115193 306
4812115194 306
4812115195 306
4812115196 306
4812115197 350
4812115198 350
4812115199 352
4812115200 324
4812115201 324
4812115202 322
4812115203 324
4812115204 324
4812115205 324
4812115206 324
4812115207 324
4812115208 324
4812115209 324
4812115210 324
4812115211 324
4812115212 324
4812115213 324
4812115214 324
4812115215 324
4812115216 324
4812115217 324
4812115218 324
4812115219 326
4812115220 326
4812115223 326
4812115224 352
4812115225 326
4812115226 326
4812115228 332
4812115229 332
4812115230 332
4812115231 64
4812115232 64
4812115233 64
4812115234 64
4812115350 178
4812115387 . . . . . 302, 318
4812115422 48
4812115423 48
4812115424 48
4812115425 48
4812115427 48
4812115467 48
4812115468 48
4812115508 44

4812115511 230
4812115673 40
4812115707 296
4812115767 266
4812115778 . . . . . 34, 38
4812115810 294
4812115902 122
4812115965 208
4812115998 . . . . . 242, 248
4812116029 . . . . . 74, 86
4812116107 114
4812116181 446
4812116183 74
4812116192 332
4812116193 332
4812116194 332
4812116195 332
4812116197 332
4812116198 332
4812116199 324
4812116201 332
4812116308 64
4812116346 292
4812116354 292
4812116357 382
4812116362 248
4812116367 . . . . . 292, 446
4812116587 292
4812116588 292
4812116617 44
4812116622 290
4812116625 188
4812116645 188
4812116651 146
4812116680 48
4812116781 216
4812116792 62
4812116793 62
4812116799 284
4812116821 . . . . . 46, 50
4812116834 126
4812116836 126
4812116857 168
4812116861 . . . . . 246, 250
4812116862 60
4812116867 . . . . . 302, 318
4812116877 250
4812116884 . . . . . 302, 318
4812116986 370
4812117048 50
4812117108 262
4812117149 264
4812117248 . . . . . 72, 108, 368, 432
4812117297 238
4812117324 206
4812117349 . . . . . 424, 428, 436
4812117379 118
4812117397 122
4812117445 186
4812117473 62
4812117481 362
4812117482 362
4812117490 390
4812117550 98
4812117602 110
4812117732 186
4812117789 122
4812117839 . . . . . 58, 58, 58, 58
4812117867 48
4812117915 168
4812117922 . . . . . 394, 398
4812117924 . . . . . 394, 396
4812117925 . . . . . 398, 400
4812117964 366
4812118062 44
4812118128 110
4812118154 242
4812118203 104
4812118275 126
4812118287 106
4812118312 388
4812118385 248
4812118432 106
4812118465 242
4812118467 . . . . . 242, 248
4812118494 112
4812118499 132
4812118525 60
4812118670 126
4812118697 390
4812118754 390
4812118814 . . . . . 16, 18, 90, 92, 94
4812118816 . . . . . 396, 400
4812118842 414
4812118849 200
4812118850 200
4812118853 72
4812118859 60
4812118862 60
4812118866 200
4812118867 200
4812118868 200

4812118869 200
4812118870 200
4812118893 442
4812118960 188
4812118961 188
4812118976 60
4812118989 62
4812118994 . . . . . 60, 62
4812119127 112
4812119227 390
4812119295 382
4812119306 370
4812119317 390
4812119327 370
4812119366 318
4812119367 318
4812119629 230
4812119788 378
4812119807 48
4812119809 48
4812120160 50
4812120204-3 120
4812120205 130
4812120255 330
4812120257 340
4812120269 . . . . . 336, 336
4812120334 282
4812120363 50
4812120376 120
4812120400 . . . . . 242, 248
4812120402 50
4812120414 48
4812120468 290
4812120469 290
4812120545 302
4812120560 50
4812120661 . . . . . 46, 50
4812120663 118
4812120672 252
4812120674 . . . . . 148, 148
4812120676 148
4812120681 48
4812120707 48
4812120727 60
4812120729 60
4812120730 60
4812120790 282
4812120840 . . . . . 192, 194
4812120842 168
4812120857 132
4812120858 132
4812121000 318
4812121201 72
4812121209 . . . . . 20, 90, 92, 94
4812121282 48
4812121331 388
4812121368 60
4812121506 96
4812121507 96
4812121512 74
4812121604 136
4812121622 252
4812121626 114
4812121665 48
4812121671 . . . . . 90, 92, 94
4812121697 138
4812121732 106
4812121733 106
4812121747 136
4812121764 198
4812121795 132
4812121796 132
4812121797 132
4812121798 132
4812121808 138
4812121815 110
4812121818 444
4812121848 288
4812121862 50
4812121866 110
4812121872 106
4812121882 30
4812121914 . . . . . 54, 144
4812121925 114
4812121926 434
4812121940 230
4812121946 . . . . . 238, 240
4812121971 204
4812121972 204
4812121973 204
4812121974 204
4812121993 128
4812122012 186
4812122014 196
4812122015 196
4812122027 132
4812122028 132
4812122030 132
4812122047 120
4812122106 114
4812122107 114
4812122144 138

4812122146 136
4812122151 110
4812122162 178
4812122163 186
4812122166 186
4812122168 186
4812122169 206
4812122170 206
4812122171 234
4812122172 234
4812122173 234
4812122174 . . . . . 186, 234
4812122175 234
4812122176 186
4812122177 200
4812122178 200
4812122188 114
4812122189 114
4812122202 100
4812122211 100
4812122213 136
4812122243 . . . . . 116, 136, 136, 136, 136, 136
4812122244 . . . . . 136, 136
4812122326 140
4812122327 140
4812122328 140
4812122380 434
4812122396 128
4812122500 252
4812122556 112
4812122611 288
4812122624 132
4812122654 . . . . . 50, 52
4812122708 88
4812122720 126
4812122765 104
4812122766 104
4812122767 104
4812122768 104
4812122777 446
4812122778 446
4812122780 446
4812122784 208
4812122786 . . . . . 216, 218
4812122791 126
4812122861 144
4812122932 180
4812122933 144
4812122942 132
4812122951 120
4812122952 124
4812122953 124
4812123003 100
4812123007 96
4812123010 110
4812123035 244
4812123038 . . . . . 74, 86, 446
4812123060 298
4812123157 136
4812123171 446
4812123175 432
4812123176 432
4812123406 168
4812123471 444
4812123488 444
4812123489 444
4812123490 444
4812123491 444
4812123523 444
4812123524 444
4812123525 444
4812123533 444
4812123534 444
4812123600 132
4812123601 248
4812123602 296
4812123681 444
4812123690 108
4812123699 444
4812123727 444
4812123728 444
4812123747 444
4812123793 64
4812123800 422
4812123815 132
4812123816 132
4812123817 132
4812123818 132
4812123819 132
4812123820 132
4812123821 132
4812123822 132
4812123901 296
4812124003 134
4812124006 48
4812124012 48
4812124042 186
4812124070 406
4812124090 444
4812124091 444
4812124167 136
4812124199 . . . . . 448, 448

4812124210 118
4812124238 258
4812124239 258
4812124256 . . . . . 448, 448
4812124295 100
4812124314 140
4812124317 132
4812124446 140
4812124447 144
4812124448 144
4812124450 140
4812124453 136
4812124458 146
4812124459 146
4812124460 146
4812124518 108
4812125078 144
4812125240 . . . . . 74, 86
4812125407 366
4812125542 116
4812125554-1 110
4812125625 138
4812125626 138
4812125853 96
4812125879 132
4812126188 108
4812126248 390
4812126260 402
4812126261 402
4812126463 414
4812126487 414
4812126568 108
4812126698 384
4812126777 284
4812126778 284
4812126833 418
4812126918 418
4812127087 206
4812127088 206
4812127103 200
4812127107 206
4812127108 206
4812127111 178
4812127141 168
4812127142 168
4812127152 168
4812127153 168
4812127229 110
4812127714 408
4812127715 316
4812127724 408
4812127730 . . . . . 404, 404
4812127731 . . . . . 404, 404
4812127878 . . . . . 404, 404
4812127879 . . . . . 404, 404
4812127986 316
4812127987 316
4812127988 316
4812127989 316
4812128022 86
4812128039 86
4812128175 60
4812128176 58
4812128177 60
4812128215 298
4812128304 128
4812128528 404
4812128529 404
4812128530 404
4812128531 404
4812128927 . . . . . 24, 74, 86
4812129127 . . . . . 50, 52
4812129173 86
4812129174 86
4812129511 . . . . . 50, 52
4812129511DOC 52
4812142385 448
4812142386 448
4812156151 226
4812156170 24
4812156599 226
4812156796 166
4812156887 160
4812156894 156
4812156895 156
4812156897 156
4812156899 156
4812156953 158
4812156954 . . . . . 158, 164
4812156955 158
4812156956 158
4812156958 . . . . . 158, 164
4812156993 . . . . . 4, 14
4812156999 182
4812157051 182
4812157052 182
4812157053 182
4812157060 184
4812157061 184
4812157062 184
4812157063 184
4812157073 184

4812157074 182
4812157076 182
4812157077 182
4812157078 182
4812157097 . . . . . 222, 224
4812157155 226
4812157156 226
4812157275 22
4812157358 162
4812157359 162
4812157360 152
4812157361 . . . . . 152, 162
4812157369 212
4812157370 212
4812157371 212
4812157372 212
4812157374 210
4812157376 210
4812157383 212
4812157387 214
4812157397 156
4812157461 164
4812157462 162
4812157463 . . . . . 156, 166
4812157464 . . . . . 156, 166
4812157465 . . . . . 158, 164
4812157466 . . . . . 158, 164
4812157469 162
4812157490 170
4812157491 170
4812157492 170
4812157493 170
4812157494 170
4812157495 170
4812157496 170
4812157497 170
4812157499 170
4812157551 170
4812157552 170
4812157654 194
4812157681 194
4812157682 194
4812157684 194
4812157685 194
4812157686 194
4812157687 194
4812157759 240
4812157770 194
4812157771 194
4812157772 194
4812157773 194
4812157796 224
4812157799 224
4812157851 172
4812157868 226
4812158153 184
4812158163 322
4812158164 322
4812158165 322
4812158198 218
4812158289 426
4812158290 426
4812158291 426
4812158292 426
4812158293 328
4812158298 212
4812158299 210
4812158351 210
4812158352 210
4812158353 210
4812158354 212
4812158358 212
4812158359 212
4812158360 212
4812158361 212
4812158362 210
4812158367 382
4812158387 82
4812158388 82
4812158389 82
4812158390 80
4812158391 80
4812158392 80
4812158393 80
4812158394 84
4812158452 182
4812158481 . . . . . 338, 428
4812158482 . . . . . 338, 428
4812158483 176
4812158484 176
4812158485 332
4812158581 24
4812158774 220
4812158775 220
4812158777 78
4812158778 78
4812158779 78
4812158780 78
4812158781 78
4812158782 78
4812158783 78
4812158859 352

4812158992 336
4812159183 324
4812159184 . . . . . 322, 322, 322
4812159460 212
4812159461 212
4812159499 102
4812159558 . . . . . 28, 324
4812159755 224
4812159767 336
4812159768 336
4812159775 326
4812159964 102
4812160053 414
4812160388 326
4812160598 430
4812160654 194
4812160664 228
4812160666 328
4812160684 210
4812160686 212
4812160767 426
4812160771 336
4812160772 336
4812160777 6
4812160778 . . . . . 8, 14
4812160779 10
4812160780 . . . . . 12, 14
4812160781 14
4812160783 . . . . . 6, 8, 10, 12, 16, 18, 122
4812160785 16
4812160786 18
4812160852 240
4812160877 . . . . . 326, 326, 326, 326
4812160891 . . . . . 16, 18, 138
4812160892 102
4812160893 102
4812160895 102
4812160896 102
4812160897 102
4812160951 142
4812160952 142
4812160953 142
4812160954 . . . . . 16, 18, 142
4812160955 142
4812161098 324
4812161099 . . . . . 324, 354
4812161153 240
4812161155 . . . . . 326, 326
4812161156 . . . . . 326, 326
4812161158 328
4812161165 . . . . . 306, 332
4812161251 326
4812161262 . . . . . 74, 86
4812161263 . . . . . 74, 86
4812161264 . . . . . 74, 86
4812161276 366
4812161298 424
4812161352 . . . . . 324, 332, 346, 346, 348
4812161353 324
4812161354 . . . . . 156, 166
4812161370 340
4812161371 350
4812161372 102
4812161373 102
4812161374 102
4812161375 102
4812161376 102
4812161377 102
4812161378 102
4812161379 102
4812161380 102
4812161381 102
4812161396 28
4812161859 . . . . . 8, 12, 18
4812161868 18
4812161883 4
4812161884 . . . . . 12, 18
4812161887 . . . . . 4, 18
4812162173 122
4812162571 . . . . . 306, 330
4812162572 . . . . . 306, 330
4812162654 336
4812163192 142
4812163278 . . . . . 424, 428
4812215510 410
4812215511 410
4812215512 410
4812215516 410
4812317429 . . . . . 6, 8, 10, 12, 16, 18
5541574800 136
D967536871 226

Dynapac Compaction Equipment AB
Box 504, SE 371 23 Karlskrona, Sweden

www.dynapac.com