Vibratory Roller
CA250-IID

DYNAPAC
Part of the Atlas Copco Group

RUTHZIL TRATOR COMERCIAL DE PEÇAS LTDA 11 97083-6812 ROLANDO

Spare Parts Catalogue

SCA250D-US5EN1

Valid from roller serial number:
***10000108**x0D007680 -*



Diesel engines:
Cummins QSB 4.5C

Published catalogue issues valid for these rollers:

Catalogue	*Issue date*	*Valid for serial numbers*
SCA250D-US5EN1	*2010-11*	*Replaced by SCA250D-US5EN2*
SCA250D-US5EN2	*2011-09*	***10000108**x0D007680 -*



We reserve the right to change specifications without notice.
Printed in Sweden.

DYNAPAC
Part of the Atlas Copco Group

RESERVDELSBESTÄLLNING

Följande uppgifter ska lämnas vid beställning av reservdelar för att undvika leveransfel:

1. Maskintyp.
2. Vältens serienummer.
3. Antal av önskad reservdel.
4. Reserdelens artikelnummer.
5. Reservdelens benämning.
6. Måttuppgifter vid beställning av metervara.

ORDERING SPARE PARTS

To avoid errors in delivery, please give the following information when ordering spare parts:

1. Type of machine.
2. Roller serial number.
3. Quantity required.
4. Part number.
5. Parts denomination.
6. Dimensions when ordering per length.

ERSATZTEILBESTELLUNG

Zur Vermeidung von Fehllieferungen sind bei der Bestellung von Ersatzteilen folgende Angaben zu machen:

1. Maschinentyp.
2. Herstellungsnummer.
3. Bestellmenge. (Quantity)
4. Ersatzteilnummer. (Part Nº)
5. Ersatzteilbenennung. (Denomination)
6. Massangaben bei Bestellung von Meterware.

ORDINI DI RICAMBI

Per evitare errori nelle consegne di ricambi, Vi preghiamo di comunicarci le seguenti informazioni al momento dell 'ordinazione:

1. Tipo di macchina.
2. Numero di serie della macchina.
3. Quantità dei pezzi desiderati. (Quantity)
4. Numero di codice del pezzo. (Part Nº)
5. Descrizione del pezzo di ricambio. (Denomination)
6. Misura, in caso di ordine per metro.

PEDIDO DE RECAMBIOS

Para evitar errores en las entregas, deberán indicarse los siguientes datos al hacer un pedido de recambios:

1. Tipo de máquina.
2. Número de serie.
3. Cantidad de piezas deseadas. (Quantity)
4. Número de artículo de la pieza de recambio. (Part Nº)
5. Denominación de la pieza. (Denomination)
6. Indíquese la medida al solicitar un artículo que se expide por metros.

COMMANDE DE PIECES DE RECHANGE

Les indications suivantes doivent être fournies lors de la commande de piéces de rechange, afin d'éviter toute erreur de livraison:

1. Type de machine.
2. Numéro de série.
3. Quantité désirée de pièce de rechange. (Quantity)
4. Numéro de la piéce de rechange. (Part Nº)
5. Dénomination de la piéce de rechange. (Denomination)
6. Longueur en cas de commande au mètre.

YOUR AGENT/DEALER:

Text pages

The text pages is structured as the picture on the right.

1. This is the remarks for specific items and the descriptions of the remarks is at the bottom of the parts list.

2. Parts indicated by a dot and moved to the right are included when buying the assembled unit above.

3. Spare parts Class code for a specific part.
"A" = 3 or more units/year,
"B" = 2 or more units/year,
"C" = 1 or more units/year,
"D" = at least 1 unit/year.

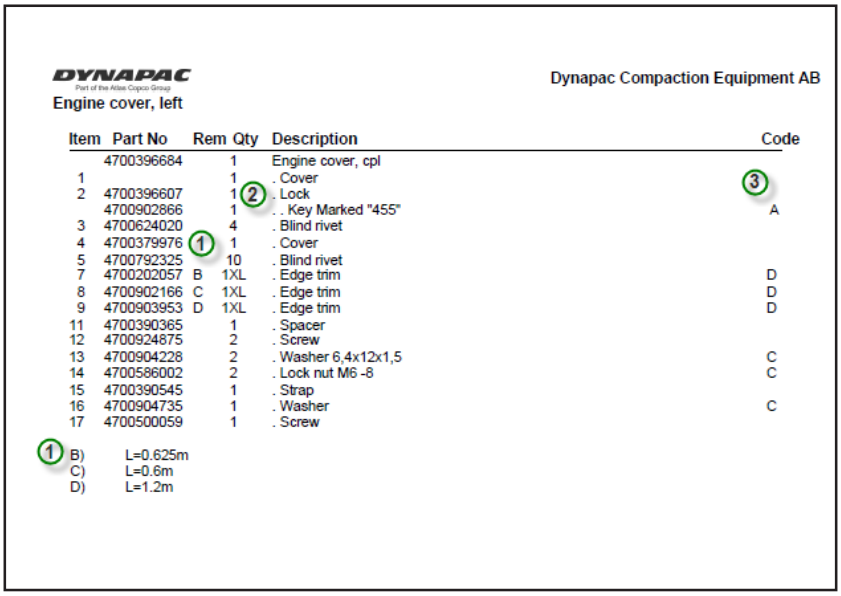

DYNAPAC
Part of the Atlas Copco Group

Dynapac Compaction Equipment AB

Engine cover, left

Item	Part No	Rem	Qty	Description	Code
	4700396684		1	Engine cover, cpl	
1			1	. Cover	3
2	4700396607		1	. Lock	
	4700902866		1	. . Key Marked "455"	A
3	4700624020		4	. Blind rivet	
4	4700379976		1	. Cover	
5	4700792325		10	. Blind rivet	
7	4700202057	B	1XL	. Edge trim	D
8	4700902166	C	1XL	. Edge trim	D
9	4700903953	D	1XL	. Edge trim	D
11	4700390365		1	. Spacer	
12	4700924875		2	. Screw	
13	4700904228		2	. Washer 6,4x12x1,5	C
14	4700586002		2	. Lock nut M6 -8	C
15	4700390545		1	. Strap	
16	4700904735		1	. Washer	C
17	4700500059		1	. Screw	

1 B) L=0.625m
C) L=0.6m
D) L=1.2m

Changes

PARTS INFO	SERVICE INFO	GROUP	PAGE	NOTES

Notes

Notes

DYNAPAC

PÄRMETIKETT

För att undvika fel vid reservdelsbeställning finns här nedan två etiketter som passar i fickorna på pärmarnas ryggar. På dessa kan man se från vilket vältnummer av aktuell maskin reservdelskatalogen gäller. Gör så här:

1. Tag denna sida ur pärmen.
2. Klipp ut etiketten till **VÄNSTER** (1) och sätt in den i fickan på **DENNA** pärmens rygg.
3. Finns det en etikett till **HÖGER** (2), kan denna användas på pärmen för **FÖREGÅENDE** utgåva av denna katalog.
4. Kasta detta papper.

BINDER LABEL

To avoid errors when ordering spare parts use the labels below to identify the catalogues on the back of the binder. The label contain the serial number range for which the catalogue is valid. Do like this:

1. Remove this page from the binder.
2. Cut out the **LEFT** label (1) and put it on **THIS** binders back.
3. If there is a label to the **RIGHT** (2), it can be used on the binder for **PRECEDING** issue of this catalogue.
4. Throw away this paper.

KATALOG-BESCHRIFTUNG

Zur Vermeidung von Fehlen bei der Ersatzteilbestellung benutzen Sie bitte die unteren Beschriftungen, um die Kataloge auf der Rückseite zu kennzeichen. Auf der Beschriftung ist angegaben, für welche Maschinennummern der jeweilige Katalog gültig ist. Ablauf:

1. Nehmen Sie dieses Blatt aus dem Katalog.
2. Schneiden Sie die **LINKE** Beschriftung (1) aus. Schieben Sie die Beschriftung in die tasche auf **DEM** Katalogrücke.
3. Sollte die Beschriftung unten **RECHTS** (2) mitgeliefert werden, kennzeichen Sie damit bitte die **ÄLTERE** Ausführung dieses Kataloges.
4. Den Rest dieses Blattes bitte vernichten.

ETICHETTA POSTA SUL RACCOGLITORE

Per evitare errori quando ordinate pezzi di ricambio, usate le etichette in calce che servono ad identificare i cataloghi sul retro del raccoglitore. L'etichetta indica il numero di matricola delle maccine prese in considerazione nel catalogo.

1. Rimuovete questa pagina dal raccoglitore.
2. Ritagliate l'etichetta posta a **SINISTRA** (1) e ponetela sul retro **DEL** raccoglitore.
3. Se trovate anche un'etichetta sulla **DESTRA** (2), ritagliatela e ponetela sul raccoglitore relativo alla **PRECEDENTE** edizione del catalogo.
4. Distruggete questo foglio.

ETIQUETA PARA LA CARPETA

Para evitar errores al pedir repuestos utilicen las etiquetas abajo descritas para identificar los catálogos en la parte trasera de la carpeta. En la etiqueta se ven los números de referencia de la serie para la cual es válido el catálogo. Instrucciones:

1. Quitar esta página de la carpeta.
2. Corta la etiqueta **IZQUIERDA** (1) y ponerla est **ESTA** carpeta en la parte trasera.
3. Si hay una etiqueta en la parte **DERECHA** (2) se puede utilizar en la carpeta para el catálogo que **PRECEDE** a esta.
4. Tirar esta hoja.

ETIQUETAGE DU CATALOGUE

Afin d'éviter des erreurs lors de commandes de pièces de rechange, nous vous conseillons d'apposer les marquages ci-dessous à l'arrière du classeur, pour identifier les catalogues. Ce marquage indique les numéros de série pour lesquels le catalogue est adapté. Il convient de procéder de la façon suivante:

1. Retirez cette page du classeur.
2. Découpez l'étiquette de **GAUCHE** (1), et apposez-la à l'arrière de **CE** catalogue.
3. Si il y a une étiquette à **DROITE** (2), vous pourrez l'apposer sur le classeur de l'edition **PRECEDENTE** du catalogue.
4. Détruire cetta feuille.

1.



CA250-IID

Catalogue **SCA250D-US5EN2**

Valid **from** serial number:

10000108x0D007680 -

TABLE OF CONTENTS Page

CA250D SN 10000108x 0D007680 - 2

Service kits 4

4700945845 Service kit 50 h 6

4700950323 Service kit 500 h 8

4700945846 Service kit 1000 h 10

Frame 12

Frames 14

Scraper and beam 16

Scrapers, Urethan Rubber Option 18

Scrapers, Spring Steel Option 20

Hitch 22

Structure 24

Drum 28

Drum 30

4700380462 Drum gear 34

4700372987 Drum gear 36

Engine 38

Engine Cummins QSB 4.5 C 40

Cooling system 42

Combustion air system 46

Fuel system 48

Exhaust system 50

Pre air cleaner Option 52

Transmission 54

Rear axle and wheels 56

4700393002 Rear axle 58

Differential with limited slip 60

Differential housing and brakes 62

Planet gear 64

4700383856 Rear axle No-Spin, Option 66

Differential with no-spin 68

Differential housing and brakes 70

Planet gear 72

4700396309 Rear axle 74

Differential with limited slip 60

Differential housing and brakes 62

TABLE OF CONTENTS Page

Planet gear 64

Hydraulic system 76

Propulsion system, Front 78
4700371509 Propulsion motor 80

Propulsion system, Rear 82
4700380830 Propulsion pump 84

Vibration system 90
4700380145 Hydraulic motor, vibration 92
4700383958 Vibration pump 94
4700937167 Rotary group, cpl 96
4700937168 Valve block, cpl 98

Steering system 100
4700376000 Steering valve 102
4700392002 Steering cylinder 104

Brake system 106

Central test panel hydraulic Option 108

Central test panel Option 110

Electrical equipment 112

Electric system 114

Control panel 118

Working lights w/o cab Option 120

Driving lights, w/o cab Option 122

Driving lights, w/o cab Left hand, Option 124

Driving lights, with Working lights and ROPS Option 126

Driving lights, with Working lights and ROPS Left hand, Option 128

Driving lights with working lights, cab Option 130

Driving lights with working lights, cab Left hand, Option 132

Rotating beacon Option 134

Back-up alarm Option 136

Compaction meter Option 138

Engine pre-heater, Cab Option 140

Licence plate light Option 142

Direction lights Option 144

Drivers platform 146

Drivers platform 148

Control panel 150

Forward and reverse control 152

TABLE OF CONTENTS

Page

Forward and reverse control handle 154
Steering column 156
Canopy Option 158
Rops and fops 160
Cab mounting 162
Cab 4700392479 164
Cab Screens 166
Cab Door, left side 170
Cab Interior rear mirror 172
Wiper arm with blade, front 174
Cab Electric 176

Decals 178

Decals 180
Decals 182

Standard equipment 184

Standard equipment 186

Optional equipment 188

Tool equipment 190
Pad shell 192
Air conditioner and heater, Simple cab 194
4700383413 Condensor, cpl 198
Air conditioner and heater unit 200
Dy-Mic 202
Heater Simple cab 204
4700379394 Heater box 206


40
50
60
80
90
70
30
20
10
DYNAPAC
DYNAPAC

CA250D SN 10000108x 0D007680 -

Item	Part No	Rem	Qty	Description	Code
1				Service kits (Page 4)	
10				Frame (Page 12)	
20				Drum (Page 28)	
30				Engine (Page 38)	
40				Transmission (Page 54)	
50				Hydraulic system (Page 76)	
60				Electrical equipment (Page 112)	
70				Drivers platform (Page 146)	
80				Decals (Page 178)	
90				Standard equipment (Page 184)	
91				Optional equipment (Page 188)	

Service kits

Item	Part No	Rem	Qty	Description	Code
10	4700945845			Service kit 50 h (Page 6)	
20	4700950323			Service kit 500 h (Page 8)	
30	4700945846			Service kit 1000 h (Page 10)	

4700945845 Service kit 50 h

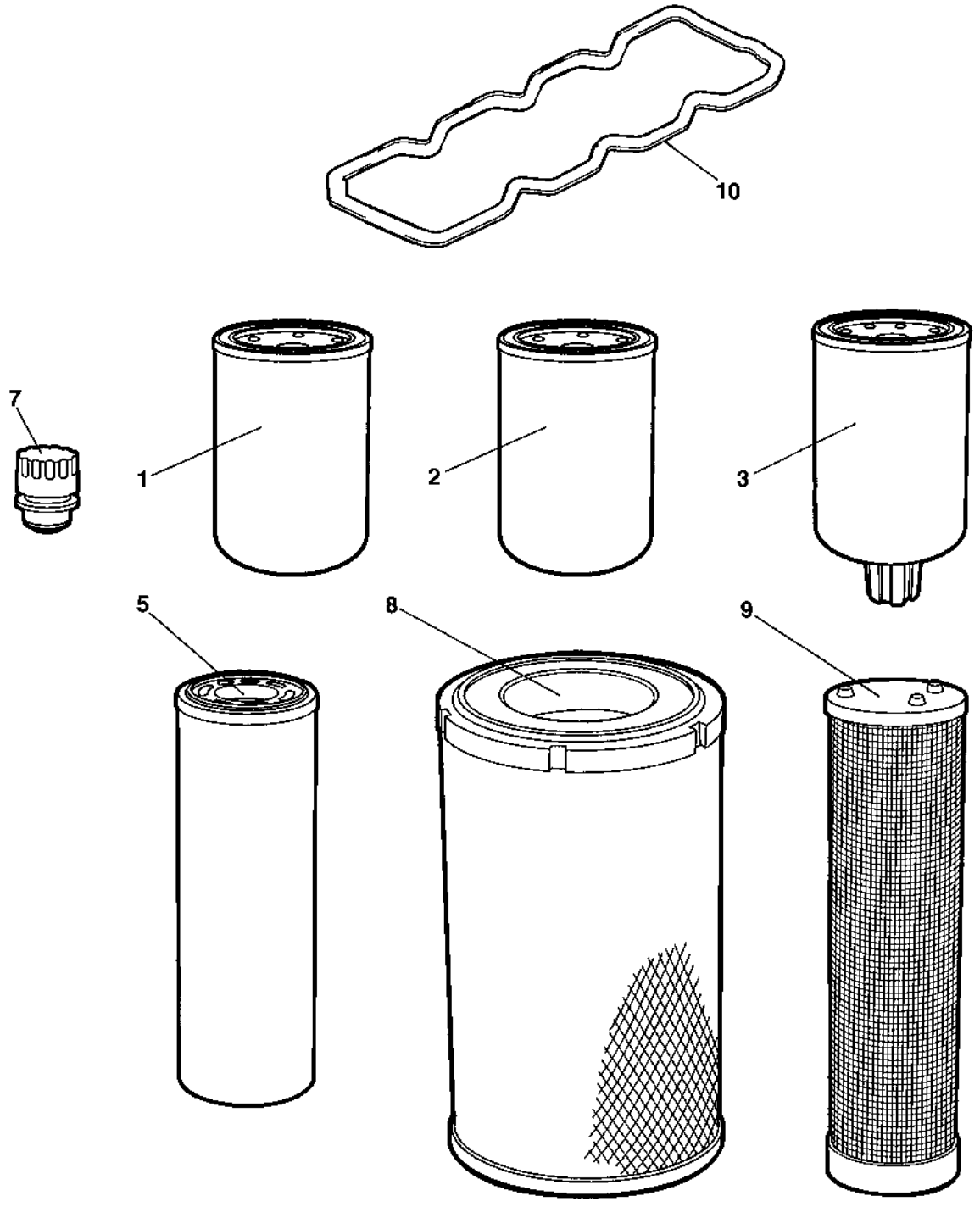

4700945845 Service kit 50 h

Item	Part No	Rem	Qty	Description	Code
	4700945845			Service kit 50 h (Page 6)	
1	4700945145		1	Oil filter element	A
2	4700945624		1	Fuel filter element	
3	4700945147		1	Pre-fuel filter element	
5	4700372229		1	Hydraulic oil filter element	A

4700950323 Service kit 500 h

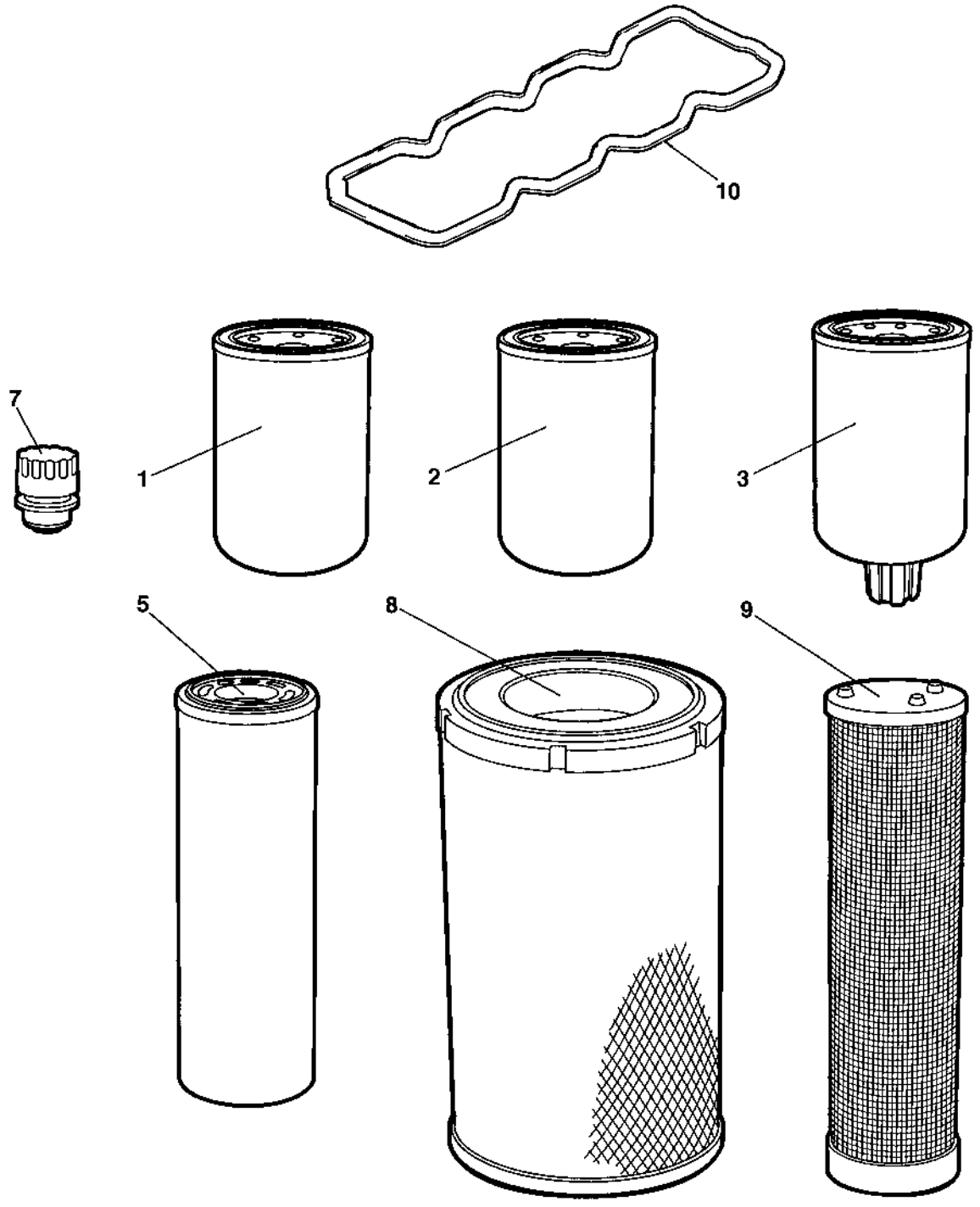

4700950323 Service kit 500 h

Item	Part No	Rem	Qty	Description	Code
	4700950323			Service kit 500 h (Page 8)	
1	4700945145		1	Oil filter element	A
2	4700945624		1	Fuel filter element	
3	4700945147		1	Pre-fuel filter element	
8	4700908450		1	Air filter element, Main	A

4700945846 Service kit 1000 h

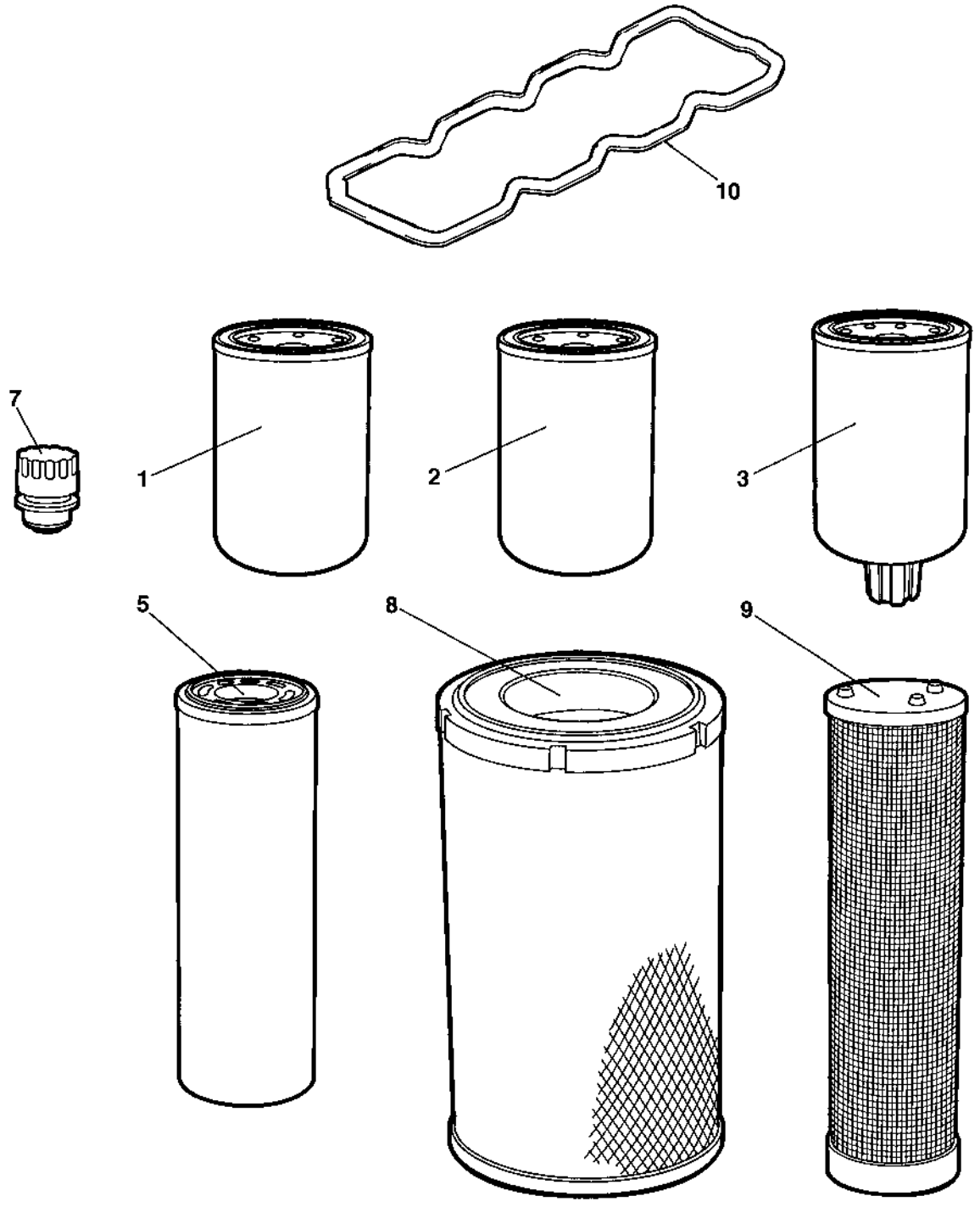

4700945846 Service kit 1000 h

Item	Part No	Rem	Qty	Description	Code
	4700945846			Service kit 1000 h (Page 10)	
1	4700945145		1	Oil filter element	A
2	4700945624		1	Fuel filter element	
3	4700945147		1	Pre-fuel filter element	
5	4700372229		1	Hydraulic oil filter element	A
7	4700357138	B	1	Ventilating filter	A
8	4700394686		1	Air filter element, main	A
9	4700394687		1	Air filter element, safety	A
10	4700945760		1	Valve cover gasket	

B) Ventilated oil filler cap for the hydraulic oil tank

Frame

Frame

Item	Part No	Rem	Qty	Description	Code
10				Frames (Page 14)	
30				Scraper and beam (Page 16)	
45				Scrapers, Urethan Rubber Option (Page 18)	
55				Scrapers, Spring Steel Option (Page 20)	
60				Hitch (Page 22)	
70				Structure (Page 24)	

Frames

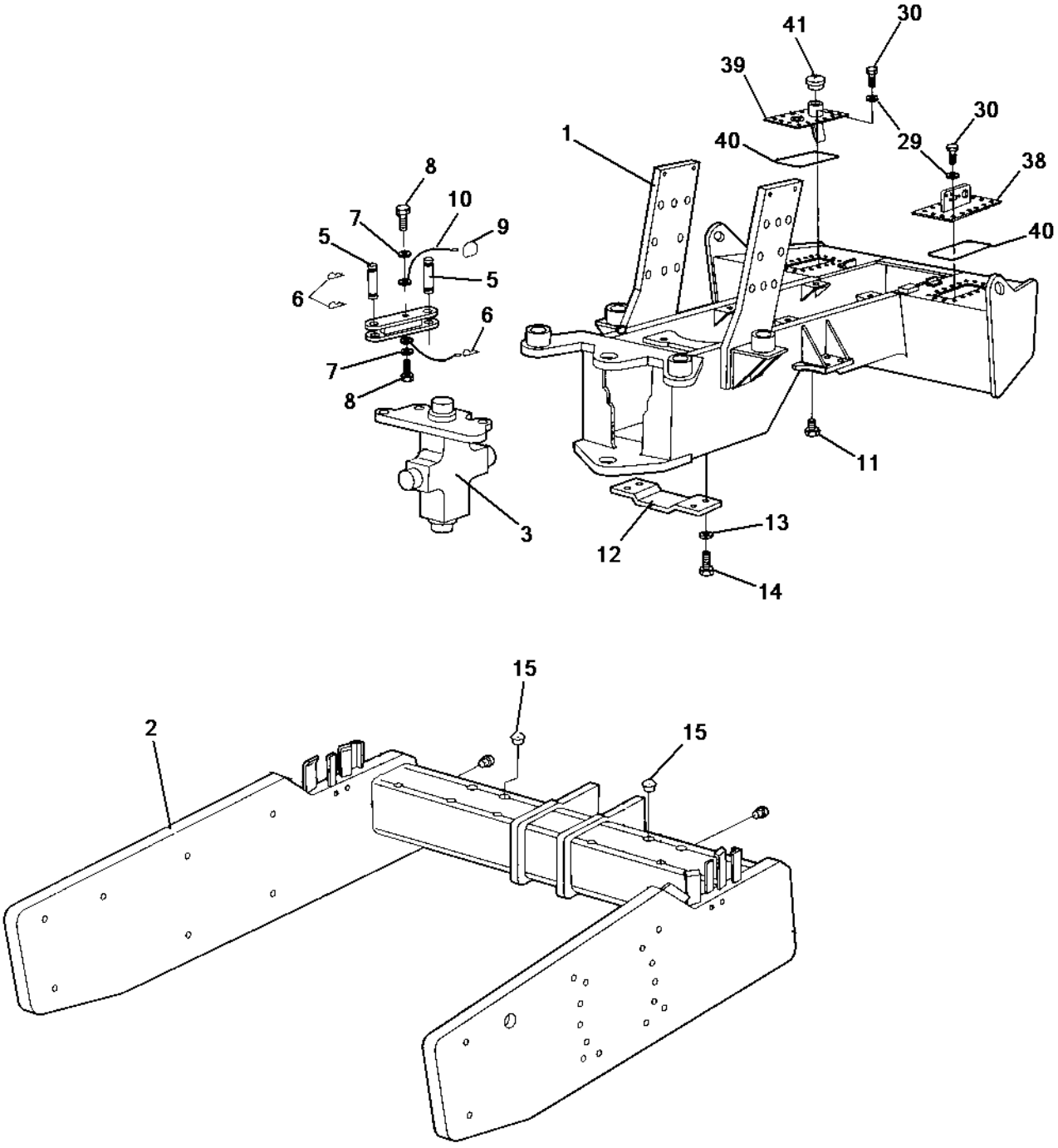

Frames

Item	Part No	Rem	Qty	Description	Code
1	4700393052		1	Tractor frame Up to 0A006782	D
	4812110986		1	Cover From 0A006783	D
2	4700397126		1	Drum frame	D
3			1	Hitch	
4	4700374744		1	Safety rod	D
5	4700347119		2	Shaft	C
6	4700635061		3	Hair clip	B
7	4700904230		4	. Steel plain washer	C
8	4700500043		2	Screw M10x16H 8,8	D
9	4700357488		1	Spring	D
10	4700343775		2	Wire	D
11	4700813391		1	Magnetic plug	D
12	4700372087		1	Protective plate	D
13	4700904557		4	Steel plain washer	C
14	4700500029		4	Hexagon head screw	C
15	4700902919		6	Plug	
29	4700904229		32	Steel plain washer 8,4x16x1,5	C
30	4700500188		32	Screw M8-1,25x14 8,8	D
38	4812110986		1	Cover Up to 0A006782	D
	4812114556		1	Cover From 0A006783	
39	4700397130		1	Cover	D
40	4700372709		1	O-ring	D
41	4700373460		1	Fuel cap	D

Scraper and beam

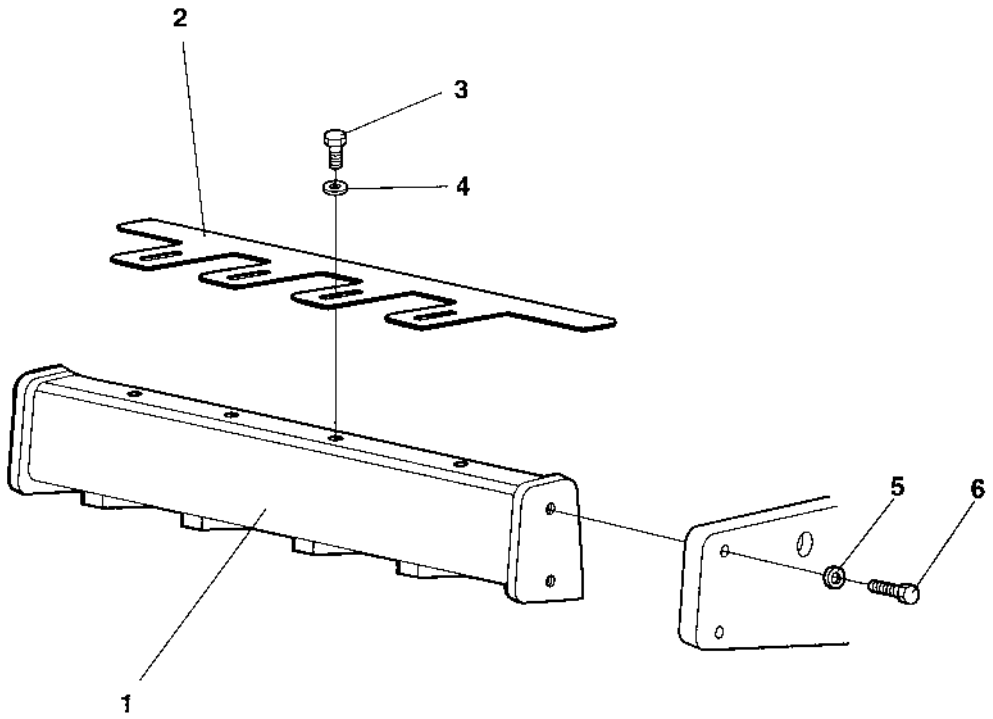

Scraper and beam

Item	Part No	Rem	Qty	Description	Code
1	4700376667		1	Cross beam	D
	4700376652	A	1	Cross beam	D
2	4700384048		1	Scraper	A
3	4700500102		4	Screw M16x45	D
4	4700904558		4	Washer 17X30X6 300HV	C
5	4700904234		4	Steel plain washer	C
6	4700928230		4	Screw M24x90 10.9	C

A) Heavy beam, Option

Scrapers, Urethan Rubber Option

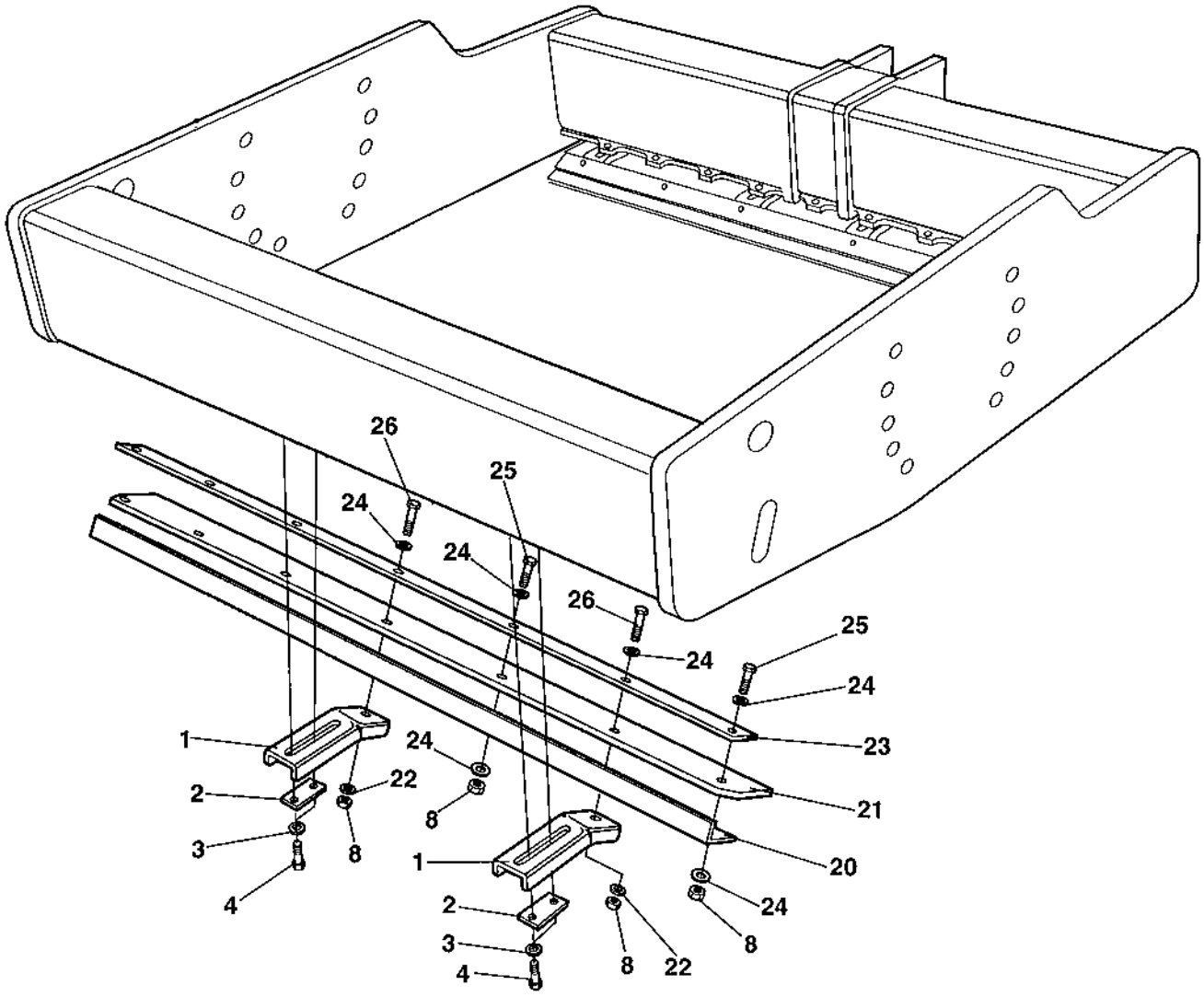

Scrapers, Urethan Rubber Option

Item	Part No	Rem	Qty	Description	Code
1	4700376819	A	8	Scraper bracket	D
2	4700376622	A	8	Holder	D
3	4700904232		16	Washer	C
4	4700500076		16	Screw M16x55	D
	4700500093		16	Screw M16x40	C
8	4700586019		18	Lock nut	C
20	4700376825	A	2	Scraper bracket	D
21	4700358033	A	2	Scraper blade	A
22	4700904213		8	Washer	C
23	4700376826	A	2	Scraper bracket	D
24	4700904231		28	Washer 13x24x2 300 HV	C
25	4700500056		10	Screw	
26	4700500049		8	Screw	C

A) Mounted on the front and rear of the drum.

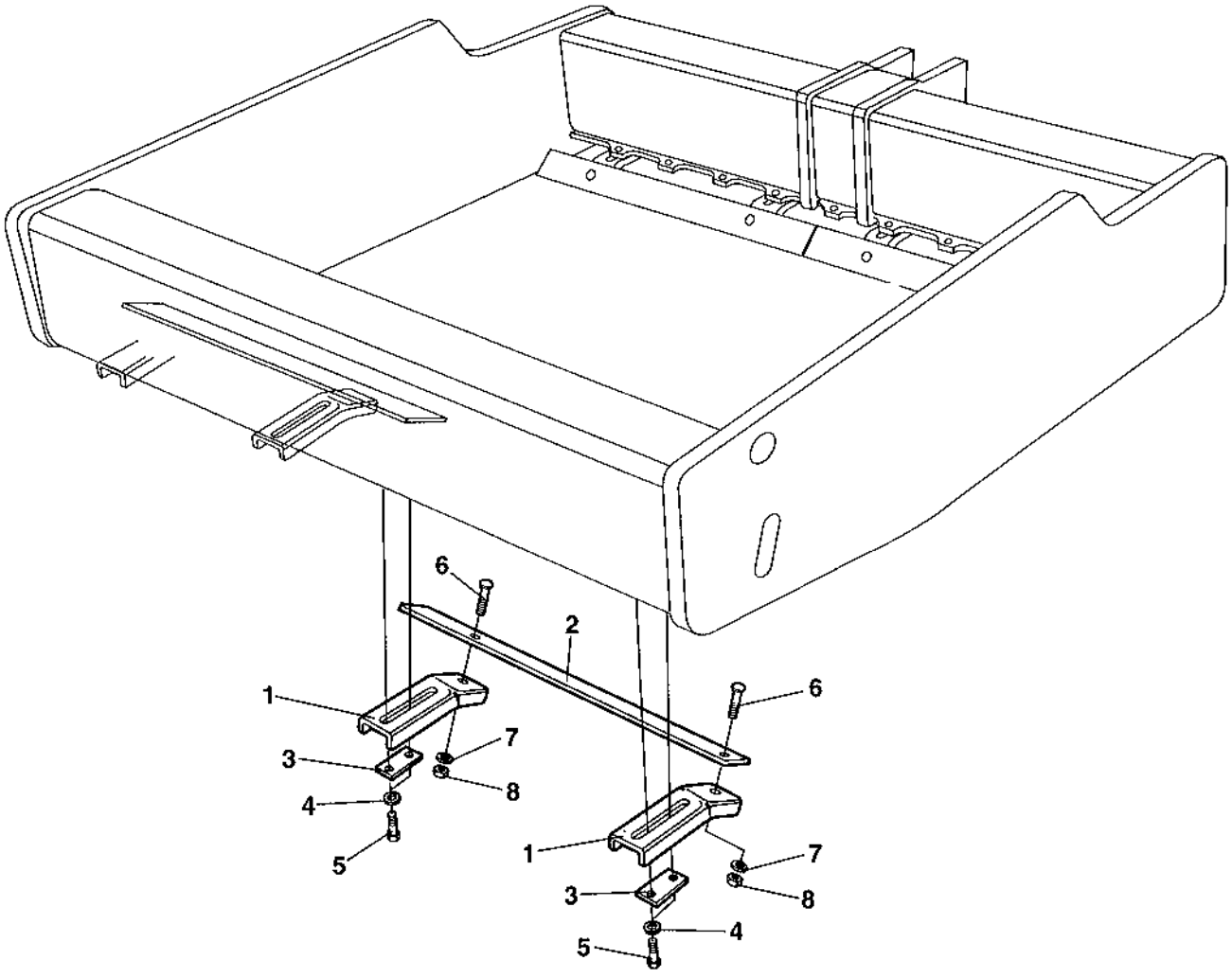
6
2
1
6
7
3
8
4
5
1
7
3
8
4
5

Scrapers, Spring Steel Option

Item	Part No	Rem	Qty	Description	Code
1	4700376819		8	Scraper bracket	D
2	4700376829		4	Scraper	A
3	4700376622		8	Holder	D
4	4700904232		16	Washer	C
5	4700500076		16	Screw M16x55	D
	4700500093		16	Screw M16x40	C
6	4700791948	A	8	Bolt M12x40H 8,8	D
7	4700904703		8	Washer	B
8	4700586019		8	Lock nut	C

A) Cup square neck bolt.

Hitch

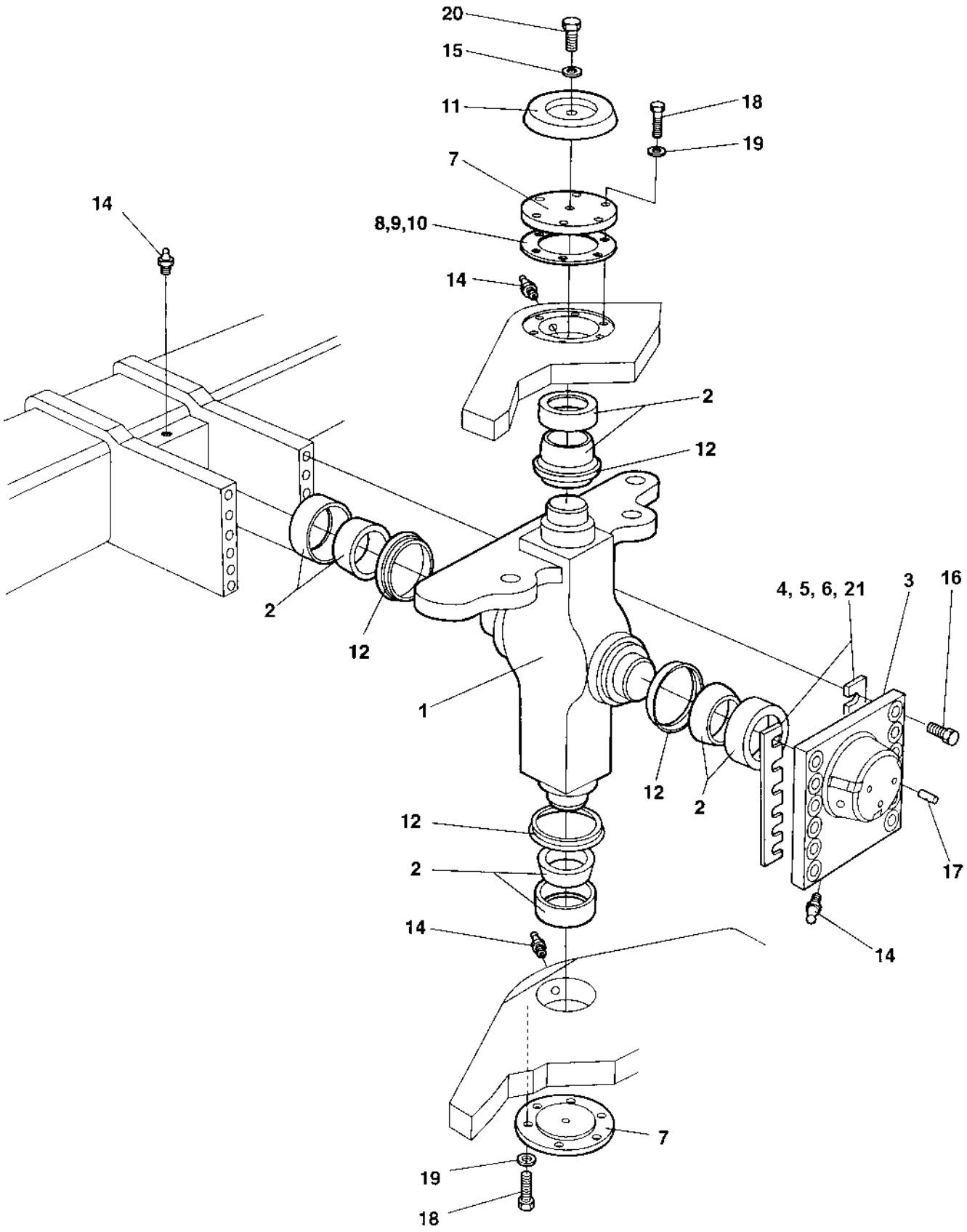
20
15
11
18
19
7
8,9,10
14
14
2
12
2
12
1
4, 5, 6, 21
3
16
12
2
12
2
14
17
14
7
19
18

Hitch

Item	Part No	Rem	Qty	Description		Code
1	4700374900		1	Hitch		D
2	4700100040		4	Axial ball bearing		B
3	4700373421		1	Bearing cover		D
4	4700345871	N		Shim	T=1,0 mm	C
5	4700345872	N		Shim	T=0,35 mm	C
6	4700345873	N		Shim	T=0,10 mm	C
7	4700337042		2	Bearing cover		D
8	4700337045	N		Shim	T=1,0 mm	C
9	4700345874	N		Shim	T=0,35 mm	C
10	4700345875	N		Shim	T=0,10 mm	C
11	4700343159		1	Cover		D
12	4700167032		4	Lip-type oil seal		C
14	4700926214		4	Grease fitting		C
15	4700904229		1	Steel plain washer 8,4x16x1,5		C
16	4700500287		12	Screw M20x80 10,9		C
	4700925208		12	Screw M20x90		D
17	4700910995		3	Stop screw		C
18	4700500037		12	Screw		C
19	4700904231		12	Washer 13x24x2 300 HV		C
20	4700500018		1	Screw M8-1,25x12 8,8		C
21	4700380993	N		Shim	T = 2,0 mm	C
	4700384498	N		Shim	T = 0,15 mm	C

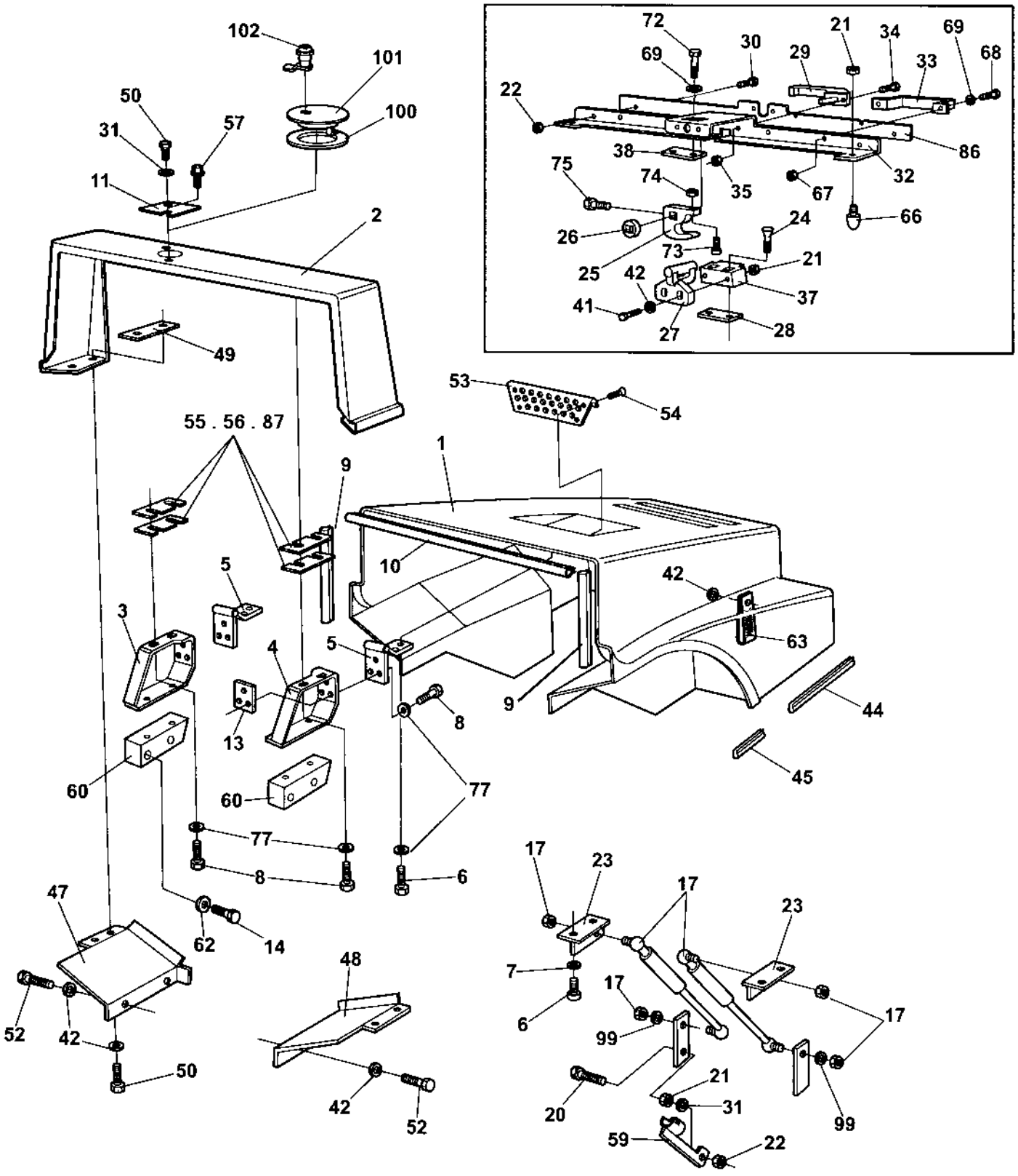
102
101
100
50
31
57
11
2
49
55 . 56 . 87
9
1
53
54
10
5
3
4
5
13
8
60
60
77
77
8
6
47
62
14
48
52
42
50
42
52
72
69
30
29
21
34
69
68
33
22
86
38
32
75
74
35
67
66
24
26
73
21
25
42
37
41
27
28
42
63
9
44
45
17
23
17
23
7
17
6
99
17
21
20
31
99
59
22

Structure

Item	Part No	Rem	Qty	Description	Code
1	4700945979	1	1	Engine hood, cpl	D
2	4700385152		1	Protecting cover	D
3	4700374797	A	1	Clamp	D
4	4700374798	B	1	Clamp	D
5	4700371366		2	Hinge	D
6	4700500028		10	Screw	C
7	4700904557		10	Steel plain washer	C
8	4700500030		7	Screw M10x035H 8.8 A3K	C
9	4700902166	C	2XL	Edge trim	D
10	4700902166	D	1XL	Edge trim	D
11	4700373955		1	Cover	D
13	4700374799		1	Holder plate	C
14	4700500133		4	Screw	C
17	4700382384		2	Gas spring	B
	4700382387	R	2	Gas spring	B
20	4700500047		1	Hexagon head screw	C
21	4700570005		5	Nut M8	C
22	4700902286		3	Hexagon lock nut with flange	C
23	4700372608		2	Bracket	D
24	4700903732		2	Screw	
25	4700382130		1	Hook	
26	4700382335		1	Spacer sleeve	
27	4700382131		1	Lock clamp	
28	4700380109		1	Holder	D
29	4700382165		1	Locking handle	
	4700902866		1	. Key Marked "455"	
30	4700927637		2	Hexagon socket countersunk screw	D
31	4700904556		2	Washer 8,4x16x3,0	C
32	4700382129		1	Holder plate	D
33	4700904874		1	Grab handle	D
34	4700535011		2	Screw	D
35	4700902284		2	Nut M5	C
37	4700382132		1	Holder	D
38	4700382336		1	Holder	D
41	4700500026		2	Screw M8-1,25x60 8,8	
42	4700904640		11	Washer 8,4x22x3	C
44	4700902166	G	2XL	Edge trim	D
45	4700902166	H	2XL	Edge trim	D
47	4700373204	I	1	Holder plate	D
48	4700373203	J	1	Holder plate	D
49	4700373309		2	Holder plate	D
50	4700500021		5	Screw M8-1,25x25 8.8	C
52	4700500019		4	Hexagon head screw M8x16H 8,8	C
53	4700372575		1	Grid	D
54	4700901767		4	Screw ST3,5x9,5 Black	
55	4700373956		N	Shim	C
56	4700373957		N	Shim	C

1) Hood cpl. with Gas springs, Lock, Edge trims, Hinges and Grids.
A) Right
B) Left
C) L = 0.940 m
D) L = 0.630 m
G) L = 0.340 m
H) L = 0.040 m
I) Right side
J) Left side
R) With noise suppression mounted, Option

Structure

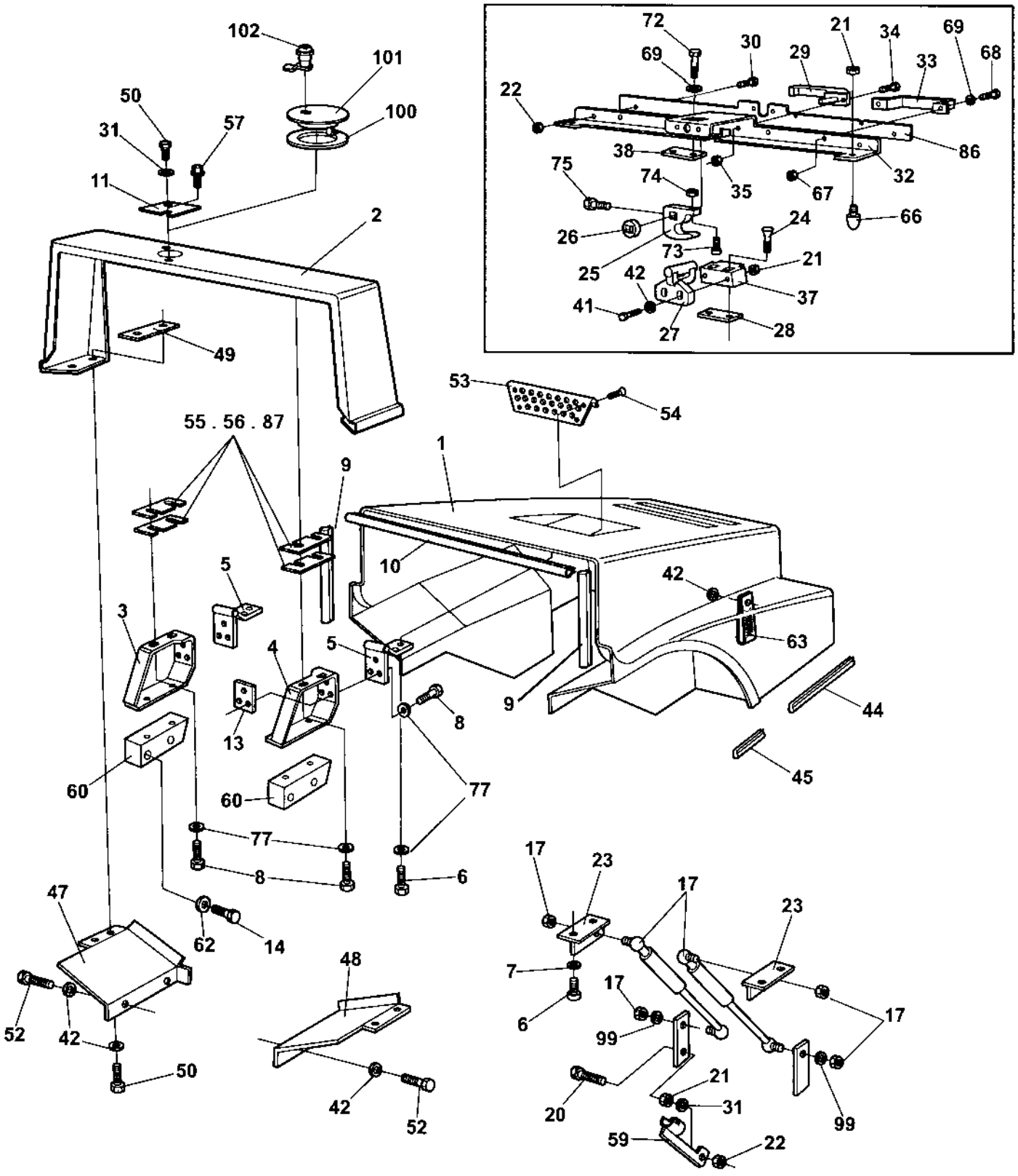
102
101
100
50
31
57
11
2
49
55 . 56 . 87
9
1
53
54
10
5
3
4
5
13
8
9
42
63
44
45
60
60
77
77
8
6
47
62
14
48
52
42
50
42
52
17
23
17
23
7
6
17
99
17
99
21
20
31
59
22

Structure

Item	Part No	Rem	Qty	Description	Code
57	4700500505		1	Screw M8x20 8.8	C
59	4700382382		1	Safety rod	
60	4700381989		2	Holder	D
62	4700904231		4	Washer 13x24x2 300 HV	C
63	4700374854		1	Grab handle	D
66	4700925629		2	Shock absorber	
67	4700902285		2	Hexagon lock nut with flange	C
68	4700500088		2	Screw M6x40	
69	4700904228		4	Washer 6,4x12x1,5	C
72	4700500013		2	Screw M6-1x16 8,8	C
73	4700500040		1	Screw M6-1x20 8,8	C
74	4700570004		1	Nut M6X1,00 -8 A2K	C
75	4700500018		1	Screw M8-1,25x12 8,8	C
77	4700904567		7	Washer 10,5x28x6 HB305	C
86	4700395119		1	Spacer	D
87	4812110773		N	Shim	
99	4700904230		2	Steel plain washer	C
100	4700375681	K	1	Gasket	D
101	4700375678	K	1	Cover	D
102	4700372658	K	1	Lock	D
	4700902866		1	. Key Marked "455"	

K) Option

Drum

Item	Part No	Rem	Qty	Description	Code
10				Drum (Page 30)	
40	4700380462			Drum gear (Page 34)	D
41	4700372987			Drum gear (Page 36)	C

Drum

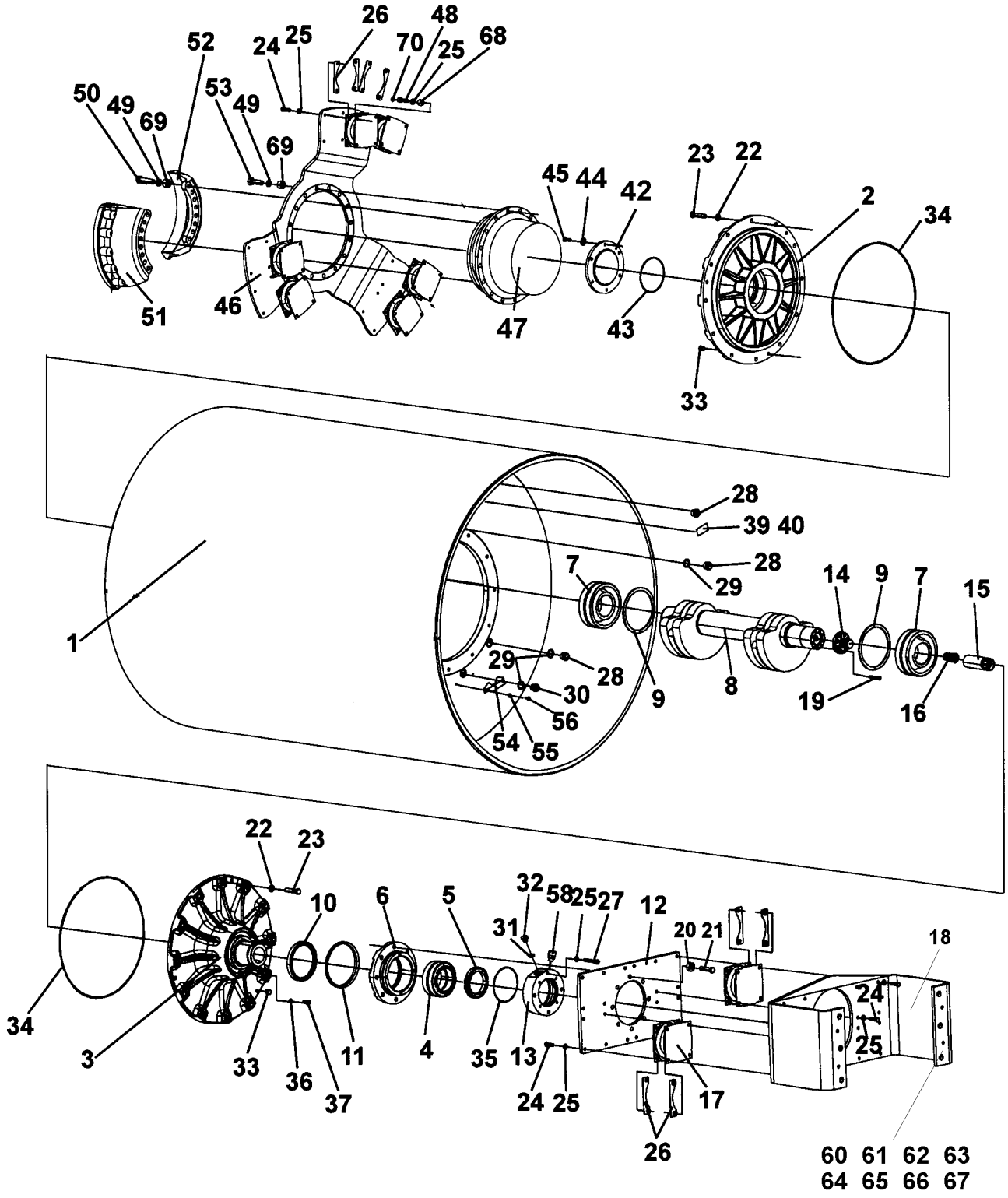
26
48
52
24
25
70
25
68
50
49
69
53
49
69
45
44
42
23
22
2
34
51
46
47
43
33
28
39 40
28
29
7
14
9
7
15
1
29
28
30
56
54
55
9
8
19
16
22
23
10
6
5
32
58
25
27
12
31
20 21
18
34
3
33
36
37
11
4
35
13
24 25
17
26
24
25
60 61 62 63
64 65 66 67

Drum

Item	Part No	Rem	Qty	Description		Code
1	4700392822		1	Drum		D
2	4700389063		1	Bearing housing		D
3	4700391206		1	Bearing housing		D
4	4700116041		1	Taper roller bearing		B
5	4812112413		1	Shaft nut		C
6	4700343318		1	Bearing housing		D
7	4700388089		2	Bearing		B
8	4700391194		1	Eccentric shaft		D
9	4700791927		2	Retaining ring		D
10	4700167023		1	Seal ring		B
11	4700929447		1	V-ring		B
12	4700343322		1	Holder plate		D
13	4812110860		1	Motor adapter		
14	4700380018		1	Splined shaft		D
15	4700381027		1	Splined sleeve		D
16	4700349715		1	Spring		D
17	4700801187		10	Shock absorber		B
18	4700396030		1	Bracket		D
19	4700791156		8	Screw M10-1,5x55 12,9		D
20	4700384114		8	Spacer		A
21	4700500082		8	Screw M16x70 8,8		D
22	4700904232		24	Washer		C
23	4700500165		24	Screw M16-2,0x75 8,8		D
24	4812110444		56	Hexagon head screw w Tuflok M12x40H 8.8 A3K		C
25	4700904231		84	Washer 13x24x2 300 HV		C
26	4700383436		28	Holder		D
27	4700500196		4	Screw M12-1,75x80 8.8		D
28	4700232210		3	Plug		B
29	4700162017		3	Seal ring		B
30	4700343744		1	Magnetic plug		C
31	4700162018		1	Sealing		B
32	4700370231		1	Plug		C
33	4700900775		6	Plug		C
34	4700904737		2	O-ring		D
35	4700160105		1	O-ring 70		C
36	4700230277		3	Copper washer 12,2x17,9x1,5		D
37	4700904177		3	Screw		
39	4700343801		1	Sign plate		D
40	4700527002		4	Drive screw		C
42	4700383783		1	Bearing cover		D
43	4700160358		1	O-ring		D
44	4700904230		6	Steel plain washer		C
45	4700500029		6	Hexagon head screw		C
46	4812114420		1	Drive disc		D
47	4700380462		1	Drum gear (Page 34)		D
48	4812110640		24	Hexagon socket head cap screw M12x40H 8.8 A3K		C
49	4700904233		32	Washer 21x36x3		C
50	4812110520		16	Screw		D
51	4700373442	A	1	Gear holder		D
52	4700373443	B	1	Gear holder		D
53	4700903919		16	Screw		
54	4700359955		1	Drop plate		D
55	4700904229		2	Steel plain washer 8,4x16x1,5		C
56	4700500019		2	Hexagon head screw M8x16H 8,8		C
58	4700926736		1	Breather		C
60	4700393276	C	N	Shim	T = 1,5 mm	D
61	4700393277	C	N	Shim	T = 3 mm	D

A) Right
B) Left
C) Not shown in illustration

Drum

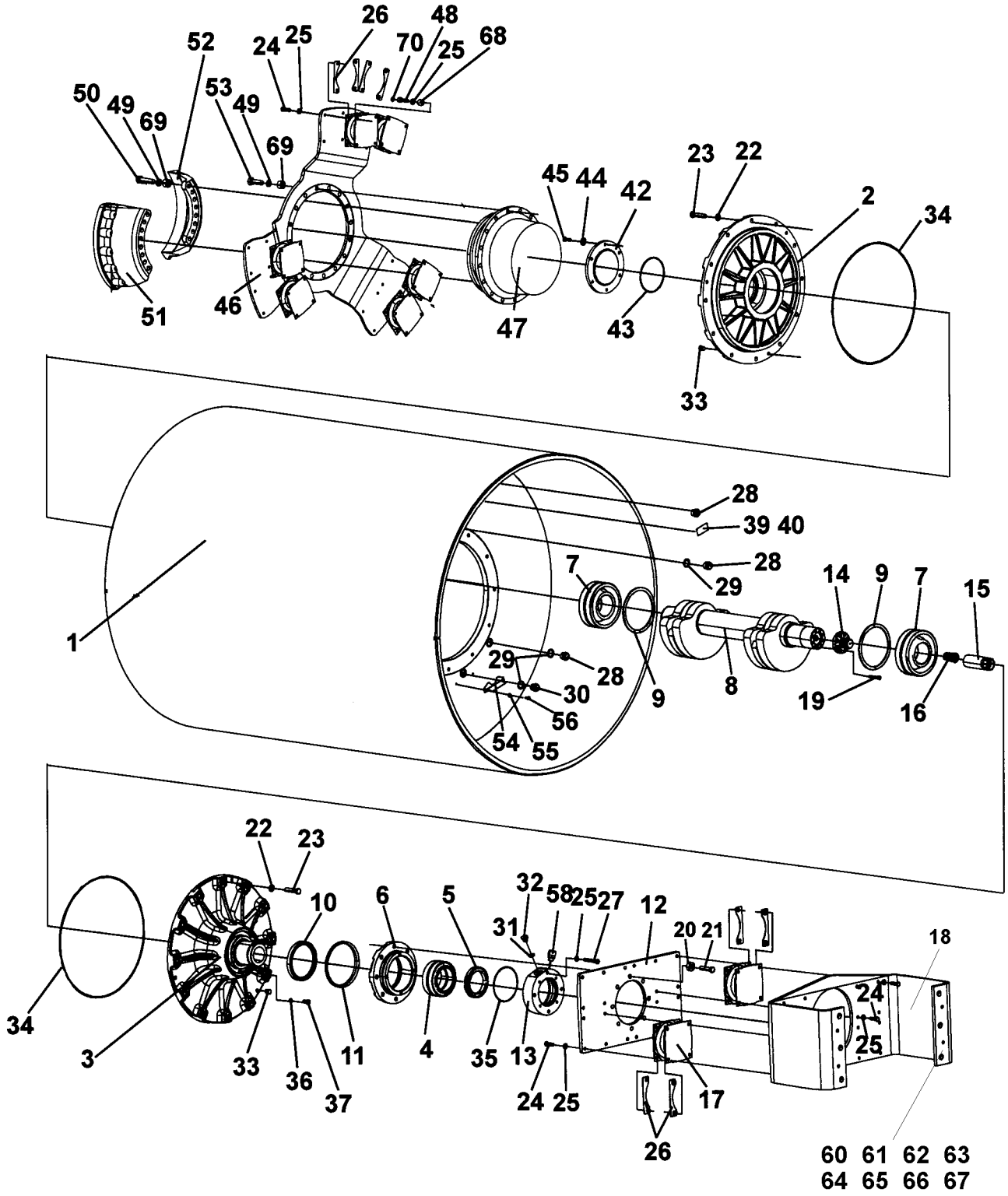
26
48
52
24
25
70
25
68
50
49
69
53
49
69
45
44
42
23
22
2
34
46
51
47
43
33
28
39 40
28
7
29
14
9
7
15
1
29
28
30
56
54
55
9
8
19
16
22
23
10
6
5
32
58
25
27
12
31
20 21
18
24
25
34
3
33
36
37
11
4
35
13
24 25
17
26
60 61 62 63
64 65 66 67

Drum

Item	Part No	Rem	Qty	Description	Code
62	4700393278	C	N	Shim T = 6 mm	D
63	4700393279	C	N	Shim T = 8 mm	D
64	4700903792	C	6	Screw M24x100 10.9	C
65	4700792464	C	6	Nut M24 -10 DIN985	D
66	4700928231	C	10	Screw M24X80 10.9	D
67	4700904234	C	22	Steel plain washer	C
68	4812110346		24	Spacer	C
69	4812110366		32	Spacer	
70	4811000127		24	Cover cap	B

C) Not shown in illustration

4700380462 Drum gear

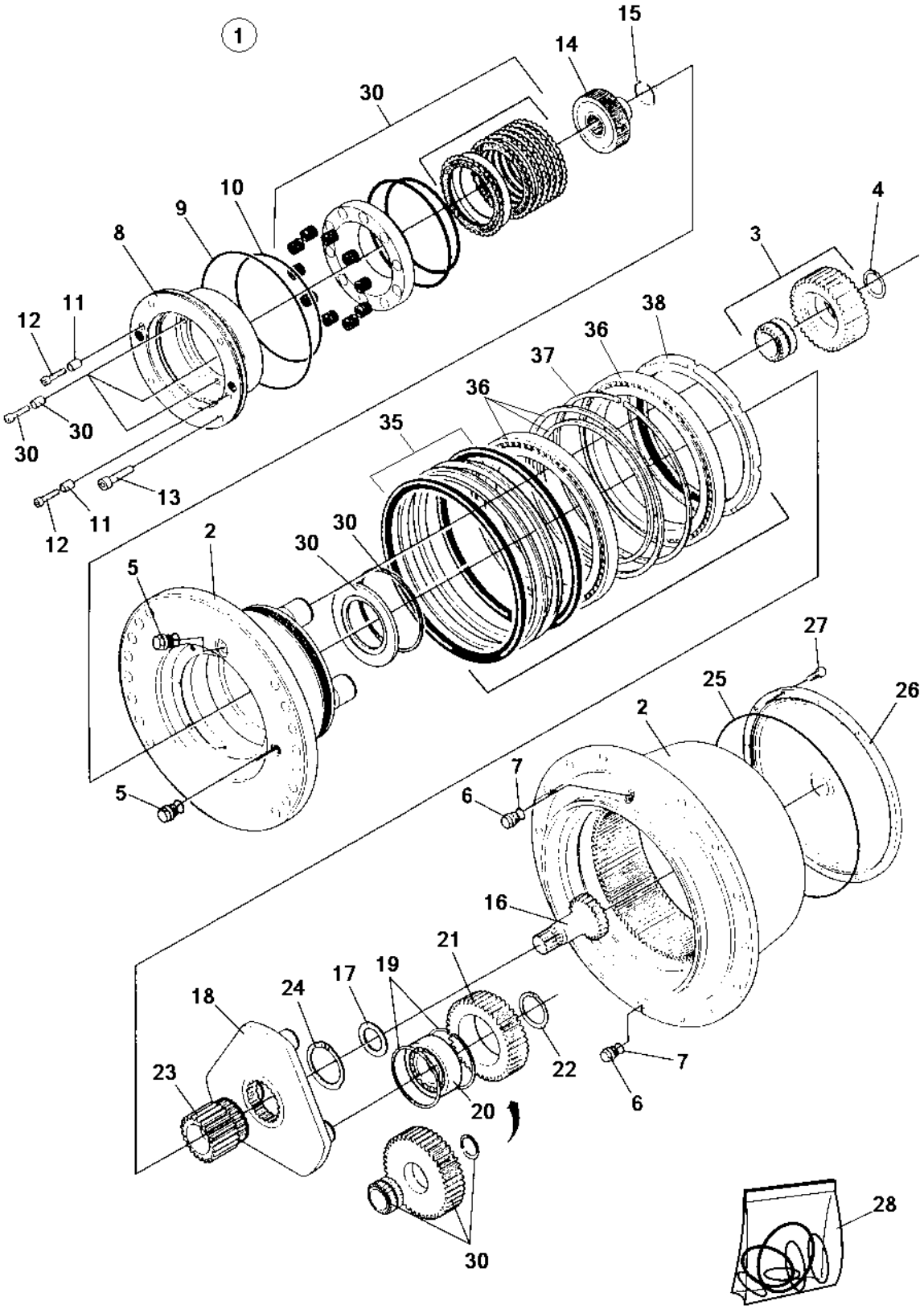

4700380462 Drum gear

Item	Part No	Rem	Qty	Description	Code
1			1	Drum gear, cpl	
2			1	. Hub	
3			3	. Planet gear	
4			3	. Retaining ring	
5	4700935394		2	. Plug	
6			2	. Plug	
7	4700935395		4	. Seal ring	
8	4700935865		1	. Adapter	
9	4700935866		1	. O-ring	
10	4700935867		1	. O-ring	
11	4700935868		2	. Bushing	
12	4700935870		2	. Screw	
13	4700902944		4	. Screw	
14	4700935874		1	. Coupling	
15	4700935875	A	1	. Retaining ring	
16	4700935876		1	. Sun wheel	
17	4700935877		1	. Spacer	
18			1	. Planet carrier	
19			6	. Retaining ring	
20	4812155788		3	. Roller bearing	B
21			3	. Planet gear	
22	4700935881		3	. Retaining ring	
23	4700935882		1	. Sun wheel	
24	4700935883		1	. Retaining ring	
25	4700935413		1	. O-ring	
26	4700935414		1	. Cover	
27			12	. Screw	
28	4700945581		1	. Seal kit	
30				Not used on this model	
35	4700935859		1	. Seal	
36	4812156168	B	2	. Roller bearing	
37			1	. Spring ring	
38	4700935862		1	. Nut	

A) Only used with Single speed Propulsion motor.
B) Kit, includes 2 pcs

4700372987 Drum gear

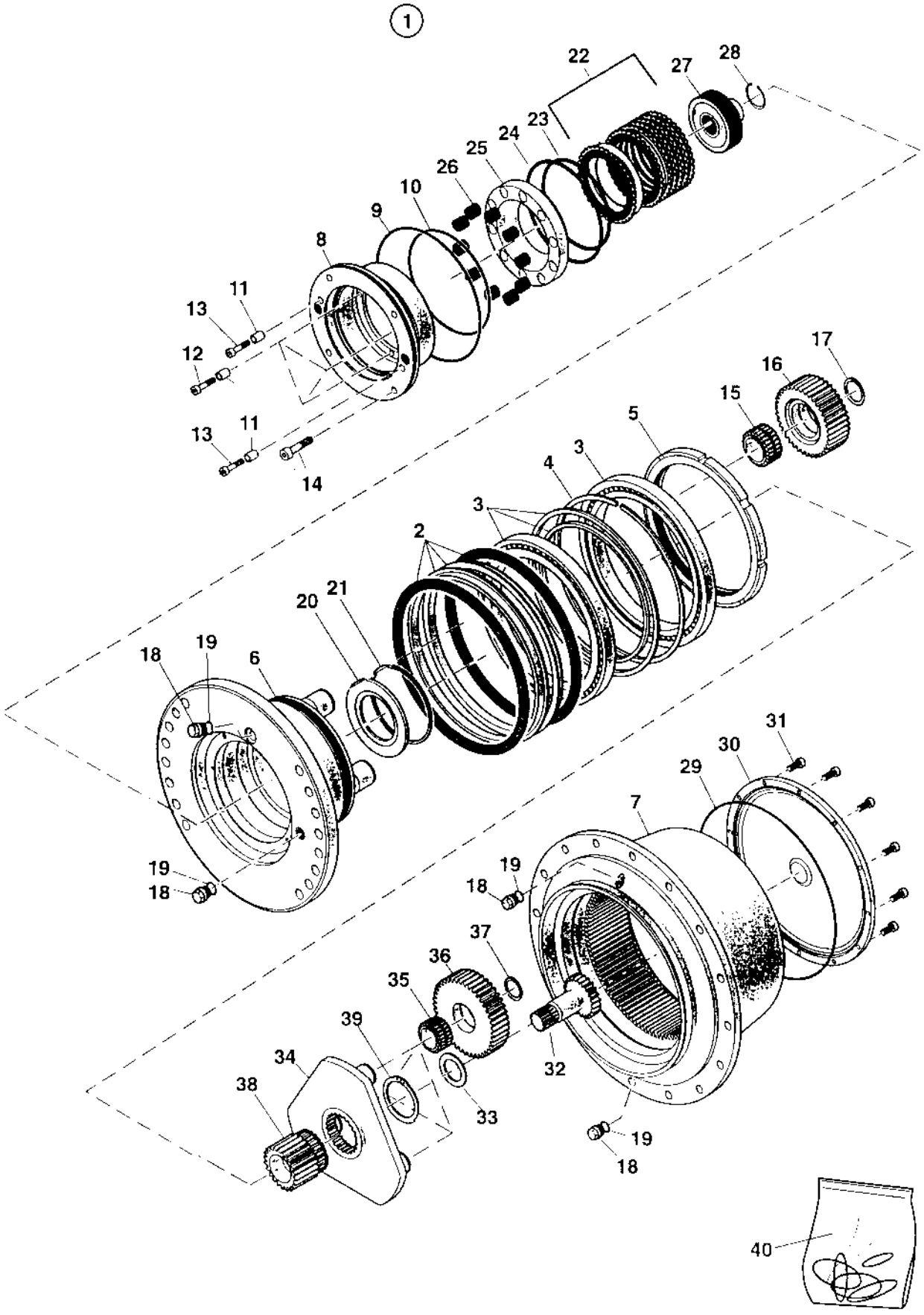

4700372987 Drum gear

Item	Part No	Rem	Qty	Description	Code
1			1	Drum gear, cpl	
2	4700935859		1	. Seal	
3	4700935860		1	. Roller bearing	
4	4700935861		1	. Spring ring	
5	4700935862		1	. Nut	
6	4700935863		1	. Hub	
7	4700935864		1	. Hollow wheel	
8	4700935865		1	. Adapter	
9	4700935866	A	1	. O-ring	
10	4700935867	A	1	. O-ring	
11	4700935868		5	. Bushing	
12	4700935869		3	. Screw	
13	4700935870		2	. Screw	
14	4700935871	C	4	. Screw	
15	4700935872		4	. Roller bearing	
16	4700935873		4	. Planet gear	
17	4700935421		4	. Retaining ring	
18	4700935394		4	. Plug	
19	4700935395	A	4	. Seal ring	
20	4700935398		1	. Plate	
21	4700935399		1	. Spring ring	
22	4700935400		1	. Brake disc kit	
23	4700935401	A	1	. O-ring	
24	4700935402	A	1	. O-ring	
25	4700935403		1	. Piston	
26	4700935404		10	. Spring	
27	4700935874		1	. Coupling	
28	4700935875	B	1	. Retaining ring	
29	4700935413	A	1	. O-ring	
30	4700935414		1	. Cover	
31	4700935415		12	. Screw	
32	4700935876		1	. Sun wheel	
33	4700935877		1	. Spacer	
34	4700935878		1	. Planet carrier	
35	4700935879		3	. Roller bearing	
36	4700935880		3	. Planet gear	
37	4700935881		3	. Retaining ring	
38	4700935882		1	. Sun wheel	
39	4700935883		1	. Retaining ring	
40	4700935380		1	Seal kit	

A) Incl. in item 40
B) Only used with Single speed Propulsion motor.
C) For Brake release

Engine

Item	Part No	Rem	Qty	Description	Code
10				Engine Cummins QSB 4.5 C (Page 40)	
20				Cooling system (Page 42)	
30				Combustion air system (Page 46)	
40				Fuel system (Page 48)	
50				Exhaust system (Page 50)	
60				Pre air cleaner Option (Page 52)	

Engine Cummins QSB 4.5 C

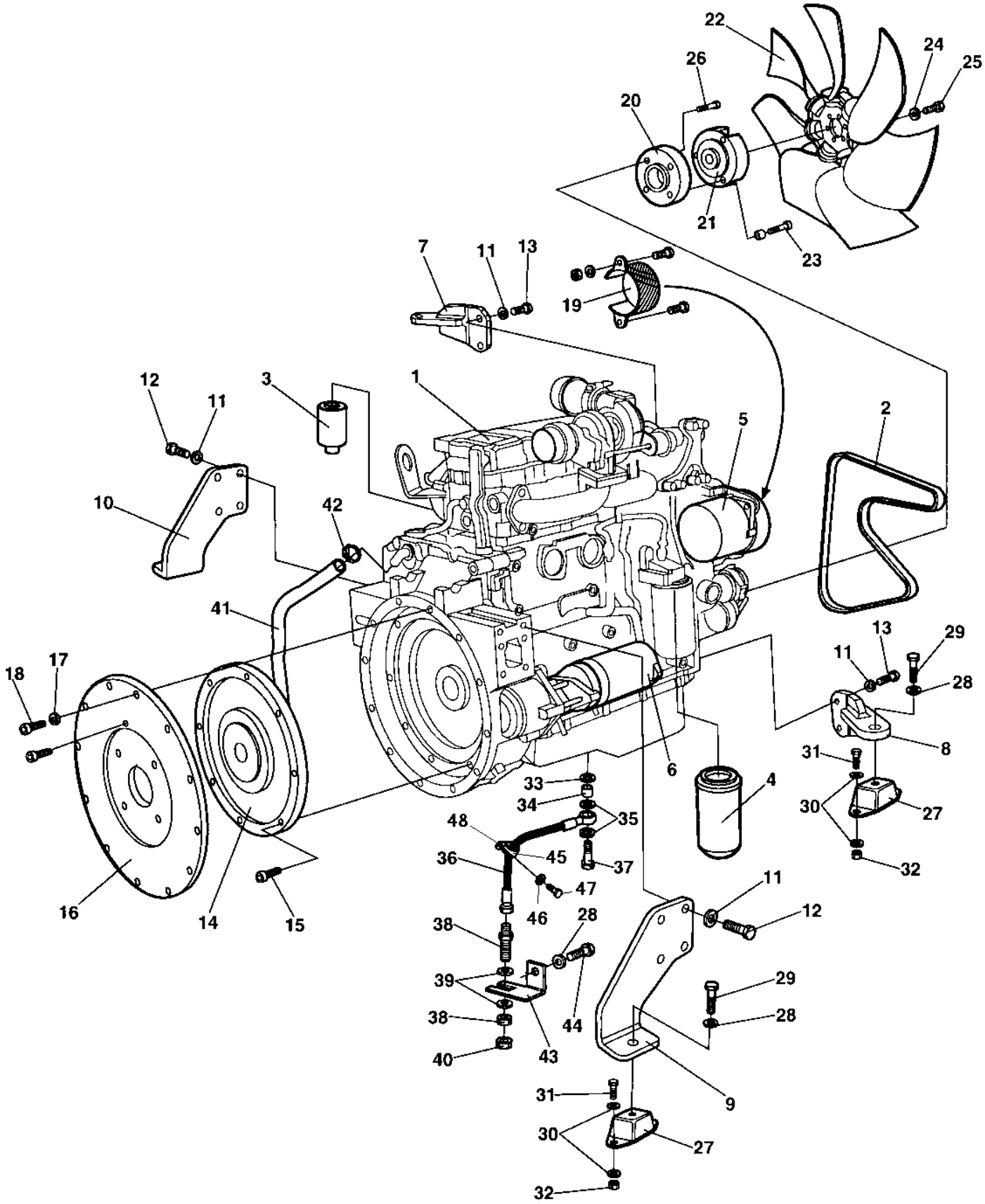

Engine Cummins QSB 4.5 C

Item	Part No	Rem	Qty	Description	Code
1	4700391663		1	Diesel engine Cummins QSB 4,5	D
2	4700945731		1	. V-belt	A
3	4700945624		1	. Fuel filter element	
4	4700945145		1	. Oil filter element	A
5	4700945140		1	. Alternator	C
6	4700945730		1	. Starter	C
7	4700392283		1	Engine bracket, Right	
8	4700392284		1	Engine bracket, Left	
9	4700393022		1	Engine bracket, Left	
10	4700393021		1	Engine bracket, Right	
11	4700904638		12	Washer 12x22x2	C
12	4700508079		8	Screw M12-1,75x35H 8,8	
13	4700500194		4	Screw	C
14	4700370229		1	Coupling, cpl	D
15	4700509025		8	Screw 3/8-16UNCx32 8,8	
16	4700372772		1	Bracket	C
17	4700904637		12	Washer	C
18	4700508029		12	Screw M10-1,5x30H 8,8	C
19	4700379163		1	V-belt cover	
20	4700393096		1	Connector	C
21	4700382393		1	Fan hub	D
22	4700379164		1	Fan	D
23	4700792081		3	Socket head cap screw M12x50 10,9	D
24	4700904556		6	Washer 8,4x16x3,0	C
25	4700500047		6	Hexagon head screw	C
26	4700792275		4	Socket head cap screw 7/16-20UNFX32 12.9	D
27	4700387129		4	Shock absorber	D
28	4700904232		5	Washer	C
29	4700500070		4	Screw M16x50	C
30	4700904703		16	Washer	B
31	4700500194		8	Screw	C
32	4700586019		8	Lock nut	C
33	4700330333		1	Copper washer	D
34	4700379480		1	Reducer	
35	4700330331		2	Washer 18,2x23,9x1,5	C
36	4700379621		1	Hydraulic hose	D
37	4700904292		1	Hollow screw	
38	4700230515		1	Connector	C
39	4700904233		2	Washer 21x36x3	C
40	4700330383		1	Cap hydraulic	
41	4700791468		1	Hydraulic hose	D
42	4700313035		1	Hose clamp	D
43	4700388855		1	Bracket	D
44	4700500154		1	Screw M16-2,0x25 8,8	
45	4700921028		1	Clamp	C
46	4700904228		1	Washer 6,4x12x1,5	C
47	4700192812		1	Screw M6x1x20 10.9	D
48	4700902285		1	Hexagon lock nut with flange	C

Cooling system

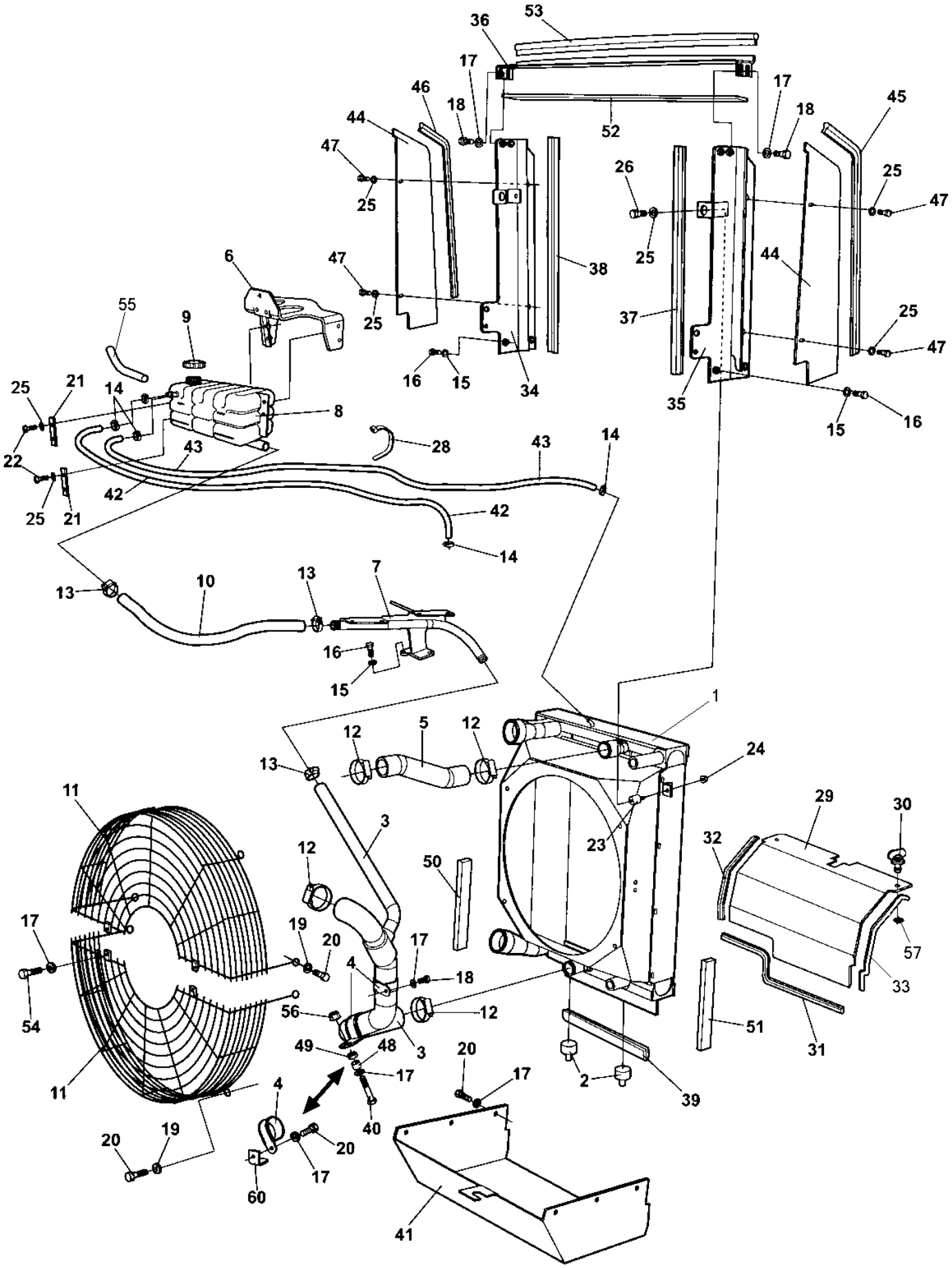

Cooling system

Item	Part No	Rem	Qty	Description	Code
1	4700392220	1	1	Radiator	D
	4812155659		1	. Charge air cooler	D
	4812155660		1	. Water radiator	C
	4812155661		1	. Oil cooler	D
	4812112388		1	Radiator	D
	4812156258		1	. Charge air cooler	D
	4812156256		1	. Water radiator	C
	4812156257		1	. Oil cooler	D
2	4700904551		2	Shock absorber	
3	4700393081		1	Coolant hose	D
4	4700904352		2	Clamp	
5	4700392297		1	Coolant hose	D
6	4700392170		1	Holder	D
7	4700393062		1	Holder	D
8	4700392313		1	Expansion tank	
9	4700903714		1	Cap	
10	4700205027	A	1XL	Coolant hose	D
11	4700387085		2	Fan guard	D
12	4700313010		4	Hose clamp	C
13	4700313006		3	Hose clamp	D
14	4700313001		4	Hose clamp	C
15	4700904230		7	Steel plain washer	C
16	4700500028		7	Screw	C
17	4700904229		16	Steel plain washer 8,4x16x1,5	C
18	4700500019		5	Hexagon head screw M8x16H 8,8	C
19	4700904640		8	Washer 8,4x22x3	C
20	4700500053		15	Screw M8x20H 8.8	C
21	4700381413		2	Washer	
22	4700500075		4	Screw M6-1,0x25 8.8	C
23	4700371774		2	Shock absorber	D
24	4700902285		2	Hexagon lock nut with flange	C
25	4700904228		10	Washer 6,4x12x1,5	C
26	4700500012		2	Screw M6x12	C
28	4700313102		N	Cable ties	
29	4700386853		1	Air inlet plate	D
30	4700904486		2	Quick lock	
31	4700902166	B	1XL	Edge trim	D
32	4700902166	C	1XL	Edge trim	D
33	4700902166	D	1XL	Edge trim	D
34	4700392714		1	Cooler frame, right	D
35	4700392715		1	Cooler frame, left	D
36	4700393361		1	Cooler frame, top	D
37	4700904076	E	1XL	Edge trim	D
38	4700904076	F	1XL	Edge trim	D

1) Replaced by Radiator P/N 4812112388 as spare part.
A) L=0,600M
B) L=0,690M
C) L=0,330M
D) L=0,450M
E) L=0,500M
F) L=0,500M

Cooling system

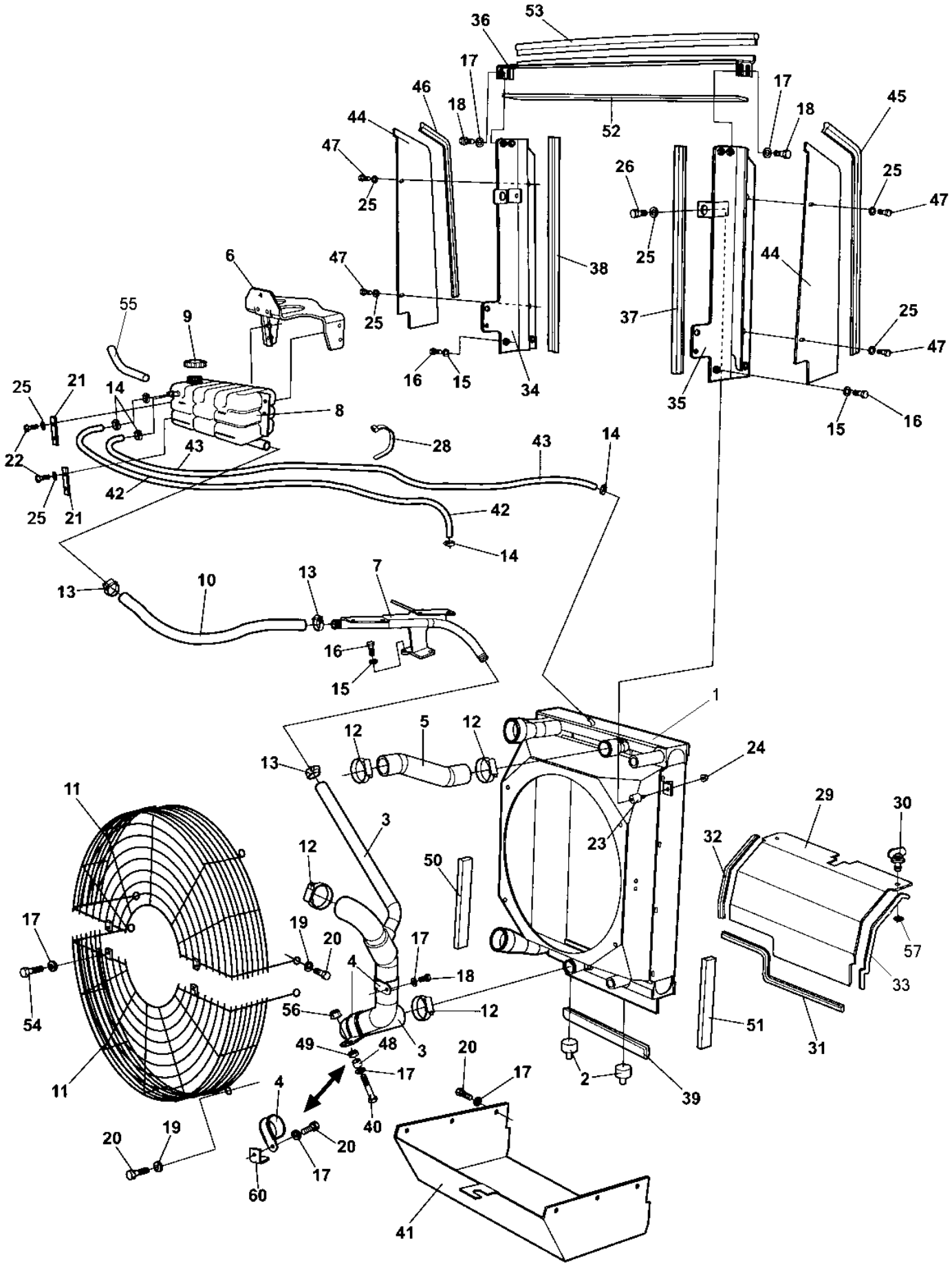

Cooling system

Item	Part No	Rem	Qty	Description	Code
39	4700902166	G	1XL	Edge trim	D
40	4700500025		1	Screw M8-1,25x50 8,8	D
41	4700386943		1	Air leading plate	D
42	4700246069	H	1XL	Fuel hose 3/8"	C
43	4700246069	I	1XL	Fuel hose 3/8"	C
44	4700393362		2	Air inlet	D
45	4700902166	J	1XL	Edge trim	D
46	4700902166	K	1XL	Edge trim	D
47	4700500040		4	Screw M6-1x20 8,8	C
48	4700371767		1	Spacer	D
49	4700570005		1	Nut M8	C
50	4700791597	L	1XL	Rubber strip	
51	4700791597	L	1XL	Rubber strip	
52	4700791597	M	1XL	Rubber strip	
53	4700902166	M	1XL	Edge trim	D
54	4700500018		2	Screw M8-1,25x12 8,8	C
55	4700904623	N	1	Hose guard	D
56	4700902286		1	Hexagon lock nut with flange	C
57	4700926985		2	Quick lock washer	C
60	4700908136		1	Bracket	D

G) L=0,470M
H) L=1,500M
I) L=1,780M
J) L=0,610M
K) L=0,610M
L) L=0,310M
M) L=0,730M
N) L=0,200M

Combustion air system

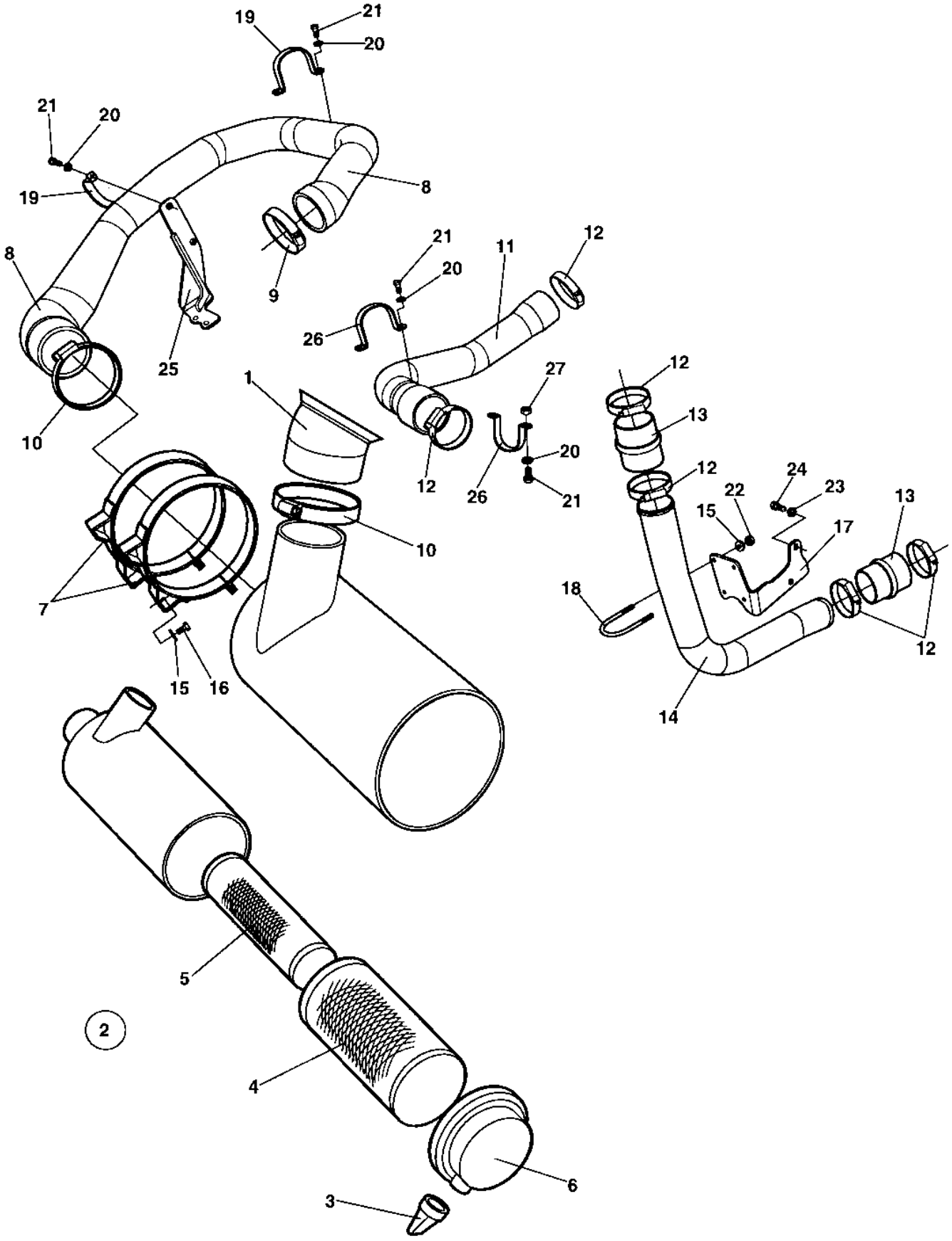

Combustion air system

Item	Part No	Rem	Qty	Description	Code
1	4700393089		1	Air inlet hose	D
2	4700394680		1	Air cleaner Cpl	D
3	4700908399		1	. Vacuator valve	A
4	4700394686		1	. Air filter element, main	A
5	4700394687		1	. Air filter element, safety	A
6	4700908452		1	. Cover	D
7	4700813791		2	Mounting band	D
8	4700393086		1	Air inlet hose	D
9	4700392810		1	Hose clamp	D
10	4700389600		2	Hose clamp	D
11	4700393045		1	Charge air hose	D
12	4700386966		6	Hose clamp 2.3/4"-3.5/8"	B
13	4700385691		2	Air intake hose	D
14	4700393058		1	Charge air tube	D
15	4700904229		8	Steel plain washer 8,4x16x1,5	C
16	4700500019		4	Hexagon head screw M8x16H 8,8	C
17	4700393059		1	Holder	D
18	4700313093		2	Pipe clamp	D
19	4700392742		2	Clamp	D
20	4700904228		8	Washer 6,4x12x1,5	C
21	4700500040		8	Screw M6-1x20 8,8	C
22	4700586003		4	Lock nut M8	C
23	4700904231		2	Washer 13x24x2 300 HV	C
24	4700500046		2	Screw M12x025H	C
25	4700392741		1	Holder	D
26	4700393097		2	Clamp	D
27	4700902285		2	Hexagon lock nut with flange	C

Fuel system

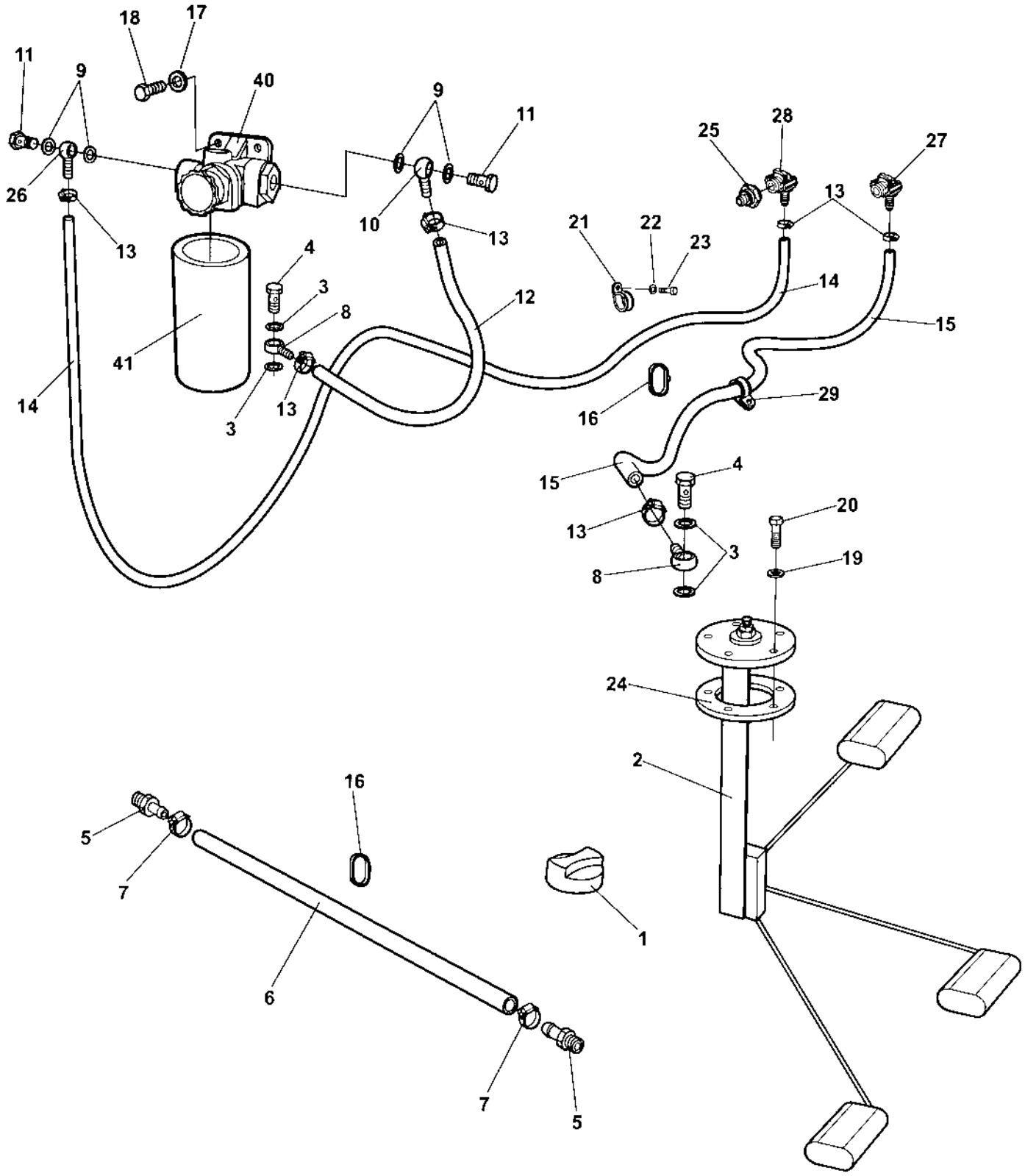
18
17
11
9
40
9
11
25
28
27
26
13
10
13
21
22
23
13
4
3
8
12
14
15
41
14
3
13
16
29
15
4
20
13
3
19
8
24
2
16
5
7
6
1
7
5

Fuel system

Item	Part No	Rem	Qty	Description	Code
1	4700373460		1	Fuel cap	D
2	4700904695		1	Fuel level sender	D
3	4700747282		4	Copper washer	C
4	4700330171		2	Hollow screw	C
5	4700373574		2	Hose connection	D
6	4700244054	A	1XL	Hose reinforced	C
7	4700313002		2	Hose clamp 13-20 mm	
8	4700901121		2	Banjo fitting 14x6 Hose 8	D
9	4700230277		4	Copper washer 12,2x17,9x1,5	D
10	4700792251		1	Banjo coupling M12 Hose 8	D
11	4700234919		2	Screw M12-1,5-24-3	
12	4700904984	B	1XL	Fuel hose	C
13	4700313001		6	Hose clamp	C
14	4700904985	C	1XL	Fuel hose	C
15	4700904984	D	1XL	Fuel hose	C
16	4700313041		N	Cable ties	B
17	4700904230		2	Steel plain washer	C
18	4700500029		2	Hexagon head screw	C
19	4700904281		5	Washer 5,3x10x1 300HV	C
20	4700500006		5	Screw M5x16	C
21	4700921084		1	Pipe clamp	
22	4700904228		1	Washer 6,4x12x1,5	C
23	4700500013		1	Screw M6-1x16 8,8	C
24	4700945777		1	Gasket	D
25	4700792814		1	Quick connect coupling	D
26	4700792808		1	Banjo coupling	D
27	4700792526		1	Quick connect coupling	
28	4700792547		1	Quick connect coupling	D
29	4700791513		1	Pipe clamp	D
40	4700945538		1	Fuel filter head with hand pump	A
41	4700945147		1	Pre-fuel filter element	

A) L=0,66M
B) L=0,65M
C) L=2,35M
D) L=1,30M

Exhaust system

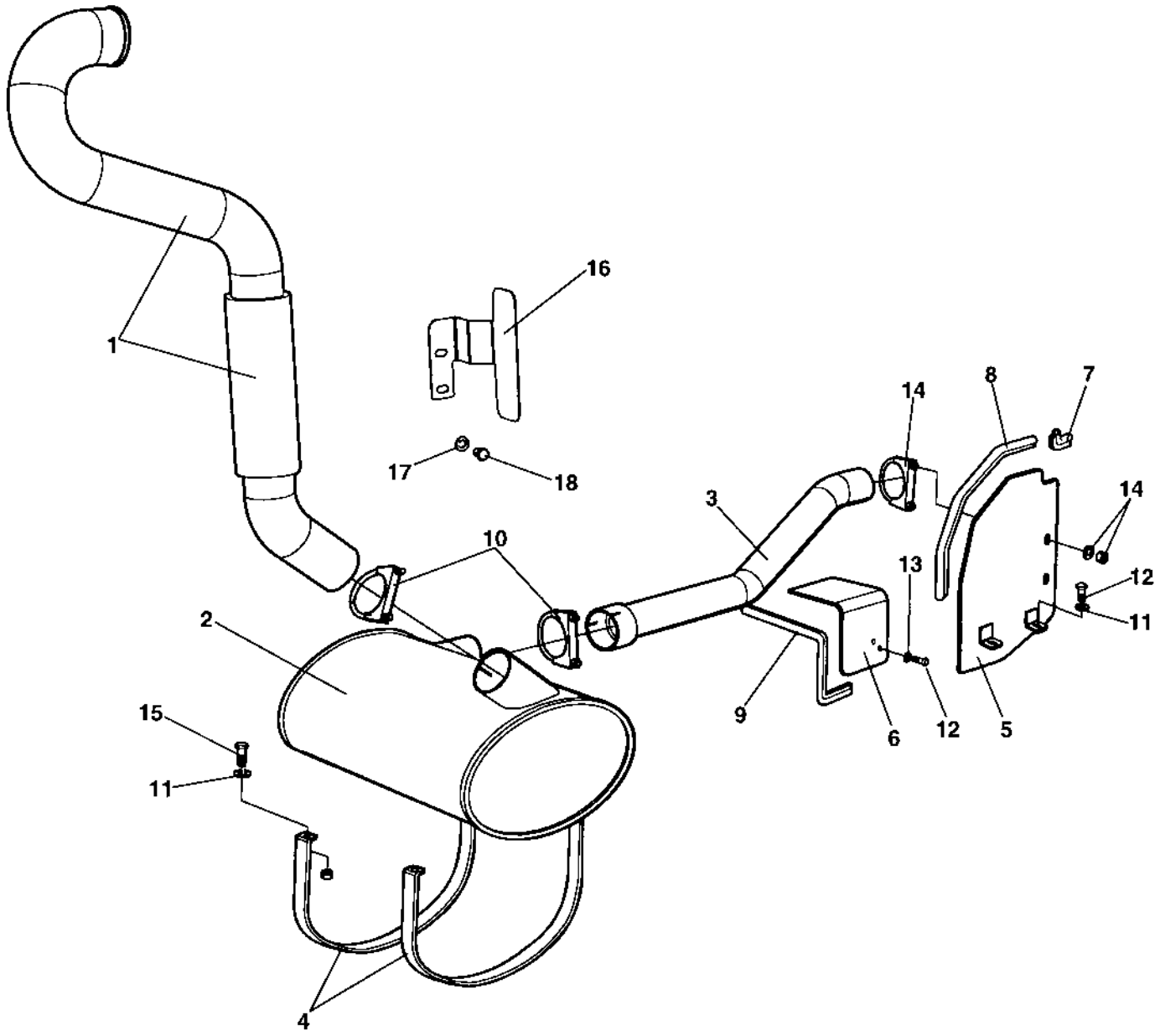

Exhaust system

Item	Part No	Rem	Qty	Description	Code
1	4700392294	1	1	Exhaust pipe	D
	4812110507		1	Exhaust pipe	
2	4700392295		1	Muffler	D
3	4700392296		1	Exhaust pipe	D
4	4700386789		2	Clamp	D
5	4700377098		1	Thermal guard	D
6	4812112782		1	Thermal guard	
7	4700902166	A	1XL	Edge trim	D
8	4700904076	B	1XL	Edge trim	D
9	4700904076	C	1XL	Edge trim	D
10	4700313094		2	Pipe clamp	C
11	4700904640		6	Washer 8,4x22x3	C
12	4700500053		4	Screw M8x20H 8.8	C
13	4700904229		4	Steel plain washer 8,4x16x1,5	C
14	4700313093		1	Pipe clamp	D
15	4700500022		4	Screw M8x30H 8.8 A2K	C
16	4812110656	2	1	Thermal guard	
	4812110645	3	1	Thermal guard	
17	4700904231		2	Washer 13x24x2 300 HV	C
18	4700500163		2	Screw M12x16	D

1) Is replaced by item 1: P/N 4812110507 together with item 16: P/N 4812110645 as spare part.
2) Is used together with item 1: P/N 4700392294.
3) Is used together with item 1: P/N 4812110507.
A) L=0.080M
B) L=0,410M
C) L=0,410M

Pre air cleaner Option

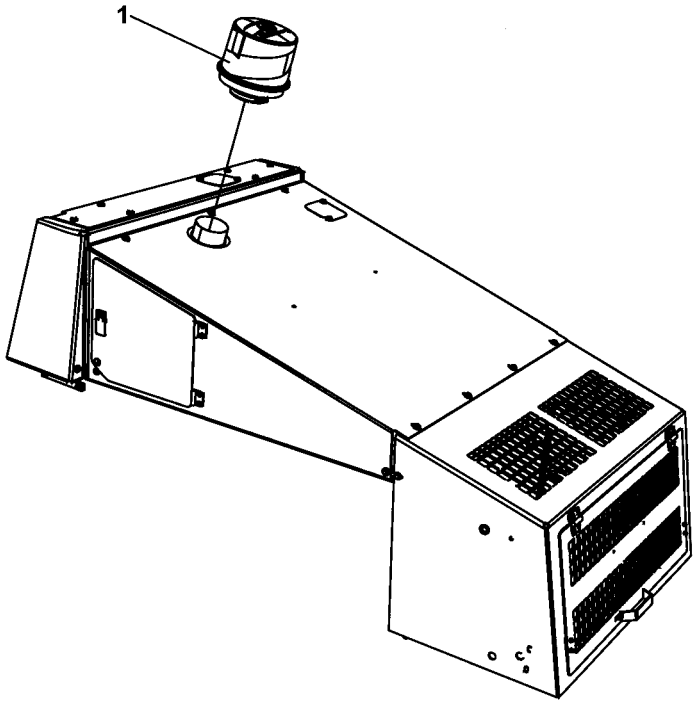

Pre air cleaner Option

Item	Part No	Rem	Qty	Description	Code
1	4700397584		1	Pre air cleaner filter	

Transmission

Item	Part No	Rem	Qty	Description	Code
17				Rear axle and wheels (Page 56)	
21	4700393002			Rear axle (Page 58)	
30	4700383856			Rear axle No-Spin, Option (Page 66)	
40	4700396309			Rear axle (Page 74)	

Rear axle and wheels

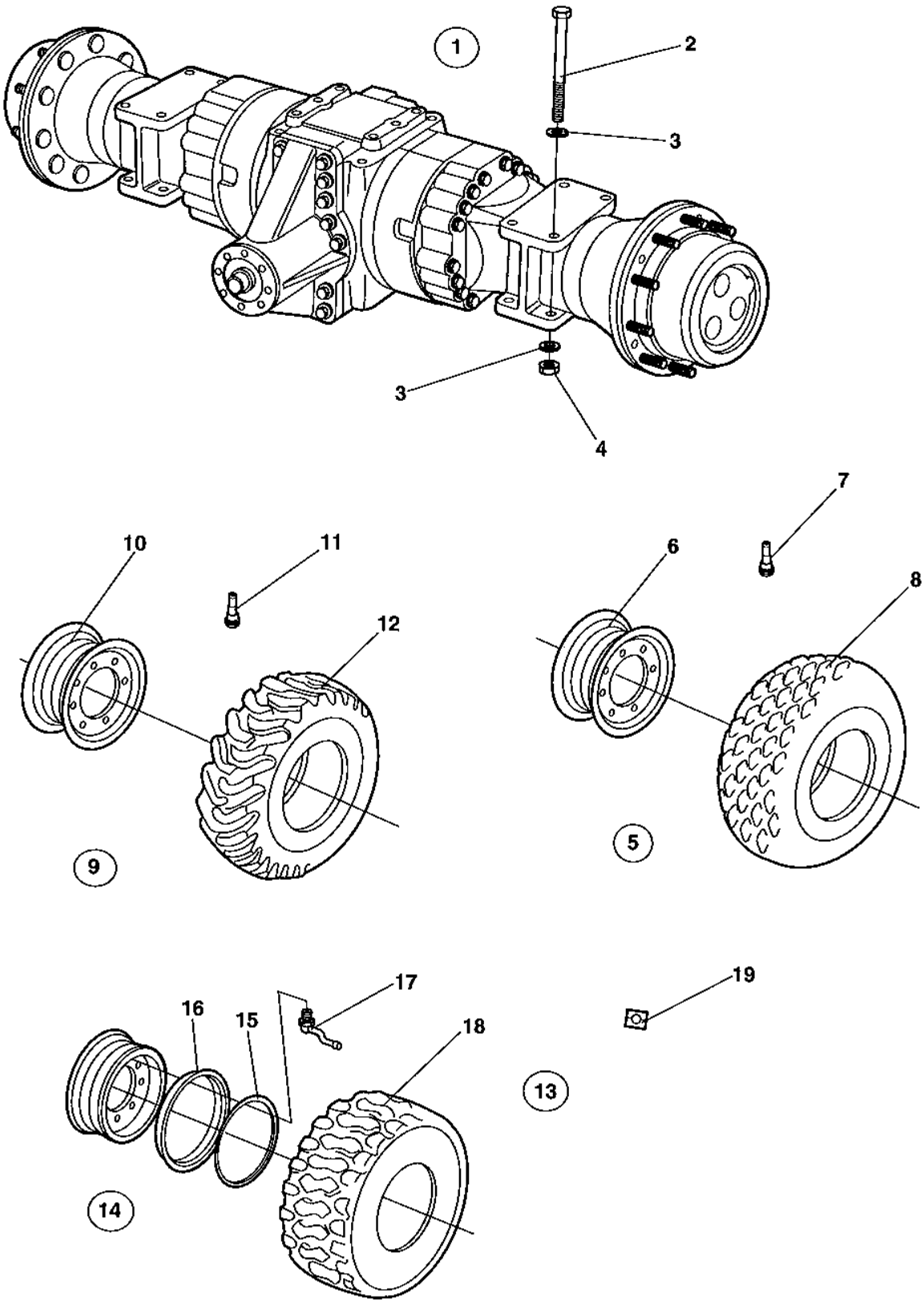

Rear axle and wheels

Item	Part No	Rem	Qty	Description	Code
1	4700393002		1	Rear axle (Page 58)	
2	4700929217		8	Screw	D
3	4700904233		16	Washer 21x36x3	C
4	4700901145		8	Lock nut M20-10	
5	4700390590		2	Wheel, cpl	D
	4700390762	A	2	Wheel, cpl	D
	4700388145	A,G	1	Wheel, cpl	D
	4700388146	G	1	Wheel, cpl	D
6	4700393335		1	. Rim	D
7	4700792261		1	. Air charging valve Straight	B
8	4700390591		1	. Tyre	D
	4700791573	J,G	1	. Tyre	D
9	4700390588	B	1	Tractor wheel, cpl	D
	4700390587	C	1	Tractor wheel, cpl	D
	4700390759	D	1	Tractor wheel, cpl	D
	4700390760	E	1	Tractor wheel, cpl	D
10	4700393335		1	. Rim	D
11	4700792261		1	. Air charging valve Straight	B
12	4700390589		1	. Tyre	D
13	4700383974	F	2	Wheel, tubeless, cpl	D
	4700383975	K	2	Wheel, tubeless, cpl	D
14	4700383955		1	. Rim cpl	D
15	4700901443		1	. . Snap ring	
16	4700901444		1	. . Side ring	
17	4700791175		1	. Air charging valve	B
	4700791176		1	. Valve foot	D
18	4700901218		1	. Tyre	D
19	4700355983	H	2	Decal "TYRE PRESSURE" 200kPa/29psi	D
	4700903985	I	2	Decal "SAFETY", "TYRE IN BALLAST"	

A) Liquidfilled, option.
B) Left, option.
C) Right, option.
D) Liquidfilled tyre, right, option.
E) Liquidfilled tyre, left, option.
F) Option, Michelin branded.
G) For Chinese market only.
H) Used with item 13, 4700383974. 4700383975.
I) Used with Liqued filled tyres.
J) Used together with 4700388145 and 4700388146.
K) Liquidfilled, option, Michelin branded.

4700393002 Rear axle

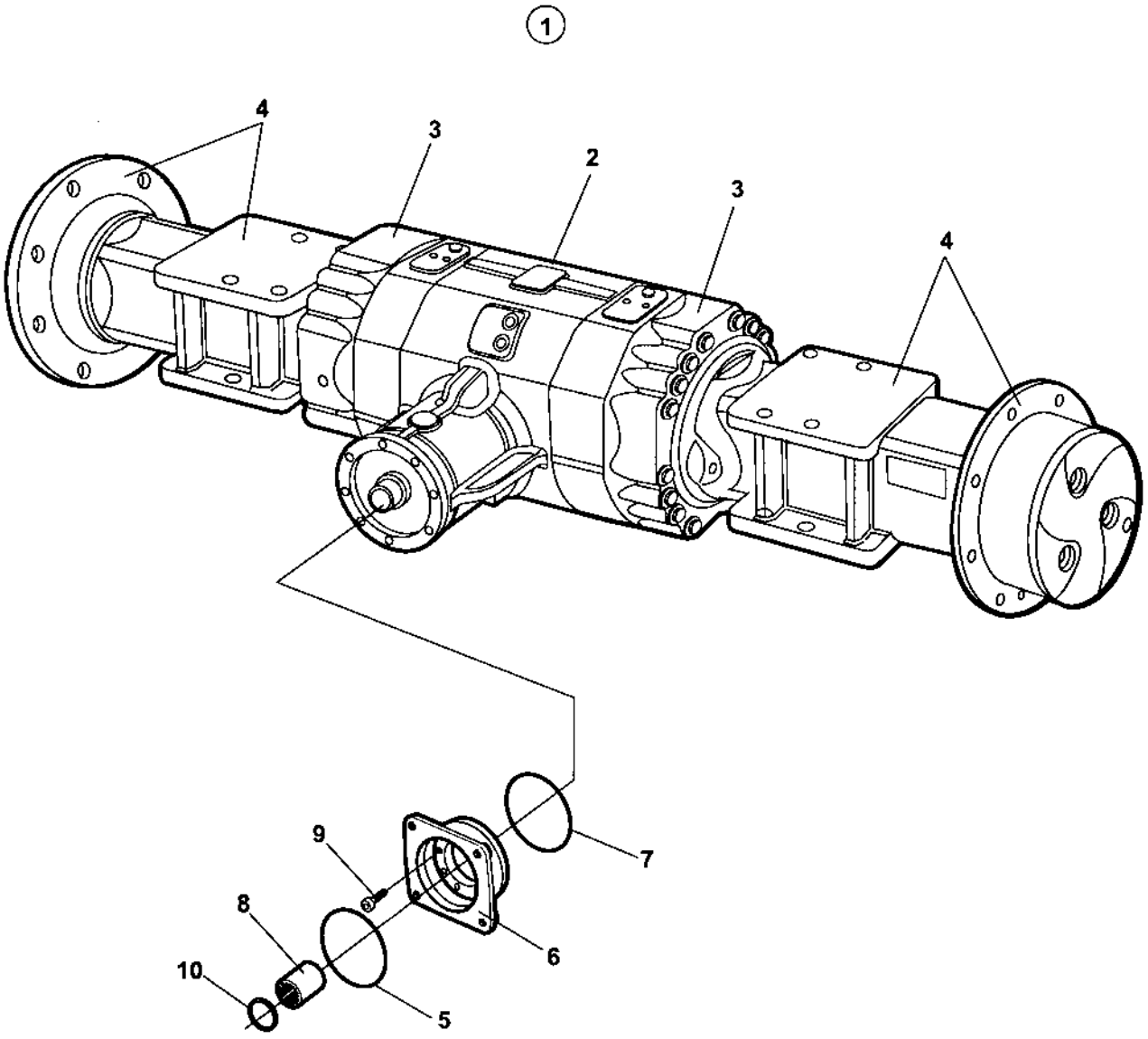

4700393002 Rear axle

Item	Part No	Rem	Qty	Description	Code
1			1	Rear axle	
2			1	. Differential with limited slip (Page 60)	
3			2	. Differential housing and brakes (Page 62)	
4			2	. Planet gear (Page 64)	
5	4700909630		1	O-ring	D
6	4700950556		1	Flange	
7	4700929648		1	O-ring	D
8	4700950559		1	Splined sleeve	
9	4700929712		8	Screw	
10			1	Circlip	

Differential with limited slip

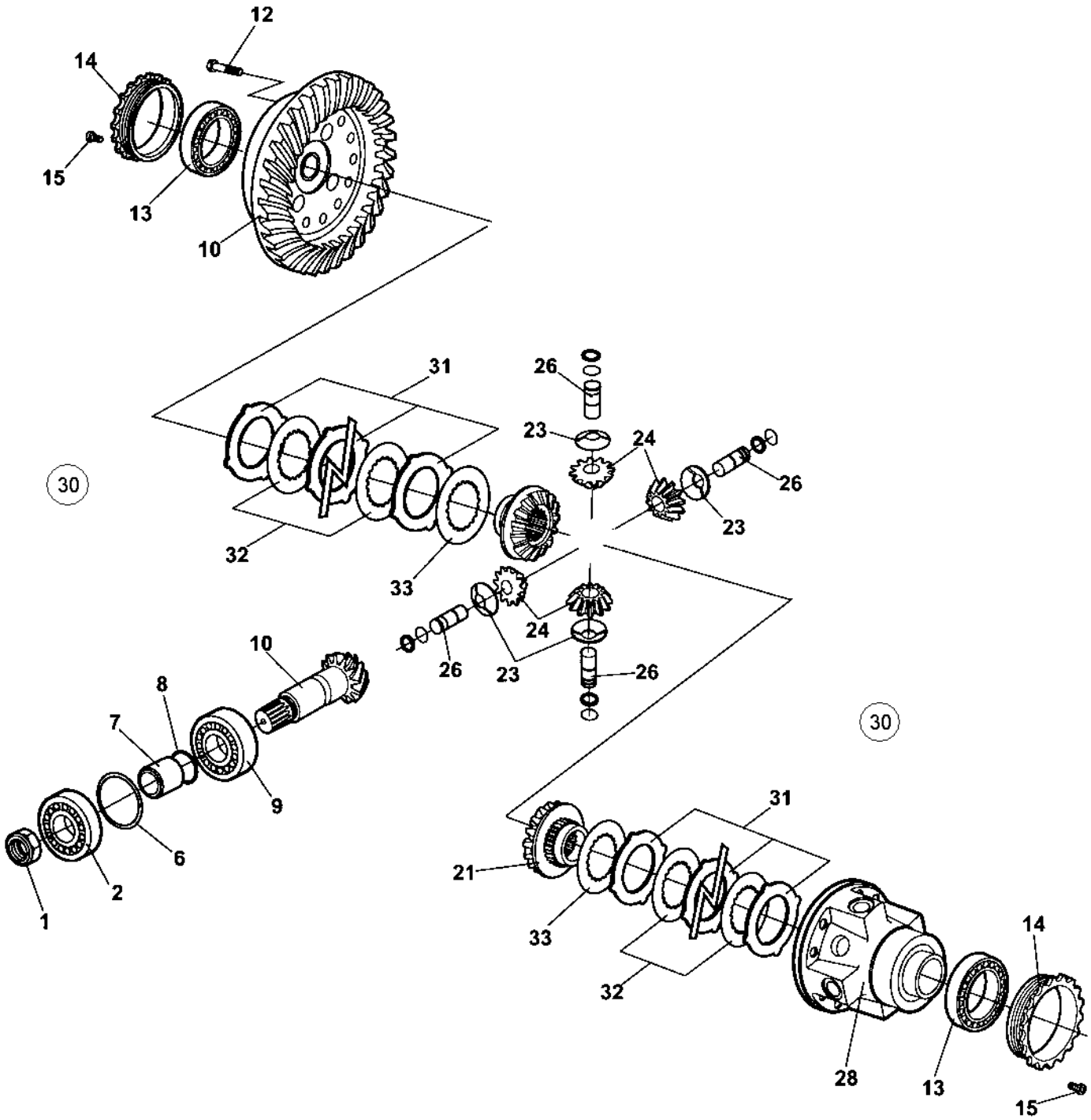

Differential with limited slip

Item	Part No	Rem	Qty	Description		Code
1	4700938988		1	Ring nut		
2	4812157360		1	Roller bearing		
6	4700926354		N	Shim		
	4700926356		N	Shim		
	4700926786		N	Shim		
7			1	Spacer		
8	4700936053		1	Shim	0.15mm	
	4700936054		1	Shim	0.20mm	
	4700936055		1	Shim	0.40mm	
	4700936056		1	Shim	0.50mm	
9	4812157361		1	Roller bearing		
10	4812157359		1	Bevel gear set		
12	4700938991		16	Bolt		D
13	4812157358		1	Taper roller bearing		
14			2	Nut		
15	4700938989		2	Bolt		
21			2	Differential gear		
23	4700936036		4	Friction washer		
24	4700936035		4	Differential pinion		
26			4	Pin		
28			1	Differential carrier		
30	4700938993		2	Disc kit		D
31			N	. Limited slip disc		
32			N	. Limited slip disc		
33			N	. Limited slip disc		

Differential housing and brakes

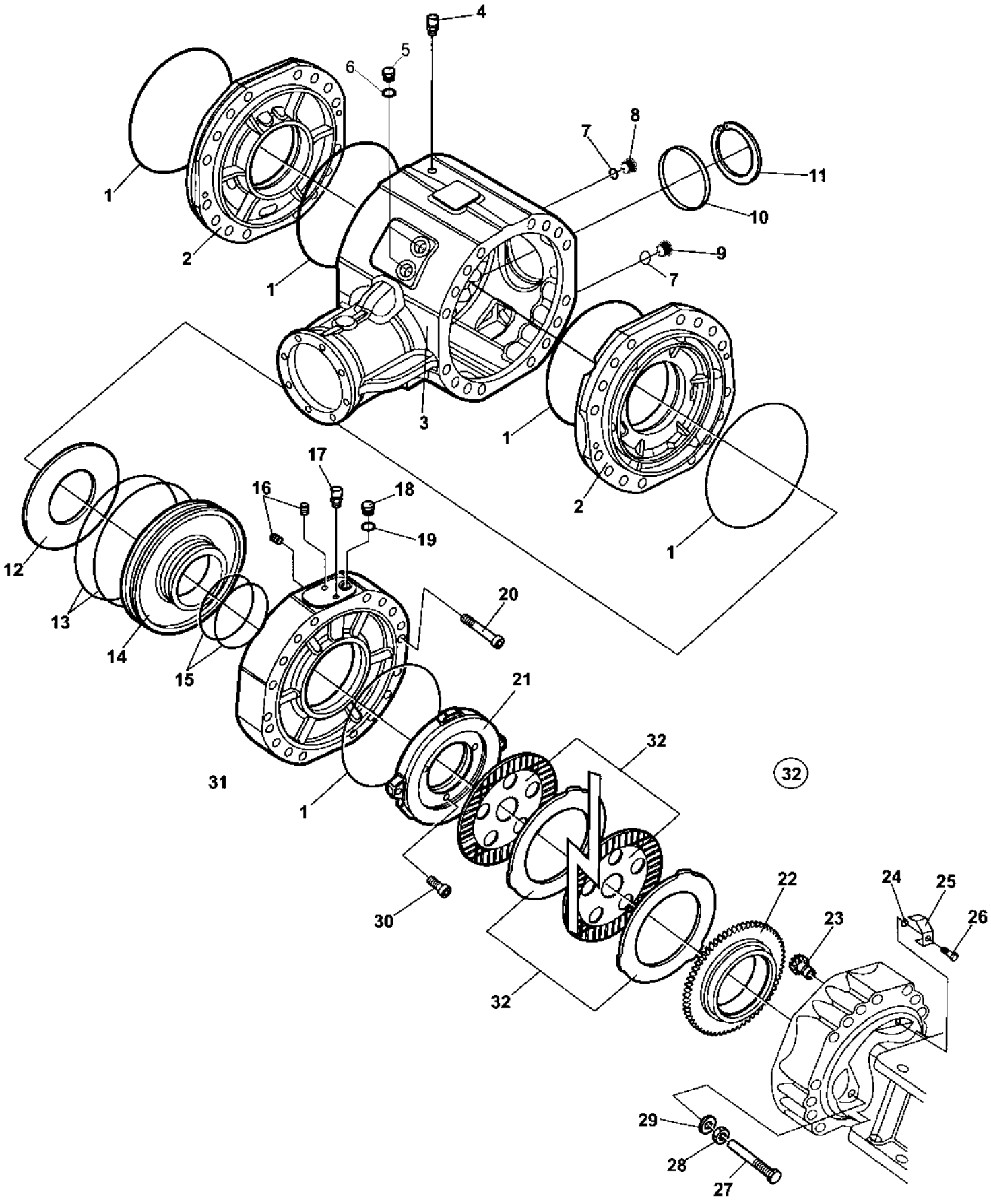

Differential housing and brakes

Item	Part No	Rem	Qty	Description	Code
1	4700909609		6	O-ring	D
2			2	Cover	
3			1	Housing	
4	4700938984		1	Vent nipple	
5	4700909544		2	Screw	
6	4700938983		2	Sealing washer	
7			2	Seal	
8	4700939348		1	Plug	
9	4700939350		1	Magnetic plug	
10			1	Plug	
11	4700929617		1	Lock ring	D
12	4700909616		2	Spring	
13	4700909618		4	O-ring	D
14	4700939280		2	Piston	C
15	4700909619		4	O-ring	D
16			4	Bolt	
17	4700938984		2	Vent nipple	
18	4700939282		2	Bolt	
19	4700939036		2	Sealing washer	C
20	4700939035		4	Screw	C
21			2	Disc	
22	4700939285		2	Ring	D
23	4700909622		2	Pinion	D
24	4700900966		2	O-ring	D
25			2	Lock plate	
26	4700909624		2	Screw	C
27	4700909626		4	Bolt	
28	4700900957		4	Nut	D
29	4700926847		4	Sealing washer	
30	4700939026		6	Screw	C
31			2	Cover	
32	4700950558		2	Brake disc kit	
			10	. Brake disc	
			10	. Brake disc	
	4700909609		2	. O-ring	D

Planet gear

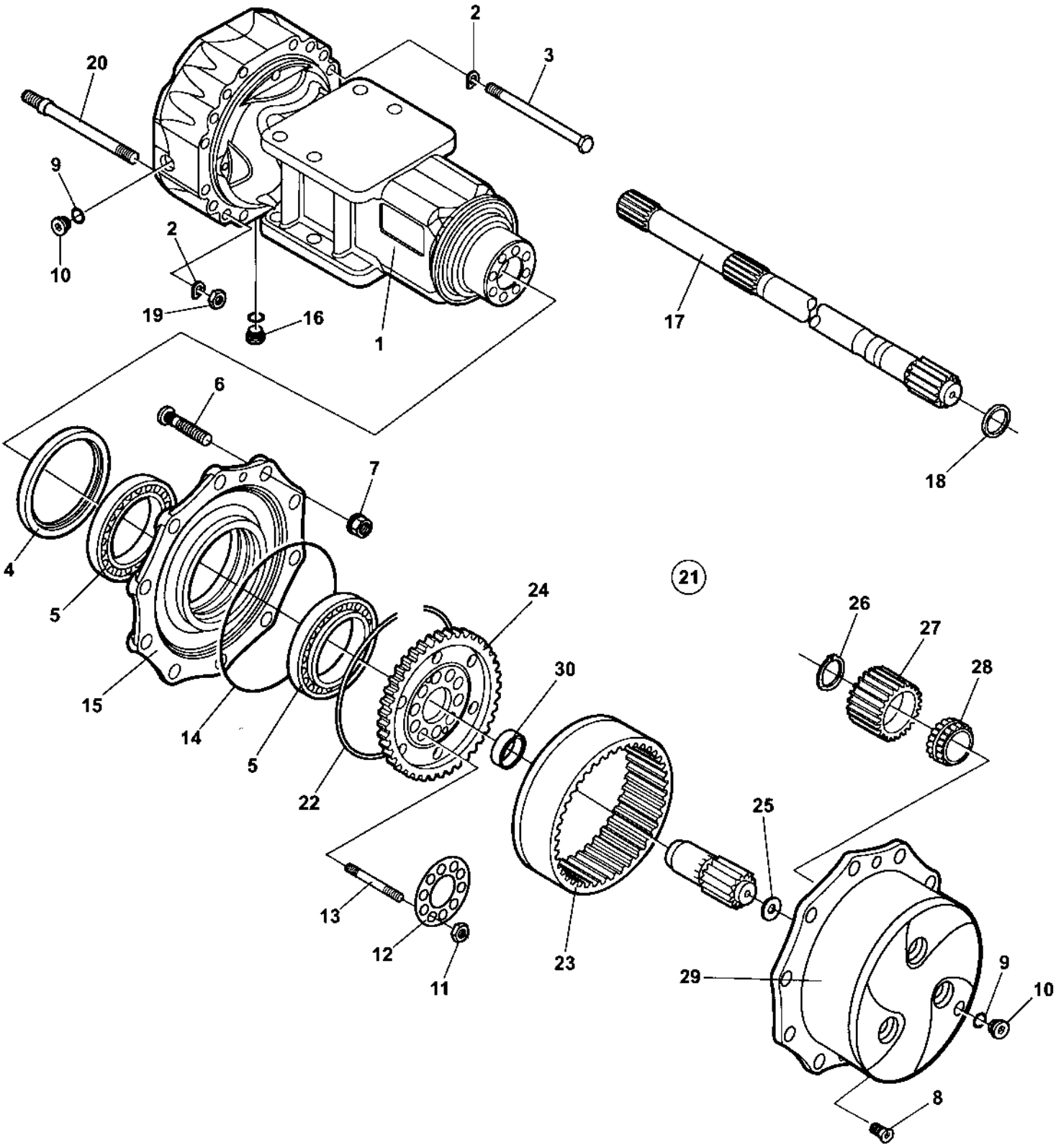
2
3
20
9
10
2
19
16
1
17
18
6
7
4
5
21
24
26
27
28
30
15
14
5
22
25
13
12
11
23
29
9
10
8

Planet gear

Item	Part No	Rem	Qty	Description	Code
1			2	Axle case	
2	4700939003		32	Spring washer	C
3	4812157362		24	Bolt	
4	4812156796		2	Seal	
5	4700939009		4	Bearing	
6	4700926781		20	Wheel screw	
7	4700901987		20	Wheel nut	
8	4700939015		4	Screw	
9			6	Copper washer	
10	4700939348		4	Plug	
11	4700939016		20	Nut	D
12	4700939010		2	Lock plate	
13	4700939017		20	Stud	D
14	4700909609		2	O-ring	D
15	4812157397		2	Wheel hub	
16	4700939350		2	Magnetic plug	
17			2	Half shaft	
18	4700939014		2	Seal	
19	4700939019		8	Nut	D
20	4700939278		8	Stud	D
21	4700950557		2	Planet gear carrier Cpl.	
22	4700939267		2	. Circlip	
23			2	. Ring gear	
24			2	. Ring gear support	
25	4700939270		2	. Washer	
26	4700939271		6	. Seal	
27	4700939272		6	. Planet gear	
28	4700939273		6	. Bearing	
29			2	. Planet gear carrier	
30	4812157398		2	Spacer	

4700383856 Rear axle No-Spin, Option

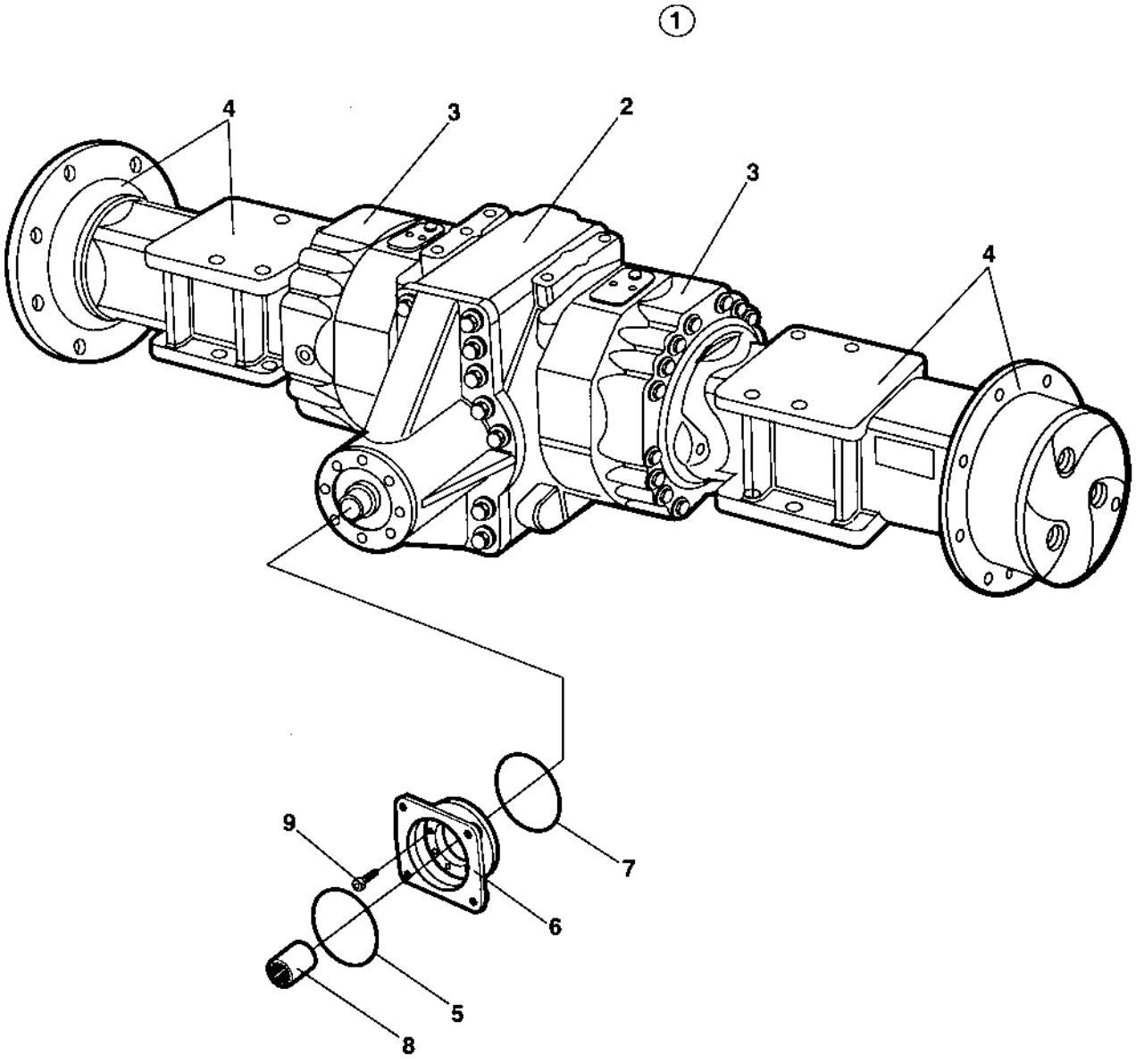

4700383856 Rear axle No-Spin, Option

Item	Part No	Rem	Qty	Description	Code
1			1	Rear axle	
2			1	. Differential with no-spin (Page 68)	
3			2	. Differential housing and brakes (Page 70)	
4			2	. Planet gear (Page 72)	
5	4700909584		1	O-ring	D
6	4700900255		1	Flange	D
7	4700929648		1	O-ring	D
8	4700901834		1	Splined sleeve	
9	4700909582		8	Screw	

Differential with no-spin

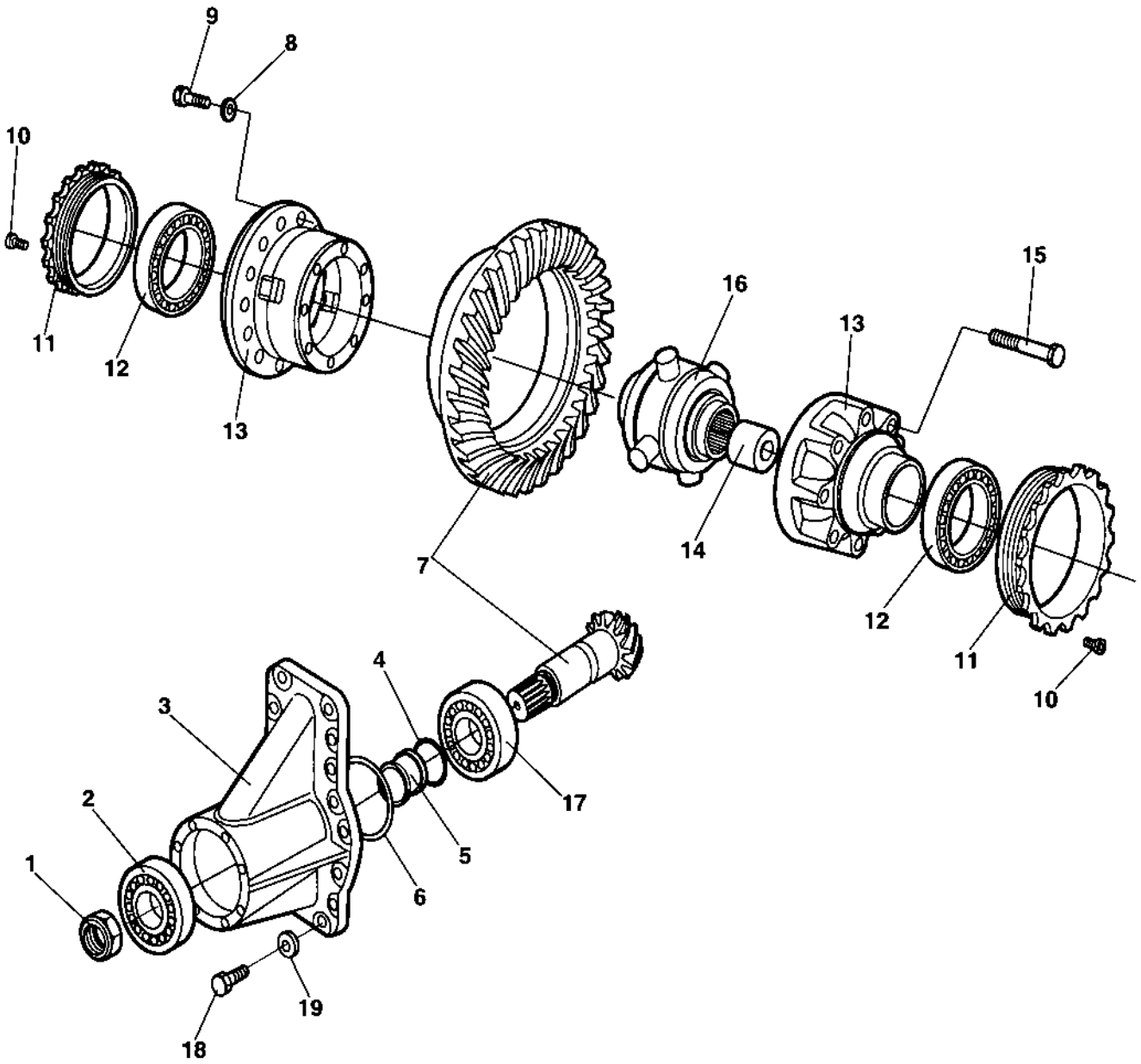

Differential with no-spin

Item	Part No	Rem	Qty	Description		Code
1	4700929638		1	Nut		D
2	4700909574		1	Tapper roller bearing		
3	4700908485		1	Housing		D
4	4700939259		1	Shim	0,15mm	
	4700909580		1	Shim	0,20mm	
	4700909576		1	Shim	0,30mm	
	4700929644		1	Shim	0,40mm	
	4700939260		1	Shim	0,50mm	
5	4700909567		1	Spacer		
6	4700909568		1	Shim	0,10mm	
	4700909569		1	Shim	0,20mm	
	4700909570		1	Shim	0,50mm	
	4700939258		1	Shim	0,15mm	
7	4700212553		1	Bevel gear set		
9	4700938991		16	Bolt		D
10	4700938989		2	Bolt		
11	4700939261		2	Ring nut		
12	4700923342		1	Tapper roller bearing		
13	4700929630		1	Differential case		D
14	4700929631		1	Spacer		D
15	4812156885		8	Screw		C
16	4700929626		1	Non-spin unit		D
17	4700909581		1	Tapper roller bearing		
18	4812156886		16	Bolt		
19	4700909572		16	Spring washer		

Differential housing and brakes

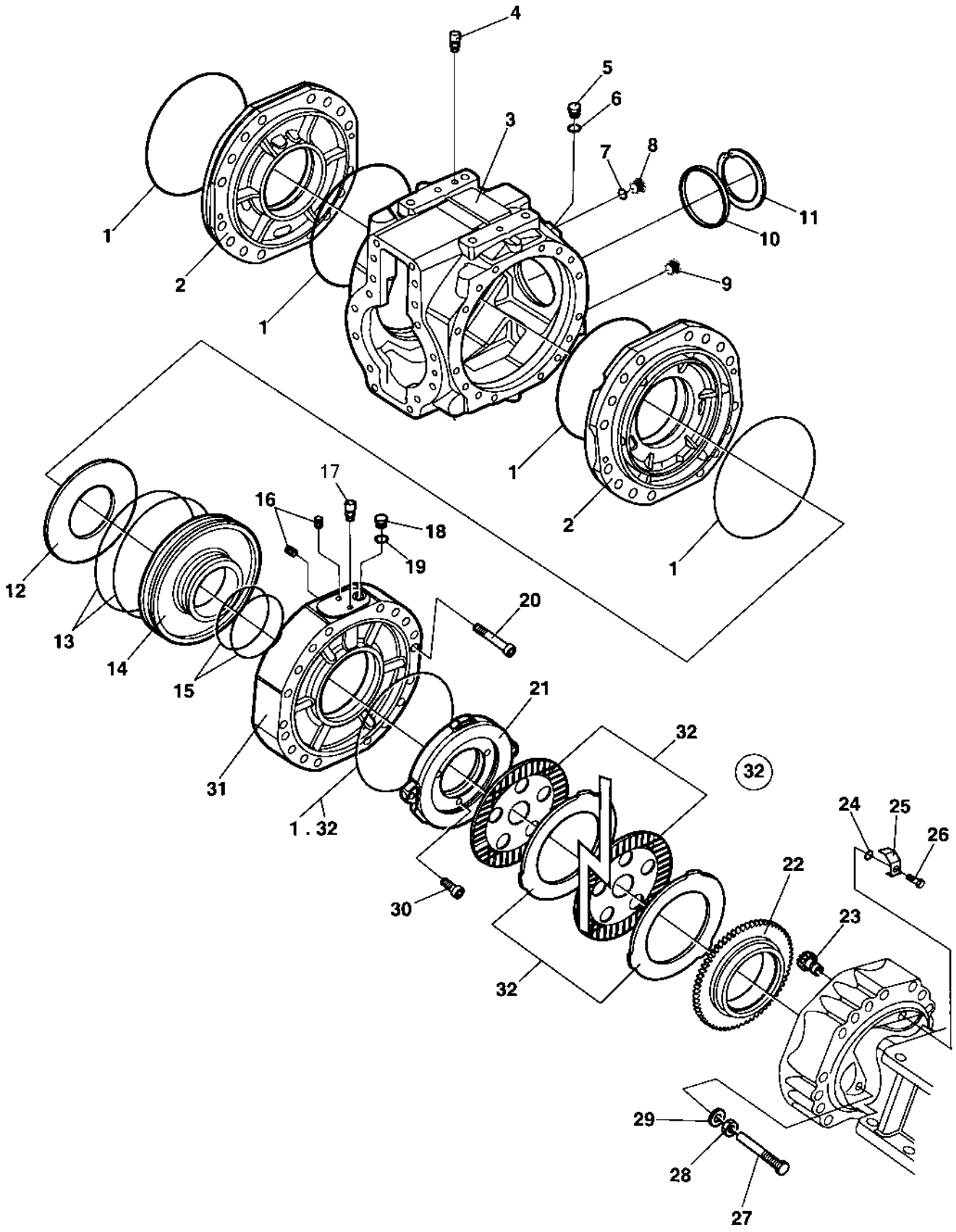

Differential housing and brakes

Item	Part No	Rem	Qty	Description	Code
1	4700909609		6	O-ring	D
2	4700939255		2	Cover	D
3	4700939256		1	Housing	D
4	4700938984		1	Vent nipple	
5	4700909544		2	Screw	
6	4700938983		2	Sealing washer	
7	4700330333		1	Copper washer	D
8	4700909596		1	Plug	C
9	4700926810		1	Magnetic plug	
10	4700938296		1	Plug	
11	4700929617		1	Lock ring	D
12	4700909616		2	Spring	
13	4700909618		4	O-ring	D
14	4700939280		2	Piston	C
15	4700909619		4	O-ring	D
16	4700939281		4	Bolt	C
17	4700938984		2	Vent nipple	
18	4700939282		2	Bolt	
19	4700939036		2	Sealing washer	C
20	4700939035		4	Screw	C
21	4700939283		2	Disc	C
22	4700939285		2	Ring	D
23	4700909622		2	Pinion	D
24	4700900966		2	O-ring	D
25	4700939286		2	Lock plate	D
26	4700909624		2	Screw	C
27	4700909626		4	Bolt	
28	4700900957		4	Nut	D
29	4700926847		4	Sealing washer	
30	4700939026		6	Screw	C
31	4700939287		2	Cover	C
32	4700939284		2	Brake disc kit	C
			12	. Brake disc	
			12	. Brake disc	
	4700909609		2	. O-ring	D

Planet gear

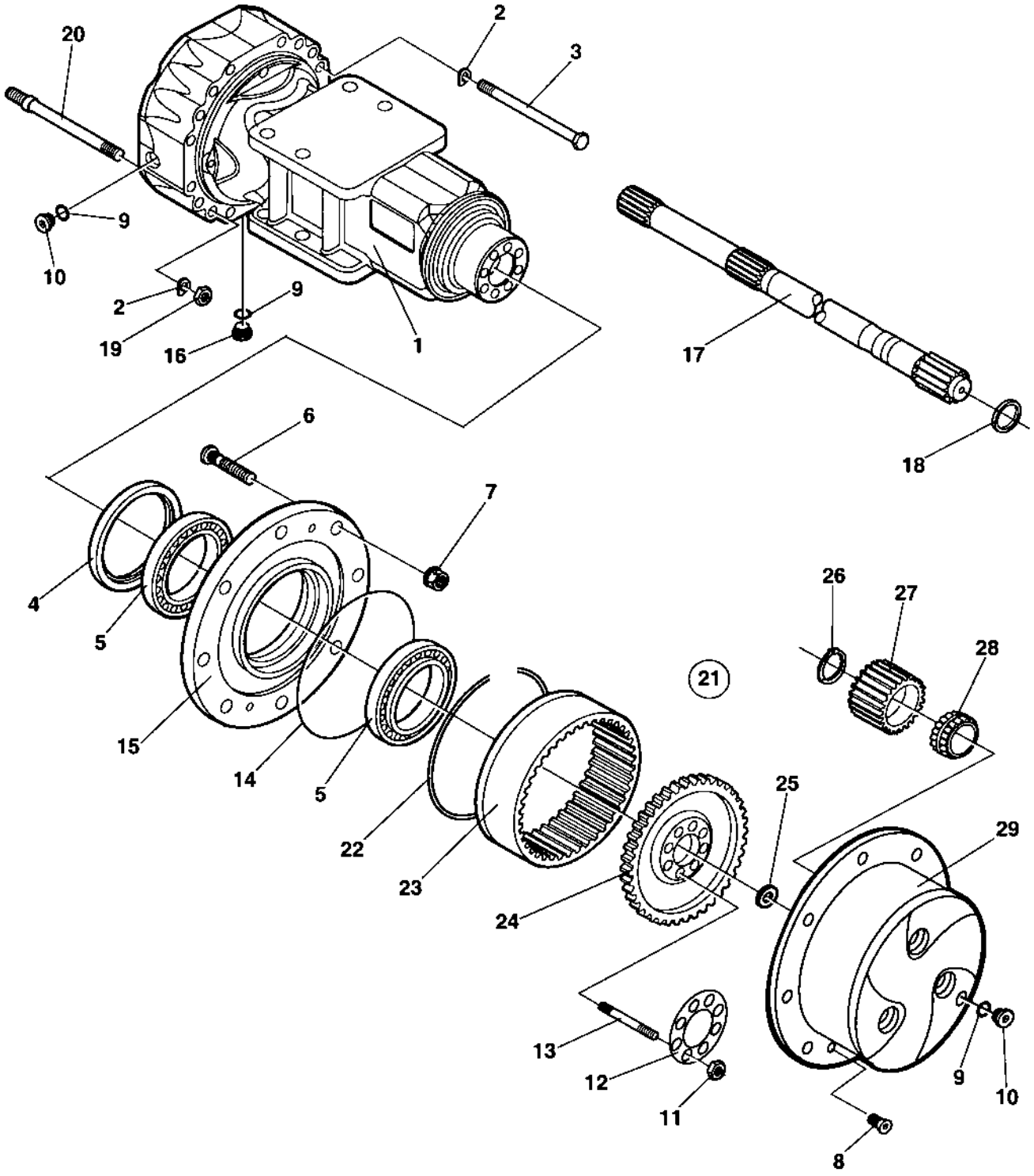
20
2
3
9
10
2
19
16
9
1
17
18
6
7
4
5
15
14
5
22
23
21
26
27
28
25
29
24
13
12
11
9
10
8

Planet gear

Item	Part No	Rem	Qty	Description	Code
1	4700939263		2	Axle case	D
2	4700939003		32	Spring washer	C
3	4700939264		24	Bolt	C
4	4700939265		2	Seal	
5	4700939266		4	Bearing	
6	4700926781		20	Wheel screw	
7	4700901987		20	Wheel nut	
8	4700939015		4	Screw	
9	4700330333		6	Copper washer	D
10	4700909596		4	Plug	C
11	4700939016		20	Nut	D
12	4700939275		2	Lock plate	
13	4700939017		20	Stud	D
14	4700909609		2	O-ring	D
15	4700939276		2	Wheel hub	
16	4700939350		2	Magnetic plug	
17	4700939277		2	Half shaft	D
18	4700909586		2	Seal	D
19	4700939019		8	Nut	D
20	4700939278		8	Stud	D
21	4700939351		2	Planet gear carrier Cpl.	D
22	4700939267		2	. Circlip	
23	4700939268		2	. Ring gear	D
24	4700939269		2	. Ring gear support	
25	4700939270		2	. Washer	
26	4700939271		8	. Seal	
27	4700939272		8	. Planet gear	
28	4700939273		8	. Bearing	
29	4700939349		2	. Planet gear carrier Cpl.	

4700396309 Rear axle

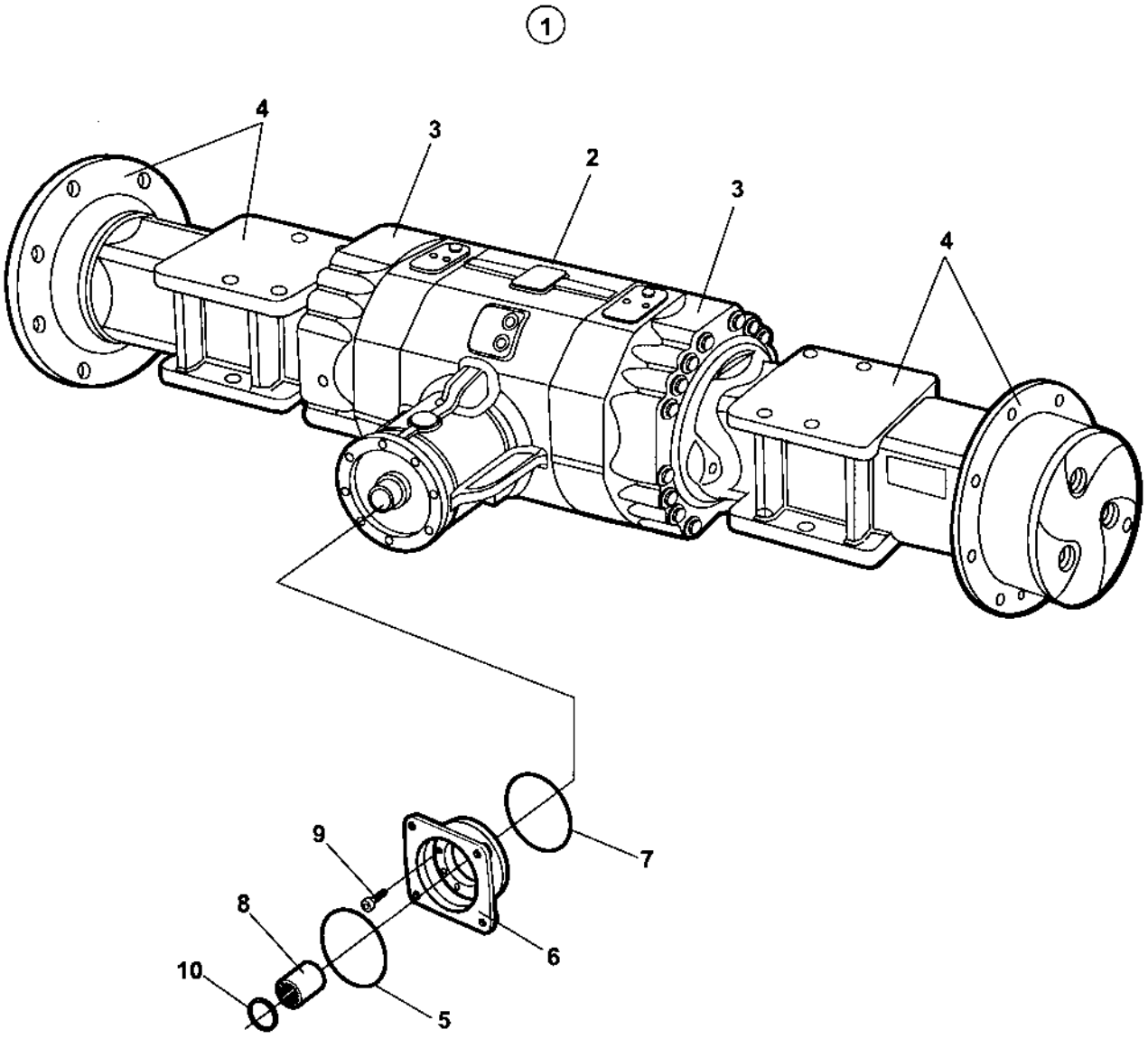

4700396309 Rear axle

Item	Part No	Rem	Qty	Description	Code
1			1	Rear axle	
2			1	. Differential with limited slip (Page 60)	
3			2	. Differential housing and brakes (Page 62)	
4			2	. Planet gear (Page 64)	
5	4700909584		1	O-ring	D
6	4700950555		1	Flange	
7	4700929648		1	O-ring	D
8	4700901834		1	Splined sleeve	
9	4700900256		8	Screw	D
10			1	Not used on this model	

Hydraulic system

Item	Part No	Rem	Qty	Description	Code
10				Propulsion system, Front (Page 78)	
15				Propulsion system, Rear (Page 82)	
20				Vibration system (Page 90)	
30				Steering system (Page 100)	
60				Brake system (Page 106)	
70				Central test panel hydraulic Option (Page 108)	
80				Central test panel Option (Page 110)	

Propulsion system, Front

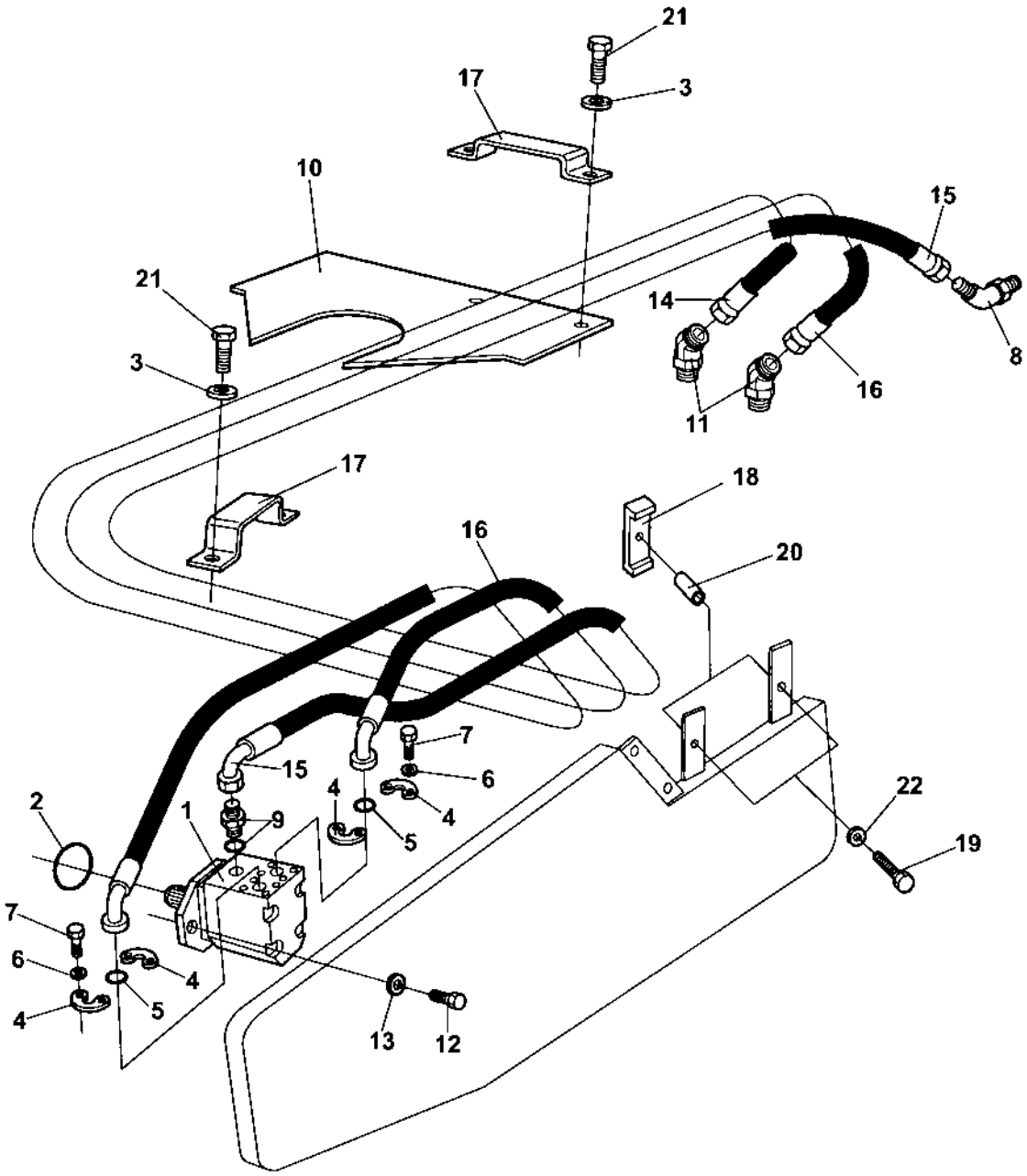

Propulsion system, Front

Item	Part No	Rem	Qty	Description	Code
1	4700371509		1	Propulsion motor (Page 80)	C
2	4700904058		1	O-ring	
3	4700904230		6	Steel plain washer	C
4	4700923384		4	Flange half	C
5	4700904005		2	O-ring	B
6	4700904638		8	Washer 12x22x2	C
7	4700502132		8	Screw UNC 7/16" x 22	D
8	4700334132		1	Elbow 45, O-ring	C
9	4700334138		1	Adapter	C
10	4700372235		1	Hose guard	D
11	4700791230		2	Elbow 45	
12	4700500101		2	Screw M20x50	C
13	4700903290		2	Washer 21x36x6	C
14	4700483996		1	Hydraulic hose	D
15	4700483190		1	Hydraulic hose	D
16	4700483995		1	Hydraulic hose	D
17	4700373016		2	Hose clamp	D
18	4700373270		2	Hose clamp	D
19	4700500033		2	Screw M10-1,5x60 8,8	D
	4700500032		2	Screw M10 x 55	D
20	4700373423		2	Spacer	D
21	4700500029		4	Hexagon head screw	C
22	4700904230		2	Steel plain washer	C

4700371509 Propulsion motor

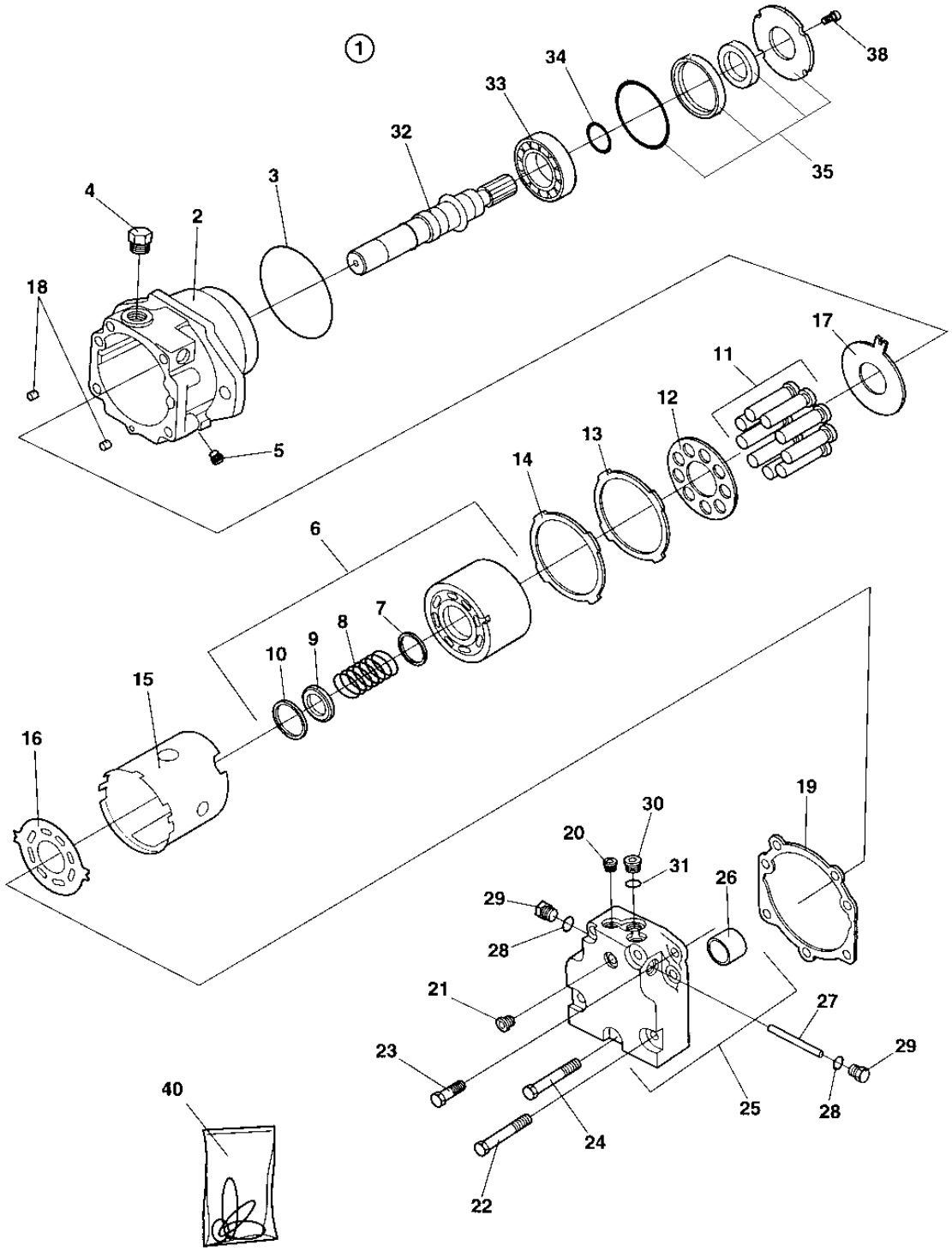

4700371509 Propulsion motor

Item	Part No	Rem	Qty	Description	Code
1			1	Hydraulic motor, Cpl	
2	4700937274		1	. Housing	
3	4700937275	1	1	. O-ring	
4	4700902928		2	. Plug	C
	4700901453	1	2	. . O-ring	C
5	4700908432		1	. Plug	C
6	4700937277		1	. Cylinder block, cpl	
7	4700935619		1	. . Spacer	
8	4700937278		1	. . Spring	
9	4700935621		1	. . Spring retainer	
10	4700935622		1	. . Ring retainer	
11	4700903570		9	. Piston	D
12	4700903571		1	. Pressure plate	D
13	4700935623		1	. Retainer guide	
14	4700935624		1	. Shim	
15	4700935625		1	. Holder	
16	4700935626		1	. Valve plate	
17	4700937279		1	. Thrust plate	
18	4700813822		2	. Pin	D
19	4700935629	1	1	. Gasket	D
20	4700358388		2	. Plug	C
21	4700908432		1	. Plug	C
22	4700909252		4	. Screw	
23	4700909253		2	. Screw	
24	4700935630		1	. Screw	
25	4700937280		1	. End cap, cpl	
26	4700903053		1	. . Bushing	
27	4700909255		1	. Spool	
28	4700923087	1	2	. O-ring	C
29	4700358388		2	. Plug	C
30	4700935853		1	. Plug	
31	4700926658	1	1	. O-ring	C
32	4700935631		1	. Shaft	
33	4700901465		1	. Bearing	
34	4700901467		1	. Ring	
35	4700950368		1	. Shaft seal kit	D
38	4700908773		3	. Screw	D
40	4700937283		1	Seal kit	

1) Includes in item 40, Seal kit

Propulsion system, Rear

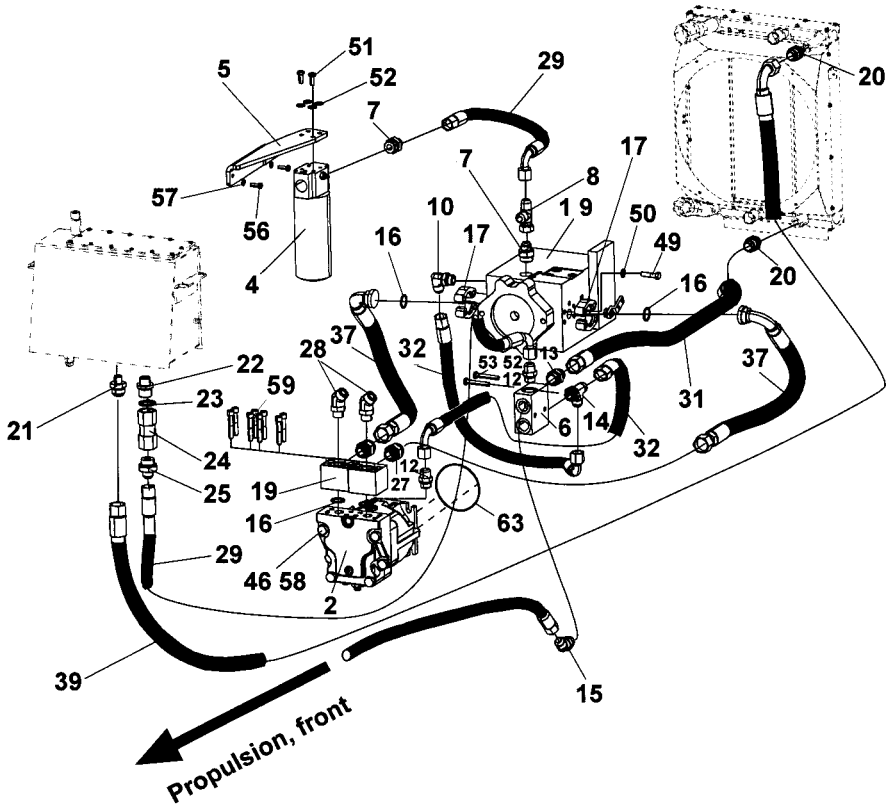

Propulsion system, Rear

Item	Part No	Rem	Qty	Description	Code
1	4700380830		1	Propulsion pump (Page 84)	C
2	4700391989		1	Hydraulic motor	C
4	4700359550		1	Hydraulic oil filter, cpl	A
	4700359551		1	. Filter head	A
	4700359552		1	. Cleaning filter element Maximum 50 hours use	A
	4700372229	A	1	Hydraulic oil filter element	A
5	4700379482		1	Filter bracket	D
6	4700345243		1	Connection block	
7	4700334468		3	Adapter	C
8	4700234243		1	T-connector	C
9	4700900229		2	Measuring nipple	C
10	4700813499		1	Elbow 90, O-ring	D
12	4700334138		2	Adapter	C
13	4700334140		1	Straight conector	
14	4700234875		1	Tee-connector o-ring	
15	4700334132		1	Elbow 45, O-ring	C
16	4700904005		4	O-ring	B
17	4700923384		4	Flange half	C
19	4700384784		2	Flange coupling	D
20	4700234958		4	Connector	
21	4700234909		1	Straight connector	
22	4700904282		1	Adapter	
23	4700162008		1	Seal washer	B
24	4700374059		1	Check valve	C
25	4700923371		1	Adapter	C
27	4700792339		2	Straight connector orfs	D
28	4700791230		2	Elbow 45	
29	4700482182	B	1	Hydraulic hose	D
31	4700483610		1	Hydraulic hose	D
32	4700482391		2	Hydraulic hose	D
37	4700483526	C	2	Hydraulic hose	D
39	4700484042		1	Hydraulic hose	D
40	4700372235		1	Hose guard	D
44	4700500046		4	Screw M12x025H	C
45	4700904213		4	Washer	C
46	4700500039		4	Screw M14x35H 8.8 A3K	D
49	4700502132		8	Screw UNC 7/16" x 22	D
50	4700904638		8	Washer 12x22x2	C
51	4700500028		5	Screw	C
52	4700904230		10	Steel plain washer	C
53	4700500109		2	Screw M10-1,5x65 8,8	D
56	4700500021		6	Screw M8-1,25x25 8.8	C
57	4700904229		12	Steel plain washer 8,4x16x1,5	C
58	4700904214		8	Washer 15x30x4 300 HV	C
59	4700900806		8	Screw 7/16 - 14UNC X 64 8.8	D
63	4700160132		1	O-ring 124, 50x3, 00	B

A) Spare part for ordinary service
B) L = 0,53 m
C) L = 0,62 m

4700380830 Propulsion pump

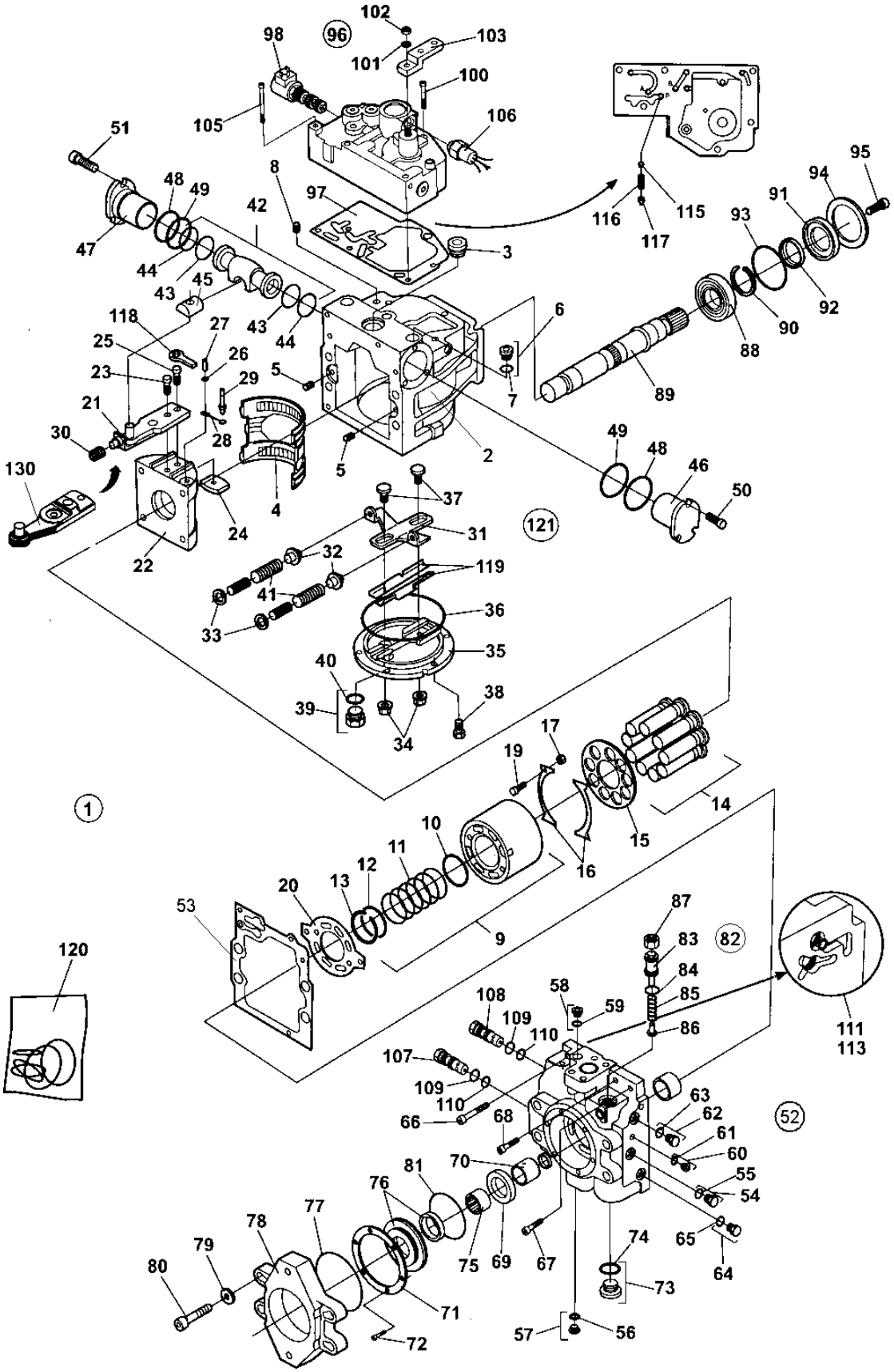

4700380830 Propulsion pump

Item	Part No	Rem	Qty	Description	Code
1	4700380830		1	Propulsion pump (Page 84)	C
2	4700936546		1	. Housing	
	4812156652	2	1	. Housing	
3	4700902928		1	. Plug	C
4	4700901452		1	. Bearing	
		2	1	. Bearing	
5	4700813822		2	. Pin	D
6	4700908432		2	. Plug	C
7	4700923087	1	2	. . O-ring	C
8	4700901454		3	. Filter element	D
9	4700901455		1	. Cylinder block, cpl	
10			1	. . Spacer	
11			1	. . Spring	
12			1	. . Spring retainer	
13			1	. . Ring retainer	
14	4700903570		9	. Piston	D
15	4700903571		1	. Pressure plate	D
16	4700901458		2	. Retainer guide	D
17	4700935856		4	. Spacer	
19	4700909382		4	. Screw	C
20	4700936547		1	. Valve plate	
21	4700909727		1	. Servo arm, cpl	
22			1	. Swash plate	
		2	1	. Swash plate	
23	4700909386		1	. Screw	C
		2	1	. Screw	
24	4700909387		1	. Guide	
25	4700909388		1	. Screw	C
26	4700909389		1	. Washer	C
27	4700909390		1	. Pin	C
28	4700909391		1	. Link	C
29	4700909392		1	. Pin	C
30	4700909393		1	. Spring	C
31			1	. Lever	
32			2	. Spring support	
33			2	. Washer	
34	4700909398	1	2	. Seal lock nut	B
35			1	. Cover	
		2	1	. Cover	
36	4700936551	1	1	. O-ring	
37			2	. Guide post	
38	4700936553		6	. Screw	C
39	4700902928		1	. Plug	C
40	4700901453	1	1	. . O-ring	C
41	4700908352		2	. Spring	D
42	4700936582		1	. Piston, cpl	
43		1	2	. . O-ring	
44		1	2	. . Seal ring	
45			1	. . Guide	
46	4700903580		1	. Servo	
47	4700903580		1	. Servo	
48	4700936557	1	2	. O-ring	
49	4700936558	1	2	. O-ring	
50	4700936559		3	. Screw	
51	4700936559		3	. Screw	
52	4700936560		1	. End cap, cpl	
53	4700936561	1	1	. Gasket	
54	4700358388		1	. Plug	C

1) Included in item 120, Seal kit
2) Valid with item 130

4700380830 Propulsion pump

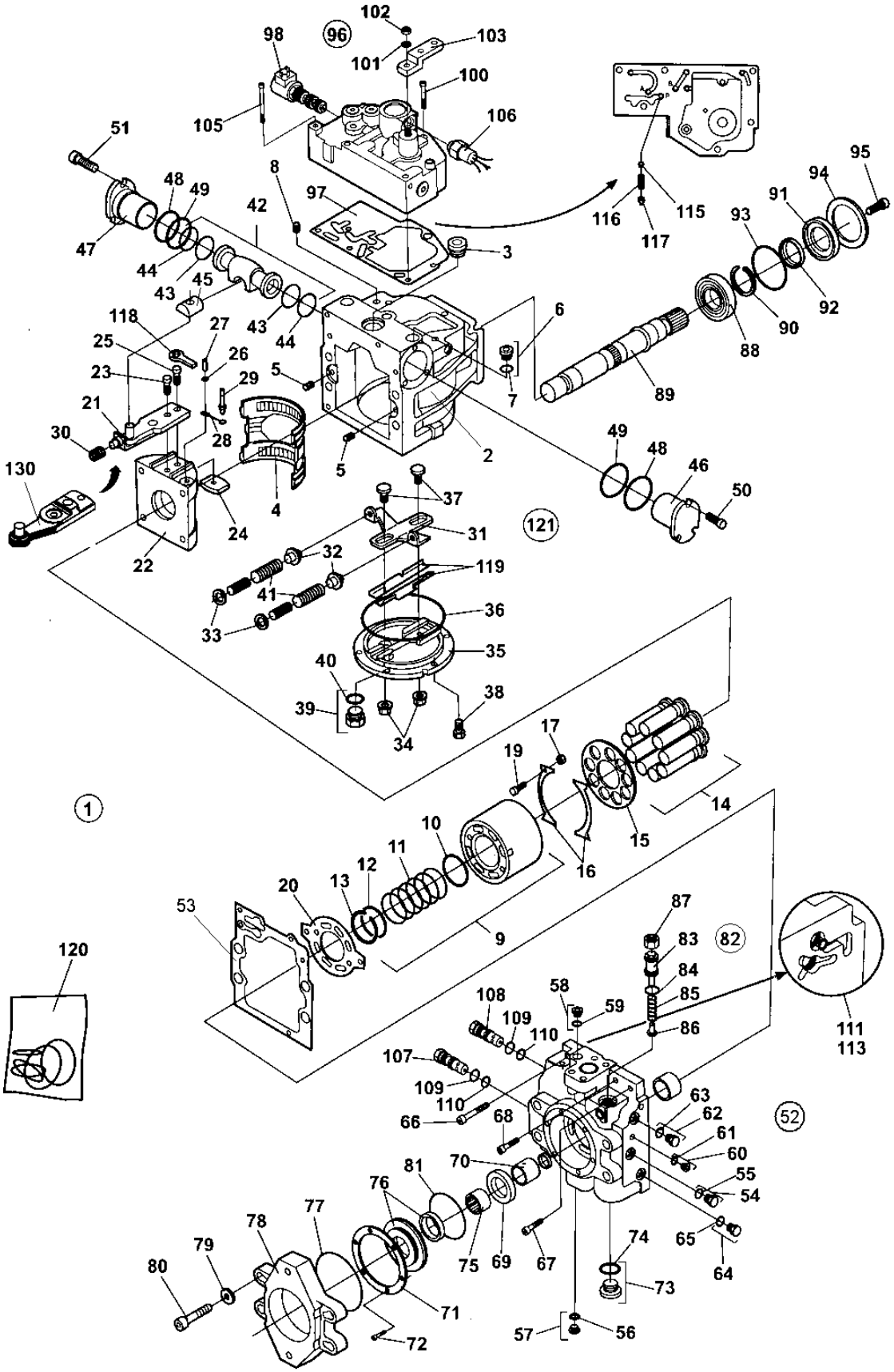

4700380830 Propulsion pump

Item	Part No	Rem	Qty	Description	Code
55	4700923087	1	1	. . O-ring	C
56	4700908432		1	. Plug	C
57	4700923087	1	1	. . O-ring	C
58	4700908432		1	. Plug	C
59	4700923087	1	1	. . O-ring	C
60	4700908432		1	. Plug	C
61	4700923087	1	1	. . O-ring	C
62	4700358388		1	. Plug	C
63	4700923087	1	1	. . O-ring	C
64	4700358388		1	. Plug	C
65	4700923087	1	1	. . O-ring	C
66	4700936562		1	. Screw	
67	4700936563		1	. Screw	
68	4700936564		1	. Screw	
69	4700950283		1	. Spacer	D
70	4700950284		1	. Spacer	D
71	4700935857		1	. Retaining plate	
72	4700936566		6	. Screw	
73	4700936567		1	. Plug, cpl	
74	4700936568	1	1	. . O-ring	
75	4812156072		1	. Coupling sleeve	
76			1	. Not used on this model	
77	4700909399	1	1	. O-ring	C
78	4700936570		1	. Adapter	
79	4700936571		4	. Washer	
			4	.	
81	4700937150		1	. O-ring	D
82	4700936583		1	. Pressure relief valve, cpl	
83			1	. . Screw	
84		1	1	. . O-ring	
85			1	. . Spring	
86			1	. . Valve cone	
87			1	. . Nut	
88	4700901465		1	. Bearing	
89	4700901466		1	. Shaft	
90	4700901467		1	. Ring	
91			1	. Pressure plate	
92		1	1	. Seal	
		2	1	. Seal	
93		1	1	. O-ring	
94			1	. Retaining plate	
95			3	. Screw	
96	4700938170		1	. Control valve, cpl	
97	4700939489	1	1	. . Control valve gasket	
98	4700938252		1	. . Solenoid valve	
100			1	. . Screw	
101	4700909428		1	. . Washer	C
102	4700909429		1	. . O-ring	C
103	4700909432		1	. . Control lever	D
105	4700937857		5	. . Screw	D
106	4700938253		1	. . Neutral start switch	
107	4700212339		1	. Valve	C
108	4700212339		1	. Valve	C
109		1	2	. . O-ring	
110		1	2	. . O-ring	
111	4700901475		2	. Valve	D
113	4700901476		2	. Plug	D
115	4700909435		1	. Orifice	C

1) Included in item 120, Seal kit
2) Valid with item 130

4700380830 Propulsion pump

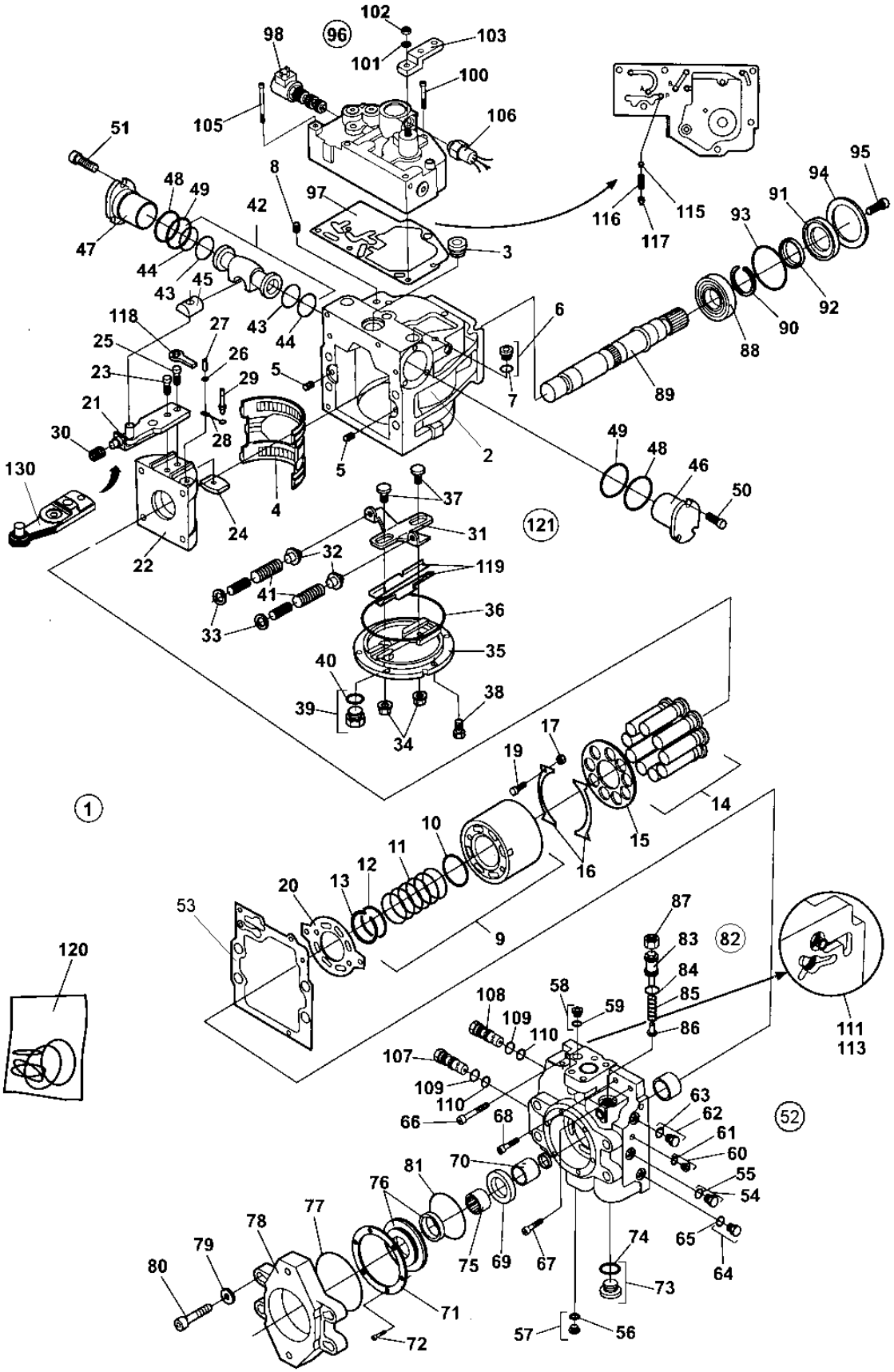

4700380830 Propulsion pump

Item	Part No	Rem	Qty	Description	Code
116	4700909436		1	. Spring	C
117	4700908448		1	. Spring retainer	C
118			1	. Link	
119			1	. Guide assy, 1pair	
120	4700901328		1	. Seal kit	D
121	4700936548		1	. Cover assembly	
130			1	. Servo arm	

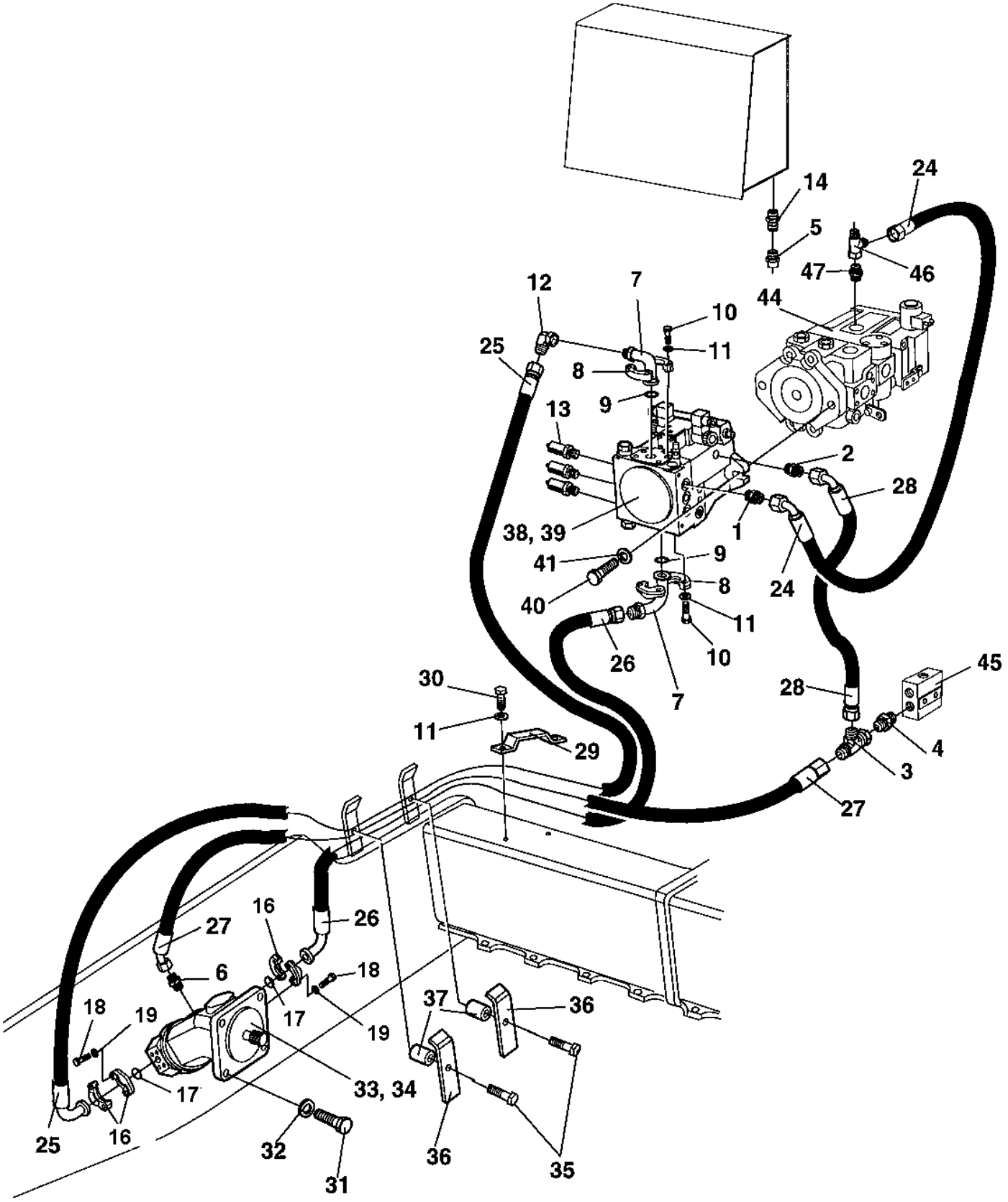
14
24
5
47
46
12
7
44
10
25
11
8
9
13
2
28
38, 39
1
41
9
24
40
8
11
26
10
7
30
28
45
11
29
4
3
27
16
26
27
6
18
18
19
17
19
37
36
33, 34
17
25
16
32
36
35
31

Vibration system

Item	Part No	Rem	Qty	Description	Code
1	4700234382		1	Adapter	
2	4700901155		1	Connector	C
3	4700334135		1	Tee-connector	C
4	4700334122		1	Adapter	D
5	4700330383		1	Cap hydraulic	
6	4700334121		1	Straight connector	C
7	4700904767		2	Flange adapter	C
8	4700929226		4	Flange half	C
9	4700904773		2	O-ring	D
10	4700500030		8	Screw M10x035H 8.8 A3K	C
11	4700904230		14	Steel plain washer	C
12	4700904781		1	Adapter	C
13	4700901157		3	Measuring nipple	C
14	4700334205		1	Straight connector	D
16	4700900430		4	Flange half	C
17	4700904774		2	O-ring	D
18	4700502019		8	Screw	C
19	4700904229		8	Steel plain washer 8,4x16x1,5	C
24	4700483286		1	Hydraulic hose	D
25	4700483910		1	Hydraulic hose	D
26	4700483911		1	Hydraulic hose	D
27	4700483031		1	Hydraulic hose	D
28	4700483397		1	Hydraulic hose	D
29	4700373017		2	Hose clamp	D
30	4700500028		4	Screw	C
31	4700500194		4	Screw	C
32	4700904231		4	Washer 13x24x2 300 HV	C
33	4700380145		1	Hydraulic motor, vibration (Page 92)	C
34	4700160132		1	O-ring 124, 50x3, 00	B
35	4700500032		2	Screw M10 x 55	D
36	4700373270		2	Hose clamp	D
37	4700373424		2	Spacer	D
38	4700383958		1	Vibration pump (Page 94)	C
39	4700903877		1	O-ring 126,72x1,78	
	4700160231		1	O-ring 120,32x2,62	D
40	4700502078		2	Screw	D
41	4700904232		2	Washer	C
44		A	1	Hydraulic pump	
45		A	1	Connection block	
46		A	1	Tee-connector	
47		A	1	Straight connector	

A) See section "Hydraulic propulsion"

4700380145 Hydraulic motor, vibration

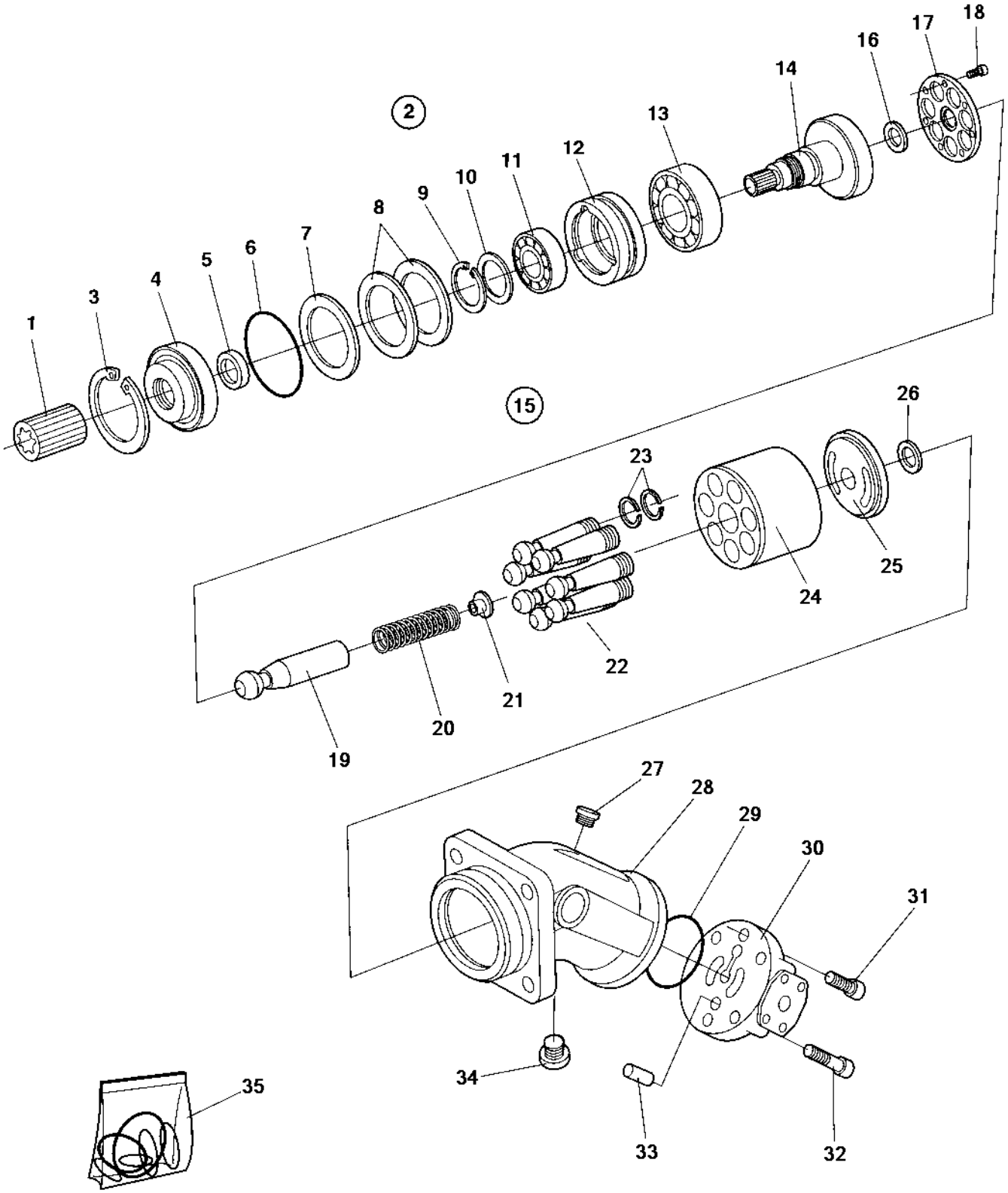

4700380145 Hydraulic motor, vibration

Item	Part No	Rem	Qty	Description	Code
			1	Hydraulic motor, vibration	
1	4700340863		1	. Splined sleeve	D
2	4700380078		1	. Hydraulic motor, vibration	C
3	4700901387		1	. . Snap ring	D
4	4700937261		1	. . Cover	
5	4700937264	1	1	. . Seal ring	
6	4700937265	1	1	. . O-ring	
7	4700901390		1	. . Shim T=0,3 mm	D
8	4700901389		2	. . Shim T=0,1 mm	D
9	4700938042		1	. . Retaining ring	
10	4700938041		1	. . Back-up plate	
11	4700901386		1	. . Bearing	D
12	4700937260		1	. . Bearing ring	
13	4700901385		1	. . Bearing	D
14	4700938040		1	. . Shaft	
15			1	. Rotary group, hydr.section	
16			1	. . Washer	
17			1	. . Retaining plate	
18			7	. . Screw	
19			1	. . Pin	
20			1	. . Spring	
21			1	. . Spring collar	
22			7	. . Piston	
			1	. . . Piston	
23			2	. . . Sealing ring	
24			1	. . Cylinder	
25			1	. . Pressure plate	
26			1	. . Washer	
27	4700937995		1	. . Screw	
28	4700937256		1	. . Housing	
29	4700937258	1	1	. . O-ring	
30	4700937257		1	. . Plate	
31	4700902655		2	. . Screw	
32	4700927350		4	. . Screw	D
33	4700937993		1	. . Pin	
34	4700937259	1	1	. . Screw	
35	4700937674		1	. Seal kit	

1) Included in seal kit, item 35

4700383958 Vibration pump

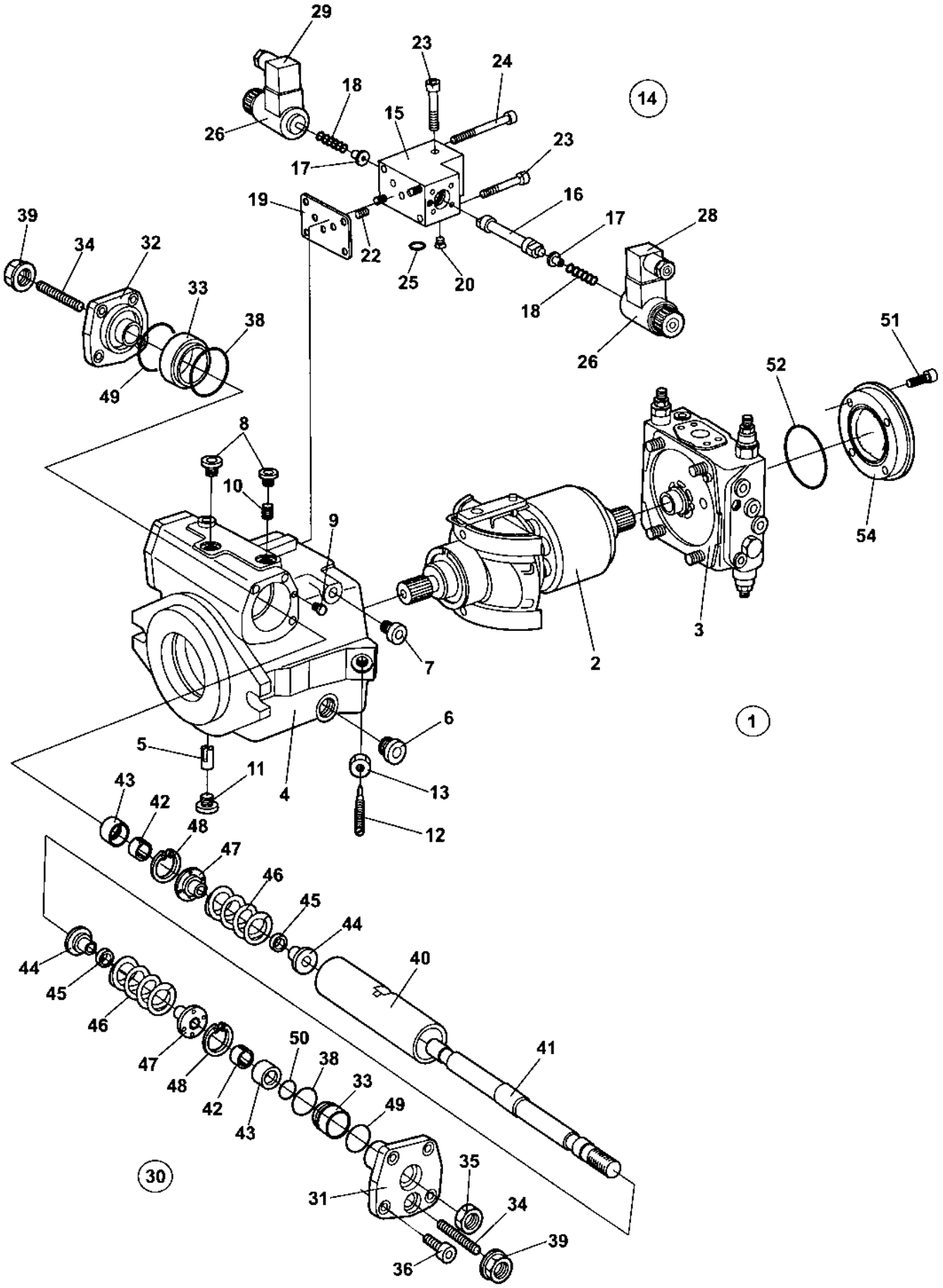

4700383958 Vibration pump

Item	Part No	Rem	Qty	Description	Code
1			1	Vibration pump	
	4700940675		1	. Seal kit	B
2	4700937167		1	. Rotary group, cpl (Page 96)	
3	4700937168		1	. Valve block, cpl (Page 98)	
4	4700937986		1	. Housing	
5	4700935158		1	. Pin	
6	4700935219		1	. Plug	
7	4700902724		1	. Plug	
8	4700902625		5	. Plug	
9	4700909514		2	. Double break-off pin	
10	4700936308		2	. Orifice	
11	4700902624		1	. Screw	
12	4700902687		1	. Pin	
13	4700902695		1	. Nut	
14	4700940507		1	. Control valve, cpl	C
15			1	. . Housing	
16	4700945775		1	. . Piston	D
17	4700945776		2	. . Spring collar	D
18	4700936686		2	. . Spring	
19			1	. . Gasket	
20			2	. . Pin	
22	4700909514		1	. . Double break-off pin	
23	4700927358		3	. . Screw	D
24	4700908383		2	. . Screw	D
25			1	. . O-ring	
26	4700940505		2	. . Solenoid	B
28			1	. . Socket	
29			1	. . Socket	
30	4700937985		1	. Hydraulic control	
31	4700937998		1	. . Cover	
32	4700937999		1	. . Cover	
33	4700938003		2	. . Guide ring	
34	4700937195		2	. . Pin	
35	4700936340		1	. . Nut	
36	4700902856		8	. . Screw	
38	4700938004		2	. . O-ring	
39	4700936393		2	. . Seal lock nut	
40	4700938005		1	. . Piston	
41	4700937198		1	. . Rod	
42			2	. . Ring	
43	4700938014		2	. . Sleeve	
44	4700937199		2	. . Spring collar	
45	4700936648		2	. . Spacer ring	
46	4700937531		2	. . Spring, outer	
	4700937200		2	. . Spring, inner	
47	4700937201		2	. . Spring collar	
48	4700939167		2	. . Retaining ring	
49	4700938001		2	. . O-ring	
50	4700909469		1	. . O-ring	
51	4700939173		4	. Screw	
52	4700935192		1	. O-ring	
54			1	. Cover	

4700937167 Rotary group, cpl

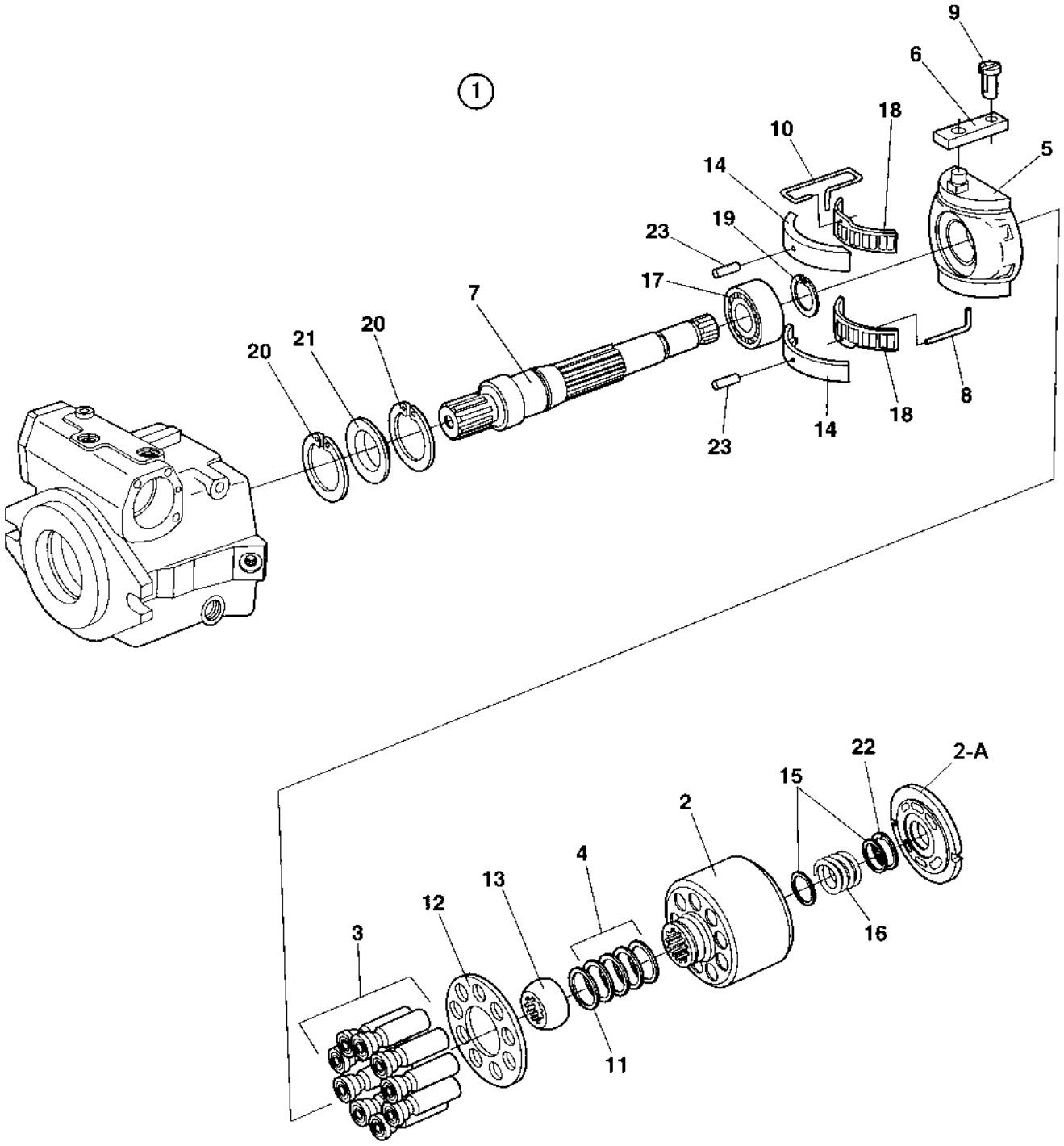

4700937167 Rotary group, cpl

Item	Part No	Rem	Qty	Description	Code
1			1	Rotary group, cpl	
2	4700937170		1	. Cylinder with control plate	
2-A	4700940308		1	. . Control plate	D
3	4700937171		9	. Piston	
4	4700937172		1	. Cup springs, cpl	
5	4700937173		1	. Cradle	
6	4700937174		1	. Slide ring	
7	4700908367		1	. Shaft	D
8	4700936621		1	. Wire	
9	4700935164		1	. Pin	
10	4700937175		1	. Wire	
11	4700937176		1	. Shim	
12	4700937180		1	. Retaining plate	
13	4700937181		1	. Retaining ball	
14	4700937182		1	. Bearing liner, 1 pair	
15	4700937183		2	. Washer	
16	4700937184		1	. Spring	
17	4700937185		1	. Bearing	
18	4700937186		1	. Cradle bearing assembly, 1 set	
19	4700937187		1	. Retaining ring	
20	4700937188		2	. V-ring	
21	4700937189		1	. Seal ring	
22	4700937190		1	. Retaining ring	
23	4700902792		2	. Pin	

4700937168 Valve block, cpl

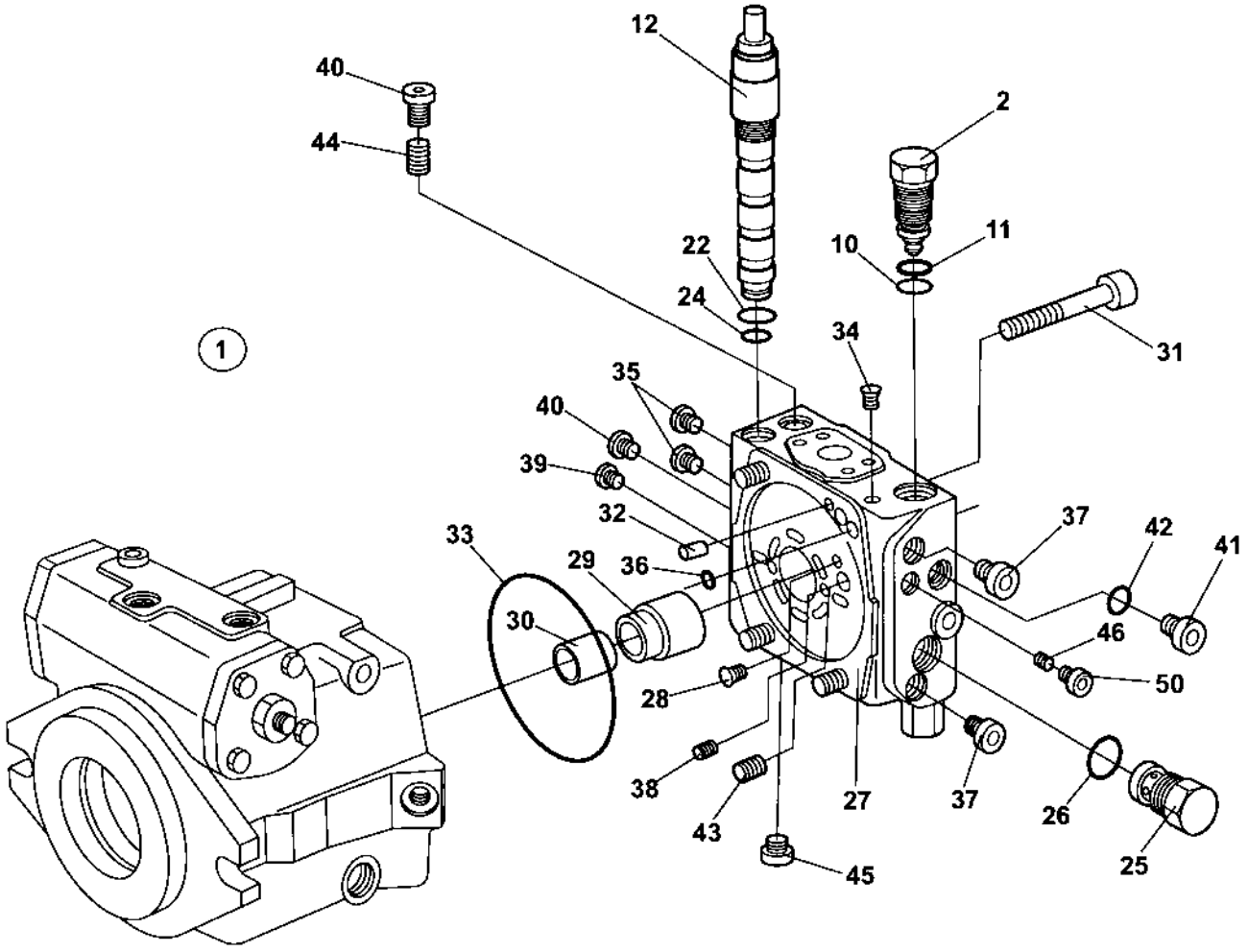

4700937168 Valve block, cpl

Item	Part No	Rem	Qty	Description	Code
1			1	Valve block, cpl	
2			2	. Relief valve 310 bar	
	4700935172		2	. Pressure relief valve 350 bar	D
			2	. Relief valve 380 bar	
	4700937240		2	. Pressure relief valve 440 bar	
10	4700927278		1	. . O-ring	D
11	4700936673		1	. . Back-up ring	
12	4700908375		1	. Valve	D
22	4700902783		1	. . O-ring	
24	4700936394		1	. . O-ring	
25	4700936674		1	. Pin	
26	4700927278		1	. O-ring	D
27	4700937202	B	1	. Port plate	
	4812155765		1	. Port plate	D
28	4700902735		1	. Pin	
29	4700937203		1	. Bush	
30	4700937204		1	. Bearing bushing	
31	4700937205		4	. Screw	
32	4700908384		2	. Pin	D
33	4700937206		1	. O-ring	
34	4700909514		3	. Double break-off pin	
35	4700936370		2	. Locking screw	
36	4700909469		2	. O-ring	
37	4700902625		2	. Plug	
38	4700901742		1	. Pin	D
39	4700902723		1	. Plug	
40	4700902811		3	. Plug	D
41	4700902693		1	. Screw	
42	4700927278		1	. O-ring	D
43	4700902697		1	. Screw	
44	4700936613		1	. Locking screw	
45	4700936614		1	. Plug	
46	4700936313		1	. Orifice	
50	4700936370		1	. Locking screw	
	4700935212	A	1	. Pin	

A) Used with Item 27; P/N 4812155765.
B) Replaced by P/N 4812155765.

Steering system

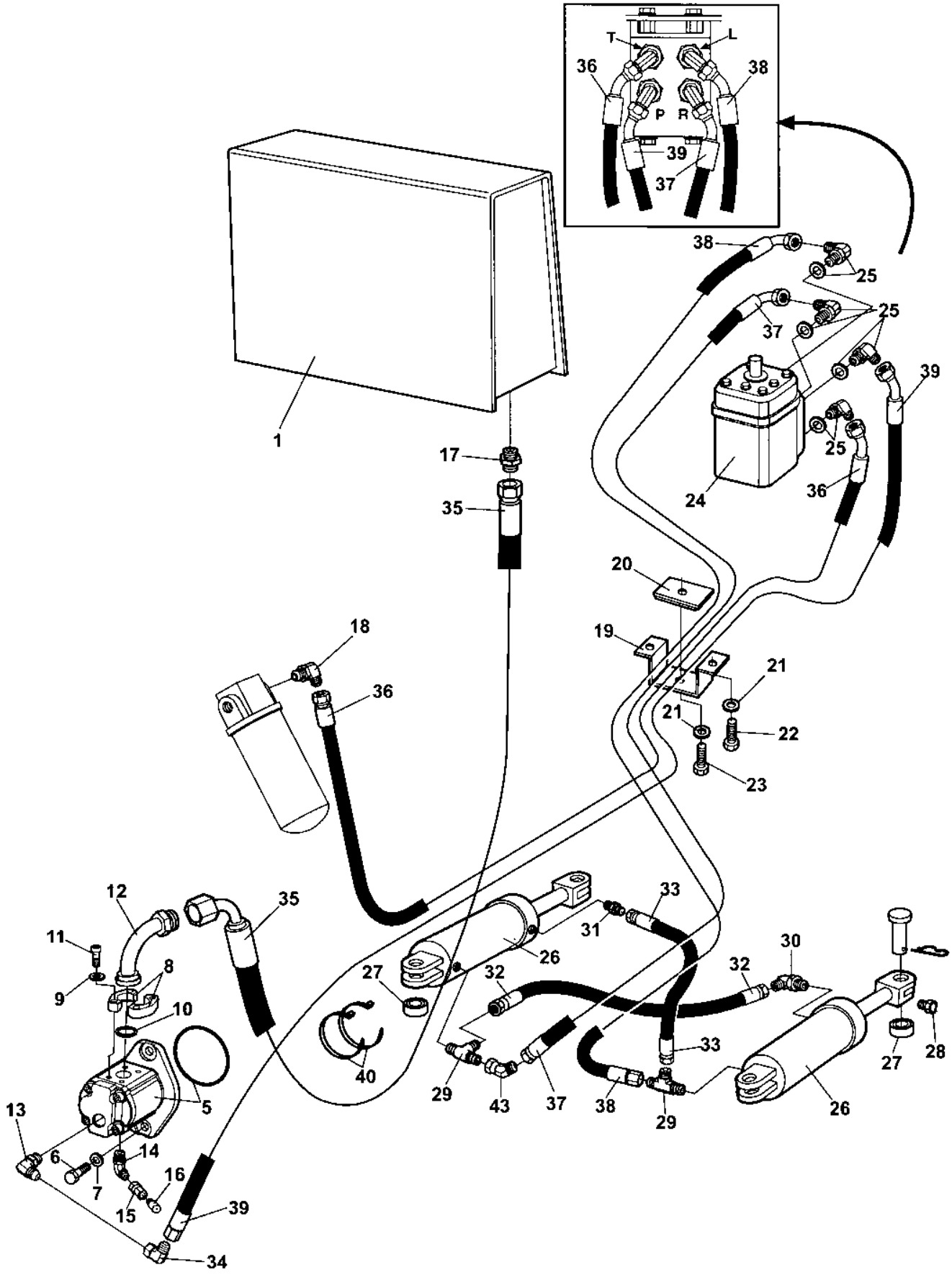

Steering system

Item	Part No	Rem	Qty	Description	Code
1				Hydraulic oil tank	
5	4700394905		1	Steering pump	D
6	4700500046		2	Screw M12x025H	C
7	4700904231		4	Washer 13x24x2 300 HV	C
8	4700232097		2	Flange half	C
9	4700904637		4	Washer	C
10	4700904005		1	O-ring	B
11	4700508029		4	Screw M10-1,5x30H 8,8	C
12	4700379481		1	Connector	D
13	4700334558		1	Elbow 90G with O-ring	C
14	4700792237		1	Elbow 90, O-ring	D
15	4700338304		1	Connector	C
16	4700910161		1	Measuring nipple	C
17	4700234626		1	Adapter	C
18	4700929123		1	Elbow 90, O-ring	D
19	4700372513		1	Hose clamp	D
20	4700372514		1	Hose clamp	D
21	4700904229		3	Steel plain washer 8,4x16x1,5	C
22	4700500019		2	Hexagon head screw M8x16H 8,8	C
23	4700500023		1	Screw M8-1,25x40 8,8	C
24	4700376000		1	Steering valve (Page 102)	
25	4700813444		4	Elbow 90, O-ring	C
26	4700392002		2	Steering cylinder (Page 104)	C
27	4700379630		4	Radial spherical plain bearing	D
28	4700500044		4	Screw M6x8	C
29	4700234218		2	Tee-connector	C
30	4700813500		1	Elbow 45, O-ring	C
31	4700334121		1	Straight connector	C
32	4700483109		1	Hydraulic hose	D
33	4700483109		1	Hydraulic hose	D
34	4700334197		1	Elbow 90 Up to 65X21500	C
35	4700483049		1	Hydraulic hose	D
36	4700483498		1	Hydraulic hose	D
37	4700483280		1	Hydraulic hose	D
38	4700483497		1	Hydraulic hose	D
39	4700483231		1	Hydraulic hose	D
40	4700313102		2	Cable ties	
43	4700234662		1	Elbow 45	C

4700376000 Steering valve

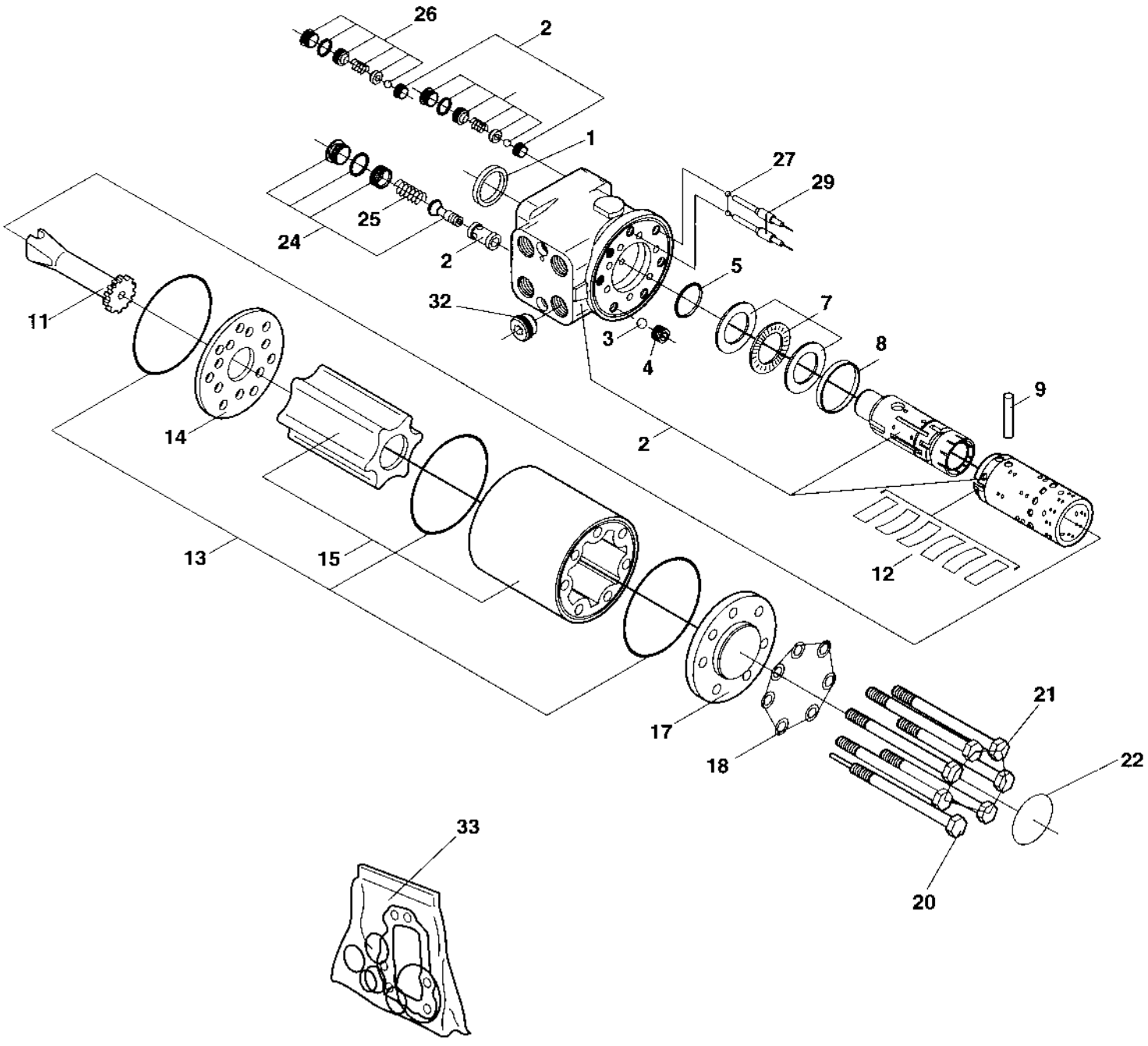

4700376000 Steering valve

Item	Part No	Rem	Qty	Description	Code
1	4700938062	A	1	Dust seal ring	
2			1	Housing, spool and sleeve	
3	4700938063		1	Ball	
4	4700938064		1	Threaded bushing	
5	4700908780	A	1	O-ring	D
7	4700911620		1	Bearing	B
8	4700480449		1	Ring	D
9	4700938066		1	Cross pin	
11	4700902861		1	Cardan shaft	C
12	4700938067		1	Set of springs	
13	4700938068	A	3	O-ring	
14	4700902862		1	Valve plate	C
15	4700903457		1	Gear wheel set	D
17	4700938069		1	End cover	
18	4700938070	A	7	Washer	
20	4700938071		1	Screw with pin	
21	4700935468		6	Spring washer	
22	4700938072		1	Name plate	
24	4700938073		1	Pressure relief valve	
25			1	Spring	
26	4700938074		2	Shock valve	
27	4700929013		2	Ball	D
29	4700929014		2	Rolled pin	D
32	4700938075		1	Check valve	
33	4700935429		1	Seal kit	

A) Included in seal kit, item 33

4700392002 Steering cylinder

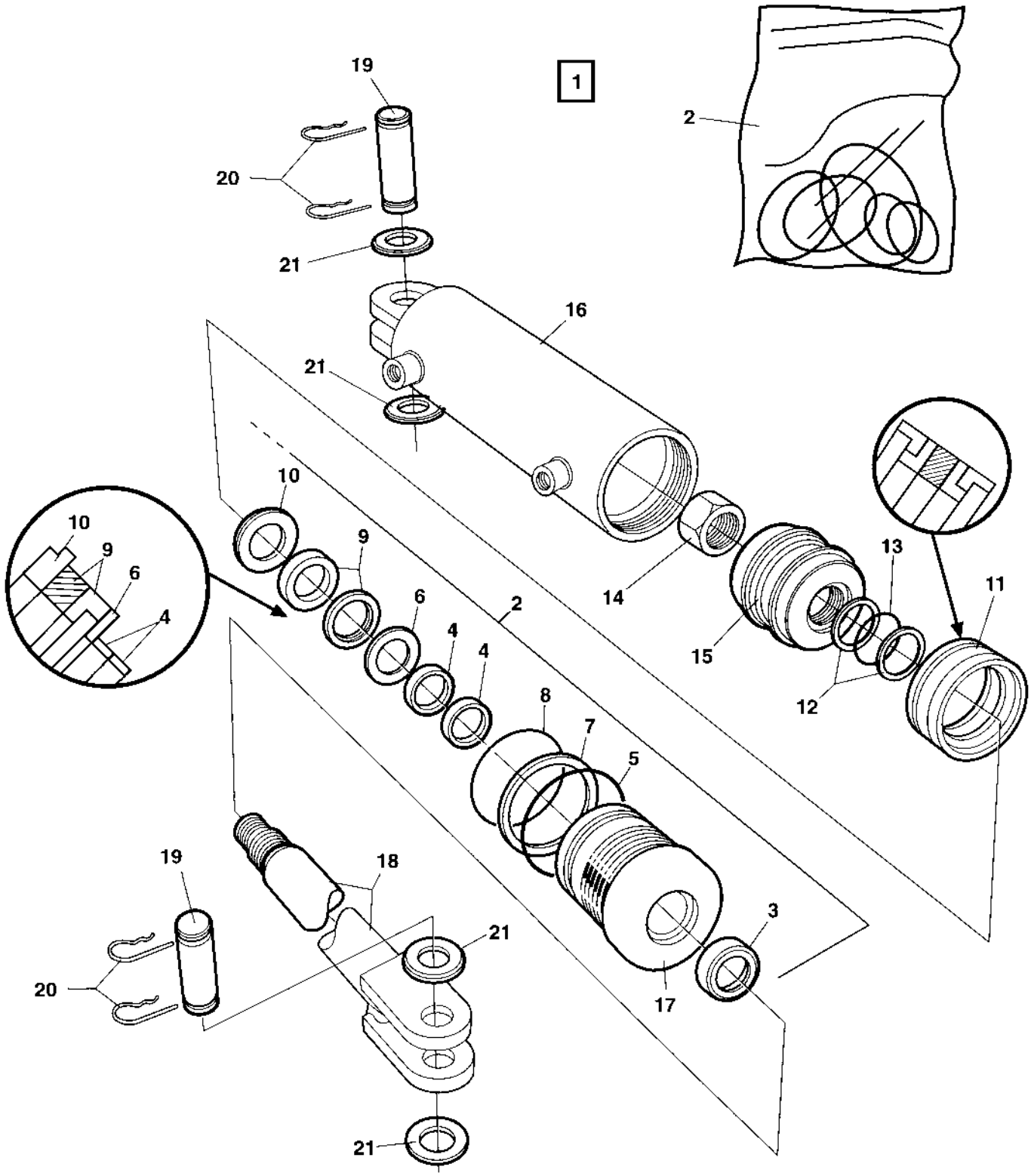

4700392002 Steering cylinder

Item	Part No	Rem	Qty	Description	Code
1	4700392002		1	Steering cylinder (Page 104)	C
2	4700392100		1	. Seal kit	B
3			1	. . Seal	
4			2	. . Seal	
5			1	. . O-ring	
6			1	. . Back-up ring	
7			1	. . Back-up ring	
8			1	. . O-ring	
9			1	. . Seal	
10			1	. . Retaining ring	
11			1	. . Seal	
12			2	. . Back-up ring	
13			1	. . O-ring	
14	4700392104		1	. Lock nut	
15			1	. Piston block	
16			1	. Cylinder	
17			1	. Steering	
18	4700392105		1	. Piston rod	D
19	4700392103		2	. Shaft	C
20	4700635061		4	. Hair clip	B
21	4700600016		4	. Washer 26x45x4	B

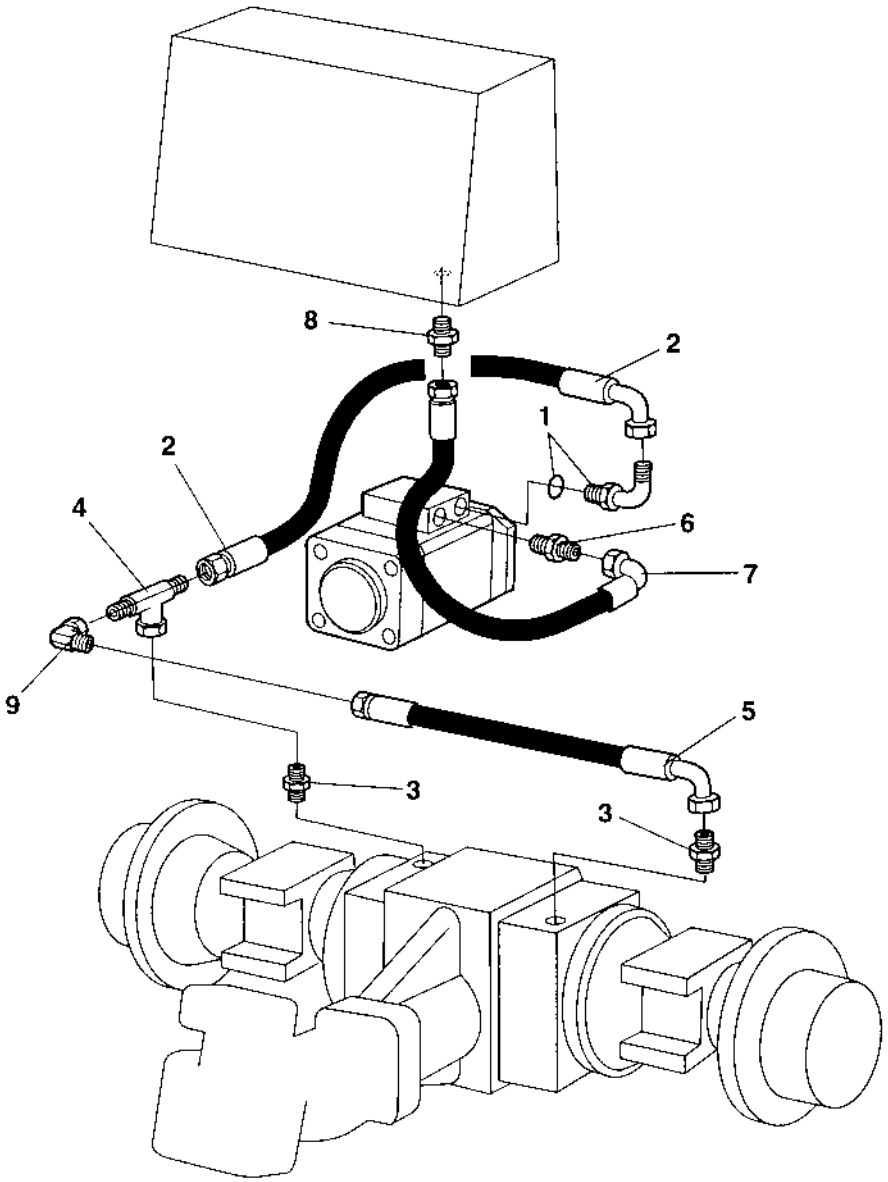
8
2
1
2
4
6
7
9
5
3
3

Brake system

Item	Part No	Rem	Qty	Description	Code
1	4700334389		1	Connector	D
2	4700482056		1	Hydraulic hose	D
3	4700900552		2	Adapter	C
4	4700234888		1	Tee-connector	D
5	4700482399		1	Hydraulic hose	D
6	4700234843		1	Adapter	
7	4700482474		1	Hydraulic hose	D
8	4700334205		1	Straight connector	D
9	4700334524		1	Connector	C

Central test panel hydraulic Option

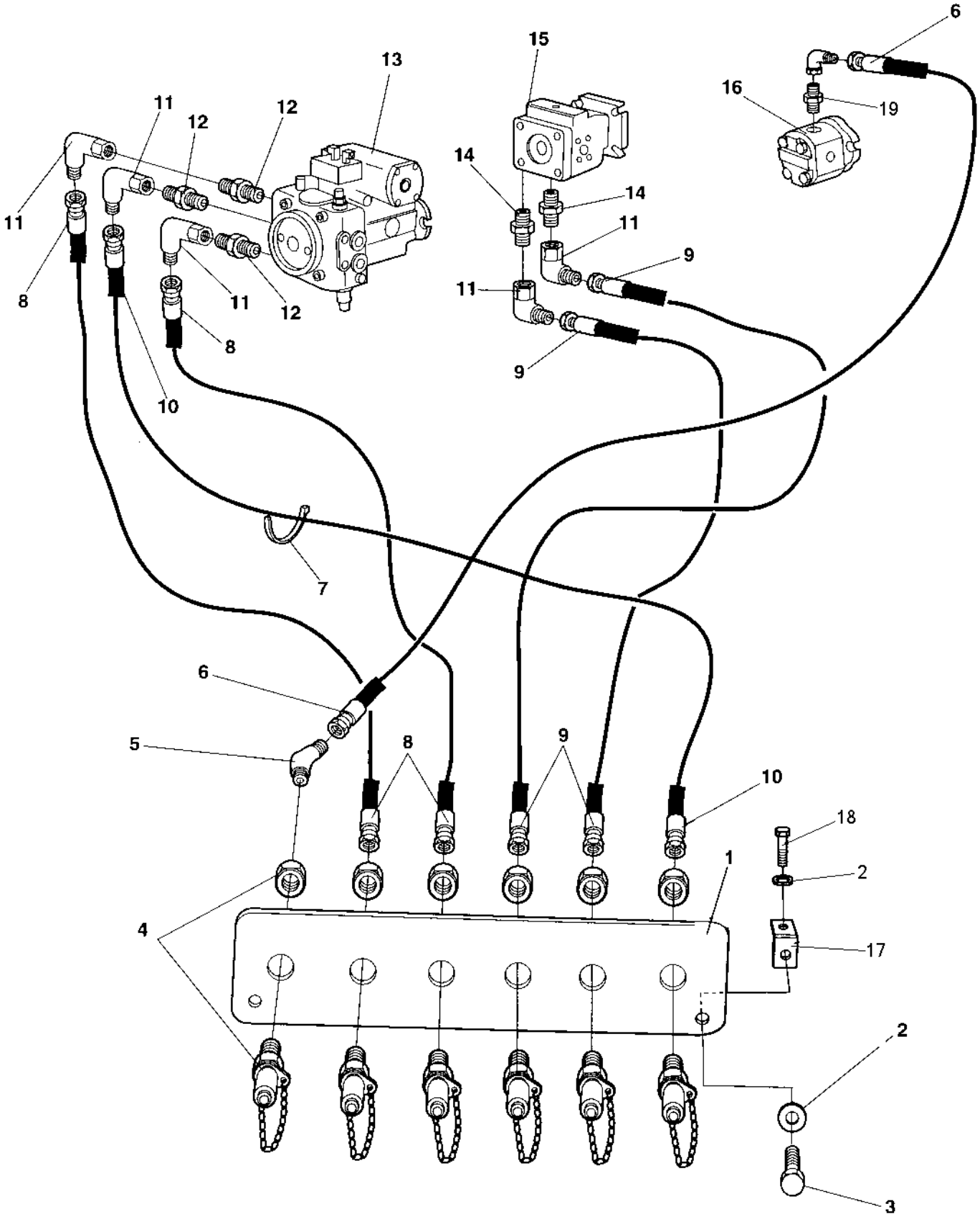

Central test panel hydraulic Option

Item	Part No	Rem	Qty	Description	Code
1	4700374028		1	Test panel	D
2	4700904229		4	Steel plain washer 8,4x16x1,5	C
3	4700500053		2	Screw M8x20H 8.8	C
4	4700356348		6	Measuring nipple	D
5	4700234622		1	Elbow 45	C
6	4700484005		1	Hydraulic hose	D
7	4700313102		N	Cable ties	
8	4700483445		2	Hydraulic hose	D
9	4700483188		2	Hydraulic hose	D
10	4700483445		1	Hydraulic hose	D
11	4700334196		5	Elbow 90	C
12	4700902125		3	Connector	
13			1	Vibration pump	
14	4700234388		2	Connector	C
15			1	Propulsion pump	
16			1	Steering pump	
17	4700908136		2	Bracket	D
18	4700500018		2	Screw M8-1,25x12 8,8	C
19			1	Connector	

Central test panel Option

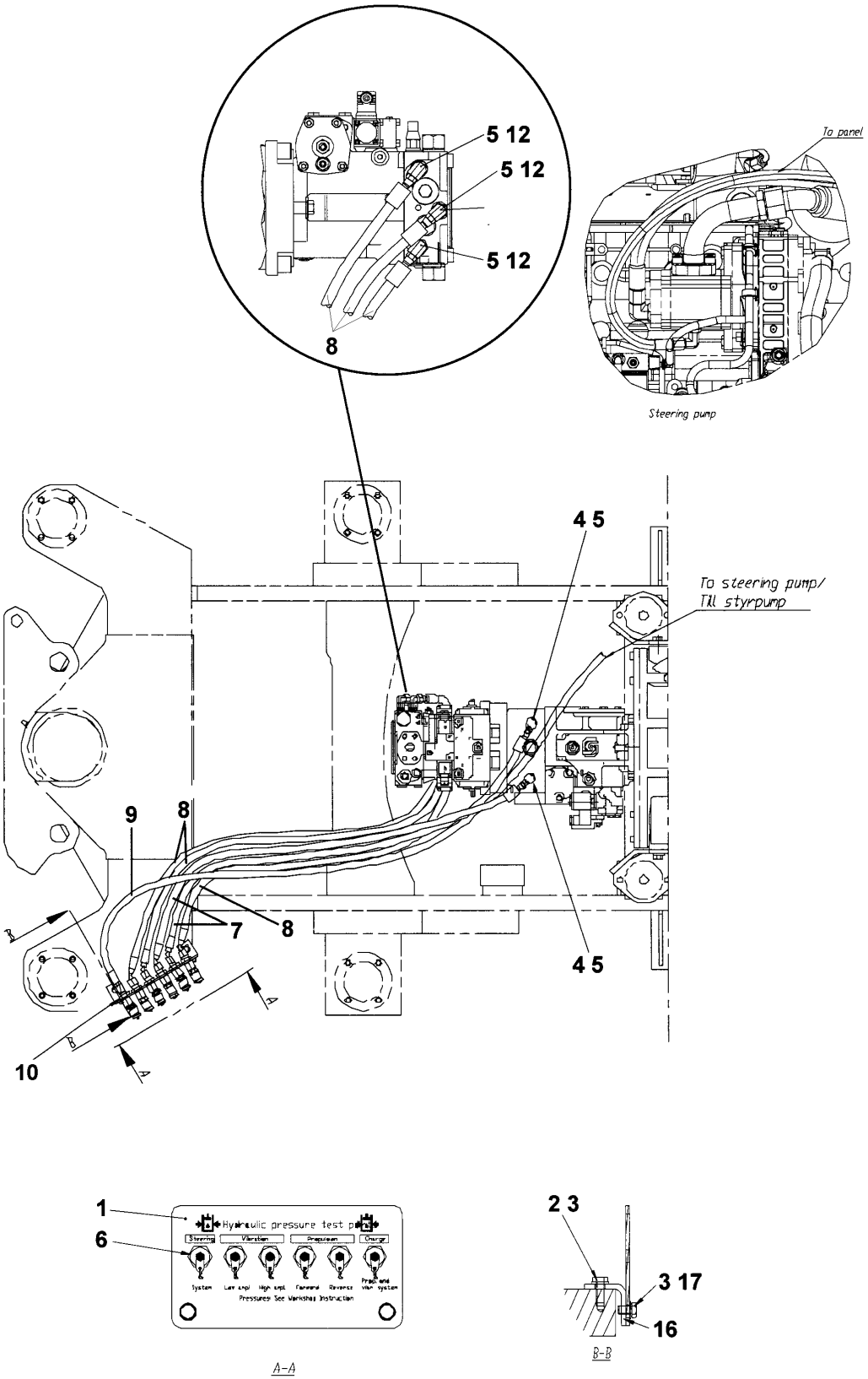

Central test panel Option

Item	Part No	Rem	Qty	Description	Code
1	4812113146		1	Test panel	D
2	4700500053		2	Screw M8x20H 8.8	C
3	4700904229		4	Steel plain washer 8,4x16x1,5	C
4	4700791914		2	Straight connector orfs	D
5	4812113110		5	Elbow 90	D
6	4812110422		6	Measuring nipple	C
7	4811000329		2	Hydraulic hose	
8	4811000328		3	Hydraulic hose	
9	4811000364		1	Hydraulic hose	
10	4700792450		6	Nut	D
11	4700313102		N	Cable ties	
12	4700791538		3	Straight connector	C
16	4700908136		2	Bracket	D
17	4700500018		2	Screw M8-1,25x12 8,8	C

Electrical equipment

Item	Part No	Rem	Qty	Description	Code
15				Electric system (Page 114)	
25				Control panel (Page 118)	
51				Working lights w/o cab Option (Page 120)	
60				Driving lights, w/o cab Option (Page 122)	
61				Driving lights, w/o cab Left hand, Option (Page 124)	
62				Driving lights, with Working lights and ROPS Option (Page 126)	
63				Driving lights, with Working lights and ROPS Left hand, Option (Page 128)	
64				Driving lights with working lights, cab Option (Page 130)	
65				Driving lights with working lights, cab Left hand, Option (Page 132)	
70				Rotating beacon Option (Page 134)	
80				Back-up alarm Option (Page 136)	
90				Compaction meter Option (Page 138)	
95				Engine pre-heater, Cab Option (Page 140)	
100				Licence plate light Option (Page 142)	
105				Direction lights Option (Page 144)	

Electric system

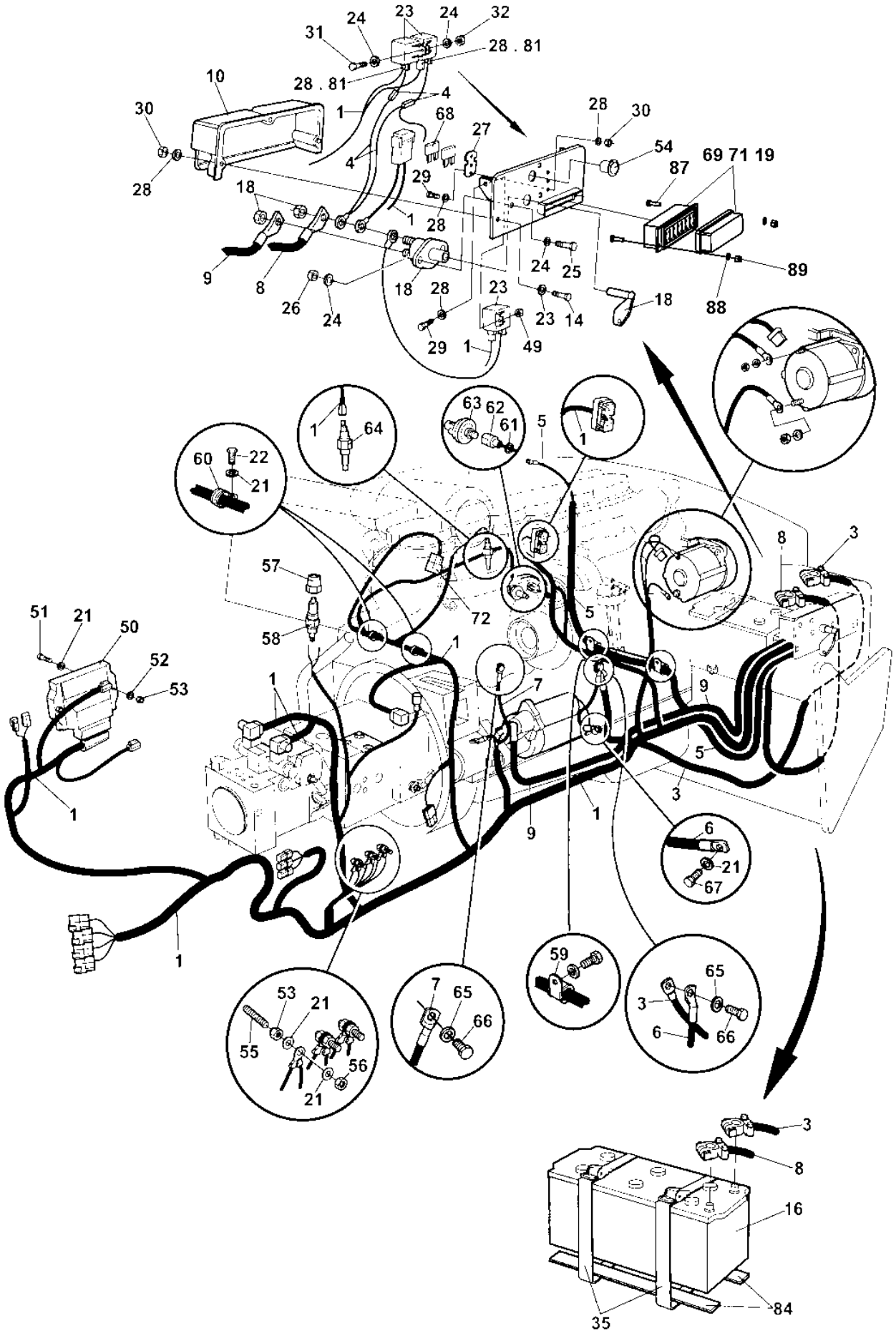

Electric system

Item	Part No	Rem	Qty	Description	Code
1	4700397128	A	1	Cable harness	D
3	4700904020		1	Battery cable	
4	4700387427	B	1	Cable harness	D
	4700791477		2	. Fuse holder	D
	4700791479		4	. Fuse, Orange 125A	
5	4700392937		1	Cable harness	D
6	4700903760		1	Connection cable, coarse	
7	4700335607		1	Connection cable, coarse	B
8	4700791503		1	Battery cable	C
9	4700904018		1	Connection cable, coarse	
10	4700373891		1	Cover	D
14	4700500184		3	Screw M5-0,8x14 8,8	D
16	4700792682		1	Battery	D
18	4700903640		1	Battery switch	D
	4700903641		1	. Key	D
19	4700901230		1	Fuse 30A	A
21	4700904229		11	Steel plain washer 8,4x16x1,5	C
22	4700500053		2	Screw M8x20H 8.8	C
23	4700791183		3	Relay	A
24	4700904228		8	Washer 6,4x12x1,5	C
25	4700500013		2	Screw M6-1x16 8,8	C
26	4700570004		2	Nut M6X1,00 -8 A2K	C
27	4700904036		1	Fuse holder	D
28	4700904281		16	Washer 5,3x10x1 300HV	C
29	4700500060		4	Screw M5-0,8x20 8.8	C
30	4700586001		5	Lock nut	C
31	4700500075		2	Screw M6-1,0x25 8.8	C
32	4700586002		2	Lock nut M6 -8	C
35	4700389662		2	Strap	
49	4700902284		2	Nut M5	C
50	4812114386		1	Control unit, ECU	C
51	4700500025		2	Screw M8-1,25x50 8,8	D
52	4700904556		2	Washer 8,4x16x3,0	C
53	4700586003		5	Lock nut M8	C
54	4812110560		1	Power socket 12V	D
55	4700903768		3	Threaded stud	C
56	4700570005		3	Nut M8	C
57	4700813434		1	Reducer	C
58	4700903631		1	Temperature sensor Hydraulic oil	B
59	4700960727		2	Clamp	
60	4700921072		2	Clamp	
61	4700902468		1	Connector	
62	4700338304		1	Connector	C
63	4700813462		1	Oil pressure sender	B
64	4700903632		1	Temperature sensor Engine	
65	4700904231		2	Washer 13x24x2 300 HV	C
66	4700500051		2	Screw M12x25H 8.8 A3K	C
67	4700500019		1	Hexagon head screw M8x16H 8,8	C
68	4700904038		1	Fuse 40A	A
69	4700791185		2	Fuse box	
71	4700901227		1	Fuse 10A	A
72	4700929023		1	Indicator	B
75	4700313041		N	Cable ties	B
79	4700904780		1	Hose clamp	D
81	4700500004		4	Screw M5 0,8x12 8,8	C
84	4812110818		2	Rubber cloth	
87	4700533010		2	Screw	D
88	4700904698		2	Washer 4,3x8x0,8	C

A) Main cable harness
B) Pre-heater

Electric system

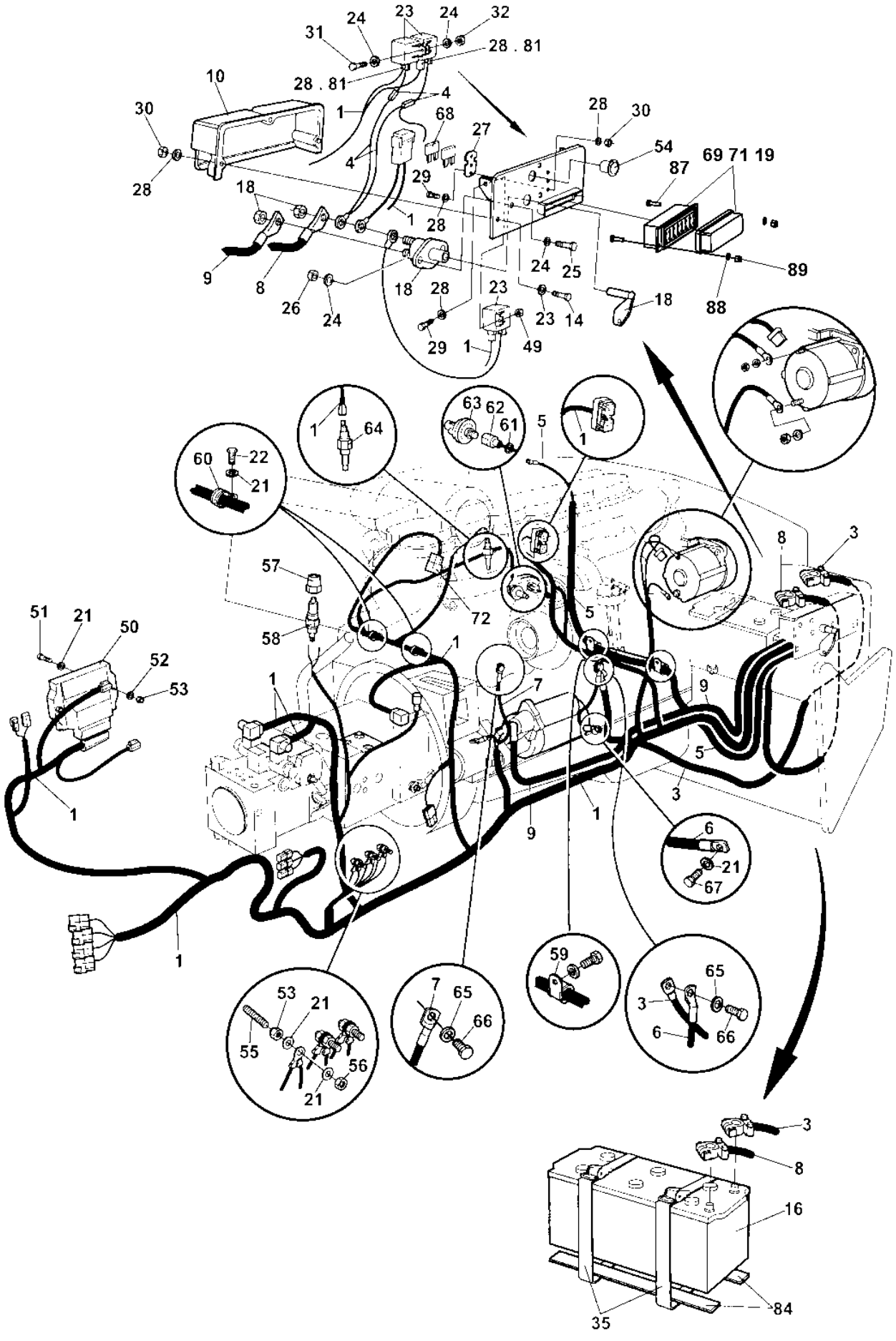

Electric system

Item	Part No	Rem	Qty	Description	Code
89	4700923976		2	Nut	C
90				Not valid for this model	

Control panel

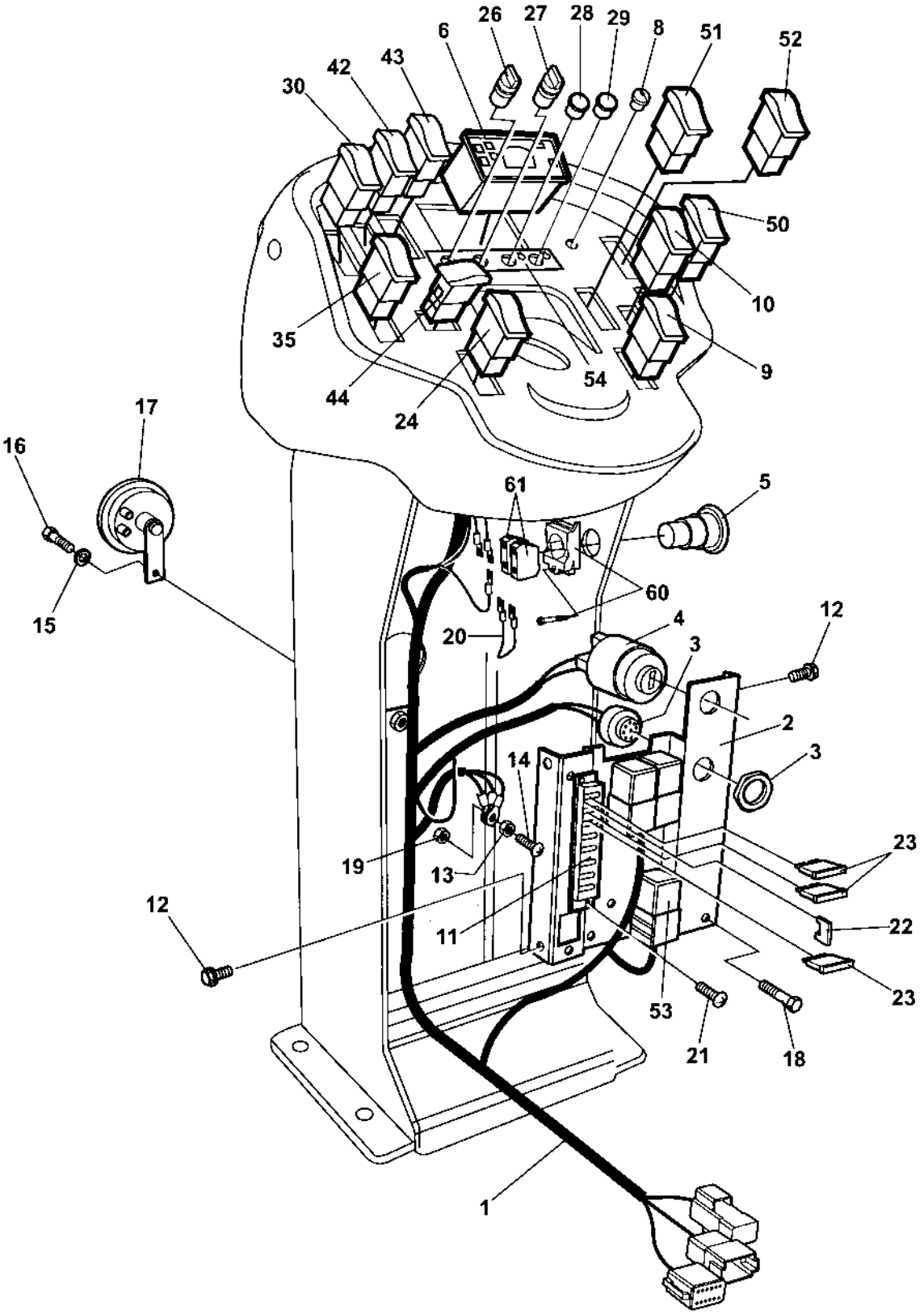

Control panel

Item	Part No	Rem	Qty	Description	Code
1	4700396968	B	1	Cable harness	D
2	4700387683		1	Distribution control plate	D
3	4700385599		1	Buzzer	B
4	4700238158		1	Ignition switch	B
	4700940451		1	. Key	D
5	4700791739		1	Emergency stop	B
	4812110967	C	1	Decal	D
6	4700392996		1	Control panel	D
8	4700792083		N	Plug	D
9	4700792414		1	Switch, RPM	D
10	4700792461		1	Switch, vibration	D
11	4700791185		1	Fuse box	
12	4700903782		4	Screw M5x12	C
13	4700570004		3	Nut M6X1,00 -8 A2K	C
14	4700500075		1	Screw M6-1,0x25 8.8	C
15	4700904229		1	Steel plain washer 8,4x16x1,5	C
16	4700500053		1	Screw M8x20H 8.8	C
17	4700999027		1	Horn	C
18	4700500075		1	Screw M6-1,0x25 8.8	C
19	4700586002		1	Lock nut M6 -8	C
20	4700343550		1	Connection cable	B
21	4700901767		2	Screw ST3,5x9,5 Black	
22	4700791211		N	Contact bridge	C
23	4700901228		N	Fuse 15A	A
	4700901227		N	Fuse 10A	A
	4700901225		N	Fuse 5A	A
24	4700791582		1	Switch, parking brake	B
26	4700792317		1	Switch	D
27	4700792318		1	Switch	D
28	4700792435		1	Pilot lamp Red	
	4700792432		1	Illuminated block red	D
29	4700792319		1	Pilot lamp Yellow	D
	4700792315		1	Illuminated block yellow	D
30	4700791587	A	1	Switch, working light	B
35	4700791585	A	1	Switch, rotating beacon	B
42	4700791583	A	1	Switch, driving light	B
43	4700791584	A	1	Switch, hazard flashers	B
44	4700792413	A	1	Switch, drive direction	B
50	4700791588		1	Panel plug	C
	4700792463	A	1	Switch, Power distribution	D
51	4700791578		1	Switch, horn	B
52	4700792462	A	1	Switch, TC & TM	D
	4700791657		1	Switch, Hi-Lo Speed	D
53	4700903956	A	1	Relay	A
54	4700394061		1	Decal	D
60	4700791733		1	Fixing collar	C
61	4700791723		2	Connector N/C	B

A) Option
B) Control panel
C) Yellow

Working lights w/o cab Option

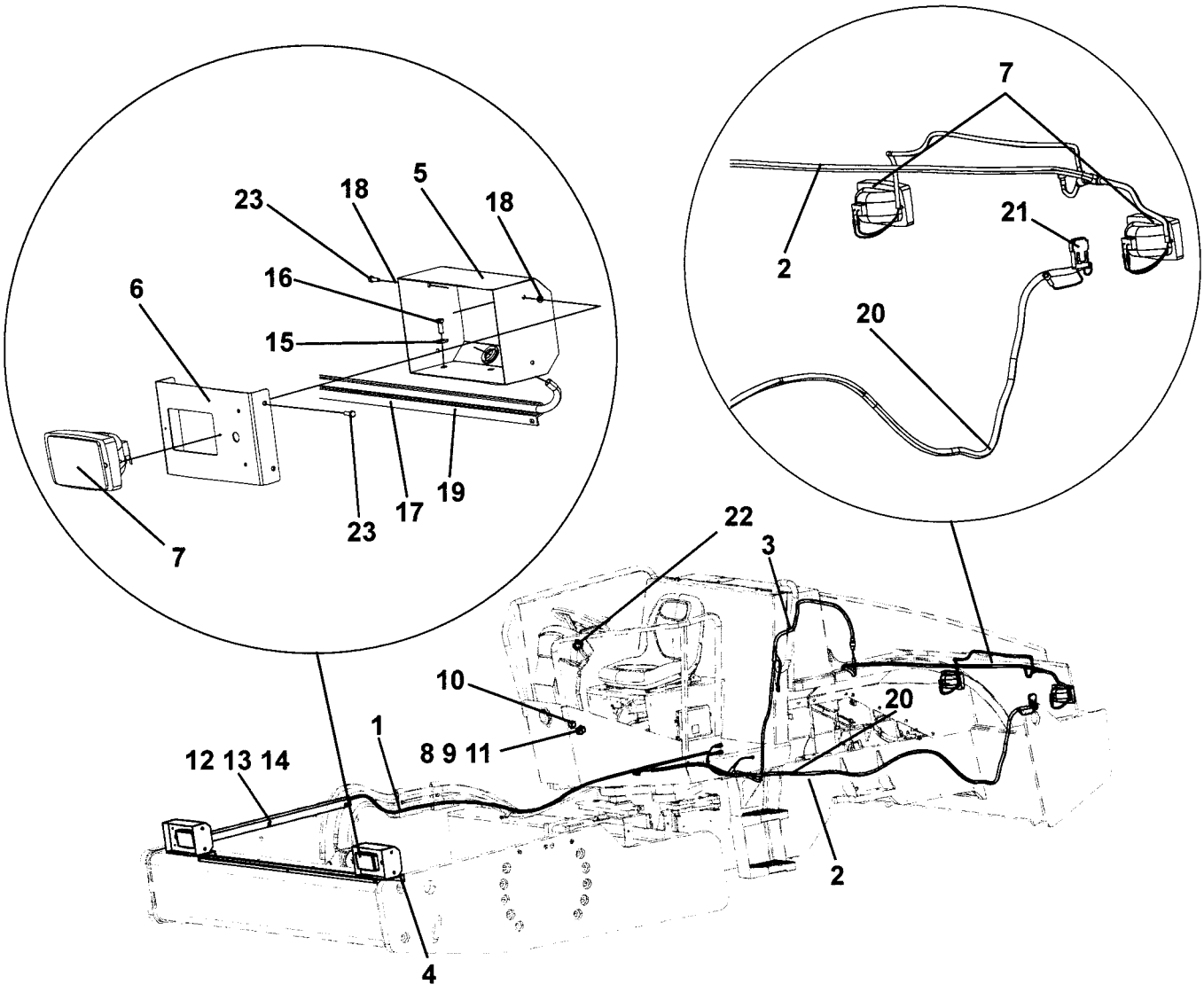

Working lights w/o cab Option

Item	Part No	Rem	Qty	Description	Code
1	4700392771		1	Cable harness	D
2	4700373360		1	Cable harness	D
3	4700397278		1	Cable harness	
4	4700384163		2	Protection	D
5	4700374029		2	Lamp shield	D
6	4700374030		2	Bracket	D
7	4700902227		4	Work light	B
8	4700792091		1	Fuse holder	C
9	4700901767		2	Screw ST3,5x9,5 Black	
10	4700903956		1	Relay	A
11	4700903741		1	Fuse 20A Yellow Medium	A
12	4700388466		1	Cable holder	D
13	4700904229		3	Steel plain washer 8,4x16x1,5	C
14	4700500019		3	Hexagon head screw M8x16H 8,8	C
15	4700904640		6	Washer 8,4x22x3	C
16	4700500053		6	Screw M8x20H 8.8	C
17	4700384162		1	Cable holder	D
18	4700904228		11	Washer 6,4x12x1,5	C
19	4700500012		3	Screw M6x12	C
20	4700373184		1	Cable harness	D
21	4700904038		1	Fuse 40A	A
22	4700791587		1	Switch, working light	B
23	4700500040		8	Screw M6-1x20 8,8	C

Driving lights, w/o cab Option

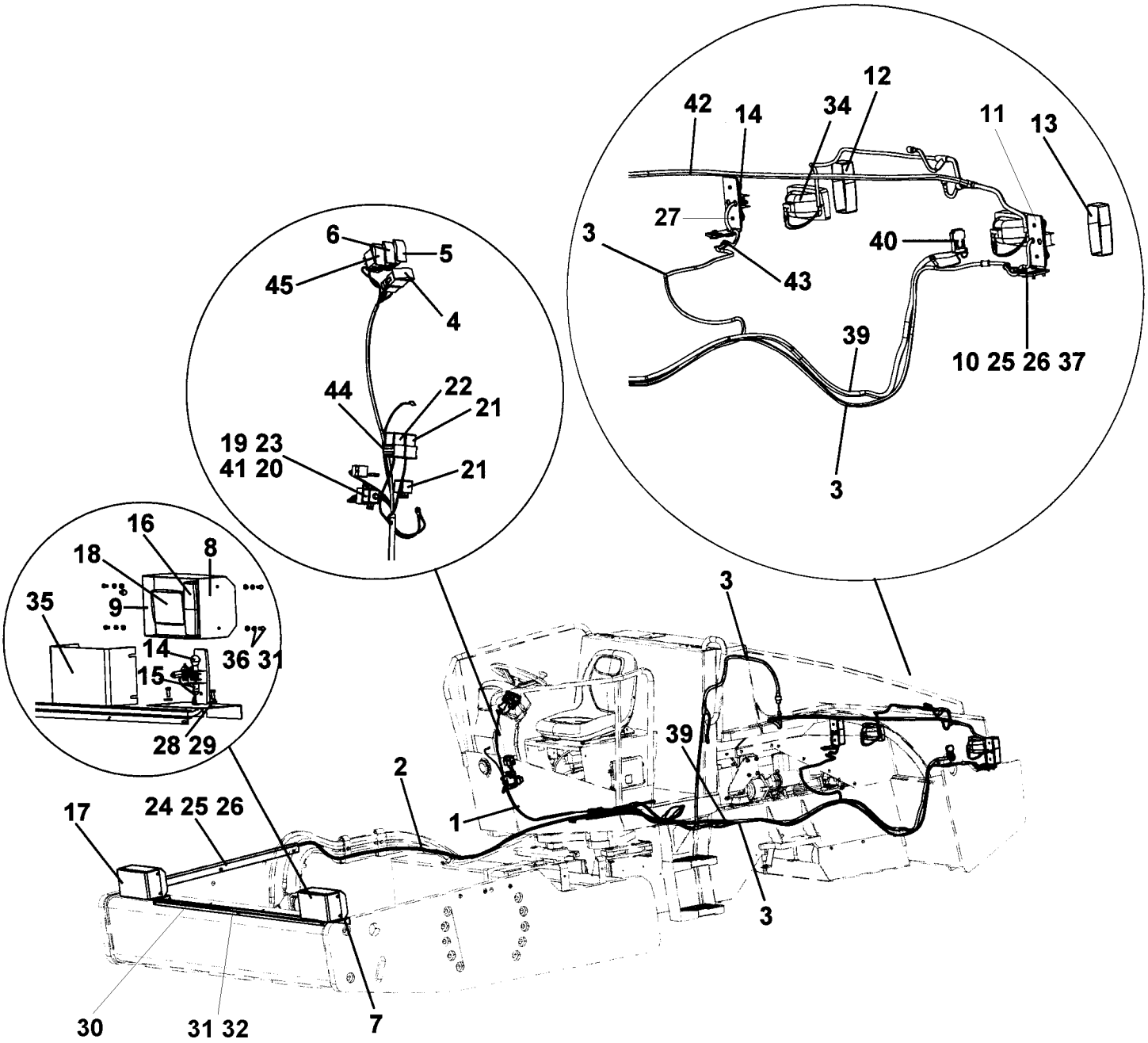

Driving lights, w/o cab Option

Item	Part No	Rem	Qty	Description	Code
1	4700392774		1	Cable harness	
2	4700392775		1	Cable harness	
3	4700397255		1	Cable harness	
4	4700792413		1	Switch, drive direction	B
5	4700791584		1	Switch, hazard flashers	B
6	4700791583		1	Switch, driving light	B
7	4700384163		2	Protection	D
8	4700374029		2	Lamp shield	D
9	4700374030		2	Bracket	D
10	4700374088		2	Holder plate	D
11	4700374089		2	Bracket	D
12	4700904318		1	Direction lamp Right	B
13	4700904317		1	Direction lamp Left	B
14	4700928502		6	Bulb 21w	B
15	4700985014		4	Bulb 5w	B
16	4700904315		1	Direction lamp Left	B
17	4700904316		1	Direction lamp Right	B
18	4700902066		2	Headlight	B
19	4700792091		1	Fuse holder	C
20	4700901767		2	Screw ST3,5x9,5 Black	
21	4700903956		2	Relay	A
22	4700904989		1	Flash relay Option	A
23	4700903741		1	Fuse 20A Yellow Medium	A
24	4700388466		1	Cable holder	D
25	4700904229		7	Steel plain washer 8,4x16x1,5	C
26	4700500019		7	Hexagon head screw M8x16H 8,8	C
27	4700533010		8	Screw	D
28	4700904230		6	Steel plain washer	C
29	4700500043		6	Screw M10x16H 8,8	D
30	4700384162		1	Cable holder	D
31	4700904228		11	Washer 6,4x12x1,5	C
32	4700500012		3	Screw M6x12	C
34	4700902227		2	Work light	B
35	4700374120		2	Protecting cover	D
36	4700500013		8	Screw M6-1x16 8,8	C
37	4700513009		4	Screw	D
38	4700313041		N	Cable ties	B
39	4700373184		1	Cable harness	D
40	4700904038		1	Fuse 40A	A
41	4700901240		1	Connector	B
42	4700374195		1	Cable harness	D
43	4700921072		3	Clamp	
44	4700791916		2	Screw	C
45	4700791587		1	Switch, working light	B

Driving lights, w/o cab Left hand, Option

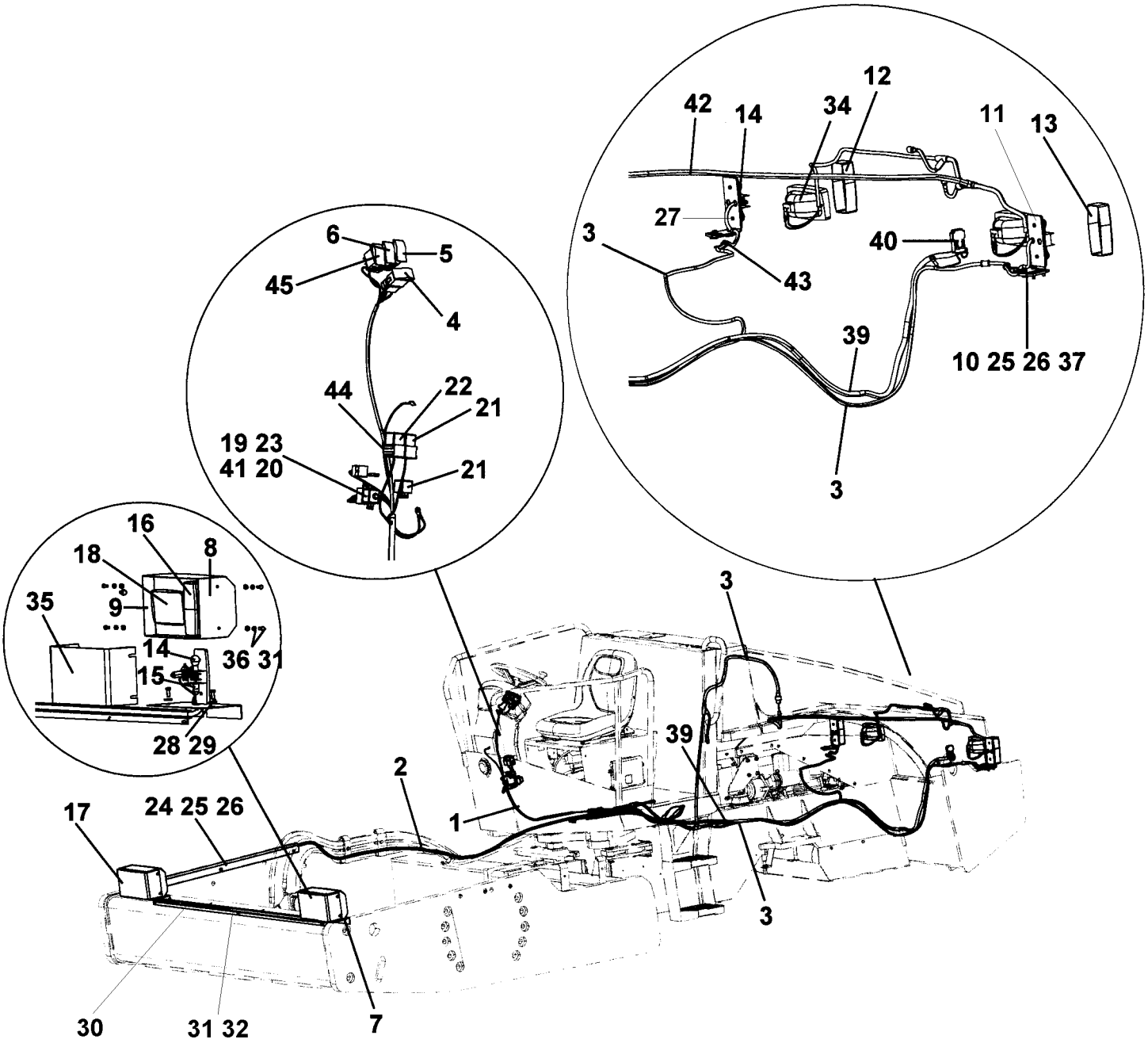

Driving lights, w/o cab Left hand, Option

Item	Part No	Rem	Qty	Description	Code
1	4700392774		1	Cable harness	
2	4700392775		1	Cable harness	
3	4700397255		1	Cable harness	
4	4700792413		1	Switch, drive direction	B
5	4700791584		1	Switch, hazard flashers	B
6	4700791583		1	Switch, driving light	B
7	4700384163		2	Protection	D
8	4700374029		2	Lamp shield	D
9	4700374030		2	Bracket	D
10	4700374088		2	Holder plate	D
11	4700374089		2	Bracket	D
12	4700904318		1	Direction lamp Right	B
13	4700904317		1	Direction lamp Left	B
14	4700928502		6	Bulb 21w	B
15	4700985014		4	Bulb 5w	B
16	4700904315		1	Direction lamp Left	B
17	4700904316		1	Direction lamp Right	B
18	4700904313		2	Headlight	B
19	4700792091		1	Fuse holder	C
20	4700901767		2	Screw ST3,5x9,5 Black	
21	4700903956		2	Relay	A
22	4700904989		1	Flash relay Option	A
23	4700903741		1	Fuse 20A Yellow Medium	A
24	4700388466		1	Cable holder	D
25	4700904229		7	Steel plain washer 8,4x16x1,5	C
26	4700500019		7	Hexagon head screw M8x16H 8,8	C
27	4700533010		8	Screw	D
28	4700904230		6	Steel plain washer	C
29	4700500043		6	Screw M10x16H 8,8	D
30	4700384162		1	Cable holder	D
31	4700904228		11	Washer 6,4x12x1,5	C
32	4700500012		3	Screw M6x12	C
34	4700902227		2	Work light	B
35	4700374120		2	Protecting cover	D
36	4700500013		8	Screw M6-1x16 8,8	C
37	4700513009		4	Screw	D
38	4700313041		N	Cable ties	B
39	4700373184		1	Cable harness	D
40	4700904038		1	Fuse 40A	A
41	4700901240		1	Connector	B
42	4700374195		1	Cable harness	D
43	4700921072		3	Clamp	
44	4700791916		2	Screw	C
45	4700791587		1	Switch, working light	B

Driving lights, with Working lights and ROPS Option

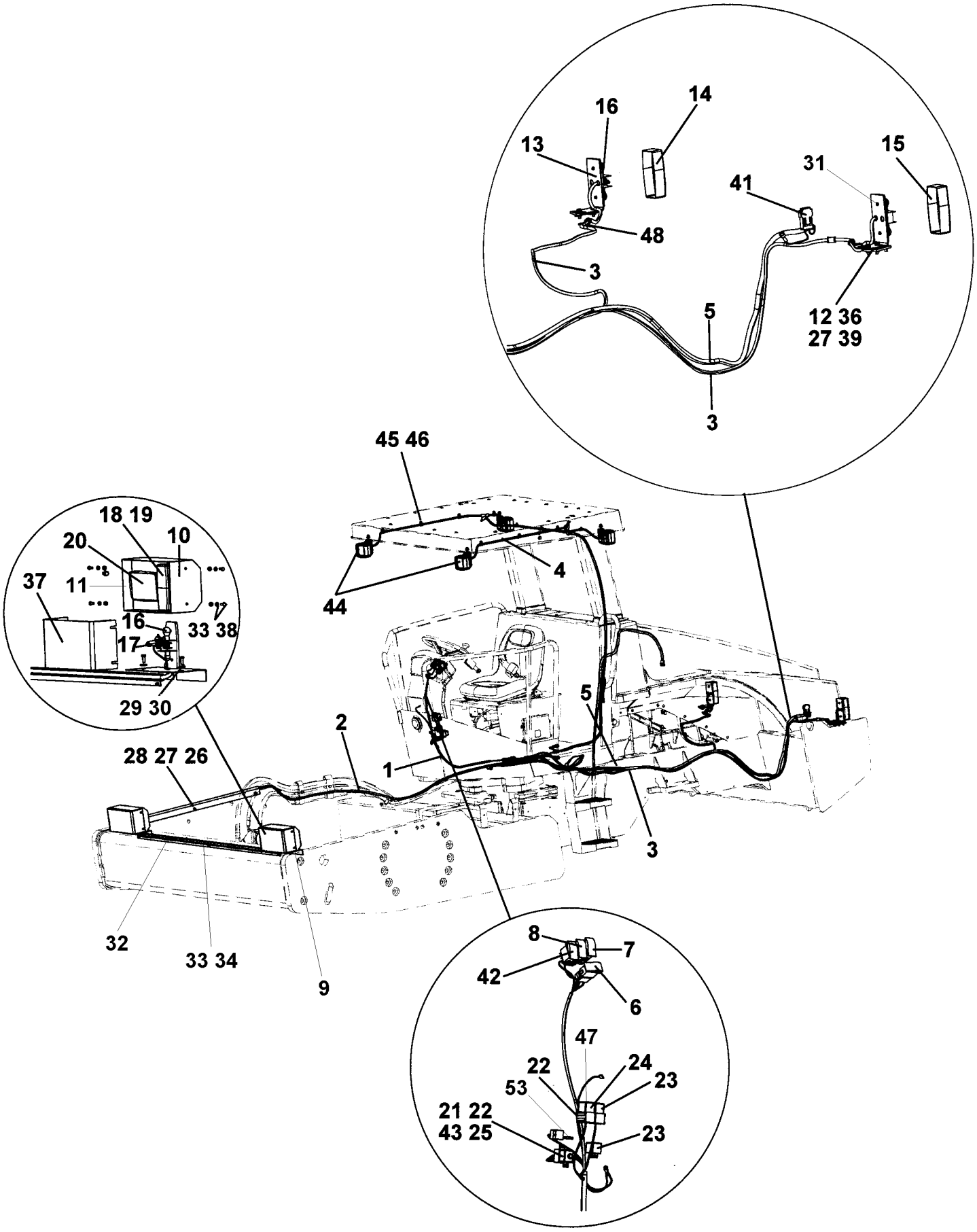

Driving lights, with Working lights and ROPS Option

Item	Part No	Rem	Qty	Description	Code
1	4700392774		1	Cable harness	
2	4700392775		1	Cable harness	
3	4700397255		1	Cable harness	
4	4700392772		1	Cable harness	D
5	4700373184		1	Cable harness	D
6	4700792413		1	Switch, drive direction	B
7	4700791584		1	Switch, hazard flashers	B
8	4700791583		1	Switch, driving light	B
9	4700384163		2	Protection	D
10	4700374029		2	Lamp shield	D
11	4700374030		2	Bracket	D
12	4700374088		2	Holder plate	D
13	4700374089		2	Bracket	D
14	4700904318		1	Direction lamp Right	B
15	4700904317		1	Direction lamp Left	B
16	4700928502		6	Bulb 21w	B
17	4700985014		4	Bulb 5w	B
18	4700904315		1	Direction lamp Left	B
19	4700904316		1	Direction lamp Right	B
20	4700902066		2	Headlight	B
21	4700792091		1	Fuse holder	C
22	4700901767		2	Screw ST3,5x9,5 Black	
23	4700903956		2	Relay	A
24	4700904989		1	Flash relay Option	A
25	4700903741		1	Fuse 20A Yellow Medium	A
26	4700388466		1	Cable holder	D
27	4700904229		9	Steel plain washer 8,4x16x1,5	C
28	4700500019		3	Hexagon head screw M8x16H 8,8	C
29	4700500043		6	Screw M10x16H 8,8	D
30	4700904230		6	Steel plain washer	C
31	4700533010		8	Screw	D
32	4700384162		1	Cable holder	D
33	4700904228		11	Washer 6,4x12x1,5	C
34	4700500012		3	Screw M6x12	C
36	4700500021		4	Screw M8-1,25x25 8.8	C
37	4700374120		2	Protecting cover	D
38	4700500013		8	Screw M6-1x16 8,8	C
39	4700513009		4	Screw	D
40	4700313041		N	Cable ties	B
41	4700904038		1	Fuse 40A	A
42	4700791587		1	Switch, working light	B
43	4700901240		1	Connector	B
44	4812110216		1	Work lamp	C
	4700904230		1	. Steel plain washer	C
	4700586018		1	. Hexagon lock nut	C
45	4700791341		13	Clamp	
46	4700541702		13	Screw M6x12	C
47	4700791916		2	Screw	C
48	4700921072		3	Clamp	
53	4700901227		1	Fuse 10A	A

Driving lights, with Working lights and ROPS Left hand, Option

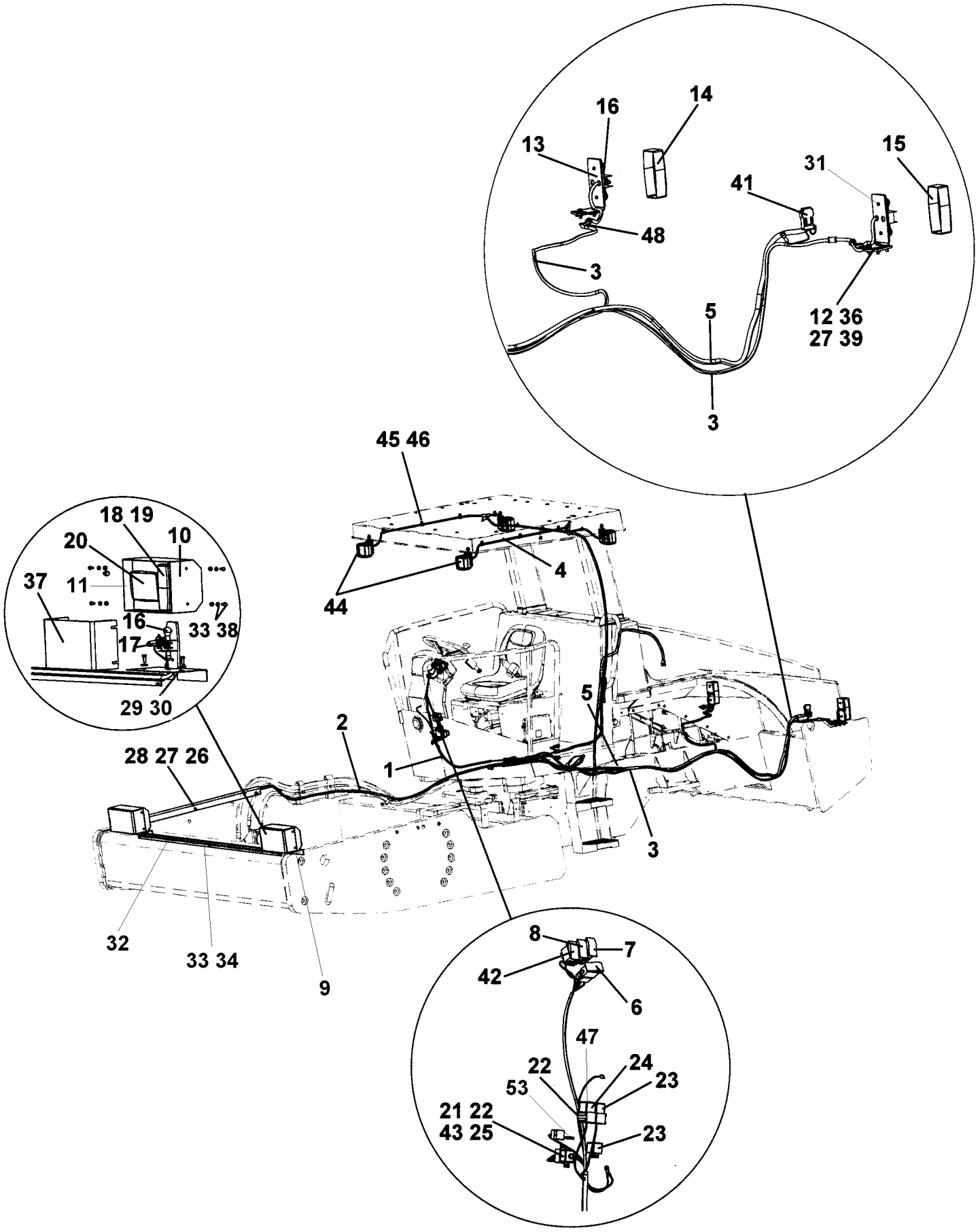

Driving lights, with Working lights and ROPS Left hand, Option

Item	Part No	Rem	Qty	Description	Code
1	4700392774		1	Cable harness	
2	4700392775		1	Cable harness	
3	4700397255		1	Cable harness	
4	4700392772		1	Cable harness	D
5	4700373184		1	Cable harness	D
6	4700792413		1	Switch, drive direction	B
7	4700791584		1	Switch, hazard flashers	B
8	4700791583		1	Switch, driving light	B
9	4700384163		2	Protection	D
10	4700374029		2	Lamp shield	D
11	4700374030		2	Bracket	D
12	4700374088		2	Holder plate	D
13	4700374089		2	Bracket	D
14	4700904318		1	Direction lamp Right	B
15	4700904317		1	Direction lamp Left	B
16	4700928502		6	Bulb 21w	B
17	4700985014		4	Bulb 5w	B
18	4700904315		1	Direction lamp Left	B
19	4700904316		1	Direction lamp Right	B
20	4700904313		2	Headlight	B
21	4700792091		1	Fuse holder	C
22	4700901767		2	Screw ST3,5x9,5 Black	
23	4700903956		2	Relay	A
24	4700904989		1	Flash relay Option	A
25	4700903741		1	Fuse 20A Yellow Medium	A
26	4700388466		1	Cable holder	D
27	4700904229		9	Steel plain washer 8,4x16x1,5	C
28	4700500019		3	Hexagon head screw M8x16H 8,8	C
29	4700533010		8	Screw	D
30	4700904230		6	Steel plain washer	C
31	4700500043		6	Screw M10x16H 8,8	D
32	4700384162		1	Cable holder	D
33	4700904228		11	Washer 6,4x12x1,5	C
34	4700500012		3	Screw M6x12	C
36	4700500021		4	Screw M8-1,25x25 8.8	C
37	4700374120		2	Protecting cover	D
38	4700500013		8	Screw M6-1x16 8,8	C
39	4700513009		4	Screw	D
40	4700313041		N	Cable ties	B
41	4700904038		1	Fuse 40A	A
42	4700791587		1	Switch, working light	B
43	4700901240		1	Connector	B
44	4812110216		1	Work lamp	C
	4700904230		1	. Steel plain washer	C
	4700586018		1	. Hexagon lock nut	C
45	4700791341		13	Clamp	
46	4700541702		13	Screw M6x12	C
47	4700791916		2	Screw	C
48	4700921072		3	Clamp	
53	4700901227		1	Fuse 10A	A

Driving lights with working lights, cab Option

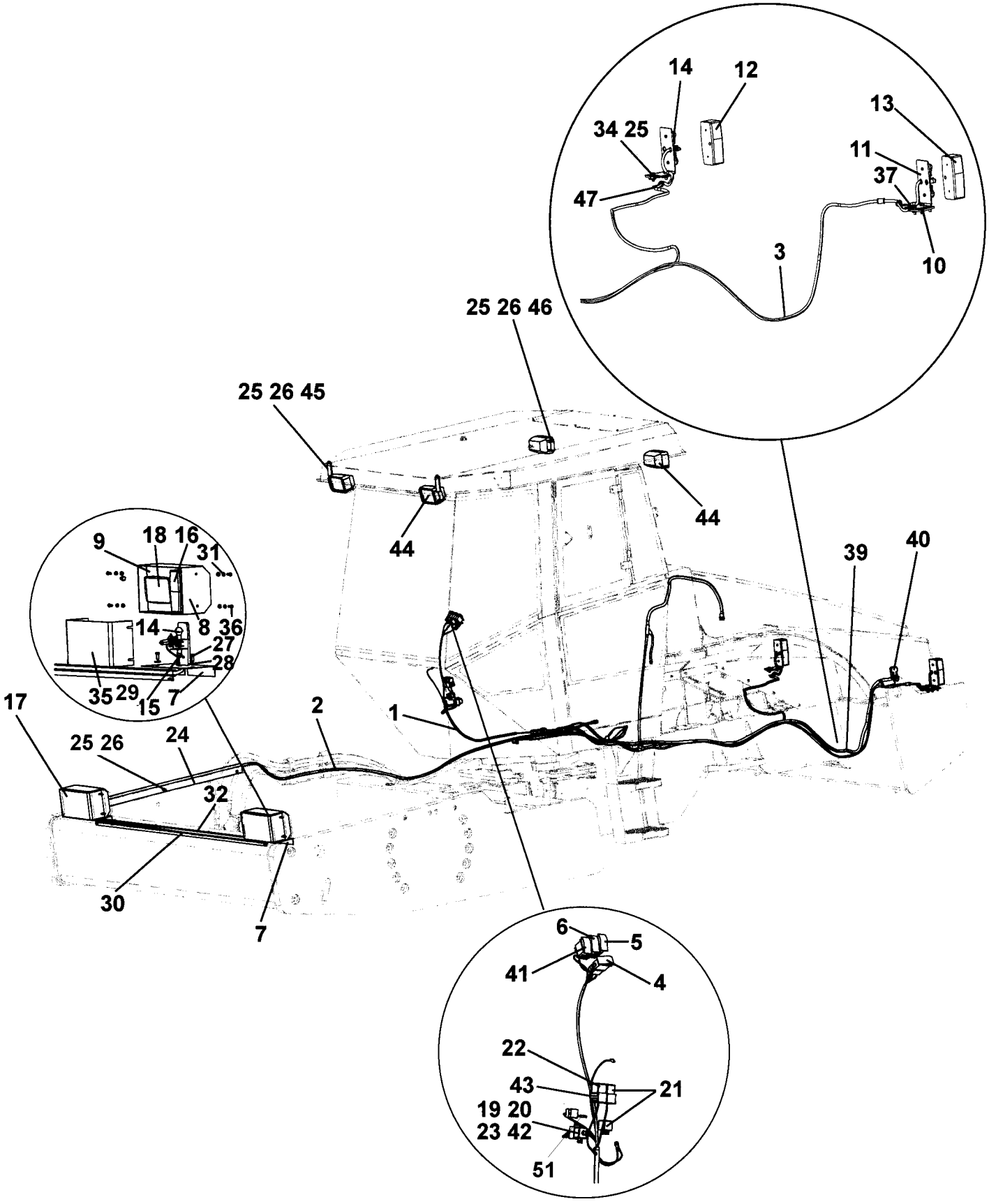

Driving lights with working lights, cab Option

Item	Part No	Rem	Qty	Description	Code
1	4700392774		1	Cable harness	
2	4700392775		1	Cable harness	
3	4700397255		1	Cable harness	
4	4700792413		1	Switch, drive direction	B
5	4700791584		1	Switch, hazard flashers	B
6	4700791583		1	Switch, driving light	B
7	4700384163		2	Protection	D
8	4700374029		2	Lamp shield	D
9	4700374030		2	Bracket	D
10	4700374088		2	Holder plate	D
11	4700374089		2	Bracket	D
12	4700904318		1	Direction lamp Right	B
13	4700904317		1	Direction lamp Left	B
14	4700928502		6	Bulb 21w	B
15	4700985014		4	Bulb 5w	B
16	4700904315		1	Direction lamp Left	B
17	4700904316		1	Direction lamp Right	B
18	4700902066		2	Headlight	B
19	4700792091		1	Fuse holder	C
20	4700901767		2	Screw ST3,5x9,5 Black	
21	4700903956		2	Relay	A
22	4700904989		1	Flash relay Option	A
23	4700903741		2	Fuse 20A Yellow Medium	A
24	4700388465		1	Cable holder	D
25	4700904229		15	Steel plain washer 8,4x16x1,5	C
26	4700500019		9	Hexagon head screw M8x16H 8,8	C
27	4700533010		8	Screw	D
28	4700904230		6	Steel plain washer	C
29	4700500043		6	Screw M10x16H 8,8	D
30	4700384162		1	Cable holder	D
31	4700904228		11	Washer 6,4x12x1,5	C
32	4700500012		3	Screw M6x12	C
34	4700500021		4	Screw M8-1,25x25 8.8	C
35	4700374120		2	Protecting cover	D
36	4700500013		8	Screw M6-1x16 8,8	C
37	4700513009		4	Screw	D
38	4700313041		N	Cable ties	B
39	4700373184		1	Cable harness	D
40	4700904038		1	Fuse 40A	A
41	4700791587		1	Switch, working light	B
42	4700901240		1	Connector	B
43	4700791916		2	Screw	C
44	4700908267		4	Working light	B
45	4700908359		2	Distance	D
46	4700586003		2	Lock nut M8	C
47	4700921072		3	Clamp	

Driving lights with working lights, cab Left hand, Option

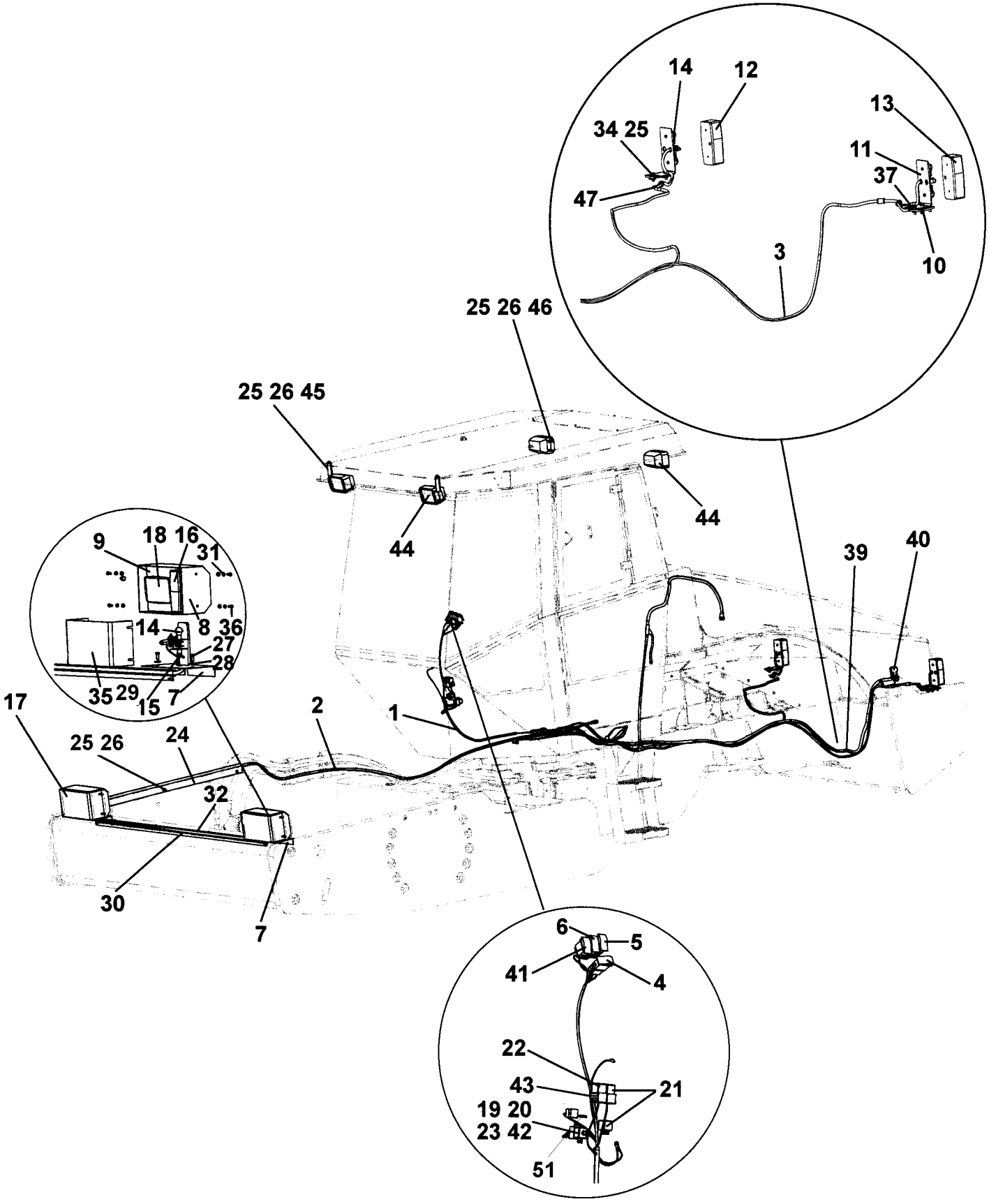

Driving lights with working lights, cab Left hand, Option

Item	Part No	Rem	Qty	Description	Code
1	4700392774		1	Cable harness	
2	4700392775		1	Cable harness	
3	4700397255		1	Cable harness	
4	4700792413		1	Switch, drive direction	B
5	4700791584		1	Switch, hazard flashers	B
6	4700791583		1	Switch, driving light	B
7	4700384163		2	Protection	D
8	4700374029		2	Lamp shield	D
9	4700374030		2	Bracket	D
10	4700374088		2	Holder plate	D
11	4700374089		2	Bracket	D
12	4700904318		1	Direction lamp Right	B
13	4700904317		1	Direction lamp Left	B
14	4700928502		6	Bulb 21w	B
15	4700985014		4	Bulb 5w	B
16	4700904315		1	Direction lamp Left	B
17	4700904316		1	Direction lamp Right	B
18	4700904313		2	Headlight	B
19	4700792091		1	Fuse holder	C
20	4700901767		2	Screw ST3,5x9,5 Black	
21	4700903956		2	Relay	A
22	4700904989		1	Flash relay Option	A
23	4700903741		2	Fuse 20A Yellow Medium	A
24	4700388465		1	Cable holder	D
25	4700904229		15	Steel plain washer 8,4x16x1,5	C
26	4700500019		9	Hexagon head screw M8x16H 8,8	C
27	4700533010		8	Screw	D
28	4700904230		6	Steel plain washer	C
29	4700500043		6	Screw M10x16H 8,8	D
30	4700384162		1	Cable holder	D
31	4700904228		11	Washer 6,4x12x1,5	C
32	4700500012		3	Screw M6x12	C
34	4700500021		4	Screw M8-1,25x25 8.8	C
35	4700374120		2	Protecting cover	D
36	4700500013		8	Screw M6-1x16 8,8	C
37	4700513009		4	Screw	D
38	4700313041		N	Cable ties	B
39	4700373184		1	Cable harness	D
40	4700904038		1	Fuse 40A	A
41	4700791587		1	Switch, working light	B
42	4700901240		1	Connector	B
43	4700791916		2	Screw	C
44	4700908267		4	Working light	B
45	4700908359		2	Distance	D
46	4700586003		2	Lock nut M8	C
47	4700921072		3	Clamp	
51	4700901227		1	Fuse 10A	A

Rotating beacon Option

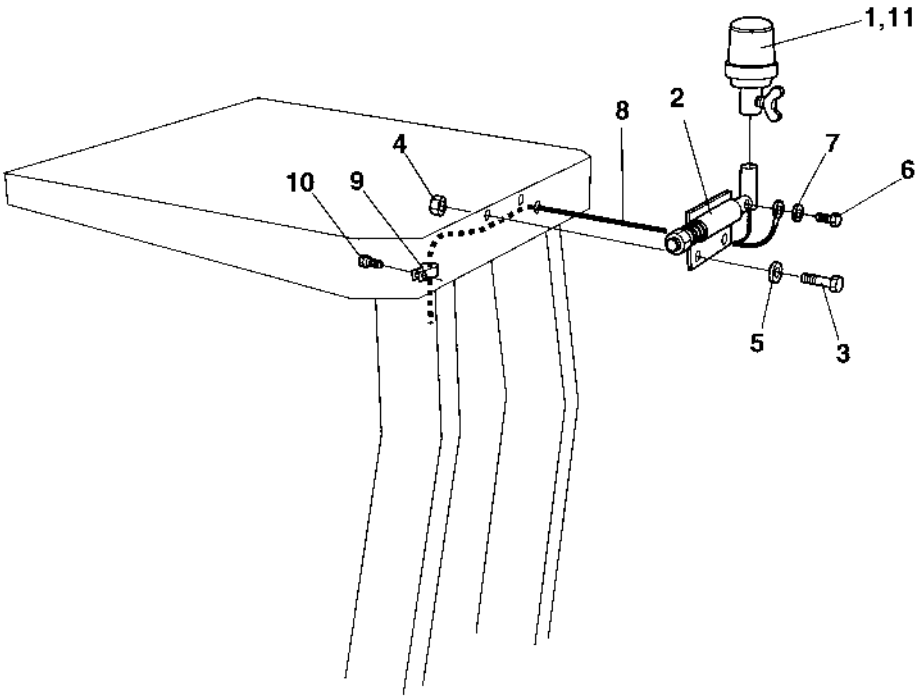

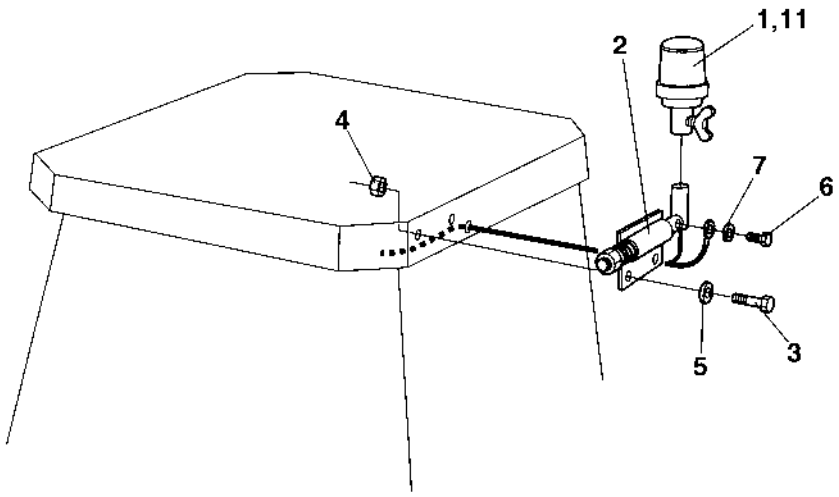

Rotating beacon Option

Item	Part No	Rem	Qty	Description	Code
1	4700999011	1	1	Rotating beacon	B
2	4700358452		1	Lamp holder	D
3	4700500021		2	Screw M8-1,25x25 8.8	C
4	4700586003		2	Lock nut M8	C
5	4700904229		4	Steel plain washer 8,4x16x1,5	C
6	4700500013		1	Screw M6-1x16 8,8	C
7	4700904228		1	Washer 6,4x12x1,5	C
8	4700392773		1	Cable harness	D
9	4700921039		1	Pipe clamp	
10	4700541702		1	Screw M6x12	C
11	4700389577	2	1	Rotating beacon 12V	B

1) Is replaced by item 11, P/N 4700389577.
2) Replaces item 1, P/N 4700999011.

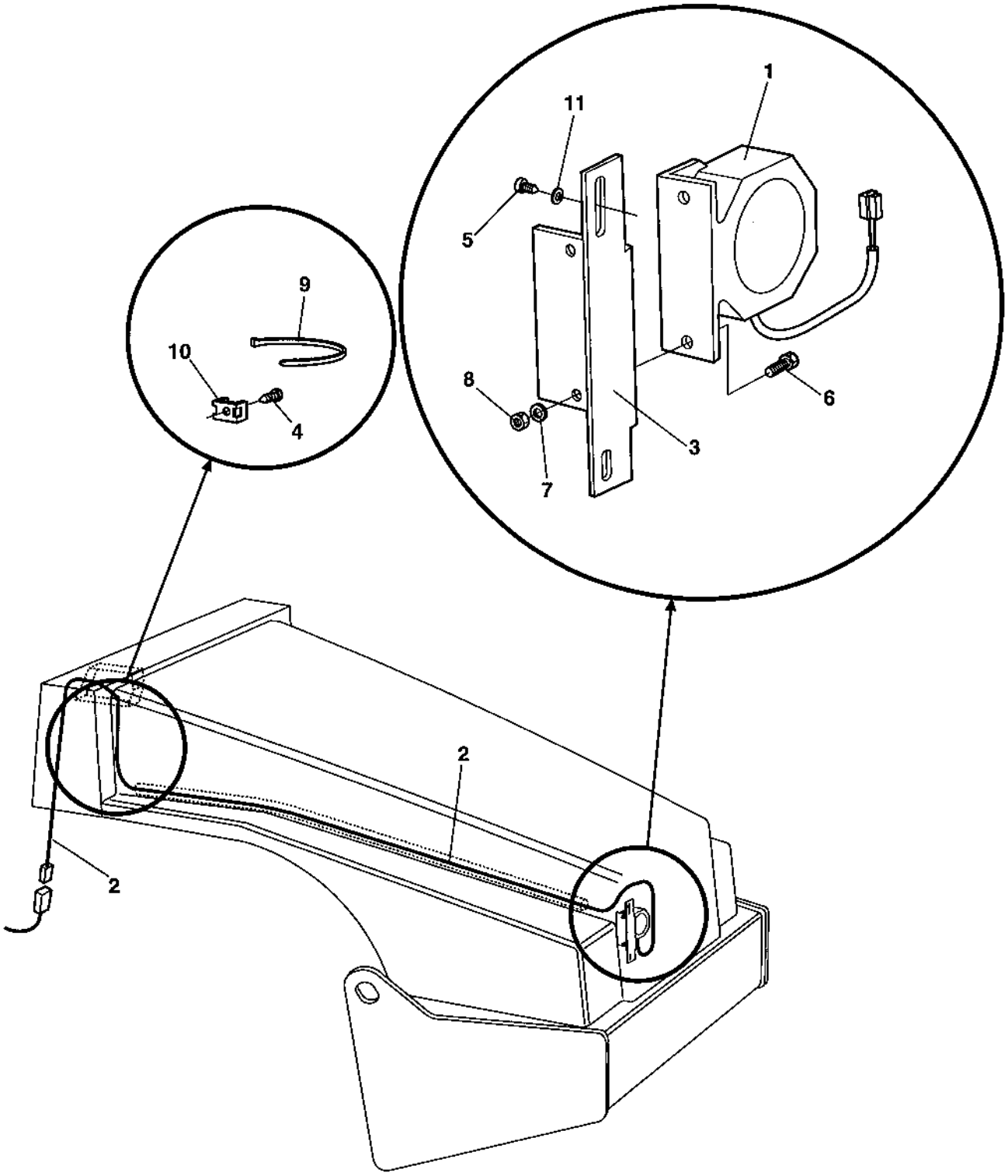
1
11
5
9
10
4
8
6
3
7
2
2

Back-up alarm Option

Item	Part No	Rem	Qty	Description	Code
1	4700904910		1	Back-up alarm	B
2	4700373286	A	1	Cable harness	D
3	4700376896		1	Bracket	D
4	4700903852		3	Screw ST4,2x13	C
5	4812110748		2	Screw KX-PT K50X18 A2K	
6	4700500013		2	Screw M6-1x16 8,8	C
7	4700904228		2	Washer 6,4x12x1,5	C
8	4700586002		2	Lock nut M6 -8	C
9	4700925802		N	Cable ties L=142 mm	C
10	4700904543		3	Cable tie holder	
11		B		Existing washer	

A) Not valid for machines equiped with working/driving lights.
B) Use existing washers on grid.

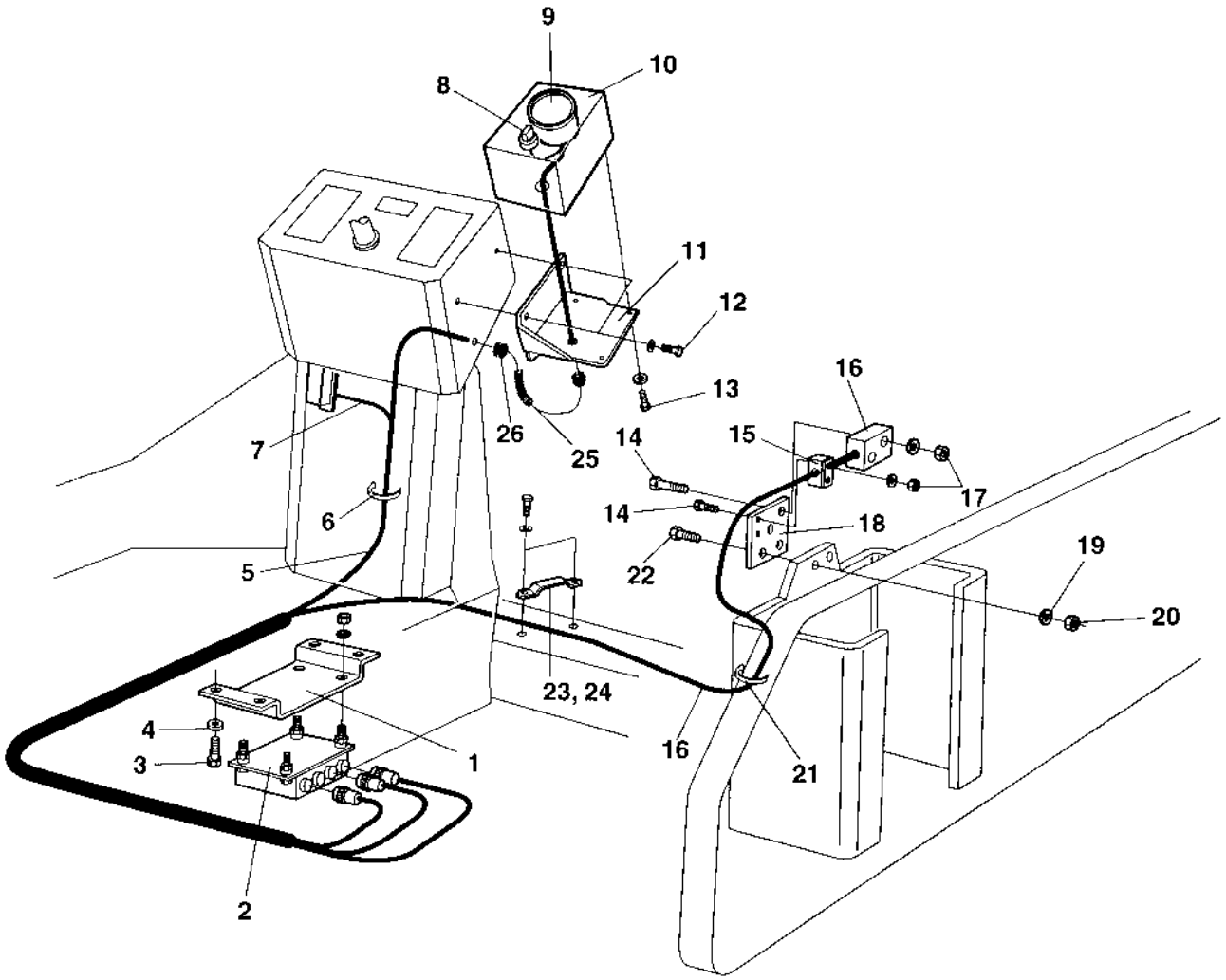
9
10
8
11
12
13
16
26
25
14
15
17
7
14
18
6
22
19
5
20
23, 24
4
3
1
16
21
2

Compaction meter Option

Item	Part No	Rem	Qty	Description	Code
1	4700372836		1	Bracket	D
2	4700388210		1	Processor comp.meter	D
3	4700500053		4	Screw M8x20H 8.8	C
4	4700904229		4	Steel plain washer 8,4x16x1,5	C
5	4700372784		1	Cable harness	D
6	4700313102		N	Cable ties	
7	4700381351		1	Cable harness	D
8	4700930151		1	Switch	B
9	4700383452		1	Compaction meter	D
10	4700373096		1	Instrument box	D
11	4700393543		1	Bracket	D
12	4700904206		3	Screw	C
13	4700541526		4	Screw	D
14	4700500079		4	Screw M6-1x50 8,8	C
15	4700902496		1	Clamp	D
16	4700348213		1	Sensor, cpl	C
17	4700902285		7	Hexagon lock nut with flange	C
18	4700373140		1	Bracket	D
19	4700904231		2	Washer 13x24x2 300 HV	C
20	4700902288		2	Nut M12	D
21	4700313041		N	Cable ties	B
22	4700500194		2	Screw	C
23	4700373016		1	Hose clamp	D
24	4700349435		1	Rubber part	D
25	4700901190	A	1	Conduit	D
26	4700903192		2	Grommet	

A) L=230mm

Engine pre-heater, Cab Option

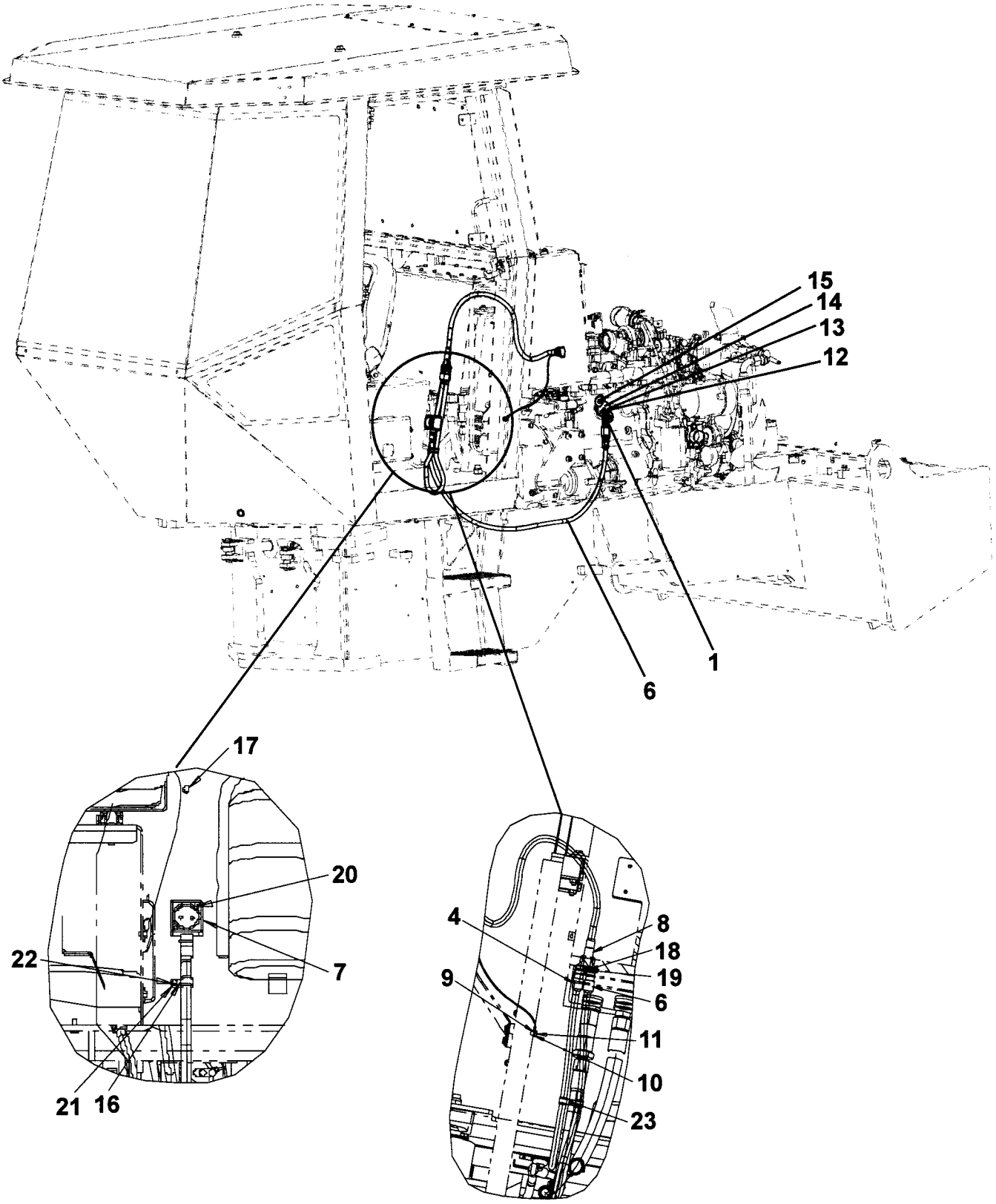

Engine pre-heater, Cab Option

Item	Part No	Rem	Qty	Description	Code
1	4700396041		1	Heater	
3	4700396045		1	Cable	
4	4700396046		1	Cable	
5	4700396048		1	Cable	
6	4700396047		1	Cable	
7	4700396044		1	Connector	
8	4700396043		1	Branching	
9	4700960051		1	Connector	
10	4700904229		1	Steel plain washer 8,4x16x1,5	C
11	4700500042		1	Screw	
12	4700500006		1	Screw M5x16	C
13	4700791304		2	Washer	C
14	4700901688		2	Washer	
15	4700500053		2	Screw M8x20H 8.8	C
16	4700921046		3	Clamp	
17	4700928346		1	Screw M6x40H 8.8	C
18	4700904228		1	Washer 6,4x12x1,5	C
19	4700586002		1	Lock nut M6 -8	C
20	4700533016		2	Screw	D
21	4700904281		2	Washer 5,3x10x1 300HV	C
22	4700500060		1	Screw M5-0,8x20 8.8	C
23	4700586001		1	Lock nut	C

Licence plate light Option

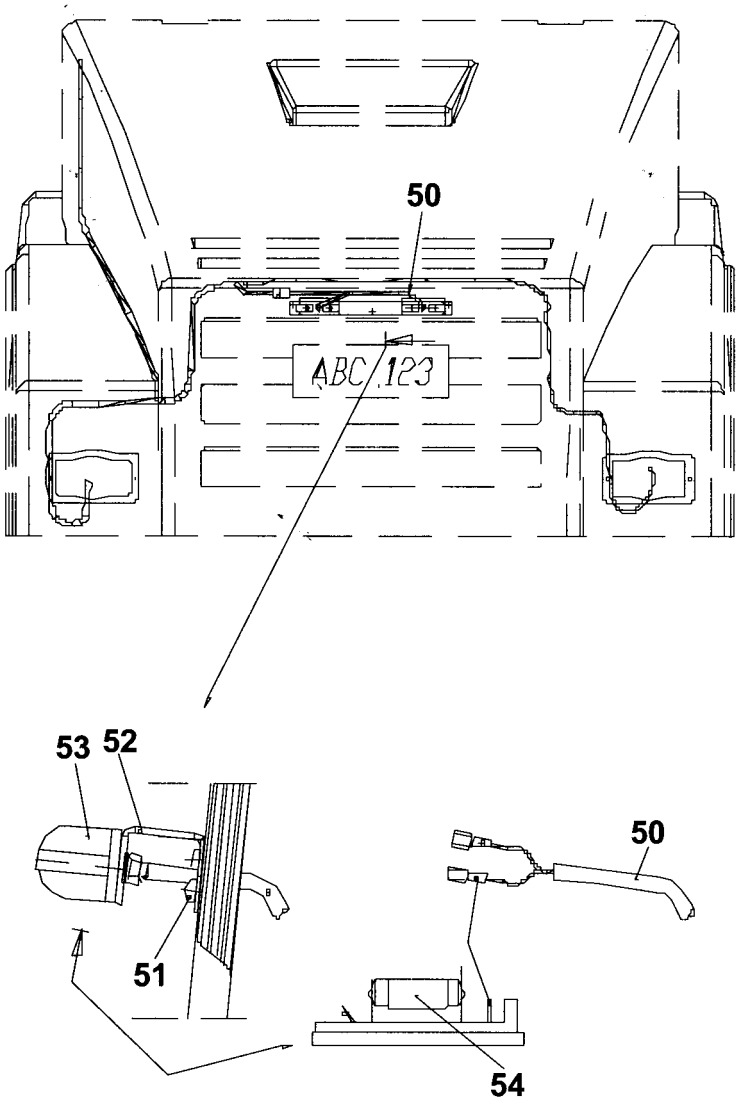

Licence plate light Option

Item	Part No	Rem	Qty	Description	Code
50	4700374196		1	Cable harness	D
51	4700903969		3	Screw ST4,8x19 Black	C
52	4700374184		1	Licence plate light bracket	D
53	4700929455		2	Licence plate light	D
54	4700985013		2	Bulb 12V,5W	B

Direction lights Option

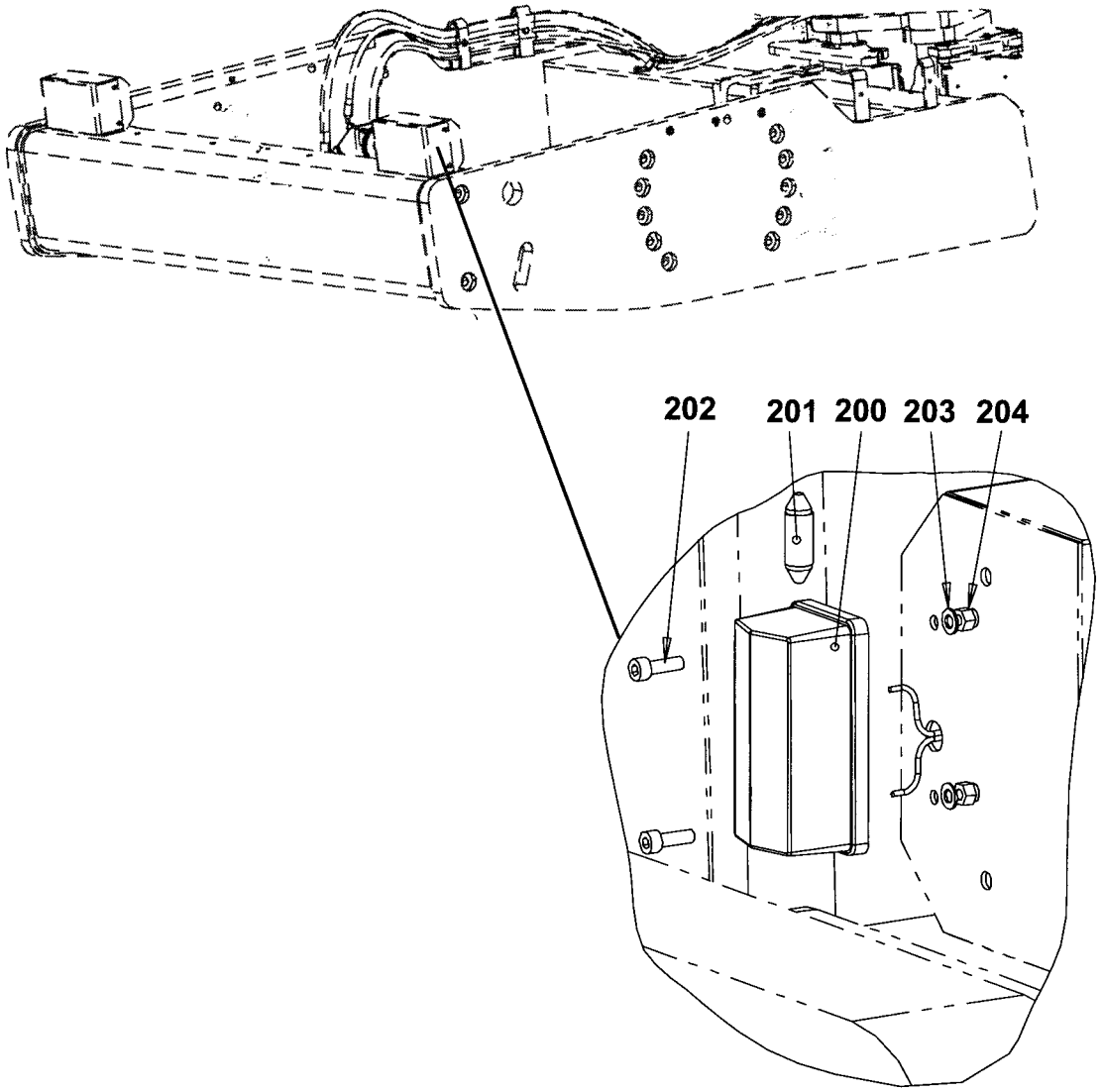

Direction lights Option

Item	Part No	Rem	Qty	Description	Code
200	4700902064		2	Direction lights	B
201	4700985013		2	Bulb 12V,5W	B
202	4700926537		4	Screw M5-0,8x16H 8,8	
203	4700904281		4	Washer 5,3x10x1 300HV	C
204	4700586001		4	Lock nut	C

Drivers platform

Item	Part No	Rem	Qty	Description	Code
10				Drivers platform (Page 148)	
20				Control panel (Page 150)	
40				Forward and reverse control (Page 152)	
52				Steering column (Page 156)	
100				Canopy Option (Page 158)	
110				Rops and fops (Page 160)	
120				Cab mounting (Page 162)	
130				Cab 4700392479 (Page 164)	

Drivers platform

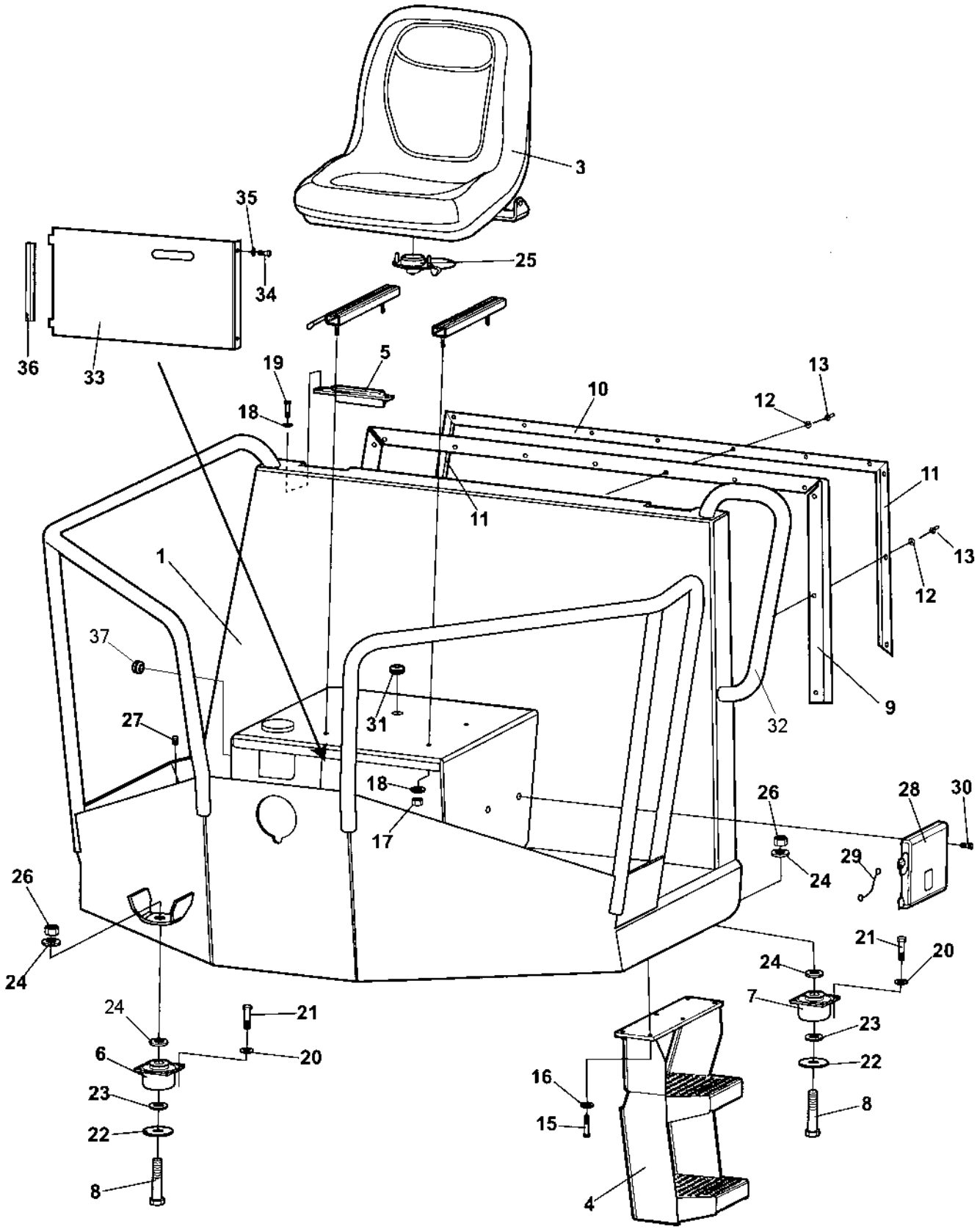

Drivers platform

Item	Part No	Rem	Qty	Description	Code
1	4700392394		1	Platform	
3	4700377556		1	Drivers seat, cpl	D
	4700377518	E	1	Drivers seat, cpl	D
	4700348331		1	Seat cover	D
4	4700376252		1	Step	D
5	4700380727		2	Cover	D
6	4700372757		2	Shock absorber	D
7	4700373400		2	Shock absorber	D
8	4700500210		4	Screw M20-2,5x100 8.8	D
9	4700372494	A	1XL	Rubber strip	D
10	4700372785		1	List	D
11	4700382582		2	List	D
12	4700927974		13	Washer	C
13	4700904433		13	Blind rivet	
15	4700500029		4	Hexagon head screw	C
16	4700904230		4	Steel plain washer	C
17	4700586003		4	Lock nut M8	C
18	4700904229		8	Steel plain washer 8,4x16x1,5	C
19	4700500053		4	Screw M8x20H 8.8	C
20	4700904231		16	Washer 13x24x2 300 HV	C
21	4700500195		16	Screw	C
22	4700347512		4	Washer	D
23	4700903290		4	Washer 21x36x6	C
24	4700904233		8	Washer 21x36x3	C
25	4700379636	C	1	Seat switch	B
	4812155075	D	1	Seat switch	B
26	4700901145		4	Lock nut M20-10	
27	4700902203		2	Plug	C
28	4700383705		1	Instruction book holder	D
29	4700357643		1	Wire	D
30	4700791226		4	Screw	C
31	4700903192		1	Grommet	
32	4700380123		1	Grab handle	D
33	4700392875		1	Cover	D
34	4700500013		2	Screw M6-1x16 8,8	C
35	4700904228		2	Washer 6,4x12x1,5	C
36	4700902166	B	1XL	Edge trim	D
37	4700903727		1	Plug	

A) L=2,400M
B) L=0,210M
C) With bayonet fitting.
D) With screws.
E) Option

Control panel

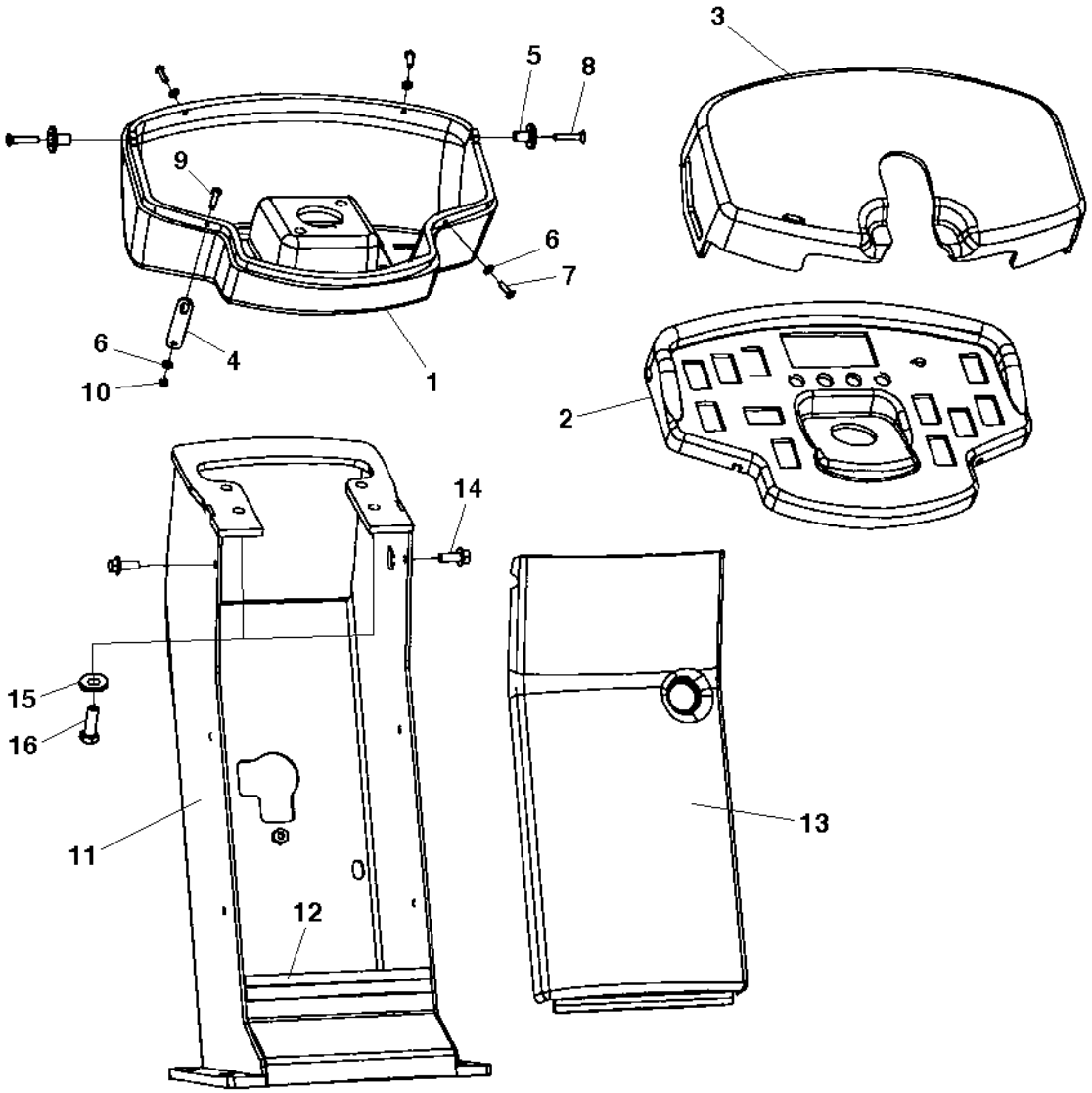

Control panel

Item	Part No	Rem	Qty	Description	Code
1	4700387720		1	Control panel holder	D
2	4700391784		1	Control panel	D
3	4700387227		1	Control panel cover	C
4	4700387545		1	Latch	D
5	4700357855		2	Bushing	C
6	4700904281		4	Washer 5,3x10x1 300HV	C
7	4700904653		3	Screw M5x16 A2-70	C
8	4700513017		2	Screw M6x30H 10,9	C
9	4700500007		1	Screw M5-0,8x22H 8,8	C
10	4700791476		1	Nut M5 -8	C
11	4700378335		1	Control panel column	D
12	4700902166	A	1XL	Edge trim	D
13	4700387226		1	Column cover	C
14	4700500505		2	Screw M8x20 8.8	C
15	4700904230		4	Steel plain washer	C
16	4700500029		4	Hexagon head screw	C

A) L=0,190 m

Forward and reverse control

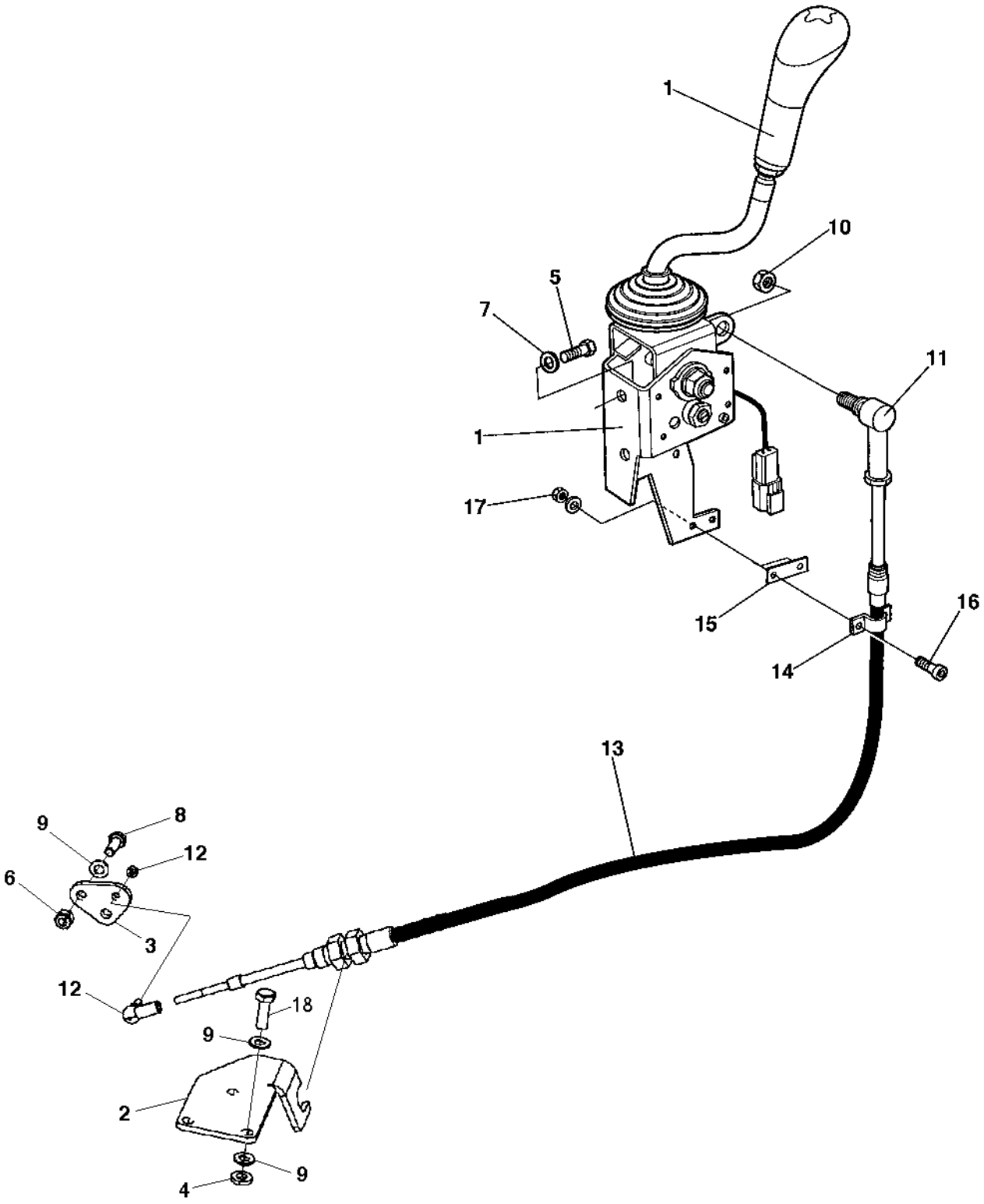

Forward and reverse control

Item	Part No	Rem	Qty	Description	Code
1			1	Forward and reverse control handle (Page 154)	
2	4700392899		1	Control bracket	D
3	4700392900		1	Control lever	D
4	4700904556		3	Washer 8,4x16x3,0	C
5	4700508092		2	Screw	C
6	4700586003		2	Lock nut M8	C
7	4700904556		2	Washer 8,4x16x3,0	C
8	4700500021		2	Screw M8-1,25x25 8.8	C
9	4700904229		8	Steel plain washer 8,4x16x1,5	C
10	4700586003		1	Lock nut M8	C
11	4700377019		1	Ball joint	C
	4700950382		1	Ball stud M8	D
12	4700416034		1	Ball joint	C
13	4700377024	A	1	Cable Forward/Reverse	B
14	4700377020		1	Clamp	D
15	4700377021		1	Spacer	D
16	4700926537		2	Screw M5-0,8x16H 8,8	
17	4700586001		2	Lock nut	C
18	4700947680		3	Screw M8-1,25x25 10.9	D

A) L=1900MM

Forward and reverse control handle

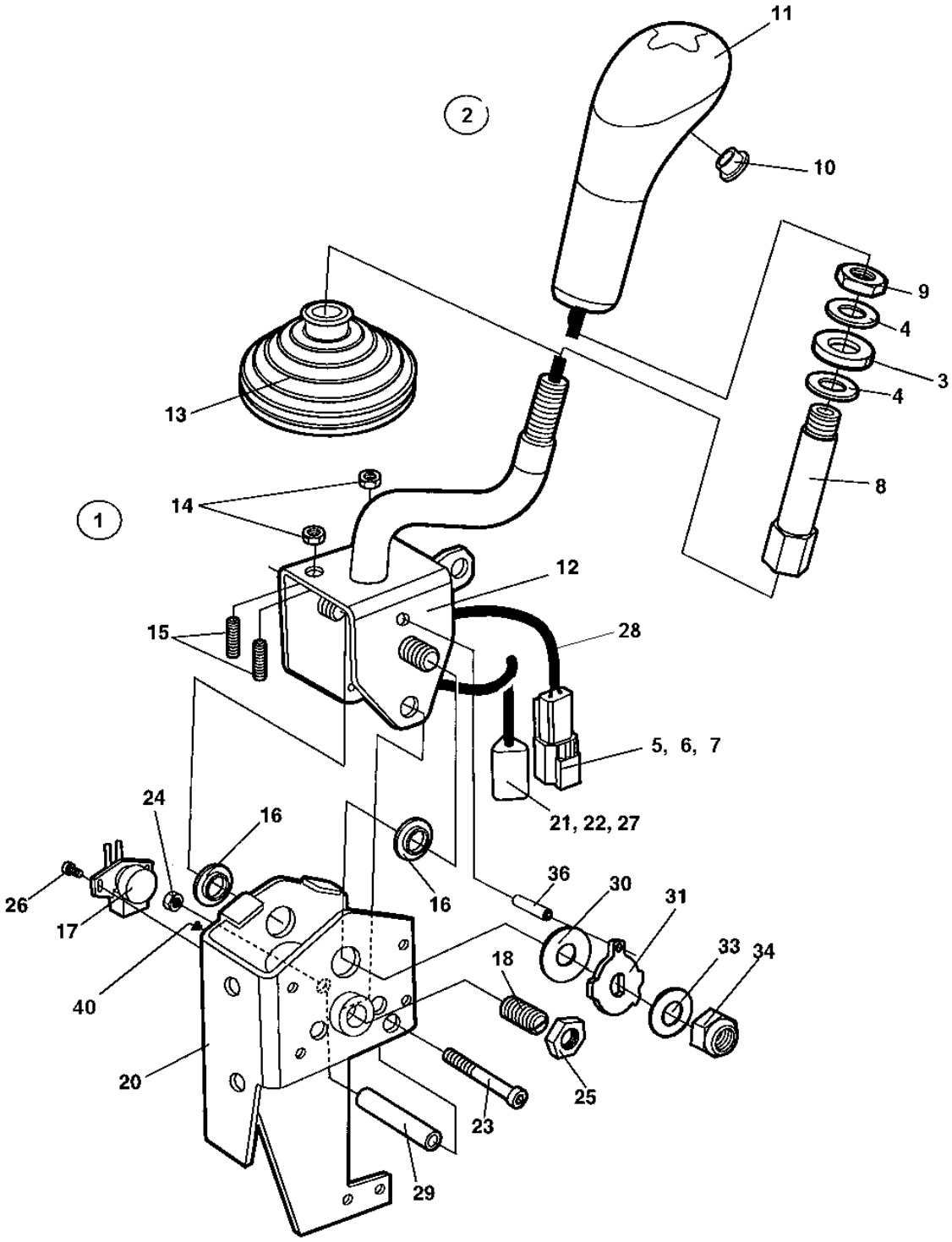

Forward and reverse control handle

Item	Part No	Rem	Qty	Description	Code
1	4700945407		1	Lever, cpl	D
2	4700940374		1	. Handle kit, cpl	A
			1	. . Handle	
	4700945729		1	. . . Push-button switch	B
			1	. . . Cable	
			1	. . Lock fluid	
			1	. . Service information	
3			1	. . Washer	
4			2	. . Washer	
5			1	. . Connector, receptable	
6			1	. . Lock wedge	
7			2	. . Pin	
8			1	. . Rod	
9			1	. . Nut	
10	4700377018		1	. . Protection plug	D
11	4700378759		1	. . Handle top	D
12	4700391379		1	. Lever	D
13	4700377009		1	. Bellows	C
14	4700570004		2	. Nut M6X1,00 -8 A2K	C
15	4700377015		2	. Set screw	D
16	4700391381		1	Bushing	D
17	4700391382		1	Potentiometer with cable	
18	4700377016		1	Spring loaded pin	D
20	4700377010		1	Bracket	D
21	4700903945		1	Connector, plug	
22	4700903946		1	Lock wedge	
23	4700508068		1	Screw	D
24	4700904563		1	Lock nut M6	C
25	4700927233		1	Nut	C
26	4700391383		1	Screw	D
27	4700903947		3	Pin	
28		B	1	Cable	
29	4700377011		1	Spacer	D
30	4700377012		1	Friction washer	D
31	4700391380		1	Cam washer	D
33	4700377014		1	Spring washer	D
34	4700586019		1	Lock nut	C
36	4700391386		1	Spirol pin	D
40	4700945207		1	Teflon bushing	

B) Included in potentiometer Pos 17

Steering column

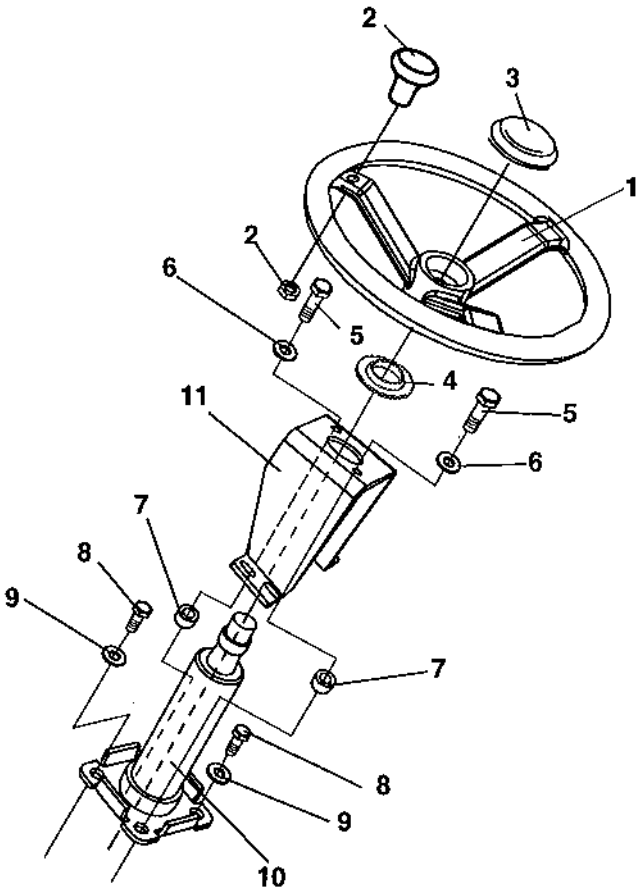

Steering column

Item	Part No	Rem	Qty	Description	Code
1	4700372964		1	Steering wheel, cpl	D
2	4700935614		1	. Turning knob	D
3	4700935613		1	. Cover	D
4	4700928830		1	Rubber washer	D
5	4700500031		2	Screw M10x040 8.8	C
6	4700904230		2	Steel plain washer	C
7	4700355869		2	Spacer sleeve	D
8	4700500048		2	Screw M10-1,5x20 8,8	C
9	4700904230		2	Steel plain washer	C
10	4700902123		1	Steering column	C
11		A	1	Bracket	

A) Included in control panel

Canopy Option

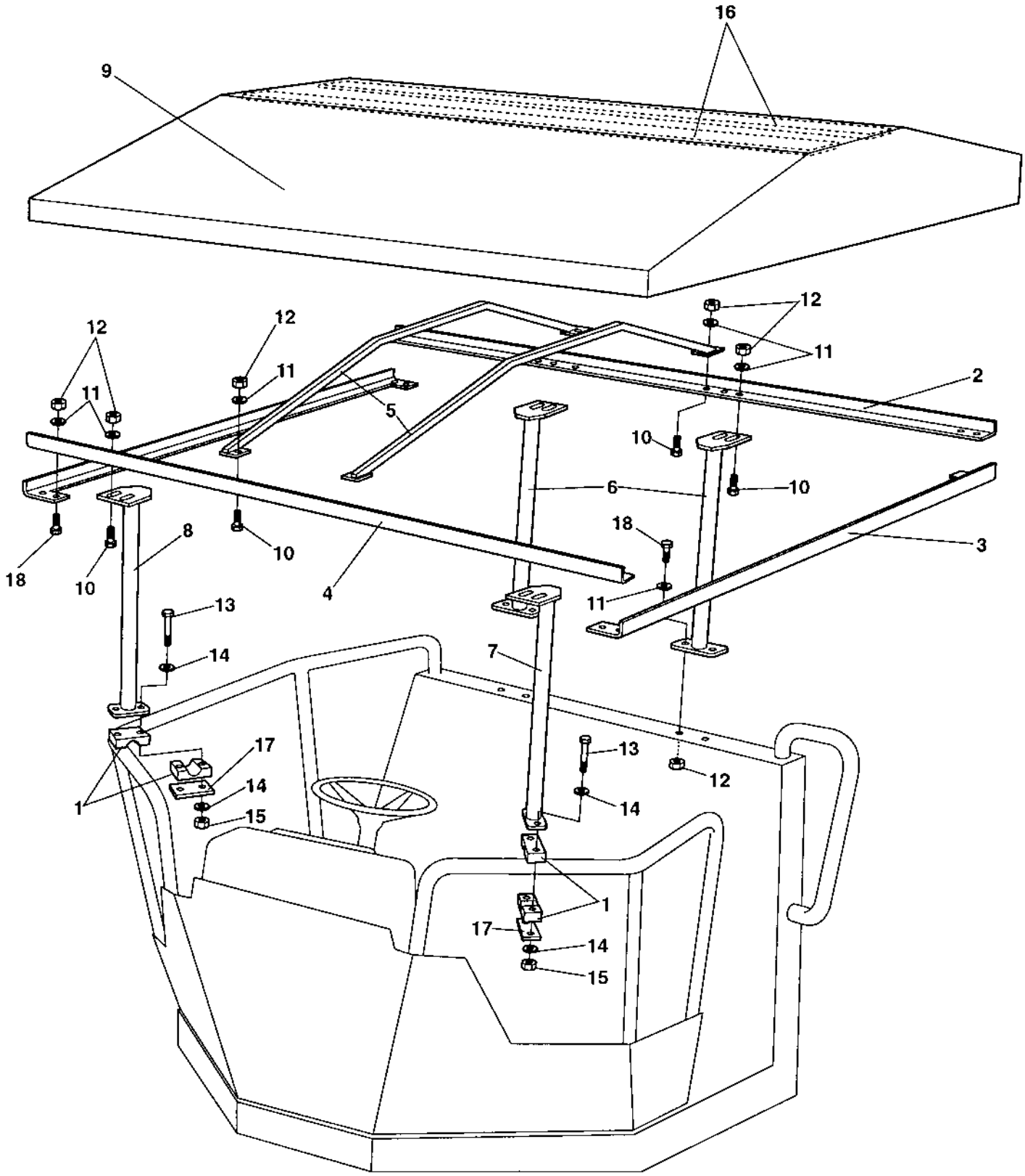

Canopy Option

Item	Part No	Rem	Qty	Description	Code
1	4700904340		2	Pipe clamp	
2	4700373746		1	Canopy profile	D
3	4700373747		2	Canopy profile	D
4	4700373748		1	Canopy profile	D
5	4700373749		4	Canopy rib	D
6	4700373750		2	Canopy anchor	D
7	4700380963		1	Canopy anchor	D
8	4700380964		1	Canopy anchor	D
9	4700373906		1	Roof	D
10	4700500021		16	Screw M8-1,25x25 8.8	C
11	4700904229		44	Steel plain washer 8,4x16x1,5	C
12	4700586003		22	Lock nut M8	C
13	4700500153		4	Screw	C
14	4700904228		8	Washer 6,4x12x1,5	C
15	4700586002		4	Lock nut M6 -8	C
16	4700373907		2	Lath	D
17	4700924791		2	Cover plate	
18	4700500022		8	Screw M8x30H 8.8 A2K	C

Rops and fops

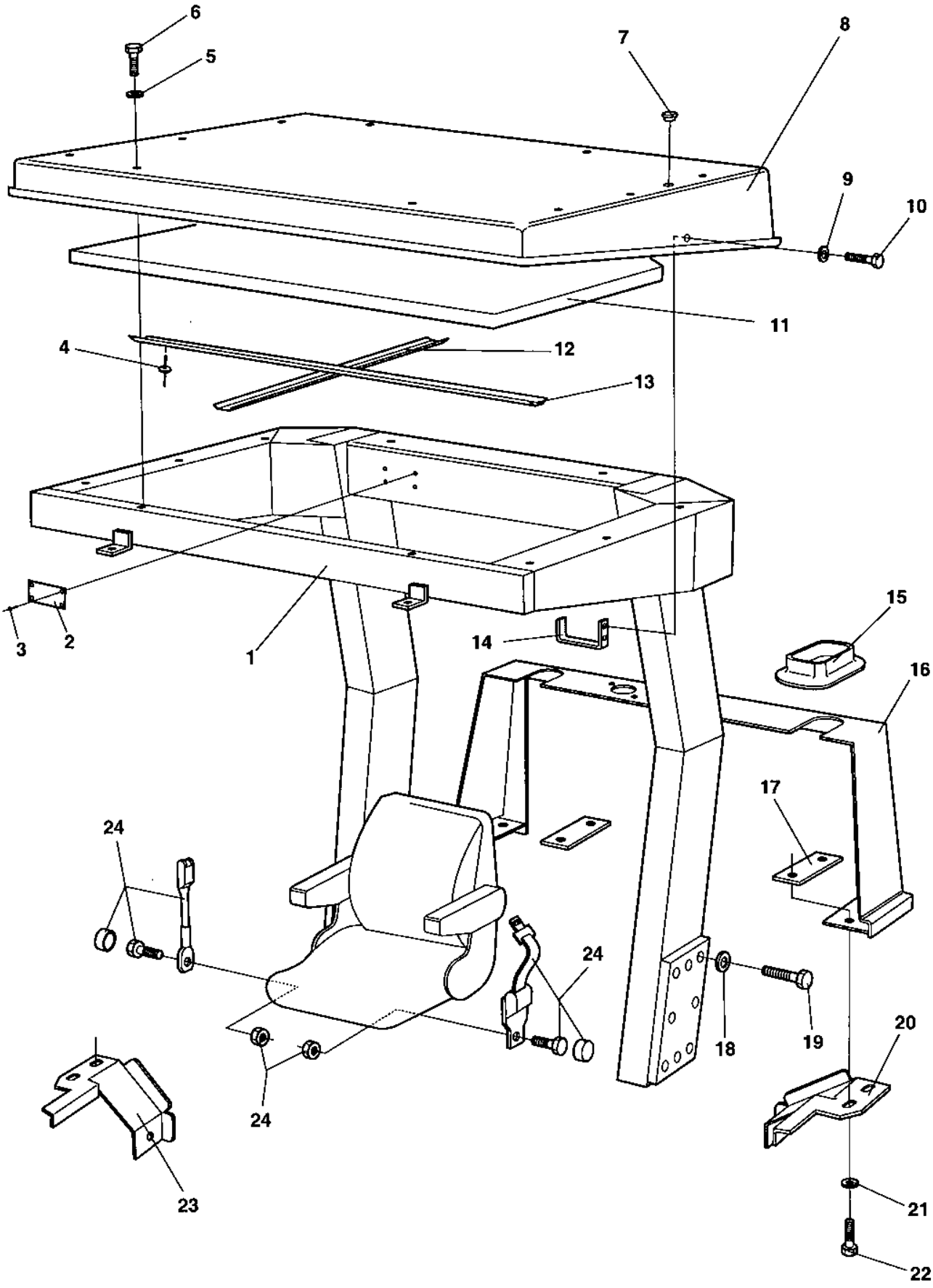

Rops and fops

Item	Part No	Rem	Qty	Description	Code
1	4700372743		1	Rops	D
2	4700370803		1	. Sign, rops	D
3	4700624016		4	. Blind rivet	D
4	4700904619		12	Blind rivet	C
5	4700904734		23	Steel plain washer	
6	4700500239		19	Screw M8x50H 8,8	C
7	4700904180		8	Plug	C
8	4700372745		1	Fops roof	D
9	4700904734		4	Steel plain washer	
10	4700500100		4	Screw	C
11	4700372678		1	Absorbent	D
12	4700376489		1	Absorbent holder	D
13	4700376488		1	Absorbent holder	D
14	4700383225		2	Hook	D
15	4700372489		2	Rubber seal	D
16	4700373799		1	Protecting cover	D
17			2	Holder plate	
18	4700904234		12	Steel plain washer	C
19	4700904562		12	Screw M24x160 10.9	
20	4700373854		1	Holder plate	D
21	4700904640		4	Washer 8,4x22x3	C
22	4700500021		4	Screw M8-1,25x25 8.8	C
23	4700373855		1	Holder plate	D
24	4700396633		1	Seat belt 2"	
	4700383200	A	1	Seat belt 3"	B

A) Option 3"

Cab mounting

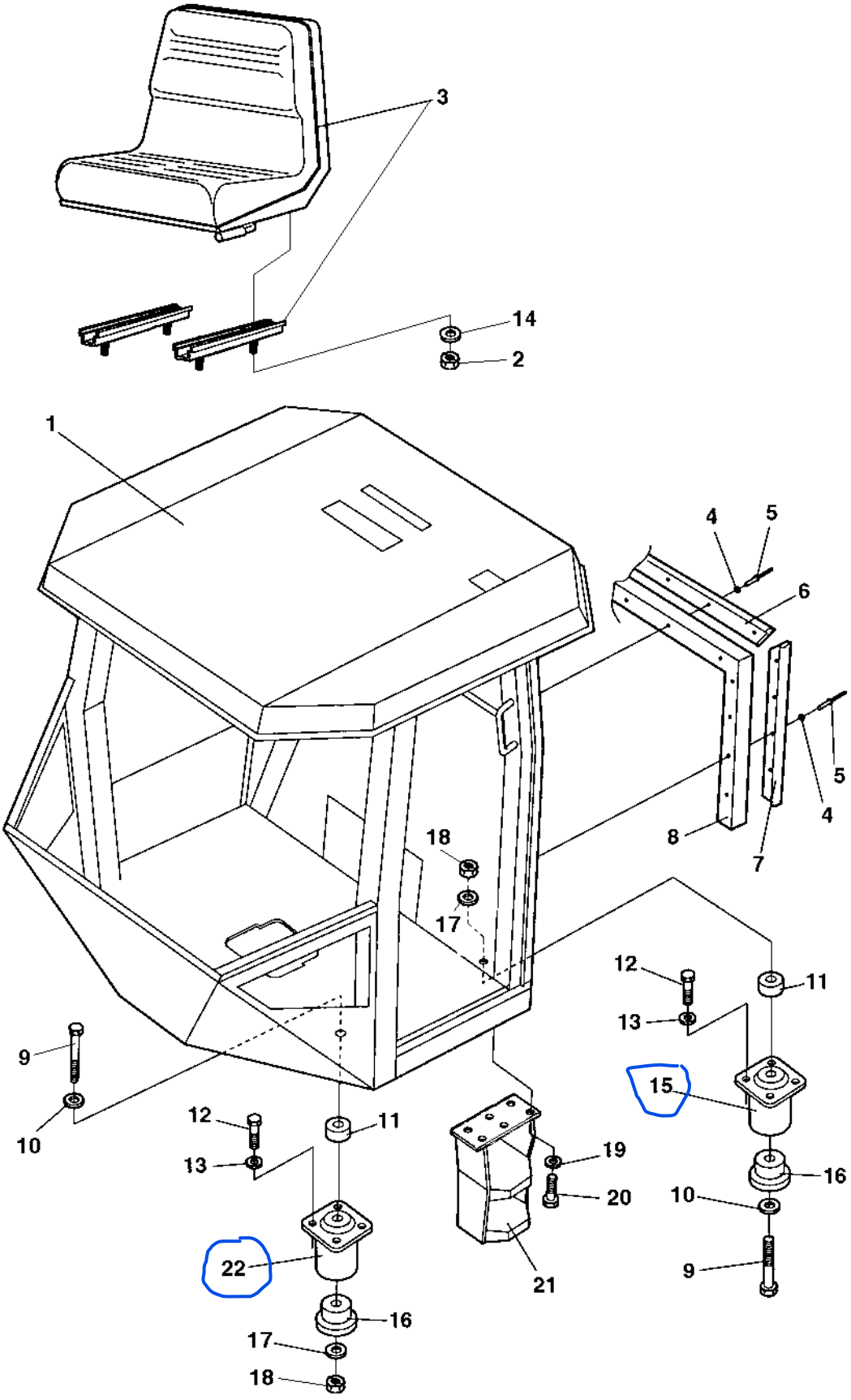

Cab mounting

Item	Part No	Rem	Qty	Description	Code
1				Cab 4700392479 (Page 164)	
2	4700570005		4	Nut M8	C
3	4700377556		1	Drivers seat, cpl	D
	4700377518	D	1	Drivers seat, cpl	D
4	4700927974		13	Washer	C
5	4700904433		13	Blind rivet	
6	4700372785		1	List	D
7	4700382582		2	List	D
8	4700372494	A	N	Rubber strip	D
9	4700791218		4	Screw M20x200	D
10	4700904233		4	Washer 21x36x3	C
11	4700384759		4	Spacer	D
12	4700500195		16	Screw	C
13	4700904231		16	Washer 13x24x2 300 HV	C
14	4700904229		4	Steel plain washer 8,4x16x1,5	C
15	4700374606	B	2	Shock absorber Green COXIM TRAZEIRO	D
16	4700372457		4	Back-up ring	C
17	4700903290		4	Washer 21x36x6	C
18	4700901145		4	Lock nut M20-10	
19	4700904230		6	Steel plain washer	C
20	4700500029		6	Hexagon head screw	C
21	4700376255		1	Step	D
22	4700374607	C	2	Shock absorber Yellow ´COXIM DIANTEIRO	D
23	4700382397		2	Spacer	D

A) L=2400 mm
B) Rear
C) Front
D) Option

Cab 4700392479

Item	Part No	Rem	Qty	Description	Code
130				Cab Screens (Page 166)	
140				Cab Door, left side (Page 170)	
150				Cab Interior rear mirror (Page 172)	
170				Wiper arm with blade, front (Page 174)	
180				Cab Electric (Page 176)	

Cab Screens

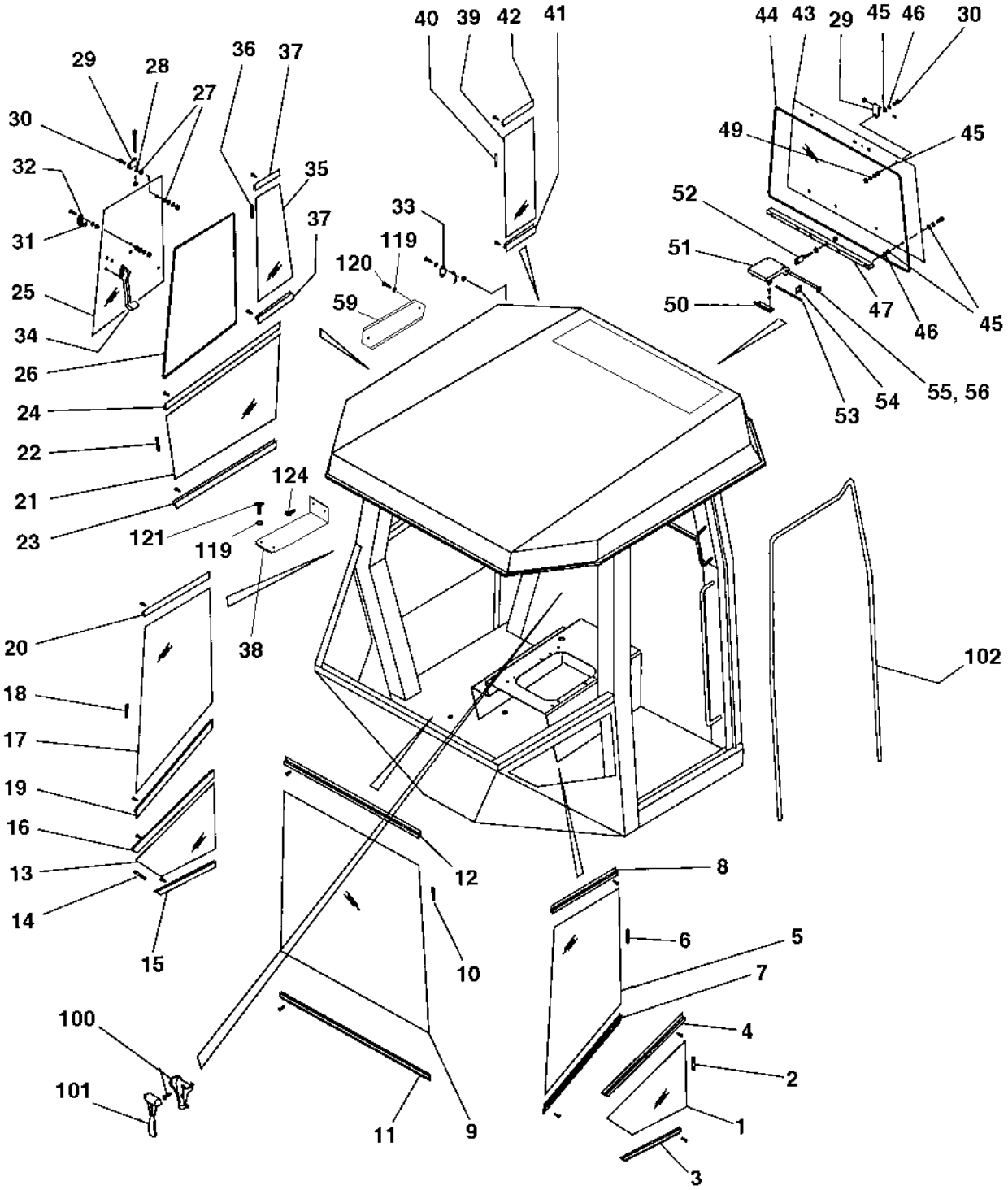
40
39
42
41
44
43
29
45
46
30
29
28
27
36
37
30
32
31
25
34
26
24
22
21
23
35
37
33
119
120
59
49
45
52
51
50
47
46
45
53
54
55, 56
124
121
119
38
20
18
17
19
16
13
14
15
12
10
8
6
5
7
4
2
1
3
100
101
11
9
102

Cab Screens

Item	Part No	Rem	Qty	Description	Code
1	4700937380		1	Screen	
2	4700908545		XL	Seal list	B
3	4700935278		1	List	
4	4700935279		1	List	
5	4700937381		1	Screen, left	
6	4700908545		XL	Seal list	B
7	4700935280		1	List	
8	4700935281		1	List	
9	4700937382		1	Screen	
10	4700908545	D	1	Seal list	B
11	4700935282		1	List	
12	4700935283		1	List	
13	4700937383		1	Screen	
14	4700908545		XL	Seal list	B
15	4700935284		1	List	
16	4700935285		1	List	
17	4700937384		1	Screen	
18	4700908545	C	1	Seal list	B
19	4700935286		1	List	
20	4700935287		1	List	
21	4700937385		1	Screen	
22	4700908545	A	1	Seal list	B
23	4700935288		1	List	
24	4700935289		1	List	
25	4700938290		1	Screen	
26	4700908499	E	1	Rubber list	D
27	4700935271		8	Washer, Flexible rubber	
28	4700935272		8	Washer, Black	
29	4700935273		4	Hinge	
30	4700935274		4	Screw	
31	4700935275		1	Rubber washer	
32	4700935276		1	Bracket	
33	4700935277		1	Lock pin	
34	4700935290		1	Window lock, right	
35	4700938291		1	Screen	
36	4700908545	B	1	Seal list	B
37	4700935291		1	List	
38	4700379608		1	Cover	D
39	4700938292		1	Screen	
40	4700908545	B	1	Seal list	B
41	4700935293		1	List	
42	4700938659		1	List	
43	4700937389		1	Screen	
44	4700908499	F	1	Rubber list	D
45	4700935271		12	Washer, Flexible rubber	
46	4700935272		12	Washer, Black	
47	4700935295		1	Screen holder	
49	4700935296		2	Washer	
50	4700935297		1	Bracket	
51	4700935298		2	Bracket	
52	4700935299		1	Bolt	
53	4700935300		1	Shaft	
54	4700935301		2	Lock	

A) L=1100 mm
B) L=1400 mm
C) L=1900 mm
D) L=2100 mm
E) L=2700 mm
F) L=3300 mm

Cab Screens

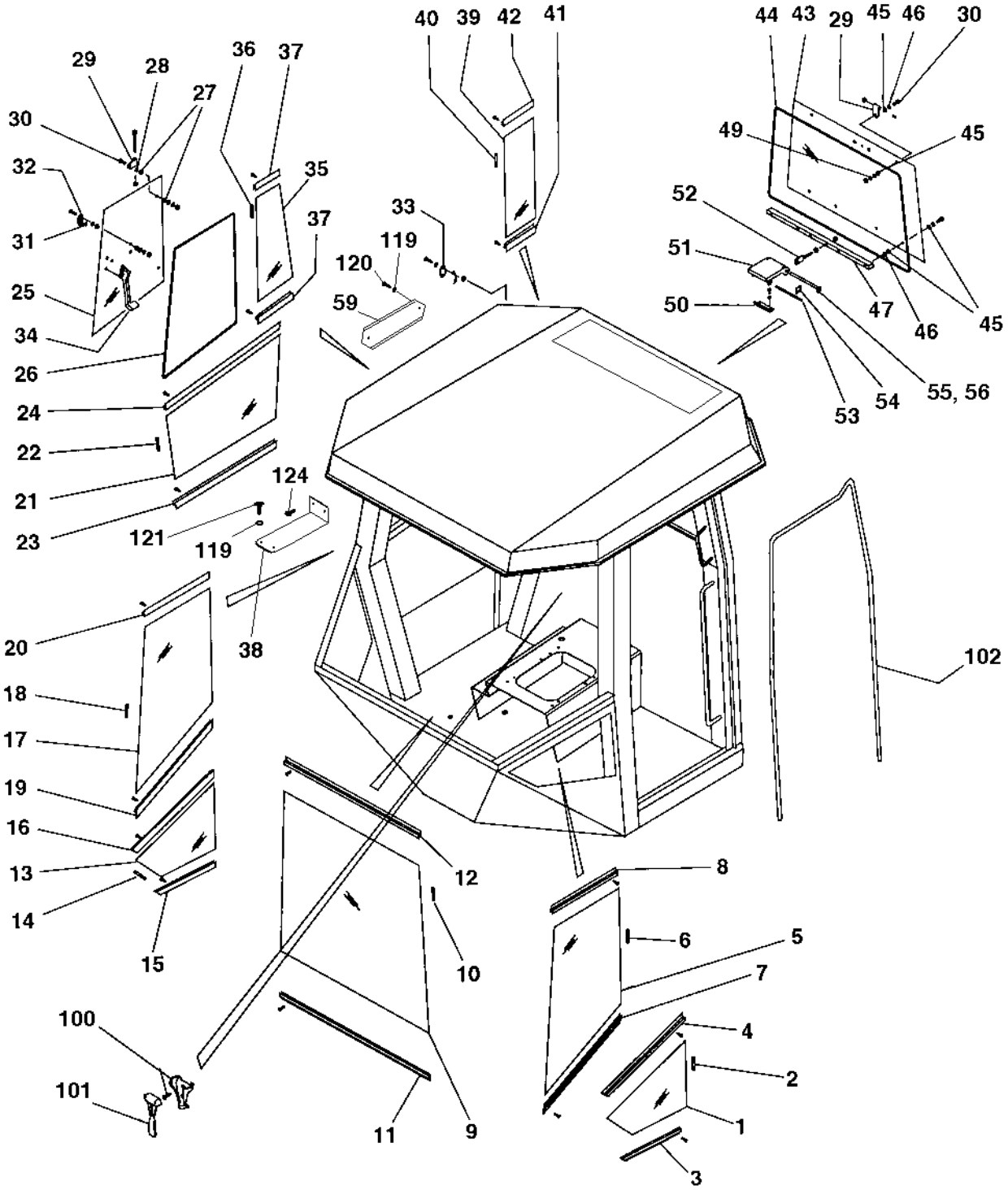
40
39
42
41
44
43
29
45
46
30
29
28
27
36
37
30
32
31
25
34
26
24
22
21
23
35
37
33
119
120
59
49
45
52
51
50
47
46
45
53
54
55, 56
124
121
119
38
20
18
17
19
16
13
14
15
12
10
8
6
5
7
4
2
1
3
100
101
11
9
102

Cab Screens

Item	Part No	Rem	Qty	Description	Code
55	4700935302		1	Rod	
56	4700935303		1	Ring	
59	4700379236		1	Cover	D
100	4700908506		1	Emergency hammer	D
101	4700908507		1	Holder	D
102	4700908499	G	1	Rubber list	D
119	4700904229		16	Steel plain washer 8,4x16x1,5	C
120	4700500019		14	Hexagon head screw M8x16H 8,8	C
121	4700500053		2	Screw M8x20H 8.8	C
124	4700903782		2	Screw M5x12	C

G) L=5 m

Cab Door, left side

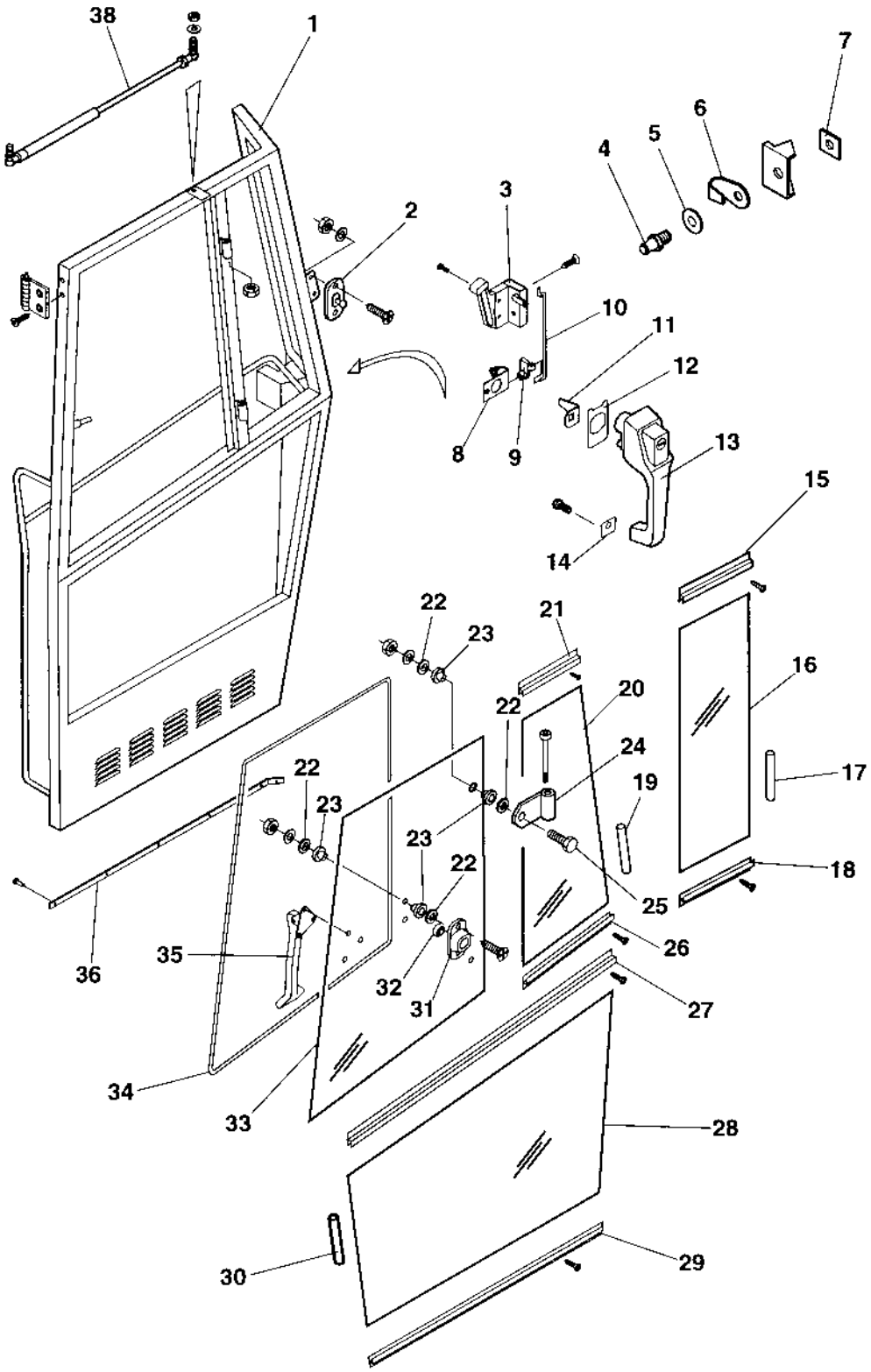

Cab Door, left side

Item	Part No	Rem	Qty	Description	Code
	4700940678		1	Door, cpl	D
1	4700390927		1	. Door frame	D
2	4700935277		1	. Lock pin	
3	4700938017		1	. Lock	
4	4700908580		1	. Lock pin	C
5	4700908581		1	. Washer	C
6	4700908582		1	. Cover	D
7	4700908583		1	. Bracket	D
8	4700935248		1	. Turning mechanism	
9	4700935249		1	. Retainer	
10	4700935250		1	. Rod	
11	4700935247		1	. Leader	
12	4700935246		1	. Seal	
13	4700935244		1	. Door handle with key	D
14	4700935245		1	. Seal	
15	4700935268		1	. List	
16	4700937391		1	. Screen	
17	4700908545	A	1	. Seal list	B
18	4700935267		1	. List	
19	4700908545	A	1	. Seal list	B
20	4700937392		1	. Screen	
21	4700935270		1	. List	
22	4700935272		8	. Washer, Black	
23	4700935271		8	. Washer, Flexible rubber	
24	4700935273		2	. Hinge	
25	4700935274		2	. Screw	
26	4700935269		1	. List	
27	4700935266		1	. List	
28	4700937390		1	. Screen	
29	4700935265		1	. List	
30	4700908545	B	1	. Seal list	B
31	4700935276		1	. Bracket	
32	4700935275		1	. Rubber washer	
33	4700937393		1	. Screen	
34	4700908499	C	1	. Rubber list	D
35	4700935253		1	. Lock	
36	4700938101		XL	. Brush profile	
38	4700938018		1	. Gas spring	

A) L=1400 mm
B) L=1100 mm
C) L=2700 mm

Cab Interior rear mirror

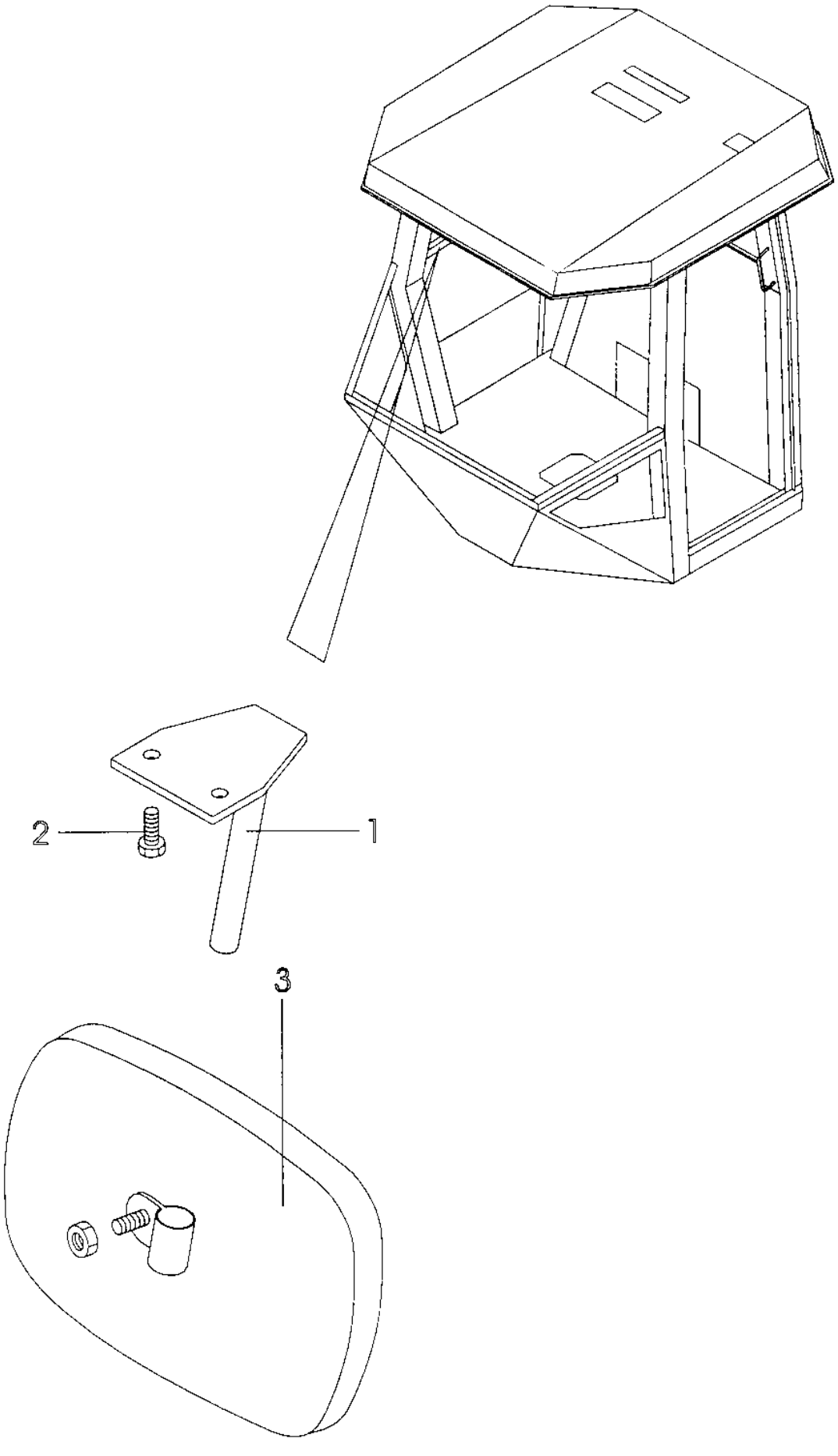

Cab Interior rear mirror

Item	Part No	Rem	Qty	Description	Code
1	4700908623		1	Bracket	D
2	4700535005		2	Screw M5x12	D
3	4700908624		1	Rear mirror	D

Wiper arm with blade, front

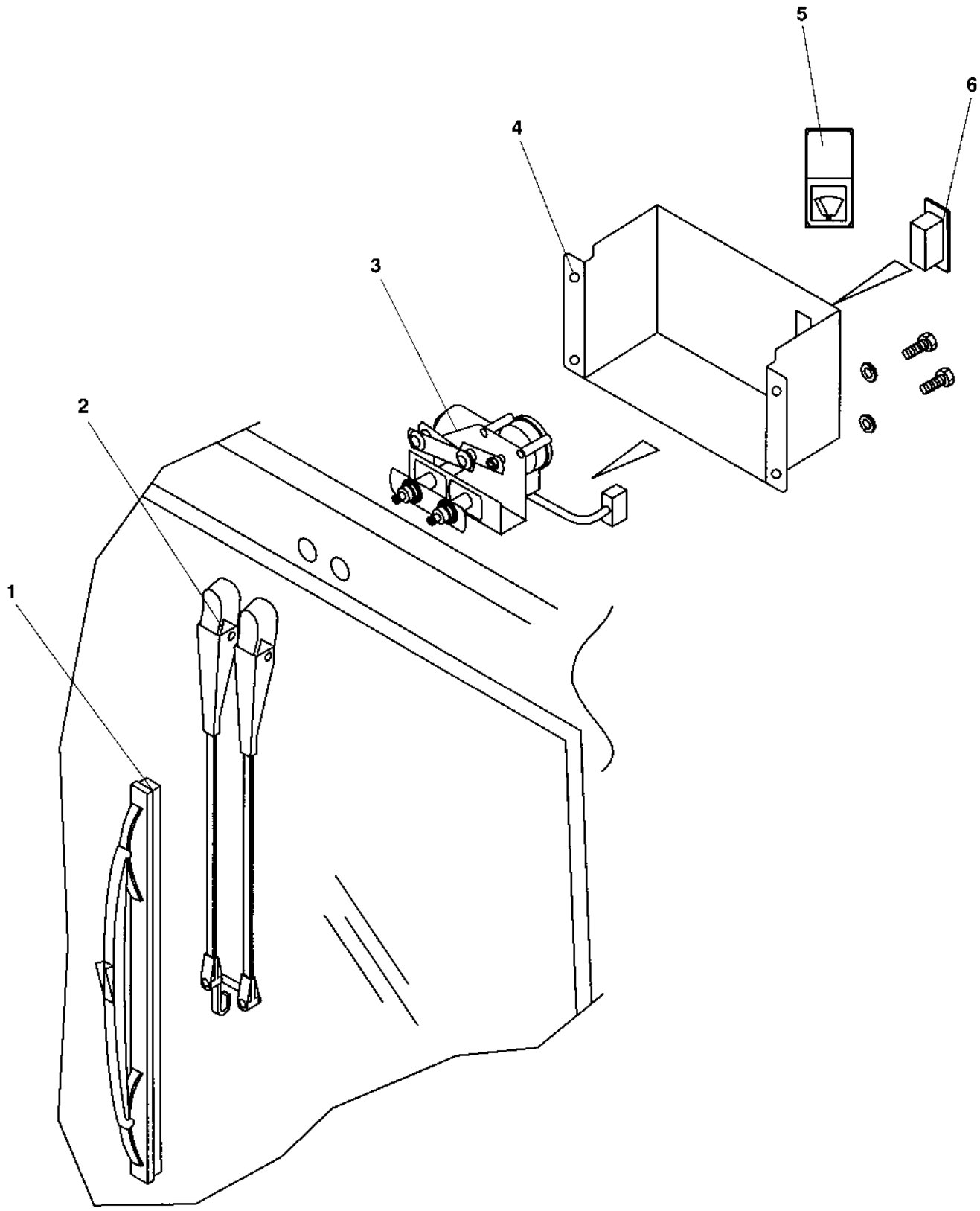

Wiper arm with blade, front

Item	Part No	Rem	Qty	Description	Code
1	4700905306		1	Wiper blade	B
2	4700905305		1	Wiper arm	C
3	4700905304		1	Wiper motor	C
4	4700937871		1	Cover	D
5	4700908605		1	Symbol, wiper	D
6	4700908617		1	Switch	B

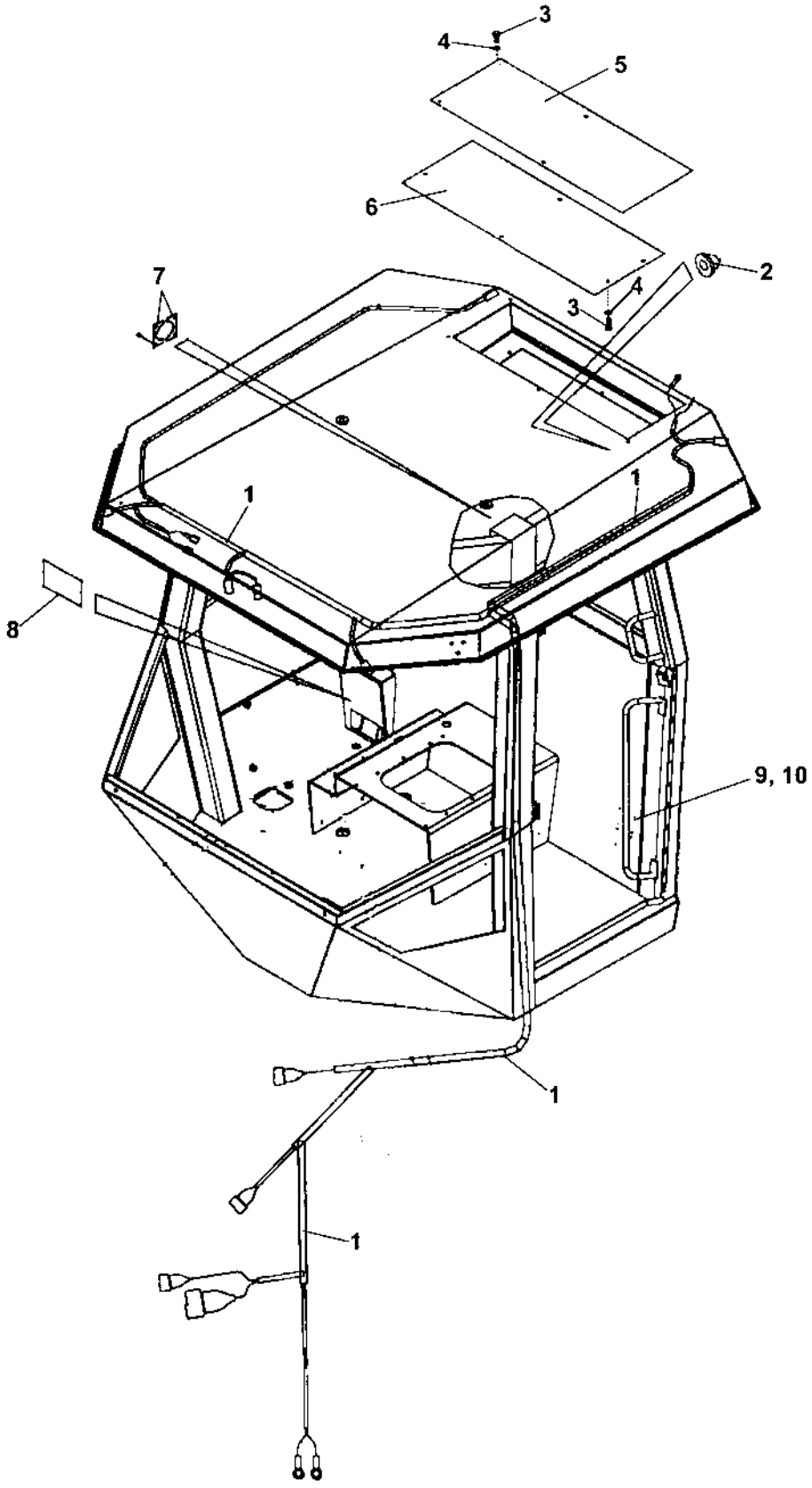
3
4
5
6
7
2
4
3
1
1
8
9, 10
1
1

Cab Electric

Item	Part No	Rem	Qty	Description	Code
1	4700937870		1	Cable harness	D
2	4700791378		2	Grommet	D
3	4700500019		12	Hexagon head screw M8x16H 8,8	C
4	4700904229		12	Steel plain washer 8,4x16x1,5	C
5	4700938678		1	Cover	D
6	4700938679		1	Cover	D
7	4700935580		2	Bracket	
8	4700391219		1	Gasket	D
9			1	Sign, rops	
10			1	Sign, fops	

Decals

Item	Part No	Rem	Qty	Description	Code
10				Decals (Page 180)	
20				Decals (Page 182)	

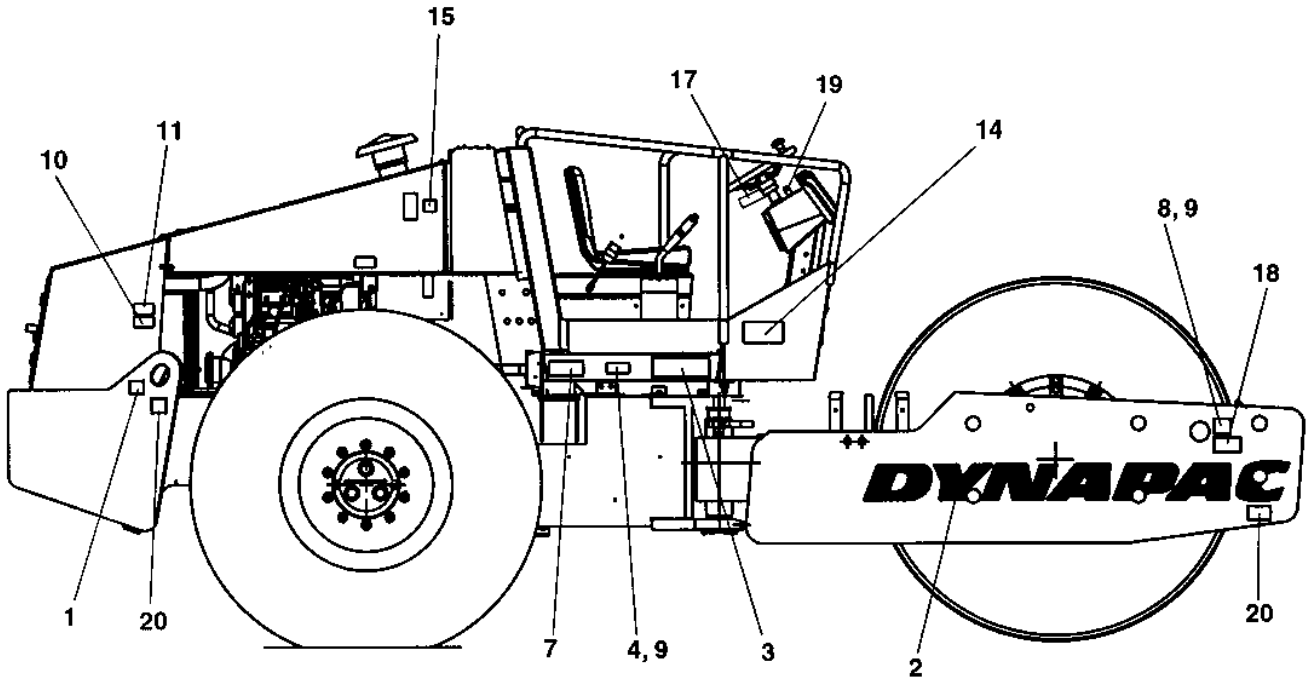
15
17
19
11
10
14
8, 9
18
DYNAPAC
1
20
7
4, 9
3
2
20

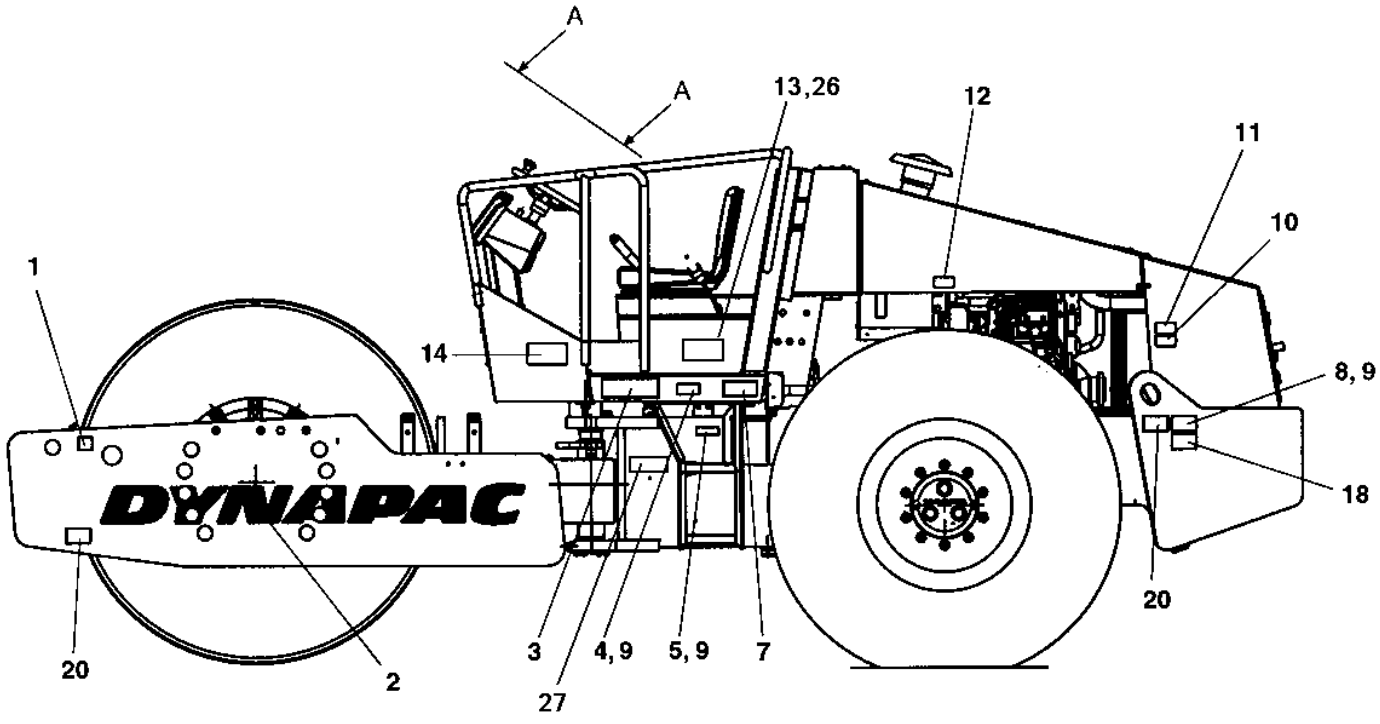
A
A
13,26
12
11
10
1
14
8, 9
18
DYNAPAC
20
2
3
4, 9
5, 9
7
27
20

Decals

Item	Part No	Rem	Qty	Description	Code
1	4700588176		2	Decal "LIFT POINT"	D
2	4700904068		2	Decal "DYNAPAC" L=1770 mm	
3	4700904723		2	Decal "MODEL CODE" White	D
	4700792222		2	Decal "MODEL CODE" Red	D
	4812111205	D	2	Decal "MODEL CODE" (-II) White	
	4812111206	E	2	Decal "MODEL CODE" (-II) Red	
4	4700377744		2	Reflector, yellow	D
5	4700358090		1	Product plate ce	
6	4700902915		4	Screw	
7	4700903459		2	Decal "SAFETY"	D
8	4700904870		2	Lifting sign	D
9	4700624005		12	Blind rivet 3,2x6,1	C
10	4700903424		2	Decal "HOT SURFACE"	D
11	4700903423		2	Decal "SAFETY"	D
12	4700991990		2	Decal "TYRE PRESSURE" 110-150kPA/16-21psi	D
	4700390900		1	Decal "TYRE PRESSURE" 110kPA/16psi	D
13	4700903425		1	Decal "SAFETY MANUAL"	D
14	4700903422		2	Decal "SAFETY"	D
15	4700272373		1	Decal "HYDRAULIC OIL"	D
17	4700384159		1	Instructions Loading-Unloading	
18	4700908229		2	Safety decal	D
19	4700358881		1	Pad lock	D
20	4700382751		4	Decal "TIE DOWN POINT"	D
25	4700791642		1	Decal "WARNING" Use of starting fluid prohib.	D
26	47393691XX		1	Instruction Handbook	
27	47960787XX		1	Product identif. decal "Dynapac"	

D) On Face lifted machines only. Has to be ordered together with part 4700904723.

E) On Face lifted machines only. Has to be ordered together with part 4700792222.

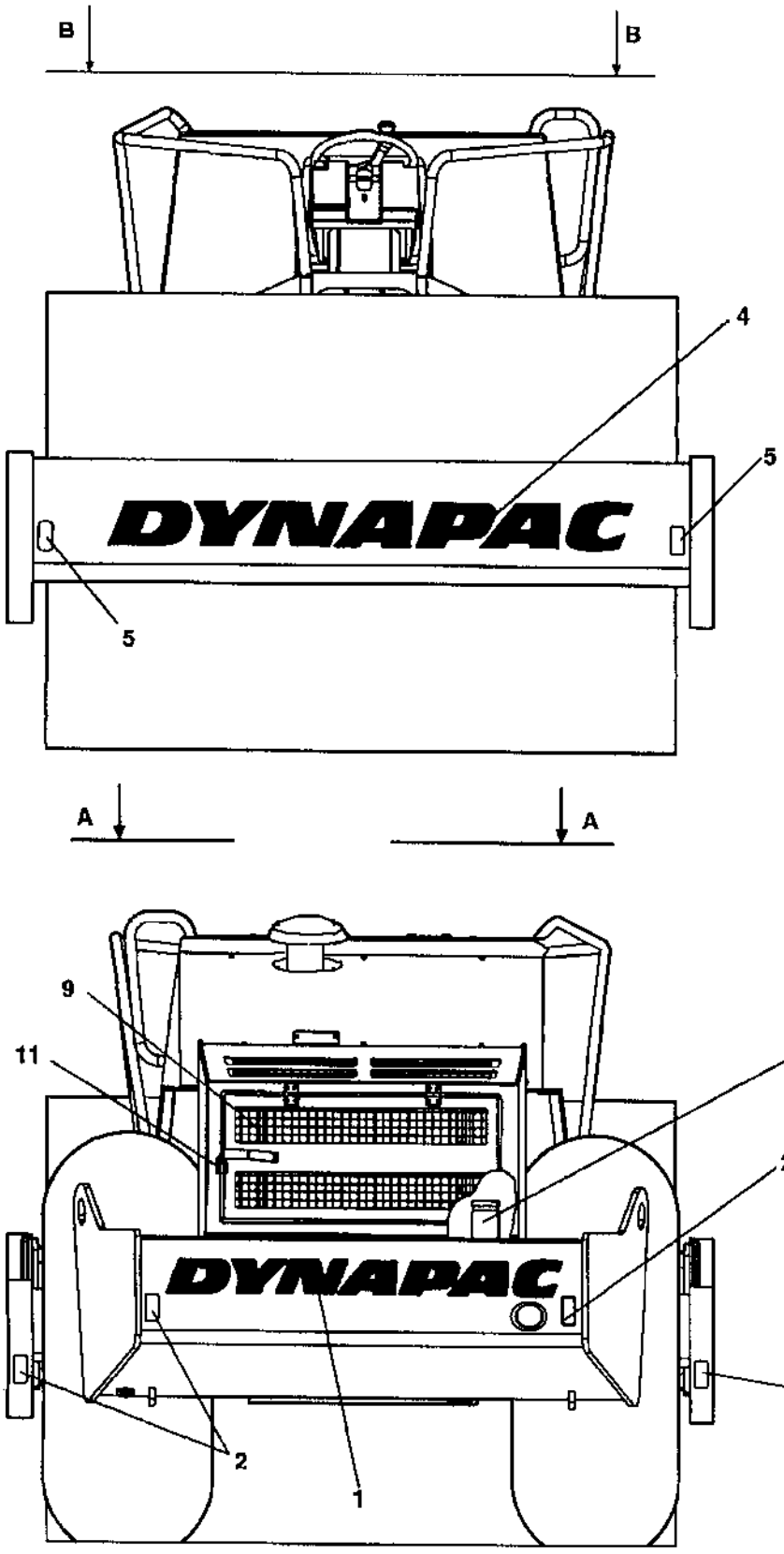

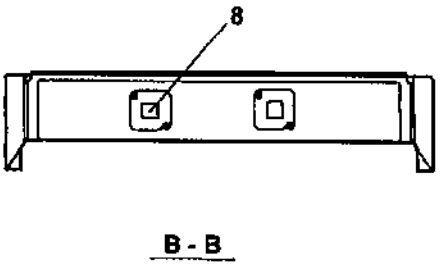

B - B

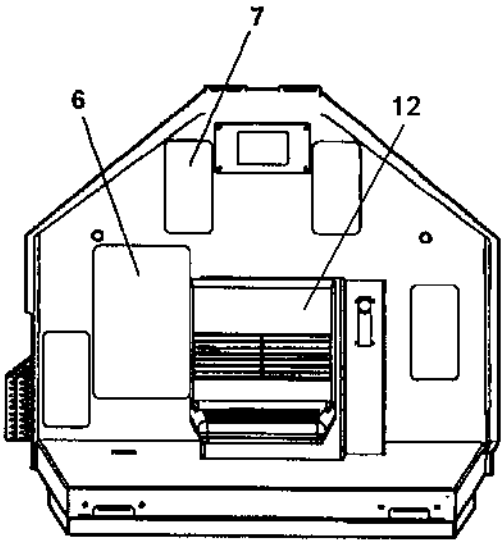

A - A

Decals

Item	Part No	Rem	Qty	Description	Code
1	4700904098		1	Decal "DYNAPAC" L=1350 mm	
2	4700377742		4	Reflector, red	D
3	4700991658		1	Decal "FUEL"	D
4	4700904068		1	Decal "DYNAPAC" L=1770 mm	
5	4700377743		2	Reflector, white	D
6	4700373364		1	Slip protection	D
7	4700373363		4	Slip protection	
8	4700272372		1	Decal "HYDRAULIC OIL"	D
9	4700904835		1	Decal "BATTERY POWER"	D
11	4700358881		1	Pad lock	D
12	4700348331		1	Seat cover	D

Standard equipment

Item	Part No	Rem	Qty	Description	Code
100				Standard equipment (Page 186)	

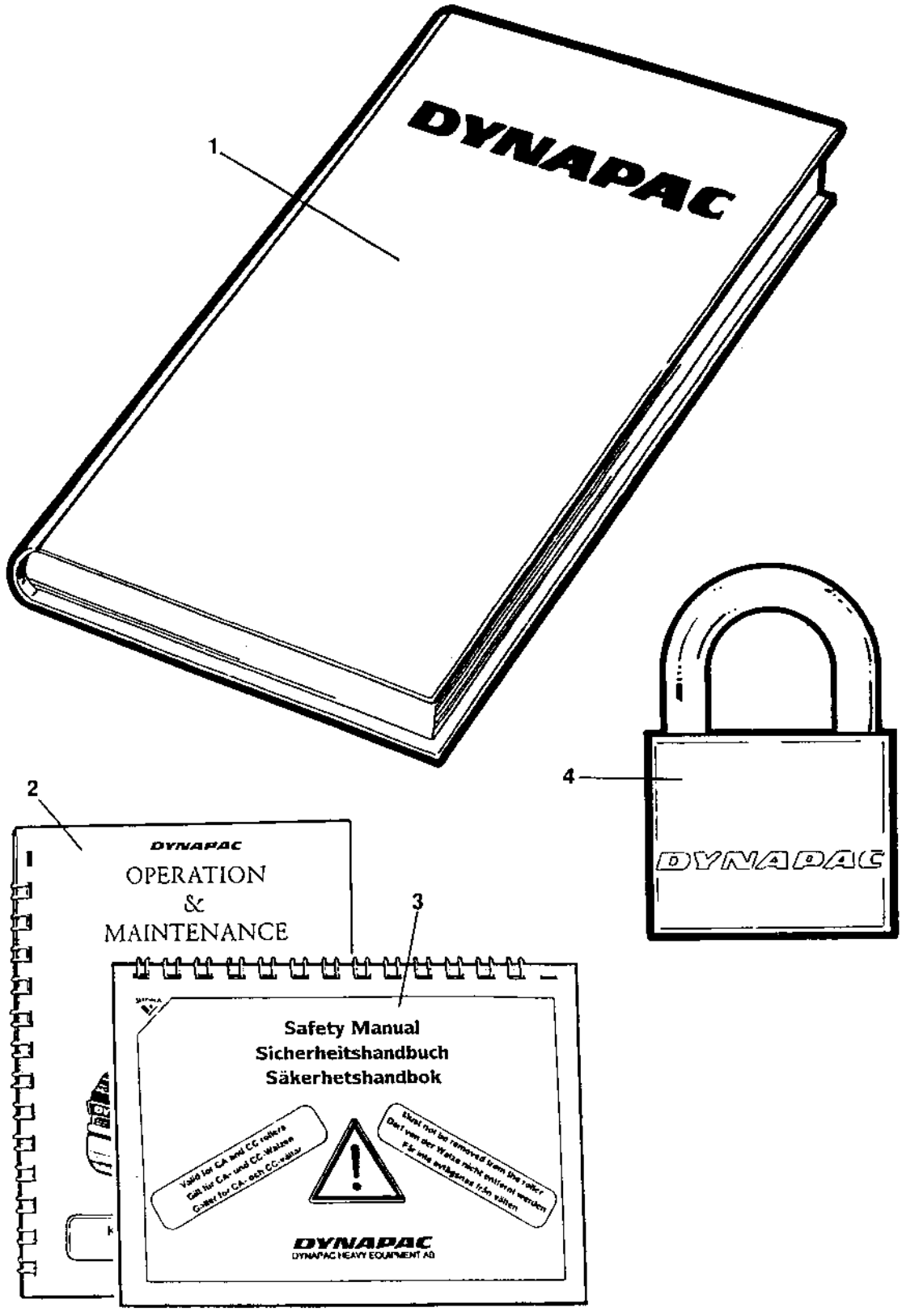
1
DYNAPAC
2
DYNAPAC
OPERATION
&
MAINTENANCE
3
Safety Manual
Sicherheitshandbuch
Säkerhetshandbok
DYNAPAC
DYNAPAC HEAVY EQUIPMENT AB
4
DYNAPAC

Standard equipment

Item	Part No	Rem	Qty	Description	Code
1			1	Documentation ISCA250D	
			1	. Warranty registration card	
			1	. Operation and maintenance ICA250	
			1	. Spare parts catalogue SCA250D	
			1	. Instruction manual Cummins QSB 4.5 C	
2			1	. Operation / maintenance instruction I5CA250	
3			1	. Safety manual RSAFE	
4	4700358881		1	Pad lock	D

Optional equipment

Item	Part No	Rem	Qty	Description	Code
10				Tool equipment (Page 190)	
40				Pad shell (Page 192)	
85				Air conditioner and heater, Simple cab (Page 194)	
86	4700383413			Condensor, cpl (Page 198)	
90				Air conditioner and heater unit (Page 200)	
100				Dy-Mic (Page 202)	
230				Heater Simple cab (Page 204)	

Tool equipment

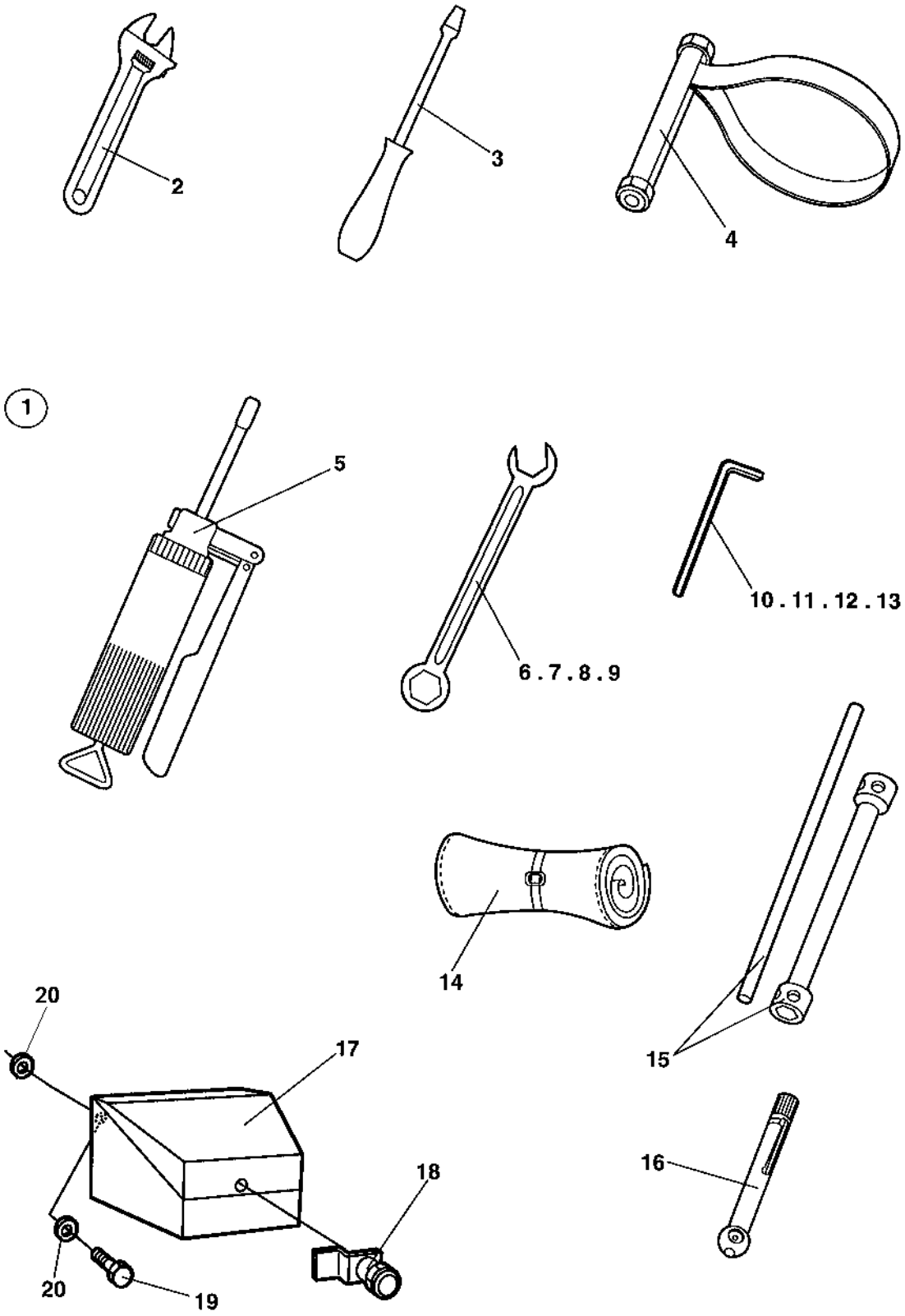

Tool equipment

Item	Part No	Rem	Qty	Description	Code
1	4700355890		1	Tool set Cpl	D
2			1	. Adjustable wrench	
3			1	. Screw driver	
4	4700902610		1	. Belt pliers	D
5	4700311016		1	. Grease gun	D
6			1	. Open end spanner 10mm	
7			1	. Open end spanner 13mm	
8			1	. Open end spanner 16mm	
9			1	. Open end spanner 18mm	
10			1	. Allen wrench 10mm	
11			1	. Allen wrench 12mm	
12			1	. Allen wrench 6mm	
13			1	. Allen wrench 8mm	
14			1	. Tool bag	
15			1	. Wheel nut key 30/32mm	
16	4700901220		1	. Pressure gauge	B
17	4700372837		1	Tool box	D
18	4700372658		1	. Lock	D
19	4700500021		3	Screw M8-1,25x25 8.8	C
20	4700904640		6	Washer 8,4x22x3	C

Pad shell

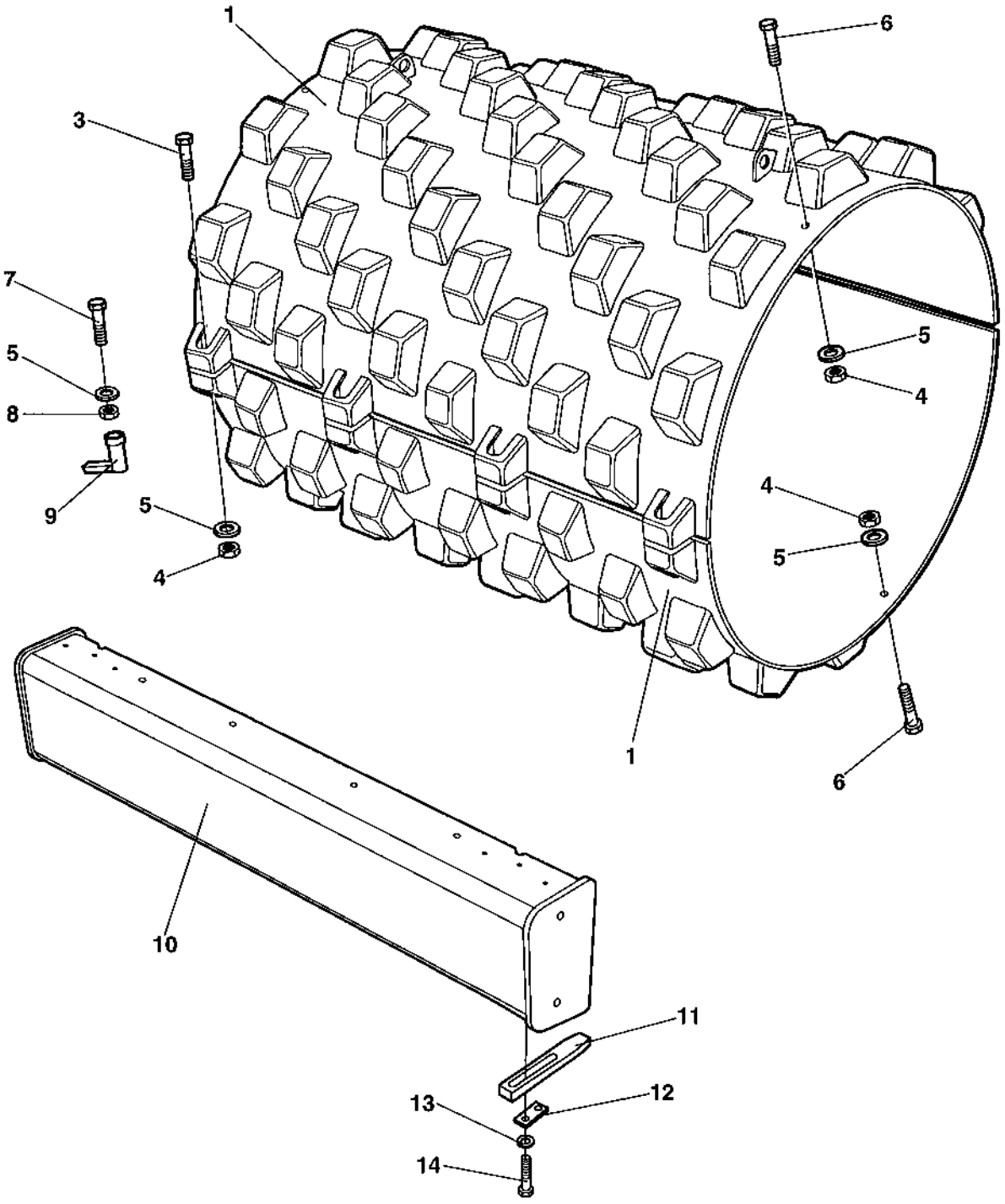

Pad shell

Item	Part No	Rem	Qty	Description	Code
1	4700382139		2	Pad shell	D
3	4700500286		8	Screw M20-2,5x140 8.8	D
4	4700586022		12	Lock nut M20-8	C
5	4700904233		16	Washer 21x36x3	C
6	4700500206		4	Screw M20X60	C
7	4700382572		4	Mounting screw	D
8	4700570015		4	Nut M20	D
9	4700382571		1	Hexagon sleeve	D
10		A	1	Cross beam	
11	4700376551		18	Scraper tooth	B
12	4700376622		18	Holder	D
13	4700904232		36	Washer	C
14	4700500165		36	Screw M16-2,0x75 8,8	D

A) See section "Frames".

Air conditioner and heater, Simple cab

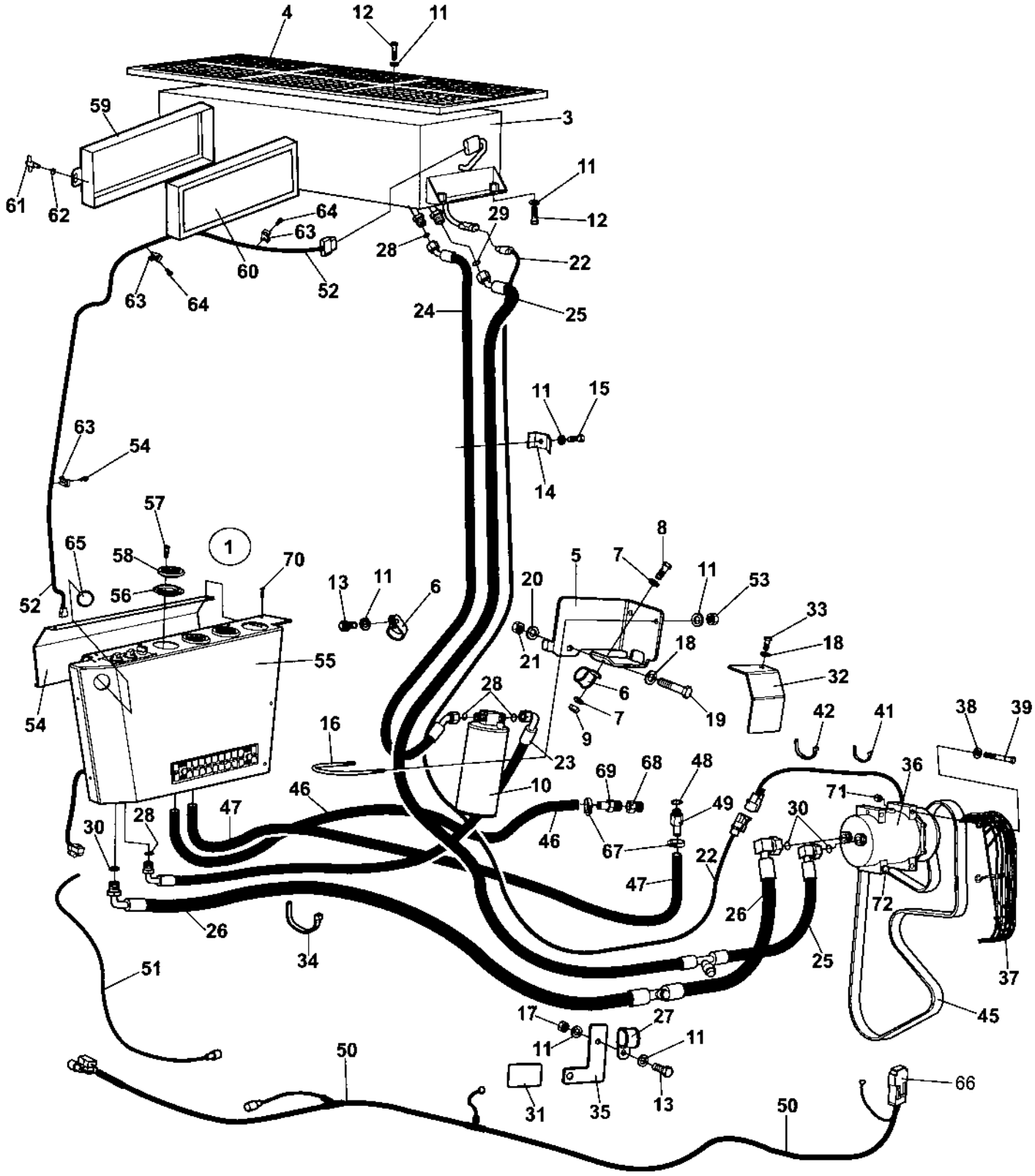

Air conditioner and heater, Simple cab

Item	Part No	Rem	Qty	Description	Code
1				Air conditioner and heater unit (Page 200)	
3	4700383413			Condensor, cpl (Page 198)	
4	4700384589		1	Cover	D
5	4700393954		1	Holder	D
6	4700921056		2	Clamp	C
7	4700904228		2	Washer 6,4x12x1,5	C
8	4700500013		1	Screw M6-1x16 8,8	C
9	4700570004		1	Nut M6X1,00 -8 A2K	C
10	4700393955		1	Drying filter	D
11	4700904229		18	Steel plain washer 8,4x16x1,5	C
12	4700500022		10	Screw M8x30H 8.8 A2K	C
13	4700500053		2	Screw M8x20H 8.8	C
14	4700346230		3	Clamp	D
15	4700500023		3	Screw M8-1,25x40 8,8	C
16	4700313093		1	Pipe clamp	D
17	4700570005		3	Nut M8	C
18	4700904230		2	Steel plain washer	C
19	4700500192		1	Screw M10x80	C
20	4700904567		1	Washer 10,5x28x6 HB305	C
21	4700570006		1	Nut	B
22	4700390824		1	Cable harness	D
23	4700384875		1	Hose	C
24	4700384876		1	Hose	C
25	4700393405		1	Hose	C
26	4700393406		1	Hose	D
27	4700921044		1	Clamp	C
28	4700384877		4	O-ring Size 6	C
29	4700384878		1	O-ring Size 8	C
30	4700384879		3	O-ring Size 10	C
31	4700904165		1	Safety decal Toxic gases	D
32	4700393408		1	Heat protection	D
33	4700500048		1	Screw M10-1,5x20 8,8	C
34	4700313102			Cable ties	
35	4700393647		1	Holder	D
36	4700390823		1	Compressor	D
37	4812113010		1	Belt guard	
38	4700904734		2	Steel plain washer	
39	4700500180		2	Screw	C
40	4700792015		1	Conduit	
41	4700313068		1	Cable ties L=92 mm	
42	4700925802		1	Cable ties L=142 mm	C
45		A	1	V-belt	
46	4700937737	B	1XL	Hose	
47	4700937737	B	1XL	Hose	
48	4700330330		1	Copper washer	
49	4700391303		1	Hose connection	
50	4700387466		1	Cable harness	D
51	4700394210		1	Cable harness	D
52	4700379275		1	Cable harness	D
53	4700586003		2	Lock nut M8	C
54	4700379285		1	Panel	D
55	4700379286		1	Panel	D
56	4700385443		3	Ring	D
57	4700938691		12	Screw	C
58	4700385442		3	Air nozzle	D
59	4700908501		1	Filter frame	D
60	4700908502		1	Filter	A
61	4700908504		2	Handle	D

A) See section "Engine installation".
B) L=3,600M

Air conditioner and heater, Simple cab

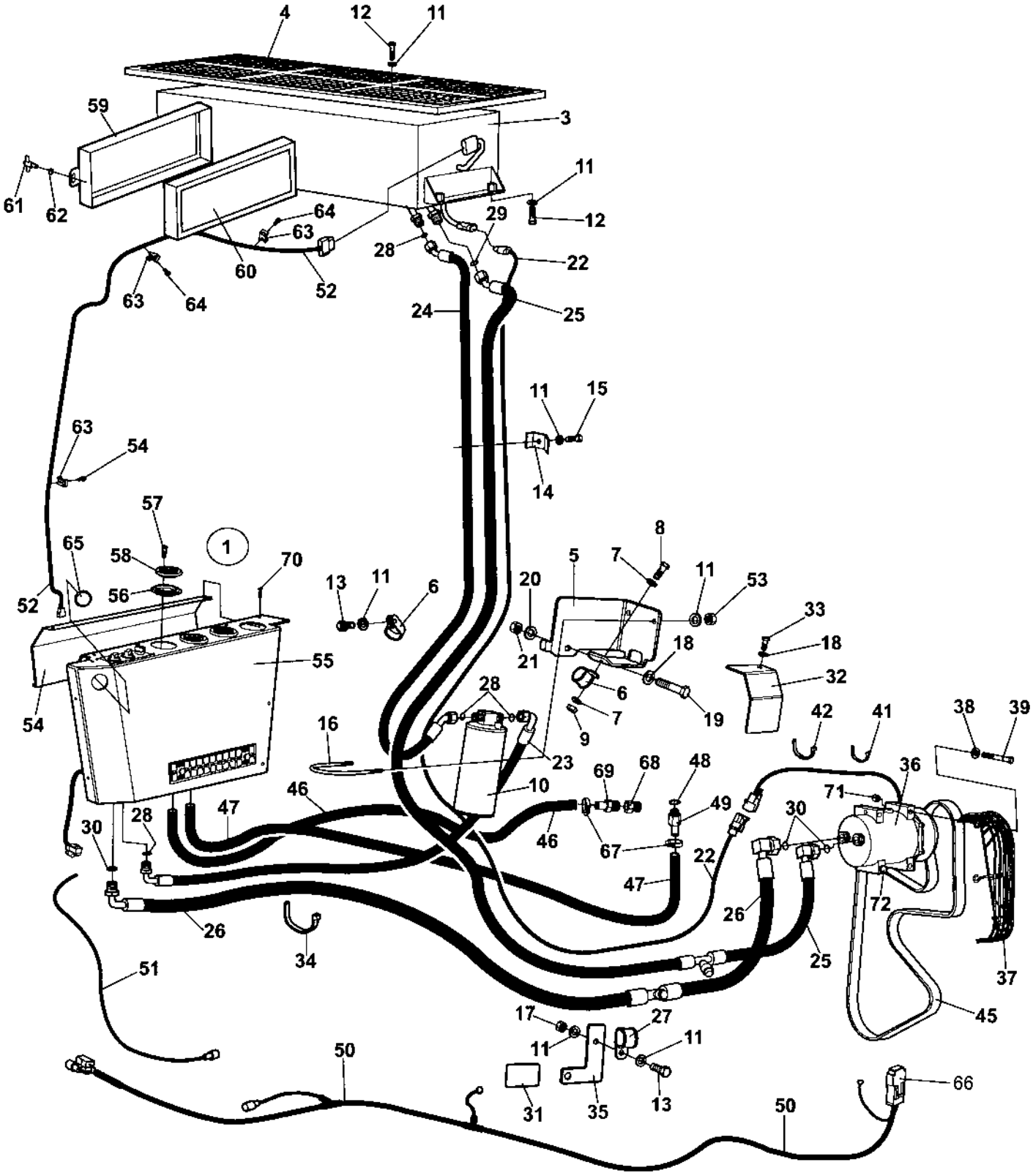

Air conditioner and heater, Simple cab

Item	Part No	Rem	Qty	Description	Code
62	4700908503		2	O-ring	D
63	4700904543		10	Cable tie holder	
64	4700903852		10	Screw ST4,2x13	C
65	4700345870		1	Plug	C
66	4700904039		1	Fuse 50A Red High	A
67	4700313004		2	Hose clamp	D
68	4700813434		1	Reducer	C
69	4700387638		1	Hose connection	
70	4700792248		5	Screw 4,2 X25	D
71	4700945314		2	Guide ring	
72	4700945315		3	Screw M8X100	D

4700383413 Condensor, cpl

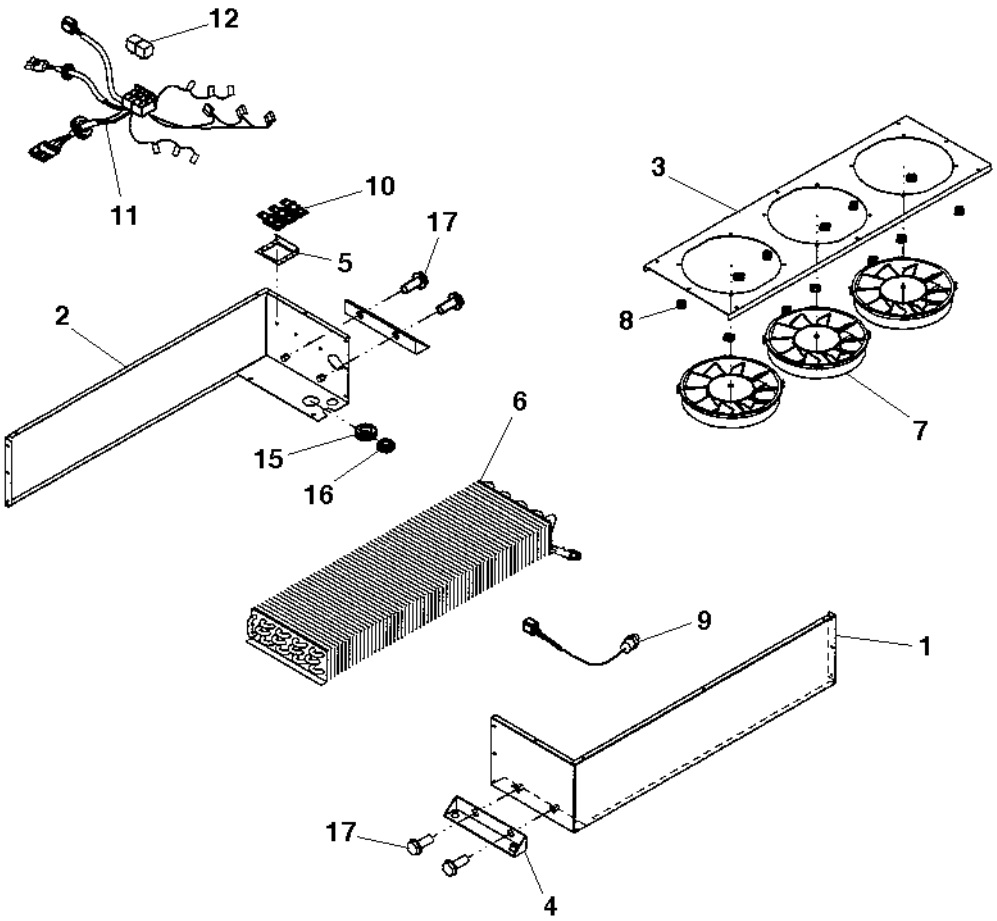

4700383413 Condensor, cpl

Item	Part No	Rem	Qty	Description	Code
1	4700938597		1	Cover	D
2	4700938598		1	Cover	D
3	4700938599		1	Fan bracket	D
4	4700938600		2	Condensor bracket	D
5	4700938601		1	Resistor bracket	D
6	4700938602		1	Condensor Coil	B
7	4700938603		3	Fan	C
8	4700938604		12	Clip	D
9	4700938605		1	Pressure switch	B
10	4700938606		3	Resistor	B
11	4700938607	A	1	Cable harness	D
	4812155890	B	1	Cable harness	
12	4700287598		2	Relay 12V-30A	A
	4700287598	C	3	Relay 12V-30A	A
15	4700938608		1	Grommet	D
16	4700938609		1	Grommet	
17	4700901832		4	Screw	C

A) Replaced by Cable harness P/N 4812155890.
B) Cable harness withh 3 Relays, replaces Cable harness P/N 4700938607.
C) Used with Cable harness 4812155890.

Air conditioner and heater unit

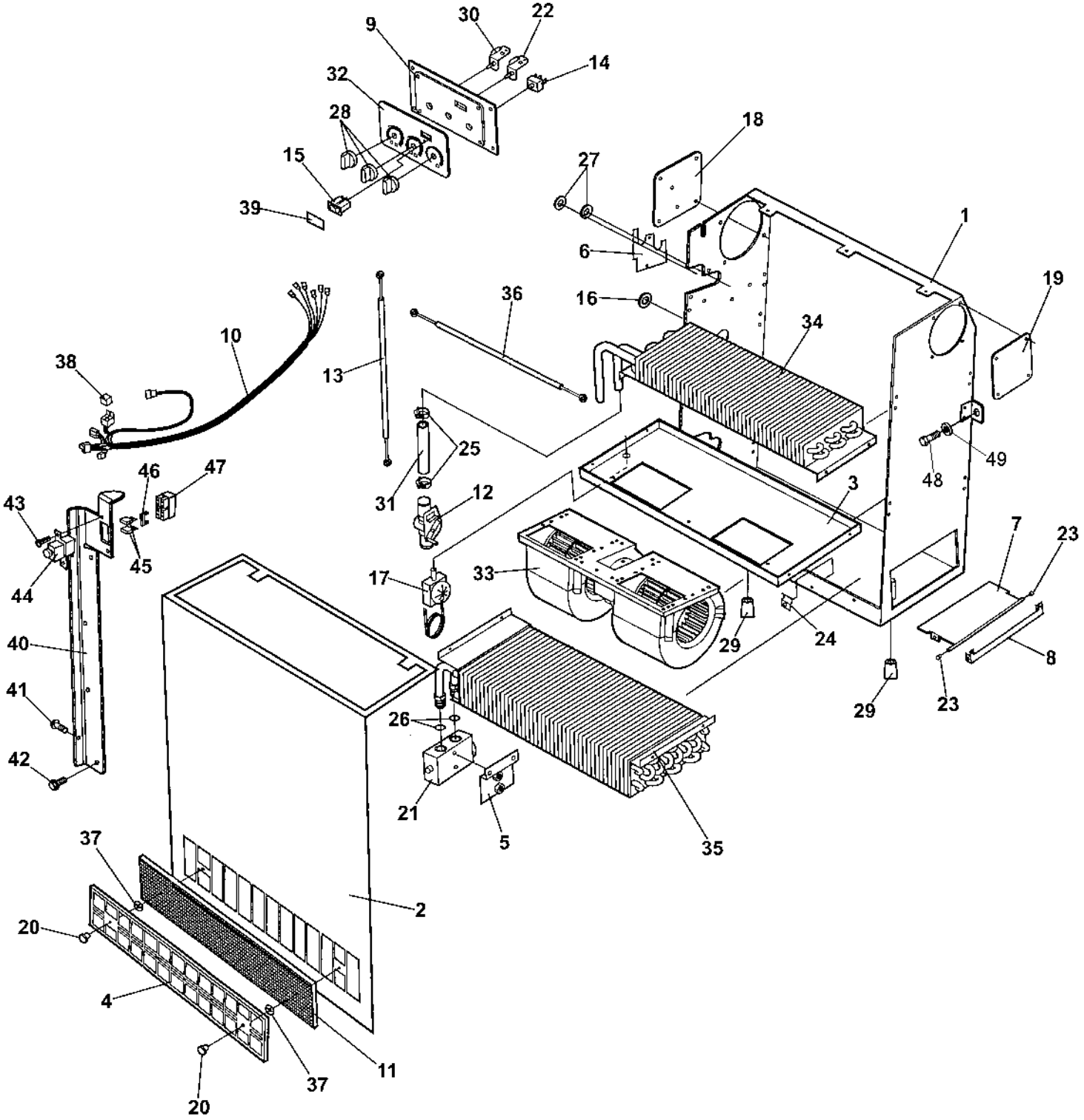

Air conditioner and heater unit

Item	Part No	Rem	Qty	Description	Code
1	4700938625		1	Casing	
2	4700938626		1	Cover	
3	4700938627		1	Fan bracket	
4	4700384760		1	Filter grill	D
5	4700384177		1	Holder	D
6	4700938628		1	Cover	
7	4700938629		1	Cover	
8	4700938630		1	Bracket	
9	4700945174		1	Panel	D
10	4700945175		1	Cable harness	D
11	4700384761		1	Air filter element	A
12	4700939693		1	Heater control valve	
13	4700938645		1	Bowden cable	
14	4700938622		1	Switch	B
15	4700938619		1	Switch	B
16	4700938644		1	Cap	C
17	4700384897		1	Thermostat	B
18	4700945176		1	Cover plate	D
19	4700945177		1	Cover plate	D
20	4700938634		2	Knob	D
21	4700384176		1	Expansion valve	C
22	4700938621		2	Rotary control	
23	4700938635		2	Sleeve	
24	4700384880		1	Wire clamp	D
25	4700313003		2	Hose clamp	D
26	4700384878		2	O-ring Size 8	C
27	4700384927		2	Grommet	D
28	4700938620		3	Knob	D
29	4700938636		2	Drain valve	C
30	4700385134		2	Lock washer	D
31	4700384881		1	Hose	D
32	4700945178		1	Panel overlay	D
33	4700938638		1	Fan	C
34	4700938639		1	Heater coil	
35	4700383414		1	Evaporator	D
36	4700384762		1	Wire	D
37	4700939413		2	Star lock	
38	4700287597		1	Relay	D
39	4700938643		1	Plug	C
40	4700379332	A	1	Holder	D
41	4700792187	A	2	Screw M5x14	
42	4700541703	A	4	Screw M6x16	D
43	4700901767	A	2	Screw ST3,5x9,5 Black	
44	4700792091	A	1	Fuse holder	C
45	4700903741	A	2	Fuse 20A Yellow Medium	A
46	4700901240	A	1	Connector	B
47	4700901699	A	1	Connector	D
48	4700500019		5	Hexagon head screw M8x16H 8,8	C
49	4700904229		5	Steel plain washer 8,4x16x1,5	C

A) Only valid for simple cab

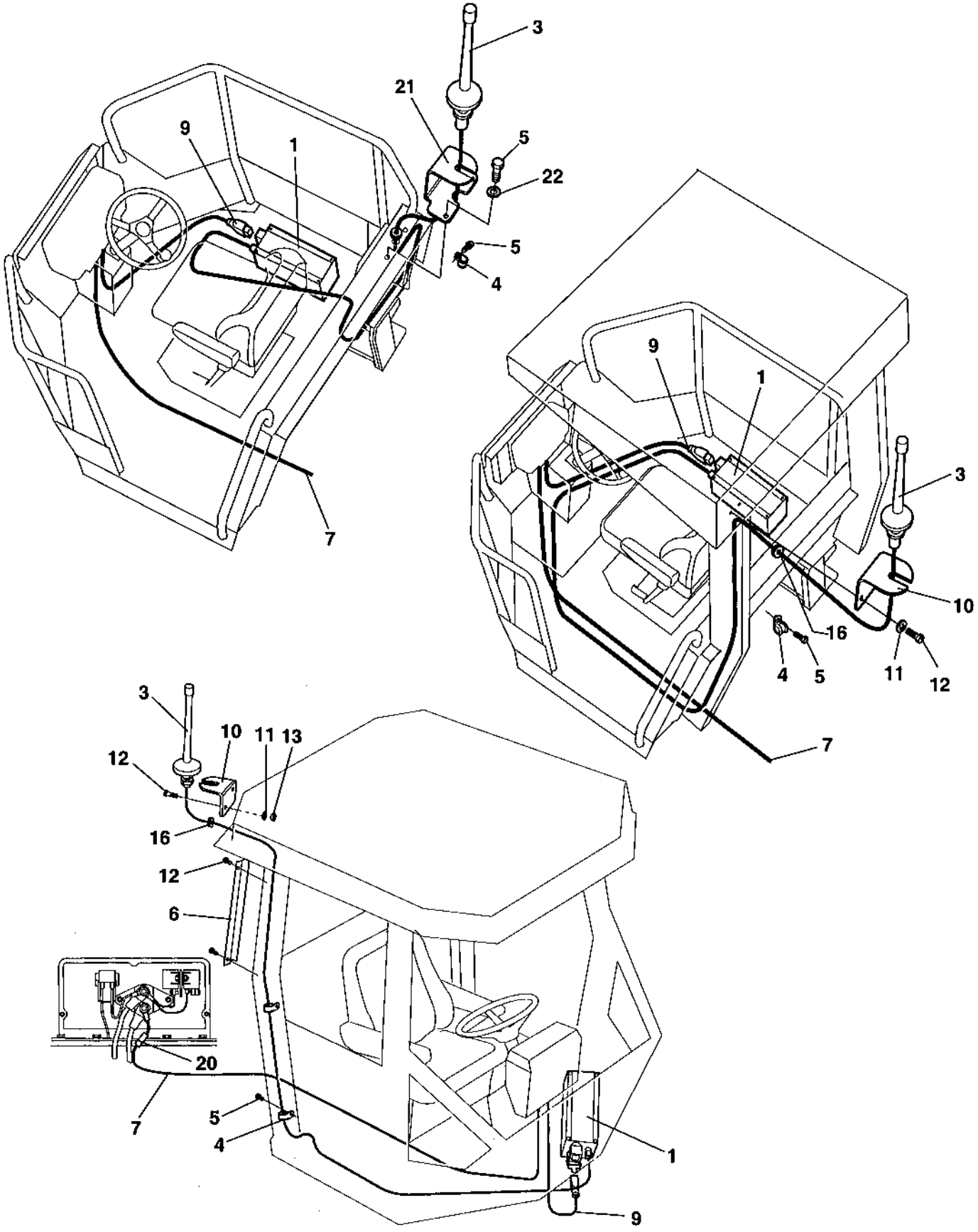
3
21
9
1
5
22
5
4
7
9
1
3
10
16
4
5
11
12
7
3
10
11
13
12
16
12
6
20
7
5
4
1
9

Dy-Mic

Item	Part No	Rem	Qty	Description	Code
1	4700386390		1	Communicator box	D
	4700508002		4	Screw M6x16	D
3	4700386391		1	Antenna Cpl	D
4	4700921039		4	Pipe clamp	
5	4700904415		4	Screw	
6	4700386512		1	Cable holder	D
7	4700386533		1	Cable harness	D
8	4700930154		3	Contact piece, NC	B
9	4700386392		1	Cable harness	D
10	4700386506		1	Antenna holder	D
11	4700904228		4	Washer 6,4x12x1,5	C
12	4700500040		4	Screw M6-1x20 8,8	C
13	4700586002		2	Lock nut M6 -8	C
16	4700909122		1	Grommet	C
17	4700313102		N	Cable ties	
18	4700313041		N	Cable ties	B
20	4700901224		1	Fuse 3A	A
21	4700386507		1	Antenna holder	D
22	4700904281		2	Washer 5,3x10x1 300HV	C

Heater Simple cab

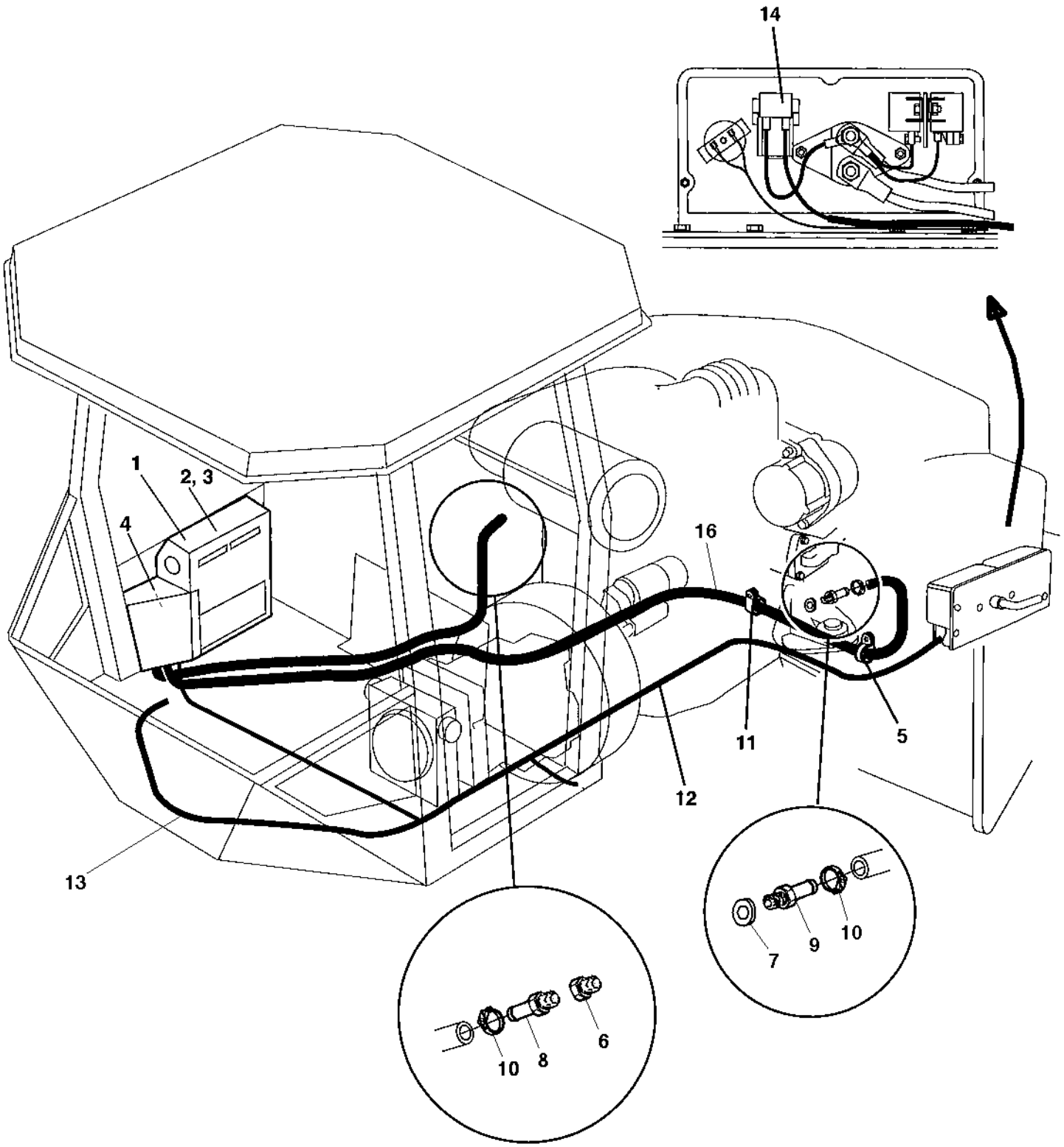

Heater Simple cab

Item	Part No	Rem	Qty	Description	Code
1	4700379394		1	Heater box (Page 206)	
2	4700500019		6	Hexagon head screw M8x16H 8,8	C
3	4700904229		6	Steel plain washer 8,4x16x1,5	C
4	4700903741		2	Fuse 20A Yellow Medium	A
5	4700921056		1	Clamp	C
6	4700813434		1	Reducer	C
7	4700330330		1	Copper washer	
8	4700387638		1	Hose connection	
9	4700391303		1	Hose connection	
10	4700313004		4	Hose clamp	D
11	4700921132		2	Clamp	C
12	4700387466		1	Cable harness	D
13	4700394210		1	Cable harness	D
14	4700904039		1	Fuse 50A Red High	A
15	4700313102		N	Cable ties	
16	4700937737	A	2XL	Hose	

A) L=3600 mm

4700379394 Heater box

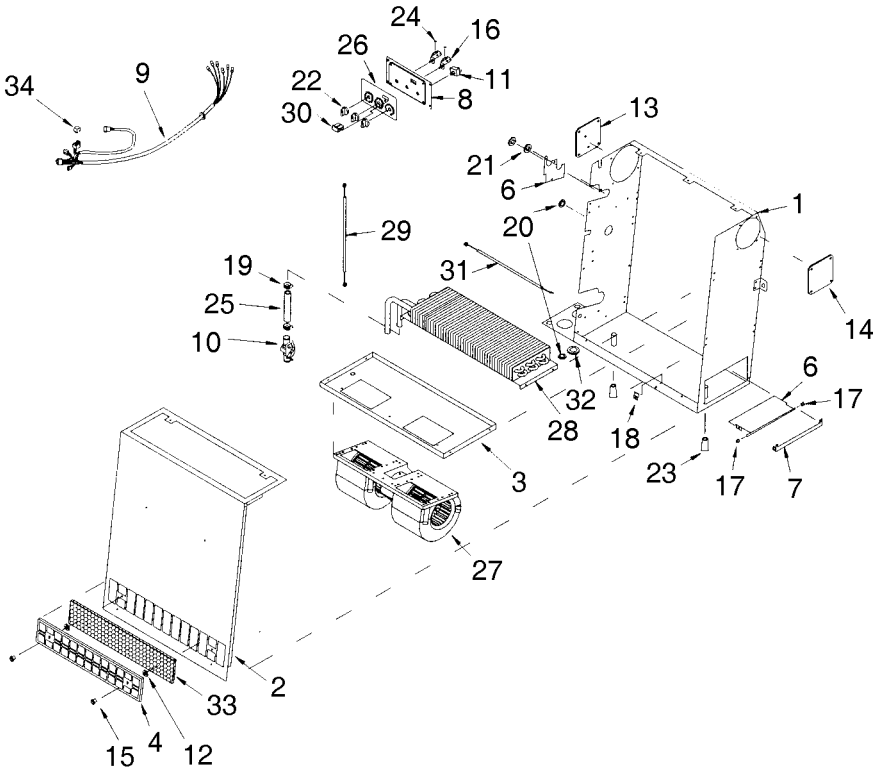

4700379394 Heater box

Item	Part No	Rem	Qty	Description	Code
10	4700939693		1	. Heater control valve	
11	4700938622		1	. Switch	B
16	4700938621		2	. Rotary control	
19	4700313003		2	. Hose clamp	D
24	4700385134		2	. Lock washer	D
25	4700384881	A	1	. Hose	D
27	4700938638		1	. Fan	C
28	4700938639		1	. Heater coil	
29	4700938645		1	. Bowden cable	
31	4700384762		1	. Wire	D
33	4700384761		1	. Air filter element	A
34	4700287597		1	. Relay	D

A) L=200 mm

NUMERICAL INDEX

Part Number	Page
4700100040	23
4700116041	31
4700160105	31
4700160132	83,91
4700160231	91
4700160358	31
4700162008	83
4700162017	31
4700162018	31
4700167023	31
4700167032	23
4700192812	41
4700205027	43
4700212339	87
4700212553	69
4700230277	31,49
4700230515	41
4700232097	101
4700232210	31
4700234218	101
4700234243	83
4700234382	91
4700234388	109
4700234622	109
4700234626	101
4700234662	101
4700234843	107
4700234875	83
4700234888	107
4700234909	83
4700234919	49
4700234958	83
4700238158	119
4700244054	49
4700246069	45
4700272372	183
4700272373	181
4700287597	201,207
4700287598	199
4700311016	191
4700313001	43,49
4700313002	49
4700313003	201,207
4700313004	197,205
4700313006	43
4700313010	43
4700313035	41
4700313041	49,115,123,125
	127,129,131,133
	139,203
4700313068	195
4700313093	47,51,195
4700313094	51
4700313102	43,101,109,111
	139,195,203,205
4700330171	49
4700330330	195,205
4700330331	41
4700330333	41,71,73
4700330383	41,91
4700334121	91,101
4700334122	91
4700334132	79,83
4700334135	91
4700334138	79,83
4700334140	83
4700334196	109
4700334197	101
4700334205	91,107
4700334389	107
4700334468	83
4700334524	107
4700334558	101
4700335607	115
4700337042	23
4700337045	23
4700338304	101,115
4700340863	93
4700343159	23
4700343318	31
4700343322	31
4700343550	119
4700343744	31
4700343775	15
4700343801	31
4700345243	83
4700345870	197
4700345871	23
4700345872	23
4700345873	23
4700345874	23
4700345875	23
4700346230	195
4700347119	15
4700347512	149
4700348213	139
4700348331	149,183
4700349435	139
4700349715	31
4700355869	157
4700355890	191
4700355983	57
4700356348	109
4700357138	11
4700357488	15
4700357643	149
4700357855	151
4700358033	19
4700358090	181
4700358388	81,85,87
4700358452	135
4700358881	181,183,187
4700359550	83
4700359551	83
4700359552	83
4700359955	31
4700370229	41
4700370231	31
4700370803	161
4700371366	25
4700371509	79,81
4700371767	45
4700371774	43
4700372087	15
4700372229	7,11,83
4700372235	79,83
4700372457	163
4700372489	161
4700372494	149,163
4700372513	101
4700372514	101
4700372575	25
4700372608	25
4700372658	27,191
4700372678	161
4700372709	15
4700372743	161
4700372745	161
4700372757	149
4700372772	41
4700372784	139
4700372785	149,163
4700372836	139
4700372837	191
4700372964	157
4700372987	29,37
4700373016	79,139
4700373017	91
4700373096	139
4700373140	139
4700373184	121,123,125,127
	129,131,133
4700373203	25
4700373204	25
4700373270	79,91
4700373286	137
4700373309	25
4700373360	121
4700373363	183
4700373364	183
4700373400	149
4700373421	23
4700373423	79
4700373424	91
4700373442	31
4700373443	31
4700373460	15,49
4700373574	49
4700373746	159
4700373747	159
4700373748	159
4700373749	159
4700373750	159
4700373799	161
4700373854	161
4700373855	161
4700373891	115
4700373906	159
4700373907	159
4700373955	25
4700373956	25
4700373957	25
4700374028	109
4700374029	121,123,125,127
	129,131,133
4700374030	121,123,125,127

NUMERICAL INDEX

Part Number	Page	Part Number	Page	Part Number	Page
4700374030	129,131,133	4700379394	205,207	4700384498	23
4700374059	83	4700379480	41	4700384589	195
4700374088	123,125,127,129	4700379481	101	4700384759	163
	131,133	4700379482	83	4700384760	201
4700374089	123,125,127,129	4700379608	167	4700384761	201,207
	131,133	4700379621	41	4700384762	201,207
4700374120	123,125,127,129	4700379630	101	4700384784	83
	131,133	4700379636	149	4700384875	195
4700374184	143	4700380018	31	4700384876	195
4700374195	123,125	4700380078	93	4700384877	195
4700374196	143	4700380109	25	4700384878	195,201
4700374606	163	4700380123	149	4700384879	195
4700374607	163	4700380145	91,93	4700384880	201
4700374744	15	4700380462	29,31,35	4700384881	201,207
4700374797	25	4700380727	149	4700384897	201
4700374798	25	4700380830	83,85,87,89	4700384927	201
4700374799	25	4700380963	159	4700385134	201,207
4700374854	27	4700380964	159	4700385152	25
4700374900	23	4700380993	23	4700385442	195
4700375678	27	4700381027	31	4700385443	195
4700375681	27	4700381351	139	4700385599	119
4700376000	101,103	4700381413	43	4700385691	47
4700376252	149	4700381989	27	4700386390	203
4700376255	163	4700382129	25	4700386391	203
4700376488	161	4700382130	25	4700386392	203
4700376489	161	4700382131	25	4700386506	203
4700376551	193	4700382132	25	4700386507	203
4700376622	19,21,193	4700382139	193	4700386512	203
4700376652	17	4700382165	25	4700386533	203
4700376667	17	4700382335	25	4700386789	51
4700376819	19,21	4700382336	25	4700386853	43
4700376825	19	4700382382	27	4700386943	45
4700376826	19	4700382384	25	4700386966	47
4700376829	21	4700382387	25	4700387085	43
4700376896	137	4700382393	41	4700387129	41
4700377009	155	4700382397	163	4700387226	151
4700377010	155	4700382571	193	4700387227	151
4700377011	155	4700382572	193	4700387427	115
4700377012	155	4700382582	149,163	4700387466	195,205
4700377014	155	4700382751	181	4700387545	151
4700377015	155	4700383200	161	4700387638	197,205
4700377016	155	4700383225	161	4700387683	119
4700377018	155	4700383413	189,195,199	4700387720	151
4700377019	153	4700383414	201	4700388089	31
4700377020	153	4700383436	31	4700388145	57
4700377021	153	4700383452	139	4700388146	57
4700377024	153	4700383705	149	4700388210	139
4700377098	51	4700383783	31	4700388465	131,133
4700377518	149,163	4700383856	55,67	4700388466	121,123,125,127
4700377556	149,163	4700383955	57		129
4700377742	183	4700383958	91,95	4700388855	41
4700377743	183	4700383974	57	4700389063	31
4700377744	181	4700383975	57	4700389577	135
4700378335	151	4700384048	17	4700389600	47
4700378759	155	4700384114	31	4700389662	115
4700379163	41	4700384159	181	4700390587	57
4700379164	41	4700384162	121,123,125,127	4700390588	57
4700379236	169		129,131,133	4700390589	57
4700379275	195	4700384163	121,123,125,127	4700390590	57
4700379285	195		129,131,133	4700390591	57
4700379286	195	4700384176	201	4700390759	57
4700379332	201	4700384177	201	4700390760	57

NUMERICAL INDEX

Part Number	Page	Part Number	Page	Part Number	Page
4700390762	57	4700393096	41	4700483910	91
4700390823	195	4700393097	47	4700483911	91
4700390824	195	4700393276	31	4700483995	79
4700390900	181	4700393277	31	4700483996	79
4700390927	171	4700393278	31	4700484005	109
4700391194	31	4700393279	33	4700484042	83
4700391206	31	4700393335	57	4700500004	115
4700391219	177	4700393361	43	4700500006	49,141
4700391303	195,205	4700393362	45	4700500007	151
4700391379	155	4700393405	195	4700500012	43,121,123,125
4700391380	155	4700393406	195		127,129,131,133
4700391381	155	4700393408	195	4700500013	27,49,115,123
4700391382	155	4700393543	139		125,127,129,131
4700391383	155	4700393647	195		133,135,137,149
4700391386	155	4700393954	195		195
4700391663	41	4700393955	195	4700500018	23,27,45,109,111
4700391784	151	4700394061	119	4700500019	25,31,43,47,101
4700391989	83	4700394210	195,205		115,121,123,125
4700392002	101,105	4700394680	47		127,129,131,133
4700392100	105	4700394686	11,47		169,177,201,205
4700392103	105	4700394687	11,47	4700500021	25,83,127,129
4700392104	105	4700394905	101		131,133,135,153
4700392105	105	4700395119	27		159,161,191
4700392170	43	4700396030	31	4700500022	51,159,195
4700392220	43	4700396041	141	4700500023	101,195
4700392283	41	4700396043	141	4700500025	45,115
4700392284	41	4700396044	141	4700500026	25
4700392294	51	4700396045	141	4700500028	25,43,83,91
4700392295	51	4700396046	141	4700500029	15,31,49,79,149
4700392296	51	4700396047	141		151,163
4700392297	43	4700396048	141	4700500030	25,91
4700392313	43	4700396309	55,75	4700500031	157
4700392394	149	4700396633	161	4700500032	79,91
4700392714	43	4700396968	119	4700500033	79
4700392715	43	4700397126	15	4700500037	23
4700392741	47	4700397128	115	4700500039	83
4700392742	47	4700397130	15	4700500040	27,45,47,121,203
4700392771	121	4700397255	123,125,127,129	4700500042	141
4700392772	127,129		131,133	4700500043	15,123,125,127
4700392773	135	4700397278	121		129,131,133
4700392774	123,125,127,129	4700397584	53	4700500044	101
	131,133	4700416034	153	4700500046	47,83,101
4700392775	123,125,127,129	4700480449	103	4700500047	25,41
	131,133	4700482056	107	4700500048	157,195
4700392810	47	4700482182	83	4700500049	19
4700392822	31	4700482391	83	4700500051	115
4700392875	149	4700482399	107	4700500053	43,51,109,111
4700392899	153	4700482474	107		115,119,121,139
4700392900	153	4700483031	91		141,149,169,195
4700392937	115	4700483049	101	4700500056	19
4700392996	119	4700483109	101	4700500060	115,141
4700393002	55,57,59	4700483188	109	4700500070	41
4700393021	41	4700483190	79	4700500075	43,115,119
4700393022	41	4700483231	101	4700500076	19,21
4700393045	47	4700483280	101	4700500079	139
4700393052	15	4700483286	91	4700500082	31
4700393058	47	4700483397	91	4700500088	27
4700393059	47	4700483445	109	4700500093	19,21
4700393062	43	4700483497	101	4700500100	161
4700393081	43	4700483498	101	4700500101	79
4700393086	47	4700483526	83	4700500102	17
4700393089	47	4700483610	83	4700500109	83

NUMERICAL INDEX

Part Number	Page	Part Number	Page	Part Number	Page
4700500133	25	4700791176	57	4700792461	119
4700500153	159	4700791183	115	4700792462	119
4700500154	41	4700791185	115,119	4700792463	119
4700500163	51	4700791211	119	4700792464	33
4700500165	31,193	4700791218	163	4700792526	49
4700500180	195	4700791226	149	4700792547	49
4700500184	115	4700791230	79,83	4700792682	115
4700500188	15	4700791304	141	4700792808	49
4700500192	195	4700791341	127,129	4700792814	49
4700500194	41,91,139	4700791378	177	4700801187	31
4700500195	149,163	4700791468	41	4700813391	15
4700500196	31	4700791476	151	4700813434	115,197,205
4700500206	193	4700791477	115	4700813444	101
4700500210	149	4700791479	115	4700813462	115
4700500239	161	4700791503	115	4700813499	83
4700500286	193	4700791513	49	4700813500	101
4700500287	23	4700791538	111	4700813791	47
4700500505	25,151	4700791573	57	4700813822	81,85
4700502019	91	4700791578	119	4700900229	83
4700502078	91	4700791582	119	4700900255	67
4700502132	79,83	4700791583	119,123,125,127	4700900256	75
4700508002	203		129,131,133	4700900430	91
4700508029	41,101	4700791584	119,123,125,127	4700900552	107
4700508068	155		129,131,133	4700900775	31
4700508079	41	4700791585	119	4700900806	83
4700508092	153	4700791587	119,121,123,125	4700900957	63,71
4700509025	41		127,129,131,133	4700900966	63,71
4700513009	123,125,127,129	4700791588	119	4700901121	49
	131,133	4700791597	45	4700901145	57,149,163
4700513017	151	4700791642	181	4700901155	91
4700527002	31	4700791657	119	4700901157	91
4700533010	115,123,125,127	4700791723	119	4700901190	139
	129,131,133	4700791733	119	4700901218	57
4700533016	141	4700791739	119	4700901220	191
4700535005	173	4700791914	111	4700901224	203
4700535011	25	4700791916	123,125,127,129	4700901225	119
4700541526	139		131,133	4700901227	115,119,127,129
4700541702	127,129,135	4700791927	31		133
4700541703	201	4700791948	21	4700901228	119
4700570004	27,115,119,155	4700792015	195	4700901230	115
	195	4700792081	41	4700901240	123,125,127,129
4700570005	25,45,115,163	4700792083	119		131,133,201
	195	4700792091	121,123,125,127	4700901328	89
4700570006	195		129,131,133,201	4700901385	93
4700570015	193	4700792187	201	4700901386	93
4700586001	115,141,145,153	4700792222	181	4700901387	93
4700586002	115,119,137,141	4700792237	101	4700901389	93
	159,203	4700792248	197	4700901390	93
4700586003	47,115,131,133	4700792251	49	4700901443	57
	135,149,153,159	4700792261	57	4700901444	57
	195	4700792275	41	4700901452	85
4700586018	127,129	4700792315	119	4700901453	81,85
4700586019	19,21,41,155	4700792317	119	4700901454	85
4700586022	193	4700792318	119	4700901455	85
4700588176	181	4700792319	119	4700901458	85
4700600016	105	4700792339	83	4700901465	81,87
4700624005	181	4700792413	119,123,125,127	4700901466	87
4700624016	161		129,131,133	4700901467	81,87
4700635061	15,105	4700792414	119	4700901475	87
4700747282	49	4700792432	119	4700901476	87
4700791156	31	4700792435	119	4700901688	141
4700791175	57	4700792450	111	4700901699	201

NUMERICAL INDEX

Part Number	Page
4700901742	99
4700901767	25,119,121,123
	125,127,129,131
	133,201
4700901832	199
4700901834	67,75
4700901987	65,73
4700902064	145
4700902066	123,127,131
4700902123	157
4700902125	109
4700902166	25,43,45,51,149
	151
4700902203	149
4700902227	121,123,125
4700902284	25,115
4700902285	27,41,43,47,139
4700902286	25,45
4700902288	139
4700902468	115
4700902496	139
4700902610	191
4700902624	95
4700902625	95,99
4700902655	93
4700902687	95
4700902693	99
4700902695	95
4700902697	99
4700902723	99
4700902724	95
4700902735	99
4700902783	99
4700902792	97
4700902811	99
4700902856	95
4700902861	103
4700902862	103
4700902866	25,27
4700902915	181
4700902919	15
4700902928	81,85
4700902944	35
4700903053	81
4700903192	139,149
4700903290	79,149,163
4700903422	181
4700903423	181
4700903424	181
4700903425	181
4700903457	103
4700903459	181
4700903570	81,85
4700903571	81,85
4700903580	85
4700903631	115
4700903632	115
4700903640	115
4700903641	115
4700903714	43
4700903727	149
4700903732	25
4700903741	121,123,125,127
	129,131,133,201
	205
4700903760	115
4700903768	115
4700903782	119,169
4700903792	33
4700903852	137,197
4700903877	91
4700903919	31
4700903945	155
4700903946	155
4700903947	155
4700903956	119,121,123,125
	127,129,131,133
4700903969	143
4700903985	57
4700904005	79,83,101
4700904018	115
4700904020	115
4700904036	115
4700904038	115,121,123,125
	127,129,131,133
4700904039	197,205
4700904058	79
4700904068	181,183
4700904076	43,51
4700904098	183
4700904165	195
4700904177	31
4700904180	161
4700904206	139
4700904213	19,83
4700904214	83
4700904228	27,41,43,47,49
	115,121,123,125
	127,129,131,133
	135,137,141,149
	159,195,203
4700904229	15,23,31,43,47
	51,83,91,101,109
	111,115,119,121
	123,125,127,129
	131,133,135,139
	141,149,153,159
	163,169,177,195
	201,205
4700904230	15,27,31,43,49
	79,83,91,123,125
	127,129,131,133
	149,151,157,163
	195
4700904231	19,23,27,31,47
	51,91,101,115
	139,149,163
4700904232	19,21,31,41,91
	193
4700904233	31,41,57,149,163
	193
4700904234	17,33,161
4700904281	49,115,141,145
	151,203
4700904282	83
4700904292	41
4700904313	125,129,133
4700904315	123,125,127,129
	131,133
4700904316	123,125,127,129
	131,133
4700904317	123,125,127,129
	131,133
4700904318	123,125,127,129
	131,133
4700904340	159
4700904352	43
4700904415	203
4700904433	149,163
4700904486	43
4700904543	137,197
4700904551	43
4700904556	25,41,115,153
4700904557	15,25
4700904558	17
4700904562	161
4700904563	155
4700904567	27,195
4700904619	161
4700904623	45
4700904637	41,101
4700904638	41,79,83
4700904640	25,43,51,121,161
	191
4700904653	151
4700904695	49
4700904698	115
4700904703	21,41
4700904723	181
4700904734	161,195
4700904737	31
4700904767	91
4700904773	91
4700904774	91
4700904780	115
4700904781	91
4700904835	183
4700904870	181
4700904874	25
4700904910	137
4700904984	49
4700904985	49
4700904989	123,125,127,129
	131,133
4700905304	175
4700905305	175
4700905306	175
4700908136	45,109,111
4700908229	181
4700908267	131,133
4700908352	85
4700908359	131,133
4700908367	97
4700908375	99
4700908383	95
4700908384	99

NUMERICAL INDEX

Part Number	Page	Part Number	Page	Part Number	Page
4700908399	47	4700909618	63,71	4700929631	69
4700908432	81,85,87	4700909619	63,71	4700929638	69
4700908448	87	4700909622	63,71	4700929644	69
4700908450	9	4700909624	63,71	4700929648	59,67,75
4700908452	47	4700909626	63,71	4700929712	59
4700908485	69	4700909630	59	4700930151	139
4700908499	167,169,171	4700909727	85	4700930154	203
4700908501	195	4700910161	101	4700935158	95
4700908502	195	4700910995	23	4700935164	97
4700908503	195	4700911620	103	4700935172	99
4700908504	195	4700921028	41	4700935192	95
4700908506	169	4700921039	135,203	4700935212	99
4700908507	169	4700921044	195	4700935219	95
4700908545	167,171	4700921046	141	4700935244	171
4700908580	171	4700921056	195,205	4700935245	171
4700908581	171	4700921072	115,123,125,127	4700935246	171
4700908582	171		129,131,133	4700935247	171
4700908583	171	4700921084	49	4700935248	171
4700908605	175	4700921132	205	4700935249	171
4700908617	175	4700923087	81,85,87	4700935250	171
4700908623	173	4700923342	69	4700935253	171
4700908624	173	4700923371	83	4700935265	171
4700908773	81	4700923384	79,83	4700935266	171
4700908780	103	4700923976	115	4700935267	171
4700909122	203	4700924791	159	4700935268	171
4700909252	81	4700925208	23	4700935269	171
4700909253	81	4700925629	27	4700935270	171
4700909255	81	4700925802	137,195	4700935271	167,171
4700909382	85	4700926214	23	4700935272	167,171
4700909386	85	4700926354	61	4700935273	167,171
4700909387	85	4700926356	61	4700935274	167,171
4700909388	85	4700926537	145,153	4700935275	167,171
4700909389	85	4700926658	81	4700935276	167,171
4700909390	85	4700926736	31	4700935277	167,171
4700909391	85	4700926781	65,73	4700935278	167
4700909392	85	4700926786	61	4700935279	167
4700909393	85	4700926810	71	4700935280	167
4700909398	85	4700926847	63,71	4700935281	167
4700909399	87	4700926985	45	4700935282	167
4700909428	87	4700927233	155	4700935283	167
4700909429	87	4700927278	99	4700935284	167
4700909432	87	4700927350	93	4700935285	167
4700909435	87	4700927358	95	4700935286	167
4700909436	87	4700927637	25	4700935287	167
4700909469	95,99	4700927974	149,163	4700935288	167
4700909514	95,99	4700928230	17	4700935289	167
4700909544	63,71	4700928231	33	4700935290	167
4700909567	69	4700928346	141	4700935291	167
4700909568	69	4700928502	123,125,127,129	4700935293	167
4700909569	69		131,133	4700935295	167
4700909570	69	4700928830	157	4700935296	167
4700909572	69	4700929013	103	4700935297	167
4700909574	69	4700929014	103	4700935298	167
4700909576	69	4700929023	115	4700935299	167
4700909580	69	4700929123	101	4700935300	167
4700909581	69	4700929217	57	4700935301	167
4700909582	67	4700929226	91	4700935302	167
4700909584	67,75	4700929447	31	4700935303	169
4700909586	73	4700929455	143	4700935380	37
4700909596	71,73	4700929617	63,71	4700935394	35,37
4700909609	63,65,71,73	4700929626	69	4700935395	35,37
4700909616	63,71	4700929630	69	4700935398	37

NUMERICAL INDEX

Part Number	Page	Part Number	Page	Part Number	Page
4700935399	37	4700936370	99	4700937256	93
4700935400	37	4700936393	95	4700937257	93
4700935401	37	4700936394	99	4700937258	93
4700935402	37	4700936546	85	4700937259	93
4700935403	37	4700936547	85	4700937260	93
4700935404	37	4700936548	89	4700937261	93
4700935413	35,37	4700936551	85	4700937264	93
4700935414	35,37	4700936553	85	4700937265	93
4700935415	37	4700936557	85	4700937274	81
4700935421	37	4700936558	85	4700937275	81
4700935429	103	4700936559	85	4700937277	81
4700935468	103	4700936560	85	4700937278	81
4700935580	177	4700936561	85	4700937279	81
4700935613	157	4700936562	87	4700937280	81
4700935614	157	4700936563	87	4700937283	81
4700935619	81	4700936564	87	4700937380	167
4700935621	81	4700936566	87	4700937381	167
4700935622	81	4700936567	87	4700937382	167
4700935623	81	4700936568	87	4700937383	167
4700935624	81	4700936570	87	4700937384	167
4700935625	81	4700936571	87	4700937385	167
4700935626	81	4700936582	85	4700937389	167
4700935629	81	4700936583	87	4700937390	171
4700935630	81	4700936613	99	4700937391	171
4700935631	81	4700936614	99	4700937392	171
4700935853	81	4700936621	97	4700937393	171
4700935856	85	4700936648	95	4700937531	95
4700935857	87	4700936673	99	4700937674	93
4700935859	35,37	4700936674	99	4700937737	195,205
4700935860	37	4700936686	95	4700937857	87
4700935861	37	4700937150	87	4700937870	177
4700935862	35,37	4700937167	95,97	4700937871	175
4700935863	37	4700937168	95,99	4700937985	95
4700935864	37	4700937170	97	4700937986	95
4700935865	35,37	4700937171	97	4700937993	93
4700935866	35,37	4700937172	97	4700937995	93
4700935867	35,37	4700937173	97	4700937998	95
4700935868	35,37	4700937174	97	4700937999	95
4700935869	37	4700937175	97	4700938001	95
4700935870	35,37	4700937176	97	4700938003	95
4700935871	37	4700937180	97	4700938004	95
4700935872	37	4700937181	97	4700938005	95
4700935873	37	4700937182	97	4700938014	95
4700935874	35,37	4700937183	97	4700938017	171
4700935875	35,37	4700937184	97	4700938018	171
4700935876	35,37	4700937185	97	4700938040	93
4700935877	35,37	4700937186	97	4700938041	93
4700935878	37	4700937187	97	4700938042	93
4700935879	37	4700937188	97	4700938062	103
4700935880	37	4700937189	97	4700938063	103
4700935881	35,37	4700937190	97	4700938064	103
4700935882	35,37	4700937195	95	4700938066	103
4700935883	35,37	4700937198	95	4700938067	103
4700936035	61	4700937199	95	4700938068	103
4700936036	61	4700937200	95	4700938069	103
4700936053	61	4700937201	95	4700938070	103
4700936054	61	4700937202	99	4700938071	103
4700936055	61	4700937203	99	4700938072	103
4700936056	61	4700937204	99	4700938073	103
4700936308	95	4700937205	99	4700938074	103
4700936313	99	4700937206	99	4700938075	103
4700936340	95	4700937240	99	4700938101	171

NUMERICAL INDEX

Part Number	Page	Part Number	Page	Part Number	Page
4700938170	87	4700939256	71	4700945776	95
4700938252	87	4700939258	69	4700945777	49
4700938253	87	4700939259	69	4700945845	5,7
4700938290	167	4700939260	69	4700945846	5,11
4700938291	167	4700939261	69	4700945979	25
4700938292	167	4700939263	73	4700947680	153
4700938296	71	4700939264	73	4700950283	87
4700938597	199	4700939265	73	4700950284	87
4700938598	199	4700939266	73	4700950323	5,9
4700938599	199	4700939267	65,73	4700950368	81
4700938600	199	4700939268	73	4700950382	153
4700938601	199	4700939269	73	4700950555	75
4700938602	199	4700939270	65,73	4700950556	59
4700938603	199	4700939271	65,73	4700950557	65
4700938604	199	4700939272	65,73	4700950558	63
4700938605	199	4700939273	65,73	4700950559	59
4700938606	199	4700939275	73	4700960051	141
4700938607	199	4700939276	73	4700960727	115
4700938608	199	4700939277	73	4700985013	143,145
4700938609	199	4700939278	65,73	4700985014	123,125,127,129
4700938619	201	4700939280	63,71		131,133
4700938620	201	4700939281	71	4700991658	183
4700938621	201,207	4700939282	63,71	4700991990	181
4700938622	201,207	4700939283	71	4700999011	135
4700938625	201	4700939284	71	4700999027	119
4700938626	201	4700939285	63,71	47393691XX	181
4700938627	201	4700939286	71	47960787XX	181
4700938628	201	4700939287	71	4811000127	33
4700938629	201	4700939348	63,65	4811000328	111
4700938630	201	4700939349	73	4811000329	111
4700938634	201	4700939350	63,65,73	4811000364	111
4700938635	201	4700939351	73	4812110216	127,129
4700938636	201	4700939413	201	4812110346	33
4700938638	201,207	4700939489	87	4812110366	33
4700938639	201,207	4700939693	201,207	4812110422	111
4700938643	201	4700940308	97	4812110444	31
4700938644	201	4700940374	155	4812110507	51
4700938645	201,207	4700940451	119	4812110520	31
4700938659	167	4700940505	95	4812110560	115
4700938678	177	4700940507	95	4812110640	31
4700938679	177	4700940675	95	4812110645	51
4700938691	195	4700940678	171	4812110656	51
4700938983	63,71	4700945140	41	4812110748	137
4700938984	63,71	4700945145	7,9,11,41	4812110773	27
4700938988	61	4700945147	7,9,11,49	4812110818	115
4700938989	61,69	4700945174	201	4812110860	31
4700938991	61,69	4700945175	201	4812110967	119
4700938993	61	4700945176	201	4812110986	15
4700939003	65,73	4700945177	201	4812111205	181
4700939009	65	4700945178	201	4812111206	181
4700939010	65	4700945207	155	4812112388	43
4700939014	65	4700945314	197	4812112413	31
4700939015	65,73	4700945315	197	4812112782	51
4700939016	65,73	4700945407	155	4812113010	195
4700939017	65,73	4700945538	49	4812113110	111
4700939019	65,73	4700945581	35	4812113146	111
4700939026	63,71	4700945624	7,9,11,41	4812114386	115
4700939035	63,71	4700945729	155	4812114420	31
4700939036	63,71	4700945730	41	4812114556	15
4700939167	95	4700945731	41	4812155075	149
4700939173	95	4700945760	11	4812155659	43
4700939255	71	4700945775	95	4812155660	43

NUMERICAL INDEX

Part Number	Page	Part Number	Page	Part Number	Page
4812155661	43				
4812155765	99				
4812155788	35				
4812155890	199				
4812156072	87				
4812156168	35				
4812156256	43				
4812156257	43				
4812156258	43				
4812156652	85				
4812156796	65				
4812156885	69				
4812156886	69				
4812157358	61				
4812157359	61				
4812157360	61				
4812157361	61				
4812157362	65				
4812157397	65				
4812157398	65				