RUTHZIL TRATOR COMERCIAL DE PEÇAS LTDA 11 97083-6812 ROLANDO

DYNAPAC
CA250STD
SPARE PARTS CATALOGUE

SCA250STD-1EN10

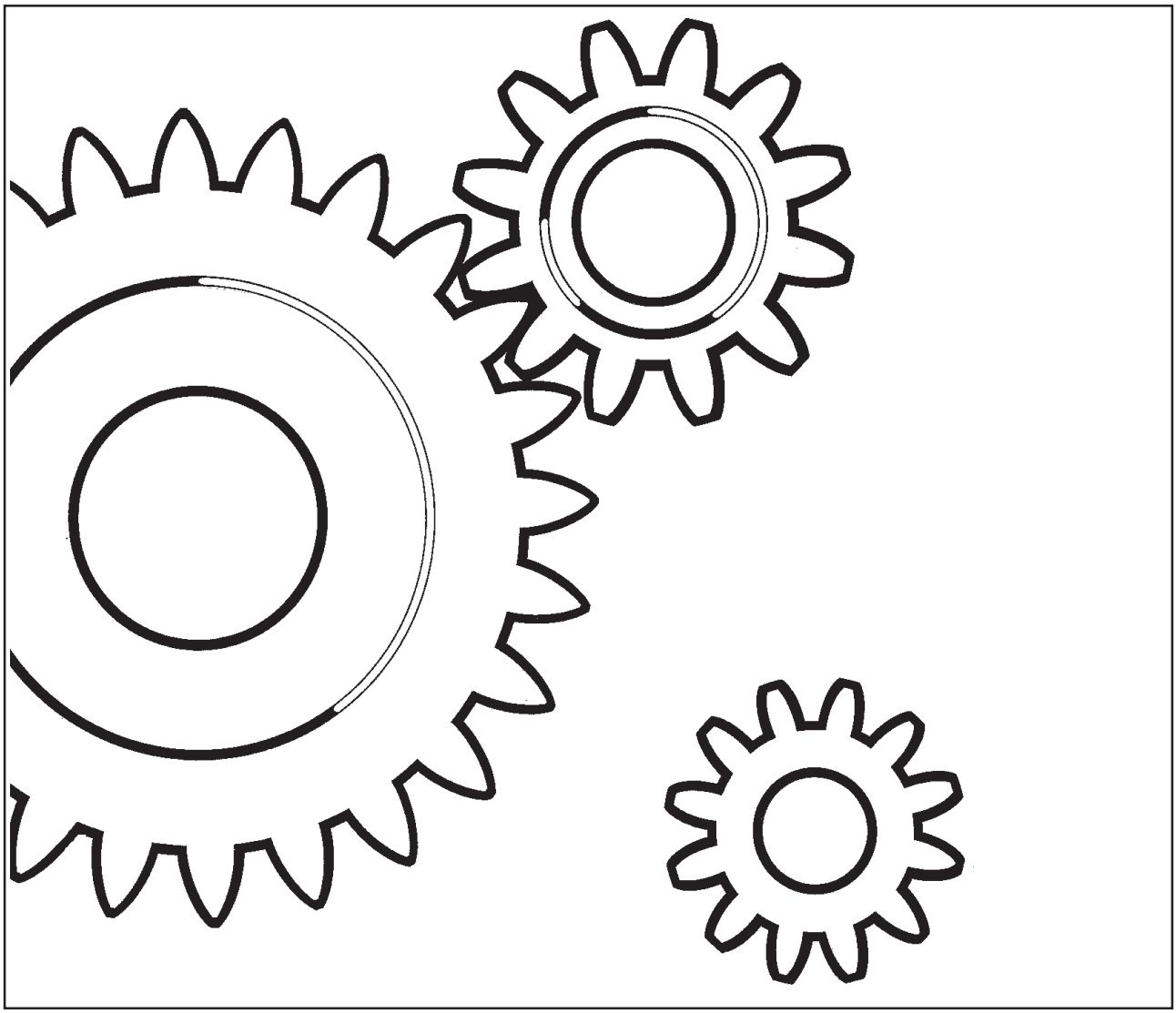

DYNAPAC
Part of the Atlas Copco Group

Box 504, SE-371 23 Karlskrona, Sweden
Phone: +46 455 30 60 00, Fax: +46 455 30 60 10
www.dynapac.com

DYNAPAC
Part of the Atlas Copco Group

Vibratory Roller
CA250STD

Spare Parts Catalogue

SCA250STD-1EN10

Valid from roller serial number:

**65120258*-*

DYNAPAC

Diesel engines:

CUMMINS 4BTA 3.9C

Published catalogue issues valid for these rollers:

Catalogue	Issue date	Valid for serial numbers
SCA250STD-1EN1	2000-02	Replaced by SCA250STD-1EN2
SCA250STD-1EN2	2000-03	Replaced by SCA250STD-1EN3
SCA250STD-1EN3	2002-10	Replaced by SCA250STD-1EN4
SCA250STD-1EN4	2003-10	Replaced by SCA250STD-1EN5
SCA250STD-1EN5	2004-11	Replaced by SCA250STD-1EN6
SCA250STD-1EN6	2006-02	Replaced by SCA250STD-1EN7
SCA250STD-1EN7	2008-03	Replaced by SCA250STD-1EN8
SCA250STD-1EN8	2008-05	Replaced by SCA250STD-1EN9
SCA250STD-1EN9	2009-04	Replaced by SCA250STD-1EN10
SCA250STD-1EN10	2009-04	**65120258*-*



We reserve the right to change specifications without notice.
Printed in Sweden.

DYNAPAC
Part of the Atlas Copco Group

RESERVDELSBESTÄLLNING

Följande uppgifter ska lämnas vid beställning av reservdelar för att undvika leveransfel:

1. Maskintyp.
2. Vältens serienummer.
3. Antal av önskad reservdel.
4. Reserdelens artikelnummer.
5. Reservdelens benämning.
6. Måttuppgifter vid beställning av metervara.

ORDERING SPARE PARTS

To avoid errors in delivery, please give the following information when ordering spare parts:

1. Type of machine.
2. Roller serial number.
3. Quantity required.
4. Part number.
5. Parts denomination.
6. Dimensions when ordering per length.

ERSATZTEILBESTELLUNG

Zur Vermeidung von Fehllieferungen sind bei der Bestellung von Ersatzteilen folgende Angaben zu machen:

1. Maschinentyp.
2. Herstellungsnummer.
3. Bestellmenge. (Quantity)
4. Ersatzteilnummer. (Part Nº)
5. Ersatzteilbenennung. (Denomination)
6. Massangaben bei Bestellung von Meterware.

ORDINI DI RICAMBI

Per evitare errori nelle consegne di ricambi, Vi preghiamo di comunicarci le seguenti informazioni al momento dell 'ordinazione:

1. Tipo di macchina.
2. Numero di serie della macchina.
3. Quantità dei pezzi desiderati. (Quantity)
4. Numero di codice del pezzo. (Part Nº)
5. Descrizione del pezzo di ricambio. (Denomination)
6. Misura, in caso di ordine per metro.

PEDIDO DE RECAMBIOS

Para evitar errores en las entregas, deberán indicarse los siguientes datos al hacer un pedido de recambios:

1. Tipo de máquina.
2. Número de serie.
3. Cantidad de piezas deseadas. (Quantity)
4. Número de artículo de la pieza de recambio. (Part Nº)
5. Denominación de la pieza. (Denomination)
6. Indíquese la medida al solicitar un artículo que se expide por metros.

COMMANDE DE PIECES DE RECHANGE

Les indications suivantes doivent être fournies lors de la commande de piéces de rechange, afin d'éviter toute erreur de livraison:

1. Type de machine.
2. Numéro de série.
3. Quantité désirée de pièce de rechange. (Quantity)
4. Numéro de la piéce de rechange. (Part Nº)
5. Dénomination de la piéce de rechange. (Denomination)
6. Longueur en cas de commande au mètre.

YOUR AGENT/DEALER:

Text pages

The text pages is structured as the picture on the right.

1. This is the remarks for specific items and the descriptions of the remarks is at the bottom of the parts list.

2. Parts indicated by a dot and moved to the right are included when buying the assembled unit above.

3. Spare parts and service code for a specific part, mainly for internal use at Dynapac. "A" = Service part, "B" = Fast moving part, "C" = Suggested exchanged part and "D" = Regular spare part.

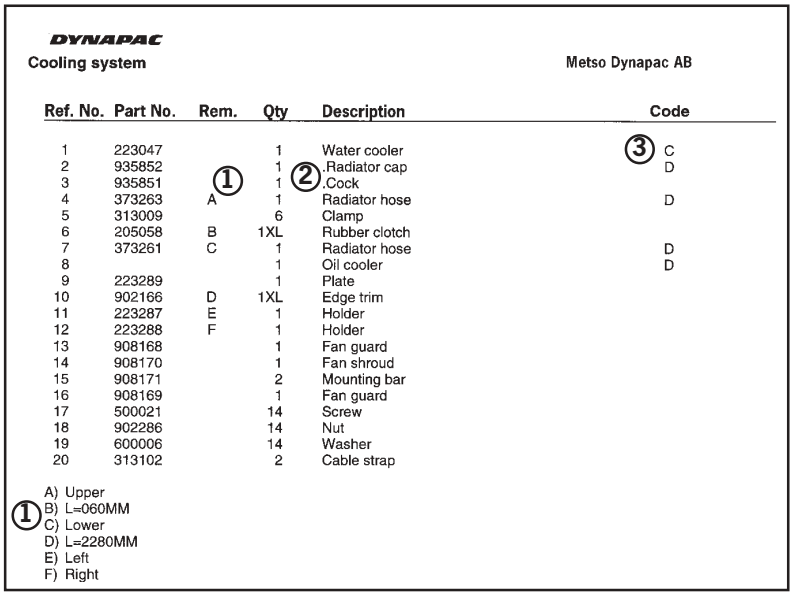

DYNAPAC

Cooling system — Metso Dynapac AB

Ref. No.	Part No.	Rem.	Qty	Description	Code
1	223047		1	Water cooler	③ C
2	935852		1	.Radiator cap	D
3	935851	①	1	②.Cock	
4	373263	A	1	Radiator hose	D
5	313009		6	Clamp	
6	205058	B	1XL	Rubber clotch	
7	373261	C	1	Radiator hose	D
8			1	Oil cooler	D
9	223289		1	Plate	
10	902166	D	1XL	Edge trim	
11	223287	E	1	Holder	
12	223288	F	1	Holder	
13	908168		1	Fan guard	
14	908170		1	Fan shroud	
15	908171		2	Mounting bar	
16	908169		1	Fan guard	
17	500021		14	Screw	
18	902286		14	Nut	
19	600006		14	Washer	
20	313102		2	Cable strap	

① A) Upper
B) L=060MM
C) Lower
D) L=2280MM
E) Left
F) Right

Changes

PARTS INFO	SERVICE INFO	GROUP	PAGE	NOTES

Notes

Notes

PÄRMETIKETT

För att undvika fel vid reservdelsbeställning finns här nedan två etiketter som passar i fickorna på pärmarnas ryggar. På dessa kan man se från vilket vältnummer av aktuell maskin reservdelskatalogen gäller. Gör så här:

1. Tag denna sida ur pärmen.
2. Klipp ut etiketten till **VÄNSTER** (1) och sätt in den i fickan på **DENNA** pärmens rygg.
3. Finns det en etikett till **HÖGER** (2), kan denna användas på pärmen för **FÖREGÅENDE** utgåva av denna katalog.
4. Kasta detta papper.

BINDER LABEL

To avoid errors when ordering spare parts use the labels below to identify the catalogues on the back of the binder. The label contain the serial number range for which the catalogue is valid. Do like this:

1. Remove this page from the binder.
2. Cut out the **LEFT** label (1) and put it on **THIS** binders back.
3. If there is a label to the **RIGHT** (2), it can be used on the binder for **PRECEDING** issue of this catalogue.
4. Throw away this paper.

KATALOG-BESCHRIFTUNG

Zur Vermeidung von Fehlen bei der Ersatzteilbestellung benutzen Sie bitte die unteren Beschriftungen, um die Kataloge auf der Rückseite zu kennzeichen. Auf der Beschriftung ist angegaben, für welche Maschinennummern der jeweilige Katalog gültig ist. Ablauf:

1. Nehmen Sie dieses Blatt aus dem Katalog.
2. Schneiden Sie die **LINKE** Beschriftung (1) aus. Schieben Sie die Beschriftung in die tasche auf **DEM** Katalogrücke.
3. Sollte die Beschriftung unten **RECHTS** (2) mitgeliefert werden, kennzeichen Sie damit bitte die **ÄLTERE** Ausführung dieses Kataloges.
4. Den Rest dieses Blattes bitte vernichten.

ETICHETTA POSTA SUL RACCOGLITORE

Per evitare errori quando ordinate pezzi di ricambio, usate le etichette in calce che servono ad identificare i cataloghi sul retro del raccoglitore. L'etichetta indica il numero di matricola delle maccine prese in considerazione nel catalogo.

1. Rimuovete questa pagina dal raccoglitore.
2. Ritagliate l'etichetta posta a **SINISTRA** (1) e ponetela sul retro **DEL** raccoglitore.
3. Se trovate anche un'etichetta sulla **DESTRA** (2), ritagliatela e ponetela sul raccoglitore relativo alla **PRECEDENTE** edizione del catalogo.
4. Distruggete questo foglio.

ETIQUETA PARA LA CARPETA

Para evitar errores al pedir repuestos utilicen las etiquetas abajo descritas para identificar los catálogos en la parte trasera de la carpeta. En la etiqueta se ven los números de referencia de la serie para la cual es válido el catálogo. Instrucciones:

1. Quitar esta página de la carpeta.
2. Corta la etiqueta **IZQUIERDA** (1) y ponerla est **ESTA** carpeta en la parte trasera.
3. Si hay una etiqueta en la parte **DERECHA** (2) se puede utilizar en la carpeta para el catálogo que **PRECEDE** a esta.
4. Tirar esta hoja.

ETIQUETAGE DU CATALOGUE

Afin d'éviter des erreurs lors de commandes de pièces de rechange, nous vous conseillons d'apposer les marquages ci-dessous à l'arrière du classeur, pour identifier les catalogues. Ce marquage indique les numéros de série pour lesquels le catalogue est adapté. Il convient de procéder de la façon suivante:

1. Retirez cette page du classeur.
2. Découpez l'étiquette de **GAUCHE** (1), et apposez-la à l'arrière de **CE** catalogue.
3. Si il y a une étiquette à **DROITE** (2), vous pourrez l'apposer sur le classeur de l'edition **PRECEDENTE** du catalogue.
4. Détruire cetta feuille.

1.



CA250STD

Catalogue **SCA250STD-1EN10**

Valid **from** serial number:

***65120258*-**

TABLE OF CONTENTS

Page

CA250STD SN 65120258 - 2

Service kits 4

4700938524 Service kit 50 h 6
4700938527 Service kit 250/750 h 8
4700938521 Service kit 500 h Up to 65X23699 10
4700950196 Service kit 500 h From 65X23700 12
4700938522 Service kit 1000 h Up to 65X23699 14
4700950197 Service kit 1000 h From 65X23700 16

Repair kits 18

4700938558 Steering hitch kit 20
4700938894 Eccentric shaft kit 22
4700938891 Drum rotation kit 24
4700938877 Shock absorber kit, drum 26

Frame 28

Frame 30
Scraper Up to 65X20596 32
Scraper and beam From 65X20597 Up to 65X24499 34
Scraper and beam From 65X24500 36
Scrapers, Urethan Rubber Option Up to 65X20819 38
Scrapers, Urethan Rubber Option From 65X20820 Up to 65X21750 40
Scrapers, Urethan Rubber Option From 65X21751 42
Scrapers, Spring Steel Option Up to 65X20839 44
Scrapers, Spring Steel Option From 65X20840 Up to 65X21750 46
Scrapers, Spring Steel Option From 65X21751 48
Hitch 50
Structure Up to 65X20481 52
Structure From 65X20482 Up to 65X23699 54
Structure From 65X23700 56
Side covers Option 58
Noise suppression From 65X20800 60
Drum shroud Option From 65X21751 62

Drum 64

Drum Up to 65X24499 66
Drum From 65X24500 68
Drum cartridge Left side Up to 65X22596 70
Drum cartridge Left side From 65X22597 Up to 65X24499 72
Drum cartridge Vibration side Up to 65X22596 74
Drum cartridge Vibration side From 65X22597 Up to 65X23899 76
Drum cartridge Vibration side From 65X23900 Up to 65X24499 78

Engine 80

Engine Up to 65X21075 82
Engine From 65X21076 Up to 65X21969 84
Engine From 65X21970 Up to 65X23699 86
Engine From 65X23700 88
Cooling system Up to 65X21524 90
4700380185 Radiator Up to 65X20609 92
4700383806 Radiator From 65X20610 Up to 65X21524 94
Cooling system From 65X21525 Up to 65X23699 96
Cooling system From 65X23700 98
Combustion air system Up to 65X21524 102
Combustion air system From 65X21525 Up to 65X23699 104
Combustion air system From 65X23700 106
Fuel system Up to 65X21524 108

TABLE OF CONTENTS

Page

Fuel system From 65X21525 Up to 65X23699 110
Fuel system From 65X23700 112
Exhaust system Up to 65X21172 114
Exhaust system From 65X21173 Up to 65X21537 116
Exhaust system From 65X21538 Up to 65X23699 118
Exhaust system From 65X23700 120

Transmission 122

Rear axle and wheels Up to 65X20819 124
Rear axle and wheels From 65X20820 Up to 65X21197 126
Rear axle and wheels From 65X21198 Up to 65X22222 128
Rear axle and wheels From 65X22223 Up to 65X22357 130
Rear axle and wheels From 65X22358 Up to 65X22381 132
Rear axle and wheels From 65X22382 134
4700370112 Rear axle Up to 65X20819 136
Differential with limited slip 138
Differential housing and brakes 140
Planet gear 142
4700383857 Rear axle From 65X20820 144
Differential with limited slip 146
Differential housing and brakes 148
Planet gear 150
4700372941 Rear axle No-Spin, Option Up to 65X20819 152
Differential with No-Spin 154
Differential housing and brakes 156
Planet gear 158
4700383856 Rear axle No-Spin, Option From 65X20820 160
Differential with No-Spin 162
Differential housing and brakes 148
Planet gear 164

Hydraulic system 166

Propulsion system Up to 65X23699 168
4700371545 Propulsion pump Up to 65X20260 170
4700380830 Propulsion pump From 65X20261 176
4700375999 Hydraulic motor 182
Propulsion system From 65X23700 Up to 65X23899 184
4700380830 Propulsion pump 176
4700375999 Hydraulic motor 182
4700371545 Propulsion pump Up to 65X20260 170
Propulsion system From 65X23900 186
4700395385 Hydraulic pump 188
4700375999 Hydraulic motor 182
Vibration system Up to 65X23899 192
4700380145 Hydraulic motor, vibration 194
4700381151 Vibration pump Up to 65X20592 196
4700937167 Rotary group, cpl 198
4700937168 Valve block, cpl 200
4700383958 Vibration pump From 65X20593 202
4700937167 Rotary group, cpl 198
4700937168 Valve block, cpl 200
4700380145 Hydraulic motor, vibration Up to 65X23899 194
4700381151 Vibration pump Up to 65X20592 196
4700937167 Rotary group, cpl 198
4700937168 Valve block, cpl 200
Vibration system From 65X23900 204
4700395384 Vibration pump 206
4700395386 Hydraulic motor, vibration 210
Steering system Up to 65X20396 212
Steering system From 65X20397 Up to 65X21524 214

TABLE OF CONTENTS

Page

Steering system From 65X21525 Up to 65X23699 216
4700375031 Steering cylinder Up to 65X22578 218
4700392002 Steering cylinder From 65X22579 220
Steering system From 65X23700 222
4700392002 Steering cylinder 220
4700376000 Steering valve 224
4700375031 Steering cylinder Up to 65X22578 218
Brake system Up to 65X20396 226
Brake system From 65X20397 228
Hydraulic oil tank Up to 65X23699 230
Hydraulic oil tank From 65X23700 232
Central test panel hydraulic Option Up to 65X23899 234
Central test panel hydraulic Option From 65X23900 236
Variable rear axle motor Option 238
4700373361 Propulsion motor 240
4700371545 Propulsion pump Up to 65X20260 170
4700380830 Propulsion pump From 65X20261 176

Electrical equipment 244

Electric system Up to 65X21524 246
Electric system From 65X21525 Up to 65X23699 248
Electric system From 65X23700 250
Control panel Up to 65X21524 252
Control panel From 65X21525 Up to 65X23699 254
Control panel From 65X23700 256
Control panel 258
Working lights Option Up to 65X20596 260
Working lights Option From 65X20597 Up to 65X21339 262
Working lights Option From 65X21340 Up to 65X23699 264
Rotating beacon Option 266
Back-up alarm Option Up to 65X21950 268
Back-up alarm Option From 65X21951 270
Compaction meter Option Up to ECN 03073 272
Compaction meter Option From ECN 03073 274

Drivers platform 276

Drivers platform 278
Drivers platform 280
Drivers platform 282
Control panel Up to 65X23699 284
Control panel From 65X23700 286
Throttle controls Up to 65X21735 288
Throttle controls From 65X21736 Up to 65X23699 290
Throttle controls From 65X23700 292
Forward and reverse control Up to 65X23699 294
Forward and reverse control From 65X23700 296
Forward and reverse control handle 298
Steering column Up to 65X22547 300
Steering column From 65X22548 302
Canopy Option 304
Rops and fops 306
Cab mounting Up to 65X22547 308
Cab 380656 Up to 65X22547 310
Cab Screens 312
Cab Door, left side 316
Cab Interior rear mirror 318
Wiper arm with blade, front 320
Cab Electric 322
Cab Exterior, rear mirror 324
Cab Work light 326

TABLE OF CONTENTS

Page

Cab mounting From 65X22548 328
Cab 378308 From 65X22548 330
Cab Screens 332
Cab Door, left side 336
Cab Interior rear mirror 318
Wiper arm with blade, front 320
Cab Electric 322

Decals 338

Decals 340
Decals 342

Standard equipment 344

Standard equipment 346

Optional equipment 348

Tool equipment 350
Pad shell Up to 65X21750 352
Scraper and beam Up to 65X21750 354
Pad shell From 65X21751 356
Dy-Mic Up to 65X21339 358
Dy-Mic From 65X21340 360
Air conditioner and heater, Simple cab 362
4700383413 Condenser, cpl 366
Heater Simple cab 368
4700385222 Heater 370

CA250STD SN 65120258 - CA250100



CA250STD SN 65120258 -

Item	Part No	Rem	Qty	Description	Code
1				Service kits (Page 4)	
2				Repair kits (Page 18)	
10				Frame (Page 28)	
20				Drum (Page 64)	
30				Engine (Page 80)	
40				Transmission (Page 122)	
50				Hydraulic system (Page 166)	
60				Electrical equipment (Page 244)	
70				Drivers platform (Page 276)	
80				Decals (Page 338)	
90				Standard equipment (Page 344)	
91				Optional equipment (Page 348)	

Service kits

Item	Part No	Rem	Qty	Description	Code
1	4700938524			Service kit (Page 6) 50 h	
2	4700938527			Service kit (Page 8) 250/750 h	
3	4700938521			Service kit Up to 65X23699 (Page 10) 500 h	
4	4700950196			Service kit From 65X23700 (Page 12) 500 h	
5	4700938522			Service kit Up to 65X23699 (Page 14) 1000 h	
6	4700950197			Service kit From 65X23700 (Page 16) 1000 h	

4700938524 Service kit 50 h

17363

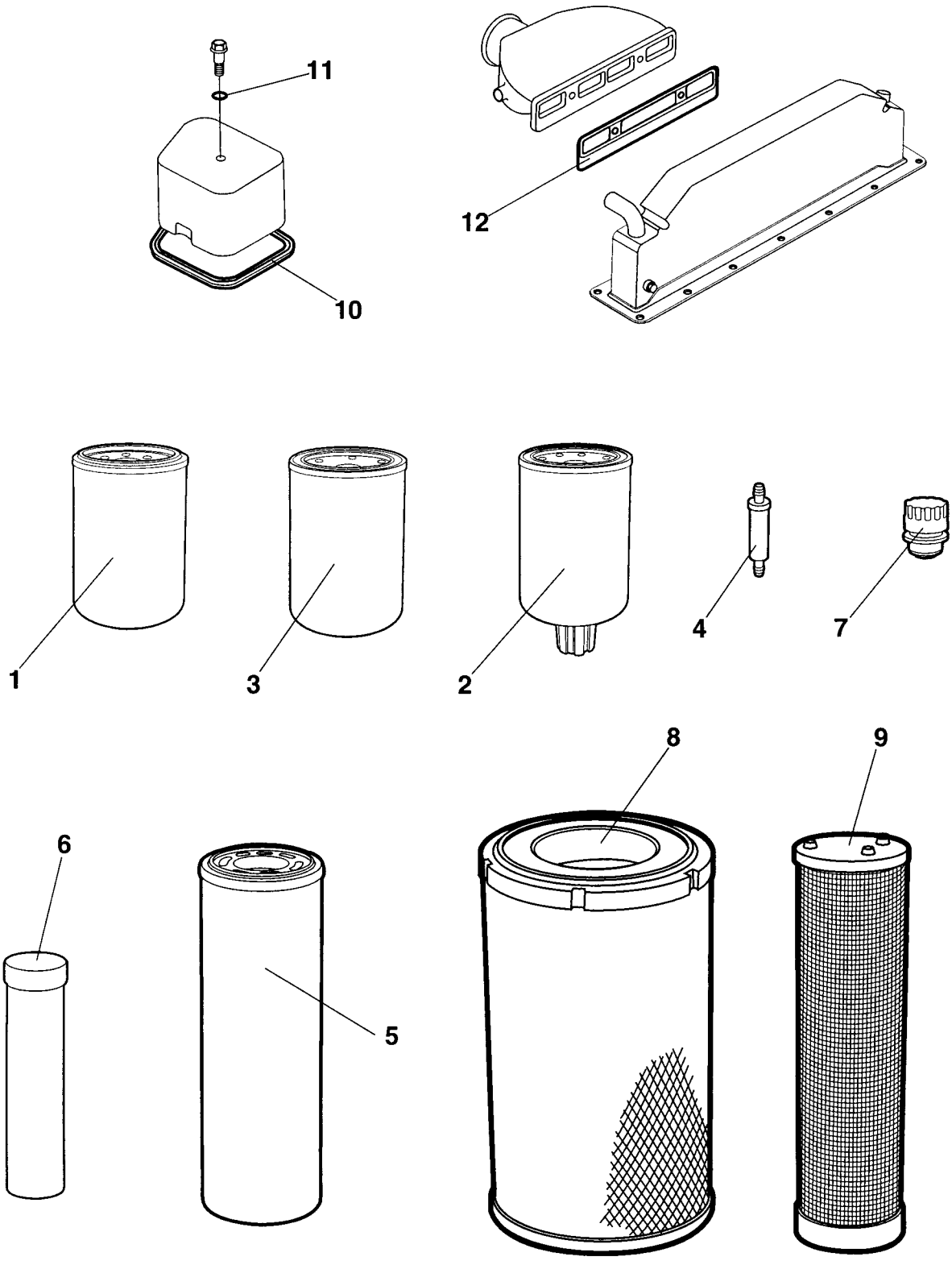

4700938524 Service kit 50 h

Item	Part No	Rem	Qty	Description		Code
	4700938524			Service kit (Page 6)	50 h	
1	4700212373		1	Oil filter		A
2	4700935969		1	Fuel filter w. waterseparator		A
5	4700372229		1	Hydraulic oil filter element		A

4700938527 Service kit 250/750 h

17363

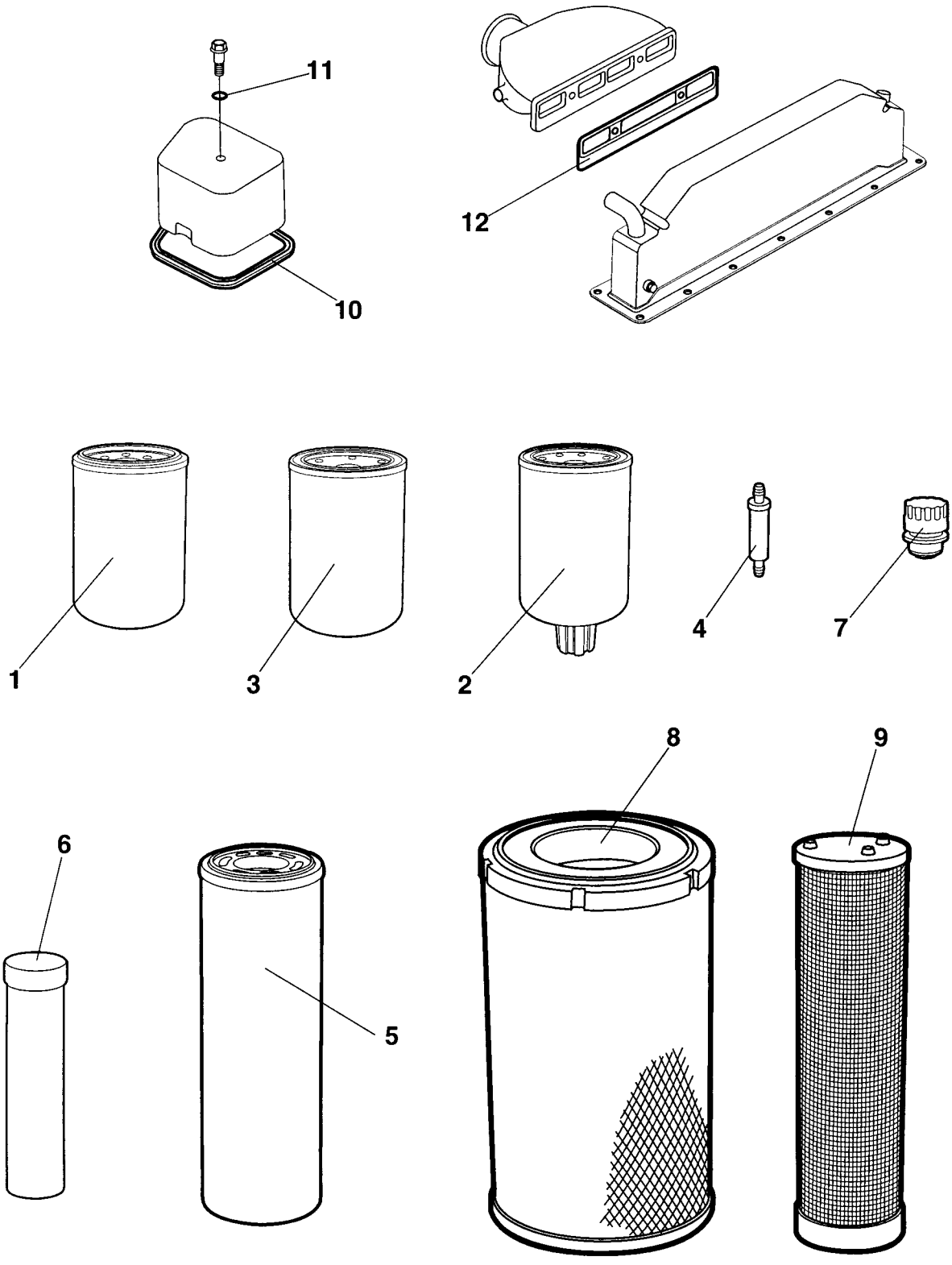

4700938527 Service kit 250/750 h

Item	Part No	Rem	Qty	Description		Code
	4700938527			Service kit (Page 8)	250/750 h	
1	4700212373		1	Oil filter		A

4700938521 Service kit 500 h

17363

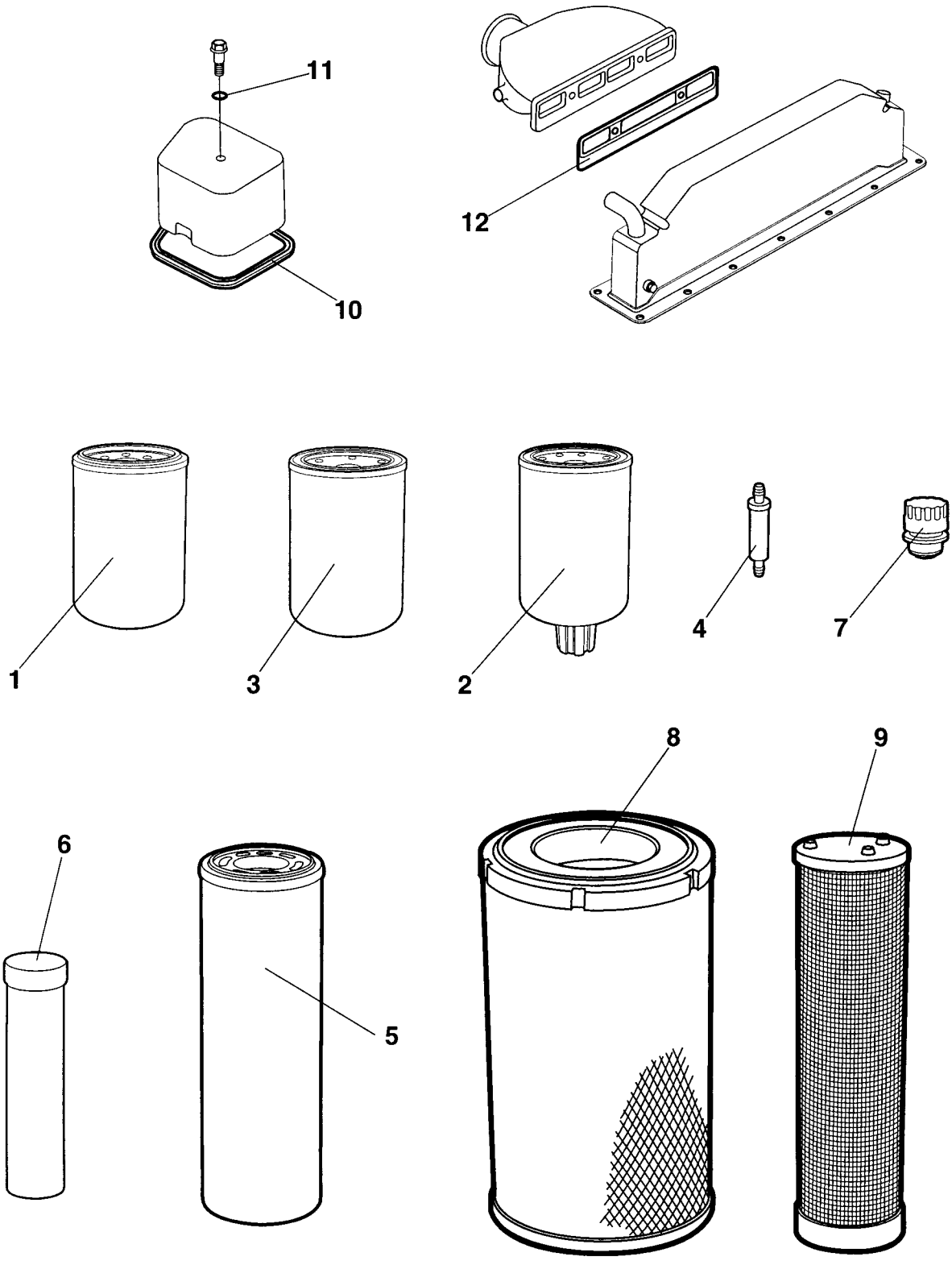

4700938521 Service kit 500 h

Item	Part No	Rem	Qty	Description		Code
	4700938521			Service kit (Page 10)	500 h	
1	4700212373		1	Oil filter		A
2	4700935969		1	Fuel filter w. waterseparator		A
8	4700908450	1	1	Air filter element,	Main	A

1) Main

4700950196 Service kit 500 h

17363

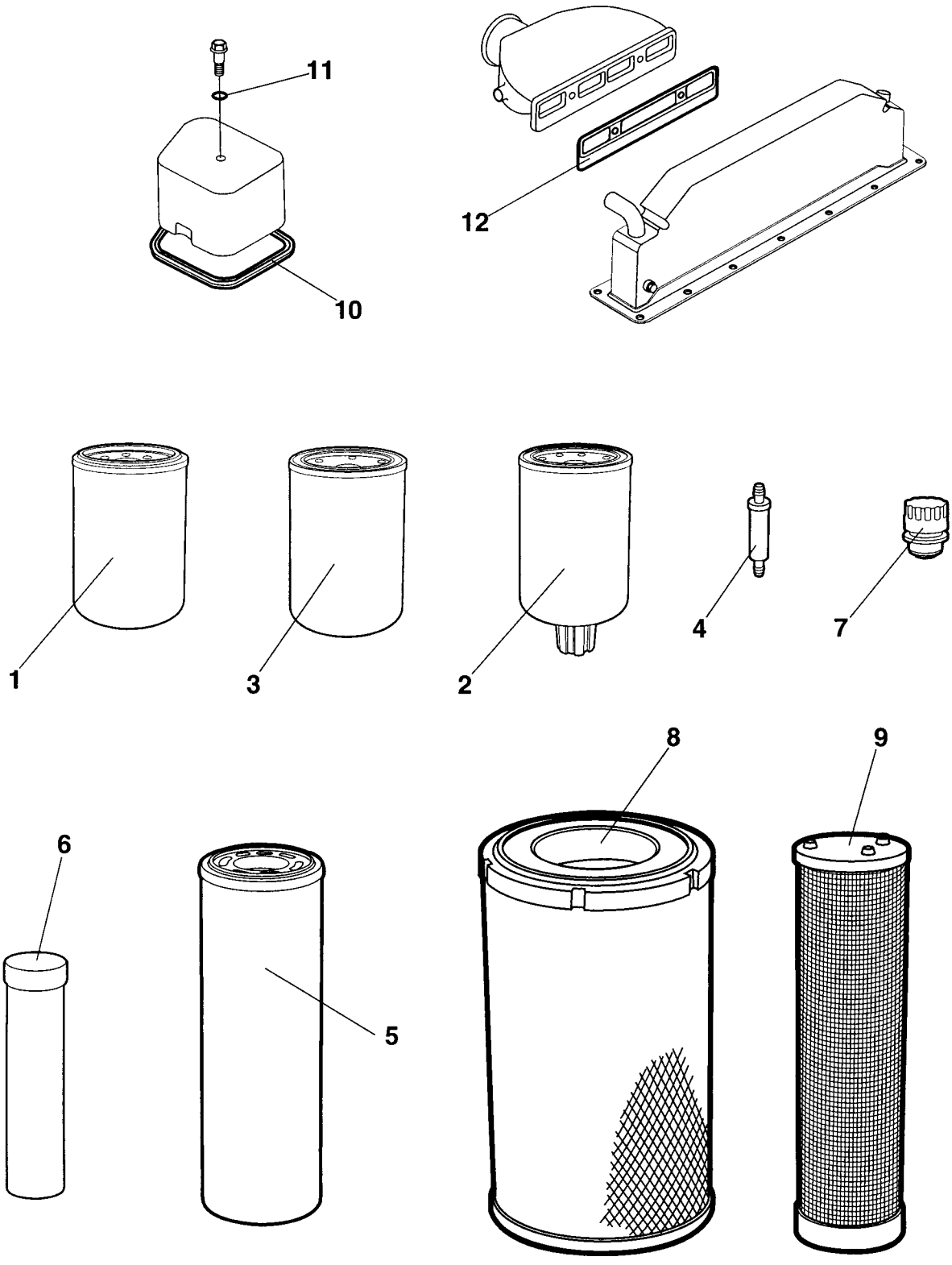

4700950196 Service kit 500 h

Item	Part No	Rem	Qty	Description		Code
	4700950196			Service kit (Page 12)	500 h	
1	4700212373		1	Oil filter		A
2	4700935969		1	Fuel filter w. waterseparator		A
8	4700394686		1	Air filter element, main		A

4700938522 Service kit 1000 h

17363

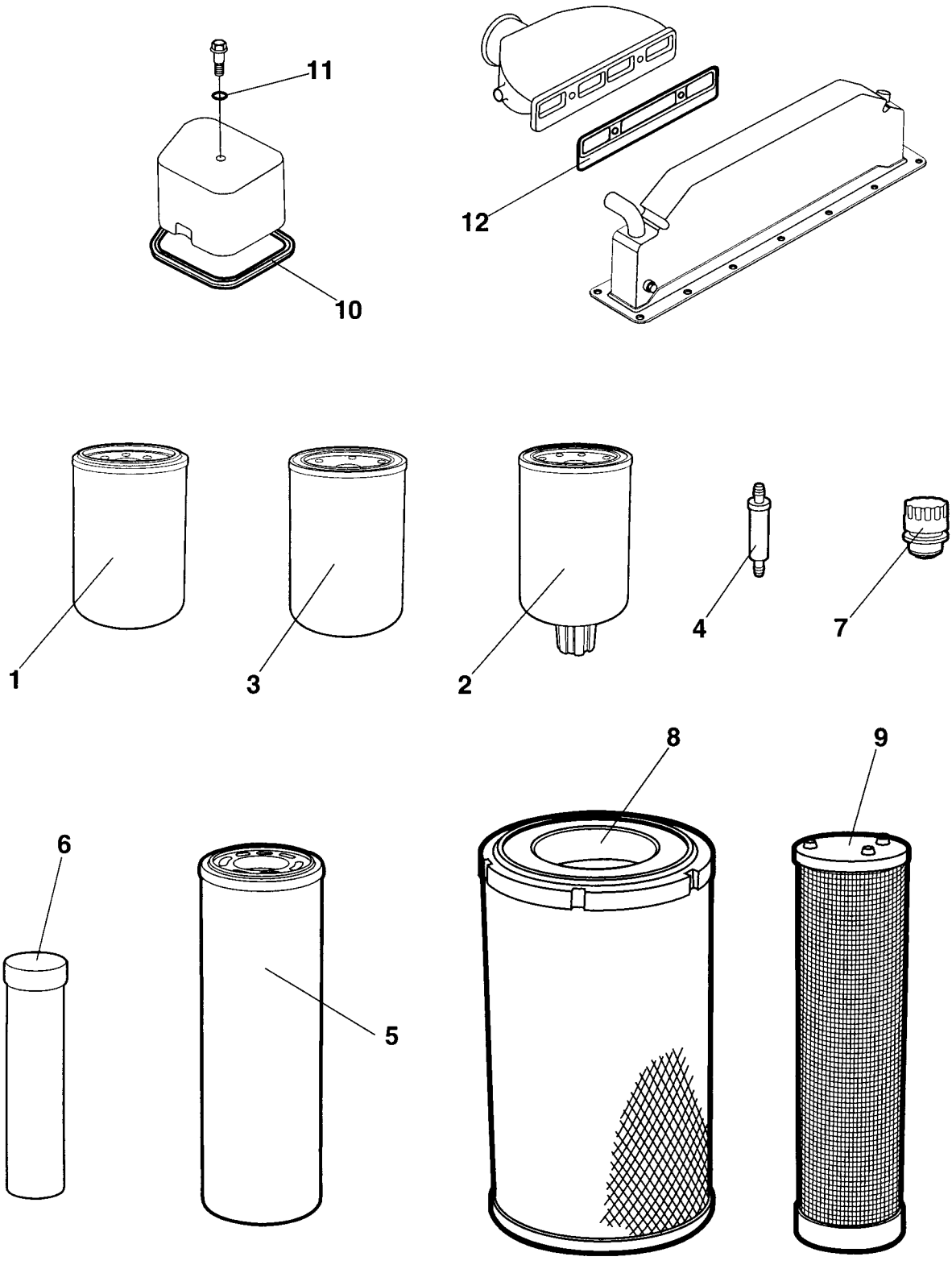

4700938522 Service kit 1000 h

Item	Part No	Rem	Qty	Description		Code
	4700938522			Service kit (Page 14)	1000 h	
1	4700212373		1	Oil filter		A
2	4700935969		1	Fuel filter w. waterseparator		A
5	4700372229		1	Hydraulic oil filter element		A
7	4700357138		1	Ventilating filter		A
8	4700394686	1	1	Air filter element, main		A
9	4700394687	2	1	Air filter element, safety		A
10	4700938514		4	Valve cover gasket		A
11	4700938516		4	Gasket		A
12	4700938517		1	Gasket, inlet pipe		

1) Main
2) Safety

4700950197 Service kit 1000 h

17363

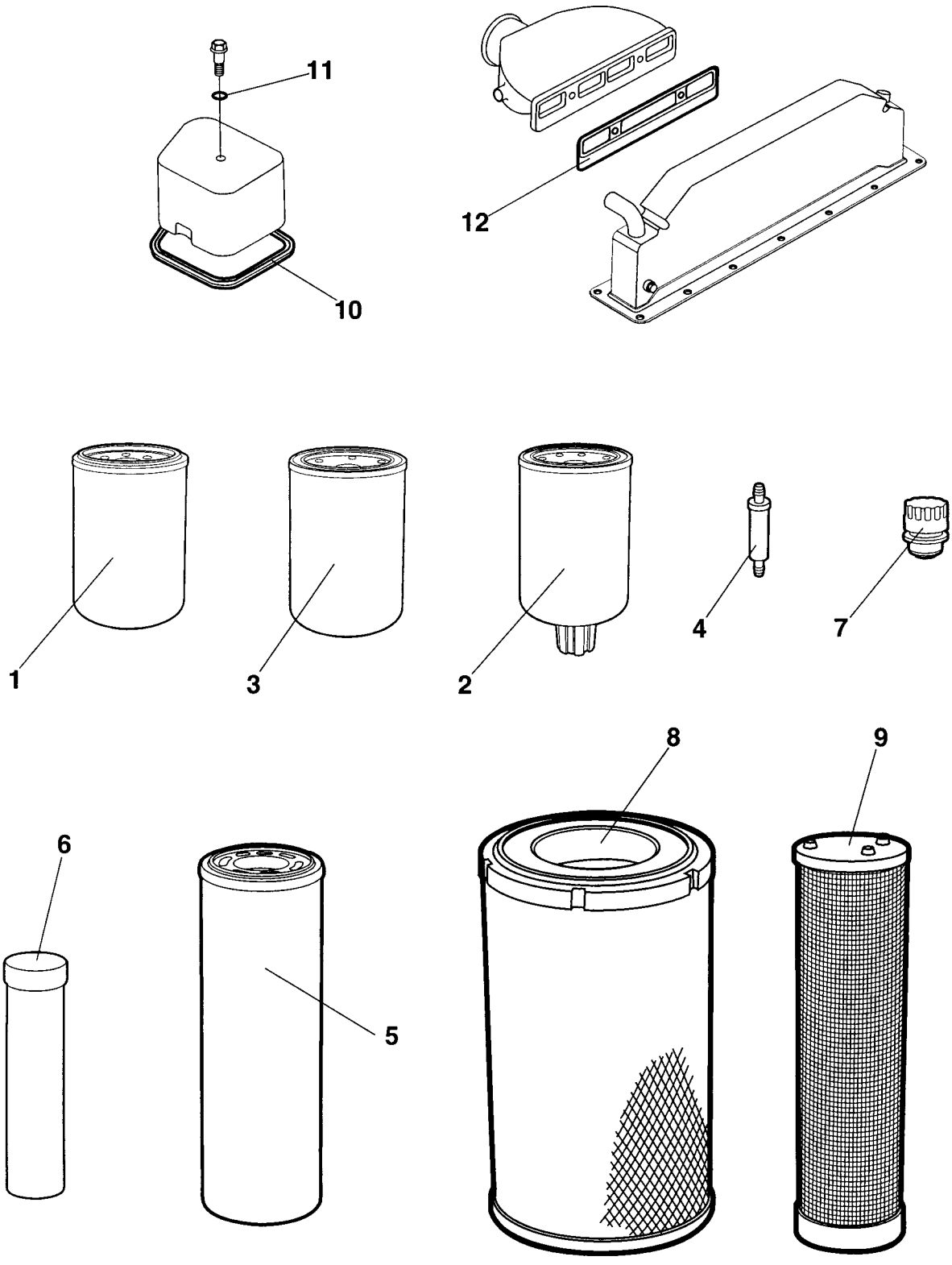

4700950197 Service kit 1000 h

Item	Part No	Rem	Qty	Description		Code
	4700950197			Service kit (Page 16)	1000 h	
1	4700212373		1	Oil filter		A
2	4700935969		1	Fuel filter w. waterseparator		A
5	4700372229		1	Hydraulic oil filter element		A
7	4700357138		1	Ventilating filter		A
8	4700394686		1	Air filter element, main		A
9	4700394687		1	Air filter element, safety		A
10	4700938514		4	Valve cover gasket		A
11	4700938516		4	Gasket		A
12	4700938517		1	Gasket, inlet pipe		

Repair kits

Item	Part No	Rem	Qty	Description	Code
5	4700938558			Steering hitch kit (Page 20)	
10	4700938894			Eccentric shaft kit (Page 22)	
20	4700938891			Drum rotation kit (Page 24)	
30	4700938877			Shock absorber kit, drum (Page 26)	

4700938558 Steering hitch kit

938558

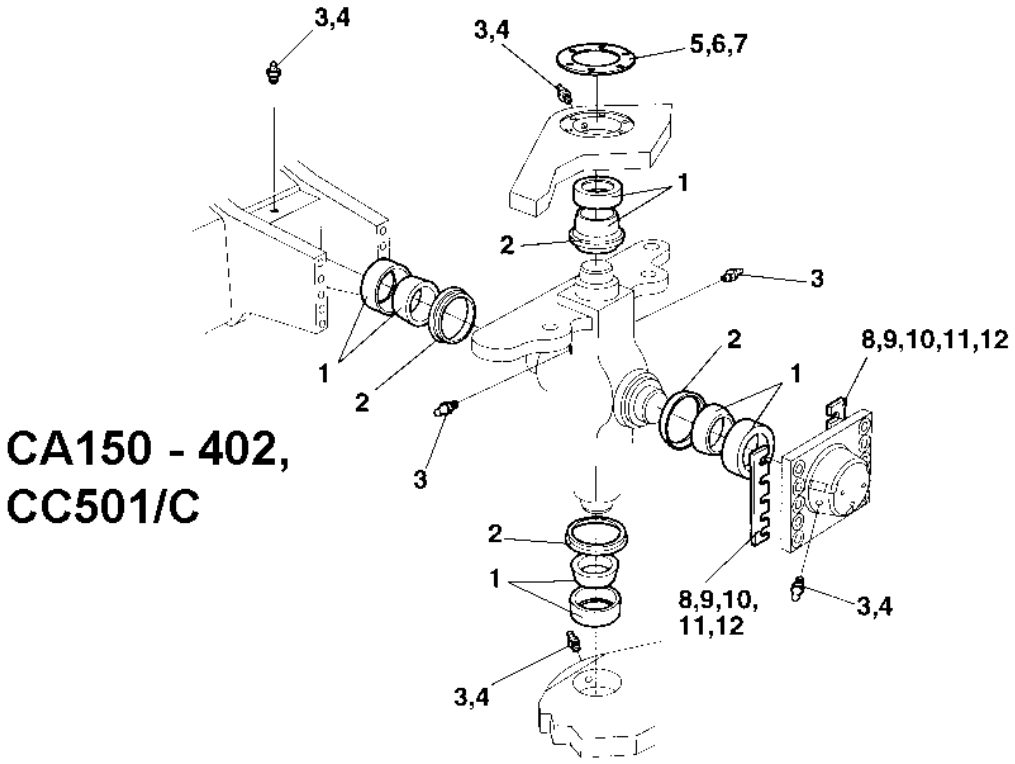

CA150 - 402, CC501/C

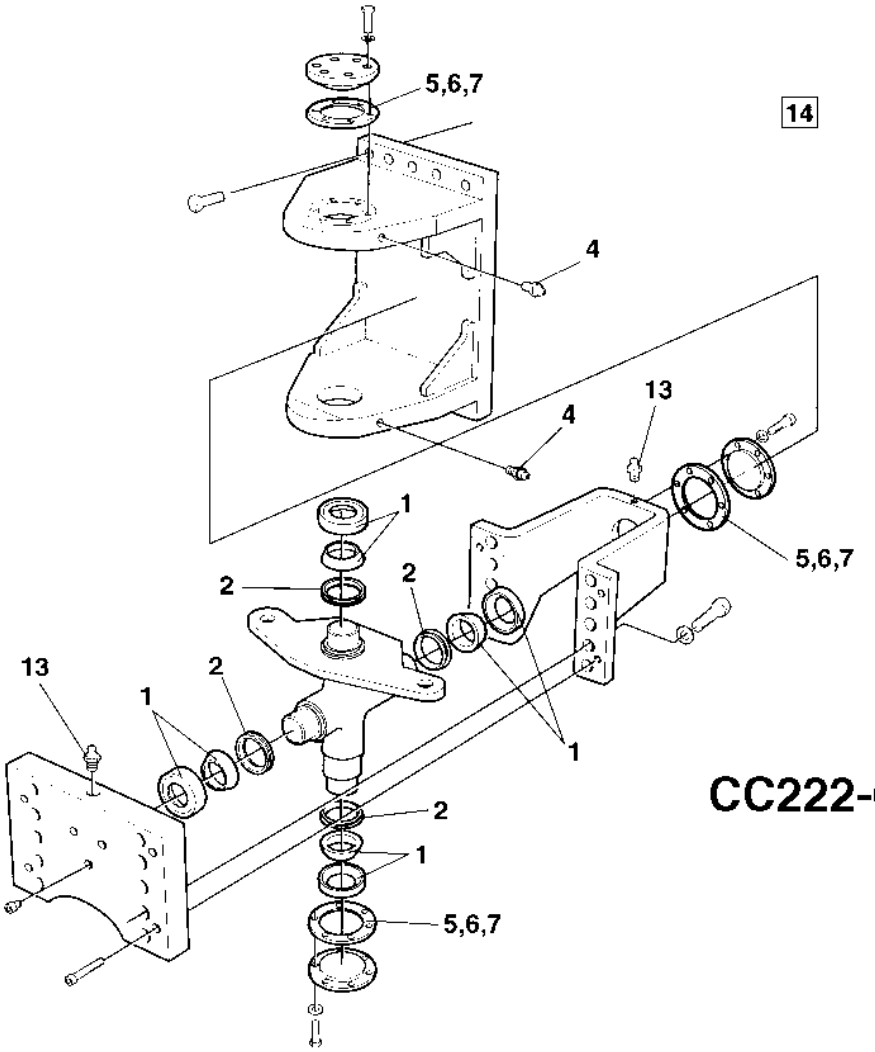

CC222-622/C

4700938558 Steering hitch kit

Item	Part No	Rem	Qty	Description		Code
	4700938558			Steering hitch kit (Page 20)		
1	4700100040		4	Axial ball bearing		D
2	4700167032		4	Lip-type oil seal		D
3	4700310008	2	3	Grease nipple		D
4	4700926214		2	Grease fitting		D
5	4700337045		3	Shim	T=1,0 mm	D
6	4700345874		3	Shim	T=0,35 mm	D
7	4700345875		3	Shim	T=0,10 mm	D
8	4700345871	1	2	Shim	T=1,0 mm	D
9	4700345872	1	2	Shim	T=0,35 mm	D
10	4700345873	1	2	Shim	T=0,10 mm	D
11	4700380993	1	2	Shim	T = 2,0 mm	D
12	4700384498	1	2	Shim	T = 0,15 mm	D
13	4700929863	3	1	Grease nipple		D
14	4700904663		1	Lube grease	" DYNAPAC special approved "	
15			1	Instructions		

1) Valid for CA150-402 and CC501/C
2) Valid for CC501/C
3) Valid for CC222/232/322/422/432/522/622/C

4700938894 Eccentric shaft kit

VALS3

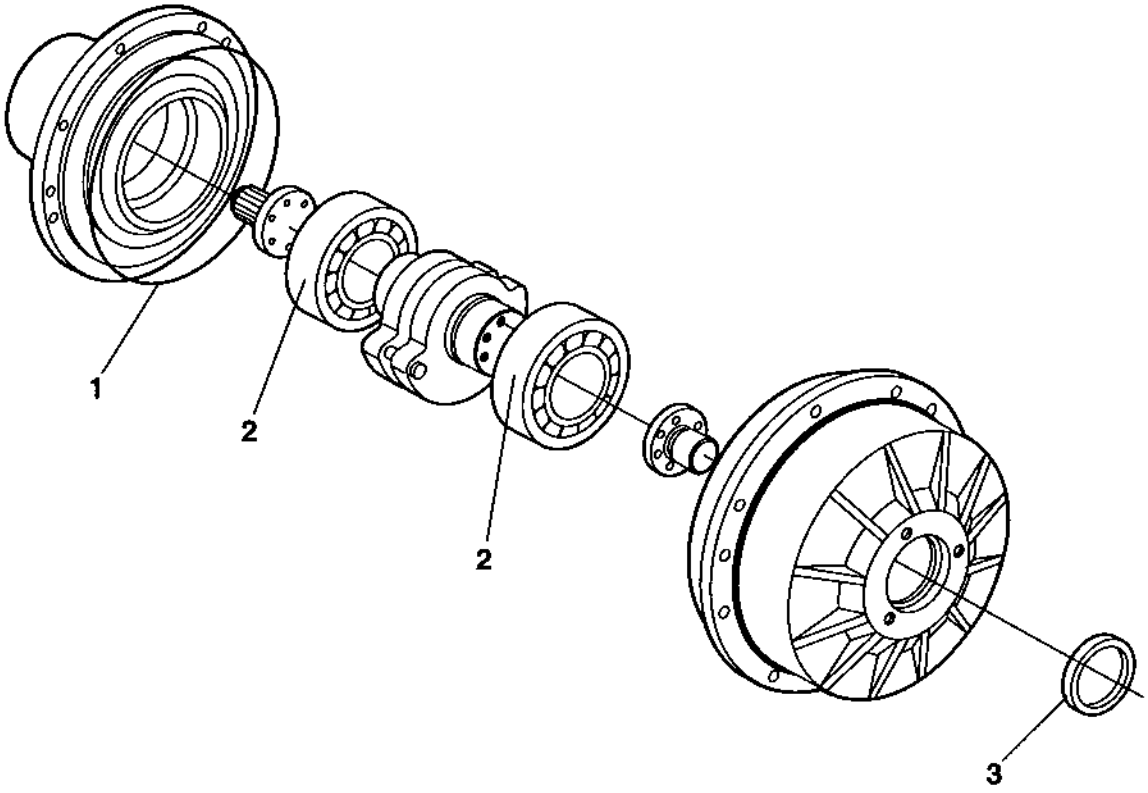

4700938894 Eccentric shaft kit

Item	Part No	Rem	Qty	Description	Code
	4700938894			Eccentric shaft kit (Page 22)	
1	4700900776		1	O-ring	D
2	4700900784		2	Cylinder roller bearing	
3	4700900782		1	Seal ring	D

4700938891 Drum rotation kit

RAMLAGER

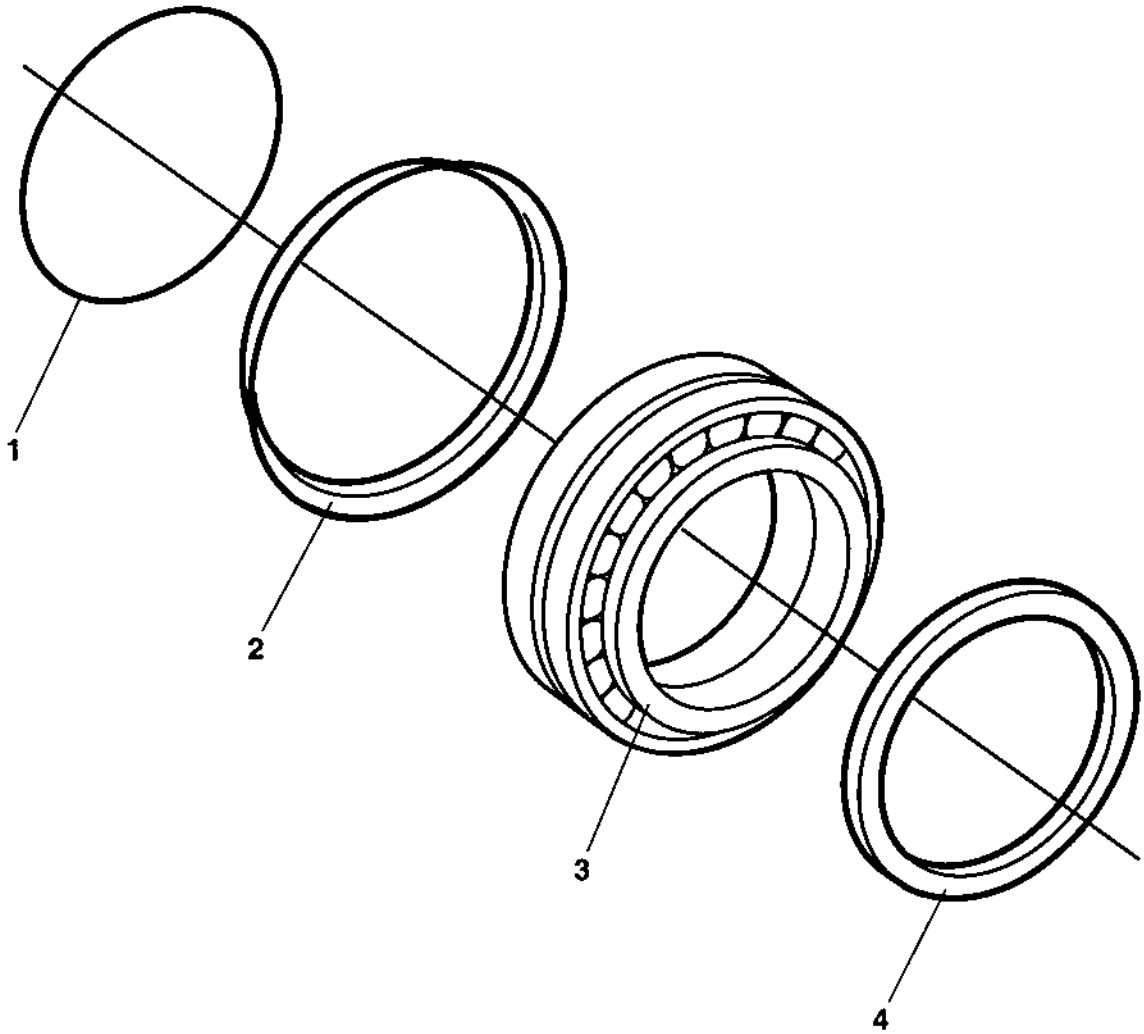

4700938891 Drum rotation kit

Item	Part No	Rem	Qty	Description	Code
	4700938891			Drum rotation kit (Page 24)	
1	4700160105		1	O-ring 70	D
2	4700929447		1	V-ring	D
3	4700116041		1	Taper roller bearing	D
4	4700386272		1	Sealing	D

4700938877 Shock absorber kit, drum

SHOCK ABSORB.

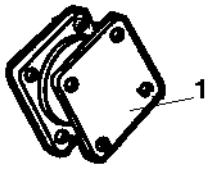

4700938877 Shock absorber kit, drum

Item	Part No	Rem	Qty	Description	Code
	4700938877			Shock absorber kit, drum (Page 26)	
1	4700801187		8	Shock absorber	B

Frame

Item	Part No	Rem	Qty	Description	Code
10				Frame (Page 30)	
20				Scraper Up to 65X20596 (Page 32)	
30				Scraper and beam From 65X20597 Up to 65X24499 (Page 34)	
35				Scraper and beam From 65X24500 (Page 36)	
40				Scrapers, Urethan Rubber Up to 65X20819 (P	Option3)
45				Scrapers, Urethan Rubber From 65X20820 Up	Option21750 (Page 40)
46				Scrapers, Urethan Rubber From 65X21751 (P	Option2)
50				Scrapers, Spring Steel Up to 65X20839 (Page	Option
55				Scrapers, Spring Steel From 65X20840 Up to	Option750 (Page 46)
56				Scrapers, Spring Steel From 65X21751 (Page	Option
60				Hitch (Page 50)	
70				Structure Up to 65X20481 (Page 52)	
75				Structure From 65X20482 Up to 65X23699 (Page 54)	
76				Structure From 65X23700 (Page 56)	
80				Side covers (Page 58)	Option
85				Noise suppression From 65X20800 (Page 60)	
90				Drum shroud From 65X21751 (Page 62)	Option

Frame

16934-1

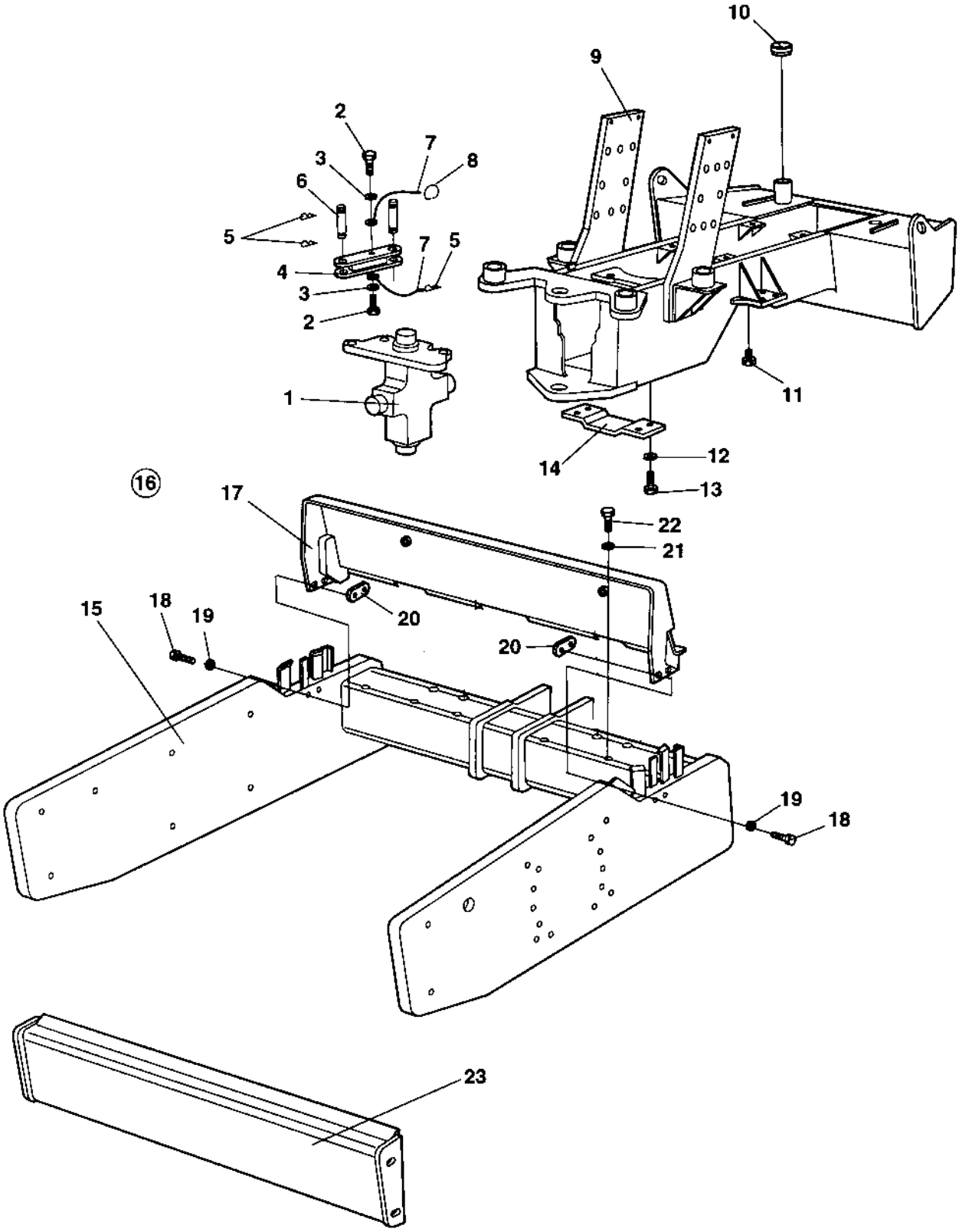

Frame

Item	Part No	Rem	Qty	Description		Code
1			1	Hitch (Page 50)		
2	4700500043		2	Screw	M10x16H 8,8	
3	4700904230		2	Washer		
4	4700374744		1	Safety rod		
5	4700635061		3	Hair clip		D
6	4700347119		2	Shaft		D
7	4700343775		2	Wire		
8	4700357488		1	Spring		
9	4700376334		1	Tractor frame Up to 65X21524		
	4700386812		1	Tractor frame From 65X21525 Up to 65X21969		
	4700378206		1	Tractor frame From 65X21970		
10	4700373460		1	Fuel cap		D
11	4700813391		1	Magnetic plug		D
12	4700904557		4	Washer		
13	4700500029		4	Screw		
14	4700372087		1	Protective plate		
15	4700380968		1	Drum frame Up to 65X20288		
	4700382850		1	Drum frame From 65X20289 Up to 65X20596		
	4700384066		1	Drum frame From 65X20597 Up to 65X21750		
	4700376701		1	Drum frame From 65X21751 Up to 65X24499		
	4700397126		1	Drum frame From 65X24500		
16			1	Drum shroud, cpl	Option	
17	4700372844	A	1	.Drum shroud Up to 65X21750		
18	4700500077		4	.Screw		
19	4700904230		4	.Washer		
20	4700376045		2	.Holder		
21	4700904557		4	.Washer		
22	4700500029		4	.Screw		
23			1	Scraper		

A) For new Drum shroud see section "Drum shroud Option".

Scraper

16975

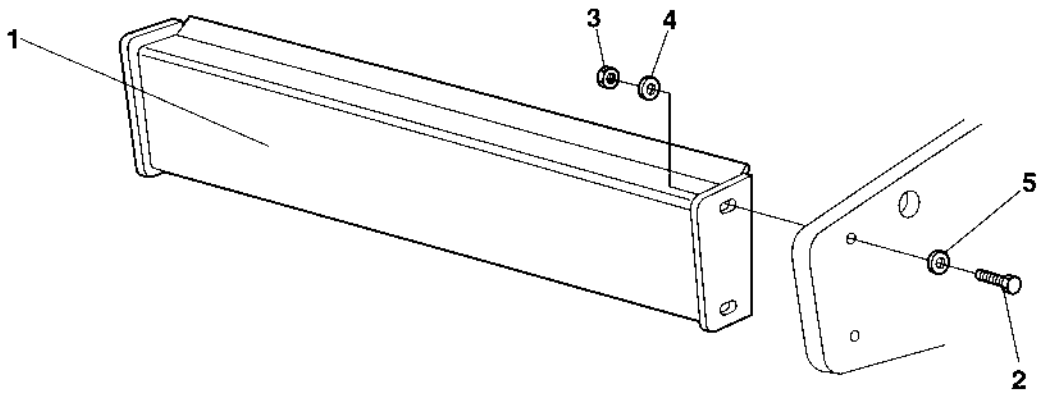

Scraper

Item	Part No	Rem	Qty	Description		Code
1	4700373350		1	Scraper		
2	4700500283		4	Screw	M24x120 8,8	
3	4700570016		4	Nut	M24	
4	4700904559		4	Washer	25x45x8	
5	4700904234		4	Washer	25x45x4	

Scraper and beam

17372

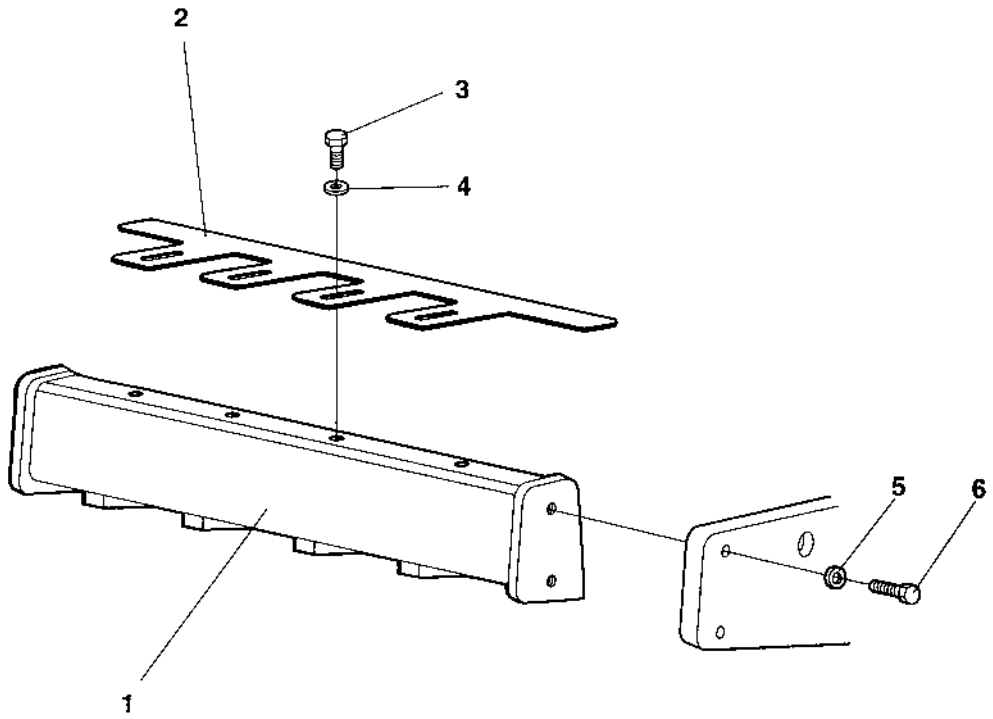

Scraper and beam

Item	Part No	Rem	Qty	Description	Code
1	4700382259		1	Cross beam Up to 65X21750	
	4700376667		1	Cross beam From 65X21751	
	4700382644	A	1	Cross beam Up to 65X21750	
	4700376652	A	1	Cross beam From 65X21751	
2	4700384048		1	Scraper	
3	4700500102		4	Screw	M16x45
4	4700904558		4	Washer	17X30X6 300HV
5	4700904234		4	Washer	25x45x4
6	4700900807		4	Screw	M24x120 10,9

A) Heavy beam, Option

Scraper and beam

17372

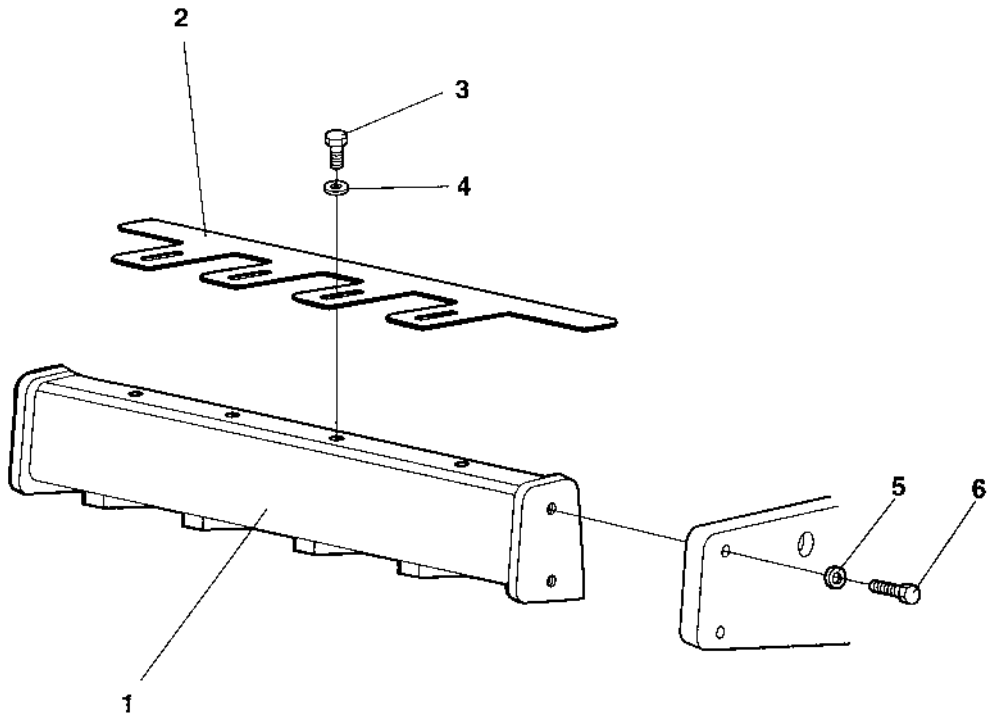

Scraper and beam

Item	Part No	Rem	Qty	Description	Code
1	4700376667		1	Cross beam	
	4700376652	A	1	Cross beam	
2	4700384048		1	Scraper	
3	4700500102		4	Screw	M16x45
4	4700904558		4	Washer	17X30X6 300HV
5	4700904234		4	Washer	25x45x4
6	4700928230		4	Screw	M24-3,0X90 10.9

A) Heavy beam, Option

Scrapers, Urethan Rubber Option

17032

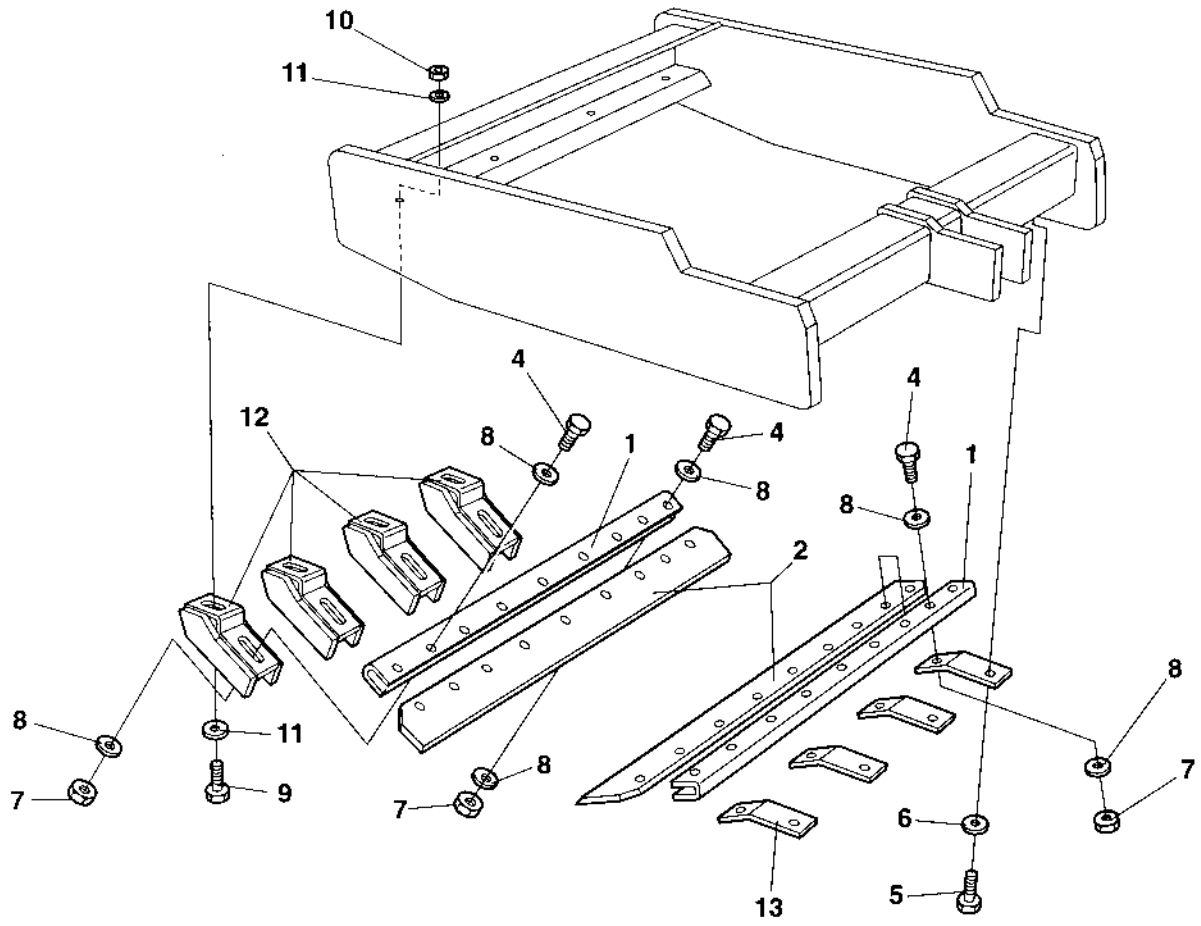

Scrapers, Urethan Rubber Option

Item	Part No	Rem	Qty	Description		Code
1	4700358034		2	Scraper bracket		
2	4700358033		2	Scraper blade		B
4	4700500195		18	Screw		
5	4700500123		4	Screw	M16x35	
6	4700904558		4	Washer	17X30X6 300HV	
7	4700586019		18	Lock nut		
8	4700904231		36	Washer	13x24x2 300 HV	
9	4700500070		4	Screw	M16x50	
10	4700586021		4	Nut	M16	
11	4700904558		8	Washer	17X30X6 300HV	
12	4700358027		4	Scraper bracket		
13	4700357630		4	Scraper bracket		

Scrapers, Urethan Rubber Option

17646

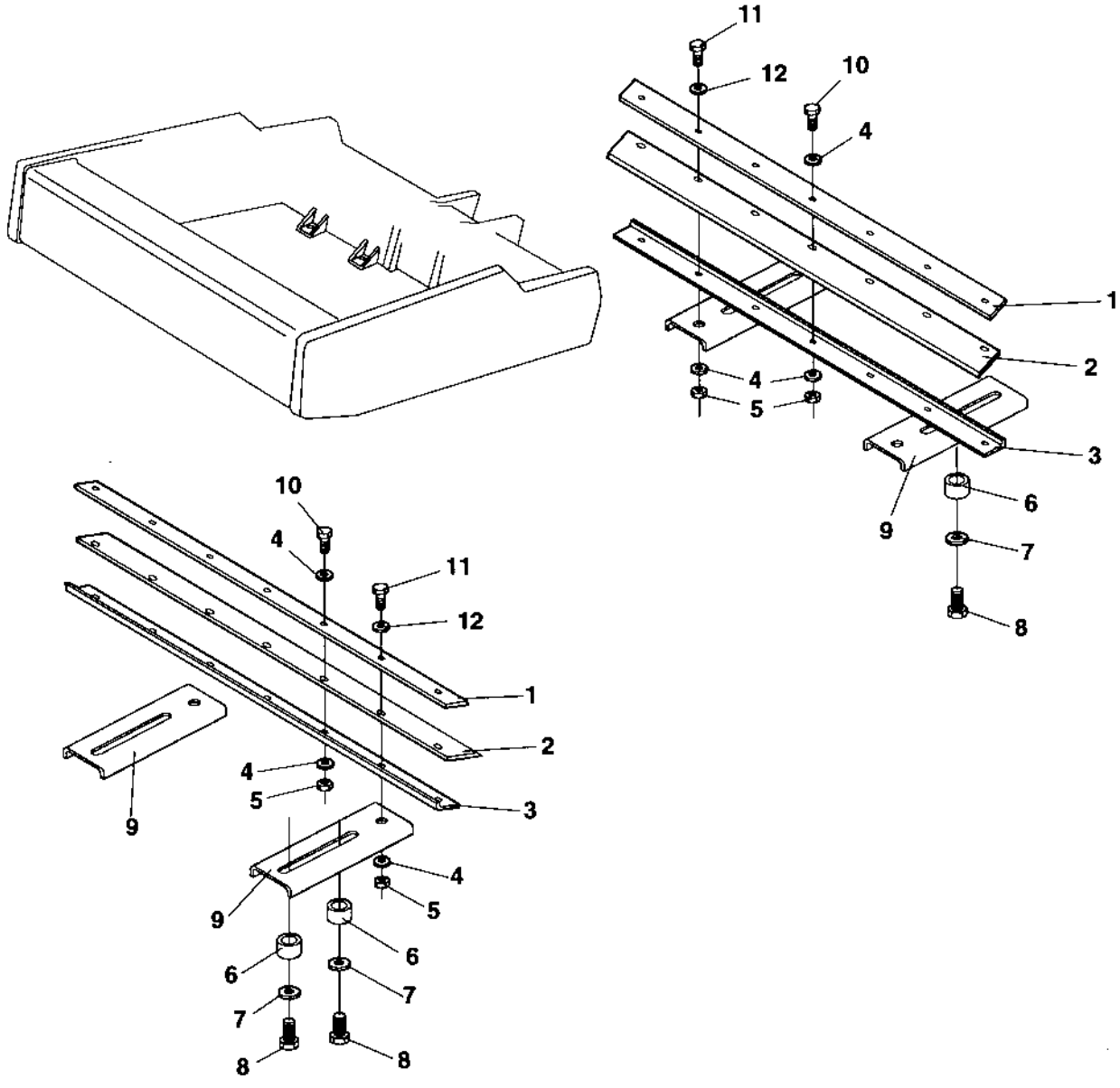

Scrapers, Urethan Rubber Option

Item	Part No	Rem	Qty	Description		Code
1	4700384052		2	Scraper bracket		
2	4700358033		2	Scraper blade		B
3	4700384051		2	Scraper bracket		
4	4700904231		28	Washer	13x24x2 300 HV	
5	4700586019		18	Lock nut		
6	4700384114		16	Spacer		
7	4700904232		16	Washer		
8	4700500070		16	Screw	M16x50	
9	4700383863		8	Scraper bracket		
10	4700500056		10	Screw		
11	4700500111		8	Screw	M12x55 8,8	
12	4700904231		8	Washer	13x24x2 300 HV	

Scrapers, Urethan Rubber Option

18014

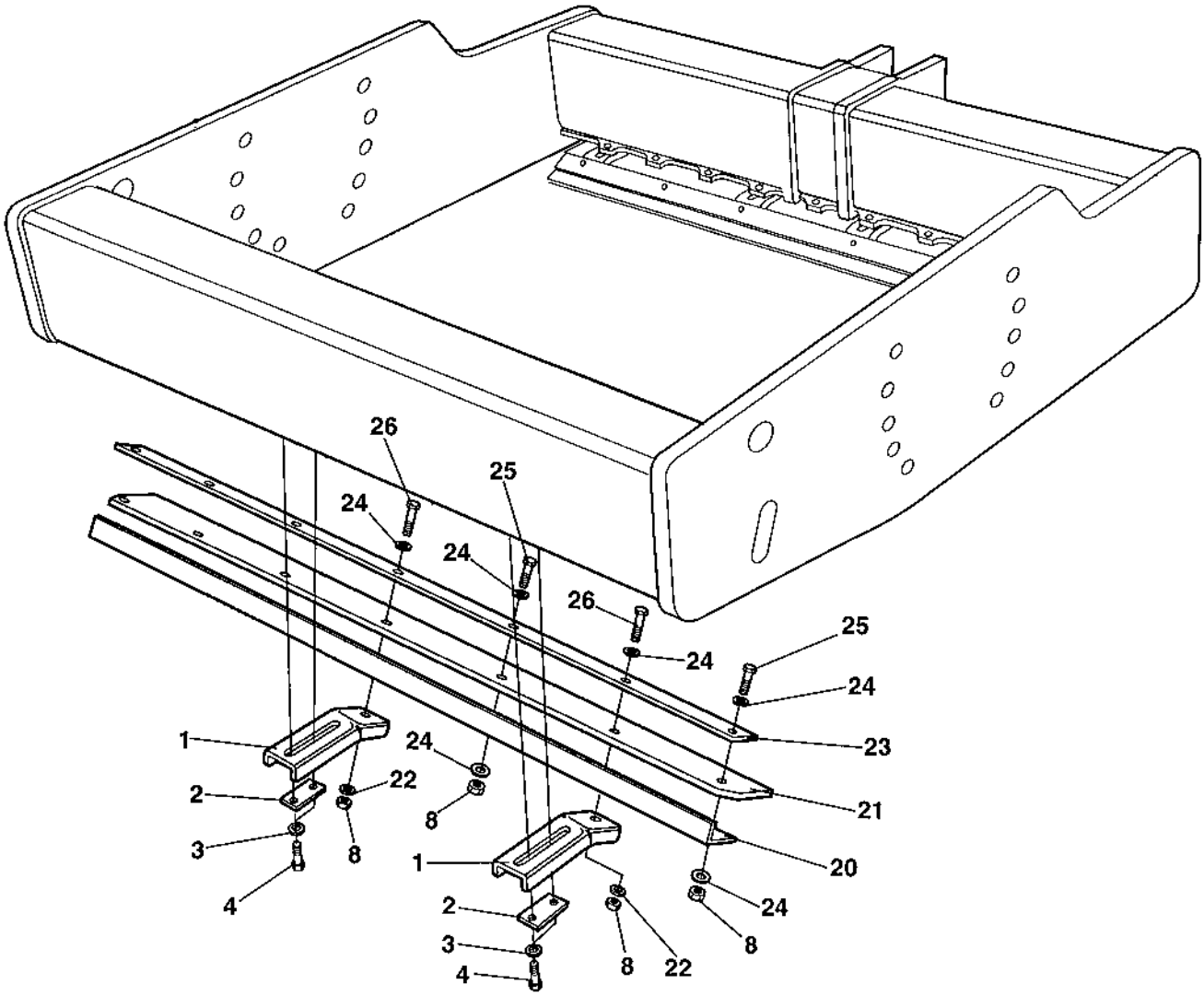

Scrapers, Urethan Rubber Option

Item	Part No	Rem	Qty	Description		Code
1	4700376819	A	8	Scraper bracket		
2	4700376622	A	8	Holder		
3	4700904232		16	Washer		
4	4700500076		16	Screw	M16x55	
8	4700586019		18	Lock nut		
20	4700376825	A	2	Scraper bracket		
21	4700358033	A	2	Scraper blade		B
22	4700904213		8	Washer		
23	4700376826	A	2	Scraper bracket		
24	4700904231		28	Washer	13x24x2 300 HV	
25	4700500056		10	Screw		
26	4700500049		8	Screw		

A) Mounted on the front and rear of the drum.

Scrapers, Spring Steel Option

17033

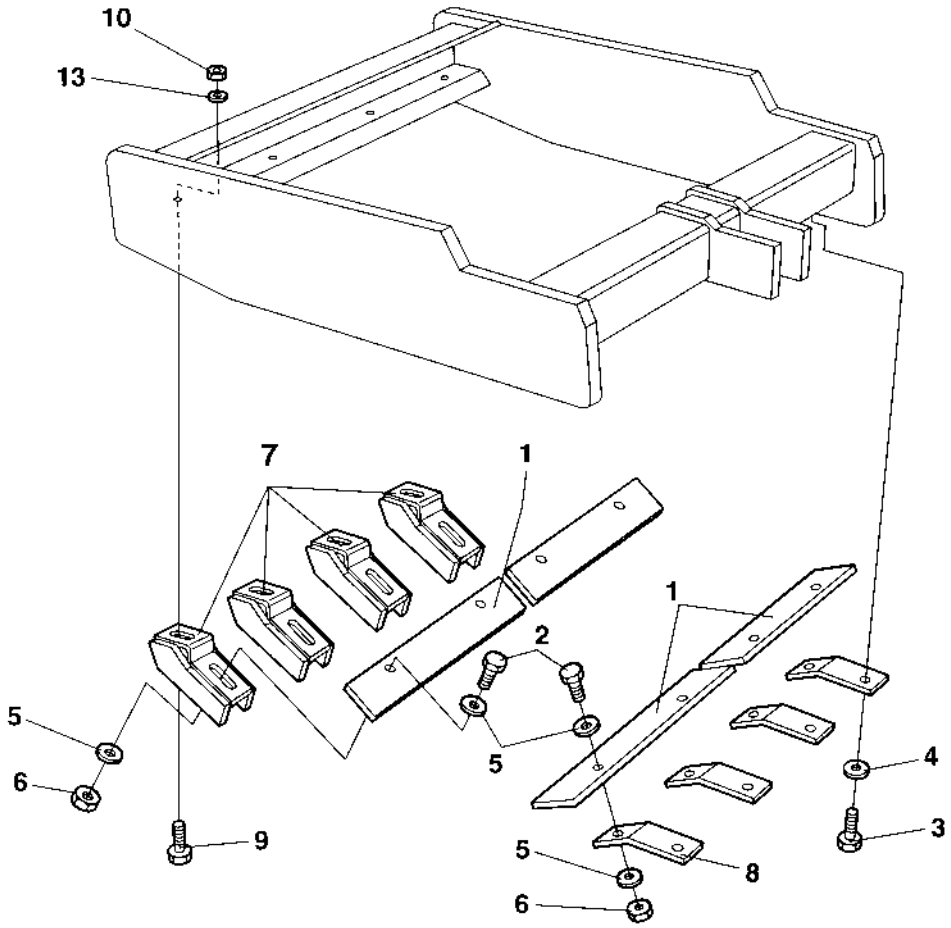

Scrapers, Spring Steel Option

Item	Part No	Rem	Qty	Description		Code
1	4700341124		4	Scraper blade Up to 65		B
	4700381603		4	Scraper blade From 65 ECN 99801		B
2	4700904342		8	Screw	M12x45	
3	4700500123		4	Screw	M16x35	
4	4700904558		8	Washer	17X30X6 300HV	
5	4700904213		16	Washer		
6	4700586019		8	Lock nut		
7	4700358027		4	Scraper bracket		
8	4700357630		4	Scraper bracket		
9	4700500134		4	Screw		
10	4700586021		4	Nut	M16	
13	4700904232		4	Washer		

Scrapers, Spring Steel Option

17543

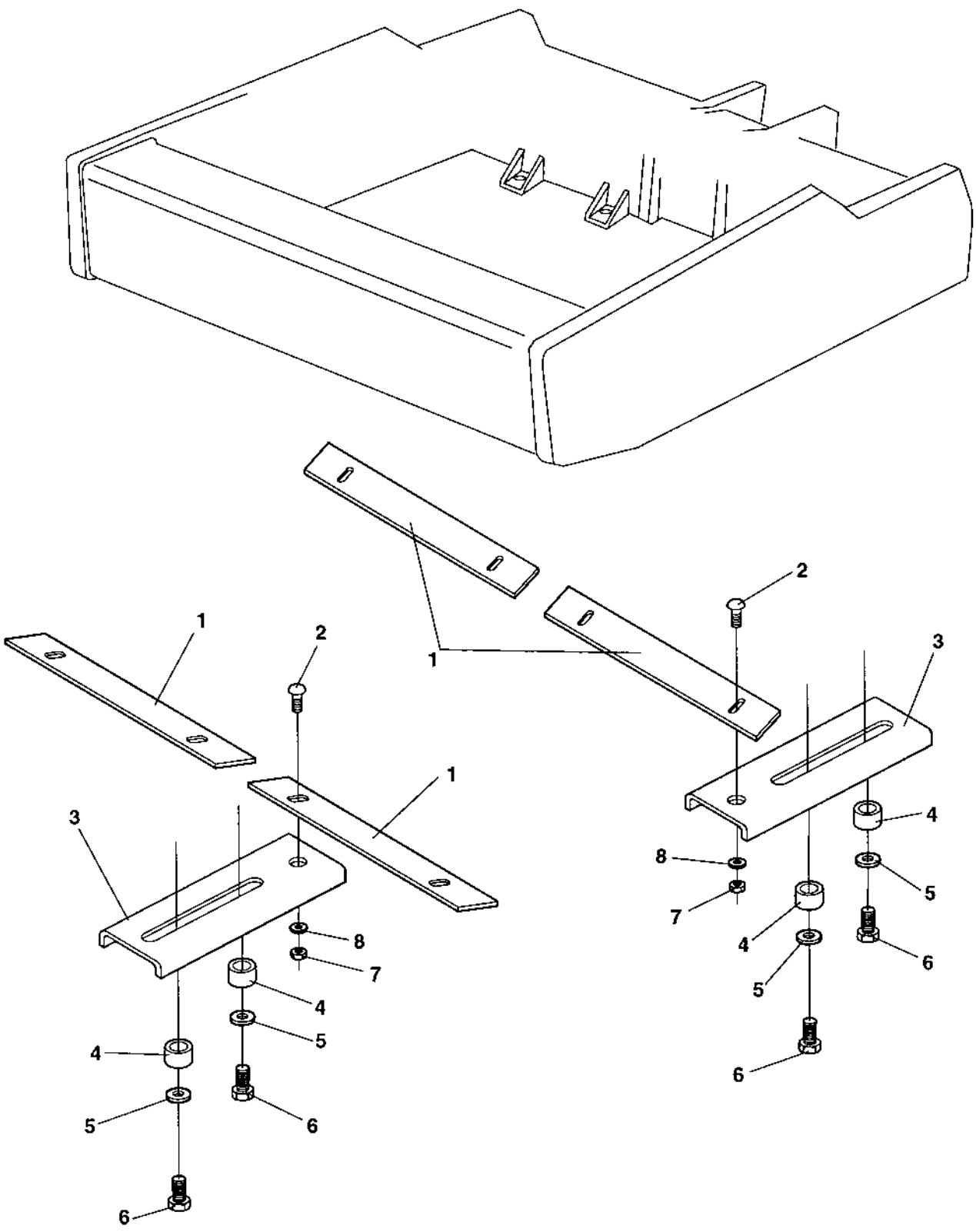

Scrapers, Spring Steel Option

Item	Part No	Rem	Qty	Description		Code
1	4700381603		4	Scraper blade		B
2	4700791227		8	Screw	M12x40	
3	4700383863		8	Scraper bracket		
4	4700384114		16	Spacer		
5	4700904232		16	Washer		
6	4700500070		16	Screw	M16x50	
7	4700586019		8	Lock nut		
8	4700904703		8	Washer		

Scrapers, Spring Steel Option

18012

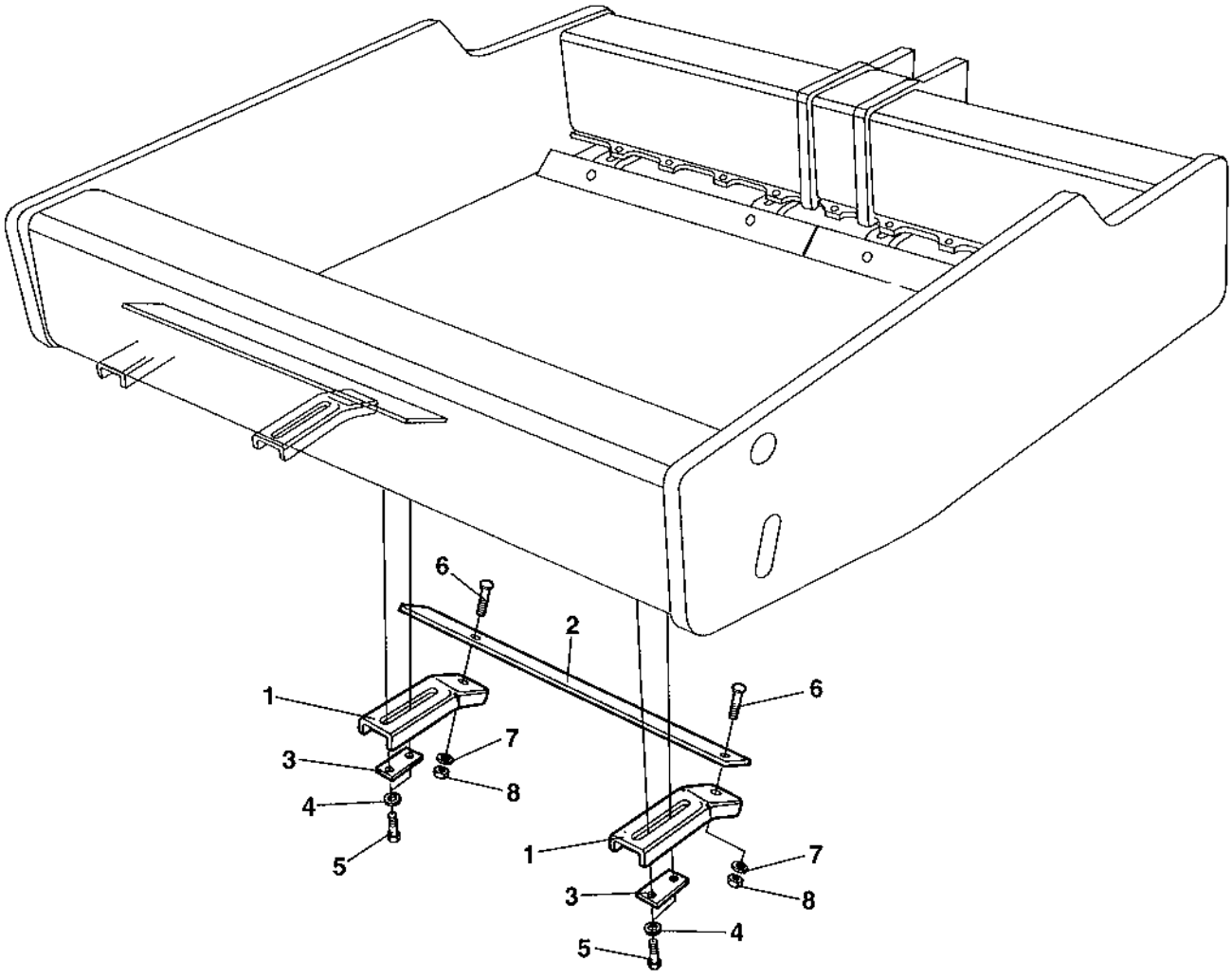

Scrapers, Spring Steel Option

Item	Part No	Rem	Qty	Description	Code
1	4700376819		8	Scraper bracket	
2	4700376829		4	Scraper	
3	4700376622		8	Holder	
4	4700904232		16	Washer	
5	4700500076		16	Screw	M16x55
6	4700791948	A	8	Bolt	M12x40H 8,8
7	4700904703		8	Washer	
8	4700586019		8	Lock nut	

A) Cup square neck bolt.

Hitch

16083

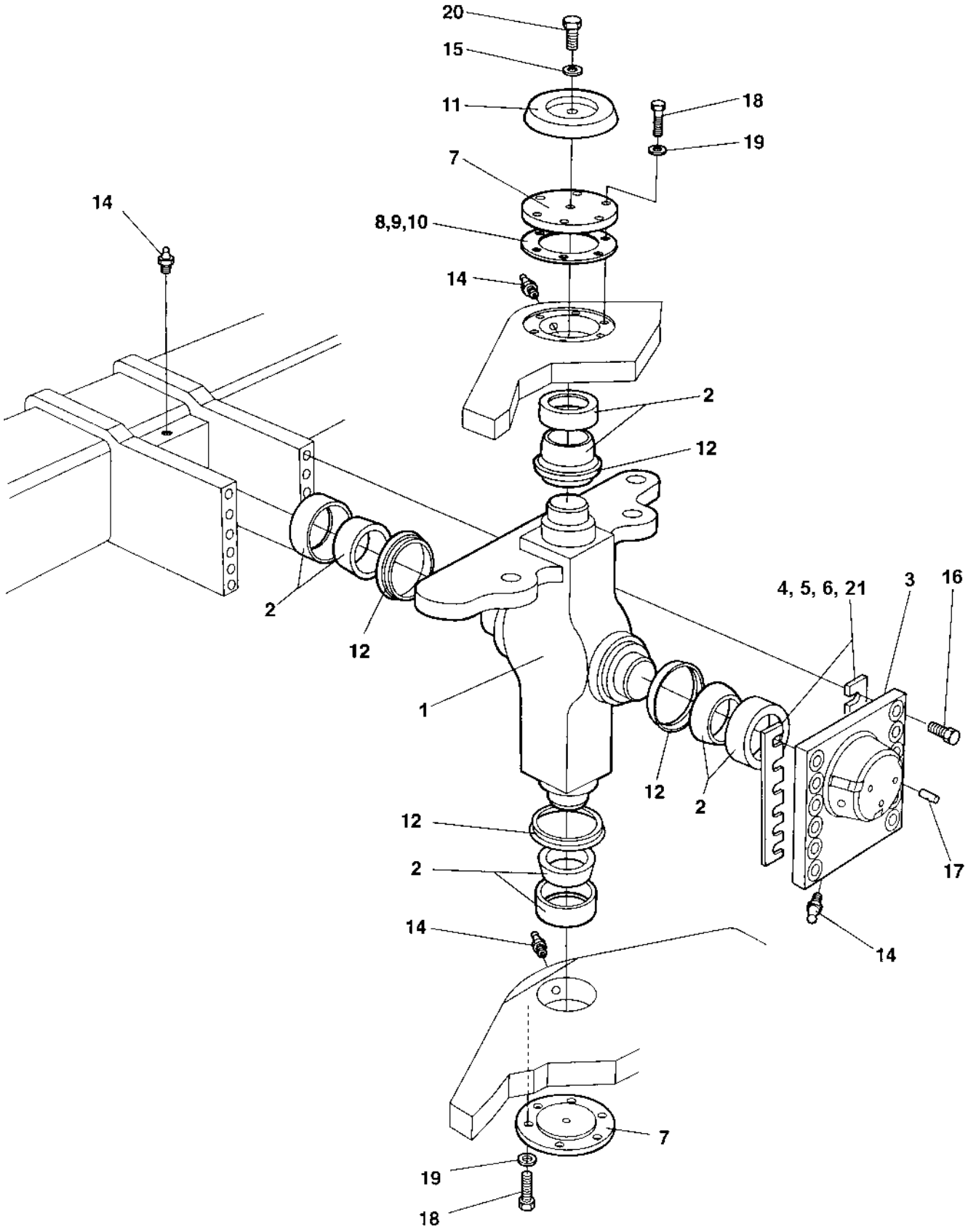
20
15
11
18
19
7
8,9,10
14
14
2
12
2
12
1
4, 5, 6, 21
3
16
12
2
17
12
2
14
14
7
19
18

Hitch

Item	Part No	Rem	Qty	Description		Code
1	4700374900		1	Hitch		
2	4700100040		4	Axial ball bearing		D
3	4700373421		1	Bearing cover		
4	4700345871		N	Shim	T=1,0 mm	D
5	4700345872		N	Shim	T=0,35 mm	D
6	4700345873		N	Shim	T=0,10 mm	D
7	4700337042		2	Bearing cover		
8	4700337045		N	Shim	T=1,0 mm	D
9	4700345874		N	Shim	T=0,35 mm	D
10	4700345875		N	Shim	T=0,10 mm	D
11	4700343159		1	Cover		
12	4700167032		4	Lip-type oil seal		D
14	4700926214		4	Grease fitting		D
15	4700904229		1	Washer	8,4x16x1,5	
16	4700500287		12	Screw	M20x80 10,9	
	4700925208		12	Screw	M20x90	
17	4700910995		3	Stop screw		
18	4700500037		12	Screw		
19	4700904231		12	Washer	13x24x2 300 HV	
20	4700500018		1	Screw	M8-1,25x12 8,8	
21	4700380993		N	Shim	T = 2,0 mm	D
	4700384498		N	Shim	T = 0,15 mm	D

Structure

16939-1

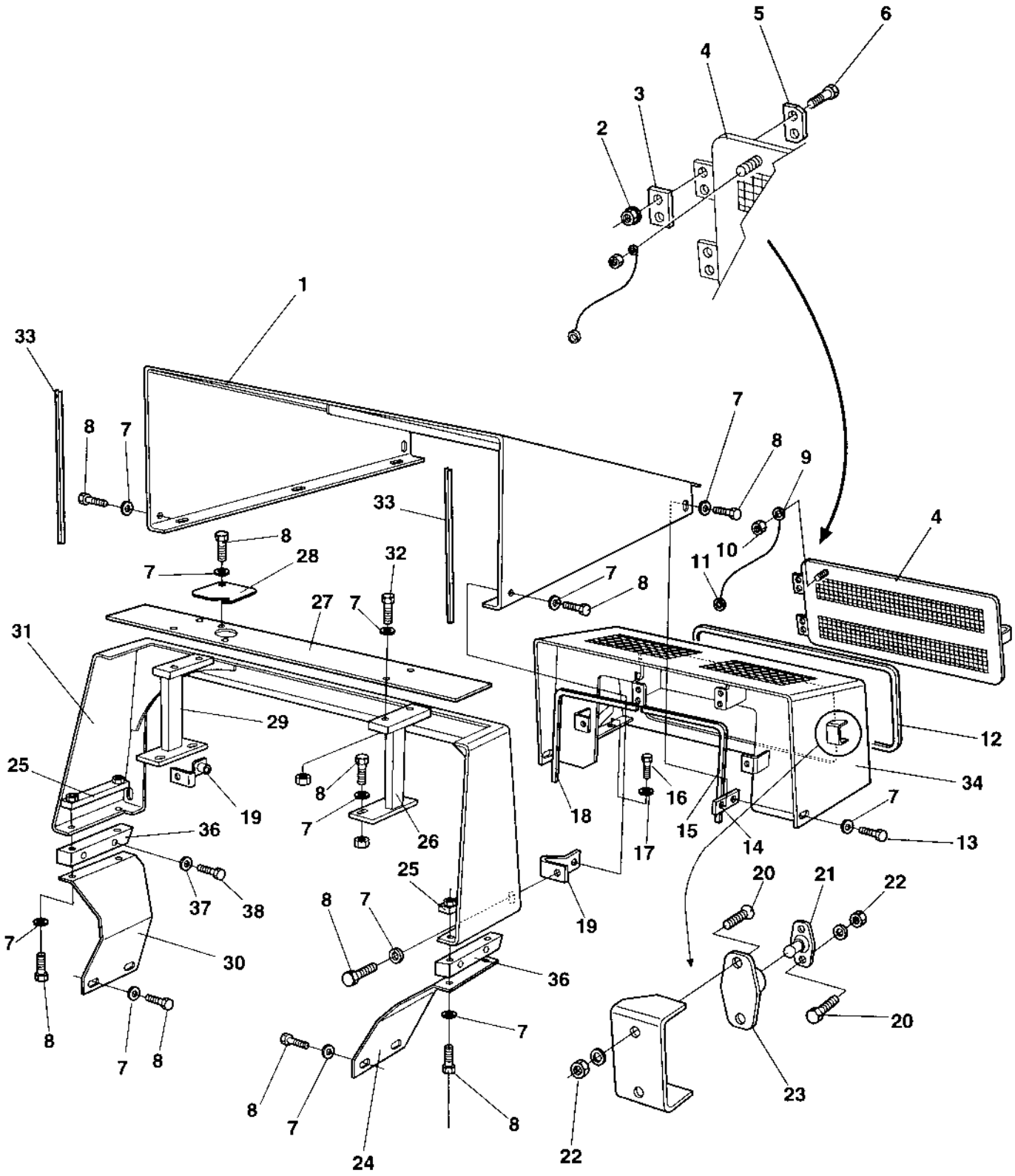

Structure

Item	Part No	Rem	Qty	Description		Code
1	4700380047		1	Engine hood		
2	4700902285		4	Lock nut	M6	
3	4700380755		2	Holder		
4	4700380005		1	Rear cover		
5	4700380012		2	Holder		
6	4700924875		4	Screw		
7	4700904640		29	Washer	8,4x22x3	
8	4700500022		19	Screw	M8x30H 8.8 A2K	
9	4700928381		2	Washer	6,4x18x1,6	
10	4700586002		2	Lock nut		
11	4700381446		1	Wire		
12	4700202028	A	1	Edge trim		
13	4700500053		6	Screw	M8x20H 8.8	
14	4700380109		2	Holder		
15	4700902166	B	1	Edge trim		
16	4700500030		4	Screw		
17	4700904230		4	Washer		
18	4700902166	C	1	Edge trim		
19	4700376366		2	Holder		
20	4700904504		4	Screw	M5 x 18	
21	4700450067		1	Door bumper		D
22	4700902284		4	Nut	M5	
23	4700450066		1	Door bumper		D
24	4700381347		1	Holder		
25	4700381330		2	Holder		
26	4700376349		1	Holder, left		
27	4700376354		1	Cover		
28	4700381297		1	Cover		
29	4700376348		1	Holder, right		
30	4700381348		1	Holder		
31	4700376340		1	Protecting cover		
32	4700500047		4	Screw		
33	4700902166	D	2	Edge trim		
34	4700376346		1	Hood		
36	4700381989		2	Holder		
37	4700904231		4	Washer	13x24x2 300 HV	
38	4700500133		4	Screw		

A) L=2500 mm
B) B=1200 mm
C) L= 750 mm
D) L=460 mm

Structure

17269-1

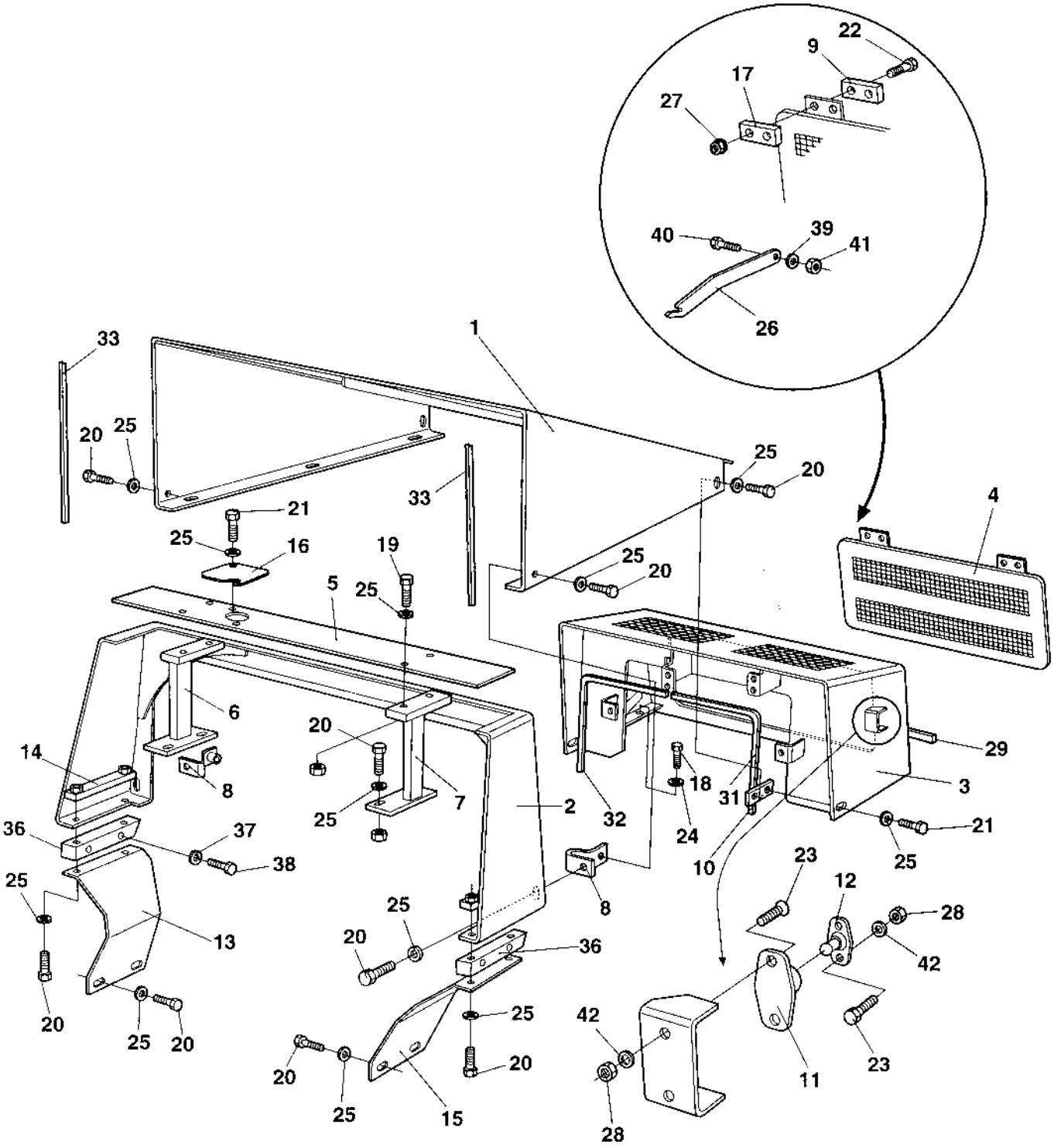

Structure

Item	Part No	Rem	Qty	Description		Code
1	4700380047		1	Engine hood Up to 65X21172		
	4700386500		1	Engine hood From 65X21173		
2	4700376340		1	Protecting cover		
3	4700382429		1	Hood Up to 65X21524		
	4700386814		1	Hood From 65X21525		
	4700791475	F	2	.Grommet From 65X21525		
4	4700382406		1	Rear cover		
5	4700376354		1	Cover		
6	4700376348		1	Holder, right		
7	4700376349		1	Holder, left		
8	4700376366		2	Holder		
9	4700380755		2	Holder		
10	4700380109		2	Holder		
11	4700450066		2	Door bumper		D
12	4700450067		2	Door bumper		D
13	4700381348		1	Holder		
14	4700381330		2	Holder		
15	4700381347		1	Holder		
16	4700381297		1	Cover		
17	4700380012		2	Holder		
18	4700500030		4	Screw Up to 65X21524		
	4700500031		4	Screw From 65X21525		
19	4700500047		4	Screw		
20	4700500022		19	Screw	M8x30H 8.8 A2K	
21	4700500053		6	Screw	M8x20H 8.8	
	4700500021		2	Screw	M8-1,25x25 8.8	
22	4700924875		4	Screw		
23	4700904504		8	Screw	M5 x 18	
24	4700904230		4	Washer Up to 65X21524		
	4700904557		4	Washer From 65X21525		
25	4700904640		31	Washer	8,4x22x3	
26	4700382411		1	Hook		
27	4700902285		4	Lock nut	M6	
28	4700586011		8	Lock nut	3/8 UNF	
29	4700902379	A	1	Edge trim		
31	4700902166	B	1	Edge trim		
32	4700902166	C	1	Edge trim		
33	4700902166	D	2	Edge trim		
36	4700381989		2	Holder		
37	4700904231		4	Washer	13x24x2 300 HV	
38	4700500133		4	Screw		
39	4700904228		2	Washer		
40	4700500040		1	Screw	M6-1x20 8,8	
41	4700586002		1	Lock nut		
42	4700904281		8	Washer		

A) L=330 mm
B) L=1200 mm
C) L=750 mm
D) L=460 mm
F) With membrane

Structure

18485-1

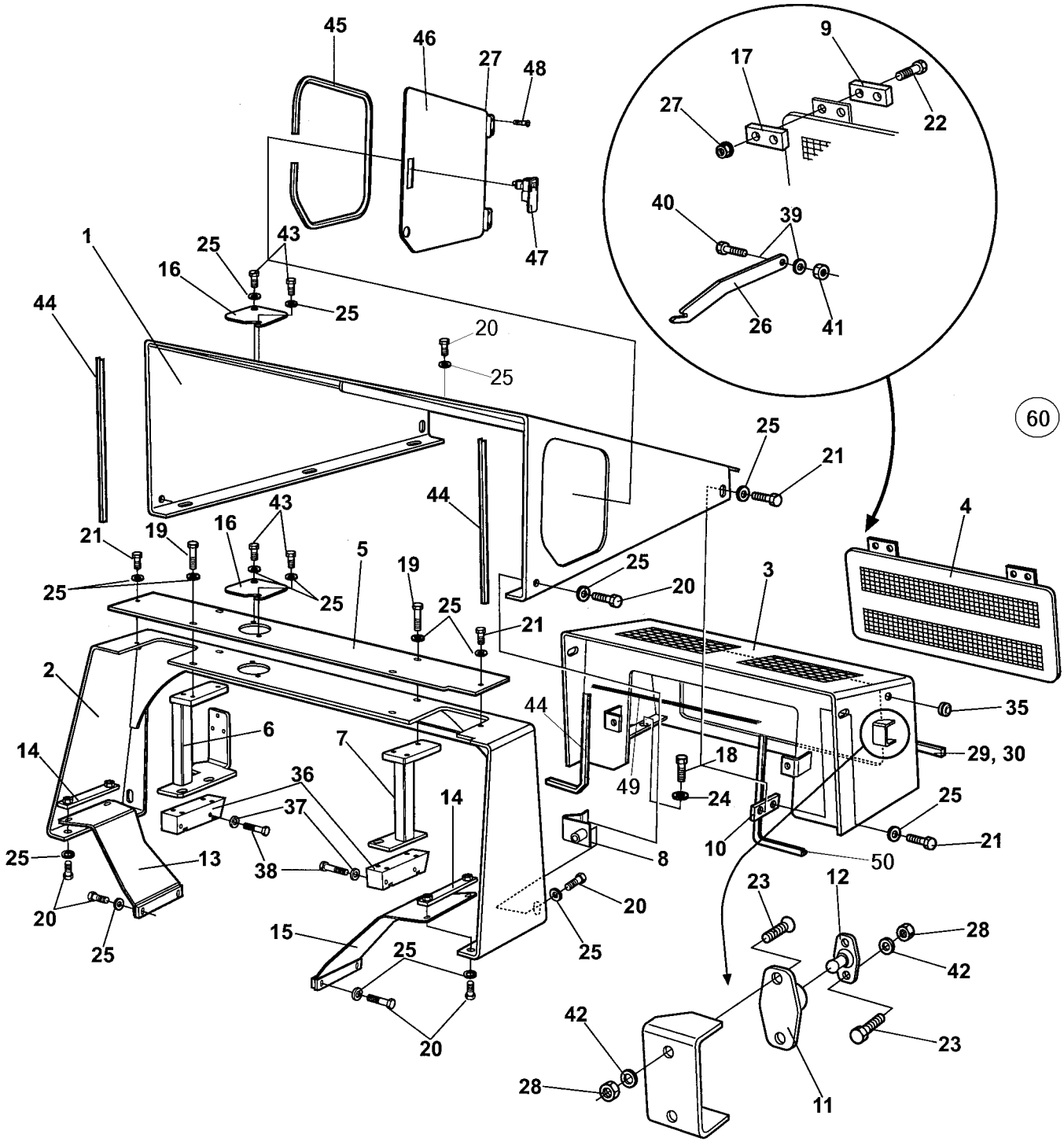

Structure

Item	Part No	Rem	Qty	Description		Code
1	4700392911		1	Hood		
2	4700376340		1	Protecting cover		
3	4700392912	H	1	Hood		
4	4700382406	H	1	Rear cover		
5	4700376354		1	Cover		
6	4700392786		1	Holder, right		
7	4700376349		1	Holder, left		
8	4700376366		2	Holder		
9	4700380755	H	2	Holder		
10	4700380109		2	Holder		
11	4700450066	H	2	Door bumper		D
12	4700450067	H	2	Door bumper		D
13	4700381348		1	Holder		
14	4700381330		2	Holder		
15	4700381347		1	Holder		
16	4700381297		2	Cover		
17	4700380012	H	2	Holder		
18	4700500031		4	Screw		
19	4700500047		4	Screw		
20	4700500022		19	Screw	M8x30H 8.8 A2K	
21	4700500053		6	Screw	M8x20H 8.8	
22	4700924875	H	4	Screw		
23	4700904504	H	8	Screw	M5 x 18	
24	4700904557		4	Washer		
25	4700904640		34	Washer	8,4x22x3	
26	4700382411		1	Hook		
27	4700902285	H	8	Lock nut	M6	
28	4700586001	H	8	Lock nut		
29	4700902379	B	1XL	Edge trim		
30	4700902379	C	1XL	Edge trim		
35	4700791475	A	2	Grommet		
36	4700381989		2	Holder		
37	4700904231		4	Washer	13x24x2 300 HV	
38	4700500133		4	Screw		
39	4700904228		2	Washer		
40	4700500040		1	Screw	M6-1x20 8,8	
41	4700586002		1	Lock nut		
42	4700904281	H	8	Washer		
43	4700500021		4	Screw	M8-1,25x25 8.8	
44	4700902166	E,E	1XL	Edge trim		
45	4700902379	D	1XL	Edge trim		
46	4700393857		1	Cover		
47	4700792549		1	Lock		
48	4700513012		4	Screw	M6x20 10,9	
49	4700791597	F	1XL	Rubber strip		
50	4700902166	G	1XL	Edge trim		
60	4700950398	I	1	Engine hood Cpl		

A) With membrane
B) L=0,330M
C) L=0,550M
D) L=1,240M
E) L=0,690M
F) L=0,660M
G) L=0,700M
H) Included in item 60 Engine hood Cpl.
I) Consists of all items marked "H".

Side covers Option

16958

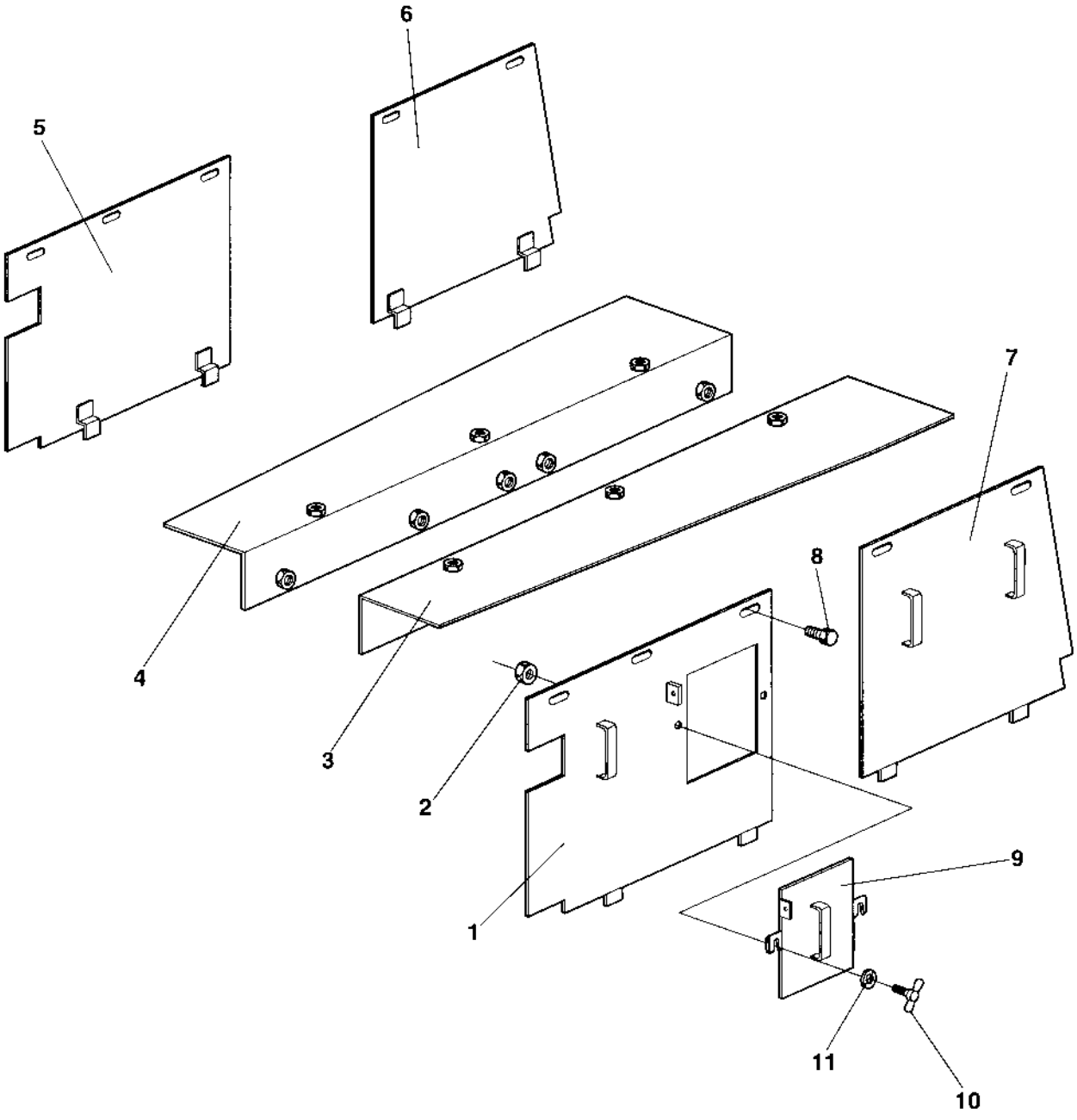

Side covers Option

Item	Part No	Rem	Qty	Description		Code
1	4700380053		1	Side cover, right		
2	4700586003		2	Lock nut	M8	
3	4700387089		1	Holder, right		
4	4700387090		1	Holder, left		
5	4700380058		1	Side cover, left		
6	4700380057		1	Side cover, left		
7	4700380052		1	Side cover, right		
8	4700500053		16	Screw	M8x20H 8.8	
9	4700381033		1	Cover		
10	4700904718		2	Wing screw		
11	4700904640		18	Washer	8,4x22x3	

Noise suppression

18299

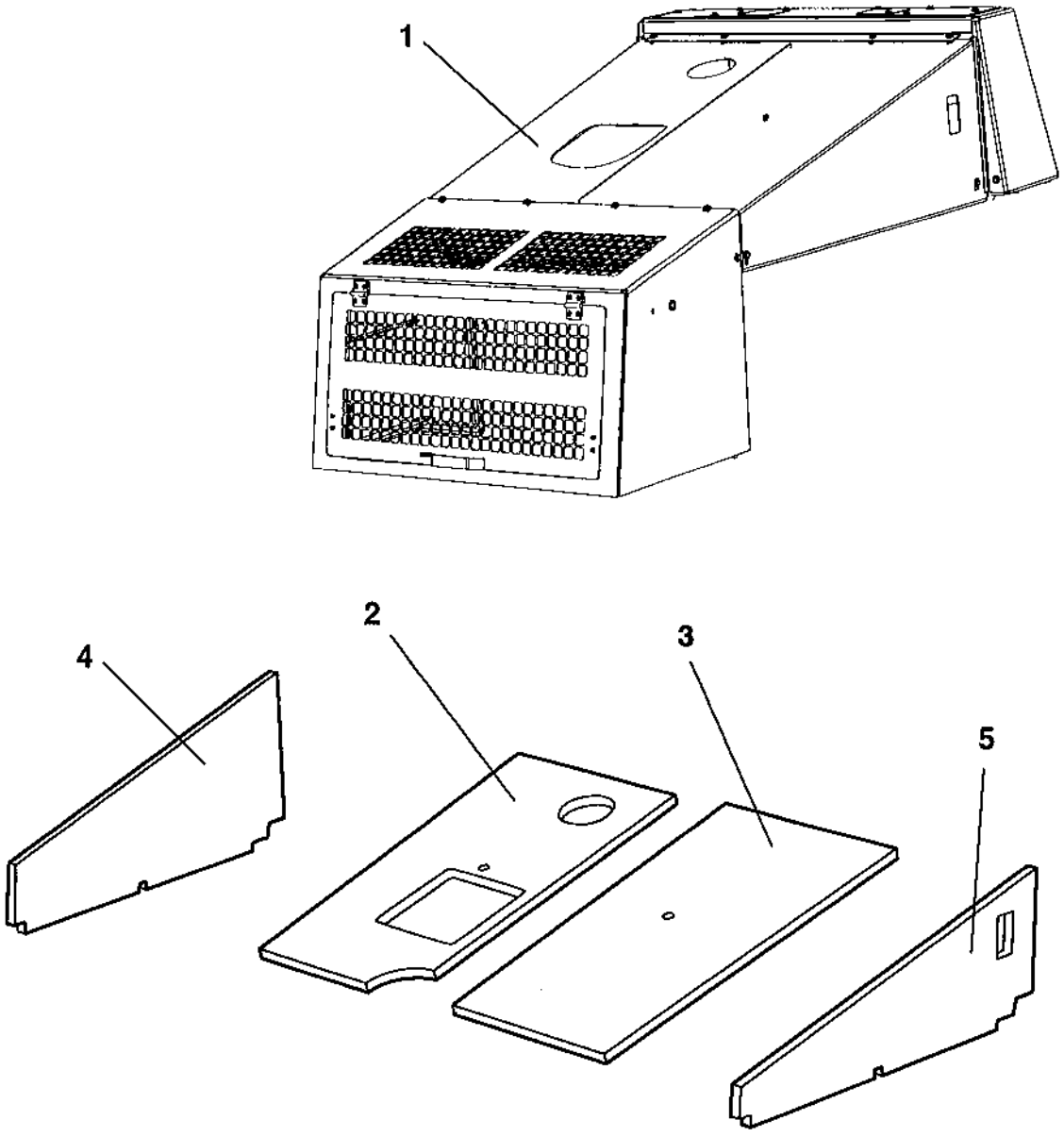

Noise suppression

Item	Part No	Rem	Qty	Description	Code
1			1	Hood	
2	4700390479		1	Noise suppression	
3	4700390478		1	Noise suppression	
4	4700390481		1	Noise suppression	
5	4700390480		1	Noise suppression	
			1		

Drum shroud Option

18169

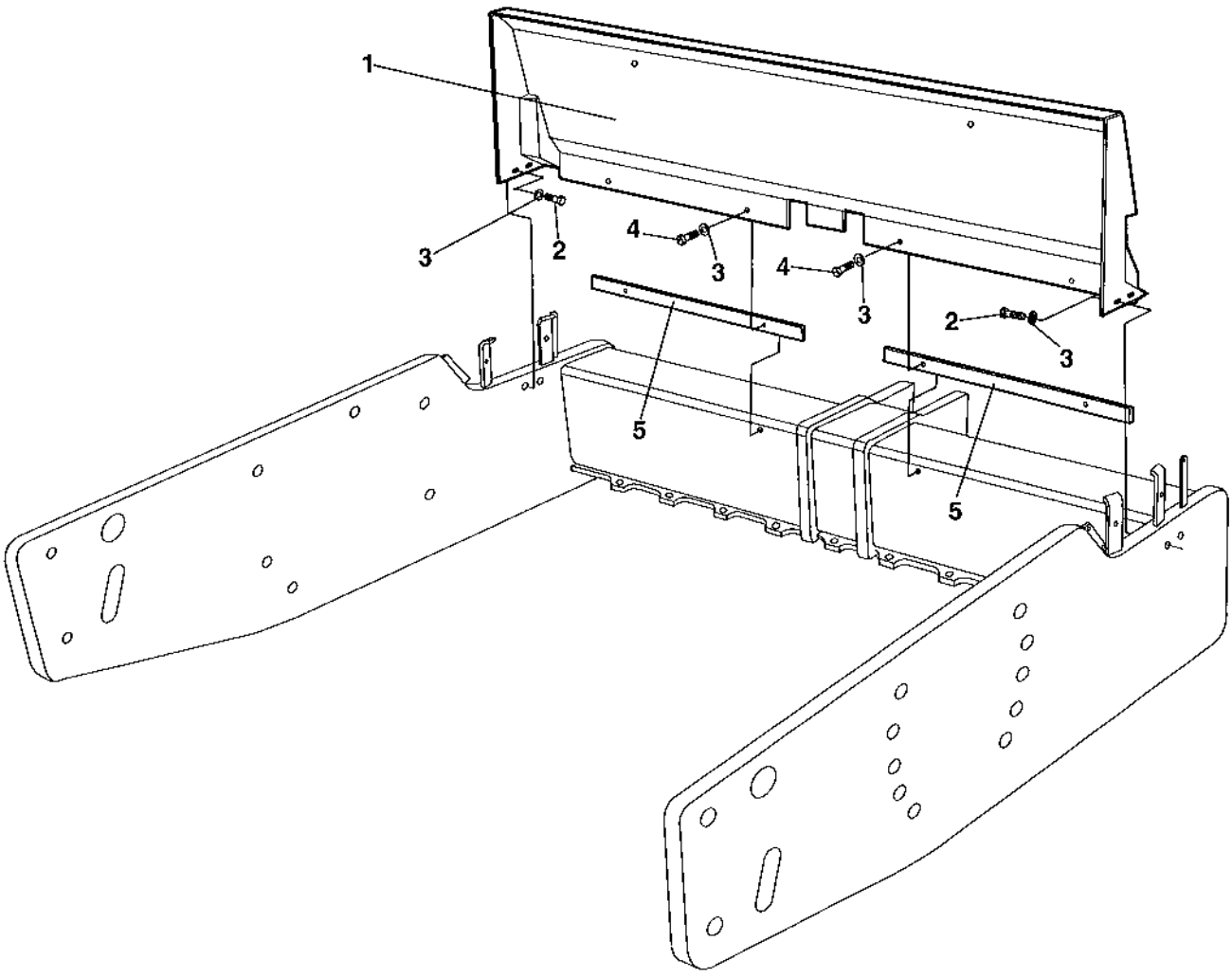

Drum shroud Option

Item	Part No	Rem	Qty	Description	Code
1	4700376945		1	Drum shroud	
2	4700500029		4	Screw	
3	4700904567		8	Washer 10,5x28x6 HB305	
4	4700500240		4	Screw M10x40H 8,8	
5	4700376944		2	Spacer	

Drum

Item	Part No	Rem	Qty	Description	Code
10				Drum Up to 65X24499 (Page 66)	
15				Drum From 65X24500 (Page 68)	
20				Drum cartridge Up to 65X22596 (Page 70) Left side	
21				Drum cartridge From 65X22597 Up to 65X244 Left sidee 72)	
30				Drum cartridge Up to 65X22596 (Page 74) Vibration side	
31				Drum cartridge From 65X22597 Up to 65X238 Vibration side)	
40				Drum cartridge From 65X23900 Up to 65X244 Vibration side)	

Drum

16117-1

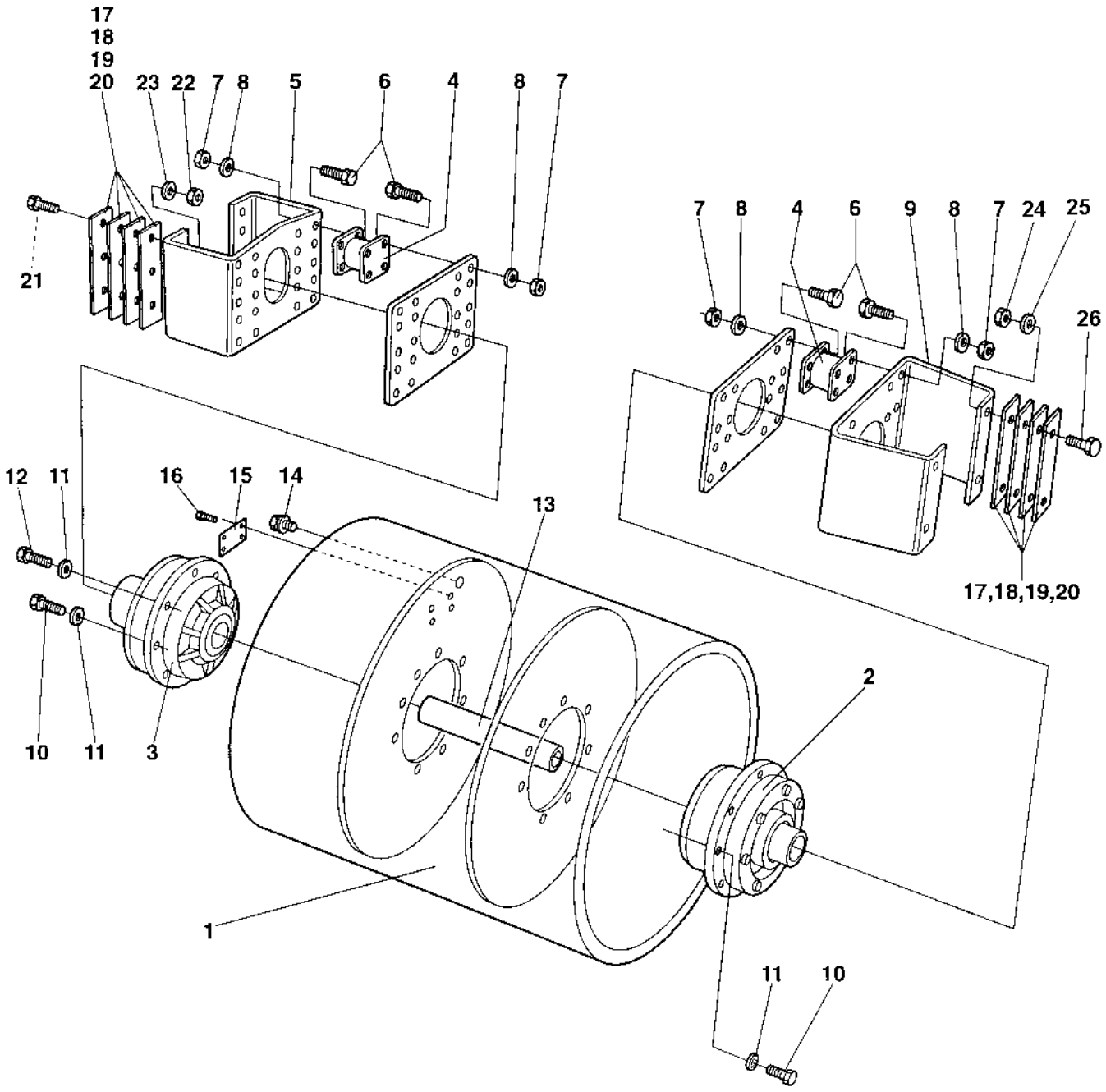
17
18
19
20
23
22
7
8
5
6
4
8
7
21
7
8
4
6
9
8
7
24
25
26
17,18,19,20
12
11
16
15
14
13
2
10
11
3
1
11
10

Drum

Item	Part No	Rem	Qty	Description		Code
1	4700355658		1	Drum		
2				Drum cartridge Up to 65X22596 (Page 70)	Left side	
				Drum cartridge From 65X22597 (Page 72)	Left side	
3				Drum cartridge Up to 65X22596 (Page 74)	Vibration side	
				Drum cartridge From 65X22597 Up to 65X238	Vibration side)	
				Drum cartridge From 65X23900 (Page 78)	Vibration side	
4	4700801187		8	Shock absorber		B
5	4700355676		1	Bracket		
	4700396030	A	1	Bracket		
6	4700500194		64	Screw		
7	4700586019		64	Lock nut		
8	4700600009		64	Washer	13x24x2,5	
9	4700373413		1	Holder plate		
10	4700500076		23	Screw Up to 65X20588	M16x55	
	4700500082		23	Screw From 65X20589	M16x70	
11	4700615046		24	Conical spring washer Up to 65X20588	17x39	
	4700384114		24	Spacer From 65X20589 Up to 65X22596		
	4700904232		24	Washer From 65X22597		
12	4700357815		1	Air breather screw Up to 65X20588		B
	4700384121		1	Air breather screw From 65X20589		B
13	4700349682		1	Drive shaft		
14	4700232210		1	Plug		
15	4700343801		1	Sign plate		
16	4700527002		4	Drive screw		
17	4700345678		N	Shim	T = 1,5 mm	
	4700393276	A	N	Shim	T = 1,5 mm	
18	4700345679		N	Shim	T = 3 mm	
	4700393277	A	N	Shim	T = 3 mm	
19	4700345884		N	Shim	T = 6 mm	
	4700393278	A	N	Shim	T = 6 mm	
20	4700345885		N	Shim	T = 8 mm	
	4700393279	A	N	Shim	T = 8 mm	
21	4700928850		6	Screw	M20-2,5x120 10,9	
	4700900807		6	Screw	M24x120 10,9	
22	4700925867		6	Nut	M20	
	4700792464	A	6	Nut	M24 -10 DIN985	
23	4700904233		12	Washer	21x36x3	
	4700904234		12	Washer	25x45x4	
24	4700570016		6	Nut	M24	
25	4700904234		16	Washer	25x45x4	
26	4700904479		6	Screw	M24x110 10,9	

A) Used together with P/N 4700900807 M24, item 21.

Drum

18656-1

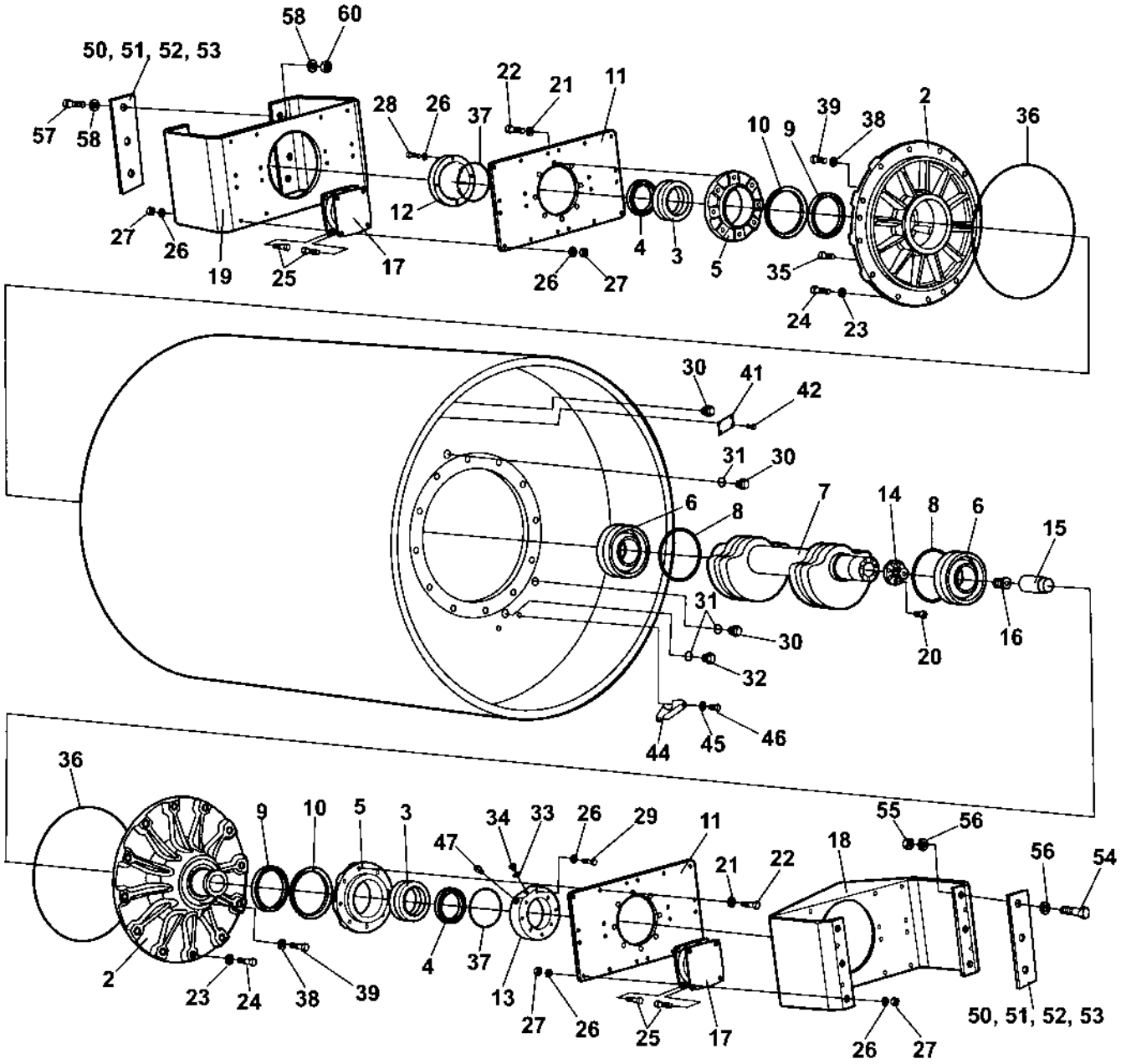
58
60
50, 51, 52, 53
57
58
28
26
37
22
21
11
39
38
2
36
10
9
12
4
3
5
35
24
23
27
26
19
25
17
26
27
30
41
42
31
30
6
8
7
14
8
6
15
31
30
32
20
16
44
45
46
36
9
10
5
3
34
33
26
29
11
47
55
56
18
21
22
56
54
2
23
24
38
39
4
37
13
27
26
25
17
26
27
50, 51, 52, 53

Drum

Item	Part No	Rem	Qty	Description		Code
1	4700392821		1	Drum		
2	4700391206		2	Bearing housing		
3	4700116041		2	Taper roller bearing		D
4	4700390897		2	Shaft nut		
5	4700343318		2	Bearing housing		D
6	4700388089		2	Bearing		
7	4700391194		1	Eccentric shaft		
8	4700791927		2	Retaining ring		
9	4700167023		2	Seal ring		D
10	4700929447		2	V-ring		D
11	4700343322		2	Holder plate		
12	4700343461		1	Cover		
13	4700395458		1	Motor adapter		
14	4700380018		1	Splined shaft		
15	4700381027		1	Splined sleeve		
16	4700349715		1	Spring		
17	4700801187		8	Shock absorber		B
18	4700396030		1	Bracket		
19	4700373413		1	Holder plate		
20	4700791156		8	Screw	M10-1,5x55 12,9	
21	4700384114		16	Spacer		
22	4700500082		16	Screw	M16x70	
23	4700904232		24	Washer		
24	4700500165		24	Screw	M16-2,0x75 8,8	
25	4700500194		64	Screw		
26	4700904231		72	Washer	13x24x2 300 HV	
27	4700570007		64	Hexagon nut	M12	
28	4700500195		4	Screw		
29	4700500196		4	Screw	M12-1,75x80 8.8	
30	4700232210		3	Plug		
31	4700162017		3	Seal ring		D
32	4700343744		1	Magnetic plug		D
33	4700162018		1	Sealing		D
34	4700370231		1	Plug		
35	4700900775		6	Plug		
36	4700904737		2	O-ring		D
37	4700160105		2	O-ring 70		D
38	4700230277		6	Copper washer	12,2x17,9x1,5	
39	4700904177		6	Screw		
41	4700343801		1	Sign plate		
42	4700527002		4	Drive screw		
44	4700359955		1	Drop plate		
45	4700904229		2	Washer	8,4x16x1,5	
46	4700500019		2	Screw	M8x16H 8.8 A2K	
47	4700926736		1	Breather		B
50	4700393276		N	Shim	T = 1,5 mm	
51	4700393277		N	Shim	T = 3 mm	
52	4700393278		N	Shim	T = 6 mm	
53	4700393279		N	Shim	T = 8 mm	
54	4700928230		6	Screw	M24-3,0X90 10.9	
55	4700792464		6	Nut	M24 -10 DIN985	
56	4700904234		12	Washer	25x45x4	
57	4700928231		6	Screw	M24X80 10.9	
58	4700904234		12	Washer	25x45x4	
60	4700792464		6	Nut	M24 -10 DIN985	

Drum cartridge Left side

16962

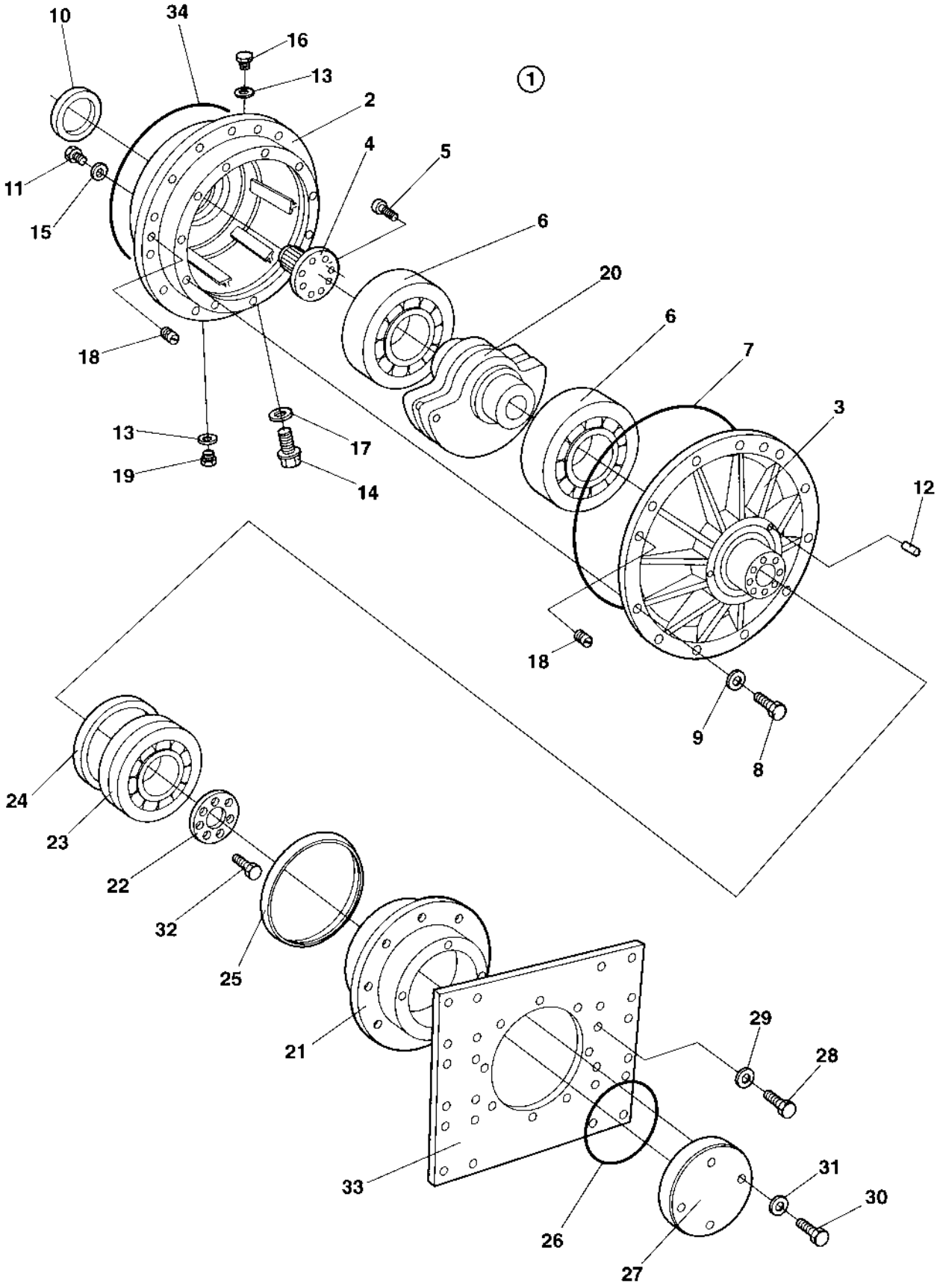

Drum cartridge Left side

Item	Part No	Rem	Qty	Description		Code
1	4700937629		1	Drum cartridge		
2	4700381738		1	.Bearing housing inner Up to 65X20588		
	4700384382		1	.Bearing housing inner From 65X20589		
3	4700356029		1	.Bearing housing outer		
4	4700380018		2	.Splined shaft		
5	4700791156		8	.Screw	M10-1,5x55 12,9	
6	4700900784		2	.Cylinder roller bearing		
7	4700900776		1	.O-ring		D
8	4700500076		12	.Screw Up to 65X20588	M16x55	
	4700500082		12	.Screw From 65X20589	M16x70	
9	4700615046		12	.Conical spring washer Up to 65X20588	17x39	
	4700904232		12	.Washer From 65X20589		
10	4700900782		1	.Seal ring		D
11	4700500163		3	.Screw	M12x16	
12	4700901828		6	.Set screw		
13	4700162017		2	.Seal ring		D
14	4700381634		1	.Plug		
15	4700162027		3	.Sealing		D
16	4700343744		1	.Magnetic plug		D
17	4700162011		1	.Washer, sealing		D
18	4700900775		6	.Plug		
19	4700232210		1	.Plug		
20	4700380324		1	.Eccentric shaft		
21	4700343318		1	Bearing housing		D
22	4700343462		1	Bearing cover Up to 65X20658		
	4700381028		1	Bearing cover From 65X20659		
23	4700116041		1	Taper roller bearing		D
24	4700167023		1	Seal ring		D
25	4700929447		1	V-ring		D
26	4700160105		1	O-ring 70		D
27	4700343461		1	Cover		
28	4700500076		8	Screw Up to 65X20588	M16x55	
	4700500082		8	Screw From 65X20589	M16x70	
29	4700615046		8	Conical spring washer Up to 65X20588	17x39	
	4700384114		8	Spacer From 65X20589		
30	4700500195		4	Screw		
31	4700904231		4	Washer	13x24x2 300 HV	
32	4700508019		8	Screw Up to 65X20658	M8x25	
	4700508056		8	Screw From 65X20659	M8x40	
33	4700343322		1	Holder plate		
34	4700904737		1	O-ring		D

Drum cartridge Left side

18390

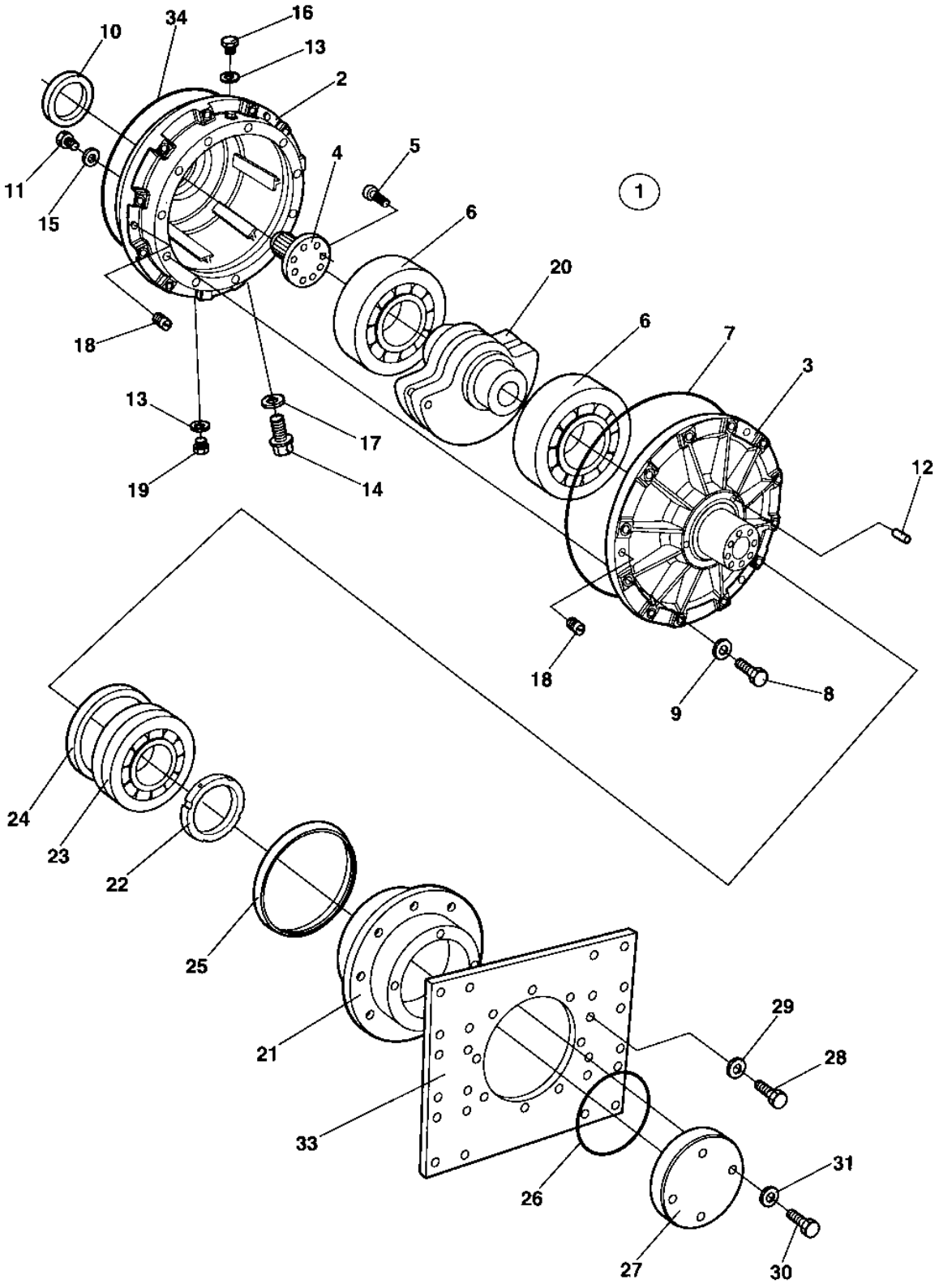

Drum cartridge Left side

Item	Part No	Rem	Qty	Description		Code
1	4700945595		1	Drum cartridge		
2	4700379880		1	.Bearing housing inner		
3	4700379878		1	.Bearing housing outer		
4	4700380018		1	.Splined shaft		
5	4700791156		8	.Screw	M10-1,5x55 12,9	
6	4700390896		2	.Spherical roller bearing		D
7	4700900776		1	.O-ring		D
8	4700500082		12	.Screw	M16x70	
9	4700904232		12	.Washer		
10	4700900782		1	.Seal ring		D
11	4700500163		3	.Screw	M12x16	
12	4700903189		3	.Stop screw		
13	4700162017		2	.Seal ring		D
14	4700381634		1	.Plug		
15	4700162027		3	.Sealing		D
16	4700343744		1	.Magnetic plug		D
17	4700162011		1	.Washer, sealing		D
18	4700900775		6	.Plug		
19	4700232210		1	.Plug		
20	4700381761		1	.Eccentric shaft		
21	4700343318		1	Bearing housing		D
22	4700390897		1	Shaft nut		
23	4700116041		1	Taper roller bearing		D
24	4700167023		1	Seal ring		D
25	4700929447		1	V-ring		D
26	4700160105		1	O-ring 70		D
27	4700343461		1	Cover		
28	4700500082		8	Screw	M16x70	
29	4700384114		8	Spacer		
30	4700500195		4	Screw		
31	4700904231		4	Washer	13x24x2 300 HV	
33	4700343322		1	Holder plate		
34	4700904737		1	O-ring		D

Drum cartridge Vibration side

16961

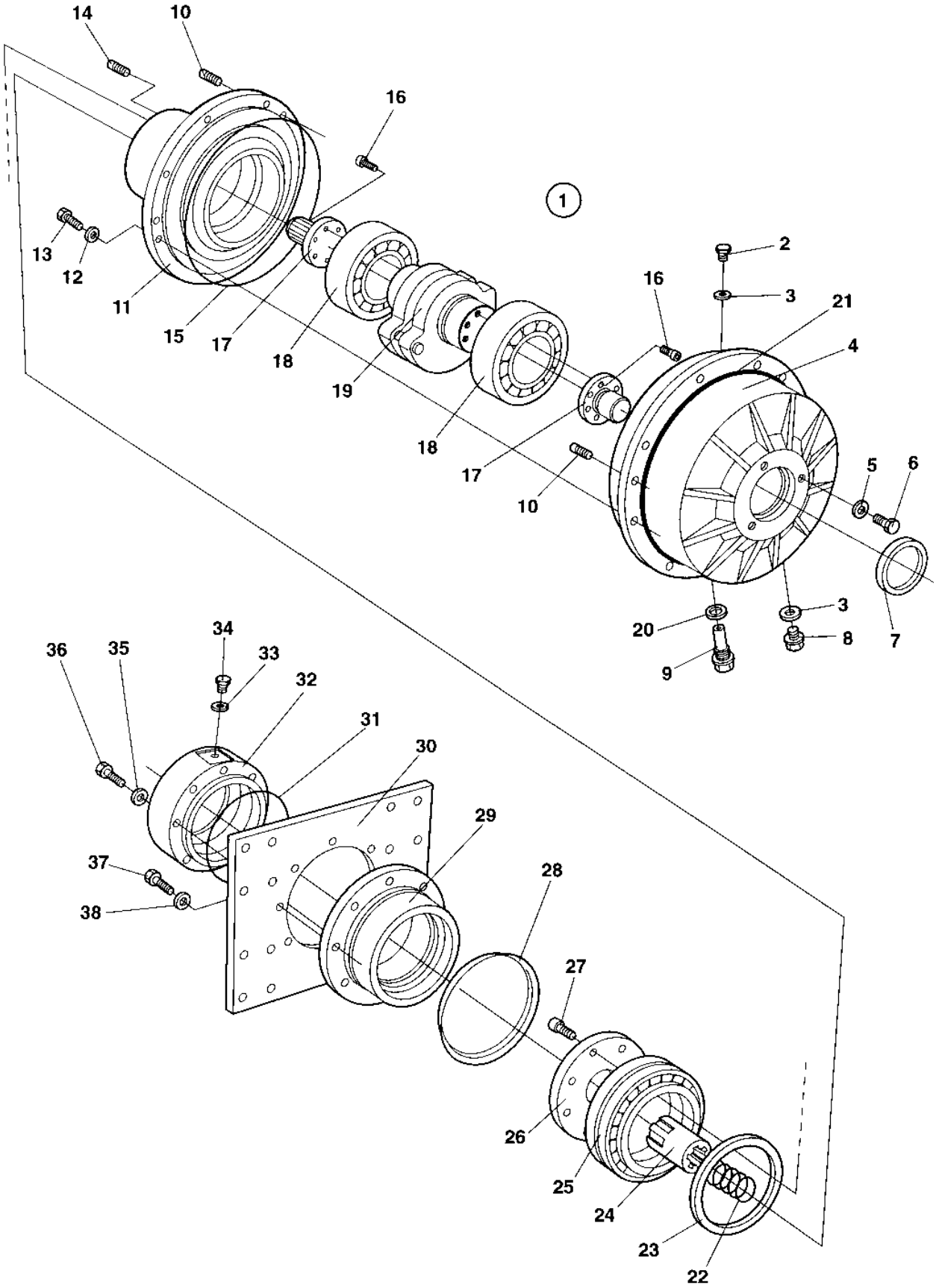

Drum cartridge Vibration side

Item	Part No	Rem	Qty	Description		Code
1	4700937631		1	Drum cartridge		
2	4700343744		1	.Magnetic plug		D
3	4700162017		2	.Seal ring		D
4	4700381738		1	.Bearing housing inner Up to 65X20588		
	4700384382		1	.Bearing housing inner From 65X20589		
5	4700162027		3	.Sealing		D
6	4700500163		3	.Screw	M12x16	
7	4700900782		1	.Seal ring		D
8	4700232210		1	.Plug		
9	4700381634		1	.Plug		
10	4700900775		6	.Plug		
11	4700356029		1	.Bearing housing outer		
12	4700615046		12	.Conical spring washer Up to 65X20588	17x39	
	4700904232		12	.Washer From 65X20589		
13	4700500076		12	.Screw Up to 65X20588	M16x55	
	4700500082		12	.Screw From 65X20589	M16x70	
14	4700901828		6	.Set screw		
15	4700900776		1	.O-ring		D
16	4700791156		16	.Screw	M10-1,5x55 12,9	
17	4700380018		2	.Splined shaft		
18	4700900784		2	.Cylinder roller bearing		
19	4700380324		1	.Eccentric shaft		
20	4700162011		1	.Washer, sealing		D
21	4700904737		1	O-ring		D
22	4700349715		1	Spring		
23	4700167023		1	Seal ring		D
24	4700370365		1	Splined sleeve Up to 65X20658		
	4700381027		1	Splined sleeve From 65X20659		
25	4700116041		1	Taper roller bearing		D
26	4700343462		1	Bearing cover Up to 65X20658		
	4700381028		1	Bearing cover From 65X20659		
27	4700508019		8	Screw Up to 65X20658	M8x25	
	4700508056		8	Screw From 65X20659	M8x40	
28	4700929447		1	V-ring		D
29	4700343318		1	Bearing housing		D
30	4700343322		1	Holder plate		
31	4700160105		1	O-ring 70		D
32	4700357271		1	Motor adapter Up to 65X20658		
	4700380967		1	Motor adapter From 65X20659		
33	4700162018		1	Sealing		D
34	4700370231		1	Plug		
35	4700904231		4	Washer	13x24x2 300 HV	
36	4700500133		4	Screw Up to 65X20658		
	4700500196		4	Screw From 65X20659	M12-1,75x80 8.8	
37	4700500076		8	Screw Up to 65X20588	M16x55	
	4700500082		8	Screw From 65X20589	M16x70	
38	4700615046		8	Conical spring washer Up to 65X20588	17x39	
	4700384114		8	Spacer From 65X20589		

Drum cartridge Vibration side

18388-1

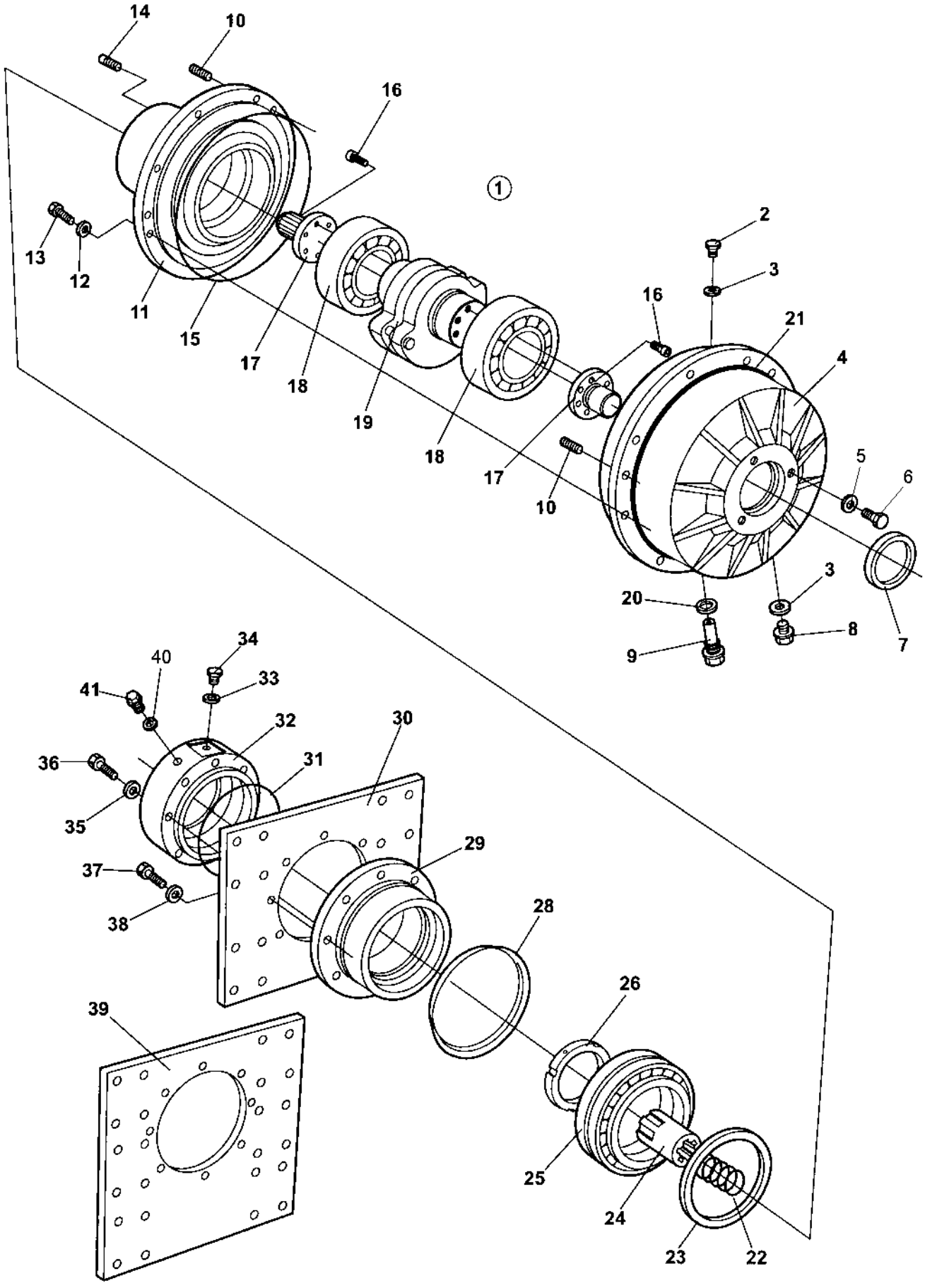

Drum cartridge Vibration side

Item	Part No	Rem	Qty	Description		Code
1	4700945588		1	Drum cartridge		
2	4700343744		1	.Magnetic plug		D
3	4700162017		2	.Seal ring		D
4	4700379880		1	.Bearing housing inner		
5	4700162027		3	.Sealing		D
6	4700500163		3	.Screw	M12x16	
7	4700900782		1	.Seal ring		D
8	4700232210		1	.Plug		
9	4700381634		1	.Plug		
10	4700900775		6	.Plug		
11	4700379878		1	.Bearing housing outer		
12	4700904232		12	.Washer		
13	4700500082		12	.Screw	M16x70	
14	4700903189		3	.Stop screw		
15	4700900776		1	.O-ring		D
16	4700791156		16	.Screw	M10-1,5x55 12,9	
17	4700380018		2	.Splined shaft		
18	4700390896		2	.Spherical roller bearing		D
19	4700381761		1	.Eccentric shaft		
20	4700162011		1	.Washer, sealing		D
21	4700904737		1	O-ring		D
22	4700349715		1	Spring		
23	4700167023		1	Seal ring		D
24	4700381027		1	Splined sleeve		
25	4700116041		1	Taper roller bearing		D
26	4700390897		1	Shaft nut		
28	4700929447		1	V-ring		D
29	4700343318		1	Bearing housing		D
30	4700343322		1	Holder plate		
31	4700160105		1	O-ring 70		D
32	4700390771		1	Motor adapter		
33	4700162018		1	Sealing		D
34	4700370231		1	Plug		
35	4700904231		4	Washer	13x24x2 300 HV	
36	4700500196		4	Screw	M12-1,75x80 8.8	
37	4700500082		8	Screw	M16x70	
38	4700384114		8	Spacer		
39				Not used on this model		
40	4700162024		1	Washer, sealing		
41	4700903190		1	Steel plug		

Drum cartridge Vibration side

18388

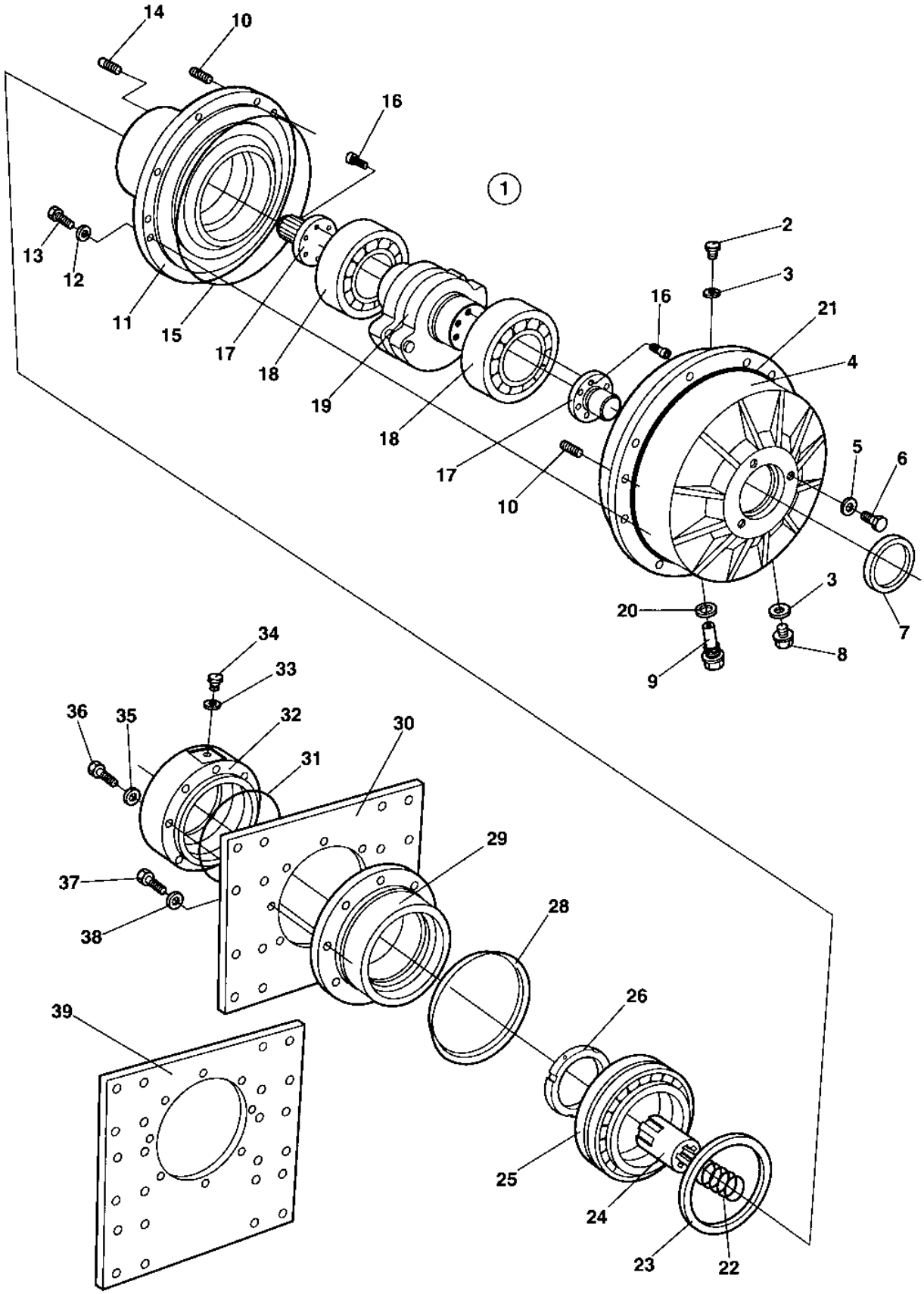

Drum cartridge Vibration side

Item	Part No	Rem	Qty	Description		Code
1	4700945588		1	Drum cartridge		
2	4700343744		1	.Magnetic plug		D
3	4700162017		2	.Seal ring		D
4	4700379880		1	.Bearing housing inner		
5	4700162027		3	.Sealing		D
6	4700500163		3	.Screw	M12x16	
7	4700900782		1	.Seal ring		D
8	4700232210		1	.Plug		
9	4700381634		1	.Plug		
10	4700900775		6	.Plug		
11	4700379878		1	.Bearing housing outer		
12	4700904232		12	.Washer		
13	4700500082		12	.Screw	M16x70	
14	4700903189		3	.Stop screw		
15	4700900776		1	.O-ring		D
16	4700791156		16	.Screw	M10-1,5x55 12,9	
17	4700380018		2	.Splined shaft		
18	4700390896		2	.Spherical roller bearing		D
19	4700381761		1	.Eccentric shaft		
20	4700162011		1	.Washer, sealing		D
21	4700904737		1	O-ring		D
22	4700349715		1	Spring		
23	4700167023		1	Seal ring		D
24	4700381027		1	Splined sleeve		
25	4700116041		1	Taper roller bearing		D
26	4700390897		1	Shaft nut		
28	4700929447		1	V-ring		D
29	4700343318		1	Bearing housing		D
30	4700343322		1	Holder plate		
31	4700160105		1	O-ring 70		D
32	4700395458		1	Motor adapter		
33	4700162018		1	Sealing		D
34	4700370231		1	Plug		
35	4700904231		4	Washer	13x24x2 300 HV	
36	4700500197		4	Screw	12x90	
37	4700500082		8	Screw	M16x70	
38	4700384114		8	Spacer		
39				Not used on this model		

Engine

Item	Part No	Rem	Qty	Description	Code
10				Engine Up to 65X21075 (Page 82)	
11				Engine From 65X21076 Up to 65X21969 (Page 84)	
12				Engine From 65X21970 Up to 65X23699 (Page 86)	
13				Engine From 65X23700 (Page 88)	
20				Cooling system Up to 65X21524 (Page 90)	
22	4700380185			Radiator Up to 65X20609 (Page 92)	
23	4700383806			Radiator From 65X20610 Up to 65X21524 (Page 94)	
25				Cooling system From 65X21525 Up to 65X23699 (Page 96)	
26				Cooling system From 65X23700 (Page 98)	
30				Combustion air system Up to 65X21524 (Page 102)	
35				Combustion air system From 65X21525 Up to 65X23699 (Page 104)	
36				Combustion air system From 65X23700 (Page 106)	
40				Fuel system Up to 65X21524 (Page 108)	
45				Fuel system From 65X21525 Up to 65X23699 (Page 110)	
46				Fuel system From 65X23700 (Page 112)	
50				Exhaust system Up to 65X21172 (Page 114)	
60				Exhaust system From 65X21173 Up to 65X21537 (Page 116)	
70				Exhaust system From 65X21538 Up to 65X23699 (Page 118)	
80				Exhaust system From 65X23700 (Page 120)	

Engine

16929

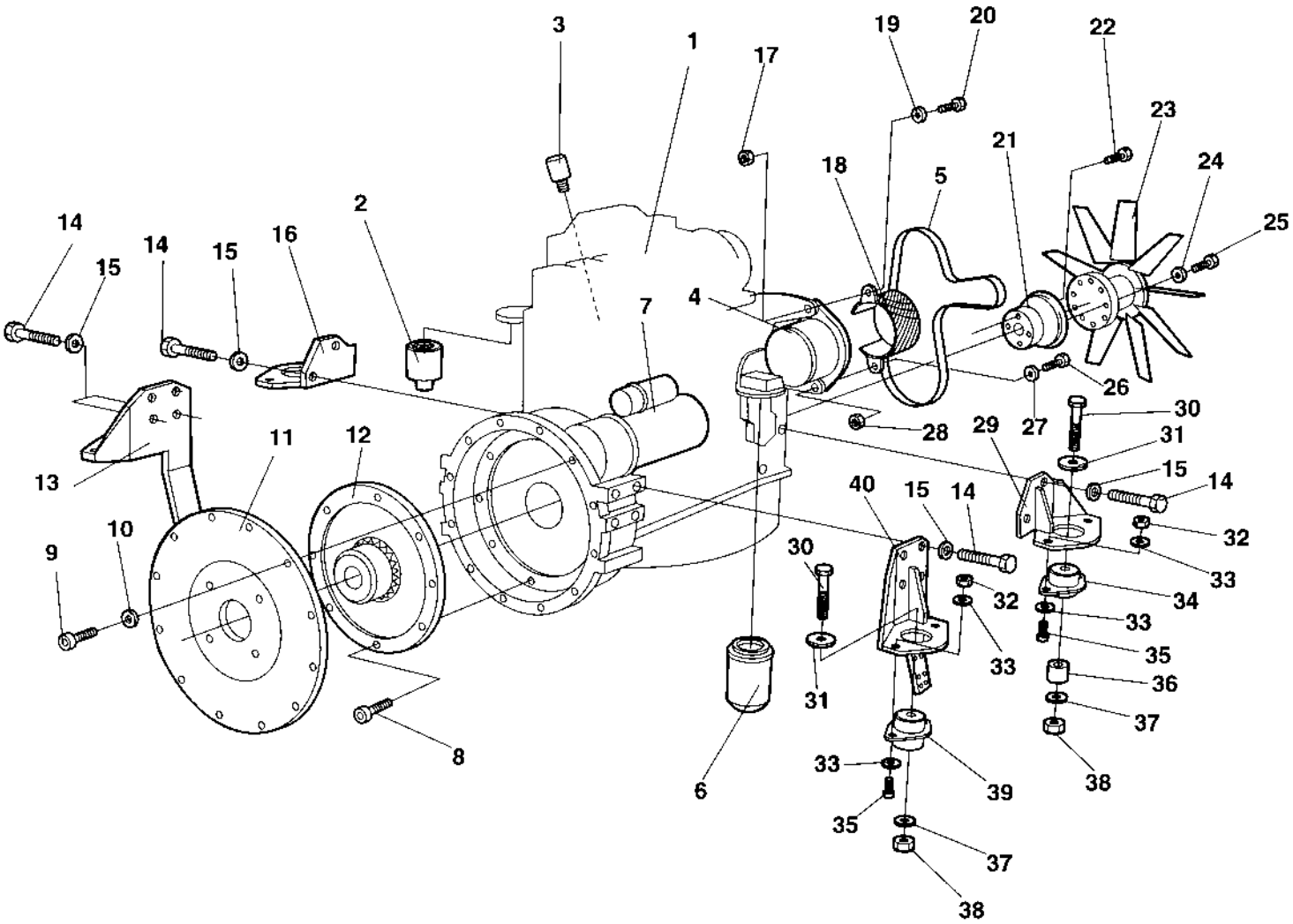

Engine

Item	Part No	Rem	Qty	Description		Code
1	4700380015		1	Engine Cummins	4BTA 3.9 Elite	
2	4700935969		1	.Fuel filter w. waterseparator		A
3	4700935758		1	.Fuel solenoid		D
4	4700937895		1	.Alternator		C
5	4700901449		1	.V-belt		B
6	4700212373		1	.Oil filter		A
7	4700901448		1	.Starter		C
8	4700509025		8	Screw	3/8-16UNCx32 8,8	
9	4700508029		12	Screw	M10-1,5x30H 8,8	
10	4700904637		12	Washer		
11	4700372772		1	Bracket		
12	4700370229		1	Coupling, cpl		
13	4700371481	A	1	Engine bracket		
14	4700500037		12	Screw		
15	4700904638		12	Washer	12x22x2	
16	4700372492	B	1	Engine bracket		
17	4700586018		1	Lock nut		
18	4700380101		1	V-belt cover		
19	4700904230		1	Washer		
20	4700904379		1	Screw	M10x110H 8,8	
21	4700373782		1	Connector		
22	4700904204		4	Screw		
23	4700382719		1	Fan		
24	4700904637		9	Washer		
25	4700500161		9	Screw		
26	4700904241		1	Screw		
27	4700904640		1	Washer	8,4x22x3	
28	4700586003		1	Lock nut	M8	
29	4700372493	C	1	Engine bracket		
30	4700500228		4	Screw	M20-2,5x120 8,8	
31	4700347512		4	Washer		
32	4700586019		8	Lock nut		
33	4700904231		16	Washer	13x24x2 300 HV	
34	4700372984		2	Shock absorber		D
35	4700500194		8	Screw		
36	4700370258		2	Spacer washer		
37	4700904233		4	Washer	21x36x3	
38	4700901145		4	Lock nut	M20-10	
39	4700372983		2	Shock absorber		D
40	4700371482	D	1	Engine bracket		

A) Right front
B) Right rear
C) Left rear
D) Left front

Engine

17774

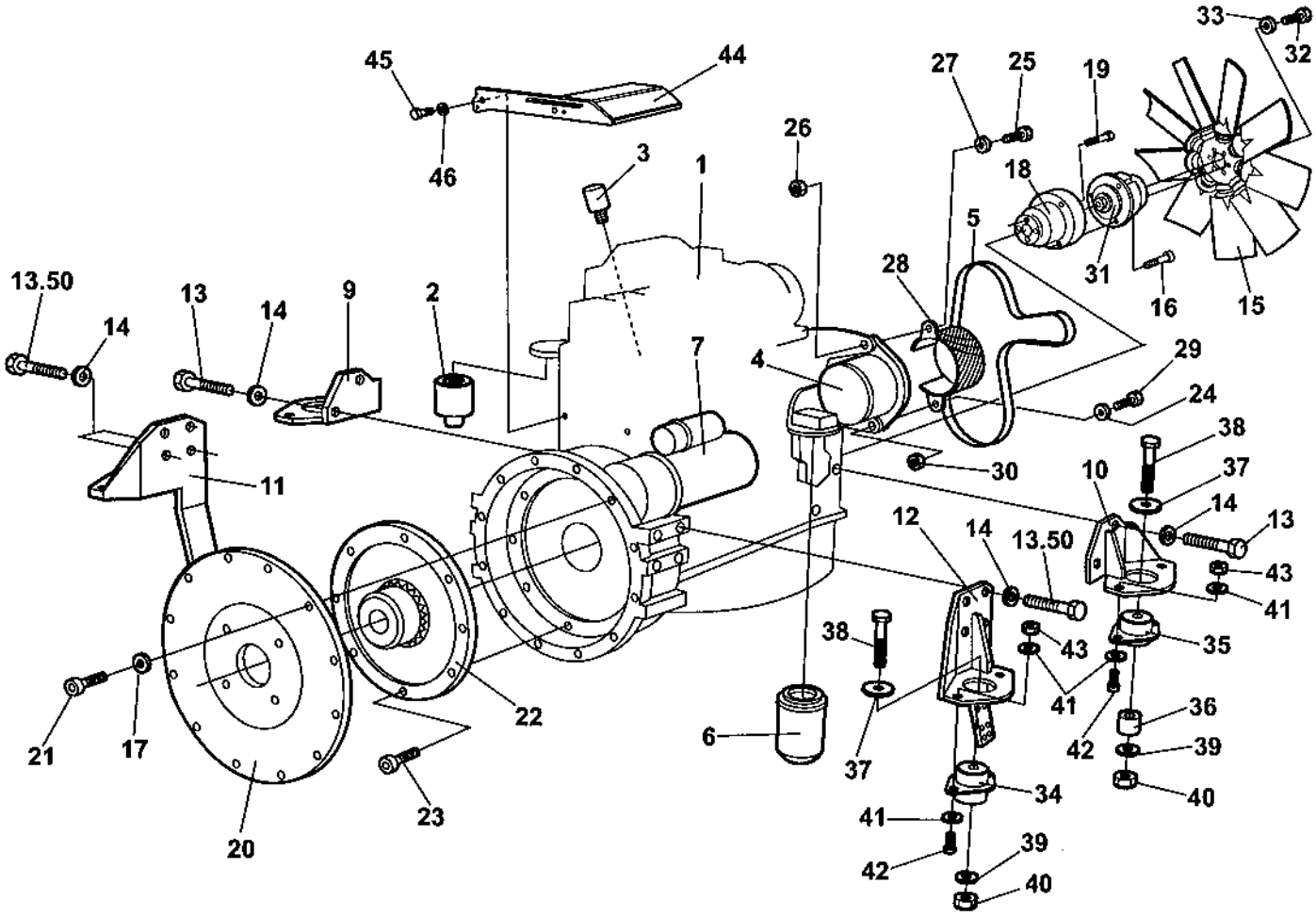

Engine

Item	Part No	Rem	Qty	Description		Code
1	4700380015		1	Engine Cummins	4BTA 3.9 Elite	
2	4700935969		1	.Fuel filter w. waterseparator		A
3	4700935758		1	.Fuel solenoid		D
4	4700937895		1	.Alternator		C
5	4700901449		1	.V-belt		B
6	4700212373		1	.Oil filter		A
7	4700901448		1	.Starter Up to 65X21540		C
	4700939505		1	.Starter From 65X21541		C
9	4700372492	A	1	Engine bracket Up to 65X21524		
	4700387264	A	1	Engine bracket From 65X21525		
10	4700372493	B	1	Engine bracket Up to 65X21524		
	4700387263	B	1	Engine bracket From 65X21525		
11	4700371481	C	1	Engine bracket		
12	4700371482	D	1	Engine bracket		
13	4700500037		12	Screw Up to 65X21524		
	4700500037		14	Screw From 65X21525		
14	4700904638		12	Washer Up to 65X21524	12x22x2	
	4700904638		14	Washer From 65X21525	12x22x2	
15	4700386006		1	Fan		
16	4700792081		3	Socket head cap screw	M12x50 10,9	
17	4700904637		12	Washer		
18	4700382392		1	Connector		
19	4700904204		4	Screw		
20	4700372772		1	Bracket		
21	4700508029		12	Screw	M10-1,5x30H 8,8	
22	4700370229		1	Coupling, cpl		
23	4700509025		8	Screw	3/8-16UNCx32 8,8	
24	4700904640		1	Washer	8,4x22x3	
25	4700904379		1	Screw	M10x110H 8,8	
26	4700586018		1	Lock nut		
27	4700904230		1	Washer		
28	4700380101		1	V-belt cover		
29	4700904241		1	Screw		
30	4700586003		1	Lock nut	M8	
31	4700382393		1	Fan hub		
32	4700500047		6	Screw		
33	4700904229		6	Washer	8,4x16x1,5	
34	4700372983	E	2	Shock absorber		D
35	4700372984	F	2	Shock absorber		D
36	4700370258		2	Spacer washer		
37	4700347512		4	Washer		
38	4700500228		4	Screw	M20-2,5x120 8,8	
39	4700904233		4	Washer	21x36x3	
40	4700901145		4	Lock nut	M20-10	
41	4700904231		16	Washer Up to 65X21524	13x24x2 300 HV	
	4700904638		16	Washer From 65X21525	12x22x2	
42	4700500194		8	Screw Up to 65X21524		
	4700500037		8	Screw From 65X21525		
43	4700586019		8	Lock nut		
44	4700387909		1	Heat protection From 65X21525		
45	4700500035		2	Screw From 65X21525	M12x020H	
46	4700904231		2	Washer From 65X21525	13x24x2 300 HV	
50	4700508079		8	Screw From 65X21525	M12-1,75x35H 8,8	
			1			

A) Right rear
B) Left rear
C) Right front
D) Left front
E) Front
F) Rear

Engine

18124

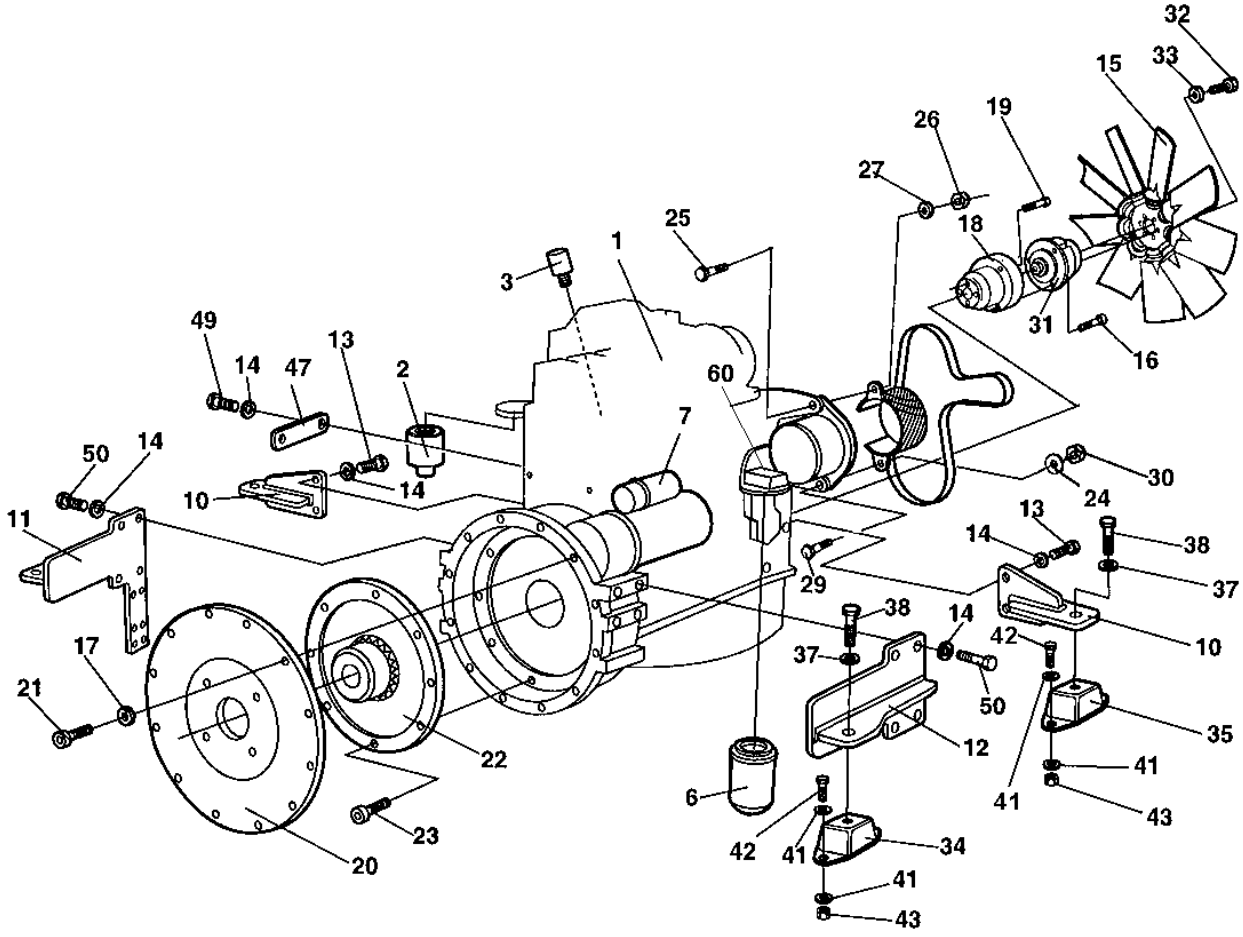

Engine

Item	Part No	Rem	Qty	Description		Code
1	4700380015		1	Engine Cummins	4BTA 3.9 Elite	
2	4700935969		1	.Fuel filter w. waterseparator		A
3	4700935758		1	.Fuel solenoid		D
4	4700937895	G	1	.Alternator Up to 65X22325		C
	4700945140		1	.Alternator From 65X22326		C
5	4700901449		1	.V-belt		B
6	4700212373		1	.Oil filter		A
7	4700939505		1	.Starter		C
9	4700378211	A	1	Engine bracket		
10	4700378211	B	1	Engine bracket		
11	4700378213	C	1	Engine bracket		
12	4700378210	D	1	Engine bracket		
13	4700500194		4	Screw		
14	4700904638		13	Washer	12x22x2	
15	4700386006		1	Fan		
16	4700792081		3	Socket head cap screw	M12x50 10,9	
17	4700904637		12	Washer		
18	4700382392		1	Connector		
19	4700904204		4	Screw		
20	4700372772		1	Bracket		
21	4700508029		12	Screw	M10-1,5x30H 8,8	
22	4700370229		1	Coupling, cpl		
23	4700509025		8	Screw	3/8-16UNCx32 8,8	
24	4700904640		1	Washer	8,4x22x3	
25	4700904379		1	Screw	M10x110H 8,8	
26	4700586018		1	Lock nut		
27	4700904230		1	Washer		
28	4700380101		1	V-belt cover		
29	4700904241		1	Screw		
30	4700586003		1	Lock nut	M8	
31	4700382393		1	Fan hub		
32	4700500047		6	Screw		
33	4700904229		6	Washer	8,4x16x1,5	
34	4700387128	E	2	Shock absorber		
35	4700387129	F	2	Shock absorber		D
37	4700904232		4	Washer		
38	4700500070		4	Screw	M16x50	
39	4700904233		4	Washer	21x36x3	
41	4700904703		16	Washer		
42	4700500194		8	Screw		
43	4700586019		8	Lock nut		
47	4700378214		1	Cable holder		
49	4700500036		1	Screw		
50	4700508079		8	Screw	M12-1,75x35H 8,8	
60	4700935044		1	Oil pressure sensor		D

A) Right rear
B) Left rear
C) Right front
D) Left front
E) Front
F) Rear
G) Replaced by Alternator kit P/N 4700945181.

Engine

18661

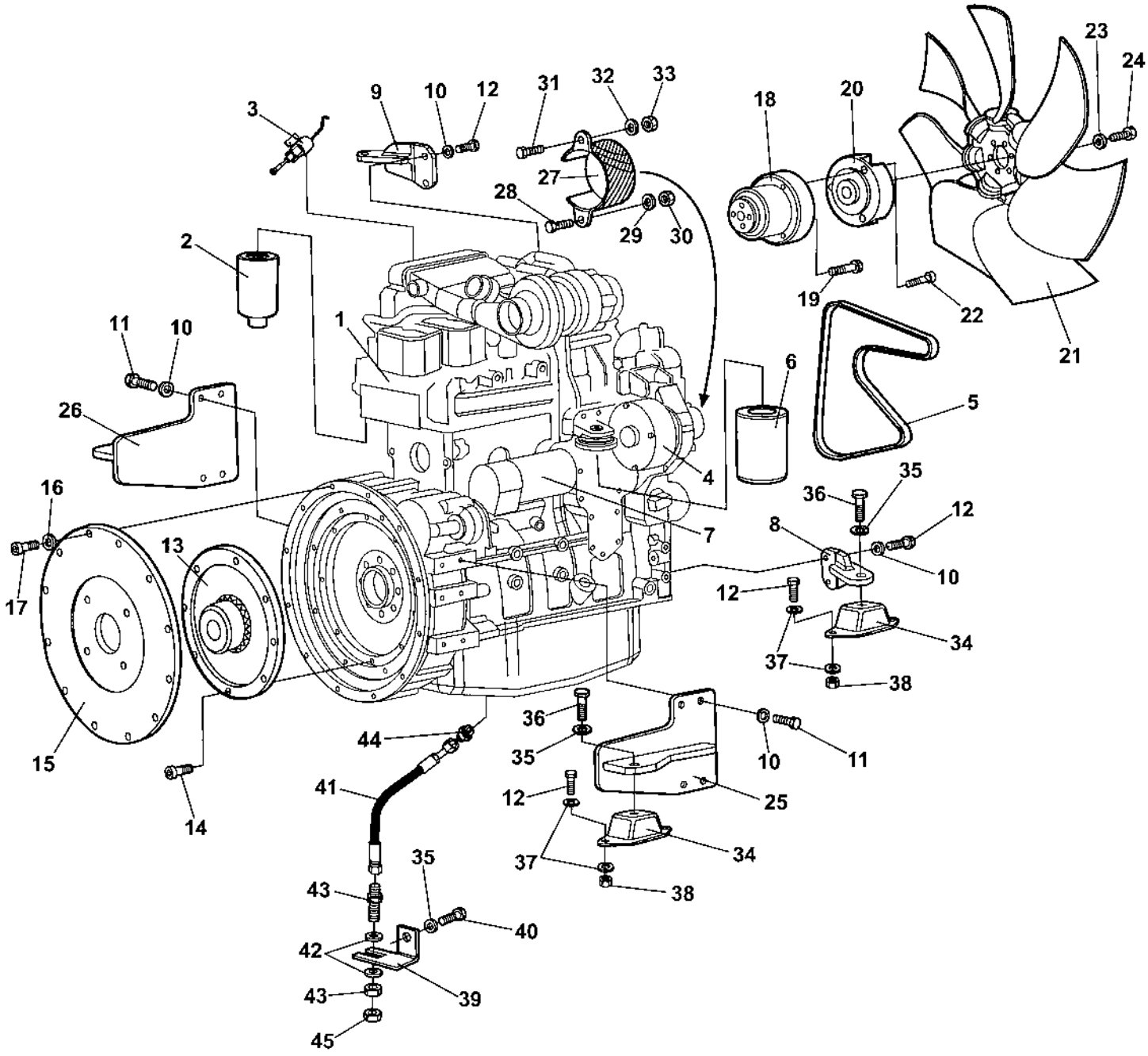

Engine

Item	Part No	Rem	Qty	Description		Code
1	4700380015		1	Engine Cummins	4BTA 3.9 Elite	
2	4700935969		1	.Fuel filter w. waterseparator		A
3	4700935758		1	.Fuel solenoid		D
4	4700945140		1	.Alternator		C
5	4700901449		1	.V-belt		B
6	4700212373		1	.Oil filter		A
7	4700939505		1	.Starter		C
8	4700392283		1	Engine bracket,	Right	
9	4700392284		1	Engine bracket,	Left	
10	4700904638		12	Washer	12x22x2	
11	4700508079		8	Screw	M12-1,75x35H 8,8	
12	4700500194		12	Screw		
13	4700370229		1	Coupling, cpl		
14	4700509025		8	Screw	3/8-16UNCx32 8,8	
15	4700372772		1	Bracket		
16	4700904637		12	Washer		
17	4700508029		12	Screw	M10-1,5x30H 8,8	
18	4700394005		1	Connector		
19	4700792661		4	Screw	M12-1,25x80 12,9	
20	4700382393		1	Fan hub		
21	4700379164		1	Fan		
22	4700792081		3	Socket head cap screw	M12x50 10,9	
23	4700904229		6	Washer	8,4x16x1,5	
24	4700500047		6	Screw		
25	4700393962		1	Engine bracket	Right	
26	4700393963		1	Engine bracket	Left	
27	4700380101		1	V-belt cover		
28	4700904241		1	Screw		
29	4700904640		1	Washer	8,4x22x3	
30	4700586003		1	Lock nut	M8	
31	4700904379		1	Screw	M10x110H 8,8	
32	4700904230		1	Washer		
33	4700586018		1	Lock nut		
34	4700387129		4	Shock absorber		D
35	4700904232		5	Washer		
36	4700500070		4	Screw	M16x50	
37	4700904703		16	Washer		
38	4700586019		8	Lock nut		
39	4700388855		1	Bracket		
40	4700500154		1	Screw	M16-2,0x25 8,8	
41	4700394511		1	Oil drain hose		
42	4700904233		2	Washer	21x36x3	
43	4700230515		1	Connector		
44	4700925723		1	Connector		
45	4700330383		1	Cap hydraulic		

Cooling system

16933

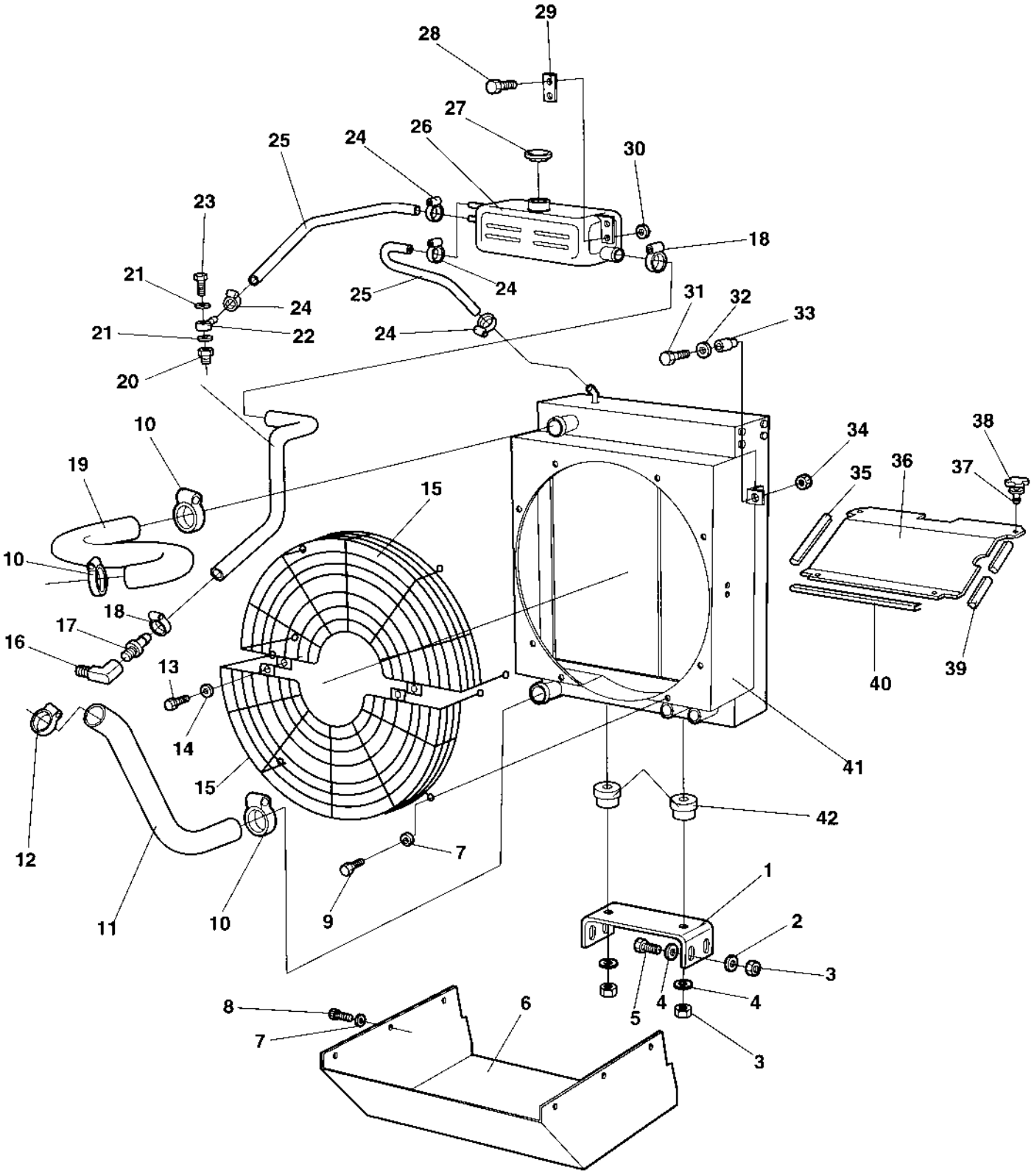

Cooling system

Item	Part No	Rem	Qty	Description		Code
1	4700370938		1	Radiator bracket		
2	4700904557		4	Washer		
3	4700586018		6	Lock nut		
4	4700904230		6	Washer		
5	4700500031		4	Screw		
6	4700373144		1	Air leading plate		
7	4700904640		14	Washer	8,4x22x3	
8	4700500053		6	Screw	M8x20H 8.8	
9	4700500019		8	Screw	M8x16H 8.8 A2K	
10	4700313010		3	Hose clamp		
11	4700381313		1	Coolant hose		
12	4700313023		1	Hose clamp		
13	4700500018		2	Screw	M8-1,25x12 8,8	
14	4700904229		6	Washer	8,4x16x1,5	
15	4700372348		2	Fan guard Up to 65X21075		
	4700386135		2	Fan guard From 65X21076		
16	4700234365		1	Elbow 90		
17	4700370840		1	Hose connection		
18	4700313006		2	Hose clamp		
19	4700372224		1	Coolant hose		D
20	4700372544		1	Connector		
21	4700330328		2	Copper washer	10x14x1	
22	4700903916		1	Banjo coupling		
23	4700903915		1	Hollow screw		
24	4700313075		4	Hose clamp		
25	4700380372		2	Rubber hose		
26	4700374864		1	Expansion tank		
27	4700903714		1	Cap		
28	4700500021		4	Screw	M8-1,25x25 8.8	
29	4700381413		1	Washer		
30	4700904229		6	Washer	8,4x16x1,5	
31	4700500012		2	Screw	M6x12	
32	4700904639		2	Washer	6,7x14x1,5	
33	4700371774		2	Shock absorber		
34	4700902285		2	Lock nut	M6	
35	4700902166	A	1	Edge trim		
36	4700380365		1	Air inlet		
37	4700926984		2	Lock bolt		
38	4700904486		2	Quick lock		
39	4700902166	B	1	Edge trim		
40	4700902166	C	1	Edge trim		
41	4700380185		1	Radiator Up to 65X20609 (Page 92)		
	4700383806		1	Radiator From 65X20610 Up to 65X21524 (Page 94)		
42	4700904551		2	Shock absorber		

A) L=320 mm
B) L=400 mm
C) L=584 mm

4700380185 Radiator

17002

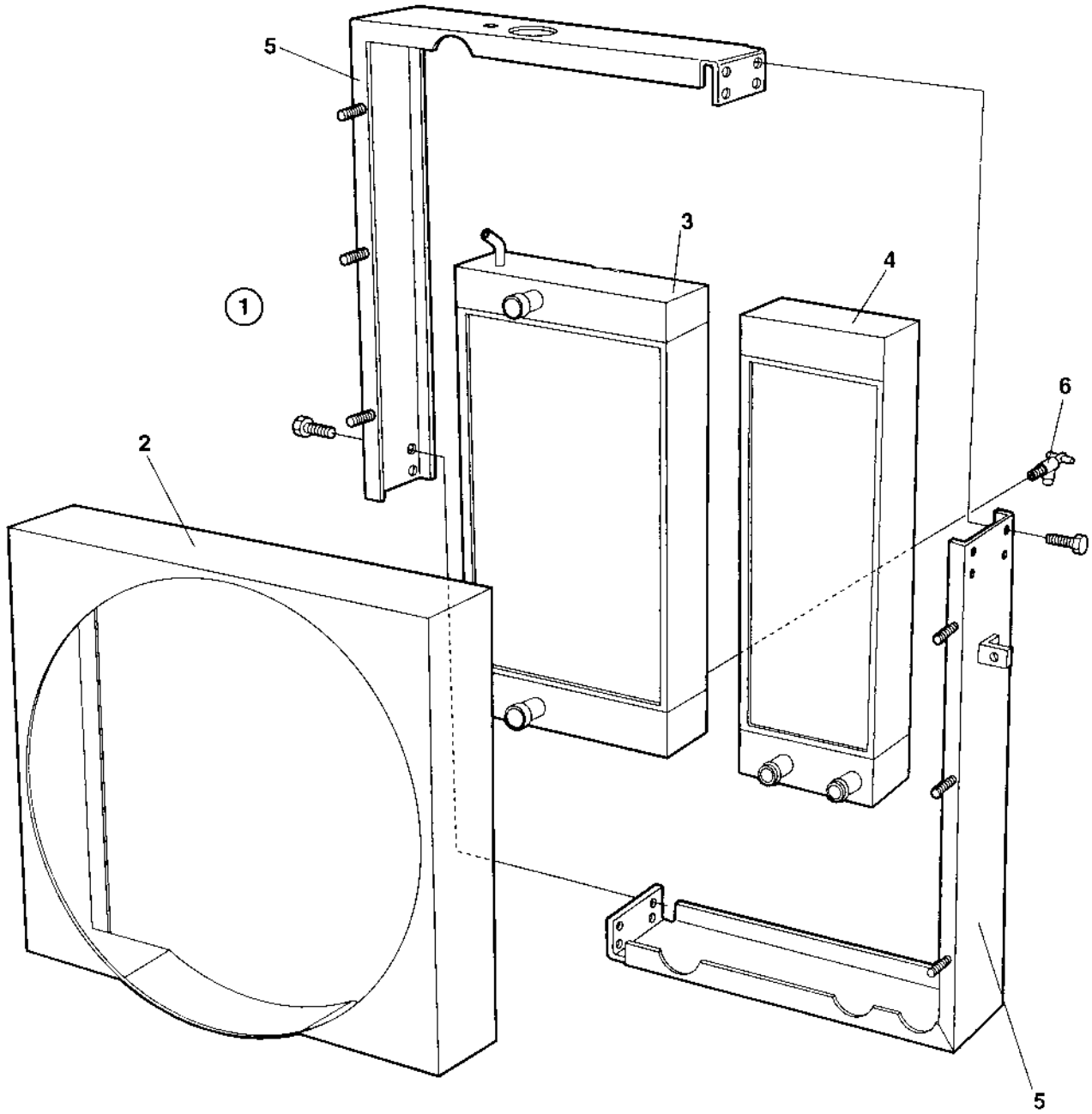

4700380185 Radiator

Item	Part No	Rem	Qty	Description	Code
1			1	Radiator, cpl	
2	4700938053		1	.Fan cover	
3	4700938054		1	.Water radiator	
4	4700938055		1	.Oil cooler	
5	4700938056		1	.Frame	
6	4700937394		1	.Drain cock	

4700383806 Radiator

17002

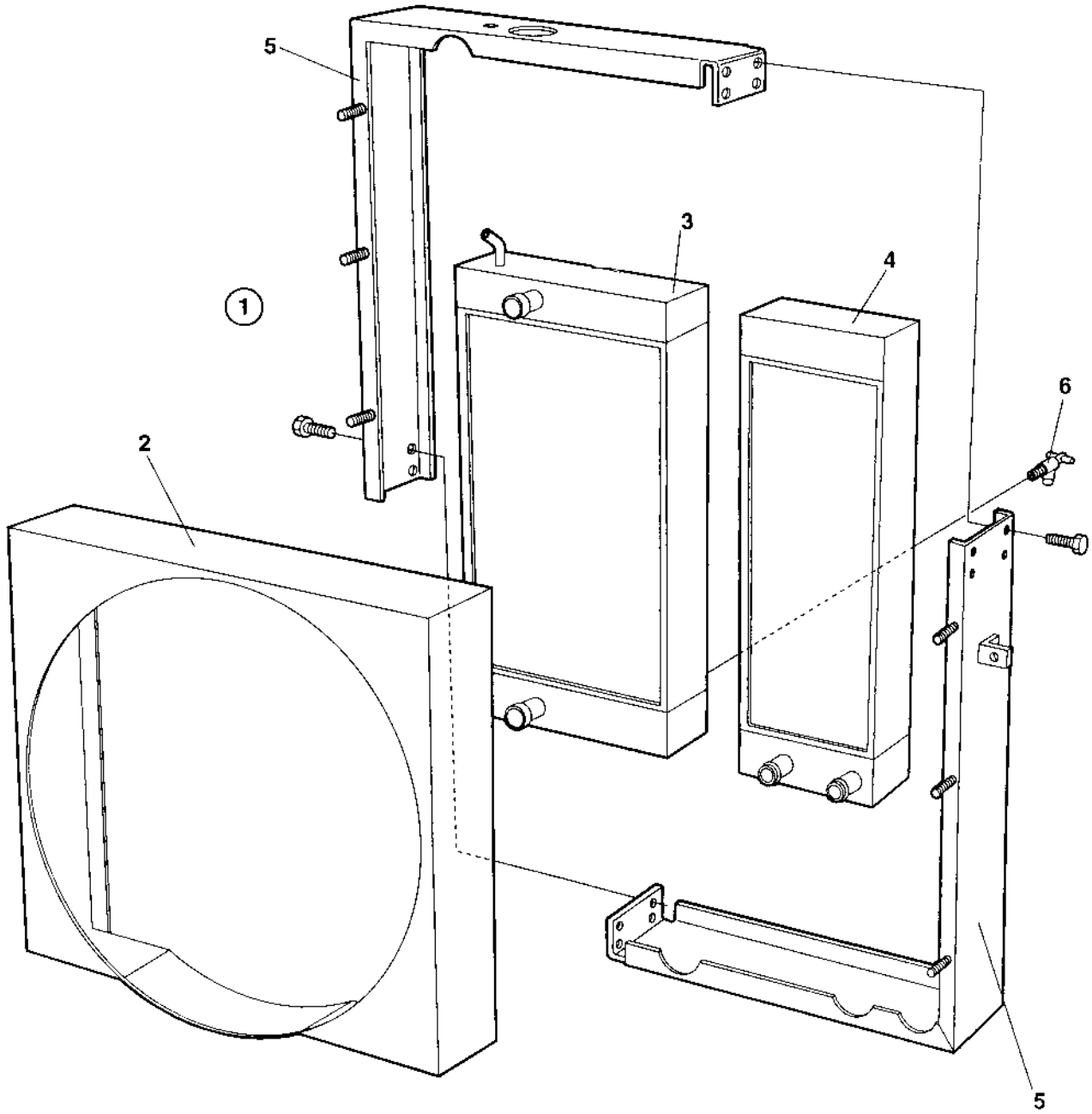

4700383806 Radiator

Item	Part No	Rem	Qty	Description	Code
1			1	Radiator, cpl	
2	4700939744		1	.Fan cover	
3	4700939741		1	.Water cooler	
4	4700939742		1	.Oil cooler	
5	4700939743		1	.Frame	
6	4700937394		1	.Drain cock	

Cooling system

17799

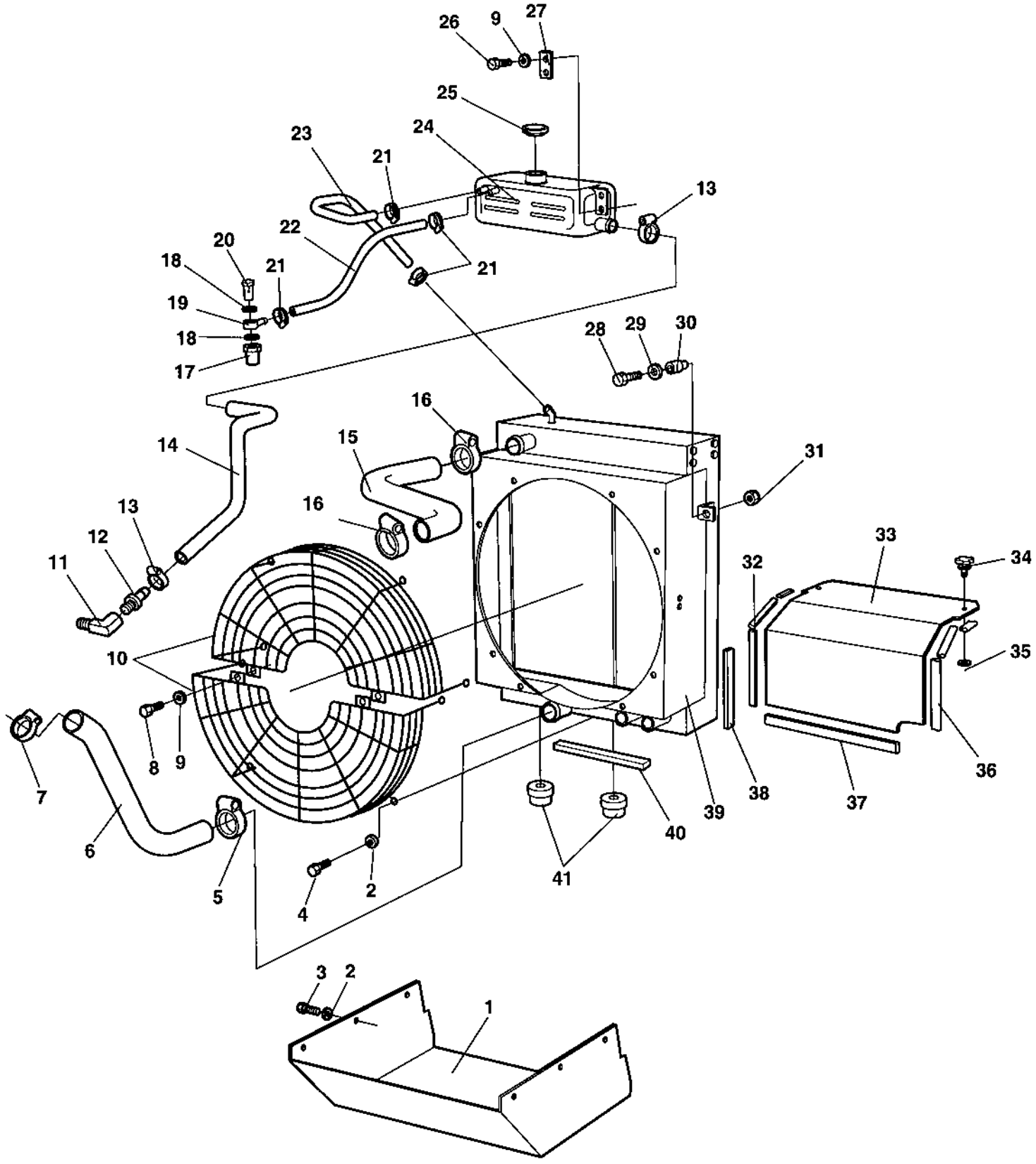

Cooling system

Item	Part No	Rem	Qty	Description	Code
1	4700373144		1	Air leading plate	
2	4700904640		14	Washer 8,4x22x3	
3	4700500053		6	Screw M8x20H 8.8	
4	4700500019		8	Screw M8x16H 8.8 A2K	
5	4700313010		1	Hose clamp	
6	4700387241		1	Coolant hose	
7	4700313023		1	Hose clamp	
8	4700500018		2	Screw M8-1,25x12 8,8	
9	4700904229		6	Washer 8,4x16x1,5	
10	4700387085		2	Fan guard	
11	4700234365		1	Elbow 90	
12	4700370840		1	Hose connection	
13	4700313006		2	Hose clamp	
14	4700380305		1	Coolant hose	
15	4700387239		1	Coolant hose	
16	4700313010		2	Hose clamp	
17	4700372544		1	Connector	
18	4700330328		2	Copper washer 10x14x1	
19	4700903916		1	Banjo coupling	
20	4700903915		1	Hollow screw	
21	4700313075		4	Hose clamp	
22	4700373775		1	Rubber hose	
23	4700380372		1	Rubber hose	
24	4700387130		1	Expansion tank	
25	4700903714		1	Cap	
26	4700500021		4	Screw M8-1,25x25 8.8	
27	4700381413		2	Washer	
28	4700500012		2	Screw M6x12	
29	4700904639		2	Washer 6,7x14x1,5	
30	4700371774		2	Shock absorber	
31	4700902285		2	Lock nut M6	
32	4700902166	A	1XL	Edge trim	
33	4700386815		1	Air inlet	
34	4700904486		2	Quick lock	
35	4700926985		2	Quick lock washer	
36	4700902166	B	1XL	Edge trim	
37	4700902166	C	1XL	Edge trim	
38	4700202041	D	2XL	Rubber strip	
39	4700387110		1	Radiator Up to 65X21714	
	4700377370		1	Radiator From 65X21715	
	4700939745		1	.Water cooler	
	4700939746		1	.Oil cooler	
40	4700288129	E	1XL	Edge trim	
41	4700904551		2	Shock absorber	

A) L=0,400 m
B) L=0,300 m
C) L=0,560 m
D) L=0,300 m
E) L=0,570 m

Cooling system

18662-1

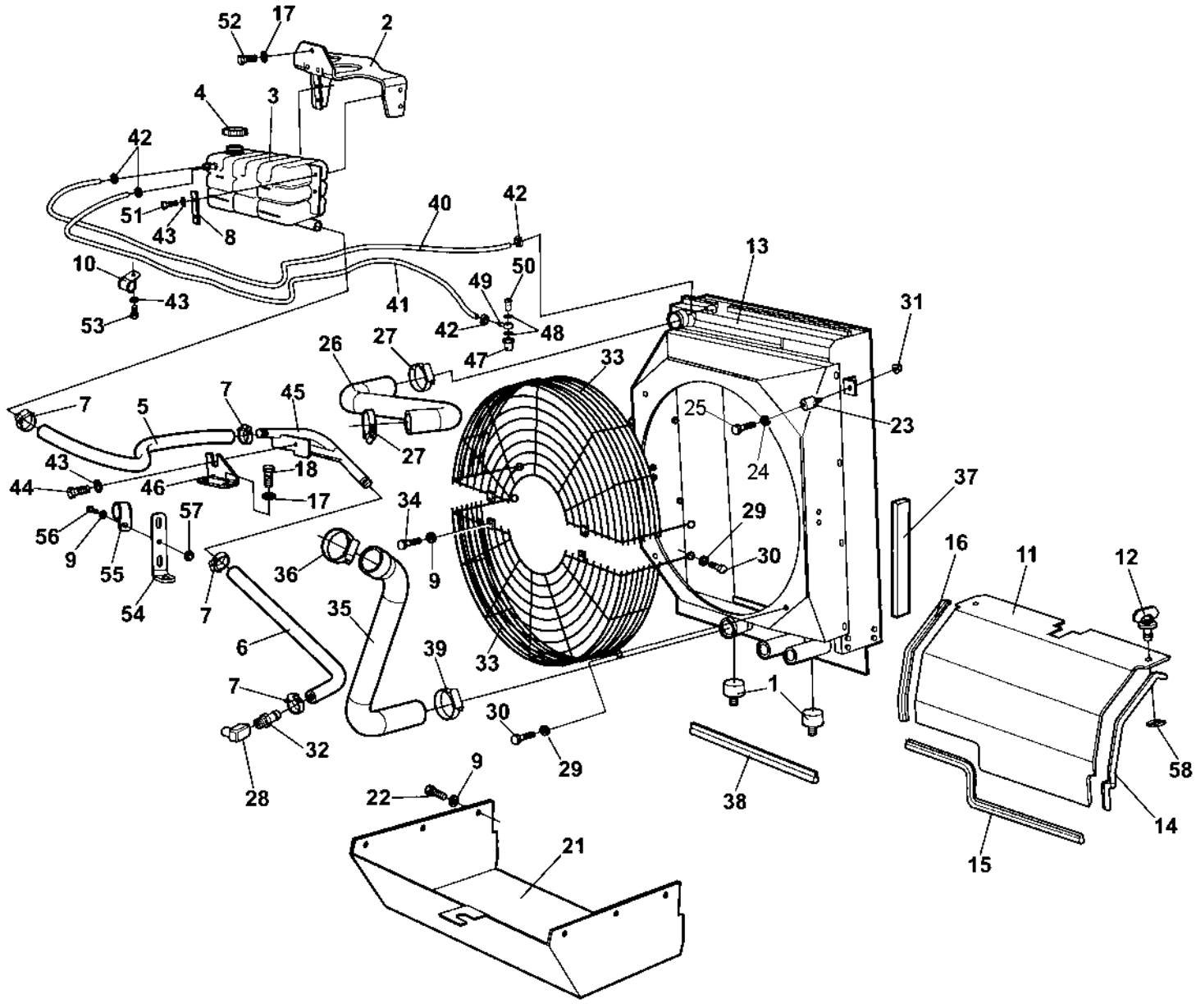

Cooling system

Item	Part No	Rem	Qty	Description	Code
1	4700904551		2	Shock absorber	
2	4700392170		1	Holder	
3	4700392313		1	Expansion tank	
4	4700903714		1	Cap	
5	4700205027	A	1XL	Coolant hose	
6	4700205027	B	1XL	Coolant hose	
7	4700313006		4	Hose clamp	
8	4700381413		2	Washer	
9	4700904229		8	Washer	8,4x16x1,5
10	4700921084		1	Pipe clamp	
11	4700386853		1	Air inlet plate	
12	4700904486		2	Quick lock	
13	4700394097		1	Radiator	
14	4700902166	C	1XL	Edge trim	
15	4700902166	D	1XL	Edge trim	
16	4700902166	E	1XL	Edge trim	
17	4700904230		5	Washer	
18	4700500028		2	Screw	
21	4700386943		1	Air leading plate	
22	4700500053		6	Screw	M8x20H 8.8
23	4700371774		2	Shock absorber	
24	4700904639		2	Washer	6,7x14x1,5
25	4700500012		2	Screw	M6x12
26	4700393705		1	Coolant hose	
27	4700313010		2	Hose clamp	
28	4700234365		1	Elbow 90	
29	4700904640		8	Washer	8,4x22x3
30	4700500019		8	Screw	M8x16H 8.8 A2K
31	4700902285		2	Lock nut	M6
32	4700370840		1	Hose connection	
33	4700387085		2	Fan guard	
34	4700500018		2	Screw	M8-1,25x12 8,8
35	4700393713		1	Coolant hose	
36	4700313023		1	Hose clamp	
37	4700202041	F	1XL	Rubber strip	
38	4700902166			Edge trim	
39	4700313010		1	Hose clamp	
40	4700246069	G	1XL	Fuel hose	3/8"
41	4700246069	H	1XL	Fuel hose	3/8"
42	4700313001		4	Hose clamp	
43	4700904228		7	Washer	
44	4700500013		2	Screw	M6-1x16 8,8
45	4700393772		1	Pipe assembly	
46	4700394071		1	Bracket	
47	4700392378		1	Connector	
48	4700747282		2	Copper washer	
49	4700330170		1	Banjo nipple	
50	4700330171		1	Hollow screw	
51	4700500075		4	Screw	M6-1,0x25 8.8
52	4700500029		3	Screw	
53	4700500040		1	Screw	M6-1x20 8,8
54	4700390083		1	Holder	

A) L=0,95M
B) 0,570M
C) L=0,450M
D) L=0,690M
E) L=0,330M
F) L=0,6M
G) L=1,90M
H) L=1,90M

Cooling system

18662-1

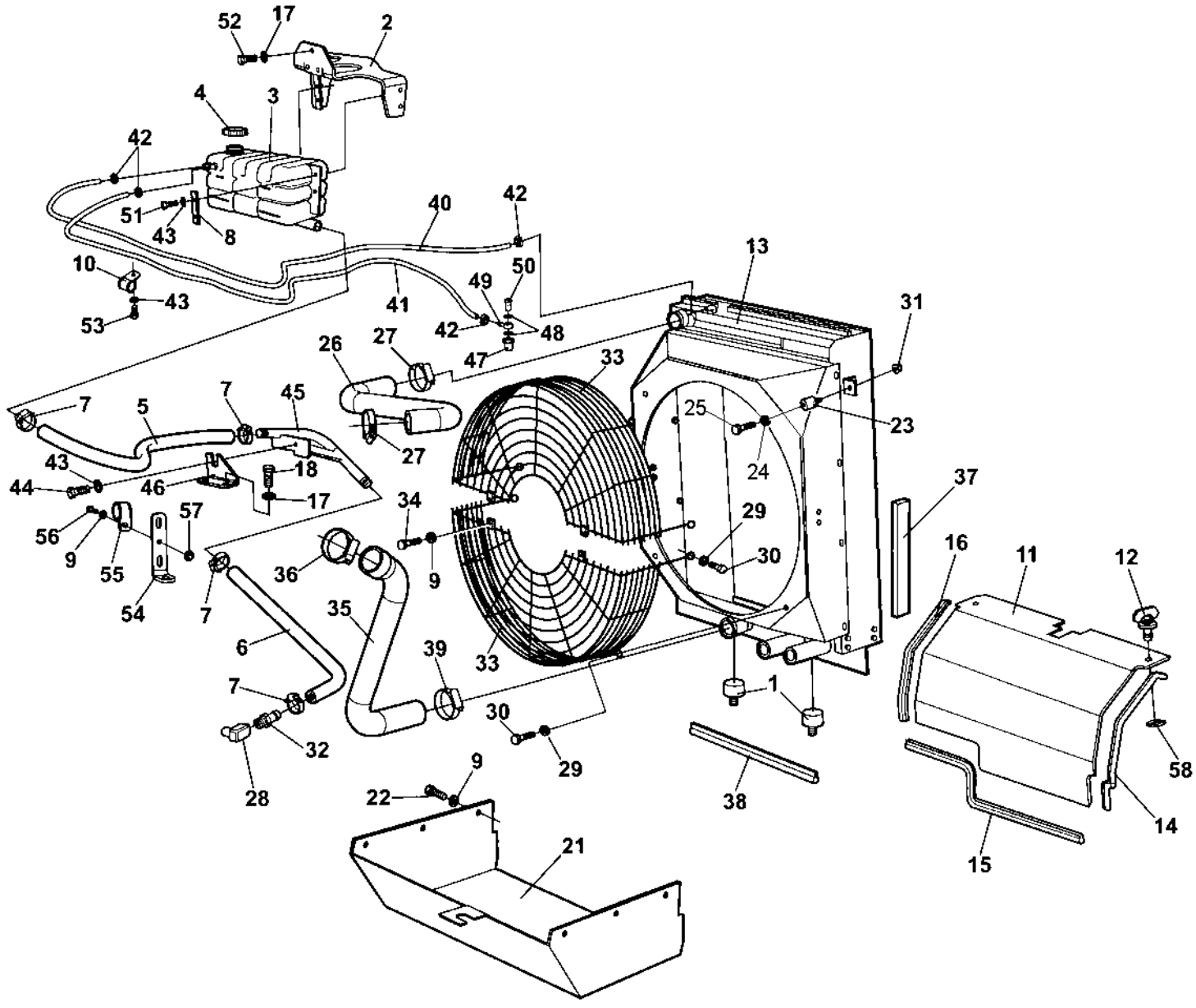

Cooling system

Item	Part No	Rem	Qty	Description		Code
55	4700921050		1	Clamp		
56	4700500021		1	Screw	M8-1,25x25 8.8	
57	4700902286		1	Lock nut	M8	
58	4700926985		2	Quick lock washer		

Combustion air system

16915

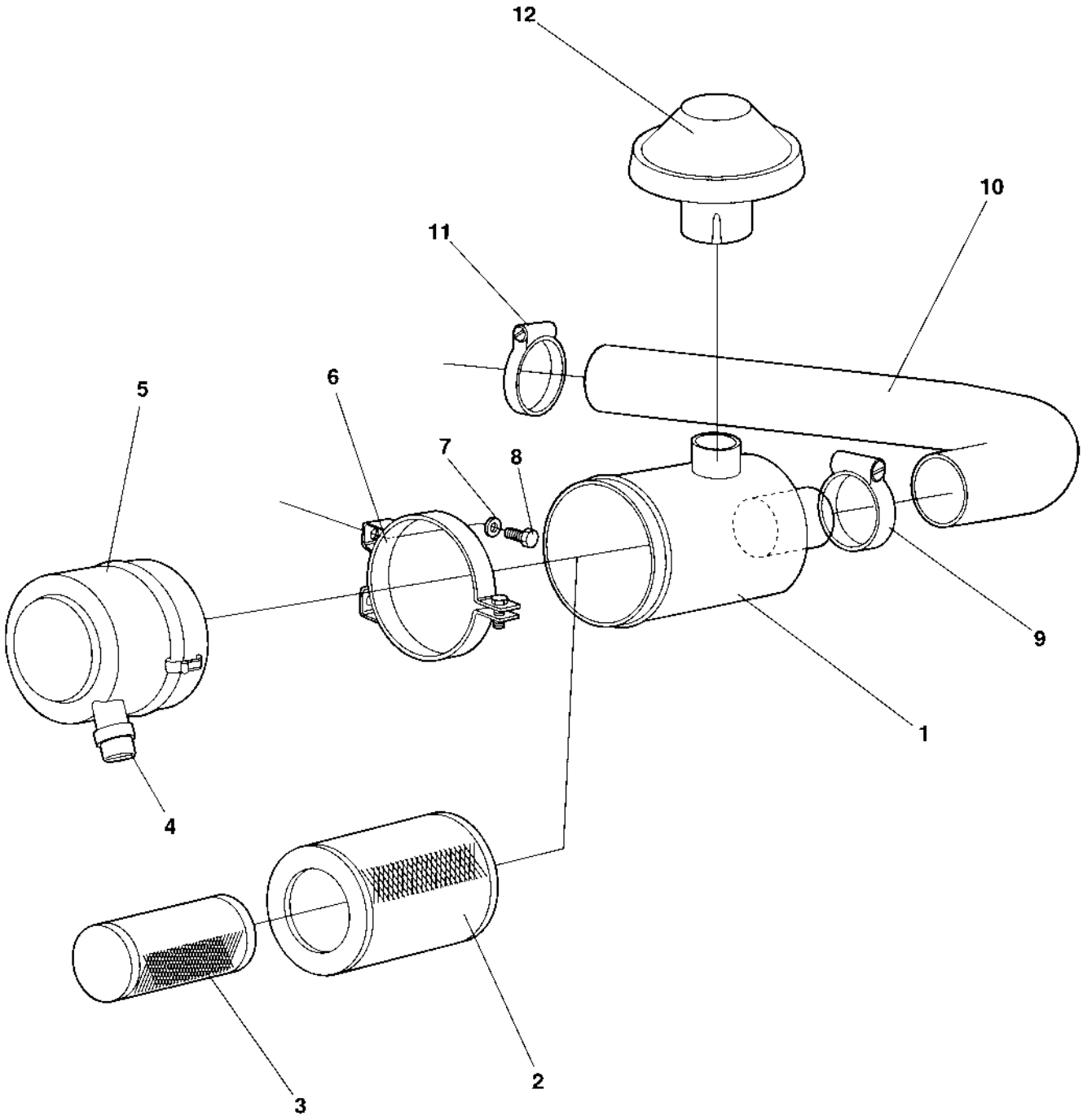

Combustion air system

Item	Part No	Rem	Qty	Description		Code
1	4700380161		1	Air cleaner		
2	4700394686	A	1	.Air filter element, main		A
3	4700394687	B	1	.Air filter element, safety		A
4	4700908399		1	.Vacuator valve		D
5	4700908452		1	.Cover		
6	4700813791		2	Mounting band		
7	4700904229		4	Washer	8,4x16x1,5	
8	4700500019		4	Screw	M8x16H 8.8 A2K	
9	4700904060		1	Hose clamp		
10	4700380157		1	Air inlet hose		
11	4700904059		1	Hose clamp		
12	4700499266		1	Protection cover		

A) Main
B) Safety

Combustion air system

16915-1

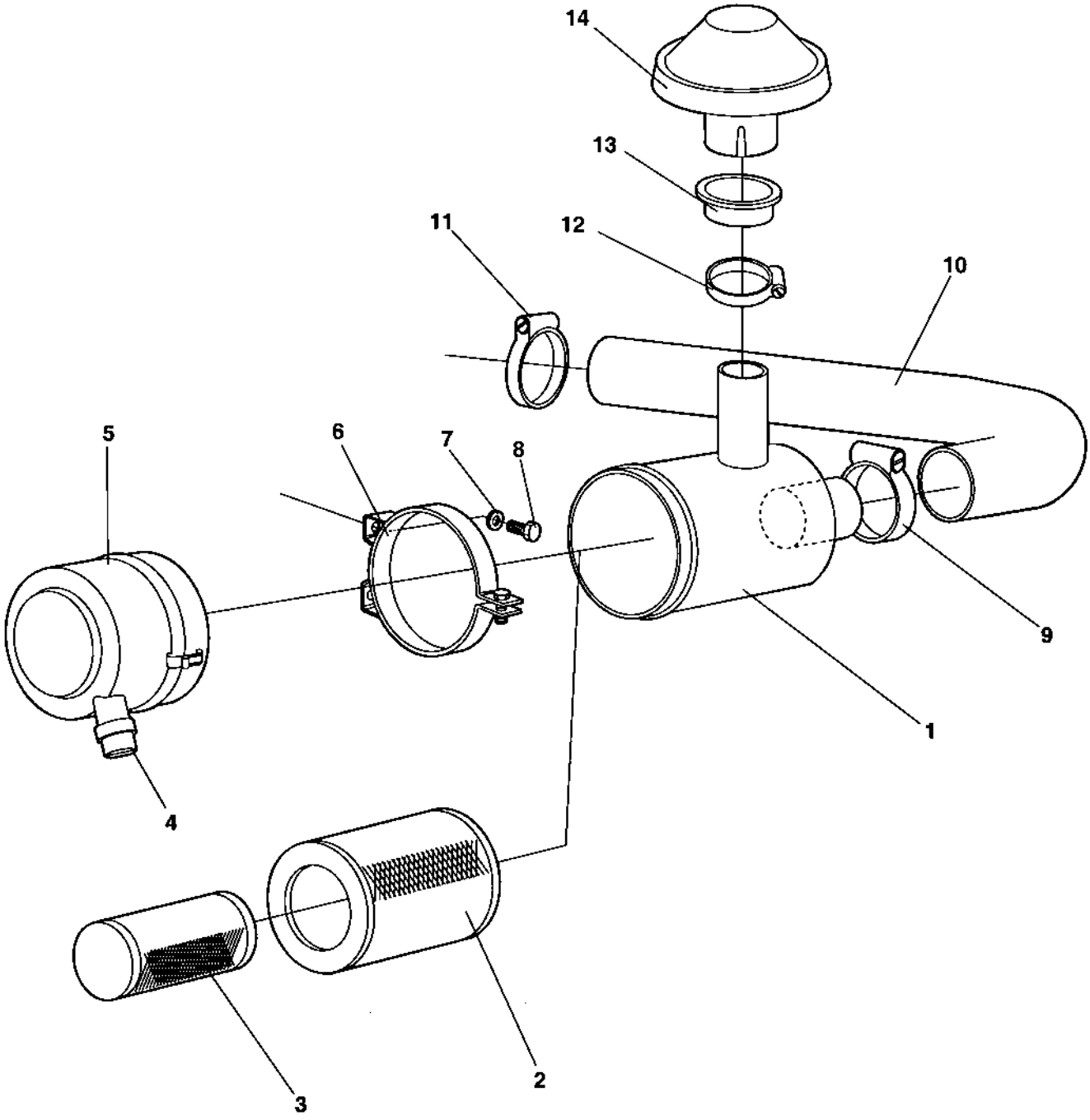

Combustion air system

Item	Part No	Rem	Qty	Description		Code
1	4700380161		1	Air cleaner		
2	4700394686	A	1	.Air filter element, main		A
3	4700394687	B	1	.Air filter element, safety		A
4	4700908399		1	.Vacuator valve		D
5	4700908452		1	.Cover		
6	4700813791		2	Mounting band		
7	4700904229		4	Washer	8,4x16x1,5	
8	4700500019		4	Screw	M8x16H 8.8 A2K	
9	4700904060		1	Hose clamp		
10	4700380157		1	Air inlet hose		
11	4700392810		1	Hose clamp		
12	4700904060		1	Hose clamp		
13	4700348309		1	Rubber bushing		
14	4700499266		1	Protection cover		

A) Main
B) Safety

Combustion air system

18663

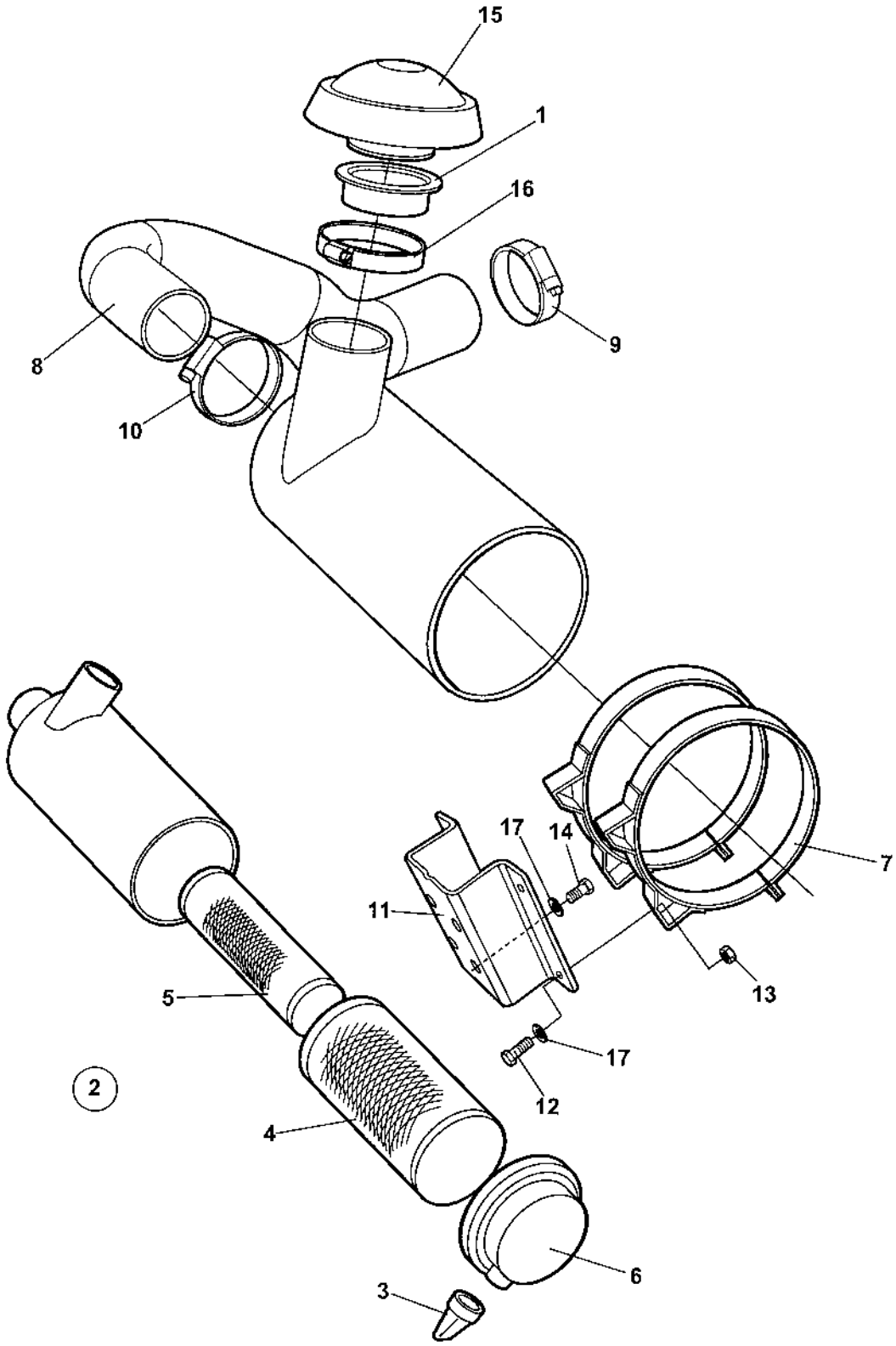

Combustion air system

Item	Part No	Rem	Qty	Description		Code
1	4700348309		1	Rubber bushing		
2	4700394680		1	Air cleaner Cpl		
3	4700908399		1	.Vacuator valve		D
4	4700394686		1	.Air filter element, main		A
5	4700394687		1	.Air filter element, safety		A
6	4700395022		1	.Cover		
7	4700813791		2	Mounting band		
8	4700393666		1	Air inlet hose		
9	4700392810		1	Hose clamp		
10	4700389600		1	Hose clamp		
11	4700393085		1	Filter bracket		
12	4700500021		4	Screw	M8-1,25x25 8.8	
13	4700586003		4	Lock nut	M8	
14	4700500053		4	Screw	M8x20H 8.8	
15	4700499266		1	Protection cover		
16	4700904060		1	Hose clamp		
17	4700904556		8	Washer	8,4x16x3,0	

Fuel system

16916

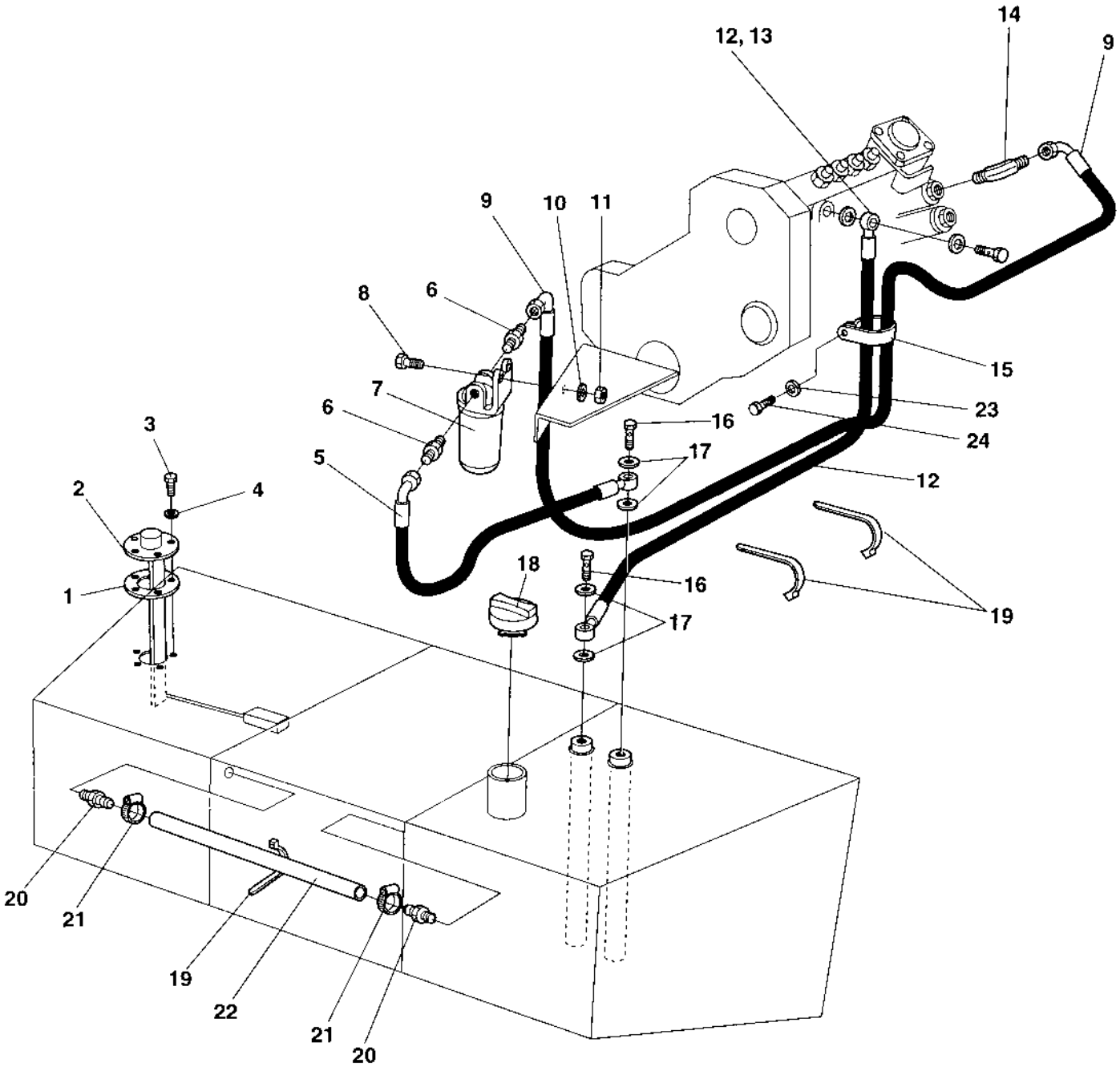

Fuel system

Item	Part No	Rem	Qty	Description		Code
1	4700945777		1	Gasket		
2	4700904695		1	Fuel level sender		D
3	4700500006		5	Screw	M5x16	
4	4700904281		5	Washer		
5	4700381081		1	Fuel hose		
6	4700900249		2	Straight connector		
7	4700900247		1	Fuel pre-filter		
8	4700500040		2	Screw	M6-1x20 8,8	
9	4700381082		1	Fuel hose		
10	4700904639		2	Washer	6,7x14x1,5	
11	4700902285		2	Lock nut	M6	
12	4700380262		1	Fuel hose		
13	4700313001		1	Hose clamp		
14	4700234619		1	Adapter		
15	4700921050		1	Clamp		
16	4700330171		2	Hollow screw		
17	4700747282		4	Copper washer		
18	4700373460		1	Fuel cap		D
19	4700313041		N	Cable ties		
20	4700373574		2	Hose connection		
21	4700313002		2	Hose clamp	13-20 mm	
22	4700244054	A	1	Hose reinforced		
23	4700603018		2	Washer	10x18x4	
24	4700500022		1	Screw	M8x30H 8.8 A2K	

A) L=650 mm

Fuel system

16916-2

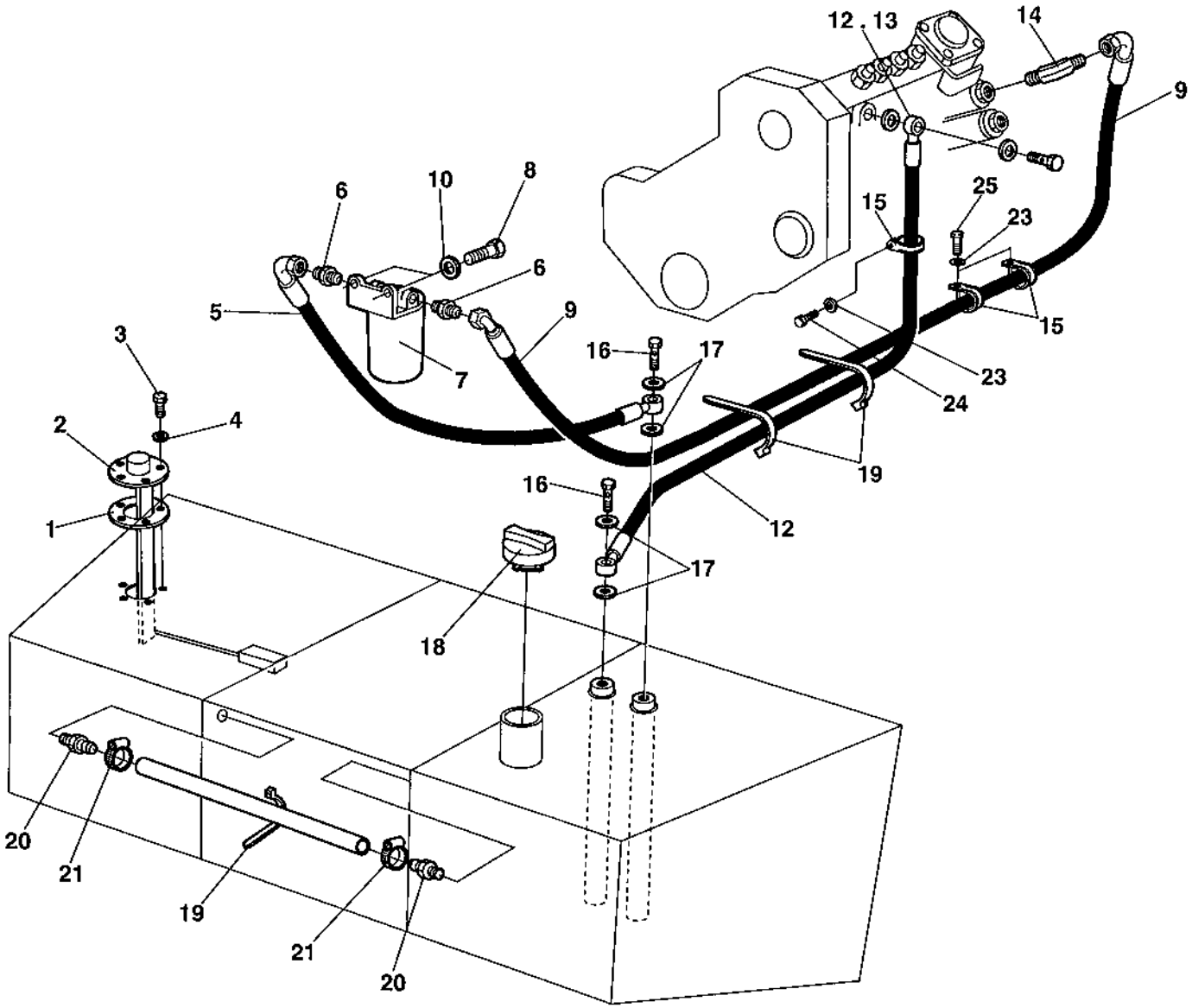

Fuel system

Item	Part No	Rem	Qty	Description		Code
1	4700945777		1	Gasket		
2	4700904695		1	Fuel level sender		D
3	4700500006		5	Screw	M5x16	
4	4700904281		5	Washer		
5	4700386882		1	Fuel hose		
6	4700900249		2	Straight connector		
7	4700939507		1	Fuel filter		A
8	4700500019		2	Screw	M8x16H 8.8 A2K	
9	4700387265		1	Fuel hose		
10	4700904229		2	Washer	8,4x16x1,5	
11				Not used on this model		
12	4700380262		1	Fuel hose		
13	4700313001		1	Hose clamp		
14	4700234619		1	Adapter		
15	4700902558		3	Clamp		
16	4700330171		2	Hollow screw		
17	4700747282		4	Copper washer		
18	4700373460		1	Fuel cap		D
19	4700313041		N	Cable ties		
20	4700373574		2	Hose connection		
21	4700313002		2	Hose clamp	13-20 mm	
22	4700244054	A	1	Hose reinforced		
23	4700603018		4	Washer	10x18x4	
24	4700500022		1	Screw	M8x30H 8.8 A2K	
25	4700500021		2	Screw	M8-1,25x25 8.8	

A) L=650 mm

Fuel system

18665

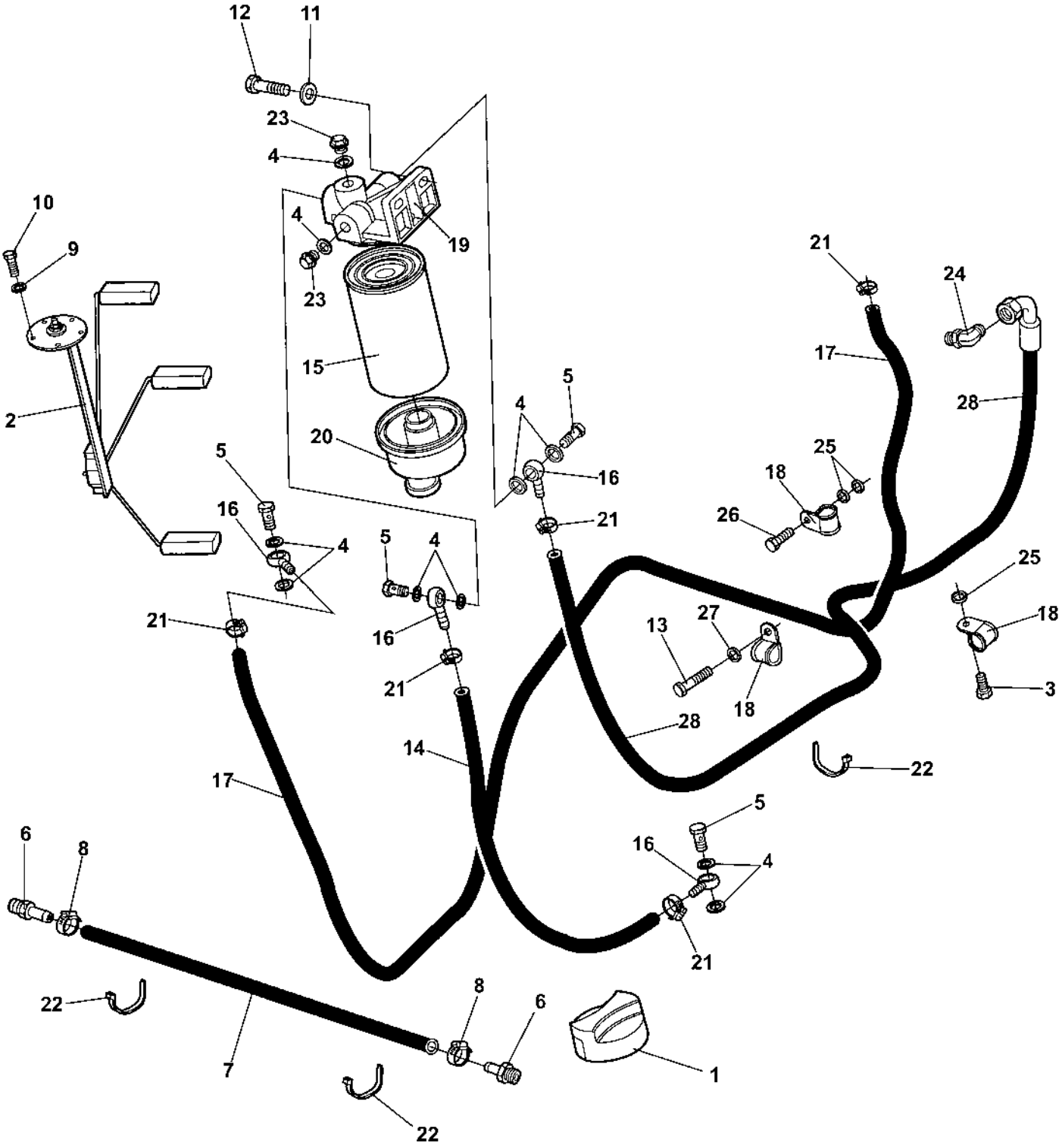

Fuel system

Item	Part No	Rem	Qty	Description		Code
1	4700373460		1	Fuel cap		D
2	4700904695		1	Fuel level sender		D
	4700945777		1	Gasket		
3	4700500021		2	Screw	M8-1,25x25 8.8	
4	4700747282		10	Copper washer		
5	4700330171		4	Hollow screw		
6	4700373574		2	Hose connection		
7	4700244054	A	1	Hose reinforced		
8	4700313002		2	Hose clamp	13-20 mm	
9	4700904281		5	Washer		
10	4700500006		5	Screw	M5x16	
11	4700904230		2	Washer		
12	4700500029		2	Screw		
13	4700500067		2	Screw	M8-1,25x55 8,8	
14	4700904984	B	1	Fuel hose		D
15	4700939404		1	Fuel filter element		A
16	4700901121		4	Banjo fitting	14x6 Hose 8	
17	4700904984	C	1	Fuel hose		D
18	4700902558		5	Clamp		
19	4700939403		1	Filter head		
20	4700939405		1	Bowl		
21	4700313001		5	Hose clamp		
22	4700313041			Cable ties		
23	4700903190		2	Steel plug		
24	4700234619		1	Adapter		
25	4700603018		4	Washer	10x18x4	
26	4700500022		1	Screw	M8x30H 8.8 A2K	
27	4700904229		2	Washer	8,4x16x1,5	
28	4700390705		1	Fuel hose		

A) L=0,640M
B) L=0,550M
C) L=2,120M

Exhaust system

16917

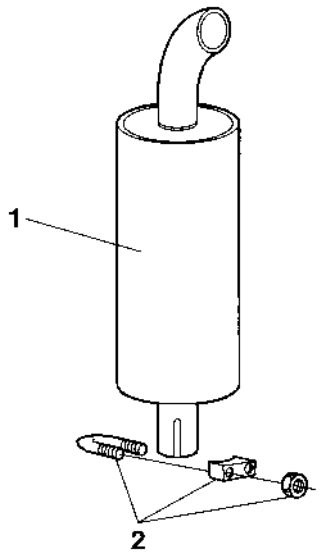

Exhaust system

Item	Part No	Rem	Qty	Description	Code
1	4700380158		1	Muffler	
2	4700904876		1	Pipe clamp	

Exhaust system

17661

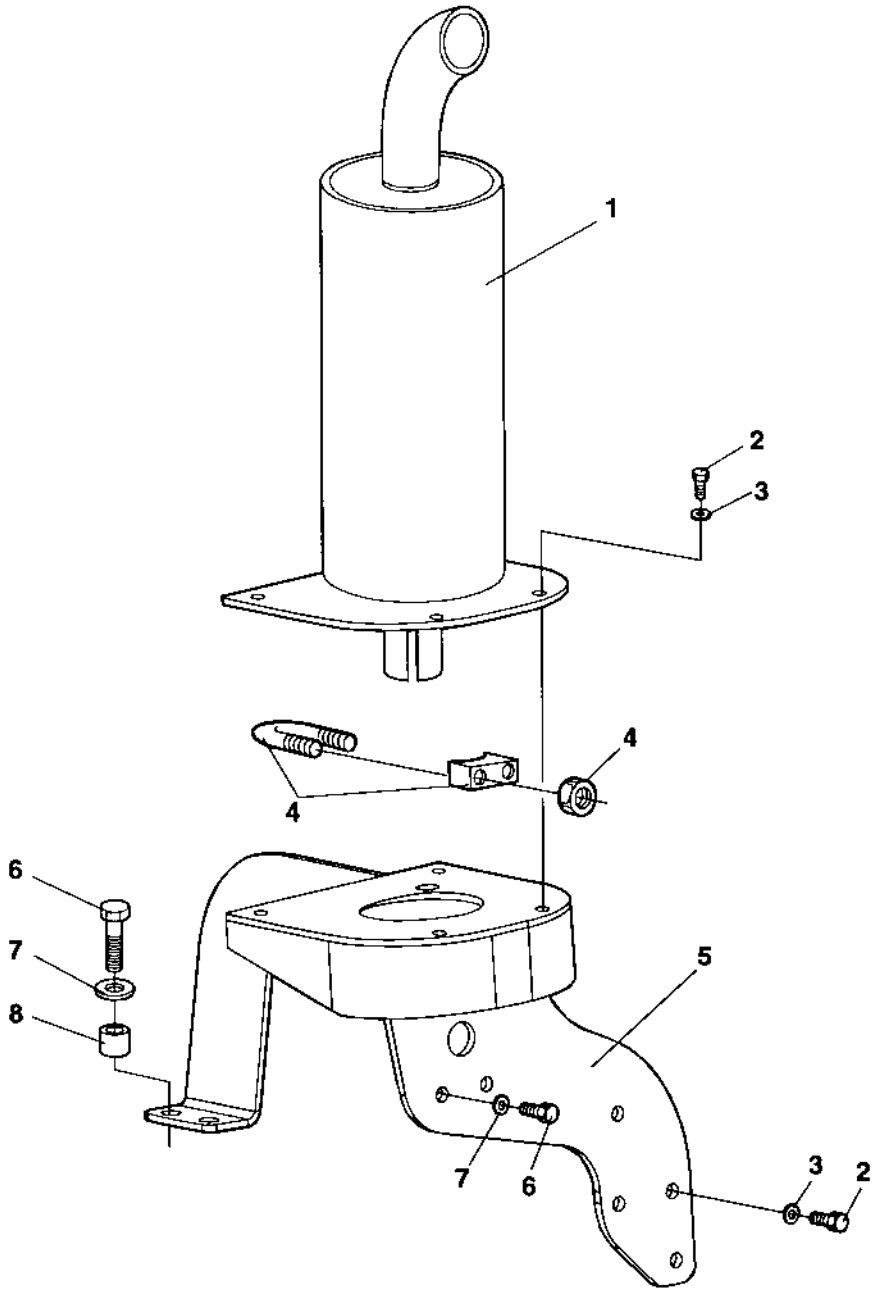

Exhaust system

Item	Part No	Rem	Qty	Description		Code
1	4700388751		1	Muffler		
2	4700500021		7	Screw	M8-1,25x25 8.8	
3	4700904640		7	Washer	8,4x22x3	
4	4700313094		1	Pipe clamp		
5	4700386448		1	Bracket		
6	4700500091		4	Screw		
7	4700904230		4	Washer		
8	4700382093		2	Spacer sleeve		

Exhaust system

17661-1

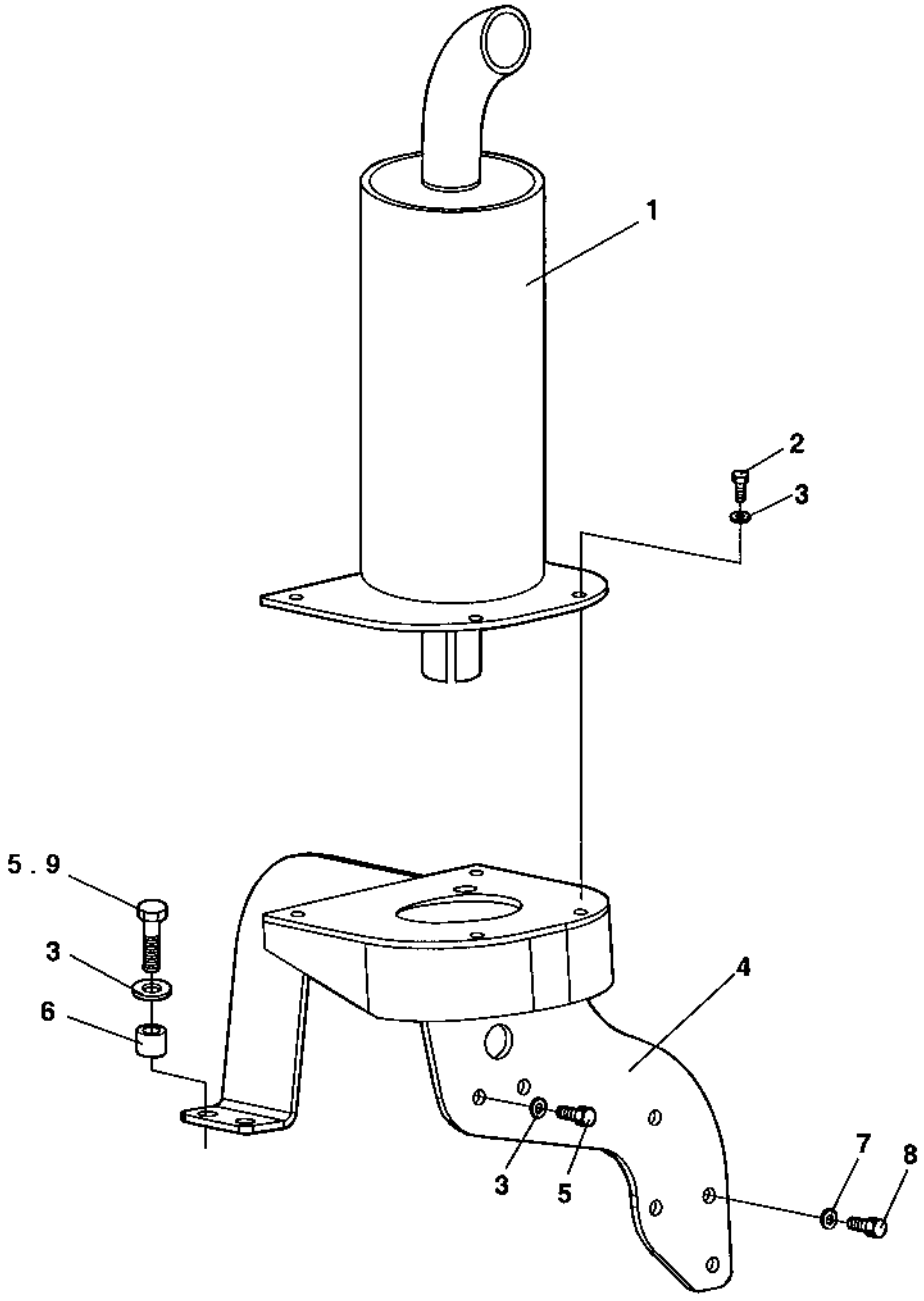

Exhaust system

Item	Part No	Rem	Qty	Description		Code
1	4700388751		1	Muffler		
2	4700500030		4	Screw		
3	4700904557		8	Washer		
4	4700388750	A	1	Bracket		
	4700395552		1	Bracket		
5	4700500091		4	Screw		
6	4700382093		2	Spacer sleeve		
7	4700904640		3	Washer	8,4x22x3	
8	4700500021		3	Screw	M8-1,25x25	8.8
9	4700500032	B	2	Screw	M10 x 55	

A) Replaced by P/N 4700395552 together with Screws P/N 4700500032 x 2.
B) Used together with Bracket P/N 4700395552.

Exhaust system

18664

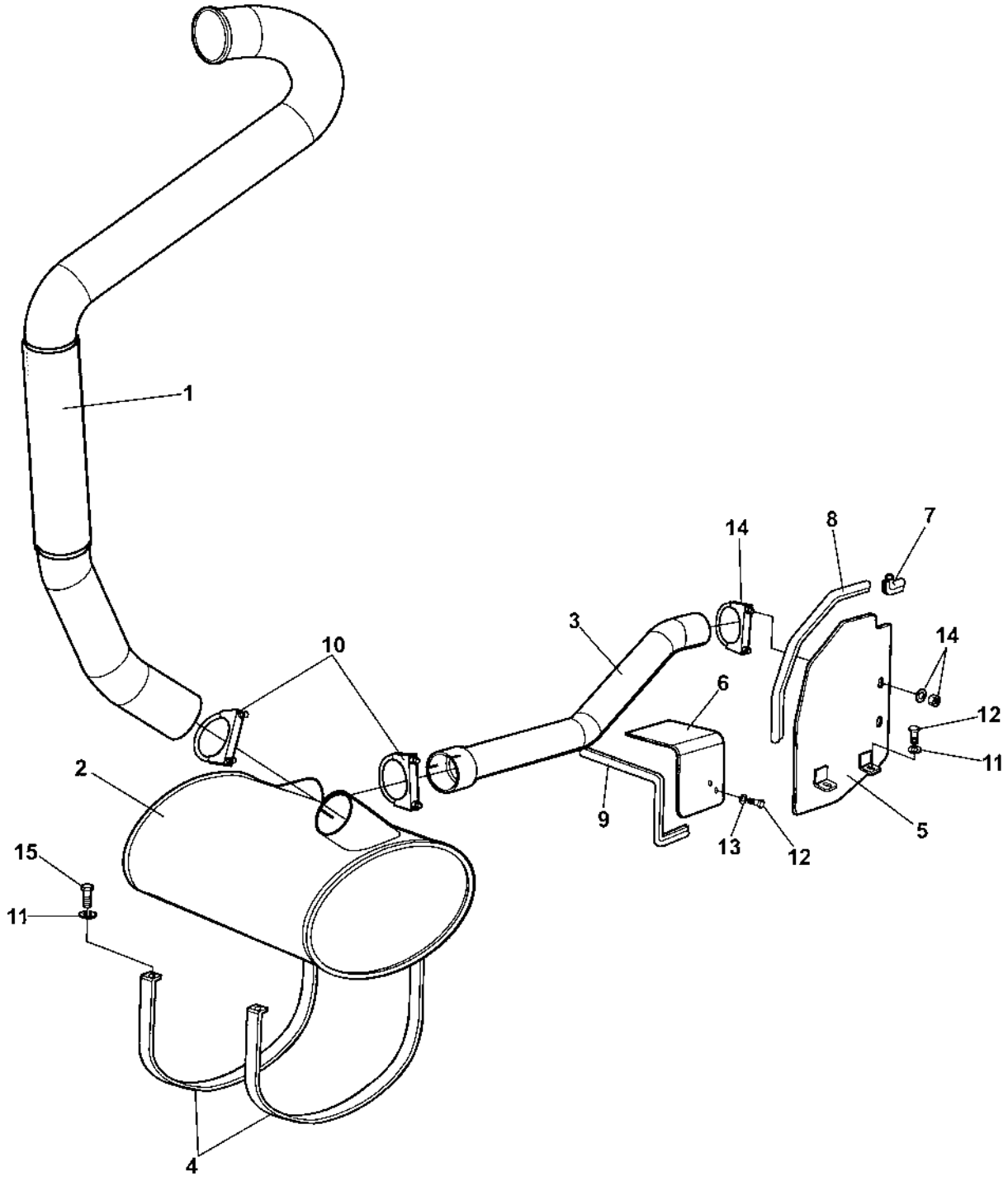

Exhaust system

Item	Part No	Rem	Qty	Description	Code
1	4700393661		1	Exhaust pipe	
2	4700392295		1	Muffler	
3	4700392296		1	Exhaust pipe	
4	4700386789		2	Clamp	
5	4700377098		1	Thermal guard	
6	4700392747		1	Thermal guard	
7	4700902166	A	1XL	Edge trim	
8	4700902166	B	1XL	Edge trim	
9	4700902166	C	1XL	Edge trim	
10	4700313094		2	Pipe clamp	
11	4700904640		6	Washer	8,4x22x3
12	4700500053		4	Screw	M8x20H 8.8
13	4700904229		4	Washer	8,4x16x1,5
14	4700313093		1	Pipe clamp	
15	4700500022		4	Screw	M8x30H 8.8 A2K

A) L=0.080M
B) L=0,410M
C) L=0,380M

Transmission

Item	Part No	Rem	Qty	Description	Code
10				Rear axle and wheels Up to 65X20819 (Page 124)	
15				Rear axle and wheels From 65X20820 Up to 65X21197 (Page 126)	
16				Rear axle and wheels From 65X21198 Up to 65X22222 (Page 128)	
17				Rear axle and wheels From 65X22223 Up to 65X22357 (Page 130)	
18				Rear axle and wheels From 65X22358 Up to 65X22381 (Page 132)	
19				Rear axle and wheels From 65X22382 (Page 134)	
20	4700370112			Rear axle Up to 65X20819 (Page 136)	
21	4700383857			Rear axle From 65X20820 (Page 144)	
60	4700372941			Rear axle Up to 65X20819 (Page 152)	No-Spin, Option
70	4700383856			Rear axle From 65X20820 (Page 160)	No-Spin, Option

Rear axle and wheels

15984

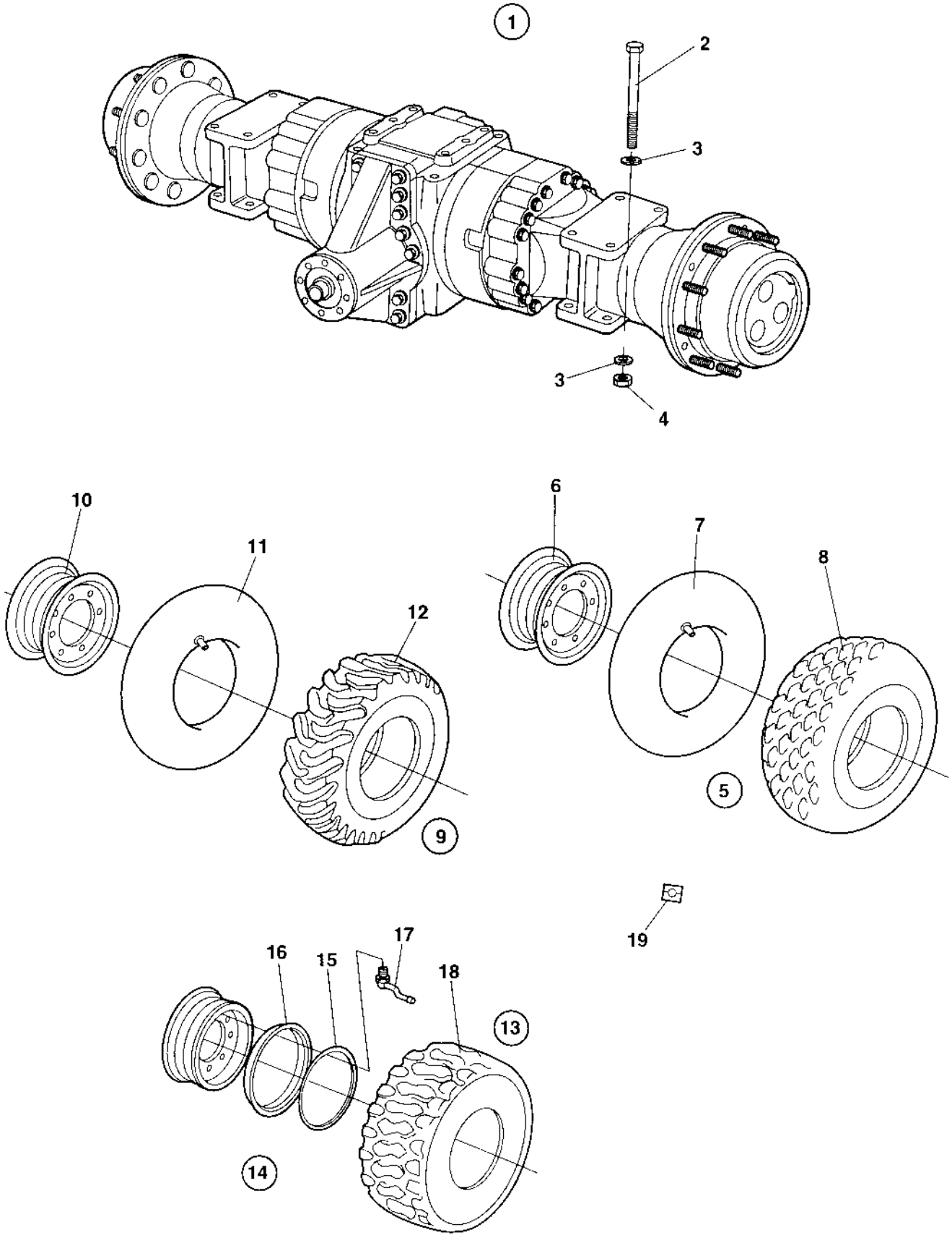

Rear axle and wheels

Item	Part No	Rem	Qty	Description		Code
1	4700370112		1	Rear axle (Page 136)		
2	4700929217		8	Screw		
3	4700904233		16	Washer	21x36x3	
4	4700901145		8	Lock nut	M20-10	
5	4700370970		2	Wheel, cpl		
	4700371945	A	2	Wheel, cpl		
6	4700370680		1	.Rim		
7	4700813380		1	.Inner tube		D
8	4700813379		1	.Tyre		D
9	4700373168	B	1	Tractor wheel, cpl		
	4700373169	C	1	Tractor wheel, cpl		
	4700371946	D	1	Tractor wheel, cpl		
	4700371947	E	1	Tractor wheel, cpl		
10	4700372913		1	.Rim		
11	4700373176		1	.Tube		D
12	4700373131		1	.Tyre		D
13	4700371179	F	2	Wheel, tubeless, cpl		
	4700371948	A	2	Wheel, tubeless, cpl		
14	4700370961		1	.Rim cpl		
15	4700901443		1	..Snap ring		
16	4700901444		1	..Side ring		
17	4700901219		1	.Air charging valve		
18	4700901218		1	.Tyre		D
19	4700991990	G	2	Decal "TYRE PRESSURE"	110-150kPA/16-21psi	
	4700390900	G	1	Decal "TYRE PRESSURE"	110kPA/16psi	
	4700355983	H	2	Decal "TYRE PRESSURE"	200kPa/29psi	
	4700903985	I	2	Decal "SAFETY", "TYRE IN BALLAST"		

A) Liquidfilled, option
B) Left, option
C) Right, option
D) Liquidfilled, left, option
E) Liquidfilled, right, option
F) Option
G) Used with item 4700370970, 4700371945, 4700373168, 4700373169, 4700371946, 4700371947.
H) Used with item 4700371179, 4700371948.
I) Used with item 4700371945, 4700371946, 4700371947, 4700371948.

Rear axle and wheels

15984-1

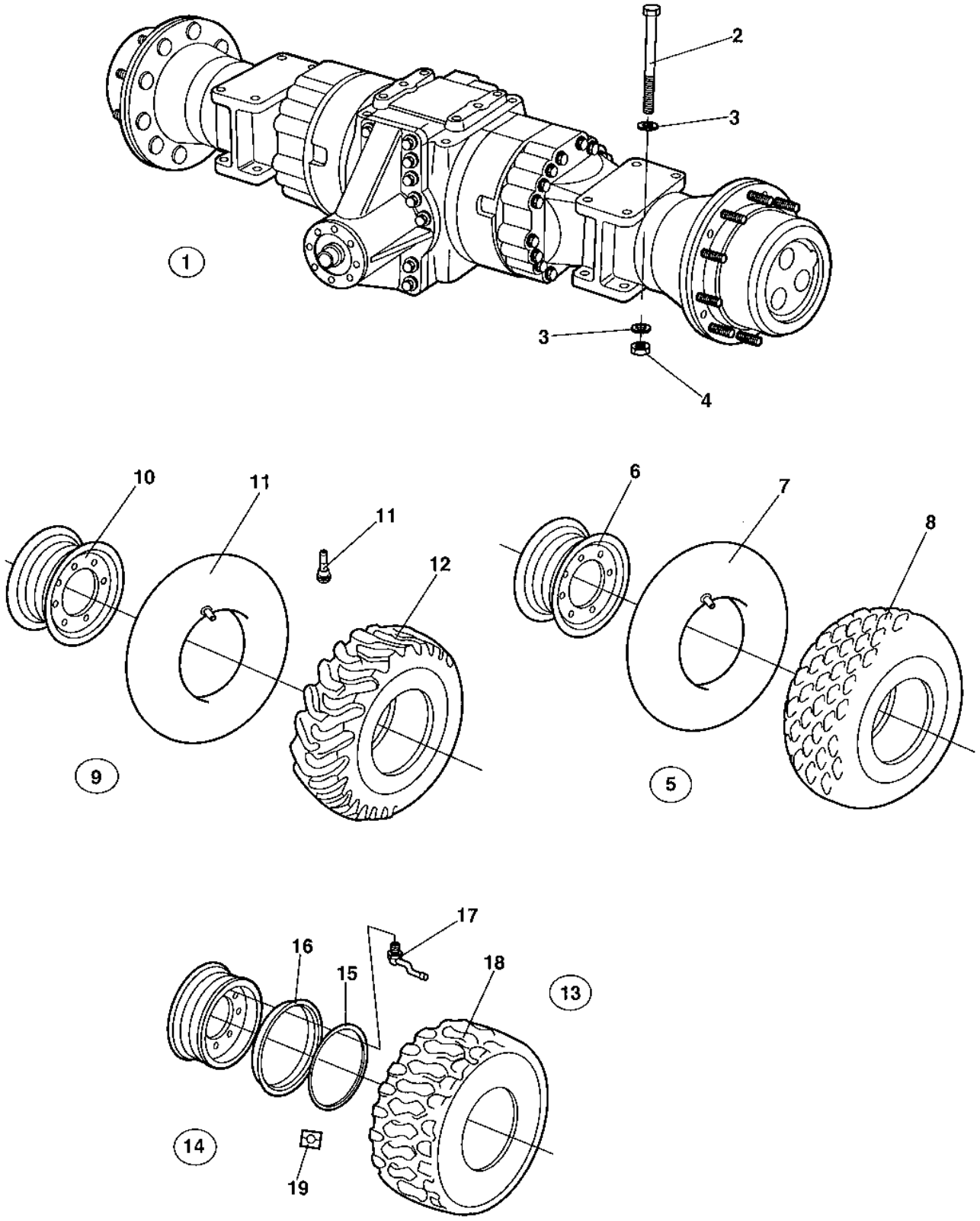

Rear axle and wheels

Item	Part No	Rem	Qty	Description		Code
1	4700383857		1	Rear axle (Page 144)		
2	4700929217		8	Screw		
3	4700904233		16	Washer	21x36x3	
4	4700901145		8	Lock nut	M20-10	
5	4700383976		2	Wheel, cpl		
	4700383977	A	2	Wheel, cpl		
	4700388145	A,G	1	Wheel, cpl		
	4700388146	G	1	Wheel, cpl		
6	4700383933		1	.Rim		
7	4700813380		1	.Inner tube		D
8	4700813379		1	.Tyre		D
	4700791573	J,G	1	.Tyre		D
9	4700383980	B	1	Tractor wheel, cpl		
	4700383981	C	1	Tractor wheel, cpl		
	4700383978	D	1	Tractor wheel, cpl		
	4700383979	E	1	Tractor wheel, cpl		
10	4700383956		1	.Rim		
11	4700373176		1	.Tube		D
	4700902239	K	1	.Air charging valve	Straight	B
12	4700373131		1	.Tyre		D
13	4700383974	F	2	Wheel, tubeless, cpl		
	4700383975	A	2	Wheel, tubeless, cpl		
14	4700383955		1	.Rim cpl		
15	4700901443		1	..Snap ring		
16	4700901444		1	..Side ring		
17	4700901219		1	.Air charging valve		
18	4700901218		1	.Tyre		D
19	4700355983	H	2	Decal "TYRE PRESSURE"	200kPa/29psi	
	4700903985	I	2	Decal "SAFETY", "TYRE IN BALLAST"		

A) Liquidfilled, option
B) Left, option
C) Right, option
D) Liquidfilled, IRight, option
E) Liquidfilled, Left, option
F) Option
G) For Chinese market only.
H) Used with item 4700383974. 4700383975.
I) Used with item 4700383977, 4700383978, 4700383979.
J) Used together with 4700388145 and 4700388146.
K) Used together with Non Liquedfilled Tubless Tractor tyres.

Rear axle and wheels

18225

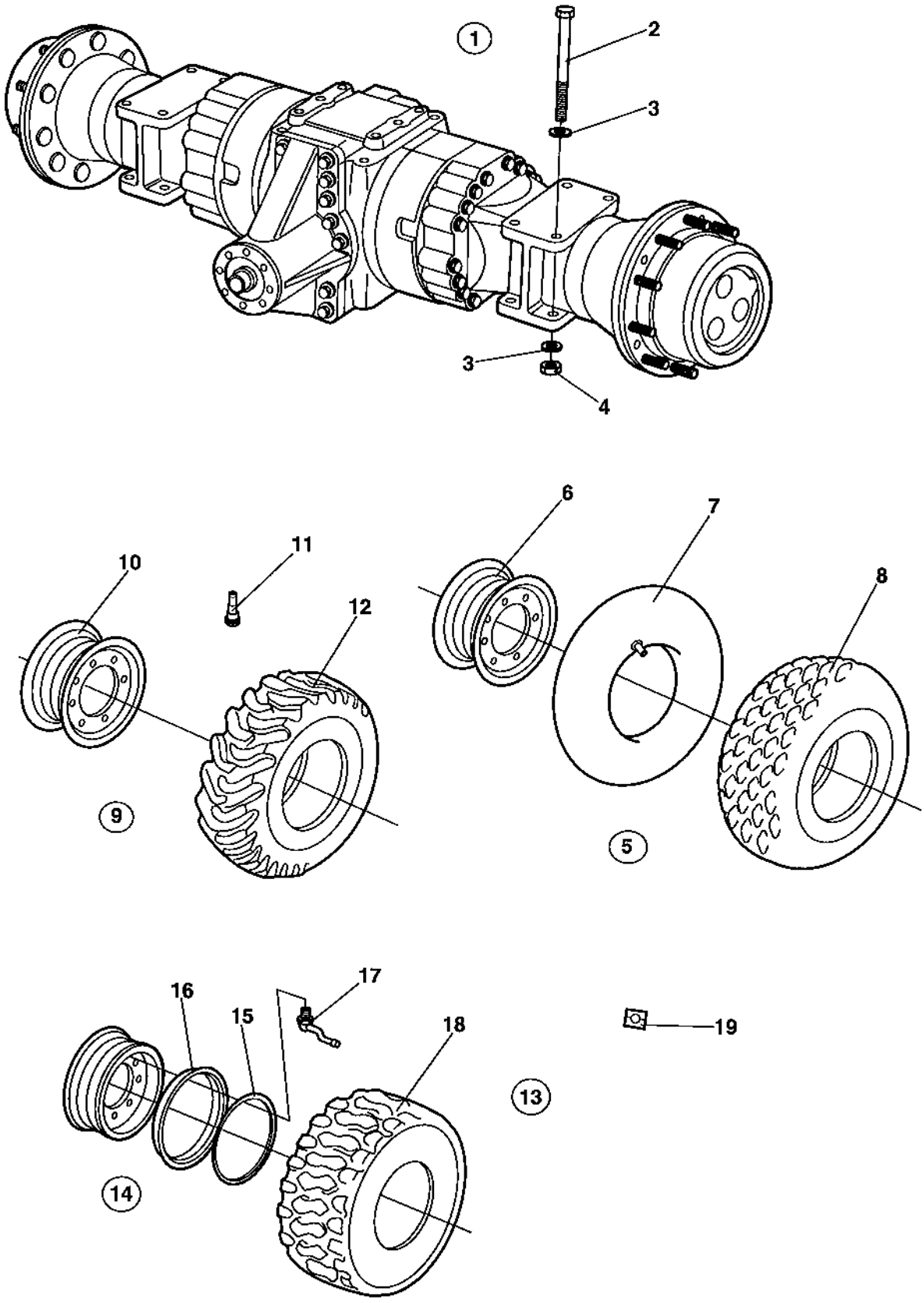

Rear axle and wheels

Item	Part No	Rem	Qty	Description		Code
1	4700383857		1	Rear axle (Page 144)		
2	4700929217		8	Screw		
3	4700904233		16	Washer	21x36x3	
4	4700901145		8	Lock nut	M20-10	
5	4700383976		2	Wheel, cpl		
	4700383977	A	2	Wheel, cpl		
	4700388145	A,G	1	Wheel, cpl		
	4700388146	G	1	Wheel, cpl		
6	4700383933		1	.Rim		
7	4700813380		1	.Inner tube		D
8	4700813379		1	.Tyre		D
	4700791573	J,G	1	.Tyre		D
9	4700379412	B	1	Tractor wheel, cpl		
	4700379411	C	1	Tractor wheel, cpl		
	4700379413	D	1	Tractor wheel, cpl		
	4700379414	E	1	Tractor wheel, cpl		
10	4700383933		1	.Rim		
11	4700792261		1	.Air charging valve	Straight	B
12	4700379410		1	.Tyre		D
13	4700383974	F	2	Wheel, tubeless, cpl		
	4700383975	K	2	Wheel, tubeless, cpl		
14	4700383955		1	.Rim cpl		
15	4700901443		1	..Snap ring		
16	4700901444		1	..Side ring		
17	4700791175		1	.Air charging valve		
	4700791176		1	.Valve foot		
18	4700901218		1	.Tyre		D
19	4700355983	H	2	Decal "TYRE PRESSURE"	200kPa/29psi	
	4700903985	I	2	Decal "SAFETY", "TYRE IN BALLAST"		

A) Liquidfilled, option.
B) Left, option.
C) Right, option.
D) Liquidfilled tyre, right, option.
E) Liquidfilled tyre, left, option.
F) Option, Michelin branded.
G) For Chinese market only.
H) Used with item 13, 4700383974. 4700383975.
I) Used with Liqued filled tyres.
J) Used together with 4700388145 and 4700388146.
K) Liquidfilled, option, Michelin branded.

Rear axle and wheels

18225-1

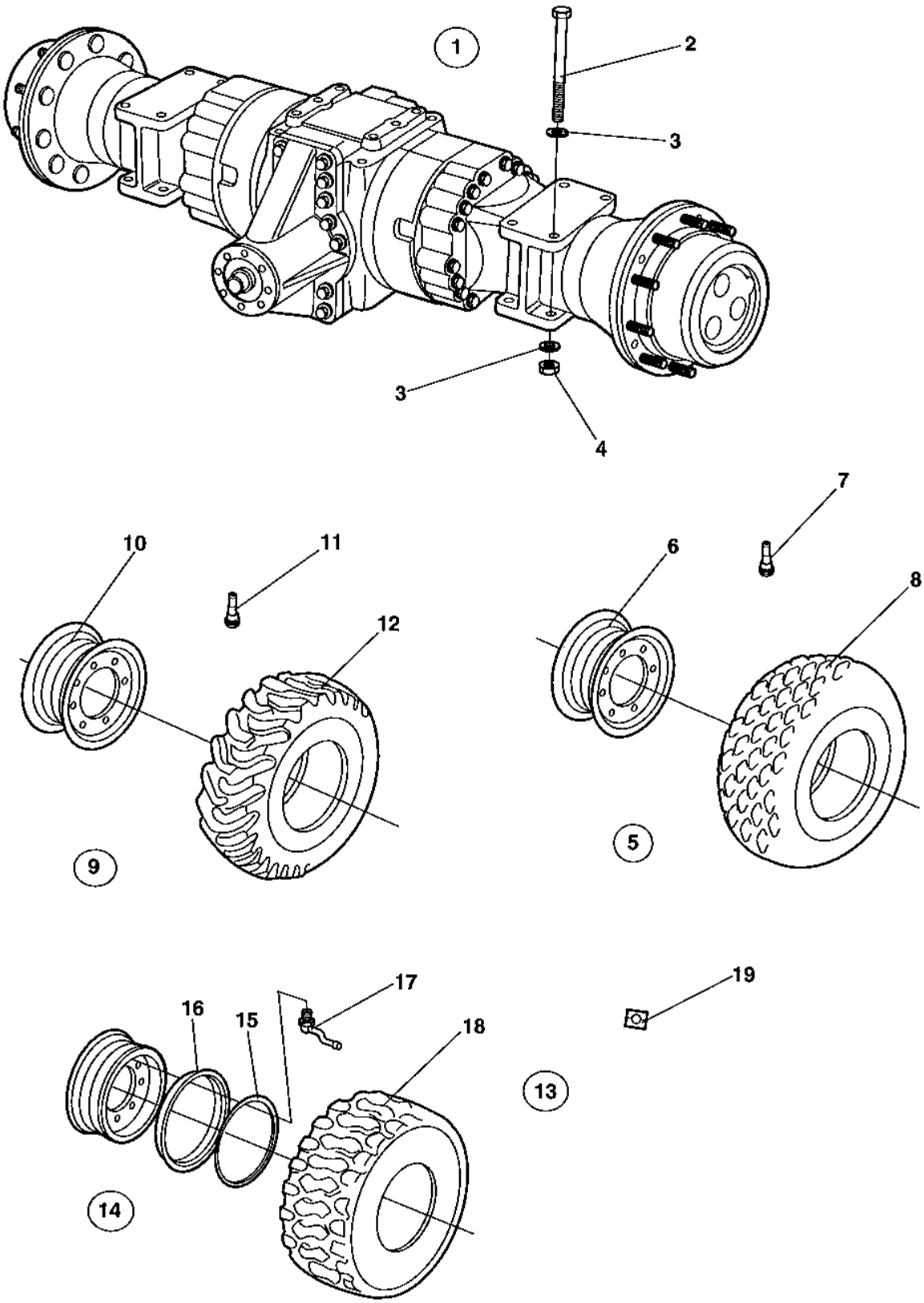

Rear axle and wheels

Item	Part No	Rem	Qty	Description		Code
1	4700383857		1	Rear axle (Page 144)		
2	4700929217		8	Screw		
3	4700904233		16	Washer	21x36x3	
4	4700901145		8	Lock nut	M20-10	
5	4700379631		2	Wheel, cpl		
	4700379691	A	2	Wheel, cpl		
	4700388145	A,G	1	Wheel, cpl		
	4700388146	G	1	Wheel, cpl		
6	4700383933		1	.Rim		
7	4700792261		1	.Air charging valve	Straight	B
8	4700379632		1	.Tyre		D
	4700791573	J,G	1	.Tyre		D
9	4700379412	B	1	Tractor wheel, cpl		
	4700379411	C	1	Tractor wheel, cpl		
	4700379413	D	1	Tractor wheel, cpl		
	4700379414	E	1	Tractor wheel, cpl		
10	4700383933		1	.Rim		
11	4700792261		1	.Air charging valve	Straight	B
12	4700379410		1	.Tyre		D
13	4700383974	F	2	Wheel, tubeless, cpl		
	4700383975	K	2	Wheel, tubeless, cpl		
14	4700383955		1	.Rim cpl		
15	4700901443		1	..Snap ring		
16	4700901444		1	..Side ring		
17	4700791175		1	.Air charging valve		
	4700791176		1	.Valve foot		
18	4700901218		1	.Tyre		D
19	4700355983	H	2	Decal "TYRE PRESSURE"	200kPa/29psi	
	4700903985	I	2	Decal "SAFETY", "TYRE IN BALLAST"		

A) Liquidfilled, option.
B) Left, option.
C) Right, option.
D) Liquidfilled tyre, right, option.
E) Liquidfilled tyre, left, option.
F) Option, Michelin branded.
G) For Chinese market only.
H) Used with item 13, 4700383974. 4700383975.
I) Used with Liqued filled tyres.
J) Used together with 4700388145 and 4700388146.
K) Liquidfilled, option, Michelin branded.

Rear axle and wheels

18225-1

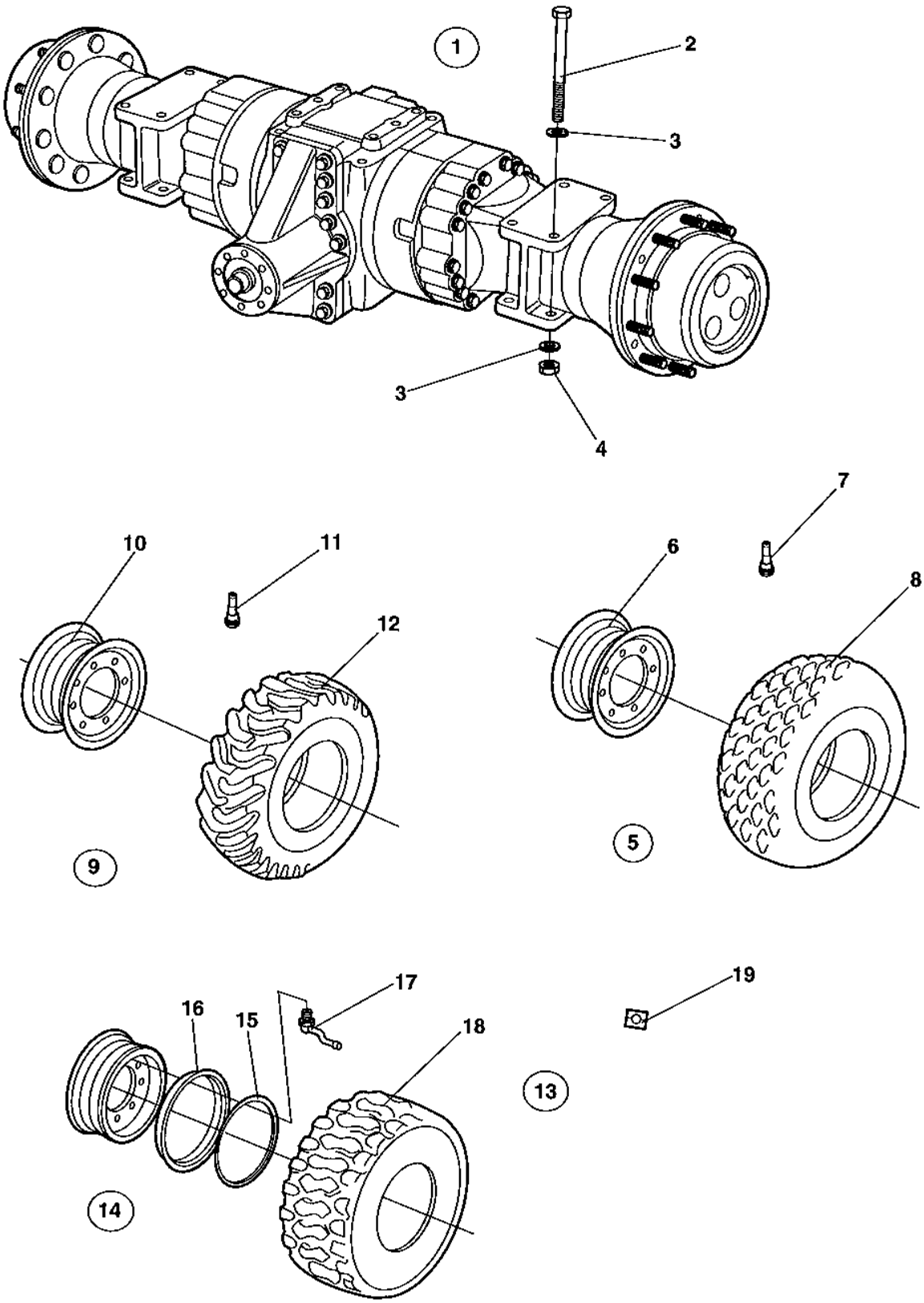

Rear axle and wheels

Item	Part No	Rem	Qty	Description		Code
1	4700383857		1	Rear axle (Page 144)		
2	4700929217		8	Screw		
3	4700904233		16	Washer	21x36x3	
4	4700901145		8	Lock nut	M20-10	
5	4700390590		2	Wheel, cpl		
	4700390762	A	2	Wheel, cpl		
	4700388145	A,G	1	Wheel, cpl		
	4700388146	G	1	Wheel, cpl		
6	4700383933		1	.Rim		
7	4700792261		1	.Air charging valve	Straight	B
8	4700390591		1	.Tyre		D
	4700791573	J,G	1	.Tyre		D
9	4700379412	B	1	Tractor wheel, cpl		
	4700379411	C	1	Tractor wheel, cpl		
	4700379413	D	1	Tractor wheel, cpl		
	4700379414	E	1	Tractor wheel, cpl		
10	4700383933		1	.Rim		
11	4700792261		1	.Air charging valve	Straight	B
12	4700379410		1	.Tyre		D
13	4700383974	F	2	Wheel, tubeless, cpl		
	4700383975	K	2	Wheel, tubeless, cpl		
14	4700383955		1	.Rim cpl		
15	4700901443		1	..Snap ring		
16	4700901444		1	..Side ring		
17	4700791175		1	.Air charging valve		
	4700791176		1	.Valve foot		
18	4700901218		1	.Tyre		D
19	4700355983	H	2	Decal "TYRE PRESSURE"	200kPa/29psi	
	4700903985	I	2	Decal "SAFETY", "TYRE IN BALLAST"		

A) Liquidfilled, option.
B) Left, option.
C) Right, option.
D) Liquidfilled tyre, right, option.
E) Liquidfilled tyre, left, option.
F) Option, Michelin branded.
G) For Chinese market only.
H) Used with item 13, 4700383974. 4700383975.
I) Used with Liqued filled tyres.
J) Used together with 4700388145 and 4700388146.
K) Liquidfilled, option, Michelin branded.

Rear axle and wheels

18225-1

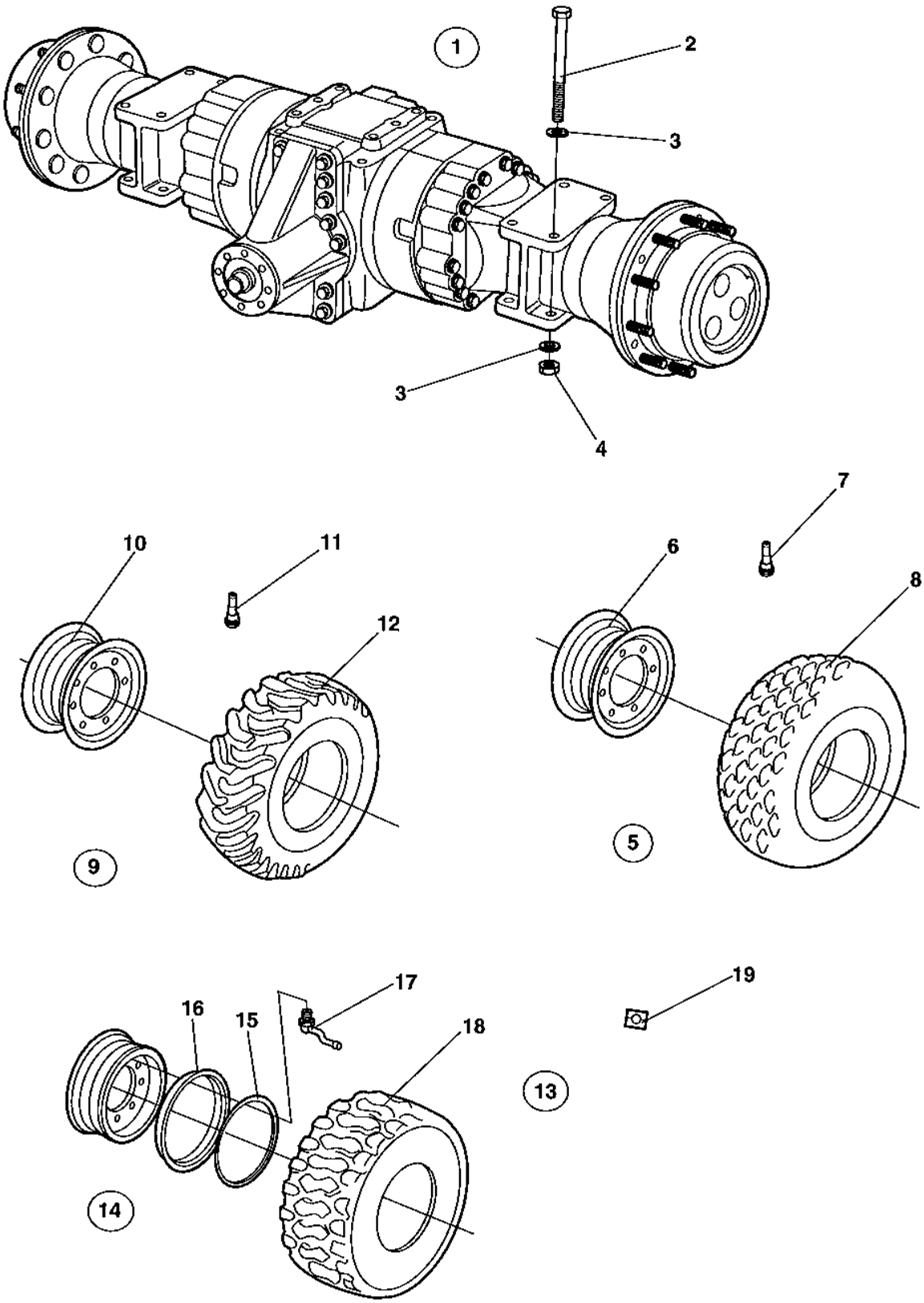

Rear axle and wheels

Item	Part No	Rem	Qty	Description		Code
1	4700383857		1	Rear axle (Page 144)		
2	4700929217		8	Screw		
3	4700904233		16	Washer	21x36x3	
4	4700901145		8	Lock nut	M20-10	
5	4700390590		2	Wheel, cpl		
	4700390762	A	2	Wheel, cpl		
	4700388145	A,G	1	Wheel, cpl		
	4700388146	G	1	Wheel, cpl		
6	4700383933		1	.Rim		
7	4700792261		1	.Air charging valve	Straight	B
8	4700390591		1	.Tyre		D
	4700791573	J,G	1	.Tyre		D
9	4700390588	B	1	Tractor wheel, cpl		
	4700390587	C	1	Tractor wheel, cpl		
	4700390759	D	1	Tractor wheel, cpl		
	4700390760	E	1	Tractor wheel, cpl		
10	4700383933		1	.Rim		
11	4700792261		1	.Air charging valve	Straight	B
12	4700390589		1	.Tyre		D
13	4700383974	F	2	Wheel, tubeless, cpl		
	4700383975	K	2	Wheel, tubeless, cpl		
14	4700383955		1	.Rim cpl		
15	4700901443		1	..Snap ring		
16	4700901444		1	..Side ring		
17	4700791175		1	.Air charging valve		
	4700791176		1	.Valve foot		
18	4700901218		1	.Tyre		D
19	4700355983	H	2	Decal "TYRE PRESSURE"	200kPa/29psi	
	4700903985	I	2	Decal "SAFETY", "TYRE IN BALLAST"		

A) Liquidfilled, option.
B) Left, option.
C) Right, option.
D) Liquidfilled tyre, right, option.
E) Liquidfilled tyre, left, option.
F) Option, Michelin branded.
G) For Chinese market only.
H) Used with item 13, 4700383974. 4700383975.
I) Used with Liqued filled tyres.
J) Used together with 4700388145 and 4700388146.
K) Liquidfilled, option, Michelin branded.

4700370112 Rear axle

15796-1

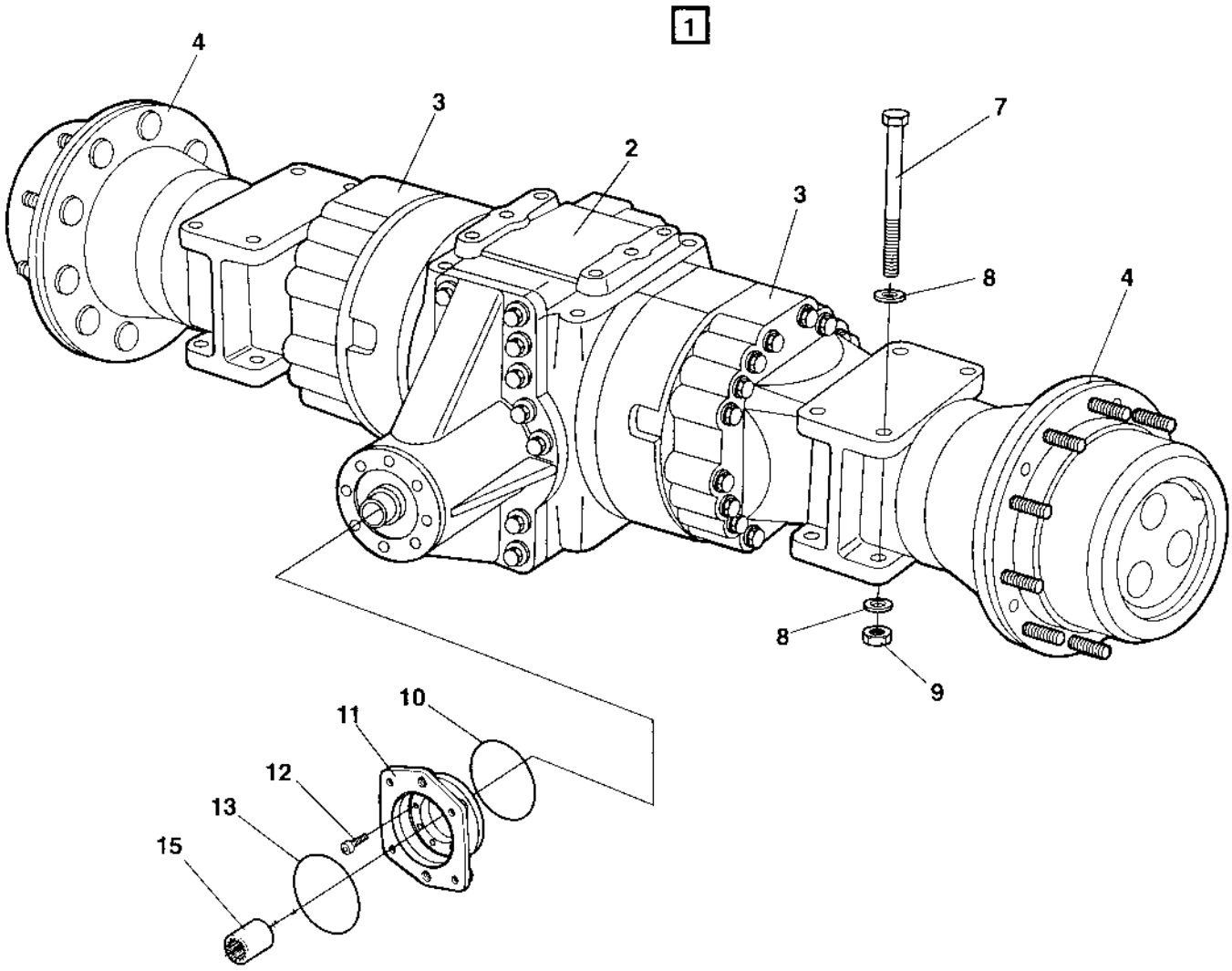

4700370112 Rear axle

Item	Part No	Rem	Qty	Description		Code
1			1	Rear axle		
2			1	.Differential with limited slip (Page 138)		
3			2	.Differential housing and brakes (Page 140)		
4			2	.Planet gear (Page 142)		
7	4700929217		8	Screw		
8	4700904233		16	Washer	21x36x3	
9	4700901145		8	Lock nut	M20-10	
10	4700929648			.O-ring		D
11	4700909583			.Flange		
12	4700909582			.Screw		
13	4700909584			.O-ring		D
15	4700901834			.Splined sleeve		

Differential with limited slip

15798

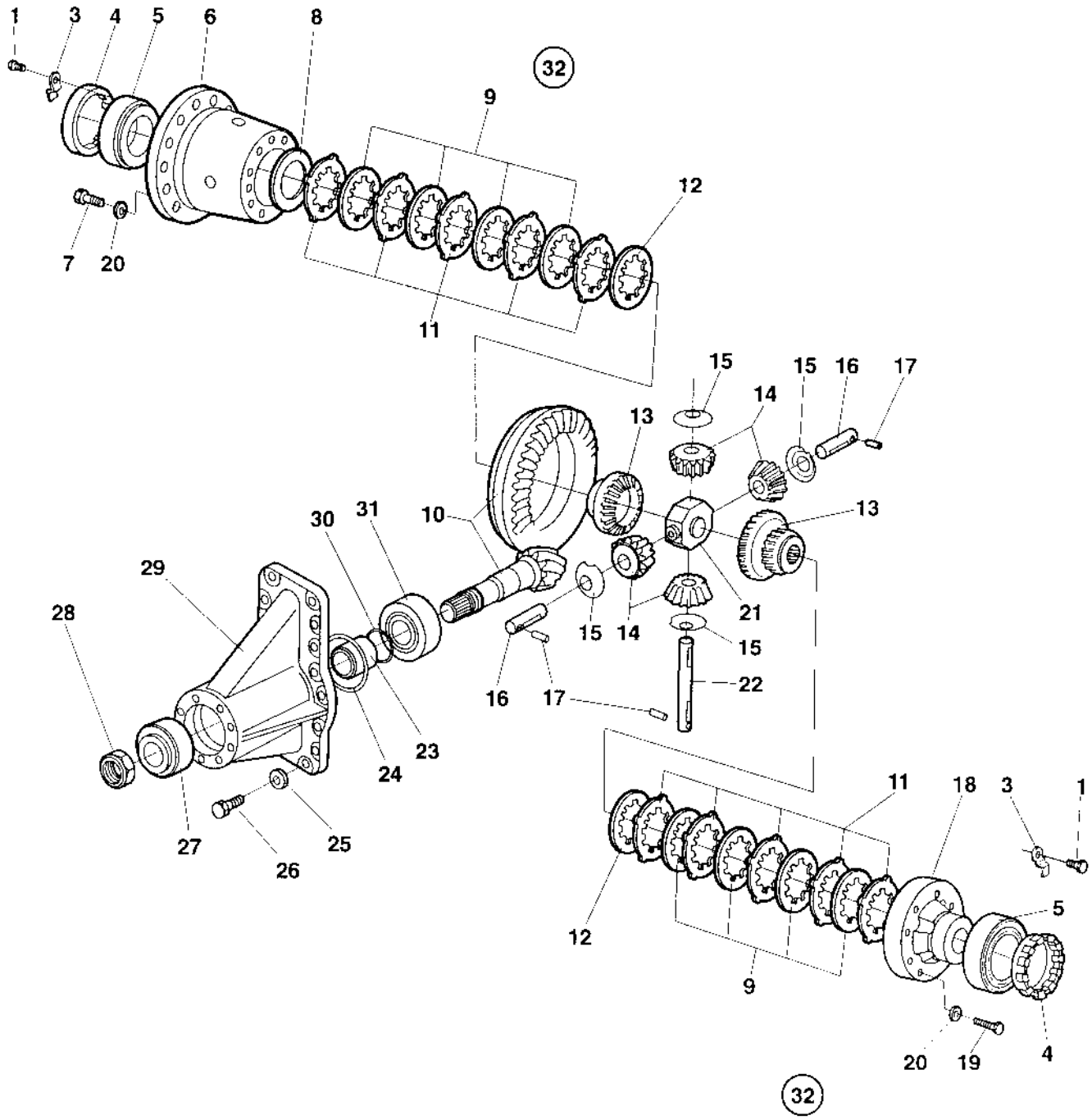

Differential with limited slip

Item	Part No	Rem	Qty	Description		Code
1	4700909547		2	Screw		
3	4700909548		2	Lock plate		
4	4700929624		2	Ring nut		
5	4700909549		2	Roller bearing		
6	4700909550		1	Differential carrier		
7	4700929629		16	Screw		
8	4700909551		1	Shim	0,30mm	
	4700909552		1	Shim	0,40mm	
	4700909553		1	Shim	0,10mm	
9		A	1	Limited slip disc		
10	4700909555		1	Bevel gear set		
11		A	10	Limited slip disc		
12		A	2	Limited slip disc		
13	4700909558		2	Differential gear		
14	4700926758		4	Differential pinion		
15	4700909559		4	Friction washer		
16	4700909560		2	Shaft		
17	4700909561		3	Rolled pin		
18	4700909562		1	Differential carrier cover		
19	4700909563		8	Screw		
20	4700909564		24	Spring washer		
21	4700909565		1	Shaft retainer		
22	4700909566		1	Shaft		
23	4700909567		1	Spacer		
24	4700909568		1	Shim	0,10mm	
	4700909569		1	Shim	0,20mm	
	4700909570		1	Shim	0,50mm	
	4700909571		1	Shim	0.15mm	
25	4700909572		16	Spring washer		
26	4700909573		16	Screw		
27	4700909574		1	Roller bearing		
28	4700909575		1	Nut		
29	4700908485		1	Housing		
30	4700929644		1	Shim	0,40mm	
	4700909576		1	Shim	0,30mm	
	4700909577		1	Shim	0.50mm	
	4700909578		1	Shim	0.60mm	
	4700909579		5	Shim	0.45mm	
	4700909580		3	Shim	0,20mm	
31	4700909581		1	Roller bearing		
32	4700935644		2	Disc kit		D

A) Use item 32

Differential housing and brakes

15797

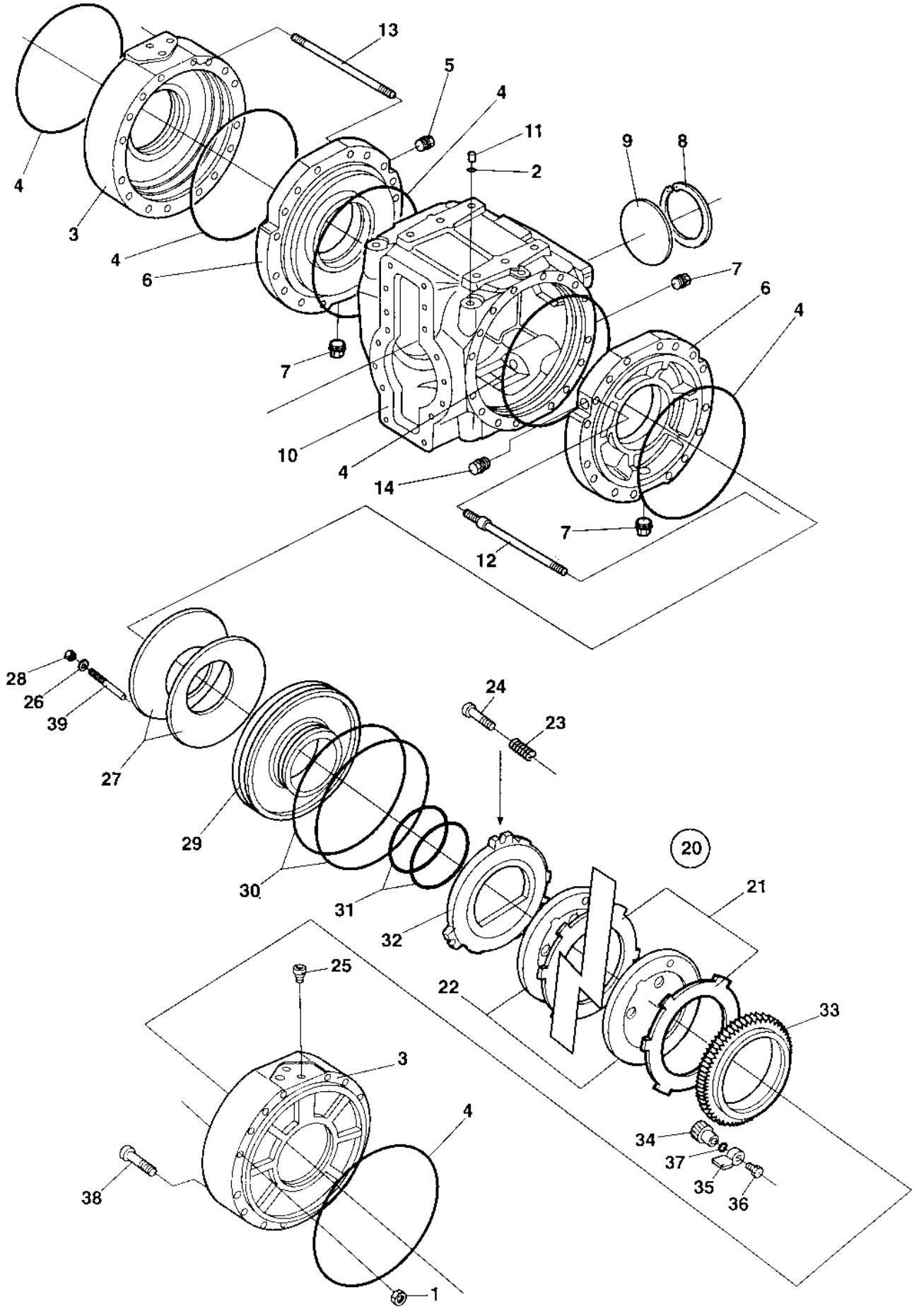

Differential housing and brakes

Item	Part No	Rem	Qty	Description	Code
1	4700211733		32	Nut	
2	4700909537		2	Washer	
3	4700909538		2	Housing	
4	4700909539		6	O-ring	D
5	4700909540		1	Plug	
6	4700909541		2	Intermediate housing	
7	4700926810		5	Magnetic plug	
8	4700929617		1	Lock ring	
9	4700909542		1	Plug	
10	4700909543		1	Housing	
11	4700909544		2	Screw	
12	4700909545		4	Stud	
13	4700909546		28	Stud	
14	4700900926		1	Breather	D
20	4700935606		2	Brake disc kit	D
21			12	.Brake disc	D
22			12	.Brake disc	D
23	4700909613		6	Spring	
24	4700909614		6	Adjusting screw	
25	4700909615		4	Breather	
26	4700926847		4	Sealing washer	
27	4700909616		4	Spring	
28	4700926846		4	Nut	
29	4700909617		2	Piston	
30	4700909618		4	O-ring	D
31	4700909619		4	O-ring	D
32	4700909620		2	Brake disc	
33	4700909621		2	Ring	
34	4700909622		2	Pinion	
35	4700909623		2	Lock plate	
36	4700909624		2	Screw	
37	4700900966		2	O-ring	D
38	4700909625		4	Screw	
39	4700909626		4	Bolt	

Planet gear

15800

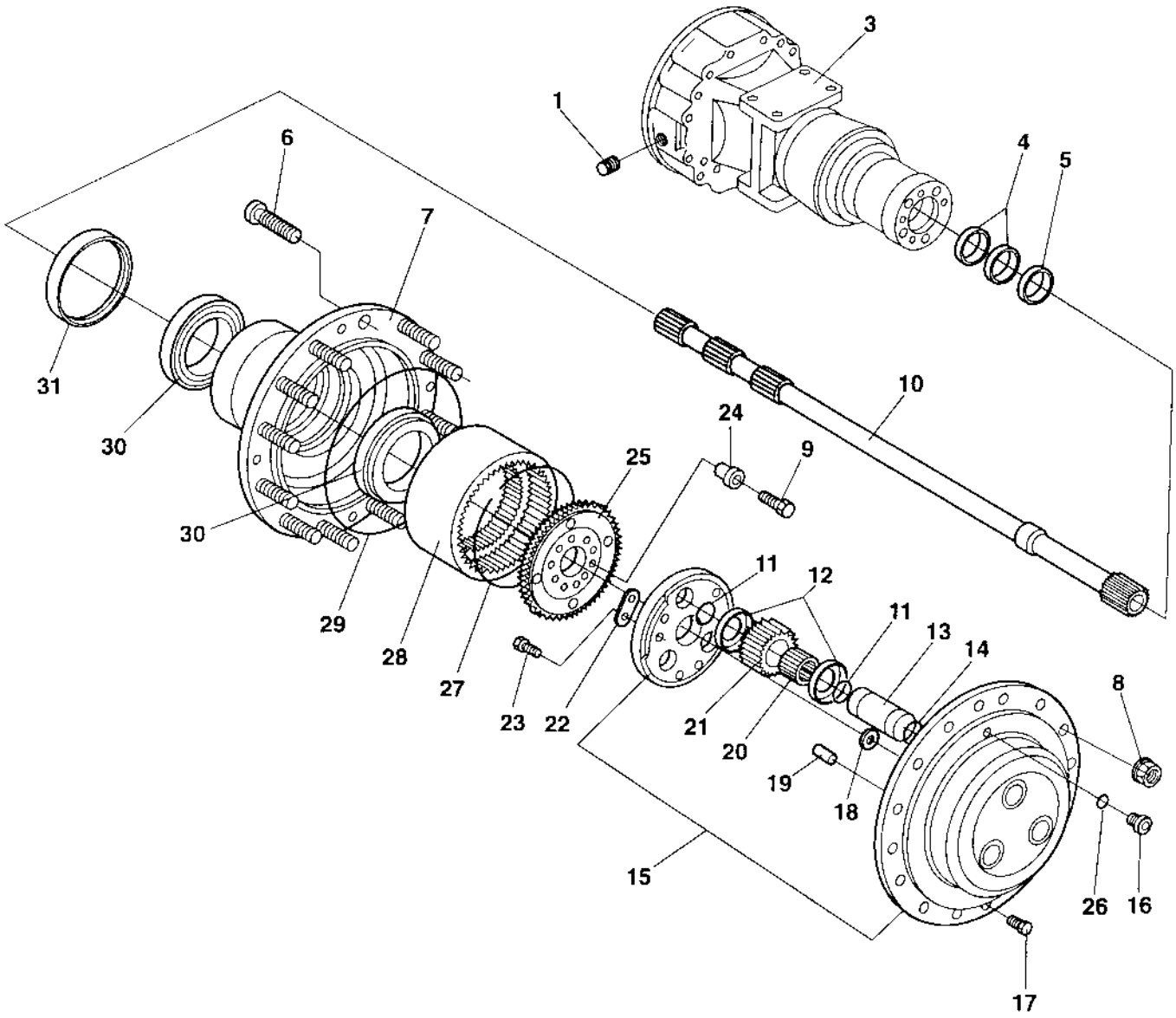

Planet gear

Item	Part No	Rem	Qty	Description	Code
1	4700926732		2	Magnetic plug	
3	4700909585		2	Housing	
4	4700909586		2	Seal	D
5	4700909587		2	Ring	
6	4700926781		20	Wheel screw	
7	4700909588		2	Hub	
8	4700901987		20	Wheel nut	
9	4700909589		20	Screw	
10	4700909590		2	Shaft	
11	4700909591		12	Snap ring	
12	4700909592		12	Washer	
13	4700909593		6	Shaft	
14	4700909594		6	O-ring	D
15	4700909595		2	Planet gear carrier	
16	4700909596		2	Plug	
17	4700909597		10	Screw	
18	4700909598		2	Friction washer	
19	4700909599		6	Pin	
20	4700909601		6	Needle roller bearing	
21	4700909602		6	Planet gear	
22	4700909603		6	Lock plate	
23	4700909604		12	Screw	
24	4700909605		20	Bushing	
25	4700909606		2	Ring gear support	
26	4700909607		2	Seal	D
27	4700909608		2	Snap ring	
28	4700908095		2	Ring gear	
29	4700909609		2	O-ring	D
30	4700909610		4	Roller bearing	
31	4700908461		2	Ring	D

4700383857 Rear axle

17671

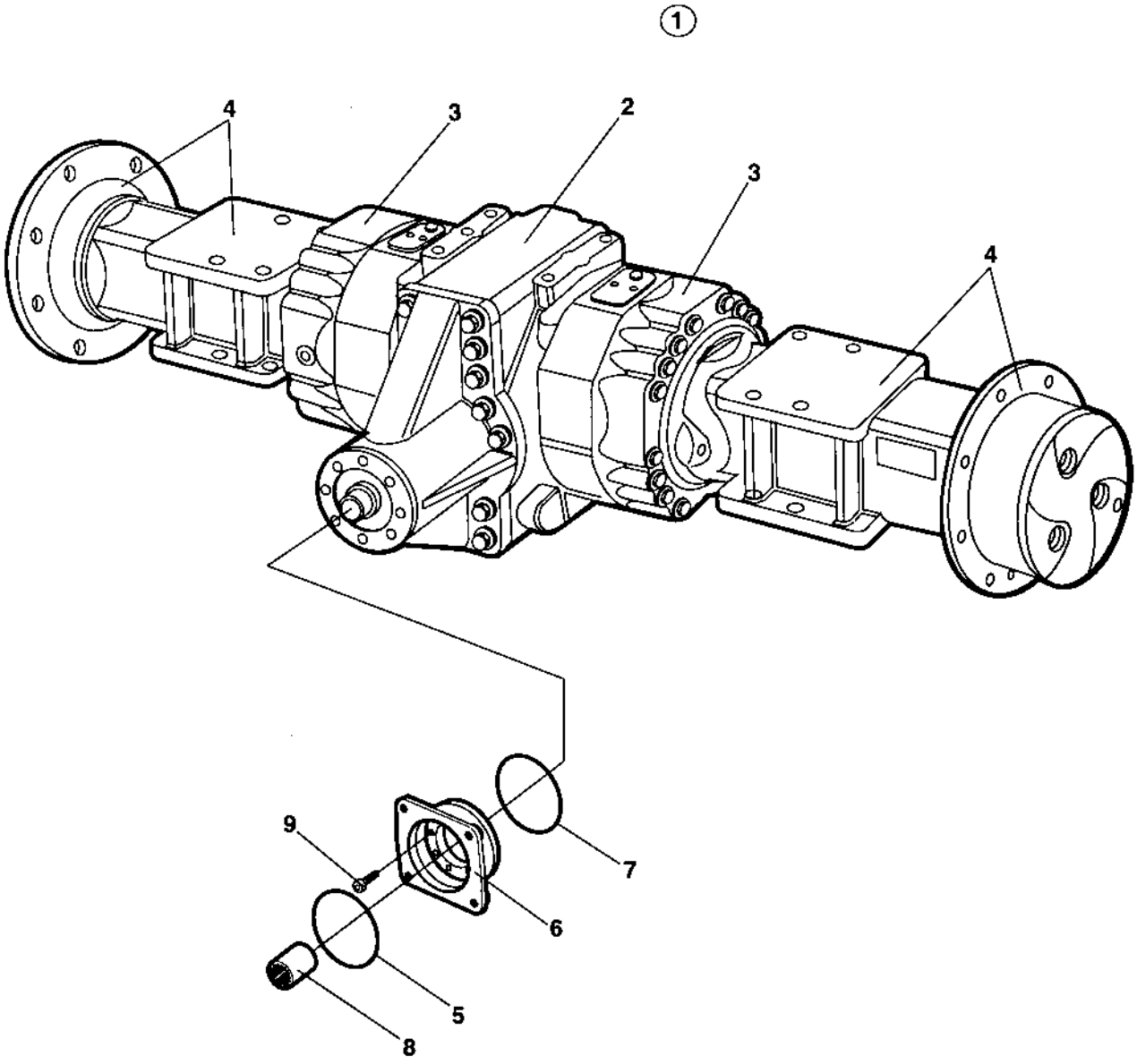

4700383857 Rear axle

Item	Part No	Rem	Qty	Description	Code
1			1	Rear axle	D
2			1	.Differential with limited slip (Page 146)	
3			2	.Differential housing and brakes (Page 148)	
4			2	.Planet gear (Page 150)	
5	4700909584		1	O-ring	D
6	4700909583		1	Flange	
7	4700929648		1	O-ring	D
8	4700901834		1	Splined sleeve	
9	4700909582		8	Screw	

Differential with limited slip

17672

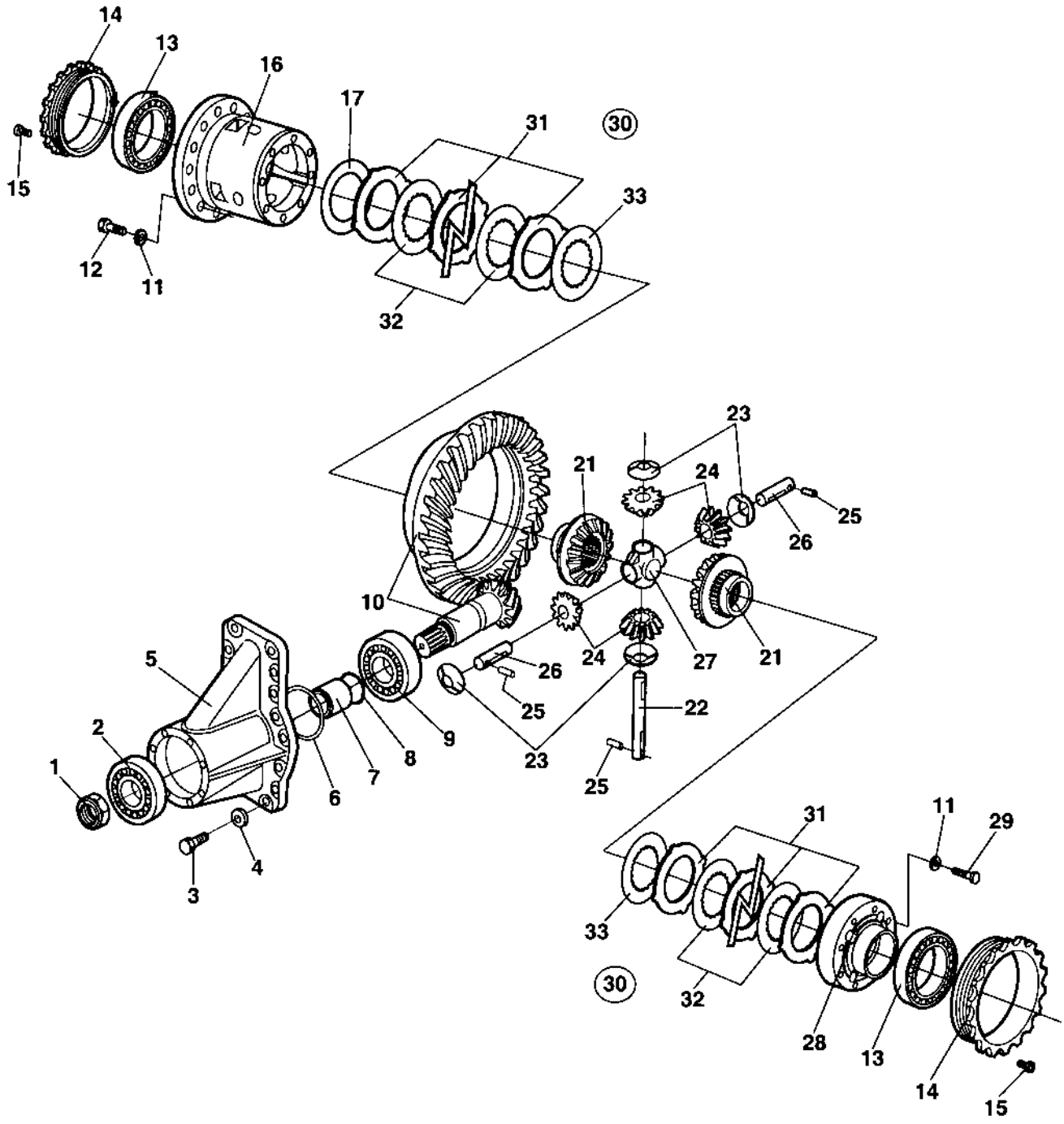

Differential with limited slip

Item	Part No	Rem	Qty	Description		Code
1	4700929638		1	Nut		
2	4700909574		1	Roller bearing		
3	4700939257		16	Bolt		
4	4700909572		16	Spring washer		
5	4700908485		1	Housing		
6	4700909568		1	Shim	0,10mm	
	4700909569		1	Shim	0,20mm	
	4700909570		1	Shim	0,50mm	
	4700939258		1	Shim	0,15mm	
7	4700909567		1	Spacer		
8	4700939259		1	Shim	0,15mm	
	4700909580		1	Shim	0,20mm	
	4700909576		1	Shim	0,30mm	
	4700929644		1	Shim	0,40mm	
	4700939260		1	Shim	0,50mm	
9	4700909581		1	Roller bearing		
10	4700212553		1	Bevel gear set		
11	4700929628		16	Washer		
12	4700929629		16	Screw		
13	4700923342		1	Bearing		
14	4700939261		2	Nut		
15	4700938989		2	Screw		
16	4700909550		1	Differential carrier		
17	4700909551		1	Shim	0,30mm	
	4700909552		1	Shim	0,40mm	
	4700909553		1	Shim	0,10mm	
21	4700909558		2	Differential gear		
22	4700909566		1	Shaft		
23	4700909559		4	Friction washer		
24	4700939262		4	Differential pinion		
25	4700909561		3	Rolled pin		
26	4700909560		2	Shaft		
27	4700909565		1	Shaft retainer		
28	4700909562		1	Differential carrier cover		
29	4700909563		8	Screw		
30	4700935644		2	Disc kit		D
31			10	.Limited slip disc		D
32			8	.Limited slip disc		D
33			2	.Limited slip disc		D

Differential housing and brakes

17670

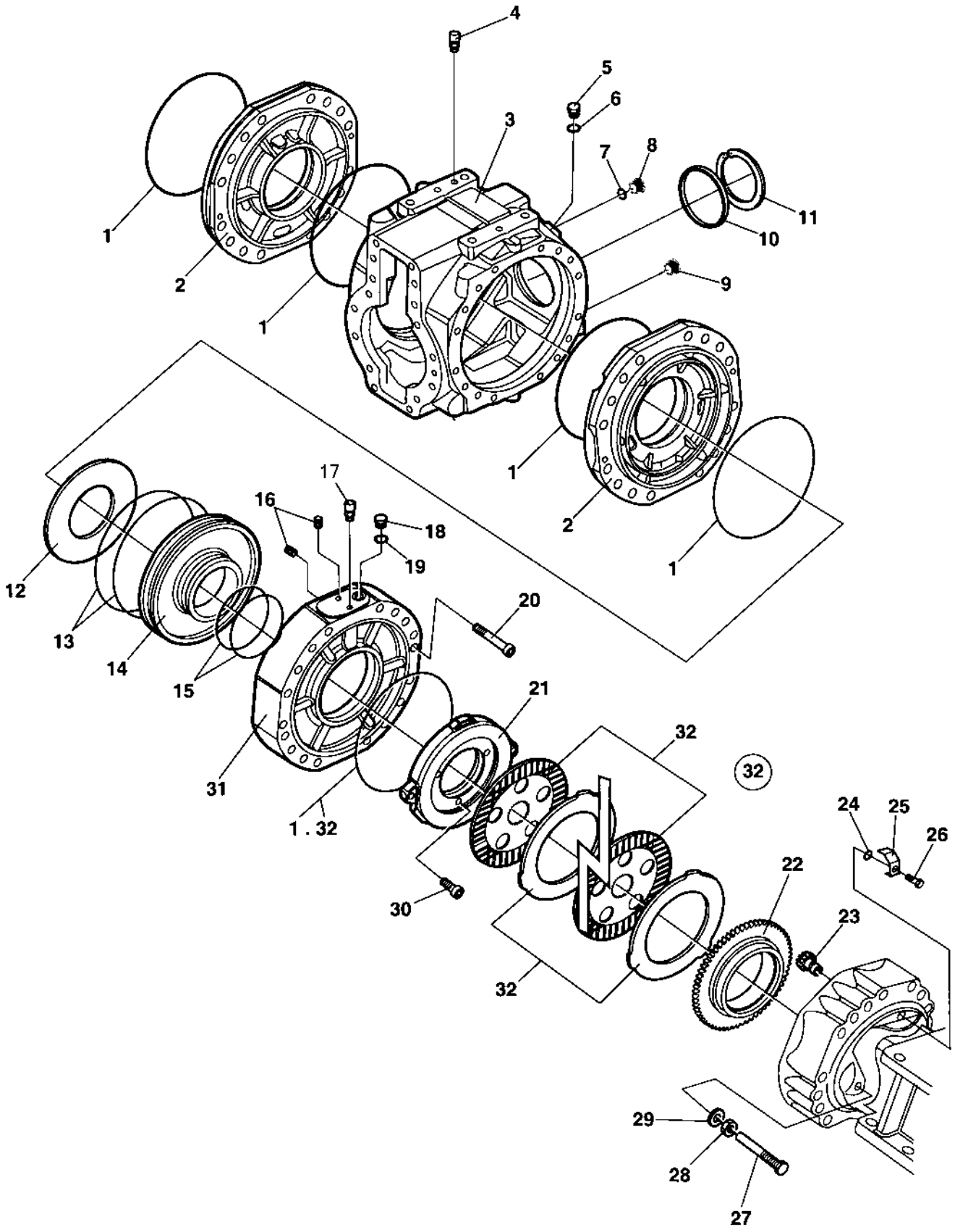

Differential housing and brakes

Item	Part No	Rem	Qty	Description	Code
1	4700909609		6	O-ring	D
2	4700939255		2	Cover	
3	4700939256		1	Housing	
4	4700938984		1	Vent nipple	
5	4700909544		2	Screw	
6	4700938983		2	Sealing washer	
7	4700909607		1	Seal	D
8	4700909596		1	Plug	
9	4700926810		1	Magnetic plug	
10	4700938296		1	Plug	
11	4700929617		1	Lock ring	
12	4700909616		2	Spring	
13	4700909618		4	O-ring	D
14	4700939280		2	Piston	
15	4700909619		4	O-ring	D
16	4700939281		4	Bolt	
17	4700938984		2	Vent nipple	
18	4700939282		2	Bolt	
19	4700939036		2	Sealing washer	
20	4700939035		4	Screw	
21	4700939283		2	Disc	
22	4700939285		2	Ring	
23	4700909622		2	Pinion	
24	4700900966		2	O-ring	D
25	4700939286		2	Lock plate	
26	4700909624		2	Screw	
27	4700909626		4	Bolt	
28	4700900957		4	Nut	
29	4700926847		4	Sealing washer	
30	4700939026		6	Screw	
31	4700939287		2	Cover	
32	4700939284		2	Brake disc kit	
			12	.Brake disc	
			12	.Brake disc	
	4700909609		2	.O-ring	D

Planet gear

17673

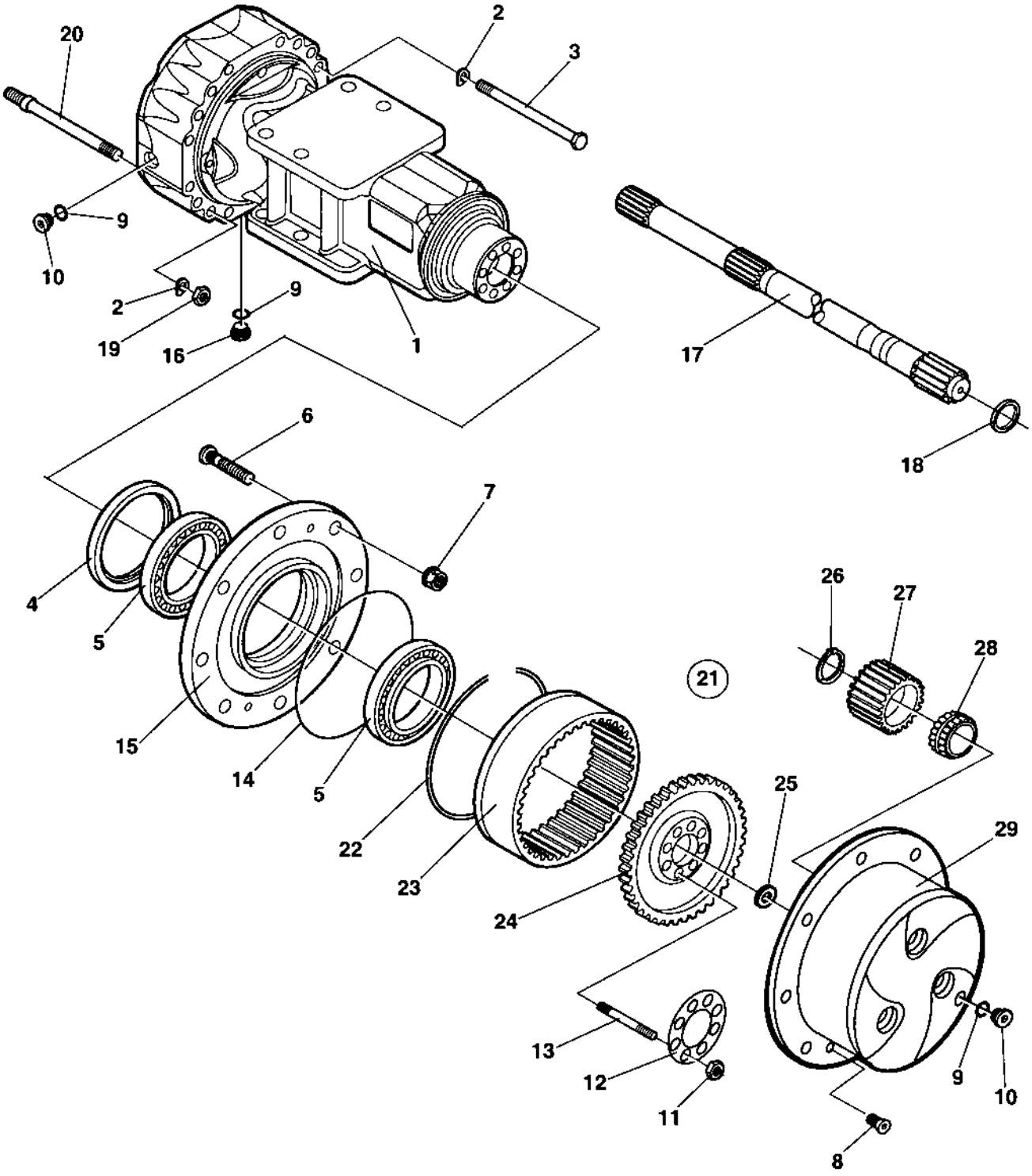

Planet gear

Item	Part No	Rem	Qty	Description	Code
1	4700939263		2	Axle case	
2	4700939003		32	Spring washer	
3	4700939264		24	Bolt	
4	4700939265		2	Seal	
5	4700939266		4	Bearing	
6	4700926781		20	Wheel screw	
7	4700901987		20	Wheel nut	
8	4700939015		4	Screw	
9	4700330333		6	Copper washer	D
10	4700909596		4	Plug	
11	4700939016		20	Nut	
12	4700939275		2	Lock plate	
13	4700939017		20	Stud	
14	4700929612		2	O-ring	
15	4700939276		2	Wheel hub	
16	4700938985		2	Magnetic plug	
17	4700939277		2	Half shaft	
18	4700909586		2	Seal	D
19	4700939019		8	Nut	
20	4700939278		8	Stud	
21	4700939279		2	Planet gear carrier Cpl.	
22	4700939267		2	.Circlip	
23	4700939268		2	.Ring gear	
24	4700939269		2	.Ring gear support	
25	4700939270		2	.Washer	
26	4700939271		6	.Seal	
27	4700939272		6	.Planet gear	
28	4700939273		6	.Bearing	
29	4700939274		2	.Planet gear carrier	

4700372941 Rear axle No-Spin, Option

15796-1

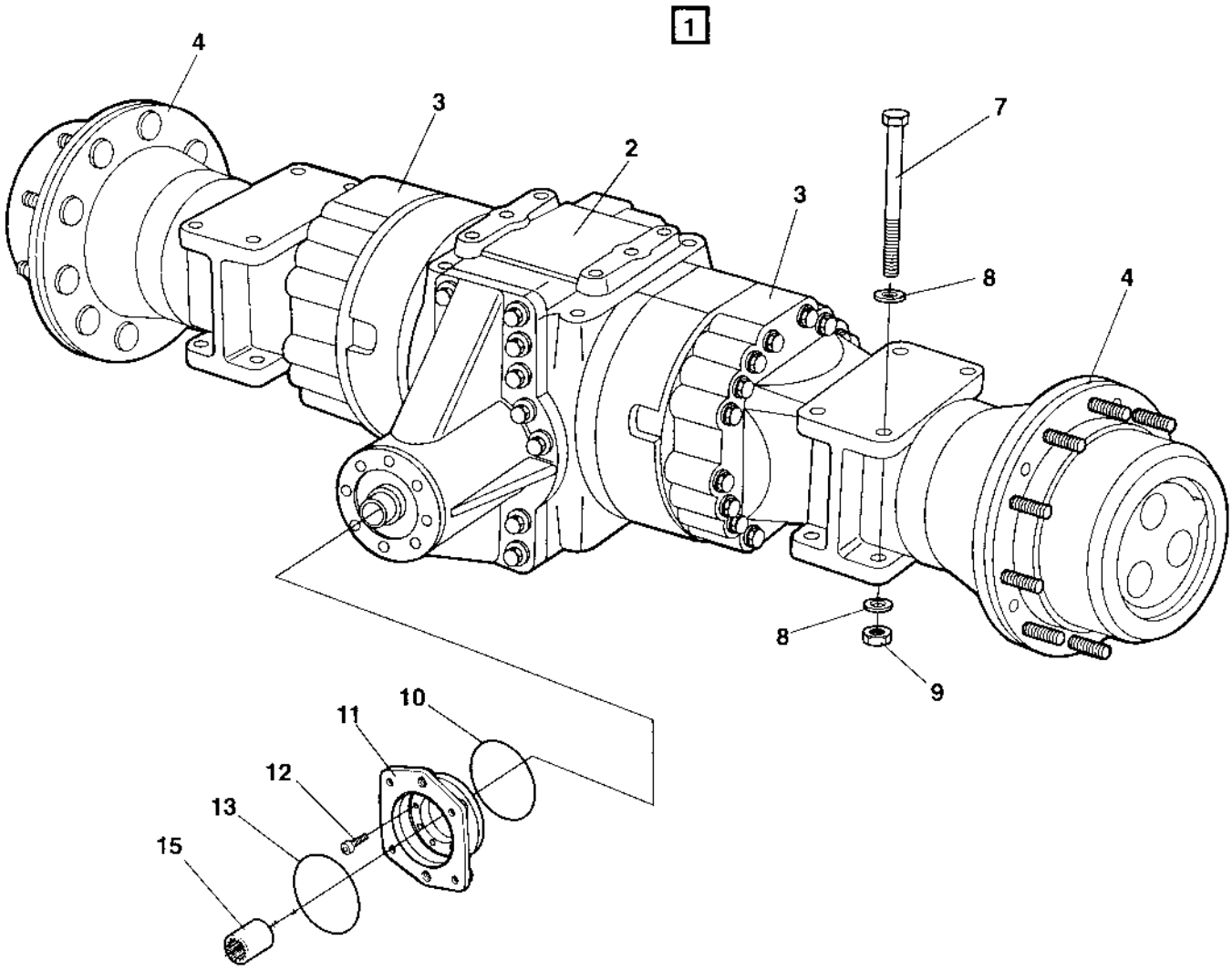

4700372941 Rear axle No-Spin, Option

Item	Part No	Rem	Qty	Description		Code
1			1	Rear axle cpl		
2			1	.Differential (Page 154)	with No-Spin	
3			2	.Differential housing and brakes (Page 156)		
4			2	.Planet gear (Page 158)		
7	4700929217		8	Screw		
8	4700600014		16	Washer		
9	4700901145		8	Lock nut	M20-10	
10	4700929648		1	.O-ring		D
11	4700909583		1	.Flange		
12	4700909582		8	.Screw		
13	4700909584		1	.O-ring		D
15	4700901834		1	.Splined sleeve		

Differential with No-Spin

15100

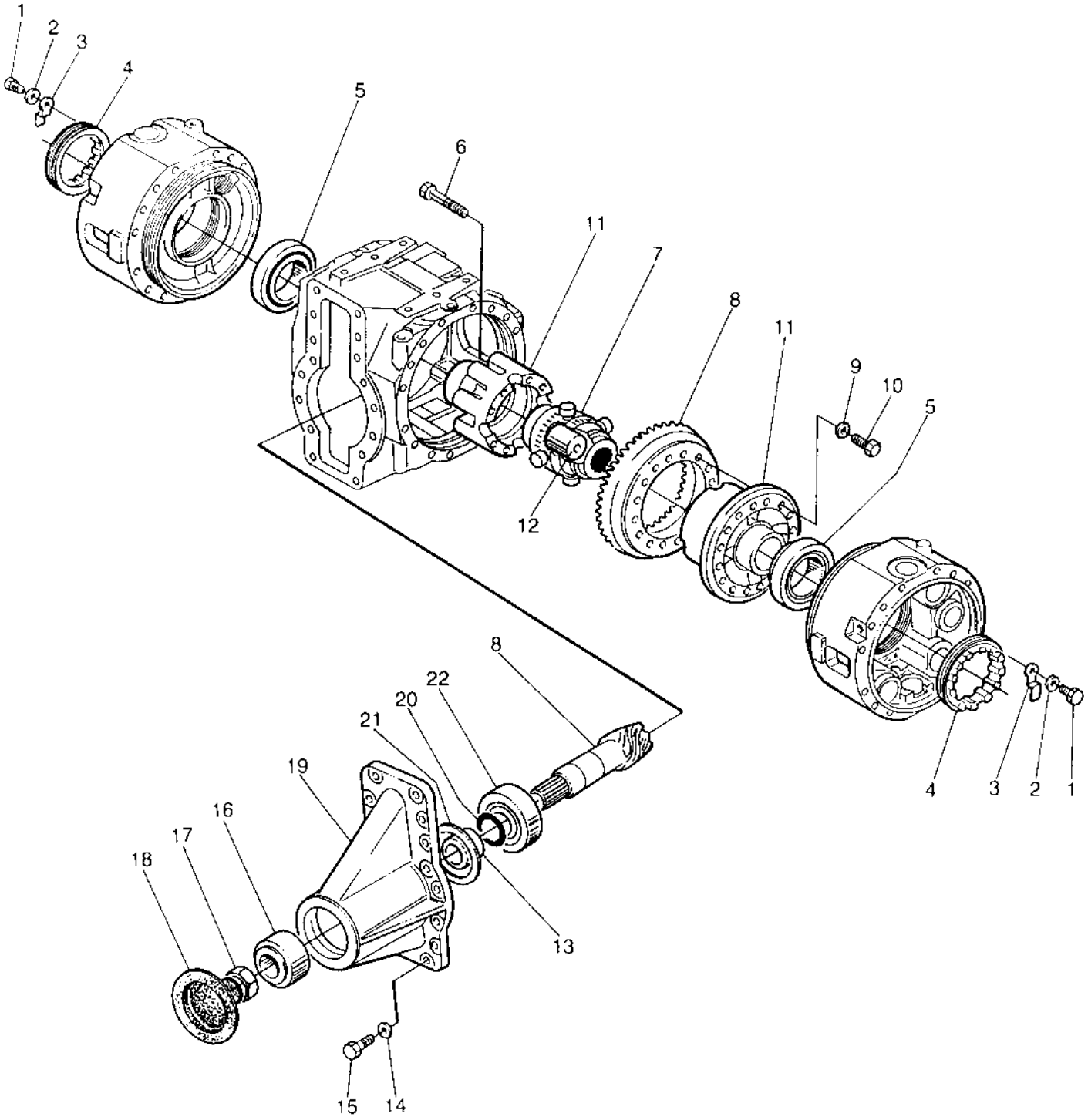

Differential with No-Spin

Item	Part No	Rem	Qty	Description		Code
1	4700900937		2	Screw		
2	4700900944		2	Washer Model Kollas		
3	4700909548		2	Lock plate		
4	4700929624		2	Ring nut		
5			2	Bearing		
6	4700929625		8	Screw		
7	4700929626		1	Non-spin unit		
8	4700909555		1	Bevel gear set		
9	4700929628		16	Washer		
10	4700929629		16	Screw		
11	4700929630		1	Differential case		
12	4700929631		1	Spacer		
13	4700909567		1	Spacer		
14	4700909572		16	Spring washer		
15	4700909573		16	Screw		
16			1	Bearing		
17	4700929638		1	Nut		
18			1	Cover		
19	4700908485		1	Housing		
20	4700929644		N	Shim	0,40mm	
	4700909576		N	Shim	0,30mm	
	4700909577		N	Shim	0.50mm	
	4700909578		N	Shim	0.60mm	
	4700909579		N	Shim	0.45mm	
	4700909580		N	Shim	0,20mm	
21	4700900969		N	Shim	T=0,10 mm	
	4700900970		N	Shim	T=0,20	
	4700900971		N	Shim	T=0,50 mm	
	4700900972		N	Shim	T=0,15 mm	
22			1	Bearing		
	4700212530	A	1	Bearing kit		D

A) Consists of item 5,16 and 22

Differential housing and brakes

15797

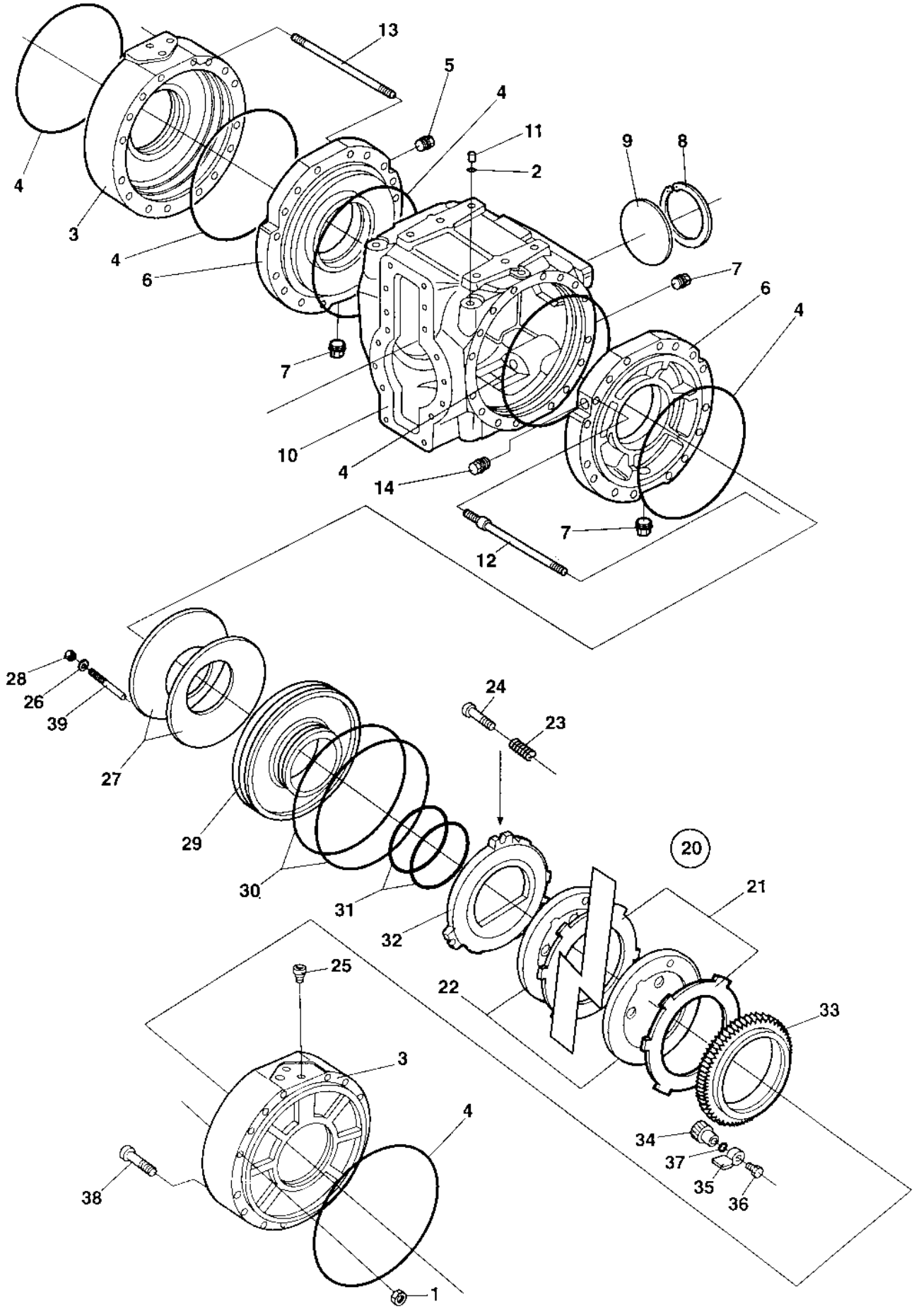

Differential housing and brakes

Item	Part No	Rem	Qty	Description	Code
1	4700936086		12	Nut	
2	4700909537		2	Washer	
3	4700909538		2	Housing	
4	4700909539		6	O-ring	D
5	4700909540		1	Plug	
6	4700938295		2	Intermediate housing	
7	4700926810		5	Magnetic plug	
8	4700929617		1	Lock ring	
9	4700938296		1	Plug	
10	4700909543		1	Housing	
11	4700909544		2	Screw	
12	4700909545		4	Stud	
13	4700938300		8	Stud	
14	4700926736		1	Breather	B
20	4700935606		2	Brake disc kit	D
21			12	.Brake disc	D
22			12	.Brake disc	D
23	4700909613		6	Spring	
24	4700909614		6	Adjusting screw	
25	4700909615		4	Breather	
26	4700926847		4	Sealing washer	
27	4700909616		4	Spring	
28	4700900957		4	Nut	
29	4700909617		2	Piston	
30	4700909618		4	O-ring	D
31	4700909619		4	O-ring	D
32	4700909620		2	Brake disc	
33	4700938298		2	Ring	
34	4700909622		2	Pinion	
35	4700909623		2	Lock plate	
36	4700909624		2	Screw	
37	4700900966		2	O-ring	D
38	4700909625		4	Screw	
39	4700909626		4	Bolt	

Planet gear

15800

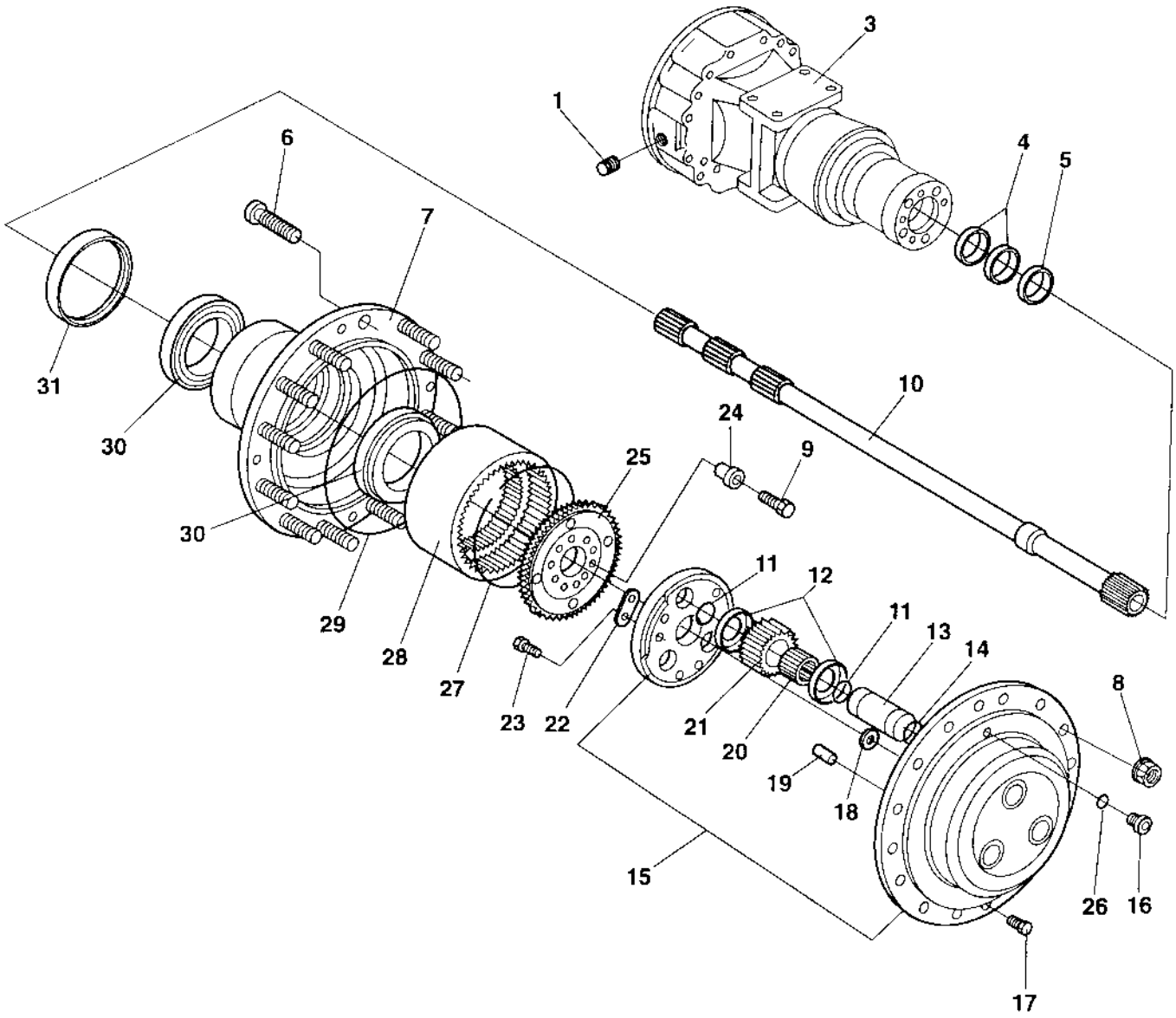

Planet gear

Item	Part No	Rem	Qty	Description	Code
1	4700926732		2	Magnetic plug	
3	4700909585		2	Housing	
4	4700909586		2	Seal	D
5	4700909587		2	Ring	
6	4700926781		20	Wheel screw	
7	4700909588		2	Hub	
8	4700901987		20	Wheel nut	
9	4700909589		20	Screw	
10	4700909590		2	Shaft	
11	4700909591		12	Snap ring	
12	4700909592		12	Washer	
13	4700909593		6	Shaft	
14	4700909594		6	O-ring	D
15	4700909595		2	Planet gear carrier	
16	4700909596		2	Plug	
17	4700909597		10	Screw	
18	4700909598		2	Friction washer	
19	4700909599		6	Pin	
20	4700909601		6	Needle roller bearing	
21	4700909602		6	Planet gear	
22	4700909603		6	Lock plate	
23	4700909604		12	Screw	
24	4700909605		20	Bushing	
25	4700909606		2	Ring gear support	
26	4700909607		2	Seal	D
27	4700909608		2	Snap ring	
28	4700908095		2	Ring gear	
29	4700909609		2	O-ring	D
30	4700909610		4	Roller bearing	
31	4700908461		2	Ring	D

4700383856 Rear axle No-Spin, Option

17671

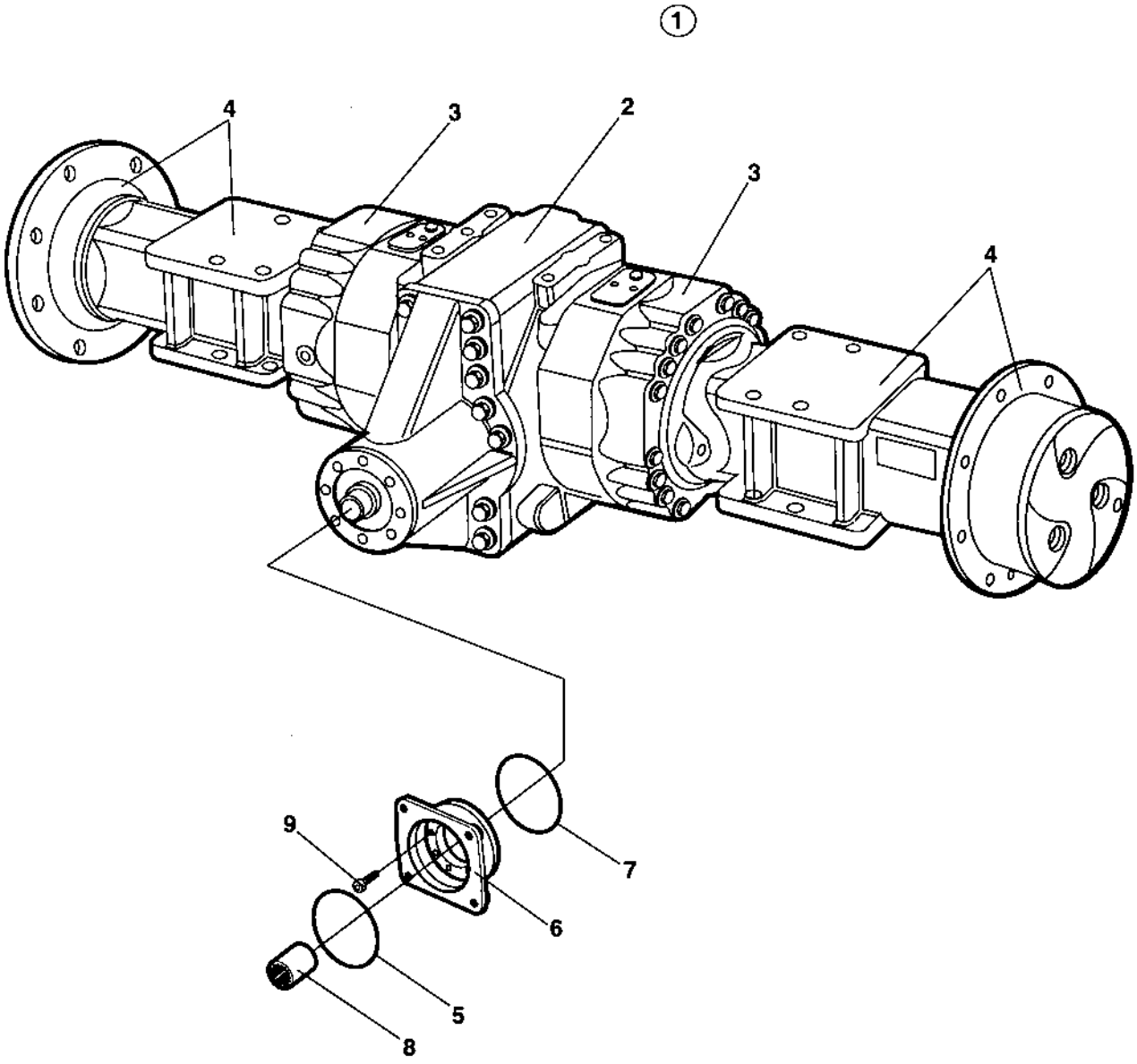

4700383856 Rear axle No-Spin, Option

Item	Part No	Rem	Qty	Description		Code
1			1	Rear axle		D
2			1	.Differential (Page 162)	with No-Spin	
3			2	.Differential housing and brakes (Page 148)		
4			2	.Planet gear (Page 164)		
5	4700909584		1	O-ring		D
6	4700909583		1	Flange		
7	4700929648		1	O-ring		D
8	4700901834		1	Splined sleeve		
9	4700909582		8	Screw		

Differential with No-Spin

17689

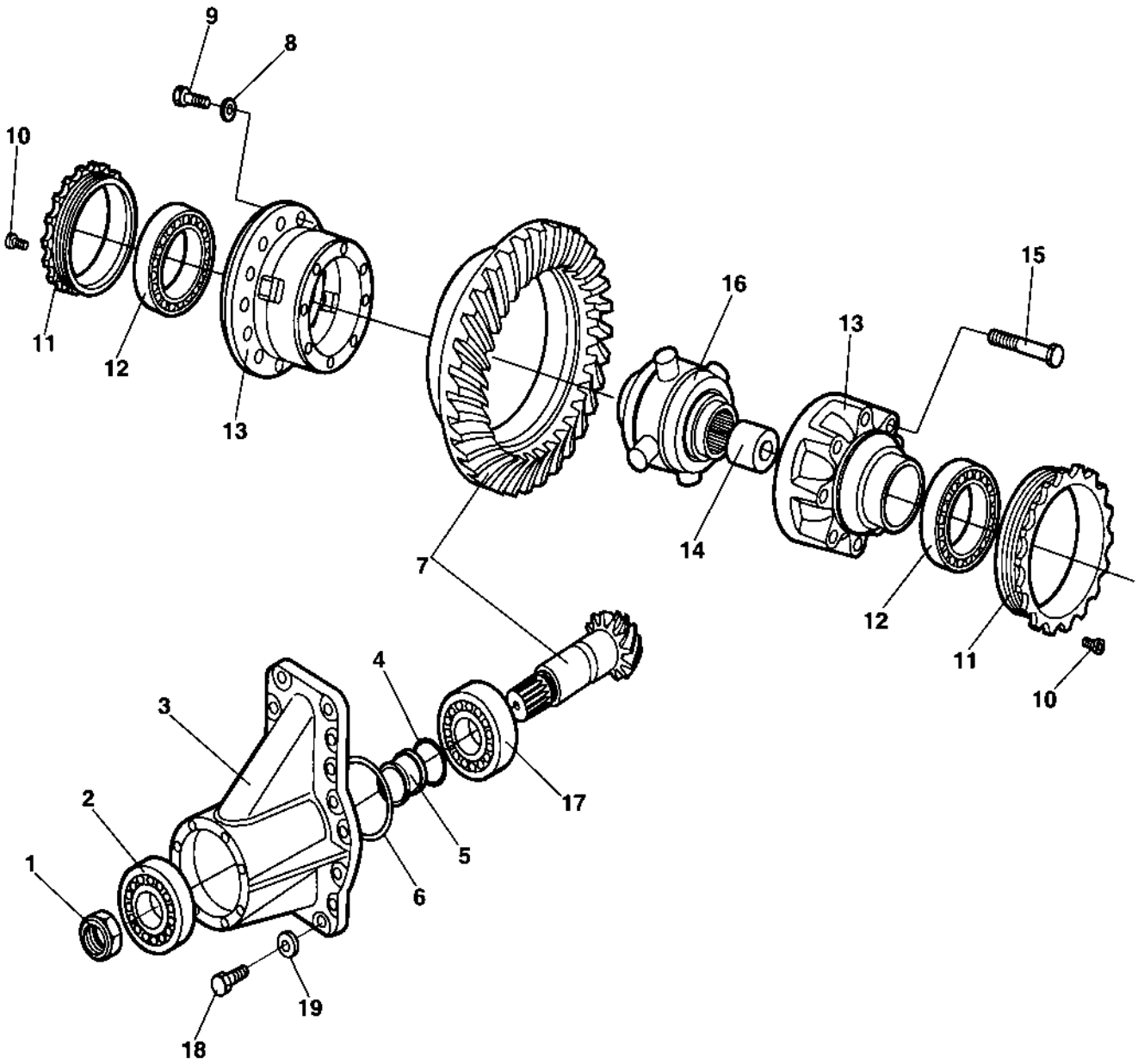

Differential with No-Spin

Item	Part No	Rem	Qty	Description	Code
1	4700929638		1	Nut	
2	4700909574		1	Roller bearing	
3	4700908485		1	Housing	
4	4700939259		1	Shim 0,15mm	
	4700909580		1	Shim 0,20mm	
	4700909576		1	Shim 0,30mm	
	4700929644		1	Shim 0,40mm	
	4700939260		1	Shim 0,50mm	
5	4700909567		1	Spacer	
6	4700909568		1	Shim 0,10mm	
	4700909569		1	Shim 0,20mm	
	4700909570		1	Shim 0,50mm	
	4700939258		1	Shim 0,15mm	
7	4700212553		1	Bevel gear set	
8	4700929628		16	Washer	
9	4700929629		16	Screw	
10	4700938989		2	Screw	
11	4700939261		2	Nut	
12	4700923342		1	Bearing	
13	4700929630		1	Differential case	
14	4700929631		1	Spacer	
15	4700929625		8	Screw	
16	4700929626		1	Non-spin unit	
17	4700909581		1	Roller bearing	
18	4700939257		16	Bolt	
19	4700909572		16	Spring washer	

Planet gear

17673

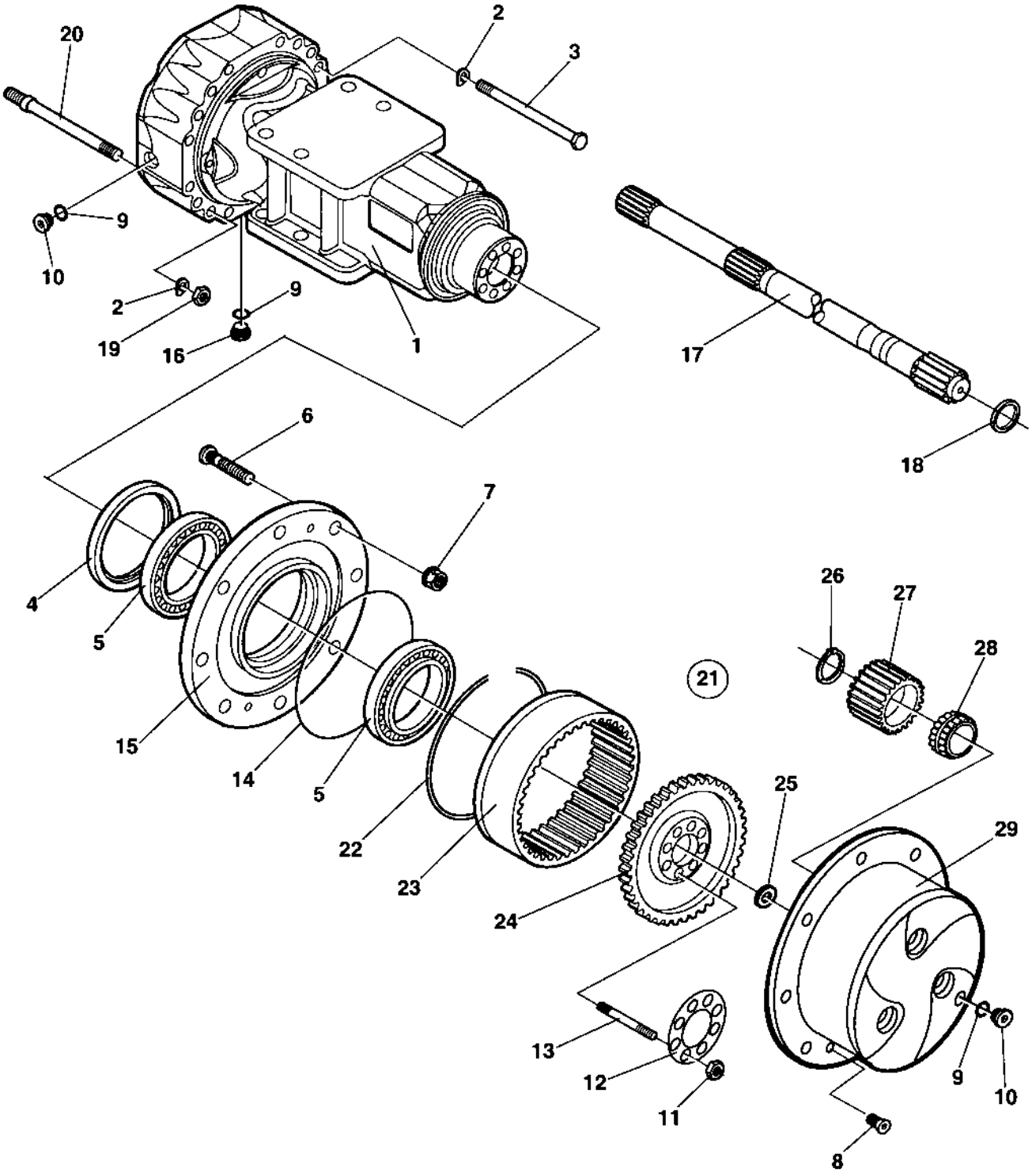

Planet gear

Item	Part No	Rem	Qty	Description	Code
1	4700939263		2	Axle case	
2	4700939003		32	Spring washer	
3	4700939264		24	Bolt	
4	4700939265		2	Seal	
5	4700939266		4	Bearing	
6	4700926781		20	Wheel screw	
7	4700901987		20	Wheel nut	
8	4700939015		4	Screw	
9	4700330333		6	Copper washer	D
10	4700909596		4	Plug	
11	4700939016		20	Nut	
12	4700939275		2	Lock plate	
13	4700939017		20	Stud	
14	4700929612		2	O-ring	
15	4700939276		2	Wheel hub	
16	4700938985		2	Magnetic plug	
17	4700939277		2	Half shaft	
18	4700909586		2	Seal	D
19	4700939019		8	Nut	
20	4700939278		8	Stud	
21	4700939351		2	Planet gear carrier Cpl.	
22	4700939267		2	.Circlip	
23	4700939268		2	.Ring gear	
24	4700939269		2	.Ring gear support	
25	4700939270		2	.Washer	
26	4700939271		8	.Seal	
27	4700939272		8	.Planet gear	
28	4700939273		8	.Bearing	
29	4700939349		2	.Planet gear carrier	

Hydraulic system

Item	Part No	Rem	Qty	Description		Code
10				Propulsion system Up to 65X23699 (Page 168)		
11				Propulsion system From 65X23700 Up to 65X23899 (Page 184)		
12	4700371545			Propulsion pump Up to 65X20260 (Page 170)		C
15				Propulsion system From 65X23900 (Page 186)		
20				Vibration system Up to 65X23899 (Page 192)		
22	4700380145			Hydraulic motor, vibration Up to 65X23899 (Page 194)		C
24	4700381151			Vibration pump Up to 65X20592 (Page 196)		C
25				Vibration system From 65X23900 (Page 204)		
30				Steering system Up to 65X20396 (Page 212)		
40				Steering system From 65X20397 Up to 65X21524 (Page 214)		
42				Steering system From 65X21525 Up to 65X23699 (Page 216)		
43				Steering system From 65X23700 (Page 222)		
44	4700376000			Steering valve (Page 224)		
48	4700375031			Steering cylinder Up to 65X22578 (Page 218)		C
50				Brake system Up to 65X20396 (Page 226)		
60				Brake system From 65X20397 (Page 228)		
65				Hydraulic oil tank Up to 65X23699 (Page 230)		
66				Hydraulic oil tank From 65X23700 (Page 232)		
70				Central test panel hydraulic Up to 65X23899 (Page 234)	Option	
71				Central test panel hydraulic From 65X23900 (Page 236)	Option	
80				Variable rear axle motor (Page 238)	Option	

Propulsion system

16925

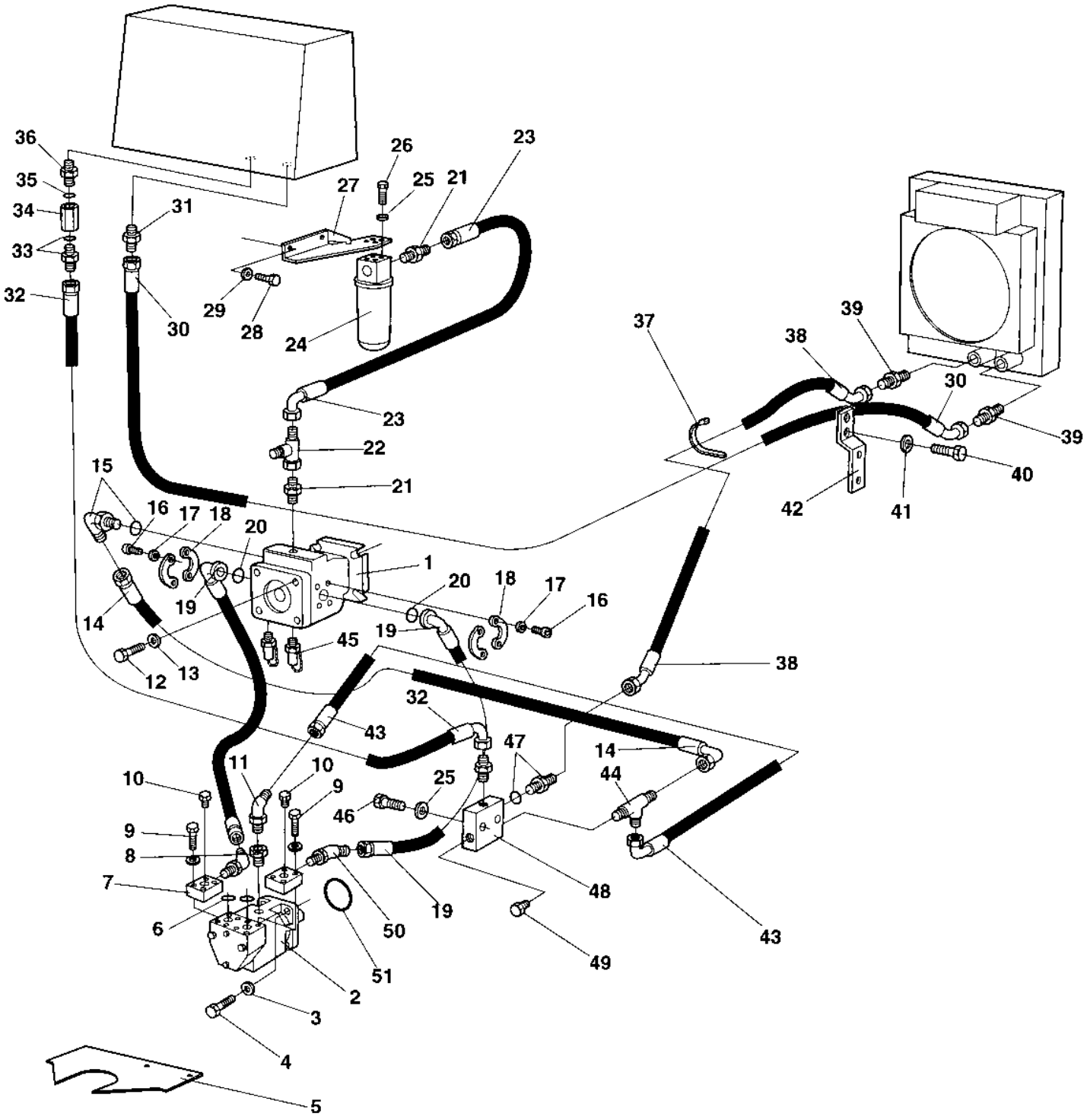

Propulsion system

Item	Part No	Rem	Qty	Description		Code
1	4700371545		1	Propulsion pump Up to 65X20260 (Page 170)		C
	4700380830		1	Propulsion pump From 65X20261 (Page 176)		C
2	4700375999		1	Hydraulic motor (Page 182)		
3	4700904793		8	Washer	19x34x3	
4	4700500263		4	Screw	M18x60	
5	4700372235		1	Hose guard		
6	4700904171		2	O-ring		
7	4700380717		2	Flange coupling		
8	4700334468		1	Adapter		
9	4700509034		8	Screw		
10	4700232222		2	Plug		
11	4700334248		1	Elbow 45, O-ring		
12	4700500046		4	Screw		
13	4700904213		4	Washer		
14	4700482391		1	Hydraulic hose		
15	4700813499		1	Elbow 90, O-ring		
16	4700502132		8	Screw	UNC 7/16" x 22	
17	4700904638		8	Washer	12x22x2	
18	4700923384		4	Flange half		
19	4700483033		2	Hydraulic hose Up to 65X20396		
	4700483517		2	Hydraulic hose From 65X20397		
20	4700904005		2	O-ring		
21	4700334468		3	Adapter		
22	4700234243		1	T-connector		
23	4700482010		1	Hydraulic hose		D
24	4700359550		1	Hydraulic oil filter, cpl		
	4700359551		1	.Filter head		
	4700359552		1	.Cleaning filter element	Maximum 50 hours use	
	4700372229	B	1	Hydraulic oil filter element		A
25	4700904230		6	Washer		
26	4700500028		4	Screw		
27	4700380490		1	Filter bracket		
28	4700500021		2	Screw	M8-1,25x25 8.8	
29	4700904229		2	Washer	8,4x16x1,5	
30	4700483499		1	Hydraulic hose		
31	4700234909		1	Straight connector		
32	4700482182		1	Hydraulic hose		D
33	4700923371		1	Adapter		
34	4700374059		1	Check valve		
35	4700162008		1	Seal washer		
36	4700904282		1	Adapter		
37	4700313102		N	Cable ties		
38	4700483123		1	Hydraulic hose		
39	4700234958		2	Connector		
40	4700500035		2	Screw Up to 65X21524	M12x020H	
41	4700904231		2	Washer Up to 65X21524	13x24x2 300 HV	
42	4700372048		1	Hose clamp Up to 65X21524		
43	4700482391		1	Hydraulic hose		
44	4700234875		1	Tee-connector o-ring		
45	4700900229		2	Measuring nipple		D
46	4700500149		2	Screw	M10x70	
47	4700334140		1	Adapter		
48	4700345243		1	Connection block		
49	4700232222		1	Plug		
50	4700234254		2	Elbow 45, O-ring Up to 65X20396		
	4700334140		2	Adapter From 65X20397		
51	4700902581		1	O-ring		D
52	4700334138		1	Adapter		

B) Spare part for ordinary service

4700371545 Propulsion pump

16521

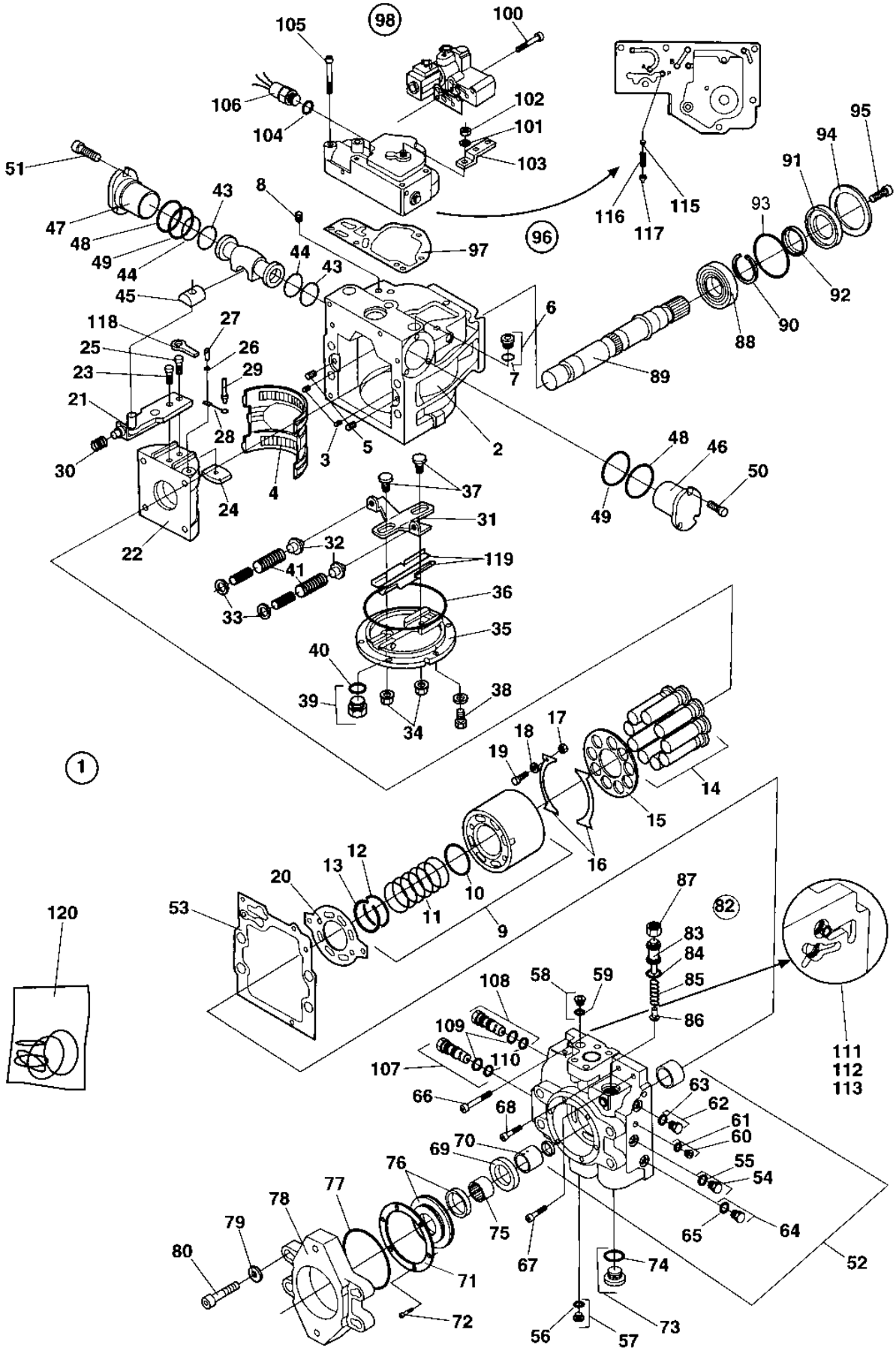

4700371545 Propulsion pump

Item	Part No	Rem	Qty	Description	Code
1	4700371545		1	Propulsion pump (Page 170)	C
2	4700936546		1	.Housing	
3	4700909374		2	.Pin	
4	4700901452		1	.Bearing	
5	4700813822		2	.Pin	
6	4700908432		2	.Plug	
7	4700923087	1	2	..O-ring	D
8	4700901454		3	.Filter element	D
9	4700901455		1	.Cylinder block, cpl	
10	4700935619		1	..Spacer	
11	4700935620		1	..Spring	
12	4700935621		1	..Spring retainer	
13	4700935622		1	..Ring retainer	
14	4700903570		9	.Piston	D
15	4700903571		1	.Pressure plate	D
16	4700901458		2	.Retainer guide	D
17	4700935856		4	.Spacer	
18	4700909381		4	.Washer	
19	4700935855		4	.Screw	
20	4700936547		1	.Valve plate	
21	4700909727		1	.Servo arm, cpl	
22	4700903579		1	.Swash plate	
23	4700909386		1	.Screw	
24	4700909387		1	.Guide	
25	4700909388		1	.Screw	
26	4700909389		1	.Washer	
27	4700909390		1	.Pin	
28	4700909391		1	.Link	
29	4700909392		1	.Pin	
30	4700909393		1	.Spring	
31	4700936549		1	.Lever	
32	4700908377		2	.Spring support	
33	4700908378		2	.Washer	
34	4700909398	1	2	.Seal lock nut	
35	4700936550		1	.Cover	
36	4700936551	1	1	.O-ring	
37	4700936552		2	.Guide post	
38	4700936553		6	.Screw	
39	4700902928		1	.Plug	
40	4700901453	1	1	..O-ring	
41	4700908352		2	.Spring	
42	4700936582		1	.Piston, cpl	
43	4700936555	1	2	.O-ring	
44	4700936556	1	2	.Seal ring	
45	4700909407		1	.Guide	
46	4700903580		1	.Servo	
47	4700903580		1	.Servo	
48	4700936557	1	2	.O-ring	
49	4700936558	1	2	.O-ring	
50	4700936559		3	.Screw	
51	4700936559		3	.Screw	
52	4700936560		1	.End cap, cpl	
53	4700936561	1	1	.Gasket	
54	4700358388		1	.Plug	
55	4700923087	1	1	..O-ring	D
56	4700908432		1	.Plug	
57	4700923087	1	1	..O-ring	D

1) Included in item 120, Seal kit

4700371545 Propulsion pump

16521

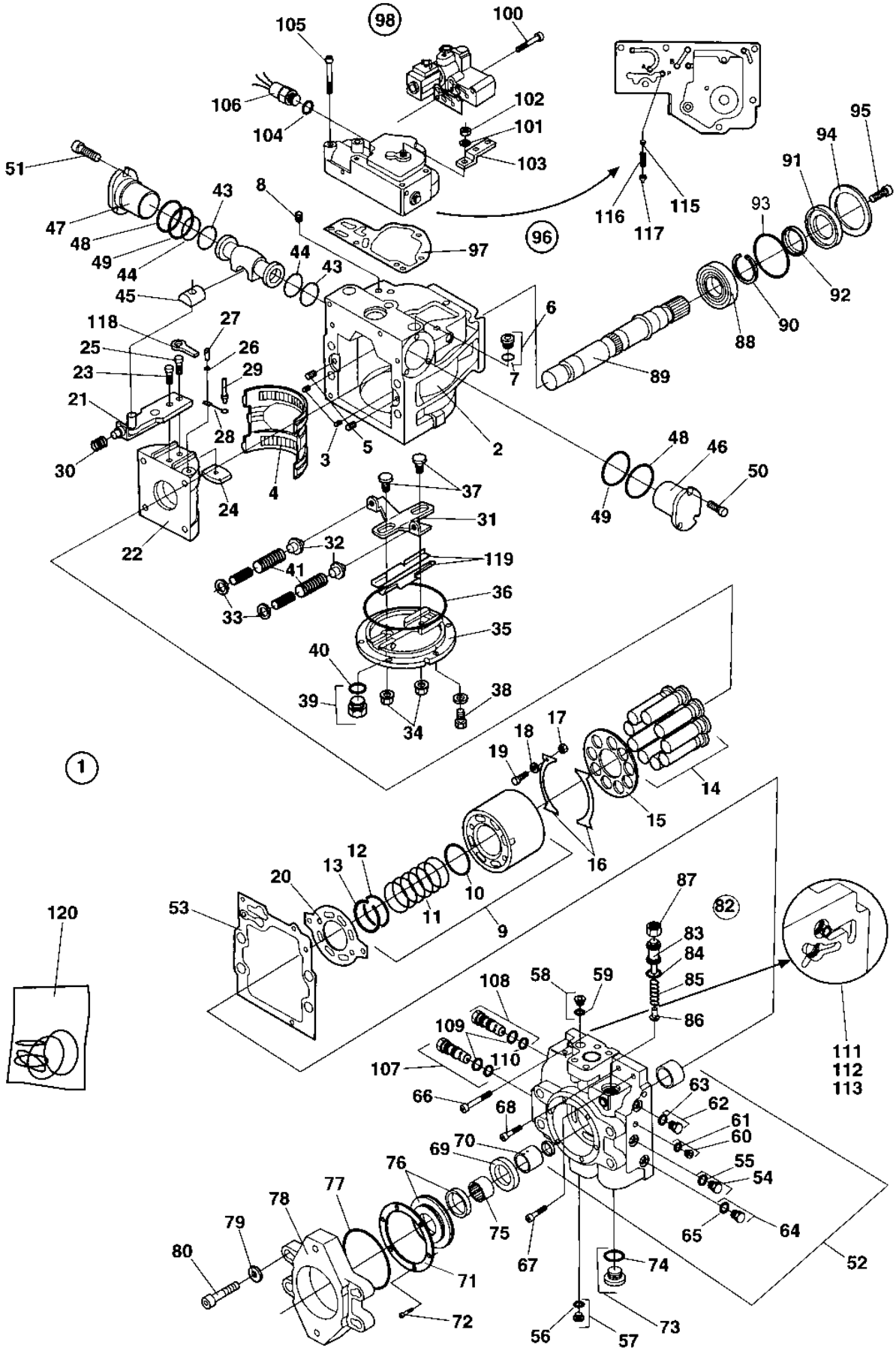

4700371545 Propulsion pump

Item	Part No	Rem	Qty	Description	Code
58	4700908432		1	.Plug	
59	4700923087	1	1	..O-ring	D
60	4700908432		1	.Plug	
61	4700923087	1	1	..O-ring	D
62	4700358388		1	.Plug	
63	4700923087	1	1	..O-ring	D
64	4700358388		1	.Plug	
65	4700923087	1	1	..O-ring	D
66	4700936562		1	.Screw	
67	4700936563		1	.Screw	
68	4700936564		1	.Screw	
69	4700936565		1	.Spacer	
70	4700903578		1	.Shaft	
71	4700935857		1	.Retaining plate	
72	4700936566		6	.Screw	
73	4700936567		1	.Plug, cpl	
74	4700936568	1	1	..O-ring	
75	4700936569		1	.Coupling sleeve	
76	4700908217		1	.Cover assembly	
77	4700909399	1	1	.O-ring	
78	4700936570		1	.Adapter	
79	4700936571		4	.Washer	
80	4700936572		4	.Screw	
82	4700936583		1	.Pressure relief valve, cpl	
83	4700903574	A	1	..Screw	
84	4700813618	1	1	..O-ring	D
85	4700901463		1	..Compression spring	D
86	4700901464		1	..Valve cone	D
87	4700902959		1	..Nut	
88	4700901465		1	.Bearing	
89	4700901466		1	.Shaft	
90	4700901467		1	.Ring	
91	4700903571		1	.Pressure plate	D
92	4700935632	1	1	.Seal	D
93	4700935633	1	1	.O-ring	D
94	4700935634		1	.Retaining plate	
95	4700908773		3	.Screw	
96	4700936288		1	.Control valve, cpl	
97	4700936576	1	1	..Gasket	
98	4700936577		1	..Solenoid valve, cpl	
	4700909641		1	...Solenoid valve	D
	4700909642		1	...Solenoid	D
	4700909643		1	...Seal kit	
99	4700909430	1	1	..Gasket	
100	4700909431		2	..Screw	
101	4700909428		1	..Washer	
102	4700909429		1	..O-ring	
103	4700909432		1	..Control lever	
104	4700909433	1	1	..O-ring	
105	4700909434		6	..Screw	
106	4700909367		1	..Neutral start switch	D
107	4700903576		1	.Valve	D
108	4700903576		1	.Valve	D
109	4700813611	1	2	..O-ring	
110	4700936579	1	2	..O-ring	
111	4700901475		2	.Valve	D
112	4700909349	1	2	.O-ring	

1) Included in item 120, Seal kit
A) Not sold seperately. Replaced by PN 4700936583.

4700371545 Propulsion pump

16521

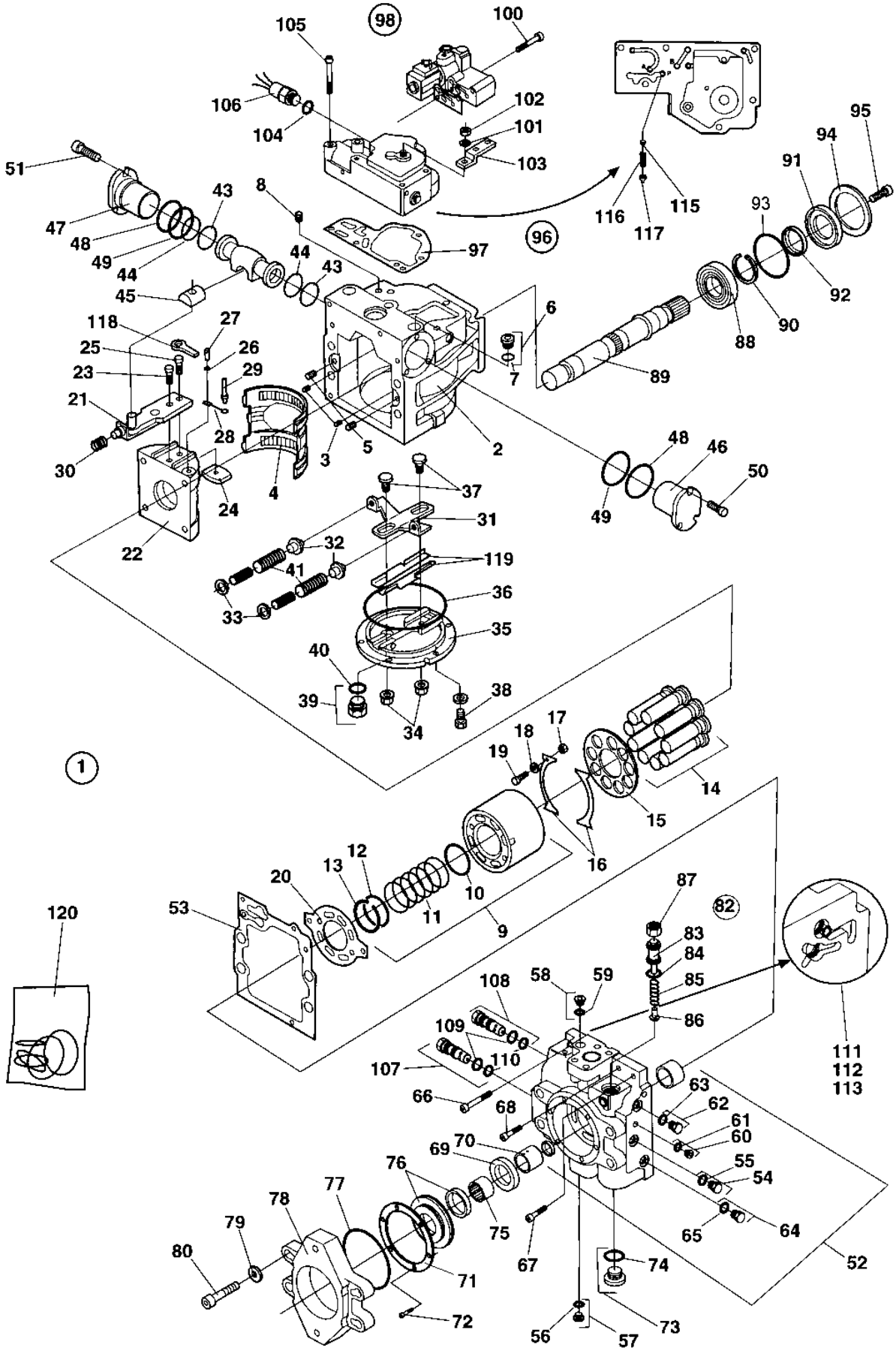

4700371545 Propulsion pump

Item	Part No	Rem	Qty	Description	Code
113	4700901476		2	.Plug	D
115	4700909435		1	.Orifice	
116	4700909436		1	.Spring	
117	4700908448		1	.Spring retainer	
118	4700936580		1	.Link	
119	4700936554		1	.Guide assy, 1pair	
120	4700935605		1	.Seal kit	

4700380830 Propulsion pump

18875

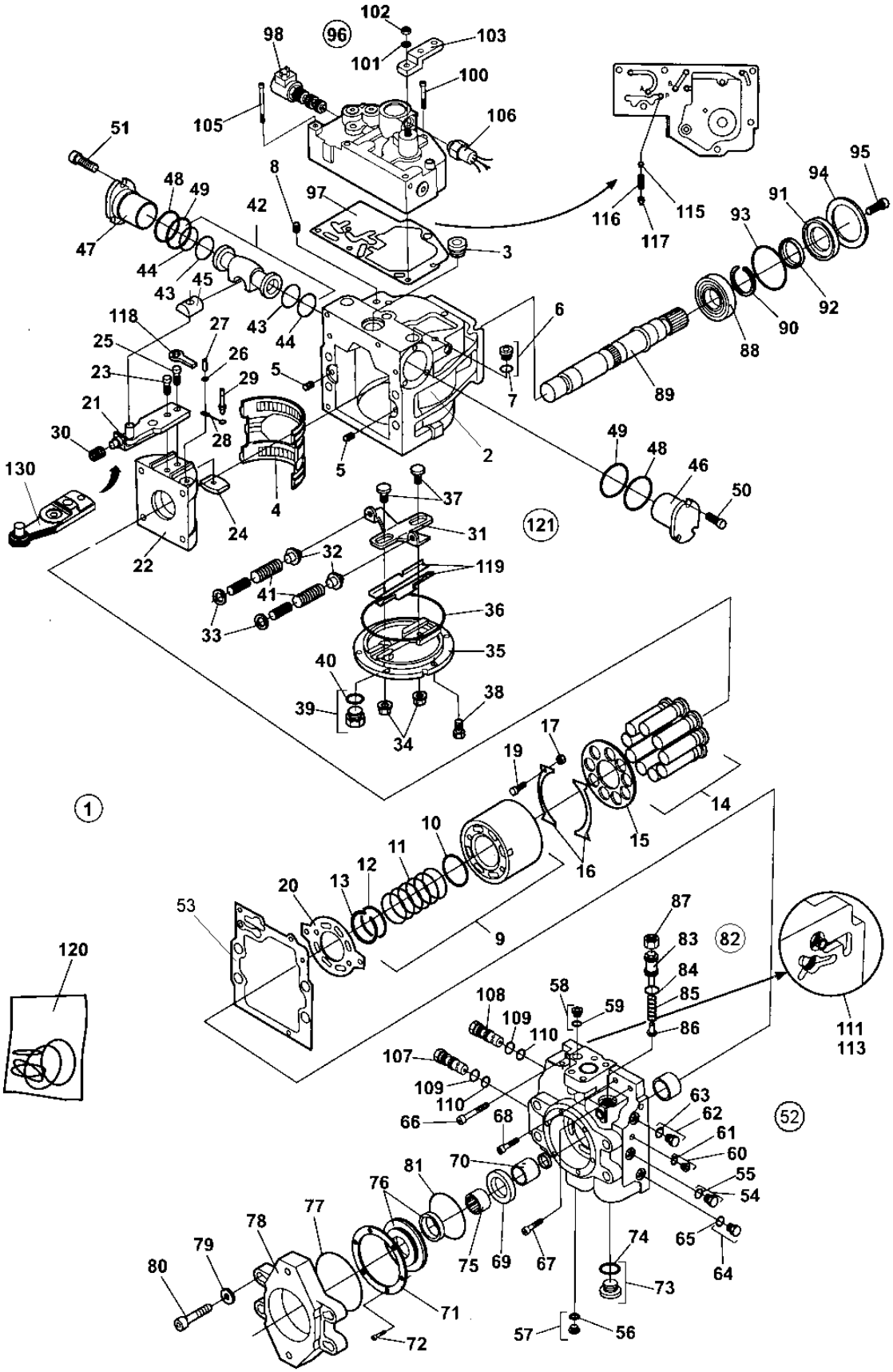

4700380830 Propulsion pump

Item	Part No	Rem	Qty	Description	Code
1	4700380830		1	Propulsion pump (Page 176)	C
2	4700936546		1	.Housing	
		2	1	.Housing	
3	4700902928		1	.Plug	
4	4700901452		1	.Bearing	
		2	1	.Bearing	
5	4700813822		2	.Pin	
6	4700908432		2	.Plug	
7	4700923087	1	2	..O-ring	D
8	4700901454		3	.Filter element	D
9	4700901455		1	.Cylinder block, cpl	
10			1	..Spacer	
11			1	..Spring	
12			1	..Spring retainer	
13			1	..Ring retainer	
14	4700903570		9	.Piston	D
15	4700903571		1	.Pressure plate	D
16	4700901458		2	.Retainer guide	D
17	4700935856		4	.Spacer	
19	4700909382		4	.Screw	
20	4700936547		1	.Valve plate	
21	4700909727		1	.Servo arm, cpl	
22			1	.Swash plate	
		2	1	.Swash plate	
23	4700909386		1	.Screw	
		2	1	.Screw	
24	4700909387		1	.Guide	
25	4700909388		1	.Screw	
26	4700909389		1	.Washer	
27	4700909390		1	.Pin	
28	4700909391		1	.Link	
29	4700909392		1	.Pin	
30	4700909393		1	.Spring	
31			1	.Lever	
32			2	.Spring support	
33			2	.Washer	
34	4700909398	1	2	.Seal lock nut	
35			1	.Cover	
		2	1	.Cover	
36	4700936551	1	1	.O-ring	
37			2	.Guide post	
38	4700936553		6	.Screw	
39	4700902928		1	.Plug	
40	4700901453	1	1	..O-ring	
41	4700908352		2	.Spring	
42	4700936582		1	.Piston, cpl	
43		1	2	..O-ring	
44		1	2	..Seal ring	
45			1	..Guide	
46	4700903580		1	.Servo	
47	4700903580		1	.Servo	
48	4700936557	1	2	.O-ring	
49	4700936558	1	2	.O-ring	
50	4700936559		3	.Screw	
51	4700936559		3	.Screw	
52	4700936560		1	.End cap, cpl	
53	4700936561	1	1	.Gasket	
54	4700358388		1	.Plug	

1) Included in item 120, Seal kit
2) Valid with item 130

4700380830 Propulsion pump

18875

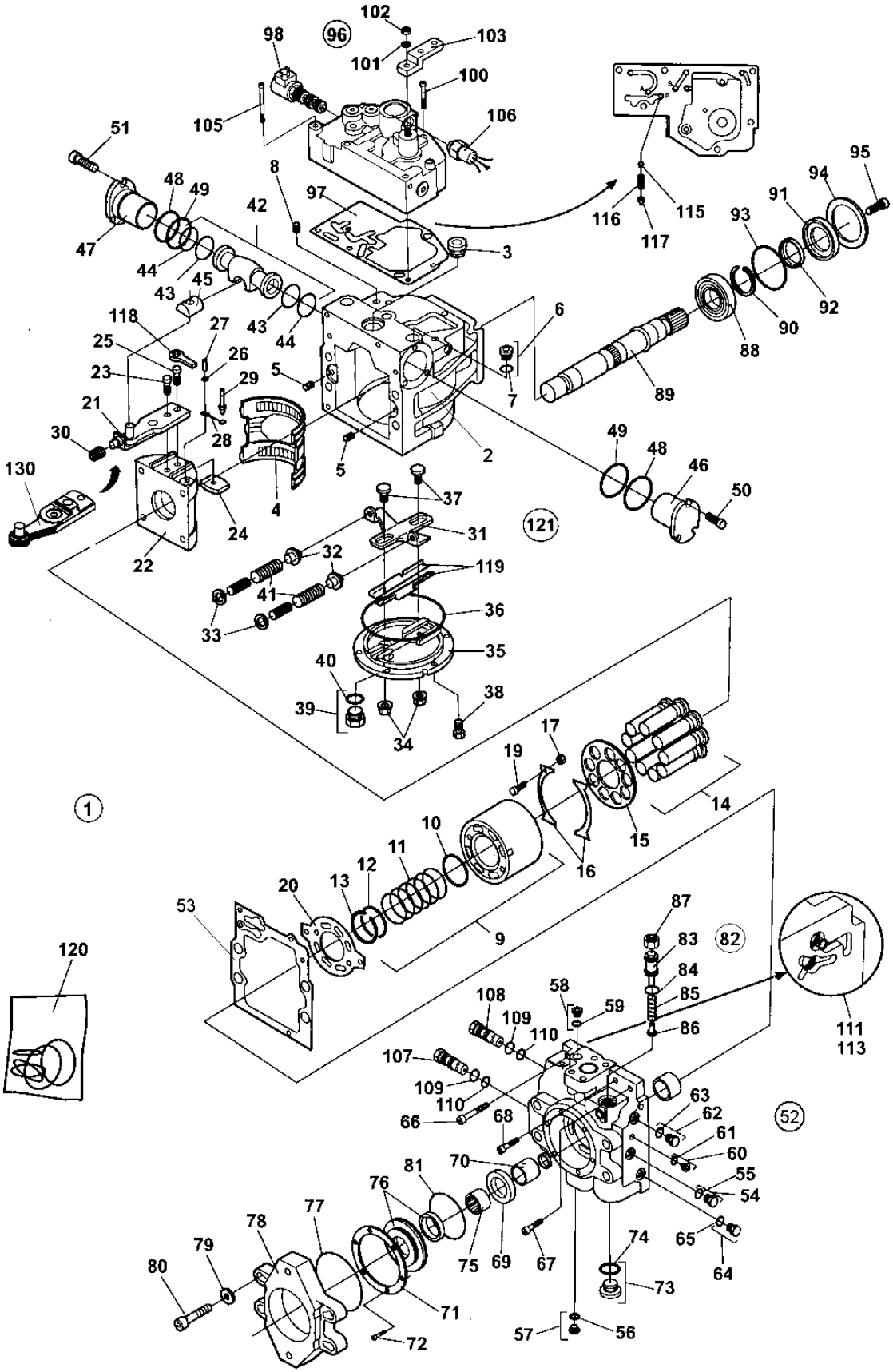

4700380830 Propulsion pump

Item	Part No	Rem	Qty	Description	Code
55	4700923087	1	1	..O-ring	D
56	4700908432		1	.Plug	
57	4700923087	1	1	..O-ring	D
58	4700908432		1	.Plug	
59	4700923087	1	1	..O-ring	D
60	4700908432		1	.Plug	
61	4700923087	1	1	..O-ring	D
62	4700358388		1	.Plug	
63	4700923087	1	1	..O-ring	D
64	4700358388		1	.Plug	
65	4700923087	1	1	..O-ring	D
66	4700936562		1	.Screw	
67	4700936563		1	.Screw	
68	4700936564		1	.Screw	
69	4700950283		1	.Spacer	
70	4700950284		1	.Spacer	
71	4700935857		1	.Retaining plate	
72	4700936566		6	.Screw	
73	4700936567		1	.Plug, cpl	
74	4700936568	1	1	..O-ring	
75			1	.Coupling sleeve	
76			1	.Cover assembly	
77	4700909399	1	1	.O-ring	
78	4700936570		1	.Adapter	
79	4700936571		4	.Washer	
			4	.	
81	4700937150		1	.O-ring	
82	4700936583		1	.Pressure relief valve, cpl	
83			1	..Screw	
84		1	1	..O-ring	
85			1	..Spring	
86			1	..Valve cone	
87			1	..Nut	
88	4700901465		1	.Bearing	
89	4700901466		1	.Shaft	
90	4700901467		1	.Ring	
91			1	.Pressure plate	
92		1	1	.Seal	
		2	1	.Seal	
93		1	1	.O-ring	
94			1	.Retaining plate	
95			3	.Screw	
96	4700938170		1	.Control valve, cpl	
97	4700939489	1	1	..Control valve gasket	
98	4700938252		1	..Solenoid valve	
100			1	..Screw	
101	4700909428		1	..Washer	
102	4700909429		1	..O-ring	
103	4700909432		1	..Control lever	
105	4700937857		5	..Screw	
106	4700938253		1	..Neutral start switch	
107	4700212339		1	.Valve	
108	4700212339		1	.Valve	
109		1	2	..O-ring	
110		1	2	..O-ring	
111	4700901475		2	.Valve	D
113	4700901476		2	.Plug	D
115	4700909435		1	.Orifice	

1) Included in item 120, Seal kit
2) Valid with item 130

4700380830 Propulsion pump

18875

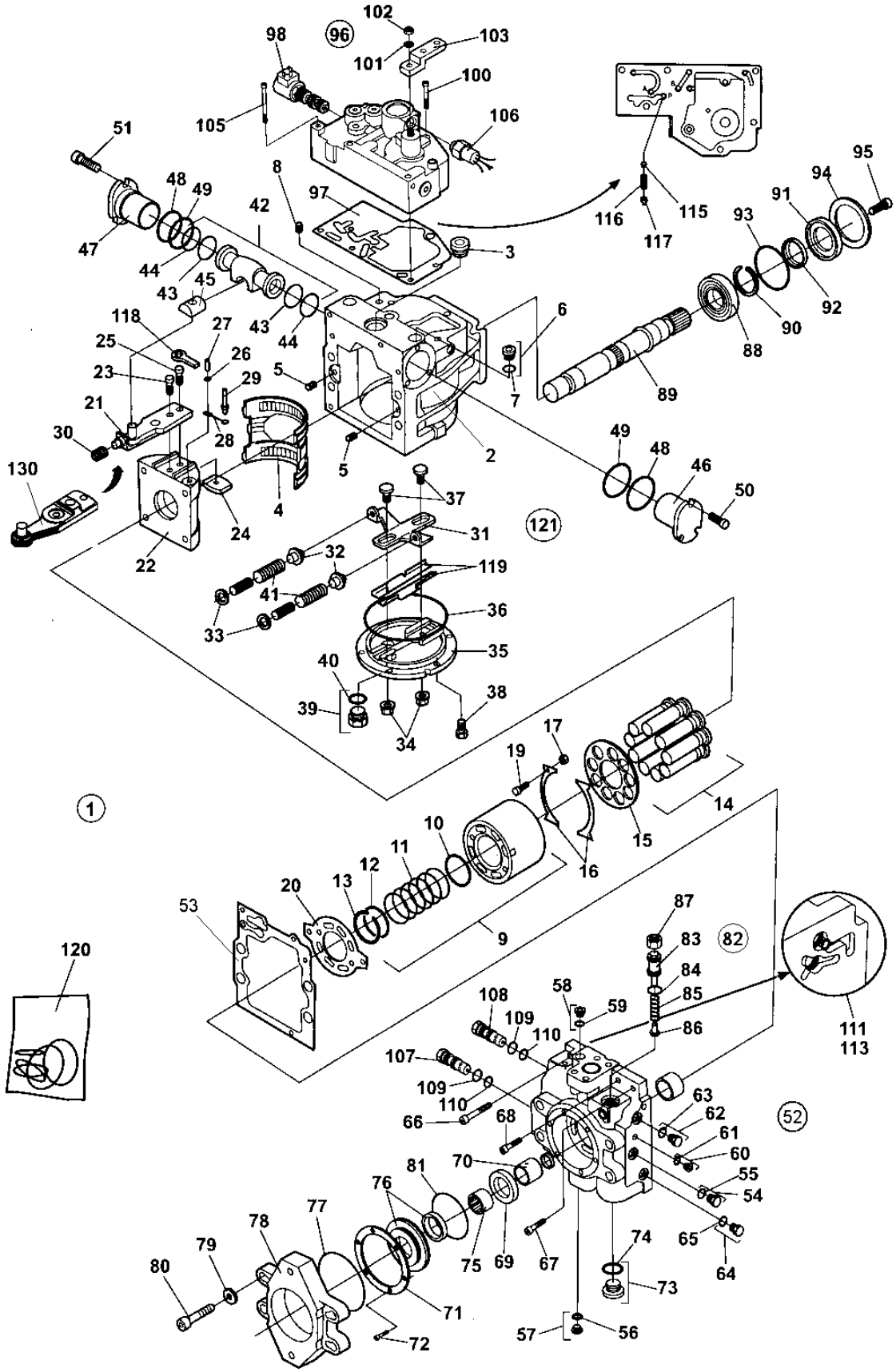

4700380830 Propulsion pump

Item	Part No	Rem	Qty	Description	Code
116	4700909436		1	.Spring	
117	4700908448		1	.Spring retainer	
118			1	.Link	
119			1	.Guide assy, 1pair	
120	4700901328		1	.Seal kit	D
121	4700936548		1	.Cover assy	
130			1	.Servo arm	

4700375999 Hydraulic motor

18874

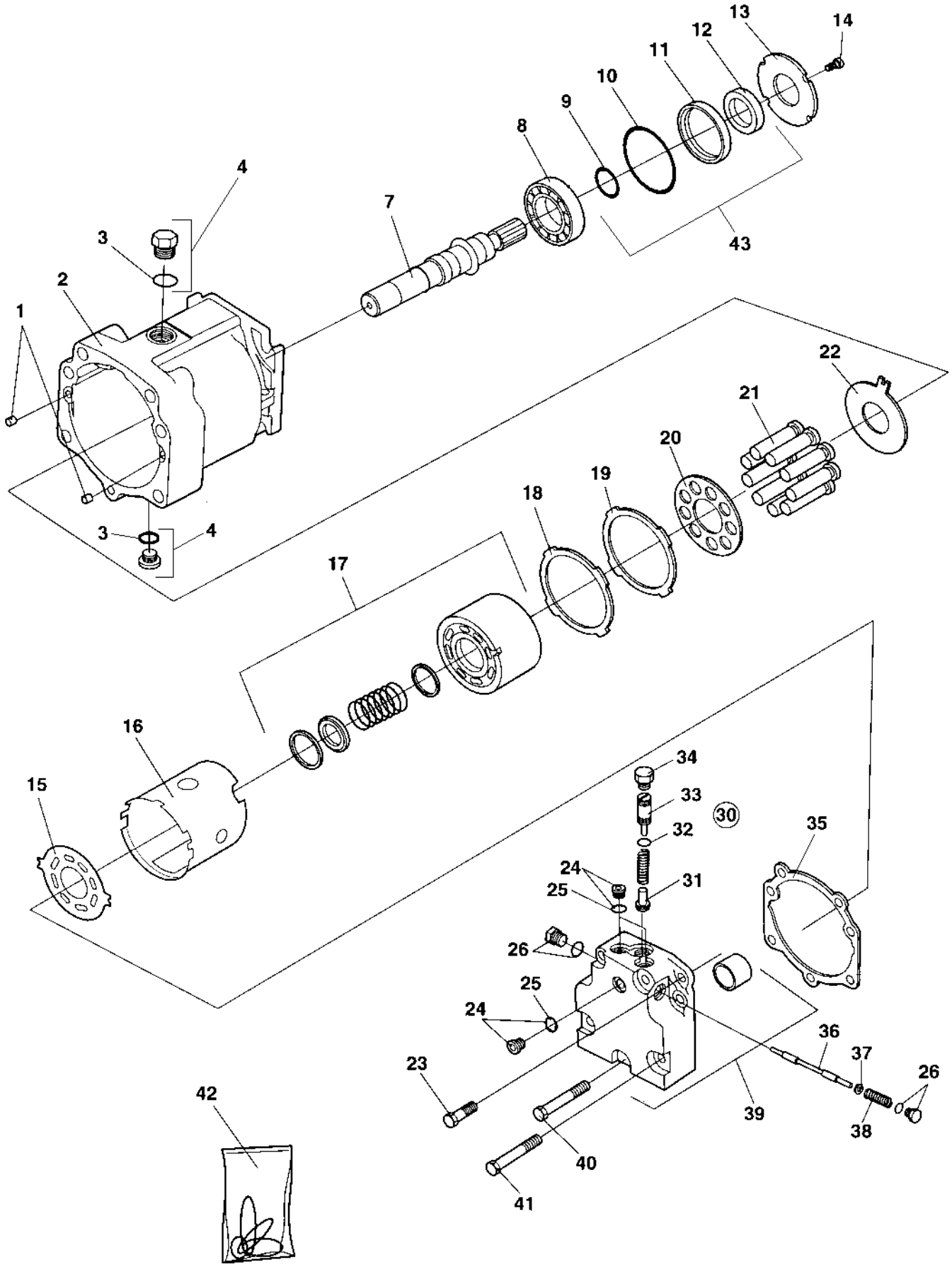

4700375999 Hydraulic motor

Item	Part No	Rem	Qty	Description	Code
1	4700813822		2	Pin	
2			1	Housing	
3		A	2	O-ring	
4	4700936567		2	Plug, cpl	
7			1	Shaft	
8			1	Bearing	
9			1	Ring	
10		A	1	O-ring	
11			1	Seal carrier	
12		A	1	Seal	
13			1	Retaining plate	
14	4700936563		3	Screw	
15	4700945160		1	Valve plate	
16			1	Holder	
17			1	Cylinder block, cpl	
18			1	Shim	
19			1	Retainer guide	
20			1	Pressure plate	
21			9	Piston	
22			1	Thrust plate	
23			2	Screw	
24	4700902337		3	Plug, cpl	
25		A	3	O-ring	
26			2	Plug, cpl	
30			1	Valve, cpl	
31			1	Spring collar	
32		A	2	O-ring	
33			1	Adapter	
34			1	Plug	
35		A	1	Gasket	
36			1	Spool	
37			2	Spring washer	
38			2	Spring	
39			1	End cap, cpl	
40			1	Screw	
41			4	Screw	
42	4700950378		1	Seal kit	D
43			1	Shaft seal kit	D

A) Included in item 42

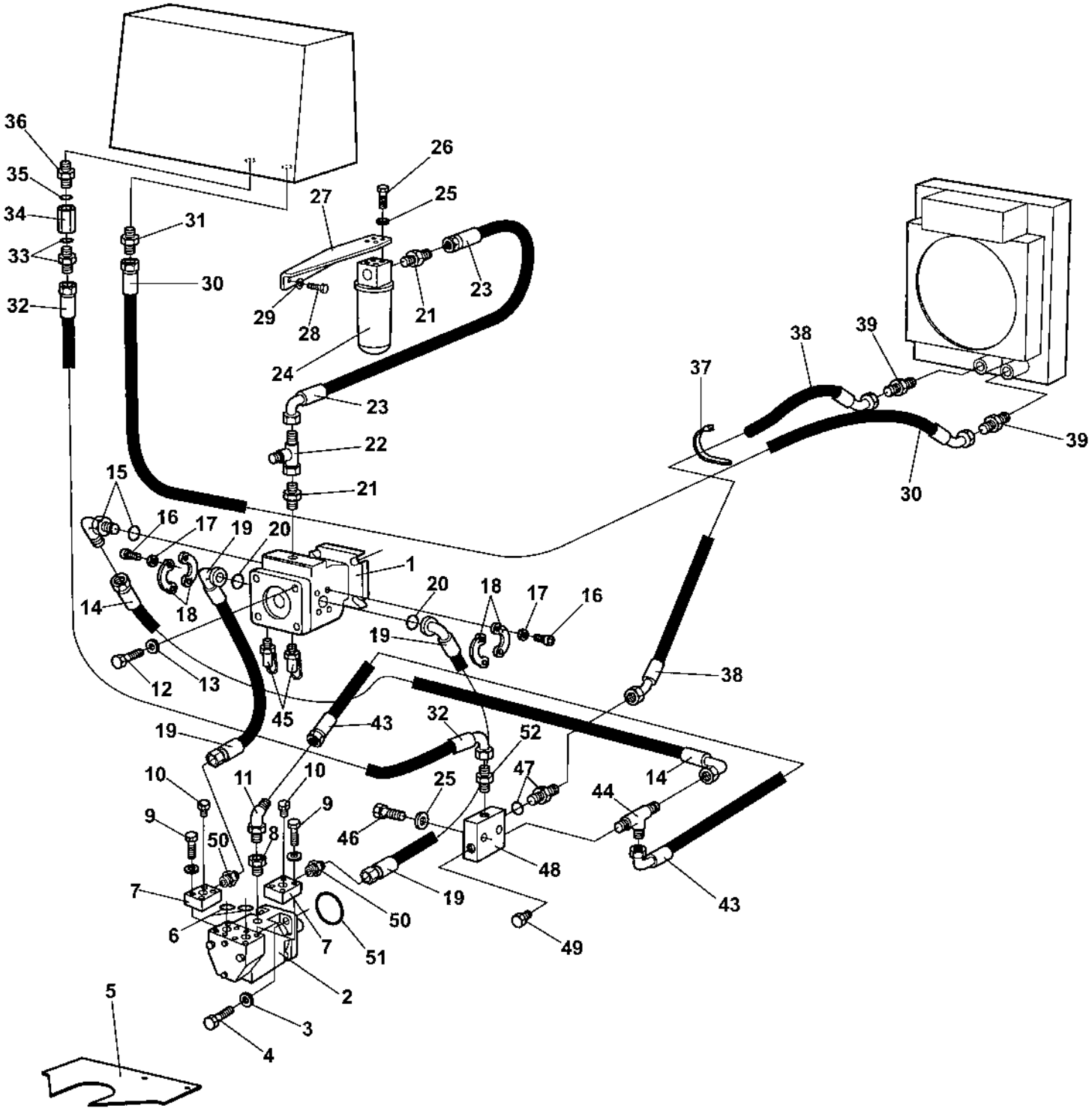
36
35
34
33
32
31
30
26
27
25
29
28
24
23
21
22
15
16
17
19
20
1
18
14
12
13
45
43
32
52
47
44
46
48
49
51
2
3
4
5
6
7
8
9
10
11
50
37
38
39

Propulsion system

Item	Part No	Rem	Qty	Description		Code
1	4700380830		1	Propulsion pump (Page 176)		C
2	4700375999		1	Hydraulic motor (Page 182)		
3	4700904793		4	Washer	19x34x3	
4	4700500263		4	Screw	M18x60	
5	4700372235		1	Hose guard		
6	4700904171		2	O-ring		
7	4700380717		2	Flange coupling		
8	4700334468		1	Adapter		
9	4700509034		8	Screw		
10	4700232222		2	Plug		
11	4700334248		1	Elbow 45, O-ring		
12	4700500046		4	Screw		
13	4700904213		4	Washer		
14	4700482391		1	Hydraulic hose		
15	4700813499		1	Elbow 90, O-ring		
16	4700502132		8	Screw	UNC 7/16" x 22	
17	4700904638		8	Washer	12x22x2	
18	4700923384		4	Flange half		
19	4700483558		2	Hydraulic hose		
20	4700904005		2	O-ring		
21	4700334468		3	Adapter		
22	4700234243		1	T-connector		
23	4700482182		1	Hydraulic hose		D
24	4700359550		1	Hydraulic oil filter, cpl		
	4700359551		1	.Filter head		
	4700359552		1	.Cleaning filter element	Maximum 50 hours use	
	4700372229	B	1	Hydraulic oil filter element		A
25	4700904230		6	Washer		
26	4700500028		4	Screw		
27	4700379482		1	Filter bracket		
28	4700500021		2	Screw	M8-1,25x25 8.8	
29	4700904229		2	Washer	8,4x16x1,5	
30	4700483499		1	Hydraulic hose		
31	4700234909		1	Straight connector		
32	4700482182		1	Hydraulic hose		D
33	4700923371		1	Adapter		
34	4700374059		1	Check valve		
35	4700162008		1	Seal washer		
36	4700904282		1	Adapter		
37	4700313102		N	Cable ties		
38	4700483123		1	Hydraulic hose		
39	4700234958		2	Connector		
43	4700482391		1	Hydraulic hose		
44	4700234875		1	Tee-connector o-ring		
45	4700900229		2	Measuring nipple		D
46	4700500109		2	Screw	M10-1,5x65 8,8	
47	4700334140		1	Adapter		
48	4700345243		1	Connection block		
49	4700232222		1	Plug		
50	4700792339		2	Straight connector orfs		
51	4700902581		1	O-ring		D
52	4700334138		1	Adapter		

B) Spare part for ordinary service

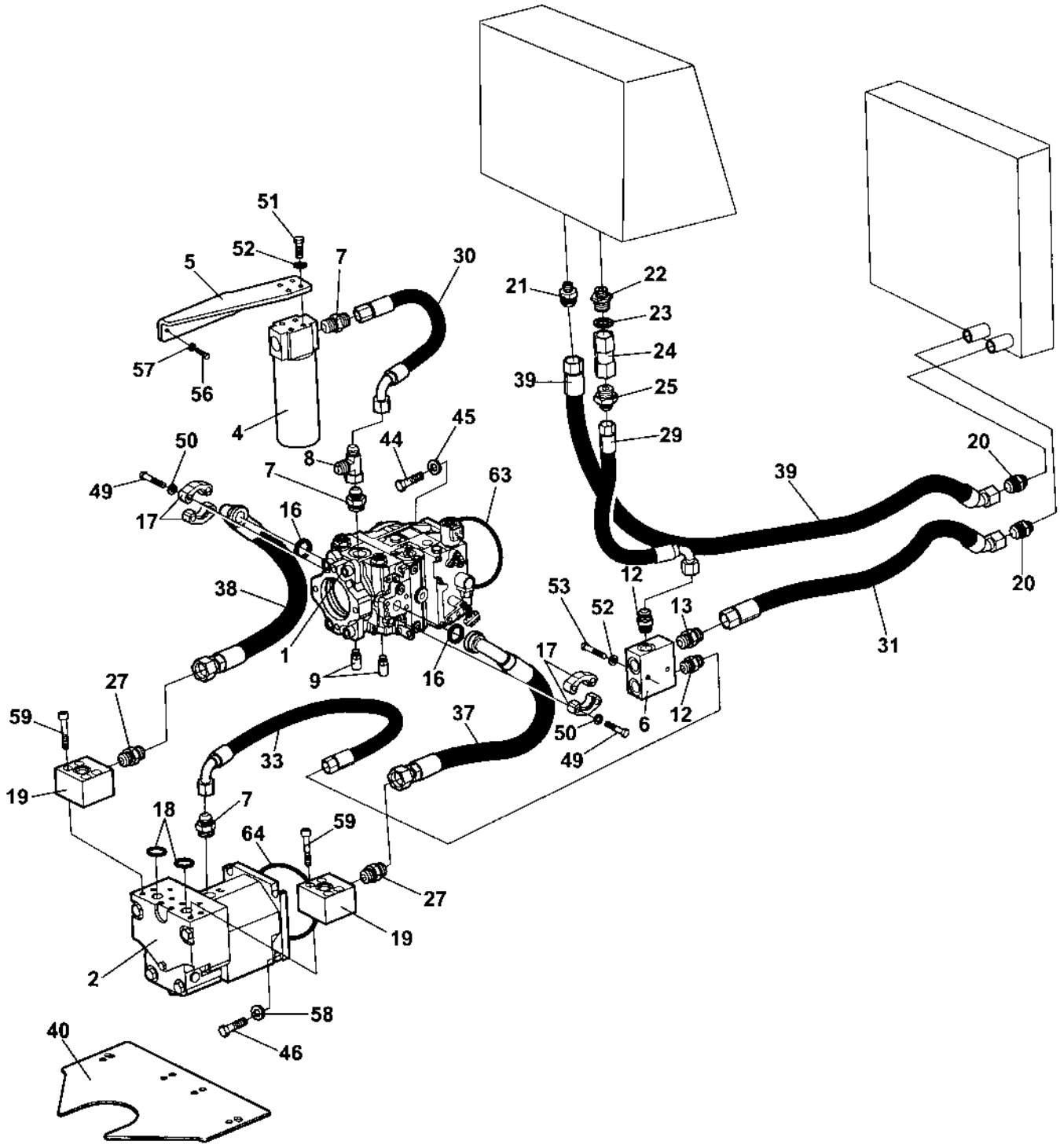
51
52
5
7
30
21
22
23
24
39
25
29
57
56
4
45
44
50
8
20
49
7
63
39
17
16
12
38
53
52
13
20
1
31
17
27
9
16
59
37
50
6
12
33
49
19
18
7
64
59
27
19
2
58
40
46

Propulsion system

Item	Part No	Rem	Qty	Description		Code
1	4700395385		1	Hydraulic pump (Page 188)		
2	4700375999		1	Hydraulic motor (Page 182)		
4	4700359550		1	Hydraulic oil filter, cpl		
	4700359551		1	.Filter head		
	4700359552		1	.Cleaning filter element	Maximum 50 hours use	
	4700372229	B	1	.Hydraulic oil filter element		A
5	4700379482		1	Filter bracket		
6	4700345243		1	Connection block		
7	4700334468		3	Adapter		
8	4700234243		1	T-connector		
9	4700900229		2	Measuring nipple		D
12	4700334138		2	Adapter		
13	4700334140		1	Adapter		
16	4700904005		2	O-ring		
17	4700923384		4	Flange half		
18	4700904171		2	O-ring		
19	4700380717		2	Flange coupling		
20	4700234958		2	Connector		
21	4700234909		1	Straight connector		
22	4700904282		1	Adapter		
23	4700162008		1	Seal washer		
24	4700374059		1	Check valve		
25	4700923371		1	Adapter		
27	4700792339		2	Straight connector orfs		
29	4700482182		1	Hydraulic hose		D
30	4700482182		1	Hydraulic hose		D
31	4700483123		1	Hydraulic hose		
33	4700482391		1	Hydraulic hose		
37	4700483551		1	Hydraulic hose		
38	4700483551		1	Hydraulic hose		
39	4700483499		1	Hydraulic hose		
40	4700372235		1	Hose guard		
44	4700500046		4	Screw		
45	4700904213		4	Washer		
46	4700500263		4	Screw	M18x60	
49	4700502132		8	Screw	UNC 7/16" x 22	
50	4700904638		8	Washer	12x22x2	
51	4700500028		4	Screw		
52	4700904230		6	Washer		
53	4700500109		2	Screw	M10-1,5x65 8,8	
56	4700500021		2	Screw	M8-1,25x25 8.8	
57	4700904229		2	Washer	8,4x16x1,5	
58	4700904793		4	Washer	19x34x3	
59	4700509034		8	Screw		
61	4700902919		3	Plug		
62	4700232222		3	Plug		
63			1	O-ring		
64	4700160132		1	O-ring	124, 50x3, 00	D

B) Spare part for ordinary service

4700395385 Hydraulic pump

18938

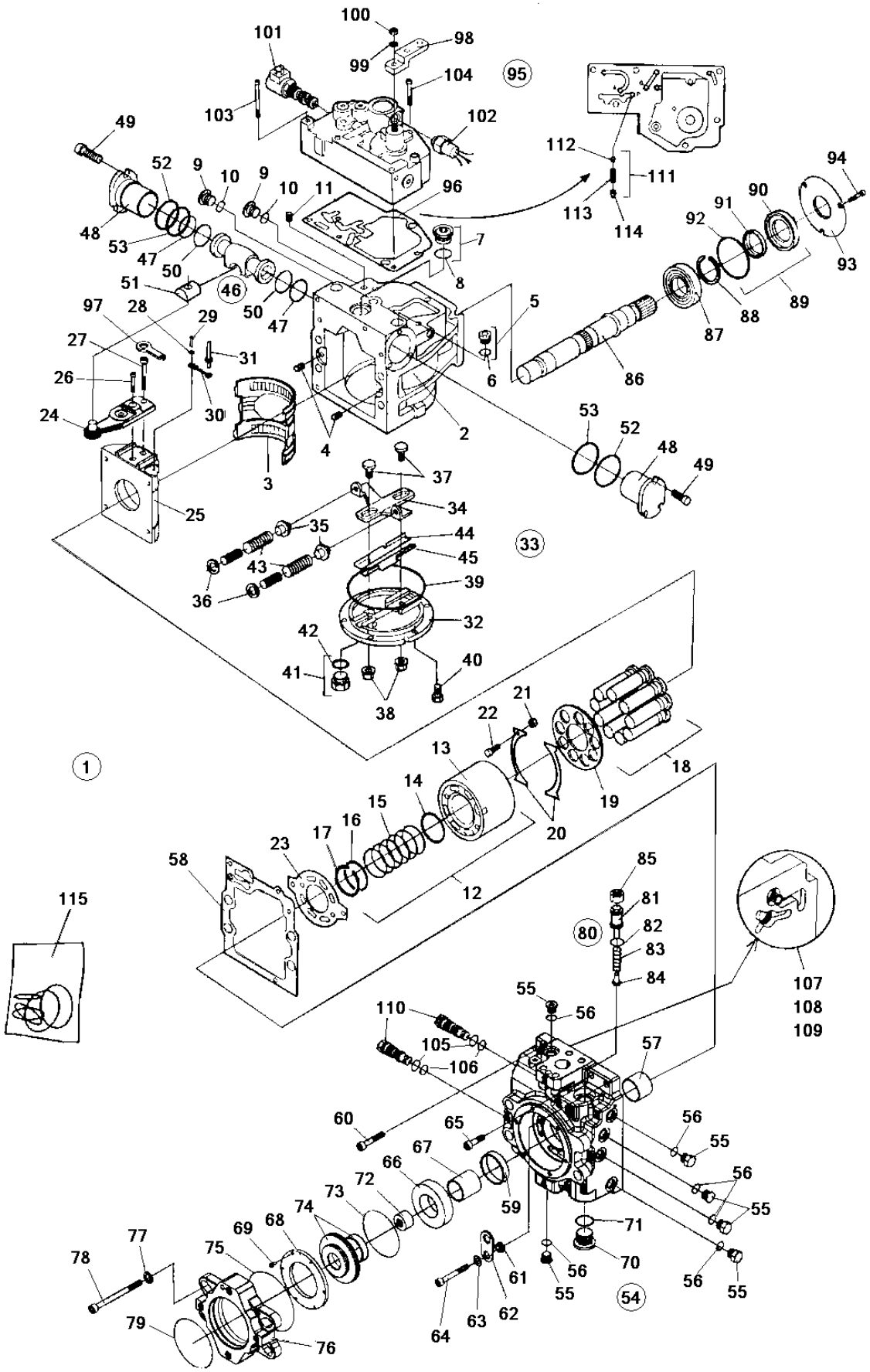

4700395385 Hydraulic pump

Item	Part No	Rem	Qty	Description	Code
1	4700395385		1	Hydraulic pump (Page 188)	
2			1	.Housing	
3			1	.Bearing	
4			2	.Pin	
5			2	.Plug	
6		A	2	..O-ring	
7			1	.Plug	
8		A	1	.O-ring	
9			2	..Plug	
10		A	2	..O-ring	
11			3	.Filter element	
12	4700901455		1	.Cylinder block, cpl	
13			1	..Cylinder block	
14			1	..Ring	
15			1	..Spring	
16			1	..Spring retainer	
17			1	..Ring	
18	4700903570		9	.Piston	D
19	4700903571		1	.Pressure plate	D
20	4700901458		2	.Retainer guide	D
21	4700935856		4	.Spacer	
22	4700909382		4	.Screw	
23	4700936547		1	.Valve plate	
24			1	.Servo arm	
25			1	.Swash plate	
26			1	.Screw	
27			1	.Screw	
28			1	.Washer	
29			1	.Pin	
30	4700909391		1	.Link	
31	4700909392		1	.Pin	
32			1	.Cover	
33	4700936548		1	.Cover assy	
34			1	.Lever	
35			2	.Spring retainer	
36			2	.Shim	
37			2	.Guide post	
38	4700909398	A	2	.Seal lock nut	
39	4700936551	A	1	.O-ring	
40	4700936553		6	.Screw	
41	4700902928		1	.Plug	
42		A	1	..O-ring	
43	4700908352		2	.Spring	
44			1	.Guide	
45			1	.Guide	
46	4700936582		1	.Piston, cpl	
47		A	2	.O-ring	
48			2	.Servo sleeve	
49	4700936559		6	.Screw	
50		A	2	.Piston ring	
51			1	.Guide	
52	4700936557	A	2	.O-ring	
53		A	2	.O-ring	
54	4700936560		1	.End cap, cpl	
55			6	.Plug	
56		A	6	..O-ring	
57			1	.Bushing	
58	4700936561	A	1	.Gasket	
59			1	.Bearing	

A) Includes in seal kit, item 115

4700395385 Hydraulic pump

18938

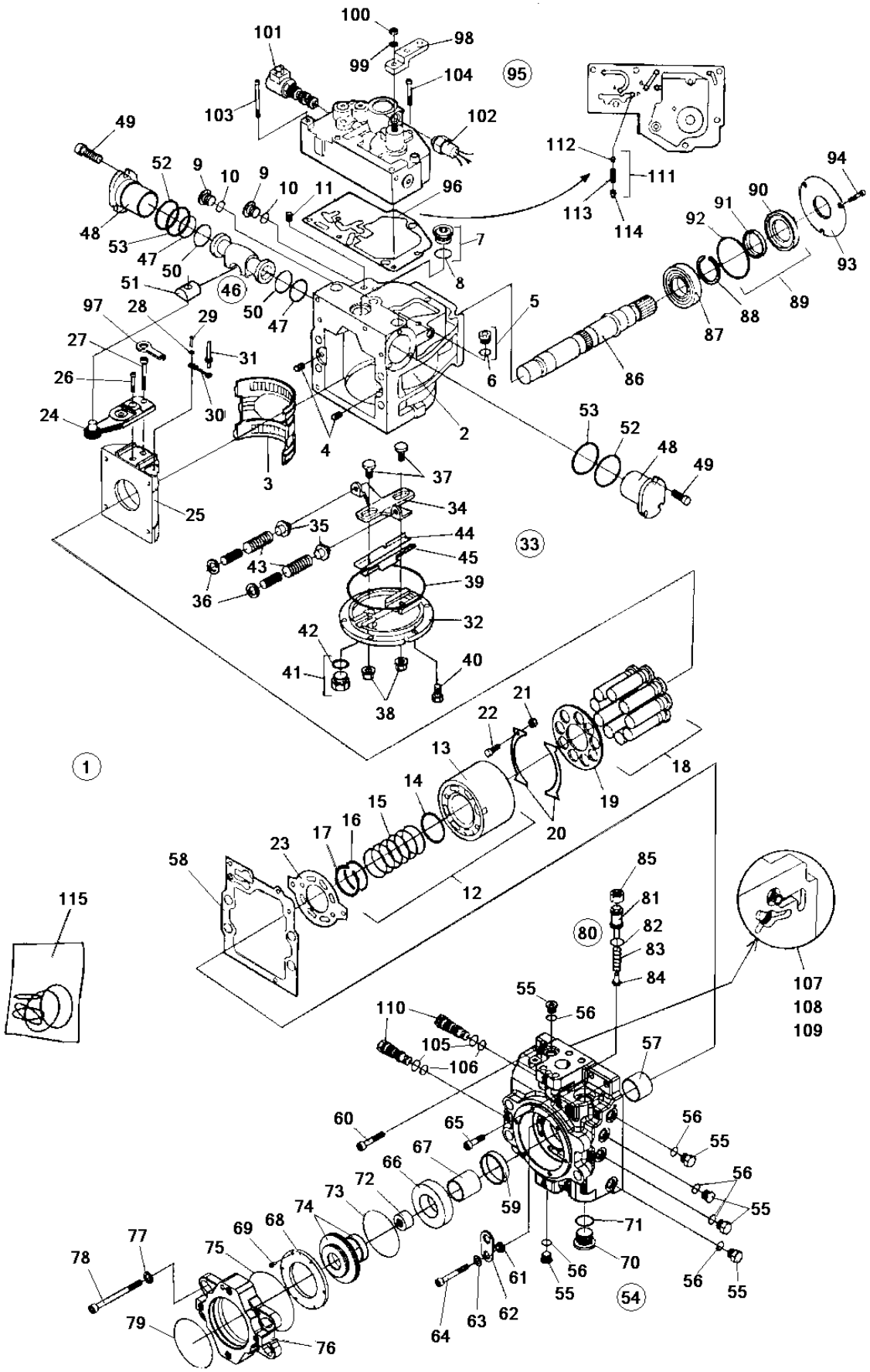

4700395385 Hydraulic pump

Item	Part No	Rem	Qty	Description	Code
60	4700936562		1	.Screw	
61			1	.Spacer	
62			1	.Lifting bracket	
63	4700900188		1	.Washer	
64	4700936563		1	.Screw	
65	4700936564		1	.Screw	
66	4700950283		1	.Spacer	
67	4700950284		1	.Spacer	
68	4700935857		1	.Retaining plate	
69	4700936566		6	.Screw	
70	4700936567		1	.Plug, cpl	
71		A	1	..O-ring	
72			1	.Coupling	
73	4700937150	A	1	.O-ring	
74			1	.Cover assy	
75	4700909399	A	1	.O-ring	
76			1	.Adapter	
77	4700936571		4	.Washer	
78			4	.Screw	
79		A	1	.O-ring	
80	4700936583		1	.Pressure relief valve, cpl	
81			1	..Screw	
82		A	1	..O-ring	
83			1	..Spring	
84			1	..Valve cone	
85			1	..Nut	
86			1	.Bearing	
87	4700901466		1	.Shaft	
88			1	.Snap ring	
89			1	.Shaft seal assy	
90			1	..Seal	
91		A	1	..Lip seal	
92		A	1	..O-ring	
93			1	.Retaining plate	
94	4700908773		3	.Screw	
95	4700938170		1	.Control valve, cpl	
96	4700939489	A	1	..Control valve gasket	
97			1	..Link	
98	4700909432		1	..Control lever	
99			1	..Washer	
100	4700909429		1	..O-ring	
101			1	..Solenoid valve	
102	4700938253		1	..Neutral start switch	
103	4700937857		5	..Screw	
104			1	..Screw	
105		A	2	.O-ring	
106		A	2	.O-ring	
107			2	.Valve	
108			2	.Plug	
109		A	2	..O-ring	
110			1	.Valve	
111	4700212336		1	.Orifice valve cpl	D
112	4700909435		1	..Orifice	
113	4700908447		1	..Compression spring	
114	4700908448		1	..Spring retainer	
115	4700901328		1	.Seal kit	D

A) Includes in seal kit, item 115

Vibration system

16927

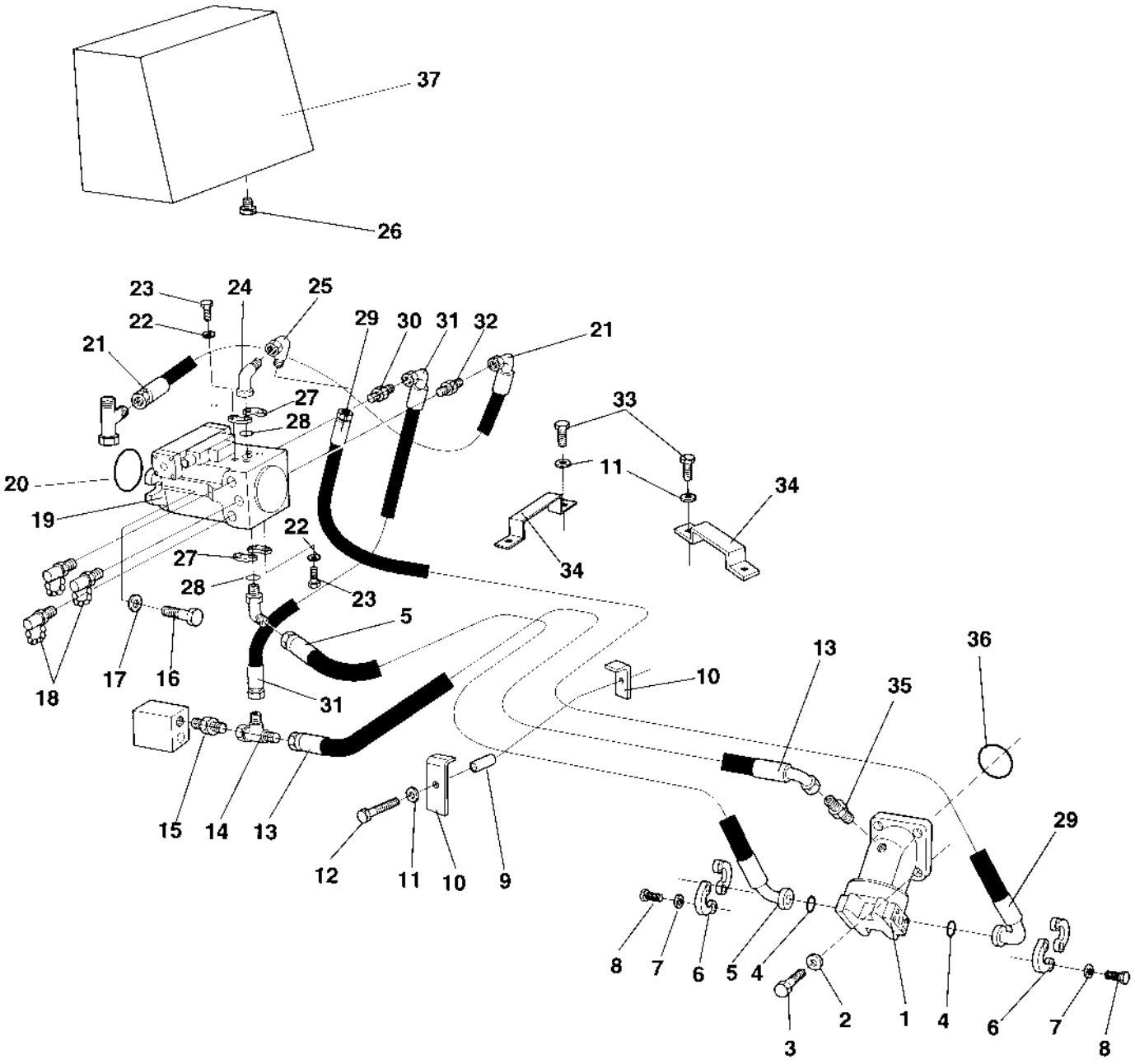

Vibration system

Item	Part No	Rem	Qty	Description		Code
1	4700380145		1	Hydraulic motor, vibration (Page 194)		C
2	4700904231		4	Washer	13x24x2 300 HV	
3	4700500194		4	Screw		
4	4700904003		2	O-ring		
5	4700483501		1	Hydraulic hose		
6	4700900430		4	Flange half		
7	4700904229		8	Washer	8,4x16x1,5	
8	4700502019		8	Screw		
9	4700373424		2	Spacer		
10	4700373270		2	Hose clamp		
11	4700904230		6	Washer		
12	4700500032		2	Screw	M10 x 55	
13	4700482107		1	Hydraulic hose		D
14	4700334135		1	Tee-connector		
15	4700334122		1	Adapter		
16	4700502078		2	Screw		
17	4700904232		2	Washer		
18	4700901157		3	Measuring nipple		D
19	4700381151		1	Vibration pump Up to 65X20592 (Page 196)		C
	4700383958		1	Vibration pump From 65X20593 (Page 202)		C
20	4700903877		1	O-ring		
21	4700483286		1	Hydraulic hose		
22	4700904230		8	Washer		
23	4700500030		8	Screw		
24	4700904767		2	Flange adapter		
25	4700904781		1	Adapter		
26	4700232122		1	Plug Up to 65X20396	3/4NPTF	
	4700334025		1	Straight connector From 65X20397		
	4700330383		1	Cap hydraulic From 65X20397		
27	4700929226		4	Flange half		
28	4700904004		2	O-ring		D
29	4700483500		1	Hydraulic hose		
30	4700901155		1	Connector		
31	4700483397		1	Hydraulic hose		
32	4700234382		1	Adapter		
33	4700500028		4	Screw		
34	4700373017		2	Hose clamp		
35	4700334121		1	Straight connector		
36	4700160132		1	O-ring	124, 50x3, 00	D
37			1	Hydraulic oil tank Up to 65X23699 (Page 230)		
			1	Hydraulic oil tank From 65X23700 (Page 232)		

4700380145 Hydraulic motor, vibration

16978

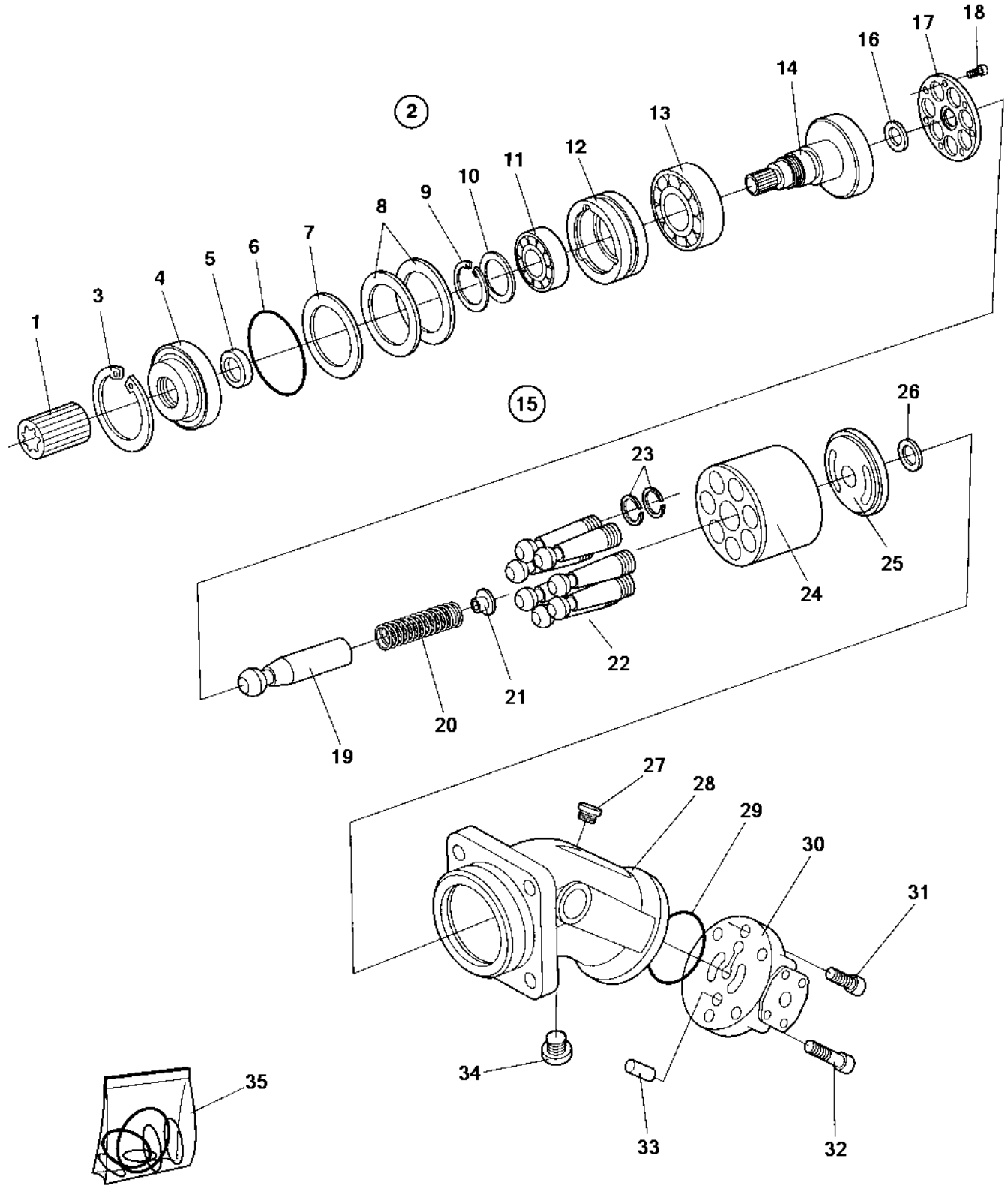

4700380145 Hydraulic motor, vibration

Item	Part No	Rem	Qty	Description		Code
			1	Hydraulic motor, vibration		
1	4700340863		1	.Splined sleeve		D
2	4700380078		1	.Hydraulic motor, vibration		
3	4700901387		1	..Snap ring		
4	4700937261		1	..Cover		
5	4700937264	1	1	..Seal ring		
6	4700937265	1	1	..O-ring		
7	4700901390		1	..Shim	T=0,3 mm	
8	4700901389		2	..Shim	T=0,1 mm	
9	4700938042		1	..Retaining ring		
10	4700938041		1	..Back-up plate		
11	4700901386		1	..Bearing		
12	4700937260		1	..Bearing ring		
13	4700901385		1	..Bearing		
14	4700938040		1	..Shaft		
15			1	.Rotary group, hydr.section		
16			1	..Washer		
17			1	..Retaining plate		
18			7	..Screw		
19			1	..Pin		
20			1	..Spring		
21			1	..Spring collar		
22			7	..Piston		
			1	...Piston		
23			2	...Sealing ring		
24			1	..Cylinder		
25			1	..Pressure plate		
26			1	..Washer		
27	4700937995		1	..Screw		
28	4700937256		1	..Housing		
29	4700937258	1	1	..O-ring		
30	4700937257		1	..Plate		
31	4700902655		2	..Screw		
32	4700927350		4	..Screw		
33	4700937993		1	..Pin		
34	4700937259	1	1	..Screw		
35	4700937674		1	.Seal kit		

1) Included in seal kit, item 35

4700381151 Vibration pump

16522-1

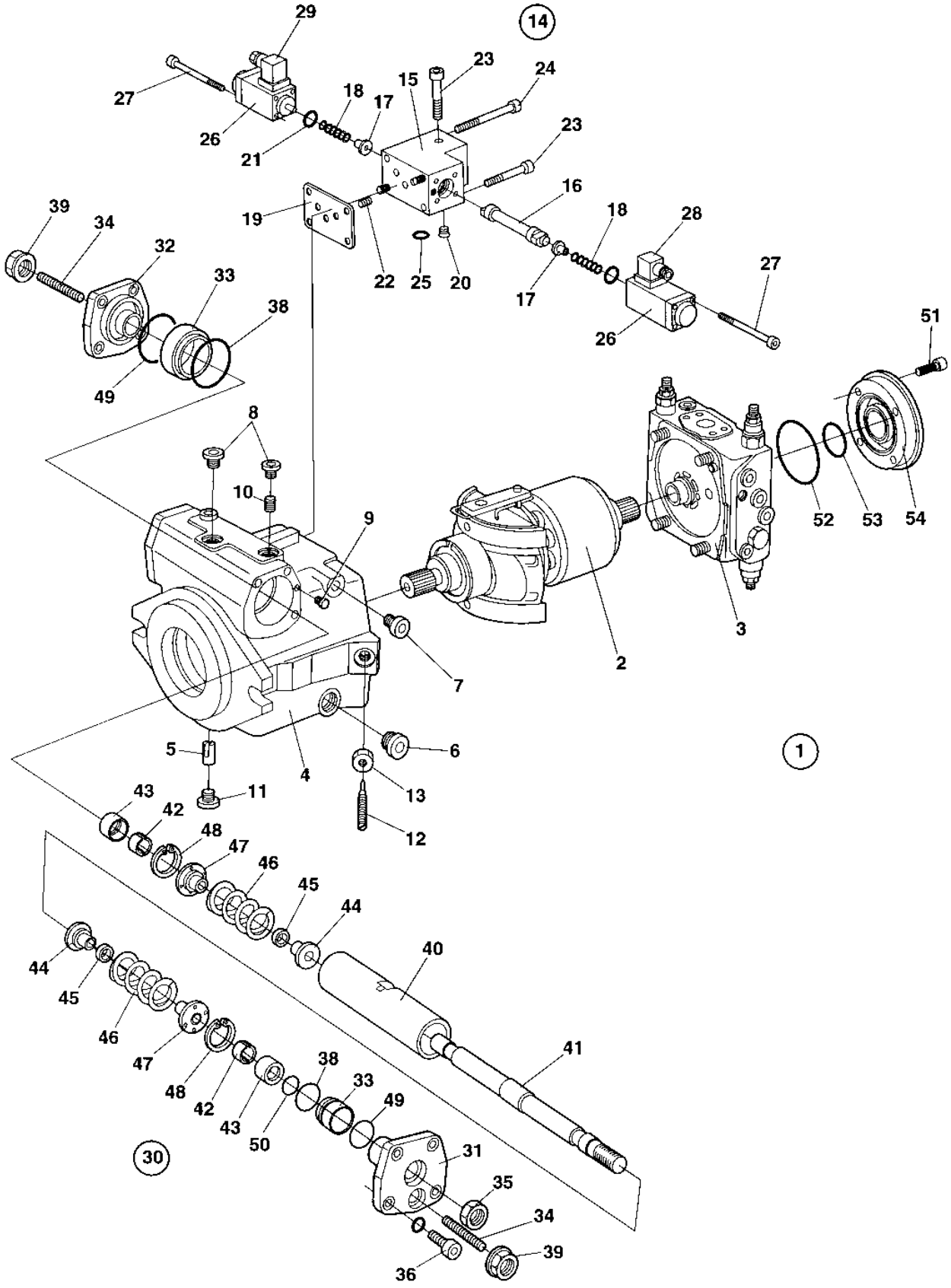

4700381151 Vibration pump

Item	Part No	Rem	Qty	Description		Code
1			1	Vibration pump		
	4700939727		1	.Seal kit		
2	4700937167		1	.Rotary group, cpl (Page 198)		
3	4700937168		1	.Valve block, cpl (Page 200)		
4	4700937986		1	.Housing		
5	4700935158		1	.Pin		
6	4700935219		1	.Plug		
7	4700902724		1	.Plug		
8	4700936803		5	.Plug		
9	4700909514		2	.Pin		
10	4700936308		2	.Orifice		
11	4700902624		1	.Screw		
12	4700902687		1	.Pin		
13	4700902695		1	.Nut		
14	4700908381		1	.Control valve		
15	4700936683		1	..Housing		
16	4700936684		1	..Piston		
17	4700936685		2	..Spring collar		
18	4700936686		2	..Spring		
19	4700935218		1	..Gasket		
20	4700936687		2	..Pin		
21	4700927253		2	..O-ring		
22	4700936688		1	..Pin		
23	4700927358		3	..Screw		
24	4700908383		2	..Screw		
25	4700936418		1	..O-ring		
26	4700937994		2	..Solenoid		
27	4700901430		8	..Screw		
28	4700927354		1	..Socket		D
29	4700927355		1	..Socket		D
30	4700937985		1	.Hydraulic control		
31	4700937998		1	..Cover		
32	4700937999		1	..Cover		
33	4700938003		2	..Guide ring		
34	4700937195		2	..Pin		
35	4700936340		1	..Nut		
36	4700902856		8	..Screw		
38	4700938004		2	..O-ring		
39	4700936393		2	..Seal lock nut		
40	4700938005		1	..Piston		
41	4700937198		1	..Rod		
42	4700938006		2	..Ring	5,77	
43	4700938014		2	..Sleeve		
44	4700937199		2	..Spring collar		
45	4700936648		2	..Spacer ring		
46	4700937531		2	..Spring, outer		
	4700937200		2	..Spring, inner		
47	4700937201		2	..Spring collar		
48	4700938015		2	..V-ring		
49	4700938001		1	..O-ring		
50	4700936371		1	..O-ring		
51	4700902655		4	.Screw		
52	4700936678		1	.O-ring		
53	4700936679		1	.O-ring		
54	4700936677		1	.Cover		

4700937167 Rotary group, cpl

17011

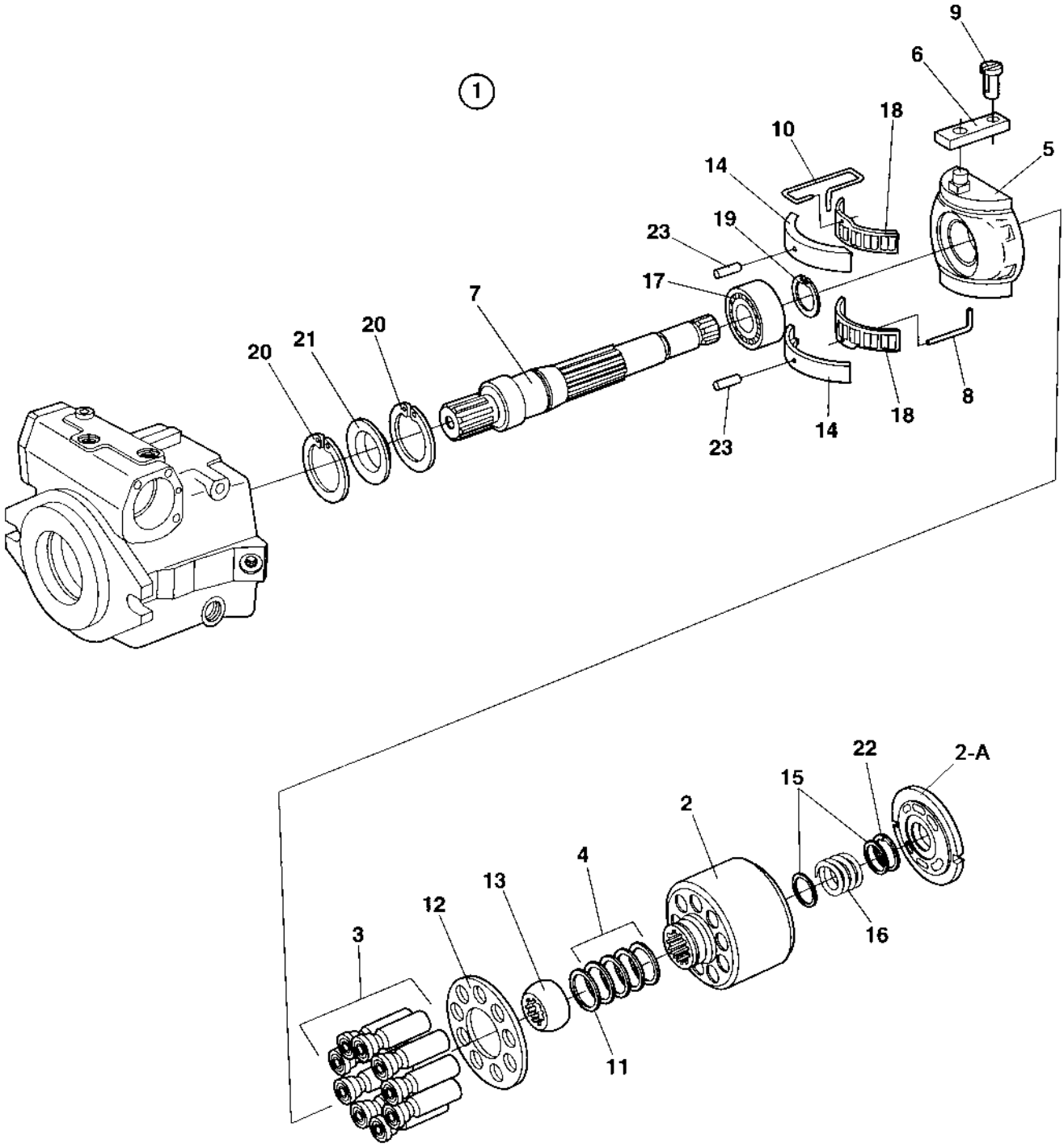

4700937167 Rotary group, cpl

Item	Part No	Rem	Qty	Description	Code
1			1	Rotary group, cpl	
2	4700937170		1	.Cylinder with control plate	
2-A	4700940308		1	..Control plate	
3	4700937171		9	.Piston	
4	4700937172		1	.Cup springs, cpl	
5	4700937173		1	.Cradle	
6	4700937174		1	.Slide ring	
7	4700908367		1	.Shaft	
8	4700936621		1	.Wire	
9	4700935164		1	.Pin	
10	4700937175		1	.Wire	
11	4700937176		1	.Shim	
12	4700937180		1	.Retaining plate	
13	4700937181		1	.Retaining ball	
14	4700937182		1	.Bearing liner, 1 pair	
15	4700937183		2	.Washer	
16	4700937184		1	.Spring	
17	4700937185		1	.Bearing	
18	4700937186		1	.Cradle bearing assembly, 1 set	
19	4700937187		1	.Retaining ring	
20	4700937188		2	.V-ring	
21	4700937189		1	.Seal ring	
22	4700937190		1	.Retaining ring	
23	4700902792		2	.Pin	

4700937168 Valve block, cpl

18844

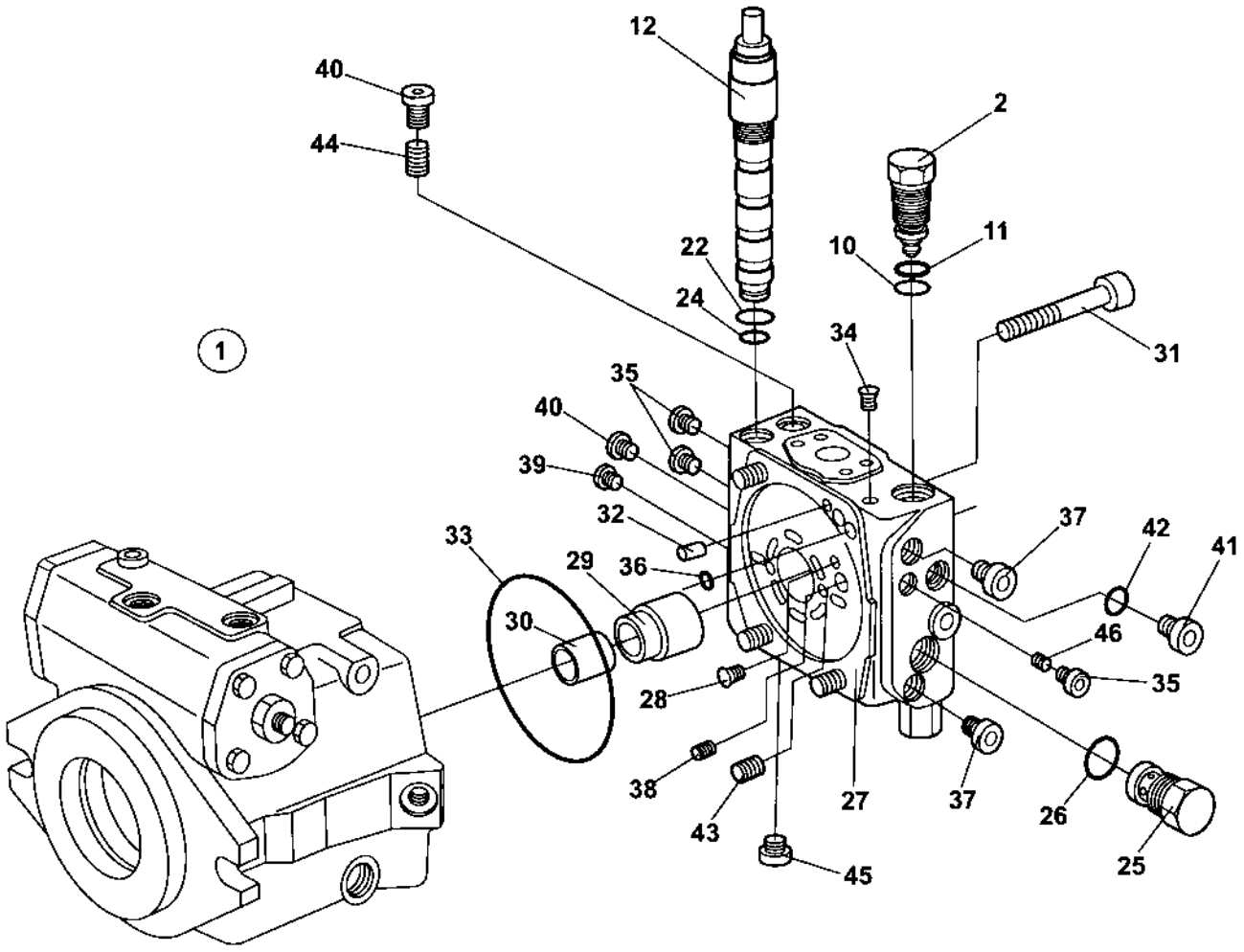

4700937168 Valve block, cpl

Item	Part No	Rem	Qty	Description		Code
1			1	Valve block, cpl		
2			2	.Relief valve	310 bar	
	4700935172		2	.Pressure relief valve	350 bar	D
			2	.Relief valve	380 bar	D
	4700937240		2	.Pressure relief valve	440 bar	
10	4700927278		1	..O-ring		D
11	4700936673		1	..Back-up ring		
12	4700908375		1	.Valve		
22	4700902783		1	..O-ring		D
24	4700936394		1	..O-ring		
25	4700936674		1	.Pin		
26	4700927278		1	.O-ring		D
27	4700937202		1	.Port plate		
28	4700902735		1	.Pin		
29	4700937203		1	.Bush		
30	4700937204		1	.Bearing bushing		
31	4700937205		4	.Screw		
32	4700908384		2	.Pin		
33	4700937206		1	.O-ring		
34	4700909514		3	.Pin		
35	4700936370		3	.Locking screw		
36	4700909469		2	.O-ring		
37	4700902625		2	.Screw		
38	4700901742		1	.Pin		
39	4700902723		1	.Plug		
40	4700902811		3	.Plug		
41	4700902693		1	.Screw		
42	4700927278		1	.O-ring		D
43	4700902697		1	.Screw		
44	4700936613		1	.Locking screw		
45	4700936614		1	.Plug		
46	4700936313		1	.Orifice		

4700383958 Vibration pump

18843

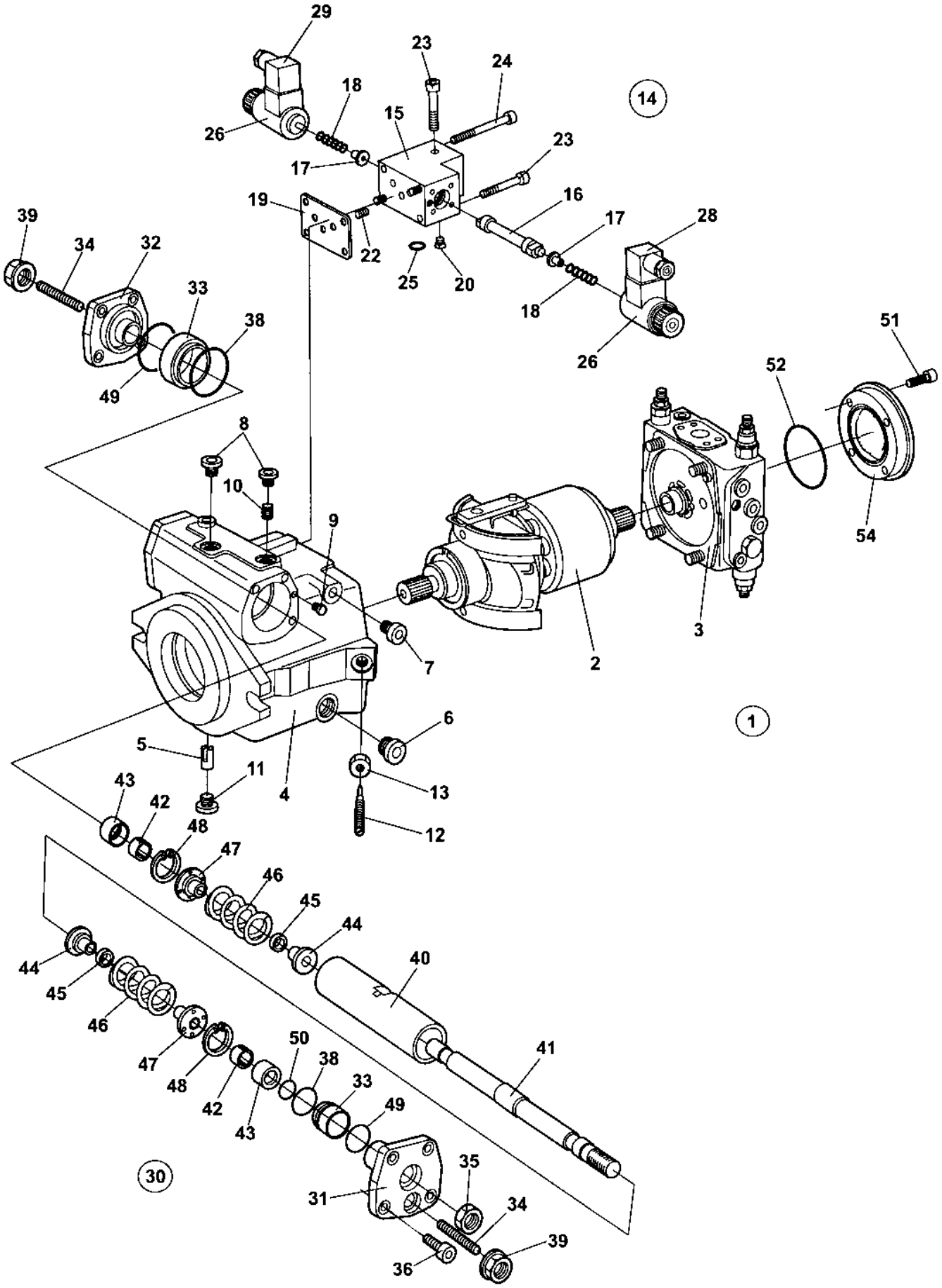

4700383958 Vibration pump

Item	Part No	Rem	Qty	Description	Code
1			1	Vibration pump	
	4700940675		1	.Seal kit	
2	4700937167		1	.Rotary group, cpl (Page 198)	
3	4700937168		1	.Valve block, cpl (Page 200)	
4	4700937986		1	.Housing	
5	4700935158		1	.Pin	
6	4700935219		1	.Plug	
7	4700902724		1	.Plug	
8	4700936803		5	.Plug	
9	4700909514		2	.Pin	
10	4700936308		2	.Orifice	
11	4700902624		1	.Screw	
12	4700902687		1	.Pin	
13	4700902695		1	.Nut	
14	4700940507		1	.Control valve, cpl	
15			1	..Housing	
16	4700945775		1	..Piston	
17	4700945776		2	..Spring collar	
18	4700936686		2	..Spring	
19			1	..Gasket	
20			2	..Pin	
22	4700936307		1	..Double break-off pin	D
23	4700927358		3	..Screw	
24	4700908383		2	..Screw	
25			1	..O-ring	
26	4700940505		2	..Solenoid	
28			1	..Socket	
29			1	..Socket	
30	4700937985		1	.Hydraulic control	
31	4700937998		1	..Cover	
32	4700937999		1	..Cover	
33	4700938003		2	..Guide ring	
34	4700937195		2	..Pin	
35	4700936340		1	..Nut	
36	4700902856		8	..Screw	
38	4700938004		2	..O-ring	
39	4700936393		2	..Seal lock nut	
40	4700938005		1	..Piston	
41	4700937198		1	..Rod	
42			2	..Ring	
43	4700938014		2	..Sleeve	
44	4700937199		2	..Spring collar	
45	4700936648		2	..Spacer ring	
46	4700937531		2	..Spring, outer	
	4700937200		2	..Spring, inner	
47	4700937201		2	..Spring collar	
48	4700939167		2	..Retaining ring	
49	4700938001		2	..O-ring	
50	4700909469		1	..O-ring	
51	4700939173		4	.Screw	
52	4700935192		1	.O-ring	
54			1	.Cover	

Vibration system

18705

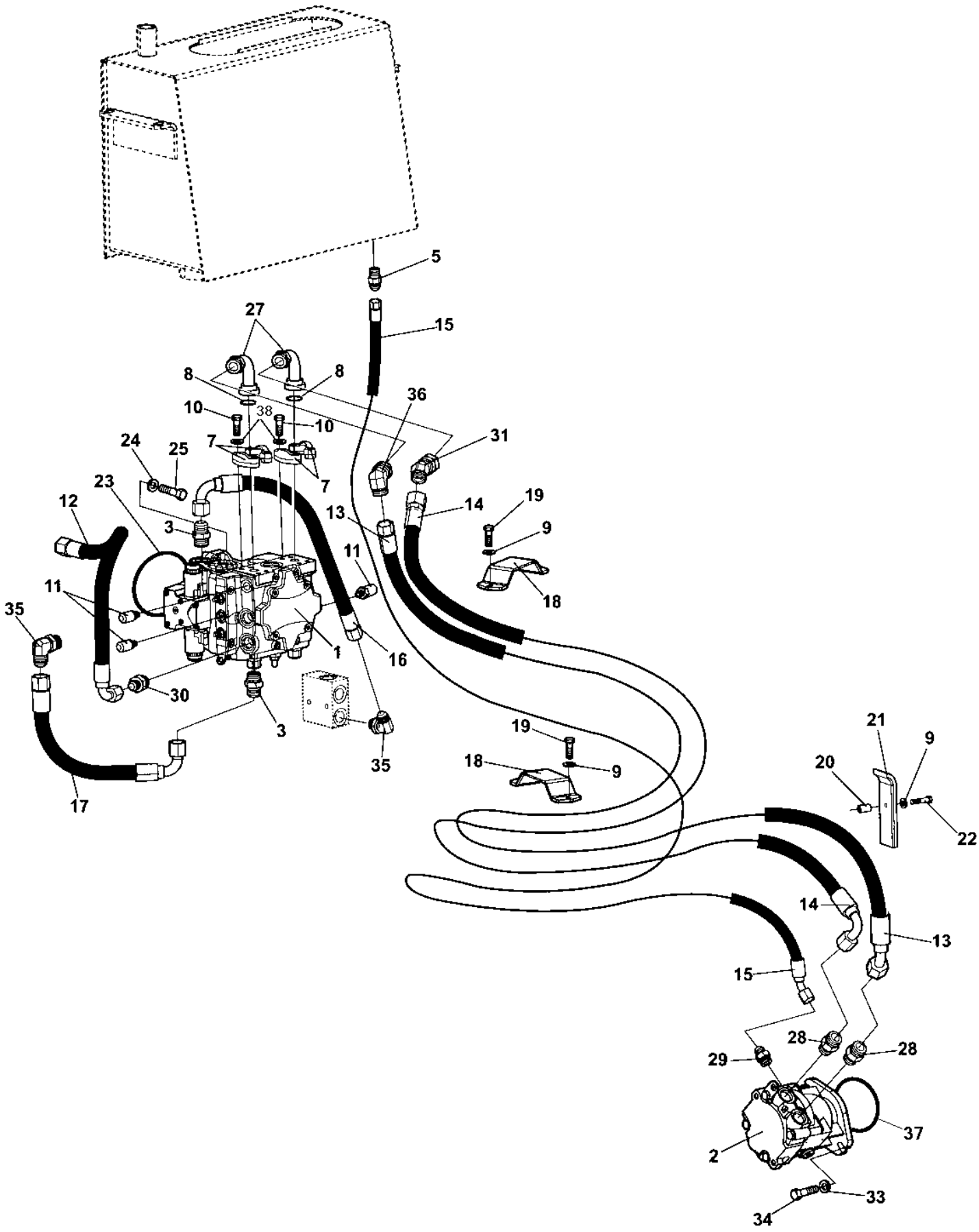

Vibration system

Item	Part No	Rem	Qty	Description		Code
1	4700395384		1	Vibration pump (Page 206)		
2	4700395386		1	Hydraulic motor, vibration (Page 210)		C
3	4700334138		2	Adapter		
5	4700334205		1	Straight connector		
7	4700929226		4	Flange half		
8	4700904773		2	O-ring		
9	4700904230		6	Washer		
10	4700500030		8	Screw		
11	4700900229		3	Measuring nipple		D
12	4700483286		1	Hydraulic hose		
13	4700484235		1	Hydraulic hose		
14	4700484234		1	Hydraulic hose		
15	4700483031		1	Hydraulic hose		
16	4700482391		1	Hydraulic hose		
17	4700483999		1	Hydraulic hose		
18	4700373016		2	Hose clamp		
19	4700500028		4	Screw		
20	4700373423		2	Spacer		
21	4700373270		2	Hose clamp		
22	4700500032		2	Screw	M10 x 55	
23	4700900512		1	O-ring		D
24	4700904231		2	Washer	13x24x2 300 HV	
25	4700502059		2	Screw	1/2"-13UNCx1.1/2" 8.8	
27	4700791819		2	Flange fitting 90		
28	4700791823		2	Straight connector orfs		
29	4700334134		1	Connector		
30	4700234119		1	Adapter		
31	4700904586		1	Elbow 45		
33	4700904703		2	Washer		
34	4700947688		2	Screw	M12x35H	
35	4700813499		2	Elbow 90, O-ring		
36	4700904584		1	Elbow connector 90		
37	4700160279		1	O-ring		D
38	4700904637		8	Washer		

4700395384 Vibration pump

18932

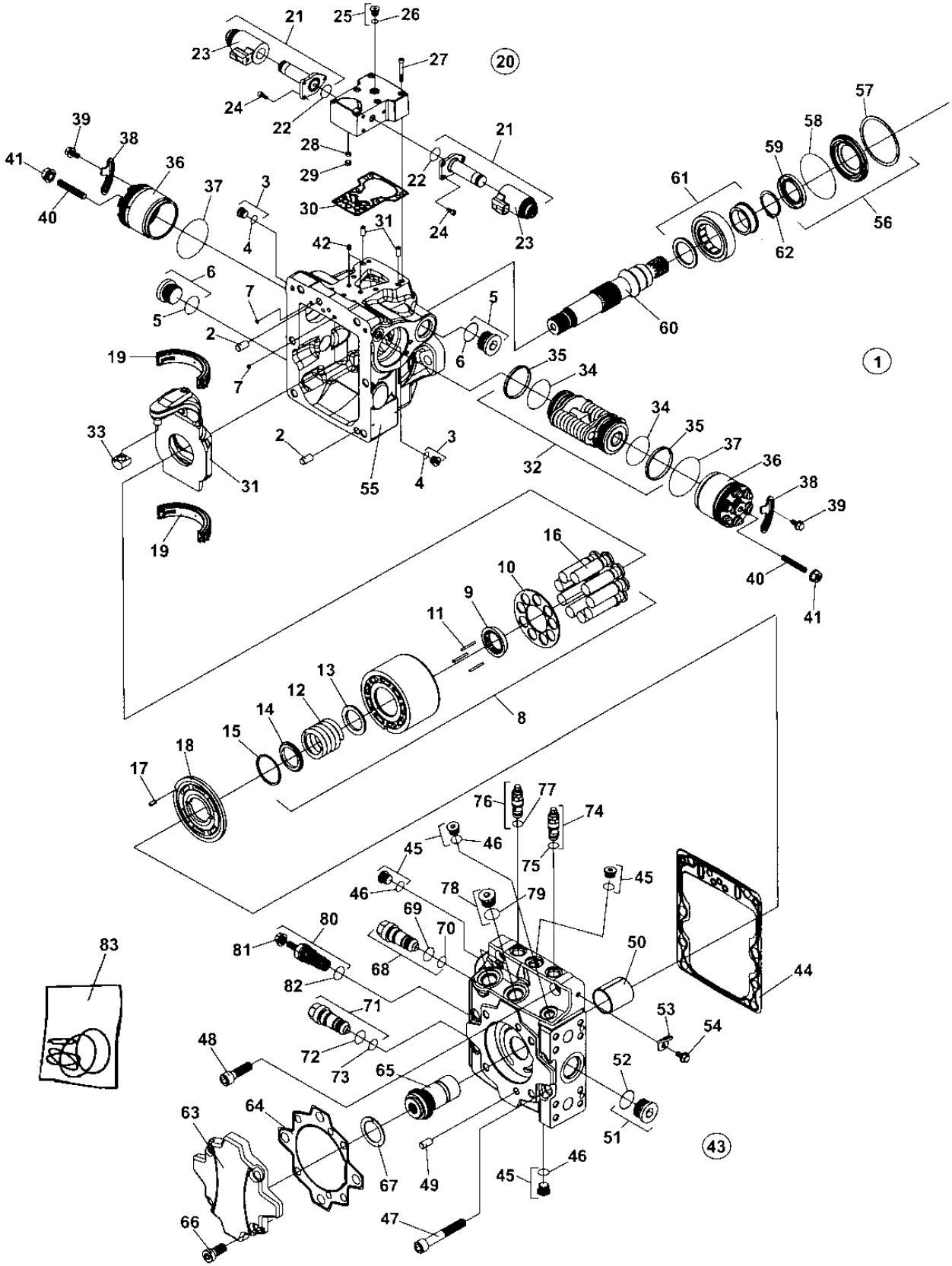

4700395384 Vibration pump

Item	Part No	Rem	Qty	Description	Code
1	4700395384		1	Vibration pump (Page 206)	
2			2	.Pin	
3			2	.Plug	
4		A	2	..O-ring	
5			2	.Plug	
6		A	1	..O-ring	
7			2	.Screen	
8	4700950617		1	.Cylinderblock kit	
9			1	..Slipper retainer guide	
10			1	..Pressure plate	
11			3	..Pin	
12			1	..Spring	
13			1	..Washer	
14			1	..Washer	
15			1	..Retaining ring	
16			1	..Piston assembly	
17	4700828142		1	.Spring	
18			1	.Valve plate	
19			1	.Swashplate bearing kit	
20			1	.Control valve, cpl	
21			2	..Solenoid valve	
22		A	2	..O-ring	
23	4700950618		2	..Coil	
24			6	..Screw	
25			2	..Plug	
26			2	..O-ring	
27			6	..Screw	
28			1	..Screw	
29			1	..Locking ring	
30		A	1	..Gasket	
31			2	.Dowel pin	
32			1	.Piston, cpl	
33			1	..Slider	
34		A	2	..O-ring	
35			2	..Piston ring	
36			2	.Servo cylinder	
37		A	2	.O-ring	
38			2	.Locking plate	
39			4	.Screw	
40			2	.Screw	
41		A	2	.Seal nut	
42			2	.Orifice	
43			1	.End cap, cpl	
44		A	1	.Gasket	
45			4	.Plug	
46		A	4	..O-ring	
47	4700909417		1	.Screw	
48			2	.Screw	
49			2	.Pin	
50			1	.Bearing	
51			1	.Plug	
52		A	1	..O-ring	
53			2	.Lifting bracket	
54	4700936933		2	.Screw	
55			1	.Housing	
56			1	.Shaft seal kit	
57			1	..Retaining ring	
58		A	1	..O-ring	
59		A	1	..Lip seal	

A) Included in seal kit, item 83

4700395384 Vibration pump

18932

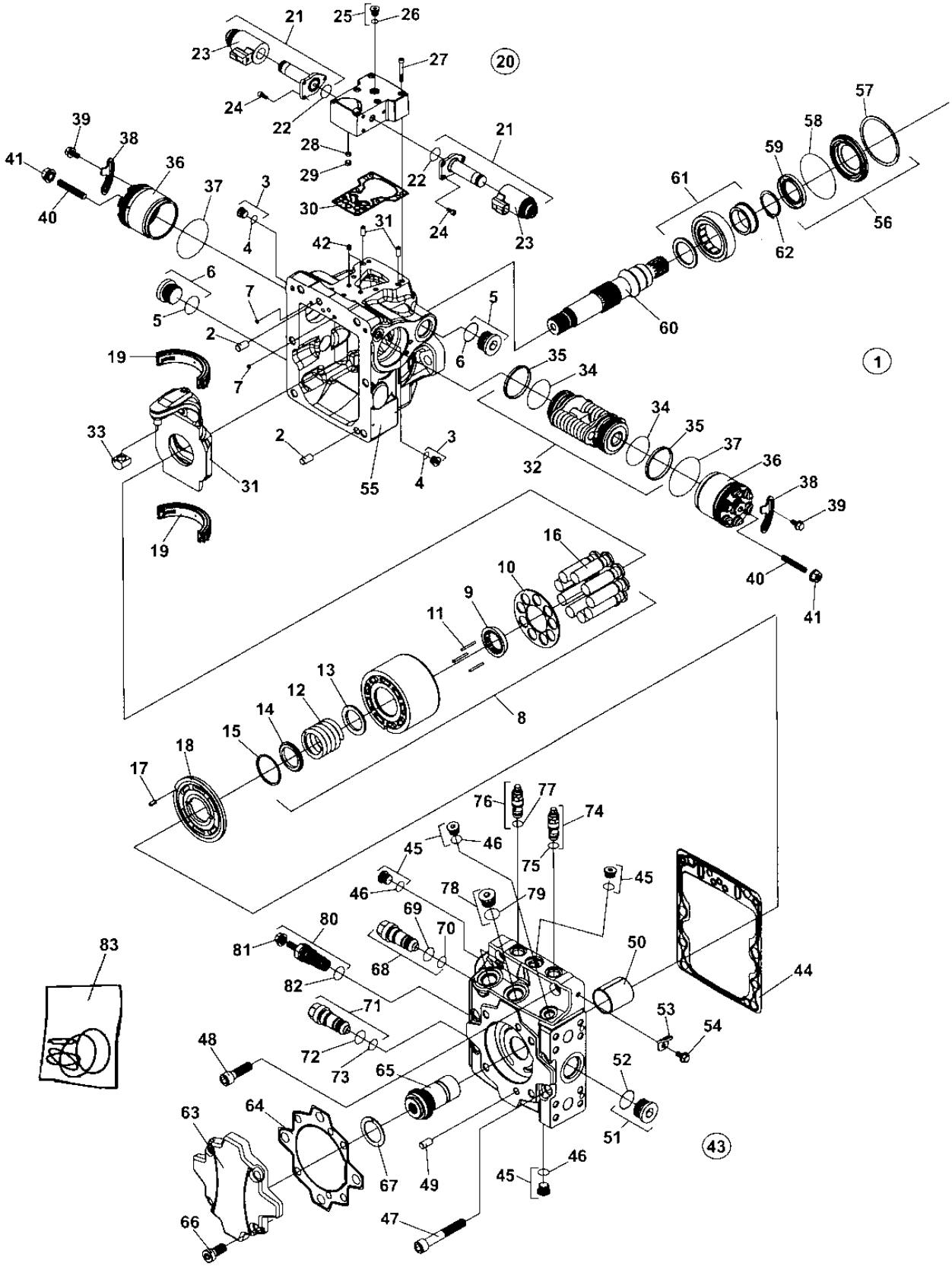

4700395384 Vibration pump

Item	Part No	Rem	Qty	Description	Code
60			1	.Shaft	
61			1	.Roller bearing	
62			1	.Retaining ring	
63			1	.Adapter	
64		A	1	.Gasket	
65			1	.Coupling	
66			4	.Screw	
67			1	.Thrust plate	
68	4700950619		1	.Pressure relief valve/350 bar	
69		A	1	..O-ring	
70		A	1	..O-ring	
71	4700950619		1	.Pressure relief valve/350 bar	
72		A	1	..O-ring	
73		A	1	..O-ring	
74	4700950620		1	.Pressure limiter valve/300 bar	
75		A	1	..O-ring	
76	4700950620		1	.Pressure limiter valve/300 bar	
77		A	1	..O-ring	
78			2	.Plug	
79		A	2	..O-ring	
80			1	.Charge relief valve	
81		A	1	..Seal nut	
82		A	1	..O-ring	
83	4700950616		1	.Seal kit	

A) Included in seal kit, item 83

4700395386 Hydraulic motor, vibration

18939

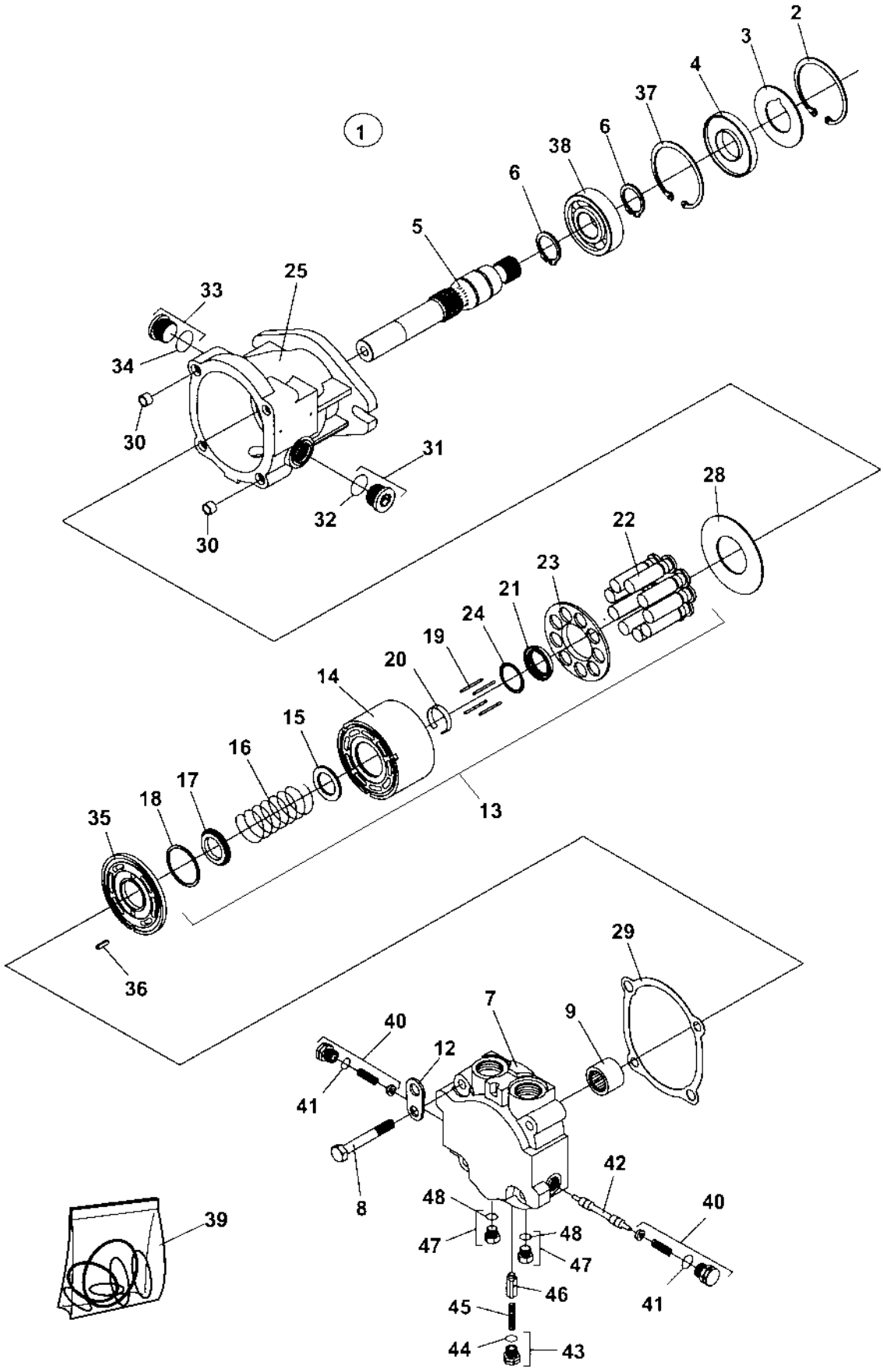

4700395386 Hydraulic motor, vibration

Item	Part No	Rem	Qty	Description	Code
1	4700395386		1	Hydraulic motor, vibration (Page 210)	C
2	4700828112		1	.Retaining ring	
3	4700937062		1	.Support washer	D
4	4700945879		1	.Lip seal	
5			1	.Shaft	
6	4700828114		2	.Retaining ring	
7	4700937079		1	.End cap	
8	4700937080		4	.Screw	
9	4700937081		1	.Needle bearing	
12			1	.Lifting bracket	
13			1	.Cylinder block, cpl	
14			1	..Cylinder block	
15	4700937066		1	..Washer	
16	4700937067		1	..Spring	
17	4700828138		1	..Spacer	
18	4700828139		1	..Retaining ring	
19	4700937070		4	..Pin	
20	4700937071		1	..Retaining ring	
21	4700937072		1	..Retainer guide	
22			9	..Piston assembly	
23	4700937074		1	..Retainer	
24	4700937077		1	..Washer	
25	4700937084		1	.Housing	
28	4700937065		1	.Thrust plate	
29	4700937075		1	.Gasket	
30	4700909346		2	.Pin	
31	4700909243		1	.Plug	
32			1	.O-ring	
33	4700909243		1	.Plug	
34			1	.O-ring	
35			1	.Valve plate	
36	4700937086		1	.Pin	
37	4700937064		1	.Retaining ring	D
38			1	.Ball bearing	D
39	4700945877		1	.Seal kit	
40			2	.Loop flushing plug	
41			2	..O-ring	
42			1	.Shuttle spool	
43			1	.Plug	
44			1	..O-ring	
45			1	.Spring	
46			1	.Poppet	
47			2	.Plug	
48			2	..O-ring	

Steering system

16928

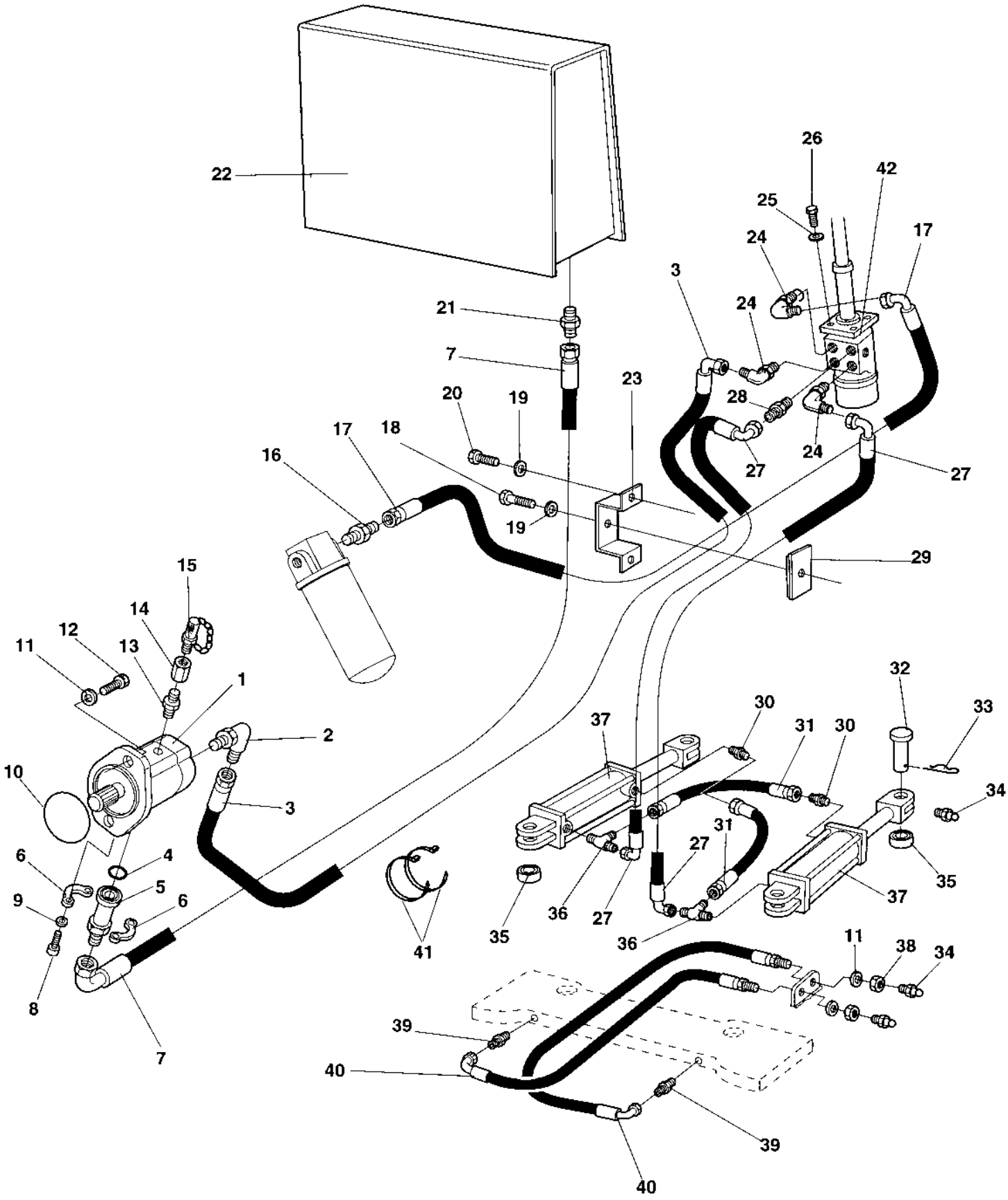

Steering system

Item	Part No	Rem	Qty	Description		Code
1	4700394902		1	Hydraulic pump		
2	4700334558		1	Elbow 90G with O-ring		
3	4700482815		1	Hydraulic hose		
4	4700904005		1	O-ring		
5	4700372625		1	Connector		
6	4700232097		2	Flange half		D
7	4700483050		1	Hydraulic hose		
8	4700508029		4	Screw	M10-1,5x30H 8,8	
9	4700904637		4	Washer		
10	4700937055		1	O-ring		
11	4700904231		4	Washer	13x24x2 300 HV	
12	4700500133		4	Screw		
13	4700334199		1	Straight o-ring connector		
14	4700338304		1	Connector		
15	4700910161		1	Measuring nipple		D
16	4700234667		1	Reducer		
17	4700482435		1	Hydraulic hose		
18	4700904241		1	Screw		
19	4700904229		3	Washer	8,4x16x1,5	
20	4700500019		2	Screw	M8x16H 8.8 A2K	
21	4700234626		1	Adapter		
22			1	Hydraulic oil tank (Page 230)		
23	4700372513		1	Hose clamp		
24	4700813444		3	Elbow 90, O-ring		
25	4700600008		4	Washer		
26	4700502034		4	Screw	UNC 3/8 - 16	
27	4700482525		2	Hydraulic hose		
28	4700334121		1	Straight connector		
29	4700372514		1	Hose clamp		
30	4700334121		2	Straight connector		
31	4700483109		2	Hydraulic hose		
32	4700347119		2	Shaft		D
33	4700635061		4	Hair clip		D
34	4700926214		4	Grease fitting		D
35	4700813316		4	Ball bushing		D
36	4700234218		2	Tee-connector		
37	4700375031		2	Steering cylinder (Page 218)		C
38	4700903831		2	Nut		
39	4700371669		2	Straight connector		
40	4700903812		2	Hydraulic hose		
41	4700313102		N	Cable ties		
42	4700376000		1	Steering valve (Page 224)		

Steering system

16928-1

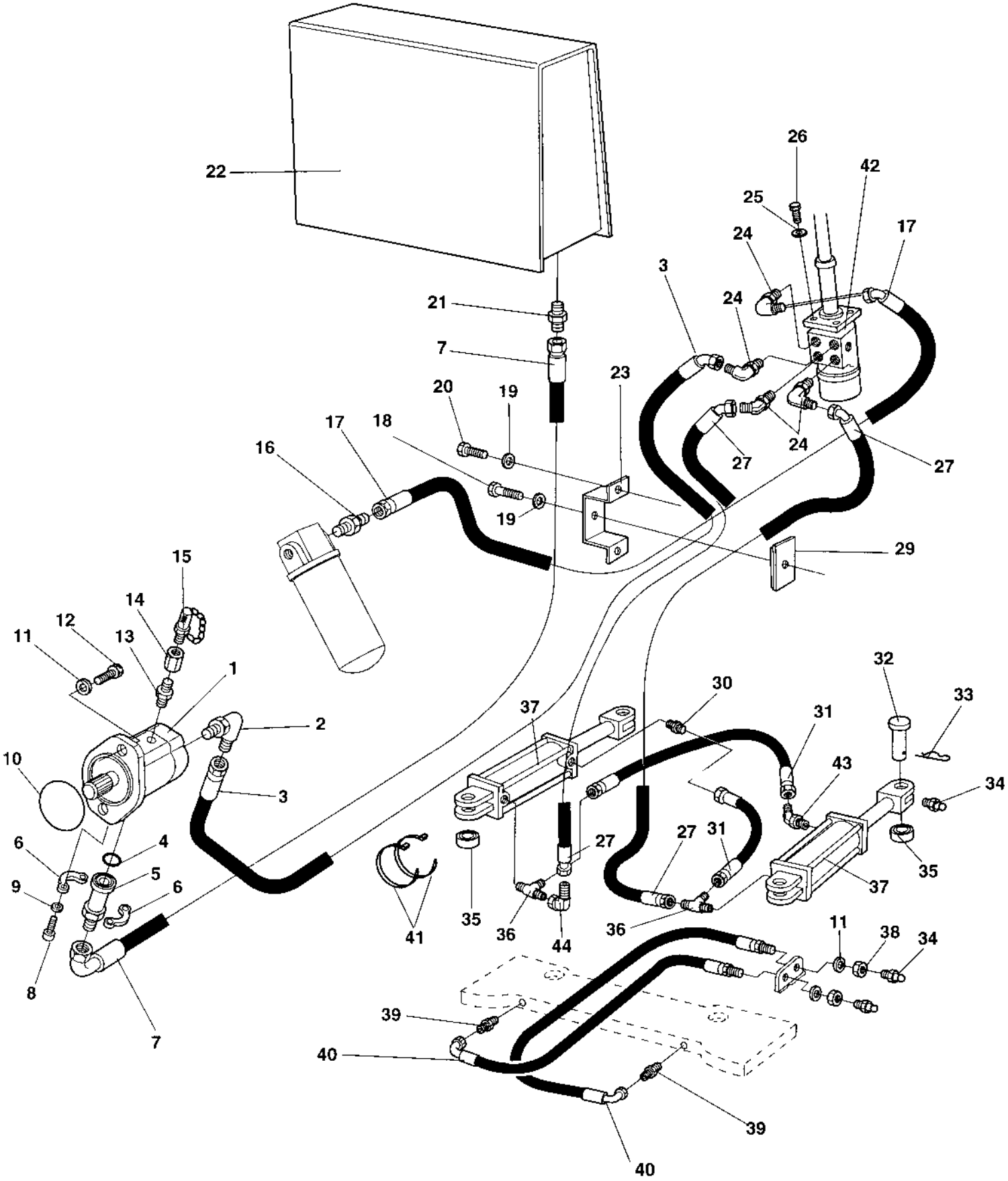

Steering system

Item	Part No	Rem	Qty	Description		Code
1	4700394902		1	Hydraulic pump		
2	4700334558		1	Elbow 90G with O-ring		
3	4700483496		1	Hydraulic hose		
4	4700904005		1	O-ring		
5	4700372625		1	Connector		
6	4700232097		2	Flange half		D
7	4700483050		1	Hydraulic hose		
8	4700508029		4	Screw	M10-1,5x30H 8,8	
9	4700904637		4	Washer		
10	4700937055		1	O-ring		
11	4700904231		4	Washer	13x24x2 300 HV	
12	4700500133		4	Screw		
13	4700334199		1	Straight o-ring connector		
14	4700338304		1	Connector		
15	4700910161		1	Measuring nipple		D
16	4700234667		1	Reducer		
17	4700483498		1	Hydraulic hose		
18	4700904241		1	Screw		
19	4700904229		3	Washer	8,4x16x1,5	
20	4700500019		2	Screw	M8x16H 8.8 A2K	
21	4700234626		1	Adapter		
22			1	Hydraulic oil tank (Page 230)		
23	4700372513		1	Hose clamp		
24	4700813444		4	Elbow 90, O-ring		
25	4700600008		4	Washer		
26	4700502034		4	Screw	UNC 3/8 - 16	
27	4700483497		2	Hydraulic hose		
28	4700334121		1	Straight connector		
29	4700372514		1	Hose clamp		
30	4700334121		1	Straight connector		
31	4700483109		2	Hydraulic hose		
32	4700347119		2	Shaft		D
33	4700635061		4	Hair clip		D
34	4700926214		4	Grease fitting		D
35	4700813316		4	Ball bushing		D
36	4700234218		2	Tee-connector		
37	4700375031		2	Steering cylinder (Page 218)		C
38	4700903831		2	Nut		
39	4700371669		2	Straight connector		
40	4700903812		2	Hydraulic hose		
41	4700313102		N	Cable ties		
42	4700376000		1	Steering valve (Page 224)		
43	4700813500		1	Elbow 45, O-ring		
44	4700234662		1	Elbow 45		

Steering system

17713

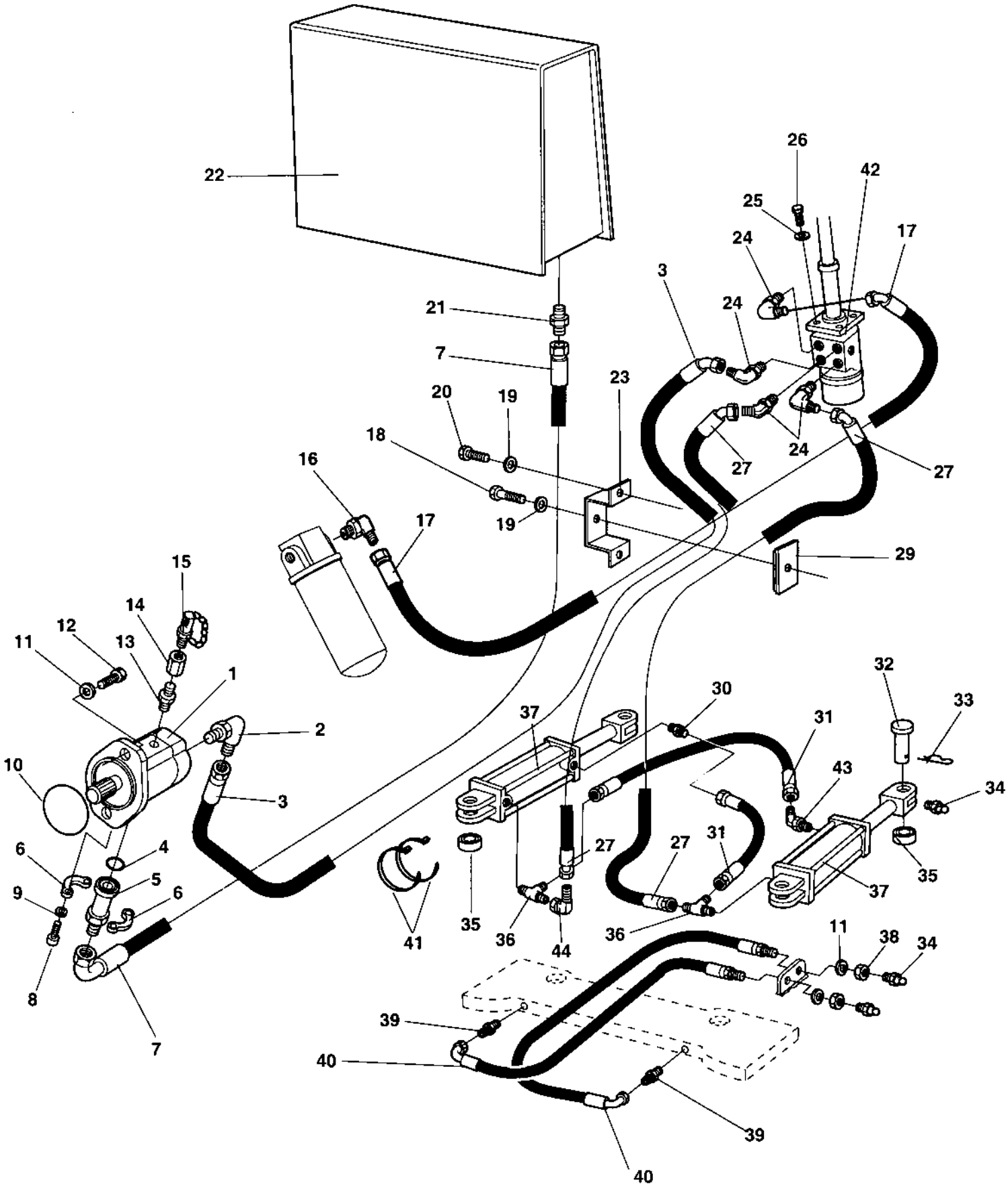

Steering system

Item	Part No	Rem	Qty	Description		Code
1	4700394902		1	Hydraulic pump		
2	4700334558		1	Elbow 90G with O-ring		
3	4700483496		1	Hydraulic hose		
4	4700904005		1	O-ring		
5	4700372625		1	Connector		
6	4700232097		2	Flange half		D
7	4700483050		1	Hydraulic hose		
8	4700508029		4	Screw	M10-1,5x30H 8,8	
9	4700904637		4	Washer		
10	4700937055		1	O-ring		
11	4700904231		4	Washer	13x24x2 300 HV	
12	4700500133		4	Screw		
13	4700334199		1	Straight o-ring connector		
14	4700338304		1	Connector		
15	4700910161		1	Measuring nipple		D
16	4700929123		1	Elbow 90, O-ring		
17	4700483498		1	Hydraulic hose		
18	4700904241		1	Screw		
19	4700904229		3	Washer	8,4x16x1,5	
20	4700500019		2	Screw	M8x16H 8.8 A2K	
21	4700234626		1	Adapter		
22			1	Hydraulic oil tank		
23	4700372513		1	Hose clamp		
24	4700813444		4	Elbow 90, O-ring		
25	4700600008		4	Washer		
26	4700502034		4	Screw	UNC 3/8 - 16	
27	4700483497		2	Hydraulic hose		
28	4700334121		1	Straight connector		
29	4700372514		1	Hose clamp		
30	4700334121		1	Straight connector		
31	4700483109		2	Hydraulic hose		
32	4700347119		2	Shaft		D
33	4700635061		4	Hair clip		D
34	4700926214		4	Grease fitting		D
35	4700813316		4	Ball bushing		D
36	4700234218		2	Tee-connector		
37	4700375031		2	Steering cylinder Up to 65X22578 (Page 218)		C
	4700392002		2	Steering cylinder From 65X22579 (Page 220)		C
38	4700903831		2	Nut		
39	4700371669		2	Straight connector		
40	4700903812		2	Hydraulic hose		
41	4700313102		N	Cable ties		
42	4700376000		1	Steering valve (Page 224)		
43	4700813500		1	Elbow 45, O-ring		
44	4700234662		1	Elbow 45		

4700375031 Steering cylinder

16490

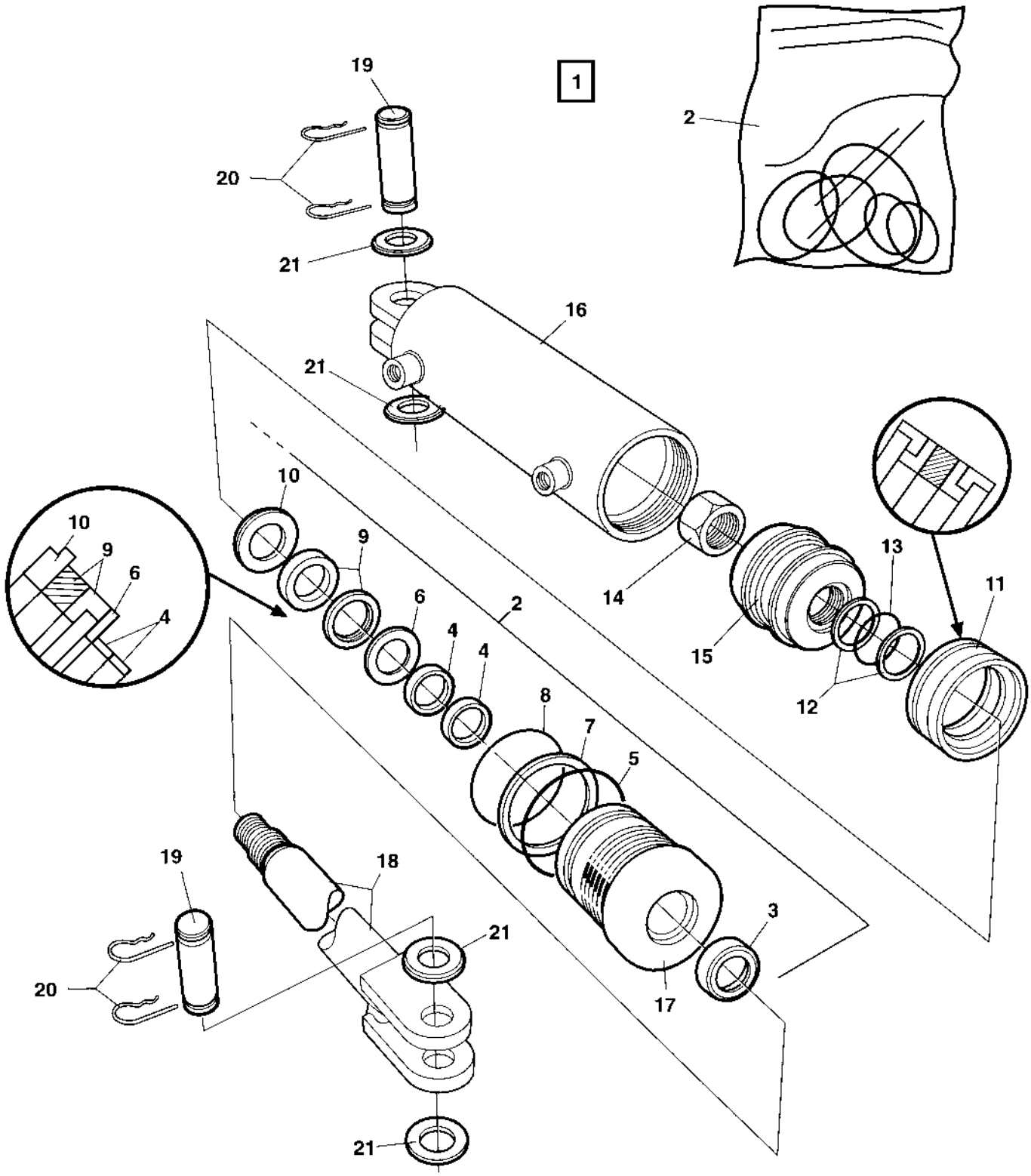

4700375031 Steering cylinder

Item	Part No	Rem	Qty	Description		Code
1			1	Steering cylinder, cpl		
2	4700904145		1	.Seal kit		D
3			1	..Seal		D
4			2	..Seal		D
5			1	..O-ring		D
6			1	..Back-up ring		D
7			1	..Back-up ring		D
8			1	..O-ring		D
9			1	..Seal		D
10			1	..Retaining ring		D
11			1	..Seal		D
12			2	..Back-up ring		D
13			1	..O-ring		D
14			1	..Lock nut		D
15	4700904143		1	.Piston block		
16	4700936267		1	.Cylinder		
17	4700903619		1	.Steering		
18	4700936268		1	.Piston rod		
19	4700347119		2	.Shaft		D
20	4700635061		4	.Hair clip		D
21	4700600016		4	.Washer	26x45x4	

4700392002 Steering cylinder

16490

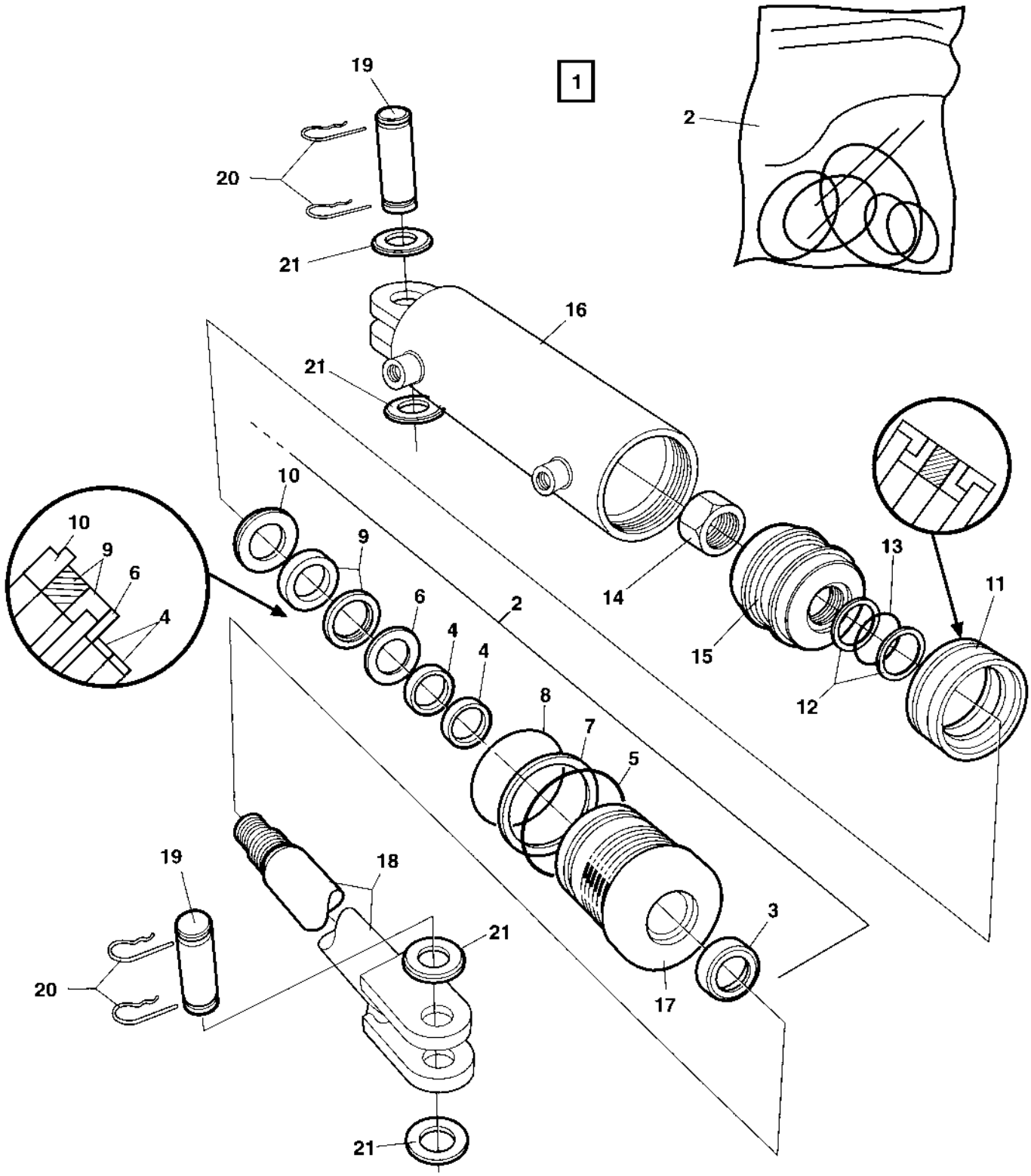

4700392002 Steering cylinder

Item	Part No	Rem	Qty	Description		Code
1	4700392002		1	Steering cylinder (Page 220)		C
2	4700392100		1	.Seal kit		
3			1	..Seal		
4			2	..Seal		
5			1	..O-ring		
6			1	..Back-up ring		
7			1	..Back-up ring		
8			1	..O-ring		
9			1	..Seal		
10			1	..Retaining ring		
11			1	..Seal		
12			2	..Back-up ring		
13			1	..O-ring		
14			1	..Lock nut		
15			1	.Piston block		
16			1	.Cylinder		
17			1	.Steering		
18	4700392105		1	.Piston rod		
19	4700392103		2	.Shaft		D
20	4700635061		4	.Hair clip		D
21	4700600016		4	.Washer	26x45x4	

Steering system

18047-2

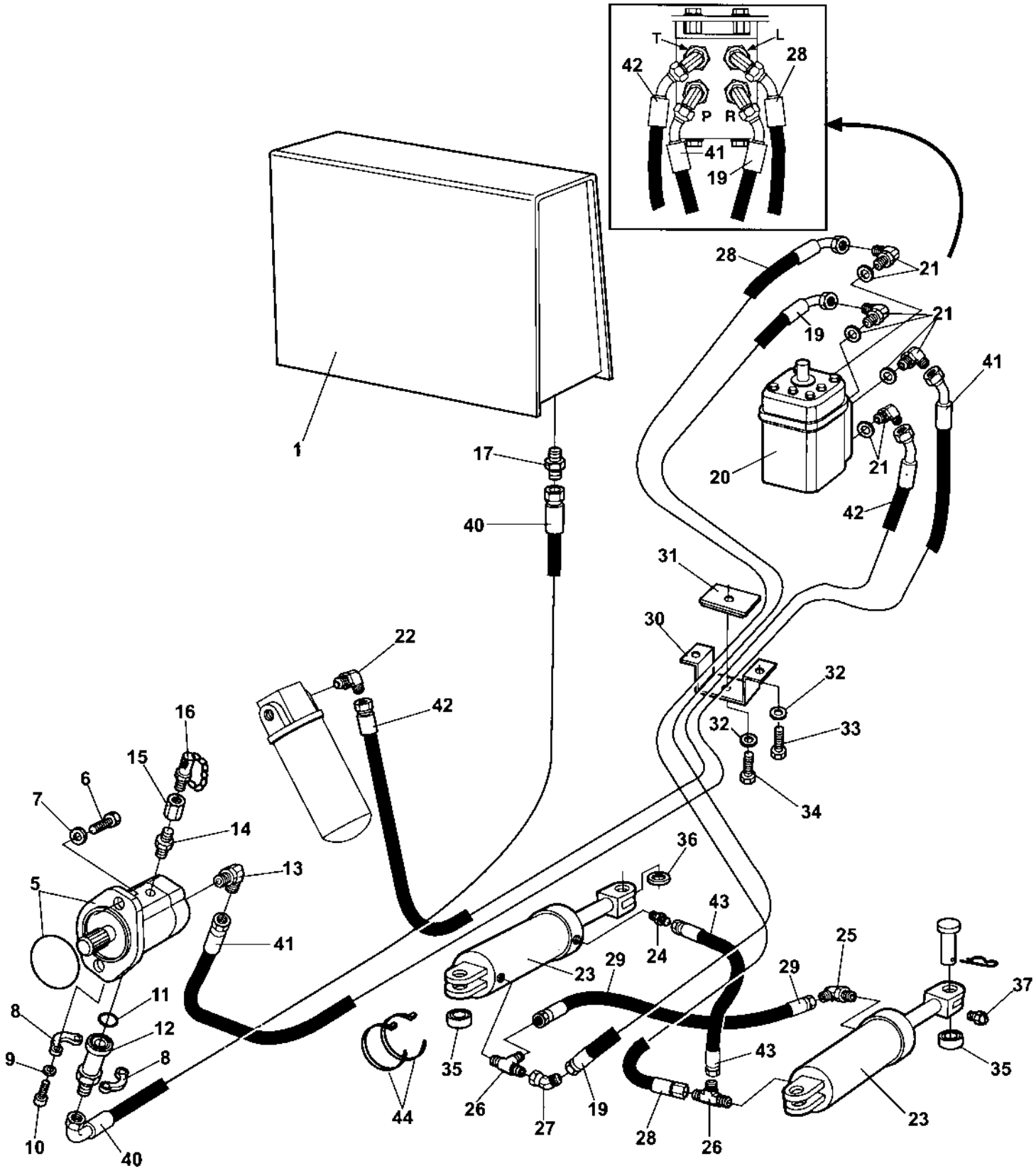

Steering system

Item	Part No	Rem	Qty	Description		Code
1			1	Hydraulic oil tank (Page 232)		
5	4700394902		1	Hydraulic pump		
6	4700500133		2	Screw		
7	4700904231		2	Washer	13x24x2 300 HV	
8	4700232097		2	Flange half		D
9	4700904637		4	Washer		
10	4700508029		4	Screw	M10-1,5x30H 8,8	
11	4700904005		1	O-ring		
12	4700372625		1	Connector		
13	4700334558		1	Elbow 90G with O-ring		
14	4700334199		1	Straight o-ring connector		
15	4700338304		1	Connector		
16	4700910161		1	Measuring nipple		D
17	4700234626		1	Adapter		
19	4700483280		1	Hydraulic hose		
20	4700376000		1	Steering valve (Page 224)		
21	4700813444		4	Elbow 90, O-ring		
22	4700929123		1	Elbow 90, O-ring		
23	4700392002		2	Steering cylinder (Page 220)		C
24	4700334121		1	Straight connector		
25	4700813500		1	Elbow 45, O-ring		
26	4700234218		2	Tee-connector		
27	4700234662		1	Elbow 45		
28	4700483497		1	Hydraulic hose		
29	4700483109		1	Hydraulic hose		
30	4700372513		1	Hose clamp		
31	4700372514		1	Hose clamp		
32	4700904229		3	Washer	8,4x16x1,5	
33	4700500019		2	Screw	M8x16H 8.8 A2K	
34	4700904241		1	Screw		
35	4700379630		4	Radial spherical plain bearing		
36	4700904234		2	Washer	25x45x4	
37	4700500044		2	Screw	M6x8	
38	4700334197		1	Elbow 90		
40	4700483050		1	Hydraulic hose		
41	4700483231		1	Hydraulic hose		
42	4700483498		1	Hydraulic hose		
43	4700483109		1	Hydraulic hose		
44	4700313102		1	Cable ties		

4700376000 Steering valve

17013

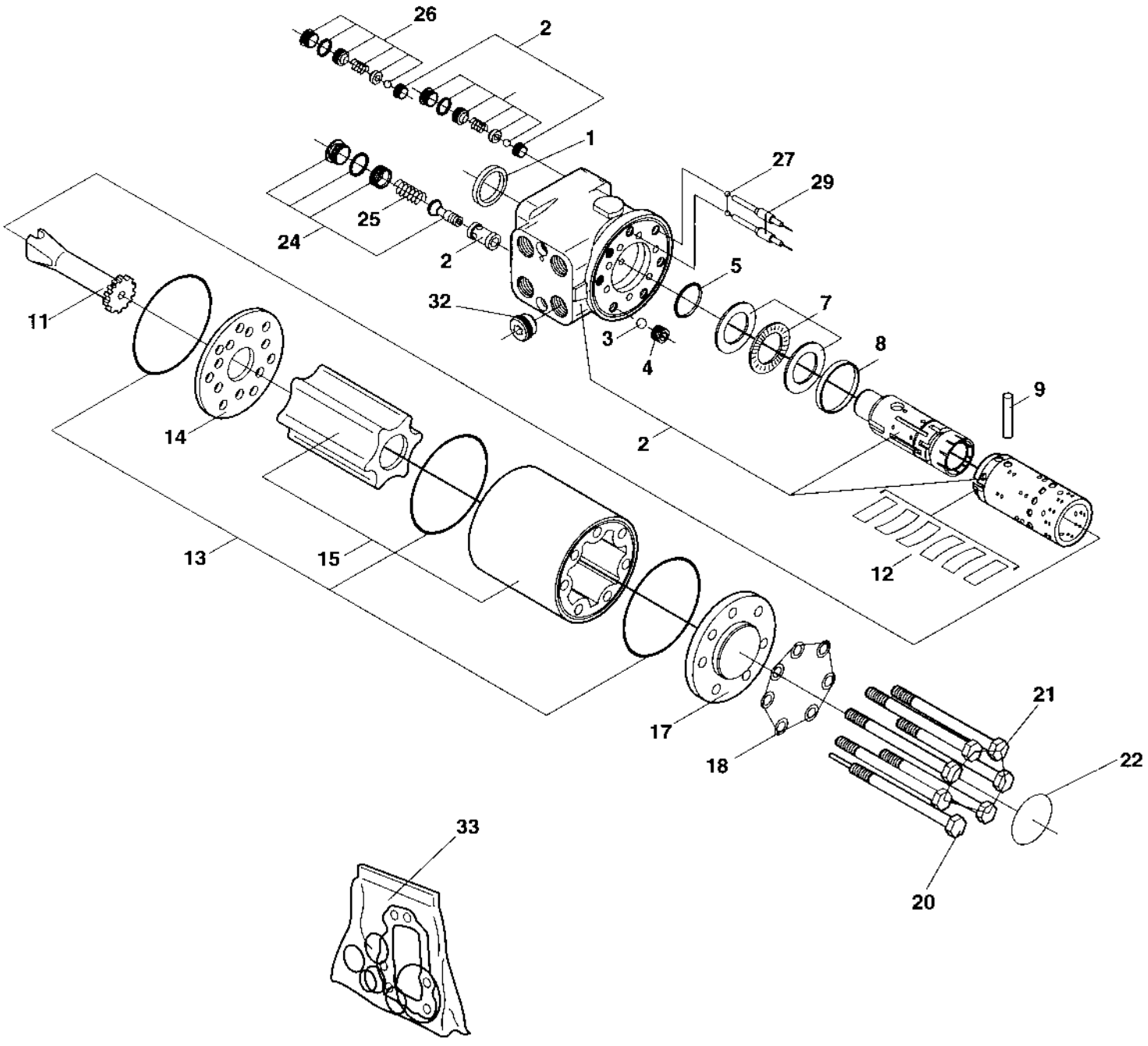

4700376000 Steering valve

Item	Part No	Rem	Qty	Description	Code
1	4700938062	A	1	Dust seal ring	
2			1	Housing, spool and sleeve	
3	4700938063		1	Ball	
4	4700938064		1	Threaded bushing	
5	4700908780	A	1	O-ring	
7	4700911620		1	Bearing	D
8	4700938065		1	Ring	
9	4700938066		1	Cross pin	
11	4700902861		1	Cardan shaft	
12	4700938067		1	Set of springs	
13	4700938068	A	3	O-ring	
14	4700902862		1	Valve plate	
15	4700903457		1	Gear wheel set	
17	4700938069		1	End cover	
18	4700938070	A	7	Washer	
20	4700938071		1	Screw with pin	
21	4700935468		6	Spring washer	
22	4700938072		1	Name plate	
24	4700938073		1	Pressure relief valve	
25	4700902864		1	Spring	
26	4700938074		2	Shock valve	
27	4700929013		2	Ball	
29	4700929014		2	Rolled pin	
32	4700938075		1	Check valve	
33	4700935429		1	Seal kit	

A) Included in seal kit, item 33

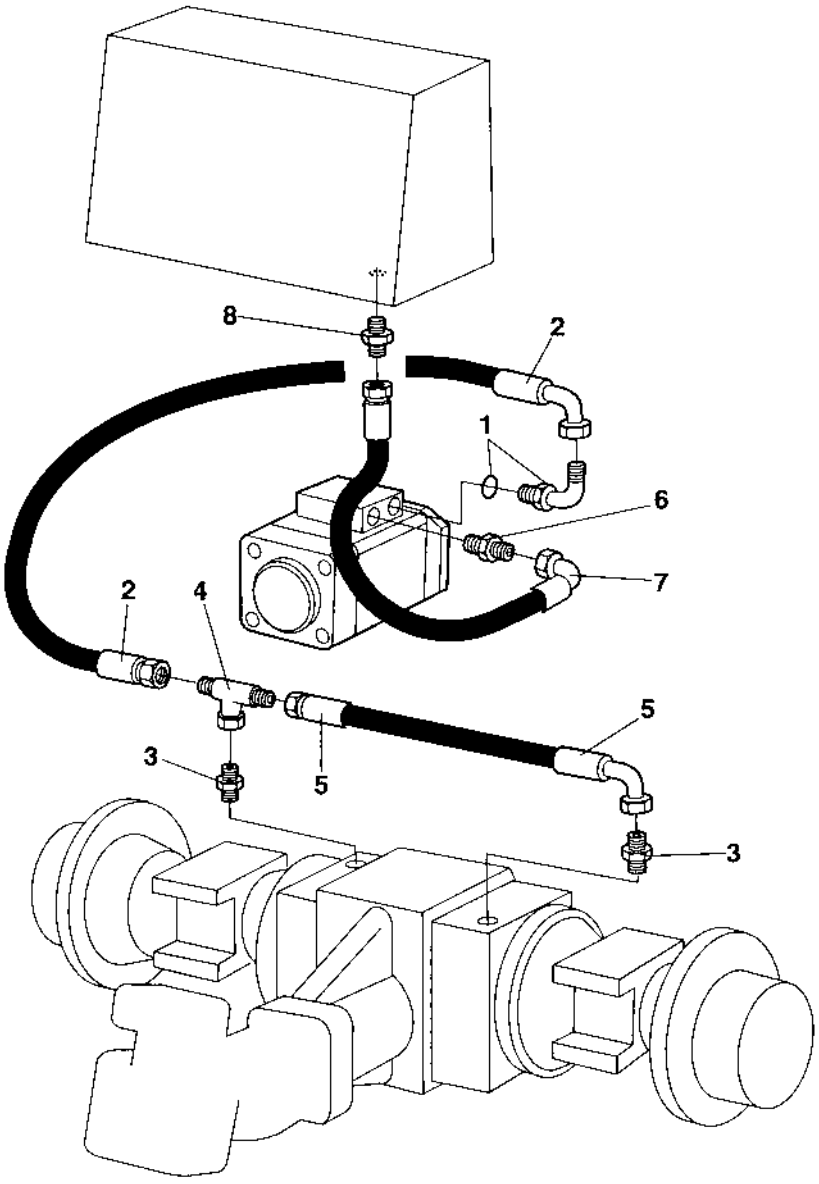
8
2
1
6
7
2
4
5
3
5
3

Brake system

Item	Part No	Rem	Qty	Description	Code
1	4700334389		1	Connector	
2	4700482056		1	Hydraulic hose	
3	4700900552		2	Adapter	
4	4700234888		1	Tee-connector	
5	4700482399		1	Hydraulic hose	
6	4700234843		1	Adapter	
7	4700482516		1	Hydraulic hose	
8	4700334205		1	Straight connector	

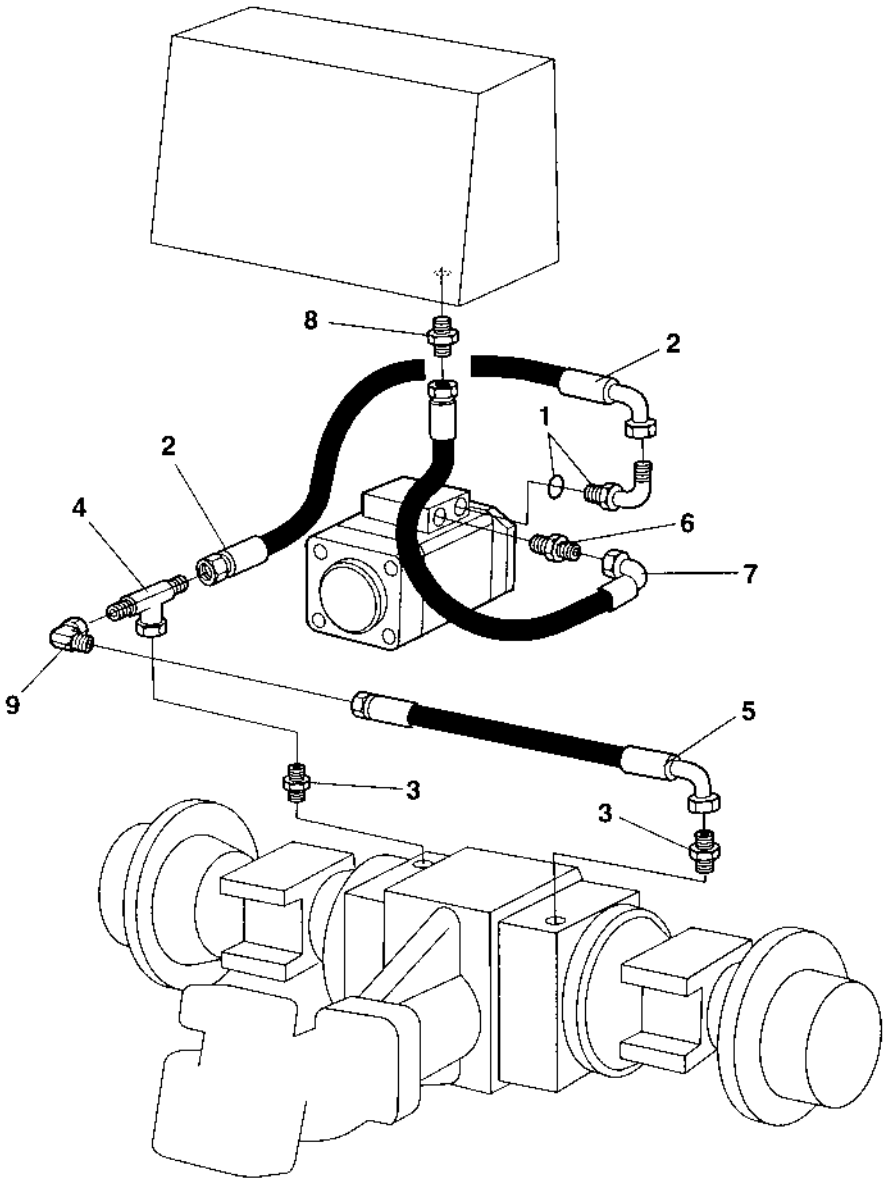
8
2
1
2
4
6
7
9
5
3
3

Brake system

Item	Part No	Rem	Qty	Description	Code
1	4700334389		1	Connector	
2	4700482056		1	Hydraulic hose	
3	4700900552		2	Adapter	
4	4700234888		1	Tee-connector	
5	4700482399		1	Hydraulic hose	
6	4700234843		1	Adapter	
7	4700482474		1	Hydraulic hose	
8	4700334205		1	Straight connector	
9	4700334524		1	Connector	

Hydraulic oil tank

16054-1

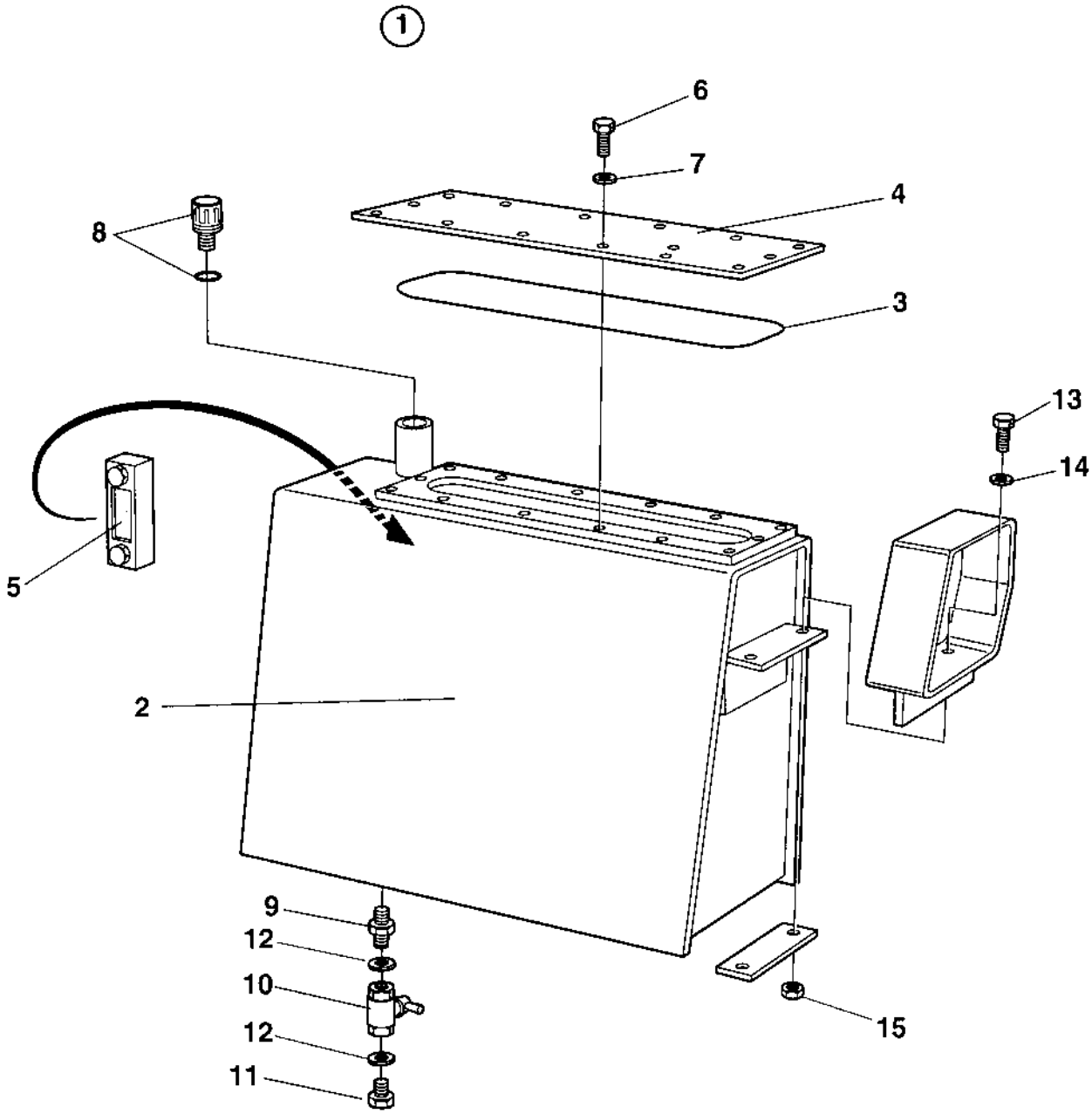

Hydraulic oil tank

Item	Part No	Rem	Qty	Description		Code
1	4700372044		1	Hydraulic oil tank, cpl		
2	4700372029		1	.Hydraulic oil tank		
3	4700349880		1	.O-ring		
4	4700349879		1	.Cover		
5	4700989151		1	.Oil level glass		D
6	4700500019		14	.Screw	M8x16H 8.8 A2K	
7	4700904229		14	.Washer	8,4x16x1,5	
8	4700357138		1	.Ventilating filter		A
9	4700813738	1	1	.Adapter Up to 65X20661	3/4NPTF	
	4700791119		1	.Adapter From 65X20662	G3/4	
10	4700233304		1	.Ball valve		
11	4700232122	2	1	.Plug Up to 65X20661	3/4NPTF	
	4700232039		1	.Plug From 65X29662	G3/4	
12	4700791120		2	.Sealing washer From 65X20662		
13	4700500192		4	Screw	M10x80	
14	4700904567		4	Washer	10,5x28x6 HB305	
15	4700570006		4	Nut		

1) Can be replaced by Adapter P/N 4700791119 X 1 if Sealing washer P/N 4700791120 X 2 is changed simultaneously.
2) Can be replaced by Plug P/N 4700232039 X1 if Sealing washer P/N 4700791120 X 2 is changed simultaneously.

Hydraulic oil tank

16054-1

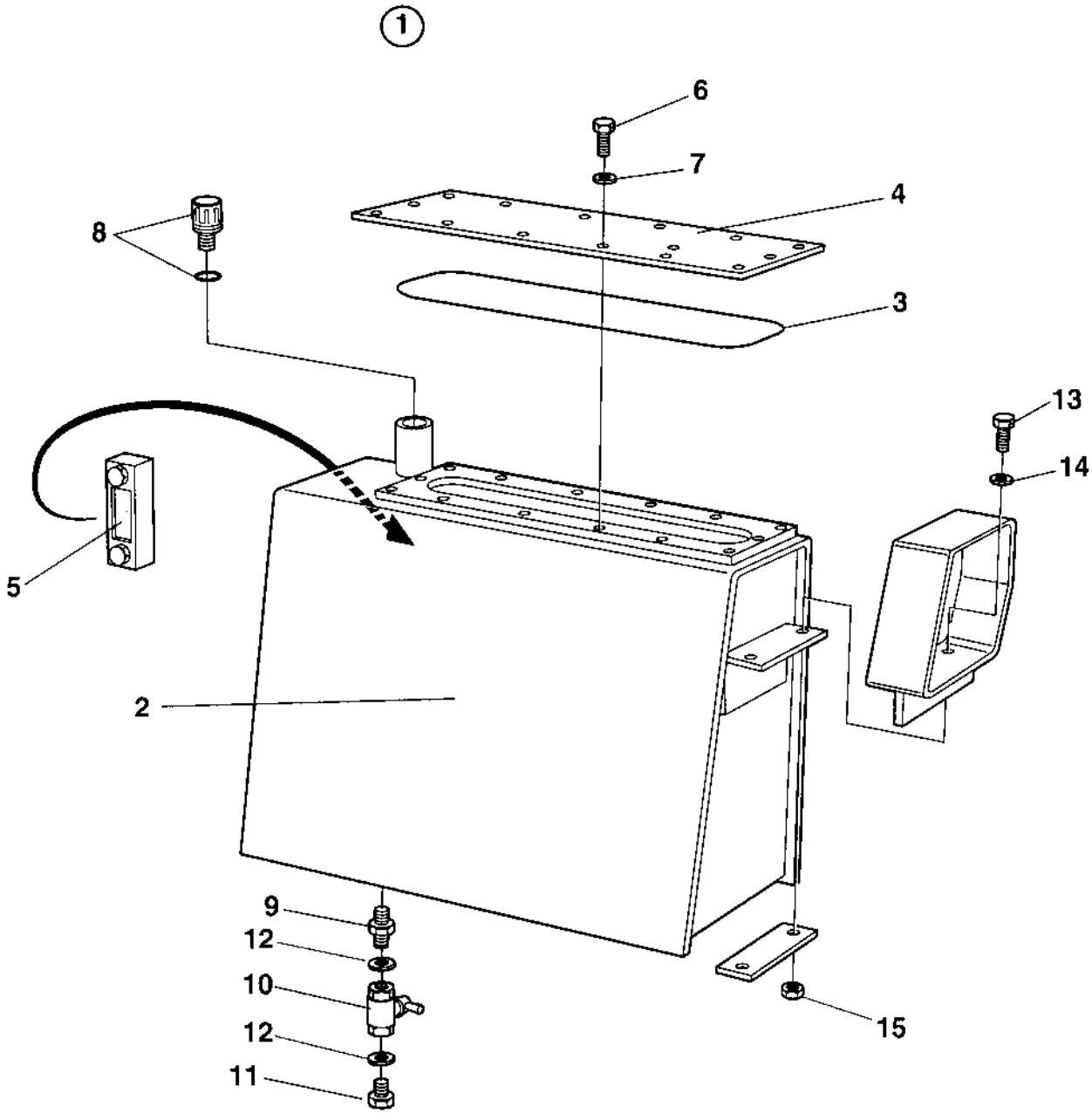

Hydraulic oil tank

Item	Part No	Rem	Qty	Description		Code
1	4700392981		1	Hydraulic oil tank, cpl		
2	4700392986		1	.Hydraulic oil tank		
3	4700349880		1	.O-ring		
4	4700349879		1	.Cover		
5	4700989151		1	.Oil level glass		D
6	4700500019		14	.Screw	M8x16H 8.8 A2K	
7	4700904229		14	.Washer	8,4x16x1,5	
8	4700357138		1	.Ventilating filter		A
9	4700791119		1	.Adapter	G3/4	
10	4700233304		1	.Ball valve		
11	4700232039		1	.Plug	G3/4	
12	4700791120		2	.Sealing washer		
13	4700500030		4	Screw		
14	4700904567		4	Washer	10,5x28x6 HB305	

Central test panel hydraulic Option

16988

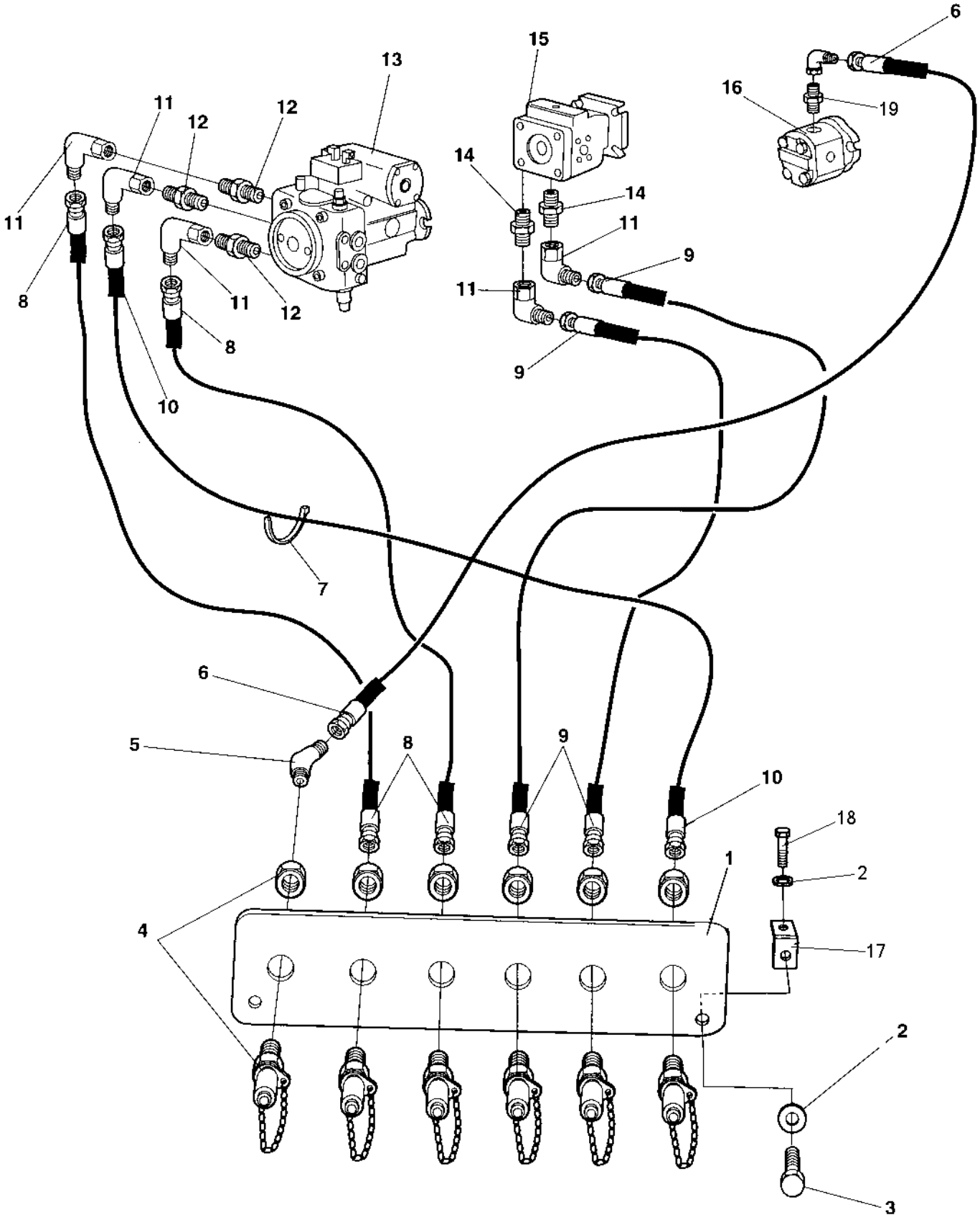

Central test panel hydraulic Option

Item	Part No	Rem	Qty	Description		Code
1	4700374028		1	Test panel		
2	4700904229		4	Washer	8,4x16x1,5	
3	4700500053		2	Screw	M8x20H 8.8	
4	4700356348		6	Measuring nipple		D
5	4700234622		1	Elbow 45		
6	4700483204		1	Hydraulic hose		
7	4700313102		N	Cable ties		
8	4700483445		2	Hydraulic hose		
9	4700483188		2	Hydraulic hose		
10	4700482342		1	Hydraulic hose		
11	4700334196		5	Elbow 90		
12	4700902125		3	Connector		
13			1	Vibration pump		
14	4700234388		2	Connector		
15			1	Propulsion pump		
16			1	Steering pump		
17	4700908136		2	Bracket		
18	4700500018		2	Screw	M8-1,25x12 8,8	

Central test panel hydraulic Option

16988-1

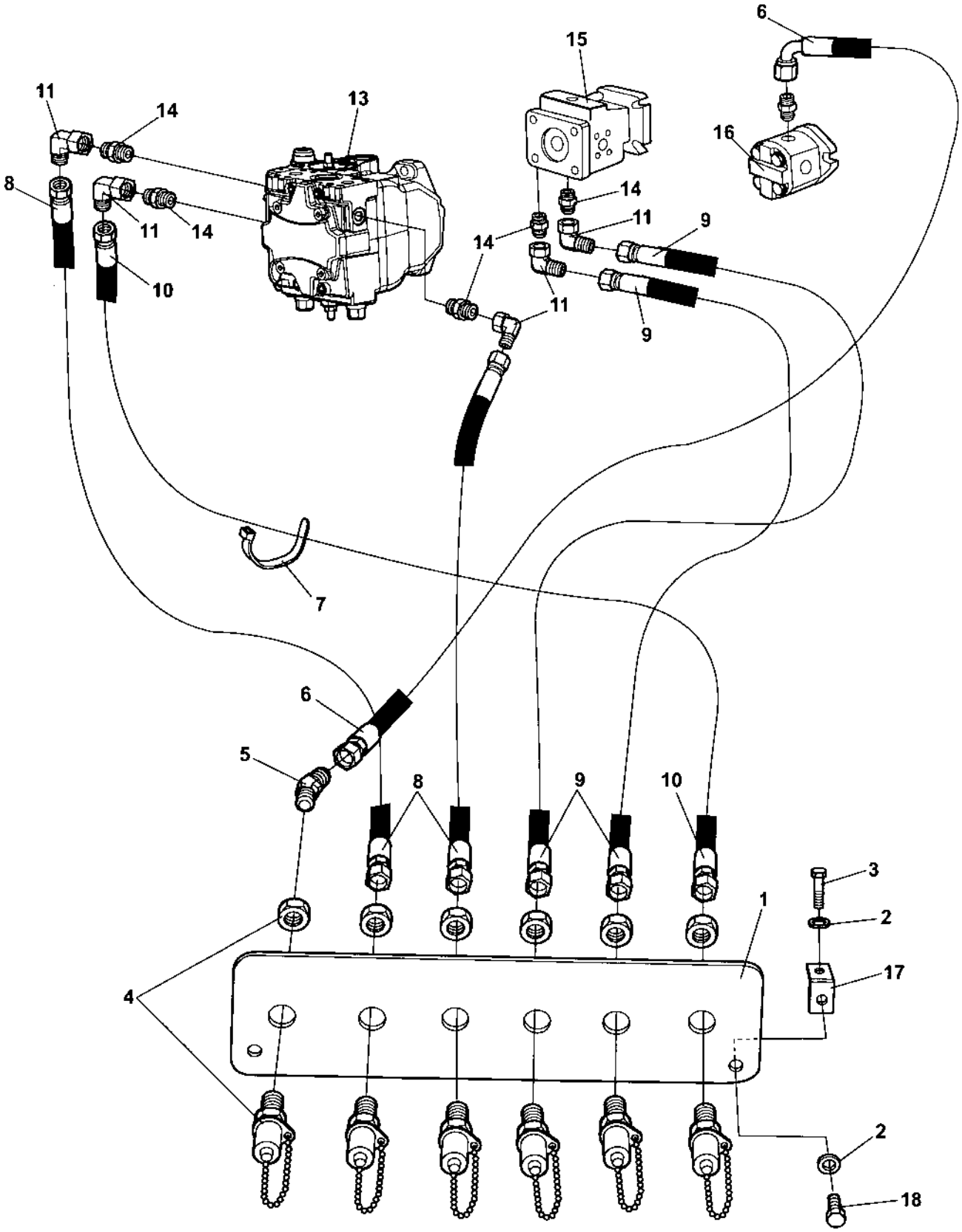

Central test panel hydraulic Option

Item	Part No	Rem	Qty	Description		Code
1	4700374028		1	Test panel		
2	4700904229		4	Washer	8,4x16x1,5	
3	4700500053		2	Screw	M8x20H 8.8	
4	4700356348		6	Measuring nipple		D
5	4700234622		1	Elbow 45		
6	4700483204		1	Hydraulic hose		
7	4700313102		N	Cable ties		
8	4700483445		2	Hydraulic hose		
9	4700483188		2	Hydraulic hose		
10	4700482342		1	Hydraulic hose		
11	4700334196		5	Elbow 90		
13			1	Vibration pump		
14	4700234388		5	Connector		
15			1	Propulsion pump		
16			1	Steering pump		
17	4700908136		2	Bracket		
18	4700500018		2	Screw	M8-1,25x12 8,8	

Variable rear axle motor Option

17527

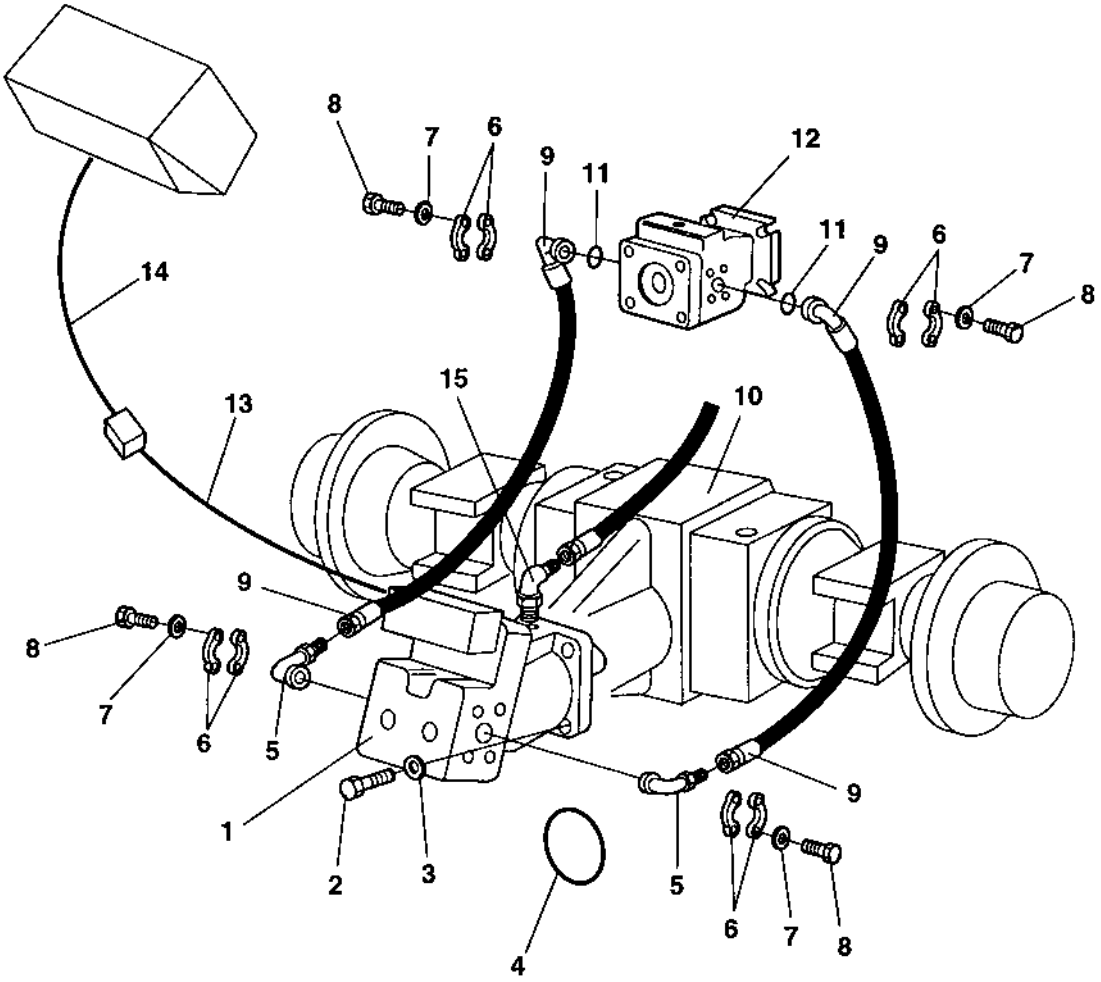

Variable rear axle motor Option

Item	Part No	Rem	Qty	Description		Code
1	4700373361		1	Propulsion motor (Page 240)		C
2	4700500263		4	Screw	M18x60	
3	4700904793		4	Washer	19x34x3	
4	4700902581		1	O-ring		D
5	4700900604		2	Adapter		
6	4700923384		8	Flange half		
7	4700904638		16	Washer	12x22x2	
8	4700502132		16	Screw	UNC 7/16" x 22	
9	4700483033		2	Hydraulic hose Up to 65X20396		
	4700483517		2	Hydraulic hose From 65X20397		
10			1	Rear axle		
11	4700904005		2	O-ring		
12	4700371545		1	Propulsion pump Up to 65X20260 (Page 170)		C
	4700380830		1	Propulsion pump From 65X20261 (Page 176)		C
13	4700380577		1	Cable harness		
14	4700380700		1	Cable harness		
15	4700334132		1	Elbow 45, O-ring		

4700373361 Propulsion motor

16654

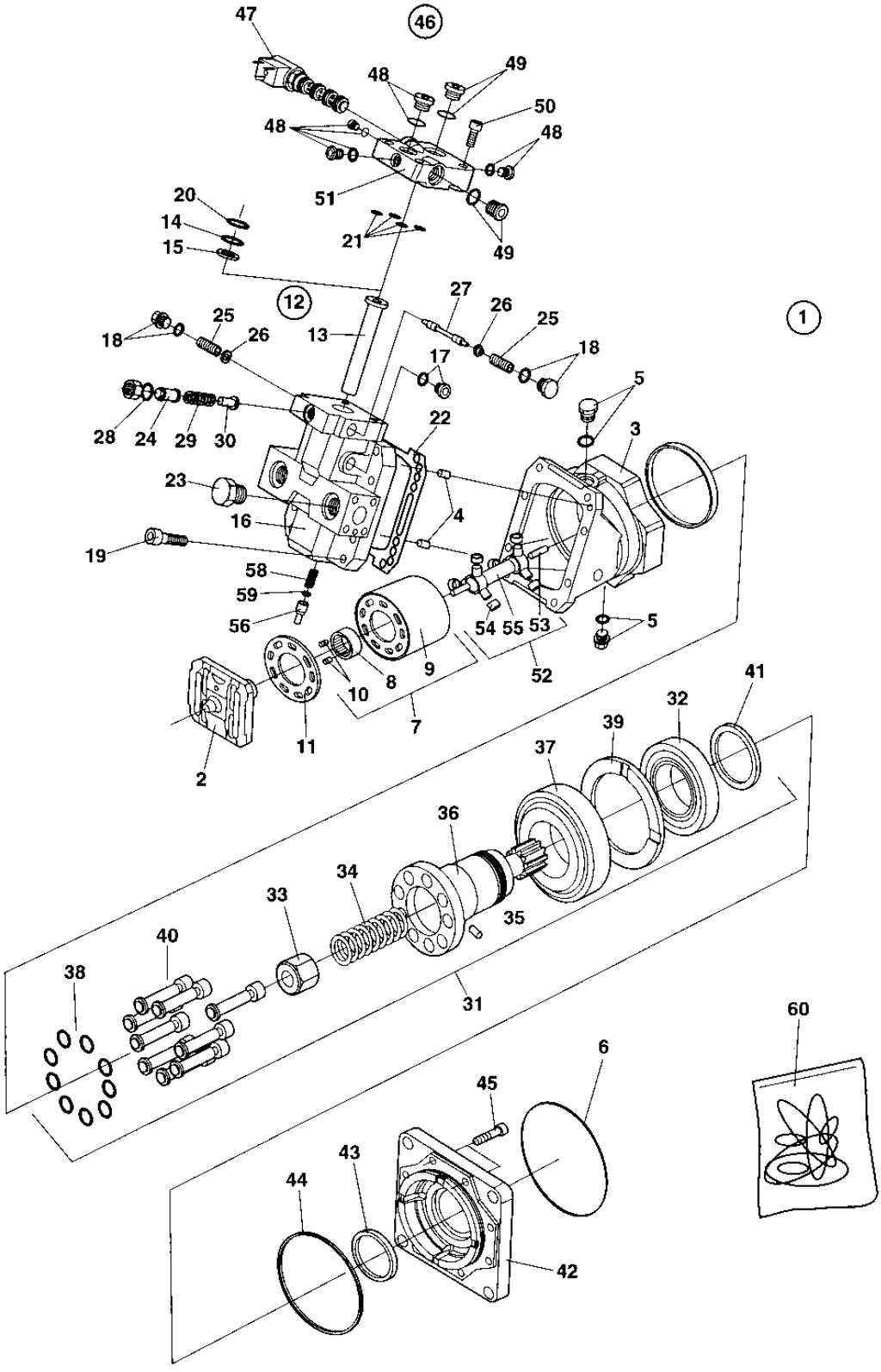

4700373361 Propulsion motor

Item	Part No	Rem	Qty	Description		Code
1			1	Hydraulic motor, Cpl		
2	4700935521		1	.Valve segment		
3	4700908422		1	.Housing		
4	4700813822		2	.Pin		
5	4700902928		2	.Plug		
	4700901453	1	2	..O-ring		
6	4700902581	1	1	.O-ring		D
7	4700902929		1	.Cylinder block		
8			1	..Bush		
9			1	..Cylinder block		
10			2	..Pin		
11	4700902930		1	.Bearing plate		D
12	4700935527		1	.Piston assembly		
13	4700935526		1	..Piston		
14	4700935525	1	1	..O-ring		D
15	4700935524	1	1	..Seal plug		D
16	4700935530		1	.End cap		
17	4700908432		1	.Plug		
18	4700935741		2	.Plug, cpl		
19	4700902944		8	.Screw		
20	4700935531	1	1	.O-ring		D
21	4700908443	1	5	.Rect. seal		
22	4700908427	1	1	.Gasket		D
23	4700902928		2	.Plug		
	4700901453	1	2	..O-ring		
24			1	.Adapter		
25	4700935749		2	.Spring		
26	4700935750		2	.Spring retainer		
27	4700935533		1	.Spool		
28	4700813618	1	1	.O-ring		D
29			1	.Spring		D
30			1	.Valve cone		D
31	4700902960		1	.Shaft, cpl		
32			1	..Roller bearing		
33			1	..Spring guide		
34			1	..Spring		
35			1	..Pin		
36			1	..Shaft		
37			1	..Roller bearing		
38			9	..Piston ring		
39			1	..Spacer		
40			9	..Piston		
41			1	..Nut		
42	4700902961		1	.Flange		
43	4700935536		1	.Shaft seal	55x75x12	D
	4700945757	1	1	.Shaft seal	55x70x7	D
44	4700935664	1	1	.O-ring		D
45	4700902962		8	.Screw		
46	4700935543		1	.Electric hydraulic control		
47	4700908435		1	..Solenoid valve assy		
48	4700908426		4	..Plug, cpl		
49	4700908432		2	..Plug		
50	4700935544		4	..Screw		
51	4700935545		1	..Valve housing		
52	4700902984		1	.Shaft, cpl		
53			2	..Pin		
54			6	..Roller		
55			1	..Shaft		
56	4700902996		1	.Cap		

1) Included in seal kit item 60

4700373361 Propulsion motor

16654

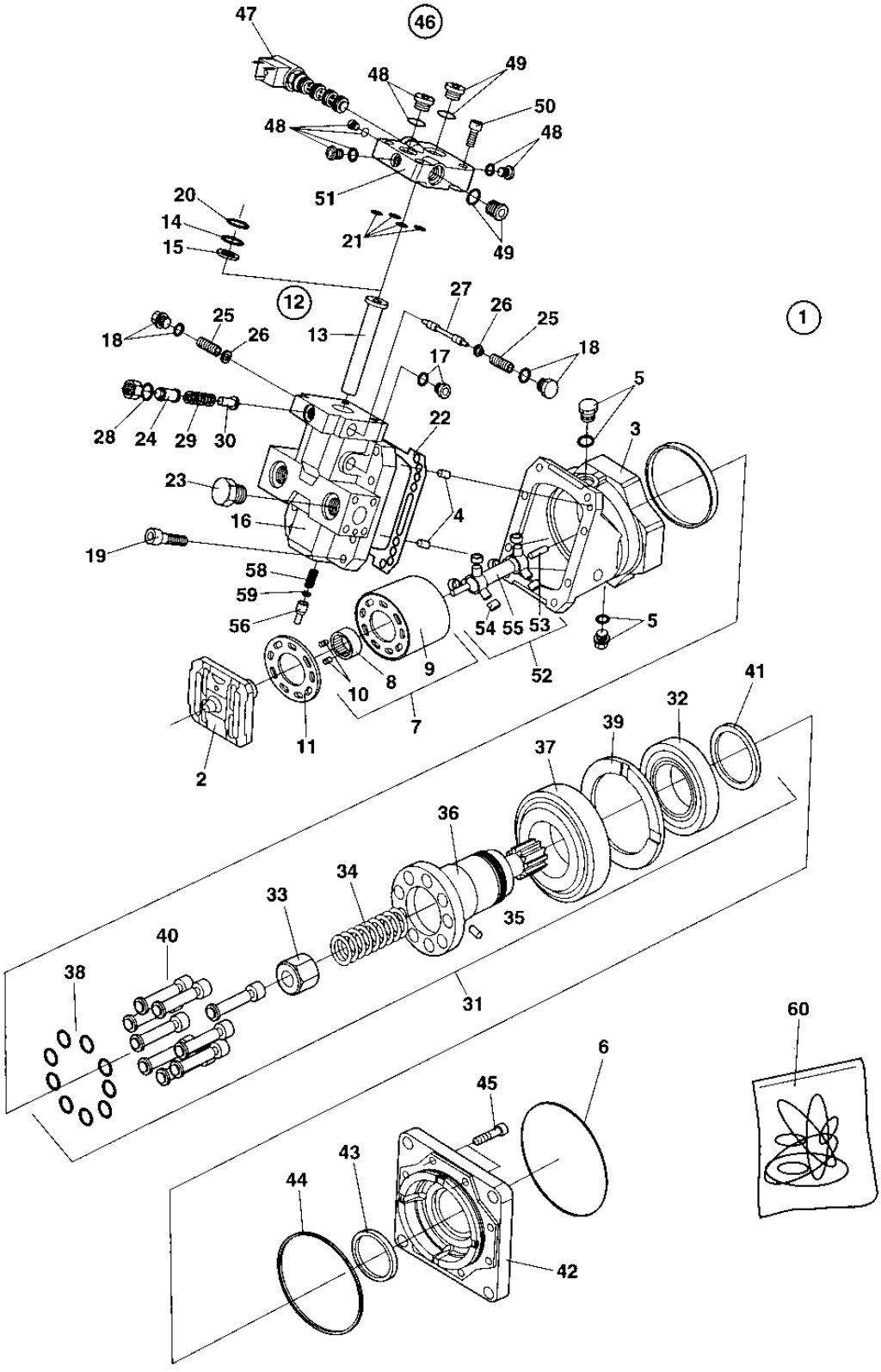

4700373361 Propulsion motor

Item	Part No	Rem	Qty	Description	Code
57	4700936593		2	.Orifice	
58	4700937363		1	.Shaft	
59	4700909525	1	1	.Nut	
60	4700935520		1	Seal kit	D

1) Included in seal kit item 60

Electrical equipment

Item	Part No	Rem	Qty	Description	Code
10				Electric system Up to 65X21524 (Page 246)	
15				Electric system From 65X21525 Up to 65X23699 (Page 248)	
17				Electric system From 65X23700 (Page 250)	
20				Control panel Up to 65X21524 (Page 252)	
25				Control panel From 65X21525 Up to 65X23699 (Page 254)	
30				Control panel From 65X23700 (Page 256)	
31				Control panel (Page 258)	
40				Working lights Up to 65X20596 (Page 260)	Option
50				Working lights From 65X20597 Up to 65X213	Option ge 262)
60				Working lights From 65X21340 Up to 65X236	Option ge 264)
70				Rotating beacon (Page 266)	Option
80				Back-up alarm Up to 65X21950 (Page 268)	Option
85				Back-up alarm From 65X21951 (Page 270)	Option
90				Compaction meter Up to ECN 03073 (Page 2	Option
95			1	Compaction meter From ECN 03073 (Page 2	Option

Electric system

16931

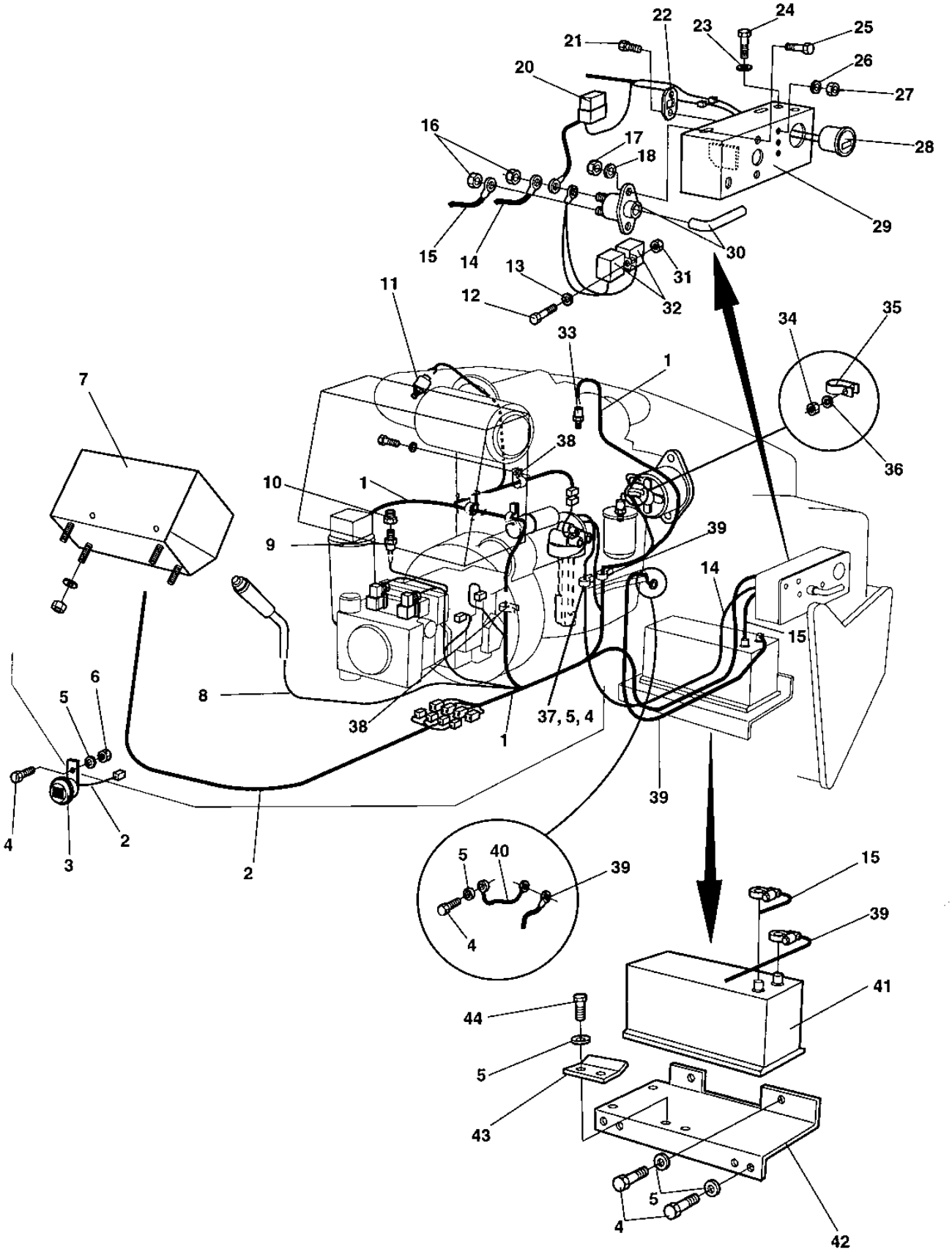

Electric system

Item	Part No	Rem	Qty	Description		Code
1	4700380280		1	Cable harness		
2	4700380281		1	Cable harness		
3	4700999027		1	Horn		D
4	4700500053		7	Screw	M8x20H 8.8	
5	4700904229		15	Washer	8,4x16x1,5	
6	4700570005		3	Nut	M8	
7			1	Control panel (Page 252)		
8	4700357583		1	Cable harness		
9	4700903631		1	Temperature sensor	Hydraulic oil	D
10	4700813434		1	Reducer		
11	4700929023		1	Indicator		D
12	4700500075		2	Screw	M6-1,0x25 8.8	
13	4700904639		2	Washer	6,7x14x1,5	
14	4700348347		1	Battery cable		
15	4700904018		1	Connection cable, coarse		
16	4700902285		2	Lock nut	M6	
17	4700902285		2	Lock nut	M6	
18	4700904639		2	Washer	6,7x14x1,5	
20	4700904037		1	Fuse	30A	D
21	4700500184		2	Screw	M5-0,8x14 8,8	
22	4700904036		1	Fuse holder		
23	4700904229		3	Washer	8,4x16x1,5	
24	4700500053		3	Screw	M8x20H 8.8	
25	4700500040		2	Screw	M6-1x20 8,8	
26	4700904228		1	Washer		
27	4700902284		2	Nut	M5	
28	4700801567		1	Hour meter		D
29	4700380087		1	Holder		
30	4700903640		1	Battery switch		D
31	4700902285		1	Lock nut	M6	
32	4700904448		2	Relay		D
33	4700903632		1	Temperature sensor	Engine	
34	4700570003		1	Nut	M5	
35	4700921031		1	Clamp		
36	4700904228		1	Washer		
37	4700921116		2	Clamp		
38	4700921104		1	Clamp		
39	4700904020		1	Battery cable		
40	4700903760		1	Connection cable, coarse		
41	4700470020		1	Battery		
42	4700371277		1	Battery shelf		
43	4700356500		1	Battery holder		
44	4700500047		2	Screw		

Electric system

18113

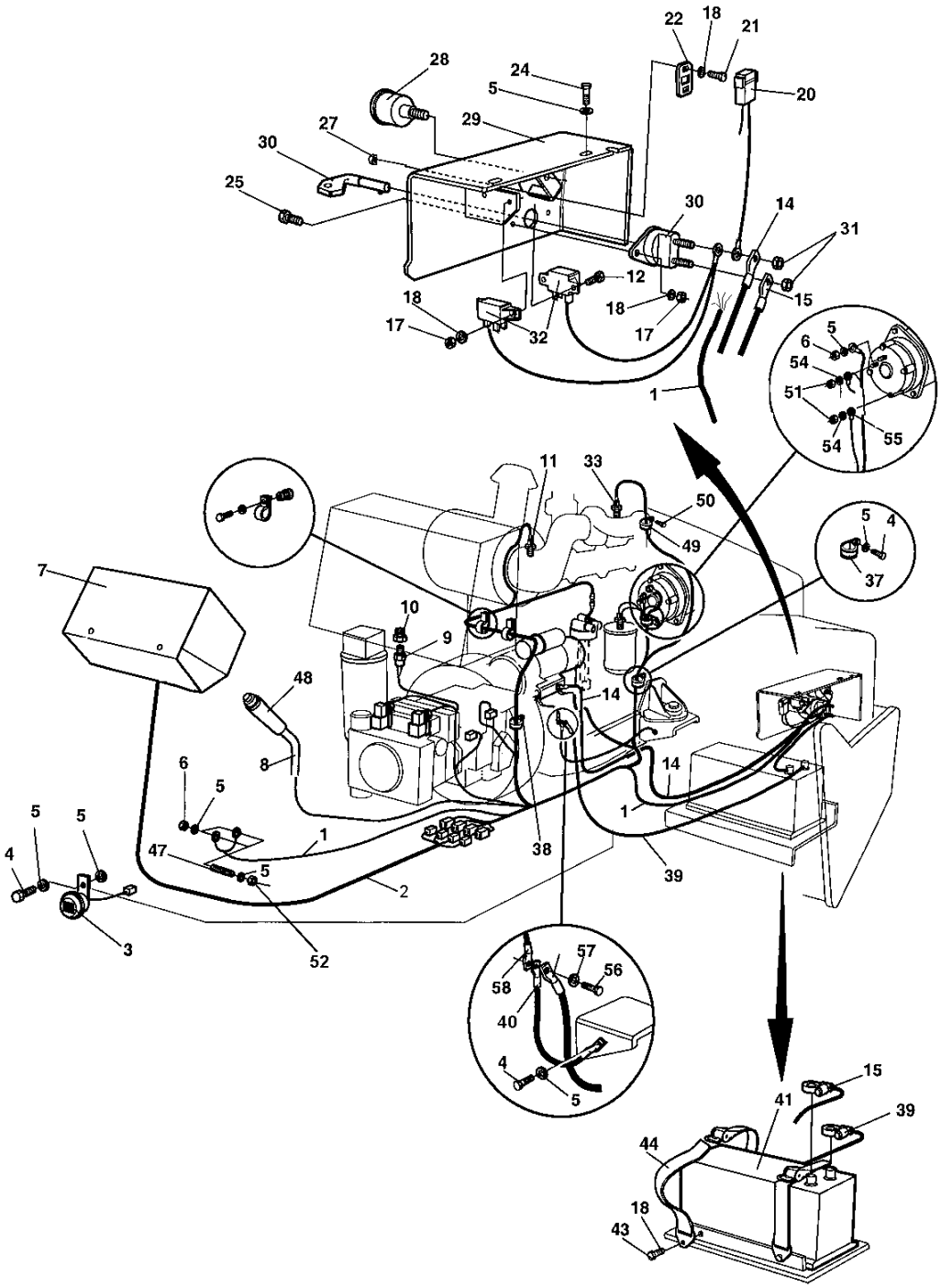

Electric system

Item	Part No	Rem	Qty	Description		Code
1	4700380280		1	Cable harness		
2	4700380281		1	Cable harness		
3	4700999027		1	Horn		D
4	4700500053		2	Screw	M8x20H 8.8	
5	4700904229		13	Washer	8,4x16x1,5	
6	4700570005		3	Nut	M8	
7			1	Control panel (Page 254)		
8	4700357583		1	Cable harness		
9	4700903631		1	Temperature sensor	Hydraulic oil	D
10	4700813434		1	Reducer		
11	4700929023		1	Indicator		D
12	4700500075		2	Screw	M6-1,0x25 8.8	
14	4700791598		1	Cable harness		
15	4700791503		1	Battery cable		
17	4700902285		2	Lock nut	M6	
18	4700904639		5	Washer	6,7x14x1,5	
20	4700904037		1	Fuse	30A	D
21	4700500184		2	Screw	M5-0,8x14 8,8	
22	4700904036		1	Fuse holder		
24	4700500053		2	Screw	M8x20H 8.8	
25	4700500040		2	Screw	M6-1x20 8,8	
27	4700902284		2	Nut	M5	
28	4700801567		1	Hour meter		D
29	4700386999		1	Holder		
30	4700903640		1	Battery switch		D
	4700903641		1	.Key		D
31			2	.Nut		D
32	4700904448		2	Relay		D
33	4700903632		1	Temperature sensor	Engine	
34	4700570003		1	Nut	M5	
35	4700921031		1	Clamp		
36	4700904228		1	Washer		
37	4700921116		2	Clamp		
38	4700921104		1	Clamp		
39	4700903758		1	Battery cable		
40	4700904750		1	Connection cable, coarse		
41	4700470020		1	Battery		
42	4700904639		4	Washer	6,7x14x1,5	
43	4700500012		4	Screw	M6x12	
44	4700791371		2	Strap		
45	4700904231		1	Washer	13x24x2 300 HV	
46	4700500051		1	Screw	M12x25H 8.8 A3K	
47	4700903768		2	Threaded stud		
48		B	1	Grab handle		
49	4700921072		1	Clamp		
50	4700500018		1	Screw	M8-1,25x12 8,8	
51	4700570003		2	Nut	M5	
52	4700902286		2	Lock nut	M8	
53	4700500047		2	Screw		
54	4700904281		2	Washer		
55	4700791924		1	Connection cable Up to 65X22325		
	4700792277		1	Connection cable From 65X22326		
56	4700500035		1	Screw	M12x020H	
57	4700904638		1	Washer	12x22x2	
58	4700335607		1	Connection cable, coarse		

B) See section "handle"

Electric system

18660

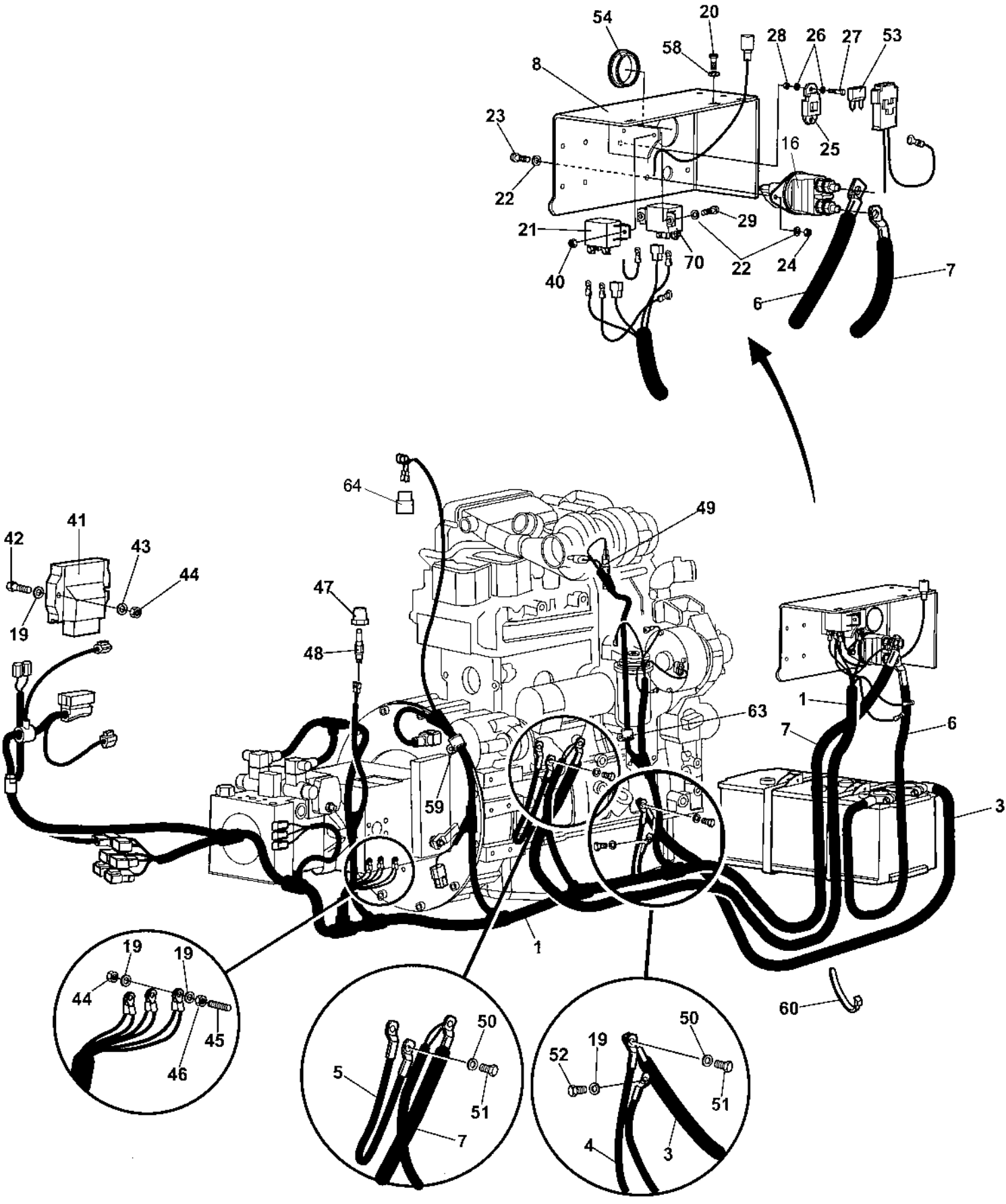

Electric system

Item	Part No	Rem	Qty	Description		Code
1	4700393810		1	Cable harness Up to 65X23899		
	4700395821		1	Cable harness From 65X23900		
3	4700904020		1	Battery cable		
4	4700903760		1	Connection cable, coarse		
5	4700335607		1	Connection cable, coarse		
6	4700791503		1	Battery cable		
7	4700792052		1	Connection cable, coarse		
8	4700386999		1	Holder		
16	4700903640		1	Battery switch		D
	4700903641		1	.Key		D
19	4700904229		10	Washer	8,4x16x1,5	
20	4700500053		2	Screw	M8x20H 8.8	
21	4700791183	A	1	Relay		D
22	4700904228		6	Washer		
23	4700500013		2	Screw	M6-1x16 8,8	
24	4700570004		2	Nut	M6X1,00 -8 A2K	
25	4700904036		1	Fuse holder		
26	4700904281		4	Washer		
27	4700500060		2	Screw	M5-0,8x20 8.8	
28	4700586001		2	Lock nut		
29	4700500075		3	Screw	M6-1,0x25 8.8	
40	4700902285		2	Lock nut	M6	
41	4700378745		1	Control unit, ECU		
42	4700500025		2	Screw	M8-1,25x50 8,8	
43	4700904556		2	Washer	8,4x16x3,0	
44	4700586003		5	Lock nut	M8	
45	4700903768		3	Threaded stud		
46	4700570005		3	Nut	M8	
47	4700813434		1	Reducer		
48	4700903631		1	Temperature sensor	Hydraulic oil	D
49	4700903632		1	Temperature sensor	Engine	
50	4700904231		2	Washer	13x24x2 300 HV	
51	4700500051		2	Screw	M12x25H 8.8 A3K	
52	4700500019		1	Screw	M8x16H 8.8 A2K	
53	4700904038		1	Fuse	40A	D
54	4700345870		1	Plug		
58	4700904230		2	Washer		
59	4700921080		1	Clamp		
60	4700313041		1	Cable ties		
63	4700921072		1	Clamp		
64	4700929023		1	Indicator		D
70	4700791183		1	Relay		D

A) Replaces P/N 4700904448 as Start relay from January 2009.

Control panel

16932

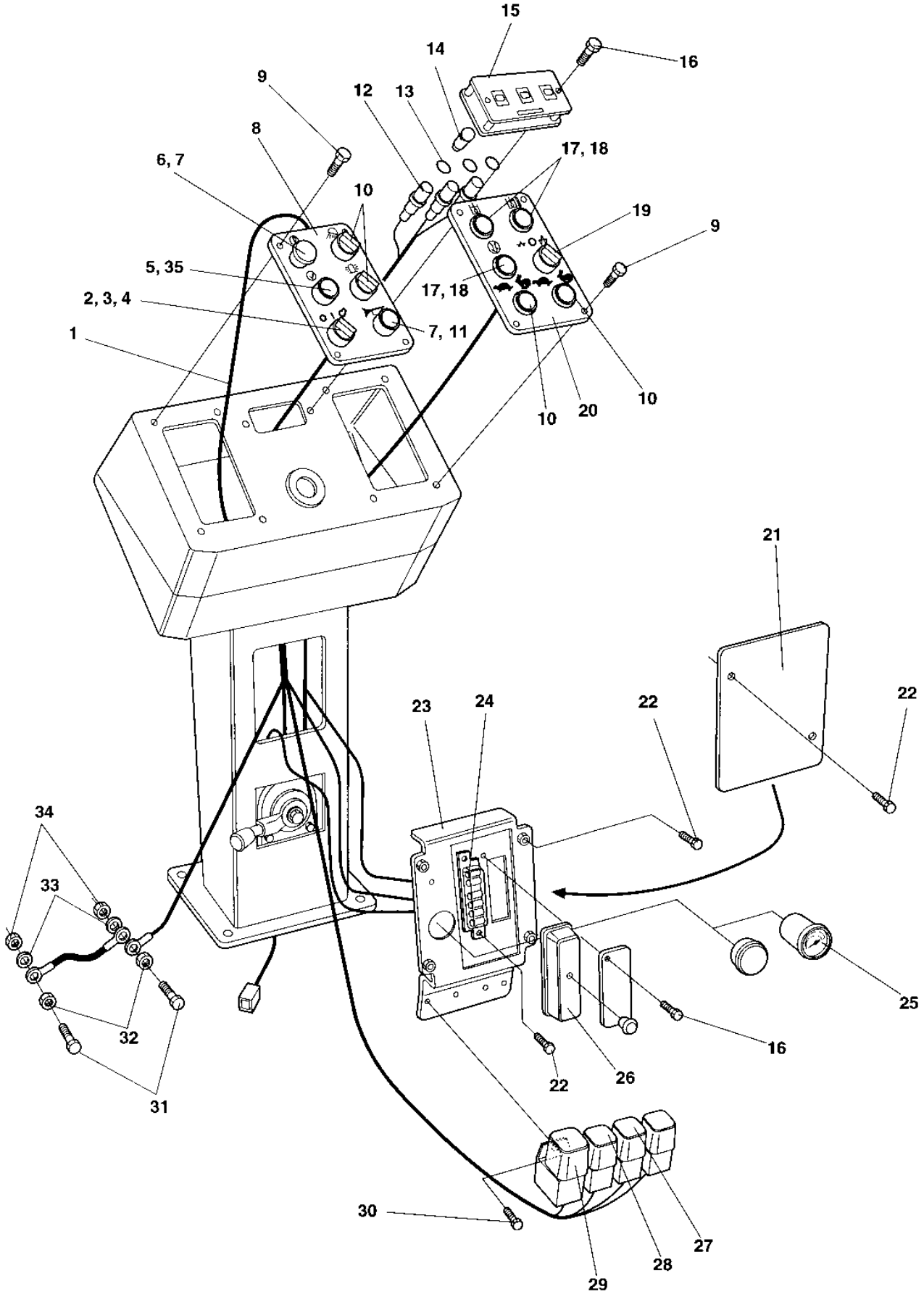

Control panel

Item	Part No	Rem	Qty	Description		Code
1	4700380281		1	Cable harness		
2	4700932050		1	Switch		
3	4700930154		1	Contact piece, NC		
4	4700930182		1	Contact block		
5	4700932032		1	Push button		
6	4700930200		1	Emergency stop		
7	4700930163		6	Contact piece, NO		D
8	4700380278		1	Control panel left		
9	4700902224		8	Screw	M6x10	
10	4700911456		4	Hole plug		
11	4700932032		1	Push button		
12	4700902225		3	Lamp socket	2-POL	
13	4700160269		3	O-ring		
14	4700985125		3	Bulb	12V	B
15	4700357585		1	Display panel		
16	4700901767		6	Screw	ST3,5x9,5 Black	
17	4700985146		3	Pilot lamp cpl	Red	D
18	4700985012		3	Bulb		D
19	4700930153		1	Switch		
20	4700380277		1	Control panel right		
21	4700371344		1	Cover		
22	4700541702		6	Screw	M6x12	
23	4700371326		1	Distribution control plate		
24	4700901226		4	Fuse	7.5A	
25	4700355263		1	Fuel gauge		D
26	4700903820		2	Fuse box		D
	4700901240		6	Connector		
27	4700287597		1	Relay		D
28	4700287598		1	Relay	12V-30A	
29	4700382782		1	Relay, VBS		D
30	4700902223		3	Screw		
31	4700500075		2	Screw	M6-1,0x25 8.8	
32	4700586002		2	Lock nut		
33	4700904228		2	Washer		
34	4700570004		2	Nut	M6X1,00 -8 A2K	
35	4700930163		1	Contact piece, NO		D

Control panel

16932-1

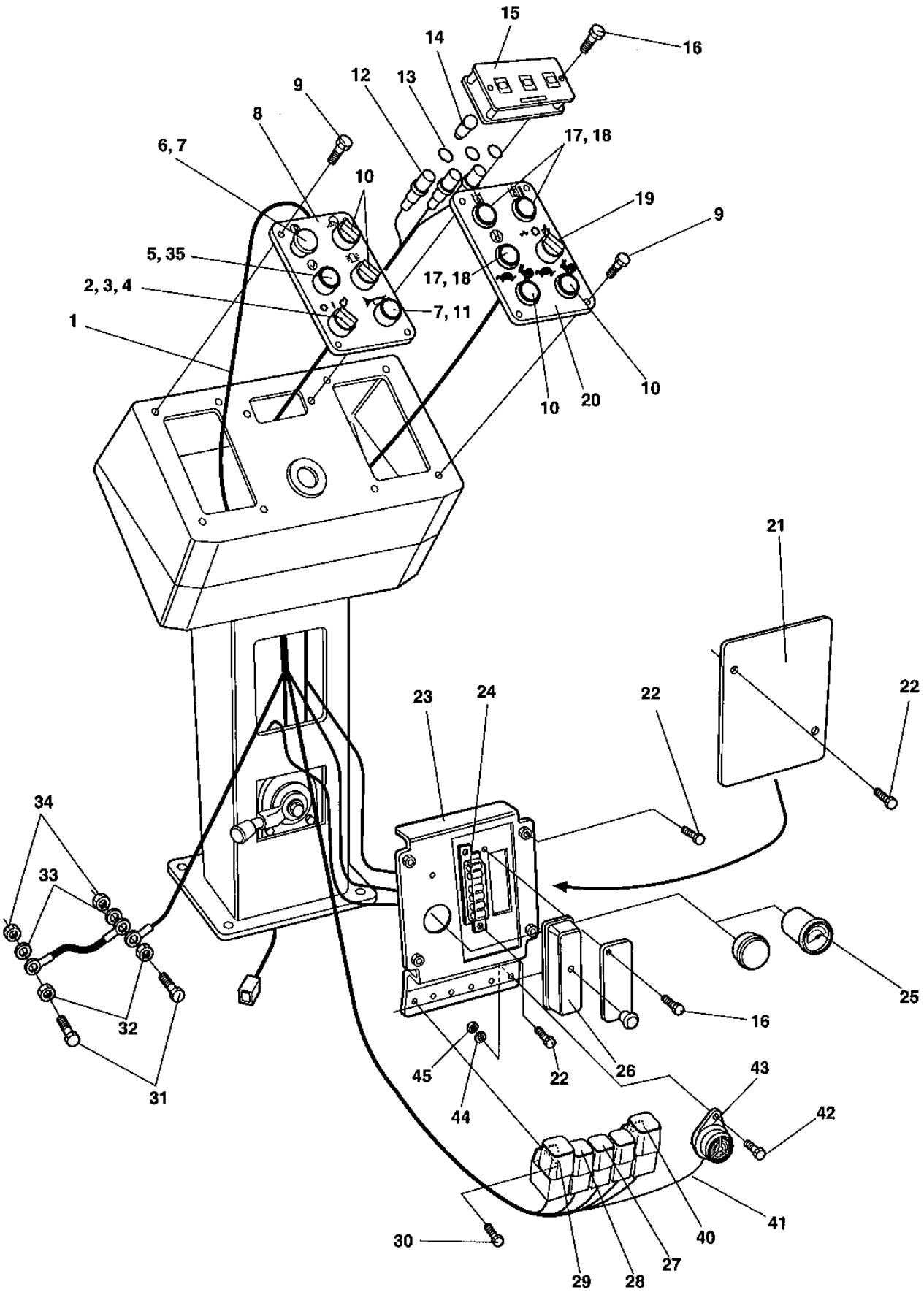

Control panel

Item	Part No	Rem	Qty	Description		Code
1	4700380281		1	Cable harness		
2	4700932050		1	Switch		
3	4700930154		1	Contact piece, NC		
4	4700930182		1	Contact block		
5	4700932032		1	Push button		
6	4700930200		1	Emergency stop		
7	4700930163		6	Contact piece, NO		D
8	4700380278		1	Control panel left		
9	4700902224		8	Screw	M6x10	
10	4700911456		4	Hole plug		
11	4700932032		1	Push button		
12	4700902225		3	Lamp socket	2-POL	
13	4700160269		3	O-ring		
14	4700985125		3	Bulb	12V	B
15	4700357585		1	Display panel		
16	4700901767		6	Screw	ST3,5x9,5 Black	
17	4700985146		3	Pilot lamp cpl	Red	D
18	4700985012		3	Bulb		D
19	4700930153		1	Switch		
20	4700380277		1	Control panel right		
21	4700371344		1	Cover		
22	4700541702		6	Screw	M6x12	
23	4700371326		1	Distribution control plate		
24	4700901226		4	Fuse	7.5A	
25	4700355263		1	Fuel gauge		D
26	4700903820		2	Fuse box		D
	4700901240		6	Connector		
27	4700287597		1	Relay		D
28	4700287598		1	Relay	12V-30A	
29	4700382782		1	Relay, VBS		D
30	4700902223		4	Screw		
31	4700500075		2	Screw	M6-1,0x25 8.8	
32	4700586002		2	Lock nut		
33	4700904228		2	Washer		
34	4700570004		2	Nut	M6X1,00 -8 A2K	
35	4700930163		1	Contact piece, NO		D
40	4700904846	A	1	Delay relay		
41	4700387728	A	1	Cable harness		
42	4700533070	A	1	Screw		
43	4700355301	A	1	Buzzer		D
44	4700904281	A	2	Washer		
45	4700586001	A	1	Lock nut		

A) Interlock, Option

Control panel

18672

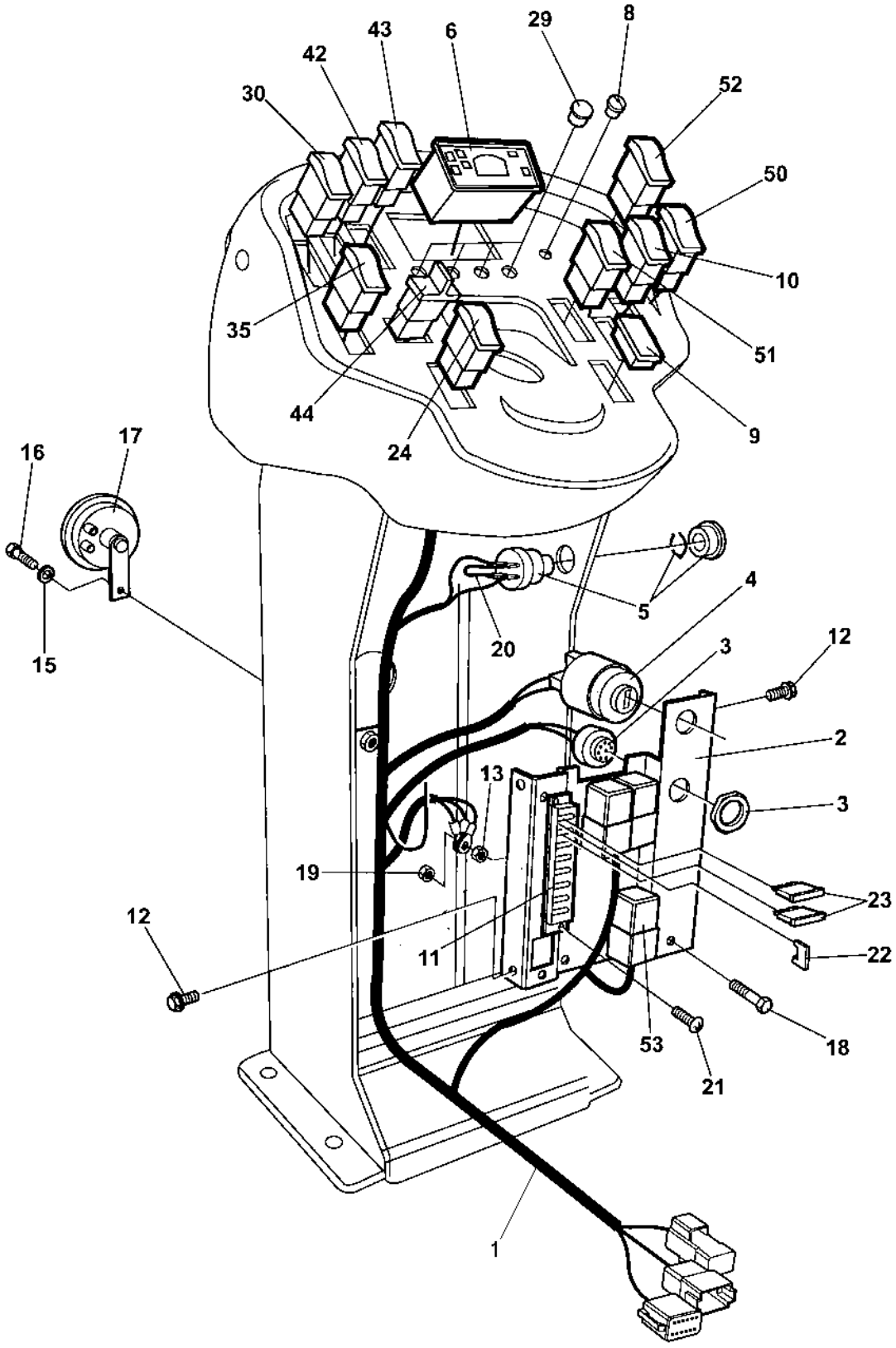

Control panel

Item	Part No	Rem	Qty	Description		Code
1	4700392507	B	1	Cable harness		
2	4700387683		1	Distribution control plate		
3	4700385599		1	Buzzer		
4	4700238158		1	Ignition switch		
	4700940451		1	.Key		
5	4700791647		1	Emergency stop		
6	4700392996		1	Control panel		
8	4700792083		N	Plug		
9	4700791588		N	Panel plug		
10	4700792461		1	Switch, vibration		
11	4700791185		1	Fuse box		
12	4700903782		4	Screw	M5x12	
13	4700570004		3	Nut	M6X1,00 -8 A2K	
15	4700904229		1	Washer	8,4x16x1,5	
16	4700500053		1	Screw	M8x20H 8.8	
17	4700999027		1	Horn		D
18	4700500075		1	Screw	M6-1,0x25 8.8	
19	4700586002		1	Lock nut		
20	4700791517		1	Connection cable		
21	4700901767		2	Screw	ST3,5x9,5 Black	
22	4700791211		N	Contact bridge		
23	4700901228		N	Fuse	15A	
	4700901227		N	Fuse	10A	B
24	4700791582		1	Switch, parking brake		
29	4700792320		4	Plug		
	4700792315		1	Illuminated block yellow		
30	4700791587	A	1	Switch, working light		
35	4700791585	A	1	Switch, rotating beacon		
42	4700791583	A	1	Switch, driving light		
43	4700791584	A	1	Switch, hazard flashers		
44	4700792413	A	1	Switch, drive direction		
50	4700791588		1	Panel plug		
	4700792463	A	1	Switch, Power distribution		
51	4700791578		1	Switch, horn		
52	4700792462	A	1	Switch, TC & TM		
	4700791657	A	1	Switch, Hi-Lo Speed		
53	4700903956	A	1	Relay		D

A) Option
B) Control panel

Control panel

18672-1

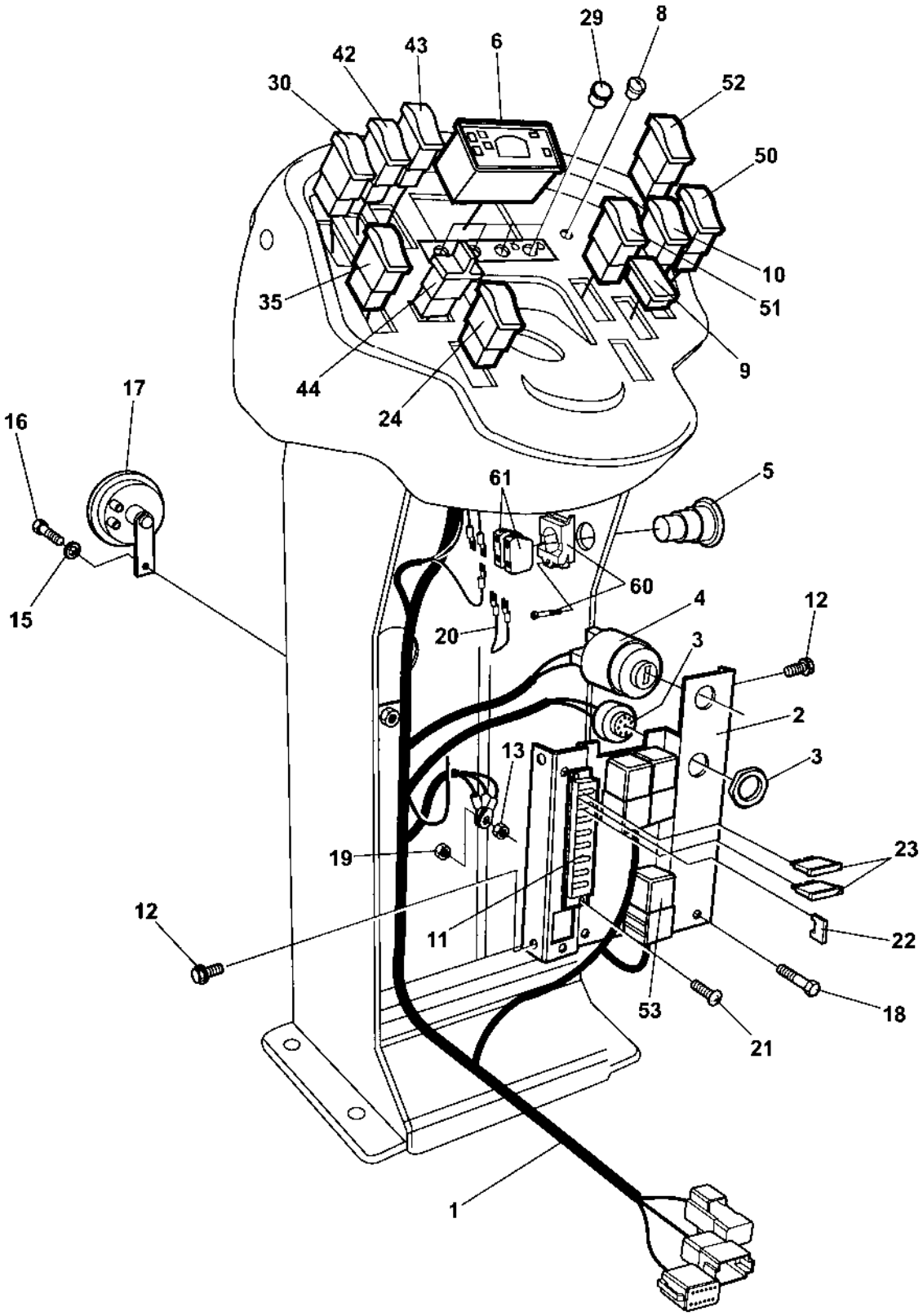

Control panel

Item	Part No	Rem	Qty	Description		Code
1	4700396968	B	1	Cable harness		
2	4700387683		1	Distribution control plate		
3	4700385599		1	Buzzer		
4	4700238158		1	Ignition switch		
	4700940451		1	.Key		
5	4700791739		1	Emergency stop		
6	4700392996		1	Control panel		
8	4700792083		N	Plug		
9	4700791588		N	Panel plug		
10	4700792461		1	Switch, vibration		
11	4700791185		1	Fuse box		
12	4700903782		4	Screw	M5x12	
13	4700570004		3	Nut	M6X1,00 -8 A2K	
15	4700904229		1	Washer	8,4x16x1,5	
16	4700500053		1	Screw	M8x20H 8.8	
17	4700999027		1	Horn		D
18	4700500075		1	Screw	M6-1,0x25 8.8	
19	4700586002		1	Lock nut		
20	4700343550		1	Connection cable		
21	4700901767		2	Screw	ST3,5x9,5 Black	
22	4700791211		N	Contact bridge		
23	4700901228		N	Fuse	15A	
	4700901227		N	Fuse	10A	B
24	4700791582		1	Switch, parking brake		
29	4700792320		4	Plug		
	4700792315		1	Illuminated block yellow		
30	4700791587	A	1	Switch, working light		
35	4700791585	A	1	Switch, rotating beacon		
42	4700791583	A	1	Switch, driving light		
43	4700791584	A	1	Switch, hazard flashers		
44	4700792413	A	1	Switch, drive direction		
50	4700791588		1	Panel plug		
	4700792463	A	1	Switch, Power distribution		
51	4700791578		1	Switch, horn		
52	4700792462	A	1	Switch, TC & TM		
	4700791657	A	1	Switch, Hi-Lo Speed		
53	4700903956	A	1	Relay		D
60	4700791733		1	Fixing collar		
61	4700791723		2	Connector		

A) Option
B) Control panel

Working lights Option

16982

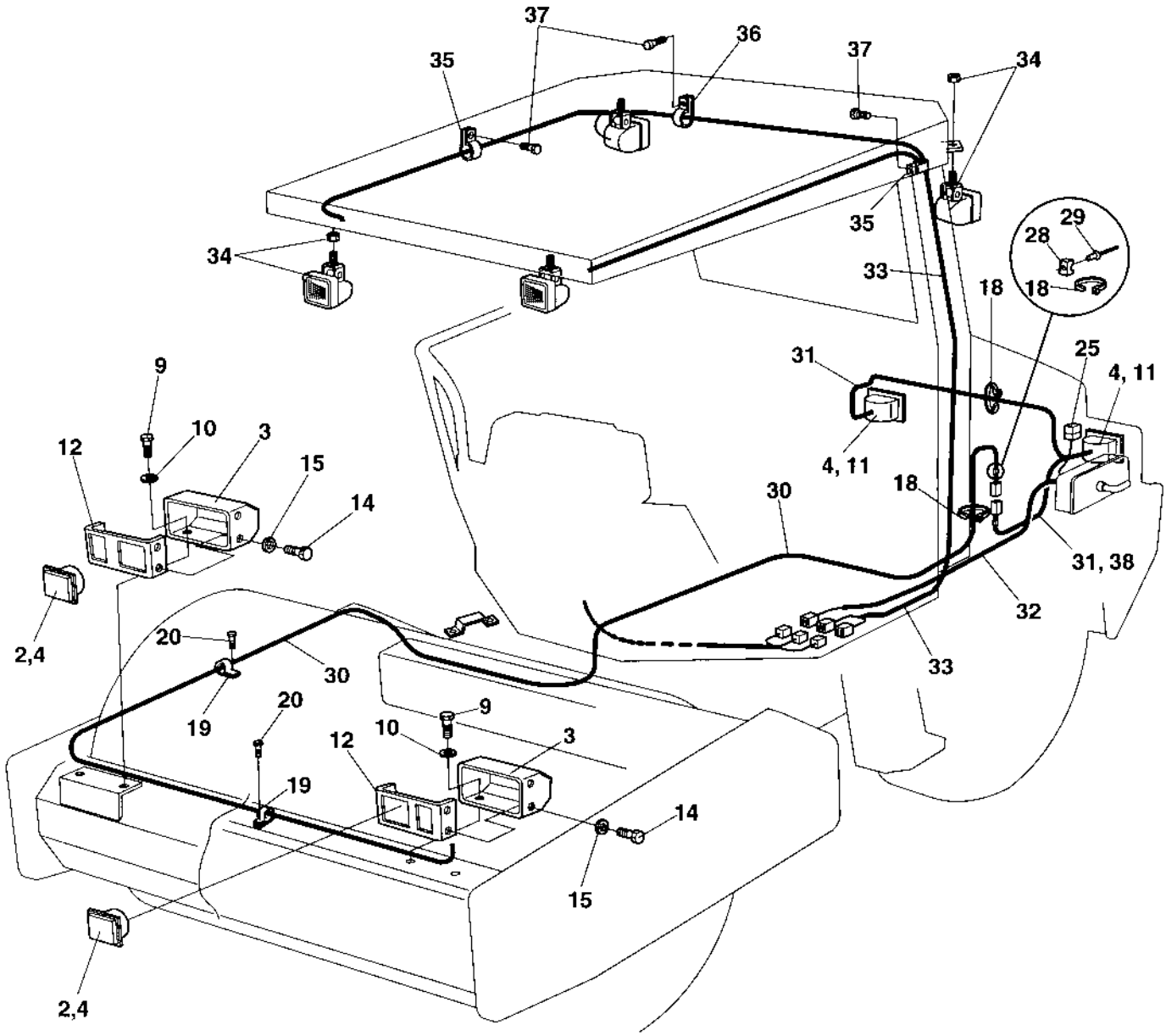

Working lights Option

Item	Part No	Rem	Qty	Description		Code
2	4700902227		2	Work light		
3	4700374029		2	Lamp shield		
4	4700901369		4	Bulb	55w H3	B
9	4700500043		6	Screw	M10x16H 8,8	
10	4700904230		6	Washer		
11	4700904314		2	Work lamp		
12	4700374030		2	Bracket		
14	4700500040		8	Screw	M6-1x20 8,8	
15	4700904228		8	Washer		
18	4700925802		7	Cable ties	L=142 mm	
19	4700921039		11	Pipe clamp		
20	4700541705		11	Screw		
25	4700904038		1	Fuse	40A	D
28	4700904543		7	Cable tie holder		
29	4700903436		7	Blind rivet		
30	4700373184		1	Cable harness		
31	4700381435		1	Cable harness		
32	4700373184		1	Cable harness		
33	4700372758		1	Cable harness		
34	4700904314		4	Work lamp		
35	4700921039		10	Pipe clamp		
36	4700921031		3	Clamp		
37	4700541702		13	Screw	M6x12	
38	4700921072		1	Clamp		

Working lights Option

16982-1

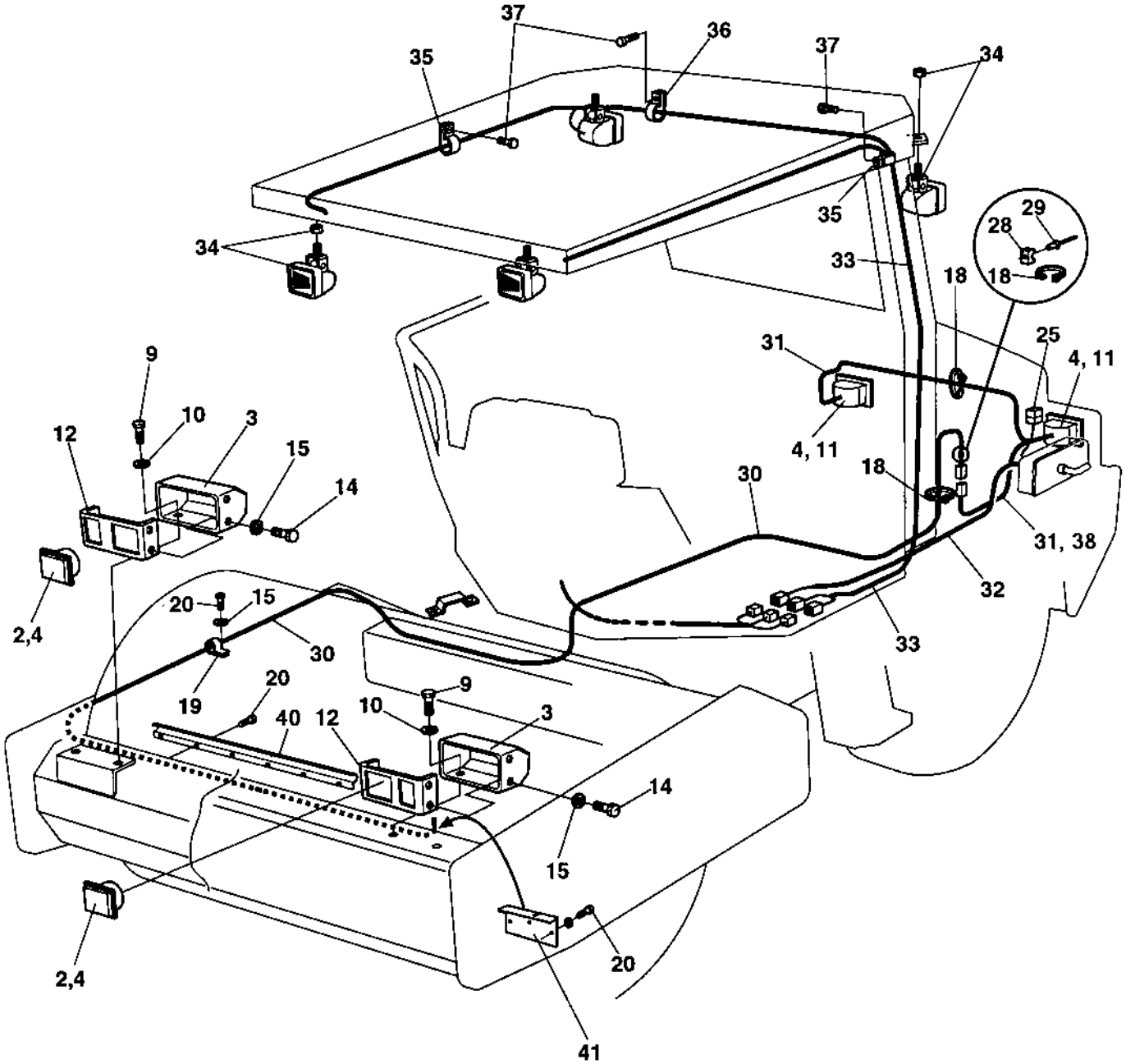

Working lights Option

Item	Part No	Rem	Qty	Description		Code
2	4700902227		2	Work light		
3	4700374029		2	Lamp shield		
4	4700901369		4	Bulb	55w H3	B
9	4700500043		6	Screw	M10x16H 8,8	
10	4700904230		6	Washer		
11	4700904314		2	Work lamp		
12	4700374030		2	Bracket		
14	4700500040		8	Screw	M6-1x20 8,8	
15	4700904228		13	Washer		
18	4700925802		7	Cable ties	L=142 mm	
19	4700921039		8	Pipe clamp		
20	4700500012		8	Screw	M6x12	
25	4700904038		1	Fuse	40A	D
28	4700904543		7	Cable tie holder		
29	4700903436		7	Blind rivet		
30	4700373184		1	Cable harness		
31	4700381435		1	Cable harness		
32	4700373184		1	Cable harness		
33	4700372758		1	Cable harness		
34	4700904314		4	Work lamp		
35	4700921039		10	Pipe clamp		
36	4700921031		3	Clamp		
37	4700541702		13	Screw	M6x12	
38	4700921072		1	Clamp		
40	4700381462		1	Rubber hose		
41	4700384163		2	Protection		

Working lights Option

16982-2

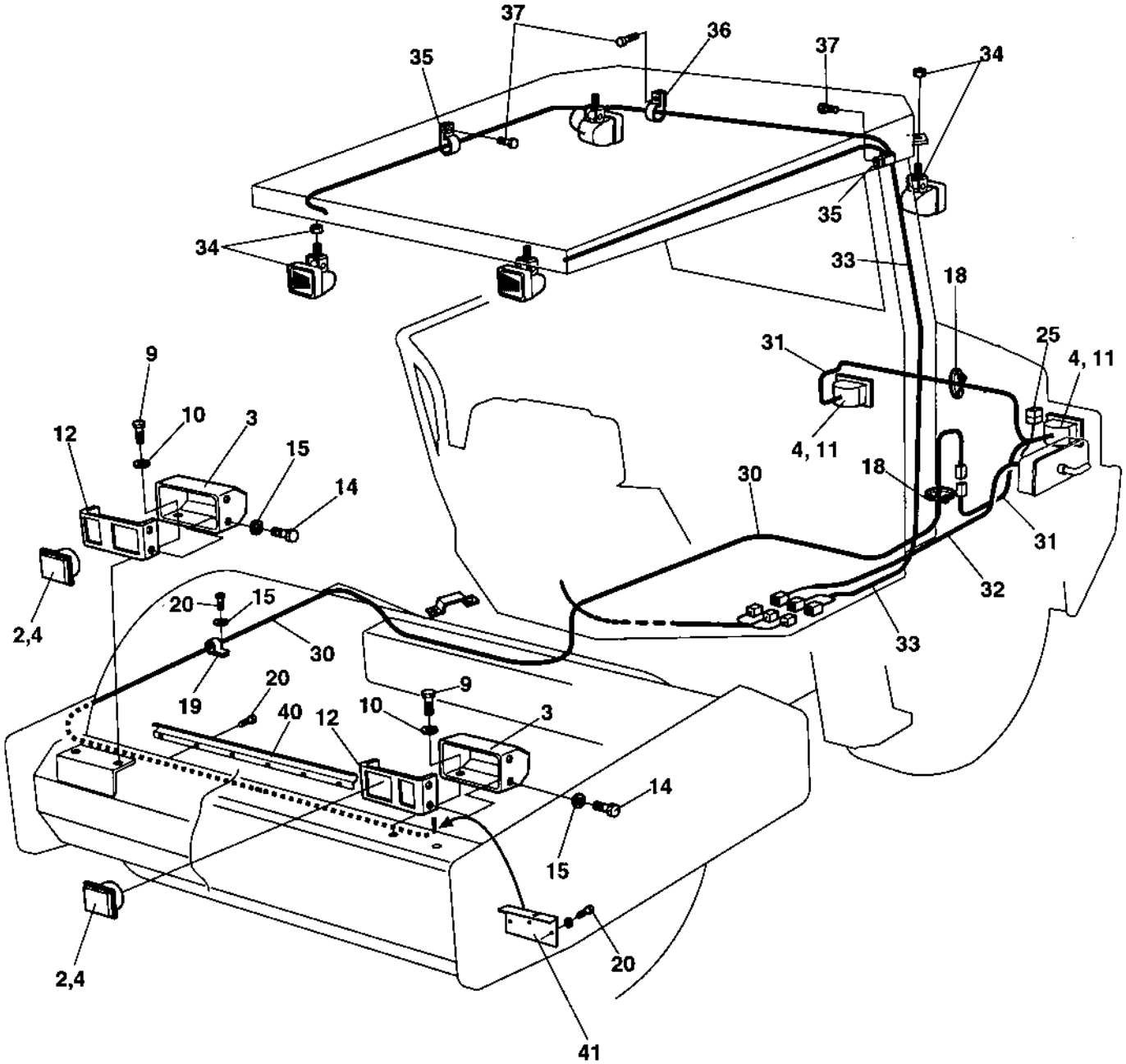

Working lights Option

Item	Part No	Rem	Qty	Description		Code
2	4700902227		2	Work light		
3	4700374029		2	Lamp shield		
4	4700901369		4	Bulb	55w H3	B
9	4700500043		6	Screw	M10x16H 8,8	
10	4700904230		6	Washer		
11	4700904314		2	Work lamp		
12	4700374030		2	Bracket		
14	4700500040		8	Screw	M6-1x20 8,8	
15	4700904228		13	Washer		
18	4700925802		N	Cable ties	L=142 mm	
19	4700921039		8	Pipe clamp		
20	4700500012		8	Screw	M6x12	
25	4700904038		1	Fuse	40A	D
30	4700373184		1	Cable harness		
31	4700387419		1	Cable harness		
32	4700373184		1	Cable harness		
33	4700372758		1	Cable harness		
34	4812110216		4	Work lamp		
	4700904230		4	Washer		
	4700586018		4	Lock nut		
35	4700921039		10	Pipe clamp		
36	4700921031		3	Clamp		
37	4700541702		13	Screw	M6x12	
40	4700381462		1	Rubber hose		
41	4700384163		2	Protection		

Rotating beacon Option

16981

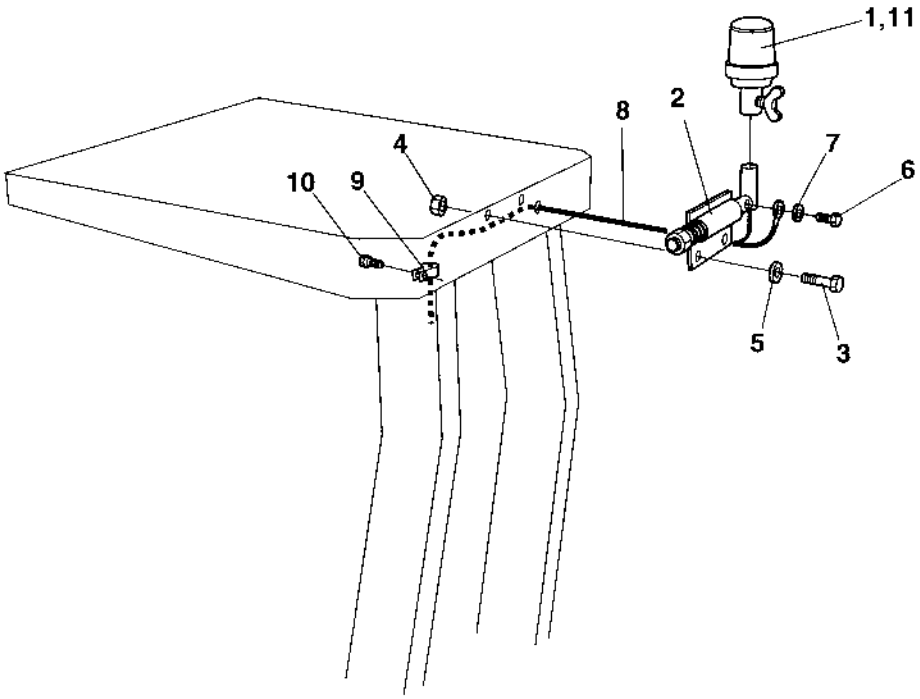

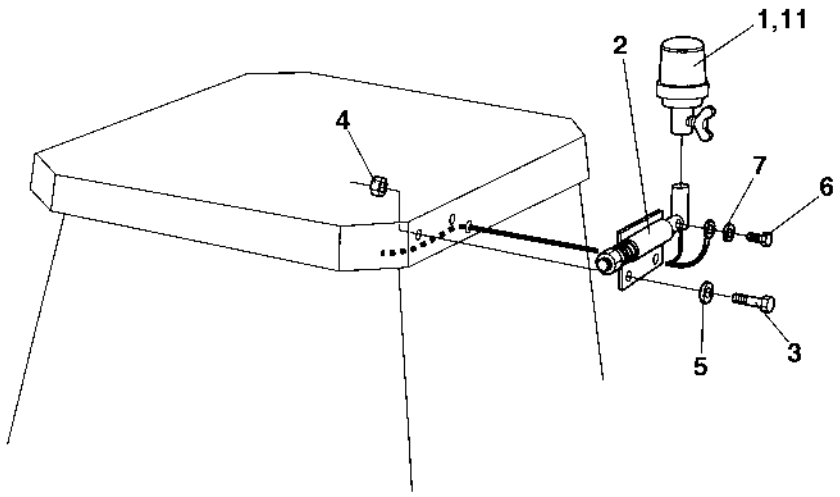

Rotating beacon Option

Item	Part No	Rem	Qty	Description		Code
1	4700999011	1	1	Rotating beacon		D
2	4700358452		1	Lamp holder		
3	4700500021		2	Screw	M8-1,25x25 8.8	
4	4700586003		2	Lock nut	M8	
5	4700904229		2	Washer	8,4x16x1,5	
6	4700500013		1	Screw	M6-1x16 8,8	
7	4700904228		1	Washer		
8	4700374398		1	Cable harness		
9	4700921039		1	Pipe clamp		
10	4700541702		1	Screw	M6x12	
11	4700389577	2	1	Rotating beacon		D

1) Is replaced by item 11, P/N 4700389577
2) Replaces item 1, P/N 4700999011

Back-up alarm Option

16983

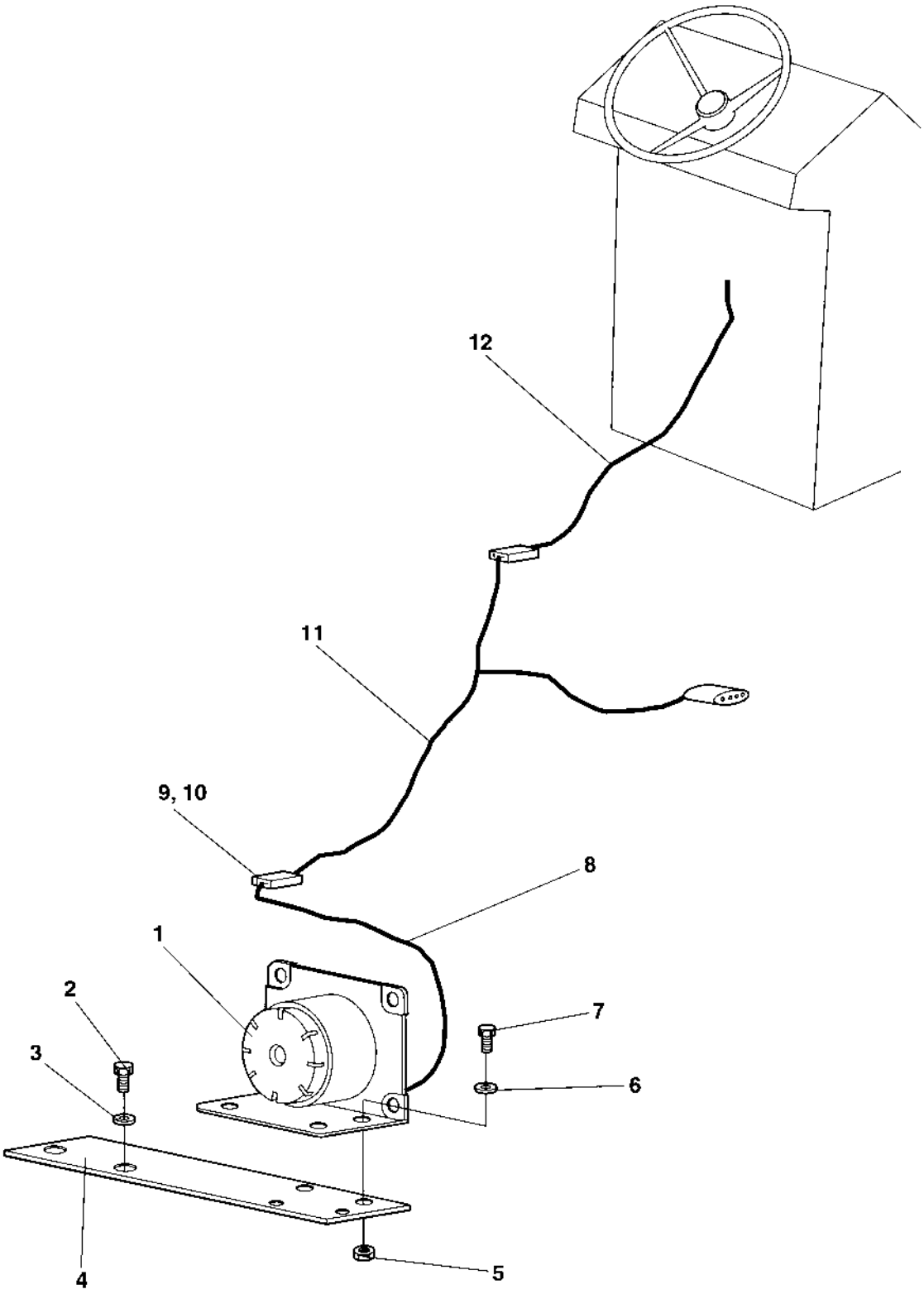

Back-up alarm Option

Item	Part No	Rem	Qty	Description		Code
1	4700900798		1	Buzzer		
2	4700500053		2	Screw	M8x20H 8.8	
3	4700904229		2	Washer	8,4x16x1,5	
4	4700380800		1	Bracket		
5	4700586001		2	Lock nut		
6	4700904281		2	Washer		
7	4700500006		2	Screw	M5x16	
8	4700244002	A	1	Plastic hose		
9	4700901766		1	Connector	2-POL	D
10	4700903897		2	Push-on terminal male		
11	4700380799		1	Cable harness		
12	4700380798		1	Cable harness		

A) L=150 mm

Back-up alarm Option

17984

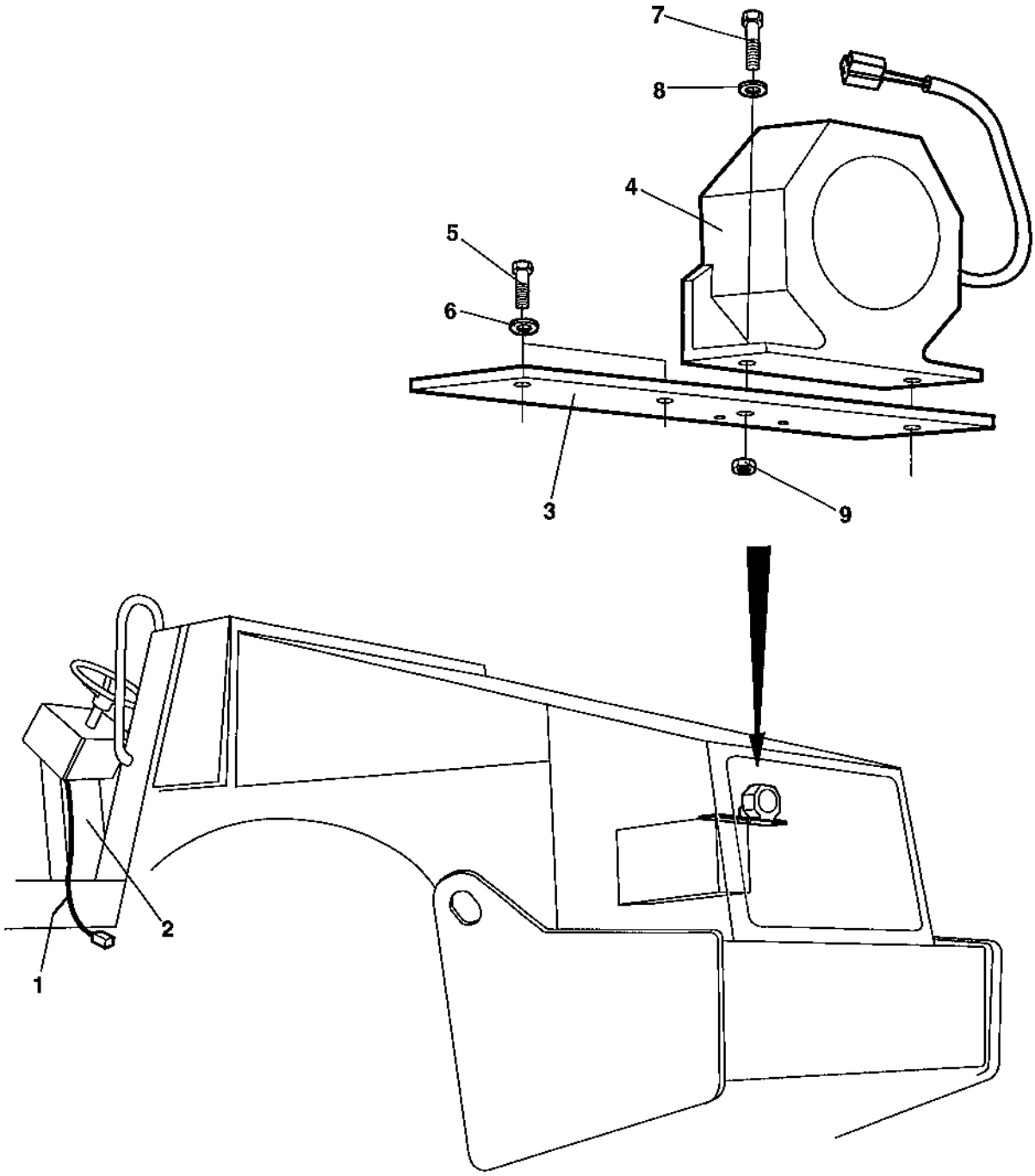

Back-up alarm Option

Item	Part No	Rem	Qty	Description		Code
1	4700380798	A	1	Cable harness		
2	4700901224	B	1	Fuse	3A	D
3	4700377071		1	Bracket		
4	4700904910		1	Back-up alarm		
5	4700500053		2	Screw	M8x20H 8.8	
6	4700904229		2	Washer	8,4x16x1,5	
7	4700500040		2	Screw	M6-1x20 8,8	
8	4700904228		2	Washer		
9	4700586002		2	Lock nut		

A) Is connected to the main wiring harness.
B) Located in the fusebox on the control panel.

Compaction meter Option

17358

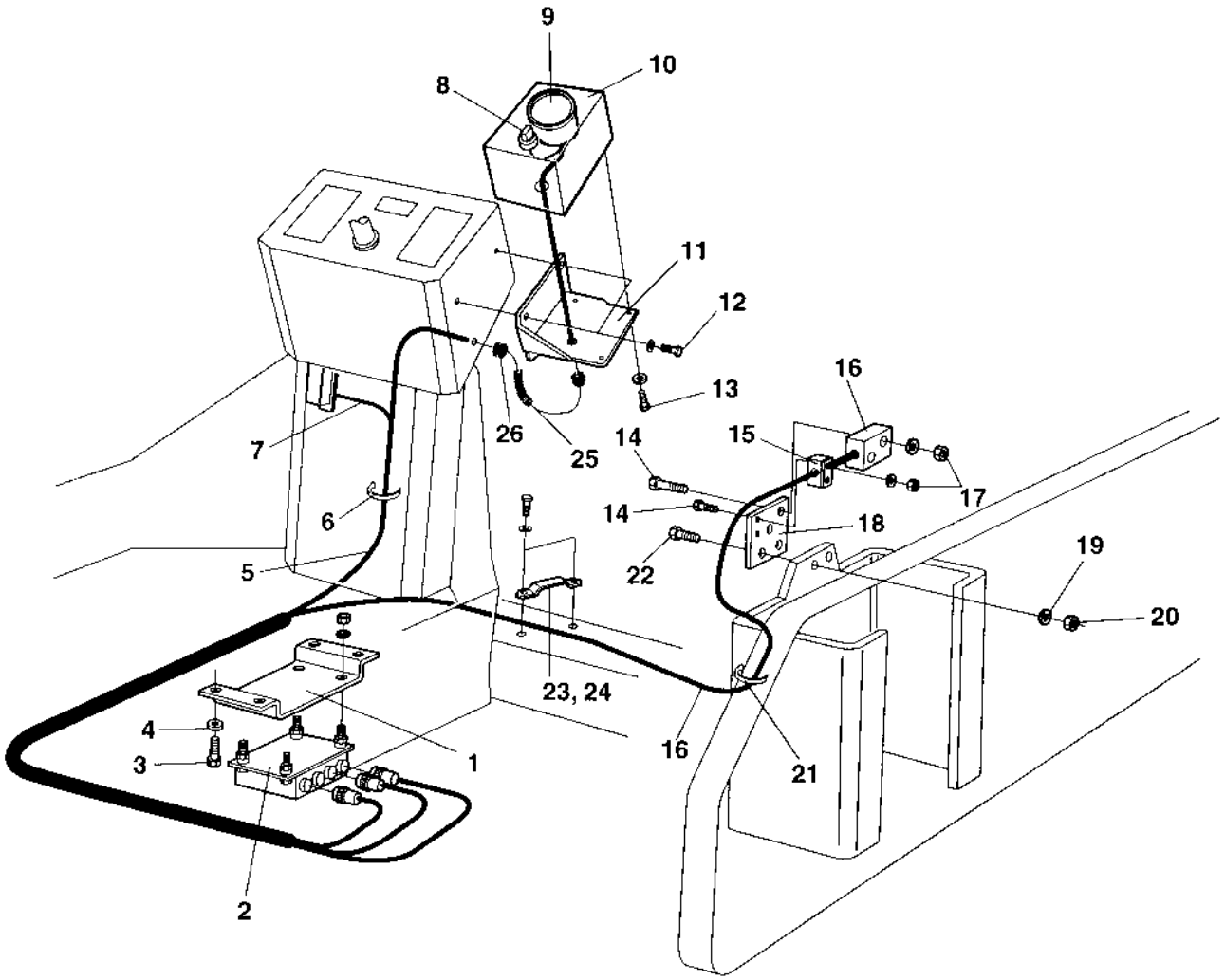

Compaction meter Option

Item	Part No	Rem	Qty	Description		Code
1	4700372836		1	Bracket		
2	4700388210		1	Processor comp.meter		
3	4700500053		4	Screw	M8x20H 8.8	
4	4700904229		4	Washer	8,4x16x1,5	
5	4700372784		1	Cable harness		
6	4700313102		N	Cable ties		
7	4700381351		1	Cable harness		
8	4700930151		1	Switch		D
9	4700383452		1	Compaction meter		
10	4700373096		1	Instrument box		
11	4700383326		1	Bracket		
12	4700904206		3	Screw		
13	4700541526		4	Screw		
14	4700500079		4	Screw	M6-1x50 8,8	
15	4700902496		1	Clamp		
16	4700348213		1	Sensor, cpl		
17	4700902285		7	Lock nut	M6	
18	4700373140		1	Bracket		
19	4700904231		2	Washer	13x24x2 300 HV	
20	4700902288		2	Nut	M12	
21	4700313041		N	Cable ties		
22	4700500194		2	Screw		
23	4700373016		1	Hose clamp		
24	4700349435		1	Rubber part		
25	4700901190	A	1	Conduit		
26	4700903192		2	Grommet		

A) L=230mm

Compaction meter Option

17358-1

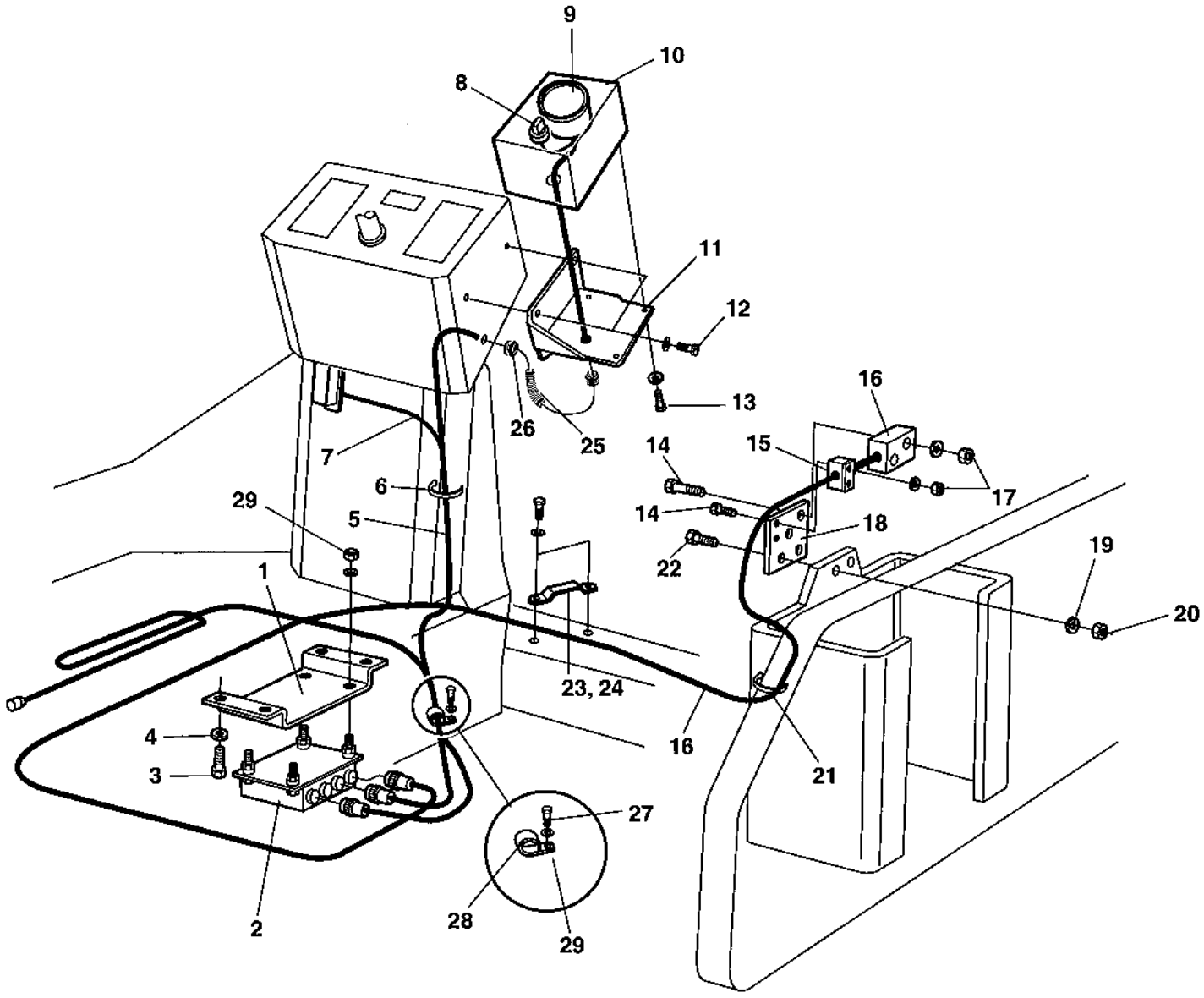

Compaction meter Option

Item	Part No	Rem	Qty	Description		Code
1	4700372836		1	Bracket		
2	4700388210		1	Processor comp.meter		
3	4700500053		4	Screw	M8x20H 8.8	
4	4700904229		4	Washer	8,4x16x1,5	
5	4700388211		1	Cable harness		
6	4700313102		N	Cable ties		
7	4700381351		1	Cable harness		
8	4700930151		1	Switch		D
9	4700383452		1	Compaction meter		
10	4700373096		1	Instrument box		
11	4700383326		1	Bracket		
12	4700904206		3	Screw		
13	4700541526		4	Screw		
14	4700500079		4	Screw	M6-1x50 8,8	
15	4700902496		1	Clamp		
16	4700348213		1	Sensor, cpl		
17	4700902285		7	Lock nut	M6	
18	4700373140		1	Bracket		
19	4700904231		2	Washer	13x24x2 300 HV	
20	4700902288		2	Nut	M12	
21	4700313041		N	Cable ties		
22	4700500194		2	Screw		
23	4700373016		1	Hose clamp		
24	4700349435		1	Rubber part		
25	4700901190	A	1	Conduit		
26	4700903192		2	Grommet		
27	4700500047		1	Screw		
28	4700921072		1	Clamp		
29	4700902286		5	Lock nut	M8	

A) L=230mm

Drivers platform

Item	Part No	Rem	Qty	Description	Code
10				Drivers platform (Page 278)	
15				Drivers platform (Page 280)	
16				Drivers platform (Page 282)	
20				Control panel Up to 65X23699 (Page 284)	
21				Control panel From 65X23700 (Page 286)	
30				Throttle controls Up to 65X21735 (Page 288)	
31				Throttle controls From 65X21736 Up to 65X23699 (Page 290)	
32				Throttle controls From 65X23700 (Page 292)	
40				Forward and reverse control Up to 65X23699 (Page 294)	
45				Forward and reverse control From 65X23700 (Page 296)	
50				Steering column Up to 65X22547 (Page 300)	
52				Steering column From 65X22548 (Page 302)	
100				Canopy (Page 304)	Option
110				Rops and fops (Page 306)	
120				Cab mounting Up to 65X22547 (Page 308)	
130				Cab Up to 65X22547 (Page 310)	380656
160				Cab (Page 324)	Exterior, rear mirror
180				Cab (Page 326)	Work light
190				Cab mounting From 65X22548 (Page 328)	
200				Cab From 65X22548 (Page 330)	378308

Drivers platform

16941-1

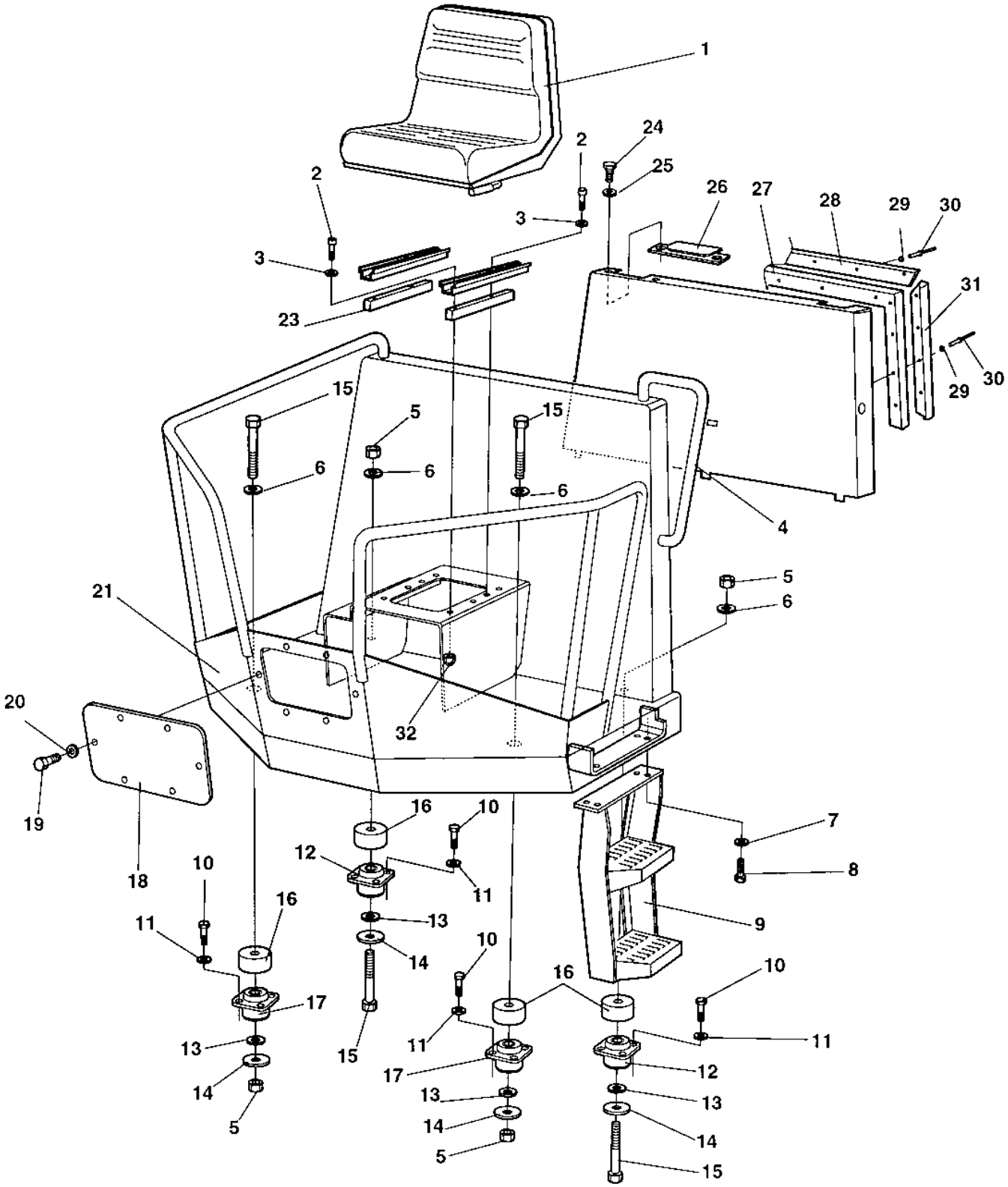

Drivers platform

Item	Part No	Rem	Qty	Description		Code
1	4700380208		1	Drivers seat, cpl		
	4700348331		1	Seat cover		D
	4700370234	A	1	Drivers seat		
	4700936283		1	.Seat switch		D
	4700380889		1	.Cable harness		
	4700909535	B,C	1	.Sliding rail	Left	D
	4700909536	D	1	.Sliding rail	Right	D
2	4700508006		4	Screw		
3	4700904229		4	Washer	8,4x16x1,5	
4	4700380123		1	Grab handle		
5	4700901145		4	Lock nut	M20-10	
6	4700904233		4	Washer	21x36x3	
7	4700904230		8	Washer		
8	4700500029		4	Screw		
9	4700376252		1	Step		
10	4700500111		16	Screw	M12x55 8,8	
11	4700904231		16	Washer	13x24x2 300 HV	
12	4700372757		2	Shock absorber		D
13	4700903290		4	Washer	21x36x6	
14	4700347512		4	Washer		
15	4700500226		4	Screw	M20-2.5x180 8,8	
16	4700374471		4	Spacer		
17	4700373400		2	Shock absorber		D
18	4700380129		1	Cover plate Up to 65X20595		
19	4700500019		6	Screw Up to 65X20595	M8x16H 8.8 A2K	
20	4700904229		6	Washer Up to 65X20595	8,4x16x1,5	
21	4700380113		1	Platform		
23	4700382397		2	Spacer		
24	4700500053		4	Screw	M8x20H 8.8	
25	4700904229		8	Washer	8,4x16x1,5	
26	4700380727		2	Cover		
27	4700372494	E	1	Rubber strip		
28	4700372785		1	List		
29	4700927974		13	Washer		
30	4700904433		13	Blind rivet		
31	4700382582		2	List		
32	4700902286		2	Lock nut	M8	

A) Option
B) With handle
C) Left
D) Right
E) L=2,4 M

Drivers platform

18486

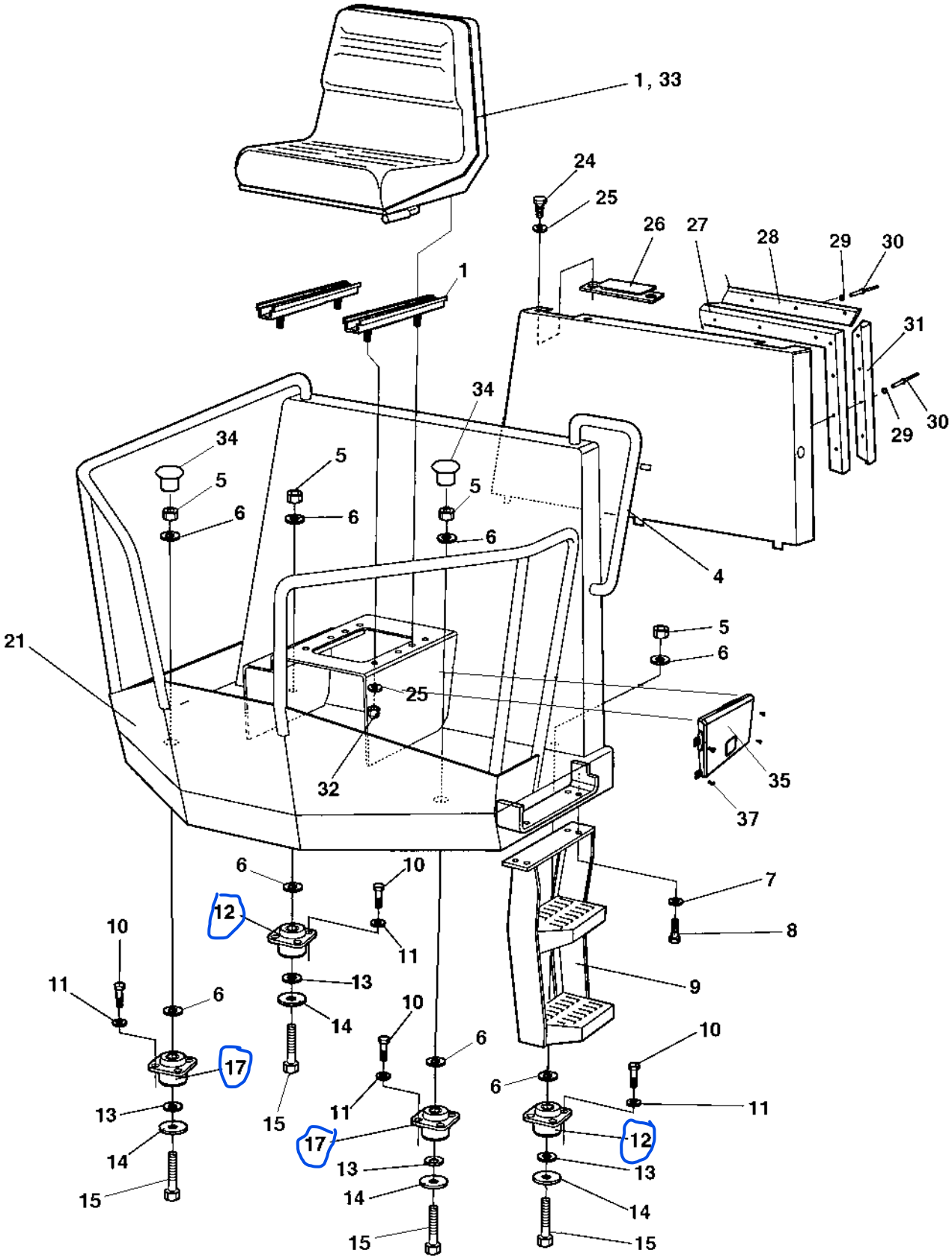

Drivers platform

Item	Part No	Rem	Qty	Description		Code
1	4700377556		1	Seat		
	4700377518	A	1	Drivers seat, cpl		
	4700348331		1	Seat cover		D
4	4700380123	F	1	Grab handle		
5	4700901145		4	Lock nut	M20-10	
6	4700904233		4	Washer	21x36x3	
7	4700904230		8	Washer		
8	4700500029		4	Screw		
9	4700376252		1	Step		
10	4700500195		16	Screw		
11	4700904231		16	Washer	13x24x2 300 HV	
12	4700372757		2	Shock absorber COXIM TRAZEIRO		D
13	4700903290		4	Washer	21x36x6	
14	4700347512		4	Washer		
15	4700500210		4	Screw	M20-2,5x100 8.8	
17	4700373400		2	Shock absorber COXIM DIANTEIRO		D
21	4700392394		1	Platform		
24	4700500053		4	Screw	M8x20H 8.8	
25	4700904229		8	Washer	8,4x16x1,5	
26	4700380727		2	Cover		
27	4700372494	E	1	Rubber strip		
28	4700372785		1	List		
29	4700927974		13	Washer		
30	4700904433		13	Blind rivet		
31	4700382582		2	List		
32	4700586003		4	Lock nut	M8	
33	4700379636		1	Seat switch		
34	4700902203		2	Plug		
35	4700383705		1	Instruction book holder		
	4700357643	G	1	Wire		
37	4700791226		4	Screw		

A) Option
E) L=2,4 M
F) Welded with platform 4700380113.
G) Not illustrated

Drivers platform

18726

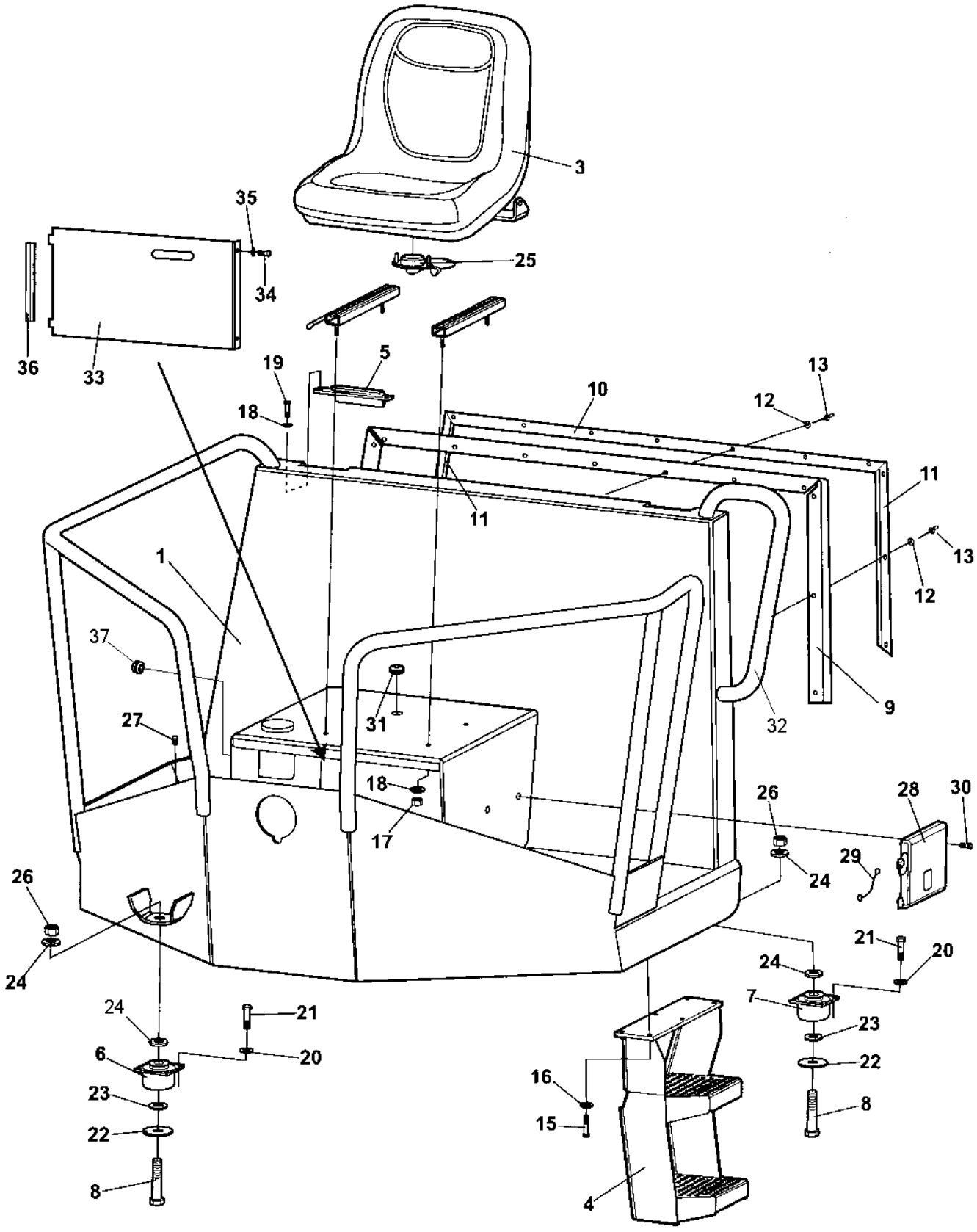

Drivers platform

Item	Part No	Rem	Qty	Description		Code
1	4700392394		1	Platform		
3	4700377556		1	Seat		
4	4700376252		1	Step		
5	4700380727		2	Cover		
6	4700372757		2	Shock absorber		D
7	4700373400		2	Shock absorber		D
8	4700500210		4	Screw	M20-2,5x100 8.8	
9	4700372494	A	1XL	Rubber strip		
10	4700372785		1	List		
11	4700382582		2	List		
12	4700927974		13	Washer		
13	4700904433		13	Blind rivet		
15	4700500029		4	Screw		
16	4700904230		4	Washer		
17	4700586003		4	Lock nut	M8	
18	4700904229		8	Washer	8,4x16x1,5	
19	4700500053		4	Screw	M8x20H 8.8	
20	4700904231		16	Washer	13x24x2 300 HV	
21	4700500195		16	Screw		
22	4700347512		4	Washer		
23	4700903290		4	Washer	21x36x6	
24	4700904233		8	Washer	21x36x3	
25	4700379636	C	1	Seat switch		
	4812155075	D	1	Seat switch		
26	4700901145		4	Lock nut	M20-10	
27	4700902203		2	Plug		
28	4700383705		1	Instruction book holder		
29	4700357643		1	Wire		
30	4700791226		4	Screw		
31	4700903192		1	Grommet		
32	4700380123		1	Grab handle		
33	4700392875		1	Cover		
34	4700500013		2	Screw	M6-1x16 8,8	
35	4700904228		2	Washer		
36	4700902166	B	1XL	Edge trim		
37	4700903727		1	Plug		

A) L=2,400M
B) L=0,210M
C) With bayonet fitting.
D) With screws.

Control panel

17263

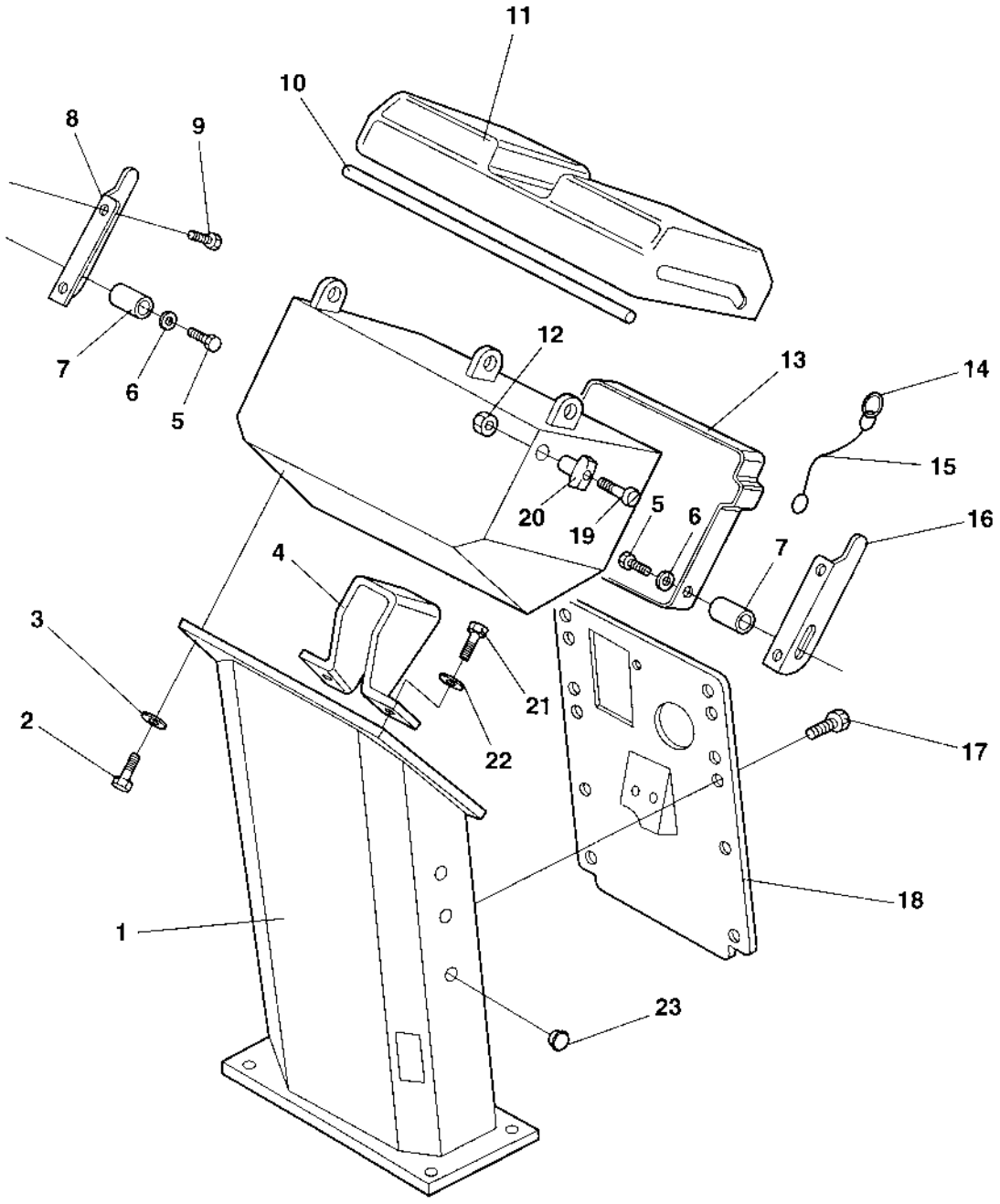

Control panel

Item	Part No	Rem	Qty	Description	Code
1	4700358142		1	Control panel	
2	4700500040		4	Screw	M6-1x20 8,8
3	4700904228		4	Washer	
4	4700357316		1	Bracket	
5	4700902164		2	Screw	
6	4700929602		4	Washer	
7	4700902163		2	Parallel pin	
8	4700357427		1	Cover holder	
9	4700901767		4	Screw	ST3,5x9,5 Black
10	4700902379	A	1	Edge trim	
11	4700357424		1	Cover	
	4700358881		1	Pad lock	
12	4700586002		2	Lock nut	
13	4700357425		1	Instruction book holder	
14	4700358254		1	Key-ring	
15	4700357643		1	Wire	
16	4700357426		1	Cover holder	
17	4700541702		8	Screw	M6x12
18	4700358143		1	Cover	
19	4700924875		2	Screw	
20	4700357855		2	Bushing	
21	4700500021		4	Screw	M8-1,25x25 8.8
22	4700904640		4	Washer	8,4x22x3
23	4700902919		4	Plug	

A) L=350 mm

Control panel

18487

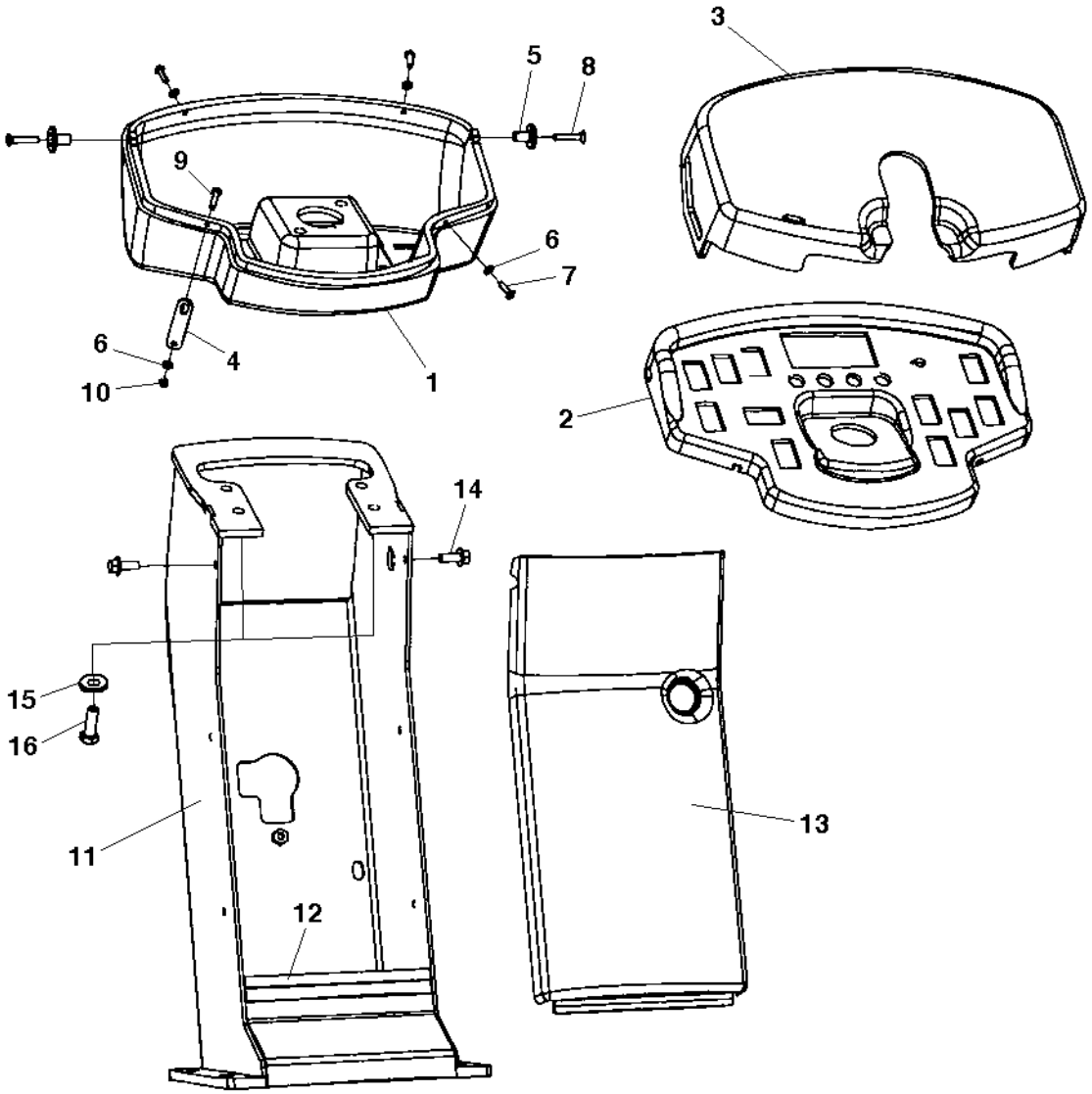

Control panel

Item	Part No	Rem	Qty	Description	Code
1	4700387720		1	Control panel holder	
2	4700391784		1	Control panel	
3	4700387227		1	Control panel cover	
4	4700387545		1	Latch	
5	4700357855		2	Bushing	
6	4700904281		4	Washer	
7	4700904653		3	Screw M5x16 A2-70	
8	4700513017		2	Screw M6x30H 10,9	
9	4700500007		1	Screw M5-0,8x22H 8,8	
10	4700791476		1	Nut M5 -8	
11	4700378335		1	Control panel column	
12	4700902166	A	1XL	Edge trim	
13	4700387226		1	Column cover	
14	4700500505		2	Screw M8x20 8.8	
15	4700904230		4	Washer	
16	4700500029		4	Screw	

A) L=0,190 m

Throttle controls

16943

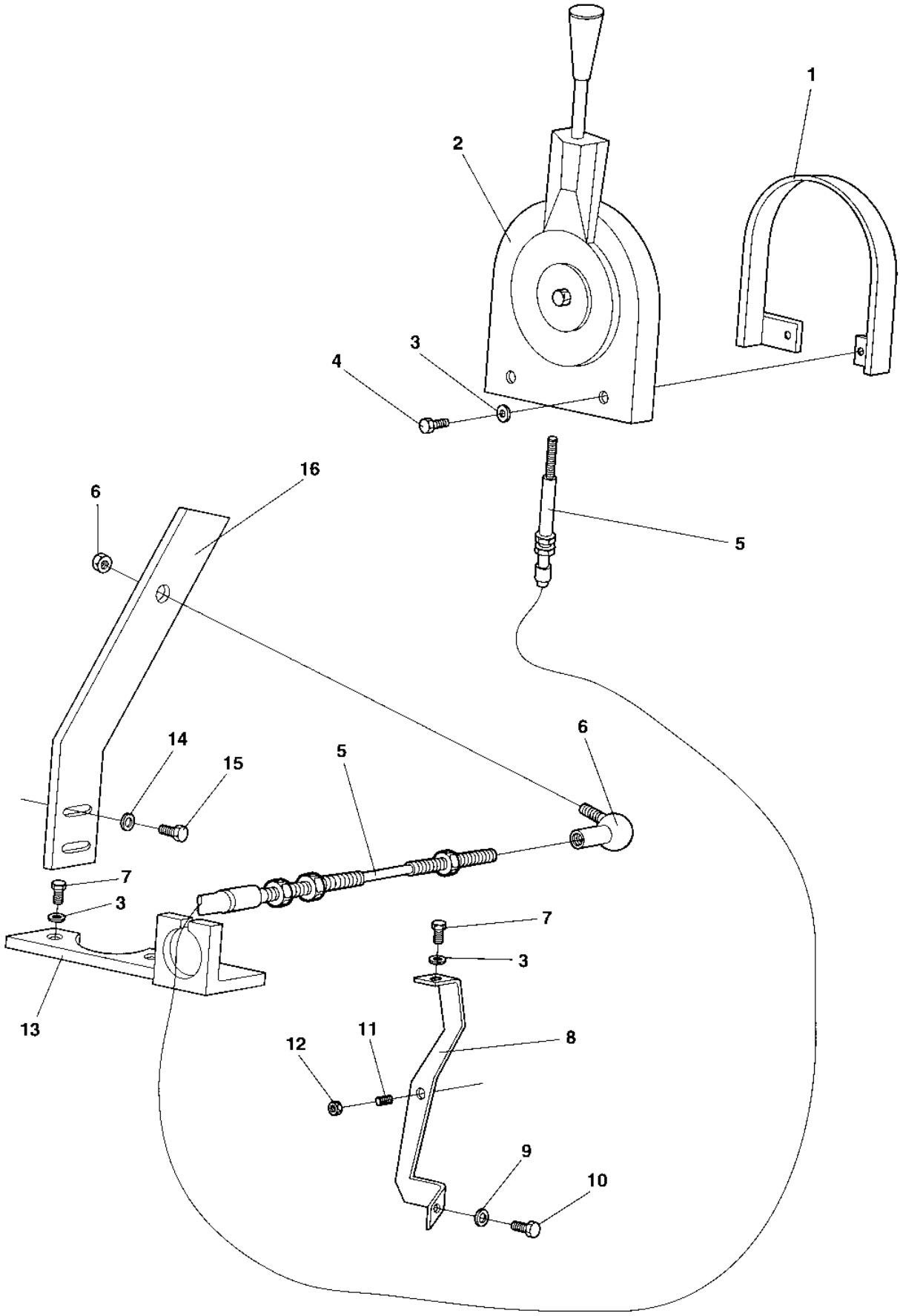

Throttle controls

Item	Part No	Rem	Qty	Description		Code
1	4700902192		1	Control		D
2	4700902192		1	Control		D
3	4700904228		4	Washer		
4	4700500015		2	Screw	M6-1x30 8,8	
5	4700372616		1	Cable		
6	4700416034		1	Ball joint		D
7	4700500040		3	Screw	M6-1x20 8,8	
8	4700375507		1	Bracket		
9	4700904229		1	Washer	8,4x16x1,5	
10	4700500021		1	Screw	M8-1,25x25 8.8	
11	4700923987		1	Stop screw	M6x25	
12	4700573003		1	Nut	M6	
13	4700381268		1	Control bracket		
14	4700603010		2	Washer	6,4X12X3	
15	4700500013		2	Screw	M6-1x16 8,8	
16	4700374065		1	Control lever		

Throttle controls

17980

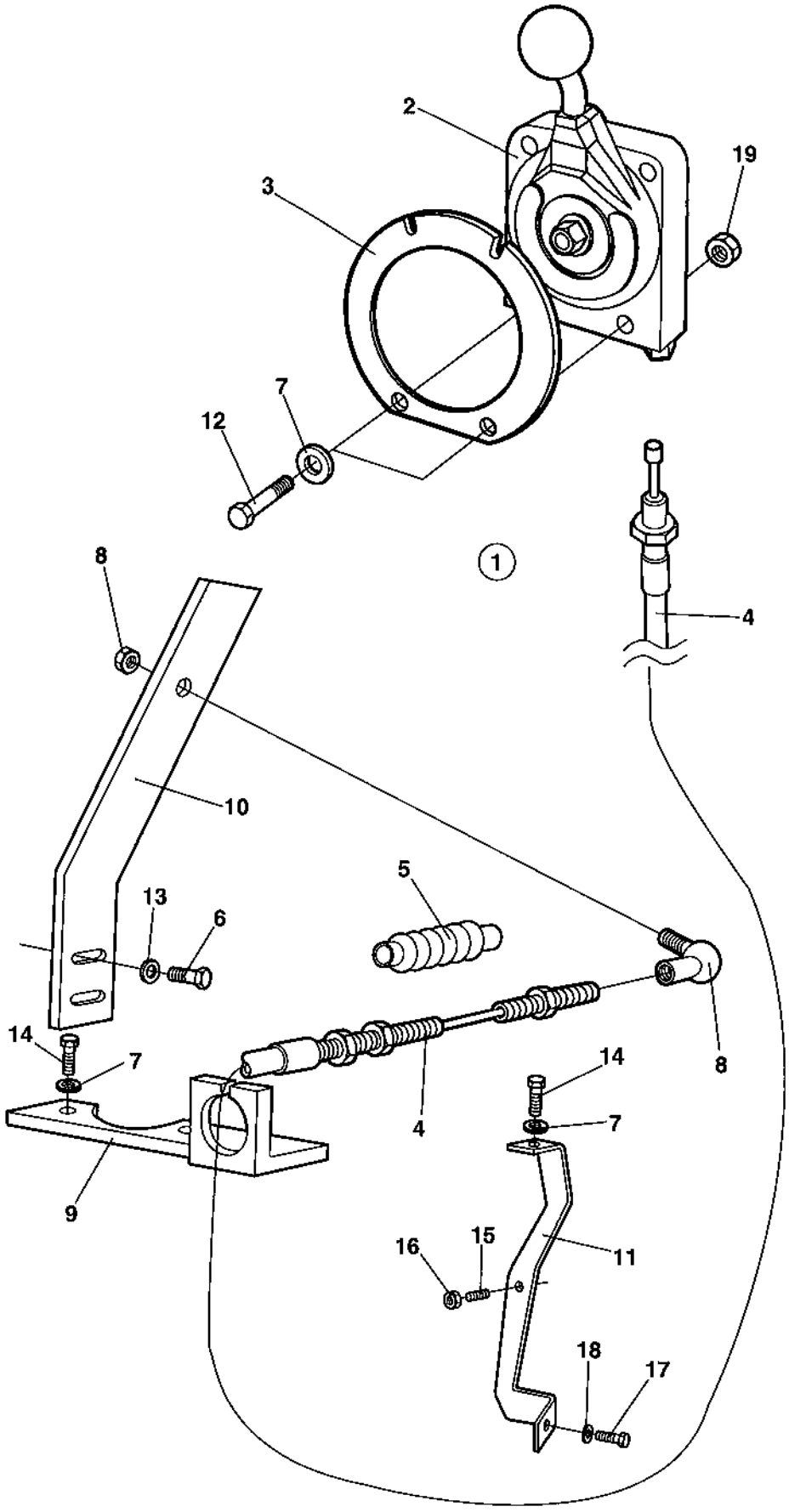

Throttle controls

Item	Part No	Rem	Qty	Description		Code
1	4700389171		1	Throttle control, cpl		
2	4700389175		1	.Control		
3	4700389177		1	.Snap plate		
4	4700389178	A	1	.Throttle cable		D
5	4700382349		1	.Bellows		
6	4700500013		2	Screw	M6-1x16 8,8	
7	4700904228		5	Washer		
8	4700416034		1	Ball joint		D
9	4700381268		1	Control bracket		
10	4700374065		1	Control lever		
11	4700375507		1	Bracket		
12	4700500061		2	Screw	M6-1X35 8,8	
13	4700603010		2	Washer	6,4X12X3	
14	4700500040		3	Screw	M6-1x20 8,8	
15	4700923987		1	Stop screw	M6x25	
16	4700573003		1	Nut	M6	
17	4700500021		1	Screw	M8-1,25x25 8.8	
18	4700904229		1	Washer	8,4x16x1,5	
19	4700902285		1	Lock nut	M6	

A) L=3530MM

Throttle controls

17980-1

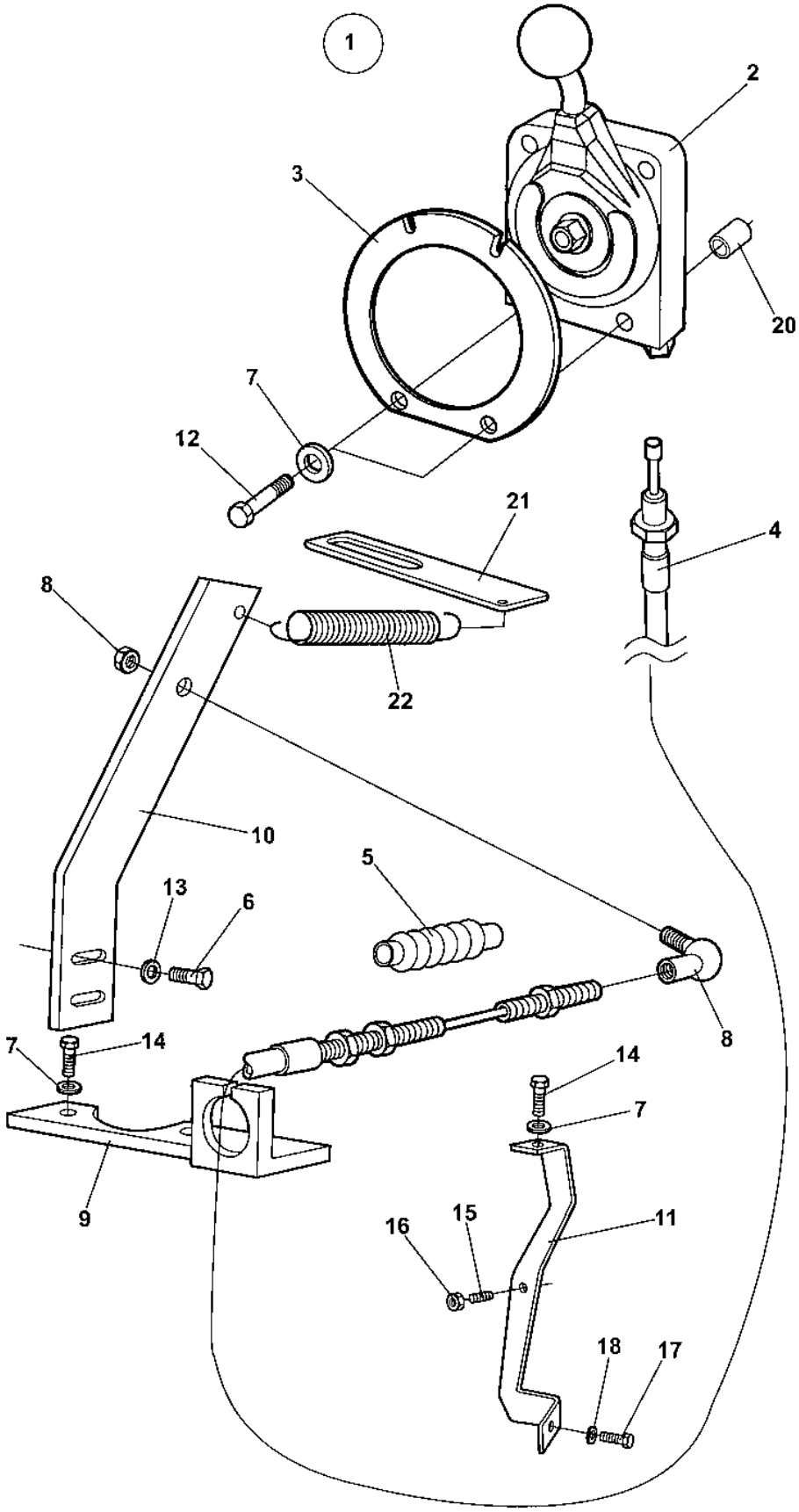

Throttle controls

Item	Part No	Rem	Qty	Description		Code
1	4700394603		1	Throttle control, cpl		
2	4700389175		1	.Control		
3	4700945822		1	.Snap plate		
4	4700389184		1	.Throttle cable		D
5	4700382349		1	.Bellows		
6	4700500013		2	Screw	M6-1x16 8,8	
7	4700904228		5	Washer		
8	4700416034		1	Ball joint		D
9	4700381268		1	Control bracket		
10	4700374065		1	Control lever		
11	4700375507		1	Bracket		
12	4700500079		2	Screw	M6-1x50 8,8	
13	4700603010		2	Washer	6,4X12X3	
14	4700500040		3	Screw	M6-1x20 8,8	
15	4700923987		1	Stop screw	M6x25	
16	4700573003		1	Nut	M6	
17	4700500021		1	Screw	M8-1,25x25 8.8	
18	4700904229		1	Washer	8,4x16x1,5	
20	4700371728		2	Spacer sleeve		
21	4700393388		1	Spring holder		
22	4700357500		1	Spring		

Forward and reverse control

16947

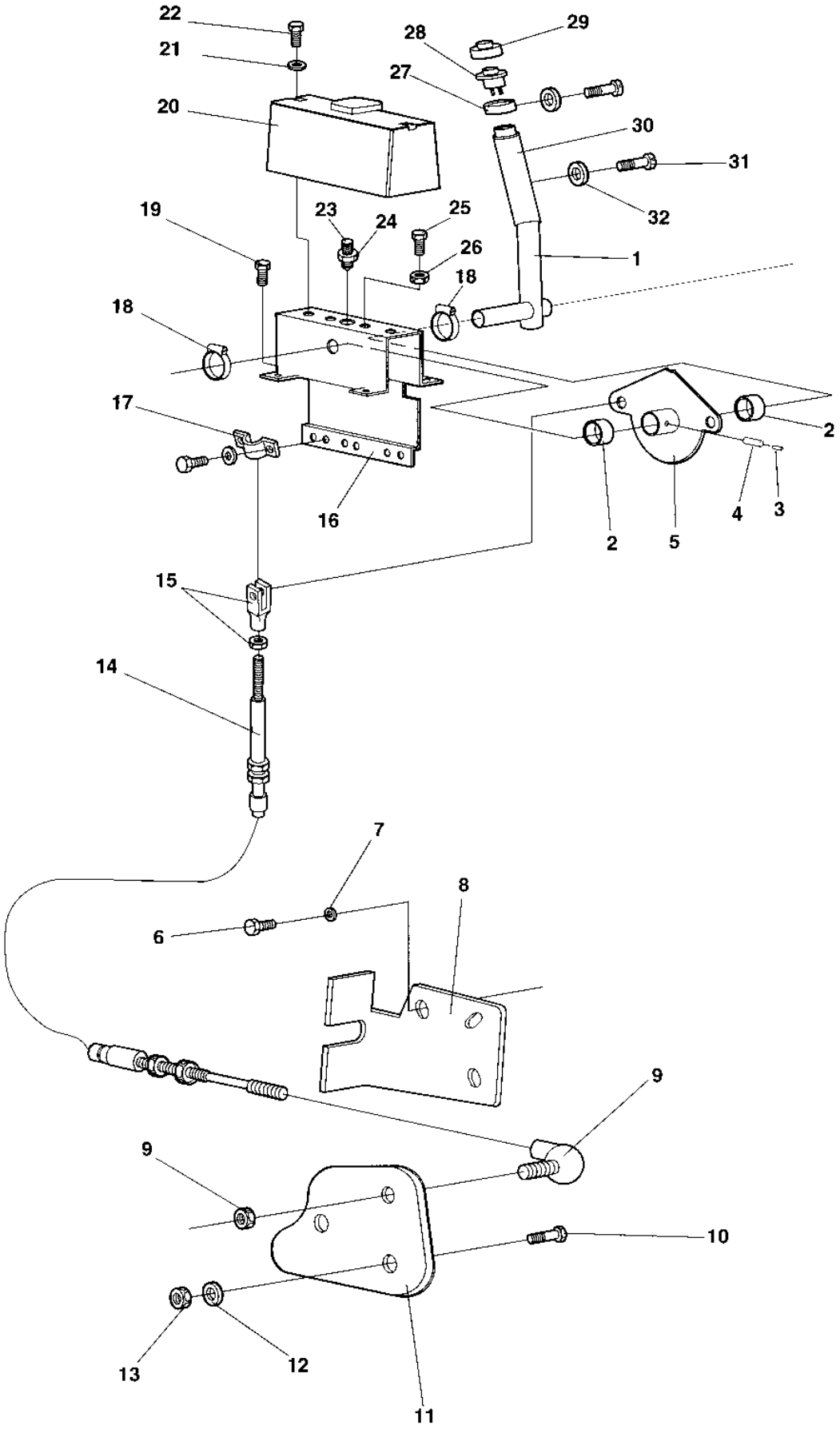

Forward and reverse control

Item	Part No	Rem	Qty	Description		Code
1	4700357501		1	Control lever		
2	4700902187		2	Bearing		
3	4700903395		1	Spirol pin		
4	4700629016		1	Expanding		
5	4700902895		1	Cam disc		
6	4700903799		3	Screw Up to 65X20260	M6 x 70	
	4700904812		3	Screw From 65X20261	M6x65	
7	4700904228		3	Washer		
8	4700380367		1	Control bracket Up to 65X20260		
	4700381777		1	Control bracket From 65X20261		
9	4700416034		1	Ball joint		D
10	4700500021		2	Screw	M8-1,25x25 8.8	
11	4700380366		1	Control bracket		
12	4700904229		2	Washer	8,4x16x1,5	
13	4700586003		2	Lock nut	M8	
14	4700902191		1	Control cable		D
15	4700416004		1	Fork		
16	4700902896		1	Framing		
17	4700902189		1	Bracket		
18	4700313035		2	Hose clamp		
19	4700541703		4	Screw	M6x16	
20	4700357494		1	Cover		
21	4700904228		2	Washer		
22	4700500013		2	Screw	M6-1x16 8,8	
23	4700922325		1	Spring ball plunger		D
24	4700573004		1	Nut		
25	4700533038		2	Screw		
26	4700570004		2	Nut	M6X1,00 -8 A2K	
27	4700285911		1	Bushing		D
28	4700928497		1	Push button		D
29	4700348481		1	Cover		D
30	4700285909		1	Grab handle		D
31	4700533001		3	Screw		
32	4700904697		3	Washer	3,2x6x0,5	

Forward and reverse control

18489

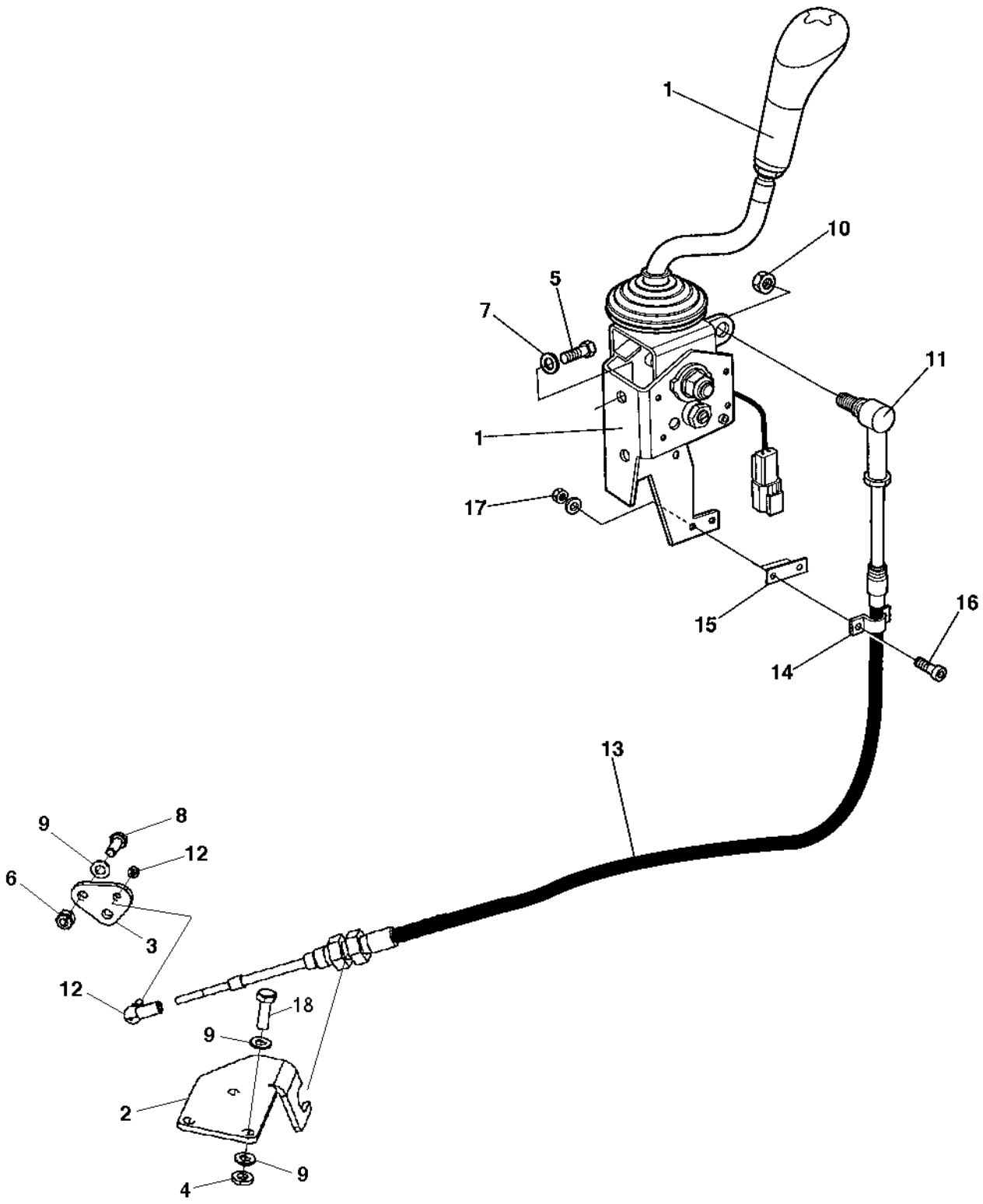

Forward and reverse control

Item	Part No	Rem	Qty	Description		Code
1			1	Forward and reverse control handle (Page 298)		
2	4700392899		1	Control bracket		
3	4700392900		1	Control lever		
4	4700904556		3	Washer	8,4x16x3,0	
5	4700508092		2	Screw		
6	4700586003		2	Lock nut	M8	
7	4700904556		2	Washer	8,4x16x3,0	
8	4700500021		2	Screw	M8-1,25x25 8.8	
9	4700904229		8	Washer	8,4x16x1,5	
10	4700586003		1	Lock nut	M8	
11	4700377019		1	Ball joint		
	4700950382		1	Ball stud	M8	
12	4700416034		1	Ball joint		D
13	4700377024	A	1	Cable	Forward/Reverse	
14	4700377020		1	Clamp		
15	4700377021		1	Spacer		
16	4700926537		2	Screw	M5-0,8x16H 8,8	
17	4700586001		2	Lock nut		
18	4700947680		3	Screw	M8-1,25x25 10.9	

A) L=1900MM

Forward and reverse control handle

18071-2

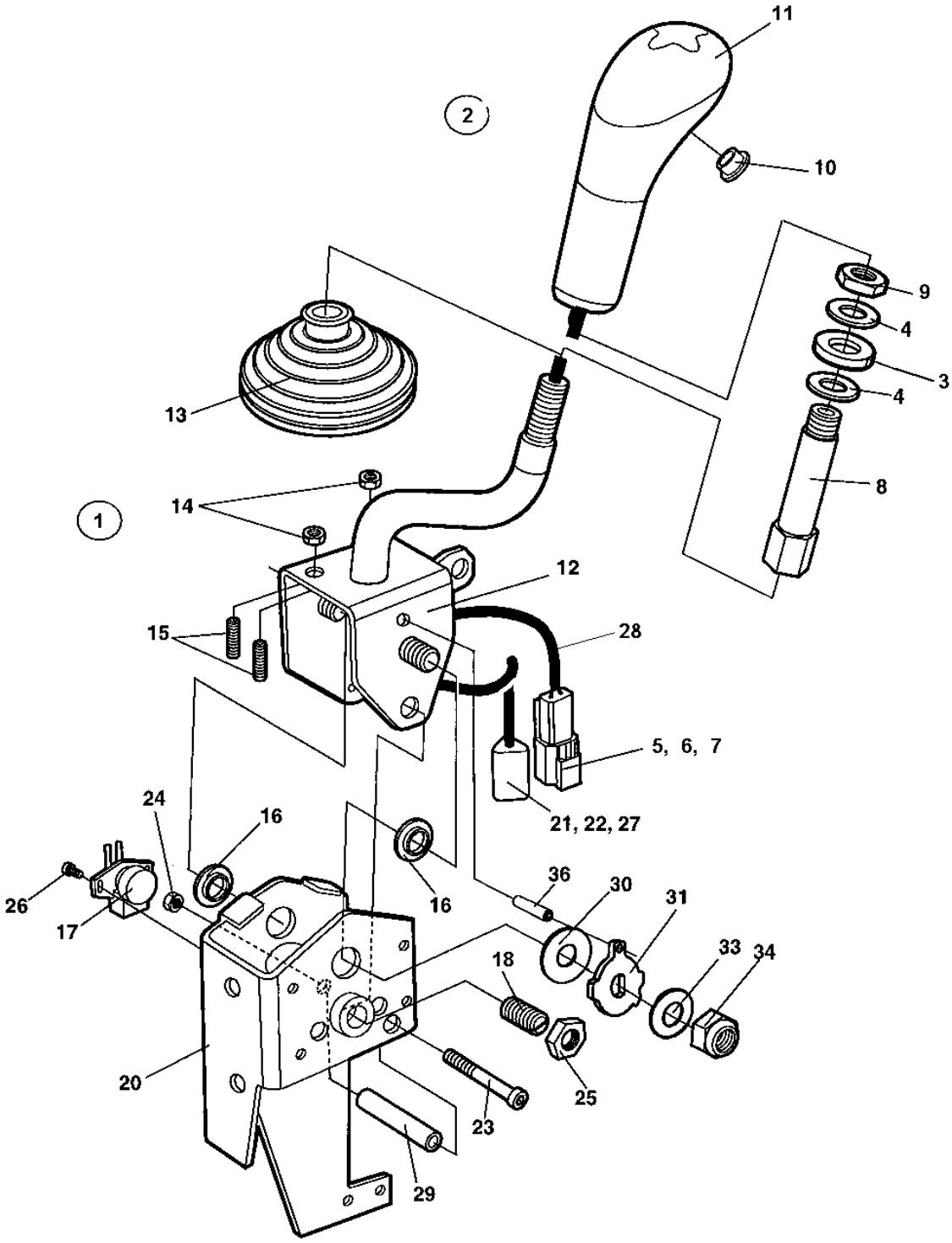

Forward and reverse control handle

Item	Part No	Rem	Qty	Description	Code
1	4700945407		1	Lever, cpl	
2	4700940374		1	.Handle kit, cpl	
			1	..Handle	
	4700945729		1	...Push-button switch	
			1	...Cable	
			1	..Lockfluid	
			1	..Service information	
3			1	..Washer	
4			2	..Washer	
5			1	..Connector, receptable	
6			1	..Lock wedge	
7			2	..Pin	
8			1	..Rod	
9			1	..Nut	
10	4700377018		1	..Protection plug	
11	4700378759		1	..Handle top	
12	4700391379		1	.Lever	
13	4700377009		1	.Bellows	
14	4700570004		2	.Nut	M6X1,00 -8 A2K
15	4700377015		2	.Set screw	
16	4700391381		1	Bushing	
17	4700391382		1	Potentiometer with cable	
18	4700377016		1	Spring loaded pin	
20	4700377010		1	Bracket	
21	4700903945		1	Connector, plug	
22	4700903946		1	Lock wedge	
23	4700508068		1	Screw	
24	4700904563		1	Lock nut	M6
25	4700927233		1	Nut	
26	4700391383		1	Screw	
27	4700903947		3	Pin	
28		B	1	Cable	
29	4700377011		1	Spacer	
30	4700377012		1	Friction washer	
31	4700391380		1	Cam washer	
33	4700377014		1	Spring washer	
34	4700586019		1	Lock nut	
36	4700391386		1	Spirol pin	

B) Included in potentiometer Pos 17

Steering column

16953-2

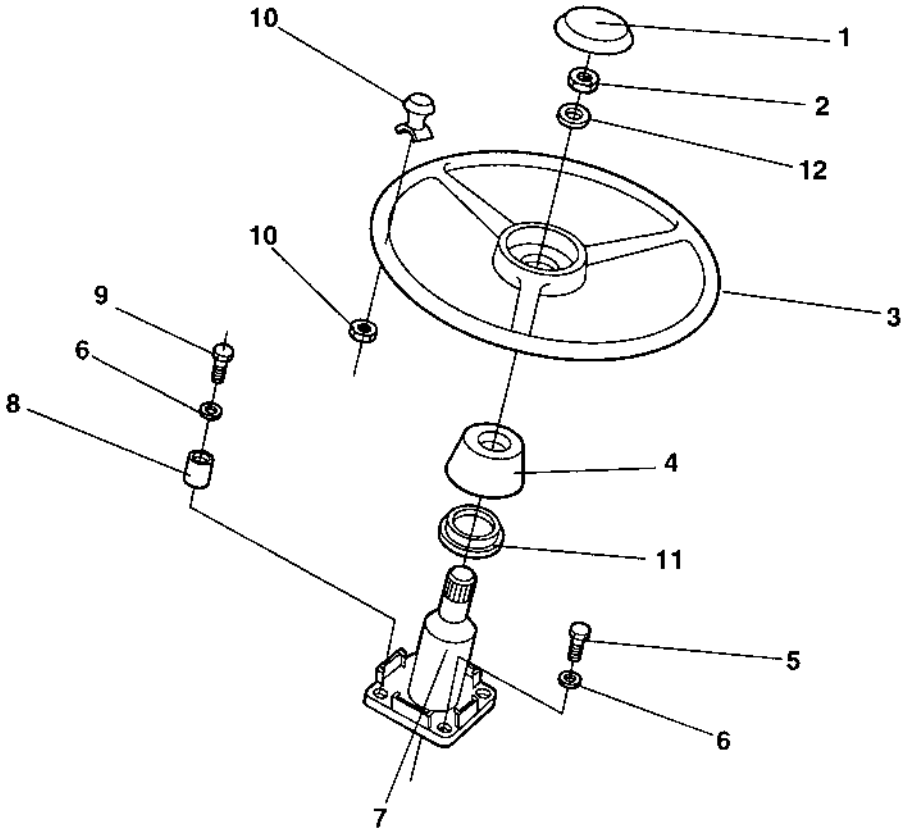

Steering column

Item	Part No	Rem	Qty	Description		Code
1	4700902186		1	Cover plate		
2			1	Nut		
3	4700902183		1	Steering wheel		
4	4700902185		1	Insert adapter		
5	4700500048		2	Screw	M10-1,5x20 8,8	
6	4700904230		4	Washer		
7	4700902123		1	Steering column		
8	4700355869		2	Spacer sleeve		
9	4700500030		2	Screw		
10	4700902184		1	Turning knob		D
11	4700928830		1	Rubber washer		
12	4700904793		1	Washer	19x34x3	

Steering column

18258

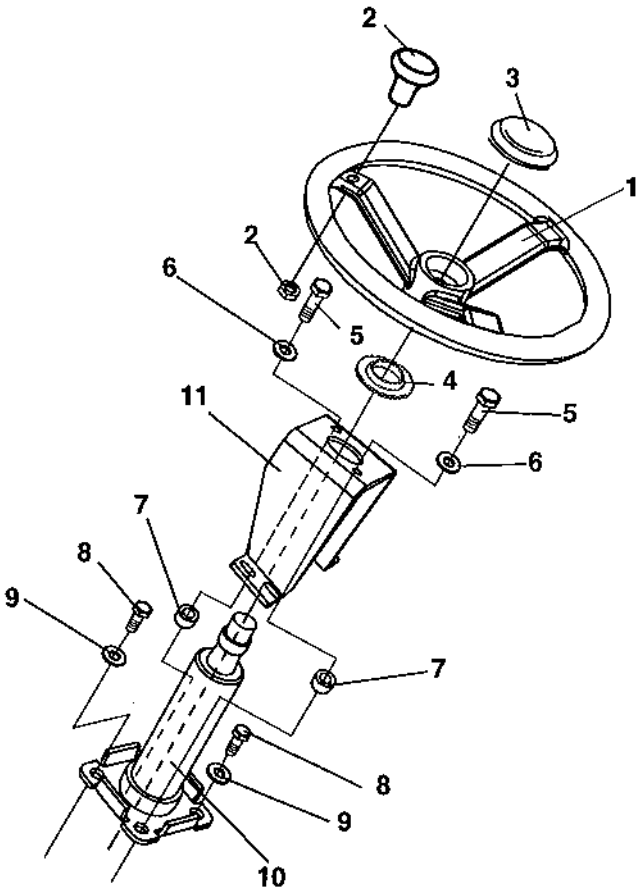

Steering column

Item	Part No	Rem	Qty	Description		Code
1	4700372964		1	Steering wheel, cpl		
2	4700935614		1	.Turning knob		D
3	4700935613		1	.Cover		
4	4700928830		1	Rubber washer		
5	4700500031		2	Screw		
6	4700904230		2	Washer		
7	4700355869		2	Spacer sleeve		
8	4700500048		2	Screw	M10-1,5x20 8,8	
9	4700904230		2	Washer		
10	4700902123		1	Steering column		
11		A	1	Bracket		

A) Included in control panel

Canopy Option

17483

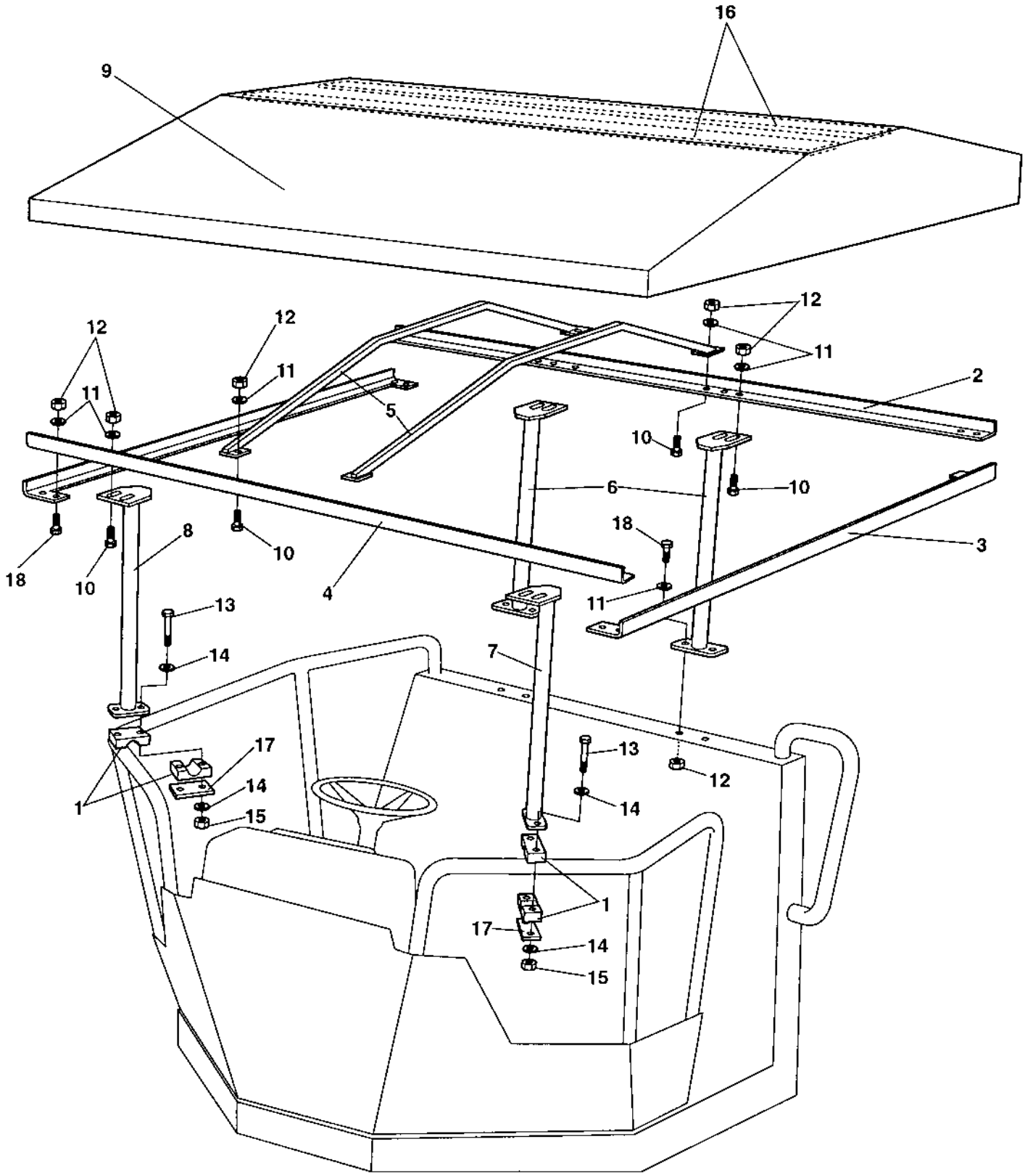

Canopy Option

Item	Part No	Rem	Qty	Description		Code
1	4700904340		2	Pipe clamp		
2	4700373746		1	Canopy profile		
3	4700373747		2	Canopy profile		
4	4700373748		1	Canopy profile		
5	4700373749		4	Canopy rib		
6	4700373750		2	Canopy anchor		
7	4700380963		1	Canopy anchor		
8	4700380964		1	Canopy anchor		
9	4700373906		1	Roof		
10	4700500021		16	Screw	M8-1,25x25 8.8	
11	4700904229		44	Washer	8,4x16x1,5	
12	4700586003		22	Lock nut	M8	
13	4700500153		4	Screw		
14	4700904228		8	Washer		
15	4700586002		4	Lock nut		
16	4700373907		2	Lath		
17	4700924791		2	Cover plate		
18	4700500022		8	Screw	M8x30H 8.8 A2K	

Rops and fops

17526

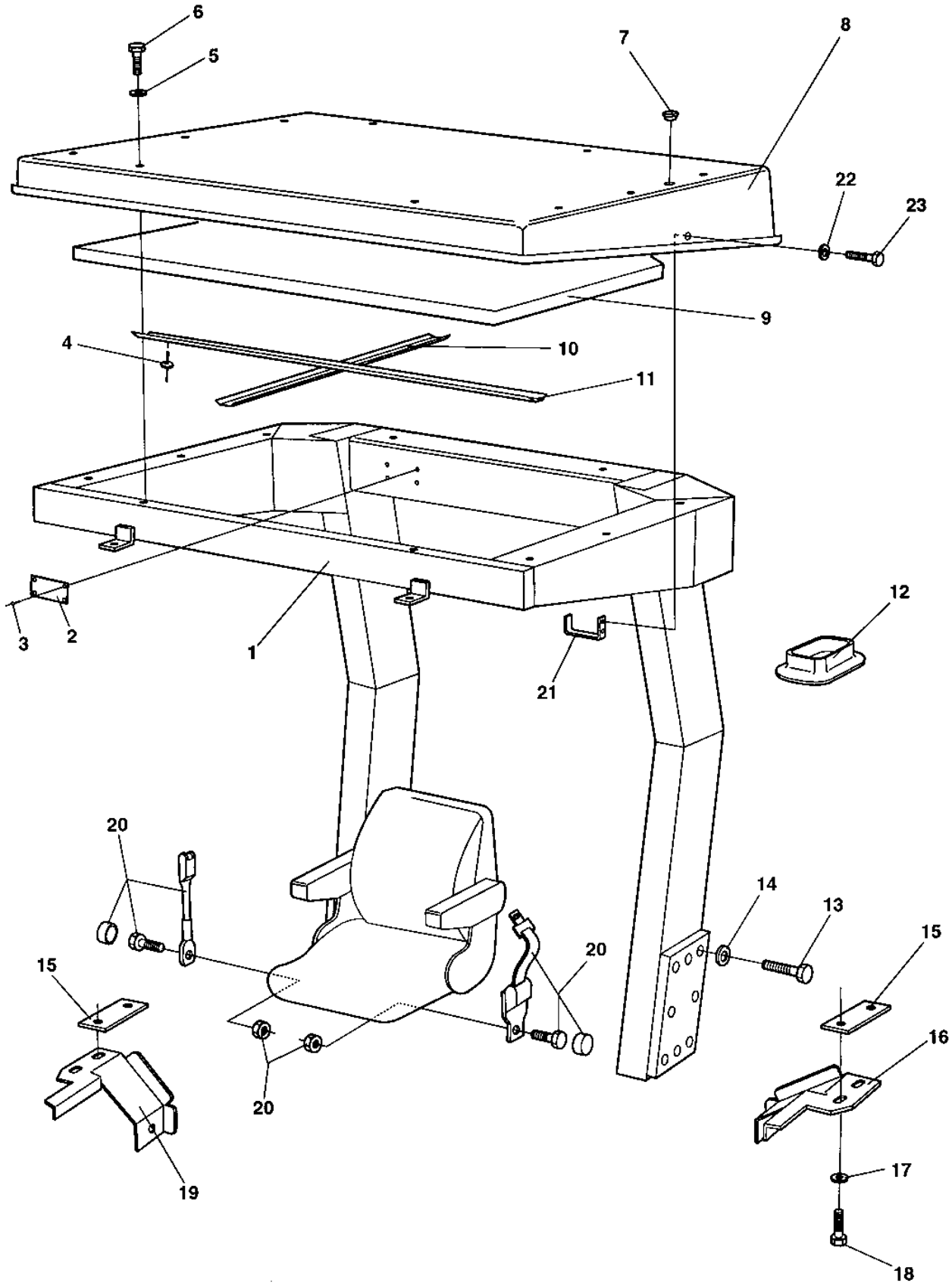

Rops and fops

Item	Part No	Rem	Qty	Description	Code
1	4700372743		1	Rops	
2	4700370803		1	.Sign, rops	
3	4700624016		4	.Blind rivet	
4	4700904619		12	Blind rivet	
5	4700500230		10	Screw	M8-1.25x35
6	4700603009		10	Washer	
7	4700904180		4	Plug	
8	4700372745		1	Fops roof	
	4700370792		1	.Sign, fops	
	4700624016		4	.Blind rivet	
9	4700372678		1	Absorbent	
10	4700376489		1	Absorbent holder	
11	4700376488		1	Absorbent holder	
12	4700372489		2	Rubber seal	
13	4700904562		12	Screw	
14	4700904234		12	Washer	25x45x4
15	4700381330		2	Holder	
16	4700381353		1	Holder plate	
17	4700904640		8	Washer	8,4x22x3
18	4700500022		8	Screw	M8x30H 8.8 A2K
19	4700381352		1	Holder plate	
20	4700370766		1	Seat belt	
	4700383200	A	1	Seat belt	3"
21	4700383225		2	Hook From 65X20592	
22	4700904734		4	Washer From 65X20592	8,4x26x4
23	4700500100		4	Screw From 65X20592	

A) Option 3"

Cab mounting

16966-1

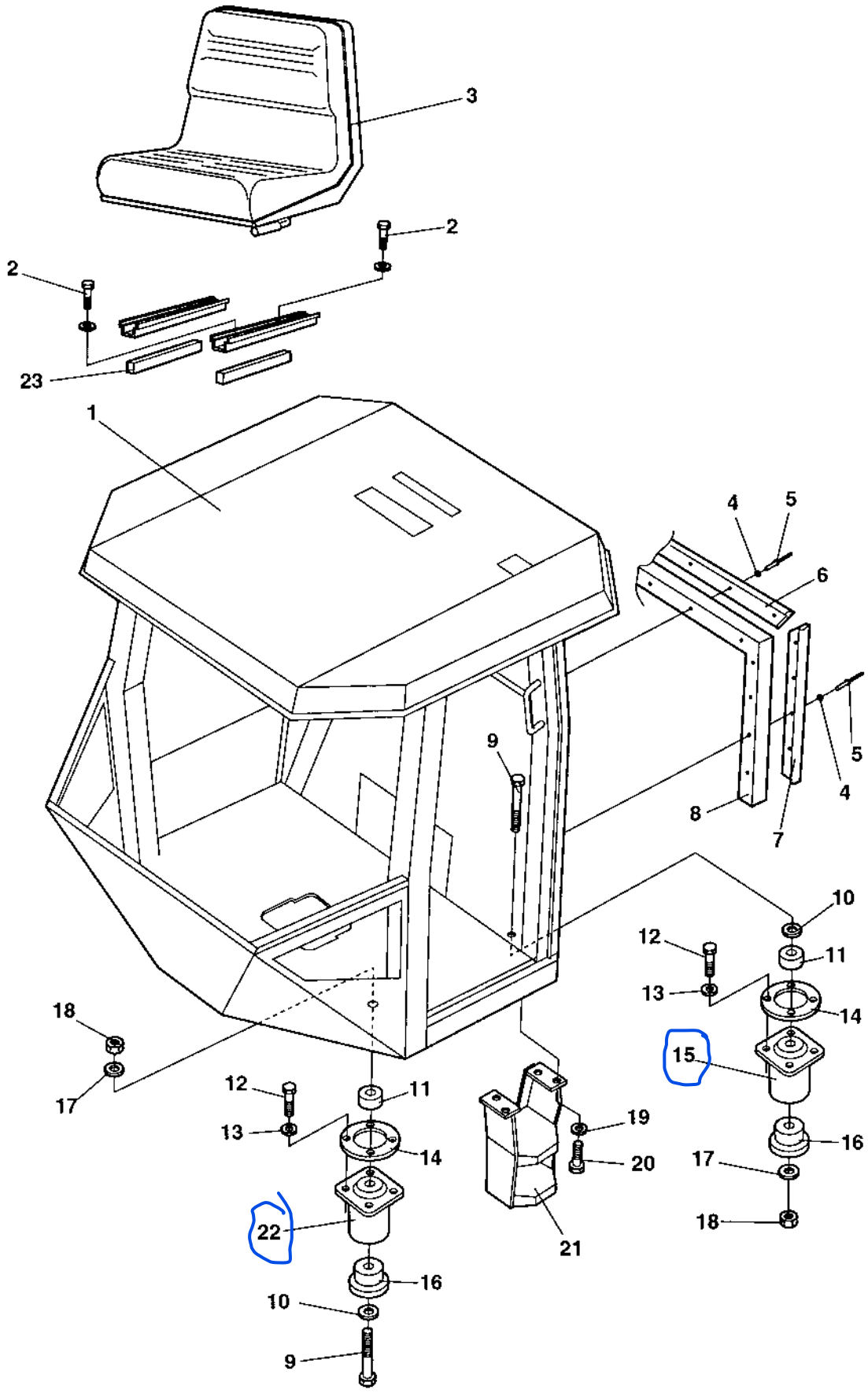

Cab mounting

Item	Part No	Rem	Qty	Description		Code
1				Cab (Page 310)	380656	
2	4700508005	H	4	Screw		
	4700508059	I	4	Screw	M8x65	
3	4700380208		1	Drivers seat, cpl		
	4700370234	D	1	Drivers seat		
	4700936283		1	.Seat switch		D
	4700380889		1	.Cable harness		
	4700909535	E,F	1	.Sliding rail	Left	D
	4700909536	G	1	.Sliding rail	Right	D
4	4700927974		13	Washer		
5	4700904433		13	Blind rivet		
6	4700372785		1	List		
7	4700382582		2	List		
8	4700372494	A	N	Rubber strip		
9	4700903905		4	Screw		
10	4700904233		4	Washer	21x36x3	
11	4700370258		4	Spacer washer		
12	4700500121		16	Screw	M12x65 8,8	
13	4700904231		16	Washer	13x24x2 300 HV	
14	4700359998		4	Back-up ring		
15	4700374606	B	2	Shock absorber COXIM TRAZEIRO	Green	D
16	4700372457		4	Back-up ring		
17	4700903290		4	Washer	21x36x6	
18	4700901145		4	Lock nut	M20-10	
19	4700904230		4	Washer		
20	4700500029		4	Screw		
21	4700376252		1	Step		
22	4700374607	C	2	Shock absorber COXIM DIANTEIRO	Yellow	D
23	4700382397		2	Spacer		

A) L=2400 mm
B) Rear
C) Front
D) Option
E) With handle
F) Left
G) Right
H) Without Ref. 23
I) With Ref. 23

Cab 380656

Item	Part No	Rem	Qty	Description		Code
130				Cab (Page 312)	Screens	
140				Cab (Page 316)	Door, left side	
150				Cab (Page 318)	Interior rear mirror	
170				Wiper arm with blade, front (Page 320)		
180				Cab (Page 322)	Electric	

Cab Screens

17435

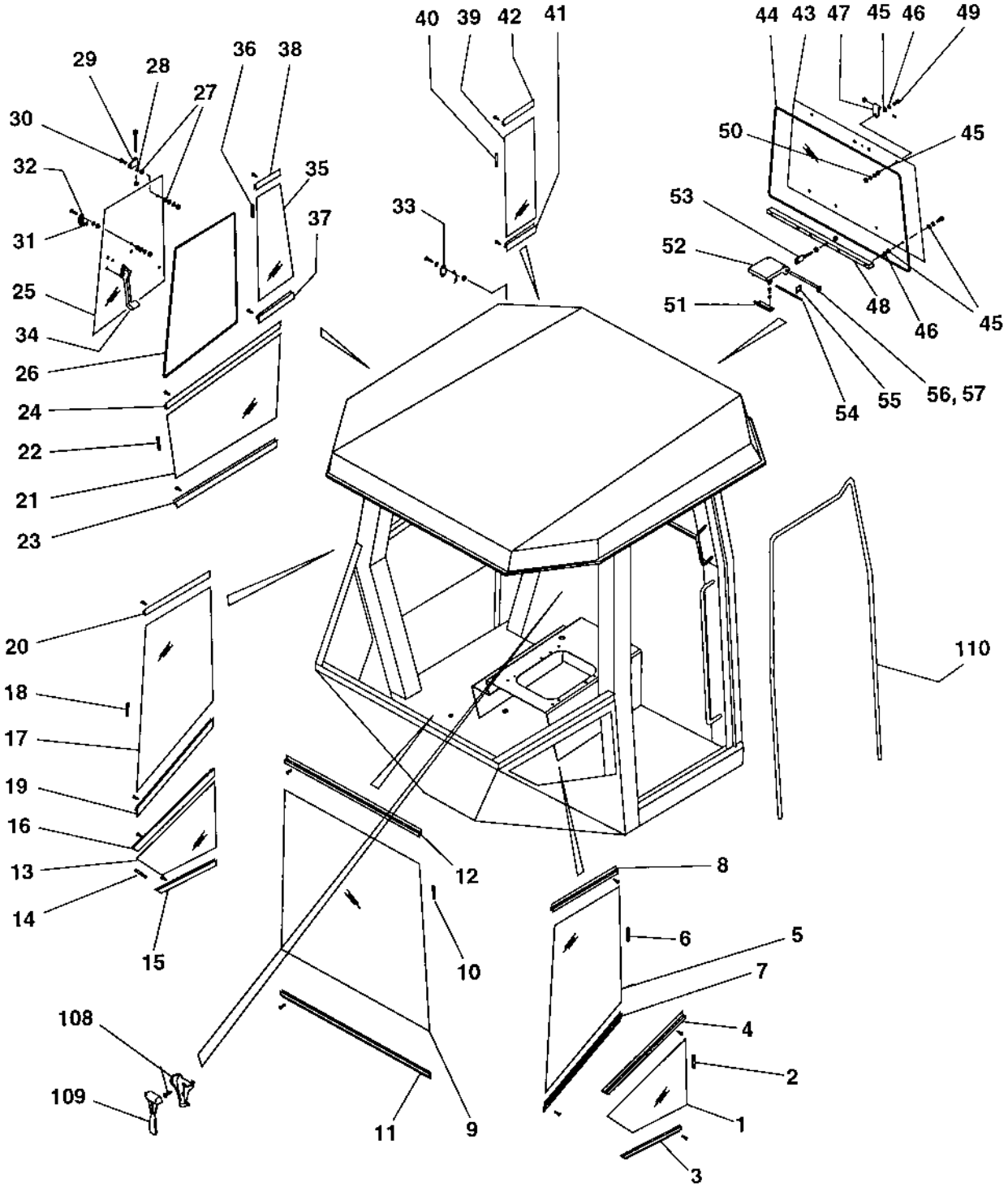

Cab Screens

Item	Part No	Rem	Qty	Description	Code
1	4700937380		1	Screen	
2	4700908545		XL	Seal list	
3	4700935278		1	List	
4	4700935279		1	List	
5	4700937381		1	Screen, left	
6	4700908545		XL	Seal list	
7	4700935280		1	List	
8	4700935281		1	List	
9	4700937382		1	Screen	
10	4700908545	B	1	Seal list	
11	4700935282		1	List	
12	4700935283		1	List	
13	4700937383		1	Screen	
14	4700908545		XL	Seal list	
15	4700935284		1	List	
16	4700935285		1	List	
17	4700937384		1	Screen	
18	4700908545	A	1	Seal list	
19	4700935286		1	List	
20	4700935287		1	List	
21	4700937385		1	Screen	
22	4700908545	A	1	Seal list	
23	4700935288		1	List	
24	4700935289		1	List	
25	4700937386		1	Screen	
26	4700908499	B	1	Rubber list	
27	4700935271		8	Washer, Flexible rubber	
28	4700935272		8	Washer, Black	
29	4700935273		2	Hinge	
30	4700935274		2	Screw	
31	4700935275		1	Rubber washer	
32	4700935276		1	Bracket	
33	4700935277		1	Lock pin	
34	4700935290		1	Window lock, right	
35	4700937387		1	Screen	
36	4700908545	A	1	Seal list	
37	4700935291		1	List	
38	4700935292		1	List	
39	4700937388	A	1	Screen	
40	4700908545	A	1	Seal list	
41	4700935293		1	List	
42	4700935294		1	List	
43	4700937389		1	Screen	
44	4700908499	C	1	Rubber list	
45	4700935271		12	Washer, Flexible rubber	
46	4700935272		12	Washer, Black	
47	4700935273		2	Hinge	
48	4700935295		1	Screen holder	
49	4700935274		6	Screw	
50	4700935296		2	Washer	
51	4700935297		1	Bracket	
52	4700935298		2	Bracket	
53	4700935299		1	Bolt	
54	4700935300		1	Shaft	
55	4700935301		2	Lock	
56	4700935302		1	Rod	

A) L=1 m
B) L=2 m
C) L=3 m

Cab Screens

17435

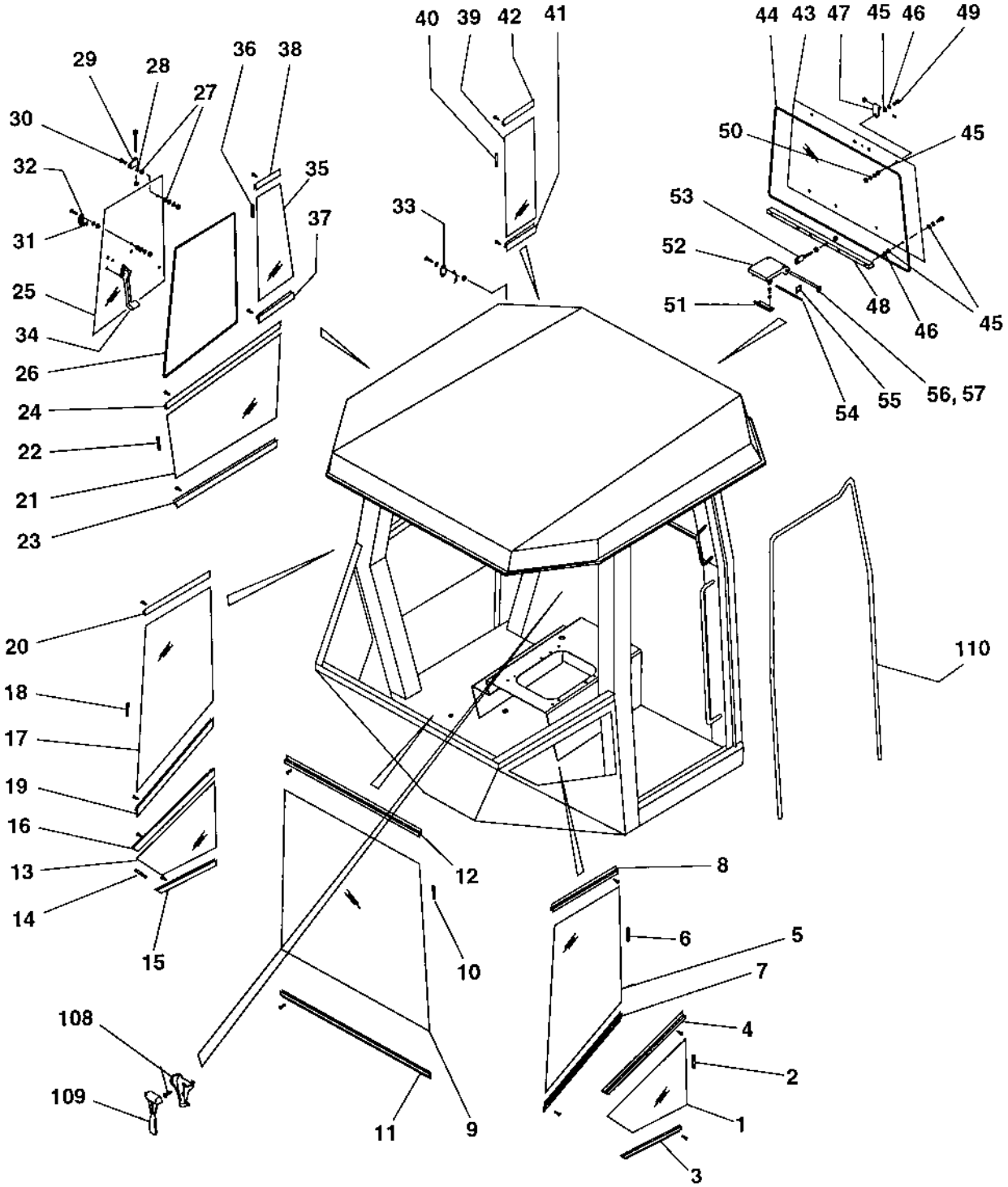

Cab Screens

Item	Part No	Rem	Qty	Description	Code
57	4700935303		1	Ring	
108	4700908506		1	Holder	
109	4700908507		1	Emergency hammer	
110	4700908499	D	1	Rubber list	

D) L=5 m

Cab Door, left side

16967-1

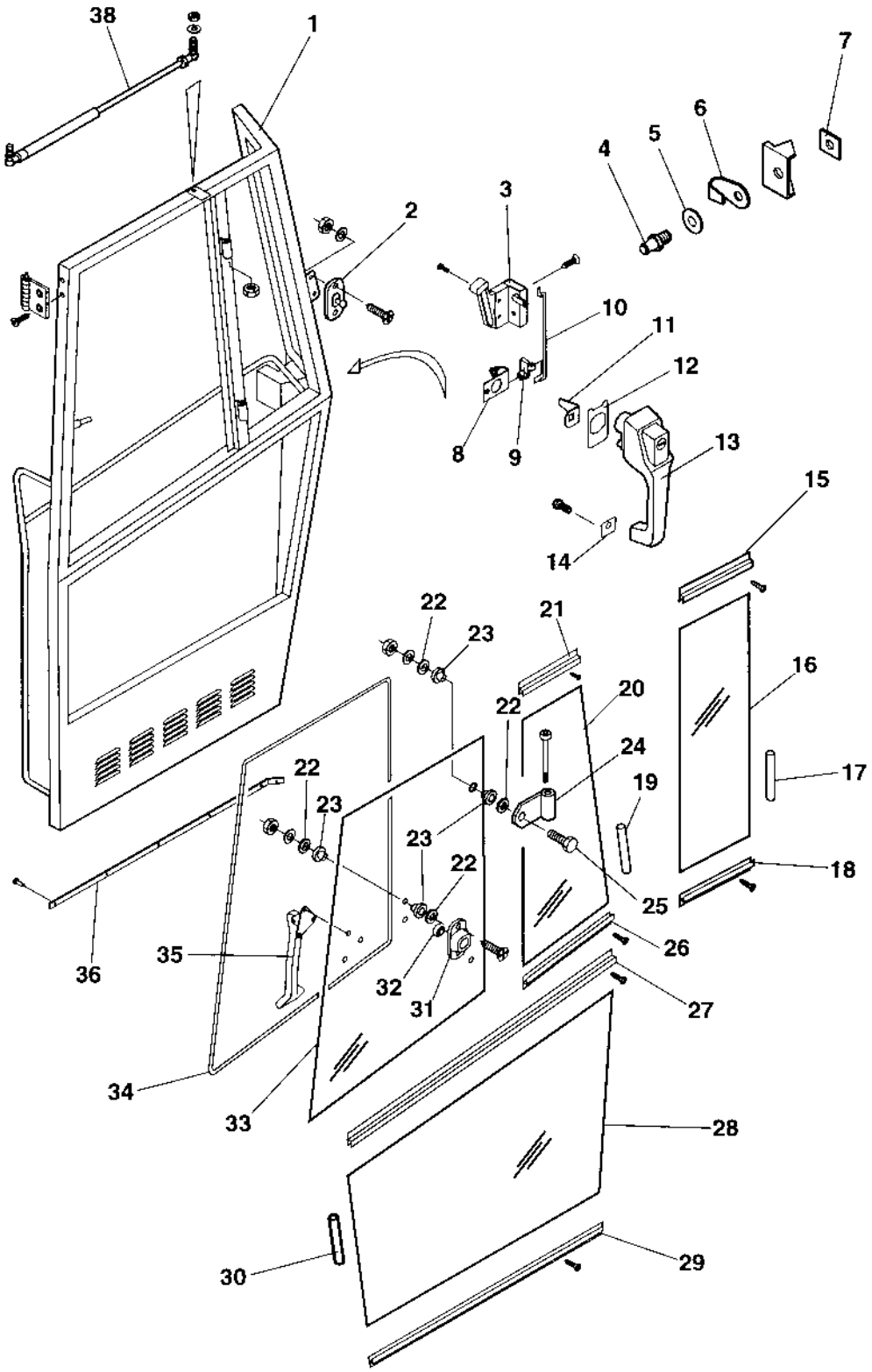

Cab Door, left side

Item	Part No	Rem	Qty	Description	Code
	4700940678		1	Door, cpl	
1	4700938045		1	.Door frame	
2	4700935277		1	.Lock pin	
3	4700938017		1	.Lock	
4	4700908580		1	.Lock pin	
5	4700908581		1	.Washer	
6	4700908582		1	.Cover	
7	4700908583		1	.Bracket	
8	4700935248		1	.Turning mechanism	
9	4700935249		1	.Retainer	
10	4700935250		1	.Rod	
11	4700935247		1	.Leader	
12	4700935246		1	.Seal	
13	4700935244		1	.Door handle with key	
14	4700935245		1	.Seal	
15	4700935268		1	.List	
16	4700937391		1	.Screen	
17	4700908545	A	1	.Seal list	
18	4700935267		1	.List	
19	4700908545	A	1	.Seal list	
20	4700937392		1	.Screen	
21	4700935270		1	.List	
22	4700935272		8	.Washer, Black	
23	4700935271		8	.Washer, Flexible rubber	
24	4700935273		2	.Hinge	
25	4700935274		2	.Screw	
26	4700935269		1	.List	
27	4700935266		1	.List	
28	4700937390		1	.Screen	
29	4700935265		1	.List	
30	4700908545	A	1	.Seal list	
31	4700935276		1	.Bracket	
32	4700935275		1	.Rubber washer	
33	4700937393		1	.Screen	
34	4700908499	B	1	.Rubber list	
35	4700935253		1	.Lock	
36	4700938101		XL	.Brush profile	
38	4700938018		1	.Gas spring	

A) L=1 m
B) L=2 m

Cab Interior rear mirror

16008

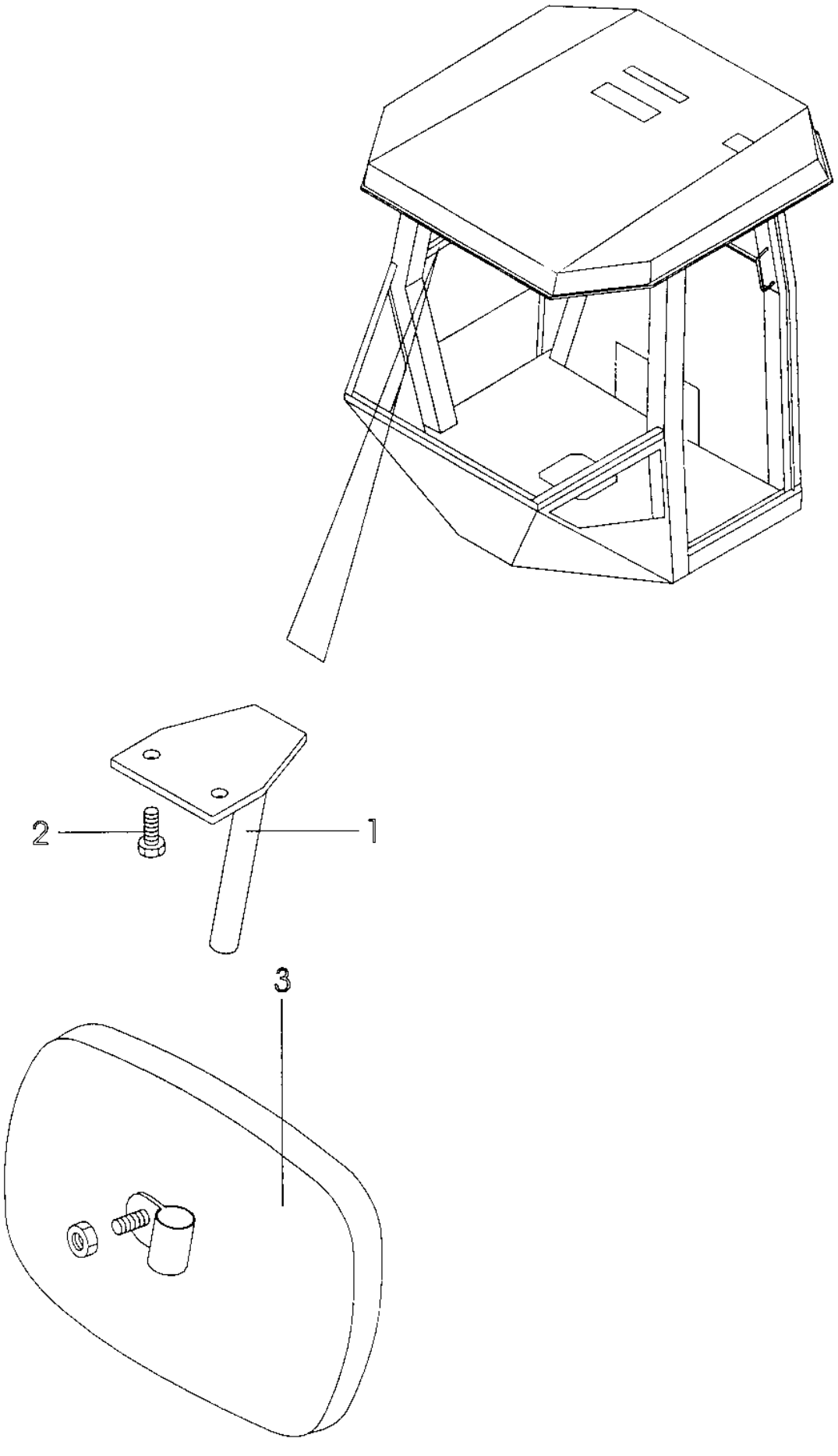

Cab Interior rear mirror

Item	Part No	Rem	Qty	Description		Code
1	4700908623		1	Bracket		
2	4700535005		2	Screw	M5x12	
3	4700908624		1	Rear mirror		

Wiper arm with blade, front

16968

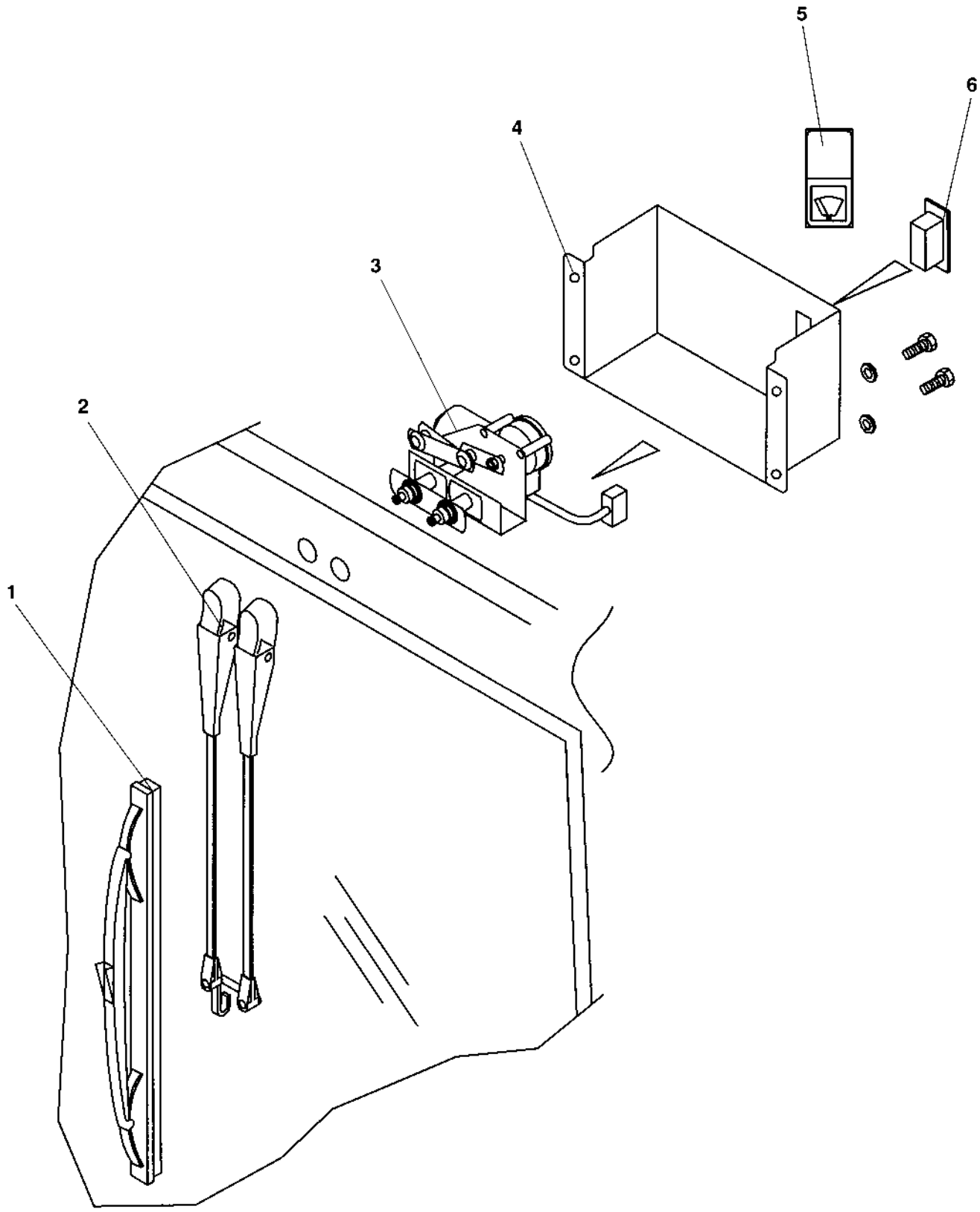

Wiper arm with blade, front

Item	Part No	Rem	Qty	Description	Code
1	4700905306		1	Wiper blade	
2	4700905305		1	Wiper arm	
3	4700905304		1	Wiper motor	
4	4700937871		1	Cover	
5	4700908605		1	Symbol, wiper	
6	4700908617		1	Switch	

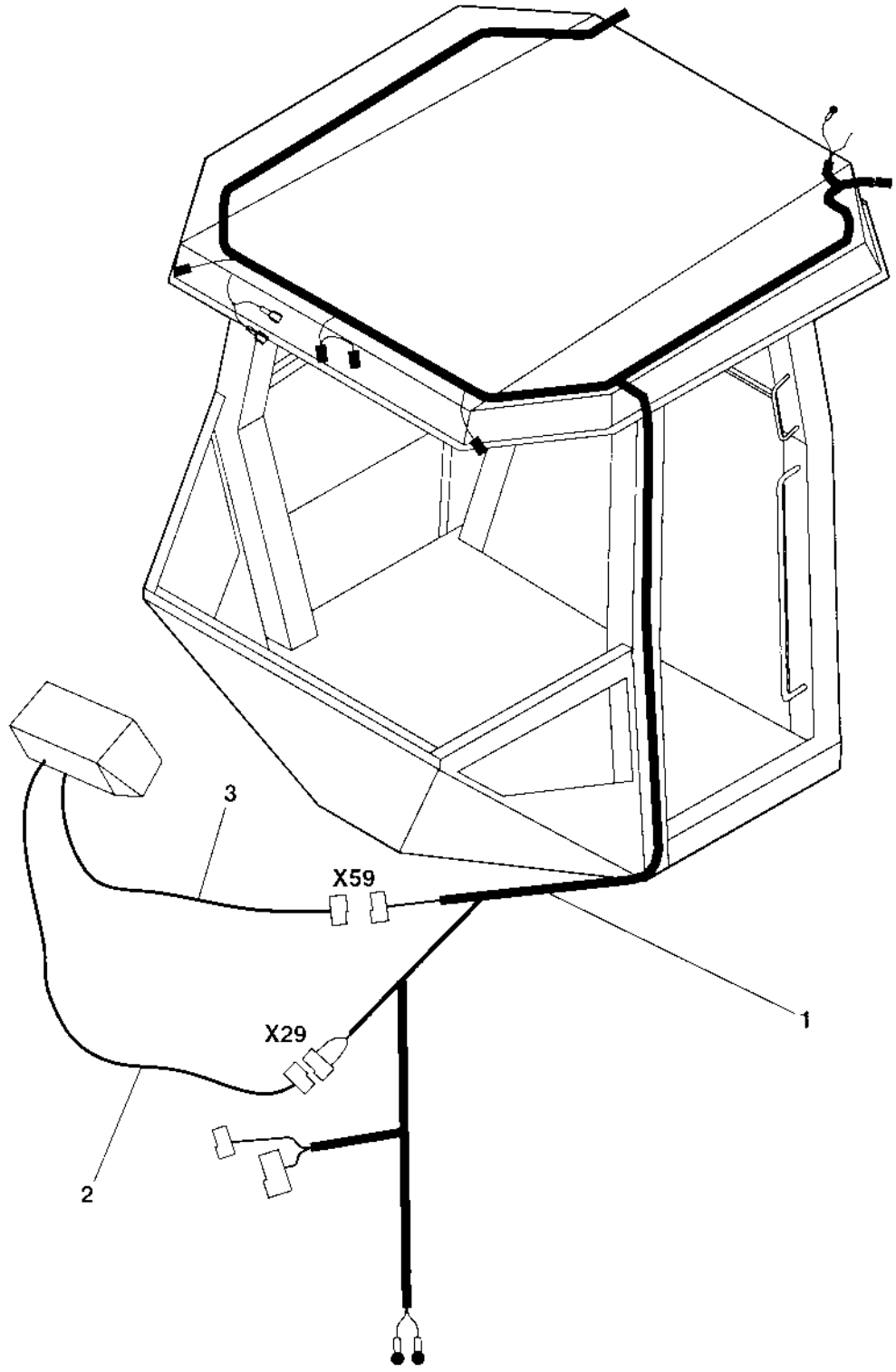
3
X59
1
X29
2

Cab Electric

Item	Part No	Rem	Qty	Description	Code
1	4700937870	A	1	Cable harness	
2	4700384403	B	1	Cable harness	
3	4700384402	C	1	Cable harness	

A) Main supply
B) Horn
C) Windshield wiper

Cab Exterior, rear mirror

16009

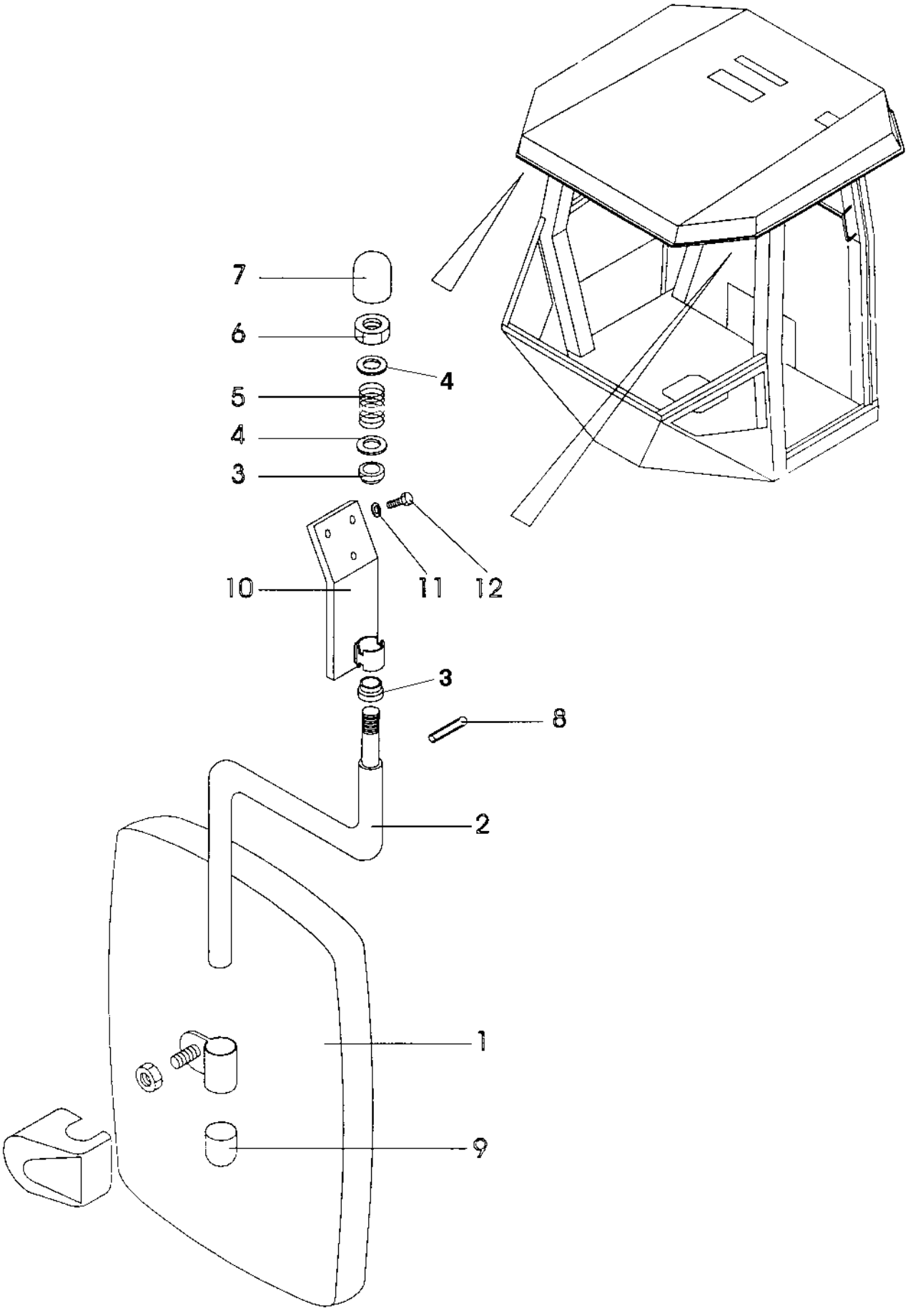

Cab Exterior, rear mirror

Item	Part No	Rem	Qty	Description	Code
1	4700371730	A	2	Rear view mirror, cpl	
	4700908265		1	.Rear view mirror	
2	4700908355		1	.Arm	
3	4700908625		2	.Sleeve	
4	4700904232		2	.Washer	
5	4700908626		1	.Spring	
6	4700586021		1	.Nut	M16
7	4700908627		1	.Cap	
8	4700629066		1	.Spirol pin	
9	4700908628		1	.Cap	
10	4700908361		1	.Bracket	
11	4700904229		6	Washer	8,4x16x1,5
12	4700500019		6	Screw	M8x16H 8.8 A2K

A) Option

Cab Work light

16007A

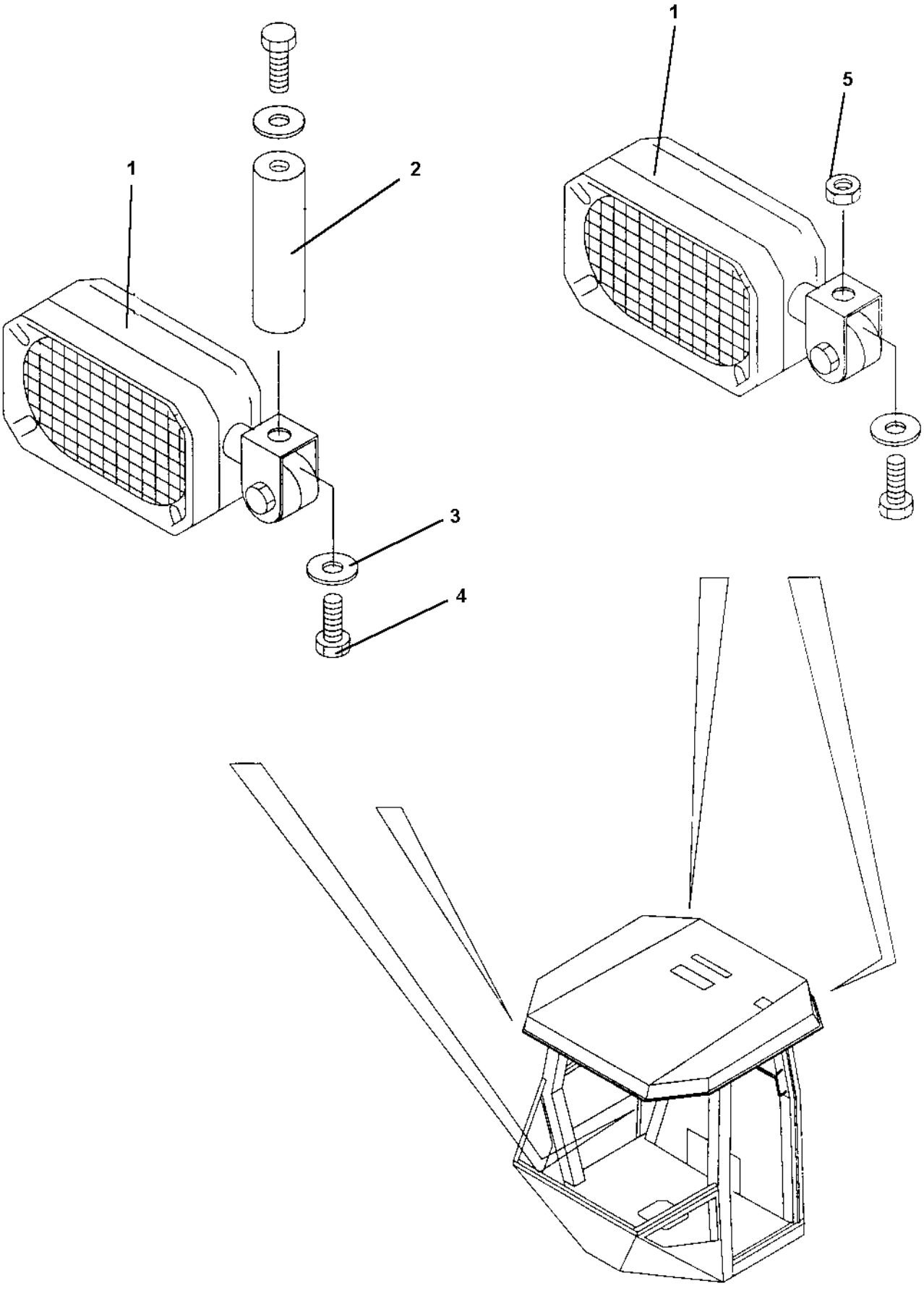

Cab Work light

Item	Part No	Rem	Qty	Description		Code
1	4700908267		4	Working light		D
2	4700908359		2	Distance		
3	4700904229		4	Washer	8,4x16x1,5	
4	4700500019		4	Screw	M8x16H 8.8 A2K	
5	4700586003		2	Lock nut	M8	

Cab mounting

18429

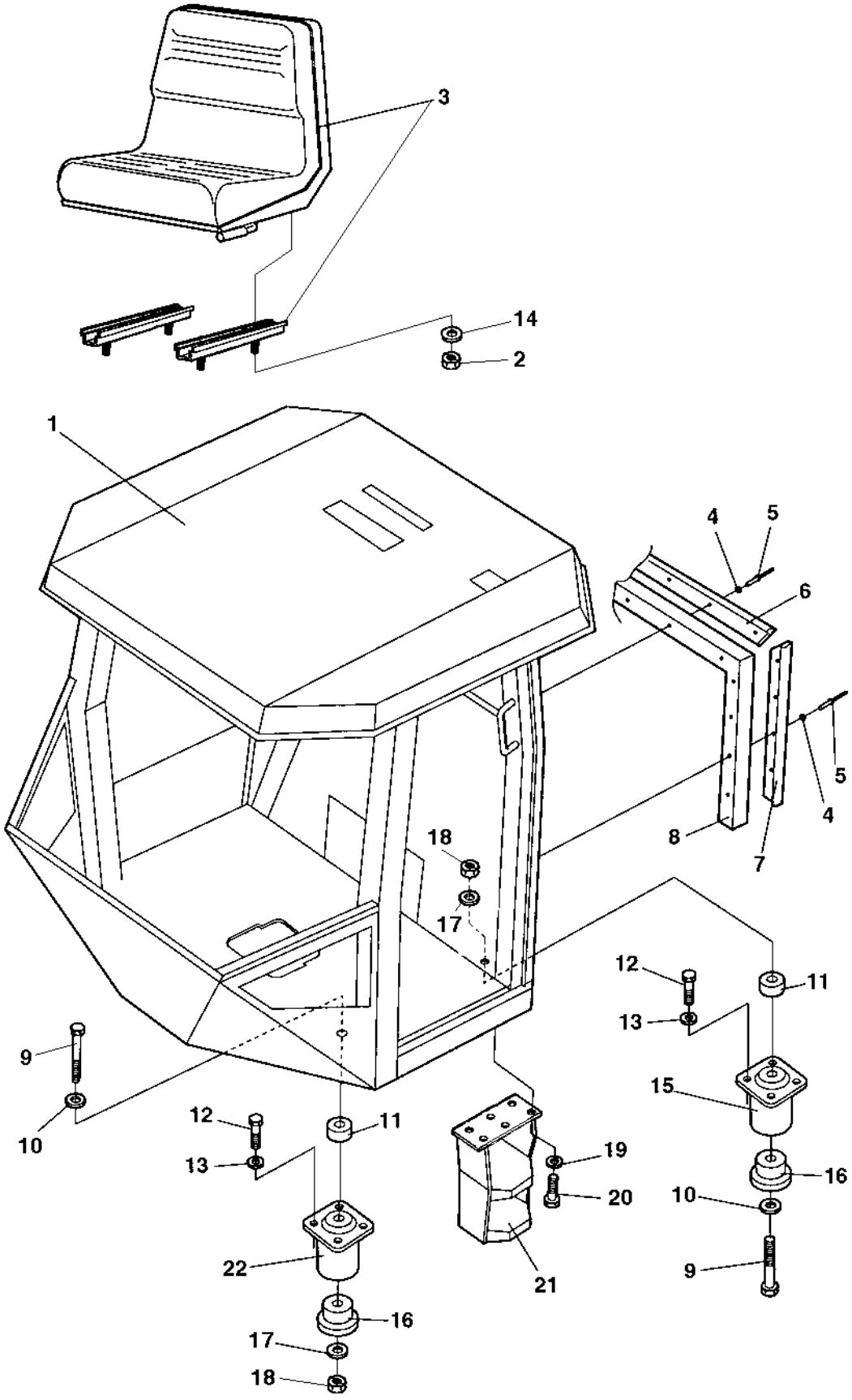

Cab mounting

Item	Part No	Rem	Qty	Description		Code
1				Cab (Page 330)	378308	
2	4700570005		4	Nut	M8	
3	4700377556		1	Seat		
	4700377518	D	1	Drivers seat, cpl		
4	4700927974		13	Washer		
5	4700904433		13	Blind rivet		
6	4700372785		1	List		
7	4700382582		2	List		
8	4700372494	A	N	Rubber strip		
9	4700791218		4	Screw	M20x200	
10	4700904233		4	Washer	21x36x3	
11	4700384759		4	Spacer		
12	4700500195		16	Screw		
13	4700904231		16	Washer	13x24x2 300 HV	
14	4700904229		4	Washer	8,4x16x1,5	
15	4700374606	B	2	Shock absorber	Green	D
16	4700372457		4	Back-up ring		
17	4700903290		4	Washer	21x36x6	
18	4700901145		4	Lock nut	M20-10	
19	4700904230		6	Washer		
20	4700500029		6	Screw		
21	4700376255		1	Step		
22	4700374607	C	2	Shock absorber	Yellow	D
23	4700382397		2	Spacer		

A) L=2400 mm
B) Rear
C) Front
D) Option

Cab 378308

Item	Part No	Rem	Qty	Description		Code
130				Cab (Page 332)	Screens	
140				Cab (Page 336)	Door, left side	
150				Cab (Page 318)	Interior rear mirror	
170				Wiper arm with blade, front (Page 320)		
180				Cab (Page 322)	Electric	

Cab Screens

18431

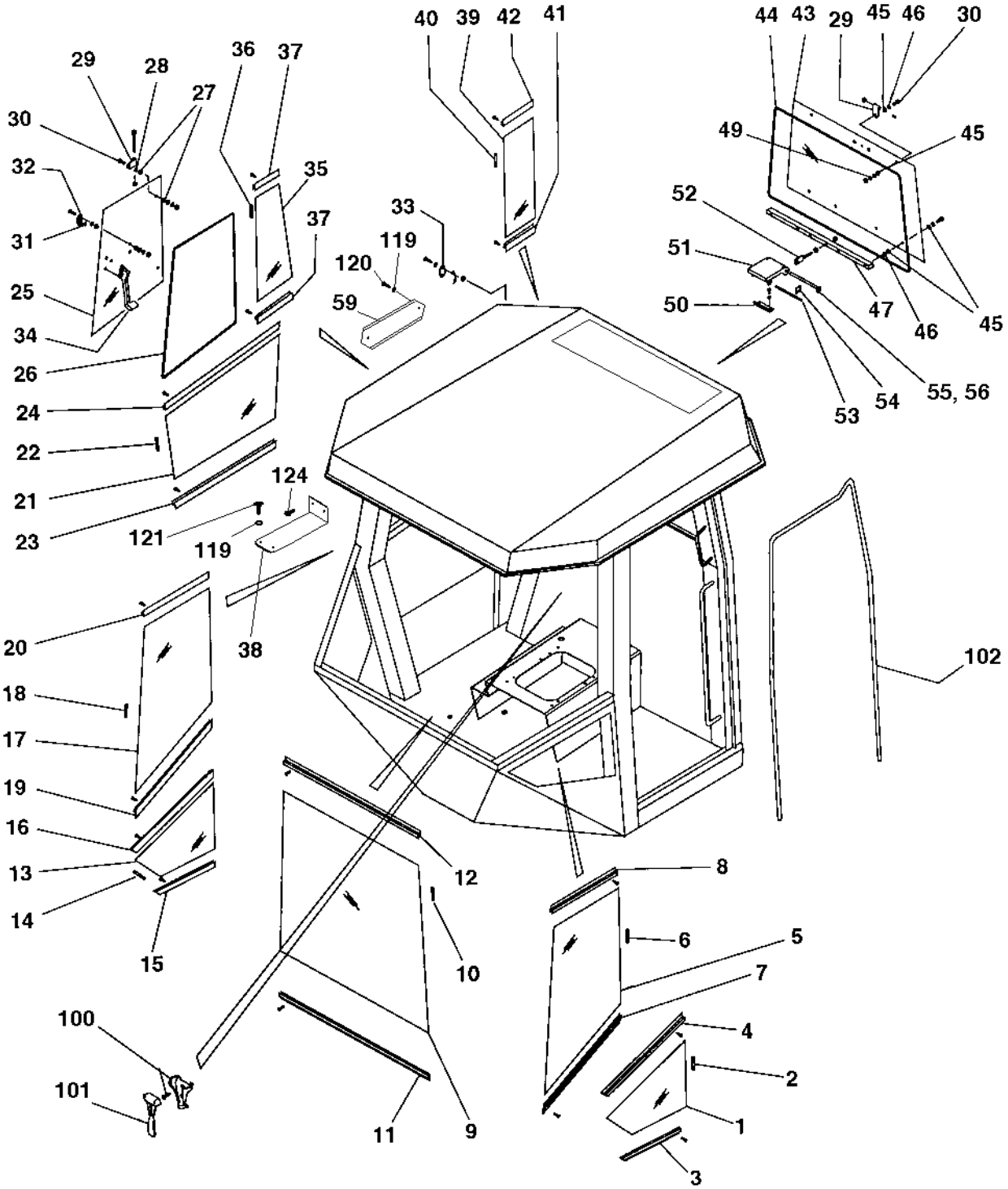

Cab Screens

Item	Part No	Rem	Qty	Description	Code
1	4700937380		1	Screen	
2	4700908545		XL	Seal list	
3	4700935278		1	List	
4	4700935279		1	List	
5	4700937381		1	Screen, left	
6	4700908545		XL	Seal list	
7	4700935280		1	List	
8	4700935281		1	List	
9	4700937382		1	Screen	
10	4700908545	D	1	Seal list	
11	4700935282		1	List	
12	4700935283		1	List	
13	4700937383		1	Screen	
14	4700908545		XL	Seal list	
15	4700935284		1	List	
16	4700935285		1	List	
17	4700937384		1	Screen	
18	4700908545	C	1	Seal list	
19	4700935286		1	List	
20	4700935287		1	List	
21	4700937385		1	Screen	
22	4700908545	A	1	Seal list	
23	4700935288		1	List	
24	4700935289		1	List	
25	4700938290		1	Screen	
26	4700908499	E	1	Rubber list	
27	4700935271		8	Washer, Flexible rubber	
28	4700935272		8	Washer, Black	
29	4700935273		4	Hinge	
30	4700935274		4	Screw	
31	4700935275		1	Rubber washer	
32	4700935276		1	Bracket	
33	4700935277		1	Lock pin	
34	4700935290		1	Window lock, right	
35	4700938291		1	Screen	
36	4700908545	B	1	Seal list	
37	4700935291		1	List	
38	4700379608		1	Cover	
39	4700938292		1	Screen	
40	4700908545	B	1	Seal list	
41	4700935293		1	List	
42	4700938659		1	List	
43	4700937389		1	Screen	
44	4700908499	F	1	Rubber list	
45	4700935271		12	Washer, Flexible rubber	
46	4700935272		12	Washer, Black	
47	4700935295		1	Screen holder	
49	4700935296		2	Washer	
50	4700935297		1	Bracket	
51	4700935298		2	Bracket	
52	4700935299		1	Bolt	
53	4700935300		1	Shaft	
54	4700935301		2	Lock	

A) L=1100 mm
B) L=1400 mm
C) L=1900 mm
D) L=2100 mm
E) L=2700 mm
F) L=3300 mm

Cab Screens

18431

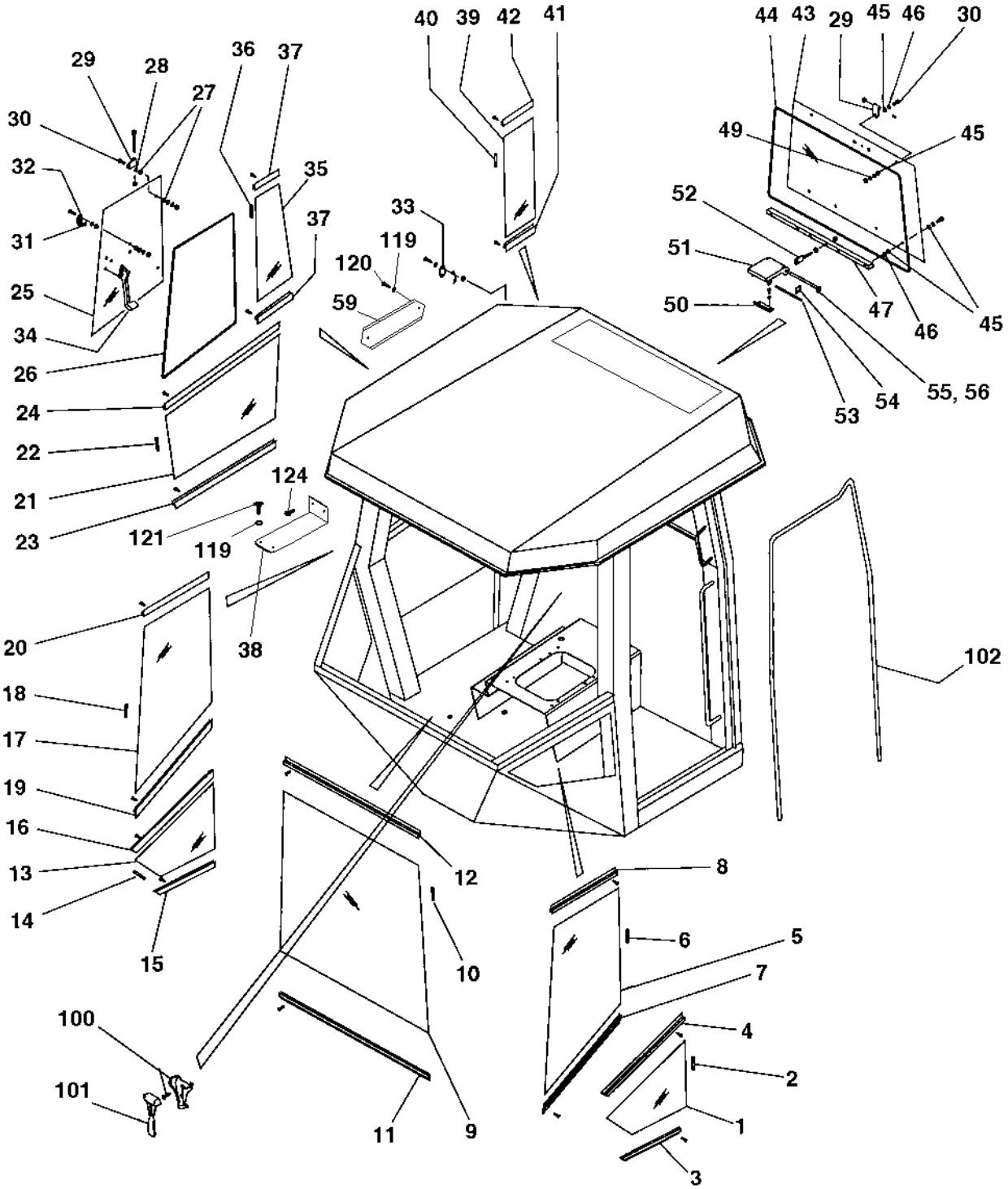

Cab Screens

Item	Part No	Rem	Qty	Description	Code
55	4700935302		1	Rod	
56	4700935303		1	Ring	
59	4700379236		1	Cover	
100	4700908506		1	Holder	
101	4700908507		1	Emergency hammer	
102	4700908499	G	1	Rubber list	
119	4700904229		16	Washer	8,4x16x1,5
120	4700500019		14	Screw	M8x16H 8.8 A2K
121	4700500053		2	Screw	M8x20H 8.8
124	4700903782		2	Screw	M5x12

G) L=5 m

Cab Door, left side

16967-1

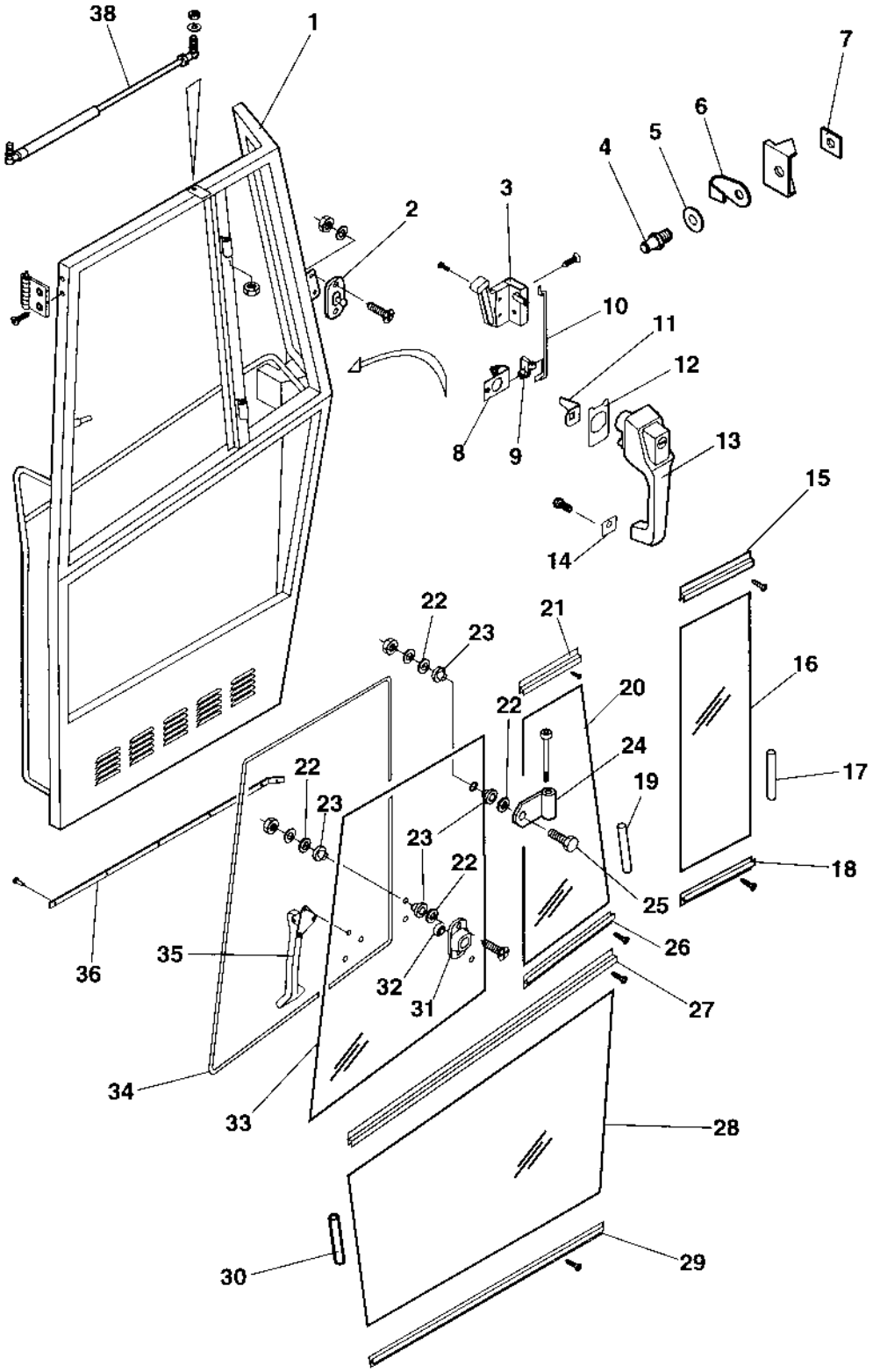

Cab Door, left side

Item	Part No	Rem	Qty	Description	Code
	4700940678		1	Door, cpl	
1	4700390927		1	.Door frame	
2	4700935277		1	.Lock pin	
3	4700938017		1	.Lock	
4	4700908580		1	.Lock pin	
5	4700908581		1	.Washer	
6	4700908582		1	.Cover	
7	4700908583		1	.Bracket	
8	4700935248		1	.Turning mechanism	
9	4700935249		1	.Retainer	
10	4700935250		1	.Rod	
11	4700935247		1	.Leader	
12	4700935246		1	.Seal	
13	4700935244		1	.Door handle with key	
14	4700935245		1	.Seal	
15	4700935268		1	.List	
16	4700937391		1	.Screen	
17	4700908545	A	1	.Seal list	
18	4700935267		1	.List	
19	4700908545	A	1	.Seal list	
20	4700937392		1	.Screen	
21	4700935270		1	.List	
22	4700935272		8	.Washer, Black	
23	4700935271		8	.Washer, Flexible rubber	
24	4700935273		2	.Hinge	
25	4700935274		2	.Screw	
26	4700935269		1	.List	
27	4700935266		1	.List	
28	4700937390		1	.Screen	
29	4700935265		1	.List	
30	4700908545	B	1	.Seal list	
31	4700935276		1	.Bracket	
32	4700935275		1	.Rubber washer	
33	4700937393		1	.Screen	
34	4700908499	C	1	.Rubber list	
35	4700935253		1	.Lock	
36	4700938101		XL	.Brush profile	
38	4700938018		1	.Gas spring	

A) L=1400 mm
B) L=1100 mm
C) L=2700 mm

Decals

Item	Part No	Rem	Qty	Description	Code
10				Decals (Page 340)	
20				Decals (Page 342)	

Decals

16956-1

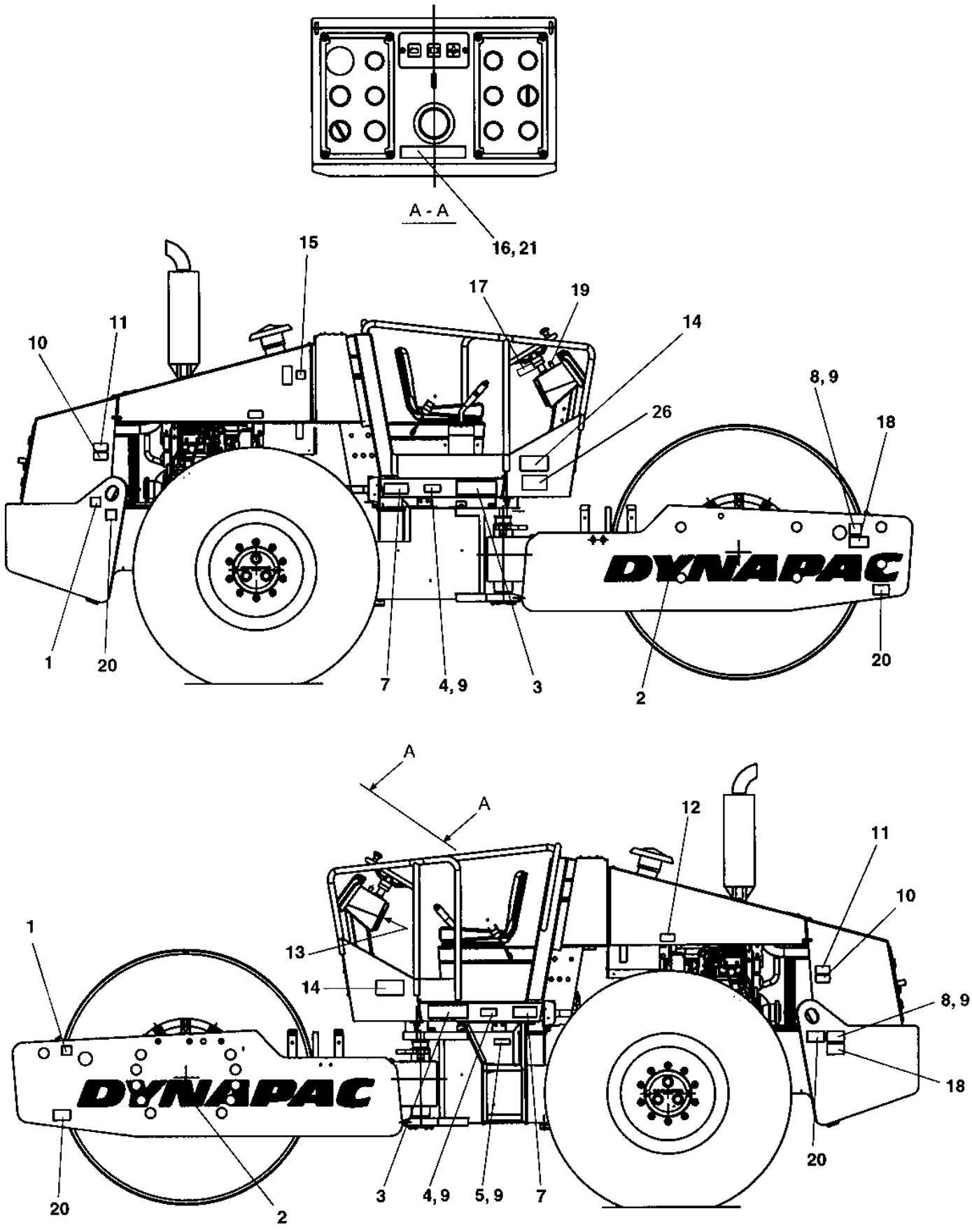

Decals

Item	Part No	Rem	Qty	Description		Code
1	4700588176		2	Decal "LIFT POINT"		
2	4700904068		2	Decal "DYNAPAC"	L=1770 mm	
3	4700904723		2	Decal "MODEL CODE"		
4	4700377744		2	Reflector, yellow		B
5		C	1	Product identification plate		B
		A,C	1	Product identification plate CE		B
		B,C	1	Product identification plate		B
6	4700902915		4	Screw		
7	4700903459		2	Decal "SAFETY"		
8	4700904870		2	Lifting sign		
9	4700624005		12	Blind rivet	3,2x6,1	
10	4700903424		2	Decal "HOT SURFACE"		
11	4700903423		2	Decal "SAFETY"		
12	4700991990		2	Decal "TYRE PRESSURE"	110-150kPA/16-21psi	
	4700390900		1	Decal "TYRE PRESSURE"	110kPA/16psi	
13	4700903425		1	Decal "SAFETY MANUAL"		
14	4700903422		2	Decal "SAFETY"		
15	4700272373		1	Decal "HYDRAULIC OIL"		
16	47349248SE		1	Decal "WARNING"	Swedish	
	47349248EN		1	Decal "WARNING"	English	
	47349248DE		1	Decal "WARNING"	German	
	47349248IT		1	Decal "WARNING"	Italian	
	47349248ES		1	Decal "WARNING"	Spanish	
	47349248FR		1	Decal "WARNING"	French	
	47349248NO		1	Decal "WARNING"	Norwegian	
	47349248DK		1	Decal "WARNING"	Danish	
	47349248FI		1	Decal "WARNING"	Finnish	
	47349248PT		1	Decal "WARNING"	Portuguese	
	47349248NL		1	Decal "WARNING"	Dutch	
	47349248GR		1	Decal "WARNING"	Greek	
	47349248IS		1	Decal "WARNING"	Icelandic	
	47349248CN		1	Decal "WARNING"	Chinese	
17	4700384159		1	Instructions	Loading-Unloading	
18	4700908229		2	Safety decal		
19	4700358881		1	Pad lock		
20	4700382751		4	Decal "TIE DOWN POINT"		
25	4700791642		1	Decal "WARNING"	Use of starting fluid prohib.	
26	4700791279		1	Decal "Sound power level"	109dB	
	4700791277		1	Decal "Sound power level"	107dB	

A) With CE-Mark
B) With "Year of Mfg"
C) Not available as sparepart

Decals

16957-2

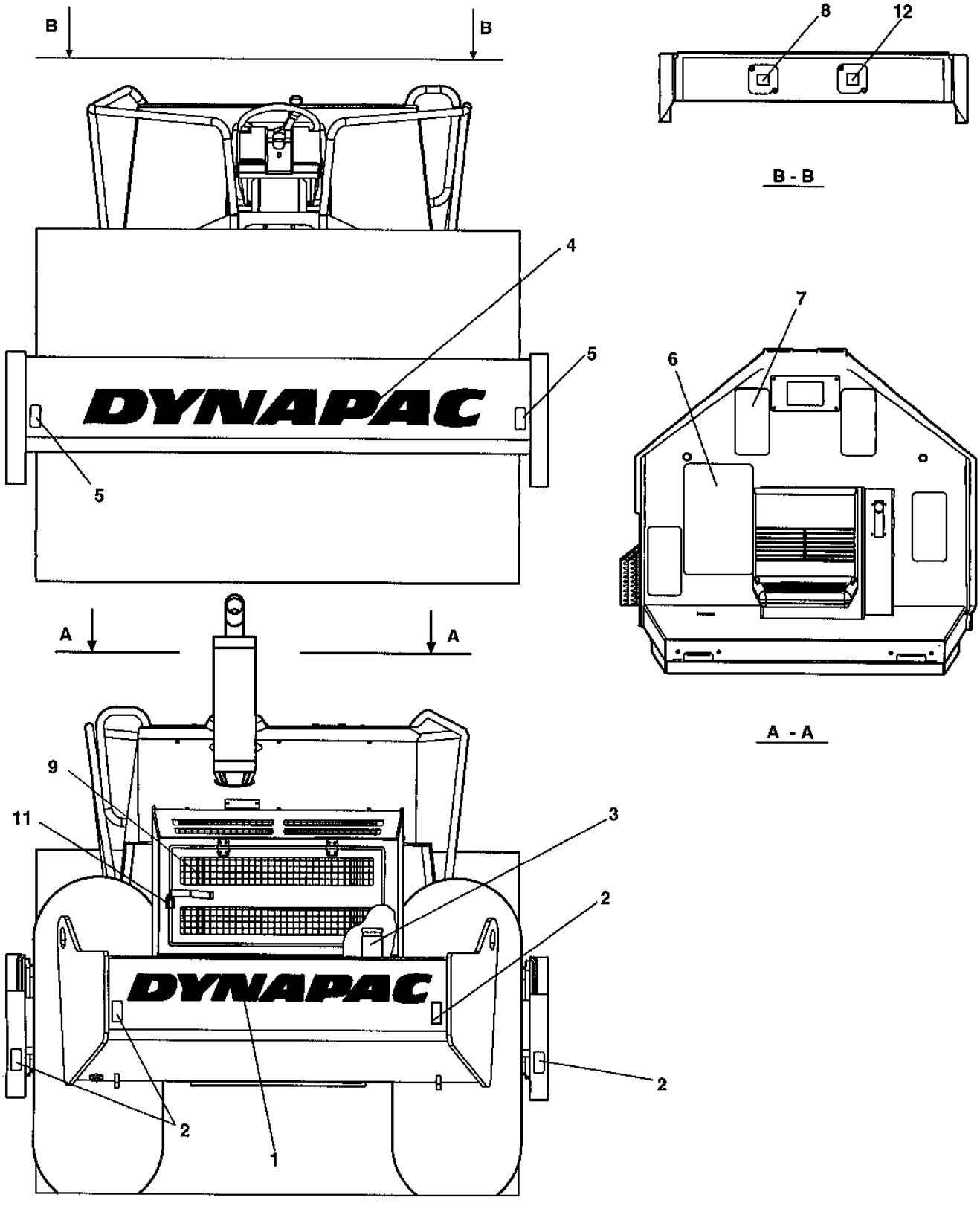

Decals

Item	Part No	Rem	Qty	Description		Code
1	4700904098		1	Decal "DYNAPAC"	L=1350 mm	
2	4700377742		4	Reflector, red		B
3	4700991658		1	Decal "FUEL"		
4	4700904068		1	Decal "DYNAPAC"	L=1770 mm	
5	4700377743		2	Reflector, white		B
6	4700373364		1	Slip protection		
7	4700373363		4	Slip protection		
8	4700272372		1	Decal "HYDRAULIC OIL"		
9	4700904835		1	Decal "BATTERY POWER"		
11	4700358881		1	Pad lock		
12	4700388449		1	Decal "Engine coolant fill"		

Standard equipment

Item	Part No	Rem	Qty	Description	Code
100				Standard equipment (Page 346)	

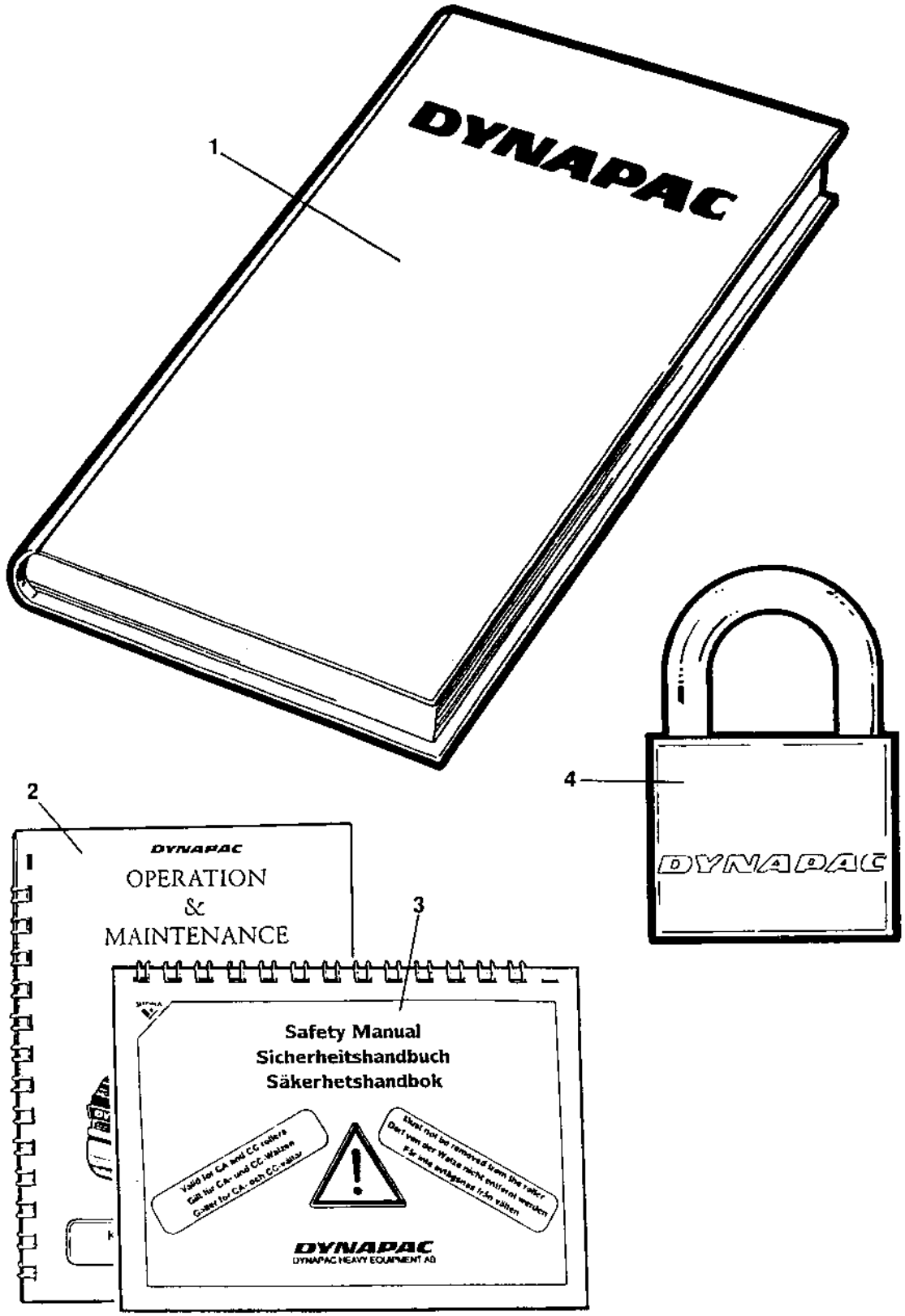
1
DYNAPAC
2
DYNAPAC
OPERATION
&
MAINTENANCE
3
Safety Manual
Sicherheitshandbuch
Säkerhetshandbok
DYNAPAC
DYNAPAC HEAVY EQUIPMENT AB
4
DYNAPAC

Standard equipment

Item	Part No	Rem	Qty	Description	Code
1			1	Documentation	ISCA250STD
			1	.Warranty registration card	
			1	.Spare parts catalogue	SCA250STD
			1	.Instruction manual	Cummins 4BTA 3.9 Elite
2			1	.Operation / maintenance instruction	ICA250
3			1	.Safety manual	RSAFE
4	4700358881		1	Pad lock	

Optional equipment

Item	Part No	Rem	Qty	Description	Code
10				Tool equipment (Page 350)	
20				Pad shell Up to 65X21750 (Page 352)	
30				Scraper and beam Up to 65X21750 (Page 354)	
40				Pad shell From 65X21751 (Page 356)	
100				Dy-Mic Up to 65X21339 (Page 358)	
110				Dy-Mic From 65X21340 (Page 360)	
120				Air conditioner and heater, Simple cab (Page 362)	
230				Heater (Page 368)	Simple cab

Tool equipment

17111-1

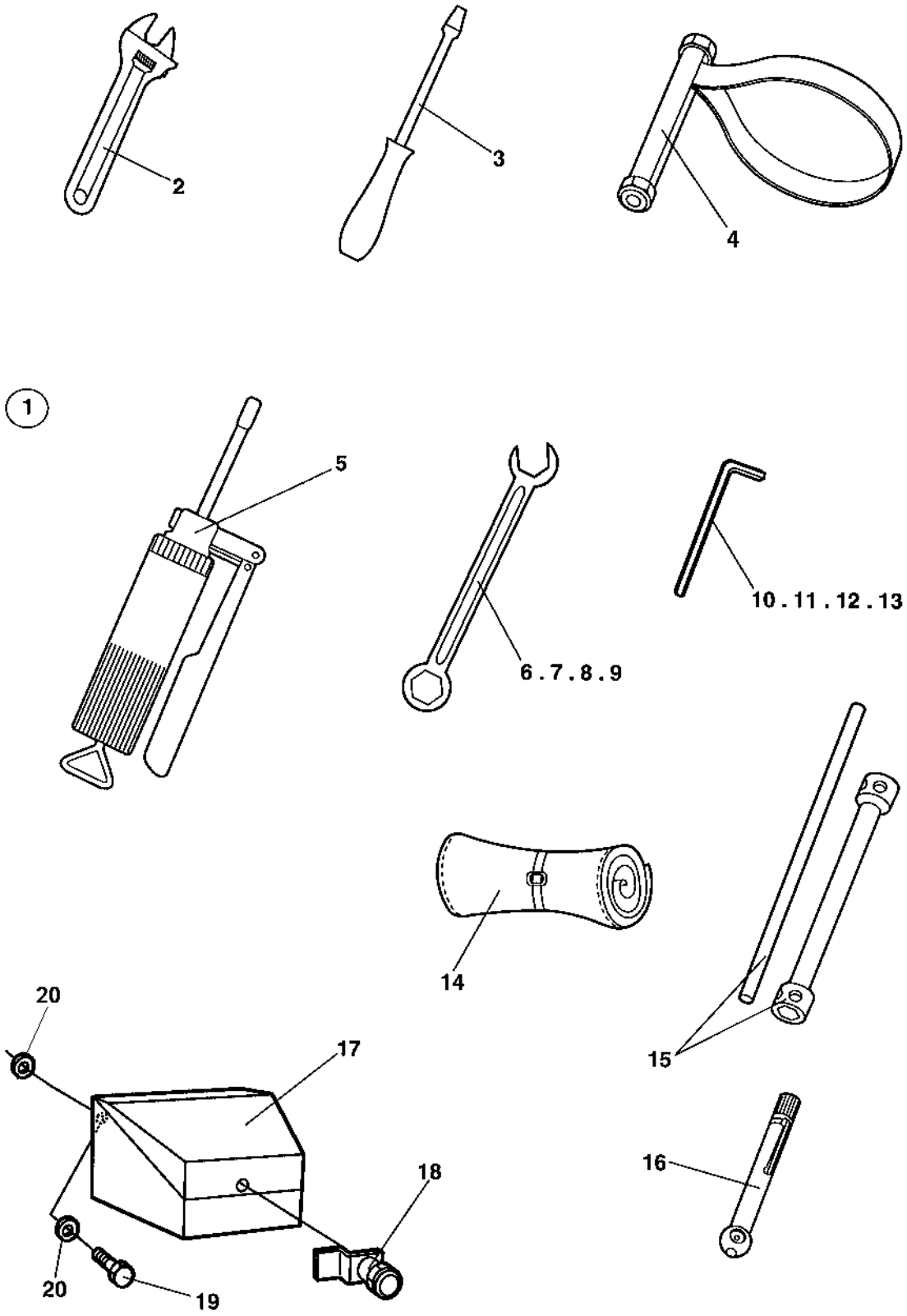

Tool equipment

Item	Part No	Rem	Qty	Description		Code
1	4700355890		1	Tool set Cpl		
2			1	.Adjustable wrench		
3			1	.Screw driver		
4	4700902610		1	.Belt pliers		
5	4700311016		1	.Grease gun		
6			1	.Open end spanner	10mm	
7			1	.Open end spanner	13mm	
8			1	.Open end spanner	16mm	
9			1	.Open end spanner	18mm	
10			1	.Allen wrench	10mm	
11			1	.Allen wrench	12mm	
12			1	.Allen wrench	6mm	
13			1	.Allen wrench	8mm	
14			1	.Tool bag		
15			1	.Wheel nut key	30/32mm	
16	4700901220		1	.Pressure gauge		
17	4700372837		1	Tool box		
18	4700372658		1	.Lock		
19	4700500021		3	Screw	M8-1,25x25 8.8	
20	4700904640		6	Washer	8,4x22x3	

Pad shell

17506

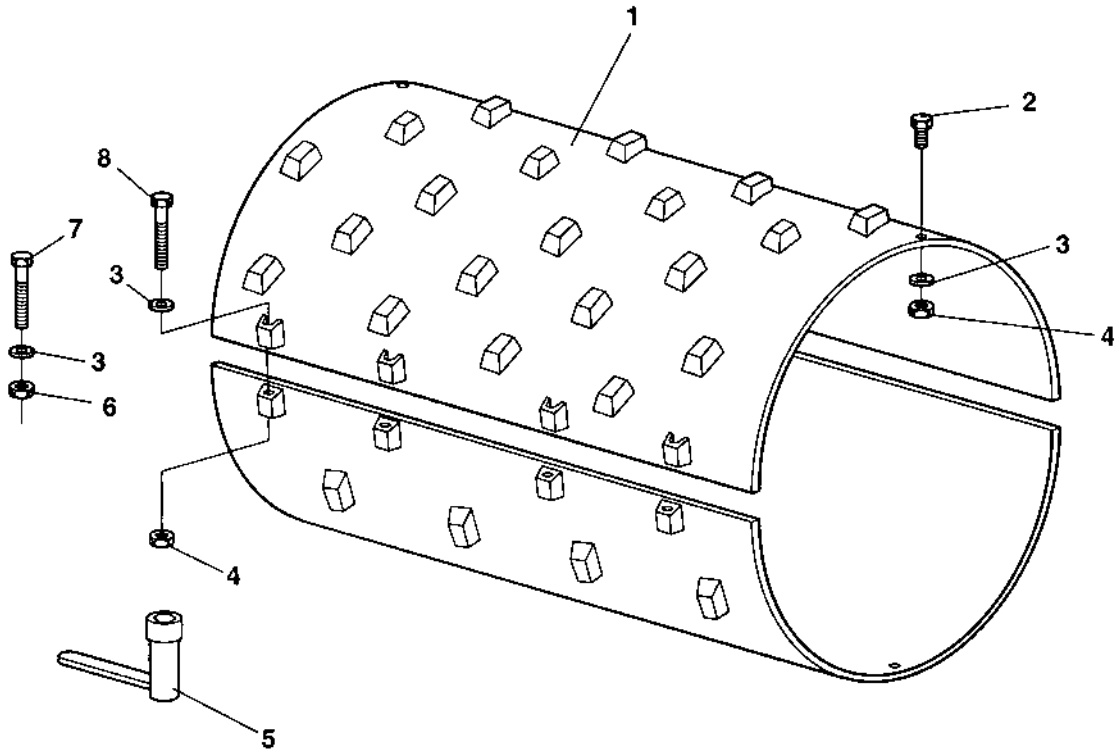

Pad shell

Item	Part No	Rem	Qty	Description		Code
1	4700382139		2	Pad shell		
2	4700500206		4	Screw	M20-2,5X60 8.8	
3	4700904233		16	Washer	21x36x3	
4	4700586022		12	Lock nut	M20-8	
5	4700382571		1	Hexagon sleeve		
6	4700570015		4	Nut	M20	
7	4700382572		4	Mounting screw		
8	4700500286		4	Screw	M20-2,5x140 8.8	

Scraper and beam

17373

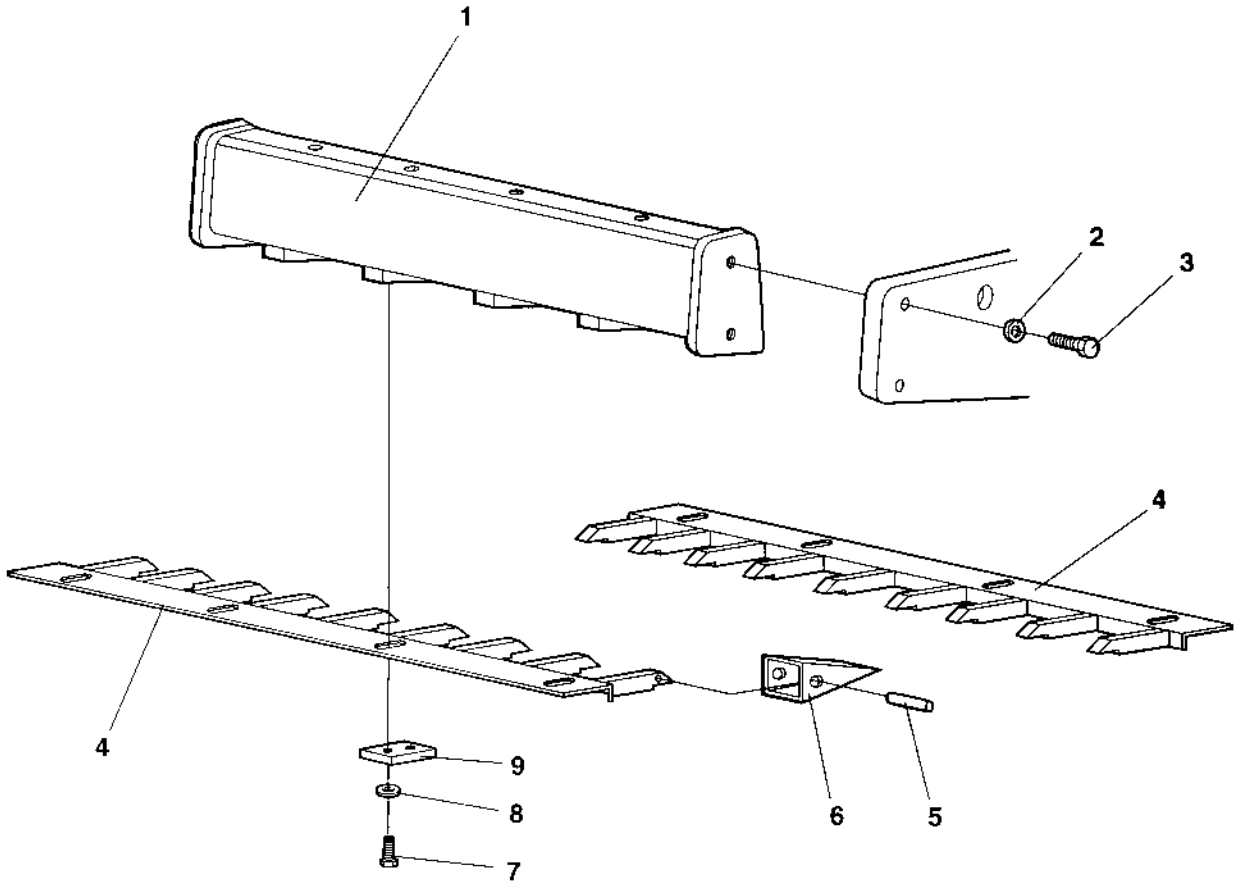

Scraper and beam

Item	Part No	Rem	Qty	Description		Code
1			1	Cross beam		
2	4700904234		4	Washer	25x45x4	
3	4700500147		4	Screw	M24x130	
4	4700344962		2	Scraper		
5	4700801631		18	Flexible pin	56,5x40	B
6	4700383844		18	Tooth		B
7	4700500102		16	Screw	M16x45	
8	4700615046		16	Conical spring washer	17x39	
9	4700355639		8	Bracket		

Pad shell

18170

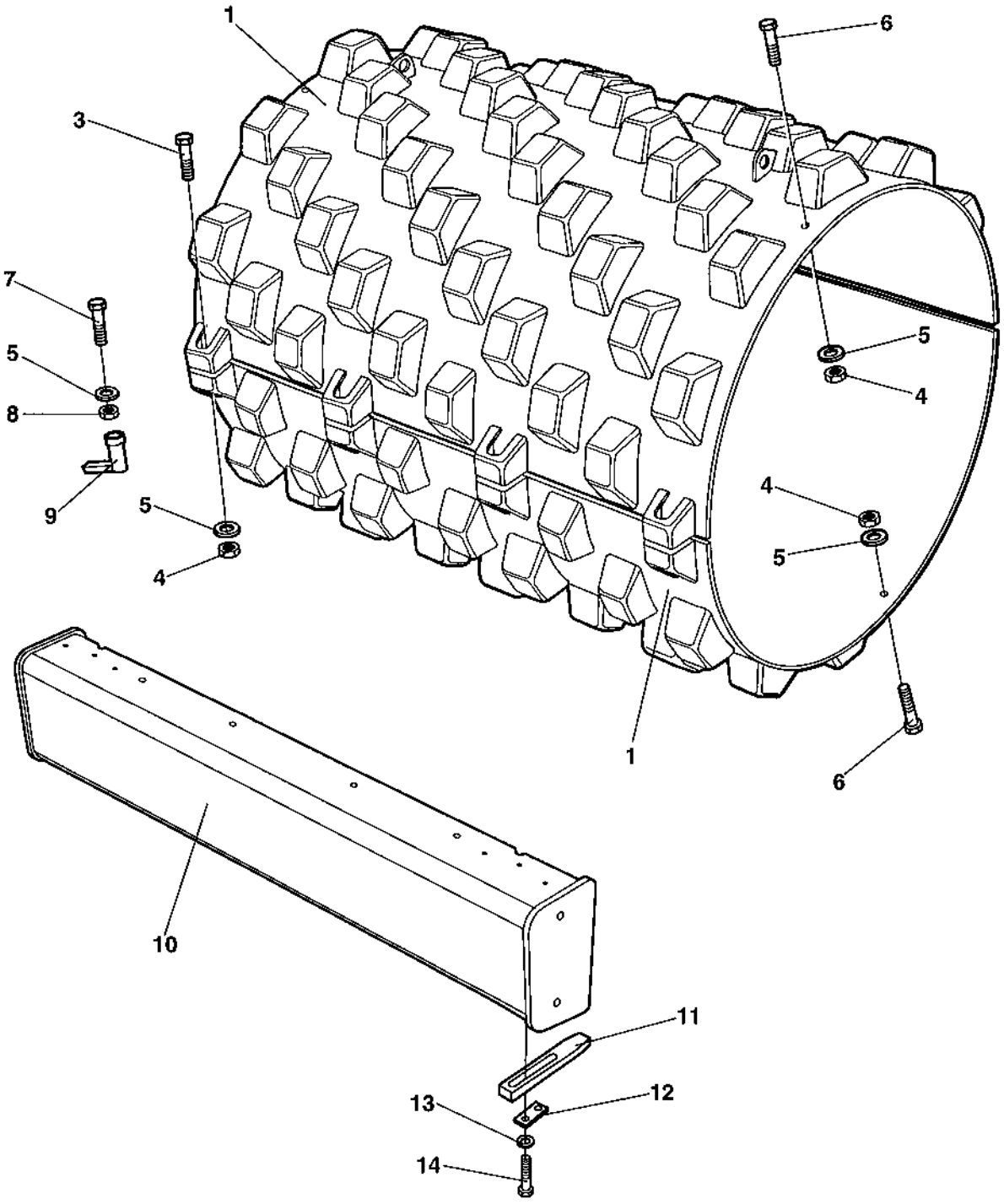

Pad shell

Item	Part No	Rem	Qty	Description	Code
1	4700382139		2	Pad shell	
3	4700500286		8	Screw M20-2,5x140 8.8	
4	4700586022		12	Lock nut M20-8	
5	4700904233		16	Washer 21x36x3	
6	4700500206		4	Screw M20-2,5X60 8.8	
7	4700382572		4	Mounting screw	
8	4700570015		4	Nut M20	
9	4700382571		1	Hexagon sleeve	
10	4700389907		1	Cross beam	
11	4700376551		18	Scraper tooth	
12	4700376622		18	Holder	
13	4700904232		36	Washer	
14	4700500165		36	Screw M16-2,0x75 8,8	

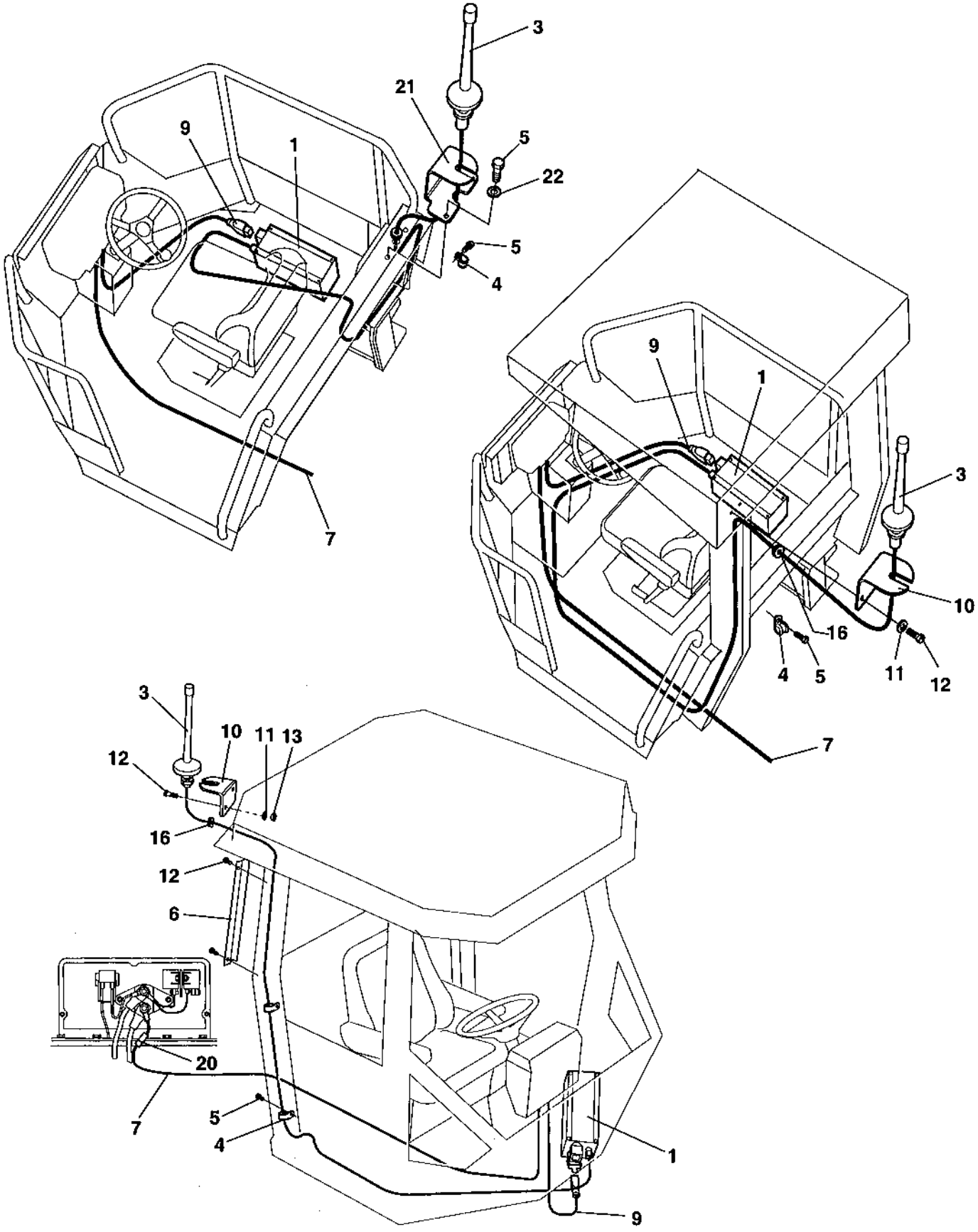
3
21
9
1
5
22
5
4
7
9
1
3
10
16
4
5
11
12
7
3
10
11
13
12
16
12
6
20
7
5
4
1
9

Item	Part No	Rem	Qty	Description		Code
1	4700386390		1	Communicator box		
	4700508002		4	Screw		
3	4700386391		1	Antenna	Cpl	
4	4700921039		4	Pipe clamp		
5	4700904415		4	Screw		
6	4700386512		1	Cable holder		
7	4700386533		1	Cable harness		
8	4700930154		3	Contact piece, NC		
9	4700386392		1	Cable harness		
10	4700386506		1	Antenna holder		
11	4700904228		4	Washer		
12	4700500040		4	Screw	M6-1x20 8,8	
13	4700586002		2	Lock nut		
16	4700909122		1	Grommet		
17	4700313102		N	Cable ties		
18	4700313041		N	Cable ties		
20	4700901224		1	Fuse	3A	D
21	4700386507		1	Antenna holder		
22	4700904281		2	Washer		

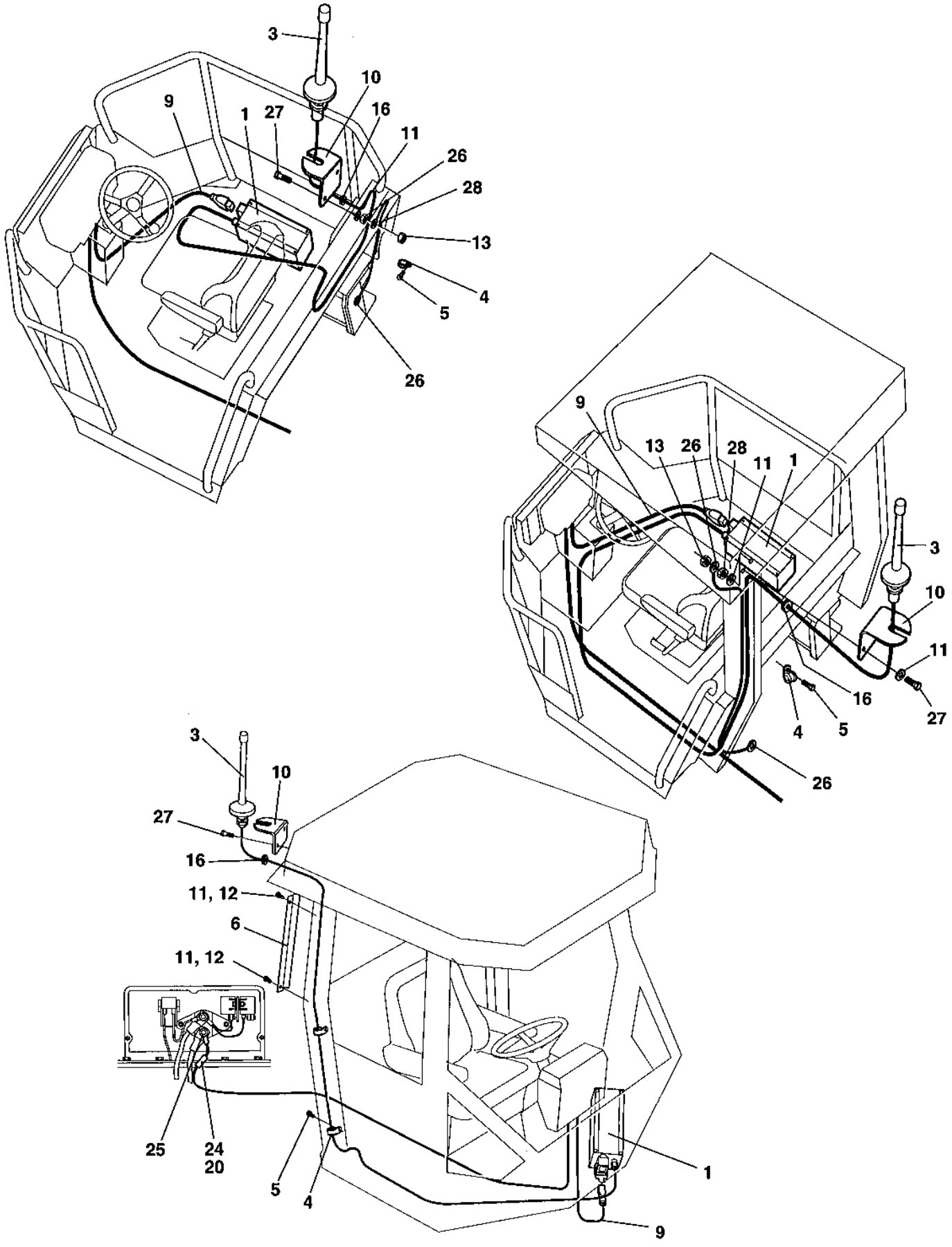
3
10
16
11
26
28
13
4
5
26
9
1
27
9
13
26
28
11
1
3
10
11
16
27
4
5
26
3
10
27
16
11, 12
6
11, 12
25
24
20
5
4
1
9

Item	Part No	Rem	Qty	Description		Code
1	4700386390		1	Communicator box		
	4700508002		4	Screw		
3	4700386391		1	Antenna	Cpl	
4	4700921039		4	Pipe clamp		
5	4700904415		4	Screw		
6	4700386512		1	Cable holder		
9	4700386392		1	Cable harness		
10	4700386506		1	Antenna holder		
11	4700904228		2	Washer		
12	4700500040		2	Screw	M6-1x20 8,8	
13	4700586002		4	Lock nut		
16	4700909122		1	Grommet		
17	4700313102		N	Cable ties		
18	4700313041		N	Cable ties		
20	4700901224		1	Fuse	3A	D
24	4700904015		1	Fuse holder		
25	4700960067		1	Cable clip		
26	4700387797		1	Ground cable		
27	4700541702		2	Screw	M6x12	
28	4700570004		1	Nut	M6X1,00 -8 A2K	

Air conditioner and heater, Simple cab

18783

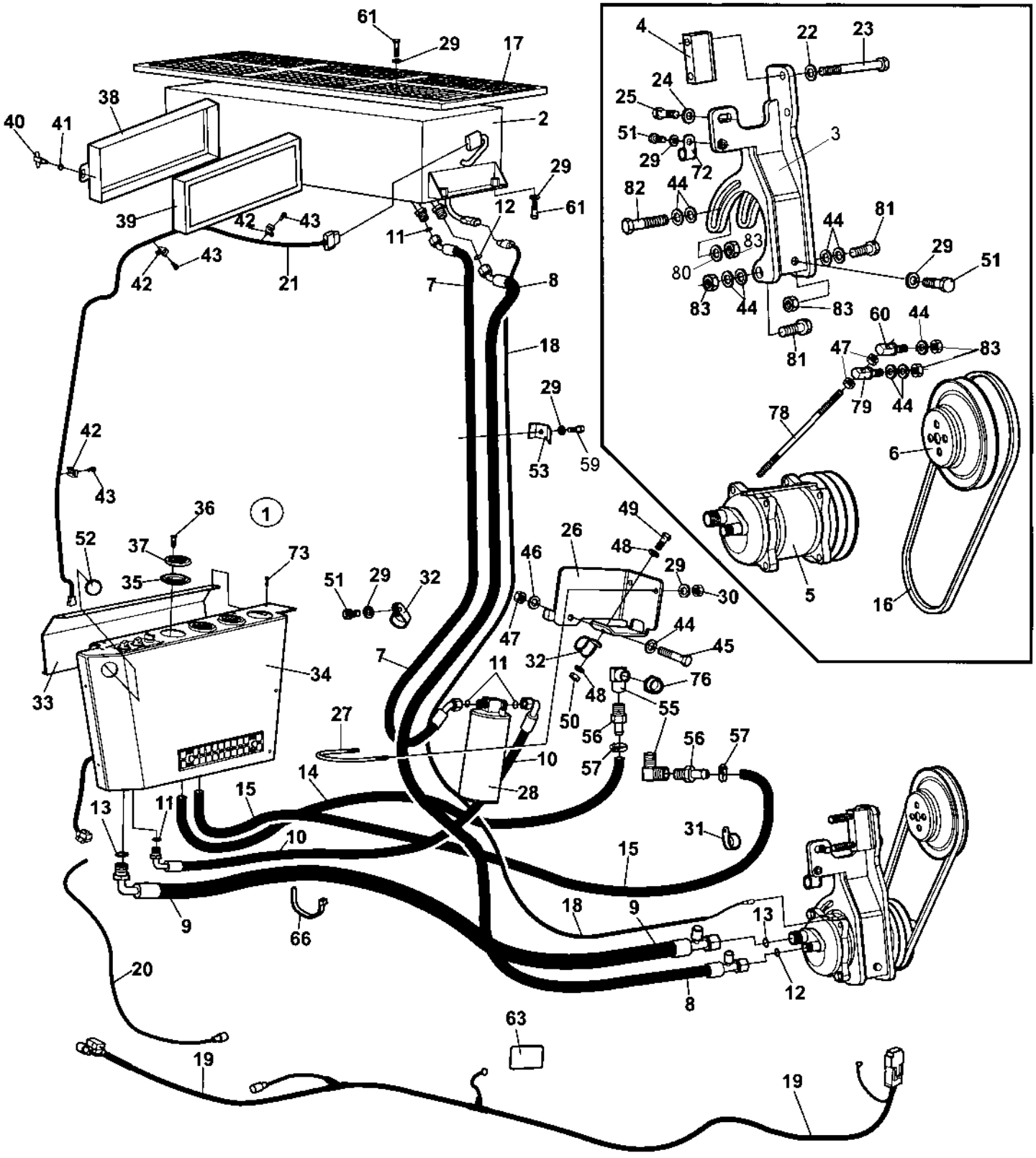

Air conditioner and heater, Simple cab

Item	Part No	Rem	Qty	Description		Code
1				Air conditioner and heater unit		
2	4700383413			Condenser, cpl (Page 366)		
3	4700377937		1	Bracket		
4	4700379643		1	Spacer		
5	4700379304		1	Compressor		
6	4700379280		1	Pulley		
7	4700384876		1	Hose		
8	4700379330		1	Hose		
9	4700379331		1	Hose		
10	4700384875		1	Hose		
11	4700384877		4	O-ring		
12	4700384878		2	O-ring		
13	4700384879		2	O-ring		
14	4700937737	A	1XL	Hose		
15	4700937737	B	1XL	Hose		
16	4700902924		1	V-belt		
17	4700384589		1	Cover		
18	4700385908		1	Cable harness		
19	4700387466		1	Cable harness		
20	4700387467		1	Cable harness		
21	4700379275		1	Cable harness		
22	4700904703		2	Washer		
23	4700500122		2	Screw		
24	4700904213		1	Washer		
25	4700903906		1	Screw		
26	4700390483		1	Holder		
27	4700313093		1	Pipe clamp		
28	4700383424		1	Drying filter		
29	4700904229		18	Washer	8,4x16x1,5	
30	4700586003		2	Lock nut	M8	
31	4700921161		1	Clamp		
32	4700921056		2	Clamp		
33	4700379285		1	Panel		
34	4700379286		1	Panel		
35	4700385443		3	Ring		
36	4700938691		12	Screw		
37	4700385442		3	Air nozzle		
38	4700908501		1	Filter frame		
39	4700908502		1	Filter		A
40	4700908504		2	Handle		
41	4700908503		2	O-ring		
42	4700904543		10	Cable tie holder		
43	4700903852		10	Screw	ST4,2x13	
44	4700904230		10	Washer		
45	4700500192		1	Screw	M10x80	
46	4700904567		1	Washer	10,5x28x6 HB305	
47	4700570006		3	Nut		
48	4700904228		2	Washer		
49	4700500013		1	Screw	M6-1x16 8,8	
50	4700570004		1	Nut	M6X1,00 -8 A2K	
51	4700500053		3	Screw	M8x20H 8.8	
52	4700345870		1	Plug		
53	4700346230		3	Clamp		
55	4700234365		2	Elbow 90		
56	4700387638		2	Hose connection		
57	4700313004		2	Hose clamp		
59	4700500023		3	Screw	M8-1,25x40 8,8	
60	4700388470		1	Screw		

A) L=3,600M
B) L=3,600M

Air conditioner and heater, Simple cab

18783

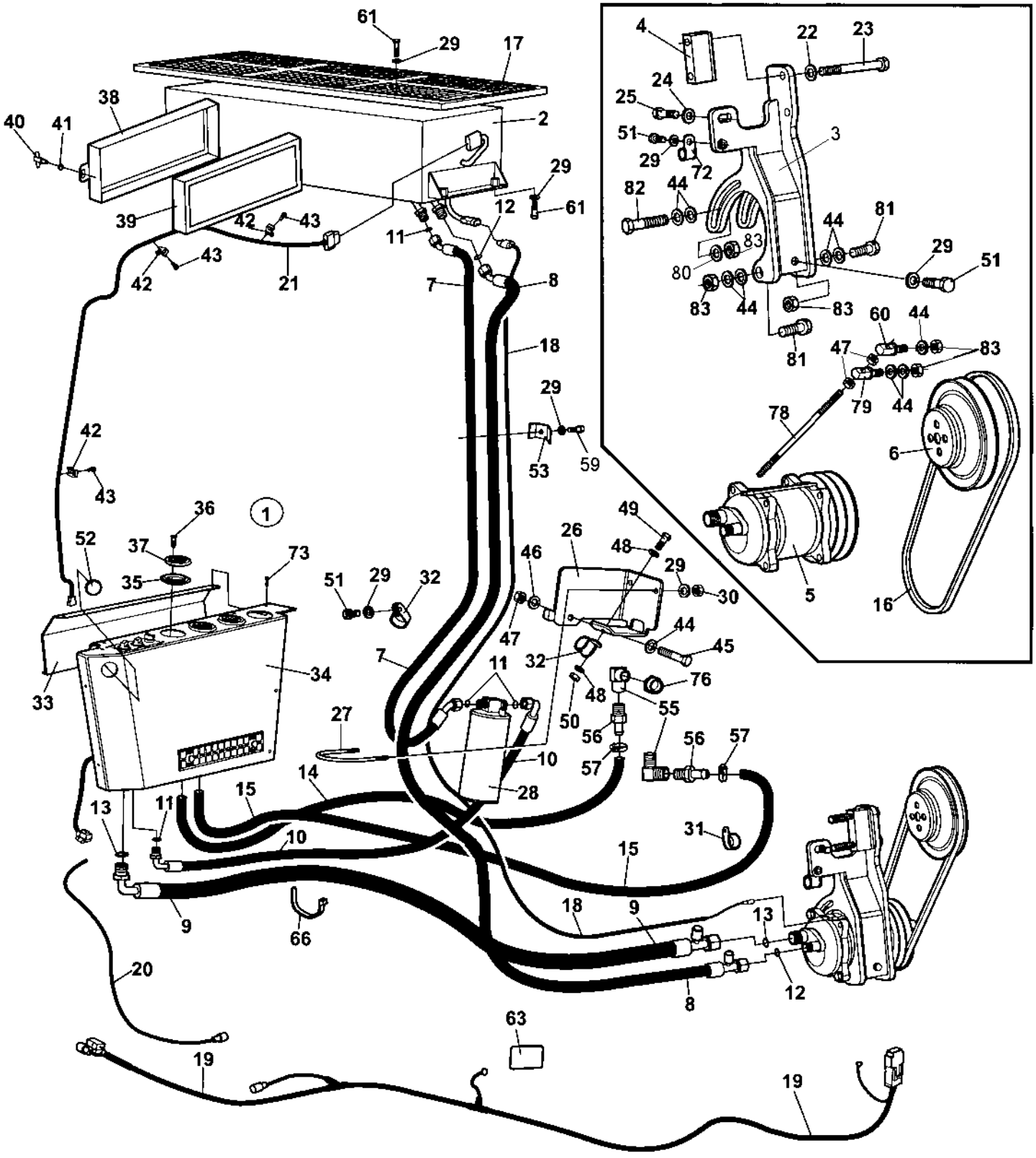

Air conditioner and heater, Simple cab

Item	Part No	Rem	Qty	Description		Code
61	4700500022		10	Screw	M8x30H 8.8 A2K	
63	4700904165		1	Safety decal	Toxic gases	
66	4700313102			Cable ties		
72	4700902558		1	Clamp		
73	4700792248		5	Screw	4,2 X25	
76				Not used on this model		
78	4700377965		1	Set screw		
79	4700377378		1	Set screw		
80	4700904557		1	Washer		
81	4700500031		2	Screw		
82	4700500161		1	Screw		
83	4700791172		5	Lock nut		

4700383413 Condenser, cpl

18385

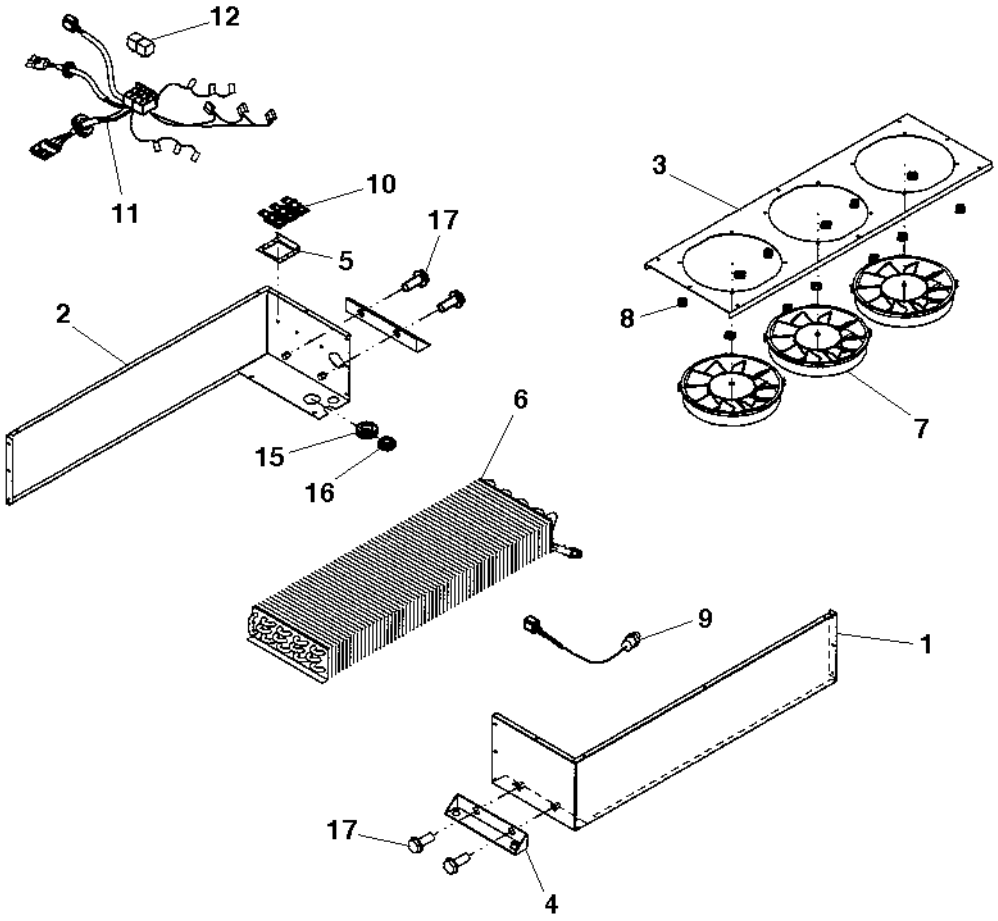

4700383413 Condenser, cpl

Item	Part No	Rem	Qty	Description	Code
1	4700938597		1	Cover	
2	4700938598		1	Cover	
3	4700938599		1	Fan bracket	
4	4700938600		2	Condensor bracket	
5	4700938601		1	Resistor bracket	
6	4700938602		1	Condensor Coil	
7	4700938603		3	Fan	
8	4700938604		12	Clip	
9	4700938605		1	Pressure switch	
10	4700938606		3	Resistor	
11	4700938607		1	Cable harness	
12	4700287598		2	Relay	12V-30A
15	4700938608		1	Grommet	
16	4700938609		1	Grommet	
17	4700901832		4	Screw	

Heater Simple cab

17844

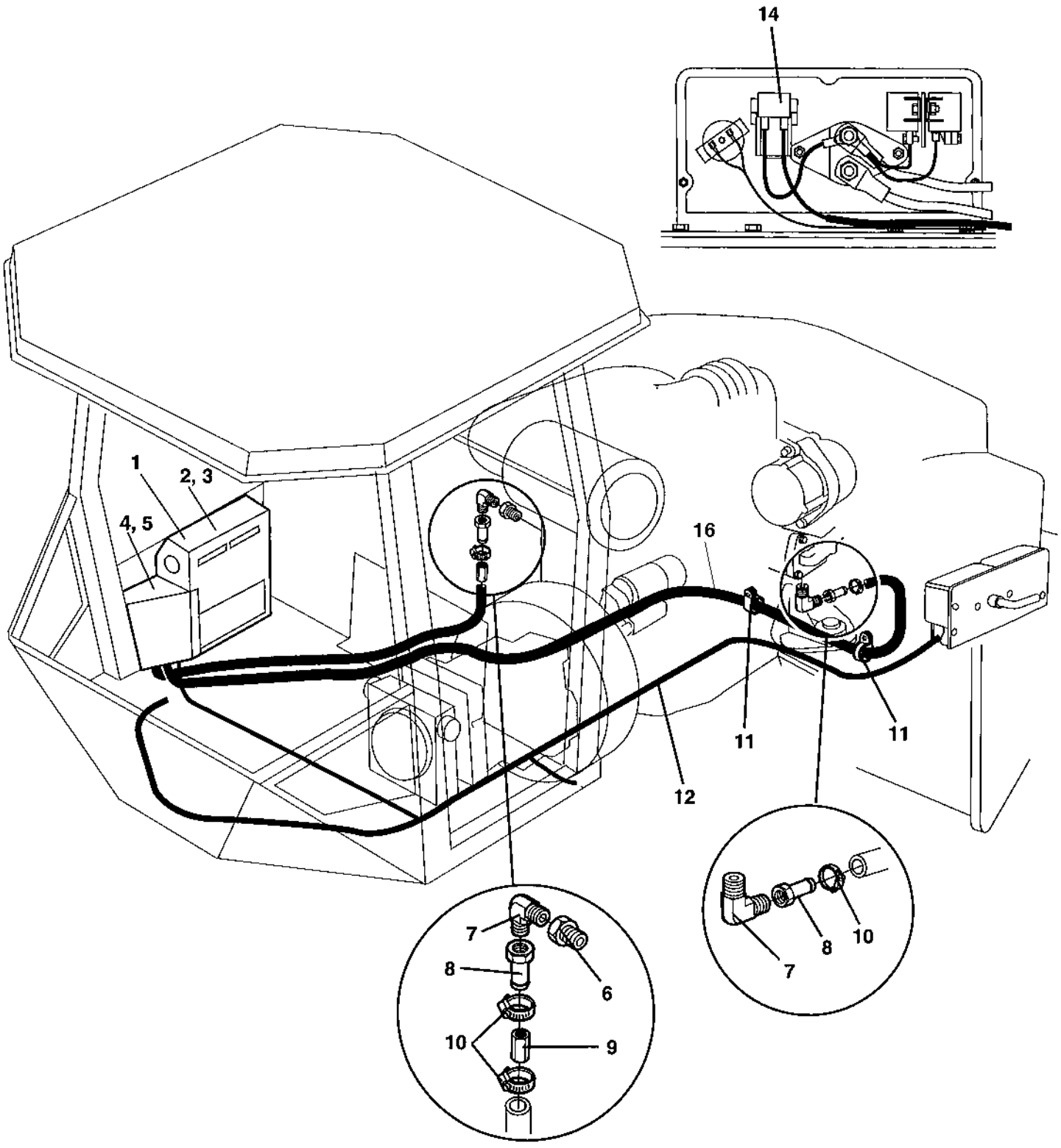

Heater Simple cab

Item	Part No	Rem	Qty	Description	Code
1	4700385222		1	Heater (Page 370)	
2	4700500018		4	Screw	M8-1,25x12 8,8
3	4700904229		4	Washer	8,4x16x1,5
4	4700500013		2	Screw	M6-1x16 8,8
5	4700904228		2	Washer	
6	4700813434		1	Reducer	
7	4700234365		2	Elbow 90	
8	4700814065		2	Hose connection	
9	4700372670		1	Reducer	
10	4700313002		3	Hose clamp	13-20 mm
11	4700921132		2	Clamp	
12	4700387466	A	1	Cable harness	
13	4700387467	A	1	Cable harness	
14	4700904294		1	Fuse	
15	4700313102		N	Cable ties	

A) Item 12 and 13 replaces Cable harness P/N 4700385235.

4700385222 Heater

17784

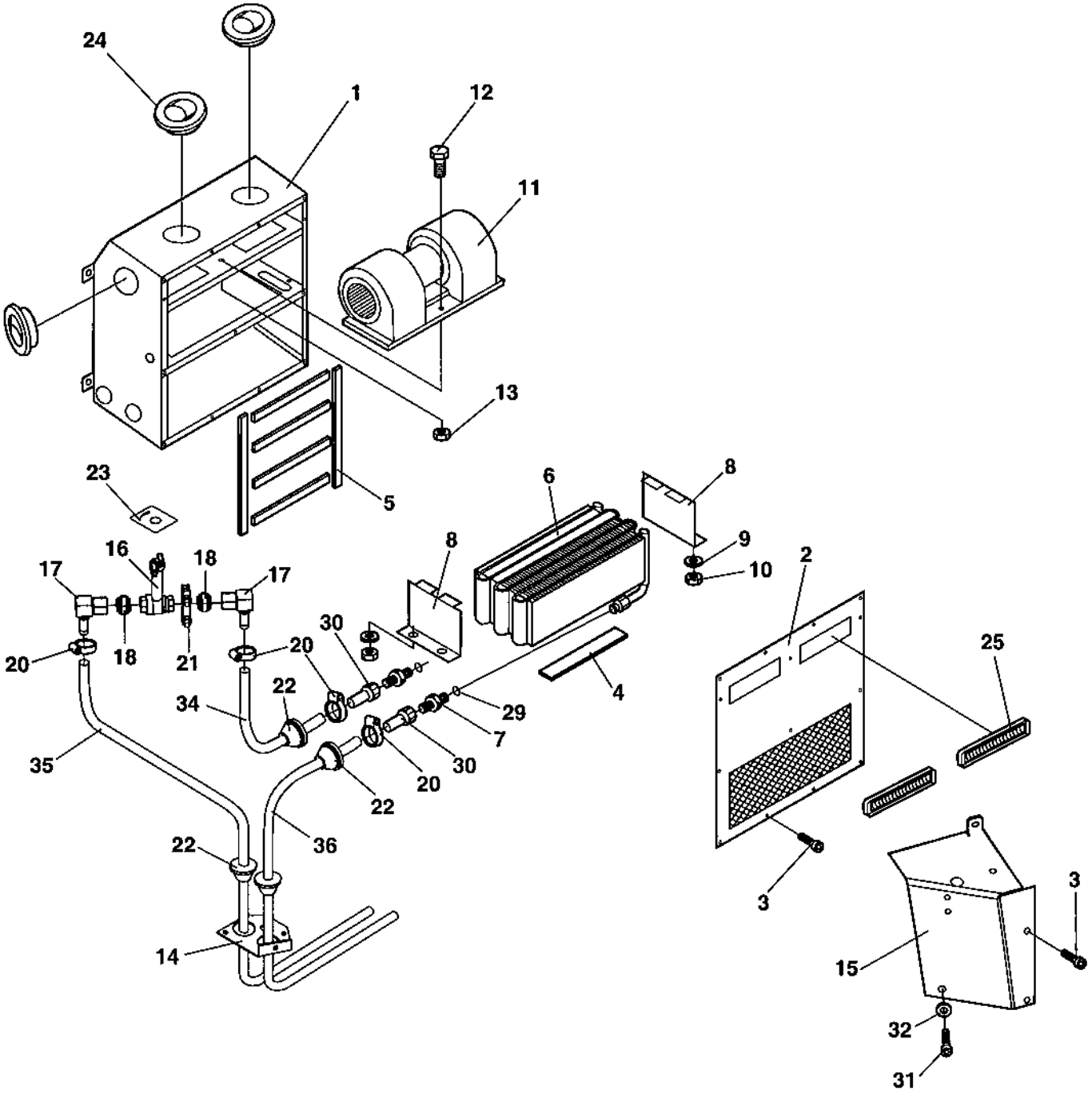

4700385222 Heater

Item	Part No	Rem	Qty	Description		Code
1	4700938587		1	Heater box		
2	4700938588		1	Cover plate		
3	4700935259		15	Screw		
4	4700908587	A	1	Edge trim		
5	4700935556	B	1	Sealing		
6	4700908585		1	Radiator		
7	4700908589		2	Connector		
8	4700935557		2	Heater element bracket		
9	4700904228		4	Washer		
10	4700570004		4	Nut	M6X1,00 -8 A2K	
11	4700908595		1	Fan, cpl		
12	4700500006		1	Screw	M5x16	
13	4700586001		1	Lock nut		
14	4700938589		1	Plate		
15	4700938590		1	Control panel		
16	4700937738		1	Ball valve w. lever		
17	4700937742		2	Connector		
18	4700937741		23	Connector		
20	4700313003		4	Hose clamp		D
21	4700923984		1	Clamp		
22	4700908496		1	Grommet		
23	4700938856		1	Cable harness	Work light	
24	4700908513		3	Nozzle		
25	4700908598		2	Nozzle		
29	4700908588		2	O-ring		
30	4700935558		2	Adapter		
31	4700500013		1	Screw	M6-1x16 8,8	
32	4700904735		1	Washer		
34	4700937737	C	1	Hose		
35	4700937737	D	1	Hose		
36	4700937737	E	1	Hose		

A) L=2,5 m
B) L=1 m
C) L=0,7 m
D) L=3,6 m
E) L=3,6 m

NUMERICAL INDEX

Part Number	Page	Part Number	Page	Part Number	Page
4700100040	21,51	4700287597	253,255	4700343801	67,69
4700116041	25,69,71,73,75	4700287598	253,255,367	4700344962	355
	77,79	4700288129	97	4700345243	169,185,187
4700160105	25,69,71,73,75	4700310008	21	4700345678	67
	77,79	4700311016	351	4700345679	67
4700160132	187,193	4700313001	99,109,111,113	4700345870	251,363
4700160269	253,255	4700313002	109,111,113,369	4700345871	21,51
4700160279	205	4700313003	371	4700345872	21,51
4700162008	169,185,187	4700313004	363	4700345873	21,51
4700162011	71,73,75,77,79	4700313006	91,97,99	4700345874	21,51
4700162017	69,71,73,75,77	4700313010	91,97,99	4700345875	21,51
	79	4700313023	91,97,99	4700345884	67
4700162018	69,75,77,79	4700313035	295	4700345885	67
4700162024	77	4700313041	109,111,113,251	4700346230	363
4700162027	71,73,75,77,79		273,275,359,361	4700347119	31,213,215,217
4700167023	69,71,73,75,77	4700313075	91,97		219
	79	4700313093	121,363	4700347512	83,85,279,281
4700167032	21,51	4700313094	117,121		283
4700202028	53	4700313102	169,185,213,215	4700348213	273,275
4700202041	97,99		217,223,235,237	4700348309	105,107
4700205027	99		273,275,359,361	4700348331	279,281
4700211733	141		365,369	4700348347	247
4700212336	191	4700330170	99	4700348481	295
4700212339	179	4700330171	99,109,111,113	4700349435	273,275
4700212373	7,9,11,13,15,17	4700330328	91,97	4700349682	67
	83,85,87,89	4700330333	151,165	4700349715	69,75,77,79
4700212530	155	4700330383	89,193	4700349879	231,233
4700212553	147,163	4700334025	193	4700349880	231,233
4700230277	69	4700334121	193,213,215,217	4700355263	253,255
4700230515	89		223	4700355301	255
4700232039	231,233	4700334122	193	4700355639	355
4700232097	213,215,217,223	4700334132	239	4700355658	67
4700232122	193,231	4700334134	205	4700355676	67
4700232210	67,69,71,73,75	4700334135	193	4700355869	301,303
	77,79	4700334138	169,185,187,205	4700355890	351
4700232222	169,185,187	4700334140	169,185,187	4700355983	125,127,129,131
4700233304	231,233	4700334196	235,237		133,135
4700234119	205	4700334197	223	4700356029	71,75
4700234218	213,215,217,223	4700334199	213,215,217,223	4700356348	235,237
4700234243	169,185,187	4700334205	205,227,229	4700356500	247
4700234254	169	4700334248	169,185	4700357138	15,17,231,233
4700234365	91,97,99,363,369	4700334389	227,229	4700357271	75
4700234382	193	4700334468	169,185,187	4700357316	285
4700234388	235,237	4700334524	229	4700357424	285
4700234619	109,111,113	4700334558	213,215,217,223	4700357425	285
4700234622	235,237	4700335607	249,251	4700357426	285
4700234626	213,215,217,223	4700337042	51	4700357427	285
4700234662	215,217,223	4700337045	21,51	4700357488	31
4700234667	213,215	4700338304	213,215,217,223	4700357494	295
4700234843	227,229	4700340863	195	4700357500	293
4700234875	169,185	4700341124	45	4700357501	295
4700234888	227,229	4700343159	51	4700357583	247,249
4700234909	169,185,187	4700343318	69,71,73,75,77	4700357585	253,255
4700234958	169,185,187		79	4700357630	39,45
4700238158	257,259	4700343322	69,71,73,75,77	4700357643	281,283,285
4700244002	269		79	4700357815	67
4700244054	109,111,113	4700343461	69,71,73	4700357855	285,287
4700246069	99	4700343462	71,75	4700358027	39,45
4700272372	343	4700343550	259	4700358033	39,41,43
4700272373	341	4700343744	69,71,73,75,77	4700358034	39
4700285909	295		79	4700358142	285
4700285911	295	4700343775	31	4700358143	285

NUMERICAL INDEX

Part Number	Page	Part Number	Page	Part Number	Page
4700358254	285	4700372743	307	4700375999	169,183,185,187
4700358388	171,173,177,179	4700372745	307	4700376000	167,213,215,217
4700358452	267	4700372757	279,281,283		223,225
4700358881	285,341,343,347	4700372758	261,263,265	4700376045	31
4700359550	169,185,187	4700372772	83,85,87,89	4700376252	279,281,283,309
4700359551	169,185,187	4700372784	273	4700376255	329
4700359552	169,185,187	4700372785	279,281,283,309	4700376334	31
4700359955	69		329	4700376340	53,55,57
4700359998	309	4700372836	273,275	4700376346	53
4700370112	123,125,137	4700372837	351	4700376348	53,55
4700370229	83,85,87,89	4700372844	31	4700376349	53,55,57
4700370231	69,75,77,79	4700372913	125	4700376354	53,55,57
4700370234	279,309	4700372941	123,153	4700376366	53,55,57
4700370258	83,85,309	4700372964	303	4700376488	307
4700370365	75	4700372983	83,85	4700376489	307
4700370680	125	4700372984	83,85	4700376551	357
4700370766	307	4700373016	205,273,275	4700376622	43,49,357
4700370792	307	4700373017	193	4700376652	35,37
4700370803	307	4700373096	273,275	4700376667	35,37
4700370840	91,97,99	4700373131	125,127	4700376701	31
4700370938	91	4700373140	273,275	4700376819	43,49
4700370961	125	4700373144	91,97	4700376825	43
4700370970	125	4700373168	125	4700376826	43
4700371179	125	4700373169	125	4700376829	49
4700371277	247	4700373176	125,127	4700376944	63
4700371326	253,255	4700373184	261,263,265	4700376945	63
4700371344	253,255	4700373270	193,205	4700377009	299
4700371481	83,85	4700373350	33	4700377010	299
4700371482	83,85	4700373361	239,241,243	4700377011	299
4700371545	167,169,171,173	4700373363	343	4700377012	299
	175,239	4700373364	343	4700377014	299
4700371669	213,215,217	4700373400	279,281,283	4700377015	299
4700371728	293	4700373413	67,69	4700377016	299
4700371730	325	4700373421	51	4700377018	299
4700371774	91,97,99	4700373423	205	4700377019	297
4700371945	125	4700373424	193	4700377020	297
4700371946	125	4700373460	31,109,111,113	4700377021	297
4700371947	125	4700373574	109,111,113	4700377024	297
4700371948	125	4700373746	305	4700377071	271
4700372029	231	4700373747	305	4700377098	121
4700372044	231	4700373748	305	4700377370	97
4700372048	169	4700373749	305	4700377378	365
4700372087	31	4700373750	305	4700377518	281,329
4700372224	91	4700373775	97	4700377556	281,283,329
4700372229	7,15,17,169,185	4700373782	83	4700377742	343
	187	4700373906	305	4700377743	343
4700372235	169,185,187	4700373907	305	4700377744	341
4700372348	91	4700374028	235,237	4700377937	363
4700372457	309,329	4700374029	261,263,265	4700377965	365
4700372489	307	4700374030	261,263,265	4700378206	31
4700372492	83,85	4700374059	169,185,187	4700378210	87
4700372493	83,85	4700374065	289,291,293	4700378211	87
4700372494	279,281,283,309	4700374398	267	4700378213	87
	329	4700374471	279	4700378214	87
4700372513	213,215,217,223	4700374606	309,329	4700378335	287
4700372514	213,215,217,223	4700374607	309,329	4700378745	251
4700372544	91,97	4700374744	31	4700378759	299
4700372616	289	4700374864	91	4700379164	89
4700372625	213,215,217,223	4700374900	51	4700379236	335
4700372658	351	4700375031	167,213,215,217	4700379275	363
4700372670	369		219	4700379280	363
4700372678	307	4700375507	289,291,293	4700379285	363

NUMERICAL INDEX

Part Number	Page	Part Number	Page	Part Number	Page
4700379286	363	4700380830	169,177,179,181	4700383857	123,127,129,131
4700379304	363		185,239		133,135,145
4700379330	363	4700380889	279,309	4700383863	41,47
4700379331	363	4700380963	305	4700383933	127,129,131,133
4700379410	129,131,133	4700380964	305		135
4700379411	129,131,133	4700380967	75	4700383955	127,129,131,133
4700379412	129,131,133	4700380968	31		135
4700379413	129,131,133	4700380993	21,51	4700383956	127
4700379414	129,131,133	4700381027	69,75,77,79	4700383958	193,203
4700379482	185,187	4700381028	71,75	4700383974	127,129,131,133
4700379608	333	4700381033	59		135
4700379630	223	4700381081	109	4700383975	127,129,131,133
4700379631	131	4700381082	109		135
4700379632	131	4700381151	167,193,197	4700383976	127,129
4700379636	281,283	4700381268	289,291,293	4700383977	127,129
4700379643	363	4700381297	53,55,57	4700383978	127
4700379691	131	4700381313	91	4700383979	127
4700379878	73,77,79	4700381330	53,55,57,307	4700383980	127
4700379880	73,77,79	4700381347	53,55,57	4700383981	127
4700380005	53	4700381348	53,55,57	4700384048	35,37
4700380012	53,55,57	4700381351	273,275	4700384051	41
4700380015	83,85,87,89	4700381352	307	4700384052	41
4700380018	69,71,73,75,77	4700381353	307	4700384066	31
	79	4700381413	91,97,99	4700384114	41,47,67,69,71
4700380047	53,55	4700381435	261,263		73,75,77,79
4700380052	59	4700381446	53	4700384121	67
4700380053	59	4700381462	263,265	4700384159	341
4700380057	59	4700381603	45,47	4700384163	263,265
4700380058	59	4700381634	71,73,75,77,79	4700384382	71,75
4700380078	195	4700381738	71,75	4700384402	323
4700380087	247	4700381761	73,77,79	4700384403	323
4700380101	83,85,87,89	4700381777	295	4700384498	21,51
4700380109	53,55,57	4700381989	53,55,57	4700384589	363
4700380113	279	4700382093	117,119	4700384759	329
4700380123	279,281,283	4700382139	353,357	4700384875	363
4700380129	279	4700382259	35	4700384876	363
4700380145	167,193,195	4700382349	291,293	4700384877	363
4700380157	103,105	4700382392	85,87	4700384878	363
4700380158	115	4700382393	85,87,89	4700384879	363
4700380161	103,105	4700382397	279,309,329	4700385222	369,371
4700380185	81,91,93	4700382406	55,57	4700385442	363
4700380208	279,309	4700382411	55,57	4700385443	363
4700380262	109,111	4700382429	55	4700385599	257,259
4700380277	253,255	4700382571	353,357	4700385908	363
4700380278	253,255	4700382572	353,357	4700386006	85,87
4700380280	247,249	4700382582	279,281,283,309	4700386135	91
4700380281	247,249,253,255		329	4700386272	25
4700380305	97	4700382644	35	4700386390	359,361
4700380324	71,75	4700382719	83	4700386391	359,361
4700380365	91	4700382751	341	4700386392	359,361
4700380366	295	4700382782	253,255	4700386448	117
4700380367	295	4700382850	31	4700386500	55
4700380372	91,97	4700383200	307	4700386506	359,361
4700380490	169	4700383225	307	4700386507	359
4700380577	239	4700383326	273,275	4700386512	359,361
4700380700	239	4700383413	363,367	4700386533	359
4700380717	169,185,187	4700383424	363	4700386789	121
4700380727	279,281,283	4700383452	273,275	4700386812	31
4700380755	53,55,57	4700383705	281,283	4700386814	55
4700380798	269,271	4700383806	81,91,95	4700386815	97
4700380799	269	4700383844	355	4700386853	99
4700380800	269	4700383856	123,161	4700386882	111

NUMERICAL INDEX

Part Number	Page	Part Number	Page	Part Number	Page
4700386943	99	4700390896	73,77,79	4700394687	107
4700386999	249,251	4700390897	69,73,77,79	4700394902	213,215,217,223
4700387085	97,99	4700390900	125,341	4700395022	107
4700387089	59	4700390927	337	4700395384	205,207,209
4700387090	59	4700391194	69	4700395385	187,189,191
4700387110	97	4700391206	69	4700395386	205,211
4700387128	87	4700391379	299	4700395458	69,79
4700387129	87,89	4700391380	299	4700395552	119
4700387130	97	4700391381	299	4700395821	251
4700387226	287	4700391382	299	4700396030	67,69
4700387227	287	4700391383	299	4700396968	259
4700387239	97	4700391386	299	4700397126	31
4700387241	97	4700391784	287	4700416004	295
4700387263	85	4700392002	217,221,223	4700416034	289,291,293,295
4700387264	85	4700392100	221		297
4700387265	111	4700392103	221	4700450066	53,55,57
4700387419	265	4700392105	221	4700450067	53,55,57
4700387466	363,369	4700392170	99	4700470020	247,249
4700387467	363,369	4700392283	89	4700482010	169
4700387545	287	4700392284	89	4700482056	227,229
4700387638	363	4700392295	121	4700482107	193
4700387683	257,259	4700392296	121	4700482182	169,185,187
4700387720	287	4700392313	99	4700482342	235,237
4700387728	255	4700392378	99	4700482391	169,185,187,205
4700387797	361	4700392394	281,283	4700482399	227,229
4700387909	85	4700392507	257	4700482435	213
4700388089	69	4700392747	121	4700482474	229
4700388145	127,129,131,133	4700392786	57	4700482516	227
	135	4700392810	105,107	4700482525	213
4700388146	127,129,131,133	4700392821	69	4700482815	213
	135	4700392875	283	4700483031	205
4700388210	273,275	4700392899	297	4700483033	169,239
4700388211	275	4700392900	297	4700483050	213,215,217,223
4700388449	343	4700392911	57	4700483109	213,215,217,223
4700388470	363	4700392912	57	4700483123	169,185,187
4700388750	119	4700392981	233	4700483188	235,237
4700388751	117,119	4700392986	233	4700483204	235,237
4700388855	89	4700392996	257,259	4700483231	223
4700389171	291	4700393085	107	4700483280	223
4700389175	291,293	4700393276	67,69	4700483286	193,205
4700389177	291	4700393277	67,69	4700483397	193
4700389178	291	4700393278	67,69	4700483445	235,237
4700389184	293	4700393279	67,69	4700483496	215,217
4700389577	267	4700393388	293	4700483497	215,217,223
4700389600	107	4700393661	121	4700483498	215,217,223
4700389907	357	4700393666	107	4700483499	169,185,187
4700390083	99	4700393705	99	4700483500	193
4700390478	61	4700393713	99	4700483501	193
4700390479	61	4700393772	99	4700483517	169,239
4700390480	61	4700393810	251	4700483551	187
4700390481	61	4700393857	57	4700483558	185
4700390483	363	4700393962	89	4700483999	205
4700390587	135	4700393963	89	4700484234	205
4700390588	135	4700394005	89	4700484235	205
4700390589	135	4700394071	99	4700499266	103,105,107
4700390590	133,135	4700394097	99	4700500006	109,111,113,269
4700390591	133,135	4700394511	89		371
4700390705	113	4700394603	293	4700500007	287
4700390759	135	4700394680	107	4700500012	91,97,99,249,263
4700390760	135	4700394686	13,15,17,103,105		265
4700390762	133,135		107	4700500013	99,251,267,283
4700390771	77	4700394687	15,17,103,105		289,291,293,295

NUMERICAL INDEX

Part Number	Page	Part Number	Page	Part Number	Page
4700500013	363,369,371	4700500091	117,119	4700541526	273,275
4700500015	289	4700500100	307	4700541702	253,255,261,263
4700500018	51,91,97,99,235	4700500102	35,37,355		265,267,285,361
	237,249,369	4700500109	185,187	4700541703	295
4700500019	69,91,97,99,103	4700500111	41,279	4700541705	261
	105,111,213,215	4700500121	309	4700570003	247,249
	217,223,231,233	4700500122	363	4700570004	251,253,255,257
	251,279,325,327	4700500123	39,45		259,295,299,361
	335	4700500133	53,55,57,75,213		363,371
4700500021	55,57,91,97,101		215,217,223	4700570005	247,249,251,329
	107,111,113,117	4700500134	45	4700570006	231,363
	119,169,185,187	4700500147	355	4700570007	69
	267,285,289,291	4700500149	169	4700570015	353,357
	293,295,297,305	4700500153	305	4700570016	33,67
	351	4700500154	89	4700573003	289,291,293
4700500022	53,55,57,109,111	4700500161	83,365	4700573004	295
	113,121,305,307	4700500163	71,73,75,77,79	4700586001	57,251,255,269
	363	4700500165	69,357		297,371
4700500023	363	4700500184	247,249	4700586002	53,55,57,253,255
4700500025	251	4700500192	231,363		257,259,271,285
4700500028	99,169,185,187	4700500194	67,69,83,85,87		305,359,361
	193,205		89,193,273,275	4700586003	59,83,85,87,89
4700500029	31,63,99,113,279	4700500195	39,69,71,73,281		107,251,267,281
	281,283,287,309		283,329		283,295,297,305
	329	4700500196	69,75,77		327,363
4700500030	53,55,119,193	4700500197	79	4700586011	55
	205,233,301	4700500206	353,357	4700586018	83,85,87,89,91
4700500031	55,57,91,303,365	4700500210	281,283		265
4700500032	119,193,205	4700500226	279	4700586019	39,41,43,45,47
4700500035	85,169,249	4700500228	83,85		49,67,83,85,87
4700500036	87	4700500230	307		89,299
4700500037	51,83,85	4700500240	63	4700586021	39,45,325
4700500040	55,57,99,109,247	4700500263	169,185,187,239	4700586022	353,357
	249,261,263,265	4700500283	33	4700588176	341
	271,285,289,291	4700500286	353,357	4700600008	213,215,217
	293,359,361	4700500287	51	4700600009	67
4700500043	31,261,263,265	4700500505	287	4700600014	153
4700500044	223	4700502019	193	4700600016	219,221
4700500046	169,185,187	4700502034	213,215,217	4700603009	307
4700500047	53,55,57,85,87	4700502059	205	4700603010	289,291,293
	89,247,249,275	4700502078	193	4700603018	109,111,113
4700500048	301,303	4700502132	169,185,187,239	4700615046	67,71,75,355
4700500049	43	4700508002	359,361	4700624005	341
4700500051	249,251	4700508005	309	4700624016	307
4700500053	53,55,57,59,91	4700508006	279	4700629016	295
	97,99,107,121	4700508019	71,75	4700629066	325
	235,237,247,249	4700508029	83,85,87,89,213	4700635061	31,213,215,217
	251,257,259,269		215,217,223		219,221
	271,273,275,279	4700508056	71,75	4700747282	99,109,111,113
	281,283,335,363	4700508059	309	4700791119	231,233
4700500056	41,43	4700508068	299	4700791120	231,233
4700500060	251	4700508079	85,87,89	4700791156	69,71,73,75,77
4700500061	291	4700508092	297		79
4700500067	113	4700509025	83,85,87,89	4700791172	365
4700500070	39,41,47,87,89	4700509034	169,185,187	4700791175	129,131,133,135
4700500075	99,247,249,251	4700513012	57	4700791176	129,131,133,135
	253,255,257,259	4700513017	287	4700791183	251
4700500076	43,49,67,71,75	4700527002	67,69	4700791185	257,259
4700500077	31	4700533001	295	4700791211	257,259
4700500079	273,275,293	4700533038	295	4700791218	329
4700500082	67,69,71,73,75	4700533070	255	4700791226	281,283
	77,79	4700535005	319	4700791227	47

NUMERICAL INDEX

Part Number	Page	Part Number	Page	Part Number	Page
4700791277	341	4700828112	211	4700901452	171,177
4700791279	341	4700828114	211	4700901453	171,177,241
4700791371	249	4700828138	211	4700901454	171,177
4700791475	55,57	4700828139	211	4700901455	171,177,189
4700791476	287	4700828142	207	4700901458	171,177,189
4700791503	249,251	4700900188	191	4700901463	173
4700791517	257	4700900229	169,185,187,205	4700901464	173
4700791573	127,129,131,133	4700900247	109	4700901465	173,179
	135	4700900249	109,111	4700901466	173,179,191
4700791578	257,259	4700900430	193	4700901467	173,179
4700791582	257,259	4700900512	205	4700901475	173,179
4700791583	257,259	4700900552	227,229	4700901476	173,179
4700791584	257,259	4700900604	239	4700901742	201
4700791585	257,259	4700900775	69,71,73,75,77	4700901766	269
4700791587	257,259		79	4700901767	253,255,257,259
4700791588	257,259	4700900776	23,71,73,75,77		285
4700791597	57		79	4700901828	71,75
4700791598	249	4700900782	23,71,73,75,77	4700901832	367
4700791642	341		79	4700901834	137,145,153,161
4700791647	257	4700900784	23,71,75	4700901987	143,151,159,165
4700791657	257,259	4700900798	269	4700902123	301,303
4700791723	259	4700900807	35,67	4700902125	235
4700791733	259	4700900926	141	4700902163	285
4700791739	259	4700900937	155	4700902164	285
4700791819	205	4700900944	155	4700902166	53,55,57,91,97
4700791823	205	4700900957	149,157		99,121,283,287
4700791924	249	4700900966	141,149,157	4700902183	301
4700791927	69	4700900969	155	4700902184	301
4700791948	49	4700900970	155	4700902185	301
4700792052	251	4700900971	155	4700902186	301
4700792081	85,87,89	4700900972	155	4700902187	295
4700792083	257,259	4700901121	113	4700902189	295
4700792248	365	4700901145	83,85,125,127	4700902191	295
4700792261	129,131,133,135		129,131,133,135	4700902192	289
4700792277	249		137,153,279,281	4700902203	281,283
4700792315	257,259		283,309,329	4700902223	253,255
4700792320	257,259	4700901155	193	4700902224	253,255
4700792339	185,187	4700901157	193	4700902225	253,255
4700792413	257,259	4700901190	273,275	4700902227	261,263,265
4700792461	257,259	4700901218	125,127,129,131	4700902239	127
4700792462	257,259		133,135	4700902284	53,247,249
4700792463	257,259	4700901219	125,127	4700902285	53,55,57,91,97
4700792464	67,69	4700901220	351		99,109,247,249
4700792549	57	4700901224	271,359,361		251,273,275,291
4700792661	89	4700901226	253,255	4700902286	101,249,275,279
4700801187	27,67,69	4700901227	257,259	4700902288	273,275
4700801567	247,249	4700901228	257,259	4700902337	183
4700801631	355	4700901240	253,255	4700902379	55,57,285
4700813316	213,215,217	4700901328	181,191	4700902496	273,275
4700813379	125,127,129	4700901369	261,263,265	4700902558	111,113,365
4700813380	125,127,129	4700901385	195	4700902581	169,185,239,241
4700813391	31	4700901386	195	4700902610	351
4700813434	247,249,251,369	4700901387	195	4700902624	197,203
4700813444	213,215,217,223	4700901389	195	4700902625	201
4700813499	169,185,205	4700901390	195	4700902655	195,197
4700813500	215,217,223	4700901430	197	4700902687	197,203
4700813611	173	4700901443	125,127,129,131	4700902693	201
4700813618	173,241		133,135	4700902695	197,203
4700813738	231	4700901444	125,127,129,131	4700902697	201
4700813791	103,105,107		133,135	4700902723	201
4700813822	171,177,183,241	4700901448	83,85	4700902724	197,203
4700814065	369	4700901449	83,85,87,89	4700902735	201

NUMERICAL INDEX

Part Number	Page
4700902783	201
4700902792	199
4700902811	201
4700902856	197,203
4700902861	225
4700902862	225
4700902864	225
4700902895	295
4700902896	295
4700902915	341
4700902919	187,285
4700902924	363
4700902928	171,177,189,241
4700902929	241
4700902930	241
4700902944	241
4700902959	173
4700902960	241
4700902961	241
4700902962	241
4700902984	241
4700902996	241
4700903189	73,77,79
4700903190	77,113
4700903192	273,275,283
4700903290	279,281,283,309
	329
4700903395	295
4700903422	341
4700903423	341
4700903424	341
4700903425	341
4700903436	261,263
4700903457	225
4700903459	341
4700903570	171,177,189
4700903571	171,173,177,189
4700903574	173
4700903576	173
4700903578	173
4700903579	171
4700903580	171,177
4700903619	219
4700903631	247,249,251
4700903632	247,249,251
4700903640	247,249,251
4700903641	249,251
4700903714	91,97,99
4700903727	283
4700903758	249
4700903760	247,251
4700903768	249,251
4700903782	257,259,335
4700903799	295
4700903812	213,215,217
4700903820	253,255
4700903831	213,215,217
4700903852	363
4700903877	193
4700903897	269
4700903905	309
4700903906	363
4700903915	91,97
4700903916	91,97
4700903945	299
4700903946	299
4700903947	299
4700903956	257,259
4700903985	125,127,129,131
	133,135
4700904003	193
4700904004	193
4700904005	169,185,187,213
	215,217,223,239
4700904015	361
4700904018	247
4700904020	247,251
4700904036	247,249,251
4700904037	247,249
4700904038	251,261,263,265
4700904059	103
4700904060	103,105,107
4700904068	341,343
4700904098	343
4700904143	219
4700904145	219
4700904165	365
4700904171	169,185,187
4700904177	69
4700904180	307
4700904204	83,85,87
4700904206	273,275
4700904213	43,45,169,185
	187,363
4700904228	55,57,99,247,249
	251,253,255,261
	263,265,267,271
	283,285,289,291
	293,295,305,359
	361,363,369,371
4700904229	51,69,85,87,89
	91,97,99,103,105
	111,113,121,169
	185,187,193,213
	215,217,223,231
	233,235,237,247
	249,251,257,259
	267,269,271,273
	275,279,281,283
	289,291,293,295
	297,305,325,327
	329,335,363,369
4700904230	31,53,55,83,85
	87,89,91,99,113
	117,169,185,187
	193,205,251,261
	263,265,279,281
	283,287,301,303
	309,329,363
4700904231	39,41,43,51,53
	55,57,69,71,73
	75,77,79,83,85
	169,193,205,213
	215,217,223,249
4700904231	251,273,275,279
	281,283,309,329
4700904232	41,43,45,47,49
	67,69,71,73,75
	77,79,87,89,193
	325,357
4700904233	67,83,85,87,89
	125,127,129,131
	133,135,137,279
	281,283,309,329
	353,357
4700904234	33,35,37,67,69
	223,307,355
4700904241	83,85,87,89,213
	215,217,223
4700904281	55,57,109,111
	113,249,251,255
	269,287,359
4700904282	169,185,187
4700904294	369
4700904314	261,263,265
4700904340	305
4700904342	45
4700904379	83,85,87,89
4700904415	359,361
4700904433	279,281,283,309
	329
4700904448	247,249
4700904479	67
4700904486	91,97,99
4700904504	53,55,57
4700904543	261,263,363
4700904551	91,97,99
4700904556	107,251,297
4700904557	31,55,57,91,119
	365
4700904558	35,37,39,45
4700904559	33
4700904562	307
4700904563	299
4700904567	63,231,233,363
4700904584	205
4700904586	205
4700904619	307
4700904637	83,85,87,89,205
	213,215,217,223
4700904638	83,85,87,89,169
	185,187,239,249
4700904639	91,97,99,109,247
	249
4700904640	53,55,57,59,83
	85,87,89,91,97
	99,117,119,121
	285,307,351
4700904653	287
4700904663	21
4700904695	109,111,113
4700904697	295
4700904703	47,49,87,89,205
	363
4700904718	59
4700904723	341

NUMERICAL INDEX

Part Number	Page	Part Number	Page	Part Number	Page
4700904734	307	4700908580	317,337	4700909545	141,157
4700904735	371	4700908581	317,337	4700909546	141
4700904737	69,71,73,75,77	4700908582	317,337	4700909547	139
	79	4700908583	317,337	4700909548	139,155
4700904750	249	4700908585	371	4700909549	139
4700904767	193	4700908587	371	4700909550	139,147
4700904773	205	4700908588	371	4700909551	139,147
4700904781	193	4700908589	371	4700909552	139,147
4700904793	169,185,187,239	4700908595	371	4700909553	139,147
	301	4700908598	371	4700909555	139,155
4700904812	295	4700908605	321	4700909558	139,147
4700904835	343	4700908617	321	4700909559	139,147
4700904846	255	4700908623	319	4700909560	139,147
4700904870	341	4700908624	319	4700909561	139,147
4700904876	115	4700908625	325	4700909562	139,147
4700904910	271	4700908626	325	4700909563	139,147
4700904984	113	4700908627	325	4700909564	139
4700905304	321	4700908628	325	4700909565	139,147
4700905305	321	4700908773	173,191	4700909566	139,147
4700905306	321	4700908780	225	4700909567	139,147,155,163
4700908095	143,159	4700909122	359,361	4700909568	139,147,163
4700908136	235,237	4700909243	211	4700909569	139,147,163
4700908217	173	4700909346	211	4700909570	139,147,163
4700908229	341	4700909349	173	4700909571	139
4700908265	325	4700909367	173	4700909572	139,147,155,163
4700908267	327	4700909374	171	4700909573	139,155
4700908352	171,177,189	4700909381	171	4700909574	139,147,163
4700908355	325	4700909382	177,189	4700909575	139
4700908359	327	4700909386	171,177	4700909576	139,147,155,163
4700908361	325	4700909387	171,177	4700909577	139,155
4700908367	199	4700909388	171,177	4700909578	139,155
4700908375	201	4700909389	171,177	4700909579	139,155
4700908377	171	4700909390	171,177	4700909580	139,147,155,163
4700908378	171	4700909391	171,177,189	4700909581	139,147,163
4700908381	197	4700909392	171,177,189	4700909582	137,145,153,161
4700908383	197,203	4700909393	171,177	4700909583	137,145,153,161
4700908384	201	4700909398	171,177,189	4700909584	137,145,153,161
4700908399	103,105,107	4700909399	173,179,191	4700909585	143,159
4700908422	241	4700909407	171	4700909586	143,151,159,165
4700908426	241	4700909417	207	4700909587	143,159
4700908427	241	4700909428	173,179	4700909588	143,159
4700908432	171,173,177,179	4700909429	173,179,191	4700909589	143,159
	241	4700909430	173	4700909590	143,159
4700908435	241	4700909431	173	4700909591	143,159
4700908443	241	4700909432	173,179,191	4700909592	143,159
4700908447	191	4700909433	173	4700909593	143,159
4700908448	175,179,191	4700909434	173	4700909594	143,159
4700908450	11	4700909435	173,179,191	4700909595	143,159
4700908452	103,105	4700909436	175,179	4700909596	143,149,151,159
4700908461	143,159	4700909469	201,203		165
4700908485	139,147,155,163	4700909514	197,201,203	4700909597	143,159
4700908496	371	4700909525	243	4700909598	143,159
4700908499	313,315,317,333	4700909535	279,309	4700909599	143,159
	335,337	4700909536	279,309	4700909601	143,159
4700908501	363	4700909537	141,157	4700909602	143,159
4700908502	363	4700909538	141,157	4700909603	143,159
4700908503	363	4700909539	141,157	4700909604	143,159
4700908504	363	4700909540	141,157	4700909605	143,159
4700908506	315,335	4700909541	141	4700909606	143,159
4700908507	315,335	4700909542	141	4700909607	143,149,159
4700908513	371	4700909543	141,157	4700909608	143,159
4700908545	313,317,333,337	4700909544	141,149,157	4700909609	143,149,159

NUMERICAL INDEX

Part Number	Page	Part Number	Page	Part Number	Page
4700909610	143,159	4700927233	299	4700935265	317,337
4700909613	141,157	4700927253	197	4700935266	317,337
4700909614	141,157	4700927278	201	4700935267	317,337
4700909615	141,157	4700927350	195	4700935268	317,337
4700909616	141,149,157	4700927354	197	4700935269	317,337
4700909617	141,157	4700927355	197	4700935270	317,337
4700909618	141,149,157	4700927358	197,203	4700935271	313,317,333,337
4700909619	141,149,157	4700927974	279,281,283,309	4700935272	313,317,333,337
4700909620	141,157		329	4700935273	313,317,333,337
4700909621	141	4700928230	37,69	4700935274	313,317,333,337
4700909622	141,149,157	4700928231	69	4700935275	313,317,333,337
4700909623	141,157	4700928381	53	4700935276	313,317,333,337
4700909624	141,149,157	4700928497	295	4700935277	313,317,333,337
4700909625	141,157	4700928830	301,303	4700935278	313,333
4700909626	141,149,157	4700928850	67	4700935279	313,333
4700909641	173	4700929013	225	4700935280	313,333
4700909642	173	4700929014	225	4700935281	313,333
4700909643	173	4700929023	247,249,251	4700935282	313,333
4700909727	171,177	4700929123	217,223	4700935283	313,333
4700910161	213,215,217,223	4700929217	125,127,129,131	4700935284	313,333
4700910995	51		133,135,137,153	4700935285	313,333
4700911456	253,255	4700929226	193,205	4700935286	313,333
4700911620	225	4700929447	25,69,71,73,75	4700935287	313,333
4700921031	247,249,261,263		77,79	4700935288	313,333
	265	4700929602	285	4700935289	313,333
4700921039	261,263,265,267	4700929612	151,165	4700935290	313,333
	359,361	4700929617	141,149,157	4700935291	313,333
4700921050	99,109	4700929624	139,155	4700935292	313
4700921056	363	4700929625	155,163	4700935293	313,333
4700921072	249,251,261,263	4700929626	155,163	4700935294	313
	275	4700929628	147,155,163	4700935295	313,333
4700921080	251	4700929629	139,147,155,163	4700935296	313,333
4700921084	99	4700929630	155,163	4700935297	313,333
4700921104	247,249	4700929631	155,163	4700935298	313,333
4700921116	247,249	4700929638	147,155,163	4700935299	313,333
4700921132	369	4700929644	139,147,155,163	4700935300	313,333
4700921161	363	4700929648	137,145,153,161	4700935301	313,333
4700922325	295	4700929863	21	4700935302	313,333
4700923087	171,173,177,179	4700930151	273,275	4700935303	313,335
4700923342	147,163	4700930153	253,255	4700935429	225
4700923371	169,185,187	4700930154	253,255,359	4700935468	225
4700923384	169,185,187,239	4700930163	253,255	4700935520	243
4700923984	371	4700930182	253,255	4700935521	241
4700923987	289,291,293	4700930200	253,255	4700935524	241
4700924791	305	4700932032	253,255	4700935525	241
4700924875	53,55,57,285	4700932050	253,255	4700935526	241
4700925208	51	4700935044	87	4700935527	241
4700925723	89	4700935158	197,203	4700935530	241
4700925802	261,263,265	4700935164	199	4700935531	241
4700925867	67	4700935172	201	4700935533	241
4700926214	21,51,213,215	4700935192	203	4700935536	241
	217	4700935218	197	4700935543	241
4700926537	297	4700935219	197,203	4700935544	241
4700926732	143,159	4700935244	317,337	4700935545	241
4700926736	69,157	4700935245	317,337	4700935556	371
4700926758	139	4700935246	317,337	4700935557	371
4700926781	143,151,159,165	4700935247	317,337	4700935558	371
4700926810	141,149,157	4700935248	317,337	4700935605	175
4700926846	141	4700935249	317,337	4700935606	141,157
4700926847	141,149,157	4700935250	317,337	4700935613	303
4700926984	91	4700935253	317,337	4700935614	303
4700926985	97,101	4700935259	371	4700935619	171

NUMERICAL INDEX

Part Number	Page	Part Number	Page	Part Number	Page
4700935620	171	4700936582	171,177,189	4700937201	197,203
4700935621	171	4700936583	173,179,191	4700937202	201
4700935622	171	4700936593	241	4700937203	201
4700935632	173	4700936613	201	4700937204	201
4700935633	173	4700936614	201	4700937205	201
4700935634	173	4700936621	199	4700937206	201
4700935644	139,147	4700936648	197,203	4700937240	201
4700935664	241	4700936673	201	4700937256	195
4700935741	241	4700936674	201	4700937257	195
4700935749	241	4700936677	197	4700937258	195
4700935750	241	4700936678	197	4700937259	195
4700935758	83,85,87,89	4700936679	197	4700937260	195
4700935855	171	4700936683	197	4700937261	195
4700935856	171,177,189	4700936684	197	4700937264	195
4700935857	173,179,191	4700936685	197	4700937265	195
4700935969	7,11,13,15,17,83	4700936686	197,203	4700937363	243
	85,87,89	4700936687	197	4700937380	313,333
4700936086	157	4700936688	197	4700937381	313,333
4700936267	219	4700936803	197,203	4700937382	313,333
4700936268	219	4700936933	207	4700937383	313,333
4700936283	279,309	4700937055	213,215,217	4700937384	313,333
4700936288	173	4700937062	211	4700937385	313,333
4700936307	203	4700937064	211	4700937386	313
4700936308	197,203	4700937065	211	4700937387	313
4700936313	201	4700937066	211	4700937388	313
4700936340	197,203	4700937067	211	4700937389	313,333
4700936370	201	4700937070	211	4700937390	317,337
4700936371	197	4700937071	211	4700937391	317,337
4700936393	197,203	4700937072	211	4700937392	317,337
4700936394	201	4700937074	211	4700937393	317,337
4700936418	197	4700937075	211	4700937394	93,95
4700936546	171,177	4700937077	211	4700937531	197,203
4700936547	171,177,189	4700937079	211	4700937629	71
4700936548	181,189	4700937080	211	4700937631	75
4700936549	171	4700937081	211	4700937674	195
4700936550	171	4700937084	211	4700937737	363,371
4700936551	171,177,189	4700937086	211	4700937738	371
4700936552	171	4700937150	179,191	4700937741	371
4700936553	171,177,189	4700937167	197,199,203	4700937742	371
4700936554	175	4700937168	197,201,203	4700937857	179,191
4700936555	171	4700937170	199	4700937870	323
4700936556	171	4700937171	199	4700937871	321
4700936557	171,177,189	4700937172	199	4700937895	83,85,87
4700936558	171,177	4700937173	199	4700937985	197,203
4700936559	171,177,189	4700937174	199	4700937986	197,203
4700936560	171,177,189	4700937175	199	4700937993	195
4700936561	171,177,189	4700937176	199	4700937994	197
4700936562	173,179,189	4700937180	199	4700937995	195
4700936563	173,179,183,191	4700937181	199	4700937998	197,203
4700936564	173,179,191	4700937182	199	4700937999	197,203
4700936565	173	4700937183	199	4700938001	197,203
4700936566	173,179,191	4700937184	199	4700938003	197,203
4700936567	173,179,183,191	4700937185	199	4700938004	197,203
4700936568	173,179	4700937186	199	4700938005	197,203
4700936569	173	4700937187	199	4700938006	197
4700936570	173,179	4700937188	199	4700938014	197,203
4700936571	173,179,191	4700937189	199	4700938015	197
4700936572	173	4700937190	199	4700938017	317,337
4700936576	173	4700937195	197,203	4700938018	317,337
4700936577	173	4700937198	197,203	4700938040	195
4700936579	173	4700937199	197,203	4700938041	195
4700936580	175	4700937200	197,203	4700938042	195

NUMERICAL INDEX

Part Number	Page	Part Number	Page	Part Number	Page
4700938045	317	4700938984	149	4700940374	299
4700938053	93	4700938985	151,165	4700940451	257,259
4700938054	93	4700938989	147,163	4700940505	203
4700938055	93	4700939003	151,165	4700940507	203
4700938056	93	4700939015	151,165	4700940675	203
4700938062	225	4700939016	151,165	4700940678	317,337
4700938063	225	4700939017	151,165	4700945140	87,89
4700938064	225	4700939019	151,165	4700945160	183
4700938065	225	4700939026	149	4700945407	299
4700938066	225	4700939035	149	4700945588	77,79
4700938067	225	4700939036	149	4700945595	73
4700938068	225	4700939167	203	4700945729	299
4700938069	225	4700939173	203	4700945757	241
4700938070	225	4700939255	149	4700945775	203
4700938071	225	4700939256	149	4700945776	203
4700938072	225	4700939257	147,163	4700945777	109,111,113
4700938073	225	4700939258	147,163	4700945822	293
4700938074	225	4700939259	147,163	4700945877	211
4700938075	225	4700939260	147,163	4700945879	211
4700938101	317,337	4700939261	147,163	4700947680	297
4700938170	179,191	4700939262	147	4700947688	205
4700938252	179	4700939263	151,165	4700950196	5,13
4700938253	179,191	4700939264	151,165	4700950197	5,17
4700938290	333	4700939265	151,165	4700950283	179,191
4700938291	333	4700939266	151,165	4700950284	179,191
4700938292	333	4700939267	151,165	4700950378	183
4700938295	157	4700939268	151,165	4700950382	297
4700938296	149,157	4700939269	151,165	4700950398	57
4700938298	157	4700939270	151,165	4700950616	209
4700938300	157	4700939271	151,165	4700950617	207
4700938514	15,17	4700939272	151,165	4700950618	207
4700938516	15,17	4700939273	151,165	4700950619	209
4700938517	15,17	4700939274	151	4700950620	209
4700938521	5,11	4700939275	151,165	4700960067	361
4700938522	5,15	4700939276	151,165	4700985012	253,255
4700938524	5,7	4700939277	151,165	4700985125	253,255
4700938527	5,9	4700939278	151,165	4700985146	253,255
4700938558	19,21	4700939279	151	4700989151	231,233
4700938587	371	4700939280	149	4700991658	343
4700938588	371	4700939281	149	4700991990	125,341
4700938589	371	4700939282	149	4700999011	267
4700938590	371	4700939283	149	4700999027	247,249,257,259
4700938597	367	4700939284	149	47349248CN	341
4700938598	367	4700939285	149	47349248DE	341
4700938599	367	4700939286	149	47349248DK	341
4700938600	367	4700939287	149	47349248EN	341
4700938601	367	4700939349	165	47349248ES	341
4700938602	367	4700939351	165	47349248FI	341
4700938603	367	4700939403	113	47349248FR	341
4700938604	367	4700939404	113	47349248GR	341
4700938605	367	4700939405	113	47349248IS	341
4700938606	367	4700939489	179,191	47349248IT	341
4700938607	367	4700939505	85,87,89	47349248NL	341
4700938608	367	4700939507	111	47349248NO	341
4700938609	367	4700939727	197	47349248PT	341
4700938659	333	4700939741	95	47349248SE	341
4700938691	363	4700939742	95	4812110216	265
4700938856	371	4700939743	95	4812155075	283
4700938877	19,27	4700939744	95		
4700938891	19,25	4700939745	97		
4700938894	19,23	4700939746	97		
4700938983	149	4700940308	199		