CA300D

DYNAPAC

Spare parts list

Soil Compactor

CA300D s/n 10000115x0E002527-
Engine: 4BT3.9

RUTHZIL TRATOR COMERCIAL DE PEÇAS LTDA 11 97083-6812 ROLANDO



Atlas Copco

© 2015 Construction & Mining Technique PC| No. 4812105177 | 2015-04

General information

This spare parts list applies to the following:

Part number	Description
4812104331	CA300D-Canopy
4812104332	CA300D-ROPS
4812104333	CA300D-Cabin

Use only authorized parts. Any damage or malfunction caused by the use of unauthorized parts is not covered by Warranty or Product Liability.
Any unauthorized use or copying of the contents or any part thereof is prohibited. This applies in particular to trademarks, model denominations, part numbers, and drawings.

Instructions for use
This spare parts list contains no safety regulations and is merely intended to assist in the ordering of spare parts.
For information about operating, servicing, or repairing, the relevant Safety and operating instructions must be consulted at all costs.
Please observe the safety instructions listed in the relevant Safety and operating instructions!

Contents

CA300D SN 10000115x 0E002527-
CA300260 CA300D SN 10000115x 0E002527 - . . . 1

Service kits
Service kits . . . 3

4812156751 Service kit 50 h
4812156751 Service kit 50 h . . . 5

4812106085 Service kit 50h, Including oil
4812106085 Service kit 50 h . . . 7

4700938527 Service kit 250/750 h
4700938527 Service kit 250/750 h . . . 9

4812106086 Service kit 250/750h, Including oil
4812106086 Service kit 250/750 h . . . 11

4700950196 Service kit 500 h
4700950196 Service kit 500 h . . . 13

4812106086 Service Kit 500h, Including oil
4812106087 Service kit 500 h . . . 15

4700950197 Service kit 1000 h
4700950197 Service kit 1000 h . . . 17

4812106088 Service kit 1000h, Including oil
4812106088 Service kit 1000 h . . . 19

4812106089 Start up kit
4812106089 Start up kit . . . 21

Repair kits
Repair kits . . . 23

4700938558 Steering hitch kit
4700938558 Steering hitch kit . . . 25

Eccentric shaft kit
Eccentric shaft kit . . . 27

4700938891 Drum rotation kit
4700938891 Drum rotation kit . . . 29

4700938881 Shock absorber kit, drum
4700938881 Shock absorber kit, drum . . . 31

Frame
Frame . . . 33

Frames
Frames . . . 35

Scraper and beam
Scraper and beam . . . 37

Scrapers, Urethan Rubber Option
Scrapers, Urethan Rubber Option . . . 39

Scrapers, Spring Steel Option
Scrapers, Spring Steel Option . . . 41

Hitch
Hitch . . . 43

Structure
Structure . . . 45

Side covers Option
Side covers Option . . . 48

Drum
Drum . . . 51

Drum
Drum . . . 53

Drum cartridge Vibration side
Drum cartridge Vibration side . . . 56

Drum cartridge Drive side
Drum cartridge Drive side . . . 60

4700380462 Drum gear
4700380462 Drum gear . . . 63

Engine
Engine . . . 65

Engine
Engine . . . 67

Fan and Fan clutch
Fan and Fan clutch . . . 70

Cooling system
Cooling system . . . 73

Combustion air system
Combustion air system . . . 76

Fuel system
Fuel system . . . 79

Exhaust system
Exhaust system . . . 82

Pre air cleaner Option
Pre air cleaner Option . . . 85

Transmission
Transmission . . . 87

Rear axle and wheels
Rear axle and wheels . . . 89

4812105196 Rear Axle
4812105196 Rear axle . . . 91

Central Housing
Central housing . . . 93

Differential
Differential . . . 95

Hub Reduction
Hub Reduction . . . 97

Brake
Brake . . . 99

Hydraulic system
Hydraulic system . . . 101

Propulsion system, Front
Propulsion system, Front . . . 103

4700371509 Propulsion motor
4700371509 Propulsion motor . . . 105

Propulsion system, Rear
Propulsion system, Rear . . . 108

4700395385 Hydraulic pump
4700395385 Hydraulic pump . . . 112

4700391989 Hydraulic motor
4700391989 Hydraulic motor . . . 118

Vibration system
Vibration system . . . 122

4700395384 Vibration pump
4700395384 Vibration pump . . . 125

4700395386 Hydraulic motor, vibration
4700395386 Hydraulic motor, vibration . . . 129

Steering system
Steering system . . . 132

4700376000 Steering valve
4700376000 Steering valve . . . 136

4812103475 Steering cylinder
4812103475 Steering cylinder . . . 139

Brake system
Brake system . . . 141

Hydraulic oil tank
Hydraulic oil tank . . . 143

Central test panel hydraulic Option
Central test panel hydraulic Option . . . 145

Central test panel, Sauer Danfoss Option
Central test panel, Sauer Danfoss Option . . . 147

Central test panel, Rexroth Option
Central test panel, Rexroth Option . . . 149

Variable rear axle motor Option
Variable rear axle motor Option . . . 151

4700373361 Propulsion motor
4700373361 Propulsion motor . . . 153

4700380830 Propulsion pump
4700380830 Propulsion pump . . . 156

Electrical equipment
Electrical equipment . . . 162

Electric system
Electric system . . . 165

Control panel
Control panel . . . 168

Working lights Option
Working lights Option . . . 172

Rotating beacon Option
Rotating beacon Option . . . 175

Back-up alarm Option
Back-up alarm Option . . . 177

Compaction meter Option
Compaction meter Option . . . 179

Drivers platform
Drivers platform . . . 181

Drivers platform
Drivers platform . . . 183

Drivers platform
Drivers platform . . . 185

Control panel
Control panel . . . 188

Control panel
Control panel . . . 191

Throttle control
Throttle control . . . 193

Forward and reverse control
Forward and reverse control . . . 195

4812103438 Forward and reverse control handel
4812103438 Forward and reverse control handel . . . 197

Steering column
Steering column . . . 199

Canopy Option
Canopy Option . . . 201

Rops and fops
Rops and fops . . . 203

Cab mounting
Cab mounting . . . 205

4812104691 cab
4812104691 Cab . . . 207

Cab Exterior, rear mirror
Cab Exterior, rear mirror 209

Cab Work light
Cab Work light 211

Decals
Decals 213

Decals
Decals 215

Decals
Decals 218

Standard equipment
Standard equipment 221

Standard equipment
Standard equipment 223

Optional equipment
Optional equipment 225

Tool equipment
Tool equipment 227

Pad shell
Pad shell 229

Air conditioner and heater, Simple cab
Air conditioner and heater, Simple cab 231

Air conditioner and heater unit
Air conditioner and heater unit 235

4700383413 Condensor, cpl
4700383413 Condensor, cpl 238

Heater Simple cab
Heater Simple cab 241

4700385222 Heater
4700385222 Heater 243

CA300D SN 10000115x 0E002527- CA300260 CA300D SN 10000115x 0E002527 -



Item	Part No.	Name	Qty	L
1	-	Service kits		
2	-	Repair kits		
10	-	Frame		
20	-	Drum		
30	-	Engine		
40	-	Transmission		
50	-	Hydraulic system		
60	-	Electrical equipment		
70	-	Drivers platform		
80	-	Decals		
90	-	Standard equipment		
91	-	Optional equipment		

Service kits Service kits

NO DRAWING AVAILABLE FOR THIS BOM

Item	Part No.	Name	Qty	L
1	4812156751	Service kit 50 h	1	
2	4812106085	Service kit 50h including oil	1	
3	4700938527	Service kit 250/750 h	1	
4	4812106086	Service kit 250/750h Including oil	1	
5	4700950196	Service kit 500 h	1	
6	4812106087	Service kit 500h including oil	1	
7	4700950197	Service kit 1000 h	1	
8	4812106088	Service kit 1000h including oil	1	
9	4812106089	Start up kit	1	

4812156751 Service kit 50 h 4812156751 Service kit 50 h

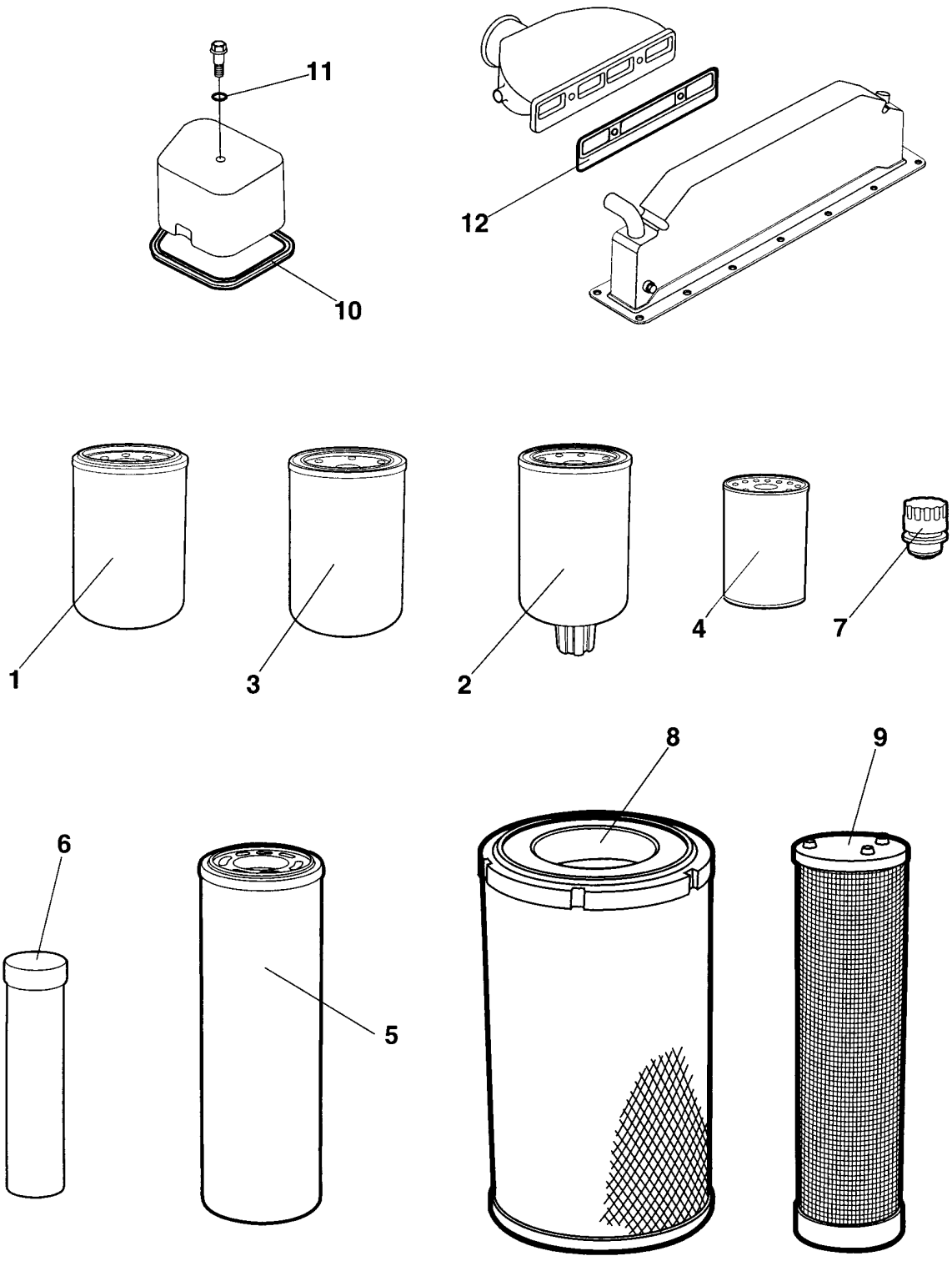

Item	Part No.	Name	Qty	L
0	4812156751	Service kit 50 h		
1	4700212373	Oil filter	1	
2	4700935969	Fuel filter w. water separator	1	
4	4700939404	Pre-fuel filter element	1	
5	4700372229	Hydraulic oil filter element	1	

4812106085 Service kit 50h, Including oil 4812106085 Service kit 50 h

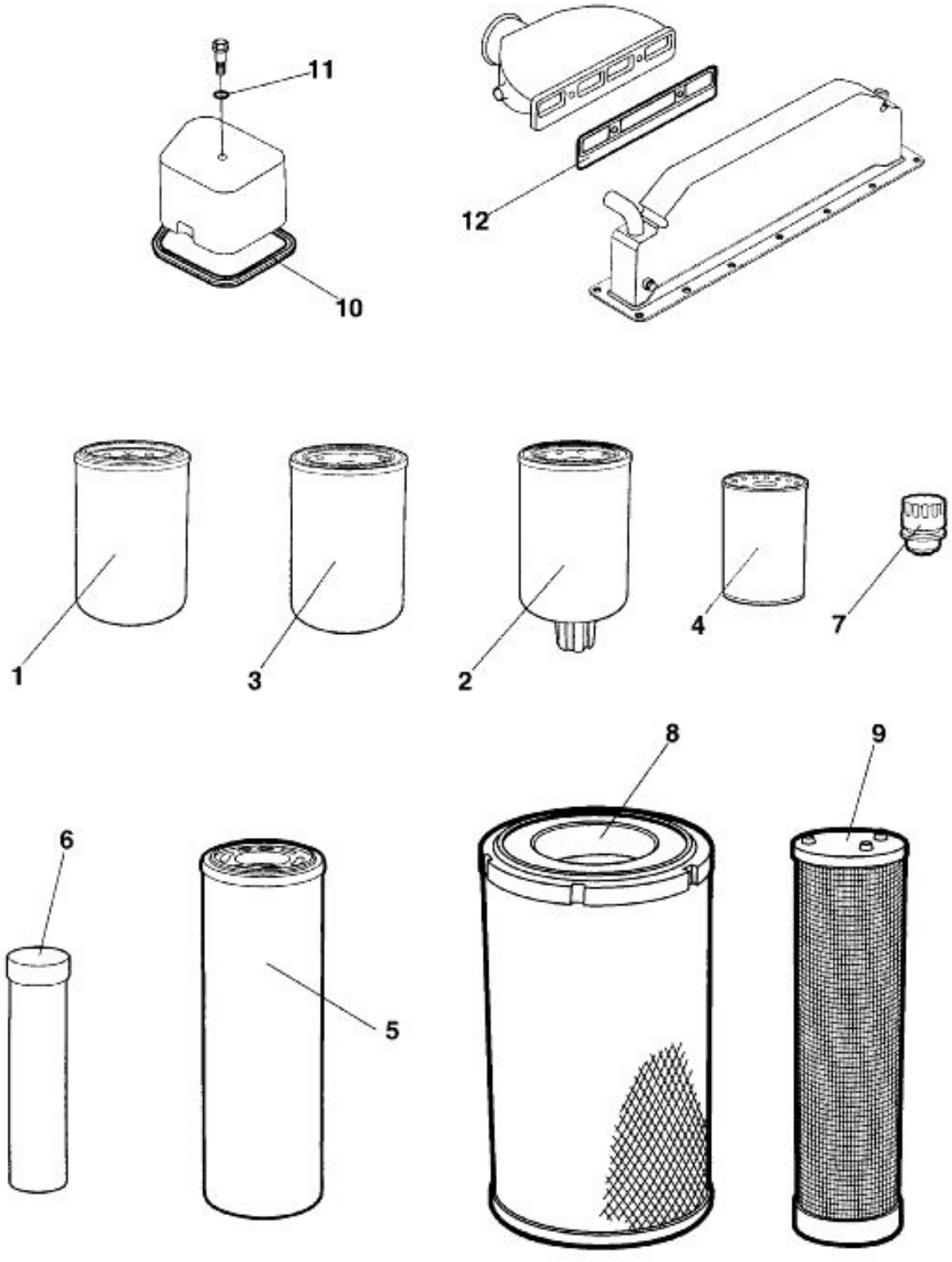

Item	Part No.	Name	Qty	L
0	4812106085	Service kit 50h including oil		
1	4700212373	Oil filter	1	
2	4700935969	Fuel filter w. water separator	1	
4	4700939404	Pre-fuel filter element	1	
5	4700372229	Hydraulic oil filter element	1	
13	5580020624	Engine oil 100 / 5 ltr.	3	
15	4812030117	Gear oil 300 / 20 ltr.	1	

4700938527 Service kit 250/750 h 4700938527 Service kit 250/750 h

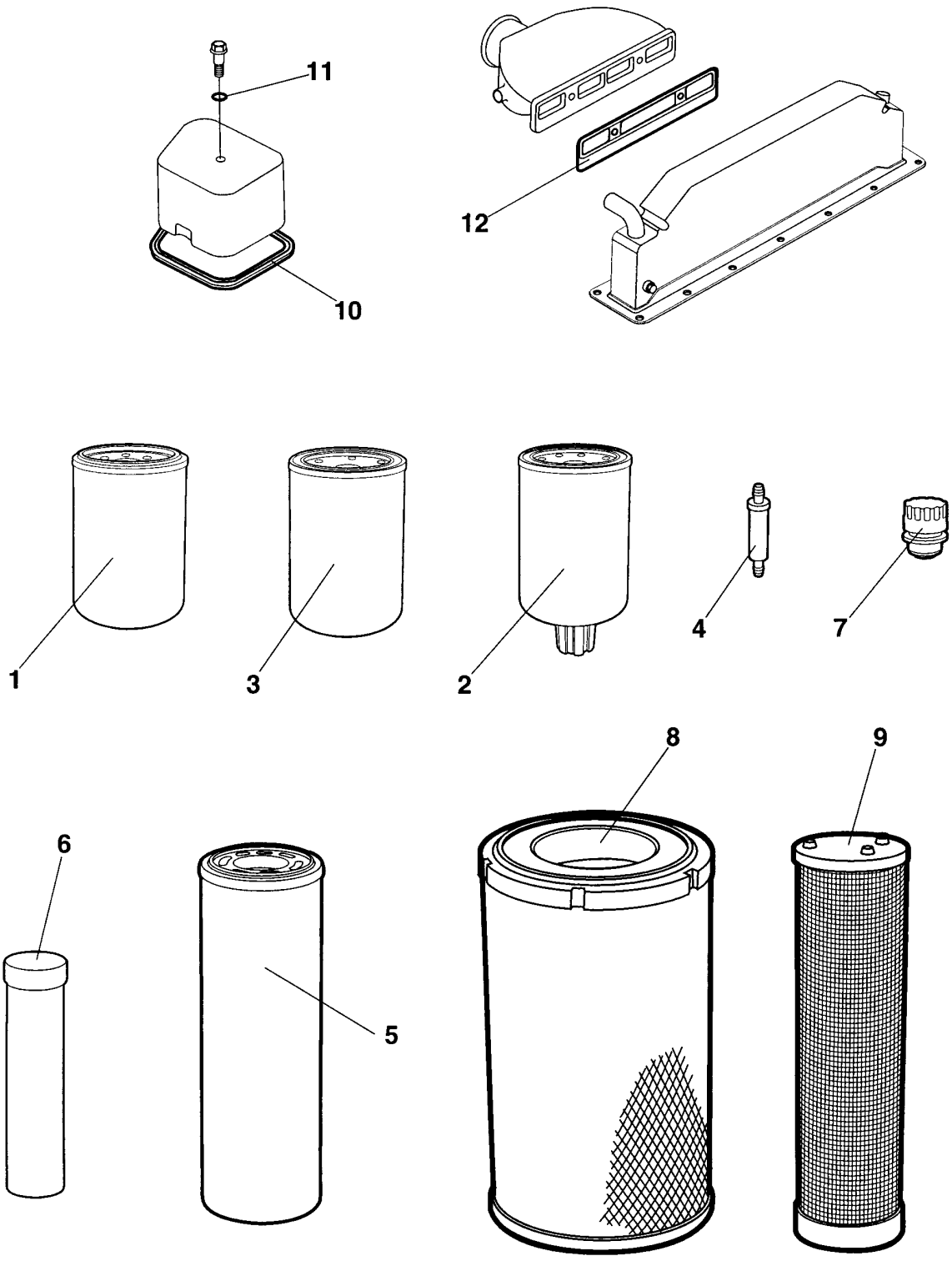

Item	Part No.	Name	Qty	L
0	4700938527	Service kit 250/750 h		
1	4700212373	Oil filter	1	

4812106086 Service kit 250/750h, Including oil 4812106086 Service kit 250/750 h

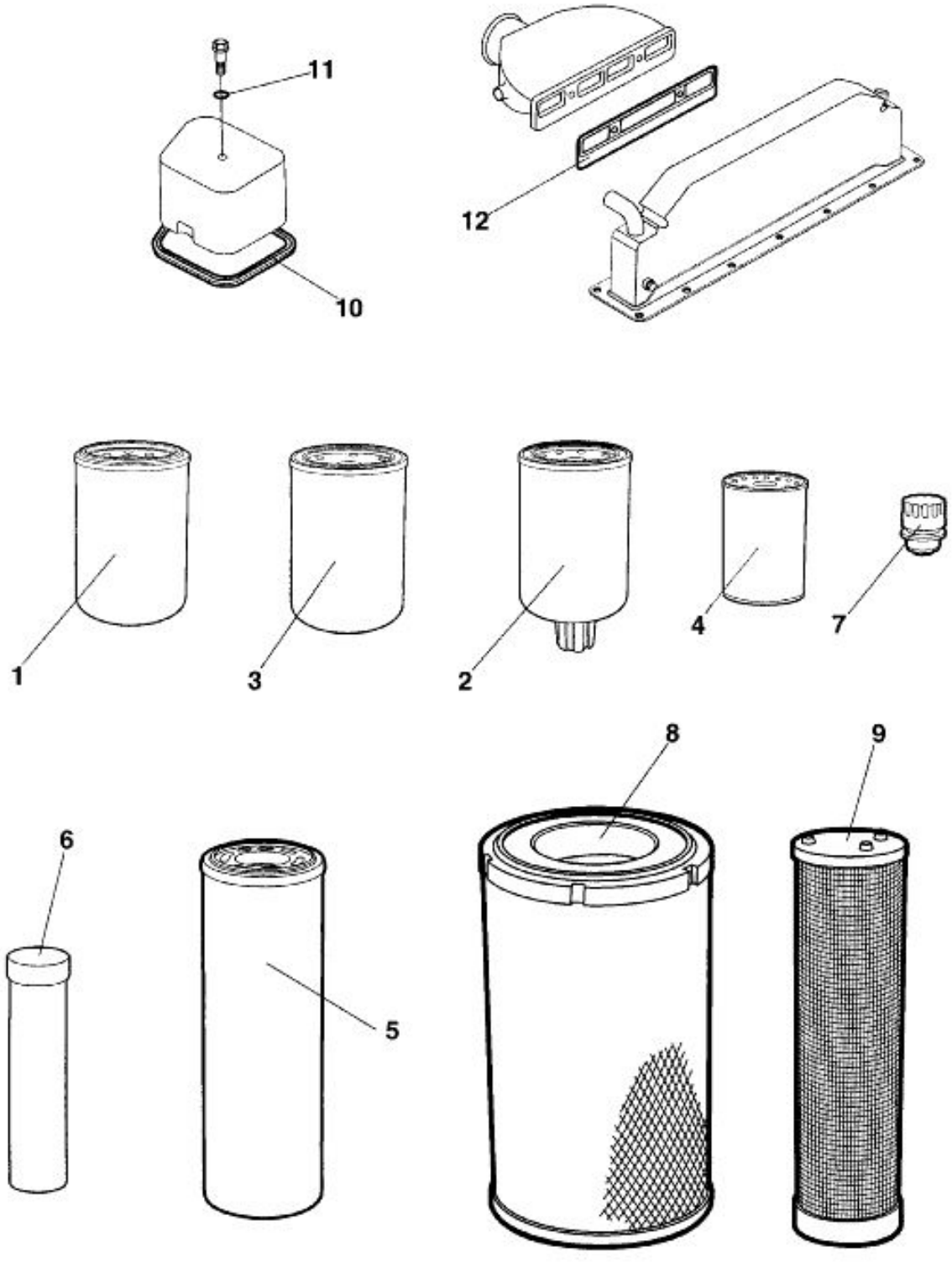

Item	Part No.	Name	Qty	L
0	4812106086	Service kit 250/750h Including oil		
1	4700212373	Oil filter	1	
13	5580020624	Engine oil 100 / 5 ltr.	3	

4700950196 Service kit 500 h 4700950196 Service kit 500 h

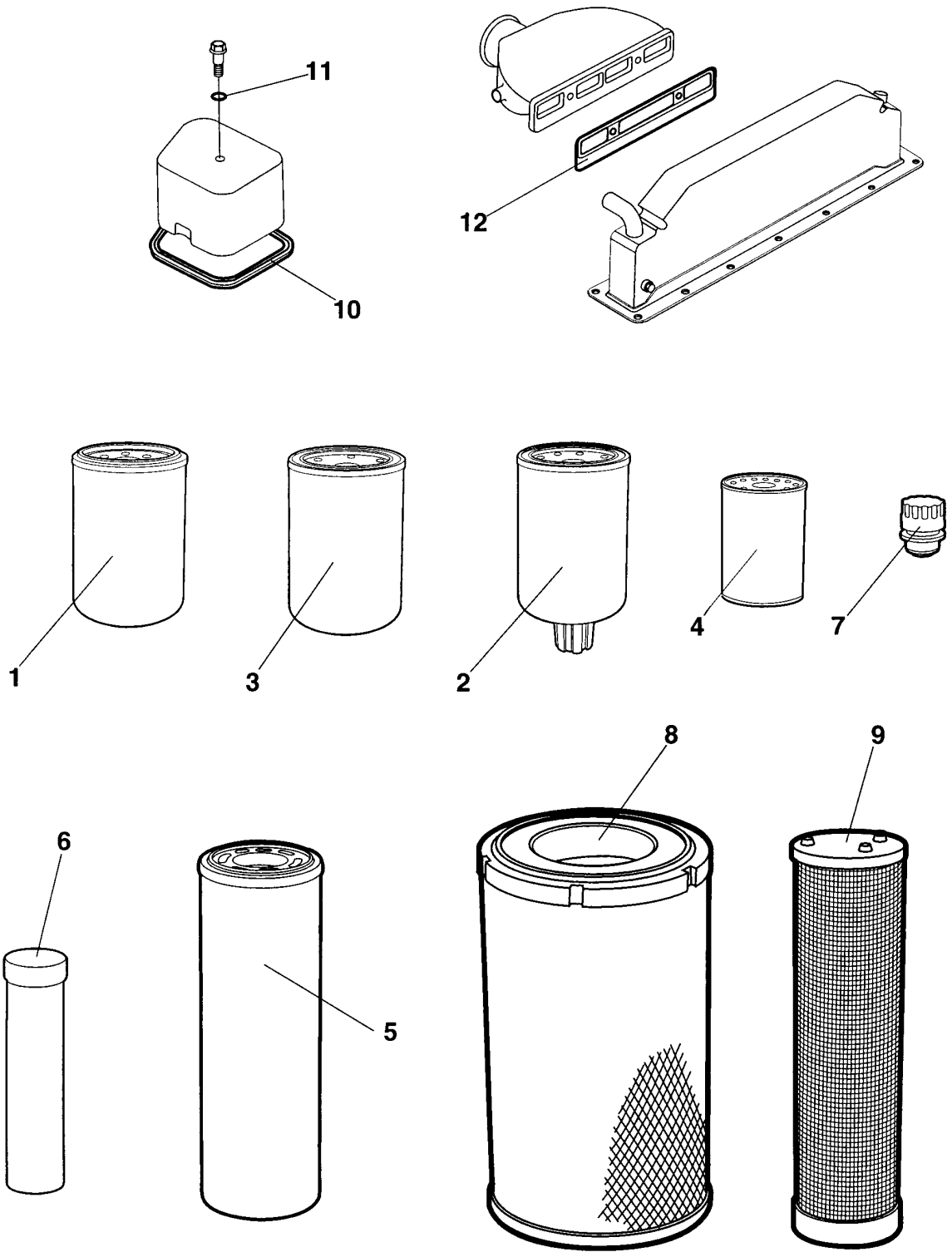

Item	Part No.	Name	Qty	L
0	4700950196	Service kit 500 h		
1	4700212373	Oil filter	1	
2	4700935969	Fuel filter w. water separator	1	
4	4700939404	Pre-fuel filter element	1	
8	4700394686	Air filter	1	

4812106086 Service Kit 500h, Including oil 4812106087 Service kit 500 h

Item	Part No.	Name	Qty	L
0	4812106087	Service kit 500h including oil		
1	4700212373	Oil filter	1	
2	4700935969	Fuel filter w. water separator	1	
4	4700939404	Pre-fuel filter element	1	
8	4700394686	Air filter	1	
13	5580020624	Engine oil 100 / 5 ltr.	3	

4700950197 Service kit 1000 h 4700950197 Service kit 1000 h

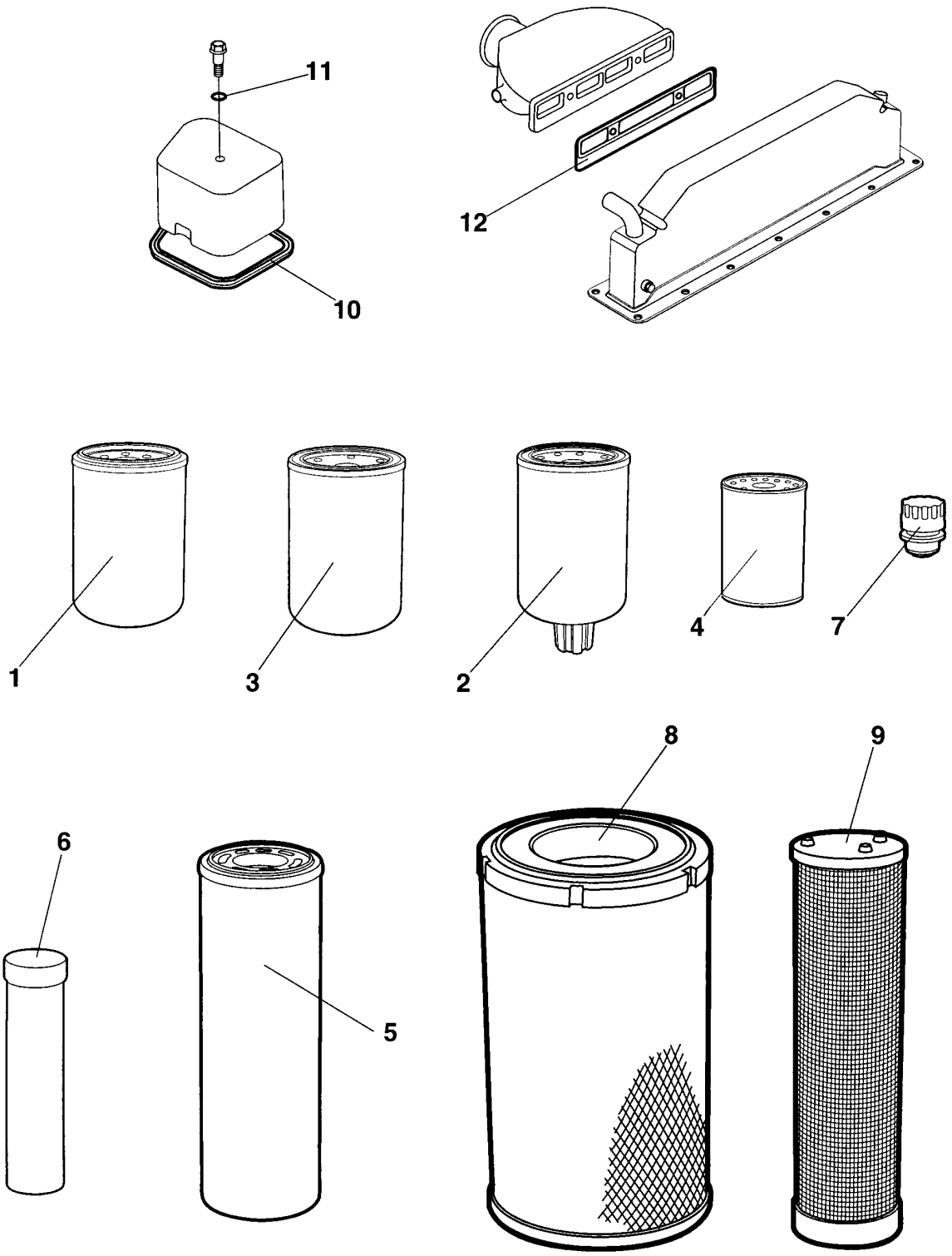

Item	Part No.	Name	Qty	L
0	4700950197	Service kit 1000 h		
1	4700212373	Oil filter	1	
2	4700935969	Fuel filter w. water separator	1	
4	4700939404	Pre-fuel filter element	1	
5	4700372229	Hydraulic oil filter element	1	
7	4700357138	Ventilating filter	1	
8	4700394686	Air filter	1	
9	4700394687	Air filter	1	
10	4700938514	Valve cover gasket	4	
11	4700938516	Gasket	4	
12	4700938517	Gasket, inlet pipe	1	

4812106088 Service kit 1000h, Including oil 4812106088 Service kit 1000 h

Item	Part No.	Name	Qty	L
0	4812106088	Service kit 1000h including oil		
1	4700212373	Oil filter	1	
2	4700935969	Fuel filter w. water separator	1	
4	4700939404	Pre-fuel filter element	1	
5	4700372229	Hydraulic oil filter element	1	
7	4700357138	Ventilating filter	1	
8	4700394686	Air filter	1	
9	4700394687	Air filter	1	
10	4700938514	Valve cover gasket	4	
11	4700938516	Gasket	4	
12	4700938517	Gasket, inlet pipe	1	
13	5580020624	Engine oil 100 / 5 ltr.	3	
14	5501527800	Atlas copco Hydraulic 150 oil	1	
15	4812030117	Gear oil 300 / 20 ltr.	1	

4812106089 Start up kit 4812106089 Start up kit

NO DRAWING AVAILABLE FOR THIS BOM

Item	Part No.	Name	Qty	L
0	4812106089	Start up kit		
1	4812106085	Service kit 50h including oil	1	
2	4812106086	Service kit 250/750h Including oil	2	
3	4812106087	Service kit 500h including oil	1	
4	4812106088	Service kit 1000h including oil	1	

Repair kits Repair kits

NO DRAWING AVAILABLE FOR THIS BOM

Item	Part No.	Name	Qty	L
5	4700938558	Steering hitch kit		
10	-	Eccentric shaft kit		
20	4700938891	Drum rotation kit		
30	4700938881	Shock absorber kit, drum		

4700938558 Steering hitch kit 4700938558 Steering hitch kit

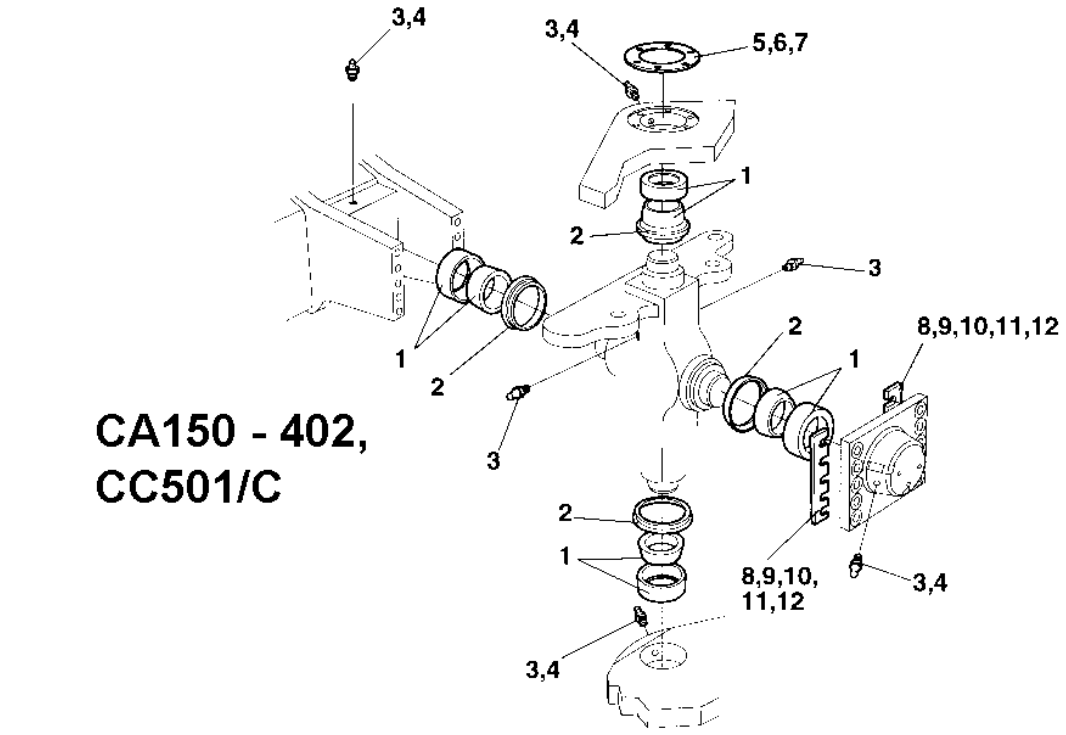

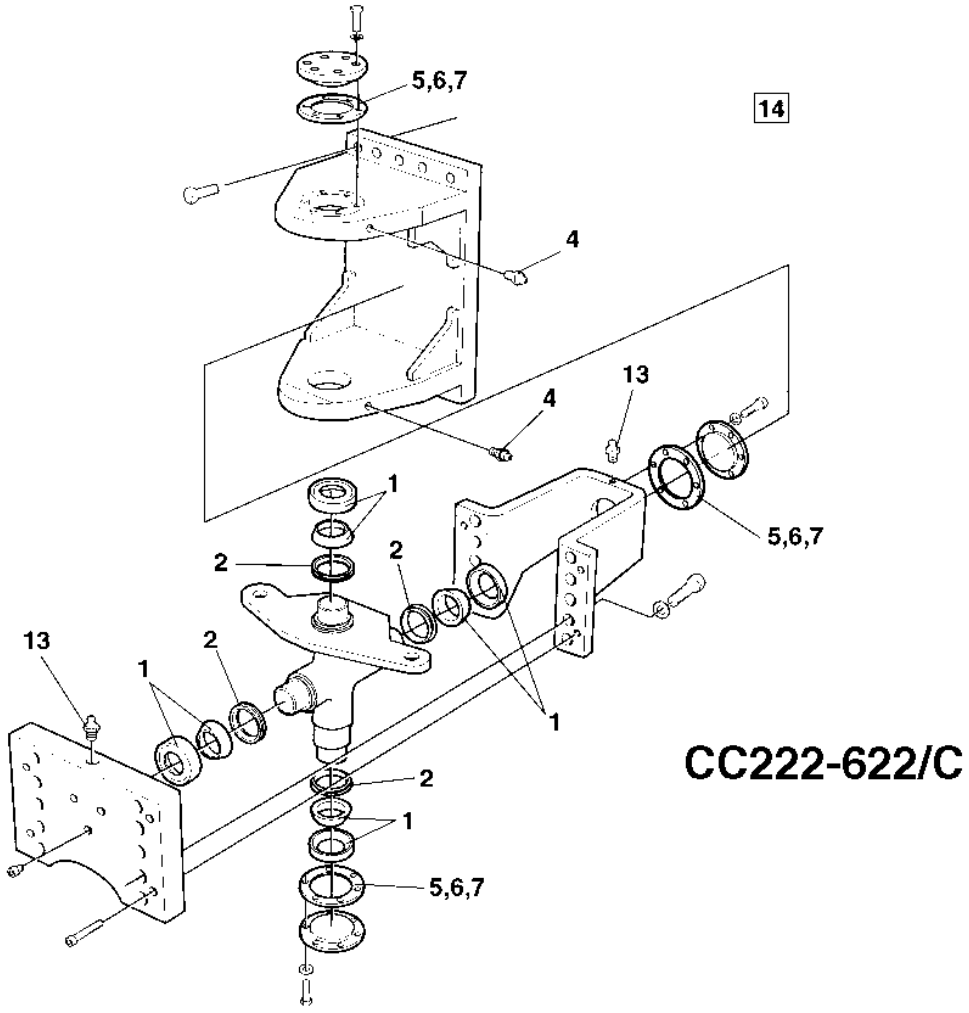

Item	Part No.	Name	Qty	L
0	4700938558	Steering hitch kit		
1	4700100040	Contact spher. Plain bearing	4	
2	4700167032	Sealing, V-ring	4	
3	4700310008	Grease nipple	3	2
4	0544210600	Lubricant nipple	2	
5	4700337045	Shim	3	
6	4700345874	Shim T=0,35 mm	3	
7	4700345875	Shim	3	
8	4700345871	Shim T=1,0 mm	2	1
9	4700345872	Shim T=0,35 mm	2	1
10	4700345873	Shim T=0,10 mm	2	1
11	4700380993	Shim T = 2,0 mm	2	1
12	4700384498	Shim T = 0,15 mm	2	1
13	4700929863	Grease nipple	1	3
14	4700904663	Lube grease " DYNAPAC special approved "	1	
15	-	Instructions	1	

Comments for Page: 4700938558 Steering hitch kit

(L)OCAL REMARKS

1 | en_US | Valid for CA150-402 and CC501/C

2 | en_US | Valid for CC501/C

3 | en_US | Valid for CC222/232/322/422/432/522/622/C

Eccentric shaft kit Eccentric shaft kit

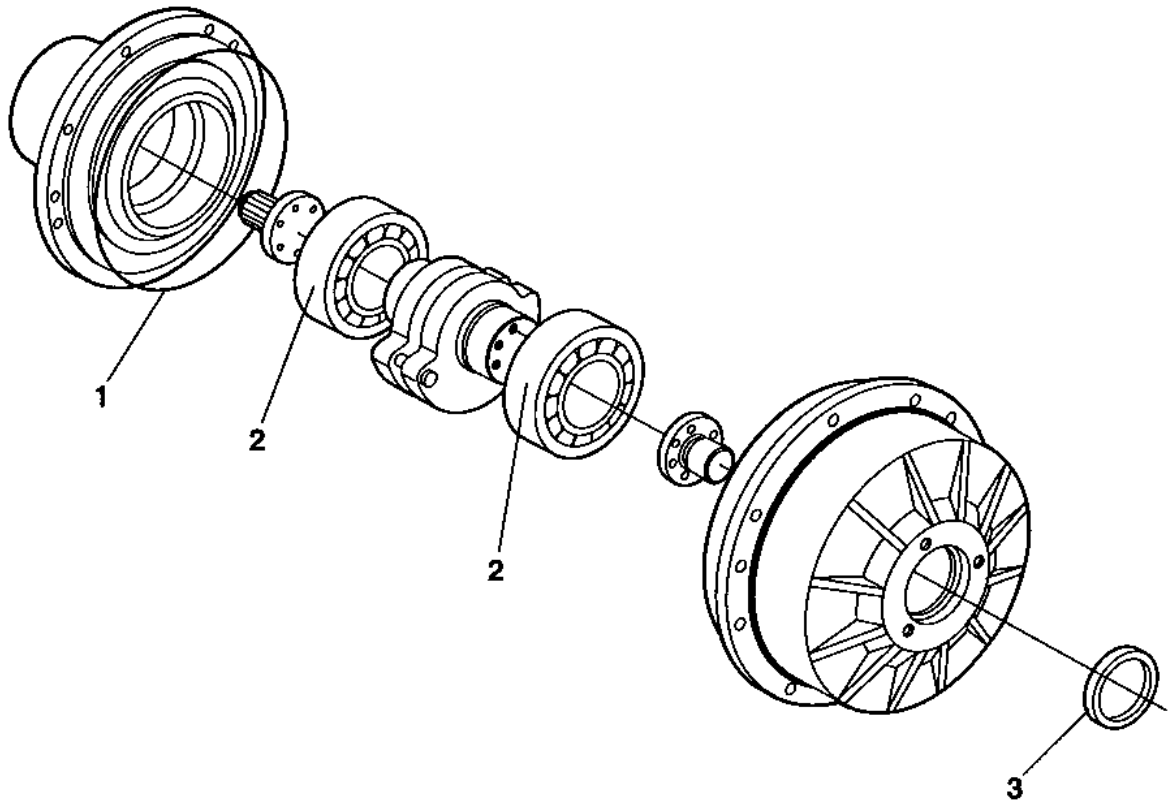

Item	Part No.	Name	Qty	L
0	4700945657	Eccentric shaft kit		
.1	4700900776	O-ring	1	
.2	4700390896	Spherical roller bearing	2	
.3	4700900782	Seal ring	1	

4700938891 Drum rotation kit 4700938891 Drum rotation kit

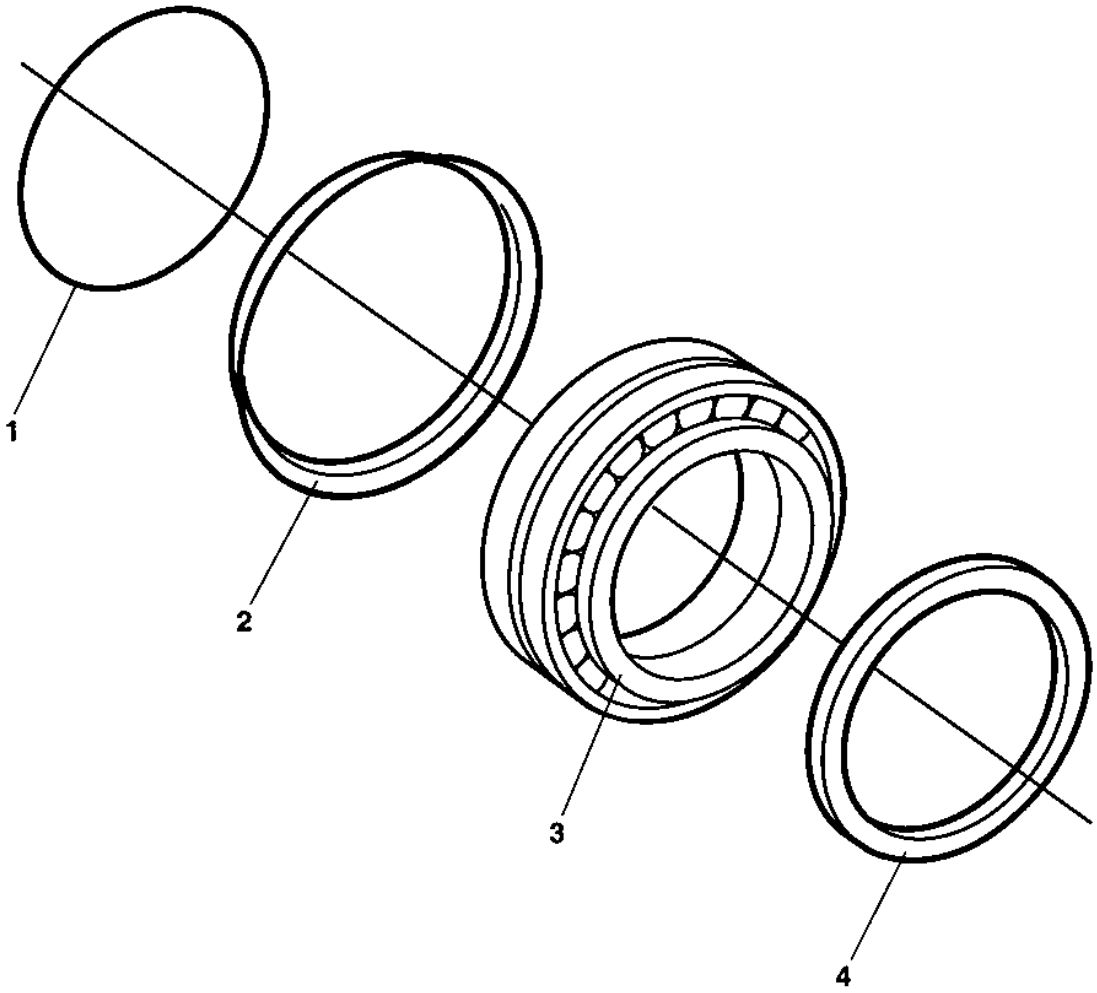

Item	Part No.	Name	Qty	L
0	4700938891	Drum rotation kit		
1	4700160105	O-ring 70	1	
2	4700929447	V-ring	1	
3	4700116041	Taper roller bearing	1	
4	4700386272	Sealing	1	

4700938881 Shock absorber kit, drum 4700938881 Shock absorber kit, drum

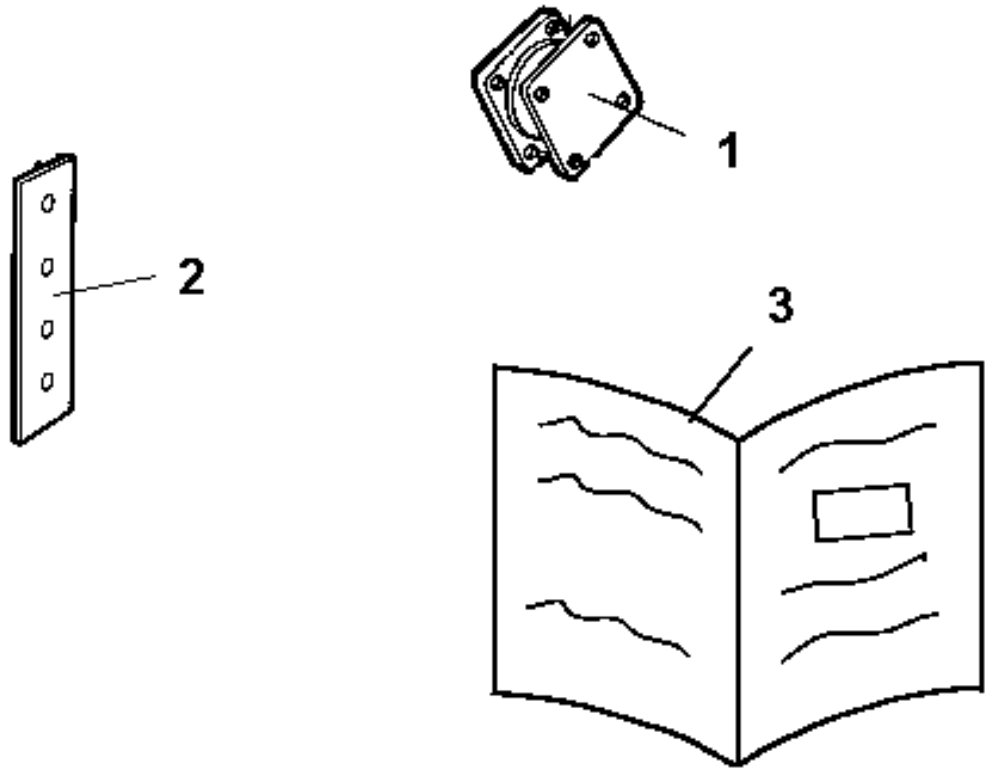

Item	Part No.	Name	Qty	L
0	4700938881	Shock absorber kit, drum		
1	4700801187	Shock absorber	14	
2	4700393276	Shim T = 1,5 mm	4	
3	4812156170	Instructions	1	

Frame Frame

NO DRAWING AVAILABLE FOR THIS BOM

Item	Part No.	Name	Qty	L
10	-	Frames		
30	-	Scraper and beam		
45	-	Scrapers, Urethan Rubber Option		
55	-	Scrapers, Spring Steel Option		
60	-	Hitch		
76	-	Structure		
80	-	Side covers Option		

Frames Frames

Item	Part No.	Name	Qty	L
1	4700374900	Hitch	1	
2	4700500043	Hex. screw	2	
3	4700904230	Washer	2	
4	4700374744	Safety rod	1	
5	4700635061	Hair clip	3	
6	4700347119	Shaft	2	
7	4700343775	Wire	2	
8	4700357488	Spring	1	
9	4700378206	Tractor frame	1	
10	4700373460	Fuel cap	1	
11	4700813391	Magnetic plug	1	
12	4700904557	Washer, 10.5x22x4 mm 300 HV	4	
13	4700500029	Hex. screw	4	
14	4700372087	Protective plate	1	
15	4812105086	Drum frame	1	
16	-	Drum shroud, cpl Option	1	
17	4700372844	Drum shroud	1	
18	4700500077	Screw	4	
19	4700904230	Washer	4	
20	4700376045	Holder	2	
21	4700904557	Washer, 10.5x22x4 mm 300 HV	4	
22	4700500029	Hex. screw	4	
23	-	Scraper	1	

Scraper and beam Scraper and beam

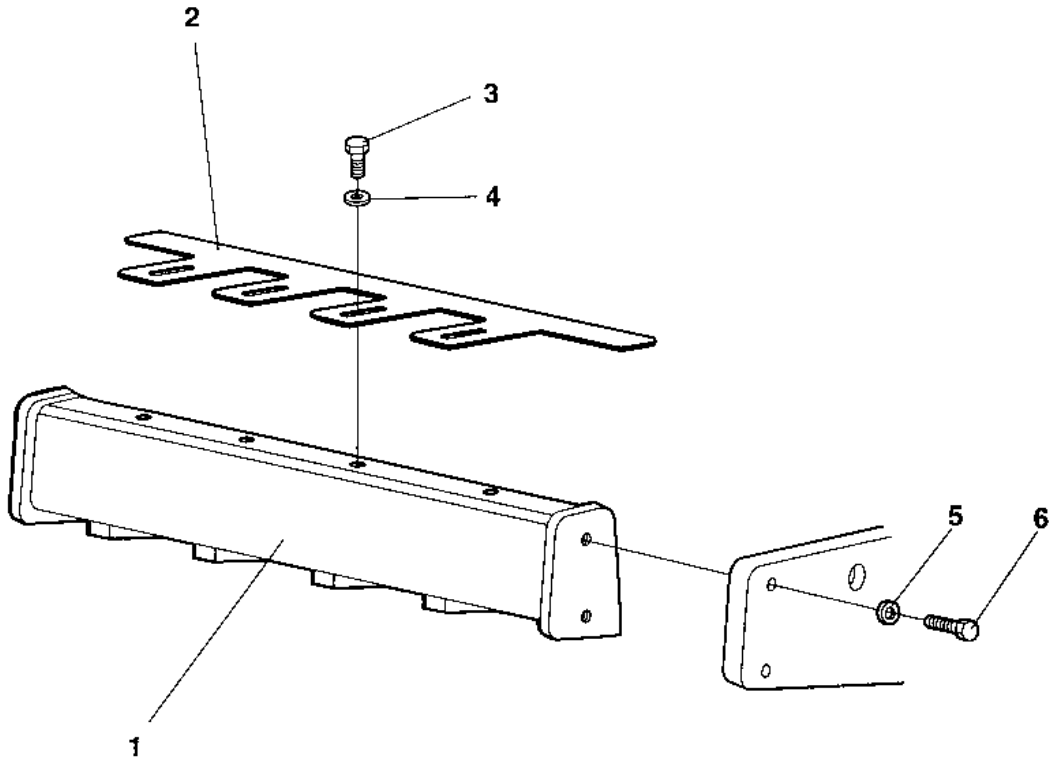

Item	Part No.	Name	Qty	L
1	4700376652	Cross beam	1	
2	4700384048	Scraper	1	
3	4700500102	Hex. screw	4	
4	4700904558	Washer, 17x30x6 mm 300 HV	4	
5	4700904234	Steel plain washer	4	
6	4700900807	Screw M24x120 10,9	4	

Scrapers, Urethan Rubber Option Scrapers, Urethan Rubber Option

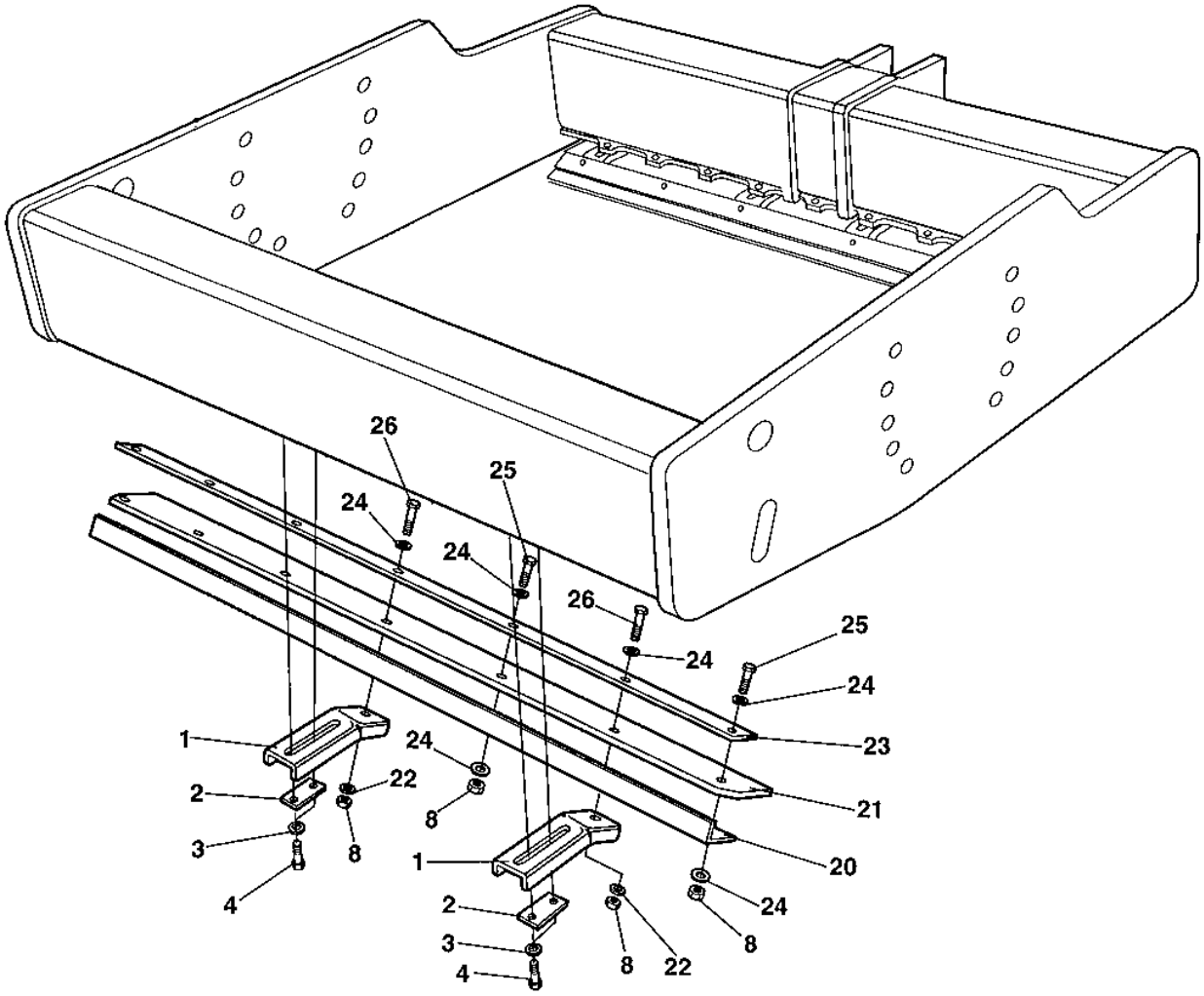

Item	Part No.	Name	Qty	L
1	4700376819	Scraper bracket	8	A
2	4700376622	Holder	8	A
3	4700904232	Steel plain washer	16	
4	4700500076	Screw M16x55	16	
4	4700500093	Hex. screw	16	
8	4700586019	Lock nut, M12	18	
20	4700376825	Scraper bracket	2	A
21	4700358033	Scraper blade	2	A
22	4700904213	Washer	8	
23	4700376826	Scraper bracket	2	A
24	4700904231	Steel plain washer, 13x24x2 mm 300 HV	28	
25	4700500056	Screw, M12x45 mm 8.8 A3K	10	
26	4700500049	Screw, M12x60 mm 8.8 A3K	8	

Comments for Page: Scrapers, Urethan Rubber Option

(L)OCAL REMARKS

A | en_US | Mounted on the front and rear of the drum.

Scrapers, Spring Steel Option Scrapers, Spring Steel Option

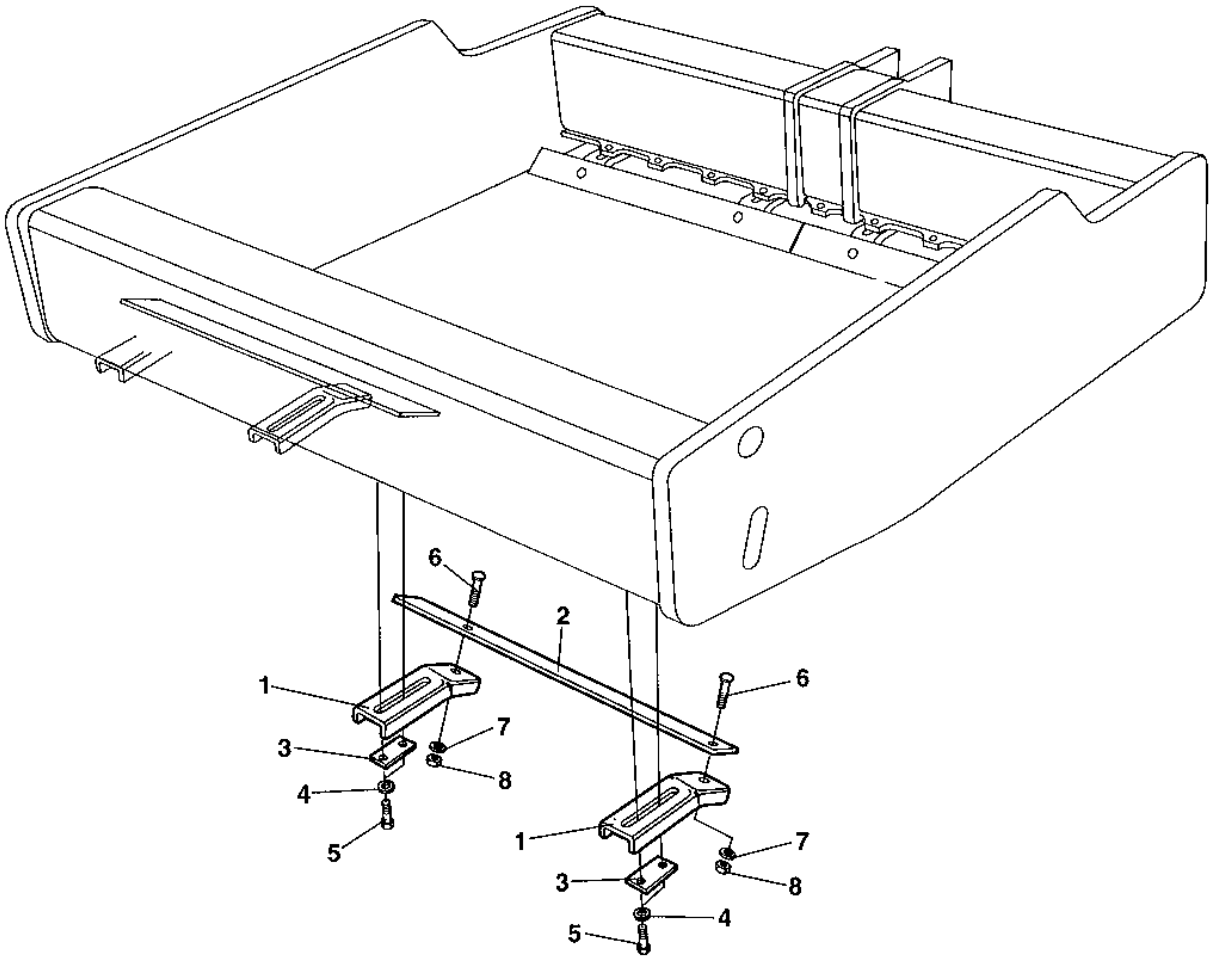

Item	Part No.	Name	Qty	L
1	4700376819	Scraper bracket	8	
2	4700376829	Scraper	4	
3	4700376622	Holder	8	
4	4700904232	Steel plain washer	16	
5	4700500076	Screw M16x55	16	
5	4700500093	Hex. screw	16	
6	4700791948	Bolt M12x40H 8,8	8	A
7	4700904703	Plain washer 13x24x4 mm	8	
8	4700586019	Lock nut, M12	8	

Comments for Page: Scrapers, Spring Steel Option

(L)OCAL REMARKS

A | en_US | Cup square neck bolt.

Hitch Hitch

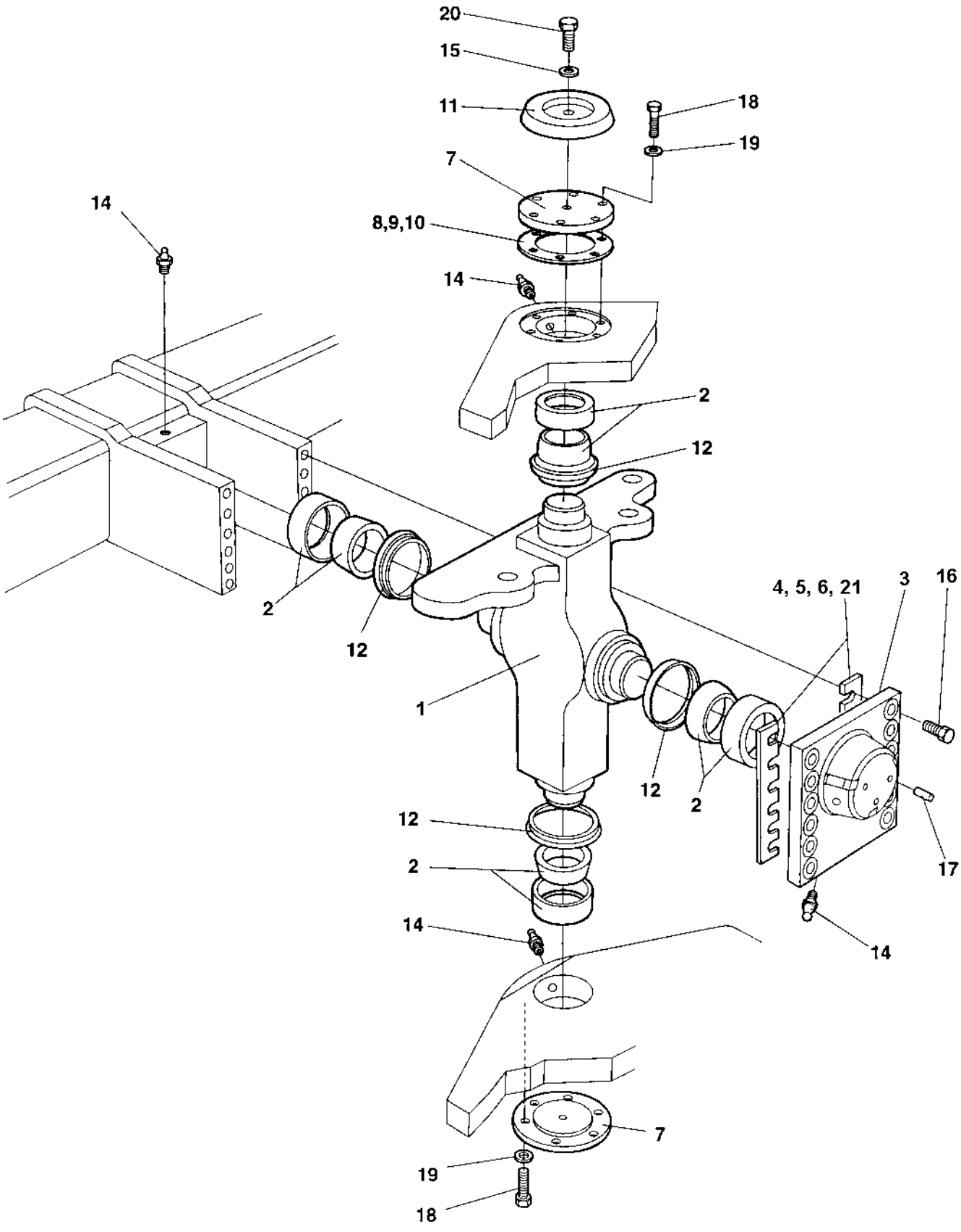
20
15
11
18
19
7
14
8,9,10
14
2
12
2
12
4, 5, 6, 21
3
16
1
12
2
17
12
2
14
14
7
19
18

Item	Part No.	Name	Qty	L
1	4700374900	Hitch	1	
2	4700100040	Contact spher. Plain bearing	4	
3	4700373421	Bearing cover	1	
4	4700345871	Shim T=1,0 mm	N	
5	4700345872	Shim T=0,35 mm	N	
6	4700345873	Shim T=0,10 mm	N	
7	4700337042	Bearing cover	2	
8	4700337045	Shim	N	
9	4700345874	Shim T=0,35 mm	N	
10	4700345875	Shim	N	
11	4700343159	Cover	1	
12	4700167032	Sealing, V-ring	4	
14	0544210600	Lubricant nipple	4	
15	4700904229	Washer, 8.4x16x1.5 mm 300 HV	1	
16	4700925208	Screw M20x90	12	
17	4700910995	Stop screw	3	
18	4700500037	Hex. screw	12	
19	4700904231	Steel plain washer, 13x24x2 mm 300 HV	12	
20	4700500018	Hex. screw	1	
21	4700380993	Shim T = 2,0 mm	N	
21	4700384498	Shim T = 0,15 mm	N	

Structure Structure

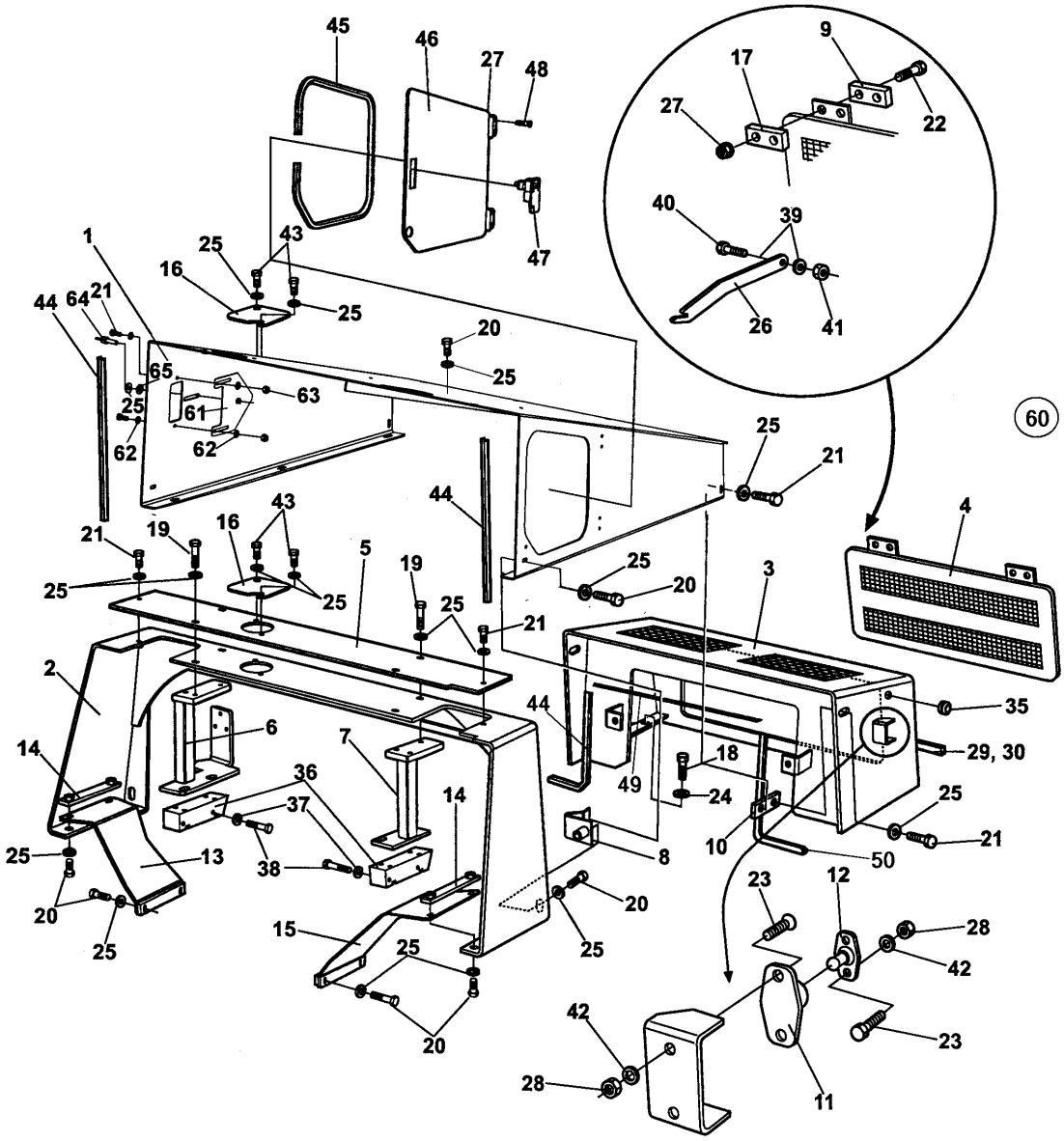

Item	Part No.	Name	Qty	L
1	4700392911	Hood	1	
2	4700376340	Protecting cover	1	J
2	4812105055	Protection cover	1	K
3	4700392912	Hood	1	H
4	4700382406	Rear cover	1	H
5	4700376354	Cover	1	
6	4812104733	Holder,right	1	
7	4700376349	Holder, left	1	
8	4700376366	Holder	2	
9	4700380755	Holder	2	H
10	4700380109	Holder	2	
11	4700450066	Door bumper	2	H
12	4700450067	Door bumper	2	H
13	4700381348	Holder	1	
14	4700381330	Holder	2	
15	4700381347	Holder	1	
16	4700381297	Cover	2	
17	4700380012	Holder	2	H
18	4700500031	Screw	4	
19	4700500047	Hexagon head screw	4	
20	4700500022	Hex. screw	19	
21	4700500053	Hex. screw	8	
22	4700924875	Screw	4	H
23	4700904504	Screw M5 x 18	8	H
24	4700904557	Washer, 10.5x22x4 mm 300 HV	4	
25	4700904640	Washer, 8.4x 2x3 mm 300 HV	35	
26	4700382411	Hook	1	
27	4700902285	Nut	8	H
28	4700586001	Lock nut	8	H
29	4700902379	Edge trim	1XL	B
30	4700902379	Edge trim	1XL	C
35	4700791475	Grommet	2	A
36	4700381989	Holder	2	
37	4700904231	Steel plain washer, 13x24x2 mm 300 HV	4	
38	4700500133	Screw	4	
39	4700904228	Steel plain washer	2	
40	4700500040	Screw	1	

Item	Part No.	Name	Qty	L
41	4700586002	Lock nut M6 -8	1	
42	4700904281	Washer, 5,3x10x1 300HV	8	H
43	4700500021	Hex. screw	4	
44	4700902166	Edge trim	1XL	E
45	4700902379	Edge trim	1XL	D
46	4700393857	Cover	1	
47	4700792549	Lock	1	
48	4700513012	Screw, M6 x 20 mm 10.9 GEOMET®	4	
49	4700791597	Rubber strip	1XL	F
50	4700902166	Edge trim	1XL	G
60	4700950398	Engine hood, cpl	1	I
61	4812117358	Cover	1	
62	4700904229	Washer, 8.4x16x1.5 mm 300 HV	7	
63	4700586003	Hexagon lock nut M8	2	
64	4700904718	Wing screw	1	
65	4700791938	Washer	1	

Comments for Page: Structure

(L)OCAL REMARKS

A | en_US | With membrane

B | en_US | L=0,330M

C | en_US | L=0,550M

D | en_US | L=1,240M

E | en_US | L=0,690M

F | en_US | L=0,660M

G | en_US | L=0,700M

H | en_US | Included in item 60 Engine hood Cpl.

I | en_US | Consists of all items marked "H".

J | en_US | Yellow colour

K | en_US | Gray Colour

Side covers Option Side covers Option

This page intentionally left blank

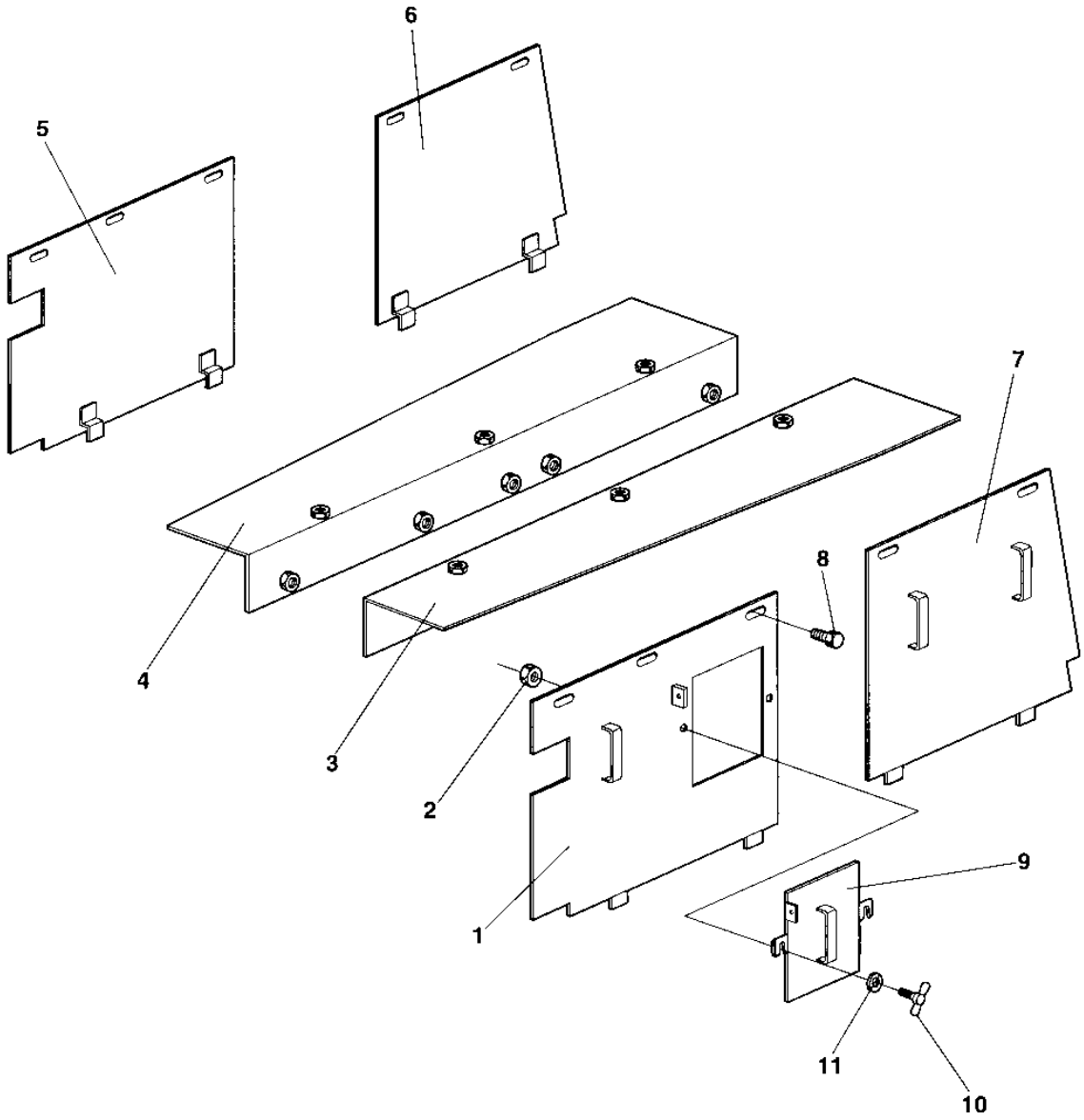
6
5
7
8
4
3
2
9
1
11
10

Item	Part No.	Name	Qty	L
1	4700380053	Side cover, right	1	
2	4700586003	Hexagon lock nut M8	2	
3	4700387089	Holder, right	1	
4	4700387090	Holder, left	1	
5	4700380058	Side cover, left	1	
6	4700380057	Side cover, left	1	
7	4700380052	Side cover, right	1	
8	4700500053	Hex. screw	16	
9	4700381033	Cover	1	
10	4700904718	Wing screw	2	
11	4700904640	Washer, 8.4x 2x3 mm 300 HV	18	

Drum Drum

NO DRAWING AVAILABLE FOR THIS BOM

Item	Part No.	Name	Qty	L
10	-	Drum		
26	-	Drum cartridge Vibration side		
35	-	Drum cartridge Drive side		
40	4700380462	Drum gear, cpl		

Drum Drum

Item	Part No.	Name	Qty	L
1	4700372527	Drum	1	
2	-	Drum cartridge Vibration side		
3	-	Drum cartridge Drive side		
4	4700801187	Shock absorber	14	
5	4700500194	Hex. screw	80	
6	4700570007	Nut	80	
7	4700904231	Steel plain washer, 13x24x2 mm 300 HV	112	
8	4700500051	Hex. screw	32	
9	4700500082	Hex. screw	23	
10	4700384114	Spacer	24	
10	4700904232	Steel plain washer	24	
11	4700384121	Air breather screw	1	
12	4700380462	Drum gear, cpl	1	
13	4700903919	Screw	16	
14	4700903281	Screw	16	
15	4700904233	Steel plain washer 21x36x3	32	
16	4700349682	Drive shaft	1	
17	4700232210	Plug	1	
18	-	Sign plate	1	
19	4700527002	Drive screw	4	
20	4700373442	Gear holder	1	A
21	4700373443	Gear holder	1	B
22	-	Not used on this model		
23	4700372230	Drive disc	1	
24	-	Not used on this model		
25	4700396031	Bracket	1	
26	4700393276	Shim T = 1,5 mm	N	
28	4700393278	Shim T = 6 mm	N	
29	4700393279	Shim T = 8 mm	N	
30	4700928229	Screw M24-3,0X130 10.9	6	
31	4700792464	Nut M24 -10 DIN985	6	
32	4700904234	Steel plain washer	12	
33	4700904479	Screw M24x110 10,9	10	
34	4700904234	Steel plain washer	10	
35	4700343480	Support	1	

Comments for Page: Drum

(L)OCAL REMARKS

A | en_US | Right

B | en_US | Left

(L)OCAL REMARKS

A | en_US | Right

B | en_US | Left

C | en_US | Used together with P/N 4700928229, item 30.

Drum cartridge Vibration side Drum cartridge Vibration side

This page intentionally left blank

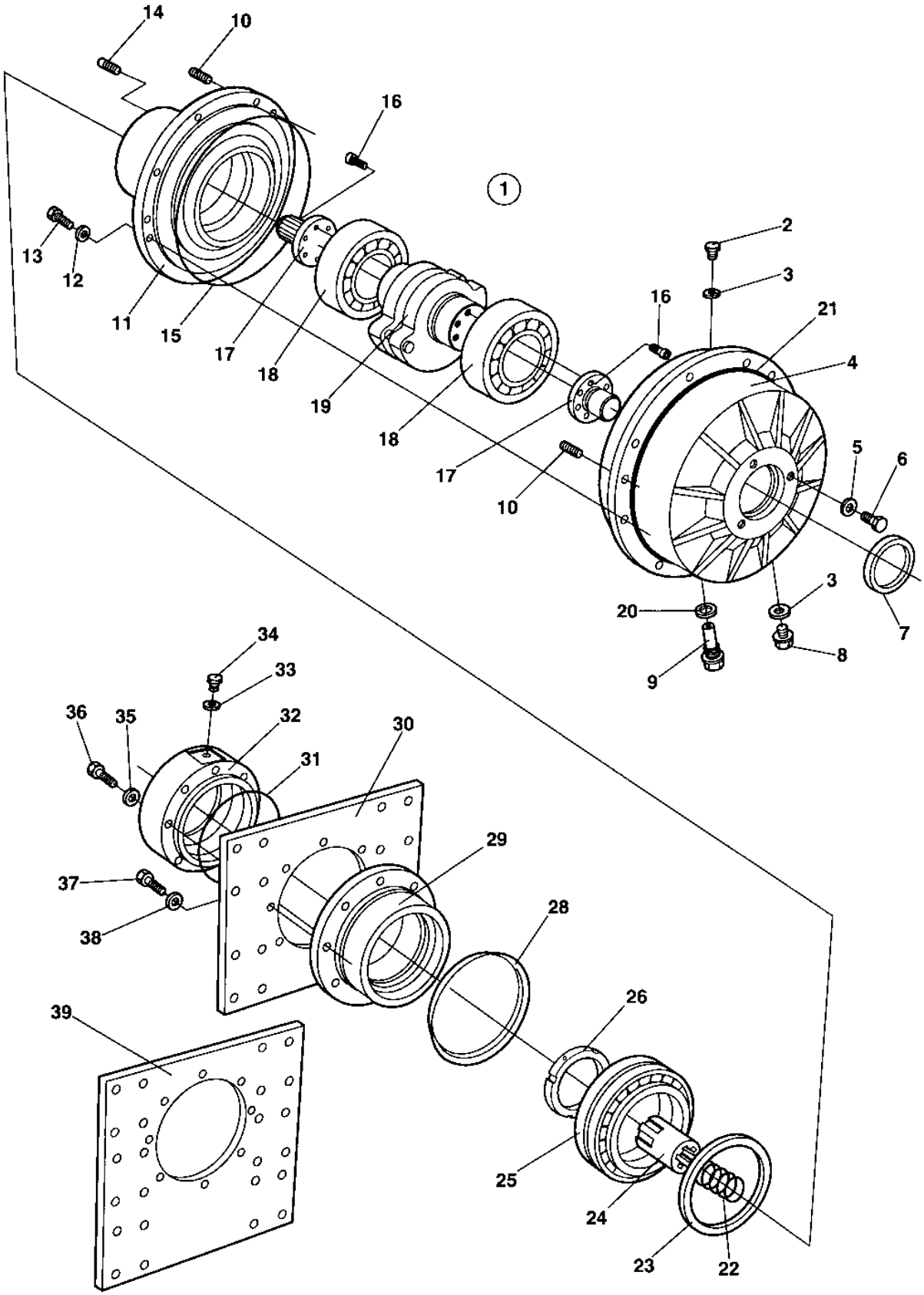
14
10
16
1
13
12
11
15
17
18
19
2
3
16
21
4
5
6
7
8
9
20
34
33
36
35
32
31
30
29
37
38
28
26
39
25
24
23
22

Item	Part No.	Name	Qty	L
1	4700945591	Drum cartridge	1	
.2	4700343744	Magnetic plug	1	
.3	4700162017	Seal ring	2	
.4	4700379880	Inner bearing housing	1	
.5	4700162027	Sealing	3	
.6	4700500163	Hex. screw	3	
.7	4700900782	Seal ring	1	
.8	4700232210	Plug	1	
.9	4700381634	Plug	1	
.10	4700900775	Plug	6	
.11	4700379878	Bearing housing outer	1	
.12	4700904232	Steel plain washer	12	
.13	4700500082	Hex. screw	12	
.14	4700903189	Stop screw	3	
.15	4700900776	O-ring	1	
.16	4700791156	Screw M10-1,5x55 12,9	16	
.17	4700380018	Splined shaft	2	
.18	4700390896	Spherical roller bearing	2	
.19	4812112746	Eccentric shaft	1	
.20	4700162011	Washer, sealing	1	
21	4700904737	O-ring	1	
22	4700349715	Spring	1	
23	4700167023	Seal ring	1	
24	4700381027	Splined sleeve	1	
25	4700116041	Taper roller bearing	1	
26	4812112413	Shaft nut	1	
28	4700929447	V-ring	1	
29	4700343318	Bearing housing	1	
30	-	Not used on this model	1	
31	4700160105	O-ring 70	1	
32	4812110878	ADAPTOR	1	
33	4700162018	Sealing	1	
34	4700370231	Plug	1	
35	4700904231	Steel plain washer, 13x24x2 mm 300 HV	4	
36	4700500197	Hex. screw	4	
37	4700500082	Hex. screw	8	
38	4700384114	Spacer	8	

Item	Part No.	Name	Qty	L
39	4700343480	Support	1	

Drum cartridge Drive side Drum cartridge Drive side

This page intentionally left blank

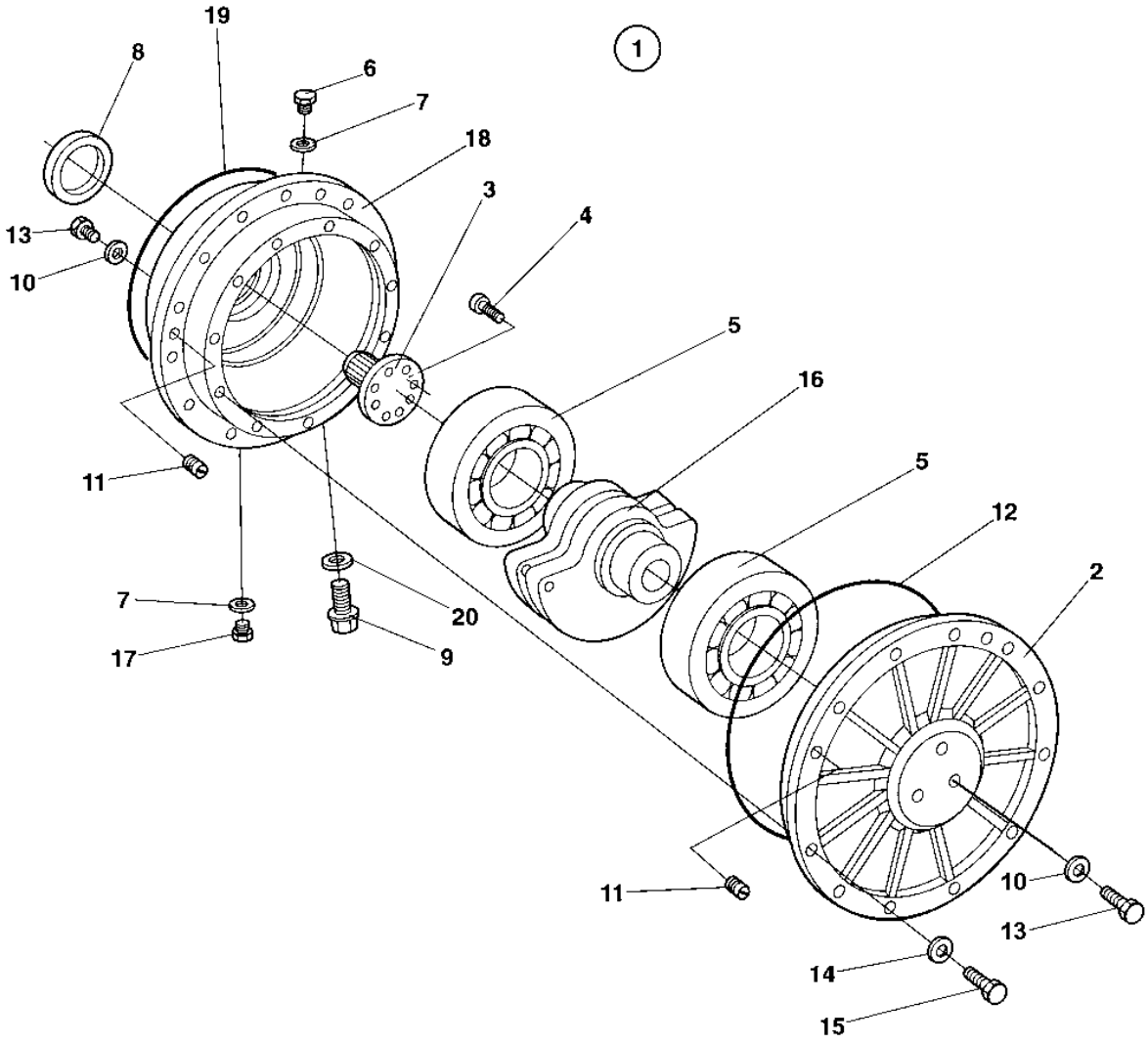
1
19
8
6
7
18
3
4
13
10
5
16
5
12
2
11
7
17
20
9
11
10
13
14
15

Item	Part No.	Name	Qty	L
1	4700945585	Drum cartridge	1	
.2	4700379876	Bearing housing outer	1	
.3	4700380018	Splined shaft	1	
.4	4700791156	Screw M10-1,5x55 12,9	8	
.5	4700390896	Spherical roller bearing	2	
.6	4700343744	Magnetic plug	1	
.7	4700162017	Seal ring	2	
.8	4700900782	Seal ring	1	
.9	4700381634	Plug	1	
.10	4700162027	Sealing	6	
.11	4700900775	Plug	6	
.12	4700900776	O-ring	1	
.13	4700500163	Hex. screw	6	
.14	4700904232	Steel plain washer	12	
.15	4700500082	Hex. screw	12	
.16	4812112746	Eccentric shaft	1	
.17	4700232210	Plug	1	
.18	4700379880	Inner bearing housing	1	
.19	4700904737	O-ring	1	
.20	4700162011	Washer, sealing	1	

4700380462 Drum gear 4700380462 Drum gear

Item	Part No.	Name	Qty	L
1	4700380462	Drum gear, cpl	1	
.2	-	Hub	1	
.3	-	Spring ring	3	
.4	-	Spring ring	3	
.5	4700935394	Plug	2	
.6	-	Plug	2	
.7	4700935395	Seal ring	4	
.8	4700935865	Adapter	1	
.9	4700935866	Set of o-rings	1	
.10	4700935867	O-ring	1	
.11	4700935868	Bushing	2	
.12	4700935870	Screw	2	
.13	4700902944	Screw	4	
.14	4700935874	Coupling	1	
.15	4700935875	Retaining ring	1	
.16	4700935876	Sun wheel	1	
.17	4700935877	Spacer	1	
.18	-	Spring ring	1	
.19	-	Spring ring	6	
.20	4812155788	Roller bearing	3	
.21	-	Spring ring	3	
.22	4700935881	Retaining ring	3	
.23	4700935882	Sun gear	1	
.24	4700935883	Retaining ring	1	
.25	4700935413	O-ring	1	
.26	4700935414	Cover	1	
.27	-	Screw	12	
.28	4700945581	Seal kit	1	
30	-	Not used on this model		
35	4700935859	Seal	1	
36	4812156168	Roller bearing	2	
37	-	Spring ring	1	
38	4700935862	Nut	1	

Engine Engine

NO DRAWING AVAILABLE FOR THIS BOM

Item	Part No.	Name	Qty	L
13	-	Engine		
15	-	Fan and Fan clutch		
26	-	Cooling system		
36	-	Combustion air system		
46	-	Fuel system		
80	-	Exhaust system		
90	-	Pre air cleaner Option		

Engine Engine

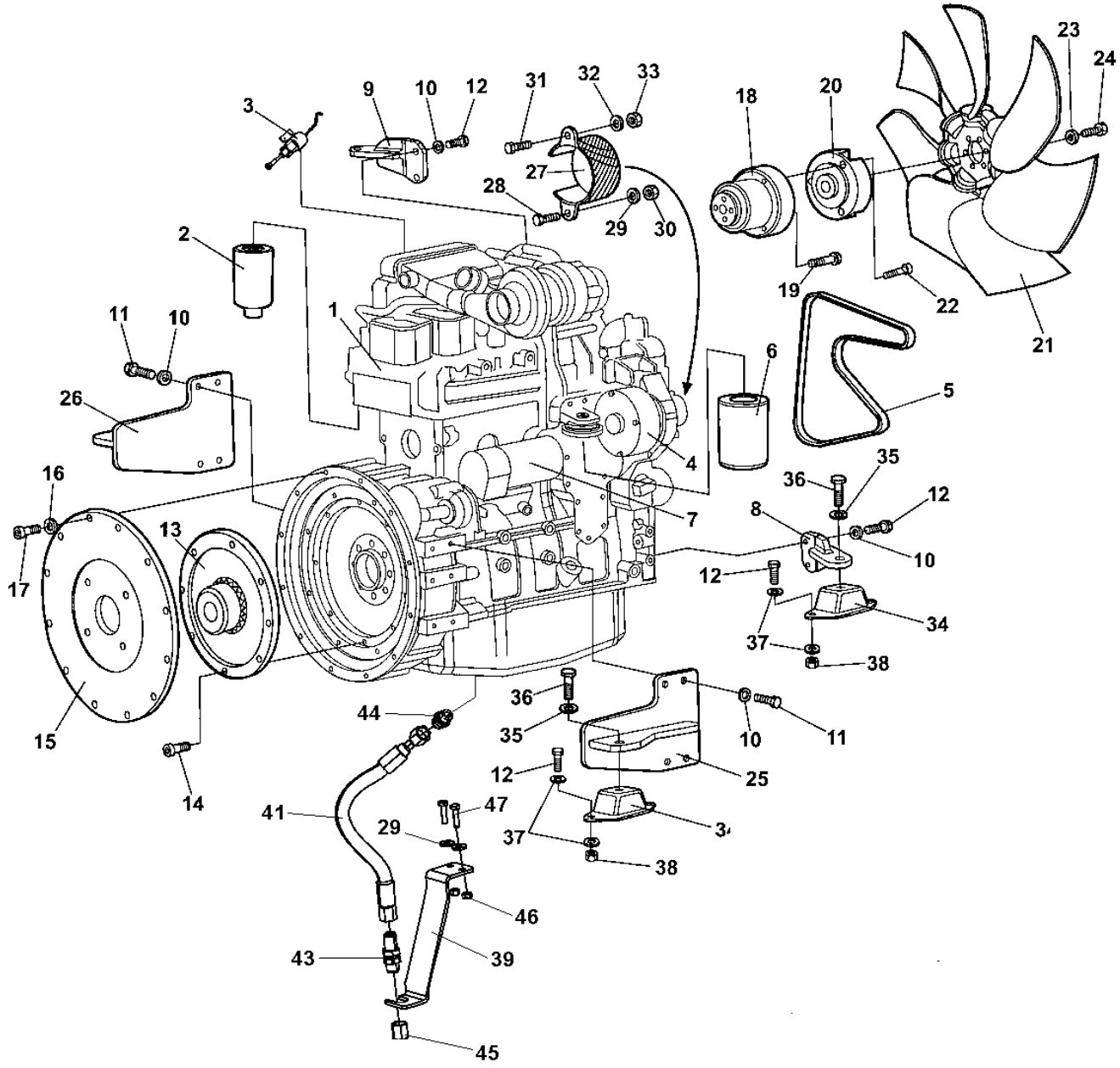

Item	Part No.	Name	Qty	L
1	4700380015	Engine Cummins	1	
.2	4700935969	Fuel filter w. water separator	1	
.3	4700935758	Fuel solenoid	1	
.4	4700945140	Alternator	1	
.5	4700901449	V-belt	1	
.6	4700212373	Oil filter	1	
.7	4700939505	Starter	1	
8	4700392283	Engine bracket, Right	1	
9	4700392284	Engine bracket, Left	1	
10	4700904638	Washer 12x22x2	12	
11	4700508079	Cylinder screw	8	
12	4700500194	Hex. screw	8	
13	4700370229	Coupling	1	
14	4700509025	Screw 3/8-16UNCx32 8,8	8	
15	4700372772	Bracket	1	
16	4700904637	Washer	12	
17	4700508029	Cylinder screw	12	
18	4700394005	Connector	1	
19	4700792661	Screw M12-1,25x80 12,9	4	
20	-	Fan hub	1	A
21	-	Fan	1	A
22	-	Socket head cap screw	3	A
23	-	Steel plain washer	6	A
24	-	Hexagon head screw	6	A
25	4700393962	Engine bracket Right	1	
26	4700393963	Engine bracket Left	1	
27	4700380101	V-belt cover	1	
28	4700904241	Screw	1	
29	4700904640	Washer, 8.4x 2x3 mm 300 HV	2	
30	4700586003	Hexagon lock nut M8	1	
31	4700904379	Hexgon head screw M	1	
32	4700904230	Washer	1	
33	4700586018	Lock nut	1	
34	4700387129	Shock absorber	4	
35	4700904232	Steel plain washer	4	
36	4700500070	Hex. screw	4	
37	4700904703	Plain washer 13x24x4 mm	16	

Item	Part No.	Name	Qty	L
38	4700586019	Lock nut, M12	8	
39	4700396206	Bracket	1	
40	4700500154	Screw	1	
41	4700394511	Oil drain hose	1	
42	4700904233	Steel plain washer 21x36x3	2	
43	4700230515	Connector	1	
44	4700925723	Connector	1	
45	4700330383	Cap JIC, steel	1	
46	4700570005	Hex. nut	2	
47	4700500022	Hex. screw	2	

Comments for Page: Engine

(L)OCAL REMARKS

A | en_US | See Section "Fan and Fan clutch" for new fan.

Fan and Fan clutch Fan and Fan clutch

This page intentionally left blank

Item	Part No.	Name	Qty	L
1	4700397284	Fan clutch	1	
2	4700397285	Fan	1	
3	4700397216	Fan spacer	1	
4	4700904231	Steel plain washer, 13x24x2 mm 300 HV	3	
5	4700925519	Screw M12x55 10.9 GEOMET	3	

Cooling system Cooling system

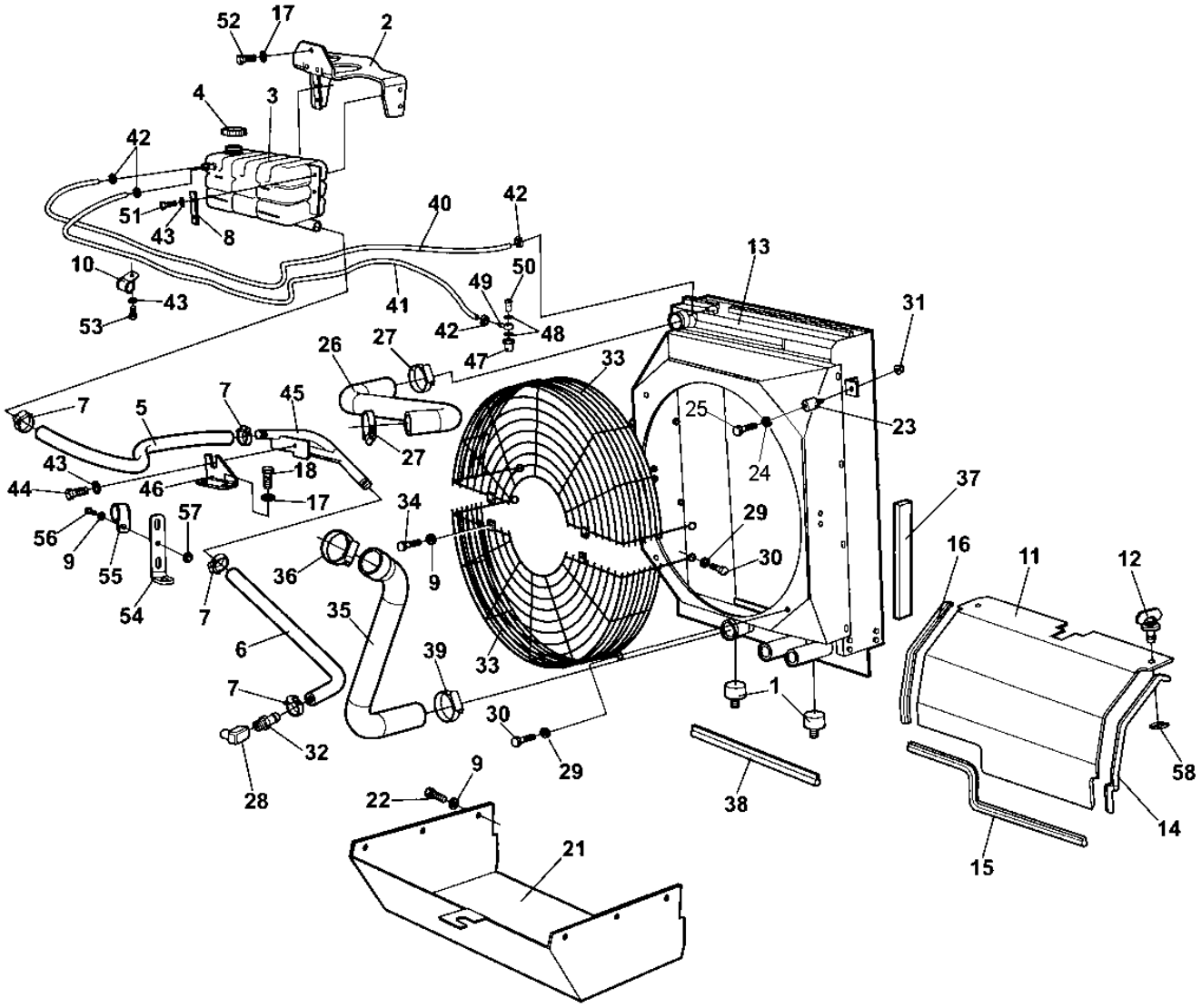

Item	Part No.	Name	Qty	L
1	4700904551	Shock absorber	2	
2	4700392170	Holder	1	
3	4700392313	Expansion tank	1	
4	4700903714	Cooler cap	1	
5	4700205027	Coolant hose	1XL	A
6	4700205027	Coolant hose	1XL	B
7	4700313006	Hose clamp	4	
8	4700381413	Washer	2	
9	4700904229	Washer, 8.4x16x1.5 mm 300 HV	8	
10	4700921084	Pipe clamp	1	
11	4700386853	Air inlet plate	1	
12	4700904486	Quick lock	2	
13	4700394097	Radiator	1	
14	4700902166	Edge trim	1XL	C
15	4700902166	Edge trim	1XL	D
16	4700902166	Edge trim	1XL	E
17	4700904230	Washer	5	
18	4700500028	Screw, M10x25 mm 8.8 A3K	2	
21	4700386943	Air leading plate	1	
22	4700500053	Hex. screw	6	
23	4700371774	Shock absorber	2	
24	4700904639	Washer, M6	2	
25	4700500012	Hex. screw	2	
26	4700393705	Coolant hose	1	
27	4700313010	Hose clamp	2	
28	4700234365	Elbow 90	1	
29	4700904640	Washer, 8.4x 2x3 mm 300 HV	8	
30	4700500019	Hex. screw	8	
31	4700902285	Nut	2	
32	4700370840	Hose connection	1	
33	4700387085	Fan guard	2	
34	4700500018	Hex. screw	2	
35	4700393713	Coolant hose	1	
36	4700313023	Hose clamp	1	
37	4700202041	Rubber strip	1XL	F
38	4700902166	Edge trim		
39	4700313010	Hose clamp	1	

Item	Part No.	Name	Qty	L
40	4700246069	Rubber hose	1XL	G
41	4700246069	Rubber hose	1XL	H
42	4700313001	Hose clamp	4	
43	4700904228	Steel plain washer	7	
44	4700500013	Hex. screw	2	
45	4700393772	Pipe assembly	1	
46	4700394071	Bracket	1	
47	4700392378	Connector	1	
48	4700747282	Copper washer	2	
49	4700330170	Banjo coupling	1	
50	4700330171	Hollow screw, M14	1	
51	4700500075	Screw, M6-1,0x25 mm 8.8	4	
52	4700500029	Hex. screw	3	
53	4700500040	Screw	1	
54	4700390083	Holder	1	
55	4700921050	Clamp	1	
56	4700500021	Hex. screw	1	
57	4700902286	Lock nut, M8x1.25 mm A2K	1	
58	4700926985	Quick lock washer	2	

Comments for Page: Cooling system

(L)OCAL REMARKS

A | en_US | L=0,95M

B | en_US | 0,570M

C | en_US | L=0,450M

D | en_US | L=0,690M

E | en_US | L=0,330M

F | en_US | L=0,6M

G | en_US | L=1,90M

H | en_US | L=1,90M

Combustion air system Combustion air system

This page intentionally left blank

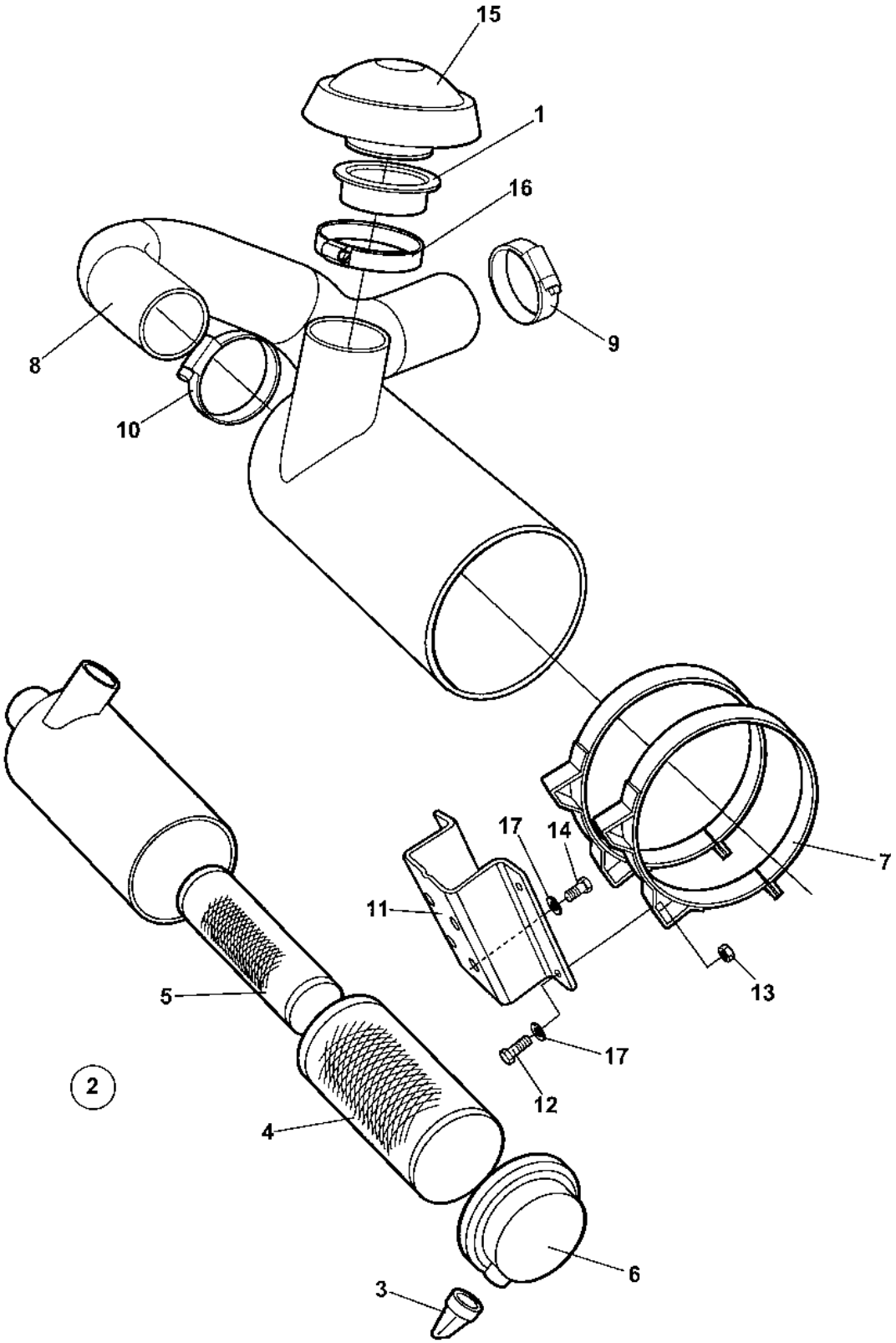
15
1
16
9
8
10
7
17
14
11
13
5
17
12
2
4
6
3

Item	Part No.	Name	Qty	L
1	4700348309	Rubber bushing	1	
2	4700394680	Air cleaner Cpl	1	
.3	4700908399	Vacuator valve	1	
.4	4700394686	Air filter	1	
.5	4700394687	Air filter	1	
.6	4700395022	Cover	1	
7	4700813791	Mounting band	2	
8	4700393666	Air inlet hose	1	
9	4700392810	Clamp	1	
10	4700389600	Hose clamp	1	
11	4700393085	Filter bracket	1	
12	4700500021	Hex. screw	4	
13	4700586003	Hexagon lock nut M8	4	
14	4700500053	Hex. screw	4	
15	4700499266	Protection cover	1	
16	4700904060	Hose clamp	1	
17	4700904556	Steel plain washer	8	

Fuel system Fuel system

Item	Part No.	Name	Qty	L
1	4700373460	Fuel cap	1	
2	4700904695	Fuel level sender	1	
2	4700945777	Gasket	1	
3	4700500021	Hex. screw	2	
4	4700747282	Copper washer	10	
5	4700330171	Hollow screw, M14	4	
6	4700373574	Hose connection	2	
7	4700244054	Hose reinforced	1	A
8	4700313002	Hose clamp	2	
9	4700904281	Washer, 5,3x10x1 300HV	5	
10	4700500006	Hex. screw	5	
11	4700904230	Washer	2	
12	4700500029	Hex. screw	2	
13	4700500067	Screw	2	
14	4700904985	Fuel hose, fire-resistant	1	B
15	4700939404	Pre-fuel filter element	1	
16	4700330170	Banjo coupling	3	
17	4700904984	Fuel hose	1	C
18	4700902558	Clamp	5	
19	4700939403	Filter head	1	
20	4700939405	Bowl	1	
21	4700313001	Hose clamp	5	
22	4700313041	Cable tie		
23	4700903190	Steel plug threaded	2	
24	4700234619	Elbow 90G	1	
25	4700603018	Washer 10x18x4	4	
26	4700500022	Hex. screw	1	
27	4700904229	Washer, 8.4x16x1.5 mm 300 HV	2	
28	4812111004	Fuel hose	1	
29	4700901121	Banjo nipple	1	

Comments for Page: Fuel system

(L)OCAL REMARKS

A | en_US | L = 0,64 m

B | en_US | L =0,55 m

C | en_US | L = 2,12 m

Exhaust system Exhaust system

This page intentionally left blank

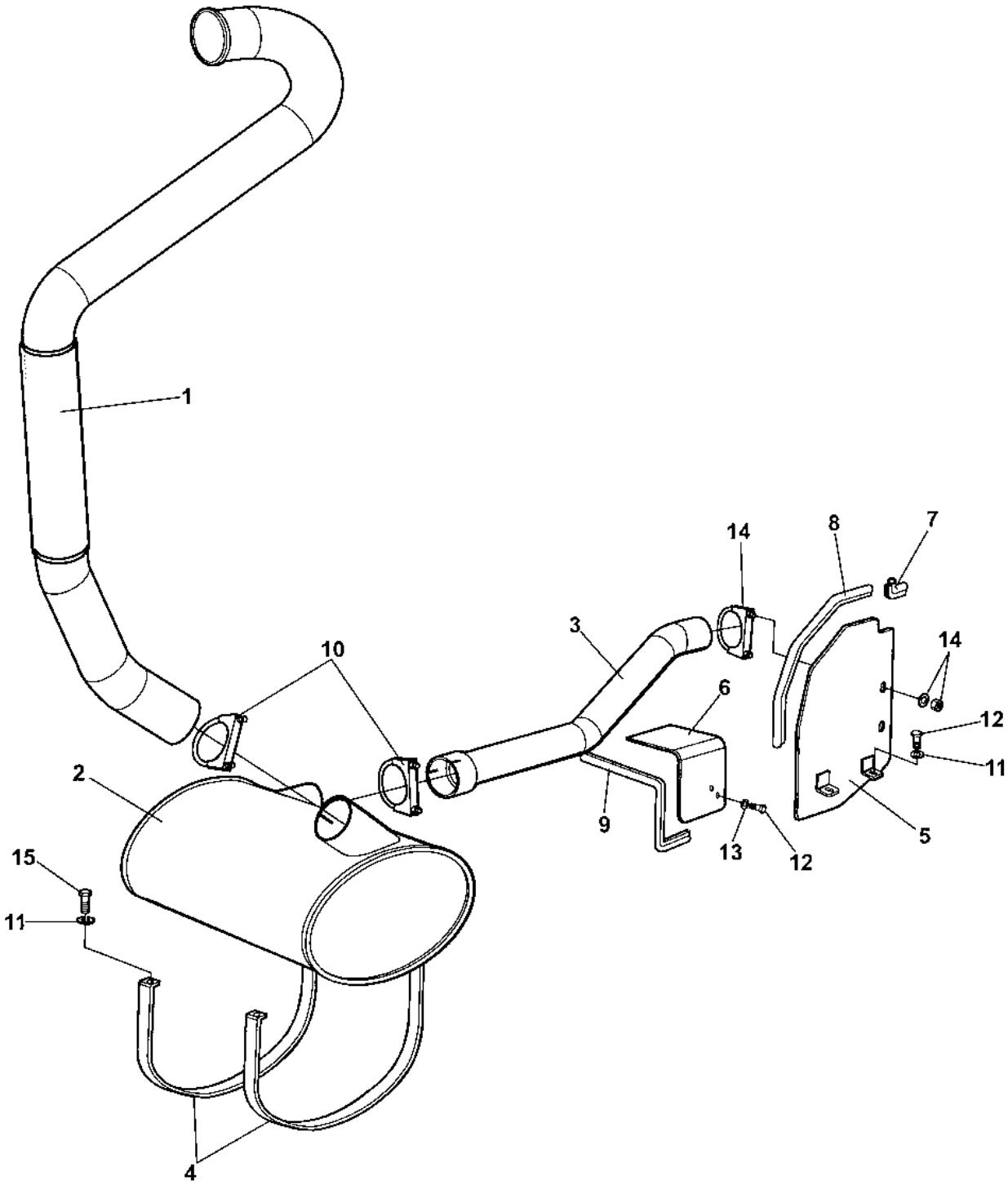
1
14
8
7
3
14
10
6
12
2
11
9
5
13
12
15
11
4

Item	Part No.	Name	Qty	L
1	4700393661	Exhaust pipe	1	
2	4700392295	Muffler	1	
3	4700392296	Exhaust pipe	1	
4	4700386789	Clamp	2	
5	4700377098	Heat protection	1	
6	4700392747	Thermal guard	1	
7	4700902166	Edge trim	1XL	A
8	4700902166	Edge trim	1XL	B
9	4700902166	Edge trim	1XL	C
10	4700313094	Pipe clamp	2	
11	4700904640	Washer, 8.4x 2x3 mm 300 HV	6	
12	4700500053	Hex. screw	4	
13	4700904229	Washer, 8.4x16x1.5 mm 300 HV	4	
14	4700313093	Pipe clamp	1	
15	4700500022	Hex. screw	4	

Comments for Page: Exhaust system

(L)OCAL REMARKS

A | en_US | L=0.080M

B | en_US | L=0,410M

C | en_US | L=0,380M

Pre air cleaner Option Pre air cleaner Option

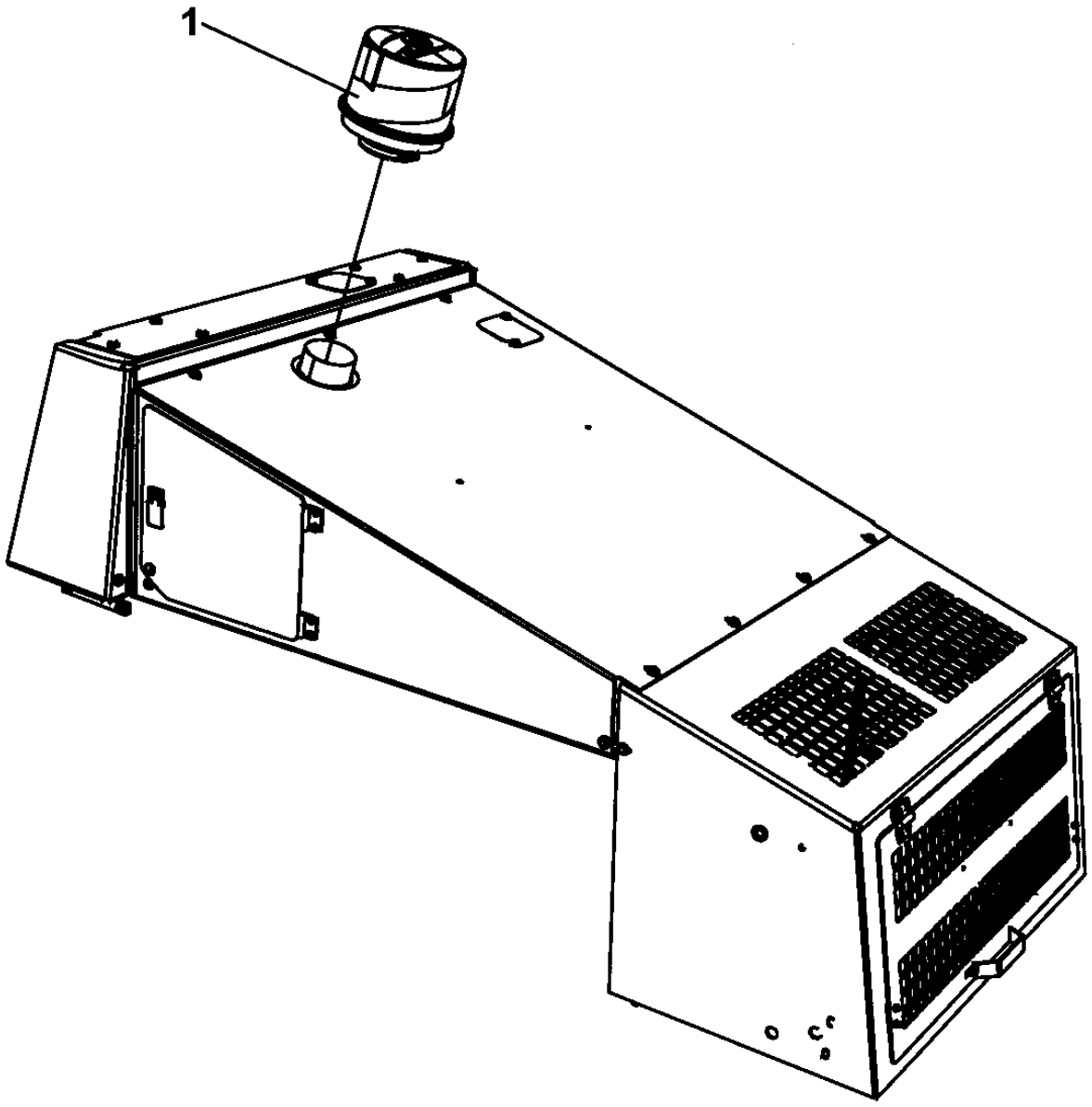

Item	Part No.	Name	Qty	L
1	4700397584	Pre air cleaner filter	1	

Transmission Transmission

NO DRAWING AVAILABLE FOR THIS BOM

Item	Part No.	Name	Qty	L
10	-	Rear axle and wheels		
20	4812105196	Rear axle single speed		

Rear axle and wheels Rear axle and wheels

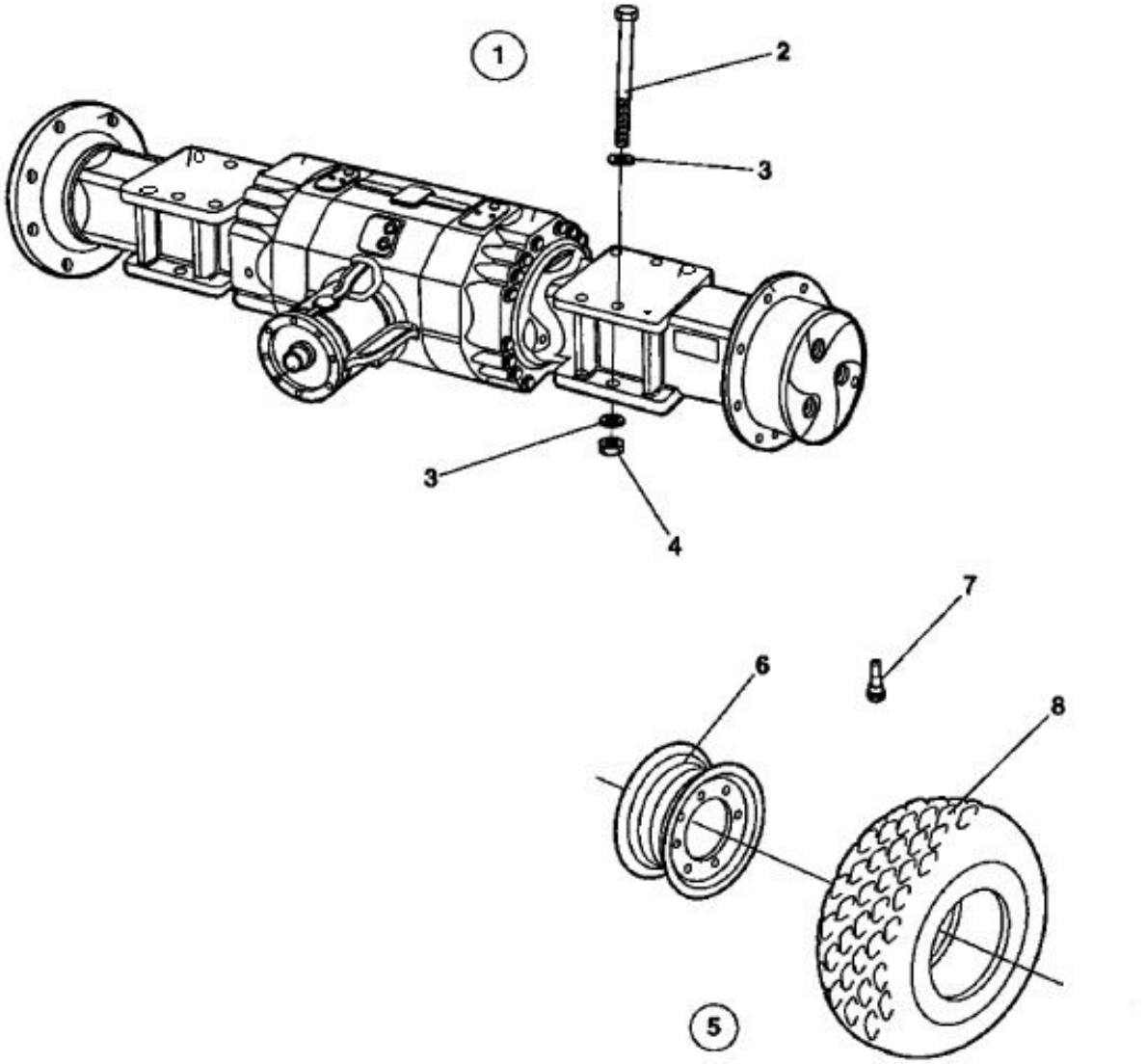

Item	Part No.	Name	Qty	L
1	4812105196	Rear axle single speed	1	
2	4700929217	Screw	8	
3	4700904233	Steel plain washer 21x36x3	16	
4	4700901145	Lock nut M20-10	8	
5	4812104711	Assly Wheel All weather tyre	2	
.6	4812120674	Rim	1	
.7	4700792261	Air charging valve Straight	1	
.8	4812103635	Tyre	1	

4812105196 Rear Axle 4812105196 Rear axle

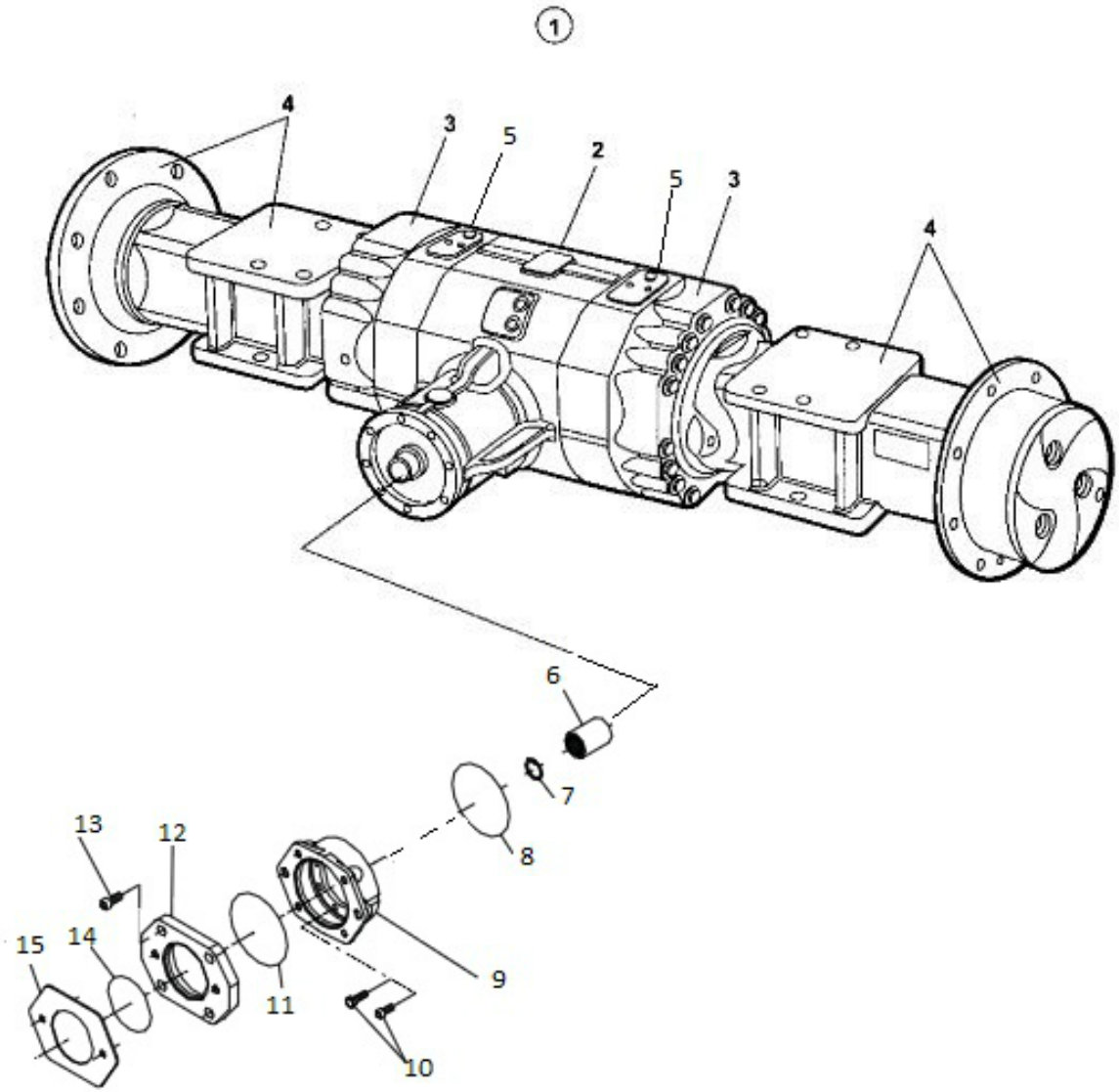

Item	Part No.	Name	Qty	L
1	-	Rear axle	1	
2	-	Central housing	1	
3	-	Differential	2	
4	-	Hub Reduction	2	
5	-	Brake	2	
6	4700901834	Splined sleeve	1	
7	-	Circlip	1	
8	4700929648	O-ring	1	
9	4700900255	Flange	1	
10	4812156888	Screw	10	
11	4700909584	O-ring	1	
12	-	Plate		
13	-	Bolt		
14	-	O-Ring		
15	-	Plate		

Central Housing Central housing

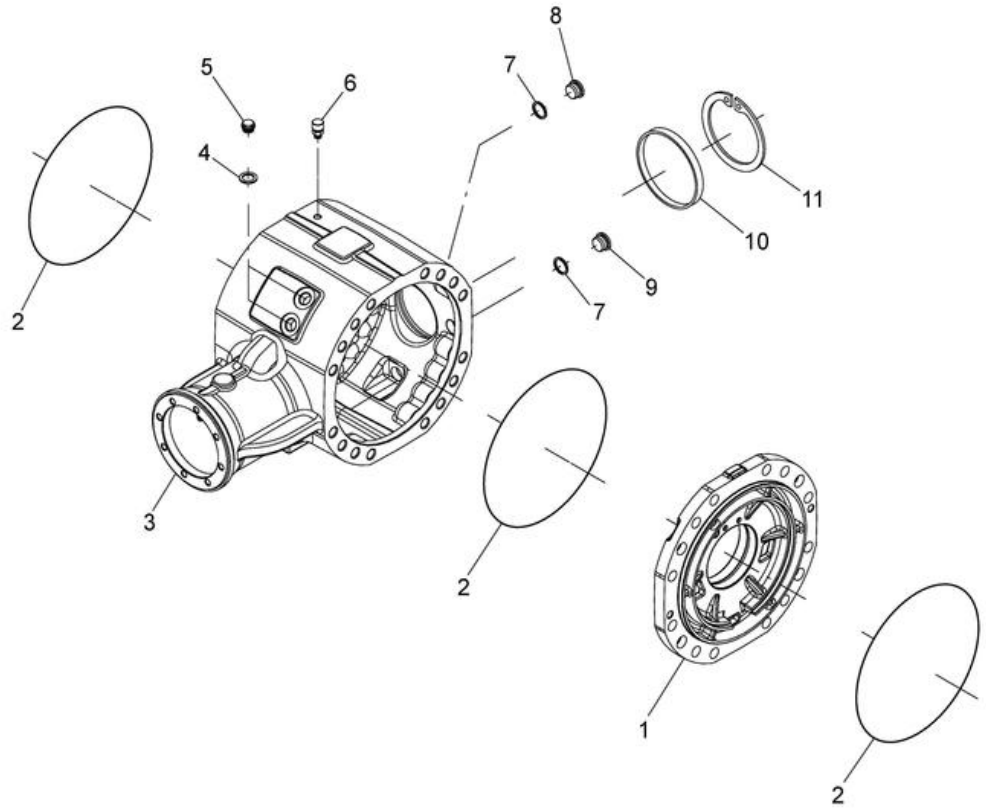

Item	Part No.	Name	Qty	L
1	4812105730	COVER	1	
2	4700909609	O-ring	3	
3	4812105732	HOUSING	1	
4	4700938983	Seal washer	2	
5	4812105734	Bolt	2	
6	4700938984	Vent nipple	1	
8	4700939348	Plug	1	
9	4700939350	Magnetic plug	1	
10	4700938296	Plug	1	
11	4700929617	Snap ring	1	

Differential Differential

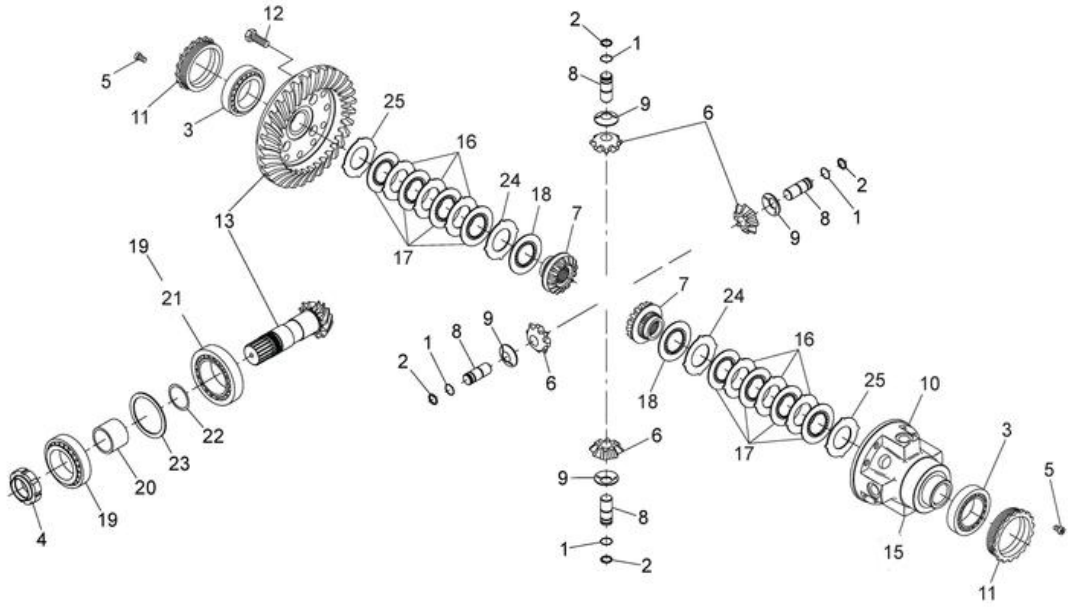

Item	Part No.	Name	Qty	L
1	4812105740	CIRCLIP	4	A
2	4812105741	CIRCLIP	4	A
3	4812157358	Taper roller bearing	2	
4	4700938988	Ring nut	1	
5	4812105744	BOLT	2	
6	4812105745	PLANET GEAR	4	A
7	4812105746	DIFFERENTIAL SIDE GEAR	2	A
8	4812105747	BOLT	4	A
9	4812105748	WASHER	4	A
10	4812105749	DIFFERENTIAL CARRIER	1	A
11	4812105750	RING NUT	2	
12	4700938991	Bolt	16	
13	4812105752	BEVEL GEAR SET	1	
14	4700938993	Disc kit	2	A
15	-	Kit	1	
19	4812157360	Roller bearing	1	
20	4812105755	SPACER	1	
21	4812157361	Roller bearing	1	B
22	4812105757	SHIM KIT	1	
23	4812105758	SHIM KIT	1	

Comments for Page: Differential

(L)OCAL REMARKS

A | en_US | Includes in Kit, item 14

B | en_US | Optional

Hub Reduction Hub Reduction

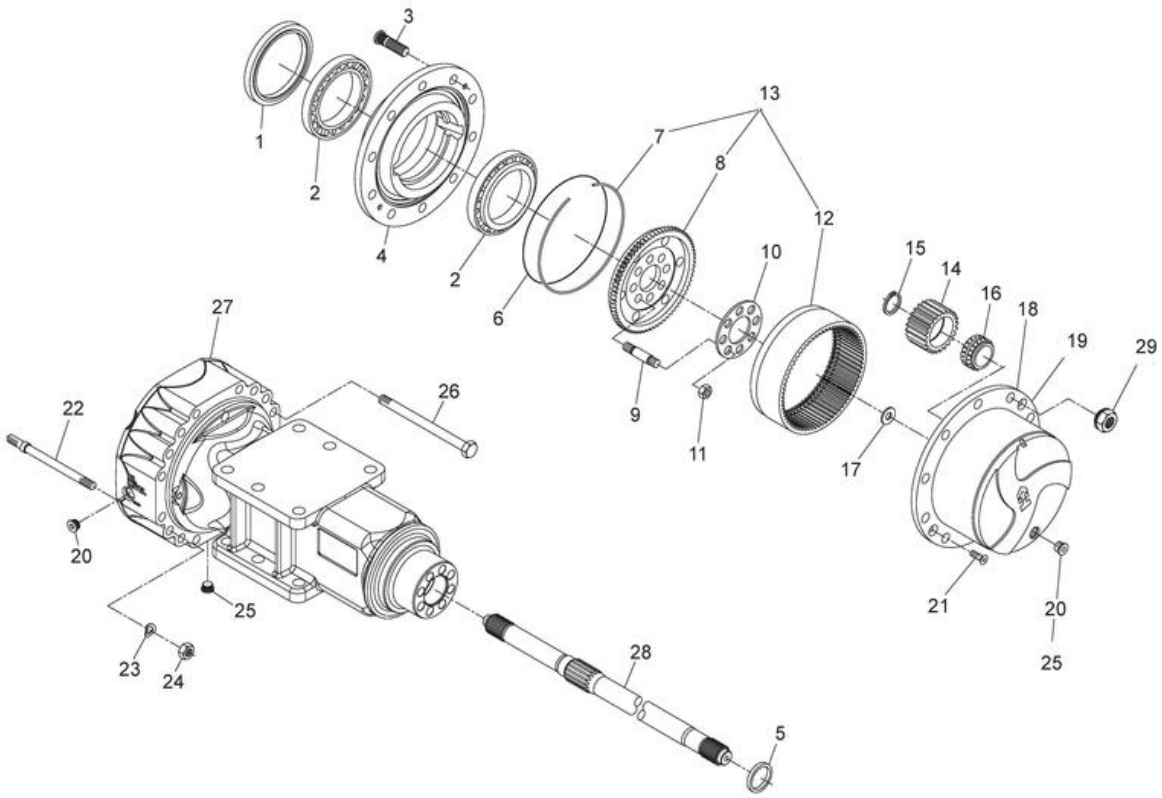

Item	Part No.	Name	Qty	L
1	4812156796	Seal	2	
2	4812105766	TAPER ROLLER BEARING	4	
3	4700926781	Wheel screw	20	
4	4812157397	Wheel hub	2	
5	4812105769	SEAL	2	
6	4812105770	O - RING	2	
7	4812105771	CIRCLIP	2	A, D
8	4812105772	RING GEAR SUPPORT	2	A, D
9	4700939017	Stud	16	
10	4812105774	LOCKING PLATE	2	
11	4700939016	Nut	16	
12	4812156895	Ring gear	2	A, D
13	4812157464	Ring gear support	2	
14	4700939272	Planet gear	6	B, D
15	4700939271	Seal	6	B, D
16	4700939273	Bearing	6	B, D
17	4700939270	Washer	2	B, D
18	4700939274	Planet gear carrier	2	B, D
19	4812157463	Planet gear carrier	2	
20	4700939348	Plug	2	
21	4700939015	Screw	4	
22	4812156899	Stud	8	
23	4700939003	Spring washer	8	
24	4700939019	Nut	8	
25	4700939350	Magnetic plug	4	C
26	4812156894	Bolt	24	
27	4812105790	AXLE CASE	2	
28	4812105791	HALF SHAFT	2	
29	4812105792	WHEEL NUT	20	C
30	4812105793	PLANET GEAR CARRIER(Included 7,8,12,14,15,16,17,18)	2	

Comments for Page: Hub Reduction

A | en_US | Includes in Rear gear support, item 13

B | en_US | Includes in Planet gear support, item 19

C | en_US | Optional

D | en_US | Includes in Planet gear Carrier, Item 30

Brake Brake

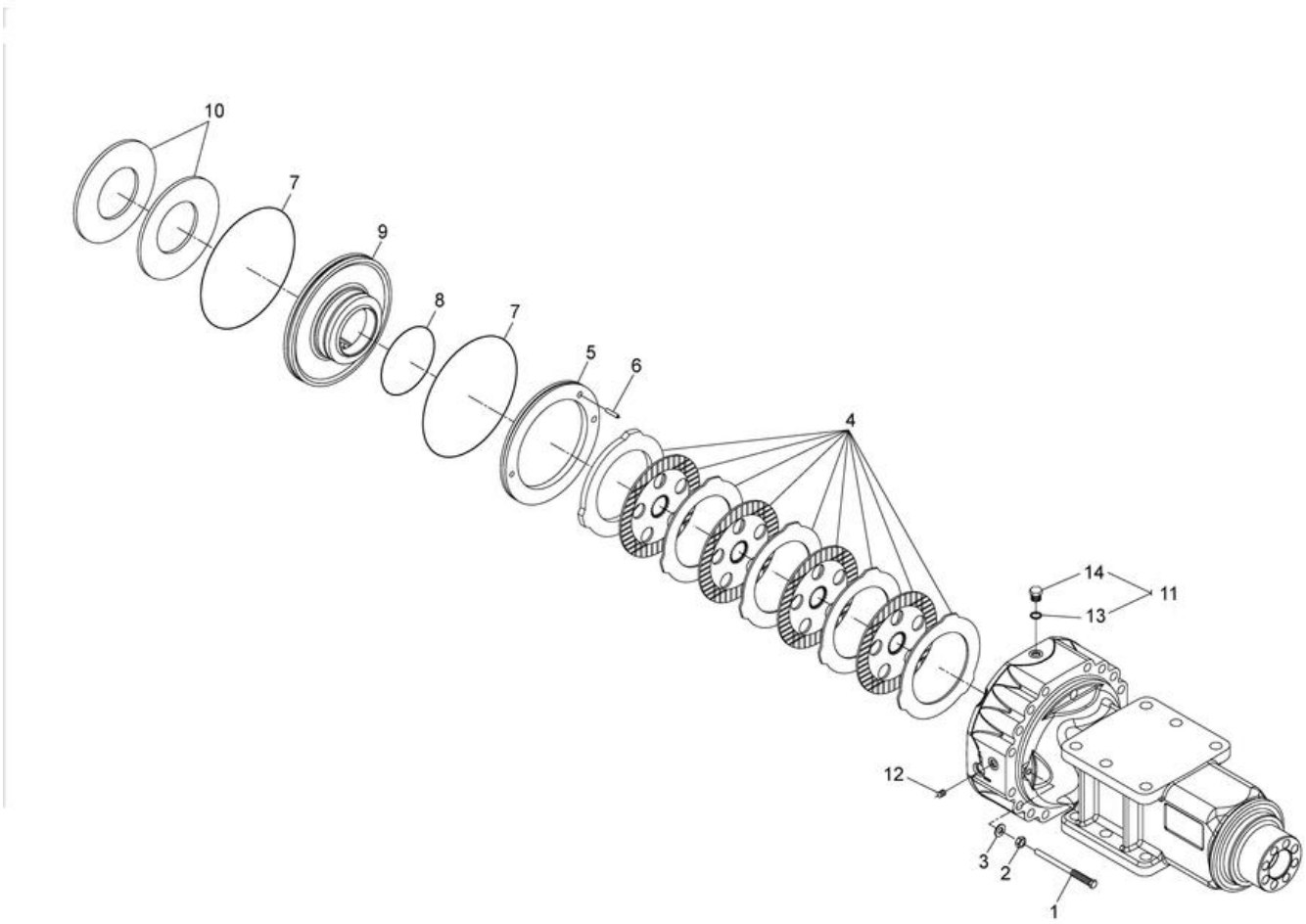

Item	Part No.	Name	Qty	L
1	4700909626	Bolt	4	
2	4700900957	Nut	4	
3	4700926847	Sealing washer	4	
4	4812157465	Brake disc	2	
5	4812156955	Ring	2	
6	4812156956	Dowel	2	
7	4700909609	O-ring	4	
8	4812156954	O-ring	2	
9	4812156953	Piston	2	
10	4700909616	Spring	4	
11	4812156958	Plug	2	
12	4812157466	Plug	2	

Hydraulic system Hydraulic system

NO DRAWING AVAILABLE FOR THIS BOM

Item	Part No.	Name	Qty	L
11	-	Propulsion system, Front		
18	-	Propulsion system, Rear		
25	-	Vibration system		
43	-	Hydraulic steering		
60	-	Brake system		
66	-	Hydraulic oil tank		
71	-	Central test panel hydraulic Option		
72	-	Central test panel, Sauer Danfoss Option		
80	-	Variable rear axle motor Option		

Propulsion system, Front Propulsion system, Front

Item	Part No.	Name	Qty	L
1	4700371509	Propulsion motor	1	
2	4700904058	O-ring	1	
3	4700904230	Washer	6	
4	4700923384	Split flange	4	
5	4700904005	O-ring	2	
6	4700904638	Washer 12x22x2	8	
7	4700502132	Screw	8	
8	4700334132	Elbow 45, O-ring	1	
9	4700334138	Adapter	1	
10	4700372235	Hose guard	1	
11	4700791230	Adapter	2	
12	4700500101	Screw M20 x 50 mm	2	
13	4700903290	Steel plain washer 21x36x6	2	
14	4700483996	Hydraulic hose	1	
15	4700483190	Hydraulic hose	1	
16	4700483995	Hydraulic hose	1	
17	4700373016	Hose clamp	2	
18	4700373270	Hose clamp	2	
19	4700500033	Screw M10-1,5x60 8,8	2	
20	4700373423	Spacer	2	
21	4700500029	Hex. screw	4	
22	4700904230	Washer	2	

4700371509 Propulsion motor 4700371509 Propulsion motor

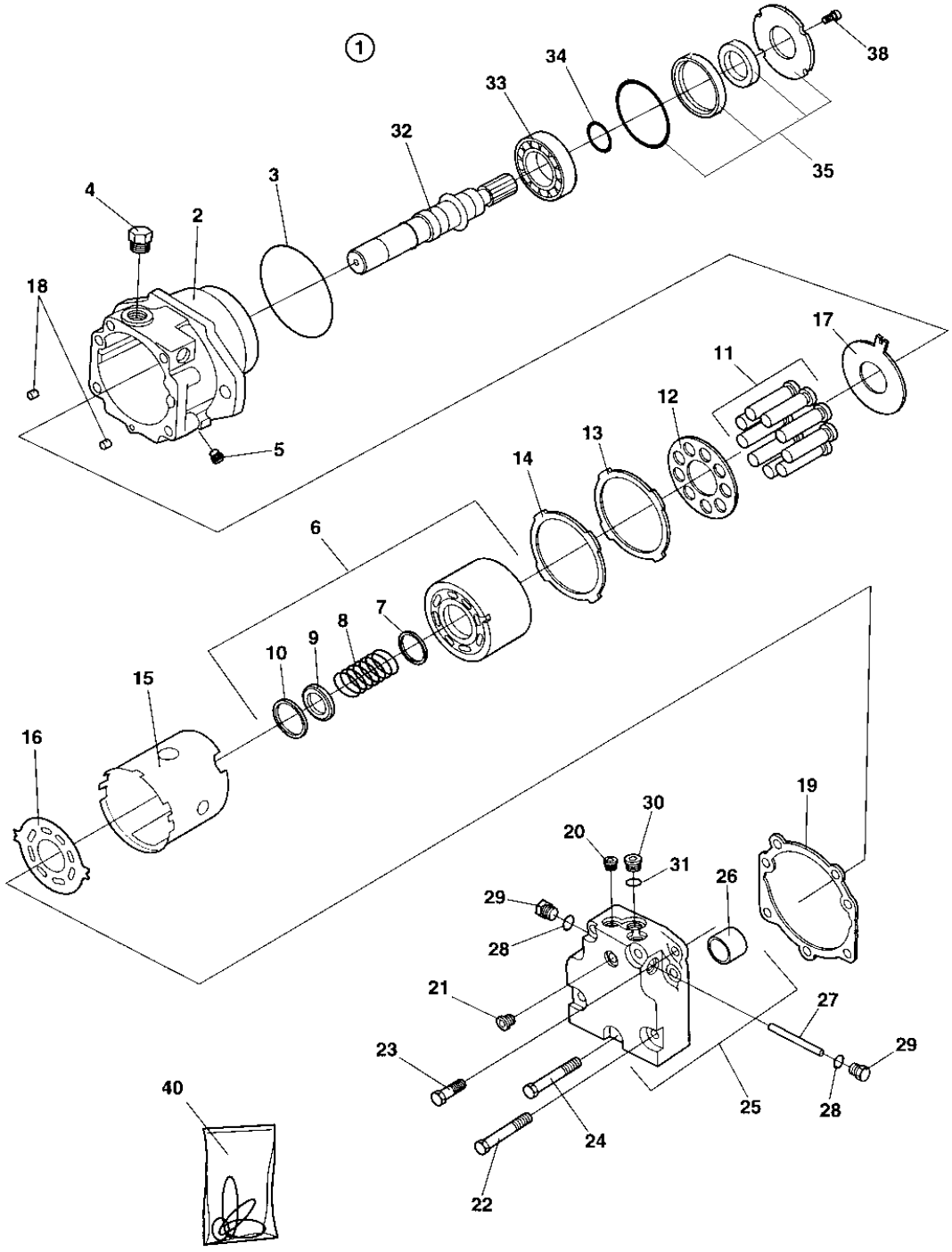

Item	Part No.	Name	Qty	L
1	-	Hydraulic motor, Cpl	1	
2	4700937274	Housing	1	
3	4700937275	O-ring	1	1
4	4700902928	Plug	2	
4	4700901453	O-ring	2	1
5	4700908432	Plug	1	
6	4700937277	Cylinder block, cpl	1	
.7	4700935619	Spacer	1	
.8	4700937278	Spring	1	
.9	4700935621	Spring retainer	1	
.10	4700935622	Ring retainer	1	
11	4700903570	Piston	9	
12	4700903571	Pressure plate	1	
13	4700935623	Retainer guide	1	
14	4700935624	Shim	1	
15	4700935625	Holder	1	
16	4700935626	Valve plate	1	
17	4700937279	Thrust plate	1	
18	4700813822	Pin	2	
19	4700935629	Gasket	1	1
20	4700358388	Plug	2	
21	4700908432	Plug	1	
22	4700909252	Screw	4	
23	4700909253	Screw	2	
24	4700935630	Screw	1	
25	4700937280	End cap, cpl	1	
.26	4700903053	Bushing	1	
27	4700909255	Spool	1	
28	4700923087	O-ring	2	1
29	4700358388	Plug	2	
30	4700935853	Plug	1	
31	4700926658	O-ring	1	1
32	4700935631	Shaft	1	
33	4700901465	Bearing	1	
34	4700901467	Ring	1	
35	4700950368	Shaft seal kit	1	
38	4700908773	Screw	3	

Item	Part No.	Name	Qty	L
40	4700937283	Seal kit	1	

Comments for Page: 4700371509 Propulsion motor

(L)OCAL REMARKS

1 | en_US | Includes in item 40, Seal kit

Propulsion system, Rear Propulsion system, Rear

This page intentionally left blank

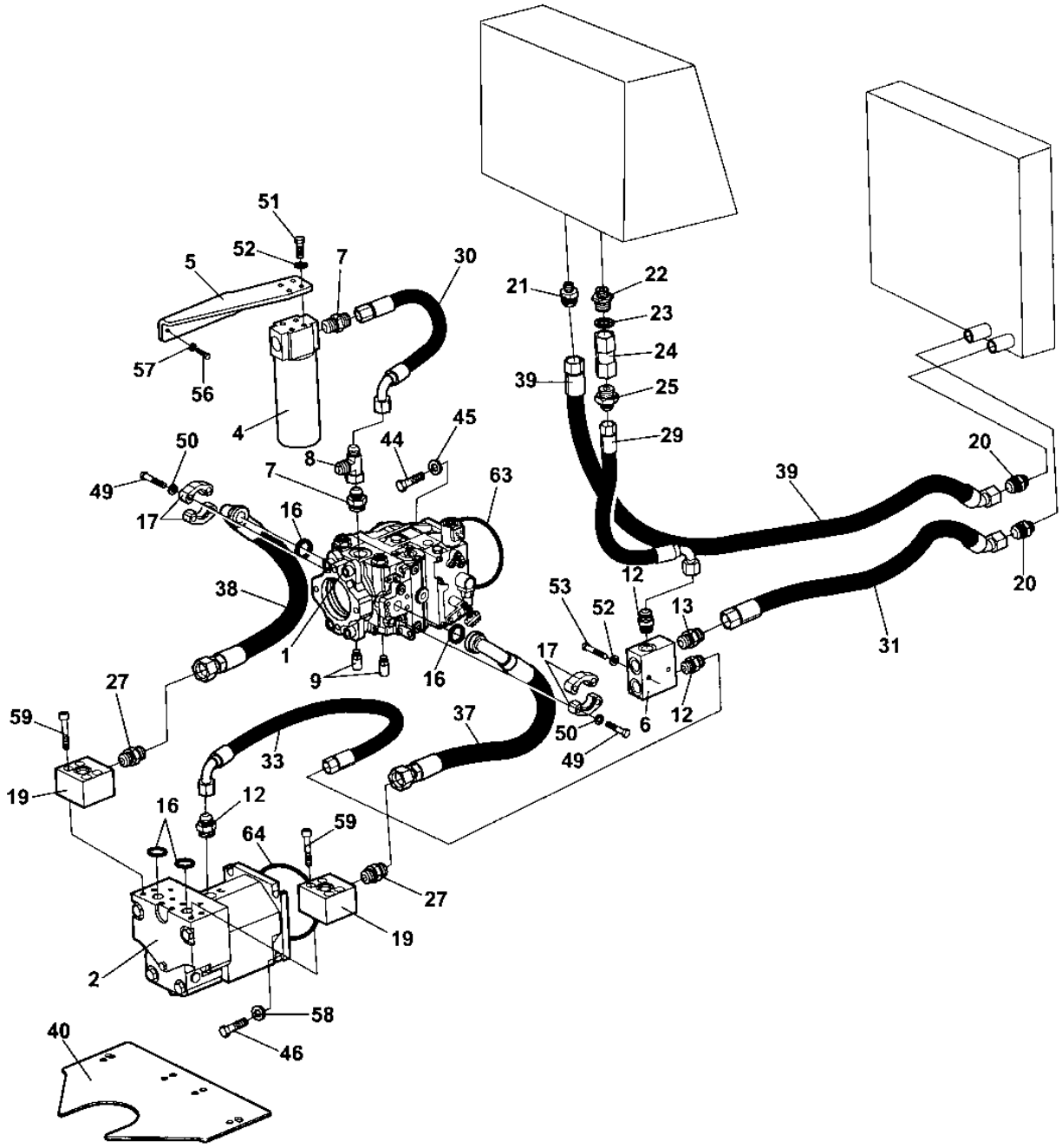
51
52
5
7
30
21
22
23
24
57
56
39
25
4
45
29
50
44
8
20
7
63
39
49
17
16
12
20
38
53
52
13
1
17
31
9
16
27
6
12
59
37
50
33
49
19
16
12
64
59
27
19
2
58
40
46

Item	Part No.	Name	Qty	L
1	4700395385	Hydraulic pump	1	
2	4700391989	Hydraulic motor	1	A
4	4700359550	Hydraulic oil filter, cpl	1	
.4	4700359551	Filter head	1	
..4	4700936898	Sensor Red (RW)	1	
.4	4700359552	Cleaning filter element Maximum 50 hours use	1	
.4	4700372229	Hydraulic oil filter element	1	B
5	4700379482	Filter bracket	1	
6	4700345243	Connection block	1	
7	4700334468	Connector	2	
8	4700234243	T-connector	1	
9	4700900229	Measuring fitting	2	
12	4700334138	Adapter	3	
13	4700334140	Straight conector	1	
16	4700904005	O-ring	4	
17	4700923384	Split flange	4	
19	4700384784	Flange coupling	2	
20	4700234958	Connector	2	
21	4700234909	Straight connector	1	
22	4700904282	Adapter	1	
23	4700162008	Seal washer	1	
24	4700374059	Check valve	1	
25	4700923371	Adapter	1	
27	4700792339	Adapter	2	
29	4700482182	Hydraulic hose	1	
30	4700482182	Hydraulic hose	1	
31	4700483123	Hydraulic hose	1	
33	4700482391	Hydraulic hose	1	
37	4700483526	Hydraulic hose	1	
38	4700483526	Hydraulic hose	1	
39	4700483499	Hydraulic hose	1	
40	4700372235	Hose guard	1	
44	4700500046	Hex. head screw M12x030H	4	
45	4700904213	Washer	4	
46	4700500039	Screw	4	
49	4700502132	Screw	8	
50	4700904638	Washer 12x22x2	8	

Item	Part No.	Name	Qty	L
51	4700500028	Screw, M10x25 mm 8.8 A3K	4	
52	4700904230	Washer	6	
53	4700500109	Screw, M10x65 mm 8.8 A3K	2	
56	4700500021	Hex. screw	2	
57	4700904229	Washer, 8.4x16x1.5 mm 300 HV	2	
58	4700904214	Washer 15x30x4 300 HV	4	
59	4700900806	Screw	8	
61	4700902919	Plug	3	
62	4700232222	Plug threaded	3	
63	-	O-ring	1	
64	4700160132	O-ring 70	1	

Comments for Page: Propulsion system, Rear

(L)OCAL REMARKS

A | en_US | Propulsion, Rear axle.

B | en_US | Spare part for ordinary service

4700395385 Hydraulic pump 4700395385 Hydraulic pump

This page intentionally left blank

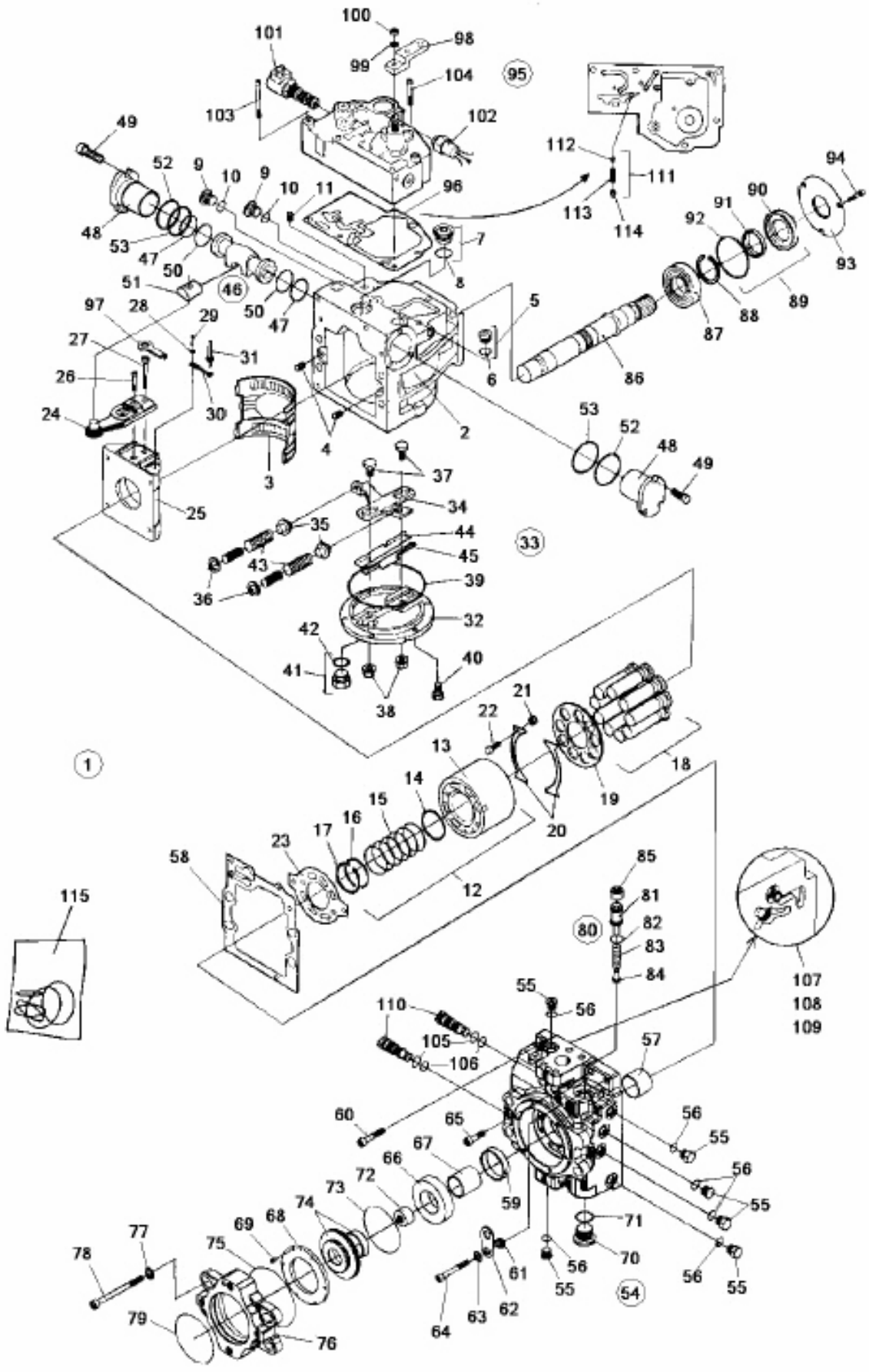
100
101
98
99
104
95
103
102
49
112
111
52
9
10
9
10
11
96
94
90
91
92
48
53
47
50
7
113
114
93
51
46
8
97
28
29
50
47
5
88
89
87
27
31
26
6
86
24
30
2
53
52
4
48
49
3
37
25
34
35
44
33
43
45
36
39
32
42
41
40
38
21
22
13
18
1
14
19
15
16
20
17
23
58
12
85
115
81
82
80
83
84
107
108
109
55
56
110
105
57
106
60
65
56
55
67
66
56
72
73
59
55
74
71
69
68
77
75
70
78
61
56
55
56
55
54
79
63
62
64
76

Item	Part No.	Name	Qty	L
1	4700395385	Hydraulic pump	1	
.2	--	Housing	1	
.3	--	Bearing	1	
.4	--	Pin	1	
.5	--	Plug	1	
..6	---	O-ring	1	A
.7	--	Plug	1	
..8	---	O-ring	1	
.9	--	Plug	1	
..10	---	O-ring	1	
.11	--	Filter element	1	
.12	--	Cylinder block, cpl	1	
..13	---	Cylinder block	1	
..14	---	Ring	1	
..15	---	Spring	1	
..16	---	Spring retainer	1	
..17	---	Ring	1	
.18	4700903570	Piston	9	
.19	4700903571	Pressure plate	1	
.20	4700901458	Retainer guide	2	
.21	4700935856	Spacer	4	
.22	4700909382	Screw	4	
.23	4700936547	Valve plate	1	
.24	--	Servo arm	1	
.25	--	Swash plate	1	
.26	--	Screw	1	
.27	--	Screw	1	
.28	--	Washer	1	
.29	--	Pin	1	
.30	4700909391	Link	1	
.31	4700909392	Pin	1	
.32	--	Cover	1	
.33	4700936548	Cover assembly	1	
.34	--	Lever	1	
.35	--	Spring retainer	2	
.36	--	Shim	2	
.37	--	Guide post	2	

Item	Part No.	Name	Qty	L
.38	4700909398	Seal lock nut	2	A
.39	4700936551	O-ring	1	A
.40	4700936553	Screw	6	
.41	4700902928	Plug	1	
..42	-	O-ring	1	A
.43	4700908352	Spring	2	
.44	--	Guide	1	
.45	--	Guide	1	
.46	4700936582	Piston, cpl	1	
.47	--	O-ring	2	A
.48	--	Servo sleeve	2	
.49	4700936559	Screw	6	
.50	--	Piston ring	2	A
.51	--	Guide	1	
.52	4700936557	O-ring	2	A
.53	--	O-ring	2	A
.54	4700936560	End cap, cpl	1	
.55	--	Plug	6	
..56	---	O-ring	6	A
.57	4700903053	Bushing	1	
.58	4700936561	Gasket	1	A
.59	--	Bearing	1	
.60	4700936562	Screw	1	
.61	--	Spacer	1	
.62	--	Lifting bracket	1	
.63	4700900188	Washer	1	
.64	4700936563	Screw	1	
.65	4700936564	Screw	1	
.66	4700950283	Spacer	1	
.67	4700950284	Spacer	1	
.68	4700935857	Retaining plate	1	
.69	4700936566	Screw	6	
.70	4700936567	Plug, cpl	1	
..71	---	O-ring	1	A
.72	4812156460	Coupling	1	
.73	4700937150	O-ring	1	A
.74	--	Cover assembly	1	

Item	Part No.	Name	Qty	L
.75	4700909399	O-ring	1	A
.76	4700937151	Adapter	1	
.77	4700936571	Washer	4	
.78	4700936572	Screw	4	
.79	4700937155	Oring	1	A
.80	4700936583	Pressure relief valve, cpl	1	
..81	---	Screw	1	
..82	---	O-ring	1	A
..83	---	Spring	1	
..84	---	Valve cone	1	
..85	---	Nut	1	
.86	4700901466	Shaft	1	
.87	--	Bearing	1	
.88	--	Snap ring	1	
.89	--	Snap seal assy	1	
..90	---	Seal	1	
..91	---	Lip seal	1	A
..92	---	O-ring	1	A
.93	--	Retaining plate	1	
.94	4700908773	Screw	3	
.95	4700938170	Control valve, cpl	1	
.96	4700939489	Control valve gasket	1	
..97	---	Link	1	
..98	4700909432	Control lever	1	
..99	---	Washer	1	
..100	4700909429	O-ring	1	
..101	4700938252	Solenoid valve	1	
..102	4700938253	Neutral start switch	1	
..103	4700937857	Screw	5	
..104	---	Screw	1	
.105	--	O-ring	2	A
.106	--	O-ring	2	A
.107	--	Valve	2	
.108	--	Plug	2	
..109	---	O-ring	2	A
.110	--	Valve	1	
.111	4700212336	Orifice valve cpl	1	

Item	Part No.	Name	Qty	L
..112	4700909435	Orifice	1	
.113	4700908447	Compression spring	1	
..114	4700908448	Spring retainer	1	
.115	4700901328	Seal kit	1	

Comments for Page: 4700395385 Hydraulic pump

(L)OCAL REMARKS

A | en_US | Includes in seal kit, item 115

4700391989 Hydraulic motor 4700391989 Hydraulic motor

This page intentionally left blank

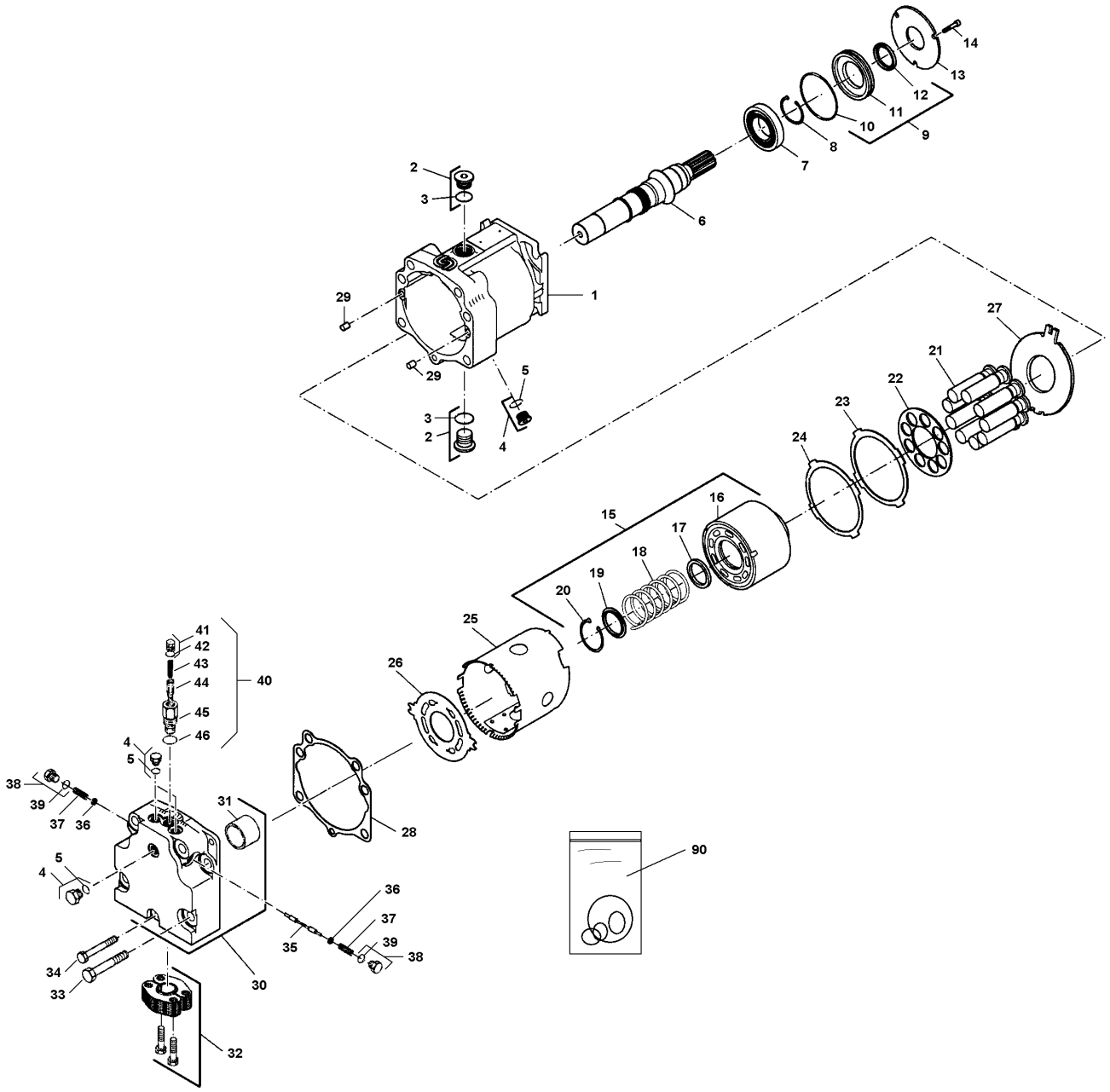
14
13
12
11
10
9
8
7
6
2
3
1
29
29
5
4
3
2
27
21
22
23
24
16
15
17
18
19
20
25
26
41
42
43
44
40
45
46
4
5
38
39
37
36
31
28
5
4
90
36
37
39
38
35
34
33
30
32

Item	Part No.	Name	Qty	L
1	-	Housing	1	
2	-	Plug	2	
3	4700901453	O-ring	2	
4	-	Plug	3	
5	4700923087	O-ring	3	
6	-	Shaft	1	
7	4812157280	Roller bearing	1	
8	-	Retaining ring	1	
9	4812157582	Seal carrier assy	1	
.10	-	O-ring	1	
.11	-	Seal carrier	1	
.12	4812157058	Lip seal	1	
13	-	Retainer plate	1	
14	-	Screw	4	
15	4812157574	Cylinder block assembly	1	
.16	-	Cylinder block	1	
.17	-	Ring	1	
.18	-	Helical spring	1	
.19	-	Spring retainer	1	
.20	-	Retaining ring	1	
21	-	Piston assembly	9	
22	-	Slipper guide	1	
23	-	Slipper guide retainer	1	
24	-	Slipper guide retainer shim	1	
25	-	Tube	1	
26	-	Valve plate	1	
27	-	Thrust plate	1	
28	4812157652	End cap gasket	1	
29	-	Pin	2	
30	4812157651	End cap assy	1	
31	-	Bearing journal	1	
32	-	Cover port assy	2	
33	-	Hexagon screw	6	
34	-	Hexagon screw	1	
35	-	Shuttle spool	1	
36	-	Spring guide	2	
37	-	Helical spring	2	

Item	Part No.	Name	Qty	L
38	-	Hexagon plug assy	2	
.39	4700923087	O-ring	2	
40	-	Valve	1	
41	-	Hexagon plug	1	
42	4700923087	O-ring	1	
43	-	Helical spring	1	
44	-	Poppet	1	
45	-	Adapter	1	
46	4700926658	O-ring	1	
90	4700950379	Seal kit	1	

Vibration system Vibration system

This page intentionally left blank

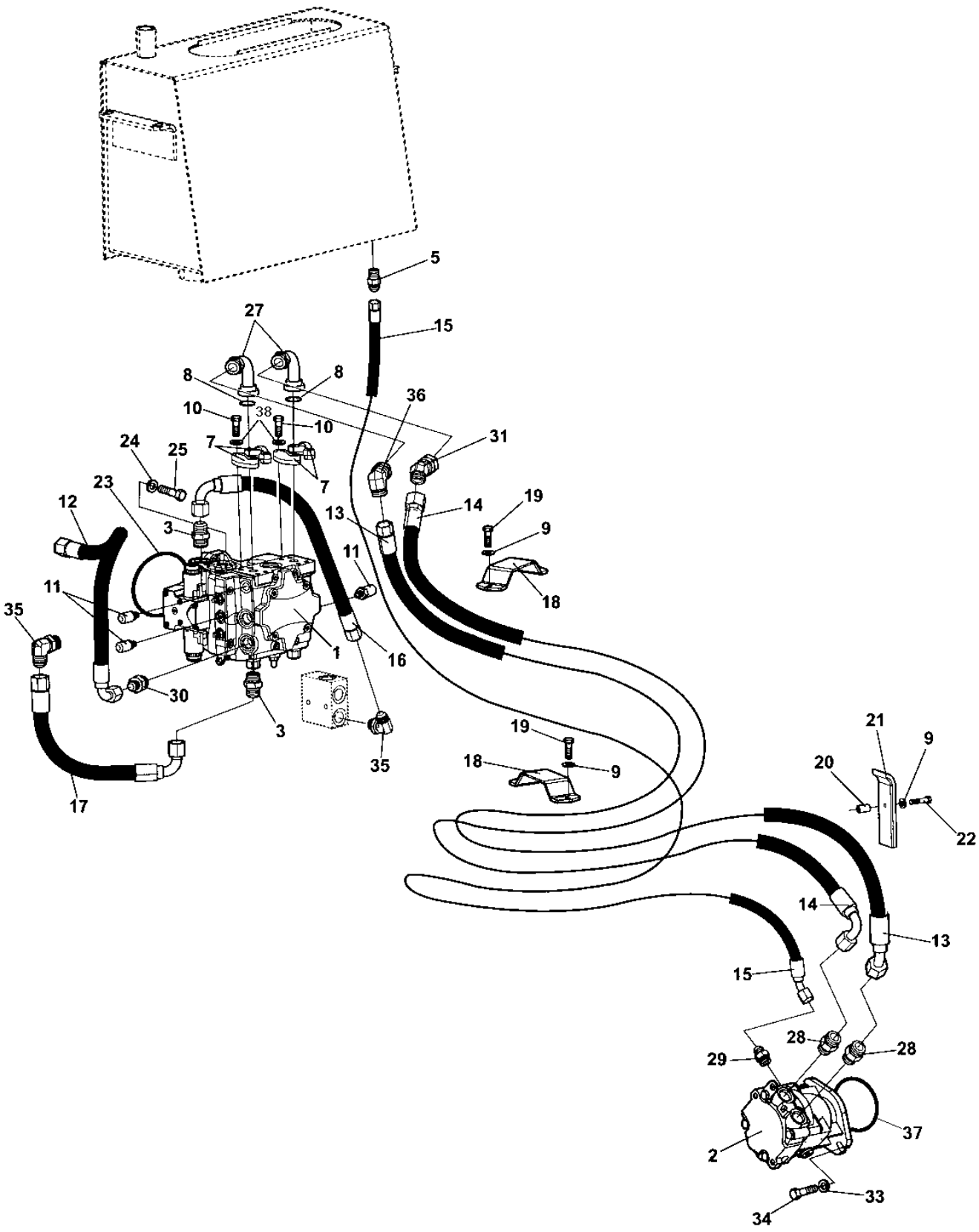
5
27
15
8
8
36
10
38
10
31
24
25
7
7
23
12
3
14
19
13
9
11
18
11
35
1
16
30
3
19
21
9
18
9
20
22
35
17
14
13
15
28
28
29
37
2
33
34

Item	Part No.	Name	Qty	L
1	4700395384	Vibration pump	1	
2	4700395386	Hydraulic motor, vibration	1	
2	4700355634	Splined sleeve	1	
3	4700334138	Adapter	2	
5	4700334205	Straight connector	1	
7	4700929226	Flange half	4	
8	4700904773	O-ring	2	
9	4700904230	Washer	6	
10	4700500030	Hexagon head screw	8	
11	4700900229	Measuring fitting	3	
12	4700483286	Hydraulic hose	1	
13	4700484235	Hydraulic hose	1	
14	4700484234	Hydraulic hose	1	
15	4700483031	Hydraulic hose	1	
16	4700482391	Hydraulic hose	1	
17	4700483999	Hydraulic hose	1	
18	4700373016	Hose clamp	2	
19	4700500028	Screw, M10x25 mm 8.8 A3K	4	
20	4700373423	Spacer	2	
21	4700373270	Hose clamp	2	
22	4700500033	Screw M10-1,5x60 8,8	2	
23	4700900512	O-ring	1	
23	4700160234	O-ring	1	
24	4700904231	Steel plain washer, 13x24x2 mm 300 HV	2	
25	4700502059	Screw 1/2"-13UNCx1.1/2" 8.8	2	
27	4700791819	Flange fitting 90	2	
28	4700791823	Adapter	2	
29	4700334134	Connector	1	
30	4700234119	Straight connector	1	
31	4700904586	Elbow 45°	1	
33	4700904703	Plain washer 13x24x4 mm	2	
34	4700947688	Screw M12 x 35 mm	2	
35	4700813499	Elbow 90, O-ring	2	
36	4700904584	Elbow connector 90°	1	
37	4700160279	O-ring 70	1	
38	4700904637	Washer	8	

4700395384 Vibration pump 4700395384 Vibration pump

Item	Part No.	Name	Qty	L
1	4700395384	Vibration pump	1	
.2	--	Pin	2	
.3	--	Plug	2	
..4	---	O-ring	2	
.5	--	Plug	2	
..6	---	O-ring	1	
.7	--	Screen	2	
.8	4700950618	Cylinder block kit	1	
..9	---	Slipper retainer guide	1	
..10	---	Pressure plate	1	
..11	---	Pin	3	
..12	---	Spring	1	
..13	---	Washer	1	
..14	---	Washer	1	
..15	---	Retaining ring	1	
..16	---	Piston assembly	1	
.17	4700828142	Spring	1	
.18	4812160592	Valve plate	1	
.19	4812155955	Swashplate bearing kit	1	
.20	4812157991	Control valve, cpl	1	
..21	4812159069	Solenoid valve	2	
..22	---	O-ring	2	
..23	4700950617	Coil	2	
..24	---	Screw	6	
..25	---	Plug	2	
..26	---	O-ring	2	
..27	---	Screw	6	
..28	---	Screw	1	
..29	---	Locking ring	1	
..30	---	Gasket	1	
.31	4812160684	Dowel pin	2	
.32	--	Piston, cpl	1	
..33	---	Slider	1	
..34	---	O-ring	2	
..35	4812160685	Piston ring	2	
.36	--	Servo cylinder	2	
.37	--	O-ring	2	

Item	Part No.	Name	Qty	L
.38	--	Locking plate	2	
.39	--	Screw	4	
.40	--	Screw	2	
.41	--	Seal nut	2	
.42	--	Orifice	2	
.43	--	End cap, cpl	1	
.44	--	Gasket	1	
.45	--	Plug	4	
..46	---	O-ring	4	
.47	4700909417	Screw	1	
.48	--	Screw	2	
.49	--	Pin	2	
.50	--	Bearing	1	
.51	--	Plug	1	
..52	---	O-ring	1	
.53	--	Lifting bracket	2	
.54	4700936933	Screw	2	
.55	--	Housing	1	
.56	4812160686	Shaft seal kit	1	
..57	---	Retaining ring	1	
..58	---	O-ring	1	
..59	---	Lip seal	1	
.60	--	Shaft	1	
.61	4812160687	Roller bearing	1	
.62	--	Retaining ring	1	
.63	--	Adapter	1	
.64	--	Gasket	1	
.65	--	Coupling	1	
.66	--	Screw	4	
.67	--	Thrust plate	1	
.68	4700950619	Pressure relief valve 350 bar	1	
..69	---	O-ring	1	
..70	---	O-ring	1	
.71	4700950619	Pressure relief valve 350 bar	1	
..72	---	O-ring	1	
..73	---	O-ring	1	
.74	4700950620	Pressure limiter valve 300 bar	1	

Item	Part No.	Name	Qty	L
..75	---	O-ring	1	
.76	4700950620	Pressure limiter valve 300 bar	1	
..77	---	O-ring	1	
.78	--	Plug	2	
..79	---	O-ring	2	
.80	--	Charge relief valve	1	
..81	---	Seal nut	1	
..82	---	O-ring	1	
.83	4700950616	Sealing kit	1	

Comments for Page: 4700395384 Vibration pump

(L)OCAL REMARKS

A | en_US | Included in seal kit, item 83

4700395386 Hydraulic motor, vibration 4700395386 Hydraulic motor, vibration

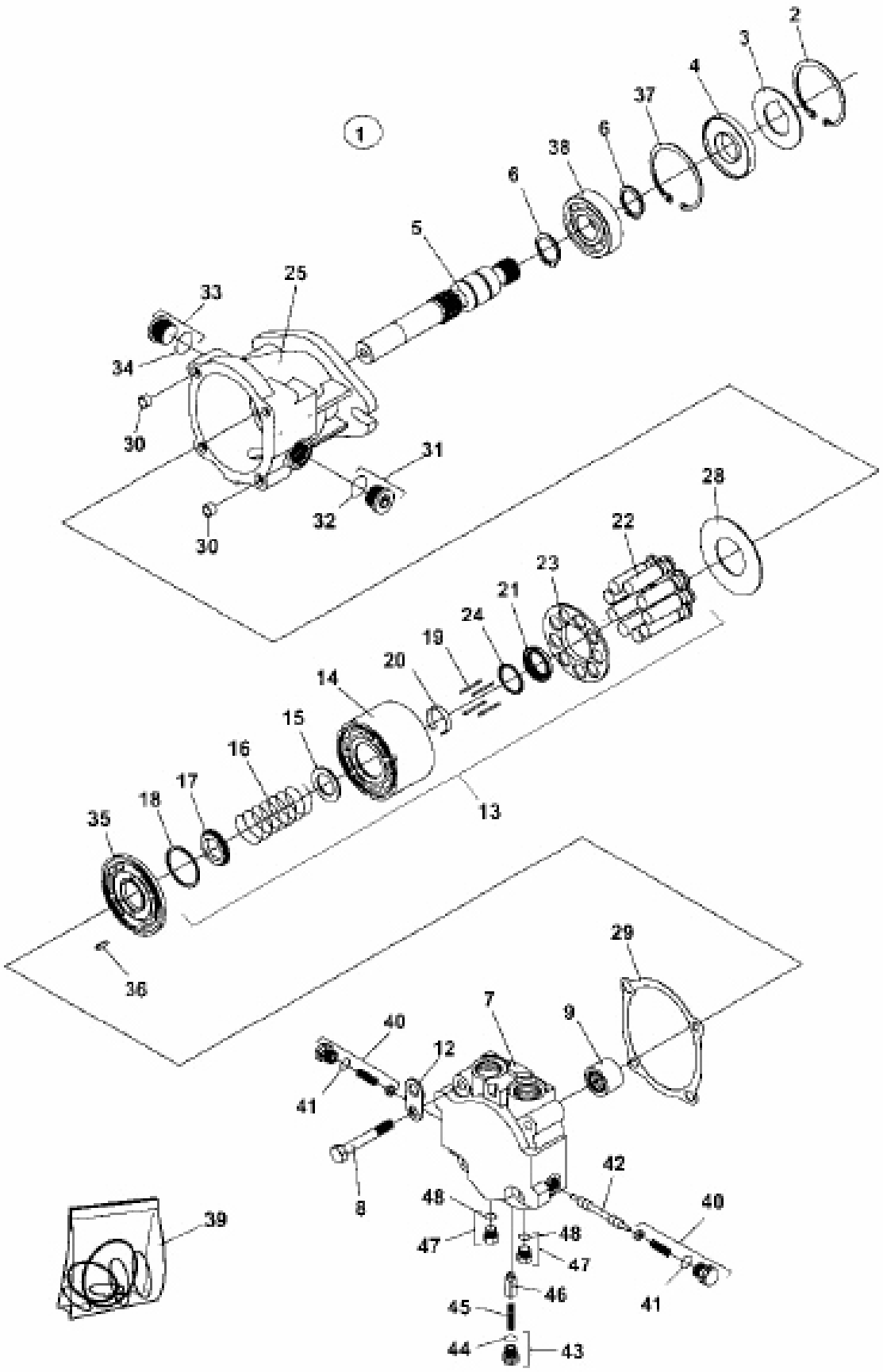

Item	Part No.	Name	Qty	L
1	4700395386	Hydraulic motor, vibration	1	
.2	4700828112	Retaining ring	1	
.3	4700937062	Support washer	1	
.4	4700945879	Lip seal	1	
.5	--	Shaft	1	
.6	4700828114	Retaining ring	2	
.7	4700937079	End cap	1	
.8	4700937080	Screw	4	
.9	4700937081	Needle bearing	1	
.12	--	Lifting bracket	1	
.13	4812160681	Cylinder block kit	1	
..14	---	Cylinder block	1	
..15	4700937066	Washer	1	
..16	4700937067	Spring	1	
..17	4700828138	Spacer	1	
..18	4700828139	Retaining ring	1	
..19	4700937070	Pin	4	
..20	4700937071	Retaining ring	1	
..21	4700937072	Retaining ring	1	
..22	---	Piston assembly	9	
..23	4700937074	Retainer	1	
..24	4700937077	Washer	1	
.25	4700937084	Housing	1	
.28	4700937065	Thrust plate	1	
.29	4700937075	Gasket	1	
.30	4700909346	Pin	2	
.31	4700909243	Plug	1	
32	---	O-ring	1	
33	4700909243	Plug	1	
34	---	O-ring	1	
35	-	Valve plate	1	
36	4700937086	Pin	1	
37	4700937064	Retaining ring	1	
38	4700937063	Ball bearing	1	
39	4700945877	Seal kit	1	
40	--	Loop flushing plug	2	
.41	---	O-ring	2	

Item	Part No.	Name	Qty	L
42	--	Shuttle spool	1	
43	--	Plug	1	
.44	---	O-ring	1	
45	--	Spring	1	
46	--	Poppet	1	
47	--	Plug	2	
.48	---	O-ring	1	

Steering system Steering system

This page intentionally left blank

Item	Part No.	Name	Qty	L
1	-	Hydraulic oil tank	1	
5	4700394902	Hydraulic pump	1	
6	4700500133	Screw	2	
7	4700904231	Steel plain washer, 13x24x2 mm 300 HV	2	
8	4700232097	Flange half	2	
9	4700904637	Washer	4	
10	4700508029	Cylinder screw	4	
11	4700904005	O-ring	1	
12	4700372625	Connector	1	
13	4700334558	Elbow 90G with O-ring	1	
14	4700334199	Straight o-ring connector	1	A
15	4700338304	Adapter	1	A
16	4700910161	Measuring nipple	1	A
16	4812117039	Measuring nipple	1	B
17	4700234626	Adapter	1	
19	4700483280	Hydraulic hose	1	
20	4700376000	Steering valve	1	
21	4700813444	Elbow 90, O-ring	4	
22	4700929123	Elbow 90, O-ring	1	
23	4812103475	Hydraulic cylinder	2	
24	4700334121	Straight connector	1	
25	4700813500	Elbow 45, O-ring	1	
26	4700234218	Tee-connector	2	
27	4700234662	Elbow 45	1	
28	4700483497	Hydraulic hose	1	
29	4700483109	Hydraulic hose	1	
30	4700372513	Hose clamp	1	
31	4700372514	Hose clamp	1	
32	4700904229	Washer, 8.4x16x1.5 mm 300 HV	3	
33	4700500019	Hex. screw	2	
34	4700904241	Screw	1	
35	4700379630	Radial spherical plain bearing	4	
36	4700904234	Steel plain washer	2	
37	4700500044	Screw M6x8	2	
38	4700334197	Elbow 90	1	
40	4700483050	Hydraulic hose	1	
41	4700483231	Hydraulic hose	1	

Item	Part No.	Name	Qty	L
42	4700483498	Hydraulic hose	1	
43	4700483109	Hydraulic hose	1	
44	4700313102	Cable ties	1	

4700376000 Steering valve 4700376000 Steering valve

This page intentionally left blank

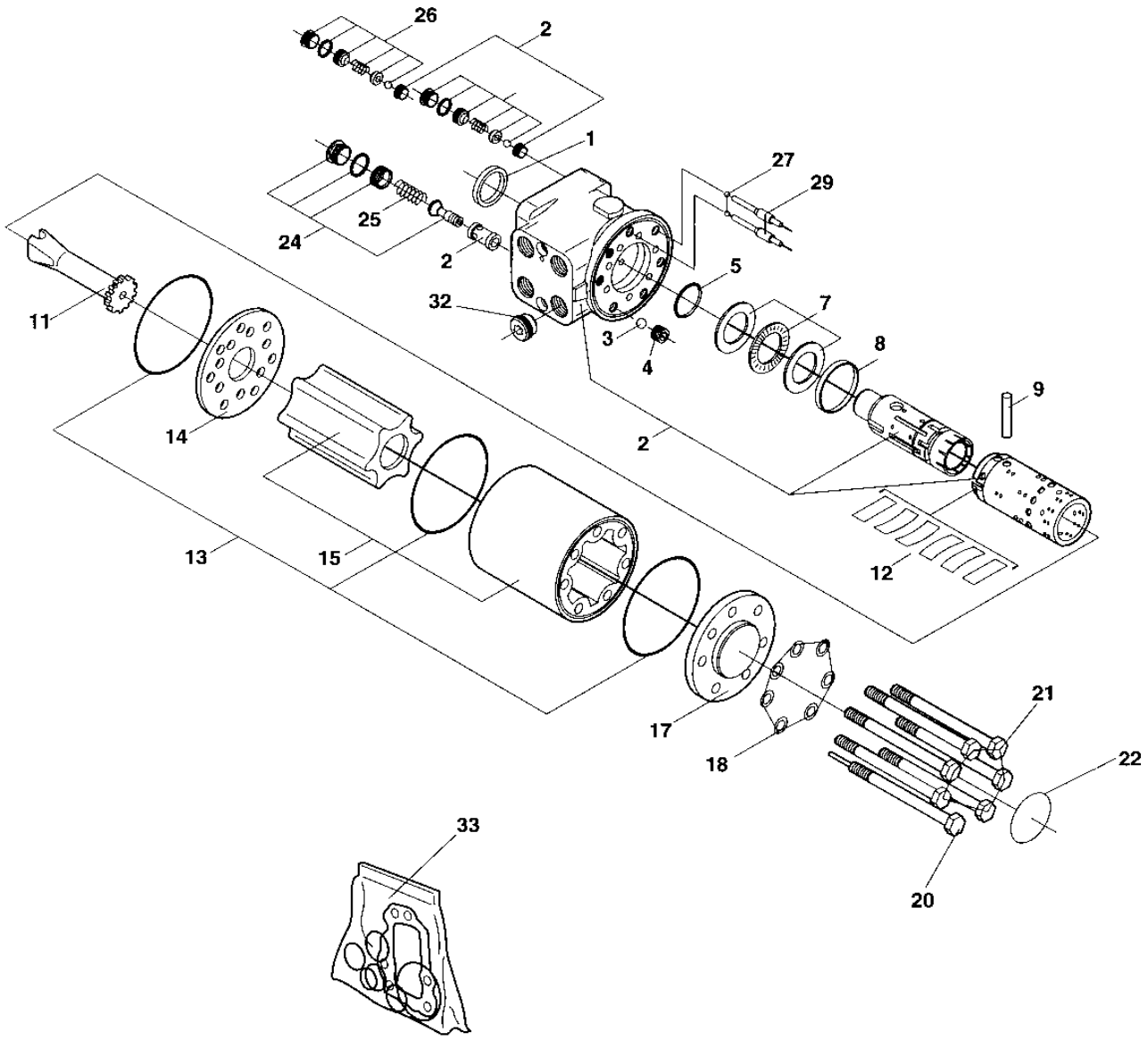
26
2
1
27
29
25
24
2
5
32
7
3
4
8
11
9
14
2
13
15
12
17
21
18
22
33
20

Item	Part No.	Name	Qty	L
1	4700938062	Dust seal ring	1	A
2	-	Housing, spool and sleeve	1	
3	4700938063	Ball	1	
4	4700938064	Threaded bushing	1	
5	4700908780	O-ring	1	A
7	4700911620	Bearing	1	
8	4700480449	Ring	1	
9	4700938066	Cross pin	1	
11	4700902861	Cardan shaft	1	
12	4700938067	Set of springs	1	
13	4700938068	O-ring	3	A
14	4700902862	Valve plate	1	
15	4700903457	Gear wheel set	1	
17	4700938069	End cover	1	
18	4700938070	Washer	7	A
20	4700938071	Screw with pin	1	
21	4700935468	Spring washer	6	
22	4700938072	Name plate	1	
24	4700938073	Pressure relief valve	1	
25	-	Spring	1	
26	4700938074	Shock valve	2	
27	4700929013	Ball	2	
29	4700929014	Rolled pin	2	
32	4700938075	Check valve	1	
33	4700935429	Seal kit	1	

Comments for Page: 4700376000 Steering valve

(L)OCAL REMARKS

A | en_US | Included in seal kit, item 33

4812103475 Steering cylinder 4812103475 Steering cylinder

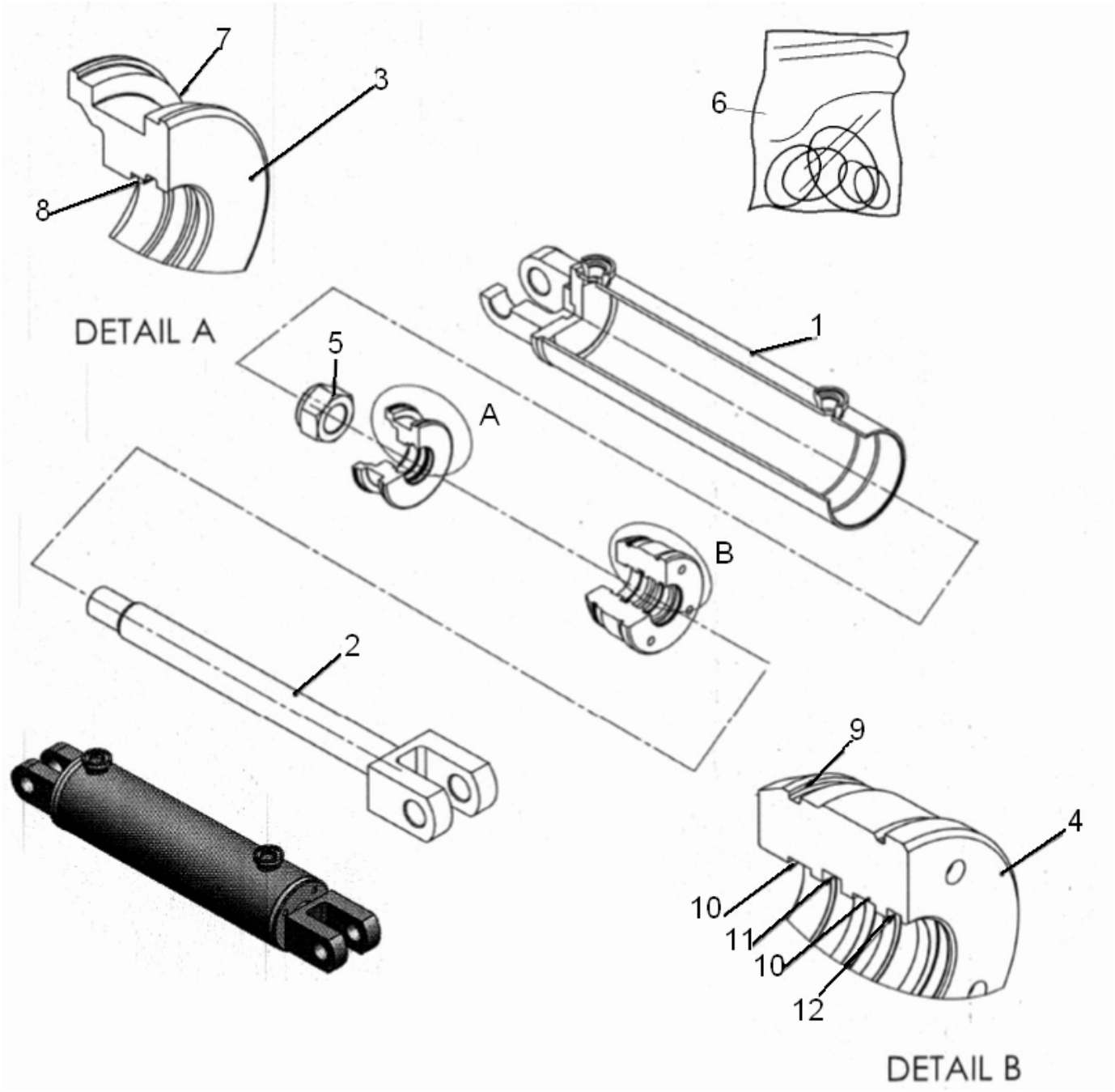

Item	Part No.	Name	Qty	L
1	4812104538	Tube Final Welding M/c	1	
2	4812104539	Piston rod	1	
3	4812104540	Piston	1	
4	4812104541	Gland	1	
5	4812104542	Nylock Nut	1	
6	4812104543	Seal kit	1	
.7	-	Piston seal	1	A
.8	-	O RING	1	A
.9	-	O RING	1	A
.10	-	Slyd Ring Rod	1	A
.11	-	Rod Seal 36(G)	1	A
.12	-	wiper Seal	1	A

Comments for Page: 4812103475 Steering cylinder

A | en_US | Includes in Seal Kit, item 6

Brake system Brake system

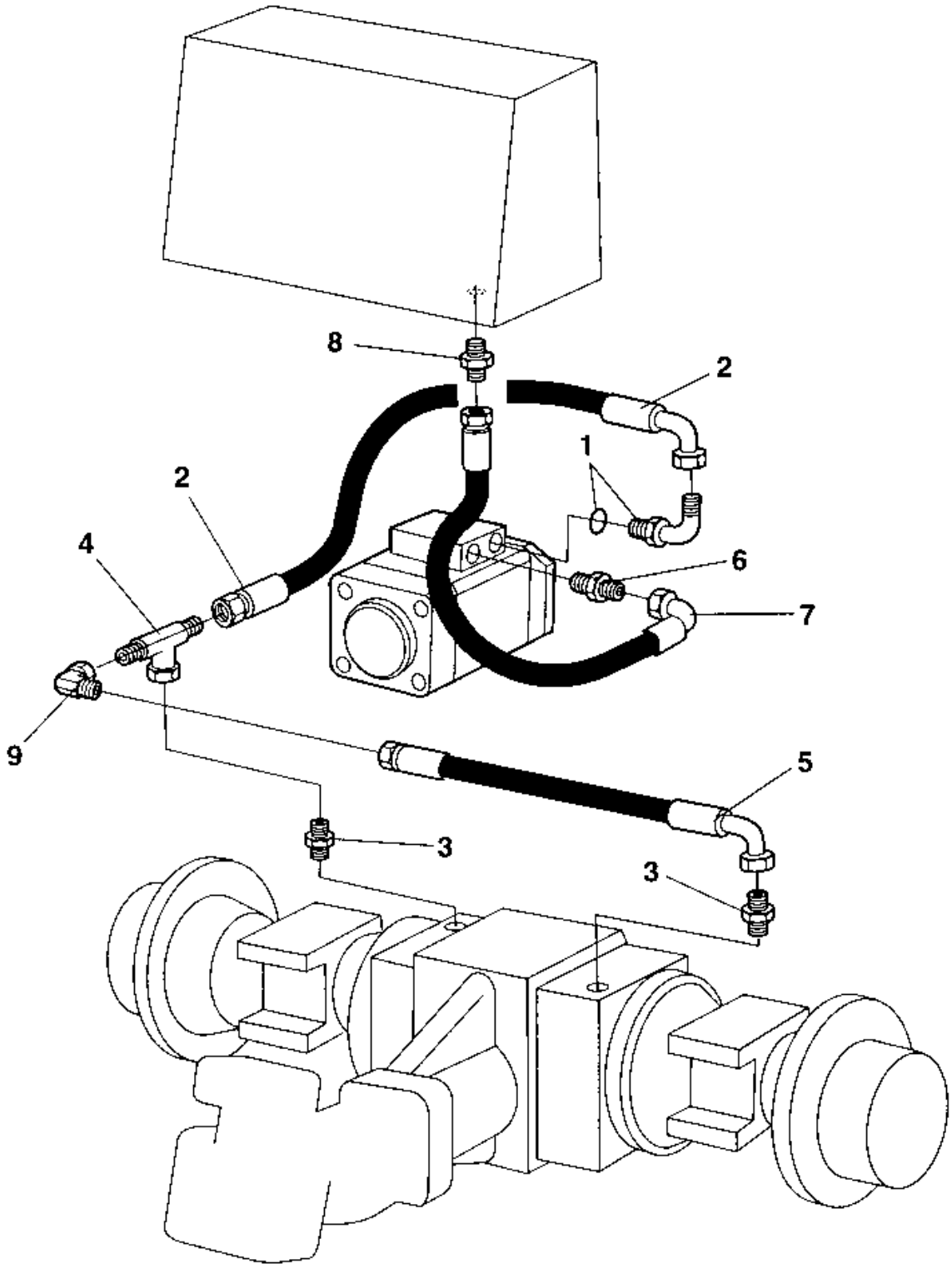

Item	Part No.	Name	Qty	L
1	4700334389	Connector	1	
2	4700482056	Hydraulic hose	1	
3	4700900552	Adapter	2	
4	4700234888	Tee-connector	1	
5	4700482399	Hydraulic hose	1	
6	4700234843	Adapter	1	
7	4700482474	Hydraulic hose	1	
8	4700334205	Straight connector	1	
9	4700334524	Elbow 90°	1	

Hydraulic oil tank Hydraulic oil tank

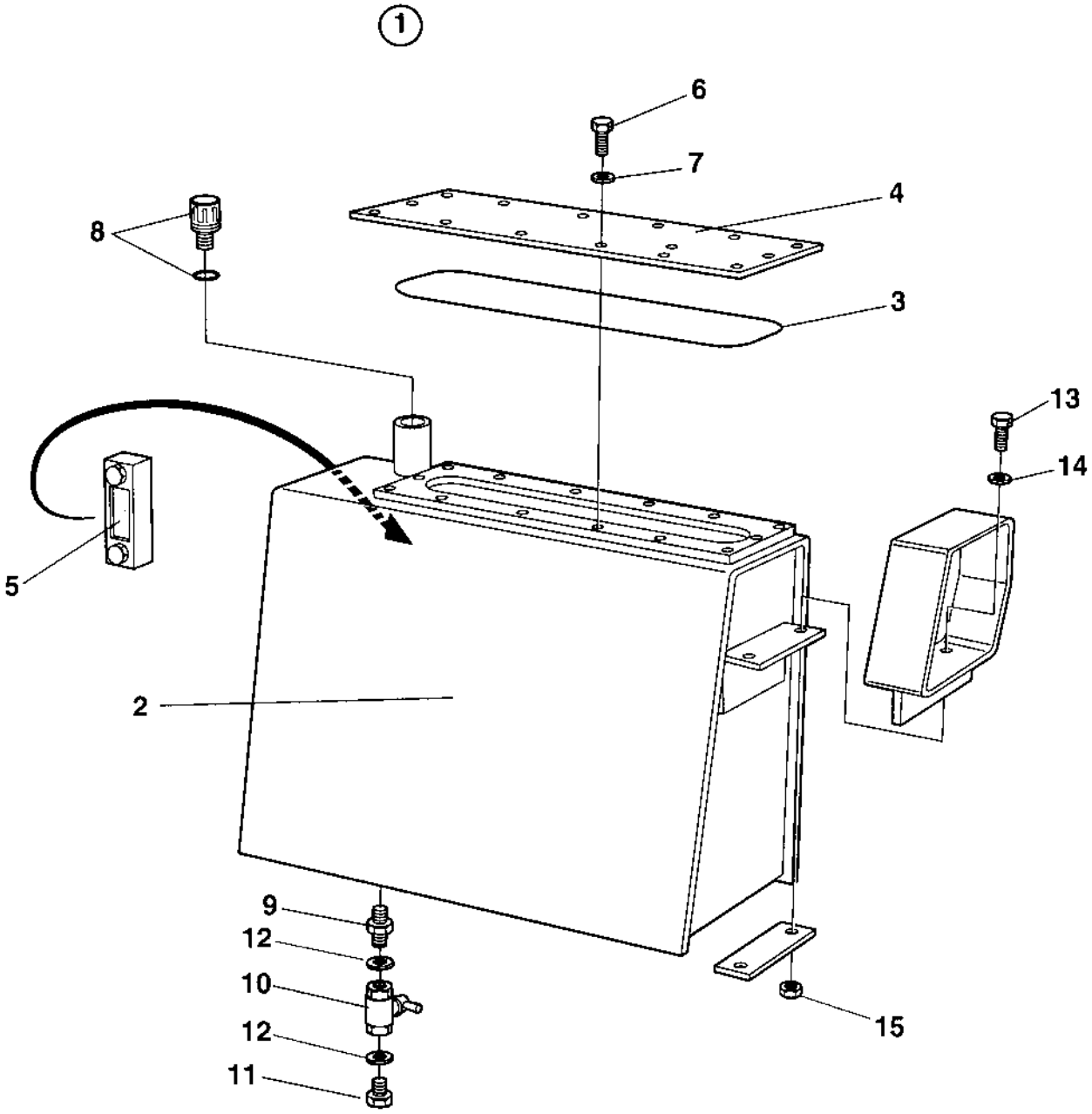

Item	Part No.	Name	Qty	L
1	4700392981	Hydraulic oil tank, cpl	1	
.2	4700392986	Hydraulic oil tank	1	
.3	4700349880	O Ring	1	
.4	4700349879	Cover	1	
.5	4700989151	Oil level glass	1	
.6	4700500019	Hex. screw	14	
.7	4700904229	Washer, 8.4x16x1.5 mm 300 HV	14	
.8	4700357138	Ventilating filter	1	
.9	4700791119	Adapter G3/4	1	
.10	4700233304	Ball valve	1	
.11	4700232039	Steel plug threaded	1	
.12	4700791120	Washer sealing	2	
13	4700500030	Hexagon head screw	4	
14	4700904567	Washer, 10.5x28x6 mm 300 HV	4	

Central test panel hydraulic Option Central test panel hydraulic Option

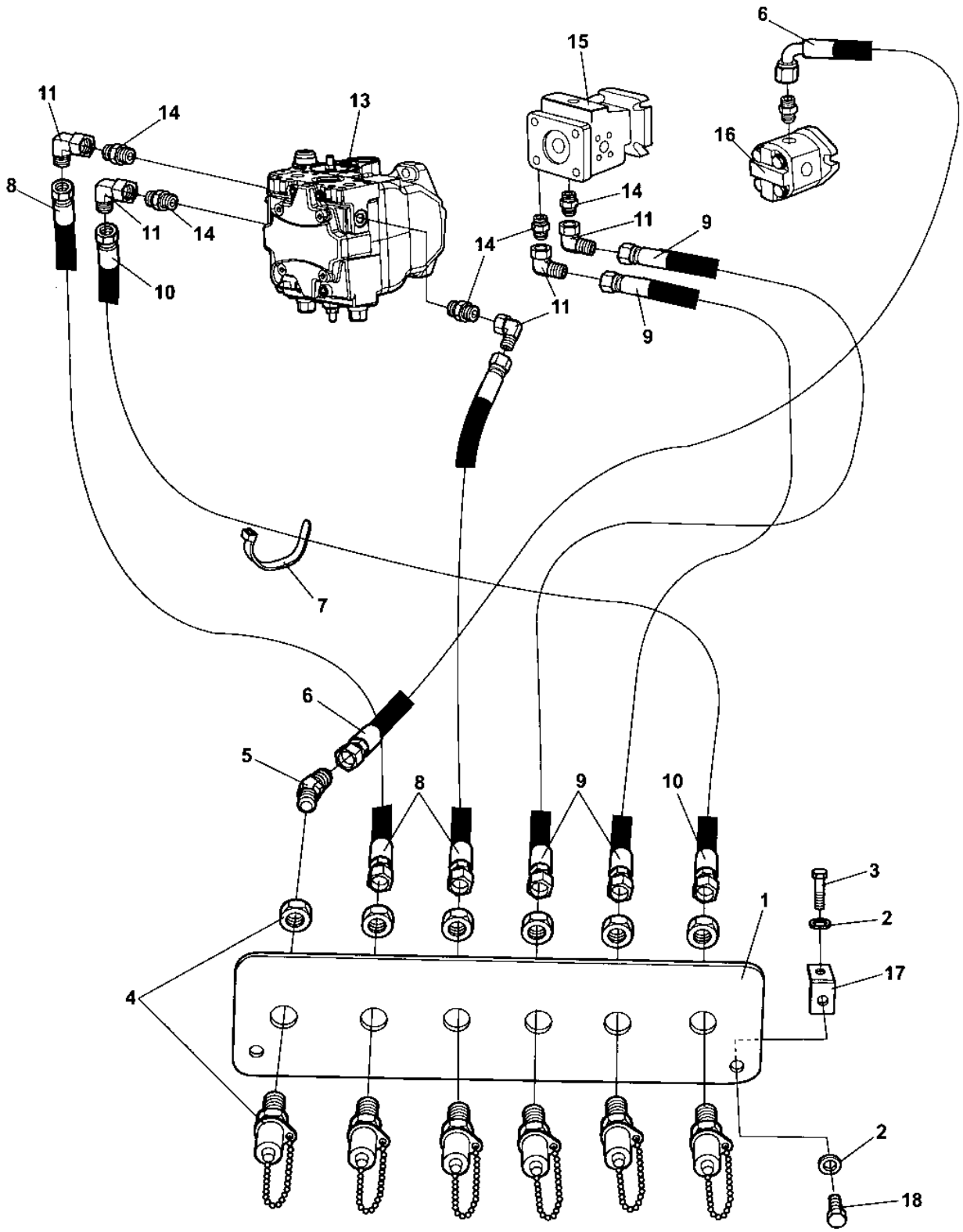

Item	Part No.	Name	Qty	L
1	4700374028	Test panel	1	
2	4700904229	Washer, 8.4x16x1.5 mm 300 HV	4	
3	4700500053	Hex. screw	2	
4	4700356348	Measuring nipple	6	
5	4700234622	Elbow 45	1	
6	4700483204	Hydraulic hose	1	
7	4700313102	Cable ties	N	
8	4700483445	Hydraulic hose	2	
9	4700483188	Hydraulic hose	2	
10	4700482342	Hydraulic hose	1	
11	4700334196	Elbow 90	5	
13	-	Vibration pump	1	
14	4700234388	Connector	5	
15	-	Propulsion pump	1	
16	-	Steering pump	1	
17	4700908136	Bracket	2	
18	4700500018	Hex. screw	2	

Central test panel, Sauer Danfoss Option Central test panel, Sauer Danfoss Option

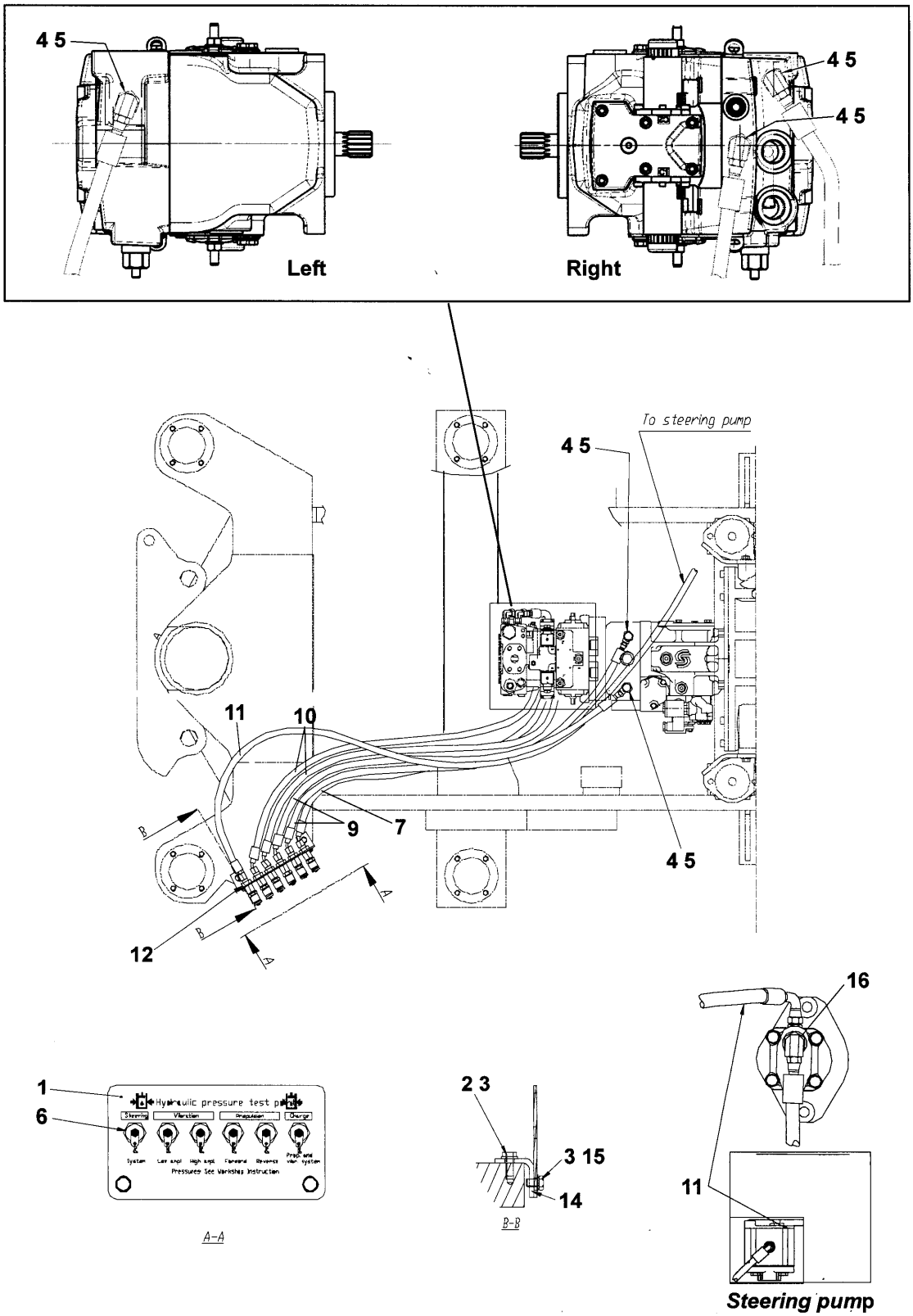

Item	Part No.	Name	Qty	L
1	4812113146	Test panel	1	
2	4700500053	Hex. screw	2	
3	4700904229	Washer, 8.4x16x1.5 mm 300 HV	4	
4	4700791914	Adapter	5	
5	4812113110	Adapter	5	
6	4812110422	Measuring nipple	6	
7	4811000367	Hydraulic hose	1	
9	4811000329	Hydraulic hose	2	
10	4811000328	Hydraulic hose	2	
11	4811000365	Hydraulic hose	1	
12	4700792450	Nut	6	
13	4700313102	Cable ties	7	
14	4700908136	Bracket	2	
15	4700500018	Hex. screw	2	
16	4700791542	Straight connector	1	

Central test panel, Rexroth Option Central test panel, Rexroth Option

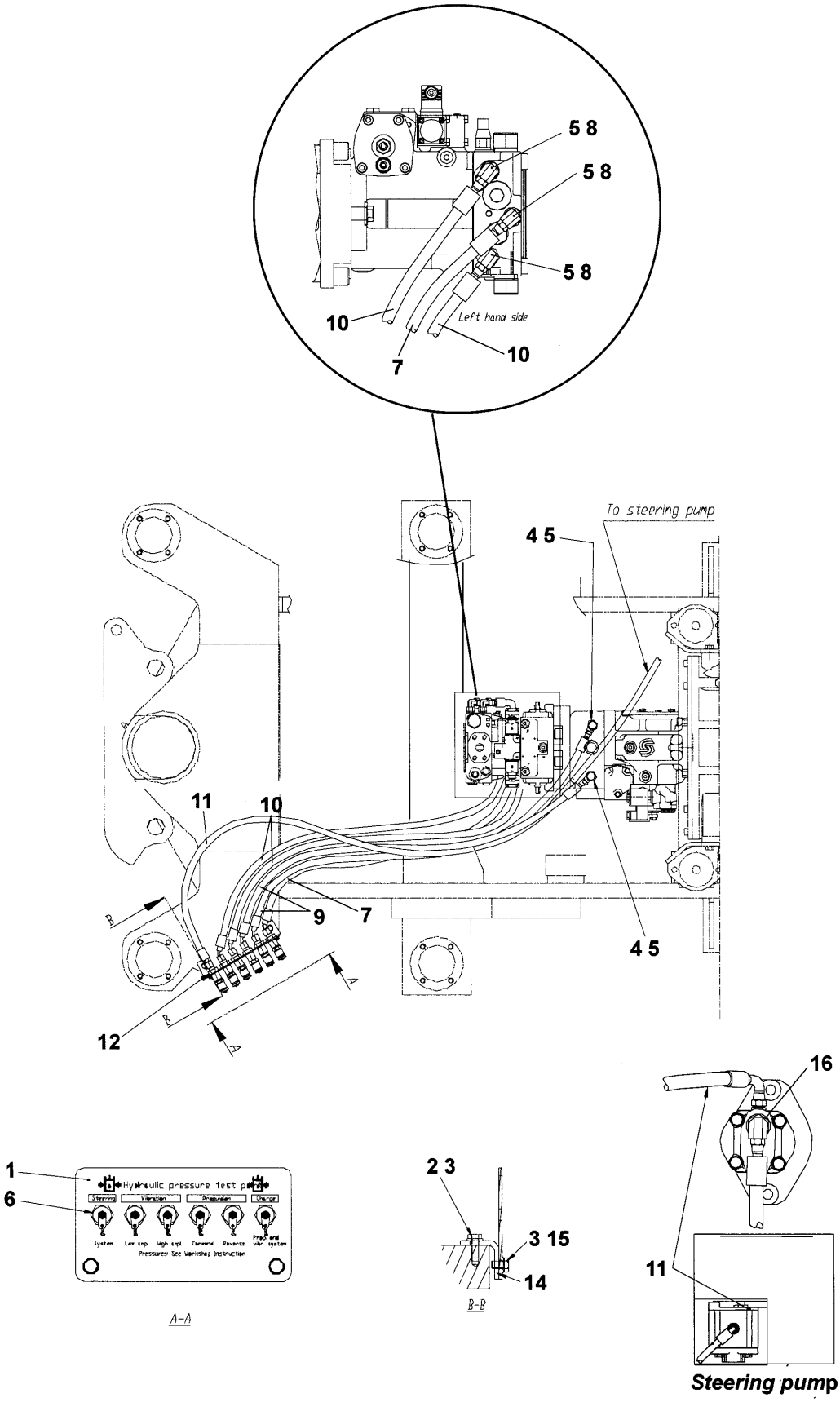

Item	Part No.	Name	Qty	L
1	4812113146	Test panel	1	
2	4700500053	Hex. screw	2	
3	4700904229	Washer, 8.4x16x1.5 mm 300 HV	4	
4	4700791914	Adapter	2	
5	4812113110	Adapter	5	
6	4812110422	Measuring nipple	6	
7	4811000367	Hydraulic hose	1	
8	4700791538	Straight connector	3	
9	4811000329	Hydraulic hose	2	
10	4811000328	Hydraulic hose	2	
11	4811000365	Hydraulic hose	1	
12	4700792450	Nut	6	
13	4700313102	Cable ties	7	
14	4700908136	Bracket	2	
15	4700500018	Hex. screw	2	
16	4700791542	Straight connector	1	

Variable rear axle motor Option Variable rear axle motor Option

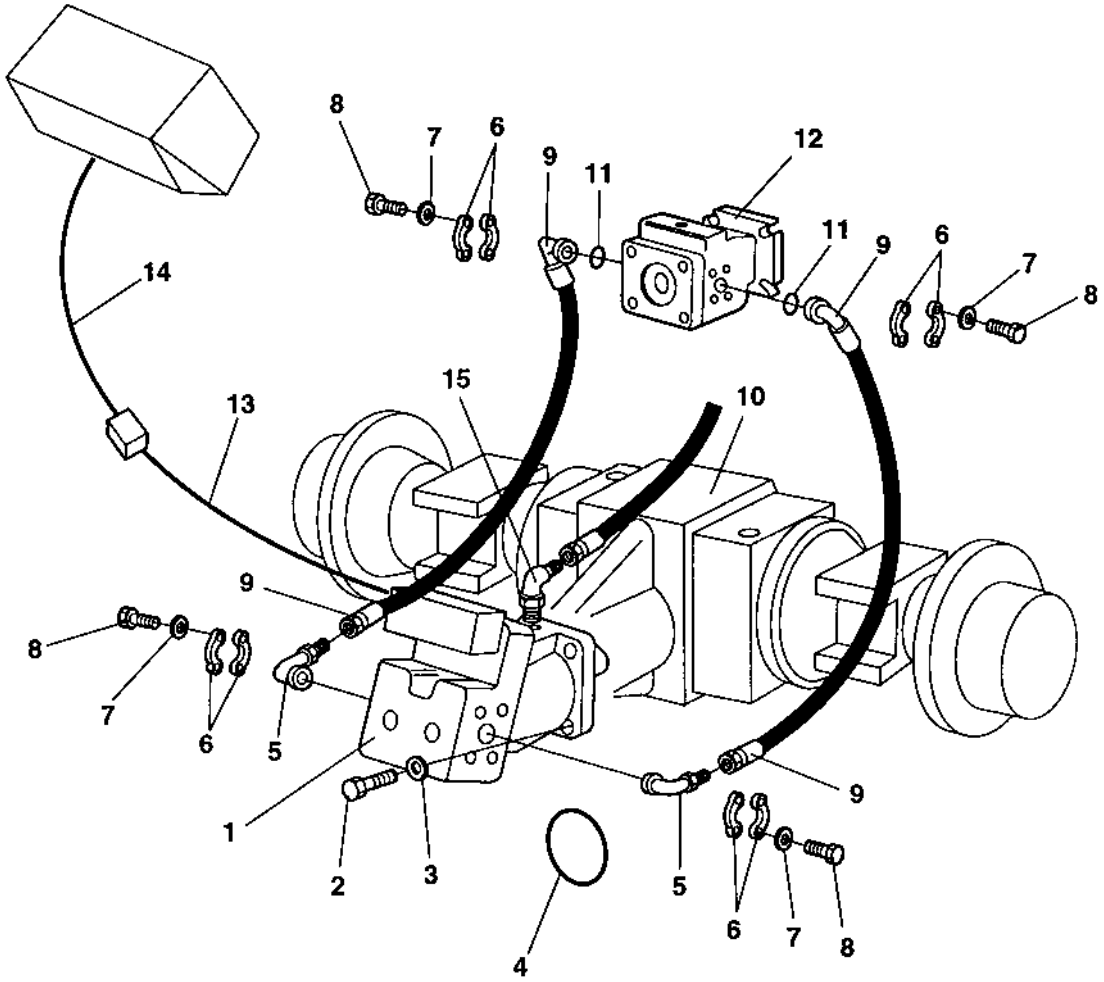

Item	Part No.	Name	Qty	L
1	4700373361	Propulsion motor	1	
2	4700500263	Screw M18x60	4	
3	4700904793	Steel plain washer	4	
4	4700902581	O-ring	1	
5	4700900604	Adapter	2	
6	4700923384	Split flange	8	
7	4700904638	Washer 12x22x2	16	
8	4700502132	Screw	16	
9	4700483517	Hydraulic hose	2	
10	-	Rear axle	1	
11	4700904005	O-ring	2	
12	4700380830	Propulsion pump	1	
13	4700380577	Cable harness	1	
14	4700380700	Cable harness	1	
15	4700334132	Elbow 45, O-ring	1	

4700373361 Propulsion motor 4700373361 Propulsion motor

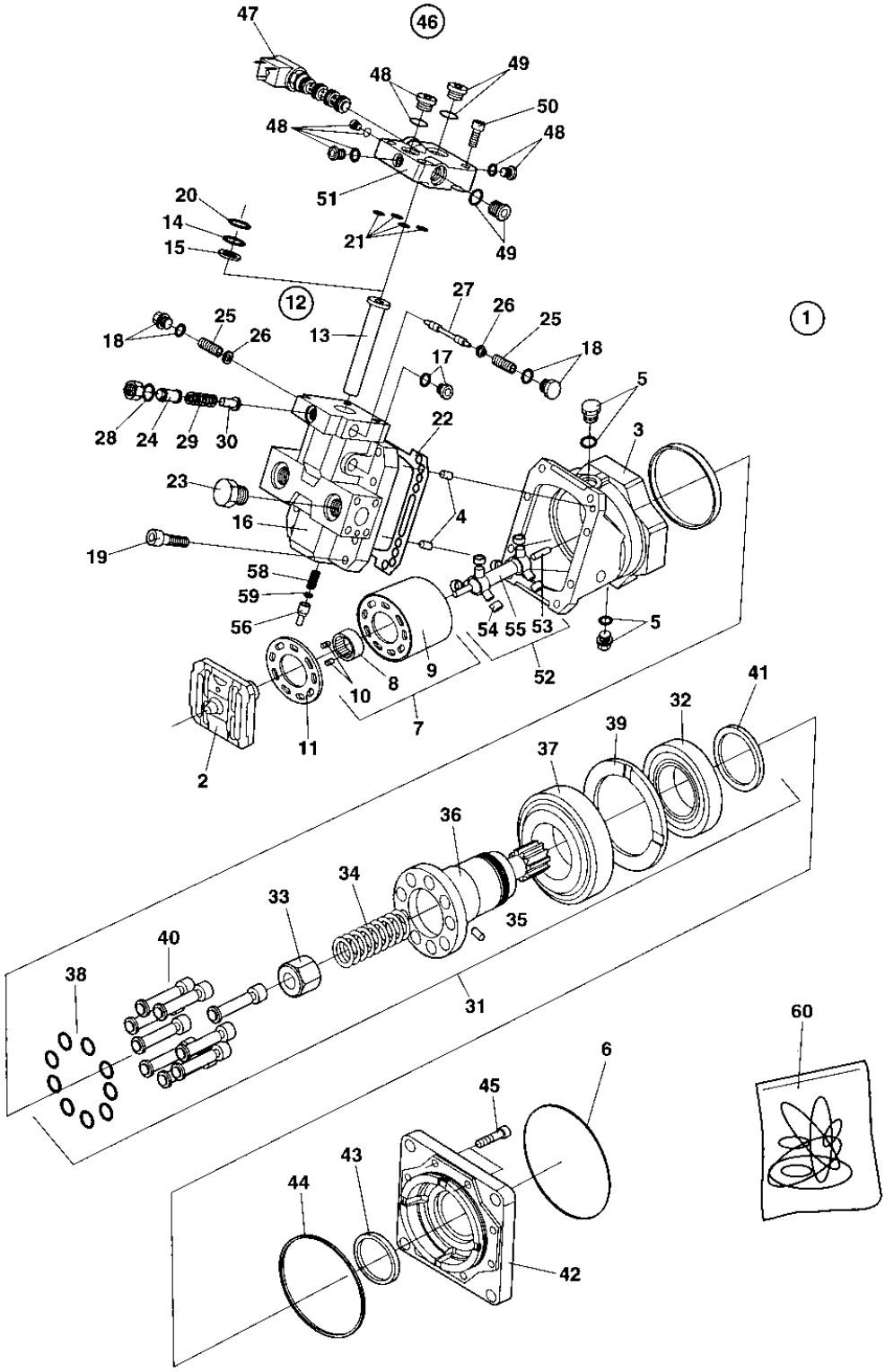

Item	Part No.	Name	Qty	L
1	-	Hydraulic motor, Cpl	1	
2	4700935521	Valve segment	1	
3	4700908422	Housing	1	
4	4700813822	Pin	2	
5	4700902928	Plug	2	
5	4700901453	O-ring	2	1
6	4700902581	O-ring	1	1
7	4700902929	Cylinder block	1	
.8	-	Bush	1	
.9	-	Cylinder block	1	
.10	-	Pin	2	
11	4700902930	Bearing plate	1	
12	4700935527	Piston assembly	1	
.13	4700935526	Piston	1	
.14	4700935525	O-ring	1	1
.15	4700935524	Seal plug	1	1
16	4700935530	End cap	1	
17	4700908432	Plug	1	
18	4700935741	Plug, cpl	2	
19	4700902944	Screw	8	
20	4700935531	O-ring	1	1
21	4700908443	Rect. seal	5	1
22	4700908427	Gasket	1	1
23	4700902928	Plug	2	
23	4700901453	O-ring	2	1
24	-	Adapter	1	
25	4700935749	Spring guide assy	2	
26	4700935750	Spring retainer	2	
27	4700935533	Spool	1	
28	4700813618	O-ring	1	1
29	-	Spring	1	
30	-	Valve cone	1	
31	4700902960	Shaft, cpl	1	
.32	-	Roller bearing	1	
.33	-	Spring guide	1	
.34	-	Spring	1	
.35	-	Pin	1	

Item	Part No.	Name	Qty	L
.36	-	Shaft	1	
.37	-	Roller bearing	1	
.38	-	Piston ring	9	
.39	-	Spacer	1	
.40	-	Piston	9	
.41	-	Nut	1	
42	4700902961	Flange	1	
43	4700935536	Shaft seal 55x75x12	1	
43	4700945757	Shaft seal	1	1
44	4700935664	O-ring	1	1
45	4700902962	Screw	8	
46	4700935543	Electric hydraulic control	1	
.47	4700908435	Solenoid valve assy	1	
..47	4700909259	Coil	1	
.48	4700908426	Plug, cpl	4	
.49	4700908432	Plug	2	
.50	4700935544	Screw	4	
.51	4700935545	Valve housing	1	
52	4700902984	Shaft, cpl	1	
.53	-	Pin	2	
.54	-	Roller	6	
.55	-	Shaft	1	
56	4700902996	Plastic cap, green	1	
57	4700936593	Orifice	2	
58	4700937363	Shaft	1	
59	4700909525	Seal nut	1	1
60	4700935520	Seal kit	1	

Comments for Page: 4700373361 Propulsion motor

(L)OCAL REMARKS

1 | en_US | Included in seal kit item 60

4700380830 Propulsion pump 4700380830 Propulsion pump

This page intentionally left blank

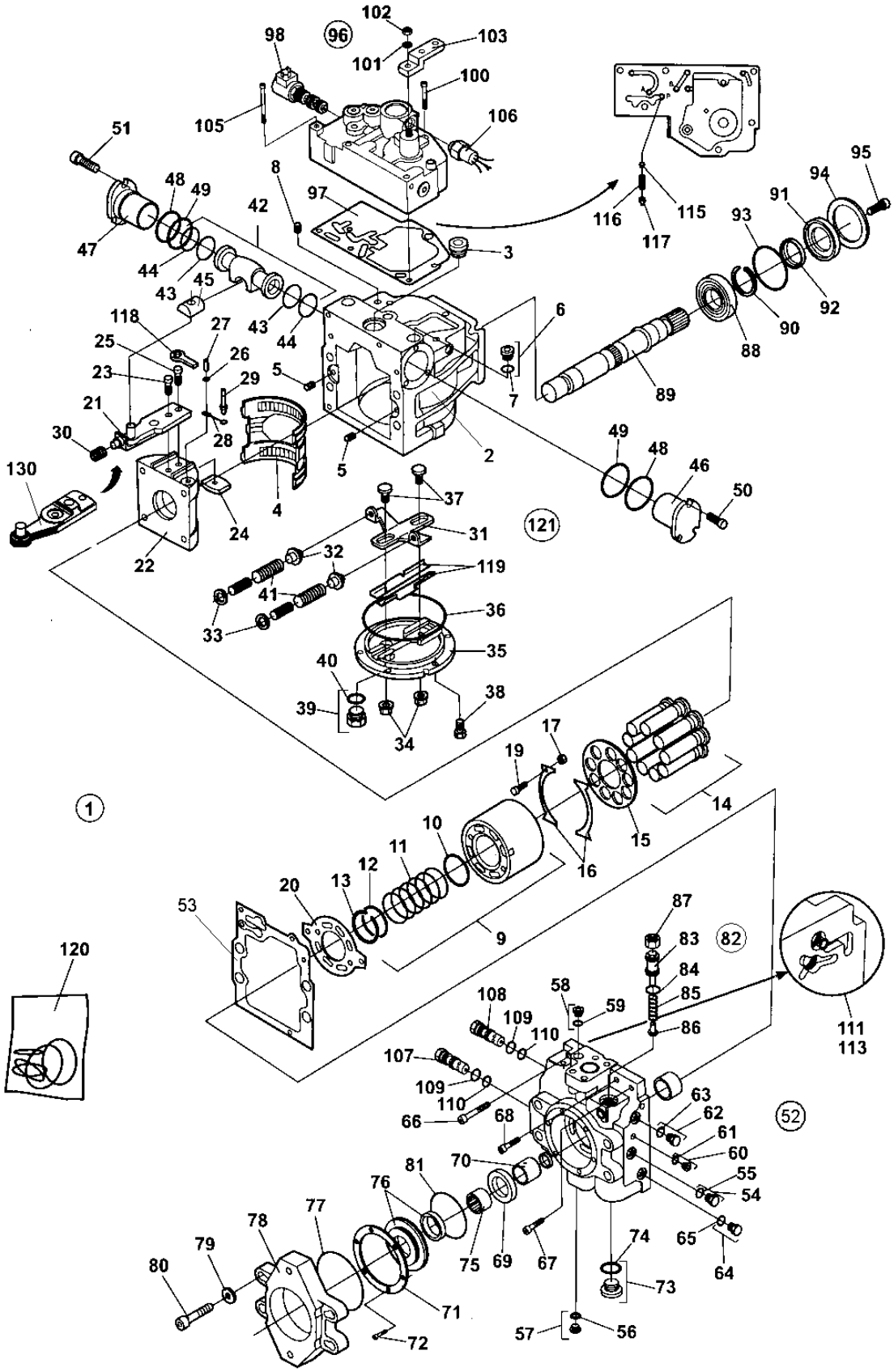
102
103
101
100
98
96
105
106
51
48
49
8
97
42
47
44
45
43
3
116
115
117
95
94
91
93
92
90
88
89
118
27
25
26
23
29
5
6
7
21
30
28
2
130
4
24
22
49
48
46
50
37
31
121
32
119
41
33
36
35
40
39
38
34
17
19
14
15
16
1
10
11
12
13
20
53
9
120
87
83
82
84
85
86
111
113
58
59
108
109
110
107
109
110
66
68
63
62
61
60
55
54
52
70
81
76
77
78
79
80
75
69
67
74
65
64
73
71
72
57
56

Item	Part No.	Name	Qty	L
1	4700380830	Propulsion pump	1	
.2	4700936546	Housing	1	
.2	4812156652	Housing	1	2
.3	4700902928	Plug	1	
.4	4700901452	Bearing	1	
.4	-	Piston guides	1	2
.5	4700813822	Pin	2	
.6	4700908432	Plug	2	
..7	4700923087	O-ring	2	1
.8	4700901454	Filter element	3	
.9	4700901455	Cylinder block, cpl	1	
..10	-	Spacer	1	
..11	-	Spring	1	
..12	-	Spring retainer	1	
..13	-	Ring retainer	1	
.14	4700903570	Piston	9	
.15	4700903571	Pressure plate	1	
.16	4700901458	Retainer guide	2	
.17	4700935856	Spacer	4	
.19	4700909382	Screw	4	
.20	4700936547	Valve plate	1	
.21	4700909727	Servo arm, cpl	1	
.22	-	Swashplate	1	
.22	-	Swashplate	1	2
.23	4700909386	Screw	1	
.23	-	Screw	1	2
.24	4700909387	Guide	1	
.25	4700909388	Screw	1	
.26	4700909389	Washer	1	
.27	4700909390	Pin	1	
.28	4700909391	Link	1	
.29	4700909392	Pin	1	
.30	4700909393	Spring	1	
.31	4700936549	Lever	1	
.32	-	Spring support	2	
.33	-	Gasket	2	
.34	4700909398	Seal lock nut	2	1

Item	Part No.	Name	Qty	L
.35	-	Cover	1	
.35	-	Cover	1	2
.36	4700936551	O-ring	1	1
.37	-	Guide post	2	
.38	4700936553	Screw	6	
.39	4700902928	Plug	1	
40	4700901453	O-ring	1	1
41	4700908352	Spring	2	
42	4700936582	Piston, cpl	1	
.43	-	O-ring	2	1
.44	-	Seal Ring	2	1
.45	-	Guide	1	
46	4700903580	Servo	1	
47	4700903580	Servo	1	
48	4700936557	O-ring	2	1
49	4700936558	O-ring	2	1
50	4700936559	Screw	3	
51	4700936559	Screw	3	
52	4700936560	End cap, cpl	1	
53	4700936561	Gasket	1	1
54	4700358388	Plug	1	
.55	4700923087	O-ring	1	1
56	4700908432	Plug	1	
.57	4700923087	O-ring	1	1
58	4700908432	Plug	1	
.59	4700923087	O-ring	1	1
60	4700908432	Plug	1	
.61	4700923087	O-ring	1	1
62	4700358388	Plug	1	
.63	4700923087	O-ring	1	1
64	4700358388	Plug	1	
.65	4700923087	O-ring	1	1
66	4700936562	Screw	1	
67	4700936563	Screw	1	
68	4700936564	Screw	1	
69	4700950283	Spacer	1	
70	4700950284	Spacer	1	

Item	Part No.	Name	Qty	L
71	4700935857	Retaining plate	1	
72	4700936566	Screw	6	
73	4700936567	Plug, cpl	1	
74	4700936568	O-ring	1	1
75	4812156072	Coupling sleeve	1	
76	-	Not used on this model	1	
77	4700909399	O-ring	1	1
78	4700936570	Adapter	1	
79	4700936571	Washer	4	
80	-	null		
81	4700937150	O-ring	1	
82	4700936583	Pressure relief valve, cpl	1	
83	-	Screw	1	
84	-	O-ring	1	1
85	-	Spring	1	
86	-	Valve cone	1	
87	-	Nut	1	
88	4700901465	Bearing	1	
89	4700901466	Shaft	1	
90	4700901467	Ring	1	
91	-	Pressure plate	1	
92	-	Seal	1	1
92	-	Seal	1	2
93	-	O-ring	1	1
94	-	Retaining plate	1	
95	-	Screw	3	
96	4700938170	Control valve, cpl	1	
.97	4700939489	Control valve gasket	1	1
.98	4700938252	Solenoid valve	1	
.100	-	Screw	1	
.101	4700909428	Washer	1	
.102	4700909429	O-ring	1	
.103	4700909432	Control lever	1	
.105	4700937857	Screw	5	
.106	4700938253	Neutral start switch	1	
107	4700212339	Valve	1	
108	4700212339	Valve	1	

Item	Part No.	Name	Qty	L
.109	-	O-ring	2	1
.110	-	O-ring	2	1
111	4700901475	Valve	2	
113	4700901476	Plug	2	
115	4700909435	Orifice	1	
116	4700909436	Spring	1	
117	4700908448	Spring retainer	1	
118	-	Link	1	
119	4700936554	Guide assy, 1pair	1	
120	4700901328	Seal kit	1	
121	4700936548	Cover assembly	1	3
130	-	Servo arm	1	

Comments for Page: 4700380830 Propulsion pump

(L)OCAL REMARKS

1 | en_US | Included in item 120, Seal kit

2 | en_US | Valid with item 130

3 | en_US | Includes items 35, 37 and 119

Electrical equipment Electrical equipment

This page intentionally left blank

NO DRAWING AVAILABLE FOR THIS BOM

Item	Part No.	Name	Qty	L
17	-	Electric system		
31	-	Control panel		
45	-	Working lights Option		
70	-	Rotating beacon Option		
85	-	Back-up alarm Option		
90	-	Compaction meter Option		

Electric system Electric system

Item	Part No.	Name	Qty	L
1	4700395821	Cable harness	1	
3	4700904020	Battery cable	1	
4	4700903760	Connection cable coarse	1	
5	4700335607	Connection cable, coarse	1	
6	4700791503	Battery cable	1	
7	4700792052	Connection cable coarse	1	
8	4700386999	Holder	1	
16	4700903640	Battery switch	1	
.16	4700903641	Key	1	
19	4700904229	Washer, 8.4x16x1.5 mm 300 HV	10	
20	4700500053	Hex. screw	2	
21	4700791183	Relay	1	
22	4700904228	Steel plain washer	6	
23	4700500013	Hex. screw	2	
24	4700570004	Hex. nut	2	
25	4700904036	Bracket	1	
26	4700904281	Washer, 5,3x10x1 300HV	4	
27	4700500060	Screw M5-0,8x20 8.8	2	
28	4700586001	Lock nut	2	
29	4700500075	Screw, M6-1,0x25 mm 8.8	3	
40	4700902285	Nut	2	
41	4812114386	Control unit, ECU	1	
42	4700500025	Screw, M8 x 50 mm 8.8 A2K	2	
43	4700904556	Steel plain washer	2	
44	4700586003	Hexagon lock nut M8	5	
45	4700903768	Threaded stud	3	
46	4700570005	Hex. nut	3	
47	4700813434	Reducer	1	
48	4700903631	Temperature sensor Hydraulic oil	1	
49	4700903632	Temperature sensor Engine	1	
50	4700904231	Steel plain washer, 13x24x2 mm 300 HV	2	
51	4700500051	Hex. screw	2	
52	4700500019	Hex. screw	1	
53	4700904038	Fuse 40A Orange	1	
54	4700345870	Plug	1	
58	4700904230	Washer	2	
59	4700921080	Clamp	1	

Item	Part No.	Name	Qty	L
60	4700313041	Cable tie	1	
63	4700921072	Clamp	1	
64	4700929023	Indicator	1	
70	4700791183	Relay	1	
75	4812110818	Rubber cloth	2	

Control panel Control panel

This page intentionally left blank

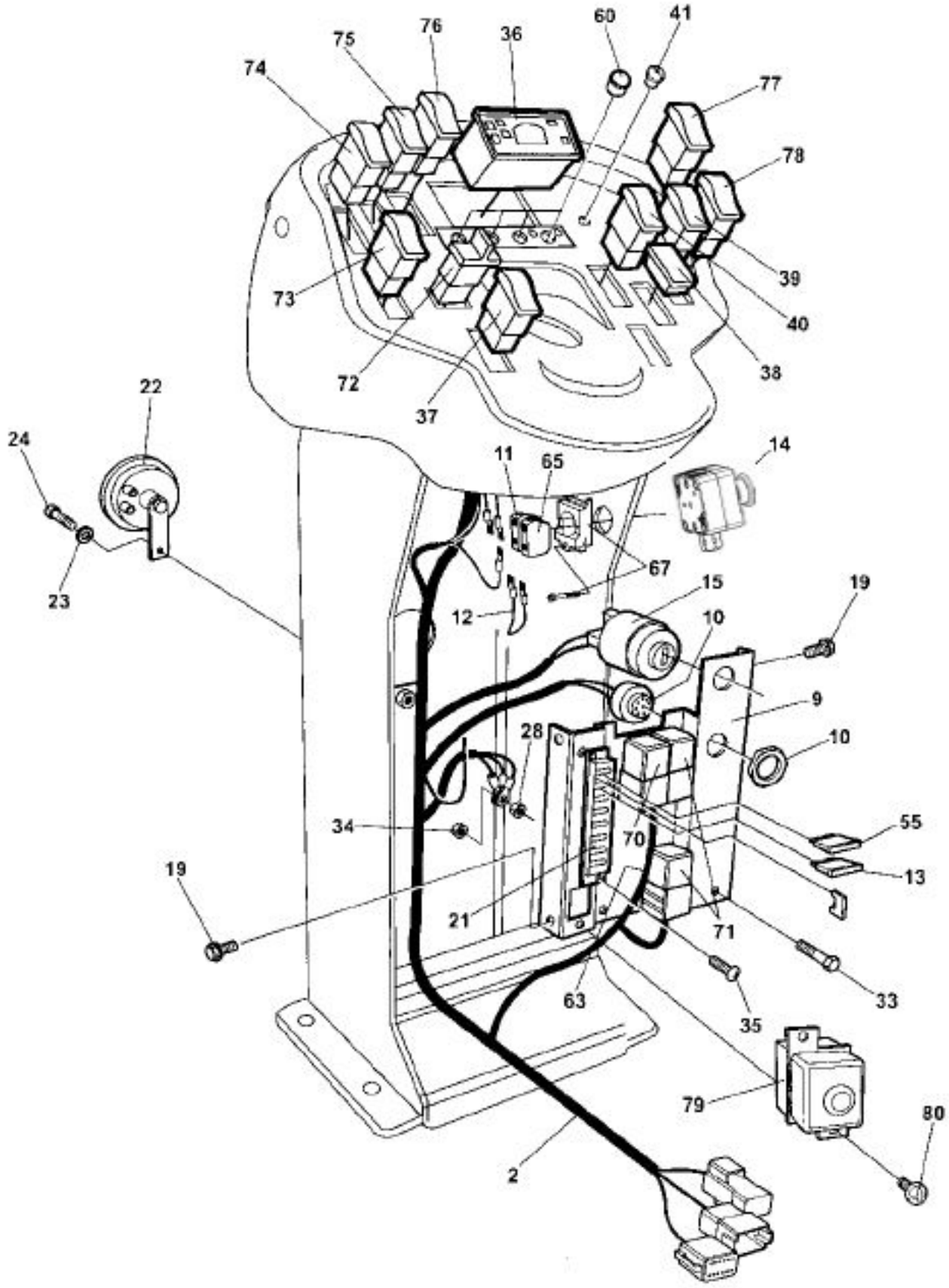
60
41
75
76
36
74
77
78
39
73
40
72
38
37
22
24
14
11
65
67
23
15
19
12
10
9
28
10
34
55
70
13
19
21
71
33
63
35
79
80
2

Item	Part No.	Name	Qty	L
2	4700396968	Cable harness	1	
9	4812103408	Distribution control plate-From M/C S/N:OE000916	1	
10	4700385599	Buzzer	1	
11	4812103822	Connector	1	
12	4700343550	Connection cable	1	
13	4700901227	Fuse 10A Red	1	
14	4812105501	Emergency stop	1	
15	4812103985	Ignition switch	1	
.15	4700940451	Ignition key	1	
19	4700903782	Screw M5x12	4	
21	4700791185	Fuse box	1	
22	4700134141	Horn	1	
23	4700904229	Washer, 8.4x16x1.5 mm 300 HV	1	
24	4700500053	Hex. screw	1	
28	4700570004	Hex. nut	1	
33	4700500075	Screw, M6-1,0x25 mm 8.8	1	
34	4700586002	Lock nut M6 -8	1	
35	4700901767	Screw	2	
36	4700392996	Control panel	1	
37	4700791582	Switch, parking brake	1	
38	4700791588	Panel plug	N	
39	4700792461	Switch, vibration	1	
40	4700791578	Switch, horn	1	
41	4700792083	Plug	N	
55	4700901228	Fuse, 15A Blue	1	
60	4700792320	Plug	4	
63	4700792210	Screw torx	1	
65	4700791723	Connector N/C	1	
66	4700313041	Cable tie	1	
67	4700791733	Fixing collar	1	
70	4700904989	Relay	1	A
71	4812104267	Relay	1	
72	4700792413	Switch, drive direction	1	A
73	4700791585	Switch, rotating beacon	1	A
74	4811000073	Switch, driving light	1	B
75	4700791583	Switch, driving light	1	C
76	4700791584	Switch, hazard flashers	1	A

Item	Part No.	Name	Qty	L
77	4700792462	Switch, TC & TM	1	A
78	4700792463	Switch, Power distribution	1	A
79	4700792091	Fuse holder	1	D
79	4700903741	Fuse 20A Yellow	1	D
80	4700901767	Screw	2	D

Comments for Page: Control panel

(L)OCAL REMARKS

A | en_US | Option

B | en_US | Option, High beam

C | en_US | Option, Low beam

D | en_US | Option, Traffic lights

Working lights Option Working lights Option

This page intentionally left blank

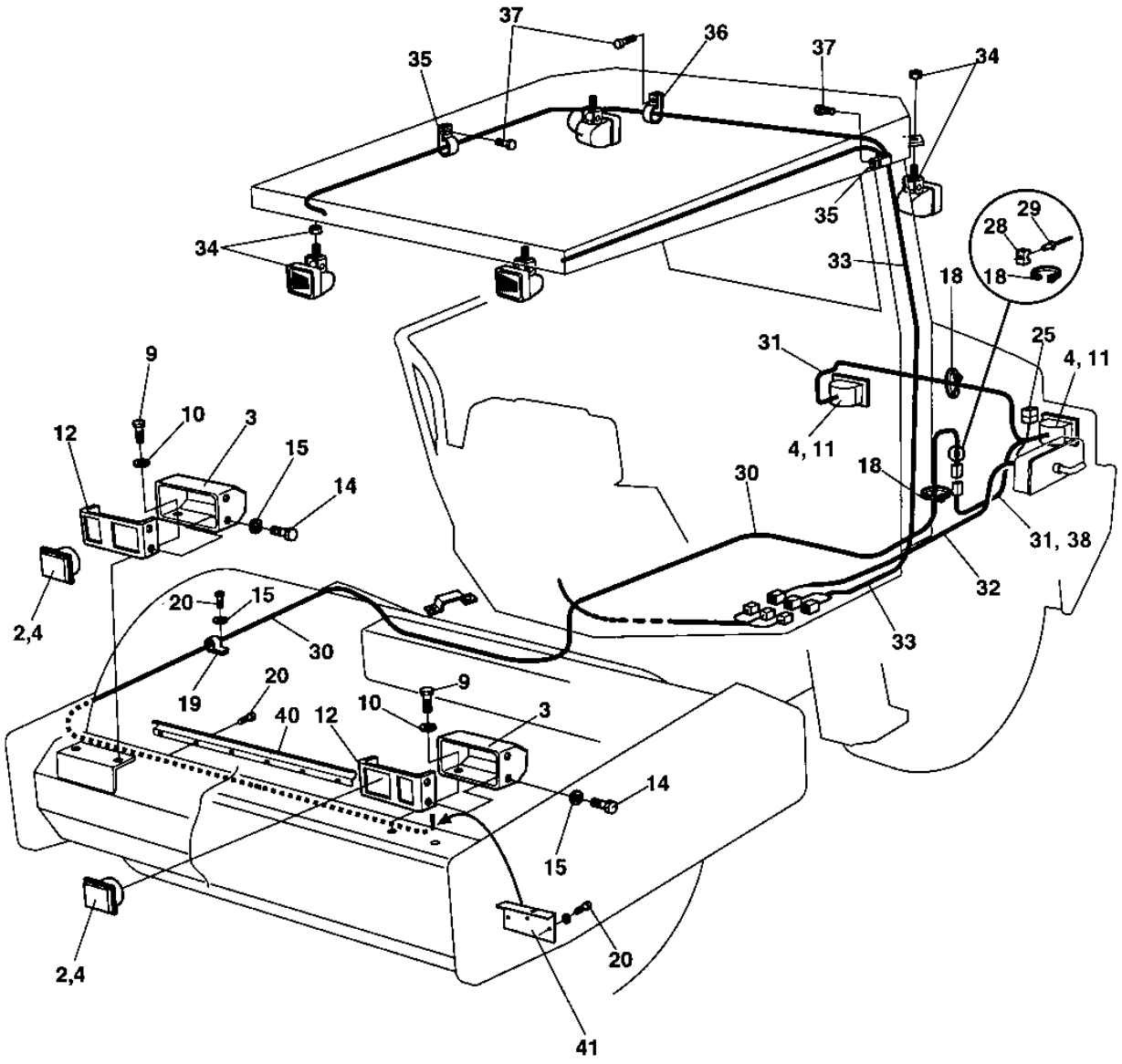
37
36
35
37
34
35
34
29
28
33
18
18
31
25
4, 11
9
10
3
12
15
14
4, 11
18
30
31, 38
32
2,4
20
15
30
33
19
20
40
12
10
9
3
14
15
20
2,4
41

Item	Part No.	Name	Qty	L
2	4700902227	Work light	2	
3	4700374029	Lamp shield	2	
4	4700901369	Bulb 55w H3	4	
9	4700500043	Hex. screw	6	
10	4700904230	Washer	6	
11	4700904314	Work lamp	2	
12	4700374030	Bracket	2	
14	4700500040	Screw	8	
15	4700904228	Steel plain washer	13	
18	4700925802	Cable ties L=142 mm	7	
19	4700921039	Pipe clamp	8	
20	4700500012	Hex. screw	8	
25	4700904038	Fuse 40A Orange	1	
28	4700904543	Cable tie holder	7	
29	4700903436	Blind rivet	7	
30	4700373184	Cable harness	1	
31	4700387419	Cable harness	1	
32	4700373184	Cable harness	1	
33	4700372758	Cable harness	1	
34	4812110216	Work lamp	4	
34	4700904230	Washer	4	
34	4700586018	Lock nut	4	
35	4700921039	Pipe clamp	10	
36	4700921031	Clamp	3	
37	4700541702	Screw M6x12	13	
38	4700921072	Clamp	1	
40	4700381462	Rubber hose	1	
41	4700384163	Protection	2	

Rotating beacon Option Rotating beacon Option

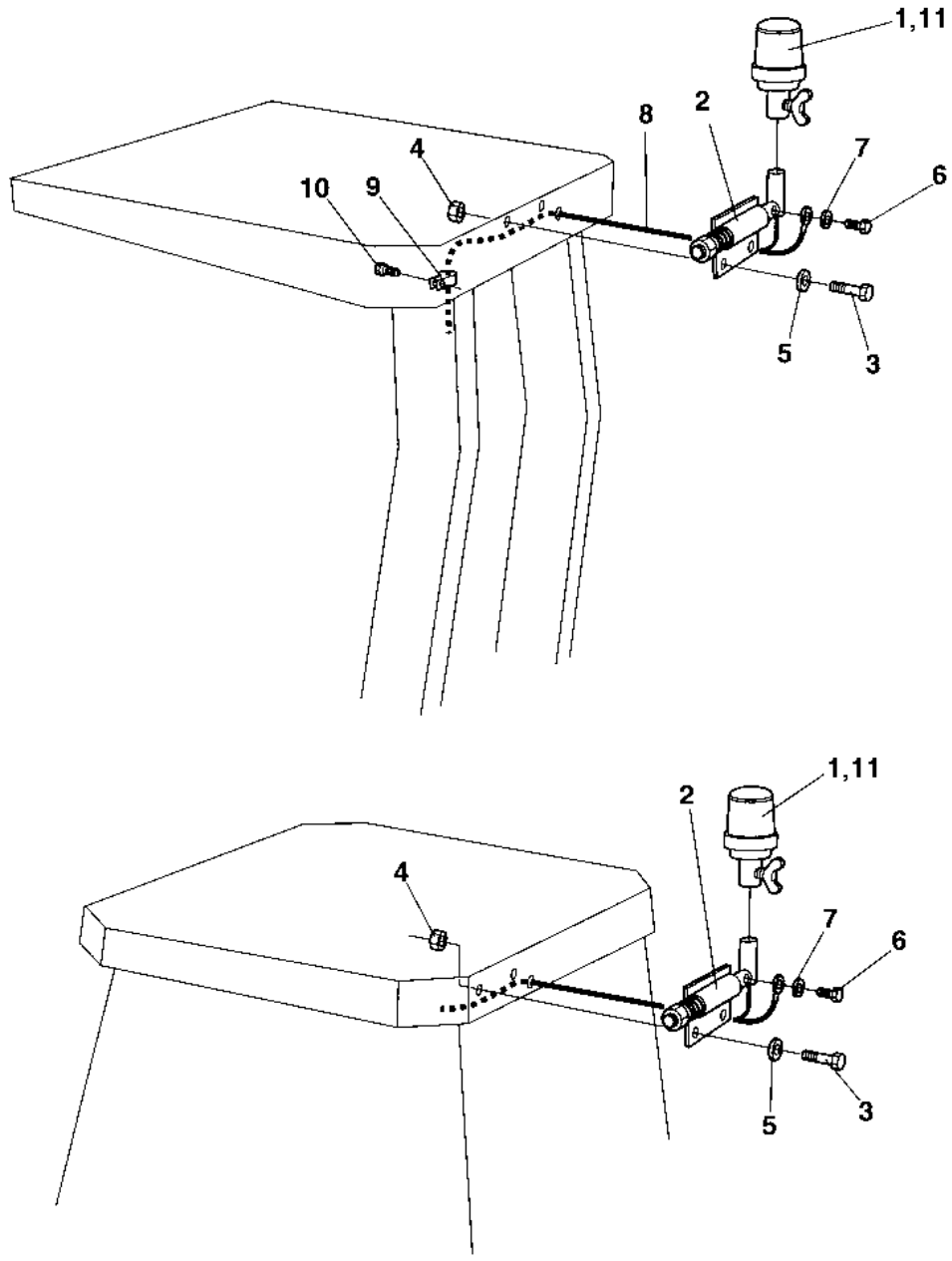

Item	Part No.	Name	Qty	L
1	4700999011	Breather filter	1	1
2	4700358452	Lamp holder	1	
3	4700500021	Hex. screw	2	
4	4700586003	Hexagon lock nut M8	2	
5	4700904229	Washer, 8.4x16x1.5 mm 300 HV	2	
6	4700500013	Hex. screw	1	
7	4700904228	Steel plain washer	1	
8	4700374398	Cable harness	1	
9	4700921039	Pipe clamp	1	
10	4700541702	Screw M6x12	1	
11	4700389577	Rotating beacon 12V	1	2

Comments for Page: Rotating beacon Option

(L)OCAL REMARKS

1 | en_US | Is replaced by item 11, P/N 4700389577

2 | en_US | Replaces item 1, P/N 4700999011

Back-up alarm Option Back-up alarm Option

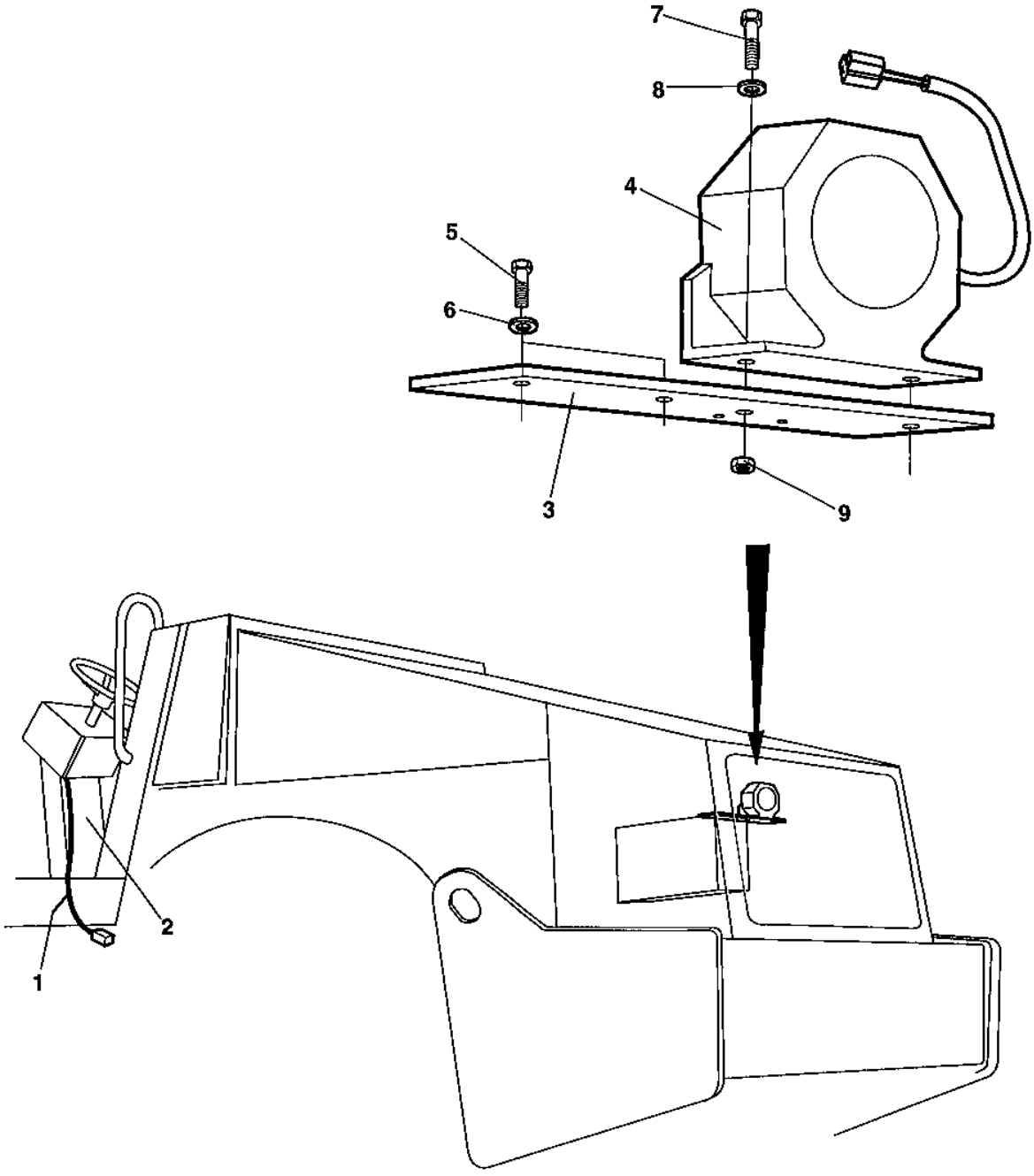

Item	Part No.	Name	Qty	L
1	4700380798	Cable harness	1	A
2	4700901224	Fuse, 3A Violet	1	B
3	4700377071	Bracket	1	
4	4700904910	Back-up alarm	1	
5	4700500053	Hex. screw	2	
6	4700904229	Washer, 8.4x16x1.5 mm 300 HV	2	
7	4700500040	Screw	2	
8	4700904228	Steel plain washer	2	
9	4700586002	Lock nut M6 -8	2	

Comments for Page: Back-up alarm Option

(L)OCAL REMARKS

A | en_US | Is connected to the main wiring harness.

B | en_US | Located in the fusebox on the control panel.

Compaction meter Option Compaction meter Option

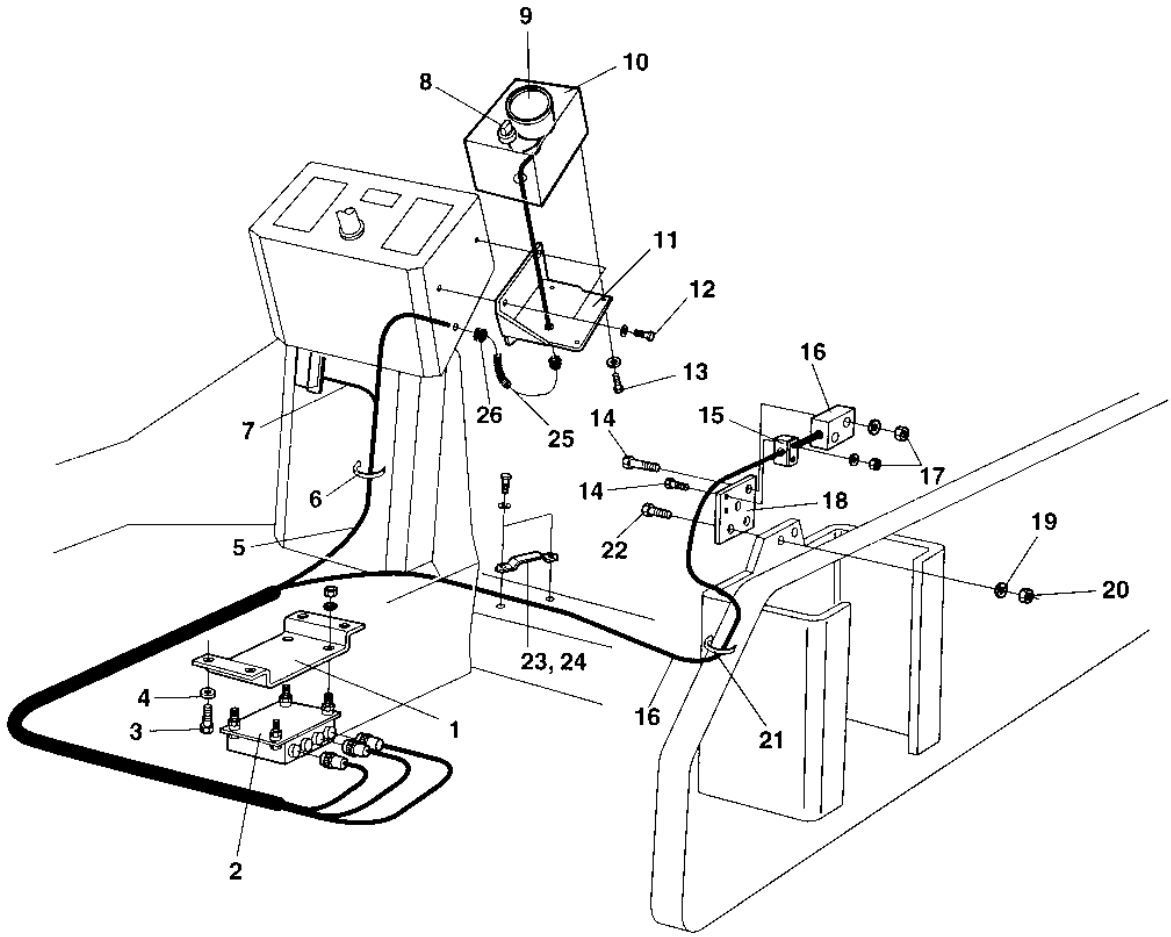

Item	Part No.	Name	Qty	L
1	4700372836	Bracket	1	
2	4700388210	Processor comp.meter	1	
3	4700500053	Hex. screw	4	
4	4700904229	Washer, 8.4x16x1.5 mm 300 HV	4	
5	4700372784	Cable harness	1	
6	4700313102	Cable ties	N	
7	4700381351	Cable harness	1	
8	4700930151	Switch	1	
9	4700383452	Compaction meter	1	
10	4700373096	Instrument box	1	
11	4700383326	Bracket	1	
12	4700904206	Screw	3	
13	4700541526	Screw ST 4,2x16	4	
14	4700500079	Screw M6-1x50 8,8	4	
15	4700902496	Clamp	1	
16	4700348213	Sensor, cpl	1	
17	4700902285	Nut	7	
18	4700373140	Bracket	1	
19	4700904231	Steel plain washer, 13x24x2 mm 300 HV	2	
20	4700902288	Nut M12	2	
21	4700313041	Cable tie	N	
22	4700500194	Hex. screw	2	
23	4700373016	Hose clamp	1	
24	4700349435	Rubber part	1	
25	4700901190	Conduit	1	A
26	4700903192	Grommet	2	

Comments for Page: Compaction meter Option

(L)OCAL REMARKS

A | en_US | L=230mm

Drivers platform Drivers platform

NO DRAWING AVAILABLE FOR THIS BOM

Item	Part No.	Name	Qty	L
16	-	Drivers platform		
17	-	Drivers platform		
21	-	Control panel		
32	-	Throttle control		
45	-	Forward and reverse control		
52	-	Steering column		
100	-	Canopy Option		
110	-	Rops and fops		
140	-	Cab mounting		
150	4700378308	Cab		
160	-	Cab Exterior, rear mirror		
180	-	Cab Work light		

Drivers platform Drivers platform

Item	Part No.	Name	Qty	L
1	4700392394	Platform	1	
3	4812114466	Drivers seat, cpl	1	
3	4700348331	Seat cover	1	
4	4700376252	Step	1	
5	4700380727	Cover	2	
6	4700372757	Shock absorber	2	
7	4700373400	Shock absorber	2	
8	4700500210	Drive sprocket, outer	4	
9	4700372494	Rubber strip	1XL	A
10	4700372785	List	1	
11	4700382582	List	2	
12	4700927974	Washer, 5x19x1 mm	13	
13	4700904433	Blind rivet	13	
15	4700500029	Hex. screw	4	
16	4700904230	Washer	4	
17	4700586003	Hexagon lock nut M8	4	
18	4700904229	Washer, 8.4x16x1.5 mm 300 HV	8	
19	4700500053	Hex. screw	4	
20	4700904231	Steel plain washer, 13x24x2 mm 300 HV	16	
21	4700500195	Screw	16	
22	4700347512	Washer	4	
23	4700903290	Steel plain washer 21x36x6	4	
24	4700904233	Steel plain washer 21x36x3	8	
25	4700379636	Seat switch	1	C
25	4700379636	Seat switch	1	D
26	4700901145	Lock nut M20-10	4	
27	4700902203	Plug	2	
28	4700383705	Instruction manual box	1	
29	4700357643	Wire	1	
30	4700791226	Screw	4	
31	4700903192	Grommet	1	
32	4700380123	Grab handle	1	
33	4700392875	Cover	1	
34	4700500013	Hex. screw	2	
35	4700904228	Steel plain washer	2	
36	4700902166	Edge trim	1XL	B
37	4700903727	Plug	1	

Drivers platform Drivers platform

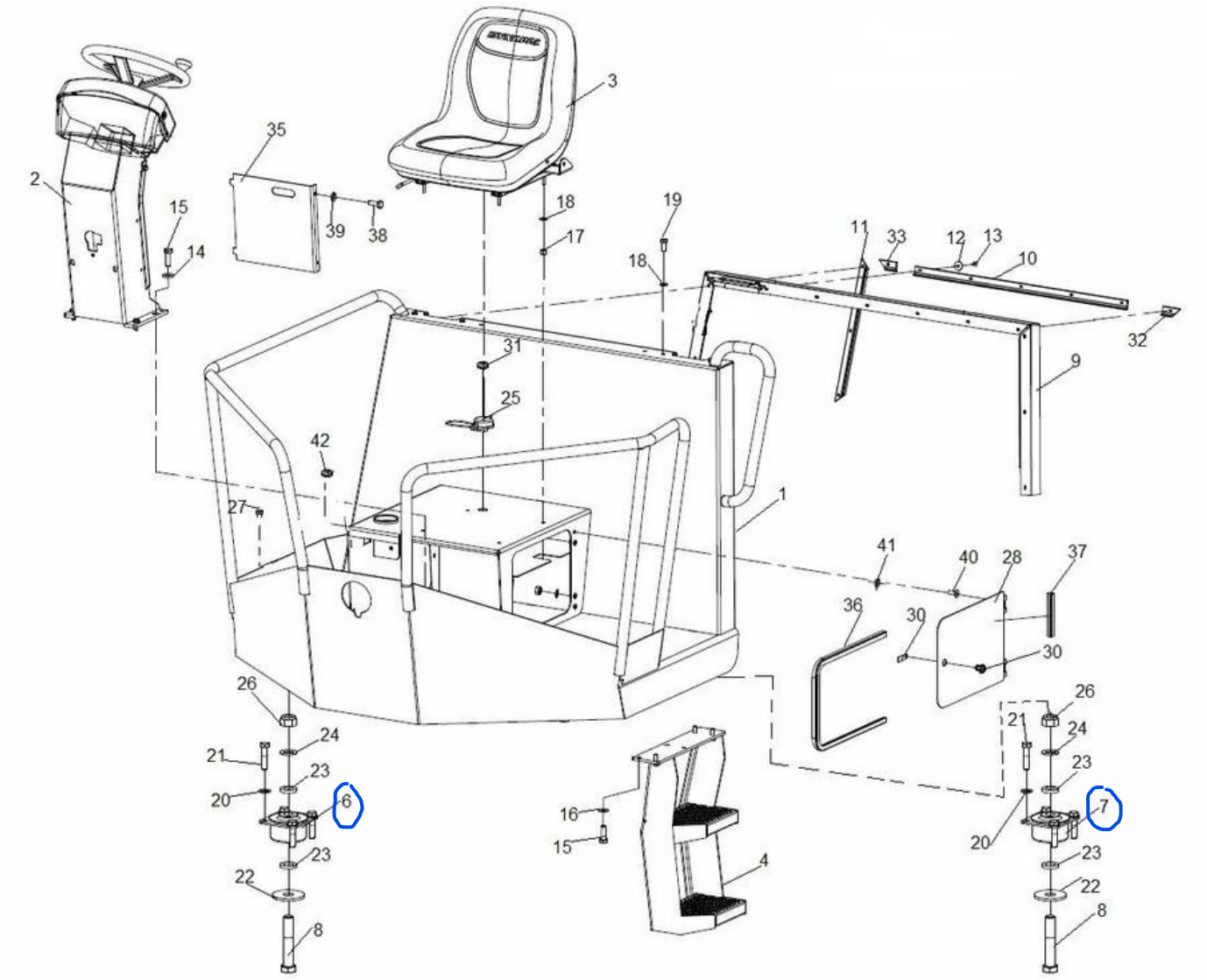

Item	Part No.	Name	Qty	L
1	4812105250	Platform	1	
2	4812104638	Control panel	1	
3	4812114466	Drivers seat, cpl	1	
3	4700348331	Seat cover	1	
4	4700376252	Step	1	
6	4700372757	Shock absorber	2	
7	4700373400	Shock absorber	2	
8	4700500211	Screw	4	
9	4812105061	Rubber strip	1	
10	4812105253	Guide Middle	1	
11	4700382582	List	2	
12	4700927974	Washer, 5x19x1 mm	13	
13	4700904433	Blind rivet	13	
14	4700904557	Washer, 10.5x22x4 mm 300 HV	6	
15	4700500029	Hex. screw	4	
16	4700904230	Washer	4	
17	4700586003	Hexagon lock nut M8	4	
18	4700904229	Washer, 8.4x16x1.5 mm 300 HV	8	
19	4700500053	Hex. screw	4	
20	4700904231	Steel plain washer, 13x24x2 mm 300 HV	16	
21	4700500195	Screw	16	
22	4700347512	Washer	4	
23	4700903290	Steel plain washer 21x36x6	4	
24	4700904233	Steel plain washer 21x36x3	8	
25	4700379636	Seat switch	1	C
26	4700901145	Lock nut M20-10	4	
27	4700902203	Plug	2	
28	4812105257	Cover	1	
30	4700383626	Lock	1	
31	4700903192	Grommet	1	
32	4812105252	Guide left	1	
33	4812105254	Guide Right	1	
35	4812103323	Protective cover	1	
36	4700202057	Rubber edge trim	1XL	A
37	4700202057	Rubber edge trim	1XL	B
38	4700500013	Hex. screw	2	
39	4700904228	Steel plain washer	2	

COXIM
COXIM

Item	Part No.	Name	Qty	L
40	4700513003	Screw	4	
41	4700902286	Lock nut, M8x1.25 mm A2K	4	
42	4700903727	Plug	1	

Comments for Page: Drivers platform

(L)OCAL REMARKS

A | en_US | L=1.200M

B | en_US | L=0,150M

C | en_US | With bayonet fitting.

D | en_US | With screws.

E | en_US | Option

Control panel Control panel

This page intentionally left blank

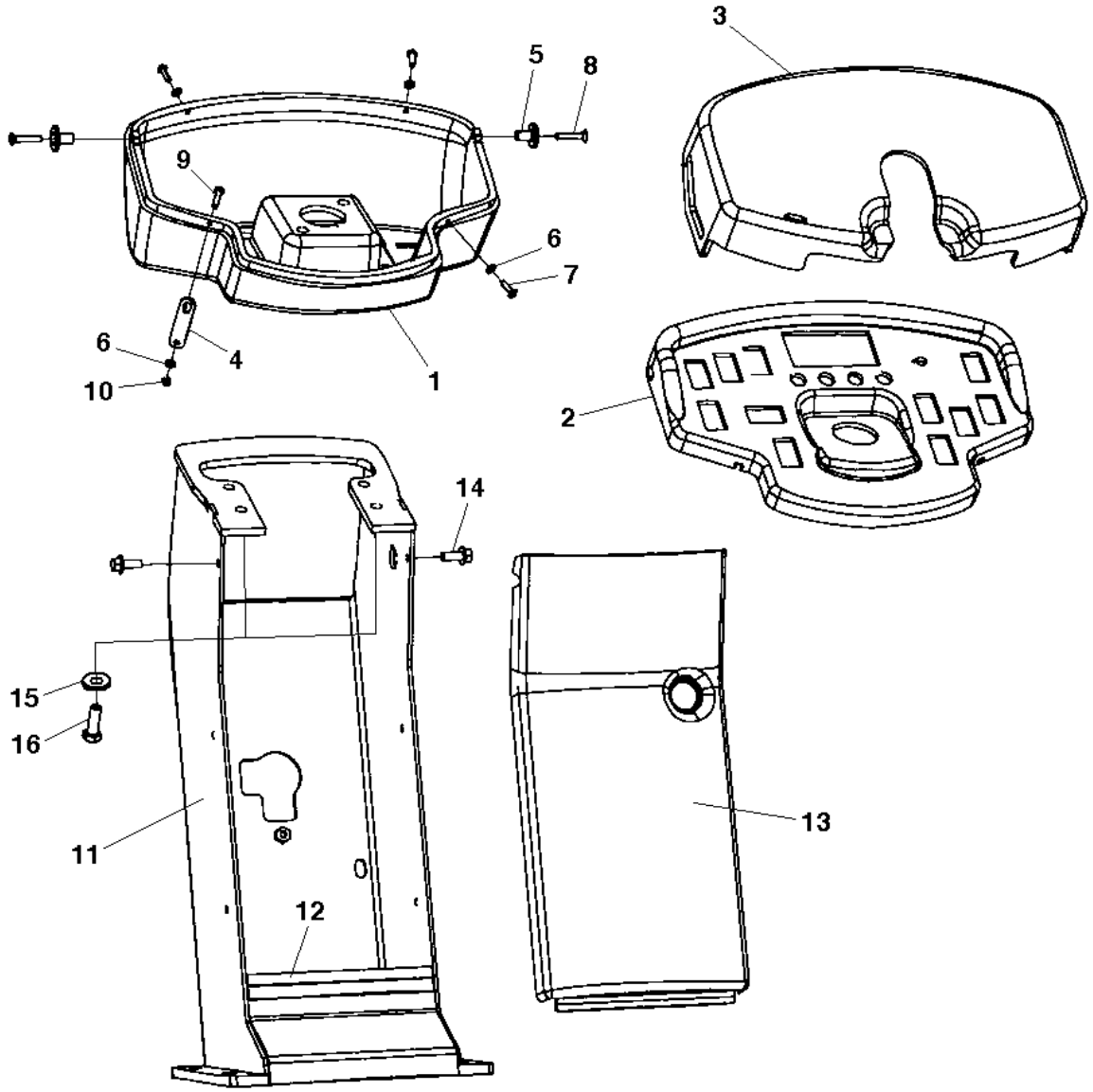
3
5
8
9
6
7
6
4
10
1
2
14
15
16
11
12
13

Item	Part No.	Name	Qty	L
1	4700387720	Control panel holder	1	
2	4700391784	Control panel	1	
3	4700387227	Control panel cover	1	
4	4700387545	Latch	1	
5	4700357855	Bushing	2	
6	4700904281	Washer, 5,3x10x1 300HV	4	
7	4700904653	Screw M5x16 A2-70	3	
8	4700513017	Screw	2	
9	4700500007	Hex. screw	1	
10	4700791476	Lock nut	1	
11	4812104309	Steering column	1	
12	4700902166	Edge trim	1XL	A
13	4700387226	Column cover	1	
14	4700500505	Screw, M8x20 mm 8.8 A2K	2	
15	4700904230	Washer	4	
16	4700500029	Hex. screw	4	

Comments for Page: Control panel

(L)OCAL REMARKS

A | en_US | L=0,190 m

Control panel Control panel

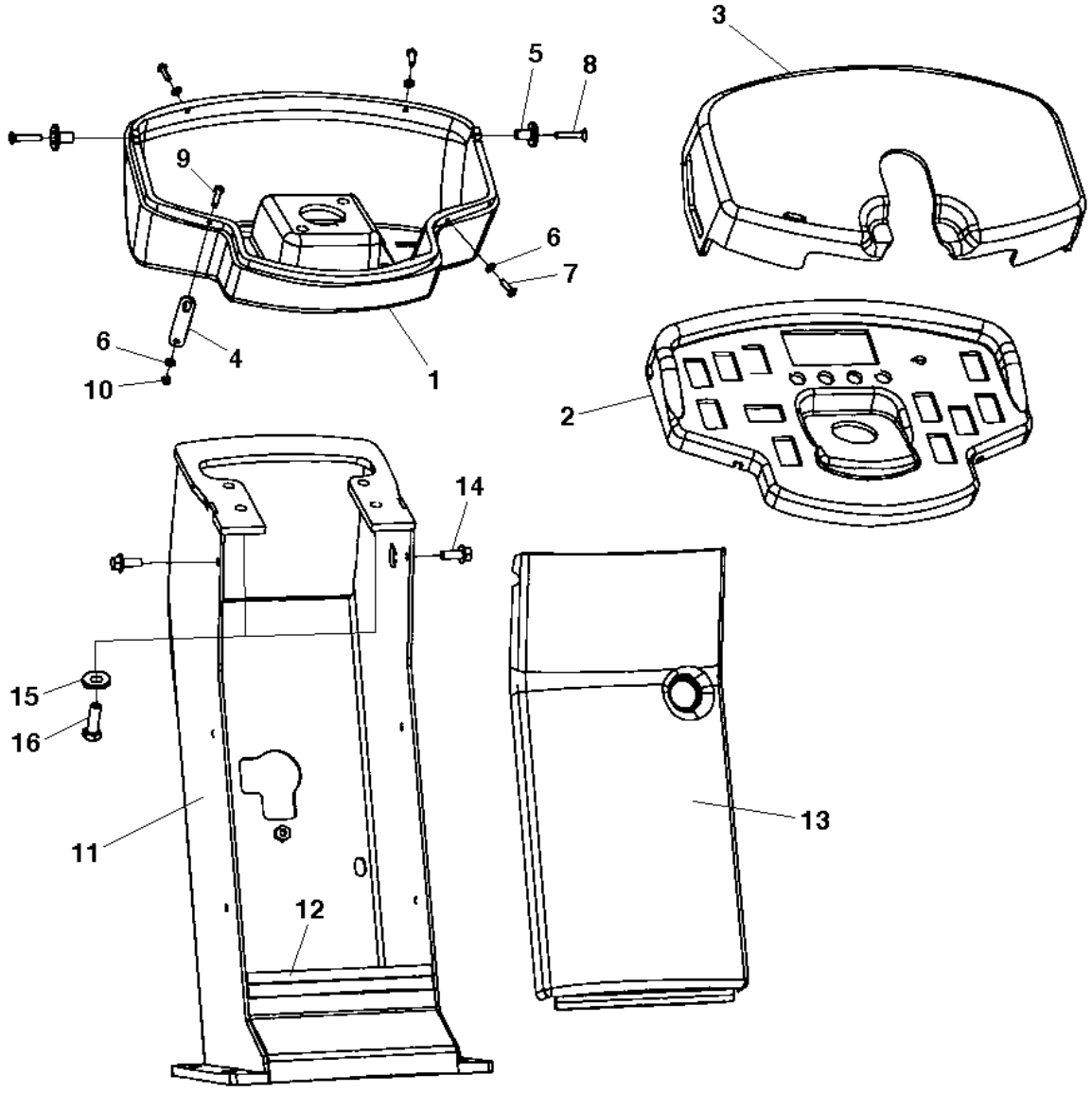

Item	Part No.	Name	Qty	L
1	4700387720	Control panel holder	1	
2	4700391784	Control panel	1	
3	4700387227	Control panel cover	1	
4	4700387545	Latch	1	
5	4700357855	Bushing	2	
6	4700904281	Washer, 5,3x10x1 300HV	4	
7	4700904653	Screw M5x16 A2-70	3	
8	4700513017	Screw	2	
9	4700500007	Hex. screw	1	
10	4700791476	Lock nut	1	
11	4700378335	Steering column	1	
12	4700902166	Edge trim	1XL	A
13	4700387226	Column cover	1	
14	4700500505	Screw, M8x20 mm 8.8 A2K	2	
15	4700904230	Washer	4	
16	4700500029	Hex. screw	4	

Comments for Page: Control panel

(L)OCAL REMARKS

A | en_US | L=0,190 m

Throttle control Throttle control

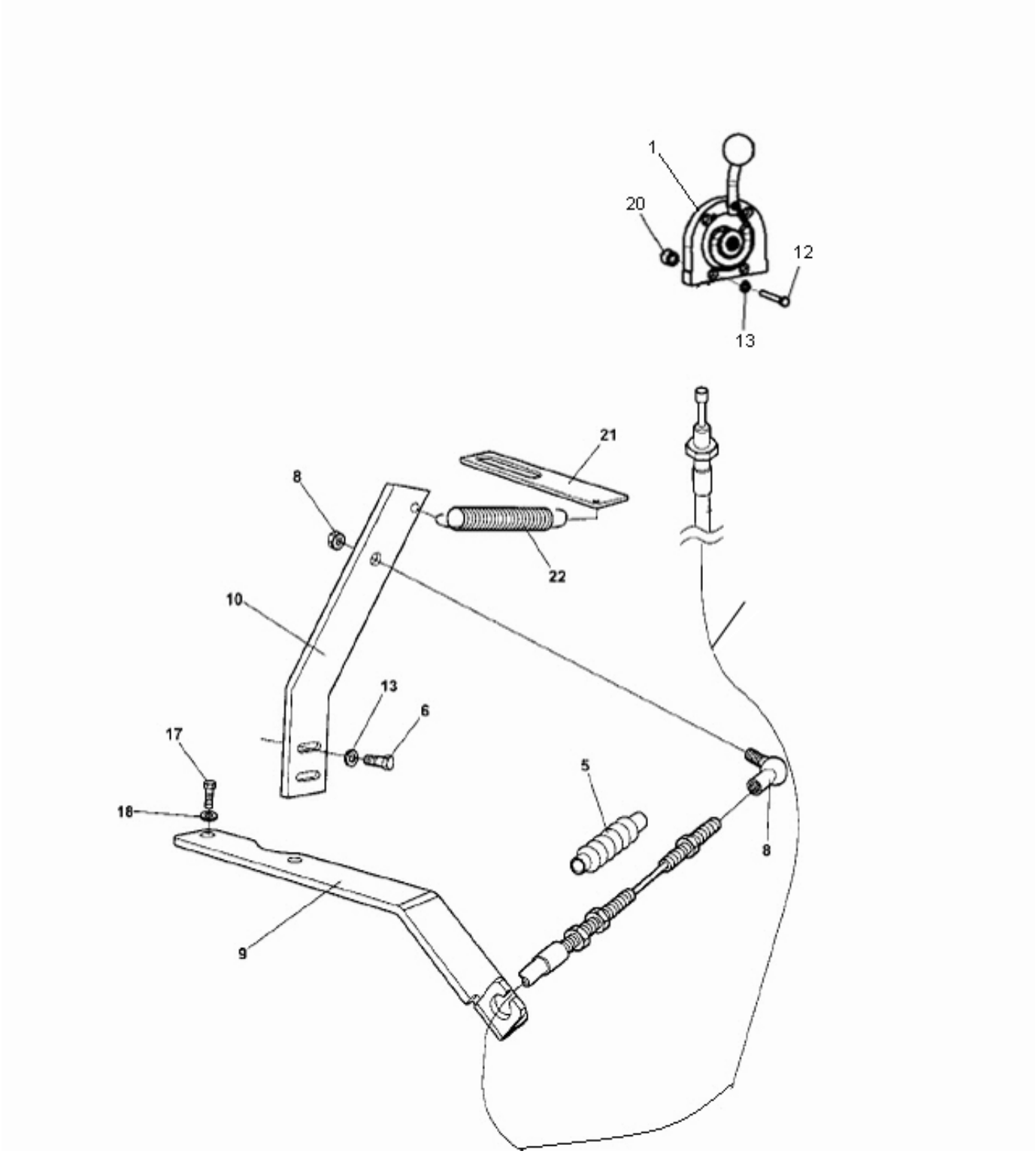

Item	Part No.	Name	Qty	L
1	4812104016	Throttle control, cpl	1	
.4	4700389184	Throttle cable	1	
.5	4700382349	Bellows	1	
6	4700500013	Hex. screw	2	
7	4700904228	Steel plain washer	4	
8	4700416034	Universal joint, M6	1	
9	4700134154	Control bracket	1	
10	4700374065	Lever	1	
12	4700500079	Screw M6-1x50 8,8	2	
13	4700603010	Washer 6,4x12x3	2	
17	4700500021	Hex. screw	2	
18	4700904229	Washer, 8.4x16x1.5 mm 300 HV	2	
20	4700371728	Spacer sleeve	2	
21	4700393388	Spring holder	1	
22	4700357500	Spring	1	

Forward and reverse control Forward and reverse control

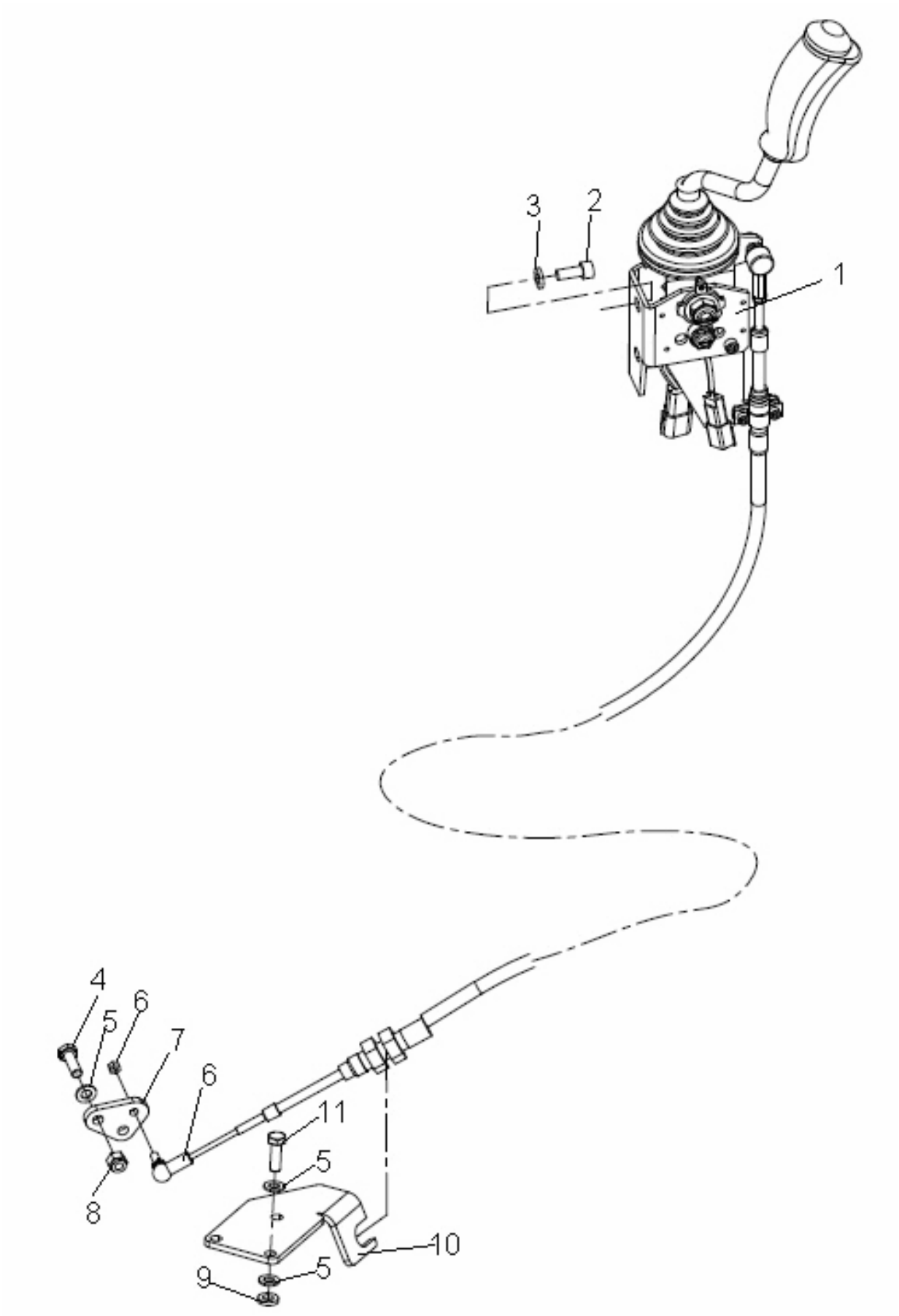

Item	Part No.	Name	Qty	L
1	4812103438	Forward and reverse control handel	1	
2	4700508092	Screw	2	
3	4700904556	Steel plain washer	2	
4	4700500021	Hex. screw	2	
5	4700904229	Washer, 8.4x16x1.5 mm 300 HV	8	
6	4700416034	Universal joint, M6	1	
7	4700392900	Control lever	1	
8	4700586003	Hexagon lock nut M8	2	
9	4700904556	Steel plain washer	3	
10	4700392899	Control bracket	1	
11	4700947680	Hexagon head screw m	3	

4812103438 Forward and reverse control handel 4812103438 Forward and reverse control handel

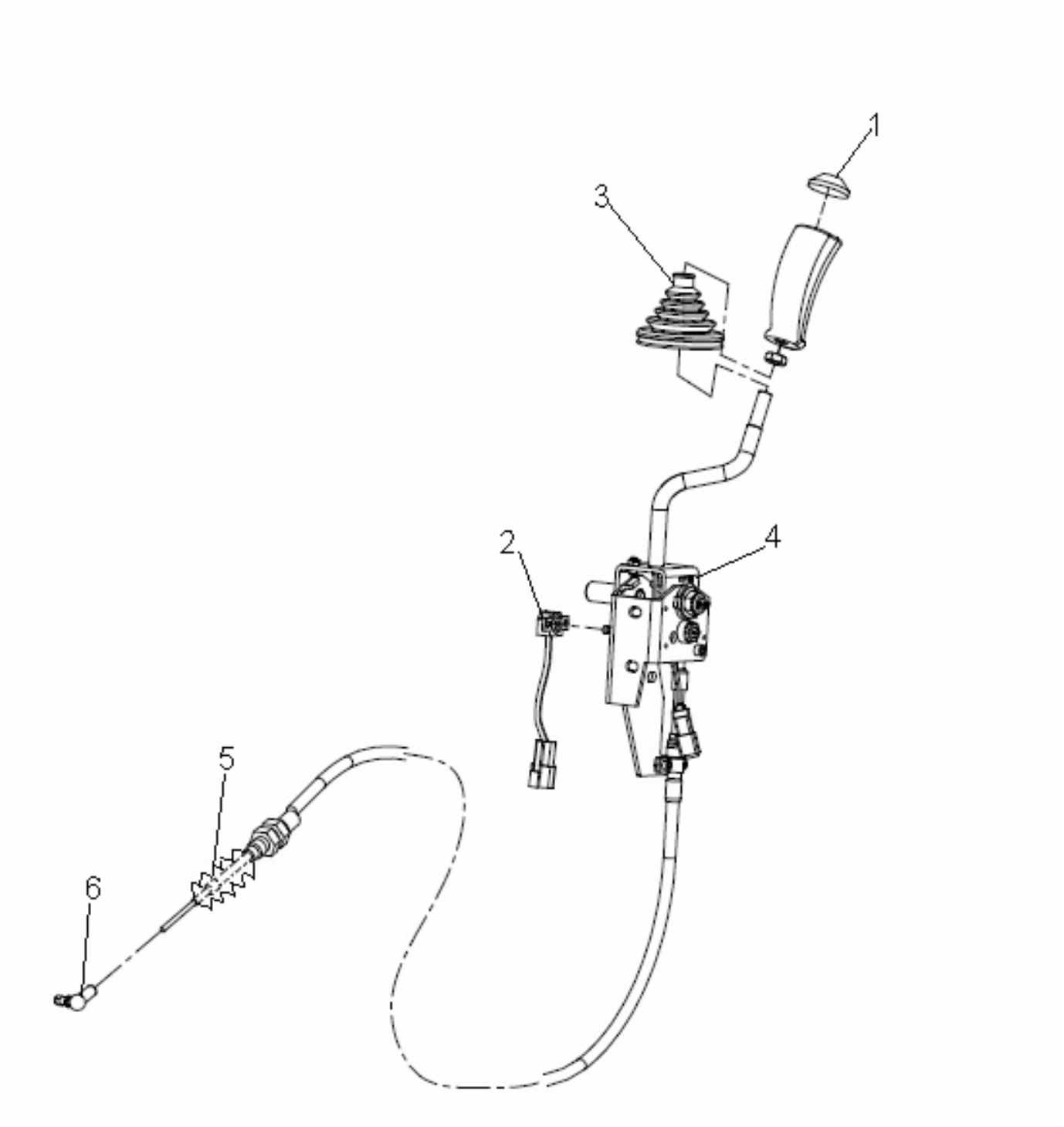

Item	Part No.	Name	Qty	L
1	4812104720	V.B.SWITCH ASSY	1	
2	4812104721	ROTATRY P.SWITCH ASSY	1	
3	4812104722	FNR BELLOW	1	
4	4812104723	CABLE ARM & HANDEL ASSY	1	
5	4812104726	cable Below	1	
6	4700416034	Universal joint, M6	1	

Steering column Steering column

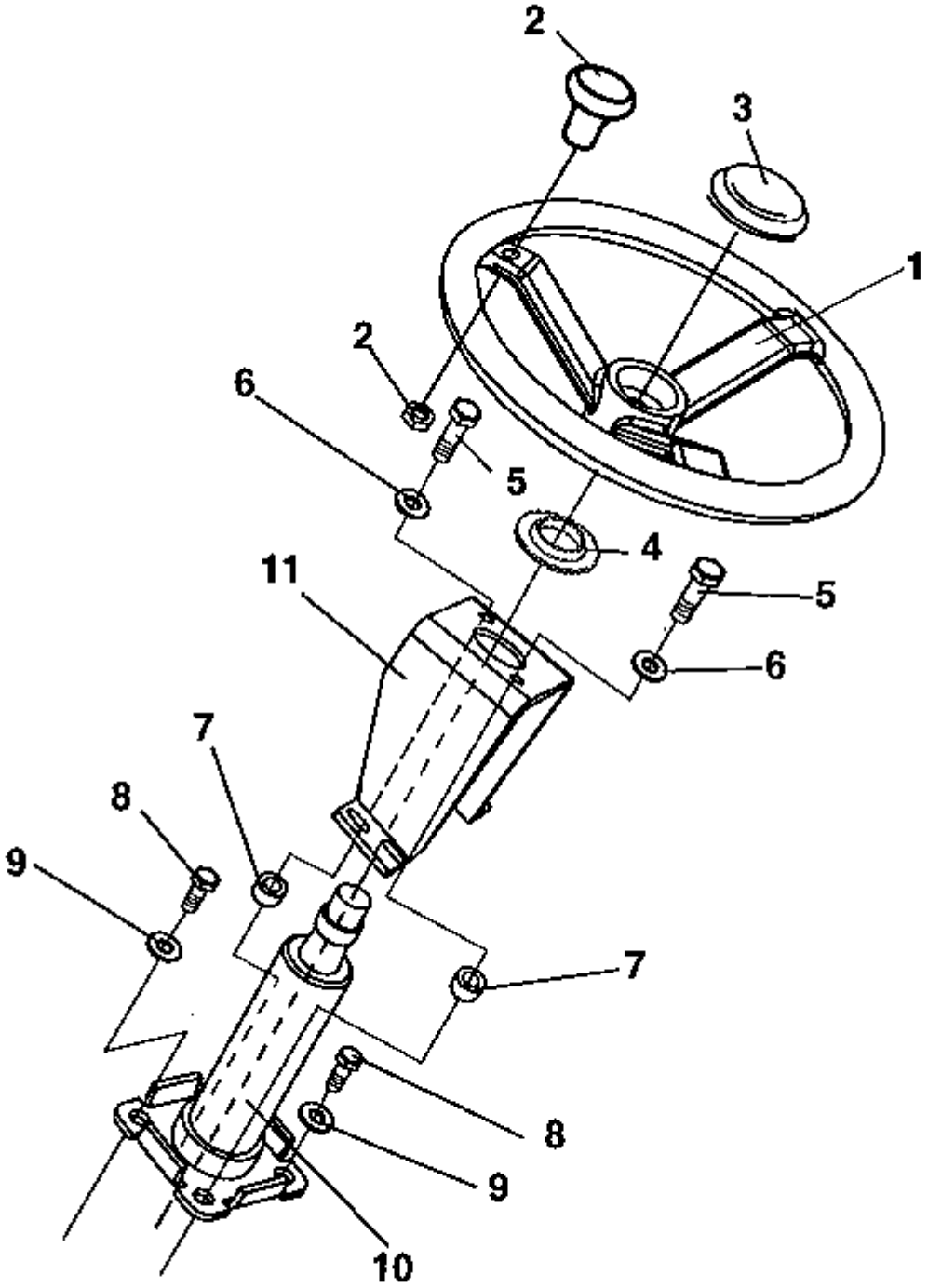

Item	Part No.	Name	Qty	L
1	4700372964	Steering wheel	1	
.2	4700935614	Turning knob	1	
.3	4700935613	Cover	1	
4	4700928830	Rubber part	1	
5	4700500031	Screw	2	
6	4700904230	Washer	2	
7	4700355869	Spacer sleeve	2	
8	4700500048	Screw	2	
9	4700904230	Washer	2	
10	4700902123	Steering column	1	
11	-	Bracket	1	A

Comments for Page: Steering column

(L)OCAL REMARKS

A | en_US | Included in control panel

Canopy Option Canopy Option

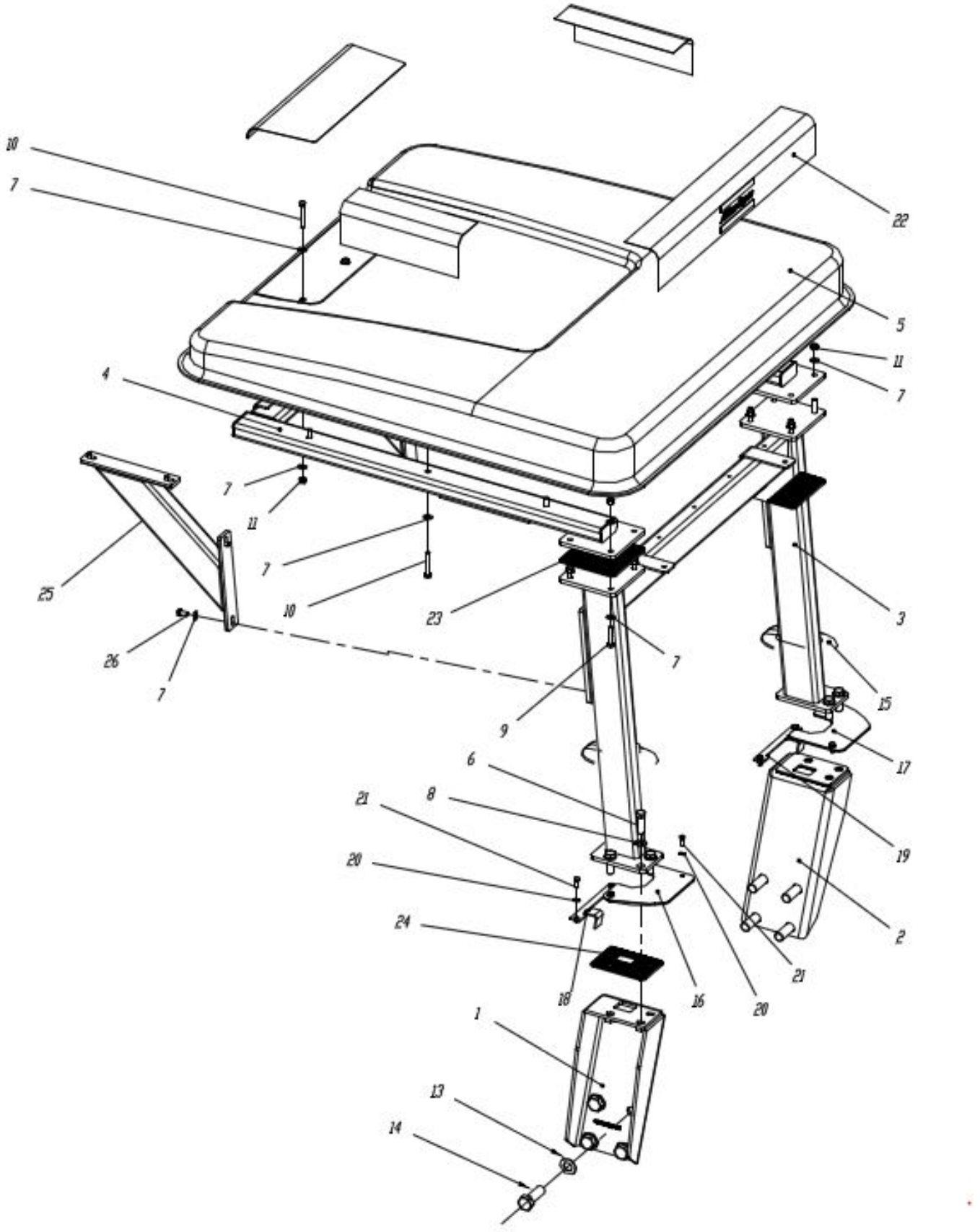

Item	Part No.	Name	Qty	L
1	4812105184	Bracket assly LH	1	
2	4812105185	Bracket assly RH	1	
3	4812105122	Canopy Frame assly	1	
4	4812105123	Top frame assly	1	
5	4812105171	Roof complete	1	
6	4700500070	Hex. screw	6	
7	4700904230	Washer	36	
8	4700904232	Steel plain washer	6	
9	4700500105	Hex. screw	8	
10	4700500109	Screw, M10x65 mm 8.8 A3K	9	
11	4700586018	Lock nut	11	
13	4700904234	Steel plain washer	8	
14	4700500288	Screw	8	
15	4812105216	Rubber grommet	2	
16	4812105291	Cover Plate assembly LH	1	
17	4812105294	Cover Plate assembly RH	1	
18	4812105304	Cover LH	1	
19	4812105305	Cover RH	1	
20	4700904229	Washer, 8.4x16x1.5 mm 300 HV	8	
21	4700500053	Hex. screw	8	
22	4812105194	Decal assly	1	
23	4812105314	Spacer	2	
24	4812105313	Spacer	2	
25	4812105330	Stiffener	2	
26	4700500048	Screw	8	

Rops and fops Rops and fops

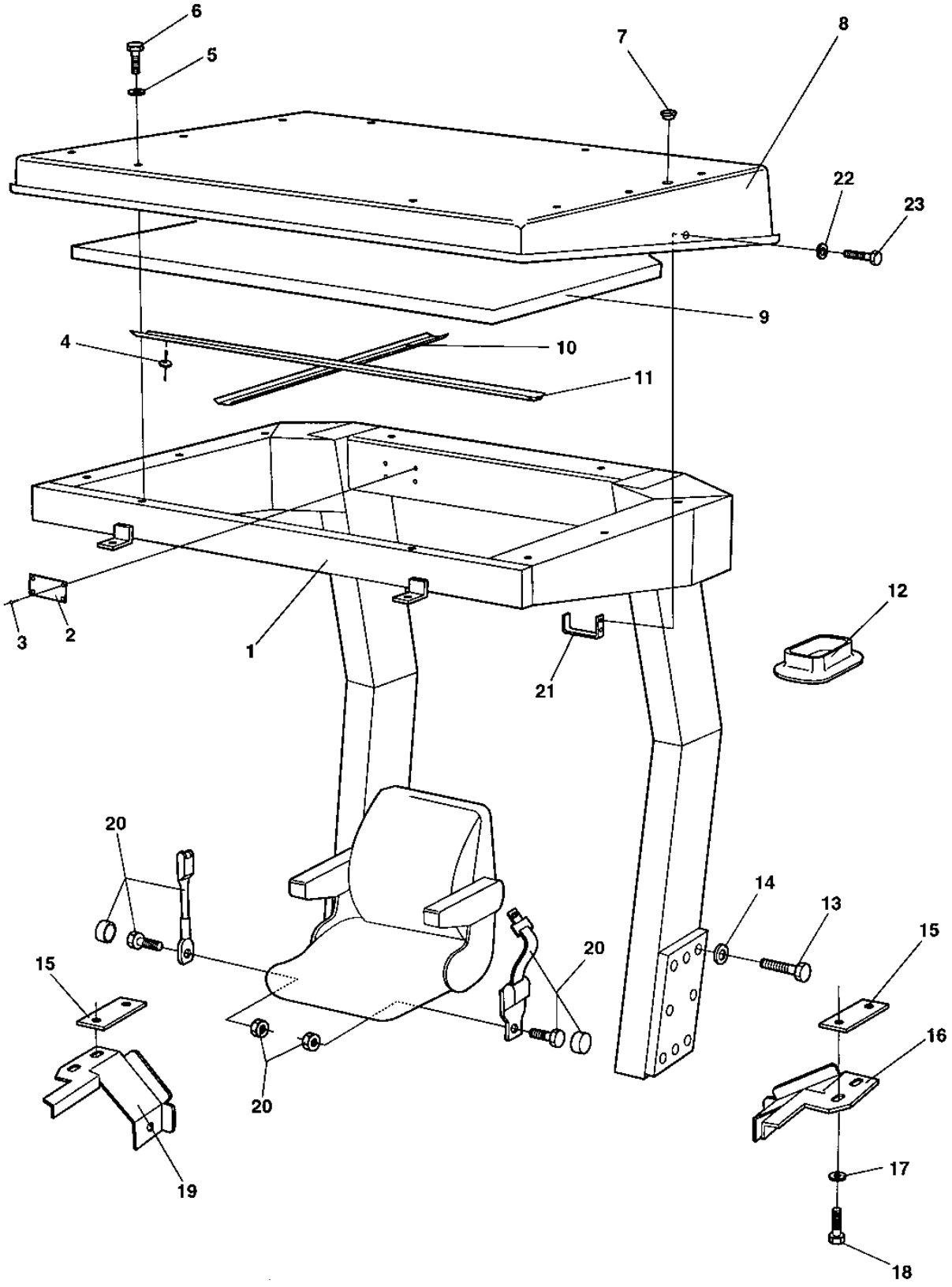

Item	Part No.	Name	Qty	L
1	4700372743	Rops	1	
.2	4700370803	Sign, rops	1	
.3	4700624016	Blind rivet	4	
4	4700904619	Blind rivet	12	
5	4700500230	Hex. screw	10	
6	4700603009	Washer, 8.4 x 25 x 2 mm, 0.33 x 0.98 x 0.12 in.	10	
7	4700904180	Plug	4	
8	4700372745	Fops roof	1	
.8	4700370792	Sign, fops	1	
.8	4700624016	Blind rivet	4	
9	4700372678	Absorbent	1	
10	4700376489	Absorbent holder	1	
11	4700376488	Absorbent holder	1	
12	4700372489	Rubber seal	2	
13	4700904562	Screw M24x160 10.9	12	
14	4700904234	Steel plain washer	12	
15	4700381330	Holder	2	
16	4700381353	Holder plate	1	
17	4700904640	Washer, 8.4x 2x3 mm 300 HV	8	
18	4700500022	Hex. screw	8	
19	4700381352	Holder plate	1	
20	4700377677	Seat belt 2"	1	
20	4700383200	Seat belt 3"	1	A
21	4700383225	Hook	2	
22	4700904734	Washer, 8.4x26x4 mm 300 HV	4	
23	4700500100	HEXAGON SCREW M	4	

Comments for Page: Rops and fops

(L)OCAL REMARKS

A | en_US | Option 3"

Cab mounting Cab mounting

Item	Part No.	Name	Qty	L
1	4812104691	Cab		
2	4700570005	Hex. nut	4	
3	4812114466	Drivers seat, cpl	1	
.3	4700379636	Seat switch	1	
4	4700927974	Washer, 5x19x1 mm	13	
5	4700904433	Blind rivet	13	
6	4700372785	List	1	
7	4700382582	List	2	
8	4700372494	Rubber strip	N	A
9	4700791218	Screw M20x200	4	
10	4700904233	Steel plain washer 21x36x3	4	
11	4700384759	Spacer	4	
12	4700500195	Screw	16	
13	4700904231	Steel plain washer, 13x24x2 mm 300 HV	16	
14	4700904229	Washer, 8.4x16x1.5 mm 300 HV	4	
15	4700374606	Shock absorber Green COXIM TRAZEIRO	2	B
16	4700372457	Back-up ring	4	
17	4700903290	Steel plain washer 21x36x6	4	
18	4700901145	Lock nut M20-10	4	
19	4700904230	Washer	6	
20	4700500029	Hex. screw	6	
21	4700376255	Step	1	
22	4700374607	Shock absorber Yellow COXIM DIANTEIRO	2	C
23	4700382397	Spacer	2	

4812104691 cab 4812104691 Cab

NO DRAWING AVAILABLE FOR THIS BOM

Item	Part No.	Name	Qty	L
130	-	Cab Screens		
140	-	Cab Door, left side		
150	-	Cab Interior rear mirror		
170	-	Wiper arm with blade, front		
180	-	Cab Electric		

Cab Exterior, rear mirror Cab Exterior, rear mirror

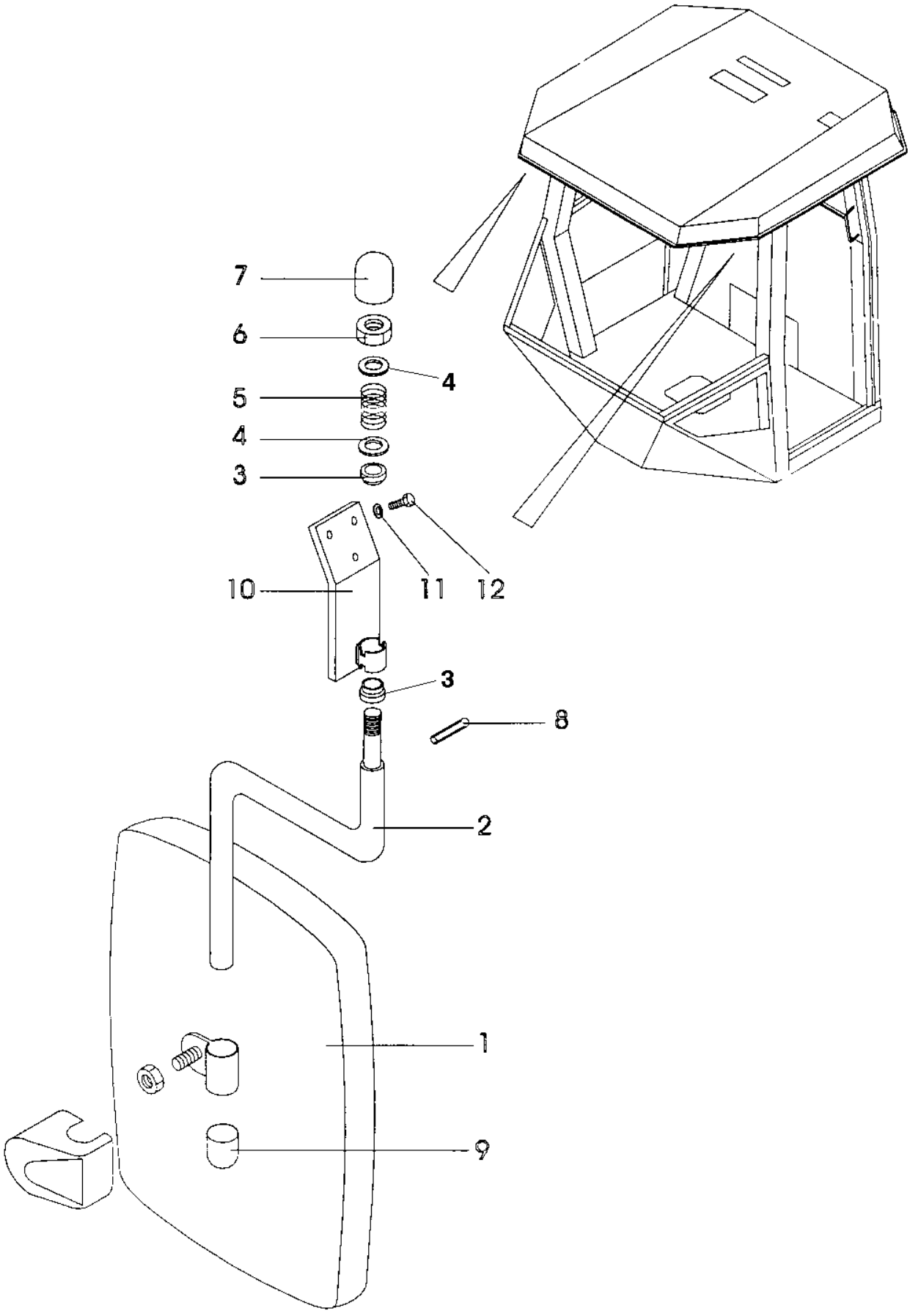

Item	Part No.	Name	Qty	L
1	4700371730	Rear view mirror, cpl	2	A
.1	4700908265	Rear view mirror	1	
.2	4700908355	Arm	1	
.3	4700908625	Sleeve	2	
.4	4700904232	Steel plain washer	2	
.5	4700908626	Spring	1	
.6	4700586021	Lock nut	1	
.7	4700908627	Cap	1	
.8	4700629066	Spirol pin	1	
.9	4700908628	Cap	1	
.10	4700908361	Bracket	1	
11	4700904229	Washer, 8.4x16x1.5 mm 300 HV	6	
12	4700500019	Hex. screw	6	

Comments for Page: Cab Exterior, rear mirror

(L)OCAL REMARKS

A | en_US | Option

Cab Work light Cab Work light

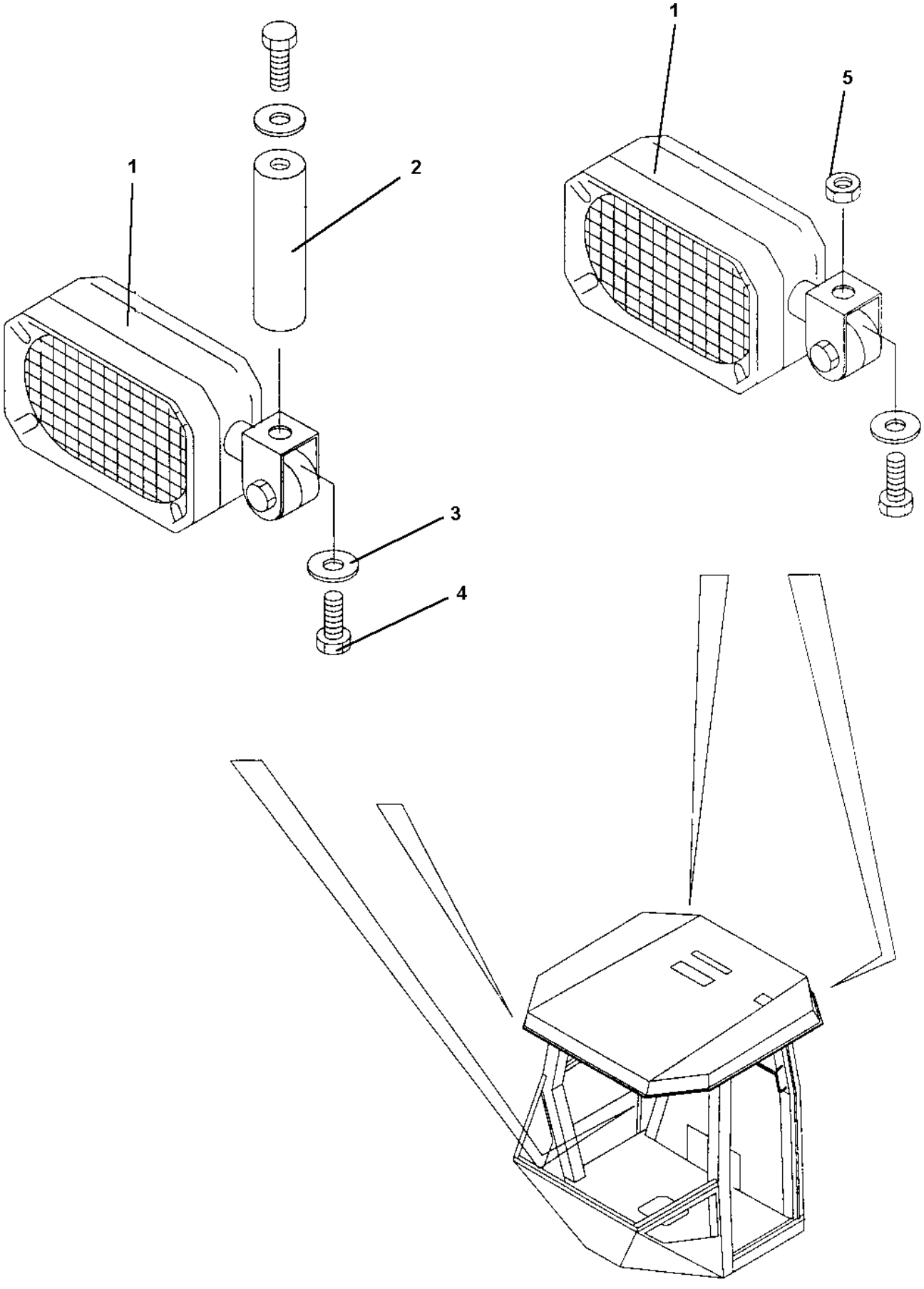

Item	Part No.	Name	Qty	L
1	4700908267	Working light	4	
2	4700908359	Distance	2	
3	4700904229	Washer, 8.4x16x1.5 mm 300 HV	4	
4	4700500019	Hex. screw	4	
5	4700586003	Hexagon lock nut M8	2	

Decals Decals

NO DRAWING AVAILABLE FOR THIS BOM

Item	Part No.	Name	Qty	L
10	-	Decals		
20	-	Decals		

Decals Decals

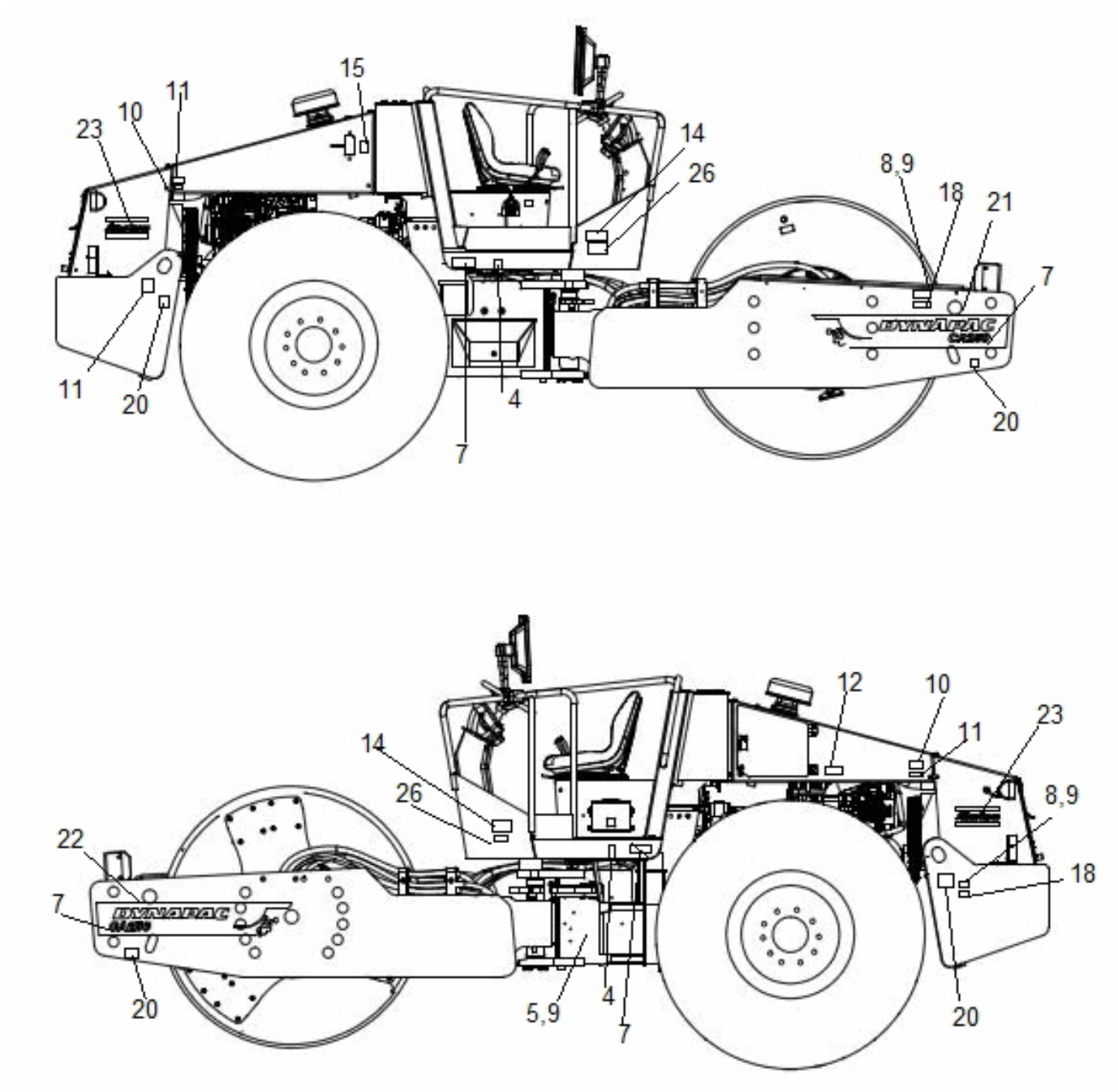

Item	Part No.	Name	Qty	L
1	4700588176	Decal "LIFT POINT"	2	
3	4700791944	Decal "MODEL CODE" White	2	
3	4812104927	CA250 model code decal	2	
3	4812104923	CA270 model code decal	2	
3	4812104924	CA300 model code decal	2	
4	4700377744	Reflector, yellow	2	
5	-	Product identification plate	1	
5	-	Product identification plate CE	1	A, C
5	-	Product identification plate	1	B, C
7	4700903459	Decal "SAFETY"	2	
8	4700904870	Lifting data plate	2	
9	4700624015	Blind rivet 4,0x8,5	12	
10	4700903424	Safety decal "HOT SURFACE"	2	
11	4700903423	Safety label, Rotating engine components	2	
12	4700991990	Decal "TYRE PRESSURE" 110-150kPA/16-21psi	2	
12	4700390900	Decal "TYRE PRESSURE" 110kPA/16psi	1	
13	4700903425	Safety decal "READ SAFETY INSTRUCTIONS"	1	
14	4700903422	Safety decal "CRUSH AREA"	2	
15	4700272373	Label, hydraulic oil level	1	
16	47386084SE	Warning plate Swedish	1	
16	47386084EN	Warning plate English	1	
16	47386084DE	Warning plate German	1	
16	47386084IT	Warning plate Italian	1	
16	47386084ES	Warning plate Spanish	1	
16	47386084FR	Warning plate French	1	
16	47386084NO	Warning plate Norwegian	1	
16	47386084DK	Warning plate Danish	1	
16	47386084FI	Warning plate Finnish	1	
16	47386084PT	Warning plate Portuguese	1	
16	47386084NL	Warning plate Dutch	1	
16	47386084GR	Warning plate Greek	1	
16	47386084IS	Warning plate Icelandic	1	
16	47386084CN	Warning plate Chinese	1	
16	47386084BR	Warning plate Brazil	1	
17	4700384159	Instructions Loading-Unloading	1	
18	4700908229	Safety decal	2	
19	4700358881	Pad lock	1	

Item	Part No.	Name	Qty	L
20	4700382751	Decal "SECURING POINT/TIE DOWN"	4	
21	4812105097	Decal compacting rocks	1	
22	4812105089	Decal compacting rocks	1	
23	4812105135	Decal AC logotype	2	
25	4700791642	Decal "WARNING" Use of starting fluid prohib.	1	

Comments for Page: Decals

(L)OCAL REMARKS

A | en_US | With CE-Mark

B | en_US | With "Year of Mfg"

C | en_US | Not available as sparepart

Decals Decals

This page intentionally left blank

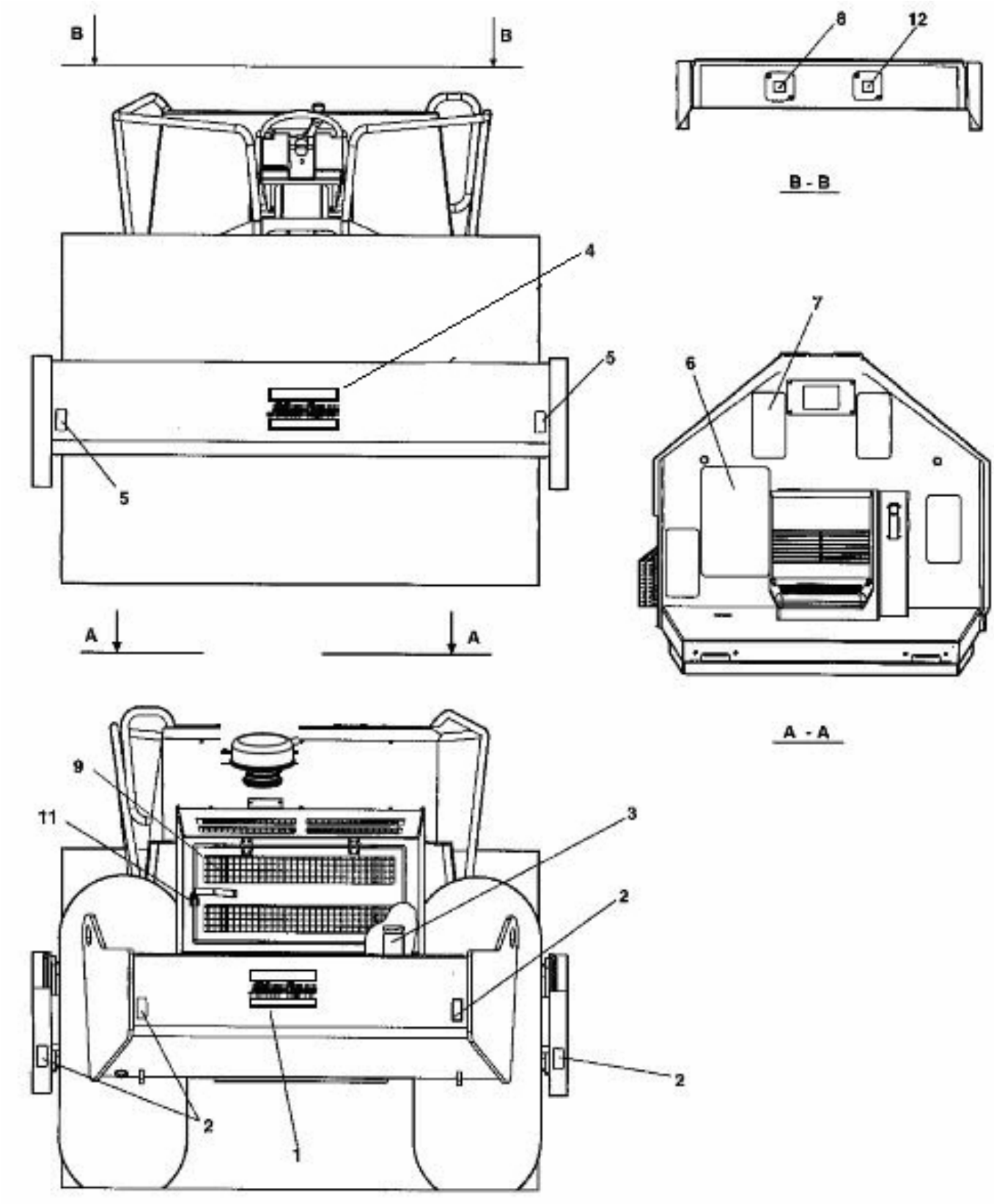
B
B
4
5
5
A
A
8
12
B - B
7
6
A - A
9
11
3
2
2
2
1

Item	Part No.	Name	Qty	L
1	4812105134	Decal AC logotype	1	
2	4700377742	Reflector, red	4	
3	4700991658	Decal "FUEL"	1	
4	4812105136	Decal AC logotype	1	
5	4700377743	Reflector, white	2	
6	4700373364	Slip protection	1	
7	4700373363	Slip protection	4	
8	4700272372	Decal "HYDRAULIC OIL"	1	
9	4700904835	Decal "BATTERY POWER"	1	
11	4700358881	Pad lock	1	
12	4700388449	Decal "ENGINE COOLANT FILL"	1	

Standard equipment Standard equipment

NO DRAWING AVAILABLE FOR THIS BOM

Item	Part No.	Name	Qty	L
100	-	Standard equipment		

Standard equipment Standard equipment

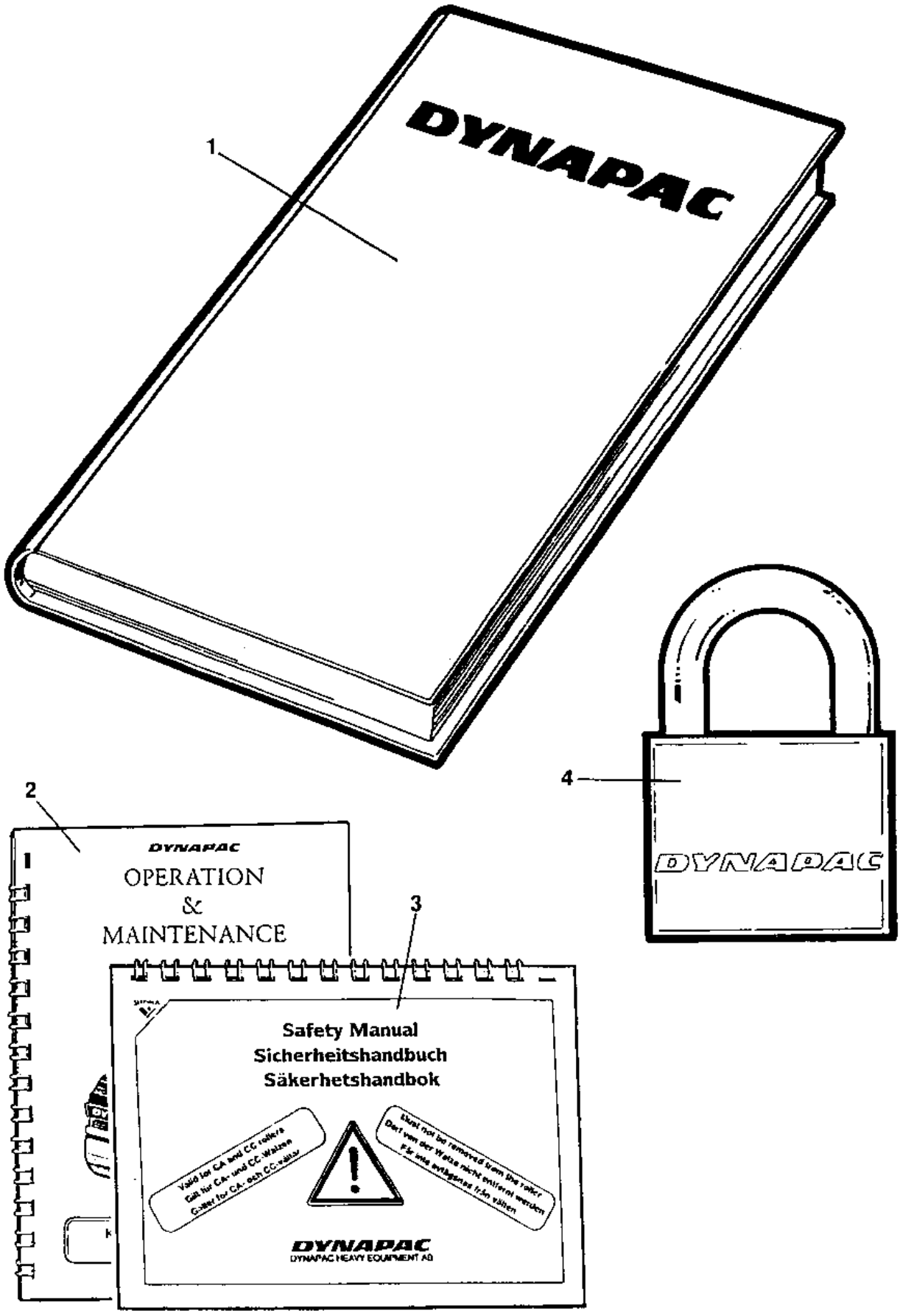

Item	Part No.	Name	Qty	L
1	-	Documentation ISCA300D	1	
.1	-	Warranty registration card	1	
.1	-	Spare parts catalogue SCA300D	1	
.1	-	Instruction manual Cummins 4BTA 3.9 Elite	1	
.2	-	Operation / maintenance instruction ICA300	1	
.3	-	Safety manual RSAFE	1	
4	4700358881	Pad lock	1	

Optional equipment Optional equipment

NO DRAWING AVAILABLE FOR THIS BOM

Item	Part No.	Name	Qty	L
10	-	Tool equipment		
40	-	Pad shell		
120	-	Air conditioner and heater, Simple cab		
230	-	Heater Simple cab		

Tool equipment Tool equipment

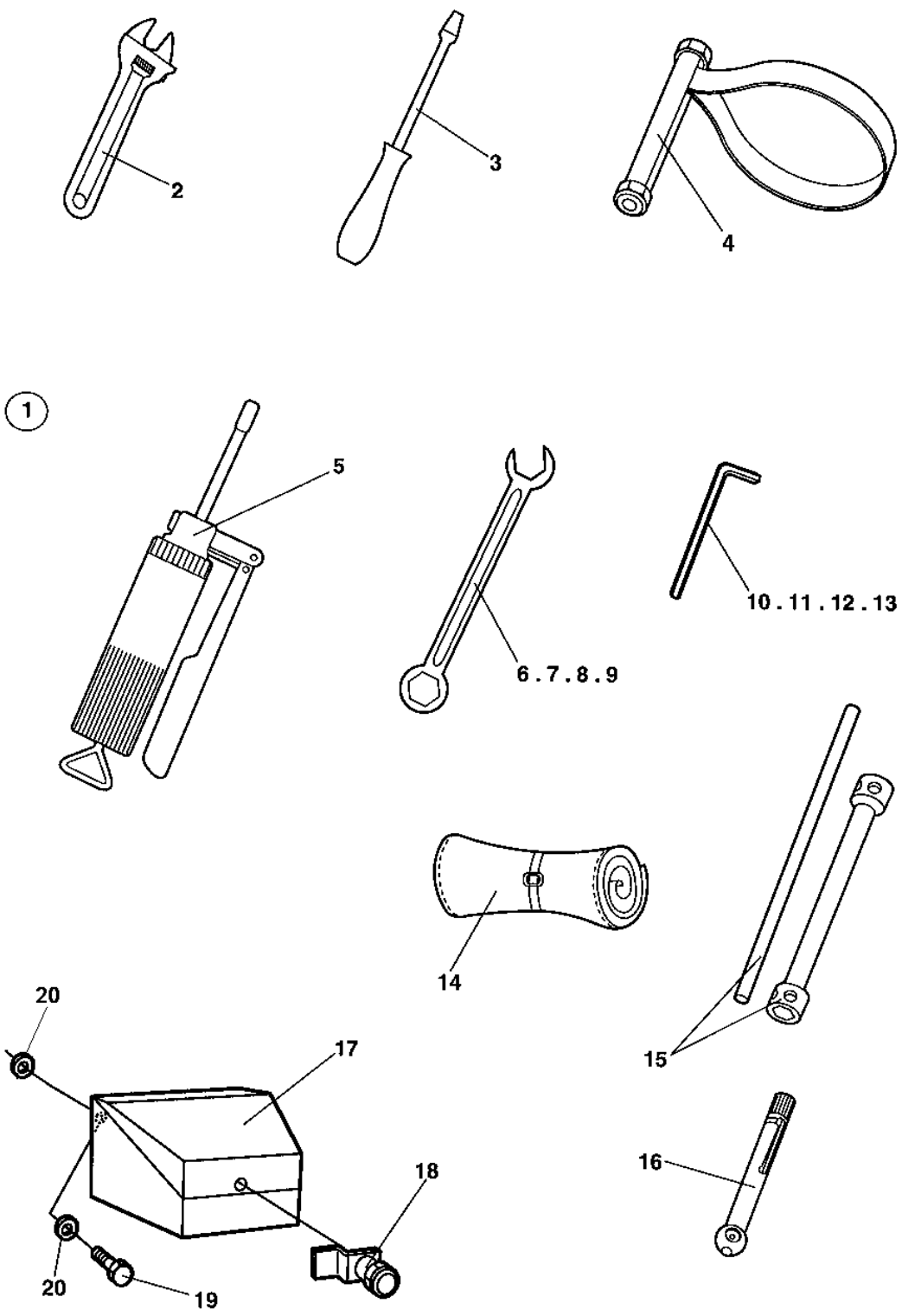

Item	Part No.	Name	Qty	L
1	4700355890	Tool set Cpl	1	
.2	-	Adjustable wrench	1	
.3	-	Screw driver	1	
.4	4700902610	Belt pliers	1	
.5	4700311016	Grease gun	1	
.6	-	Open end spanner 10mm	1	
.7	-	Open end spanner 13mm	1	
.8	-	Open end spanner 16mm	1	
.9	-	Open end spanner 18mm	1	
.10	-	Allen wrench 10mm	1	
.11	-	Allen wrench 12mm	1	
.12	-	Allen wrench 6mm	1	
.13	-	Allen wrench 8mm	1	
.14	-	Tool bag	1	
.15	-	Wheel nut key 30/32mm	1	
.16	4700901220	Pressure gauge	1	
17	4700372837	Tool box	1	
.18	4700372658	Lock	1	
19	4700500021	Hex. screw	3	
20	4700904640	Washer, 8.4x 2x3 mm 300 HV	6	

Pad shell Pad shell

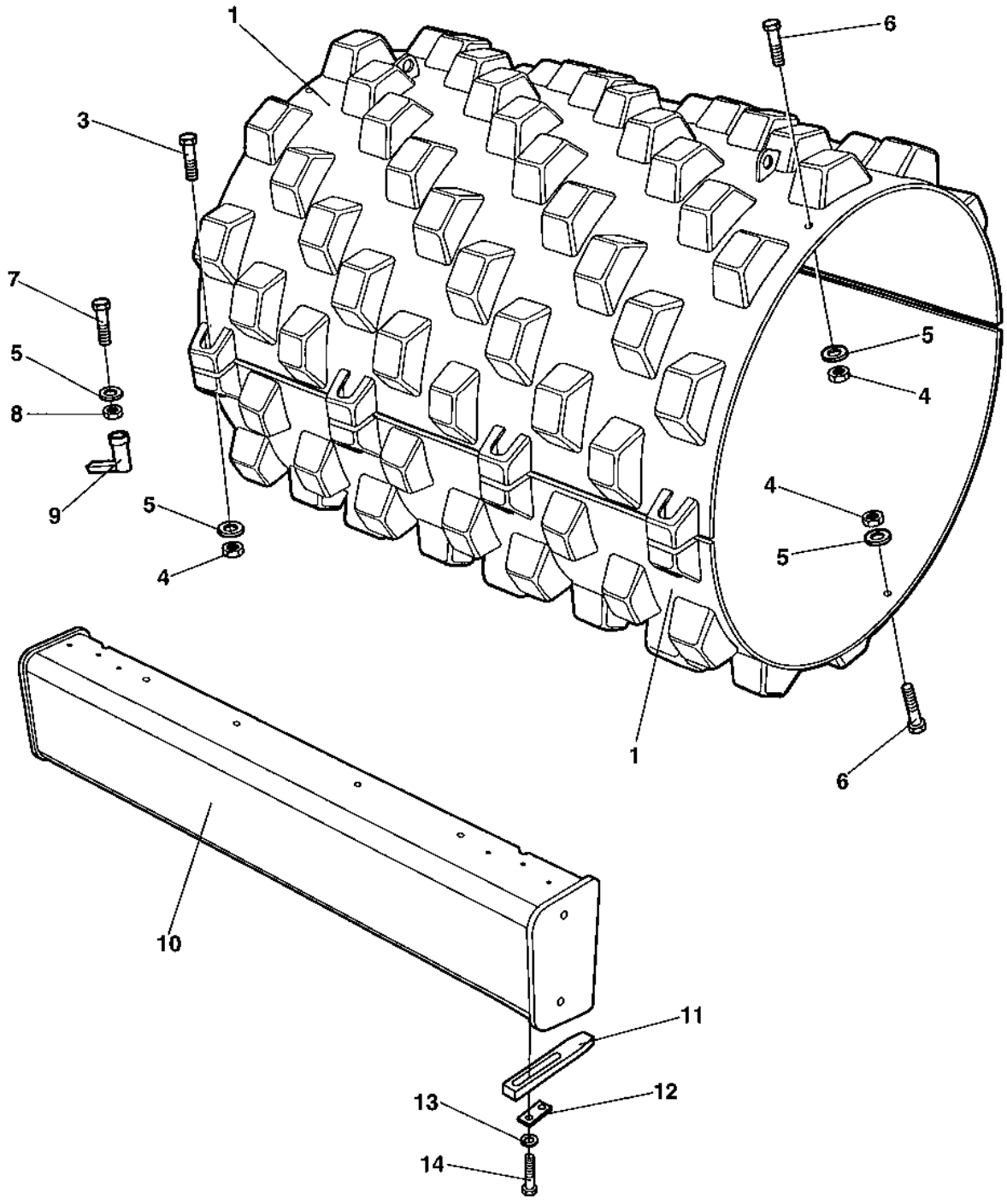

Item	Part No.	Name	Qty	L
1	4700377001	Pad shell	2	
3	4700500286	Screw M20-2,5x140 8.8	8	
4	4700586022	Lock nut	12	
5	4700904233	Steel plain washer 21x36x3	16	
6	4700500098	Screw M20-2,5x75 8,8	4	
7	4700382572	Mounting screw	4	
8	4700570015	Nut M20	4	
9	4700382571	Hexagon sleeve	1	
10	-	Crossbeam	1	A
11	4700376551	Scraper tooth	18	
12	4700376622	Holder	18	
13	4700904232	Steel plain washer	36	
14	4700500165	Hex. screw M 20x60 DIN 933	36	

Comments for Page: Pad shell

(L)OCAL REMARKS

A | en_US | See section "Frames".

Air conditioner and heater, Simple cab Air conditioner and heater, Simple cab

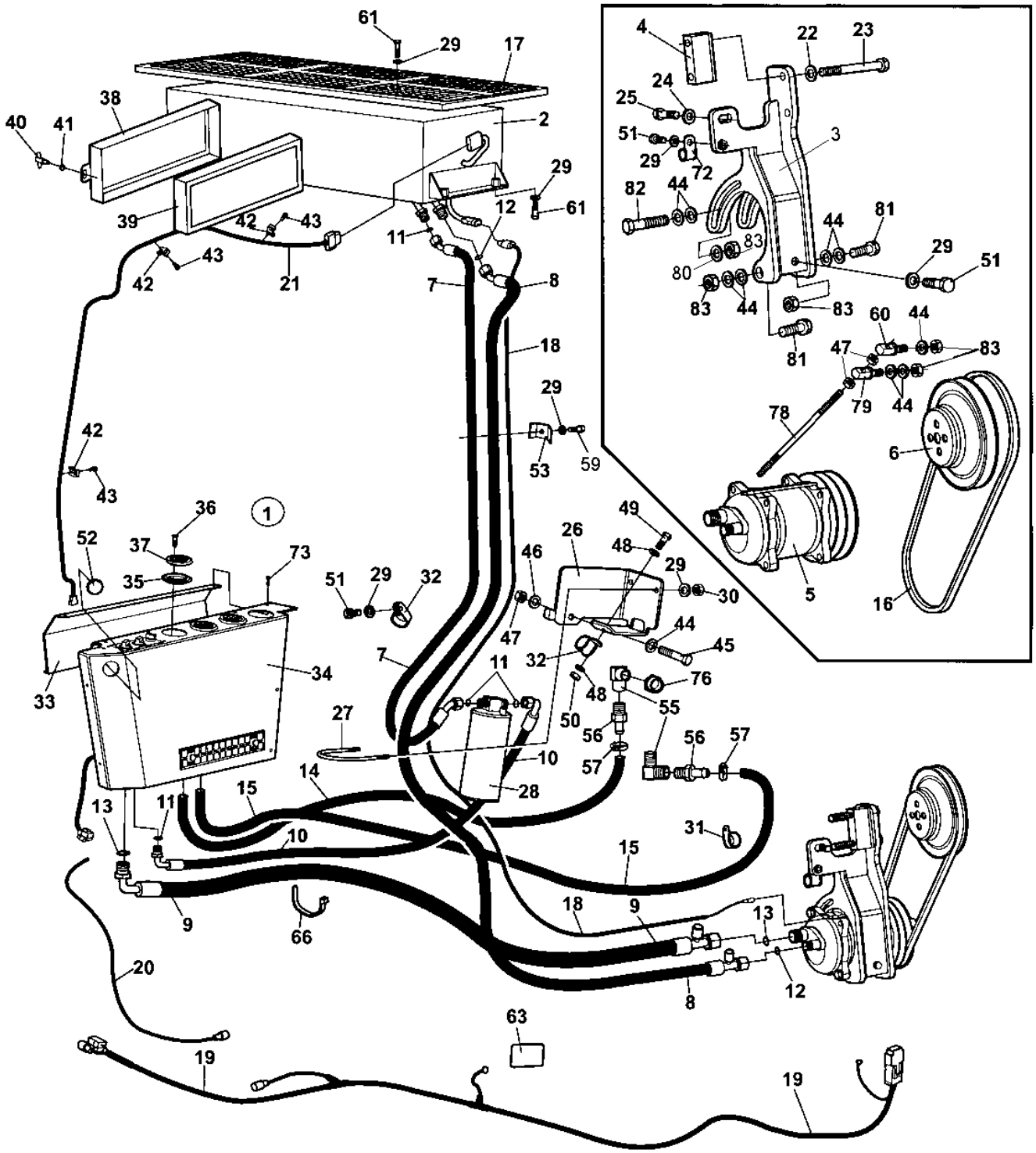

Item	Part No.	Name	Qty	L
1	-	Air conditioner and heater unit		
2	4700383413	Condensor, cpl		
3	4700377937	Bracket	1	
4	4700379643	Spacer	1	
5	4700379304	Compressor	1	
6	4700379280	Pulley	1	
7	4700384876	Hose	1	
8	4700379330	Hose	1	
9	4700379331	Hose	1	
10	4700384875	Hose	1	
11	4700384877	O-ring Size 6	4	
12	4700384878	O-ring Size 8	2	
13	4700384879	O-ring Size 10	2	
14	4700937737	Hose	1XL	A
15	4700937737	Hose	1XL	B
16	4700902924	V-belt	1	
17	4700384589	Cover	1	
18	4700385908	Cable harness	1	
19	4700387466	Cable harness	1	
20	4700387467	Cable harness	1	
21	4700379275	Cable harness	1	
22	4700904703	Plain washer 13x24x4 mm	2	
23	4700500122	Screw	2	
24	4700904213	Washer	1	
25	4700903906	Hexagon head screw m	1	
26	4700390483	Holder	1	
27	4700313093	Pipe clamp	1	
28	4700383424	Drying filter	1	
29	4700904229	Washer, 8.4x16x1.5 mm 300 HV	18	
30	4700586003	Hexagon lock nut M8	2	
31	4700921161	Pipe clamp	1	
32	4700921056	Clamp	2	
33	4700379285	Panel	1	
34	4700379286	Panel	1	
35	4700385443	Ring	3	
36	4700938691	Screw	12	
37	4700385442	Air nozzle	3	

Item	Part No.	Name	Qty	L
38	4700908501	Filter frame	1	
39	4700908502	Filter	1	
40	4700908504	Handle	2	
41	4700908503	O-ring	2	
42	4700904543	Cable tie holder	10	
43	4700903852	Screw ST4,2x13	10	
44	4700904230	Washer	10	
45	4700500192	Hex. screw	1	
46	4700904567	Washer, 10.5x28x6 mm 300 HV	1	
47	4700570006	Hex. nut	3	
48	4700904228	Steel plain washer	2	
49	4700500013	Hex. screw	1	
50	4700570004	Hex. nut	1	
51	4700500053	Hex. screw	3	
52	4700345870	Plug	1	
53	4700346230	Clamp	3	
55	4700234365	Elbow 90	2	
56	4700387638	Hose connection	2	
57	4700313004	Hose clamp 19-29mm	2	
59	4700500023	Screw, M8 x 40 mm 8.8 A2K	3	
60	4700388470	Screw	1	
61	4700500022	Hex. screw	10	
63	4700904165	Safety decal "Toxic gases"	1	
66	4700313102	Cable ties		
72	4700902558	Clamp	1	
73	4700792248	Screw 4,2 X25	5	
76	-	Not used on this model		
78	4700377965	Set screw	1	
79	4700377378	Set screw	1	
80	4700904557	Washer, 10.5x22x4 mm 300 HV	1	
81	4700500031	Screw	2	
82	4700500161	Screw	1	
83	4700791172	Lock nut M10 DIN985	5	

Comments for Page: Air conditioner and heater, Simple cab

(L)OCAL REMARKS

A | en_US | L=3,600M

B | en_US | L=3,600M

Air conditioner and heater unit Air conditioner and heater unit

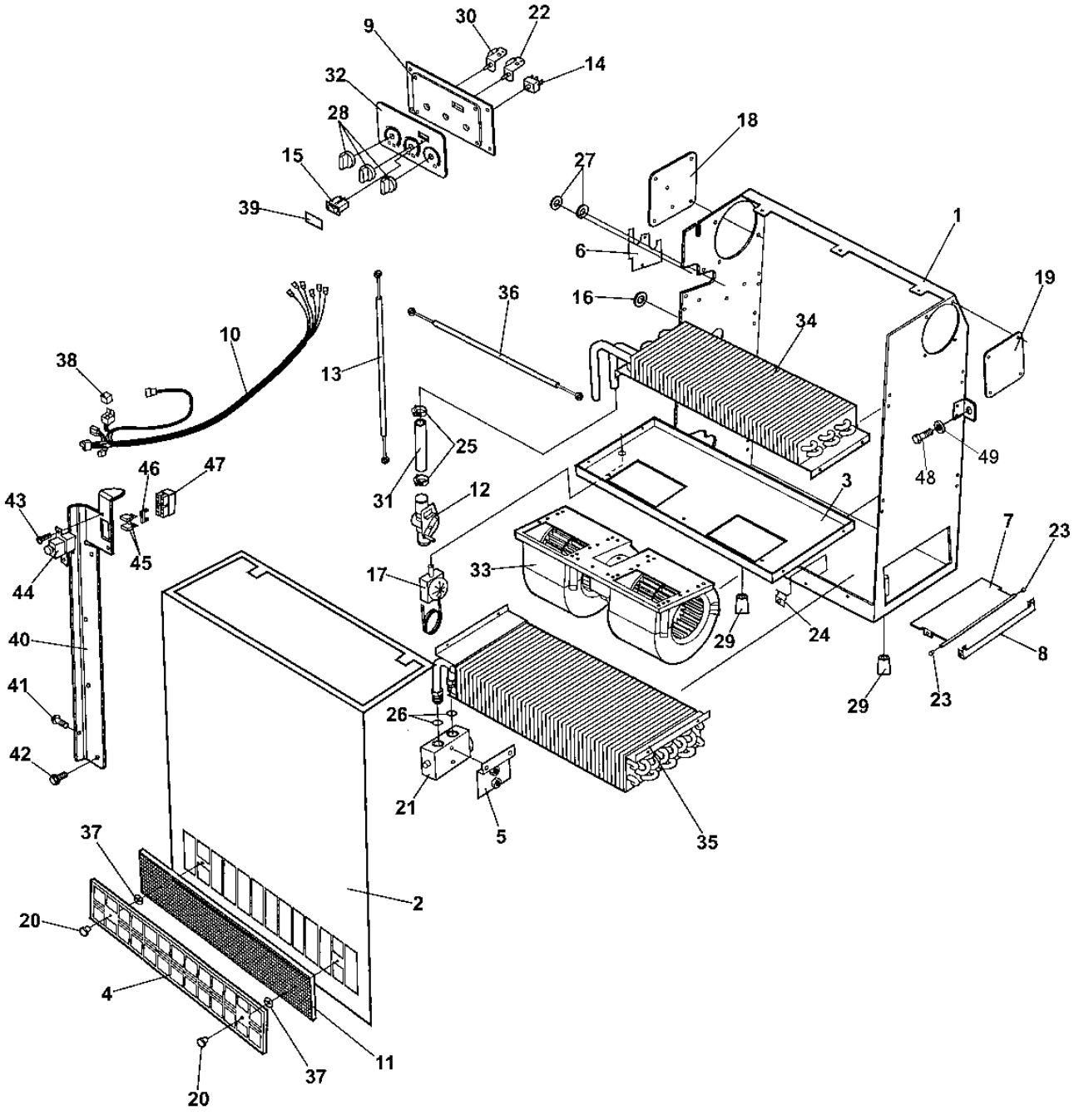

Item	Part No.	Name	Qty	L
1	4700938625	Casing	1	
2	4700938626	Cover	1	
3	4700938627	Fan bracket	1	
4	4700384760	Filter grill	1	
5	4700384177	Holder	1	
6	4700938628	Cover	1	
7	4700938629	Cover	1	
8	4700938630	Bracket	1	
9	4700945174	Panel	1	
10	4700945175	Cable harness	1	
11	4700384761	Air filter element	1	
12	4700939693	Heater control valve	1	
13	4700938645	Bowden cable	1	
14	4700938622	Switch	1	
15	4700938619	Switch	1	
16	4700938644	Cap	1	
17	4700384897	Thermostat	1	
18	4700945176	Cover plate	1	
19	4700945177	Cover plate	1	
20	4700938634	Knob	2	
21	4700384176	Expansion valve	1	
22	4700938621	Rotary control	2	
23	4700938635	Sleeve	2	
24	4700384880	Wire clamp	1	
25	4700313003	Hose clamp	2	
26	4700384878	O-ring Size 8	2	
27	4700384927	Grommet	2	
28	4700938620	Knob	3	
29	4700938636	Drain valve	2	
30	4700385134	Lock washer	2	
31	4700384881	Hose	1	
32	4700945178	Panel overlay	1	
33	4700938638	Fan	1	
34	4700938639	Heater coil	1	
35	4700383414	Evaporator	1	
36	4700384762	Wire	1	
37	4700939413	Star lock	2	

Item	Part No.	Name	Qty	L
38	4700287597	Relay	1	
39	4700938643	Plug	1	
40	4700379332	Holder	1	A
41	4700792187	Thread forming screw M5x14	2	A
42	4700541703	thread forming screw	4	A
43	4700901767	Screw	2	A
44	4700792091	Fuse holder	1	A
45	4700903741	Fuse 20A Yellow	2	A
46	4700901240	Connector	1	A
47	4700901699	Connector	1	A
48	4700500019	Hex. screw	5	
49	4700904229	Washer, 8.4x16x1.5 mm 300 HV	5	

Comments for Page: Air conditioner and heater unit

(L)OCAL REMARKS

A | en_US | Only valid for simple cab

4700383413 Condensor, cpl 4700383413 Condensor, cpl

This page intentionally left blank

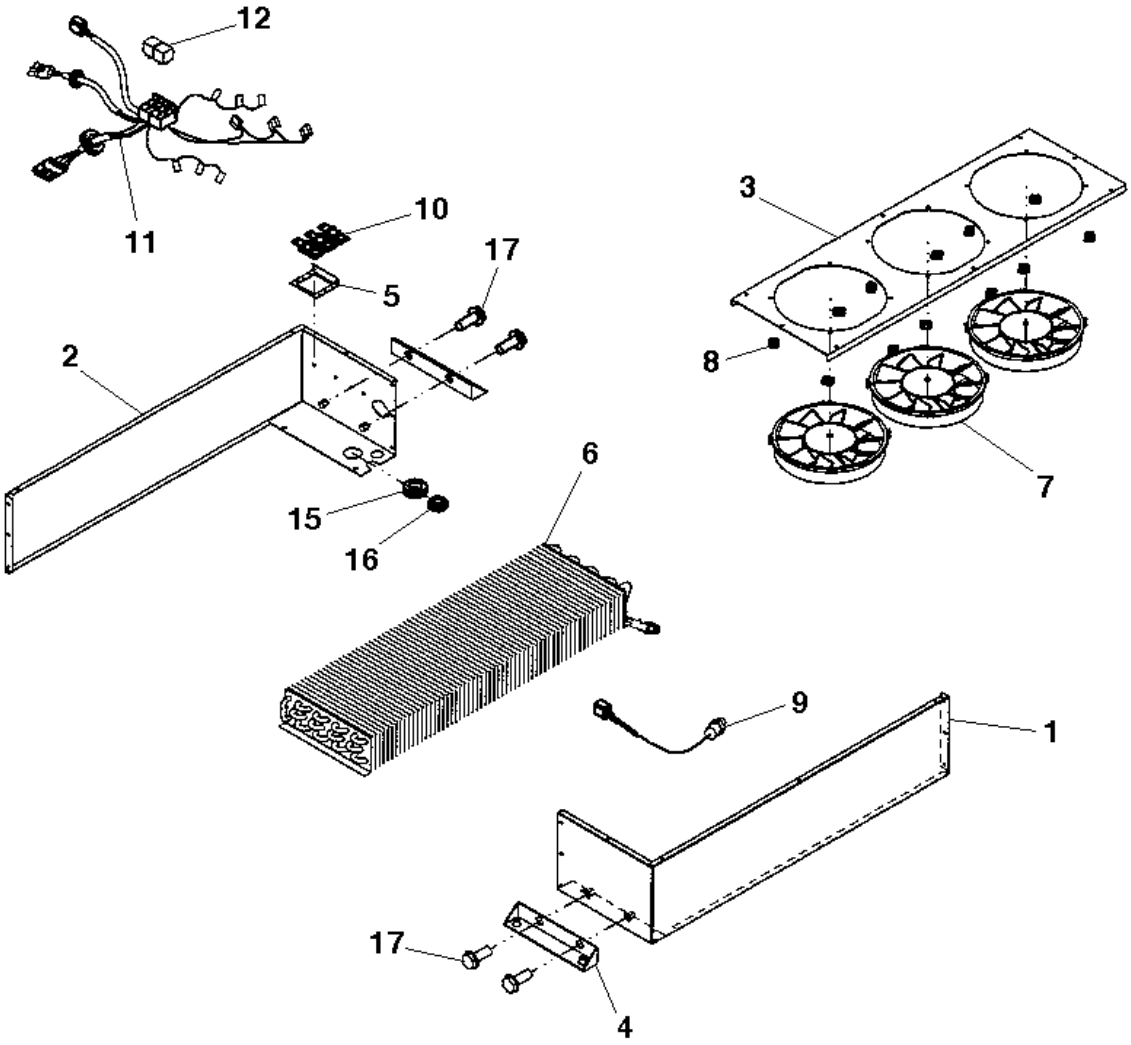
12
11
10
17
5
2
15
16
6
3
8
7
9
1
17
4

Item	Part No.	Name	Qty	L
1	4700938597	Cover	1	
2	4700938598	Cover	1	
3	4700938599	Fan bracket	1	
4	4700938600	Condensor bracket	2	
5	4700938601	Resistor bracket	1	
6	4700938602	Condensor Coil	1	
7	4700938603	Fan	3	
8	4700938604	Clip	12	
9	4700938605	Pressure switch	1	
10	4700938606	Resistor	3	
11	4700938607	Cable harness	1	A
11	4812155890	Cable harness	1	B
12	4700287598	Relay 12V-30A	2	C
15	4700938608	Grommet	1	
16	4700938609	Grommet	1	
17	4700901832	Screw	4	

Comments for Page: 4700383413 Condensor, cpl

(L)OCAL REMARKS

A | en_US | Replaced by Cable harness P/N 4812155890.

B | en_US | Cable harness with 3 Relays, replaces Cable harness P/N 4700938607.

C | en_US | Used with Cable harness 4812155890.

Heater Simple cab Heater Simple cab

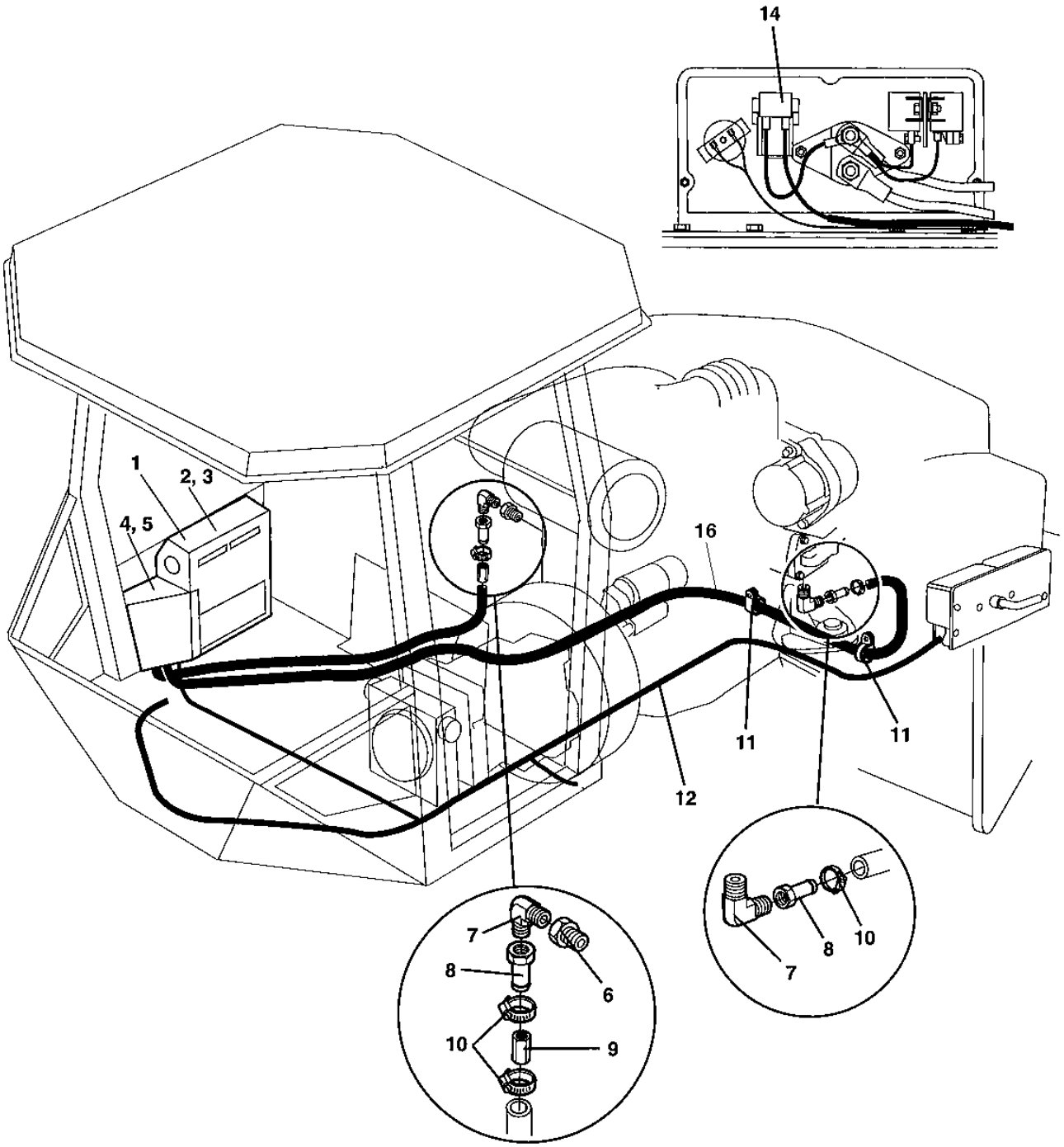

Item	Part No.	Name	Qty	L
1	4700385222	Heater	1	
2	4700500018	Hex. screw	4	
3	4700904229	Washer, 8.4x16x1.5 mm 300 HV	4	
4	4700500013	Hex. screw	2	
5	4700904228	Steel plain washer	2	
6	4700813434	Reducer	1	
7	4700234365	Elbow 90	2	
8	4700814065	Hose connection	2	
9	4700372670	Reducer	1	
10	4700313002	Hose clamp	3	
11	4700921132	Clamp	2	
12	4700387466	Cable harness	1	A
13	4700387467	Cable harness	1	A
14	4700904294	Fuse 20A Yellow	1	
15	4700313102	Cable ties	N	

Comments for Page: Heater Simple cab

(L)OCAL REMARKS

A | en_US | Item 12 and 13 replaces Cable harness P/N 4700385235.

4700385222 Heater 4700385222 Heater

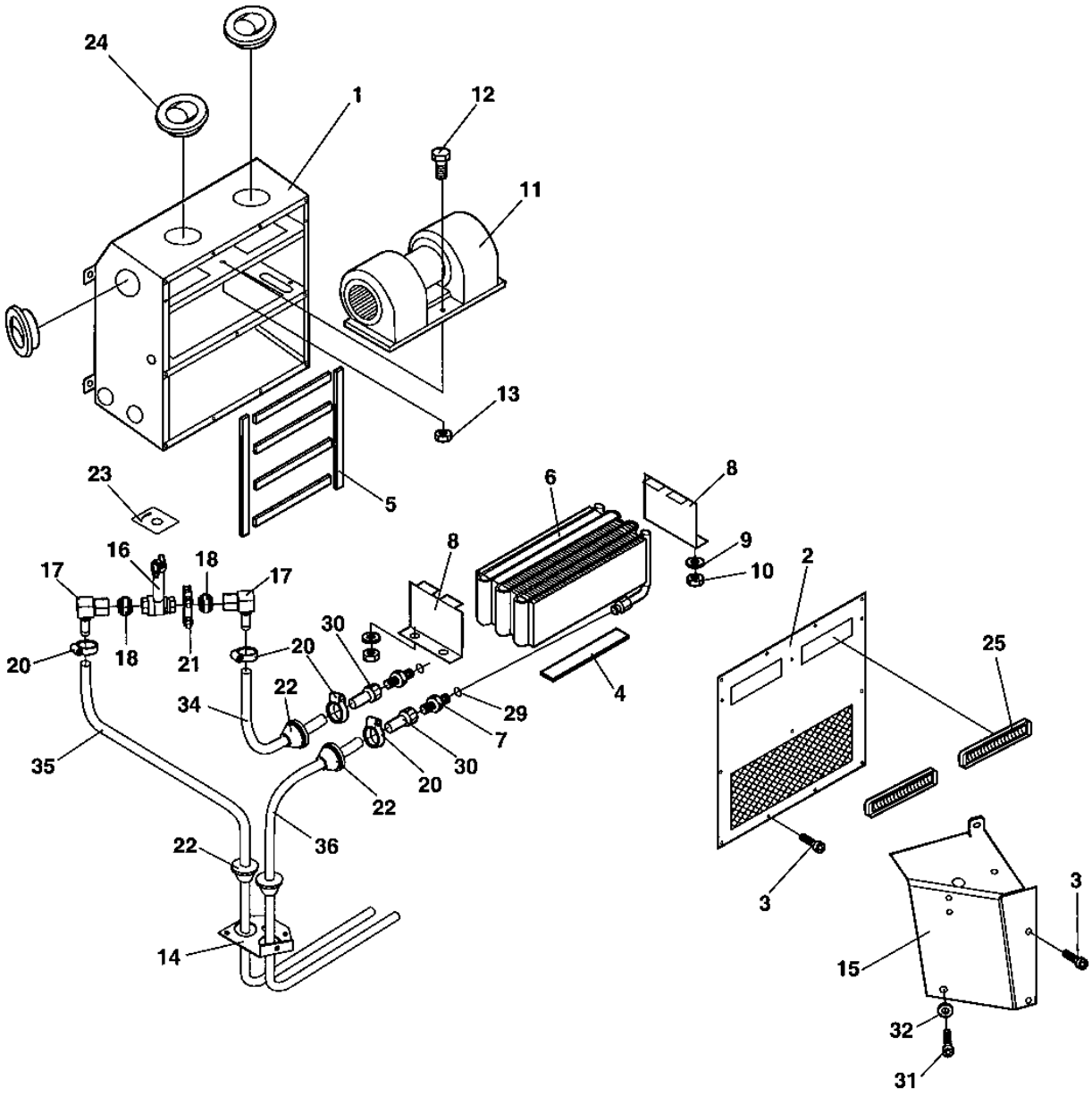

Item	Part No.	Name	Qty	L
1	4700938587	Heater box	1	
2	4700938588	Cover plate	1	
3	4700935259	Screw	15	
4	4700908587	Edge trim	1	A
5	4700935556	Sealing	1	B
6	4700908585	Radiator	1	
7	4700908589	Connector	2	
8	4700935557	Heater element bracket	2	
9	4700904228	Steel plain washer	4	
10	4700570004	Hex. nut	4	
11	4700908595	Fan, cpl	1	
12	4700500006	Hex. screw	1	
13	4700586001	Lock nut	1	
14	4700938589	Plate	1	
15	4700938590	Control panel	1	
16	4700937738	Ball valve w. lever	1	
17	4700937742	Connector	2	
18	4700937741	Connector	23	
20	4700313003	Hose clamp	4	
21	4700923984	Clamp	1	
22	4700908496	Grommet	1	
23	4700938856	Cable harness Work light	1	
24	4700908513	Nozzle	3	
25	4700908598	Nozzle	2	
29	4700908588	O-ring	2	
30	4700935558	Adapter	2	
31	4700500013	Hex. screw	1	
32	4700904735	Steel plain washer	1	
34	4700937737	Hose	1	C
35	4700937737	Hose	1	D
36	4700937737	Hose	1	E

Comments for Page: 4700385222 Heater

(L)OCAL REMARKS

A | en_US | L=2,5 m

B | en_US | L=1 m

C | en_US | L=0,7 m

D | en_US | L=3,6 m

E | en_US | L=3,6 m

Any unauthorized use or copying of the contents or any part thereof is prohibited. This applies in particular to trademarks, model denominations, part numbers, and drawings.