CA6000 D PD

DYNAPAC

Spare parts list

Vibratory roller

CA6000D/PD s/n 10000135xxA012734 - 021034
Engine: Deutz TDC 2012 L06 2V (IIIA/T3)

RUTHZIL TRATOR COMERCIAL DE PEÇAS LTDA 11 97083-6812 ROLANDO



© 2018 Dynapac Compaction Equipment AB | No. 4812160197_B| 2018-11

DYNAPAC FAYAT GROUP

General information

Use only authorized parts. Any damage or malfunction caused by the use of unauthorized parts is not covered by Warranty or Product Liability.
Any unauthorized use or copying of the contents or any part thereof is prohibited. This applies in particular to trademarks, model denominations, part numbers, and drawings.

Instructions for use
This spare parts list contains no safety regulations and is merely intended to assist in the ordering of spare parts.
For information about operating, servicing, or repairing, the relevant Safety and operating instructions must be consulted at all costs.
Please observe the safety instructions listed in the relevant Safety and operating instructions!

CA6000D/PD (IIIA/T3) SN 10000135xxA012734 - 021034 . . . 1

Service kits

4812156993 Service kit, 50h Plus . . . 3
4812156994 Service kit, 500h . . . 5
4812157363 Service kit, 500h Plus . . . 7
4812156995 Service kit, 1000h . . . 9
4812157277 Service kit, 1000h Plus . . . 11
4812157254 Start up kit . . . 13
4812158053 Service kit, 2000h . . . 15
4812157255 Service kit, 2000h Plus . . . 17

Repair kits

Eccentric shaft kit . . . 19
4812157275 Drum rotation kit . . . 21
4812157276 Shock absorber kit, drum . . . 23

General - Keys and others

Fuses . . . 25
Keys . . . 27

Frame

Frame, front . . . 29
4812117507 Steering hitch, cpl . . . 31

Scrapers, option

Scrapers, option . . . 33
Scraper module Hardox . . . 35
Scraper module Rubber . . . 37
Scraper assy . . . 39
Scraper module PD Hardox . . . 41
Scraper module PD Heavy duty . . . 43
Scraper mount . . . 45

Frame, rear . . . 47
Frame rear module . . . 49
Cover assembly . . . 51
Step module . . . 53
Step assy . . . 55
Tool box module, Option . . . 57
Engine structure . . . 59
Engine hood module . . . 61
Engine hood mount . . . 63
4812118994 Lock handle, cpl . . . 65
Fender module . . . 67
Hinge module . . . 69
Gas spring module . . . 71
Safety link module . . . 73

Drum

Drum, cpl . . . 75
4812111831 Drum gear, cpl . . . 79

Drum cartridges (D-version)

4812157393 Drum cartridge, vibration side (D/PD version) . . . 81
4812157394 Drum cartridge, vibration side (VM/VP 3-class) . . . 83
4812157784 Drum cartridge with shaft nut, vibration side (D/PD version) . . . 85
4812157785 Drum cartridge with shaft nut, vibration side (VM/VP 3-class) . . . 87
4812157390 Drum cartridge, drive side (D/PD version) . . . 89
4812157391 Drum cartridge, drive side (VM/VP 3-class) . . . 91

Drum cartridges (PD-version)

4812157393 Drum cartridge, vibration side (D/PD version) . . . See page 81
4812157784 Drum cartridge with shaft nut, vibration side (D/PD version) . . . See page 85
4812157390 Drum cartridge, drive side (D/PD version) . . . See page 89

Tooth wheel module . . . 93
Vibration motor adapter . . . 95

Engine

Engine . . . 97
Diesel engine . . . 99
Belt guard module . . . 101
Bracket module . . . 103
Air cleaner . . . 105
Air cleaner module . . . 107
Cooling system . . . 109
Cooler stand module . . . 111
Hose kit . . . 113
Hoses . . . 115

Fuel system

Fuel system . . . 117
Fuel tank module . . . 119
Fuel tank . . . 121
Brackets assy . . . 123
Hoses . . . 125
Draining module . . . 127
Exhaust system . . . 129
Expansion tank module . . . 131

Transmission

Rear axle and wheels . . . 133

4812111833 Rear axle No-Spin

4812111833 Rear axle No-Spin . . . 135
Differential with no-spin . . . 137
Differential housing and brakes . . . 139
Planet gear . . . 141

4812111832 Rear axle Limited-Slip

4812111832 Rear axle Limited-Slip . . . 143
Differential . . . 145
Central housing and brakes . . . 147
Hub reduction . . . 149

Hydraulic systems

Hydraulic system, drum

Hydraulic system, drum . . . 151
Hydraulic motor . . . 153

4812116969 Hydraulic motor

4812116969 Hydraulic motor . . . 155
Rotary group . . . 157
4812157180 Flush & boost pressure valve . . . 159
Lock ring . . . 161
Hydraulic motor . . . 163

4812112200 Hydraulic motor

4812112200 Hydraulic motor . . . 165
Loop flushing . . . 169

Hydraulic system, drum Anti-spin option

Hydraulic system, drum Anti-spin option . . . 171
Hydraulic motor . . . See page 153

4812116969 Hydraulic motor

4812116969 Hydraulic motor . . . See page 155
Rotary group . . . See page 157

4812157180 Flush & boost pressure valve . . . See page 159
Lock ring . . . See page 161
Hydraulic motor . . . 173

4812112202 Drum motor
4812112202 Drum motor . . . 175
Drum motor. Front section . . . 177
Loop flushing . . . 179
Drum motor. Rear section . . . 181

Hydraulic system, rear axle
Hydraulic system, rear axle . . . 183
Hydraulic motor . . . 185

4812112211 Rear axle motor
4812112211 Rear axle motor . . . 187
Loop flusing . . . 191
4812122932 Hydraulic motor . . . 193
Hose holder . . . 197

Hydraulic system, rear axle Anti-spin option
Hydraulic system, rear axle Anti-spin option . . . 199
Hydraulic motor . . . 201

4812112213 Rear axle motor
4812112213 Rear axle motor . . . 203
Front section . . . 205
Loop flushing . . . 207
Rear section . . . 209
Hose holder . . . See page 197

Hydraulic system, oil tank
Hydraulic system, oil tank . . . 211
Hydraulic oil tank assembly . . . 213
Hydraulic valve module . . . 217
4812120840 Hydraulic valve . . . 219
4812112238 Hydraulic valve . . . 221
Hose holder assy kit . . . 223
Fan module, front . . . 225
4812117797 Hydraulic motor . . . 227
Fan module, rear . . . 229
4812117796 Hydraulic motor . . . 231

Hydraulic system, engine room
Hydraulic system, engine room . . . 233
Hydraulic pump module . . . 235

4812112171 Hydraulic pump
4812112171 Hydraulic pump . . . 237
End cap, cpl . . . 241
Hydraulic pump module . . . 243

4812112175 Hydraulic pump
4812112175 Hydraulic pump . . . 245
Rotary group . . . 247
Hydraulic adjustment . . . 249
4/3 Pilot valve . . . 251
Hydraulic oil filter assy . . . 253
Hydraulic pump module . . . 255
4812118150 Hydraulic pump, steering . . . 257

Hydraulic system, engine room Adjustable frequency, Eco opti
Hydraulic system, engine room Adjustable frequency, Eco opti . . . 259
Hydraulic pump module . . . See page 235

4812112171 Hydraulic pump
4812112171 Hydraulic pump . . . See page 237
End cap, cpl . . . See page 241
Hydraulic pump . . . 261

4812112181 Hydraulic pump
4812112181 Hydraulic pump . . . 263
Rotary group . . . 265
Control hydraulic . . . 267
Sub plate . . . 269
Cover with accessories . . . 271
Control module . . . 273
Hydraulic oil filter assy . . . See page 253
Hydraulic pump module, Eco . . . 275
4812118151 Hydraulic pump . . . 277
Hydraulic pump module . . . See page 255
4812118150 Hydraulic pump, steering . . . See page 257

Hydraulic system, frame rear
Hydraulic system, frame rear . . . 279
Connector kit . . . 281
Connector kit . . . 283

Hydraulic system, steering
Hydraulic system, steering . . . 285
Hydraulic cylinder . . . 287
4812121947 Hydraulic cylinder . . . 289
4812120830 Hydraulic cylinder . . . 291
Steering valve module . . . 293
Hydraulic hoses, steering . . . 295

Emergency steering option
Emergency steering option . . . 297
4812112188 Hydraulic pump Emergency steering unit . . . 299
4812112236 Hydraulic valve . . . 301

Electrical equipment

Electric cables, power supply, 1-pole
Electric cables, power supply, 1-pole . . . 303
Battery module . . . 305
Battery disconnector module . . . 307

Electric cables, power supply, 2-pole, option
Electric cables, power supply, 2-pole, option . . . 309
Battery module . . . See page 305
Battery disconnector, 2-pole . . . 311

Electric cables, engine ECU, horn, back-up alarm
Electric cables, engine ECU, horn, back-up alarm . . . 313
ECU, inclination sensor, power converter . . . 315
Standard ECU assembly . . . 317
Power converter module . . . 319
Inclination sensor module . . . 321
Inclination sensor module . . . 323
Horn module . . . 325
Back-up alarm module . . . 327
Back-up alarm module, Quacker . . . 329
Bracket module . . . 331

Cable harness kit Power supply cab
Cable harness kit Power supply cab . . . 333

Driving & side direction lights, number plate light, option
Driving & side direction lights, number plate light, option . . . 335
Steering column switch module . . . 337
Cable harness kit . . . 339
Registration plate light module . . . 341
Registration plate light . . . 343
Holder, Registration plate light . . . 345

Reversing light, option
Reversing light module . . . 347

DCA/GPS equipment module, option
DCA/GPS equipment module, option . . . 349
Holder . . . 351
GPS equipment module . . . 353
GPS equipment assy . . . 355
Computer . . . 357

Tachograph, option
Tachograph, option . . . 359
Holder assy . . . 361
Power supply module . . . 363

Speed sensor, frequency sensor, option
Speed sensor, frequency sensor, option . . . 365
Pulse sensor module (6-pol) . . . 367

Pre-heater installation, option
Pre-heater installation, option . . . 369

Rotating beacon, working light, option
Rotating beacon, working light, option . . . 371
Rotating beacon module . . . 373
Bracket, Rotating beacon . . . 375
Working light module H3 . . . 377

Cable harness, emergency steering, option
Cable harness, emergency steering, option . . . 379

Displacement shift
Displacement shift . . . 381

Compaction meter, option
Compaction meter, option . . . 383
Power supply . . . 385

External emergency stop, option
External emergency stop, option . . . 387

Drivers platform

Platform, rops
Platform, rops . . . 389

4812120544 Platform with 4-post ROPS
4812120544 Platform with 4-post ROPS . . . 391
Basic kit Rops, roof, front handrail . . . 393
Rear cover . . . 395
Handrail . . . 397
Cab, basic kit . . . 399
Manual box . . . 401
Decals basic kit . . . 403

Cab symmetric module

Cab symmetric module 405

4812119364 Cab, cpl Comfort

4812119364 Cab, cpl Comfort 407
Screens 409
4812115202 Cab door, cpl 411
4812115200 Sliding screen, left hand 413
Windshield wiper 415
Roof 417
Heater assy 419
Hose kit heater 421
Cab cable harness 423
Cab Interior 425
Heater controls 427
Cab, electrical equipment 429
Emergency hammer, hook 431
Cab, rear cover 433
Cab, front cover 435
Floor mat 437
Step light, front wiper switches 439
Cab, basic kit . . . . . See page 399
Air channel 441
Sun-blind, inner light 443

4812119365 Cab, cpl Basic

4812119365 Cab, cpl Basic 445
Screens . . . . . See page 409
4812115202 Cab door, cpl . . . . . See page 411
4812115200 Sliding screen, left hand . . . . . See page 413
Windshield wiper . . . . . See page 415
Hose kit heater . . . . . See page 421
Roof . . . . . See page 417
Heater assy . . . . . See page 419
Cab cable harness . . . . . See page 423
Cab, electrical equipment . . . . . See page 429
Cab Interior . . . . . See page 425
Heater controls . . . . . See page 427
Emergency hammer, hook . . . . . See page 431
Cab, rear cover 447
Cab, front cover 449
Wiper switch, front 451
Cab, basic kit . . . . . See page 399
Manual box . . . . . See page 401
Decals basic kit . . . . . See page 403
Car stereo module, option 453
Rear view mirror 455
Rear view mirror module 457
Hose assy kit, heater 459

Drivers seat

Drivers seat 461
Seat frame structure 463
4700391163 Steering column 465
Seat frame adapter module, rotating 467
Seat frame adapter module, fixed 469
Floor cassette module 471
Seat comfort, fabric suspensioned 473
Seat, galon suspensioned 475

Seat belts

Seat belt 2" 477
Seat belt 3" 479

Seat belt 2" with reminder . . . 481
Seat belt 3" with reminder . . . 483
Control module . . . 485
Forward reverse control module . . . 487
Display unit . . . 491
Reading light . . . 493
Control panel cover . . . 495

Decals

Decals . . . 497
Decals . . . 501
Plain Dynapac decals, kit . . . 503

Optional equipment

Air conditioning

Air conditioning . . . 505
Drying filter module . . . 507
4812114257 Drying filter assy . . . 509
Condensor assembly . . . 511
ACC module . . . 513
4812113624 ACC kit . . . 515
AC module . . . 517
4812113623 Evaporator, cpl . . . 519
Hose assy kit for AC . . . 521
4812114973 Compressor kit . . . 523
Compressor module AC . . . 525
Hose assy kit for AC . . . 527

Level sensor module, option

Level sensor module, option . . . 529

Fire extinguisher/First Aid Cushion

Fire extinguisher/First Aid Cushion . . . 531
Fire extinguisher . . . 533

SMV-sign

SMV-sign . . . 535

Cooling box module

Cooling box module . . . 537

Lunch box

Lunch box . . . 539
Dyn@Link module . . . 541
4812013038 GPS module . . . 543
Compaction meter (DCM) . . . 545
Dyn@lyzer . . . 547
Appendix B:Parts Index . . . 549

CA6000D/PD (IIIA/T3) SN 10000135xxA012734 - 021034



Item	Part No.	Name	Qty	L	SN INFO
1	-	Service kits	1		
2	-	Repair kits	1		
10	-	Frame	1		
20	-	Drum	1		
30	-	Engine	1		
40	-	Transmission	1		
50	-	Hydraulic systems	1		
60	-	Electrical Equipment	1		
70	-	Drivers platform	1		
80	-	Decals	1		
91	-	Optional equipment	1		

Service kits 4812156993 Service kit, 50h Plus

Item	Part No.	Name	Qty	L	SN INFO
-	4812156993	Service kit, 50h Plus			
6	4812112262	Hydraulic oil filter element	1		
15	4812161887	Dynapac Drum oil 1000 / 5 ltr.	1		
16	4812161883	Dynapac Gear Oil 300 / 5 ltr.	1		

Service kits 4812156994 Service kit, 500h

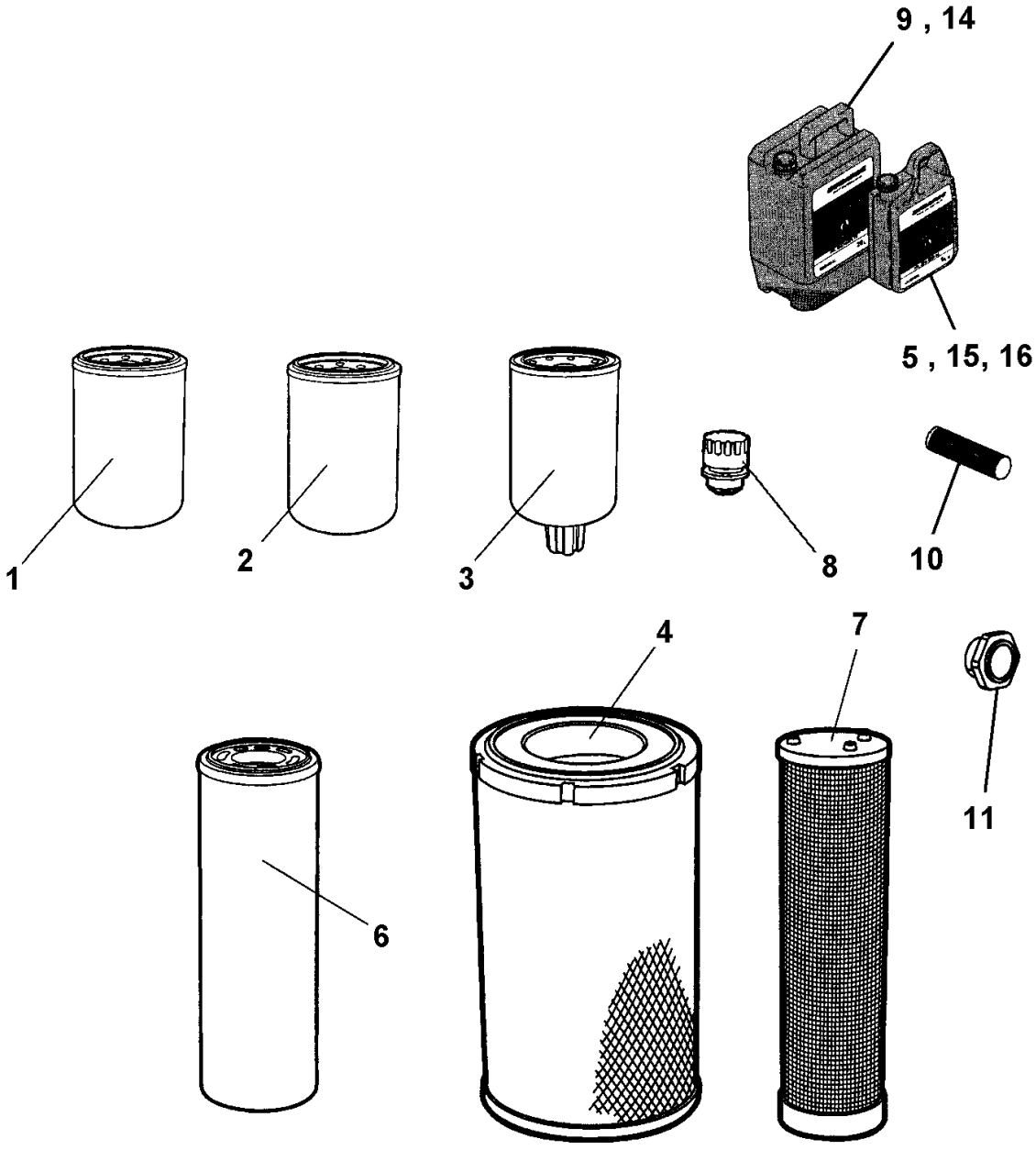

Item	Part No.	Name	Qty	L	SN INFO
-	4812156994	Service kit, 500h			
1	4700903942	Oil filter	1		
2	4700950568	Fuel filter	2		
3	4812031626	Pre-fuel filter, filter element	1		
4	4700394688	Air filter element, main	1		

Service kits 4812157363 Service kit, 500h Plus

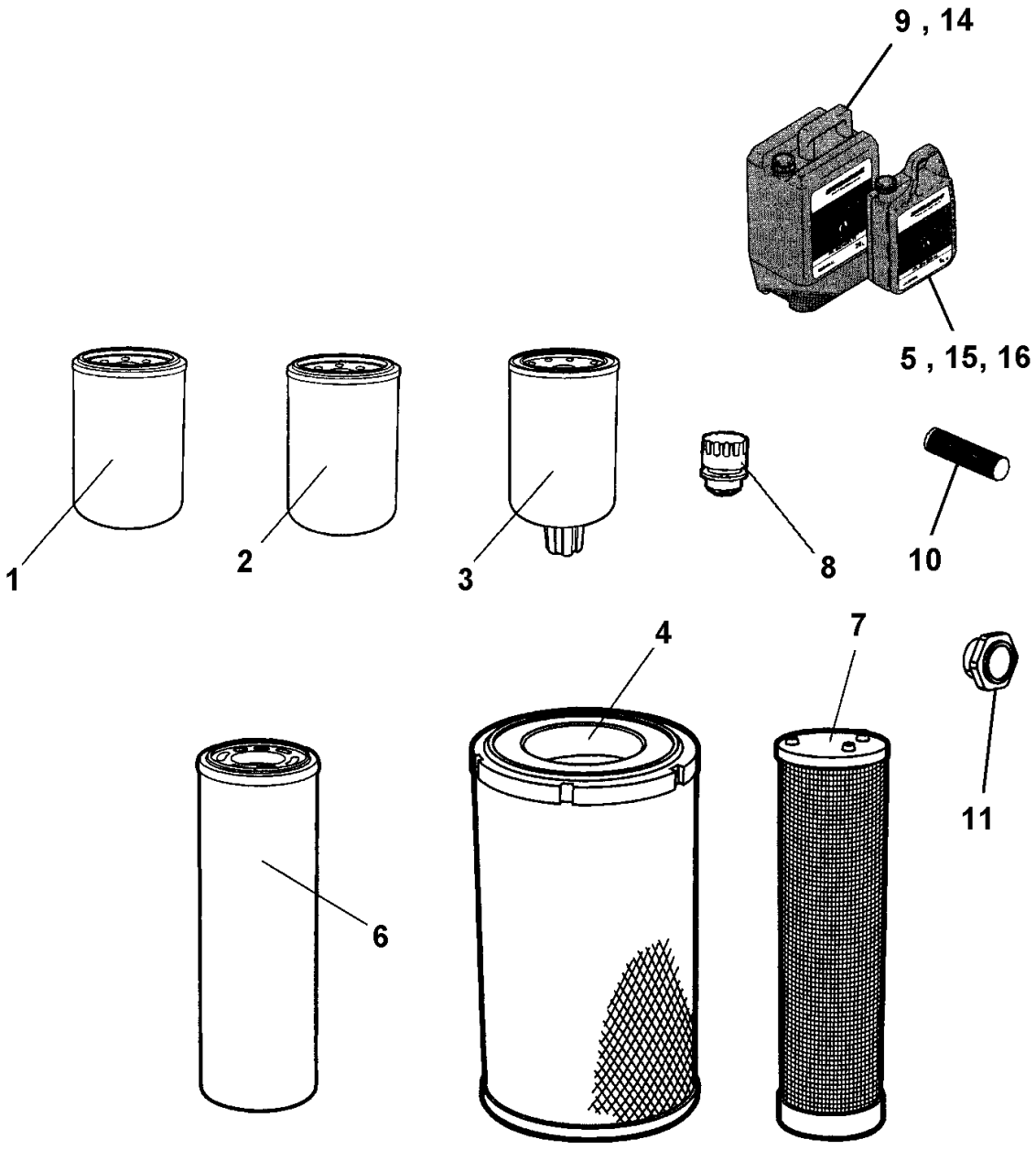

Item	Part No.	Name	Qty	L	SN INFO
-	4812157363	Service kit, 500h Plus			
1	4700903942	Oil filter	1		
2	4700950568	Fuel filter	2		
3	4812031626	Pre-fuel filter, filter element	1		
4	4700394688	Air filter element, main	1		
5	4812161855	Dynapac Engine Oil 200 / 5 ltr.	3		

Service kits 4812156995 Service kit, 1000h

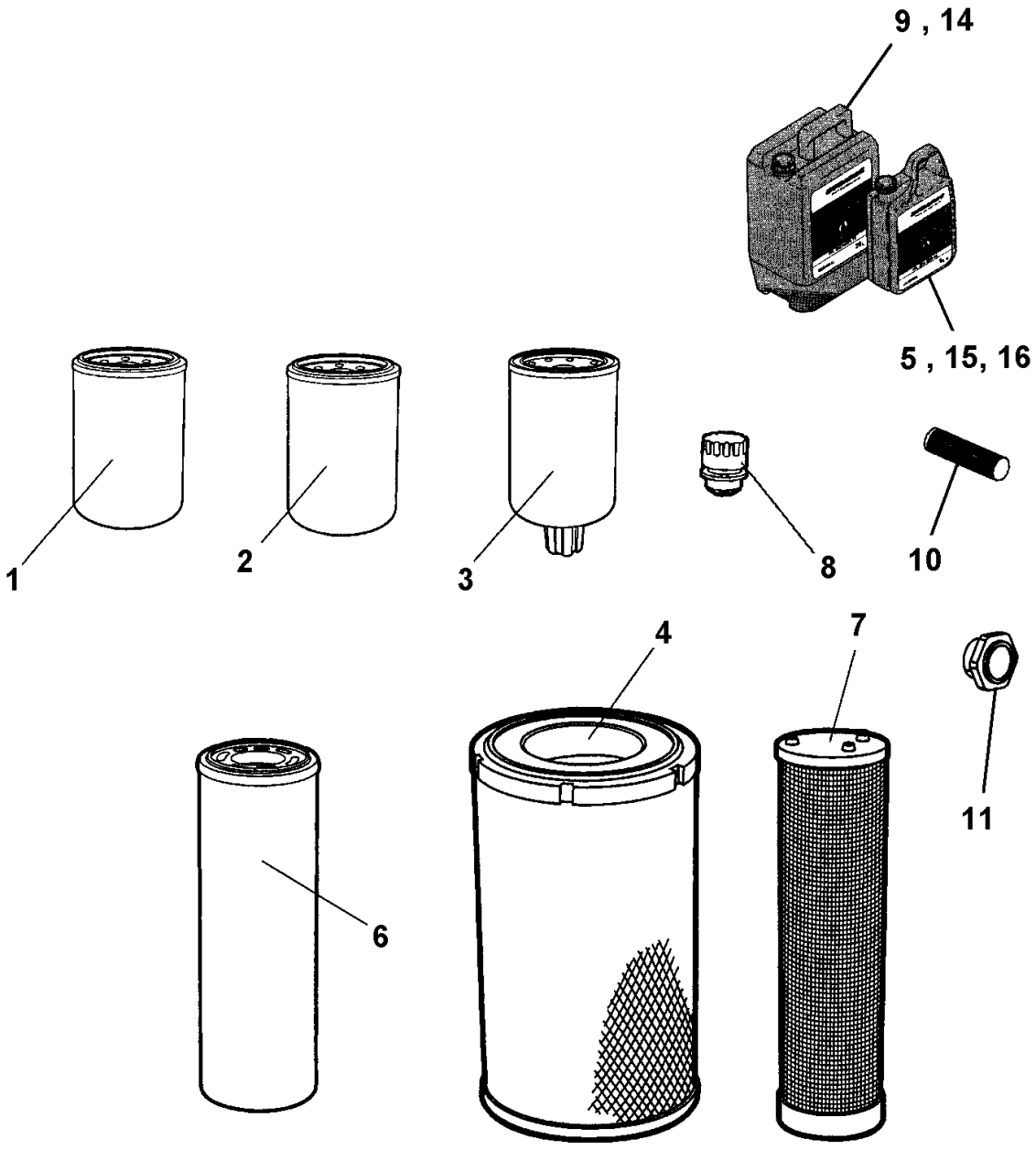

Item	Part No.	Name	Qty	L	SN INFO
-	4812156995	Service kit, 1000h			
1	4700903942	Oil filter	1		
2	4700950568	Fuel filter	2		
3	4812031626	Pre-fuel filter, filter element	1		
4	4700394688	Air filter element, main	1		
6	4812112262	Hydraulic oil filter element	1		
7	4700394689	Air filter element, safety	1		
8	4700357138	Ventilating filter	1		

Service kits 4812157277 Service kit, 1000h Plus

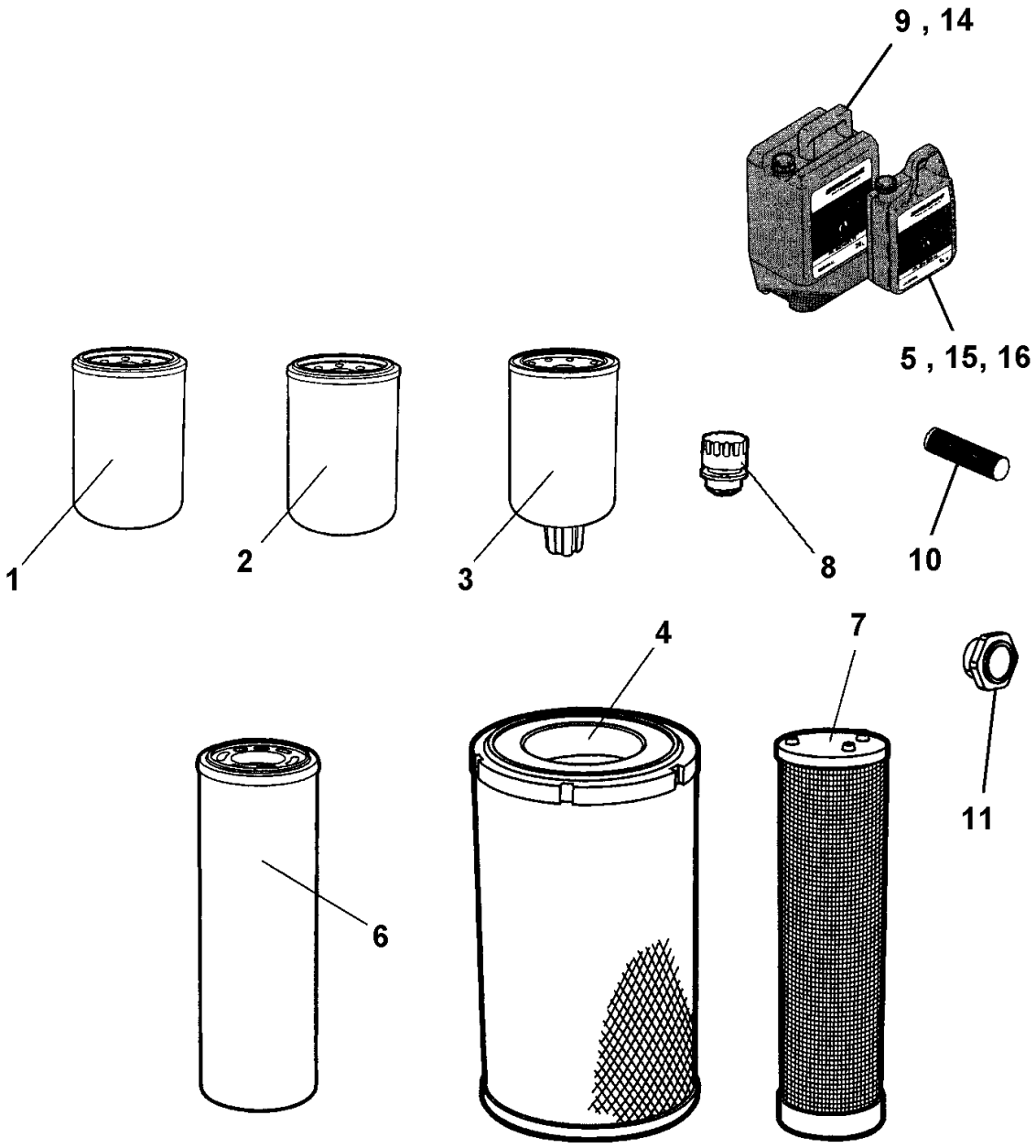

Item	Part No.	Name	Qty	L	SN INFO
-	4812157277	Service kit, 1000h Plus			
1	4700903942	Oil filter	1		
2	4700950568	Fuel filter	2		
3	4812031626	Pre-fuel filter, filter element	1		
4	4700394688	Air filter element, main	1		
5	4812161855	Dynapac Engine Oil 200 / 5 ltr.	3		
6	4812112262	Hydraulic oil filter element	1		
7	4700394689	Air filter element, safety	1		
8	4700357138	Ventilating filter	1		
9	4812161884	Dynapac Gear oil 300 / 20 ltr.	1		
10	4812030096	Dynapac Roller Grease	1		

Service kits 4812157254 Start up kit

NO EXPLODED VIEW
AVAILABLE
FOR THIS BOM

Item	Part No.	Name	Qty	L	SN INFO
-	4812157254	Start up kit			
1	4812156993	Service kit, 50h Plus	1		
2	4812157363	Service kit, 500h Plus	1		
3	4812157277	Service kit, 1000h Plus	1		

Service kits 4812158053 Service kit, 2000h

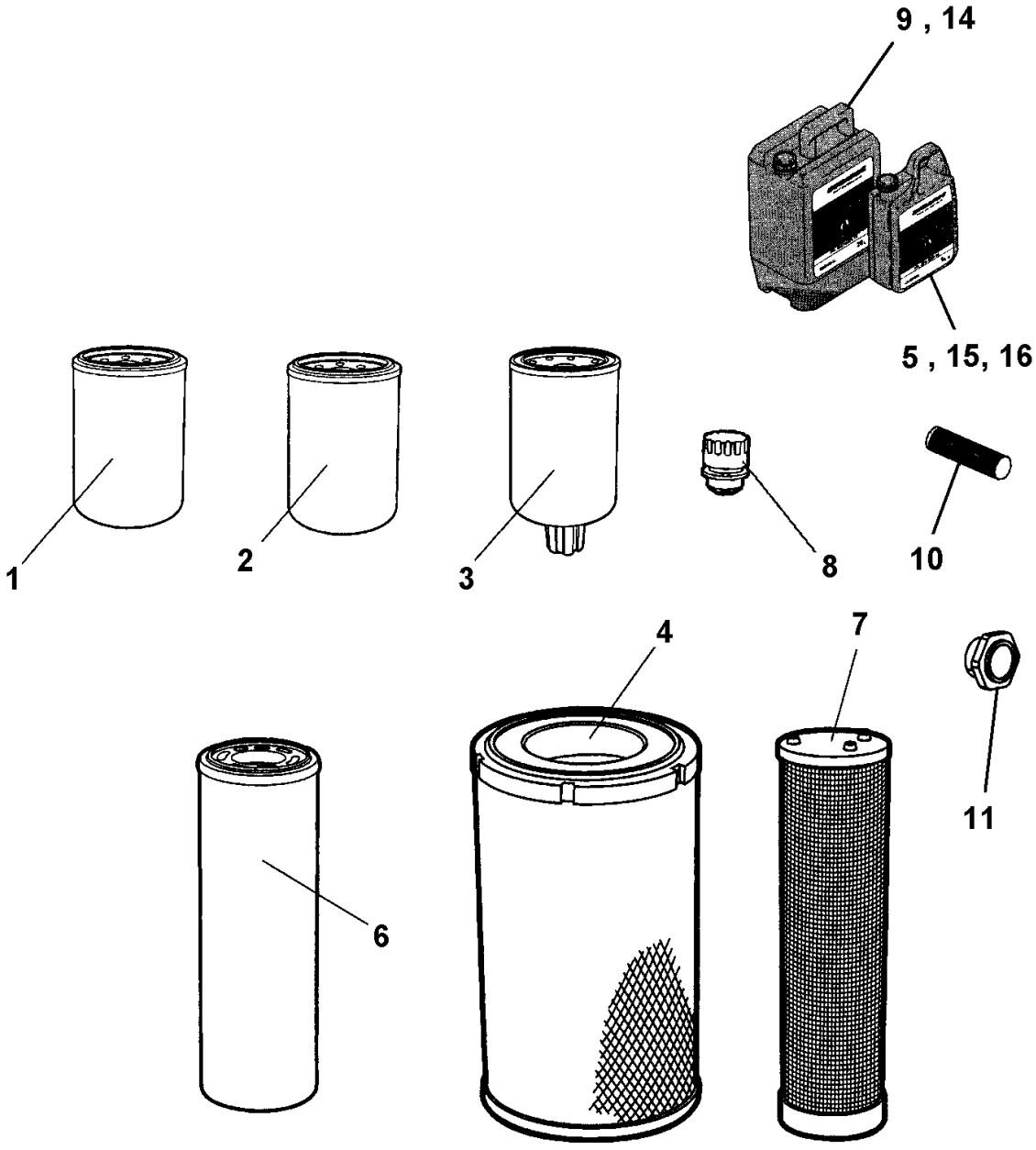

Item	Part No.	Name	Qty	L	SN INFO
-	4812158053	Service kit, 2000h			
1	4700903942	Oil filter	1		
2	4700950568	Fuel filter	2		
3	4812031626	Pre-fuel filter, filter element	1		
4	4700394688	Air filter element, main	1		
6	4812112262	Hydraulic oil filter element	1		
7	4700394689	Air filter element, safety	1		
8	4700357138	Ventilating filter	1		
11	4812118814	Oil level glass	2		

Service kits 4812157255 Service kit, 2000h Plus

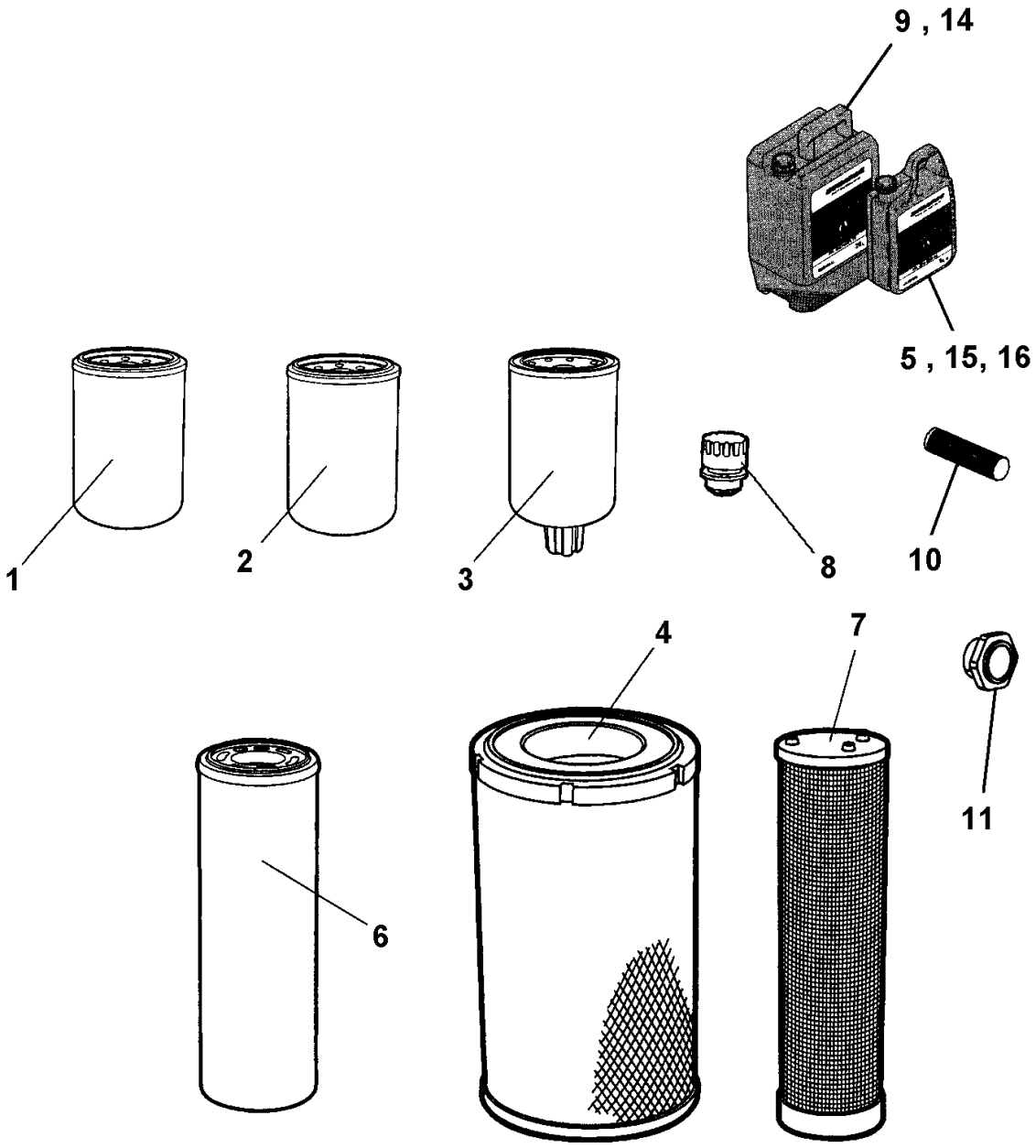

Item	Part No.	Name	Qty	L	SN INFO
-	4812157255	Service kit, 2000h Plus			
1	4700903942	Oil filter	1		
2	4700950568	Fuel filter	2		
3	4812031626	Pre-fuel filter, filter element	1		
4	4700394688	Air filter element, main	1		
5	4812161855	Dynapac Engine Oil 200 / 5 ltr.	3		
6	4812112262	Hydraulic oil filter element	1		
7	4700394689	Air filter element, safety	1		
8	4700357138	Ventilating filter	1		
9	4812161884	Dynapac Gear oil 300 / 20 ltr.	1		
10	4812030096	Dynapac Roller Grease	1		
11	4812118814	Oil level glass	2		
14	4812161868	Dynapac Hydraulic 300 / 20 ltr	3		
15	4812161887	Dynapac Drum oil 1000 / 5 ltr.	1		

Repair kits Eccentric shaft kit

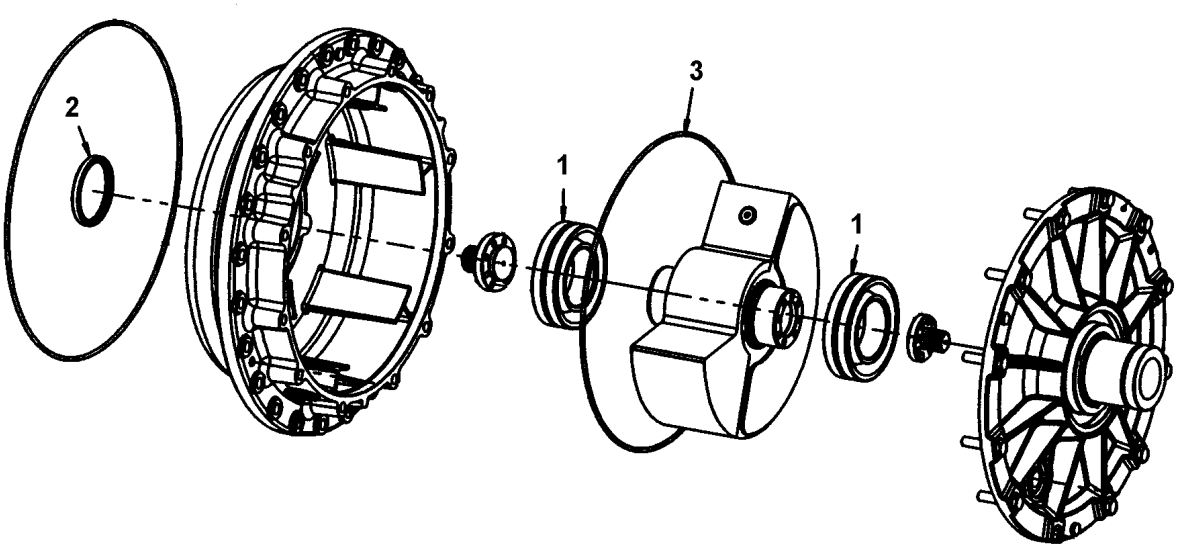

Item	Part No.	Name	Qty	L	SN INFO
0	4700945657	Eccentric shaft kit			
1	4700390896	Spherical roller bearing	2		
2	4812121209	Seal ring	1		
3	4700900776	O-ring	1		

Repair kits 4812157275 Drum rotation kit

Item	Part No.	Name	Qty	L	SN INFO
0	4812157275	Drum rotation kit	1		
1	4700116041	Taper roller bearing	1		
2	4700167023	Seal ring	1		
3	4700929447	V-ring	1		
4	4700160105	O-ring 70	1		

Repair kits 4812157276 Shock absorber kit, drum

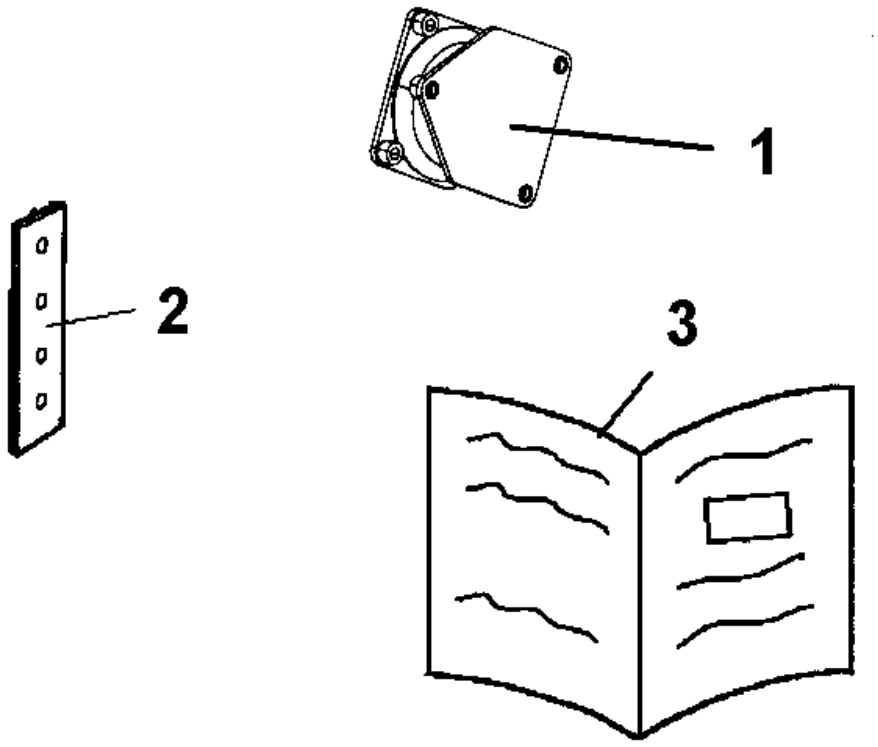

Item	Part No.	Name	Qty	L	SN INFO
1	4812119342	Shock absorber	22		
2	4812113168	Shim t = 1 mm	4		
3	4812156170	Instructions	1		

General - Keys and others Fuses

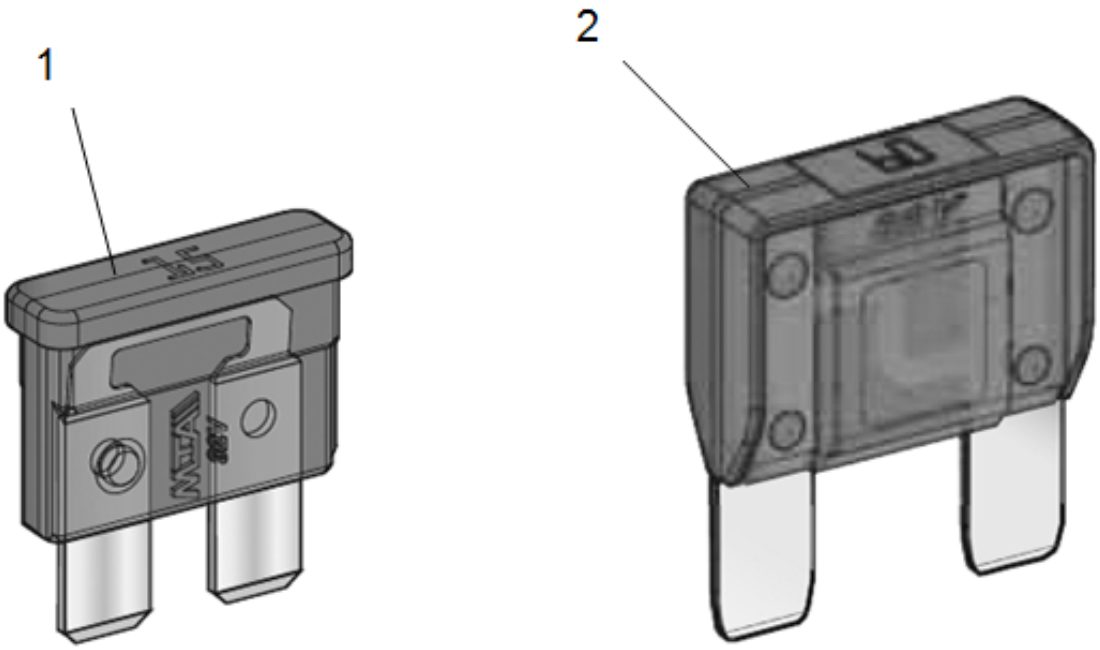

Item	Part No.	Name	Qty	L	SN INFO
1	-	Fuse, blade type Medium			
1	4700901224	Fuse, 3A Violet			
1	4700901225	Fuse 5A Tan			
1	4700901226	Fuse 7.5A Brown			
1	4700901227	Fuse 10A Red			
1	4700901228	Fuse, 15A Blue			
1	4700903741	Fuse 20A Yellow			
1	4700901229	Fuse, 25A Natural			
1	4700901230	Fuse, 30A Green			
2	-	Fuse, blade typ High			
2	4700904294	Fuse 20A Yellow			
2	4700904037	Fuse 30A Green			
2	4700904038	Fuse 40A Orange			
2	4700904039	Fuse 50A Red			
2	4700904040	Fuse 60A Blue			
2	4700904041	Fuse 70A Tan			
2	4700904042	Fuse 80A Natural (White)			

General - Keys and others Keys

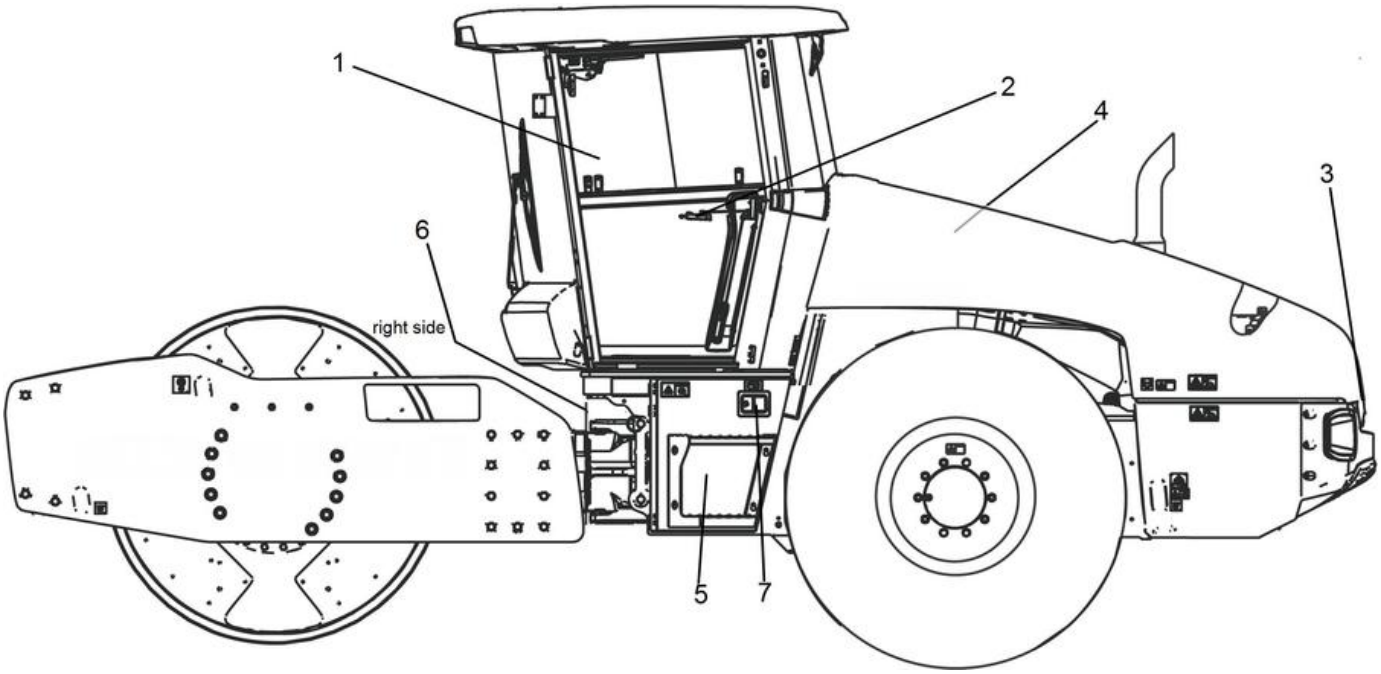

Item	Part No.	Name	Qty	L	SN INFO
1	-	Ignition switch			
1	4700940451	Ignition key			
2	-	Cab door			
2	4812159558	Key (2pcs)			
3	-	Engine hood (handle)			
3	4700902866	Key Marked "455"			
4	-	Engine cover			
4	4700902866	Key Marked "455"			
5	-	Battery switch			
5	4700903641	Battery key			
6	-	Tool box			
6	4700358881	Pad lock			
7	-	Battery space			
7	4700358881	Pad lock			
7	4812161396	Key			

Frame Frame, front

Item	Part No.	Name	Qty	L	SN INFO
1	-	Side plate	1		
2	-	Side plate	1		
3	4700904233	Steel plain washer 21x36x3	32		
4	4700500287	Screw M20x80 10,9	28		
5	4700925208	Screw M20x90	34		
6	4700901381	Screw	8		
7	4812112159	Ballast weight	2		
8	4700904487	Screw M20x140 10.9	8		
9	4812111653	Crossbeam	1		
10	4812114726	Crossbeam	1		
11	4812114910	Bracket	1		
12	4700904232	Steel plain washer	4		
13	4700500070	Hex. screw	4		
14	4812117507	Steering hitch, cpl	1		
15	4812112535	Protective hood	1		
16	4700904230	Steel plain washer	3		
17	4700500192	Hexagon head screw M10x80	3		
18	4812113607	Bracket	2		
19	4700904230	Steel plain washer	8		
20	4700500028	Hex Head screw	4		
21	4700377742	Reflector, red	2		
22	4700902166	Edge trim	1XL	A	
23	4700500028	Hex Head screw	4		
24	4700377743	Reflector, white	2		
25	4700791396	Protective plug	2		
26	4700903290	Steel plain washer 21x36x6	46		

Comments for Page: Frame, front

(L)OCAL REMARKS

A | en_US | L=0.37m

Frame 4812117507 Steering hitch, cpl

Item	Part No.	Name	Qty	L	SN INFO
1	4812117508	Yoke	1		
2	4812115392	Shaft	1		
3	4812117512	Holder	1		
4	4812121396	Shaft	1		
5	4812115949	Cover cap	1		
6	4812115950	Cover cap	1		
7	4812116334	Spherical plain bearing	2		
8	4812115467	Spherical plain bearing	2		
9	4812115398	Bushing	1		
10	4812116333	Disc spring	2		
11	4700391031	Radial lip-type seal	1		
12	4700792515	Sealing, v-ring	1		
13	4700160296	O-ring 70	1		
14	4812116821	Radial spherical plain bearing	2		
15	4700151023	Retaining ring	4		
16	4812116340	Spacer washer	1		
17	4700792394	Screw	16		
18	4812121398	Radial seal	2		
19	4812120414	Hexagon socket head cap screw w Tuflok	12		
20	4812115947	Washer	1		
21	4700904231	Washer, 13x24x2 mm 300 HV	10		
22	4812120615	Radial lip-type seal	2		
23	4812116702	Protective plug	1		
24	4812119809	Locking pin cpl	1		
25	4812120618	Threaded stud	1		
26	4700904558	Washer, 17x30x6 mm 300 HV	1		
27	4812121397	Shaft	1		
28	4700792083	Plug	6		
30	4812117530	Shim washer	1		
31	4812121665	Stop plate	1		
32	4812121282	Thread forming screw m	8		
33	4812119807	Holder	1		
34	4700904567	Washer, 10.5x28x6 mm	1		
35	291112842	Prev torq hex nut m	1		
36	4700500028	Hex Head screw	1		
38	4812120661	Sealing strip	2		
39	4812121111	O-ring	2		

Scrapers, option Scrapers, option

NO EXPLODED VIEW
AVAILABLE
FOR THIS BOM

Item	Part No.	Name	Qty	L	SN INFO
1	-	Scraper module Hardox	4		
2	-	Scraper module Rubber	4		
3	-	Scraper module PD Hardox	18		
4	-	Scraper module PD Heavy duty	2		

Scrapers, option Scraper module Hardox

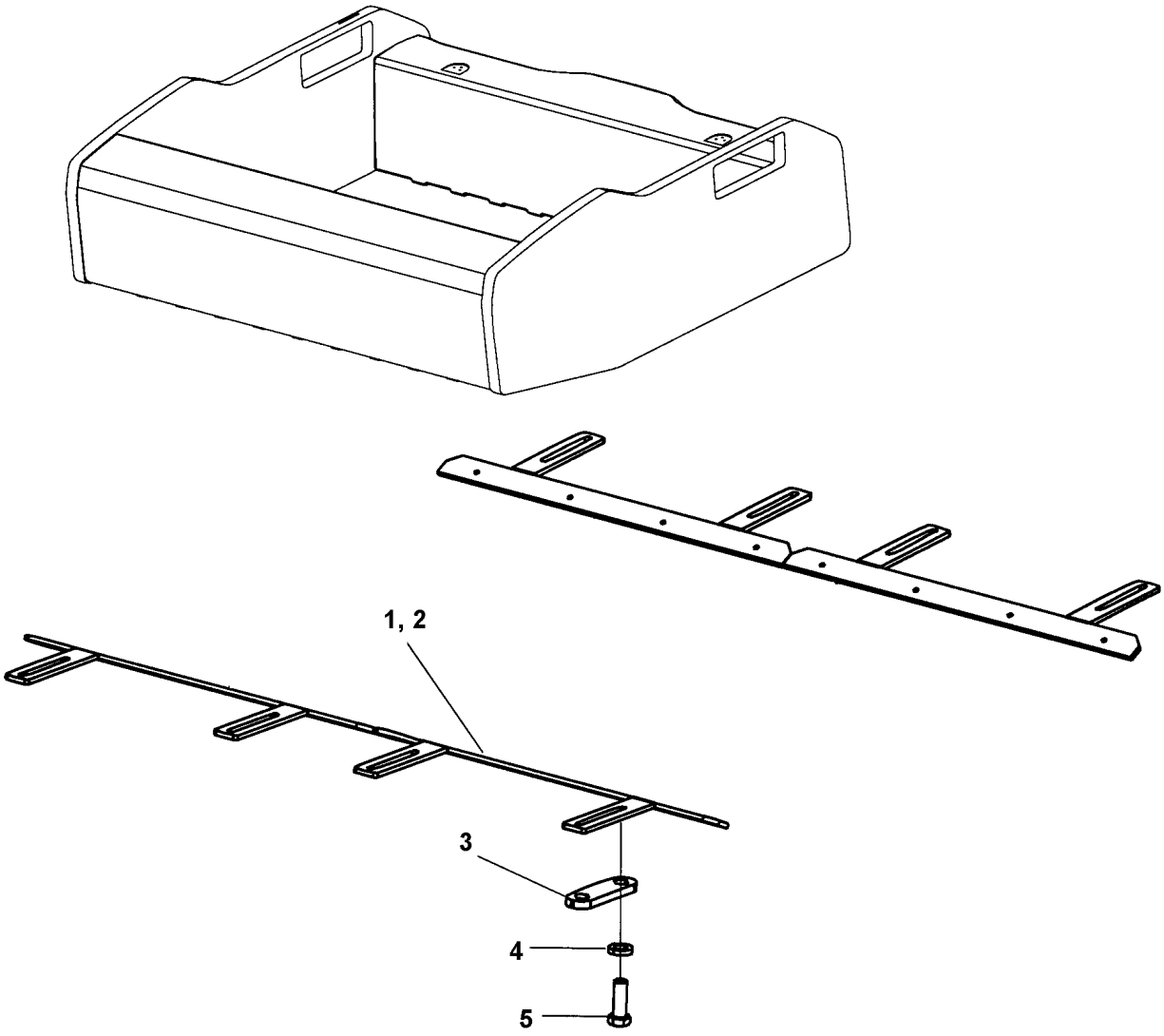

Item	Part No.	Name	Qty	L	SN INFO
1	4812111020	Scraper, hardox	1		
2	4812112614	Scraper, steel	1	A	
3	4812111103	Holder	2		
4	4700904558	Washer, 17x30x6 mm 300 HV	4		
5	4700500102	Hex. screw	4		

Comments for Page: Scraper module Hardox

(L)OCAL REMARKS

A | en_US | Replaced by item 1 p/n 4812111020.

Scrapers, option Scraper module Rubber

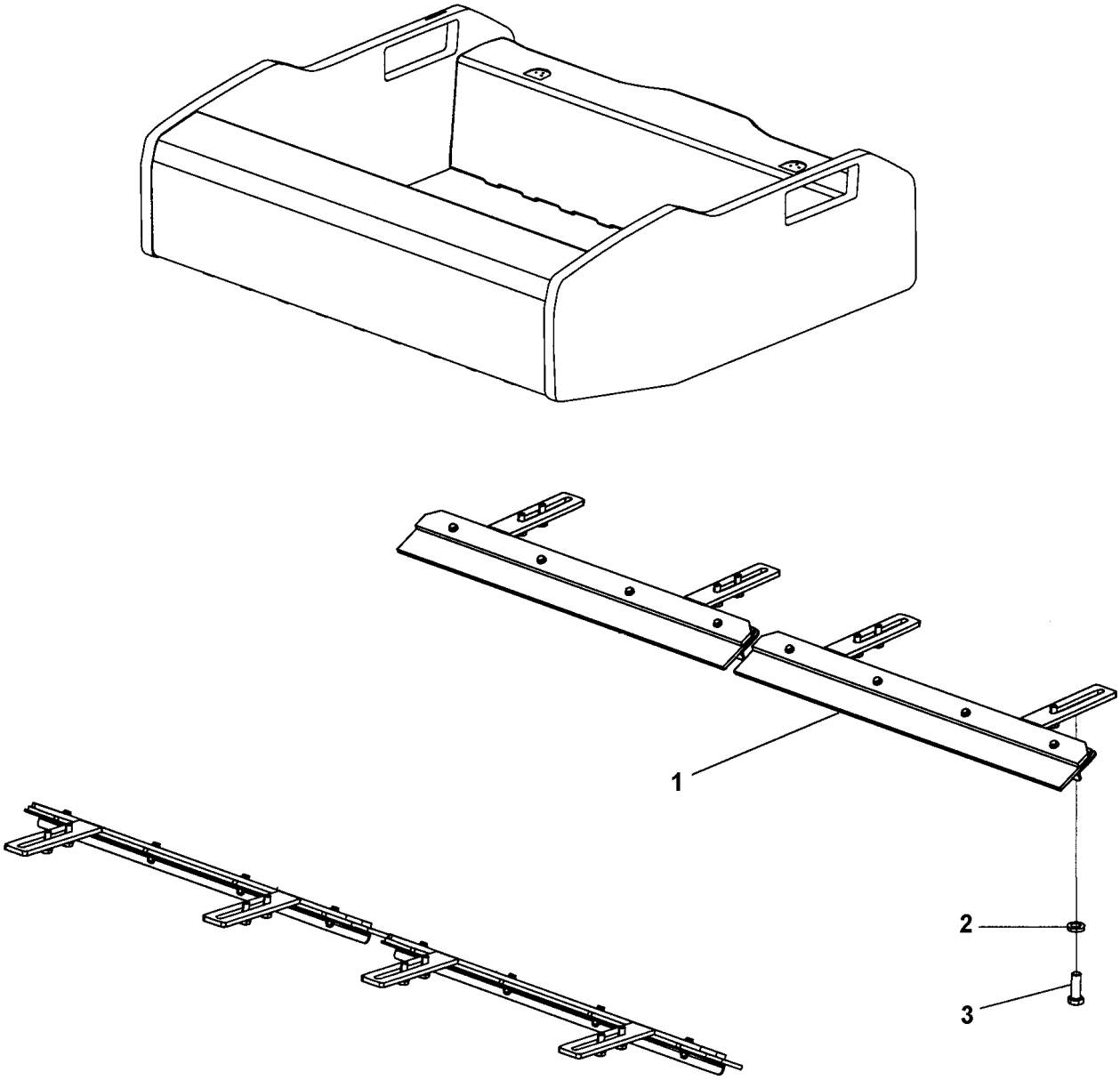

Item	Part No.	Name	Qty	L	SN INFO
1	-	Scraper assy	1		
2	4700904558	Washer, 17x30x6 mm 300 HV	4		
3	4700500102	Hex. screw	4		

Scrapers, option Scraper assy

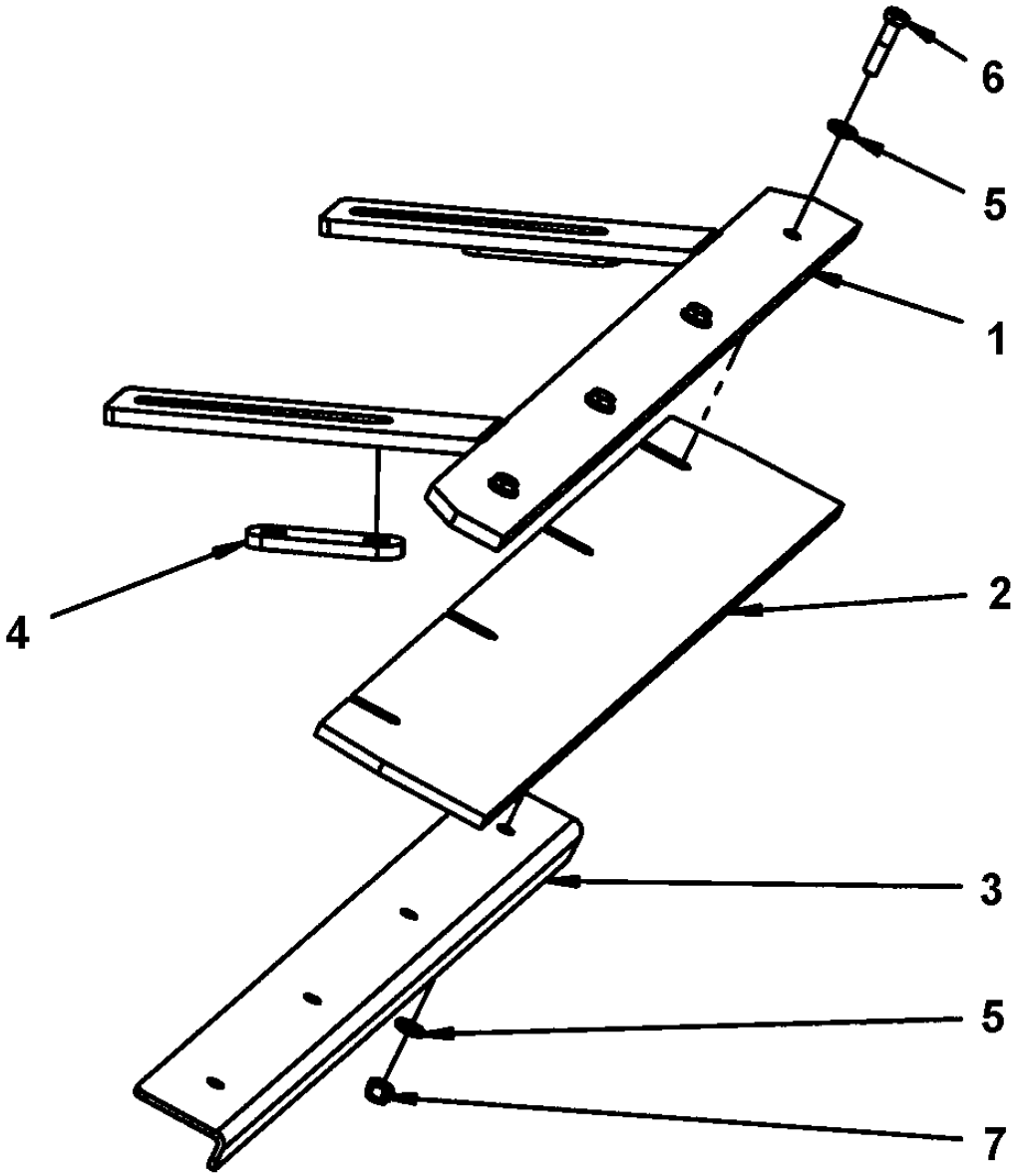

Item	Part No.	Name	Qty	L	SN INFO
1	4812111020	Scraper, hardox	1		
2	4812114833	Scraper blade	1		
3	4812111092	Bracket	1		
4	4812111103	Holder	2		
5	4700904230	Steel plain washer	8		
6	4700500161	Screw	4		
7	4700586018	Lock nut M10	4		

Scrapers, option Scraper module PD Hardox

Item	Part No.	Name	Qty	L	SN INFO
1	4700397305	Scraper tooth	1		
2	4812111103	Holder	1		
3	4700904558	Washer, 17x30x6 mm 300 HV	2		
4	4812110572	Screw w Tuflok	2		

Scrapers, option Scraper module PD Heavy duty

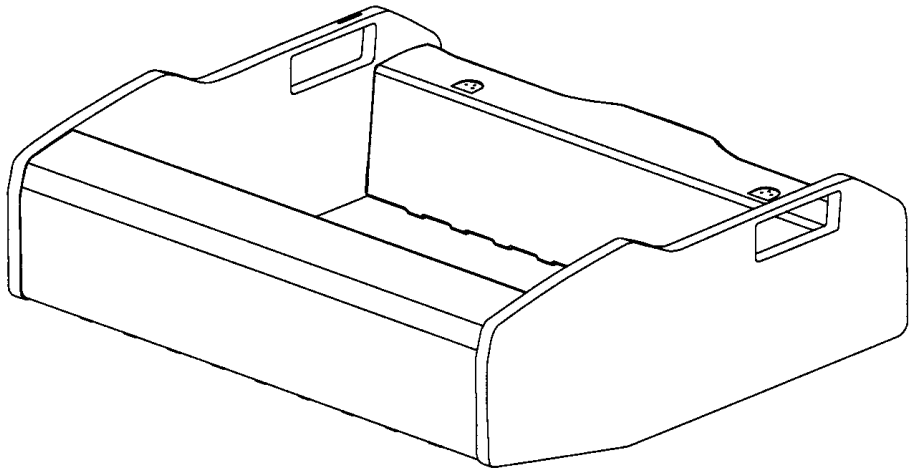

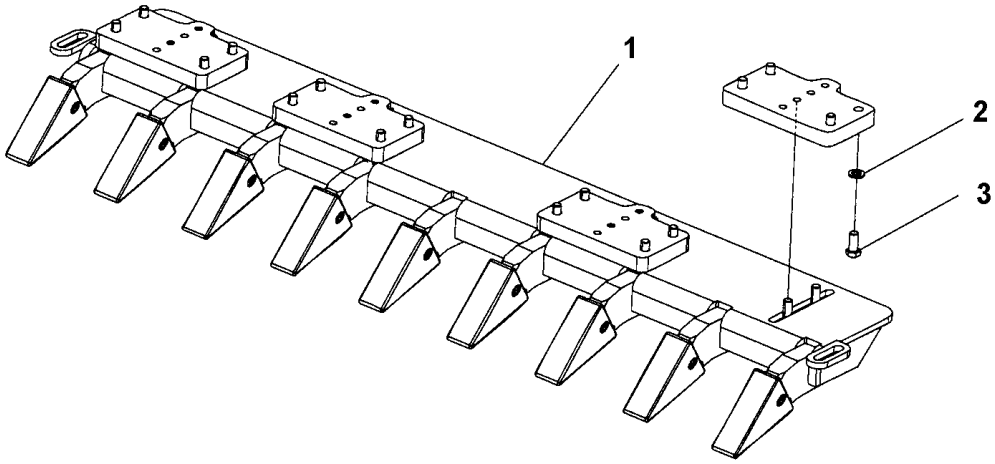

Item	Part No.	Name	Qty	L	SN INFO
1	-	Scraper mount	1		
2	4700904232	Steel plain washer	16		
3	4700500123	Hex. screw	16		

Scrapers, option Scraper mount

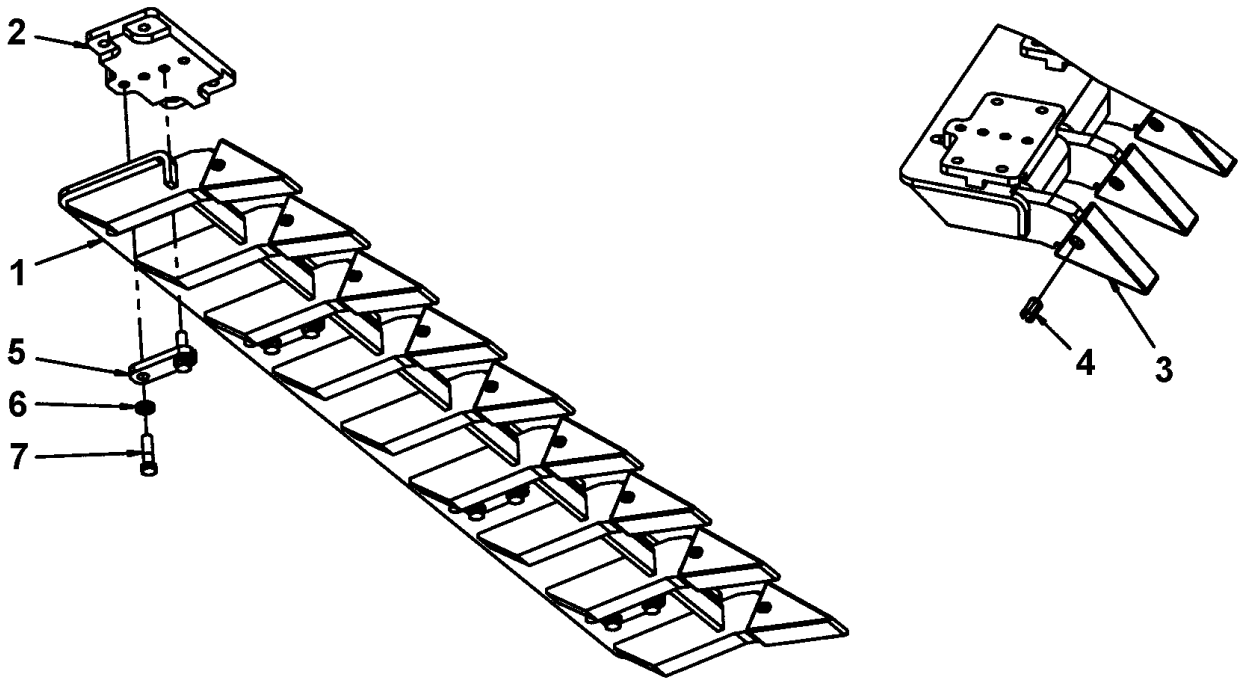

Item	Part No.	Name	Qty	L	SN INFO
1	4812116617	Scraper	1		
2	4812115508	Adapter	4		
3	4700383844	Scraper	9		
4	4700801631	Pin	9		
5	4812118062	Holder	4	A	
6	4700904558	Washer, 17x30x6 mm 300 HV	8		
7	4700500270	Screw M16x60 10,9	8	A	

Comments for Page: Scraper mount

(L)OCAL REMARKS

A | en_US | Item 5 and 7 used together.

Frame Frame, rear

Item	Part No.	Name	Qty	L	SN INFO
1	-	Frame rear module	1		
2	-	Step module	1	A	
5	-	Tool box module, Option	1		

Comments for Page: Frame, rear

(L)OCAL REMARKS

A | en_US | Used with cab.

Frame Frame rear module

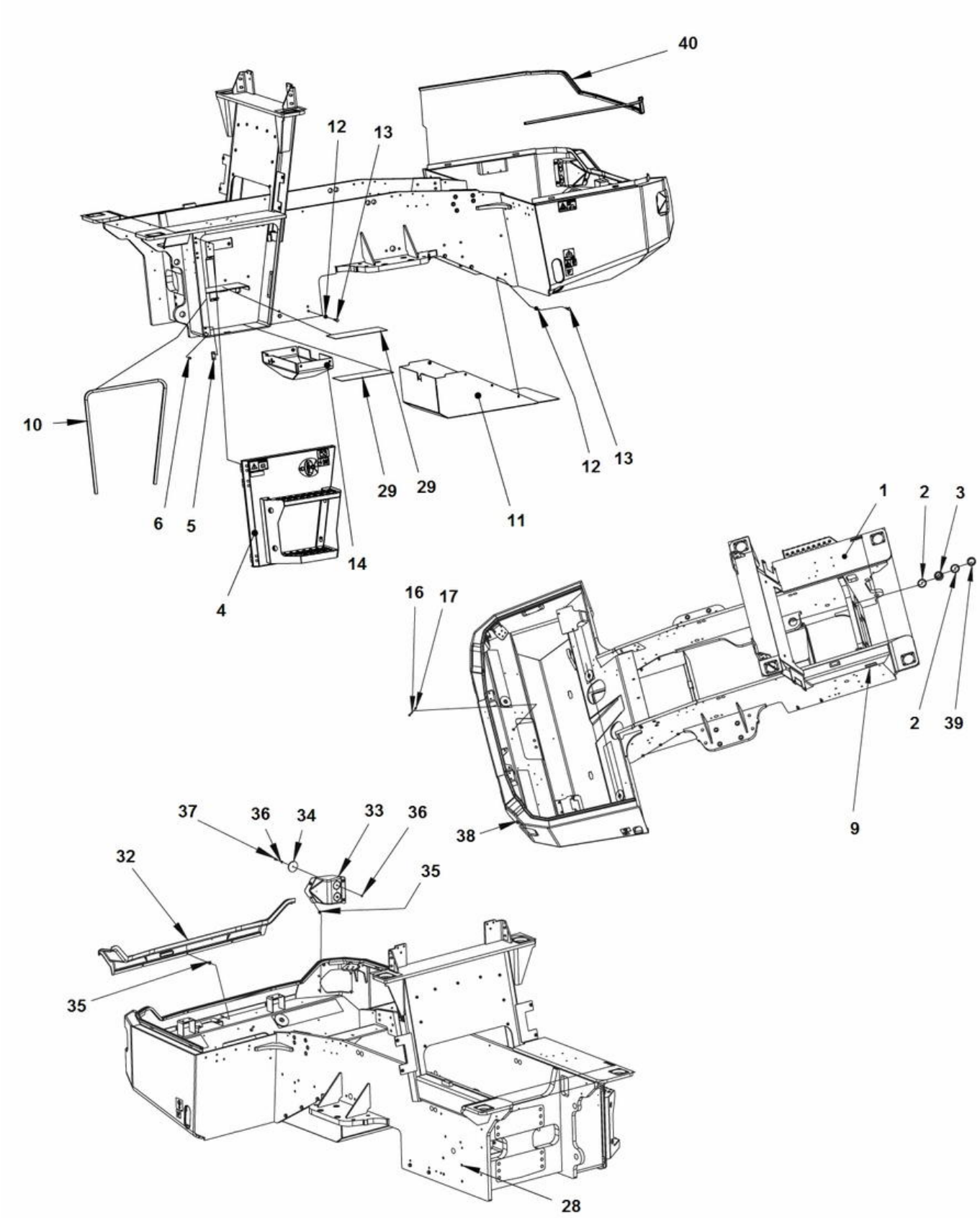

Item	Part No.	Name	Qty	L	SN INFO
1	4812122054	Frame rear	1		
2	4700151023	Retaining ring	4		
3	4812116821	Radial spherical plain bearing	2		
4	-	Cover assembly	1		
5	4700389857	Threaded plate	3		
6	4700513012	Screw, M6 x 20 mm 10.9 GEOMET®	6		
10	4700202057	Rubber edge trim	1XL	A	
11	4812120560	Cover plate	1		
12	4700904557	Washer, 10.5x22x4 mm 300 HV	10		
13	4700500091	Screw	10		
14	4812117048	Cover plate	1		
16	4700500239	Hex. head screw	1		
17	4700570005	Hexagon nut	1		
28	4700926215	Protective plug	5		
29	4700355608	Slip protection	2		
32	4812120526	Cover	1		
33	4812120160	Holder	2		
34	4700791956	Reflector, red	4		
35	4700903586	Nut, M8x1.25 mm A2K	13		
36	4700904228	Washer 6,4x12x1,5	8		
37	4700791666	Blind rivet	4		
38	4700377742	Reflector, red	2		
39	4812120661	Sealing strip	2		
40	4812120363	Edge trim	1XL	B	

Comments for Page: Frame rear module

(L)OCAL REMARKS

A | en_US | L=1.83m

B | en_US | L=4.2 m

Frame Cover assembly

Item	Part No.	Name	Qty	L	SN INFO
1	4812113315	Cover	1		
1.1	4700396839	Hinge	3		
2	4812112059	Step assy	1		
3	4812121914	Lock with bracket	1		
4	4700902285	Nut	4		
5	4700921723	Plug	6		
6	4700508028	Screw, M10x20H	4		
7	4700390365	Spacer	1		
8	4700513017	Screw	2		

Frame Step module

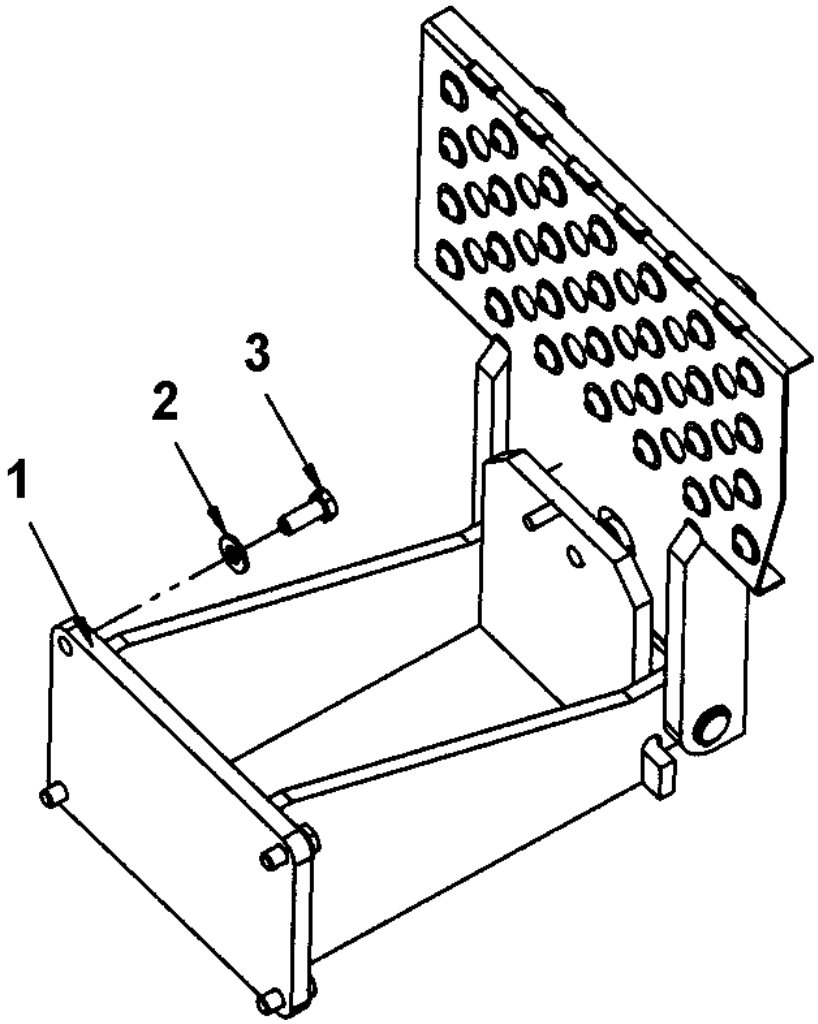

Item	Part No.	Name	Qty	L	SN INFO
1	-	Step assy	1		
2	4700904230	Steel plain washer	4		
3	4700500028	Hex Head screw	4		

Frame Step assy

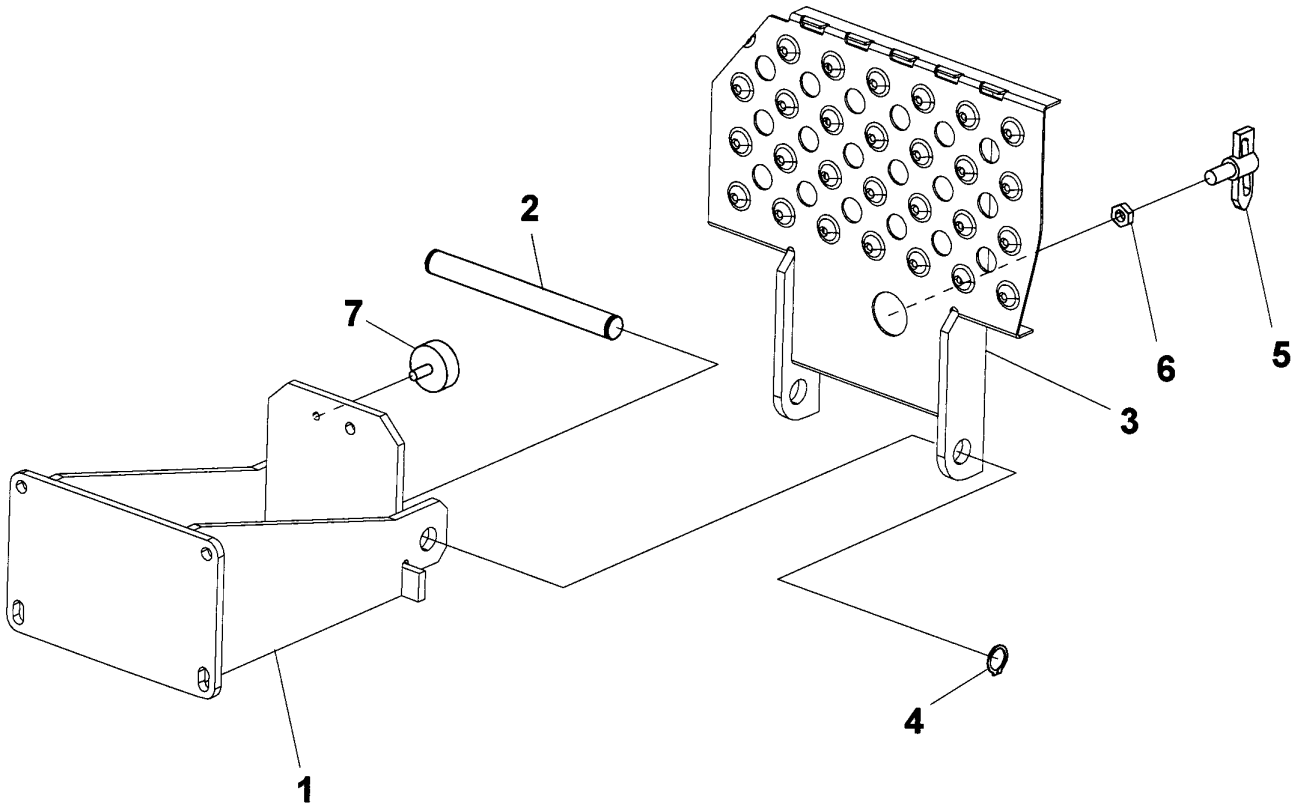

Item	Part No.	Name	Qty	L	SN INFO
1	4812116653	Bracket	1	A	
2	4812116651	Shaft	1	A	
3	4812116652	Step	1	A	
4	4700150008	Circlip	2		
5	4700475064	Lock	1		
6	4700927233	Nut	1		
7	4700792601	Shock absorber	1		

Comments for Page: Step assy

(L)OCAL REMARKS

A | en_US | Item 1, 2 and 3 used together.

Frame Tool box module, Option

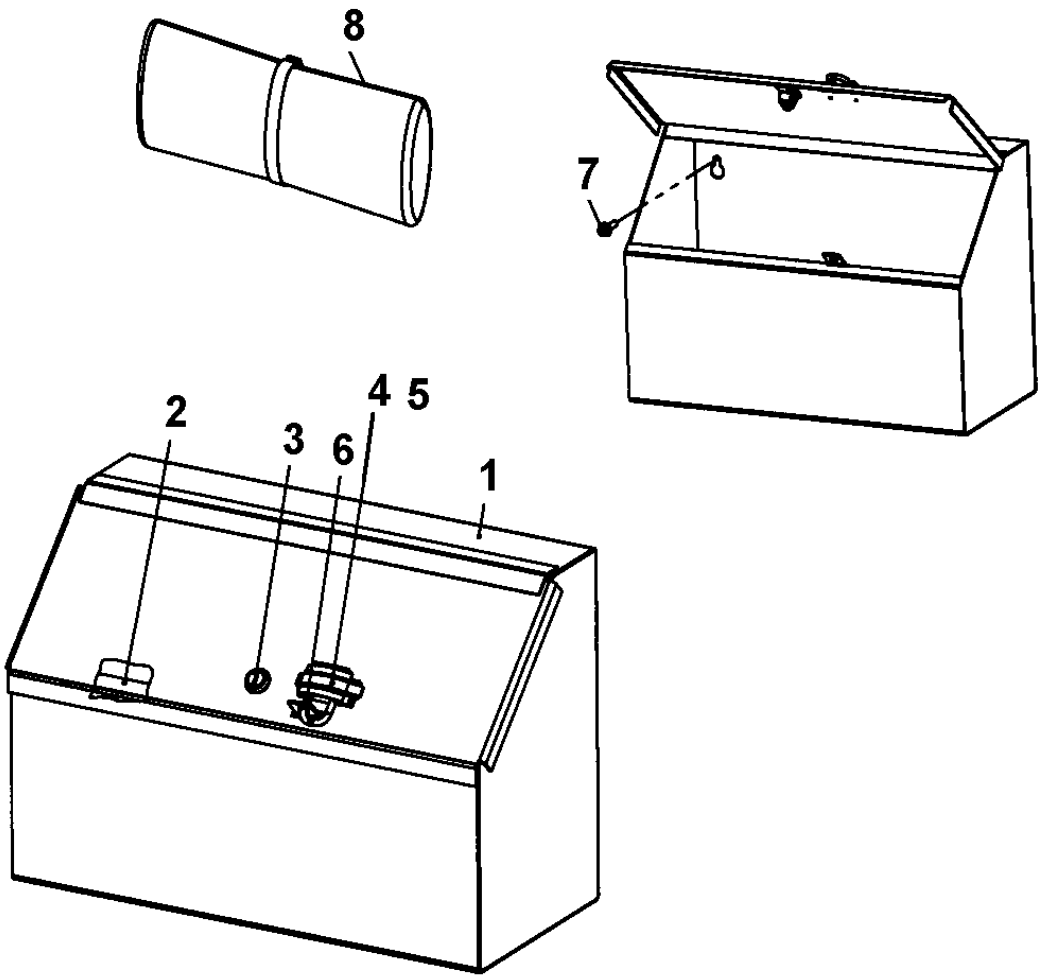

Item	Part No.	Name	Qty	L	SN INFO
1	4812114756	Tool box	1		
2	4700903615	Rubber strip	1XL	A	
3	4700372658	Lock	1		
4	4700394536	Wiring clip	1		
5	4700624018	Blind rivet	2		
6	4700358881	Pad lock	1		
7	4700902041	Screw, M8x25mm 8.8 A2K	3		
8	4700355889	Tool set Cpl	1		

Comments for Page: Tool box module, Option

(L)OCAL REMARKS

A | en_US | L=0.48m

Frame Engine structure

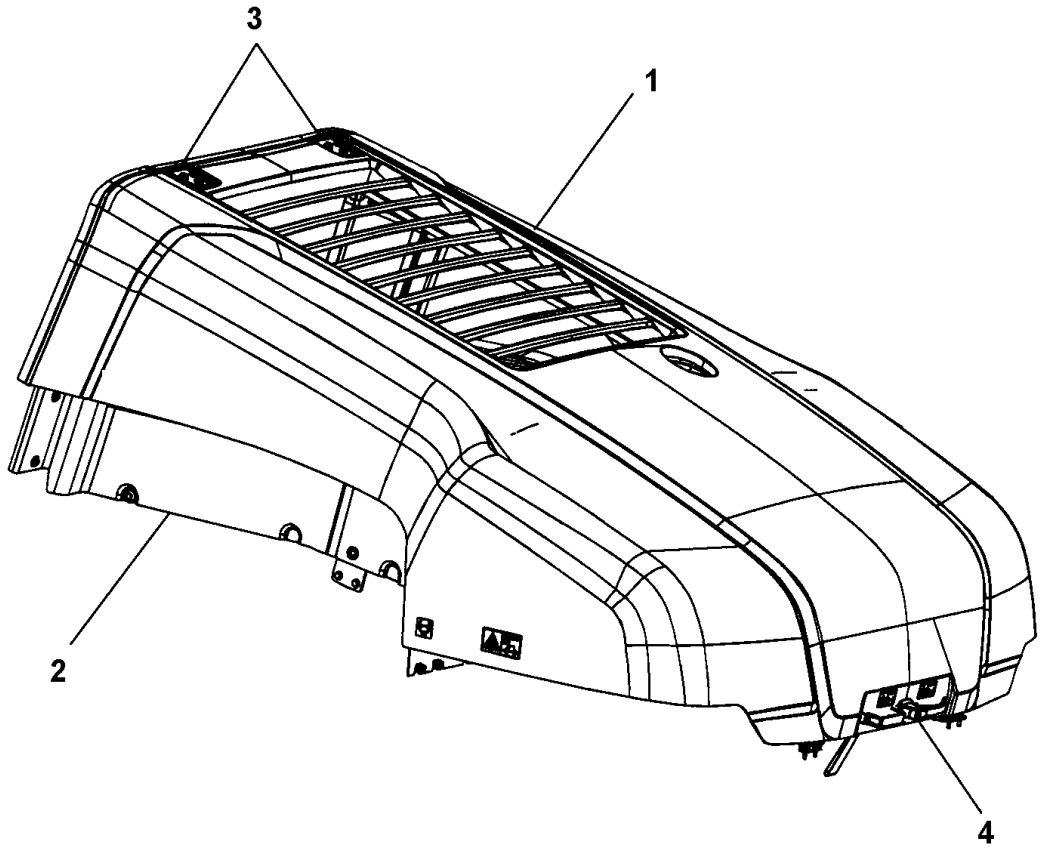

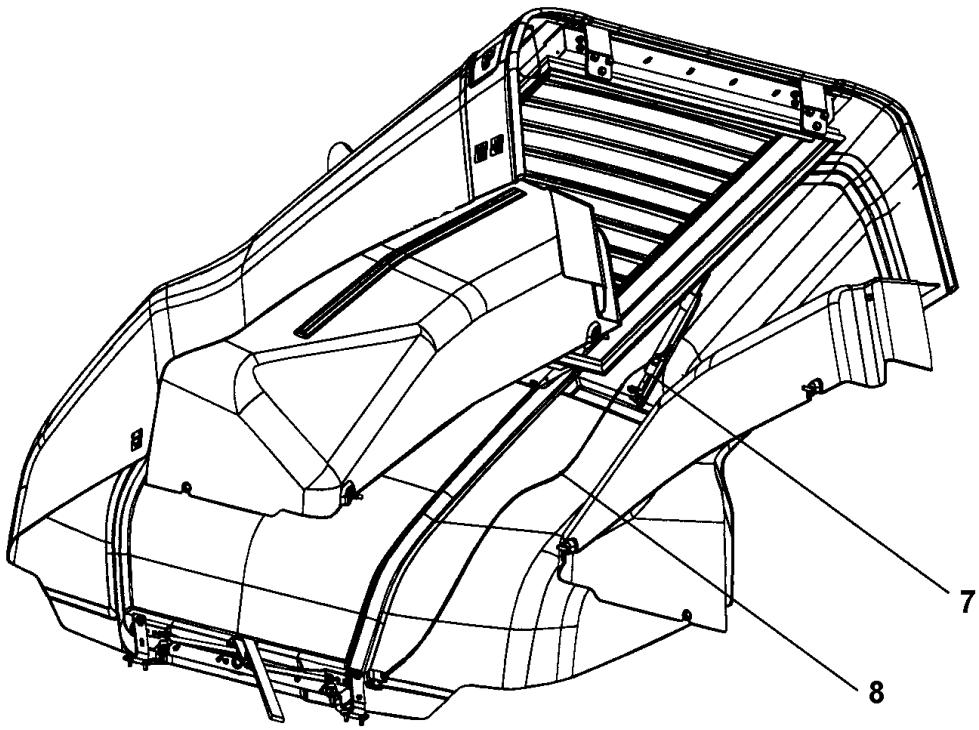

Item	Part No.	Name	Qty	L	SN INFO
1	-	Engine hood module	1		
2	-	Fender module	1		
3	-	Hinge module	1		
7	-	Gas spring module	1		
8	-	Safety link module	1		

Frame Engine hood module

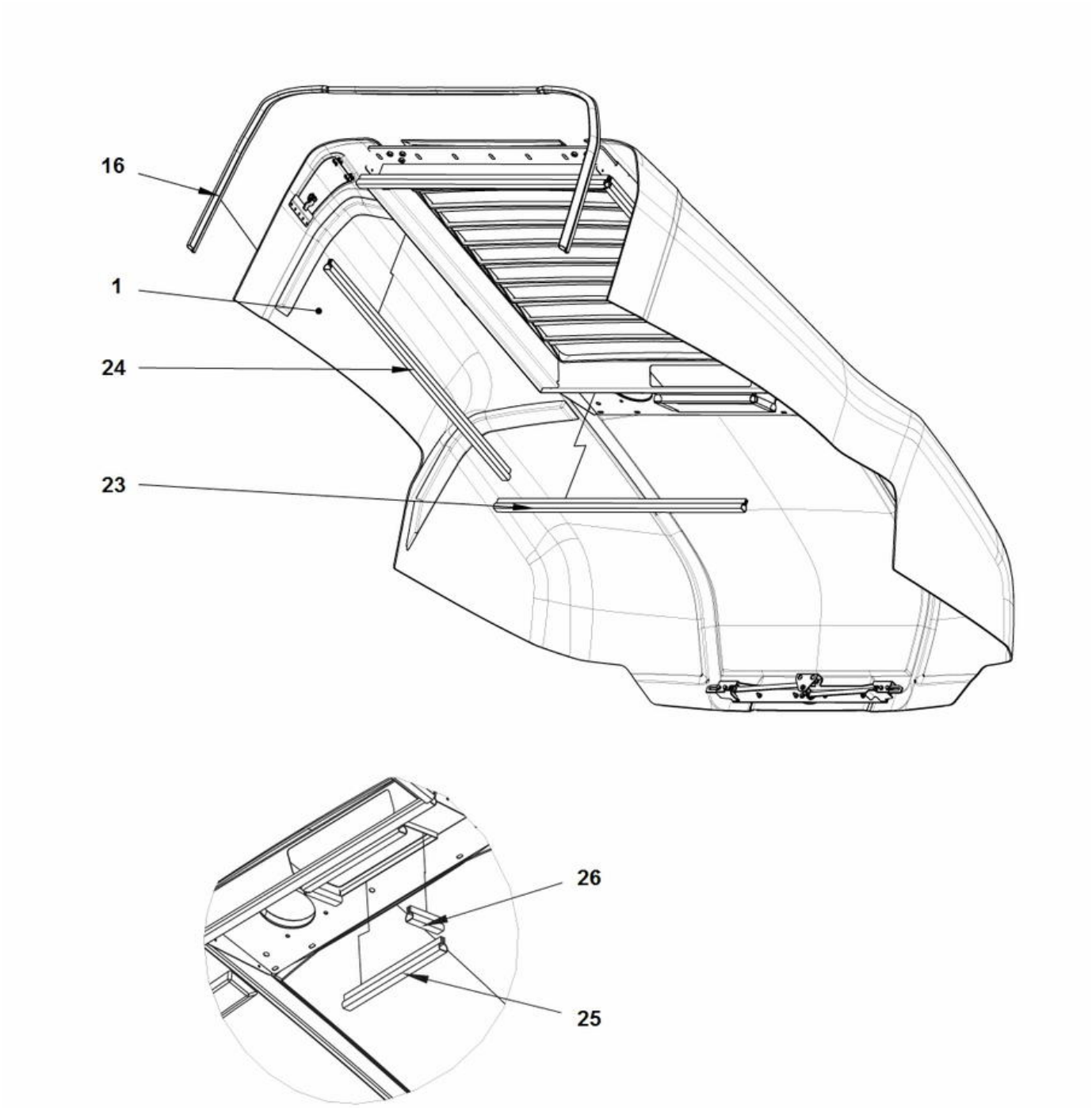

Item	Part No.	Name	Qty	L	SN INFO
1	-	Engine hood mount	1		
16	4812114814	Sealing strip	1		
23	4812117839	Sealing strip	1XL	A	
24	4812117839	Sealing strip	1XL	B	
25	4812117839	Sealing strip	1XL	C	
26	4812117839	Sealing strip	1XL	D	

Comments for Page: Engine hood module

(L)OCAL REMARKS

A | en_US | L= 1.99 m

B | en_US | L= 2.44 m

C | en_US | L= 0.76 m

D | en_US | L= 0.21 m

Frame Engine hood mount

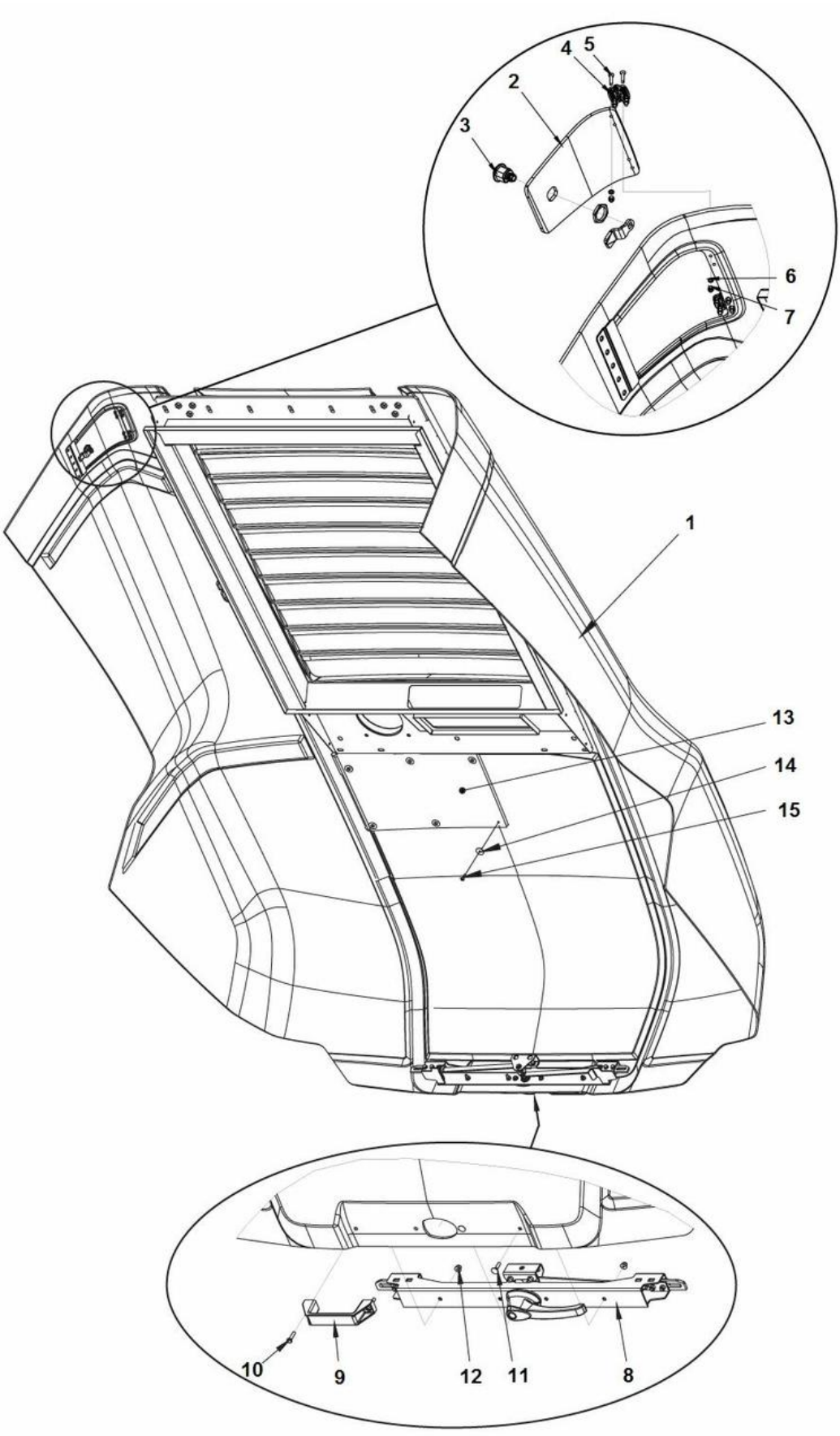

Item	Part No.	Name	Qty	L	SN INFO
1	4812120722	Engine hood, cpl	1		
2	4812120724	Cover	1		
3	4812112834	Lock	1		
3	4700902866	Key Marked "455"	2		
4	4812116862	Hinge	2		
5	4812118976	Hex.sock.flat head cap screw	8		
6	4700904698	Plain washer	8		
7	4700923976	Lock nut	8		
8	4812118994	Lock handle, cpl	1		
9	4812112404	Grab handle	1		
10	4700500075	Screw, M6-1,0x25 mm 8.8	2		
11	4700903923	Cup square neck bolt	2		
12	4700902285	Nut	4		
13	4812121090	Heat protection	1		
14	4700615065	Steel plain washer	6		
15	4812121152	Tapping screw st	6		

Frame 4812118994 Lock handle, cpl

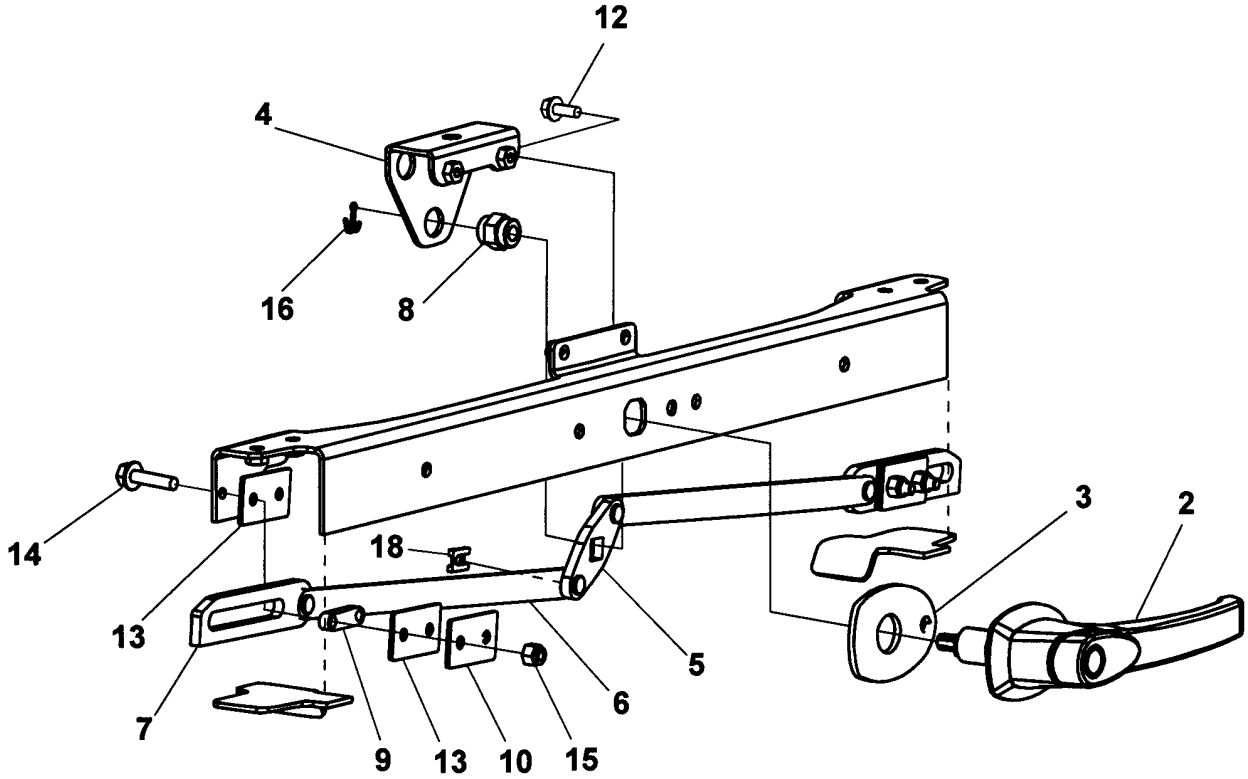

Item	Part No.	Name	Qty	L	SN INFO
-	4812118994	Lock handle, cpl	1		
2	4812112403	Lock handle	1		
2	4700902866	Key Marked "455"	1		
3	4812114828	Spacer washer	1		
4	4812118989	Holder	1		
5	4812114829	Coupling link	1		
6	4812114830	Lock lever	2		
7	4812112843	Lock lever	2		
8	4812114831	Lock nut	1		
9	4812112884	Slide plate	2		
10	4812116793	Thrust washer	2		
12	4700792119	Screw, M6x16 mm 8.8 A2K	2		
13	4812116792	Slide plate	4		
14	4700500502	Hexagon screw with flange M6 -25	4		
15	4700586002	Lock nut M6 -8	4		
16	4700630003	Split pin	1		
18	4812117473	Locking clip for shaft	4		

Frame Fender module

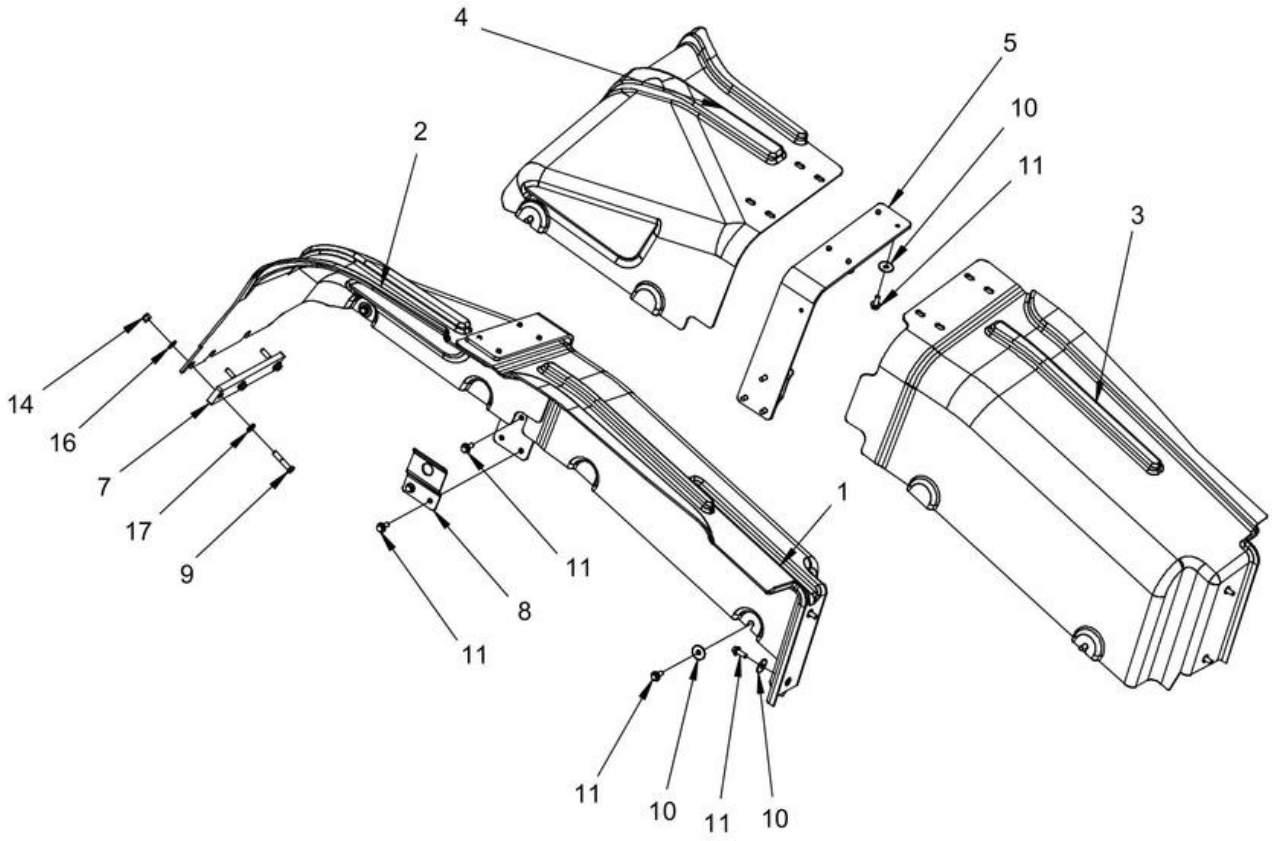

Item	Part No.	Name	Qty	L	SN INFO
1	4812115066	Fender	1		
2	4812115067	Fender	1		
3	4812115068	Fender	1		
4	4812115069	Fender	1		
5	4812115022	Bracket	2		
7	4812123793	Bracket	2		
8	4812116308	Bracket	2		
9	4700500032	Screw M10 x 55	6		
10	4700615061	Steel plain washer	16		
11	4700500509	Screw, M10x25, 8.8	22		
14	4700586018	Lock nut M10	5		
16	4700904230	Steel plain washer	5		
17	4700904557	Washer, 10.5x22x4 mm 300 HV	6		

Frame Hinge module

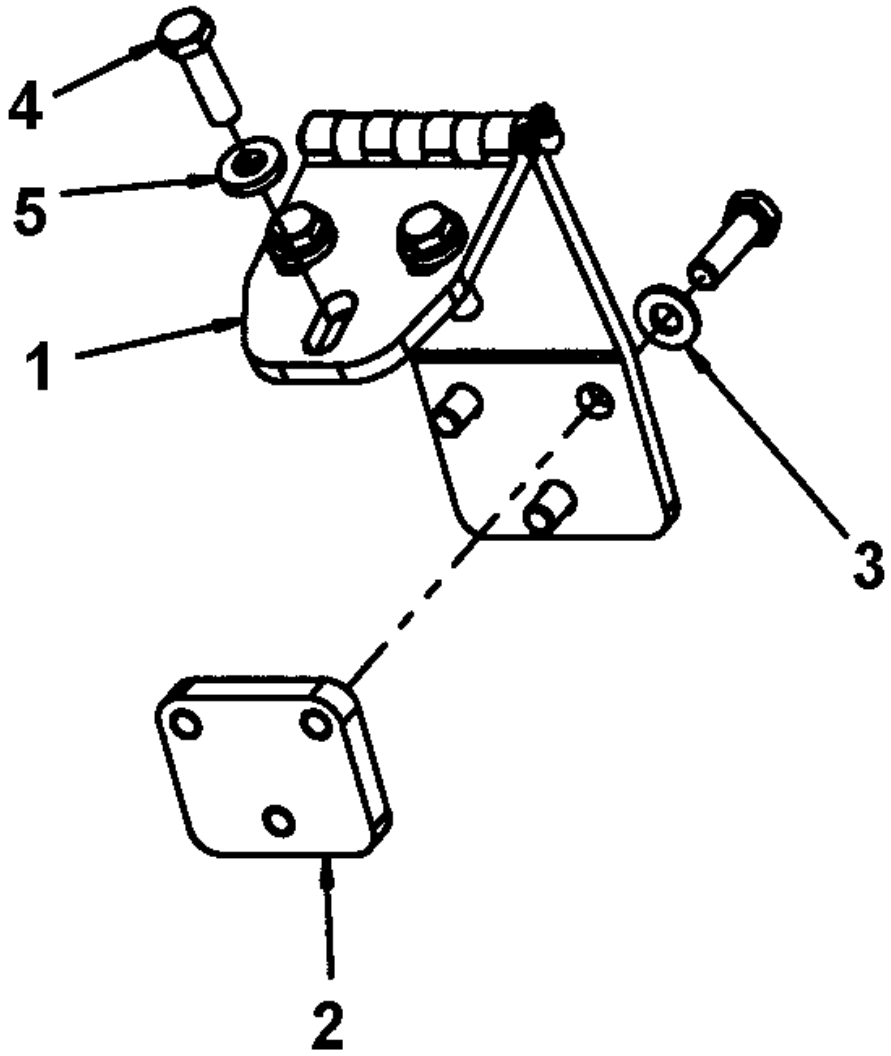

Item	Part No.	Name	Qty	L	SN INFO
1	4812112402	Hinge	2		
2	4700374799	Holder plate	2		
3	4700904230	Steel plain washer	6		
4	4700500030	Hexagon head screw	12		
5	4700904557	Washer, 10.5x22x4 mm 300 HV	6		

Frame Gas spring module

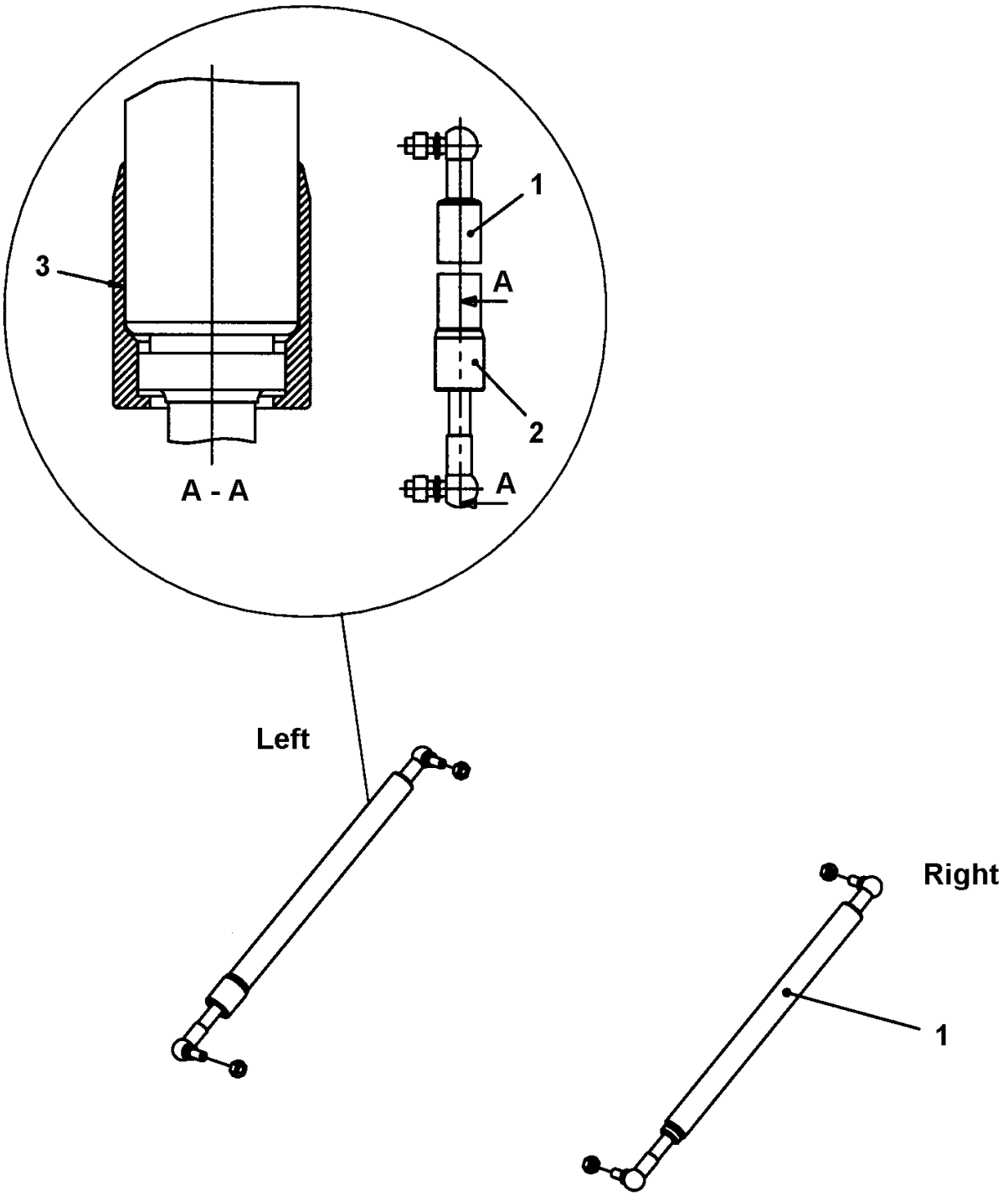

Item	Part No.	Name	Qty	L	SN INFO
1	4812112405	Gas spring	2		
2	4700382383	Gas spring protection	1	A	
3	-	Loctite 638	N		

Comments for Page: Gas spring module

(L)OCAL REMARKS

A | en_US | Only on left side.

Frame Safety link module

Item	Part No.	Name	Qty	L	SN INFO
1	4812112736	Safety link	1		
2	4812112952	Spacer	1		
3	4812112950	Control wire	1		
4	4812118853	Bracket	1		
5	4811000462	Compression spring	1		
7	4812117248	Cable tie with holder	1		
8	4812121201	Compression spring	1		
9	4700313041	Cable ties	2		
10	4700500031	Screw M10x40	1		
11	4700904230	Steel plain washer	1		

Drum Drum, cpl

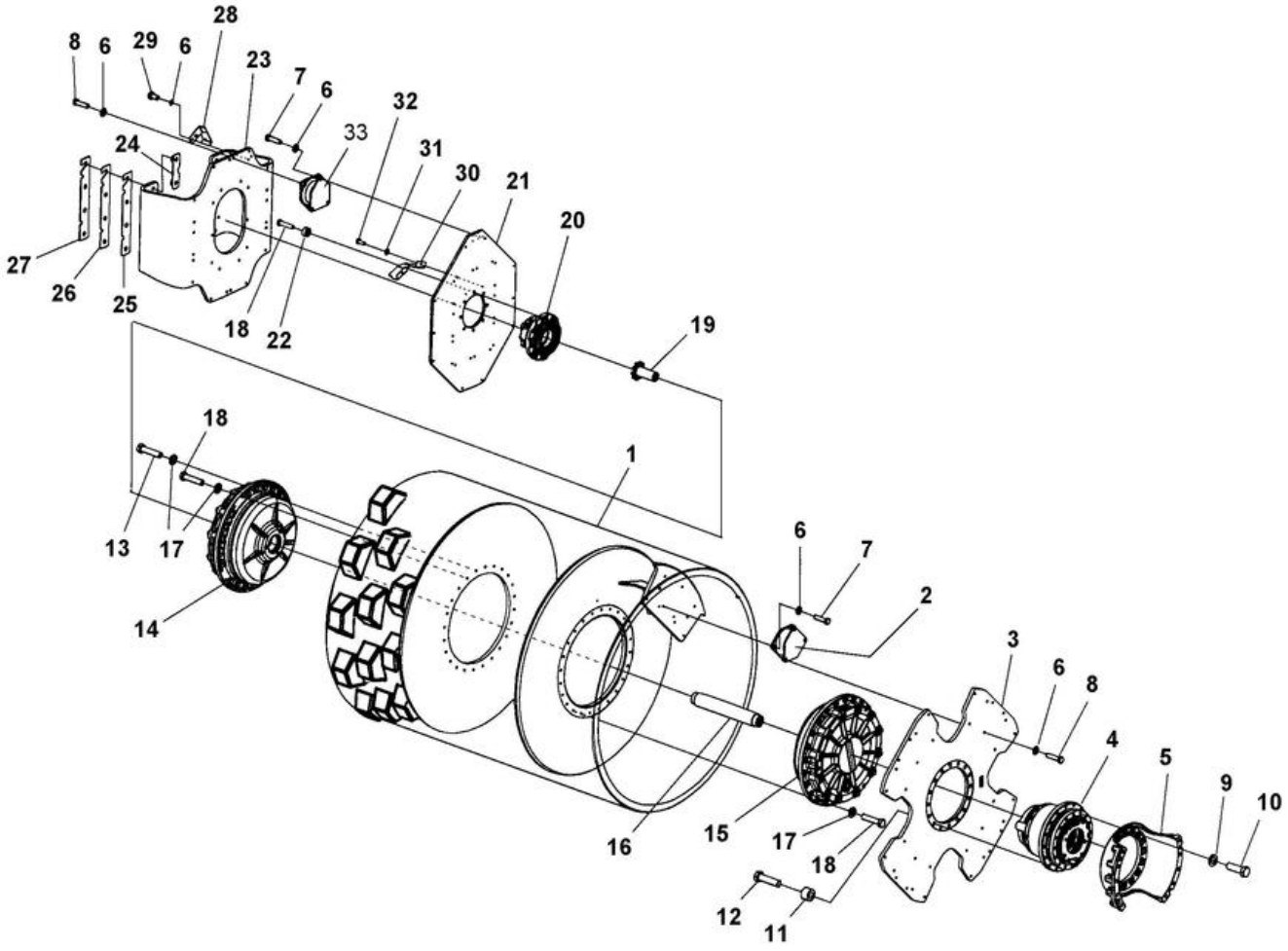

Item	Part No.	Name	Qty	L	SN INFO
1	4812112043	Drum	1		
1	4812112044	Drum, pad	1		
-	4700335659	Padfoot	130		
2	4812119342	Shock absorber	12		
3	4812112111	Driving disc	1		
4	4812111831	Drum gear, cpl	1		
5	4812111167	Bracket	1		
6	4700904231	Washer, 13x24x2 mm 300 HV	134		
7	4812110642	Hexagon screw w Tuflok M12x45 10.9 GEOMET	66		
8	4812110644	Hexagon screw w Tuflok M12x50 10.9 GEOMET	66		
9	4700904233	Steel plain washer 21x36x3	16		
10	4700929409	Hexagon head screw	16		
11	4812114777	Spacer	16		
12	4700500287	Screw M20x80 10,9	16		
13	4700384121	Air breather screw	1		
14	4812157393	Drum cartridge, vibration side (D/PD version)	1	A, B	
14	4812157394	Drum cartridge, vibration side (VM/VP 3-class)	1	C	
14	4812157784	Drum cartridge with shaft nut, vibration side (D/PD version)	1	A, B	
14	4812157785	Drum cartridge with shaft nut, vibration side (VM/VP 3-class)	1	C	
15	4812157390	Drum cartridge, drive side (D/PD version)	1	A, B	
15	4812157391	Drum cartridge, drive side (VM/VP 3-class)	1	C	
16	4812112465	Drive shaft	1		
17	4700904232	Steel plain washer	48		
18	4700500082	Screw M16x70 8.8	55		
19	-	Tooth wheel module	1		
20	-	Vibration motor adapter	1		
21	4812114969	Bracket	1		
22	4700384114	Spacer	8		
23	4812114971	Bracket	1		
24	4812112438	Nut-plate	4		
25	4812113168	Shim t = 1 mm	N		
26	4812113169	Shim t = 3 mm	N		
27	4812113170	Shim t = 5 mm	N		
28	4812113090	Bracket	1		
29	4700500035	Hexagon screw, M12x20H	2		
30	4812116029	Protective casing	1		
31	4700904556	Steel plain washer 8,4x16x3,0	2		

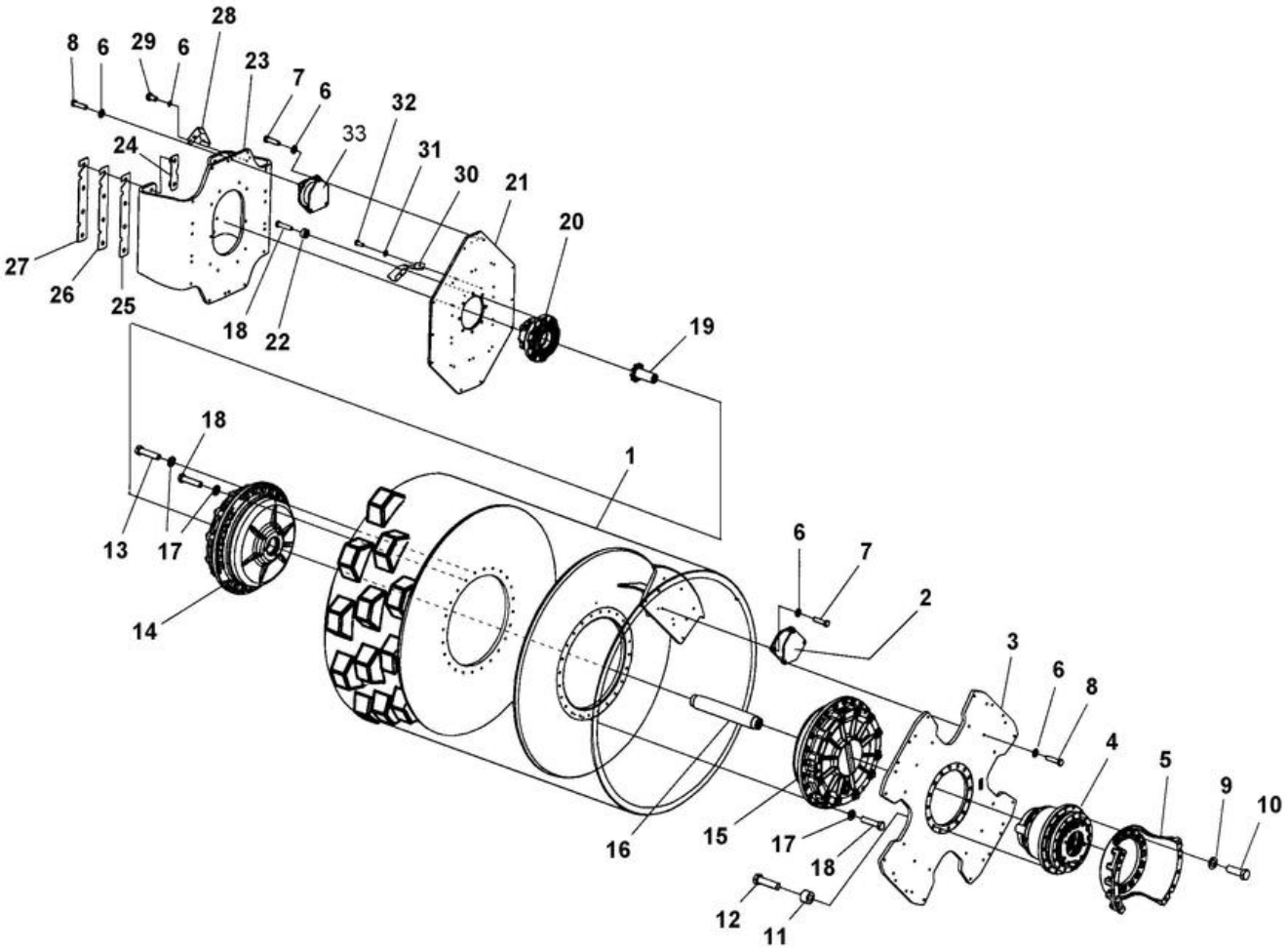
8
6
29
6
28
23
7
6
32
33
31
30
21
20
24
27
26
25
18
22
19
18
1
13
17
14
6
7
2
3
6
8
4
5
9
10
16
15
17
18
12
11

Item	Part No.	Name	Qty	L	SN INFO
32	4700500053	Screw, M8x20 mm 8.8 A2K	2		
33	4812119342	Shock absorber	10		

Comments for Page: Drum, cpl

(L)OCAL REMARKS

A | en_US | For D machines.

B | en_US | For PD machines.

C | en_US | For VM 3-class machines, option.

Drum 4812111831 Drum gear, cpl

Item	Part No.	Name	Qty	L	SN INFO
1	-	Screw	13		
2	-	Oil breather plug	2		
3	-	Gasket	2		
4	-	Cover assembly	1		
5	4812157157	O-ring	1		
6	-	Pad	1		
7	-	Sun gear	1		
8	-	1st Red assembly	1		
9	-	2nd red assembly	1		
10	-	Circlip	5		
11	-	Planetary assembly	5		
12	-	Spacer	5		
13	-	Lock nut	1		
14	4812157158	Housing and bearing	1		
15	4812157159	Lifetime seal	1		
16	-	Hub	1		
17	-	Brake shaft	1		
18	4812161259	Sintered disc	7		
19	D951069237	Steel disc	6		
20	4812161260	Backup ring	1		
21	4812157160	O-ring	1		
22	4812157161	O-ring	1		
23	4812161261	Backup ring	1		
24	-	Brake piston	1		
25	-	Lock nut	17		
26	-	Spring retainer plate	1		
27	-	Circlip	1		
28	4812157162	O-ring	1		
29	-	Motor adapter	1		
30	-	Screw	6		
31	-	Extension	1		
32	-	Gasket	4		
33	-	Plug	3		

Drum cartridges (D-version) 4812157393 Drum cartridge, vibration side (D/PD version)

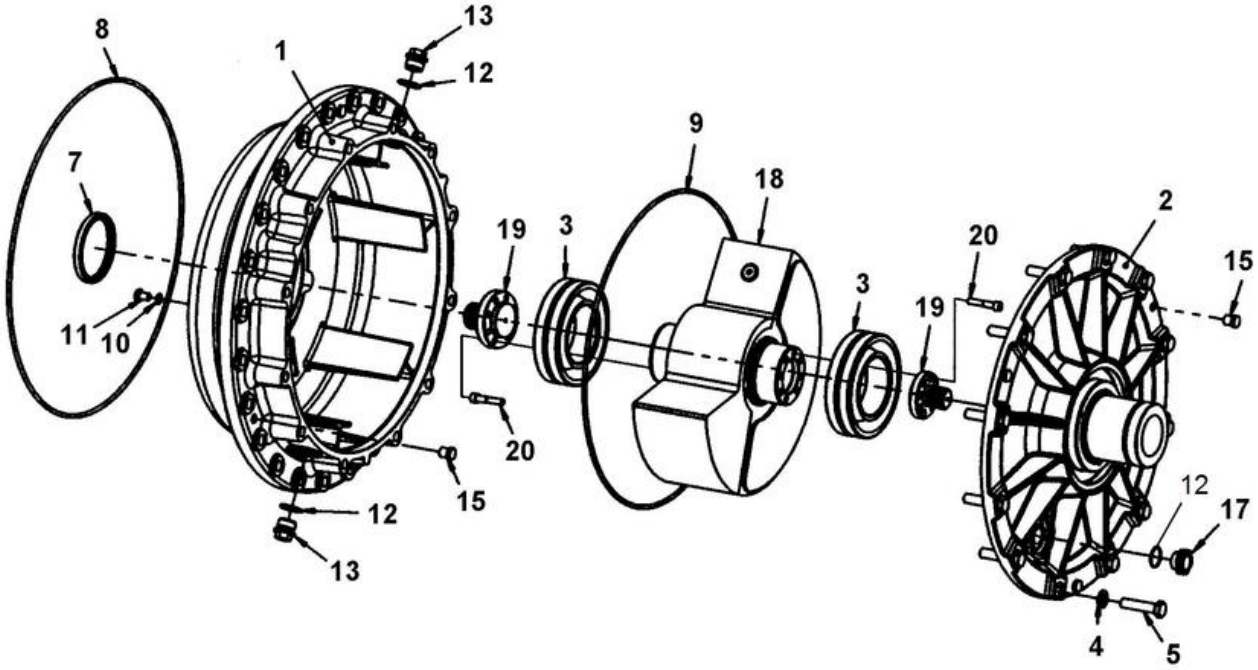

Item	Part No.	Name	Qty	L	SN INFO
1	4812112784	Housing	1		
2	4812112455	Bearing housing	1		
3	4700390896	Spherical roller bearing	2		
4	4700904232	Steel plain washer	12		
5	4700500082	Screw M16x70 8.8	12		
7	4812121209	Seal ring	1		
8	4700900776	O-ring	1		
9	4700900776	O-ring	1		
10	4700162027	Sealing	3		
11	4700500163	Hex. screw	3		
12	4700162017	Seal ring	3		
13	4700343744	Magnetic plug	1		
15	4700900775	Plug	6		
17	4812118814	Oil level glass	1		
18	4812112138	Eccentric shaft	1		
19	4700380018	Splined shaft	2		
20	4700791156	Screw M10-1,5x55 12,9	16		

Drum cartridges (D-version) 4812157394 Drum cartridge, vibration side (VM/VP 3-class)

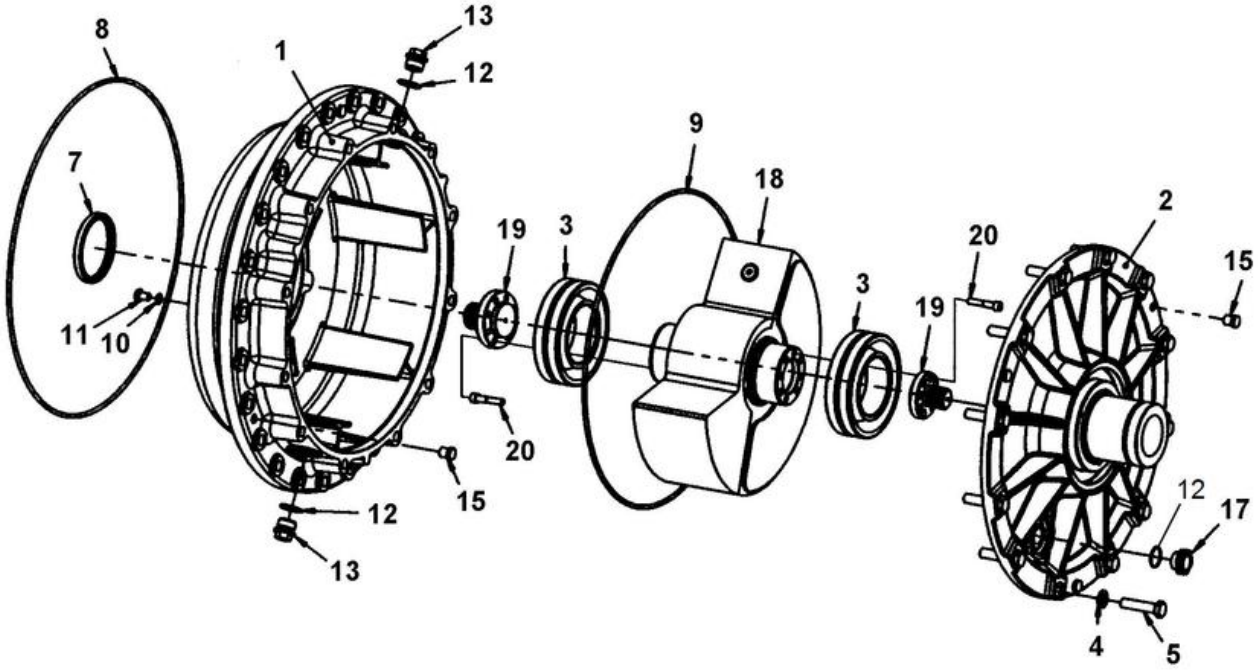

Item	Part No.	Name	Qty	L	SN INFO
1	4812112784	Housing	1		
2	4812112455	Bearing housing	1		
3	4700390896	Spherical roller bearing	2		
4	4700904232	Steel plain washer	12		
5	4700500082	Screw M16x70 8.8	12		
7	4812121209	Seal ring	1		
8	4700900776	O-ring	1		
9	4700900776	O-ring	1		
10	4700162027	Sealing	3		
11	4700500163	Hex. screw	3		
12	4700162017	Seal ring	3		
13	4700343744	Magnetic plug	1		
15	4700900775	Plug	6		
17	4812118814	Oil level glass	1		
18	4812112139	Eccentric shaft	1		
19	4700380018	Splined shaft	2		
20	4700791156	Screw M10-1,5x55 12,9	16		

Drum cartridges (D-version) 4812157784 Drum cartridge with shaft nut, vibration side (D/PD version)

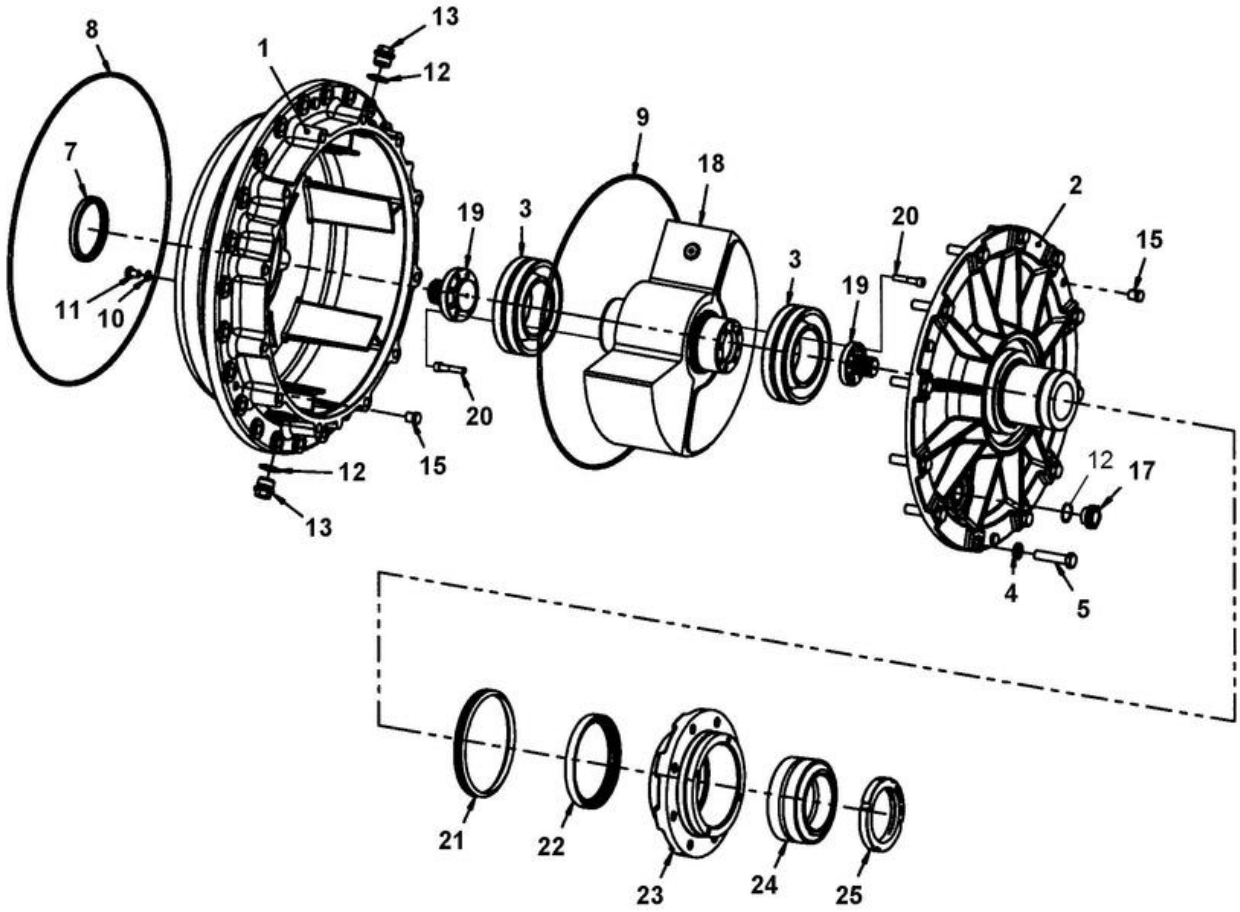

Item	Part No.	Name	Qty	L	SN INFO
1	4812112784	Housing	1		
2	4812112455	Bearing housing	1		
3	4700390896	Spherical roller bearing	2		
4	4700904232	Steel plain washer	12		
5	4700500082	Screw M16x70 8.8	12		
7	4812121209	Seal ring	1		
8	4700900776	O-ring	1		
9	4700900776	O-ring	1		
10	4700162027	Sealing	3		
11	4700500163	Hex. screw	3		
12	4700162017	Seal ring	3		
13	4700343744	Magnetic plug	1		
15	4700900775	Plug	6		
17	4812118814	Oil level glass	1		
18	4812112138	Eccentric shaft	1		
19	4700380018	Splined shaft	2		
20	4700791156	Screw M10-1,5x55 12,9	16		
21	4700929447	V-ring	1		
22	4700167023	Seal ring	1		
23	4700343318	Bearing housing	1		
24	4700116041	Taper roller bearing	1		
25	4812112413	Shaft nut	1		

Drum cartridges (D-version) 4812157785 Drum cartridge with shaft nut, vibration side (VM/VP 3-class)

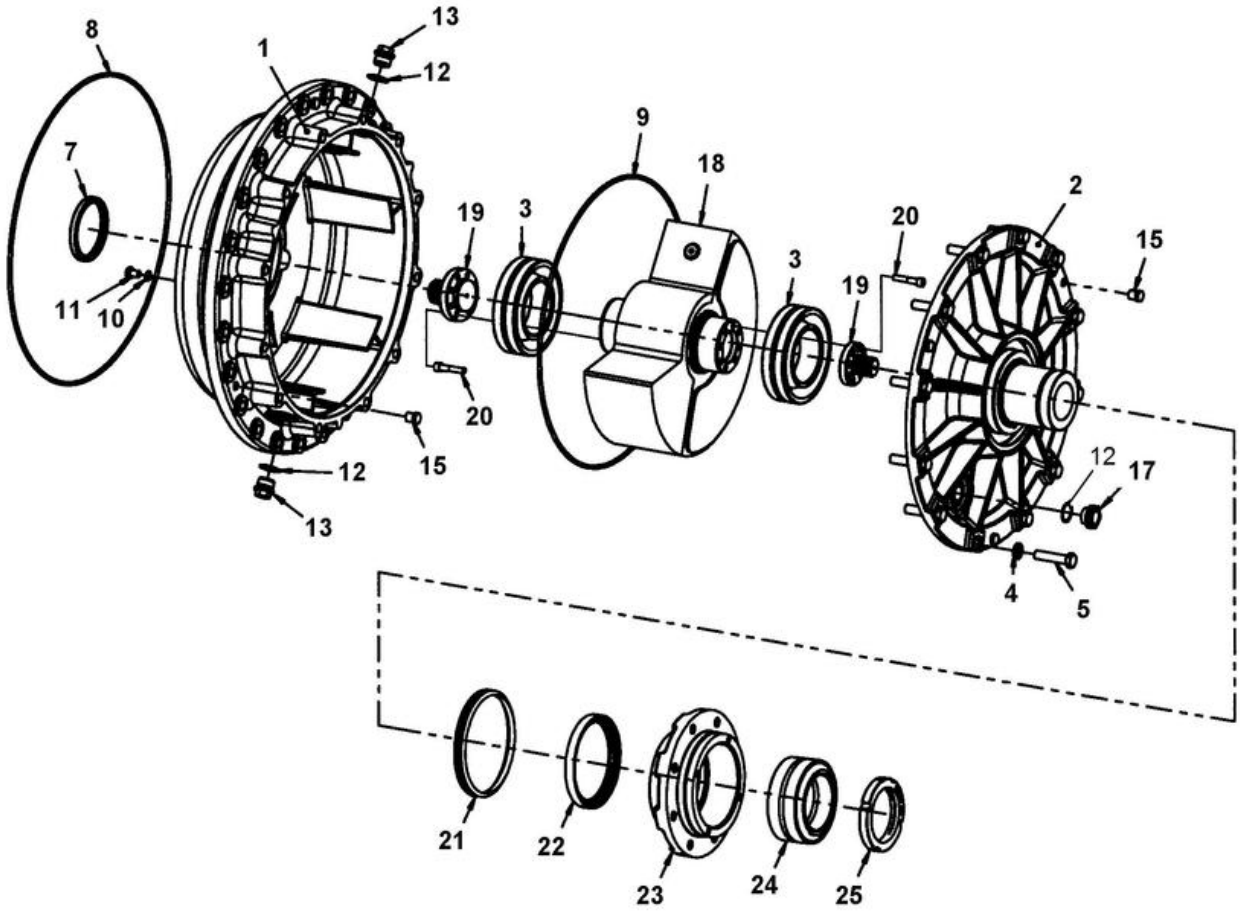

Item	Part No.	Name	Qty	L	SN INFO
1	4812112784	Housing	1		
2	4812112455	Bearing housing	1		
3	4700390896	Spherical roller bearing	2		
4	4700904232	Steel plain washer	12		
5	4700500082	Screw M16x70 8.8	12		
7	4812121209	Seal ring	1		
8	4700900776	O-ring	1		
9	4700900776	O-ring	1		
10	4700162027	Sealing	3		
11	4700500163	Hex. screw	3		
12	4700162017	Seal ring	3		
13	4700343744	Magnetic plug	1		
15	4700900775	Plug	6		
17	4812118814	Oil level glass	1		
18	4812112139	Eccentric shaft	1		
19	4700380018	Splined shaft	2		
20	4700791156	Screw M10-1,5x55 12,9	16		
21	4700929447	V-ring	1		
22	4700167023	Seal ring	1		
23	4700343318	Bearing housing	1		
24	4700116041	Taper roller bearing	1		
25	4812112413	Shaft nut	1		

Drum cartridges (D-version) 4812157390 Drum cartridge, drive side (D/PD version)

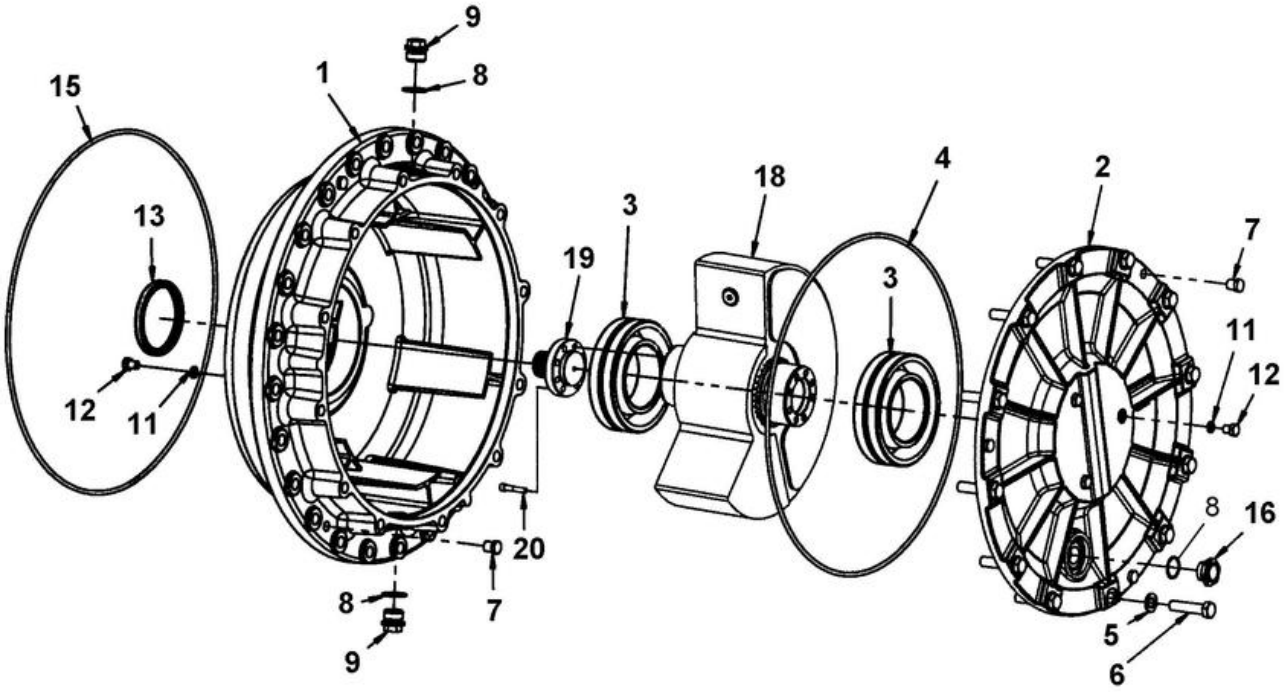

Item	Part No.	Name	Qty	L	SN INFO
1	4812112784	Housing	1		
2	4812111122	Bearing housing	1		
3	4700390896	Spherical roller bearing	2		
4	4700900776	O-ring	1		
5	4700904232	Steel plain washer	12		
6	4700500082	Screw M16x70 8.8	12		
7	4700900775	Plug	6		
8	4700162017	Seal ring	3		
9	4700343744	Magnetic plug	2		
11	4700162027	Sealing	6		
12	4700500163	Hex. screw	6		
13	4812121209	Seal ring	1		
15	4700900776	O-ring	1		
16	4812118814	Oil level glass	1		
18	4812112138	Eccentric shaft	1		
19	4700380018	Splined shaft	1		
20	4700791156	Screw M10-1,5x55 12,9	8		

Drum cartridges (D-version) 4812157391 Drum cartridge, drive side (VM/VP 3-class)

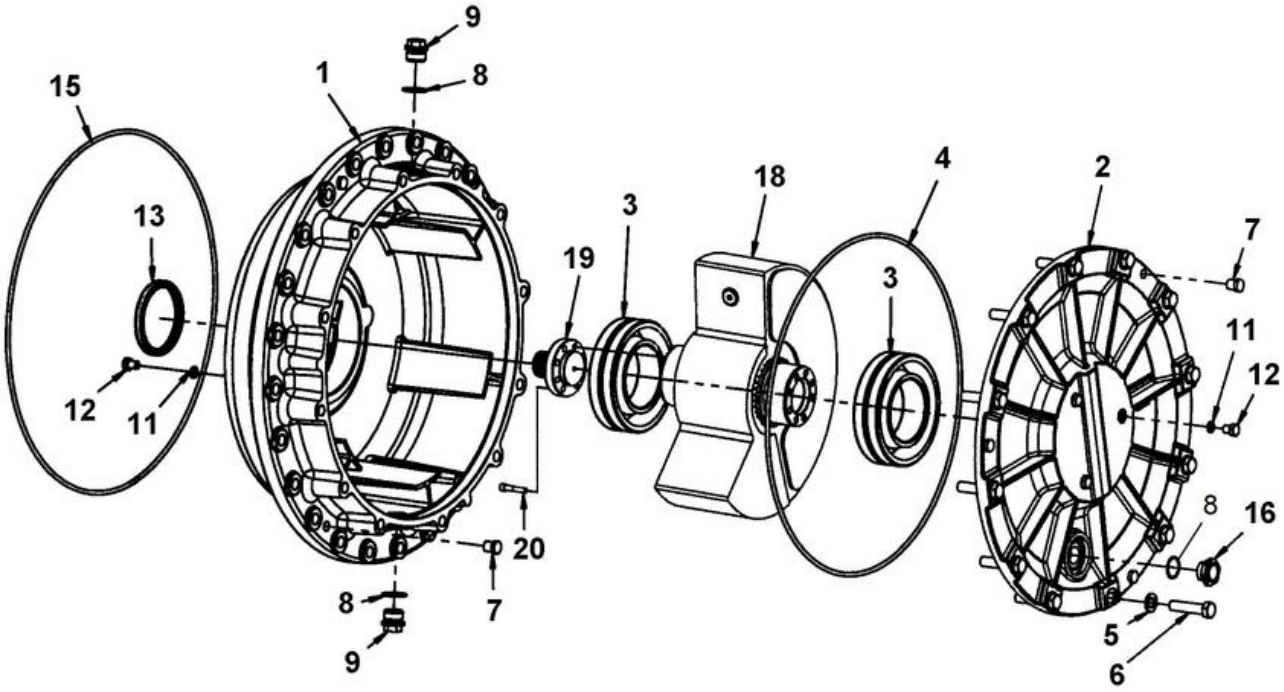

Item	Part No.	Name	Qty	L	SN INFO
1	4812112784	Housing	1		
2	4812111122	Bearing housing	1		
3	4700390896	Spherical roller bearing	2		
4	4700900776	O-ring	1		
5	4700904232	Steel plain washer	12		
6	4700500082	Screw M16x70 8.8	12		
7	4700900775	Plug	6		
8	4700162017	Seal ring	3		
9	4700343744	Magnetic plug	2		
11	4700162027	Sealing	6		
12	4700500163	Hex. screw	6		
13	4812121209	Seal ring	1		
15	4700900776	O-ring	1		
16	4812118814	Oil level glass	1		
18	4812112139	Eccentric shaft	1		
19	4700380018	Splined shaft	1		
20	4700791156	Screw M10-1,5x55 12,9	8		

Drum Tooth wheel module

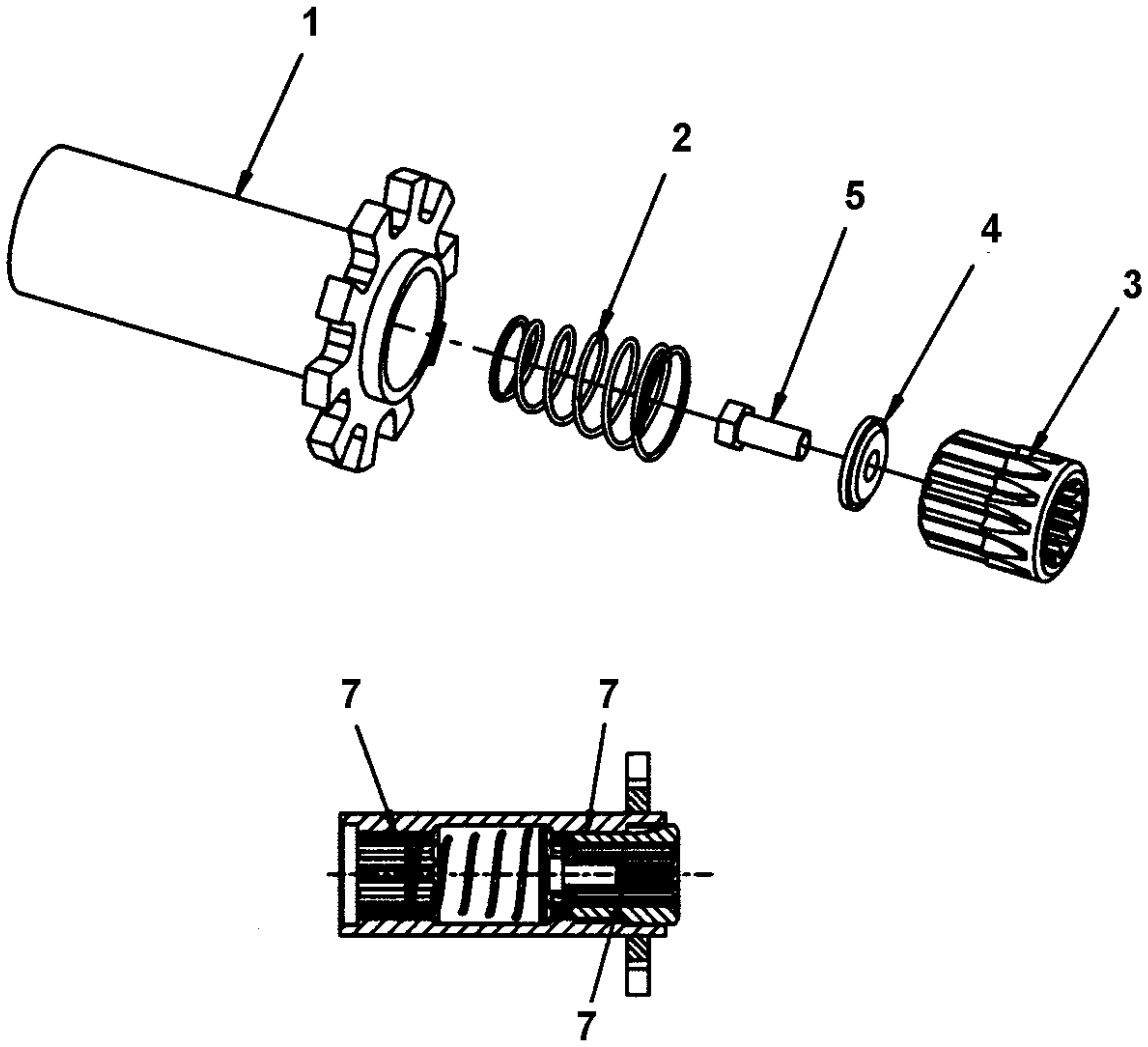

Item	Part No.	Name	Qty	L	SN INFO
1	4812114223	Wheel	1		
2	4700349715	Spring	1		
3	4700340863	Splined sleeve	1		
4	4812113832	Washer	1		
5	4700502053	Screw	1		
7	4812030096	Dynapac Roller Grease	N		

Drum Vibration motor adapter

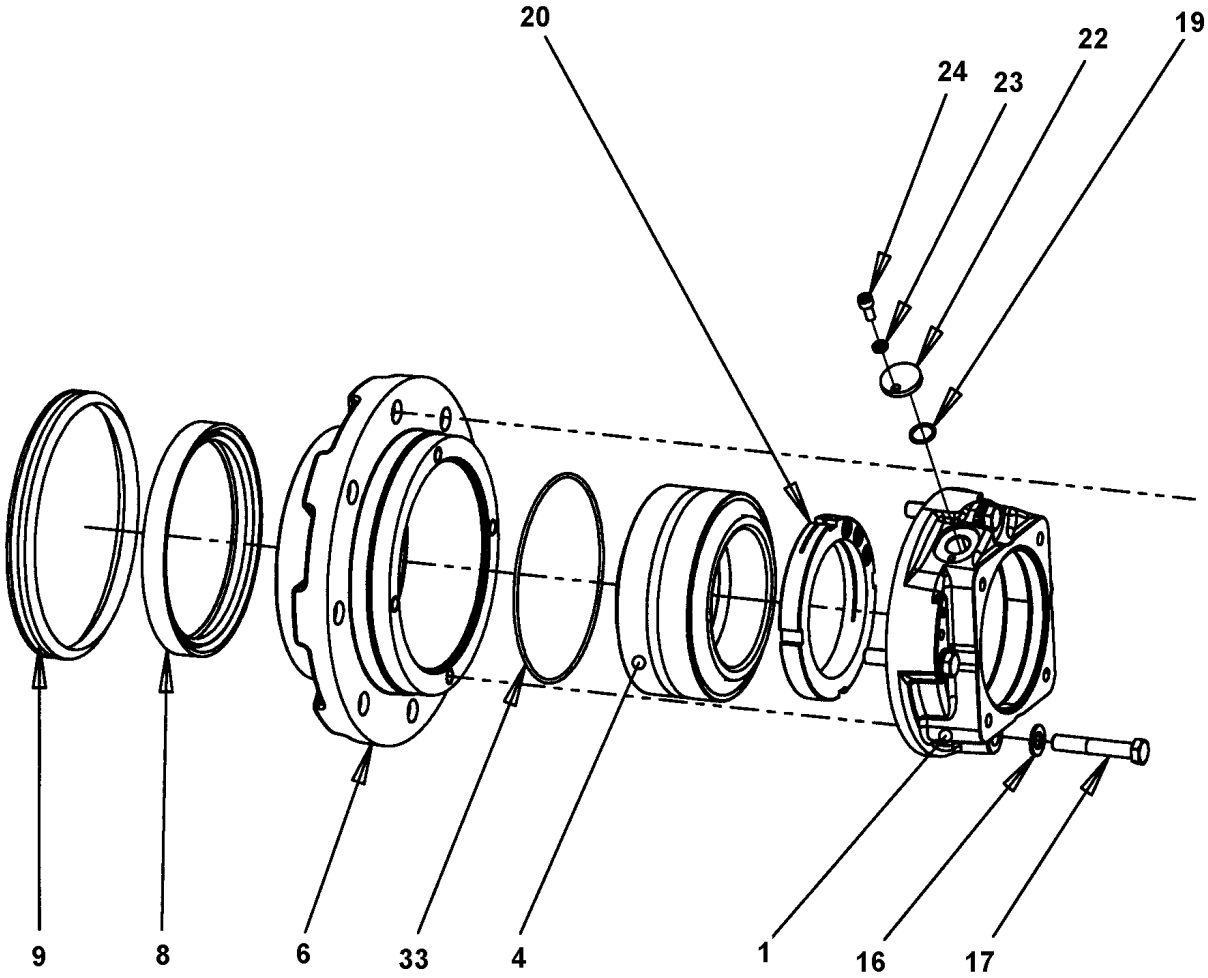

Item	Part No.	Name	Qty	L	SN INFO
1	4812116023	Adapter	1		
4	4700116041	Taper roller bearing	1		
6	4700343318	Bearing housing	1		
8	4700167023	Seal ring	1		
9	4700929447	V-ring	1		
16	4700904231	Washer, 13x24x2 mm 300 HV	4		
17	4700500133	Screw	4		
19	4812113903	O-ring	1		
20	4812112413	Shaft nut	1		
22	4812113476	Plug	1		
23	4700904228	Washer 6,4x12x1,5	1		
24	4700903795	Hexagon socket head cap screw	1		
33	4700160105	O-ring 70	1		

Engine Engine

Item	Part No.	Name	Qty	L	SN INFO
1	-	Diesel engine	1		
2	-	Belt guard module	1		
3	-	Bracket module	1		
4	4812112015	Coupling	1		
5	4700500029	Steel plain washer	8		
6	4700372772	Bracket	1		
7	4700904637	Washer	12		
8	4700508096	Hexagon socket head cap screw	12		
9	4812113959	Holder	1		
10	4700904229	Washer, 8.4x 6x1.5 mm 300HV	8		
11	4700500047	Hexagon head screw	4		
12	4700904281	Washer, 5,3x10x1 300HV	4		
13	4700500007	Hex. screw	4		
14	4700791145	Straight adapter	1		
15	4811000149	Hydraulic hose	1		
16	4700230516	Adapter	1		
17	4700230384	Cap	1		
18	4811000150	Hydraulic hose	1		
19	4700230515	Connector	1		
20	4700330383	Cap JIC, steel	1		
21	4700791431	Elbow 90, O-ring	1		
22	4812118245	Bracket	1		
23	4700500021	Screw, M8x25 mm 8.8 A2K	2		
24	4812112355	Holder	1		
26	4700395816	Plug socket 24V	1		
27	4812114221	Bracket	1		
28	4812117751	Bracket	1	A	
30	4700904489	Pipe clamp	1		
31	4700500022	Screw	2		
33	4700570005	Hexagon nut	2		
34	4700903586	Nut, M8x1.25 mm A2K	2		

Comments for Page: Engine

(L)OCAL REMARKS

A | en_US | Used with clamp 4812117710, rubber strip 4812117602 and screw 4700792119. See section 'Cooling system'.

Engine Diesel engine

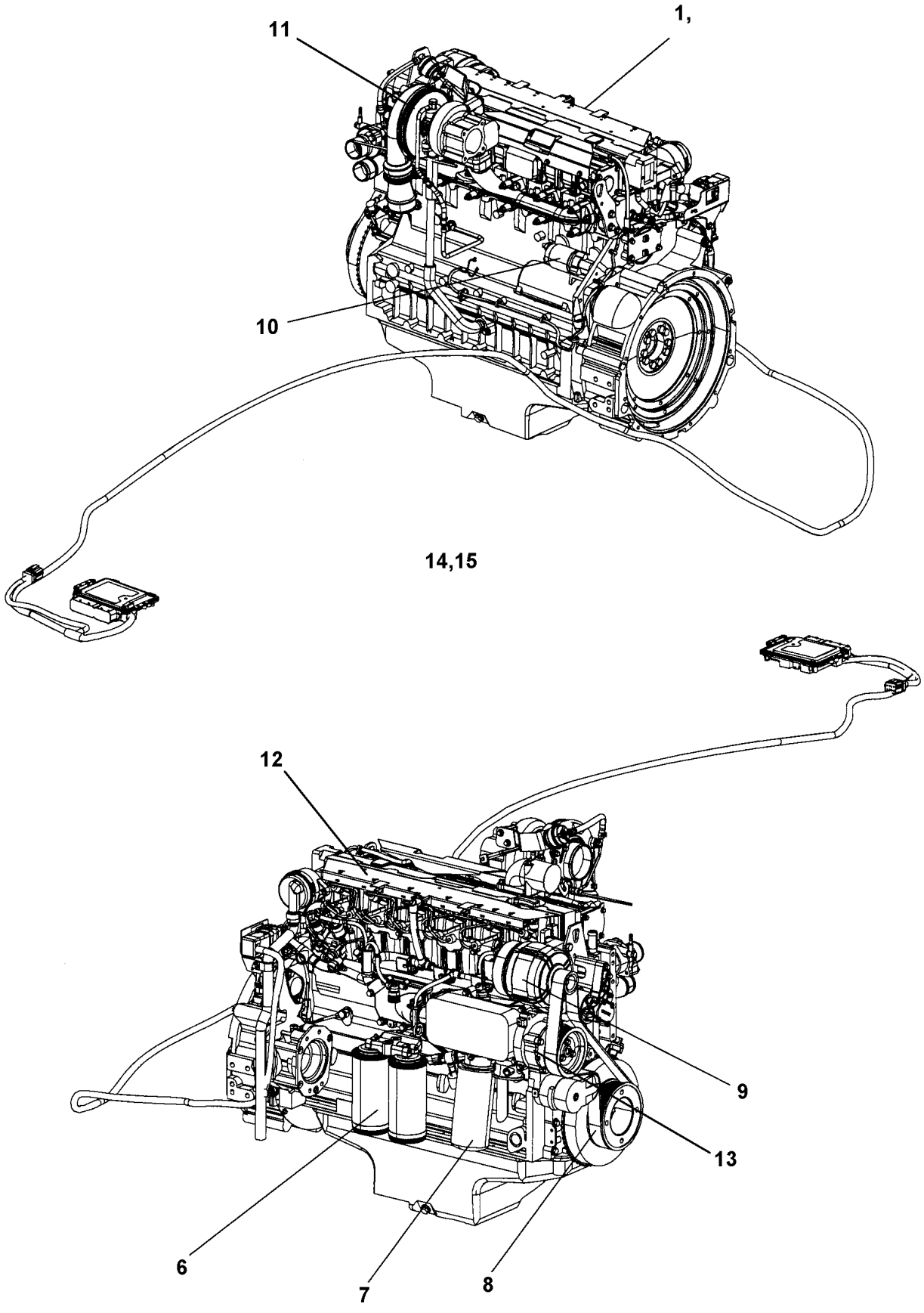

Item	Part No.	Name	Qty	L	SN INFO
1	4812113819	Diesel engine Deutz TCD2012 L06 2V 150kW -3A	1	A	
1	4812115147	Diesel engine Deutz TCD2012 L06 2V 150kW -3A	1	B	
6	4700950568	Fuel filter	2		
7	4700903942	Oil filter	1		
8	4812157596	V-belt	1		
9	D900505654	Alternator	1		
10	4812028097	Starter	1		
11	4812158177	Turbo charger, cpl	1		
12	4812158178	Injector	6		
13	D900509687	Water pump	1		
14	4812159786	Water temperature sensor	1		
15	4812159787	Oil pressure sensor	1		

Comments for Page: Diesel engine

(L)OCAL REMARKS

A | en_US | Non certified.

B | en_US | EU flex.

Engine Belt guard module

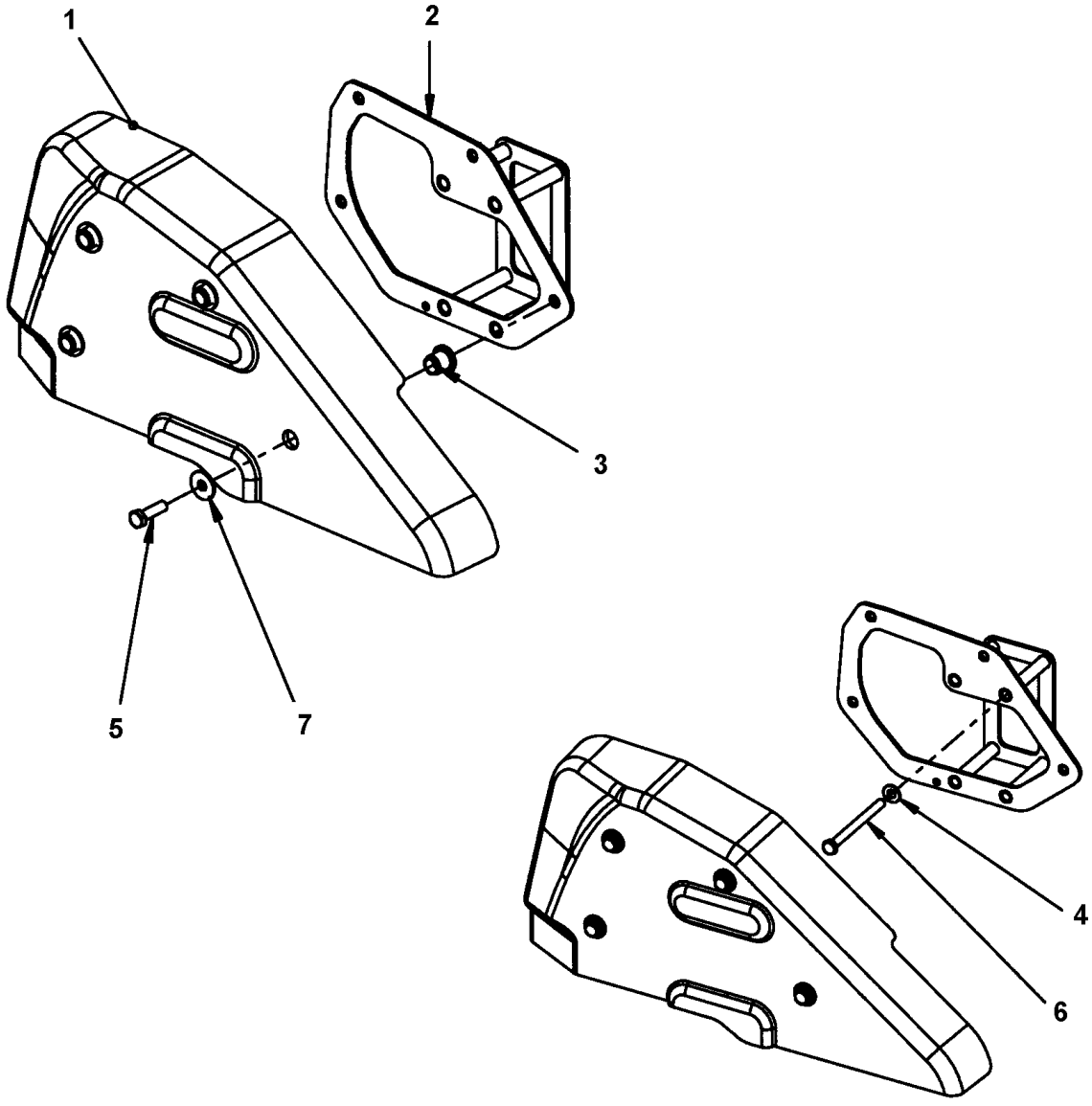

Item	Part No.	Name	Qty	L	SN INFO
1	4812117043	Belt guard	1		
2	4812117054	Bracket	1		
3	4812118203	Shock absorber	4		
4	4700904230	Steel plain washer	4		
5	4700500030	Hexagon head screw	4		
6	4700500055	Screw	4		
7	4700928441	Washer, 21 x 45 mm	4		

Engine Bracket module

Item	Part No.	Name	Qty	L	SN INFO
1	4812118285	Bracket	1		
2	4812114546	Bracket	1		
3	4812114547	Bracket	1		
4	4812114548	Bracket	1		
5	4812114397	Shock absorber	4		
6	4700359989	Spacer sleeve	8		
7	4700904558	Washer, 17x30x6 mm 300 HV	13		
8	4700500102	Hex. screw	4		
9	4700500056	Screw, M12x45 mm 8.8 A3K	8		
10	4700586021	Lock nut	5		
11	4812118287	Strut	1	A	
12	4812118432	Spacer sleeve	2	A	
13	4700500107	Screw M16x100 8.8	1		
14	4700500082	Screw M16x70 8.8	1		

Comments for Page: Bracket module

(L)OCAL REMARKS

A | en_US | Not used on all machines.

Engine Air cleaner

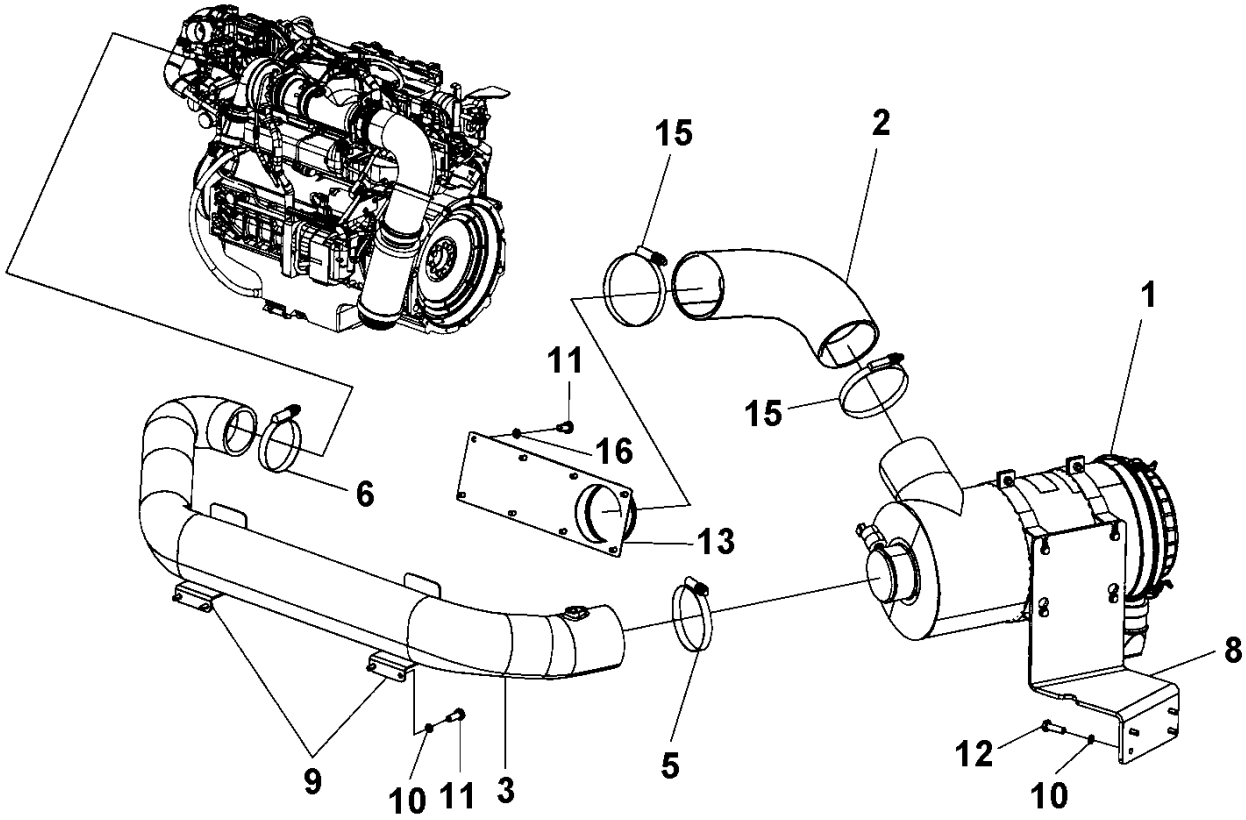

Item	Part No.	Name	Qty	L	SN INFO
1	-	Air cleaner module	1		
2	4812114107	Air intake hose	1		
3	4812113926	Air intake hose	1		
5	4700389600	Hose clamp	1		
6	4700378712	Clamp	1		
8	4812112487	Bracket	1		
9	4812118179	Hose holder	2		
10	4700904229	Washer, 8.4x 6x1.5 mm 300HV	8		
11	4700500053	Screw, M8x20 mm 8.8 A2K	12		
12	4700500021	Screw, M8x25 mm 8.8 A2K	4		
13	4812113573	Air intake duct	1		
15	4812118433	Hose clamp	2		
16	4700904556	Steel plain washer 8,4x16x3,0	8		

Engine Air cleaner module

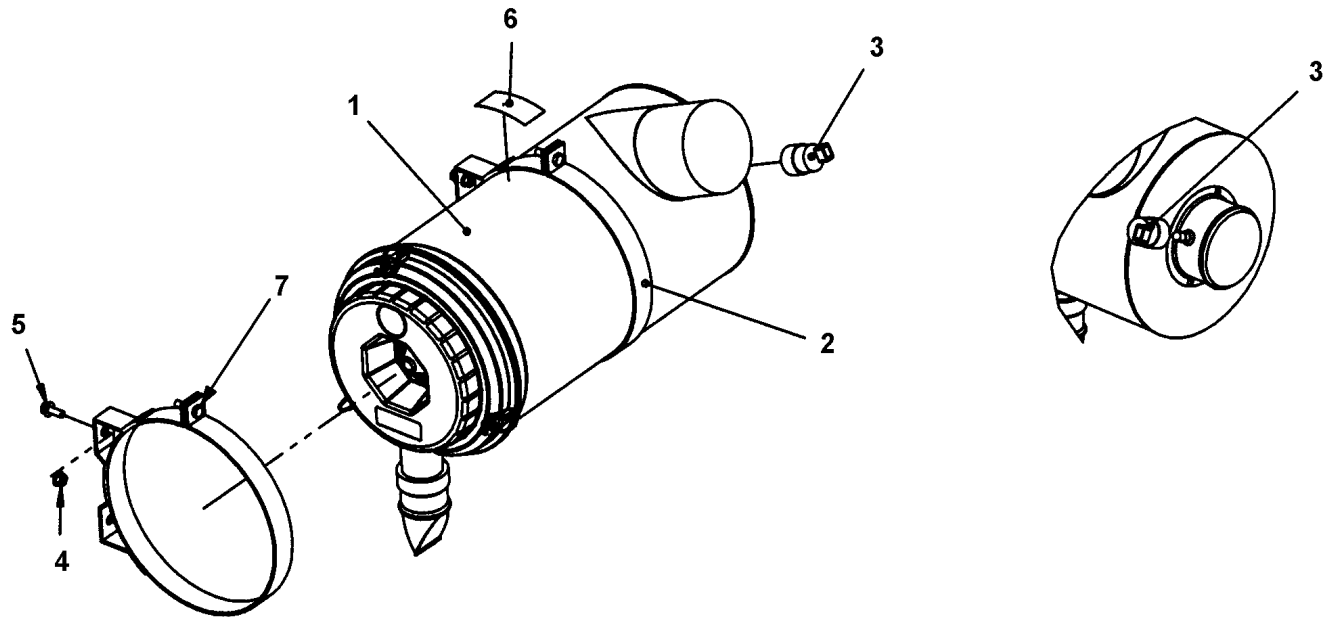

Item	Part No.	Name	Qty	L	SN INFO
1	4700394682	Air cleaner, cpl	1		
1	4700908399	Vacuator valve	1		
1	4700394688	Air filter element, main	1		
1	4700394689	Air filter element, safety	1		
1	4700395022	Cover	1		
2	4700813791	Mounting band	2		
3	4812117860	Indicator	1		
4	4700903586	Nut, M8x1.25 mm A2K	4		
5	4700500505	Screw, M8x20 mm 8.8 A2K	4		
6	4700791642	Decal "WARNING" Use of starting fluid prohib.	1		
7	4700904229	Washer, 8.4x 6x1.5 mm 300HV	2		

Engine Cooling system

Item	Part No.	Name	Qty	L	SN INFO
1	-	Cooler stand module	1		
2	4812121866	Hydraulic oil cooler	1		
3	4812122685	Water cooler	1		
4	4812121815	Charge air cooler	1		
5	-	Hose Kit	1		
6	-	Hoses	1		
7	4812112097	Shock absorber	8		
8	4700792322	Hose connection	1		
9	4700162004	Sealing	1		
10	4812114280	Shock absorber	6		

Engine Cooler stand module

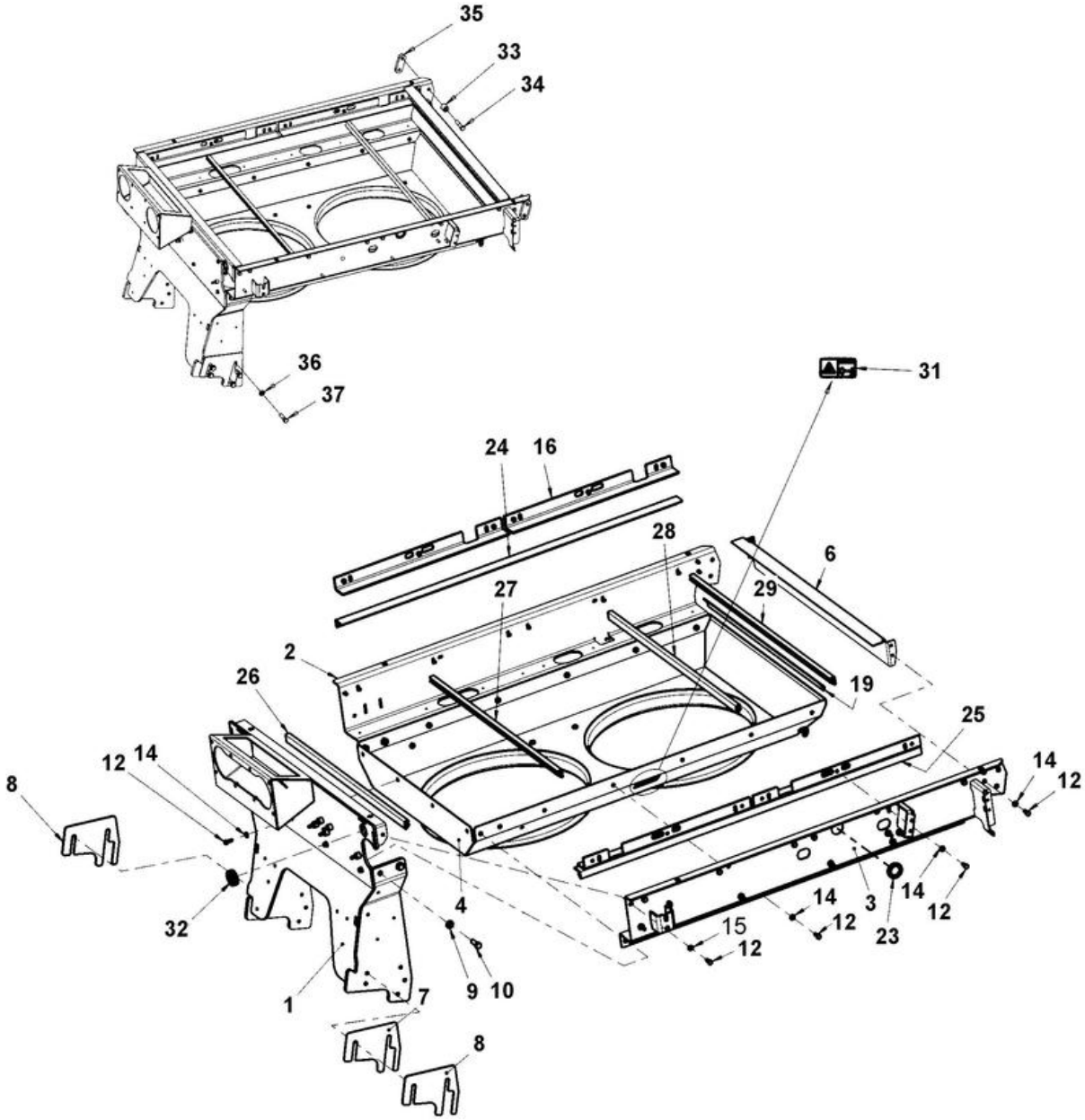

Item	Part No.	Name	Qty	L	SN INFO
1	4812118494	Cooler stand	1		
2	4812110768	Bracket	1		
3	4812110769	Bracket	1		
4	4812110843	Fan casing	1		
6	4812111264	Cover plate	1		
7	4812113878	Shim	N		
8	4812113879	Shim	N		
9	4700904231	Washer, 13x24x2 mm 300 HV	4		
10	4700500037	Hex. screw	4		
12	4700500053	Screw, M8x20 mm 8.8 A2K	32		
14	4700904556	Steel plain washer 8,4x16x3,0	30		
15	4700904640	Washer, 8.4x22x3 mm 300HV	2		
16	4700392075	Bracket	4		
19	4700791460	Edge strip	1XL	A	
23	4812114465	Grommet with membrane	1		
24	4812113708	Rubber strip	1XL	B	
25	4812113708	Rubber strip	1XL	B	
26	4700391299	Rubber strip	1XL	C	
27	4700391299	Rubber strip	1XL	D	
28	4700391299	Rubber strip	1XL	D	
29	4700391299	Rubber strip	1XL	D	
31	4700903423	Safety label, Rotating engine components	2		
32	4812119127	Grommet with membrane	1		
33	4700383024	Spacer sleeve	4		
34	4700925519	Screw M12x55 10.9 GEOMET	4		
35	4812110930	Nut-plate	2		
36	4700904231	Washer, 13x24x2 mm 300 HV	10		
37	4700947690	Screw	10		

Comments for Page: Cooler stand module

(L)OCAL REMARKS

A | en_US | L = 0.77m

B | en_US | L = 1.24m

C | en_US | L = 0.785m

D | en_US | L = 0.85m

Engine Hose kit

Item	Part No.	Name	Qty	L	SN INFO
1	4812113897	Charge air hose	1		
2	4812113898	Charge air hose	1		
3	4700386966	Hose clamp 2.3/4"-3.5/8"	2		
4	4700392810	Clamp	2		
5	4812117710	Clamp	1	B	
6	4812117602	Strip	1XL	A, B	
7	4700792119	Screw, M6x16 mm 8.8 A2K	1	B	
8	4812117699	Holder	1		
9	4812117602	Strip	1XL	C	
10	4700313102	Cable ties	N		

Comments for Page: Hose kit

(L)OCAL REMARKS

A | en_US | L = 0.19m

B | en_US | Used with bracket 4812117751, see section 'Engine'.

C | en_US | L = 0.13m

Engine Hoses

Item	Part No.	Name	Qty	L	SN INFO
1	4812117026	Cooler hose	1		
2	4700903703	Clamp	5		
3	4700313010	Hose clamp	4		
4	4700921050	Clamp	2		
5	4700313006	Hose clamp	2		
6	4700902286	Lock nut, M8x1.25 mm A2K	7		
7	4812117027	Cooler hose	1		
8	4700205027	Coolant hose	1XL	E	
9	4812117248	Cable tie with holder	2		

Comments for Page: Hoses

(L)OCAL REMARKS

E | L = 2.05m

Fuel system Fuel system

Item	Part No.	Name	Qty	L	SN INFO
1	-	Fuel tank module	1		
3	-	Hoses	1		
5	4700380436	Fuel cap	1		
6	4700904556	Steel plain washer 8,4x16x3,0	3		
14	4812156451	Pre-fuel filter, cpl	1		
14	4812031626	Pre-fuel filter, filter element	1		
14	4812002714	Pre-fuel filter, sensor	1		
17	4812117040	Bracket	1		
18	4812118102	Bracket	1		
19	4812114212	Bracket	1		
20	4700904229	Washer, 8.4x 6x1.5 mm 300HV	5		
21	4700500021	Screw, M8x25 mm 8.8 A2K	3		
22	4700500029	Steel plain washer	2		
23	4700508025	Screw, M6x20 mm 8.8 A2K	2		
24	4700603010	Washer 6,4x12x3	2		
25	-	Draining module, option	1		
26	4700904213	Steel Plain Washer	2		
27	4700500194	Hexagon head screw w Tuflok M12x40H 8.8 A3K	2		
28	-	Fuel filter WS element	1	B	
29	4812120376	Bracket	1		
30	4700500021	Screw, M8x25 mm 8.8 A2K	3		

Comments for Page: Fuel system

(L)OCAL REMARKS

B | en_US | See section for diesel engine.

Fuel system Fuel tank module

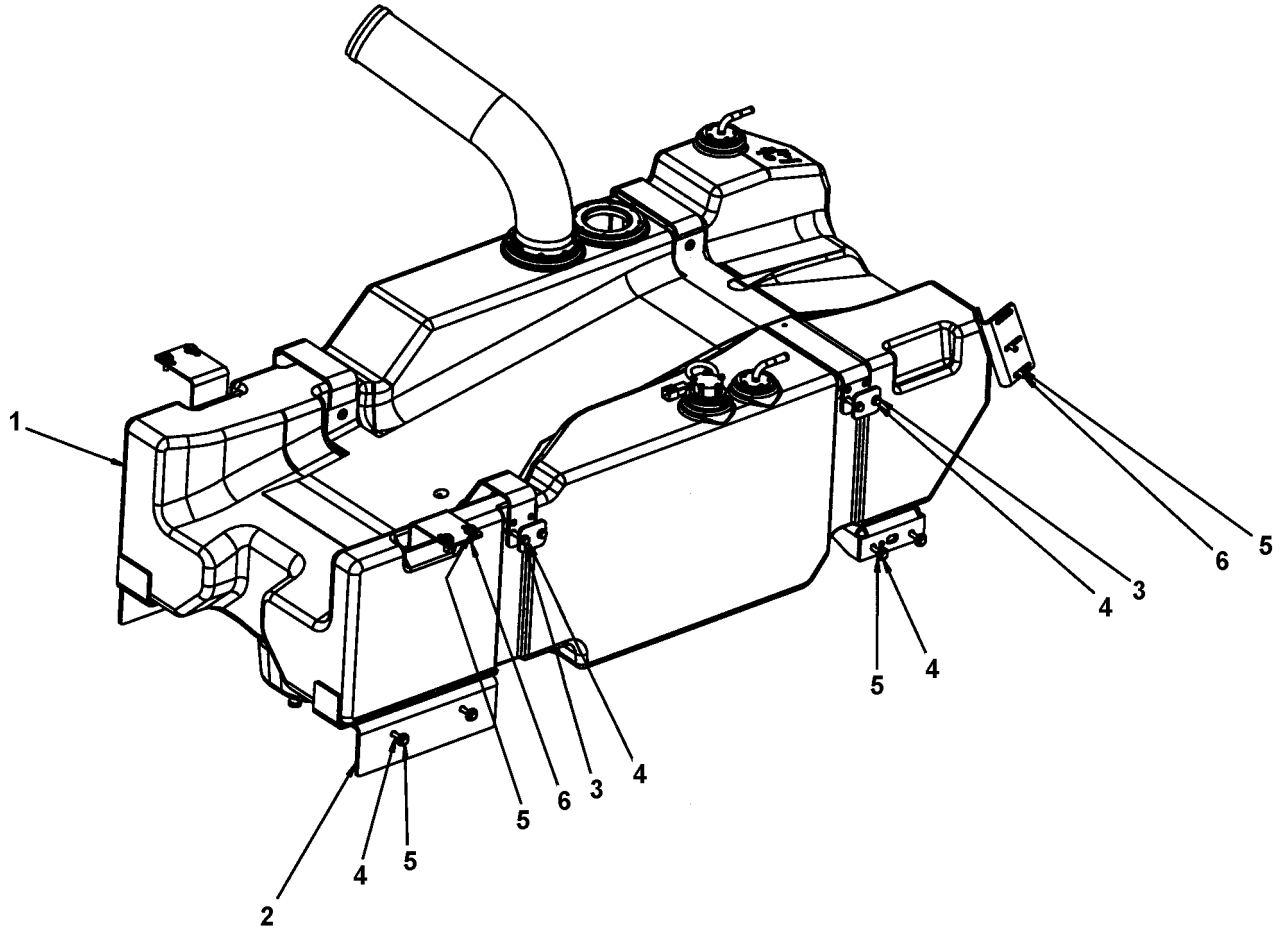

Item	Part No.	Name	Qty	L	SN INFO
1	-	Fuel Tank	1		
2	-	Brackets assy	1		
3	4700904229	Washer, 8.4x 6x1.5 mm 300HV	8		
4	4700500024	Screw M8x45	16		
5	4700904640	Washer, 8.4x22x3 mm 300HV	16		
6	4700500021	Screw, M8x25 mm 8.8 A2K	8		

Fuel system Fuel tank

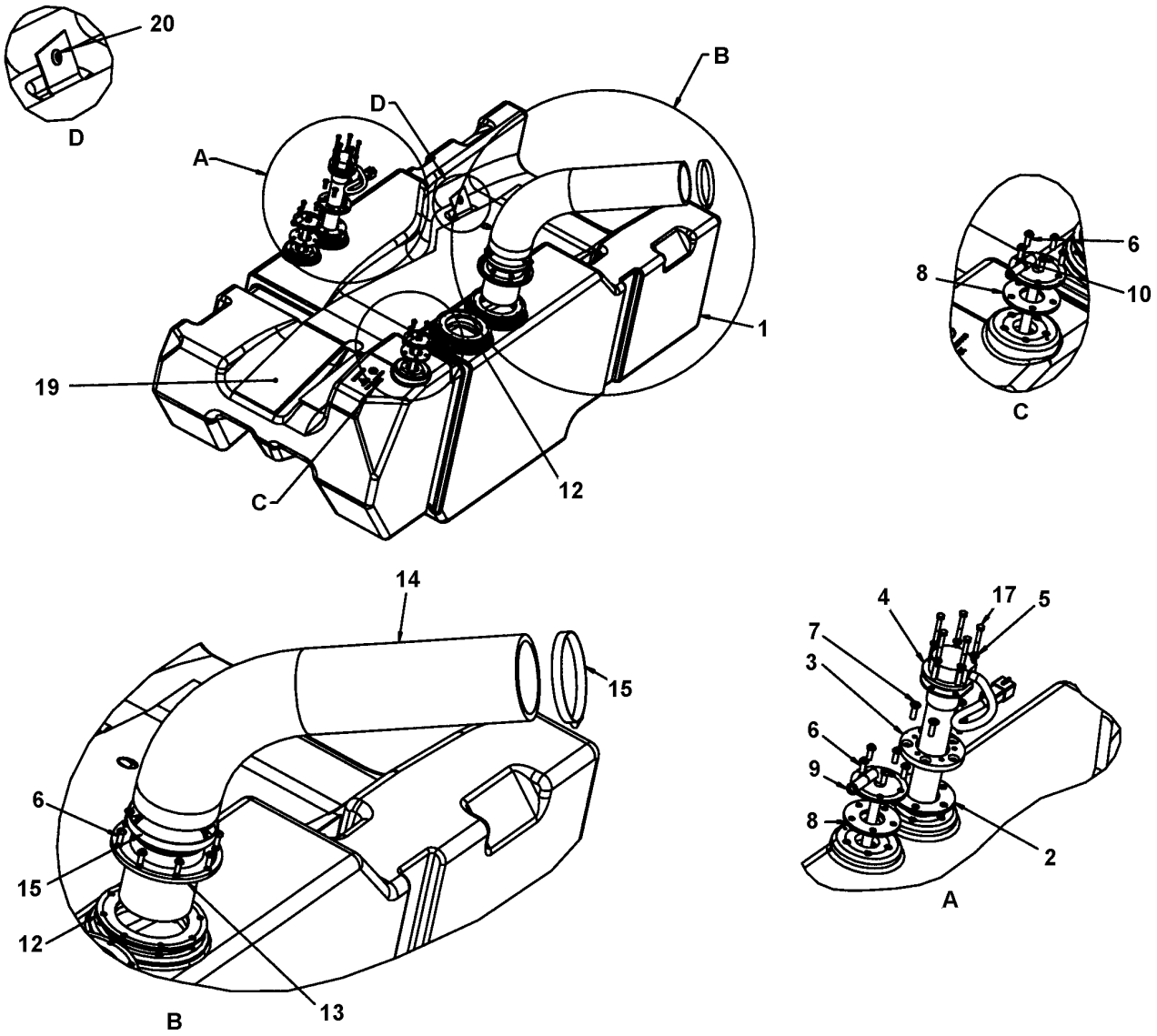

Item	Part No.	Name	Qty	L	SN INFO
1	4812118626	Fuel tank	1		
2	4812114949	Gasket	1		
3	4812114813	Adapter	1		
4	4812114935	Level sensor	1		
5	4700904281	Washer, 5,3x10x1 300HV	5		
6	4700904206	Screw, M6x16 mm	18		
7	4700513012	Screw, M6 x 20 mm 10.9 GEOMET®	5		
8	4812116834	Gasket	2		
9	4812118275	Fuel pipe	1		
10	4812116836	Fuel pipe	1		
12	4812112655	Flange gasket	2		
13	4812112656	Flange connection	1		
14	4812118670	Fuel hose	1		
15	4700313033	Hose clamp	2		
17	4700500009	Hex. screw	5		
19	4812112729	Rubber cloth	1		
20	4700395785	Expansion rivet	3		

Fuel system Brackets assy

Item	Part No.	Name	Qty	L	SN INFO
1	4812112343	Bracket	1		
2	4812112344	Bracket	1		
3	4812112639	Spacer	4		
4	4812112761	Rubber cloth	4		
5	4812113640	Bracket	1		
6	4812112647	Bracket	1		
7	4812113641	Bracket	1		
8	4812112777	Bracket	2		
9	4812112776	Bracket	2		
10	4812114913	Bracket	1		

Fuel system Hoses

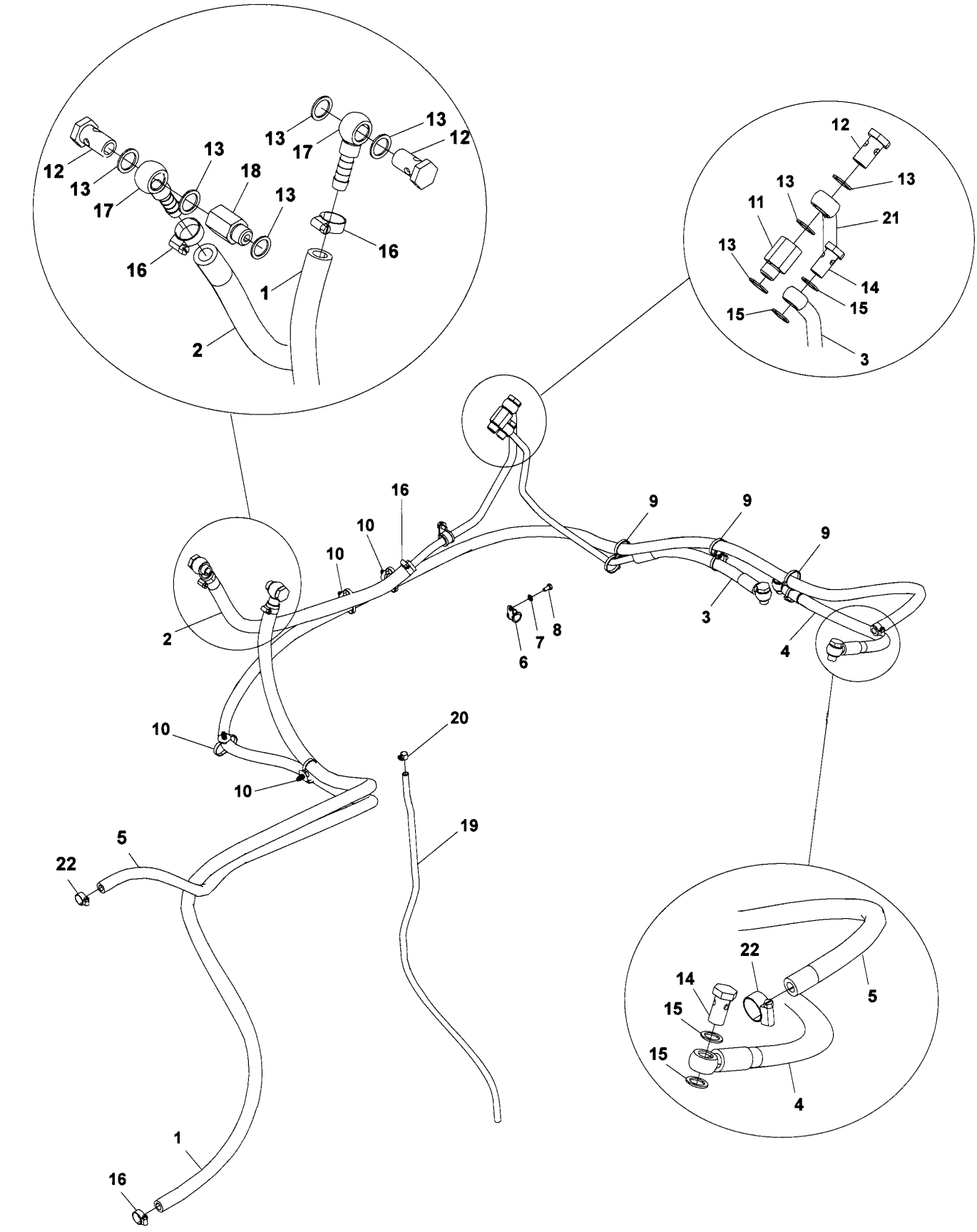

Item	Part No.	Name	Qty	L	SN INFO
1	4700904986	Fuel hose, fire-resistant	1XL	A	
2	4700904986	Fuel hose, fire-resistant	1XL	B	
3	4812117498	Fuel hose	1		
4	4700355524	Fuel hose	1		
5	4700904985	Fuel hose, fire-resistant	1XL	C	
6	4700921046	Clamp	2		
7	4700904228	Washer 6,4x12x1,5	2		
8	4700500012	Hex. screw	2		
9	4700792686	Cable tie with holder	3		
10	4700792441	Cable tie with holder	4		
11	4812113111	Straight connector	1		
12	4700234928	Screw, M16x1,5	3		
13	4700330330	Copper washer	8		
14	4700330171	Hollow screw, M14	4		
15	4700747282	Copper washer	8		
16	4700313002	Hose clamp	4		
17	4700234927	Banjo coupling	2		
18	4812113111	Straight connector	1		
19	4700902160	Plastic hose	1		
20	4700904394	Hose clamp	1		
21	4812118280	Fuel pipe	1		
22	4700313001	Hose clamp, 11-18 x 9 mm	2		
23	4700904213	Steel Plain Washer	2		
24	4700500194	Hexagon head screw w Tuflok M12x40H 8.8 A3K	2		

Comments for Page: Hoses

(L)OCAL REMARKS

A | en_US | L = 2m

B | en_US | L = 1.2m

C | en_US | L = 3.5m

Fuel system Draining module

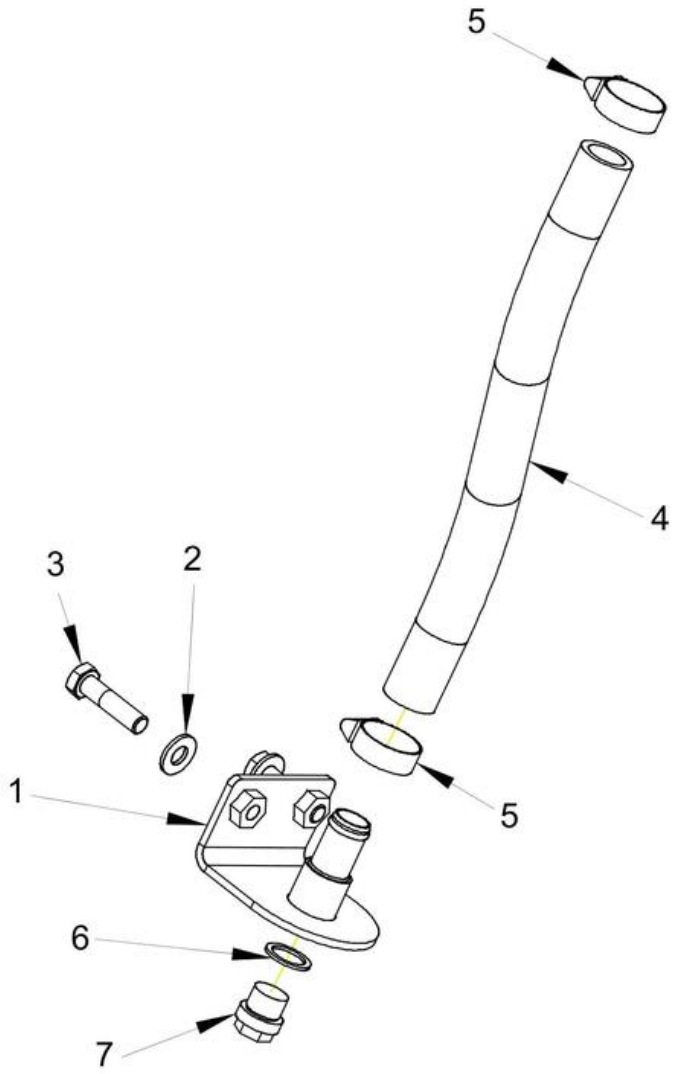

Item	Part No.	Name	Qty	L	SN INFO
1	4812120205	Bracket	1		
2	4700904230	Steel plain washer	2		
3	4700500031	Screw M10x40	2		
4	4700904988	Fuel hose	0.45		
5	4700313006	Hose clamp	2		
6	4700330331	Washer 18,2x23,9x1,5	1		
7	4700232160	Plug screw	1		

Engine Exhaust system

Item	Part No.	Name	Qty	L	SN INFO
1	4812116342	Bracket	1		
2	4812116341	Bracket	1		
3	4812114228	Muffler	1		
4	4812114227	Exhaust pipe	1		
5	4812113040	Exhaust pipe	1		
6	4812114224	Exhaust pipe	1		
7	4812114225	Exhaust pipe	1		
8	4812114226	Exhaust pipe	1		
9	4812112710	Clamp	1		
10	4700927857	Pipe clamp	4		
11	4700359989	Spacer sleeve	4		
12	4700500030	Hexagon head screw	4		
13	4700500021	Screw, M8x25 mm 8.8 A2K	6		
14	4700904556	Steel plain washer 8,4x16x3,0	4		
15	4812118499	Bracket	1		
16	4811000481	Pipe clamp	1		
17	4700570005	Hexagon nut	2		
18	4700904230	Steel plain washer	4		
19	4700500161	Screw	4		
20	4700904229	Washer, 8.4x 6x1.5 mm 300HV	3		
21	4700570005	Hexagon nut	3		
22	4812112479	Exhaust pipe	1		
23	4700904640	Washer, 8.4x22x3 mm 300HV	4		

Engine Expansion tank module

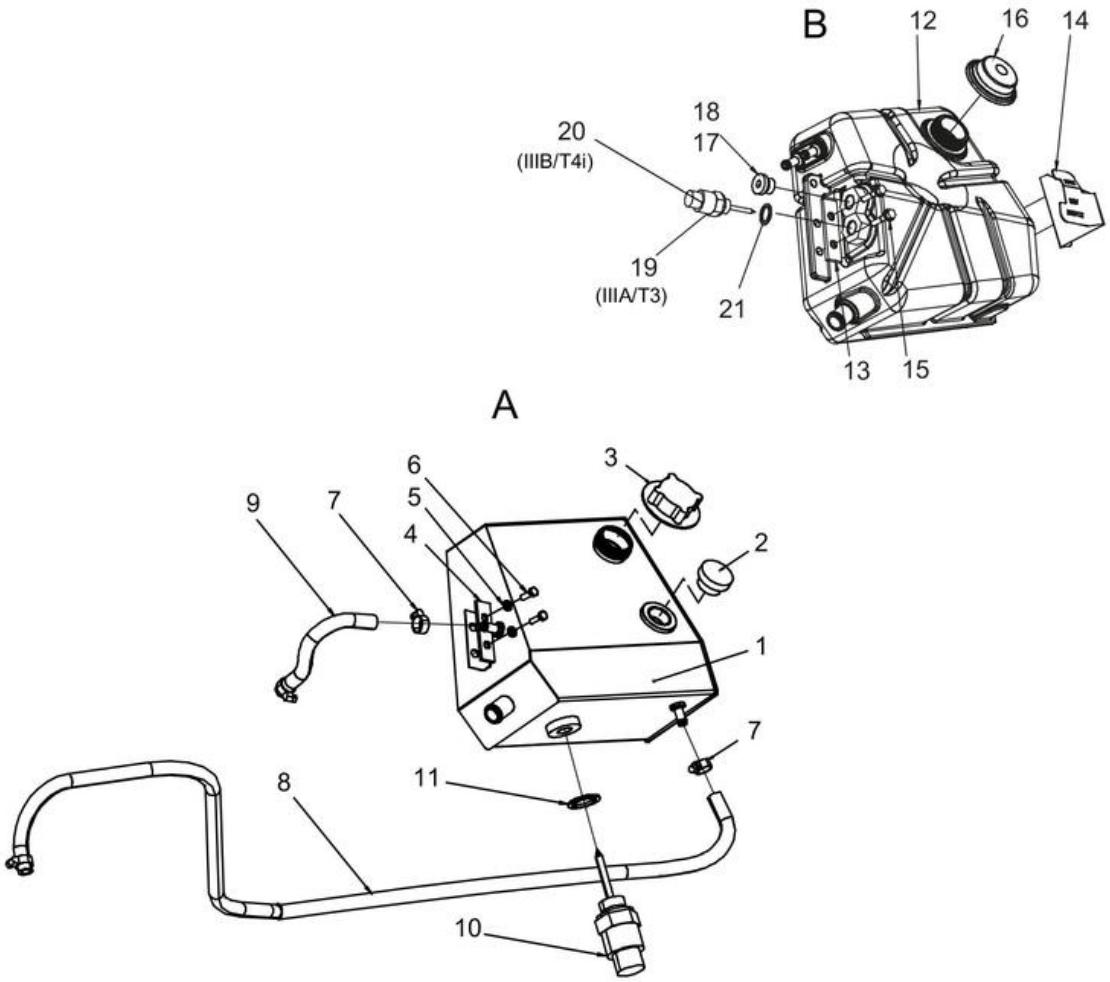

Item	Part No.	Name	Qty	L	SN INFO
1	4812110931	Expansion tank, metal	1		
2	4700372597	Level glass	1		
3	4700903714	Cooler cap	1		
4	4700381413	Washer	2		
5	4700904228	Washer 6,4x12x1,5	4		
6	4700500040	Screw, M6x20 mm 8.8 A2K	4		
7	4700313001	Hose clamp, 11-18 x 9 mm	4		
8	4700904985	Fuel hose, fire-resistant	1XL	A	
9	4700904985	Fuel hose, fire-resistant	1XL	B	
10	4812117942	Level sensor	1		
11	4700162015	Seal ring	1		
12	4812117379	Expansion tank, plastic	1		
13	4700381413	Washer	2		
14	4700500503	Screw, M6x30 mm 8.8 A2K	4		
15	4812117533	Indicator	1		
16	4700903714	Cooler cap	1		
17	4700792295	Steel plug	1		
18	4700160080	O-ring	1		
19	4812117942	Level sensor	1	C	
20	4812112421	Level sensor	1	D	
21	4700162015	Seal ring	1		

Comments for Page: Expansion tank module

(L)OCAL REMARKS

A | L=2.1m

B | L=0.18m

C | Deutz IIIA/T3

D | Deutz IIIB/T4i

Transmission Rear axle and wheels

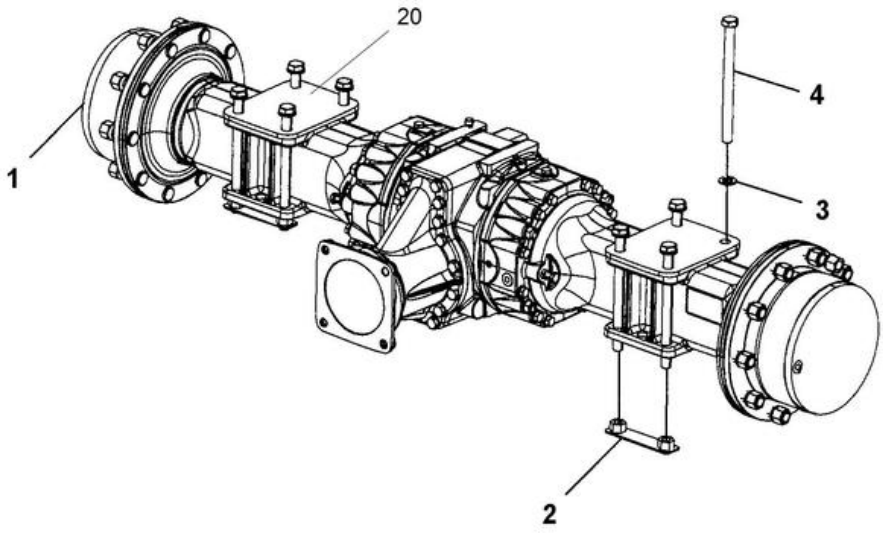

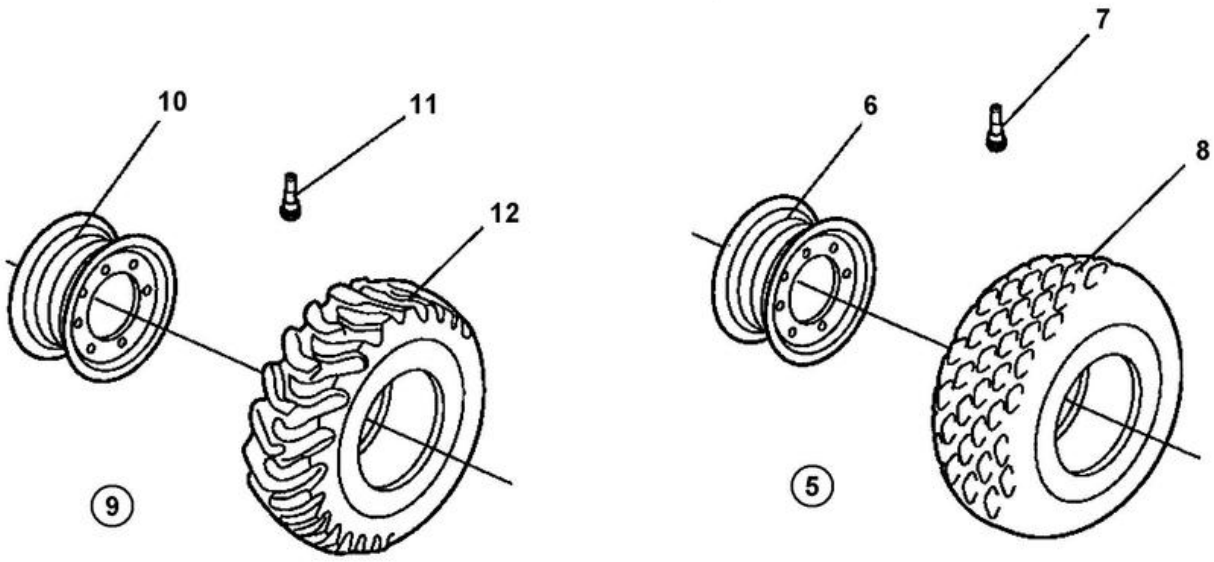

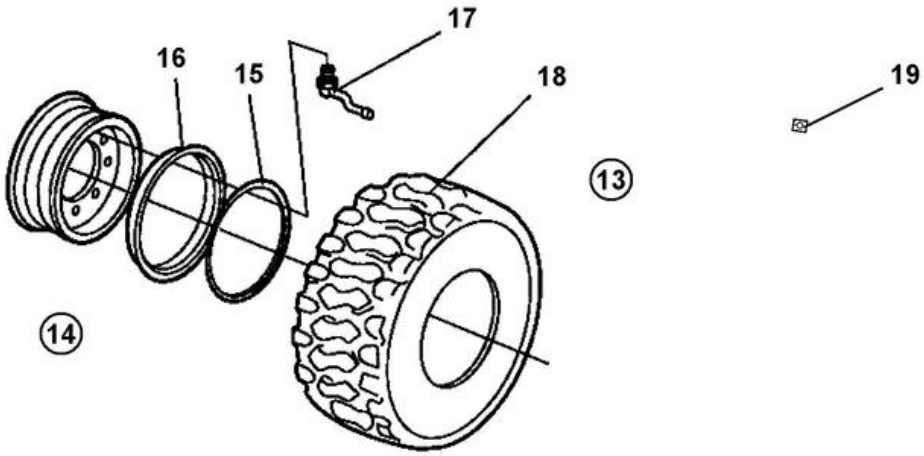

Item	Part No.	Name	Qty	L	SN INFO
1	4812111833	Rear axle No-Spin	1		
1	4812111832	Rear axle Limited-Slip	1		
2	4812112393	Nut-plate	4		
3	4700904233	Steel plain washer 21x36x3	8		
4	4700929217	Screw	8		
5	-	Wheel, cpl (All-weather)	2	A	
6	4812120674	Rim	1		
7	4700792261	Air charging valve Straight	1		
8	4812116039	Tyre	1		
9	-	Tractor wheel, cpl	2		
10	4812120674	Rim	1		
11	4700792261	Air charging valve Straight	1		
12	4700390589	Tyre	1		
13	-	Wheel, cpl (Premium)	2	F	
14	4812120676	Rim cpl	1		
15	4700901443	Snap ring	1		
16	4700901444	Side ring	1		
17	4700791175	Air charging valve	1		
17	4700791176	Valve foot	1		
18	4700901218	Tyre	1		
19	4700903985	Decal "SAFETY	4	G	
20	4812112435	Spacer	2	1	

Comments for Page: Rear axle and wheels

(L)OCAL REMARKS

1| en_US | Used together with Rear axle P/N 4812111833.

A | en_US | All-weather wheel.

F | en_US | Premium.

G | en_US | Used with liquid filled tyres.

4812111833 Rear axle No-Spin 4812111833 Rear axle No-Spin

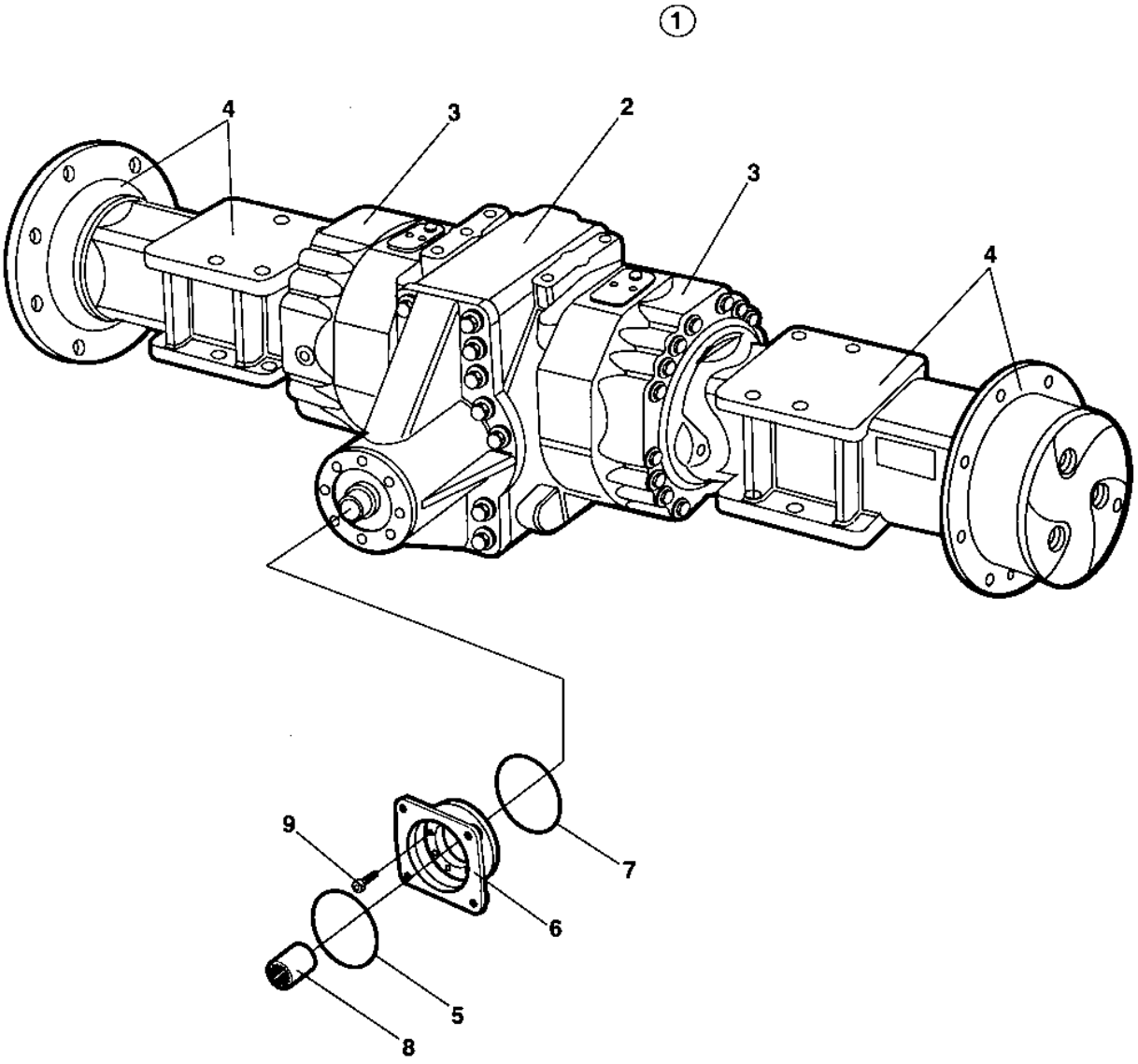

Item	Part No.	Name	Qty	L	SN INFO
1	4812111833	Rear axle No-Spin	1		
2	-	Differential with No-Spin	1		
3	-	Differential housing and brakes	2		
4	-	Planet gear	2		
5	4700909584	O-ring	1		
6	4700900255	Square Flange	1		
7	4700929648	O-ring	1		
8	4812156887	Splined sleeve	1		
9	4812156888	Screw	8		

4812111833 Rear axle No-Spin Differential with no-spin

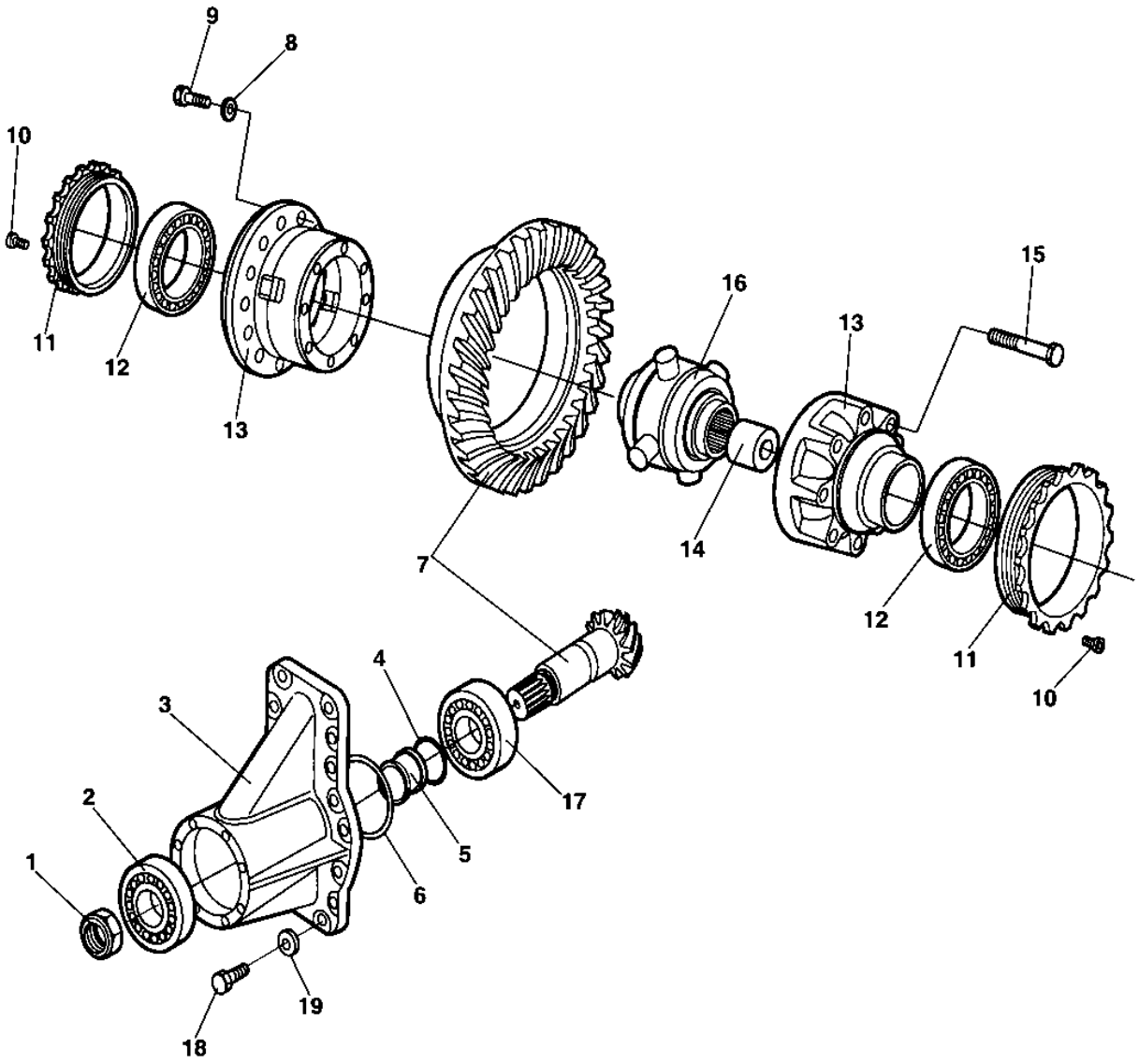

Item	Part No.	Name	Qty	L	SN INFO
1	4700929638	Nut	1		
2	4700909574	Tapered roller bearing	1		
3	4700908485	Housing	1		
4	4700939259	Shim t = 0.15mm	1		
4	4700909580	Shim t = 0.20mm	1		
4	4700909576	Shim t = 0.30mm	1		
4	4700929644	Shim t = 0.40mm	1		
4	4700939260	Shim t = 0.50mm	1		
5	4700909567	Spacer	1		
6	4700909568	Shim t = 0.10mm	1		
6	4700909569	Shim t = 0.20mm	1		
6	4700909570	Shim t = 0.50mm	1		
6	4700939258	Shim t = 0.15mm	1		
7	4700212553	Bevel gear set	1		
9	4700938991	Bolt	16		
10	4700938989	Bolt	2		
11	4700939261	Ring nut	2		
12	4700923342	Tapered roller bearing	1		
13	4700929630	Differential case	1		
14	4700929631	Spacer	1		
15	4812156885	Screw	8		
16	4700929626	Non-spin unit	1		
17	4700909581	Tapered roller bearing	1		
18	4812156886	Bolt	16		
19	4700909572	Spring washer	16		

4812111833 Rear axle No-Spin Differential housing and brakes

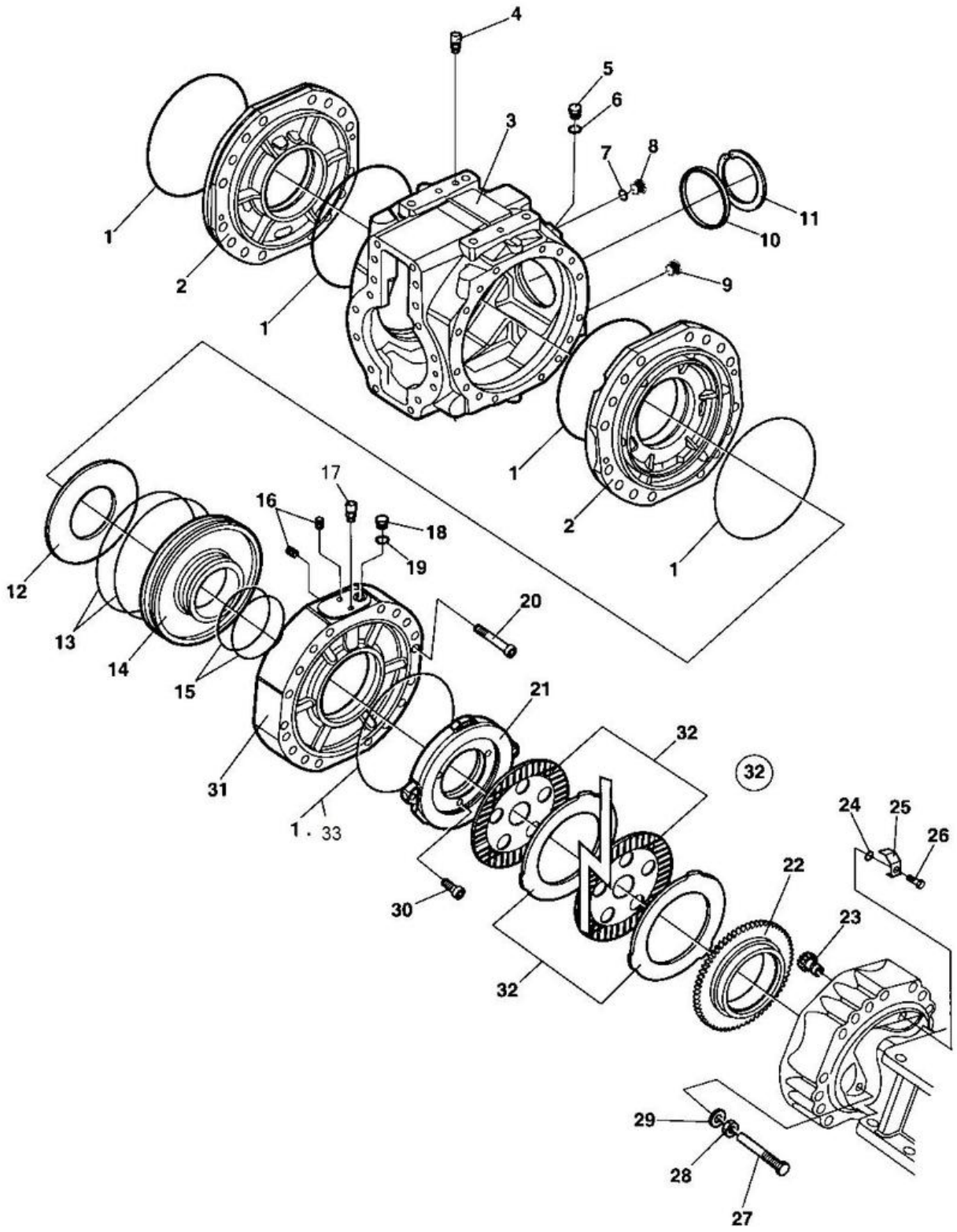

Item	Part No.	Name	Qty	L	SN INFO
1	4700909609	O-ring	6		
2	4700939255	Cover	2		
3	4700939256	Housing	1		
4	4700938984	Vent nipple	1		
5	4700909544	Screw	2		
6	4700938983	Seal washer	2		
7	4700330333	Copper washer	1		
8	4700909596	Plug	1		
9	4700926810	Magnetic plug	1		
10	4700938296	Plug	1		
11	4700929617	Snap ring	1		
12	4700909616	Spring	2		
13	4700909618	O-ring	4		
14	4700939280	Piston	2		
15	4700909619	O-ring	4		
16	4700939281	Bolt	4		
17	4700938984	Vent nipple	2		
18	4700939282	Bolt	2		
19	4700939036	Sealing washer	2		
20	4700939035	Screw	4		
21	4700939283	Disc	2		
22	4700939285	Ring	2		
23	4700909622	Pinion	2		
24	4700900966	O-ring	2		
25	4700939286	Lock plate	2		
26	4700909624	Screw	2		
27	4700909626	Bolt	4		
28	4700900957	Nut	4		
29	4700926847	Sealing washer	4		
30	4700939026	Screw	6		
31	4700939287	Cover	2		
32	4700939284	Brake disc kit	2		
32	--	Steel disc	6		
32	--	Steel disc	6		
33	4700909609	O-ring	2		

4812111833 Rear axle No-Spin Planet gear

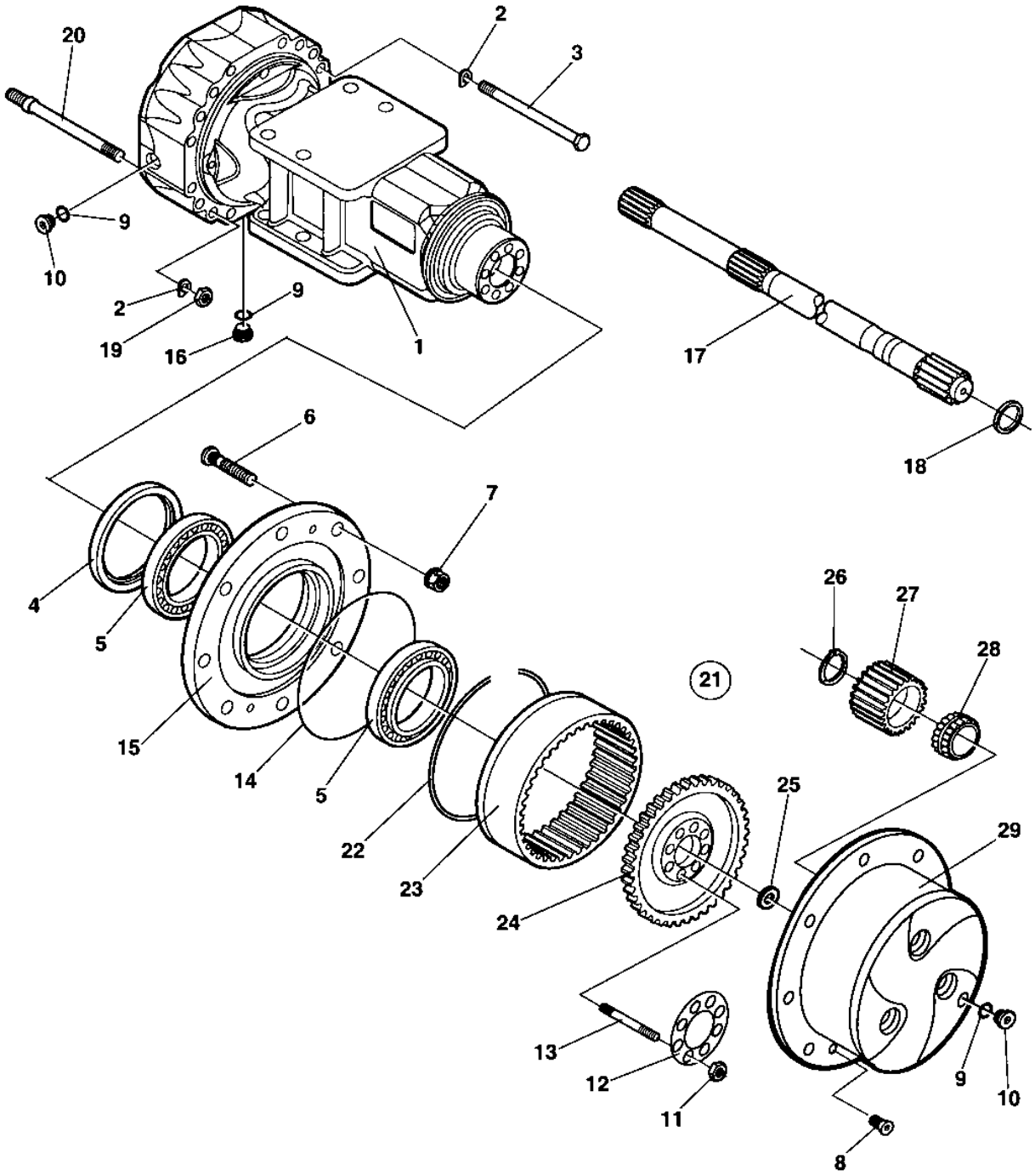

Item	Part No.	Name	Qty	L	SN INFO
1	4700939263	Axle case	2		
2	4700939003	Spring washer	32		
3	4700939264	Bolt	24		
4	4700939265	Seal	2		
5	4700939266	Bearing	4		
6	4700926781	Wheel screw	20		
7	4700901987	Wheel nut	20		
8	4700939015	Screw	4		
9	4700330333	Copper washer	6		
10	4700909596	Plug	4		
11	4700939016	Nut	20		
12	4700939275	Lock plate	2		
13	4700939017	Stud	20		
14	4700909609	O-ring	2		
15	4700939276	Wheel hub	2		
16	4700939350	Magnetic plug	2		
17	4700939277	Half shaft	2		
18	4700909586	Seal	2		
19	4700939019	Nut	8		
20	4700939278	Stud	8		
21		Planet gear carrier Cpl.	2		
22	4700939267	Circlip	2		
23	4700939268	Ring gear	2		
24	4700939269	Ring gear support	2		
25	4700939270	Washer	2		
26	4700939271	Seal	8		
27	4700939272	Planet gear	8		
28	4700939273	Bearing	8		
29		Planet gear carrier	2		

4812111832 Rear axle Limited-Slip 4812111832 Rear axle Limited-Slip

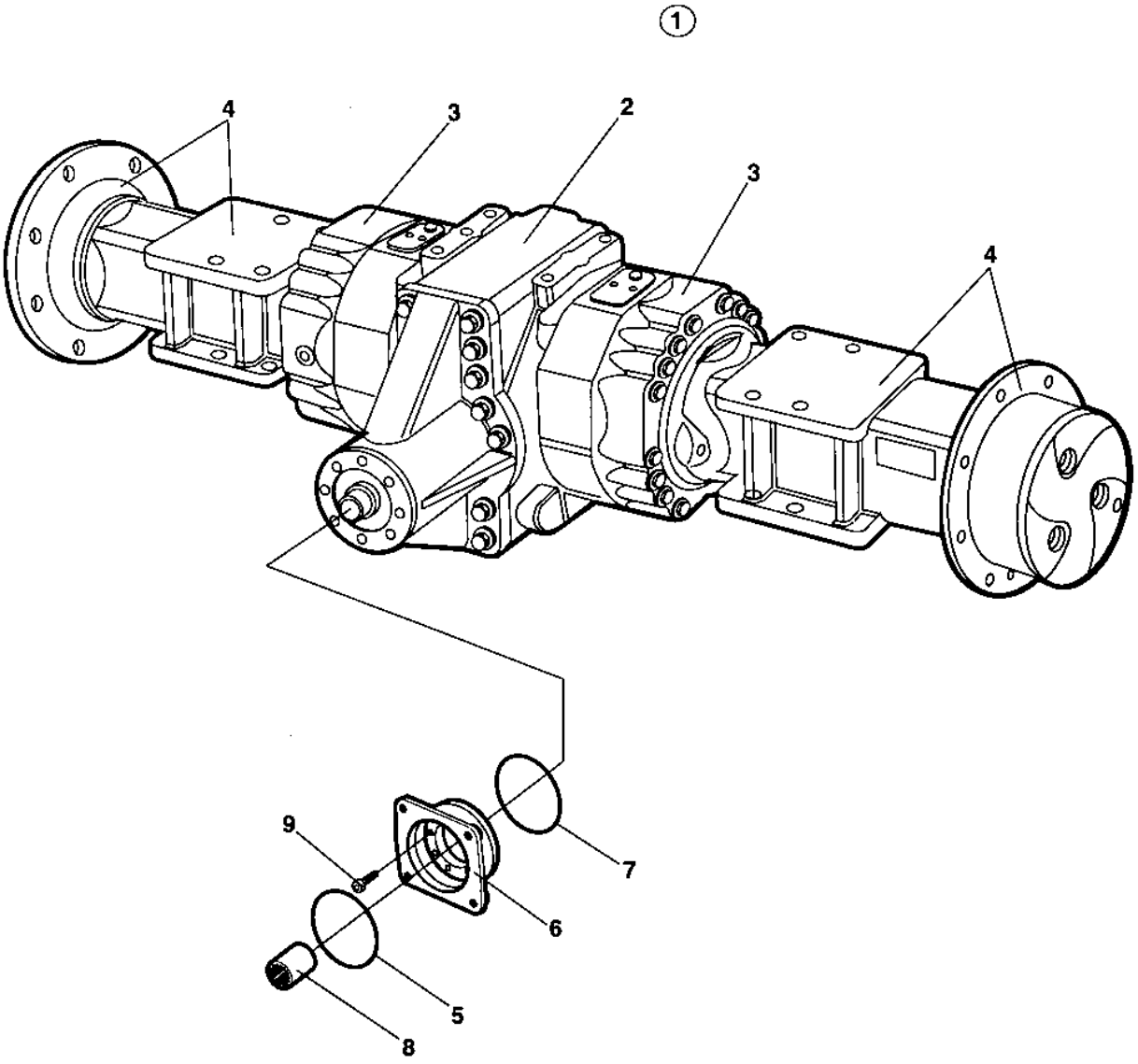

Item	Part No.	Name	Qty	L	SN INFO
1	-	Rear axle	1		
2	-	Differential	1		
3	-	Central housing and brakes	2		
4	-	Hub reduction	2		
5	4700909584	O-ring	1		
6	4700900255	Square Flange	1		
7	4700929648	O-ring	1		
8	4812156887	Splined sleeve	1		
9	4812156888	Screw	8		

4812111832 Rear axle Limited-Slip Differential

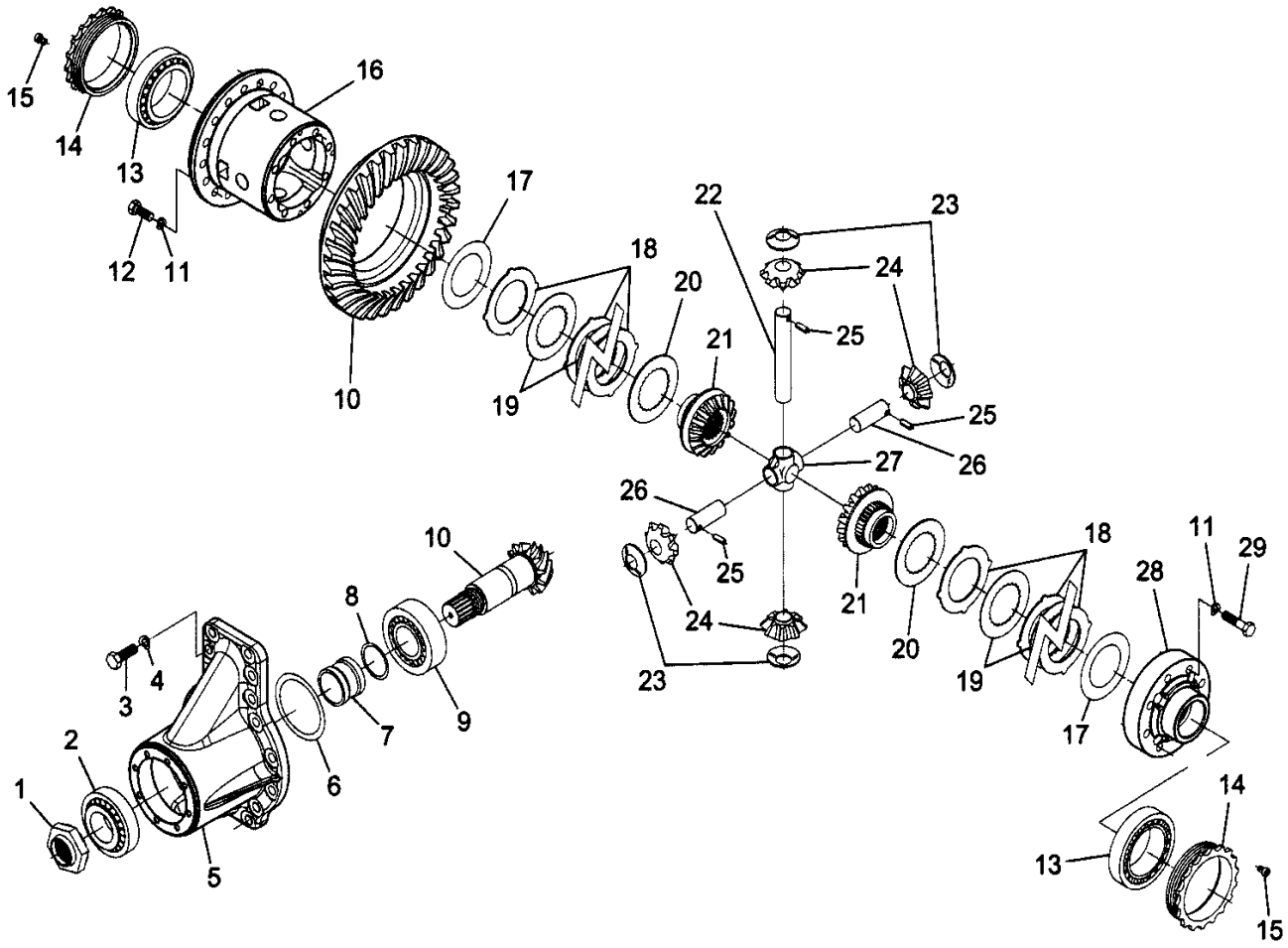

Item	Part No.	Name	Qty	L	SN INFO
1	4700929638	Nut	1		
2	4700909574	Tapered roller bearing	1		
3	4812156886	Bolt	16		
4	4700909572	Spring washer	16		
5	4700908485	Housing	1		
6	4700909568	Shim t = 0.10mm	1		
6	4700909569	Shim t = 0.20mm	1		
6	4700909570	Shim t = 0.50mm	1		
6	4700939258	Shim t = 0.15mm	1		
7	4700909567	Spacer	1		
8	4700939259	Shim t = 0.15mm	1		
8	4700909580	Shim t = 0.20mm	1		
8	4700909576	Shim t = 0.30mm	1		
8	4700929644	Shim t = 0.40mm	1		
8	4700939260	Shim t = 0.50mm	1		
9	4700909581	Tapered roller bearing	1		
10	4700212553	Bevel gear set	1		
12	4700938991	Bolt	16		
13	4700923342	Tapered roller bearing	2		
14	4700939261	Ring nut	2		
15	4700938989	Bolt	2		
16	4700909550	Differential carrier	1		
17	4700909551	Shim t = 0.30mm	1		
17	4700909553	Shim t = 0.10mm	1		
17	4700909552	Shim t = 0.40mm	1		
19	4700909554	Disc	8		
20	4700909557	Disc	2		
21	4700909558	Differential side gear	2		
22	4812156962	Pin	1		
23	4812156963	Friction washer	4		
24	4700926757	Differential pinion	4		
25	4700909561	Roll pin	3		
26	4812156964	Differential Shaft	2		
27	4700909565	Shaft retainer	1		
28	4700909562	Differential carrier cover	1		
29	4812156965	Bolt	8		

4812111832 Rear axle Limited-Slip Central housing and brakes

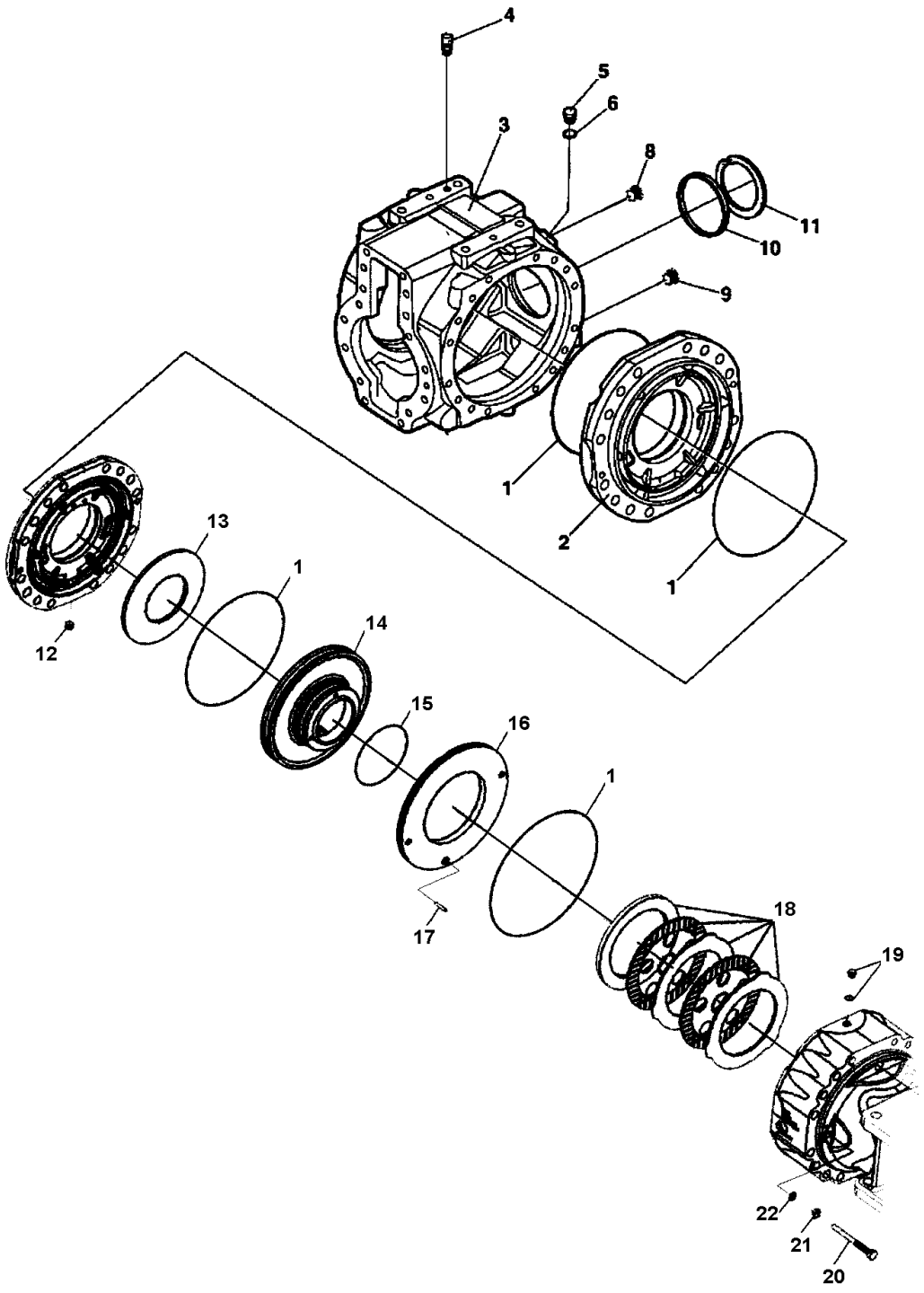

Item	Part No.	Name	Qty	L	SN INFO
1	4700909609	O-ring	8		
2	4812156883	Cover	2		
3	4812156884	Housing	1		
4	4700938984	Vent nipple	1		
5	4700909544	Screw	2		
6	4700938983	Seal washer	2		
8	4700939348	Plug	1		
9	4700926810	Magnetic plug	1		
10	4700938296	Plug	1		
11	4700929617	Snap ring	1		
12	4812156959	Bolt	2		
13	4700909616	Spring	2		
14	4812156953	Piston	2		
15	4812156954	O-ring	2		
16	4812156955	Ring	2		
17	4812156956	Dowel	2		
18	4812156957	Brake disc kit	2		
19	4812156958	Plug	2		
20	4700909626	Bolt	4		
21	4700900957	Nut	4		
22	4700926847	Sealing washer	4		

4812111832 Rear axle Limited-Slip Hub reduction

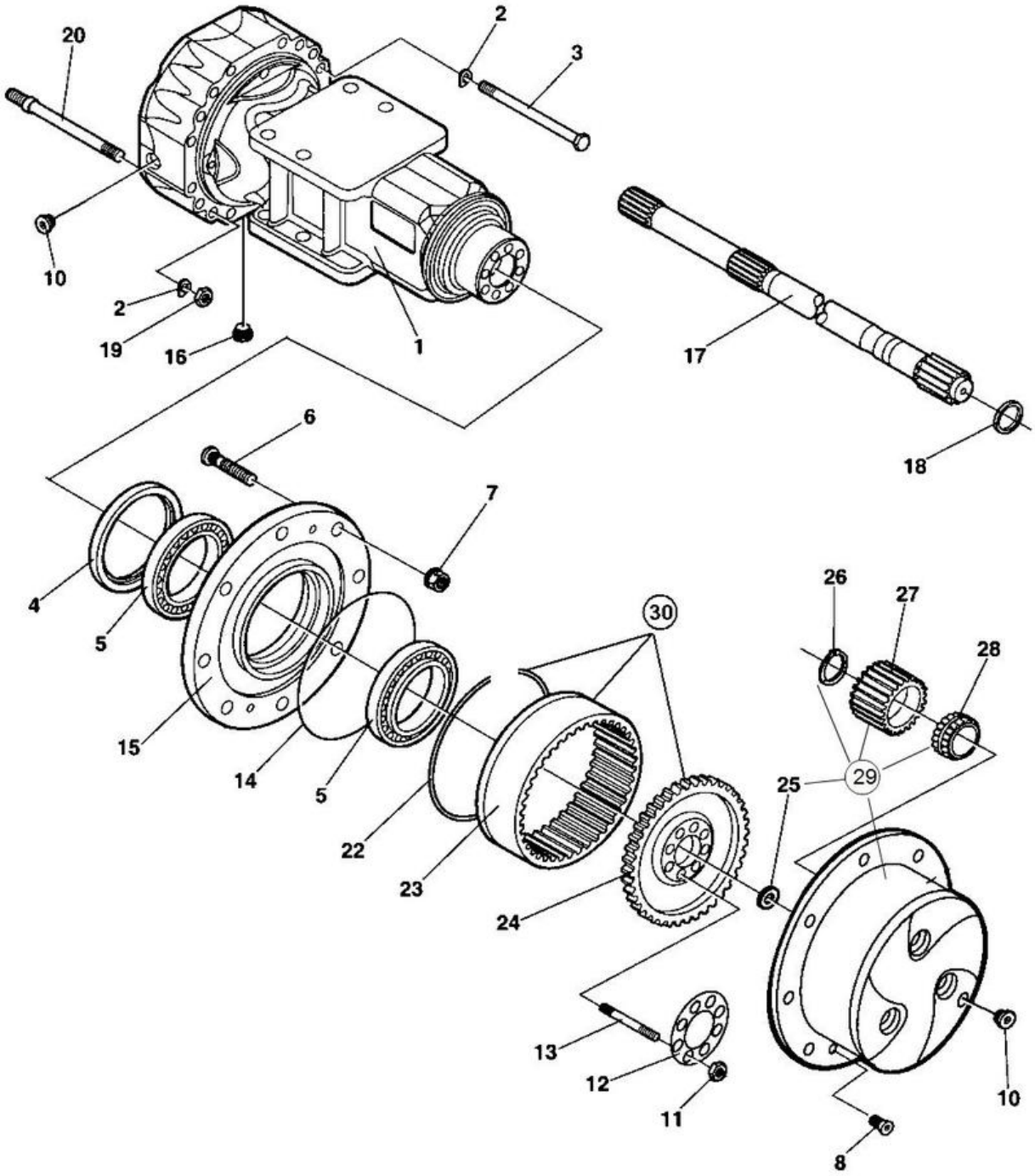

Item	Part No.	Name	Qty	L	SN INFO
1	4812156892	Axle case	2		
2	4812156893	Spring washer	32		
3	4812156894	Bolt	24		
4	4700939265	Seal	2		
5	4700939266	Bearing	4		
6	4700926781	Wheel screw	20		
7	4700901987	Wheel nut	20		
8	4700939015	Screw	4		
10	4700939348	Plug	4		
11	4812156896	Nut	20		
12	4700939275	Lock plate	2		
13	4812156897	Stud	20		
14	4700909609	O-ring	2		
15	4700939276	Wheel hub	2		
16	4700939350	Magnetic plug	2		
17	4812156898	Half shaft	2		
18	4700909586	Seal	2		
19	4700926813	Nut	8		
20	4812156899	Stud	8		
22	4700939267	Circlip	2		
23	4812156895	Ring gear	2		
24	4700939269	Ring gear support	2		
25	4700939270	Washer	2		
26	4700939271	Seal	8		
27	4700939272	Planet gear	8		
28	4700939273	Bearing	8		
29	4812156951	Planet gear carrier, cpl	2		
30	4812156952	Ring gear support, Cpl	2		

Hydraulic system, drum Hydraulic system, drum

Item	Part No.	Name	Qty	L	SN INFO
1	-	Hydraulic motor, vibration	1		
2	-	Hydraulic motor, propulsion	1		
3	4812127148	Hydraulic hose	1		
4	4811000239	Hydraulic hose	1		
5	4812127147	Hydraulic hose	1		
6	4812127117	Hydraulic hose	1		
7	4811000234	Hydraulic hose	1		
8	4812127116	Hydraulic hose	1		
9	4811000237	Hydraulic hose	1		
10	4811000416	Straight connector orfs	1		
11	4812117326	Cable tie holder	1		
12	4700904229	Washer, 8.4x 6x1.5 mm 300HV	7		
13	4700500019	Hexagon screw	1		
14	4812112308	Bracket	2		
15	4700500022	Screw	6		
16	4812112304	Hose holder	6		
17	4700791860	Stud	24		
18	4700902286	Lock nut, M8x1.25 mm A2K	24		
19	4812113963	Bracket	2		
20	4700904230	Steel plain washer	4		
21	4700500028	Hex Head screw	8		
22	4812113569	Bracket	2		
23	4812112306	Hose holder	6		
24	4700904557	Washer, 10.5x22x4 mm 300 HV	4		
25	4812117325	Cable tie	1		
26	4812115835	Cable tie	N		

Hydraulic system, drum Hydraulic motor

Item	Part No.	Name	Qty	L	SN INFO
1	4812116969	Hydraulic motor	1		
2	4700160132	O-ring 70	1		
3	4700904231	Washer, 13x24x2 mm 300 HV	4		
4	4700500194	Hexagon head screw w Tuflok M12x40H 8.8 A3K	4		
5	4811000074	Straight connector orfs	1		
6	4700923384	Split flange	4		
7	4700904005	O-ring	2		
8	4700904638	Washer 12x22x2	8		
9	4700903906	Hexagon head screw m	8		

4812116969 Hydraulic motor 4812116969 Hydraulic motor

Item	Part No.	Name	Qty	L	SN INFO
1	-	Rotary group	1		
2	4812157180	Flush & boost pressure valve	1		
3	-	Housing	1		
4	-	Subplate	1		
5	-	Dowel	1		
6	4700950634	O-ring	1		
7	-	Cap screw	2		
8	-	Cap screw	4		
9	-	Screw	1		
10	-	Lock ring	1		
11	4812158155	Seal kit, cpl	1		

4812116969 Hydraulic motor Rotary group

Item	Part No.	Name	Qty	L	SN INFO
1	-	Drive shaft	1		
2	4700950631	Bearing ring	1		
3	-	Supporting disc	1		
4	-	Circlip	1		
5	4700950632	Bearing	1		
6	4812157182	Bearing	1		
7	-	Cylinder	1		
8	-	Control panel	1		
9	-	Center pin	1		
10	-	Piston with piston rings	7		
11	-	Gasket	1		
12	-	Shim	1		
13	-	Pressure spring	1		
14	-	Retaining plate	1		
15	-	Slotted screw	7		

4812116969 Hydraulic motor 4812157180 Flush & boost pressure valve

Item	Part No.	Name	Qty	L	SN INFO
1	-	Housing	1		
2	-	Flushing piston	1		
3	-	Valve piston	1		
4	-	Locking screw	2		
5	-	Locking screw	1		
6	-	Washer	2		
7	-	Retaining ring	1		
8	-	Pressure spring	2		
9	-	Pressure spring	1		
10	-	Orifice	1		
11	-	Socket head screw	4		
12	4812160294	Locking screw with o-ring	2		
13	4812157460	O-ring	1		
14	4812157170	O-ring	2		
15	4812157184	O-ring	1		
16	4812157185	O-ring	2		
17	-	Shim	1		

4812116969 Hydraulic motor Lock ring

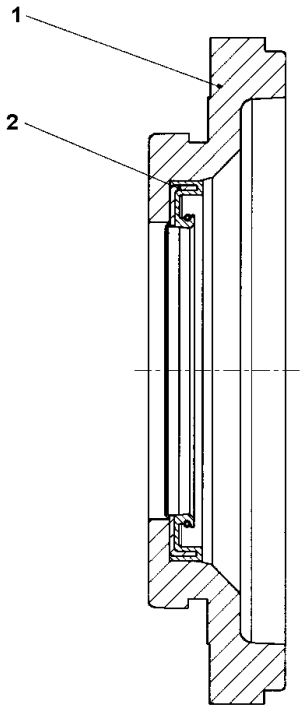

.

Item	Part No.	Name	Qty	L	SN INFO
1	4812157187	Lock ring	1		
2	4812157186	Shaft sealing ring	1		

Hydraulic system, drum Hydraulic motor

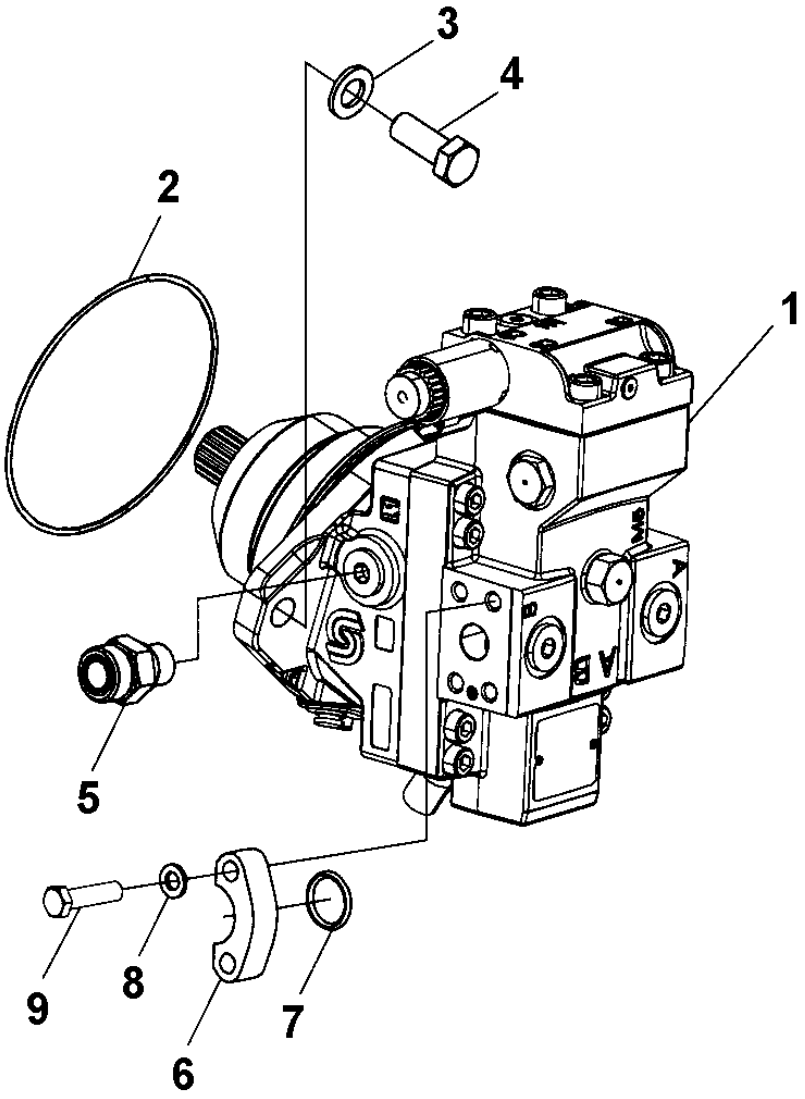

Item	Part No.	Name	Qty	L	SN INFO
1	4812112200	Hydraulic motor	1		
2	4700160043	O-ring	1		
3	4700904232	Steel plain washer	2		
4	4700500093	Hex. screw	2		
5	4812115051	Straight connector orfs	1		
6	4700929226	Flange half	4		
7	4700904004	O-ring 90	2		
8	4700904637	Washer	8		
9	4700500030	Hexagon head screw	8		

4812112200 Hydraulic motor 4812112200 Hydraulic motor

Item	Part No.	Name	Qty	L	SN INFO
1	4812157074	Solenoid On/off, 24 volt	1		
2	4812157075	Coil kit, 24 volt	1		
3	--	O-ring	1		
4	-	Control housing, 2 position	1		
5	4812156999	Shuttle valve assembly	1		
6	4700908432	Plug	2		
7	4700923087	O-ring	2		
8	4812158398	Plug assembly	3		
9	4700908440	O-ring	3		
10	4812157051	Spool	1		
11	4812157052	Spring	1		
12	-	Screw	2		
13	-	Screw	2		
14	4812157053	Control seal	1		
15	-	Orifice plug, 1.2 mm	1		
17	-	End cap	1		
18	4812157054	Servo piston	1		
19	-	Button head screw	1		
20	-	Plug assembly	1		
21	--	O-ring	1		
22	-	Screw	8		
23	-	Plug assembly	2		
24	--	O-ring	2		
25	-	O-ring	1		
26	-	Piston ring	1		
27	4812157055	Valve segment assembly	1		
28	4812160876	Synch shaft assembly	1		
29	-	Cylinder block assembly	1		
30	4812157056	Bearing plate	1		
31	-	Shaft assembly, 14 tooth, DIN	1		
32	-	Set screw, 0-19cc, M12x65mm	1		
33	4700909525	Seal nut	1		
34	4700902996	Plastic cap, green	1		
35	-	Housing, cartridge with speed sensor port	1		
36	4812157058	Lip seal	1		
37	4812157059	Retaining ring	1		
38	-	Pin	2		
39	-	Plug assembly	1		

Item	Part No.	Name	Qty	L	SN INFO
40	--	O-ring	1		
41	-	Plug assembly	2		
42	--	O-ring	2		
43	4812157064	Gasket	1		
44	-	Plug assembly	1		
45	4812157057	O-ring	1		
46	-	Screw	1		
50	-	Loop flushing	1		
51	4812158154	Seal kit, cpl	1		

4812112200 Hydraulic motor Loop flushing

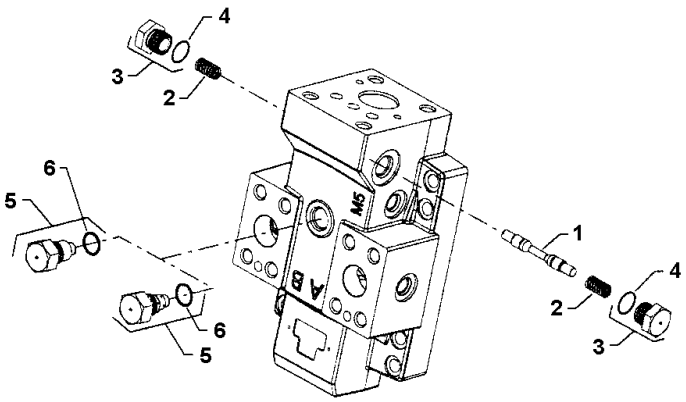

Item	Part No.	Name	Qty	L	SN INFO
1	4812157060	Spool	1		
2	4812157061	Spring	2		
3	-	Plug assembly	2		
4	-	O-ring	2		
5	4812157062	Loop flushing relief valve 10 l/min	1		
6	4812157063	O-ring	1		

Hydraulic system, drum Anti-spin option Hydraulic system, drum Anti-spin option

Item	Part No.	Name	Qty	L	SN INFO
1	-	Hydraulic motor, vibration	1		
2	-	Hydraulic motor, propulsion	1		
3	4812127148	Hydraulic hose	1		
4	4811000239	Hydraulic hose	1		
5	4812127147	Hydraulic hose	1		
6	4812127117	Hydraulic hose	1		
7	4811000234	Hydraulic hose	1		
8	4812127116	Hydraulic hose	1		
9	4811000237	Hydraulic hose	1		
10	4811000416	Straight connector orfs	1		
11	4812117326	Cable tie holder	1		
12	4700904229	Washer, 8.4x 6x1.5 mm 300HV	7		
13	4700500019	Hexagon screw	1		
14	4812112308	Bracket	2		
15	4700500022	Screw	6		
16	4812112304	Hose holder	6		
17	4700791860	Stud	24		
18	4700902286	Lock nut, M8x1.25 mm A2K	24		
19	4812113963	Bracket	2		
20	4700904230	Steel plain washer	4		
21	4700500028	Hex Head screw	8		
22	4812113569	Bracket	2		
23	4812112306	Hose holder	6		
24	4700904557	Washer, 10.5x22x4 mm 300 HV	4		
25	4812117325	Cable tie	1		

Hydraulic system, drum Anti-spin option Hydraulic motor

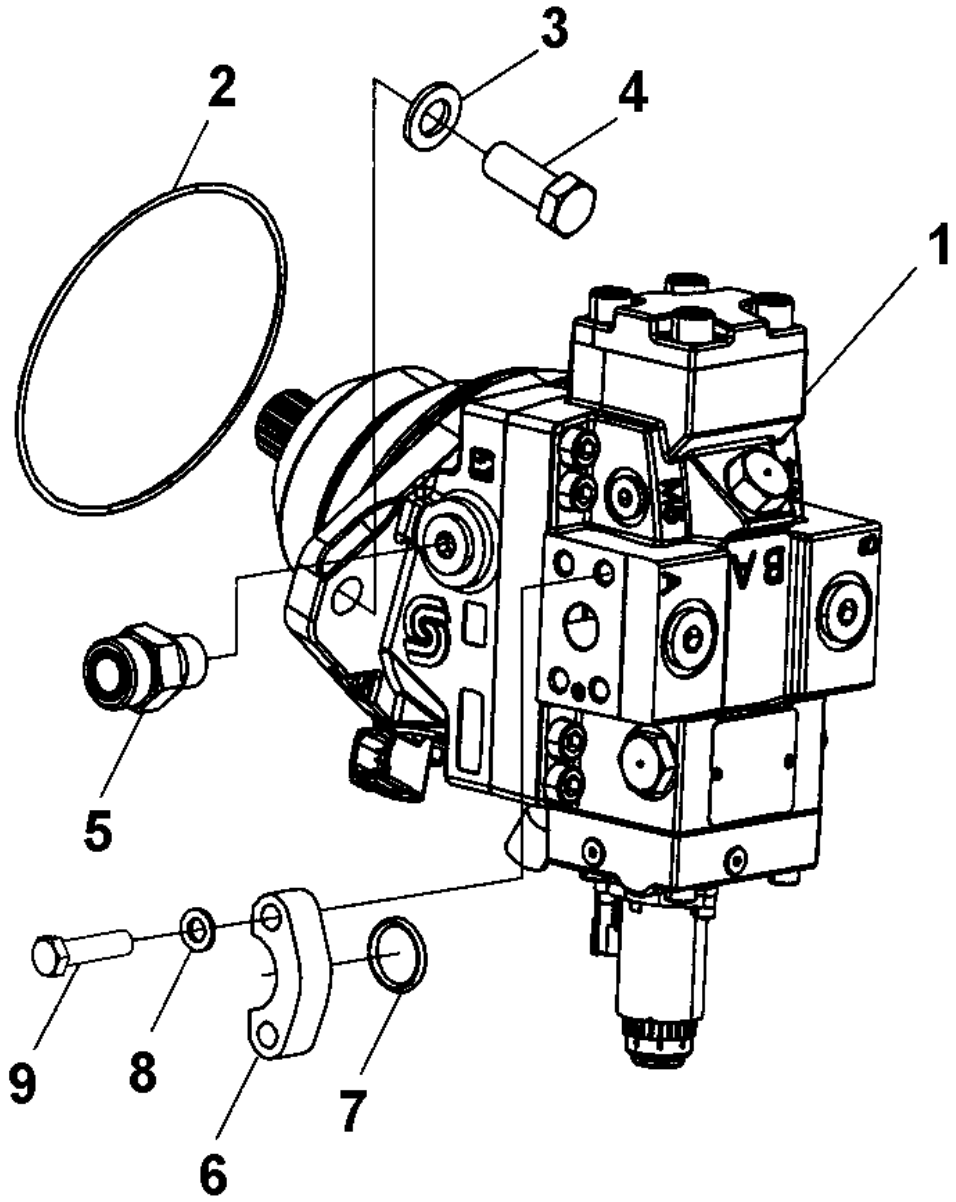

Item	Part No.	Name	Qty	L	SN INFO
1	4812112202	Drum motor	1		
2	4700160043	O-ring	1		
3	4700904232	Steel plain washer	2		
4	4700500093	Hex. screw	2		
5	4812115051	Straight connector orfs	1		
6	4700929226	Flange half	4		
7	4700904004	O-ring 90	2		
8	4700904637	Washer	8		
9	4700500030	Hexagon head screw	8		

4812112202 Drum motor 4812112202 Drum motor

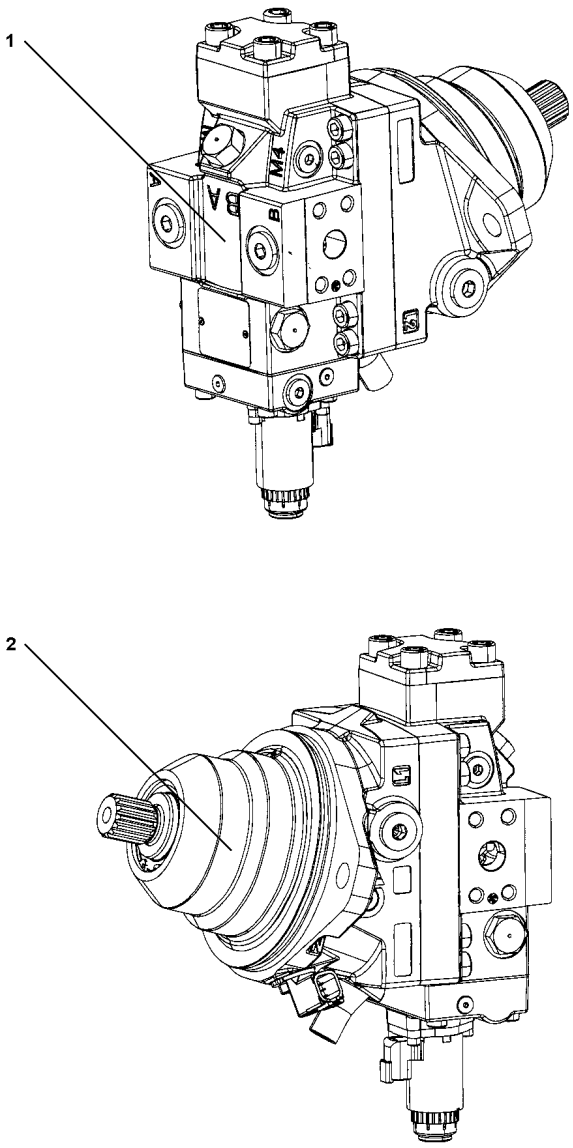

Item	Part No.	Name	Qty	L	SN INFO
1	-	Drum motor. Front section	1		
2	-	Drum motor. Rear section	1		
3	4812158154	Seal kit, cpl	1		

4812112202 Drum motor Drum motor. Front section

Item	Part No.	Name	Qty	L	SN INFO
1	-	Servo piston cover	1		
2	-	Screw	4		
3	4812157065	O-ring	1		
4	-	Servo piston assembly	1		
5	4812157066	O-ring	1		
6	4812157067	Piston ring	1		
7	-	Screw	1		
8	-	End cap	1		
9	-	Servo piston	1		
10	-	Spring guide	1		
11	-	Lock nut	1		
12	-	Setting lug	1		
13	4812157068	Setting lug pin	1		
14	-	Set screw	1		
15	-	Button head screw	1		
16	-	Plug assembly	2		
17	--	O-ring	2		
18	-	Screw	8		
19	-	Plug assembly	2		
20	--	O-ring	2		
21	4812157069	Valve segment assembly	1		
22	-	Control housing, proportional	1		
23	4812156999	Shuttle valve assembly	1		
24	-	Plug assembly	1		
25	--	O-ring	1		
26	-	Plug assembly	3		
27	--	O-ring	3		
28	4812157070	Spool	1		
29	-	Screw	4		
30	-	Control seal	1		
31	4812157071	Solenoid proportional valve 24V	1		
32	4812157072	Coil kit 24V	1		
33	4812157371	O-ring	1		
34	-	Plastic cap	1		
35	-	Screw	3		
36	-	Spring retainer	2		
50	-	Loop flushing	1		

4812112202 Drum motor Loop flushing

Item	Part No.	Name	Qty	L	SN INFO
1	4812157060	Spool	1		
2	4812157061	Spring	2		
3	-	Plug assembly	2		
4	--	O-ring	2		
5	4812157062	Loop flushing relief valve 10 l/min	1		
6	4812157063	O-ring	1		

4812112202 Drum motor Drum motor. Rear section

Item	Part No.	Name	Qty	L	SN INFO
1	-	Synch shaft assembly	1		
2	-	Cylinder block assembly	1		
3	4812157056	Bearing plate	1		
4	-	Shaft assembly, 14 tooth, DIN, speed ring	1		
5	-	Housing, cartridge with speed sensor port	1		
6	4812157058	Lip seal	1		
7	4812157059	Retaining ring	1		
8	-	Pin	2		
9	-	Plug assembly	1		
10	--	O-ring	1		
11	-	Plug assembly	2		
12	--	O-ring	2		
13	4812157064	Gasket	1		
14	4700396601	Pulse sensor (6-pol)	1		
15	4812157057	O-ring	1		
16	-	Screw	1		
17	-	Set screw, 0-19 cc, M12x65mm	1		
18	4700909525	Seal nut	1		
19	4700902996	Plastic cap, green	1		

Hydraulic system, rear axle Hydraulic system, rear axle

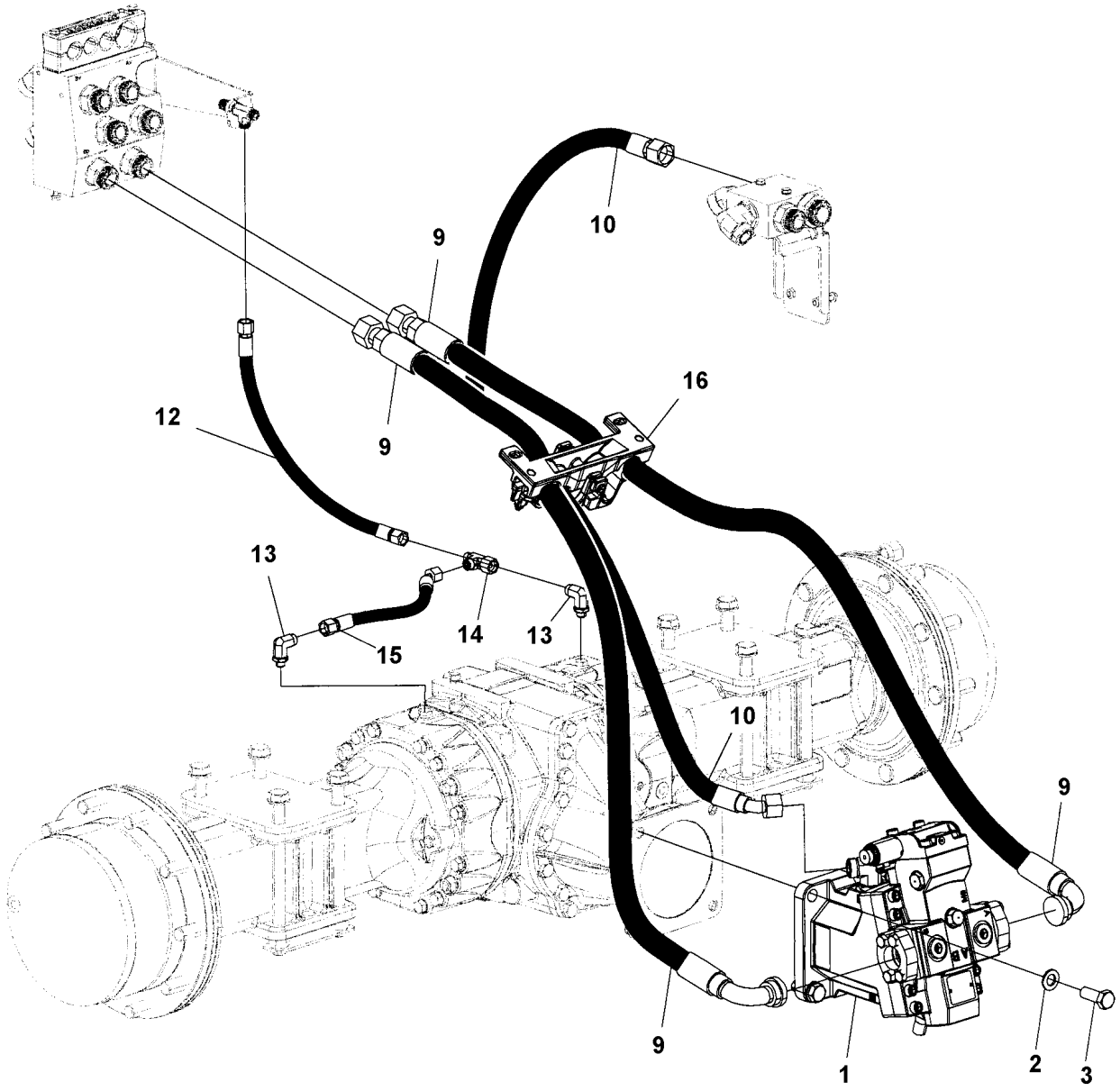

Item	Part No.	Name	Qty	L	SN INFO
1	-	Hydraulic motor, propulsion	1		
2	4700904793	Steel plain washer	4		
3	4811000310	Hexagon head screw	4		
9	4812127112	Hydraulic hose	2		
10	4811000230	Hydraulic hose	1		
12	4811000228	Hydraulic hose	1		
13	4811000086	Elbow 90 orfs	2		
14	4700791414	T-connection, O-ring with swivel	1		
15	4811000229	Hydraulic hose	1		
16	-	Hose holder	1		

Hydraulic system, rear axle Hydraulic motor

Item	Part No.	Name	Qty	L	SN INFO
1	4812112211	Rear axle motor	1		To A018406 excl. 17059
1	4812122932	Rear axle motor	1		From A018407 incl. 17059
2	4700904005	O-ring	2		
3	4700923384	Split flange	4		
4	4700904638	Washer 12x22x2	8		
5	4700928791	Screw, M12x45	8		
6	4700791231	Adapter	1		
7	4700160043	O-ring	1		

4812112211 Rear axle motor 4812112211 Rear axle motor

Item	Part No.	Name	Qty	L	SN INFO
1	4812157074	Solenoid On/off, 24 volt	1		
2	4812157075	Coil kit, 24 volt	1		
3	-	O-ring	1		
4	-	Control housing, 2 position	1		
5	4812156999	Shuttle valve assembly	1		
6	-	Plug assembly	2		
7	--	O-ring	2		
8	-	Plug assembly	3		
9	--	O-ring	3		
10	4812157051	Spool	1		
11	4812157052	Spring	1		
12	-	Screw	2		
13	-	Screw	2		
14	4812157053	Control seal	1		
15	-	Orifice plug, 1.2 mm	2		
16	-	End cap	1		
17	4812157076	Servo piston	1		
18	-	Button head screw	1		
19	-	Plug assembly	1		
20	--	O-ring	1		
21	-	Screw	8		
22	-	Plug assembly	2		
23	--	O-ring	2		
24	-	O-ring	1		
25	-	Piston ring	1		
26	4812157077	Valve segment assembly	1		
27	-	Synch shaft assembly	1		
28	-	Cylinder block assembly	1		
29	4700902930	Bearing plate	1		
30	-	Shaft assembly, 13 tooth, 8/12 pitch	1		
31	-	Housing, SAE flange with speed sensor port	1		
32	4700945757	Shaft seal	1		
33	4812157078	Retaining ring	1		
34	-	Pin	2		
35	-	Shaft locating plug assembly	1		
36	--	O-ring	1		
37	-	Plug assembly	2		
38	--	O-ring	2		

Item	Part No.	Name	Qty	L	SN INFO
39	4812157079	Gasket	1		
40	-	PPU Plug assembly	1		
41	4812157057	O-ring	1		
42	-	Screw	1		
43	-	Set screw, 32-60cc, M12x90mm	1		
44	4700909525	Seal nut	1		
45	4700902996	Plastic cap, green	1		
50	-	Loop flusing	1		
51	4812158153	Seal kit,cpl	1		

4812112211 Rear axle motor Loop flusing

Item	Part No.	Name	Qty	L	SN INFO
1	4812157060	Spool	1		
2	4812157061	Spring	2		
3	-	Plug assembly	2		
4	--	O-ring	2		
5	4812157062	Loop flushing relief valve 10 l/min	1		
6	4812157063	O-ring	1		

Hydraulic system, rear axle 4812122932 Hydraulic motor

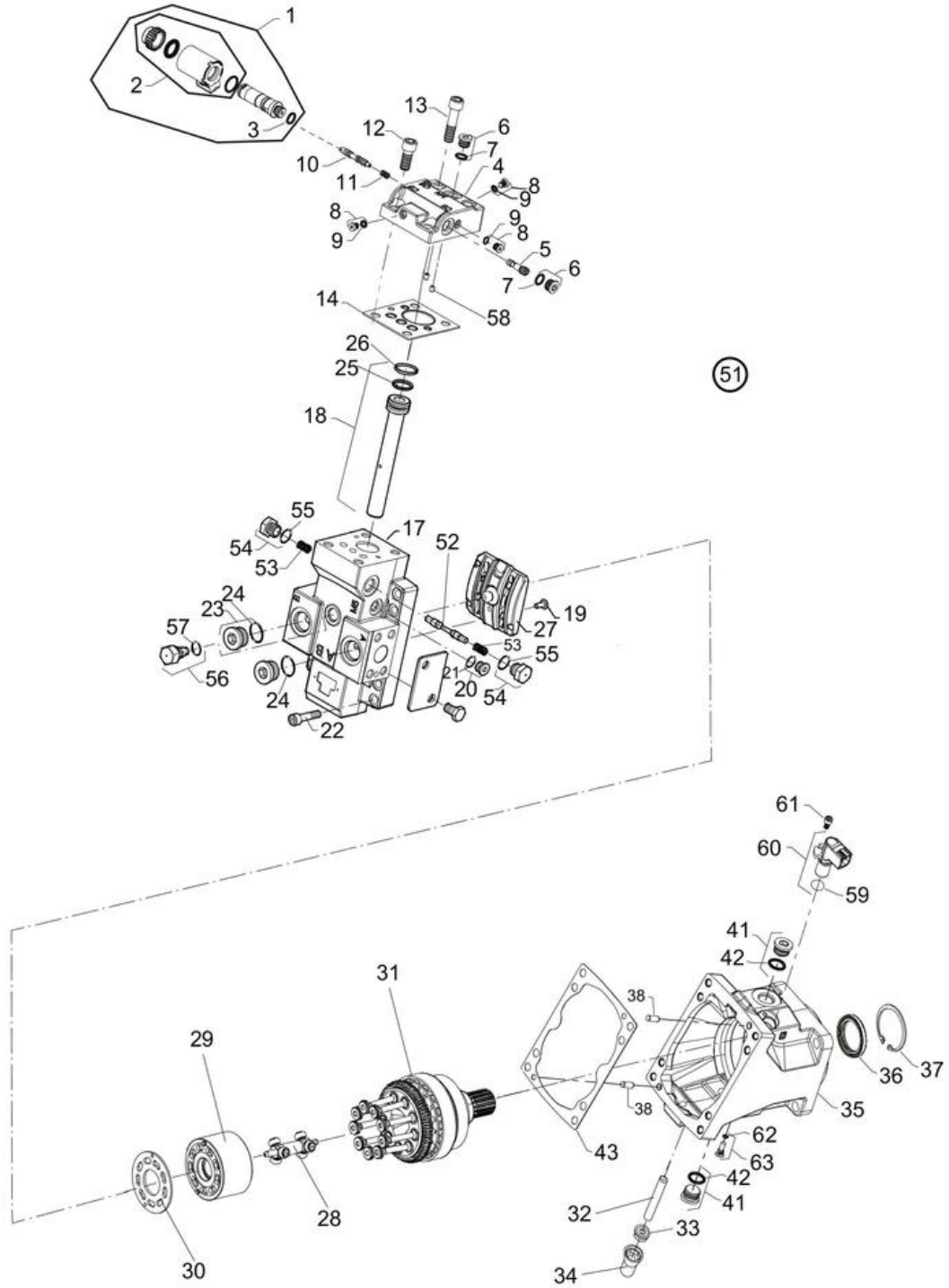

Item	Part No.	Name	Qty	L	SN INFO
1	-	Solenoid On/off, 24 volt	1		
2	--	Coil kit, 24 volt	1		
3	4700923087	O-ring	1		
4	-	Control housing, 2 position	1		
5	4812156999	Shuttle valve assembly	1		
6	-	Plug	2		
7	4700923087	O-ring	2		
8	4700908426	Plug, cpl	3		
9	4700908440	O-ring	3		
10	4812157051	Spool	1		
11	4812157052	Spring	1		
12	4812158452	Screw	2		
13	4700902944	Screw	2		
14	4812157053	Control seal	1		
17	-	End cap	1		
18	4812157076	Servo piston	1		
19	-	Button head screw	1		
20	-	Plug assembly	1		
21	--	O-ring	1		
22	4700902944	Screw	8		
23	4700902928	Plug	2		
24	--	O-ring	2		
25	4700935525	O-ring	1		
26	4700935524	Seal plug	1		
27	4812157077	Valve segment assembly	1		
28	-	Synch shaft assembly	1		
29	-	Cylinder block assembly	1		
30	4700902930	Bearing plate	1		
31	-	Shaft assembly, 14 tooth, DIN	1		
32	-	Set screw, 0-19cc, M12x65mm	1		
33	4700909525	Seal nut	1		
34	4700902996	Plastic cap, green	1		
35	-	Housing, cartridge with speed sensor port	1		
36	-	Lip seal	1		
37	4812157078	Retaining ring	1		
38	-	Pin	2		
41	-	Plug assembly	2		
42	--	O-ring	2		

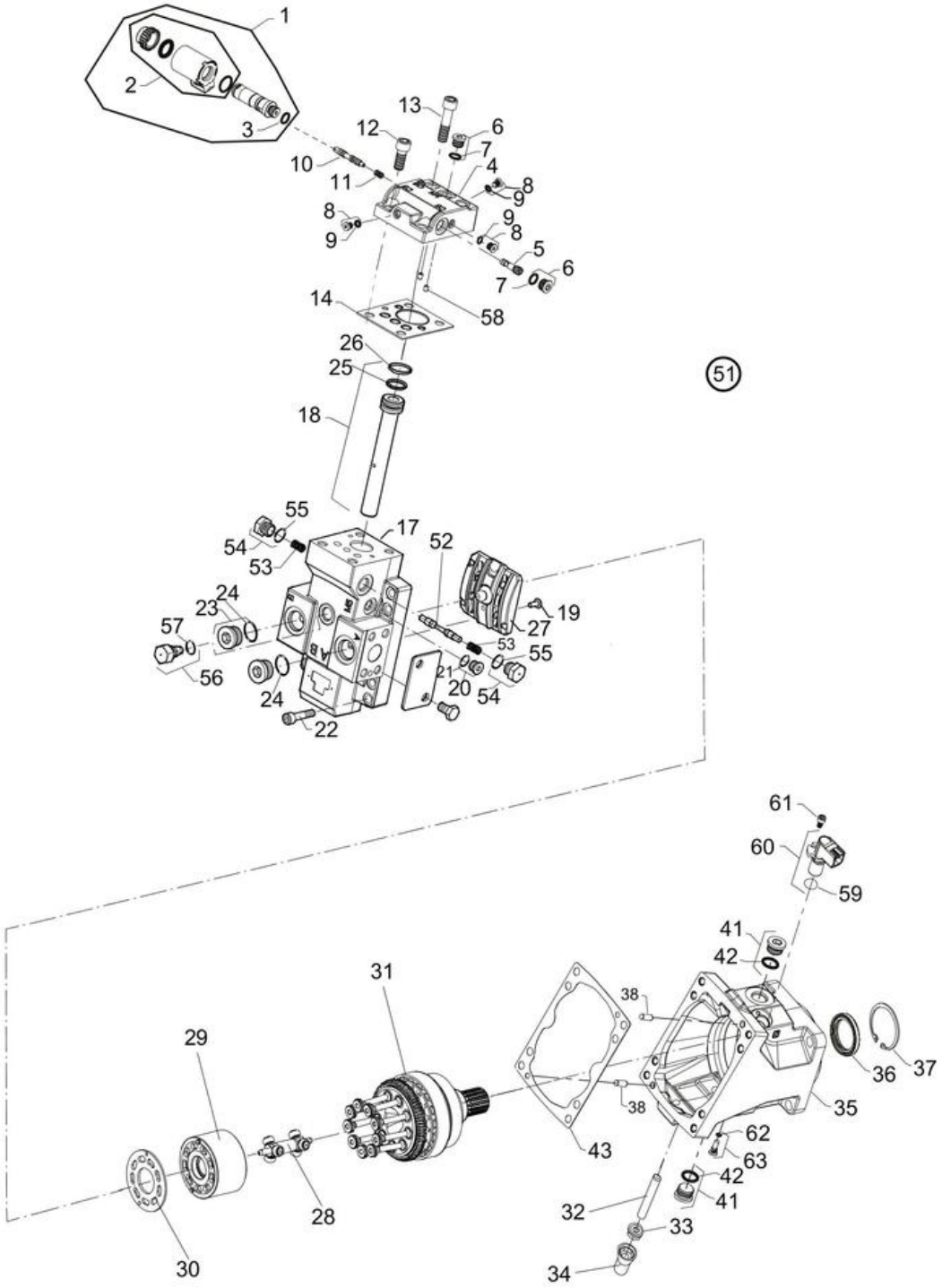
1
2
3
13
12
6
7
10
4
11
8
9
5
14
58
26
25
51
18
55
17
52
54
53
19
27
24
23
57
56
21
20
22
61
60
59
41
42
31
38
29
36
37
35
62
63
43
28
32
33
34
30

Item	Part No.	Name	Qty	L	SN INFO
43	-	Plain washer	1		
50	-	Loop flushing	1		
51	4812158153	Seal kit,cpl	1		
52	4812157060	Spool	1		
53	4812157061	Spring	2		
54	-	Plug assembly	2		
55	--	O-ring	2		
56	4812157062	Loop flushing relief valve 10 l/min	1		
57	4812157063	O-ring	1		
58	-	Orifice plug, 1.2 mm	1		
59	-	O-ring	1		
60	4812157073	Speed sensor	1		
61	-	Screw	1		
62	4700908440	O-ring	1		
63	-	Plug assembly	1		

Hydraulic system, rear axle Hose holder

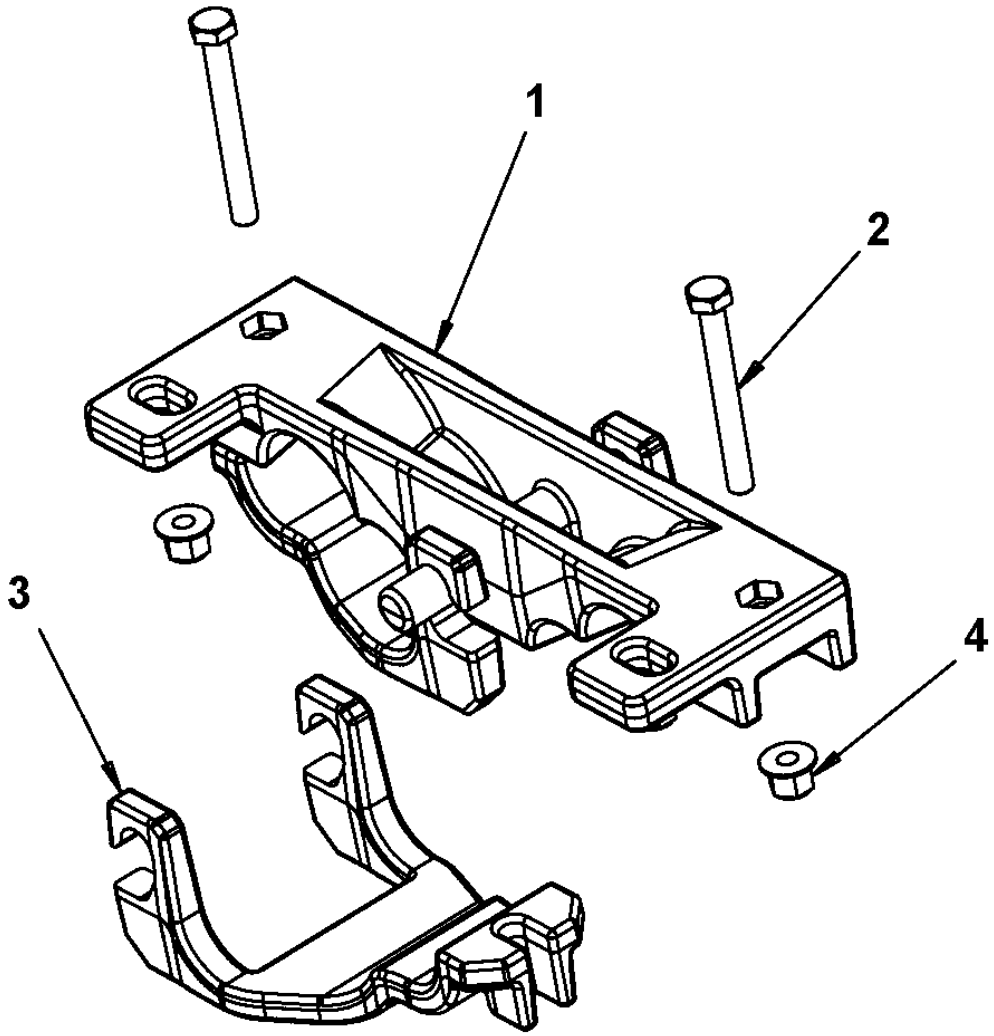

Item	Part No.	Name	Qty	L	SN INFO
1	4812114652	Hose holder	1		
2	4700500189	Screw	2		
3	4812114622	Hose holder	2		
4	4700902286	Lock nut, M8x1.25 mm A2K	4		

Hydraulic system, rear axle Anti-spin option Hydraulic system, rear axle Anti-spin option

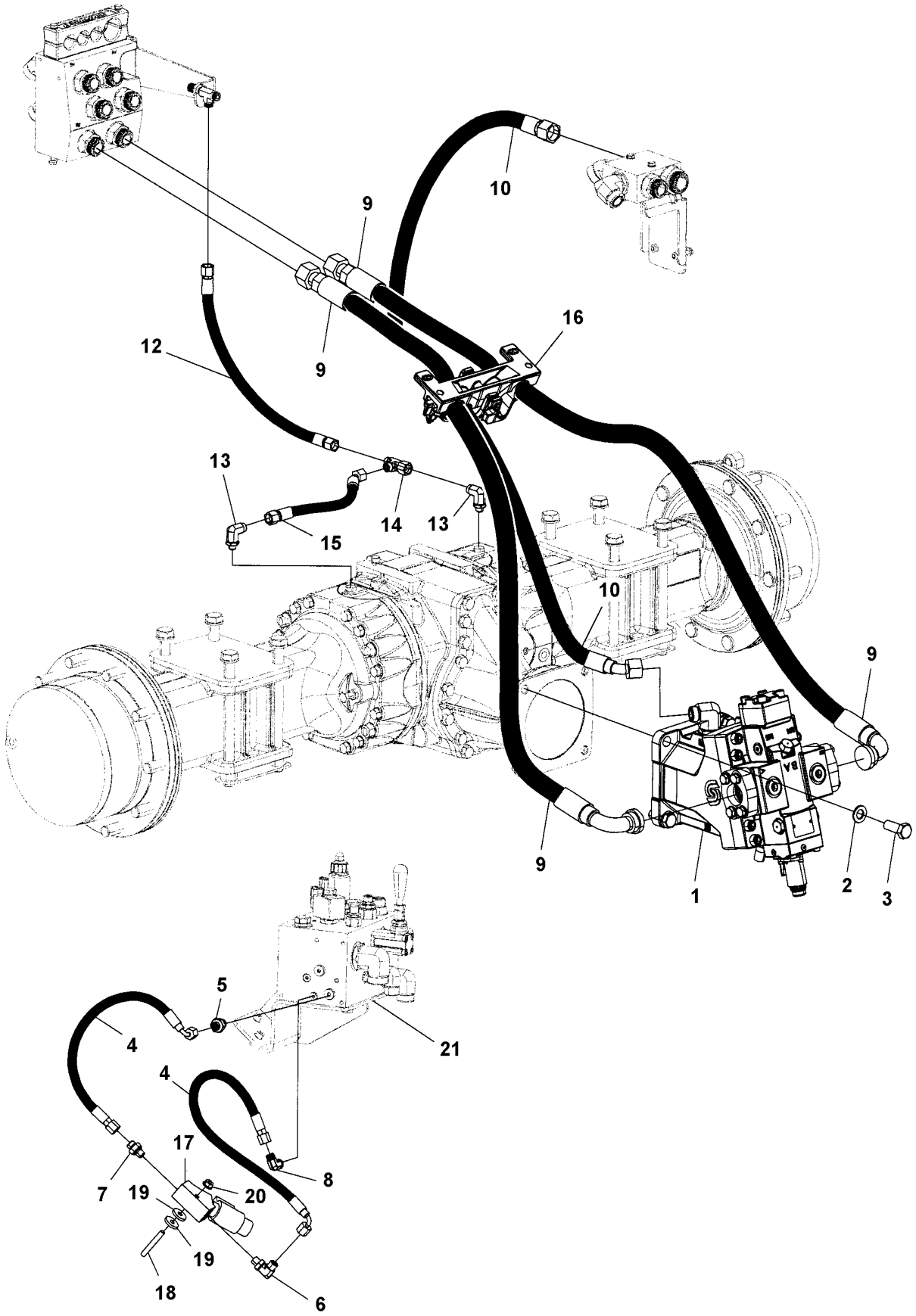

Item	Part No.	Name	Qty	L	SN INFO
1	-	Hydraulic motor, propulsion	1		
2	4700904793	Steel plain washer	4		
3	4811000310	Hexagon head screw	4		
4	4812116921	Hydraulic hose	2		
5	4700791542	Straight connector	1		
6	4700791397	Connector	1		
7	4700791541	Adapter	1		
8	0570704138	Connector elbow 90 orfs	1		
9	4811000242	Hydraulic hose	2		
10	4811000230	Hydraulic hose	1		
12	4811000228	Hydraulic hose	1		
13	4811000086	Elbow 90 orfs	2		
14	4700791414	T-connection, O-ring with swivel	1		
15	4811000229	Hydraulic hose	1		
16	-	Hose holder	1		
17	4812116687	Hydraulic valve	1		
18	4700791858	Stud	1		
19	4700904734	Washer, 8.4x26x4 mm 300 HV	2		
20	4700903586	Nut, M8x1.25 mm A2K	1		
21	-	Hydraulic valve	1	A	

Comments for Page: Hydraulic system, rear axle Anti-spin option

(L)OCAL REMARKS

A | en_US | See section for hydraulic system, oil tank.

Hydraulic system, rear axle Anti-spin option Hydraulic motor

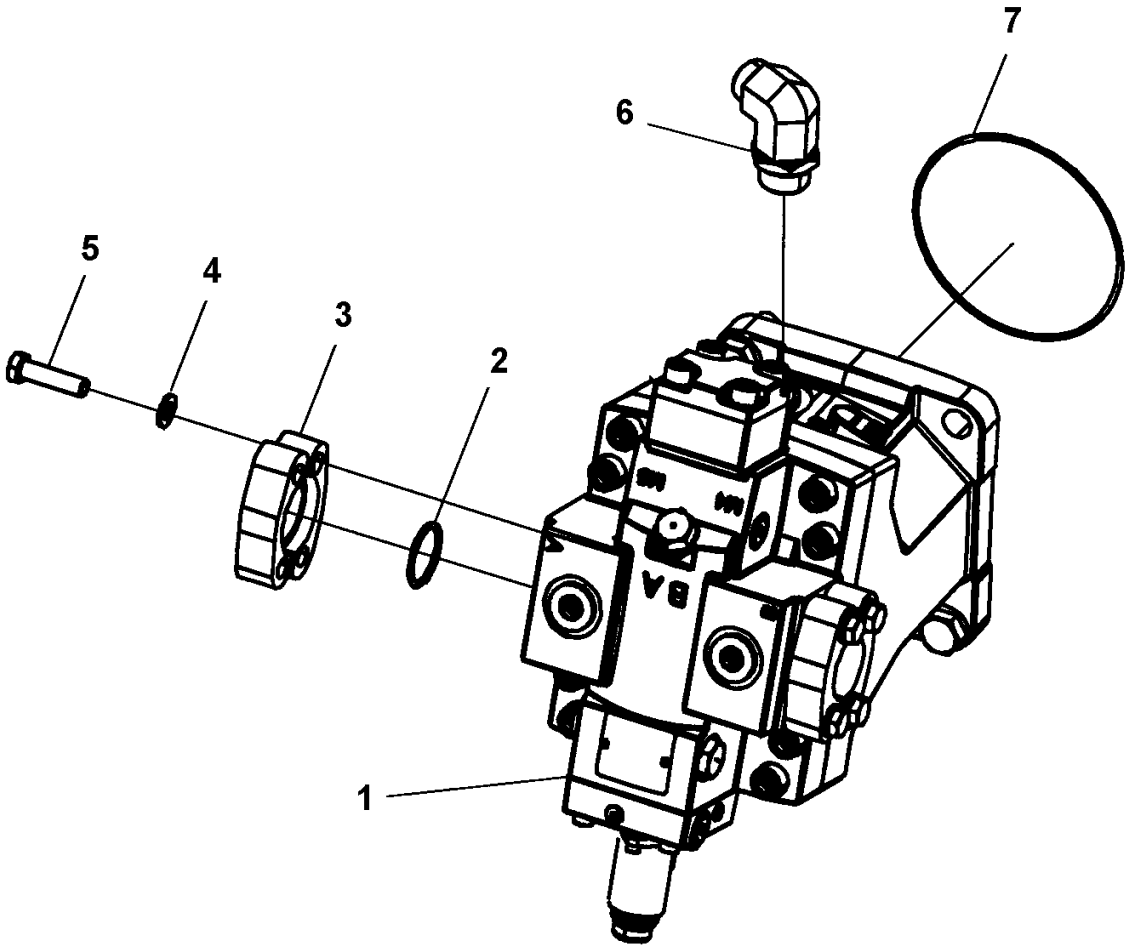

Item	Part No.	Name	Qty	L	SN INFO
1	4812112213	Rear axle motor	1		
2	4700904171	O-ring	2		
3	4700900342	Split flange	4		
4	4700904638	Washer 12x22x2	8		
5	4700928791	Screw, M12x45	8		
6	4700791231	Adapter	1		
7	4700160043	O-ring	1		

4812112213 Rear axle motor 4812112213 Rear axle motor

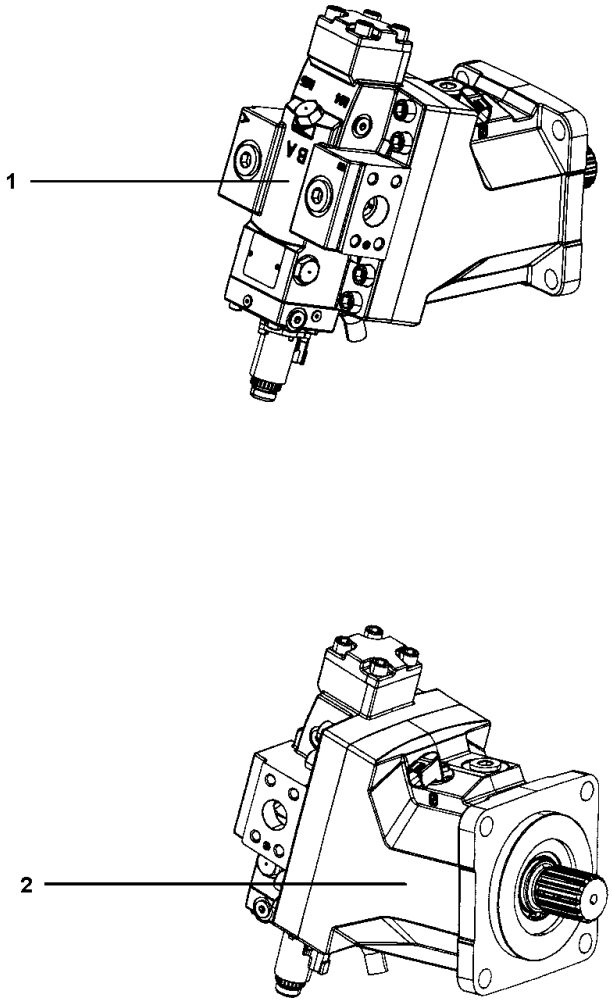

Item	Part No.	Name	Qty	L	SN INFO
1	-	Front section	1		
2	-	Rear section	1		

4812112213 Rear axle motor Front section

Item	Part No.	Name	Qty	L	SN INFO
1	-	Servo piston cover	1		
2	-	Screw	4		
3	4812157065	O-ring	1		
4	-	Servo piston assembly	1		
5	4812157083	O-ring	1		
6	4812157084	Piston ring	1		
7	-	Screw	1		
8	-	End cap	1		
9	-	Servo piston	1		
10	-	Spring guide	1		
11	-	Lock nut	1		
12	-	Setting lug	1		
13	4812157068	Setting lug pin	1		
14	-	Set screw	1		
15	-	Button head screw	1		
16	-	Plug assembly	2		
17	-	Screw	8		
18	-	Plug assembly	2		
19	4812157081	Valve segment assembly	1		
20	-	Control housing, proportional	1		
21	4812156999	Shuttle valve assembly	1		
22	-	Plug assembly	1		
23	-	Plug assembly	3		
24	4812157070	Spool	1		
25	-	Screw	4		
26	4812157080	Control seal	1		
27	4812157071	Solenoid proportional valve 24V	1		
28	4812157072	Coil kit 24V	1		
29	4812157371	O-ring	1		
30	-	Plastic cap	1		
31	-	Screw	3		
32	-	Orifice plug, 1.2 mm	2		
40	-	Loop flushing	1		

4812112213 Rear axle motor Loop flushing

Item	Part No.	Name	Qty	L	SN INFO
1	4812157060	Spool	1		
2	4812157061	Spring	2		
3	-	Plug assembly	2		
4	--	O-ring	2		
5	4812157062	Loop flushing relief valve 10 l/min	1		
6	4812157063	O-ring	1		

4812112213 Rear axle motor Rear section

Item	Part No.	Name	Qty	L	SN INFO
1	-	Synch shaft assembly	1		
2	-	Cylinder block assembly	1		
3	4812157082	Bearing plate	1		
4	-	Shaft assembly,13 tooth,8/12 pitch,speed ring	1		
5	4700396601	Pulse sensor (6-pol)	1		
6	4812157057	O-ring	1		
7	-	Screw	1		
8	-	Housing, SAE flange with speed sensor port	1		
9	4700945757	Shaft seal	1		
10	4812157078	Retaining ring	1		
11	-	Pin	2		
12	-	Shaft locating plug assembly	1		
13	--	O-ring	1		
14	-	Plug assembly	2		
15	4812157085	Gasket	1		
16	-	Set screw, 0-43cc, M12x75mm	1		
17	4700909525	Seal nut	1		
18	4700902996	Plastic cap, green	1		

Hydraulic system, oil tank Hydraulic system, oil tank

Item	Part No.	Name	Qty	L	SN INFO
1	-	Hydraulic oil tank assembly	1		
2	4811000197	Hydraulic hose	1		
3	4812112555	Adapter	2		
4	4812117451	Hydraulic hose uptc	1		
5	4811000214	Hydraulic hose	1		
6	4811000217	Hydraulic hose	1		
7	4811000209	Hydraulic hose	1		
8	4812117450	Hydraulic hose uptc	1		
9	4812117702	Hydraulic hose	1		
10	4812117448	Hydraulic hose uptc	1		
11	4811000215	Hydraulic hose	1		
12	-	Hydraulic valve module	1		
13	-	Hose holder assy kit	1		
14	4811000198	Hydraulic hose	1		
15	4811000211	Hydraulic hose	1		
16	4811000199	Hydraulic hose	1		
17	4700903703	Clamp	1		
18	4700902286	Lock nut, M8x1.25 mm A2K	1		
19	4700903768	Threaded stud	1		
20	-	Fan module, front	1		
21	-	Fan module, rear	1		
22	4700904229	Washer, 8.4x 6x1.5 mm 300HV	16		
23	4812117436	Connector uptc	1		
24	0570704101	Connector Elbow 90	1		
25	4812115064	Elbow connector 90°	2		
26	4700904774	O-ring	4		
27	4812117732	Flange connector	4		
28	4700508048	Hexagon socket head cap screw M	16		
29	4700904766	Elbow connector 90°	2		

Hydraulic system, oil tank Hydraulic oil tank assembly

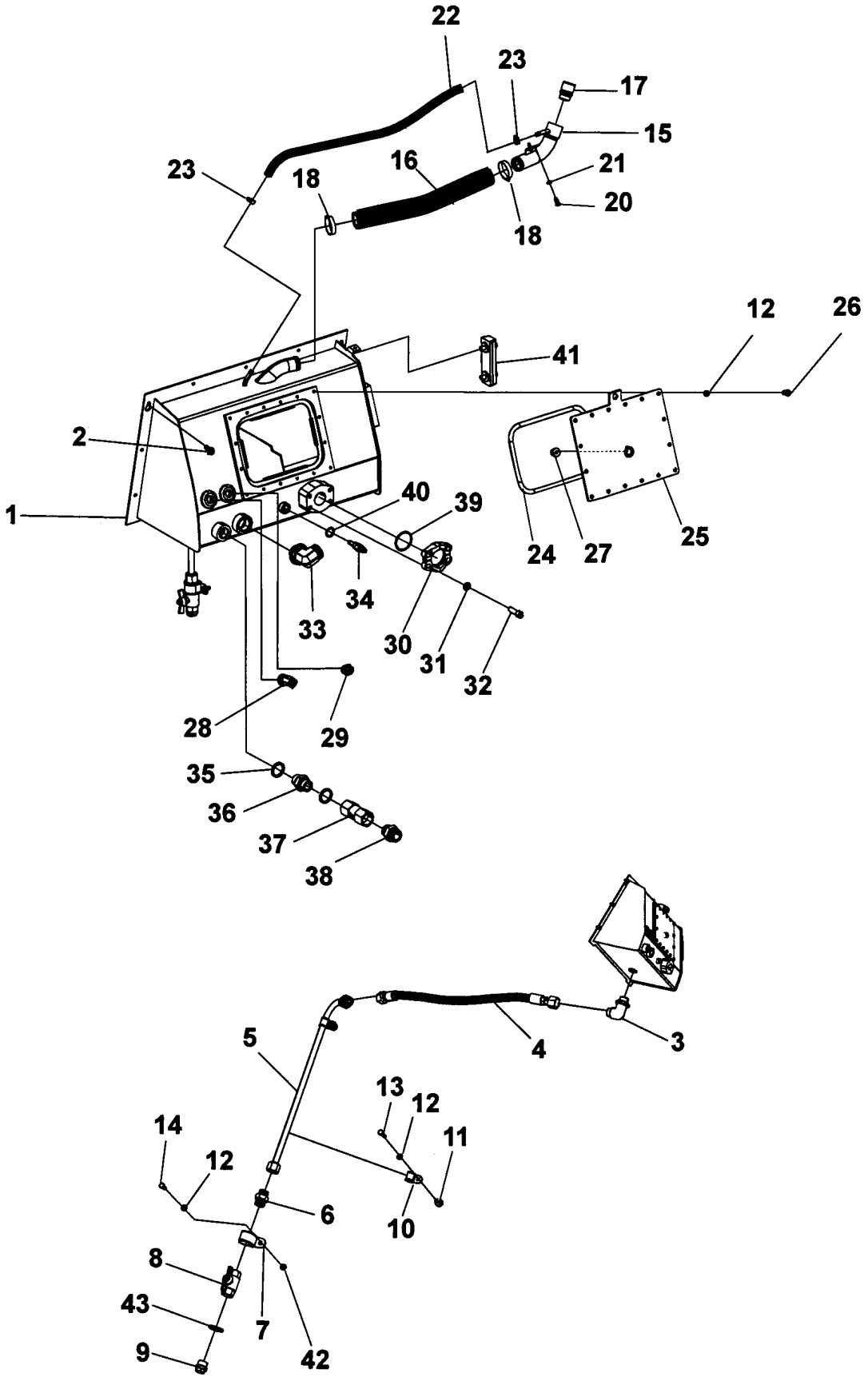

Item	Part No.	Name	Qty	L	SN INFO
1	4812118960	Hydraulic oil tank, cpl	1	A	
2	4700500505	Screw, M8x20 mm 8.8 A2K	9		
3	4700792068	Elbow 90°	1		
4	4811000202	Hydraulic hose	1		
5	4812114205	Hydraulic pipe	1		
6	0570702503	Straight connector	1		
7	4700923008	Clamp	1		
8	4700233304	Ball valve	1		
9	4700232039	Steel plug threaded	1		
10	4700904346	Clamp	2		
11	4700343748	Spacer sleeve	2		
12	4700904229	Washer, 8.4x 6x1.5 mm 300HV	19	D	
13	4700500022	Screw	2		
14	4700500053	Screw, M8x20 mm 8.8 A2K	1		
15	4812112648	Pipe assembly	1		
16	4812116645	Rubber hose	1		
17	4700357138	Ventilating filter	1		
18	4700313009	Hose clamp	2		
20	4700500013	Screw, M6x16 mm 8.8 A2K	2		
21	4700904228	Washer 6,4x12x1,5	2		
22	4700904985	Fuel hose, fire-resistant	1XL	B	
23	4700313001	Hose clamp, 11-18 x 9 mm	2		
24	4700390926	O-ring	1	C	
25	4812118961	Cover	1	C	
26	4700500019	Hexagon screw	16	C	
27	4700792295	Steel plug	1	C	
28	4700792809	Elbow 90 orfs	1		
29	4700791405	Straight o-ring connector	1		
30	4700232118	Flange	2		
31	4700904638	Washer 12x22x2	4		
32	4700508063	Screw, M12x40 mm 8.8	4		
33	4812112556	Connector elbow 90 orfs	1		
34	4700792276	Temperature sensor	1		
35	4700162008	Seal washer	2		
36	4700792264	Straight connector	1		
37	4700374059	Check valve	1		
38	4700792338	Adapter	1		
39	4700160191	O-ring	1		

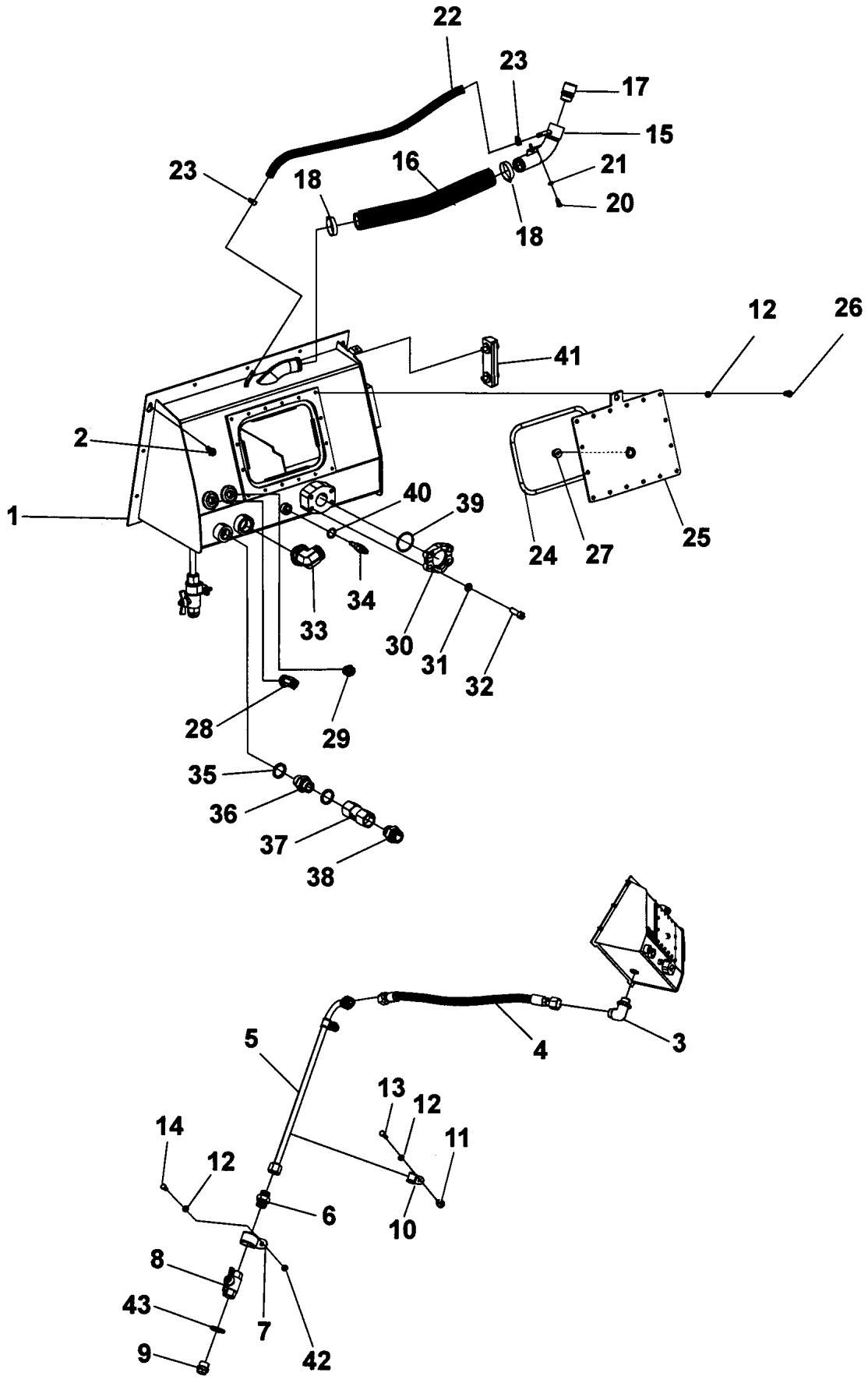
22
23
17
15
23
16
18
21
18
20
12
26
41
2
1
40
39
24
27
25
34
33
30
31
32
28
29
35
36
37
38
5
4
3
13
12
14
11
12
6
10
8
43
7
9
42

Item	Part No.	Name	Qty	L	SN INFO
40	4700330331	Washer 18,2x23,9x1,5	1		
41	4700989151	Oil level glass	1		
42	4700904556	Steel plain washer 8,4x16x3,0	1		
43	4700791120	Washer sealing	1		

Comments for Page: Hydraulic oil tank assembly

(L)OCAL REMARKS

A | en_US | Includes item 24, 25, 26, 27 and 12 (16 pcs).

B | en_US | L=0.68m

C | en_US | Part of item 1.

D | en_US | 16 pcs part of item 1.

Hydraulic system, oil tank Hydraulic valve module

Item	Part No.	Name	Qty	L	SN INFO
1	4812112238	Hydraulic valve	1		To A016753
1	4812120840	Hydraulic valve	1		From A016754
2	4700904230	Steel plain washer	2		
3	4700500027	Screw M10-1,55x22 8.8	2		
4	4812114434	Bracket	1		
5	4700904229	Washer, 8.4x 6x1.5 mm 300HV	4		
6	4700508092	Screw	4		
7	4700791743	Straight connector orfs	5		
8	4700791231	Adapter	1		
9	4700792299	Adapter	1		
10	4700791409	Straight connector orfs	2		
11	4700791843	Elbow 90, O-ring with swivel	1		
12	4700910162	Measuring nipple	2		

Hydraulic system, oil tank 4812120840 Hydraulic valve

Item	Part No.	Name	Qty	L	SN INFO
0	4812120840	Hydraulic valve	1		
1	4812157654	Pressure compensator	1		
2	-	Pressure relief valve	1		
3	4812157681	Shuttle valve	1		
4	4812157770	Electric 3/2 valve	1		
4	4812157771	Coil	1		
5	4812157682	2/2 Valve	1		
6	4812157772	Hand pump	1		
6	4812157773	Kit manual lever	1		
7	-	Orifice	1		
8	4812157684	Orifice	1		
9	4812157685	Orifice	1		
10	4812157686	Brake pressure relief valve	1		
11	4812157687	Proportional pressure relief valve	1		
11	4812160654	Coil	1		
12	-	Check valve	1		

Hydraulic system, oil tank 4812112238 Hydraulic valve

Item	Part No.	Name	Qty	L	SN INFO
0	4812112238	Hydraulic valve	1		
1	4812157654	Pressure compensator	1		
2	4812157655	Pressure relief valve	1		
3	4812157681	Shuttle valve	1		
4	4812157770	Electric 3/2 valve	1		
4	4812157771	Coil	1		
5	4812157682	2/2 Valve	1		
6	4812157772	Hand pump	1		
6	4812157773	Kit manual lever	1		
7	4812157683	Orifice	1		
8	4812157684	Orifice	1		
9	4812157685	Orifice	1		
10	4812157686	Brake pressure relief valve	1		
11	4812157687	Proportional pressure relief valve	1		
11	4812160654	Coil	1		
12	4812157688	Check valve	1		

Hydraulic system, oil tank Hose holder assy kit

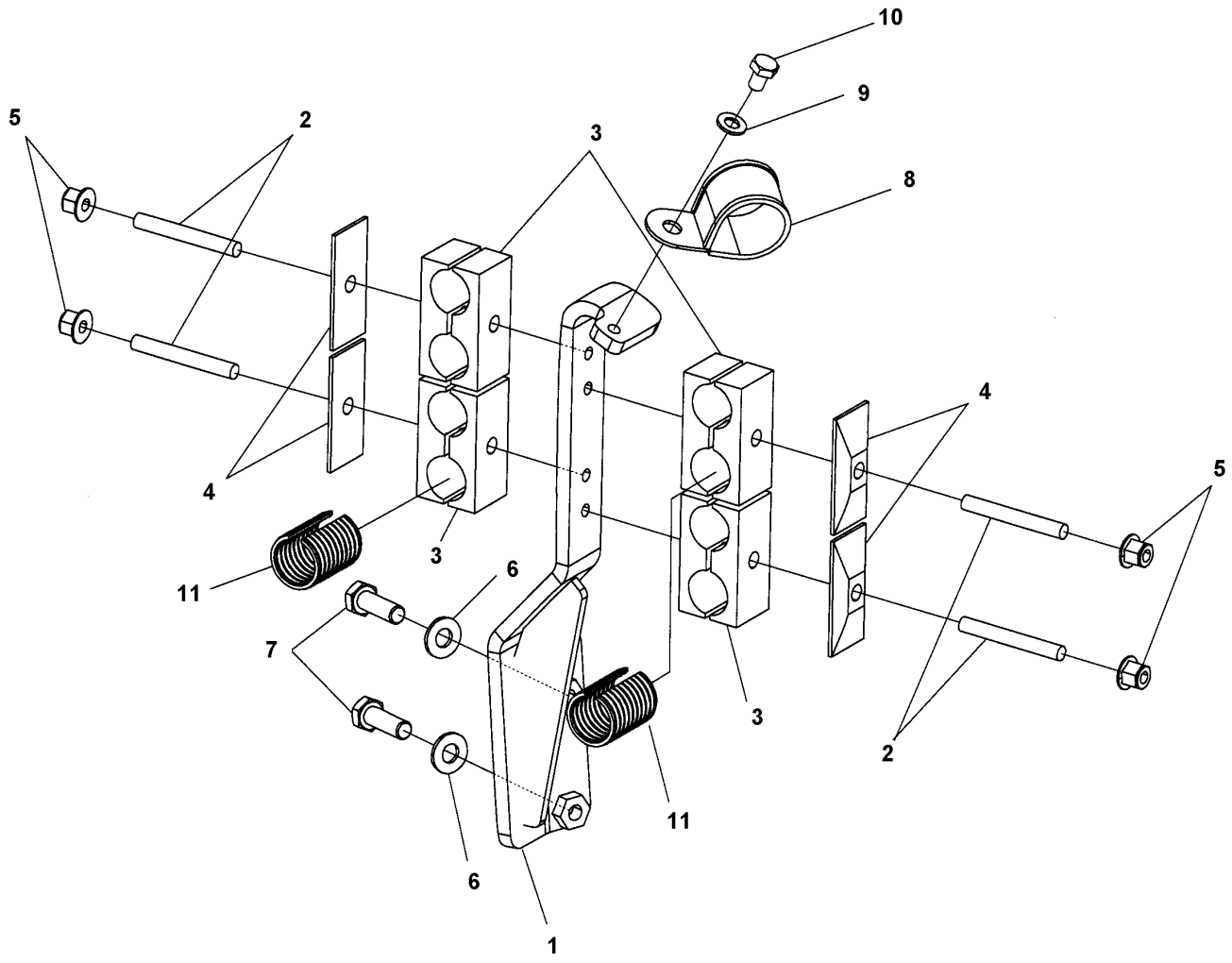

Item	Part No.	Name	Qty	L	SN INFO
1	4812112542	Bracket	1		
2	4700792500	Stud	4		
3	4700287295	Clamp	4		
4	4700904872	Cover plate	4		
5	4700902286	Lock nut, M8x1.25 mm A2K	4		
6	4700904230	Steel plain washer	2		
7	4700500029	Steel plain washer	2		
8	4700923008	Clamp	1		
9	4700904229	Washer, 8.4x 6x1.5 mm 300HV	1		
10	4700500018	Hex. screw	1		
11	4812113941	Hose holder clip	2		

Hydraulic system, oil tank Fan module, front

Item	Part No.	Name	Qty	L	SN INFO
1	4812111035	Fan	1		
2	4812118214	Bracket	1		
3	4700500021	Screw, M8x25 mm 8.8 A2K	6		
4	4700904640	Washer, 8.4x22x3 mm 300HV	4		
5	4812117797	Hydraulic motor	1		
5	4812121763	Hydraulic motor	1		
6	4700904229	Washer, 8.4x 6x1.5 mm 300HV	2		

Hydraulic system, oil tank 4812117797 Hydraulic motor

Item	Part No.	Name	Qty	L	SN INFO
-	4812117797	Hydraulic motor	1		
1	-	Screw	4		
2	-	End cover	1		
3	-	Seal	2	A	
4	-	Bearing block	2		
5	-	Drive gear	1		
6	-	Idler gear	1		
7	-	Shaft seal	2	A	
8	-	Dowel pin	4		
9	-	Gear housing	1		
10	-	Mounting flange	1		
11	-	Shaft seal	1	A	
12	-	Snap ring	1		
13	4700903431	Seal kit	1		

Comments for Page: 4812117797 Hydraulic motor

(L)OCAL REMARKS

A | en_US | Included in seal kit.

Hydraulic system, oil tank Fan module, rear

Item	Part No.	Name	Qty	L	SN INFO
1	4812111035	Fan	1		
2	4812118214	Bracket	1		
3	4700500021	Screw, M8x25 mm 8.8 A2K	6		
4	4700904640	Washer, 8.4x22x3 mm 300HV	4		
5	4812117796	Hydraulic motor	1		To A019610 excl. A019608
5	4812121764	Hydraulic motor	1		From A019611 incl. A019608
6	4700904229	Washer, 8.4x 6x1.5 mm 300HV	2		

Hydraulic system, oil tank 4812117796 Hydraulic motor

Item	Part No.	Name	Qty	L	SN INFO
-	4812117796	Hydraulic motor	1		
1	--	Screw	4		
2	--	End cover	1		
3	--	Seal	2	A	
4	--	Bearing block	2		
5	--	Drive gear	1		
6	--	Idler gear	1		
7	--	Shaft seal	2	A	
8	--	Dowel pin	4		
9	--	Gear housing	1		
10	--	Mounting flange	1		
11	--	Shaft seal	1	A	
12	--	Snap ring	1		
13	4700903431	Seal kit	1		
14	4812159763	Sensor w cable	1		

Comments for Page: 4812117796 Hydraulic motor

(L)OCAL REMARKS

A | en_US | Included in seal kit.

Hydraulic system, engine room Hydraulic system, engine room

Item	Part No.	Name	Qty	L	SN INFO
1	-	Hydraulic pump module	1		
2	-	Hydraulic pump module	1		
3	4812127110	Hydraulic hose	1		
4	4812127109	Hydraulic hose	1		
5	4812127084	Hydraulic hose	1		
6	4812127083	Hydraulic hose	1		
7	4811000212	Hydraulic hose	1		
8	4811000218	Hydraulic hose	1		
9	4811000216	Hydraulic hose	1		
10	4812117324	Hydraulic hose	1		
11	4812117322	Hydraulic hose	1		
12	4812114519	Hydraulic hose	1		
13	4812113941	Hose holder clip	2		
14	4700791711	Pipe clamp	2		
15	4700791712	Cover plate	2		
16	4700902286	Lock nut, M8x1.25 mm A2K	2		
17	4700791805	Stud	2		
18	-	Hydraulic oil filter assy	1		
19	-	Hydraulic pump module	1		

Hydraulic system, engine room Hydraulic pump module

Item	Part No.	Name	Qty	L	SN INFO
1	4812112171	Hydraulic pump	1		
2	4700500037	Hex. screw	4		
3	4700904703	Plain washer 13x24x4 mm	4		
4	4812115051	Straight connector orfs	1		
5	4700791831	Tee-connector	1		
6	4700900229	Measuring fitting	3		
7	4812112560	Straight connector orfs	1		
8	4812112561	T-adapter	1		
9	4700904005	O-ring	2		
10	4700928791	Screw, M12x45	8		
11	4700904638	Washer 12x22x2	8		
12	4700923384	Split flange	4		

4812112171 Hydraulic pump 4812112171 Hydraulic pump

Item	Part No.	Name	Qty	L	SN INFO
0	4812112171	Hydraulic pump	1		
1	4812157365	Seal kit	1		
2	4812157369	Control unit kit	1		
3	4812157370	Solenoid	2		
4	4812157371	O-ring	2		
5	4812157372	Coil kit 24V	2		
6	---	Screw	6		
7	---	Seal nut	1		
8	---	Plug	1		
9	---	O-ring	1		
10	---	Screen	1		
11	---	Locking ring	1		
12	4812157373	Control gasket	1		
13	--	Screw	6		
14	--	Swashplate feedback link	1		
15	--	Dowel pin	2		
16	--	Dowel pin	2		
17	--	Plug assy	2		
18	--	O-ring	2		
19	--	Plug assy	2		
20	--	O-ring	2		
21	--	Plug assy	2		
22	--	O-ring	2		
23	4812157366	Cylinder block kit 78cc	1		
24	---	Slipper/piston kit, 78cc	1		
25	---	Slipper retainer	1		
26	---	Slipper retainer ball guide	1		
27	---	Spring washer	1		
28	---	Cylinder block assembly, 78cc	1		
29	---	Washer	1		
30	---	Cylinder block spring	1		
31	---	Washer	1		
32	---	Retaining ring	1		
33	--	Valve plate pin	1		
34	4812157367	Swashplate	1		
35	4812157368	Swashplate bearing kit	1		
37	--	Valve plate	1		
38	--	Servo piston assy	1		

Item	Part No.	Name	Qty	L	SN INFO
39	4812157374	Slider block	1		
40	---	Piston seal ring kit	2		
41	--	Servo cylinder	1		
42	--	Servo cylinder	1		
43	4812157375	O-ring	2		
44	--	Locking plate	2		
45	--	Screw	4		
46	4812157376	Orifice 1.3, M6x0.75mm	2		
47	--	Screen 8 mm, 125 micron	2		
48	4812157379	Shaft 21 tooth spline, 16/32 pitch	1		
49	4812157380	Roller bearing	1		
50	--	Retaining ring	2		
51	4812157381	Lip seal	1		
52	--	Retaining ring	1		
53	--	End cap, cpl	1		

4812112171 Hydraulic pump End cap, cpl

Item	Part No.	Name	Qty	L	SN INFO
1	4812157377	End cap gasket	1		
2	-	Plug assy	3		
3	--	O-ring	3		
4	-	Plug assy	2		
5	--	O-ring	2		
6	-	Screw	6		
7	-	Screw	2		
8	4812157378	Bearing journal	1		
9	-	Screw	2		
10	-	Lifting bracket	1		
11	-	Lubrication orifice	1		
12	4812157382	Coupling 14 tooth, 12/24 pitch	1		
13	-	O-ring	1		
14	-	Flange cover	1		
15	-	Screw	4		
16	-	Screw	6		
17	4812157383	Thrust washer	1		
18	-	Charge pump cover	1		
20	4812157384	High pressure relief valve, towing valve 400 bar	2		
21	4812159461	O-ring	2		
22	4700813618	O-ring	2		
23	4812158360	Pressure limiter kit	2		
24	-	Seal nut	2		
25	-	O-ring	2		
26	4812157386	Charge relief valve kit	1		
27	4812157387	Seal nut	1		
28	4812158990	O-ring	1		
29	-	Plug assy	1		
30	--	O-ring	1		
31	-	Plug assy	2		
32	--	O-ring	2		

Hydraulic system, engine room Hydraulic pump module

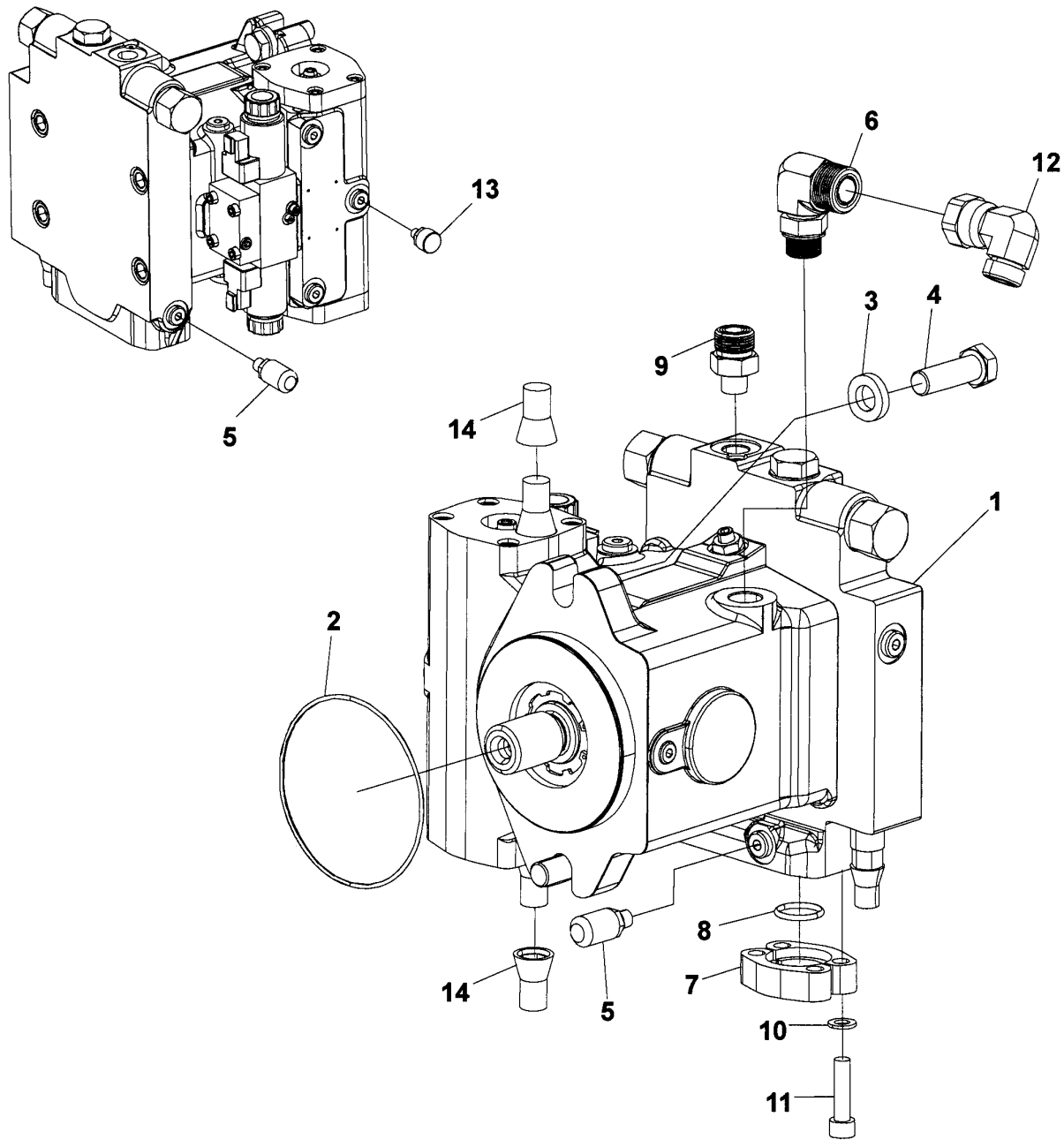

Item	Part No.	Name	Qty	L	SN INFO
1	4812112175	Hydraulic pump	1		
2	4700160231	O-ring	1		
3	4700904558	Washer, 17x30x6 mm 300 HV	2		
4	4700500070	Hex. screw	2		
5	4700901157	Measuring nipple	2		
6	4811000417	Connector elbow 90 orfs	1		
7	4700929226	Flange half	4		
8	4700904004	O-ring 90	2		
9	4700792465	Straight connector orfs	1		
10	4700904637	Washer	8		
11	4700508080	Screw	8		
12	4700904584	Connector elbow 90 ORFS	1		
13	4812116781	Oil filling plug	1		
14	4812118393	Sealing	2		

4812112175 Hydraulic pump 4812112175 Hydraulic pump

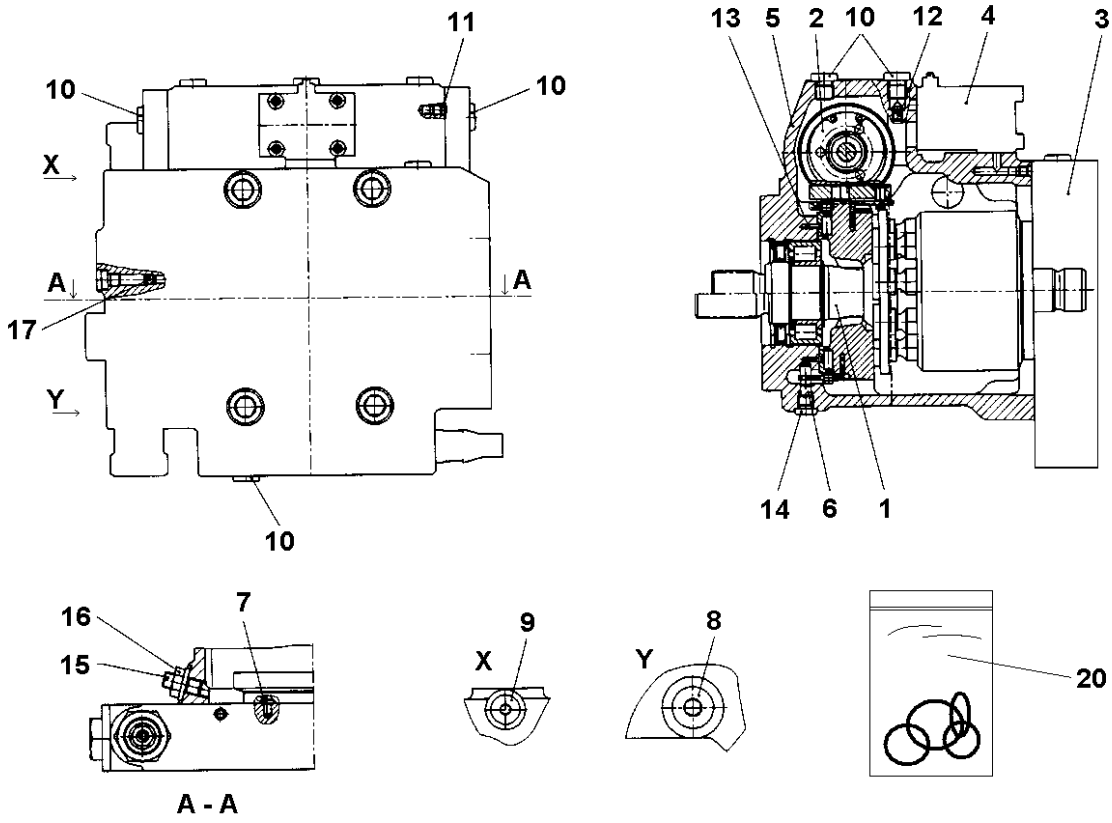

Item	Part No.	Name	Qty	L	SN INFO
1	-	Rotary group	1		
2	-	Hydraulic adjustment	1		
3	-	Subplate	1		
4	-	4/3 Pilot valve	1		
5	-	Housing	1		
6	-	Hinge pin	1		
7	-	Fixing pin	1		
8	-	Locking screw	1		
9	-	Locking screw	1		
10	-	Locking screw	4		
11	-	Double break of pin	2		
12	-	Orifice	2		
13	-	Clamping pin	2		
14	-	Locking screw	1		
15	-	Set screw	1		
16	-	Collar nut	1		
17	-	Orifice	1		
20	4700940676	Seal kit	1		

4812112175 Hydraulic pump Rotary group

Item	Part No.	Name	Qty	L	SN INFO
1	-	Engine hydraulic part	1		
2	-	Control panel	1		
3	-	Cradle	1		
4	-	Sliding ring	1		
5	-	Drive shaft	1		
6	-	Wire	1		
7	-	Hinge pin	1		
8	-	Wire	1		
9	4812157193	Bearing pair	1		
10	4812157194	Cylindrical roller bearings	1		
11	4812157195	Cage pair	1		
12	-	Circlip	1		
13	-	Circlip	1		
14	-	Shaft sealing ring	1		
15	-	Circlip	1		
16	-	Cylinder with bushing	1		
17	-	Piston slipper pad	9		
20	4812157196	Retaining plate	1		
21	4812157197	Retaining ball	1		
22	-	Gasket	2		
23	-	Pressure spring	1		
24	-	Circlip	1		

4812112175 Hydraulic pump Hydraulic adjustment

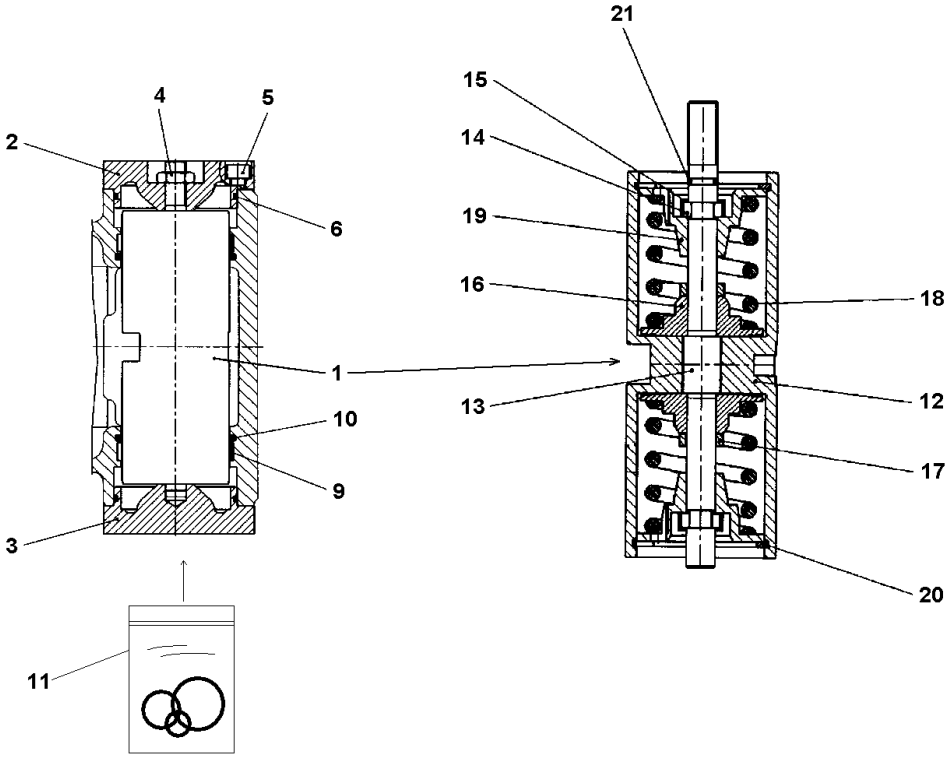

Item	Part No.	Name	Qty	L	SN INFO
1	-	Positioning piston	1		
2	-	Injector part	1		
3	-	Injector part	1		
4	-	Hexagon nut	1		
5	-	Socket head screw	8		
6	4812157198	O-ring	2		
9	-	Guide ring	2		
10	-	Rod seal kit	2		
11	4812157199	Hydraulic seal kit	1		
12	-	Control piston	1		
13	-	Rod	1		
14	-	Ring	2		
15	-	Retaining ring	2		
16	-	Spring plate	2		
17	-	Spacer	2		
18	-	Pressure spring	2		
19	-	Spring plate	2		
20	-	Circlip	2		
21	4812157251	O-ring	1		

4812112175 Hydraulic pump 4/3 Pilot valve

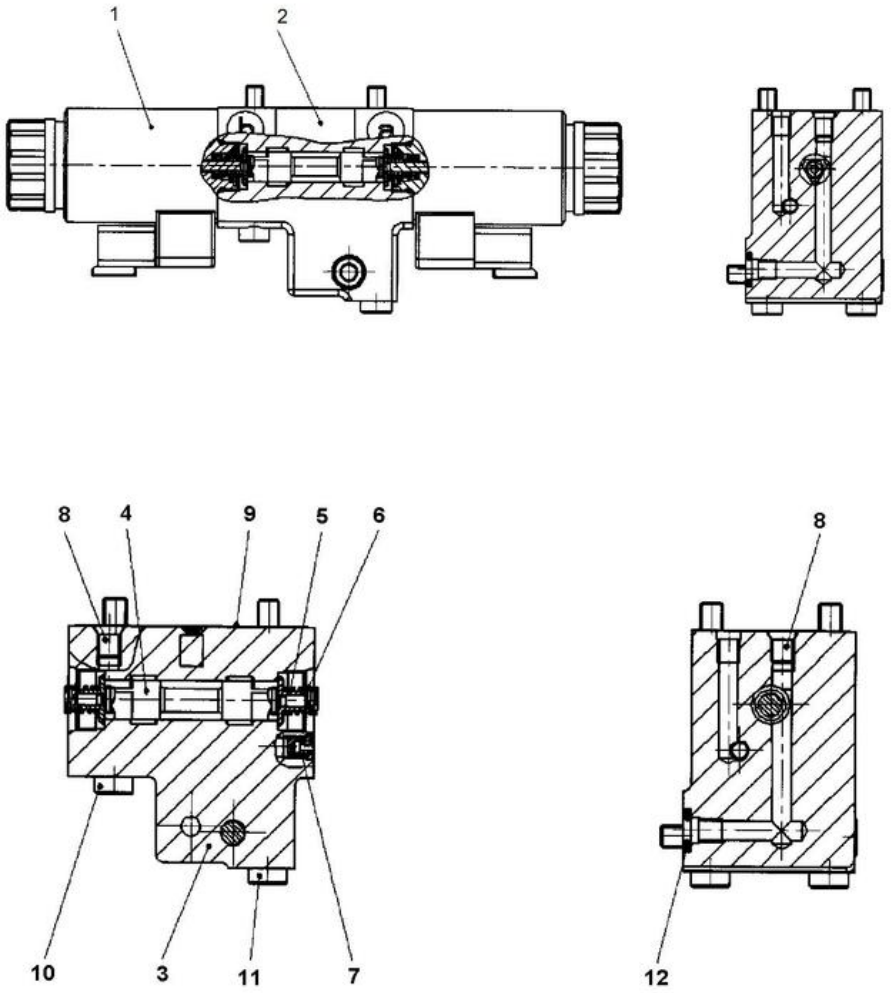

Item	Part No.	Name	Qty	L	SN INFO
1	4812156152	Solenoid	2		
2	4812157252	Valve with accesories	1		
3	--	Valve house	1		
4	--	Spool	1		
5	--	Spring plate	2		
6	--	Pressure spring	2		
7	--	Plug	1		
8	--	Cap screw	2		
9	--	Gasket	1		
10	--	Cap screw	3		
11	--	Cap screw	2		
12	4812157253	O-ring	1		

Hydraulic system, engine room Hydraulic oil filter assy

Item	Part No.	Name	Qty	L	SN INFO
1	4812112260	Hydraulic oil filter	1		
1	4812112262	Hydraulic oil filter element	1		
1	4812160664	Fiction ring, filter head	1		
1	4700936898	Sensor Red (RW)	1		
2	4700904230	Steel plain washer	4		
3	4700500048	Screw, M10x20 mm 8.8 A3K	4		
5	4700921161	Pipe clamp	1		
6	4700792339	Adapter	2		

Hydraulic system, engine room Hydraulic pump module

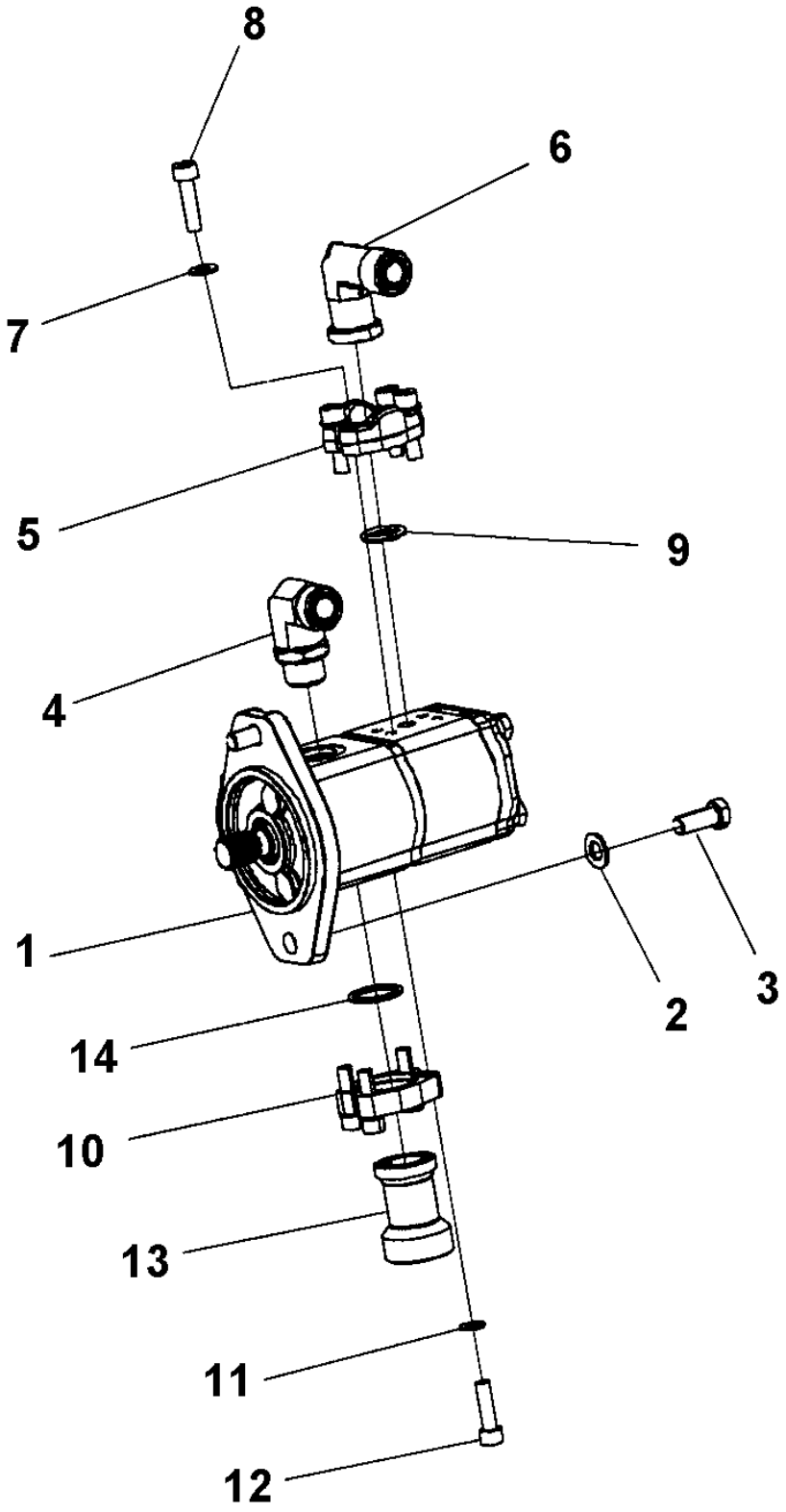

Item	Part No.	Name	Qty	L	SN INFO
1	4812118150	Hydraulic pump, steering	1		
2	4700904231	Washer, 13x24x2 mm 300 HV	2		
3	4700500046	Hex. head screw M12x030H	2		
4	4700791231	Adapter	1		
5	4700232145	Split flange	2		
6	4812112108	Flange fitting 90	1		
7	4700904229	Washer, 8.4x 6x1.5 mm 300HV	4		
8	4700508048	Hexagon socket head cap screw M	4		
9	4700904774	O-ring	1		
10	4700232097	Flange half	2		
11	4700904637	Washer	4		
12	4700508053	Screw	4		
13	4812111214	Flange connector	1		
14	4700813429	O-ring 70	1		

Hydraulic system, engine room 4812118150 Hydraulic pump, steering

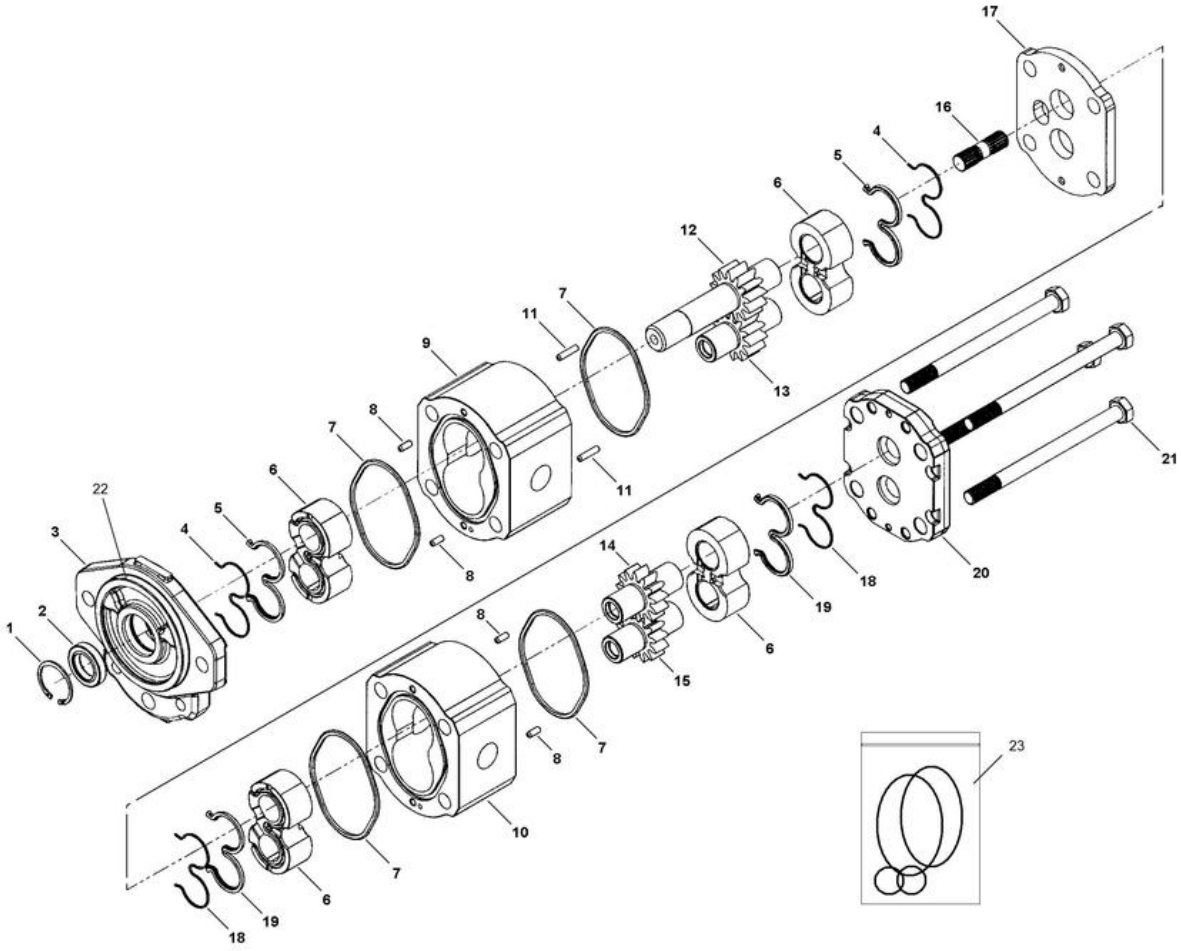

Item	Part No.	Name	Qty	L	SN INFO
-	4812118150	Hydraulic pump, steering	1		
1	--	Snap ring	1		
2	--	Shaft seal	1		
3	--	Mounting flange	1		
4	--	Back-up ring	2		
5	--	Seal	2		
6	--	Bearing block	4		
7	--	O-ring	4		
8	--	Dowel pin 1	4		
9	--	Gear housing 1	1		
10	--	Gear housing 2	1		
11	--	Dowel pin 2	2		
12	--	Drive gear 1	1		
13	--	Idler gear 1	1		
14	--	Drive gear 2	1		
15	--	Idler gear 2	1		
16	--	Coupling	1		
17	--	Distance plate	1		
18	--	Back-up ring	2		
19	--	Seal	2		
20	--	End cover	1		
21	--	Screw	4		
22	4700937055	O-ring	1		
23	4812158395	Seal kit, cpl	1		

Hydraulic system, engine room Adjustable frequency, Eco opti Hydraulic system, engine room Adjustable frequency, Eco opti

Item	Part No.	Name	Qty	L	SN INFO
1	-	Hydraulic pump module	1		
2	-	Hydraulic Pump	1		
3	4812127110	Hydraulic hose	1		
4	4812127109	Hydraulic hose	1		
5	4812127085	Hydraulic hose	1		
6	4812127086	Hydraulic hose	1		
7	4811000212	Hydraulic hose	1		
8	4811000218	Hydraulic hose	1		
9	4811000216	Hydraulic hose	1		
10	4812117323	Hydraulic hose	1		
11	4812117322	Hydraulic hose	1		
12	4812114519	Hydraulic hose	1		
13	4812113941	Hose holder clip	2		
14	4700791711	Pipe clamp	2		
15	4700791712	Cover plate	2		
16	4700902286	Lock nut, M8x1.25 mm A2K	2		
17	4700791805	Stud	2		
18	-	Hydraulic oil filter assy	1		
19	-	Hydraulic pump module	1	A	
19	-	Hydraulic pump module	1	B	

Comments for Page: Hydraulic system, engine room Adjustable frequency, Eco opti

(L)OCAL REMARKS

A | en_US | Eco option

B | en_US | Adjustable frequency option

Hydraulic system, engine room Adjustable frequency, Eco opti Hydraulic pump

Item	Part No.	Name	Qty	L	SN INFO
1	4812112181	Hydraulic pump	1		
2	4700160231	O-ring	1		
3	4700904558	Washer, 17x30x6 mm 300 HV	2		
4	4700500093	Hex. screw	2		
5	4700901157	Measuring nipple	2		
6	4700791549	Elbow adapter 90	1		
7	4700791835	Elbow connector 45 orfs	1		
8	4700904005	O-ring	2		
9	4700923384	Split flange	4		
10	4700904638	Washer 12x22x2	8		
11	4700928791	Screw, M12x45	8		
12	4812116781	Oil filling plug	1		
13	4700904584	Connector elbow 90 ORFS	1		

4812112181 Hydraulic pump 4812112181 Hydraulic pump

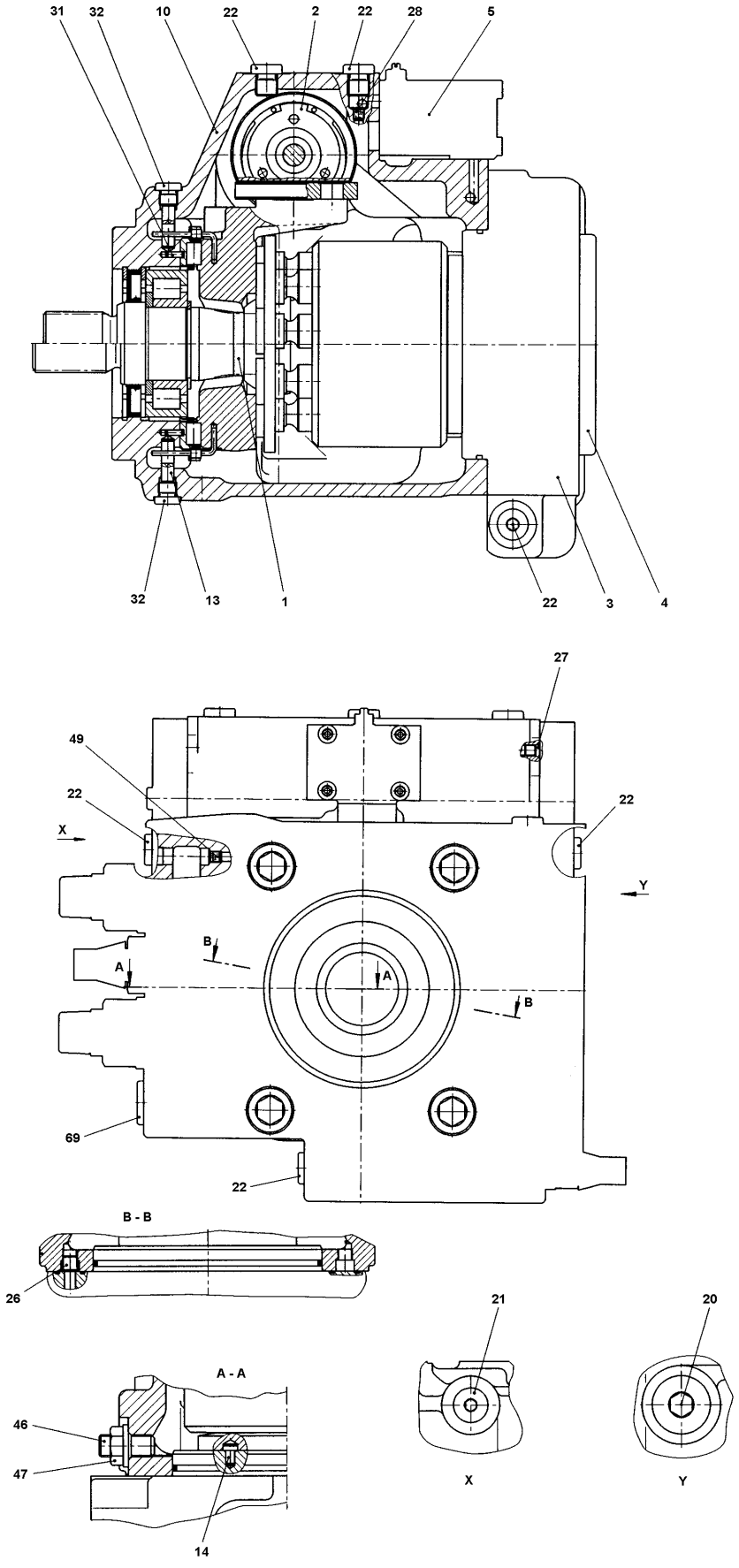

Item	Part No.	Name	Qty	L	SN INFO
1	-	Rotary group	1		
2	-	Control hydraulic	1		
3	-	Sub plate	1		
4	-	Cover with accessories	1		
5	-	Control module	1		
10	-	Housing	1		
13	-	Joint pin	2		
14	-	Dowel pin	1		
20	-	Locking screw	1		
21	-	Locking screw	1		
22	-	Locking screw	4		
26	-	Locking screw	1		
27	-	Double break-of plug	1		
28	4812158198	Orifice	2		
31	-	Clamping pin	2		
32	-	Locking screw	2		
46	-	Threaded pin	1		
47	-	Seal lock nut	1		
49	4700936313	Orifice	1		
69	-	Locking screw	1		
98	D967536859	Seal kit	1		

4812112181 Hydraulic pump Rotary group

Item	Part No.	Name	Qty	L	SN INFO
1	-	Rotary group, hydraul section	1		
2	--	Cylinder with bushing	1		
3	--	Piston slipper pad	9		
4	--	Cup spring stack	1		
5	--	Shim	1		
6	--	Retaining plate	1		
7	--	Retaining ball	1		
8	--	Washer	2		
9	--	Pressure spring	1		
10	--	Retaining ring	1		
11	-	Control plate	1		
12	-	Cradle	1		
13	-	Slide ring	1		
14	4812157094	Drive shaft	1		
15	-	Gasket	1		
17	-	Wire	2		
26	4812157092	Bearing liner (Pair)	1		
31	4812157093	Plain roller bearing	1		
32	-	Cradle bearing assy (Set)	1		
36	-	Retaining ring	1		
37	-	Retaining ring	2		
38	4812158199	Shaft seal ring	1		
98	4812157091	Seal kit drive shaft	1		

4812112181 Hydraulic pump Control hydraulic

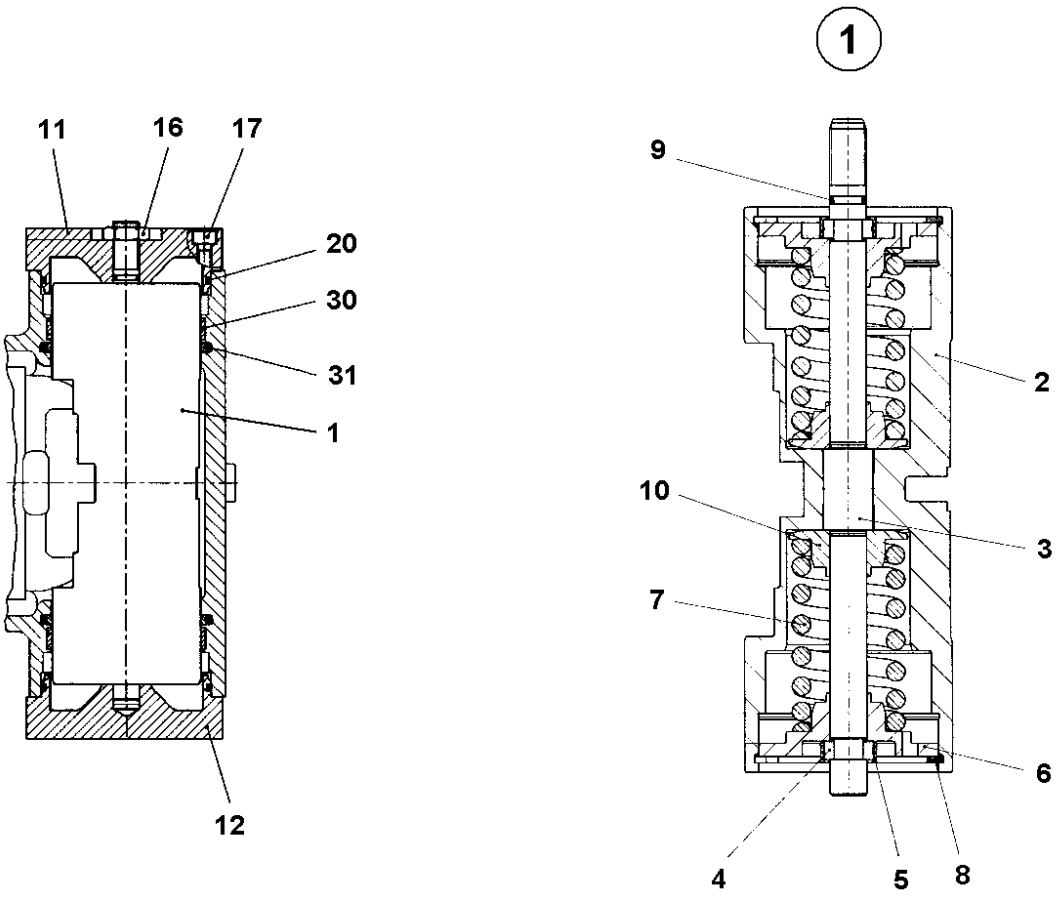

Item	Part No.	Name	Qty	L	SN INFO
1	-	Positioning piston	1		
2	-	Positioning piston	1		
3	-	Rod	1		
4	-	Ring	2		
5	-	Assembly ring	2		
6	-	Spring collar	2		
7	-	Pressure spring	2		
8	-	Retaining ring	2		
9	4812157151	O-ring	1		
10	-	Spring collar	2		
11	-	Injector part	1		
12	-	Injector part	1		
16	-	Hexagon nut	1		
17	-	Socket head screw	8		
20	4812157098	O-ring	2		
30	-	Gouide ring	2		
31	4812157099	Rod seal kit	2		
98	4812157096	Seal kit hydr. control	1		

4812112181 Hydraulic pump Sub plate

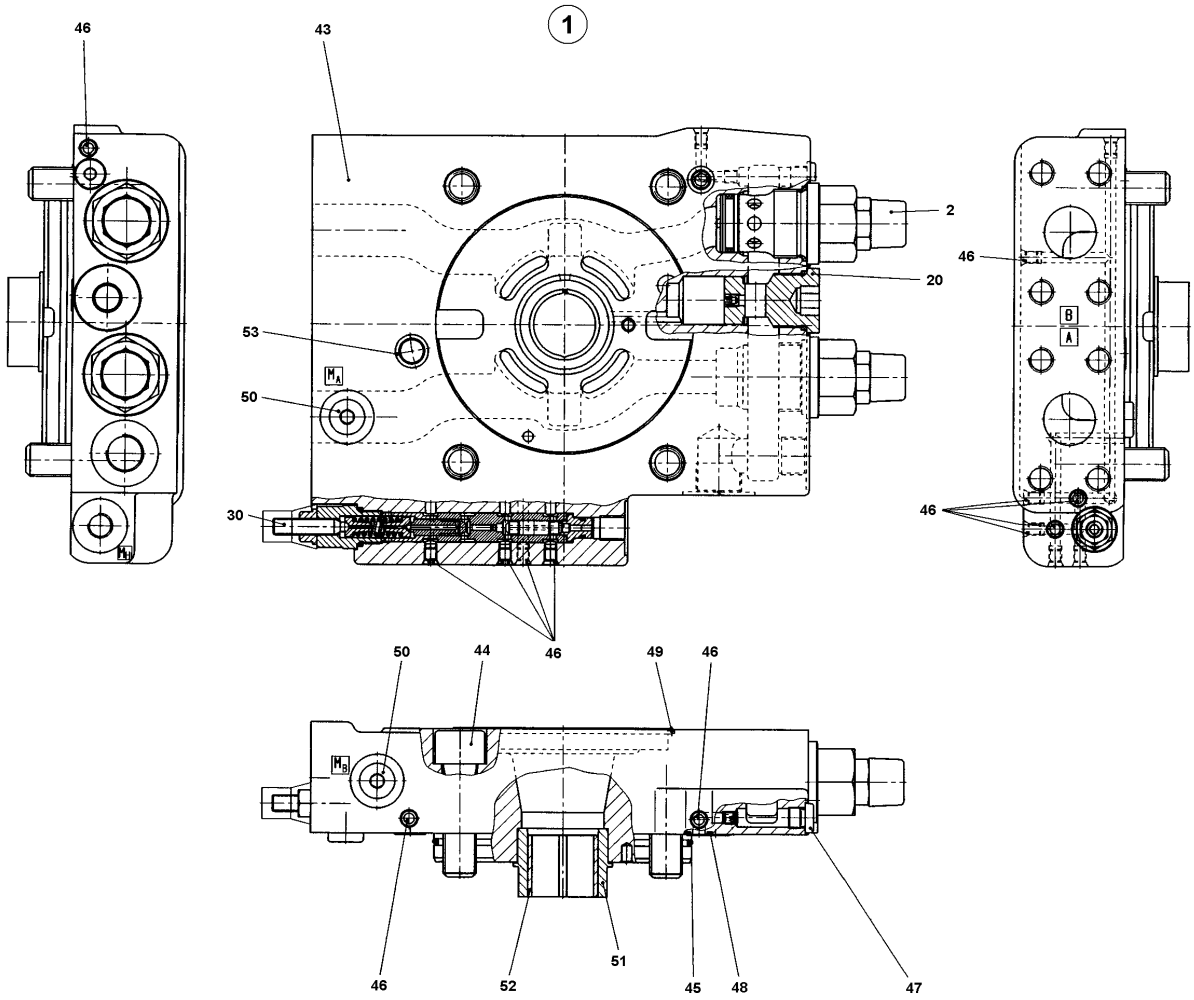

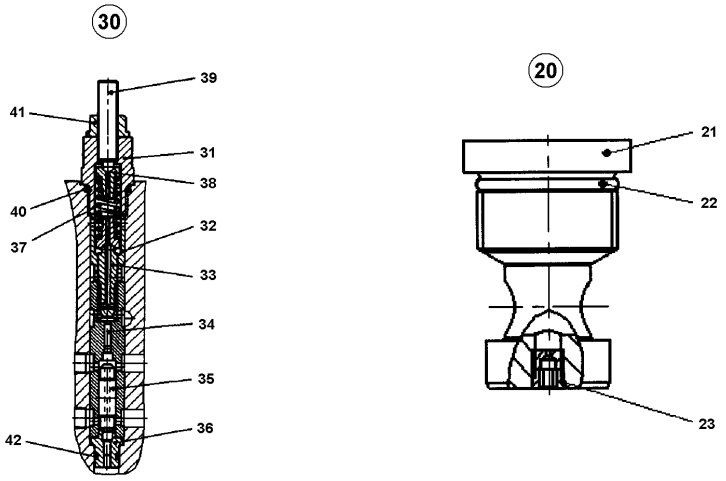

Item	Part No.	Name	Qty	L	SN INFO
1	4812158197	Subplate	1		
2	4700936359	Delivery-valve assembly	2		
2	4700936374	Seal kit	1		
20	D967711040	catch set	1		
21	-	Locking screw	1		
22	4700927278	O-ring	1		
23	-	Orifice	1		
30	4812157095	Pressure overide valve	1		
31	-	Locking screw	1		
32	-	Valve bushing	1		
33	-	Control piston	1		
34	-	Piston	1		
35	-	Valve piston	1		
36	-	Poppet seat	1		
37	-	Pressure spring	1		
38	-	Spring collar	2		
39	-	Adjusting screw	1		
40	4700902783	O-ring	1		
41	-	Seal lock nut	1		
42	4812157097	O-ring	1		
43	-	Port plate	1		
44	-	Socket head screw	4		
45	4700936367	O-ring	1		
46	-	Double break-off plug	6		
47	-	Locking screw	1		
48	4812157151	O-ring	1		
49	4812158251	O-ring	1		
50	-	Locking screw	2		
51	-	Bush	1		
52	-	Bearing bushing	1		
53	4812157975	O-ring	2		

4812112181 Hydraulic pump Cover with accessories

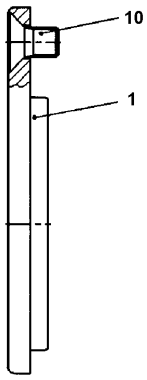

Item	Part No.	Name	Qty	L	SN INFO
1	-	Injector part	1		
10	-	Flat head screw	2		

4812112181 Hydraulic pump Control module

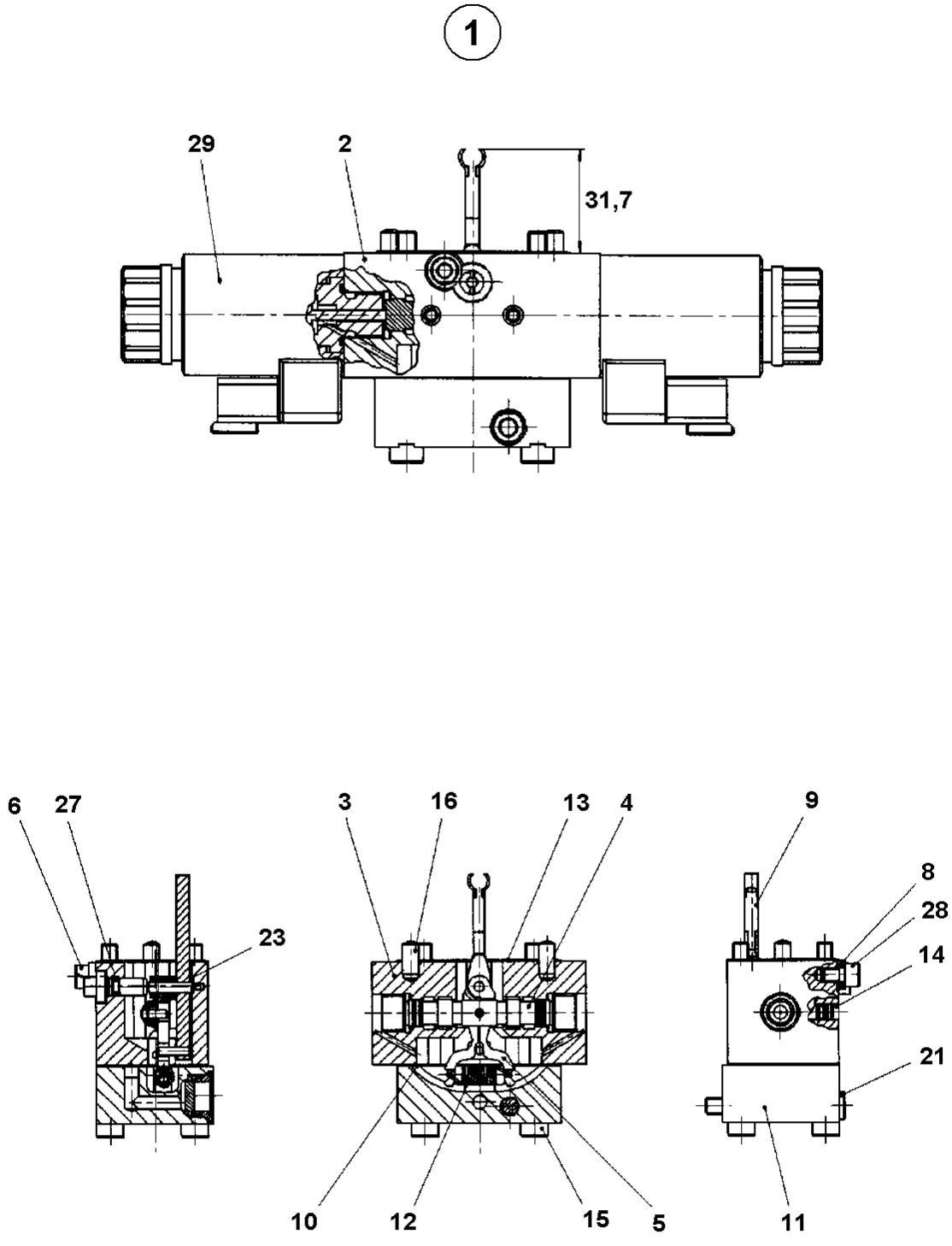

Item	Part No.	Name	Qty	L	SN INFO
1	4812157152	Control module	1		
2	-	Control module	1		
3	-	Housing	1		
4	-	Control piston with cylinder pin	1		
5	-	Lever pair	1		
6	-	Eccentric pin	1		
8	-	Shim	1		
9	-	Feedback lever with needle roller	1		
10	4812157155	Gasket	1		
11	-	Cover with filter	1		
12	-	Draw spring	1		
13	4812156599	Gasket	1		
14	-	Seal plug	2		
15	-	Socket head screw	4		
16	-	Cylinder pin	2		
21	-	Socket head screw	1		
23	-	Shim	1		
27	4812157156	O-ring	1		
28	-	Socket head screw	1		
29	4812156151	Solenoid	2		
98	D967536871	Seal kit	1		

Hydraulic system, engine room Adjustable frequency, Eco opti Hydraulic pump module, Eco

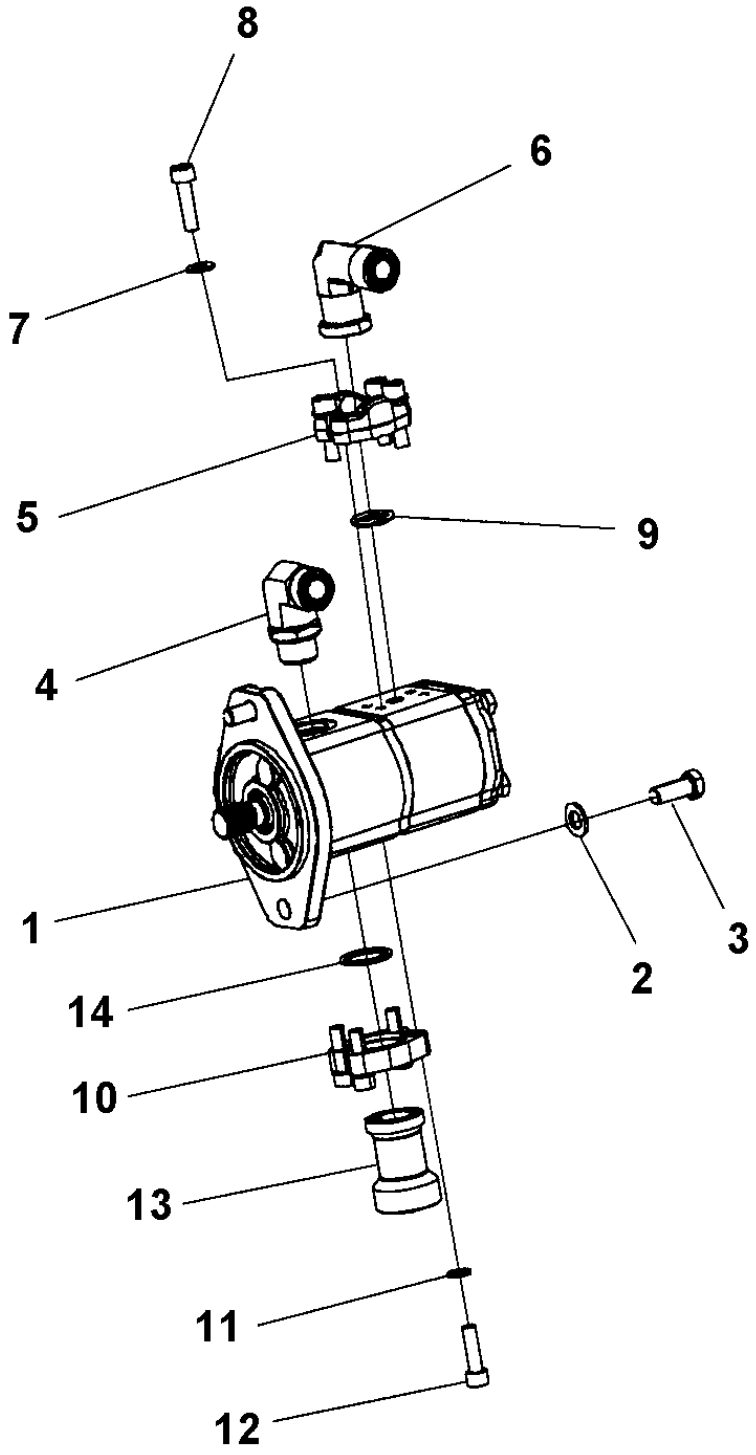

Item	Part No.	Name	Qty	L	SN INFO
1	4812118151	Hydraulic pump	1		
2	4700904231	Washer, 13x24x2 mm 300 HV	2		
3	4700500046	Hex. head screw M12x030H	2		
4	4700791231	Adapter	1		
5	4700232145	Split flange	2		
6	4812112108	Flange fitting 90	1		
7	4700904229	Washer, 8.4x 6x1.5 mm 300HV	4		
8	4700508048	Hexagon socket head cap screw M	4		
9	4700904774	O-ring	1		
10	4700232098	Flange half	2		
11	4700904637	Washer	4		
12	4700508053	Screw	4		
13	4812114815	Flange connector	1		
14	4700160186	O-ring	1		

Hydraulic system, engine room Adjustable frequency, Eco opti 4812118151 Hydraulic pump

Item	Part No.	Name	Qty	L	SN INFO
-	4812118151	Hydraulic pump	1		
1	--	Snap ring	1		
2	--	Shaft seal	1		
3	--	Mounting flange	1		
4	--	Back-up ring	2		
5	--	Seal	2		
6	--	Bearing block	4		
7	--	O-ring	4		
8	--	Dowel pin 1	4		
9	--	Gear housing 1	1		
10	--	Gear housing 2	1		
11	--	Dowel pin 2	2		
12	--	Drive gear 1	1		
13	--	Idler gear 1	1		
14	--	Drive gear 2	1		
15	--	Idler gear 2	1		
16	--	Coupling	1		
17	--	Distance plate	1		
18	--	Back-up ring	2		
19	--	Seal	2		
20	--	End cover	1		
21	--	Screw	4		
22	4812158395	Seal kit, cpl	1		

Hydraulic system, frame rear Hydraulic system, frame rear

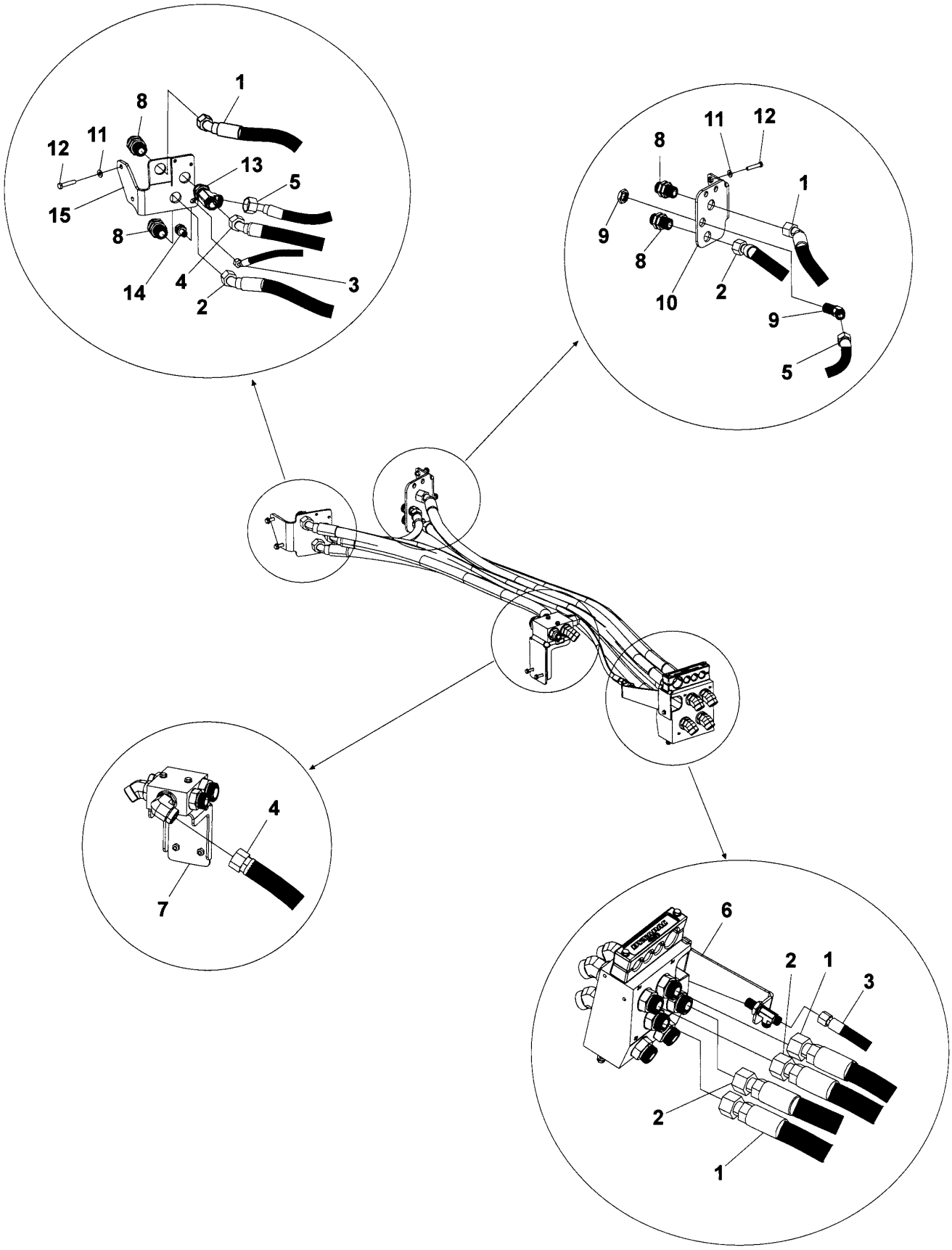

Item	Part No.	Name	Qty	L	SN INFO
1	4812127103	Hydraulic hose	2		
2	4812127104	Hydraulic hose	2		
3	4811000205	Hydraulic hose	1		
4	4811000201	Hydraulic hose	1		
5	4811000200	Hydraulic hose	1		
6	-	Connector kit	1		
7	-	Connector kit	1		
8	4812112559	Bulkhead union	1		
9	4811000261	Bulkhead elbow 45	1		
10	4812112341	Bracket	1		
11	4700904230	Steel plain washer	4		
12	4700500161	Screw	4		
13	4811000263	Bulkhead union	1		
14	4700791830	Adapter	1		
15	4812115832	Bracket	1		

Hydraulic system, frame rear Connector kit

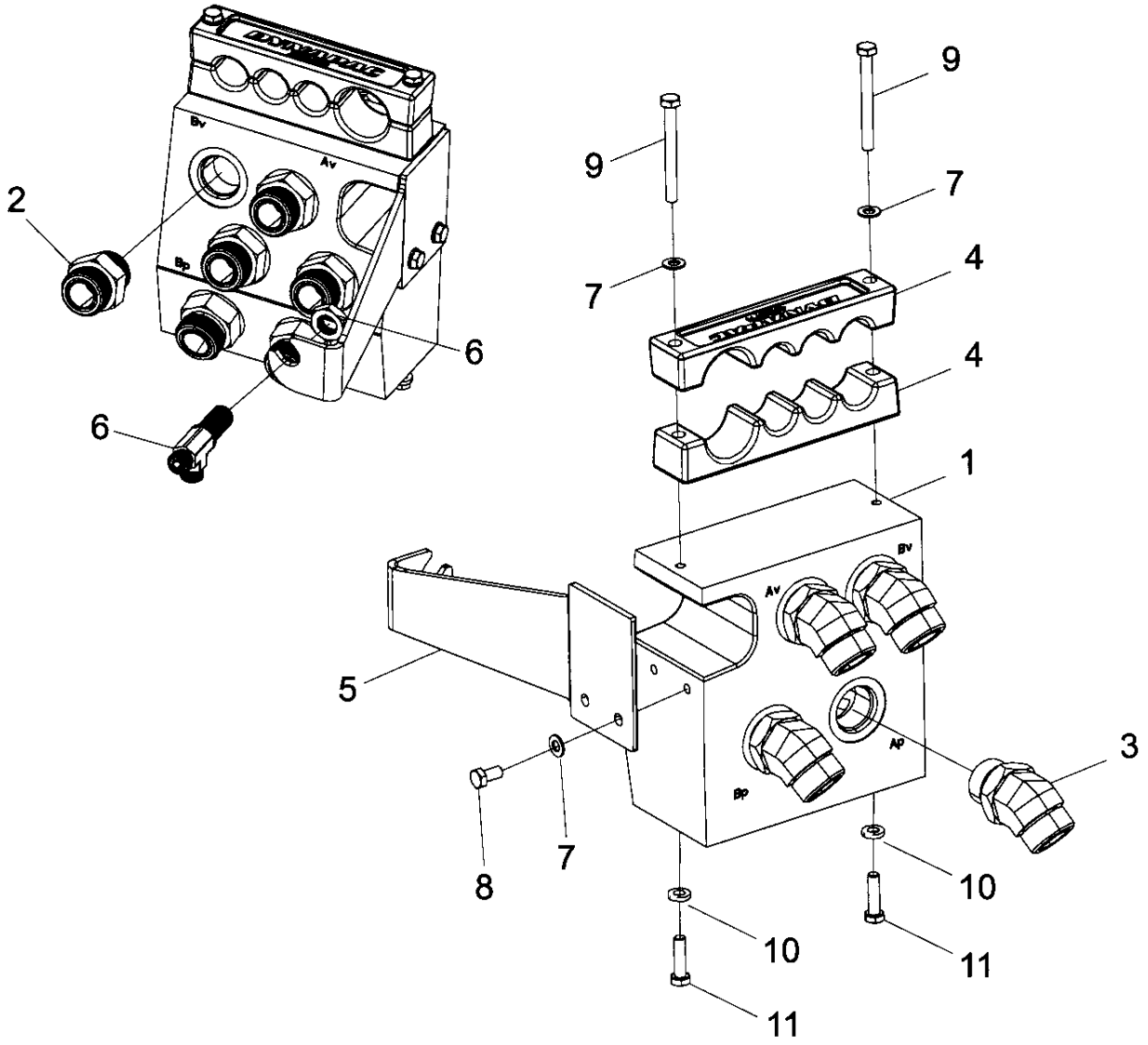

Item	Part No.	Name	Qty	L	SN INFO
1	4812111768	Hydraulic block	1		
2	4700792339	Adapter	6		
3	4700791212	Adapter	4		
4	4812111771	Hose holder	2		
5	4812111770	Holder	1		
6	4812114492	Bulkhead union	1		
7	4700904229	Washer, 8.4x 6x1.5 mm 300HV	4		
8	4700500019	Hexagon screw	2		
9	4700500090	Screw	2		
10	4700904556	Steel plain washer 8,4x16x3,0	2		
11	4700500022	Screw	2		

Hydraulic system, frame rear Connector kit

Item	Part No.	Name	Qty	L	SN INFO
1	4812115463	Holder	1		
2	4812121550	Holder	1		
3	4700904640	Washer, 8.4x22x3 mm 300HV	2		
4	4700500021	Screw, M8x25 mm 8.8 A2K	2		
5	4812111769	Hydraulic block	1		
6	4700792339	Adapter	1		
7	4812112555	Adapter	1		
8	4700792299	Adapter	1		
9	4700791212	Adapter	1		
10	4700791318	Adapter	1		
11	4700904229	Washer, 8.4x 6x1.5 mm 300HV	2		
12	4700500025	Screw, M8x50 mm 8.8 A2K	2		
13	4700500249	Screw	2		
14	4700586003	Lock nut M8	2		
15	4700904734	Washer, 8.4x26x4 mm 300 HV	2		
16	4700604005	Spring washer	1		
17	4700904556	Steel plain washer 8,4x16x3,0	2		
18	4700570005	Hexagon nut	2		

Hydraulic system, steering Hydraulic system, steering

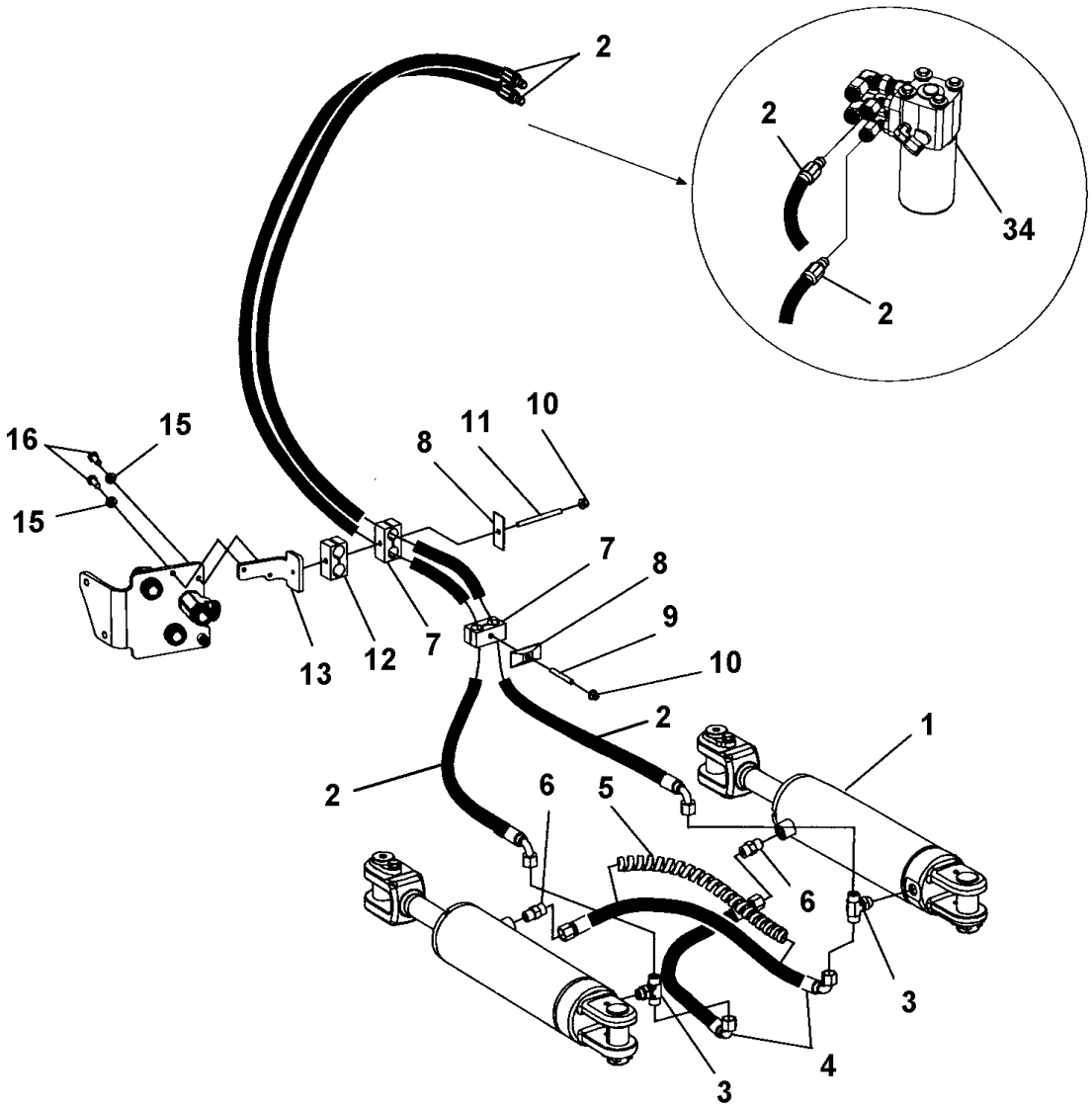

Item	Part No.	Name	Qty	L	SN INFO
1	-	Hydraulic Cylinder	2		
2	4811000207	Hydraulic hose	2		
3	4700792586	T-connector ORFS	2		
4	4811000206	Hydraulic hose	2		
5	4700904623	Hose guard	1XL	A	
6	4700791799	Straight connector orfs	2		
7	4700903456	Pipe clamp	2		
8	4700904872	Cover plate	2		
9	4700792500	Stud	1		
10	4700902286	Lock nut, M8x1.25 mm A2K	2		
11	4700791807	Stud	1		
12	4700287295	Clamp	1		
13	4812113983	Bracket	1		
15	4700904229	Washer, 8.4x 6x1.5 mm 300HV	2		
16	4700500053	Screw, M8x20 mm 8.8 A2K	2		
34	-	Steering valve module	1		

Comments for Page: Hydraulic system, steering

(L)OCAL REMARKS

A | en_US | L=0.4m

Hydraulic system, steering Hydraulic cylinder

Item	Part No.	Name	Qty	L	SN INFO
1	4812112508	Hydraulic cylinder	1		
1	4812120830	Hydraulic cylinder	1		
1	4812121947	Hydraulic cylinder	1		
2	4700900994	Lock washer	2		
3	4700500046	Hex. head screw M12x030H	2		
4	4700792083	Plug	2		

Hydraulic system, steering 4812121947 Hydraulic cylinder

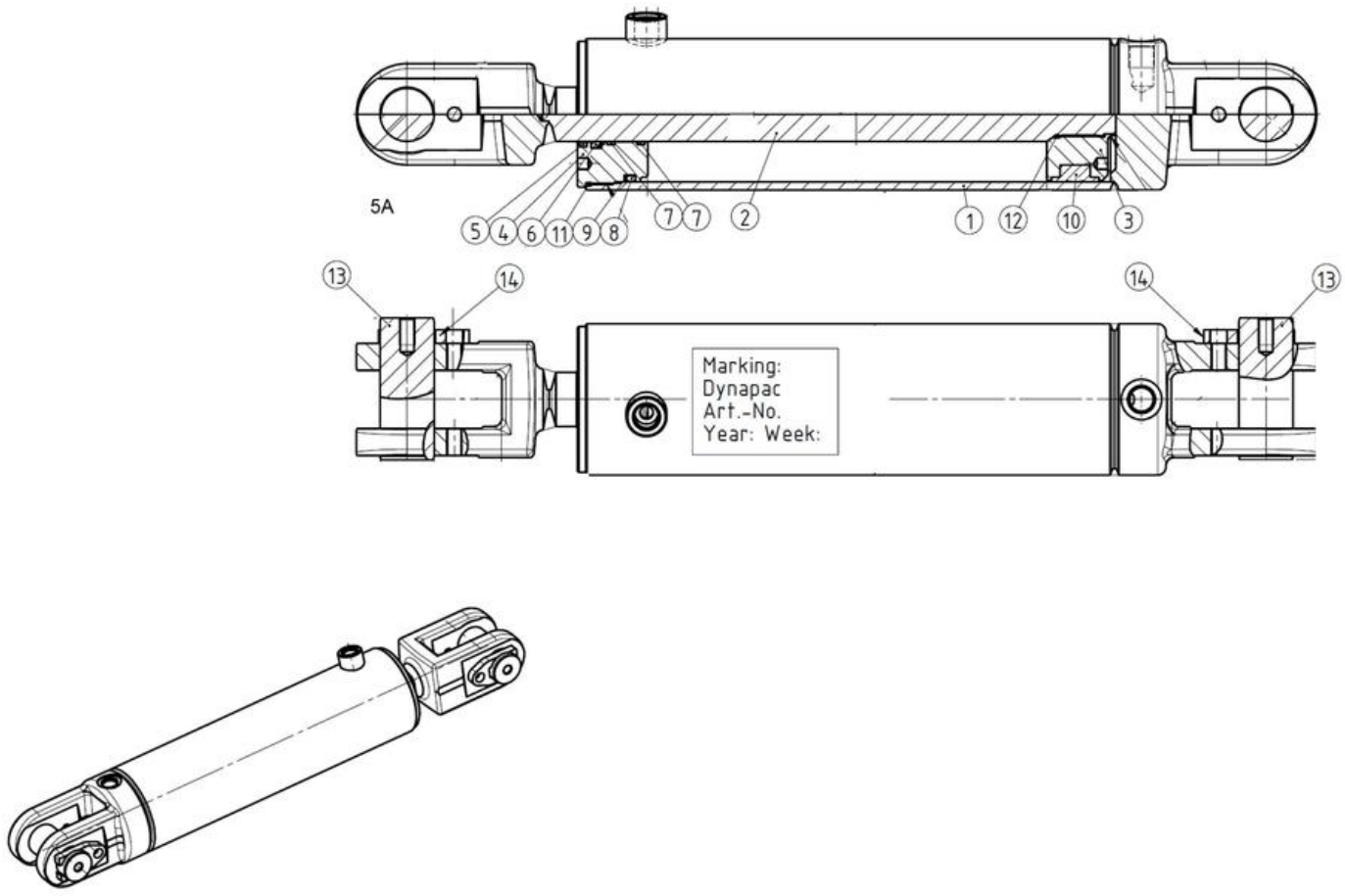

Item	Part No.	Name	Qty	L	SN INFO
0	4812121947	Hydraulic cylinder	1		
1	--	Guide block	1		
2	--	Piston rod	1		
3	--	Piston	1		
4	--	Guide block	1		
5A	4700950417	Seal kit	1		
5	---	Wiper	1		
6	---	Rod seal	1		
7	---	Guide Ring	2		
8	---	O-ring	1		
9	---	Backup ring	1		
10	---	O-ring	1		
11	---	O-ring	1		
12	---	O-ring	1		
13	--	Pin	2		
14	--	Washer	2		

Hydraulic system, steering 4812120830 Hydraulic cylinder

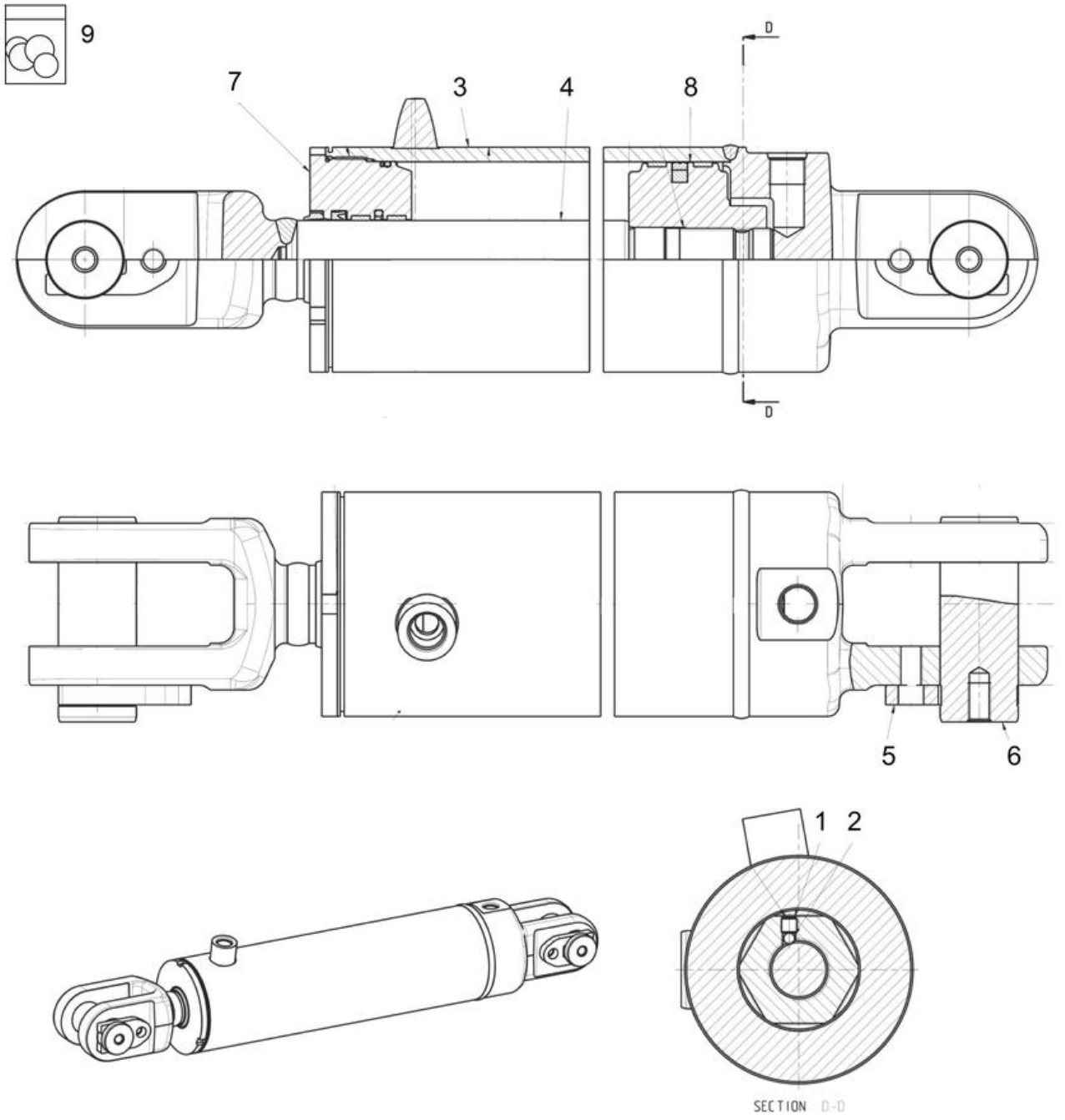

Item	Part No.	Name	Qty	L	SN INFO
0	4812120830	Hydraulic cylinder	1		
1	--	Screw	1		
2	4812157758	Ball	1		
3	--	Cylinder tube	1		
4	--	Rod seal	1		
5	4812157759	Locking fork	2		
6	4812157760	Locking pin	2		
7	--	Cylinder head	1		
8	--	Piston	1		
9	4812157761	Seal kit	1		

Hydraulic system, steering Steering valve module

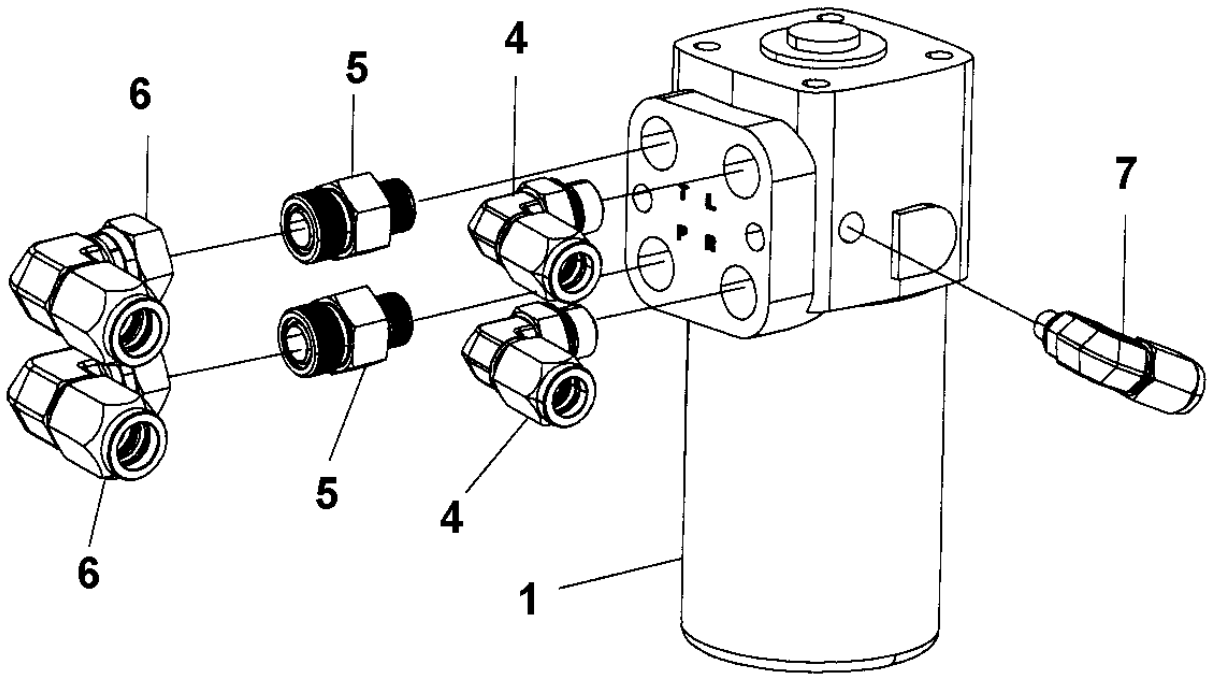

Item	Part No.	Name	Qty	L	SN INFO
1	4812112290	Steering valve	1		
4	4812115063	Elbow connector 90°	2		
5	4811000074	Straight connector orfs	2		
6	4812115064	Elbow connector 90°	2		
7	4812115065	Elbow connector 90°	1		

Hydraulic system, steering Hydraulic hoses, steering

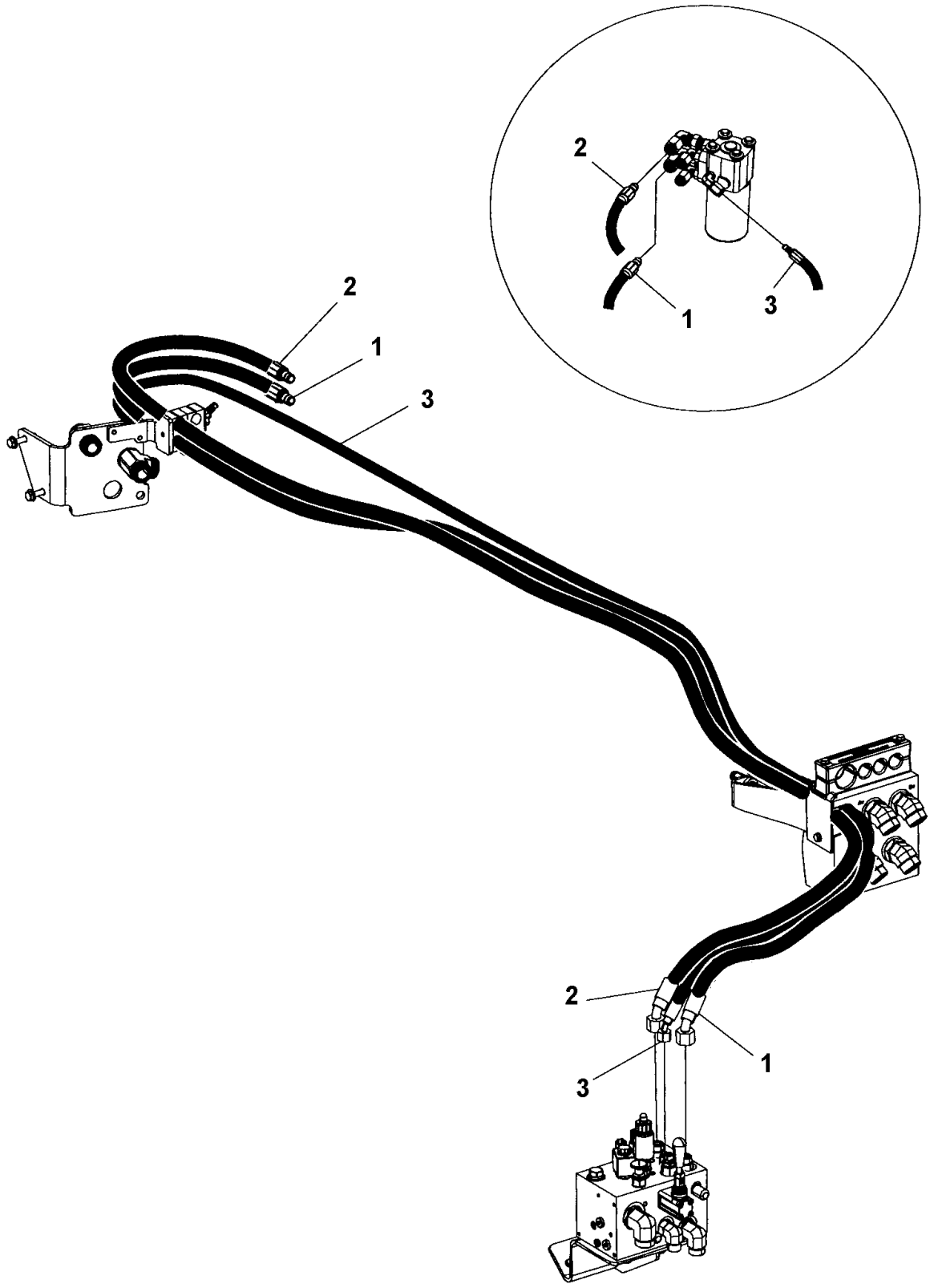

Item	Part No.	Name	Qty	L	SN INFO
1	4811000231	Hydraulic hose	1		
2	4811000232	Hydraulic hose	1		
3	4811000233	Hydraulic hose	1		

Emergency steering option Emergency steering option

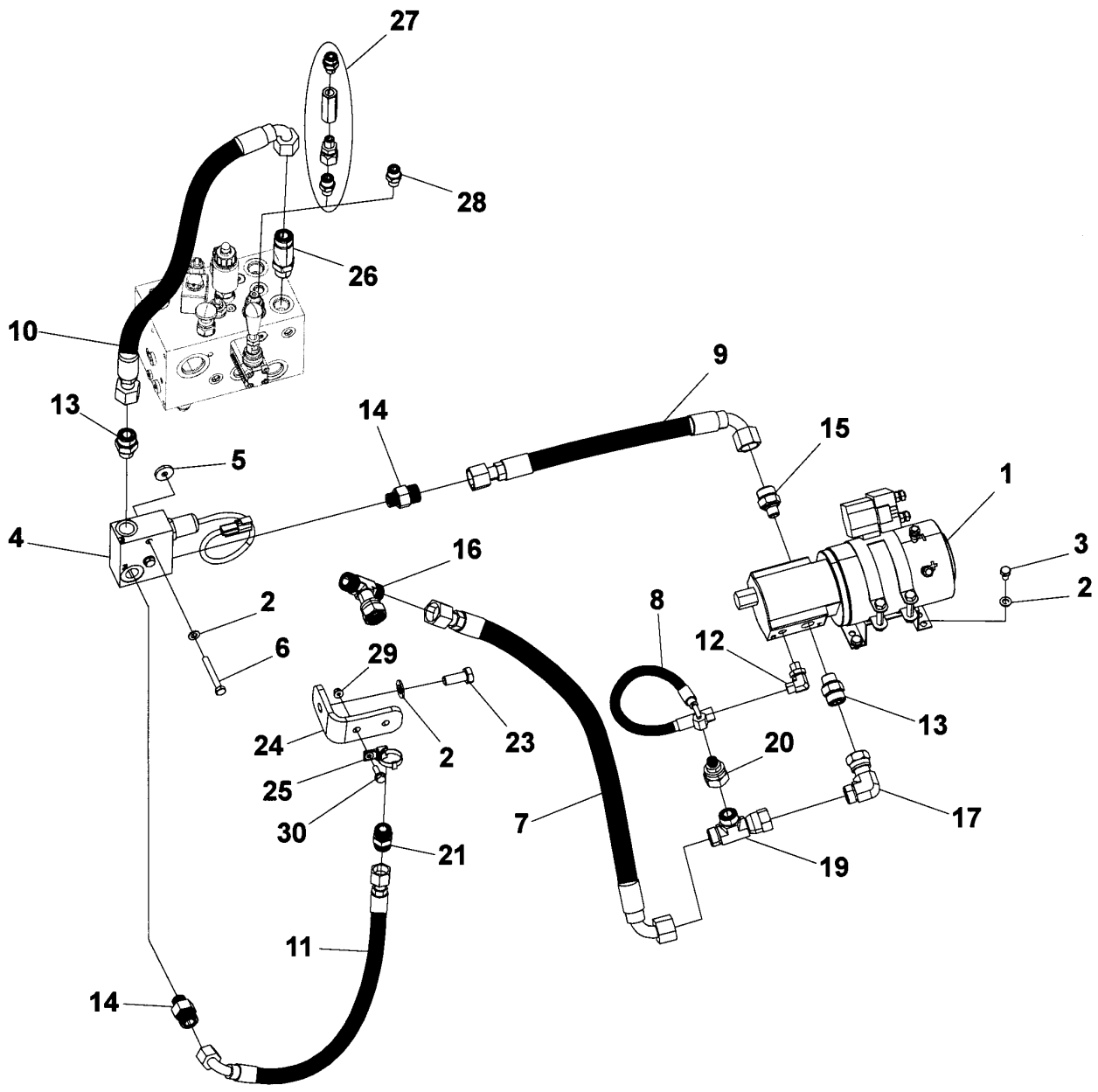

Item	Part No.	Name	Qty	L	SN INFO
1	4812112188	Hydraulic pump Emergency steering unit	1		
2	4700904229	Washer, 8.4x 6x1.5 mm 300HV	7		
3	4700500018	Hex. screw	4		
4	4812112236	Hydraulic valve	1		
5	4700904734	Washer, 8.4x26x4 mm 300 HV	2		
6	4700500026	Screw M8-1,25x60 mm 8.8	2		
7	4811000391	Hydraulic hose	1		
8	4700484342	Hydraulic hose	1		
9	4811000392	Hydraulic hose	1		
10	4811000393	Hydraulic hose	1		
11	4812116806	Hydraulic hose	1		
12	4700791397	Connector	1		
13	4700792074	Straight connector	2		
14	4811000074	Straight connector orfs	2		
15	4700792093	Straight connector orfs	1		
16	4811000341	Tee-connector	1		
17	4700904766	Elbow connector 90°	1		
19	4700791832	Tee-connector	1		
20	4811000305	Reducer	1		
21	4700904943	Connector	1		
23	4700500053	Screw, M8x20 mm 8.8 A2K	1		
24	4812116807	Bracket	1		
25	4812117665	Cable tie with holder	1		
26	4700791821	Straight connector orfs	1		
27	-	Valve assembly	1	A	
28	4812117024	Check valve	1		
29	4700902285	Nut	1		
30	4700500501	Screw M6x20	1		

Comments for Page: Emergency steering option

(L)OCAL REMARKS

A | en_US | Replaced by item 28.

Emergency steering option 4812112188 Hydraulic pump Emergency steering unit

Item	Part No.	Name	Qty	L	SN INFO
0	4812112188	Hydraulic pump Emergency steering unit	1		
1	4812157656	Motor	1		
1-A	-	Brush kit	1		
1-B	4812157471	Ball bearing	1		
1-C	4812157472	Ball bearing	1		
2	4812157657	Pump	1		
2-A	4812157473	Seal kit	1		
3	-	Relief valve kit	1		
4	-	Check valve	1		
5	-	Screw	2		
6	-	Clamp cpl	2		
7	4812157474	Start switch	1		
8	-	Motor bracket	1		
9	-	Connection cable	1		

Emergency steering option 4812112236 Hydraulic valve

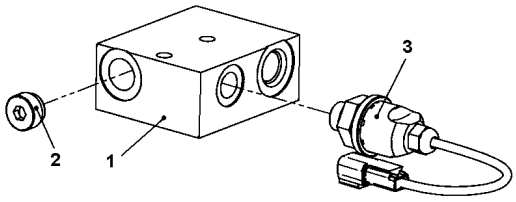

Item	Part No.	Name	Qty	L	SN INFO
0	4812112236	Hydraulic valve	1		
1	-	Control Block	1		
2	-	Check valve	1		
3	-	Pressure switch cpl	1		

Electric cables, power supply, 1-pole Electric cables, power supply, 1-pole

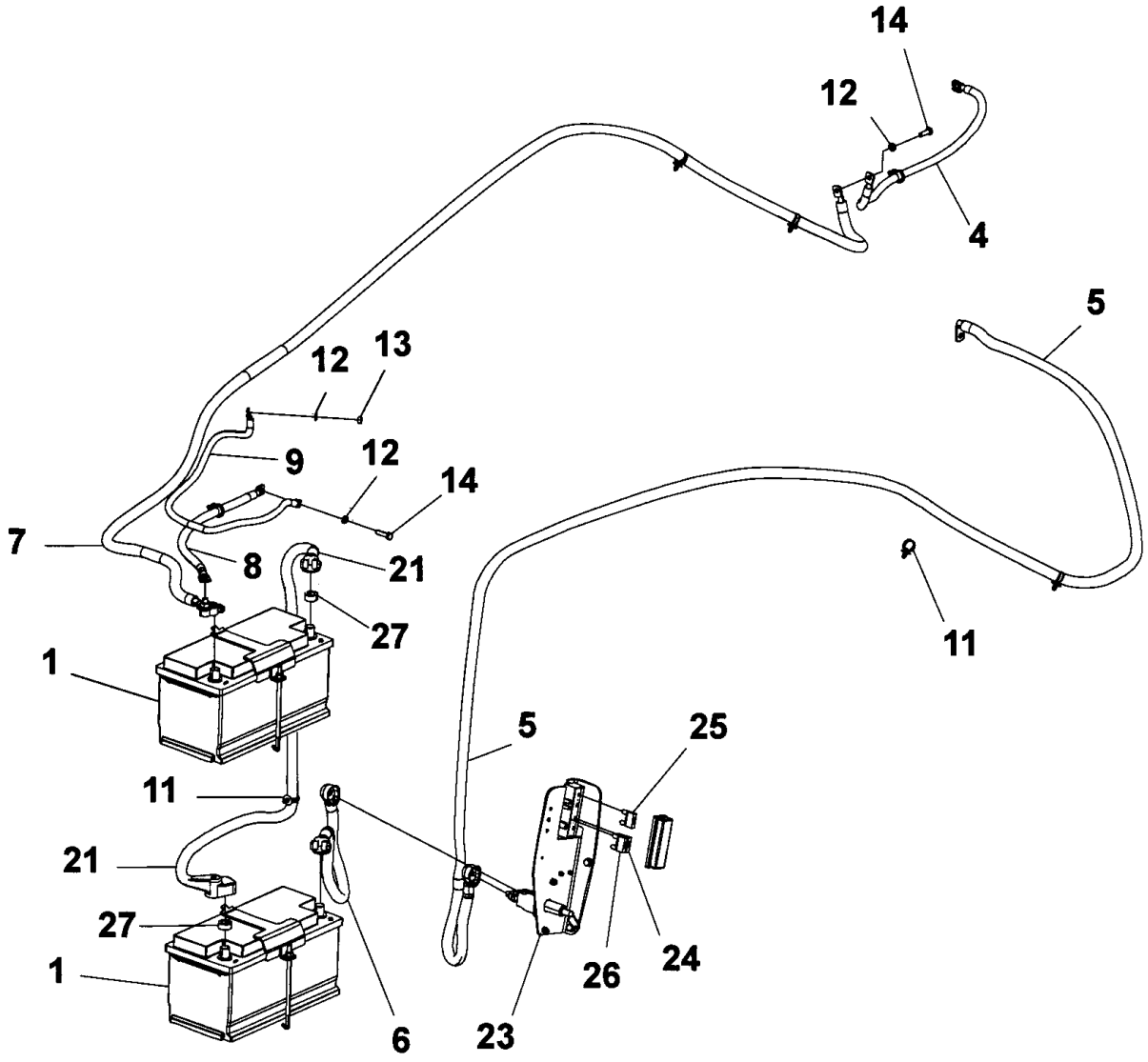

Item	Part No.	Name	Qty	L	SN INFO
1	-	Battery module	2		
4	4811000172	Connection cable, coarse	1		
5	4812118464	Connection cable, coarse	1		
6	4811000176	Battery cable	1		
7	4811000177	Battery cable	1		
8	4811000178	Connection cable, coarse	1		
9	4700791518	Connection cable, coarse	1		
11	4700792441	Cable tie with holder	N		
12	4700904229	Washer, 8.4x 6x1.5 mm 300HV	4		
13	4700570005	Hexagon nut	3		
14	4700500053	Screw, M8x20 mm 8.8 A2K	2		
21	4812118467	Battery union cable	1		
23	-	Battery disconnector module	1		
24	4700904037	Fuse 30A Green	1		
25	4700904039	Fuse 50A Red	1		
26	4700904038	Fuse 40A Orange	1		
27	4812118154	Spacer	2		

Electric cables, power supply, 1-pole Battery module

Item	Part No.	Name	Qty	L	SN INFO
1	-	Battery 12V, 100 Ah (353x175x190)	1		
2	4812123035	Battery holder	1		
3	4700396635	Battery screw	1		
4	4700904229	Washer, 8.4x 6x1.5 mm 300HV	1		
5	4700586003	Lock nut M8	1		
6	4700355608	Slip protection	1		

Electric cables, power supply, 1-pole Battery disconnector module

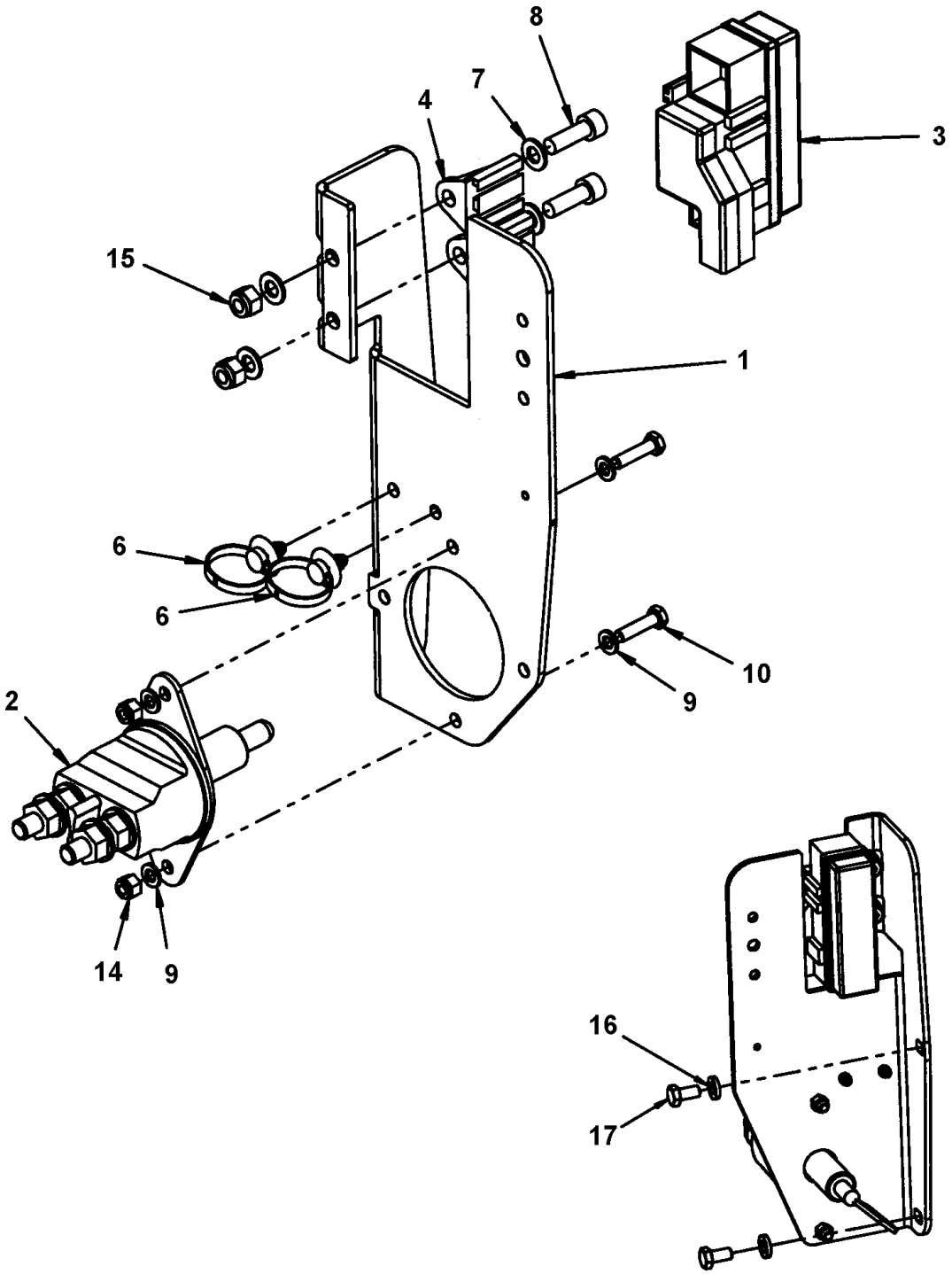

Item	Part No.	Name	Qty	L	SN INFO
1	4812116738	Holder	1		
2	4700903640	Battery switch	1		
2	4700903641	Battery key	1		
3	4812111981	Fuse holder	1		
4	4812112000	Fuse holder	2		
6	4700792441	Cable tie with holder	2		
7	4700904229	Washer, 8.4x 6x1.5 mm 300HV	4		
8	4700508019	Cylinder screw	2		
9	4700904228	Washer 6,4x12x1,5	4		
10	4700500075	Screw, M6-1,0x25 mm 8.8	2		
14	4700586002	Lock nut M6 -8	2		
15	4700586003	Lock nut M8	2		
16	4700904556	Steel plain washer 8,4x16x3,0	2		
17	4700500019	Hexagon screw	2		

Electric cables, power supply, 2-pole, option Electric cables, power supply, 2-pole, option

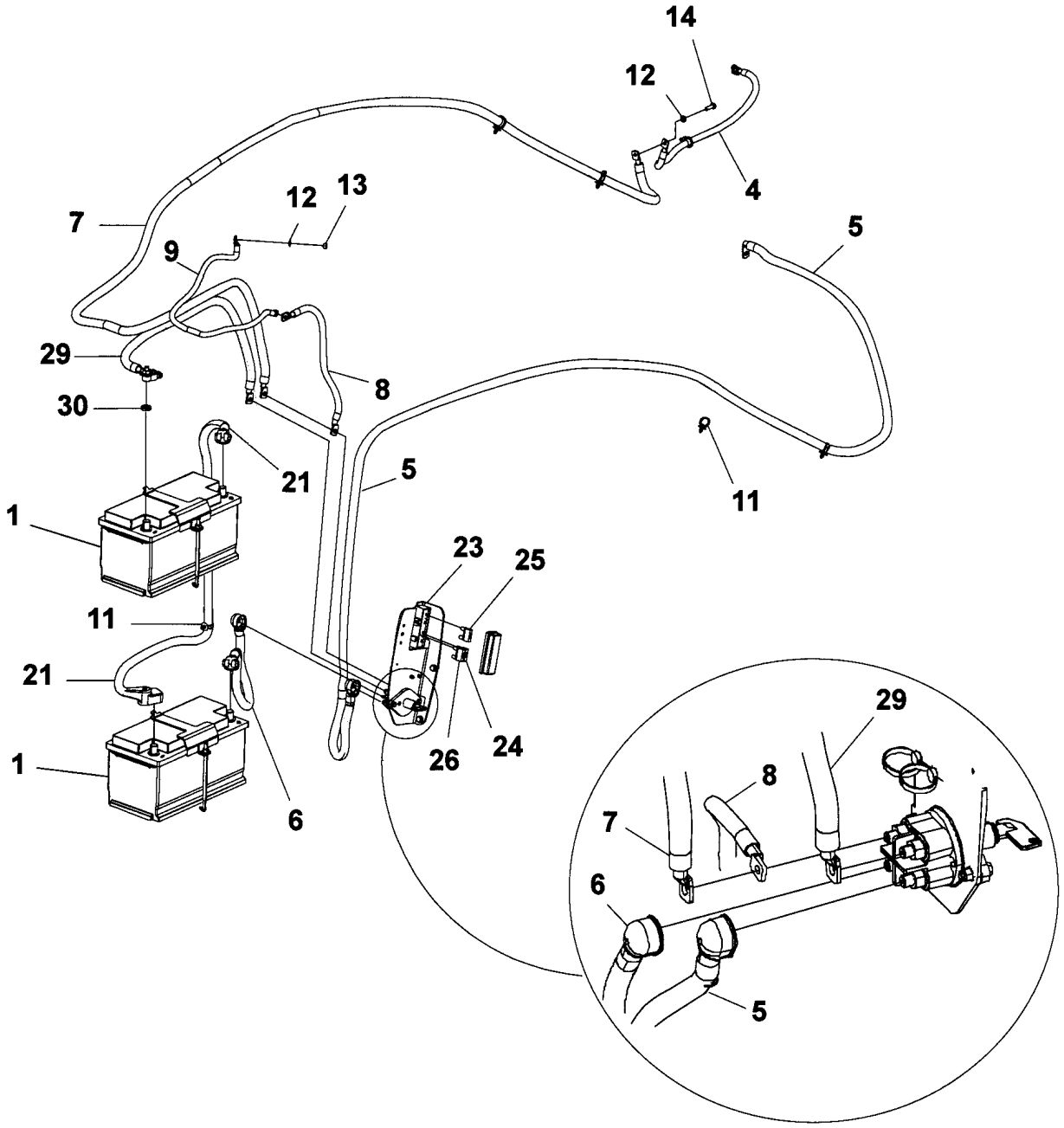

Item	Part No.	Name	Qty	L	SN INFO
1	-	Battery module	2		
4	4811000172	Connection cable, coarse	1		
5	4812118464	Connection cable, coarse	1		
6	4811000176	Battery cable	1		
7	4812116361	Connection cable	1		
8	4812118385	Connection cable, coarse	1		
9	4700791518	Connection cable, coarse	1		
11	4700792441	Cable tie with holder	N		
12	4700904229	Washer, 8.4x 6x1.5 mm 300HV	2		
13	4700570005	Hexagon nut	1		
14	4700500021	Screw, M8x25 mm 8.8 A2K	1		
21	4812118467	Battery union cable	1		
23	-	Battery disconnector, 2-pole	1		
24	4700904037	Fuse 30A Green	1		
25	4700904039	Fuse 50A Red	1		
26	4700904038	Fuse 40A Orange	1		
29	4812116362	Battery cable	1		
30	4812118154	Spacer	2		

Electric cables, power supply, 2-pole, option Battery disconnector, 2-pole

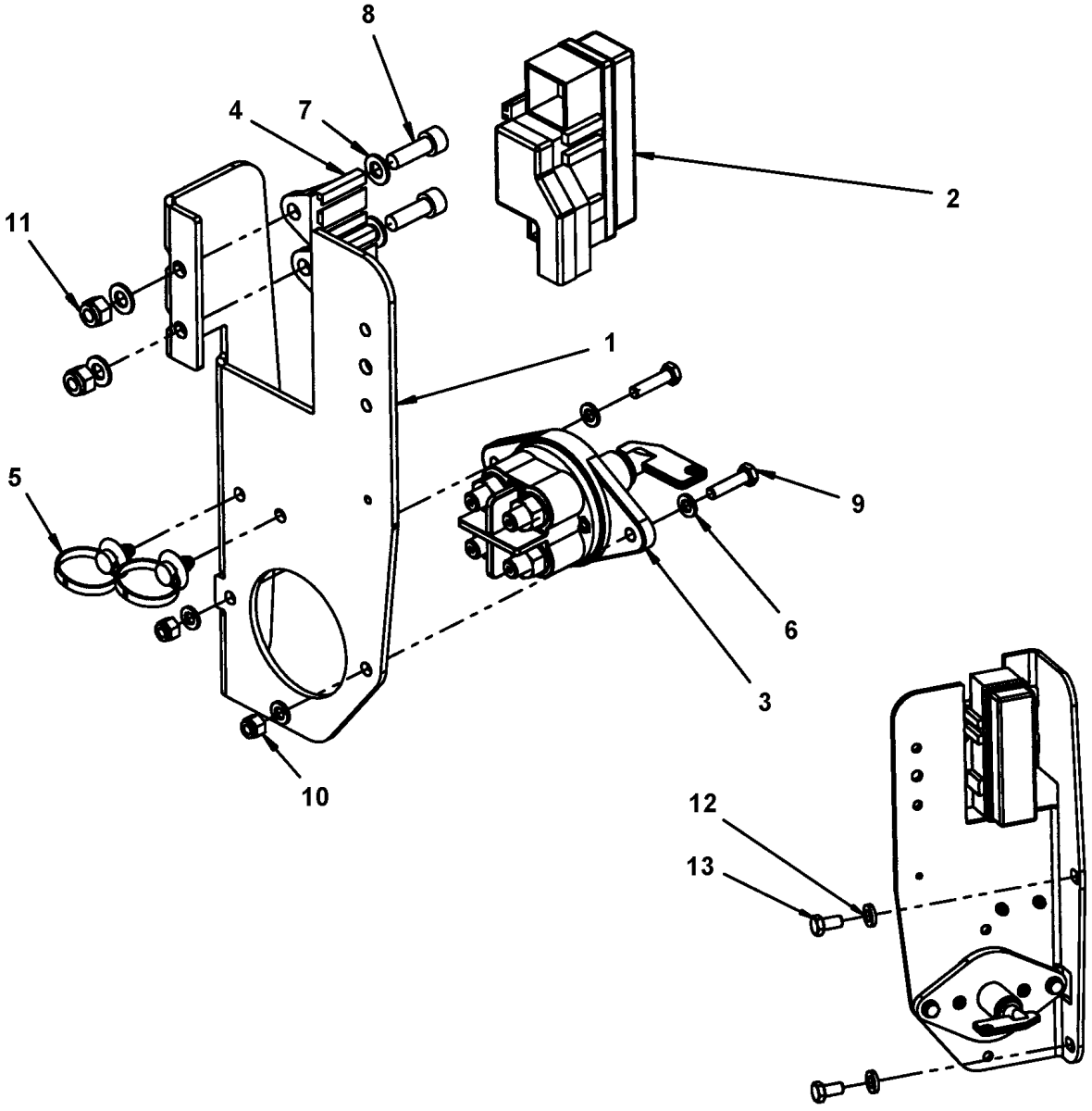

Item	Part No.	Name	Qty	L	SN INFO
1	4812116738	Holder	1		
2	4812111981	Fuse holder	1		
3	4812116877	Battery switch	1		
4	4812112000	Fuse holder	2		
5	4700792441	Cable tie with holder	2		
6	4700904228	Washer 6,4x12x1,5	4		
7	4700904229	Washer, 8.4x 6x1.5 mm 300HV	4		
8	4700508019	Cylinder screw	2		
9	4700500075	Screw, M6-1,0x25 mm 8.8	2		
10	4700586002	Lock nut M6 -8	2		
11	4700586003	Lock nut M8	2		
12	4700904556	Steel plain washer 8,4x16x3,0	2		
13	4700500019	Hexagon screw	3		

Electric cables, engine ECU, horn, back-up alarm Electric cables, engine ECU, horn, back-up alarm

Item	Part No.	Name	Qty	L	SN INFO
1	4812110560	Power socket 12V	1	C	
2	4812120923	Cable harness	1		
10	-	ECU, inclination sensor, power converter	1		
11	4700792441	Cable tie with holder	N		
13	-	Horn module	1		
14	4700792309	Relay	1	B	
16	4700792310	Relay 120A	1	A	
21	4700904228	Washer 6,4x12x1,5	4		
24	4700500013	Screw, M6x16 mm 8.8 A2K	4		
25	4700792422	Relay 24V 20A	1	D	
26	4700792210	Screw torx	1		
27	4700904281	Washer, 5,3x10x1 300HV	8		
28	4700904036	Bracket	1		
29	4700500060	Screw M5-0,8x20 8.8	2		
30	4700586001	Lock nut	2		
31	-	Back-up alarm module	1		
32	0248998073	Threaded stud	1		
33	4700570005	Hexagon nut	4		
37	-	Back-up alarm module	1		
38	-	Bracket module	1		
39	4700570101	Nut M6	2		

Comments for Page: Electric cables, engine ECU, horn, back-up alarm

(L)OCAL REMARKS

A | en_US | Grid heater relay.

B | en_US | Starter relay.

C | en_US | Option.

D | en_US | ECM box.

Electric cables, engine ECU, horn, back-up alarm ECU, inclination sensor, power converter

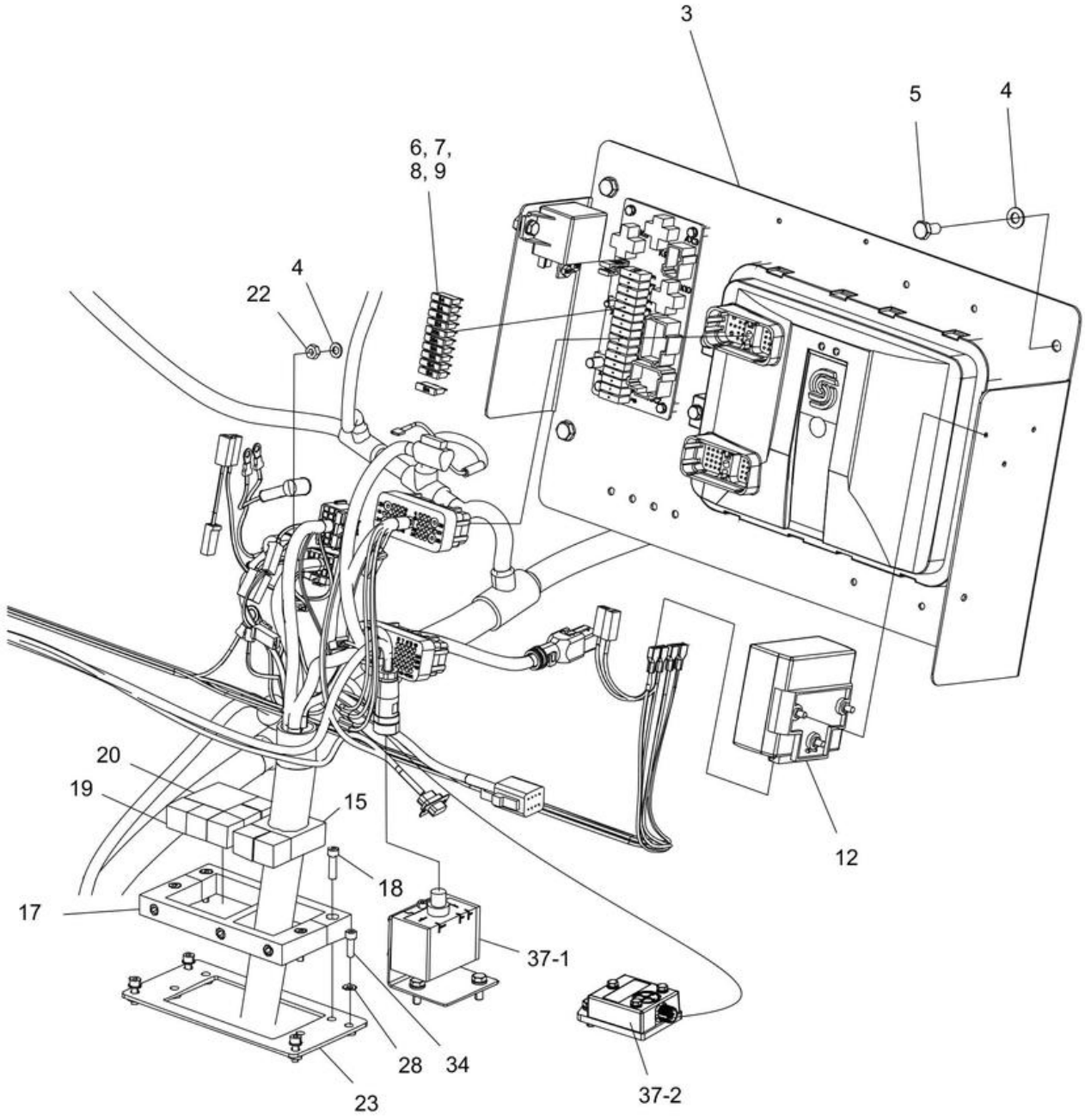

Item	Part No.	Name	Qty	L	SN INFO
3	-	Standard ECU assembly	1		
4	4700904229	Washer, 8.4x 6x1.5 mm 300HV	5		
5	4700500019	Hexagon screw	4		
6	4700901225	Fuse 5A Tan	1		
7	4700901227	Fuse 10A Red	7		
8	4700903741	Fuse 20A Yellow	2		
9	4700901228	Fuse, 15A Blue	1		
12	-	Power converter module	1		
15	4812112067	Cable entry insert	1		
17	4812112065	Cable entry frame	1		
18	4700508020	Screw	4		
19	4812112066	Cable entry insert	7		
20	4812112070	Cable entry insert	1		
22	4700570005	Hexagon nut	1		
23	4812114426	Holder	1		
28	4700904281	Washer, 5,3x10x1 300HV	4		
34	4700926537	Screw	4		
37-1	-	Inclination sensor module	1		To A017098
37-2		Inclination sensor module	1		From A017099

Electric cables, engine ECU, horn, back-up alarm Standard ECU assembly

Item	Part No.	Name	Qty	L	SN INFO
1	4812114619	Mounting plate	1		
2	4700390860	Control unit, main	1		
3	4700792309	Relay	1	A	
4	4700904228	Washer 6,4x12x1,5	4		
5	4700928467	Washer	2		
6	4700500015	Hex. screw	4		
7	4700500013	Screw, M6x16 mm 8.8 A2K	2		
8	4812114655	Circuit board	1		
9	4700904698	Plain washer	4		
10	4700904312	Screw	4		
11	4700792441	Cable tie with holder	2		
15	4700901227	Fuse 10A Red	7		
16	4700903741	Fuse 20A Yellow	2		
17	4700901225	Fuse 5A Tan	1		

Comments for Page: Standard ECU assembly

(L)OCAL REMARKS

A | en_US | Main.

Electric cables, engine ECU, horn, back-up alarm Power converter module

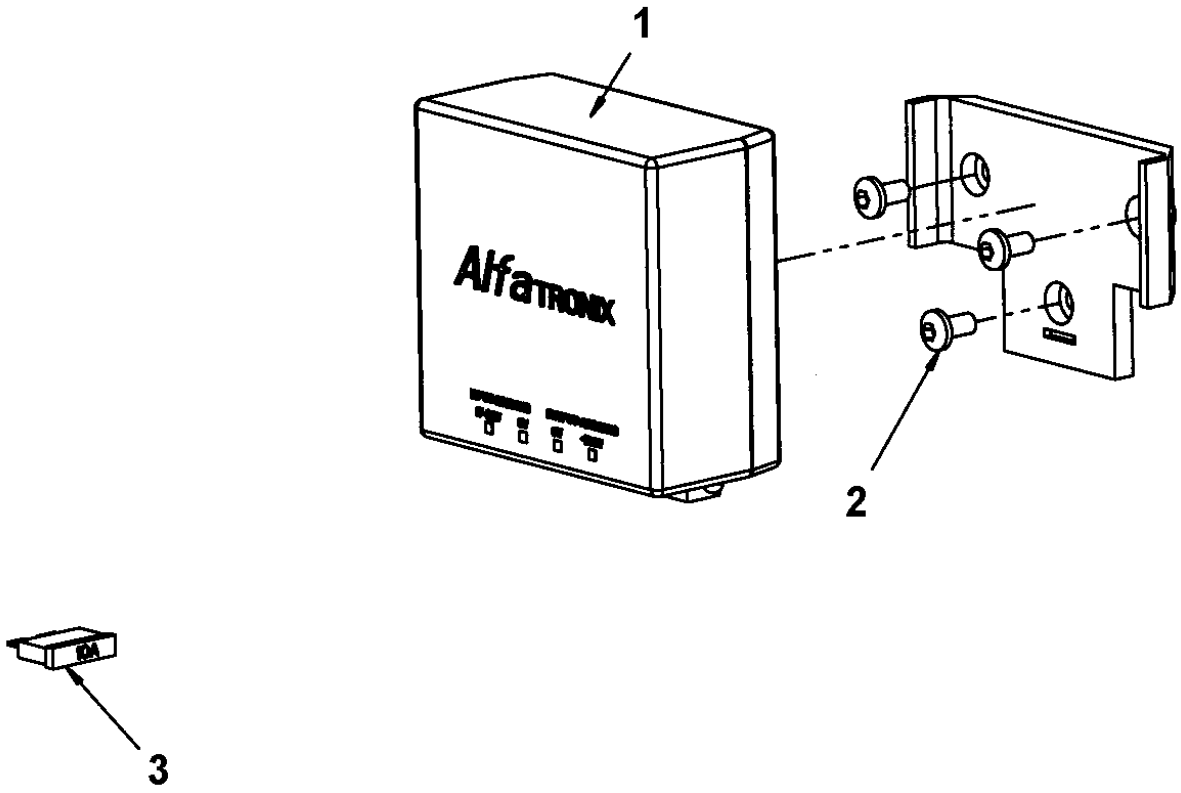

Item	Part No.	Name	Qty	L	SN INFO
1	4812112017	Power converter	1		
2	4700792210	Screw torx	3		
3	4700901227	Fuse 10A Red	1		

Electric cables, engine ECU, horn, back-up alarm Inclination sensor module

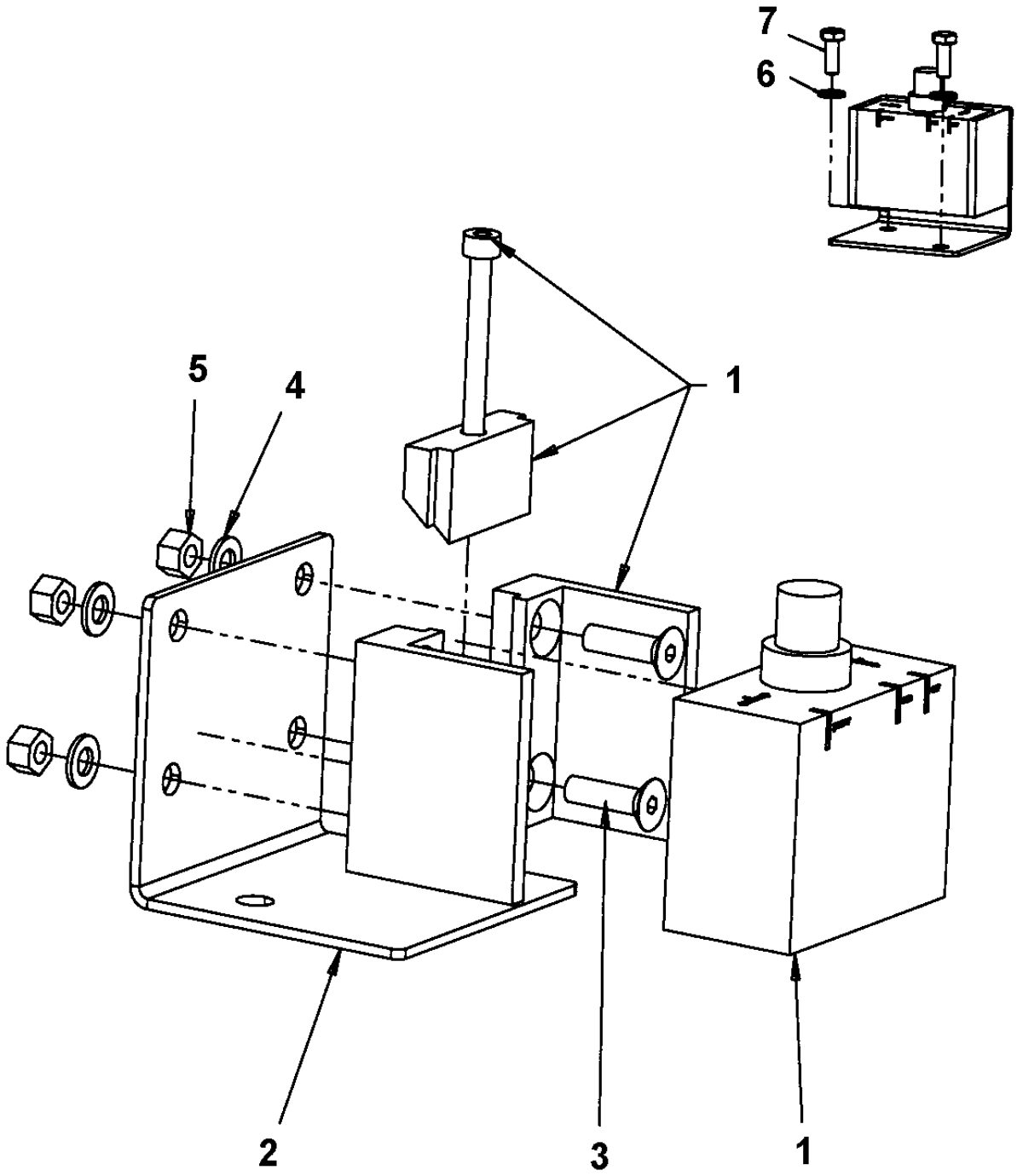

Item	Part No.	Name	Qty	L	SN INFO
1	4812112686	Inclination sensor	1		
2	4812112691	Holder	1		
3	4700904504	Screw M5 x 18	4		
4	4700904281	Washer, 5,3x10x1 300HV	4		
5	4700570003	Hex. nut	4		
6	4700904228	Washer 6,4x12x1,5	2		
7	4700500013	Screw, M6x16 mm 8.8 A2K	2		

Electric cables, engine ECU, horn, back-up alarm Inclination sensor module

Item	Part No.	Name	Qty	L	SN INFO
1	4812124239	Bracket	1		
2	4812124238	Inclination sensor	1		
3	4700904698	Plain washer	3		
4	4700904311	Hexagon head screw	3		
5	4700904228	Washer 6,4x12x1,5	2		
6	4700500013	Screw, M6x16 mm 8.8 A2K	2		

Electric cables, engine ECU, horn, back-up alarm Horn module

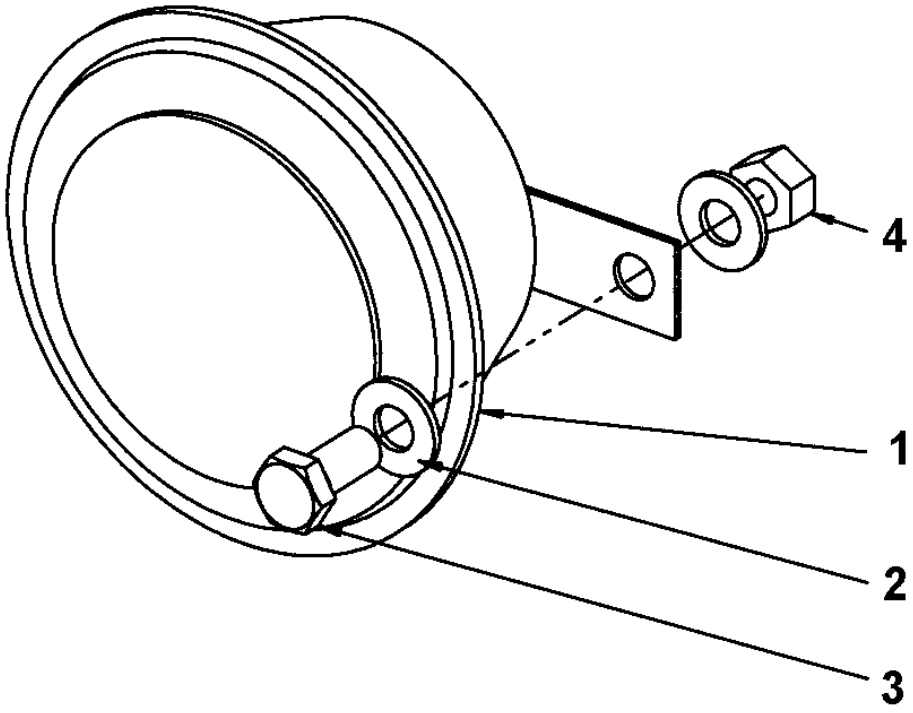

Item	Part No.	Name	Qty	L	SN INFO
1	4812115767	Horn	1		
2	4700904230	Steel plain washer	2		
3	4700500027	Screw M10-1,55x22 8.8	1		
4	4700570006	Hexagon nut	1		

Electric cables, engine ECU, horn, back-up alarm Back-up alarm module

Item	Part No.	Name	Qty	L	SN INFO
1	4700904911	Back-up alarm	1		
2	4700904228	Washer 6,4x12x1,5	2		
3	4700500013	Screw, M6x16 mm 8.8 A2K	2		

Electric cables, engine ECU, horn, back-up alarm Back-up alarm module, Quacker

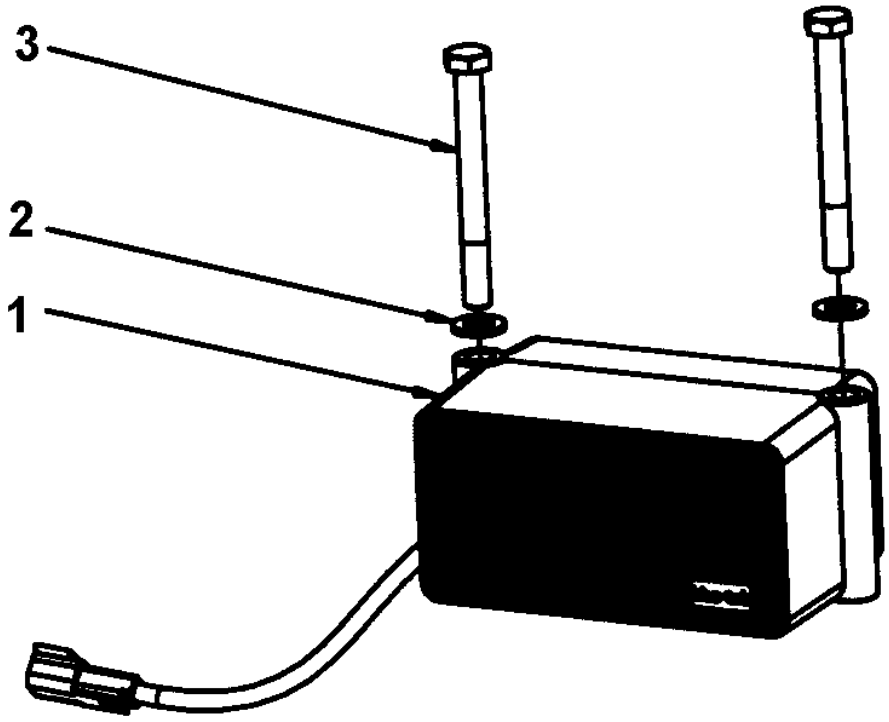

Item	Part No.	Name	Qty	L	SN INFO
1	4812117108	Back-up alarm	1		
2	4700904570	Steel plain washer	2		
3	4700792776	Screw	2		

Electric cables, engine ECU, horn, back-up alarm Bracket module

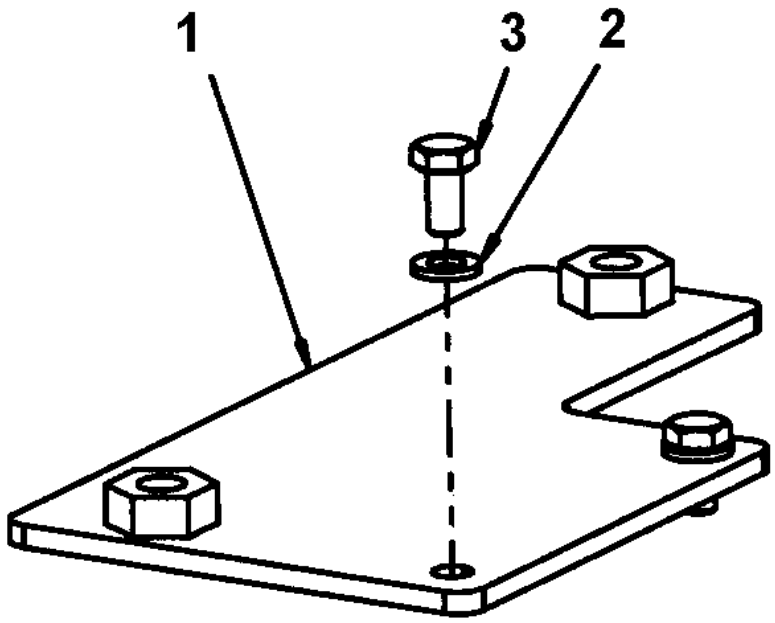

Item	Part No.	Name	Qty	L	SN INFO
1	4812117149	Bracket	1		
2	4700904228	Washer 6,4x12x1,5	2		
3	4700500012	Hex. screw	2		

Cable harness kit Power supply cab Cable harness kit Power supply cab

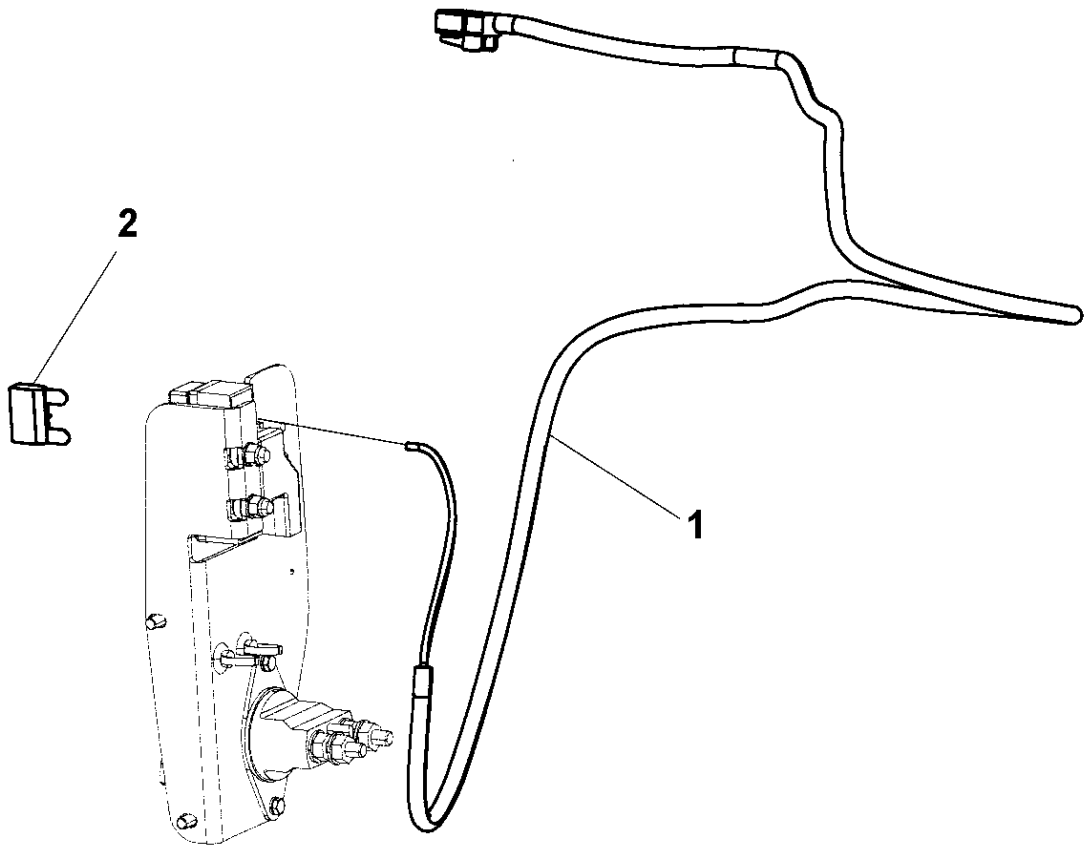

Item	Part No.	Name	Qty	L	SN INFO
1	4812111241	Cable harness	1		
2	4700904037	Fuse 30A Green	1		

Driving & side direction lights, number plate light, option Driving & side direction lights, number plate light, option

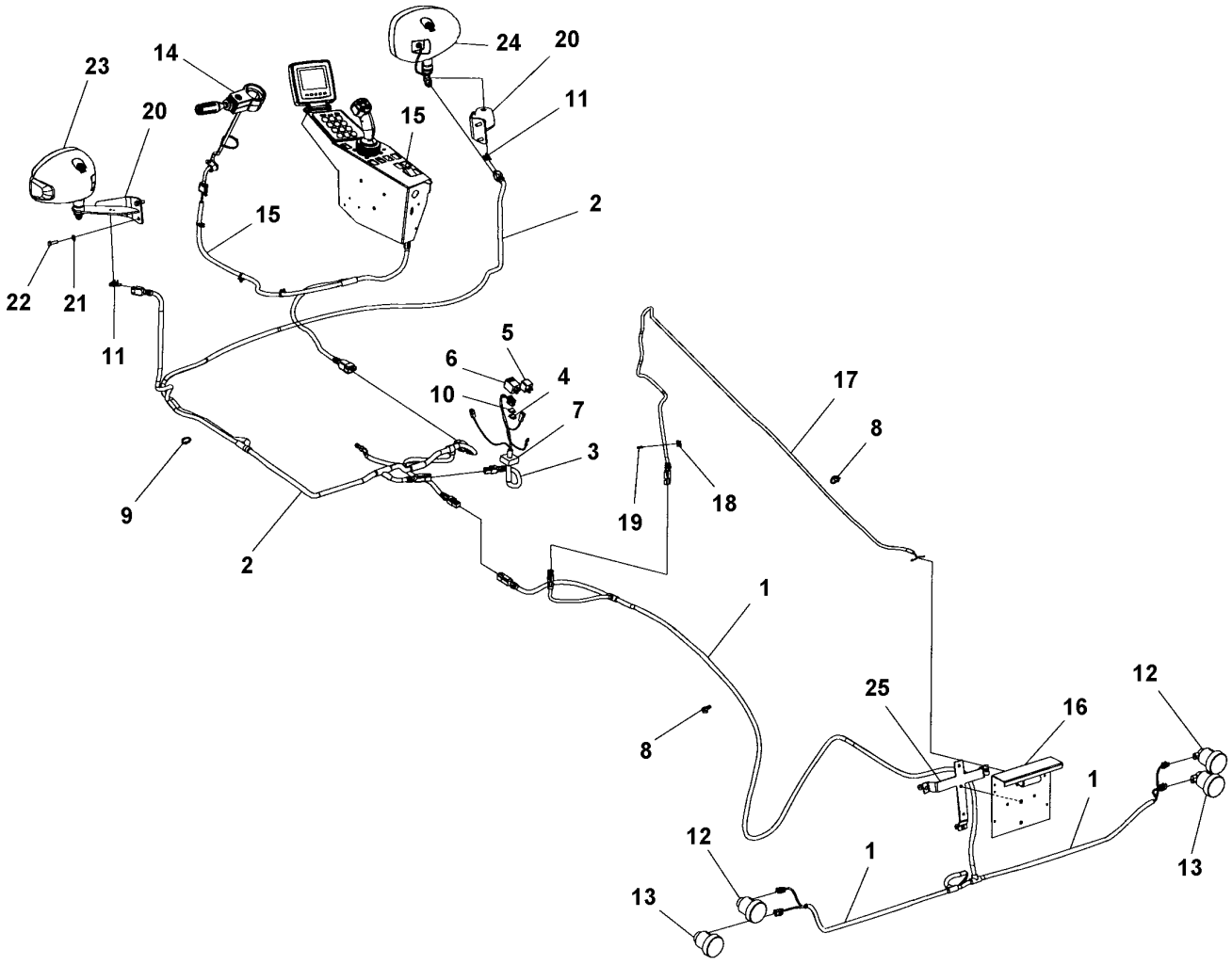

Item	Part No.	Name	Qty	L	SN INFO
1	4812110884	Cable harness	1		
2	4812112374	Cable harness	1		
3	4812114656	Cable harness	1		
4	4700901227	Fuse 10A Red	1		
5	4700792422	Relay 24V 20A	1		
6	4811000163	Flash relay	1		
7	4811000429	Cable entry insert	1		
8	4700792441	Cable tie with holder	26		
9	4700313041	Cable ties	11		
10	4700901226	Fuse 7.5A Brown	1		
11	4812114873	Connector holder	2		
12	4700792520	Direction indicator	2		
13	4700792519	Brake/position light	2		
14	-	Steering column switch module	1		
15	-	Cable harness kit	1		
16	-	Registration plate light module	1		
17	4812112916	Cable harness	1		
18	4700395352	Cable tie holder	5		
19	4700313068	Cable ties, L=92 mm	5		
20	4812112793	Bracket	2		
21	4700904229	Washer, 8.4x 6x1.5 mm 300HV	4		
22	4700500021	Screw, M8x25 mm 8.8 A2K	4		
23	4812113117	Head light, right hand asymmetric	1	A	
23	4812113140	Head light, left hand asymmetric	1	A	
24	4812113118	Head light, right hand asymmetric	1	B	
24	4812113141	Head light, left hand asymmetric	1	B	
25	-	Holder, Registration plate light	1		

Comments for Page: Driving & side direction lights, number plate light, option

(L)OCAL REMARKS

A | en_US | Left

B | en_US | Right

Driving & side direction lights, number plate light, option Steering column switch module

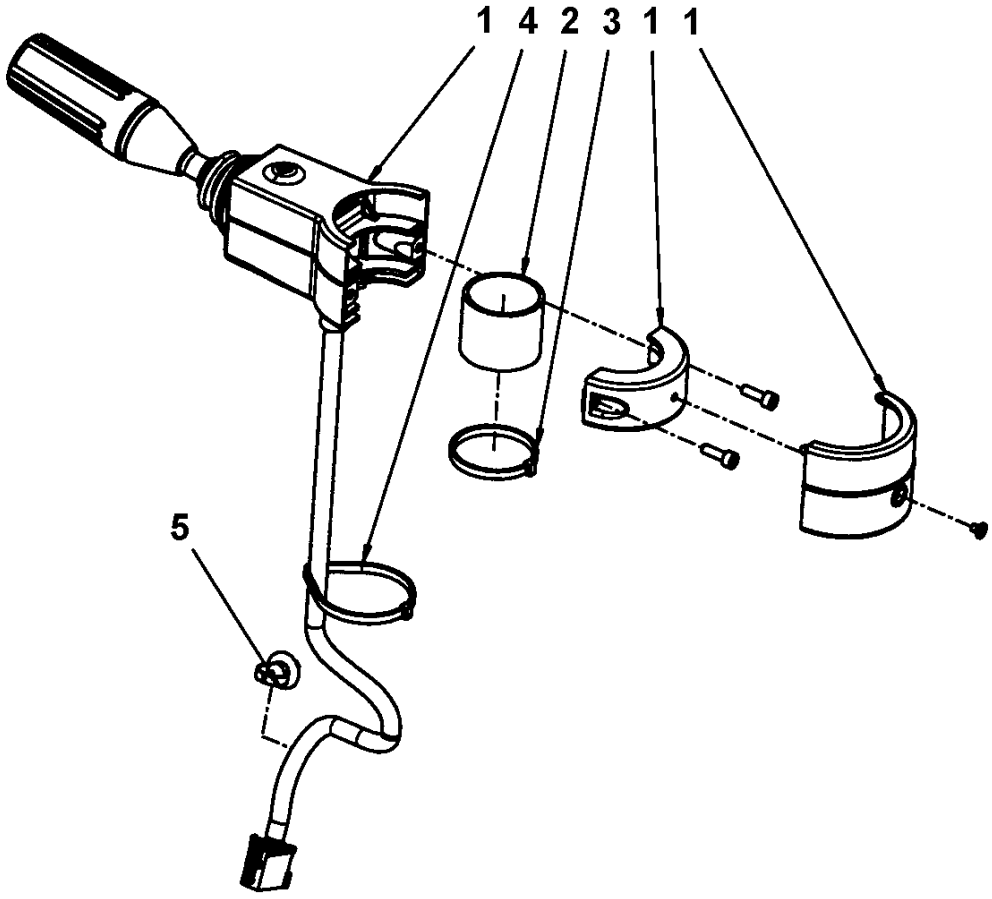

Item	Part No.	Name	Qty	L	SN INFO
1	4700392450	Steering column switch	1		
2	4700392451	Rubber cloth	1		
3	4700313041	Cable ties	1		
4	4700792609	Cable ties	1		
5	4700921080	Clamp	1		

Driving & side direction lights, number plate light, option Cable harness kit

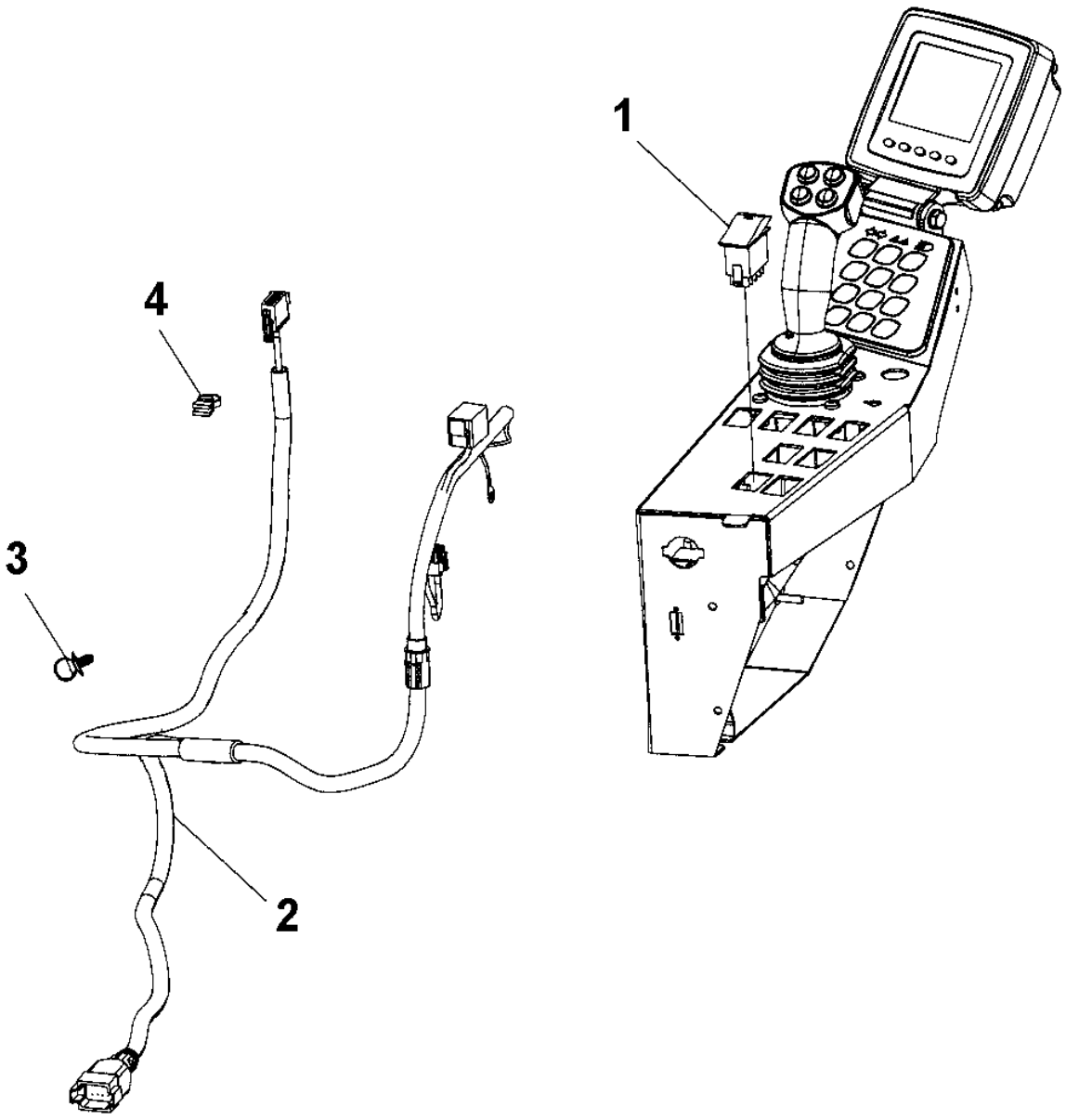

Item	Part No.	Name	Qty	L	SN INFO
1	4700792398	Switch	1		
2	4812111248	Cable harness	1		
3	4700792441	Cable tie with holder	2		
4	4700792537	Cable tie with holder	1		

Driving & side direction lights, number plate light, option Registration plate light module

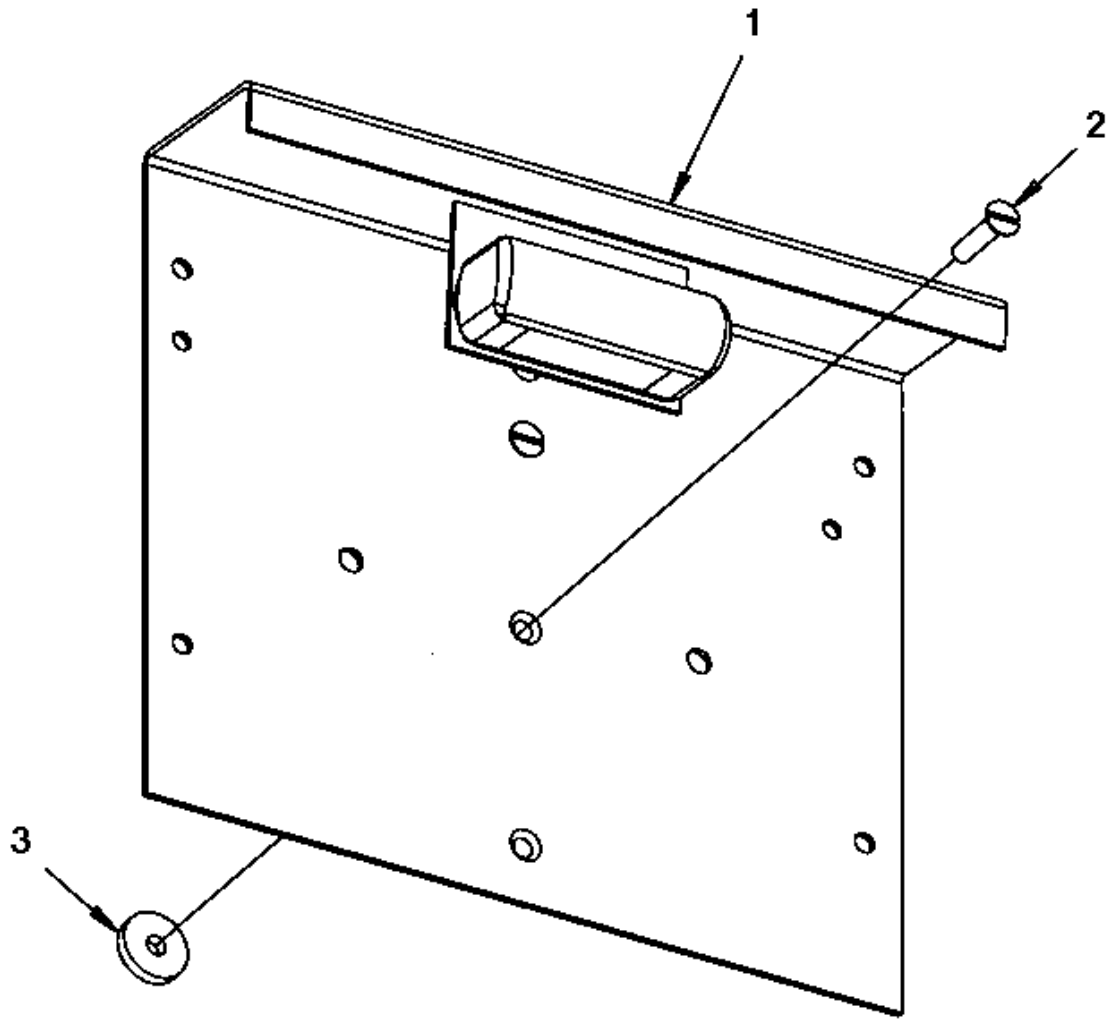

Item	Part No.	Name	Qty	L	SN INFO
1	-	Registration plate light	1		
2	4700928784	Screw	2		
3	4700904735	Steel plain washer	2		

Driving & side direction lights, number plate light, option Registration plate light

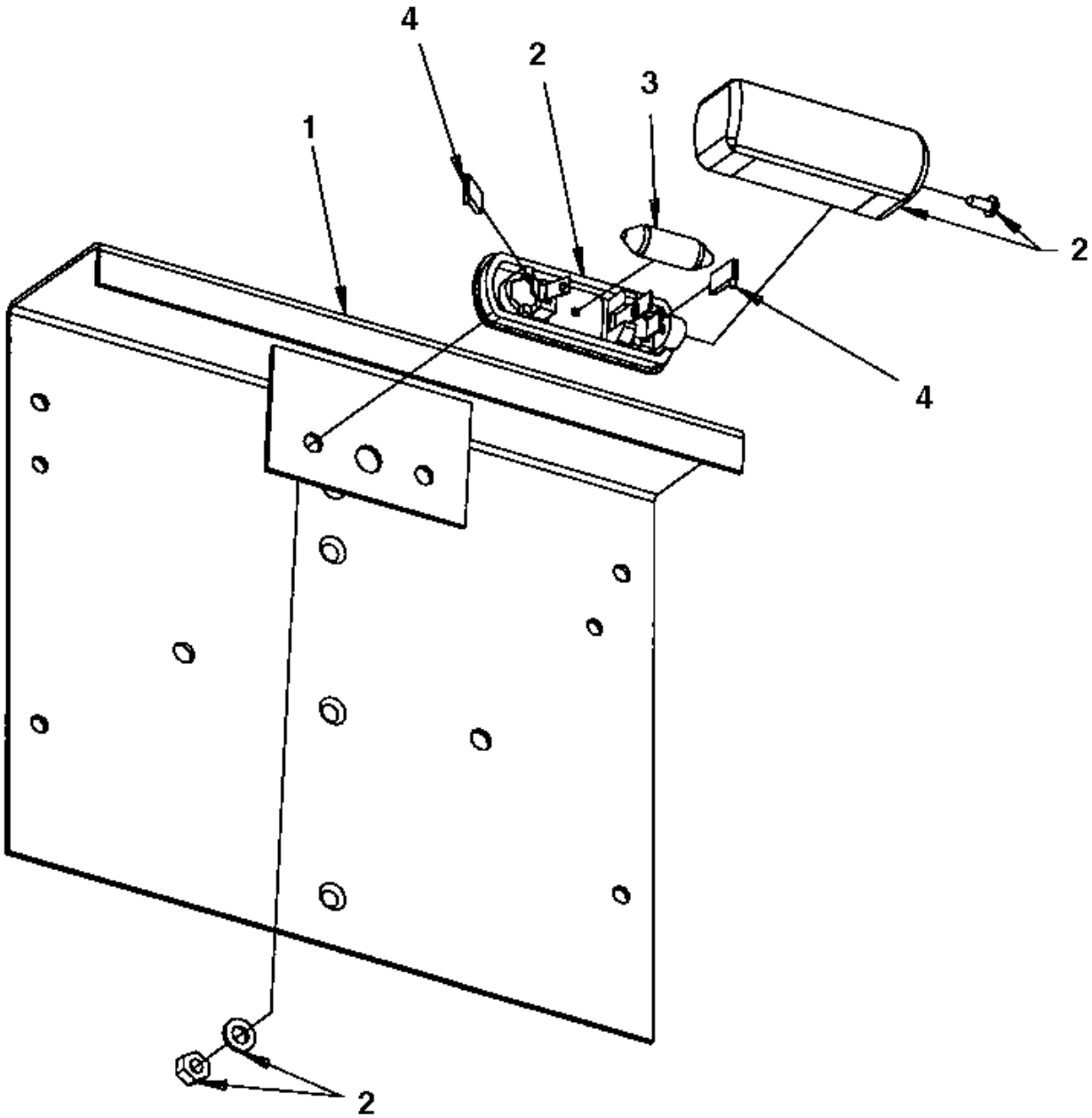

Item	Part No.	Name	Qty	L	SN INFO
1	4700355797	Licence plate holder	1		
2	4700929455	Licence plate light	1		
3	4700792354	Bulb 24V 5W	1		
4	4700792035	Push-on terminal	2		

Driving & side direction lights, number plate light, option Holder, Registration plate light

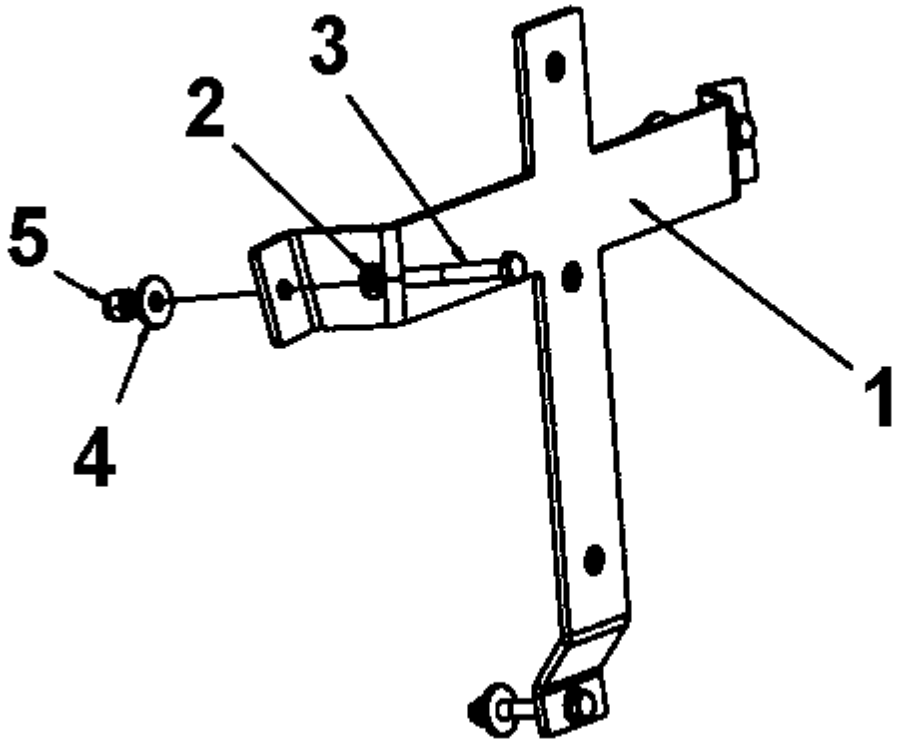

Item	Part No.	Name	Qty	L	SN INFO
1	4812112924	Holder	1		
2	4700904281	Washer, 5,3x10x1 300HV	3		
3	4700500010	Screw	3		
4	4700601001	Washer	3		
5	4700586001	Lock nut	3		

Reversing light, option Reversing light module

Item	Part No.	Name	Qty	L	SN INFO
1	4812120334	Reverse light LED	1		
2	4812120790	Bracket	1		
3	4700904653	Screw M5x16 A2-70	2		
4	4700500006	Screw M5x16	3		
5	4700902284	Nut M5	5		
6	4700601001	Washer	2		

DCA/GPS equipment module, option DCA/GPS equipment module, option

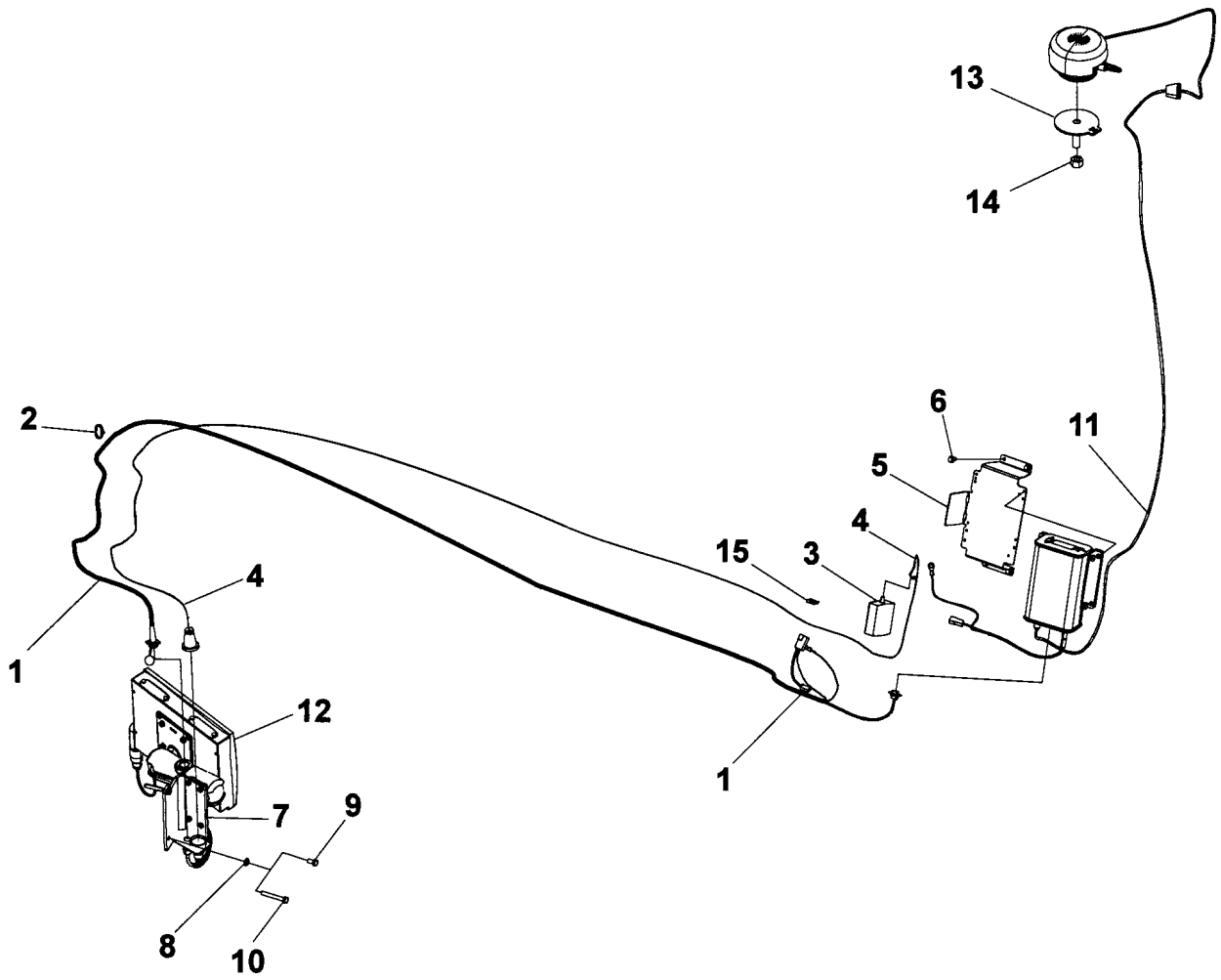

Item	Part No.	Name	Qty	L	SN INFO
1	4812113167	Cable harness	1		
2	4700313041	Cable ties	6		
3	4700792660	Gateway CAN/BUS	1		
4	4812115093	Cable harness	1		
5	4700394276	Bracket	1		
6	4700541702	Screw M6x12	4		
7	-	Holder	1		
8	4700904229	Washer, 8.4x 6x1.5 mm 300HV	2		
9	4700500019	Hexagon screw	2		
10	4700500026	Screw M8-1,25x60 mm 8.8	2	A	
11	-	GPS equipment module	1		
12	-	Computer	1		
13	4700394275	Bracket	1		
14	4700570008	Hex. nut	1		
15	4700901227	Fuse 10A Red	1		

Comments for Page: DCA/GPS equipment module, option

(L)OCAL REMARKS

A | en_US | Used with comfort cab.

DCA/GPS equipment module, option Holder

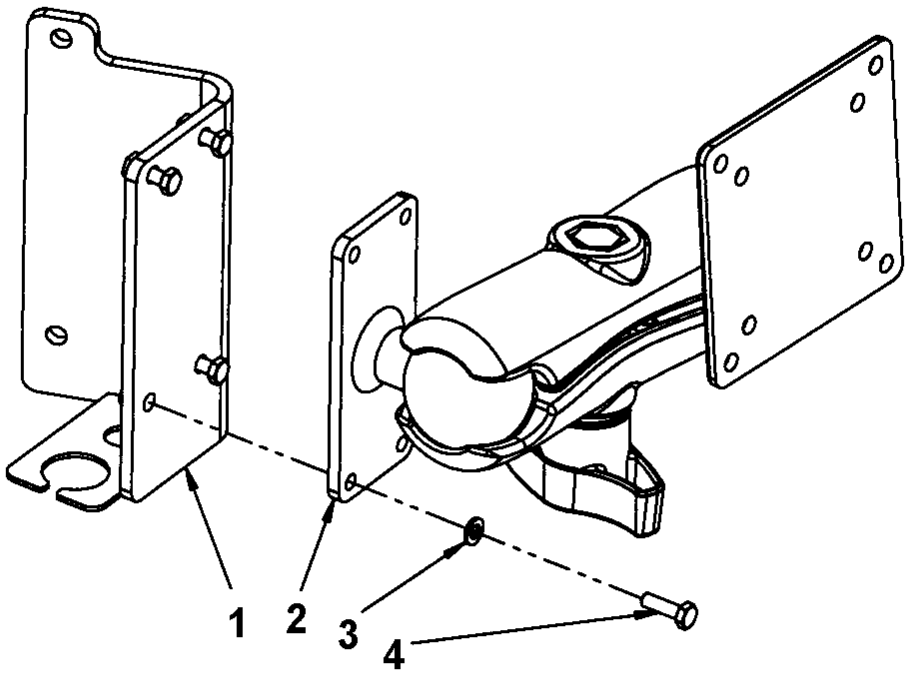

Item	Part No.	Name	Qty	L	SN INFO
1	4700395888	Bracket	1		
2	4700394542	Ball joint	1		
3	4700904228	Washer 6,4x12x1,5	4		
4	4700500040	Screw, M6x20 mm 8.8 A2K	4		

DCA/GPS equipment module, option GPS equipment module

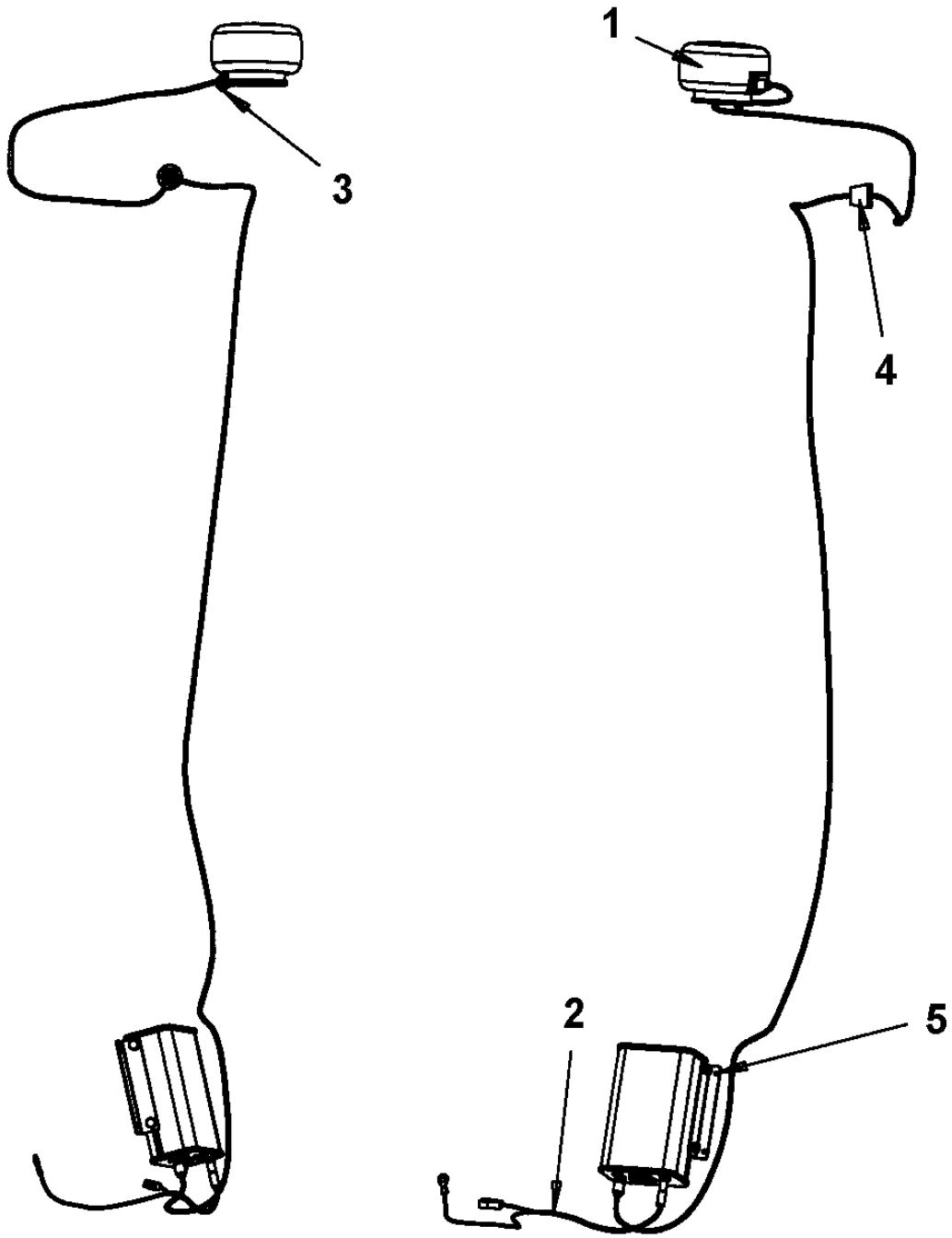

Item	Part No.	Name	Qty	L	SN INFO
1	-	GPS equipment assy	1		
2	4812113238	Cable harness	1		
3	4700313041	Cable ties	N		
4	4700792392	Grommet with membrane	1		
5	4700792210	Screw torx	4		

DCA/GPS equipment module, option GPS equipment assy

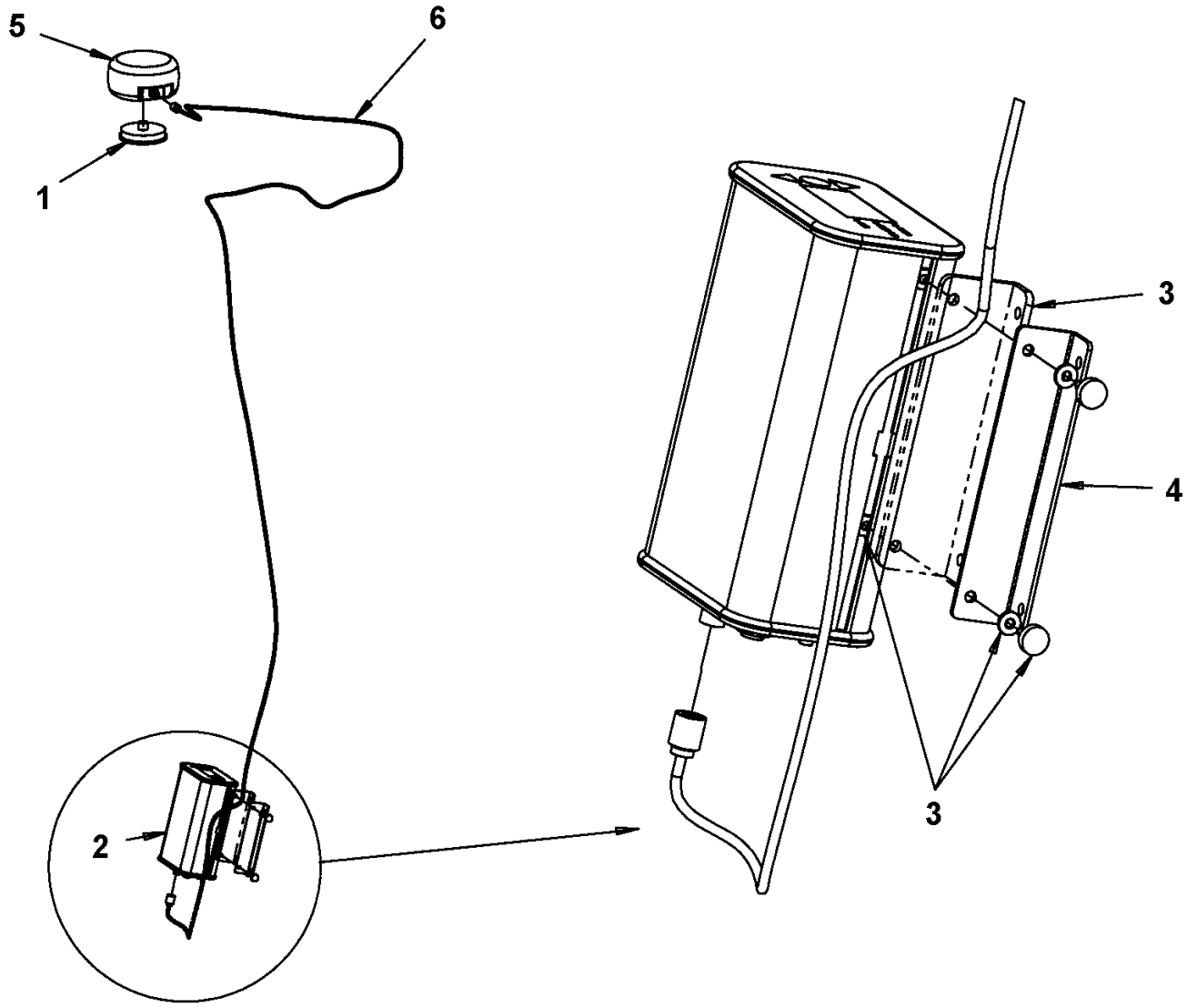

Item	Part No.	Name	Qty	L	SN INFO
1	4812113160	Bracket	1		
2	4812114146	Reciever	1		
3	4811000395	Bracket	1		
4	4812114156	Holder	2		
5	4812113058	Antenna	1		
6	4812113158	Antenna lead	1		

DCA/GPS equipment module, option Computer

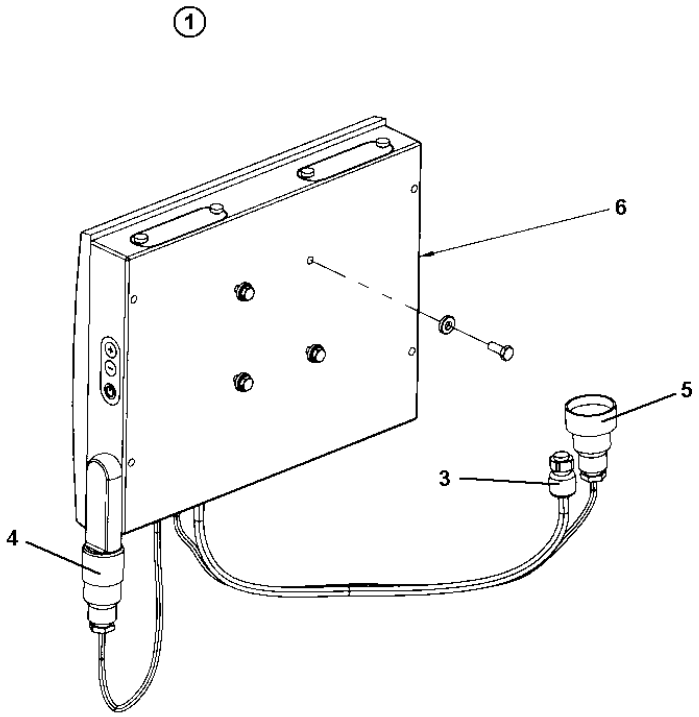

Item	Part No.	Name	Qty	L	SN INFO
1	4700396119	Computer, cpl.	1		
2	4700792795	Voltage adapter	1		
3	4700792761	Power and serial cable	1		
4	4700792762	USB cable L = 300mm	1		
5	4700792763	USB cable L = 500mm	1		
6	4700396536	Computer	1		

Tachograph, option Tachograph, option

Item	Part No.	Name	Qty	L	SN INFO
1	-	Holder assy	1		
2	4811000292	Tachograph	1		
3	4811000529	Cover cap	1		
7	4812112417	Cable harness	1		
8	4812112917	Cable harness	1		
9	4812112068	Cable entry insert	1		
10	4700313041	Cable ties	3		
11	4812112419	Pulse sensor cpl	1		
12	-	Power supply module	1		
13	4700904229	Washer, 8.4x 6x1.5 mm 300HV	2		
14	4700500019	Hexagon screw	2		
15	4700500026	Screw M8-1,25x60 mm 8.8	2	A	
16	4812118625	Seal kit	1		

Comments for Page: Tachograph, option

(L)OCAL REMARKS

A | en_US | Used with comfort cab.

Tachograph, option Holder assy

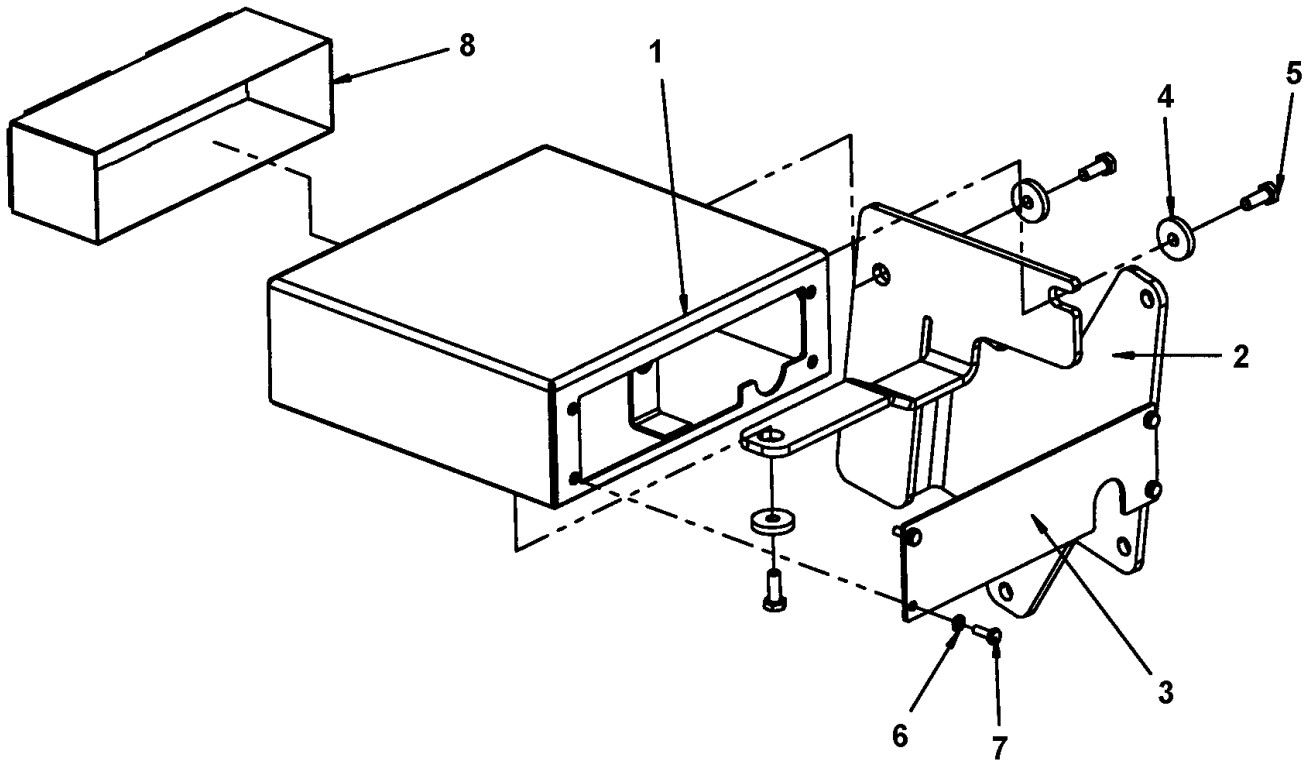

Item	Part No.	Name	Qty	L	SN INFO
1	4812118641	Holder	1		
2	4812112837	Holder	1		
3	4812112838	Cover	1		
4	4700904735	Steel plain washer	3		
5	4700500013	Screw, M6x16 mm 8.8 A2K	3		
6	4700904698	Plain washer	4		
7	4700500002	Screw M4-0,7x12H 8.8	4		
8	4812118624	Mounting frame	1		

Tachograph, option Power supply module

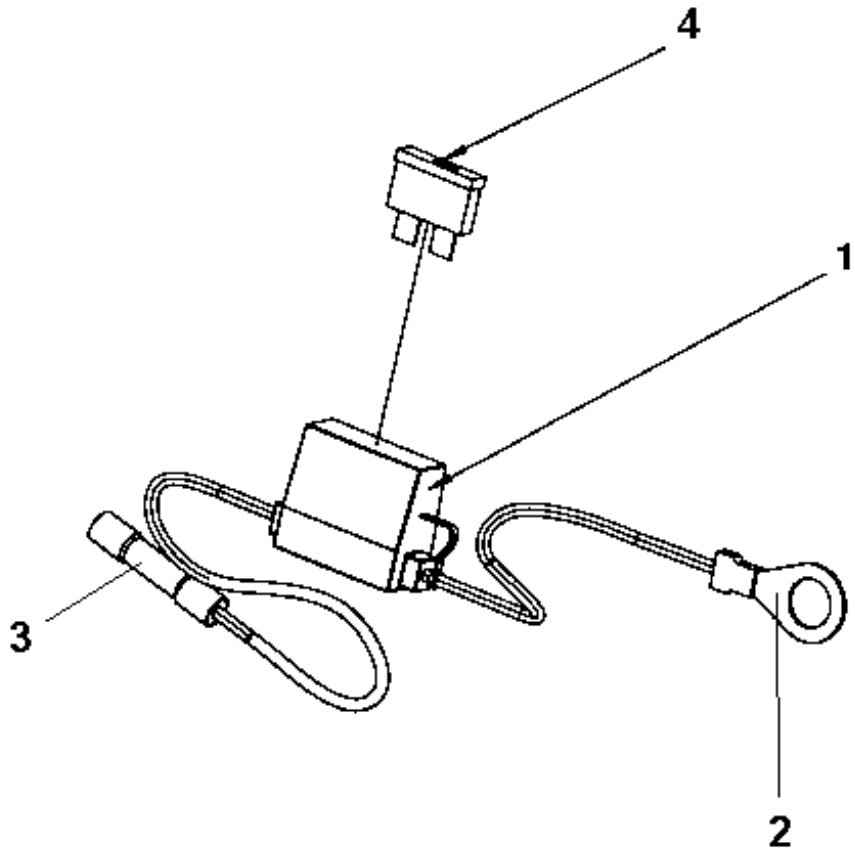

Item	Part No.	Name	Qty	L	SN INFO
1	4700904015	Fuse holder	1		
2	4700960067	Cable clip	1		
3	4700904024	Splicing sleeve	1		
4	4700901227	Fuse 10A Red	1		

Speed sensor, frequency sensor, option Speed sensor, frequency sensor, option

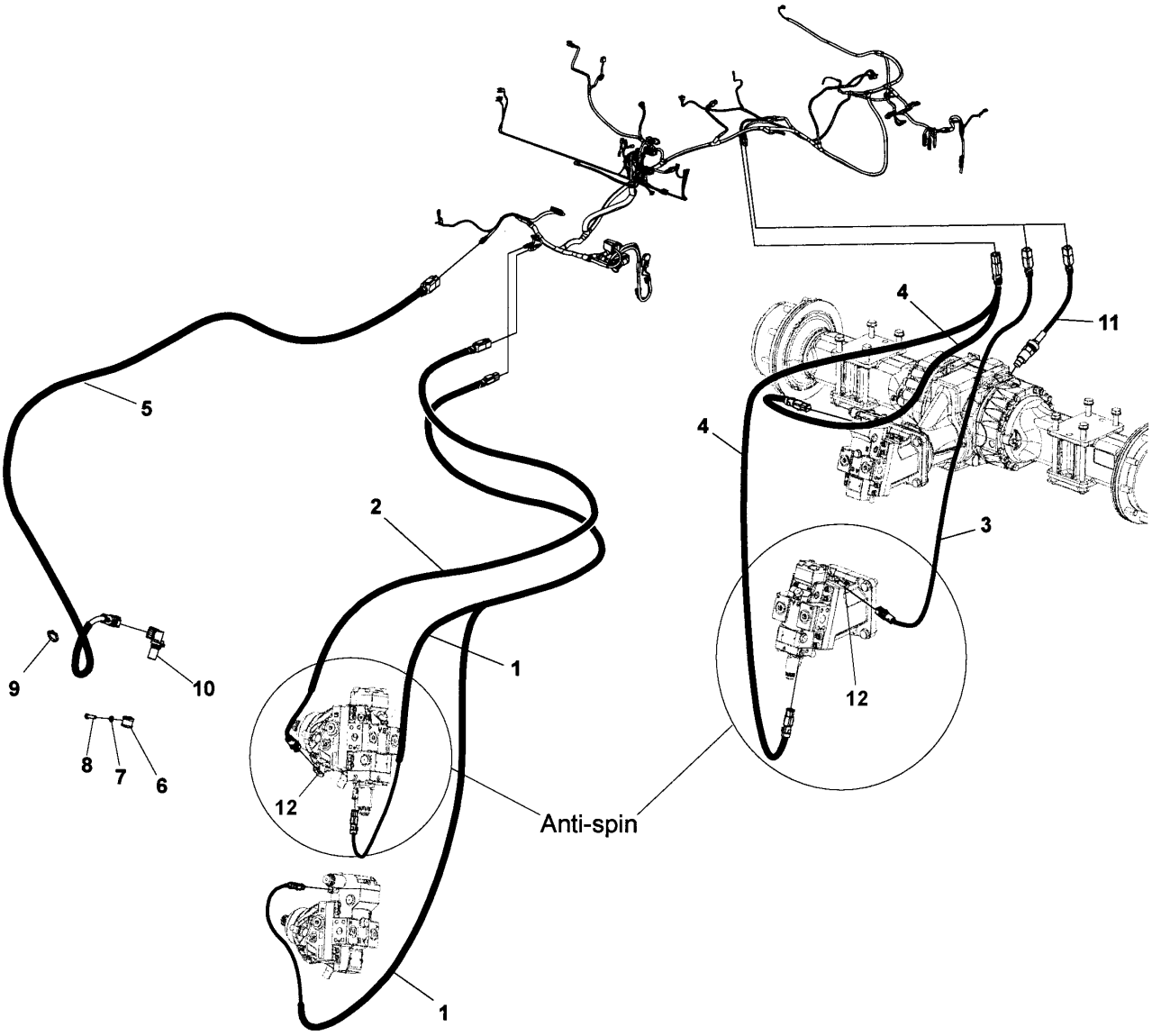

Item	Part No.	Name	Qty	L	SN INFO
1	4812112062	Cable harness, displacement	1	A	
2	4812112227	Cable harness, Speed sensor front	1	B, E	
3	4812112231	Cable harness, Speed sensor rear	1	B, E	
4	4812112229	Cable harness	1	C	
5	4812111268	Cable harness, Frequency (6-pol)	1	D	
6	4700921078	Clamp	1		
7	4700904228	Washer 6,4x12x1,5	1		
8	4700500015	Hex. screw	1		
9	4700313041	Cable ties	2		
10	-	Pulse sensor module	1	D	
11	4812112419	Pulse sensor cpl	1	B	
12	4700396601	Pulse sensor (6-pol)	2		

Comments for Page: Speed sensor, frequency sensor, option

(L)OCAL REMARKS

A | en_US | Displacement shift front.

B | en_US | Speed sensor.

C | en_US | Displacement shift rear.

D | en_US | Frequency sensor.

E | en_US | Anti-spin, option.

Speed sensor, frequency sensor, option Pulse sensor module (6-pol)

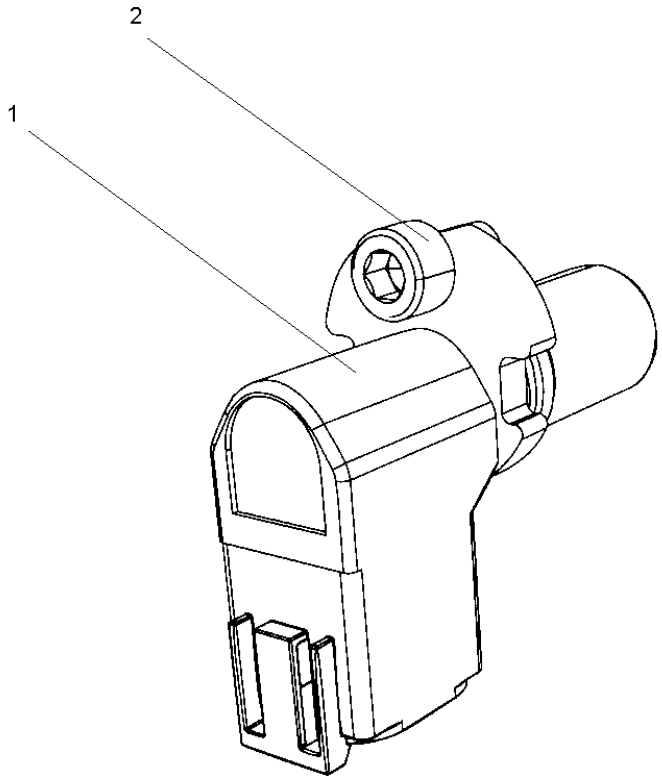

Item	Part No.	Name	Qty	L	SN INFO
1	4700396601	Pulse sensor (6-pol)	1		
2	4700508001	Screw M6x12	1		

Pre-heater installation, option Pre-heater installation, option

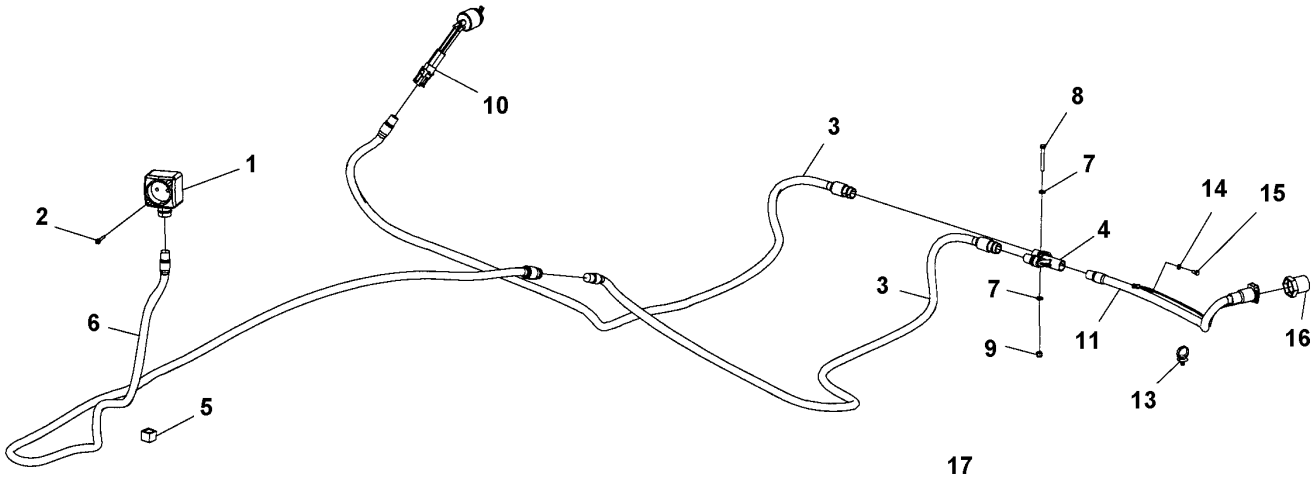

Item	Part No.	Name	Qty	L	SN INFO
1	4700396044	Connector	1		
2	4700792186	Thread forming screw	2		
3	4700396047	Cable	2		
4	4700396043	Branching	1		
5	4812112071	Cable entry insert	1		
6	4700396047	Cable	1		
7	4700904228	Washer 6,4x12x1,5	2		
8	4700500079	Screw M6-1x50 8,8	1		
9	4700586002	Lock nut M6 -8	1		
10	4812113162	Heater	1		
11	4811000316	Cable	1		
13	4700792441	Cable tie with holder	4		
14	4700904281	Washer, 5,3x10x1 300HV	1		
15	4700500003	Hex. screw	1		
16	4812114984	Nut	1		
17	4700396048	Cable 230V	1		

Rotating beacon, working light, option Rotating beacon, working light, option

Item	Part No.	Name	Qty	L	SN INFO
1	4700792397	Switch	1		
2	-	Rotating beacon module	1		
2-1	-	Rotating beacon module	2	A	
3	4812126778	Working light, LED 25W	4		
3	4812126777	Working light, LED 15W	4		
3	-	Working light module H3	4		
4	4812112325	Cable harness	1		
5	4700570005	Hexagon nut	2		
6	4700904229	Washer, 8.4x 6x1.5 mm 300HV	6		
7	4700792667	Cable tie holder	1		
8	4700313041	Cable ties	N		
9	4811000077	Connection cable	1		
10	4812116799	Holder	1		
11	4700586003	Lock nut M8	2		
12	4700500021	Screw, M8x25 mm 8.8 A2K	2		

Comments for Page: Rotating beacon, working light, option

(L)OCAL REMARKS

A | en_US | Dual LED

Rotating beacon, working light, option Rotating beacon module

Item	Part No.	Name	Qty	L	SN INFO
1	-	Bracket, Rotating beacon	1		
2	4700904230	Steel plain washer	2		
3	4700500048	Screw, M10x20 mm 8.8 A3K	2		
4	4812122611	Rotating beacon	1		
5	4812121848	Rotating beacon, LED	1	A	

Comments for Page: Rotating beacon module

(L)OCAL REMARKS

A | en_US | Dual LED

Rotating beacon, working light, option Bracket, Rotating beacon

Item	Part No.	Name	Qty	L	SN INFO
1	4812116622	Bracket	1		
2	4812112460	Bracket	1		
2	4812120468	Bracket	1	A	
3	4700392321	Bracket	1		
3	4812120469	Bracket	1	B	
4	4812115020	Wiring harness	1		
5	4700792410	Hand knob nut	1		
6	4700904640	Washer, 8.4x22x3 mm 300HV	1		
7	4700902286	Lock nut, M8x1.25 mm A2K	1		
8	4700904229	Washer, 8.4x 6x1.5 mm 300HV	2		
9	4700500189	Screw	1		
10	4812112774	Bushing	2		

Comments for Page: Bracket, Rotating beacon

(L)OCAL REMARKS

A | en_US | interchangeable with part 4812120469

B | en_US | interchangeable with part 4812120468

Rotating beacon, working light, option Working light module H3

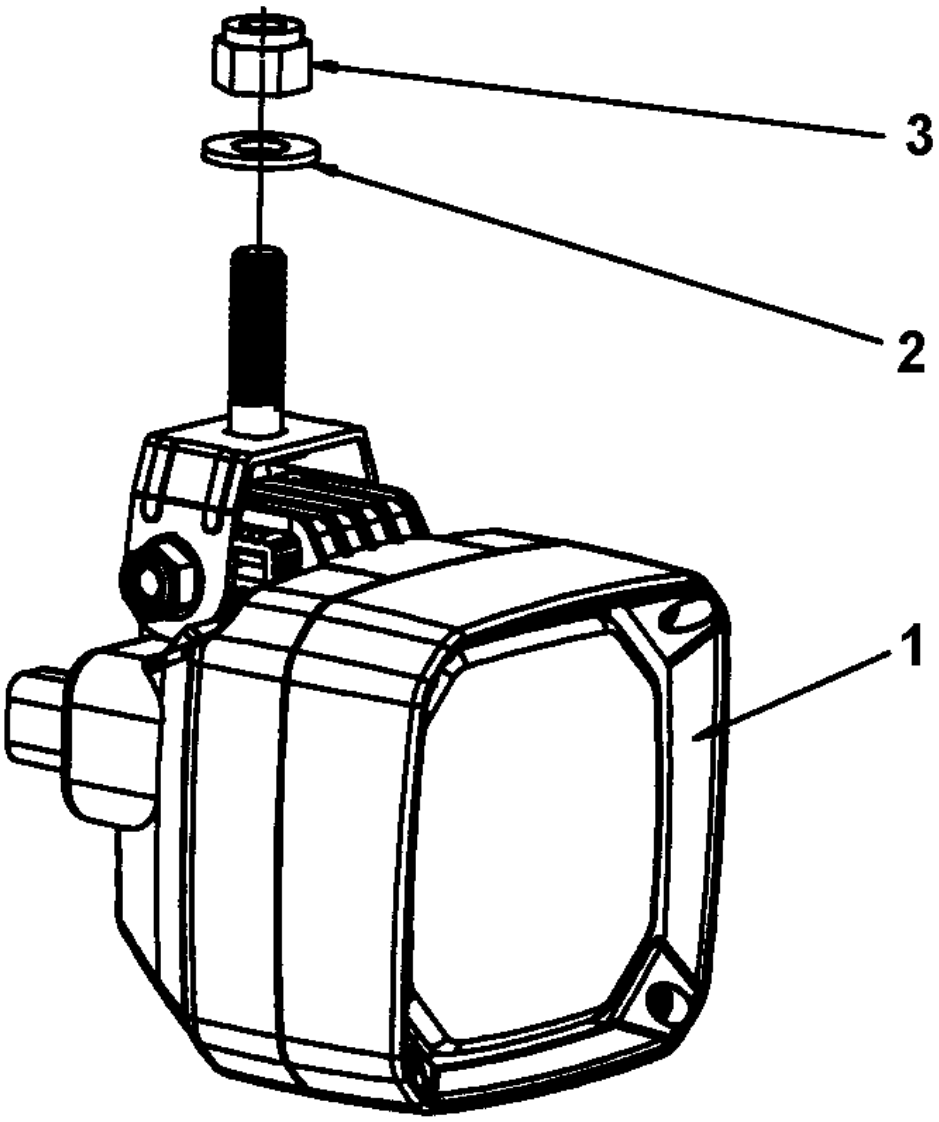

Item	Part No.	Name	Qty	L	SN INFO
1	4812114720	Working light	1		
2	4700904230	Steel plain washer	1		
3	4700586018	Lock nut M10	1		

Cable harness, emergency steering, option Cable harness, emergency steering, option

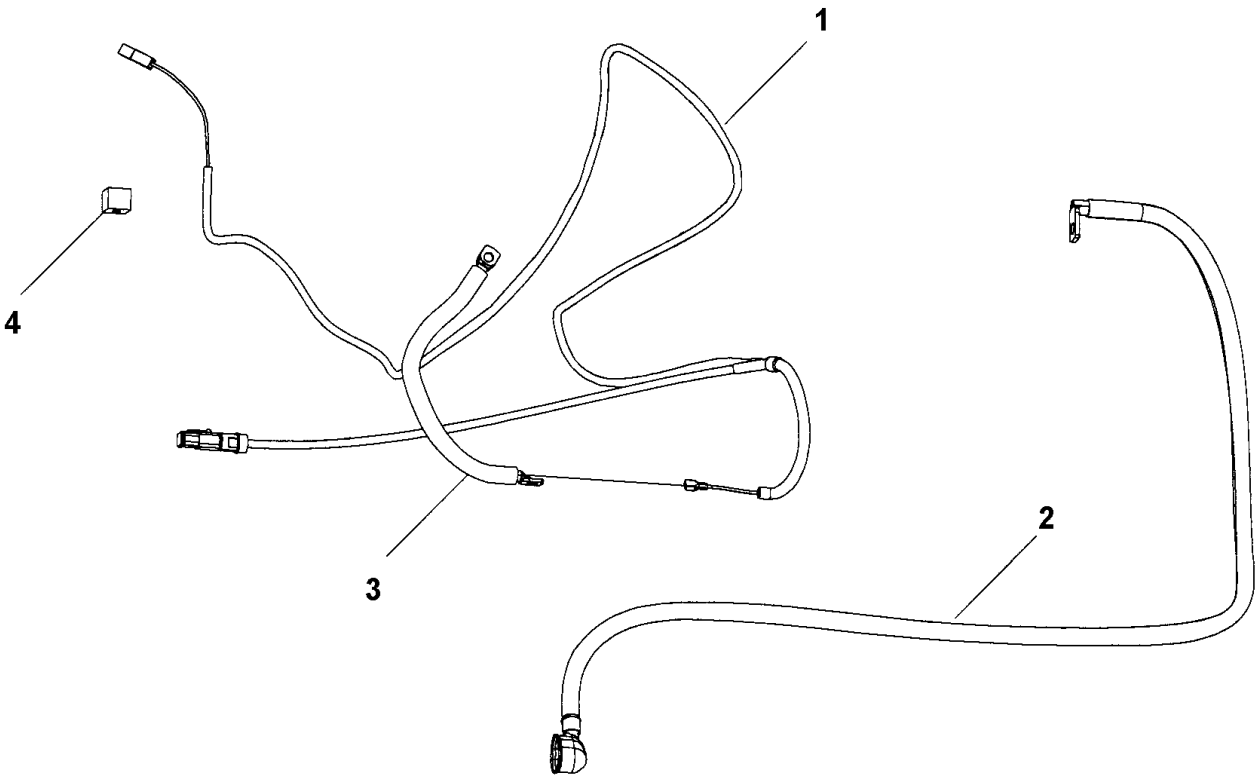

Item	Part No.	Name	Qty	L	SN INFO
1	4812113086	Cable harness	1		
2	4811000397	Connection cable, coarse	1		
3	4811000396	Connection cable, coarse	1		
4	4812114433	Cable entry insert	1		

Displacement shift Displacement shift

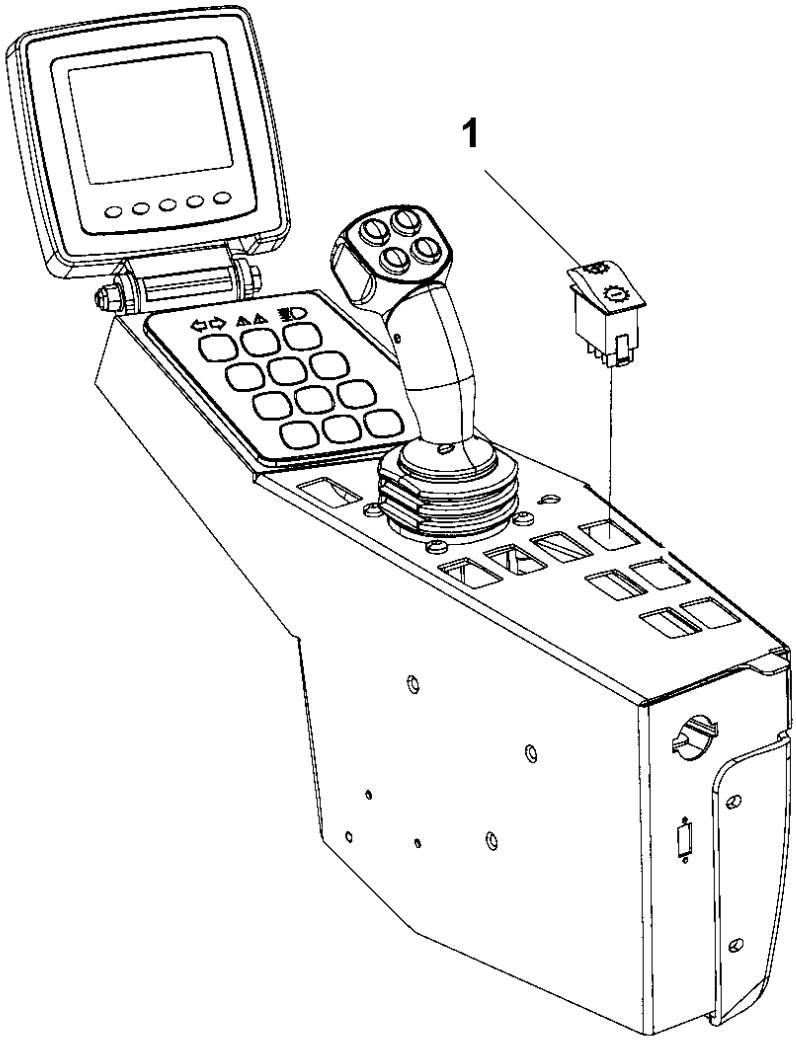

Item	Part No.	Name	Qty	L	SN INFO
1	4812115810	Switch, displacement shift	1		

Compaction meter, option Compaction meter, option

Item	Part No.	Name	Qty	L	SN INFO
1	4812115921	Dcm unit	1		
2	4812112072	Cable entry insert	1		
3	4700923876	Clamp	1		
4	4700904228	Washer 6,4x12x1,5	4		
5	4700923859	Cover plate	1		
6	4700500079	Screw M6-1x50 8,8	4		
7	4812121264	Screw	4		
8	4700791453	Pipe clamp block	1		
9	4700791454	Cover plate	1		
10	4812116181	Bracket	1		
11	4700904231	Washer, 13x24x2 mm 300 HV	2		
12	4700500035	Hexagon screw, M12x20H	2		
13		Power supply	1		
14	4700792210	Screw torx	2		
15	4700792441	Cable tie with holder	2		
16	4700606003	Washer	4		
17	4812121118	Gasket	1		

Compaction meter, option Power supply

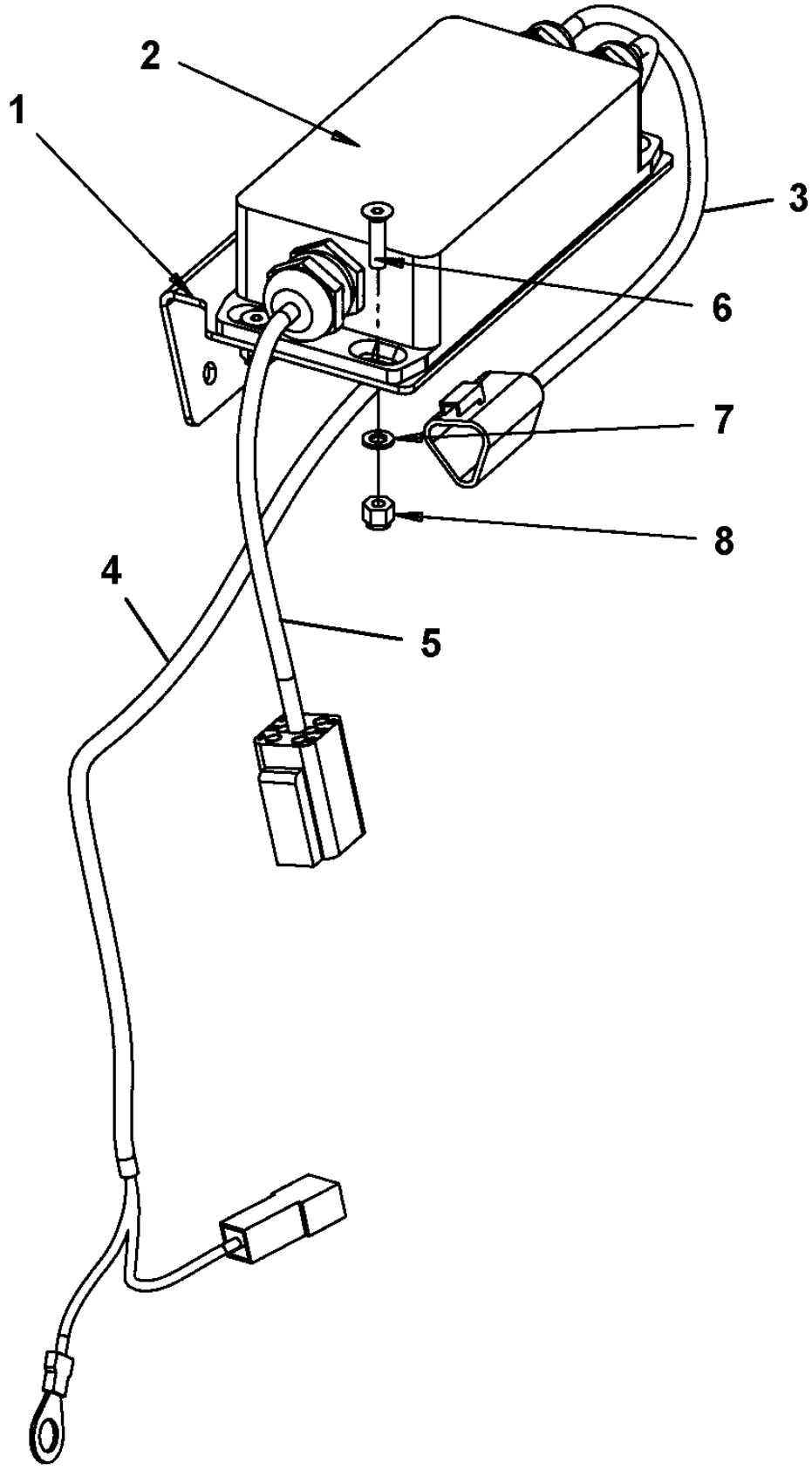

Item	Part No.	Name	Qty	L	SN INFO
1	4812112792	Holder	1		
2	4812113123	Power supply unit	1		
3	4812112640	Cable harness	1		
4	4812112641	Cable harness	1		
5	4812112642	Cable harness	1		
6	4700513027	Screw M4x16H 10,9	4		
7	4700904698	Plain washer	4		
8	4700923976	Lock nut	4		

External emergency stop, option External emergency stop, option

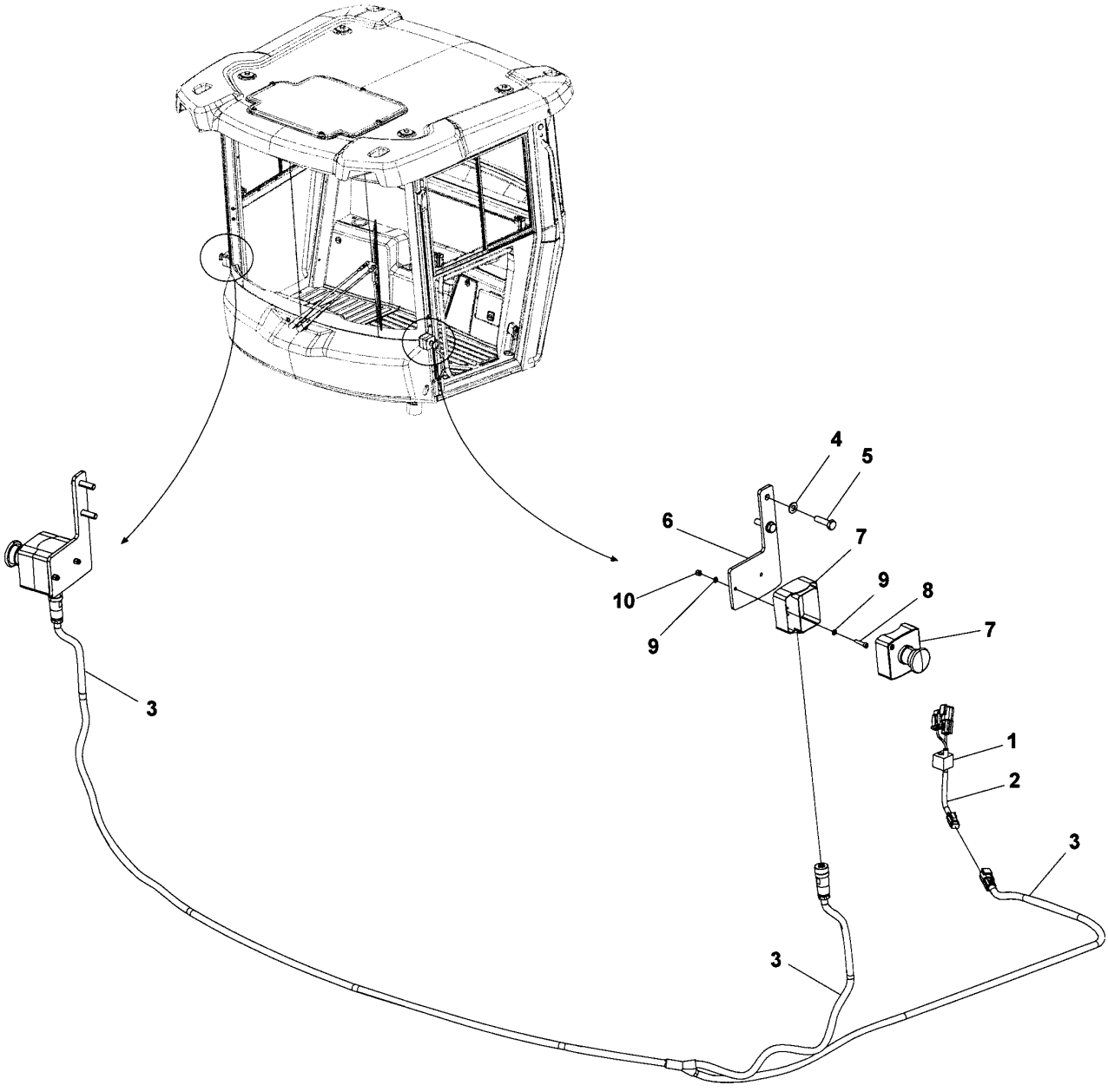

Item	Part No.	Name	Qty	L	SN INFO
1	4812116367	Cable entry frame and inserts	1		
2	4812116346	Cable harness	1		
3	4812116354	Cable harness	1		
4	4700904229	Washer, 8.4x 6x1.5 mm 300HV	4		
5	4700500022	Screw	4		
6	4812116588	Holder	2		
7	4812116587	Emergency stop box	2		
8	4700903386	Screw	4		
9	4700904698	Plain washer	8		
10	4700923976	Lock nut	4		

Platform, rops Platform, rops

Item	Part No.	Name	Qty	L	SN INFO
1	4812120544	Platform with 4-post ROPS	1		
2	4700393525	Holder	8		
3	4700359998	Back-up ring	4		
4	4700500056	Screw, M12x45 mm 8.8 A3K	16		
5	4812115387	Protective plug	2		
6	4812116884	Shock absorber	4		
7	4700927410	Washer	4		
8	4700904233	Steel plain washer 21x36x3	2		
9	4700903290	Steel plain washer 21x36x6	2		
10	4700901145	Lock nut M20-10	4		
11	4700902282	Screw	4		
12	-	Manual box	1		
13	4812116867	Spacer	4		

4812120544 Platform with 4-post ROPS 4812120544 Platform with 4-post ROPS

Item	Part No.	Name	Qty	L	SN INFO
1	-	Basic kit Rops, roof, front handrail	1		
2	-	Rear cover	1		
3	-	Handrail	1		
4	4812114568	Floor mat	1		
5		Rops	1		
6	-	Cab, basic kit	1		

4812120544 Platform with 4-post ROPS Basic kit Rops, roof, front handrail

Item	Part No.	Name	Qty	L	SN INFO
1	4812115193	Handrail	1		
3	-	Screw	4		
4	4812115194	Plate	1		
6	-	Screw	4		
7	4700202028	Edge trim	1XL	A	
8	4700202028	Edge trim	1XL	B	
9	4700202028	Edge trim	1XL	C	
10	4700202028	Edge trim	1XL	D	
11	4700202028	Edge trim	1XL	E	
12	4700202028	Edge trim	1XL	F	
13	-	Cap	2		
20	4812115195	Roof	1		
21	4812115164	Rubber strip	1XL	G	
22	4812161165	Foam strip (Xm)	1XL	H	
23	4812115196	Roof plate	1		
24	4812115166	Rubber washer	5		
25	4700601003	Washer, 8,4x25x2 mm	5		
26	4812162571	Screw	5		
27	4812115170	Seal washer	10		
28	4812115171	Washer	4		
29	4812162572	Hexagon screw	4		
30	4700601003	Washer, 8,4x25x2 mm	2		
31	4700947680	Hexagon head screw m	2		
40	4700908505	Hook	1		
41	-	Screw	4		

Comments for Page: Basic kit Rops, roof, front handrail

(L)OCAL REMARKS

A | L=0.508m

B | L=0.133m

C | L=1.415m

D | L=1.43m

E | L=0.856m

F | L=1.515m

G | L=6.7m

H | L=2.513m

4812120544 Platform with 4-post ROPS Rear cover

Item	Part No.	Name	Qty	L	SN INFO
1	4812114563	Rear cover	1		
2	4812114564	Service cover	1		
3	4812114565	Bracket	1		
4	4700601001	Washer	2		
5	4700500004	Screw M5x12 8,8	2		
6	4812114566	Turn fastener	1		
7	4812114567	Speed nut	8		
8	-	Screw	8		
9	-	Socket, 24V	1		

4812120544 Platform with 4-post ROPS Handrail

Item	Part No.	Name	Qty	L	SN INFO
1	4812114569	Handrail	1		
2	-	Screw	4		
3	4700904557	Washer, 10.5x22x4 mm 300 HV	2		
4	4700791172	Lock nut M10 DIN985	2		

4812120544 Platform with 4-post ROPS Cab, basic kit

Item	Part No.	Name	Qty	L	SN INFO
1	4700792103	Blind insert nut	10		
2	4700902379	Edge trim	2XL	A	
4	4812115186	Cover	1		
5	4700929587	Grommet	7		
6	4700909129	Grommet	2		
7	-	Grommet	1		
8	-	Sign, rops	1		
9	-	Screw	4		
10	-	Sign, fops	1		
11	-	Screw	4		

Comments for Page: Cab, basic kit

(L)OCAL REMARKS

A | en_US | L=0.263m

Platform, rops Manual box

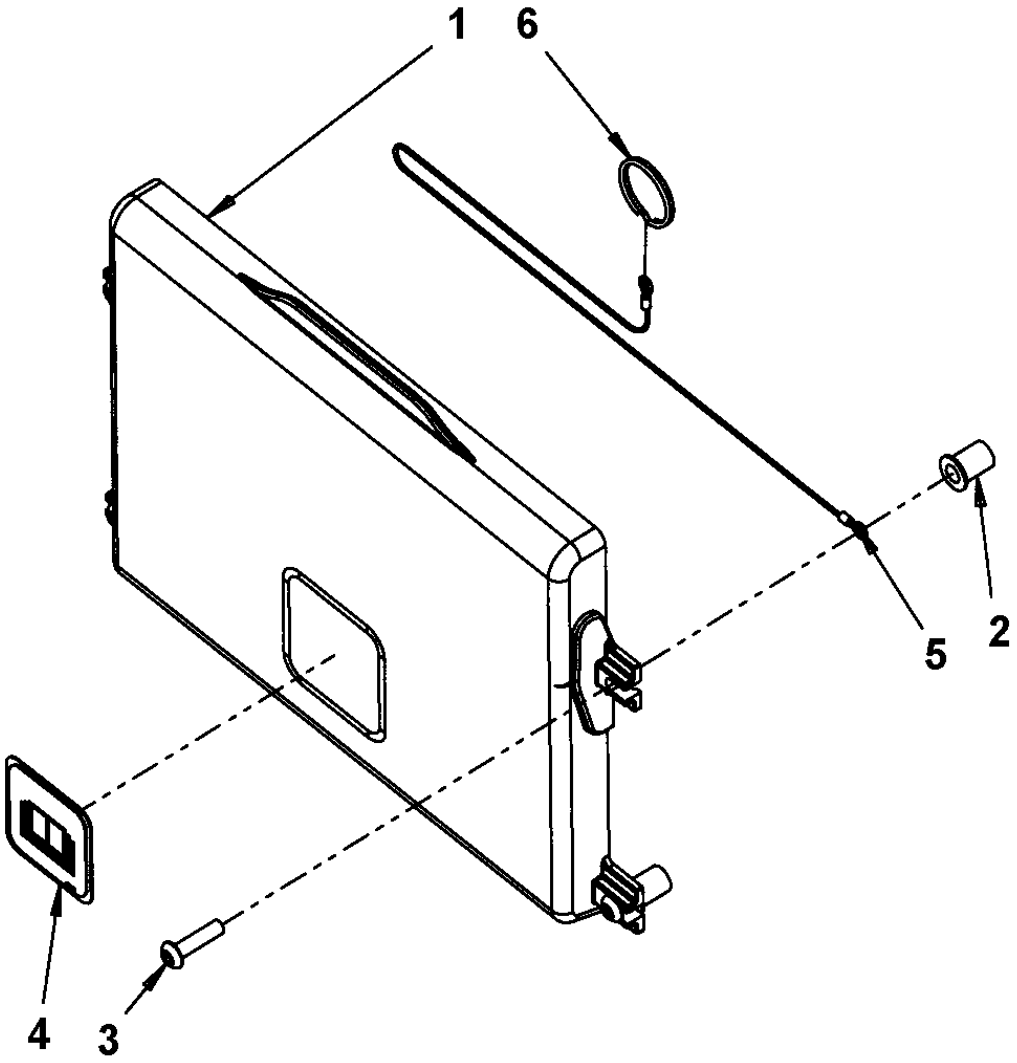

Item	Part No.	Name	Qty	L	SN INFO
1	4700383705	Instruction manual box	1		
2	4700792536	Rubber nut	4		
3	4700792589	Screw	4		
4	4700903425	Safety decal "READ SAFETY INSTRUCTIONS"	1		
5	4700384584	Wire	1		
6	4700358254	Key-ring	1		

Platform, rops Decals basic kit

Item	Part No.	Name	Qty	L	SN INFO
1	4812120070	Decal cosmetic, kit	1		
2	--	Decal cosmetic Yellow	1		
3	--	Decal cosmetic Yellow	1		
4	--	Decal cosmetic Yellow	1		
5	--	Decal cosmetic Yellow	1		

Cab symmetric module Cab symmetric module

Item	Part No.	Name	Qty	L	SN INFO
1	4812119364	Cab, cpl Comfort	1		
1	4812119365	Cab, cpl Basic	1		
2	4812112294	Bracket	4		
3	4700359998	Back-up ring	4		
4	4700500195	Screw	16		
5	4812115387	Protective plug	2		
6	4700374606	Shock absorber Green COXIM DIA/TRAZ	4		
7	4700372457	Back-up ring	4		
8	4700904233	Steel plain washer 21x36x3	6		
9	4700903290	Steel plain washer 21x36x6	2		
10	4700901145	Lock nut M20-10	4		
11	4700903633	Screw M20x150 10,9	4		
12	-	Manual box	1		

4812119364 Cab, cpl Comfort 4812119364 Cab, cpl Comfort

Item	Part No.	Name	Qty	L	SN INFO
1	-	Screens	1		
2	-	Windshield wiper	1		
3	-	Roof	1		
4	-	Hose kit heater	1		
5	-	Cab Interior	1		
6	-	Cab cable harness	1		
7	-	Cab, electrical equipment	1		
8	-	Emergency hammer, hook	1		
9	-	Cab, rear cover	1		
10	-	Cab, front cover	1		
11	-	Floor mat	1		
12	-	Step light, wiper switch	1		
14	-	Cab, basic kit	1		
15		Rops	1		
16	-	Air channel	1		
17	-	Sun-blind, inner light	1		

4812119364 Cab, cpl Comfort Screens

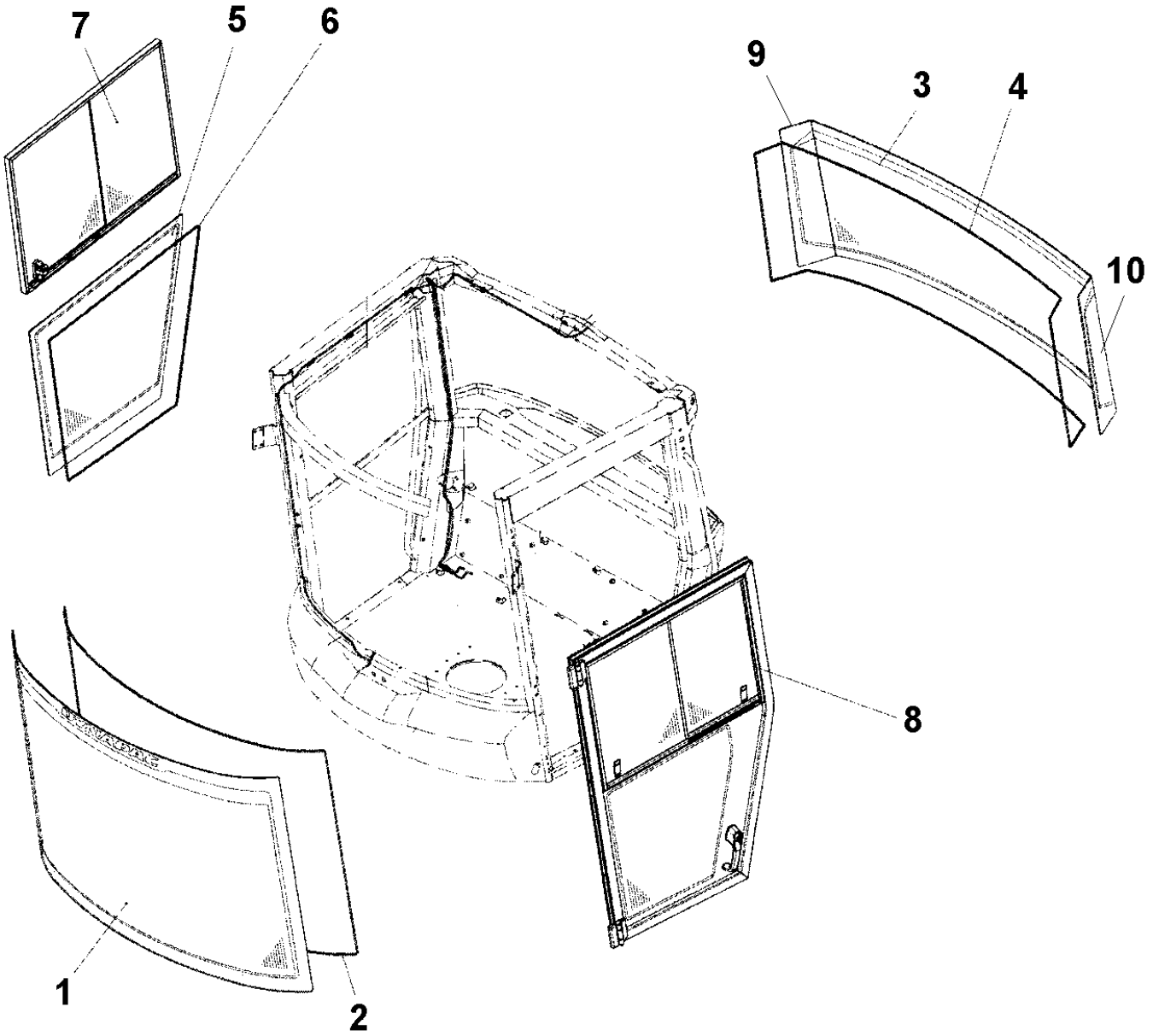

Item	Part No.	Name	Qty	L	SN INFO
1	4812114586	Front screen	1		
2	4812159184	Rubber list	1XL	A	
3	4812158164	Rear screen middle	1		
4	4812159184	Rubber list	1XL	B	
5	4812114587	Side screen	1		
6	4812159184	Rubber list	1XL	C	
7	4812114588	Sliding screen	1		
8	4812115202	Cab door, cpl	1		
9	4812158165	Rear screen right	1		
10	4812158163	Rear screen left	1		

Comments for Page: Screens

(L)OCAL REMARKS

A | en_US | L=5.002m

B | en_US | L=4.779m

C | en_US | L=2.99m

4812119364 Cab, cpl Comfort 4812115202 Cab door, cpl

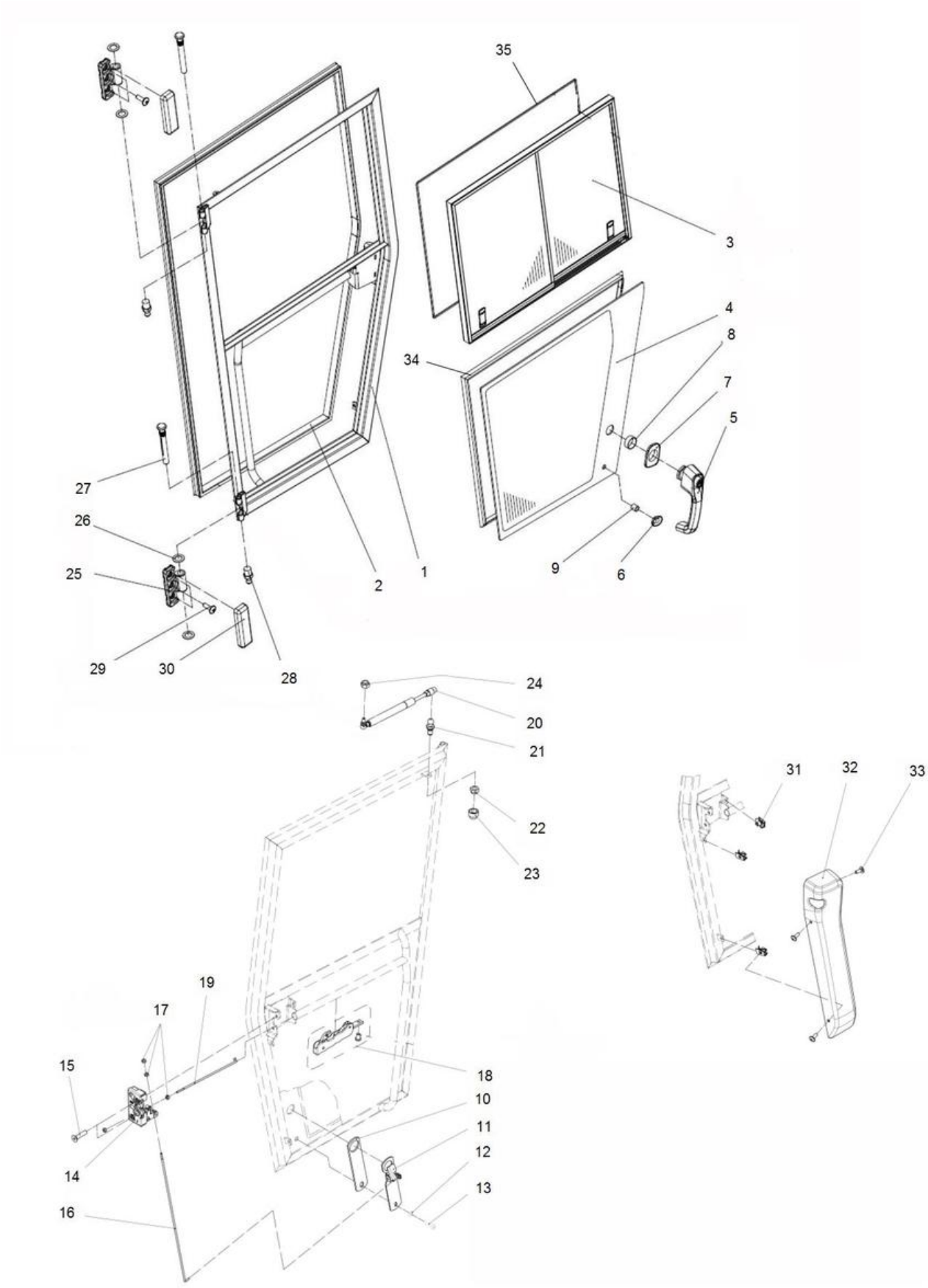

Item	Part No.	Name	Qty	L	SN INFO
1	4812116199	Door	1		
2	4812159183	Rubber list	4.41		
3	4812115200	Sliding screen, left hand	1		
4	4812114593	Screen	1		
5	4812115203	Handle	1		
5	4812159558	Key (2pcs)	1		
6	4812115204	Washer	1		
7	4812115205	Washer	1		
8	4812115206	Washer	1		
9	4812115207	Bushing	1		
10	4812115208	Rubber gasket	1		
11	4812115209	Bracket	1		
12	4700904228	Washer 6,4x12x1,5	1		
13	-	Screw, M6x25	1		
14	4812115210	Lock	1		
15	-	Screw, M8x35	2		
16	4812115211	Lock rod	1		
17	4700570005	Hexagon nut	4		
18	4812115212	Lock handle	1		
19	4812115213	Lock rod	1		
20	4812115214	Gas spring	1		
21	4812115215	Ball stud	1		
22	4700791182	Nut, M8 -8 DIN985	1		
23	-	Protecting cap	1		
24	4700791182	Nut, M8 -8 DIN985	1		
25	4812115216	Hinge	2		
26	-	Gasket	4		
27	4812115217	Pin	2		
28	-	Lubrication nipple	2		
29	-	Screw, M8x25	6		
30	4812115218	Hinge	2		
31	4812161353	Speed nut	3		
32	4812115201	Door cover	1		
33	4812161352	Screw	3		
34	4812161098	Seal list	2,756		
35	4812161099	Seal list	2,77		

4812119364 Cab, cpl Comfort 4812115200 Sliding screen, left hand

Item	Part No.	Name	Qty	L	SN INFO
1	-	Window frame	1		
2	4812115225	Screen	1		
-	4812161251	Sealing bar	1		
3	4812115226	Screen	1		
4	4812160388	Sealing bar	1		
5	4812115219	Handle	1		
6	4812115220	Handle	1		
7	4812159775	Guide	4		
8	4812115223	Bracket	6		
9	4812161156	Strip	1XL	A	
10	4812161155	Strip	1XL	B	
11	4812161156	Strip	1XL	C	
12	4812161155	Strip	1XL	D	
13	4812160877	Window seal	1XL	E	
14	4812160877	Window seal	1XL	F	
15	4812160877	Window seal	1XL	G	
16	4812160877	Window seal	1XL	H	

Comments for Page: 4812115200 Sliding screen, left hand

(L)OCAL REMARKS

A | en_US | L=0.612m

B | en_US | L=0.15m

C | en_US | L=0.613m

D | en_US | L=0.117m

E | en_US | L=0.676m

F | en_US | L=0.643m

G | en_US | L=0.612m

H | en_US | L=0.613m

4812119364 Cab, cpl Comfort Windshield wiper

Item	Part No.	Name	Qty	L	SN INFO
1	4812114606	Bracket	1		
2	-	Gasket	3		
3	-	Screw	3		
4	4812114598	Bolt	1		
5	4812114599	Clamp	1		
6	4812114602	Washer	1		
7	4812114603	Plate	1		
8	4812114600	Wiper motor, front	1		
9	4812114604	Wiper arm w nozzle	1		
10	4812114605	Wiper blade, front	1		
11	4700601003	Washer, 8,4x25x2 mm	2		
12	4700791182	Nut, M8 -8 DIN985	2		
13	-	Spacer	2		
14	-	Gasket	2		
15	4812114601	Wiper motor, rear	1		
16	4812114607	Wiper arm	1		
17	4812114608	Wiper blade, rear	1		
18	4812114610	Nozzle	1		
19	4812114609	Clamp	1		
20	4812114611	Hose	0,42		
21	4812114612	Water tank	1		
21	4812158293	Cap	1		
21	4812160666	Electric washer pump	2		
22	4812161158	Rubber seal	0,20		
23	4812114613	Bracket	1		
24	4700904228	Washer 6,4x12x1,5	7		
25	4700904563	Lock nut M6	3		
26	4812115162	Filling pipe	1		
27	4700313023	Hose clamp	2		
28	4700500013	Screw, M6x16 mm 8.8 A2K	4		
29	4812114611	Hose	0,12		
30	4700908564	Check valve	2		
31	4812114611	Hose	4,40		
32	4700908561	Grommet	2		
33	4812114611	Hose	2,55		
34	4812114611	Hose	0,16		

4812119364 Cab, cpl Comfort Roof

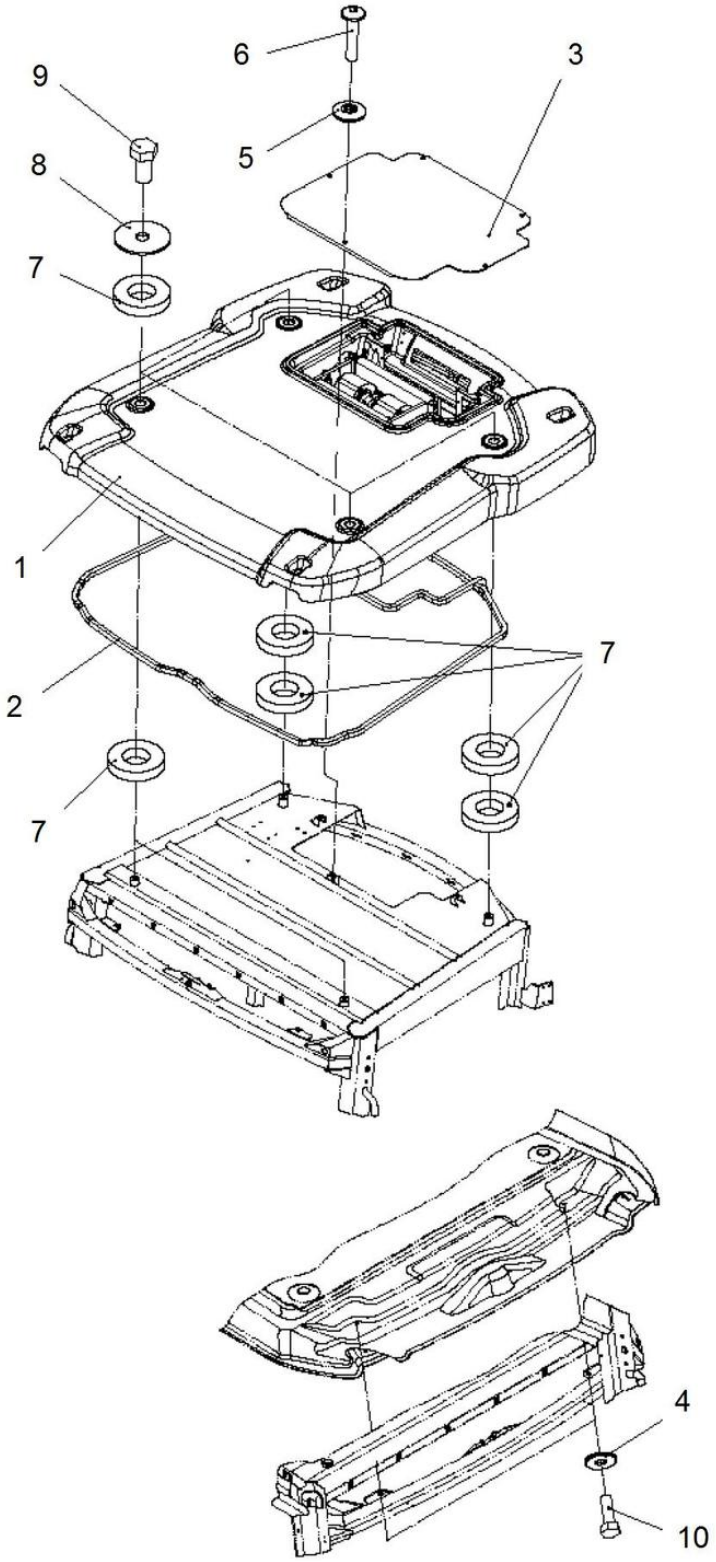

Item	Part No.	Name	Qty	L	SN INFO
1	-	Heater assy	1		
2	4812115164	Rubber strip	1XL	A	
3	4812115165	AC hood	1		
4	4700601003	Washer, 8,4x25x2 mm	2		
5	4812120255	Seal washer	5		
6	4812162571	Screw	5		
7	4812115170	Seal washer	10		
8	4812115171	Washer	4		
9	4812162572	Hexagon screw	4		
10	4700947680	Hexagon head screw m	2		

Comments for Page: Roof

(L)OCAL REMARKS

A | en_US | L=6.7m

4812119364 Cab, cpl Comfort Heater assy

Item	Part No.	Name	Qty	L	SN INFO
1	4812116201	Roof	1		
2	4812161165	Foam strip (Xm)	2,56		
3	-	Grommet	2		
4	4700929587	Grommet	2		
5	4812115228	Grommet	1		
6	4812115229	Bracket	1		
7	4700202028	Edge trim	0,03		
8	4812115186	Cover	1		
9	4700791666	Blind rivet	2		
10	4700904229	Washer, 8.4x 6x1.5 mm 300HV	2		
11	4812158485	Fan 24V	1		
12	4812115230	Bracket	1		
13	4812116192	Bracket	2		
14	4700904229	Washer, 8.4x 6x1.5 mm 300HV	4		
15	-	Hexagon screw	4		
16	4812115164	Rubber strip	0,41		
17	4812116193	Heater coil	1		
18	4812116194	Clip	4		
19	4812116195	Bracket	2		
20	4700500012	Hex. screw	2		
21	4700939693	Heater control valve	1		
22	4700372174	Spacer	1		
23	4700903670	Clamp	1		
24	4700500079	Screw M6-1x50 8,8	1		
25	4700205112	Coolant hose	0,15		
26	4700313004	Hose clamp 19-29mm	4		
27	4812116197	Air filter	2		
28	4812116198	Cover	1		
29	4812161352	Screw	3		
30	4700791475	Grommet	1		
31	-	Grommet	1		

4812119364 Cab, cpl Comfort Hose kit heater

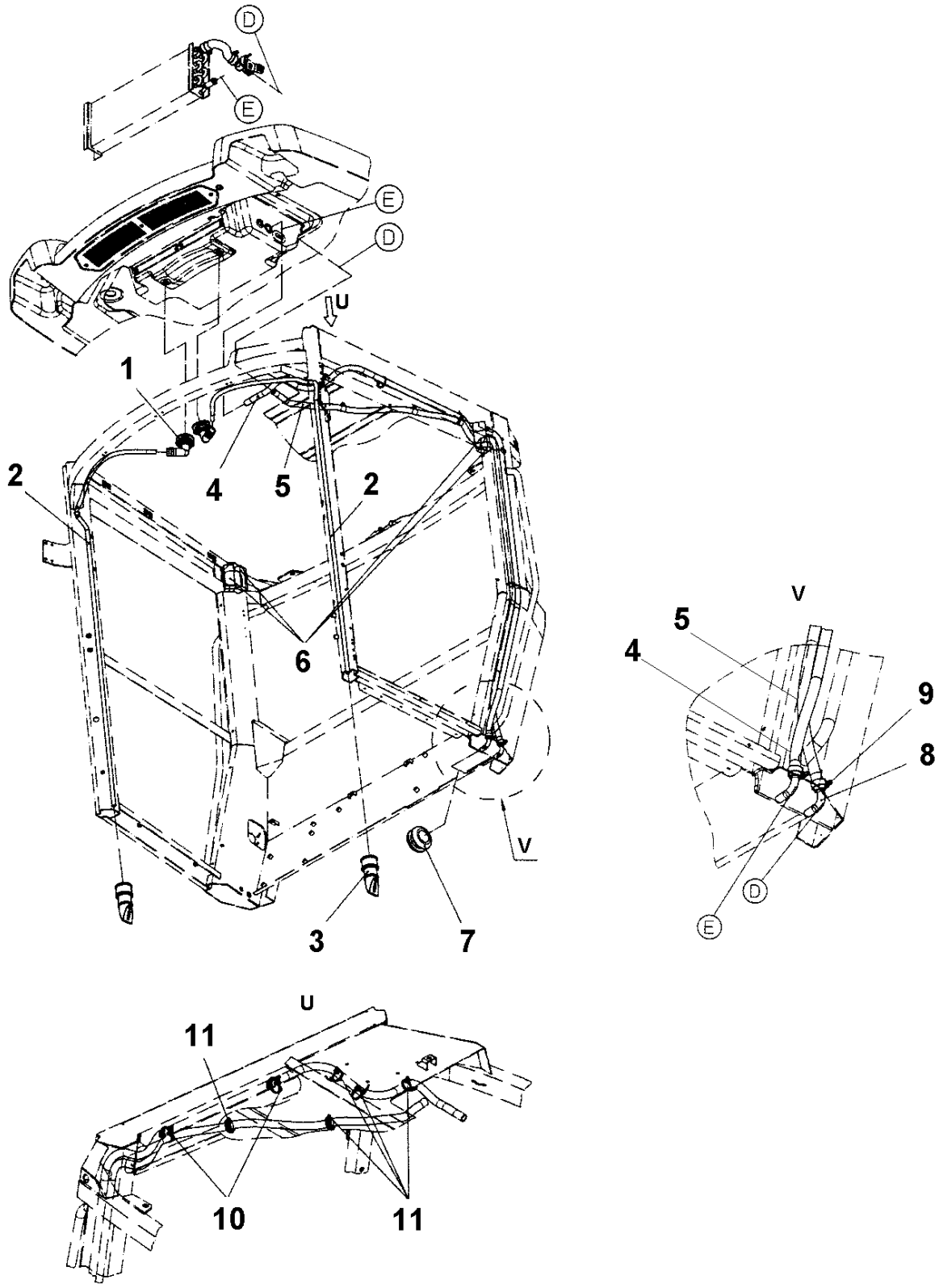

Item	Part No.	Name	Qty	L	SN INFO
1	4812115167	Connector	2		
2	4812115168	Drain hose	2XL	A	
3	4812115169	Drain valve	2		
4	4700205112	Coolant hose	1XL	B	
5	4700205112	Coolant hose	1XL	C	
6	-	Foam	1		
7	-	Grommet	1		
8	4812115172	Connection pipe	2		
9	4700313004	Hose clamp 19-29mm	2		
10	4700313041	Cable ties	2		
11	4700792441	Cable tie with holder	5		

Comments for Page: Hose kit heater

(L)OCAL REMARKS

A | en_US | L=1.96m

B | en_US | L=2.831m

C | en_US | L=2.5m

4812119364 Cab, cpl Comfort Cab cable harness

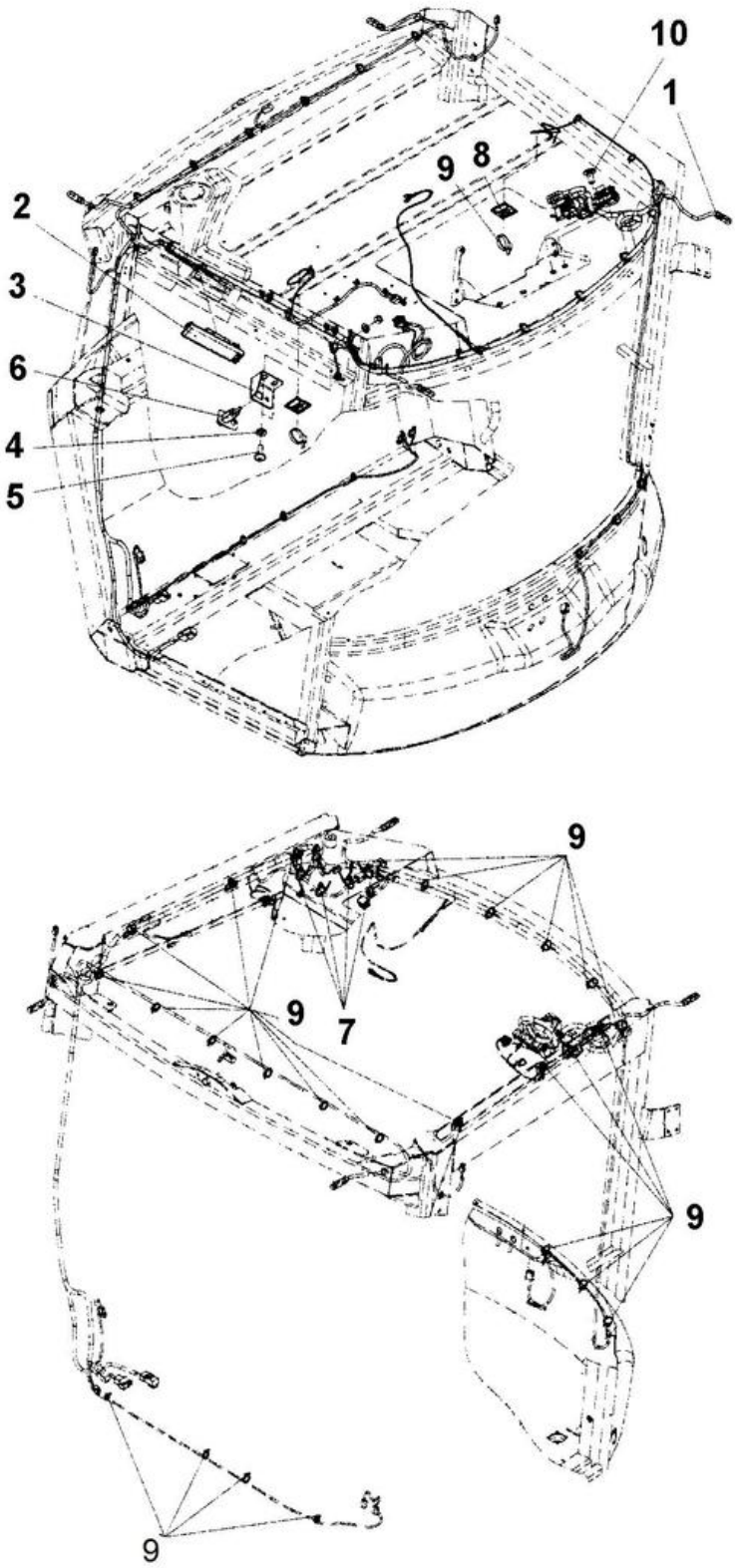

Item	Part No.	Name	Qty	L	SN INFO
1	4812115181	Cable harness	1		
2	4812120257	Inner light	1		
2	4700792715	Bulb, 10W	2		
3	4812115182	Bracket	1		
4	4700904228	Washer 6,4x12x1,5	2		
5	-	Screw	2		
6	4812115183	Door switch	1		
7	4700792441	Cable tie with holder	4		
8	4812161370	Cable support	2		
9	4700313041	Cable ties	28		
10	-	Screw	2		

4812119364 Cab, cpl Comfort Cab Interior

Item	Part No.	Name	Qty	L	SN INFO
1	4812158992	Inner panel, cpl	1		
2	4812160772	Rubber list	2XL	A	
3	4812160771	Seal	1XL	B	
4	4812115175	Bracket	2		
5	4812114567	Speed nut	2		
6	4812120269	Sealing washer	2		
7	4700928381	Washer, 6.4x18x1.6 mm	2		
8	4812162654	Screw	2		
9	4700904228	Washer 6,4x12x1,5	4		
10	4700500012	Hex. screw	4		
11	4812120269	Sealing washer	2		
12	4700928381	Washer, 6.4x18x1.6 mm	2		
13	4700792119	Screw, M6x16 mm 8.8 A2K	2		
14	-	Heater controls	1		
15	-	Screw	4		
16	4812115177	Mirror	1		
17	4812159768	Screw	2		
18	4812159767	Speed nut	2		
19	4812115178	Radio console	1		
20	4811000458	Speed nut	3		
21	-	Screw	3		
22	4812115179	Radio cover	1		
23	4812115180	Air nozzle	6		
24	-	Air inlet cover	2		
25	-	Speaker cover	2		

Comments for Page: Cab Interior

(L)OCAL REMARKS

A | en_US | L=0.525m

B | en_US | L=0.915m

4812119364 Cab, cpl Comfort Heater controls

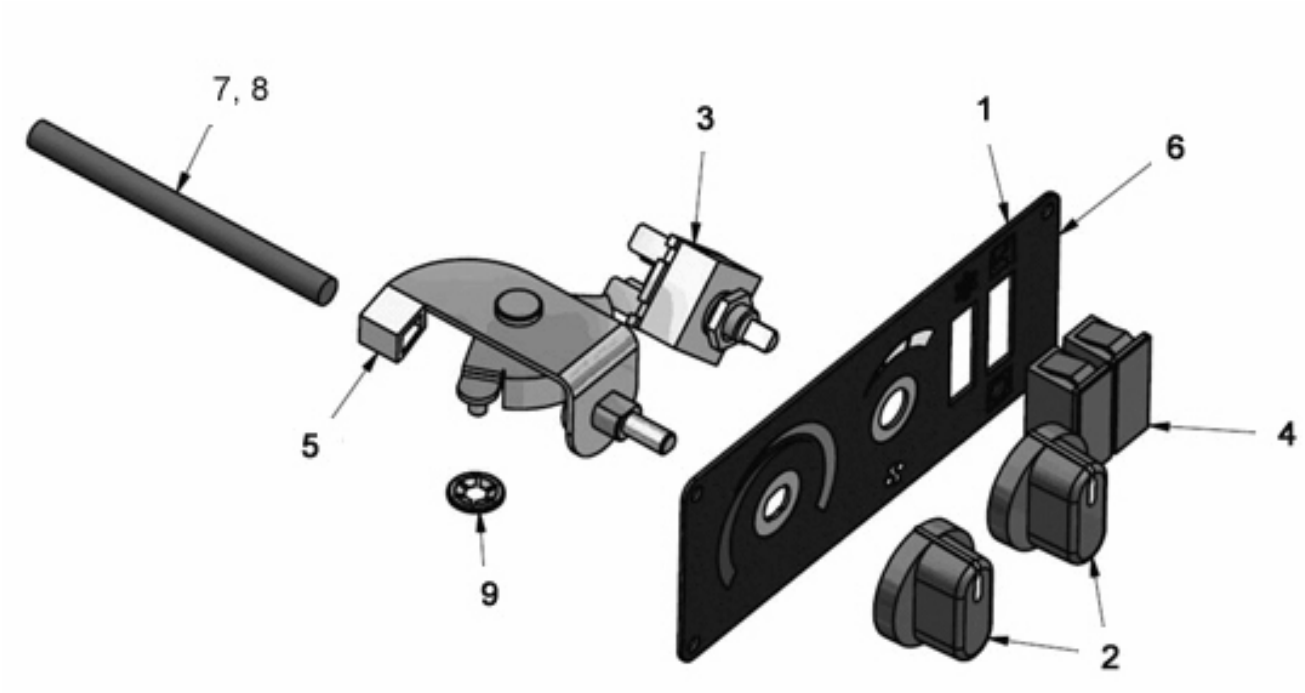

Item	Part No.	Name	Qty	L	SN INFO
1	-	Panel plate	1		
2	4700377508	Knob	2		
3	4700938622	Switch	1		
4	-	Injector part	2		
5	4700377507	Rotary control	1		
6	-	Overlay	1		
7	4700395841	Wire clips	1		
8	-	Wire	1		
9	4700395843	Lock washer	2		

4812119364 Cab, cpl Comfort Cab, electrical equipment

Item	Part No.	Name	Qty	L	SN INFO
1	4812115184	Bracket	1		
2	4700792309	Relay	1		
3	-	Screw	2		
4	4700904504	Screw M5 x 18	2		
5	4812115185	Bracket	1		
6	-	Screw	3		
7	4812115187	Switch, Windshield wiper, rear	1		
8	4700792505	Switch, Windshield washers	1		
9	4700791185	Fuse box	1		
10	4700901227	Fuse 10A Red	2		
11	4700901228	Fuse, 15A Blue	1		
12	4700791966	Head screw M4 x 12	2		

4812119364 Cab, cpl Comfort Emergency hammer, hook

Item	Part No.	Name	Qty	L	SN INFO
1	4700908505	Hook	2		
2	-	Screw	4		
3	4700908506	Emergency hammer hook	1		
4	-	Screw	2		
5	4700908507	Emergency hammer	1		
6	-	Pin	1		
7	4700903590	Decal emergency exit	1		

4812119364 Cab, cpl Comfort Cab, rear cover

Item	Part No.	Name	Qty	L	SN INFO
1	4812114573	Cover	1		
2	4812114564	Service cover	1		
3	4812114565	Bracket	1		
4	4700601001	Washer	2		
5	4700500004	Screw M5x12 8,8	2		
6	4812114566	Turn fastener	1		
7	4812114567	Speed nut	15		
8	4812161352	Screw	15		
9	4700395816	Plug socket 24V	1		
10	4812114574	Cover	1		
11	4812114575	Bracket	3		
12	4812161352	Screw	3		
13	4812114576	Cover	1		

4812119364 Cab, cpl Comfort Cab, front cover

Item	Part No.	Name	Qty	L	SN INFO
1	4812114570	Cover	1		
2	4812114571	Cover	1		
3	4812114572	Bracket	1		
4	4812161352	Screw	8		
5	4812114567	Speed nut	6		

4812119364 Cab, cpl Comfort Floor mat

Item	Part No.	Name	Qty	L	SN INFO
1	4812115197	Floor mat	1		
2	4812115198	Entrance plate	1		
3	4812161371	Screw	3		

4812119364 Cab, cpl Comfort Step light, front wiper switches

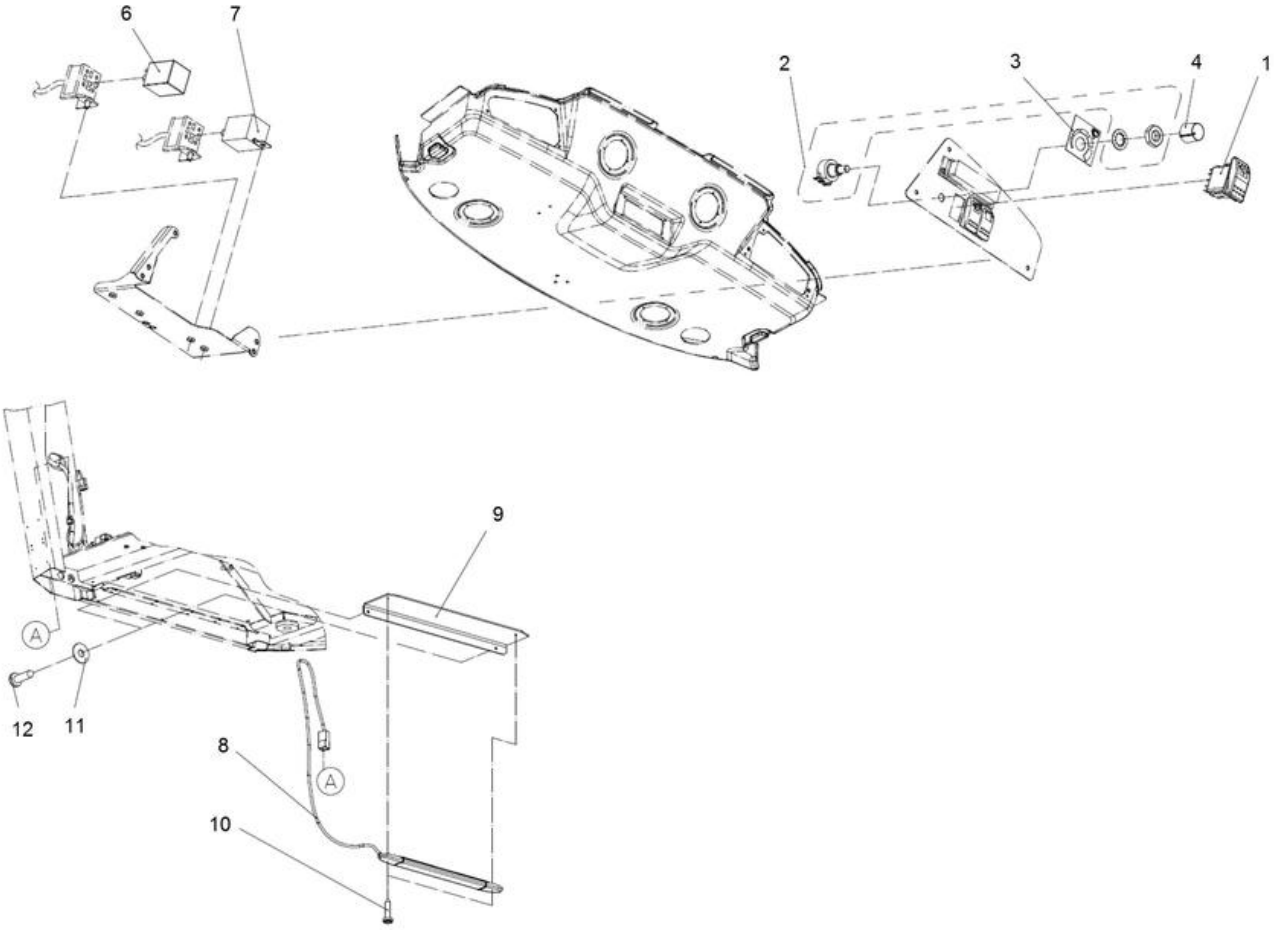

Item	Part No.	Name	Qty	L	SN INFO
1	4812115188	Switch, front wiper	1		
2	4812115189	Potentiometer	1		
3	-	Decal	1		
4	4812158859	Turning knob	1		
6	4812115190	Wiper Interval Relay	1		
7	4812115191	Time control unit	1		
8	4812115199	Step light	1		
9	4812115224	Bracket	1		
10	-	Screw	2		
11	-	Gasket	2		
12	-	Screw	2		

4812119364 Cab, cpl Comfort Air channel

Item	Part No.	Name	Qty	L	SN INFO
1	4812114577	Air channel	1		
2	4812161099	Seal list	2XL	A	
3	4812114578	Air channel	1		
4	-	Screw	4		
5	-	Screw	2		
6	4812114579	Air nozzle	2		
7	4812114580	Cover	1		
8	4812114581	Cover	1		
9	-	Screw	8		

Comments for Page: Air channel

(L)OCAL REMARKS

A | en_US | L=0.195m

4812119364 Cab, cpl Comfort Sun-blind, inner light

Item	Part No.	Name	Qty	L	SN INFO
1	4812114582	Sun-blind	1		
2	4812114583	Bracket	1		
3	4700904228	Washer 6,4x12x1,5	5		
4	4700500012	Hex. screw	2		
5	4812114567	Speed nut	3		
6	4700791171	Screw	3		
7	4812114584	Sun-blind	1		
8	4700904206	Screw, M6x16 mm	2		
9	4812114585	Inner light	1		
10	-	Lock nut	2		
11	-	Screw	2		

4812119365 Cab, cpl Basic 4812119365 Cab, cpl Basic

Item	Part No.	Name	Qty	L	SN INFO
1	-	Screens	1		
2	-	Windshield wiper	1		
3	-	Roof	1		
4	-	Hose kit heater	1		
5	-	Cab Interior	1		
6	-	Cab cable harness	1		
7	-	Cab, electrical equipment	1		
8	-	Emergency hammer, hook	1		
9	-	Cab, rear cover	1		
10	-	Cab, front cover	1		
11	4812114568	Floor mat	1		
12	-	Wiper switch, front	1		
14	-	Cab, basic kit	1		
15		Rops	1		

4812119365 Cab, cpl Basic Cab, rear cover

Item	Part No.	Name	Qty	L	SN INFO
1	4812114563	Rear cover	1		
2	4812114564	Service cover	1		
3	4812114565	Bracket	1		
4	4700601001	Washer	2		
5	4700500004	Screw M5x12 8,8	2		
6	4812114566	Turn fastener	1		
7	4812114567	Speed nut	8		
8	-	Screw	8		
9	-	Socket, 24V	1		

4812119365 Cab, cpl Basic Cab, front cover

Item	Part No.	Name	Qty	L	SN INFO
1	-	Front cover Left	1		
2	-	Front cover Right	1		
3	4812114572	Bracket	1		
4	-	Bracket	1		
5	4812114567	Speed nut	5		
6	-	Screw	9		
7	4700202028	Edge trim	2XL	A	

Comments for Page: Cab, front cover

(L)OCAL REMARKS

A | en_US | L=0.473m

4812119365 Cab, cpl Basic Wiper switch, front

Item	Part No.	Name	Qty	L	SN INFO
1	4812115192	Switch	1		
2	4700921723	Plug	1		

Drivers platform Car stereo module, option

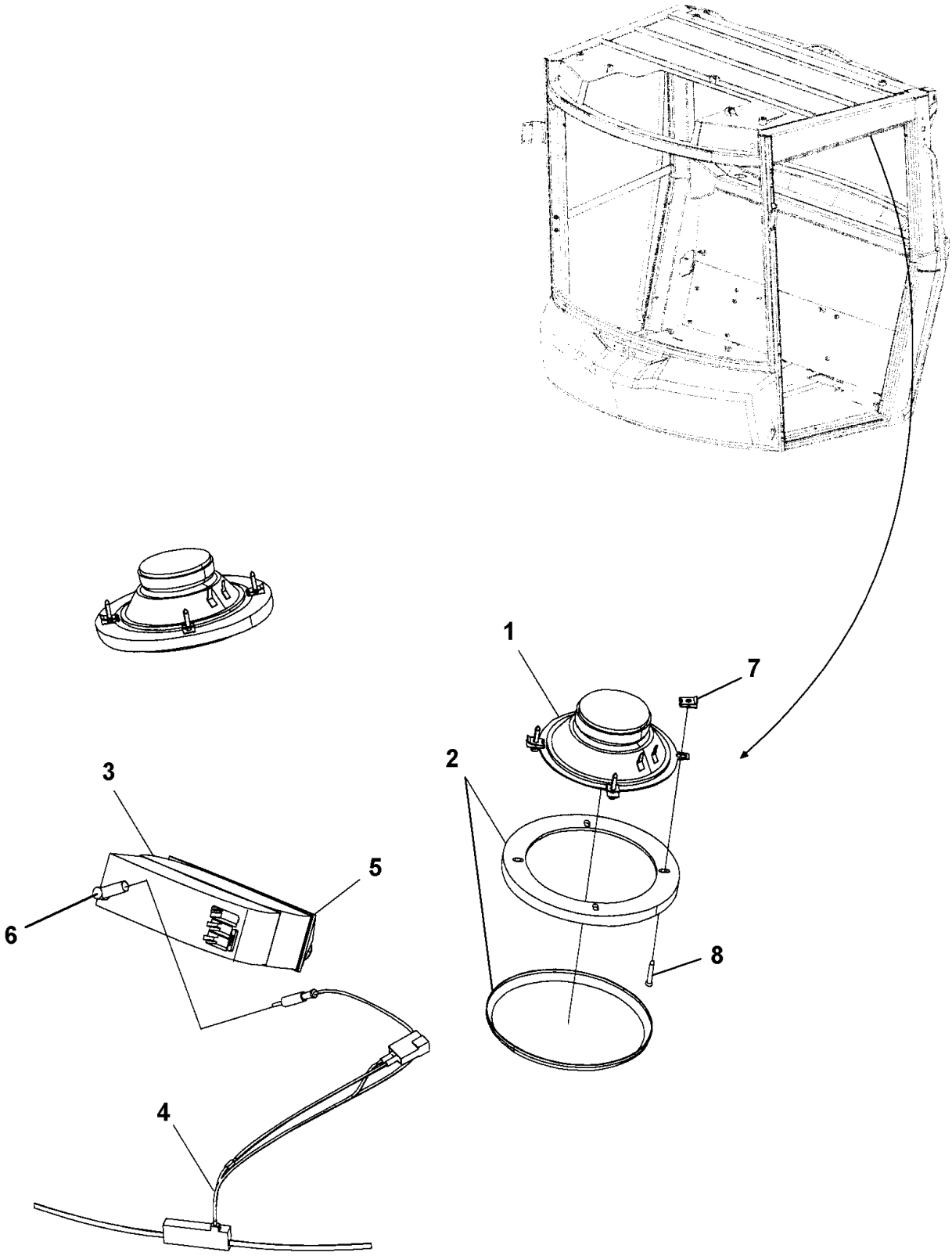

Item	Part No.	Name	Qty	L	SN INFO
1	4811000268	Loud speaker	2		
2	4811000269	Loud speaker cover	2		
3	4811000265	Car stereo	1		
4	4812114194	Antenna	1		
5	4812116986	Spacer frame	1		
6	4812119306	Antenna adapter	1		
7	4700791970	Speed nut	8		
8	4812119327	Tapping screw	8		

Drivers platform Rear view mirror

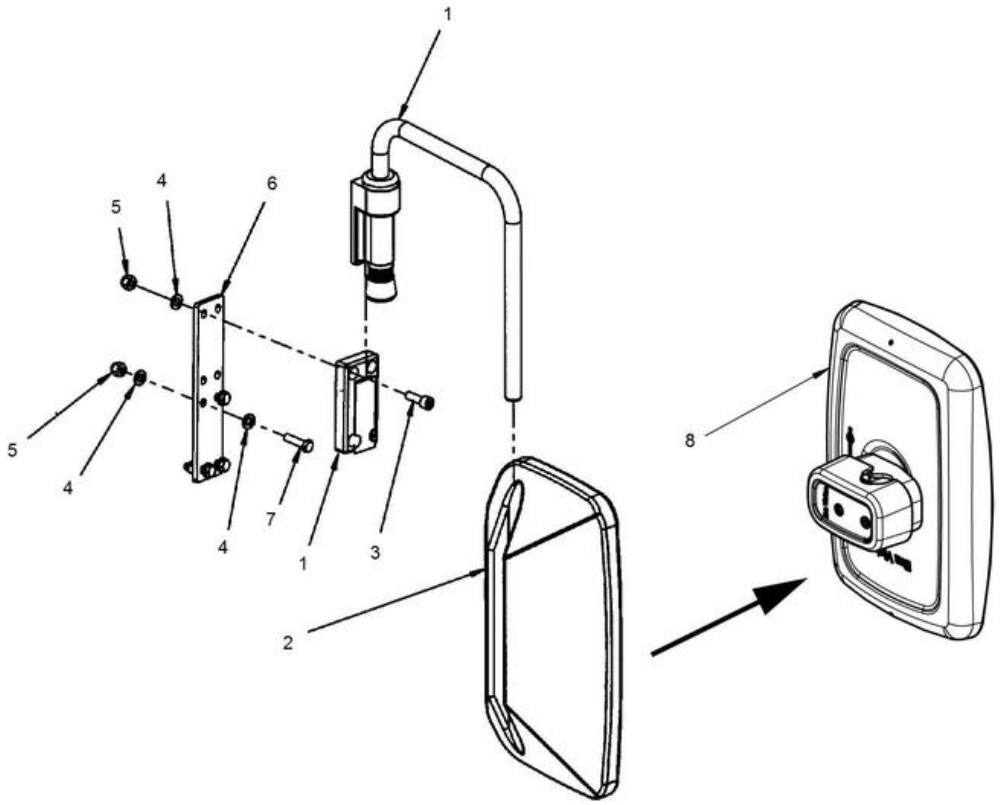

Item	Part No.	Name	Qty	L	SN INFO
1	4812110367	Bracket	1		
2	4700381943	Mirror	1		
2.1	4812161276	Mirror glass	1		
3	4700508019	Cylinder screw	4		
4	4700904229	Washer, 8.4x 6x1.5 mm 300HV	12		
5	4700586003	Lock nut M8	12		
6	4812117964	Bracket	1	A	
7	4700500022	Screw	4		
8	4812125407	Mirror	1		
8.1	-	Mirror glass	1		

Comments for Page: Rear view mirror

(L)OCAL REMARKS

A | en_US | Not used on all models.

Drivers platform Rear view mirror module

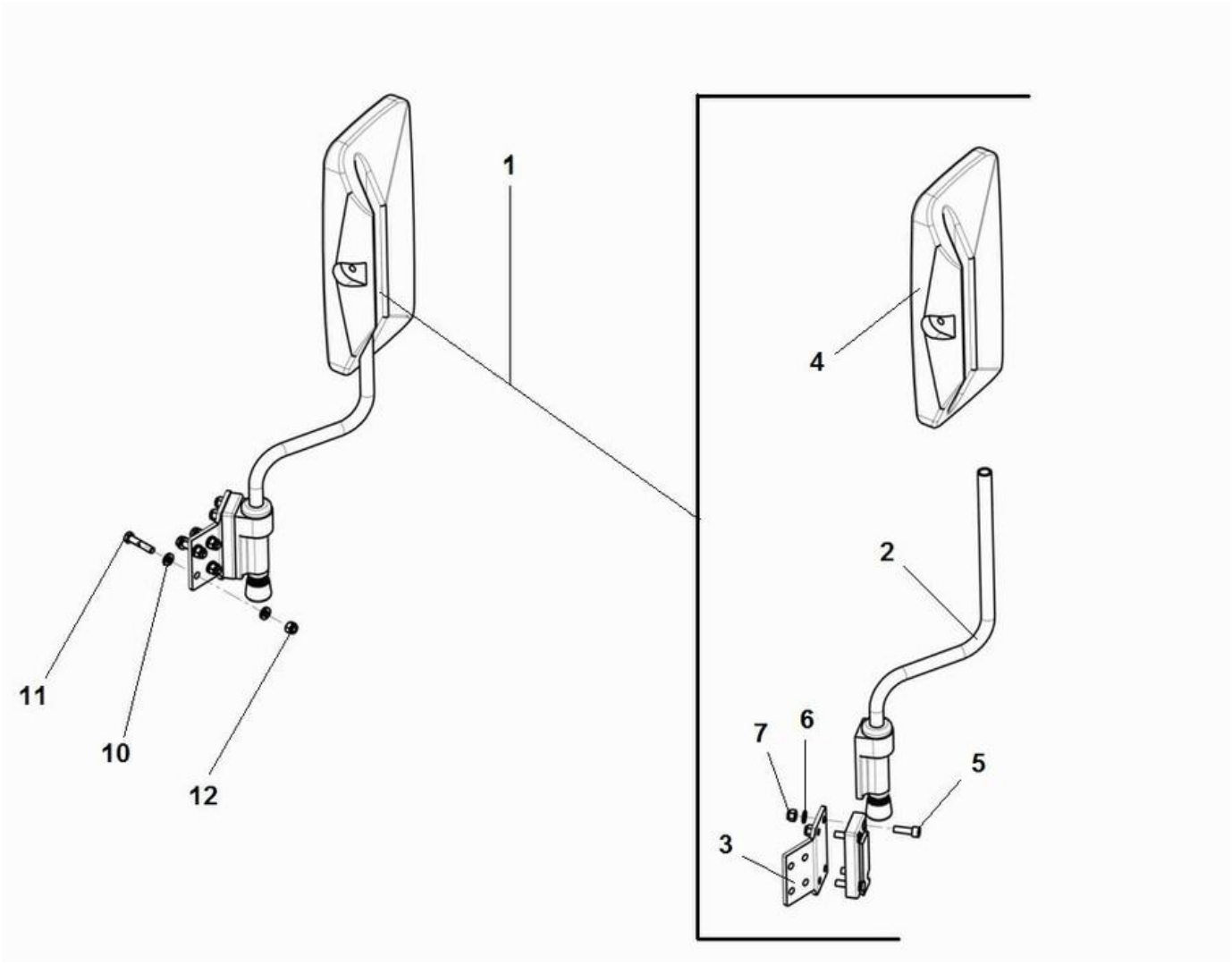

Item	Part No.	Name	Qty	L	SN INFO
1	4812110352	Mirror assy	1		
2	4700381944	Holder	1		
3	4700392316	Bracket	1		
4	4700381943	Mirror	1		
4	4812161276	Mirror glass	1		
5	4700508019	Cylinder screw	4		
6	4700904229	Washer, 8.4x 6x1.5 mm 300HV	4		
7	4700586003	Lock nut M8	4		
10	4700904556	Steel plain washer 8,4x16x3,0	8		
11	4700500024	Screw M8x45	4	A	
12	4700586003	Lock nut M8	4		
13	4700500025	Screw, M8x50 mm 8.8 A2K	4	B	
14	4700500067	Screw	4	C	

Comments for Page: Rear view mirror module

(L)OCAL REMARKS

A | en_US | Used on machines with Handrails.

B | en_US | Used on machines with Handrails and Canopy.

C | en_US | Used on mashines with Handrails, Canopy and additional Work lights.

Drivers platform Hose assy kit, heater

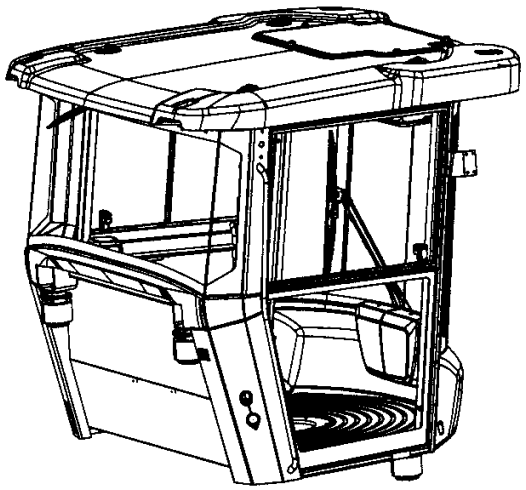

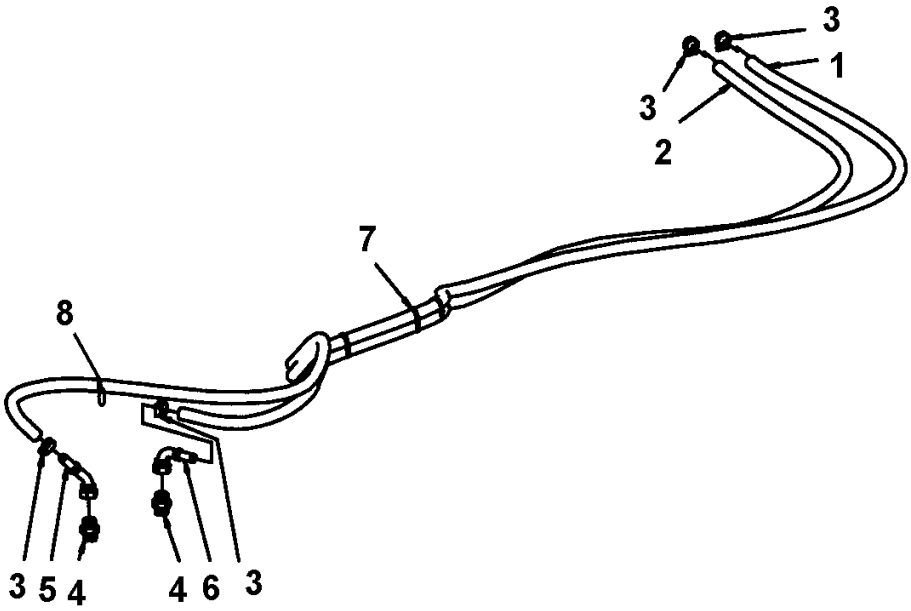

Item	Part No.	Name	Qty	L	SN INFO
1	4700205112	Coolant hose	1XL	A	
2	4700205112	Coolant hose	1XL	B	
3	4700313004	Hose clamp 19-29mm	4		
3	4700313003	Hose clamp	4		
4	4812115026	Straight connector orfs	2		
5	4812115011	Hose connection	1		
6	4812115019	Hose connection	1		
7	4700313041	Cable ties	N		
8	4812117248	Cable tie with holder	1		

Comments for Page: Hose assy kit, heater

(L)OCAL REMARKS

A | en_US | L=3.85m

B | en_US | L=3.25m

Drivers seat Drivers seat

Item	Part No.	Name	Qty	L	SN INFO
1	-	Seat frame structure	1		
2	-	Seat frame adapter module, rotating	1		
2	-	Seat frame adapter module, fixed	1		
3	-	Floor cassette module	1		
4	-	Seat, fabric suspensioned	1		
5	-	Seat, galon suspensioned	1		
6	-	Control module	1		
7	-	Forward reverse control module	1		
8	-	Display unit	1		
9	-	Seat belt 2"	1		
9	-	Seat belt 3"	1	A	
9	-	Seat belt 2" with reminder	1	A	
9	-	Seat belt 3" with reminder	1	A	
10	-	Reading light	1		
11	-	Control panel cover	1		

Comments for Page: Drivers seat

(L)OCAL REMARKS

A | en_US | Option.

Drivers seat Seat frame structure

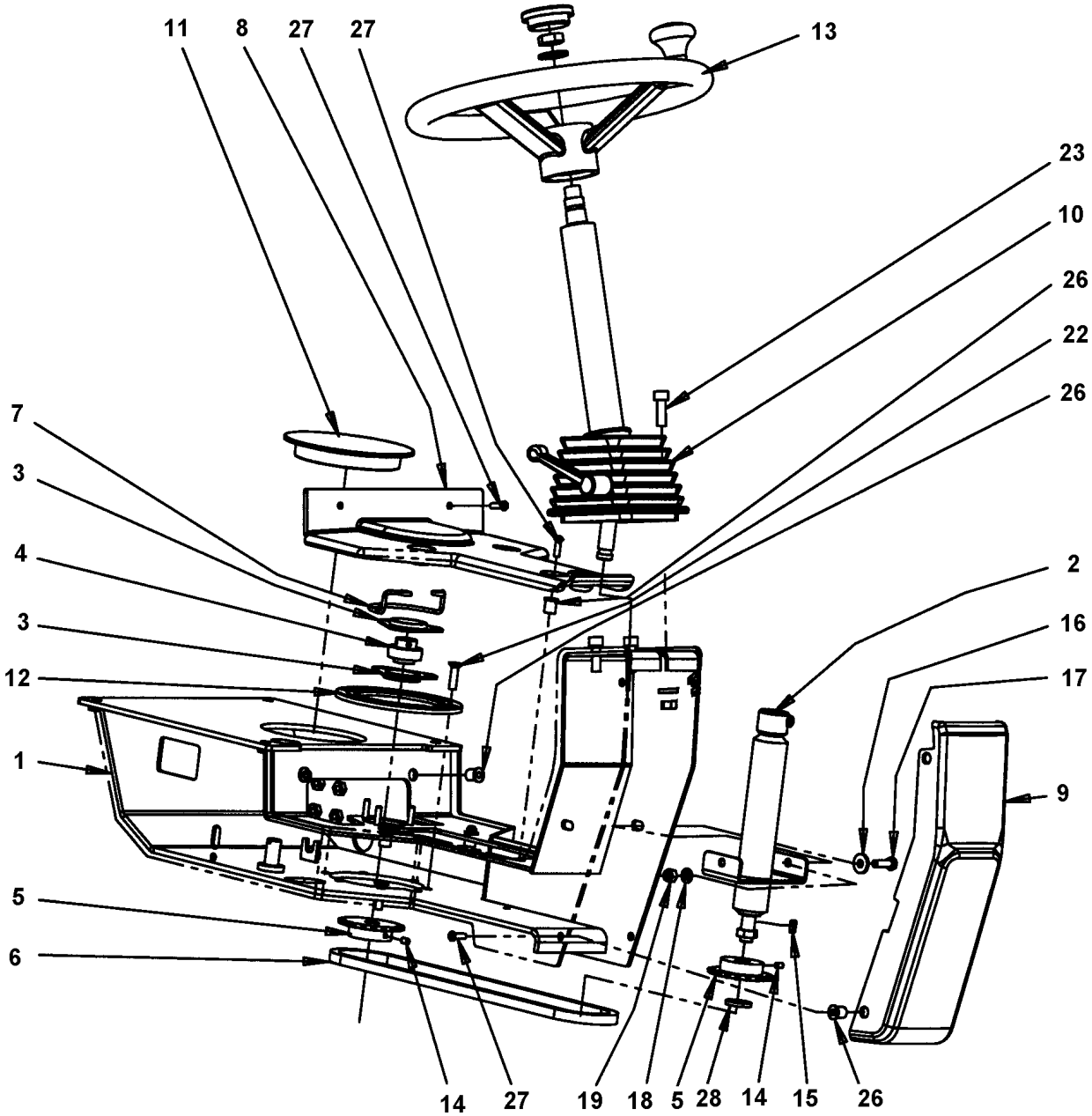

Item	Part No.	Name	Qty	L	SN INFO
1	4700395447	Seat frame	1		
2	4700359919	Shaft	1		
3	4700903917	Bearing outer	2		
4	4700903918	Bearing inner	1		
5	4700359916	Chain wheel	2		
6	4700379718	Chain and connecting link	1		
7	4700372672	Chain guard	1		
8	4700392839	Cover	1		
9	4700392840	Cover	1		
10	4700391163	Steering column	1		
11	4700359920	Plug	1		
12	4700372965	Lock ring	1		
13	4700372964	Steering wheel	1		
14	4700516040	Threaded pin	2		
15	4700350009	Flat key	1		
16	4700904640	Washer, 8.4x22x3 mm 300HV	2		
17	4700500021	Screw, M8x25 mm 8.8 A2K	2		
18	4700904229	Washer, 8.4x 6x1.5 mm 300HV	2		
19	4700586003	Lock nut M8	2		
22	4700902520	Screw	6		
23	4700508029	Cylinder screw	3		
26	4700792539	Rubber nut	10		
27	4700791524	Screw, M6 x 20 mm A2-70	10		
28	4700904214	Washer 15x30x4 300 HV	1		

Drivers seat 4700391163 Steering column

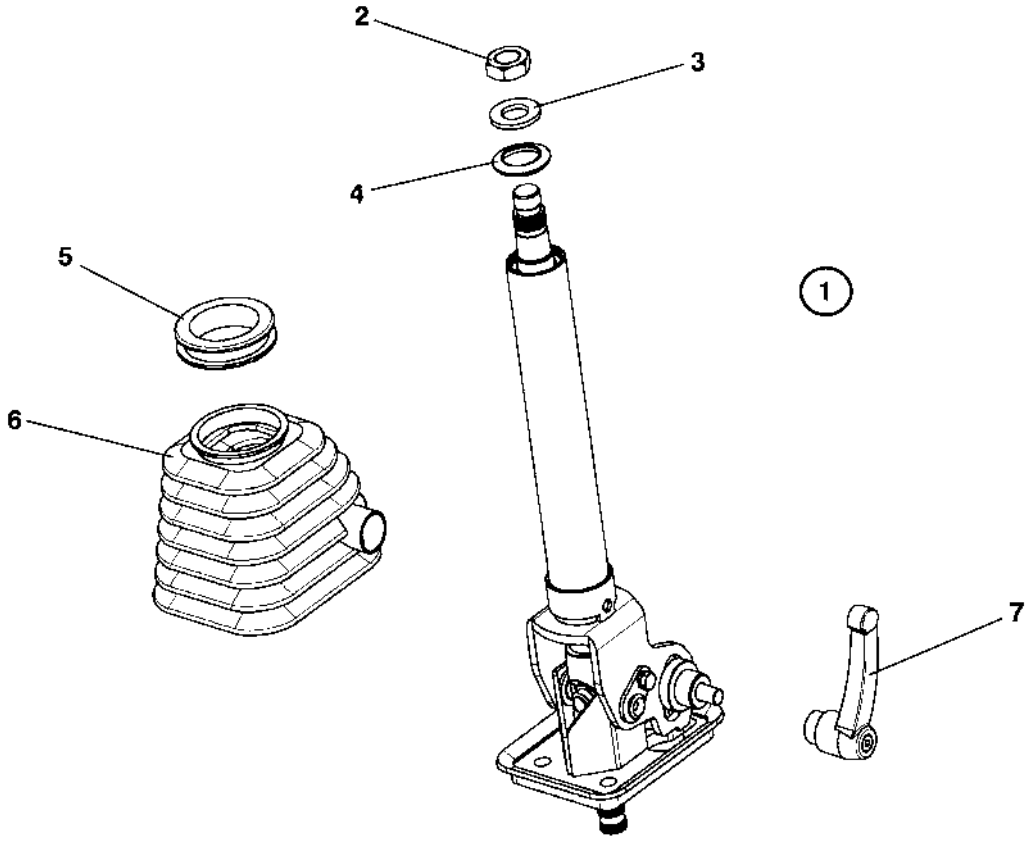

Item	Part No.	Name	Qty	L	SN INFO
1	4700391163	Steering column			
2	4700945632	Nut	1		
3	4700945633	Washer	1		
4	4700945634	Rubber cap	1		
5	4700945635	Bellows ring	1		
6	4700945636	Bellows	1		
7	4700945637	Locking handle	1		

Drivers seat Seat frame adapter module, rotating

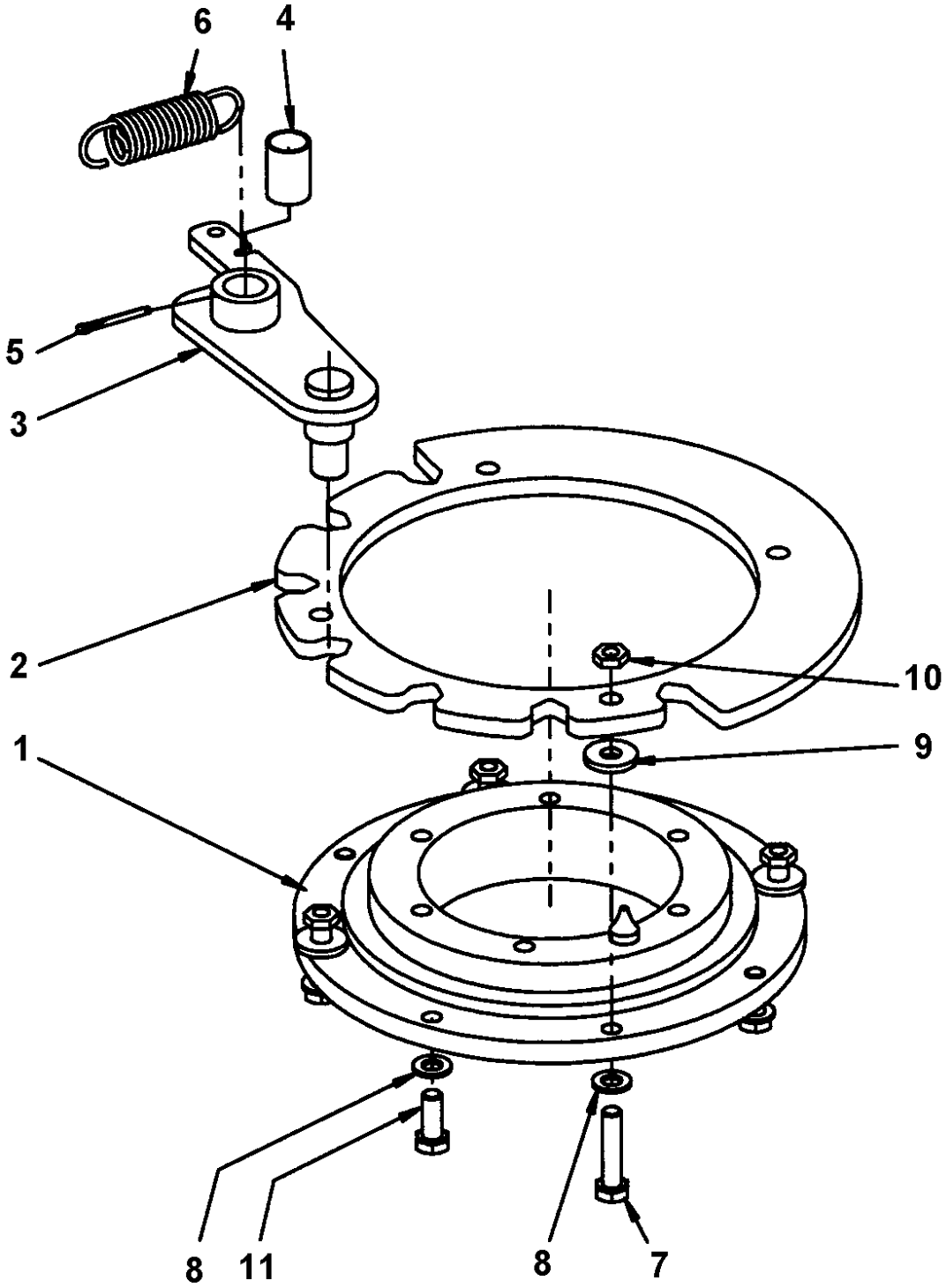

Item	Part No.	Name	Qty	L	SN INFO
1	4700359125	Ball bearing	1		
2	4700379728	Locking disc	1		
3	4812119788	Coupling link	1		
4	4700359819	Bushing	1		
5	4700630008	Pin	1		
6	4700359043	Spring	1		
7	4700792678	Screw	4		
8	4700904229	Washer, 8.4x 6x1.5 mm 300HV	8		
9	4700904640	Washer, 8.4x22x3 mm 300HV	4		
10	4700573008	Nut M8	4		
11	4700947679	Hexagon head screw	4		

Drivers seat Seat frame adapter module, fixed

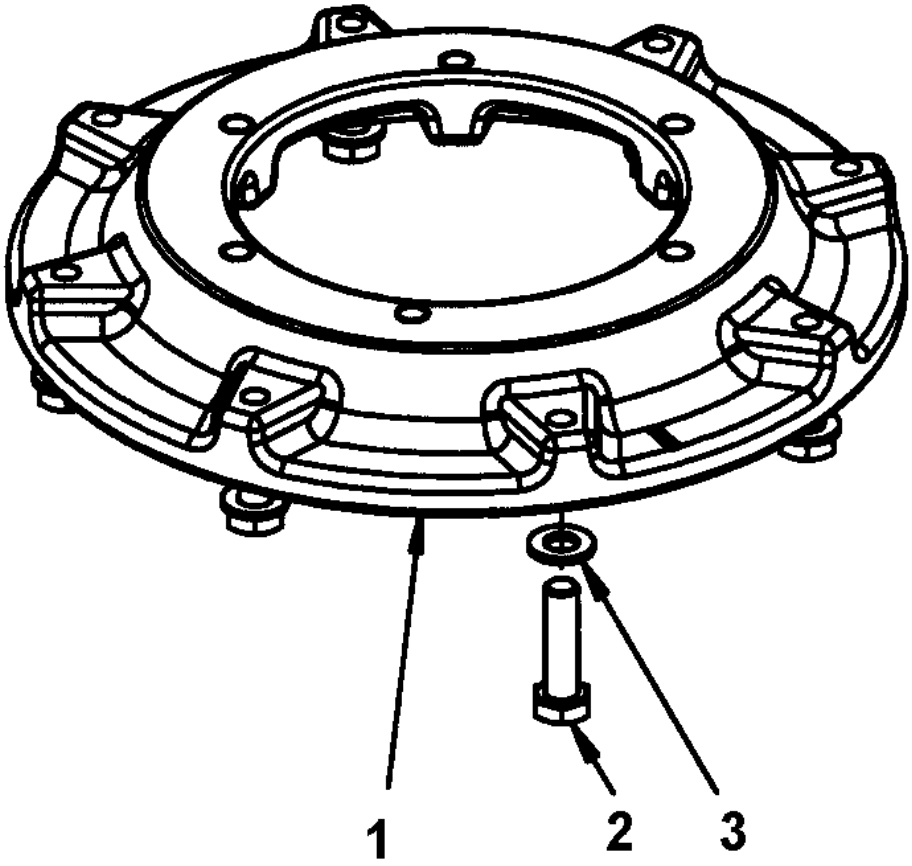

Item	Part No.	Name	Qty	L	SN INFO
1	4812110891	Spacer	1		
2	4700500022	Screw	8		
3	4700904229	Washer, 8.4x 6x1.5 mm 300HV	8		

Drivers seat Floor cassette module

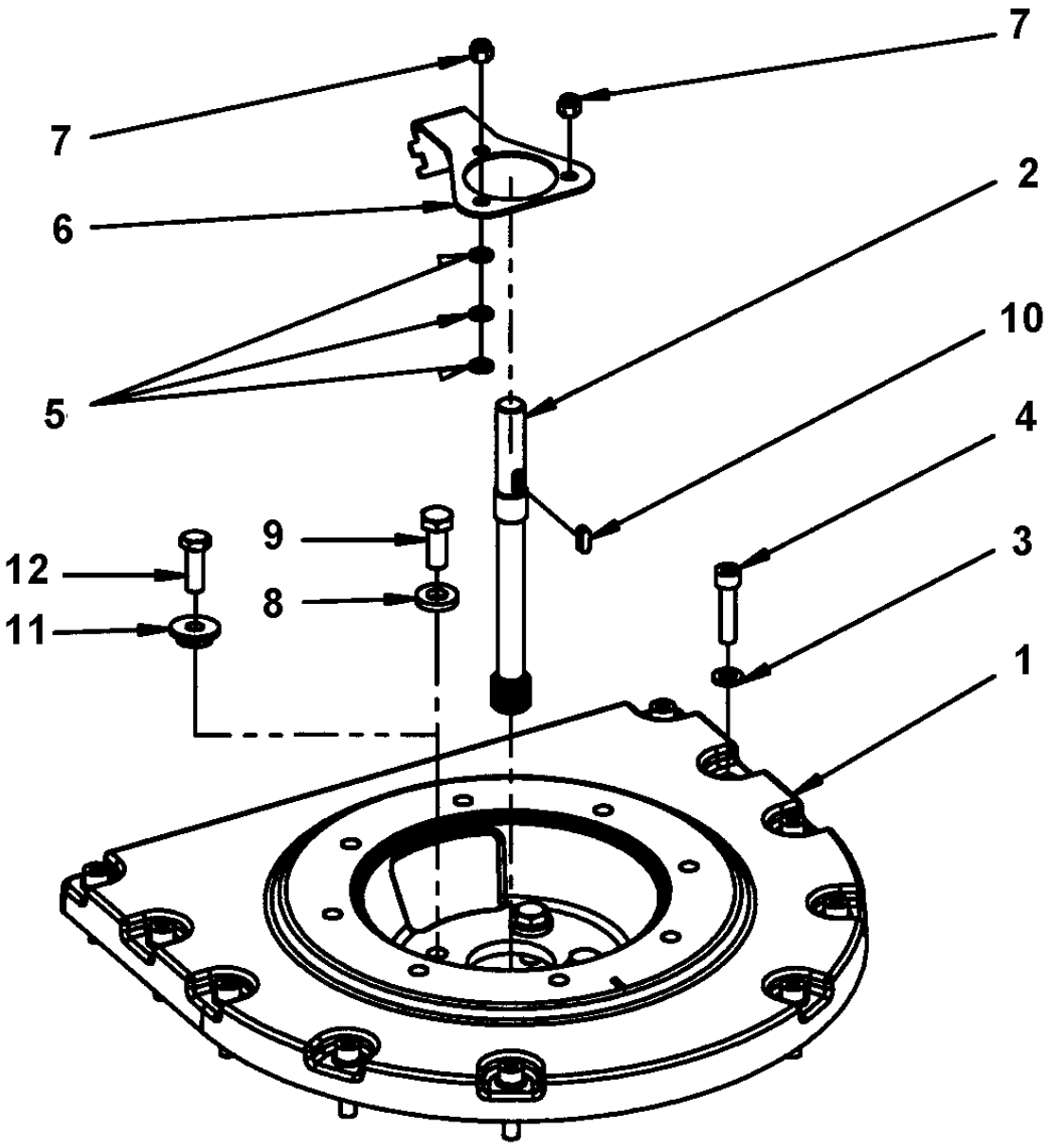

Item	Part No.	Name	Qty	L	SN INFO
1	4812111294	Adapter	1		
2	4812110885	Splined shaft	1		
3	4700904229	Washer, 8.4x 6x1.5 mm 300HV	10		
4	4700508027	Screw	10		
5	4700904228	Washer 6,4x12x1,5	3		
6	4812114172	Bracket	1		
7	4700586002	Lock nut M6 -8	3		
8	4700904557	Washer, 10.5x22x4 mm 300 HV	4		
9	4700500028	Hex Head screw	4		
10	4700350009	Flat key	1		
11	4812113478	Washer	4		
12	4700500029	Steel plain washer	4		

Drivers seat Seat comfort, fabric suspensioned

Item	Part No.	Name	Qty	L	SN INFO
1	4812116357	Seat, fabric suspensioned	1	A	
1	4700937892	Seat switch	1		
1	4700937620	Arm rest, right	1		
1	4812158367	Arm rest wide, right	1		
1	4700937621	Arm rest, left	1		
2	4812119295	Control bracket	1		
3	4700904230	Steel plain washer	2		
4	4700500028	Hex Head screw	1		
5	4700792527	Screw	3		
8	4700508092	Screw	4		

Comments for Page: Seat comfort, fabric suspensioned

(L)OCAL REMARKS

A | en_US | Without seat belt.

Drivers seat Seat, galon suspensioned

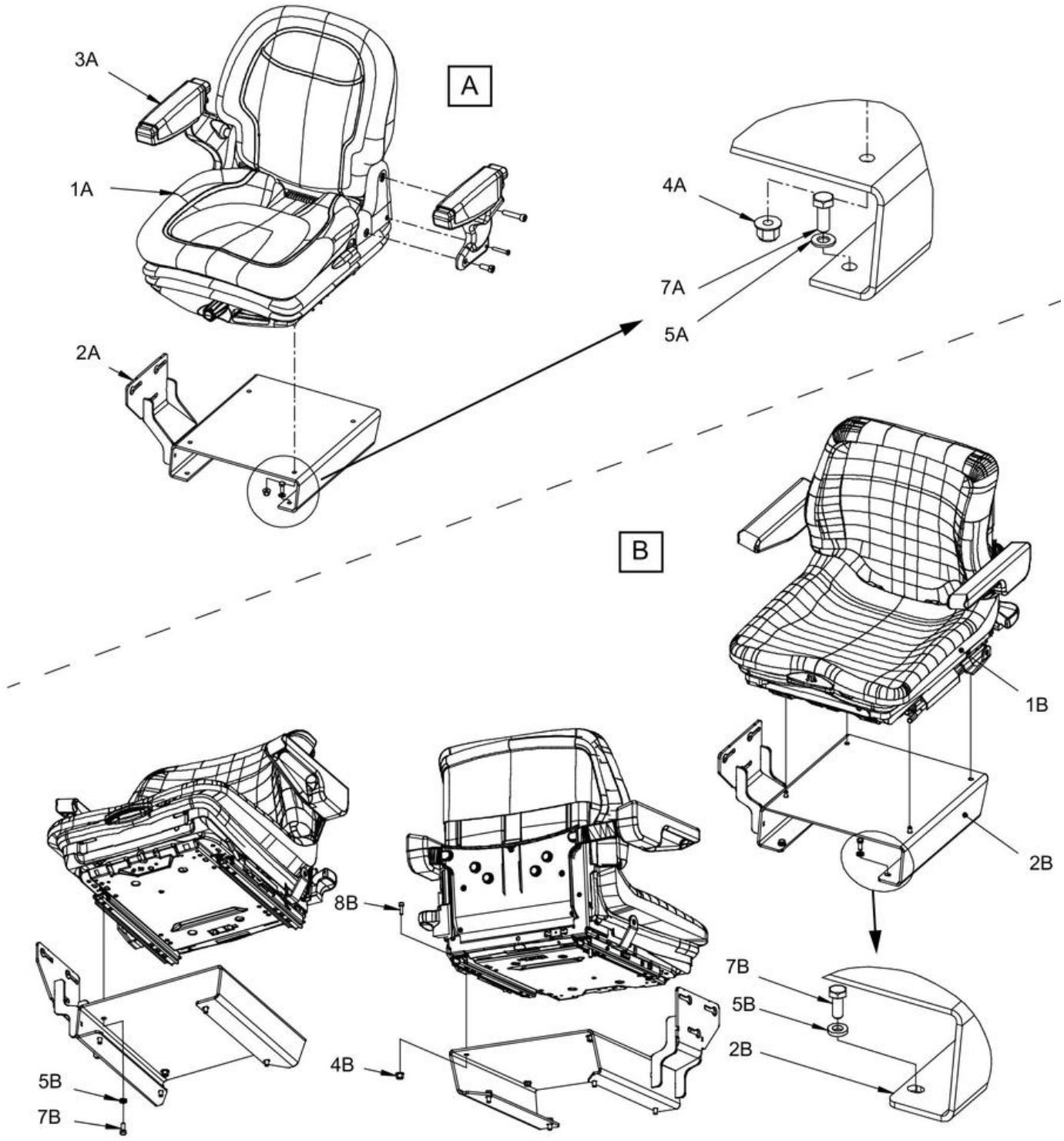

Item	Part No.	Name	Qty	L	SN INFO
1A	4700377518	Seat, galon suspensioned	1		
-	4700945622	Seat switch	1		
-	4700945660	Seat cushion	1		
-	4700945661	Adjuster kit, slide	1	A	
2A	4700390561	Seat frame	1		
3A	4700390963	Arm rest kit	1		
4A	4700902286	Lock nut, M8x1.25 mm A2K	4		
5A	4700904229	Washer, 8.4x 6x1.5 mm 300HV	4		
7A	4700500053	Screw, M8x20 mm 8.8 A2K	4		
1B	4700370234	Seat, galon suspensioned	1		
-	4700909535	Sliding rail with handle	1		
-	4700909536	Sliding rail	1		
-	4700936283	Seat switch	1		
-	4700372696	Arm rest, left	1		
-	4700372697	Arm rest, right	1		
2B	4812126698	Seat frame	1		
4B	4700902286	Lock nut, M8x1.25 mm A2K	2		
5B	4700904556	Steel plain washer 8,4x16x3,0	6		
7B	4700500053	Screw, M8x20 mm 8.8 A2K	6		
8B	4700508025	Screw, M6x20 mm 8.8 A2K	2		

Comments for Page: Seat, galon suspensioned

(L)OCAL REMARKS

A | en_US | Left & right sliding rail

Seat belts Seat belt 2"

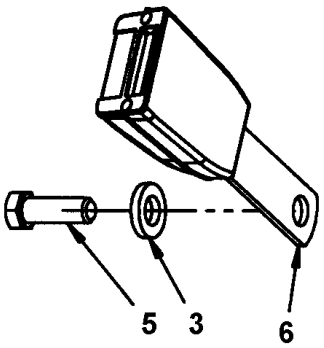

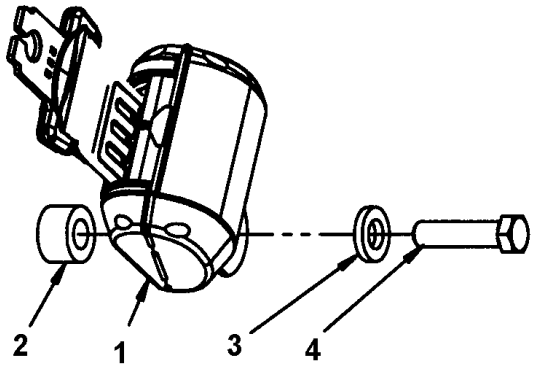

Item	Part No.	Name	Qty	L	SN INFO
1	4812117922	Seat belt 2"	1		
2	4700791572	Spacer washer	1		
3	4700904703	Plain washer 13x24x4 mm	4		
4	4700792527	Screw	1	A	
5	4700928347	Hexagon screw	2	A	
6	4812117924	Buckle	1		

Comments for Page: Seat belt 2"

(L)OCAL REMARKS

A | en_US | Used with seat 4700377518.

Seat belts Seat belt 3"

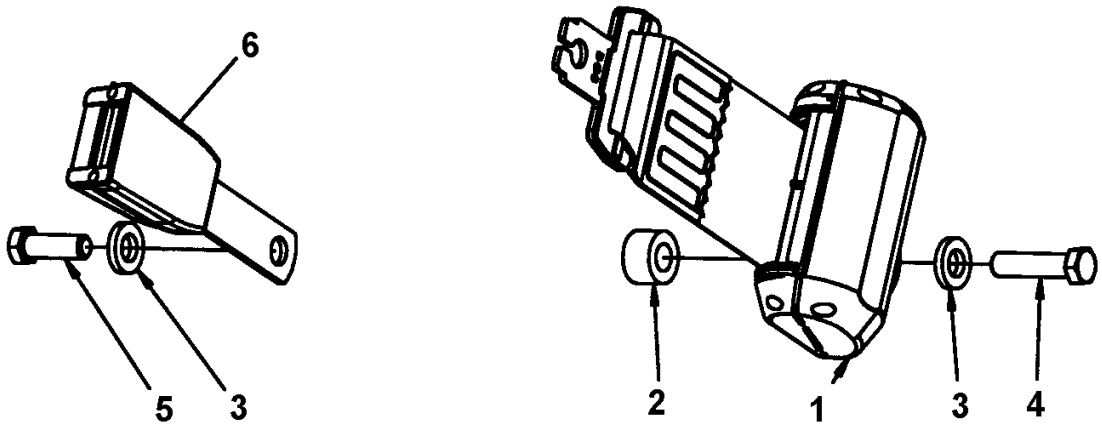

Item	Part No.	Name	Qty	L	SN INFO
1	4812118816	Seat belt 3"	1		
2	4700791572	Spacer washer	1		
3	4700904703	Plain washer 13x24x4 mm	4		
4	4700792527	Screw	1		
5	4700928347	Hexagon screw	2		
6	4812117924	Buckle	1		

Seat belts Seat belt 2" with reminder

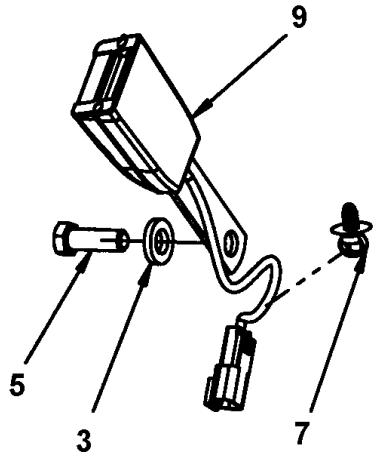

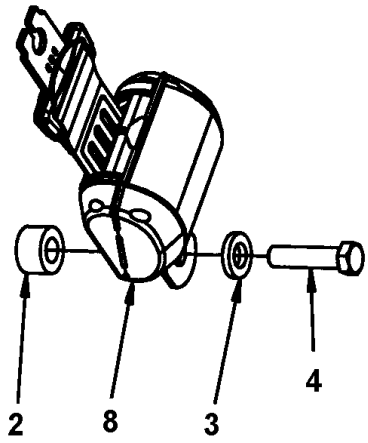

Item	Part No.	Name	Qty	L	SN INFO
2	4700791572	Spacer washer	1		
3	4700904703	Plain washer 13x24x4 mm	4		
4	4700792527	Screw	1		
5	4700928347	Hexagon screw	2		
7	4700792441	Cable tie with holder	1		
8	4812117922	Seat belt 2"	1		
9	4812117925	Buckle with reminder	1		

Seat belts Seat belt 3" with reminder

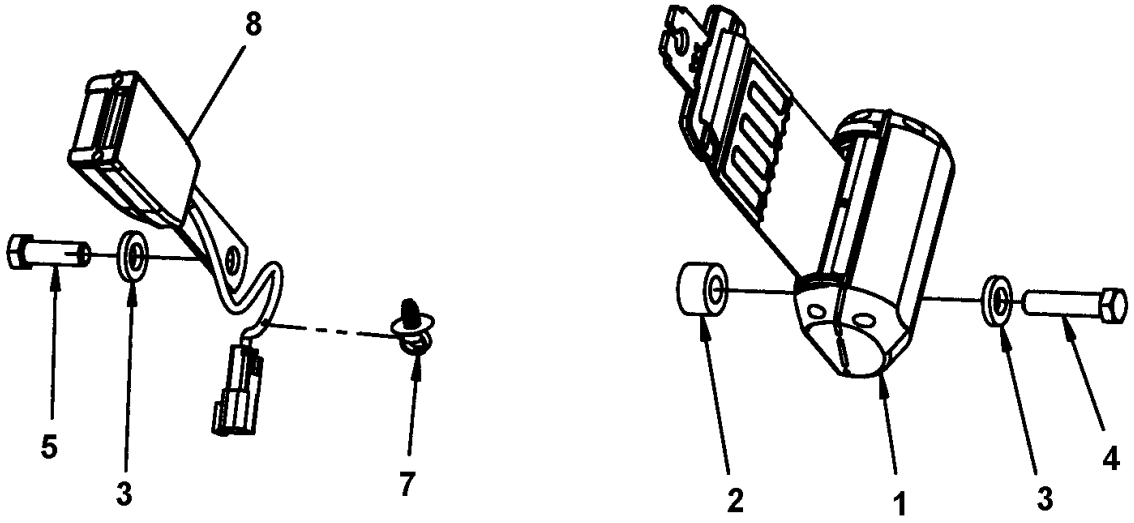

Item	Part No.	Name	Qty	L	SN INFO
1	4812118816	Seat belt 3"	1		
2	4700791572	Spacer washer	1		
3	4700904703	Plain washer 13x24x4 mm	4		
4	4700792527	Screw	1		
5	4700928347	Hexagon screw	2		
7	4700792441	Cable tie with holder	1		
8	4812117925	Buckle with reminder	1		

Drivers seat Control module

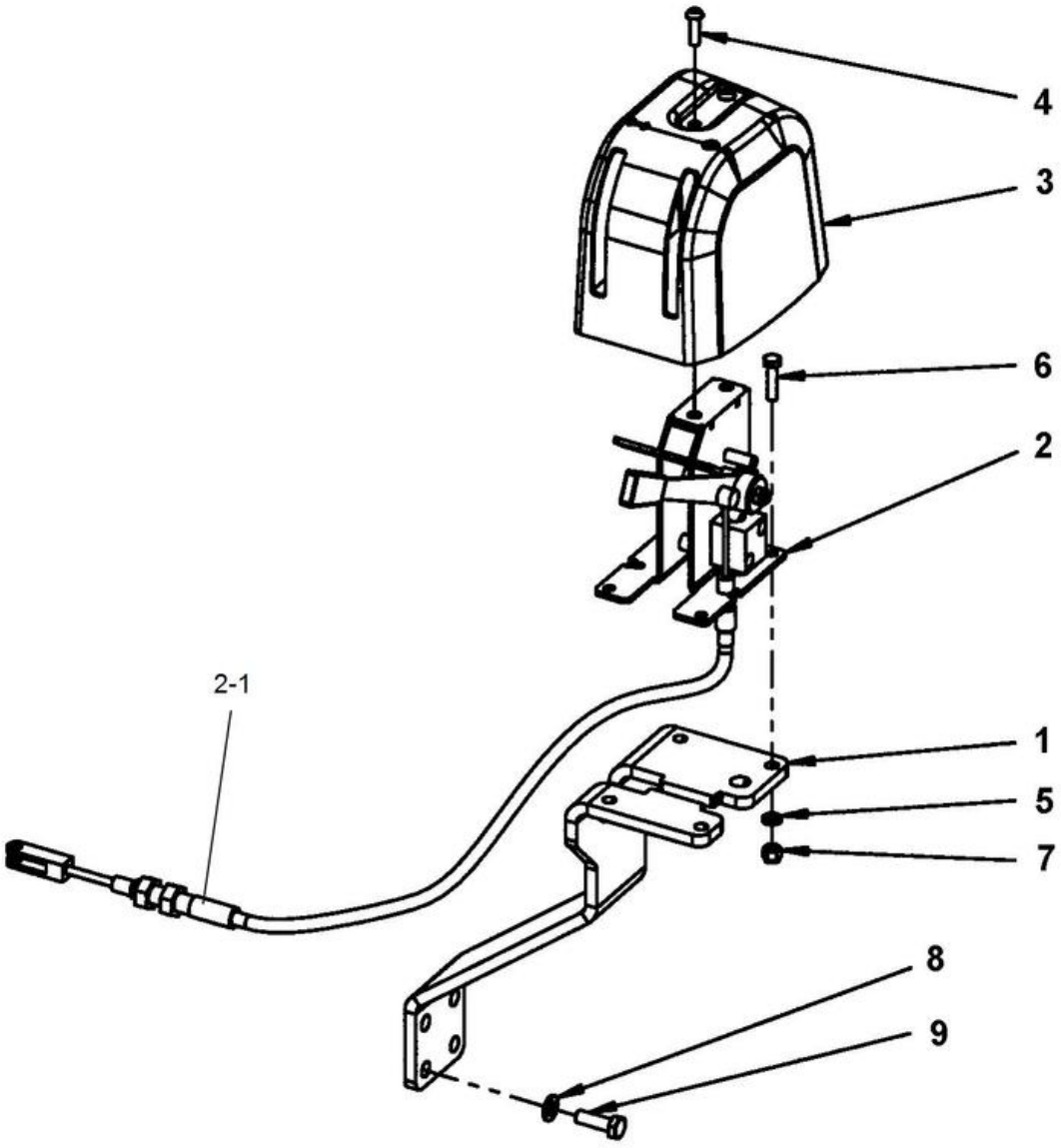

Item	Part No.	Name	Qty	L	SN INFO
1	4812118312	Bracket	1		
2	4812111216	Control, cpl	1		
2-1	4812121331	Cable	1		
3	4700392965	Control cover	1		
4	4700791524	Screw, M6 x 20 mm A2-70	2		
5	4700904228	Washer 6,4x12x1,5	4		
6	4700500075	Screw, M6-1,0x25 mm 8.8	4		
7	4700586002	Lock nut M6 -8	4		
8	4700904229	Washer, 8.4x 6x1.5 mm 300HV	4		
9	4700500021	Screw, M8x25 mm 8.8 A2K	4		

Drivers seat Forward reverse control module

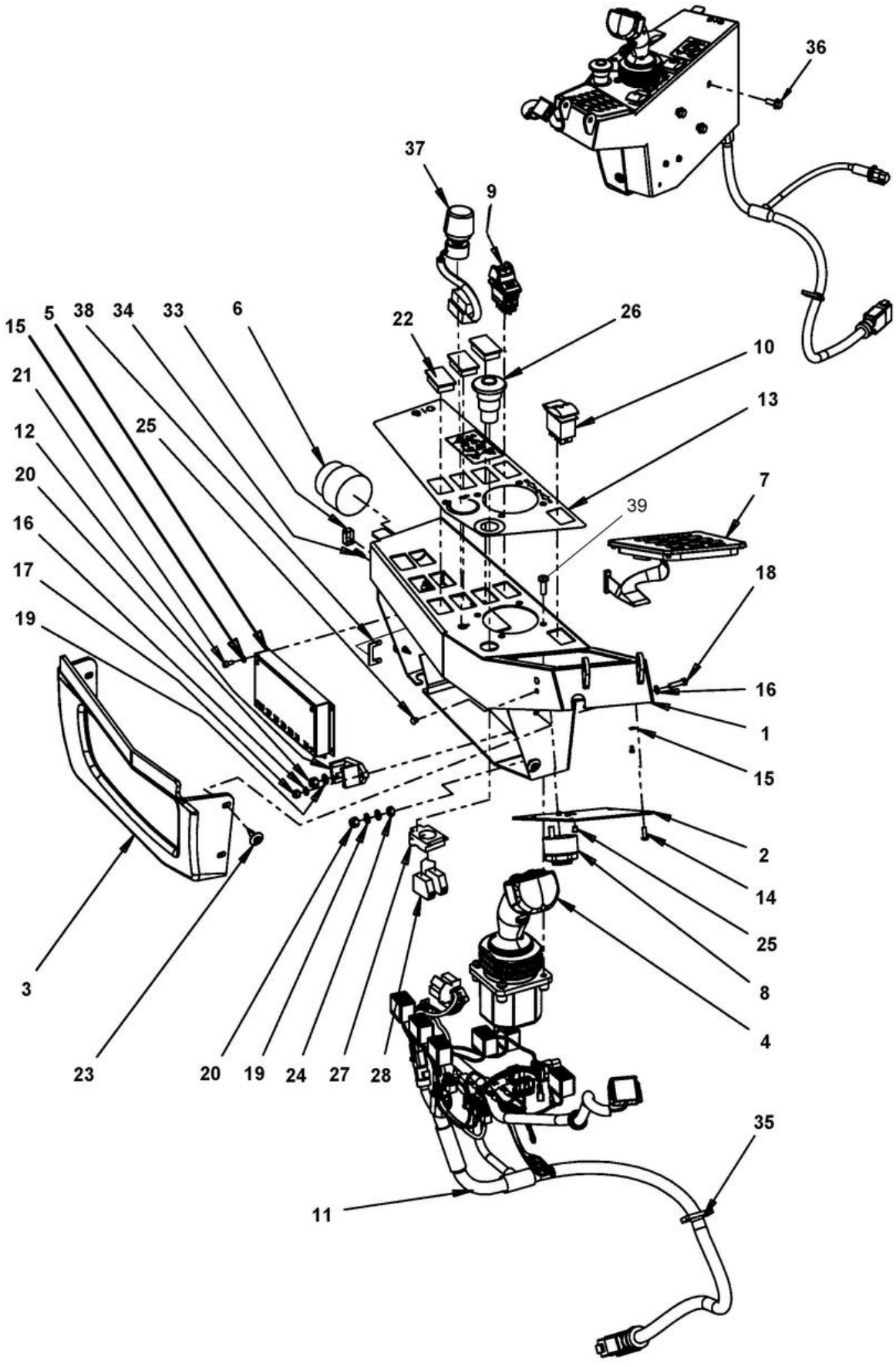

Item	Part No.	Name	Qty	L	SN INFO
1	4812110886	Control box	1		
2	4700391396	Cover	1		
3	4700396662	Cover	1		
4	4700391420	Control handle, 4 switches	1		To A019243, excl. 18998, 19157, 19159, 19241
4	4812126248	Control handle, 4 switches	1		From A019244, incl. 18998, 19157, 19159, 19241
5	4812113875	Control unit, I/O	1		
6	4812110901	Ignition switch	1		
6	4700940451	Ignition key	1		
7	4812114803	Membrane switch panel	1		
8	4700385599	Buzzer	1		
9	4812118697	Switch, parking brake	1		
10	4700792414	Switch, RPM	1		
10	4812117490	Switch, green ECO	1		
11	4812118754	Cable harness	1		
12	4700392930	Junction box	1		
13	4812111780	Decal	1		
14	4812119227	Thread rolling screw	4		
15	4700904698	Plain washer	8		
16	4700904281	Washer, 5,3x10x1 300HV	4		
17	4700586001	Lock nut	2		
18	4700500060	Screw M5-0,8x20 8.8	2		
19	4700904228	Washer 6,4x12x1,5	3		
20	4700586002	Lock nut M6 -8	2		
21	4700508017	Cylinder screw	4		
22	4700791588	Panel plug	3		
23	4700395785	Expansion rivet	4		
24	4700570004	Hexagon nut M6	1		
25	4700902804	Plug	5		
26	4700791739	Emergency stop	1		
27	4700791733	Fixing collar	1		
28	4700791723	Connector	2		
33	4812114214	Cover	1		
34	4812114213	Lock screw	2		
35	4700313041	Cable ties	N		
36	4700500505	Screw, M8x20 mm 8.8 A2K	3		
37	4700388737	Potentiometer	1		
37	4700939826	Knob	1		

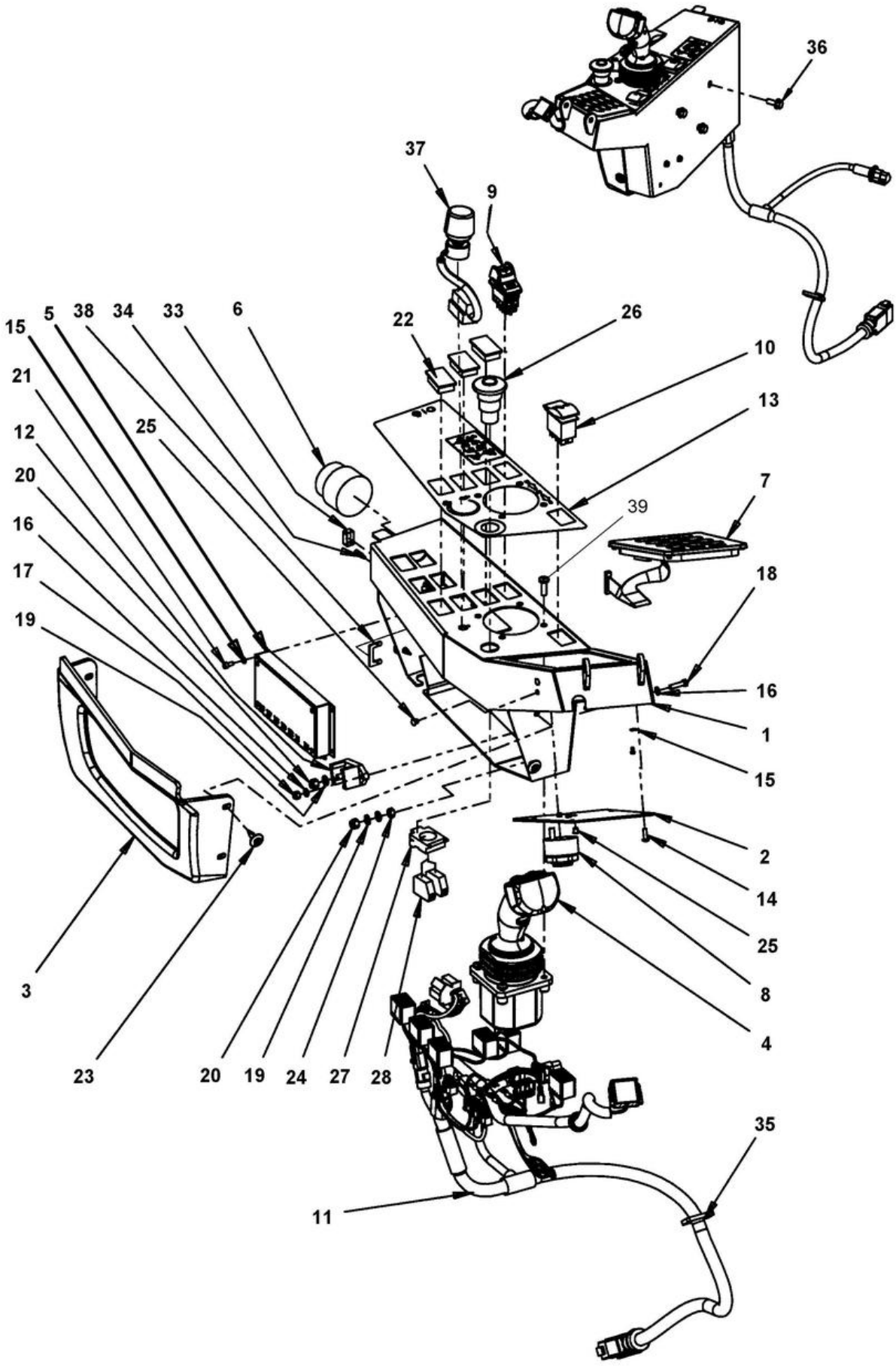
36
37
9
15
5
38
34
33
6
22
26
21
10
12
25
13
20
7
39
16
17
18
19
16
1
15
2
14
25
8
4
3
23
20
19
24
27
28
35
11

Item	Part No.	Name	Qty	L	SN INFO
38	4812119317	Holder	1		
39	4700904650	Button head socket screw, M6x12	4		

Drivers seat Display unit

Item	Part No.	Name	Qty	L	SN INFO
1	4700392717	Display holder	1		
2	4812113786	Display unit	1		
3	4700392719	Cover	1		
4	4700393094	Decal	1		
5	4700904228	Washer 6,4x12x1,5	4		
6	4700586002	Lock nut M6 -8	4		
11	4700903662	Washer	2		
12	4700606004	Plastic washer	2		
13	4700500115	Screw	1		
14	4700586003	Lock nut M8	1		

Drivers seat Reading light

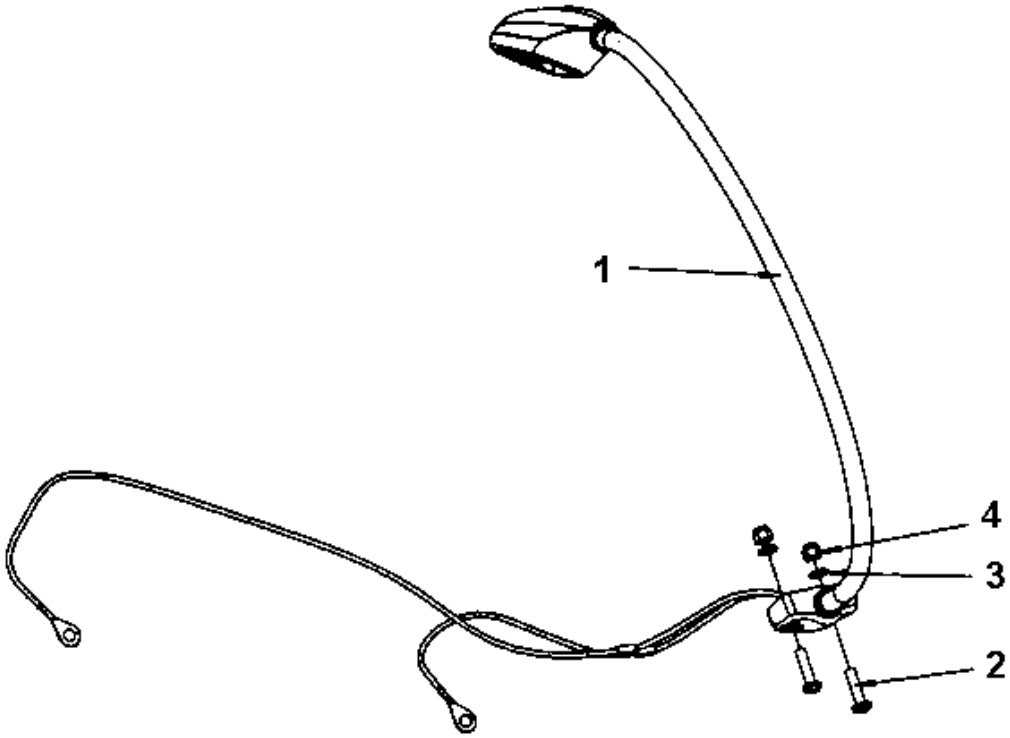

Item	Part No.	Name	Qty	L	SN INFO
1	4700397604	Reading lamp	1		
2	4700791421	Machine screw	2		
3	4700904281	Washer, 5,3x10x1 300HV	2		
4	4700586001	Lock nut	2		

Drivers seat Control panel cover

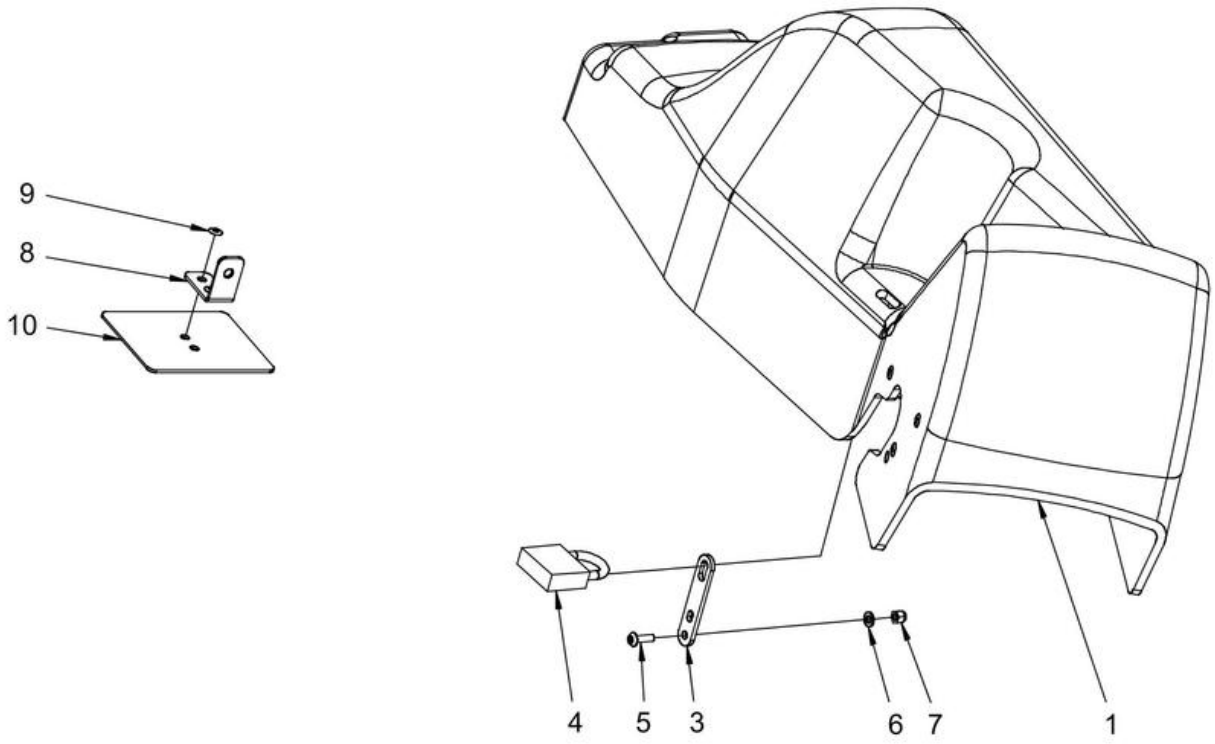

Item	Part No.	Name	Qty	L	SN INFO
1	4812126260	Instrument panel cover	1		
3	4700387545	Latch	1		
4	4700358881	Pad lock	1		
5	4700904653	Screw M5x16 A2-70	2		
6	4700904281	Washer, 5,3x10x1 300HV	4		
7	4700586001	Lock nut	2		
8	4700396670	Bracket	1		
9	4700904619	Blind rivet	2		
10	4812126261	Support plate	1		

Decals Decals

Item	Part No.	Name	Qty	L	SN INFO
1		Decal "COMPACTING ROCKS" Right	1		
Comments for Part Num. 4812120100 No longer available, update the machine on both sides with new model codes in Black. For part number see Parts list. If yellow colour is needed, available spray has p/n 4812007591 Kits with plain Dynapac decals are also available, see separate page in Parts book.					
1		Decal "COMPACTING ROCKS" Left	1		
Comments for Part Num. 4812120101 No longer available, update the machine on both sides with new model codes in Black. For part number see Parts list. If yellow colour is needed, available spray has p/n 4812007591 Kits with plain Dynapac decals are also available, see separate page in Parts book.					
2	4700588176	Decal "LIFT POINT"	1		
3	4700382751	Decal "SECURING POINT/TIE DOWN"	2		
4	4700908229	Safety decal	1		
5	4700904870	Lifting data plate	1		
5	4700624005	Blind rivet 3,2x6,1	4		
6	4700903422	Safety decal "CRUSH AREA"	2		
7	4700903459	Decal "SAFETY"	1		
8	4700904895	Safety decal "Brake release"	1		
9	4700904870	Lifting data plate	1		
10	4700908229	Safety decal	1		
11	4700382751	Decal "SECURING POINT/TIE DOWN"	2		
12	4700588176	Decal "LIFT POINT"	1		
13	4700904835	Decal "BATTERY POWER"	1		
14	4700272373	Decal, hydraulic oil level	1		
15	4700390900	Decal "TYRE PRESSURE" 110kPA/16psi	2	A, B	
15	4700355983	Decal "TYRE PRESSURE" 200kPa/29psi	2	C	
16	4700388449	Decal "ENGINE COOLANT FILL"	1		
17	4812120443	Decal "MODEL CODE" CA5000. Black	2		
17	4812120444	Decal "MODEL CODE" CA5500, Black	2		
17	4812120116	Decal "MODEL CODE" CA6000, Black	2		
17	4812120445	Decal "MODEL CODE" CA6500, Black	2		
18	4700903985	Decal "SAFETY	4		
19	4700272372	Decal "HYDRAULIC OIL"	1		

Item	Part No.	Name	Qty	L	SN INFO
19	4700792772	Decal "BIO HYDRAULIC OIL" PANOLIN	1		
20	4700991658	Decal "FUEL"	1		
21	4700903425	Safety decal "READ SAFETY INSTRUCTIONS"	1		
23	-	Product identification plate	1		
24	4700791273	Decal "Sound power level" 103 dB	1		
28	4700393959	Decal "Battery voltage 24V"	1		
29	4700624005	Blind rivet 3,2x6,1	4		
31	4700904390	Decal "Risk location"	2		
32	4700904389	Decal "Risk location"	1		
33	4700904391	Decal "Risk location"	1		
34	4700904388	Decal "Risk location"	2		

Comments for Page: Decals

(L)OCAL REMARKS

A | en_US | All weather wheel.

B | en_US | Tractor wheel.

C | en_US | Premium wheel.

Decals Decals

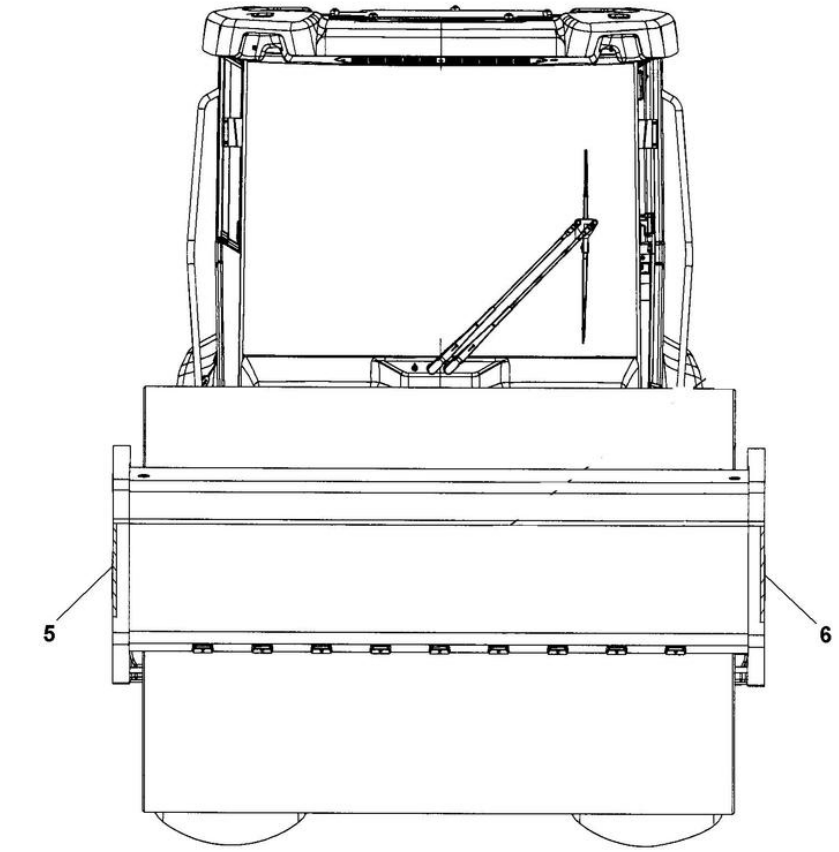

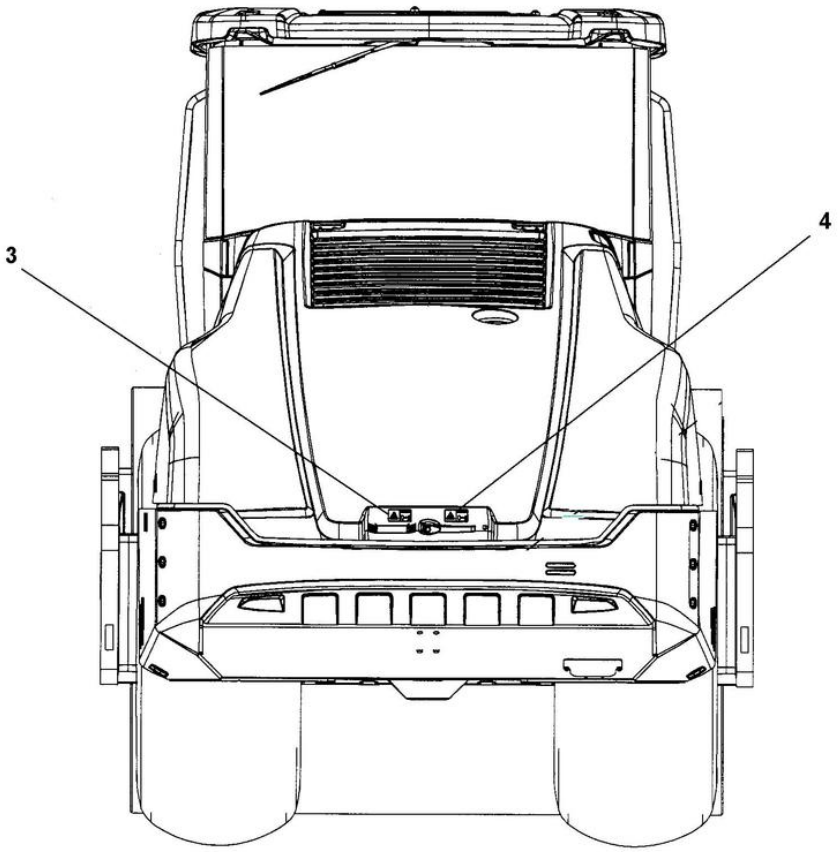

Item	Part No.	Name	Qty	L	SN INFO
3	4700903423	Safety label, Rotating engine components	1		
4	4700903424	Safety label, hot surfaces	1		
5	4700904389	Decal "Risk location"	1		
6	4700904391	Decal "Risk location"	1		

Decals Plain Dynapac decals, kit

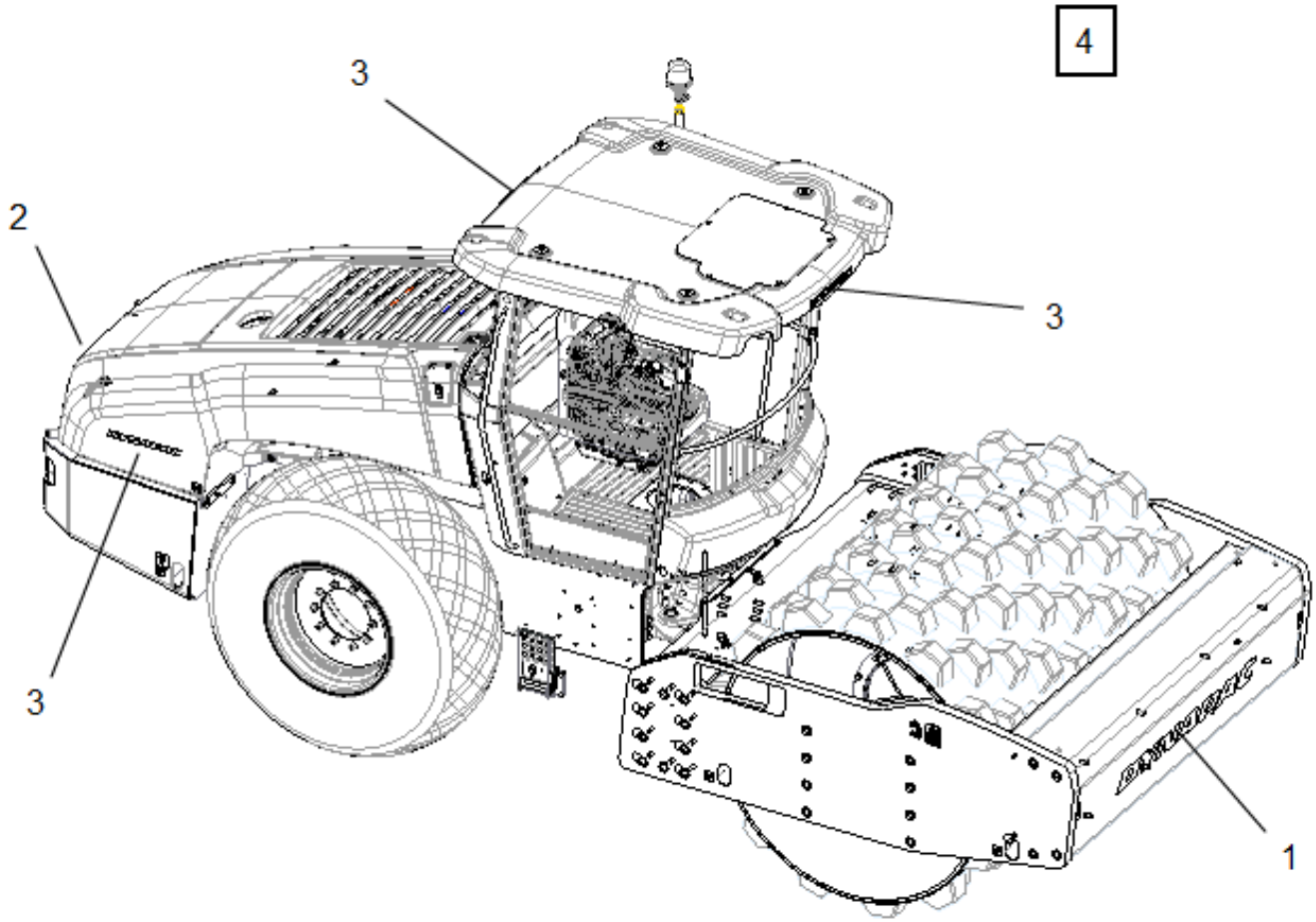

Item	Part No.	Name	Qty	L	SN INFO
0	4812127932	Plain Dynapac decals, kit			
1	4812127909	Decal "DYNAPAC", black 1350	1		
2	4700904096	Decal "DYNAPAC", white 420	1		
3	4812127820	Decal "DYNAPAC", black 420	4		
4	4812128222	Drawing for instruction			

Air conditioning Air conditioning

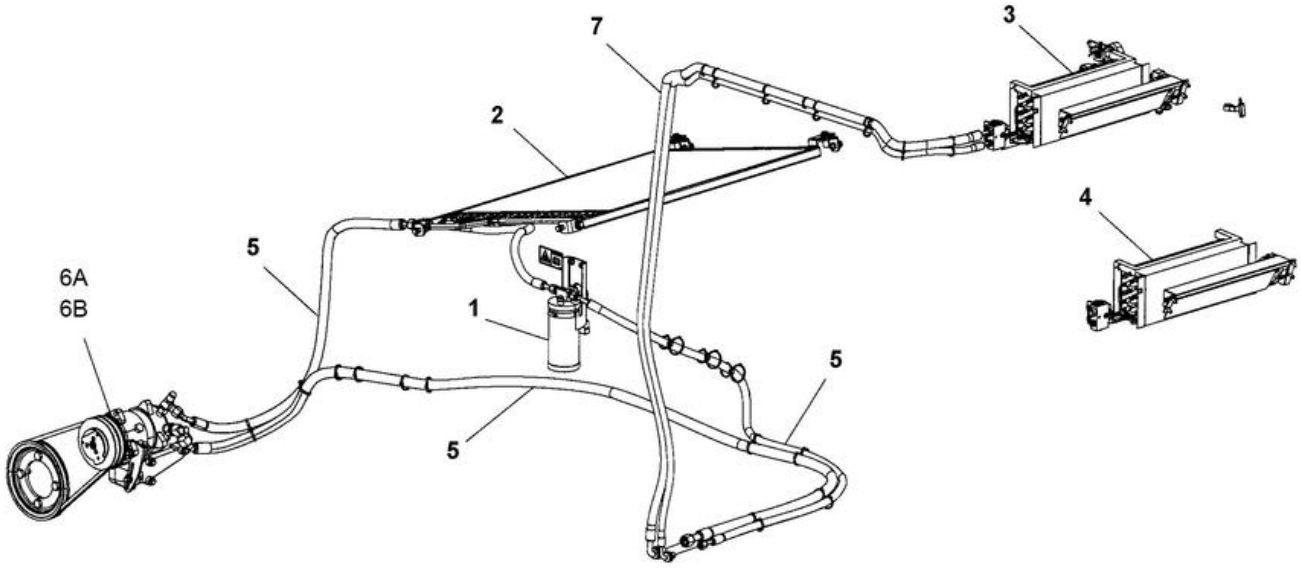

Item	Part No.	Name	Qty	L	SN INFO
1	-	Drying filter module	1		
2	-	Condensor assembly	1		
3	-	ACC module	1		
4	-	AC module	1		
5	-	Hose assy kit for AC	1		
6A	4812114973	Compressor kit	1		
6B	-	Compressor module	1		
7	-	Hose assy kit for AC	1		

Air conditioning Drying filter module

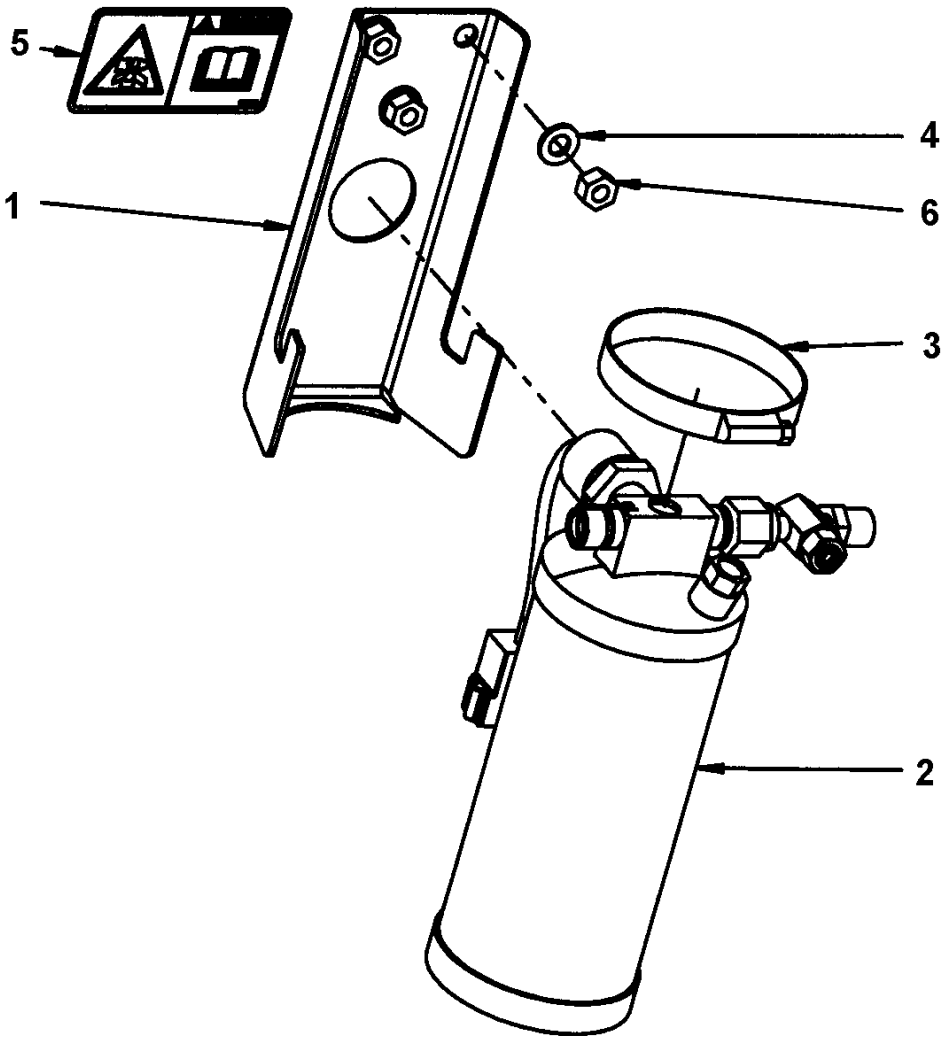

Item	Part No.	Name	Qty	L	SN INFO
1	4812111311	Bracket	1		
2	4812114257	Drying filter assy	1		
3	4700313022	Hose clamp	1		
4	4700904229	Washer, 8.4x 6x1.5 mm 300HV	3		
5	4700904165	Safety decal "Toxic gases"	1		
6	4700570005	Hexagon nut	3		

Air conditioning 4812114257 Drying filter assy

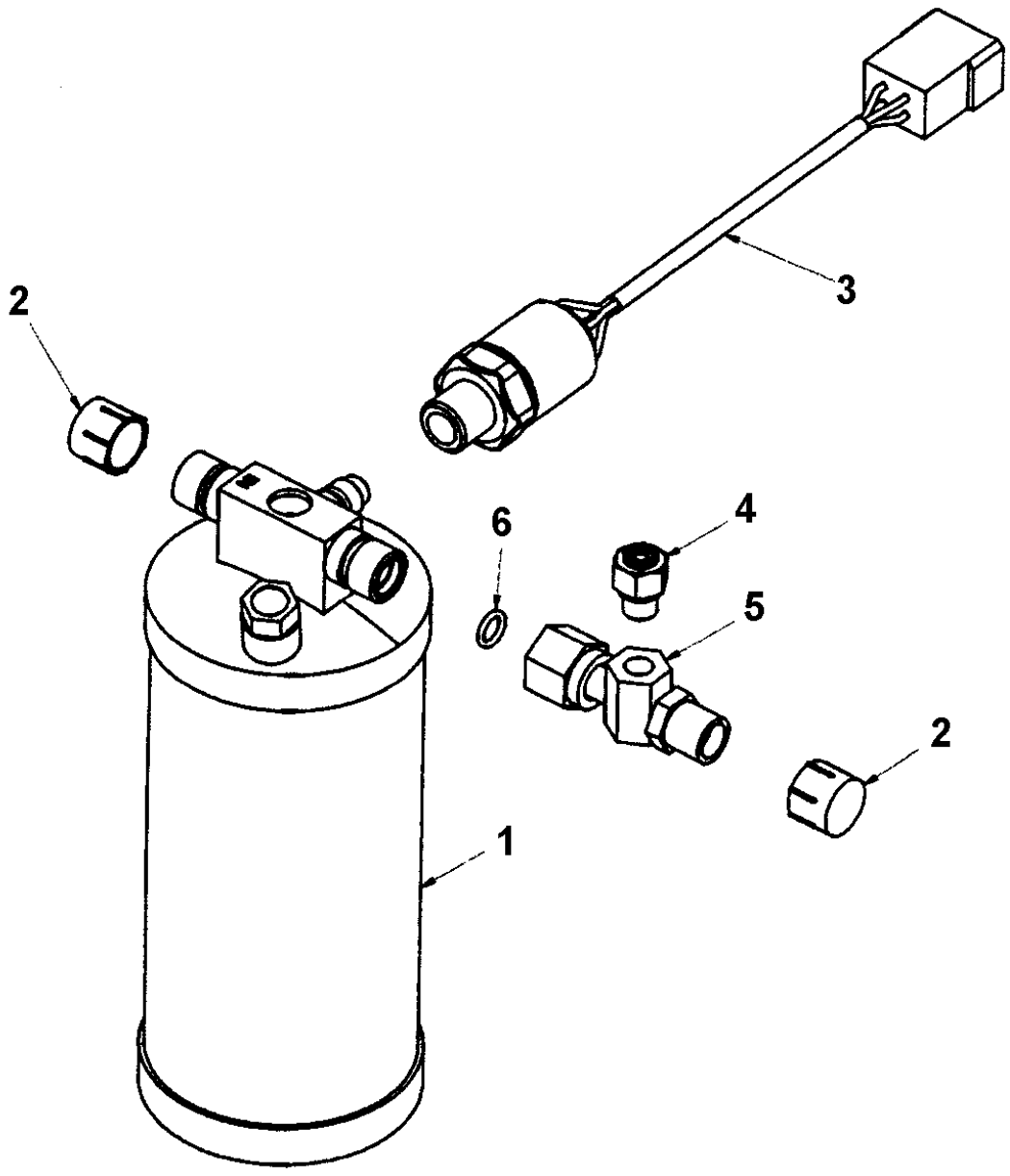

Item	Part No.	Name	Qty	L	SN INFO
1	4812113083	Drying filter	1		
2	-	Plastic cap	2		
3	4812113245	Pressure switch	1		
4	4812114245	Pressure relief valve	1		
5	4812114246	Adapter	1		
6	-	O-ring	1		

Air conditioning Condensor assembly

Item	Part No.	Name	Qty	L	SN INFO
1	4812113032	Condensor	1		
2	4812123800	Bracket	4		
3	4700586003	Lock nut M8	4		
4	4700500021	Screw, M8x25 mm 8.8 A2K	4		
5	4700904556	Steel plain washer 8,4x16x3,0	3		
6	4700904640	Washer, 8.4x22x3 mm 300HV	2		
7	4700904229	Washer, 8.4x 6x1.5 mm 300HV	4		
8	4700500022	Screw	4		
9	4700904556	Steel plain washer 8,4x16x3,0	4		
X	-	Not to be used			

Air conditioning ACC module

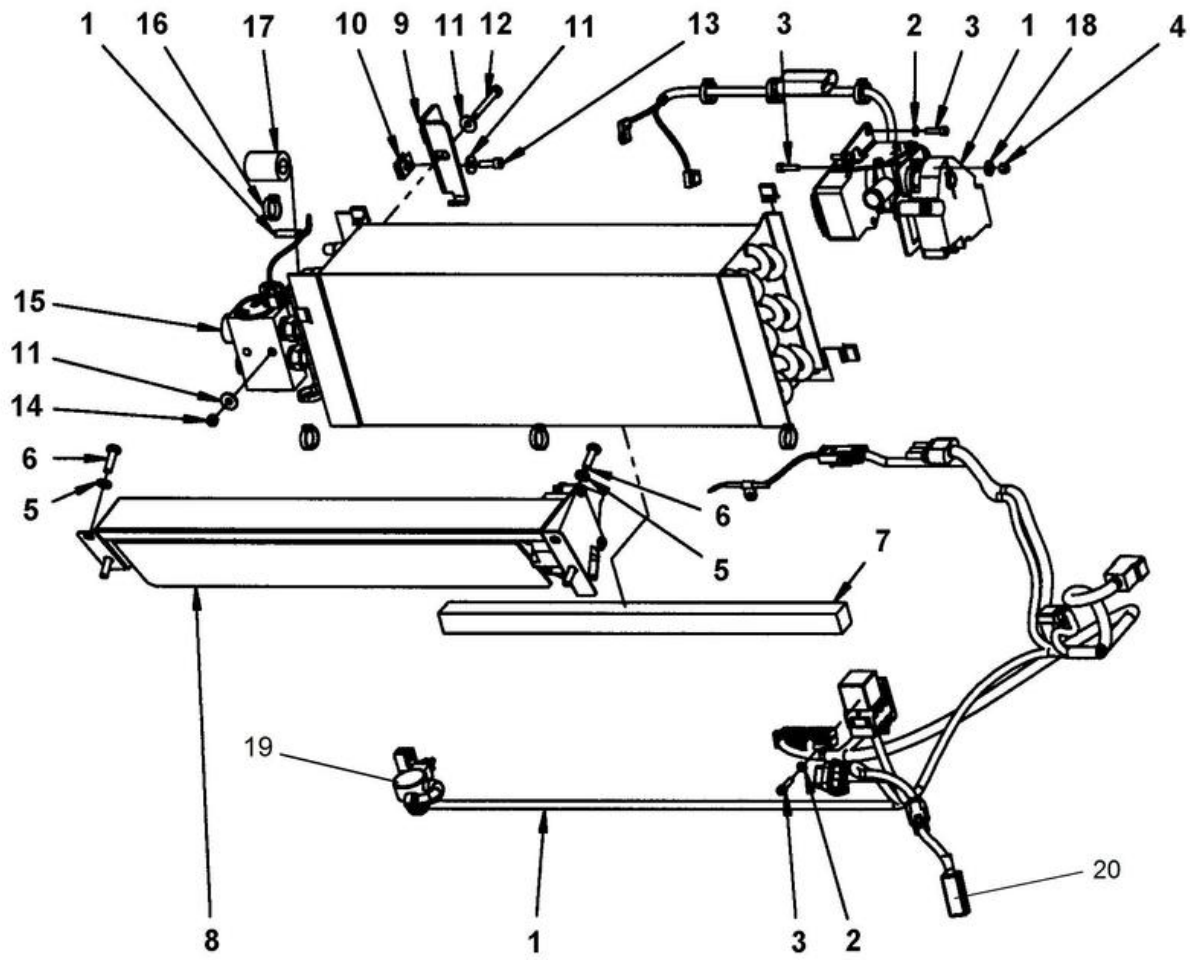

Item	Part No.	Name	Qty	L	SN INFO
1	4812113624	ACC kit	1		
2	4700904698	Plain washer	3		
3	4700508022	Hexagon socket head cap screw	4		
4	4700923976	Lock nut	1		
5	4700904228	Washer 6,4x12x1,5	4		
6	4700500040	Screw, M6x20 mm 8.8 A2K	4		
7	4700792718	Foam rubber	1		
8	4812115013	Air intake	1		
9	4812114311	Bracket	1		
10	4811000458	Speed nut	2		
11	4700601001	Washer	4		
12	4700508099	Screw	1		
13	4700926537	Screw	2		
14	4700570003	Hex. nut	1		
15	4812113623	Evaporator, cpl	1		
16	4700313041	Cable ties	10		
17	4812117349	Cork tape	1XL	A	
18	4700904299	Washer	1		
19	4700938624	Sensor, inner temp	1		
20	4812161298	Sensor, outer temp	1		

Comments for Page: ACC module

(L)OCAL REMARKS

A | en_US | L = 0.5m

Air conditioning 4812113624 ACC kit

Item	Part No.	Name	Qty	L	SN INFO
1	4812158289	Micro ECC	1		
1	4812160767	Knob	1		
2	4700383425	Electronic valve	1		
3	-	Bracket	1		
4	-	Panel	1		
5	4812158290	Blower control	1		
6	-	Clip	4		
7	4812158291	Cable harness	1		
8	4812158292	Deicing sensor	1		
9	-	Screw	2		

Air conditioning AC module

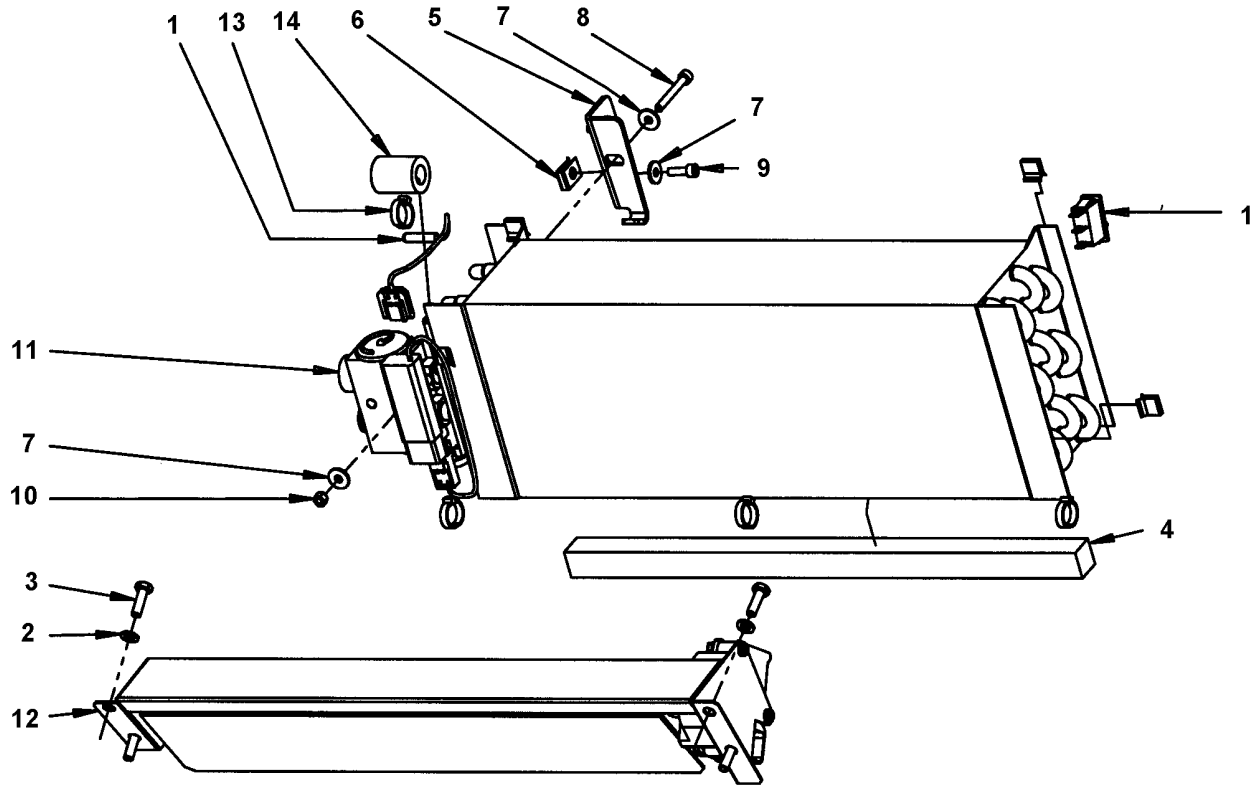

Item	Part No.	Name	Qty	L	SN INFO
1	4812113622	Ac kit	1		
1	4700950348	Switch, air condition	1		
1	4812158481	Switch, flapper	1		
1	4812158482	Thermostat	1		
2	4700904228	Washer 6,4x12x1,5	4		
3	4700500040	Screw, M6x20 mm 8.8 A2K	4		
4	4700792718	Foam rubber	1		
5	4812114311	Bracket	1		
6	4811000458	Speed nut	2		
7	4700601001	Washer	4		
8	4700508099	Screw	1		
9	4700926537	Screw	2		
10	4700570003	Hex. nut	1		
11	4812113623	Evaporator, cpl	1		
12	4812115013	Air intake	1		
13	4700313041	Cable ties	10		
14	4812117349	Cork tape	1XL	A	

Comments for Page: AC module

(L)OCAL REMARKS

A | en_US | L = 0.5m

Air conditioning 4812113623 Evaporator, cpl

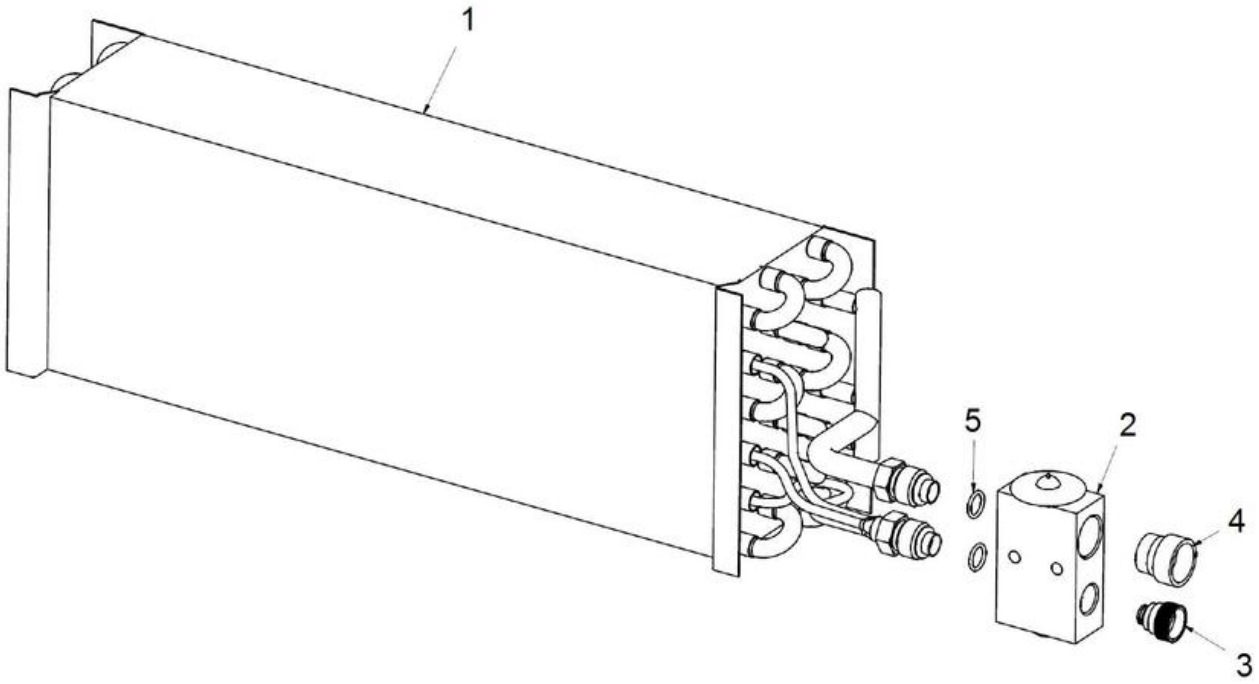

Item	Part No.	Name	Qty	L	SN INFO
1	4812160598	Evaporator coil	1		
2	4700384176	Expansion valve	1		
3	-	Connector plug	1		
4	-	Connector plug	1		
5	4700384878	O-ring Size 8	2		

Air conditioning Hose assy kit for AC

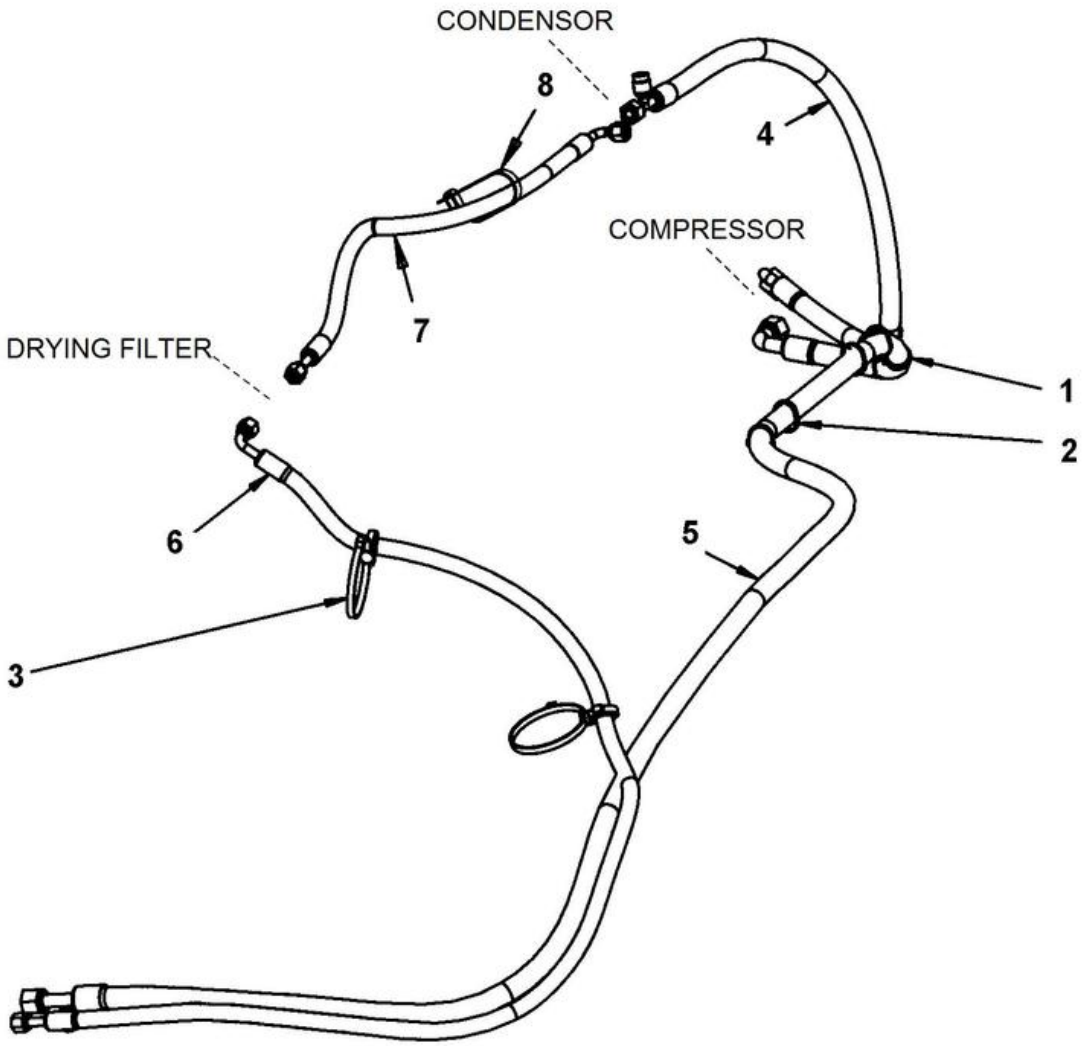

Item	Part No.	Name	Qty	L	SN INFO
1	4700792686	Cable tie with holder	4		
2	4700313041	Cable ties	N		
3	4812117248	Cable tie with holder	2		
4	4812118250	Refrigerant hose	1		
4	4700384878	O-ring Size 8	1		
5	4812119490	Refrigerant hose	1		
6	4812113491	Refrigerant hose	1		
7	4812113492	Refrigerant hose	1		
7	4700384877	O-ring Size 6	1		
8	4812115835	Cable tie	1		

Air conditioning 4812114973 Compressor kit

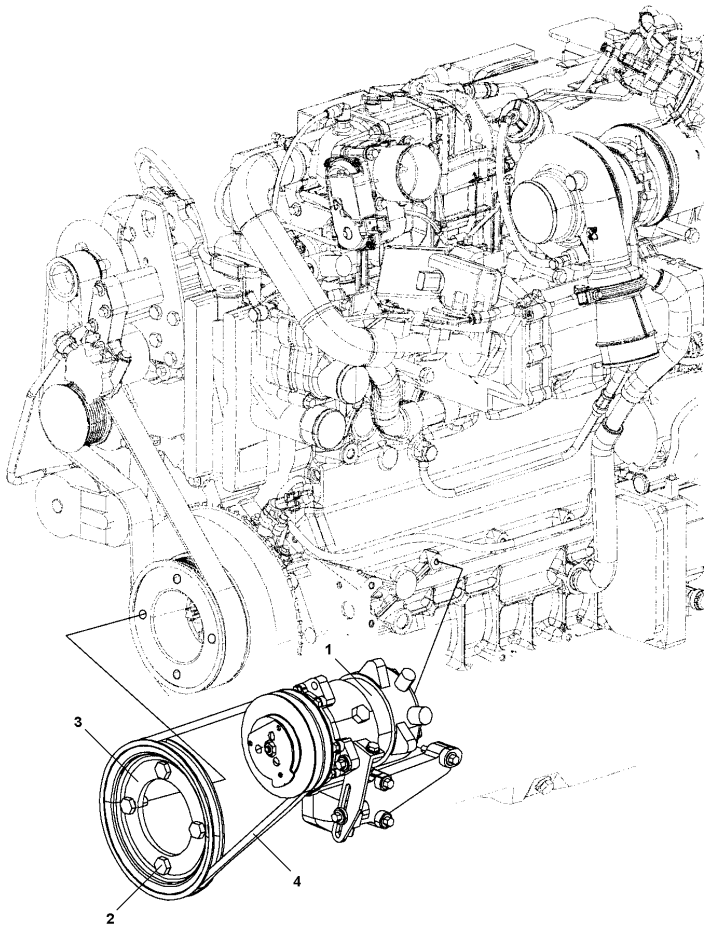

.

Item	Part No.	Name	Qty	L	SN INFO
1	4812157765	Compressor	1		
2	4812157766	Hexagon bolt	4		
3	4812157767	V-pulley	1		
4	4812157768	V-belt	1		

Air conditioning Compressor module AC

Item	Part No.	Name	Qty	L	SN INFO
1	4812157765	Compressor	1		
2	4812119649	Bracket	1		
3	4812114046	Belt tightener	1		
4	4812114047	Adjusting unit	1		
5	4700904229	Washer, 8.4x 6x1.5 mm 300HV	1		
6	0147195898	Hexagon head screw m	1		
7	4700904640	Washer, 8.4x22x3 mm 300HV	1		
8	4700500025	Screw, M8x50 mm 8.8 A2K	1		
9	4700904230	Steel plain washer	2		
10	4700500030	Hexagon head screw	1		
11	4700586003	Lock nut M8	1		
12	4700792797	Hexagon socket head cap screw m	1		
13	4700570103	Nut, M10 x 1.5 mm GEOMET®	1		
14	4812119307	Pulley	1		
15	4700413049	V-belt	1		
16	4700904703	Plain washer 13x24x4 mm	4		
17	4700947687	Screw M12-1,75x30 10,9	4		
18	4700500508	Screw, M8x50 mm 8.8 A2K	3		

Air conditioning Hose assy kit for AC

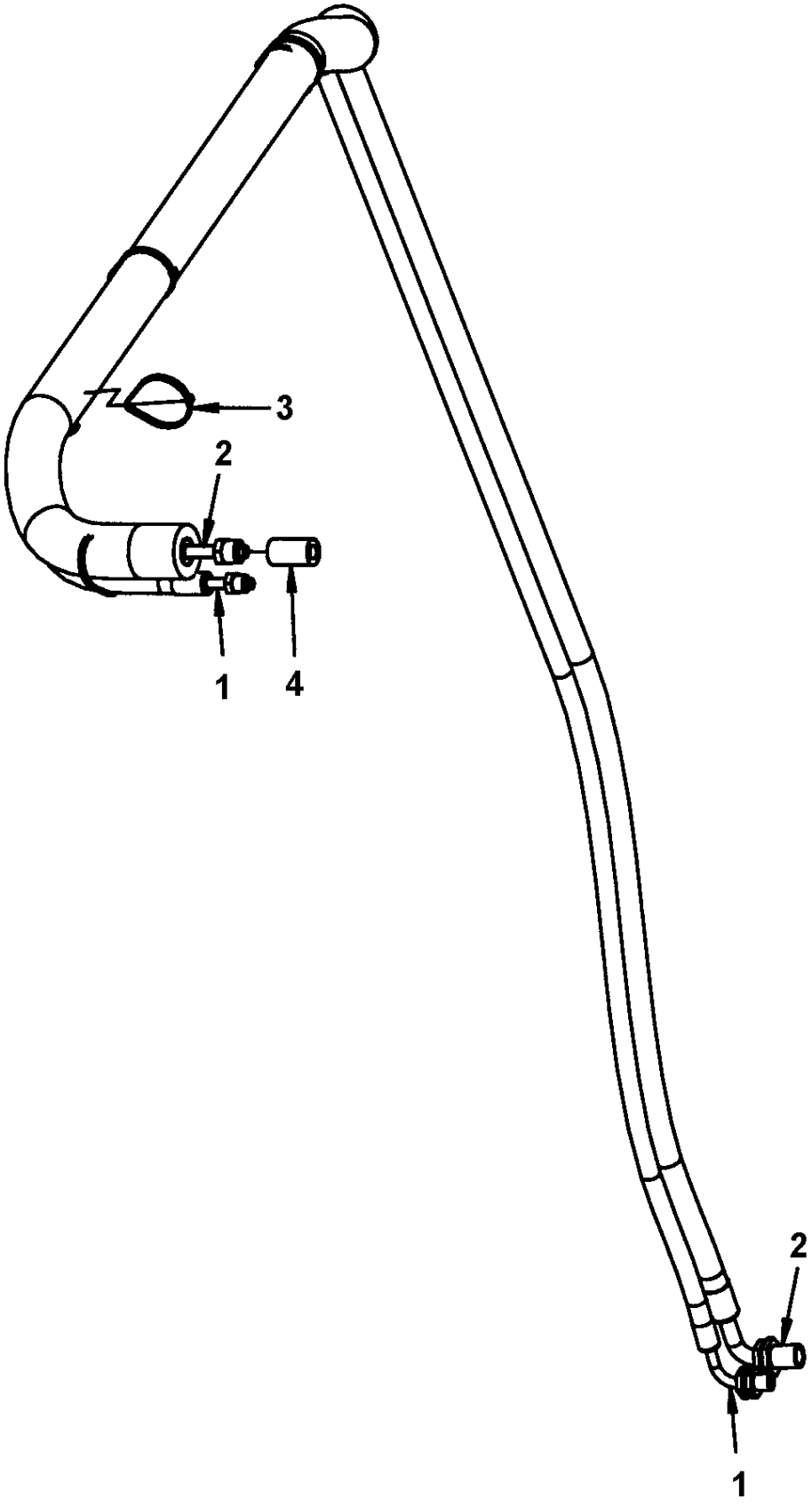

Item	Part No.	Name	Qty	L	SN INFO
1	4812114931	Refrigerant hose	1		
2	4812114932	Refrigerant hose	1		
3	4700792609	Cable ties	7		
4	4812117349	Cork tape	1XL	A	

Comments for Page: Hose assy kit for AC

(L)OCAL REMARKS

A | en_US | L = 0.2m

Level sensor module, option Level sensor module, option

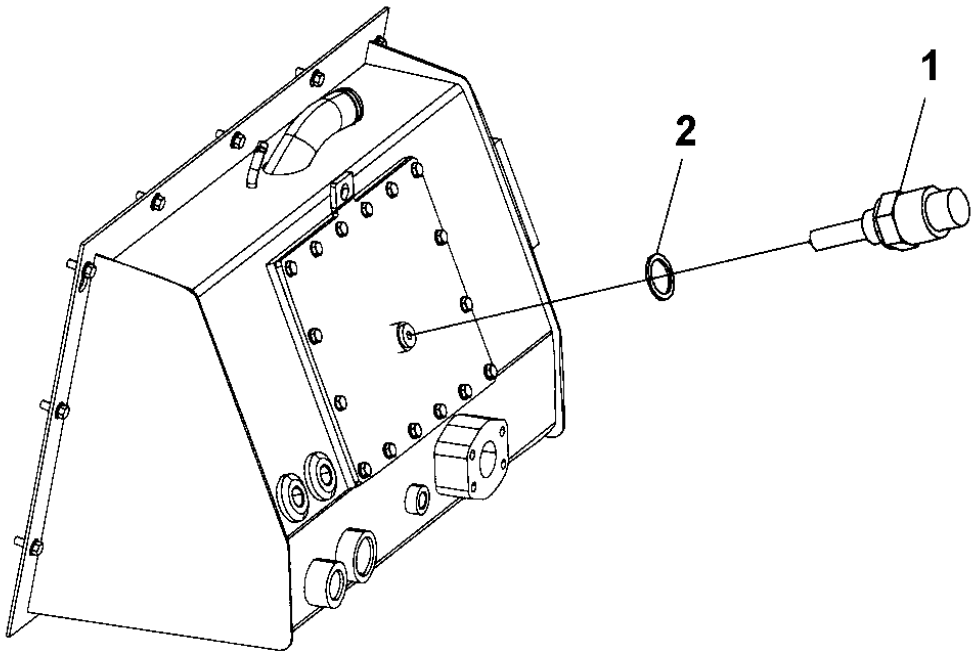

Item	Part No.	Name	Qty	L	SN INFO
1	4812112423	Level sensor	1		
2	4700330331	Washer 18,2x23,9x1,5	1		

Fire extinguisher/First Aid Cushion Fire extinguisher/First Aid Cushion

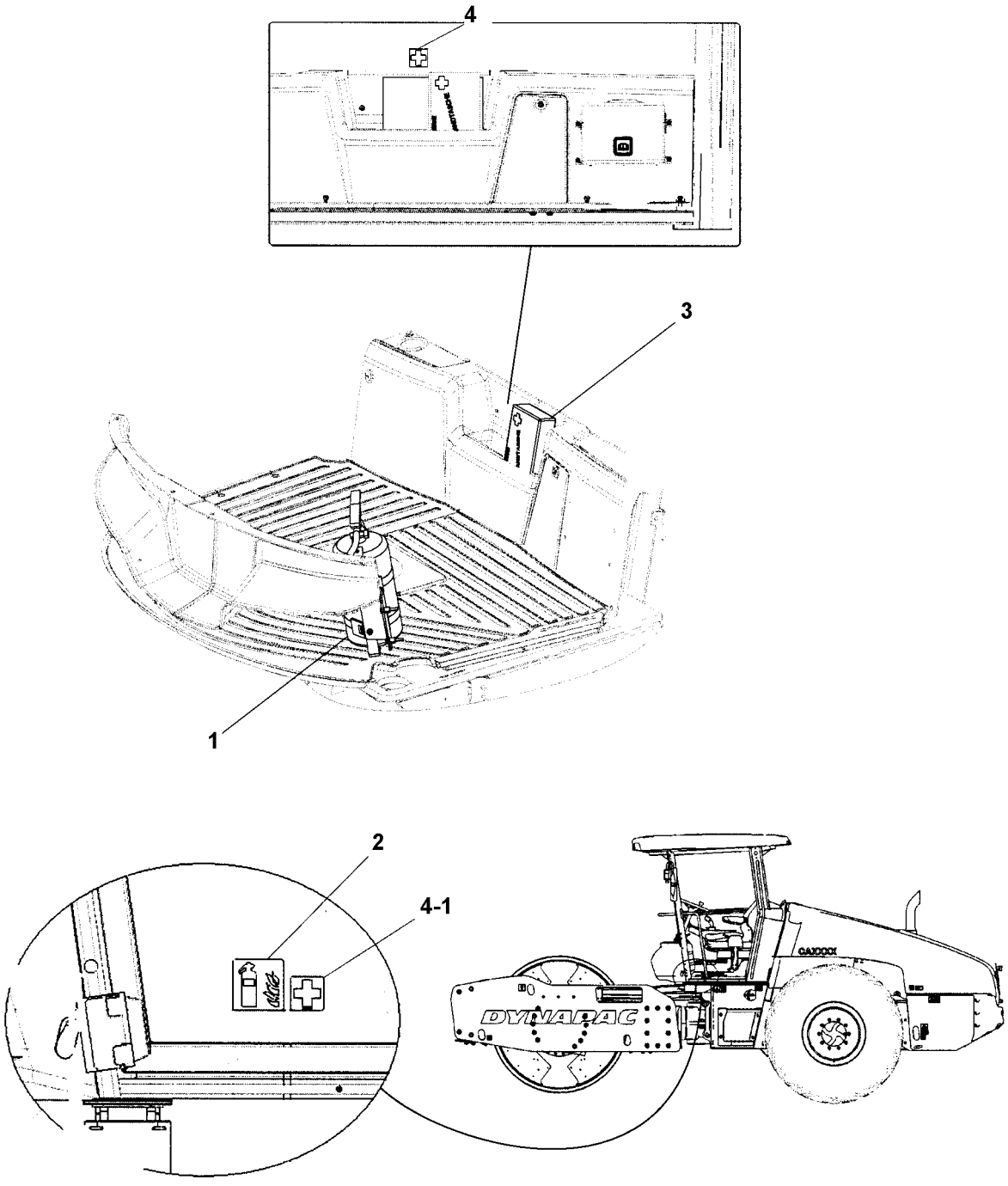

Item	Part No.	Name	Qty	L	SN INFO
1	-	Fire extinguisher	1		
2	4700792634	Decal fire extinguisher	1	A	
3	4700394395	First aid cushion	1		
4	4700902509	Decal	1	B	
4-1	4700902509	Decal	1	A	

Comments for Page: Fire extinguisher/First Aid Cushion

(L)OCAL REMARKS

A | en_US | Location on cab.

B | en_US | Location on platform.

Fire extinguisher/First Aid Cushion Fire extinguisher

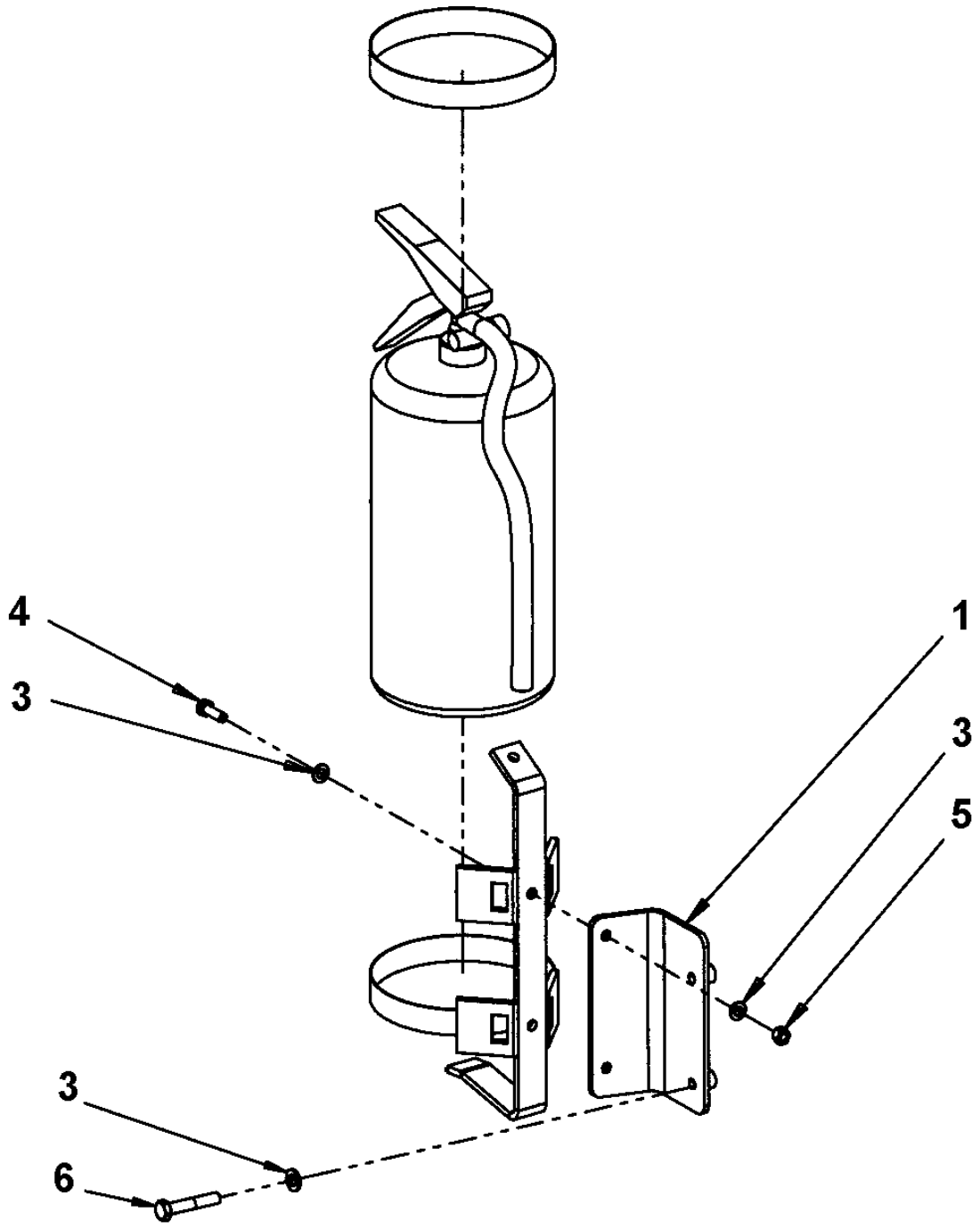

Item	Part No.	Name	Qty	L	SN INFO
1	4812114804	Bracket	1		
3	4700904229	Washer, 8.4x 6x1.5 mm 300HV	6		
4	4700500021	Screw, M8x25 mm 8.8 A2K	2		
5	4700570005	Hexagon nut	2		
6	4700500024	Screw M8x45	2		

SMV-sign SMV-sign

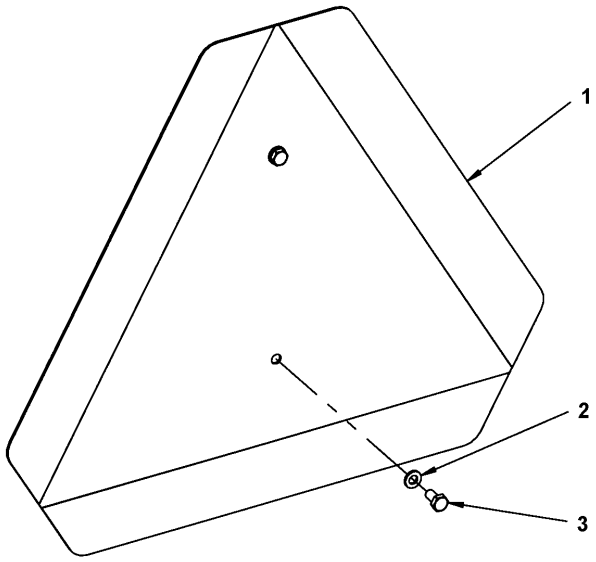

Item	Part No.	Name	Qty	L	SN INFO
1	4700476019	SMV-sign	1		
2	4700904228	Washer 6,4x12x1,5	2		
3	4700500012	Hex. screw	2		

Cooling box module Cooling box module

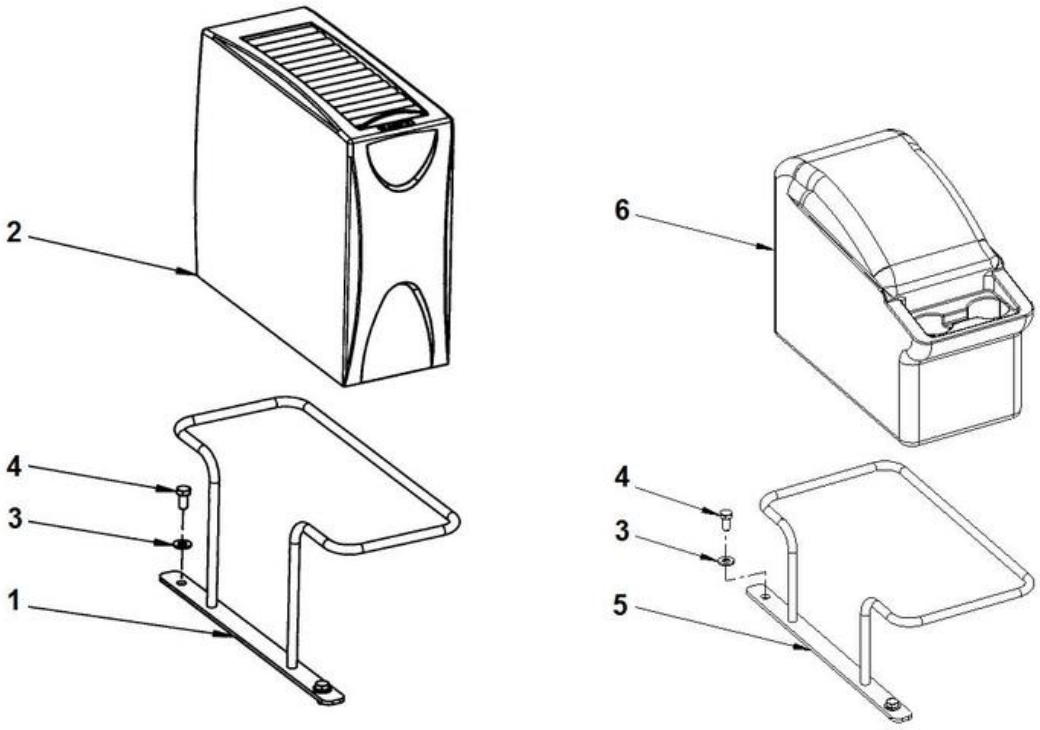

Item	Part No.	Name	Qty	L	SN INFO
1	4812114742	Holder	1		
2	4812118842	Cooling box	1		
2	4812160053	Cable 12V	1		
3	4700904230	Steel plain washer	2		
4	4700500048	Screw, M10x20 mm 8.8 A3K	2		
5	4812126463	Holder	1		
6	4812126487	Cooling box	1		

Lunch box Lunch box

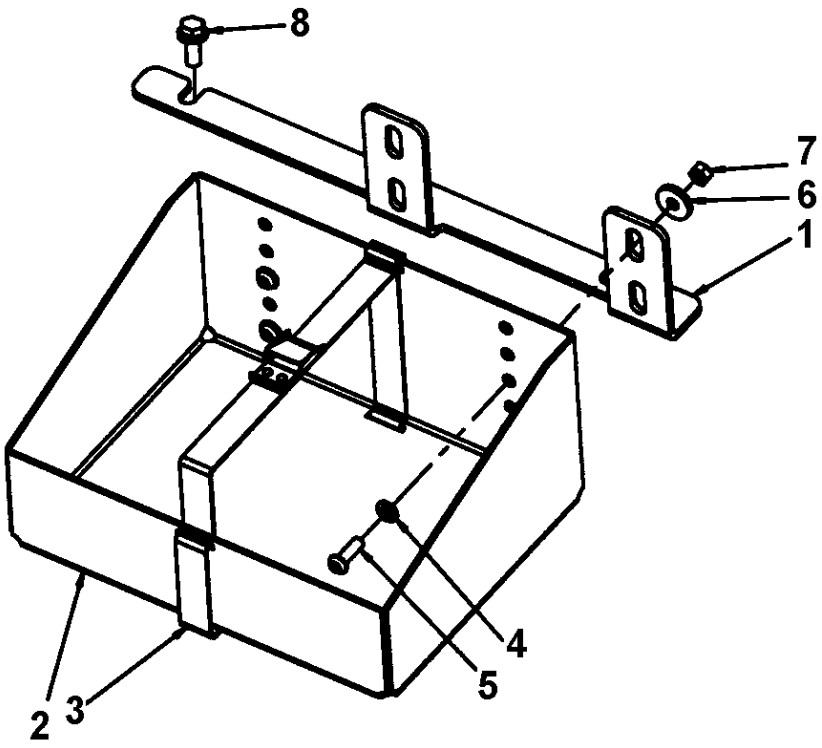

Item	Part No.	Name	Qty	L	SN INFO
1	4812118893	Bracket	1		
2	4700377913	Box	1		
3	4700287643	Metal strapping	1		
4	4700904229	Washer, 8.4x 6x1.5 mm 300HV	4		
5	4700904654	Screw, M8 x 25 mm A2-70	4		
6	4700904734	Washer, 8.4x26x4 mm 300 HV	4		
7	4700570005	Hexagon nut	4		
8	4700500509	Screw, M10x25, 8.8	2		

Optional equipment Dyn@Link module

Item	Part No.	Name	Qty	L	SN INFO
1		FleetLink Advanced			
2	4700901225	Fuse 5A Tan	1		
3	4812124256	Wiring harness	1		
4	4700792609	Cable ties	2		
5	4812013040	GPS module, V2	1		
6	4700792210	Screw torx	2		
7	4812124199	Bracket	1		
8		FleetLink			
9	4700901225	Fuse 5A Tan	1		
10	4812124256	Wiring harness	1		
11	4700792609	Cable ties	2		
12	4812013038	GPS module	1		
13	4700792210	Screw torx	2		
14	4812124199	Bracket	1		

Optional equipment 4812013038 GPS module

Item	Part No.	Name	Qty	L	SN INFO
1	4812013160	Socket shell	1		
2	4812013161	Male contact	3		

Optional equipment Compaction meter (DCM)

Item	Part No.	Name	Qty	L	SN INFO
1	4812122819	Plate	1		
2	4700904231	Washer, 13x24x2 mm 300 HV	2		
3	4812110670	Hexagon head screw M12x30H 10,9	2		
4	4700923876	Clamp	1		
5	4812122777	DCM unit	1		
6	4700606003	Washer	4		
7	4812121264	Screw	4		
8	4700904228	Washer 6,4x12x1,5	2		
9	4700500079	Screw M6-1x50 8,8	2		
10	4700923859	Cover plate	1		
11	4700500079	Screw M6-1x50 8,8	2		
12	4700904228	Washer 6,4x12x1,5	2		
13	4700791453	Pipe clamp block	1		
14	4700904231	Washer, 13x24x2 mm 300 HV	2		
15	4700500035	Hexagon screw, M12x20H	2		
16	4812116181	Bracket	1		
17	4700313102	Cable ties	1		
18	4700792441	Cable tie with holder	1		
19	4812122778	Power supply	1		
20	4700792210	Screw torx	2		
21	4700923976	Lock nut	4		
22	4700928200	Hexagon socket countersunk screw	4		
23	4812122780	Bracket	1		
24	4812116367	Cable entry frame and inserts	1		

Optional equipment Dyn@lyzer

Item	Part No.	Name	Qty	L	SN INFO
1	4812123488	Computer	1		
2	4812123489	Holder	1		
3	4812123728	Arm	1		
4	4812123727	Ball joint	1		
5	4812123747	Bracket	1		
6	4700904229	Washer, 8.4x 6x1.5 mm 300HV	2		
7	4700500026	Screw M8-1,25x60 mm 8.8	2		
8	4700500019	Hexagon screw	2		
9	4812123524	Wiring harness	1		
10	4700901226	Fuse 7.5A Brown	1		
11	4700792154	Tapping screw ST	4		
12	4812123490	Gateway	1		
13	4700541702	Screw M6x12	4		
14	4812123471	Bracket	1		
15	4812124090	Carrying case	1		
16	4812124091	Rubber insert	1		
17	4812123523	Wiring harness	1		
18	4812123681	Ground cable	1		
19	4812123533	Wiring harness	1		
20	4812123525	Wiring harness	1		
21	4812121818	Bracket	1		
22	4700513016	Hexagon socket countersunk screw M16	1		
23	4812123534	Thread insert	1		
24	4812113160	Bracket	1		
25	4812123491	Antenna	1		
26	4812123699	Wiring harness	1		
27	4700901226	Fuse 7.5A Brown	1		

Appendix B:Parts Index

0147195898 526
0248998073 314
0570702503 214
0570704101 212
0570704138 200
291112842 32
4700116041 . . . . . 22, 86, 88, 96
4700150008 56
4700151023 . . . . . 32, 50
4700160043 . . . . . 164, 174, 186, 202
4700160080 132
4700160105 . . . . . 22, 96
4700160132 154
4700160186 276
4700160191 214
4700160231 . . . . . 244, 262
4700160296 32
4700162004 110
4700162008 214
4700162015 . . . . . 132, 132
4700162017 . . . . . 82, 84, 86, 88, 90, 92
4700162027 . . . . . 82, 84, 86, 88, 90, 92
4700167023 . . . . . 22, 86, 88, 96
4700202028 . . . . . 394, 394, 394, 394, 394, 394, 420, 450
4700202057 50
4700205027 116
4700205112 . . . . . 420, 422, 422, 460, 460
4700212553 . . . . . 138, 146
4700230384 98
4700230515 98
4700230516 98
4700232039 214
4700232097 256
4700232098 276
4700232118 214
4700232145 . . . . . 256, 276
4700232160 128
4700233304 214
4700234927 126
4700234928 126
4700272372 498
4700272373 498
4700287295 . . . . . 224, 286
4700287643 540
4700313001 . . . . . 126, 132, 214
4700313002 126
4700313003 460
4700313004 . . . . . 420, 422, 460
4700313006 . . . . . 116, 128
4700313009 214
4700313010 116
4700313022 508
4700313023 416
4700313033 122
4700313041 . 74, 336, 338, 350, 354, 360, 366, 372, 422, 424, 460, 488, 514, 518, 522
4700313068 336
4700313102 . . . . . 114, 546
4700330171 126
4700330330 126
4700330331 . . . . . 128, 216, 530
4700330333 . . . . . 140, 142
4700330383 98
4700335659 76
4700340863 94
4700343318 . . . . . 86, 88, 96
4700343744 . . . . . 82, 84, 86, 88, 90, 92
4700343748 214
4700349715 94
4700350009 . . . . . 464, 472
4700355524 126
4700355608 . . . . . 50, 306
4700355797 344
4700355889 58
4700355983 498
4700357138 . . . . . 10, 12, 16, 18, 214
4700358254 402
4700358881 . . . . . 28, 28, 58, 496
4700359043 468
4700359125 468
4700359819 468
4700359916 464
4700359919 464
4700359920 464
4700359989 . . . . . 104, 130
4700359998 . . . . . 390, 406
4700370234 476
4700372174 420
4700372457 406
4700372597 132
4700372658 58
4700372672 464
4700372696 476
4700372697 476
4700372772 98
4700372964 464
4700372965 464
4700374059 214
4700374606 406
4700374799 70
4700377507 428

4700377508 428
4700377518 476
4700377742 . . . . . 30, 50
4700377743 30
4700377913 540
4700378712 106
4700379718 464
4700379728 468
4700380018 . . . . . 82, 84, 86, 88, 90, 92
4700380436 118
4700381413 . . . . . 132, 132
4700381943 . . . . . 456, 458
4700381944 458
4700382383 72
4700382751 . . . . . 498, 498
4700383024 112
4700383425 516
4700383705 402
4700383844 46
4700384114 76
4700384121 76
4700384176 520
4700384584 402
4700384877 522
4700384878 . . . . . 520, 522
4700385599 488
4700386966 114
4700387545 496
4700388449 498
4700388737 488
4700389600 106
4700389857 50
4700390365 52
4700390561 476
4700390589 134
4700390860 318
4700390896 . . . . . 20, 82, 84, 86, 88, 90, 92
4700390900 498
4700390926 214
4700390963 476
4700391031 32
4700391163 . . . . . 464, 466
4700391299 . . . . . 112, 112, 112, 112
4700391396 488
4700391420 488
4700392075 112
4700392316 458
4700392321 376
4700392450 338
4700392451 338
4700392717 492
4700392719 492
4700392810 114
4700392839 464
4700392840 464
4700392930 488
4700392965 486
4700393094 492
4700393525 390
4700393959 500
4700394275 350
4700394276 350
4700394395 532
4700394536 58
4700394542 352
4700394682 108
4700394688 . . . . . 6, 8, 10, 12, 16, 18, 108
4700394689 . . . . . 10, 12, 16, 18, 108
4700395022 108
4700395352 336
4700395447 464
4700395785 . . . . . 122, 488
4700395816 . . . . . 98, 434
4700395841 428
4700395843 428
4700395888 352
4700396043 370
4700396044 370
4700396047 . . . . . 370, 370
4700396048 370
4700396119 358
4700396536 358
4700396601 . . . . . 182, 210, 366, 368
4700396635 306
4700396662 488
4700396670 496
4700396839 52
4700397305 42
4700397604 494
4700413049 526
4700475064 56
4700476019 536
4700484342 298
4700500002 362
4700500003 370
4700500004 . . . . . 396, 434, 448
4700500006 348
4700500007 98
4700500009 122
4700500010 346
4700500012 . . . . . 126, 332, 420, 426, 444, 536
4700500013 . . . . . 214, 314, 318, 322, 324, 328, 362, 416

4700500015 . . . . . 318, 366
4700500018 . . . . . 224, 298
4700500019 . . 152, 172, 214, 282, 308, 312, 316, 350, 360, 548
4700500021 . 98, 106, 118, 118, 120, 130, 226, 230, 284, 310, 336, 372, 464, 486, 512, 534
4700500022 . . . . . 98, 152, 172, 214, 282, 388, 456, 470, 512
4700500024 . . . . . 120, 458, 534
4700500025 . . . . . 284, 458, 526
4700500026 . . . . . 298, 350, 360, 548
4700500027 . . . . . 218, 326
4700500028 . . . . . 30, 30, 32, 54, 152, 172, 472, 474
4700500029 . . . . . 98, 118, 224, 472
4700500030 . . . . . 70, 102, 130, 164, 174, 526
4700500031 . . . . . 74, 128
4700500032 68
4700500035 . . . . . 76, 384, 546
4700500037 . . . . . 112, 236
4700500040 . . . . . 132, 352, 514, 518
4700500046 . . . . . 256, 276, 288
4700500047 98
4700500048 . . . . . 254, 374, 538
4700500053 . . . . . 78, 106, 112, 214, 286, 298, 304, 476, 476
4700500055 102
4700500056 . . . . . 104, 390
4700500060 . . . . . 314, 488
4700500067 458
4700500070 . . . . . 30, 244
4700500075 . . . . . 64, 308, 312, 486
4700500079 . . . . . 370, 384, 420, 546, 546
4700500082 . . . . . 76, 82, 84, 86, 88, 90, 92, 104
4700500090 282
4700500091 50
4700500093 . . . . . 164, 174, 262
4700500102 . . . . . 36, 38, 104
4700500107 104
4700500115 492
4700500123 44
4700500133 96
4700500161 . . . . . 40, 130, 280
4700500163 . . . . . 82, 84, 86, 88, 90, 92
4700500189 . . . . . 198, 376
4700500192 30
4700500194 . . . . . 118, 126, 154
4700500195 406
4700500239 50
4700500249 284
4700500270 46
4700500287 . . . . . 30, 76
4700500501 298
4700500502 66
4700500503 132
4700500505 . . . . . 108, 214, 488
4700500508 526
4700500509 . . . . . 68, 540
4700502053 94
4700508001 368
4700508017 488
4700508019 . . . . . 308, 312, 456, 458
4700508020 316
4700508022 514
4700508025 . . . . . 118, 476
4700508027 472
4700508028 52
4700508029 464
4700508048 . . . . . 212, 256, 276
4700508053 . . . . . 256, 276
4700508063 214
4700508080 244
4700508092 . . . . . 218, 474
4700508096 98
4700508099 . . . . . 514, 518
4700513012 . . . . . 50, 122
4700513016 548
4700513017 52
4700513027 386
4700516040 464
4700541702 . . . . . 350, 548
4700570003 . . . . . 322, 514, 518
4700570004 488
4700570005 50, 98, 130, 130, 284, 304, 310, 314, 316, 372, 412, 508, 534, 540
4700570006 326
4700570008 350
4700570101 314
4700570103 526
4700573008 468
4700586001 . . . . . 314, 346, 488, 494, 496
4700586002 . . . . . 66, 308, 312, 370, 472, 486, 488, 492
4700586003 . . 284, 306, 308, 312, 372, 456, 458, 458, 464, 492, 512, 526
4700586018 . . . . . 40, 68, 378
4700586021 104
4700588176 . . . . . 498, 498
4700601001 . . . . . 346, 348, 396, 434, 448, 514, 518
4700601003 . . . . . 394, 394, 416, 418
4700603010 118
4700604005 284
4700606003 . . . . . 384, 546
4700606004 492
4700615061 68
4700615065 64
4700624005 . . . . . 498, 500
4700624018 58

4700630003 66
4700630008 468
4700747282 126
4700791120 216
4700791145 98
4700791156 . . . . . 82, 84, 86, 88, 90, 92
4700791171 444
4700791172 398
4700791175 134
4700791176 134
4700791182 . . . . . 412, 412, 416
4700791185 430
4700791212 . . . . . 282, 284
4700791231 . . . . . 186, 202, 218, 256, 276
4700791273 500
4700791318 284
4700791396 30
4700791397 . . . . . 200, 298
4700791405 214
4700791409 218
4700791414 . . . . . 184, 200
4700791421 494
4700791431 98
4700791453 . . . . . 384, 546
4700791454 384
4700791460 112
4700791475 420
4700791518 . . . . . 304, 310
4700791524 . . . . . 464, 486
4700791541 200
4700791542 200
4700791549 262
4700791572 . . . . . 478, 480, 482, 484
4700791588 488
4700791642 108
4700791666 . . . . . 50, 420
4700791711 . . . . . 234, 260
4700791712 . . . . . 234, 260
4700791723 488
4700791733 488
4700791739 488
4700791743 218
4700791799 286
4700791805 . . . . . 234, 260
4700791807 286
4700791821 298
4700791830 280
4700791831 236
4700791832 298
4700791835 262
4700791843 218
4700791858 200
4700791860 . . . . . 152, 172
4700791956 50
4700791966 430
4700791970 454
4700792035 344
4700792068 214
4700792074 298
4700792083 . . . . . 32, 288
4700792093 298
4700792103 400
4700792119 . . . . . 66, 114, 426
4700792154 548
4700792186 370
4700792210 . . . . . 314, 320, 354, 384, 542, 542, 546
4700792261 . . . . . 134, 134
4700792264 214
4700792276 214
4700792295 . . . . . 132, 214
4700792299 . . . . . 218, 284
4700792309 . . . . . 314, 318, 430
4700792310 314
4700792322 110
4700792338 214
4700792339 . . . . . 254, 282, 284
4700792354 344
4700792392 354
4700792394 32
4700792397 372
4700792398 340
4700792410 376
4700792414 488
4700792422 . . . . . 314, 336
4700792441 126, 304, 308, 310, 312, 314, 318, 336, 340, 370, 384, 422, 424, 482, 484, 546
4700792465 244
4700792500 . . . . . 224, 286
4700792505 430
4700792515 32
4700792519 336
4700792520 336
4700792527 . . . . . 474, 478, 480, 482, 484
4700792536 402
4700792537 340
4700792539 464
4700792586 286
4700792589 402
4700792601 56
4700792609 . . . . . 338, 528, 542, 542
4700792634 532
4700792660 350

4700792667 372
4700792678 468
4700792686 . . . . . 126, 522
4700792715 424
4700792718 . . . . . 514, 518
4700792761 358
4700792762 358
4700792763 358
4700792772 500
4700792776 330
4700792795 358
4700792797 526
4700792809 214
4700801631 46
4700813429 256
4700813618 242
4700813791 108
4700900229 236
4700900255 . . . . . 136, 144
4700900342 202
4700900775 . . . . . 82, 84, 86, 88, 90, 92
4700900776 . . . 20, 82, 82, 84, 84, 86, 86, 88, 88, 90, 90, 92, 92
4700900957 . . . . . 140, 148
4700900966 140
4700900994 288
4700901145 . . . . . 390, 406
4700901157 . . . . . 244, 262
4700901218 134
4700901224 26
4700901225 . . . . . 26, 316, 318, 542, 542
4700901226 . . . . . 26, 336, 548, 548
4700901227 . . . . . 26, 316, 318, 320, 336, 350, 364, 430
4700901228 . . . . . 26, 316, 430
4700901229 26
4700901230 26
4700901381 30
4700901443 134
4700901444 134
4700901987 . . . . . 142, 150
4700902041 58
4700902160 126
4700902166 30
4700902282 390
4700902284 348
4700902285 . . . . . 52, 64, 298
4700902286 116, 152, 172, 198, 212, 224, 234, 260, 286, 376, 476, 476
4700902379 400
4700902509 . . . . . 532, 532
4700902520 464
4700902783 270
4700902804 488
4700902866 . . . . . 28, 28, 64, 66
4700902928 194
4700902930 . . . . . 188, 194
4700902944 . . . . . 194, 194
4700902996 . . . . . 166, 182, 190, 194, 210
4700903290 . . . . . 30, 390, 406
4700903386 388
4700903422 498
4700903423 . . . . . 112, 502
4700903424 502
4700903425 . . . . . 402, 500
4700903431 . . . . . 228, 232
4700903456 286
4700903459 498
4700903586 . . . . . 50, 98, 108, 200
4700903590 432
4700903615 58
4700903633 406
4700903640 308
4700903641 . . . . . 28, 308
4700903662 492
4700903670 420
4700903703 . . . . . 116, 212
4700903714 . . . . . 132, 132
4700903741 . . . . . 26, 316, 318
4700903768 212
4700903795 96
4700903906 154
4700903917 464
4700903918 464
4700903923 64
4700903942 . . . . . 6, 8, 10, 12, 16, 18, 100
4700903985 . . . . . 134, 498
4700904004 . . . . . 164, 174, 244
4700904005 . . . . . 154, 186, 236, 262
4700904015 364
4700904024 364
4700904036 314
4700904037 . . . . . 26, 304, 310, 334
4700904038 . . . . . 26, 304, 310
4700904039 . . . . . 26, 304, 310
4700904040 26
4700904041 26
4700904042 26
4700904096 504
4700904165 508
4700904171 202
4700904206 . . . . . 122, 444
4700904213 . . . . . 118, 126
4700904214 464

4700904228 . . 50, 96, 126, 132, 214, 308, 312, 314, 318, 322, 324, 328, 332, 352, 366, 370, 384, 412, 416, 424, 426, 444, 472, 486, 488, 492, 514, 518, 536, 546, 546
4700904229 . 98, 106, 108, 118, 120, 130, 152, 172, 212, 214, 218, 224, 226, 230, 256, 276, 282, 284, 286, 298, 304, 306, 308, 310, 312, 316, 336, 350, 360, 372, 376, 388, 420, 420, 456, 458, 464, 468, 470, 472, 476, 486, 508, 512, 526, 534, 540, 548
4700904230 . 30, 30, 40, 54, 68, 70, 74, 102, 128, 130, 152, 172, 218, 224, 254, 280, 326, 374, 378, 474, 526, 538
4700904231 . 32, 76, 96, 112, 112, 154, 256, 276, 384, 546, 546
4700904232 . . . . . 30, 44, 76, 82, 84, 86, 88, 90, 92, 164, 174
4700904233 . . . . . 30, 76, 134, 390, 406
4700904281 . . . 98, 122, 314, 316, 322, 346, 370, 488, 494, 496
4700904294 26
4700904299 514
4700904311 324
4700904312 318
4700904346 214
4700904388 500
4700904389 . . . . . 500, 502
4700904390 500
4700904391 . . . . . 500, 502
4700904394 126
4700904487 30
4700904489 98
4700904504 . . . . . 322, 430
4700904556 . 76, 106, 112, 118, 130, 216, 282, 284, 308, 312, 458, 476, 512, 512
4700904557 . . . . . 50, 68, 70, 152, 172, 398, 472
4700904558 . . . . . 32, 36, 38, 42, 46, 104, 244, 262
4700904563 416
4700904567 32
4700904570 330
4700904584 . . . . . 244, 262
4700904619 496
4700904623 286
4700904637 . . . . . 98, 164, 174, 244, 256, 276
4700904638 . . . . . 154, 186, 202, 214, 236, 262
4700904640 112, 120, 130, 226, 230, 284, 376, 464, 468, 512, 526
4700904650 490
4700904653 . . . . . 348, 496
4700904654 540
4700904698 . . . . . 64, 318, 324, 362, 386, 388, 488, 514
4700904703 . . . . . 236, 478, 480, 482, 484, 526
4700904734 . . . . . 200, 284, 298, 540
4700904735 . . . . . 342, 362
4700904766 . . . . . 212, 298
4700904774 . . . . . 212, 256, 276
4700904793 . . . . . 184, 200
4700904835 498
4700904870 . . . . . 498, 498
4700904872 . . . . . 224, 286
4700904895 498
4700904911 328
4700904943 298
4700904985 . . . . . 126, 132, 132, 214
4700904986 . . . . . 126, 126
4700904988 128
4700908229 . . . . . 498, 498
4700908399 108
4700908426 194
4700908432 166
4700908440 . . . . . 166, 194, 196
4700908485 . . . . . 138, 146
4700908505 . . . . . 394, 432
4700908506 432
4700908507 432
4700908561 416
4700908564 416
4700909129 400
4700909525 . . . . . 166, 182, 190, 194, 210
4700909535 476
4700909536 476
4700909544 . . . . . 140, 148
4700909550 146
4700909551 146
4700909552 146
4700909553 146
4700909554 146
4700909557 146
4700909558 146
4700909561 146
4700909562 146
4700909565 146
4700909567 . . . . . 138, 146
4700909568 . . . . . 138, 146
4700909569 . . . . . 138, 146
4700909570 . . . . . 138, 146
4700909572 . . . . . 138, 146
4700909574 . . . . . 138, 146
4700909576 . . . . . 138, 146
4700909580 . . . . . 138, 146
4700909581 . . . . . 138, 146
4700909584 . . . . . 136, 144
4700909586 . . . . . 142, 150
4700909596 . . . . . 140, 142
4700909609 . . . . . 140, 140, 142, 148, 150
4700909616 . . . . . 140, 148
4700909618 140
4700909619 140
4700909622 140

4700909624 140
4700909626 . . . . . 140, 148
4700910162 218
4700921046 126
4700921050 116
4700921078 366
4700921080 338
4700921161 254
4700921723 . . . . . 52, 452
4700923008 . . . . . 214, 224
4700923087 . . . . . 166, 194, 194
4700923342 . . . . . 138, 146
4700923384 . . . . . 154, 186, 236, 262
4700923859 . . . . . 384, 546
4700923876 . . . . . 384, 546
4700923976 . . . . . 64, 386, 388, 514, 546
4700925208 30
4700925519 112
4700926215 50
4700926537 . . . . . 316, 514, 518
4700926757 146
4700926781 . . . . . 142, 150
4700926810 . . . . . 140, 148
4700926813 150
4700926847 . . . . . 140, 148
4700927233 56
4700927278 270
4700927410 390
4700927857 130
4700928200 546
4700928347 . . . . . 478, 480, 482, 484
4700928381 . . . . . 426, 426
4700928441 102
4700928467 318
4700928784 342
4700928791 . . . . . 186, 202, 236, 262
4700929217 134
4700929226 . . . . . 164, 174, 244
4700929409 76
4700929447 . . . . . 22, 86, 88, 96
4700929455 344
4700929587 . . . . . 400, 420
4700929617 . . . . . 140, 148
4700929626 138
4700929630 138
4700929631 138
4700929638 . . . . . 138, 146
4700929644 . . . . . 138, 146
4700929648 . . . . . 136, 144
4700935524 194
4700935525 194
4700936283 476
4700936313 264
4700936359 270
4700936367 270
4700936374 270
4700936898 254
4700937055 258
4700937620 474
4700937621 474
4700937892 474
4700938296 . . . . . 140, 148
4700938622 428
4700938624 514
4700938983 . . . . . 140, 148
4700938984 . . . . . 140, 140, 148
4700938989 . . . . . 138, 146
4700938991 . . . . . 138, 146
4700939003 142
4700939015 . . . . . 142, 150
4700939016 142
4700939017 142
4700939019 142
4700939026 140
4700939035 140
4700939036 140
4700939255 140
4700939256 140
4700939258 . . . . . 138, 146
4700939259 . . . . . 138, 146
4700939260 . . . . . 138, 146
4700939261 . . . . . 138, 146
4700939263 142
4700939264 142
4700939265 . . . . . 142, 150
4700939266 . . . . . 142, 150
4700939267 . . . . . 142, 150
4700939268 142
4700939269 . . . . . 142, 150
4700939270 . . . . . 142, 150
4700939271 . . . . . 142, 150
4700939272 . . . . . 142, 150
4700939273 . . . . . 142, 150
4700939275 . . . . . 142, 150
4700939276 . . . . . 142, 150
4700939277 142
4700939278 142
4700939280 140
4700939281 140
4700939282 140
4700939283 140
4700939284 140

4700939285 140
4700939286 140
4700939287 140
4700939348 . . . . . 148, 150
4700939349 142
4700939350 . . . . . 142, 150
4700939351 142
4700939693 420
4700939826 488
4700940451 . . . . . 28, 488
4700940676 246
4700945622 476
4700945632 466
4700945633 466
4700945634 466
4700945635 466
4700945636 466
4700945637 466
4700945657 20
4700945660 476
4700945661 476
4700945757 . . . . . 188, 210
4700947679 468
4700947680 . . . . . 394, 418
4700947687 526
4700947690 112
4700950348 518
4700950417 290
4700950568 . . . . . 6, 8, 10, 12, 16, 18, 100
4700950631 158
4700950632 158
4700950634 156
4700960067 364
4700989151 216
4700991658 500
4811000074 . . . . . 154, 294, 298
4811000077 372
4811000086 . . . . . 184, 200
4811000149 98
4811000150 98
4811000163 336
4811000172 . . . . . 304, 310
4811000176 . . . . . 304, 310
4811000177 304
4811000178 304
4811000197 212
4811000198 212
4811000199 212
4811000200 280
4811000201 280
4811000202 214
4811000205 280
4811000206 286
4811000207 286
4811000209 212
4811000211 212
4811000212 . . . . . 234, 260
4811000214 212
4811000215 212
4811000216 . . . . . 234, 260
4811000217 212
4811000218 . . . . . 234, 260
4811000228 . . . . . 184, 200
4811000229 . . . . . 184, 200
4811000230 . . . . . 184, 200
4811000231 296
4811000232 296
4811000233 296
4811000234 . . . . . 152, 172
4811000237 . . . . . 152, 172
4811000239 . . . . . 152, 172
4811000242 200
4811000261 280
4811000263 280
4811000265 454
4811000268 454
4811000269 454
4811000292 360
4811000305 298
4811000310 . . . . . 184, 200
4811000316 370
4811000341 298
4811000391 298
4811000392 298
4811000393 298
4811000395 356
4811000396 380
4811000397 380
4811000416 . . . . . 152, 172
4811000417 244
4811000429 336
4811000458 . . . . . 426, 514, 518
4811000462 74
4811000481 130
4811000529 360
4812002714 118
4812013038 542
4812013040 542
4812013160 544
4812013161 544
4812028097 100
4812030096 . . . . . 12, 18, 94

4812031626 . . . . . 6, 8, 10, 12, 16, 18, 118
4812110352 458
4812110367 456
4812110560 314
4812110572 42
4812110642 76
4812110644 76
4812110670 546
4812110768 112
4812110769 112
4812110843 112
4812110884 336
4812110885 472
4812110886 488
4812110891 470
4812110901 488
4812110930 112
4812110931 132
4812111020 . . . . . 36, 40
4812111035 . . . . . 226, 230
4812111092 40
4812111103 . . . . . 36, 40, 42
4812111122 . . . . . 90, 92
4812111167 76
4812111214 256
4812111216 486
4812111241 334
4812111248 340
4812111264 112
4812111268 366
4812111294 472
4812111311 508
4812111653 30
4812111768 282
4812111769 284
4812111770 282
4812111771 282
4812111780 488
4812111831 76
4812111832 134
4812111833 . . . . . 134, 136
4812111981 . . . . . 308, 312
4812112000 . . . . . 308, 312
4812112015 98
4812112017 320
4812112043 76
4812112044 76
4812112059 52
4812112062 366
4812112065 316
4812112066 316
4812112067 316
4812112068 360
4812112070 316
4812112071 370
4812112072 384
4812112097 110
4812112108 . . . . . 256, 276
4812112111 76
4812112138 . . . . . 82, 86, 90
4812112139 . . . . . 84, 88, 92
4812112159 30
4812112171 . . . . . 236, 238
4812112175 244
4812112181 262
4812112188 . . . . . 298, 300
4812112200 164
4812112202 174
4812112211 186
4812112213 202
4812112227 366
4812112229 366
4812112231 366
4812112236 . . . . . 298, 302
4812112238 . . . . . 218, 222
4812112260 254
4812112262 . . . . . 4, 10, 12, 16, 18, 254
4812112267 . . . . . 392, 408, 446
4812112290 294
4812112294 406
4812112304 . . . . . 152, 172
4812112306 . . . . . 152, 172
4812112308 . . . . . 152, 172
4812112325 372
4812112341 280
4812112343 124
4812112344 124
4812112355 98
4812112374 336
4812112393 134
4812112402 70
4812112403 66
4812112404 64
4812112405 72
4812112413 . . . . . 86, 88, 96
4812112417 360
4812112419 . . . . . 360, 366
4812112421 132
4812112423 530
4812112435 134
4812112438 76
4812112455 . . . . . 82, 84, 86, 88

4812112460 376
4812112465 76
4812112479 130
4812112487 106
4812112508 288
4812112535 30
4812112542 224
4812112555 . . . . . 212, 284
4812112556 214
4812112559 280
4812112560 236
4812112561 236
4812112614 36
4812112639 124
4812112640 386
4812112641 386
4812112642 386
4812112647 124
4812112648 214
4812112655 122
4812112656 122
4812112686 322
4812112688B 316
4812112691 322
4812112710 130
4812112729 122
4812112736 74
4812112761 124
4812112774 376
4812112776 124
4812112777 124
4812112784 . . . . . 82, 84, 86, 88, 90, 92
4812112791 384
4812112792 386
4812112793 336
4812112834 64
4812112837 362
4812112838 362
4812112843 66
4812112884 66
4812112916 336
4812112917 360
4812112924 346
4812112950 74
4812112952 74
4812113032 512
4812113040 130
4812113058 356
4812113083 510
4812113086 380
4812113090 76
4812113111 . . . . . 126, 126
4812113117 336
4812113118 336
4812113123 386
4812113140 336
4812113141 336
4812113158 356
4812113160 . . . . . 356, 548
4812113162 370
4812113167 350
4812113168 . . . . . 24, 76
4812113169 76
4812113170 76
4812113238 354
4812113245 510
4812113315 52
4812113476 96
4812113478 472
4812113491 522
4812113492 522
4812113569 . . . . . 152, 172
4812113573 106
4812113607 30
4812113622 518
4812113623 . . . . . 514, 518
4812113624 514
4812113640 124
4812113641 124
4812113708 . . . . . 112, 112
4812113786 492
4812113819 100
4812113832 94
4812113875 488
4812113878 112
4812113879 112
4812113897 114
4812113898 114
4812113903 96
4812113926 106
4812113941 . . . . . 224, 234, 260
4812113959 98
4812113963 . . . . . 152, 172
4812113983 286
4812114046 526
4812114047 526
4812114107 106
4812114146 356
4812114156 356
4812114172 472
4812114194 454
4812114205 214

4812114212 118
4812114213 488
4812114214 488
4812114221 98
4812114223 94
4812114224 130
4812114225 130
4812114226 130
4812114227 130
4812114228 130
4812114245 510
4812114246 510
4812114257 508
4812114280 110
4812114311 . . . . . 514, 518
4812114397 104
4812114426 316
4812114433 380
4812114434 218
4812114465 112
4812114492 282
4812114519 . . . . . 234, 260
4812114546 104
4812114547 104
4812114548 104
4812114563 . . . . . 396, 448
4812114564 . . . . . 396, 434, 448
4812114565 . . . . . 396, 434, 448
4812114566 . . . . . 396, 434, 448
4812114567 . . . . . 396, 426, 434, 436, 444, 448, 450
4812114568 . . . . . 392, 446
4812114569 398
4812114570 436
4812114571 436
4812114572 . . . . . 436, 450
4812114573 434
4812114574 434
4812114575 434
4812114576 434
4812114577 442
4812114578 442
4812114579 442
4812114580 442
4812114581 442
4812114582 444
4812114583 444
4812114584 444
4812114585 444
4812114586 410
4812114587 410
4812114588 410
4812114593 412
4812114598 416
4812114599 416
4812114600 416
4812114601 416
4812114602 416
4812114603 416
4812114604 416
4812114605 416
4812114606 416
4812114607 416
4812114608 416
4812114609 416
4812114610 416
4812114611 . . . . . 416, 416, 416, 416, 416
4812114612 416
4812114613 416
4812114619 318
4812114622 198
4812114652 198
4812114655 318
4812114656 336
4812114720 378
4812114726 30
4812114742 538
4812114756 58
4812114777 76
4812114803 488
4812114804 534
4812114813 122
4812114814 62
4812114815 276
4812114828 66
4812114829 66
4812114830 66
4812114831 66
4812114833 40
4812114873 336
4812114910 30
4812114913 124
4812114931 528
4812114932 528
4812114935 122
4812114949 122
4812114969 76
4812114971 76
4812114973 506
4812114984 370
4812115011 460
4812115013 . . . . . 514, 518
4812115019 460

4812115020 376
4812115022 68
4812115026 460
4812115051 . . . . . 164, 174, 236
4812115063 294
4812115064 . . . . . 212, 294
4812115065 294
4812115066 68
4812115067 68
4812115068 68
4812115069 68
4812115093 350
4812115147 100
4812115162 416
4812115164 . . . . . 394, 418, 420
4812115165 418
4812115166 394
4812115167 422
4812115168 422
4812115169 422
4812115170 . . . . . 394, 418
4812115171 . . . . . 394, 418
4812115172 422
4812115175 426
4812115177 426
4812115178 426
4812115179 426
4812115180 426
4812115181 424
4812115182 424
4812115183 424
4812115184 430
4812115185 430
4812115186 . . . . . 400, 420
4812115187 430
4812115188 440
4812115189 440
4812115190 440
4812115191 440
4812115192 452
4812115193 394
4812115194 394
4812115195 394
4812115196 394
4812115197 438
4812115198 438
4812115199 440
4812115200 412
4812115201 412
4812115202 410
4812115203 412
4812115204 412
4812115205 412
4812115206 412
4812115207 412
4812115208 412
4812115209 412
4812115210 412
4812115211 412
4812115212 412
4812115213 412
4812115214 412
4812115215 412
4812115216 412
4812115217 412
4812115218 412
4812115219 414
4812115220 414
4812115223 414
4812115224 440
4812115225 414
4812115226 414
4812115228 420
4812115229 420
4812115230 420
4812115387 . . . . . 390, 406
4812115392 32
4812115398 32
4812115463 284
4812115467 32
4812115508 46
4812115767 326
4812115810 382
4812115832 280
4812115835 . . . . . 152, 522
4812115921 384
4812115947 32
4812115949 32
4812115950 32
4812116023 96
4812116029 76
4812116039 134
4812116181 . . . . . 384, 546
4812116192 420
4812116193 420
4812116194 420
4812116195 420
4812116197 420
4812116198 420
4812116199 412
4812116201 420
4812116308 68

4812116333 32
4812116334 32
4812116340 32
4812116341 130
4812116342 130
4812116346 388
4812116354 388
4812116357 474
4812116361 310
4812116362 310
4812116367 . . . . . 388, 546
4812116587 388
4812116588 388
4812116617 46
4812116622 376
4812116645 214
4812116651 56
4812116652 56
4812116653 56
4812116687 200
4812116702 32
4812116738 . . . . . 308, 312
4812116781 . . . . . 244, 262
4812116792 66
4812116793 66
4812116799 372
4812116806 298
4812116807 298
4812116821 . . . . . 32, 50
4812116834 122
4812116836 122
4812116862 64
4812116867 390
4812116877 312
4812116884 390
4812116921 200
4812116969 154
4812116986 454
4812117024 298
4812117026 116
4812117027 116
4812117040 118
4812117043 102
4812117048 50
4812117054 102
4812117108 330
4812117149 332
4812117248 . . . . . 74, 116, 460, 522
4812117322 . . . . . 234, 260
4812117323 260
4812117324 234
4812117325 . . . . . 152, 172
4812117326 . . . . . 152, 172
4812117349 . . . . . 514, 518, 528
4812117379 132
4812117436 212
4812117448 212
4812117450 212
4812117451 212
4812117473 66
4812117490 488
4812117498 126
4812117507 30
4812117508 32
4812117512 32
4812117530 32
4812117533 132
4812117602 . . . . . 114, 114
4812117665 298
4812117699 114
4812117702 212
4812117710 114
4812117732 212
4812117751 98
4812117796 . . . . . 230, 232
4812117797 . . . . . 226, 228
4812117839 . . . . . 62, 62, 62, 62
4812117860 108
4812117922 . . . . . 478, 482
4812117924 . . . . . 478, 480
4812117925 . . . . . 482, 484
4812117942 . . . . . 132, 132
4812117964 456
4812118062 46
4812118102 118
4812118150 . . . . . 256, 258
4812118151 . . . . . 276, 278
4812118154 . . . . . 304, 310
4812118179 106
4812118203 102
4812118214 . . . . . 226, 230
4812118245 98
4812118250 522
4812118275 122
4812118280 126
4812118285 104
4812118287 104
4812118312 486
4812118385 310
4812118393 244
4812118432 104
4812118433 106

4812118464 . . . . . 304, 310
4812118467 . . . . . 304, 310
4812118494 112
4812118499 130
4812118624 362
4812118625 360
4812118626 122
4812118641 362
4812118670 122
4812118697 488
4812118754 488
4812118814 . . . . . 16, 18, 82, 84, 86, 88, 90, 92
4812118816 . . . . . 480, 484
4812118842 538
4812118853 74
4812118893 540
4812118960 214
4812118961 214
4812118976 64
4812118989 66
4812118994 . . . . . 64, 66
4812119127 112
4812119227 488
4812119295 474
4812119306 454
4812119307 526
4812119317 490
4812119327 454
4812119342 . . . . . 24, 76, 78
4812119364 406
4812119365 406
4812119490 522
4812119649 526
4812119788 468
4812119807 32
4812119809 32
4812120070 404
4812120100 498
4812120101 498
4812120116 498
4812120160 50
4812120205 128
4812120255 418
4812120257 424
4812120269 . . . . . 426, 426
4812120334 348
4812120363 50
4812120376 118
4812120414 32
4812120443 498
4812120444 498
4812120445 498
4812120468 376
4812120469 376
4812120526 50
4812120544 390
4812120560 50
4812120615 32
4812120618 32
4812120661 . . . . . 32, 50
4812120674 . . . . . 134, 134
4812120676 134
4812120722 64
4812120724 64
4812120790 348
4812120830 . . . . . 288, 292
4812120840 . . . . . 218, 220
4812120923 314
4812121090 64
4812121111 32
4812121118 384
4812121152 64
4812121201 74
4812121209 . . . . . 20, 82, 84, 86, 88, 90, 92
4812121264 . . . . . 384, 546
4812121282 32
4812121331 486
4812121396 32
4812121397 32
4812121398 32
4812121550 284
4812121665 32
4812121763 226
4812121764 230
4812121815 110
4812121818 548
4812121848 374
4812121866 110
4812121914 52
4812121947 . . . . . 288, 290
4812122054 50
4812122611 374
4812122685 110
4812122777 546
4812122778 546
4812122780 546
4812122819 546
4812122932 186
4812123035 306
4812123471 548
4812123488 548
4812123489 548

4812123490 548
4812123491 548
4812123523 548
4812123524 548
4812123525 548
4812123533 548
4812123534 548
4812123681 548
4812123699 548
4812123727 548
4812123728 548
4812123747 548
4812123793 68
4812123800 512
4812124090 548
4812124091 548
4812124199 . . . . . 542, 542
4812124238 324
4812124239 324
4812124256 . . . . . 542, 542
4812125407 456
4812126248 488
4812126260 496
4812126261 496
4812126463 538
4812126487 538
4812126698 476
4812126777 372
4812126778 372
4812127083 234
4812127084 234
4812127085 260
4812127086 260
4812127103 280
4812127104 280
4812127109 . . . . . 234, 260
4812127110 . . . . . 234, 260
4812127112 184
4812127116 . . . . . 152, 172
4812127117 . . . . . 152, 172
4812127147 . . . . . 152, 172
4812127148 . . . . . 152, 172
4812127820 504
4812127909 504
4812127932 504
4812128222 504
4812142385 542
4812142386 542
4812156151 274
4812156152 252
4812156170 24
4812156451 118
4812156599 274
4812156883 148
4812156884 148
4812156885 138
4812156886 . . . . . 138, 146
4812156887 . . . . . 136, 144
4812156888 . . . . . 136, 144
4812156892 150
4812156893 150
4812156894 150
4812156895 150
4812156896 150
4812156897 150
4812156898 150
4812156899 150
4812156951 150
4812156952 150
4812156953 148
4812156954 148
4812156955 148
4812156956 148
4812156957 148
4812156958 148
4812156959 148
4812156962 146
4812156963 146
4812156964 146
4812156965 146
4812156993 . . . . . 4, 14
4812156994 6
4812156995 10
4812156999 . . . . . 166, 178, 188, 194, 206
4812157051 . . . . . 166, 188, 194
4812157052 . . . . . 166, 188, 194
4812157053 . . . . . 166, 188, 194
4812157054 166
4812157055 166
4812157056 . . . . . 166, 182
4812157057 . . . . . 168, 182, 190, 210
4812157058 . . . . . 166, 182
4812157059 . . . . . 166, 182
4812157060 . . . . . 170, 180, 192, 196, 208
4812157061 . . . . . 170, 180, 192, 196, 208
4812157062 . . . . . 170, 180, 192, 196, 208
4812157063 . . . . . 170, 180, 192, 196, 208
4812157064 . . . . . 168, 182
4812157065 . . . . . 178, 206
4812157066 178
4812157067 178
4812157068 . . . . . 178, 206

4812157069 178
4812157070 . . . . . 178, 206
4812157071 . . . . . 178, 206
4812157072 . . . . . 178, 206
4812157073 196
4812157074 . . . . . 166, 188
4812157075 . . . . . 166, 188
4812157076 . . . . . 188, 194
4812157077 . . . . . 188, 194
4812157078 . . . . . 188, 194, 210
4812157079 190
4812157080 206
4812157081 206
4812157082 210
4812157083 206
4812157084 206
4812157085 210
4812157091 266
4812157092 266
4812157093 266
4812157094 266
4812157095 270
4812157096 268
4812157097 270
4812157098 268
4812157099 268
4812157151 . . . . . 268, 270
4812157152 274
4812157155 274
4812157156 274
4812157157 80
4812157158 80
4812157159 80
4812157160 80
4812157161 80
4812157162 80
4812157170 160
4812157180 156
4812157182 158
4812157184 160
4812157185 160
4812157186 162
4812157187 162
4812157193 248
4812157194 248
4812157195 248
4812157196 248
4812157197 248
4812157198 250
4812157199 250
4812157251 250
4812157252 252
4812157253 252
4812157254 14
4812157255 18
4812157275 22
4812157277 . . . . . 12, 14
4812157363 . . . . . 8, 14
4812157365 238
4812157366 238
4812157367 238
4812157368 238
4812157369 238
4812157370 238
4812157371 . . . . . 178, 206, 238
4812157372 238
4812157373 238
4812157374 240
4812157375 240
4812157376 240
4812157377 242
4812157378 242
4812157379 240
4812157380 240
4812157381 240
4812157382 242
4812157383 242
4812157384 242
4812157386 242
4812157387 242
4812157390 76
4812157391 76
4812157393 76
4812157394 76
4812157460 160
4812157471 300
4812157472 300
4812157473 300
4812157474 300
4812157596 100
4812157654 . . . . . 220, 222
4812157655 222
4812157656 300
4812157657 300
4812157681 . . . . . 220, 222
4812157682 . . . . . 220, 222
4812157683 222
4812157684 . . . . . 220, 222
4812157685 . . . . . 220, 222
4812157686 . . . . . 220, 222
4812157687 . . . . . 220, 222
4812157688 222

4812157758 292
4812157759 292
4812157760 292
4812157761 292
4812157765 . . . . . 524, 526
4812157766 524
4812157767 524
4812157768 524
4812157770 . . . . . 220, 222
4812157771 . . . . . 220, 222
4812157772 . . . . . 220, 222
4812157773 . . . . . 220, 222
4812157784 76
4812157785 76
4812157975 270
4812158053 16
4812158153 . . . . . 190, 196
4812158154 . . . . . 168, 176
4812158155 156
4812158163 410
4812158164 410
4812158165 410
4812158177 100
4812158178 100
4812158197 270
4812158198 264
4812158199 266
4812158251 270
4812158289 516
4812158290 516
4812158291 516
4812158292 516
4812158293 416
4812158360 242
4812158367 474
4812158395 . . . . . 258, 278
4812158398 166
4812158452 194
4812158481 518
4812158482 518
4812158485 420
4812158859 440
4812158990 242
4812158992 426
4812159183 412
4812159184 . . . . . 410, 410, 410
4812159461 242
4812159558 . . . . . 28, 412
4812159763 232
4812159767 426
4812159768 426
4812159775 414
4812159786 100
4812159787 100
4812160053 538
4812160294 160
4812160388 414
4812160598 520
4812160654 . . . . . 220, 222
4812160664 254
4812160666 416
4812160767 516
4812160771 426
4812160772 426
4812160876 166
4812160877 . . . . . 414, 414, 414, 414
4812161098 412
4812161099 . . . . . 412, 442
4812161155 . . . . . 414, 414
4812161156 . . . . . 414, 414
4812161158 416
4812161165 . . . . . 394, 420
4812161251 414
4812161259 80
4812161260 80
4812161261 80
4812161276 . . . . . 456, 458
4812161298 514
4812161352 . . . . . 412, 420, 434, 434, 436
4812161353 412
4812161370 424
4812161371 438
4812161396 28
4812161855 . . . . . 8, 12, 18
4812161868 18
4812161883 4
4812161884 . . . . . 12, 18
4812161887 . . . . . 4, 18
4812162571 . . . . . 394, 418
4812162572 . . . . . 394, 418
4812162654 426
D900505654 100
D900509687 100
D951069237 80
D967536859 264
D967536871 274
D967711040 270

Dynapac Compaction Equipment AB
Box 504, SE 371 23 Karlskrona, Sweden

www.dynapac.com