M0094033-03 (en-us)
May 2019

RUTHZIL TRATOR COMERCIAL DE PEÇAS LTDA 11 97083-6812 ROLANDO CITRANGULO

Parts Manual

CB7, CB10 Asphalt Compactor

G441-UP (Machine)
5B41-UP (Machine)
2W21-UP (Engine)
2W21-UP (Engine)

Powered By C4.4 Engine

PUBLICATIONS.CAT.COM

Product and Dealer Information

Note: For product identification plate locations, see the section “Product Identification Information” in the Operation and Maintenance Manual.

Delivery Date: _____

Product Information

Model: _____

Product Identification Number: _____

Engine Serial Number: _____

Transmission Serial Number: _____

Generator Serial Number: _____

Attachment Serial Numbers: _____

Attachment Information: _____

Customer Equipment Number: _____

Dealer Equipment Number: _____

Dealer Information

Name: _____ Branch: _____

Address: _____

_____

_____

	Dealer Contact	Phone Number	Hours
Sales: Parts:	_____	_____	_____
Service:	_____	_____	_____
	_____	_____	_____

MEMORANDA

TABLE OF CONTENTS

NAME PAGE
PAGE

GENERAL INFORMATION. A4

REPAIR ALTERNATIVES. A7

SUPPLEMENTAL COOLANT ADDITIVES. A8

MAINTENANCE PARTS. A9

INDEX A12

MACHINE ARRANGEMENT 1
- CHASSIS AR. 1
- COMMON AR 1
- MACHINE AR 2

ENGINE ARRANGEMENT 4
- ENGINE AR-PRIMARY. 4
- INSTALLATION AR-ENGINE 7

BASIC ENGINE 8
- BELT TENSIONER GP. 8
- CAMSHAFT GP 10
- COVER GP-VALVE MECHANISM 11
- CRANKSHAFT GP 12
- CYLINDER BLOCK GP 16
- CYLINDER BLOCK GP-SHORT. 18
- CYLINDER HEAD AS 19
- CYLINDER HEAD GP. 21
- DRAIN GP-ENGINE OIL. 23
- DRIVE GP-FAN. 24
- FLYWHEEL GP. 25
- GUARD GP-BELT 26
- HOUSING GP-FLYWHEEL. 27
- HOUSING GP-FRONT 28
- JET GP-PISTON COOLING 31
- LIFTING GP-ENGINE 32
- MOUNTING GP-ENGINE 33
- PAN GP-OIL 35
- PISTON & ROD GP 36
- PLUG GP-ENGINE. 39
- PULLEY GP-ALTERNATOR. 40
- PULLEY GP-CRANKSHAFT 41
- ROCKER ARM GP 42
- SERVICE GP-ENGINE 45
- SUPPRESSION GP-SOUND 47

LUBRICATION SYSTEM 48
- FILLER GP-ENGINE OIL 48
- FILTER GP-ENGINE OIL 49
- FUMES DISPOSAL GP 50
- GAUGE GP-OIL LEVEL (DIPSTICK) 51
- PUMP GP-ENGINE OIL 53
- VALVE GP-FLUID SAMPLING 54

COOLING SYSTEM. 55

NAME

- CONNECTION GP-WATER. 55
- COOLER GP-ENGINE OIL. 56
- FAN GP-SUCTION. 58
- LINES GP-COOLANT. 60
- PUMP GP-WATER. 64
- RADIATOR & HYD OIL COOLER GP. 65
- TANK GP-COOLANT. 69

AIR INLET AND EXHAUST SYSTEM. 73
- AIR CLEANER GP. 73
- ELBOW GP-AIR INLET. 80
- LINES GP-COOLING. 81
- MANIFOLD GP-EXHAUST. 83
- MOUNTING GP-EXHAUST. 84
- MUFFLER GP. 85
- TURBOCHARGER GP. 89
- VALVE GP-SOLENOID. 91

FUEL SYSTEM. 92
- FILTER GP-FUEL. 92
- INJECTOR GP-FUEL. 96
- LINES GP-FUEL. 97
- PUMP GP-FUEL INJECTION. 105
- RAIL GP-FUEL. 107
- TANK & MTG GP-FUEL. 109
- TANK GP-FUEL. 110

ELECTRICAL AND STARTING SYSTEM. 112
- ALTERNATOR GP-CHARGING. 112
- BATTERY & WIRING GP. 113
- CIRCUIT BREAKER GP. 116
- CONTROL GP-COMMUNICATION. 118
- CONTROL GP-ELECTRONIC. 120
- CONTROL GP-UNPROGRAMMED. 123
- ELECTRICAL AR. 124
- ELECTRONICS GP-MACHINE. 124
- ELECTRONICS GP-MONITOR. 124
- HARNESS AS-CAB. 127
- HARNESS AS-CHASSIS. 131
- HARNESS AS-ENGINE. 134
- HARNESS AS-HEATER & AIR COND. 136
- HARNESS AS-LIGHTING. 136
- HARNESS AS-MONITOR. 138
- HARNESS AS-PLATFORM. 139
- HARNESS AS-SENSOR. 141
- HARNESS AS-WIRING. 141
- HARNESS GP-WIRING. 142
- INSTALLATION AR-COMMUNICATION. 143
- INSTALLATION GP-COMMUNICATION. 144
- LAMP GP-DOME. 160
- LAMP GP-FLOOD. 161
- LAMP GP-SIGNAL. 164
- LAMP GP-WARNING BEACON. 166

TABLE OF CONTENTS

NAME PAGE

LIGHTING GP-FLOOD 168
LIGHTING GP-ROADING 176
LIGHTING GP-WARNING BEACON 178
MOUNTING GP-CONTROL 179
PANEL GP-CIRCUIT BREAKER 180
SENSOR & MOUNTING GP. 181
SENSOR & MTG GP-TEMPERATURE 184
SENSOR GP-ENGINE. 186
SENSOR GP-POSITION. 187
SENSOR GP-SPEED 191
SENSOR GP-TEMPERATURE 192
STARTING AID GP 193
STARTING MOTOR GP-ELECTRIC 194
SWITCH GP-DISCONNECT. 195
WIRING GP-AIR CONDITIONER 196
WIRING GP-CAB 198
WIRING GP-ENGINE. 202
WIRING GP-MACHINE 204
WIRING GP-PLATFORM 209

POWER TRAIN. 211
DRUM GP-COMPACTOR. 211
LINES GP-PROPEL 216
MOTOR & MTG GP-PROPEL 222
MOUNTING GP-DRUM 226
POWER TRAIN AR 230
PUMP & MTG GP-PROPEL 232
SHAFT GP-DRIVE 234
SUPPORT GP-DRUM 239

FRAME AND BODY 241
COVER GP-ACCESS 241
DOOR GP-ACCESS 243
ENCLOSURE GP.....245
FRAME GP-MAIN. 249
GUARD GP-DRUM 251
HITCH AR 253
HITCH GP-ARTICULATING 254
SCRAPER GP-DRUM 260
STEP GP 264
SUPPRESSION GP-SOUND 265

BRAKING SYSTEM 266
KIT-BRAKE RELEASE 266
LINES GP-BRAKE 267
LINES GP-BRAKE & SHIFT 268

STEERING SYSTEM. 272
CYLINDER & MTG GP-STEERING.....272
KNOB GP-STEERING 273
LINES GP-STEERING. 274
VALVE & MTG GP-STEERING 278
VALVE GP-FLOW CONTROL. 282

HYDRAULIC SYSTEM 286

NAME

CYLINDER & MTG GP-OFFSET.....286
CYLINDER GP-HYDRAULIC.....287
CYLINDER GP-SIDECUTTER.....288
FILTER & MTG GP-HYDRAULIC.....289
FILTER GP-OIL.....290
HEAD GP-PUMP.....291
HYDRAULIC AR.....293
HYDRAULIC AR-AUXILIARY.....293
LINES GP-AUXILIARY HYDRAULIC.....295
LINES GP-HYDRAULIC.....298
LINES GP-HYDRAULIC OIL COOLER.....302
MANIFOLD GP-CONTROL.....306
MOTOR GP-GEAR.....307
MOTOR GP-PISTON.....308
PUMP & MTG GP-GEAR.....317
PUMP & MTG GP-HYDRAULIC.....318
PUMP GP-GEAR.....321
PUMP GP-PISTON.....323
ROTATING GP-MOTOR.....327
ROTATING GP-PUMP.....329
TANK & MTG GP-HYDRAULIC.....331
TANK GP-HYDRAULIC.....332
VALVE & MTG GP-CONTROL.....334
VALVE & MTG GP-SIDECUTTER.....340
VALVE & MTG GP-SOLENOID.....342
VALVE GP-CONTROL.....343
VALVE GP-PUMP CONTROL.....347
VALVE GP-SHUTTLE.....349
VALVE GP-SOLENOID.....350

IMPLEMENTS.....352
SIDECUTTER AR.....352
SIDECUTTER GP.....353

VIBRATORY SYSTEM.....362
DRIVE GP-VIBRATORY.....362
HOUSING GP-ECCENTRIC WEIGHT.....368
LINES GP-VIBRATORY.....375
MOTOR & MTG GP-PISTON.....379
MOTOR & MTG GP-VIBRATORY.....381
PULLEY GP.....385
PUMP & MTG GP-VIBRATORY.....387
SENSOR AR-COMPACTION.....389
SHAFT GP-VIBRATORY DRIVE.....390
VALVE GP-DIVERTER.....391
VIBRATORY AR.....392
WEIGHT GP-ECCENTRIC.....397

WATER SYSTEM.....414
BAR GP-SPRAY.....414
DEFLECTOR GP.....416
FILTER GP-WATER.....417
KIT-WATER SPRAY.....418
LINES GP-WATER SPRAY.....419

TABLE OF CONTENTS

NAME PAGE

MAT & MTG GP-WATER 428

PUMP GP-DIAPHRAGM....432
PUMP GP-WATER SPRAY....433
SPRAY AR-WATER....434
SPRAY GP-WATER....435
TANK & MTG GP-WATER....437
TANK GP-WATER....438

OPERATOR STATION....446
AIR CONDITIONER AR....446
AIR CONDITIONER GP....447
CAB GP....456
CAB GP-ENCLOSED ROPS....470
CANOPY GP....475
COMPRESSOR GP-REFRIGERANT....479
CONDENSER & MTG GP-REFRIGERANT....481
CONSOLE GP-OPERATOR....482
CONTROL GP-JOYSTICK....490
COVER GP-CAB....493
DISPLAY GP-MONITOR....501
DOOR GP-CAB....502
FLOOR MAT GP....512
FLOOR MAT GP-CAB....514
GUARD GP-VANDALISM....516
INSTALLATION GP-CONTROLS....517
LINER GP-CAB....518
LINES GP-AIR CONDITIONER....522
LINES GP-HEATER....526
LOCK GP-ROTATION....534
MIRROR GP-REAR VIEW....536
MODULE GP-KEYPAD....540
MOUNTING GP-PLATFORM....541
OPERATOR AR....542
PLATFORM GP-CAB....545
PLATFORM GP-OPERATOR....546
PLATFORM GP-SLIDE....558
ROPS GP....561
SEAT & ARMREST GP....563
SEAT BELT GP....571
SEAT GP....572
SEAT GP-SUSPENSION....575
SUSPENSION GP-SEAT....576
VALVE GP-WATER....580
VISOR GP-CAB....581
WASHER GP-WINDOW....582
WINDOW GP-CAB....584
WIPER GP-WINDOW....592

SERVICE EQUIPMENT AND SUPPLIES....595
FILM GP....595
PLATE & FILM GP....604
PLATE & FILM GP-CERTIFICATION....611
PLATE-SERIAL NUMBER....613

NAME PAGE

PART NUMBER INDEX B1

GENERAL INFORMATION

1. MACHINE IDENTIFICATION

machines are identified by Product Identification Numbers (PIN). Some components included in a machine may be identified by Serial Numbers (S/N). Typical components that will be serialized include PARTS engines, transmissions, bulldozers, and rippers. The machine and engine are further identified by arrangement numbers and in some cases modification numbers. These numbers are shown on the product identification plate(s) and on the master plate in the operator's compartment.

Cat dealers need all of these numbers to determine accurate parts identification.

Effective First Quarter 2001 the Cat Product Identification Number (PIN) changed from 8 to 17 characters. In an effort to provide uniform equipment identification, Caterpillar and other construction equipment manufacturers are moving to comply with the standard. Non-road machine PINs are defined by ISO 10261. The new PIN format will apply to all Cat generator sets. The PIN plates and frame character PIN. The new

Where:

1. Caterpillar's World Manufacturing Code (characters 1-3)
2. Machine Descriptor (characters 4-8)
3. Check Character (character 9)
4. Machine Indicator Section (MIS) or Product Sequence Number (characters 10-17). These were previously INDEX referred to as the Serial Number.

Machines and generator sets produced before First 2001 will maintain their 8 character PIN format.

Components such as engines, transmissions, axles, etc. Cat and work tools will continue to use an 8 character Serial Number (S/N).

2. ORDERING

Quality Cat replacement parts are available from Cat dealers throughout the world. Their parts inventories are latest version protect your investment in Cat machines. Dealers may machines and offer repair kits or remanufactured parts to allow marking will display the 17 selection of the most effective repair alternative for a format will look like the following: particular situation. When ordering parts, your order should specify the quantity, part number, part name, and the serial number/product identification number of the machine for which the parts are needed.

3. PARTS MANUAL ORGANIZATION

Product information in this manual is presented as "information elements" that represent all of the components for the specific model. Engine Arrangement and Seat Group are examples of information elements. The information elements are organized alphabetically by part name and secondarily by part number within each major section of the manual.

4. TABLE OF CONTENTS

A table of contents (TOC) is found at the beginning of the manual. The TOC lists each section of the manual with a complete list of all information elements organized as they appear in the manual. Page numbers are provided for quick reference to detailed parts identification illustrations and serviceable consist lists.

5. MAINTENANCE PARTS

The Maintenance Parts Index, located near the Quarter beginning of the manual, references most frequently used maintenance part numbers, providing description, quantity, usage and page number. This information is organized alphabetically by part description.

⚠ WARNING

When replacement parts are required for this product Caterpillar recommends using Caterpillar replacement parts or parts with equivalent specifications including, but not limited to, physical dimensions, type, strength and material.

Failure to heed this warning can lead to premature failures, product damage, personal injury or death.

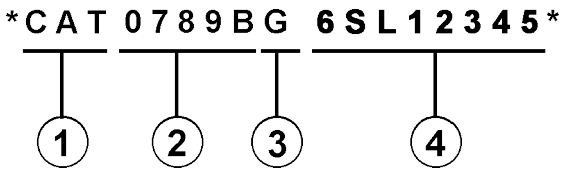

GENERAL INFORMATION

6. INDEX

The index located near the front of the manual is an alphabetical listing of all information elements included in the manual. Page numbers are provided for quick reference to detailed parts identification illustrations and to show where to reconnect illustrations that have been separated.

7. PART NUMBER INDEX

A numerical index listing all part numbers and the corresponding page number(s) appears at the back of the manual.

8. CAPTIONS

Captions located at the beginning of each information element identify the part number and part name along with additional descriptive information. PIN and S/N information found in each caption should be used to select correct information for a specific machine. Field replacement options, identification of optional attachment components, and where used ("part of") information is also provided.

The first line of a caption is shown in larger type font to indicate the beginning of an information element. Captions for additional pages that may be required to include the term (contd.).

9. NON-SERVICED PARTS

In some instances it is necessary to display non-serviced parts that are a link to a lower level serviceable consist. These non-serviced part numbers are shown in italic type indicating that they are not available.

10. PARTS LIST REFERENCE NUMBERS

Numbers shown in the Ref No column correspond to those used in the associated graphic(s). An alphabetic suffix may be added to a reference number to identify lower level consist items. Numbers shown in the Graphic Ref column refer to the graphic number identifier displayed in the lower left corner of each illustration. The Graphic Ref number may be used in combination with the item Ref No to determine the correct part number. There may be intentional omission of a Ref No in a consist list as information is updated to reflect the latest information.

11. INDENTED PART NAMES

When a part name is indented in a parts list, it is part of (included in) the group or assembly under which it is indented.

12. ILLUSTRATION REFERENCE LETTERS

When necessary, illustrations contain reference letters (A, B, C etc.) that are intended to track lines and harnesses from one point to another. They are also used to reconnect illustrations that have been serviceable parts identification illustrations and to show where to reconnect illustrations that have been serviceable consist lists.

13. ABBREVIATIONS AND SYMBOLS

O.D. – Outside Diameter
I.D. – Inside Diameter
A – Not Part Of This Group
B – Use As Required
C – Change From Previous Type
D – Order By The Meter
E – Order By The Centimeter
F – Not Shown
G – Order By The Inch
I – Refer To Hydraulic Information System
M – Metric Part
R – Remfg Part May Be Available
Y – Separate Illustration
Z – Not Serviced Separately

14. DESCRIPTION OF TYPE CHANGES

Type - A type is defined as any configuration change that requires an additional Information Element for an Arrangement, Group, or Assembly. If serial number breaks for types are not available, a type # (Type 1, Type 2, etc.) will be displayed in the caption. These "type" changes are identified with a "C" note (change from previous type) in the Parts List. Only the "types" that apply to this Parts Manual will be included. Additional types may exist causing "C" notes to appear on an Information Element when no other types are shown.

15.<END>

This symbol indicates the end of an information element. numbers used

NOTE:

Continuing improvement and advancement of product design may cause changes to your machine which may not be included in this publication. Whenever a question arises regarding your Cat product or this publication, please consult your Cat dealer for the latest available consist list as information is updated to reflect the latest serviceable part numbers.

FRAME AND BODY

8E-3299 PLATFORM GP-CAB

PIN 3SK1-99999

SMCS-7253 — 100090751

NOTE	REF NO	GRAPHIC REF	PART NUMBER	QTY	PART NAME (1 2 3 4 5 6 PRODUCT LEVEL)	SEE PAGE
		1	3T-3863	1	PLATE AS	
	2	1	5B-3062	25	BOLT (3/8-16X.750IN)	
	3	1	6P-1076	41	WASHER-HARD (38MM THK)	
	4	1	9P-1464	2	SUPPORT AS-FOOT	
	5	1	7P-2228	19	BOLT (1/2-13X1IN)	
		1	6P-	19	WASHER-HARD (41MM THK)	
	6	1	8E-8136		COVER AS-LH	
		1	9F-2978	5	NUT-WELD (3/8-16 THD)	
		1	1P-8199	1	CLIP	
	7	1	7S-3411	4	COVER	
	8	1	6J-0488	19	SCREW-HEAD (3/8-16X.875IN)	
	9	1	[illegible]	1	COVER	
		1	8E-59[illegible]		GASKET	
	10	1	8E-3249	1	[illegible]	
		1	8E-3250	1	GASKET	
	11	1	3T-3836	1	HANDHOLD	
	12	1	8E-8976	1	COVER AS	
		1	9F-2978	8	NUT-WELD (3/8-16 THD)	
		1	8E-5979	1	GASKET	
	13	1	7T-0131	1	FLOORPLATE AS	
		1	1F-0748	4	NUT-WELD (1/2-13 THD)	
	14	1	7V-5087	1	PLUG-BUTTON	
	15	1	7T-0126	1	PLATE AS	
		1	9F-2978	5	NUT-WELD (3/8-16 THD)	
	16	1	7T-5068	1	COVER	
		1	7T-0779	1	GASKET	
	17	1	3T-3861	1	PLATE AS	
	18	1	8T-0354	4	BOLT (1/4-20X.625IN)	
M		1	8T-4295	4	WASHER-HARD (20MM THK)	
	19	1	8I-0484	1	FLOOR MAT	
	20	1	8E-8849	1	MODULE AS-OPERATOR	
	21	1	3T-3834	1	HANDHOLD	
	22	1	9P-8571	2	PLUG	
	23	2	8T-0354	4	BOLT (1/4-20X.625IN)	
M		2	8T-4295	4	WASHER-HARD (20MM THK)	
	24	2	5B-3062	17	BOLT (3/8-16X.750IN)	
	25	2	6P-1076	21	WASHER-HARD (38MM THK)	
	26	2	7T-0135	1	SEAL	
	27	2	7X-0375	2	BOLT (3/4-10X5IN)	
		2	7X-0693	2	WASHER-HARD (64MM THK)	
	28	2	3T-3852	2	PLATE	
	29	2	3T-5280	1	PLATE AS	
		2	7S-4628	6	SPACER	
	30	2	3T-6281	1	SEAL	
	31	2	7S-6017	1	GASKET	
	32	2	7S-9018	1	COVER AS	
		2	2S-2276	2	WASHER	
		2	6P-9028	2	SCREW-KNURLED	
	33	2	9P-3429	1	COVER	
	34	2	8E-9697	1	COVER	
	35	2	9D-3031	8	SCREW-SOCKET HEAD	
	36	2	9P-2142	8	MOUNTING	
	37	2	9P-9027	2	PLATE	
	38	2	7X-5390	2	BOLT (7/8-9X5IN)	
		2	7X-0672	2	WASHER-HARD	
	39	2	4L-6454	4	BOLT (3/8-16X1.0IN)	
	40	2	3T-4788	1	COVER	

12 FRAME AND BODY — 1 of 4 — SELP4570-01

FRAME AND BODY

8E-3299 PLATFORM GP-CAB (contd.)

100090751

NOTE	REF NO	GRAPHIC REF	PART NUMBER	QTY	PART NAME (1 2 3 4 5 6 PRODUCT LEVEL)	SEE PAGE
	41	2	8E-2515	1	COVER	
	42	2	7T-0134	1	PLATE	
	43	2	7T-0138	1	GASKET	
	44	2	7S-8724	1	GASKET	
	45	2	7S-8723	1	COVER	
	46	2	6V-1960	2	PLUG-BUTTON	

M-METRIC PART

SELP4570-01 — 2 of 4 — FRAME AND BODY 13

FRAME AND BODY

8E-3299 PLATFORM GP-CAB (contd.)

100090751

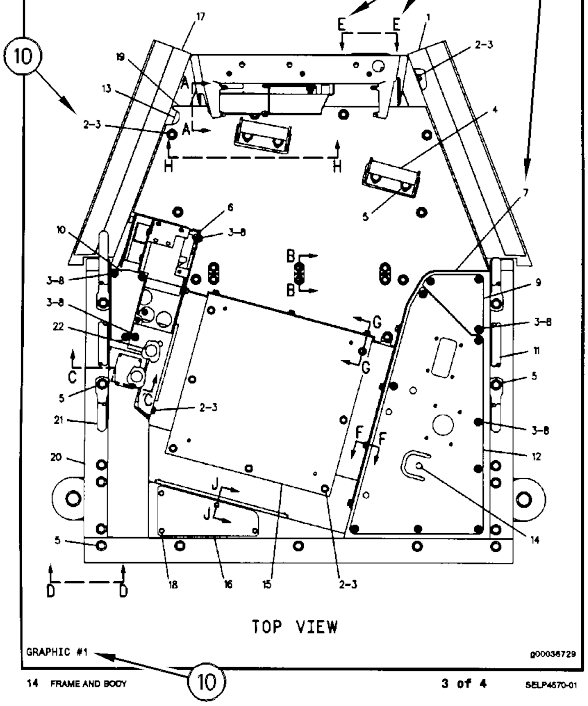

14 FRAME AND BODY — 3 of 4 — SELP4570-01

FRAME AND BODY

8E-3299 PLATFORM GP-CAB (contd.)

100090751

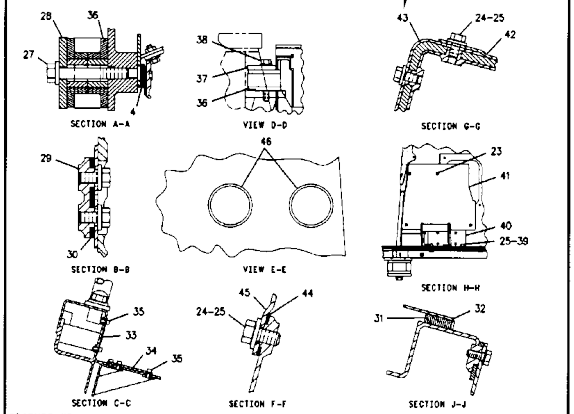

SELP4570-01 — 4 of 4 — FRAME AND BODY 15

REMANUFACTURED COMPONENTS

As an option when making repairs consider Cat Remanufactured Components. Components that are available through the Cat Remanufactured Program are identified three ways in the parts book:

- with the letter R in the note field of the parts list
- with an R* at the beginning of the first line of the caption
- with an *R at the end of the first line of the caption

Typical components included in the Remanufacturing Program include:

ALTERNATORS
CONNECTING RODS
CRANKSHAFTS - UNDERSIZE
CRANKSHAFTS - UPGRADE TO
NEW CYLINDER HEADS
ELECTRONIC CONTROL MODULES
(ECM) ELECTRONIC SENSORS
FUEL
INJECTORS
FUEL NOZZLES
FUEL PUMPS
GOVERNORS
OIL PUMPS
PISTONS
SHORT
BLOCKS
STARTERS
TURBOCHARGERS -
COMPLETE TURBOCHARGER
CARTRIDGES WATER PUMPS

Cat Remanufactured engines for many engine arrangements are also available.

SUPPLEMENTAL COOLANT ADDITIVES

CUSTOMER BENEFITS:

Protects against cavitation, foam, erosion, corrosion, and scale buildup in cooling systems.

- Provides measured coolant conditioner.

DESCRIPTION:

Additives deplete from the coolant with normal operation. For this reason, Supplemental Coolant Additives (SCA) must be added to all heavy duty coolants at regular intervals. In addition, when not using a fully formulated, pre-charged antifreeze, like Cat DEAC, an initial charge of SCA must be added to the cooling system. The amount of SCA added to the system is dependent on the capacity of the system.

The SCA for initial fill is provided as a liquid. SCA's for maintenance intervals are available in liquid form and as a spin- on element. (No Spin-on available for 3600 Family of Engines)

NOTE:

The amount of SCA added at initial fill is not the same as the amount added at maintenance intervals.

The coolant additive elements can be used with any ethylene or propylene glycol type antifreeze which meets ASTM D4985 or ASTM D5345 Specifications.

NOTE:

For use with standard heavy duty coolant only, not for use with Extended Life Coolant.

PARTS NEEDED:

Cooling System Capacity		Liquid SCA at Initial Fill	Liquid SCA at Maintenance *	Spin-on SCA Maintenance Element*
Liters	Gallons			
22-30	(6-8)	3P-2044 (1)	6V-3542 (1)	111-2370 (1)
30-38	(8-10)	3P-2044 (1) 6V-3542 (1)	111-2372 (1)	111-2369 (1)
38-49	(10-13)	3P-2044 (1) 8T-1589 (1)	111-2372 (1)	111-2369 (1)
49-64	(13-17)	3P-2044 (2)	8T-1589 (1)	9N-3368 (1)
64-83	(17-22)	3P-2044 (2) 8T-1589 (1)	111-2372 (1) 6V-3542 (1)	111-2371 (1)
83-114	(22-30)	3P-2044 (3) 8T-1589 (1)	3P-2044 (1)	9N-3718 (1)
114-163	(30-43)	3P-2044 (5)	3P-2044 (1) 6V-3542 (1)	111-2371 (2)
163-242	(43-64)	3P-2044 (8)	3P-2044 (2)	9N-3718 (2)

* Normal maintenance period is 250 hrs. See your Operation and Maintenance Manual for complete coolant maintenance instructions.

( ) Indicates quantity required.

MAINTENANCE PARTS

DESCRIPTION	PART NUMBER	QTY	WHERE USED	PAGE
AIR INLET AND EXHAUST SYSTEM				
FILTER ELEMENT AS-AIR (PRIMARY)	110-6326	1	AIR CLEANER GP	74
	222-9020	1	AIR CLEANER GP	75
FILTER ELEMENT AS-AIR (SECONDARY)	110-6331	1	AIR CLEANER GP	74
	222-9021	1	AIR CLEANER GP	75
GASKET-EXHAUST MANIFOLD	298-4570	1	MANIFOLD GP-EXHAUST	83
BASIC ENGINE				
BELT-SERPENTINE	286-7845	1	BELT TENSIONER GP	8
BELT-SERPENTINE (AIR CONDITIONER)	365-2985	1	BELT TENSIONER GP	9
GASKET (VALVE COVER)	392-9472	1	COVER GP-VALVE MECHANISM	11
KEY-WOODRUFF	067-6135	1	CAMSHAFT GP	10
		1	CRANKSHAFT GP	14
KEY-WOODRUFF (CRANKSHAFT)	067-6135	1	CRANKSHAFT GP	12
PLUG-DRAIN (ENGINE OIL)	7C-0351	2	DRAIN GP-ENGINE OIL	23
COOLING SYSTEM				
CAP AS-RADIATOR	031-1119	1	TANK GP-COOLANT	69
GASKET-WATER REGULATOR	281-8744	1	CONNECTION GP-WATER	55
ELECTRICAL AND STARTING SYSTEM				
BATTERY AS (12-VOLT, MAINTENANCE FREE)	263-9574	1	BATTERY & WIRING GP	113
BREATHER (HYDRAULIC TANK)	183-3873	2	SENSOR & MTG GP-TEMPERATURE	184
CIRCUIT BREAKER AS (150-AMPERE)	171-2215	1	CIRCUIT BREAKER GP	116
CIRCUIT BREAKER AS (50-AMPERE)	171-2206	1	CIRCUIT BREAKER GP	116
CIRCUIT BREAKER AS (70-AMPERE)	171-2209	1	CIRCUIT BREAKER GP	116
FLASHER AS (12 TO 24-VDC)	317-2284	1	LIGHTING GP-ROADING	176
FUSE (10-AMPERE)	113-8490	6	HARNESS AS-CHASSIS	131
FUSE (15-AMPERE)	113-8491	11	HARNESS AS-CHASSIS	131
FUSE (20-AMPERE)	113-8492	2	HARNESS AS-CHASSIS	131
FUSE (30-AMPERE)	124-3548	6	HARNESS AS-CHASSIS	131
FUSE (7.5-AMPERE)	141-2760	11	HARNESS AS-CHASSIS	131
GLOW PLUG (12-VOLT)	452-3112	4	STARTING AID GP	193
KEY (BATTERY DISCONNECT)	8H-5306	1	SWITCH GP-DISCONNECT	195
LAMP (12-VOLT, 21-WATT) (ROADING LIGHTS)	9W-3326	1	LAMP GP-SIGNAL	164
		1	LAMP GP-SIGNAL	165
LAMP (12-VOLT, 5-WATT) (REGISTRATION PLATE)	108-7605	1	LAMP GP-SIGNAL	164
LAMP (12-VOLT, 55-WATT)	9W-0607	1	LIGHTING GP-FLOOD	172
		1	LIGHTING GP-ROADING	176
LAMP (12-VOLT, 55-WATT) (FLOODLIGHT)	9W-0607	1	LAMP GP-FLOOD	161
		1	LAMP GP-FLOOD	162

LAMP (12-VOLT, 7.5-WATT) (DOME)	7M-9957	1	LAMP GP-DOME	160

DESCRIPTION	PART NUMBER	QTY	WHERE USED	PAGE
LAMP (12-VOLT) (REGISTRATION)	7S-1800	1	LAMP GP-SIGNAL	165
LAMP (24-VOLT, HID)	290-8160	1	LAMP GP-FLOOD	163
LAMP-HEAD (12-VOLT, 60/55-WATT)	9W-3324	1	LIGHTING GP-ROADING	176
FUEL SYSTEM				
CAP-FUEL (VENTED)	284-9039	1	TANK GP-FUEL	110
FILTER AS-WATER SEP & FUEL	439-5037	1	FILTER GP-FUEL	93
FILTER ELEMENT-FUEL	360-8960	1	FILTER GP-FUEL	92
STRAINER-FUEL (FILLER NECK)	282-2270	1	TANK GP-FUEL	110
HYDRAULIC SYSTEM				
BREATHER	183-3873	1	TANK GP-HYDRAULIC	332
CAP AS-FILLER (LOCKABLE)	142-8937	1	TANK GP-HYDRAULIC	332
FILTER-OIL (ADVANCED EFFICIENCY) (HYDRAULIC)	1G-8878	1	FILTER GP-OIL	290
SCREEN (HYDRAULIC)	6E-5066	2	VALVE GP-CONTROL	345
STRAINER AS	364-0879	1	TANK GP-HYDRAULIC	332
LUBRICATION SYSTEM				
FILTER AS-ENGINE OIL	7W-2326	1	FILTER GP-ENGINE OIL	49
OPERATOR STATION				
BLADE AS-WIPER (500-MM) (REAR WINDOW)	362-2637	1	WIPER GP-WINDOW	592
		1	WIPER GP-WINDOW	594
BLADE AS-WIPER (700-MM) (FRONT WINDOW)	6V-7419	1	WIPER GP-WINDOW	592
		1	WIPER GP-WINDOW	594
CAP-VENTED (WASHER TANK)	276-3884	1	PLATFORM GP-OPERATOR	552
		1	PLATFORM GP-OPERATOR	553
		1	PLATFORM GP-OPERATOR	554
		1	PLATFORM GP-OPERATOR	556
DRYER-REFRIGERANT (RECEIVER)	106-5534	1	LINES GP-AIR CONDITIONER	522
		1	LINES GP-AIR CONDITIONER	524
FILTER ELEMENT AS-CAB AIR (FRONT)	232-1732	1	AIR CONDITIONER GP	448
		1	AIR CONDITIONER GP	450
		1	AIR CONDITIONER GP	452
		1	AIR CONDITIONER GP	454
FILTER ELEMENT-CAB AIR	265-6618	1	AIR CONDITIONER GP	448

(RECIRCULATION)				
		1	AIR CONDITIONER GP	450
		1	AIR CONDITIONER GP	452
		1	AIR CONDITIONER GP	454
SEAT BELT GP (RETRACTABLE, 51-MM (2-IN))	258-4095	1	SEAT & ARMREST GP	563
		1	SEAT & ARMREST GP	564
		1	SEAT GP-SUSPENSION	575

MAINTENANCE PARTS

DESCRIPTION	PART NUMBER	QTY	WHERE USED	PAGE
STEERING SYSTEM				
SCREEN-FILTER (STEERING)	341-5969	1	VALVE GP-FLOW CONTROL	282
		1	VALVE GP-FLOW CONTROL	284
VIBRATORY SYSTEM				
KEY	155-9133	1	DRIVE GP-VIBRATORY	362
		1	DRIVE GP-VIBRATORY	364
		1	DRIVE GP-VIBRATORY	366
		4	PULLEY GP	385
		4	PULLEY GP	386
KEY (DRIVE)	525-1425	1	WEIGHT GP-ECCENTRIC	397
		1	WEIGHT GP-ECCENTRIC	408
KEY (SHAFT)	525-1426	1	WEIGHT GP-ECCENTRIC	400
PLUG AS-MAGNETIC	165-4929	1	WEIGHT GP-	397
		1	ECCENTRIC WEIGHT GP-ECCENTRIC	400
		1	WEIGHT GP-ECCENTRIC	404
		1	WEIGHT GP-ECCENTRIC	406
		1	WEIGHT GP-ECCENTRIC	408
PLUG-DRAIN (MAGNETIC)	9X-2230	1	WEIGHT GP-ECCENTRIC	410
PLUG-MAGNETIC (ECCENTRIC WEIGHT)	5P-4484	1	WEIGHT GP-ECCENTRIC	397
		1	WEIGHT GP-ECCENTRIC	400
		1	WEIGHT GP-ECCENTRIC	404
		1	WEIGHT GP-ECCENTRIC	406
		1	WEIGHT GP-ECCENTRIC	408
WATER SYSTEM				
CAP-FILLER	6G-9333	2	TANK GP-WATER	445
CAP-FILLER (OIL)	6G-9333	2	TANK GP-WATER	443
CAP-FILLER (WATER TANK DRAIN PLUG)	388-4934	2	TANK GP-WATER	438
CAP-VENTED (WASHER TANK)	276-3884	1	LINES GP-WATER SPRAY	419
FILTER-WATER	136-4165	1	KIT-WATER SPRAY	418
STRAINER	219-0349	1	TANK GP-WATER	439
		1	TANK GP-WATER	440
STRAINER (WATER SPRAY)	251-7580	1	FILTER GP-WATER	417

416-5396	7	BAR GP-	414
	7	SPRAY BAR GP-SPRAY	415

INDEX

NAME PAGE

A

ACTUATOR GP-PUMP (HYDRAULIC) 325
AIR CLEANER GP 73
74
75
76
78
552
AIR CONDITIONER AR 446
AIR CONDITIONER GP 447
448
450
452
454
ALTERNATOR GP-CHARGING 112

B

BAR GP-SPRAY 414
415
BATTERY & WIRING GP-MAINTENANCE 113
BATTERY (MAINTENANCE FREE) 113
BELT TENSIONER GP 8
9
BELT-SERPENTINE 8
BELT-SERPENTINE (AIR CONDITIONER) 9
BLADE AS-WIPER (500-MM) (REAR WINDOW) 592
594
156
BLADE AS-WIPER (700-MM) (FRONT WINDOW) 592
594
BREATHER 332
BREATHER (HYDRAULIC TANK) 184
BRIDGE GP-VALVE 43

C

CAB GP 458
460
462
463
464
466
467
241
468
469
493
CAB GP-ENCLOSED ROPS 470
472
497
473
474
CAB GP–BASIC 456
CAMSHAFT GP 10
CANOPY GP 475

NAME PAGE

CAP AS-RADIATOR 69
CAP-FILLER 445
CAP-FILLER (OIL) 443
CAP-FILLER (WATER TANK DRAIN PLUG) 438
CAP-FUEL (VENTED) 110
CAP-VENTED (WASHER TANK) 419
553
554
CHASSIS AR 556
CIRCUIT BREAKER AS (150-AMPERE) 1
CIRCUIT BREAKER AS (50-AMPERE) 116
CIRCUIT BREAKER AS (70-AMPERE) 116
CIRCUIT BREAKER GP 116
COMMON AR 1
2
COMPRESSOR GP-REFRIGERANT 479
480
CONDENSER & MTG GP-REFRIGERANT 484
CONNECTION GP-INLET 484
CONSOLE GP-OPERATOR 486
CONSOLE GP-OPERATOR–FIELD INSTALLED 488
CONTROL GP-AIR CONDITIONER (COMPRESSOR) 482
CONTROL GP-COMMUNICATION 196
157
159
CONTROL GP-COMMUNICATION (SNM941) 158
CONTROL GP-ELECTRONIC 118
120
121
CONTROL GP-ELECTRONIC–PRODUCT LINK ELITE 641 CELLULAR 122
CONTROL GP-JOYSTICK 490
CONTROL GP-JOYSTICK–2-BUTTON 491
CONTROL GP-JOYSTICK–6-BUTTON 492
CONTROL GP-UNPROGRAMMED 120
CONTROL GP-UNPROGRAMMED–PRODUCT LINK ELITE 631 SATELLITE 123
COOLER GP-ENGINE OIL 56
COVER GP-ACCESS 57
242
495
COVER GP-CAB 499
COVER GP-VALVE MECHANISM 11
CRANKSHAFT GP 14
CYLINDER & MTG GP-OFFSET 286
CYLINDER & MTG GP-STEERING 1

476
467
478
CAP AS-FILLER (LOCKABLE) 332
CYLINDER BLOCK GP.....272
CYLINDER BLOCK GP-SHORT.....17
CYLINDER GP-HYDRAULIC.....287

INDEX

NAME PAGE

CYLINDER GP-HYDRAULIC (OFFSET). 286
CYLINDER GP-HYDRAULIC (STEERING) 272
CYLINDER GP-SIDECUTTER. 288
CYLINDER HEAD AS. 19
20
CYLINDER HEAD GP. 21
22

D

DEFLECTOR GP 416
DISPLAY GP-MONITOR. 488
501
DOOR GP-ACCESS 243
DOOR GP-CAB 502
504
506
507
509
510
DRAIN GP-ENGINE OIL 23
DRIVE GP-FAN 24
DRIVE GP-VIBRATORY 362
364
366
DRUM GP-COMPACTOR. 211
212

562
213

606
214

610
215

DRYER-REFRIGERANT (RECEIVER). 522

610
524

E

ELBOW GP-AIR INLET 80

ELECTRICAL AR 124

ELECTRONICS GP-ENGINE. 5

ELECTRONICS GP-MACHINE 124

ELECTRONICS GP-MONITOR 125

NAME PAGE

FILM GP.....595
596
597
598
599
601
602
603
FILM-IDENTIFICATION (CAT).....595
597
59
9
601
FILM-IDENTIFICATION (CIRCUIT PANEL).....607
FILM-IDENTIFICATION (COMPACTION CONTROL).....184
FILM-IDENTIFICATION (JOYSTICK CONTROL).....492
FILM-IDENTIFICATION (LIFT EYE LOCATION).....607
FILM-IDENTIFICATION (LIFT EYE, TIE-DOWN LOCATION).....611
612
FILM-IDENTIFICATION (PARKING BRAKE).....336
FILM-IDENTIFICATION (POWER RECEPTACLE, 12-VOLT).....607
FILM-IDENTIFICATION (ROPS,FOPS, READ OMM).....561

FILM-IDENTIFICATION (SECONDARY EXIT).
606

FILM-IDENTIFICATION (TIE-DOWN).
607
FILM-IDENTIFICATION (WATER FOR WATER SPRAY)
.....
607
FILM-INFORMATION (BRAZIL).
603
FILM-INFORMATION (EXTENDED LIFE COOLANT)
607
FILM-INFORMATION (JACKING POINT)
607
FILM-INFORMATION (PRODUCT LINK, READ OMM).

126

ELECTRONICS GP-MONITOR–GRADE CONTROL 124

ELECTRONICS GP-MONITOR–PL631 125

ELECTRONICS GP-MONITOR–PL641 CELLULAR 124

ENCLOSURE GP 245

247

ENGINE AR-PRIMARY 4

6

F

FAN GP-SUCTION 58

FILLER GP-ENGINE OIL 48

607

FILM-INSTRUCTION

491

FILM-INSTRUCTION (ENGINE START)

488

FILM-INSTRUCTION (FUEL, READ OMM)

607

FILM-INSTRUCTION (SEAT ADJUSTMENT)

607

FILM-INSTRUCTION (START AID, READ OMM).

607

FILM-WARNING (COLD START, READ OMM).

604

FILM-WARNING (CRUSH HAZARD, READ OMM, INTL)

607

FILM-WARNING (CRUSH HAZARD, STAY BACK, INTL)

607

FILM-WARNING (DO NOT SPRAY, READ OMM).

598

FILM-WARNING (EMERGENCY STOP).

488

FILM-WARNING (HOT FLUID UNDER PRESS)

607

FILM-WARNING (JUMP START, READ OMM, INTL)

607

INDEX

NAME PAGE PAGE

FILM-WARNING (NO ETHER SPRAY/AIR INTK, INTL) 607
FILM-WARNING (NO WELD, NO DRILL, READ OMM). 561
52
562
606
610
410
FILM-WARNING (PRODUCT LINK RADIO, INTL) 607
400
FILM-WARNING (SEAT BELT,
404
INTERNATIONAL) 607
406
FILM-WARNING (UNIVERSAL WARNING) 598
408
FILM-WARNING (UNIVERSAL, READ OMM). . . . 607
FILTER & MTG GP-HYDRAULIC 289
FILTER AS-ENGINE OIL 49
FILTER AS-WATER SEP & FUEL 93
252
FILTER ELEMENT AS-AIR (PRIMARY). 74
75
FILTER ELEMENT AS-AIR (SECONDARY).....74
FILTER ELEMENT AS-CAB AIR (FRONT). 75
448
450
452
129
454
FILTER ELEMENT-CAB AIR (RECIRCULATION) 448
157
450
158
452

NAME
GASKET-WATER REGULATOR
55
GAUGE AS-OIL LEVEL (DIPSTICK).
52
GAUGE GP-OIL LEVEL (DIPSTICK)
51
GAUGE GP-SIGHT
332
GAUGE-SIGHT
69
GAUGE-SIGHT (ECCENTRIC WEIGHT)
397
GLOW PLUG (12-VOLT)
193
GUARD GP-BELT
26
GUARD GP-DRUM–SOLID DRUM
251
GUARD GP-VANDALISM
516

H

HARNESS AS-CAB
127
HARNESS AS-CHASSIS
131
HARNESS AS-CONTROL
156

159
454
FILTER ELEMENT-FUEL 92
135
FILTER GP-ENGINE OIL. 49
FILTER GP-FUEL. 92
93
447
94
95
137
FILTER GP-OIL–HYDRAULIC 290
FILTER GP-WATER 417
FILTER GP-WATER (WATER SPRAY) 417
FILTER-OIL (ADVANCED EFFICIENCY)
(HYDRAULIC) 290
FILTER-WATER 418
FLASHER AS (12 TO 24-VDC). 176
FLOOR MAT GP 512
513
224
FLOOR MAT GP-CAB 514
515
FLYWHEEL GP 25
FRAME GP-MAIN. 249
250
FUMES DISPOSAL GP 50
FUSE (10-AMPERE) 131
FUSE (15-AMPERE) 131
FUSE (20-AMPERE) 131
FUSE (30-AMPERE) 131
256
FUSE (7.5-AMPERE). 131

G

GASKET (VALVE COVER).....11
GASKET-EXHAUST MANIFOLD.....83
HARNESS AS-ENGINE
134
HARNESS AS-HEATER
574
HARNESS AS-HEATER & AIR COND
136
HARNESS AS-LIGHTING
136
HARNESS AS-LIGHTING (FLOODLIGHTS, FRONT) (LH)
176
HARNESS AS-LIGHTING (FLOODLIGHTS, FRONT) (RH)
176
HARNESS AS-LIGHTING–ROPS
138
HARNESS AS-MONITOR
138
HARNESS AS-PLATFORM
139
HARNESS AS-SENSOR
141
HARNESS AS-SENSOR (MOTOR SPEED)
222
HARNESS AS-VALVE (SEAT AIR COMPRESSOR)
578
HARNESS AS-WIRING
141
HARNESS GP-WIRING
142
HEAD GP-PUMP–PROPEL
291
HITCH AR
253
HITCH AR–OFFSET
253
HITCH GP-ARTICULATING
254
HOUSING AS-SWITCH.
574

INDEX

NAME PAGE PAGE

HOUSING GP-ECCENTRIC WEIGHT. 368
369
370
371

372
373

HOUSING GP-FLYWHEEL 374

HOUSING GP-FRONT 27

176 . 28

HYDRAULIC AR. 30

162

HYDRAULIC AR-AUXILIARY. 293
293

HYDRAULIC AR–SOLID DRUM. 294

293

I

INDICATOR AS-AIR FILTER CHANGE 78

175

INJECTOR GP-FUEL 96

INSTALLATION AR-COMMUNICATION 143

INSTALLATION AR-ENGINE. 7

INSTALLATION GP-COMMUNICATION 144

146
148

150

154

156

157

INSTALLATION GP-COMMUNICATION–

PL631 152

NAME

L

LAMP (12-VOLT, 21-WATT) (ROADING LIGHTS)
164

LAMP (12-VOLT, 5-WATT) (REGISTRATION PLATE)
164

LAMP (12-VOLT, 55-WATT)
172

LAMP (12-VOLT, 55-WATT) (FLOODLIGHT)
161

LAMP (12-VOLT, 7.5-WATT) (DOME)
160

LAMP (12-VOLT) (REGISTRATION)
165

LAMP (24-VOLT, HID)
163

LAMP GP-DOME–WITH SWITCH
160

LAMP GP-FLOOD
. . . . . .
162

LAMP GP-FLOOD (FLOOD, 850 LUMENS)

163

17
3

LAMP GP-FLOOD–VERTICAL
161

LAMP GP-HEAD.
176

LAMP GP-SIGNAL–FRONT
164

LAMP GP-SIGNAL–REAR
165

LAMP GP-WARNING BEACON–AMBER, LED, 24-VOLT
166

LAMP-HEAD (12-VOLT, 60/55-WATT)
176

LEVER GP
491

LEVER GP-PROPEL
492

LIFTING GP-ENGINE
32

LIGHTING GP-FLOOD
168

169
INSTALLATION GP-COMMUNICATION–PRODUCT

170
LINK. 155

171
INSTALLATION GP-COMMUNICATION–

172
SNM941 158

173
159

175
INSTALLATION GP-CONTROLS 517

J

JET GP-PISTON COOLING 31

K

296

KEY 362

270
364
366
385
386

KEY (BATTERY DISCONNECT) 195

KEY (DRIVE). 397

99
408

100
KEY (SHAFT) 400

102
KEY-WOODRUFF. 10

LIGHTING GP-ROADING
176
LIGHTING GP-WARNING BEACON
.....
178
LINE AS-FUEL
.....
97
LINER GP-CAB.
518
520

LINES GP-AIR CONDITIONER
522
524
LINES GP-AUXILIARY HYDRAULIC
.....
295

296

LINES GP-BRAKE & SHIFT
.....
268

LINES GP-BRAKE–SOLID DRUM
267
LINES GP-COOLANT
62
LINES GP-COOLANT–CAB
60
LINES GP-COOLING.
81
LINES GP-FUEL
97

LINES GP-HEATER
526

14

528
KEY-WOODRUFF (CRANKSHAFT). 12

530
KIT-BRAKE RELEASE–SOLID DRUM 266

532
KIT-WATER SPRAY 418

KNOB GP-STEERING. 273

300

LINES GP-HYDRAULIC
298

INDEX

NAME PAGE PAGE

LINES GP-HYDRAULIC OIL COOLER. 302
LINES GP-HYDRAULIC OIL COOLER–HYDRAULIC. 304
LINES GP-PROPEL. 216
LINES GP-PROPEL–HYDRAULIC 219
LINES GP-STEERING. 275 276
LINES GP-STEERING–HYDRAULIC OIL.....274
LINES GP-VIBRATORY.....375 377
LINES GP-WATER SPRAY. 421 423 604
LINES GP-WATER SPRAY–CAB. 425
LINKAGE GP-DOOR (CAB) 419 504
LOCK GP-ROTATION. 507 534

M

MACHINE AR 2 3 607
MANIFOLD GP-CONTROL 306
MANIFOLD GP-EXHAUST. 83
MAT & MTG GP-WATER 428 429 430 431
MIRROR GP-REAR VIEW. 536 537 538 539 547
MODULE GP-KEYPAD 540
MOTOR & MTG GP-PISTON–VERSA VIBE. 379
MOTOR & MTG GP-PROPEL 222 224 552
MOTOR & MTG GP-VIBRATORY. 381 383 554
MOTOR GP-GEAR 307
MOTOR GP-PISTON. 308 310 312 559
MOTOR GP-PISTON–VIBRATORY 314 316

NAME

O

OPERATOR AR.....542 543 544
OPERATOR AR–CAB.....543 544

P

PADLOCK GP.....516 605
PAN GP-OIL.....18
PANEL GP-CIRCUIT BREAKER.....180
PISTON & ROD GP.....36 37
PLATE & FILM GP.....604 605 606
PLATE & FILM GP-CERTIFICATION.....610 611 612
PLATE GP-IDENTIFICATION.....18
PLATE GP-SERIAL NUMBER.....5
PLATE-SERIAL NUMBER.....613
PLATFORM GP-CAB.....545
PLATFORM GP-OPERATOR.....546 549 550 551 553 556
PLATFORM GP-OPERATOR–CANOPY.....548
PLATFORM GP-SLIDE.....558
PLUG AS-MAGNETIC.....397 400

MOUNTING GP-CONTROL 179
MOUNTING GP-DRUM. 226
228
408
MOUNTING GP-ENGINE 33
34
MOUNTING GP-ENGINE & XMSN 33
MOUNTING GP-EXHAUST 84
MOUNTING GP-PLATFORM. 541
MOUNTING GP-RAD & OIL COOLER 67
MUFFLER GP. 85
87
404
406
PLUG GP-CONNECTOR (64-PIN).....134
PLUG GP-ENGINE.....39
PLUG-DRAIN (ENGINE OIL).....23
PLUG-DRAIN (MAGNETIC).....410
PLUG-MAGNETIC (ECCENTRIC WEIGHT).....397
400
404
406
408
POWER TRAIN AR.....230
23
1
PULLEY GP.....385
38
6

NAME PAGE
PAGE

PULLEY GP-ALTERNATOR 40
PULLEY GP-CRANKSHAFT 41

PUMP & MTG GP-GEAR 317

564
PUMP & MTG GP-HYDRAULIC 318

575
PUMP & MTG GP-PROPEL 232

PUMP & MTG GP-VIBRATORY 387
PUMP GP-DIAPHRAGM. 432

PUMP GP-ENGINE OIL 53

PUMP GP-FUEL INJECTION 105

106

574
PUMP GP-GEAR 321

PUMP GP-HAND (BRAKE RELEASE). 345

PUMP GP-PISTON 323

443
325

445
PUMP GP-WATER. 64

PUMP GP-WATER SPRAY. 433

R

RADIATOR & HYD OIL COOLER GP. 65

RADIATOR & HYD OIL COOLER GP–BASIC. . . . 67

RAIL GP-FUEL 107

RECEIVER GP-SATELLITE (GPS) 154

155
RELAY AS (12-VOLT) 132

RELAY AS (12-VOLT) (ALARM) 204

RELAY AS (12-VOLT) (ENGINE, KEY) 204

189
RELAY AS (12-VOLT) (ENGINE, MAIN) 204

NAME

SEAT BELT GP (RETRACTABLE, 51-MM (2-IN))
563

SEAT BELT GP–RETRACTABLE
571
SEAT GP-SUSPENSION–12-VOLT, VINYL, HEATED
575
SEAT GP–CLOTH
573
SEAT GP–VINYL
572

SENDER AS-FUEL LEVEL (TANK)
110
SENDER AS-LEVEL (WATER TANK)
438

SENSOR (FUEL RAIL PRESSURE)
107
SENSOR (TEMPERATURE)
184
SENSOR & MOUNTING GP
. . . . . .
181
18
2

SENSOR & MTG GP-TEMPERATURE
253
18
4

SENSOR AR-COMPACTION
389
SENSOR AS (COMPACTION)
182
SENSOR AS-TEMPERATURE (MAT)
184
SENSOR GP-ENGINE
186
SENSOR GP-LIQUID LEVEL (WATER IN FUEL)
93
SENSOR GP-POSITION.
124

SENSOR GP-POSITION (ROTARY)

RELAY AS (12-VOLT) (FLOODLIGHT) 198
200
RELAY AS (12-VOLT) (HORN) 534
RELAY AS (12-VOLT) (SHUTDOWN) 204
188
RELAY AS (12-VOLT) (STARTER). 204
ROCKER ARM GP 42
43
44
ROPS GP. 561
191
562
ROTATING GP-MOTOR. 327
224
328
379
ROTATING GP-PUMP 323
381
329
383

S

SCRAPER GP-DRUM 260
262
SCREEN (HYDRAULIC) 345
SCREEN-FILTER (STEERING). 282
78
284
SEAT & ARMREST GP–12-VOLT, VINYL, HEATED 569
SEAT & ARMREST GP–CLOTH 564
338
567
SEAT & ARMREST GP–VINYL 563
565
235
189
SENSOR GP-POSITION (ROTARY) (STEERING CONTROL)
181
SENSOR GP-POSITION–ROTARY
187
SENSOR GP-PRESSURE (ENGINE OIL)
186
SENSOR GP-PRESSURE (INLET MANIFOLD AIR)
186
SENSOR GP-SPEED
186
SENSOR GP-SPEED (MOTOR).
222
SENSOR GP-TEMPERATURE
. . . . . .
192
SENSOR GP-TEMPERATURE (ENGINE COOLANT)
186
SENSOR GP-TEMPERATURE (HYDRAULIC OIL)
334
SENSOR-TEMPERATURE (2-PIN)
338
SENSOR-TEMPERATURE (2-PIN) (AFTERCOOLER)
76
SENSOR-TEMPERATURE (2-PIN) (HYDRAULIC OIL)
334
SERVICE GP-ENGINE
45
SHAFT GP-DRIVE
234
236
237
238

INDEX

NAME PAGE

SHAFT GP-ECCENTRIC WEIGHT 400
SHAFT GP-VIBRATORY DRIVE 390
SIDECUTTER AR. 352
SIDECUTTER GP 353
SOFTWARE GP-ELECTRONIC (SATELLITE) . . . 118
SOFTWARE GP-MACHINE 121
SOFTWARE GP-MONITOR. 124
SOFTWARE GP-MONITOR (CELLULAR) 122
SOFTWARE GP-MONITOR (OPERATING SYSTEM) 124
SOFTWARE GP-MONITOR (SATELLITE RADIO) 123
SOFTWARE GP-MONITOR (SATELLITE RECEIVER) 154
SOLENOID AS (PUMP CONTROL VALVE). 347
SPRAY AR-WATER. 434
SPRAY GP-WATER. 418
SPRING AS-GAS (CAB DOOR)....243
SPRING AS-GAS (CAB) 504
STARTING AID GP....193
STARTING MOTOR GP-ELECTRIC 194
STEP GP 264
STRAINER 439
SWITCH AS-PUSH BUTTON (EMERGENCY STOP)....488
SWITCH AS-ROCKER (12-VOLT) (FLASHER)....176
SWITCH AS-ROCKER (12-VOLT) (FLOODLIGHT)....168
SWITCH AS-ROCKER (12-VOLT) (FLOODLIGHTS, DRUM EDGE)
SWITCH AS-ROCKER (24-VOLT) (SEALED)
SWITCH AS-ROCKER (24-VOLT) (TURN SIGNAL)
SWITCH AS-ROCKER (BEACON).
SWITCH AS-ROCKER (HORN)
SWITCH AS-ROCKER (PARKING BRAKE ON, OFF)
SWITCH AS-ROCKER (REAR LIGHTS)
SWITCH AS-ROCKER (ROADING LIGHTS)
SWITCH AS-ROCKER (WIPER, WASHER, FRONT)
SWITCH AS-ROCKER (WIPER, WASHER, REAR)
SWITCH AS-START (KEY)
SWITCH GP-DISCONNECT–BATTERY
SWITCH-ROCKER (HEATED SEAT) (SEAT ADJUSTMENT)

T

TANK & MTG GP-FUEL
TANK & MTG GP-HYDRAULIC
TANK & MTG GP-WATER

440
STRAINER (WATER SPRAY). 414
415
417
STRAINER AS 332
71
STRAINER-FUEL (FILLER NECK). 110
SUPPORT GP-CONTROL 565
SUPPORT GP-CONTROL (LH) 567
569
439
SUPPORT GP-CONTROL (RH) 567
440
569
441
SUPPORT GP-DRUM 239
443
240
445
SUPPRESSION GP-SOUND 47
265
583
SUSPENSION GP-SEAT–AIR 578
SUSPENSION GP-SEAT–MECHANICAL 576
90
SWITCH AS-MAGNETIC (12-VDC) (CIRCUIT BREAKER) 116
SWITCH AS-PRESSURE (HIGH, LOW) (REFRIGERANT) 522
SWITCH AS-PRESSURE (HYDRAULIC OIL). . . . 524
338
290
437
TANK GP (ANTIFREEZE)
60
TANK GP (REAR, LH)
419
TANK GP (REAR, RH).
419
TANK GP-COOLANT.
69
TANK GP-FUEL
110
TANK GP-HYDRAULIC
332
TANK GP-WATER
438
TANK GP-WINDOW WASHER
582
TURBOCHARGER GP
89

V

VALVE & MTG GP-CONTROL.
336
VALVE & MTG GP-CONTROL–RETURN
334

NAME PAGE
PAGE

VALVE & MTG GP-SIDECUTTER. 340

VALVE & MTG GP-SOLENOID–2-SPEED 342

393
VALVE & MTG GP-STEERING 278

394
280

395
VALVE AS-PRESSURE RELIEF (REFRIGERANT

396
COMPRESSOR) 479
VALVE AS-SOLENOID (WATER SPRAY

CONTROL). 421
VALVE GP-CHECK 282

284
343

VALVE GP-CONTROL 343

345
VALVE GP-COUNTERBALANCE.....343
VALVE GP-DIVERTER 391
VALVE GP-FLOW CONTROL.....278
VALVE GP-FLOW CONTROL–STEERING 282

VALVE GP-FLOW CONTROL–STEERING,

583
OFFSET 284

VALVE GP-FLUID SAMPLING 54

399
VALVE GP-PUMP CONTROL. 323

400
VALVE GP-PUMP CONTROL–PROPEL 347

402
VALVE GP-RELIEF 282

403
284

404
VALVE GP-RELIEF (CHARGE) 323

406
VALVE GP-RELIEF (CROSSOVER) 323

408
VALVE GP-RELIEF (PUMP HEAD,

410

NAME

VIBRATORY AR
392

VIBRATORY AR–2-AMPLITUDE, SOLID
DRUM
393
VIBRATORY AR–2-AMPLITUDE, SOLID DRUM,
EAME
393
VIBRATORY AR–VERSA VIBE, SOLID
DRUM
392
VISOR GP-CAB
581

W

WASHER GP-WINDOW
582

WEIGHT GP-ECCENTRIC
397

CROSSOVER). 291

412
VALVE GP-RELIEF (VIBRATORY MOTOR

413
FLUSHING) 345

VALVE GP-RELIEF (VIBRATORY MOTOR,

585
MAKEUP) 345

586
VALVE GP-SEQUENCE 282

588
VALVE GP-SEQUENCE (FLOW

589
REGULATOR) 284

590
VALVE GP-SEQUENCE (PRESSURE

REGULATOR) 284

594
VALVE GP-SHUTTLE 349

VALVE GP-SOLENOID. 91

323

200
350

351

VALVE GP-SOLENOID (12-VOLT) (DIFFERENTIAL

LOCK).....306
VALVE GP-SOLENOID (FRONT STEER).....282
284
VALVE GP-SOLENOID (HYDRAULIC WARM-
UP).....282
284
VALVE GP-SOLENOID (PROPEL MOTOR SHIFT,
HIGH/LOW)
.....
345
VALVE GP-SOLENOID (PUMP HEAD).....291
VALVE GP-SOLENOID (SIDECUTTER).....343
VALVE GP-SOLENOID (STEERING
DISABLE).....282
284
VALVE GP-SOLENOID (VIBRATORY CONTROL,
REAR DRUM)
.....
345
VALVE GP-WATER.....580

WINDOW GP-CAB
584

WIPER GP-WINDOW
592

WIRING GP-AIR CONDITIONER
196
WIRING GP-CAB
198

WIRING GP-ENGINE
202
WIRING GP-MACHINE
204
WIRING GP-PLATFORM
209

MEMORANDA

MACHINE ARRANGEMENT

451-3120 CHASSIS AR

S/N: G441-UP

PART OF 451-3200 COMMON AR

SMCS-7000 **i07398826**

NOTE	PART NUMBER	QTY	PART NAME 1 2 3 4 5 6 (PRODUCT LEVEL)	SEE PAGE
Y	*514-6670*	1	DOOR GP-ACCESS	243
Y	*505-8504*	1	ENCLOSURE GP	245
Y	*508-4319*	1	FILM GP	599
Y	*507-1554*	1	FRAME GP-MAIN	250
Y	*451-3121*	1	PLATE & FILM GP	604
Y	*510-3955*	1	SUPPRESSION GP-SOUND	265
Y	*510-0764*	1	TANK & MTG GP-FUEL	109
Y	*343-6037*	1	TANK & MTG GP-HYDRAULIC	331

Y - SEPARATE ILLUSTRATION

<END>

451-3220 CHASSIS AR

S/N: 5B41-UP

PART OF 451-3300 COMMON AR

SMCS-7000 **i07418049**

NOTE	PART NUMBER	QTY	PART NAME 1 2 3 4 5 6 (PRODUCT LEVEL)	SEE PAGE
Y	*514-6670*	1	DOOR GP-ACCESS	243
Y	*505-8505*	1	ENCLOSURE GP	247
Y	*508-4321*	1	FILM GP	601
Y	*506-7954*	1	FRAME GP-MAIN	249
Y	*451-3221*	1	PLATE & FILM GP	605
Y	*510-3956*	1	SUPPRESSION GP-SOUND	47
Y	*510-0764*	1	TANK & MTG GP-FUEL	109
Y	*343-6037*	1	TANK & MTG GP-HYDRAULIC	331

Y - SEPARATE ILLUSTRATION

<END>

451-3200 COMMON AR

S/N: G441-UP

SMCS-7000 **i07396793**

NOTE	PART NUMBER	QTY	PART NAME 1 2 3 4 5 6 (PRODUCT LEVEL)	SEE PAGE
Y	*451-3120*	1	CHASSIS AR	1
Y	*451-3140*	1	ELECTRICAL AR	124
Y	*377-5344*	1	HYDRAULIC AR-AUXILIARY	293
Y	*451-3130*	1	INSTALLATION AR-ENGINE	7
Y	*505-8543*	1	OPERATOR AR	544
Y	*510-0767*	1	SPRAY AR-WATER	434

Y - SEPARATE ILLUSTRATION

<END>

MACHINE ARRANGEMENT

451-3300 COMMON AR

S/N: 5B41-UP

SMCS-7000 **i07418022**

NOTE	PART NUMBER	QTY	PART NAME 1 2 3 4 5 6 (PRODUCT LEVEL)	SEE PAGE
Y	*451-3220*	1	CHASSIS AR	1
Y	*451-3140*	1	ELECTRICAL AR	124
Y	*377-5354*	1	HYDRAULIC AR-AUXILIARY	294
Y	*451-3230*	1	INSTALLATION AR-ENGINE	7
Y	*505-8543*	1	OPERATOR AR	544
Y	*510-0765*	1	SPRAY AR-WATER	434

Y - SEPARATE ILLUSTRATION

<END>

504-6839 MACHINE AR

S/N: 5B41-UP

AN ATTACHMENT

SMCS-7000 **i07418169**

NOTE	PART NUMBER	QTY	PART NAME 1 2 3 4 5 6 (PRODUCT LEVEL)	SEE PAGE
Y	*383-7260*	1	LINES GP-VIBRATORY	377
Y	*504-6841*	1	POWER TRAIN AR	231
Y	*357-3814*	1	PUMP & MTG GP-VIBRATORY	387
Y	*343-8288*	1	SHAFT GP-DRIVE (REAR)	236
Y	*424-1383*	1	SHAFT GP-DRIVE (FRONT)	238

Y - SEPARATE ILLUSTRATION

<END>

516-8451 MACHINE AR

S/N: 5B41-UP

SOLID DRUM

AN ATTACHMENT

SMCS-7000 **i07418301**

NOTE	PART NUMBER	QTY	PART NAME 1 2 3 4 5 6 (PRODUCT LEVEL)	SEE PAGE
Y	*383-7260*	1	LINES GP-VIBRATORY	377
Y	*386-7954*	1	POWER TRAIN AR	230
Y	*357-3814*	1	PUMP & MTG GP-VIBRATORY	387
Y	*343-8288*	2	SHAFT GP-DRIVE	236

Y - SEPARATE ILLUSTRATION

<END>

MACHINE ARRANGEMENT

537-5499 MACHINE AR

S/N: 5B41-UP

AN ATTACHMENT

SMCS-7000 **i07418305**

NOTE	PART NUMBER	QTY	PART NAME 1 2 3 4 5 6 (PRODUCT LEVEL)	SEE PAGE
Y	*383-7260*	1	LINES GP-VIBRATORY	377
Y	*537-5500*	1	POWER TRAIN AR	231
Y	*357-3814*	1	PUMP & MTG GP-VIBRATORY	387
Y	*343-8288*	1	SHAFT GP-DRIVE	236
Y	*424-1383*	1	SHAFT GP-DRIVE	238

Y - SEPARATE ILLUSTRATION

<END>

539-2601 MACHINE AR

S/N: G441-UP

AN ATTACHMENT

SMCS-7000 **i07416704**

NOTE	PART NUMBER	QTY	PART NAME 1 2 3 4 5 6 (PRODUCT LEVEL)	SEE PAGE
Y	*383-7240*	1	LINES GP-VIBRATORY	375
Y	*381-1896*	1	POWER TRAIN AR	230
Y	*343-6141*	2	SHAFT GP-DRIVE	235

Y - SEPARATE ILLUSTRATION

<END>

539-2608 MACHINE AR

S/N: G441-UP

AN ATTACHMENT

SMCS-7000 **i07416534**

NOTE	PART NUMBER	QTY	PART NAME 1 2 3 4 5 6 (PRODUCT LEVEL)	SEE PAGE
Y	*383-7240*	1	LINES GP-VIBRATORY	375
Y	*504-6816*	1	POWER TRAIN AR	230
Y	*343-6141*	1	SHAFT GP-DRIVE	235
Y	*424-1372*	1	SHAFT GP-DRIVE	237

Y - SEPARATE ILLUSTRATION

<END>

435-7493 ENGINE AR-PRIMARY

S/N: 2W21-UP

97 BRAKE KW (129 BHP) AT 2200 RPM

OPTIONAL FIELD REPLACEMENT ORDER 452-7386–PAGE: 18, 452-7397–PAGE: 22

AN ATTACHMENT

SMCS-1000

i07420882

NOTE	PART NUMBER	QTY	PART NAME 1 2 3 4 5 6 (PRODUCT LEVEL)	SEE PAGE
Y	*425-9179*	1	ALTERNATOR GP-CHARGING	112
Y	*435-7778*	1	CAMSHAFT GP	10
Y	*416-1866*	1	CONNECTION GP-WATER	55
Y	*415-5535*	1	CONTROL GP-ELECTRONIC	120
Y	*418-7659*	1	COOLER GP-ENGINE OIL	57
Y	*415-7105*	1	COVER GP-VALVE MECHANISM	11
Y	*510-5297*	1	CRANKSHAFT GP	14
Y	*415-3299*	1	CYLINDER BLOCK GP	16
Y	*415-5520*	1	CYLINDER HEAD GP	21
Y	*417-4187*	1	DRAIN GP-ENGINE OIL	23
Y	*444-9582*	1	DRIVE GP-FAN	24
Y	*416-9543*	1	ELBOW GP-AIR INLET	80
Y	*417-4186*	1	FILLER GP-ENGINE OIL	48
Y	*416-8716*	1	FILM GP (ALTERNATOR)	597
Y	*417-4284*	1	FILM GP (EMISSIONS)	598
Y	*329-8098*	1	FILM GP (STARTING MOTOR)	595
Y	*417-3394*	1	FILTER GP-ENGINE OIL	49
Y	*453-7163*	1	FILTER GP-FUEL	95
Y	*417-3391*	1	FLYWHEEL GP	25
Y	*433-5258*	1	FUMES DISPOSAL GP	50
Y	*416-1055*	1	GAUGE GP-OIL LEVEL (DIPSTICK)	51
Y	*492-2947*	1	HARNESS GP-WIRING	142
Y	*416-1030*	1	HOUSING GP-FLYWHEEL	27
Y	*416-8722*	1	HOUSING GP-FRONT	30
Y	*415-7116*	1	HOUSING GP-FRONT	28
Y	*415-5522*	1	INJECTOR GP-FUEL	96
Y	*415-7948*	1	JET GP-PISTON COOLING	31
Y	*417-3458*	1	LIFTING GP-ENGINE	32
Y	*415-7119*	1	LINES GP-FUEL	97
Y	*421-7092*	1	MANIFOLD GP-EXHAUST	83
Y	*415-7949*	1	MOUNTING GP-CONTROL	179
Y	*417-4119*	1	MOUNTING GP-ENGINE	34
Y	*416-8775*	1	MOUNTING GP-EXHAUST	84
Y	*416-1051*	1	PAN GP-OIL	35
Y	*415-5519*	1	PISTON & ROD GP	37
Y	*417-4286*	1	PLUG GP-ENGINE	39
Y	*416-1047*	1	PULLEY GP-ALTERNATOR	40
Y	*416-1089*	1	PULLEY GP-CRANKSHAFT	41
Y	*508-3673*	1	PUMP GP-ENGINE OIL	53
Y	*415-5523*	1	PUMP GP-FUEL INJECTION	106
Y	*416-1864*	1	PUMP GP-WATER	64
Y	*415-5527*	1	RAIL GP-FUEL	107
Y	*415-7947*	1	ROCKER ARM GP	43
Y	*425-9760*	1	SENSOR GP-ENGINE	186
Y	*430-5204*	1	SENSOR GP-TEMPERATURE	192
Y	*417-3453*	1	STARTING AID GP	193

435-7493 **ENGINE AR-PRIMARY (**contd.**)** **i07420882**

NOTE	PART NUMBER	QTY	PART NAME 1 2 3 4 5 6 (PRODUCT LEVEL)	SEE PAGE
Y	*425-9174*	1	STARTING MOTOR GP-ELECTRIC	194
Y	*444-8091*	1	TURBOCHARGER GP	90
Y	*417-4213*	1	VALVE GP-FLUID SAMPLING	54
	453-3537	1	ELECTRONICS GP-ENGINE	
	415-9834	1	PLATE GP-SERIAL NUMBER	
	332-0905	2	RIVET-DRIVE	
	350-8958	1	PLATE-SERIAL NUMBER (ENGINE)	

Y - SEPARATE ILLUSTRATION

<END>

435-7494 ENGINE AR-PRIMARY

S/N: 2W21-UP

82 BRAKE KW (110 BHP) AT 2200 RPM

OPTIONAL FIELD REPLACEMENT ORDER 452-7386–PAGE: 18, 452-7397–PAGE: 22

AN ATTACHMENT

SMCS-1000

i07422898

NOTE	PART NUMBER	QTY	PART NAME 1 2 3 4 5 6 (PRODUCT LEVEL)	SEE PAGE
Y	*425-9179*	1	ALTERNATOR GP-CHARGING	112
Y	*435-7778*	1	CAMSHAFT GP	10
Y	*416-1866*	1	CONNECTION GP-WATER	55
Y	*415-5535*	1	CONTROL GP-ELECTRONIC	120
Y	*418-7659*	1	COOLER GP-ENGINE OIL	57
Y	*415-7105*	1	COVER GP-VALVE MECHANISM	11
Y	*510-5297*	1	CRANKSHAFT GP	14
Y	*415-3299*	1	CYLINDER BLOCK GP	16
Y	*415-5520*	1	CYLINDER HEAD GP	21
Y	*417-4187*	1	DRAIN GP-ENGINE OIL	23
Y	*444-9582*	1	DRIVE GP-FAN	24
Y	*416-9543*	1	ELBOW GP-AIR INLET	80
Y	*417-4186*	1	FILLER GP-ENGINE OIL	48
Y	*329-8098*	1	FILM GP (STARTING MOTOR)	595
Y	*416-8716*	1	FILM GP (ALTERNATOR)	597
Y	*417-4284*	1	FILM GP (EMISSIONS)	598
Y	*417-3394*	1	FILTER GP-ENGINE OIL	49
Y	*453-7163*	1	FILTER GP-FUEL	95
Y	*417-3391*	1	FLYWHEEL GP	25
Y	*433-5258*	1	FUMES DISPOSAL GP	50
Y	*416-1055*	1	GAUGE GP-OIL LEVEL (DIPSTICK)	51
Y	*492-2947*	1	HARNESS GP-WIRING	142
Y	*416-1030*	1	HOUSING GP-FLYWHEEL	27
Y	*415-7116*	1	HOUSING GP-FRONT	28
Y	*416-8722*	1	HOUSING GP-FRONT	30
Y	*415-5522*	1	INJECTOR GP-FUEL	96
Y	*415-7948*	1	JET GP-PISTON COOLING	31
Y	*417-3458*	1	LIFTING GP-ENGINE	32
Y	*415-7119*	1	LINES GP-FUEL	97
Y	*421-7092*	1	MANIFOLD GP-EXHAUST	83
Y	*415-7949*	1	MOUNTING GP-CONTROL	179
Y	*417-4119*	1	MOUNTING GP-ENGINE	34
Y	*416-8775*	1	MOUNTING GP-EXHAUST	84
Y	*416-1051*	1	PAN GP-OIL	35
Y	*415-5519*	1	PISTON & ROD GP	37
Y	*417-4286*	1	PLUG GP-ENGINE	39
Y	*416-1047*	1	PULLEY GP-ALTERNATOR	40
Y	*416-1089*	1	PULLEY GP-CRANKSHAFT	41
Y	*508-3673*	1	PUMP GP-ENGINE OIL	53
Y	*415-5523*	1	PUMP GP-FUEL INJECTION	106
Y	*416-1864*	1	PUMP GP-WATER	64
Y	*415-5527*	1	RAIL GP-FUEL	107
Y	*415-7947*	1	ROCKER ARM GP	43
Y	*425-9760*	1	SENSOR GP-ENGINE	186
Y	*430-5204*	1	SENSOR GP-TEMPERATURE	192
Y	*417-3453*	1	STARTING AID GP	193

435-7494 **ENGINE AR-PRIMARY** (contd.) **i07422898**

NOTE	PART NUMBER	QTY	PART NAME 1 2 3 4 5 6 (PRODUCT LEVEL)	SEE PAGE
Y	*425-9174*	1	STARTING MOTOR GP-ELECTRIC	194
Y	*417-3407*	1	TURBOCHARGER GP	89
Y	*417-4213*	1	VALVE GP-FLUID SAMPLING	54
	453-3538	1	ELECTRONICS GP-ENGINE	
	415-9834	1	PLATE GP-SERIAL NUMBER	
	332-0905	2	RIVET-DRIVE	
	350-8958	1	PLATE-SERIAL NUMBER (ENGINE)	

Y - SEPARATE ILLUSTRATION

<END>

451-3130 INSTALLATION AR-ENGINE

S/N: G441-UP

PART OF 451-3200 COMMON AR

SMCS-1000 **i06647317**

NOTE	PART NUMBER	QTY	PART NAME 1 2 3 4 5 6 (PRODUCT LEVEL)	SEE PAGE
Y	*377-5349*	1	AIR CLEANER GP	76
Y	*355-6236*	1	FAN GP-SUCTION	58
Y	*381-1908*	1	GUARD GP-BELT	26
Y	*451-3131*	1	LINES GP-COOLANT	62
Y	*451-3132*	1	LINES GP-FUEL	100
Y	*377-5357*	1	MOUNTING GP-ENGINE	33
Y	*377-5346*	1	MUFFLER GP	85
Y	*343-6084*	1	RADIATOR & HYD OIL COOLER GP	65
Y	*444-3666*	1	SERVICE GP-ENGINE	45
Y	*377-5351*	1	TANK GP-COOLANT	69

Y - SEPARATE ILLUSTRATION

<END>

451-3230 INSTALLATION AR-ENGINE

S/N: 5B41-UP

PART OF 451-3300 COMMON AR

SMCS-1000 **i06648243**

NOTE	PART NUMBER	QTY	PART NAME 1 2 3 4 5 6 (PRODUCT LEVEL)	SEE PAGE
Y	*377-5359*	1	AIR CLEANER GP	78
Y	*355-6236*	1	FAN GP-SUCTION	58
Y	*451-3231*	1	LINES GP-COOLING	81
Y	*451-3232*	1	LINES GP-FUEL	102
Y	*377-5357*	1	MOUNTING GP-ENGINE	33
Y	*377-5356*	1	MUFFLER GP	87
Y	*343-6084*	1	RADIATOR & HYD OIL COOLER GP	65
Y	*444-3666*	1	SERVICE GP-ENGINE	45
Y	*377-5361*	1	TANK GP-COOLANT	71

Y - SEPARATE ILLUSTRATION

<END>

355-1670 BELT TENSIONER GP

S/N: 5B41-UP; G441-
UP AN ATTACHMENT

SMCS-1357, 1358, 1397

i06862349

REF SEE NOTE QTY	GRAPHIC NO 1 2 3 4 5 6 (PRODUCT LEVEL)	REF PAGE	PART NAME PART NUMBER
1	1 **286-7845**	1	BELT-SERPENTINE
2	1 **377-9082**	1	BELT TENSIONER

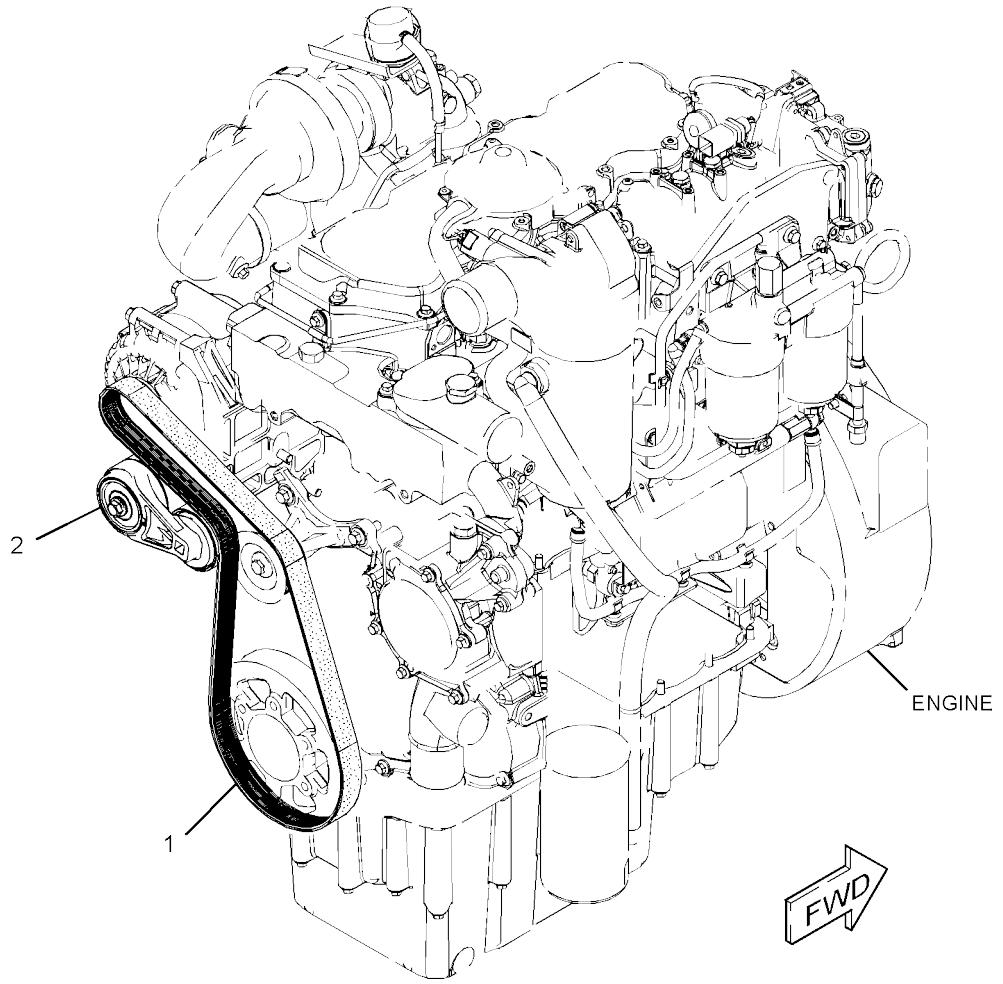

GRAPHIC #1 <END> g02888237

355-1671 BELT TENSIONER GP

S/N: 5B41-UP; G441-

UP AN ATTACHMENT

SMCS-1357, 1358, 1397

i07403853

REF SEE NOTE QTY	GRAPHIC NO 1 2 3 4 5 6	(PRODUCT LEVEL)	REF PAGE	PART NAME PART NUMBER
1	1	**369-1255**	1	TENSIONER
2	1	**365-2985**	1	BELT-SERPENTINE (AIR CONDITIONER)

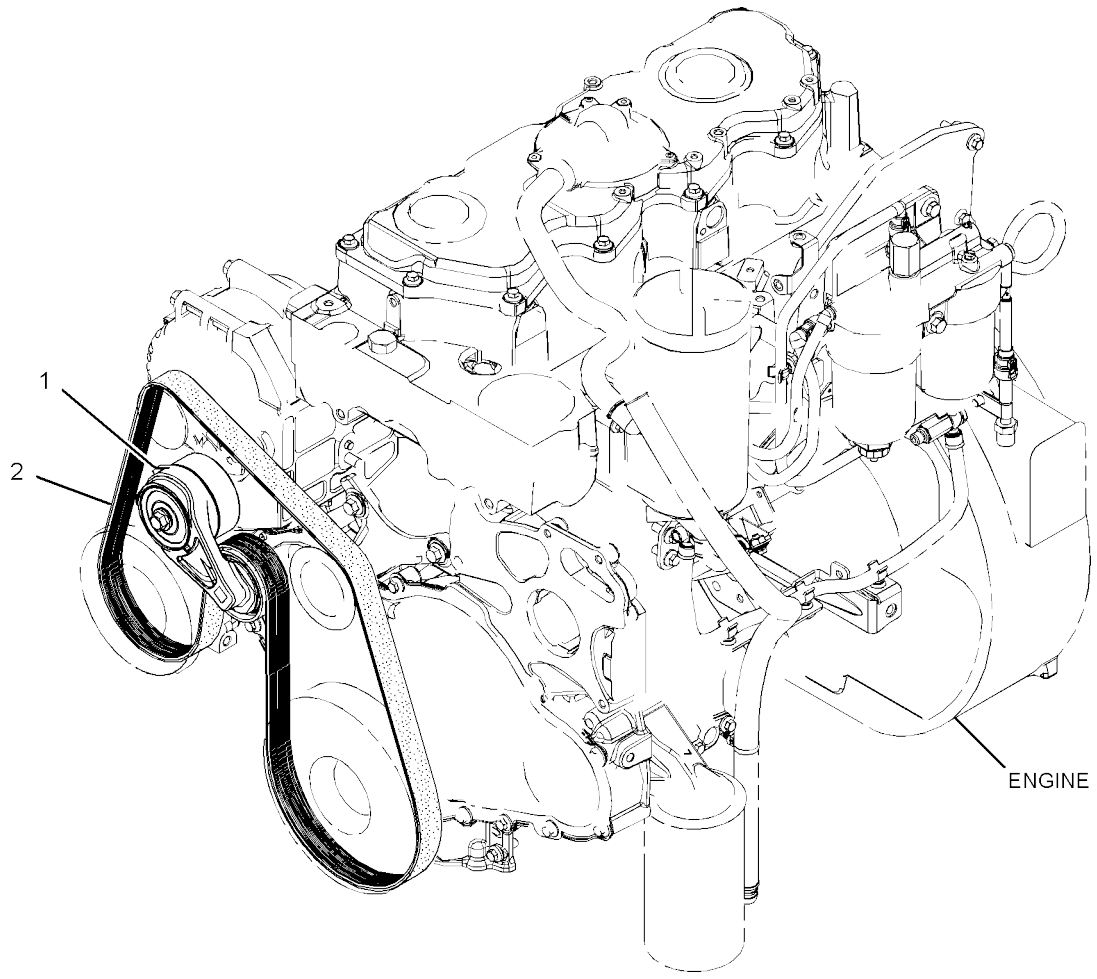

GRAPHIC #1 <END> g02717905

435-7778 CAMSHAFT GP

S/N: 2W21-UP
PART OF 435-7493, 435-7494 ENGINE AR-PRIMARY AN ATTACHMENT

SMCS-1210

i07374836

REF SEE NOTE QTY	GRAPHIC NO 1 2 3 4 5 6	(PRODUCT LEVEL)	REF PAGE	PART NAME PART NUMBER
1	1	**278-5126**	8	PUSHROD
2	1	**315-3384**	8	TAPPET
3	1	**454-0683**	1	CAMSHAFT GP
3A	1	**067-6135**	1	KEY-WOODRUFF

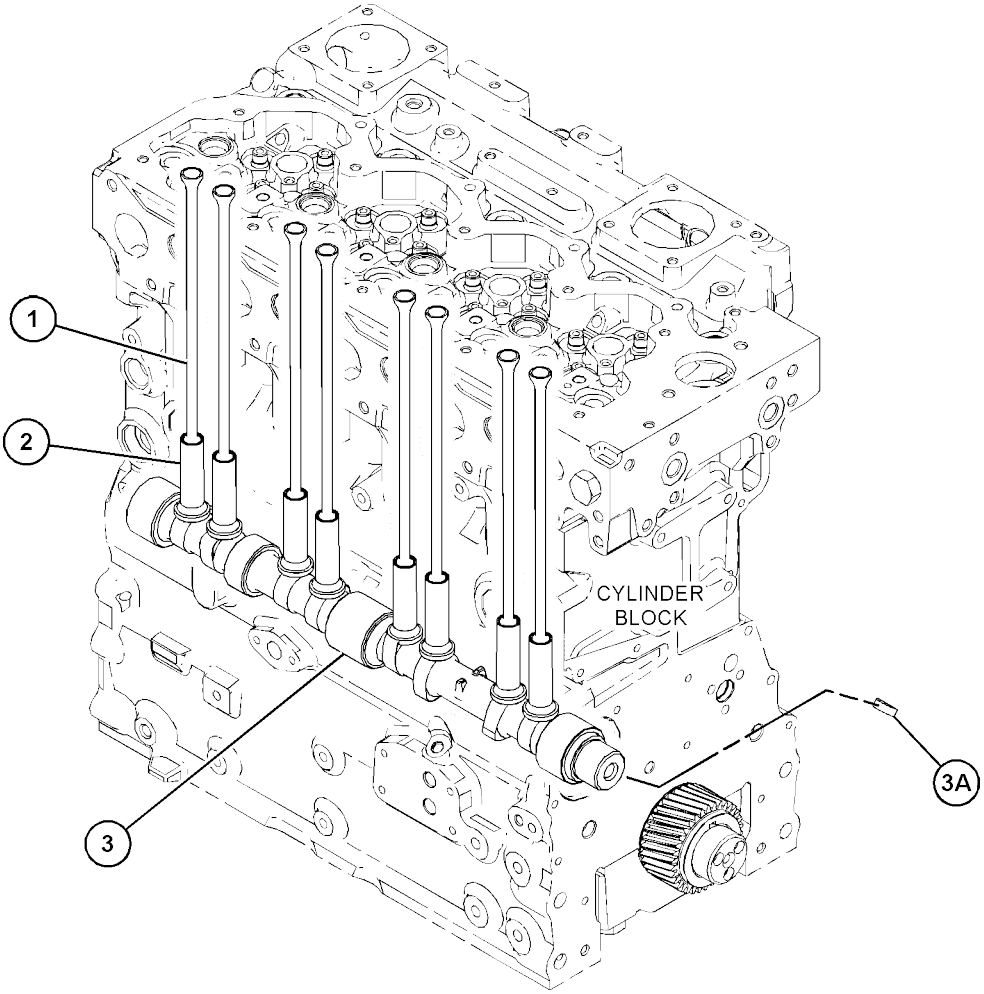

GRAPHIC #1 <END> g03811367

415-7105 COVER GP-VALVE MECHANISM

S/N: 2W21-UP
PART OF 435-7493, 435-7494 ENGINE AR-PRIMARY AN ATTACHMENT

SMCS-1107, 1120

i06581556

	REF SEE NOTE QTY	GRAPHIC NO 1 2 3 4 5 6	(PRODUCT LEVEL)	REF PAGE	PART NAME PART NUMBER
M	1	1	**101-3895**	7	BOLT (M8X1.25X35-MM) (S)
M	2	1	**103-5705**	4	BOLT (M8X1.25X110-MM)
	3	1	**392-9458**	1	COVER GP-VALVE MECHANISM
M	3A	1	**195-9245**	3	SCREW (M4X0.7X10-MM)
	3B	1	**380-9615**	1	BREATHER (VALVE MECHANISM)
	3C	1	**392-9471**	1	SEAL
	4	1	**392-9472**	1	GASKET (VALVE COVER)
	5	1	**455-6923**	1	COVER-BASE
M	6	1	**6I-0217**	10	BOLT (M8X1.25X20-MM)

M - METRIC PART

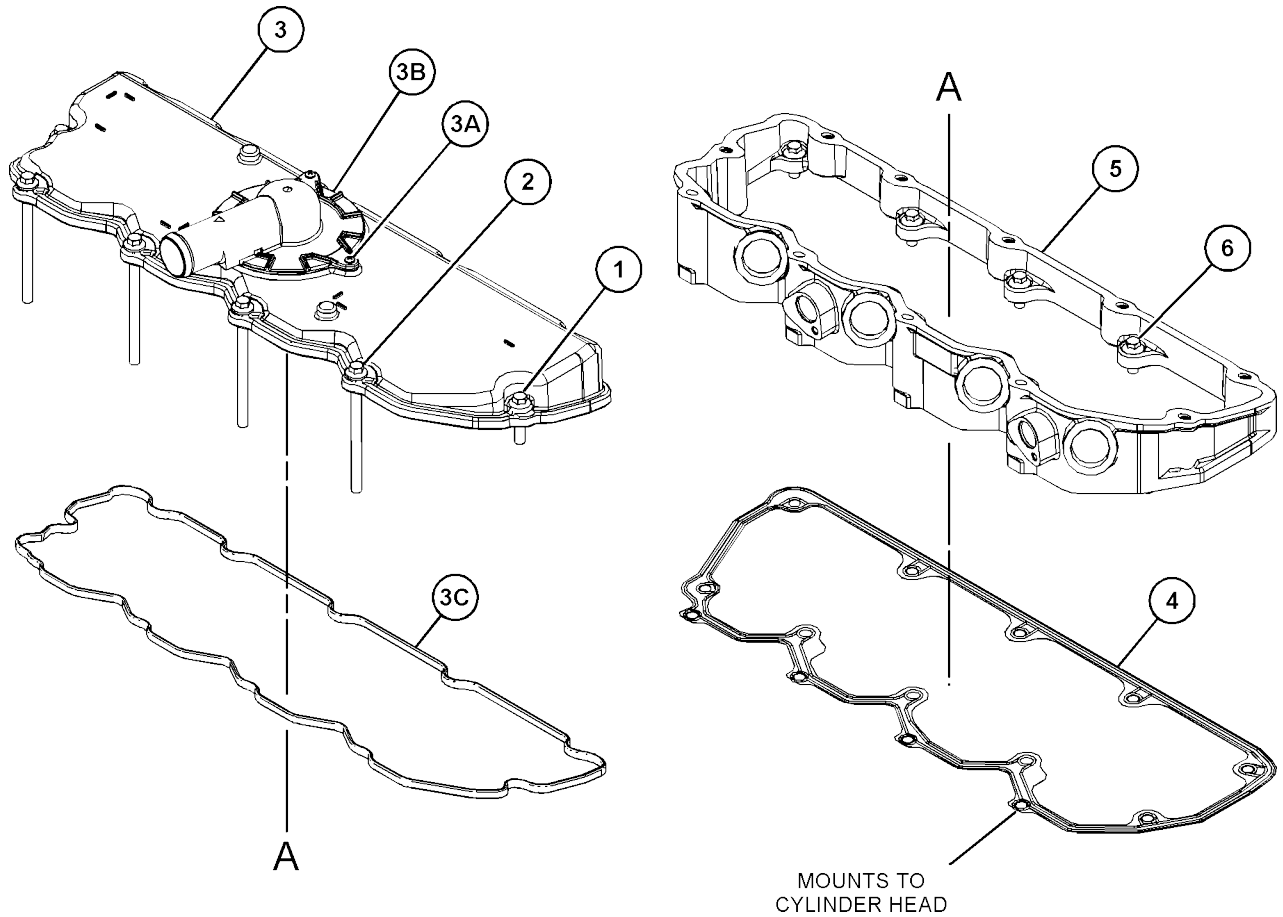

GRAPHIC #1 <END> g03814998

433-6323 CRANKSHAFT GP

S/N: 2W21-UP

PART OF 452-7386 CYLINDER BLOCK GP-SHORT

SMCS-1202

i07569416

	REF SEE NOTE QTY	GRAPHIC NO 1 2 3 4 5 6	(PRODUCT LEVEL)	REF PAGE	PART NAME PART NUMBER
CJ	1	1	**470-7995**	2	PLATE-THRUST (STANDARD)
	2	1	**339-8780**	1	DOWEL
	3	1	**341-4028**	1	RING-TIMING
	4	1	*475-8373*	1	CRANKSHAFT GP
	4A	1	**455-3693**	1	CRANKSHAFT
	5	1	**216-8314**	1	GEAR-CRANKSHAFT (34-TEETH)
M	6	1	**276-7394**	3	SCREW (M6X1XX12-MM)
CJ	7	1	*470-8021*	2	PLATE-THRUST (STANDARD)
	8	1	**067-6135**	1	KEY-WOODRUFF (CRANKSHAFT)
CFP			*470-7971*	1	BEARING (STANDARD-UPPER)
CFP			*470-8031*	5	BEARING (STANDARD-LOWER)
CF			*470-8023*	4	BEARING (STANDARD-UPPER)
					AVAILABLE REPAIR KIT(S):
BP			**518-5437**	1	KIT-BEARING
					(INCLUDES BEARINGS)
AB			**518-5440**		KIT-BEARING (0.254-MM US)
AB			**518-5441**		KIT-BEARING (0.508-MM US)
AB			**518-5885**		KIT-BEARING (0.762-MM US)
					(EACH BEARING KIT INCLUDES BEARINGS)
J			**518-5891**	1	KIT-WASHER (STANDARD)
					(INCLUDES WASHERS)
AB			**518-5892**		KIT-WASHER (0.191-MM US)
AB			**518-5893**		KIT-WASHER (STANDARD, 0.191-MM US)
					(EACH WASHER KIT INCLUDES WASHERS)
AB			**360-3986**		KIT-BEARING (CONNECTING ROD)
AB			**468-7762**		KIT-BEARING (0.254-MM US)
AB			**468-7769**		KIT-BEARING (0.508-MM US)
AB			**468-7770**		KIT-BEARING (0.762-MM US)
					(EACH BEARING KIT INCLUDES BEARINGS)

A - NOT PART OF THIS GROUP B - USE AS REQUIRED
C - CHANGE FROM PREVIOUS TYPE F - NOT SHOWN
J - KIT MARKED J SERVICES PART(S) MARKED J M - METRIC PART
P - KIT MARKED P SERVICES PART(S) MARKED P

433-6323 **CRANKSHAFT GP** (contd.) **i07569416**

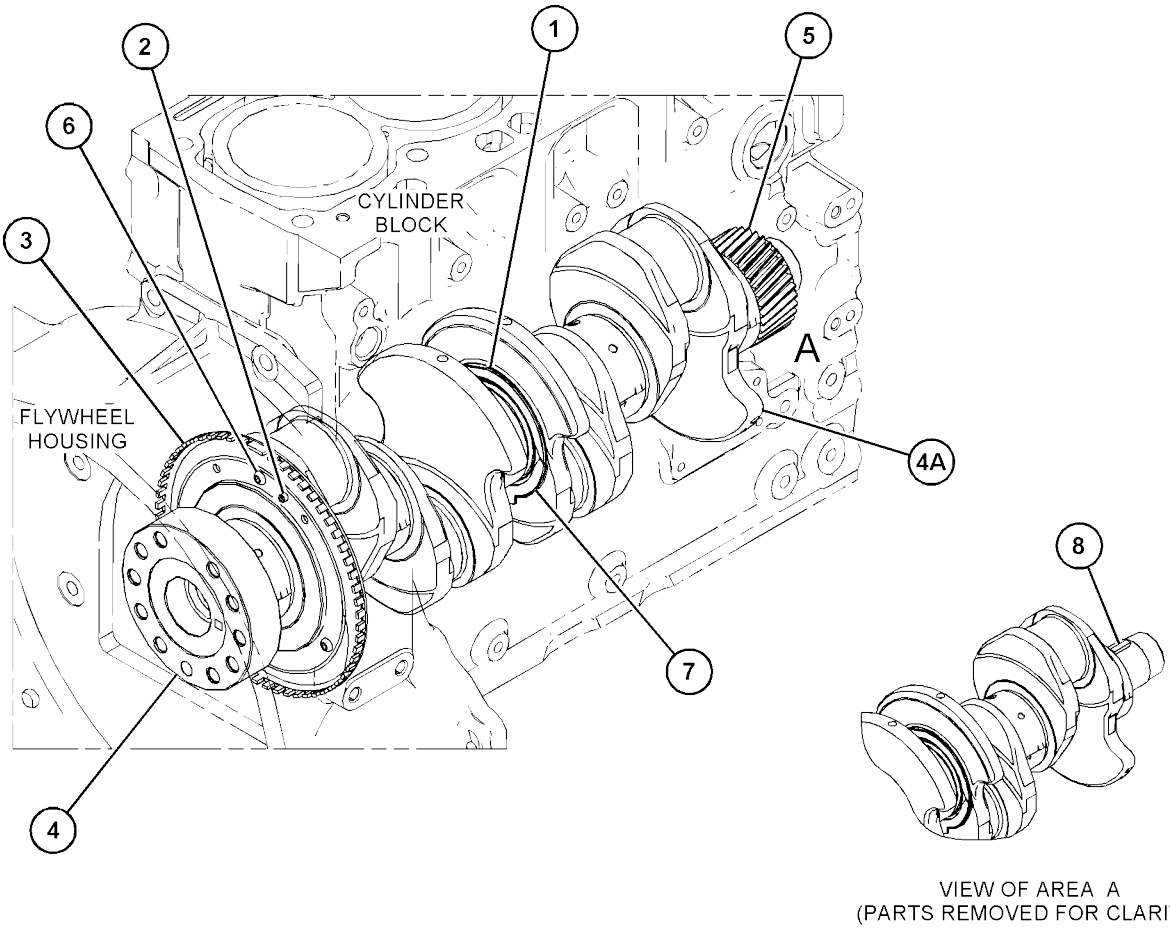

GRAPHIC #1 <END> g03872708

510-5297 CRANKSHAFT GP

S/N: 2W21-UP

PART OF 435-7493, 435-7494 ENGINE AR-PRIMARY AN ATTACHMENT

SMCS-1202

i07143171

	REF SEE NOTE QTY	GRAPHIC NO 1 2 3 4 5 6	(PRODUCT LEVEL)	REF PAGE	PART NAME PART NUMBER
CJ	1	1	*470-7995*	2	PLATE-THRUST (STANDARD) (UPPER)
CJ	2	1	*470-8021*	2	PLATE-THRUST (STANDARD) (LOWER)
	3	1	**067-6135**	1	KEY-WOODRUFF
M	4	1	**276-7394**	3	SCREW (M6X1XX12-MM)
	5	1	**339-8780**	1	DOWEL
	6	1	**341-4028**	1	RING-TIMING
	7	1	**448-2620**	1	CRANKSHAFT AS
	8	1	**216-8314**	1	GEAR-CRANKSHAFT (34-TEETH)
N	9	1	*470-8031*	5	BEARING
N	10	1	*470-7971*	1	BEARING
	11	1	**470-8023**	4	BEARING
					AVAILABLE REPAIR KIT(S):
N			**518-5437**	1	KIT-BEARING (CRANKSHAFT)
					(INCLUDES BEARINGS)
AB			**518-5440**		KIT-BEARING (0.254-MM US) (0.254-MM US)
					(INCLUDES BEARINGS)
AB			**518-5441**		KIT-BEARING (0.508-MM US) (0.50-MM US)
					(INCLUDES BEARINGS)
AB			**518-5885**		KIT-BEARING (0.762-MM US) (0.75-MM US)
					(INCLUDES BEARINGS)
J			**518-5891**	1	KIT-WASHER (STANDARD) (CRANKSHAFT)
					(INCLUDES THRUST WASHERS)
AB			**518-5892**		KIT-WASHER (0.191-MM US)
					(INCLUDES THRUST WASHERS)
AB			**518-5893**		KIT-WASHER (STANDARD, 0.191-MM US)
					(INCLUDES THRUST WASHERS)

A - NOT PART OF THIS GROUP B - USE AS REQUIRED
C - CHANGE FROM PREVIOUS TYPE
J - KIT MARKED J SERVICES PART(S) MARKED J M - METRIC PART
N - KIT MARKED N SERVICES PART(S) MARKED N

510-5297 **CRANKSHAFT GP** (contd.) **i07143171**

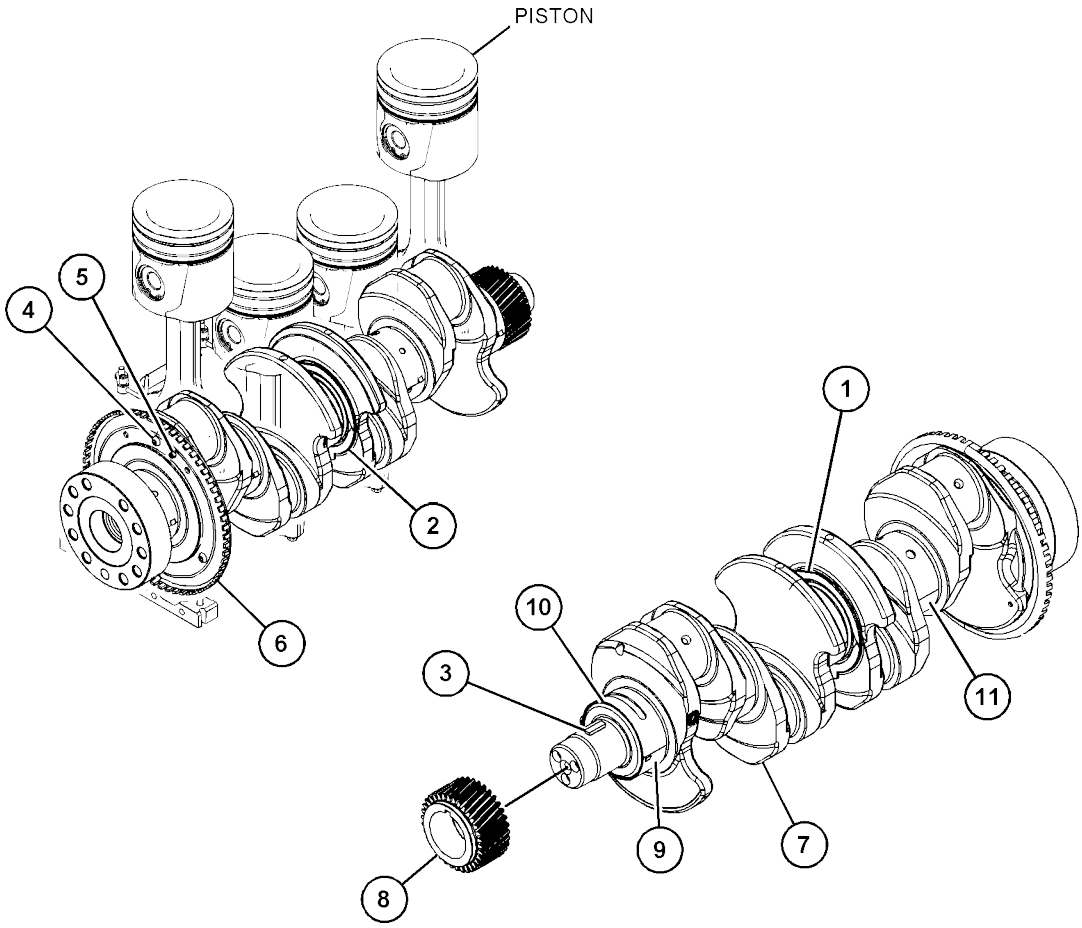

GRAPHIC #1 <END> g06157281

415-3299 CYLINDER BLOCK GP

S/N: 2W21-UP

PART OF 452-7386 CYLINDER BLOCK GP-SHORT, 435-7493, 435-7494 ENGINE AR-PRIMARY AN ATTACHMENT

SMCS-1201

i06280846

	REF SEE NOTE QTY	GRAPHIC NO 1 2 3 4 5 6	(PRODUCT LEVEL)	REF PAGE	PART NAME PART NUMBER	
M	1	1	**209-9219**	10	BOLT (M8X1.25X16-MM)	
	2	1	**232-7449**	1	HOUSING AS	
Y	3	1	**451-7736**	1	CYLINDER BLOCK GP	17

M - METRIC PART
Y - SEPARATE ILLUSTRATION

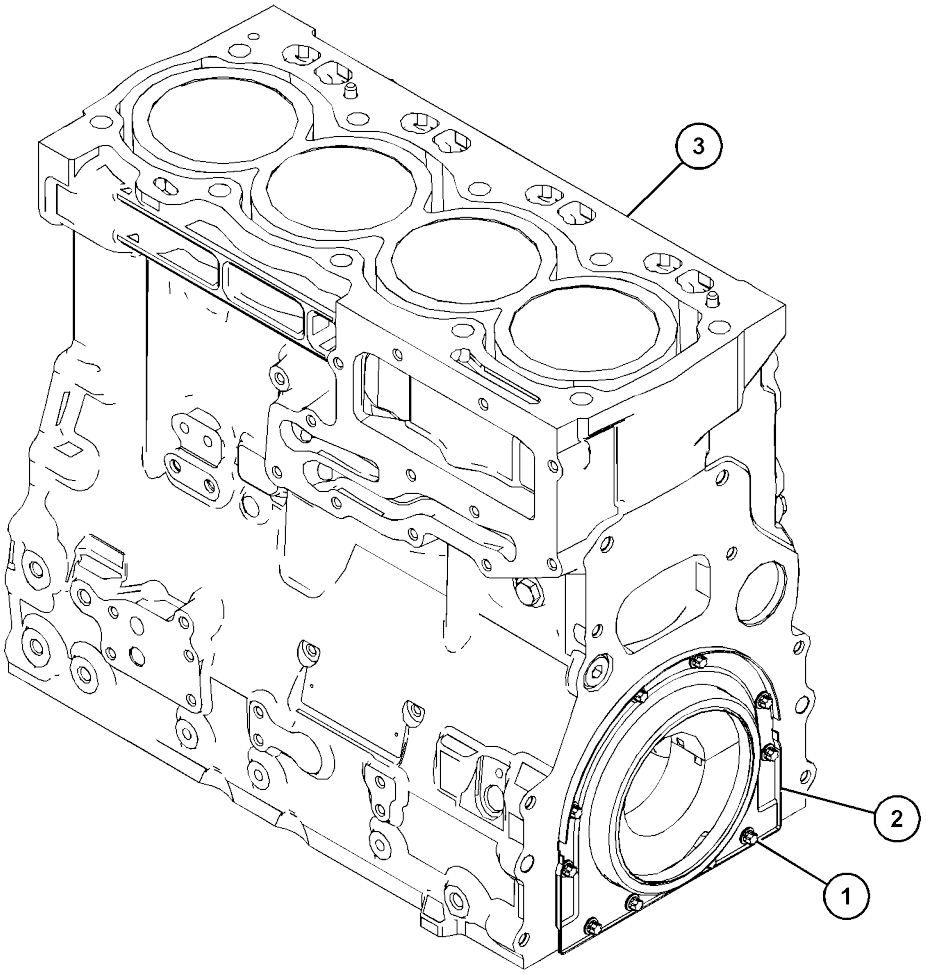

GRAPHIC #1 <END> g03813084

451-7736 CYLINDER BLOCK GP

S/N: 2W21-UP
PART OF 415-3299 CYLINDER BLOCK
GP AN ATTACHMENT

SMCS-1201

i06914862

REF NO	SEE NOTE QTY	GRAPHIC 1 2 3 4 5 6	(PRODUCT LEVEL)	REF PAGE	PART NAME PART NUMBER
1	1		**035-8068**	10	BOLT (5/8-18X3.75-IN)
2	1		**067-6006**	1	PLUG (CYLINDER BLOCK)
3	1		**067-6043**	1	PLUG-SIDE
4	1		**185-0884**	2	DOWEL
5	1		**225-8858**	2	PLUG
6	1		**232-7596**	1	PLUG
7	1		**232-7597**	2	PLUG
8	1		**232-7599**	1	PLUG
9	1		**366-8853**	1	BEARING
10	1		**067-6002**	10	DOWEL

PARTS SHOWN IN GRAPHIC(S) WITHOUT A REFERENCE NUMBER ARE NOT SERVICED SEPARATELY

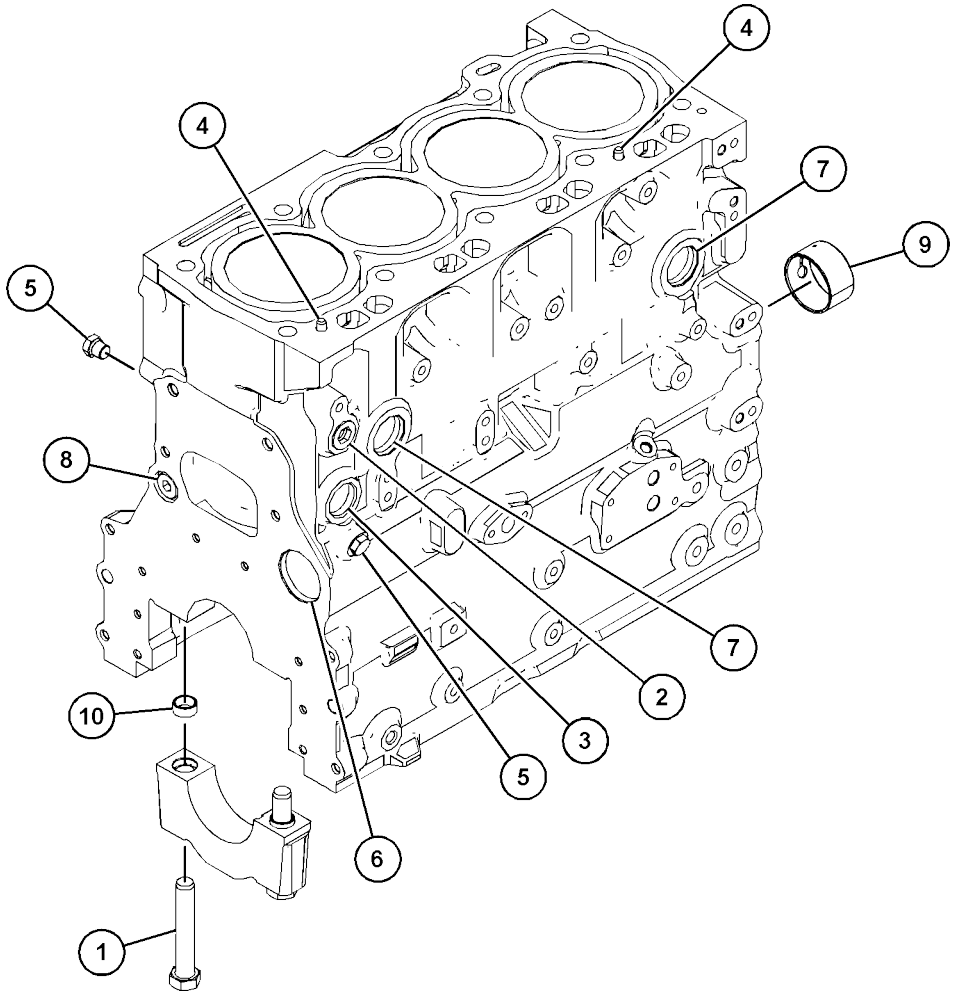

GRAPHIC #1 <END> g03811216

452-7386 CYLINDER BLOCK GP-SHORT

S/N: 2W21-UP

FIELD REPLACEMENT FOR 435-7493-PAGE: 4: FOR 435-7494-PAGE: 6

SMCS-1200

i06888752

	REF SEE NOTE QTY	GRAPHIC NO 1 2 3 4 5 6	(PRODUCT LEVEL)	REF PAGE	PART NAME PART NUMBER	
Y	1	1	*415-3299*	1	CYLINDER BLOCK GP	16
Y	2	1	*415-5518*	1	PISTON & ROD GP	36
Y	3	1	*415-7948*	1	JET GP-PISTON COOLING	31
	4	1	*415-9833*	1	PLATE GP-IDENTIFICATION	
		1	**332-0905**	2	RIVET-DRIVE	
		1	**350-8959**	1	PLATE-SERIAL NUMBER	
Y	5	1	*433-6323*	1	CRANKSHAFT GP	12
	6	1	*460-6528*	1	PAN GP-OIL	
M		1	**8T-0269**	2	BOLT-SOCKET HEAD (M6X1X20-MM)	
		1	**230-8094**	1	BRIDGE	

M - METRIC PART
Y - SEPARATE ILLUSTRATION

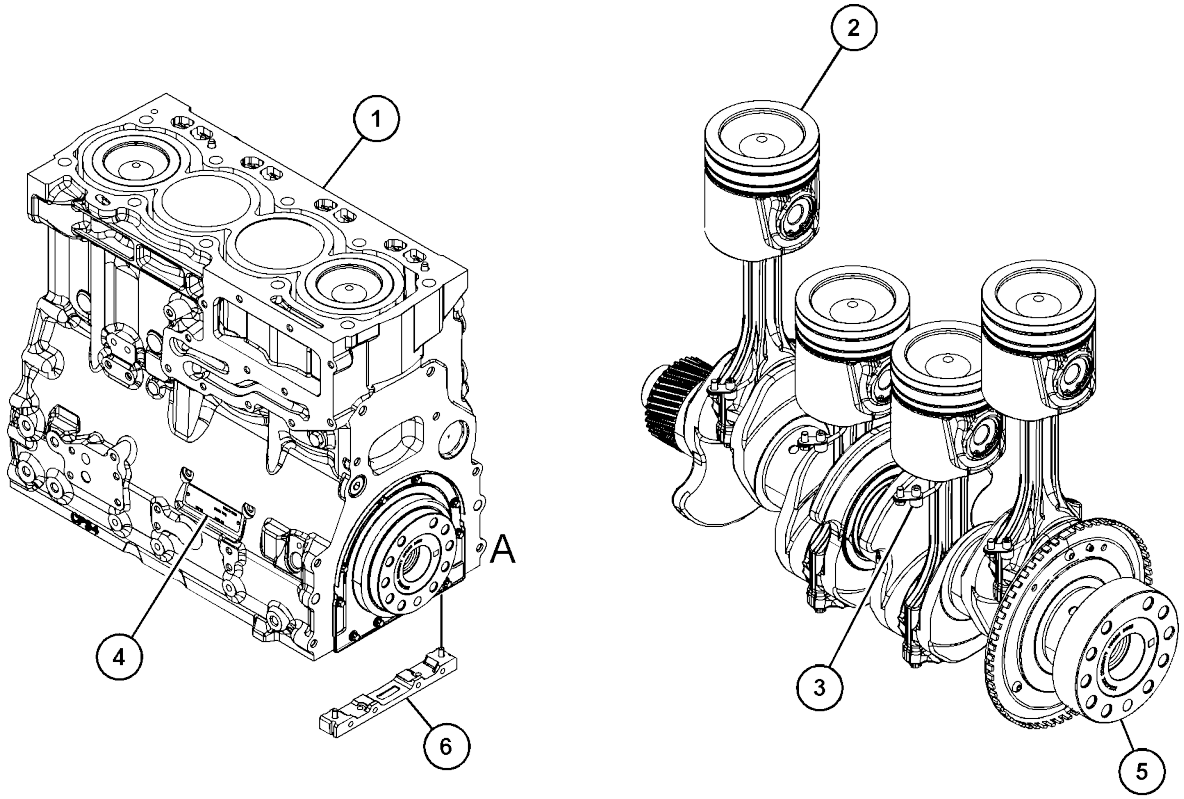

VIEW OF AREA A
(PARTS REMOVED FOR CLARITY)

GRAPHIC #1 <END> g06120474

397-1559 CYLINDER HEAD AS

S/N: 2W21-UP

PART OF 460-7780 CYLINDER HEAD AS, 415-5520 CYLINDER HEAD GP AN ATTACHMENT

SMCS-1100, 1101

i06091856

REF SEE NOTE QTY	GRAPHIC NO 1 2 3 4 5 6	(PRODUCT LEVEL)	REF PAGE	PART NAME PART NUMBER
1	1	**276-8116**	4	PLUG-CORE
2	1	**377-0400**	8	INSERT-VALVE SEAT (EXHAUST)
3	1	**377-0399**	8	INSERT-VALVE SEAT (INTAKE)
4	1	**276-8117**	9	PLUG-CORE
5	1	**298-4528**	1	PLUG-CORE
6	1	**298-4527**	1	PLUG-CORE

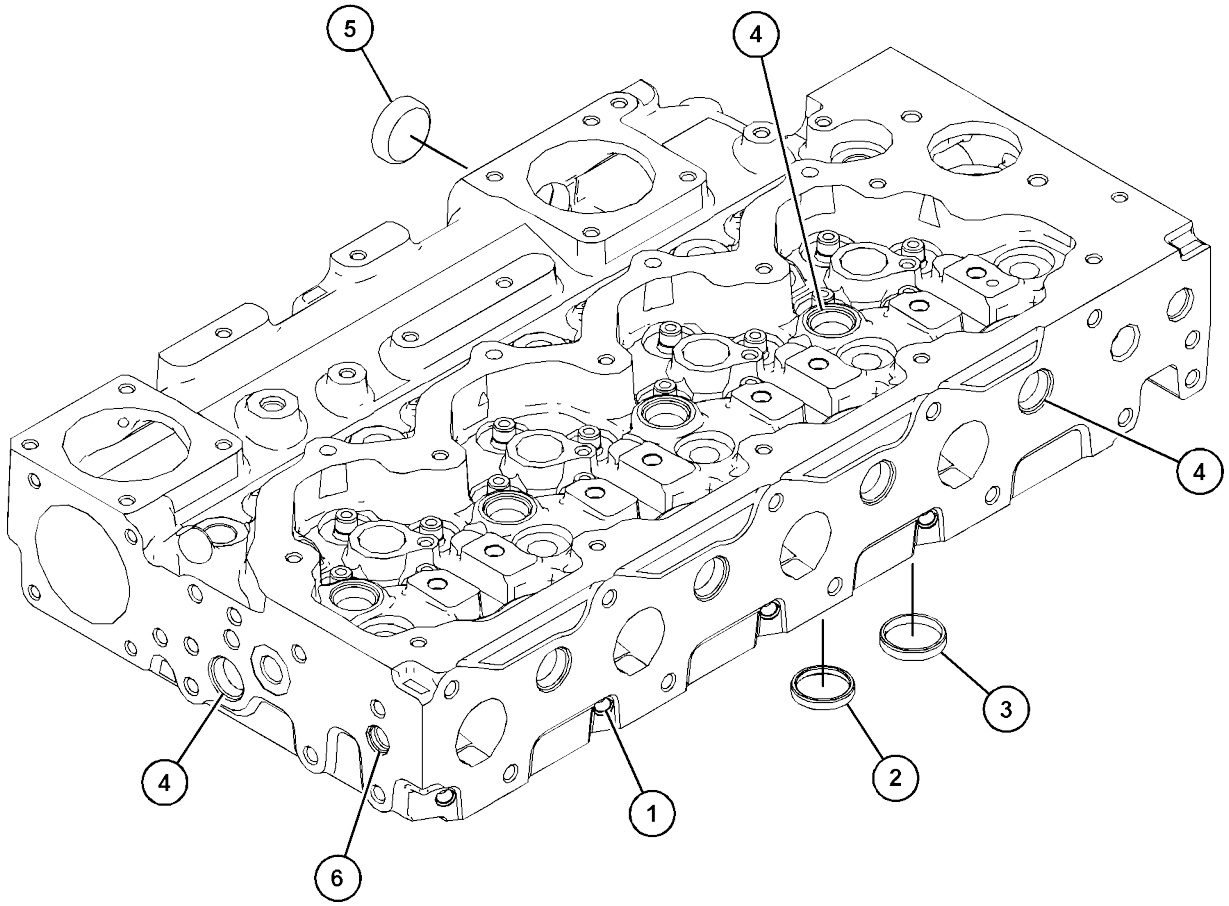

GRAPHIC #1 <END> g03813035

460-7780 CYLINDER HEAD AS

S/N: 2W21-UP
PART OF 452-7397 CYLINDER HEAD GP

SMCS-1100, 1101

i06888755

	REF SEE NOTE QTY	GRAPHIC NO 1 2 3 4 5 6 (PRODUCT LEVEL)	REF PAGE	PART NAME PART NUMBER	
	1	1 **199-9751**	1	SEAL-O-RING	
Y	2	1 **397-1559**	1	CYLINDER HEAD AS	19
	3	1 **232-1322**	1	PLUG (BLANKING)	
	4	1 **295-6661**	1	PLUG	

Y - SEPARATE ILLUSTRATION

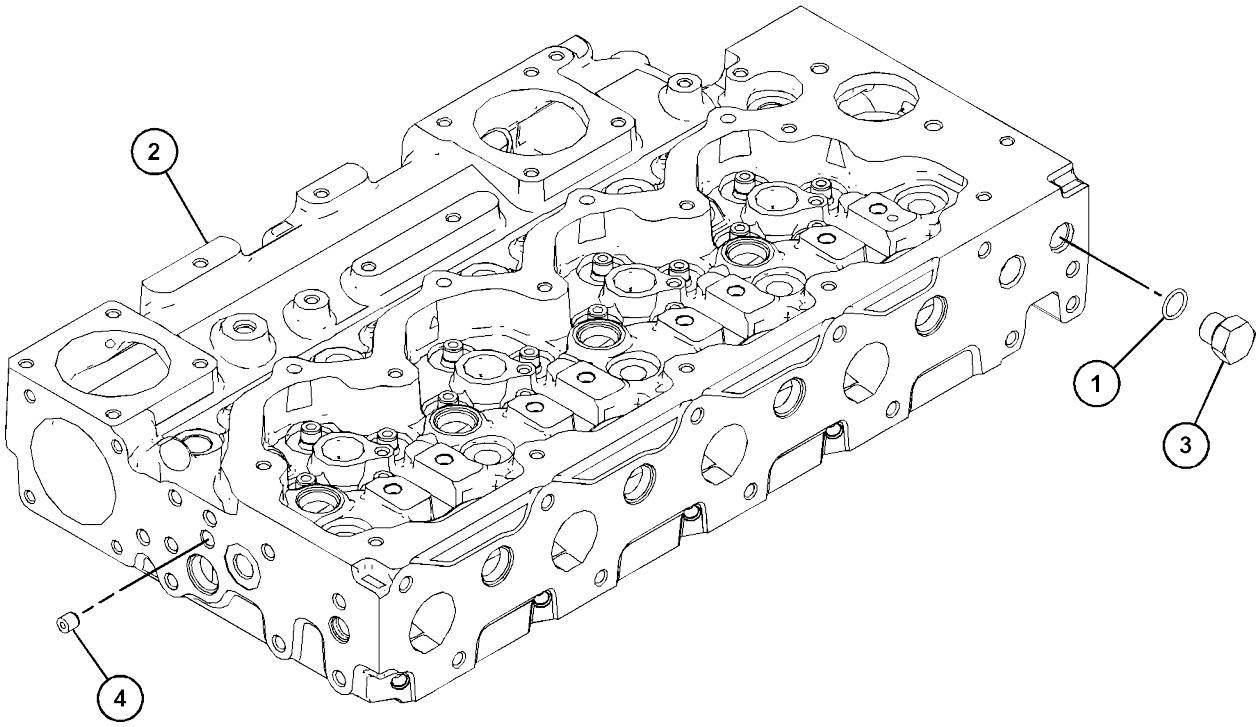

GRAPHIC #1 <END> g06110937

415-5520 CYLINDER HEAD GP

S/N: 2W21-UP
PART OF 435-7493, 435-7494 ENGINE AR-
PRIMARY AN ATTACHMENT

SMCS-1100

i06280854

	REF SEE NOTE QTY	GRAPHIC NO 1 2 3 4 5 6	(PRODUCT LEVEL)	REF PAGE	PART NAME PART NUMBER	
	1	1	**310-8520**	1	GASKET-CYLINDER HEAD	
Y	2	1	**397-1559**	1	CYLINDER HEAD AS	19
	3	1	**225-5501**	10	BOLT (M15X1.5X137-MM)	
	4	1	**295-6661**	1	PLUG	
F			**369-3707**	1	GASKET-CYLINDER HEAD	

F - NOT SHOWN
Y - SEPARATE ILLUSTRATION

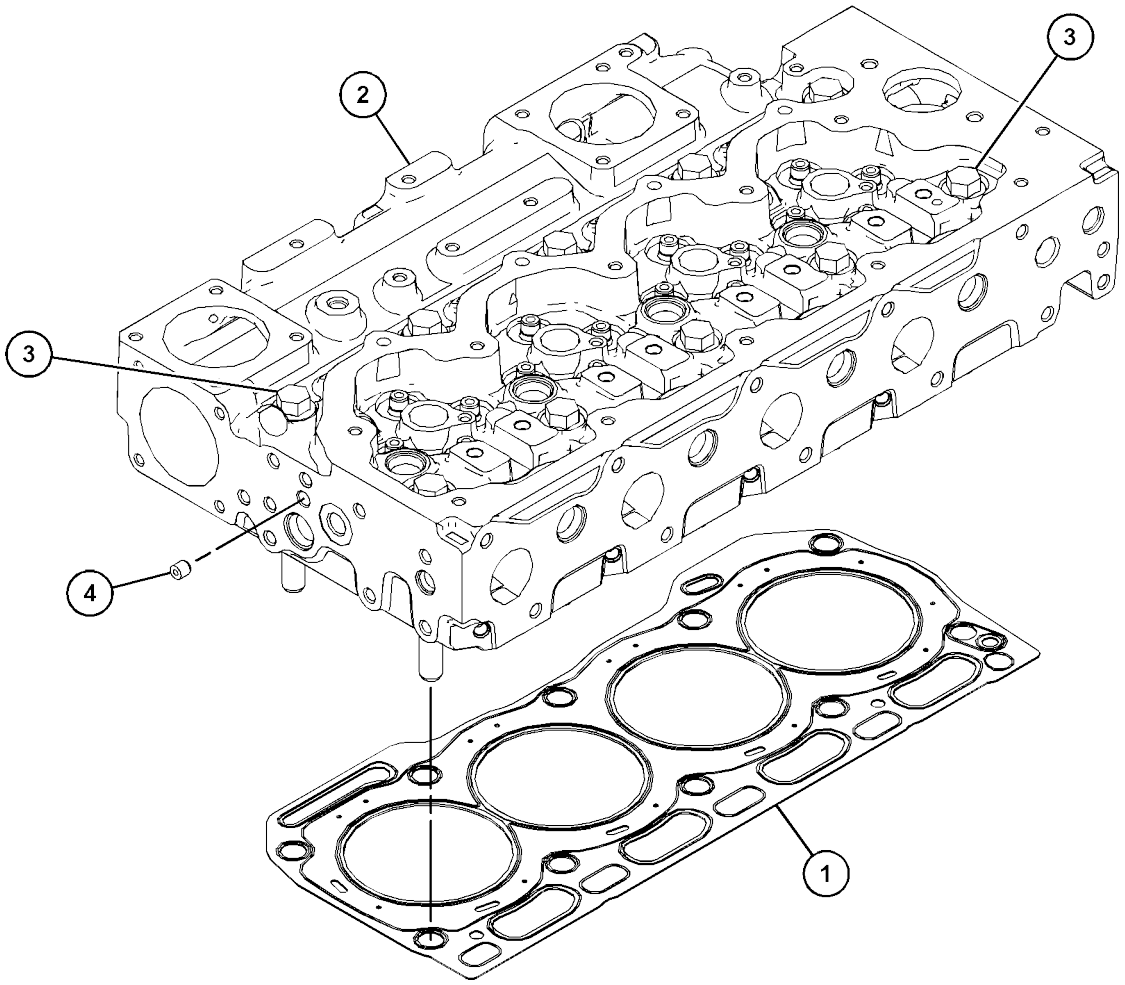

GRAPHIC #1 <END> g03828609

452-7397 CYLINDER HEAD GP

S/N: 2W21-UP

FIELD REPLACEMENT FOR 435-7493-PAGE: 4: FOR 435-7494-PAGE: 6

SMCS-1100

i07075129

REF SEE NOTE QTY	GRAPHIC NO 1 2 3 4 5 6 (PRODUCT LEVEL)	REF PAGE	PART NAME PART NUMBER	
Y 1	1 *460-7780*	1	CYLINDER HEAD AS	20
Y 2	1 *460-7781*	1	ROCKER ARM GP	44

Y - SEPARATE ILLUSTRATION

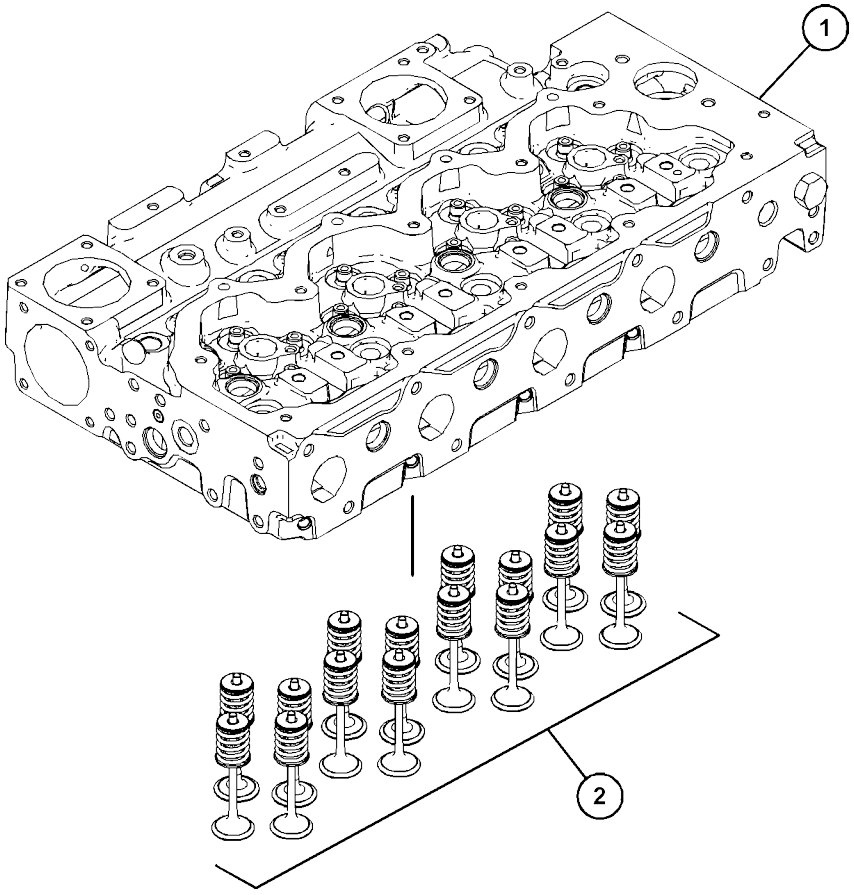

GRAPHIC #1 <END> g06116995

417-4187 DRAIN GP-ENGINE OIL

S/N: 2W21-UP
PART OF 435-7493, 435-7494 ENGINE AR-
PRIMARY AN ATTACHMENT

SMCS-1302

i06948478

REF SEE NOTE QTY	GRAPHIC NO 1 2 3 4 5 6	(PRODUCT LEVEL)	REF PAGE	PART NAME PART NUMBER
1	1	**7C-0351**	2	PLUG-DRAIN (ENGINE OIL)
2	1	**335-7585**	2	SEAL

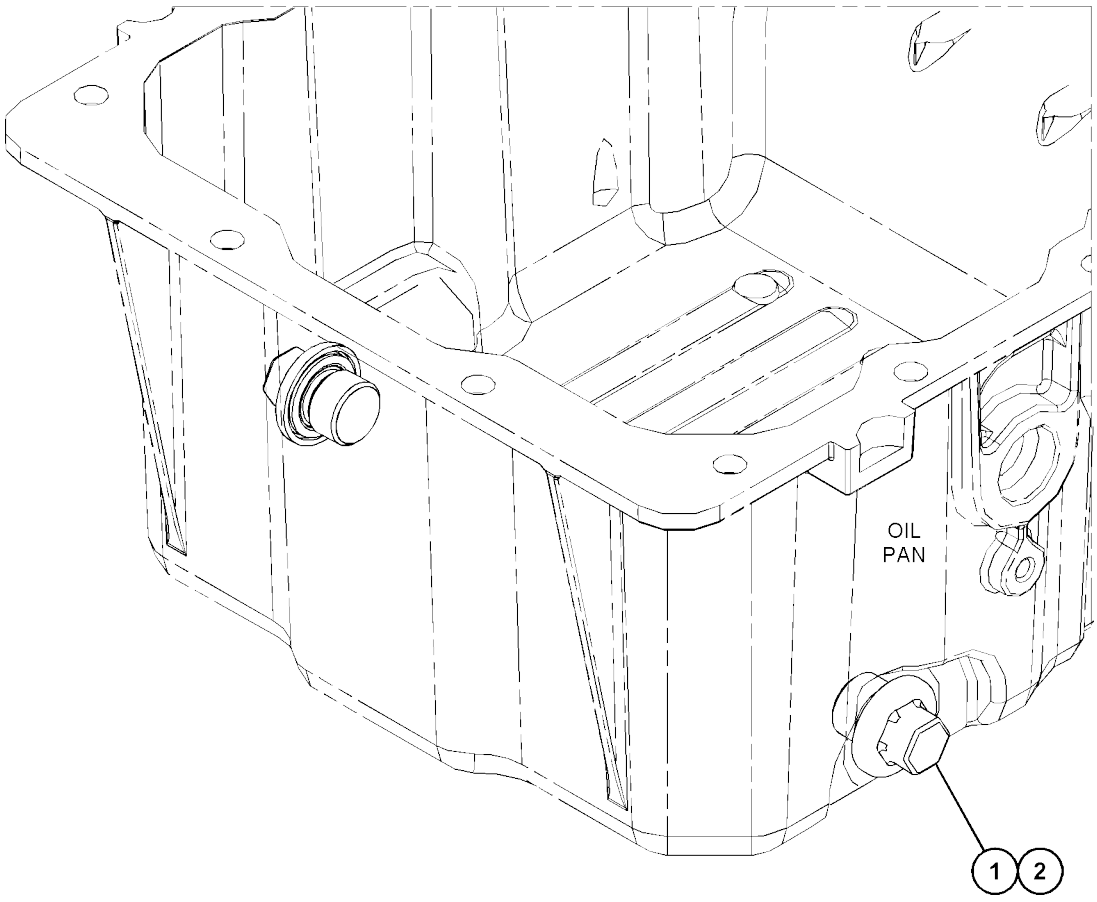

GRAPHIC #1 <END> g03817839

444-9582 DRIVE GP-FAN

S/N: 2W21-UP
PART OF 435-7493, 435-7494 ENGINE AR-PRIMARY AN ATTACHMENT

SMCS-1359

i06124362

	REF SEE NOTE QTY	GRAPHIC NO 1 2 3 4 5 6	(PRODUCT LEVEL)	REF PAGE	PART NAME PART NUMBER
M	1	1	**111-0859**	2	BOLT (M10X1.5X35-MM)
	2	1	**371-8298**	1	BRACKET
	3	1	**377-9255**	1	PULLEY AS (8-GROOVE)
M	3A	1	**423-7576**	1	BOLT (M10X1.5X50-MM)

M - METRIC PART

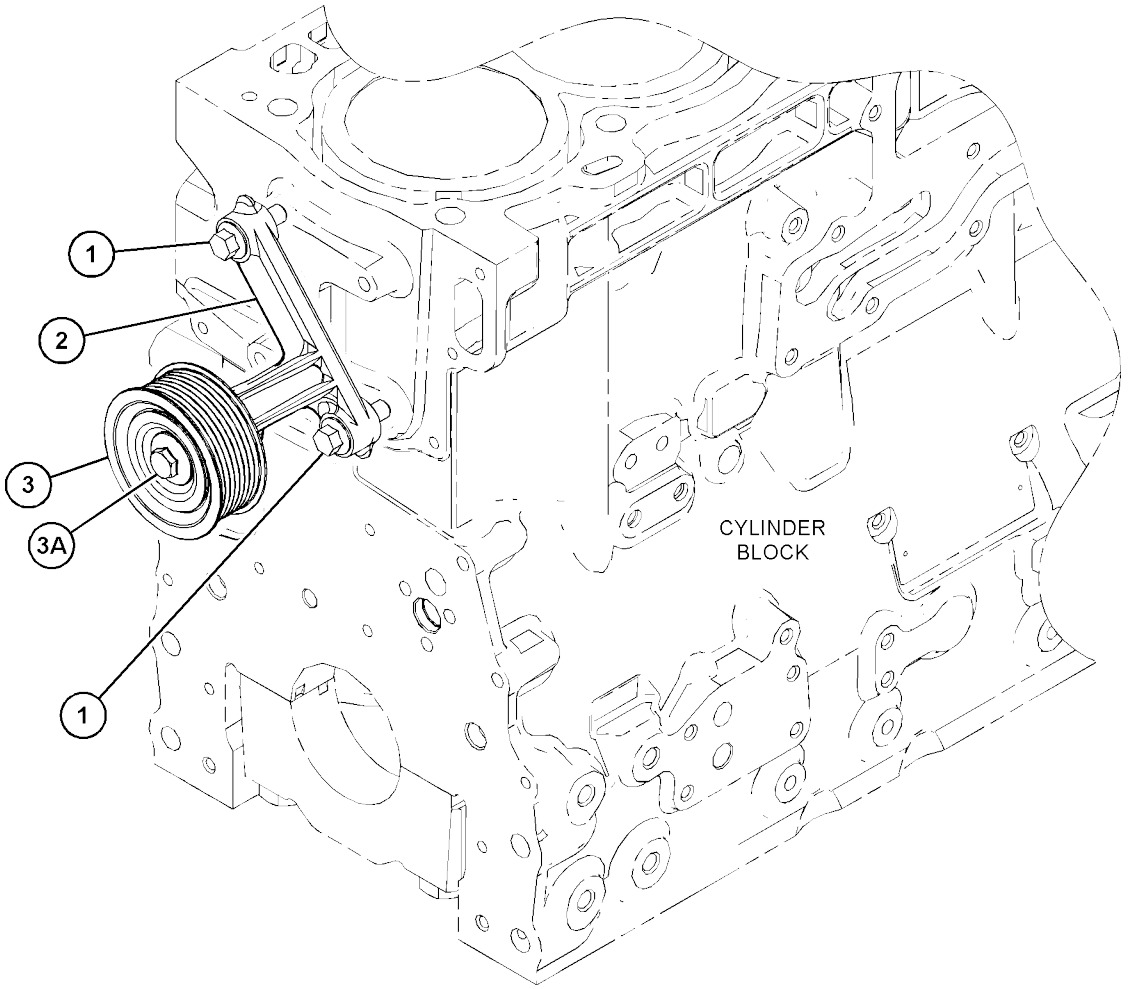

GRAPHIC #1 <END> g03841238

417-3391 FLYWHEEL GP

S/N: 2W21-UP
PART OF 435-7493, 435-7494 ENGINE AR-
PRIMARY AN ATTACHMENT

SMCS-1156

i07012598

REF SEE NOTE QTY	GRAPHIC NO 1 2 3 4 5 6	(PRODUCT LEVEL)	REF PAGE	PART NAME PART NUMBER
1	1	**145-4911**	10	WASHER
2	1	**0S-1603**	10	BOLT (1/2-20X1.5-IN)
3	1	**458-3404**	1	FLYWHEEL AS
3A	1	**033-7687**	1	RING-STARTING MOTOR (126-TEETH)

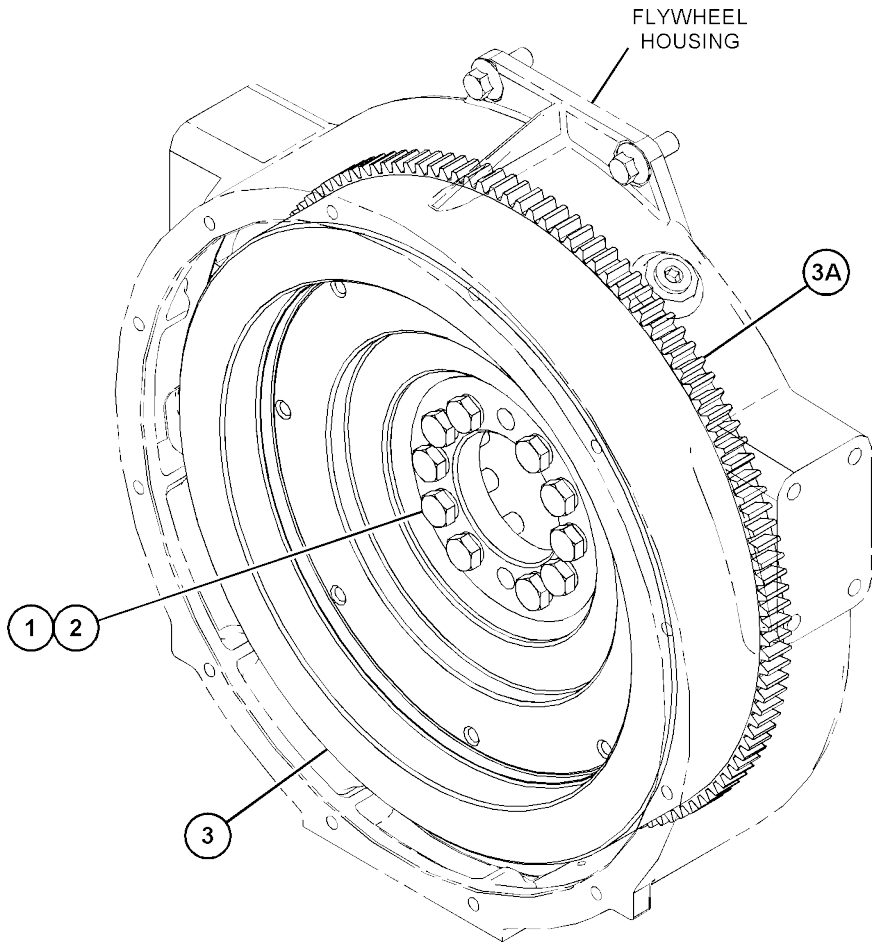

GRAPHIC #1 <END> g03842940

381-1908 GUARD GP-BELT

S/N: G441-UP

PART OF 451-3130 INSTALLATION AR-ENGINE

SMCS-7174

i06650920

	REF SEE NOTE QTY	GRAPHIC NO 1 2 3 4 5 6	(PRODUCT LEVEL)	REF PAGE	PART NAME PART NUMBER
	1	1	**390-5492**	1	GUARD AS
M	1A	1	**8T-3612**	4	NUT-WELD (M8X1.25-THD)
	2	1	**5P-4116**	4	WASHER-HARD (8.8X20.5X2-MM THK)
M	3	1	**8T-4189**	4	BOLT (M8X1.25X20-MM)

M - METRIC PART

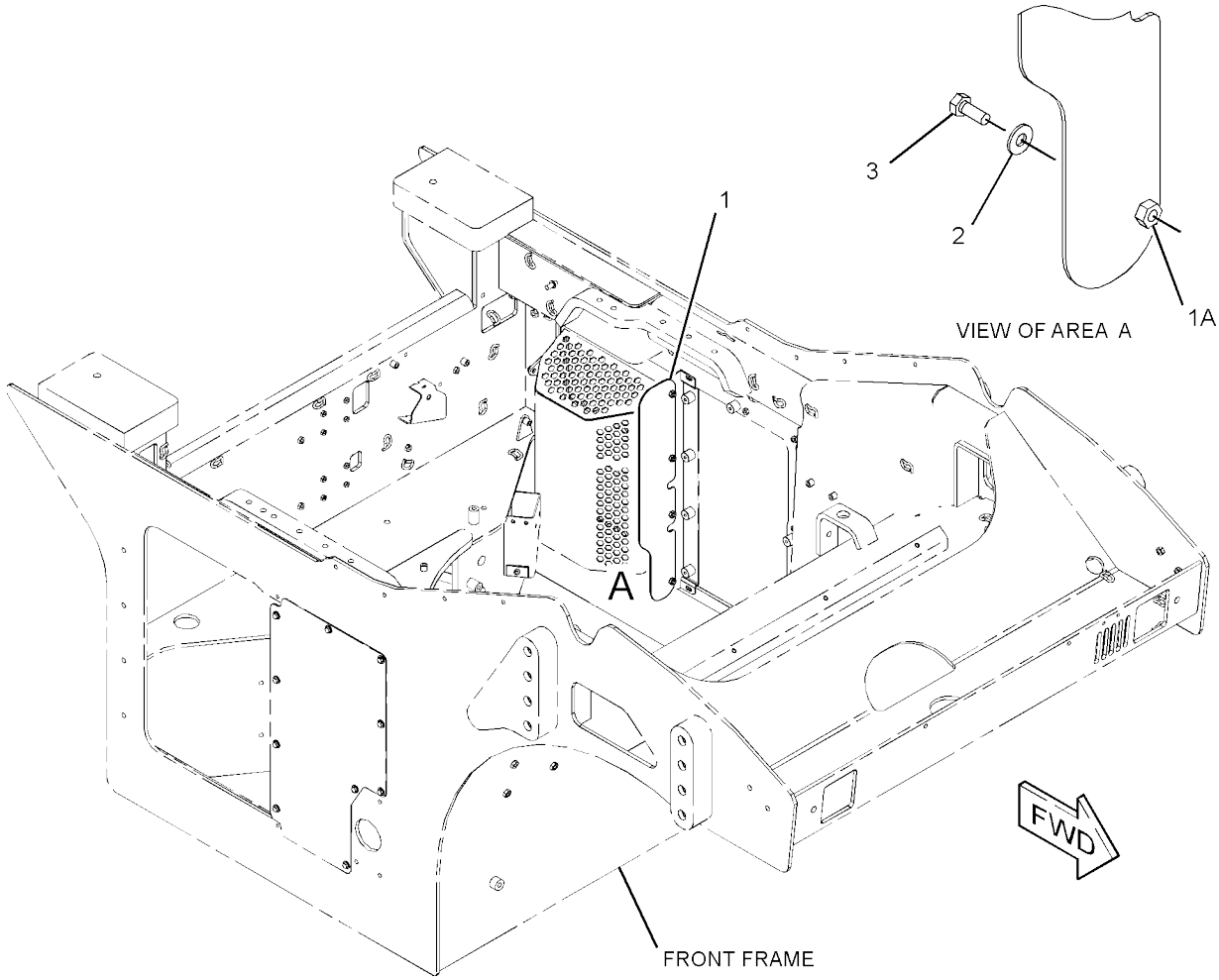

GRAPHIC #1 <END> g03335863

416-1030 HOUSING GP-FLYWHEEL

S/N: 2W21-UP
PART OF 435-7493, 435-7494 ENGINE AR-PRIMARY AN ATTACHMENT

SMCS-1157

i07420895

	REF SEE NOTE QTY	GRAPHIC NO 1 2 3 4 5 6	(PRODUCT LEVEL)	REF PAGE	PART NAME PART NUMBER
M	1	1	**6I-0423**	2	BOLT (M12X1.75X30-MM)
M	2	1	**6I-0631**	2	BOLT (M6X1X12-MM)
M	3	1	**6I-4200**	3	BOLT (M10X1.5X16-MM)
	4	1	**102-1957**	1	PLATE
M	5	1	**121-0883**	6	BOLT (M10X1.5X30-MM)
	6	1	**199-3109**	1	PLUG
	7	1	**287-8597**	2	DOWEL
	8	1	**324-2981**	1	HOUSING-FLYWHEEL
	9	1	**375-9272**	1	PLUG
	10	1	**393-4006**	1	GASKET

M - METRIC PART

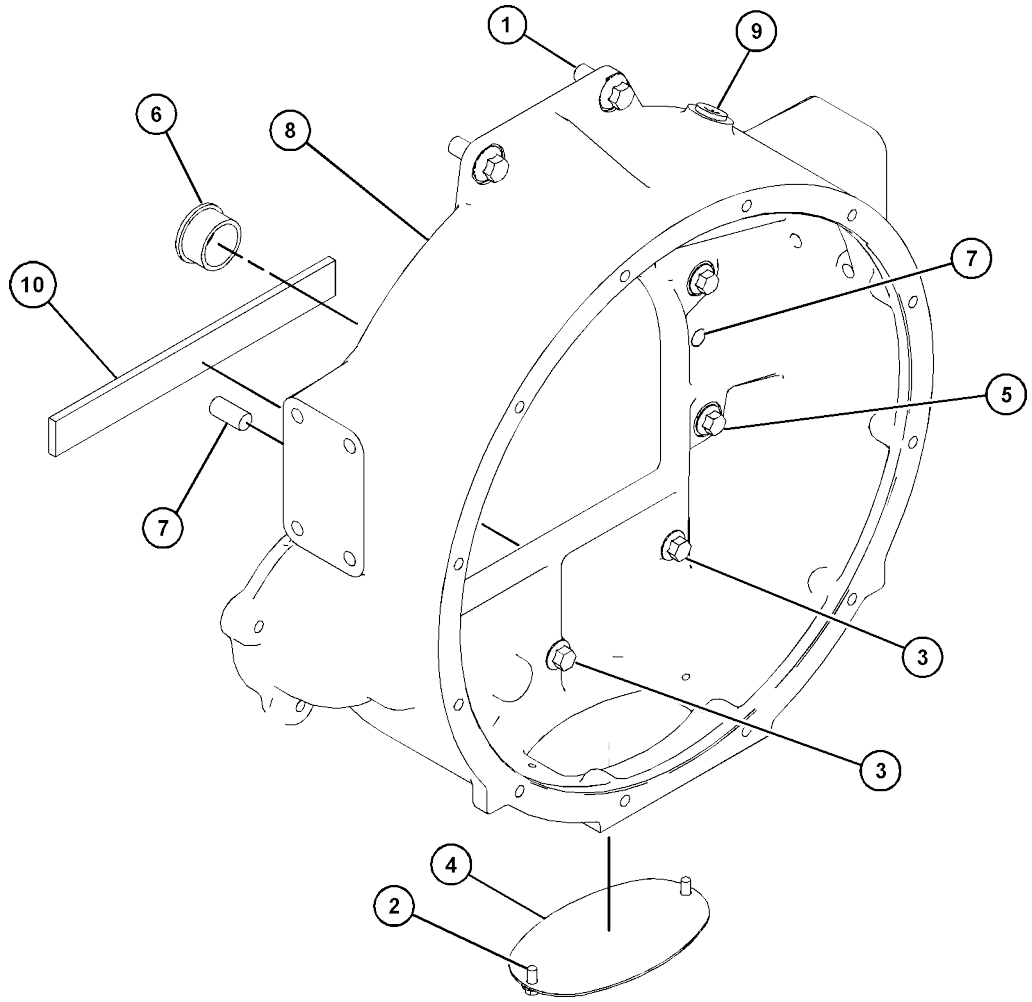

GRAPHIC #1 <END> g03852179

415-7116 HOUSING GP-FRONT

S/N: 2W21-UP

PART OF 435-7493, 435-7494 ENGINE AR-PRIMARY AN ATTACHMENT

SMCS-1151, 1162

i07420894

	REF SEE NOTE QTY	GRAPHIC NO 1 2 3 4 5 6	(PRODUCT LEVEL)	REF PAGE	PART NAME PART NUMBER
M	1	1	**6I-0217**	6	BOLT (M8X1.25X20-MM)
M	2	1	**6I-0645**	4	BOLT (M8X1.25X25-MM)
M	3	1	**6I-0650**	3	BOLT (M10X1.5X65-MM)
M	4	1	**7C-4616**	1	BOLT (M12X1.75X45-MM)
	5	1	**067-6179**	1	DOWEL
M	6	1	**100-3751**	5	BOLT (M8X1.25X65-MM)
M	7	1	**100-4830**	1	BOLT (M10X1.5X20-MM)
M	8	1	**101-3895**	2	BOLT (M8X1.25X35-MM)
M	9	1	**124-3815**	9	BOLT (M8X1.25X16-MM)
	10	1	**133-1011**	1	WASHER
	11	1	**425-7103**	1	GEAR (68-TEETH)
	12	1	**226-8767**	1	COVER AS-FRONT
	12A	1	**226-8766**	1	GASKET-COVER
	13	1	**232-3666**	1	WASHER-THRUST
	14	1	**251-4336**	1	GEAR AS-IDLER (73-TEETH)
	15	1	**277-3012**	1	GASKET-COVER
	16	1	**277-3013**	1	SEAL
	17	1	**324-0444**	1	HUB-IDLER GEAR
	18	1	**346-0408**	1	PLATE
	19	1	**443-9253**	1	CASE-GEAR

M - METRIC PART

415-7116 **HOUSING GP-FRONT** (contd.) **i07420894**

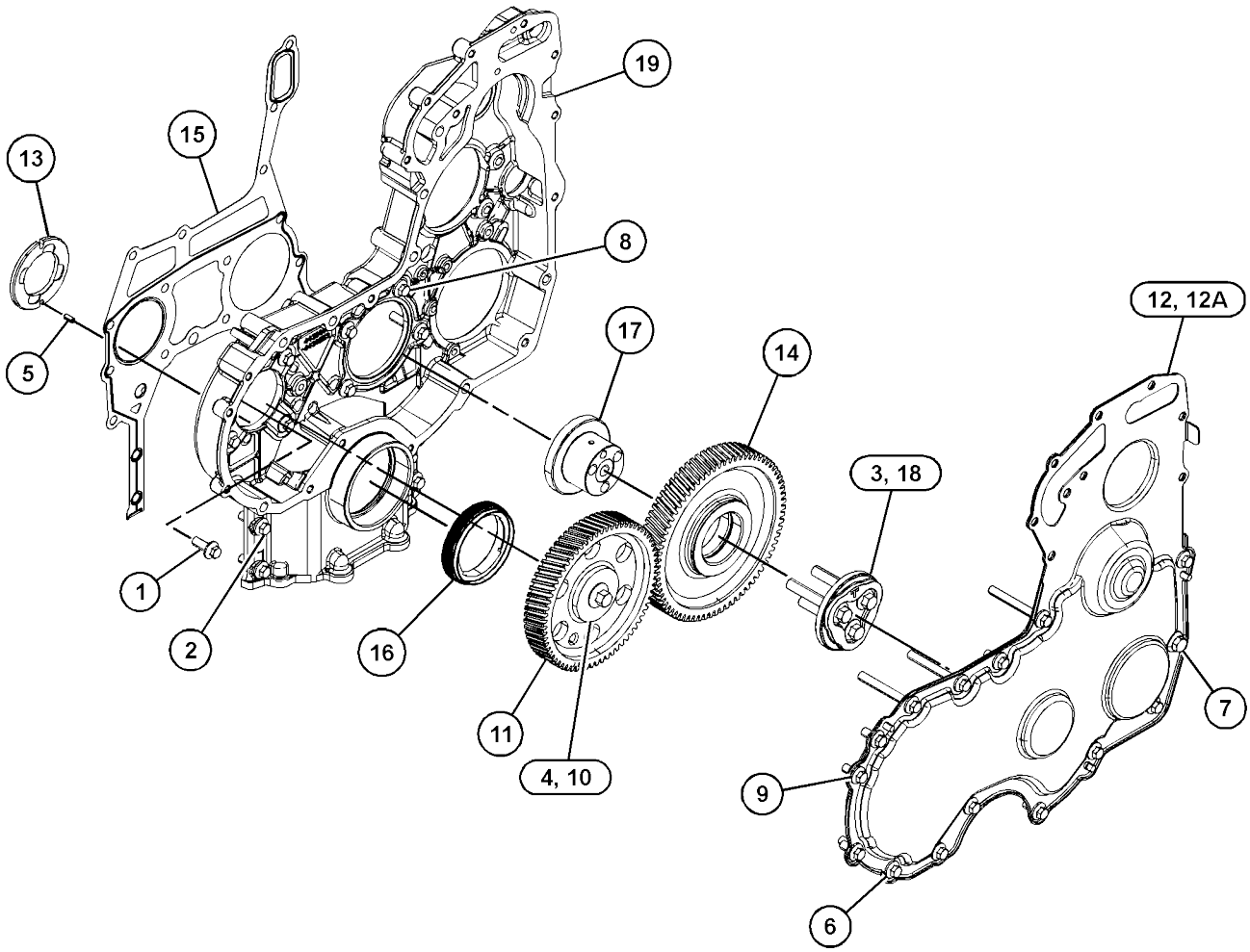

GRAPHIC #1 <END> g03831930

416-8722 HOUSING GP-FRONT

S/N: 2W21-
UP PTO
PART OF 435-7493, 435-7494 ENGINE AR-
PRIMARY AN ATTACHMENT

SMCS-1151, 1162

i06581566

	REF SEE NOTE QTY	GRAPHIC NO 1 2 3 4 5 6	(PRODUCT LEVEL)	REF PAGE	PART NAME PART NUMBER
M	1	1	**100-4830**	2	BOLT (M10X1.5X20-MM)
M	2	1	**102-2078**	1	BOLT (M10X1.5X25-MM)
M	3	1	**126-3212**	5	BOLT (M8X1.25X25-MM)
	4	1	**198-8262**	1	COVER AS
	4A	1	**198-8263**	1	SEAL-O-RING
	5	1	**214-3203**	1	WASHER (SEALING)
M	6	1	**6I-0646**	1	BOLT (M10X1.5X14-MM)
	7	1	**102-2073**	1	SEAL-O-RING
	8	1	**235-1063**	1	ADAPTER AS
	8A	1	**6H-3957**	1	BALL BEARING
	8B	1	**102-2075**	1	BEARING
	8C	1	**102-2076**	1	CLIP
	8D	1	**235-1061**	1	GEAR (33-TEETH)

M - METRIC PART

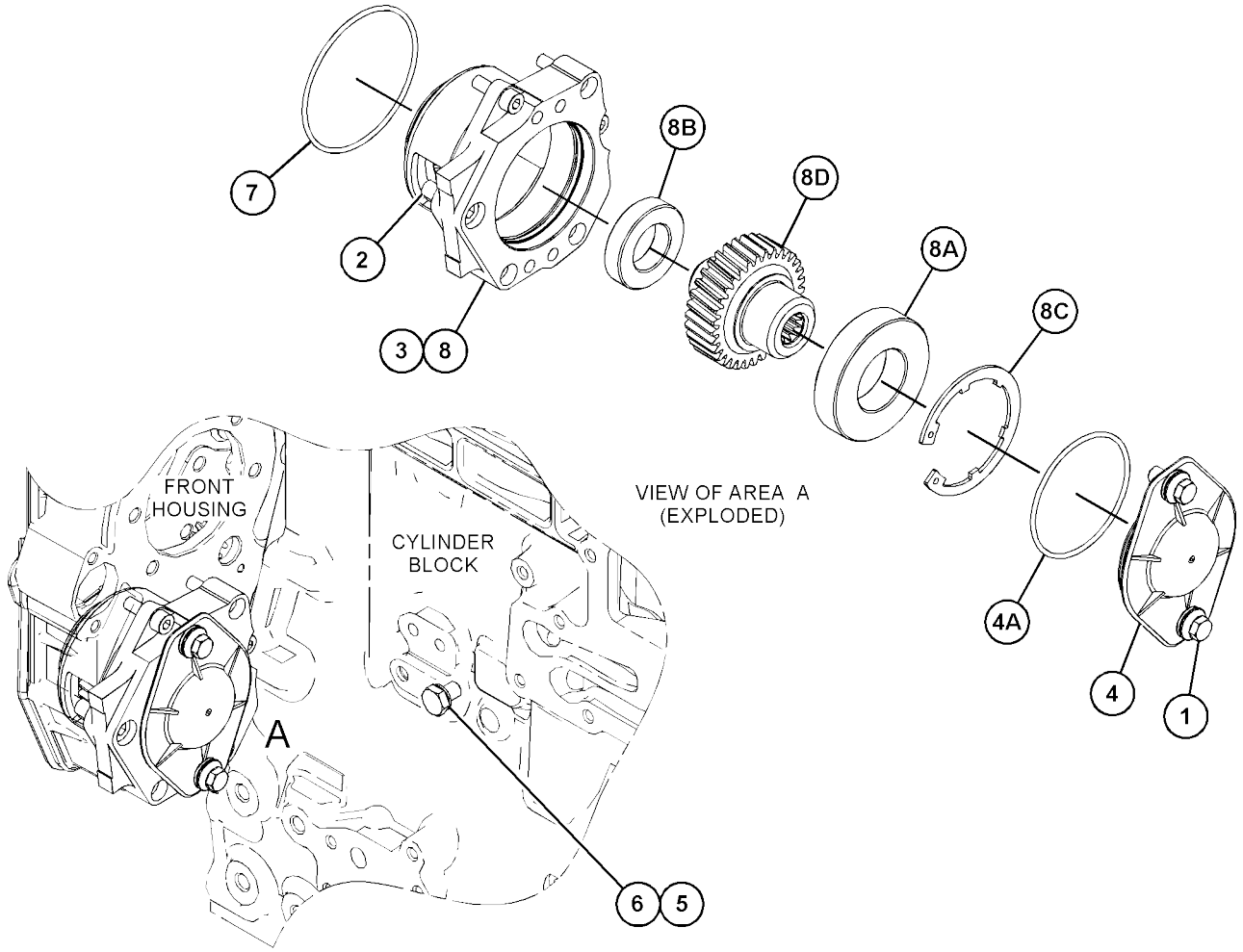

GRAPHIC #1 <END> g03881057

415-7948 JET GP-PISTON COOLING

S/N: 2W21-UP

PART OF 452-7386 CYLINDER BLOCK GP-SHORT, 435-7493, 435-7494 ENGINE AR-PRIMARY AN ATTACHMENT

SMCS-1331

i06302489

	REF SEE NOTE QTY	GRAPHIC NO 1 2 3 4 5 6	(PRODUCT LEVEL)	REF PAGE	PART NAME PART NUMBER
M	1	1	**100-4841**	4	BOLT (M6X1X10-MM)
	2	1	**276-5605**	4	JET AS-PISTON COOLING

M - METRIC PART

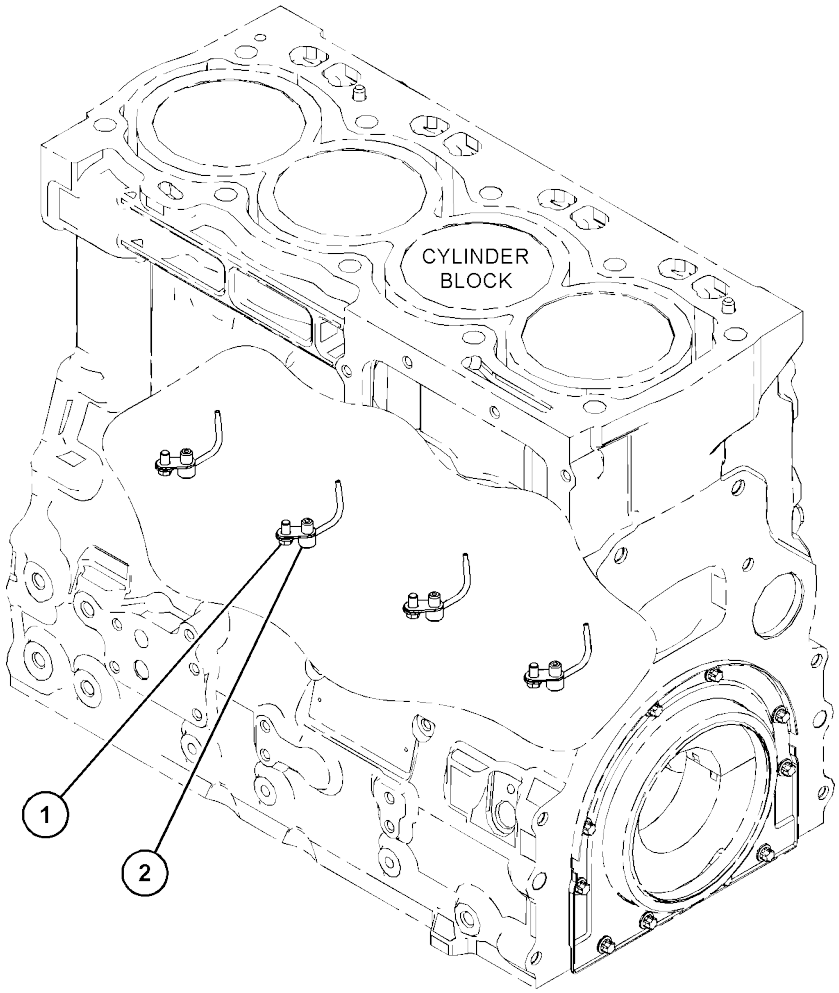

GRAPHIC #1 <END> g03813693

417-3458 LIFTING GP-ENGINE

S/N: 2W21-UP

PART OF 435-7493, 435-7494 ENGINE AR-PRIMARY AN ATTACHMENT

SMCS-1122

i06888809

	REF SEE NOTE QTY	GRAPHIC NO 1 2 3 4 5 6	(PRODUCT LEVEL)	REF PAGE	PART NAME PART NUMBER
M	1	1	**6I-0654**	4	BOLT (M10X1.5X25-MM)
	2	1	**299-5024**	1	BRACKET
	3	1	**299-5026**	1	BRACKET

M - METRIC PART

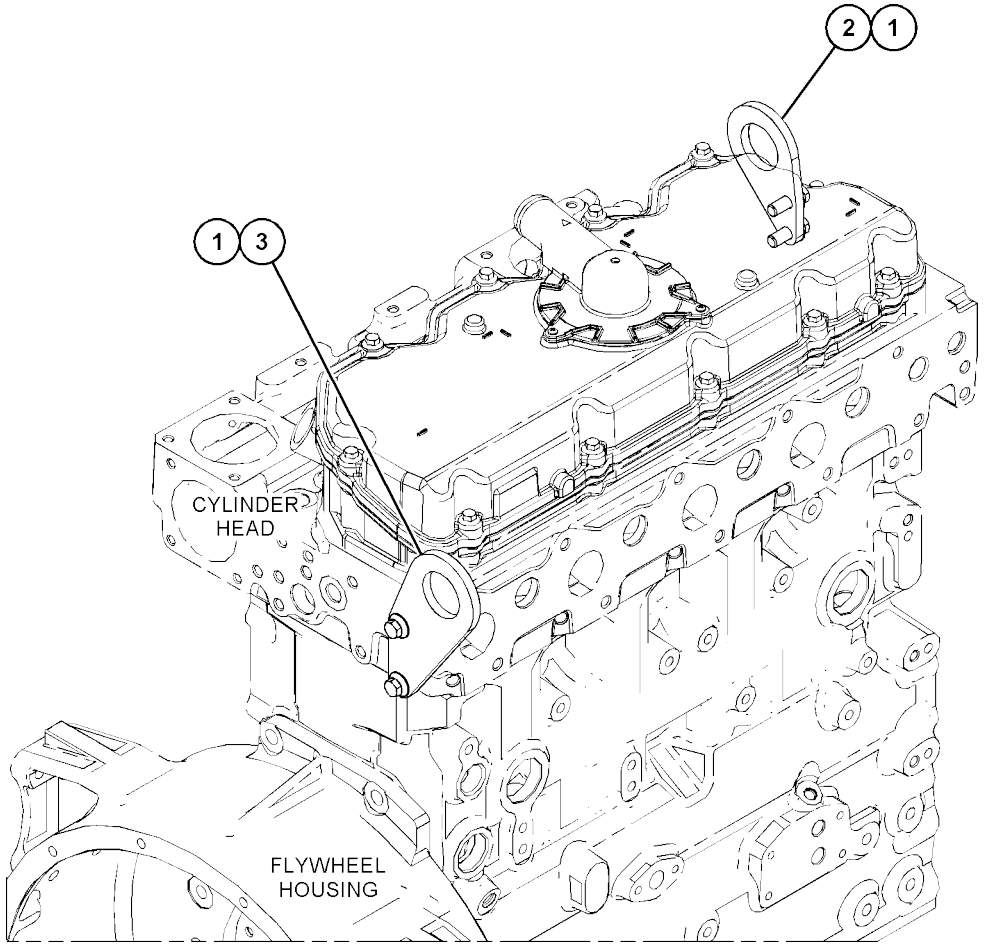

GRAPHIC #1 <END> g03817838

377-5357 MOUNTING GP-ENGINE

S/N: 5B41-UP; G441-UP
PART OF 451-3130, 451-3230 INSTALLATION AR-ENGINE

SMCS-1152

i06650904

	REF SEE NOTE QTY	GRAPHIC NO 1 2 3 4 5 6	(PRODUCT LEVEL)	REF PAGE	PART NAME PART NUMBER
	1	1	**9W-9952**	2	WASHER (16.75X86X8-MM THK)
	2	1	**9W-9953**	4	SLEEVE
	3	1	**273-7309**	4	MOUNTING GP-ENGINE & XMSN
	4	1	**327-4444**	2	PLATE AS
					(EACH INCLUDES)
M	4A	1	**355-8941**	1	NUT-WELD (M16X2-THD)
	5	1	**362-3905**	1	SUPPORT AS-ENGINE (RIGHT)
	6	1	**391-0756**	1	SUPPORT AS
M	6A	1	**8T-3597**	4	NUT-WELD (M12X1.75-THD)
	7	1	**418-2222**	1	SUPPORT-ENGINE
	8	1	**5P-1076**	4	WASHER-HARD (13.5X30X4-MM THK)
	9	1	**8T-4122**	6	WASHER-HARD (17X32X3.5-MM THK)
M	10	1	**8T-4132**	2	NUT (M16X2-THD)
M	11	1	**8T-4173**	4	BOLT (M16X2X110-MM)
M	12	1	**8T-4183**	4	BOLT (M12X1.75X40-MM)
M	13	1	**8T-4184**	8	BOLT (M12X1.75X45-MM)
	14	1	**8T-4223**	8	WASHER-HARD (13.5X25.5X3-MM THK)

M - METRIC PART

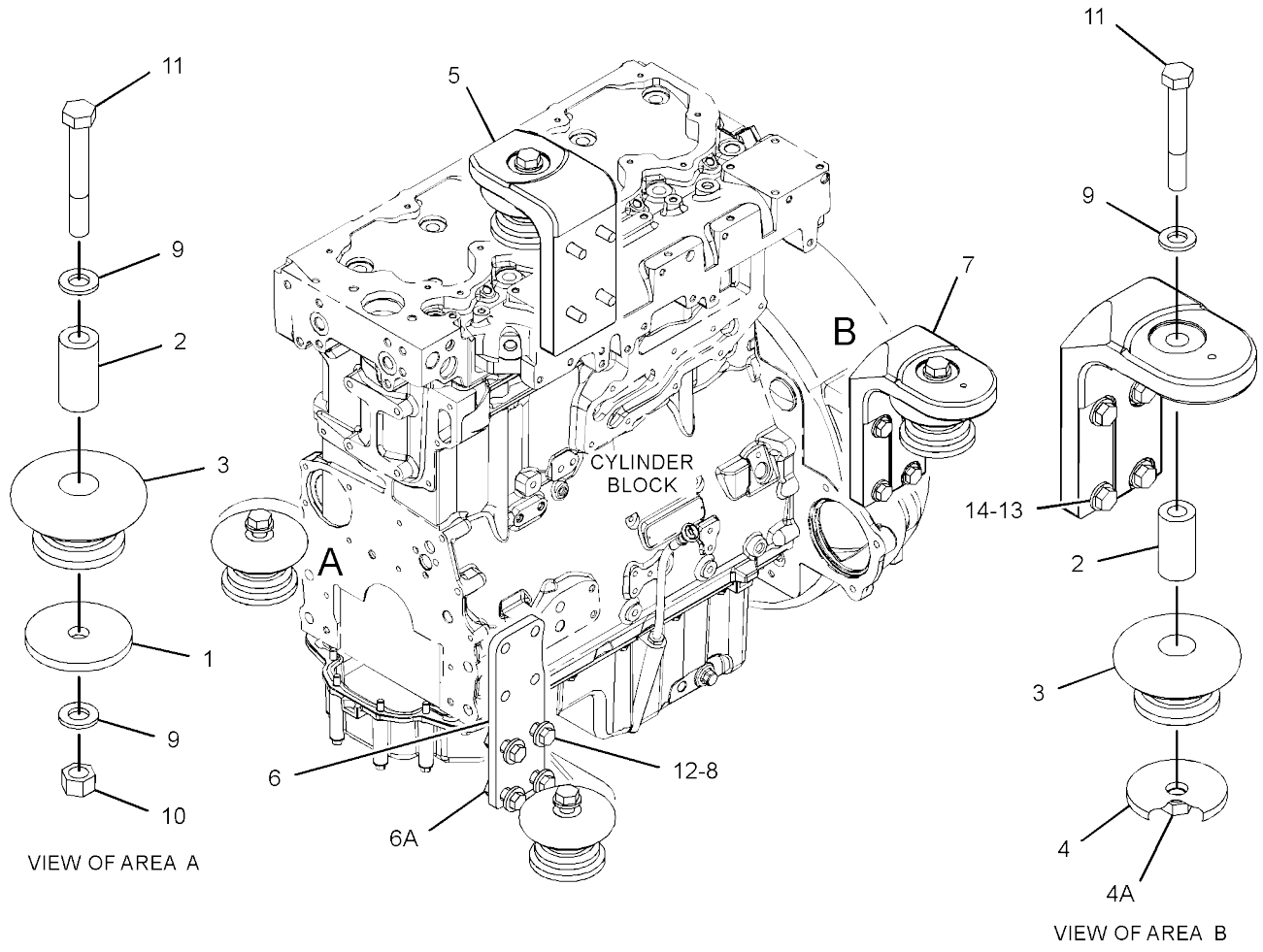

GRAPHIC #1

<END>

g03339585

417-4119 MOUNTING GP-ENGINE

S/N: 2W21-UP
PART OF 435-7493, 435-7494 ENGINE AR-
PRIMARY AN ATTACHMENT

SMCS-1152

i07420896

	REF SEE NOTE QTY	GRAPHIC NO 1 2 3 4 5 6	(PRODUCT LEVEL)	REF PAGE	PART NAME PART NUMBER
	1	1	**195-2136**	8	STUD
M	2	1	**195-2221**	8	NUT (M12X1.75-THD)
	3	1	**195-2132**	1	SUPPORT-FRONT (LH)
	4	1	**195-2134**	1	SUPPORT-FRONT (RH)
	5	1	**6H-3616**	4	PLUG-PROTECTION

M - METRIC PART

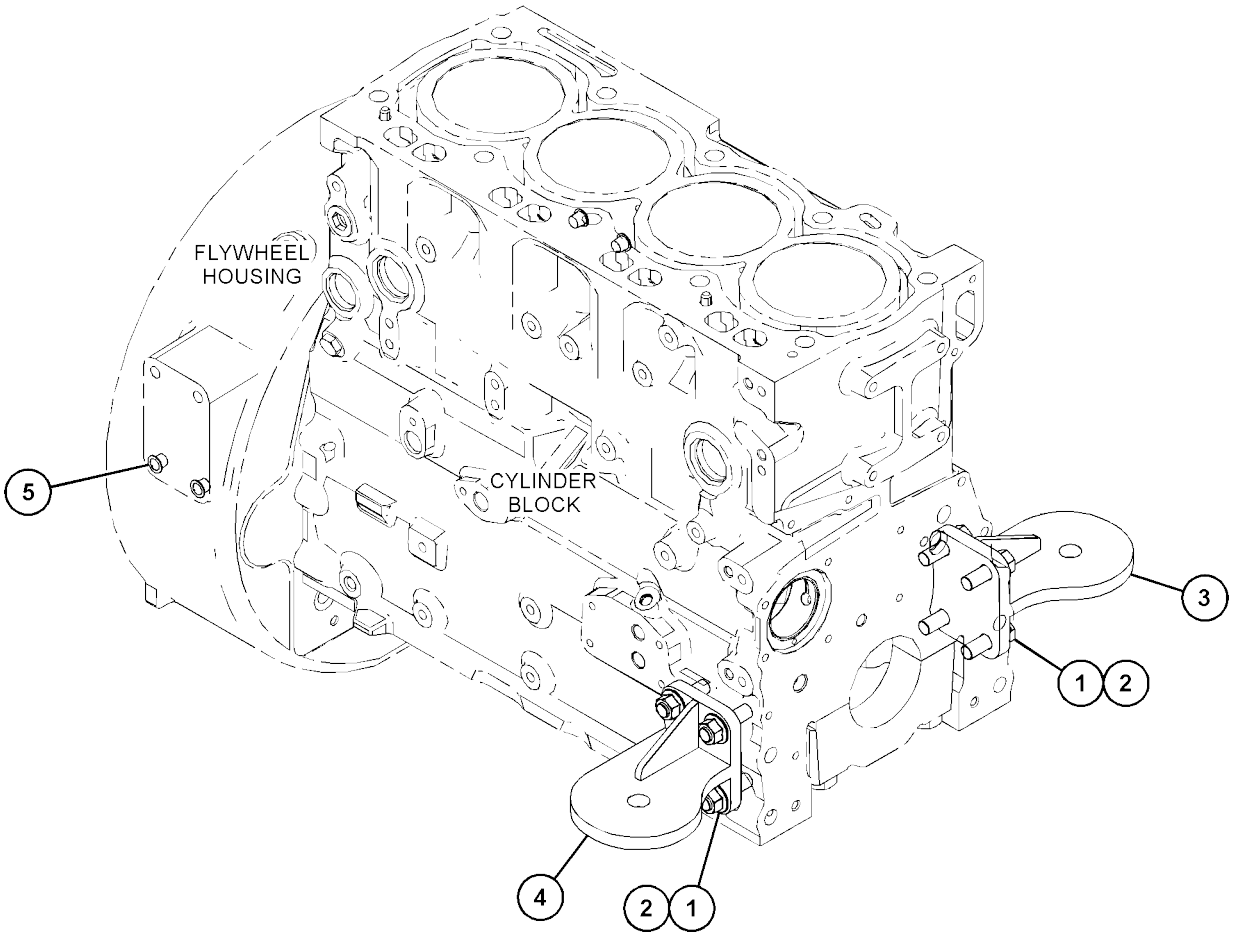

GRAPHIC #1 <END> g03848199

416-1051 PAN GP-OIL

S/N: 2W21-UP
PART OF 435-7493, 435-7494 ENGINE AR-PRIMARY AN ATTACHMENT

SMCS-1302

i07176516

	REF SEE NOTE QTY	GRAPHIC NO 1 2 3 4 5 6	(PRODUCT LEVEL)	REF PAGE	PART NAME PART NUMBER
M	1	1	**6I-0363**	2	BOLT (M6X1X20-MM)
M	2	1	**101-3771**	4	BOLT (M8X1.25X85-MM)
	3	1	**480-4406**	1	PAN
M	4	1	**6I-0217**	12	BOLT (M8X1.25X20-MM)
M	5	1	**6I-0260**	2	BOLT (M8X1.25X25-MM)
M	6	1	**6I-0572**	4	BOLT (M8X1.25X20-MM)
	7	1	**067-6213**	1	GASKET
	8	1	**471-2882**	1	GASKET
	9	1	**225-6041**	1	TUBE
	10	1	**230-8094**	1	BRIDGE

M - METRIC PART

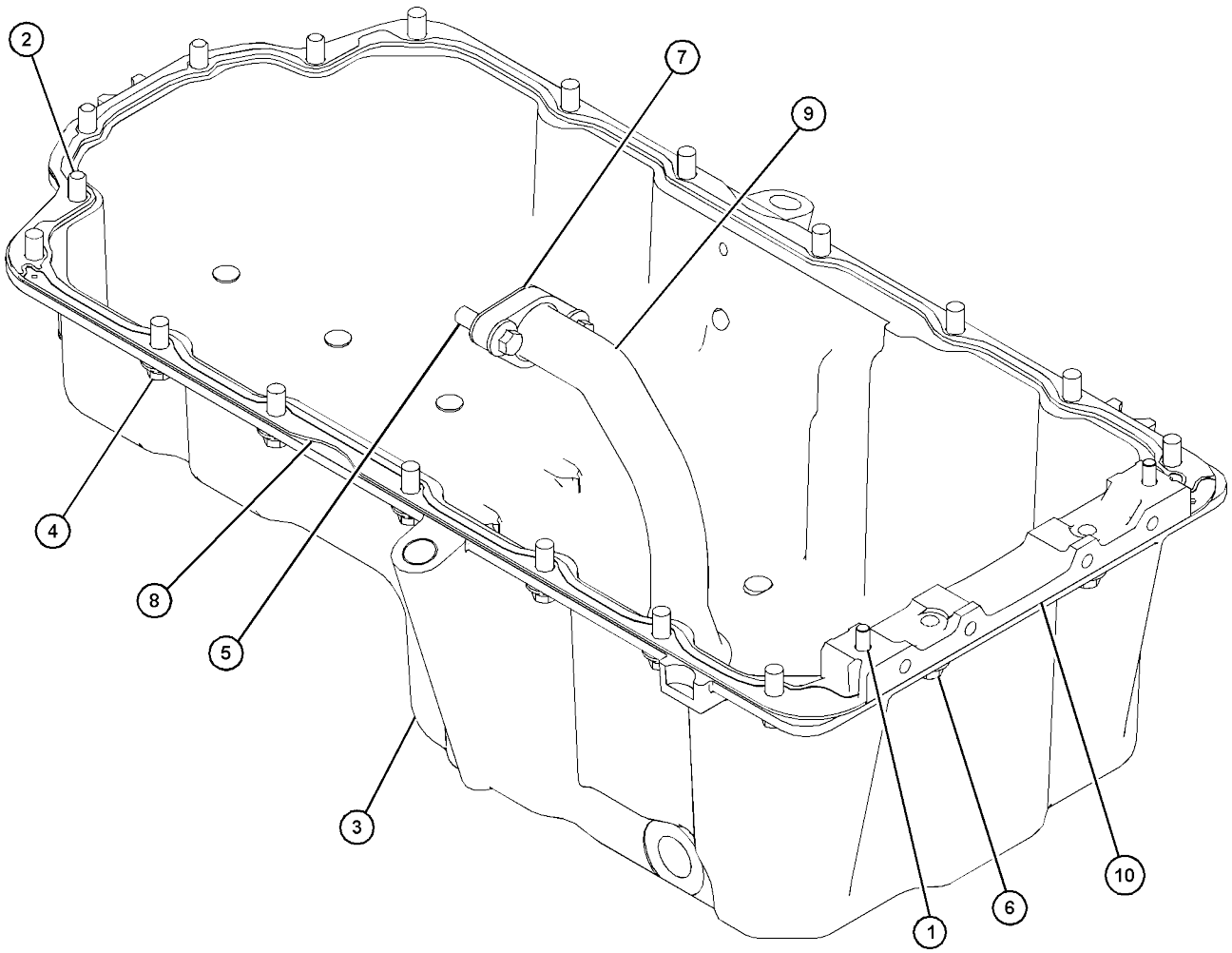

GRAPHIC #1 <END> g03841817

415-5518 PISTON & ROD GP

S/N: 2W21-UP

PART OF 452-7386 CYLINDER BLOCK GP-SHORT

SMCS-1225

i06888753

	REF SEE NOTE QTY	GRAPHIC NO 1 2 3 4 5 6	(PRODUCT LEVEL)	REF PAGE	PART NAME PART NUMBER
	1	1	**359-0719**	4	ROD AS-CONNECTING (LENGTH R)
					(EACH INCLUDES)
	1A	1	**225-5438**	1	BUSHING
M	1B	1	**323-9312**	2	BOLT (M10X1X50-MM)
	2	1	**124-3536**	8	RING-RETAINING
					AVAILABLE REPAIR KIT(S):
B			**360-3986**	1	KIT-BEARING (CONNECTING ROD)
					(INCLUDES BEARINGS)
B			**443-9543**	1	KIT-RING (PISTON)
					(INCLUDES RINGS)
B			**380-2065**	1	KIT-PISTON RING (0.5-MM OS)
					(INCLUDES RINGS)
B			**466-4849**	1	KIT-PISTON RING (1-MM OS) (PISTON)
					(INCLUDES RINGS)
B			**447-5251**		KIT-PISTON (STANDARD)
					(INCLUDES PISTON, PIN & RINGS)

B - USE AS REQUIRED M - METRIC PART

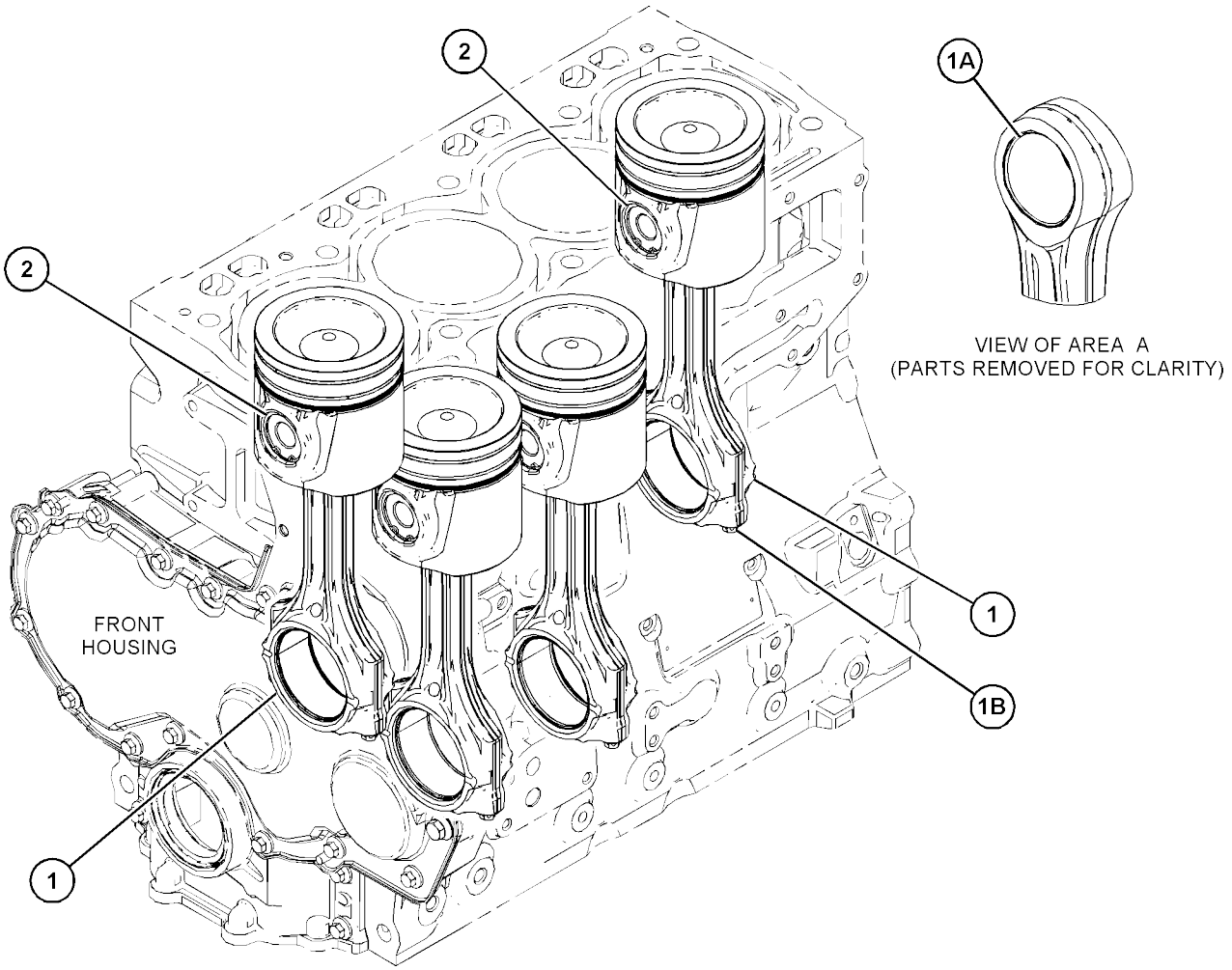

GRAPHIC #1 <END> g03814933

415-5519 PISTON & ROD GP

S/N: 2W21-UP
PART OF 435-7493, 435-7494 ENGINE AR-PRIMARY AN ATTACHMENT

SMCS-1225

i06781889

	REF SEE NOTE QTY	GRAPHIC NO 1 2 3 4 5 6	(PRODUCT LEVEL)	REF PAGE	PART NAME PART NUMBER
	1	1	**359-0719**	4	ROD AS-CONNECTING (LENGTH R)
					(EACH INCLUDES)
	1A	1	**225-5438**	1	BUSHING
M	1B	1	**323-9312**	2	BOLT (M10X1X50-MM)
	2	1	**124-3536**	8	RING-RETAINING
					PARTS SHOWN IN GRAPHIC(S) WITHOUT A REFERENCE NUMBER ARE NOT SERVICED SEPARATELY
					AVAILABLE REPAIR KIT(S):
B			**360-3986**	1	KIT-BEARING (CONNECTING ROD) (STANDARD)
					(INCLUDES BEARING)
B			**468-7762**	1	KIT-BEARING (0.254-MM US)
					(INCLUDES BEARING)
B			**468-7769**	1	KIT-BEARING (0.508-MM US)
					(INCLUDES BEARING)
B			**468-7770**	1	KIT-BEARING (0.762-MM US)
					(INCLUDES BEARING)
B			**443-9543**	1	KIT-RING (STANDARD)
					(INCLUDES RINGS)
B			**380-2065**	1	KIT-PISTON RING (0.5-MM OS)
					(INCLUDES RINGS)
B			**466-4849**	1	KIT-PISTON RING (1-MM OS) (PISTON)
					(INCLUDES RINGS)
B			**447-5252**	1	KIT-PISTON (STANDARD)
					(INCLUDES PISTON, PIN, & RINGS)
B			**447-5249**	1	KIT-PISTON (0.5-MM OS)
					(INCLUDES PISTON, PIN, & RINGS)
B			**447-5250**	1	KIT-PISTON (1-MM OS)
					(INCLUDES PISTON, PIN, & RINGS)

B - USE AS REQUIRED M - METRIC PART

415-5519 **PISTON & ROD GP** (contd.) **i06781889**

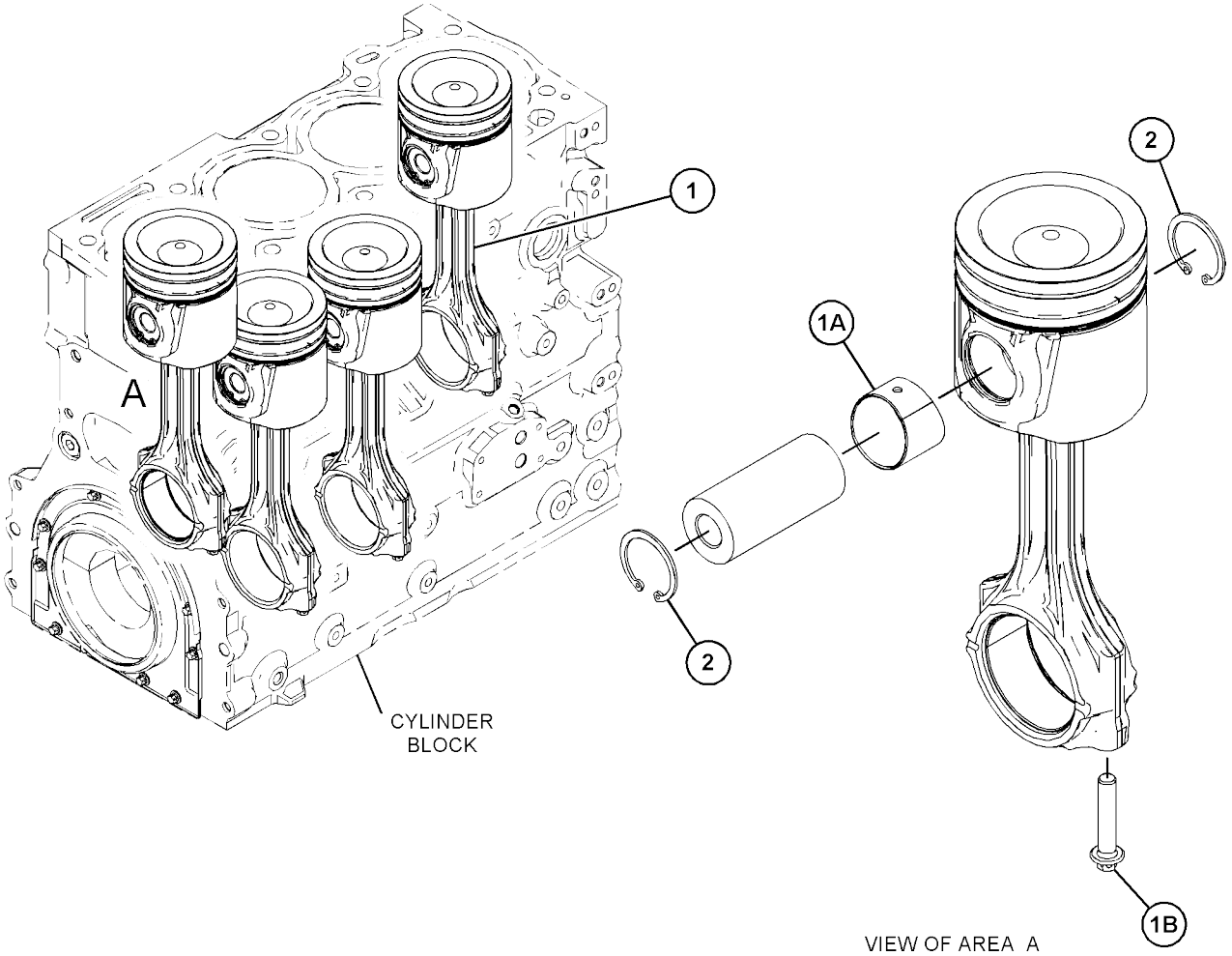

GRAPHIC #1 <END> g03826302

417-4286 PLUG GP-ENGINE

S/N: 2W21-UP
PART OF 435-7493, 435-7494 ENGINE AR-PRIMARY AN ATTACHMENT

SMCS-1000

i06581579

REF SEE NOTE QTY	GRAPHIC NO 1 2 3 4 5 6	(PRODUCT LEVEL)	REF PAGE	PART NAME PART NUMBER
1	1	**067-6823**	3	PLUG

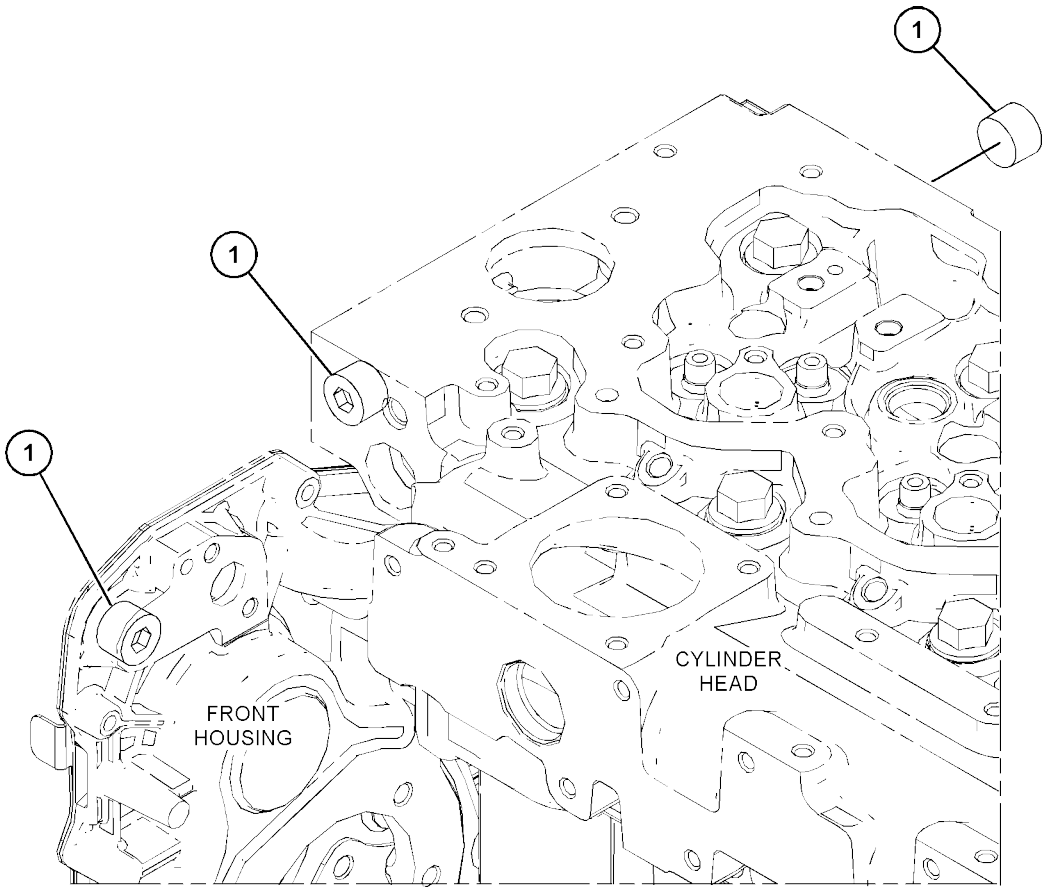

GRAPHIC #1 <END> g03815206

416-1047 PULLEY GP-ALTERNATOR

S/N: 2W21-UP
PART OF 435-7493, 435-7494 ENGINE AR-PRIMARY AN ATTACHMENT

SMCS-1205, 1425

i06581580

REF SEE NOTE QTY	GRAPHIC NO 1 2 3 4 5 6	(PRODUCT LEVEL)	REF PAGE	PART NAME PART NUMBER
1	1	**321-6131**	1	PULLEY (8-GROOVE)

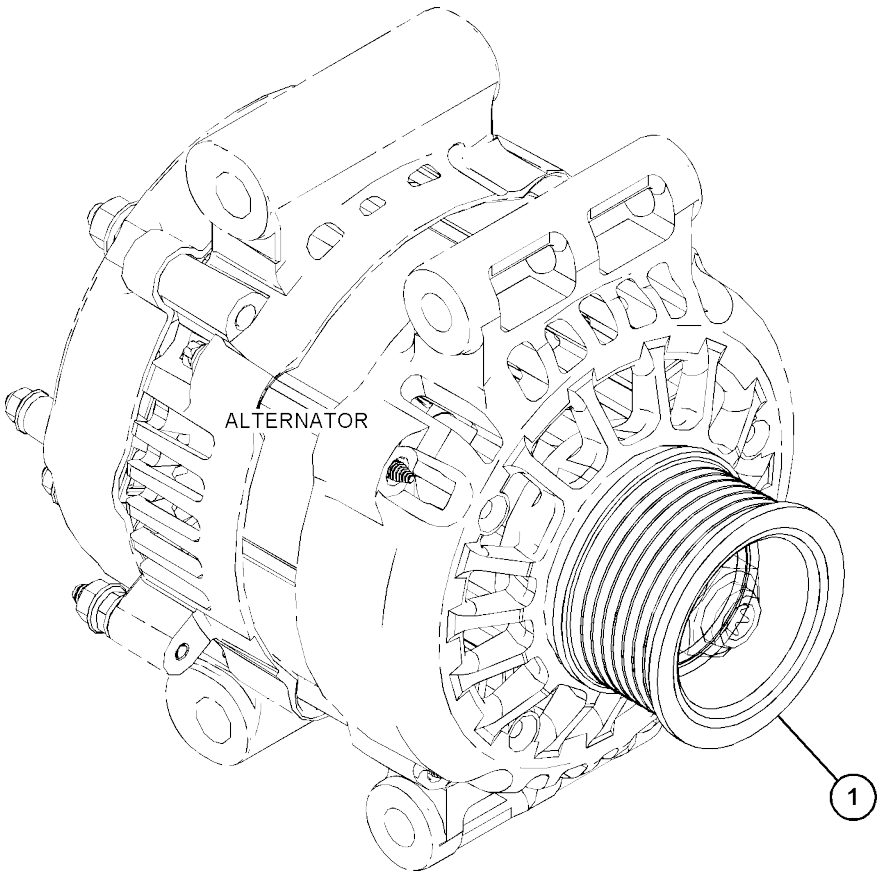

GRAPHIC #1 <END> g03829167

416-1089 PULLEY GP-CRANKSHAFT

S/N: 2W21-UP
PART OF 435-7493, 435-7494 ENGINE AR-PRIMARY AN ATTACHMENT

SMCS-1205

i06581581

REF NO	SEE NOTE QTY	GRAPHIC 1 2 3 4 5 6	(PRODUCT LEVEL)	REF PAGE	PART NAME PART NUMBER
1	1	1	**335-8270**	1	PULLEY (8-GROOVE)
2	1	1	**334-9334**	3	BOLT

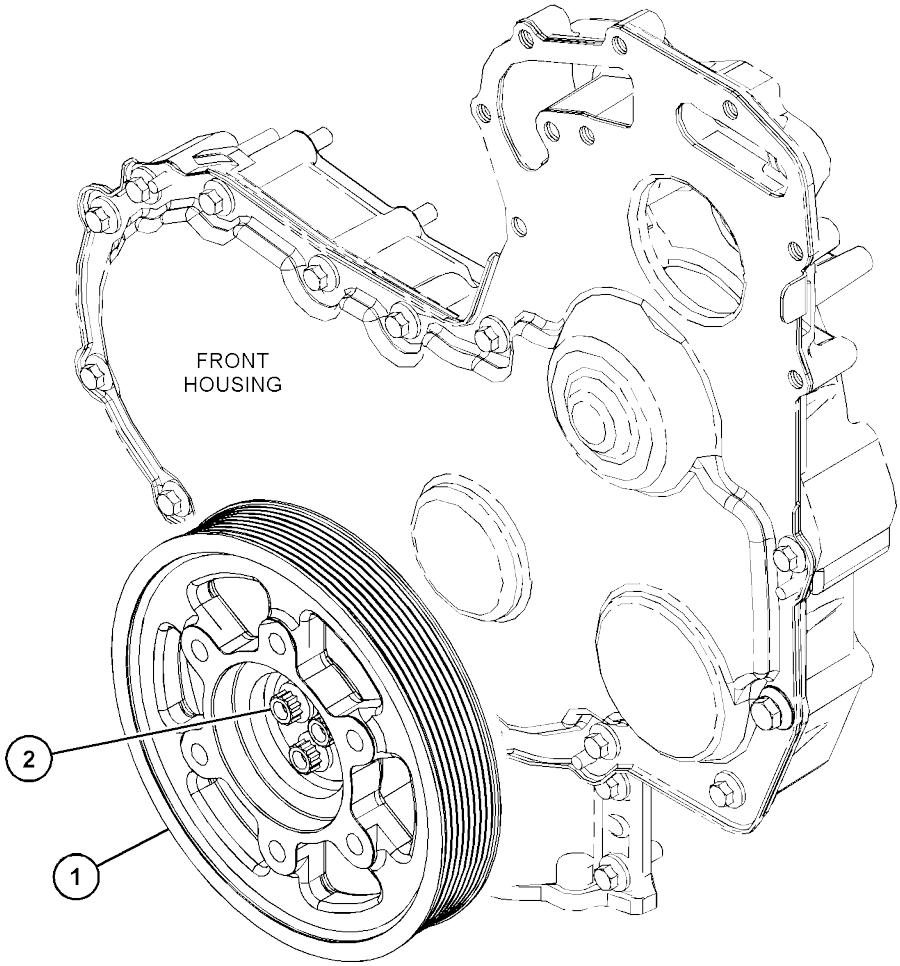

GRAPHIC #1 <END> g03814640

298-4533 ROCKER ARM GP

S/N: 2W21-UP
PART OF 415-7947 ROCKER ARM
GP AN ATTACHMENT

SMCS-1102, 1123

i03607232

REF SEE NOTE QTY	GRAPHIC NO 1 2 3 4 5 6	(PRODUCT LEVEL)	REF PAGE	PART NAME PART NUMBER
1	1	**276-9200**	2	PLUG-SHAFT END
2	1	**276-9201**	1	CLIP
3	1	**276-9206**	3	SPRING-SHAFT
4	1	**276-9207**	1	SPRING-SHAFT
5	1	**278-5111**	4	ROCKER ARM AS
5A	1	**276-9230**	1	NUT
5B	1	**278-5113**	1	SCREW-ADJUSTING (TORX)
6	1	**278-5112**	4	ROCKER ARM AS
6A	1	**276-9230**	1	NUT
6B	1	**278-5113**	1	SCREW-ADJUSTING (TORX)
7	1	**280-1912**	4	BRACKET
8	1	**280-1913**	4	RETAINER
9	1	**280-1914**	8	BOLT (M8X1.25X55-MM)

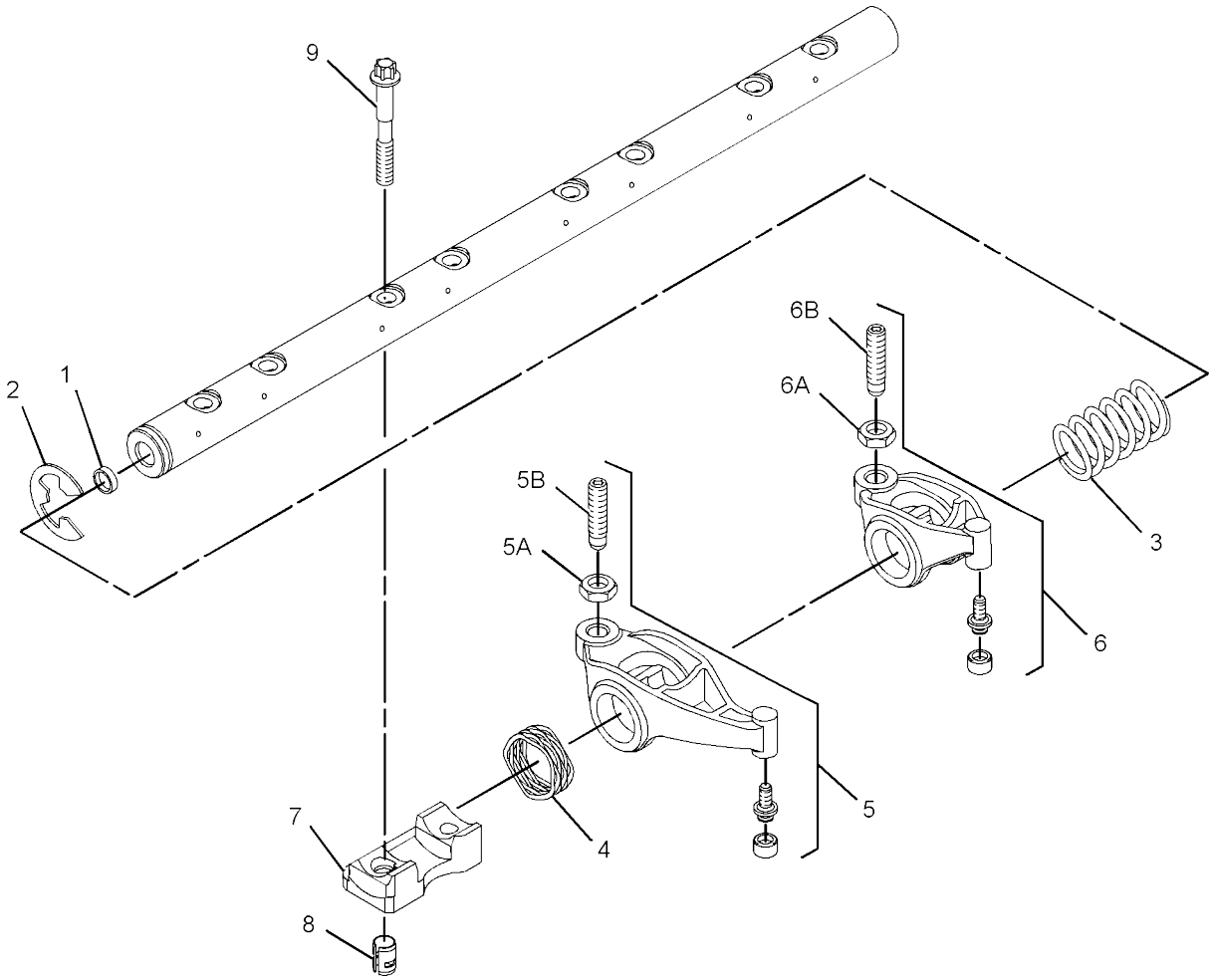

GRAPHIC #1 <END> g01532745

415-7947 ROCKER ARM GP

S/N: 2W21-UP
PART OF 435-7493, 435-7494 ENGINE AR-
PRIMARY AN ATTACHMENT

SMCS-1102, 1123

i06280890

REF SEE NOTE QTY	GRAPHIC NO 1 2 3 4 5 6	(PRODUCT LEVEL)	REF PAGE	PART NAME PART NUMBER	
1	1	**276-8133**	16	CAP-VALVE	
2	1	**346-4709**	8	BRIDGE GP-VALVE	
3	1	**436-0524**	16	SPRING-VALVE	
4	1	**276-8123**	32	COTTER-CAP	
Y 5	1	**298-4533**	1	ROCKER ARM GP	42
6	1	**299-5511**	16	SEAL-VALVE STEM	
7	1	**309-6678**	8	VALVE-INLET	
8	1	**339-9637**	8	VALVE-EXHAUST	

Y - SEPARATE ILLUSTRATION

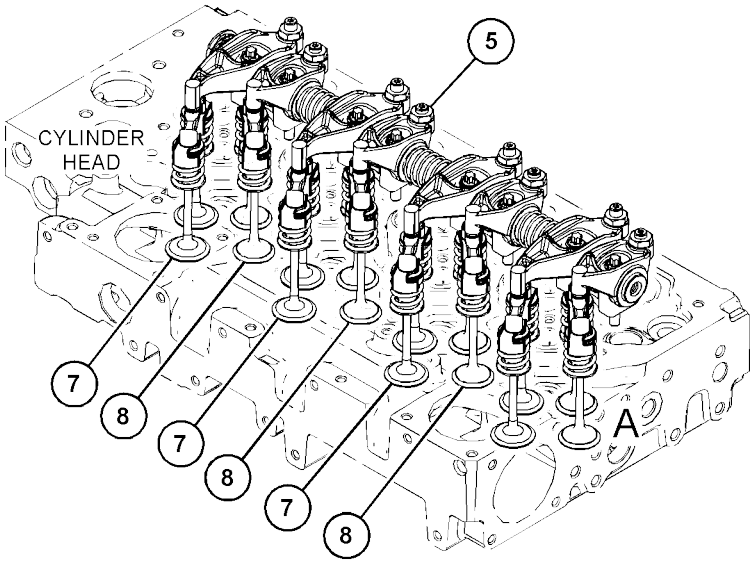

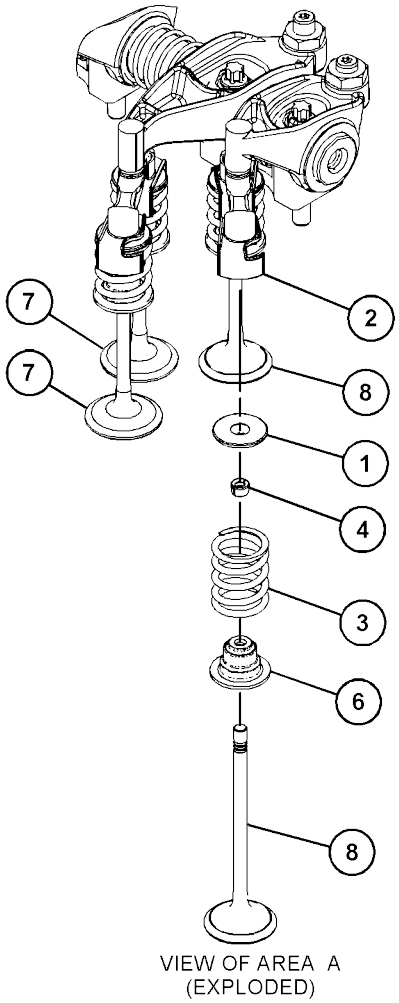

VIEW OF AREA A
(EXPLODED)

GRAPHIC #1 <END> g03815520

460-7781 ROCKER ARM GP

S/N: 2W21-UP

PART OF 452-7397 CYLINDER HEAD GP

SMCS-1102, 1123

i06888756

REF SEE NOTE QTY	GRAPHIC NO 1 2 3 4 5 6	(PRODUCT LEVEL)	REF PAGE	PART NAME PART NUMBER
1	1	**276-8133**	16	CAP-VALVE
2	1	**436-0524**	16	SPRING-VALVE
3	1	**276-8123**	32	COTTER-CAP
4	1	**299-5511**	16	SEAL-VALVE STEM
5	1	**309-6678**	8	VALVE-INLET
6	1	**339-9637**	8	VALVE-EXHAUST

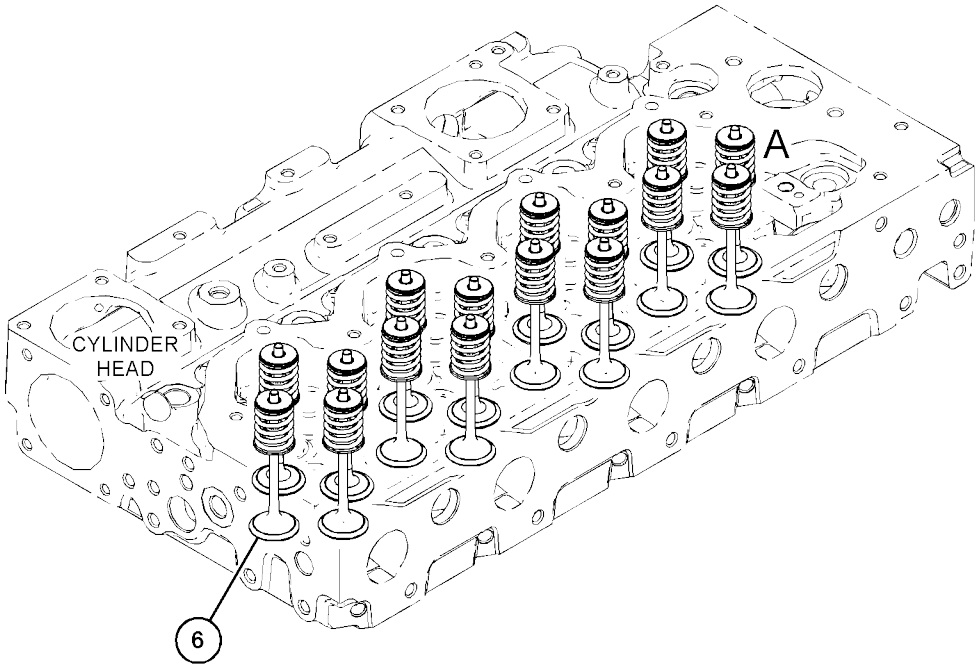

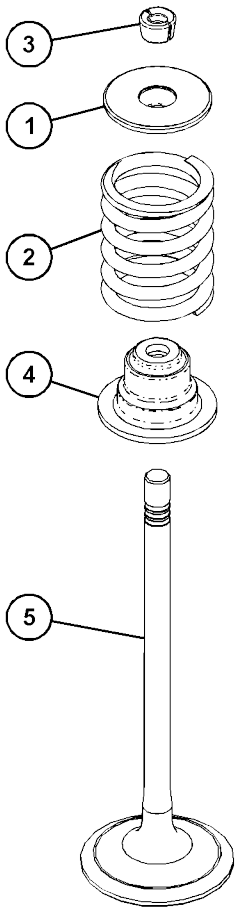

VIEW OF AREA A
(EXPLODED)

GRAPHIC #1

<END>

g06123274

444-3666 SERVICE GP-ENGINE

S/N: 5B41-UP; G441-UP

PART OF 451-3130, 451-3230 INSTALLATION AR-ENGINE

SMCS-1261, 1263, 1302, 7542

i06650910

	REF SEE NOTE QTY	GRAPHIC NO 1 2 3 4 5 6	(PRODUCT LEVEL)	REF PAGE	PART NAME PART NUMBER
	1	1	**3S-2093**	2	STRAP-CABLE
	2	1	*150-4036*	1	TEE AS
		1	**3K-0360**	1	SEAL-O-RING
		1	**118-0911**	1	TEE-O-RING PORT
	3	1	*165-2273*	1	VALVE AS-SHUTOFF (COOLANT)
		1	**3K-0360**	1	SEAL-O-RING
		1	**6V-7238**	1	VALVE-SHUTOFF (COOLANT)
	4	1	**250-1448**	1	CONNECTOR
	5	1	*268-1517*	1	CONNECTOR AS
		1	**3K-0360**	1	SEAL-O-RING
		1	**149-8142**	1	CONNECTOR
	6	1	**269-6650**	1	ADAPTER
	7	1	**444-5943**	1	HOSE
	8	1	**067-3045**	2	CLIP (LOOP)
M	9	1	**099-3649**	1	BOLT (M8X1.25X40-MM)
	10	1	**110-8330**	1	SPACER (11.3X19.05X90-MM THK)
	11	1	*148-8411*	1	PLUG AS
		1	**3K-0360**	1	SEAL-O-RING
		1	**9S-4185**	1	PLUG (3/4-16-THD)
	12	1	**157-0670**	1	CAP-DUST
	13	1	*164-5590*	1	VALVE AS-FLUID SAMPLING (ENGINE OIL)
		1	**3J-7354**	1	SEAL-O-RING
		1	**8C-3446**	1	VALVE-SAMPLING (ENGINE OIL)
	14	1	**3K-0360**	1	SEAL-O-RING
	15	1	**3P-1932**	1	ADAPTER
	16	1	**5D-1026**	2	CLAMP-BAND
	17	1	**5P-4116**	1	WASHER-HARD (8.8X20.5X2-MM THK)
	18	1	**5P-4961**	2	CLAMP-HOSE
	19	1	**6V-8397**	1	SEAL-O-RING
	20	1	**6V-8398**	1	SEAL-O-RING
	21	1	**6V-9168**	1	NUT (11/16-16-THD)
M	22	1	**7X-2539**	1	BOLT (M8X1.25X110-MM)
	23	1	**8C-6872**	1	CONNECTOR
	24	1	**8C-8835**	1	ADAPTER-BULKHEAD
	25	1	**8T-4224**	1	WASHER-HARD (8.8X16X2-MM THK)
	26	1	**8T-4983**	1	CLAMP-HOSE
	27	1	**2B-0941**	1	SPACER (10.5X19X19-MM THK)
E	28	1	**6V-8523**		HOSE (33-CM)
G	29	1	**423-1984**		HOSE (3-IN)
G	29A	1	**423-1984**		HOSE (2.4-IN)
E	30	1	**8C-3681**		HOSE (32-CM)
E	30A	1	**8C-3681**		HOSE (30.5-CM)

E - ORDER BY THE CENTIMETER G - ORDER BY THE INCH
M - METRIC PART

444-3666 **SERVICE GP-ENGINE** (contd.) **i06650910**

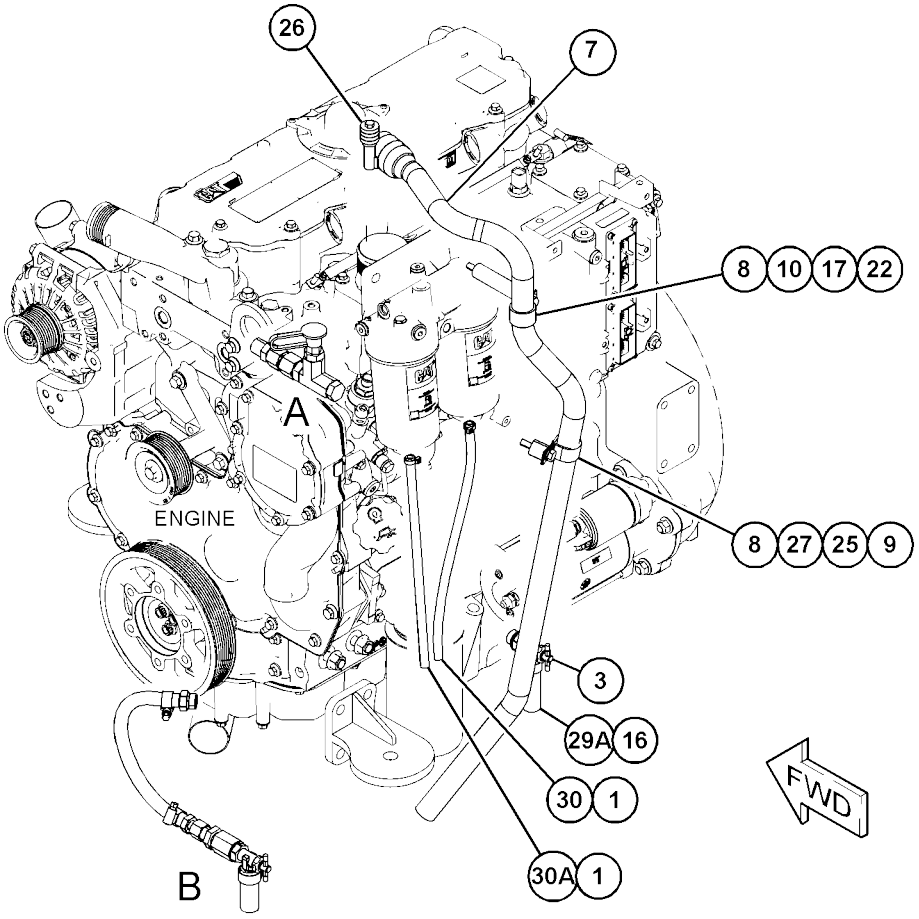

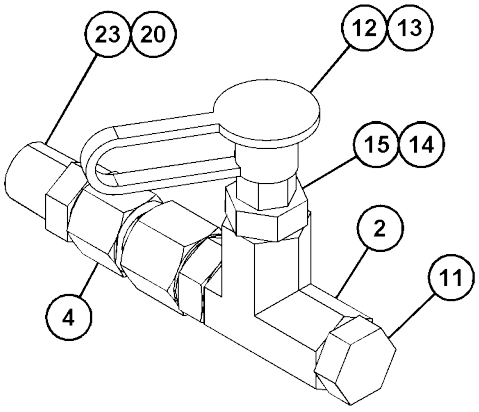

VIEW OF AREA A

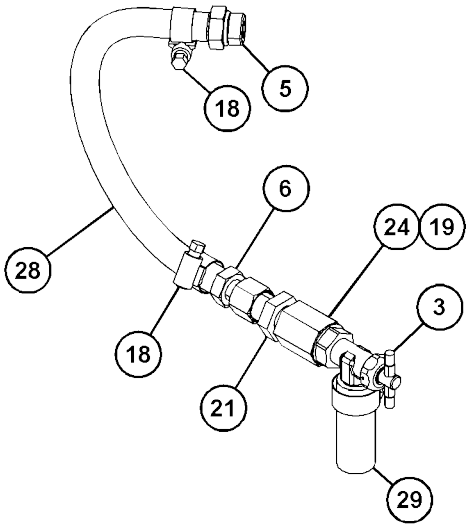

VIEW OF AREA B

GRAPHIC #1 <END> g03845759

510-3956 SUPPRESSION GP-SOUND

S/N: 5B41-UP

PART OF 451-3220 CHASSIS AR

SMCS-1801

i07418066

REF SEE NOTE QTY	GRAPHIC NO 1 2 3 4 5 6	(PRODUCT LEVEL)	REF PAGE	PART NAME PART NUMBER
1	1	**524-1869**	1	INSULATION-SOUND SUPPRESSION
2	1	**364-5768**	1	INSULATION-SOUND SUPPRESSION
3	1	**364-8423**	1	INSULATION-SOUND SUPPRESSION
4	1	**518-3891**	1	INSULATION-SOUND SUPPRESSION
5	1	**518-4192**	1	INSULATION-SOUND SUPPRESSION

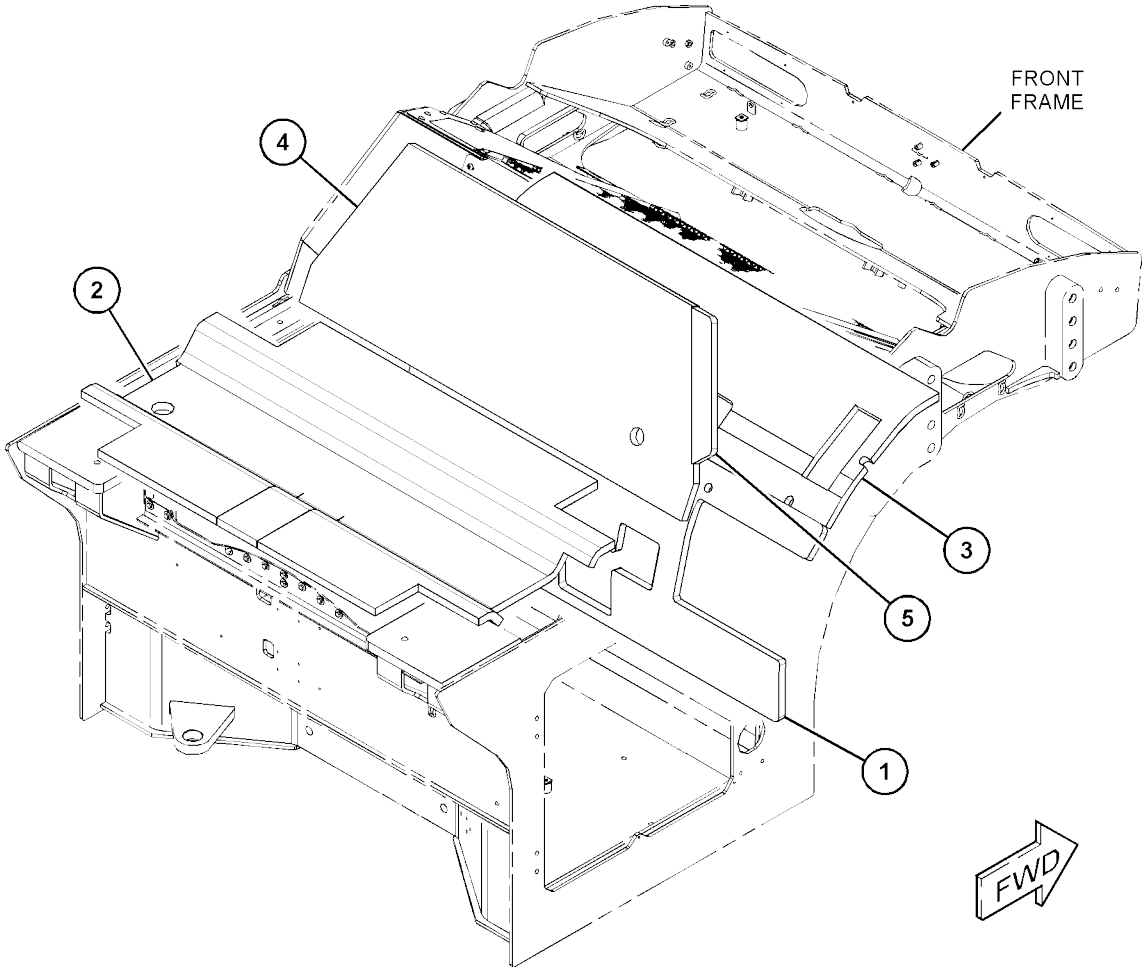

GRAPHIC #1 <END> g06147476

417-4186 FILLER GP-ENGINE OIL

S/N: 2W21-UP
PART OF 435-7493, 435-7494 ENGINE AR-
PRIMARY AN ATTACHMENT

SMCS-1316

i06582428

	REF SEE NOTE QTY	GRAPHIC NO 1 2 3 4 5 6	(PRODUCT LEVEL)	REF PAGE	PART NAME PART NUMBER
M	1	1	**6I-0254**	1	BOLT (M8X1.25X30-MM)
	2	1	**318-0774**	1	FILLER GP-ENGINE OIL
M	3	1	**6I-4374**	1	BOLT (M8X1.25X60-MM)

M - METRIC PART

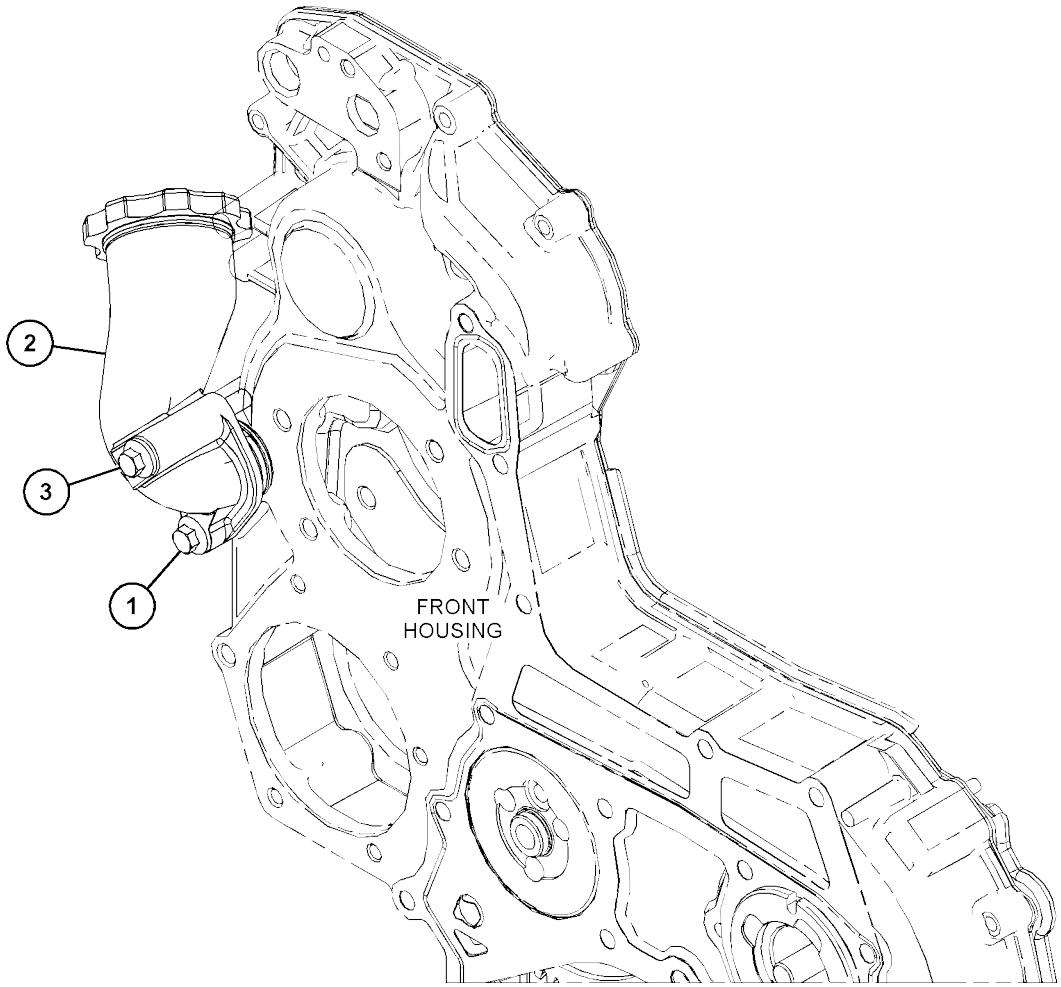

GRAPHIC #1 <END> g03871823

417-3394 FILTER GP-ENGINE OIL

S/N: 2W21-UP
PART OF 435-7493, 435-7494 ENGINE AR-PRIMARY AN ATTACHMENT

SMCS-1306, 1308

i06581560

REF SEE NOTE QTY	GRAPHIC NO 1 2 3 4 5 6	(PRODUCT LEVEL)	REF PAGE	PART NAME PART NUMBER
1	1	**7W-2326**	1	FILTER AS-ENGINE OIL

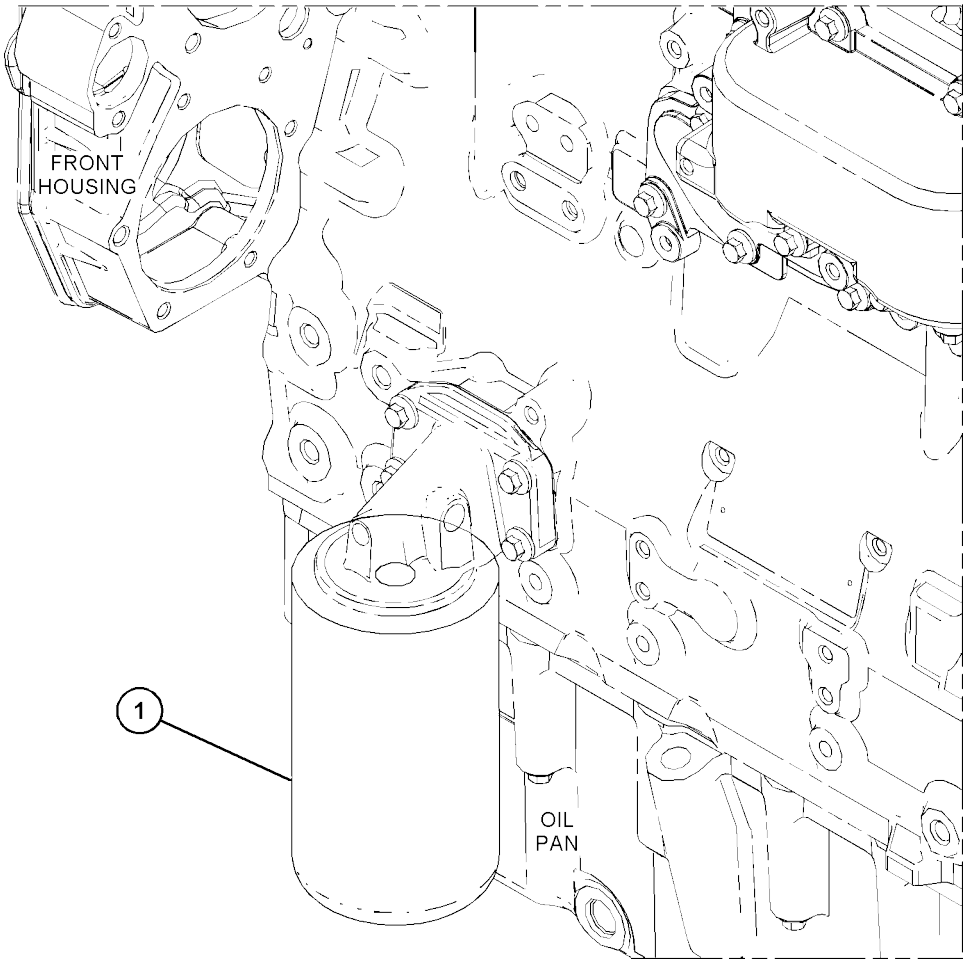

GRAPHIC #1 <END> g03817298

433-5258 FUMES DISPOSAL GP

S/N: 2W21-UP
PART OF 435-7493, 435-7494 ENGINE AR-
PRIMARY AN ATTACHMENT

SMCS-1317

i07528448

	REF SEE NOTE QTY	GRAPHIC NO 1 2 3 4 5 6	(PRODUCT LEVEL)	REF PAGE	PART NAME PART NUMBER
M	1	1	**127-3361**	1	BOLT (M8X1.25X95-MM)
	2	1	**316-9351**	1	MOUNTING-CABLE TIE
	3	1	**363-5813**	1	CLAMP-HOSE
	4	1	**433-1900**	1	HOSE
	5	1	**433-2688**	1	PILLAR
	6	1	**067-3045**	1	CLIP (LOOP)

M - METRIC PART

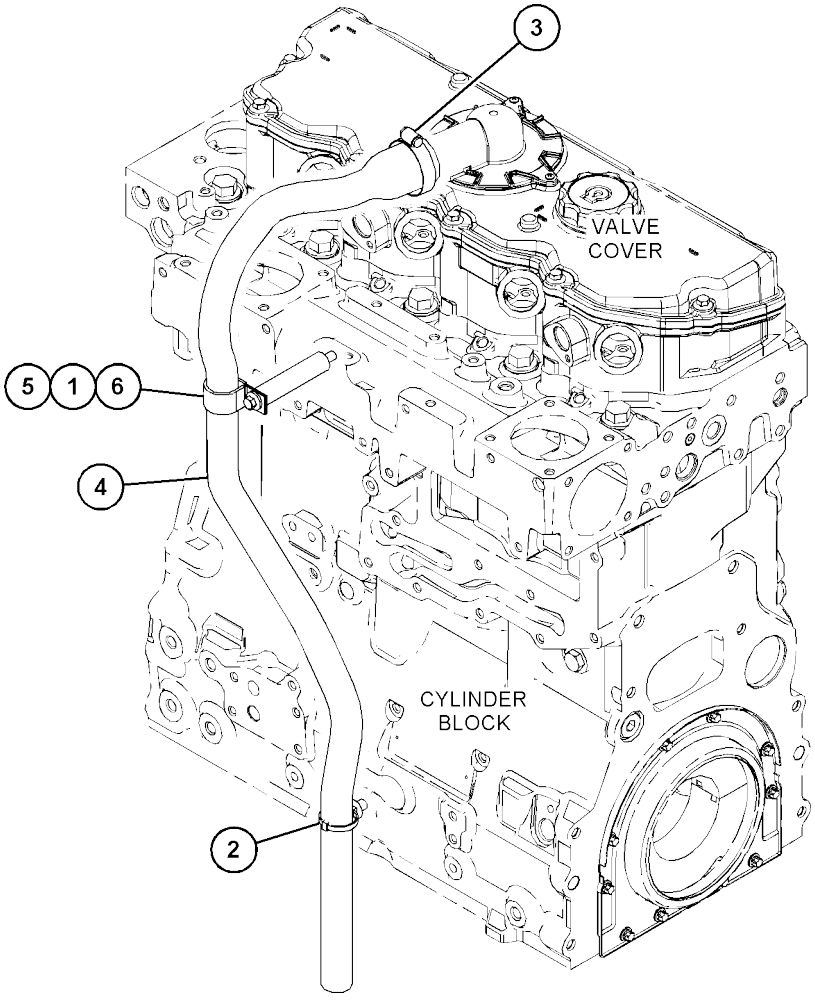

GRAPHIC #1 <END> g03811633

416-1055 GAUGE GP-OIL LEVEL (DIPSTICK)

S/N: 2W21-UP
PART OF 435-7493, 435-7494 ENGINE AR-
PRIMARY AN ATTACHMENT

SMCS-1326

i06581561

	REF SEE NOTE QTY	GRAPHIC NO 1 2 3 4 5 6	(PRODUCT LEVEL)	REF PAGE	PART NAME PART NUMBER	
	1	1	**6I-0289**	1	PLUG	
	2	1	**6I-1497**	1	SEAL	
M	3	1	**106-8916**	1	BOLT (M6X16-MM)	
M	4	1	**124-3815**	1	BOLT (M8X1.25X16-MM)	
Y	5	1	**435-7501**	1	GAUGE GP-OIL LEVEL (DIPSTICK)	52
	6	1	**435-7509**	1	BRACKET AS	

M - METRIC PART
Y - SEPARATE ILLUSTRATION

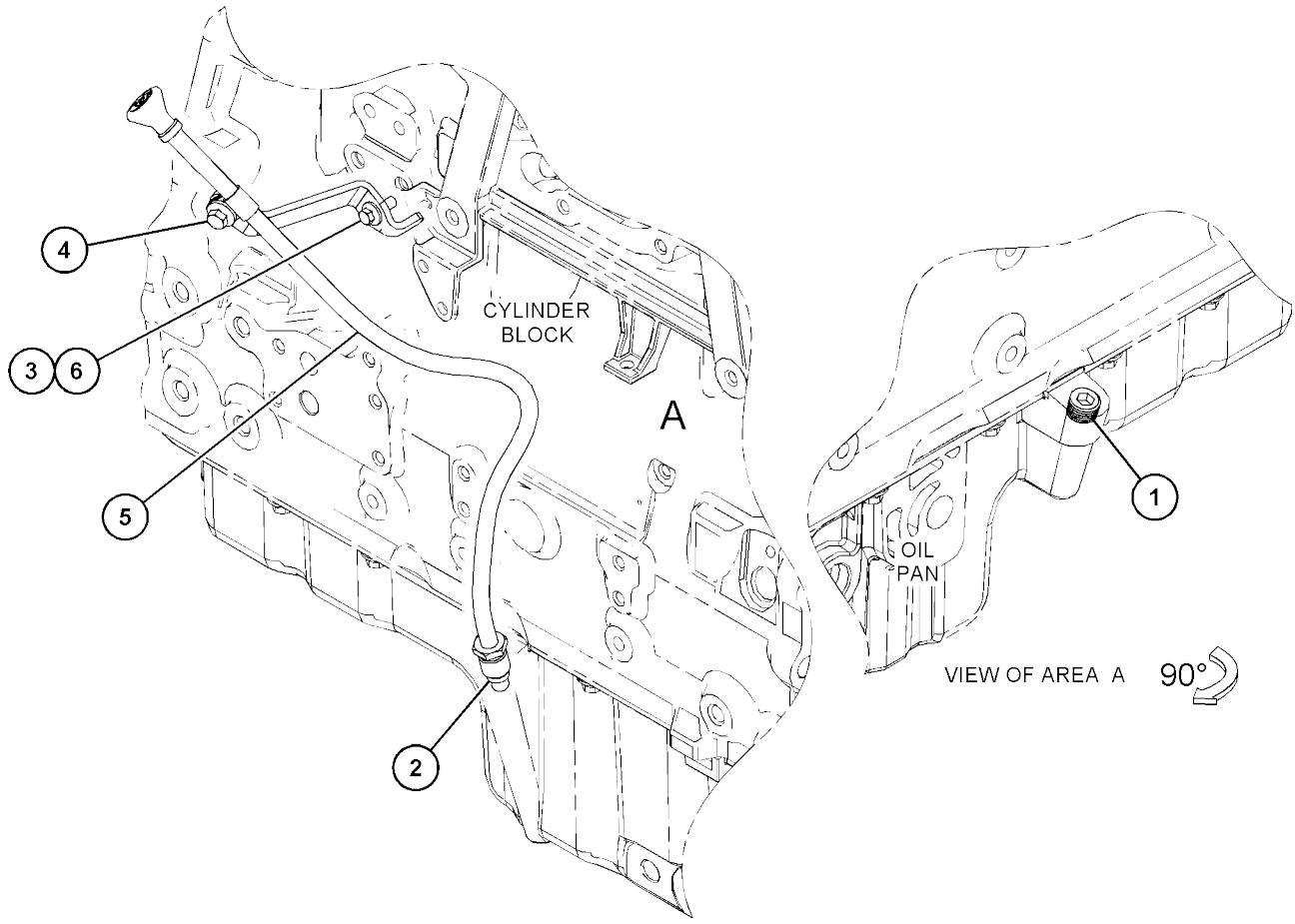

GRAPHIC #1 <END> g03842841

435-7501 GAUGE GP-OIL LEVEL (DIPSTICK)

S/N: 2W21-UP
PART OF 416-1055 GAUGE GP-OIL LEVEL (DIPSTICK) AN ATTACHMENT

SMCS-1326

i06582433

REF SEE NOTE QTY	GRAPHIC NO 1 2 3 4 5 6	(PRODUCT LEVEL)	REF PAGE	PART NAME PART NUMBER
1	1	*396-4638*	1	GAUGE AS-OIL LEVEL (DIPSTICK)
1A	1	**275-9891**	2	SEAL-O-RING
2	1	**435-7503**	1	TUBE AS
2A	1	**187-0555**	1	CLIP
2B	1	**228-7089**	1	SEAL-O-RING

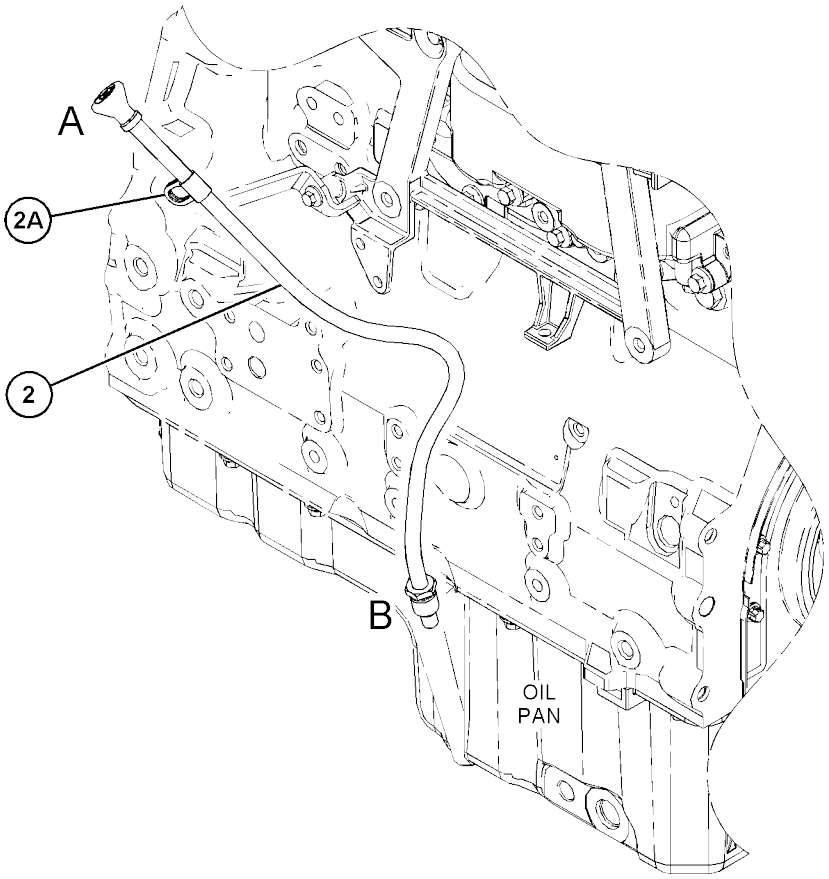

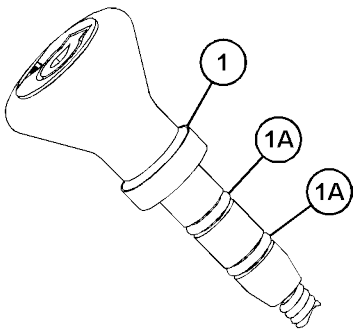

VIEW OF AREA A
(PARTS REMOVED FOR CLARITY)

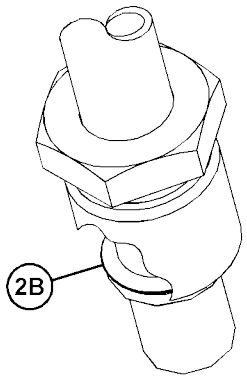

VIEW OF AREA B

GRAPHIC #1 <END> g03843870

508-3673 PUMP GP-ENGINE OIL

S/N: 2W21-UP
PART OF 435-7493, 435-7494 ENGINE AR-
PRIMARY AN ATTACHMENT

SMCS-1304, 1315

i06888823

	REF SEE NOTE QTY	GRAPHIC NO 1 2 3 4 5 6	(PRODUCT LEVEL)	REF PAGE	PART NAME PART NUMBER
M	1	1	**100-4461**	5	BOLT (M10X1.5X50-MM)
	2	1	**420-0471**	1	PUMP AS-ENGINE OIL

M - METRIC PART

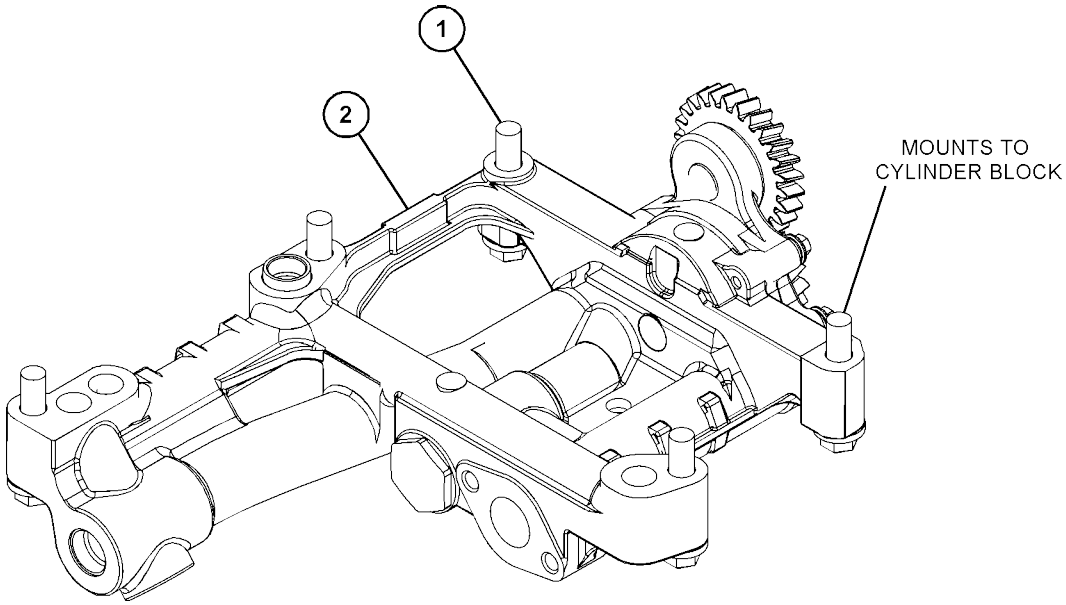

GRAPHIC #1 <END> g06152360

417-4213 VALVE GP-FLUID SAMPLING

S/N: 2W21-UP
PART OF 435-7493, 435-7494 ENGINE AR-PRIMARY AN ATTACHMENT

SMCS-1306, 7542

i06809921

REF SEE NOTE QTY	GRAPHIC NO 1 2 3 4 5 6	(PRODUCT LEVEL)	REF PAGE	PART NAME PART NUMBER
1	1	**8C-3445**	1	CAP-DUST
2	1	**216-9633**	1	VALVE AS-FLUID SAMPLING (ENGINE OIL)

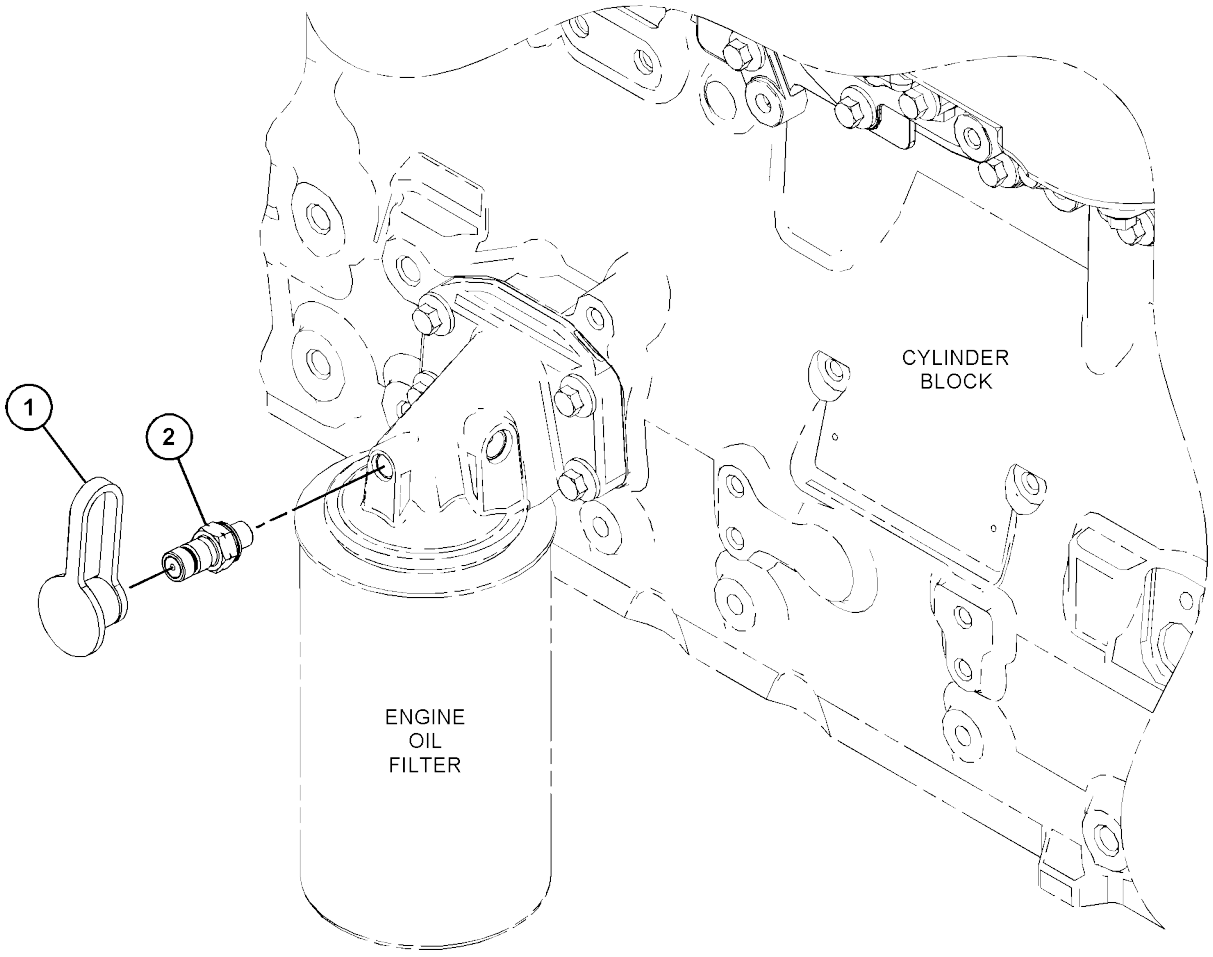

GRAPHIC #1 <END> g03826567

416-1866 CONNECTION GP-WATER

S/N: 2W21-UP
PART OF 435-7493, 435-7494 ENGINE AR-PRIMARY AN ATTACHMENT

SMCS-1380

i06888803

	REF SEE NOTE QTY	GRAPHIC NO 1 2 3 4 5 6	(PRODUCT LEVEL)	REF PAGE	PART NAME PART NUMBER
M	1	1	**103-5687**	1	BOLT (M10X1.5X85-MM)
M	2	1	**123-2899**	1	BOLT (M10X1.5X40-MM)
	3	1	**281-8744**	1	GASKET-WATER REGULATOR
	4	1	**357-8714**	1	CONNECTION AS
	4A	1	**367-8509**	1	SEAL-BONDED
	4B	1	**367-8512**	1	PLUG

M - METRIC PART

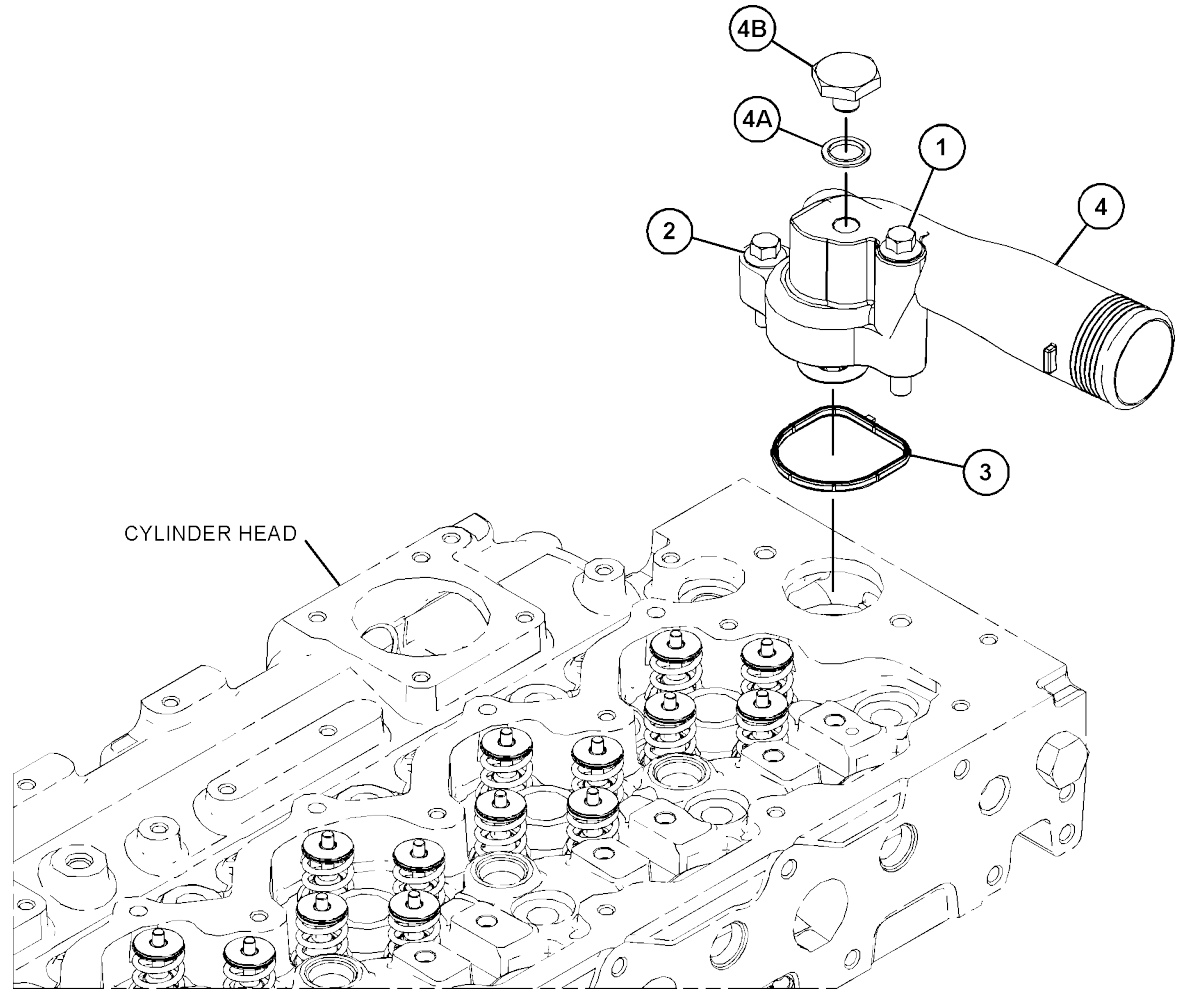

GRAPHIC #1 <END> g03848839

353-7717 COOLER GP-ENGINE OIL

S/N: 2W21-UP
PART OF 418-7659 COOLER GP-ENGINE OIL AN ATTACHMENT

SMCS-1378

i04003847

	REF SEE NOTE QTY	GRAPHIC NO 1 2 3 4 5 6	(PRODUCT LEVEL)	REF PAGE	PART NAME PART NUMBER
M	1	1	**6I-0217**	2	BOLT (M8X1.25X20-MM)
M	2	1	**6I-0260**	7	BOLT (M8X1.25X25-MM)
M	3	1	**6I-1090**	1	BOLT (M8X1.25X40-MM)
M	4	1	**100-3751**	2	BOLT (M8X1.25X65-MM)
	5	1	**298-4558**	1	COOLER-OIL
	6	1	**353-7715**	1	GASKET
	7	1	**298-4560**	2	GASKET

M - METRIC PART

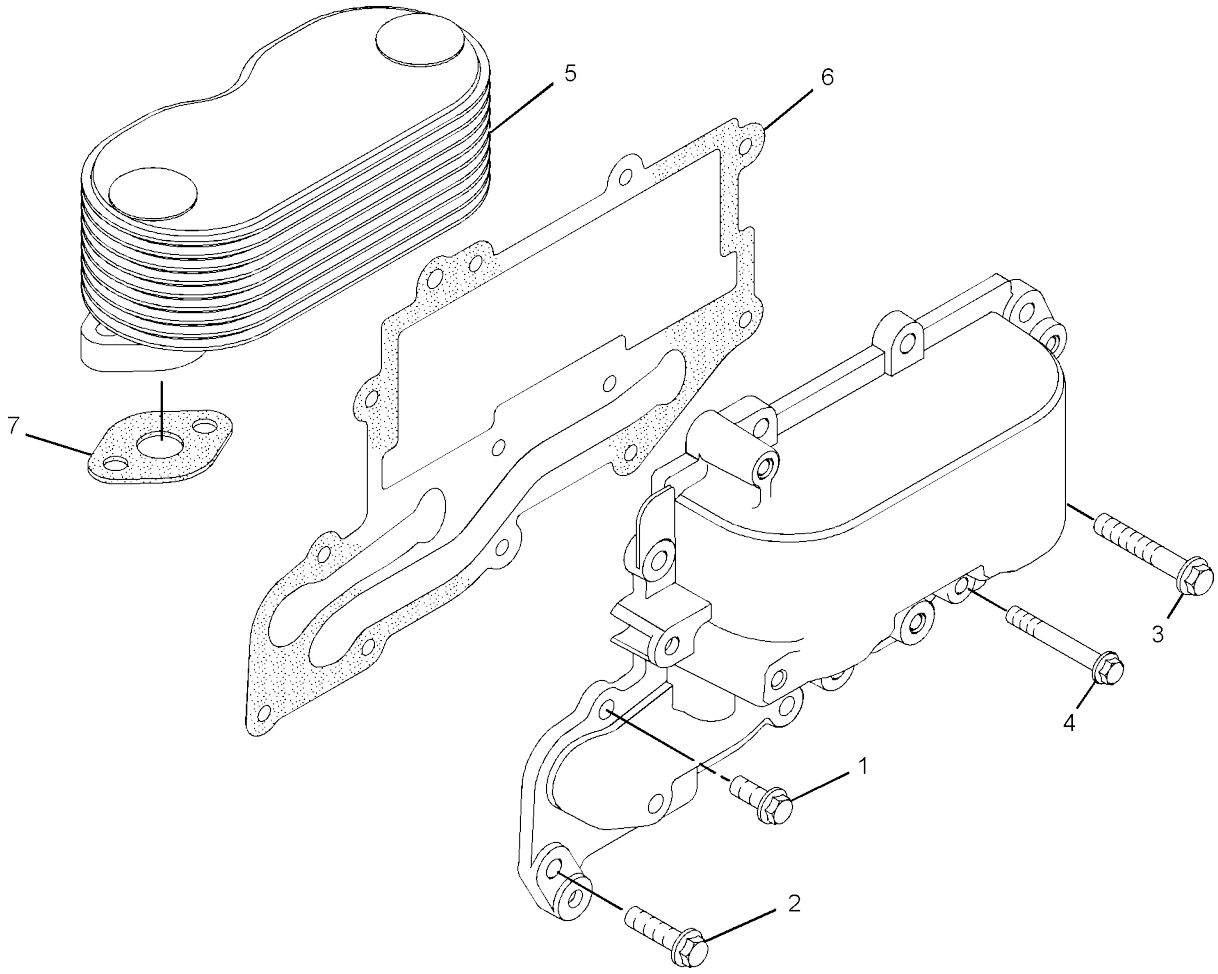

GRAPHIC #1 <END> g02196064

418-7659 COOLER GP-ENGINE OIL

S/N: 2W21-UP
PART OF 435-7493, 435-7494 ENGINE AR-
PRIMARY AN ATTACHMENT

SMCS-1378

i06124075

REF SEE NOTE	QTY	GRAPHIC NO 1 2 3 4 5 6	(PRODUCT LEVEL)	REF PAGE	PART NAME PART NUMBER	
	1	1	**249-0974**	1	HEAD AS-OIL FILTER	
Y	2	1	**353-7717**	1	COOLER GP-ENGINE OIL	56
M	3	1	**6I-0572**	4	BOLT (M8X1.25X20-MM)	
M	4	1	**6I-0645**	4	BOLT (M8X1.25X25-MM)	
	5	1	**225-7944**	2	GASKET (ENGINE OIL FILTER BASE)	
	6	1	**232-3751**	1	PLATE (BLANKING)	

M - METRIC PART
Y - SEPARATE ILLUSTRATION

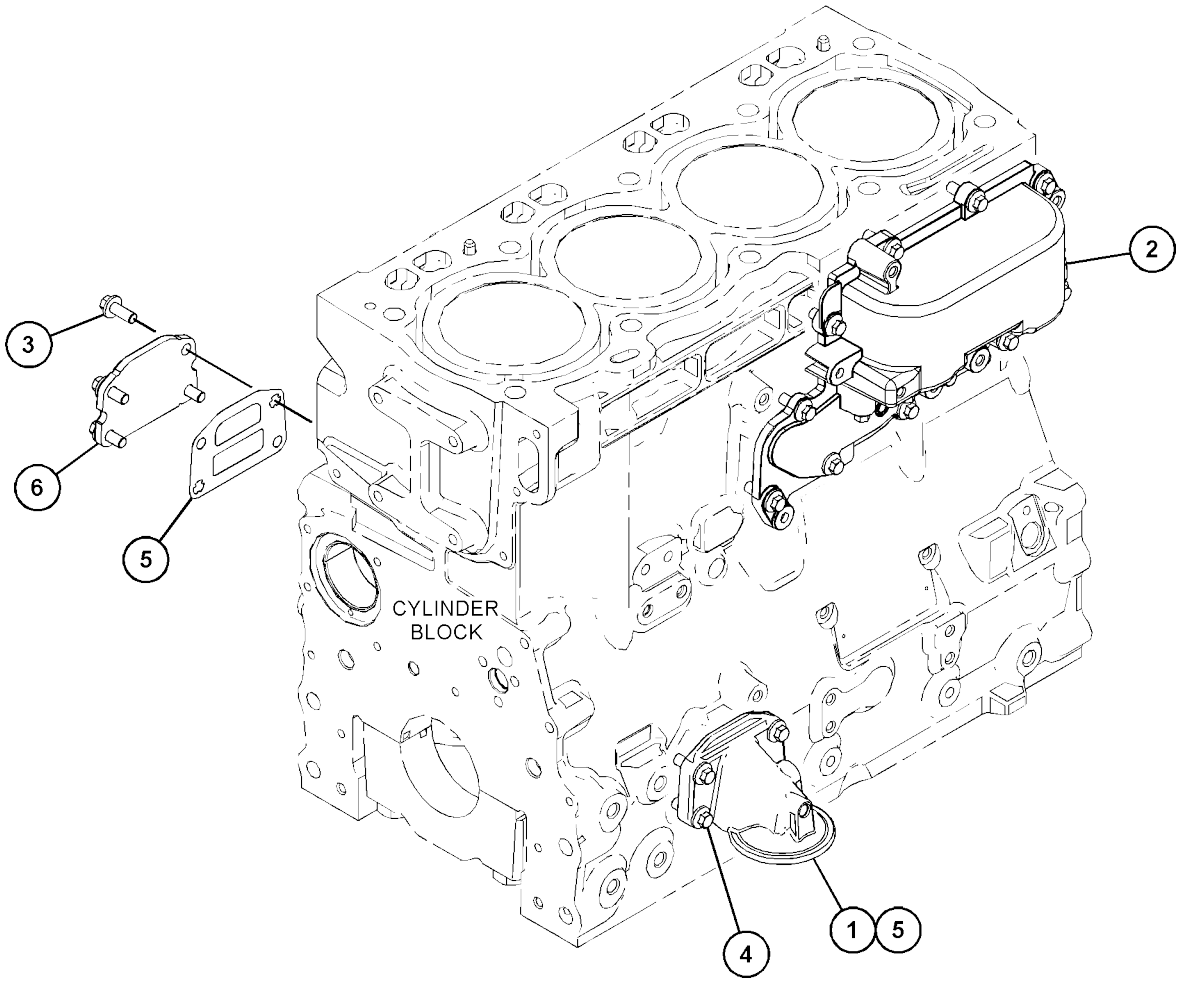

GRAPHIC #1 <END> g03821671

355-6236 FAN GP-SUCTION

S/N: 5B41-UP; G441-UP

PART OF 451-3130, 451-3230 INSTALLATION AR-ENGINE

SMCS-1356

i06650903

	REF SEE NOTE QTY	GRAPHIC NO 1 2 3 4 5 6	(PRODUCT LEVEL)	REF PAGE	PART NAME PART NUMBER	
	1	1	**194-2888**	1	FAN AS (9-BLADE)	
Y	2	1	**211-2095**	1	VALVE GP-SOLENOID (24-VOLT) (HYDRAULIC FAN MOTOR)	91
Y	3	1	**353-5935**	1	MOTOR GP-GEAR (HYDRAULIC FAN)	307
	4	1	**360-1324**	1	SHROUD AS	
	5	1	**360-1874**	1	SUPPORT AS-FAN	
	6	1	**364-5962**	1	ADAPTER-FAN	
M	7	1	**118-9573**	2	BOLT-12 POINT HEAD (M10X1.5X35-MM)	
	8	1	**132-5789**	3	CLIP (LADDER)	
	9	1	*148-8327*	2	CONNECTOR AS	
					(EACH INCLUDES)	
		1	**3D-2824**	1	SEAL-O-RING	
		1	**6V-8637**	1	CONNECTOR	
		1	**6V-9746**	1	SEAL-O-RING	
	10	1	*150-4043*	1	CONNECTOR AS	
		1	**3J-1907**	1	SEAL-O-RING	
		1	**6V-8398**	1	SEAL-O-RING	
		1	**6V-9873**	1	CONNECTOR	
	11	1	**5P-4116**	4	WASHER-HARD (8.8X20.5X2-MM THK)	
	12	1	**7X-0579**	16	WASHER-HARD (8.8X25.5X2-MM THK)	
	13	1	**7X-7729**	8	WASHER (11X25X3-MM THK)	
	14	1	**8T-4121**	2	WASHER-HARD (11X21X2.5-MM THK)	
M	15	1	**8T-4189**	6	BOLT (M8X1.25X20-MM)	
M	16	1	**8T-4196**	8	BOLT (M10X1.5X35-MM)	
M	17	1	**8T-4200**	16	BOLT (M8X1.25X16-MM)	

PARTS SHOWN IN GRAPHIC(S) WITHOUT A REFERENCE NUMBER ARE NOT SERVICED SEPARATELY

M - METRIC PART
Y - SEPARATE ILLUSTRATION

355-6236 **FAN GP-SUCTION (**contd.**)** **i06650903**

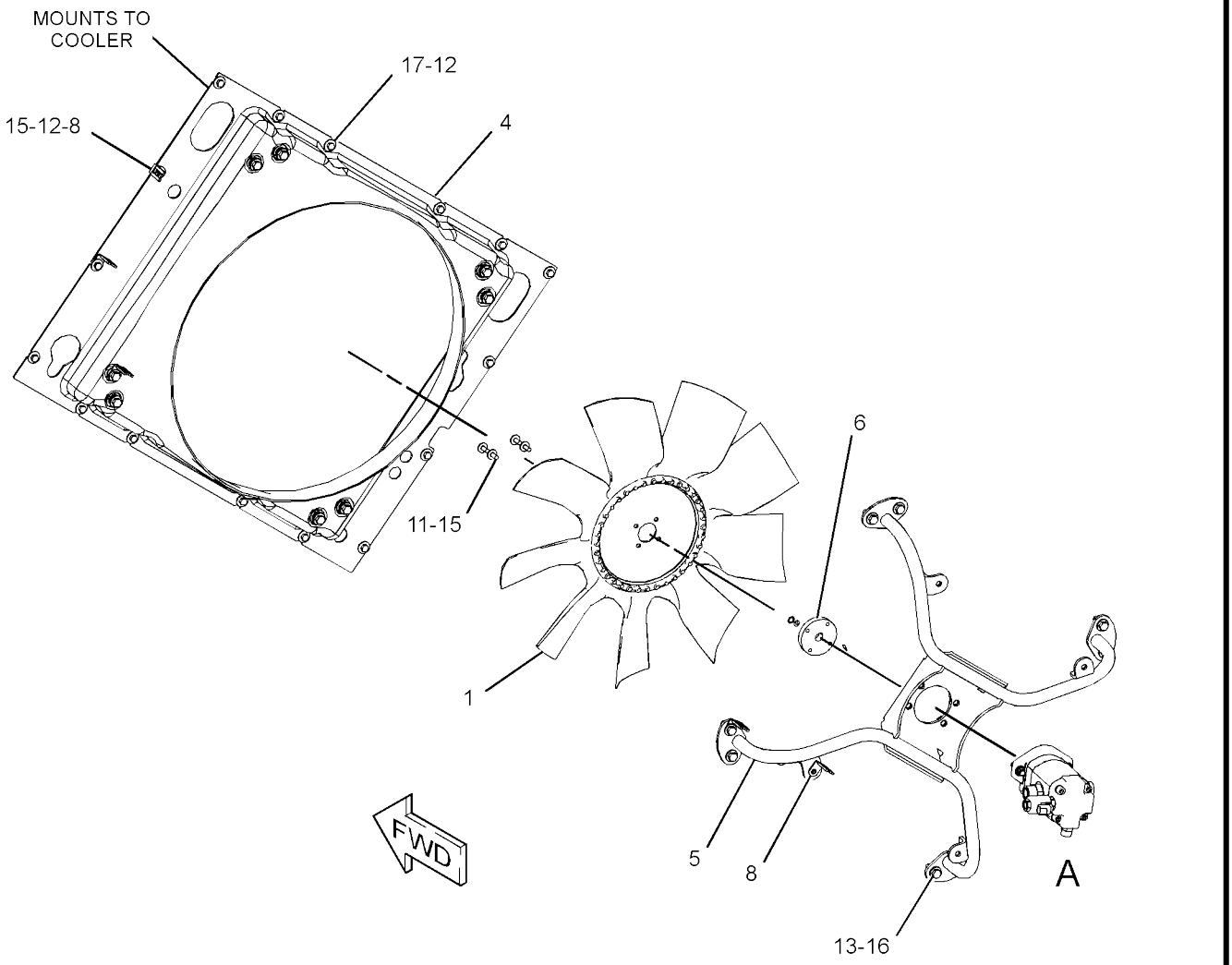

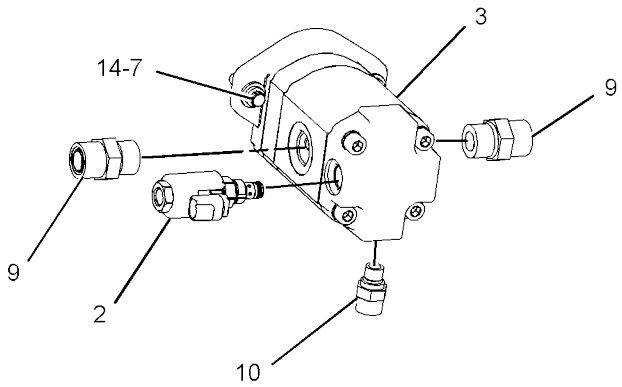

VIEW OF AREA A

GRAPHIC #1 <END> g02852619

351-3427 LINES GP-COOLANT-CAB

S/N: 5B41-UP; G441-

UP AN ATTACHMENT

SMCS-1380

i07400023

REF SEE NOTE	QTY	GRAPHIC NO 1 2 3 4 5 6	(PRODUCT LEVEL)	REF PAGE	PART NAME PART NUMBER
	1	1	**129-1090**	1	VALVE-DRAIN (WATER SPRAY, REAR DRUM)
	2	1	**177-2215**	2	STRAP-DUAL CLAMP
	3	1	**200-6345**	1	SADDLE-MOUNTING (DUAL SWIVEL)
	4	1	**204-2281**	6	STRAP-CABLE
	5	1	**331-9059**	1	ELBOW
	6	1	**331-9060**	4	ADAPTER
	7	1	**331-9072**	2	ADAPTER (PLASTIC)
	8	1	**331-9073**	1	ELBOW (PLASTIC)
	9	1	**364-5485**	1	TANK GP (ANTIFREEZE)
	10	1	**6L-9848**	4	CLAMP
	11	1	**3S-2093**	3	STRAP-CABLE
	12	1	**4P-8134**	1	CLIP (LADDER)
	13	1	**5P-4116**	6	WASHER-HARD (8.8X20.5X2-MM THK)
	14	1	**5P-6264**	1	GROMMET
	15	1	**7C-4354**	1	CLIP
M	16	1	**8T-4200**	6	BOLT (M8X1.25X16-MM)
E	17	1	**144-0195**		HOSE (39-CM)
G	18	1	**423-1982**		HOSE (78.3-IN)
G	18A	1	**423-1982**		HOSE (23.6-IN)
	19	1	**290-5562**	1	MOUNT (DUAL SWIVEL)

E - ORDER BY THE CENTIMETER G - ORDER BY THE INCH
M - METRIC PART

351-3427 **LINES GP-COOLANT** (contd.) **i07400023**

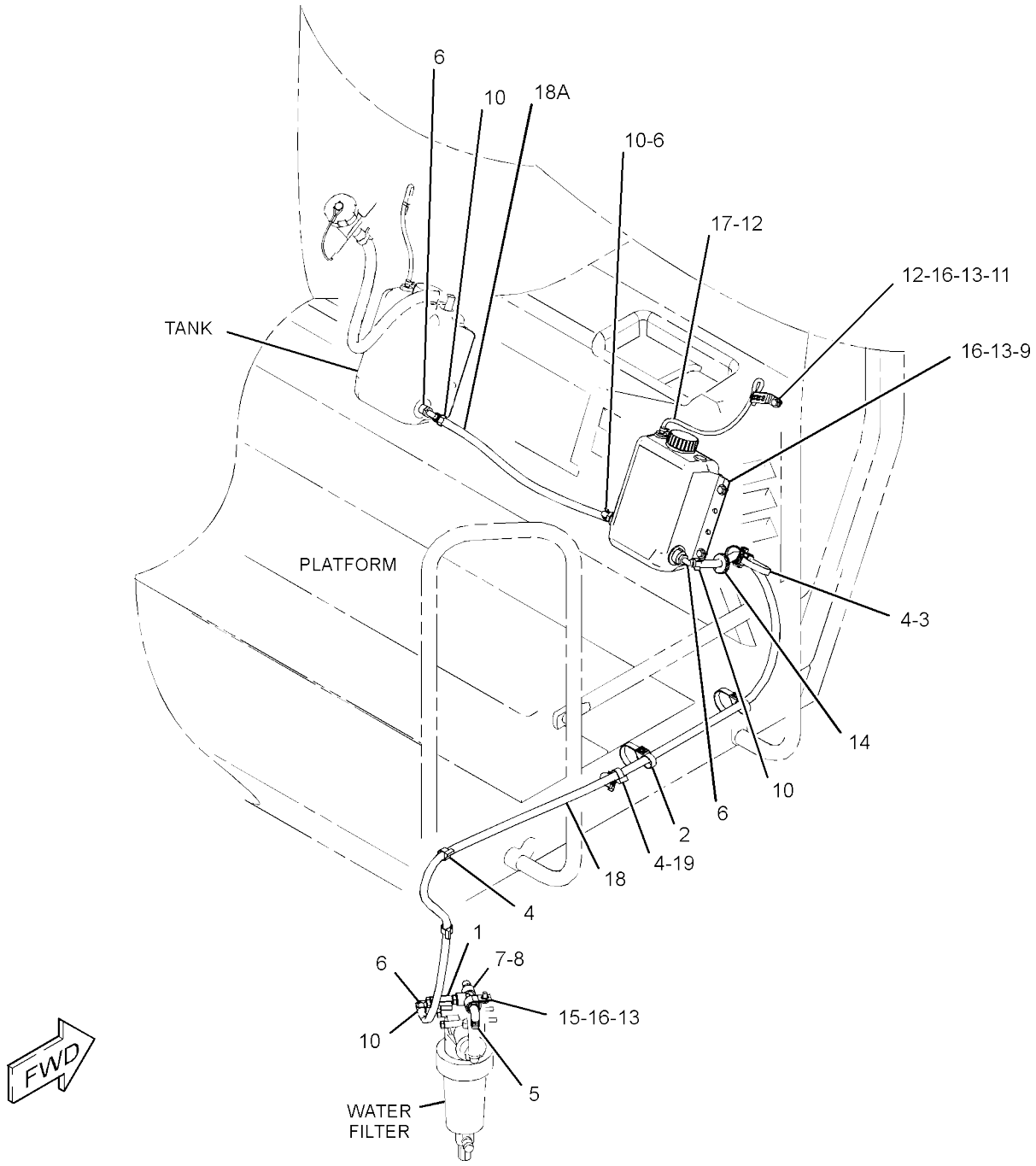

GRAPHIC #1 <END> g06192903

451-3131 LINES GP-COOLANT

S/N: G441-UP

PART OF 451-3130 INSTALLATION AR-ENGINE

SMCS-1380

i06650921

	REF SEE NOTE QTY	GRAPHIC NO 1 2 3 4 5 6	(PRODUCT LEVEL)	REF PAGE	PART NAME PART NUMBER
	1	1	*195-2037*	1	FITTING AS
		1	**3K-0360**	1	SEAL-O-RING
		1	**034-3679**	1	ADAPTER
	2	1	**357-6735**	1	HOSE AS
	3	1	**362-1306**	1	HOSE
	4	1	**362-3622**	1	HOSE
	5	1	**377-5368**	1	HOSE
	6	1	**377-5377**	1	TUBE AS
	7	1	**377-5378**	1	TUBE
	8	1	**377-5379**	1	HOSE AS
	9	1	**377-5384**	1	HOSE
	10	1	**381-1893**	1	TUBE
	11	1	**383-7251**	1	HOSE
	12	1	**383-7254**	1	TUBE
	13	1	**450-9646**	1	HOSE
	14	1	**459-8323**	1	BRACKET
	15	1	**144-0367**	3	CLAMP-HOSE
M	16	1	**5C-7261**	1	NUT (M8X1.25-THD)
	17	1	**5P-4116**	6	WASHER-HARD (8.8X20.5X2-MM THK)
	18	1	**5P-7468**	6	CLIP (SLOT)
	19	1	**5P-7469**	6	CLIP (TAB)
	20	1	**8T-4121**	3	WASHER-HARD (11X21X2.5-MM THK)
M	21	1	**8T-4136**	1	BOLT (M10X1.5X25-MM)
M	22	1	**8T-4137**	2	BOLT (M10X1.5X20-MM)
M	23	1	**8T-4189**	2	BOLT (M8X1.25X20-MM)
	24	1	**8T-4984**	11	CLAMP-HOSE
	25	1	**8T-6703**	2	CLAMP-HOSE
M	26	1	**8T-7547**	3	BOLT (M8X1.25X30-MM)

M - METRIC PART

451-3131 **LINES GP-COOLANT** (contd.) **i06650921**

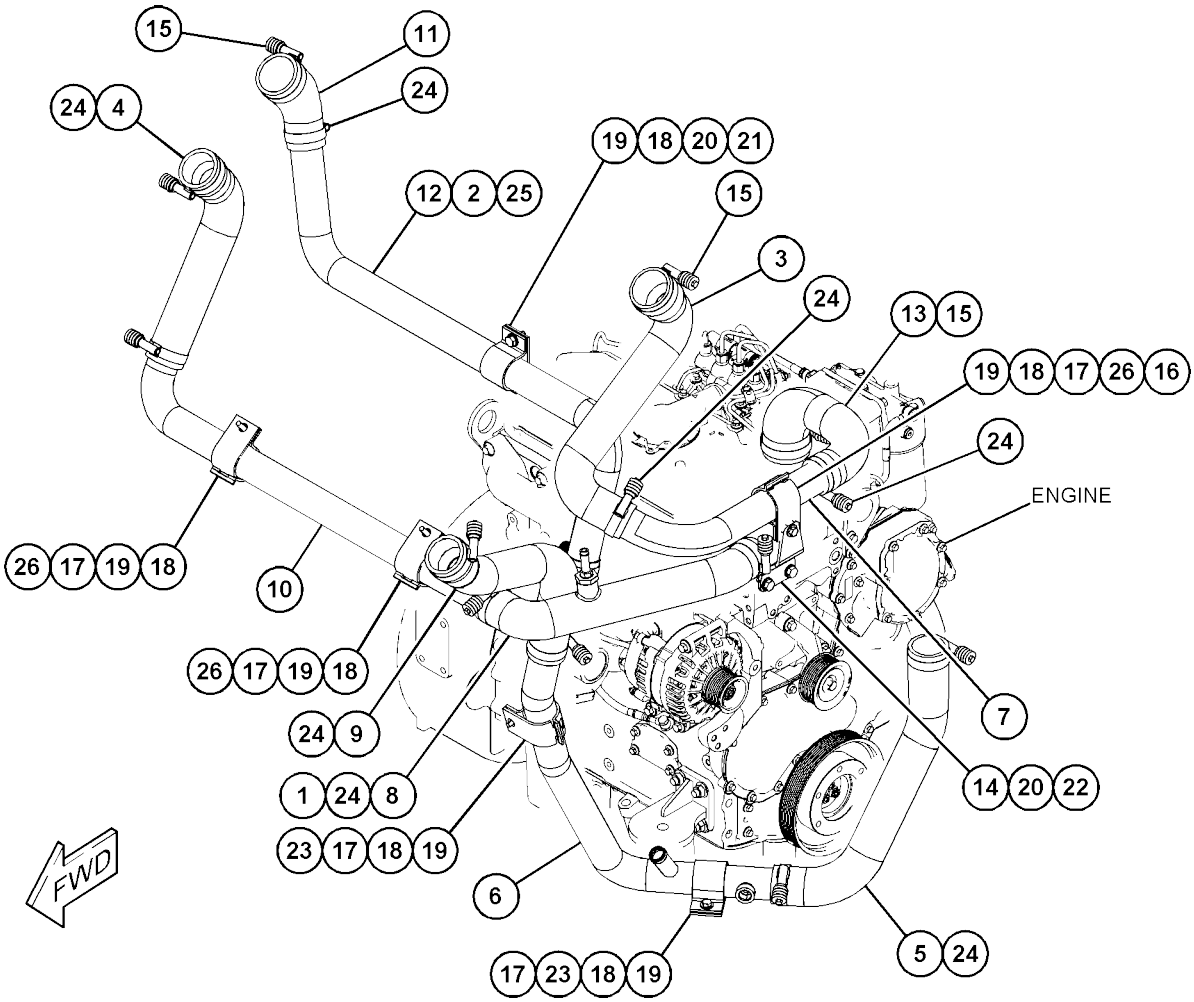

GRAPHIC #1 <END> g06033910

416-1864 PUMP GP-WATER

S/N: 2W21-UP
PART OF 435-7493, 435-7494 ENGINE AR-PRIMARY AN ATTACHMENT

SMCS-1361

i06797687

	REF SEE NOTE QTY	GRAPHIC NO 1 2 3 4 5 6	(PRODUCT LEVEL)	REF PAGE	PART NAME PART NUMBER
M	1	1	**113-8129**	2	BOLT (M8X1.25X75-MM)
J	2	1	**225-8019**	1	GASKET
	3	1	**277-2925**	1	CONNECTION AS
	3A	1	**277-2923**	1	GASKET
	3B	1	**225-7738**	1	SEAL-O-RING
CJ	4	1	**485-4894**	1	PUMP GP-WATER
	4A	1	**278-3242**	3	BOLT-FLANGE HEAD (M8X1.25X18-MM)
	4B	1	**374-4419**	1	GASKET
M	5	1	**6I-0217**	2	BOLT (M8X1.25X20-MM)
M	6	1	**6I-0254**	2	BOLT (M8X1.25X30-MM)
M	7	1	**6I-0839**	5	BOLT (M8X1.25X70-MM)
					AVAILABLE REPAIR KIT(S):
CJ			**485-4895**	1	PUMP GP-WATER
					(INCLUDES WATER PUMP GP & GASKET)

C - CHANGE FROM PREVIOUS TYPE
J - KIT MARKED J SERVICES PART(S)
MARKED J M - METRIC PART

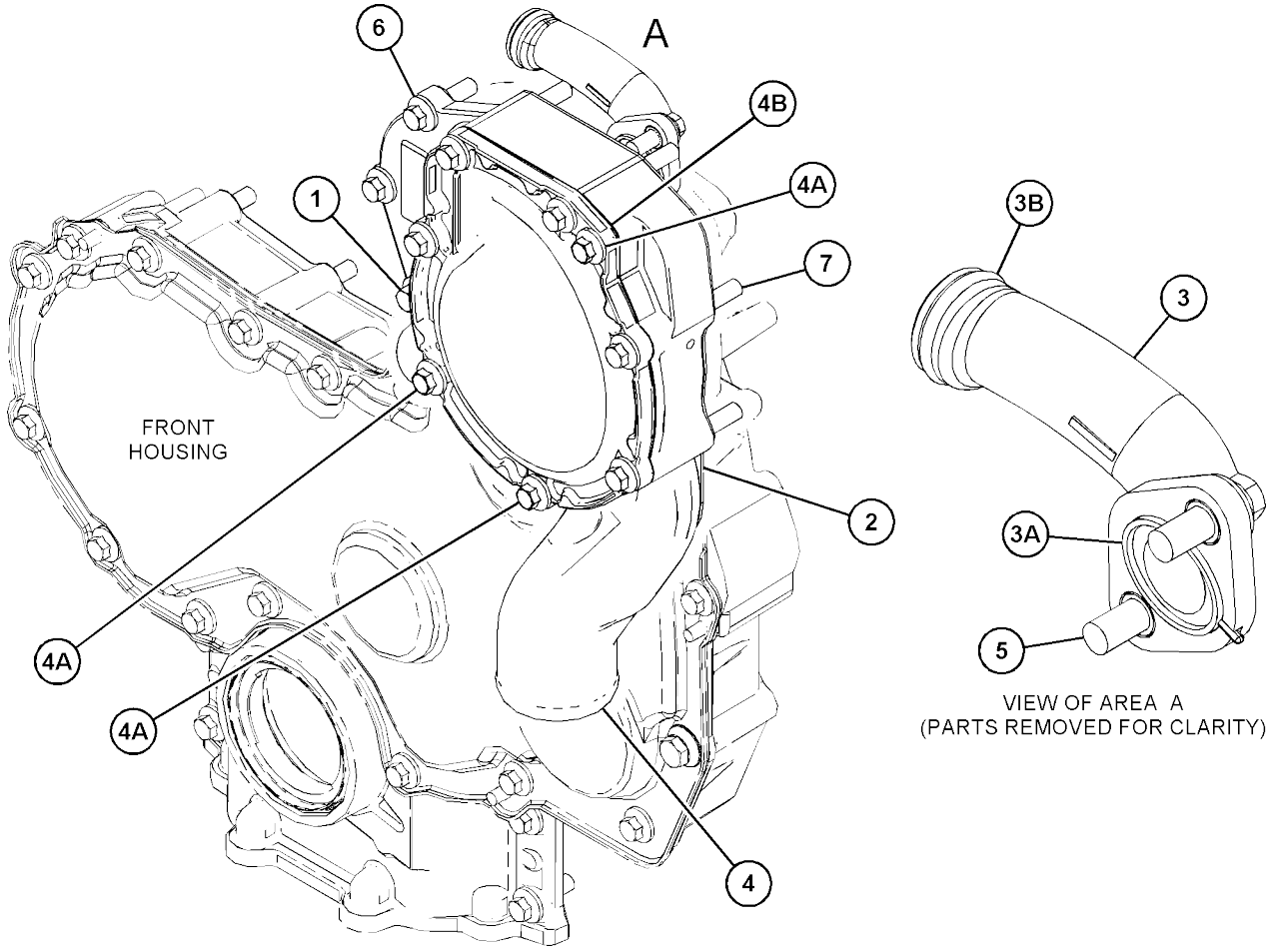

GRAPHIC #1 <END> g06120580

343-6084 RADIATOR & HYD OIL COOLER GP

S/N: 5B41-UP; G441-UP

PART OF 451-3130, 451-3230 INSTALLATION AR-ENGINE

SMCS-1351, 1353, 1374

i06650909

	REF SEE NOTE QTY	GRAPHIC NO 1 2 3 4 5 6	(PRODUCT LEVEL)	REF PAGE	PART NAME PART NUMBER	
	1	1	**5P-9768**	1	PLUG	
	2	1	**5R-5927**	4	WASHER (14X65X6-MM THK)	
Y	3	1	**360-2360**	1	RADIATOR & HYD OIL COOLER GP (BASIC)	67
	4	1	**360-2476**	2	CHANNEL AS	
	5	1	**360-2477**	2	SUPPORT AS	
	6	1	**360-7602**	2	SUPPORT AS	
	7	1	**360-7603**	2	SUPPORT	
	8	1	**362-3016**	1	SUPPORT (BOTTOM)	
	9	1	**364-2524**	1	DUCT-INLET	
	10	1	**364-2525**	1	SUPPORT-TOP	
	11	1	**364-6004**	4	MOUNT AS	
	12	1	**5M-6213**	1	PLUG-PIPE (1/4-18-THD)	
	13	1	**5P-4116**	16	WASHER-HARD (8.8X20.5X2-MM THK)	
	14	1	**7X-0579**	8	WASHER-HARD (8.8X25.5X2-MM THK)	
	15	1	**7X-7729**	2	WASHER (11X25X3-MM THK)	
M	16	1	**8T-4189**	12	BOLT (M8X1.25X20-MM)	
M	17	1	**8T-4196**	2	BOLT (M10X1.5X35-MM)	
	18	1	**8T-4223**	2	WASHER-HARD (13.5X25.5X3-MM THK)	
M	19	1	**8T-4244**	2	NUT (M12X1.75-THD)	
M	20	1	**8T-4648**	2	BOLT (M12X1.75X70-MM)	
M	21	1	**8T-4908**	8	BOLT (M8X1.25X25-MM)	
M	22	1	**8T-6868**	2	BOLT (M12X1.75X80-MM)	
M	23	1	**8T-7547**	4	BOLT (M8X1.25X30-MM)	
D	24	1	**6V-1392**		SEAL (0.2-M EACH)	
D	24A	1	**6V-1392**		SEAL (0.5-M EACH)	
D	25	1	**5P-5687**		SEAL (0.3-M)	
D	25A	1	**5P-5687**		SEAL (0.1-M)	
D	25B	1	**5P-5687**		SEAL (0.2-M)	
D	26	1	**6V-2803**		SEAL (3.1-M)	

D - ORDER BY THE METER M - METRIC PART
Y - SEPARATE ILLUSTRATION

343-6084 **RADIATOR & HYD OIL COOLER GP** (contd.) **i06650909**

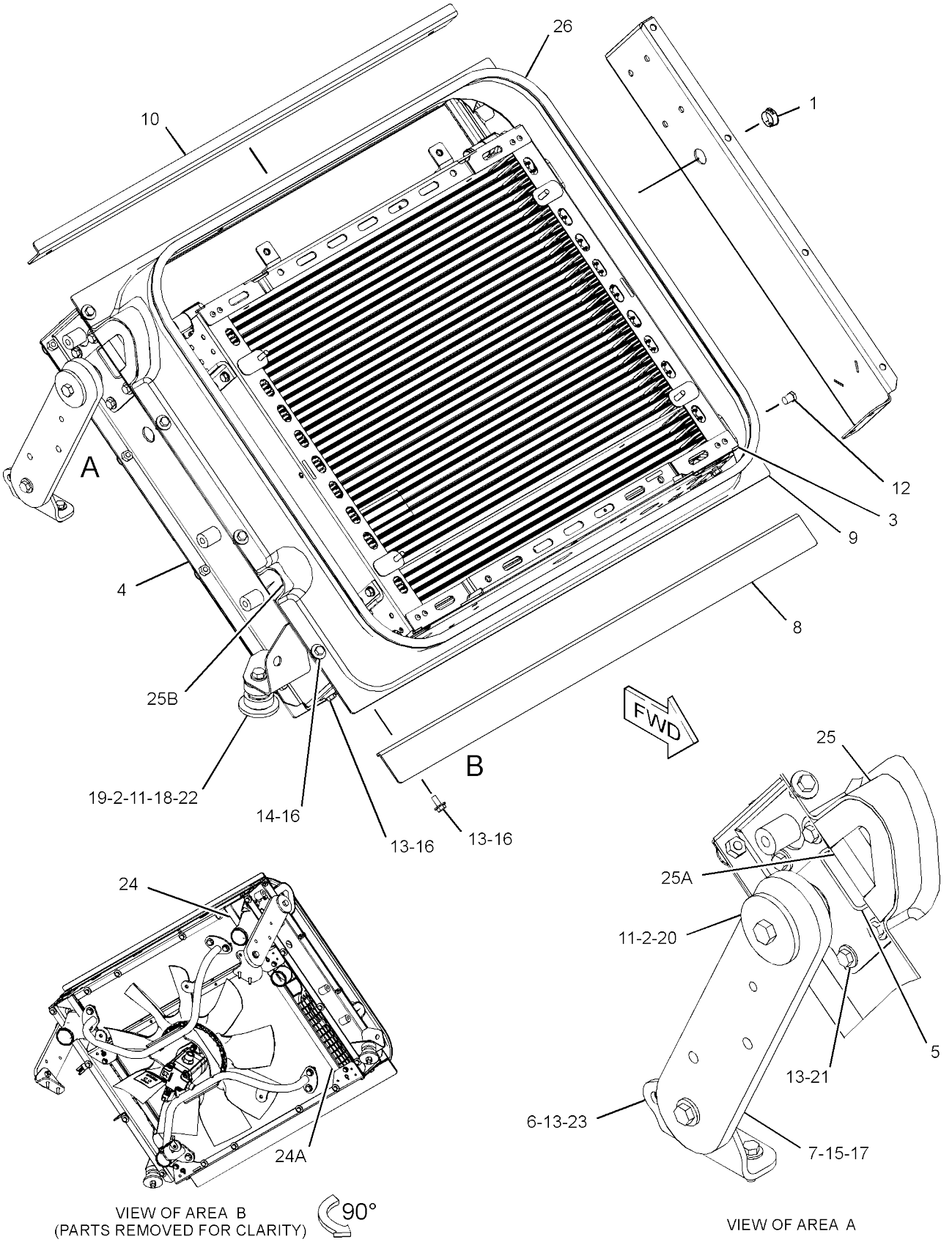

GRAPHIC #1 <END> g02869536

360-2360 RADIATOR & HYD OIL COOLER GP-BASIC

S/N: 5B41-UP; G441-UP

PART OF 343-6084 RADIATOR & HYD OIL COOLER GP

SMCS-1351, 1353, 1374

i06806220

	REF SEE NOTE QTY	GRAPHIC NO 1 2 3 4 5 6	(PRODUCT LEVEL)	REF PAGE	PART NAME PART NUMBER
	1	1	**365-6654**	1	AFTERCOOLER GP
M		1	**5C-7261**	4	NUT (M8X1.25-THD)
M		1	**8T-4189**	4	BOLT (M8X1.25X20-MM)
		1	**8T-4224**	8	WASHER-HARD (8.8X16X2-MM THK)
		1	**389-1233**	1	PLATE AS
J		1	**294-3155**		SEAL (8-DM)
M	2	1	**8T-7547**	6	BOLT (M8X1.25X30-MM)
	3	1	**8T-4224**	10	WASHER-HARD (8.8X16X2-MM THK)
	4	1	**365-6652**	1	RADIATOR GP
		1	**389-1234**		PLATE AS
E		1	**122-2228**		SEAL (80-CM)
J		1	**294-3155**		SEAL (8-DM)
		1	**389-1235**	1	PLATE AS
J		1	**294-3155**		SEAL (8-DM)
M		1	**8T-4199**	8	BOLT (M8X1.25X12-MM)
M	5	1	**8T-4189**	2	BOLT (M8X1.25X20-MM)
	6	1	**365-6653**	1	MOUNTING GP-RAD & OIL COOLER
M		1	**8T-4189**	4	BOLT (M8X1.25X20-MM)
M		1	**8T-4200**	4	BOLT (M8X1.25X16-MM)
		1	**8T-4224**	8	WASHER-HARD (8.8X16X2-MM THK)
M	7	1	**5C-7261**	2	NUT (M8X1.25-THD)
	8	1	**1U-2812**	2	SPACER (10X18X12.7-MM THK)

E - ORDER BY THE CENTIMETER J - ORDER BY THE DECIMETER M - METRIC PART

360-2360 **RADIATOR & HYD OIL COOLER GP** (contd.) **i06806220**

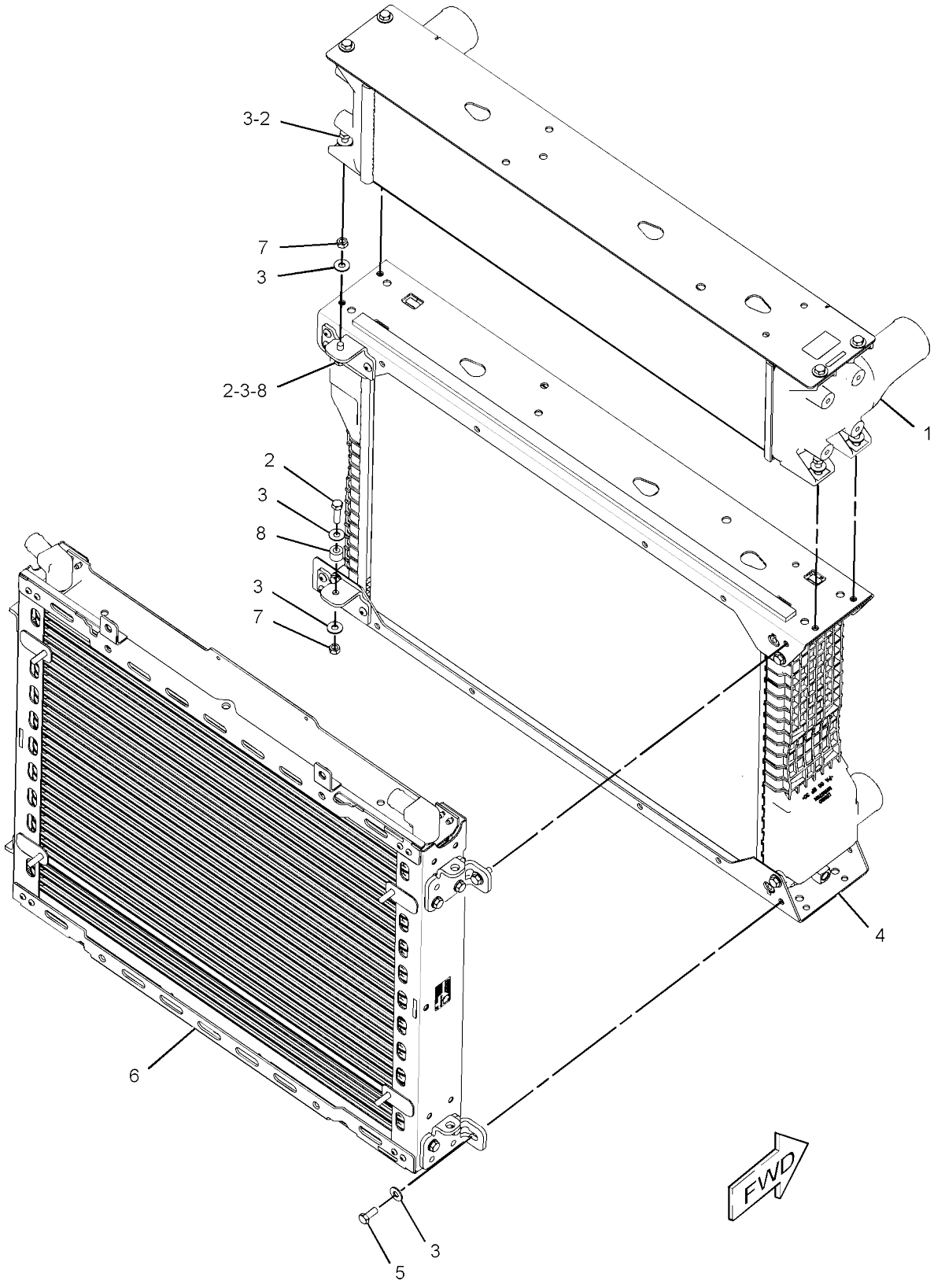

GRAPHIC #1 <END> g02868836

377-5351 TANK GP-COOLANT

S/N: G441-UP

PART OF 451-3130 INSTALLATION AR-ENGINE

SMCS-1354, 1377

i06650924

	REF SEE NOTE QTY	GRAPHIC NO 1 2 3 4 5 6	(PRODUCT LEVEL)	REF PAGE	PART NAME PART NUMBER
	1	1	**204-2281**	2	STRAP-CABLE
	2	1	**253-2590**	1	INSERT-NYLON
	3	1	**361-2220**	1	TANK AS-COOLANT
	3A	1	**7M-8485**	1	SEAL-O-RING
	3B	1	**9Y-9236**	1	GAUGE-SIGHT
	3C	1	**031-1119**	1	CAP AS-RADIATOR
	4	1	**375-8930**	1	HOSE
	5	1	**132-5789**	1	CLIP (LADDER)
	6	1	**178-3620**	1	STRAP-DUAL CLAMP
	7	1	**1P-4278**	1	CLAMP-HOSE
	8	1	**204-8000**	2	MOUNTING-CABLE TIE
	9	1	**3S-2093**	3	STRAP-CABLE
	10	1	**5P-4116**	7	WASHER-HARD (8.8X20.5X2-MM THK)
	11	1	**5P-4961**	6	CLAMP-HOSE
	12	1	**5P-7175**	1	FITTING-STRAIGHT
	13	1	**6K-8180**	1	GROMMET
	14	1	**7K-1181**	2	STRAP-CABLE
M	15	1	**7X-2537**	3	BOLT (M8X1.25X35-MM)
	16	1	**7X-7958**	2	CLAMP-HOSE
M	17	1	**8T-4189**	2	BOLT (M8X1.25X20-MM)
M	18	1	**8T-4908**	2	BOLT (M8X1.25X25-MM)
G	19	1	**423-1981**		HOSE (18.1-IN)
E	20	1	**8I-1362**		HOSE (133-CM)
E	21	1	**9X-2133**		HOSE (138-CM)
E	21A	1	**9X-2133**		HOSE (64-CM)
	22	1	**277-1873**	1	CLIP (LADDER)

E - ORDER BY THE CENTIMETER G - ORDER BY THE INCH
M - METRIC PART

377-5351 **TANK GP-COOLANT** (contd.) **i06650924**

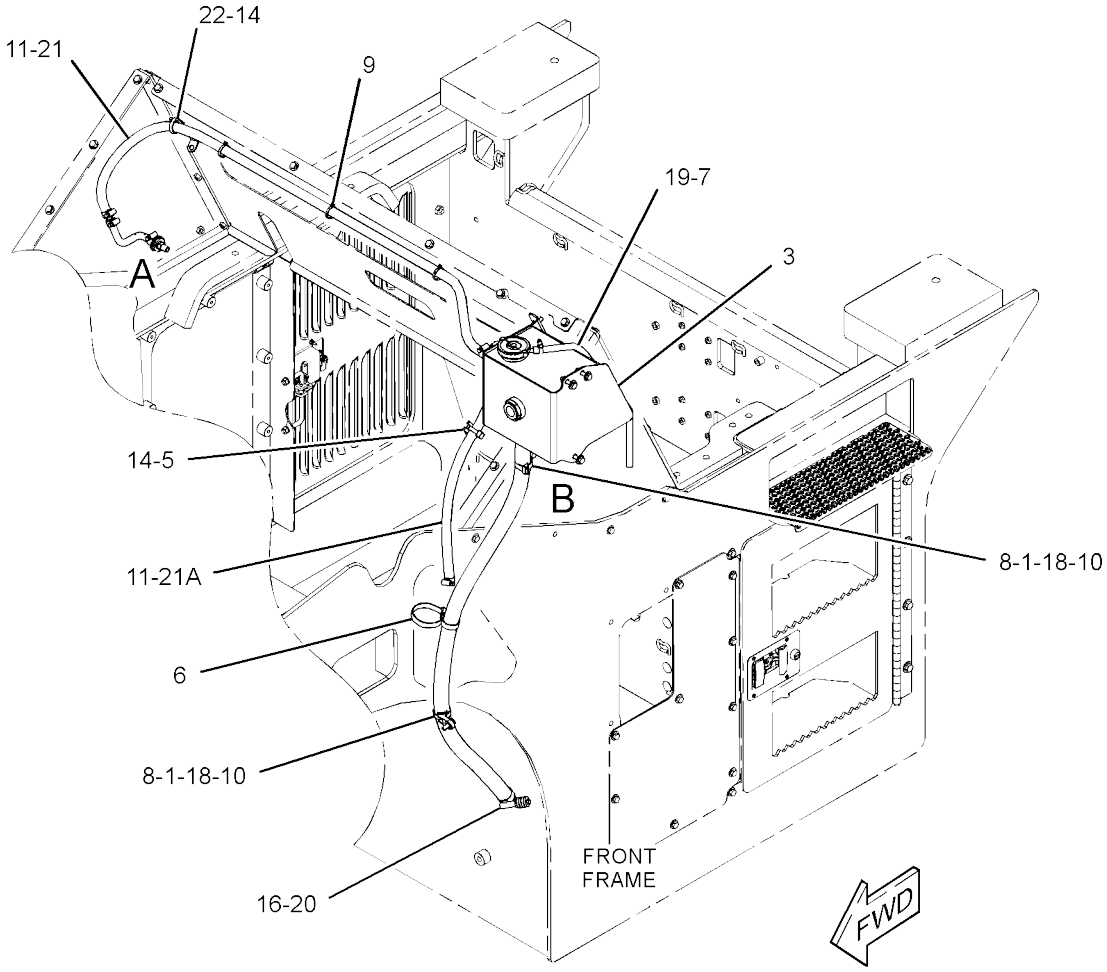

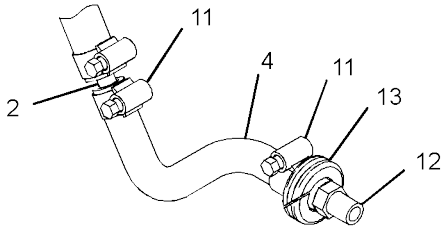

VIEW OF AREA A

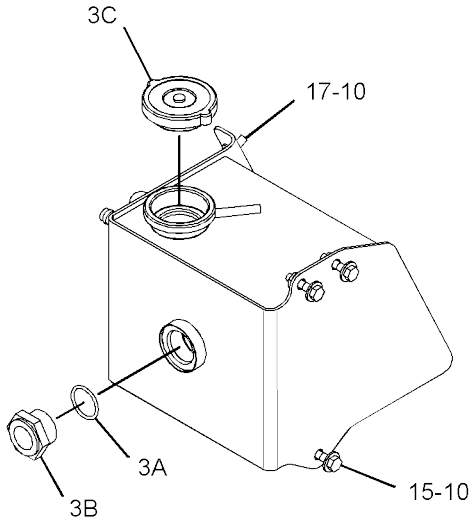

VIEW OF AREA B
(PARTS REMOVED FOR CLARITY)

GRAPHIC #1 <END> g03736489

377-5361 TANK GP-COOLANT

S/N: 5B41-UP

PART OF 451-3230 INSTALLATION AR-ENGINE

SMCS-1354, 1377

i06650912

REF SEE NOTE	QTY	GRAPHIC NO 1 2 3 4 5 6	(PRODUCT LEVEL)	REF PAGE	PART NAME PART NUMBER
	1	1	**3S-2093**	3	STRAP-CABLE
	2	1	**7K-1181**	1	STRAP-CABLE
	3	1	**204-2281**	2	STRAP-CABLE
	4	1	**253-2590**	1	INSERT-NYLON
	5	1	**361-2220**	1	TANK AS-COOLANT
	6	1	**361-2221**	1	SUPPORT AS
	7	1	**375-8930**	1	HOSE
	8	1	**178-3620**	1	STRAP-DUAL CLAMP
	9	1	**1P-4278**	1	CLAMP-HOSE
	10	1	**204-8000**	2	MOUNTING-CABLE TIE
	11	1	**277-1873**	1	CLIP (LADDER)
	12	1	**5P-4116**	9	WASHER-HARD (8.8X20.5X2-MM THK)
	13	1	**5P-4961**	6	CLAMP-HOSE
	14	1	**5P-7175**	1	FITTING-STRAIGHT
	15	1	**6K-8180**	1	GROMMET
	16	1	**7X-7958**	2	CLAMP-HOSE
M	17	1	**8T-4189**	7	BOLT (M8X1.25X20-MM)
M	18	1	**8T-4908**	2	BOLT (M8X1.25X25-MM)
G	19	1	**423-1981**		HOSE (18.1-IN)
E	20	1	**8I-1362**		HOSE (129-CM)
E	21	1	**9X-2133**		HOSE (138-CM)
E	21A	1	**9X-2133**		HOSE (62-CM)

E - ORDER BY THE CENTIMETER G - ORDER BY THE INCH
M - METRIC PART

377-5361 **TANK GP-COOLANT** (contd.) **i06650912**

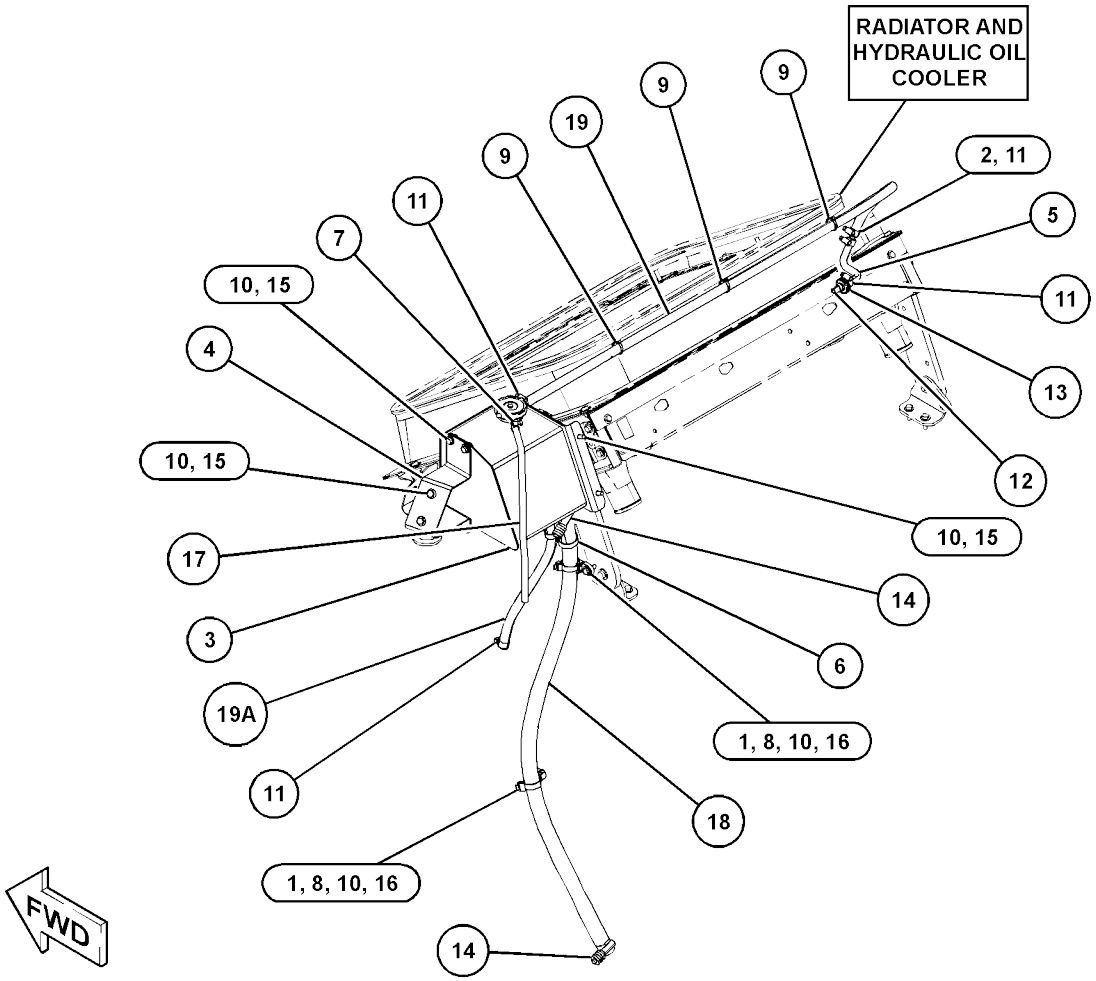

GRAPHIC #1 <END> g03340587

326-5331 AIR CLEANER GP

S/N: G441-UP

PART OF 377-5349 AIR CLEANER GP

SMCS-1051, 1054

i07398883

	REF SEE NOTE QTY	GRAPHIC NO 1 2 3 4 5 6	(PRODUCT LEVEL)	REF PAGE	PART NAME PART NUMBER	
	1	1	**152-4898**	1	BAND-MOUNTING	
	2	1	**479-0028**	1	INDICATOR (AIR CLEANER)	
Y	3	1	**326-5332**	1	AIR CLEANER GP	74

Y - SEPARATE ILLUSTRATION

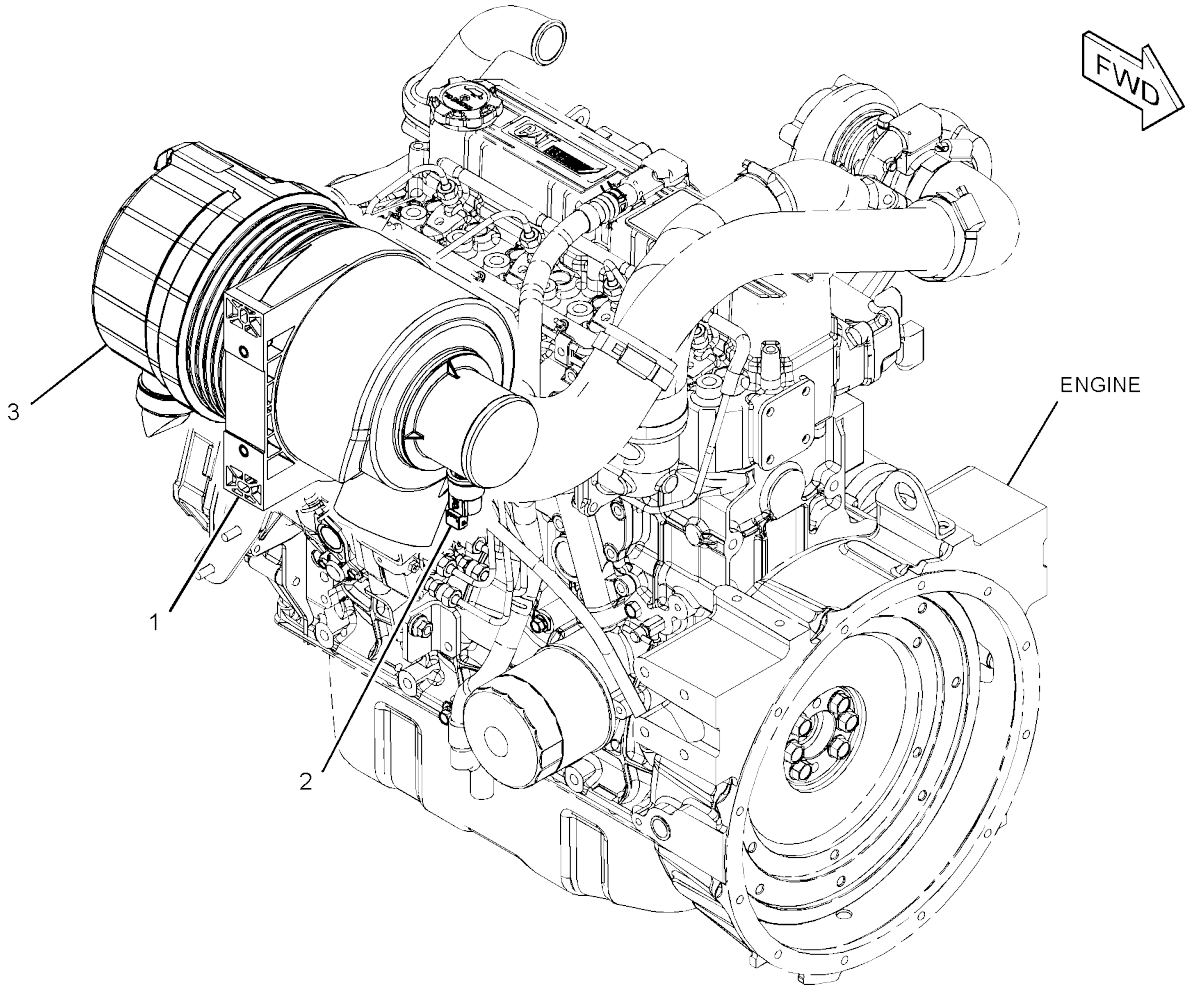

GRAPHIC #1 <END> g06019968

326-5332 AIR CLEANER GP

S/N: G441-UP

PART OF 326-5331 AIR CLEANER GP

SMCS-1051, 1054

i06616800

REF SEE NOTE	QTY	GRAPHIC NO 1 2 3 4 5 6	(PRODUCT LEVEL)	REF PAGE	PART NAME PART NUMBER
	1	1	**112-9717**	1	VALVE-DUST (AIR CLEANER)
	2	1	**243-0407**	1	COVER AS
	3	1	**280-8298**	1	CLAMP
F			**110-6326**	1	FILTER ELEMENT AS-AIR (PRIMARY)
F			**110-6331**	1	FILTER ELEMENT AS-AIR (SECONDARY)

F - NOT SHOWN

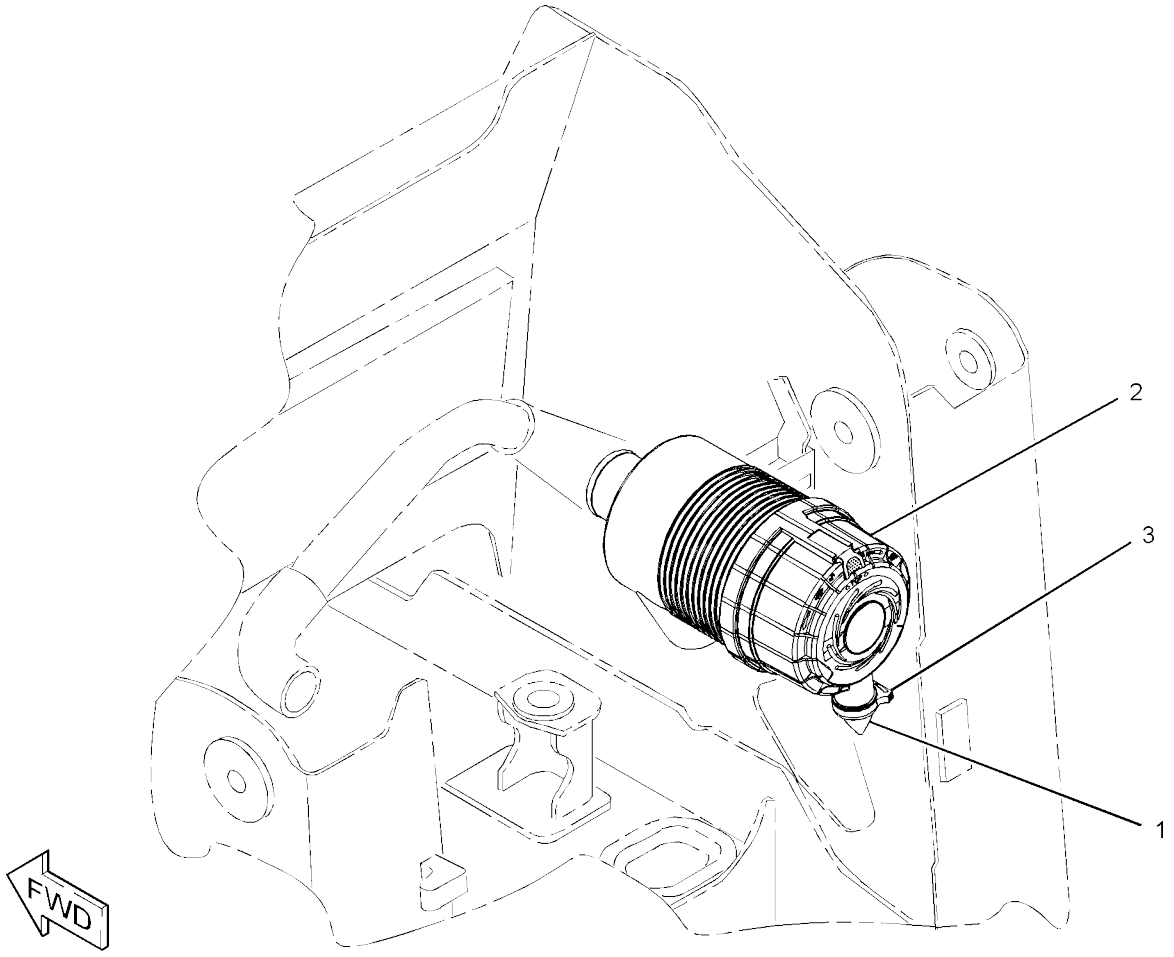

GRAPHIC #1 <END> g02173638

363-7549 AIR CLEANER GP

S/N: 5B41-UP

PART OF 377-5359 AIR CLEANER GP

SMCS-1051, 1054

i07423304

REF SEE NOTE QTY	GRAPHIC NO 1 2 3 4 5 6	(PRODUCT LEVEL)	REF PAGE	PART NAME PART NUMBER
1	1	**222-9020**	1	FILTER ELEMENT AS-AIR (PRIMARY)
2	1	**222-9021**	1	FILTER ELEMENT AS-AIR (SECONDARY)
3	1	**224-2262**	1	COVER AS
4	1	**224-2263**	1	VALVE AS-AIR (DUST)
5	1	**243-5054**	1	BRACKET

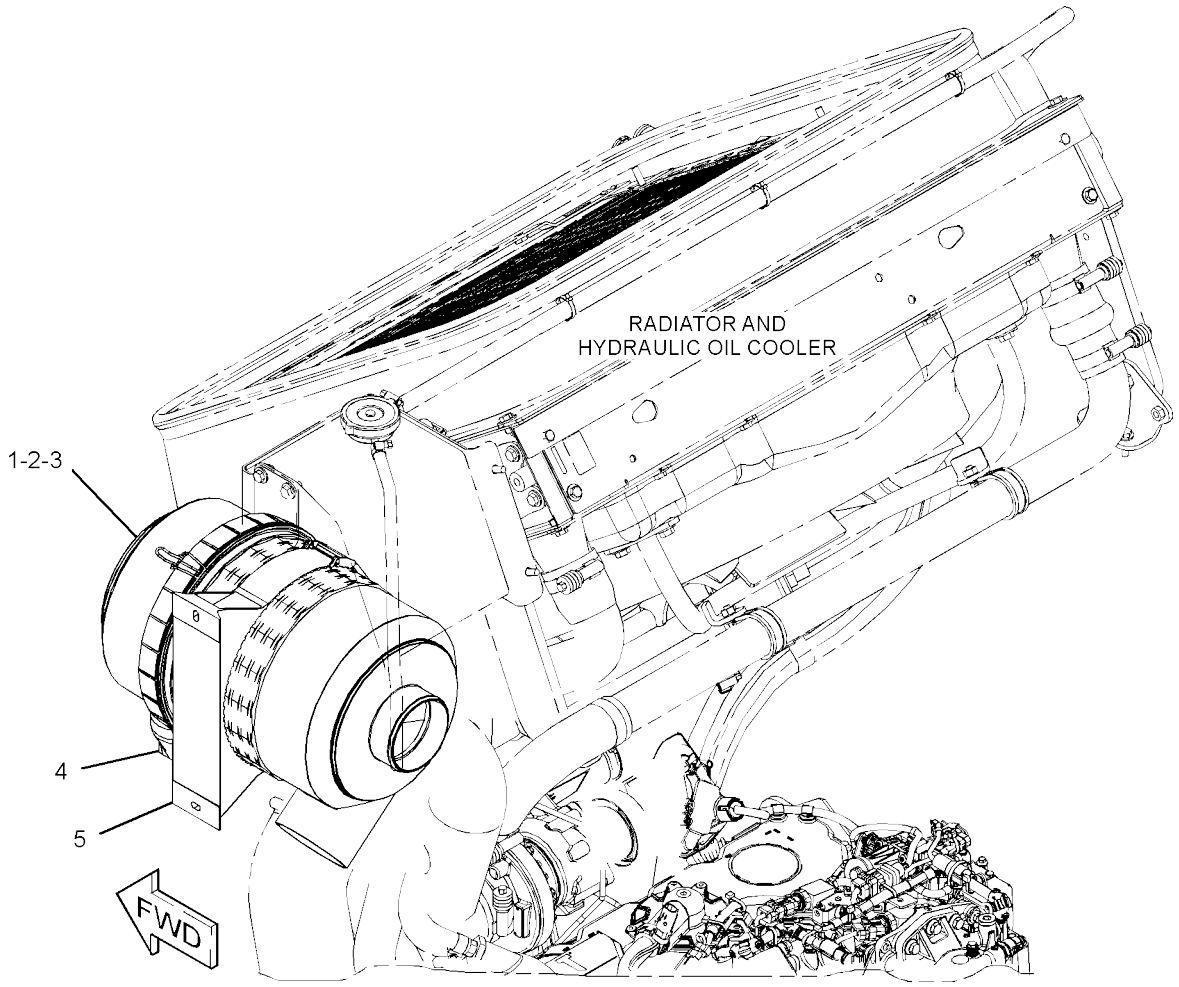

GRAPHIC #1 <END> g02878979

377-5349 AIR CLEANER GP

S/N: G441-UP

PART OF 451-3130 INSTALLATION AR-ENGINE

SMCS-1051, 1054

i06650918

	REF SEE NOTE QTY	GRAPHIC NO 1 2 3 4 5 6	(PRODUCT LEVEL)	REF PAGE	PART NAME PART NUMBER	
	1	1	**256-6453**	1	SENSOR-TEMPERATURE (2-PIN) (AFTERCOOLER)	
Y	2	1	*326-5331*	1	AIR CLEANER GP	73
	3	1	**435-8617**	1	SUPPORT AS	
M		1	**8T-3597**	1	NUT-WELD (M12X1.75-THD)	
M		1	**8T-3612**	1	NUT-WELD (M8X1.25-THD)	
	4	1	**364-5500**	1	HOSE	
	5	1	**391-0761**	1	HOSE	
	6	1	**394-6381**	1	DUCT AS (AIR INLET)	
	7	1	**241-6157**	1	PLUG	
M	8	1	**5C-7261**	1	NUT (M8X1.25-THD)	
	9	1	**5P-4116**	4	WASHER-HARD (8.8X20.5X2-MM THK)	
M	10	1	**8T-4189**	1	BOLT (M8X1.25X20-MM)	
	11	1	**8T-4224**	3	WASHER-HARD (8.8X16X2-MM THK)	
M	12	1	**8T-4908**	3	BOLT (M8X1.25X25-MM)	
	13	1	**8T-4984**	1	CLAMP-HOSE	
	14	1	**8T-4985**	1	CLAMP-HOSE	
	15	1	**8T-4986**	2	CLAMP-HOSE	
M	16	1	**8T-7547**	2	BOLT (M8X1.25X30-MM)	
	17	1	**5P-1076**	1	WASHER-HARD (13.5X30X4-MM THK)	
M	18	1	**8T-4183**	1	BOLT (M12X1.75X40-MM)	

M - METRIC PART
Y - SEPARATE ILLUSTRATION

377-5349 **AIR CLEANER GP (**contd.**)** **i06650918**

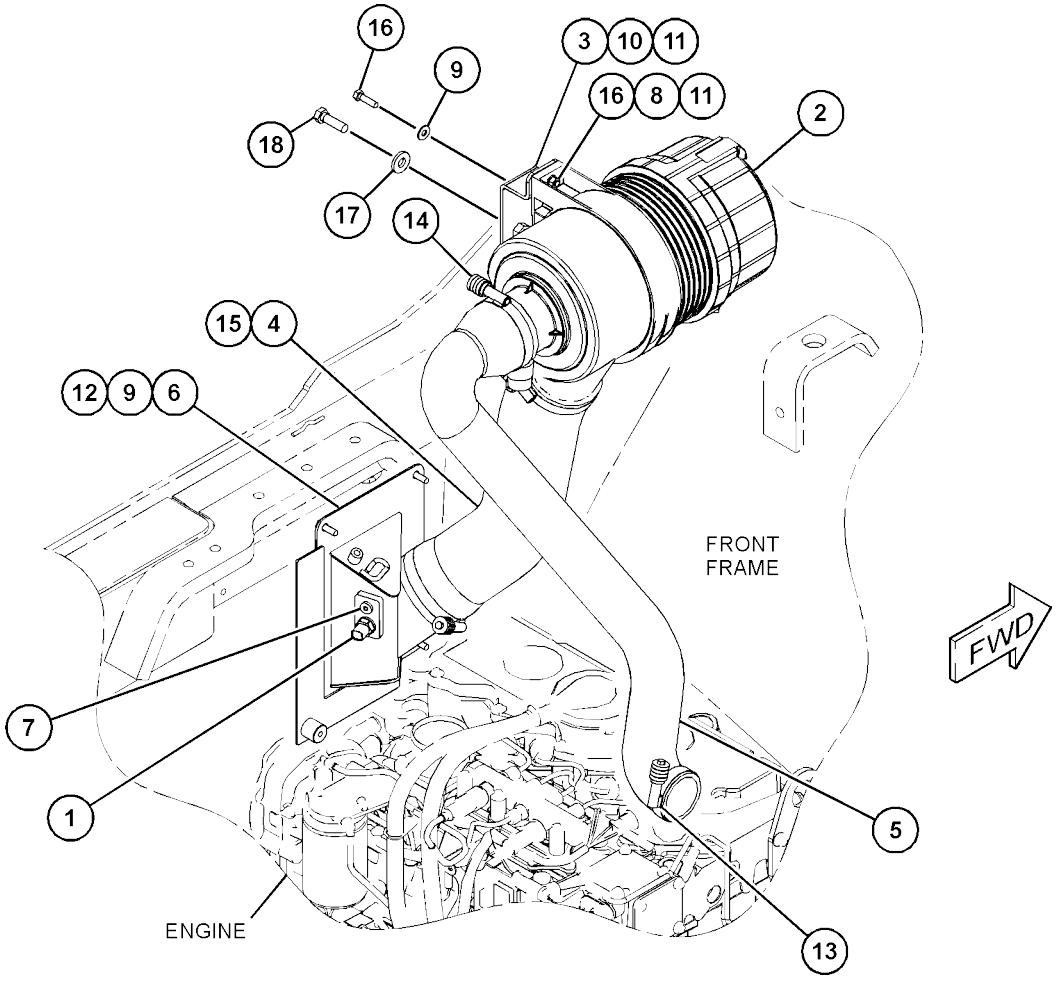

GRAPHIC #1 <END> g03434166

377-5359 AIR CLEANER GP

S/N: 5B41-UP

PART OF 451-3230 INSTALLATION AR-ENGINE

SMCS-1051, 1054

i06650900

	REF SEE NOTE QTY	GRAPHIC NO 1 2 3 4 5 6	(PRODUCT LEVEL)	REF PAGE	PART NAME PART NUMBER	
	1	1	**5L-3233**	1	FITTING-CONNECTOR	
	2	1	**256-6453**	1	SENSOR-TEMPERATURE (2-PIN)	
	3	1	**362-6442**	1	HOSE	
	4	1	**363-0591**	1	INDICATOR AS-AIR FILTER CHANGE	
Y	5	1	**363-7549**	1	AIR CLEANER GP	75
	6	1	**377-5374**	1	HOSE AS	
	7	1	**394-6381**	1	DUCT AS (AIR INLET)	
	8	1	**241-6157**	1	PLUG	
	9	1	**5P-4116**	5	WASHER-HARD (8.8X20.5X2-MM THK)	
M	10	1	**8T-4908**	3	BOLT (M8X1.25X25-MM)	
	11	1	**8T-4984**	1	CLAMP-HOSE	
	12	1	**8T-4986**	3	CLAMP-HOSE	
M	13	1	**8T-6912**	2	BOLT (M8X1.25X50-MM)	

M - METRIC PART
Y - SEPARATE ILLUSTRATION

377-5359 **AIR CLEANER GP (**contd.**)** **i06650900**

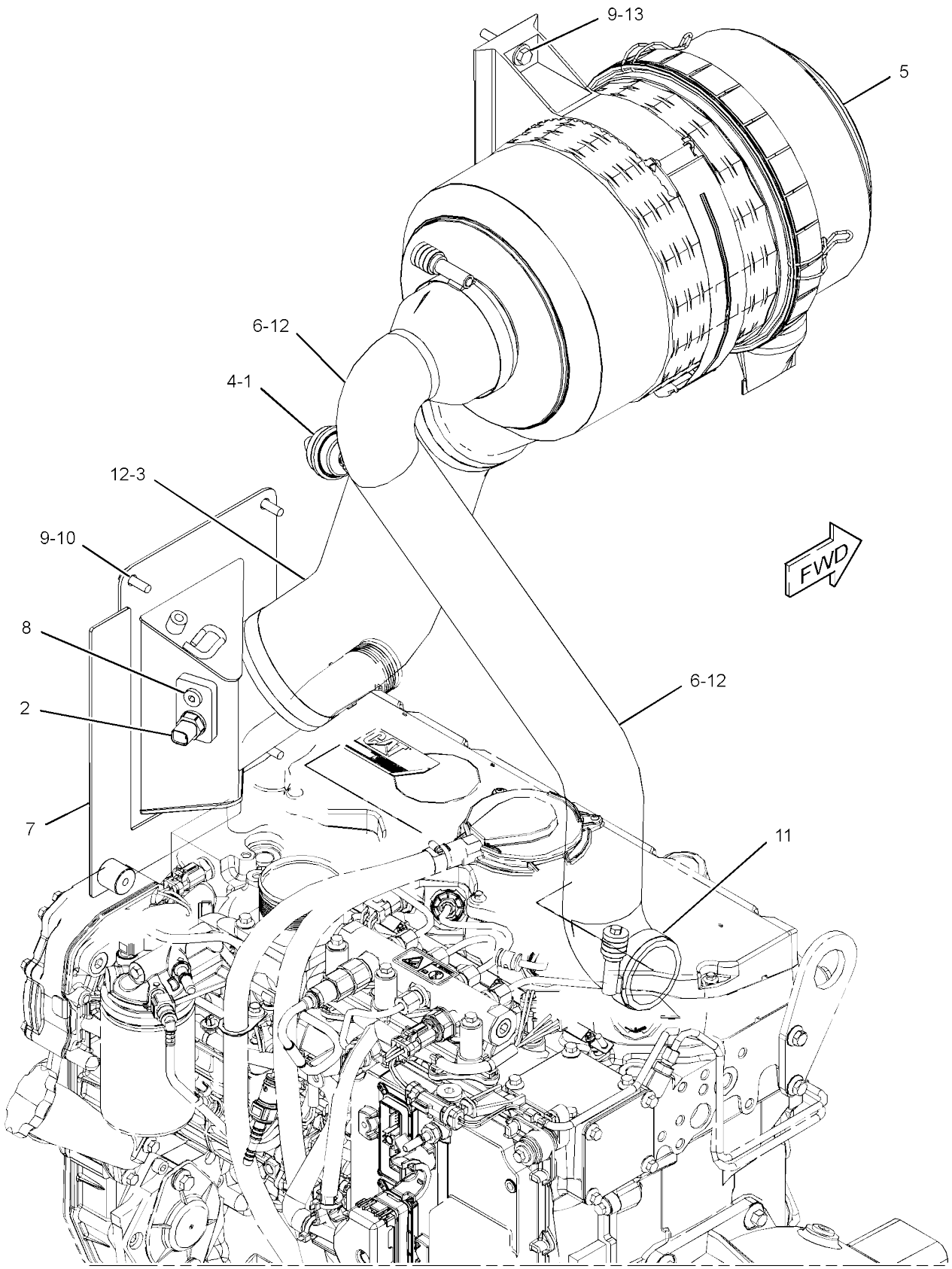

GRAPHIC #1 <END> g03340532

416-9543 ELBOW GP-AIR INLET

S/N: 2W21-UP

PART OF 435-7493, 435-7494 ENGINE AR-PRIMARY AN ATTACHMENT

SMCS-1087

i06281208

	REF SEE NOTE QTY	GRAPHIC NO 1 2 3 4 5 6	(PRODUCT LEVEL)	REF PAGE	PART NAME PART NUMBER
M	1	1	**6I-0260**	4	BOLT (M8X1.25X25-MM)
M	2	1	**111-8222**	4	BOLT (M8X16-MM)
M	3	1	**124-3815**	4	BOLT (M8X1.25X16-MM)
	4	1	**185-6627**	2	PLATE
	5	1	**419-3740**	1	CONNECTION GP-INLET
	5A	1	**238-8288**	1	GASKET-INLET

M - METRIC PART

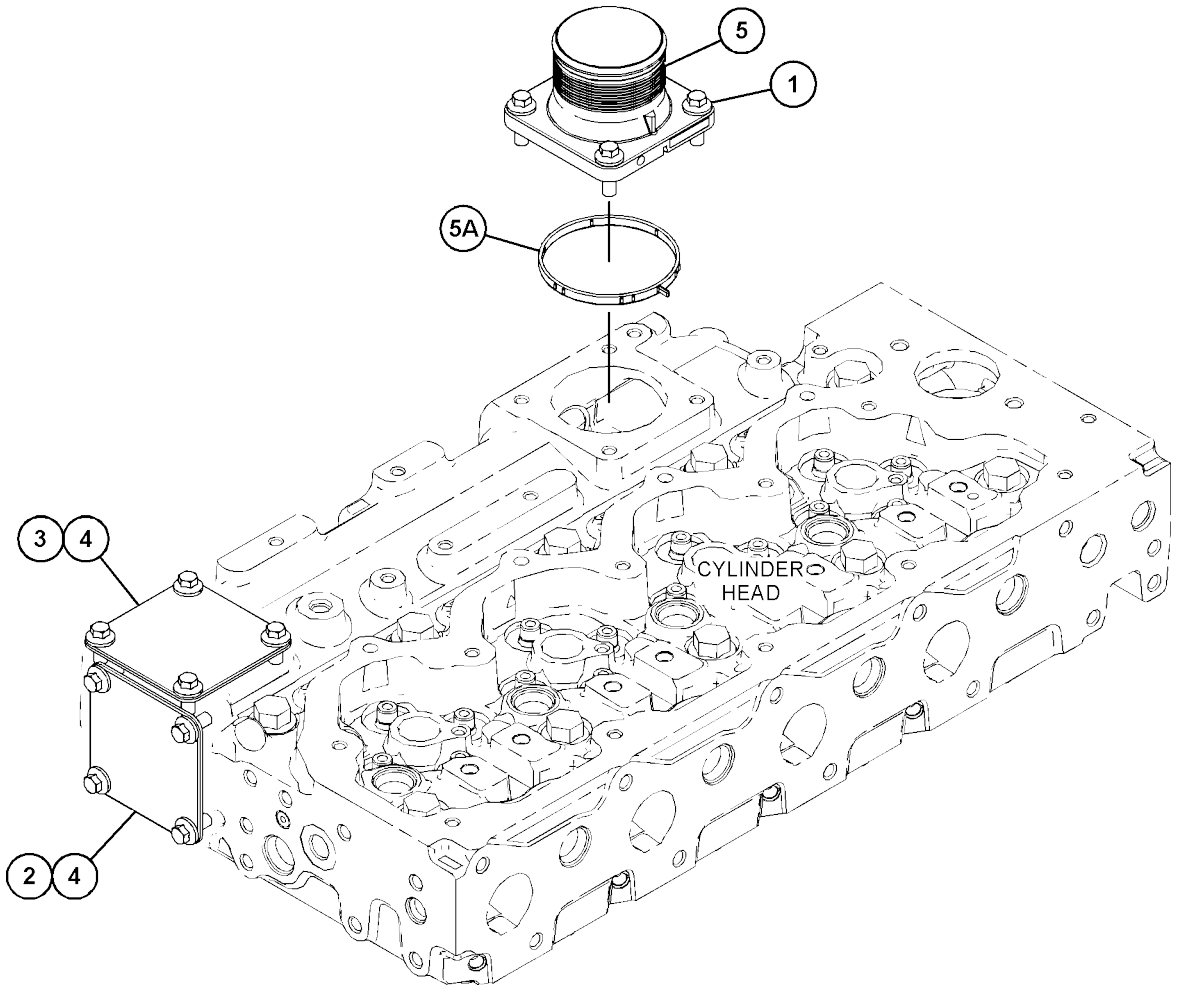

GRAPHIC #1 <END> g03822801

451-3231 LINES GP-COOLING

S/N: 5B41-UP

PART OF 451-3230 INSTALLATION AR-ENGINE

SMCS-1087, 1380

i06615584

	REF SEE NOTE QTY	GRAPHIC NO 1 2 3 4 5 6	(PRODUCT LEVEL)	REF PAGE	PART NAME PART NUMBER
	1	1	*195-2037*	1	FITTING AS
		1	**3K-0360**	1	SEAL-O-RING
		1	**034-3679**	1	ADAPTER
	2	1	**357-6735**	1	HOSE AS
	3	1	**362-1304**	1	TUBE
	4	1	**362-1306**	1	HOSE
	5	1	**362-3622**	1	HOSE
	6	1	**377-5364**	1	TUBE AS
	7	1	**377-5367**	1	HOSE
	8	1	**377-5368**	1	HOSE
	9	1	**377-5369**	1	TUBE
	10	1	**377-5373**	1	HOSE AS
	11	1	**383-7251**	1	HOSE
	12	1	**383-7252**	1	TUBE
	13	1	**450-9646**	1	HOSE
	14	1	**459-8323**	1	BRACKET
	15	1	**144-0367**	3	CLAMP-HOSE
M	16	1	**5C-7261**	1	NUT (M8X1.25-THD)
	17	1	**5P-4116**	6	WASHER-HARD (8.8X20.5X2-MM THK)
	18	1	**5P-7468**	6	CLIP (SLOT)
	19	1	**5P-7469**	6	CLIP (TAB)
	20	1	**8T-4121**	3	WASHER-HARD (11X21X2.5-MM THK)
M	21	1	**8T-4136**	1	BOLT (M10X1.5X25-MM)
M	22	1	**8T-4137**	2	BOLT (M10X1.5X20-MM)
M	23	1	**8T-4189**	2	BOLT (M8X1.25X20-MM)
	24	1	**8T-4984**	11	CLAMP-HOSE
	25	1	**8T-6703**	2	CLAMP-HOSE
M	26	1	**8T-7547**	3	BOLT (M8X1.25X30-MM)

M - METRIC PART

451-3231 **LINES GP-COOLING** (contd.) **i06615584**

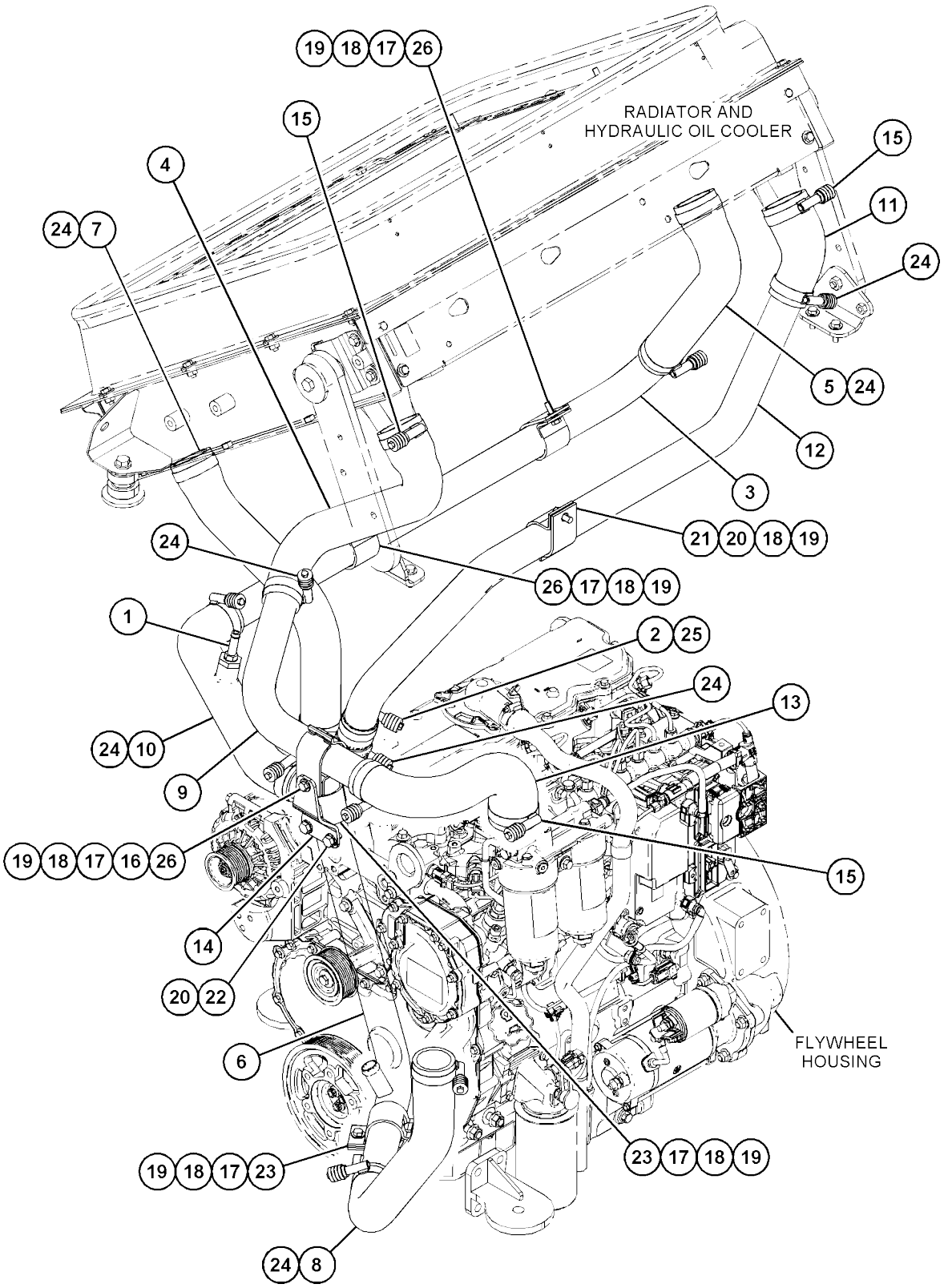

GRAPHIC #1 <END> g06086556

421-7092 MANIFOLD GP-EXHAUST

S/N: 2W21-UP
PART OF 435-7493, 435-7494 ENGINE AR-
PRIMARY AN ATTACHMENT

SMCS-1059

i06281372

	REF SEE NOTE QTY	GRAPHIC NO 1 2 3 4 5 6	(PRODUCT LEVEL)	REF PAGE	PART NAME PART NUMBER
	1	1	**238-8292**	1	BOLT-FLANGE HEAD
M	2	1	**278-0361**	7	BOLT (M10X1.5X45-MM)
	3	1	**298-4569**	1	MANIFOLD-EXHAUST
	4	1	**298-4570**	1	GASKET-EXHAUST MANIFOLD
	5	1	**361-7519**	4	ROD-THREADED

M - METRIC PART

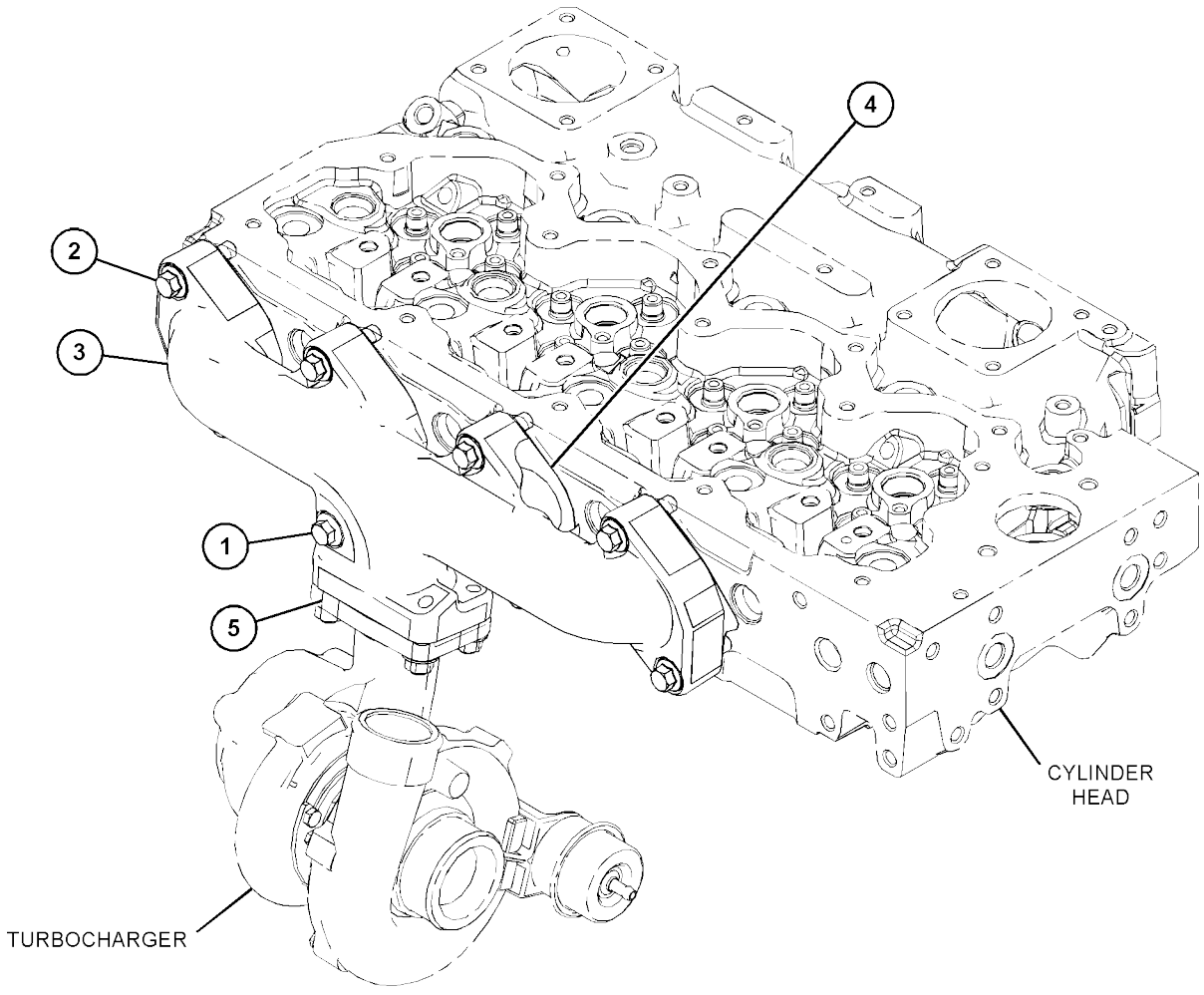

GRAPHIC #1 <END> g03848980

416-8775 MOUNTING GP-EXHAUST

S/N: 2W21-
UP HARDWARE
PART OF 435-7493, 435-7494 ENGINE AR-
PRIMARY AN ATTACHMENT

SMCS-1061

i06281193

	REF SEE NOTE QTY	GRAPHIC NO 1 2 3 4 5 6	(PRODUCT LEVEL)	REF PAGE	PART NAME PART NUMBER
M	1	1	**6I-0563**	3	NUT (M10X1.5-THD)
	2	1	**361-7519**	3	ROD-THREADED

M - METRIC PART

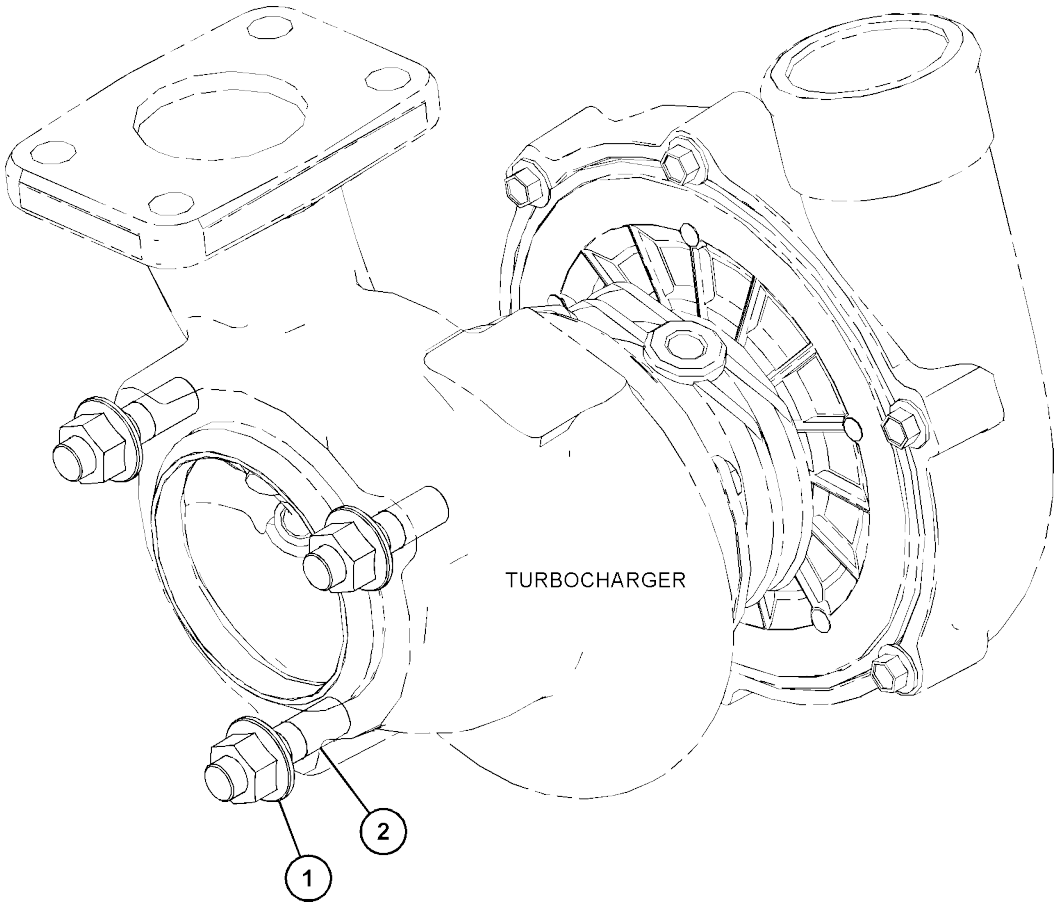

GRAPHIC #1 <END> g03828783

377-5346 MUFFLER GP

S/N: G441-UP

PART OF 451-3130 INSTALLATION AR-ENGINE

SMCS-1062

i06650923

	REF SEE NOTE QTY	GRAPHIC NO 1 2 3 4 5 6	(PRODUCT LEVEL)	REF PAGE	PART NAME PART NUMBER
	1	1	**110-5141**	1	GASKET
	2	1	**225-8530**	1	GASKET
	3	1	**302-0581**	1	ADAPTER-EXHAUST
	4	1	**333-0211**	1	COUPLING
	5	1	**333-0213**	1	BRACKET AS
	6	1	**459-3211**	2	BRACKET AS
M		1	**8T-3490**	2	NUT-WELD (M10X1.5-THD)
	7	1	**375-9898**	1	MUFFLER
	8	1	**383-7242**	1	SUPPORT AS
M		1	**8T-3490**	4	NUT-WELD (M10X1.5-THD)
M		1	**8T-3612**	3	NUT-WELD (M8X1.25-THD)
	9	1	**435-2001**	1	TUBE AS-EXHAUST
	10	1	**383-7248**	1	PLATE AS
M		1	**8T-3612**	1	NUT-WELD (M8X1.25-THD)
	11	1	**387-7864**	2	STRAP-CLAMP
	12	1	**391-0759**	1	TUBE-EXHAUST
	13	1	**391-0760**	1	SUPPORT
	14	1	**393-9151**	1	INSULATION
	15	1	**393-9152**	1	INSULATION
	16	1	**393-9162**	1	INSULATION-MUFFLER
	17	1	**393-9166**	1	PIPE AS
	18	1	**388-7009**	2	CLAMP-BENT BOLT
	19	1	**5P-4116**	7	WASHER-HARD (8.8X20.5X2-MM THK)
	20	1	**6V-3964**	1	WASHER-HARD (8.8X25.5X5-MM THK)
	21	1	**6V-4356**	1	CLIP (SLOT)
	22	1	**6V-4357**	1	CLIP (TAB)
	23	1	**7X-7729**	4	WASHER (11X25X3-MM THK)
	24	1	**8T-4121**	17	WASHER-HARD (11X21X2.5-MM THK)
M	25	1	**8T-4182**	10	BOLT (M10X1.5X45-MM)
M	26	1	**8T-4186**	2	BOLT (M10X1.5X40-MM)
M	27	1	**8T-4189**	1	BOLT (M8X1.25X20-MM)
M	28	1	**8T-4195**	5	BOLT (M10X1.5X30-MM)
M	29	1	**8T-4196**	4	BOLT (M10X1.5X35-MM)
	30	1	**8T-4224**	3	WASHER-HARD (8.8X16X2-MM THK)
M	31	1	**8T-7547**	10	BOLT (M8X1.25X30-MM)

M - METRIC PART

377-5346 **MUFFLER GP** (contd.) **i06650923**

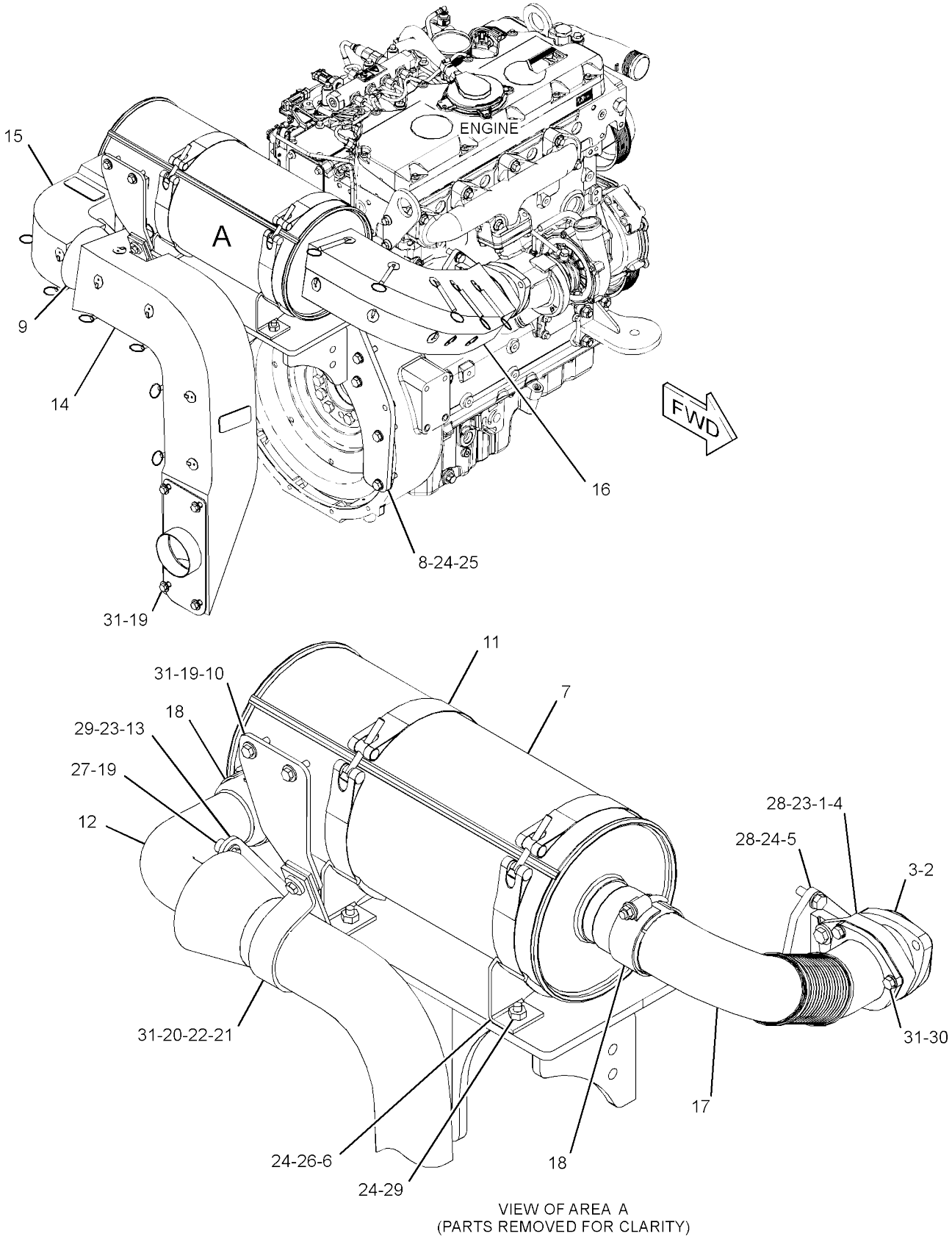

VIEW OF AREA A
(PARTS REMOVED FOR CLARITY)

GRAPHIC #1 <END> g03342754

377-5356 MUFFLER GP

S/N: 5B41-UP

PART OF 451-3230 INSTALLATION AR-ENGINE

SMCS-1062

i06650906

	REF SEE NOTE QTY	GRAPHIC NO 1 2 3 4 5 6	(PRODUCT LEVEL)	REF PAGE	PART NAME PART NUMBER
	1	1	**110-5141**	1	GASKET
	2	1	**225-8530**	1	GASKET
	3	1	**302-0581**	1	ADAPTER-EXHAUST
	4	1	**333-0211**	1	COUPLING
	5	1	**333-0213**	1	BRACKET AS
	6	1	**363-5221**	1	SUPPORT AS
	7	1	**459-3211**	2	BRACKET AS
					(EACH INCLUDES)
M		1	**8T-3490**	2	NUT-WELD (M10X1.5-THD)
	8	1	**374-3580**	1	INSULATION
	9	1	**375-9898**	1	MUFFLER
	10	1	**435-2002**	1	TUBE AS-EXHAUST
	11	1	**383-7242**	1	SUPPORT AS
M		1	**8T-3490**	4	NUT-WELD (M10X1.5-THD)
M		1	**8T-3612**	3	NUT-WELD (M8X1.25-THD)
	12	1	**387-7864**	2	STRAP-CLAMP
	13	1	**391-0757**	1	TUBE-EXHAUST
	14	1	**391-0758**	1	SUPPORT
	15	1	**393-9153**	1	INSULATION-MUFFLER
	16	1	**393-9162**	1	INSULATION-MUFFLER
	17	1	**393-9166**	1	PIPE AS
	18	1	**388-7009**	2	CLAMP-BENT BOLT
	19	1	**5P-4116**	6	WASHER-HARD (8.8X20.5X2-MM THK)
	20	1	**6V-3964**	1	WASHER-HARD (8.8X25.5X5-MM THK)
	21	1	**6V-4356**	1	CLIP (SLOT)
	22	1	**6V-4357**	1	CLIP (TAB)
	23	1	**7X-7729**	4	WASHER (11X25X3-MM THK)
	24	1	**8T-4121**	17	WASHER-HARD (11X21X2.5-MM THK)
M	25	1	**8T-4182**	10	BOLT (M10X1.5X45-MM)
M	26	1	**8T-4186**	2	BOLT (M10X1.5X40-MM)
M	27	1	**8T-4189**	1	BOLT (M8X1.25X20-MM)
M	28	1	**8T-4195**	5	BOLT (M10X1.5X30-MM)
M	29	1	**8T-4196**	4	BOLT (M10X1.5X35-MM)
	30	1	**8T-4224**	3	WASHER-HARD (8.8X16X2-MM THK)
M	31	1	**8T-4908**	3	BOLT (M8X1.25X25-MM)
M	32	1	**8T-7547**	6	BOLT (M8X1.25X30-MM)

M - METRIC PART

377-5356 **MUFFLER GP** (contd.) **i06650906**

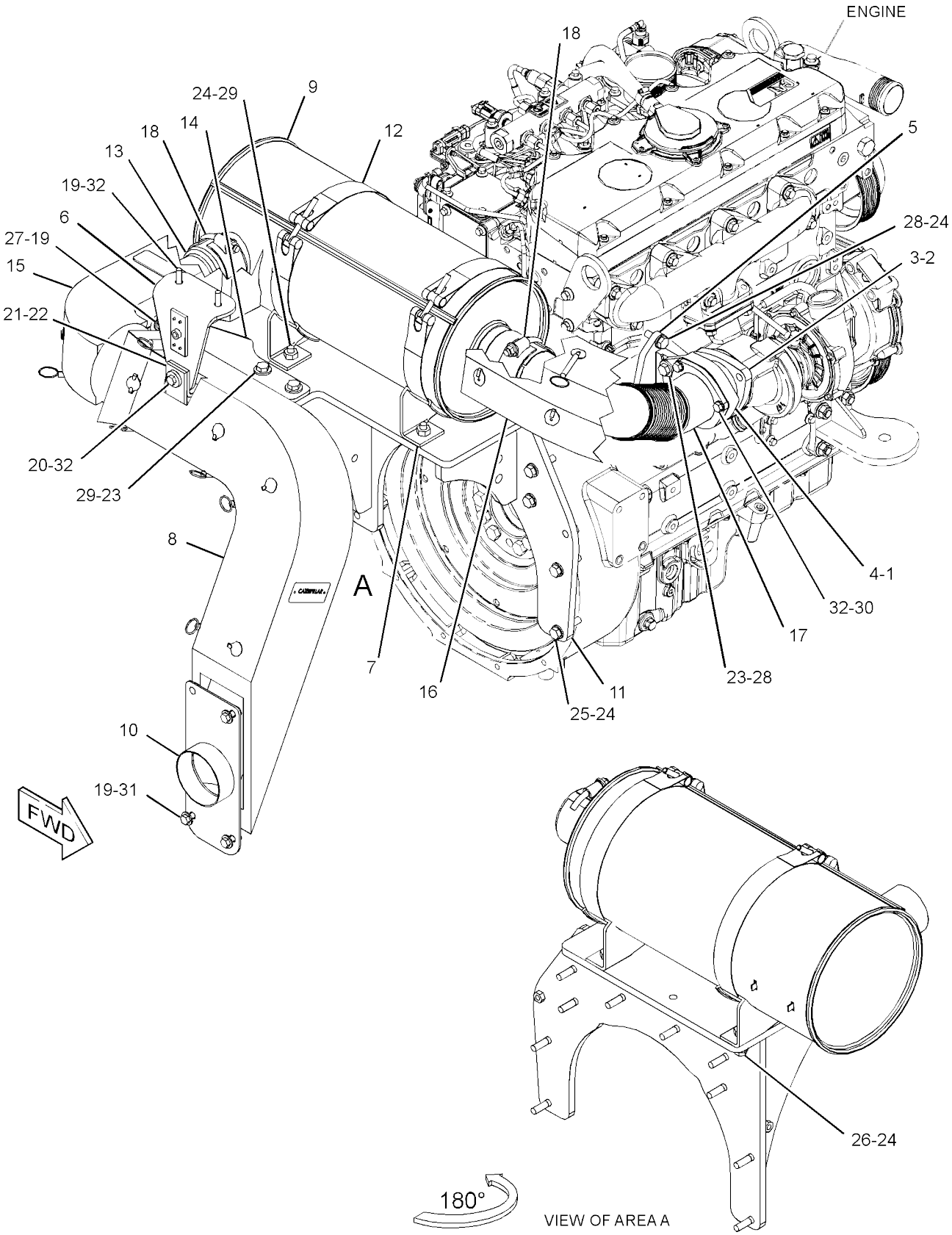

GRAPHIC #1 <END> g03832898

417-3407 TURBOCHARGER GP

S/N: 2W21-UP
PART OF 435-7494 ENGINE AR-
PRIMARY AN ATTACHMENT

SMCS-1052, 1053

i06998795

	REF SEE NOTE QTY	GRAPHIC NO 1 2 3 4 5 6	(PRODUCT LEVEL)	REF PAGE	PART NAME PART NUMBER
M	1	1	**6I-0217**	2	BOLT (M8X1.25X20-MM)
M	2	1	**6I-0563**	4	NUT (M10X1.5-THD)
M	3	1	**106-8916**	2	BOLT (M6X16-MM)
	4	1	**194-5390**	1	GASKET-MANIFOLD
	5	1	**298-4566**	1	TUBE AS
	5A	1	**225-8524**	2	BOLT-SPECIAL
	5B	1	**225-8526**	4	WASHER (10.4X13.75X1.37-MM THK)
	6	1	**507-5015**	1	LINE AS
	6A	1	**269-3086**	2	CLAMP-BAND
	7	1	**353-3477**	1	GASKET-TURBOCHARGER
	8	1	**353-3478**	1	GASKET-TURBOCHARGER
	9	1	**488-1826**	1	TURBOCHARGER AS
	9A	1	**487-8468**	1	RING
	9B	1	**487-8469**	1	HOSE
	9C	1	**487-8470**	2	CLIP

M - METRIC PART

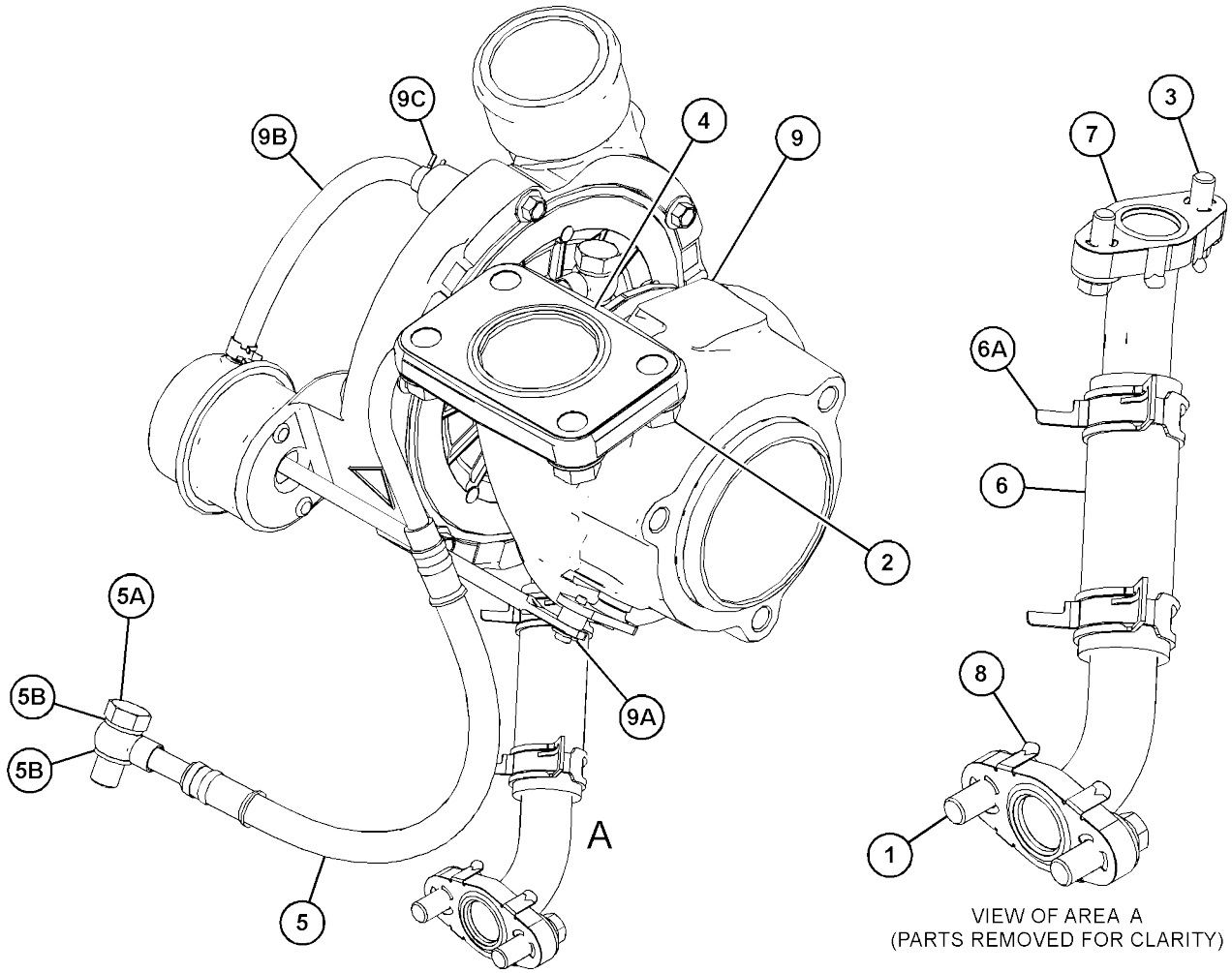

GRAPHIC #1 <END> g06193756

444-8091 TURBOCHARGER GP

S/N: 2W21-UP
PART OF 435-7493 ENGINE AR-
PRIMARY AN ATTACHMENT

SMCS-1052, 1053

i06948050

	REF SEE NOTE QTY	GRAPHIC NO 1 2 3 4 5 6	(PRODUCT LEVEL)	REF PAGE	PART NAME PART NUMBER
M	1	1	**6I-0217**	2	BOLT (M8X1.25X20-MM)
M	2	1	**6I-0563**	4	NUT (M10X1.5-THD)
M	3	1	**106-8916**	2	BOLT (M6X16-MM)
	4	1	**194-5390**	1	GASKET-MANIFOLD
	5	1	**298-4566**	1	TUBE AS
	5A	1	**225-8524**	2	BOLT-SPECIAL
	5B	1	**225-8526**	4	WASHER (10.4X13.75X1.37-MM THK)
	6	1	**507-5015**	1	LINE AS
	6A	1	**269-3086**	2	CLAMP-BAND
	7	1	**353-3477**	1	GASKET-TURBOCHARGER
	8	1	**353-3478**	1	GASKET-TURBOCHARGER
	9	1	**482-0233**	1	TURBOCHARGER

M - METRIC PART

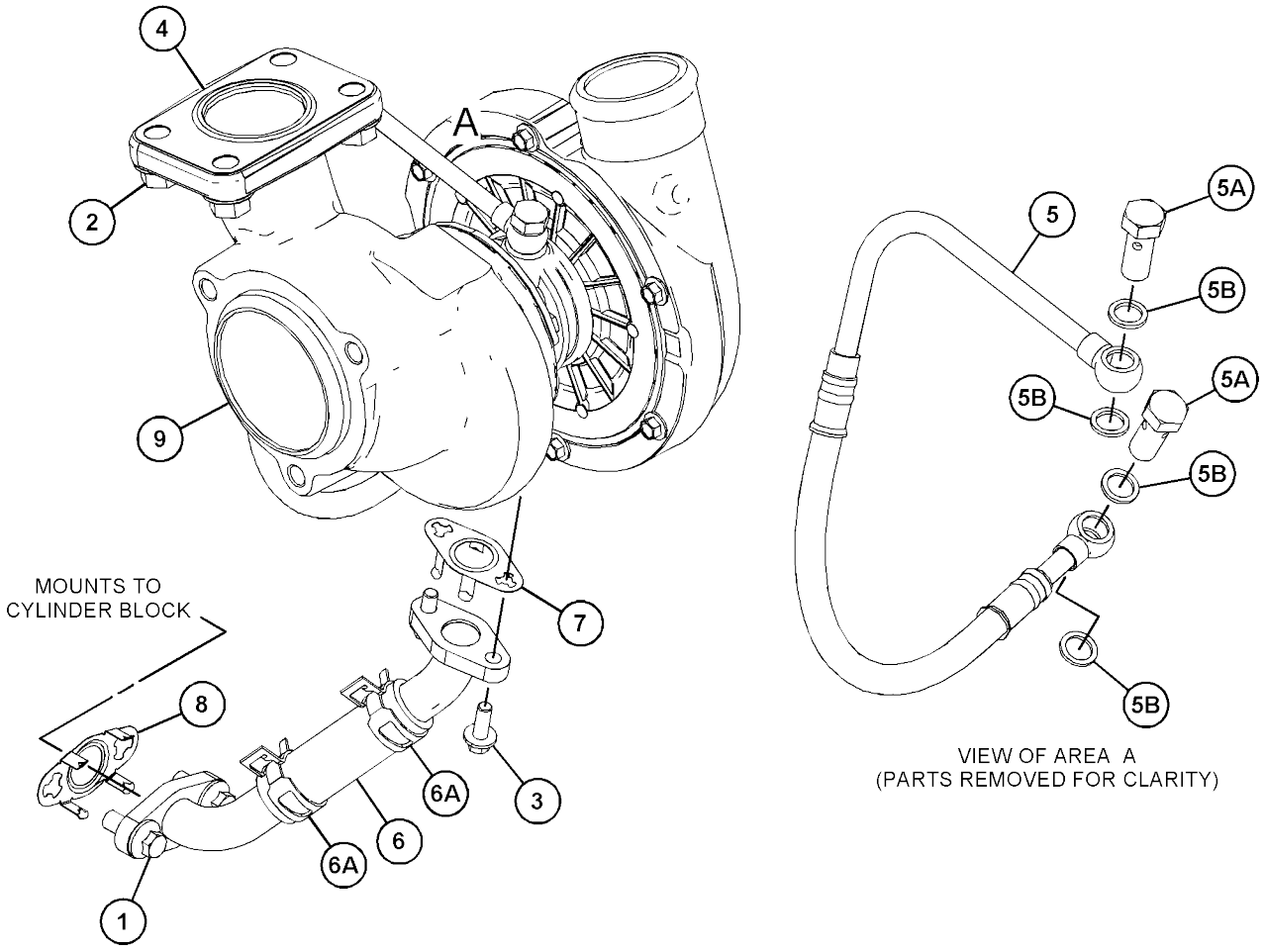

GRAPHIC #1 <END> g06187748

211-2095 VALVE GP-SOLENOID

S/N: 5B41-UP; G441-
UP 24-VOLT
PART OF 355-6236 FAN GP-SUCTION
SMCS-1061, 5479

i06806209

REF SEE NOTE QTY	GRAPHIC NO 1 2 3 4 5 6	(PRODUCT LEVEL)	REF PAGE	PART NAME PART NUMBER
1	1	**123-3132**	1	RING-BACKUP
3	1	**230-0913**	1	COIL AS (24-VOLT)
4	1	**033-6028**	1	SEAL-O-RING
5	1	**8L-2779**	1	SEAL-O-RING

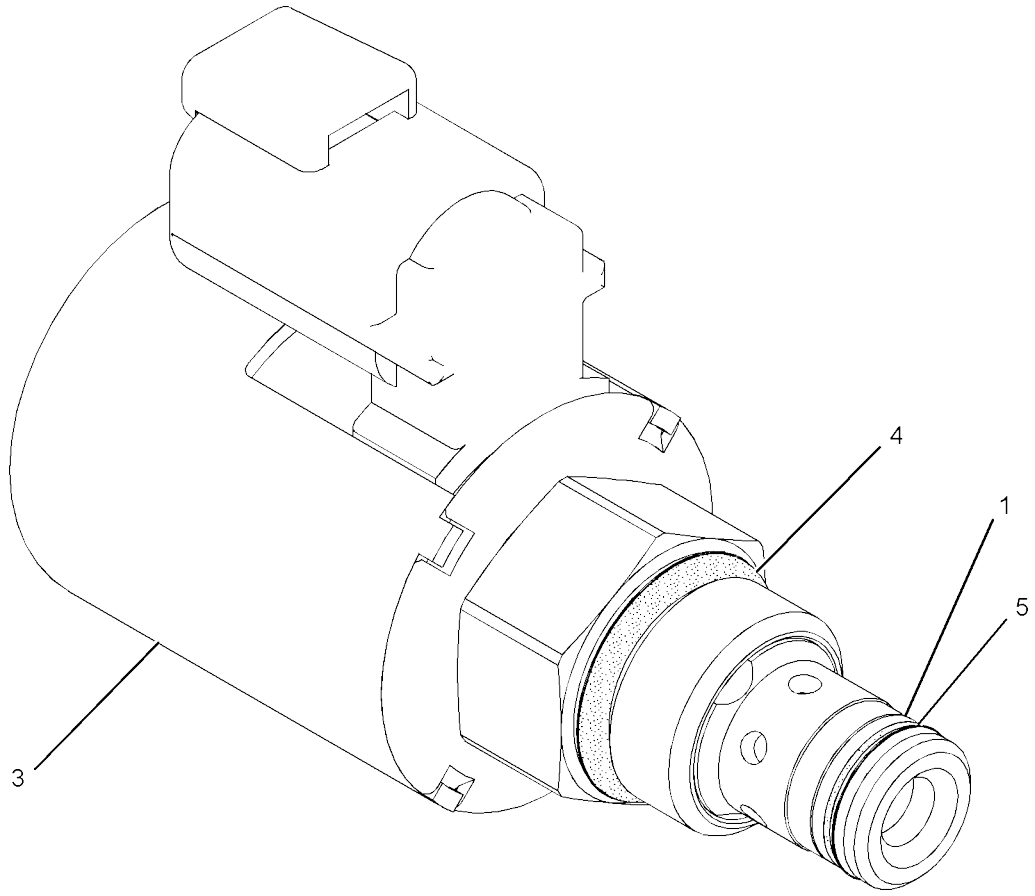

GRAPHIC #1 <END> g01173916

360-8958 FILTER GP-FUEL

S/N: 2W21-UP
PART OF 452-8547 FILTER GP-FUEL AN ATTACHMENT

SMCS-1261

i06791520

REF SEE NOTE QTY	GRAPHIC NO 1 2 3 4 5 6	(PRODUCT LEVEL)	REF PAGE	PART NAME PART NUMBER
1	1	**360-8960**	1	FILTER ELEMENT-FUEL
				AVAILABLE REPAIR KIT(S):
		362-5412	1	KIT-DRAIN (FUEL FILTER)
				(INCLUDES DRAIN, KNOB, & SEALS)
		370-8376	1	KIT-FUEL SYSTEM PARTS

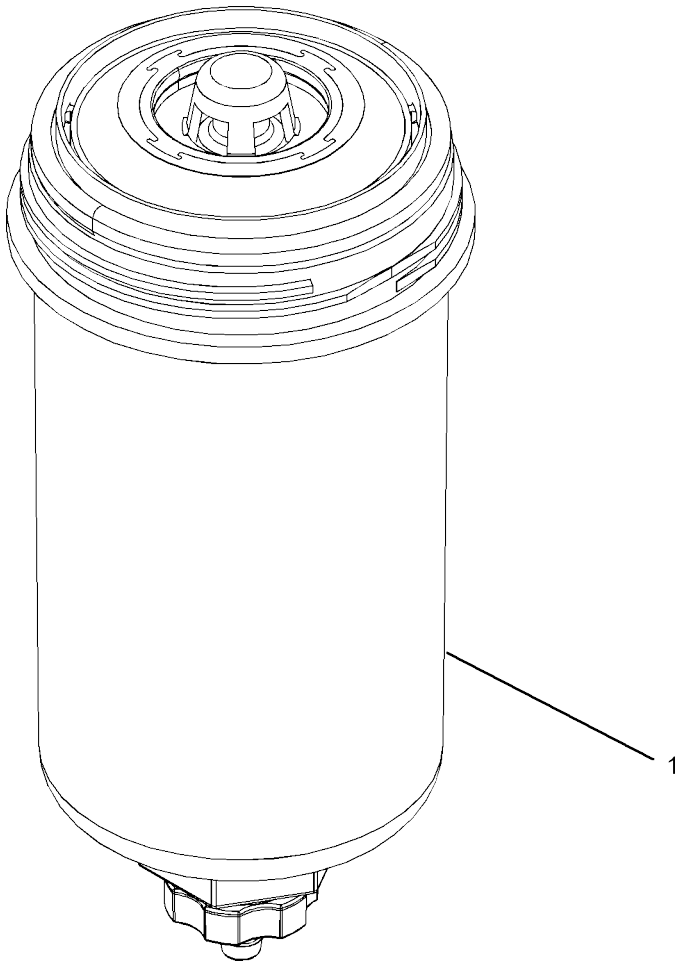

GRAPHIC #1 <END> g03173178

438-7763 FILTER GP-FUEL

S/N: 5B41-UP; G441-UP
PART OF 451-3132, 451-3232 LINES GP-FUEL

SMCS-1261

i07568959

REF SEE NOTE QTY	GRAPHIC NO 1 2 3 4 5 6	(PRODUCT LEVEL)	REF PAGE	PART NAME PART NUMBER
1	1	**439-5040**	1	BOWL AS
2	1	*192-9207*	1	PLUG AS
2A	1	**126-9093**	1	SEAL
2B	1	**439-1841**	1	PLUG
3	1	**439-5037**	1	FILTER AS-WATER SEP & FUEL
4	1	**439-5039**	1	SENSOR GP-LIQUID LEVEL (WATER IN FUEL)

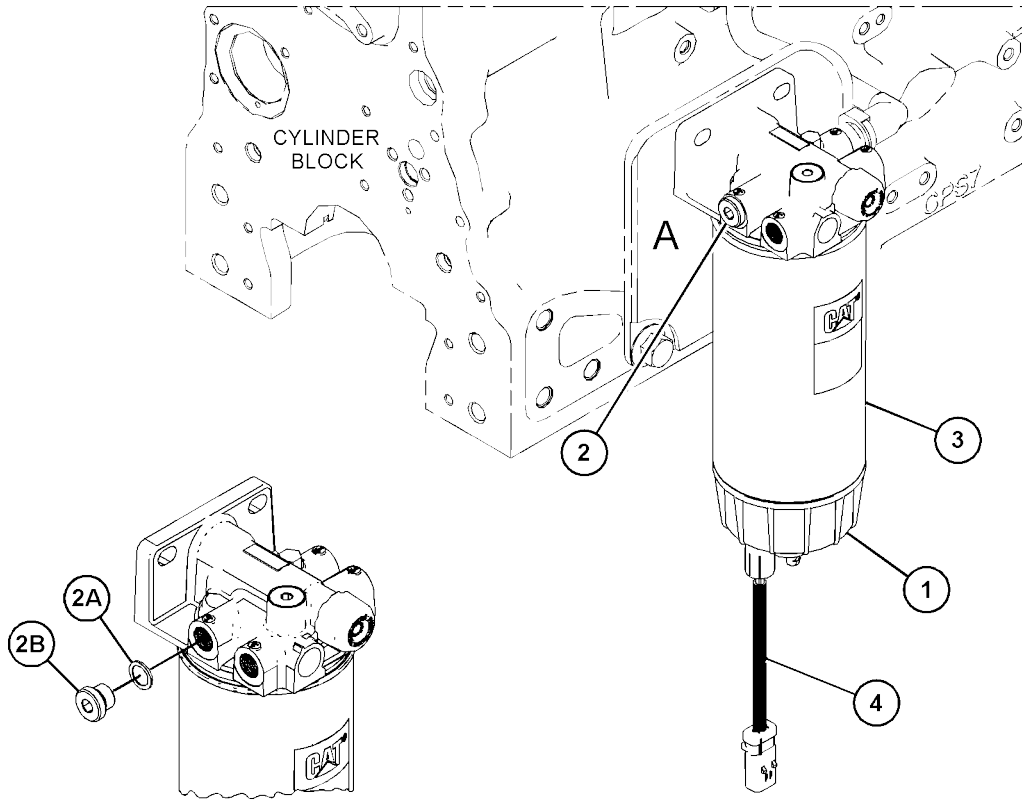

VIEW OF AREA A

GRAPHIC #1 <END> g06217269

452-8547 FILTER GP-FUEL

S/N: 2W21-UP
PART OF 453-7163 FILTER GP-FUEL AN ATTACHMENT

SMCS-1261

i05856598

REF SEE NOTE	QTY	GRAPHIC NO 1 2 3 4 5 6	(PRODUCT LEVEL)	REF PAGE	PART NAME PART NUMBER	
Y	1	1	**360-8958**	2	FILTER GP-FUEL	92
	2	1	**362-9689**	2	SCREW-SPECIAL	
					AVAILABLE REPAIR KIT(S):	
			362-5412	2	KIT-DRAIN	
					(EACH KIT INCLUDES DRAIN, KNOB & SEAL)	

Y - SEPARATE ILLUSTRATION

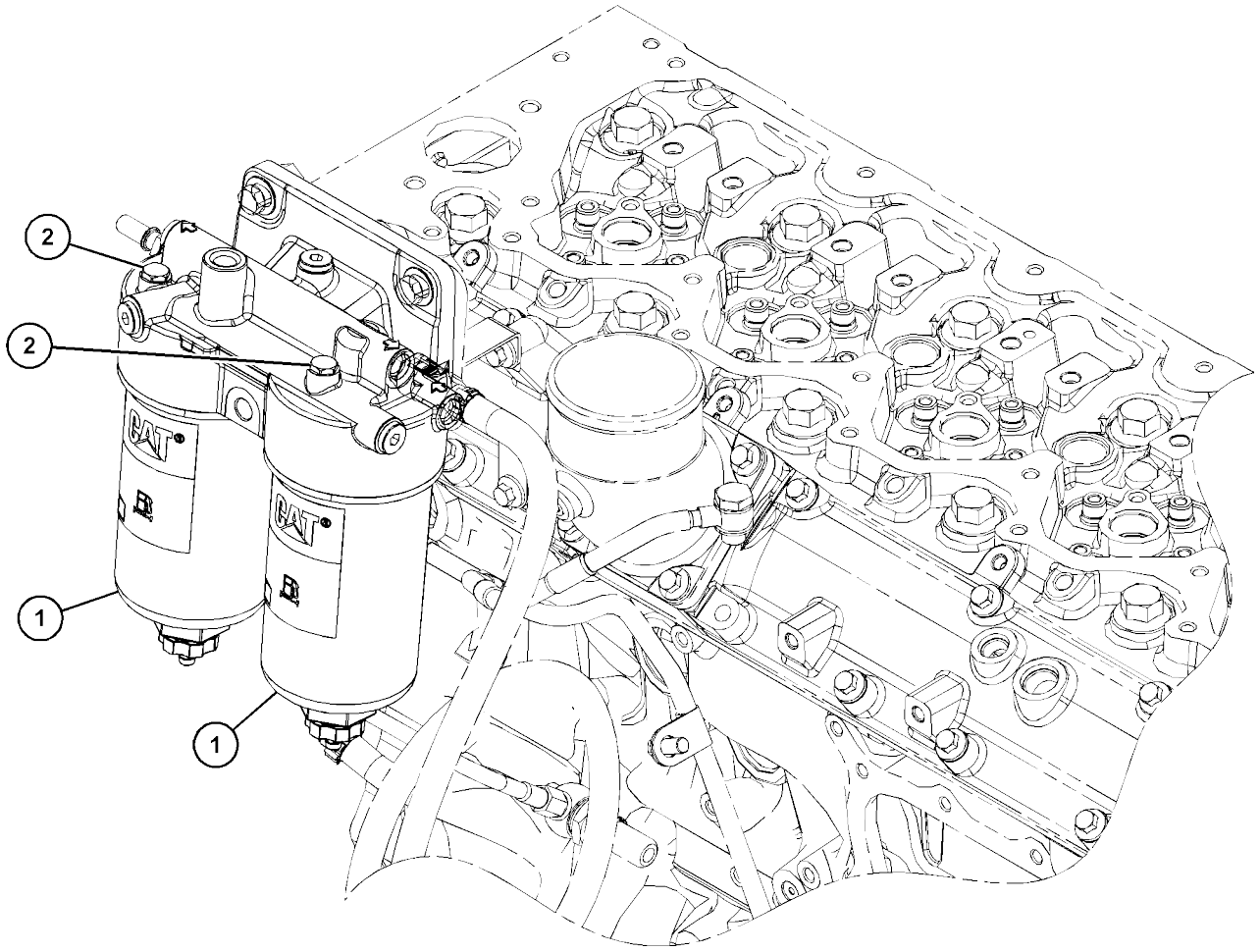

GRAPHIC #1 <END> g03701881

453-7163 FILTER GP-FUEL

S/N: 2W21-UP
PART OF 435-7493, 435-7494 ENGINE AR-PRIMARY AN ATTACHMENT

SMCS-1261

i05856596

REF SEE NOTE	QTY	GRAPHIC NO 1 2 3 4 5 6	(PRODUCT LEVEL)	REF PAGE	PART NAME PART NUMBER	
Y	1	1	**452-8547**	1	FILTER GP-FUEL	94

Y - SEPARATE ILLUSTRATION

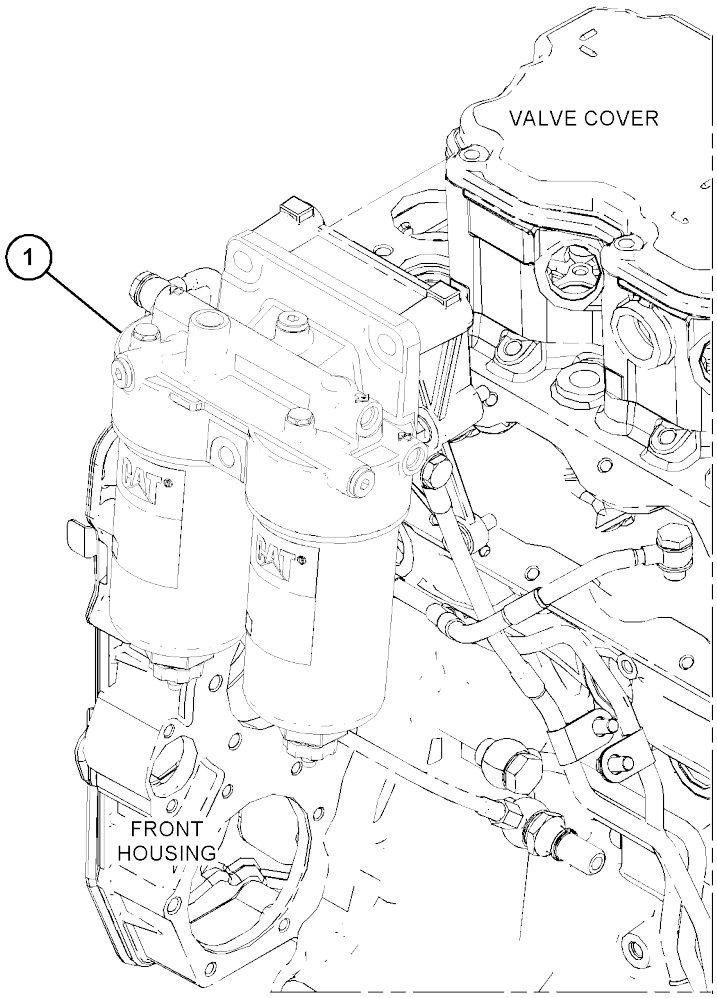

GRAPHIC #1 <END> g03695817

415-5522 INJECTOR GP-FUEL

S/N: 2W21-UP
PART OF 435-7493, 435-7494 ENGINE AR-
PRIMARY AN ATTACHMENT

SMCS-1251, 1254, 1290, 1713

i06919727

	REF SEE NOTE QTY	GRAPHIC NO 1 2 3 4 5 6	(PRODUCT LEVEL)	REF PAGE	PART NAME PART NUMBER
	1	1	**278-5170**	4	BOLT
	2	1	**369-7799**	4	CLAMP-INJECTOR
	3	1	**449-3315**	4	INJECTOR GP-FUEL
					(EACH INCLUDES)
	3A	1	**376-6403**	1	WASHER-SEALING
	3B	1	**376-6405**	1	SEAL-O-RING
C	4	1	**517-8243**	4	SLEEVE-INJECTOR

C - CHANGE FROM PREVIOUS TYPE

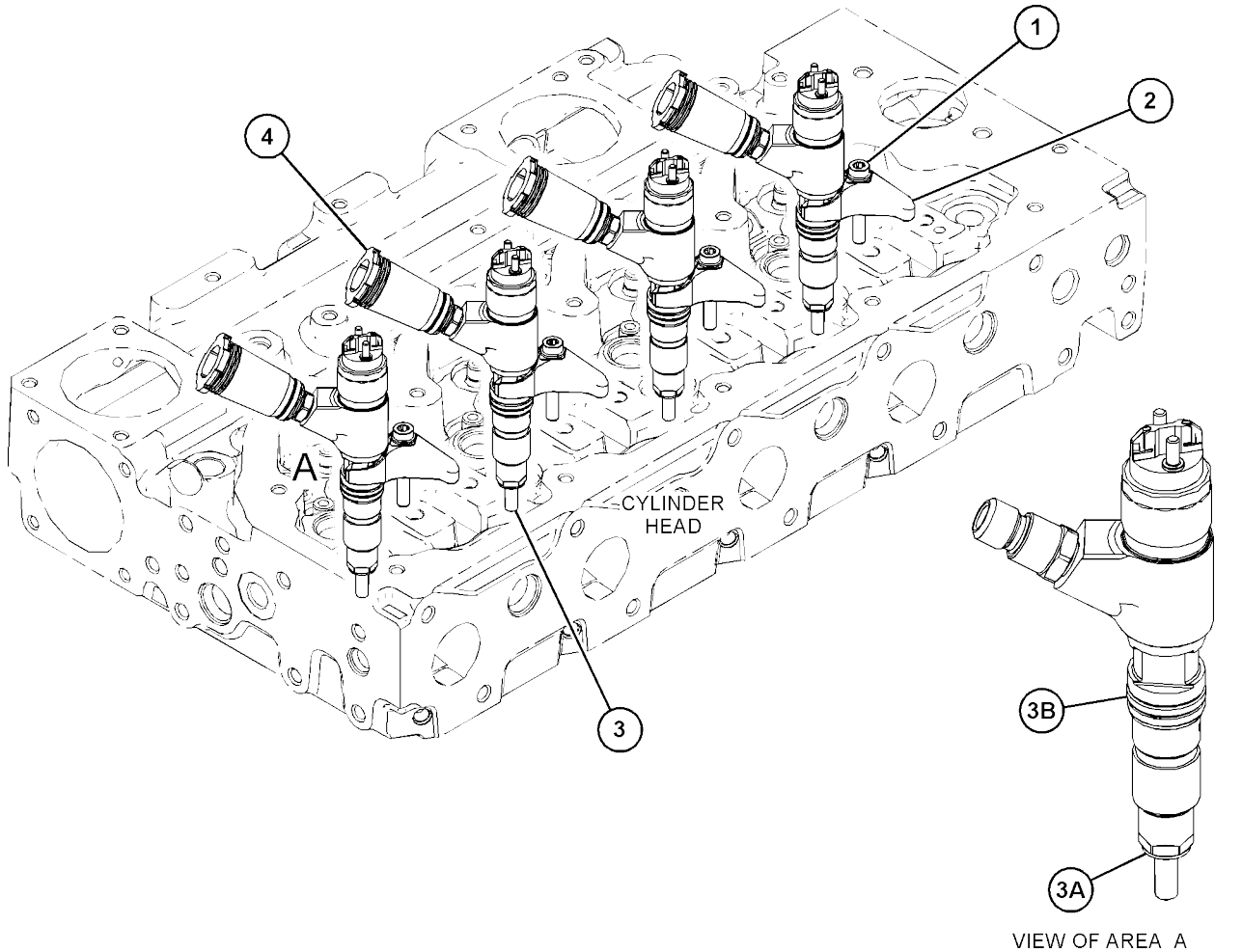

GRAPHIC #1 <END> g03808813

415-7119 LINES GP-FUEL

S/N: 2W21-UP
PART OF 435-7493, 435-7494 ENGINE AR-
PRIMARY AN ATTACHMENT

SMCS-1274

i06581570

	REF SEE NOTE QTY	GRAPHIC NO 1 2 3 4 5 6	(PRODUCT LEVEL)	REF PAGE	PART NAME PART NUMBER	
M	1	1	**6I-0593**	2	BOLT (M10X1.5X30-MM)	
M	2	1	**100-4458**	1	BOLT (M8X1.25X14-MM)	
M	3	1	**164-7468**	1	BOLT (M10X1.5X95-MM)	
	4	1	**247-4928**	1	WASHER (16.5X20.5X1.6-MM THK)	
M	5	1	**293-1875**	1	BOLT (M10X1.5X16-MM)	
	6	1	*330-9723*	2	PLUG AS	
					(EACH INCLUDES)	
	6A	1	**228-7100**	1	SEAL-O-RING	
	6B	1	**241-6157**	1	PLUG	
	7	1	**356-3986**	3	CONNECTOR AS	
					(EACH INCLUDES)	
	7A	1	**277-4993**	1	SEAL-O-RING	
	9	1	**376-9967**	1	CONNECTION-FUEL	
	10	1	**396-2421**	1	LINE AS-FUEL	
	10A	1	**277-9938**	1	BOLT-SPECIAL (BANJO)	
	10B	1	**286-2890**	2	WASHER	
	10C	1	**295-4670**	1	BOLT-SPECIAL (BANJO)	
	11	1	**397-8294**	1	LINE AS-FUEL	
	12	1	**397-8298**	1	LINE AS-FUEL	
Y	13	1	**433-1316**	1	LINES GP-FUEL	99
	14	1	**454-9914**	1	BRACKET-FILTER	
	15	1	**456-1364**	1	LINE AS-FUEL	
	15A	1	**277-4993**	1	SEAL-O-RING	
	15B	1	**286-2890**	2	WASHER	
	15C	1	**295-4670**	1	BOLT-SPECIAL (BANJO)	
M	16	1	**6I-0254**	3	BOLT (M8X1.25X30-MM)	

M - METRIC PART
Y - SEPARATE ILLUSTRATION

415-7119 **LINES GP-FUEL (**contd.**)** **i06581570**

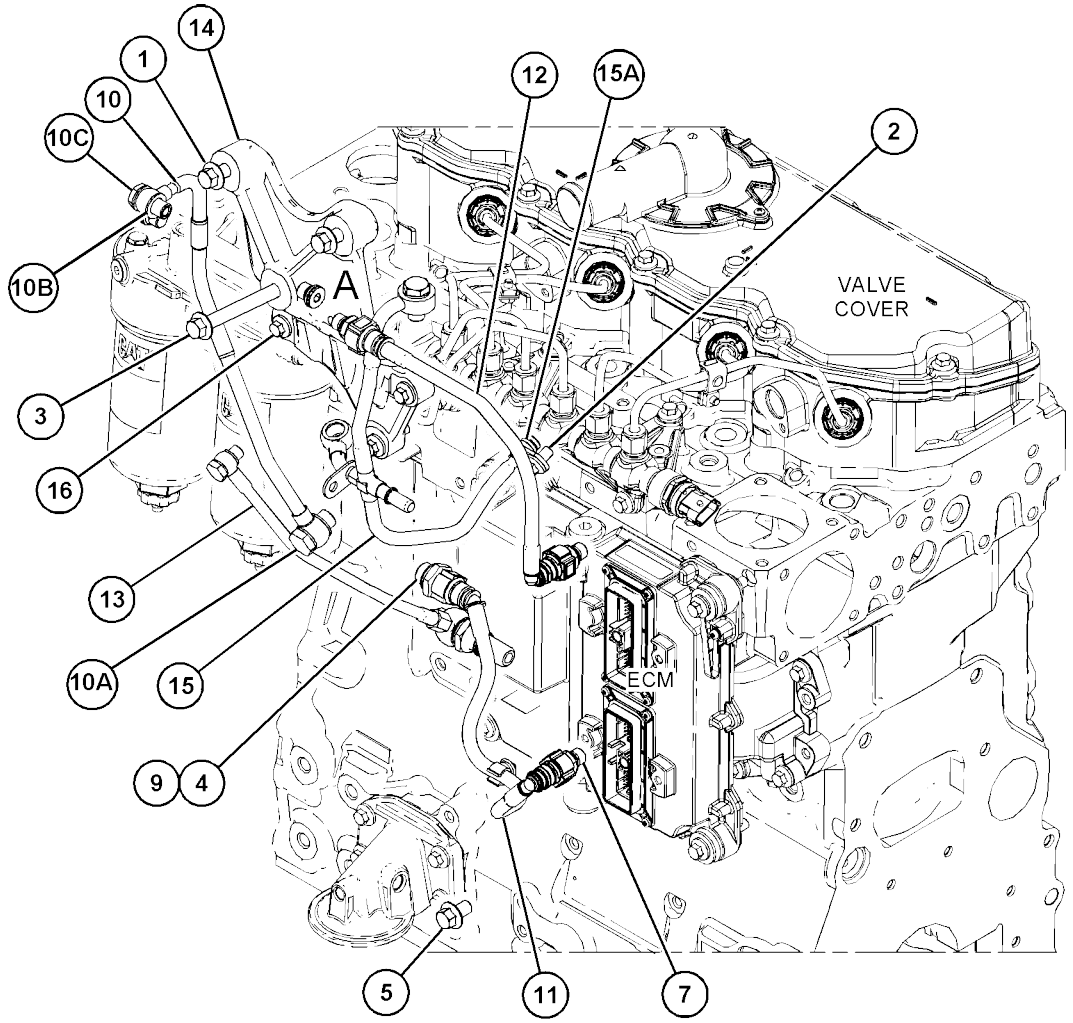

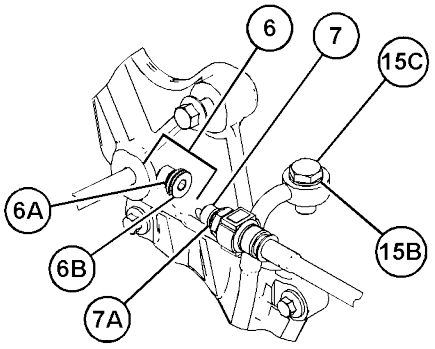

VIEW OF AREA A

GRAPHIC #1 <END> g03818209

433-1316 LINES GP-FUEL

S/N: 2W21-UP
PART OF 415-7119 LINES GP-FUEL AN ATTACHMENT

SMCS-1274

i07163829

REF SEE NOTE QTY	GRAPHIC NO 1 2 3 4 5 6	(PRODUCT LEVEL)	REF PAGE	PART NAME PART NUMBER
1	1	**246-4361**	2	WASHER (10.5X14X1.5-MM THK)
2	1	**385-1398**	1	CONNECTION-FUEL
3	1	**386-1864**	1	BOLT-BANJO
4	1	**247-4928**	2	WASHER (16.5X20.5X1.6-MM THK)
5	1	**433-0190**	1	LINE AS-FUEL

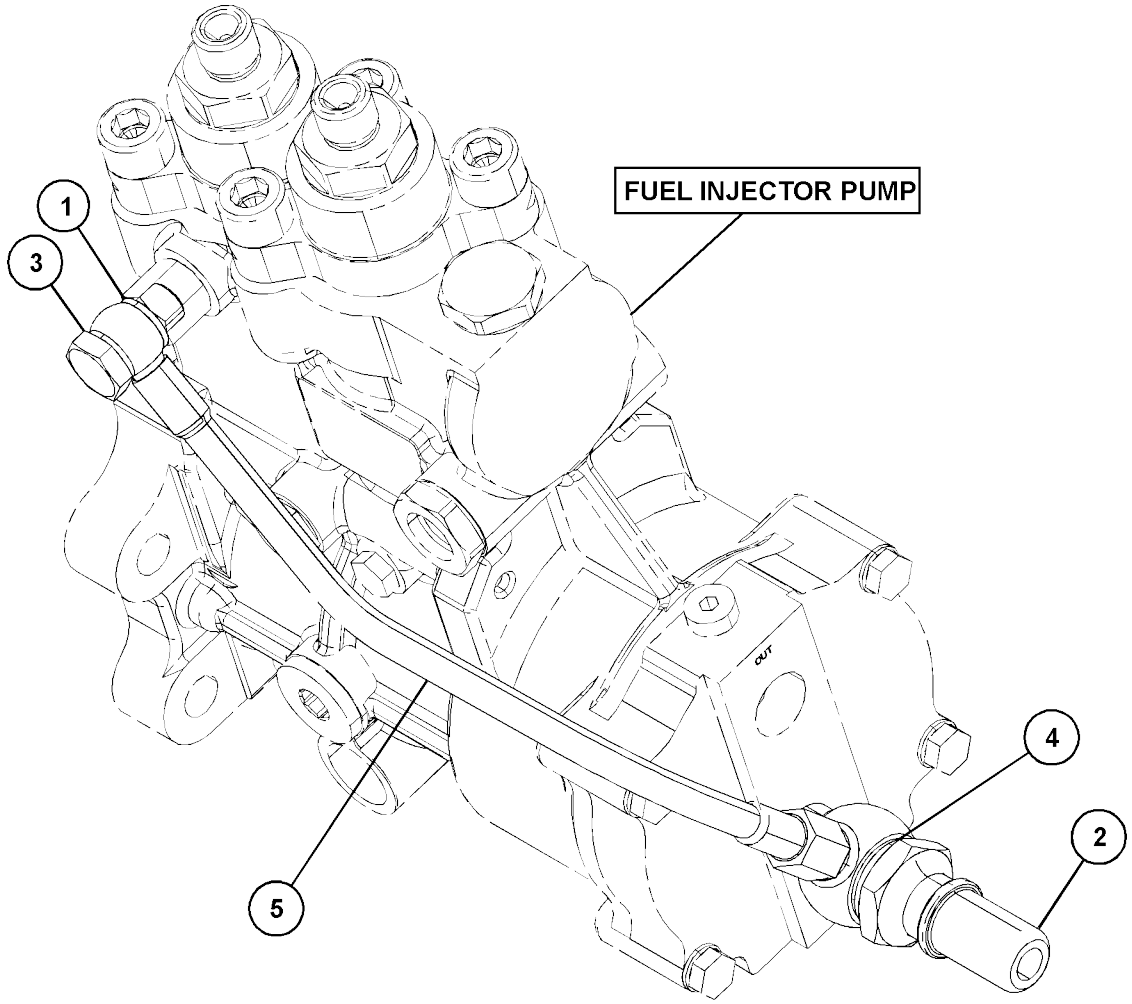

GRAPHIC #1 <END> g06240340

451-3132 LINES GP-FUEL

S/N: G441-UP

PART OF 451-3130 INSTALLATION AR-ENGINE

SMCS-1274

i07600936

	REF SEE NOTE QTY	GRAPHIC NO 1 2 3 4 5 6	(PRODUCT LEVEL)	REF PAGE	PART NAME PART NUMBER	
	1	1	**7K-1181**	1	STRAP-CABLE	
	2	1	**204-2281**	15	STRAP-CABLE	
	3	1	**264-3518**	2	CONNECTOR-RECEPTACLE	
	4	1	*309-5145*	2	CONNECTOR AS	
					(EACH INCLUDES)	
		1	**3J-1907**	1	SEAL-O-RING	
		1	**297-7964**	1	CONNECTOR	
	5	1	**354-0817**	2	CONNECTOR-HOSE	
	6	1	**387-1419**	1	CONNECTOR-HOSE	
Y	7	1	**438-7763**	1	FILTER GP-FUEL	93
	8	1	*442-1579*	1	FITTING AS	
		1	**126-9093**	1	SEAL	
		1	**439-1840**	1	FITTING	
	9	1	*448-8981*	1	FITTING AS	
		1	**126-9093**	1	SEAL	
		1	**448-8980**	1	FITTING	
	11	1	*150-3026*	1	ELBOW AS	
		1	**3K-0360**	1	SEAL-O-RING	
		1	**6V-4292**	1	ELBOW	
	12	1	*165-4931*	1	ELBOW AS	
		1	**3J-1907**	1	SEAL-O-RING	
		1	**6V-8077**	1	ELBOW	
	13	1	**177-2215**	2	STRAP-DUAL CLAMP	
	14	1	**204-8000**	14	MOUNTING-CABLE TIE	
	15	1	*244-3712*	1	PLUG AS	
		1	**9S-4191**	1	PLUG (9/16-18-THD)	
		1	**214-7568**	1	SEAL-O-RING	
	16	1	**334-1073**	10	CLAMP	
	17	1	**352-3968**	1	CLIP (LADDER)	
	18	1	**356-9301**	1	SPACER (13.8X30X60-MM THK)	
	19	1	**3K-0360**	1	SEAL-O-RING	
	20	1	**5P-4116**	17	WASHER-HARD (8.8X20.5X2-MM THK)	
	21	1	**6K-8180**	2	GROMMET	
	22	1	**6V-1230**	1	ELBOW	
M	23	1	**8T-4177**	1	BOLT (M8X1.25X90-MM)	
M	24	1	**8T-4189**	12	BOLT (M8X1.25X20-MM)	
M	25	1	**8T-7547**	4	BOLT (M8X1.25X30-MM)	
E	26	1	**347-8647**		HOSE (40-CM)	
E	27	1	**347-8646**		HOSE (479-CM)	
E	27A	1	**347-8646**		HOSE (149-CM)	
E	27B	1	**347-8646**		HOSE (126-CM)	
E	27C	1	**347-8646**		HOSE (345-CM)	
G	28	1	**160-2248**		SLEEVE-ABRASION (107.5-IN)	

E - ORDER BY THE CENTIMETER G - ORDER BY THE INCH
M - METRIC PART
Y - SEPARATE ILLUSTRATION

451-3132 **LINES GP-FUEL** (contd.) **i07600936**

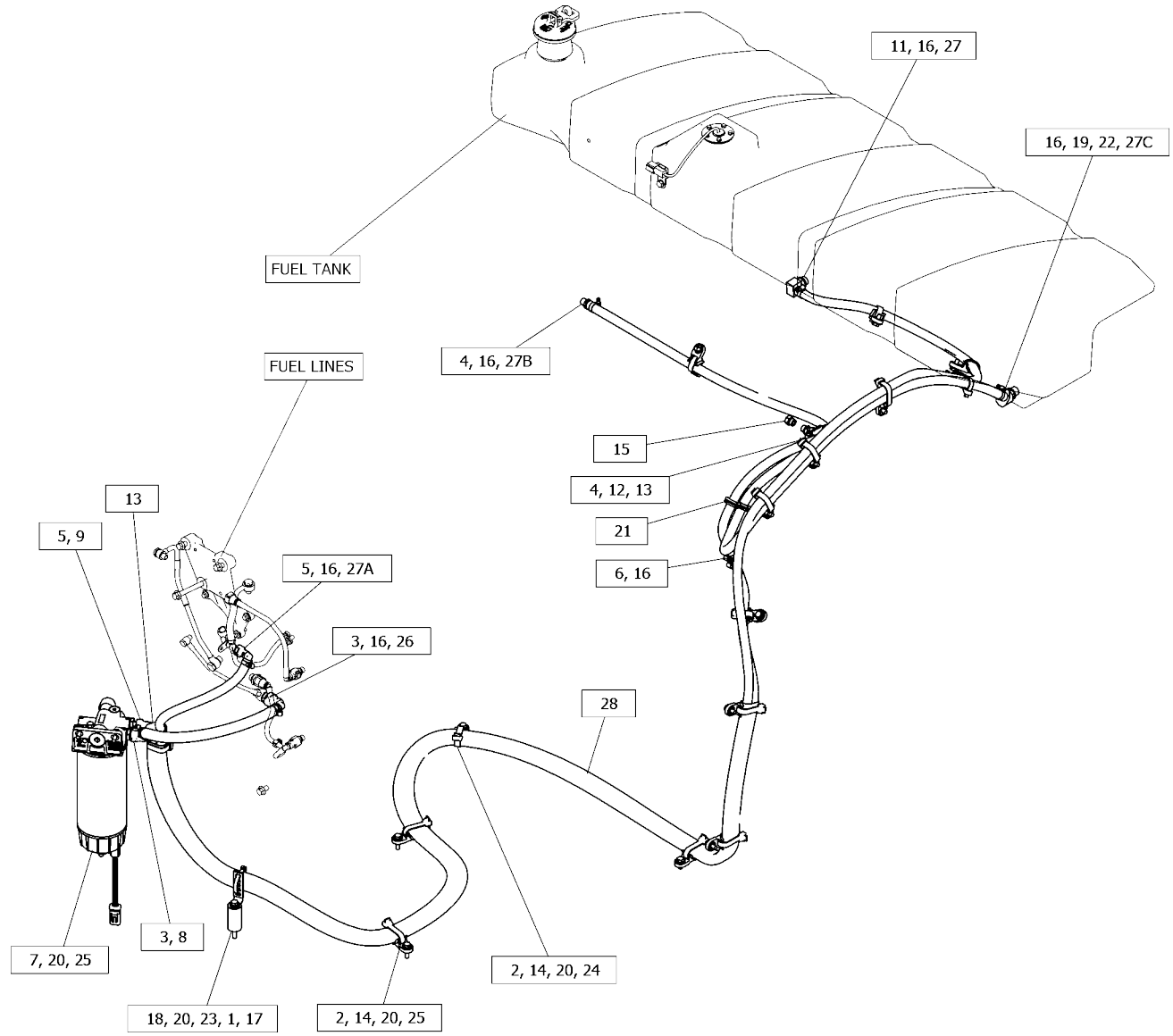

GRAPHIC #1 <END> g06275688

451-3232 LINES GP-FUEL

S/N: 5B41-UP

PART OF 451-3230 INSTALLATION AR-ENGINE

SMCS-1274

i06718201

	REF SEE NOTE QTY	GRAPHIC NO 1 2 3 4 5 6	(PRODUCT LEVEL)	REF PAGE	PART NAME PART NUMBER	
	1	1	*195-2037*	1	FITTING AS	
	1A	1	**3K-0360**	1	SEAL-O-RING	
	1B	1	**034-3679**	1	ADAPTER	
	2	1	**204-2281**	12	STRAP-CABLE	
	3	1	**264-3518**	1	CONNECTOR-RECEPTACLE	
	4	1	**264-3522**	1	CONNECTOR-RECEPTACLE	
	5	1	*309-5145*	2	CONNECTOR AS	
					(EACH INCLUDES)	
	5A	1	**3J-1907**	1	SEAL-O-RING	
	5B	1	**297-7964**	1	CONNECTOR	
	6	1	**354-0817**	2	CONNECTOR-HOSE	
	7	1	**387-1419**	1	CONNECTOR-HOSE	
Y	8	1	**438-7763**	1	FILTER GP-FUEL	93
	9	1	*442-1579*	1	FITTING AS	
	9A	1	**126-9093**	1	SEAL	
	9B	1	**439-1840**	1	FITTING	
	10	1	*448-8981*	1	FITTING AS	
	10A	1	**126-9093**	1	SEAL	
	10B	1	**448-8980**	1	FITTING	
	11	1	**451-3139**	1	PLATE AS	
M	11A	1	**8T-3612**	2	NUT-WELD (M8X1.25-THD)	
	12	1	*150-3026*	1	ELBOW AS	
	12A	1	**3K-0360**	1	SEAL-O-RING	
	12B	1	**6V-4292**	1	ELBOW	
	13	1	*165-4931*	1	ELBOW AS	
	13A	1	**3J-1907**	1	SEAL-O-RING	
	13B	1	**6V-8077**	1	ELBOW	
	14	1	**177-2215**	1	STRAP-DUAL CLAMP	
	15	1	**204-8000**	11	MOUNTING-CABLE TIE	
	16	1	*244-3712*	1	PLUG AS	
	16A	1	**9S-4191**	1	PLUG (9/16-18-THD)	
	16B	1	**214-7568**	1	SEAL-O-RING	
	17	1	**334-1073**	10	CLAMP	
	18	1	**5P-4116**	16	WASHER-HARD (8.8X20.5X2-MM THK)	
	19	1	**6K-8180**	4	GROMMET	
M	20	1	**8T-4189**	11	BOLT (M8X1.25X20-MM)	
M	21	1	**8T-7547**	4	BOLT (M8X1.25X30-MM)	
E	22	1	**347-8647**		HOSE (28-CM)	
E	23	1	**347-8646**		HOSE (312-CM)	
E	23A	1	**347-8646**		HOSE (129-CM)	
E	23B	1	**347-8646**		HOSE (126-CM)	
E	23C	1	**347-8646**		HOSE (440-CM)	
G	24	1	**160-2246**		SLEEVE-ABRASION (95-IN)	
	25	1	**132-5789**	1	CLIP (LADDER)	
M	26	1	**8T-4200**	1	BOLT (M8X1.25X16-MM)	
	27	1	**7K-1181**	1	STRAP-CABLE	

451-3232 **LINES GP-FUEL (**contd.**)** **i06718201**

REF QTY	SEE NOTE	GRAPHIC NO	1	2	3	4	5	6	(PRODUCT LEVEL)	REF PAGE	PART NAME PART NUMBER

E - ORDER BY THE CENTIMETER G - ORDER BY THE INCH
M - METRIC PART
Y - SEPARATE ILLUSTRATION

451-3232 **LINES GP-FUEL** (contd.) **i06718201**

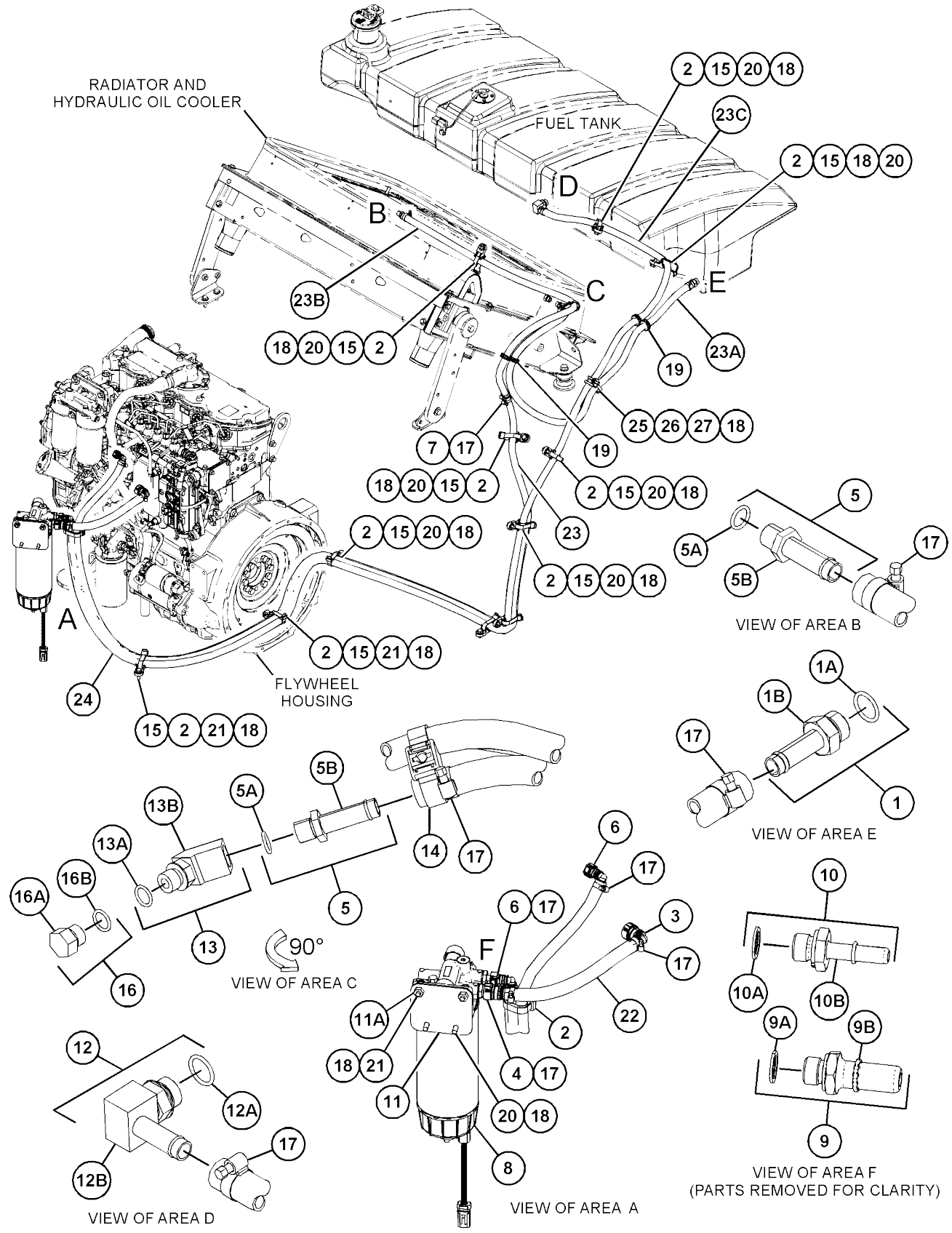

GRAPHIC #1 <END> g06093877

375-2647 PUMP GP-FUEL INJECTION*R

S/N: 2W21-UP
PART OF 415-5523 PUMP GP-FUEL INJECTION AN ATTACHMENT

SMCS-1251, 1290

i07351531

REF SEE NOTE QTY	GRAPHIC NO 1 2 3 4 5 6	(PRODUCT LEVEL)	REF PAGE	PART NAME PART NUMBER
1	1	**386-3819**	1	KEY-SHAFT
2	1	**375-8254**	1	VALVE
3	1	**376-6409**	1	SEAL
4	1	**376-6410**	1	RETAINER-WASHER
5	1	**376-6411**	1	NUT-SHAFT
6	1	**386-2971**	2	WASHER
7	1	**386-2976**	2	WASHER
8	1	**453-0790**	3	BOLT
9	1	**454-5109**	1	BOLT-BANJO

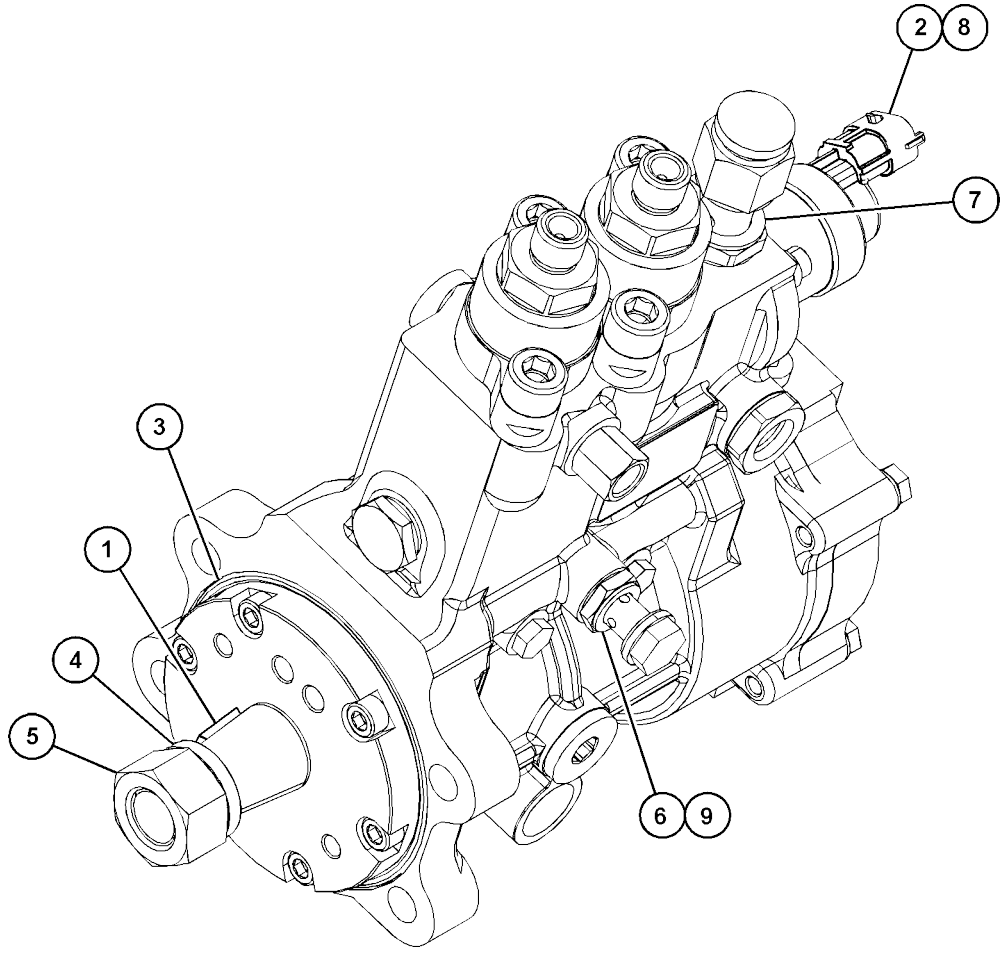

GRAPHIC #1 <END> g06182840

415-5523 PUMP GP-FUEL INJECTION

S/N: 2W21-UP
PART OF 435-7493, 435-7494 ENGINE AR-
PRIMARY AN ATTACHMENT

SMCS-1251, 1290

i06952350

	REF SEE NOTE QTY	GRAPHIC NO 1 2 3 4 5 6	(PRODUCT LEVEL)	REF PAGE	PART NAME PART NUMBER	
M	1	1	**6I-0654**	1	BOLT (M10X1.5X25-MM)	
M	2	1	**100-4830**	2	BOLT (M10X1.5X20-MM)	
M	3	1	**286-0123**	4	BOLT (M10X1.5X35-MM THK)	
	4	1	**346-0006**	1	BOLT-SPECIAL	
	5	1	**371-2691**	1	BRACKET	
YR	6	1	**375-2647**	1	PUMP GP-FUEL INJECTION	105
	7	1	**445-9016**	1	LINE AS-OIL	
	8	1	**449-3333**	1	BRACKET	
	9	1	**500-3055**	1	GEAR-FUEL PUMP	
M	10	1	**6I-0217**	2	BOLT (M8X1.25X20-MM)	
M	11	1	**175-7141**	1	NUT-HEX FLANGE (M10X1.5-THD)	
	12	1	**346-0007**	2	WASHER	

M - METRIC PART
R - REMANUFACTURED PART MAY BE
AVAILABLE Y - SEPARATE ILLUSTRATION

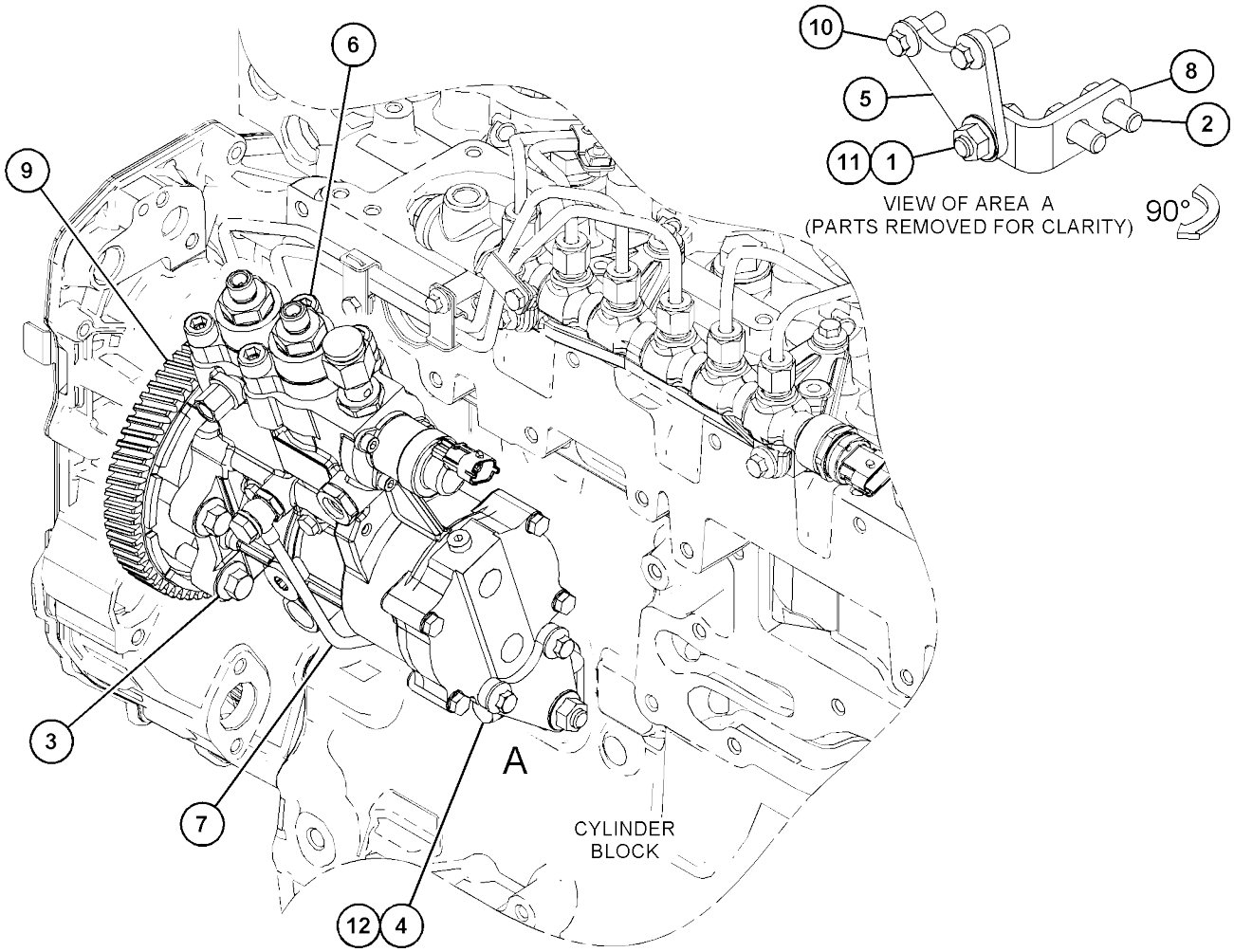

GRAPHIC #1

<END>

g03808909

415-5527 RAIL GP-FUEL

S/N: 2W21-UP
PART OF 435-7493, 435-7494 ENGINE AR-
PRIMARY AN ATTACHMENT

SMCS-1288

i06280862

	REF SEE NOTE QTY	GRAPHIC NO 1 2 3 4 5 6	(PRODUCT LEVEL)	REF PAGE	PART NAME PART NUMBER
M	1	1	**101-3895**	2	BOLT (M8X1.25X35-MM)
M	2	1	**178-2510**	1	BOLT (M6X1X45-MM)
	3	1	**396-2052**	1	RAIL AS-FUEL
	3A	1	**375-6988**	1	SENSOR (FUEL RAIL PRESSURE)
	3B	1	**398-6226**	1	VALVE (FUEL RAIL PRESSURE)
	4	1	*396-2602*	1	LINE AS-FUEL
	4A	1	**397-6836**	1	CLAMP AS
		1	**396-2606**	1	LINE-FUEL
	4B	1	**396-2607**	1	LINE-FUEL
	5	1	*396-2603*	1	LINE AS-FUEL
	5A	1	**397-6836**	1	CLAMP AS
		1	**396-2608**	1	LINE-FUEL
	5B	1	**396-2609**	1	LINE-FUEL
	6	1	*396-2604*	1	LINE AS-FUEL
	6A	1	**397-6836**	2	CLAMP AS
	6B	1	**396-2610**	1	LINE-FUEL
		1	**396-2611**	1	LINE-FUEL
	7	1	**398-7219**	1	PILLAR
	8	1	**399-8470**	1	BRACKET
M	9	1	**6I-0260**	4	BOLT (M8X1.25X25-MM)
					AVAILABLE REPAIR KIT(S):
			463-8336	1	KIT-CLIP
					(INCLUDES PLATE, BRACKET & INSERT)

M - METRIC PART

415-5527 **RAIL GP-FUEL (**contd.**)** **i06280862**

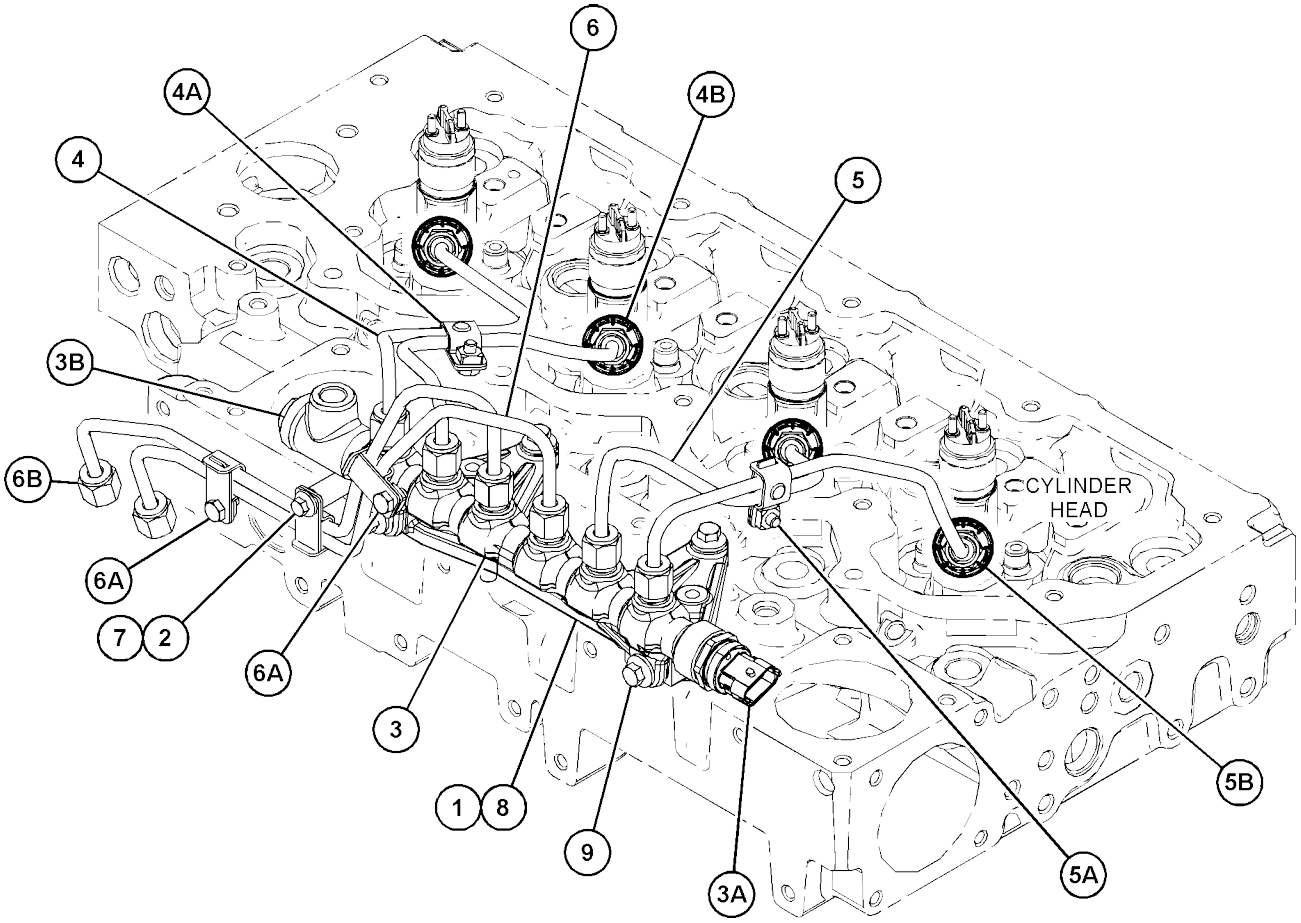

GRAPHIC #1 <END> g03815915

510-0764 TANK & MTG GP-FUEL

S/N: 5B41-UP; G441-UP
PART OF 451-3120, 451-3220 CHASSIS AR

SMCS-1273

i07398867

	REF SEE NOTE QTY	GRAPHIC NO 1 2 3 4 5 6	(PRODUCT LEVEL)	REF PAGE	PART NAME PART NUMBER	
	1	1	**389-4418**	2	STRAP AS	
Y	2	1	*509-7723*	1	TANK GP-FUEL	110
	3	1	**3K-6060**	2	LOCKNUT (3/8-16-THD)	
	4	1	**7X-7729**	2	WASHER (11X25X3-MM THK)	
	5	1	**8T-4224**	2	WASHER-HARD (8.8X16X2-MM THK)	
M	6	1	**8T-4908**	2	BOLT (M8X1.25X25-MM)	

M - METRIC PART
Y - SEPARATE ILLUSTRATION

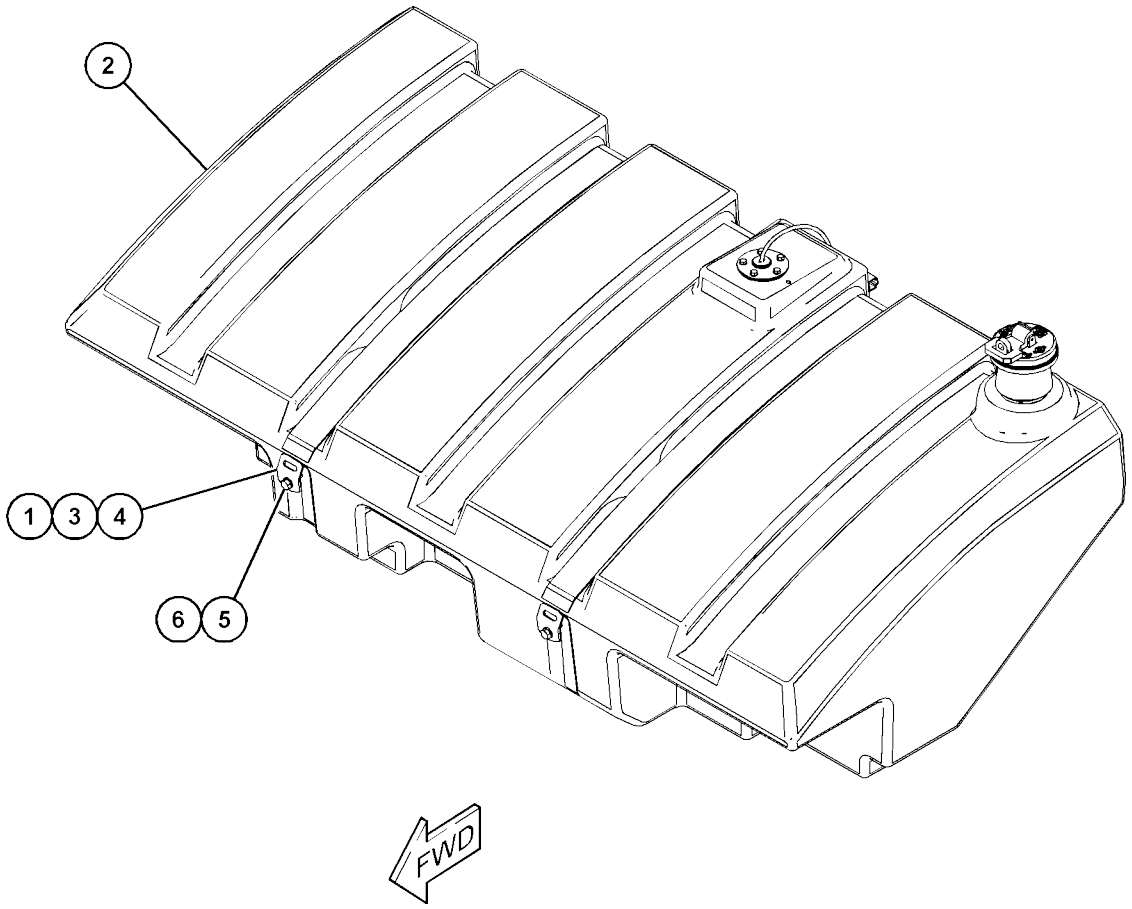

GRAPHIC #1 <END> g06101937

509-7723 TANK GP-FUEL

S/N: 5B41-UP; G441-UP 199-L (52.6 US GAL)

PART OF 510-0764 TANK & MTG GP-FUEL

SMCS-1273

i07398868

	REF SEE NOTE QTY	GRAPHIC NO 1 2 3 4 5 6	(PRODUCT LEVEL)	REF PAGE	PART NAME PART NUMBER
	1	1	**9R-7240**	1	GASKET (FUEL TANK)
	2	1	**206-4441**	1	ADAPTER-FUEL CAP
	3	1	**282-2270**	1	STRAINER-FUEL (FILLER NECK)
	4	1	**330-2172**	1	FITTING-FUEL (WITH FILTER)
	5	1	**388-1362**	1	SENDER AS-FUEL LEVEL (TANK)
		1	**9X-3401**	2	PIN-CONNECTOR (16-GA TO 18-GA)
		1	**102-8802**	1	KIT-RECEPTACLE (2-PIN)
					(INCLUDES RECEPTACLE AS & WEDGE)
	6	1	**509-7722**	1	TANK-FUEL
	7	1	**130-5300**	1	CLIP
	8	1	*148-8411*	1	PLUG AS
		1	**3K-0360**	1	SEAL-O-RING
		1	**9S-4185**	1	PLUG (3/4-16-THD)
	9	1	**284-9039**	1	CAP-FUEL (VENTED)
	10	1	**3K-0360**	1	SEAL-O-RING
M	11	1	**7I-2273**	5	BOLT (M5X0.8X16-MM)
	12	1	**8C-6438**	1	SCREW-PAN HEAD (6-20X12.7-MM)
	13	1	**8T-0328**	5	WASHER-HARD (5.5X10X1-MM THK)
M	14	1	**8T-4199**	1	BOLT (M8X1.25X12-MM)
	15	1	**8T-4224**	1	WASHER-HARD (8.8X16X2-MM THK)

M - METRIC PART

509-7723 **TANK GP-FUEL** (contd.) **i07398868**

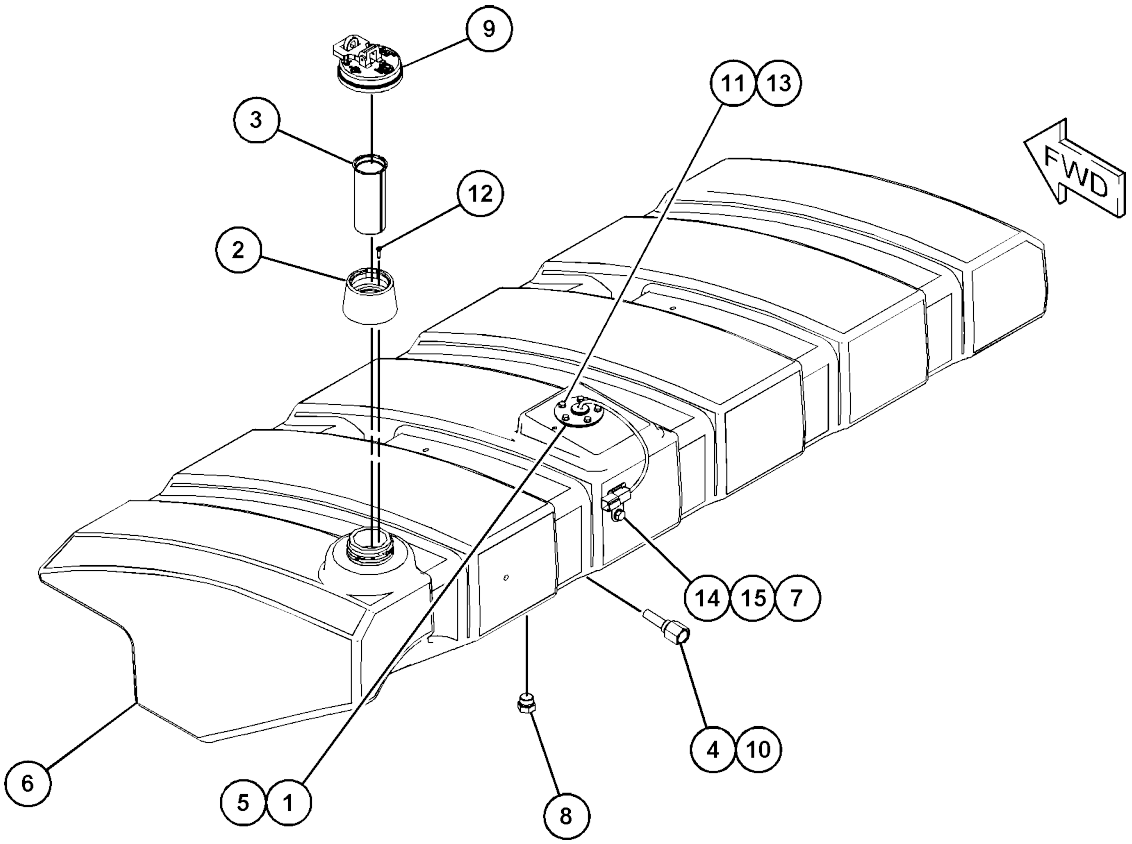

GRAPHIC #1 <END> g06100429

ELECTRICAL AND STARTING SYSTEM

425-9179 ALTERNATOR GP-CHARGING

S/N: 2W21-UP

PART OF 435-7493, 435-7494 ENGINE AR-PRIMARY AN ATTACHMENT

SMCS-1405

i06888816

	REF SEE NOTE QTY	GRAPHIC NO 1 2 3 4 5 6	(PRODUCT LEVEL)	REF PAGE	PART NAME PART NUMBER
M	1	1	**111-0859**	4	BOLT (M10X1.5X35-MM)
M	2	1	**164-7468**	4	BOLT (M10X1.5X95-MM)
R	3	1	**321-8927**	1	ALTERNATOR (12-VOLT, 150-AMPERE)
	4	1	**321-8952**	1	BRACKET AS
	4A	1	**161-9820**	2	PIN

M - METRIC PART
R - REMANUFACTURED PART MAY BE AVAILABLE

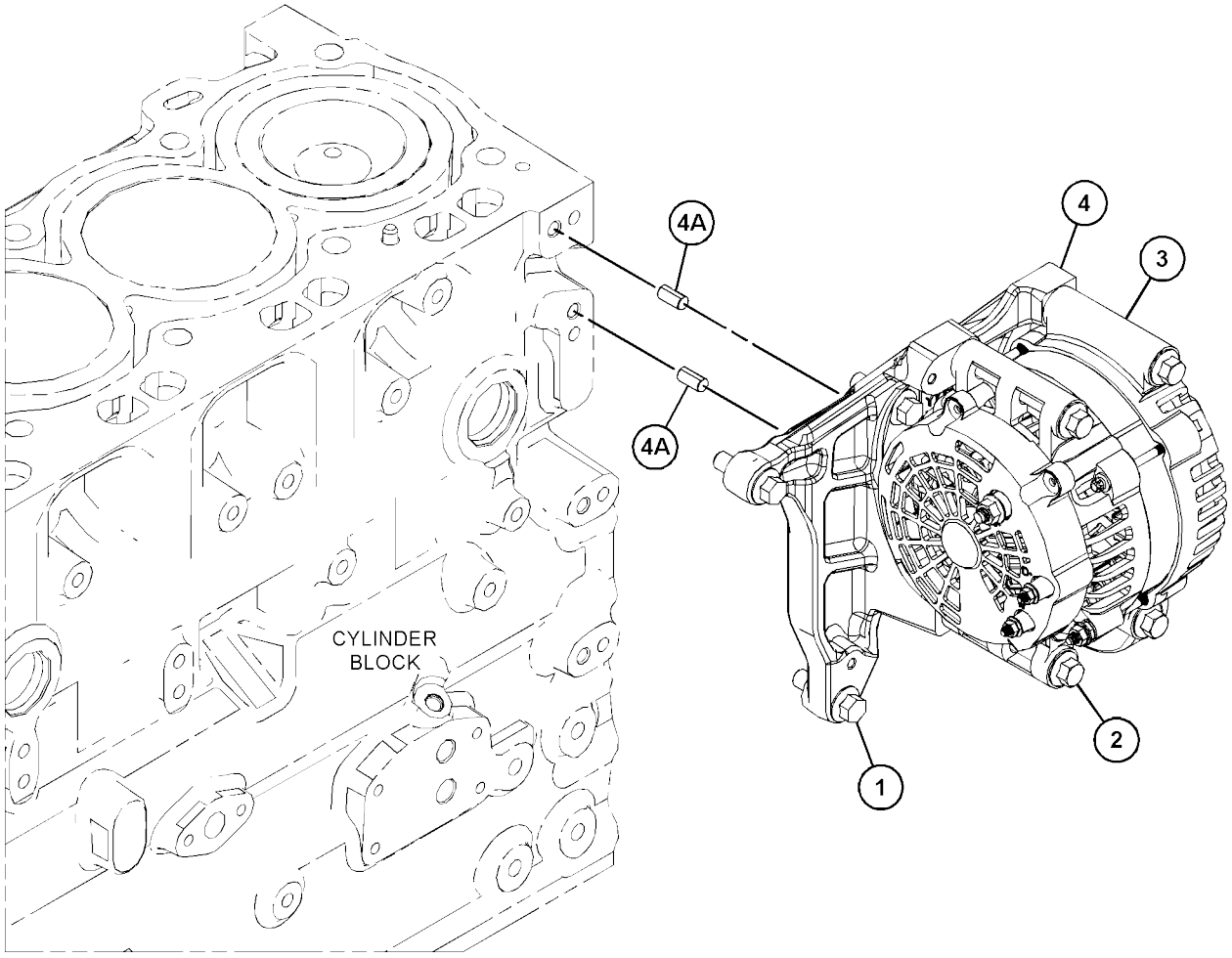

GRAPHIC #1 <END> g03848951

514-6423 BATTERY & WIRING GP

S/N: 5B41-UP; G441-UP
PART OF 451-3140 ELECTRICAL
AR

SMCS-1401, 1402, 1408

i07398949

	REF SEE NOTE QTY	GRAPHIC NO 1 2 3 4 5 6 (PRODUCT LEVEL)	REF PAGE	PART NAME PART NUMBER	
	1	1 **3E-8320**	1	PLATE-INSTRUCTION (BATTERY)	
	2	1 **3S-2093**	1	STRAP-CABLE	
Y	3	1 **7N-0718**	1	SWITCH GP-DISCONNECT (BATTERY)	195
	4	1 **7V-5628**	2	PLATE (TOP)	
	5	1 **177-2215**	1	STRAP-DUAL CLAMP	
	6	1 **200-6345**	2	SADDLE-MOUNTING (DUAL SWIVEL)	
	7	1 **204-2281**	6	STRAP-CABLE	
	8	1 **263-9574**	1	BATTERY AS (12-VOLT, MAINTENANCE FREE)	
	9	1 *363-5913*	1	BRACKET AS	
		1 **178-8505**	1	PLATE-WELD	
	10	1 **363-5914**	1	CABLE AS-BATTERY (NEGATIVE)	
		1 **1S-7251**	1	TERMINAL-CABLE (00-GA, 1/2-IN SCREW)	
E		1 **159-8050**		CABLE (00-GA, BLACK) (51-CM)	
		1 **315-0180**	1	TERMINAL-RING (00-GA, 3/8-IN SCREW)	
	11	1 **384-1773**	1	CABLE AS-POSITIVE	
		1 **8T-8799**	1	BOOT (RED)	
E		1 **8C-3056**		CABLE (2-GA, RED) (47-CM)	
E		1 **159-8049**		CABLE (00-GA, RED) (133-CM)	
E		1 **5P-0695**		CONDUIT (119-CM)	
		1 **141-2316**	1	COVER	
		1 **276-1786**	1	COVER-TERMINAL (RED)	
		1 **1S-4915**	2	LINER (CONDUIT)	
B		1 **1P-0810**		TAPE-ELECTRICAL	
		1 *141-2640*	1	TERMINAL AS-BATTERY (POSITIVE, DUAL ENTRY)	
		1 **1M-6119**	1	BOLT (5/16-18X1.375-IN)	
		1 **1M-6120**	1	NUT (5/16-18-THD)	
		1 **315-0180**	1	TERMINAL-RING (00-GA, 3/8-IN SCREW)	
E		1 **8T-2225**		TUBE-HEAT SHRINK (25.4-MM DIA) (16-CM)	
	12	1 **418-3840**	1	STRAP-GROUNDING	
	13	1 **430-4525**	1	CABLE AS-BATTERY	
		1 **9X-5699**	1	BOOT	
E		1 **159-8050**		CABLE (00-GA, BLACK) (142-CM)	
		1 **7T-9988**	1	COVER AS-TERMINAL (BLACK)	
		1 **8L-8413**	1	STRAP-CABLE (WHITE)	
B		1 **1P-0810**		TAPE-ELECTRICAL (18-CM)	
		1 **3S-6050**	1	TERMINAL AS-BATTERY (NEGATIVE)	
		1 **1M-6119**	1	BOLT (5/16-18X1.375-IN)	
		1 **1M-6120**	1	NUT (5/16-18-THD)	
		1 **315-0180**	1	TERMINAL-RING (00-GA, 3/8-IN SCREW)	
	14	1 **475-8436**	1	BRACKET AS	
M	15	1 **139-4613**	1	BOLT (M10X1.5X16-MM)	
	16	1 **204-8000**	1	MOUNTING-CABLE TIE	
M	17	1 **272-3089**	1	BOLT (M10X1.5X90-MM)	
	18	1 **293-9452**	1	MOUNTING-CABLE TIE	
	19	1 **352-3968**	2	CLIP (LADDER)	
	20	1 **5P-4115**	1	WASHER-HARD (7.2X19X2-MM THK)	
	21	1 **7K-1181**	3	STRAP-CABLE	

514-6423 **BATTERY & WIRING GP (**contd.**)** **i07398949**

	REF SEE NOTE QTY	GRAPHIC NO 1 2 3 4 5 6	(PRODUCT LEVEL)	REF PAGE	PART NAME PART NUMBER
	22	1	**7R-7908**	4	CLAMP
	23	1	**7X-7729**	3	WASHER (11X25X3-MM THK)
M	24	1	**8C-8451**	4	BOLT (M6X1X40-MM)
	25	1	**8T-4121**	4	WASHER-HARD (11X21X2.5-MM THK)
M	26	1	**8T-4133**	2	NUT (M10X1.5-THD)
M	27	1	**8T-4136**	1	BOLT (M10X1.5X25-MM)
M	28	1	**8T-4137**	2	BOLT (M10X1.5X20-MM)
M	29	1	**8T-4138**	1	BOLT (M6X1X20-MM)
M	30	1	**8T-4189**	1	BOLT (M8X1.25X20-MM)
M	31	1	**8T-4195**	1	BOLT (M10X1.5X30-MM)
M	32	1	**8T-4200**	1	BOLT (M8X1.25X16-MM)
	34	1	**8T-4224**	2	WASHER-HARD (8.8X16X2-MM THK)
	35	1	**223-5856**	2	CLAMP-HALF
	36	1	**102-8705**	1	PLATE (TOP)
M	37	1	**7X-0818**	1	BOLT (M8X1.25X45-MM)

B - USE AS REQUIRED
E - ORDER BY THE CENTIMETER M - METRIC PART
Y - SEPARATE ILLUSTRATION

514-6423 **BATTERY & WIRING GP (**contd.**)** **i07398949**

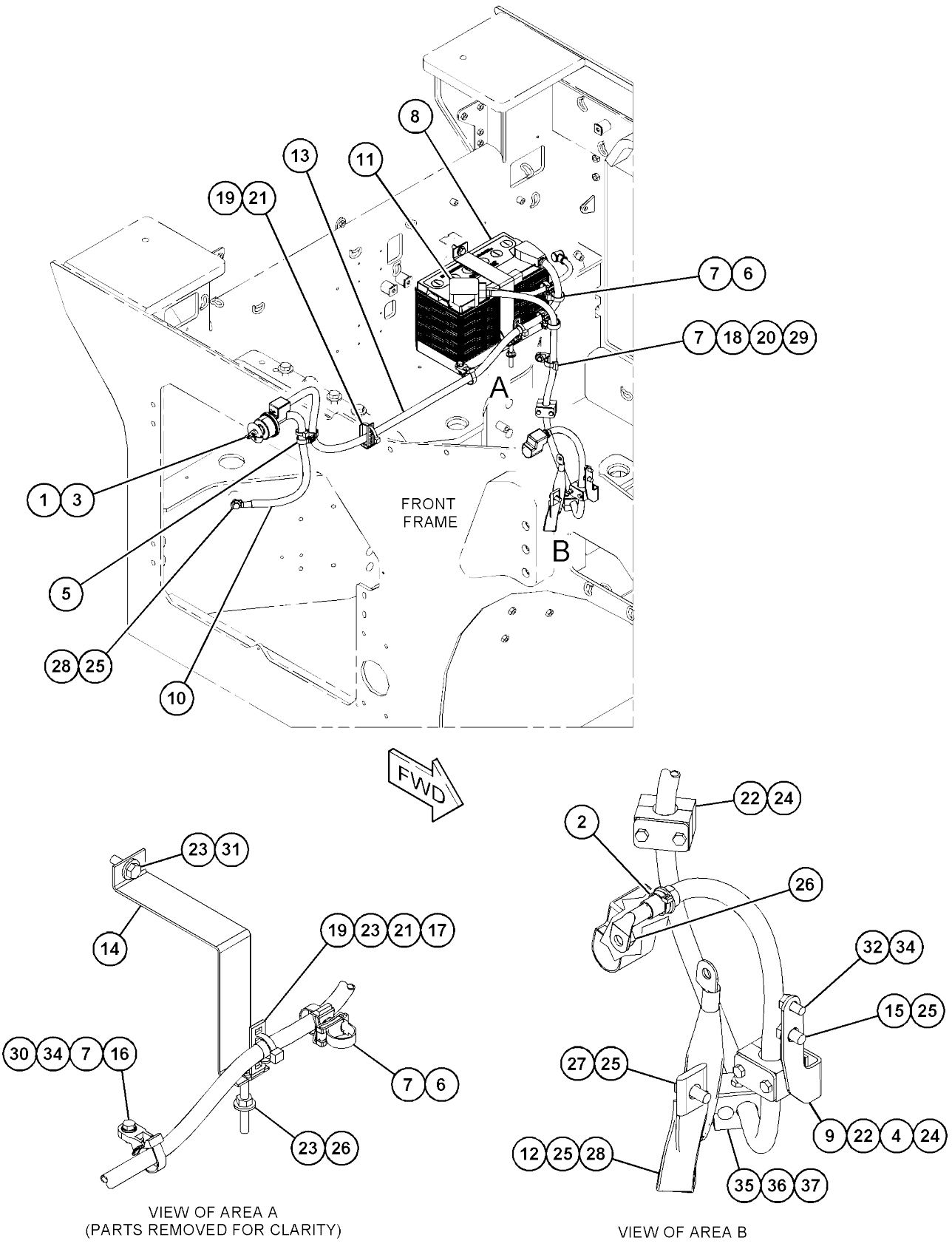

GRAPHIC #1 <END> g06277663

415-1770 CIRCUIT BREAKER GP

S/N: 5B41-UP; G441-UP

PART OF 343-6058 PANEL GP-CIRCUIT BREAKER

SMCS-1420

i07398895

	REF SEE NOTE QTY	GRAPHIC NO 1 2 3 4 5 6	(PRODUCT LEVEL)	REF PAGE	PART NAME PART NUMBER
	1	1	**7V-9275**	2	STRAP
	2	1	**8T-8799**	4	BOOT (RED)
	3	1	**171-2206**	1	CIRCUIT BREAKER AS (50-AMPERE)
	4	1	**171-2209**	1	CIRCUIT BREAKER AS (70-AMPERE)
	5	1	**171-2215**	1	CIRCUIT BREAKER AS (150-AMPERE)
					(EACH CIRCUIT BREAKER AS INCLUDES)
		1	**4E-5724**	2	WASHER (7X12X1-MM THK)
		1	**8T-0122**	2	NUT-FULL (1/4-28-THD)
		1	**253-2111**	2	LOCKWASHER
	6	1	**241-8367**	1	SWITCH AS-MAGNETIC (12-VDC) (CIRCUIT BREAKER)
		1	**4F-2294**	2	NUT-JAM (5/16-24-THD)
		1	**8T-8730**	2	SOCKET-CONNECTOR (16-GA TO 18-GA)
		1	**155-2270**	1	KIT-CONNECTING PLUG (2-PIN)
					(INCLUDES PLUG AS, WEDGE & INTERFACE SEAL)
	7	1	**364-3642**	1	WIRE AS
	8	1	**376-3437**	1	PANEL
M	9	1	**5C-2890**	2	NUT (M6X1-THD)
	10	1	**5P-4115**	4	WASHER-HARD (7.2X19X2-MM THK)
	11	1	**6V-7978**	6	SCREW-MACHINE (10-32X0.375-IN)
M	12	1	**8T-4138**	2	BOLT (M6X1X20-MM)

M - METRIC PART

415-1770 **CIRCUIT BREAKER GP (**contd.**)** **i07398895**

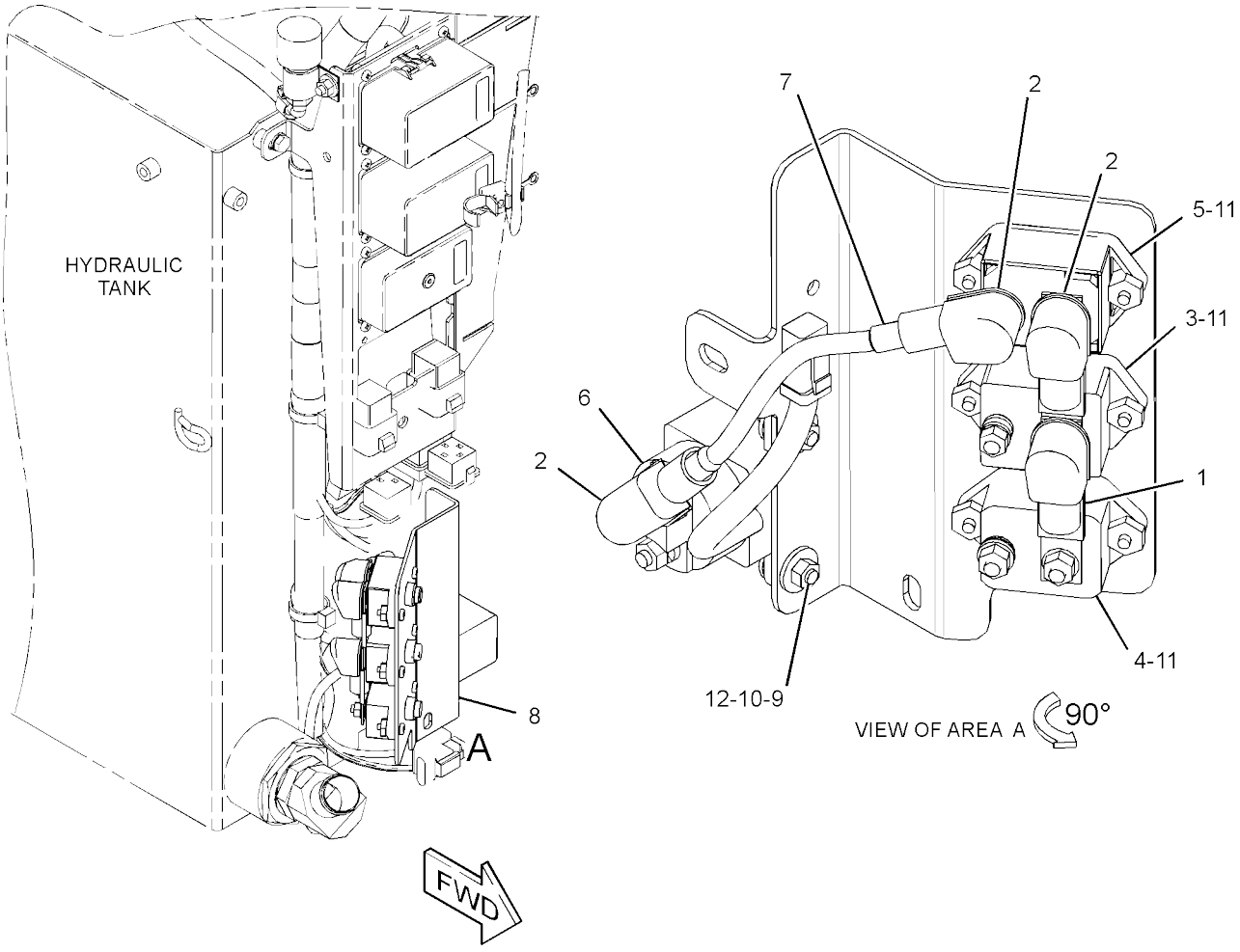

GRAPHIC #1 <END> g03170840

ELECTRICAL AND STARTING SYSTEM

451-3245 CONTROL GP-COMMUNICATION

S/N: 5B41-UP; G441-

UP CAB

AN ATTACHMENT

SMCS-7606, 7610, 7620

i07409072

	REF SEE NOTE QTY	GRAPHIC NO 1 2 3 4 5 6	(PRODUCT LEVEL)	REF PAGE	PART NAME PART NUMBER
	1	1	**3S-2093**	11	STRAP-CABLE
	2	1	**7K-1181**	8	STRAP-CABLE
	3	1	**8T-8737**	8	PLUG-SEAL
	4	1	**365-6510**	1	CABLE AS-ANTENNA
YR	6	1	**442-7199**	1	CONTROL GP-UNPROGRAMMED (PRODUCT LINK ELITE 631 SATELLITE) 123
	7	1	**443-8462**	1	ANTENNA AS (CELLULAR)
		1	**361-1045**	1	NUT-SPECIAL (5/8-18-THD)
		1	**385-8201**	1	CAP AS-CONNECTOR
	8	1	**463-7544**	1	PLATE AS
M		1	**6V-9632**	6	NUT-WELD (M6X1-THD)
	9	1	**463-7568**	1	PLATE
	10	1	**155-2265**	1	KIT-CONNECTING PLUG (8-PIN)
					(INCLUDES PLUG AS, WEDGE, & INTERFACE SEAL)
M	11	1	**344-5674**	2	NUT (M8X1.25-THD)
	12	1	**5P-4116**	7	WASHER-HARD (8.8X20.5X2-MM THK)
M	13	1	**6V-7357**	4	BOLT (M6X1X25-MM)
M	14	1	**8T-4189**	3	BOLT (M8X1.25X20-MM)
M	15	1	**8T-4908**	2	BOLT (M8X1.25X25-MM)
M	16	1	**8T-7547**	2	BOLT (M8X1.25X30-MM)
	17	1	**9X-8256**	4	WASHER (6.6X12X2-MM THK)
E	18	1	**116-8528**		SLEEVE (43-CM)
F		1	**479-0025**	1	SOFTWARE GP-ELECTRONIC (SATELLITE)

E - ORDER BY THE CENTIMETER F - NOT SHOWN
M - METRIC PART
R - REMANUFACTURED PART MAY BE AVAILABLE Y - SEPARATE ILLUSTRATION

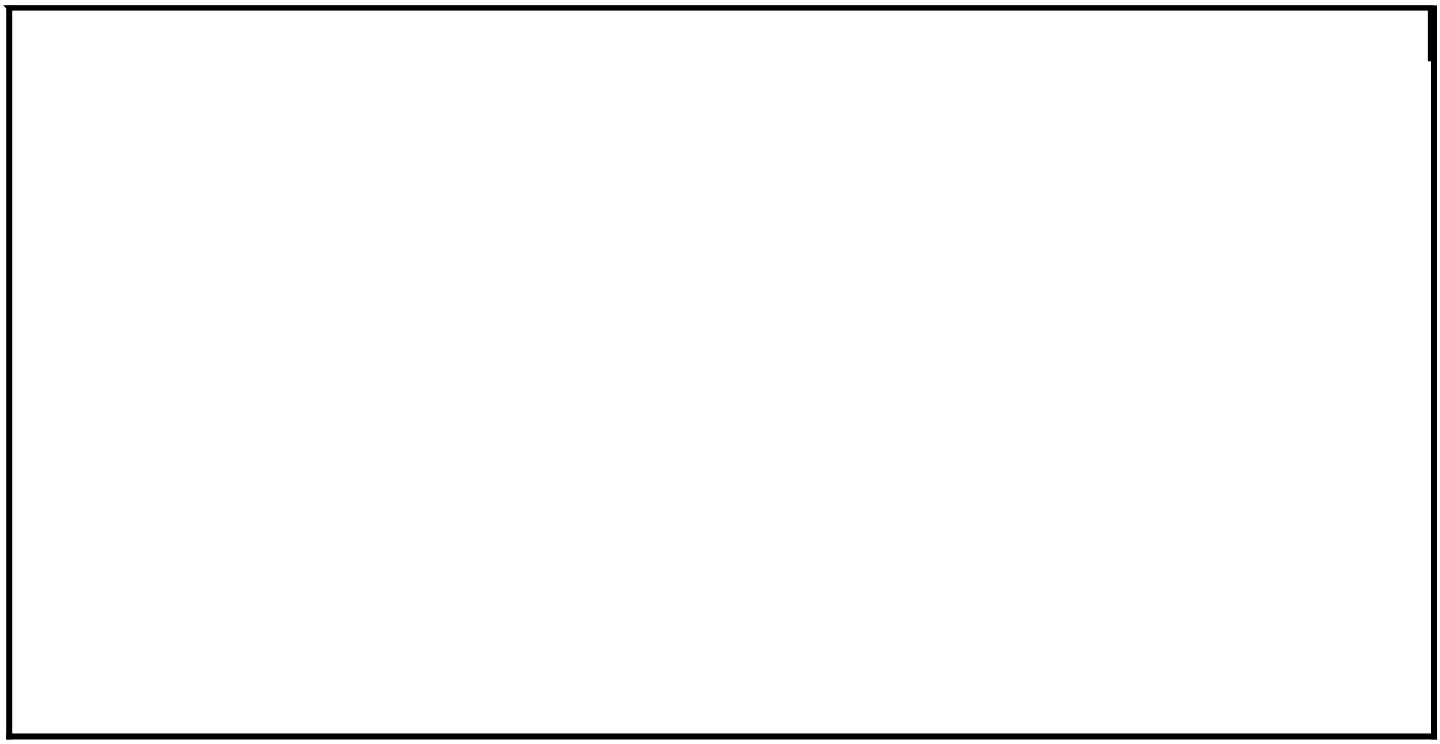

451-3245 **CONTROL GP-COMMUNICATION (**contd.**)** **i07409072**

GRAPHIC #1 <END> g06193124

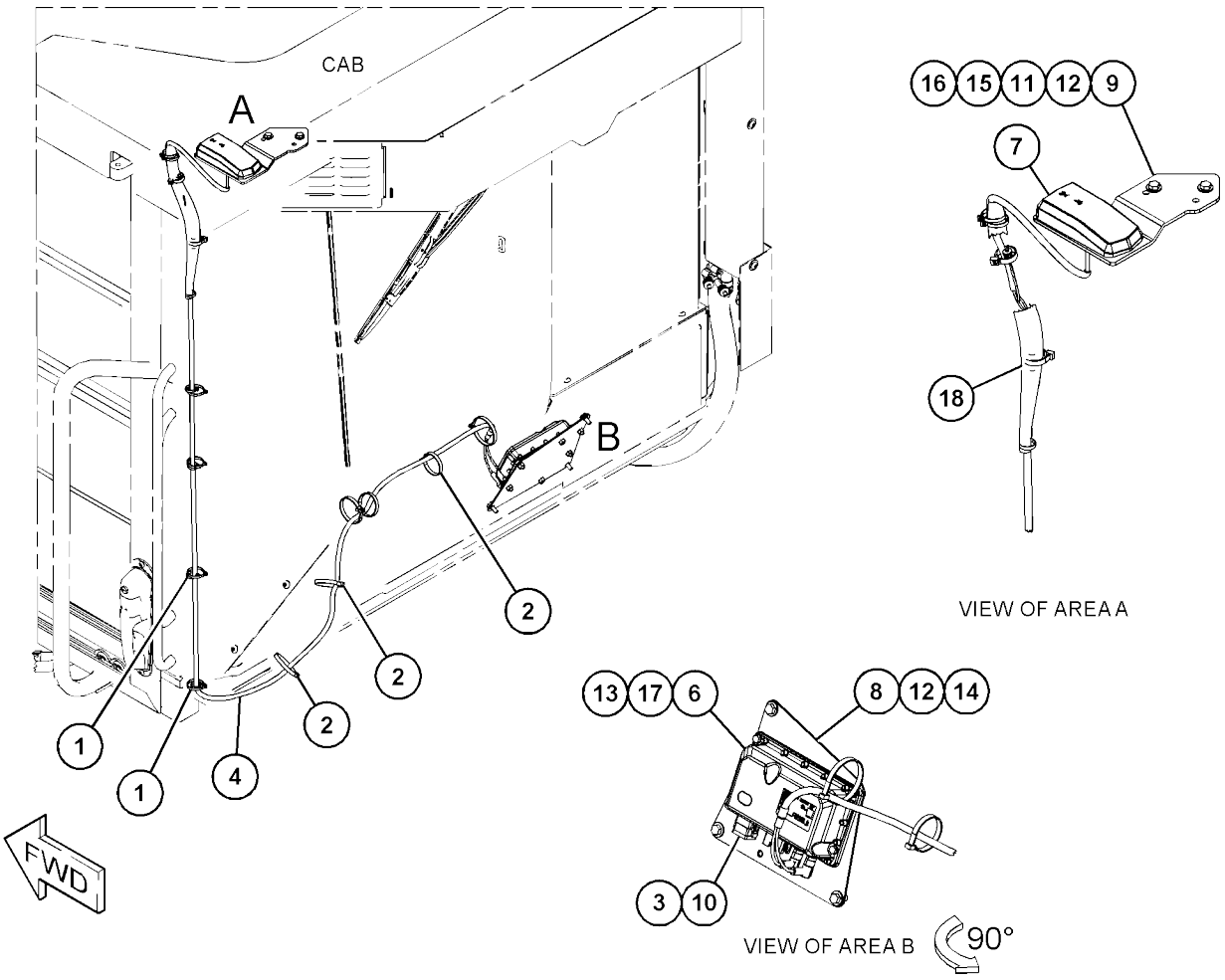
CAB
A
B
2
2
2
1
1
4
FWD
16 15 11 12 9
7
18
VIEW OF AREA A
13 17 6
8 12 14
3 10
VIEW OF AREA B
90°

415-5535 CONTROL GP-ELECTRONIC

S/N: 2W21-UP

PART OF 435-7493, 435-7494 ENGINE AR-PRIMARY

AN ATTACHMENT

SMCS-7490, 7600, 7632

i065824
20

NOTE	REF NO	GRAPHIC REF	PART NUMBER	QTY	PART NAME 1 2 3 4 5 6 (PRODUCT LEVEL)	SEE PAGE
	1	1	**7W-2632**	1	WASHER (8.5X16.8X1.6-MM THK)	
	2	1	**217-0099**	4	SPACER (8.2X25X2-MM THK)	
	3	1	**278-5203**	4	SPACER	
	4	1	**300-6714**	8	MOUNT	
	5	1	**374-2641**	1	CONTROL GP-UNPROGRAMMED	
M	6	1	**6I-0456**	4	BOLT (M8X1.25X45-MM)	

M - METRIC PART

GRAPHIC #1 <END> g03813336

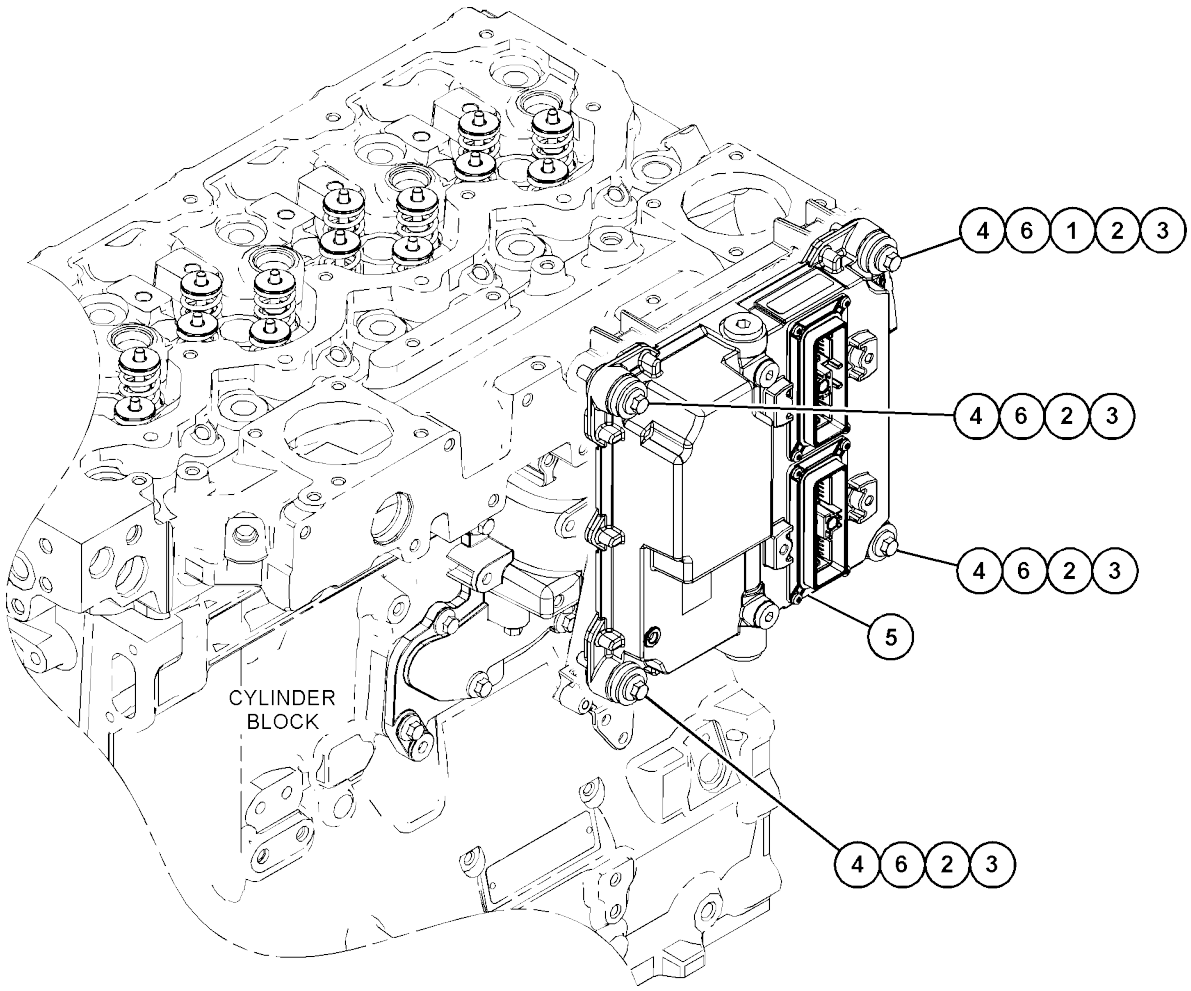
4 6 1 2 3
4 6 2 3
4 6 2 3
5
CYLINDER BLOCK
4 6 2 3

526-5838 CONTROL GP-ELECTRONIC

S/N: 5B41-UP; G441-UP

PART OF 451-3145 CONTROL GP-JOYSTICK

SMCS-7490, 7600, 7632

i073989
31

NOTE	PART NUMBER	QTY	PART NAME 1 2 3 4 5 6 (PRODUCT LEVEL)	SEE PAGE
	526-5837	1	SOFTWARE GP-MACHINE	

<END>

ELECTRICAL AND STARTING SYSTEM

440-2105 CONTROL GP-ELECTRONIC–PRODUCT LINK ELITE 641 CELLULAR*R

S/N: 5B41-UP; G441-UP

PART OF 451-3240, 451-3241, 451-3242 INSTALLATION GP-COMMUNICATION

AN ATTACHMENT

SMCS-1408, 4020, 7610

i07704329

NOTE	REF NO	GRAPHIC REF	PART NUMBER	QTY	PART NAME [1 2 3 4] [5 6] (PRODUCT LEVEL)	SEE PAGE
F			**568-5111**	1	SOFTWARE GP-MONITOR (CELLULAR)	

F - NOT SHOWN

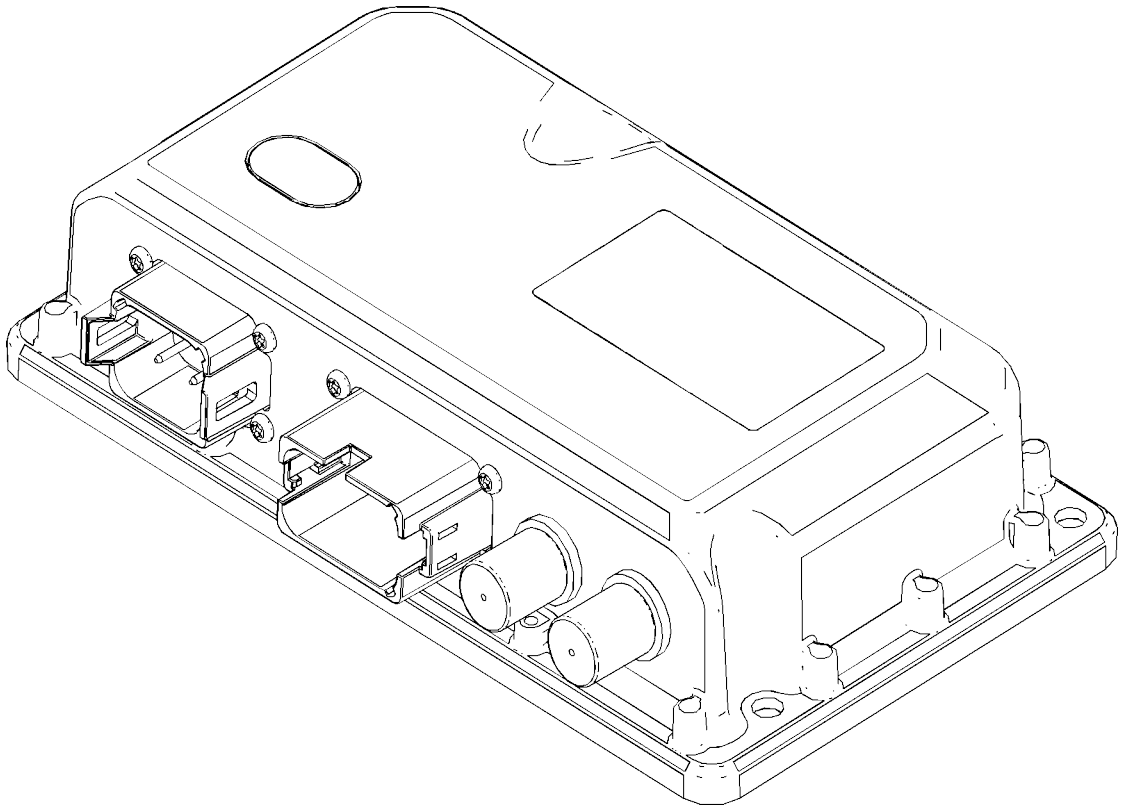

GRAPHIC #1 <END> g06131293

ELECTRICAL AND STARTING SYSTEM

442-7199 CONTROL GP-UNPROGRAMMED–PRODUCT LINK ELITE 631 SATELLITE*R

S/N: 5B41-UP; G441-UP

PART OF 451-3245 CONTROL GP-COMMUNICATION, 451-3243, 451-3244 INSTALLATION GP-COMMUNICATION

AN ATTACHMENT

SMCS-1408, 4020, 7610

i07416692

NOTE	REF NO	GRAPHIC REF	PART NUMBER	QTY	PART NAME [1] [2] [3] [4] [5] [6]	(PRODUCT LEVEL)	SEE PAGE
F			**559-9492**	1	SOFTWARE GP-MONITOR (SATELLITE RADIO)		

F - NOT SHOWN

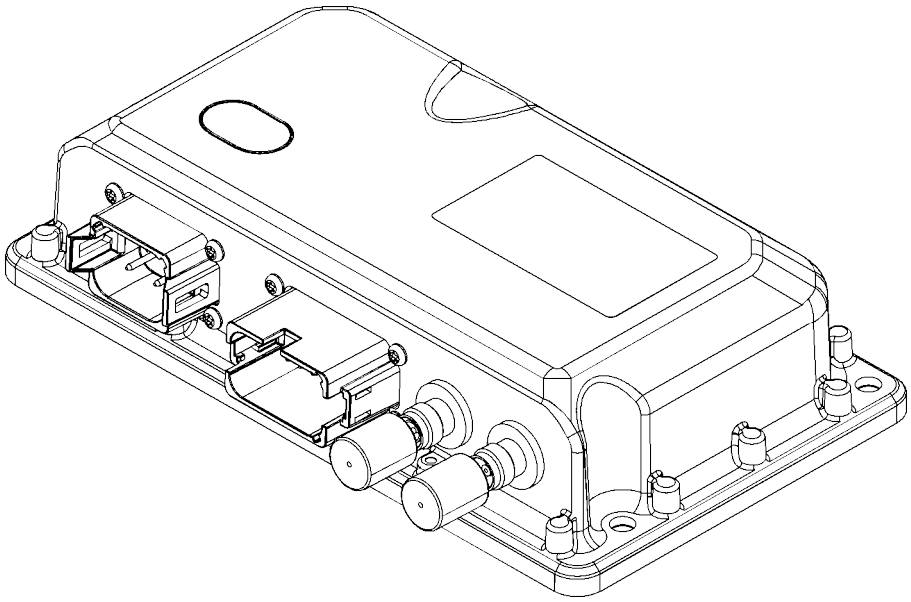

GRAPHIC #1 <END> g06131298

451-3140 ELECTRICAL AR

S/N: 5B41-UP; G441-UP
PART OF 451-3200, 451-3300 COMMON AR

SMCS-1408

i07398830

NOTE	PART NUMBER	QTY	PART NAME 1 2 3 4 5 6 (PRODUCT LEVEL)	SEE PAGE
Y	*514-6423*	1	BATTERY & WIRING GP	113
Y	*451-3145*	1	CONTROL GP-JOYSTICK	490
Y	*522-4510*	1	ELECTRONICS GP-MACHINE	124
Y	*343-6058*	1	PANEL GP-CIRCUIT BREAKER	180
Y	*344-0545*	1	SENSOR GP-POSITION	189
Y	*387-7705*	1	WIRING GP-ENGINE	202
Y	*518-4947*	1	WIRING GP-MACHINE	204
Y	*451-3147*	1	WIRING GP-PLATFORM	209

Y - SEPARATE ILLUSTRATION

<END>

522-4510 ELECTRONICS GP-MACHINE

S/N: 5B41-UP; G441-UP
PART OF 451-3140 ELECTRICAL AR

SMCS-7610, 7620

i07692483

NOTE	PART NUMBER	QTY	PART NAME 1 2 3 4 5 6 (PRODUCT LEVEL)	SEE PAGE
	568-6298	1	SOFTWARE GP-MACHINE	

<END>

459-4006 ELECTRONICS GP-MONITOR-GRADE CONTROL

S/N: 5B41-UP; G441-UP
PART OF 514-1273, 514-1274 INSTALLATION AR-COMMUNICATION AN ATTACHMENT

SMCS-7490, 7601, 7603, 7610, 7620

i07348994

NOTE	PART NUMBER	QTY	PART NAME 1 2 3 4 5 6 (PRODUCT LEVEL)	SEE PAGE
	375-0107	1	SOFTWARE GP-MONITOR	
	516-0908	1	SOFTWARE GP-MONITOR (OPERATING SYSTEM)	
	545-7119	1	SOFTWARE GP-MONITOR	

<END>

478-8210 ELECTRONICS GP-MONITOR-PL641 CELLULAR

S/N: 5B41-UP; G441-UP
PART OF 451-3240, 451-3242 INSTALLATION GP-COMMUNICATION AN ATTACHMENT

SMCS-7490, 7601, 7603, 7610, 7620

i07416691

NOTE	PART NUMBER	QTY	PART NAME 1 2 3 4 5 6 (PRODUCT LEVEL)	SEE PAGE
	560-0261	1	SOFTWARE GP-MONITOR (CELLULAR)	

<END>

478-8212 ELECTRONICS GP-MONITOR-PL631

S/N: 5B41-UP; G441-UP
PART OF 451-3243 INSTALLATION GP-COMMUNICATION AN ATTACHMENT

SMCS-7490, 7601, 7603, 7610, 7620

i07748162

NOTE	PART NUMBER	QTY	PART NAME 1 2 3 4 5 6 (PRODUCT LEVEL)	SEE PAGE
	559-9492	1	SOFTWARE GP-MONITOR (SATELLITE RADIO)	

<END>

527-8200 ELECTRONICS GP-MONITOR

S/N: 5B41-UP; G441-UP AN ATTACHMENT

SMCS-7490, 7601, 7603, 7610, 7620

i07416527

NOTE	PART NUMBER	QTY	PART NAME 1 2 3 4 5 6 (PRODUCT LEVEL)	SEE PAGE
	553-0234	1	SOFTWARE GP-MONITOR	

<END>

527-8201 ELECTRONICS GP-MONITOR

S/N: 5B41-UP; G441-UP AN ATTACHMENT

SMCS-7490, 7601, 7603, 7610, 7620

i07416528

NOTE	PART NUMBER	QTY	PART NAME 1 2 3 4 5 6 (PRODUCT LEVEL)	SEE PAGE
	553-0235	1	SOFTWARE GP-MONITOR	

<END>

527-8202 ELECTRONICS GP-MONITOR

S/N: 5B41-UP; G441-UP AN ATTACHMENT

SMCS-7490, 7601, 7603, 7610, 7620

i07416529

NOTE	PART NUMBER	QTY	PART NAME 1 2 3 4 5 6 (PRODUCT LEVEL)	SEE PAGE
	553-0236	1	SOFTWARE GP-MONITOR	

<END>

527-8204 ELECTRONICS GP-MONITOR

S/N: 5B41-UP; G441-UP DISPLAY AN ATTACHMENT

SMCS-7490, 7601, 7603, 7610, 7620

i07416531

NOTE	PART NUMBER	QTY	PART NAME 1 2 3 4 5 6 (PRODUCT LEVEL)	SEE PAGE
	553-0237	1	SOFTWARE GP-MONITOR	

<END>

ELECTRICAL AND STARTING SYSTEM

527-8205 ELECTRONICS GP-MONITOR

S/N: 5B41-UP; G441-
UP AN ATTACHMENT

SMCS-7490, 7601, 7603, 7610, 7620

i07416532

NOTE	PART NUMBER	QTY	PART NAME 1 2 3 4 5 6 (PRODUCT LEVEL)	SEE PAGE
	553-0238	1	SOFTWARE GP-MONITOR	

<END>

527-8206 ELECTRONICS GP-MONITOR

S/N: 5B41-UP; G441-
UP AN ATTACHMENT

SMCS-7490, 7601, 7603, 7610, 7620

i07416533

NOTE	PART NUMBER	QTY	PART NAME 1 2 3 4 5 6 (PRODUCT LEVEL)	SEE PAGE
	553-0239	1	SOFTWARE GP-MONITOR	

<END>

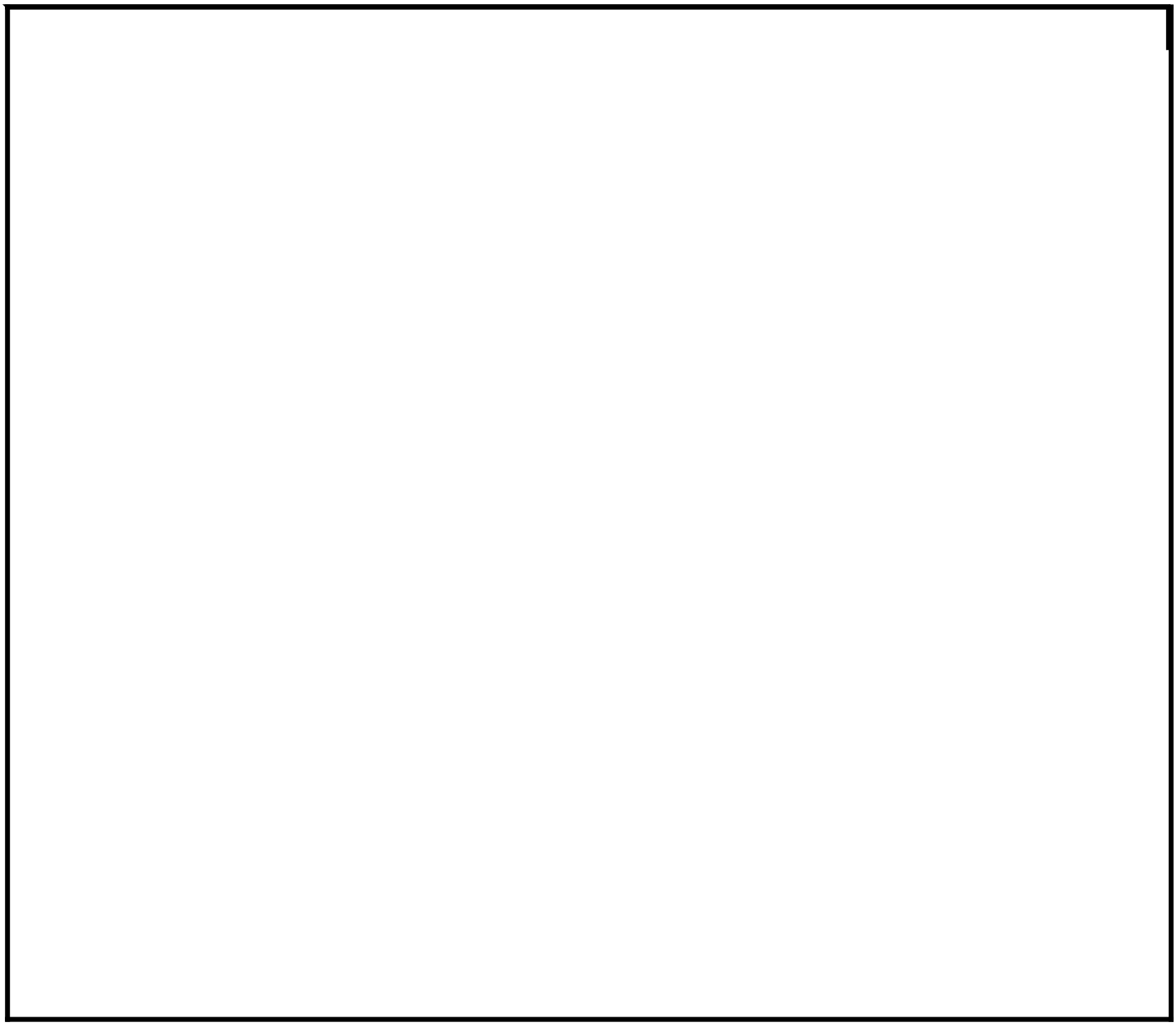

416-4268 HARNESS AS-CAB

S/N: 5B41-UP; G441-UP
PART OF 416-4308 WIRING GP-CAB
AN ATTACHMENT
SMCS-1408

i07406140

NOTE	PART NUMBER	QTY	PART NAME 1 2 3 4 5 6 (PRODUCT LEVEL)	SEE PAGE
	7X-1608	4	BEAD-FERRITE	
	274-3774	4	CAP-CONNECTOR	
	123-7615	2	CONNECTOR (1-PIN)	
	115-3519	1	PIN-CONNECTOR (12-GA TO 14-GA)	
	9X-3401	10	PIN-CONNECTOR (16-GA TO 18-GA)	
			-OR-	
	126-1767	10	PIN-CONNECTOR (14-GA TO 16-GA)	
	9X-1054	4	PLUG AS-CONNECTOR (4-PIN)	
	155-2255	1	KIT-CONNECTING PLUG (12-PIN)	
	155-2265	1	KIT-CONNECTING PLUG (8-PIN)	
	155-2260	1	KIT-CONNECTING PLUG (3-PIN)	
	155-2270	4	KIT-CONNECTING PLUG (2-PIN)	
	155-2271	3	KIT-CONNECTING PLUG (4-PIN)	
	177-9656	1	KIT-CONNECTING PLUG (4-PIN)	
	245-7434	3	KIT-CONNECTING PLUG (10-PIN)	
			(EACH PLUG KIT INCLUDES PLUG AS, WEDGE & INTERFACE SEAL)	
	8T-8737	8	PLUG-SEAL	
	177-9645	1	KIT-RECEPTACLE (2-PIN)	
			(INCLUDES RECEPTACLE AS & WEDGE)	
	230-4010	1	RECEPTACLE AS-CONNECTOR (12-PIN)	
	230-4012	1	RECEPTACLE AS-CONNECTOR (2-PIN)	
	274-3778	1	CAP-SEAL	
	185-1860	10	SEAL-WIRE	
	185-1861	10	SEAL-WIRE	
	3E-5226	4	SOCKET-CONNECTOR (12-GA TO 14-GA)	
	9X-3402	40	SOCKET-CONNECTOR (16-GA TO 18-GA)	
			-OR-	
	126-1768	40	SOCKET-CONNECTOR (14-GA TO 16-GA)	
B	**329-3734**		TAPE-ELECTRICAL	
	128-4178	2	TERMINAL AS	
			(EACH INCLUDES)	
	2L-8068	1	TERMINAL-RING (10-GA TO 12-GA, 5/16-IN SCREW)	
D	**5P-6006**		TUBE-HEAT SHRINK (9.52-MM DIA) (0.1-M)	
	5P-4571	2	TERMINAL-BLADE (14-GA TO 16-GA)	
	097-7234	2	TERMINAL-BLADE (18-GA TO 22-GA)	
	7N-7221	2	TERMINAL-BLADE (18-GA TO 22-GA)	
	6V-0491	4	TERMINAL-BLADE (14-GA TO 18-GA)	
	204-1297	10	TERMINAL AS-BLADE (18-GA TO 20-GA)	
			(EACH INCLUDES)	
	235-4123	1	TERMINAL (18-GA TO 20-GA)	
	9X-1055	8	TERMINAL-RECEPTACLE (12-GA)	
	9X-1056	4	TERMINAL-RECEPTACLE (14-GA TO 16-GA)	
	100-5041	4	TERMINAL-RECEPTACLE (18-GA TO 20-GA)	
E	**119-3662**		TUBE-HEAT SHRINK (10.85-MM DIA) (20-CM)	
E	**125-7874**		TUBE-HEAT SHRINK (5.72-MM DIA) (50-CM)	
E	**125-7875**		TUBE-HEAT SHRINK (7.44-MM DIA) (5-CM)	

416-4268 **HARNESS AS-CAB** (contd.) **i07406140**

NOTE	PART NUMBER	QTY	PART NAME 1 2 3 4 5 6 (PRODUCT LEVEL)	SEE PAGE
B - USE AS REQUIRED D - ORDER BY THE METER E - ORDER BY THE CENTIMETER				

<END>

423-1940 HARNESS AS-CAB

S/N: 5B41-UP; G441-UP

PART OF 362-2581 WIRING GP-CAB

AN ATTACHMENT

SMCS-1408

i07406204

NOTE	PART NUMBER	QTY	PART NAME 1 2 3 4 5 6 (PRODUCT LEVEL)	SEE PAGE
	7X-1608	4	BEAD-FERRITE	
	374-7468	1	CAP-SEAL	
	374-7467	1	CAP-SEAL	
	374-7463	4	CAP-SEAL	
	5E-7765	1	CONNECTOR	
	5E-7764	1	CONNECTOR	
	5E-7763	1	CONNECTOR	
	9X-3401	13	PIN-CONNECTOR (16-GA TO 18-GA)	
			-OR-	
	126-1767	13	PIN-CONNECTOR (14-GA TO 16-GA)	
	115-3519	1	PIN-CONNECTOR (12-GA TO 14-GA)	
	253-8111	1	PLUG (12-PIN)	
	253-8110	1	PLUG (12-PIN)	
	202-5397	10	PLUG	
	9X-1054	4	PLUG AS-CONNECTOR (4-PIN)	
	177-9656	1	KIT-CONNECTING PLUG (4-PIN)	
	155-2271	3	KIT-CONNECTING PLUG (4-PIN)	
	155-2270	4	KIT-CONNECTING PLUG (2-PIN)	
	155-2260	1	KIT-CONNECTING PLUG (3-PIN)	
	155-2265	1	KIT-CONNECTING PLUG (8-PIN)	
	155-2255	2	KIT-CONNECTING PLUG (12-PIN)	
			(EACH PLUG KIT INCLUDES PLUG AS, WEDGE & INTERFACE SEAL)	
	278-8844	1	PLUG AS-CONNECTOR	
	230-4011	1	PLUG AS-CONNECTOR (2-PIN)	
	8T-8737	2	PLUG-SEAL	
	245-7434	3	KIT-CONNECTING PLUG (10-PIN)	
	8T-8737	8	PLUG-SEAL	
	230-4012	1	RECEPTACLE AS-CONNECTOR (2-PIN)	
	230-4010	1	RECEPTACLE AS-CONNECTOR (12-PIN)	
	177-9645	1	KIT-RECEPTACLE (2-PIN)	
			(INCLUDES RECEPTACLE AS & WEDGE)	
	169-0705	14	SEAL	
	185-1861	10	SEAL-WIRE	
	185-1860	10	SEAL-WIRE	
	3E-5226	4	SOCKET-CONNECTOR (12-GA TO 14-GA)	
	283-8106	10	SOCKET-CONNECTOR (20-GA)	
			-OR-	
	374-8372	10	SOCKET-CONNECTOR (16-GA TO 18-GA)	
	9X-3402	49	SOCKET-CONNECTOR (16-GA TO 18-GA)	
			-OR-	
	126-1768	49	SOCKET-CONNECTOR (14-GA TO 16-GA)	
B	**329-3734**		TAPE-ELECTRICAL	
B	**1P-0810**		TAPE-ELECTRICAL	
	7N-7221	4	TERMINAL-BLADE (18-GA TO 22-GA)	
	097-7234	2	TERMINAL-BLADE (18-GA TO 22-GA)	
	5P-4571	4	TERMINAL-BLADE (14-GA TO 16-GA)	
	128-4178	2	TERMINAL AS	

423-1940 **HARNESS AS-CAB** (contd.) **i07406204**

NOTE	PART NUMBER	QTY	PART NAME 1 2 3 4 5 6 (PRODUCT LEVEL)	SEE PAGE
			(EACH INCLUDES)	
	2L-8068	1	TERMINAL-RING (10-GA TO 12-GA, 5/16-IN SCREW)	
D	**5P-6006**		TUBE-HEAT SHRINK (9.52-MM DIA) (0.1-M)	
	5E-7767	11	TERMINAL	
	204-1297	10	TERMINAL AS-BLADE (18-GA TO 20-GA)	
			(EACH INCLUDES)	
	235-4123	1	TERMINAL (18-GA TO 20-GA)	
	9X-1056	4	TERMINAL-RECEPTACLE (14-GA TO 16-GA)	
	9X-1055	8	TERMINAL-RECEPTACLE (12-GA)	
	100-5041	4	TERMINAL-RECEPTACLE (18-GA TO 20-GA)	
E	**125-7875**		TUBE-HEAT SHRINK (7.44-MM DIA) (25-CM)	
E	**125-7874**		TUBE-HEAT SHRINK (5.72-MM DIA) (45-CM)	
E	**119-3662**		TUBE-HEAT SHRINK (10.85-MM DIA) (13-CM)	

B - USE AS REQUIRED
D - ORDER BY THE METER
E - ORDER BY THE CENTIMETER

<END>

546-0311 HARNESS AS-CHASSIS

S/N: 5B41-UP; G441-UP
PART OF 518-4947 WIRING GP-MACHINE

SMCS-1408

i07398951

NOTE	PART NUMBER	QTY	PART NAME 1 2 3 4 5 6 (PRODUCT LEVEL)	SEE PAGE
	293-6119	1	BLOCK AS-FUSE	
	306-0348	1	COVER-FUSE	
	306-0351	1	SEAL-COVER	
	306-0282	2	BLOCK AS-FUSE	
			(EACH INCLUDES)	
	306-0350	1	COVER	
	306-0351	1	SEAL-COVER	
	374-7463	19	CAP-SEAL	
	374-7464	2	CAP-SEAL	
	374-7465	6	CAP-SEAL	
	374-7466	1	CAP-SEAL	
	374-7468	5	CAP-SEAL	
E	**232-0893**		CONDUIT-FLEXIBLE (6.2-MM ID) (8-CM)	
	123-7615	1	CONNECTOR (1-PIN)	
	424-4322	2	COVER-CONNECTOR	
	113-8490	6	FUSE (10-AMPERE)	
	113-8491	11	FUSE (15-AMPERE)	
	113-8492	2	FUSE (20-AMPERE)	
	124-3548	6	FUSE (30-AMPERE)	
	141-2760	11	FUSE (7.5-AMPERE)	
E	**6V-5632**		HOSE (138-CM)	
	111-6795	1	HOUSING-RELAY	
	111-6816	1	LOCK	
	203-9007	2	NUT (1-1/2-18-THD)	
	9X-3401	63	PIN-CONNECTOR (16-GA TO 18-GA)	
			-OR-	
	126-1767	63	PIN-CONNECTOR (14-GA TO 16-GA)	
	202-5397	16	PLUG	
	253-8112	1	PLUG	
	176-1477	1	PLUG AS (2-PIN)	
	3E-5519	1	PLUG AS-CONNECTOR (5-PIN)	
	9X-1054	4	PLUG AS-CONNECTOR (4-PIN)	
	127-5483	1	PLUG AS-CONNECTOR (1-PIN)	
	155-2255	2	KIT-CONNECTING PLUG (12-PIN)	
	155-2256	3	KIT-CONNECTING PLUG (12-PIN)	
	155-2270	34	KIT-CONNECTING PLUG (2-PIN)	
	155-2271	8	KIT-CONNECTING PLUG (4-PIN)	
	155-2274	1	KIT-CONNECTING PLUG (6-PIN)	
	237-0166	1	KIT-CONNECTING PLUG (12-PIN)	
	331-4226	11	KIT-CONNECTING PLUG (2-PIN)	
			(EACH PLUG KIT INCLUDES PLUG AS, WEDGE, & INTERFACE SEAL)	
	155-2260	6	KIT-CONNECTING PLUG (3-PIN)	
	174-0503	2	KIT-CONNECTING PLUG (3-PIN)	
			(EACH PLUG KIT INCLUDES WEDGES, PLUG AS & INTERFACE SEAL)	
	177-9648	1	KIT-CONNECTING PLUG (2-PIN)	
	177-9656	1	KIT-CONNECTING PLUG (4-PIN)	
			(EACH PLUG KIT INCLUDES PLUG AS & WEDGE)	

546-0311 **HARNESS AS-CHASSIS (**contd.**)** **i07398951**

NOTE	PART NUMBER	QTY	PART NAME 1 2 3 4 5 6 (PRODUCT LEVEL)	SEE PAGE
	230-4009	1	PLUG AS-CONNECTOR (12-PIN)	
	455-0709	1	SEAL-CONNECTOR	
	230-4011	5	PLUG AS-CONNECTOR (2-PIN)	
			(EACH INCLUDES)	
	455-0704	1	SEAL-CONNECTOR	
	240-7878	1	PLUG AS-CONNECTOR (3-PIN)	
	455-0705	1	SEAL-CONNECTOR	
	261-0524	2	PLUG AS-CONNECTOR (4-PIN)	
			(EACH INCLUDES)	
	455-0706	1	SEAL-CONNECTOR	
	281-3388	1	PLUG AS-CONNECTOR (6-PIN)	
	455-0708	1	SEAL-CONNECTOR	
	281-3395	3	PLUG AS-CONNECTOR (12-PIN)	
			(EACH INCLUDES)	
	455-0709	1	SEAL-CONNECTOR	
	426-4838	1	PLUG AS-CONNECTOR	
	7R-2751	47	PLUG-CONNECTOR (1-PIN)	
	245-7434	5	KIT-CONNECTING PLUG (10-PIN)	
			(EACH INCLUDES)	
	288-7146	10	WIRE AS (16-GA)	
	202-5397	8	PLUG	
	8T-8737	75	PLUG-SEAL	
	214-7404	1	CONNECTOR (12-PIN)	
	102-8802	1	KIT-RECEPTACLE (2-PIN)	
	102-8803	1	KIT-RECEPTACLE (3-PIN)	
	177-9645	1	KIT-RECEPTACLE (2-PIN)	
			(EACH RECEPTACLE KIT INCLUDES RECEPTACLE AS & WEDGE)	
	134-2540	2	RECEPTACLE AS-CONNECTOR (3-PIN)	
	230-4014	1	RECEPTACLE AS-CONNECTOR (3-PIN)	
	260-6728	1	RECEPTACLE AS-CONNECTOR (12-PIN)	
	451-8019	2	RECEPTACLE AS-CONNECTOR (14-PIN)	
	146-9439	10	RELAY AS (12-VOLT)	
	169-0705	27	SEAL	
	185-1861	2	SEAL-WIRE	
	128-4123	32	SEAL-CABLE	
	128-5016	33	SEAL-CABLE	
	274-3785	1	CAP-SEAL	
	274-3780	3	CAP-SEAL	
	7R-2750	8	SEAL-CONNECTOR	
	185-1860	31	SEAL-WIRE	
E	**114-8843**		SLEEVE-PLASTIC (20-CM)	
E	**149-7373**		SLEEVE-ABRASION (87-CM)	
	202-0315	10	TERMINAL AS (12-GA)	
	3E-5226	4	SOCKET-CONNECTOR (12-GA TO 14-GA)	
	8N-1547	1	SOCKET-CONNECTOR (6-GA)	
	9X-3402	245	SOCKET-CONNECTOR (16-GA TO 18-GA)	
			-OR-	
	126-1768	245	SOCKET-CONNECTOR (14-GA TO 16-GA)	
	194-5226	6	WIRE AS (16-GA)	
			-OR-	
	194-5227	6	WIRE AS (14-GA)	
	202-0313	32	TERMINAL AS (18-GA)	

546-0311 **HARNESS AS-CHASSIS** (contd.) **i07398951**

NOTE	PART NUMBER	QTY	PART NAME 1 2 3 4 5 6 (PRODUCT LEVEL)	SEE PAGE
	202-0314	31	TERMINAL AS (14-GA)	
	283-8106	57	SOCKET-CONNECTOR (20-GA)	
			-OR-	
	374-8372	57	SOCKET-CONNECTOR (16-GA TO 18-GA)	
	189-3158	4	SUPPRESSOR-ARC	
B	**1P-0810**		TAPE-ELECTRICAL	
B	**329-3734**		TAPE-ELECTRICAL	
	176-1521	2	TERMINAL	
	2L-8050	5	TERMINAL-RING (6-GA, 1/4-IN SCREW)	
			-OR-	
	2L-8058	5	TERMINAL-RING (8-GA, 1/4-IN SCREW)	
	2L-8051	3	TERMINAL-RING (6-GA, 5/16-IN SCREW)	
			-OR-	
	5P-3455	3	TERMINAL-RING (8-GA, 5/16-IN SCREW)	
	2L-8054	4	TERMINAL-RING (6-GA, 1/2-IN SCREW)	
			-OR-	
	2L-8061	4	TERMINAL-RING (8-GA, 1/2-IN SCREW)	
	2L-8067	1	TERMINAL-RING (10-GA TO 12-GA, 1/4-IN SCREW)	
	131-1497	2	TERMINAL AS-RING (10-GA TO 12-GA)	
			(EACH INCLUDES)	
	2L-8068	1	TERMINAL-RING (10-GA TO 12-GA, 5/16-IN SCREW)	
E	**125-7875**		TUBE-HEAT SHRINK (7.44-MM DIA) (4-CM)	
	2L-8071	12	TERMINAL-RING (10-GA TO 12-GA, 1/2-IN SCREW)	
	131-1503	1	TERMINAL AS-RING	
	2L-8076	1	TERMINAL-RING (14-GA TO 16-GA, NO. 10 SCREW)	
E	**125-7874**		TUBE-HEAT SHRINK (5.72-MM DIA) (3-CM)	
	6V-0491	2	TERMINAL-BLADE (14-GA TO 18-GA)	
	9X-1055	6	TERMINAL-RECEPTACLE (12-GA)	
	100-5041	15	TERMINAL-RECEPTACLE (18-GA TO 20-GA)	
	204-1297	31	TERMINAL AS-BLADE (18-GA TO 20-GA)	
	111-6792	3	TERMINAL-RECEPTACLE (18-GA TO 20-GA)	
	223-4779	3	TERMINAL-BLADE (14-GA TO 16-GA)	
E	**135-5010**		TUBE-HEAT SHRINK (52-MM DIA) (40-CM)	
E	**125-7874**		TUBE-HEAT SHRINK (5.72-MM DIA) (310-CM)	
E	**125-7875**		TUBE-HEAT SHRINK (7.44-MM DIA) (45-CM)	
	155-2258	6	WEDGE-PLUG LOCK (12-PIN)	

B - USE AS REQUIRED
E - ORDER BY THE CENTIMETER

<END>

ELECTRICAL AND STARTING SYSTEM

447-5149 HARNESS AS-ENGINE

S/N: 2W21-UP

PART OF 492-2947 HARNESS GP-WIRING AN ATTACHMENT

SMCS-1403, 1408

i06538648

NOTE	PART NUMBER	QTY	PART NAME 1 2 3 4 5 6 (PRODUCT LEVEL)	SEE PAGE
	155-2271	2	KIT-CONNECTING PLUG (4-PIN)	
			(EACH KIT INCLUDES PLUG AS, WEDGE & INTERFACE SEAL)	
	185-1860	5	SEAL-WIRE	
	206-1345	4	STRAP-CABLE	
	217-9039	8	STRAP-CABLE	
	230-4011	2	PLUG AS-CONNECTOR (2-PIN)	
			(EACH INCLUDES)	
	455-0704	1	SEAL-CONNECTOR	
	245-1043	1	PLUG GP-CONNECTOR (64-PIN)	
M	**267-7207**	1	BOLT-SPECIAL (M6X1-THD)	
	245-1044	2	LOCK-CONNECTOR	
	267-9572	25	SOCKET-CONNECTION (18-GA)	
	245-1048	39	PLUG-CONNECTOR (1-PIN)	
	281-8804	2	PLUG AS-CONNECTOR (3-PIN)	
			(EACH INCLUDES)	
	455-0705	1	SEAL-CONNECTOR	
E	**292-2896**		CONDUIT (16.9-MM ID) (21-CM)	
	344-1686	4	SOCKET-CONNECTOR (18-GA)	
	9X-3402	18	SOCKET-CONNECTOR (16-GA TO 18-GA)	
			-OR-	
	126-1768	18	SOCKET-CONNECTOR (14-GA TO 16-GA)	
E	**125-7874**		TUBE-HEAT SHRINK (5.72-MM DIA) (10-CM)	
	292-2893		CONDUIT (10.1-MM ID) (109-CM)	

E - ORDER BY THE CENTIMETER M - METRIC PART

<END>



479-0905 HARNESS AS-ENGINE

S/N: 5B41-UP; G441-UP

PART OF 387-7705 WIRING GP-ENGINE

SMCS-1403, 1408

i07398926

NOTE	PART NUMBER	QTY	PART NAME 1 2 3 4 5 6 (PRODUCT LEVEL)	SEE PAGE
E	**159-8047**		CABLE-ELECTRICAL (0-GA, RED) (158-CM)	
	274-3781	1	CAP-SEAL	
	245-1045	1	COVER	
	245-1044	2	LOCK-CONNECTOR	
	8N-1546	1	PIN-CONNECTOR (6-GA)	
	9X-3401	19	PIN-CONNECTOR (16-GA TO 18-GA)	
			-OR-	
	126-1767	19	PIN-CONNECTOR (14-GA TO 16-GA)	
	155-2260	1	KIT-CONNECTING PLUG (3-PIN)	
			(INCLUDES PLUG AS,WEDGES & INTERFACE SEAL)	
	240-7878	1	PLUG AS-CONNECTOR (3-PIN)	
	455-0705	1	SEAL-CONNECTOR	
	245-1042	1	PLUG AS-CONNECTOR (64-PIN)	
M	**267-7207**	1	BOLT-SPECIAL (M6X1-THD)	
	245-1048	40	PLUG-CONNECTOR (1-PIN)	
	8T-8737	3	PLUG-SEAL	
	177-9653	1	KIT-RECEPTACLE (4-PIN)	
			(INCLUDES RECEPTACLE AS & WEDGE)	
	260-6727	1	RECEPTACLE AS	
	127-5484	1	RECEPTACLE AS-CONNECTOR (1-PIN)	
	260-6728	1	RECEPTACLE AS-CONNECTOR (12-PIN)	
	134-2540	1	RECEPTACLE AS-CONNECTOR (3-PIN)	
E	**284-1491**		SLEEVE (17-CM)	
E	**330-4374**		SLEEVE (228-CM)	
	9X-3402	5	SOCKET-CONNECTOR (16-GA TO 18-GA)	
			-OR-	
	126-1768	5	SOCKET-CONNECTOR (14-GA TO 16-GA)	
	267-9572	24	SOCKET-CONNECTION (18-GA)	
E	**329-3734**		TAPE-ELECTRICAL (111-CM)	
	131-1496	1	TERMINAL AS	
	2L-8067	1	TERMINAL-RING (10-GA TO 12-GA, 1/4-IN SCREW)	
	2L-8067	1	TERMINAL-RING (10-GA TO 12-GA, 1/4-IN SCREW)	
E	**125-7875**		TUBE-HEAT SHRINK (7.44-MM DIA) (4-CM)	
	2L-8050	1	TERMINAL-RING (6-GA, 1/4-IN SCREW)	
			-OR-	
	2L-8058	1	TERMINAL-RING (8-GA, 1/4-IN SCREW)	
	030-1707	1	TERMINAL-RING (0-GA, 3/8-IN SCREW)	
	030-1708	1	TERMINAL-RING (0-GA)	
E	**125-7874**		TUBE-HEAT SHRINK (5.72-MM DIA) (10-CM)	
E	**125-7875**		TUBE-HEAT SHRINK (7.44-MM DIA) (10-CM)	
E	**125-7876**		TUBE-HEAT SHRINK (17.78-MM DIA) (10-CM)	

E - ORDER BY THE CENTIMETER M - METRIC PART

<END>

444-6758 HARNESS AS-HEATER & AIR COND

S/N: 5B41-UP; G441-UP
PART OF 523-8700 WIRING GP-AIR CONDITIONER AN ATTACHMENT

SMCS-1408

i07403923

NOTE	PART NUMBER	QTY	PART NAME 1 2 3 4 5 6 (PRODUCT LEVEL)	SEE PAGE
	9X-3401	7	PIN-CONNECTOR (16-GA TO 18-GA)	
			-OR-	
	126-1767	7	PIN-CONNECTOR (14-GA TO 16-GA)	
	155-2270	2	KIT-CONNECTING PLUG (2-PIN)	
			(EACH INCLUDES PLUG AS, WEDGE & INTERFACE SEAL)	
	102-8804	1	KIT-RECEPTACLE (4-PIN)	
			(INCLUDES RECEPTACLE AS & WEDGE)	
	281-3121	1	RECEPTACLE AS-CONNECTOR (3-PIN)	
	100-6674	2	SEAL-CONNECTOR	
	9X-3402	4	SOCKET-CONNECTOR (16-GA TO 18-GA)	
			-OR-	
	126-1768	4	SOCKET-CONNECTOR (14-GA TO 16-GA)	
	189-3158	1	SUPPRESSOR-ARC	
	124-5640	2	TERMINAL-SOCKET	
E	**125-7874**		TUBE-HEAT SHRINK (5.72-MM DIA) (10-CM)	

E - ORDER BY THE CENTIMETER

<END>

375-6060 HARNESS AS-LIGHTING

S/N: 5B41-UP; G441-UP
PART OF 351-3443 LIGHTING GP-WARNING BEACON AN ATTACHMENT

SMCS-1408

i07403827

NOTE	PART NUMBER	QTY	PART NAME 1 2 3 4 5 6 (PRODUCT LEVEL)	SEE PAGE
	102-8802	2	KIT-RECEPTACLE (2-PIN)	
			(EACH INCLUDES RECEPTACLE AS & WEDGE)	
	8T-8737	4	PLUG-SEAL	
E	**125-7874**		TUBE-HEAT SHRINK (5.72-MM DIA) (10-CM)	
	126-1768	4	SOCKET-CONNECTOR (14-GA TO 16-GA)	
	126-1767	2	PIN-CONNECTOR (14-GA TO 16-GA)	
	155-2270	2	KIT-CONNECTING PLUG (2-PIN)	
			(EACH INCLUDES PLUG AS, WEDGE & INTERFACE SEAL)	
	230-4012	1	RECEPTACLE AS-CONNECTOR (2-PIN)	

E - ORDER BY THE CENTIMETER

<END>

392-9725 HARNESS AS-LIGHTING

S/N: 5B41-UP; G441-UP
PART OF 515-1429 LIGHTING GP-
FLOOD AN ATTACHMENT

SMCS-1408

i07416510

NOTE	PART NUMBER	QTY	PART NAME 1 2 3 4 5 6 (PRODUCT LEVEL)	SEE PAGE
	7X-1608	4	BEAD-FERRITE	
	126-1767	2	PIN-CONNECTOR (14-GA TO 16-GA)	
	155-2270	4	KIT-CONNECTING PLUG (2-PIN)	
			(EACH INCLUDES PLUG AS, WEDGE & INTERFACE SEAL)	
	230-4012	1	RECEPTACLE AS-CONNECTOR (2-PIN)	
	126-1768	8	SOCKET-CONNECTOR (14-GA TO 16-GA)	
	131-1489	1	TERMINAL AS-RING (6-GA TO 8-GA)	
	6H-3592	1	TERMINAL-RING (6-GA TO 8-GA, 5/16-IN SCREW)	
E	**119-3662**		TUBE-HEAT SHRINK (10.85-MM DIA) (4-CM)	
E	**125-7874**		TUBE-HEAT SHRINK (5.72-MM DIA) (10-CM)	

E - ORDER BY THE CENTIMETER

<END>

418-7917 HARNESS AS-LIGHTING

S/N: 5B41-UP; G441-UP
PART OF 419-4040, 419-4041 LIGHTING GP-
FLOOD AN ATTACHMENT

SMCS-1408

i07403891

NOTE	PART NUMBER	QTY	PART NAME 1 2 3 4 5 6 (PRODUCT LEVEL)	SEE PAGE
	7X-1608	4	BEAD-FERRITE	
	9X-3401	2	PIN-CONNECTOR (16-GA TO 18-GA)	
			-OR-	
	126-1767	2	PIN-CONNECTOR (14-GA TO 16-GA)	
	155-2270	4	KIT-CONNECTING PLUG (2-PIN)	
			(EACH INCLUDES PLUG AS, WEDGE & INTERFACE SEAL)	
	230-4012	1	RECEPTACLE AS-CONNECTOR (2-PIN)	
	9X-3402	8	SOCKET-CONNECTOR (16-GA TO 18-GA)	
			-OR-	
	126-1768	8	SOCKET-CONNECTOR (14-GA TO 16-GA)	
	2L-8051	1	TERMINAL-RING (6-GA, 5/16-IN SCREW)	
			-OR-	
	5P-3455	1	TERMINAL-RING (8-GA, 5/16-IN SCREW)	
E	**125-7874**		TUBE-HEAT SHRINK (5.72-MM DIA) (10-CM)	

E - ORDER BY THE CENTIMETER

<END>

ELECTRICAL AND STARTING SYSTEM

524-2481 HARNESS AS-LIGHTING-ROPS

S/N: 5B41-UP; G441-UP
PART OF 515-1429, 515-1430 LIGHTING GP-FLOOD AN ATTACHMENT

SMCS-1408

i07416511

NOTE	PART NUMBER	QTY	PART NAME 1 2 3 4 5 6 (PRODUCT LEVEL)	SEE PAGE
	484-9581	1	CORE	
	9X-3401	2	PIN-CONNECTOR (16-GA TO 18-GA)	
			-OR-	
	126-1767	2	PIN-CONNECTOR (14-GA TO 16-GA)	
	155-2270	1	KIT-CONNECTING PLUG (2-PIN)	
			(INCLUDES PLUG AS, WEDGE, & INTERFACE SEAL)	
	102-8802	1	KIT-RECEPTACLE (2-PIN)	
			(INCLUDES RECEPTACLE AS & WEDGE)	
	9X-3402	2	SOCKET-CONNECTOR (16-GA TO 18-GA)	
			-OR-	
	126-1768	2	SOCKET-CONNECTOR (14-GA TO 16-GA)	

<END>

392-9726 HARNESS AS-MONITOR

S/N: 5B41-UP; G441-UP
PART OF 438-7447 DISPLAY GP-MONITOR AN ATTACHMENT

SMCS-1408, 7490

i07416498

NOTE	PART NUMBER	QTY	PART NAME 1 2 3 4 5 6 (PRODUCT LEVEL)	SEE PAGE
	9X-3401	17	PIN-CONNECTOR (16-GA TO 18-GA)	
			-OR-	
	126-1767	17	PIN-CONNECTOR (14-GA TO 16-GA)	
	155-2265	1	KIT-CONNECTING PLUG (8-PIN)	
	174-0503	1	KIT-CONNECTING PLUG (3-PIN)	
			(EACH PLUG KIT INCLUDES PLUG AS, WEDGE & INTERFACE SEAL)	
	8T-8737	5	PLUG-SEAL	
	134-2540	1	RECEPTACLE AS-CONNECTOR (3-PIN)	
	230-5011	1	RECEPTACLE AS-CONNECTOR (6-PIN)	
	260-6728	1	RECEPTACLE AS-CONNECTOR (12-PIN)	
	274-3778	1	CAP-SEAL	
	9X-3402	7	SOCKET-CONNECTOR (16-GA TO 18-GA)	
			-OR-	
	126-1768	7	SOCKET-CONNECTOR (14-GA TO 16-GA)	
E	**125-7874**		TUBE-HEAT SHRINK (5.72-MM DIA) (15-CM)	
E	**125-7875**		TUBE-HEAT SHRINK (7.44-MM DIA) (5-CM)	

E - ORDER BY THE CENTIMETER

<END>



562-3678 HARNESS AS-PLATFORM

S/N: 5B41-UP; G441-UP
PART OF 451-3147 WIRING GP-PLATFORM

SMCS-1408

i07417673

NOTE	PART NUMBER	QTY	PART NAME 1 2 3 4 5 6 (PRODUCT LEVEL)	SEE PAGE
E	**196-8876**		BRAID (BLACK, ONE GOLD STRAND) (663-CM)	
	374-7465	3	CAP-SEAL	
	484-9581	2	CORE	
E	**5P-0718**		HOSE (235-CM)	
	271-5604	2	PIN-CONNECTOR (20-GA)	
			-OR-	
	347-0109	2	WIRE AS (18-GA)	
	202-5397	6	PLUG	
	253-8110	1	PLUG (12-PIN)	
	331-5048	2	PLUG AS-CONNECTOR (6-PIN)	
	3E-5519	2	PLUG AS-CONNECTOR (5-PIN)	
	155-2271	5	KIT-CONNECTING PLUG (4-PIN)	
			(EACH INCLUDES PLUG AS, WEDGE, & INTERFACE SEAL)	
	174-0503	3	KIT-CONNECTING PLUG (3-PIN)	
	155-2260	3	KIT-CONNECTING PLUG (3-PIN)	
			(EACH PLUG KIT INCLUDES PLUG AS, WEDGES & INTERFACE SEAL)	
	230-5010	1	PLUG AS-CONNECTOR (6-PIN)	
	281-8811	1	PLUG AS-CONNECTOR (6-PIN)	
			(EACH PLUG AS-CONNECTOR INCLUDES)	
	455-0707	1	SEAL-CONNECTOR	
	281-3395	2	PLUG AS-CONNECTOR (12-PIN)	
	281-3396	1	PLUG AS-CONNECTOR (12-PIN)	
	281-3397	1	PLUG AS-CONNECTOR (12-PIN)	
	281-3398	1	PLUG AS-CONNECTOR (12-PIN)	
			(EACH PLUG AS-CONNECTOR INCLUDES)	
	455-0709	1	SEAL-CONNECTOR	
	271-5590	1	PLUG AS-CONNECTOR (2-PIN)	
	245-7434	3	KIT-CONNECTING PLUG (10-PIN)	
			(EACH INCLUDES)	
	202-5397	8	PLUG	
	288-7146	10	WIRE AS (16-GA)	
	8T-8737	10	PLUG-SEAL	
	134-2540	3	RECEPTACLE AS-CONNECTOR (3-PIN)	
	271-5600	1	RECEPTACLE AS-CONNECTOR (2-PIN)	
	169-0705	11	SEAL	
	274-3785	2	CAP-SEAL	
	274-3783	1	CAP-SEAL	
	185-1860	24	SEAL-WIRE	
G	**160-2246**		SLEEVE-ABRASION (15.4-IN)	
	9X-3402	91	SOCKET-CONNECTOR (16-GA TO 18-GA)	
			-OR-	
	126-1768	91	SOCKET-CONNECTOR (14-GA TO 16-GA)	
	283-8106	15	SOCKET-CONNECTOR (20-GA)	
			-OR-	
	374-8372	15	SOCKET-CONNECTOR (16-GA TO 18-GA)	
B	**1P-0810**		TAPE-ELECTRICAL	
B	**329-3734**		TAPE-ELECTRICAL	
	7N-7221	2	TERMINAL-BLADE (18-GA TO 22-GA)	

562-3678 **HARNESS AS-PLATFORM** (contd.) **i07417673**

NOTE	PART NUMBER	QTY	PART NAME 1 2 3 4 5 6 (PRODUCT LEVEL)	SEE PAGE
	2L-8081	4	TERMINAL-RING (14-GA TO 16-GA, 1/2-IN SCREW)	
	2L-8071	2	TERMINAL-RING (10-GA TO 12-GA, 1/2-IN SCREW)	
	2L-8077	2	TERMINAL-RING (14-GA TO 16-GA, 1/4-IN SCREW)	
	100-5041	10	TERMINAL-RECEPTACLE (18-GA TO 20-GA)	
	204-1297	24	TERMINAL AS-BLADE (18-GA TO 20-GA)	
			(EACH INCLUDES)	
	235-4123	1	TERMINAL (18-GA TO 20-GA)	
E	**135-5009**		TUBE-HEAT SHRINK (32-MM DIA) (30-CM)	
E	**135-5010**		TUBE-HEAT SHRINK (52-MM DIA) (15-CM)	
E	**125-7874**		TUBE-HEAT SHRINK (5.72-MM DIA) (105-CM)	
E	**125-7875**		TUBE-HEAT SHRINK (7.44-MM DIA) (10-CM)	
	253-8113	1	WEDGE (12-PIN)	
	332-1983	2	WEDGE-PLUG LOCK (6-PIN)	
	271-5602	1	WEDGE	

B - USE AS REQUIRED
E - ORDER BY THE CENTIMETER G - ORDER BY THE INCH

<END>

388-2110 HARNESS AS-SENSOR

S/N: 5B41-UP; G441-UP
PART OF 343-6139, 344-0513 MOTOR & MTG GP-VIBRATORY AN ATTACHMENT

SMCS-1408

i07399906

NOTE	PART NUMBER	QTY	PART NAME 1 2 3 4 5 6 (PRODUCT LEVEL)	SEE PAGE
	9X-3401	3	PIN-CONNECTOR (16-GA TO 18-GA)	
	230-5008	1	PLUG AS-CONNECTOR (4-PIN)	
	264-7031	1	SEAL-CONNECTOR	
	8T-8737	10	PLUG-SEAL	
	230-4010	1	RECEPTACLE AS-CONNECTOR (12-PIN)	
	194-5226	3	WIRE AS (16-GA)	
			-OR-	
	194-5227	3	WIRE AS (14-GA)	

<END>

528-5494 HARNESS AS-WIRING

S/N: 5B41-UP; G441-UP
PART OF 513-6264 SENSOR & MTG GP-TEMPERATURE AN ATTACHMENT

SMCS-1408

i07416489

NOTE	PART NUMBER	QTY	PART NAME 1 2 3 4 5 6 (PRODUCT LEVEL)	SEE PAGE
	9X-3401	2	PIN-CONNECTOR (16-GA TO 18-GA)	
			-OR-	
	126-1767	2	PIN-CONNECTOR (14-GA TO 16-GA)	
	155-2270	2	KIT-CONNECTING PLUG (2-PIN)	
			(EACH INCLUDES PLUG AS, WEDGE, & INTERFACE SEAL)	
	102-8802	1	KIT-RECEPTACLE (2-PIN)	
			(INCLUDES RECEPTACLE AS & WEDGE)	
	9X-3402	4	SOCKET-CONNECTOR (16-GA TO 18-GA)	
			-OR-	
	126-1768	4	SOCKET-CONNECTOR (14-GA TO 16-GA)	
	189-3158	1	SUPPRESSOR-ARC	
E	**125-7874**		TUBE-HEAT SHRINK (5.72-MM DIA) (10-CM)	

E - ORDER BY THE CENTIMETER

<END>

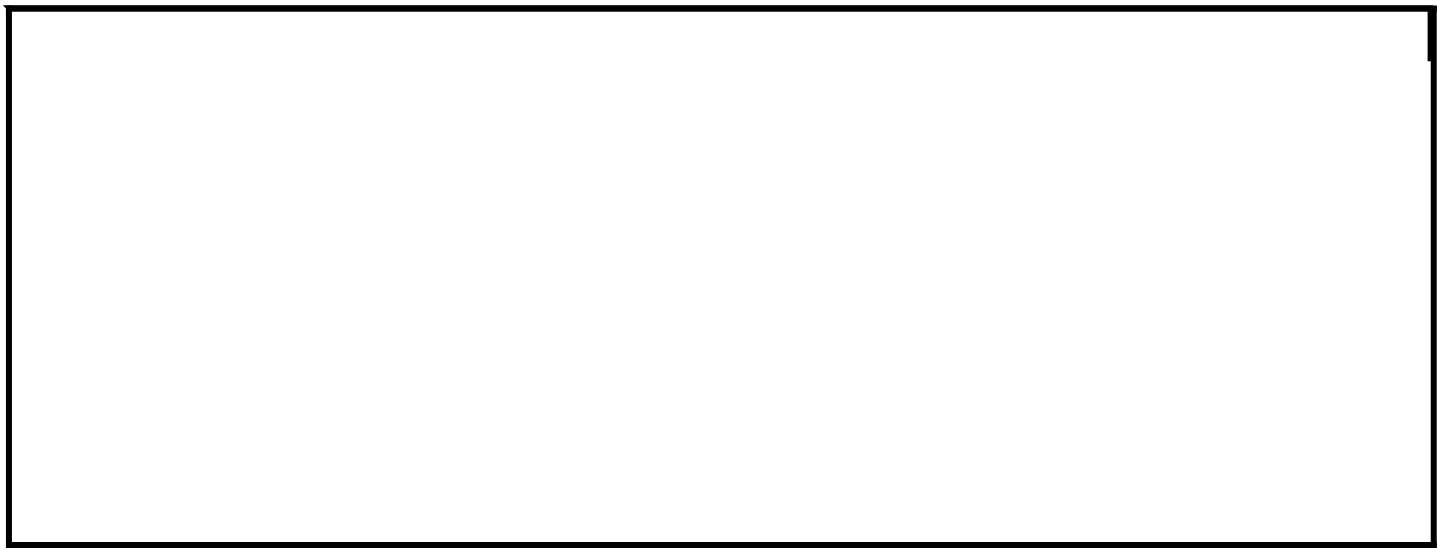

ELECTRICAL AND STARTING SYSTEM

492-2947 HARNESS GP-WIRING

S/N: 2W21-UP

PART OF 435-7493, 435-7494 ENGINE AR-PRIMARY AN ATTACHMENT

SMCS-1408

i07420898

	REF SEE NOTE QTY	GRAPHIC NO 1 2 3 4 5 6	(PRODUCT LEVEL)	REF PAGE	PART NAME PART NUMBER	
	1	1	**487-6726**	1	BRACKET	
	2	1	**217-9039**	1	STRAP-CABLE	
	3	1	**323-7347**	2	SEAL-O-RING	
	4	1	**396-5615**	1	MOUNT	
Y	5	1	**447-5149**	1	HARNESS AS-ENGINE	134
	6	1	**458-3745**	2	HARNESS AS-PLATFORM	
					(EACH INCLUDES)	
		1	**332-7865**	1	TIE-CABLE	
M	7	1	**232-1693**	1	BOLT-FLANGE HEAD (M6X1X35-MM)	
M	8	1	**254-3633**	2	BOLT-FLANGE HEAD (M6X1X16-MM, SELF LOCKING)	
	9	1	**316-9351**	1	MOUNTING-CABLE TIE	

M - METRIC PART
Y - SEPARATE ILLUSTRATION

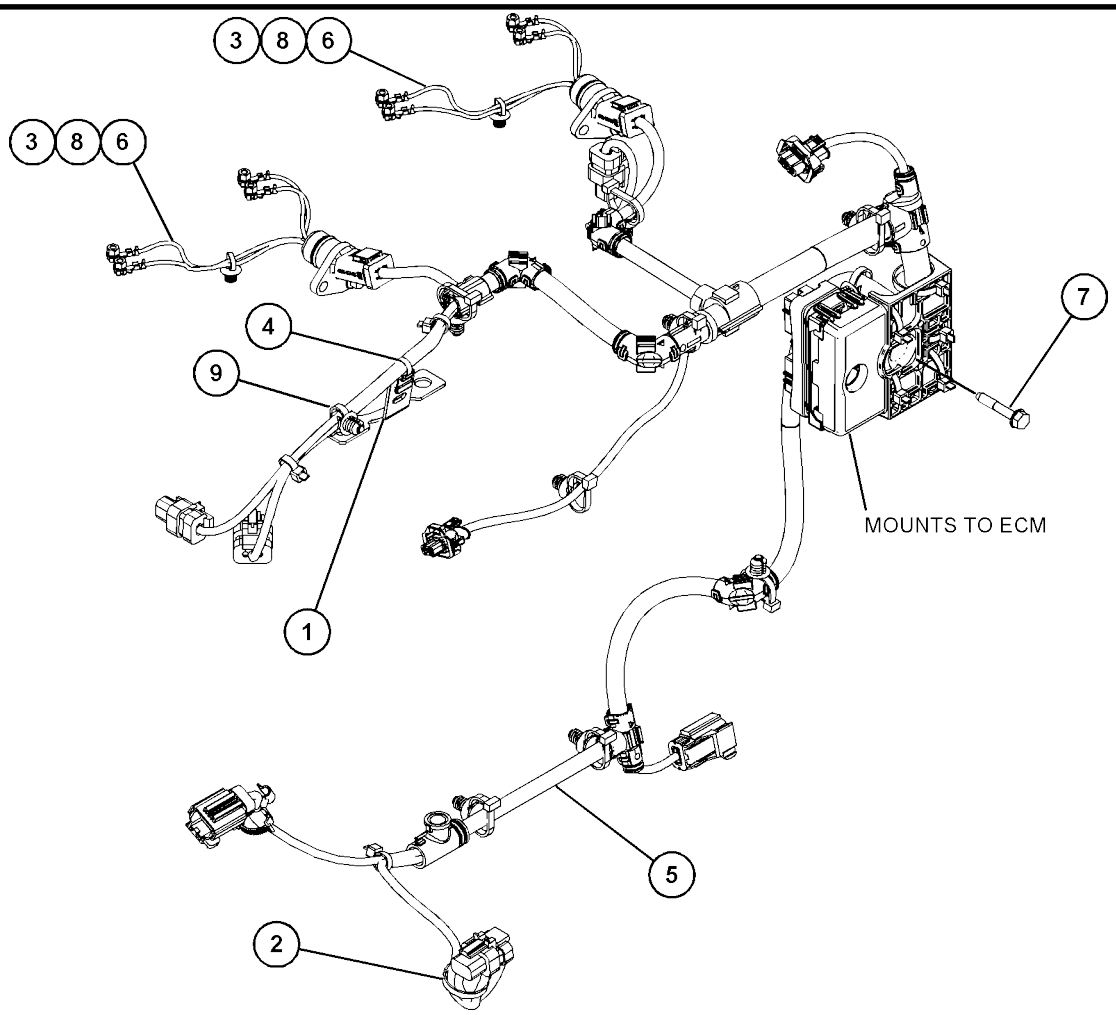

GRAPHIC #1 <END> g06085751

514-1273 INSTALLATION AR-COMMUNICATION

S/N: 5B41-UP; G441-
UP GRADE CONTROL,
ROPS AN ATTACHMENT

SMCS-5267, 7606

i07416490

NOTE	PART NUMBER	QTY	PART NAME 1 2 3 4 5 6 (PRODUCT LEVEL)	SEE PAGE
Y	*438-7447*	1	DISPLAY GP-MONITOR (GRADE CONTROL)	501
Y	*459-4006*	1	ELECTRONICS GP-MONITOR (GRADE CONTROL)	124
Y	*479-4114*	1	INSTALLATION GP-COMMUNICATION (PRODUCT LINK)	154
Y	*513-6264*	1	SENSOR & MTG GP-TEMPERATURE	184

Y - SEPARATE ILLUSTRATION

<END>

514-1274 INSTALLATION AR-COMMUNICATION

S/N: 5B41-UP; G441-
UP GRADE CONTROL,
CAB
AN ATTACHMENT

SMCS-5267, 7606

i07416491

NOTE	PART NUMBER	QTY	PART NAME 1 2 3 4 5 6 (PRODUCT LEVEL)	SEE PAGE
Y	*438-7447*	1	DISPLAY GP-MONITOR (GRADE CONTROL)	501
Y	*459-4006*	1	ELECTRONICS GP-MONITOR (GRADE CONTROL)	124
Y	*479-4115*	1	INSTALLATION GP-COMMUNICATION (PRODUCT LINK)	155
Y	*513-6264*	1	SENSOR & MTG GP-TEMPERATURE	184

Y - SEPARATE ILLUSTRATION

<END>

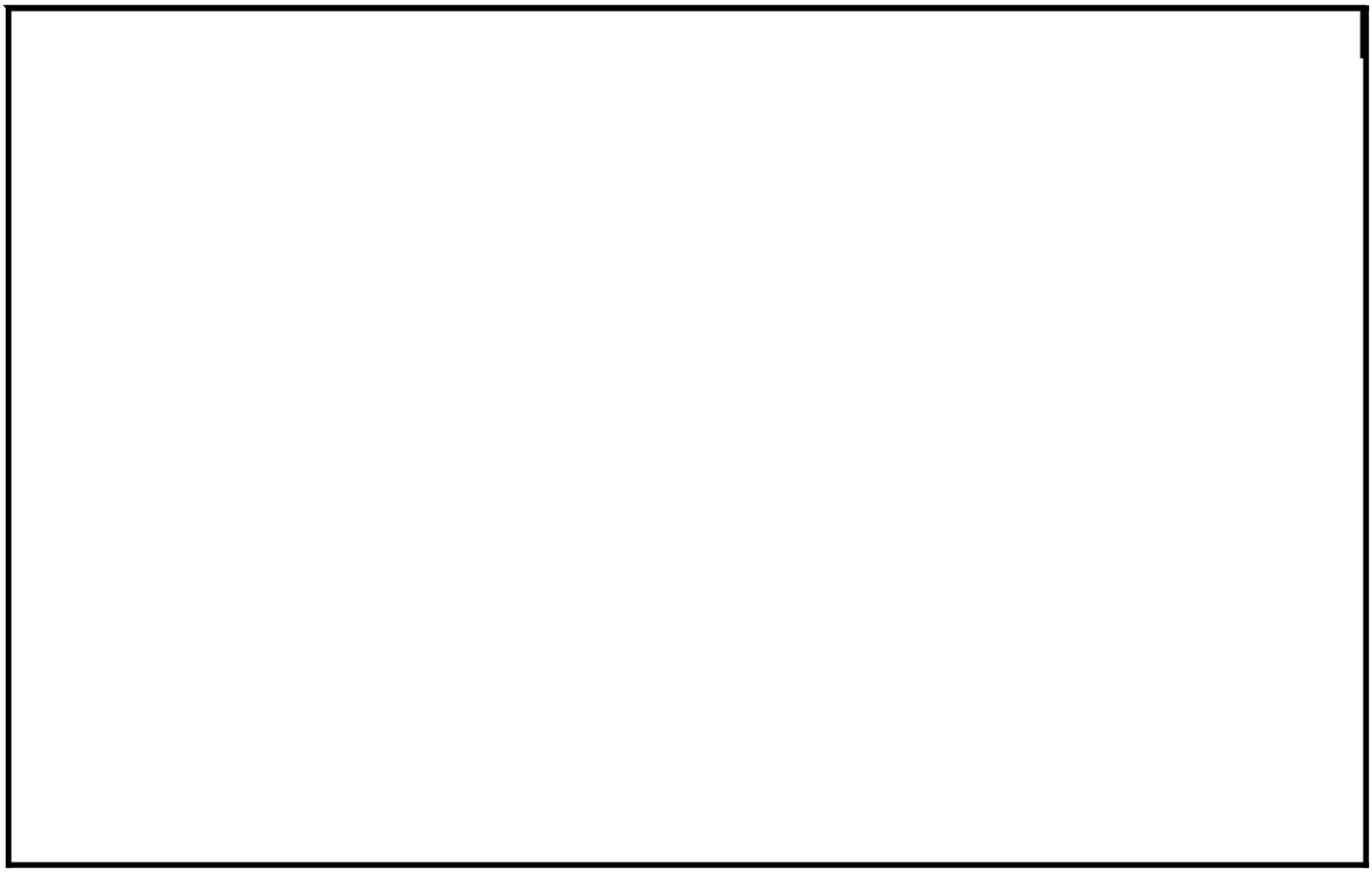

451-3240 INSTALLATION GP-COMMUNICATION

S/N: 5B41-UP; G441-
UP ROPS
AN ATTACHMENT

SMCS-1408, 1901, 1902, 5267, 7602, 7606, 7610, 7620

i07409054

	REF SEE NOTE QTY	GRAPHIC NO 1 2 3 4 5 6	(PRODUCT LEVEL)	REF PAGE	PART NAME PART NUMBER	
	1	1	**7K-1181**	14	STRAP-CABLE	
	2	1	**8T-8737**	8	PLUG-SEAL	
	3	1	**201-7833**	1	TIE DOWN	
	4	1	**463-7544**	1	PLATE AS	
M		1	**6V-9632**	6	NUT-WELD (M6X1-THD)	
	5	1	**393-1180**	1	CABLE AS-ANTENNA	
B		1	**1P-0810**	1	TAPE-ELECTRICAL	
YR	6	1	**440-2105**	1	CONTROL GP-ELECTRONIC (PRODUCT LINK ELITE 641 CELLULAR)	122
	7	1	**443-8462**	1	ANTENNA AS (CELLULAR)	
		1	**361-1045**	1	NUT-SPECIAL (5/8-18-THD)	
		1	**385-8201**	1	CAP AS-CONNECTOR	
	8	1	**451-3249**	1	BRACKET AS	
	9	1	**155-2265**	1	KIT-CONNECTING PLUG (8-PIN)	
					(INCLUDES PLUG AS, WEDGE, & INTERFACE SEAL)	
M	10	1	**6V-7357**	4	BOLT (M6X1X25-MM)	
M	11	1	**8T-4189**	3	BOLT (M8X1.25X20-MM)	
	12	1	**8T-4224**	2	WASHER-HARD (8.8X16X2-MM THK)	
	13	1	**9X-8256**	4	WASHER (6.6X12X2-MM THK)	
	14	1	**5P-4116**	3	WASHER-HARD (8.8X20.5X2-MM THK)	
FY		1	*478-8210*	1	ELECTRONICS GP-MONITOR (PL641 CELLULAR)	124

B - USE AS REQUIRED F - NOT SHOWN
M - METRIC PART
R - REMANUFACTURED PART MAY BE AVAILABLE Y - SEPARATE ILLUSTRATION

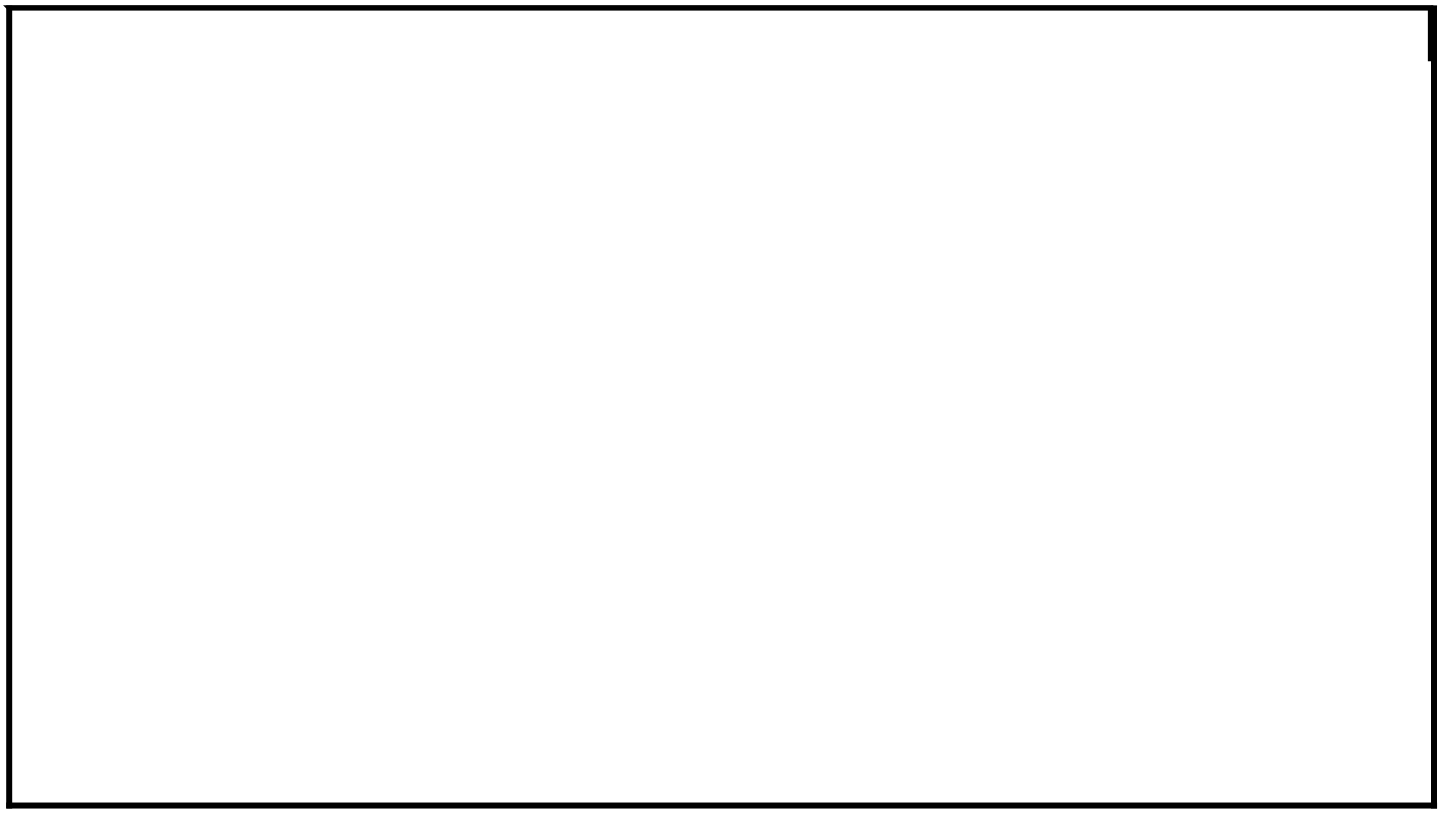

451-3240 **INSTALLATION GP-COMMUNICATION (**contd.**)** **i07409054**

GRAPHIC #1 <END> g06175517

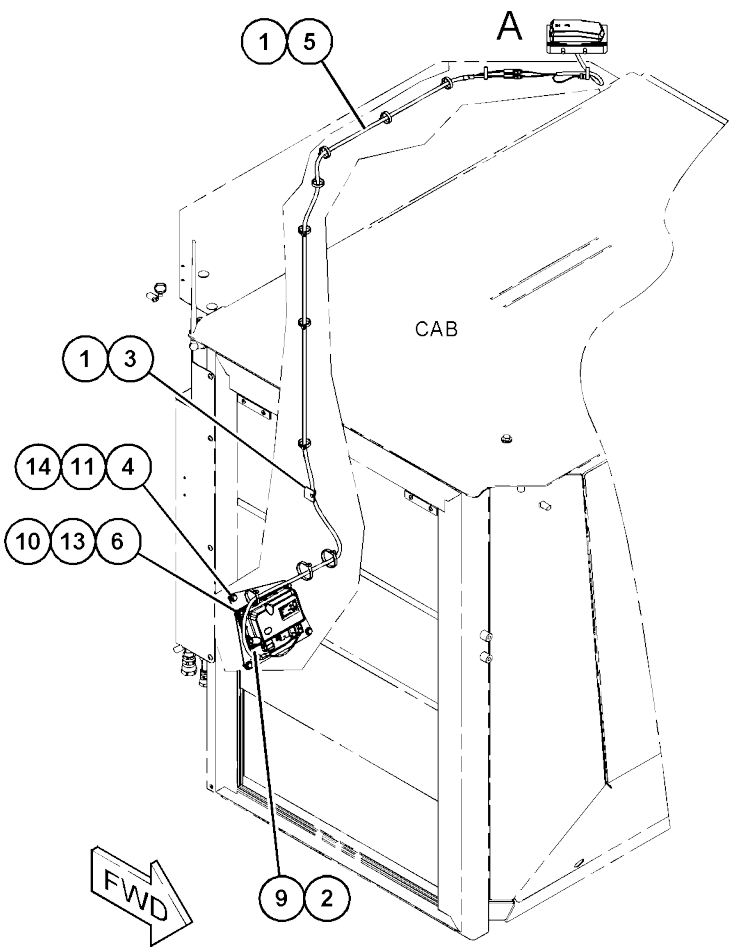

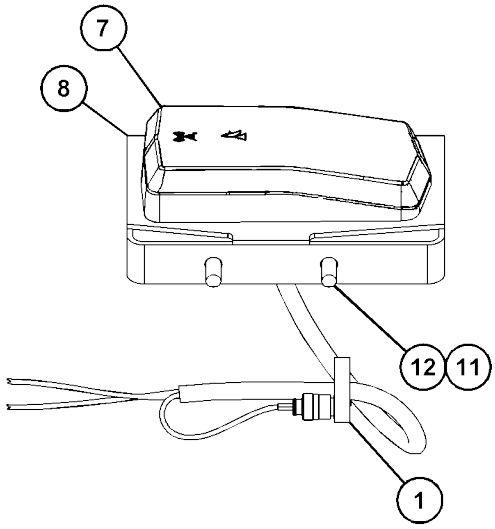

VIEW OF AREA A

451-3241 INSTALLATION GP-COMMUNICATION

S/N: 5B41-UP; G441-UP

AN

ATTACHMENT

SMCS-1408, 1901, 1902, 5267, 7602, 7606, 7610, 7620

i07409059

NOTE	REF NO	GRAPHIC REF	PART NUMBER	QTY	PART NAME 1 2 3 4 5 6 (PRODUCT LEVEL)	SEE PAGE
	1	1	**3S-2093**	9	STRAP-CABLE	
	2	1	**7K-1181**	8	STRAP-CABLE	
	3	1	**8T-8737**	8	PLUG-SEAL	
	4	1	**385-8201**	1	CAP AS-CONNECTOR	
	5	1	**393-1180**	1	CABLE AS-ANTENNA	
B		1	**1P-0810**	1	TAPE-ELECTRICAL	
YR	6	1	**440-2105**	1	CONTROL GP-ELECTRONIC (PRODUCT LINK ELITE 641 CELLULAR)	122
	7	1	**443-8462**	1	ANTENNA AS (CELLULAR)	
		1	**361-1045**	1	NUT-SPECIAL (5/8-18-THD)	
		1	**385-8201**	1	CAP AS-CONNECTOR	
	8	1	**463-7568**	1	PLATE	
	9	1	**155-2265**	1	KIT-CONNECTING PLUG (8-PIN)	
					(INCLUDES PLUG AS, WEDGE, & INTERFACE SEAL)	
M	10	1	**344-5674**	2	NUT (M8X1.25-THD)	
	11	1	**5P-4116**	4	WASHER-HARD (8.8X20.5X2-MM THK)	
M	12	1	**6V-7357**	4	BOLT (M6X1X25-MM)	
M	13	1	**8T-4908**	2	BOLT (M8X1.25X25-MM)	
M	14	1	**8T-7547**	2	BOLT (M8X1.25X30-MM)	
	15	1	**9X-8256**	4	WASHER (6.6X12X2-MM THK)	
E	16	1	**116-8528**		SLEEVE (43-CM)	

B - USE AS REQUIRED
E - ORDER BY THE CENTIMETER M - METRIC PART
R - REMANUFACTURED PART MAY BE AVAILABLE
Y - SEPARATE ILLUSTRATION

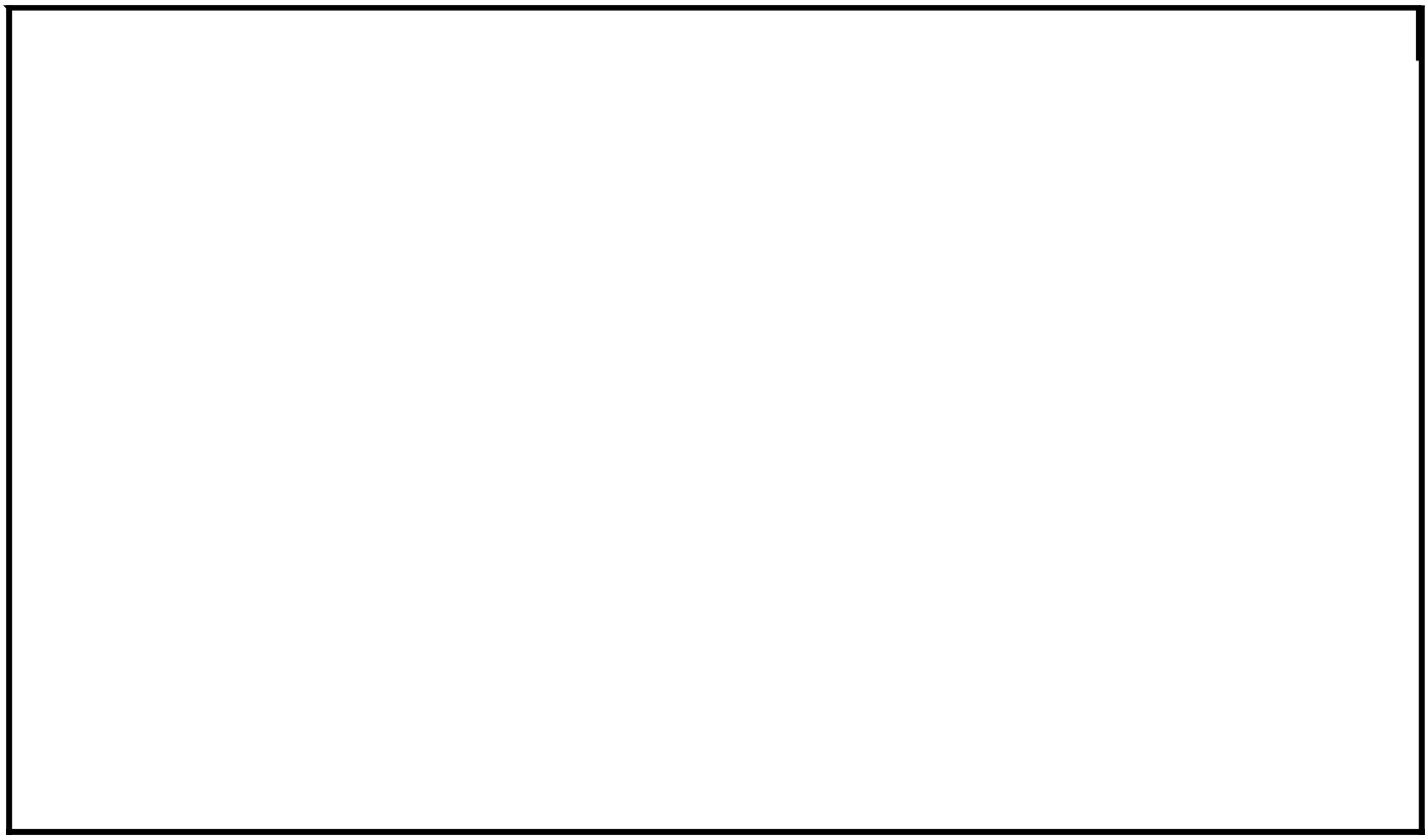

451-3241 **INSTALLATION GP-COMMUNICATION (**contd.**)** **i07409059**

GRAPHIC #1 <END> g06031723

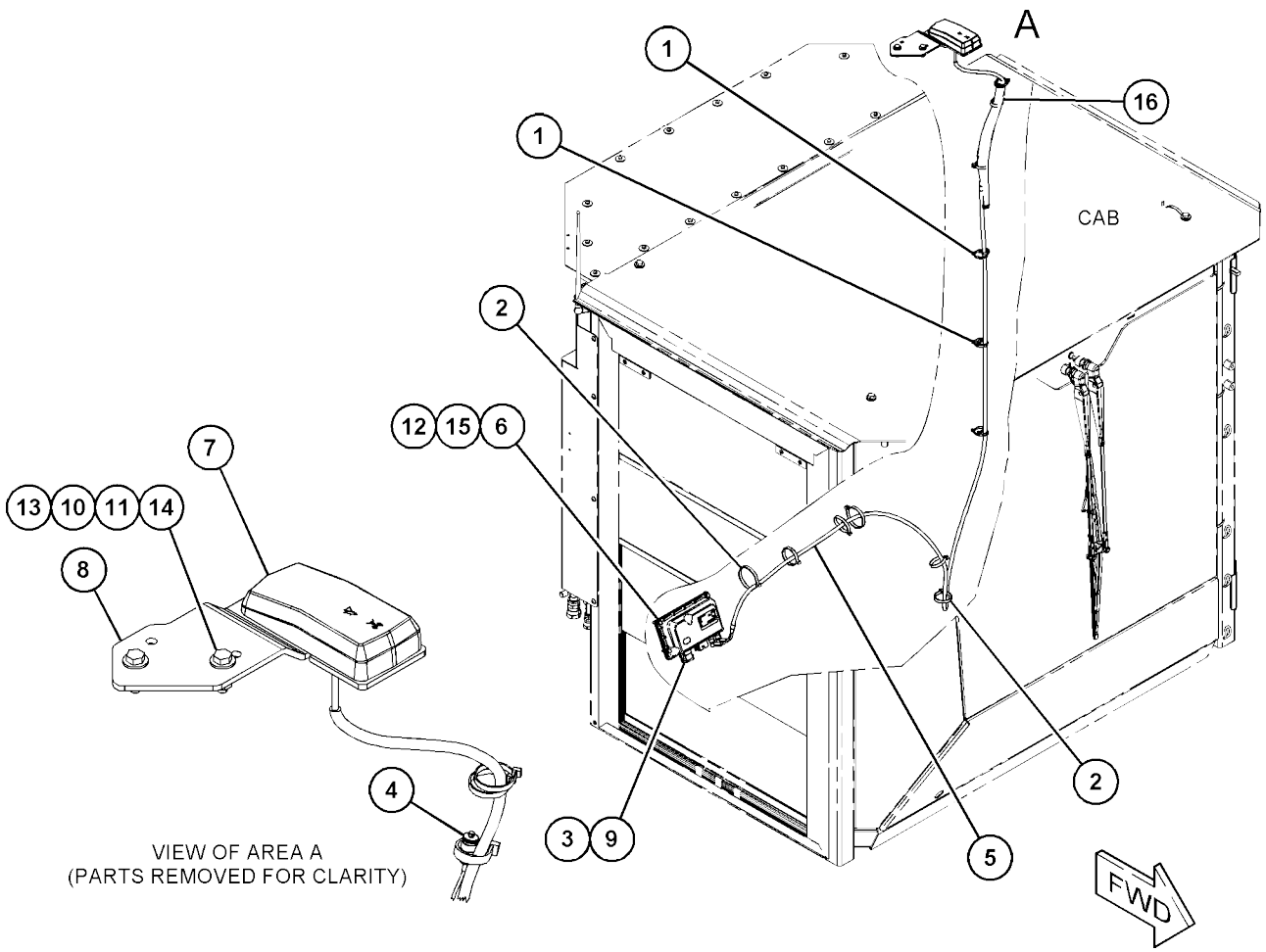
A
1
1
16
CAB
2
12
15
6
7
13
10
11
14
8
4
3
9
5
2
FWD
VIEW OF AREA A
(PARTS REMOVED FOR CLARITY)

451-3242 INSTALLATION GP-COMMUNICATION

S/N: 5B41-UP; G441-UP

AN

ATTACHMENT

SMCS-1408, 1901, 1902, 5267, 7602, 7606, 7610, 7620

i074090 61

NOTE	REF NO	GRAPHIC REF	PART NUMBER	QTY	PART NAME 1 2 3 4 5 6 (PRODUCT LEVEL)	SEE PAGE
	1	1	**3S-2093**	11	STRAP-CABLE	
	2	1	**7K-1181**	8	STRAP-CABLE	
	3	1	**8T-8737**	8	PLUG-SEAL	
	4	1	**365-6510**	1	CABLE AS-ANTENNA	
YR	6	1	**440-2105**	1	CONTROL GP-ELECTRONIC (PRODUCT LINK ELITE 641 CELLULAR)	122
	7	1	**443-8462**	1	ANTENNA AS (CELLULAR)	
		1	**361-1045**	1	NUT-SPECIAL (5/8-18-THD)	
		1	**385-8201**	1	CAP AS-CONNECTOR	
	8	1	**463-7544**	1	PLATE AS	
M		1	**6V-9632**	6	NUT-WELD (M6X1-THD)	
	9	1	**463-7568**	1	PLATE	
		1	**155-2265**	1	KIT-CONNECTING PLUG (8-PIN)	
					(INCLUDES PLUG AS, WEDGE, & INTERFACE SEAL)	
M	11	1	**344-5674**	2	NUT (M8X1.25-THD)	
	12	1	**5P-4116**	7	WASHER-HARD (8.8X20.5X2-MM THK)	
M	13	1	**6V-7357**	4	BOLT (M6X1X25-MM)	
M	14	1	**8T-4189**	3	BOLT (M8X1.25X20-MM)	
M	15	1	**8T-4908**	2	BOLT (M8X1.25X25-MM)	
M	16	1	**8T-7547**	2	BOLT (M8X1.25X30-MM)	
	17	1	**9X-8256**	4	WASHER (6.6X12X2-MM THK)	
E	18	1	**116-8528**		SLEEVE (43-CM)	
FY			*478-8210*	1	ELECTRONICS GP-MONITOR (PL641 CELLULAR)	124

E - ORDER BY THE CENTIMETER F - NOT SHOWN
M - METRIC PART
R - REMANUFACTURED PART MAY BE AVAILABLE Y - SEPARATE ILLUSTRATION

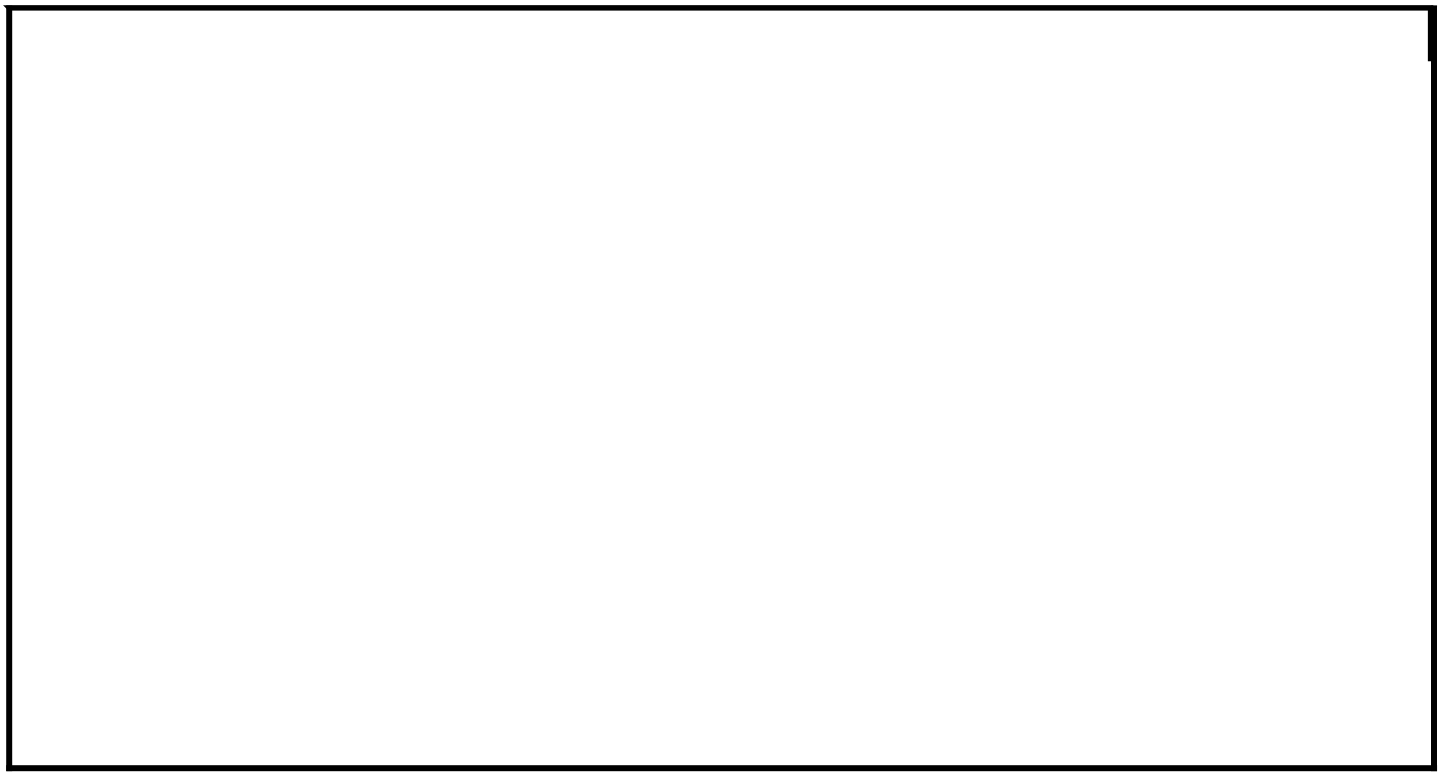

451-3242 **INSTALLATION GP-COMMUNICATION (**contd.**)** **i07409061**

GRAPHIC #1 <END> g06037366

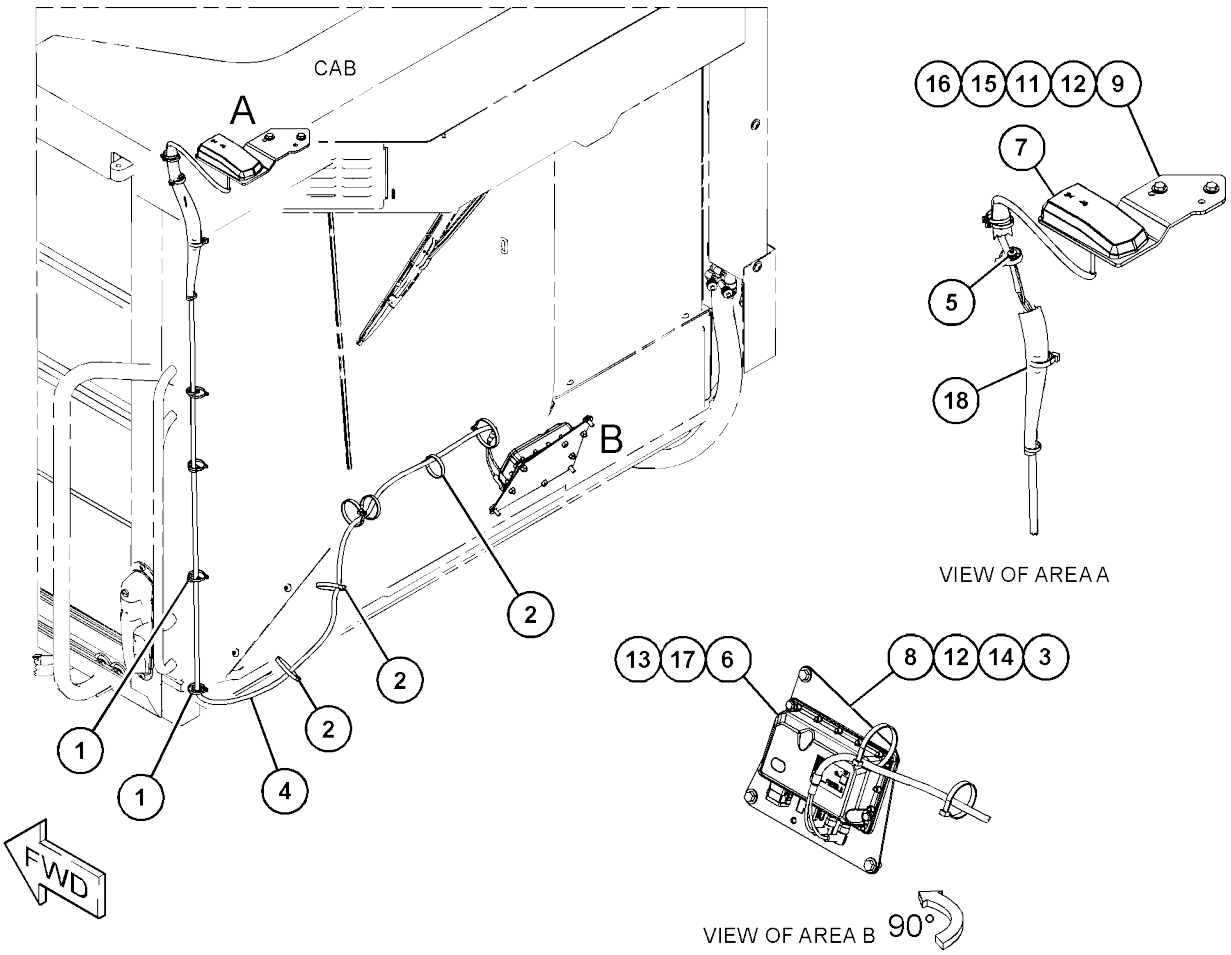
CAB
A
B
1
1
2
2
2
2
4
FWD
16
15
11
12
9
7
5
18
VIEW OF AREA A
13
17
6
8
12
14
3
VIEW OF AREA B
90°

451-3243 INSTALLATION GP-COMMUNICATION

S/N: 5B41-UP; G441-UP
ROPS
AN
ATTACHMENT

SMCS-1408, 1901, 1902, 5267, 7602, 7606, 7610, 7620

i074090 70

NOTE	REF NO	GRAPHIC REF	PART NUMBER	QTY	PART NAME 1 2 3 4 5 6 (PRODUCT LEVEL)	SEE PAGE
	1	1	**7K-1181**	14	STRAP-CABLE	
	2	1	**8T-8737**	8	PLUG-SEAL	
	3	1	**201-7833**	1	TIE DOWN	
	4	1	**5P-4116**	3	WASHER-HARD (8.8X20.5X2-MM THK)	
	5	1	**393-1180**	1	CABLE AS-ANTENNA	
B		1	**1P-0810**		TAPE-ELECTRICAL	
YR	6	1	**442-7199**	1	CONTROL GP-UNPROGRAMMED (PRODUCT LINK ELITE 631 SATELLITE)	123
	7	1	**443-8462**	1	ANTENNA AS (CELLULAR)	
		1	**361-1045**	1	NUT-SPECIAL (5/8-18-THD)	
		1	**385-8201**	1	CAP AS-CONNECTOR	
	8	1	**451-3249**	1	BRACKET AS	
	9	1	**155-2265**	1	KIT-CONNECTING PLUG (8-PIN)	
					(INCLUDES PLUG AS, WEDGE, & INTERFACE SEAL)	
M	10	1	**6V-7357**	4	BOLT (M6X1X25-MM)	
M	11	1	**8T-4189**	5	BOLT (M8X1.25X20-MM)	
	12	1	**8T-4224**	2	WASHER-HARD (8.8X16X2-MM THK)	
	13	1	**9X-8256**	4	WASHER (6.6X12X2-MM THK)	
	14	1	**463-7544**	1	PLATE AS	
M		1	**6V-9632**	6	NUT-WELD (M6X1-THD)	
FY		1	*478-8212*	1	ELECTRONICS GP-MONITOR (PL631)	125

B - USE AS REQUIRED F - NOT SHOWN
M - METRIC PART
R - REMANUFACTURED PART MAY BE AVAILABLE Y - SEPARATE ILLUSTRATION

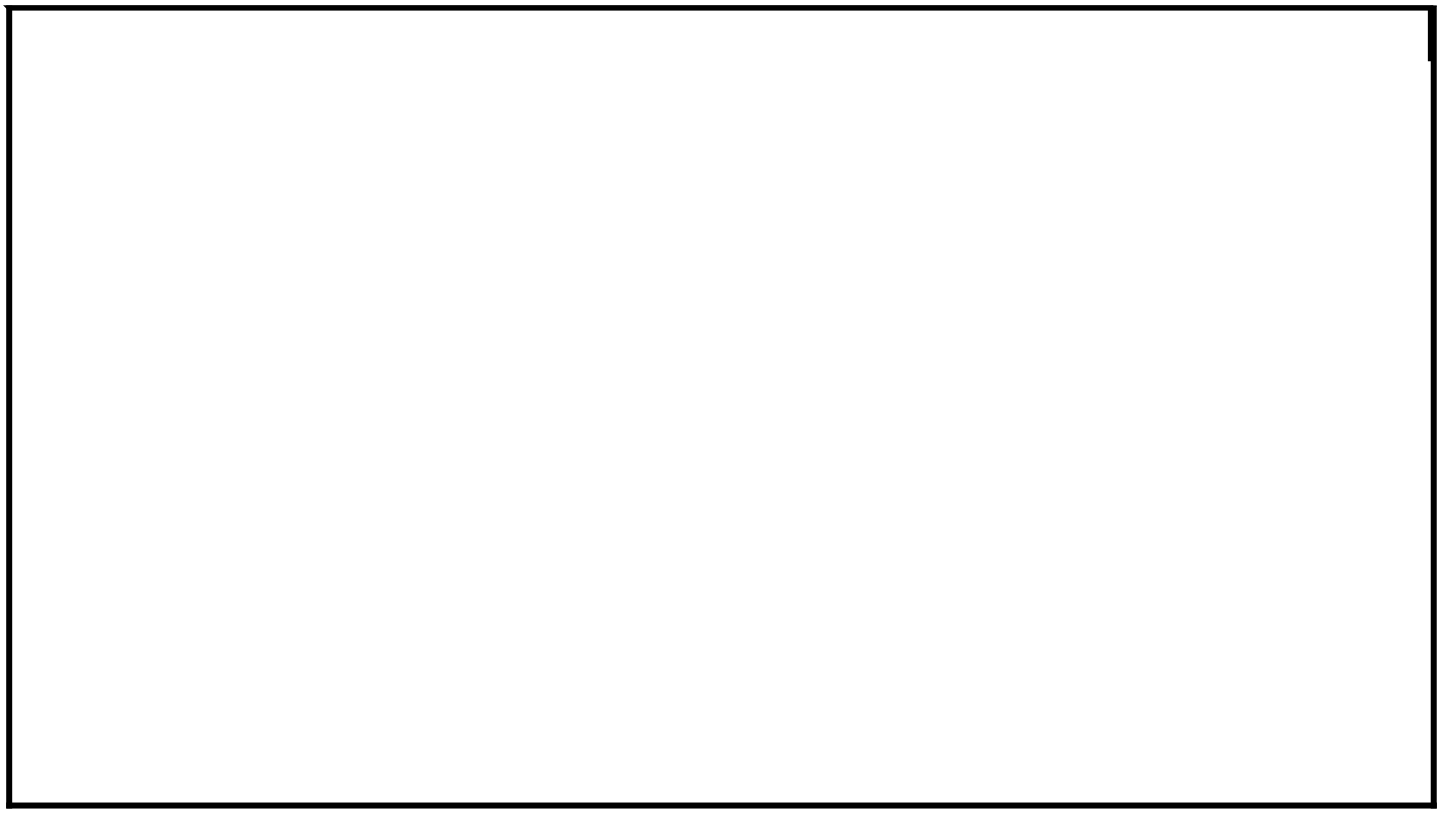

451-3243 **INSTALLATION GP-COMMUNICATION (**contd.**)** **i07409070**

GRAPHIC #1 <END> g06189469

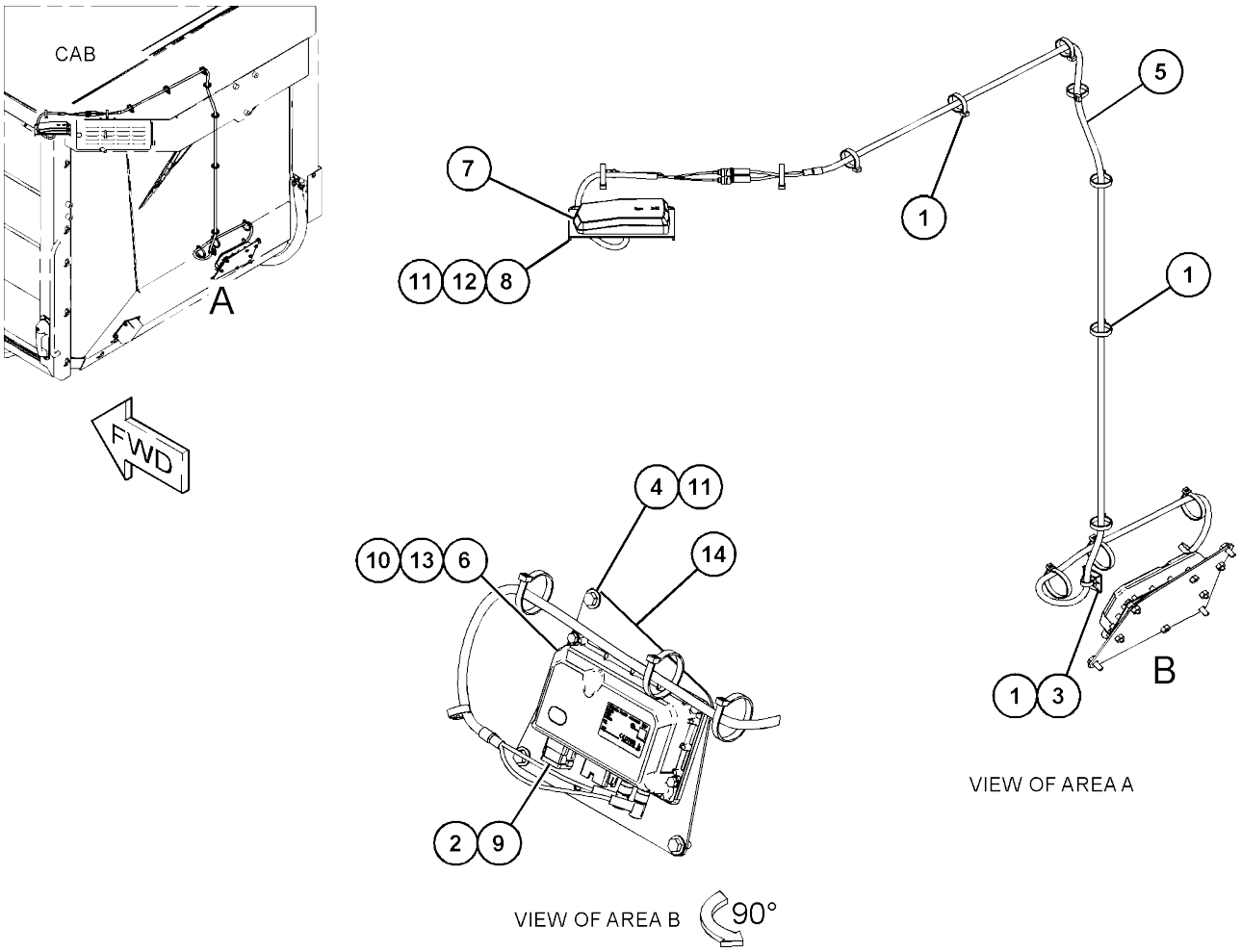
CAB
A
FWD
7
11
12
8
1
5
1
4
11
14
10
13
6
2
9
1
3
B
VIEW OF AREA A
VIEW OF AREA B
90°

451-3244 INSTALLATION GP-COMMUNICATION-PL631

S/N: 5B41-UP; G441-
UP
CAB
AN ATTACHMENT

SMCS-1408, 1901, 1902, 5267, 7602, 7606, 7610, 7620

i07409071

NOTE	REF NO	GRAPHIC REF	PART NUMBER	QTY	PART NAME 1 2 3 4 5 6 (PRODUCT LEVEL)	SEE PAGE
	1	1	**3S-2093**	9	STRAP-CABLE	
	2	1	**7K-1181**	8	STRAP-CABLE	
	3	1	**8T-8737**	8	PLUG-SEAL	
	4	1	**385-8201**	1	CAP AS-CONNECTOR	
	5	1	**393-1180**	1	CABLE AS-ANTENNA	
B		1	**1P-0810**		TAPE-ELECTRICAL	
YR	6	1	**442-7199**	1	CONTROL GP-UNPROGRAMMED (PRODUCT LINK ELITE 631 SATELLITE)	123
	7	1	**443-8462**	1	ANTENNA AS (CELLULAR)	
		1	**361-1045**	1	NUT-SPECIAL (5/8-18-THD)	
		1	**385-8201**	1	CAP AS-CONNECTOR	
	8	1	**463-7568**	1	PLATE	
	9	1	**155-2265**	1	KIT-CONNECTING PLUG (8-PIN)	
					(INCLUDES PLUG AS, WEDGE, & INTERFACE SEAL)	
M	10	1	**344-5674**	2	NUT (M8X1.25-THD)	
	11	1	**5P-4116**	4	WASHER-HARD (8.8X20.5X2-MM THK)	
M	12	1	**6V-7357**	4	BOLT (M6X1X25-MM)	
M	13	1	**8T-4908**	2	BOLT (M8X1.25X25-MM)	
M	14	1	**8T-7547**	2	BOLT (M8X1.25X30-MM)	
	15	1	**9X-8256**	4	WASHER (6.6X12X2-MM THK)	
E	16	1	**116-8528**		SLEEVE (43-CM)	

B - USE AS REQUIRED
E - ORDER BY THE CENTIMETER M - METRIC PART
R - REMANUFACTURED PART MAY BE AVAILABLE
Y - SEPARATE ILLUSTRATION

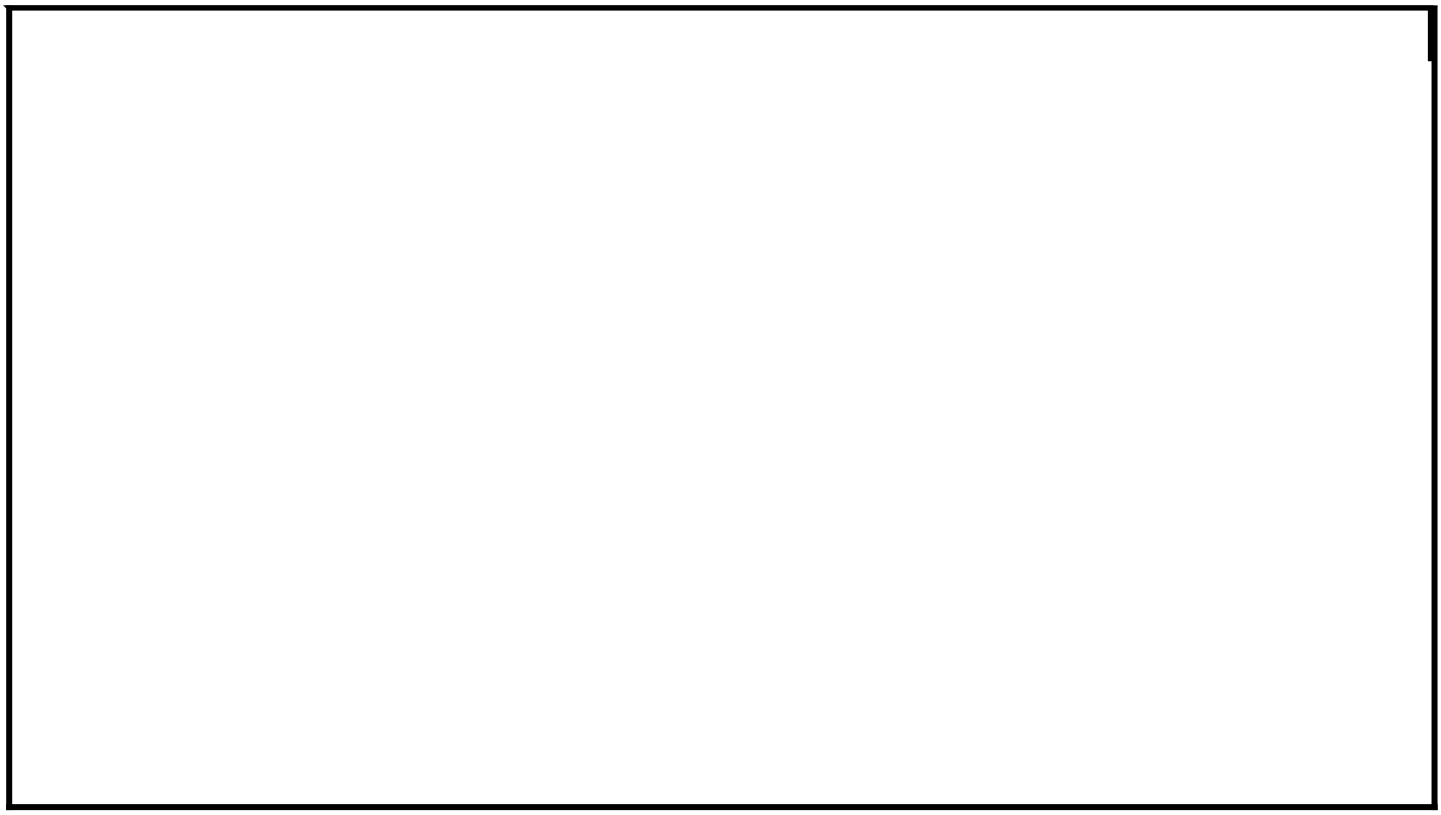

451-3244 **INSTALLATION GP-COMMUNICATION (**contd.**)** **i07409071**

GRAPHIC #1 <END> g06031803

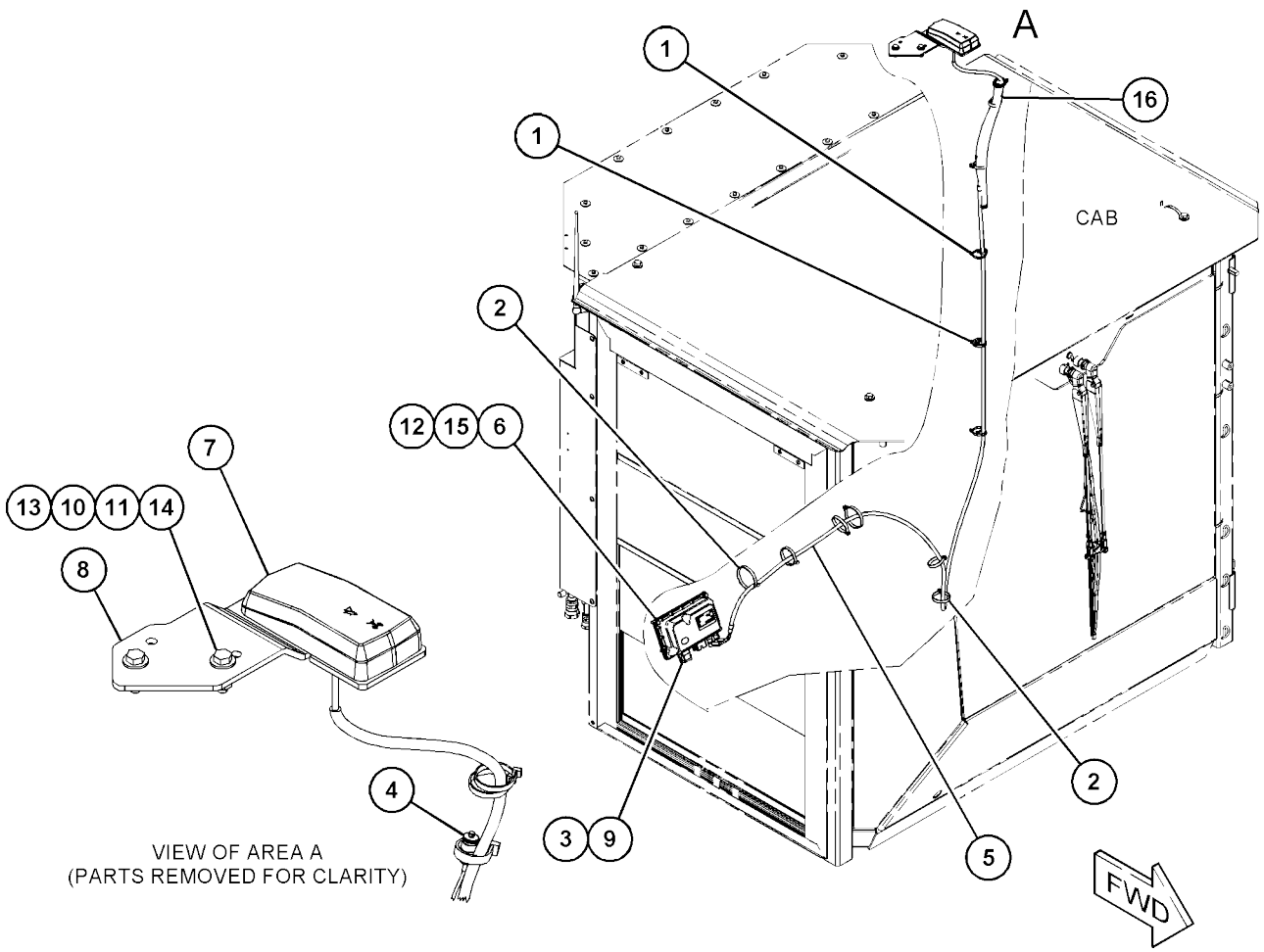
A
1
1
16
CAB
2
12
15
6
7
13
10
11
14
8
4
3
9
5
2
FWD
VIEW OF AREA A
(PARTS REMOVED FOR CLARITY)

ELECTRICAL AND STARTING SYSTEM

479-4114 INSTALLATION GP-COMMUNICATION

S/N: 5B41-UP; G441-UP

PART OF 514-1273 INSTALLATION AR-COMMUNICATION

AN ATTACHMENT

SMCS-1408, 1901, 1902, 5267, 7602, 7606, 7610, 7620

i07416499

	REF SEE NOTE QTY	GRAPHIC NO 1 2 3 4 5 6	(PRODUCT LEVEL)	REF PAGE	PART NAME PART NUMBER
	1	1	**450-9199**	1	RECEIVER GP-SATELLITE (GPS)
		1	**528-4971**	1	SOFTWARE GP-MONITOR (SATELLITE RECEIVER)
	2	1	**386-7311**	1	ANTENNA (GPS)
	3	1	**393-0083**	1	CABLE AS-ANTENNA
	4	1	**434-7537**	1	BRACKET
	5	1	**132-5789**	1	CLIP (LADDER)
	6	1	**9R-7216**	1	SPACER (20X40X20-MM THK)
	7	1	**4P-7581**	1	CLIP (LADDER)
	8	1	**5P-4116**	3	WASHER-HARD (8.8X20.5X2-MM THK)
	9	1	**7K-1181**	16	STRAP-CABLE
	10	1	**7X-0345**	1	BOLT (5/8-11X1.75-IN)
	11	1	**8T-4122**	1	WASHER-HARD (17X32X3.5-MM THK)
M	12	1	**8T-4138**	4	BOLT (M6X1X20-MM)
M	13	1	**8T-4189**	3	BOLT (M8X1.25X20-MM)
	14	1	**9X-8256**	4	WASHER (6.6X12X2-MM THK)

M - METRIC PART

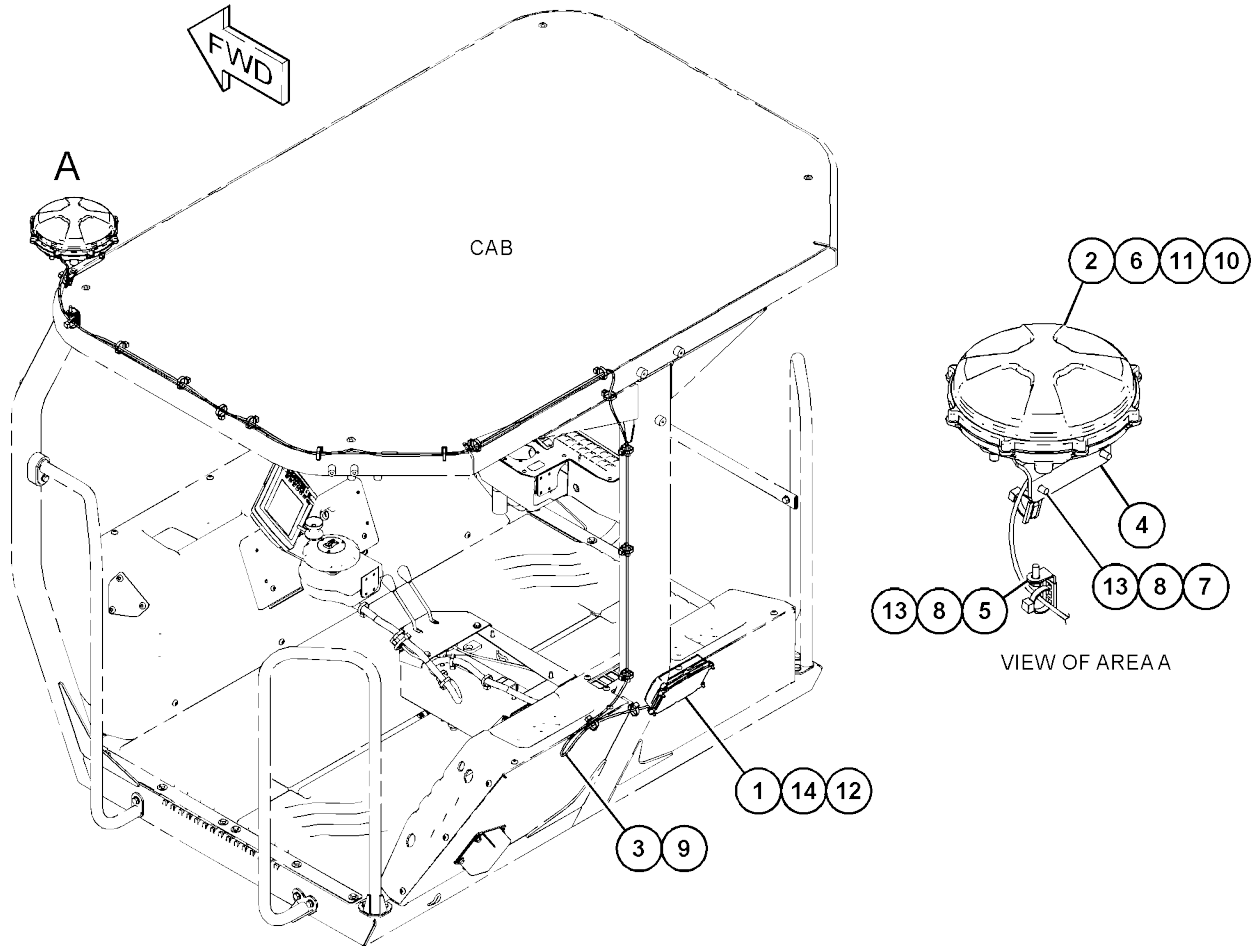

GRAPHIC #1 <END> g03816586

479-4115 INSTALLATION GP-COMMUNICATION–PRODUCT LINK

S/N: 5B41-UP; G441-UP

PART OF 514-1274 INSTALLATION AR-COMMUNICATION

AN ATTACHMENT

SMCS-1408, 1901, 1902, 5267, 7602, 7606, 7610, 7620

i07416502

NOTE	REF NO	GRAPHIC REF	PART NUMBER	QTY	PART NAME 1 2 3 4 5 6 (PRODUCT LEVEL)	SEE PAGE
	1	1	**450-9199**	1	RECEIVER GP-SATELLITE (GPS)	
		1	**528-4971**	1	SOFTWARE GP-MONITOR (SATELLITE RECEIVER)	
	2	1	**386-7311**	1	ANTENNA (GPS)	
	3	1	**393-0083**	1	CABLE AS-ANTENNA	
	4	1	**434-7540**	1	BRACKET	
	5	1	**9R-7216**	1	SPACER (20X40X20-MM THK)	
	6	1	**5P-4116**	2	WASHER-HARD (8.8X20.5X2-MM THK)	
	7	1	**7K-1181**	17	STRAP-CABLE	
	8	1	**7X-0345**	1	BOLT (5/8-11X1.75-IN)	
	9	1	**8T-4122**	1	WASHER-HARD (17X32X3.5-MM THK)	
M	10	1	**8T-4138**	4	BOLT (M6X1X20-MM)	
M	11	1	**8T-4908**	2	BOLT (M8X1.25X25-MM)	
	12	1	**9X-8256**	4	WASHER (6.6X12X2-MM THK)	

M - METRIC PART

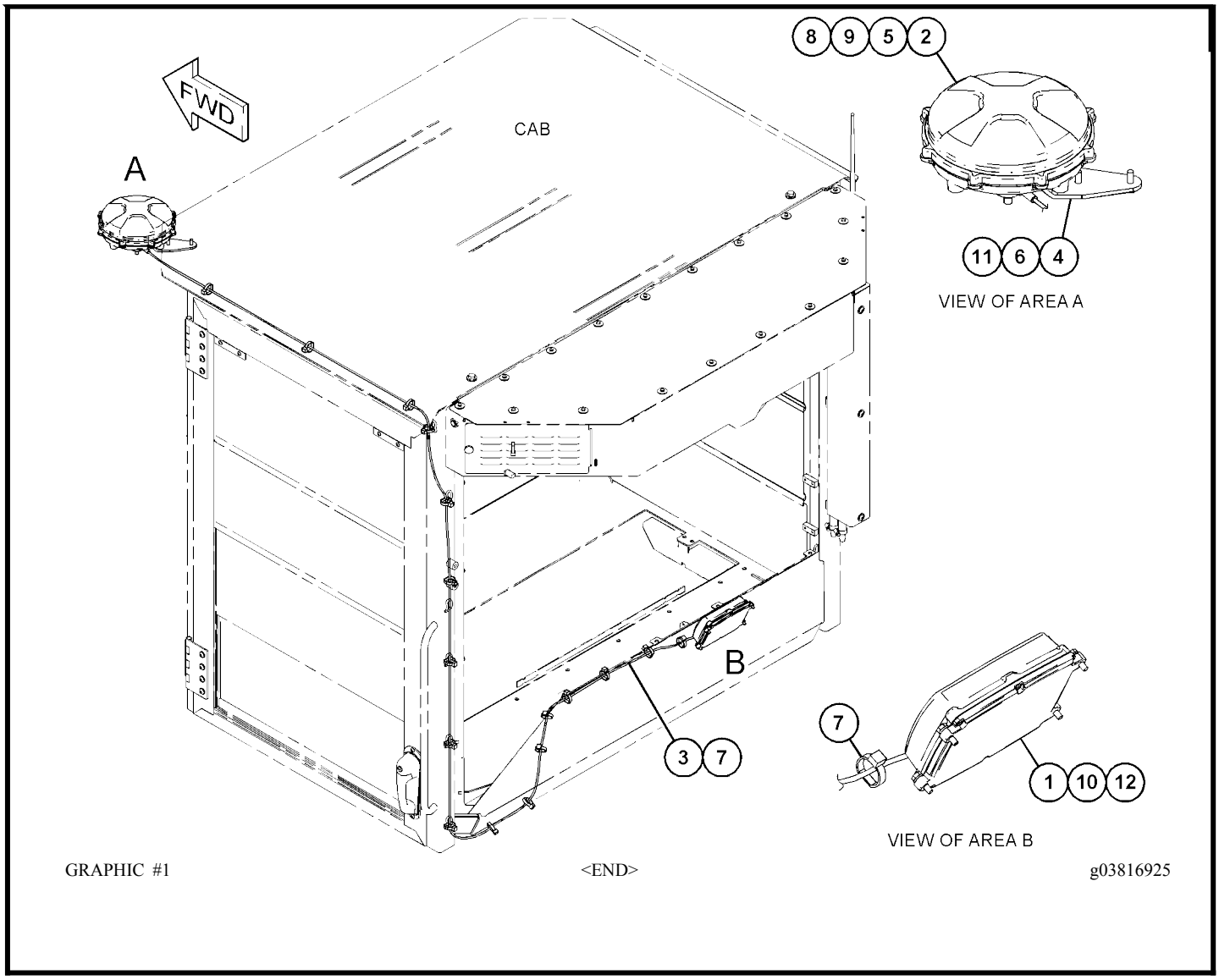

GRAPHIC #1 <END> g03816925

513-6263 INSTALLATION GP-COMMUNICATION

S/N: 5B41-UP; G441-UP

AN

ATTACHMENT

SMCS-1408, 1901, 1902, 5267, 7602, 7606, 7610, 7620

i07416485

NOTE	REF NO	GRAPHIC REF	PART NUMBER	QTY	PART NAME 1 2 3 4 5 6 (PRODUCT LEVEL)	SEE PAGE
	1	1	**483-2126**	1	ANTENNA AS (CELLULAR/GPS)	
	2	1	**483-2127**	1	ANTENNA AS (WI-FI)	
	3	1	**483-2128**	1	HARNESS AS-CONTROL	
	4	1	**492-2631**	1	CONTROL GP-COMMUNICATION	
	5	1	**277-1873**	2	CLIP (LADDER)	
	6	1	**352-3968**	2	CLIP (LADDER)	
M	7	1	**5C-9553**	1	BOLT (M6X1X16-MM)	
	8	1	**5P-4115**	4	WASHER-HARD (7.2X19X2-MM THK)	
	9	1	**7K-1181**	22	STRAP-CABLE	
	10	1	**8T-4121**	1	WASHER-HARD (11X21X2.5-MM THK)	
M	11	1	**8T-4137**	1	BOLT (M10X1.5X20-MM)	
M	12	1	**8T-4138**	3	BOLT (M6X1X20-MM)	
M	13	1	**8T-4189**	1	BOLT (M8X1.25X20-MM)	
	14	1	**8T-4224**	1	WASHER-HARD (8.8X16X2-MM THK)	
	15	1	**201-7833**	5	TIE DOWN	

M - METRIC PART

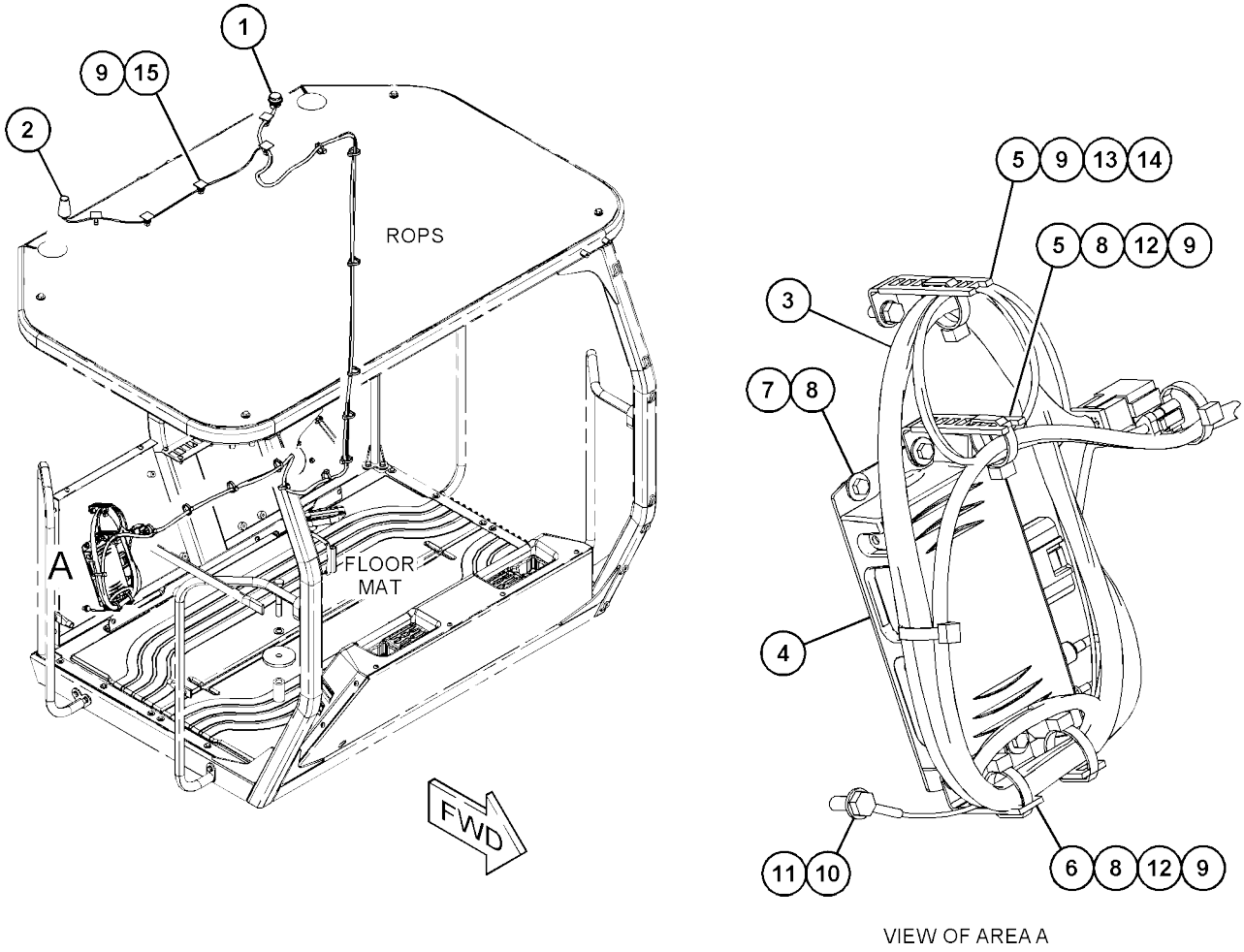

GRAPHIC #1 <END> g06205662

517-5373 INSTALLATION GP-COMMUNICATION

S/N: 5B41-UP; G441-UP

AN

ATTACHMENT

SMCS-1408, 1901, 1902, 5267, 7602, 7606, 7610, 7620

i074165 18

NOTE	REF NO	GRAPHIC REF	PART NUMBER	QTY	PART NAME 1 2 3 4 5 6 (PRODUCT LEVEL)	SEE PAGE
	1	1	**475-4984**	1	CONTROL GP-COMMUNICATION	
	2	1	**483-2126**	1	ANTENNA AS (CELLULAR/GPS)	
	3	1	**483-2127**	1	ANTENNA AS (WI-FI)	
	4	1	**483-2128**	1	HARNESS AS-CONTROL	
	5	1	**277-1873**	2	CLIP (LADDER)	
	6	1	**352-3968**	2	CLIP (LADDER)	
M	7	1	**5C-9553**	1	BOLT (M6X1X16-MM)	
	8	1	**5P-4115**	4	WASHER-HARD (7.2X19X2-MM THK)	
	9	1	**7K-1181**	22	STRAP-CABLE	
	10	1	**8T-4121**	1	WASHER-HARD (11X21X2.5-MM THK)	
M	11	1	**8T-4137**	1	BOLT (M10X1.5X20-MM)	
M	12	1	**8T-4138**	3	BOLT (M6X1X20-MM)	
M	13	1	**8T-4189**	1	BOLT (M8X1.25X20-MM)	
	14	1	**8T-4224**	1	WASHER-HARD (8.8X16X2-MM THK)	
	15	1	**201-7833**	5	TIE DOWN	

M - METRIC PART

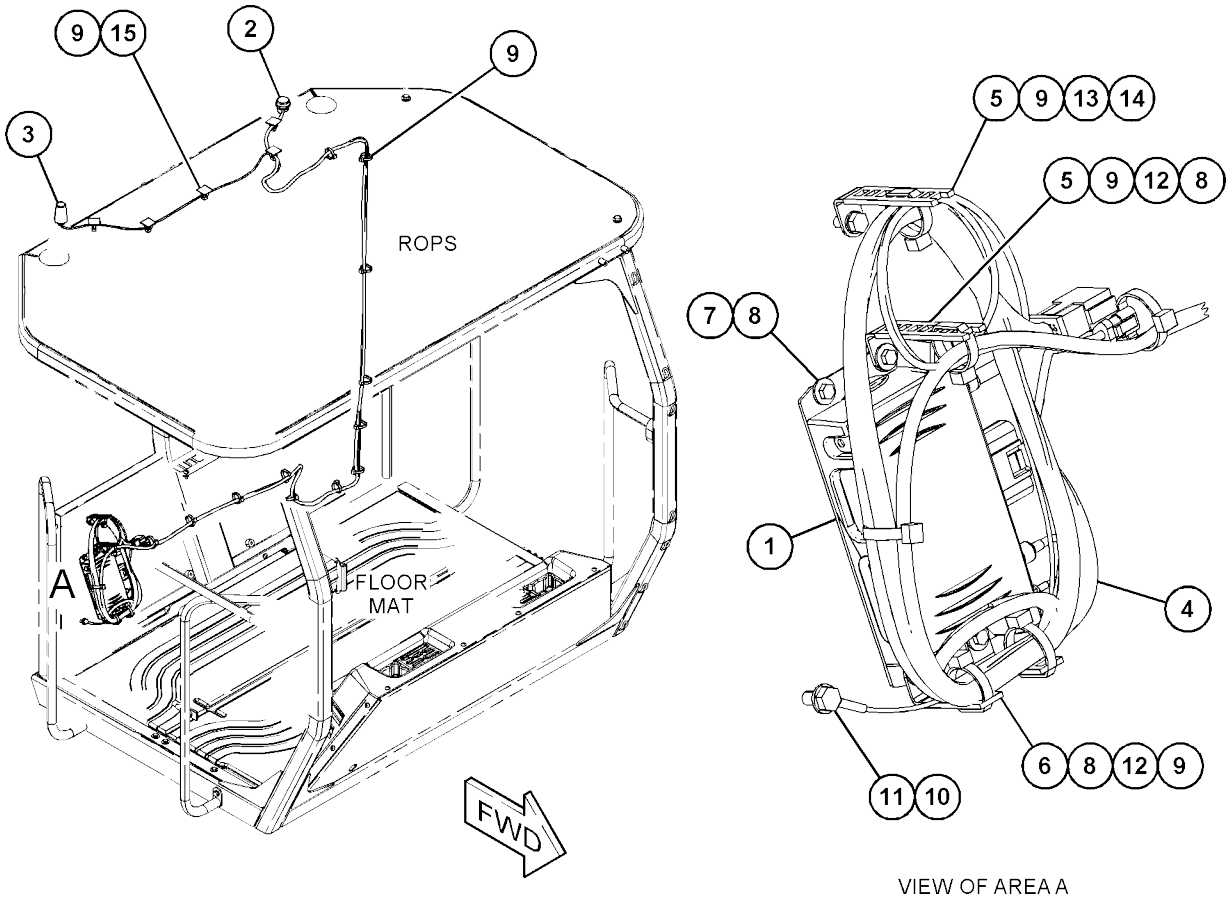

GRAPHIC #1 <END> g06205305

567-4607 INSTALLATION GP-COMMUNICATION-SNM941

S/N: 5B41-UP; G441-UP

AN ATTACHMENT

SMCS-1408, 1901, 1902, 5267, 7602, 7606, 7610, 7620

i07534649

NOTE	REF NO	GRAPHIC REF	PART NUMBER	QTY	PART NAME 1 2 3 4 5 6 (PRODUCT LEVEL)	SEE PAGE
	1	1	**483-2128**	1	HARNESS AS-CONTROL	
	2	1	**544-2908**	1	CONTROL GP-COMMUNICATION (SNM941)	
	3	1	**544-2921**	1	CABLE AS	
	4	1	**277-1873**	2	CLIP (LADDER)	
	5	1	**352-3968**	2	CLIP (LADDER)	
	6	1	**544-2919**	1	ANTENNA AS	
M	7	1	**5C-9553**	1	BOLT (M6X1X16-MM)	
	8	1	**5P-4115**	4	WASHER-HARD (7.2X19X2-MM THK)	
	9	1	**7K-1181**	17	STRAP-CABLE	
	10	1	**8P-8540**	1	GROMMET	
	11	1	**8T-4121**	1	WASHER-HARD (11X21X2.5-MM THK)	
M	12	1	**8T-4137**	1	BOLT (M10X1.5X20-MM)	
M	13	1	**8T-4138**	3	BOLT (M6X1X20-MM)	
M	14	1	**8T-4189**	1	BOLT (M8X1.25X20-MM)	
	15	1	**8T-4224**	1	WASHER-HARD (8.8X16X2-MM THK)	

M - METRIC PART

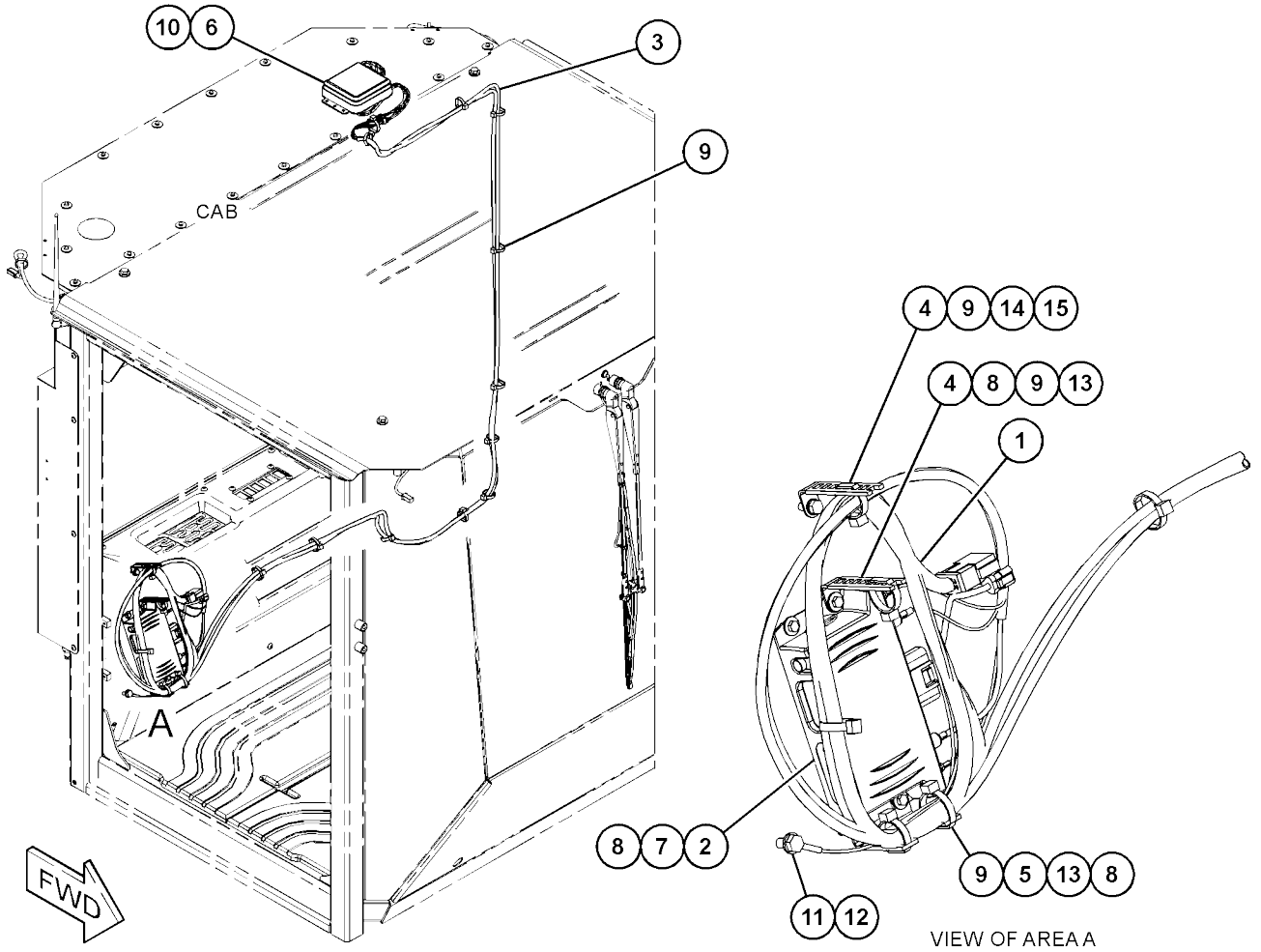

GRAPHIC #1 <END> g06353818

567-4608 INSTALLATION GP-COMMUNICATION-SNM941

S/N: 5B41-UP; G441-UP

AN ATTACHMENT

SMCS-1408, 1901, 1902, 5267, 7602, 7606, 7610, 7620

i07531837

NOTE	REF NO	GRAPHIC REF	PART NUMBER	QTY	PART NAME 1 2 3 4 5 6 (PRODUCT LEVEL)	SEE PAGE
	1	1	**483-2128**	1	HARNESS AS-CONTROL	
	2	1	**548-8002**	1	CONTROL GP-COMMUNICATION	
	3	1	**277-1873**	2	CLIP (LADDER)	
	4	1	**352-3968**	2	CLIP (LADDER)	
	5	1	**544-2919**	1	ANTENNA AS	
	6	1	**544-2921**	1	CABLE AS	
M	7	1	**5C-9553**	1	BOLT (M6X1X16-MM)	
	8	1	**5P-4115**	4	WASHER-HARD (7.2X19X2-MM THK)	
	9	1	**7K-1181**	17	STRAP-CABLE	
	10	1	**8P-8540**	1	GROMMET	
	11	1	**8T-4121**	1	WASHER-HARD (11X21X2.5-MM THK)	
M	12	1	**8T-4137**	1	BOLT (M10X1.5X20-MM)	
M	13	1	**8T-4138**	3	BOLT (M6X1X20-MM)	
M	14	1	**8T-4189**	1	BOLT (M8X1.25X20-MM)	
	15	1	**8T-4224**	1	WASHER-HARD (8.8X16X2-MM THK)	

M - METRIC PART

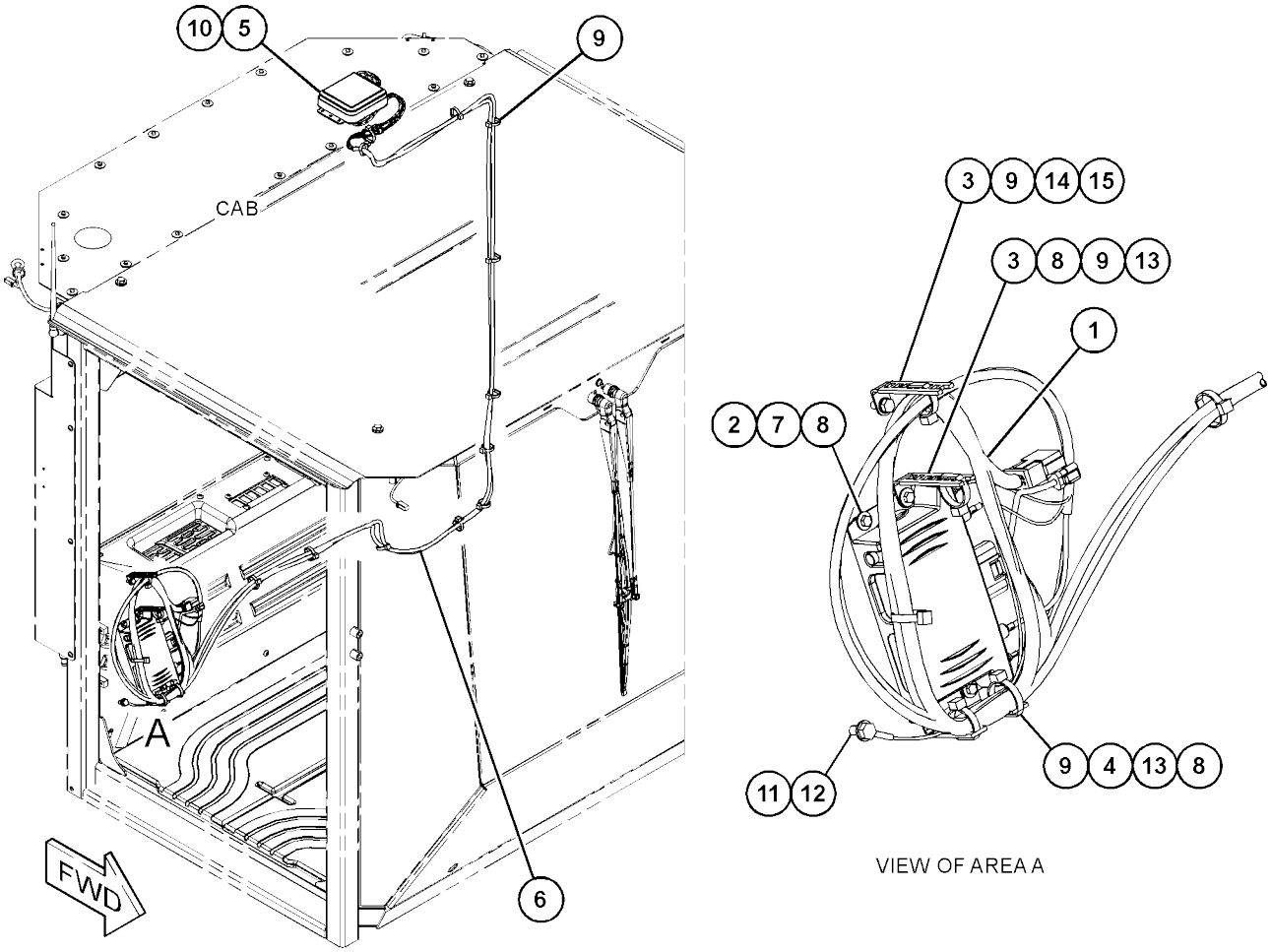

GRAPHIC #1 <END> g06353826

3E-7301 LAMP GP-DOME-WITH SWITCH

S/N: 5B41-UP; G441-UP
12-VOLT
PART OF 362-2581, 416-4308 WIRING GP-CAB
AN ATTACHMENT

SMCS-1433 **i074061 39**

NOTE	REF NO	GRAPHIC REF	PART NUMBER	QTY	PART NAME 1 2 3 4 5 6 (PRODUCT LEVEL)	SEE PAGE
	1	1	**102-8803**	1	KIT-RECEPTACLE (3-PIN)	
					(INCLUDES RECEPTACLE AS & WEDGE)	
	2	1	**186-3735**	3	PIN-CONNECTOR (16-GA TO 18-GA)	
	3	1	**7T-0020**	1	LENS-DOME LAMP	
	4	1	**7M-9957**	1	LAMP (12-VOLT, 7.5-WATT) (DOME)	

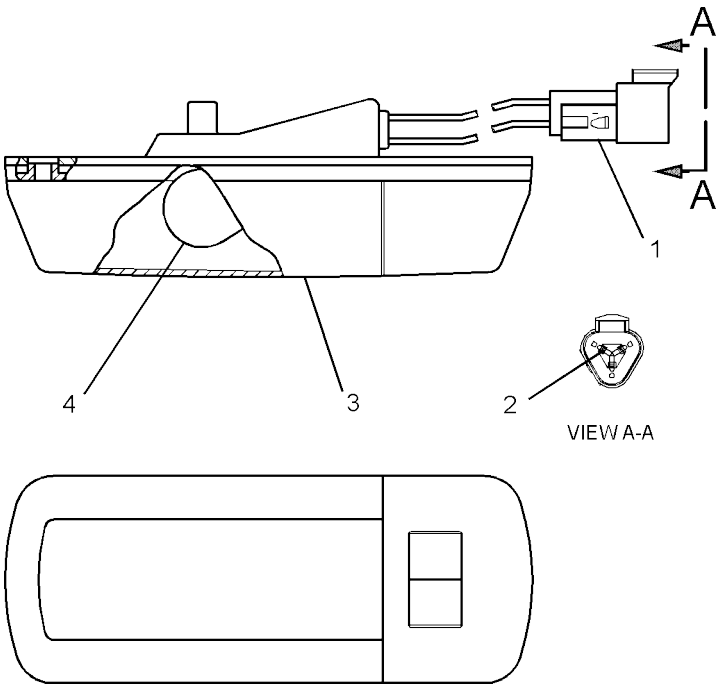

GRAPHIC #1 <END> g01278083

212-9347 LAMP GP-FLOOD-

VERTICAL

S/N: 5B41-UP; G441-UP

12-VOLT

PART OF 351-3439, 351-3441, 419-4040, 419-4041 LIGHTING GP-FLOOD

AN ATTACHMENT

SMCS-1434 **i074036 32**

NOTE	REF NO	GRAPHIC REF	PART NUMBER	QTY	PART NAME 1 2 3 4 5 6 (PRODUCT LEVEL)	SEE PAGE
	1	1	**9W-0607**	1	LAMP (12-VOLT, 55-WATT) (FLOODLIGHT)	
M	2	1	**9X-4244**	2	SCREW-SPECIAL (M4X1.79X25-MM)	
	3	1	**202-6614**	1	LENS AS	
	4	1	**175-4292**	1	BODY AS	
	5	1	**164-7556**	1	BRACKET (LAMP RETAINING)	
M	6	1	**6V-2317**	1	BOLT (M8X1.25X30-MM)	
M	7	1	**5C-7261**	1	NUT (M8X1.25-THD)	
	8	1	**8T-4224**	2	WASHER-HARD (8.8X16X2-MM THK)	
	9	1	**175-4291**	1	BRACKET AS	

M - METRIC PART

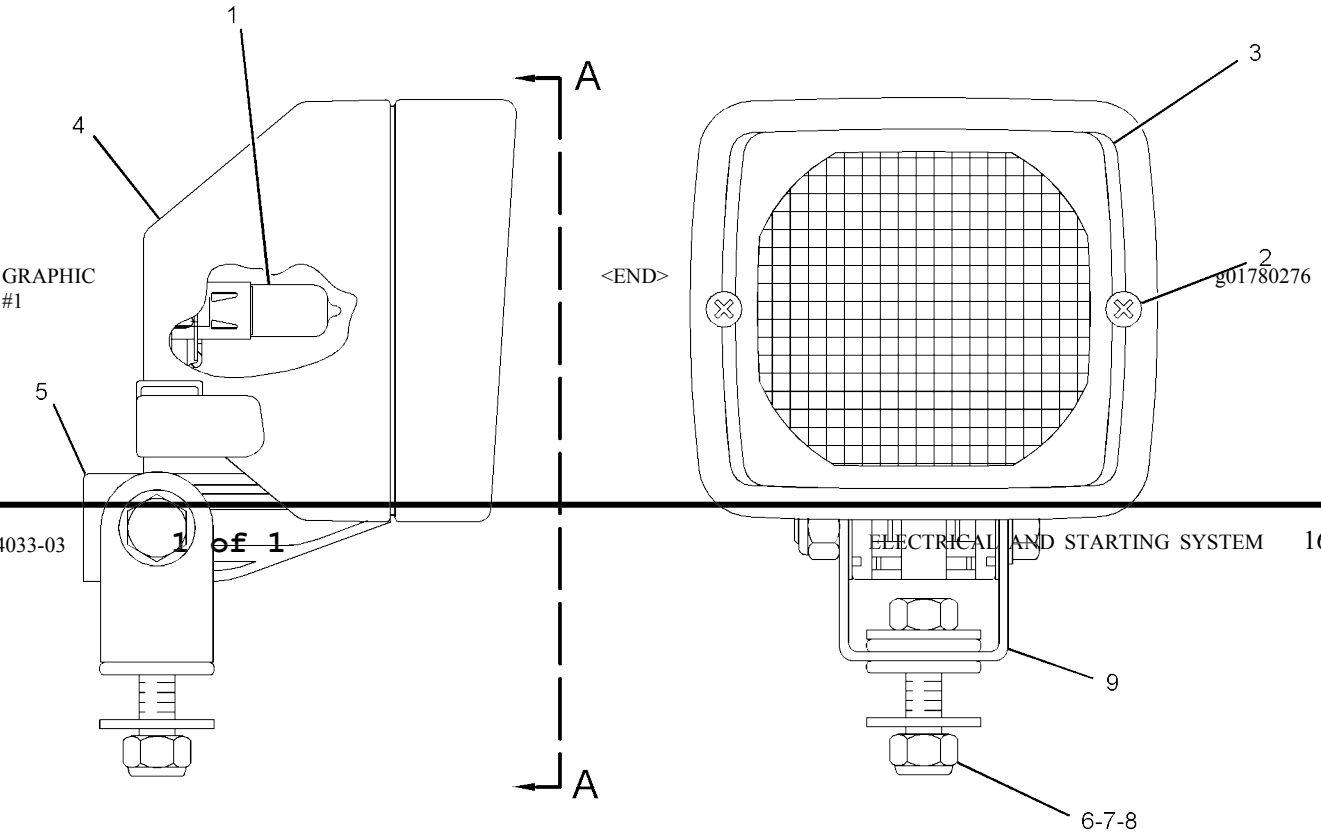

VIEW A-A

GRAPHIC #1

<END>

g01780276

214-2968 LAMP GP-FLOOD

S/N: 5B41-UP; G441-UP

12-VOLT

PART OF 351-3439, 419-4041 LIGHTING GP-FLOOD ATTACHMENT

SMCS-1434 **i05518689**

NOTE	REF NO	GRAPHIC REF	PART NUMBER	QTY	PART NAME 1 2 3 4 5 6 (PRODUCT LEVEL)	SEE PAGE
	1	1	**9W-0607**	1	LAMP (12-VOLT, 55-WATT) (FLOODLIGHT)	
M	2	1	**6V-2317**	1	BOLT (M8X1.25X30-MM)	
M	3	1	**5C-7261**	1	NUT (M8X1.25-THD)	
	4	1	**8T-4224**	2	WASHER-HARD (8.8X16X2-MM THK)	
M	5	1	**9X-4244**	2	SCREW-SPECIAL (M4X1.79X25-MM)	
	6	1	**202-6614**	1	LENS AS (FLOODLIGHT)	
	7	1	**175-4292**	1	BODY AS	
	8	1	**164-7556**	1	BRACKET (LAMP RETAINING)	
	9	1	**175-4291**	1	BRACKET AS	

M - METRIC PART

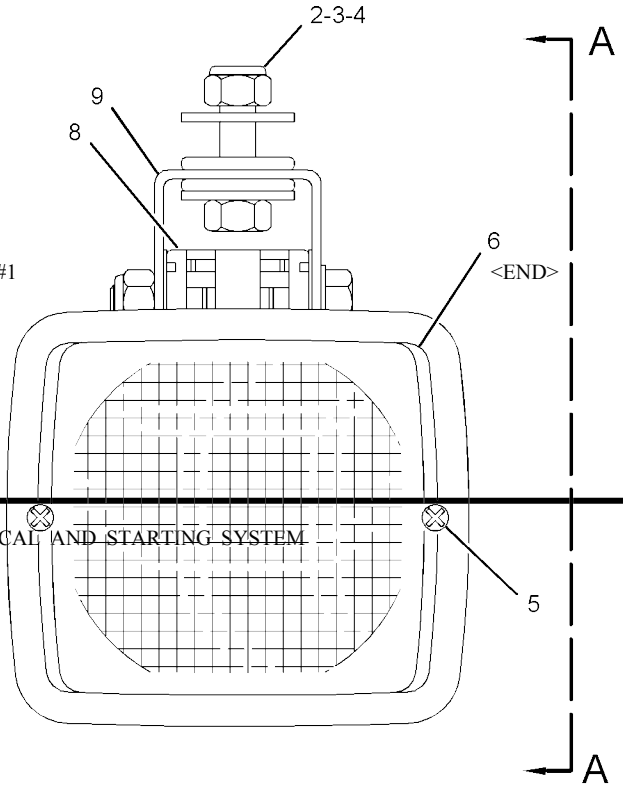

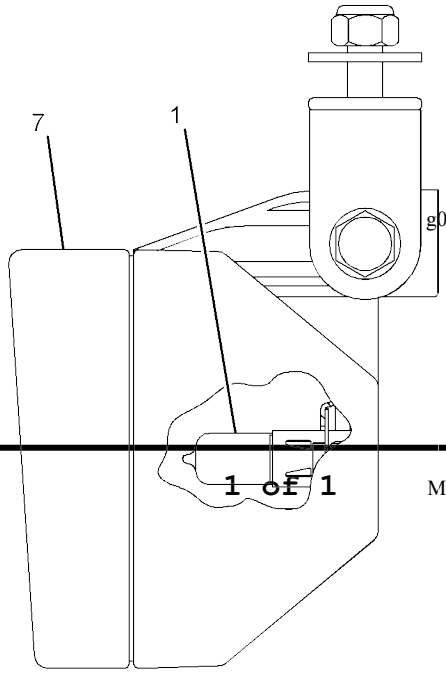

VIEW A-A

GRAPHIC #1 <END> g01181714

388-6292 LAMP GP-FLOOD

S/N: 5B41-UP; G441-UP
12-VOLT, 35-WATT, HID
PART OF 351-3441, 419-4040 LIGHTING GP-FLOOD
A ATTACHMENT
N

SMCS-1434 **i074038 24**

NOTE	REF NO	GRAPHIC REF	PART NUMBER	QTY	PART NAME 1 2 3 4 5 6 (PRODUCT LEVEL)	SEE PAGE
	1	1	**290-8160**	1	LAMP (24-VOLT, HID)	
	2	1	**319-7384**	1	BALLAST AS (24-VOLT, 35-WATT, HID)	
M	3	1	**6V-7744**	1	LOCKNUT (M10X1.5-THD)	
	4	1	**453-4742**	1	LENS AS (FLOODLIGHT)	

M - METRIC PART

GRAPHIC #1 <EN D> g03808656

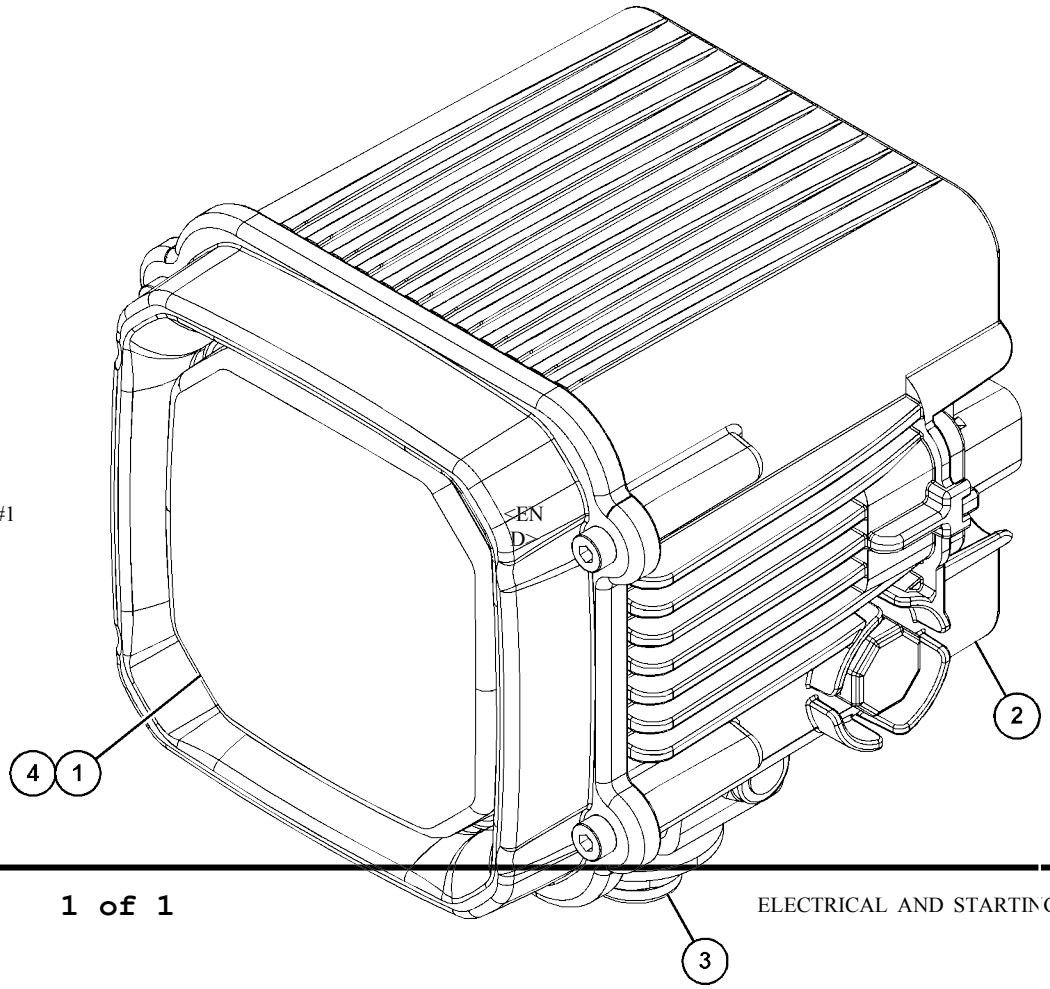

397-6223 LAMP GP-SIGNAL-FRONT

S/N: 5B41-UP; G441-UP
12-VOLT
PART OF 501-6573 LIGHTING GP-ROADING
AN ATTACHMENT

SMCS-1430 **i074164 40**

NOTE	REF NO	GRAPHIC REF	PART NUMBER	QTY	PART NAME 1 2 3 4 5 6 (PRODUCT LEVEL)	SEE PAGE
	1	1	**2A-3211**	2	WASHER (5.5X12.3X0.8-MM THK)	
	2	1	**102-8803**	1	KIT-RECEPTACLE (3-PIN)	
					(INCLUDES RECEPTACLE AS & WEDGE)	
M	3	1	**5C-2874**	2	NUT (M5X0.8-THD)	
	4	1	**108-7605**	1	LAMP (12-VOLT, 5-WATT) (REGISTRATION PLATE)	
	5	1	**9W-3326**	1	LAMP (12-VOLT, 21-WATT) (ROADING LIGHTS)	

M - METRIC PART

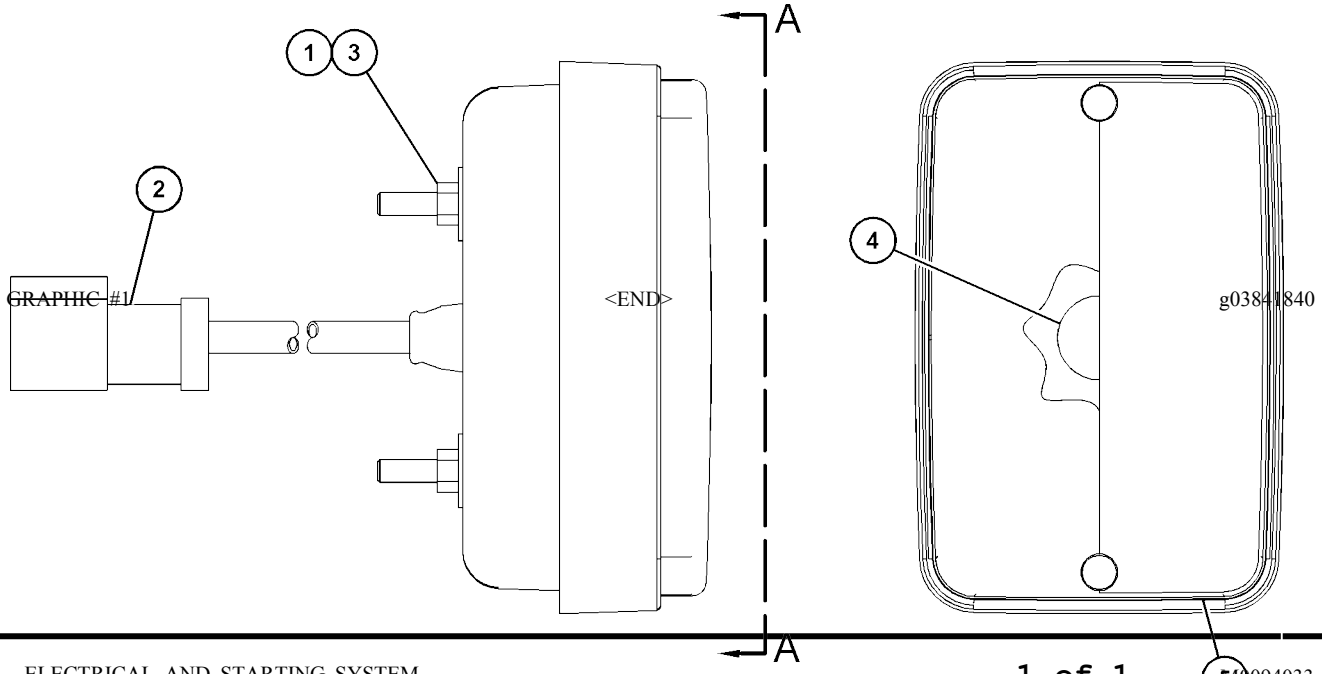

1 of 1

397-6225 LAMP GP-SIGNAL-REAR

S/N: 5B41-UP; G441-UP
12-VOLT
PART OF 501-6573 LIGHTING GP-ROADING
A ATTACHMENT N

SMCS-1430 **i07416441**

NOTE	REF NO	GRAPHIC REF	PART NUMBER	QTY	PART NAME 1 2 3 4 5 6 (PRODUCT LEVEL)	SEE PAGE
	1	1	**2A-3211**	2	WASHER (5.5X12.3X0.8-MM THK)	
	2	1	**102-8804**	1	KIT-RECEPTACLE (4-PIN)	
					(INCLUDES RECEPTACLE AS & WEDGE)	
M	3	1	**5C-2874**	2	NUT (M5X0.8-THD)	
	4	1	**7S-1800**	1	LAMP (12-VOLT) (REGISTRATION)	
	5	1	**9W-3326**	1	LAMP (12-VOLT, 21-WATT) (ROADING LIGHTS)	

M - METRIC PART

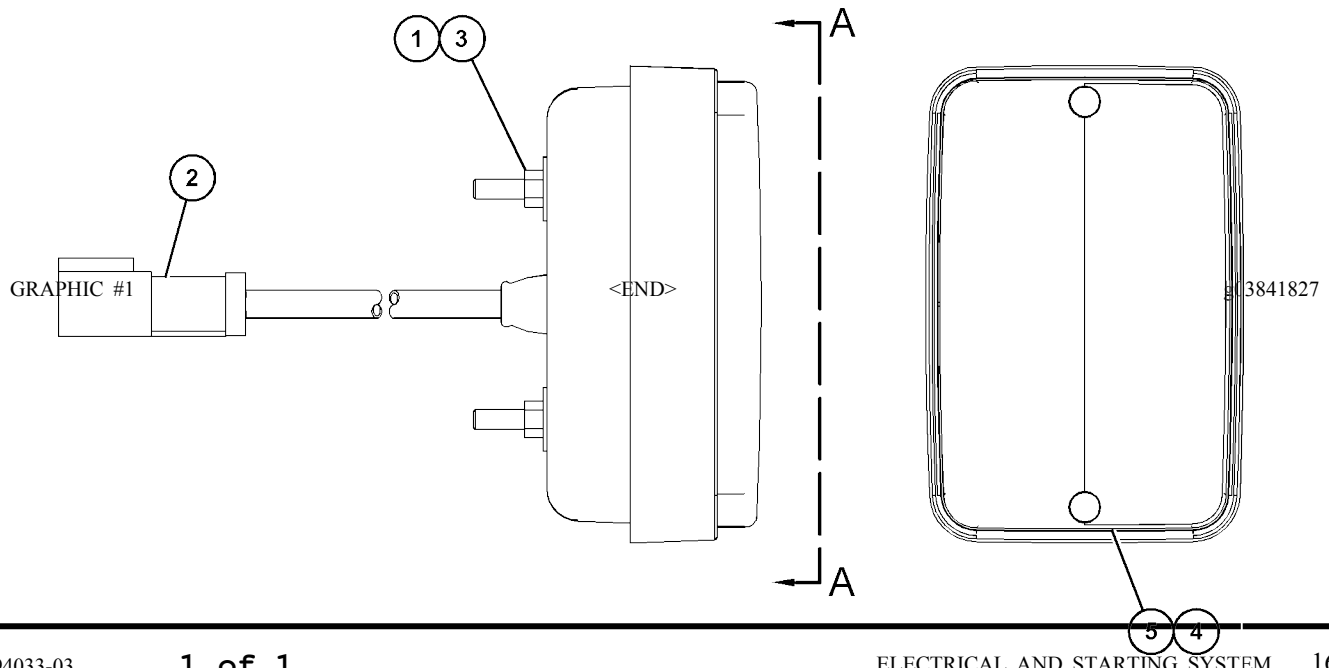

GRAPHIC #1 <END> g013841827

378-6901 LAMP GP-WARNING BEACON–AMBER, LED, 24-VOLT

S/N: 5B41-UP; G441-UP
PART OF 351-3443 LIGHTING GP-WARNING BEACON
AN ATTACHMENT

SMCS-1431 **i07005544**

NOTE	REF NO	GRAPHIC REF	PART NUMBER	QTY	PART NAME 1 2 3 4 5 6 (PRODUCT LEVEL)	SEE PAGE
	1	1	**102-8802**	1	KIT-RECEPTACLE (2-PIN)	
					(INCLUDES RECEPTACLE AS & WEDGE)	
	2	1	**8T-8729**	2	PIN-CONNECTOR (16-GA TO 20-GA)	
	3	1	**389-5708**	1	LENS (AMBER, WARNING BEACON)	
E	4	1	**9X-1386**		SLEEVE (260-CM)	

E - ORDER BY THE CENTIMETER

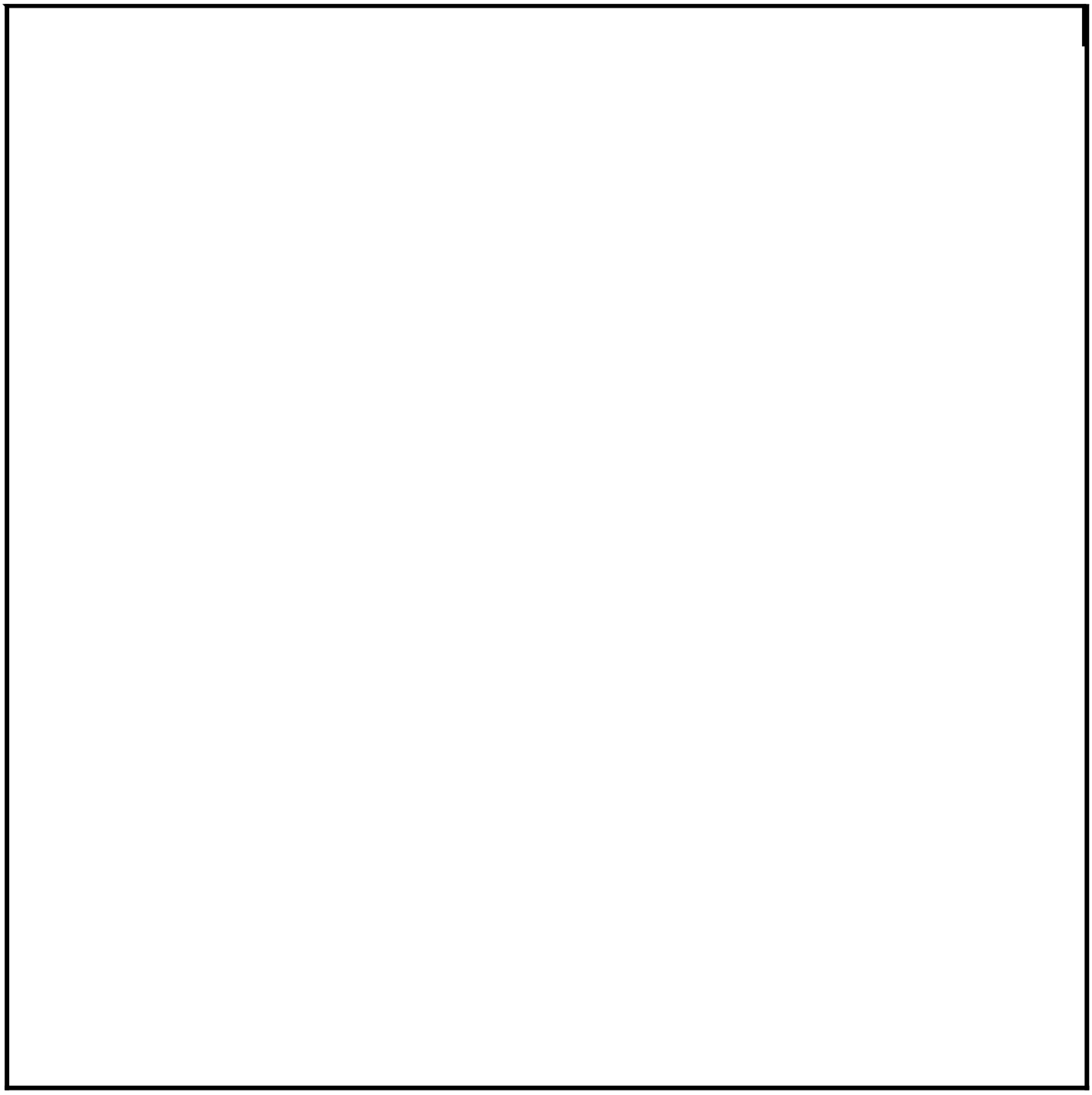

378-6901	**LAMP GP-WARNING BEACON** (contd.)	**i07005544**

GRAPHIC #1 <END> g06195351

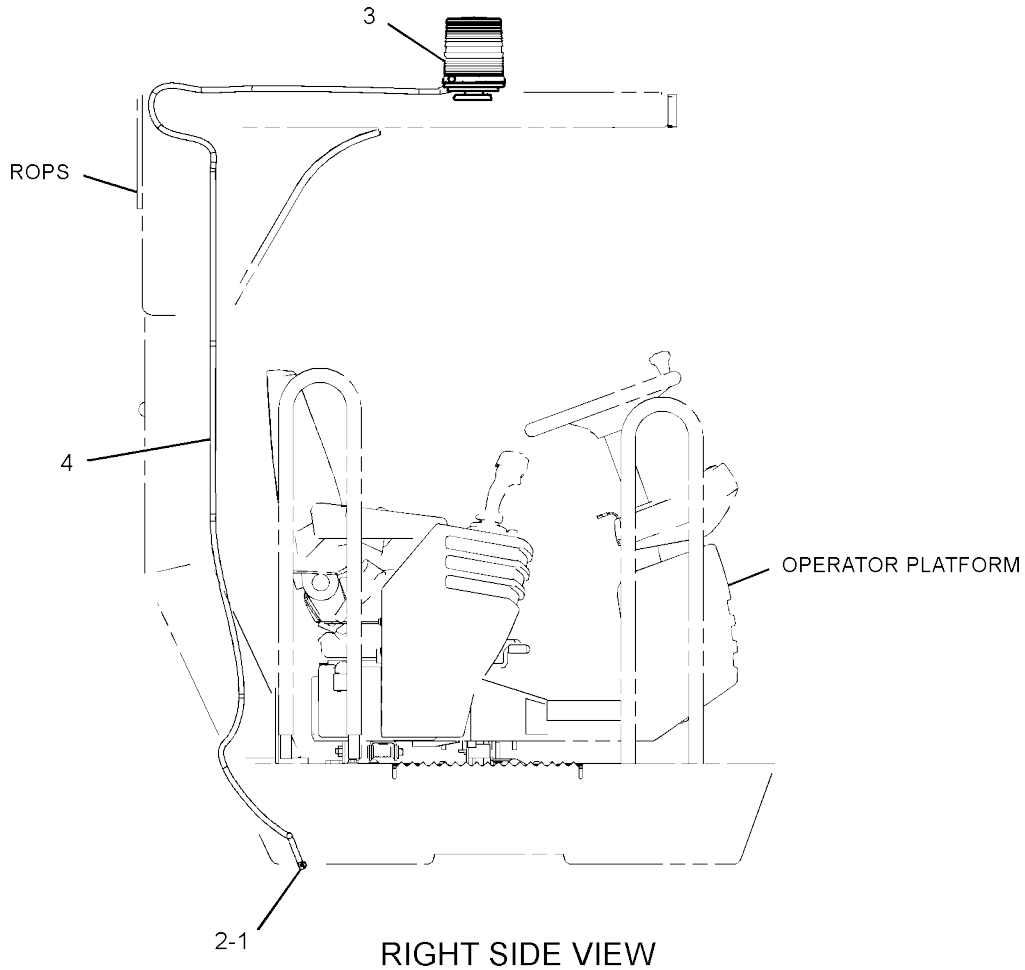

RIGHT SIDE VIEW

ELECTRICAL AND STARTING SYSTEM

351-3439 LIGHTING GP-FLOOD

S/N: 5B41-UP; G441-UP

A ATTACHMENT
N

SMCS-1434 **i074036 30**

NOTE	REF NO	GRAPHIC REF	PART NUMBER	QTY	PART NAME 1 2 3 4 5 6 (PRODUCT LEVEL)	SEE PAGE
Y	1	1	**212-9347**	6	LAMP GP-FLOOD (12-VOLT, 55-WATT)	161
Y	2	1	**214-2968**	4	LAMP GP-FLOOD (12-VOLT)	162
	3	1	**360-1763**	1	SWITCH AS-ROCKER (12-VOLT) (FLOODLIGHT)	
	4	1	**361-2445**	5	BRACKET	
	5	1	**525-7114**	4	BRACKET	
M	6	1	**8T-4908**	4	BOLT (M8X1.25X25-MM)	
M	7	1	**5C-7261**	12	NUT (M8X1.25-THD)	
	8	1	**5P-4116**	30	WASHER-HARD (8.8X20.5X2-MM THK)	
M	9	1	**8T-4189**	6	BOLT (M8X1.25X20-MM)	
M	10	1	**8T-6912**	8	BOLT (M8X1.25X50-MM)	

M - METRIC PART
Y - SEPARATE ILLUSTRATION

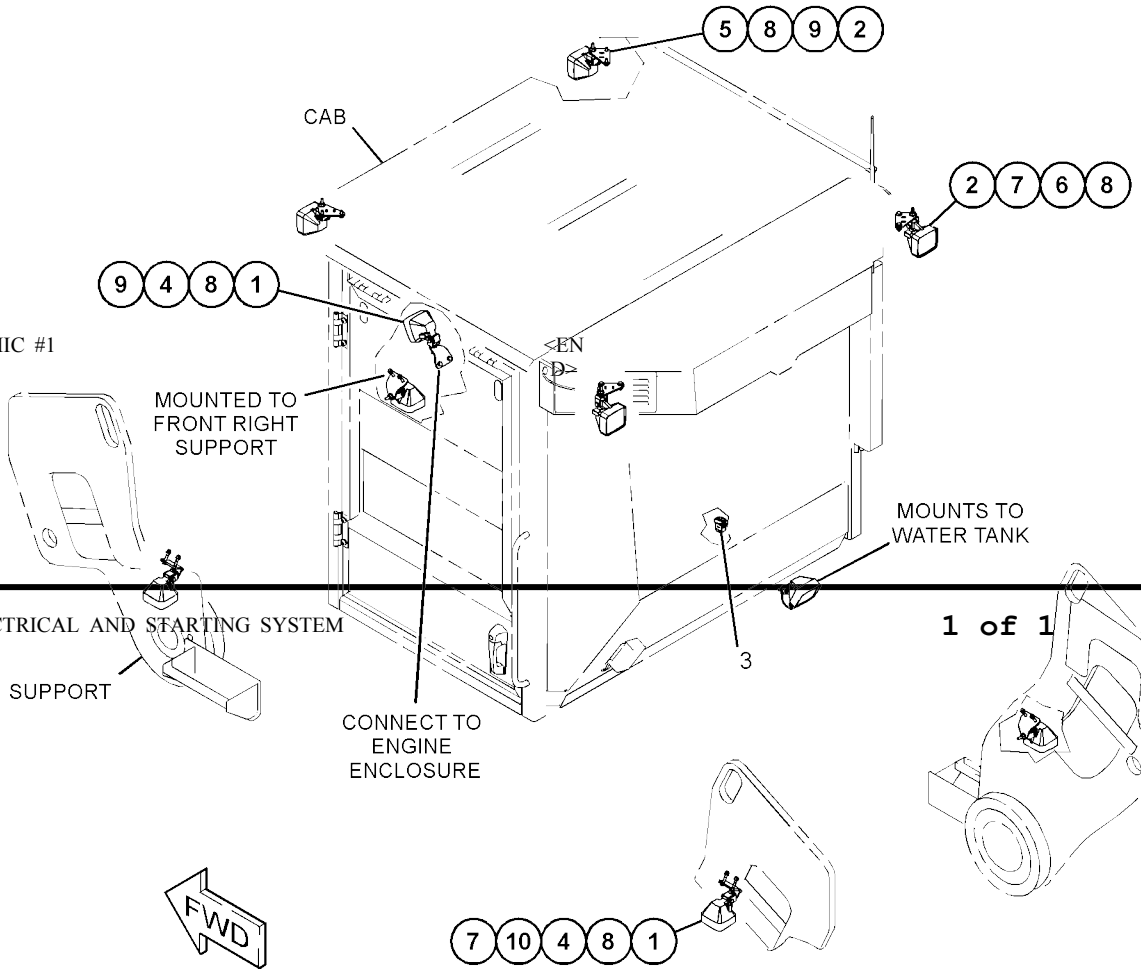

GRAPHIC #1 g06252614

ELECTRICAL AND STARTING SYSTEM

351-3441 LIGHTING GP-FLOOD

S/N: 5B41-UP; G441-UP

A ATTACHMENT
N

SMCS-1434 **i074038 20**

NOTE	REF NO	GRAPHIC REF	PART NUMBER	QTY	PART NAME 1 2 3 4 5 6 (PRODUCT LEVEL)	SEE PAGE
Y	1	1	**212-9347**	6	LAMP GP-FLOOD (12-VOLT, 55-WATT) (SR)	161
Y	2	1	**388-6292**	4	LAMP GP-FLOOD (12-VOLT, 35-WATT) (HID)	163
	3	1	**360-1763**	1	SWITCH AS-ROCKER (12-VOLT) (FLOODLIGHT)	
	4	1	**361-2445**	5	BRACKET	
	5	1	**525-7114**	4	BRACKET	
M	6	1	**8T-4908**	4	BOLT (M8X1.25X25-MM)	
M	7	1	**5C-7261**	12	NUT (M8X1.25-THD)	
	8	1	**5P-4116**	30	WASHER-HARD (8.8X20.5X2-MM THK)	
	9	1	**7K-1181**	4	STRAP-CABLE	
M	10	1	**8T-4189**	6	BOLT (M8X1.25X20-MM)	
M	11	1	**8T-6912**	8	BOLT (M8X1.25X50-MM)	

M - METRIC PART
Y - SEPARATE ILLUSTRATION

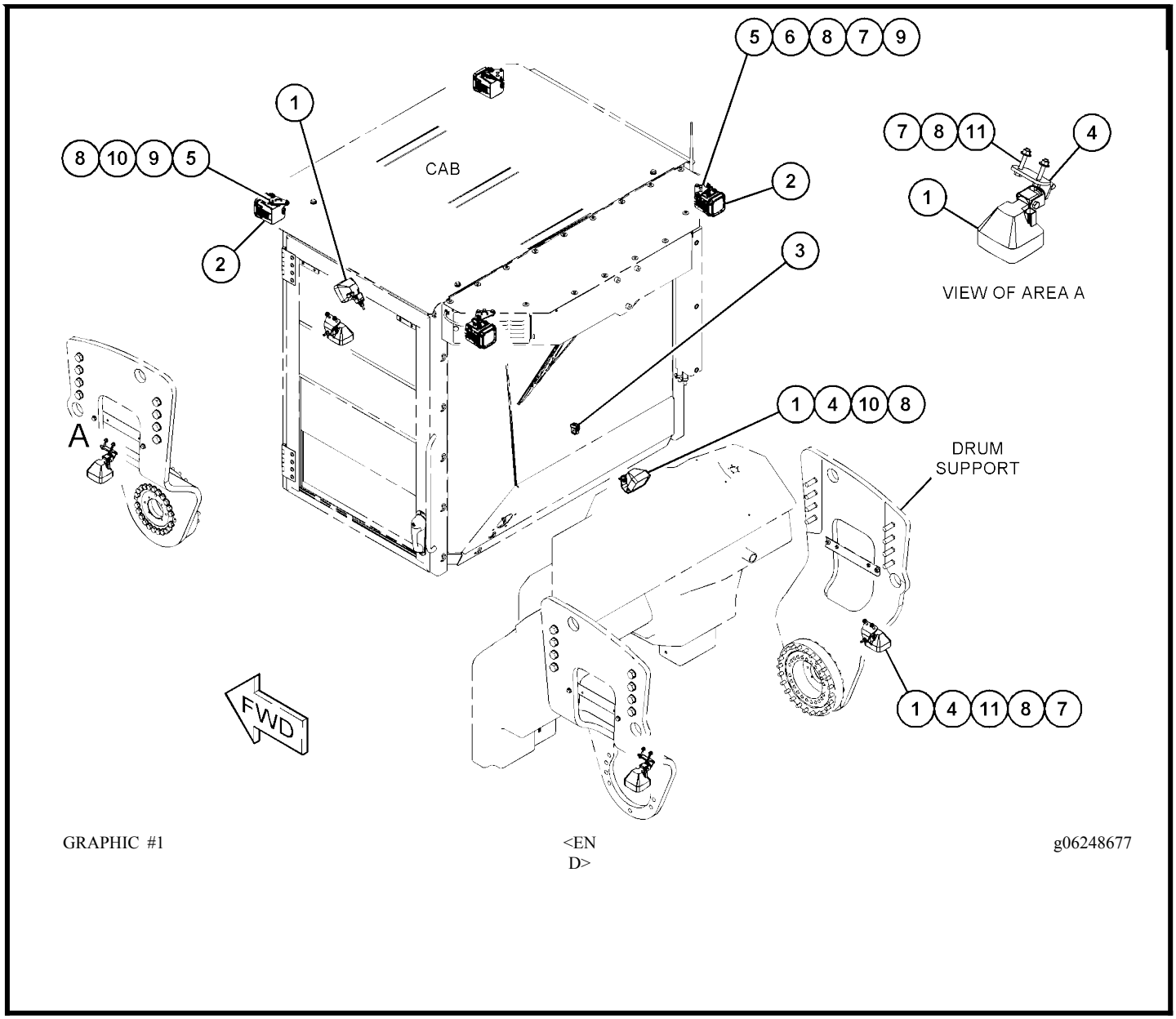

GRAPHIC #1 <END> g06248677

419-4040 LIGHTING GP-FLOOD

S/N: 5B41-UP; G441-UP

A ATTACHMENT
N

SMCS-1434 **i074038 90**

NOTE	REF NO	GRAPHIC REF	PART NUMBER	QTY	PART NAME 1 2 3 4 5 6 (PRODUCT LEVEL)	SEE PAGE
Y	1	1	**212-9347**	6	LAMP GP-FLOOD (12-VOLT, 55-WATT)	161
Y	2	1	**388-6292**	4	LAMP GP-FLOOD (12-VOLT, 35-WATT)	163
	3	1	**360-1763**	1	SWITCH AS-ROCKER (12-VOLT) (FLOODLIGHT)	
	4	1	**361-2445**	5	BRACKET	
	5	1	**364-9375**	2	BRACKET	
	6	1	**364-9376**	2	BRACKET	
Y	7	1	**418-7917**	1	HARNESS AS-LIGHTING	137
	8	1	**352-3964**	1	CLIP (LADDER)	
M	9	1	**5C-7261**	8	NUT (M8X1.25-THD)	
	10	1	**5P-4116**	26	WASHER-HARD (8.8X20.5X2-MM THK)	
	11	1	**7K-1181**	29	STRAP-CABLE	
M	12	1	**8T-4189**	10	BOLT (M8X1.25X20-MM)	
M	13	1	**8T-6912**	8	BOLT (M8X1.25X50-MM)	

M - METRIC PART
Y - SEPARATE ILLUSTRATION

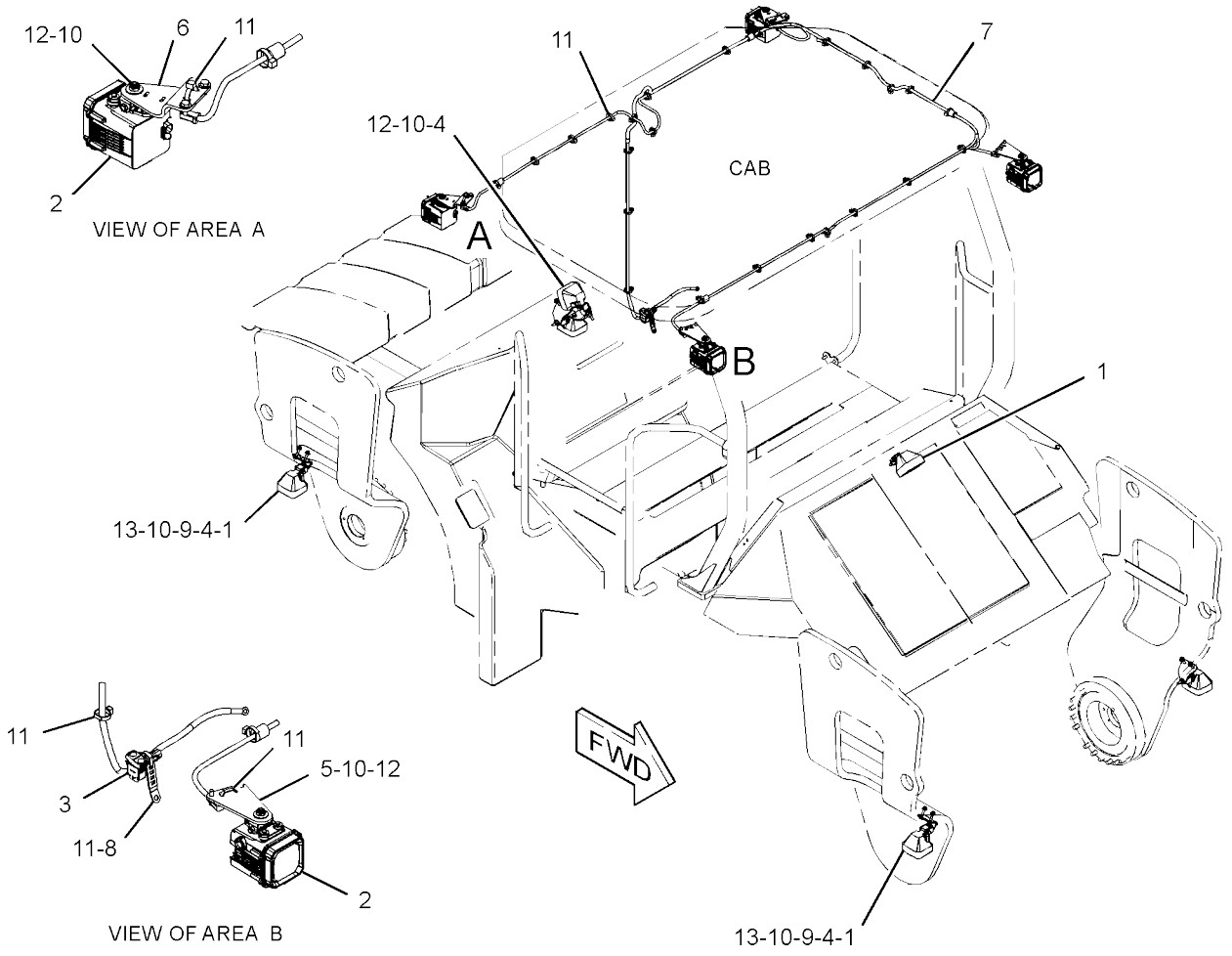

GRAPHIC #1 <END> g03536976

419-4041 LIGHTING GP-FLOOD

S/N: 5B41-UP; G441-UP

A ATTACHMENT
N

SMCS-1434 **i07403892**

NOTE	REF NO	GRAPHIC REF	PART NUMBER	QTY	PART NAME 1 2 3 4 5 6 (PRODUCT LEVEL)	SEE PAGE
Y	1	1	**212-9347**	6	LAMP GP-FLOOD (12-VOLT, 55-WATT)	161
Y	2	1	**214-2968**	4	LAMP GP-FLOOD (12-VOLT)	162
	3	1	**360-1763**	1	SWITCH AS-ROCKER (12-VOLT) (FLOODLIGHT)	
	4	1	**361-2445**	5	BRACKET	
	5	1	**525-7114**	4	BRACKET	
M	6	1	**8T-6912**	8	BOLT (M8X1.25X50-MM)	
Y	7	1	**418-7917**	1	HARNESS AS-LIGHTING	137
	8	1	**352-3964**	1	CLIP (LADDER)	
M	9	1	**5C-7261**	8	NUT (M8X1.25-THD)	
	10	1	**5P-4116**	26	WASHER-HARD (8.8X20.5X2-MM THK)	
	11	1	**7K-1181**	29	STRAP-CABLE	
M	12	1	**8T-4189**	10	BOLT (M8X1.25X20-MM)	

M - METRIC PART
Y - SEPARATE ILLUSTRATION

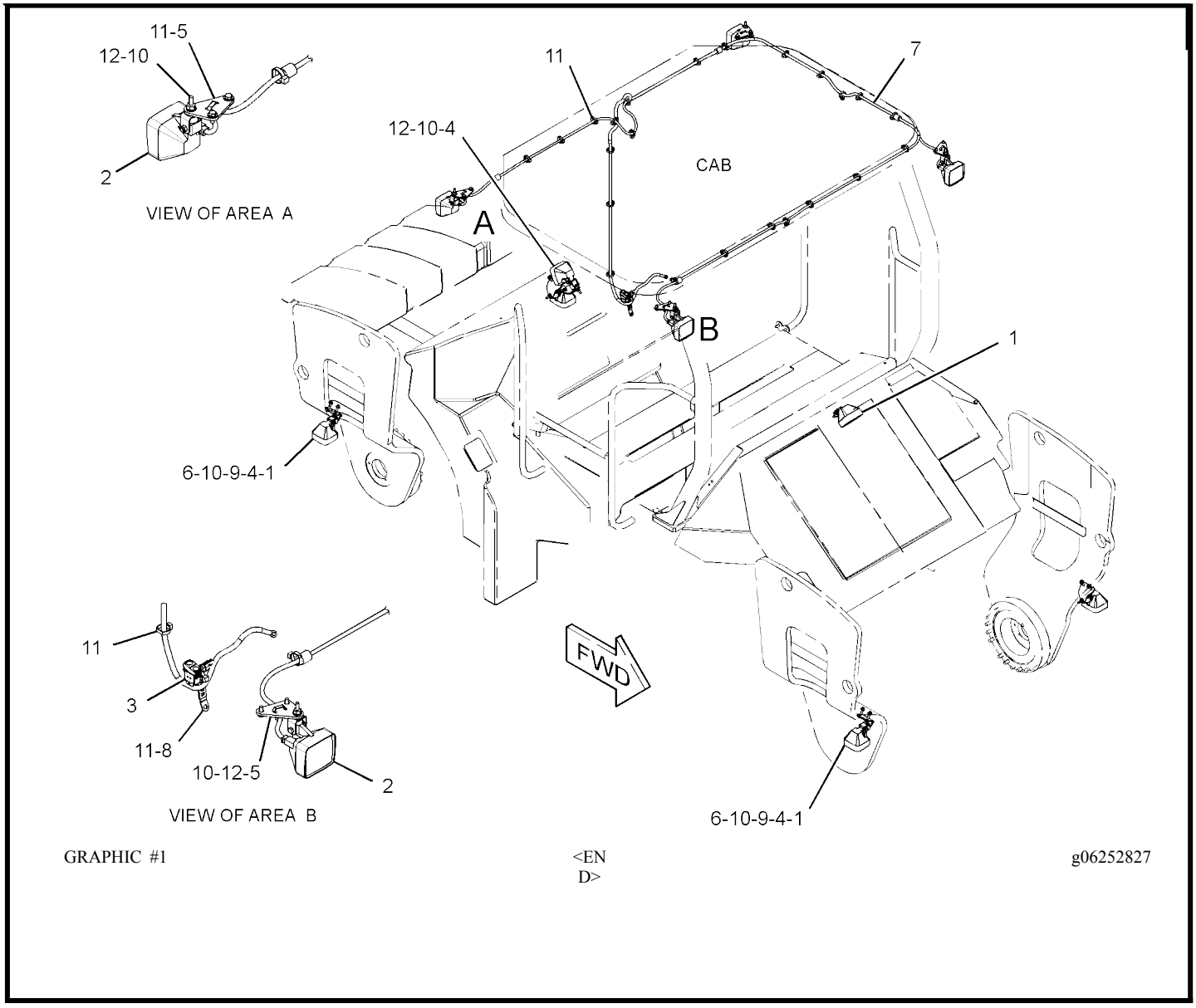

GRAPHIC #1 <END> g06252827

ELECTRICAL AND STARTING SYSTEM

501-6572 LIGHTING GP-FLOOD

S/N: 5B41-UP; G441-UP

A ATTACHMENT
N

SMCS-1434 **i07416438**

NOTE	REF NO	GRAPHIC REF	PART NUMBER	QTY	PART NAME 1 2 3 4 5 6 (PRODUCT LEVEL)	SEE PAGE
	1	1	**397-6221**	4	LAMP GP-FLOOD (12-VOLT)	
					(EACH INCLUDES)	
		1	**9W-0607**	1	LAMP (12-VOLT, 55-WATT)	
	2	1	**500-8892**	4	PLATE-MOUNTING	
	3	1	**1H-4393**	8	LOCKWASHER	
M	4	1	**9X-2044**	16	SCREW-TRUSS HEAD (M6X1X16-MM)	
M	5	1	**5C-8312**	8	NUT (M4X0.7-THD)	
M	6	1	**8T-0024**	8	SCREW (M4X0.7X30-MM)	

M - METRIC PART

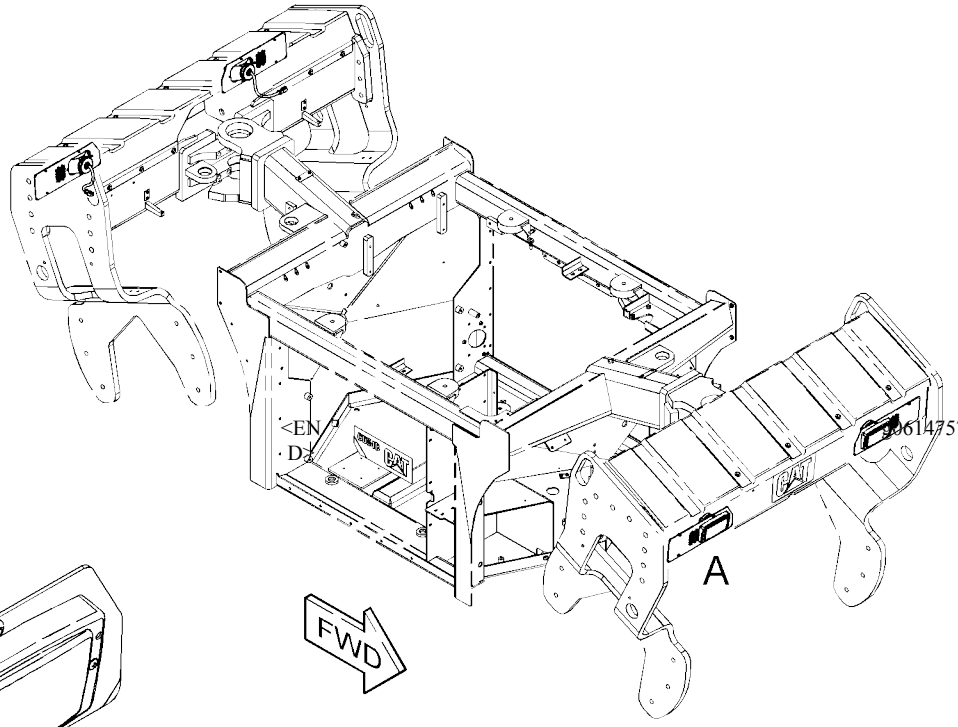

GRAPHIC #1 <EN · D 306147573

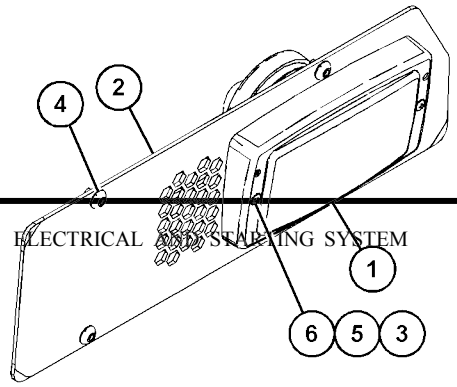

VIEW OF AREA A

515-1429 LIGHTING GP-FLOOD

S/N: 5B41-UP; G441-UP

WITH ROPS

AN ATTACHMENT

SMCS-1434 **i074165 07**

NOTE	REF NO	GRAPHIC REF	PART NUMBER	QTY	PART NAME 1 2 3 4 5 6 (PRODUCT LEVEL)	SEE PAGE
M	1	1	**344-5674**	8	NUT (M8X1.25-THD)	
	2	1	**360-1763**	1	SWITCH AS-ROCKER (12-VOLT) (FLOODLIGHTS, DRUM EDGE)	
	3	1	**361-2445**	5	BRACKET	
Y	4	1	**392-9725**	1	HARNESS AS-LIGHTING (REAR)	137
	5	1	**479-8444**	10	LAMP GP-FLOOD (FLOOD, 850 LUMENS)	
					(EACH INCLUDES)	
M		1	**3T-0852**	2	LOCKNUT (M8X1.25-THD)	
		1	**5P-4116**	1	WASHER-HARD (8.8X20.5X2-MM THK)	
M		1	**8T-6912**	1	BOLT (M8X1.25X50-MM)	
Y	6	1	**524-2481**	4	HARNESS AS-LIGHTING (FRONT)	138
	7	1	**525-7114**	4	BRACKET	
	8	1	**4D-7794**	1	CLIP	
	9	1	**5P-4116**	26	WASHER-HARD (8.8X20.5X2-MM THK)	
	10	1	**7K-1181**	37	STRAP-CABLE	
M	11	1	**8T-4189**	10	BOLT (M8X1.25X20-MM)	
M	12	1	**8T-6912**	8	BOLT (M8X1.25X50-MM)	

M - METRIC PART
Y - SEPARATE ILLUSTRATION

515-1429 **LIGHTING GP-FLOOD (**contd.**)** **i07416507**

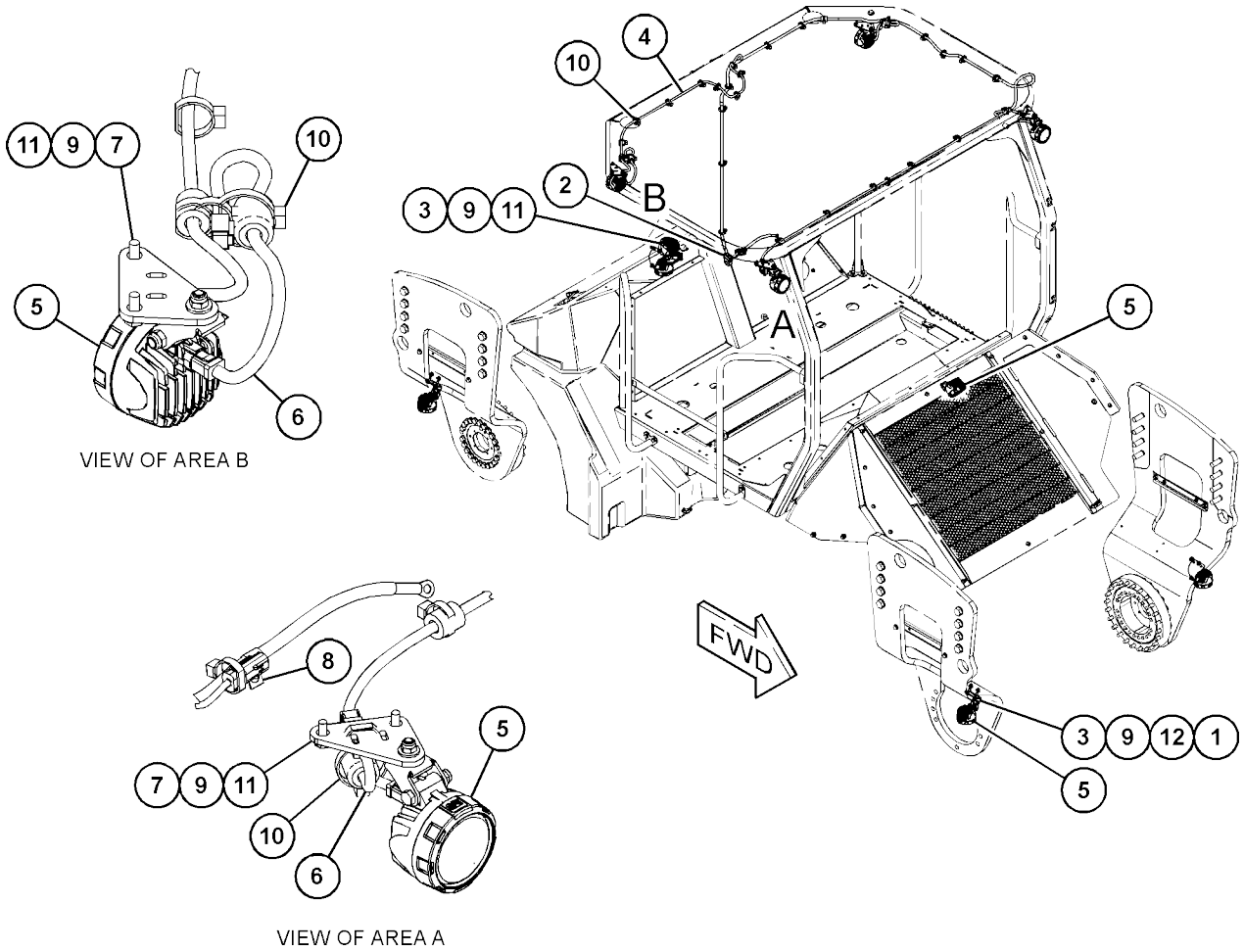

GRAPHIC #1 <END> g06176731

ELECTRICAL AND STARTING SYSTEM

515-1430 LIGHTING GP-FLOOD

S/N: 5B41-UP; G441-
UP WITH CAB
AN ATTACHMENT

SMCS-1434

i07416512

	REF SEE NOTE	QTY	GRAPHIC NO 1 2 3 4 5 6	(PRODUCT LEVEL)	REF PAGE	PART NAME PART NUMBER	
M	1	1		**344-5674**	12	NUT (M8X1.25-THD)	
	2	1		**360-1763**	1	SWITCH AS-ROCKER (12-VOLT) (FLOODLIGHT)	
	3	1		**361-2445**	5	BRACKET	
	4	1		**479-8444**	10	LAMP GP-FLOOD (FLOOD, 850 LUMENS)	
						(EACH INCLUDES)	
M		1		**3T-0852**	2	LOCKNUT (M8X1.25-THD)	
		1		**5P-4116**	1	WASHER-HARD (8.8X20.5X2-MM THK)	
M		1		**8T-6912**	1	BOLT (M8X1.25X50-MM)	
Y	5	1		**524-2481**	2	HARNESS AS-LIGHTING (FRONT)	138
Y	5A	1		**524-2481**	2	HARNESS AS-LIGHTING (REAR)	138
	6	1		**525-7114**	4	BRACKET	
	7	1		**5P-4116**	30	WASHER-HARD (8.8X20.5X2-MM THK)	
	8	1		**7K-1181**	8	STRAP-CABLE	
M	9	1		**8T-4189**	6	BOLT (M8X1.25X20-MM)	
M	10	1		**8T-4908**	4	BOLT (M8X1.25X25-MM)	
M	11	1		**8T-6912**	8	BOLT (M8X1.25X50-MM)	

M - METRIC PART
Y - SEPARATE ILLUSTRATION

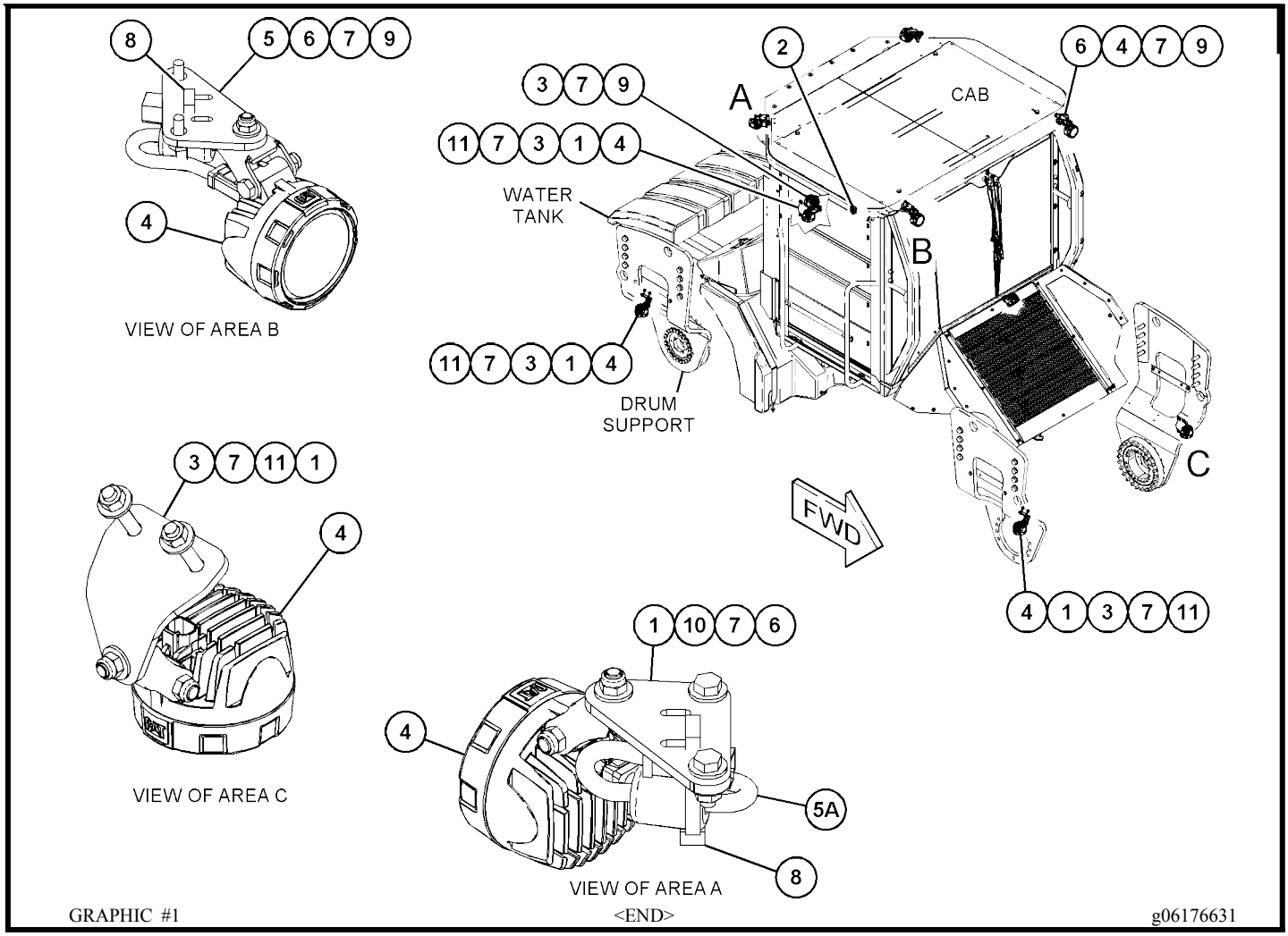

GRAPHIC #1 <END> g06176631

501-6573 LIGHTING GP-ROADING

S/N: 5B41-UP; G441-UP AN ATTACHMENT

SMCS-1408, 1429

i07416439

	REF SEE NOTE QTY	GRAPHIC NO 1 2 3 4 5 6	(PRODUCT LEVEL)	REF PAGE	PART NAME PART NUMBER	
	1	1	**317-2284**	1	FLASHER AS (12 TO 24-VDC)	
	2	1	**360-1761**	1	SWITCH AS-ROCKER (12-VOLT) (FLASHER)	
	3	1	**368-4536**	1	SWITCH AS-ROCKER (24-VOLT) (TURN SIGNAL)	
	4	1	**397-6221**	2	LAMP GP-FLOOD (12-VOLT)	
					(EACH INCLUDES)	
		1	**9W-0607**	1	LAMP (12-VOLT, 55-WATT)	
	5	1	**397-6222**	2	LAMP GP-HEAD	
					(EACH INCLUDES)	
		1	**9W-3324**	1	LAMP-HEAD (12-VOLT, 60/55-WATT)	
Y	6	1	**397-6223**	2	LAMP GP-SIGNAL (FRONT)	164
Y	7	1	**397-6225**	2	LAMP GP-SIGNAL (REAR)	165
	8	1	**435-1281**	1	HARNESS AS-LIGHTING (FLOODLIGHTS, FRONT) (LH)	
	8A	1	**435-1281**	1	HARNESS AS-LIGHTING (FLOODLIGHTS, FRONT) (RH)	
					(EACH HARNESS AS INCLUDES)	
		1	**102-8802**	1	KIT-RECEPTACLE (2-PIN)	
					(INCLUDES RECEPTACLE AS & WEDGE)	
E		1	**9X-1813**		SLEEVE (19-CM)	
		1	**9X-3401**	2	PIN-CONNECTOR (16-GA TO 18-GA)	
					-OR-	
		1	**126-1767**	2	PIN-CONNECTOR (14-GA TO 16-GA)	
	9	1	**499-3589**	4	SUPPORT	
	10	1	**500-8864**	4	PLATE-MOUNTING	
	11	1	**1H-0159**	8	LOCKWASHER	
	12	1	**1H-4393**	8	LOCKWASHER	
M	13	1	**9X-2044**	16	SCREW-TRUSS HEAD (M6X1X16-MM)	
M	14	1	**5C-2874**	8	NUT (M5X0.8-THD)	
M	15	1	**5C-8312**	8	NUT (M4X0.7-THD)	
	16	1	**7K-1181**	2	STRAP-CABLE	
M	17	1	**8T-0024**	8	SCREW (M4X0.7X30-MM)	

E - ORDER BY THE CENTIMETER M - METRIC PART
Y - SEPARATE ILLUSTRATION

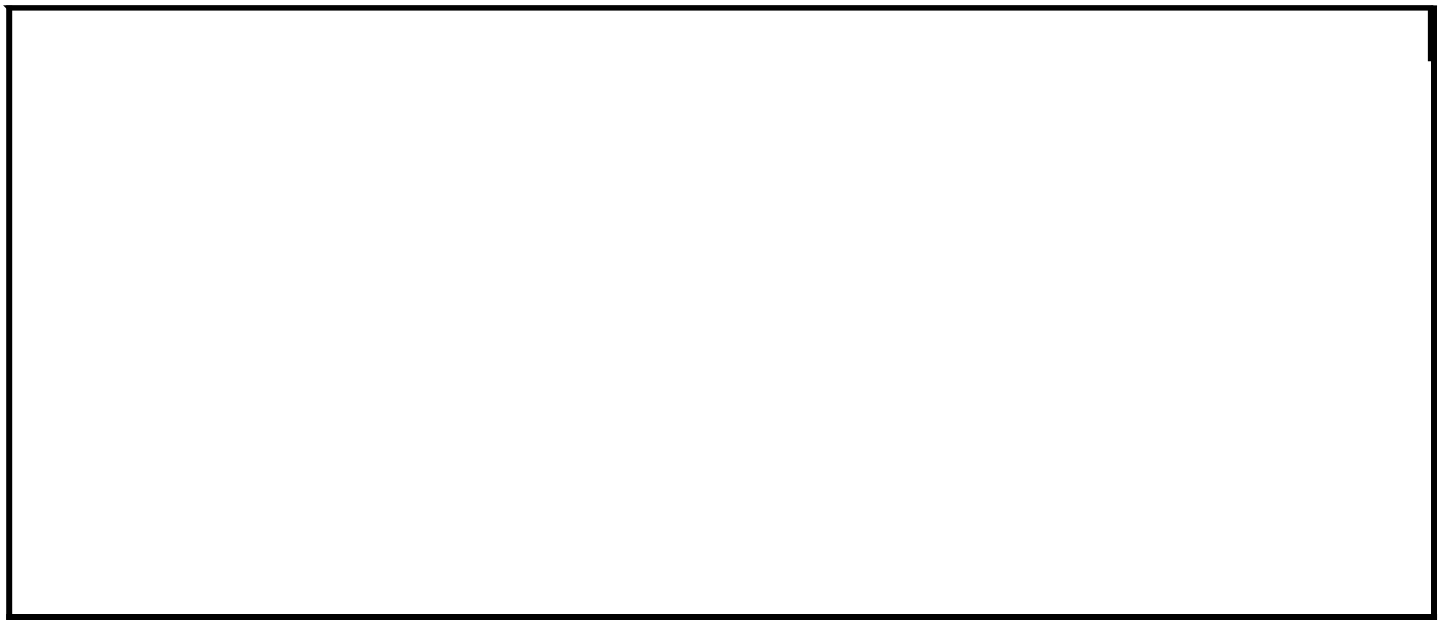

501-6573 **LIGHTING GP-ROADING (**contd.**)** **i07416439**

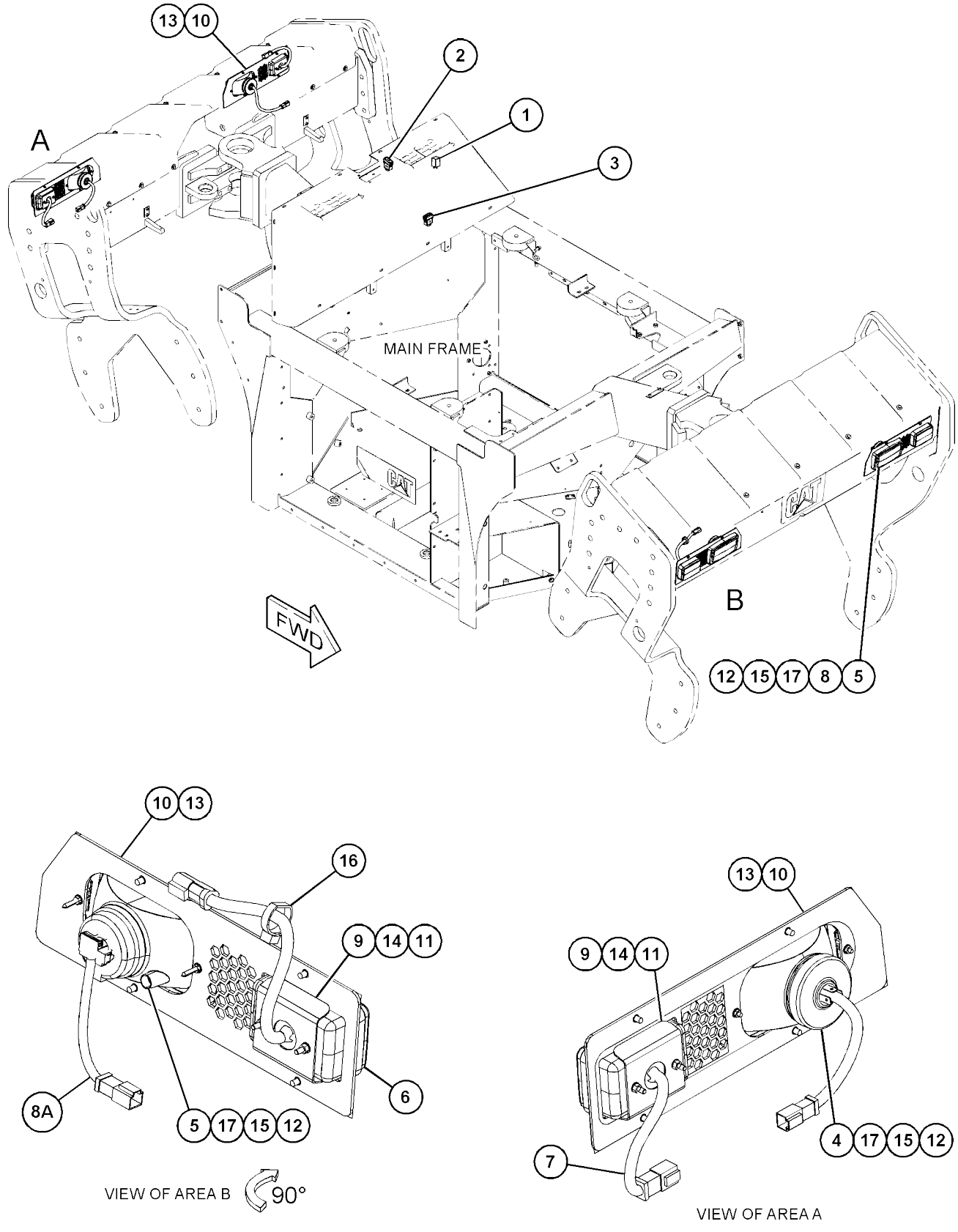

GRAPHIC #1 <END> g06148698

ELECTRICAL AND STARTING SYSTEM

351-3443 LIGHTING GP-WARNING BEACON

S/N: 5B41-UP; G441-UP AN ATTACHMENT

SMCS-1431

i07403825

	REF QTY	GRAPHIC NO 1 2 3 4 5 6	(PRODUCT LEVEL)	REF PAGE	PART NAME PART NUMBER	
	1	1	**3S-2093**	2	STRAP-CABLE	
Y	2	1	**378-6901**	2	LAMP GP-WARNING BEACON (AMBER, LED, 12/24-VOLT)	166
	3	1	**360-1760**	1	SWITCH AS-ROCKER (BEACON)	
Y	4	1	**375-6060**	1	HARNESS AS-LIGHTING	136
	5	1	**7K-1181**	5	STRAP-CABLE	

Y - SEPARATE ILLUSTRATION

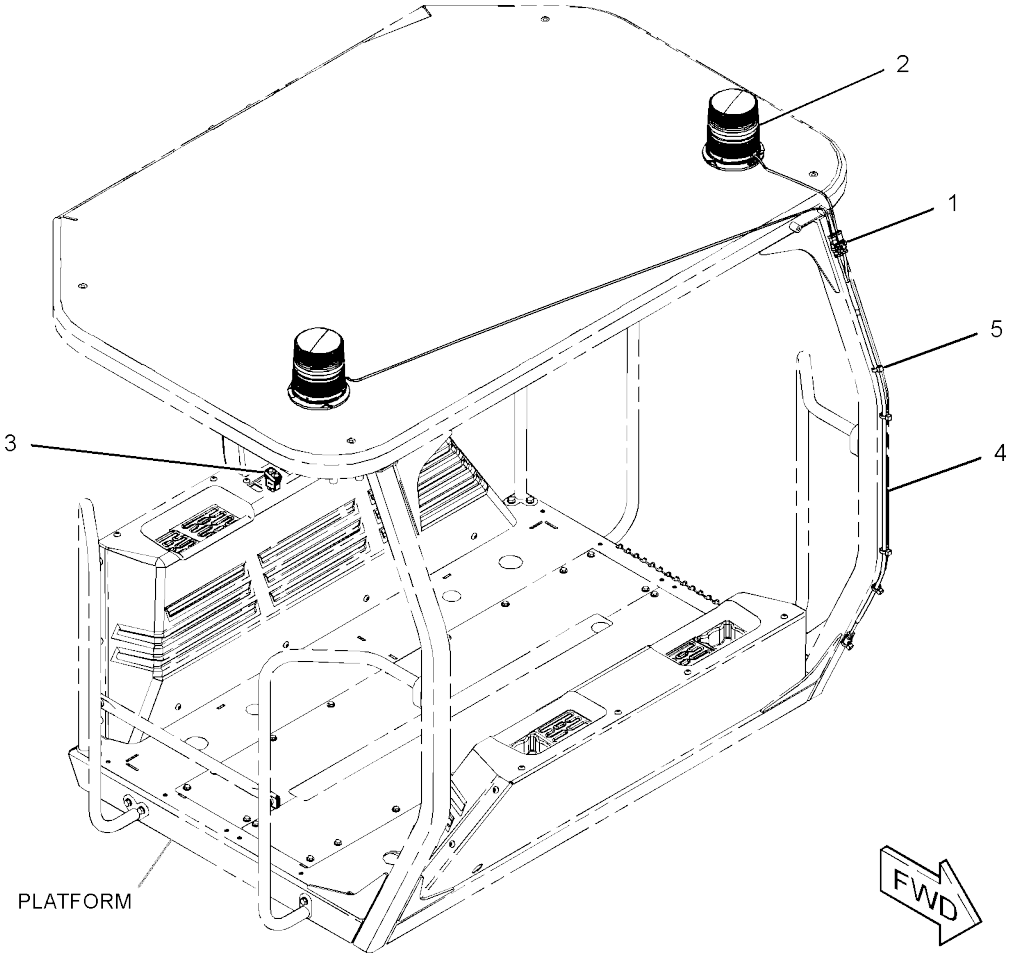

GRAPHIC #1 <END> g03337644

ELECTRICAL AND STARTING SYSTEM

415-7949 MOUNTING GP-CONTROL

S/N: 2W21-UP

PART OF 435-7493, 435-7494 ENGINE AR-PRIMARY AN ATTACHMENT

SMCS-1901

i06280904

	REF SEE NOTE QTY	GRAPHIC NO 1 2 3 4 5 6	(PRODUCT LEVEL)	REF PAGE	PART NAME PART NUMBER
	1	1	**425-9955**	1	BRACKET
M	2	1	**6I-0572**	4	BOLT (M8X1.25X20-MM)

M - METRIC PART

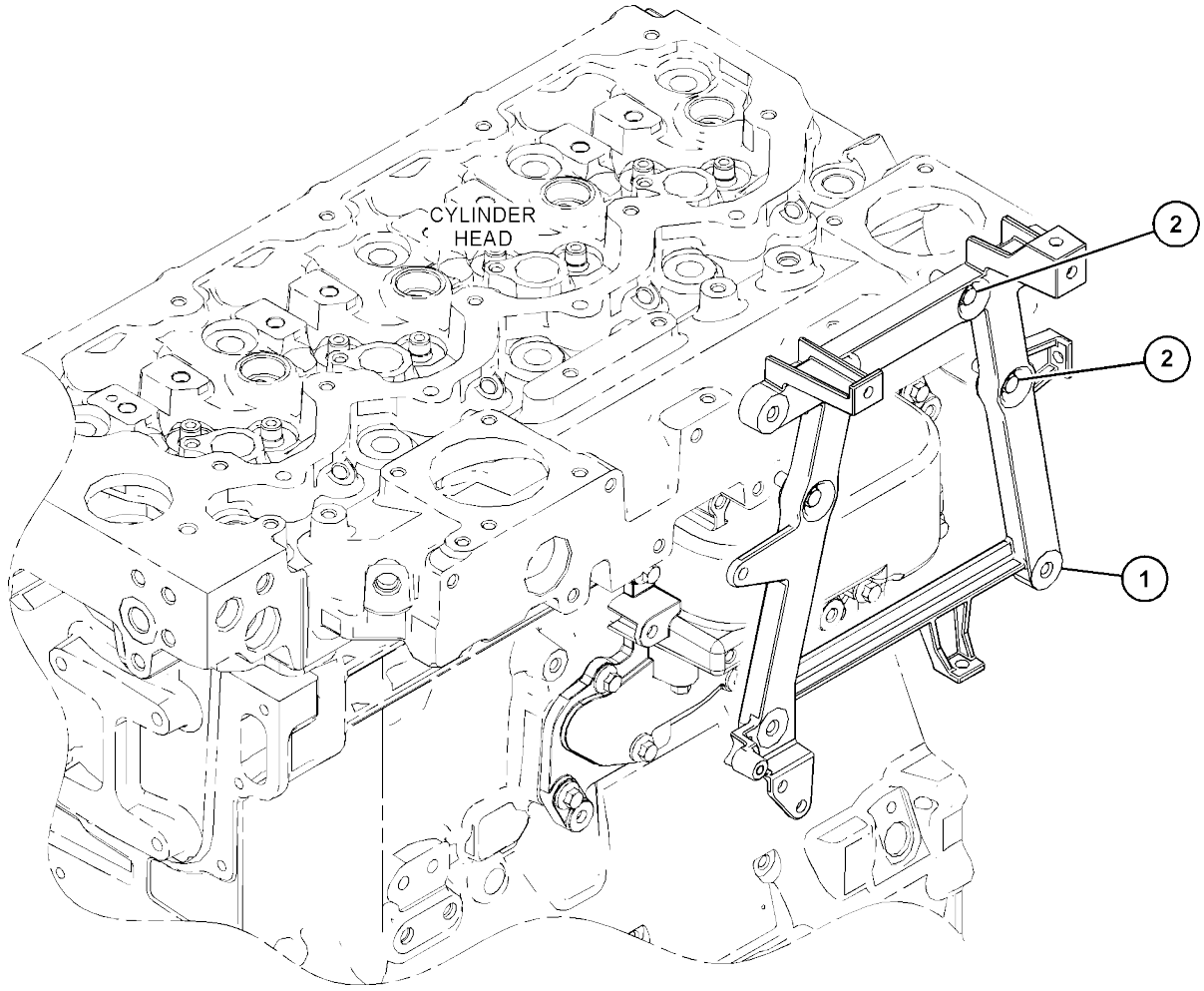

GRAPHIC #1 <END> g03818841

343-6058 PANEL GP-CIRCUIT BREAKER

S/N: 5B41-UP; G441-UP
PART OF 451-3140 ELECTRICAL
AR

SMCS-1417, 1420

i07398894

	REF SEE NOTE QTY	GRAPHIC NO 1 2 3 4 5 6	(PRODUCT LEVEL)	REF PAGE	PART NAME PART NUMBER	
Y	1	1	*415-1770*	1	CIRCUIT BREAKER GP	116
	2	1	**5P-4116**	2	WASHER-HARD (8.8X20.5X2-MM THK)	
M	3	1	**8T-4200**	1	BOLT (M8X1.25X16-MM)	
M	4	1	**8T-4908**	1	BOLT (M8X1.25X25-MM)	
	5	1	**264-3617**	2	LOCKWASHER	

M - METRIC PART
Y - SEPARATE ILLUSTRATION

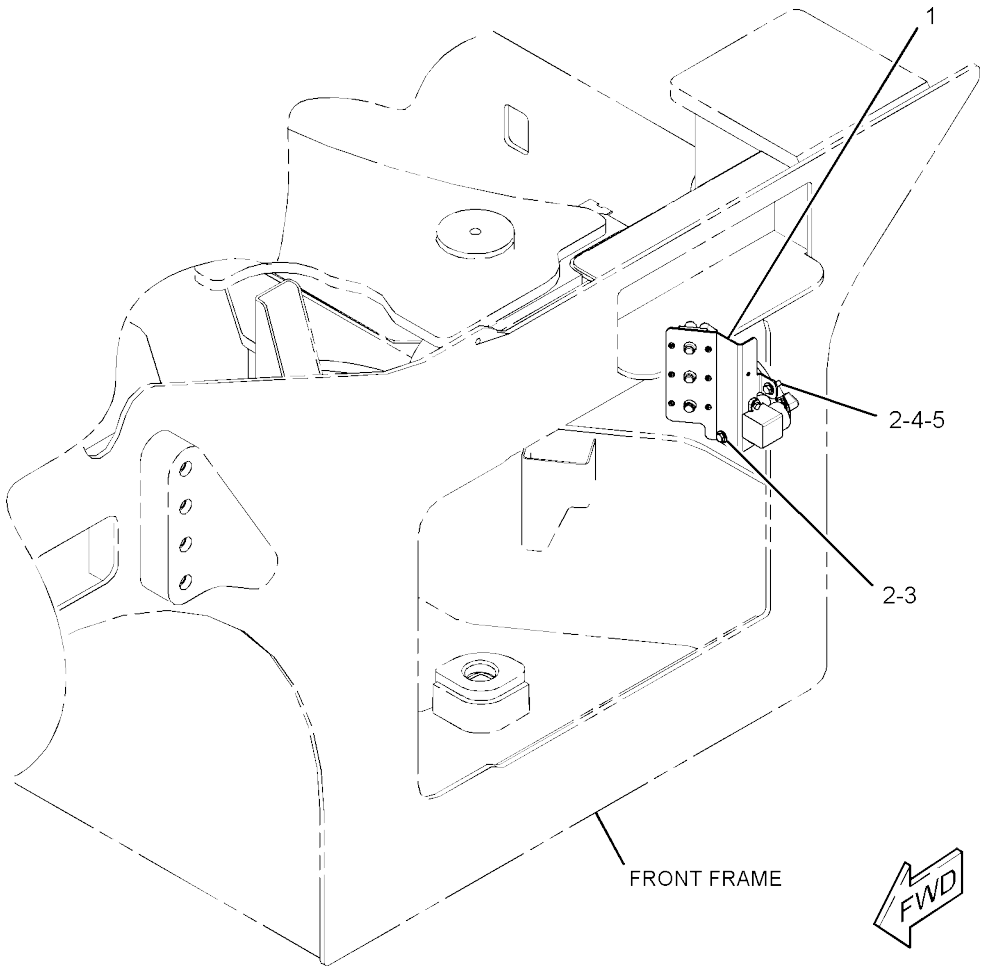

GRAPHIC #1 <END> g06187871

ELECTRICAL AND STARTING SYSTEM

351-3409 SENSOR & MOUNTING GP

S/N: 5B41-UP; G441-UP
PART OF 341-8801 HITCH
AR AN ATTACHMENT

SMCS-1408, 1906, 1907, 1912, 1917, 1923, 1924, 430S

i07399990

	REF SEE NOTE QTY	GRAPHIC NO 1 2 3 4 5 6	(PRODUCT LEVEL)	REF PAGE	PART NAME PART NUMBER
Y	1	1	**266-1467**	1	SENSOR GP-POSITION (ROTARY) (STEERING CONTROL)
187					
	2	1	**8T-4205**	4	WASHER-HARD (7.2X14.5X2-MM THK)
M	3	1	**274-8353**	2	BOLT-SOCKET HEAD (M5X0.8X30-MM)
M	4	1	**5C-9553**	4	BOLT (M6X1X16-MM)
	5	1	**6V-0894**	1	SEAL-O-RING
	6	1	**3S-2093**	1	STRAP-CABLE
	7	1	**379-8445**	1	GUARD
	8	1	**8T-0328**	2	WASHER-HARD (5.5X10X1-MM THK)

M - METRIC PART
Y - SEPARATE ILLUSTRATION

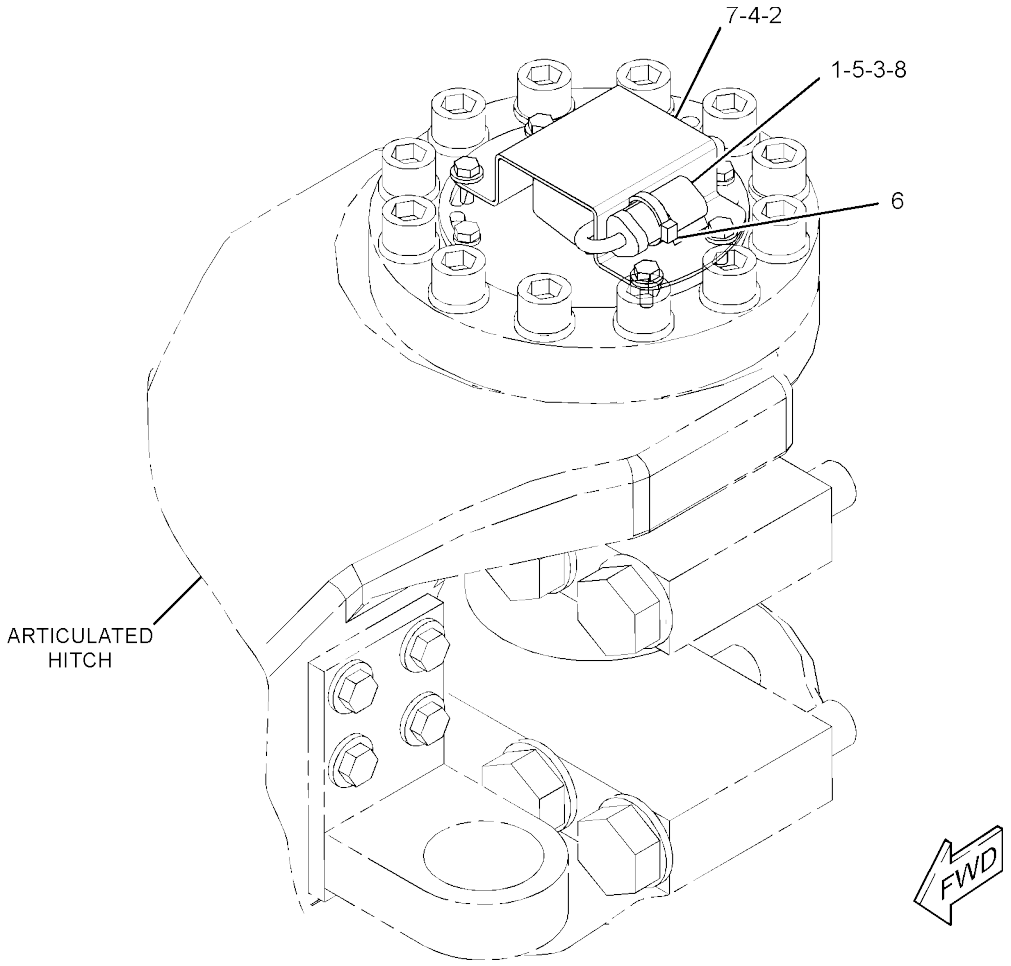

GRAPHIC #1 <END> g02878209

ELECTRICAL AND STARTING SYSTEM

517-5375 SENSOR & MOUNTING GP

S/N: 5B41-UP; G441-
UP COMPACTION
MEASUREMENT
PART OF 510-4015 SENSOR AR-
COMPACTION AN ATTACHMENT

SMCS-1408, 1906, 1907, 1912, 1917, 1923, 1924, 430S

i07692939

	REF SEE NOTE QTY	GRAPHIC NO 1 2 3 4 5 6	(PRODUCT LEVEL)	REF PAGE	PART NAME PART NUMBER
M	1	1	**8T-4182**	1	BOLT (M10X1.5X45-MM)
M	2	1	**8T-4186**	1	BOLT (M10X1.5X40-MM)
M	3	1	**7X-2533**	2	BOLT (M6X1X35-MM)
	4	1	**4P-7581**	1	CLIP (LADDER)
M	5	1	**5C-2890**	2	NUT (M6X1-THD)
	6	1	**7K-1181**	9	STRAP-CABLE
	7	1	**8T-4121**	3	WASHER-HARD (11X21X2.5-MM THK)
	8	1	**9X-8256**	4	WASHER (6.6X12X2-MM THK)
	9	1	**132-5789**	2	CLIP (LADDER)
	10	1	**177-2215**	1	STRAP-DUAL CLAMP
M	11	1	**344-5675**	1	NUT (M10X1.5-THD)
	12	1	**390-1735**	1	SENSOR AS (COMPACTION)
	13	1	**390-1736**	1	CABLE AS
		1	**102-8805**	1	KIT-RECEPTACLE (6-PIN)
					(INCLUDES RECEPTACLE AS & WEDGE)
		1	**3E-3383**	1	WEDGE-RECEPTACLE LOCK (6-PIN)
		1	**8T-8737**	2	PLUG-SEAL
		1	**9X-3401**	4	PIN-CONNECTOR (16-GA TO 18-GA)
					-OR-
		1	**126-1767**	4	PIN-CONNECTOR (14-GA TO 16-GA)
BH		1	**339-5431**		WIRE (18-GA, BLACK) (2-DM)
	14	1	**304-9465**	4	STRAP-CABLE

B - USE AS REQUIRED
H - ORDER BY THE DECIMETER M - METRIC PART

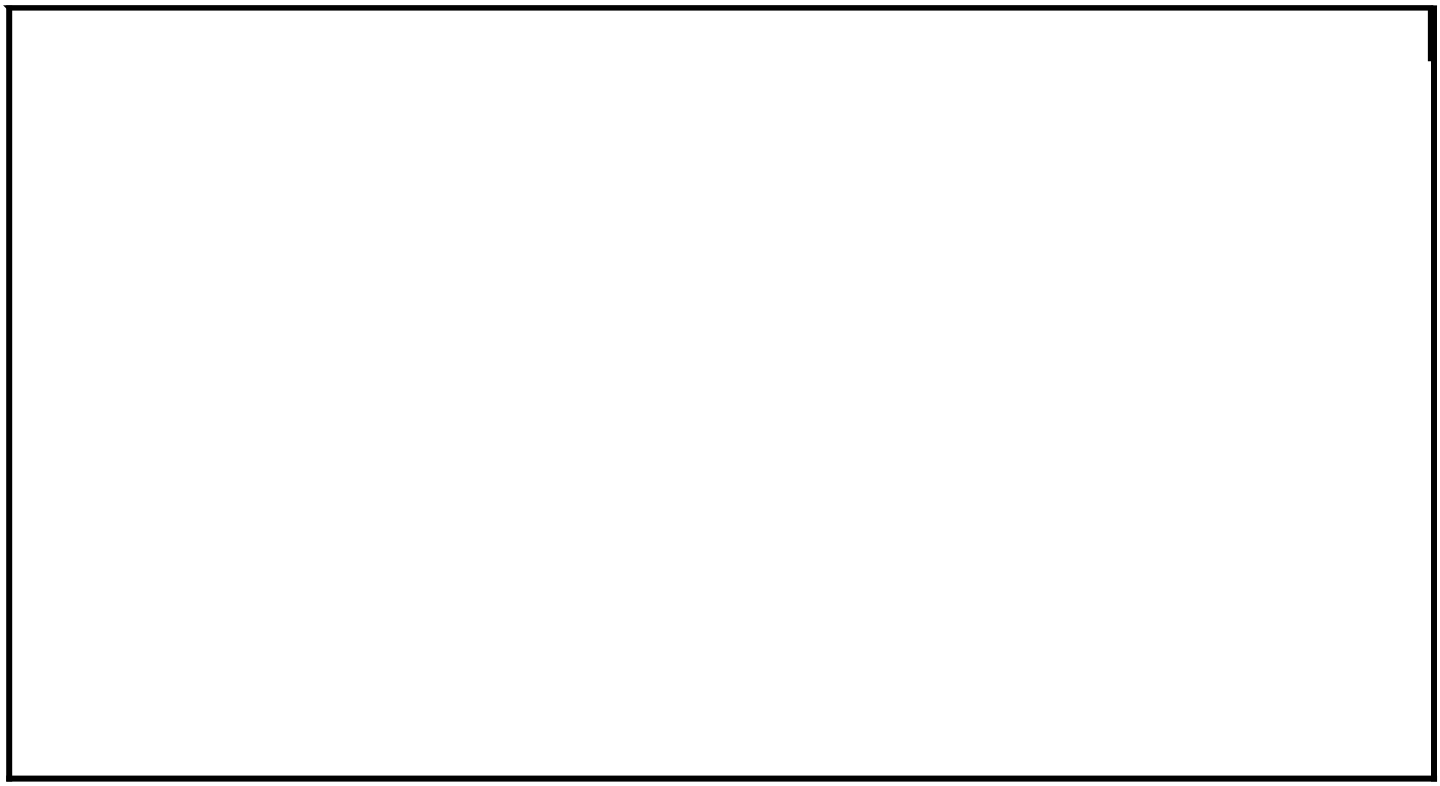

517-5375 **SENSOR & MOUNTING GP** (contd.) **i07692939**

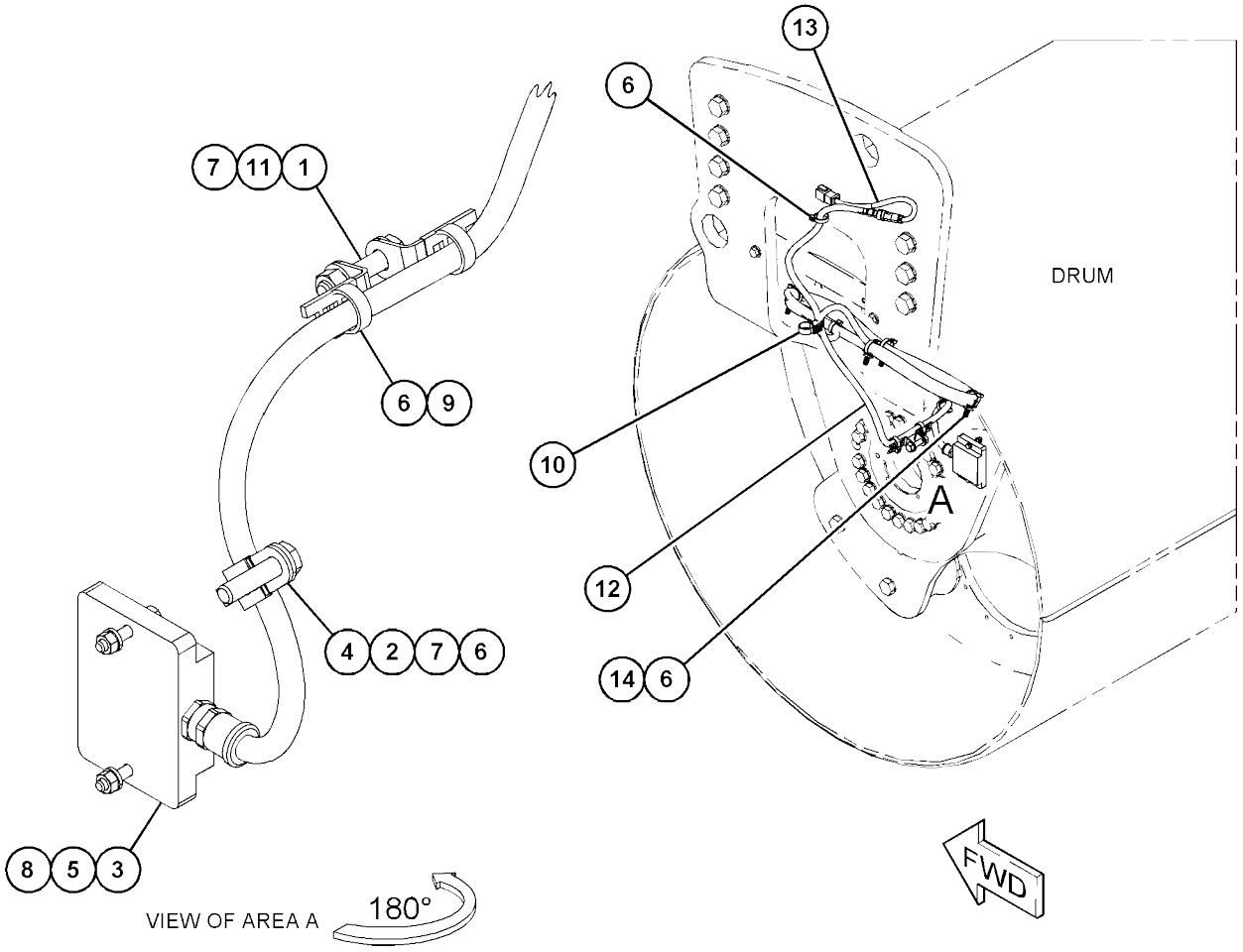

GRAPHIC #1 <END> g06397542

513-6264 SENSOR & MTG GP-TEMPERATURE

S/N: 5B41-UP; G441-UP
PART OF 514-1273, 514-1274 INSTALLATION AR-
COMMUNICATION AN ATTACHMENT

SMCS-1439

i07416487

	REF SEE NOTE QTY	GRAPHIC NO 1 2 3 4 5 6	(PRODUCT LEVEL)	REF PAGE	PART NAME PART NUMBER	
E	1	1	**3S-2093**	8	STRAP-CABLE	
	2	1	**7T-9234**	2	FITTING	
	3	1	**183-3873**	2	BREATHER (HYDRAULIC TANK)	
	4	1	**278-7339**	6	MOUNT-FLEXIBLE	
	5	1	**339-4419**	2	COLLAR	
	6	1	**342-6632**	2	SENSOR AS-TEMPERATURE (MAT)	
					(EACH INCLUDES)	
		1	**3E-3377**	1	WEDGE-RECEPTACLE LOCK (4-PIN)	
		1	**102-8804**	1	KIT-RECEPTACLE (4-PIN)	
					(INCLUDES RECEPTACLE AS & WEDGE)	
		1	**8T-8729**	4	PIN-CONNECTOR (16-GA TO 20-GA)	
E		1	**125-7874**		TUBE-HEAT SHRINK (5.72-MM DIA) (3-CM)	
		1	**361-3934**	1	SENSOR (TEMPERATURE)	
	7	1	*504-6836*	1	FILM GP	
		1	**399-2413**	2	FILM-IDENTIFICATION (COMPACTION CONTROL)	
	8	1	**434-3828**	2	CAPACITOR AS	
					(EACH INCLUDES)	
		1	**102-8802**	1	KIT-RECEPTACLE (2-PIN)	
					(INCLUDES RECEPTACLE AS & WEDGE)	
		1	**8T-8729**	2	PIN-CONNECTOR (16-GA TO 20-GA)	
Y	9	1	**439-7224**	2	PUMP GP-DIAPHRAGM	432
Y	10	1	**528-5494**	2	HARNESS AS-WIRING (MAT)	141
	11	1	**508-4248**	2	BRACKET	
	12	1	**178-3620**	2	STRAP-DUAL CLAMP	
	13	1	**7F-2050**	6	LOCKNUT (3/4-16-THD)	
	14	1	**7K-1181**	2	STRAP-CABLE	
M	15	1	**7X-2619**	6	BOLT (M6X1X10-MM)	
	16	1	**8T-4188**	2	ADAPTER-UNION	
	17	1	**9X-8256**	6	WASHER (6.6X12X2-MM THK)	
E	18	1	**144-0195**		HOSE (11.5-CM EACH)	

E - ORDER BY THE CENTIMETER M - METRIC PART
Y - SEPARATE ILLUSTRATION

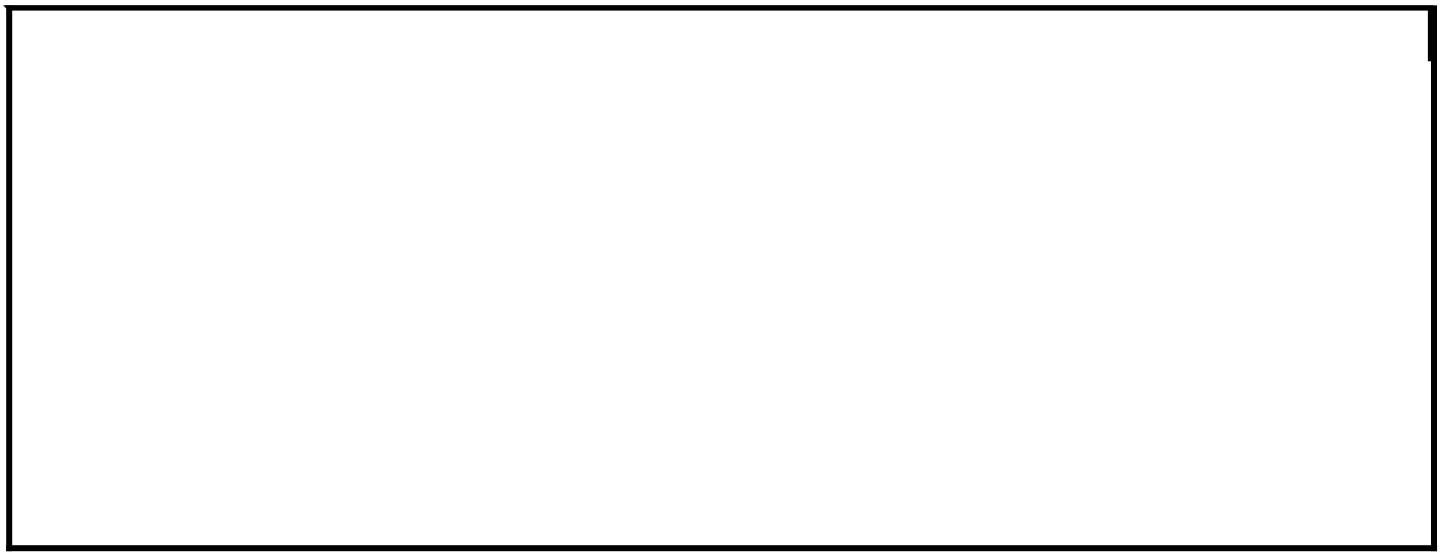

513-6264 **SENSOR & MTG GP-TEMPERATURE** (contd.) **i07416487**

GRAPHIC #1 <END> g06222110

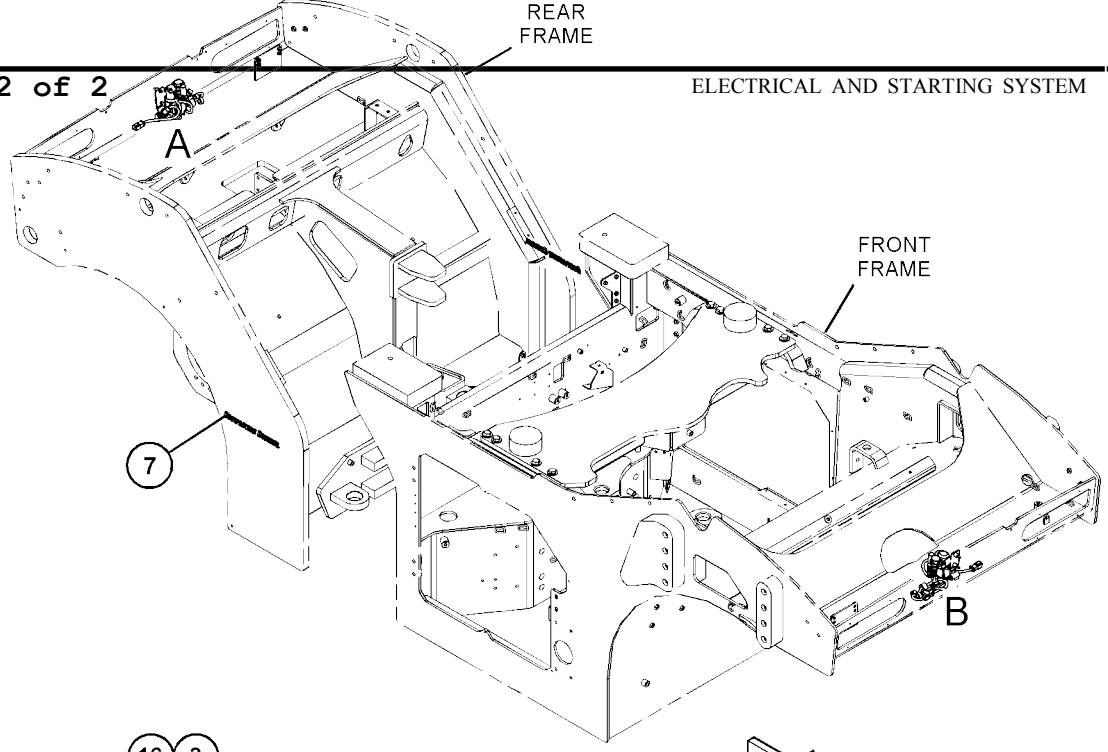

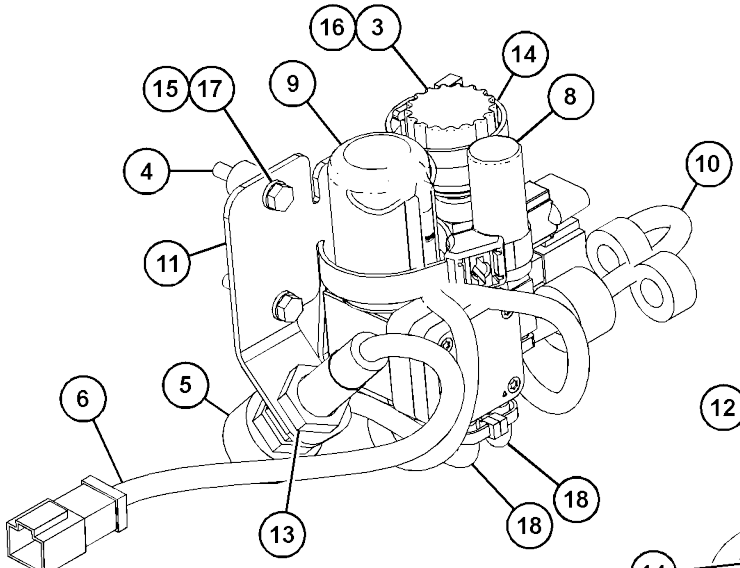

VIEW OF AREA A

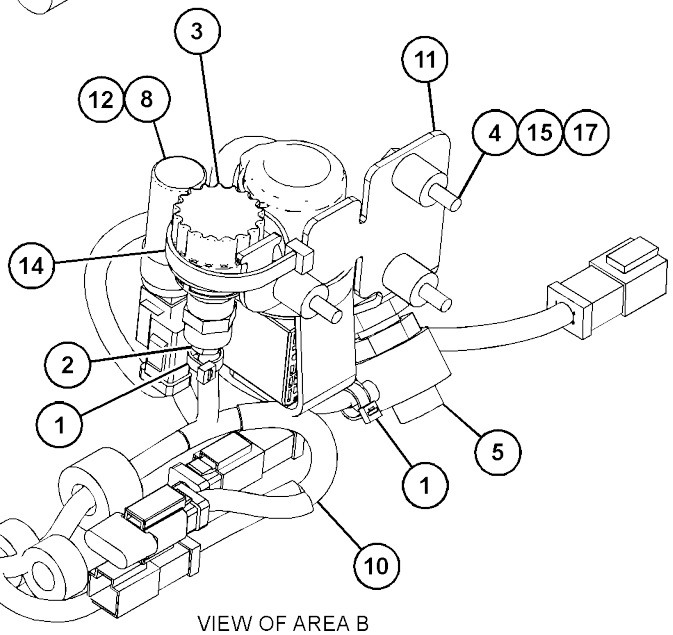

VIEW OF AREA B

425-9760 SENSOR GP-ENGINE

S/N: 2W21-
UP
PART OF 435-7493, 435-7494 ENGINE AR-PRIMARY
AN
ATTACHMENT

SMCS-1403, 1439, 1718, 1906, 1907, 1912, 1917, 1923, 1924, 1925, 1928, 1929, 7400, 7422

i065815 84

NOTE	REF NO	GRAPHIC REF	PART NUMBER	QTY	PART NAME 1 2 3 4 5 6 (PRODUCT LEVEL)	SEE PAGE
M	1	1	**124-3815**	1	BOLT (M8X1.25X16-MM)	
	2	1	**199-9252**	1	SEAL-O-RING	
	3	1	**199-9267**	1	SEAL-O-RING	
	4	1	**206-1826**	1	BOLT	
	5	1	**238-0112**	1	SENSOR GP-TEMPERATURE (ENGINE COOLANT)	
	5A	1	**238-0112**	1	SENSOR GP-TEMPERATURE (ENGINE COOLANT)	
	6	1	**274-1639**	2	SEAL	
	7	1	**278-5226**	2	SEAL-O-RING	
	8	1	**320-3060**	1	SENSOR GP-PRESSURE (ENGINE OIL)	
	9	1	**320-3062**	1	SENSOR GP-PRESSURE (INLET MANIFOLD AIR)	
	10	1	**384-3887**	1	SENSOR GP-SPEED	
	11	1	**384-3888**	1	SENSOR GP-SPEED	
	12	1	**425-9111**	1	ADAPTER	
M	13	1	**8T-1158**	1	BOLT-SOCKET HEAD (M8X1.25X20-MM)	

M - METRIC PART

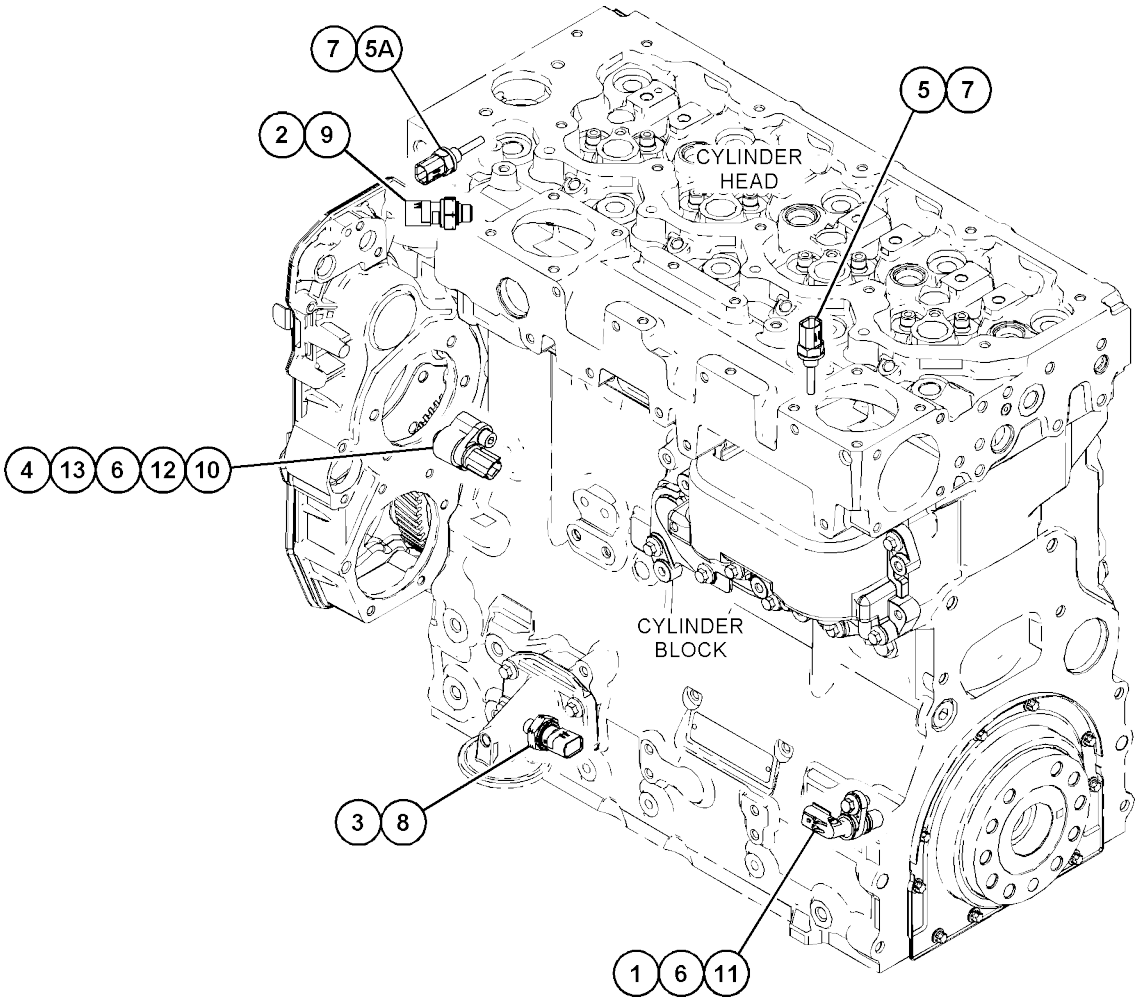

GRAPHIC #1 <END> g03814927

266-1467 SENSOR GP-POSITION-ROTARY

S/N: 5B41-UP; G441-UP

PART OF 351-3409 SENSOR & MOUNTING GP

AN ATTACHMENT

SMCS-1408, 1905, 1911

i072846 46

NOTE	REF NO	GRAPHIC REF	PART NUMBER	QTY	PART NAME 1 2 3 4 5 6 (PRODUCT LEVEL)	SEE PAGE
	1	1	**9X-3401**	3	PIN-CONNECTOR (16-GA TO 18-GA)	
					-OR-	
		1	**126-1767**	3	PIN-CONNECTOR (14-GA TO 16-GA)	
	2	1	**102-8803**	1	KIT-RECEPTACLE (3-PIN)	
					(INCLUDES RECEPTACLE AS & WEDGE)	
E	3	1	**3E-9375**		CONDUIT (14-CM)	

E - ORDER BY THE CENTIMETER

GRAPHIC #1 <END> g03547699

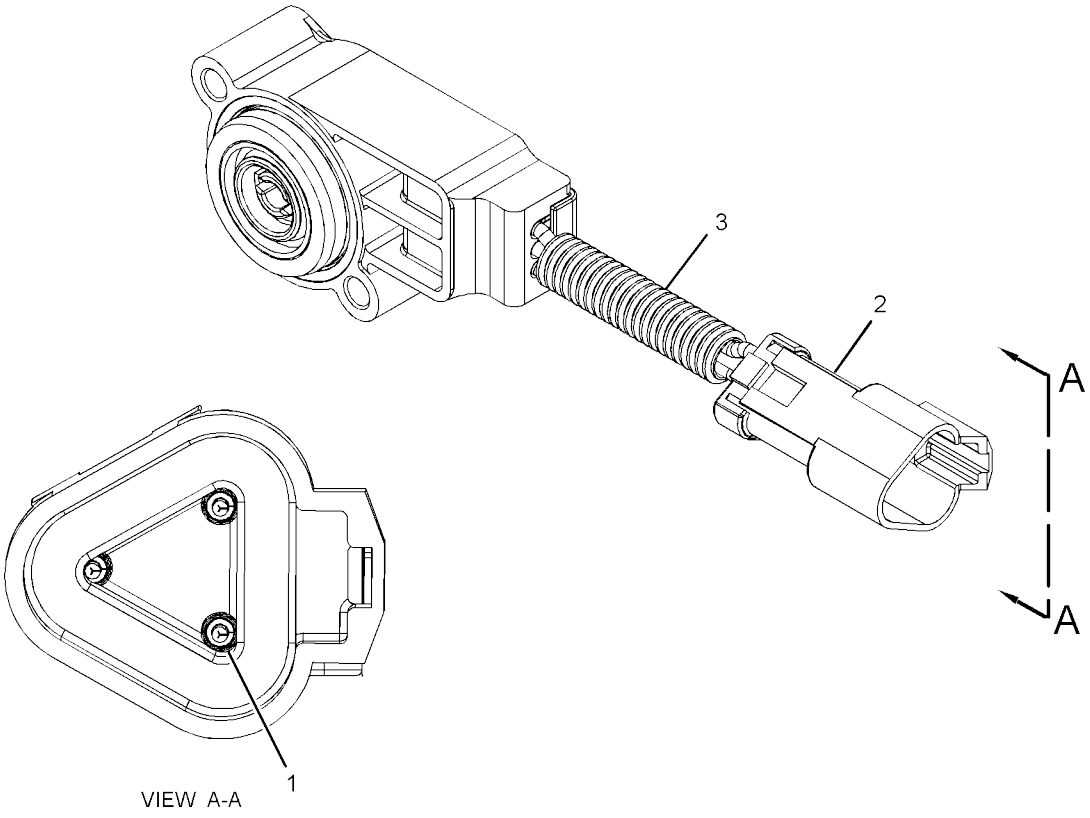
3
2
A
A
1
VIEW A-A

266-1484 SENSOR GP-POSITION-ROTARY

S/N: 5B41-UP; G441-UP

PART OF 344-0545 SENSOR GP-POSITION

SMCS-1408, 1905, 1911

i073989 22

NOTE	REF NO	GRAPHIC REF	PART NUMBER	QTY	PART NAME 1 2 3 4 5 6 (PRODUCT LEVEL)	SEE PAGE
	1	1	**9X-3401**	3	PIN-CONNECTOR (16-GA TO 18-GA)	
					-OR-	
		1	**126-1767**	3	PIN-CONNECTOR (14-GA TO 16-GA)	
	2	1	**102-8803**	1	KIT-RECEPTACLE (3-PIN)	
					(INCLUDES RECEPTACLE AS & WEDGE)	
	3	1	**3E-3371**	1	WEDGE-RECEPTACLE LOCK (3-PIN)	
E	4	1	**9X-1813**		SLEEVE (14-CM)	

E - ORDER BY THE CENTIMETER

GRAPHIC #1 <END> g06282854

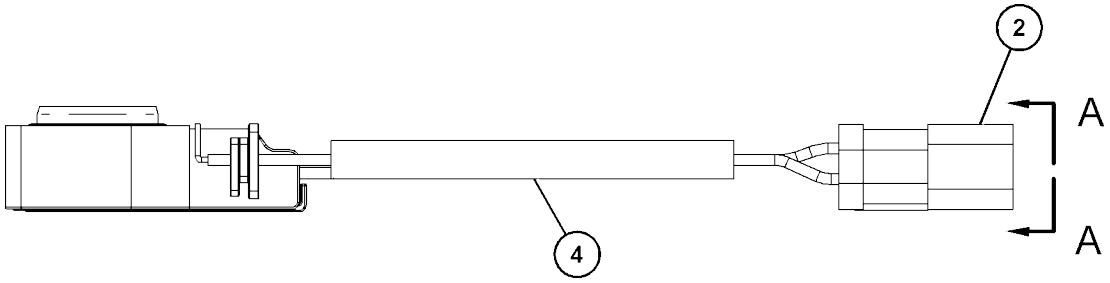

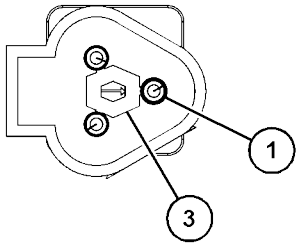

VIEW A-A

344-0545 SENSOR GP-POSITION

S/N: 5B41-UP; G441-UP

PART OF 451-3140 ELECTRICAL AR

SMCS-1408, 1905, 1911

i073988 97

NOTE	REF NO	GRAPHIC REF	PART NUMBER	QTY	PART NAME 1 2 3 4 5 6 (PRODUCT LEVEL)	SEE PAGE
	1	1	**1U-1648**	2	SPRING	
	2	1	**166-0692**	1	BLOCK AS-MOUNTING (POSITION SENSOR)	
Y	3	1	**266-1484**	1	SENSOR GP-POSITION (ROTARY)	188
	4	1	**361-2487**	1	ARM AS	
	5	1	**421-8498**	1	BRACKET AS	
M		1	**8T-3612**	4	NUT-WELD (M8X1.25-THD)	
	6	1	**425-9933**	1	SUPPORT AS	
		1	**7T-1099**	3	LINK	
	7	1	**130-5300**	1	CLIP	
	8	1	**2F-7888**	2	SCREW-MACHINE (10-32X1.25-IN)	
	9	1	**4M-5281**	2	BOLT (1/4-20X0.75-IN)	
	10	1	**9X-8256**	2	WASHER (6.6X12X2-MM THK)	
	11	1	**6V-0894**	1	SEAL-O-RING	
	12	1	**7X-0620**	2	WASHER-HARD (5.5X13X1.6-MM THK)	
	13	1	**8S-3159**	1	SETSCREW-SOCKET (10-24X7.92-MM)	
M	14	1	**8T-4189**	8	BOLT (M8X1.25X20-MM)	
	15	1	**8T-4224**	8	WASHER-HARD (8.8X16X2-MM THK)	
	16	1	**8T-7566**	1	PIN-SPRING	

M - METRIC PART
Y - SEPARATE ILLUSTRATION

344-0545 **SENSOR GP-POSITION (**contd.**)** **i07398897**

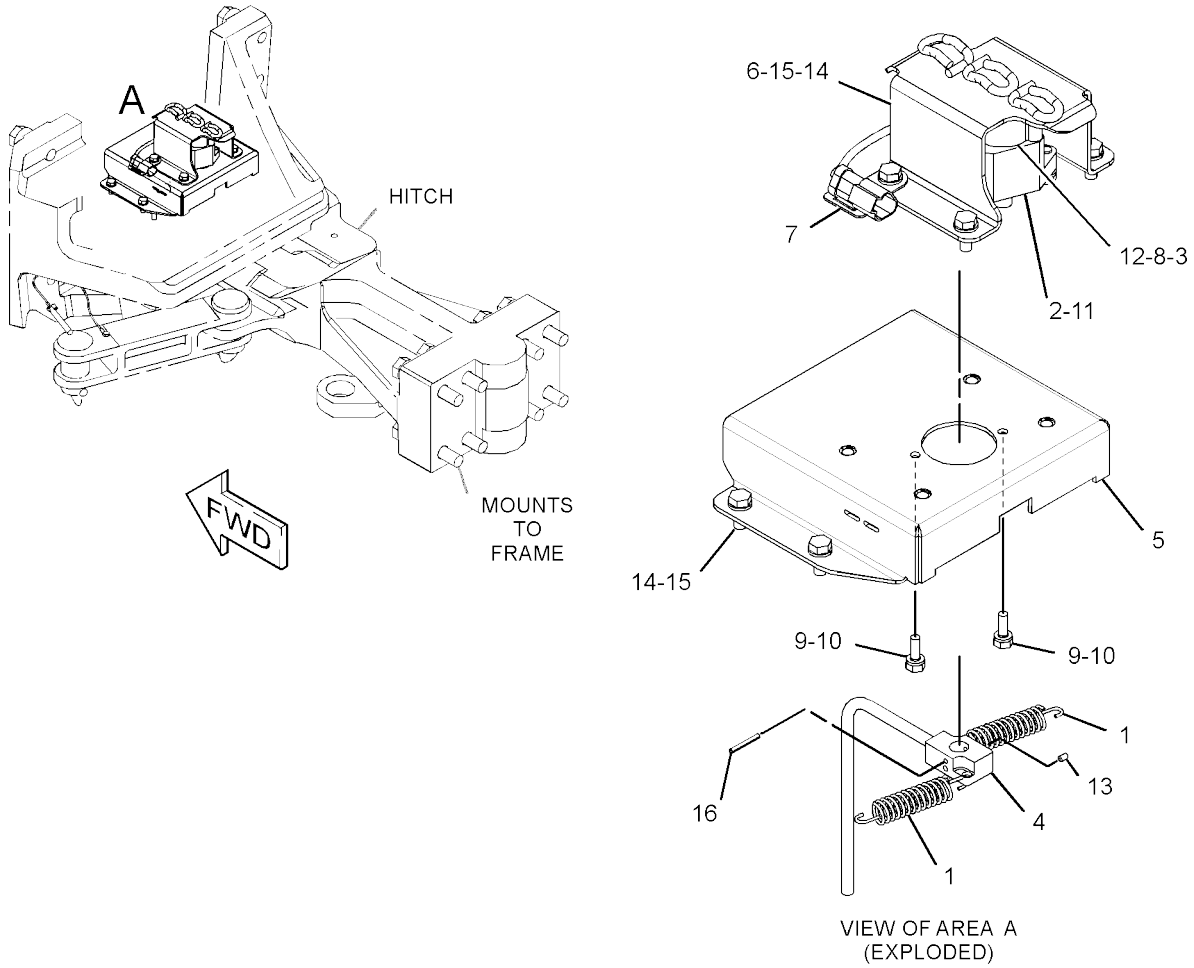

GRAPHIC #1 <END> g03428751

ELECTRICAL AND STARTING SYSTEM

262-3764 SENSOR GP-SPEED

S/N: G441-UP
PART OF 343-6153 MOTOR & MTG GP-PROPEL AN ATTACHMENT

SMCS-1907, 4803

i07416593

REF SEE NOTE	QTY	GRAPHIC NO 1 2 3 4 5 6	(PRODUCT LEVEL)	REF PAGE	PART NAME PART NUMBER
	1	1	**102-8804**	1	KIT-RECEPTACLE (4-PIN)
					(INCLUDES RECEPTACLE AS & WEDGE)
	2	1	**9X-3401**	4	PIN-CONNECTOR (16-GA TO 18-GA)
E	3	1	**9X-1813**		SLEEVE (28-CM)
	4	1	**9X-7408**	1	SEAL-O-RING
B	5	1	**171-5349**	1	STRAP-MARKER

B - USE AS REQUIRED
E - ORDER BY THE CENTIMETER

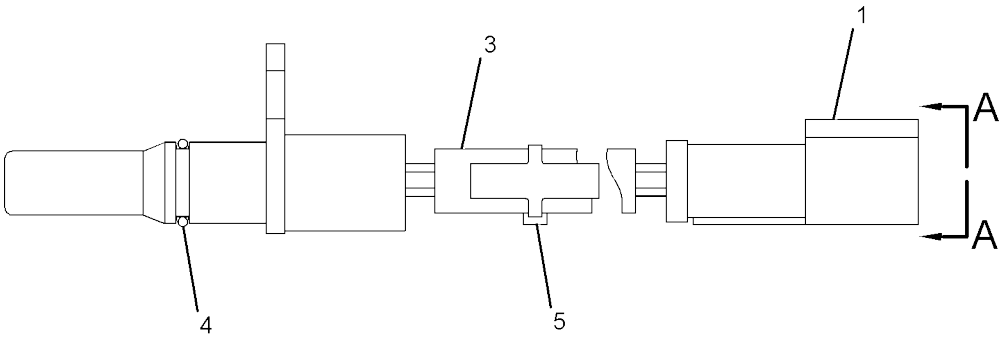

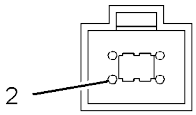

VIEW A-A

GRAPHIC #1 <END> g01326248

ELECTRICAL AND STARTING SYSTEM

430-5204 SENSOR GP-TEMPERATURE

S/N: 2W21-UP

PART OF 435-7493, 435-7494 ENGINE AR-PRIMARY AN ATTACHMENT

SMCS-1408

i06281678

REF SEE NOTE QTY	GRAPHIC NO 1 2 3 4 5 6	(PRODUCT LEVEL)	REF PAGE	PART NAME PART NUMBER
1	1	**199-9751**	1	SEAL-O-RING
2	1	**232-1322**	1	PLUG

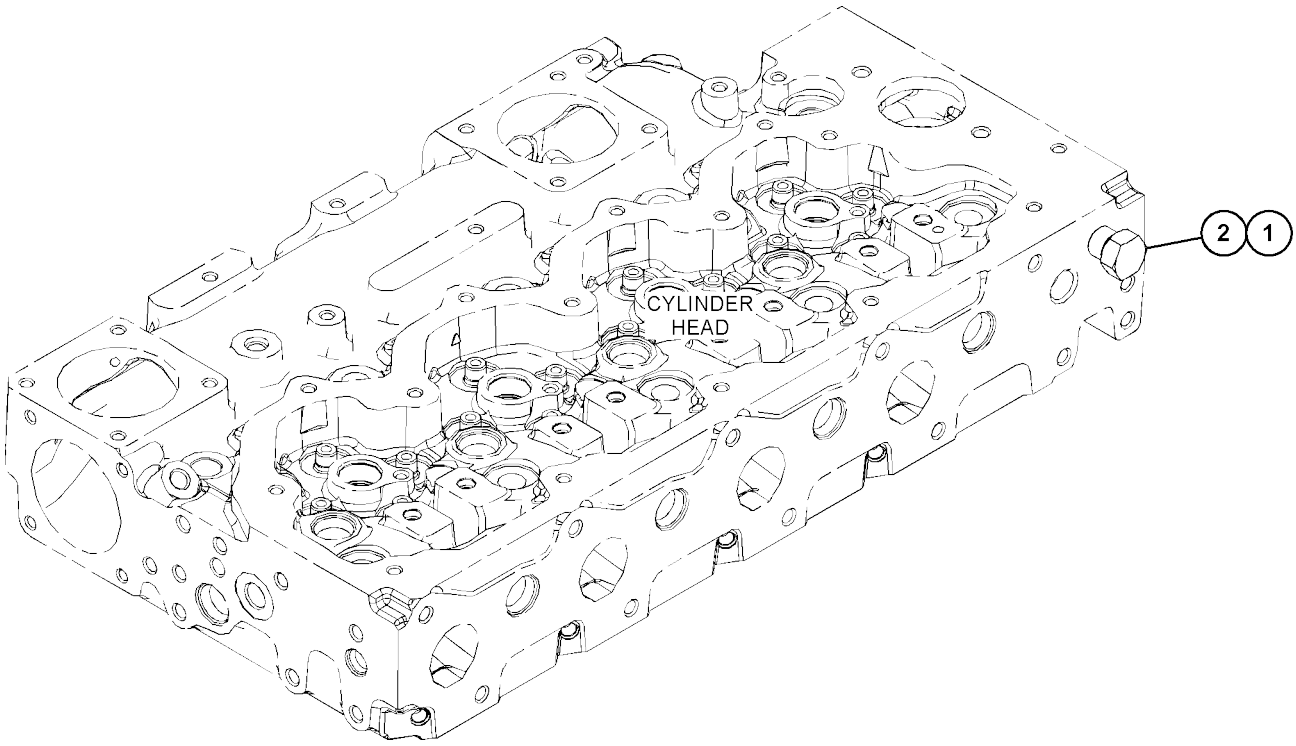

GRAPHIC #1 <END> g03812299

ELECTRICAL AND STARTING SYSTEM

417-3453 STARTING AID GP

S/N: 2W21-UP

PART OF 435-7493, 435-7494 ENGINE AR-PRIMARY AN ATTACHMENT

SMCS-1090

i06888806

REF SEE NOTE QTY	GRAPHIC NO 1 2 3 4 5 6 (PRODUCT LEVEL)	REF PAGE	PART NAME PART NUMBER
1	1 **452-3112**	4	GLOW PLUG (12-VOLT)
2	1 **368-3147**	1	BUS BAR AS

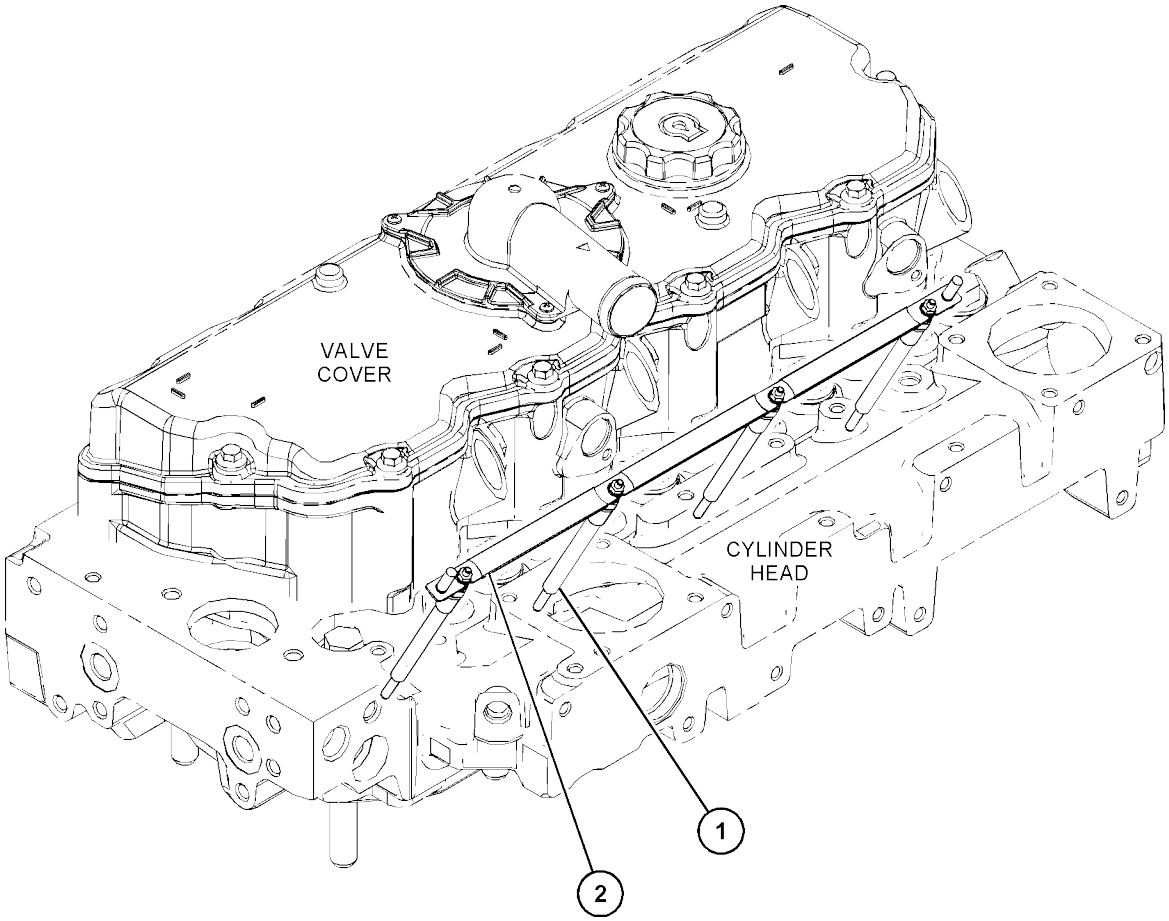

GRAPHIC #1 <END> g03817299

ELECTRICAL AND STARTING SYSTEM

425-9174 STARTING MOTOR GP-ELECTRIC

S/N: 2W21-UP

PART OF 435-7493, 435-7494 ENGINE AR-PRIMARY AN ATTACHMENT

SMCS-1453

i07420897

	REF SEE NOTE QTY	GRAPHIC NO 1 2 3 4 5 6	(PRODUCT LEVEL)	REF PAGE	PART NAME PART NUMBER
R	1	1	**331-7010**	1	STARTING MOTOR-ELECTRIC (12-VOLT, 4-KW)
M	2	1	**175-7141**	3	NUT-HEX FLANGE (M10X1.5-THD)
M	3	1	**6I-4012**	3	STUD

M - METRIC PART
R - REMANUFACTURED PART MAY BE AVAILABLE

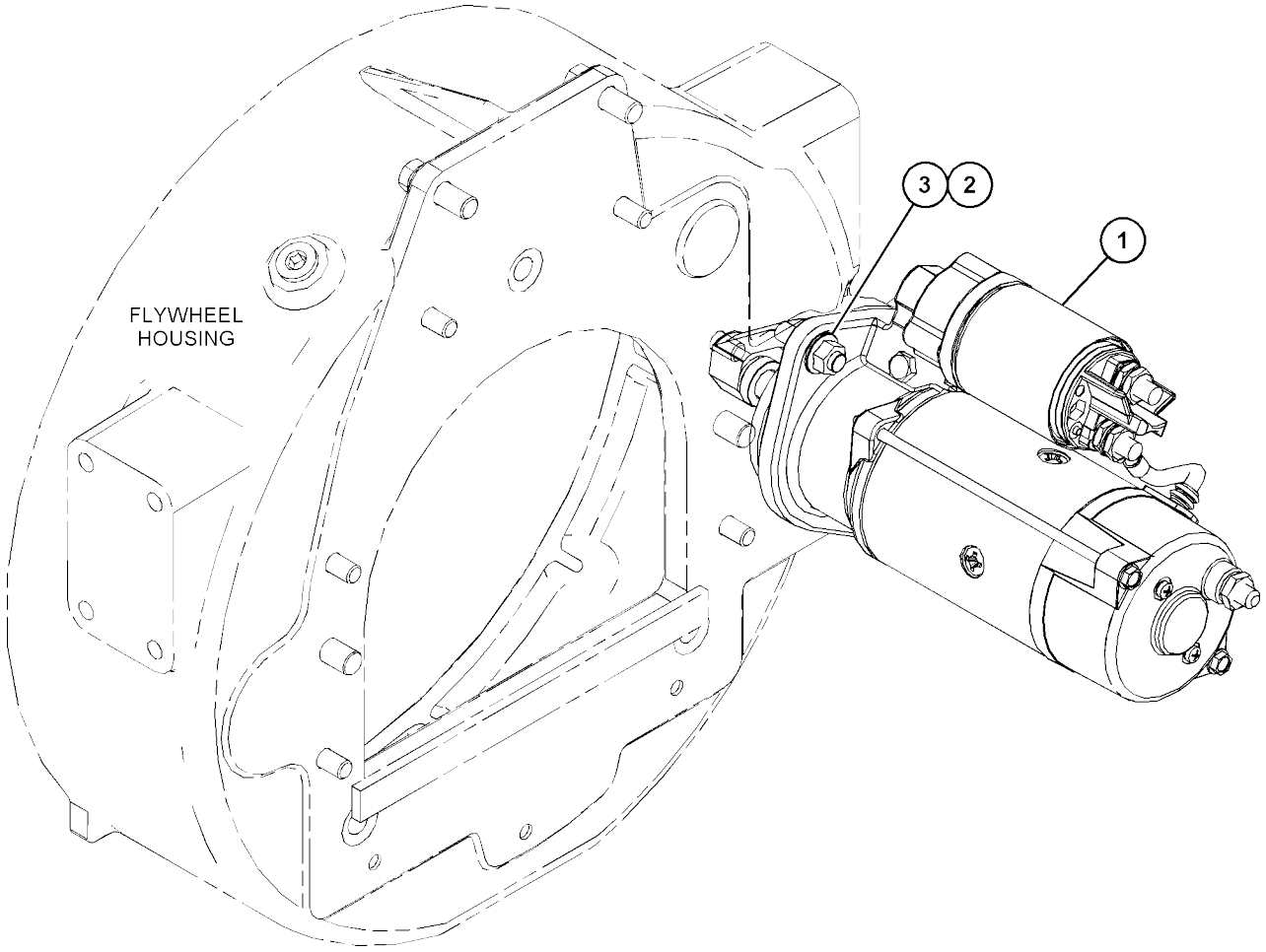

GRAPHIC #1 <END> g03822779

7N-0718 SWITCH GP-DISCONNECT-BATTERY

S/N: 5B41-UP; G441-
UP 12-VOLT
PART OF 514-6423 BATTERY & WIRING GP
SMCS-1411

i07398962

REF SEE NOTE QTY	GRAPHIC NO 1 2 3 4 5 6	(PRODUCT LEVEL)	REF PAGE	PART NAME PART NUMBER
1	1	**8H-5306**	1	KEY (BATTERY DISCONNECT)
2	1	**8H-5303**	1	NUT (3/4-16-THD)
3	1	**2H-3922**	2	LOCKWASHER
4	1	**264-3617**	2	LOCKWASHER
5	1	**6F-7045**	2	NUT-FULL (3/8-24-THD)

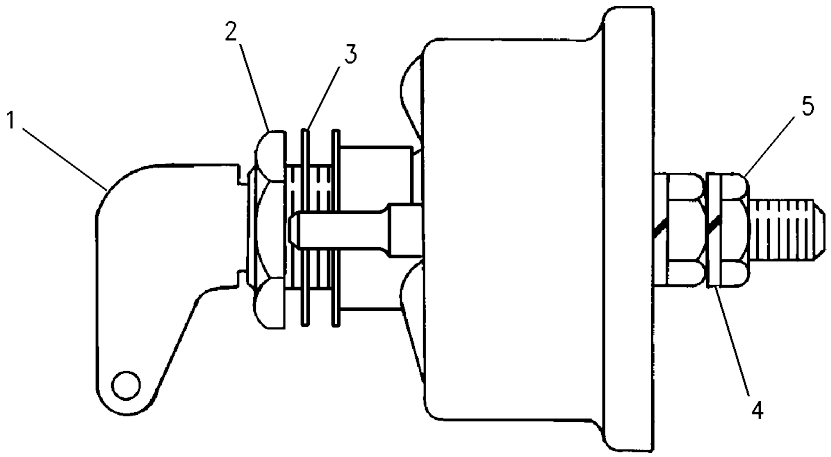

GRAPHIC #1 <END> g00715584

523-8700 WIRING GP-AIR CONDITIONER

S/N: 5B41-UP; G441-UP

PART OF 451-3170, 451-3270 AIR CONDITIONER AR

AN ATTACHMENT

SMCS-1408, 7320

i07528447

	REF SEE NOTE	QTY	GRAPHIC NO 1 2 3 4 5 6	(PRODUCT LEVEL)	REF PAGE	PART NAME PART NUMBER	
	1	1		**8R-9137**	1	ANGLE	
	2	1		**212-2204**	1	CONTROL GP-AIR CONDITIONER (COMPRESSOR)	
		1		**155-2271**	1	KIT-CONNECTING PLUG (4-PIN)	
						(INCLUDES PLUG AS, WEDGE, & INTERFACE SEAL)	
		1		**8T-8730**	4	SOCKET-CONNECTOR (16-GA TO 18-GA)	
	3	1		**251-1198**	1	SWITCH AS-ROCKER (24-VOLT) (SEALED)	
Y	4	1		**444-6758**	1	HARNESS AS-HEATER & AIR COND	136
	5	1		**352-3964**	1	CLIP (LADDER)	
	6	1		**352-3968**	1	CLIP (LADDER)	
	7	1		**7K-1181**	5	STRAP-CABLE	
	8	1		**8T-4121**	2	WASHER-HARD (11X21X2.5-MM THK)	
M	9	1		**8T-4133**	1	NUT (M10X1.5-THD)	
M	10	1		**8T-4137**	1	BOLT (M10X1.5X20-MM)	

M - METRIC PART
Y - SEPARATE ILLUSTRATION

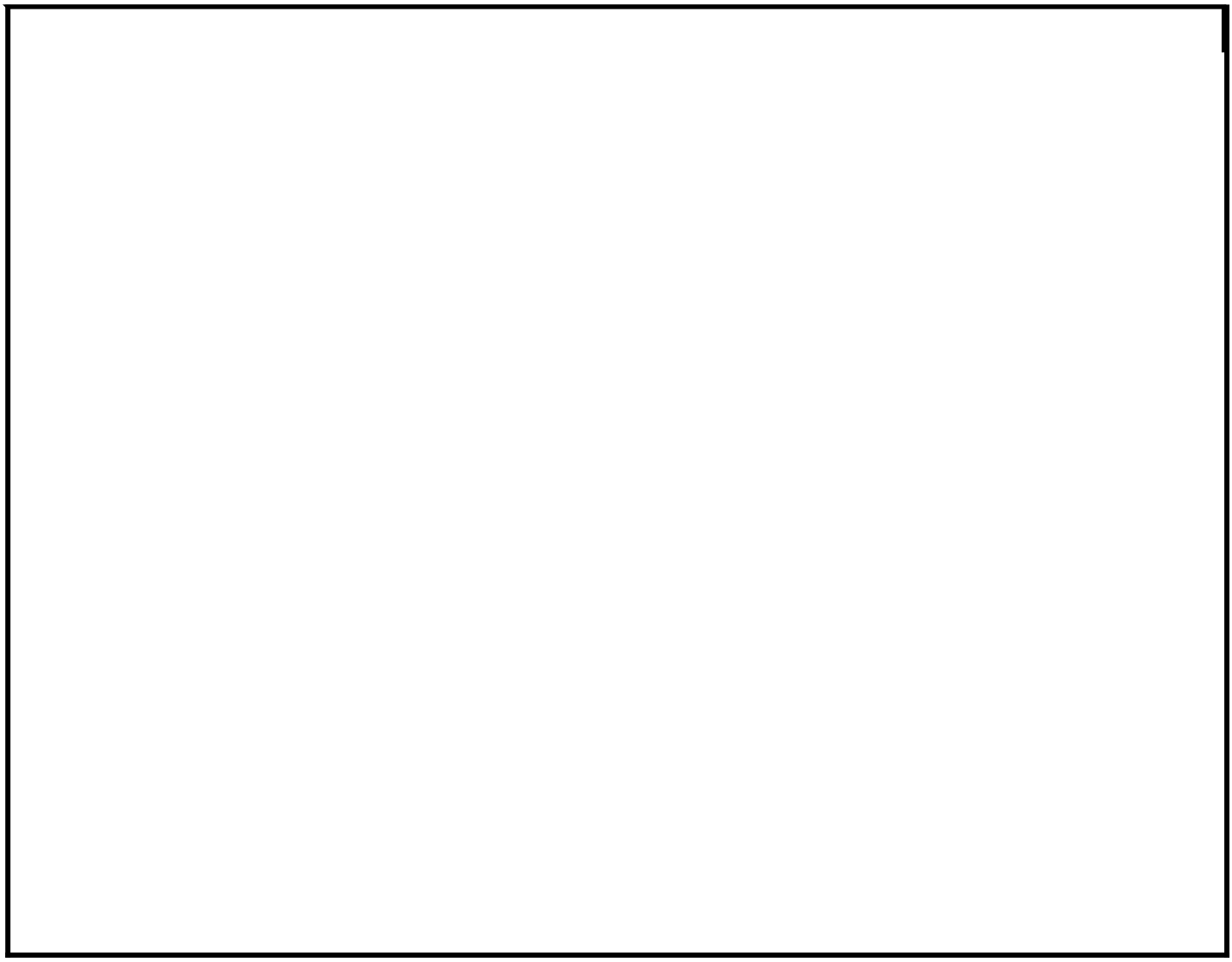

523-8700 **WIRING GP-AIR CONDITIONER (**contd.**)** **i07528447**

GRAPHIC #1 <END> g06176630

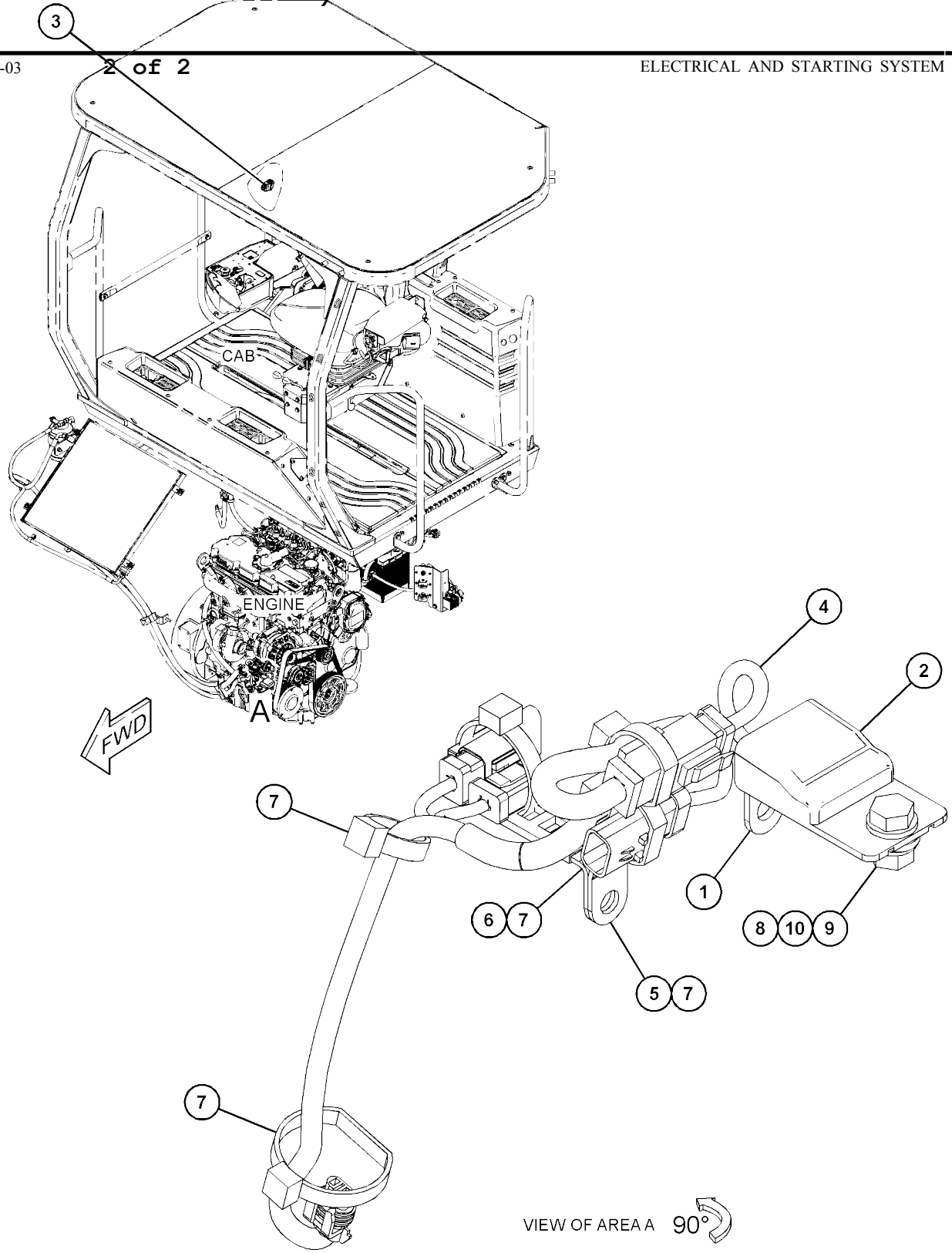
3
CAB
ENGINE
A
FWD
4
2
7
1
6
7
8
10
9
5
7
7
VIEW OF AREA A 90°

362-2581 WIRING GP-CAB

S/N: 5B41-UP; G441-UP

PART OF 462-5780, 509-9422 CAB GP, 462-5781, 509-9415 CAB GP-ENCLOSED ROPS AN ATTACHMENT

SMCS-1408

i07406178

NOTE	REF NO	GRAPHIC REF	PART NUMBER	QTY	PART NAME [1 2 3 4 5 6] (PRODUCT LEVEL)	SEE PAGE
	1	1	**8E-1118**	1	ANTENNA AS	
	2	1	**115-1615**	4	RELAY AS (12-VOLT) (FLOODLIGHT)	
	4	1	**199-3387**	1	CABLE AS	
	5	1	**228-6089**	3	PLUG (ROCKER SWITCH)	
	6	1	**267-5239**	1	PANEL AS (AIR CONDITIONER, HEATER CONT)	
		1	**271-7312**	1	KNOB	
		1	**285-7415**	1	KNOB	
	7	1	**360-1758**	1	SWITCH AS-ROCKER (WIPER, WASHER, FRONT)	
	8	1	**360-1759**	1	SWITCH AS-ROCKER (WIPER, WASHER, REAR)	
Y	9	1	**423-1940**	1	HARNESS AS-CAB	129
	10	1	**362-2767**	1	PLATE	
	11	1	**366-1981**	1	PLATE AS	
	12	1	**277-1873**	1	CLIP (LADDER)	
	13	1	**2V-8259**	1	GROMMET	
	14	1	**7K-1181**	55	STRAP-CABLE	
M	15	1	**8T-4138**	3	BOLT (M6X1X20-MM)	
M	16	1	**8T-4200**	4	BOLT (M8X1.25X16-MM)	
	17	1	**5P-4116**	5	WASHER-HARD (8.8X20.5X2-MM THK)	
	19	1	**9D-8508**	1	GROMMET	
	20	1	**9X-8256**	2	WASHER (6.6X12X2-MM THK)	
Y	21	1	**3E-7301**	1	LAMP GP-DOME (WITH SWITCH)	160

M - METRIC PART
Y - SEPARATE ILLUSTRATION

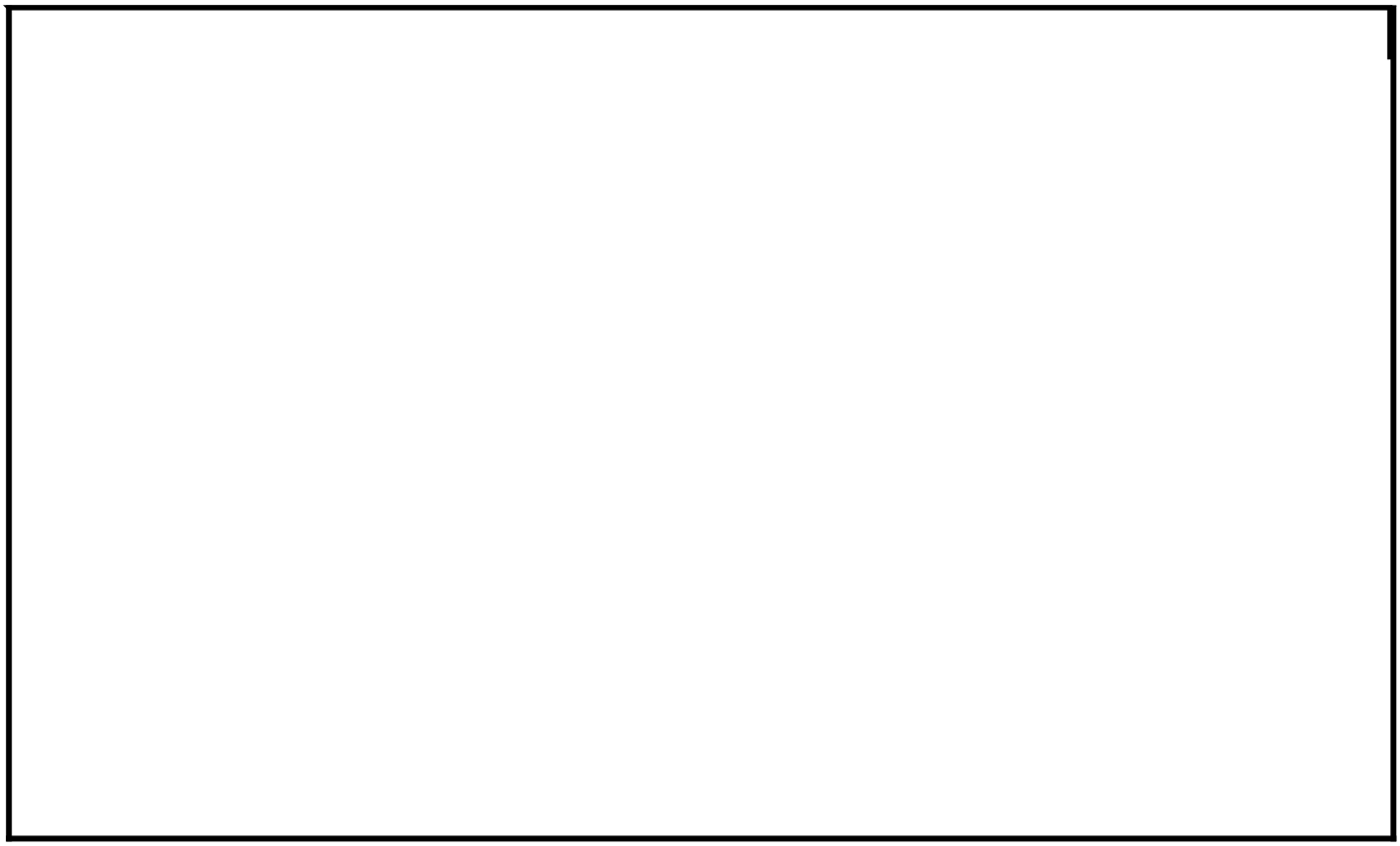

362-2581 **WIRING GP-CAB (**contd.**)** **i07406178**

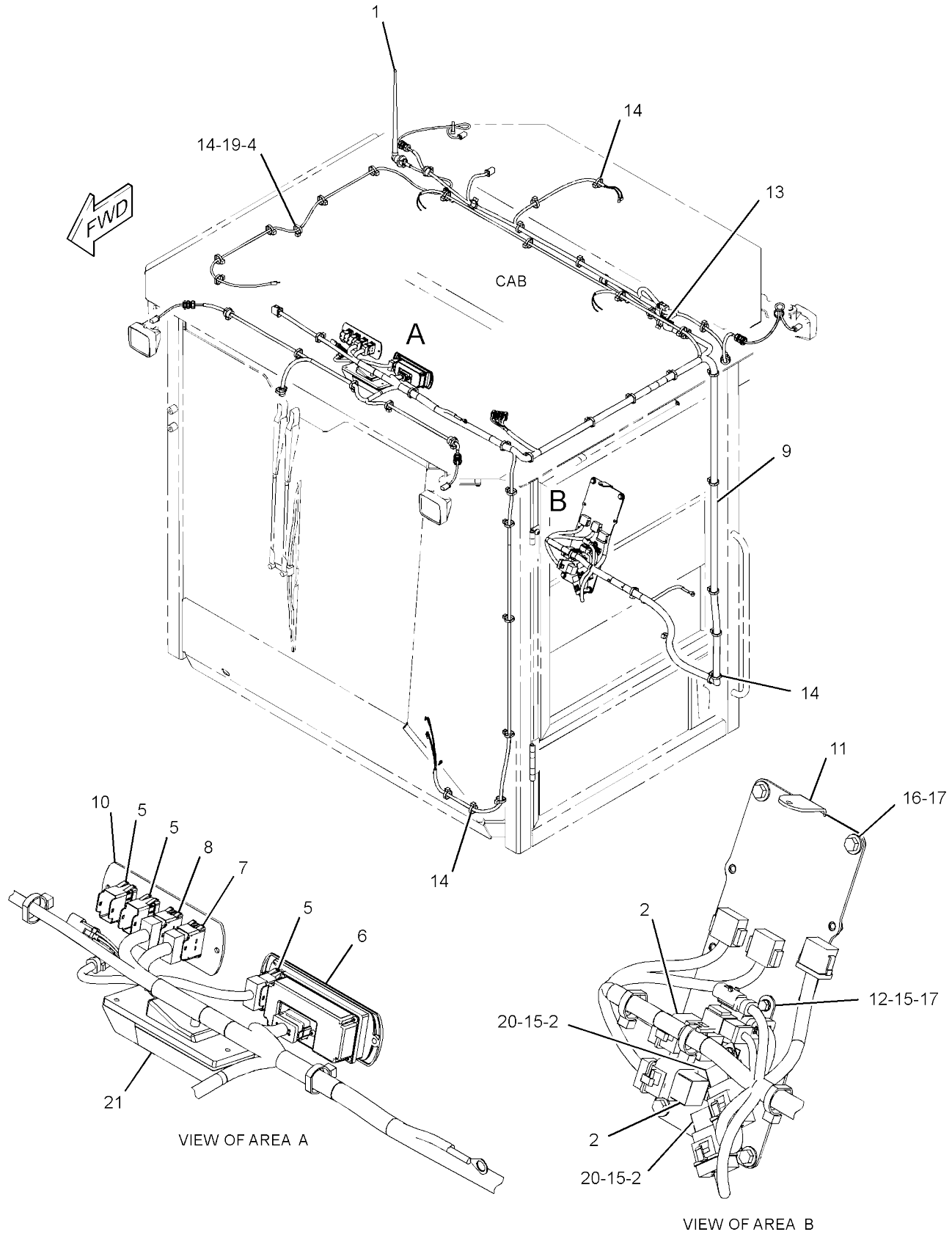

GRAPHIC #1 <END> g06208274

416-4308 WIRING GP-CAB

S/N: 5B41-UP; G441-UP
PART OF 393-0166, 393-0167 CAB
GP AN ATTACHMENT

SMCS-1408

i07406138

	REF SEE NOTE QTY	GRAPHIC NO 1 2 3 4 5 6	(PRODUCT LEVEL)	REF PAGE	PART NAME PART NUMBER	
Y	1	1	**3E-7301**	1	LAMP GP-DOME (WITH SWITCH) (CAB)	160
	2	1	**8E-1118**	1	ANTENNA AS (RADIO)	
	3	1	**115-1615**	4	RELAY AS (12-VOLT) (FLOODLIGHT)	
	4	1	**199-3387**	1	CABLE AS	
	5	1	**228-6089**	3	PLUG (ROCKER SWITCH)	
	6	1	**267-5239**	1	PANEL AS (AIR CONDITIONER, HEATER CONT)	
		1	**271-7312**	1	KNOB (TEMPERATURE CONTROL)	
		1	**285-7415**	1	KNOB (BLOWER FAN SPEED)	
	7	1	**360-1758**	1	SWITCH AS-ROCKER (WIPER, WASHER, FRONT)	
	8	1	**360-1759**	1	SWITCH AS-ROCKER (WIPER, WASHER, REAR)	
	9	1	**362-2767**	1	PLATE	
	10	1	**395-0040**	1	PLATE AS	
M		1	**6V-9632**	5	NUT-WELD (M6X1-THD)	
Y	11	1	**416-4268**	1	HARNESS AS-CAB	127
	12	1	**277-1873**	1	CLIP (LADDER)	
	13	1	**2V-8259**	1	GROMMET	
M	14	1	**5C-7261**	2	NUT (M8X1.25-THD)	
	15	1	**7K-1181**	61	STRAP-CABLE	
M	16	1	**8T-4138**	3	BOLT (M6X1X20-MM)	
	17	1	**8T-4224**	2	WASHER-HARD (8.8X16X2-MM THK)	
M	18	1	**8T-4970**	4	BOLT (M6X1X14-MM)	
	19	1	**9D-8508**	1	GROMMET	
	20	1	**9X-2038**	4	WASHER (7X19X2-MM THK)	
	21	1	**9X-8256**	3	WASHER (6.6X12X2-MM THK)	

M - METRIC PART
Y - SEPARATE ILLUSTRATION

416-4308 **WIRING GP-CAB (**contd.**)** **i07406138**

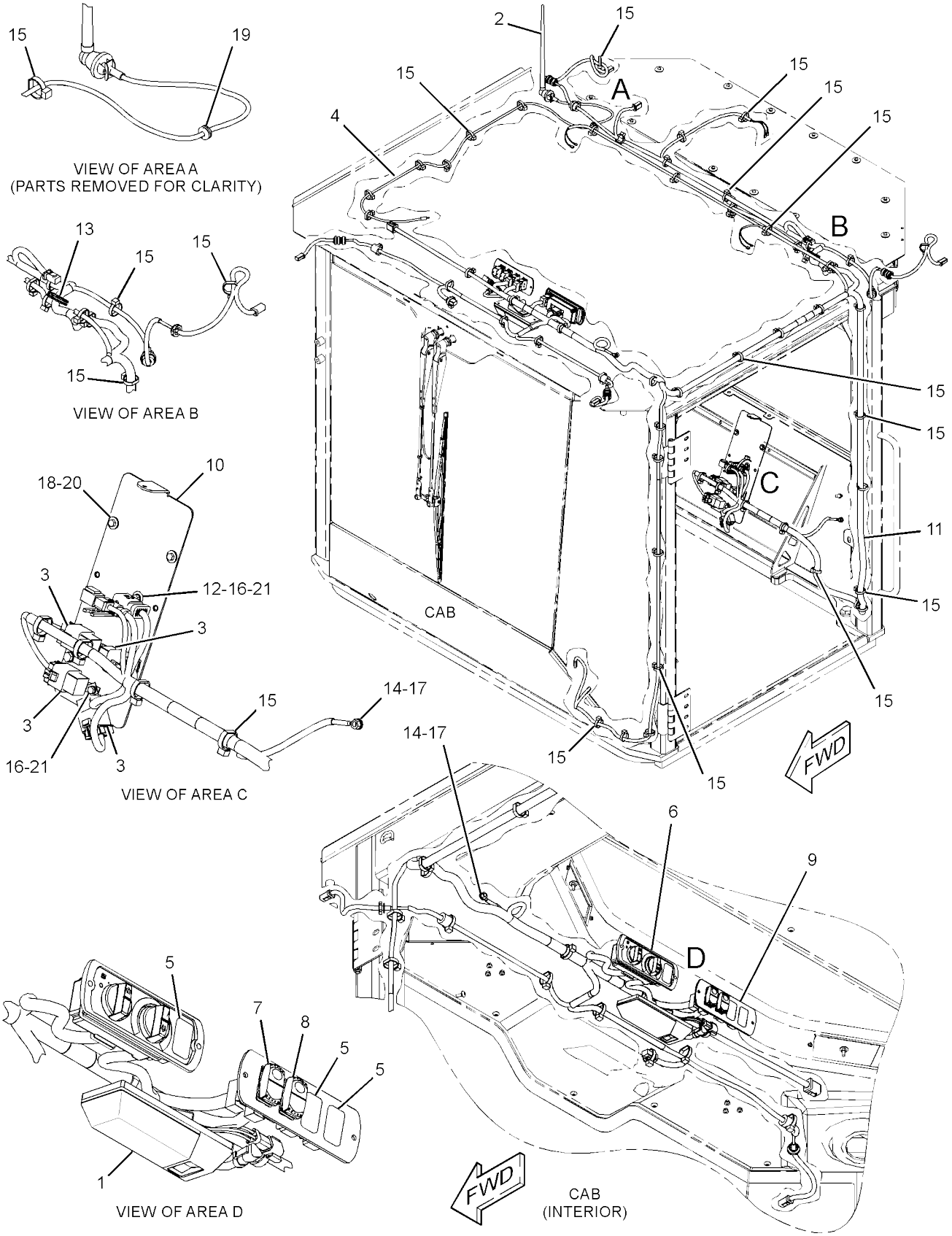

GRAPHIC #1 <END> g03680408

ELECTRICAL AND STARTING SYSTEM

387-7705 WIRING GP-ENGINE

S/N: 5B41-UP; G441-UP
PART OF 451-3140 ELECTRICAL
AR

SMCS-1408

i07398925

	REF SEE NOTE	QTY	GRAPHIC NO 1 2 3 4 5 6	(PRODUCT LEVEL)	REF PAGE	PART NAME PART NUMBER	
		1	1	**3S-2093**	4	STRAP-CABLE	
		2	1	**8R-9137**	1	ANGLE	
		3	1	**8T-4205**	1	WASHER-HARD (7.2X14.5X2-MM THK)	
		4	1	**204-2281**	1	STRAP-CABLE	
		5	1	**268-6677**	1	BRACKET AS	
M		6	1	**260-3939**	1	SCREW-HEX HEAD (M6X1X25-MM)	
		7	1	**433-6810**	1	STRAP AS-GROUND	
			1	**030-1712**	1	TERMINAL-RING (2-GA, 1/4-IN SCREW)	
			1	**311-6184**	1	TERMINAL-RING (2-GA, 3/8-IN SCREW)	
Y		8	1	**479-0905**	1	HARNESS AS-ENGINE	135
		9	1	**130-5300**	4	CLIP	
		10	1	**309-4314**	1	CLIP (LADDER)	
		11	1	**352-3964**	2	CLIP (LADDER)	
		12	1	**4P-8134**	1	CLIP (LADDER)	
		13	1	**352-3968**	1	CLIP (LADDER)	
		14	1	**352-3970**	1	CLIP (LADDER)	
		15	1	**4P-7581**	2	CLIP (LADDER)	
M		16	1	**5C-2890**	1	NUT (M6X1-THD)	
M		17	1	**5C-7261**	1	NUT (M8X1.25-THD)	
		18	1	**5P-4116**	2	WASHER-HARD (8.8X20.5X2-MM THK)	
M		19	1	**6V-7743**	1	LOCKNUT (M6X1-THD)	
		20	1	**7K-1181**	9	STRAP-CABLE	
		21	1	**8T-4121**	5	WASHER-HARD (11X21X2.5-MM THK)	
M		22	1	**8T-4137**	5	BOLT (M10X1.5X20-MM)	
M		23	1	**8T-4189**	1	BOLT (M8X1.25X20-MM)	
		24	1	**8T-4224**	1	WASHER-HARD (8.8X16X2-MM THK)	
M		25	1	**8T-4908**	1	BOLT (M8X1.25X25-MM)	
M		26	1	**8T-7547**	1	BOLT (M8X1.25X30-MM)	
		27	1	**9X-8256**	1	WASHER (6.6X12X2-MM THK)	

M - METRIC PART
Y - SEPARATE ILLUSTRATION

387-7705 **WIRING GP-ENGINE** (contd.) **i07398925**

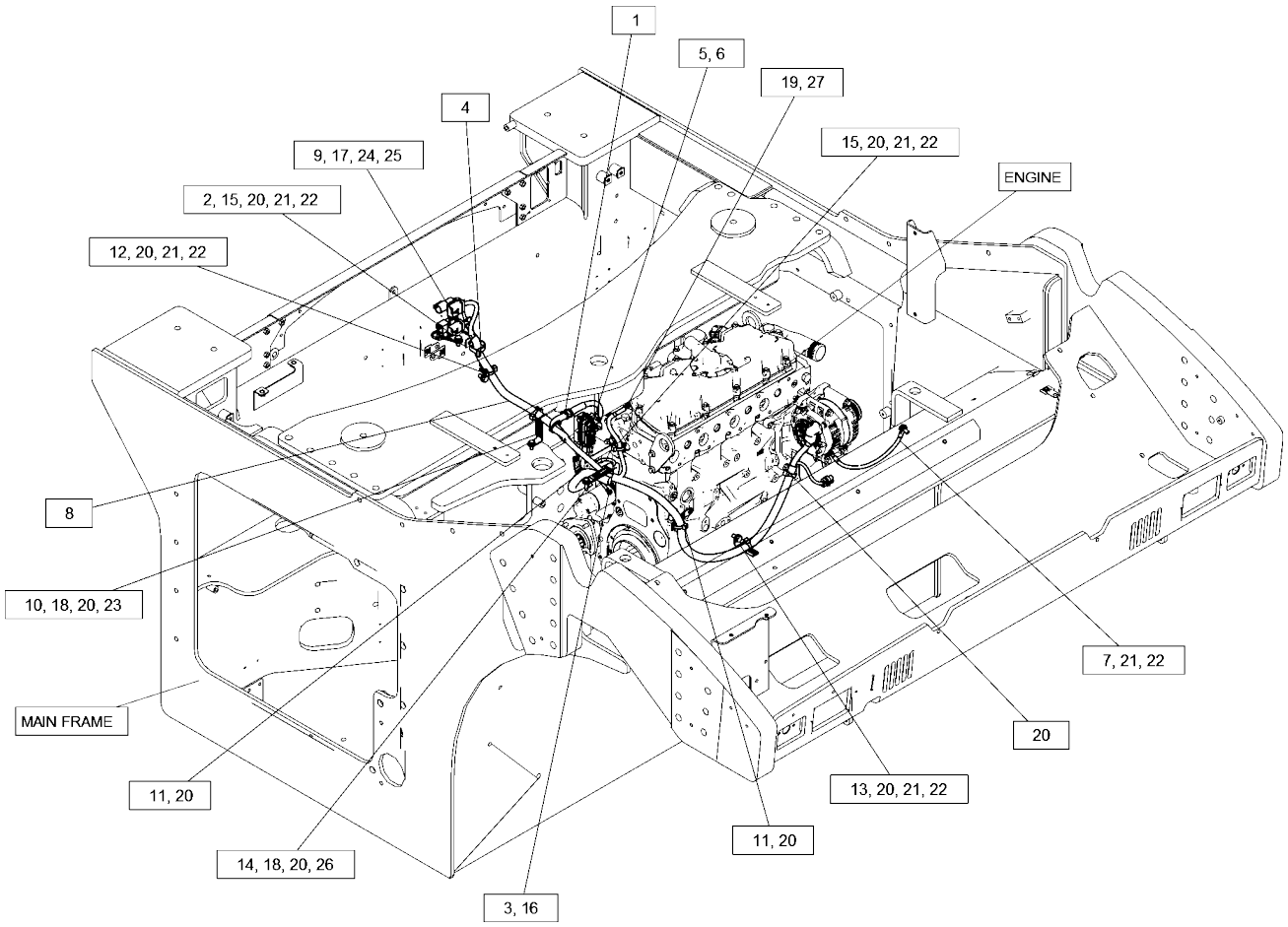

GRAPHIC #1 <END> g06273936

518-4947 WIRING GP-MACHINE

S/N: 5B41-UP; G441-UP
PART OF 451-3140 ELECTRICAL
AR

SMCS-1408

i07748156

	REF SEE NOTE QTY	GRAPHIC NO 1 2 3 4 5 6	(PRODUCT LEVEL)	REF PAGE	PART NAME PART NUMBER	
	1	2	**3S-2093**	1	STRAP-CABLE	
	2	1	**7K-1181**	115	STRAP-CABLE	
	3	2	**8T-8799**	4	BOOT (RED)	
	4	2	**116-7471**	1	PULLER-MINIFUSE	
	5	1	**154-5428**	1	ALARM AS (BACKUP)	
BD		1	**5P-5623**		WIRE-ELECTRICAL (16-GA, BLACK)	
BH		1	**6A-3361**		WIRE-ELECTRICAL (16-GA)	
		1	**8T-8729**	2	PIN-CONNECTOR (16-GA TO 20-GA)	
		1	**102-8802**	1	KIT-RECEPTACLE (2-PIN)	
					(INCLUDES RECEPTACLE AS & WEDGE)	
	6	1	**164-9425**	1	HORN AS (12-VOLT, LOW TONE)	
	7	1	**178-3620**	3	STRAP-DUAL CLAMP	
	8	2	**228-6089**	4	PLUG (ROCKER SWITCH)	
	9	1	**327-0325**	1	STRAP-CABLE	
	10	2	**335-5365**	1	SOCKET-AUXILIARY POWER (12-VOLT)	
	11	2	**360-1765**	1	SWITCH AS-ROCKER (REAR LIGHTS)	
	12	2	**360-1766**	1	SWITCH AS-ROCKER (ROADING LIGHTS)	
	13	2	**375-2255**	1	BRACKET AS	
M		1	**6V-9632**	1	NUT-WELD (M6X1-THD)	
	14	3	**375-8402**	1	RELAY AS (12-VOLT) (ALARM)	
	14A	3	**375-8402**	1	RELAY AS (12-VOLT) (ENGINE, MAIN)	
	14B	2	**375-8402**	1	RELAY AS (12-VOLT) (SHUTDOWN)	
	14C	2	**375-8402**	1	RELAY AS (12-VOLT) (STARTER)	
	14D	2	**375-8402**	1	RELAY AS (12-VOLT) (ENGINE, KEY)	
Y	15	1	**546-0311**	1	HARNESS AS-CHASSIS (MAIN)	131
	16	1,2	**130-5300**	3	CLIP	
	17	2	**132-5789**	3	CLIP (LADDER)	
	18	1	**177-2215**	12	STRAP-DUAL CLAMP	
	19	1,2	**186-0358**	4	CLIP (LOOP)	
	20	3	**1H-3244**	3	LOCKWASHER	
	21	1	**200-6345**	1	SADDLE-MOUNTING (DUAL SWIVEL)	
	22	1	**204-2281**	6	STRAP-CABLE	
	23	1	**204-8000**	1	MOUNTING-CABLE TIE	
	24	1,2	**277-1873**	3	CLIP (LADDER)	
	25	2	**352-3964**	1	CLIP (LADDER)	
	26	1	**352-3968**	1	CLIP (LADDER)	
	27	2	**3E-4352**	3	WASHER-HARD (8.8X20.5X2.5-MM THK)	
	28	2	**4B-4274**	3	WASHER (5.5X13X1.2-MM THK)	
	29	1	**4P-7581**	4	CLIP (LADDER)	
M	30	3	**5C-2890**	5	NUT (M6X1-THD)	
M	31	2	**5C-7261**	1	NUT (M8X1.25-THD)	
M	32	2	**5C-9553**	3	BOLT (M6X1X16-MM)	
	33	1,2	**5P-4116**	9	WASHER-HARD (8.8X20.5X2-MM THK)	
	34	2	**5P-7162**	12	SCREW-MACHINE (10-32X0.5-IN)	
	36	1	**7X-7729**	2	WASHER (11X25X3-MM THK)	
M	37	2	**8T-3647**	2	BOLT (M8X1.25X80-MM)	
	38	1	**8T-4121**	3	WASHER-HARD (11X21X2.5-MM THK)	
M	39	1	**8T-4133**	1	NUT (M10X1.5-THD)	

518-4947 **WIRING GP-MACHINE** (contd.) **i07748156**

	REF SEE NOTE QTY	GRAPHIC NO 1 2 3 4 5 6	(PRODUCT LEVEL)	REF PAGE	PART NAME PART NUMBER
M	40	1	**8T-4136**	3	BOLT (M10X1.5X25-MM)
M	41	1	**8T-4137**	6	BOLT (M10X1.5X20-MM)
M	42	1	**8T-4189**	2	BOLT (M8X1.25X20-MM)
M	43	1,2	**8T-4200**	7	BOLT (M8X1.25X16-MM)
	44	3	**8T-4205**	3	WASHER-HARD (7.2X14.5X2-MM THK)
	45	1	**8T-4223**	5	WASHER-HARD (13.5X25.5X3-MM THK)
	46	1,2	**8T-4224**	2	WASHER-HARD (8.8X16X2-MM THK)
M	47	1,2	**8T-4908**	2	BOLT (M8X1.25X25-MM)
	48	2,3	**9X-8256**	5	WASHER (6.6X12X2-MM THK)
E	49	2	**103-2543**		SEAL (5-CM)

B - USE AS REQUIRED
D - ORDER BY THE METER
E - ORDER BY THE CENTIMETER H - ORDER BY THE DECIMETER M - METRIC PART
Y - SEPARATE ILLUSTRATION

518-4947 **WIRING GP-MACHINE** (contd.) **i07748156**

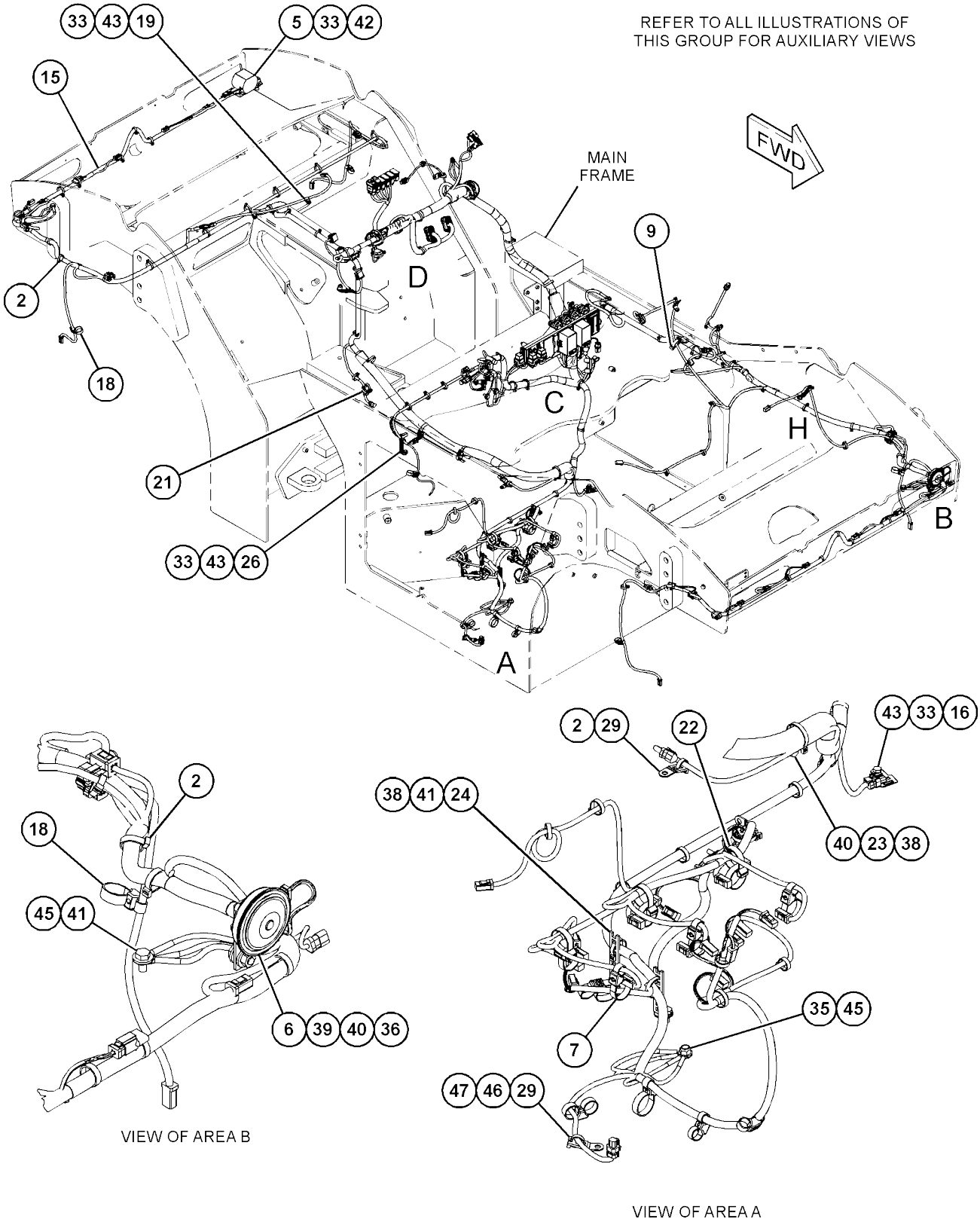

GRAPHIC #1 g06179121

518-4947 **WIRING GP-MACHINE** (contd.) **i07748156**

REFER TO ALL ILLUSTRATIONS OF
THIS GROUP FOR AUXILIARY VIEWS

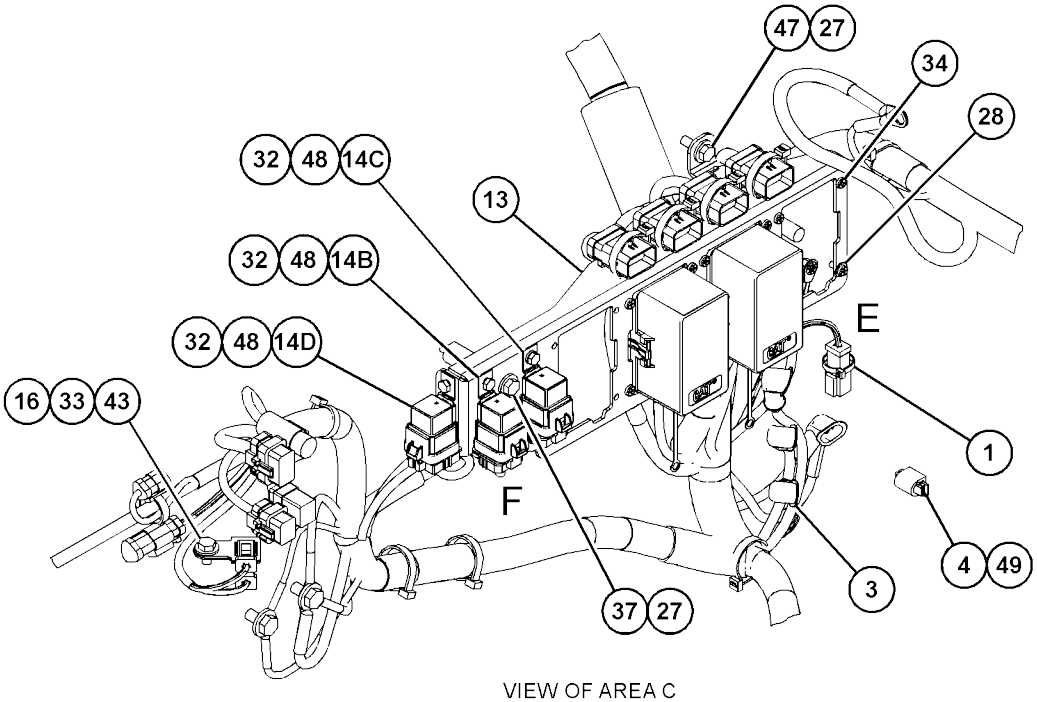

VIEW OF AREA C
(PARTS REMOVED FOR CLARITY)

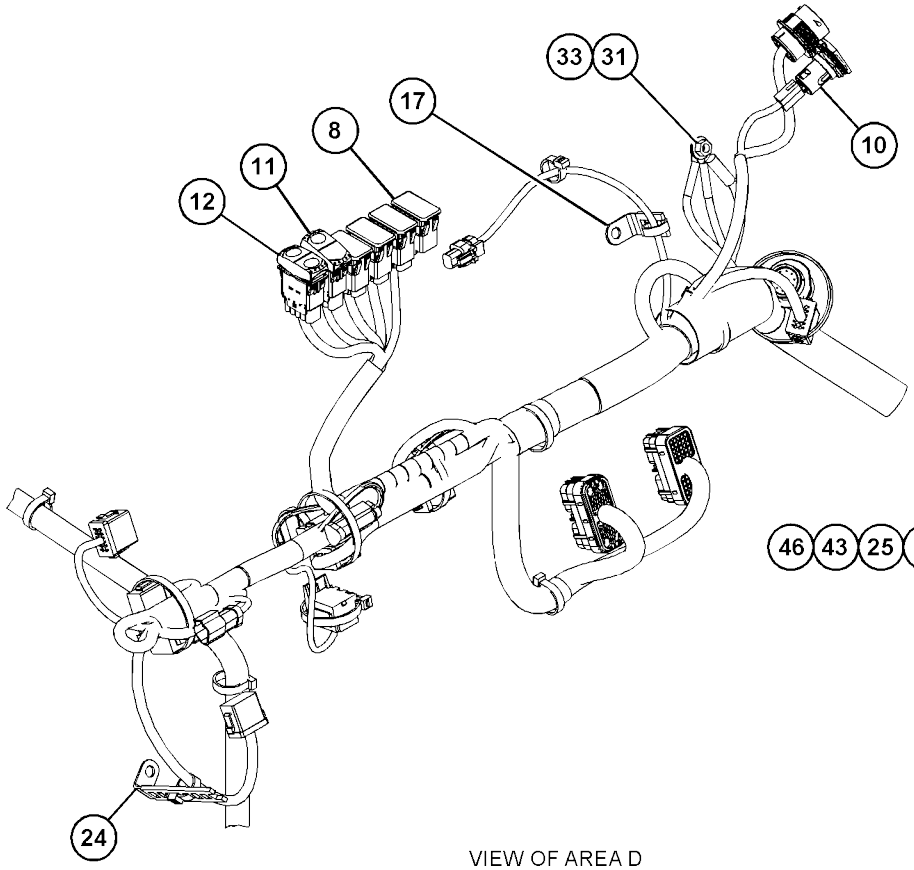

VIEW OF AREA D

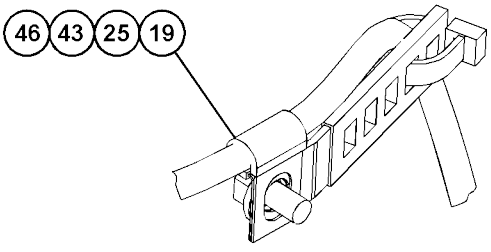

VIEW OF AREA H

GRAPHIC #2 g06179122

518-4947 **WIRING GP-MACHINE (**contd.**)** **i07748156**

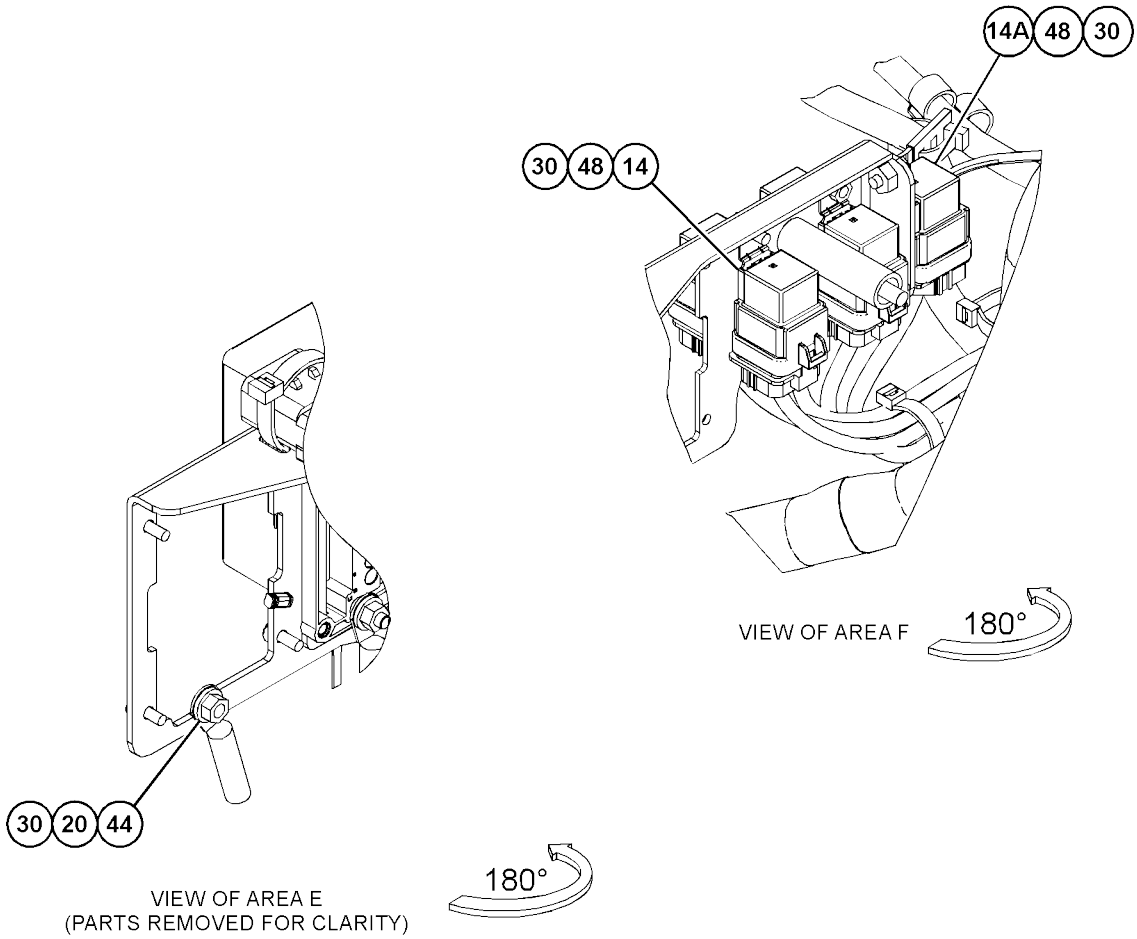

GRAPHIC #3 <END> g06179123

451-3147 WIRING GP-PLATFORM

S/N: 5B41-UP; G441-UP
PART OF 451-3140 ELECTRICAL
AR

SMCS-1408

i07398947

	REF SEE NOTE QTY	GRAPHIC NO 1 2 3 4 5 6	(PRODUCT LEVEL)	REF PAGE	PART NAME PART NUMBER	
	1	1	**7V-5628**	2	PLATE (TOP)	
	2	1	**290-5664**	5	STRAP-CABLE	
Y	3	1	**562-3678**	1	HARNESS AS-PLATFORM	139
	4	1	**1H-3244**	2	LOCKWASHER	
	5	1	**204-2281**	1	STRAP-CABLE	
M	6	1	**6V-7687**	1	LOCKNUT (M12X1.75-THD)	
	7	1	**7K-1181**	30	STRAP-CABLE	
	8	1	**7V-6089**	4	CLAMP	
M	9	1	**8C-8451**	4	BOLT (M6X1X40-MM)	
	10	1	**8T-4223**	1	WASHER-HARD (13.5X25.5X3-MM THK)	
M	11	1	**8T-4137**	1	BOLT (M10X1.5X20-MM)	
	12	1	**7X-7729**	1	WASHER (11X25X3-MM THK)	

M - METRIC PART
Y - SEPARATE ILLUSTRATION

451-3147 **WIRING GP-PLATFORM (**contd.**)** **i07398947**

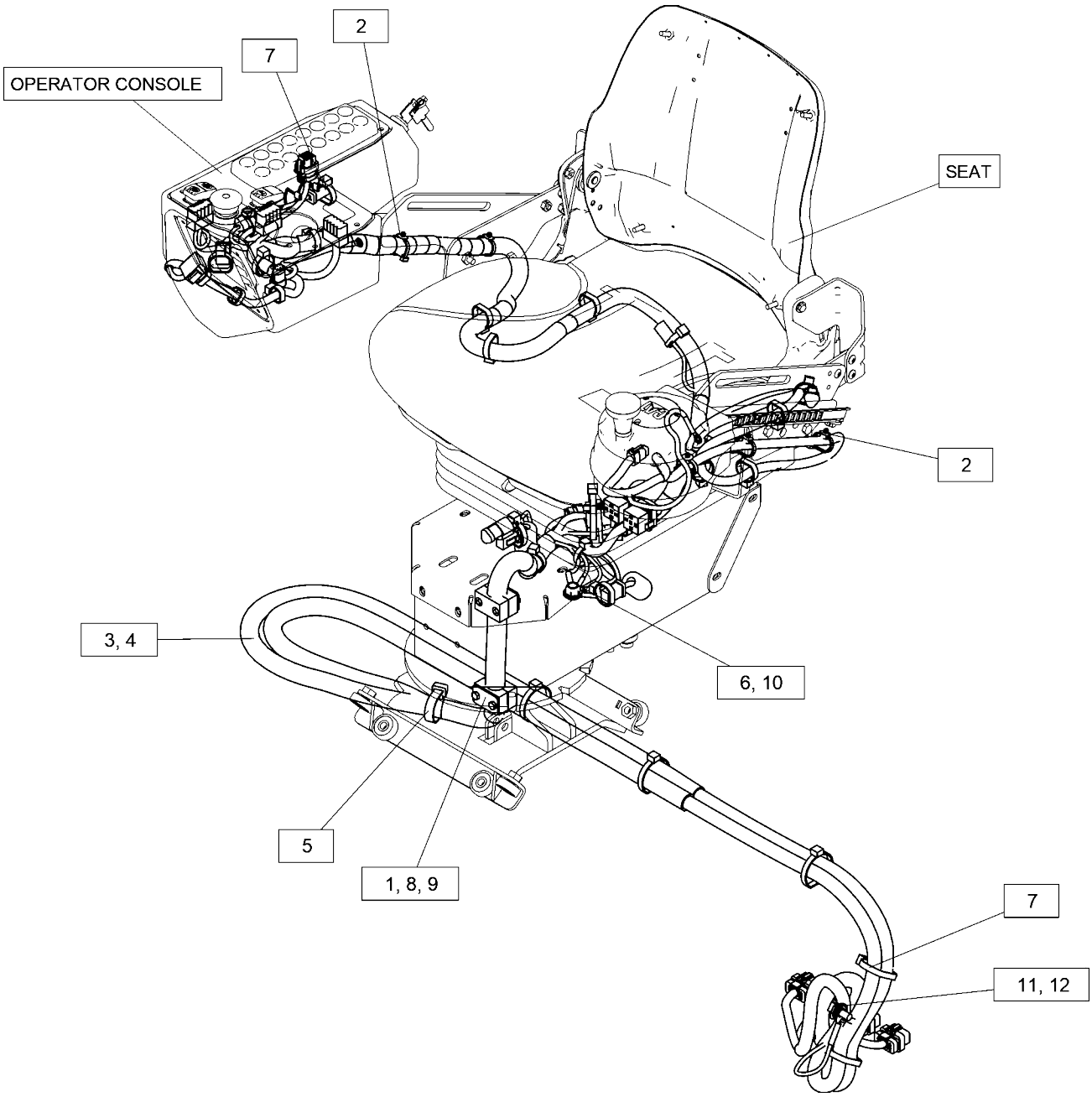

GRAPHIC #1 <END> g06316541

339-6553 DRUM GP-COMPACTOR

S/N: G441-UP
PART OF 381-1896, 504-6816 POWER TRAIN AR
AN ATTACHMENT

SMCS-6605

i07416542

	REF SEE NOTE	QTY	GRAPHIC NO 1 2 3 4 5 6	(PRODUCT LEVEL)	REF PAGE	PART NAME PART NUMBER
		1	1	**258-0899**	1	PLATE
		2	1	**339-6554**	1	DRUM AS
		3	1	**356-8448**	1	PLATE
		4	1	**359-1511**	12	MOUNT-RUBBER
		5	1	**8T-5439**	24	WASHER-HARD (21.5X45X6-MM THK)
M		6	1	**8T-5460**	24	BOLT (M20X2.5X40-MM)

M - METRIC PART

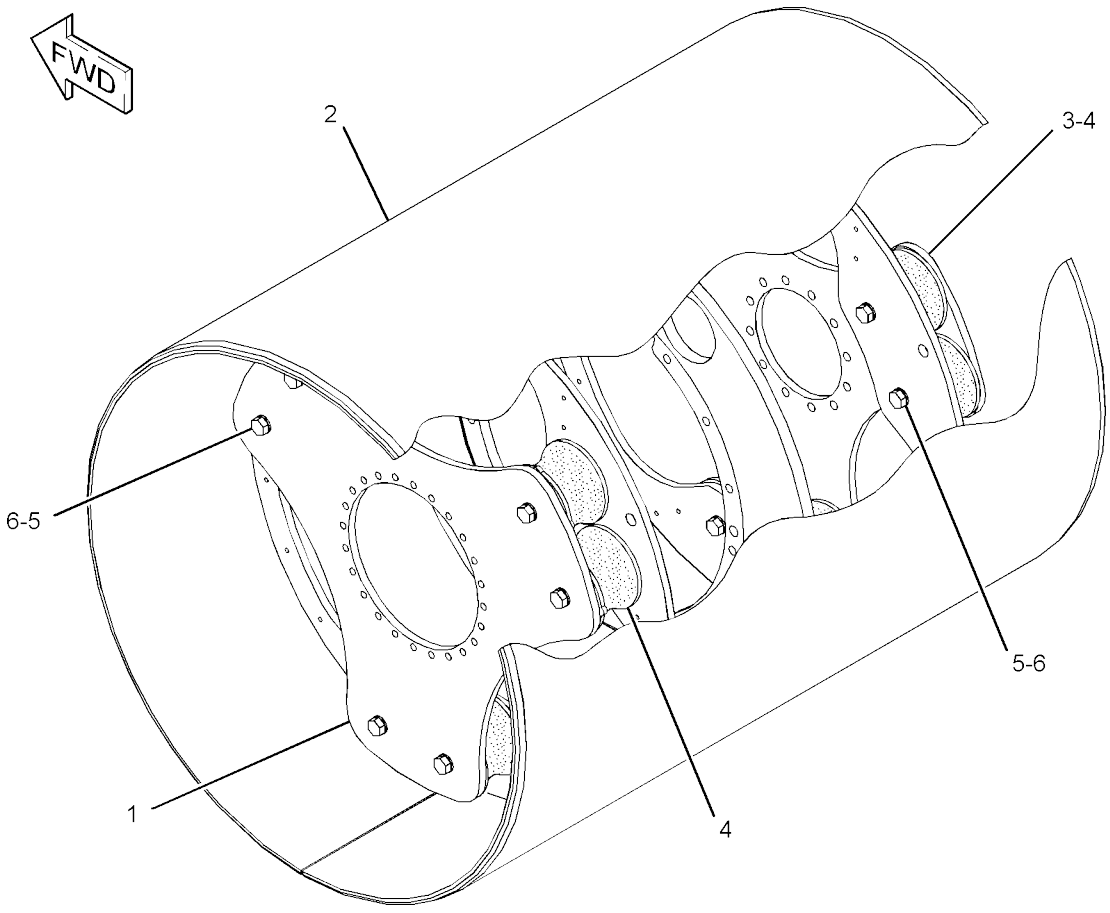

GRAPHIC #1 <END> g02848977

339-6555 DRUM GP-COMPACTOR

S/N: 5B41-UP

PART OF 386-7954, 504-6841, 537-5500 POWER TRAIN

AR AN ATTACHMENT

SMCS-6605

i07418277

	REF SEE NOTE QTY	GRAPHIC NO 1 2 3 4 5 6	(PRODUCT LEVEL)	REF PAGE	PART NAME PART NUMBER
	1	1	**339-6552**	1	PLATE
	2	1	**341-3152**	1	DRUM AS
		1	**5C-3370**	1	BOSS
	3	1	**359-1511**	12	MOUNT-RUBBER
	4	1	**374-7424**	1	PLATE
	5	1	**8T-4123**	24	WASHER (22X35X3.5-MM THK)
M	6	1	**8T-5460**	24	BOLT (M20X2.5X40-MM)

M - METRIC PART

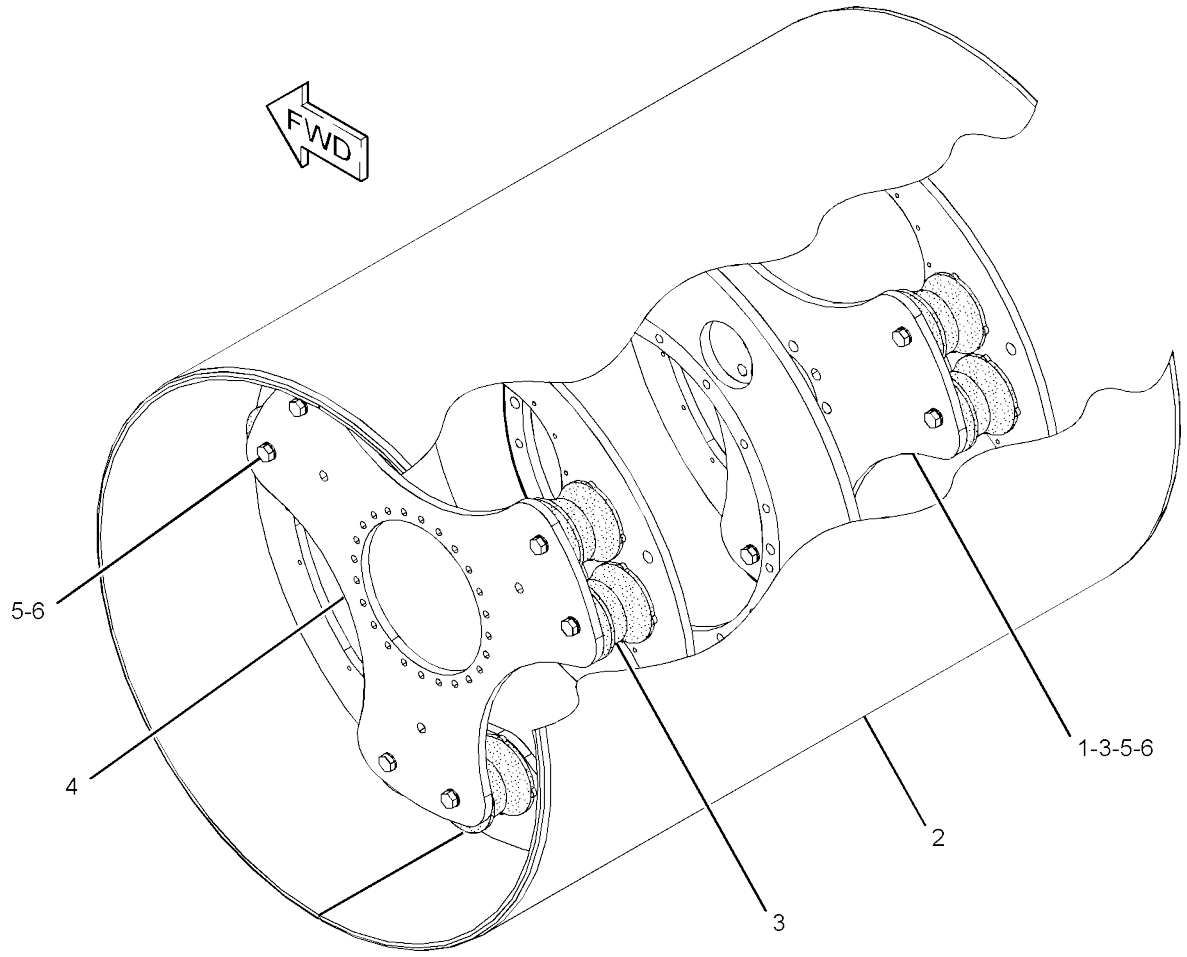

GRAPHIC #1 <END> g02813483

504-6805 DRUM GP-COMPACTOR

S/N: 5B41-
UP STANDARD
PART OF 504-6841 POWER TRAIN
AR AN ATTACHMENT

SMCS-6605

i07418284

	REF SEE NOTE QTY	GRAPHIC NO 1 2 3 4 5 6	(PRODUCT LEVEL)	REF PAGE	PART NAME PART NUMBER
	1	1	**339-6552**	1	PLATE
	2	1	**359-1511**	12	MOUNT-RUBBER
	3	1	**374-7424**	1	PLATE
	4	1	**488-5457**	1	DRUM AS
	5	1	**8T-4123**	24	WASHER (22X35X3.5-MM THK)
M	6	1	**8T-5460**	24	BOLT (M20X2.5X40-MM)

M - METRIC PART

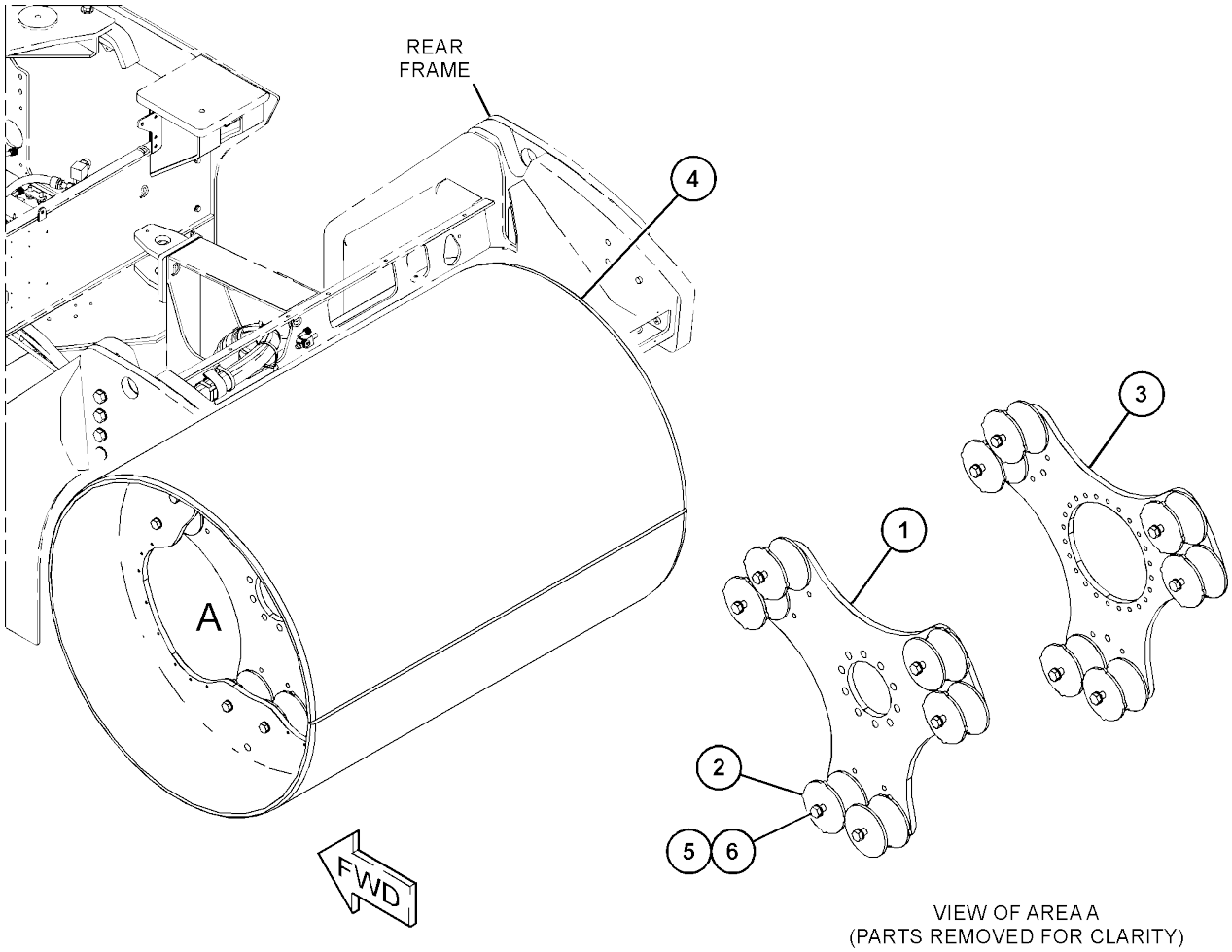

VIEW OF AREA A
(PARTS REMOVED FOR CLARITY)

GRAPHIC #1 <END> g06147443

504-6817 DRUM GP-COMPACTOR

S/N: G441-UP
PART OF 504-6816 POWER TRAIN
AR AN ATTACHMENT

SMCS-6605

i07416547

	REF SEE NOTE QTY	GRAPHIC NO 1 2 3 4 5 6 (PRODUCT LEVEL)	REF PAGE	PART NAME PART NUMBER
	1	1 **258-0899**	1	PLATE
	2	1 **356-8448**	1	PLATE
	3	1 **359-1511**	12	MOUNT-RUBBER
	4	1 **489-6570**	1	DRUM AS
	5	1 **8T-5439**	24	WASHER-HARD (21.5X45X6-MM THK)
M	6	1 **8T-5460**	24	BOLT (M20X2.5X40-MM)

M - METRIC PART

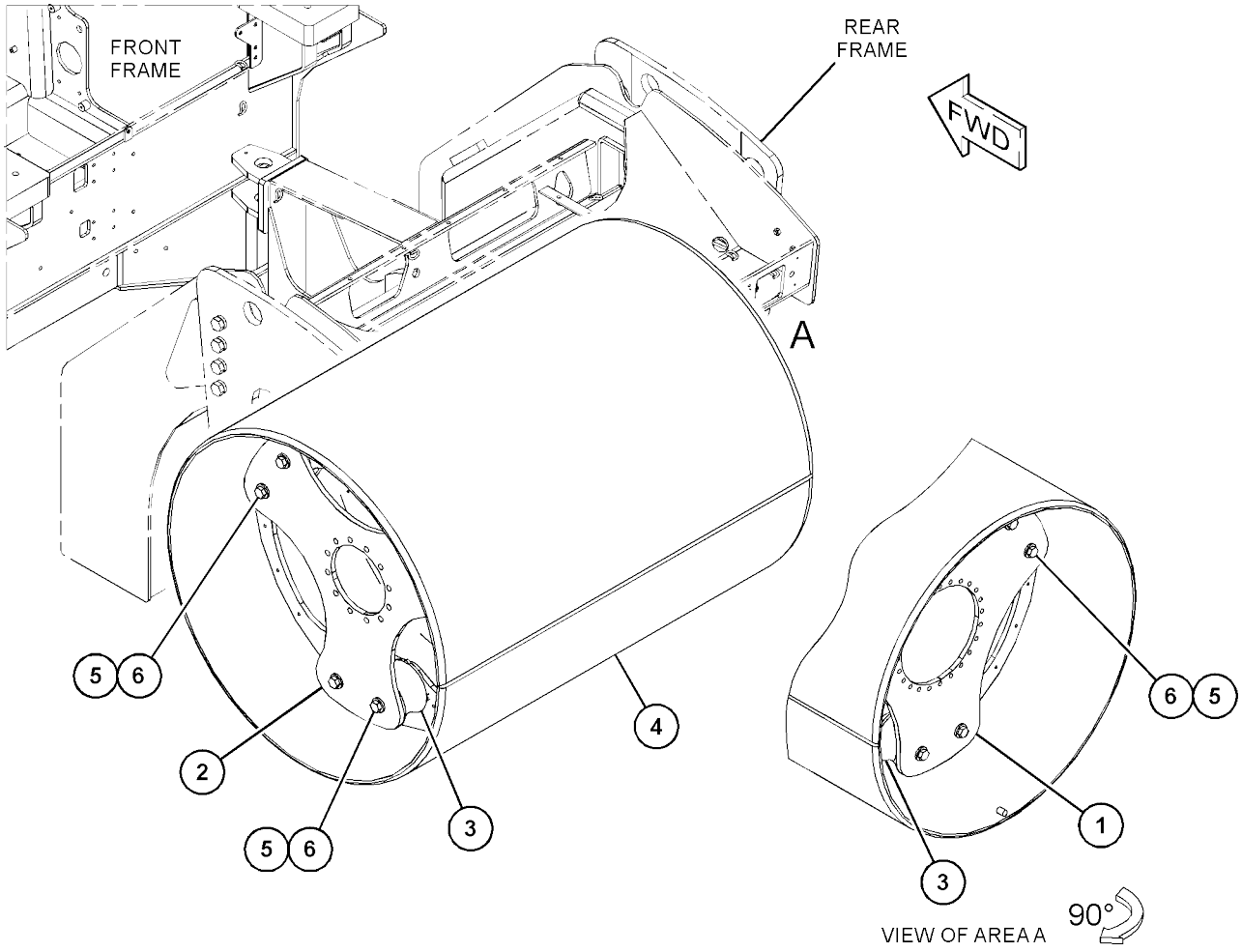

GRAPHIC #1 <END> g06124167

536-2028 DRUM GP-COMPACTOR

S/N: 5B41-UP
PART OF 537-5500 POWER TRAIN
AR AN ATTACHMENT

SMCS-6605

i07418411

	REF SEE NOTE	QTY	GRAPHIC NO 1 2 3 4 5 6	(PRODUCT LEVEL)	REF PAGE	PART NAME PART NUMBER
		1	1	**339-6552**	1	PLATE
		2	1	**359-1511**	12	MOUNT-RUBBER
		3	1	**374-7424**	1	PLATE
		4	1	**536-2027**	1	DRUM AS
			1	**5C-3370**	1	BOSS
		5	1	**8T-4123**	24	WASHER (22X35X3.5-MM THK)
M		6	1	**8T-5460**	24	BOLT (M20X2.5X40-MM)

M - METRIC PART

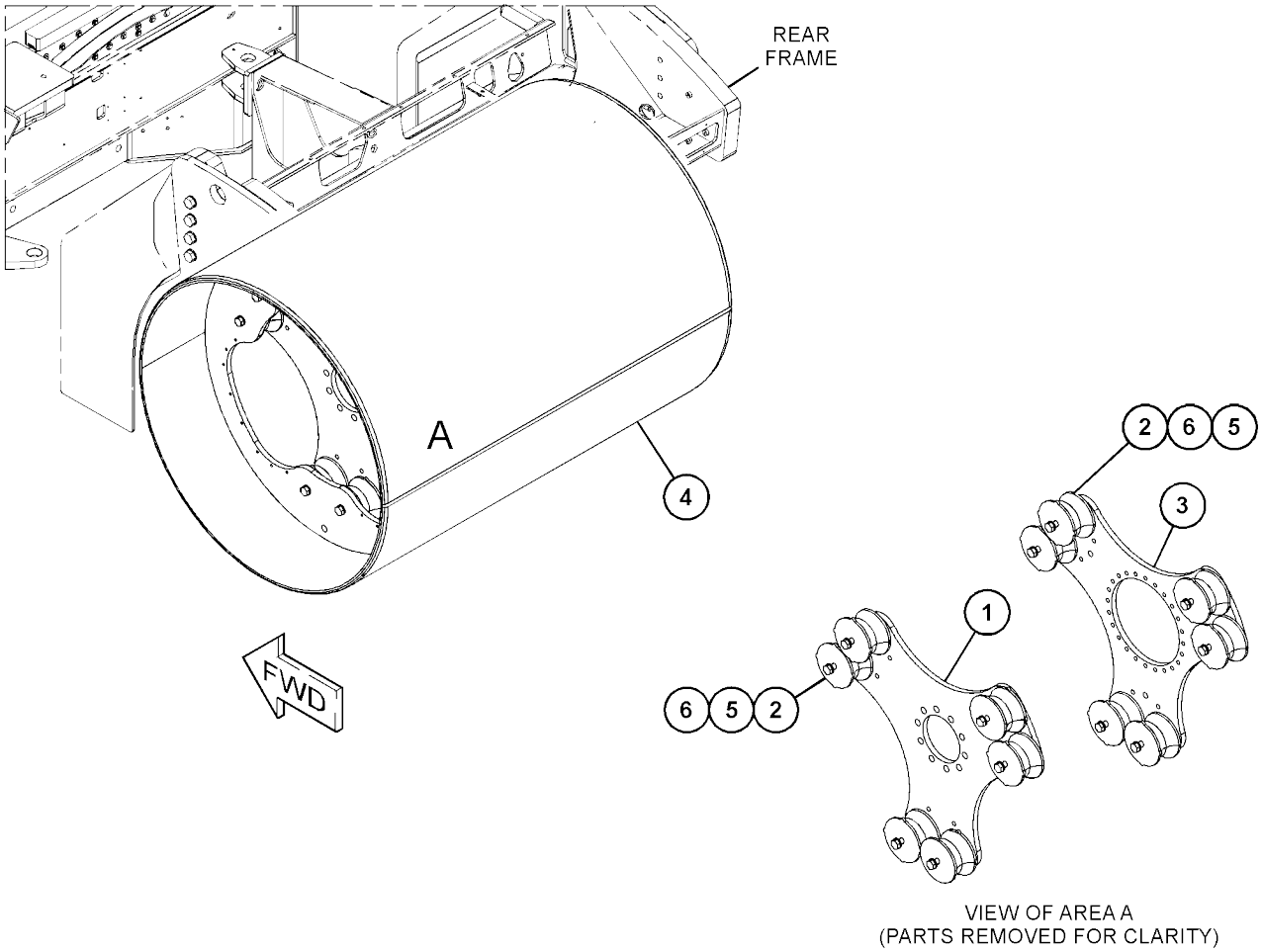

VIEW OF AREA A
(PARTS REMOVED FOR CLARITY)

GRAPHIC #1 <END> g06241222

381-1929 LINES GP-PROPEL

S/N: G441-UP
PART OF 381-1897 HYDRAULIC
AR AN ATTACHMENT

SMCS-3154

i07416630

	REF SEE NOTE QTY	GRAPHIC NO 1 2 3 4 5 6	(PRODUCT LEVEL)	REF PAGE	PART NAME PART NUMBER
	1	1	**115-8645**	5	GUARD
	2	1	**124-1008**	1	GUARD
	4	1	**207-4499**	1	PLATE-COVER
I	5	1	**217-6234**	1	HOSE AS
I	6	1	**364-7557**	1	HOSE AS
	7	1	**364-7558**	2	CLAMP
I	8	1	**391-0771**	1	HOSE AS
I	9	1	**391-0774**	1	HOSE AS
I	10	1	**391-0775**	1	HOSE AS
I	11	1	**391-0776**	1	HOSE AS
I	12	1	**391-0777**	1	HOSE AS
	13	1	**286-3018**	1	CLIP (SLOT)
	14	1	**286-3019**	1	CLIP (TAB)
	15	1	*148-8341*	1	CONNECTOR AS
		1	**3D-2824**	1	SEAL-O-RING
		1	**6V-8713**	1	CONNECTOR
		1	**7J-9108**	1	SEAL-O-RING
	16	1	**177-2215**	3	STRAP-DUAL CLAMP
	17	1	*198-0143*	1	ELBOW AS
		1	**7J-9108**	1	SEAL-O-RING
		1	**157-2348**	1	ELBOW
	18	1	**204-2281**	21	STRAP-CABLE
	19	1	**268-1573**	1	TEE-SWIVEL
	20	1	**2V-6350**	1	CLIP (TAB)
	21	1	**2V-6352**	1	CLIP (SLOT)
	22	1	**352-3969**	1	CLIP (LADDER)
	23	1	**5P-1076**	2	WASHER-HARD (13.5X30X4-MM THK)
	24	1	**5P-4116**	4	WASHER-HARD (8.8X20.5X2-MM THK)
	25	1	**6V-4356**	1	CLIP (SLOT)
	26	1	**6V-4357**	1	CLIP (TAB)
	27	1	**6V-8398**	2	SEAL-O-RING
	28	1	**7B-1251**	1	GROMMET
	29	1	**7G-5984**	3	CLIP (TAB)
	30	1	**7G-5985**	3	CLIP (SLOT)
	31	1	**7X-7729**	7	WASHER (11X25X3-MM THK)
M	32	1	**8T-4133**	2	NUT (M10X1.5-THD)
M	33	1	**8T-4182**	1	BOLT (M10X1.5X45-MM)
M	34	1	**8T-4196**	2	BOLT (M10X1.5X35-MM)
M	35	1	**8T-4956**	2	BOLT (M12X1.75X35-MM)
M	36	1	**8T-6869**	4	BOLT (M8X1.25X60-MM)
	37	1	**9C-0995**	2	CLAMP
	38	1	**9X-2488**	6	CLAMP-HOSE
	39	1	**9X-3965**	1	TEE
G	40	1	**423-1983**		HOSE (55-IN)
G	40A	1	**423-1983**		HOSE (90.6-IN)
G	40B	1	**423-1983**		HOSE (105.7-IN)

381-1929 **LINES GP-PROPEL** (contd.) **i07416630**

	REF SEE NOTE QTY	GRAPHIC NO 1 2 3 4 5 6	(PRODUCT LEVEL)	REF PAGE	PART NAME PART NUMBER
M	41	1	**6V-5220**	1	BOLT (M8X1.25X65-MM)
	42	1	**5P-1075**	1	WASHER-HARD (10.2X22.5X3-MM THK)

G - ORDER BY THE INCH
I - REFER TO HYDRAULIC INFORMATION SYSTEM
M - METRIC PART

381-1929 **LINES GP-PROPEL** (contd.) **i07416630**

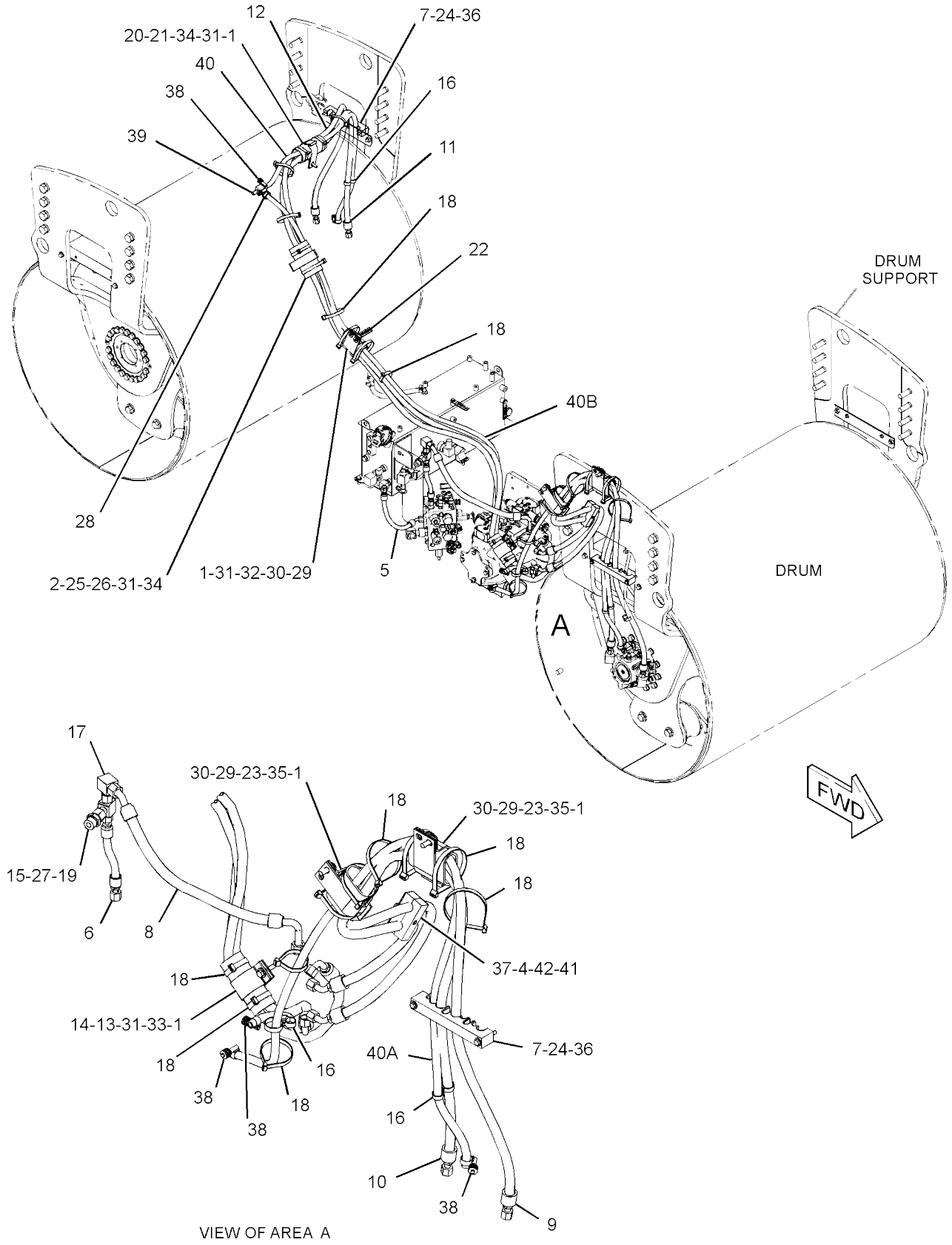

GRAPHIC #1 <END> g03682061

458-9402 LINES GP-PROPEL-HYDRAULIC

S/N: 5B41-UP
PART OF 386-7544 HYDRAULIC
AR AN ATTACHMENT

SMCS-3154

i07418295

	REF SEE NOTE QTY	GRAPHIC NO 1 2 3 4 5 6	(PRODUCT LEVEL)	REF PAGE	PART NAME PART NUMBER
	1	1	**9X-3965**	1	TEE
	2	1	**115-8645**	4	GUARD
	3	1	**124-1008**	2	GUARD
I	4	1	**246-4423**	1	HOSE AS
I	5	1	**269-5799**	1	HOSE AS
	6	1	*287-7262*	1	TEE AS
		1	**6V-8398**	1	SEAL-O-RING
		1	**7J-9108**	1	SEAL-O-RING
		1	**287-7261**	1	TEE-SWIVEL
I	7	1	**352-6180**	1	HOSE AS
I	8	1	**364-1641**	1	HOSE AS
	9	1	**364-1680**	2	CLAMP
I	10	1	**380-6851**	1	HOSE AS
	11	1	**454-8389**	1	BRACKET AS
M		1	**8T-3490**	1	NUT-WELD (M10X1.5-THD)
	12	1	*148-8382*	1	ELBOW AS
		1	**3D-2824**	1	SEAL-O-RING
		1	**7J-9108**	1	SEAL-O-RING
		1	**8T-0404**	1	ELBOW
	13	1	**177-2215**	3	STRAP-DUAL CLAMP
	14	1	**204-2281**	21	STRAP-CABLE
	15	1	**206-6413**	2	CLAMP-HALF
	16	1	**207-4499**	1	PLATE-COVER
	17	1	**2V-6350**	1	CLIP (TAB)
	18	1	**2V-6352**	1	CLIP (SLOT)
	19	1	**352-3969**	1	CLIP (LADDER)
	20	1	**5P-1076**	2	WASHER-HARD (13.5X30X4-MM THK)
	21	1	**5P-4116**	4	WASHER-HARD (8.8X20.5X2-MM THK)
	22	1	**6V-4356**	2	CLIP (SLOT)
	23	1	**6V-4357**	2	CLIP (TAB)
M	24	1	**6V-5220**	1	BOLT (M8X1.25X65-MM)
	25	1	**7B-1251**	1	GROMMET
	26	1	**7G-5984**	3	CLIP (TAB)
	27	1	**7G-5985**	3	CLIP (SLOT)
	28	1	**7X-7729**	7	WASHER (11X25X3-MM THK)
	29	1	**8T-4121**	2	WASHER-HARD (11X21X2.5-MM THK)
M	30	1	**8T-4133**	2	NUT (M10X1.5-THD)
M	31	1	**8T-4186**	3	BOLT (M10X1.5X40-MM)
M	32	1	**8T-4196**	2	BOLT (M10X1.5X35-MM)
	33	1	**8T-4224**	2	WASHER-HARD (8.8X16X2-MM THK)
M	34	1	**8T-4956**	2	BOLT (M12X1.75X35-MM)
M	35	1	**8T-7329**	4	BOLT (M8X1.25X55-MM)
	36	1	**9X-2488**	8	CLAMP-HOSE
G	37	1	**423-1983**		HOSE (65.4-IN)
G	37A	1	**423-1983**		HOSE (113-IN)

458-9402 **LINES GP-PROPEL (**contd.**)** **i07418295**

	REF SEE NOTE QTY	GRAPHIC NO 1 2 3 4 5 6	(PRODUCT LEVEL)	REF PAGE	PART NAME PART NUMBER
G	37B	1	**423-1983**		HOSE (7.6-IN)
G	37C	1	**423-1983**		HOSE (98.6-IN)

G - ORDER BY THE INCH
I - REFER TO HYDRAULIC INFORMATION
SYSTEM M - METRIC PART

458-9402 **LINES GP-PROPEL** (contd.) **i07418295**

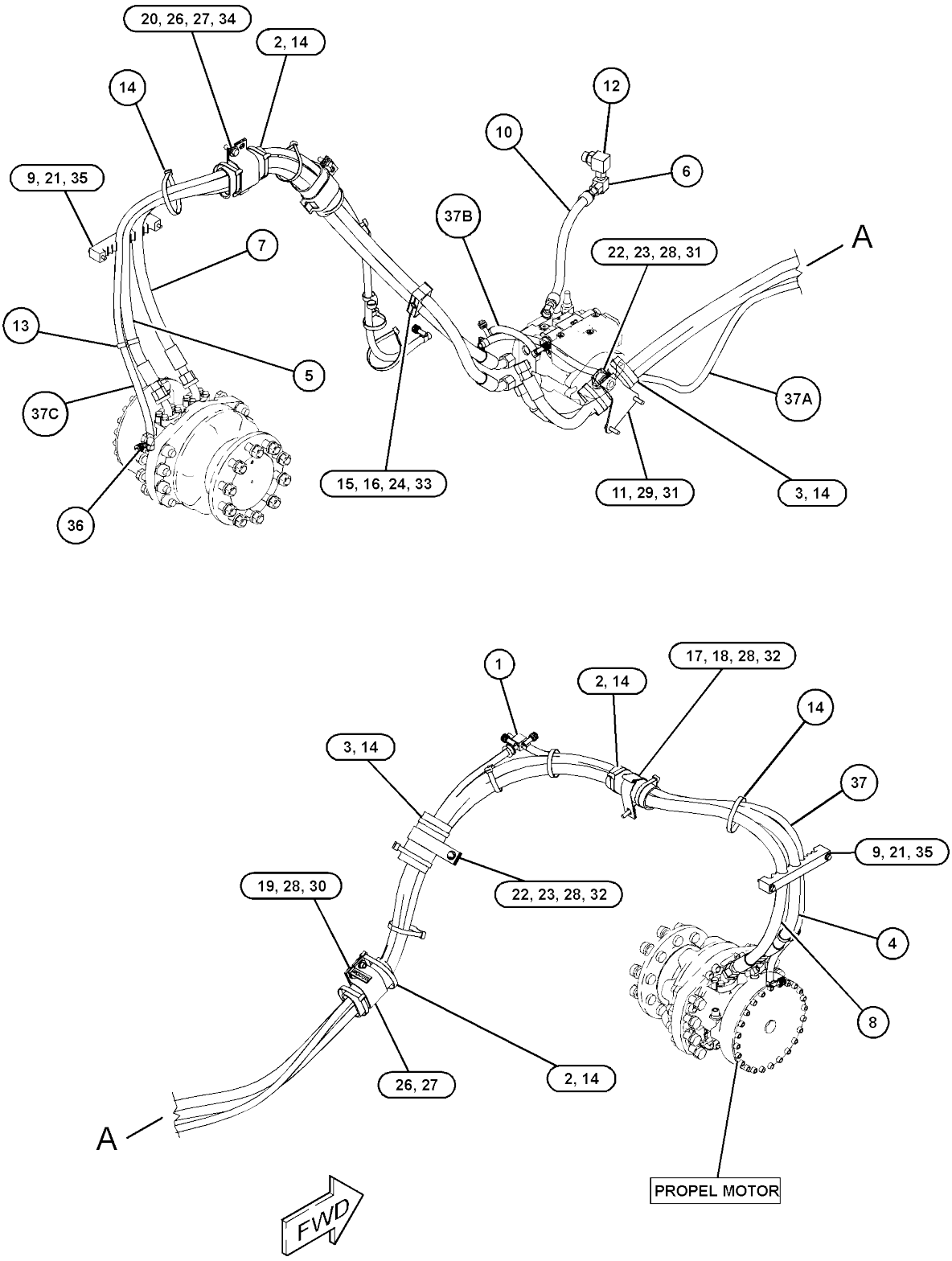

GRAPHIC #1 <END> g03809872

343-6153 MOTOR & MTG GP-PROPEL

S/N: G441-UP
PART OF 381-1897 HYDRAULIC
AR AN ATTACHMENT

SMCS-4351, 5058

i07416592

	REF SEE NOTE QTY	GRAPHIC NO 1 2 3 4 5 6	(PRODUCT LEVEL)	REF PAGE	PART NAME PART NUMBER	
	1	1	**177-2215**	7	STRAP-DUAL CLAMP	
	2	1	*195-2037*	2	FITTING AS	
					(EACH INCLUDES)	
		1	**3K-0360**	1	SEAL-O-RING	
		1	**034-3679**	1	ADAPTER	
Y	3	1	**262-3764**	2	SENSOR GP-SPEED (MOTOR)	191
Y	4	1	**419-3263**	2	MOTOR GP-PISTON	312
	5	1	**421-7411**	2	HARNESS AS-SENSOR (MOTOR SPEED)	
					(EACH INCLUDES)	
		1	**9X-3401**	4	PIN-CONNECTOR (16-GA TO 18-GA)	
					-OR-	
		1	**126-1767**	4	PIN-CONNECTOR (14-GA TO 16-GA)	
		1	**155-2271**	1	KIT-CONNECTING PLUG (4-PIN)	
					(INCLUDES PLUG AS, WEDGE & INTERFACE SEAL)	
		1	**230-5009**	1	RECEPTACLE AS-CONNECTOR (4-PIN)	
		1	**194-5226**	4	WIRE AS (16-GA)	
					-OR-	
		1	**194-5227**	4	WIRE AS (14-GA)	
	6	1	*148-8381*	4	ELBOW AS	
					(EACH INCLUDES)	
		1	**3D-2824**	1	SEAL-O-RING	
		1	**6V-8398**	1	SEAL-O-RING	
		1	**8T-5429**	1	ELBOW	
	7	1	*150-4043*	2	CONNECTOR AS	
					(EACH INCLUDES)	
		1	**3J-1907**	1	SEAL-O-RING	
		1	**6V-8398**	1	SEAL-O-RING	
		1	**6V-9873**	1	CONNECTOR	
M	8	1	**170-6705**	2	BOLT-SOCKET HEAD (M8X1.25X12-MM)	
	9	1	**7K-1181**	4	STRAP-CABLE	
M	10	1	**8T-4193**	48	BOLT (M16X2X50-MM)	
	11	1	**9X-8257**	48	WASHER (17.5X30X3.5-MM THK)	
	12	1	*148-8325*	2	CONNECTOR AS	
					(EACH INCLUDES)	
		1	**3J-1907**	1	SEAL-O-RING	
		1	**4J-5477**	1	SEAL-O-RING	
		1	**6V-8641**	1	CONNECTOR	

M - METRIC PART
Y - SEPARATE ILLUSTRATION

343-6153 **MOTOR & MTG GP-PROPEL (**contd.**)** **i07416592**

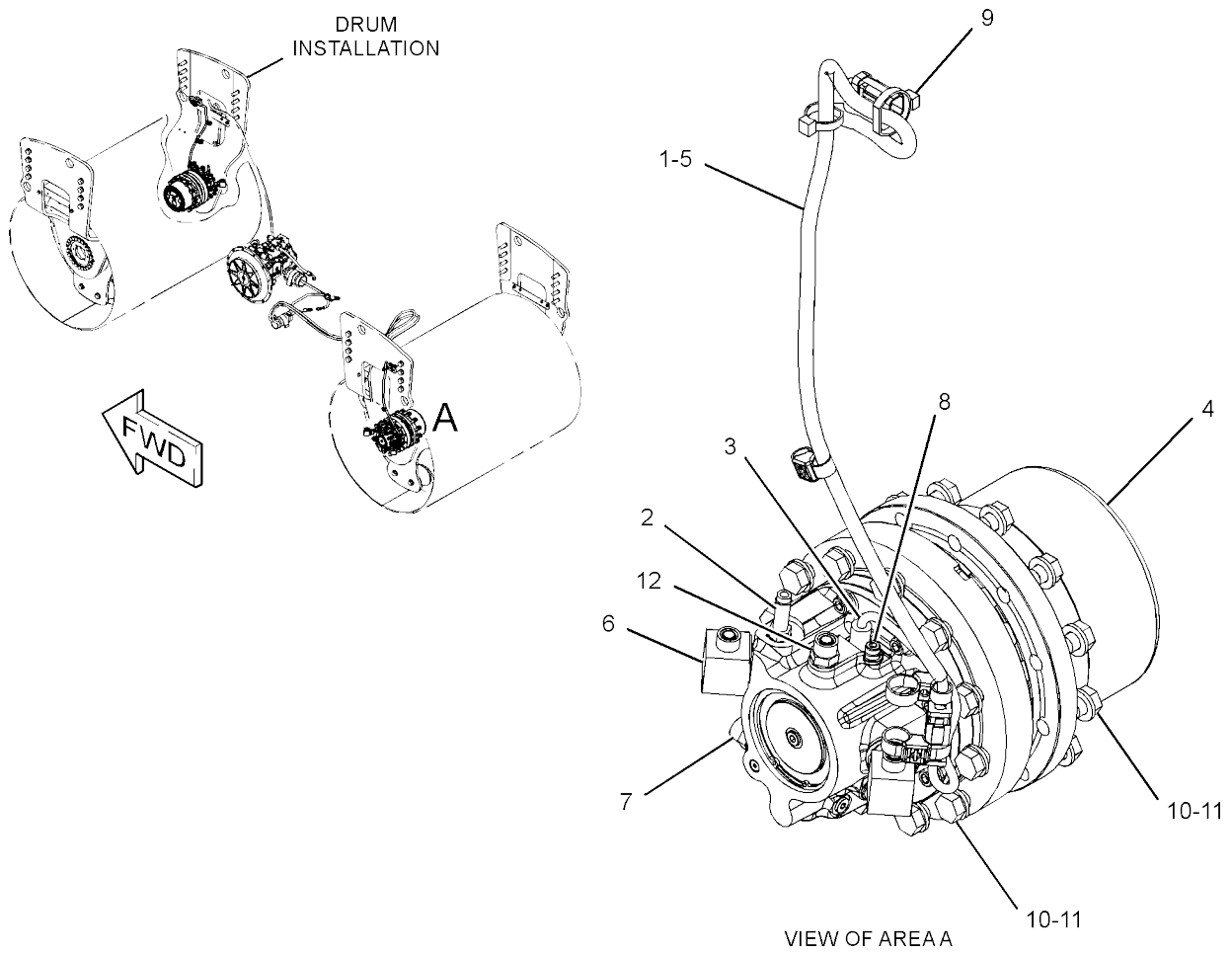

GRAPHIC #1 <END> g02900959

343-8297 MOTOR & MTG GP-PROPEL

S/N: 5B41-UP
PART OF 386-7544 HYDRAULIC
AR AN ATTACHMENT

SMCS-4351, 5058

i07418310

	REF SEE NOTE QTY	GRAPHIC NO 1 2 3 4 5 6	(PRODUCT LEVEL)	REF PAGE	PART NAME PART NUMBER	
	1	1	**5W-9857**	8	FLANGE-HALF	
	2	1	**127-7056**	4	ELBOW	
	3	1	**177-2215**	8	STRAP-DUAL CLAMP	
	4	1	*309-5145*	2	CONNECTOR AS	
					(EACH INCLUDES)	
		1	**3J-1907**	1	SEAL-O-RING	
		1	**297-7964**	1	CONNECTOR	
Y	5	1	**356-0767**	2	MOTOR GP-PISTON (PROPEL)	308
	6	1	**356-0787**	2	SENSOR GP-SPEED (MOTOR)	
					(EACH INCLUDES)	
		1	**6V-5758**	1	SEAL-O-RING	
	7	1	**388-2109**	2	HARNESS AS-SENSOR	
					(EACH INCLUDES)	
		1	**9X-3401**	4	PIN-CONNECTOR (16-GA TO 18-GA)	
		1	**155-2271**	1	KIT-CONNECTING PLUG (4-PIN)	
					(INCLUDES PLUG AS, WEDGE & INTERFACE SEAL)	
		1	**230-5009**	1	RECEPTACLE AS-CONNECTOR (4-PIN)	
		1	**180-9340**	4	SOCKET-CONNECTOR (14-GA TO 18-GA)	
	8	1	*148-8313*	2	ADAPTER AS	
					(EACH INCLUDES)	
		1	**3K-0360**	1	SEAL-O-RING	
		1	**5P-6944**	1	ADAPTER	
	9	1	*150-3033*	2	ELBOW AS	
					(EACH INCLUDES)	
		1	**3J-1907**	1	SEAL-O-RING	
		1	**4J-5477**	1	SEAL-O-RING	
		1	**8T-0164**	1	ELBOW	
	10	1	*150-4043*	2	CONNECTOR AS	
					(EACH INCLUDES)	
		1	**3J-1907**	1	SEAL-O-RING	
		1	**6V-8398**	1	SEAL-O-RING	
		1	**6V-9873**	1	CONNECTOR	
	11	1	*241-6215*	2	ELBOW AS	
					(EACH INCLUDES)	
		1	**3J-1907**	1	SEAL-O-RING	
		1	**6V-8076**	1	ELBOW	
	12	1	**4J-5267**	4	SEAL-O-RING	
	13	1	**6V-9746**	4	SEAL-O-RING	
	14	1	**7K-1181**	2	STRAP-CABLE	
M	15	1	**7X-2565**	16	BOLT (M20X2.5X100-MM)	
M	16	1	**8T-0267**	4	BOLT-SOCKET HEAD (M6X1X12-MM)	
	17	1	**8T-4121**	16	WASHER-HARD (11X21X2.5-MM THK)	
	18	1	**8T-4123**	32	WASHER (22X35X3.5-MM THK)	
M	19	1	**8T-4131**	16	NUT (M20X2.5-THD)	
M	20	1	**8T-4196**	16	BOLT (M10X1.5X35-MM)	

M - METRIC PART
Y - SEPARATE ILLUSTRATION

343-8297 **MOTOR & MTG GP-PROPEL (**contd.**)** **i07418310**

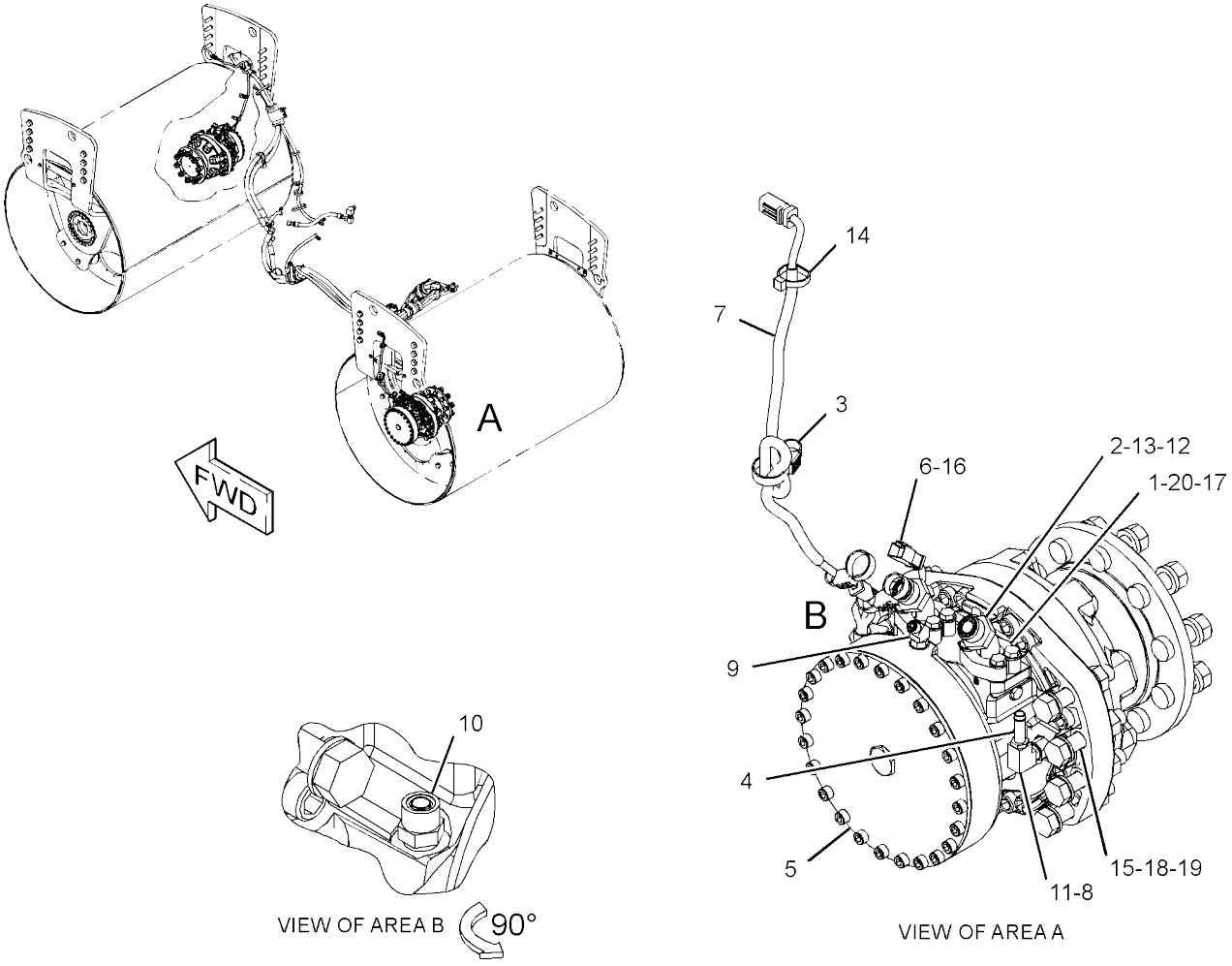

GRAPHIC #1 <END> g02847936

483-0536 MOUNTING GP-DRUM

S/N: 5B41-UP; G441-
UP AN ATTACHMENT

SMCS-6605

i07409085

	REF SEE NOTE QTY	GRAPHIC NO 1 2 3 4 5 6	(PRODUCT LEVEL)	REF PAGE	PART NAME PART NUMBER
BM	1	1	**7X-2475**	2	BOLT (M16X2X130-MM)
					-OR-
BM		1	**8T-4174**	2	BOLT (M16X2X120-MM)
	3	1	**3B-8489**	1	FITTING-GREASE (1/8-27 PTF)
M	4	1	**8C-8451**	2	BOLT (M6X1X40-MM)
M	5	1	**141-9203**	1	SCREW-BUTTON HEAD (M10X1.5X30-MM)
	6	1	**188-5072**	1	BEARING-PIVOT
	7	1	**470-1857**	3	PLATE
	8	1	**470-1858**	1	BELT
	9	1	**470-1859**	1	PLATE
	10	1	**470-1860**	1	PLATE
	11	1	**470-1861**	1	PLATE
	12	1	**470-1862**	1	PLATE
	13	1	**470-1863**	3	PIN
	14	1	**470-1864**	2	BRACKET
	15	1	**483-0535**	1	PLATE
	16	1	**516-0729**	1	PLATE
	17	1	**4D-8123**	3	CLIP (LOOP)
M	18	1	**5C-2890**	2	NUT (M6X1-THD)
M	20	1	**8T-0389**	6	LOCKNUT (M10X1.5-THD)
	21	1	**8T-4121**	35	WASHER-HARD (11X21X2.5-MM THK)
	22	1	**8T-4123**	6	WASHER (22X35X3.5-MM THK)
M	23	1	**8T-4132**	1	NUT (M16X2-THD)
M	24	1	**8T-4133**	2	NUT (M10X1.5-THD)
M	25	1	**8T-4137**	3	BOLT (M10X1.5X20-MM)
M	26	1	**8T-4195**	13	BOLT (M10X1.5X30-MM)
M	27	1	**8T-4196**	10	BOLT (M10X1.5X35-MM)
M	28	1	**8T-6430**	6	BOLT (M20X2.5X50-MM)
	29	1	**9X-8256**	4	WASHER (6.6X12X2-MM THK)
	30	1	**9X-8257**	5	WASHER (17.5X30X3.5-MM THK)
	31	1	**156-5782**	1	SPACER (17.5X30X10-MM THK)
M	32	1	**7X-2557**	1	BOLT (M16X2X140-MM)
M	33	1	**8T-4174**	1	BOLT (M16X2X120-MM)

B - USE AS REQUIRED M - METRIC PART

483-0536 **MOUNTING GP-DRUM** (contd.) **i07409085**

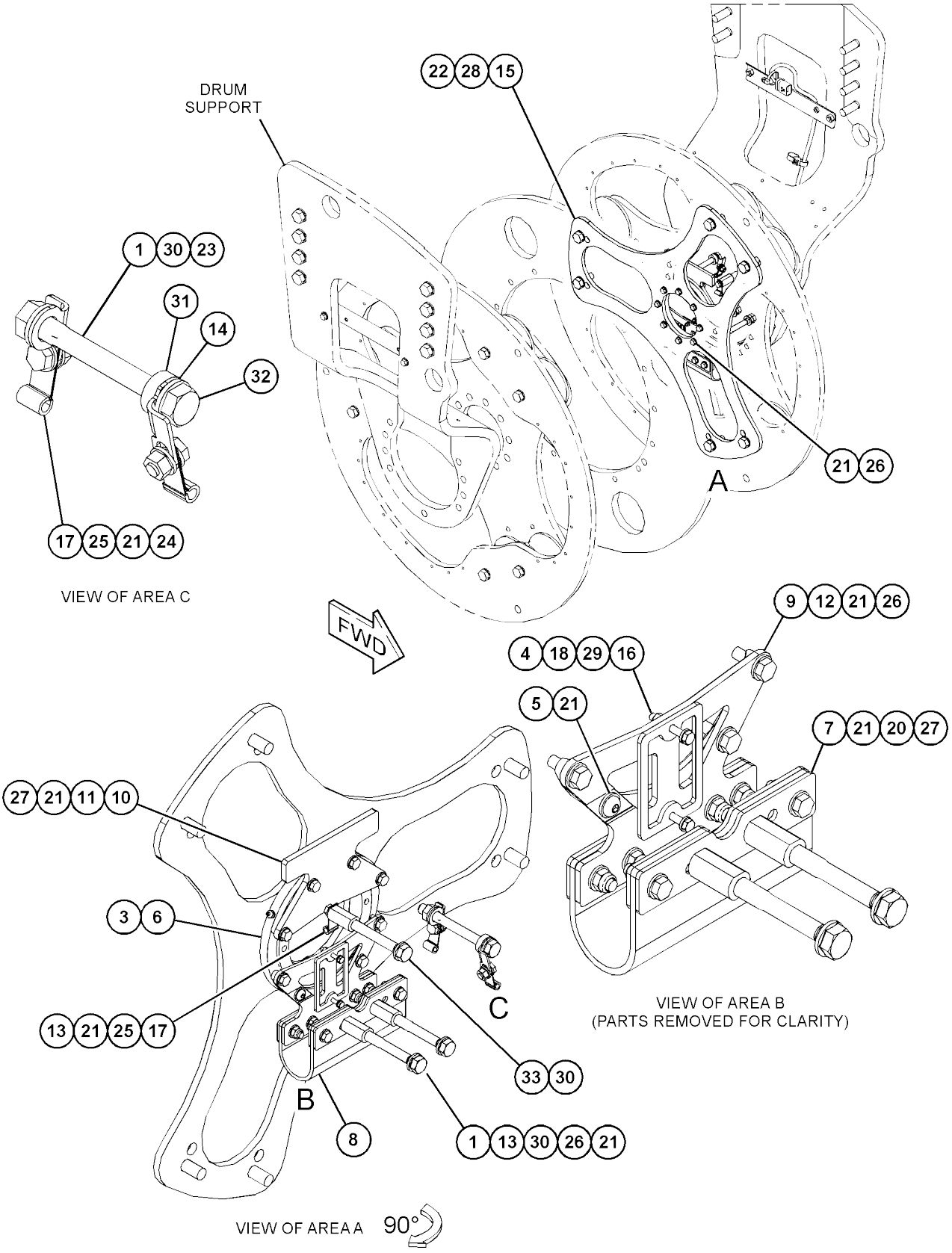

GRAPHIC #1 <END> g06202622

520-1732 MOUNTING GP-DRUM

S/N: 5B41-UP; G441-UP
PART OF 510-4015 SENSOR AR-
COMPACTION AN ATTACHMENT

SMCS-6605

i07416447

	REF SEE NOTE QTY	GRAPHIC NO 1 2 3 4 5 6	(PRODUCT LEVEL)	REF PAGE	PART NAME PART NUMBER
M	1	1	**8T-4195**	11	BOLT (M10X1.5X30-MM)
M	2	1	**8T-4196**	10	BOLT (M10X1.5X35-MM)
M	3	1	**7X-2475**	2	BOLT (M16X2X130-MM)
M	4	1	**8T-4174**	2	BOLT (M16X2X120-MM)
M	5	1	**8T-6430**	6	BOLT (M20X2.5X50-MM)
	6	1	**3B-8489**	1	FITTING-GREASE (1/8-27 PTF)
M	7	1	**5C-2890**	2	NUT (M6X1-THD)
M	8	1	**8C-8451**	2	BOLT (M6X1X40-MM)
M	9	1	**8T-0389**	6	LOCKNUT (M10X1.5-THD)
	10	1	**8T-4121**	30	WASHER-HARD (11X21X2.5-MM THK)
	11	1	**8T-4123**	6	WASHER (22X35X3.5-MM THK)
	12	1	**9X-8256**	4	WASHER (6.6X12X2-MM THK)
	13	1	**9X-8257**	2	WASHER (17.5X30X3.5-MM THK)
M	14	1	**141-9203**	3	SCREW-BUTTON HEAD (M10X1.5X30-MM)
	15	1	**188-5072**	1	BEARING-PIVOT
	16	1	**470-1857**	3	PLATE
	17	1	**470-1858**	1	BELT
	18	1	**470-1859**	1	PLATE
	19	1	**470-1860**	1	PLATE
	20	1	**470-1861**	1	PLATE
	21	1	**470-1862**	1	PLATE
	22	1	**483-0535**	1	PLATE
	23	1	**516-0729**	1	PLATE
	24	1	**521-6269**	2	PIN

M - METRIC PART

520-1732 **MOUNTING GP-DRUM (**contd.**)** **i07416447**

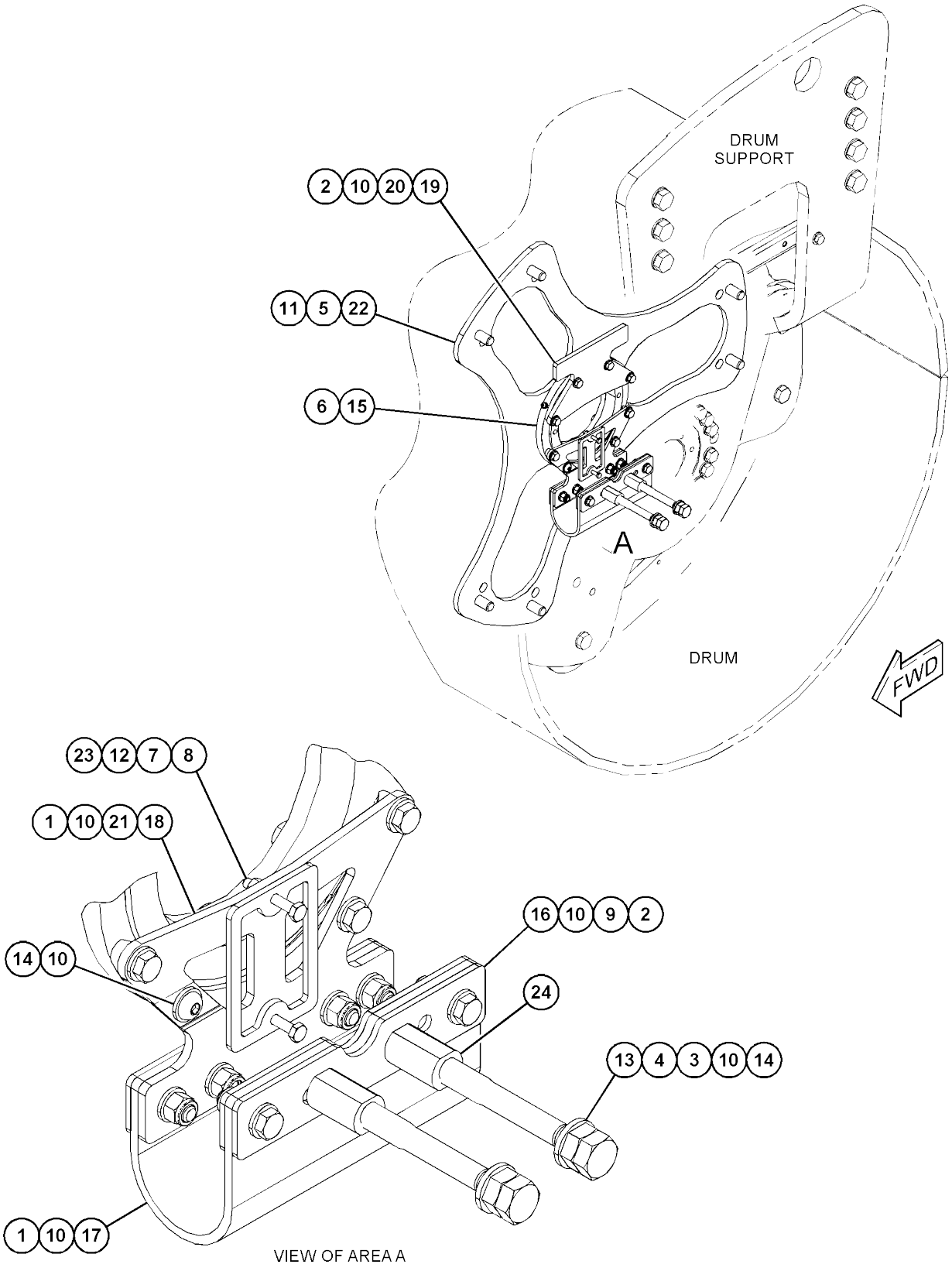

GRAPHIC #1 <END> g06147519

381-1896 POWER TRAIN AR

S/N: G441-UP
PART OF 539-2601 MACHINE
AR AN ATTACHMENT

SMCS-3000, 4000

i07416706

NOTE	PART NUMBER	QTY	PART NAME 1 2 3 4 5 6 (PRODUCT LEVEL)	SEE PAGE
Y	*339-6553*	2	DRUM GP-COMPACTOR	211
Y	*381-1897*	1	HYDRAULIC AR	293
Y	*350-2786*	1	SUPPORT GP-DRUM	240

Y - SEPARATE ILLUSTRATION

<END>

386-7954 POWER TRAIN AR

S/N: 5B41-UP
PART OF 516-8451 MACHINE
AR AN ATTACHMENT

SMCS-3000, 4000

i07418397

NOTE	PART NUMBER	QTY	PART NAME 1 2 3 4 5 6 (PRODUCT LEVEL)	SEE PAGE
Y	*339-6555*	2	DRUM GP-COMPACTOR	212
Y	*386-7544*	1	HYDRAULIC AR	293
Y	*343-6148*	1	SUPPORT GP-DRUM	239

Y - SEPARATE ILLUSTRATION

<END>

504-6816 POWER TRAIN AR

S/N: G441-UP
PART OF 539-2608 MACHINE
AR AN ATTACHMENT

SMCS-3000, 4000

i07416539

NOTE	PART NUMBER	QTY	PART NAME 1 2 3 4 5 6 (PRODUCT LEVEL)	SEE PAGE
Y	*339-6553*	1	DRUM GP-COMPACTOR	211
Y	*504-6817*	1	DRUM GP-COMPACTOR	214
Y	*381-1897*	1	HYDRAULIC AR (SOLID DRUM)	293
Y	*350-2786*	1	SUPPORT GP-DRUM	240

Y - SEPARATE ILLUSTRATION

<END>



504-6841 POWER TRAIN AR

S/N: 5B41-UP
PART OF 504-6839 MACHINE
AR AN ATTACHMENT

SMCS-3000, 4000

i07418274

NOTE	PART NUMBER	QTY	PART NAME 1 2 3 4 5 6 (PRODUCT LEVEL)	SEE PAGE
Y	*339-6555*	1	DRUM GP-COMPACTOR (EXTRA WIDE)	212
Y	*504-6805*	1	DRUM GP-COMPACTOR	213
Y	*386-7544*	1	HYDRAULIC AR	293
Y	*343-6148*	1	SUPPORT GP-DRUM	239

Y - SEPARATE ILLUSTRATION

<END>

537-5500 POWER TRAIN AR

S/N: 5B41-UP
PART OF 537-5499 MACHINE
AR AN ATTACHMENT

SMCS-3000, 4000

i07418407

NOTE	PART NUMBER	QTY	PART NAME 1 2 3 4 5 6 (PRODUCT LEVEL)	SEE PAGE
Y	*339-6555*	1	DRUM GP-COMPACTOR	212
Y	*536-2028*	1	DRUM GP-COMPACTOR	215
Y	*386-7544*	1	HYDRAULIC AR	293
Y	*343-6148*	1	SUPPORT GP-DRUM	239

Y - SEPARATE ILLUSTRATION

<END>

458-9403 PUMP & MTG GP-PROPEL

S/N: 5B41-UP
PART OF 386-7544 HYDRAULIC
AR AN ATTACHMENT

SMCS-3203, 3204, 5070

i07418297

	REF SEE NOTE QTY	GRAPHIC NO 1 2 3 4 5 6	(PRODUCT LEVEL)	REF PAGE	PART NAME PART NUMBER	
	1	1	**6V-0852**	2	CAP-DUST	
	2	1	**102-1733**	1	FLANGE-NYLON	
	3	1	*150-3026*	1	ELBOW AS	
		1	**3K-0360**	1	SEAL-O-RING	
		1	**6V-4292**	1	ELBOW	
	4	1	*161-9916*	1	ADAPTER AS	
		1	**2M-9780**	1	SEAL-O-RING	
		1	**6V-7420**	1	ADAPTER	
	5	1	**191-8924**	1	COUPLING AS (HYDRAULIC)	
M		1	**6V-8200**	1	BOLT-SOCKET HEAD (M12X1.75X35-MM)	
	6	1	**359-3099**	1	SUPPORT-ENGINE	
Y	7	1	**420-1972**	1	PUMP GP-PISTON	325
	8	1	**0T-0924**	8	BOLT (3/8-24X1.5-IN)	
	9	1	**110-6349**	2	FITTING AS (QUICK DISCONNECT)	
	10	1	*148-8336*	1	CONNECTOR AS	
		1	**3J-1907**	1	SEAL-O-RING	
		1	**6V-8397**	1	SEAL-O-RING	
		1	**6V-8636**	1	CONNECTOR	
	11	1	*148-8433*	1	TEE AS	
		1	**6V-8397**	2	SEAL-O-RING	
		1	**6V-9836**	1	TEE-SWIVEL	
	12	1	*164-5574*	2	TEE AS	
					(EACH INCLUDES)	
		1	**3D-2824**	1	SEAL-O-RING	
		1	**6V-8784**	1	TEE-FACE SEAL	
		1	**6V-9746**	2	SEAL-O-RING	
	13	1	*268-6377*	1	TEE AS	
		1	**3K-0360**	1	SEAL-O-RING	
		1	**7J-9108**	2	SEAL-O-RING	
		1	**268-6052**	1	TEE-O-RING	
	14	1	**3K-0715**	1	SEAL-O-RING	
	15	1	**8T-4121**	2	WASHER-HARD (11X21X2.5-MM THK)	
M	16	1	**8T-4193**	2	BOLT (M16X2X50-MM)	
M	17	1	**8T-4196**	2	BOLT (M10X1.5X35-MM)	
	18	1	**9X-8257**	2	WASHER (17.5X30X3.5-MM THK)	

M - METRIC PART
Y - SEPARATE ILLUSTRATION

458-9403 **PUMP & MTG GP-PROPEL** (contd.) **i07418297**

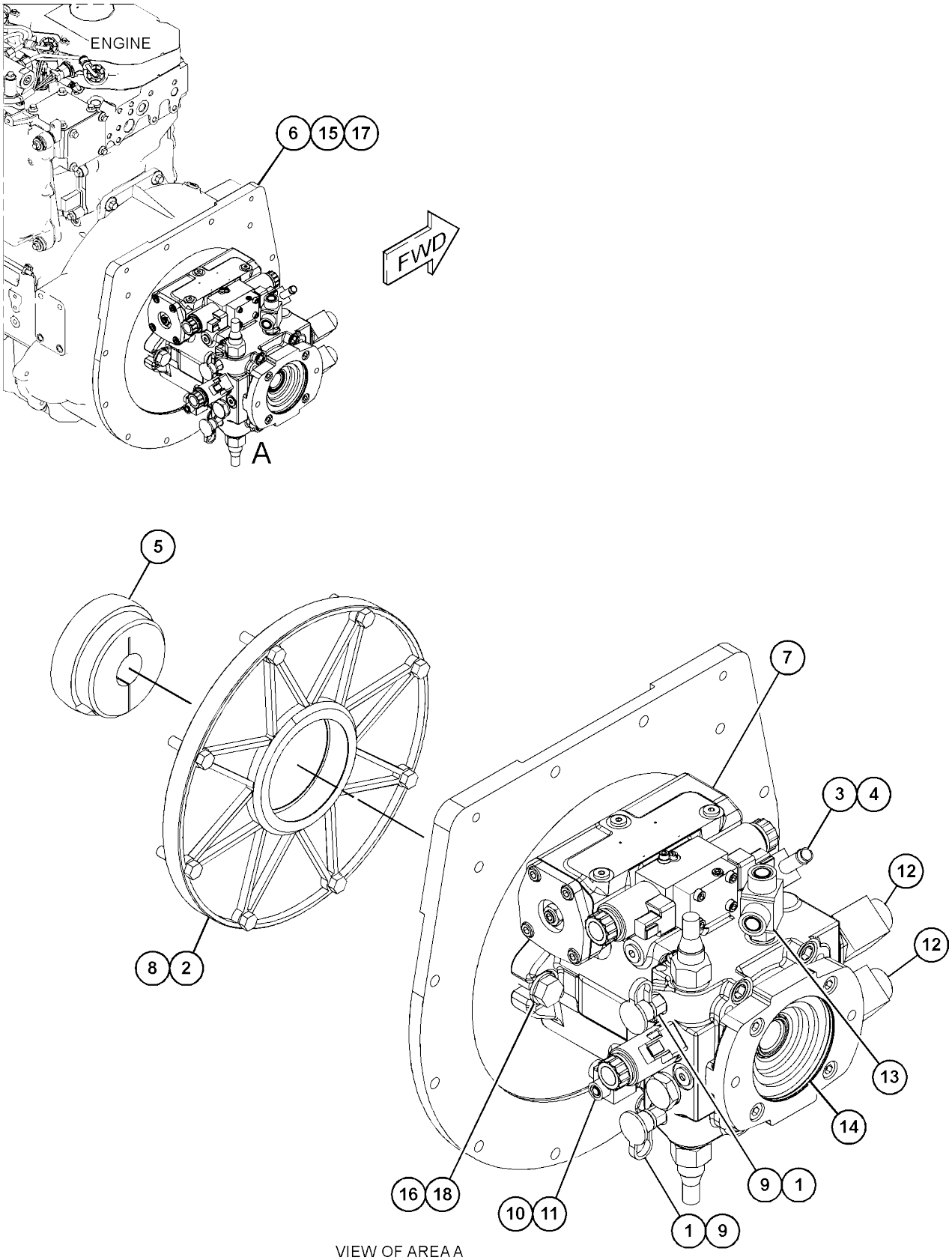

VIEW OF AREA A
(EXPLODED)

GRAPHIC #1 <END> g03808711

190-9845 SHAFT GP-DRIVE

S/N: 5B41-UP
PART OF 343-8288 SHAFT GP-DRIVE AN ATTACHMENT

SMCS-3253

i07418193

REF SEE NOTE QTY	GRAPHIC NO 1 2 3 4 5 6	(PRODUCT LEVEL)	REF PAGE	PART NAME PART NUMBER
1	1	**5E-2620**	2	FLANGE-YOKE
2	1	**124-8545**	2	KIT-UNIVERSAL JOINT (DRIVE SHAFT)
3	1	**027-1287**	1	FITTING-GREASE
4	1	**111-9380**	1	KIT-DUST CAP (DRIVE SHAFT)

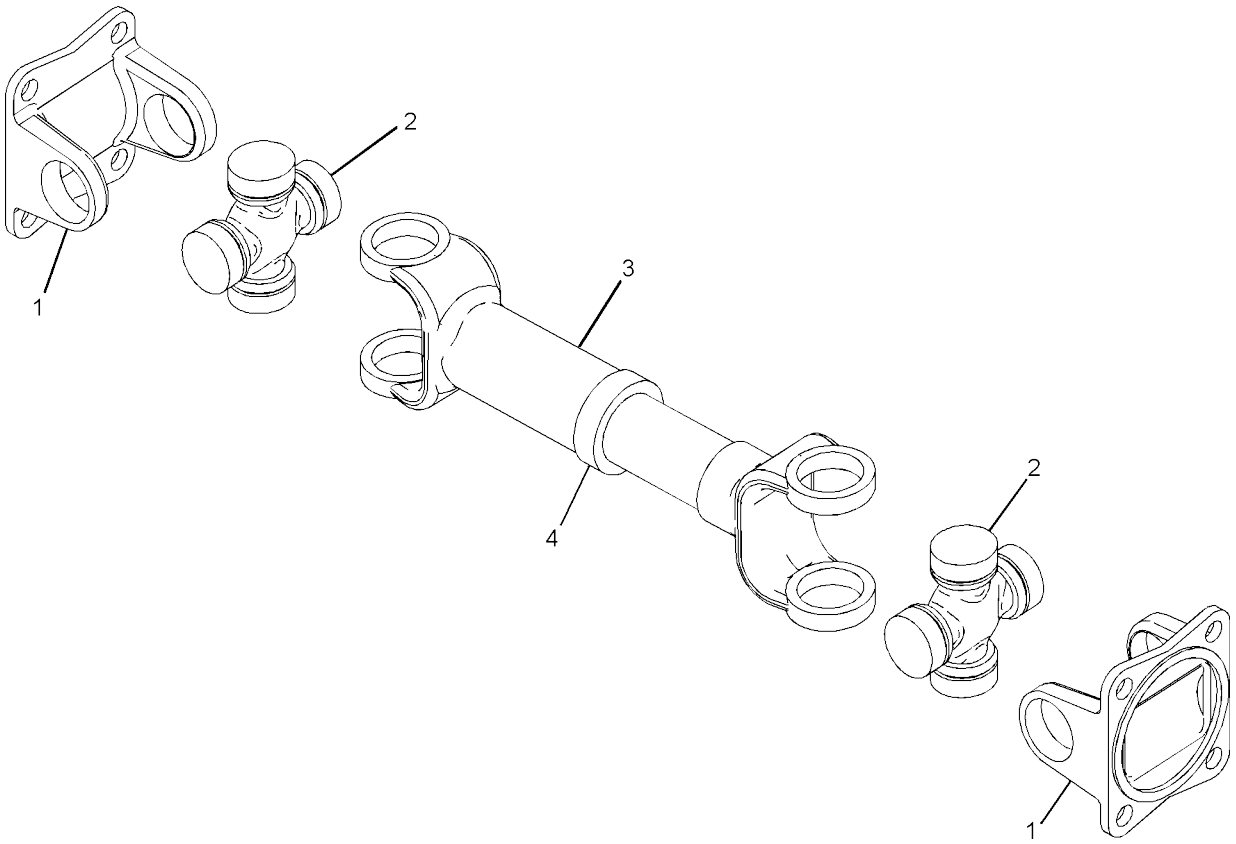

GRAPHIC #1 <END> g01064489

343-6141 SHAFT GP-DRIVE

S/N: G441-UP
PART OF 539-2601, 539-2608 MACHINE
AR AN ATTACHMENT

SMCS-3253

i07416536

	REF SEE NOTE QTY	GRAPHIC NO 1 2 3 4 5 6 (PRODUCT LEVEL)	REF PAGE	PART NAME PART NUMBER
	1	1 **118-7202**	1	SHAFT-DRIVE (ECCENTRIC WEIGHT)
M	2	1 **5A-3604**	8	BOLT-SOCKET HEAD (M8X1.25X25-MM)
	3	1 **8T-4224**	8	WASHER-HARD (8.8X16X2-MM THK)

M - METRIC PART

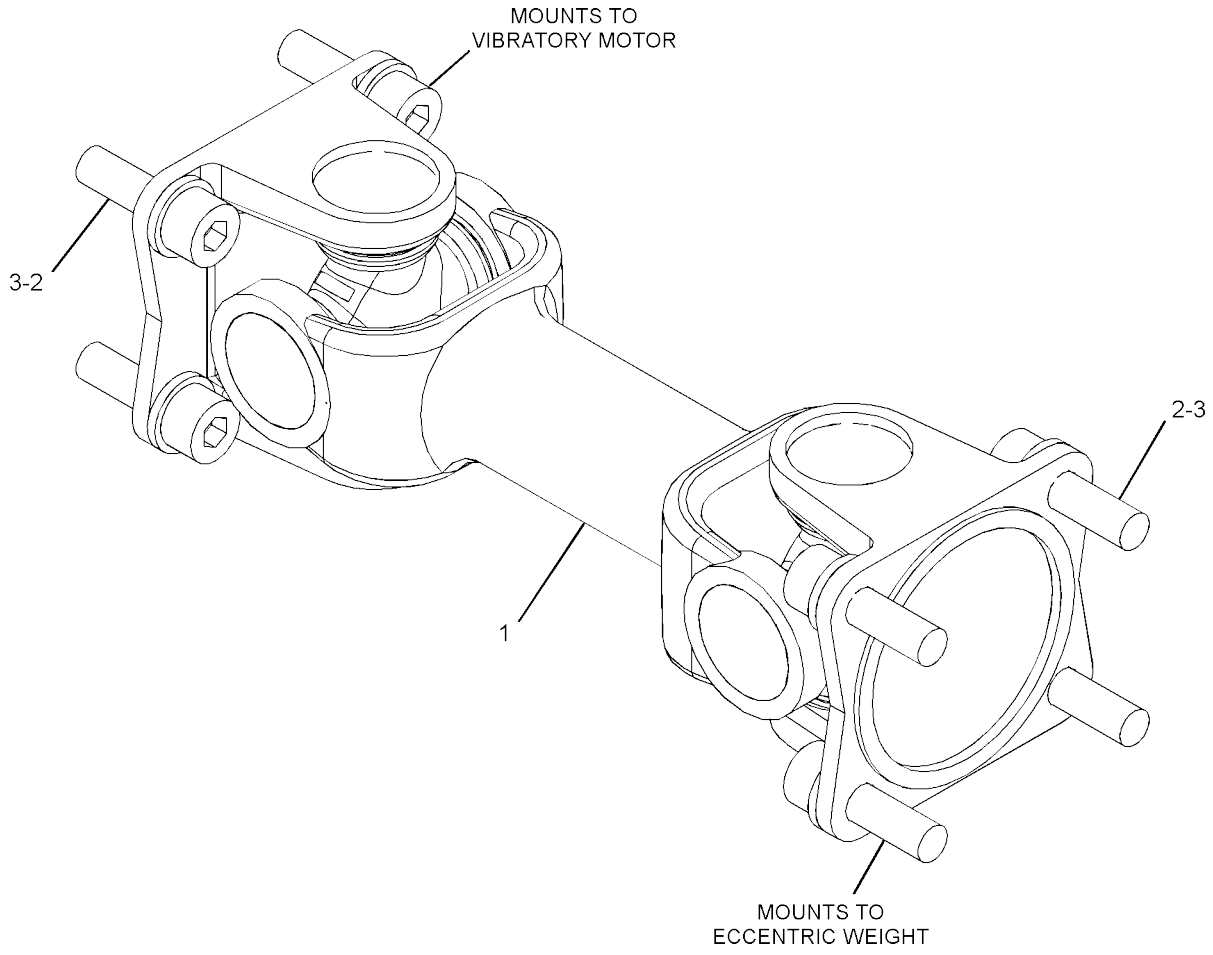

GRAPHIC #1 <END> g02847336

343-8288 SHAFT GP-DRIVE

S/N: 5B41-UP
PART OF 504-6839, 516-8451, 537-5499 MACHINE
AR AN ATTACHMENT

SMCS-3253

i07418170

	REF SEE NOTE QTY	GRAPHIC NO 1 2 3 4 5 6	(PRODUCT LEVEL)	REF PAGE	PART NAME PART NUMBER	
Y	1	1	**190-9845**	1	SHAFT GP-DRIVE	234
M	2	1	**5A-3604**	8	BOLT-SOCKET HEAD (M8X1.25X25-MM)	
	3	1	**8T-4224**	8	WASHER-HARD (8.8X16X2-MM THK)	

M - METRIC PART
Y - SEPARATE ILLUSTRATION

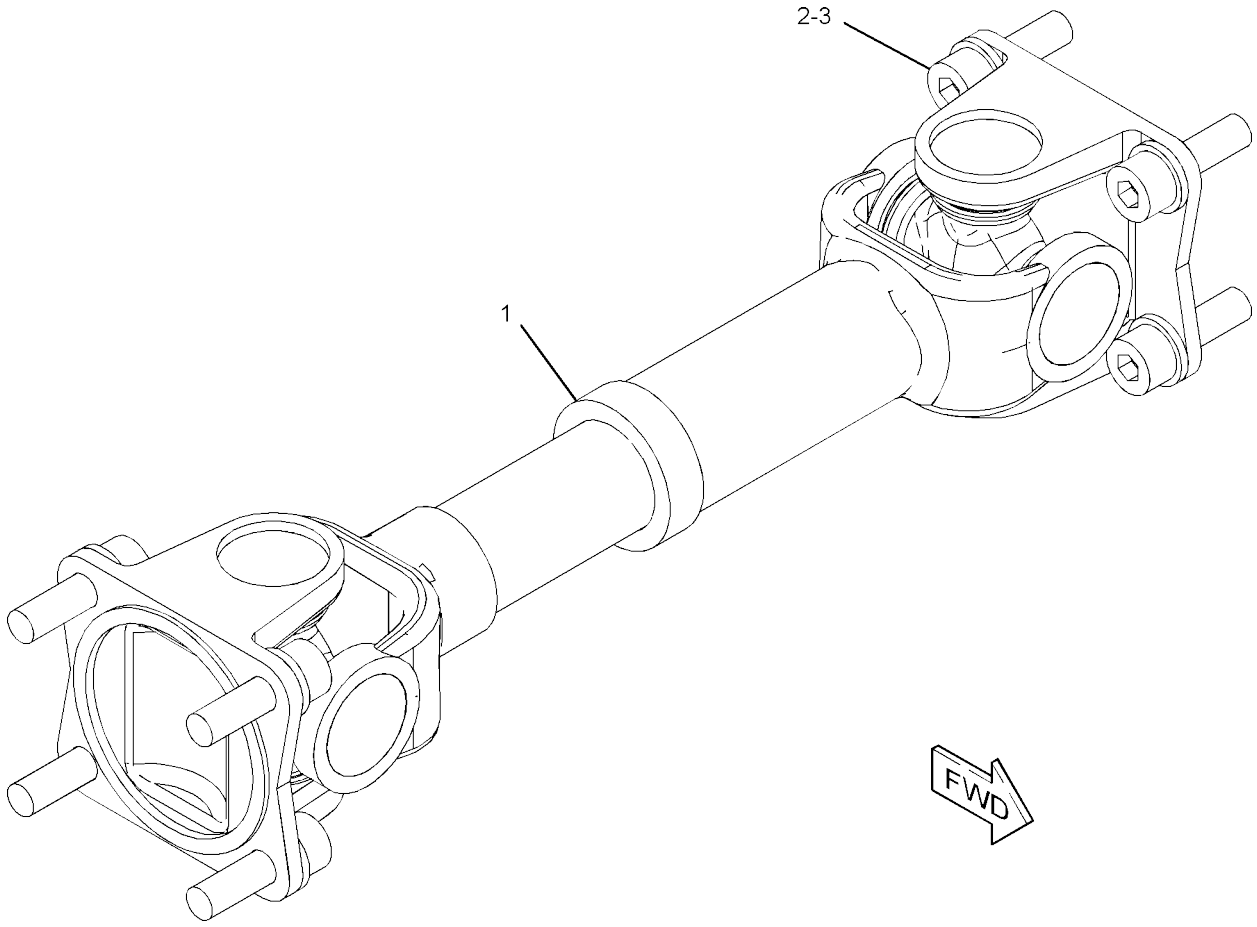

GRAPHIC #1 <END> g02844876

424-1372 SHAFT GP-DRIVE

S/N: G441-UP
PART OF 539-2608 MACHINE
AR AN ATTACHMENT

SMCS-3253

i07416537

	REF SEE NOTE QTY	GRAPHIC NO 1 2 3 4 5 6	(PRODUCT LEVEL)	REF PAGE	PART NAME PART NUMBER
	1	1	**212-0316**	1	SHAFT AS-VIBRATORY
		1	**5E-2620**	2	FLANGE-YOKE
		1	**027-1287**	1	FITTING-GREASE
		1	**111-9380**	1	KIT-DUST CAP (DRIVE SHAFT)
		1	**124-8545**	1	KIT-UNIVERSAL JOINT (DRIVE SHAFT)
M	2	1	**5A-3604**	8	BOLT-SOCKET HEAD (M8X1.25X25-MM)
	3	1	**8T-4224**	8	WASHER-HARD (8.8X16X2-MM THK)

M - METRIC PART

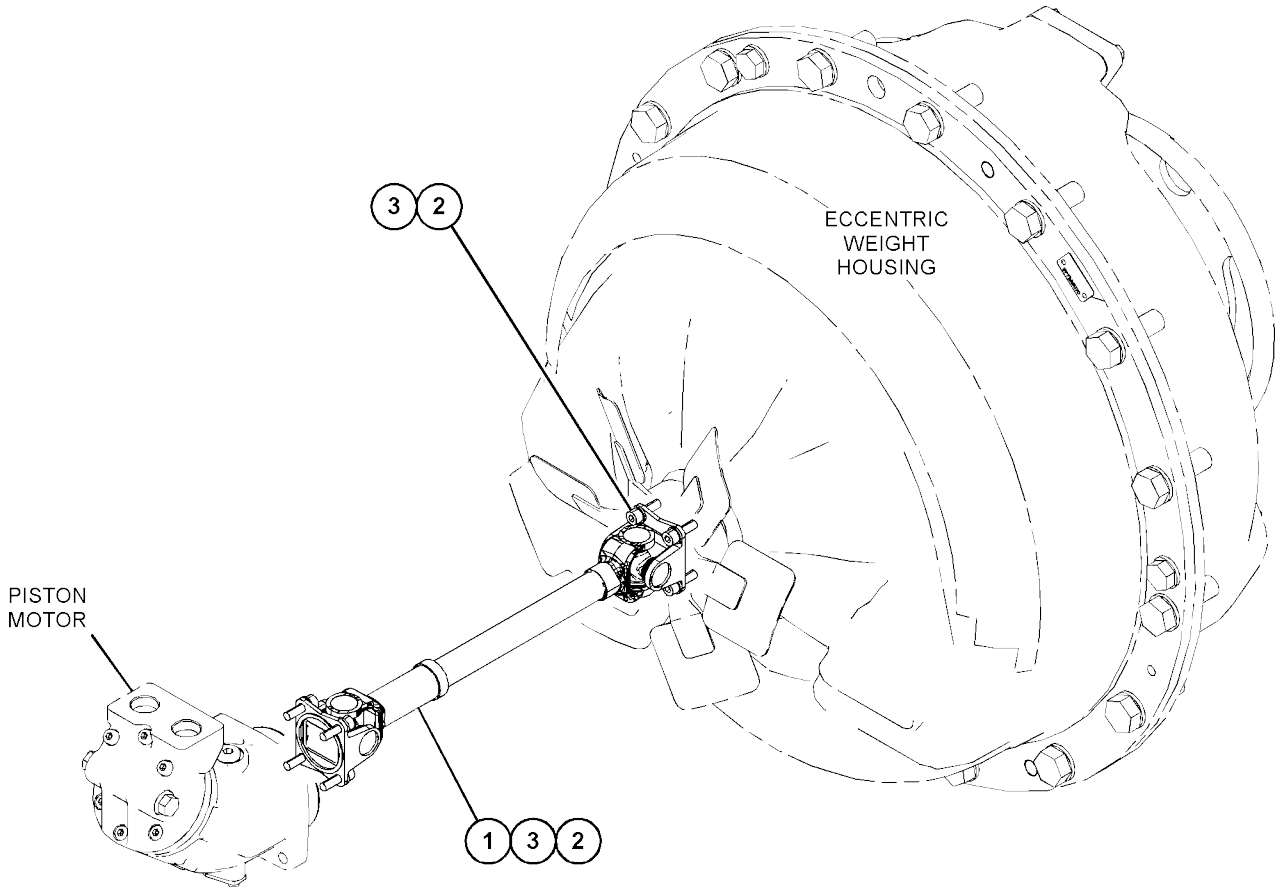

GRAPHIC #1 <END> g03843816

424-1383 SHAFT GP-DRIVE

S/N: 5B41-UP

PART OF 504-6839, 537-5499 MACHINE AR, 504-6807, 537-5498 VIBRATORY AR AN ATTACHMENT

SMCS-3253

i07418144

	REF SEE NOTE QTY	GRAPHIC NO 1 2 3 4 5 6 (PRODUCT LEVEL)	REF PAGE	PART NAME PART NUMBER	
Y	1	1 **260-4738**	1	SHAFT GP-VIBRATORY DRIVE	390
M	2	1 **5A-3604**	8	BOLT-SOCKET HEAD (M8X1.25X25-MM)	
	3	1 **8T-4224**	8	WASHER-HARD (8.8X16X2-MM THK)	

M - METRIC PART
Y - SEPARATE ILLUSTRATION

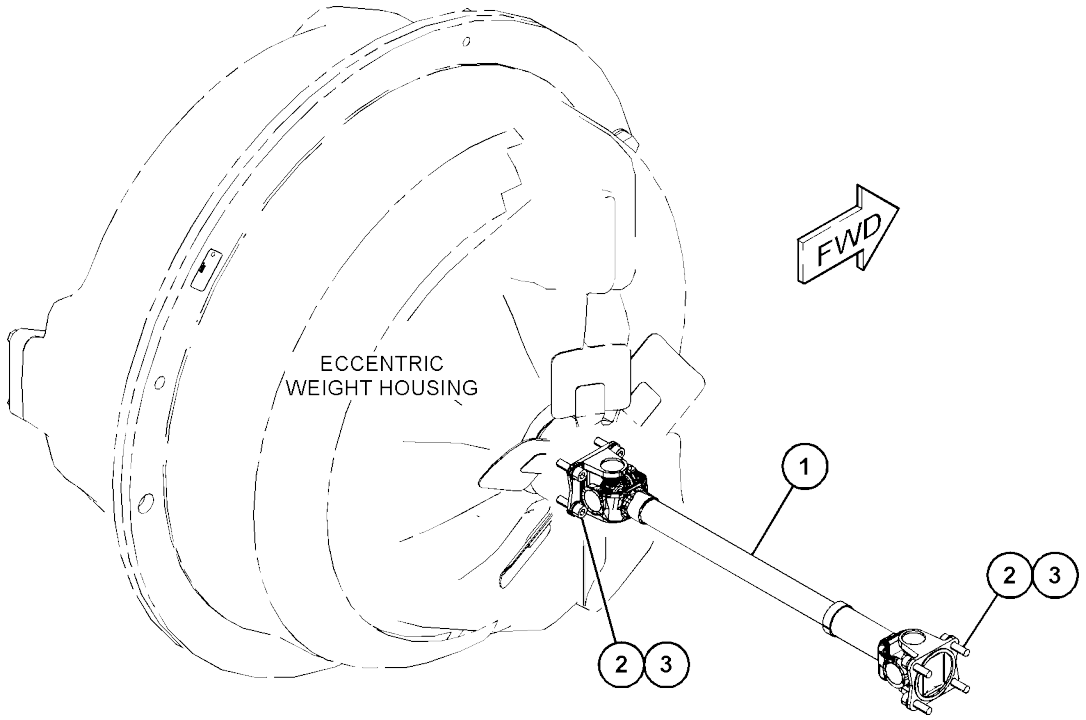

GRAPHIC #1 <END> g03840983

343-6148 SUPPORT GP-DRUM

S/N: 5B41-UP

PART OF 386-7954, 504-6841, 537-5500 POWER TRAIN

AR AN ATTACHMENT

SMCS-6605

i07748165

	REF SEE NOTE QTY	GRAPHIC NO 1 2 3 4 5 6	(PRODUCT LEVEL)	REF PAGE	PART NAME PART NUMBER
	1	1	**185-5622**	2	BEARING AS (DRUM)
					(EACH INCLUDES)
		1	**2D-4867**	2	FITTING-GREASE (1/8-27 PTF)
	2	1	**549-5085**	2	SUPPORT-DRUM (VIBRATORY)
	3	1	**549-5086**	2	SUPPORT-DRUM (PROPEL)
	4	1	**360-4755**	4	GUARD AS
					(EACH INCLUDES)
M		1	**8T-3597**	2	NUT-WELD (M12X1.75-THD)
M		1	**8T-3612**	2	NUT-WELD (M8X1.25-THD)
M	5	1	**7X-2555**	48	BOLT (M16X2X80-MM)
M	6	1	**7X-2577**	32	BOLT (M24X3X90-MM)
	7	1	**8T-4167**	32	WASHER-HARD (26X44X4-MM THK)
M	8	1	**8T-4173**	44	BOLT (M16X2X110-MM)
M	9	1	**8T-4194**	8	BOLT (M12X1.75X50-MM)
	10	1	**8T-4223**	8	WASHER-HARD (13.5X25.5X3-MM THK)
	11	1	**9X-8257**	44	WASHER (17.5X30X3.5-MM THK)

M - METRIC PART

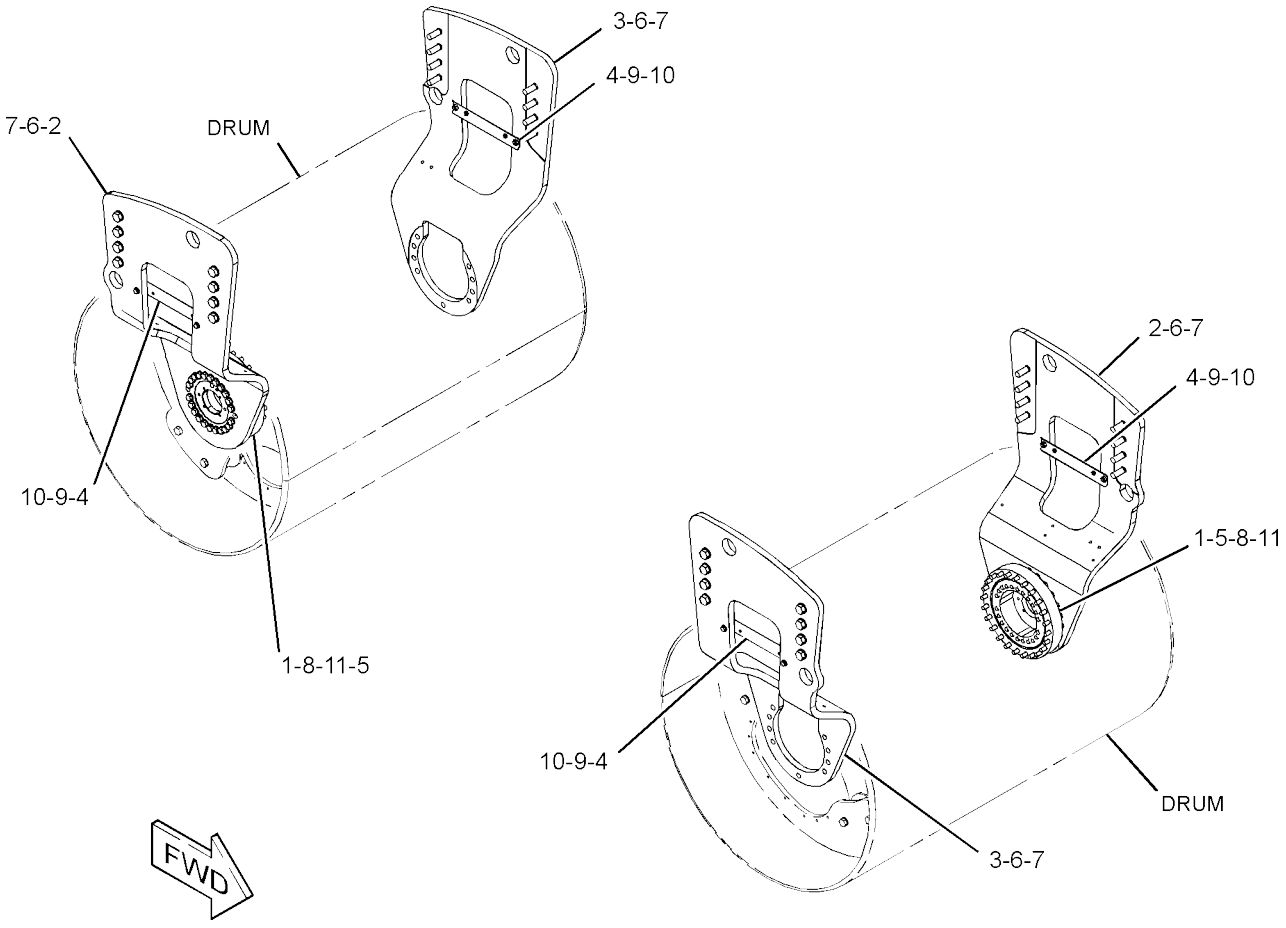

GRAPHIC #1 <END> g06166468

350-2786 SUPPORT GP-DRUM

S/N: G441-UP
PART OF 381-1896, 504-6816 POWER TRAIN AR
AN ATTACHMENT

SMCS-6605

i07416589

	REF SEE NOTE QTY	GRAPHIC NO 1 2 3 4 5 6	(PRODUCT LEVEL)	REF PAGE	PART NAME PART NUMBER
	1	1	**185-5622**	2	BEARING AS
					(EACH INCLUDES)
		1	**2D-4867**	2	FITTING-GREASE (1/8-27 PTF)
	2	1	**360-4755**	4	GUARD AS
					(EACH INCLUDES)
M		1	**8T-3597**	2	NUT-WELD (M12X1.75-THD)
M		1	**8T-3612**	2	NUT-WELD (M8X1.25-THD)
	3	1	**549-5088**	2	SUPPORT-DRUM
	4	1	**549-5087**	2	SUPPORT-DRUM
	5	1	**126-8928**	32	WASHER-HARD (26X40X8-MM THK)
M	6	1	**7X-2555**	48	BOLT (M16X2X80-MM)
M	7	1	**7X-2556**	44	BOLT (M16X2X100-MM)
M	8	1	**7X-2577**	32	BOLT (M24X3X90-MM)
M	9	1	**8T-4194**	8	BOLT (M12X1.75X50-MM)
	10	1	**8T-4223**	8	WASHER-HARD (13.5X25.5X3-MM THK)
	11	1	**9X-8257**	44	WASHER (17.5X30X3.5-MM THK)

M - METRIC PART

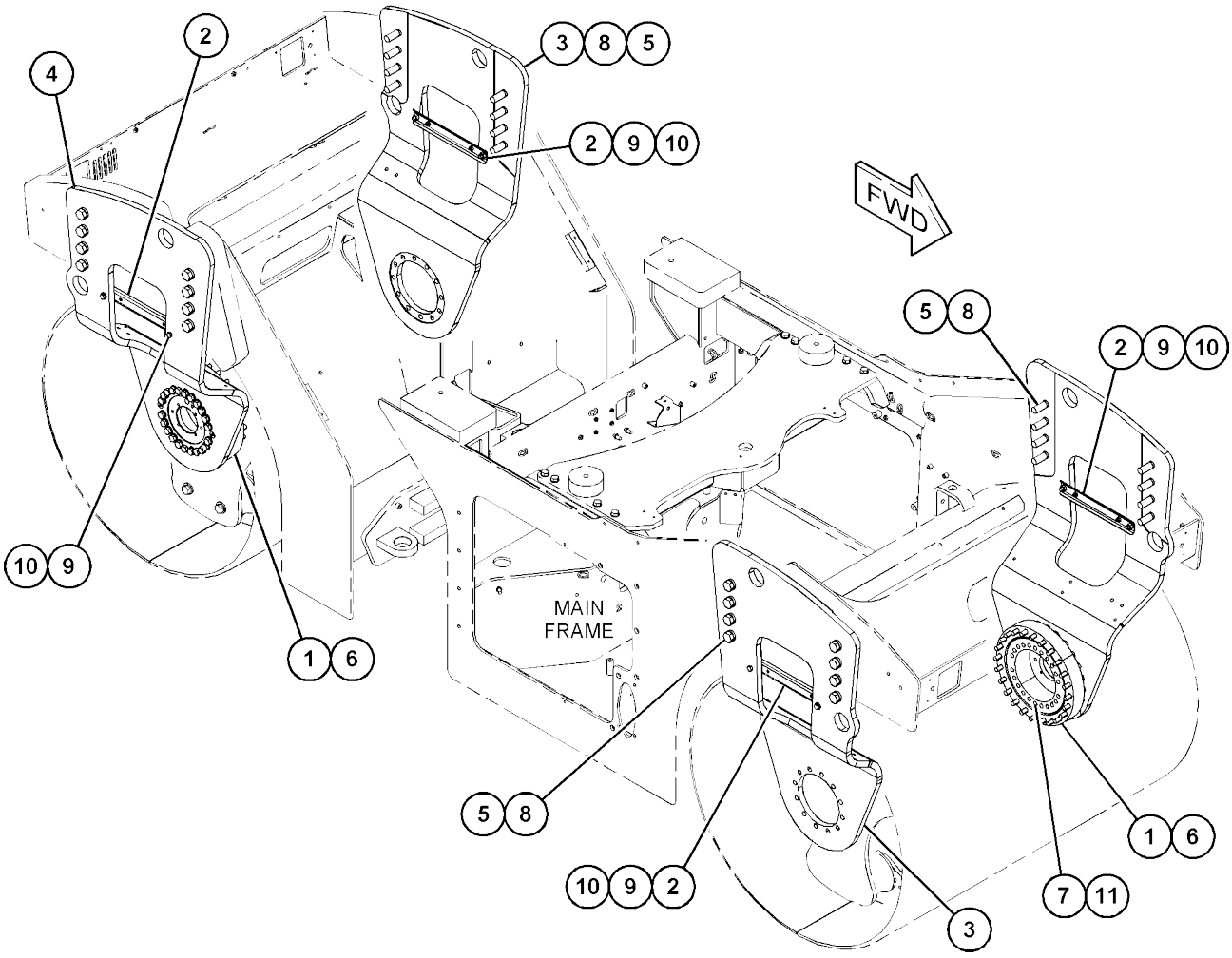

GRAPHIC #1

<END>

g06165803

499-9101 COVER GP-ACCESS

S/N: G441-UP
PART OF 496-5276, 504-6818, 542-0258 VIBRATORY
AR AN ATTACHMENT

SMCS-726A

i07416432

	REF SEE NOTE QTY	GRAPHIC NO 1 2 3 4 5 6 (PRODUCT LEVEL)	REF PAGE	PART NAME PART NUMBER
	1	1 **499-3096**	1	BRACKET AS
M		1 **8T-3612**	14	NUT-WELD (M8X1.25-THD)
	2	1 **526-4297**	4	PLATE
	3	1 **526-4336**	6	PLATE
	4	1 **526-5013**	2	COVER
M	5	1 **176-5311**	6	LOCKNUT (M16X2-THD)
	6	1 **5G-2934**	4	PLUG
	7	1 **5P-4116**	32	WASHER-HARD (8.8X20.5X2-MM THK)
	8	1 **8T-4122**	6	WASHER-HARD (17X32X3.5-MM THK)
M	9	1 **8T-4908**	32	BOLT (M8X1.25X25-MM)
D	10	1 **5P-5637**		SEAL (1.8-M EACH)
	10A	1 **5P-5637**		SEAL (0.2-M EACH)

D - ORDER BY THE METER M - METRIC PART

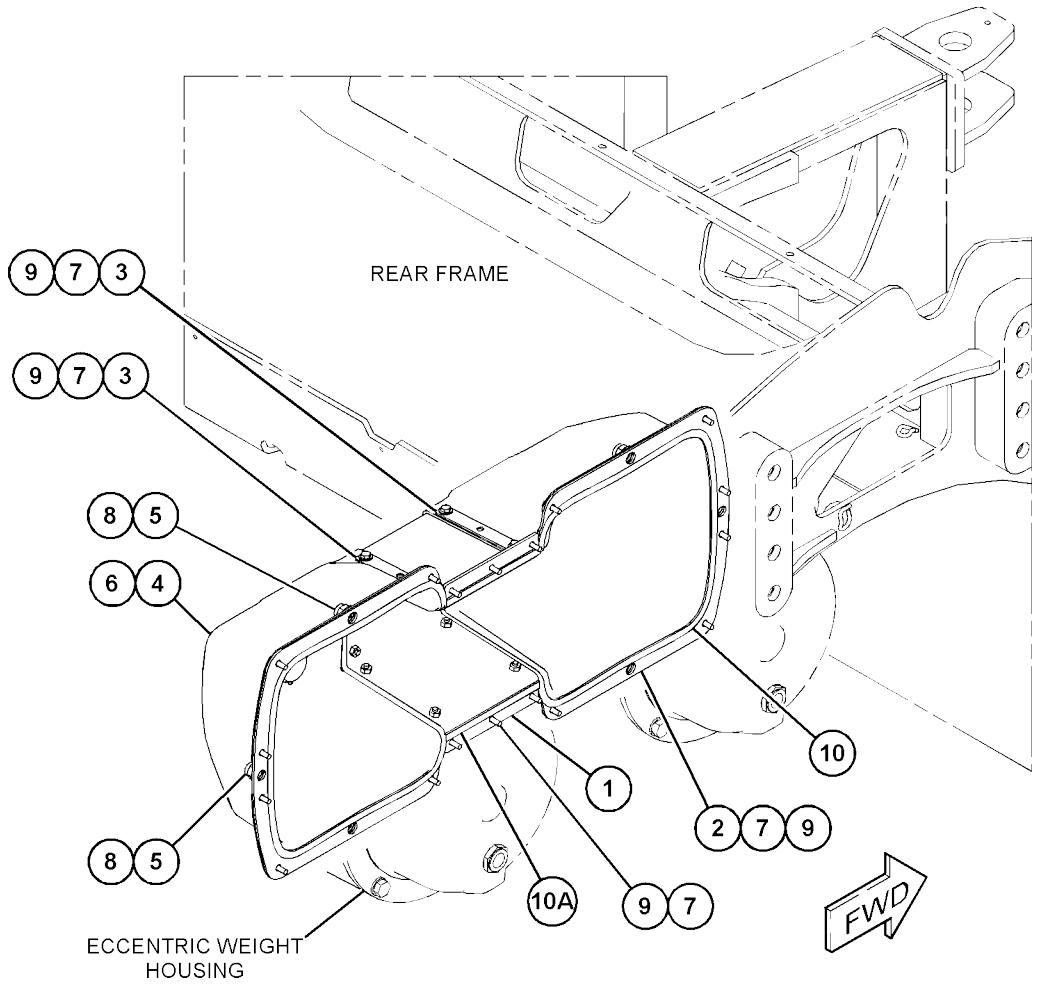

GRAPHIC #1 <END> g06205618

499-9118 COVER GP-ACCESS

S/N: 5B41-UP
OSCILLATION
PART OF 496-0536, 504-6797, 504-6803, 504-6804, 504-6807, 537-5498 VIBRATORY AR AN ATTACHMENT

SMCS-726A

i07672427

	REF SEE NOTE QTY	GRAPHIC NO 1 2 3 4 5 6 (PRODUCT LEVEL)	REF PAGE	PART NAME PART NUMBER
	1	1 **496-4814**	1	BRACKET AS
M		1 **8T-3612**	14	NUT-WELD (M8X1.25-THD)
	2	1 **526-4297**	4	PLATE
	3	1 **526-4336**	6	PLATE
	4	1 **526-5013**	2	COVER
M	5	1 **176-5311**	6	LOCKNUT (M16X2-THD)
	6	1 **5G-2934**	4	PLUG
	7	1 **5P-4116**	32	WASHER-HARD (8.8X20.5X2-MM THK)
	8	1 **8T-4122**	2	WASHER-HARD (17X32X3.5-MM THK)
M	9	1 **8T-4908**	32	BOLT (M8X1.25X25-MM)
D	10	1 **5P-5637**		SEAL (1.8-M EACH)
D	10A	1 **5P-5637**		SEAL (0.3-M EACH)

D - ORDER BY THE METER M - METRIC PART

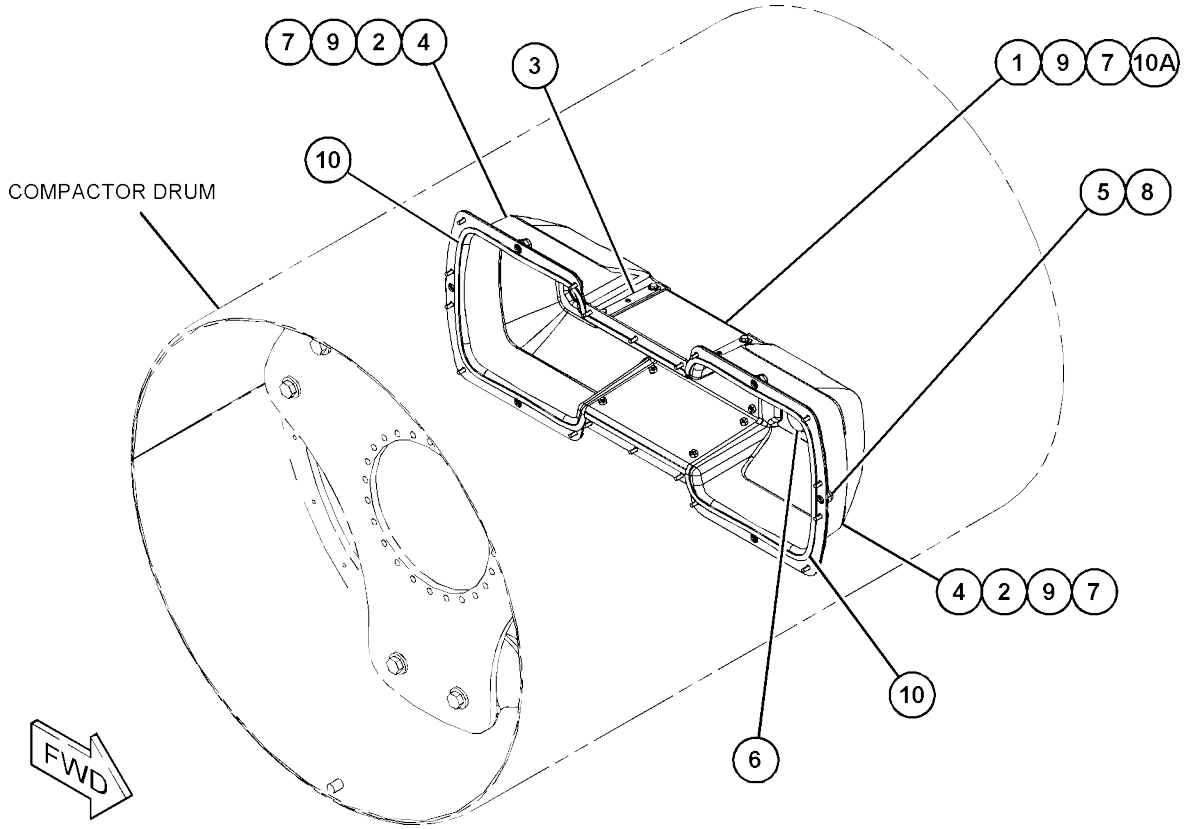

GRAPHIC #1 <END> g06390641

514-6670 DOOR GP-ACCESS

S/N: 5B41-UP; G441-UP
PART OF 451-3120, 451-3220 CHASSIS AR

SMCS-7273

i07398956

	REF SEE NOTE QTY	GRAPHIC NO 1 2 3 4 5 6	(PRODUCT LEVEL)	REF PAGE	PART NAME PART NUMBER
	1	1	**8T-2444**	4	STUD-BALL
	2	1	**114-9284**	8	BUMPER
J	3	1	**226-0294**	2	LOCK AS
	4	1	**226-0325**	2	CAM-LOCK
	5	1	**336-0099**	4	RETAINER
	6	1	**345-5640**	2	LATCH AS
	7	1	**489-0312**	2	SPRING AS-GAS (CAB DOOR)
	8	1	**559-2414**	1	DOOR AS-ACCESS (LH)
	9	1	**508-6644**	1	DOOR AS-ACCESS (RH)
					(EACH DOOR AS INCLUDES)
		1	**360-5106**	2	HINGE AS
	10	1	**509-6900**	2	PLATE
	11	1	*509-8358*	4	PLATE AS
					(EACH INCLUDES)
M		1	**8T-3490**	2	NUT-WELD (M10X1.5-THD)
	12	1	**511-7176**	2	STRIKER
	13	1	**513-2574**	1	GUARD-BELT
	14	1	**526-2606**	1	SUPPORT AS (RH)
	15	1	**526-4452**	1	SUPPORT AS (LH)
					(EACH SUPPORT AS INCLUDES)
M		1	**8T-3612**	3	NUT-WELD (M8X1.25-THD)
M	16	1	**172-8591**	4	NUT-CLIP (M6X1-THD)
M	17	1	**178-3336**	8	NUT-HEX FLANGE (M8X1.25-THD)
M	18	1	**343-4072**	12	BOLT-FLANGE HEAD (M6X1X25-MM)
	19	1	**5P-1075**	4	WASHER-HARD (10.2X22.5X3-MM THK)
M	20	1	**5A-3604**	2	BOLT-SOCKET HEAD (M8X1.25X25-MM)
	21	1	**7X-0796**	2	LOCKWASHER (10.2X18.4X2.5-MM THK)
	23	1	**8T-4121**	12	WASHER-HARD (11X21X2.5-MM THK)
M	24	1	**8T-4189**	2	BOLT (M8X1.25X20-MM)
M	25	1	**8T-4196**	12	BOLT (M10X1.5X35-MM)
	26	1	**8T-4224**	2	WASHER-HARD (8.8X16X2-MM THK)
	27	1	**9B-7237**	2	BOLT (3/8-16X1.25-IN)

J - REQUIRES CORPORATE
KEY M - METRIC PART

514-6670 **DOOR GP-ACCESS (**contd.**)** **i07398956**

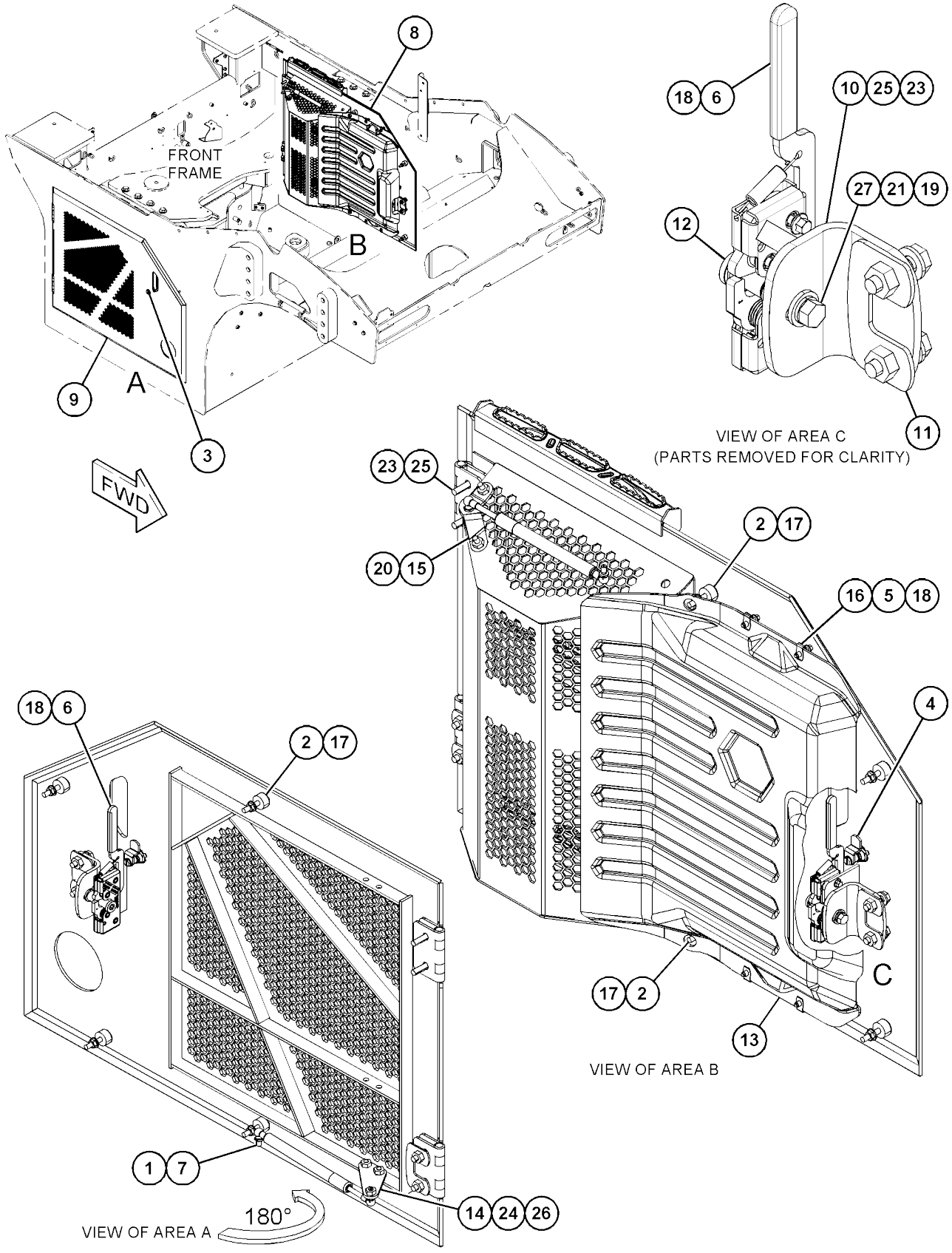

GRAPHIC #1 <END> g06313661

505-8504 ENCLOSURE GP

S/N: G441-UP
PART OF 451-3120 CHASSIS AR

SMCS-7251, 7263

i07398862

	REF SEE NOTE QTY	GRAPHIC NO 1 2 3 4 5 6	(PRODUCT LEVEL)	REF PAGE	PART NAME PART NUMBER	
	1	1	**226-0294**	1	LOCK AS	
	2	1	**226-0325**	1	CAM-LOCK	
Y	3	1	*424-7533*	1	DEFLECTOR GP	416
	4	1	**515-2352**	1	COVER AS	
M		1	**8T-3597**	3	NUT-WELD (M12X1.75-THD)	
M		1	**8T-3612**	6	NUT-WELD (M8X1.25-THD)	
	5	1	**515-3709**	1	SUPPORT	
	6	1	**515-3913**	1	PLATE AS	
M		1	**8T-3612**	1	NUT-WELD (M8X1.25-THD)	
	7	1	**515-3994**	1	DOOR AS	
M		1	**8T-3612**	1	NUT-WELD (M8X1.25-THD)	
	8	1	**525-0312**	1	GRILL AS	
	9	1	**522-2352**	1	COVER AS	
M		1	**8T-3597**	3	NUT-WELD (M12X1.75-THD)	
M		1	**8T-3612**	8	NUT-WELD (M8X1.25-THD)	
		1	**090-9434**	2	SPACER (9X20X10-MM THK)	
	10	1	**116-5763**	1	CLIP-SPRING	
	11	1	**132-5789**	1	CLIP (LADDER)	
M	12	1	**208-9311**	6	BOLT-FLANGE HEAD (M12X1.75X35-MM)	
	13	1	**5P-4116**	17	WASHER-HARD (8.8X20.5X2-MM THK)	
M	14	1	**7Y-9099**	18	SCREW-TRUSS HEAD (M8X1.25X25-MM)	
D	15	1	**5P-5637**		SEAL (0.27-M)	
D	15A	1	**5P-5637**		SEAL (0.095-M)	

D - ORDER BY THE METER M - METRIC PART
Y - SEPARATE ILLUSTRATION

505-8504 **ENCLOSURE GP** (contd.) **i07398862**

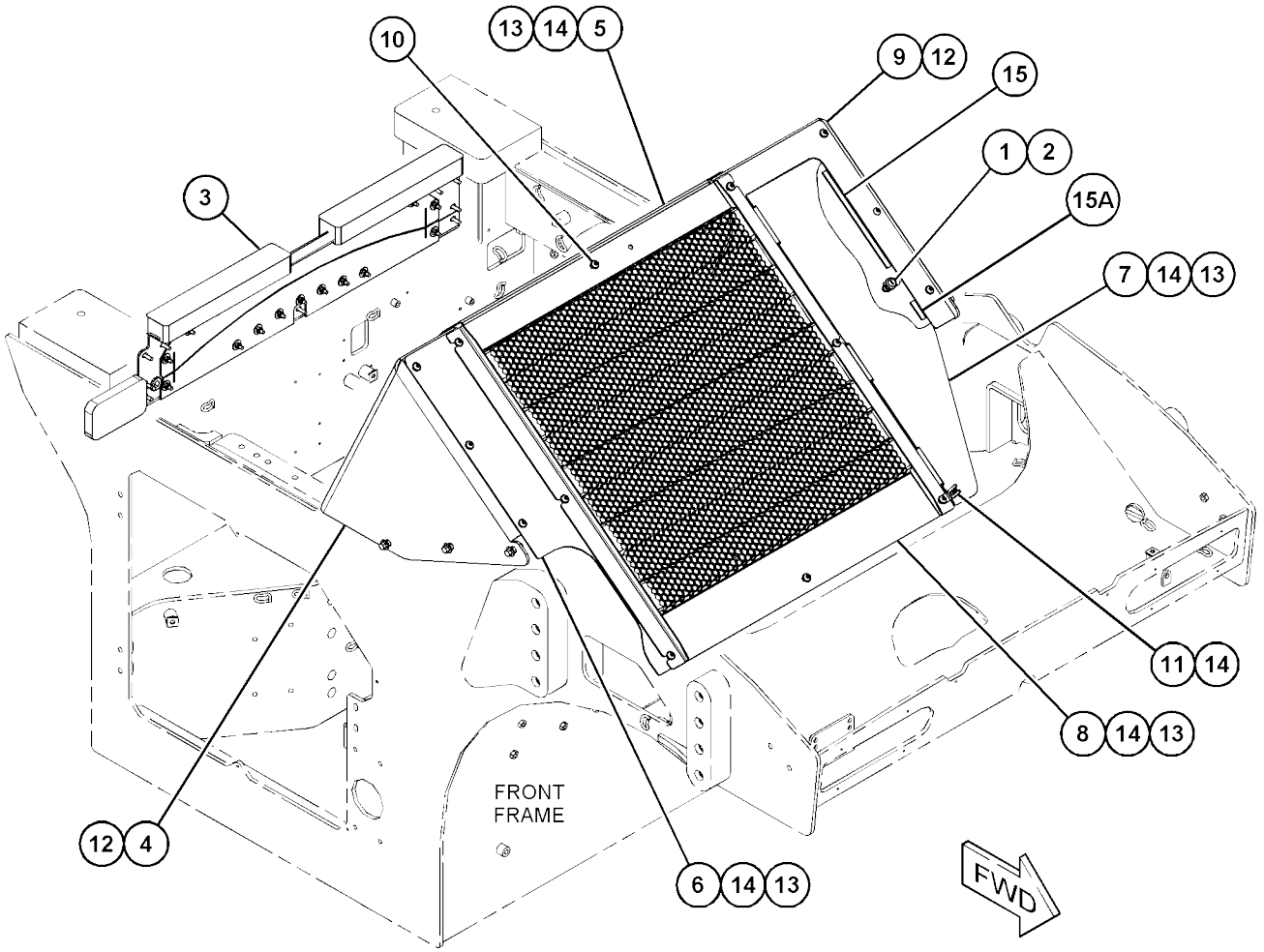

GRAPHIC #1 <END> g06148198

505-8505 ENCLOSURE GP

S/N: 5B41-UP
PART OF 451-3220 CHASSIS AR

SMCS-7251, 7263

i07528443

	REF SEE NOTE QTY	GRAPHIC NO 1 2 3 4 5 6 (PRODUCT LEVEL)	REF PAGE	PART NAME PART NUMBER	
J	1	1 **226-0294**	1	LOCK AS	
	2	1 **226-0325**	1	CAM-LOCK	
Y	3	1 *424-7533*	1	DEFLECTOR GP (FAN)	416
	4	1 **559-2416**	1	DOOR AS	
M		1 **8T-3612**	1	NUT-WELD (M8X1.25-THD)	
	5	1 **514-6684**	1	PLATE AS	
M		1 **8T-3612**	1	NUT-WELD (M8X1.25-THD)	
	6	1 **514-9008**	1	COVER AS	
M		1 **8T-3597**	3	NUT-WELD (M12X1.75-THD)	
M		1 **8T-3612**	9	NUT-WELD (M8X1.25-THD)	
	7	1 **515-1544**	1	COVER AS	
M		1 **8T-3597**	3	NUT-WELD (M12X1.75-THD)	
M		1 **8T-3612**	6	NUT-WELD (M8X1.25-THD)	
	8	1 **515-3709**	1	SUPPORT	
	9	1 **525-0312**	1	GRILL AS	
	10	1 **116-5763**	1	CLIP-SPRING	
	11	1 **132-5789**	1	CLIP (LADDER)	
M	12	1 **208-9311**	6	BOLT-FLANGE HEAD (M12X1.75X35-MM)	
	13	1 **5P-4116**	18	WASHER-HARD (8.8X20.5X2-MM THK)	
M	14	1 **7Y-9099**	19	SCREW-TRUSS HEAD (M8X1.25X25-MM)	
D	15	1 **5P-5637**		SEAL (0.23-M)	
D	15A	1 **5P-5637**		SEAL (0.06-M)	

D - ORDER BY THE METER
J - REQUIRES CORPORATE
KEY M - METRIC PART
Y - SEPARATE ILLUSTRATION

505-8505 **ENCLOSURE GP** (contd.) **i07528443**

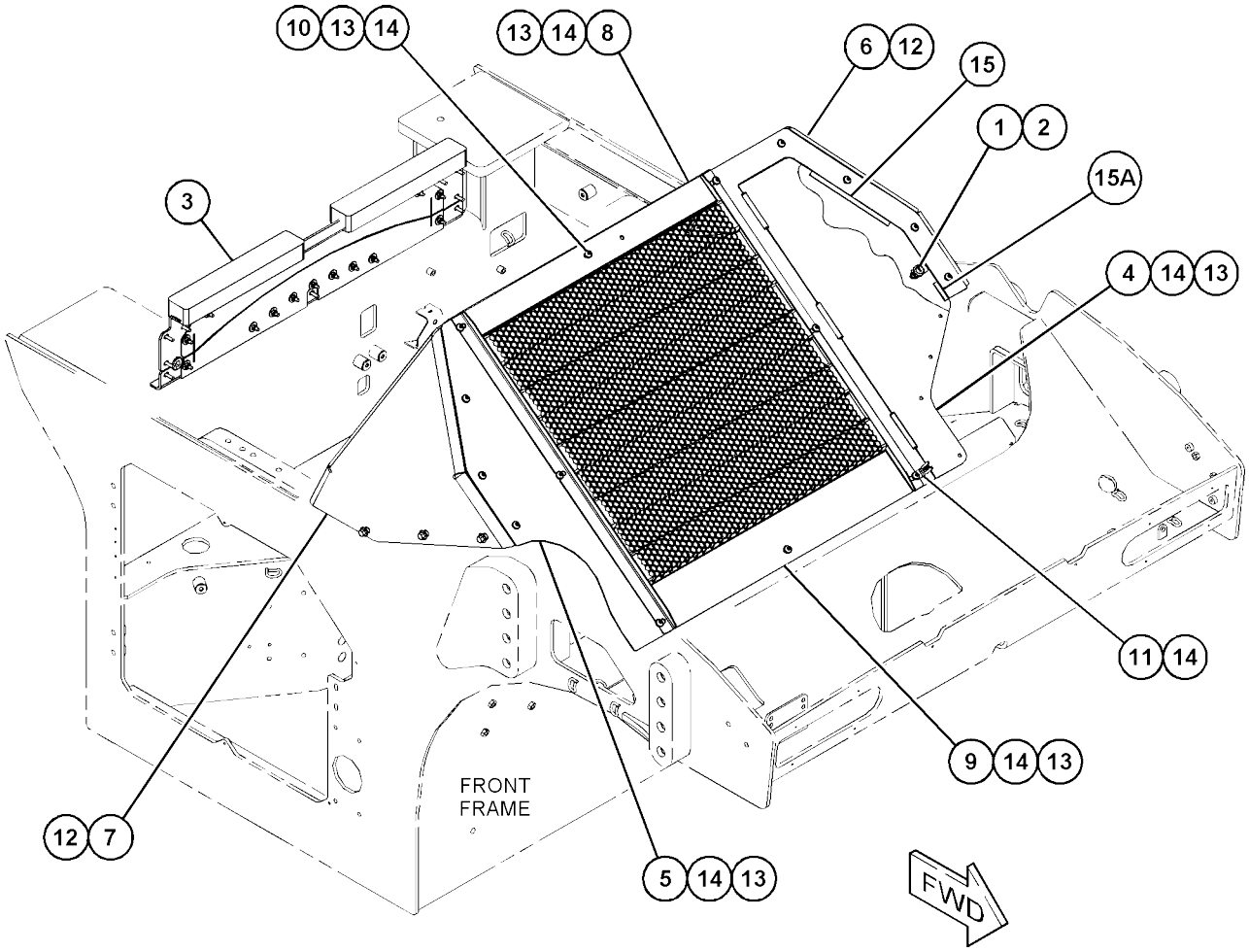

GRAPHIC #1 <END> g06321018

506-7954 FRAME GP-MAIN

S/N: 5B41-UP
PART OF 451-3220 CHASSIS AR

SMCS-7051

i07418063

	REF SEE NOTE QTY	GRAPHIC NO 1 2 3 4 5 6	(PRODUCT LEVEL)	REF PAGE	PART NAME PART NUMBER
	1	1	**375-6567**	1	PLATE AS
	2	1	**506-7958**	1	FRAME AS-FRONT
	3	1	**506-7961**	1	FRAME AS-REAR
	4	1	**120-5737**	9	WASHER (17.5X40X4-MM THK)
M	5	1	**8T-4193**	9	BOLT (M16X2X50-MM)
	6	1	**8T-4121**	8	WASHER-HARD (11X21X2.5-MM THK)
M	7	1	**8T-4136**	8	BOLT (M10X1.5X25-MM)
	8	1	**081-2714**		EDGING (0.17-M EACH)
	8A	1	**081-2714**		EDGING (0.2-M EACH)

M - METRIC PART

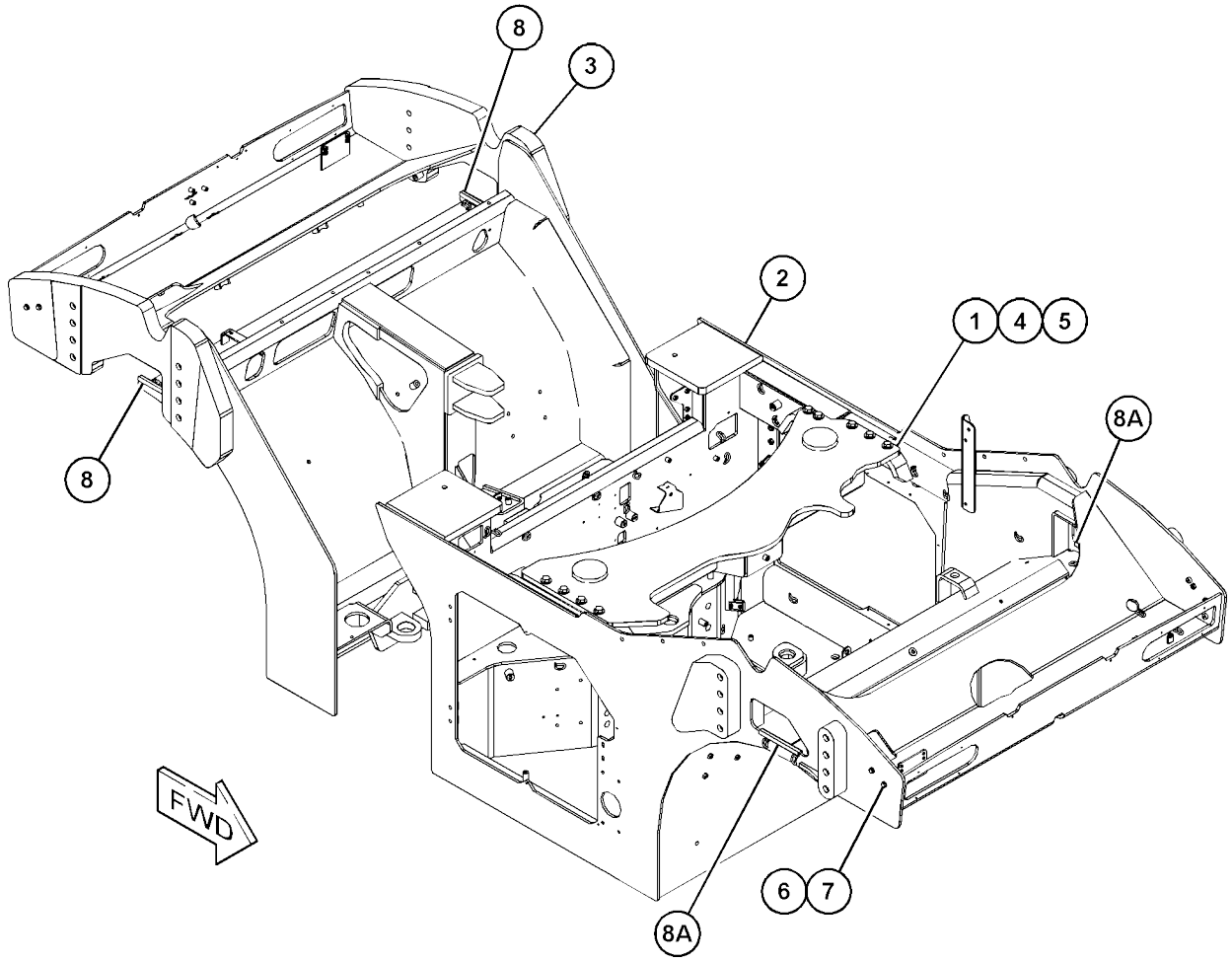

GRAPHIC #1 <END> g06178993

507-1554 FRAME GP-MAIN

S/N: G441-UP
PART OF 451-3120 CHASSIS AR

SMCS-7051

i07398864

	REF SEE NOTE QTY	GRAPHIC NO 1 2 3 4 5 6	(PRODUCT LEVEL)	REF PAGE	PART NAME PART NUMBER
	1	1	**375-6568**	1	PLATE AS
	2	1	**548-0589**	1	FRAME AS-REAR
	3	1	**507-1556**	1	FRAME AS-FRONT
		1	**7T-1099**	29	LINK
M		1	**8T-3490**	19	NUT-WELD (M10X1.5-THD)
M		1	**8T-3612**	3	NUT-WELD (M8X1.25-THD)
M		1	**8Y-4499**	2	BOSS (M12X1.75X30-MM)
M		1	**9R-3572**	2	BOSS (M12X1.75X20-MM)
M		1	**178-7023**	1	BOSS (M10X1.5X30-MM)
M		1	**294-4550**	1	BOSS-WELD (M10X1.5X60-MM)
	4	1	**120-5737**	8	WASHER (17.5X40X4-MM THK)
	5	1	**8T-4121**	8	WASHER-HARD (11X21X2.5-MM THK)
M	6	1	**8T-4136**	8	BOLT (M10X1.5X25-MM)
M	7	1	**8T-4193**	8	BOLT (M16X2X50-MM)
D	8	1	**081-2714**		EDGING (0.2-M EACH)

D - ORDER BY THE METER M - METRIC PART

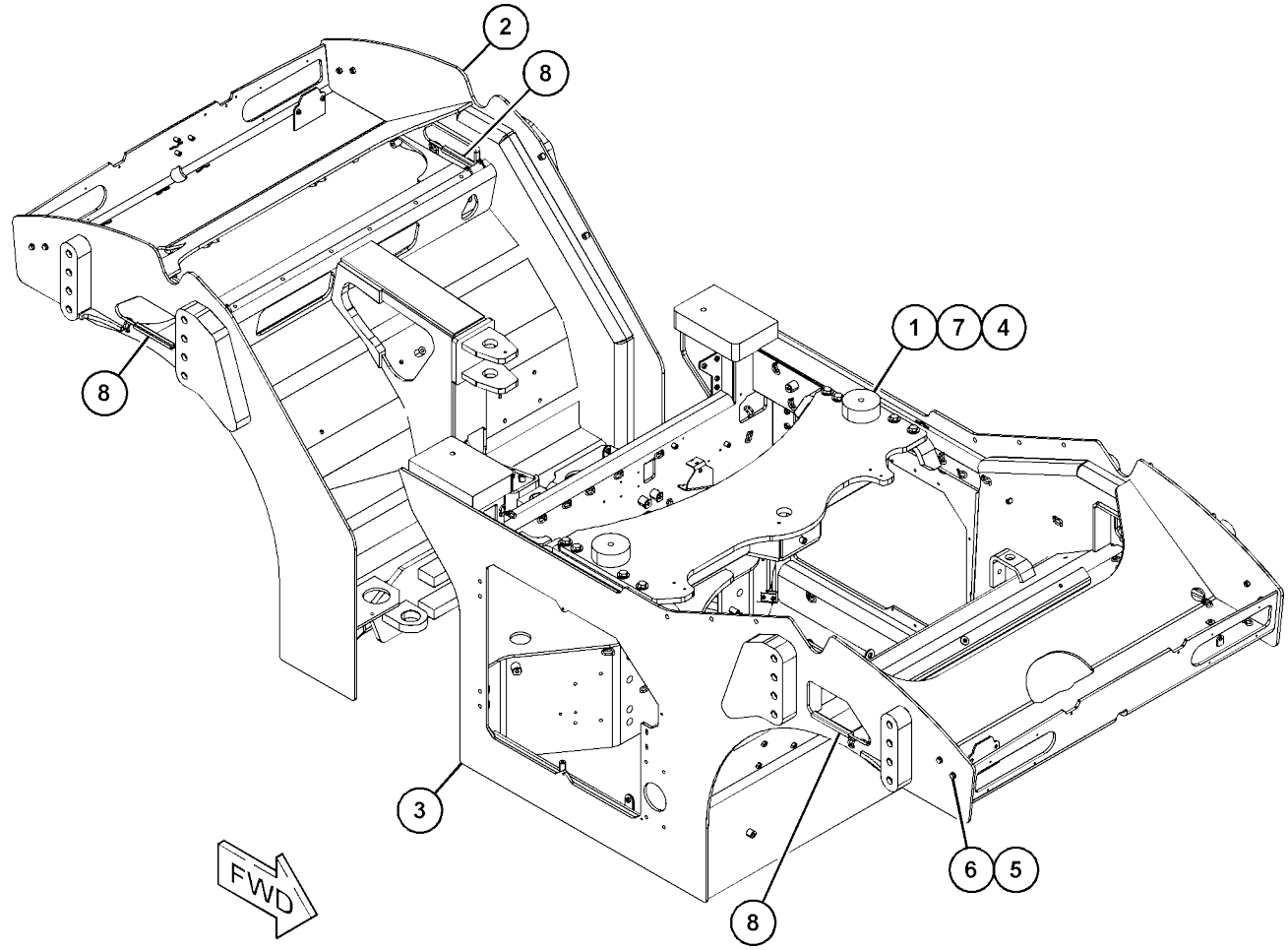

GRAPHIC #1 <END> g06265062

351-3424 GUARD GP-DRUM-SOLID DRUM

S/N: G441-
UP AN
ATTACHMENT

SMCS-7150, 7167

i07400019

	REF SEE NOTE QTY	GRAPHIC NO 1 2 3 4 5 6	(PRODUCT LEVEL)	REF PAGE	PART NAME PART NUMBER
	1	1	**383-3494**	12	PLATE
	2	1	**8T-4121**	84	WASHER-HARD (11X21X2.5-MM THK)
M	3	1	**8T-4182**	84	BOLT (M10X1.5X45-MM)
	4	1	**9C-5344**	84	SPACER (10.5X20X18-MM THK)

M - METRIC PART

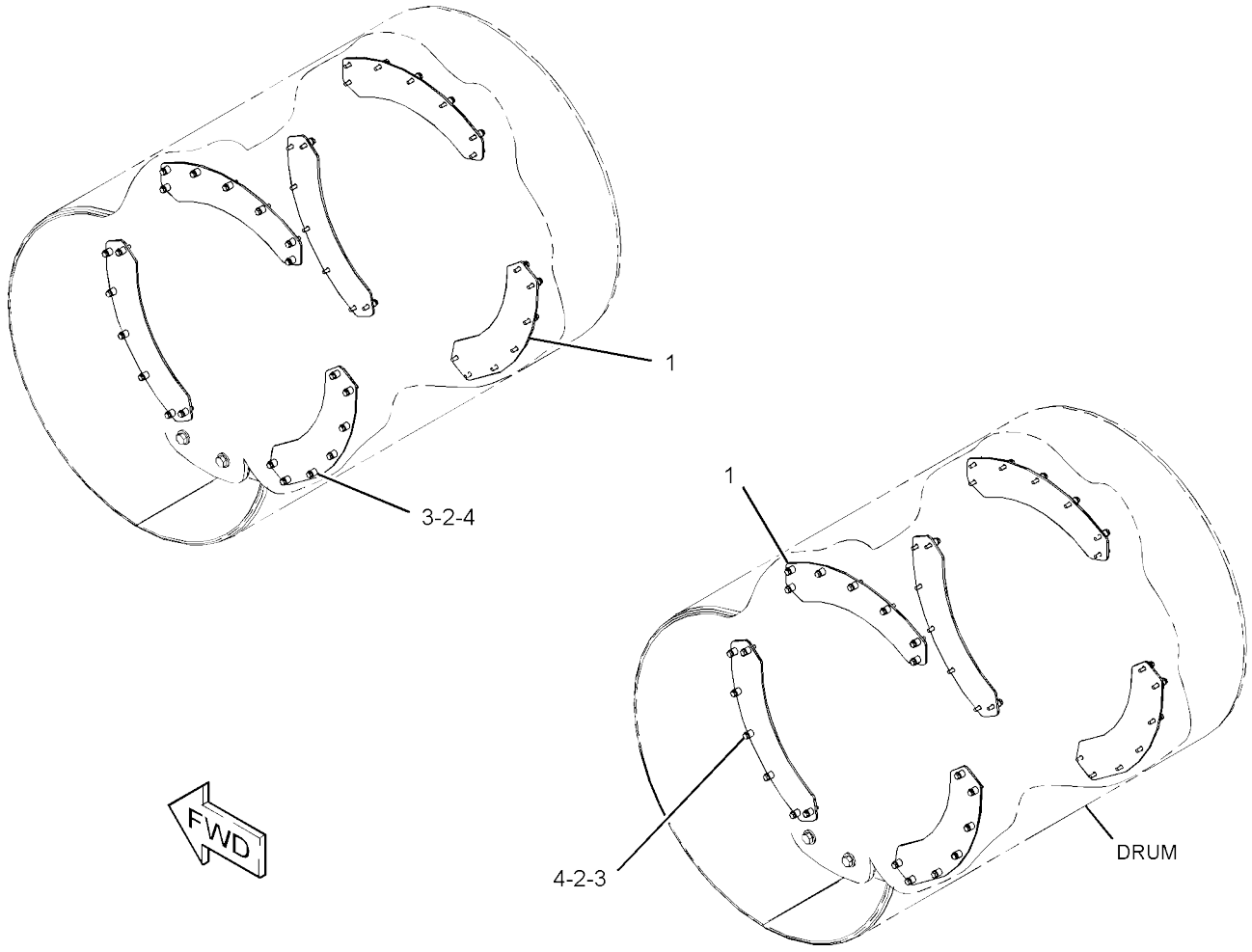

GRAPHIC #1 <END> g03428039

351-3425 GUARD GP-DRUM-SOLID DRUM

S/N: 5B41-
UP AN
ATTACHMENT

SMCS-7150, 7167

i07417988

	REF SEE NOTE QTY	GRAPHIC NO 1 2 3 4 5 6 (PRODUCT LEVEL)	REF PAGE	PART NAME PART NUMBER
	1	1 **229-2820**	12	PLATE
	2	1 **8T-4121**	96	WASHER-HARD (11X21X2.5-MM THK)
M	3	1 **8T-4182**	96	BOLT (M10X1.5X45-MM)
	4	1 **9C-5344**	96	SPACER (10.5X20X18-MM THK)

M - METRIC PART

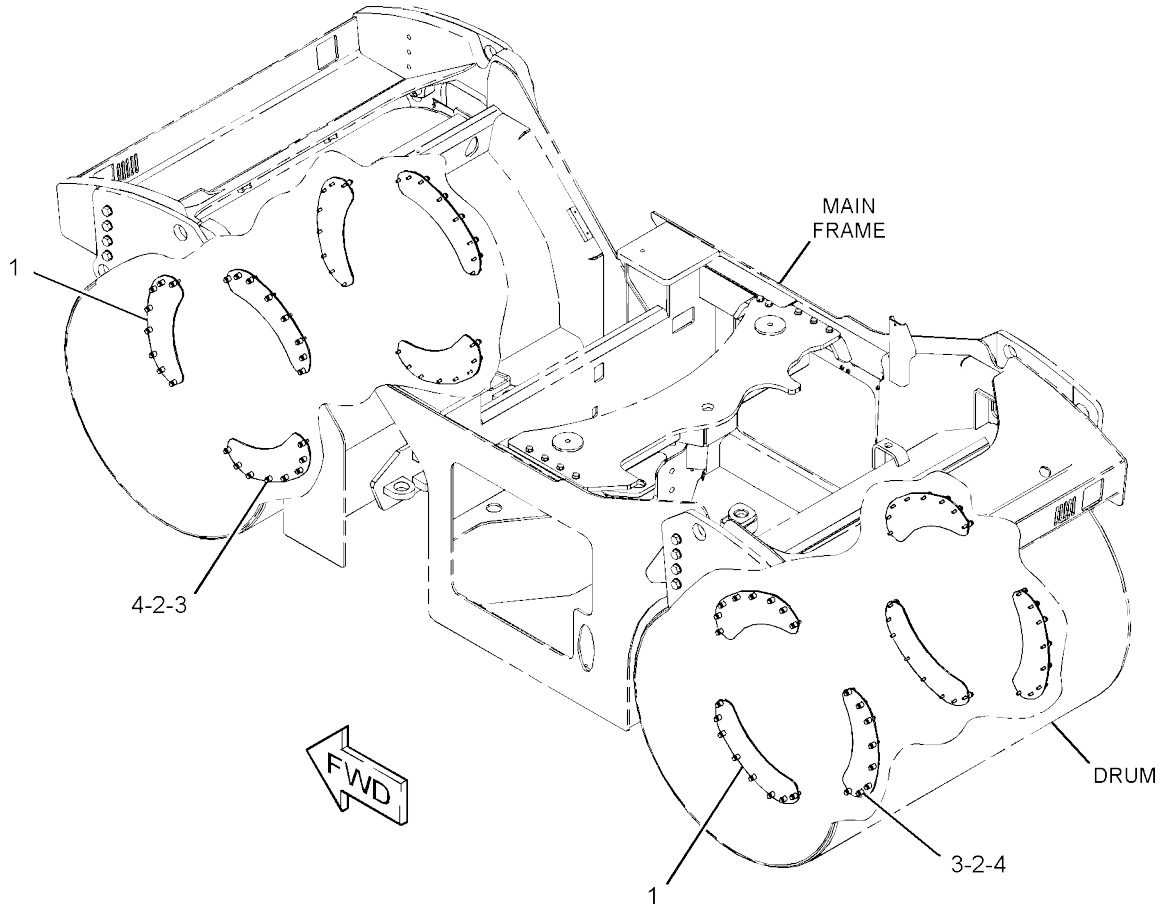

GRAPHIC #1 <END> g03428070

341-8800 HITCH AR

S/N: 5B41-UP; G441-UP AN ATTACHMENT

SMCS-7100

i07399933

NOTE	PART NUMBER	QTY	PART NAME 1 2 3 4 5 6 (PRODUCT LEVEL)	SEE PAGE
Y	*343-6171*	1	HITCH GP-ARTICULATING	254
Y	*343-6834*	1	VALVE & MTG GP-STEERING	278

Y - SEPARATE ILLUSTRATION

<END>

341-8801 HITCH AR-OFFSET

S/N: 5B41-UP; G441-UP AN ATTACHMENT

SMCS-7100

i07399983

NOTE	PART NUMBER	QTY	PART NAME 1 2 3 4 5 6 (PRODUCT LEVEL)	SEE PAGE
Y	*350-2770*	1	CYLINDER & MTG GP-OFFSET	286
Y	*351-3406*	1	HITCH GP-ARTICULATING	256
Y	*351-3408*	1	LINES GP-STEERING	275
Y	*351-3409*	1	SENSOR & MOUNTING GP	181
Y	*357-4659*	1	VALVE & MTG GP-STEERING	280

Y - SEPARATE ILLUSTRATION

<END>

343-6171 HITCH GP-ARTICULATING

S/N: 5B41-UP; G441-UP
PART OF 341-8800 HITCH
AR AN ATTACHMENT

SMCS-7057, 7100

i07415829

	REF SEE NOTE QTY	GRAPHIC NO 1 2 3 4 5 6	(PRODUCT LEVEL)	REF PAGE	PART NAME PART NUMBER
	1	1	**5P-7957**	1	LANYARD
	2	1	**5P-7958**	1	SLEEVE-CABLE SPLICE
	3	1	**232-4810**	2	PIN
	4	1	**357-7435**	1	SEAL-LIP TYPE
	5	1	**357-7436**	1	SEAL-LIP TYPE
	6	1	**358-6705**	2	PIN AS
B	7	1	**361-1901**	2	SHIM (1-MM THK)
B		1	**363-9167**	2	SHIM (0.5-MM THK)
B		1	**363-9168**	2	SHIM (0.2-MM THK)
	8	1	**361-1902**	2	BEARING
	9	1	**361-1903**	1	PLATE
	10	1	**361-1904**	1	PLATE
	11	1	**361-1905**	1	BEARING
	12	1	**361-1906**	1	BEARING
	13	1	**394-6569**	3	RING
	14	1	**362-6528**	4	SEAL-LIP TYPE
	15	1	**363-0782**	1	LINK AS-UPPER
	18	1	**420-4624**	1	LINK AS
	19	1	**364-3602**	1	PIN
	20	1	**364-3603**	1	PIN AS
	21	1	**367-9342**	1	PLATE-LOCK
	22	1	**373-2452**	1	PIN
	23	1	**373-2537**	1	PIN
	25	1	**376-0028**	1	HITCH
	26	1	**423-7972**	1	MOUNT (HITCH)
	27	1	**384-0738**	1	PLATE-WEAR
	28	1	**384-0739**	1	PLATE-WEAR
	29	1	**126-8928**	8	WASHER-HARD (26X40X8-MM THK)
	30	1	**1J-6472**	4	RING-RETAINING
	31	1	**5P-1076**	12	WASHER-HARD (13.5X30X4-MM THK)
	32	1	**7X-0632**	2	WASHER-HARD (11X36X6-MM THK)
M	33	1	**7X-2576**	8	BOLT (M24X3X70-MM)
	34	1	**8T-4121**	9	WASHER-HARD (11X21X2.5-MM THK)
M	35	1	**8T-4139**	28	BOLT (M12X1.75X30-MM)
	36	1	**8T-4167**	8	WASHER-HARD (26X44X4-MM THK)
M	37	1	**8T-4171**	1	BOLT (M6X1X12-MM)
M	38	1	**8T-4175**	1	BOLT (M16X2X90-MM)
M	39	1	**8T-4196**	9	BOLT (M10X1.5X35-MM)
M	40	1	**112-3928**	8	BOLT (M24X3X130-MM)
M	41	1	**8T-7338**	18	BOLT (M16X2X45-MM)
	42	1	**9X-8256**	1	WASHER (6.6X12X2-MM THK)
	43	1	**9X-8257**	19	WASHER (17.5X30X3.5-MM THK)
	44	1	**423-9865**	1	STOP (OSCILLATION)
	45	1	**390-5009**	1	STOP (OSCILLATION)
	46	1	**8T-4223**	16	WASHER-HARD (13.5X25.5X3-MM THK)
	47	1	**518-7893**	2	SPACER

343-6171 **HITCH GP-ARTICULATING** (contd.) **i07415829**

REF SEE NOTE QTY	GRAPHIC NO 1 2 3 4 5 6 (PRODUCT LEVEL)	REF PAGE	PART NAME PART NUMBER

B - USE AS REQUIRED M - METRIC PART

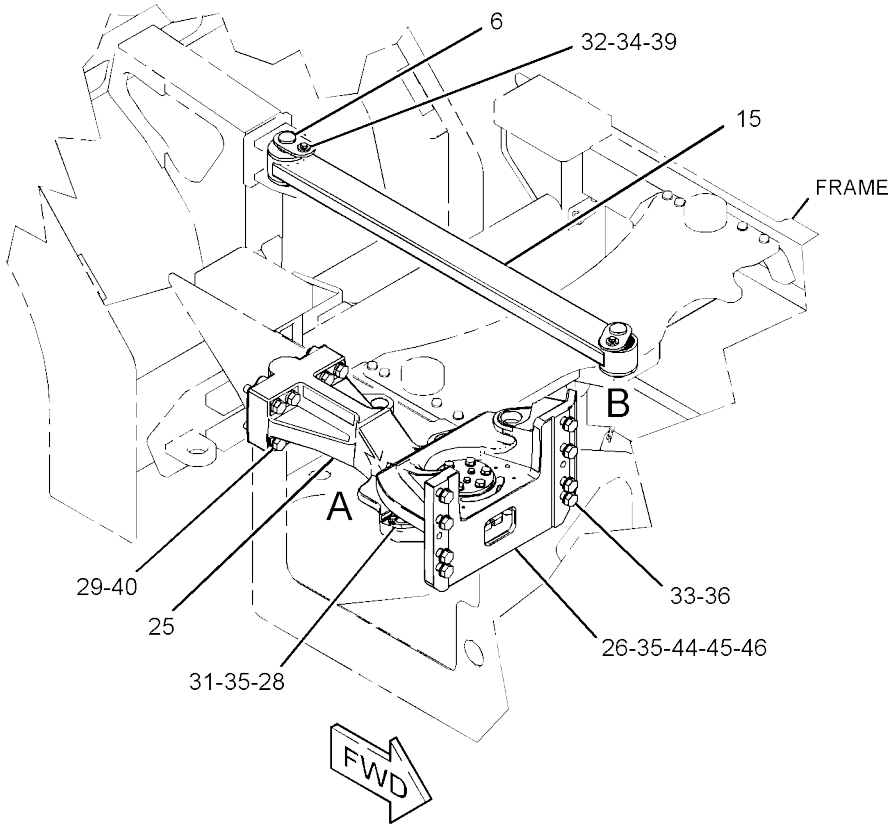

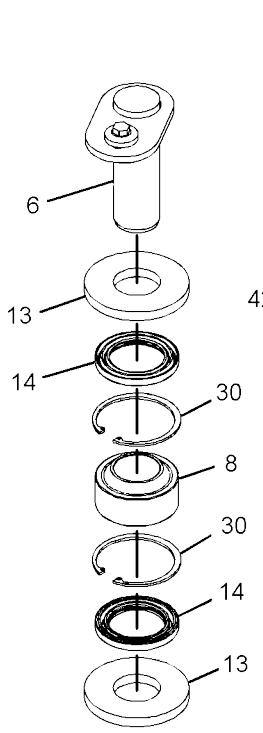

VIEW OF AREA B
(PARTS REMOVED FOR CLARITY)

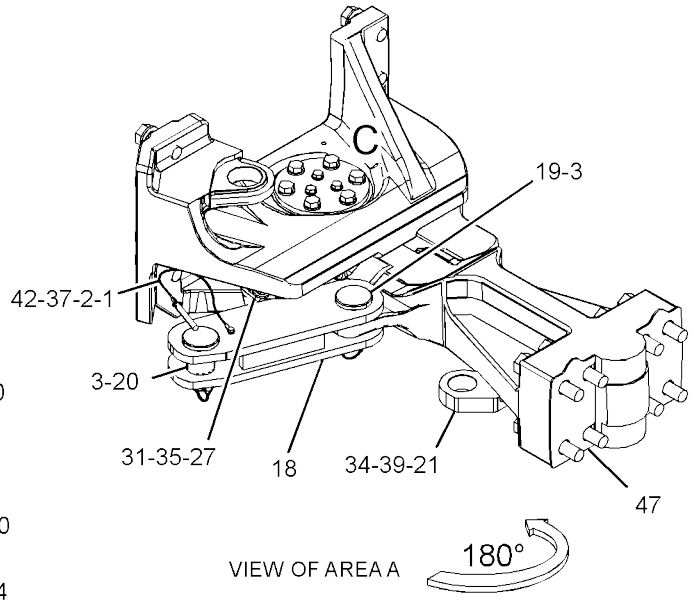

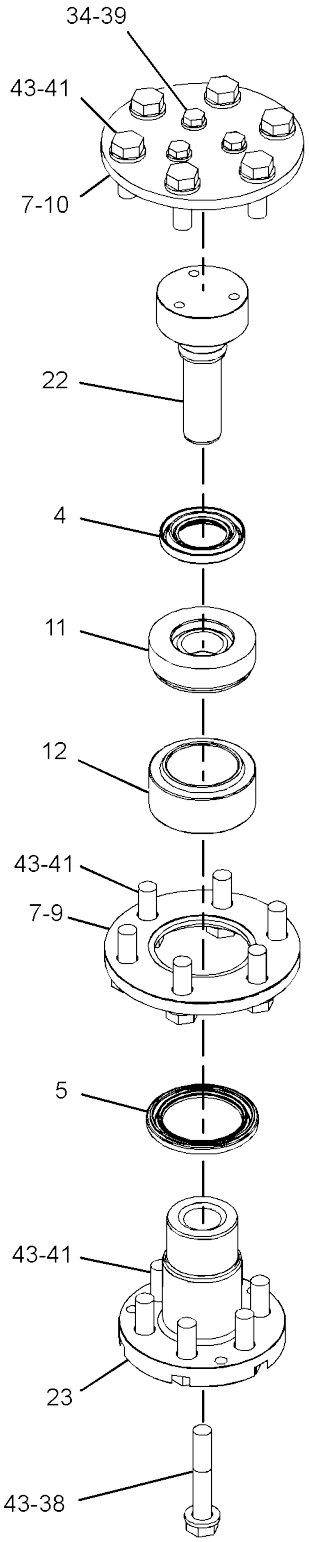

VIEW OF AREA C
(PARTS REMOVED FOR CLARITY)

GRAPHIC #1 <END> g06313926

351-3406 HITCH GP-ARTICULATING

S/N: 5B41-UP; G441-UP
PART OF 341-8801 HITCH
AR AN ATTACHMENT

SMCS-7057, 7100

i07748164

REF	SEE NOTE	QTY	GRAPHIC NO 1 2 3 4 5 6	(PRODUCT LEVEL)	REF PAGE	PART NAME PART NUMBER
		1	2	**3K-6454**	2	SEAL-LIP TYPE
		2	1	**5P-7957**	1	LANYARD
		3	1	**5P-7958**	1	SLEEVE-CABLE SPLICE
		4	2	**6H-3568**	2	CUP-BEARING
		5	2	**6I-8849**	2	CONE-BEARING (TAPERED ROLLER)
		6	2	**7X-0588**	12	WASHER-HARD (17X27X3.5-MM THK)
		7	2	**8S-6959**	1	SEAL-LIP TYPE
		8	2	**527-3093**	1	SLEEVE
		9	1	**193-6984**	2	PLATE
		10	1	**232-4810**	2	PIN
		11	2	**305-5624**	1	SHAFT-SENSOR
		12	2	**306-7623**	1	SHAFT
		13	2	**527-3094**	1	SLEEVE
		14	2	**344-7521**	1	ADAPTER
		15	2	**357-7435**	1	SEAL-LIP TYPE
		16	2	**357-7436**	1	SEAL-LIP TYPE
		17	1	**358-6705**	2	PIN AS
	B	18	2	**361-1901**	2	SHIM (1-MM THK)
		19	1	**525-5773**	2	BEARING
		20	2	**361-1903**	1	PLATE
		21	2	**361-1904**	1	PLATE
		22	2	**361-1905**	1	BEARING
		23	2	**361-1906**	1	BEARING
		24	1	**394-6569**	3	RING
		25	1	**362-6528**	4	SEAL-LIP TYPE
		26	1	**363-0782**	1	LINK AS-UPPER
	B	27	2	**363-9167**	2	SHIM (0.5-MM THK)
	B		2	**363-9168**	2	SHIM (0.2-MM THK)
		29	1	**420-4624**	1	LINK AS
		30	1	**364-3602**	1	PIN
		31	1	**364-3603**	1	PIN AS
		32	1	**364-3605**	1	BRACKET AS
	B	33	2	**365-0066**	1	SHIM (1-MM THK)
	B		2	**365-0067**	1	SHIM (0.3-MM THK)
		35	2	**373-2452**	1	PIN
		36	2	**373-2537**	1	PIN
		38	1	**376-0029**	1	HITCH
		39	1	**423-7972**	1	MOUNT (HITCH)
		40	1	**384-0738**	1	PLATE-WEAR
		41	1	**384-0739**	1	PLATE-WEAR
		42	1	**1J-6472**	4	RING-RETAINING
		43	2	**2P-1279**	1	LOCKNUT (9/16-18-THD)
	M	44	2	**5C-9553**	4	BOLT (M6X1X16-MM)
		45	1	**5P-1076**	12	WASHER-HARD (13.5X30X4-MM THK)
		46	1	**7X-0632**	2	WASHER-HARD (11X36X6-MM THK)
	M	47	1	**7X-2576**	8	BOLT (M24X3X70-MM)

351-3406 **HITCH GP-ARTICULATING** (contd.) **i07748164**

	REF SEE NOTE QTY	GRAPHIC NO 1 2 3 4 5 6	(PRODUCT LEVEL)	REF PAGE	PART NAME PART NUMBER
	48	1	**7X-7729**	4	WASHER (11X25X3-MM THK)
M	49	2	**8T-2393**	12	BOLT-SOCKET HEAD (M16X2X60-MM)
M	50	2	**101-7402**	6	BOLT-SOCKET HEAD (M12X1.75X30-MM)
	51	1,2	**8T-4121**	5	WASHER-HARD (11X21X2.5-MM THK)
M	52	1	**8T-4139**	28	BOLT (M12X1.75X30-MM)
	53	1	**8T-4167**	16	WASHER-HARD (26X44X4-MM THK)
M	54	1	**8T-4171**	1	BOLT (M6X1X12-MM)
M	55	2	**8T-4175**	1	BOLT (M16X2X90-MM)
M	56	1,2	**8T-4196**	9	BOLT (M10X1.5X35-MM)
M	57	1	**112-3930**	8	BOLT (M24X3X140-MM)
M	58	2	**8T-7338**	18	BOLT (M16X2X45-MM)
	59	2	**9F-2247**	2	PLUG-PIPE (1/8-27-THD)
	60	2	**9X-7549**	1	SEAL-O-RING
	61	1,2	**9X-8256**	5	WASHER (6.6X12X2-MM THK)
	62	2	**9X-8257**	19	WASHER (17.5X30X3.5-MM THK)
	63	1	**8T-4223**	16	WASHER-HARD (13.5X25.5X3-MM THK)
	64	1	**390-5009**	1	STOP (OSCILLATION)
	65	1	**423-9865**	1	STOP (OSCILLATION)

B - USE AS REQUIRED M - METRIC PART

351-3406 **HITCH GP-ARTICULATING (**contd.**)** **i07748164**

REFER TO ALL ILLUSTRATIONS OF
THIS GROUP FOR AUXILIARY VIEWS

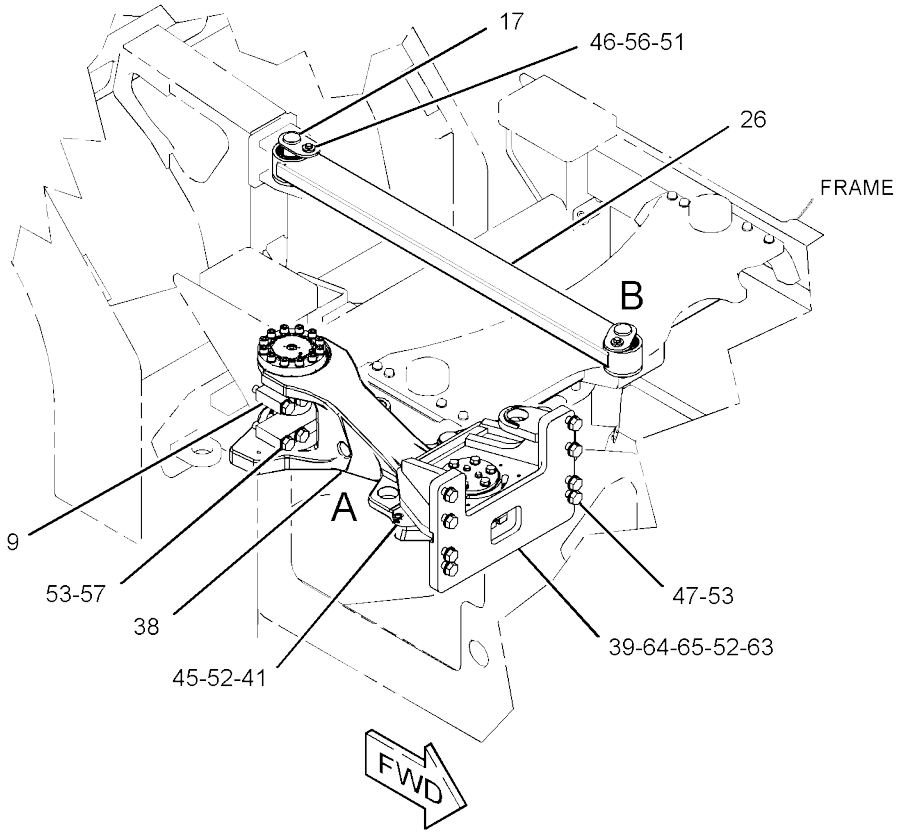

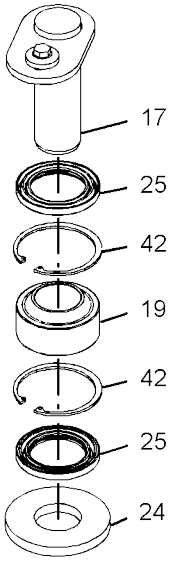

VIEW OF AREA B
(EXPLODED)
(PARTS REMOVED FOR CLARITY)

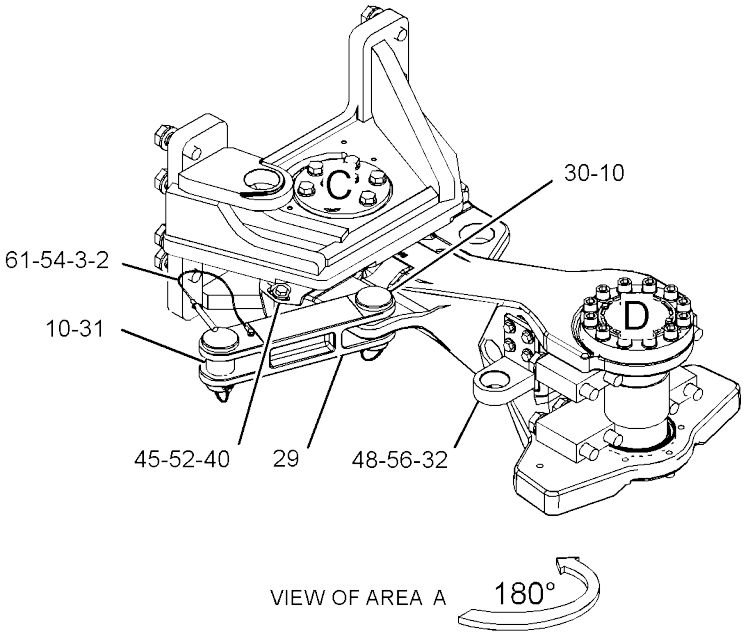

GRAPHIC #1 g03345454

351-3406 **HITCH GP-ARTICULATING (**contd.**)** **i07748164**

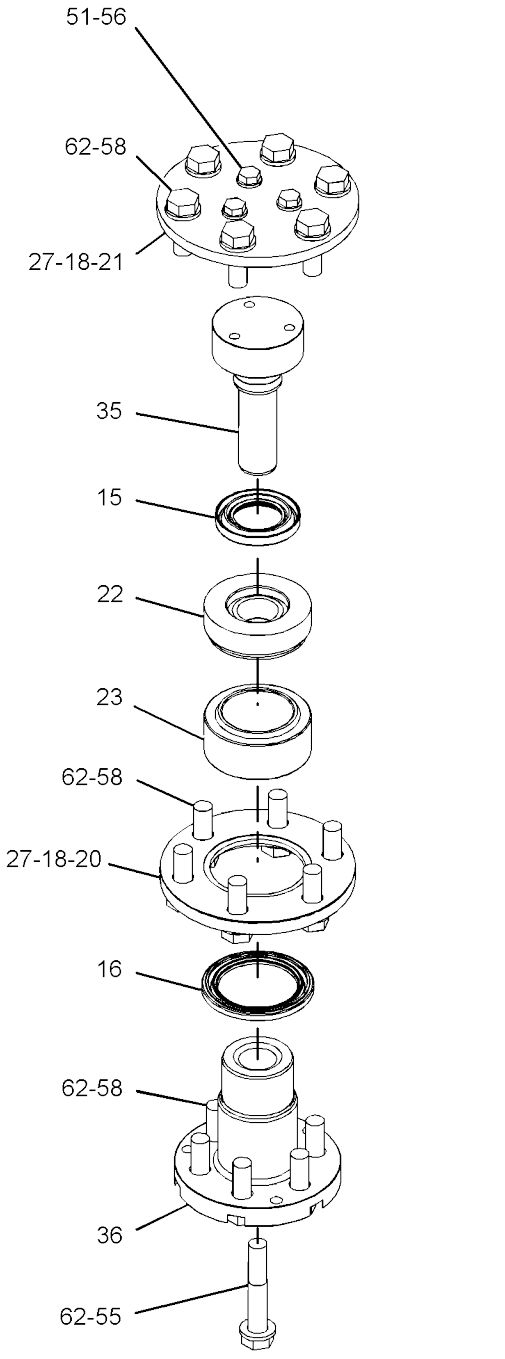

VIEW OF AREA C
(EXPLODED AND PARTS REMOVED FOR CLARITY)

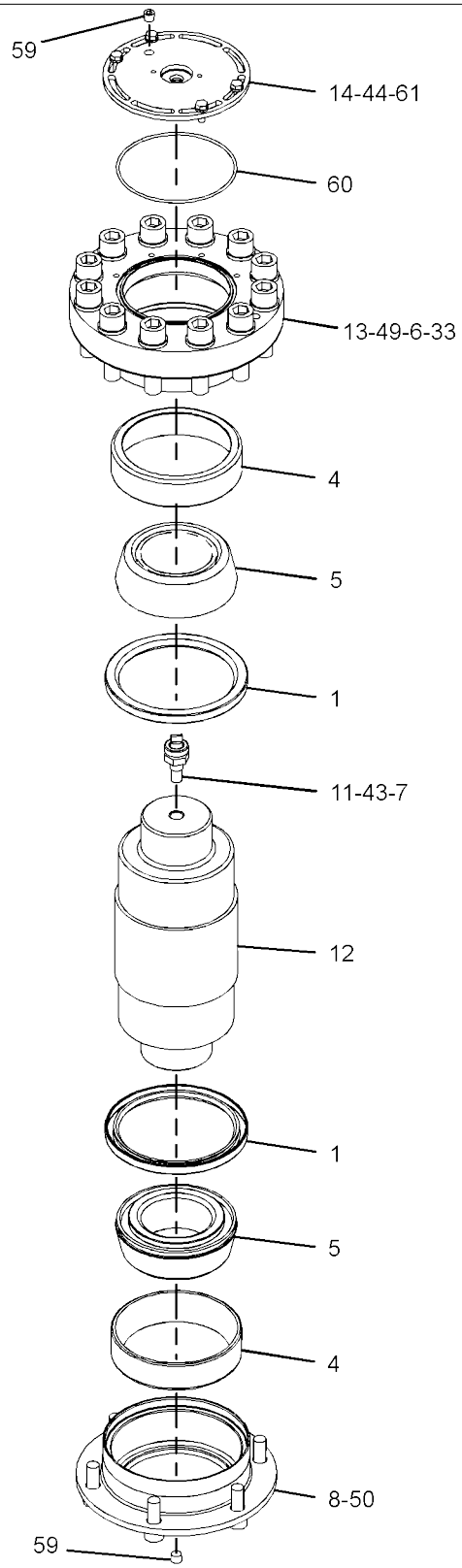

VIEW OF AREA D
(EXPLODED AND PARTS REMOVED FOR CLARITY)

GRAPHIC #2 <END> g06423646

510-4014 SCRAPER GP-DRUM

S/N: 5B41-UP

PART OF 510-0765 SPRAY AR-WATER

SMCS-6607

i07694198

	REF SEE NOTE QTY	GRAPHIC NO 1 2 3 4 5 6	(PRODUCT LEVEL)	REF PAGE	PART NAME PART NUMBER
	1	1	**8C-3392**	8	ROD END
M	2	1	**329-3356**	4	NUT (M12X1.75-THD)
	3	1	**299-2074**	4	SCRAPER
	4	1	**299-2077**	4	PLATE AS
					(EACH INCLUDES)
M		1	**8T-3490**	6	NUT-WELD (M10X1.5-THD)
M	5	1	**8T-4139**	4	BOLT (M12X1.75X30-MM)
	6	1	**565-0875**	4	BRACKET
	7	1	**565-0886**	2	SUPPORT AS
	8	1	**363-4075**	2	SUPPORT
	9	1	**419-9829**	8	SPRING
	10	1	**441-4492**	4	HOOK
	11	1	**508-4247**	4	BRACKET AS
M	12	1	**099-0492**	4	LOCKNUT (M6X1-THD)
M	13	1	**178-3336**	8	NUT-HEX FLANGE (M8X1.25-THD)
M	14	1	**342-9922**	8	BOLT-FLANGE HEAD (M8X1.25X25-MM)
	15	1	**5P-1076**	4	WASHER-HARD (13.5X30X4-MM THK)
	16	1	**8T-4223**	32	WASHER-HARD (13.5X25.5X3-MM THK)
M	17	1	**6V-7687**	4	LOCKNUT (M12X1.75-THD)
	18	1	**9X-8256**	8	WASHER (6.6X12X2-MM THK)
	19	1	**7X-7729**	24	WASHER (11X25X3-MM THK)
M	20	1	**8T-4138**	4	BOLT (M6X1X20-MM)
M	22	1	**8T-4192**	8	BOLT (M12X1.75X25-MM)
M	23	1	**8T-4194**	8	BOLT (M12X1.75X50-MM)
M	24	1	**8T-4196**	24	BOLT (M10X1.5X35-MM)

M - METRIC PART

510-4014 **SCRAPER GP-DRUM** (contd.) **i07694198**

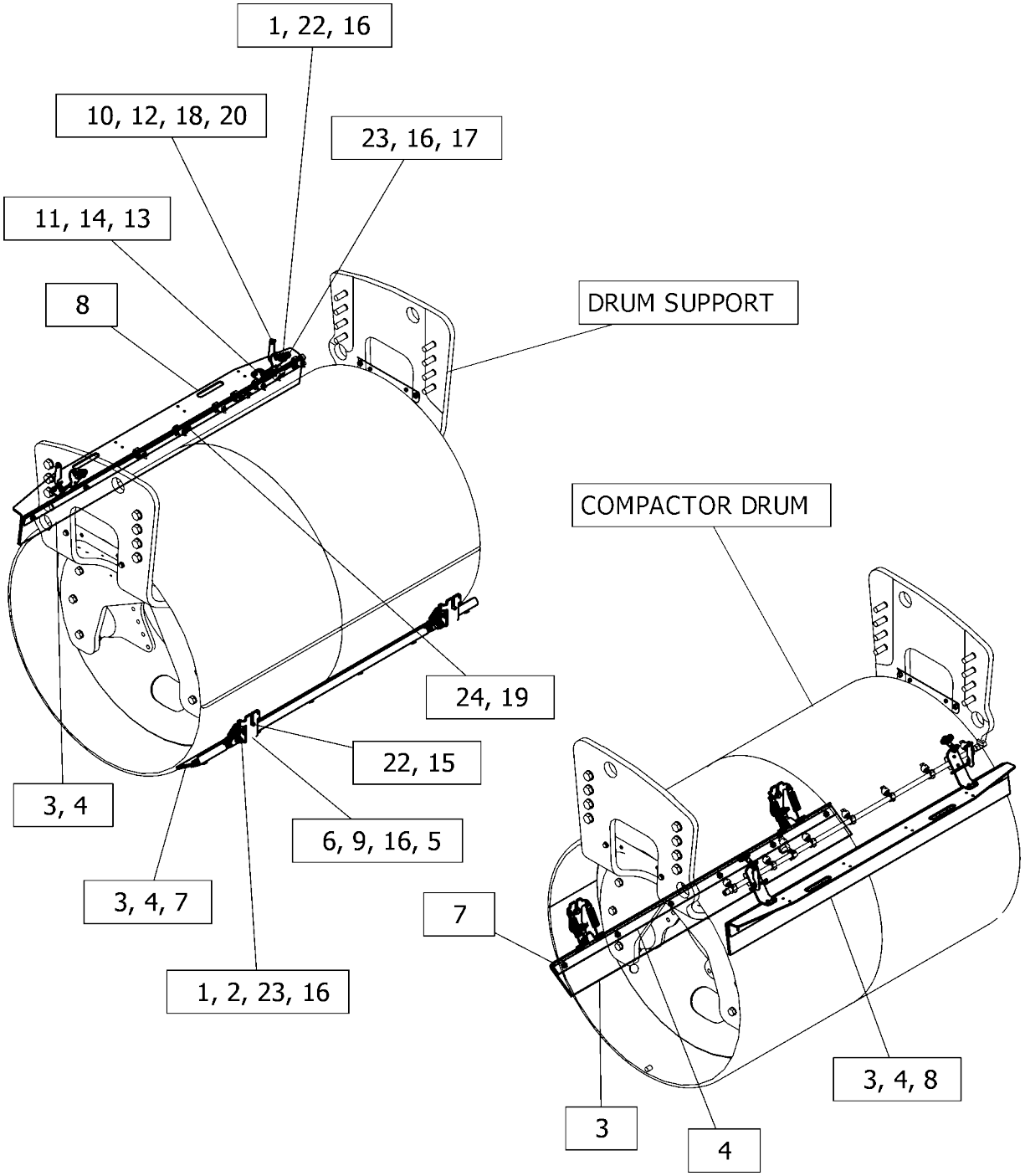

GRAPHIC #1 <END> g06423801

510-4016 SCRAPER GP-DRUM

S/N: G441-UP

PART OF 510-0767 SPRAY AR-WATER

SMCS-6607

i07399899

	REF SEE NOTE QTY	GRAPHIC NO 1 2 3 4 5 6	(PRODUCT LEVEL)	REF PAGE	PART NAME PART NUMBER
	1	1	**8C-3392**	4	ROD END
	2	1	**107-4746**	8	CLAMP
	3	1	**299-2081**	4	PLATE-STOP
	4	1	**341-0832**	4	BRACKET AS
	5	1	**363-5795**	4	SCRAPER
	6	1	**363-5809**	4	PLATE AS
	7	1	**363-5846**	2	SUPPORT-SCRAPER
	8	1	**363-9046**	2	SUPPORT AS
					(EACH INCLUDES)
		1	**178-8507**	2	PLATE-WELD
	9	1	**419-9829**	8	SPRING
	10	1	**441-4492**	4	HOOK
	11	1	**508-4247**	4	BRACKET AS
M	12	1	**099-0492**	4	LOCKNUT (M6X1-THD)
M	13	1	**342-9922**	8	BOLT-FLANGE HEAD (M8X1.25X25-MM)
M	14	1	**178-3336**	8	NUT-HEX FLANGE (M8X1.25-THD)
	15	1	**5P-1076**	4	WASHER-HARD (13.5X30X4-MM THK)
	16	1	**5P-4115**	8	WASHER-HARD (7.2X19X2-MM THK)
M	17	1	**6V-7687**	4	LOCKNUT (M12X1.75-THD)
M	18	1	**7X-2533**	8	BOLT (M6X1X35-MM)
	19	1	**7X-7729**	20	WASHER (11X25X3-MM THK)
M	20	1	**8T-4138**	4	BOLT (M6X1X20-MM)
M	21	1	**8T-4192**	8	BOLT (M12X1.75X25-MM)
M	22	1	**8T-4194**	4	BOLT (M12X1.75X50-MM)
M	23	1	**8T-4196**	20	BOLT (M10X1.5X35-MM)
	24	1	**8T-4223**	16	WASHER-HARD (13.5X25.5X3-MM THK)
	25	1	**9X-8256**	8	WASHER (6.6X12X2-MM THK)

M - METRIC PART

510-4016 **SCRAPER GP-DRUM** (contd.) **i07399899**

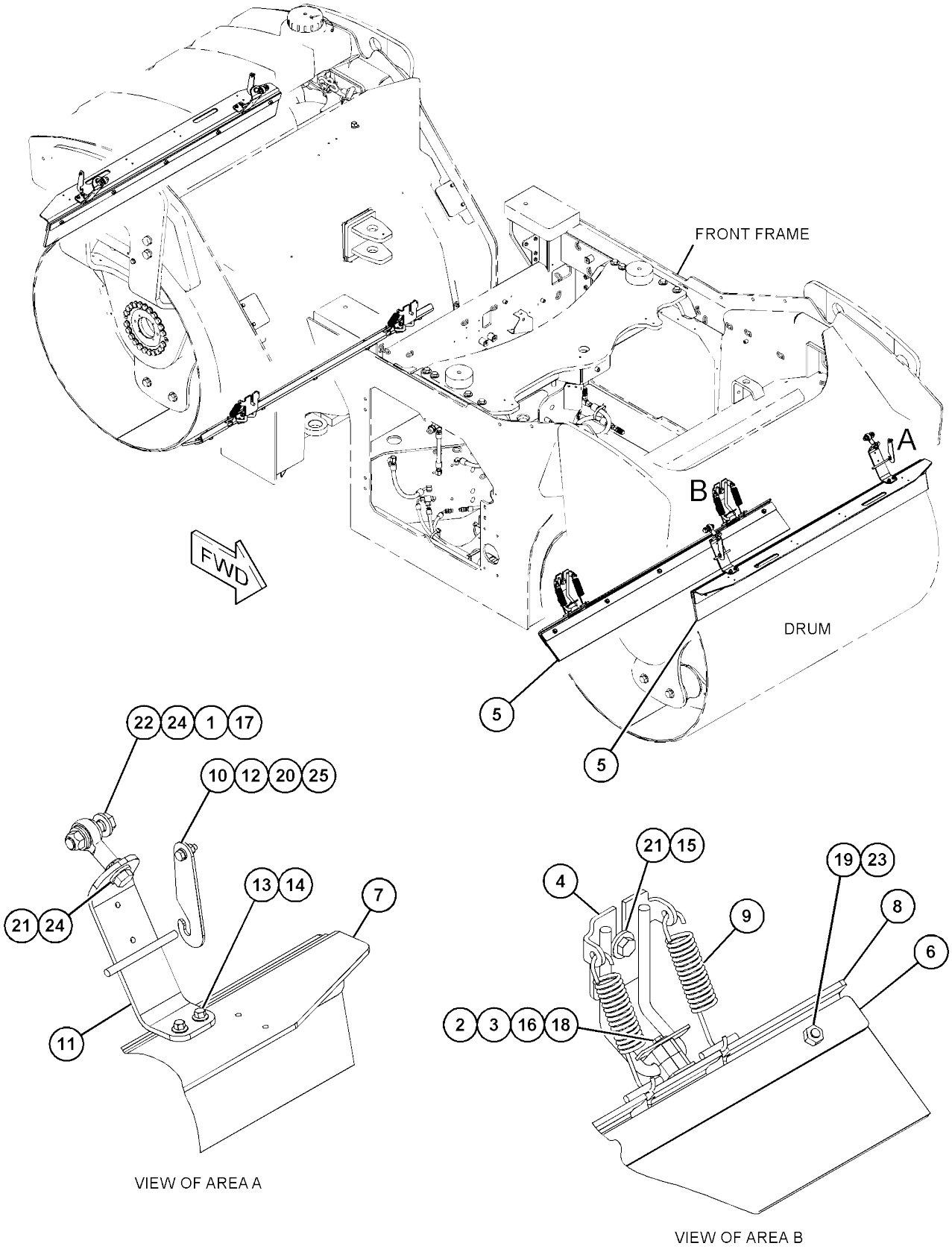

GRAPHIC #1 <END> g06173462

513-4771 STEP GP

S/N: 5B41-UP; G441-UP AN ATTACHMENT

SMCS-7254

i07416466

	REF SEE NOTE QTY	GRAPHIC NO 1 2 3 4 5 6	(PRODUCT LEVEL)	REF PAGE	PART NAME PART NUMBER
	1	1	**9R-8537**	2	SOCKET-LATCH
	2	1	**9R-8538**	2	PLUNGER (LATCH)
	3	1	**424-6727**	2	HANDLE
	4	1	**543-3032**	2	SPACER (6.6X30X16-MM THK)
	5	1	**552-7388**	1	SUPPORT AS
	6	1	**552-7386**	2	STEP AS
					(EACH INCLUDES)
M		1	**6V-9632**	1	NUT-WELD (M6X1-THD)
		1	**454-7795**	1	STEP
	7	1	**552-7387**	1	SUPPORT AS
M	8	1	**6V-7687**	4	LOCKNUT (M12X1.75-THD)
M	9	1	**7X-2549**	4	BOLT (M12X1.75X100-MM)
	10	1	**8T-4123**	4	WASHER (22X35X3.5-MM THK)
	11	1	**8T-4223**	10	WASHER-HARD (13.5X25.5X3-MM THK)
M	12	1	**8T-5460**	4	BOLT (M20X2.5X40-MM)
M	13	1	**8T-8442**	4	BOLT-SOCKET HEAD (M6X1X30-MM)
M	14	1	**9X-2041**	4	SCREW-TRUSS HEAD (M10X1.5X20-MM)

M - METRIC PART

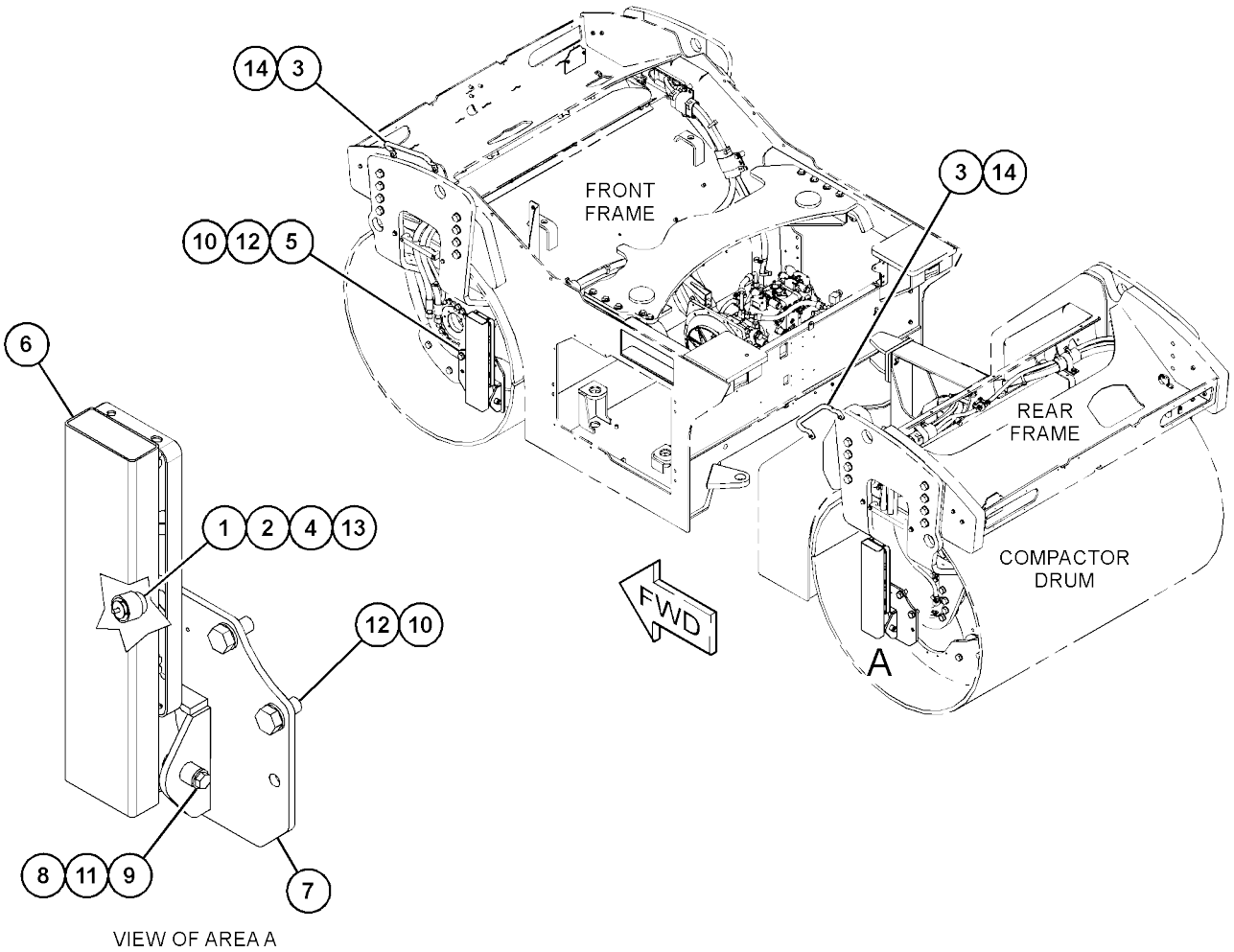

VIEW OF AREA A

GRAPHIC #1

<END>

g06307688

510-3955 SUPPRESSION GP-SOUND

S/N: G441-UP
PART OF 451-3120 CHASSIS AR

SMCS-1801, 7076, 7261

i07398871

REF SEE NOTE QTY	GRAPHIC NO 1 2 3 4 5 6 (PRODUCT LEVEL)	REF PAGE	PART NAME PART NUMBER
1	1 **364-8099**	1	INSULATION-SOUND SUPPRESSION
2	1 **364-8101**	1	INSULATION
3	1 **364-8467**	1	INSULATION-SOUND SUPPRESSION
4	1 **518-4191**	1	INSULATION-SOUND SUPPRESSION
5	1 **518-4192**	2	INSULATION-SOUND SUPPRESSION

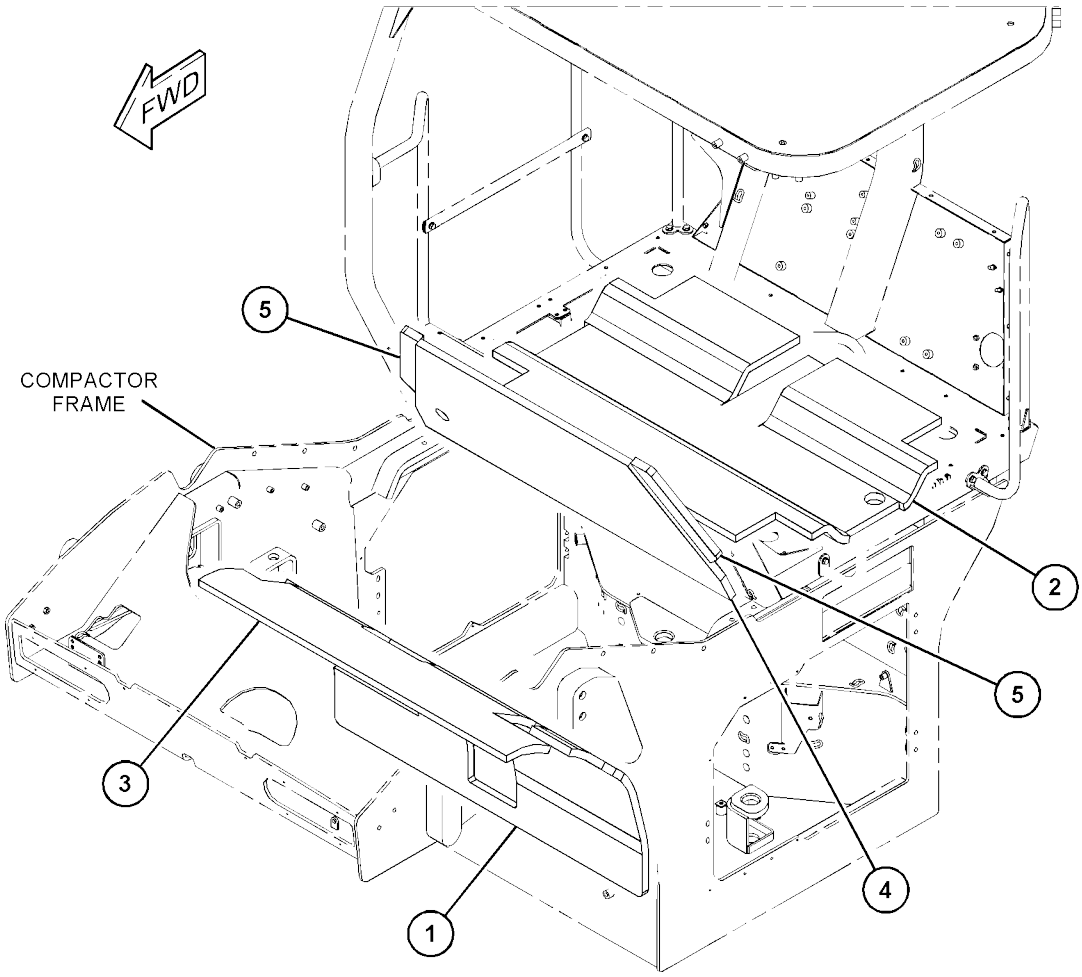

GRAPHIC #1 <END> g06147468

461-2690 KIT-BRAKE RELEASE-SOLID DRUM

S/N: 5B41-UP
PART OF 386-7544 HYDRAULIC
AR AN ATTACHMENT

SMCS-4267

i07418298

	REF SEE NOTE QTY	GRAPHIC NO 1 2 3 4 5 6	(PRODUCT LEVEL)	REF PAGE	PART NAME PART NUMBER
	1	1	**389-3996**	2	PLATE
M	2	1	**180-5932**	2	BOLT (M20X2.5X80-MM)
M	3	1	**344-5675**	2	NUT (M10X1.5-THD)
	4	1	**8T-4121**	4	WASHER-HARD (11X21X2.5-MM THK)
	5	1	**8T-4123**	2	WASHER (22X35X3.5-MM THK)
M	6	1	**8T-4131**	2	NUT (M20X2.5-THD)
M	7	1	**8T-5005**	2	BOLT (M10X1.5X70-MM)

M - METRIC PART

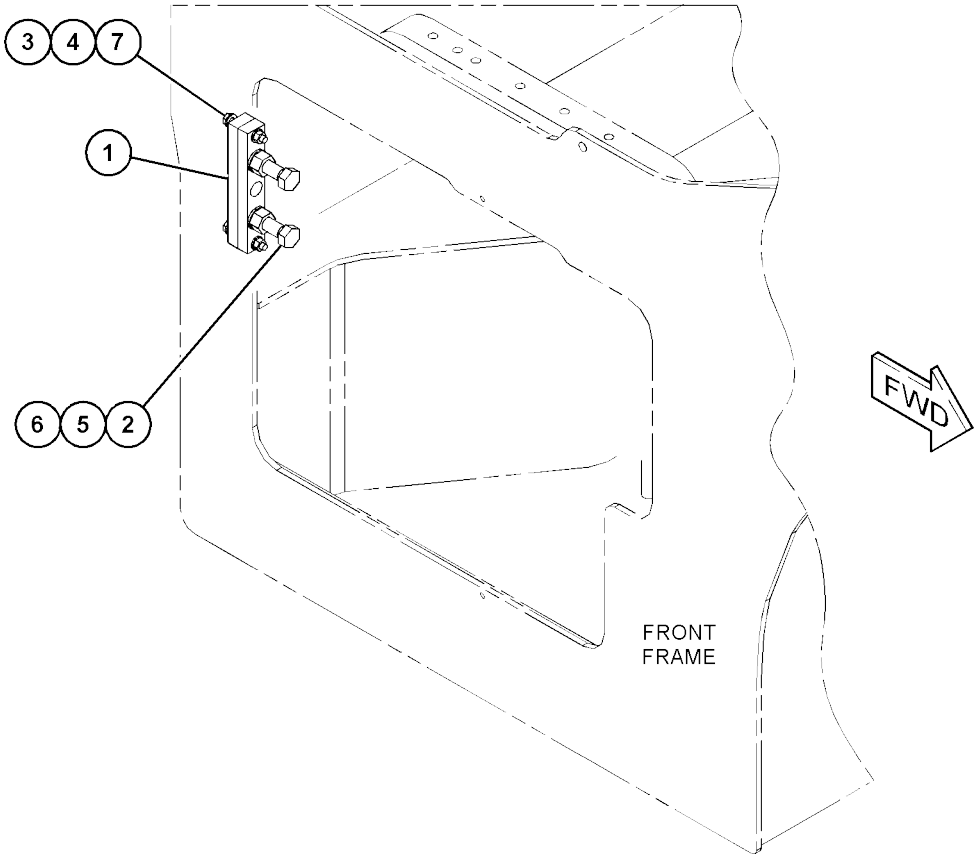

GRAPHIC #1 <END> g03728461

461-2688 LINES GP-BRAKE-SOLID DRUM

S/N: G441-UP
PART OF 381-1897 HYDRAULIC
AR AN ATTACHMENT

SMCS-4257

i07416635

	REF SEE NOTE QTY	GRAPHIC NO 1 2 3 4 5 6	(PRODUCT LEVEL)	REF PAGE	PART NAME PART NUMBER
	1	1	**142-2763**	2	COUPLER AS-QUICK CONNECT
	2	1	**204-2281**	2	STRAP-CABLE
I	3	1	**297-1225**	1	HOSE AS
	4	1	*148-8326*	1	CONNECTOR AS
		1	**3J-7354**	1	SEAL-O-RING
		1	**6V-8397**	1	SEAL-O-RING
		1	**6V-9872**	1	CONNECTOR
	5	1	*148-8361*	1	ELBOW AS (90-DEG)
		1	**3J-7354**	1	SEAL-O-RING
		1	**6V-8397**	1	SEAL-O-RING
		1	**6V-9200**	1	ELBOW

I - REFER TO HYDRAULIC INFORMATION SYSTEM

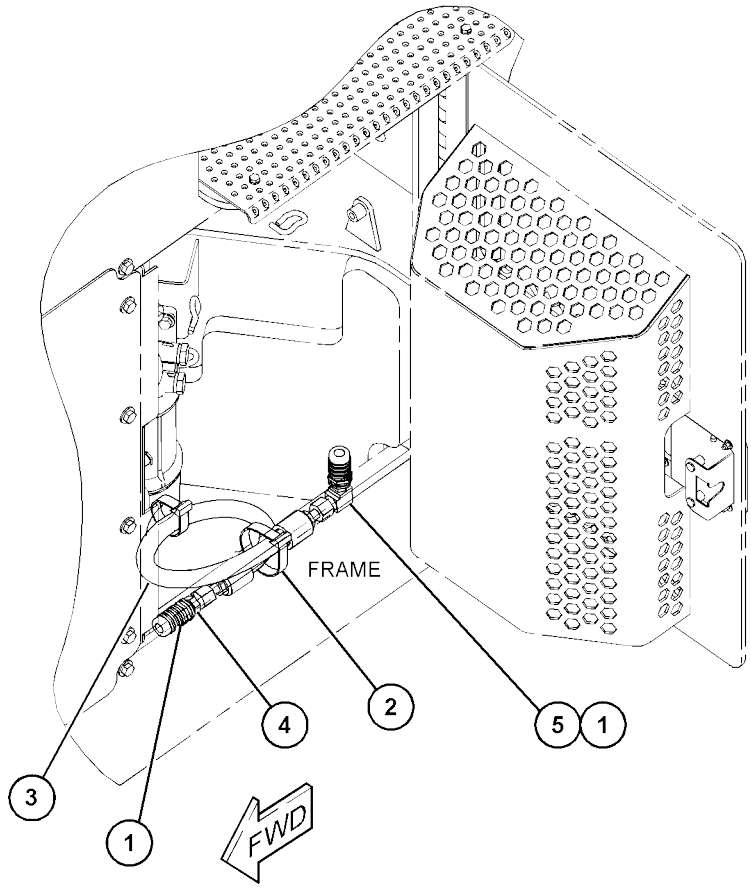

GRAPHIC #1 <END> g03728920

386-9551 LINES GP-BRAKE & SHIFT

S/N: G441-UP
PART OF 381-1897 HYDRAULIC
AR AN ATTACHMENT

SMCS-4257

i07416633

	REF SEE NOTE	QTY	GRAPHIC NO 1 2 3 4 5 6	(PRODUCT LEVEL)	REF PAGE	PART NAME PART NUMBER
		1	1	**115-8645**	1	GUARD
		2	1	**124-1008**	1	GUARD
	I	3	1	**373-9829**	1	HOSE AS
	I	4	1	**379-8454**	1	HOSE AS
	I	5	1	**391-0772**	1	HOSE AS
	I	6	1	**394-7079**	1	HOSE AS
	I	7	1	**394-7080**	1	HOSE AS
		8	1	*148-8435*	1	TEE AS
				3J-1907	1	SEAL-O-RING
				6V-8397	2	SEAL-O-RING
				6V-8781	1	TEE
		9	1	**177-2215**	6	STRAP-DUAL CLAMP
		10	1	**200-6345**	1	SADDLE-MOUNTING (DUAL SWIVEL)
		11	1	**204-2281**	9	STRAP-CABLE
		12	1	**269-4949**	2	ADAPTER
		13	1	**2V-6350**	1	CLIP (TAB)
		14	1	**2V-6352**	1	CLIP (SLOT)
		15	1	**356-9301**	1	SPACER (13.8X30X60-MM THK)
		16	1	**6V-4356**	1	CLIP (SLOT)
		17	1	**6V-4357**	1	CLIP (TAB)
		18	1	**8T-4121**	2	WASHER-HARD (11X21X2.5-MM THK)
	M	19	1	**8T-4178**	1	BOLT (M10X1.5X90-MM)
	M	20	1	**8T-4196**	1	BOLT (M10X1.5X35-MM)

I - REFER TO HYDRAULIC INFORMATION SYSTEM M - METRIC PART

386-9551 **LINES GP-BRAKE & SHIFT** (contd.) **i07416633**

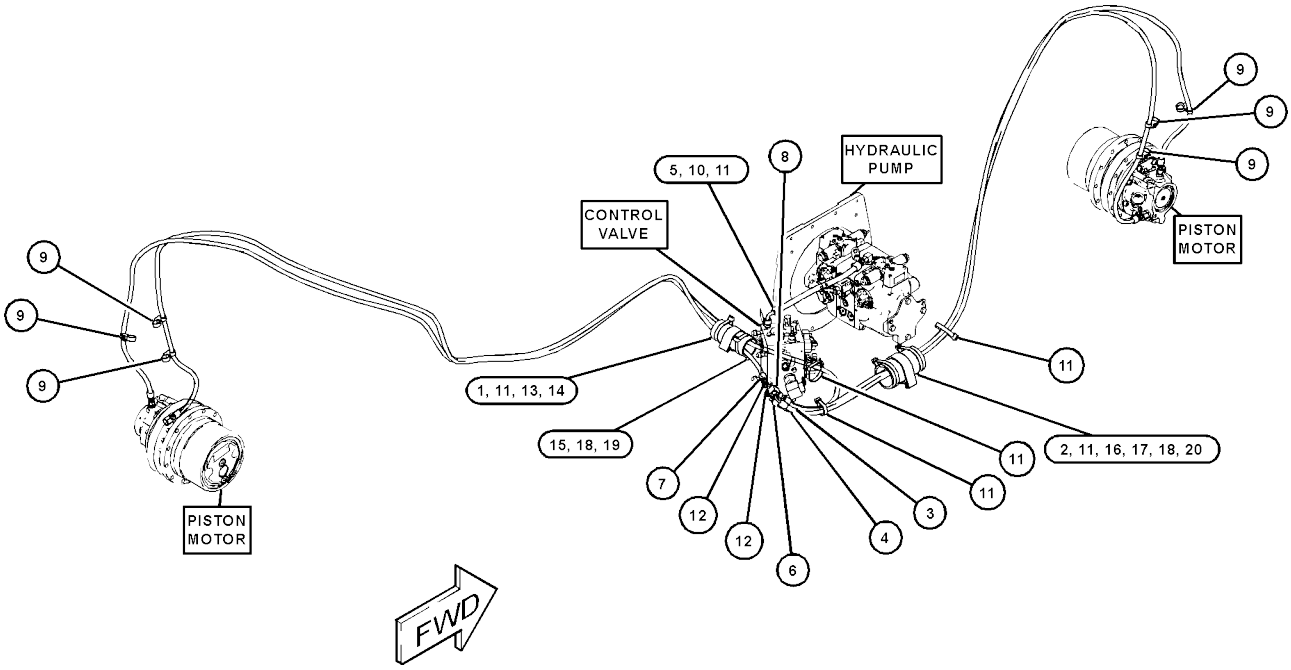

GRAPHIC #1 <END> g03348233

458-9401 LINES GP-BRAKE & SHIFT

S/N: 5B41-UP
PART OF 386-7544 HYDRAULIC
AR AN ATTACHMENT

SMCS-4257

i07418294

	REF SEE NOTE	QTY	GRAPHIC NO 1 2 3 4 5 6	(PRODUCT LEVEL)	REF PAGE	PART NAME PART NUMBER
		1	1	**115-8645**	1	GUARD
		2	1	**177-2215**	4	STRAP-DUAL CLAMP
	I	3	1	**341-3057**	1	HOSE AS
	I	4	1	**364-1422**	1	HOSE AS
	I	5	1	**364-1586**	1	HOSE AS
	I	6	1	**364-1645**	1	HOSE AS
	I	7	1	**385-7696**	1	HOSE AS
	I	8	1	**454-8475**	1	HOSE AS
		9	1	**178-3620**	2	STRAP-DUAL CLAMP
		10	1	**200-6345**	2	SADDLE-MOUNTING (DUAL SWIVEL)
		11	1	**204-2281**	6	STRAP-CABLE
		12	1	**204-8000**	1	MOUNTING-CABLE TIE
		13	1	**292-7635**	1	BOSS
		14	1	**2V-6350**	1	CLIP (TAB)
		15	1	**2V-6352**	1	CLIP (SLOT)
		16	1	**8T-4121**	2	WASHER-HARD (11X21X2.5-MM THK)
	M	17	1	**8T-4196**	1	BOLT (M10X1.5X35-MM)
	M	18	1	**8T-5005**	1	BOLT (M10X1.5X70-MM)

I - REFER TO HYDRAULIC INFORMATION SYSTEM M - METRIC PART

458-9401 **LINES GP-BRAKE & SHIFT** (contd.) **i07418294**

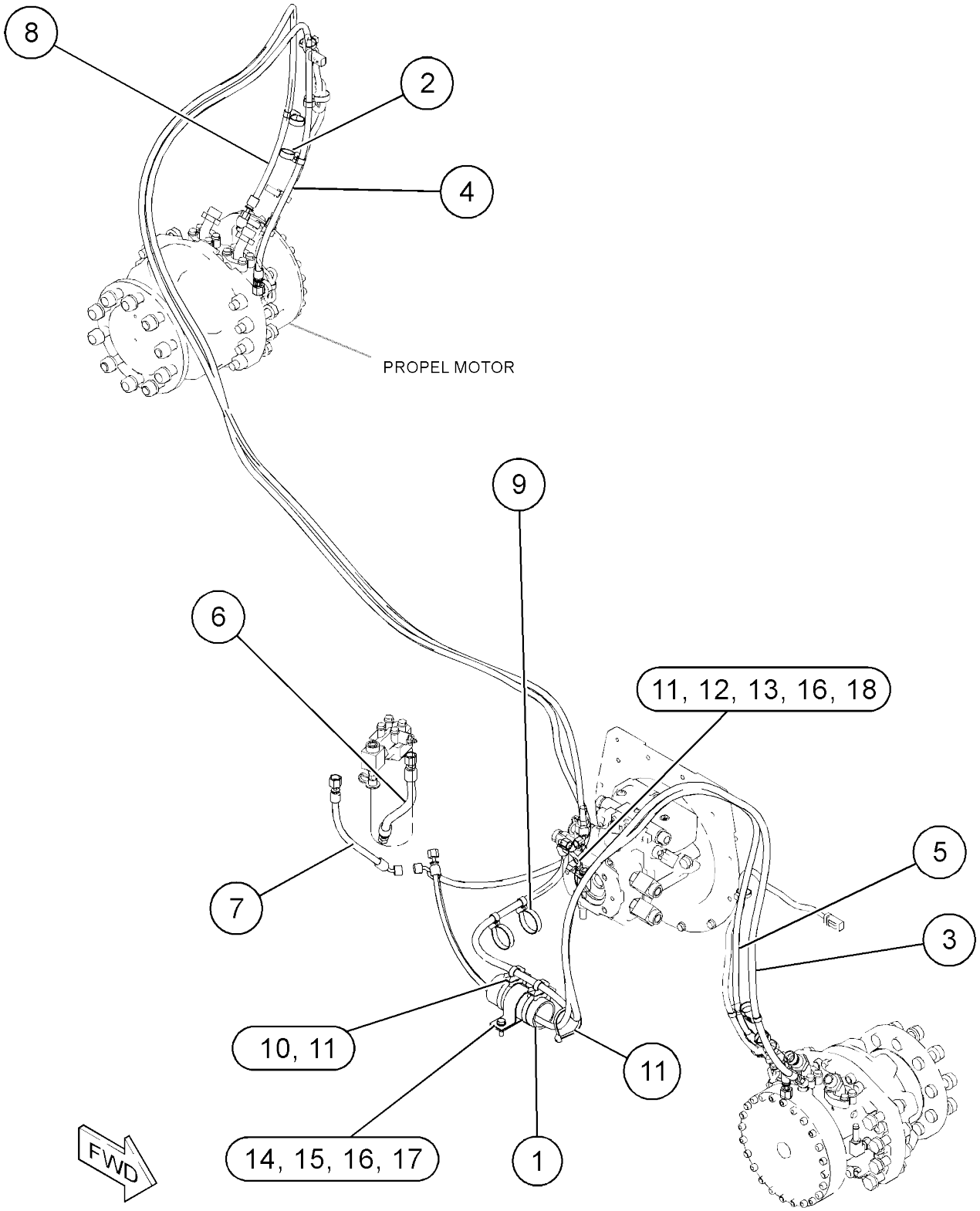

GRAPHIC #1 <END> g03782668

343-6075 CYLINDER & MTG GP-STEERING

S/N: 5B41-UP; G441-UP
105-MM (4.1-IN) BORE X 234-MM (9.2-IN) STROKE
PART OF 377-5344, 377-5354 HYDRAULIC AR-
AUXILIARY

SMCS-4303

i07398844

	REF SEE NOTE QTY	GRAPHIC NO 1 2 3 4 5 6	(PRODUCT LEVEL)	REF PAGE	PART NAME PART NUMBER
	1	1	**3B-8488**	2	FITTING-GREASE (1/8-27 PTF)
	2	1	**106-6340**	2	SPACER (10.74X17.14X7-MM THK)
	3	1	**336-2009**	2	PIN AS
	4	1	**336-3749**	2	BEARING-SELF-ALIGNING
J	5	1	**373-6357**	1	CYLINDER GP-HYDRAULIC (STEERING)
	6	1	**7X-7729**	2	WASHER (11X25X3-MM THK)
M	7	1	**8T-4136**	2	BOLT (M10X1.5X25-MM)
					AVAILABLE REPAIR KIT(S):
J			**493-6139**	1	KIT-SEAL
					(INCLUDES BACKUP-RING, O-RING SEALS, PISTON- SEAL, ROD-SEAL, WEAR-RING & WIPER)

J - KIT MARKED J SERVICES PART(S)
MARKED J M - METRIC PART

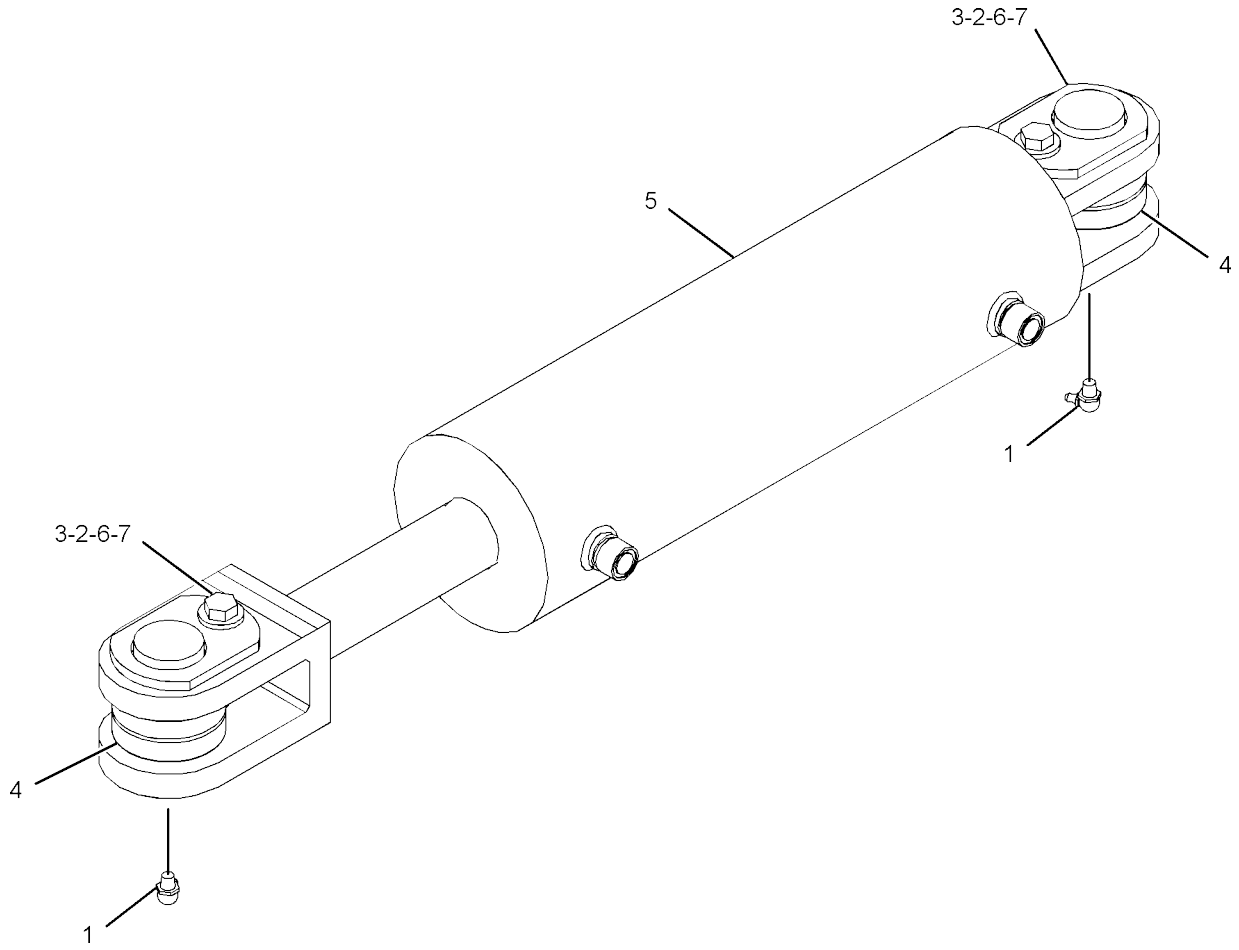

GRAPHIC #1 <END> g02888817

153-7369 KNOB GP-STEERING

S/N: 5B41-UP; G441-UP
PART OF 489-6273, 489-6274 CONSOLE GP-OPERATOR AN ATTACHMENT

SMCS-4309

i01509389

	REF SEE NOTE QTY	GRAPHIC NO 1 2 3 4 5 6	(PRODUCT LEVEL)	REF PAGE	PART NAME PART NUMBER
M	1	1	**8T-6869**	1	BOLT (M8X1.25X60-MM)
	2	1	**8T-4224**	1	WASHER-HARD (8.8X16X2-MM THK)
M	3	1	**5C-7261**	1	NUT (M8X1.25-THD)

M - METRIC PART

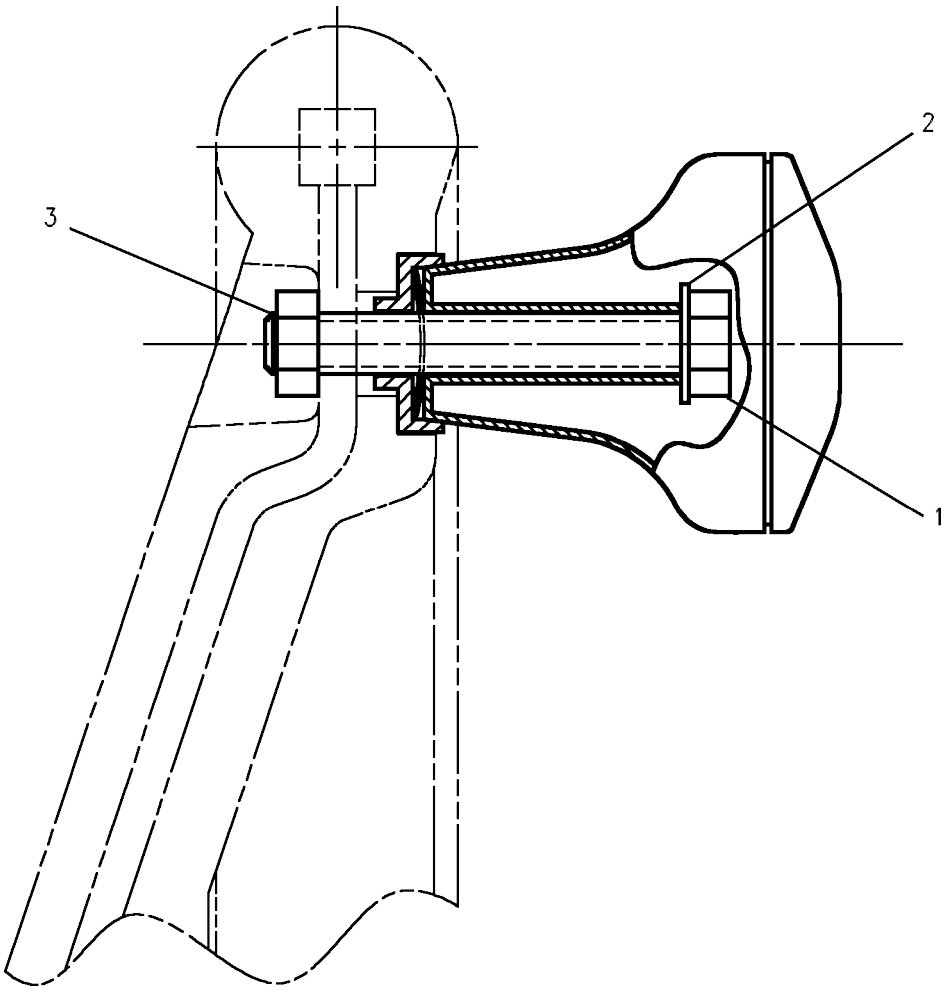

GRAPHIC #1 <END> g00534771

343-6070 LINES GP-STEERING-HYDRAULIC OIL

S/N: 5B41-UP

PART OF 377-5354 HYDRAULIC AR-AUXILIARY

SMCS-4304

i07418052

	REF SEE NOTE QTY	GRAPHIC NO 1 2 3 4 5 6	(PRODUCT LEVEL)	REF PAGE	PART NAME PART NUMBER
	1	1	**9R-2053**	1	BLOCK
I	2	1	**145-7118**	1	HOSE AS
I	3	1	**237-2858**	1	HOSE AS
I	4	1	**369-9558**	1	HOSE AS
I	5	1	**436-2775**	1	HOSE AS
	6	1	**437-8682**	1	BRACKET AS
M		1	**8T-3490**	1	NUT-WELD (M10X1.5-THD)
	7	1	**200-6345**	2	SADDLE-MOUNTING (DUAL SWIVEL)
	8	1	**204-2281**	10	STRAP-CABLE
	9	1	**275-1442**	1	CLIP (TAB)
	10	1	**275-1443**	1	CLIP (SLOT)
	11	1	**275-1444**	1	GROMMET
	12	1	**5P-0599**	1	CLAMP-BAND
	13	1	**5P-5148**	1	STRAP-CABLE
	14	1	**7K-1181**	3	STRAP-CABLE
	15	1	**8T-4121**	1	WASHER-HARD (11X21X2.5-MM THK)
M	16	1	**8T-4195**	1	BOLT (M10X1.5X30-MM)
G	17	1	**160-2245**		SLEEVE-ABRASION (22.1-IN)
G	17A	1	**160-2245**		SLEEVE-ABRASION (12.6-IN)
G	17B	1	**160-2245**		SLEEVE-ABRASION (26-IN)

G - ORDER BY THE INCH
I - REFER TO HYDRAULIC INFORMATION
SYSTEM M - METRIC PART

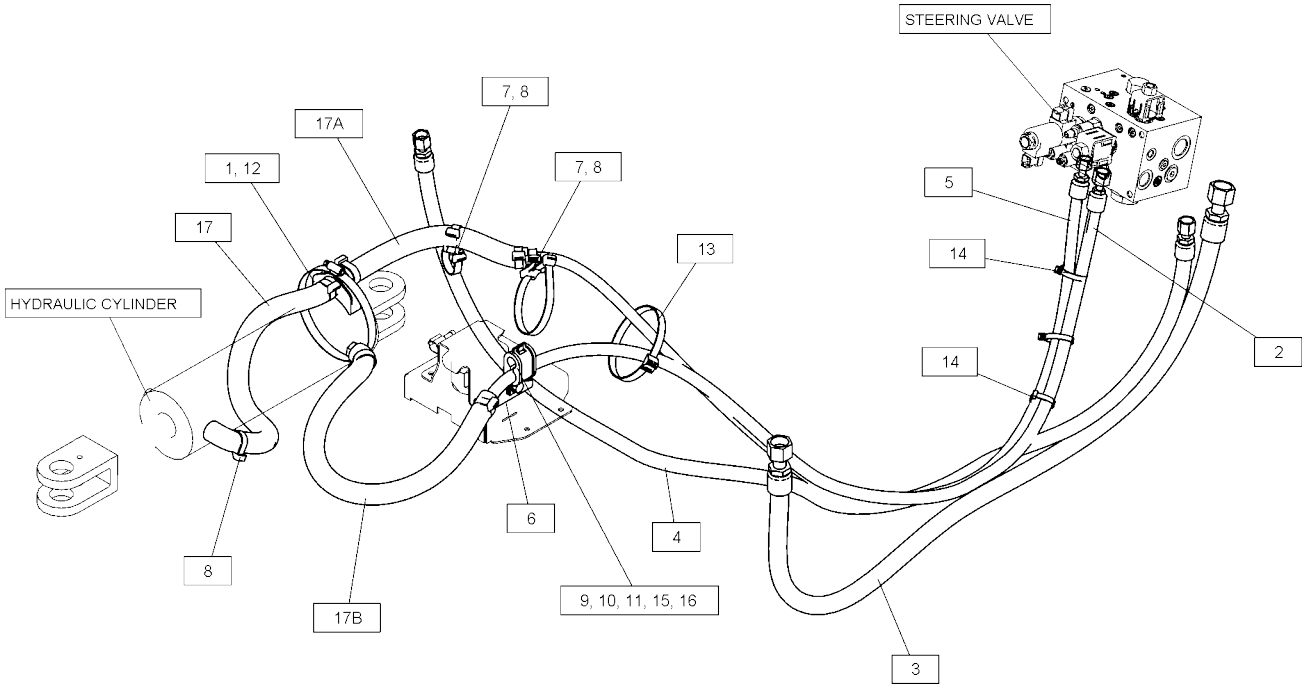

GRAPHIC #1 <END> g06303094

351-3408 LINES GP-STEERING

S/N: 5B41-UP; G441-UP
PART OF 341-8801 HITCH
AR AN ATTACHMENT

SMCS-4304

i07399988

	REF SEE NOTE QTY	GRAPHIC NO 1 2 3 4 5 6 (PRODUCT LEVEL)	REF PAGE	PART NAME PART NUMBER
	1	1 **204-2281**	8	STRAP-CABLE
I	2	1 **240-3163**	1	HOSE AS
I	3	1 **364-5989**	1	HOSE AS
	4	1 **200-6345**	2	SADDLE-MOUNTING (DUAL SWIVEL)
	5	1 **177-2215**	3	STRAP-DUAL CLAMP
G	6	1 **160-2245**		SLEEVE-ABRASION (23.7-IN)
G	6A	1 **160-2245**		SLEEVE-ABRASION (15.8-IN)

G - ORDER BY THE INCH
I - REFER TO HYDRAULIC INFORMATION SYSTEM

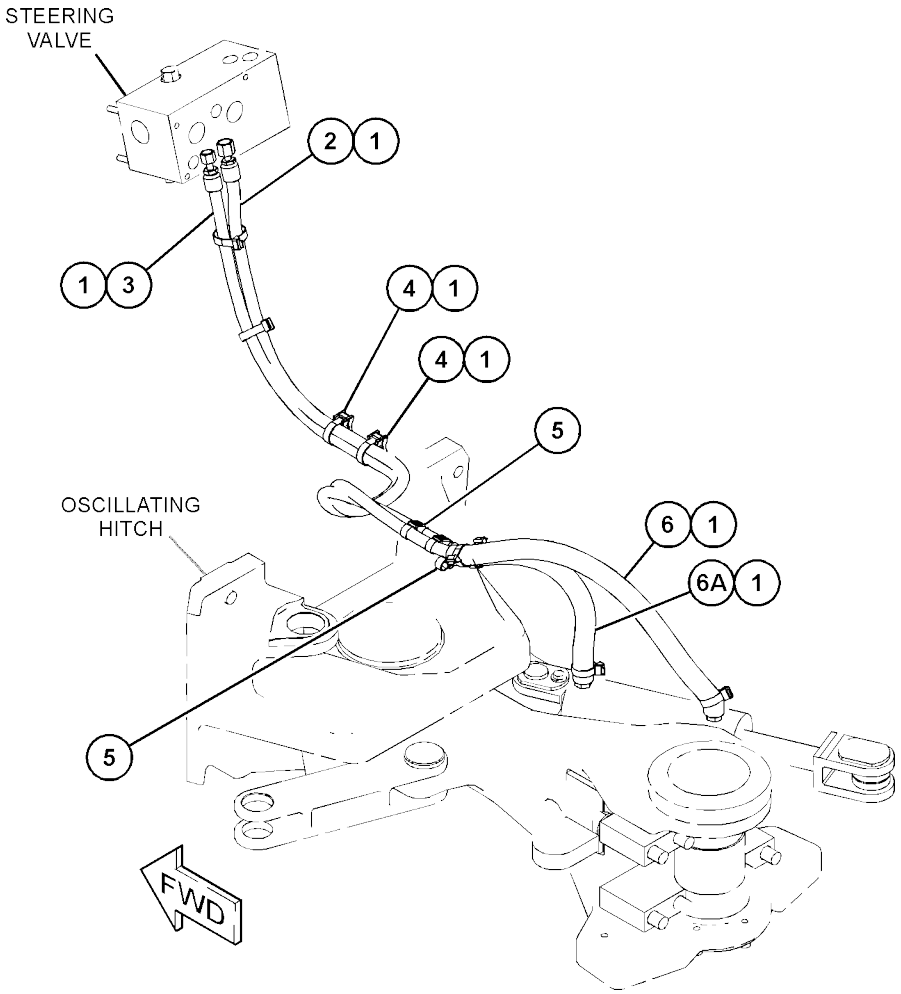

GRAPHIC #1 <END> g03427709

383-7239 LINES GP-STEERING

S/N: G441-UP

PART OF 377-5344 HYDRAULIC AR-AUXILIARY

SMCS-4304

i07398847

	REF SEE NOTE QTY	GRAPHIC NO 1 2 3 4 5 6	(PRODUCT LEVEL)	REF PAGE	PART NAME PART NUMBER
	1	1	**9R-2053**	1	BLOCK
I	2	1	**393-9148**	1	HOSE AS
I	3	1	**393-9149**	1	HOSE AS
I	4	1	**393-9150**	1	HOSE AS
I	5	1	**436-2777**	1	HOSE AS
	6	1	**437-8682**	1	BRACKET AS
M		1	**8T-3490**	1	NUT-WELD (M10X1.5-THD)
	7	1	**200-6345**	2	SADDLE-MOUNTING (DUAL SWIVEL)
	8	1	**204-2281**	11	STRAP-CABLE
	9	1	**204-8000**	1	MOUNTING-CABLE TIE
	10	1	**275-1442**	1	CLIP (TAB)
	11	1	**275-1443**	1	CLIP (SLOT)
	12	1	**275-1444**	1	GROMMET
	13	1	**5P-0599**	1	CLAMP-BAND
	14	1	**5P-4116**	1	WASHER-HARD (8.8X20.5X2-MM THK)
	15	1	**5P-5148**	1	STRAP-CABLE
	16	1	**7K-1181**	2	STRAP-CABLE
	17	1	**8T-4121**	1	WASHER-HARD (11X21X2.5-MM THK)
M	18	1	**8T-4195**	1	BOLT (M10X1.5X30-MM)
M	19	1	**8T-4908**	1	BOLT (M8X1.25X25-MM)
G	20	1	**160-2245**		SLEEVE-ABRASION (13-IN)
G	20A	1	**160-2245**		SLEEVE-ABRASION (22-IN)
G	20B	1	**160-2245**		SLEEVE-ABRASION (26-IN)

G - ORDER BY THE INCH
I - REFER TO HYDRAULIC INFORMATION SYSTEM M - METRIC PART

383-7239 **LINES GP-STEERING (**contd.**)** **i07398847**

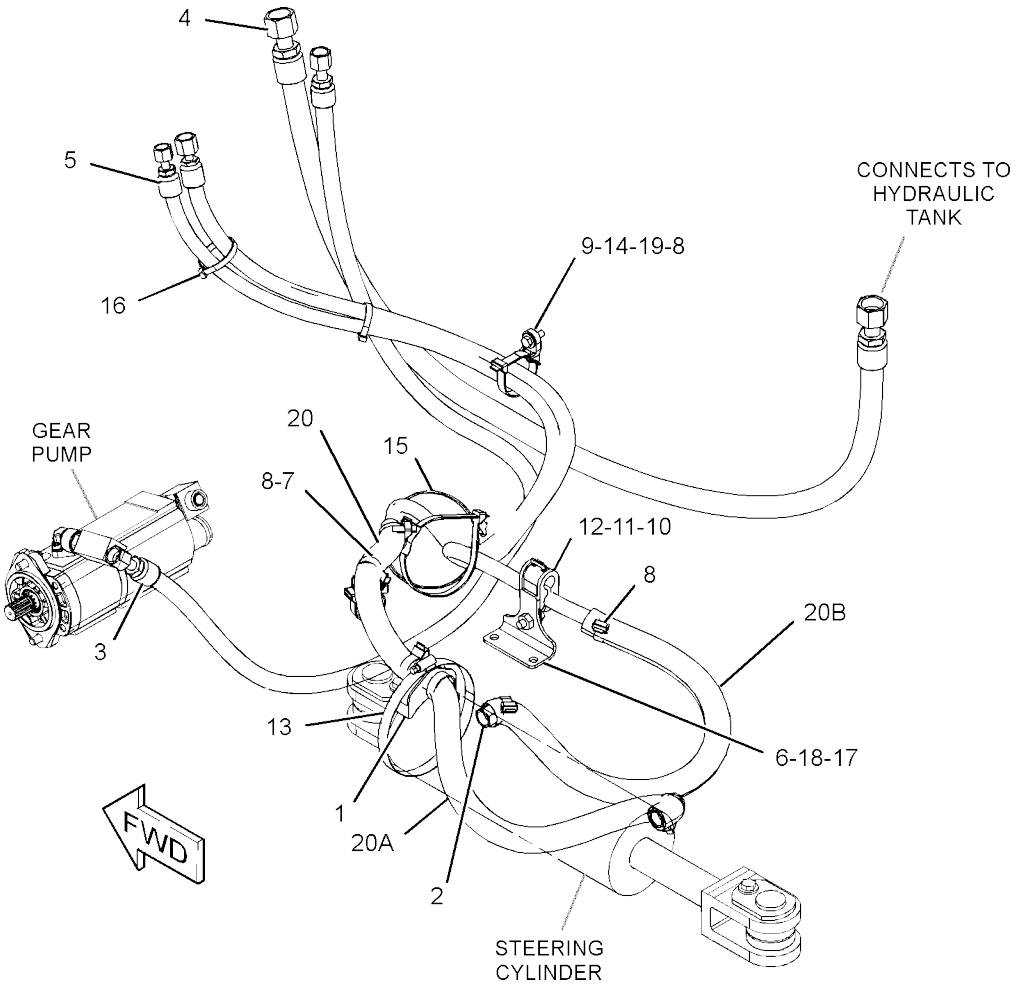

GRAPHIC #1 <END> g03432445

343-6834 VALVE & MTG GP-STEERING

S/N: 5B41-UP; G441-UP
PART OF 341-8800 HITCH
AR AN ATTACHMENT

SMCS-4307, 4312, 4343

i07399945

	REF SEE NOTE QTY	GRAPHIC NO 1 2 3 4 5 6	(PRODUCT LEVEL)	REF PAGE	PART NAME PART NUMBER	
	1	1	**6V-0852**	1	CAP-DUST	
	2	1	**110-6349**	1	FITTING AS (QUICK DISCONNECT)	
Y	3	1	**384-9265**	1	VALVE GP-FLOW CONTROL	282
	4	1	**132-5789**	3	CLIP (LADDER)	
	5	1	*148-8336*	1	CONNECTOR AS	
		1	**3J-1907**	1	SEAL-O-RING	
		1	**6V-8397**	1	SEAL-O-RING	
		1	**6V-8636**	1	CONNECTOR	
	6	1	*148-8347*	1	ELBOW AS	
		1	**3D-2824**	1	SEAL-O-RING	
		1	**6V-9007**	1	ELBOW	
		1	**6V-9746**	1	SEAL-O-RING	
	7	1	*148-8372*	1	ELBOW AS	
		1	**2M-9780**	1	SEAL-O-RING	
		1	**6V-8398**	1	SEAL-O-RING	
		1	**6V-8721**	1	ELBOW	
	8	1	*150-4043*	1	CONNECTOR AS	
		1	**3J-1907**	1	SEAL-O-RING	
		1	**6V-8398**	1	SEAL-O-RING	
		1	**6V-9873**	1	CONNECTOR	
	9	1	*162-6802*	1	ELBOW AS	
		1	**3J-7354**	1	SEAL-O-RING	
		1	**151-5145**	1	ELBOW	
M	10	1	**7X-2545**	4	BOLT (M10X1.5X150-MM)	
	11	1	**8T-4121**	4	WASHER-HARD (11X21X2.5-MM THK)	

M - METRIC PART
Y - SEPARATE ILLUSTRATION

343-6834 **VALVE & MTG GP-STEERING (**contd.**)** **i07399945**

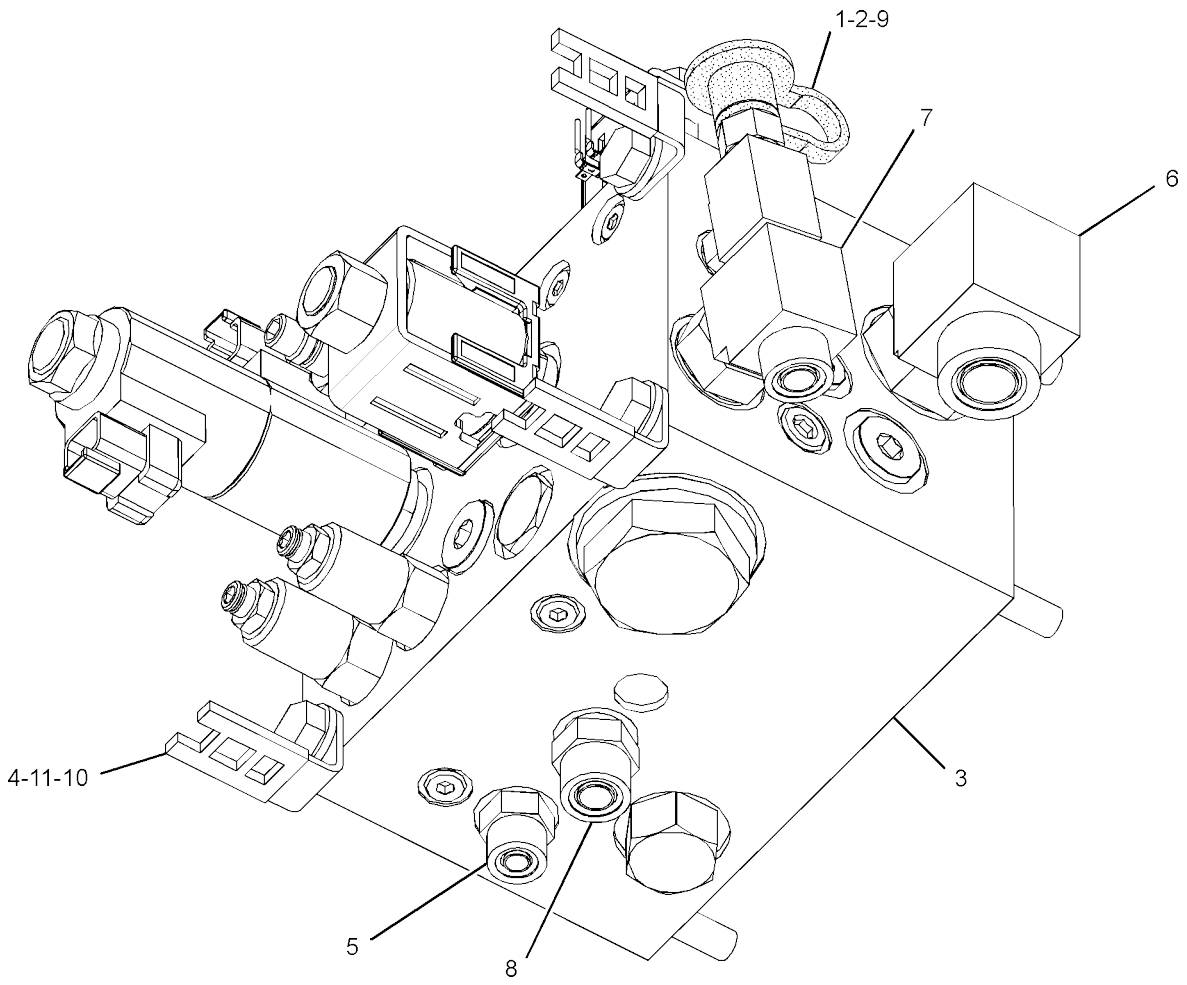

GRAPHIC #1 <END> g02849389

357-4659 VALVE & MTG GP-STEERING

S/N: 5B41-UP; G441-UP
PART OF 341-8801 HITCH
AR AN ATTACHMENT

SMCS-4307, 4312, 4343

i07399991

	REF SEE NOTE QTY	GRAPHIC NO 1 2 3 4 5 6	(PRODUCT LEVEL)	REF PAGE	PART NAME PART NUMBER	
	1	1	**6V-0852**	1	CAP-DUST	
	2	1	**110-6349**	1	FITTING AS (QUICK DISCONNECT)	
Y	3	1	**384-9267**	1	VALVE GP-FLOW CONTROL (STEERING)	284
	4	1	**132-5789**	3	CLIP (LADDER)	
	5	1	*148-8336*	2	CONNECTOR AS	
					(EACH INCLUDES)	
		1	**3J-1907**	1	SEAL-O-RING	
		1	**6V-8397**	1	SEAL-O-RING	
		1	**6V-8636**	1	CONNECTOR	
	6	1	*148-8347*	1	ELBOW AS	
		1	**3D-2824**	1	SEAL-O-RING	
		1	**6V-9007**	1	ELBOW	
		1	**6V-9746**	1	SEAL-O-RING	
	7	1	*148-8372*	1	ELBOW AS	
		1	**2M-9780**	1	SEAL-O-RING	
		1	**6V-8398**	1	SEAL-O-RING	
		1	**6V-8721**	1	ELBOW	
	8	1	*150-4043*	2	CONNECTOR AS	
					(EACH INCLUDES)	
		1	**3J-1907**	1	SEAL-O-RING	
		1	**6V-8398**	1	SEAL-O-RING	
		1	**6V-9873**	1	CONNECTOR	
	9	1	*162-6802*	1	ELBOW AS	
		1	**3J-7354**	1	SEAL-O-RING	
		1	**151-5145**	1	ELBOW	
M	10	1	**7X-2545**	4	BOLT (M10X1.5X150-MM)	
	11	1	**8T-4121**	4	WASHER-HARD (11X21X2.5-MM THK)	

M - METRIC PART
Y - SEPARATE ILLUSTRATION

357-4659 **VALVE & MTG GP-STEERING (**contd.**)** **i07399991**

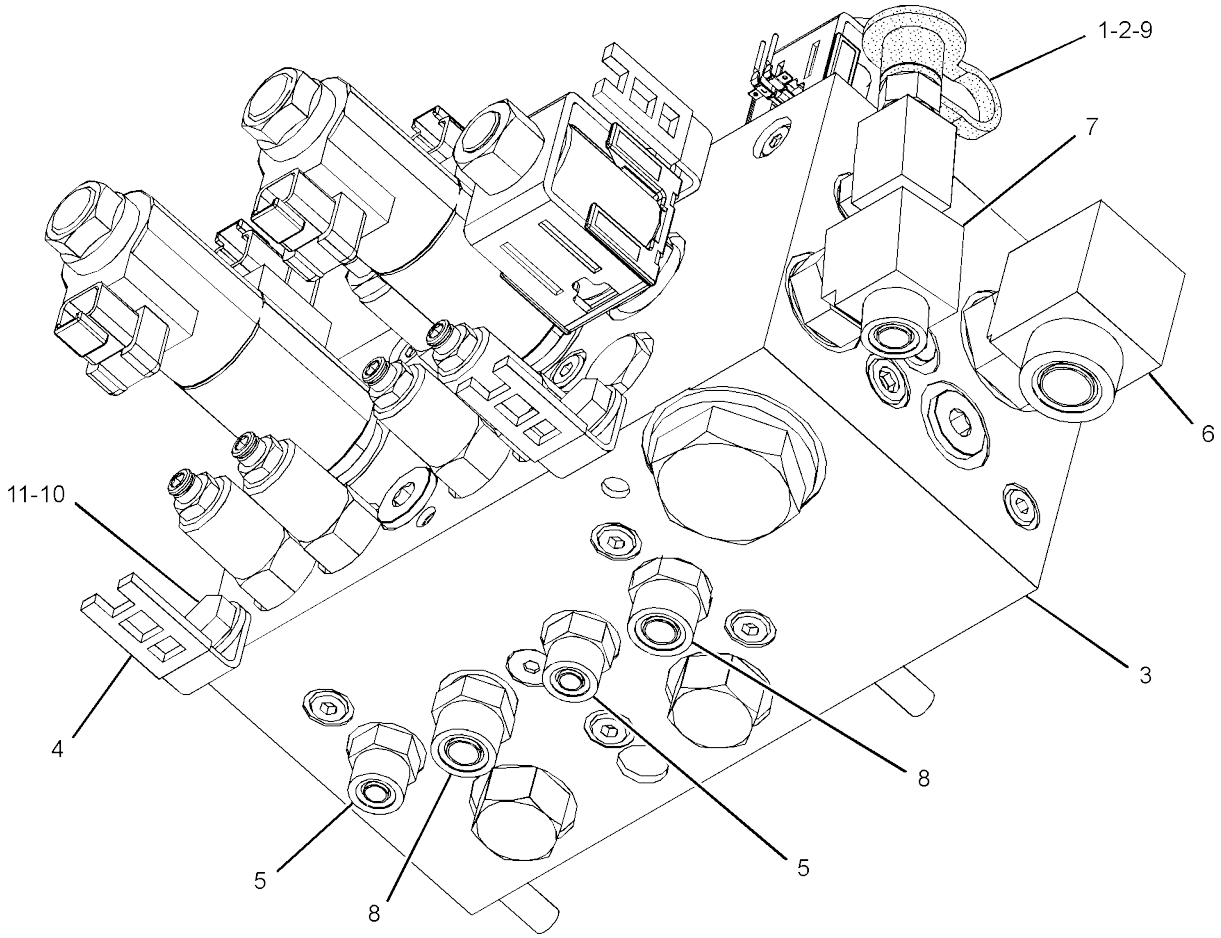

GRAPHIC #1 <END> g02880557

384-9265 VALVE GP-FLOW CONTROL-STEERING

S/N: 5B41-UP; G441-UP
PART OF 343-6834 VALVE & MTG GP-STEERING AN ATTACHMENT

SMCS-4307, 5137

i07399946

	REF SEE NOTE QTY	GRAPHIC NO 1 2 3 4 5 6	(PRODUCT LEVEL)	REF PAGE	PART NAME PART NUMBER	
L	1	1	**339-5297**	2	VALVE-COUNTERBALANCE	
Y	2	1	**339-5293**	1	VALVE GP-SOLENOID (FRONT STEER)	351
P	3	1	**353-3888**	1	VALVE GP-SOLENOID (STEERING DISABLE)	
		1	**339-5303**	1	COIL-SOLENOID	
		1	**339-5305**	1	NUT (M16X1-THD)	
	4	1	**341-5968**	1	PLUG-FILTER	
	5	1	**8U-2588**	1	SEAL-O-RING	
	6	1	**341-5969**	1	SCREEN-FILTER (STEERING)	
J	7	1	**226-5684**	2	VALVE GP-SHUTTLE	
S	8	1	**353-3889**	1	VALVE GP-SEQUENCE	
N	9	1	**353-3876**	1	VALVE GP-CHECK	
	10	1	**353-3890**	2	ORIFICE	
	11	1	**9S-8005**	2	PLUG (3/4-16-THD)	
LV	12	1	**033-6028**	2	SEAL-O-RING	
V	13	1	**353-5423**	1	VALVE GP-SOLENOID (HYDRAULIC WARM-UP)	
		1	**339-5305**	1	NUT (M16X1-THD)	
		1	**382-6850**	1	COIL	
N	14	1	**353-5425**	1	VALVE GP-RELIEF	
T	15	1	**353-3891**	1	VALVE GP-SEQUENCE	
					AVAILABLE REPAIR KIT(S):	
J			**248-2980**	1	KIT-SEAL (DIFFERENTIAL LOCK CHECK VALVE)	
					(INCLUDES BACKUP RINGS & O-RING SEALS)	
L			**226-5687**	1	KIT-SEAL (COUNTERBALANCE VALVE)	
					(INCLUDES O-RING SEALS & BACKUP RINGS)	
N			**255-6257**	1	KIT-SEAL (CHECK VALVE)	
					(INCLUDES BACKUP RING & O-RING SEALS)	
P			**339-5304**	1	KIT-SEAL (SOLENOID VALVE)	
					(INCLUDES O-RING SEALS & BACKUP RING)	
S			**255-6259**	1	KIT-SEAL (SEQUENCE VALVE)	
					(INCLUDES BACKUP RINGS & O-RING SEALS)	
T			**357-9616**	1	KIT-SEAL (SEQUENCE VALVE)	
					(INCLUDES BACKUP RINGS & O-RING SEALS)	
V			**356-3720**	1	KIT-SEAL (SOLENOID VALVE)	
					(INCLUDES BACKUP RINGS & O-RING SEAL)	

J - KIT MARKED J SERVICES PART(S) MARKED J L - KIT MARKED L SERVICES PART(S) MARKED L N - KIT MARKED N SERVICES PART(S) MARKED N P - KIT MARKED P SERVICES PART(S) MARKED P S - KIT MARKED S SERVICES PART(S) MARKED S T - KIT MARKED T SERVICES PART(S) MARKED T V - KIT MARKED V SERVICES PART(S) MARKED V
Y - SEPARATE ILLUSTRATION

384-9265 **VALVE GP-FLOW CONTROL (**contd.**)** **i07399946**

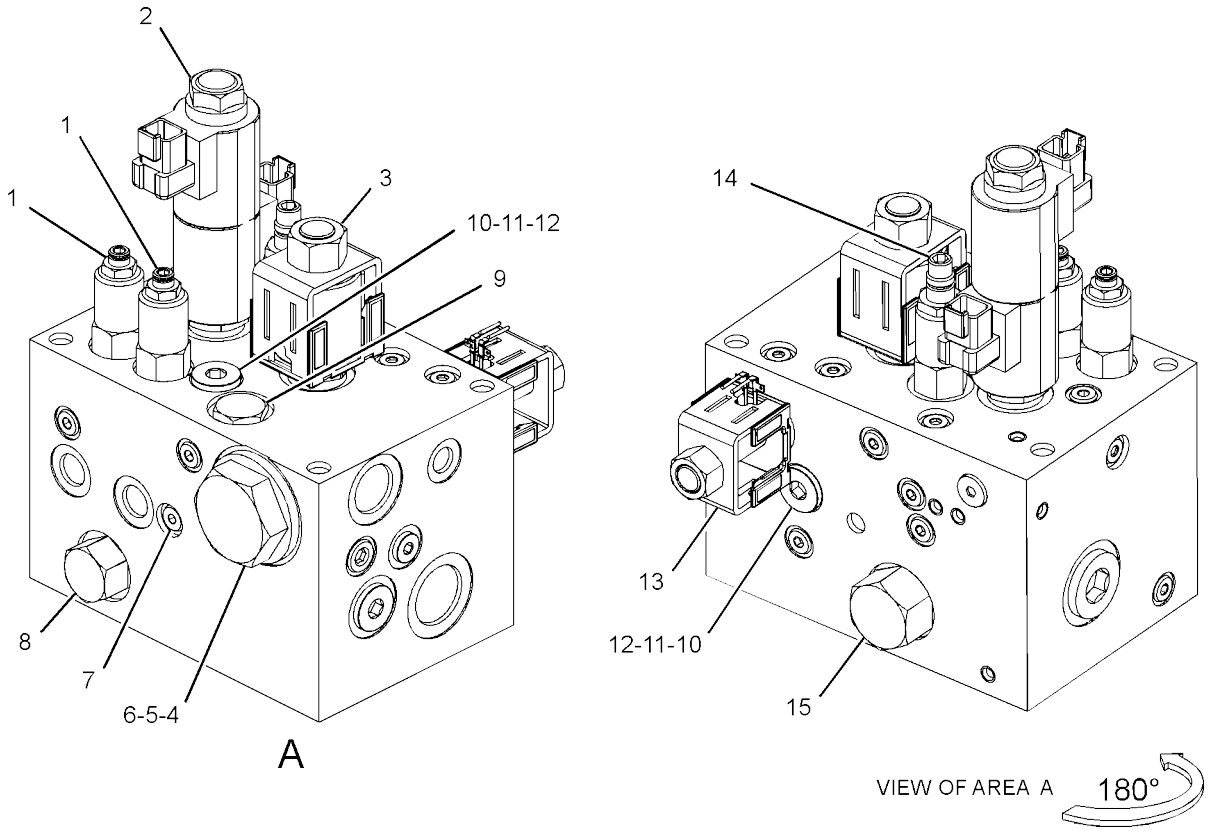

GRAPHIC #1 <END> g03344665

384-9267 VALVE GP-FLOW CONTROL-STEERING, OFFSET

S/N: 5B41-UP; G441-UP
PART OF 357-4659 VALVE & MTG GP-STEERING AN ATTACHMENT

SMCS-4307, 5137

i07399993

	REF SEE NOTE QTY	GRAPHIC NO 1 2 3 4 5 6	(PRODUCT LEVEL)	REF PAGE	PART NAME PART NUMBER	
L	1	1	**339-5297**	4	VALVE-COUNTERBALANCE	
Y	2	1	**339-5293**	2	VALVE GP-SOLENOID (FRONT STEER)	351
T	3	1	**353-3888**	1	VALVE GP-SOLENOID (STEERING DISABLE)	
		1	**339-5303**	1	COIL-SOLENOID	
		1	**339-5305**	1	NUT (M16X1-THD)	
N	4	1	**353-3876**	1	VALVE GP-CHECK	
	5	1	**341-5968**	1	PLUG-FILTER	
	6	1	**183-2317**	1	SEAL-O-RING	
	7	1	**341-5969**	1	SCREEN-FILTER (STEERING)	
P	8	1	**353-3889**	2	VALVE GP-SEQUENCE (FLOW REGULATOR)	
J	9	1	**226-5684**	4	VALVE GP-SHUTTLE (STEERING)	
	10	1	**353-3890**	2	ORIFICE	
	11	1	**9S-8005**	2	PLUG (3/4-16-THD)	
	12	1	**033-6028**	2	SEAL-O-RING	
V	13	1	**353-5423**	1	VALVE GP-SOLENOID (HYDRAULIC WARM-UP)	
		1	**339-5305**	1	NUT (M16X1-THD)	
		1	**382-6850**	1	COIL	
N	14	1	**353-5425**	1	VALVE GP-RELIEF	
S	15	1	**353-3891**	1	VALVE GP-SEQUENCE (PRESSURE REGULATOR)	
					AVAILABLE REPAIR KIT(S):	
J			**248-2980**	1	KIT-SEAL (DIFFERENTIAL LOCK CHECK VALVE)	
					(INCLUDES O-RING SEALS & BACKUP RINGS)	
L			**226-5687**	1	KIT-SEAL	
					(INCLUDES O-RING SEALS & BACKUP RINGS)	
NT			**255-6257**	1	KIT-SEAL (CHECK VALVE)	
					(INCLUDES O-RING SEALS & BACKUP RINGS)	
P			**255-6259**	1	KIT-SEAL	
					(INCLUDES O-RING SEALS & BACKUP RINGS)	
S			**357-9616**	1	KIT-SEAL	
					(INCLUDES O-RING SEALS & BACKUP RINGS)	
T			**339-5304**	1	KIT-SEAL	
					(INCLUDES O-RING SEALS)	
V			**356-3720**	1	KIT-SEAL	
					(INCLUDES O-RINGS SEALS)	

J - KIT MARKED J SERVICES PART(S) MARKED J L - KIT MARKED L SERVICES PART(S) MARKED L N - KIT MARKED N SERVICES PART(S) MARKED N P - KIT MARKED P SERVICES PART(S) MARKED P S - KIT MARKED S SERVICES PART(S) MARKED S T - KIT MARKED T SERVICES PART(S) MARKED T V - KIT MARKED V SERVICES PART(S) MARKED V
Y - SEPARATE ILLUSTRATION

384-9267 **VALVE GP-FLOW CONTROL (**contd.**)** **i07399993**

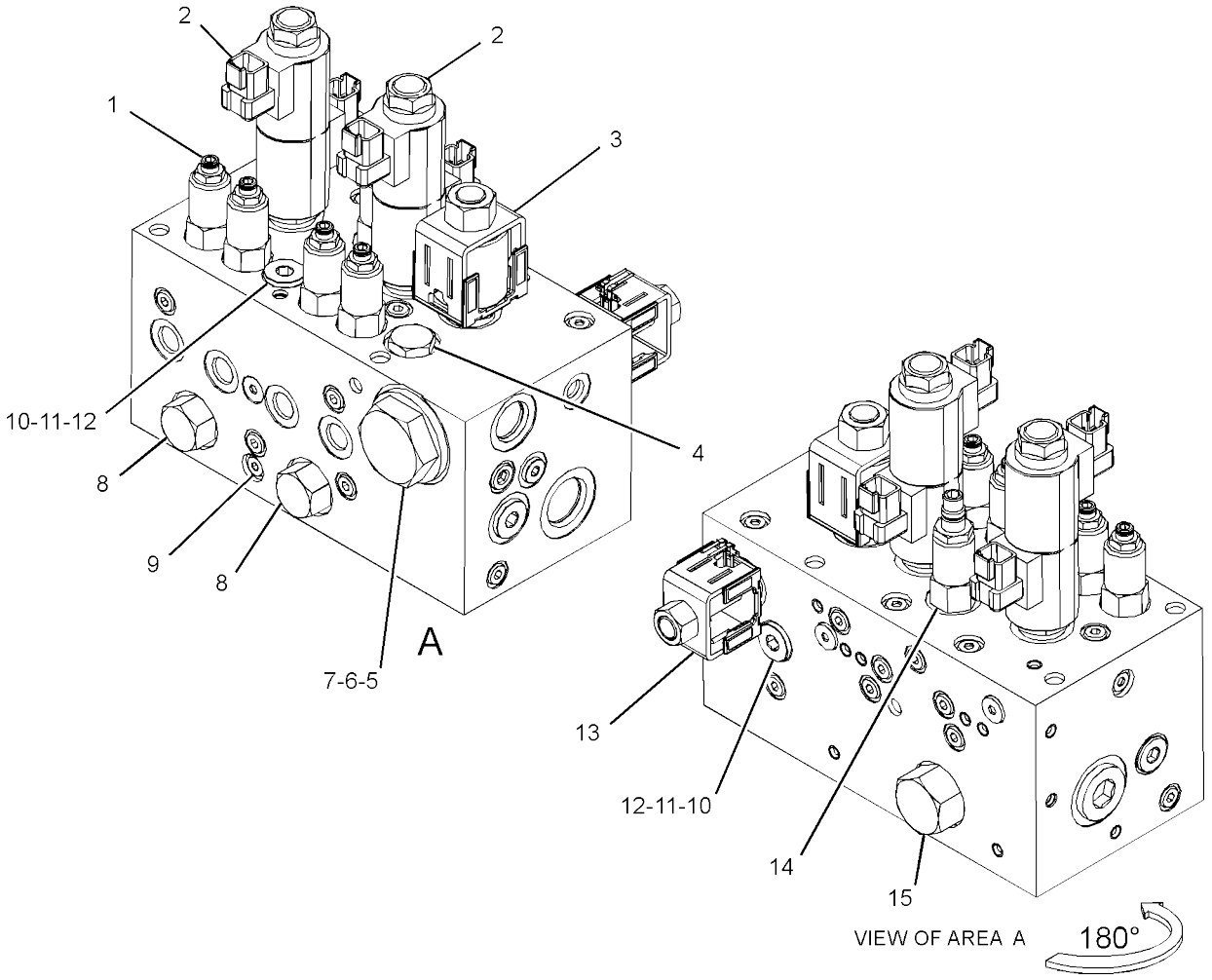

GRAPHIC #1 <END> g03344625

350-2770 CYLINDER & MTG GP-OFFSET

S/N: 5B41-UP; G441-UP
80-MM (3.2-IN) BORE X 205-MM (8.1-IN)
STROKE PART OF 341-8801 HITCH AR
AN ATTACHMENT

SMCS-6068, 7562

i07399984

	REF SEE NOTE QTY	GRAPHIC NO 1 2 3 4 5 6	(PRODUCT LEVEL)	REF PAGE	PART NAME PART NUMBER
	1	1	**3B-8488**	2	FITTING-GREASE (1/8-27 PTF)
	2	1	**106-6340**	2	SPACER (10.74X17.14X7-MM THK)
	3	1	**336-2009**	2	PIN AS
	4	1	**336-3749**	2	BEARING-SELF-ALIGNING
	5	1	**364-5879**	1	CYLINDER GP-HYDRAULIC (OFFSET)
	6	1	**7X-7729**	2	WASHER (11X25X3-MM THK)
M	7	1	**8T-4136**	2	BOLT (M10X1.5X25-MM)

M - METRIC PART

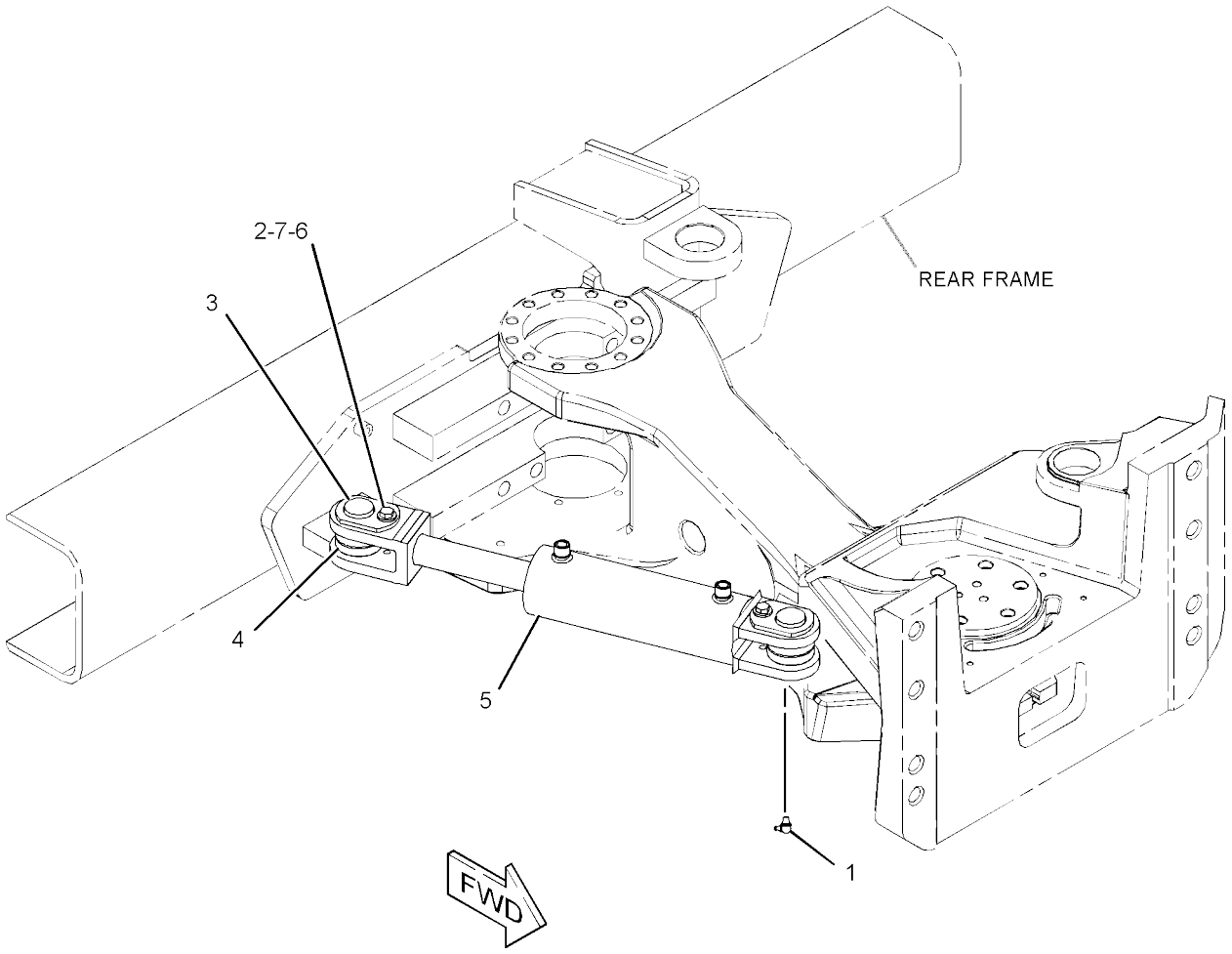

GRAPHIC #1 <END> g02981056

385-5948 CYLINDER GP-HYDRAULIC

S/N: 5B41-UP
63-MM (2.5-IN) BORE X 80-MM (3.2-IN)
STROKE PART OF 378-7652 SIDECUTTER GP
AN ATTACHMENT

SMCS-4303, 5102

i07418396

	REF SEE NOTE QTY	GRAPHIC NO 1 2 3 4 5 6	(PRODUCT LEVEL)	REF PAGE	PART NAME PART NUMBER
	1	1	**137-4003**	2	EYE-CYLINDER
	2	1	**348-0406**	4	CLIP
	3	1	**6V-1506**	2	FITTING-GREASE
M	4	1	**5A-3604**	2	BOLT-SOCKET HEAD (M8X1.25X25-MM)
	5	1	**137-4002**	1	YOKE
					AVAILABLE REPAIR KIT(S):
			137-4004	1	KIT-SEAL (SIDECUTTER)

M - METRIC PART

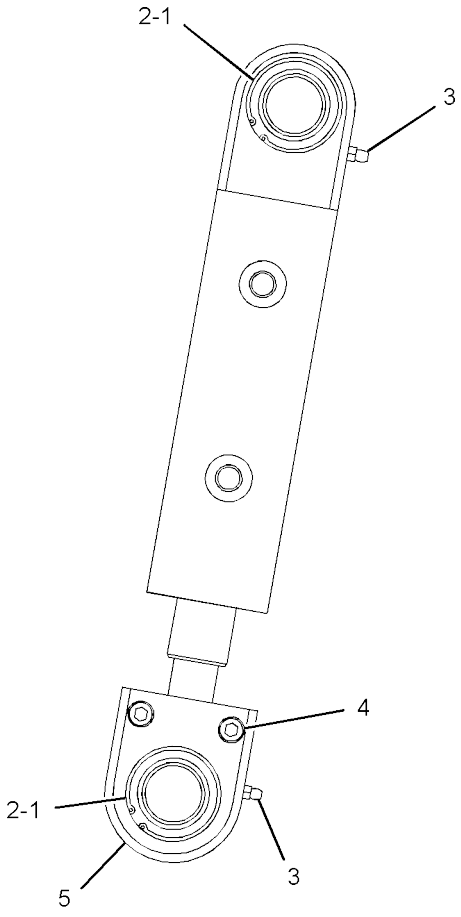

VIEW OF AREA A

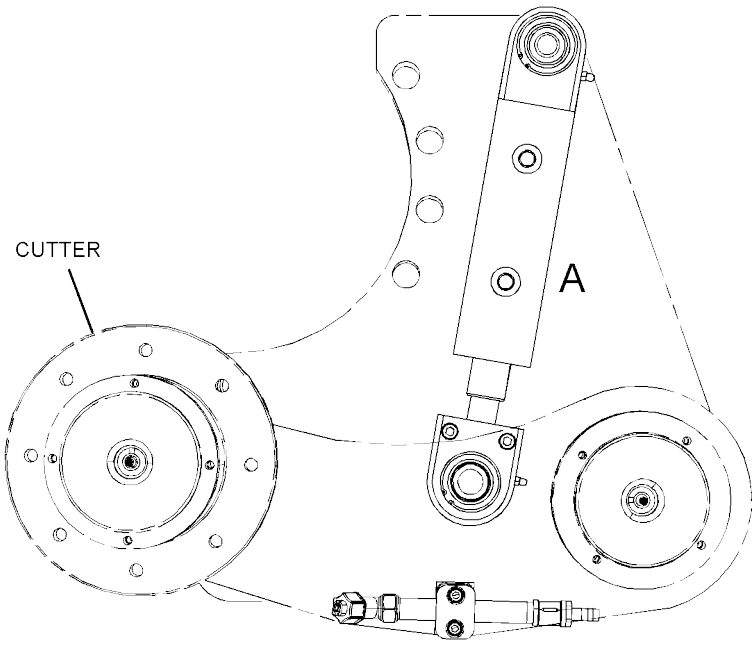

RIGHT SIDE VIEW

GRAPHIC #1

<END>

g03422220

384-7636 CYLINDER GP-SIDECUTTER

S/N: G441-UP
PART OF 374-8044 SIDECUTTER
GP AN ATTACHMENT

SMCS-5102, 6601

i07416476

	REF SEE NOTE QTY	GRAPHIC NO 1 2 3 4 5 6	(PRODUCT LEVEL)	REF PAGE	PART NAME PART NUMBER
	1	1	**137-4003**	2	EYE-CYLINDER
	2	1	**348-0406**	4	CLIP
	3	1	**6V-1506**	2	FITTING-GREASE
M	4	1	**5A-3604**	2	BOLT-SOCKET HEAD (M8X1.25X25-MM)
	5	1	**137-4002**	1	YOKE
					AVAILABLE REPAIR KIT(S):
			137-4004	1	KIT-SEAL (SIDECUTTER)

M - METRIC PART

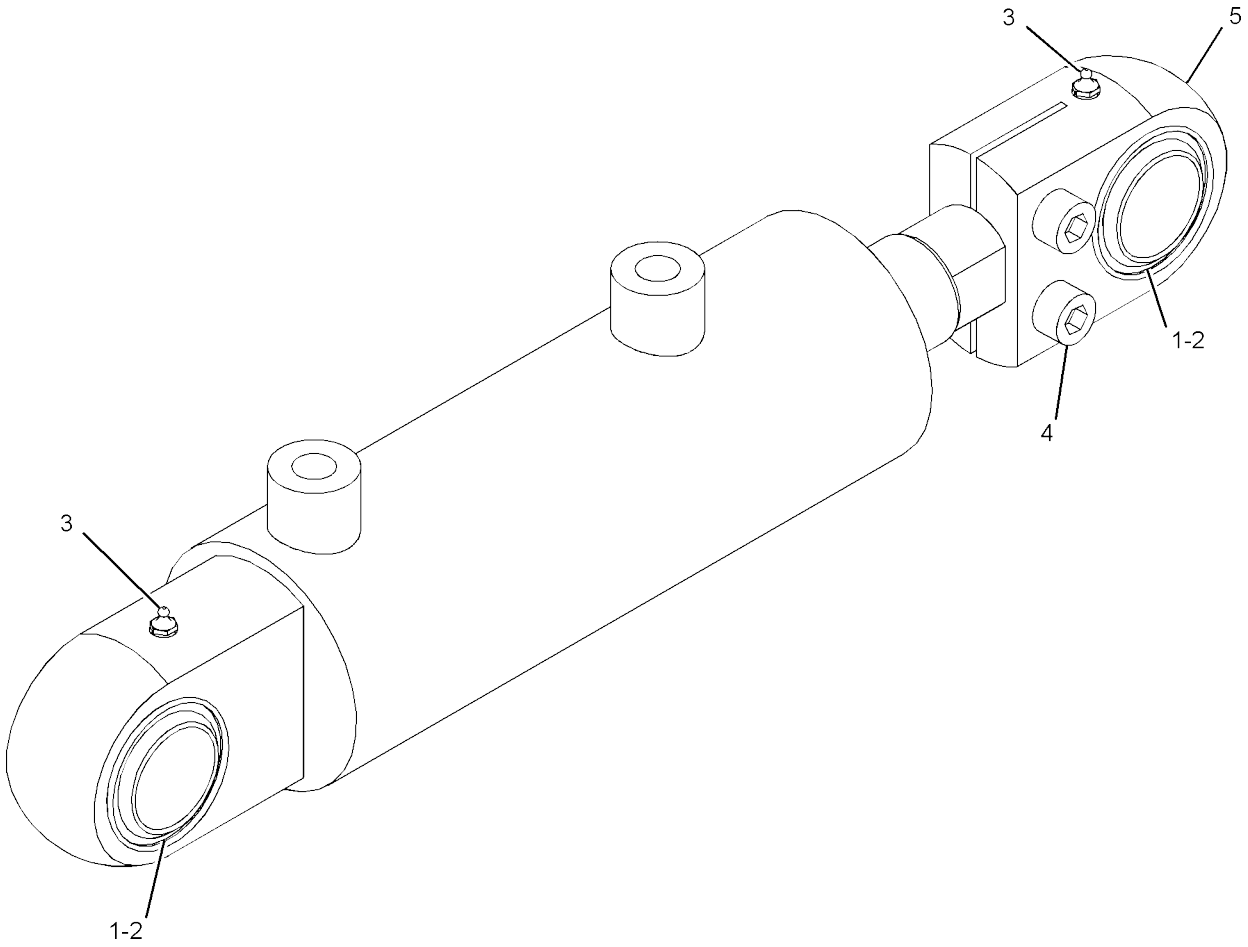

GRAPHIC #1 <END> g03341316

343-6068 FILTER & MTG GP-HYDRAULIC

S/N: 5B41-UP; G441-UP

PART OF 377-5344, 377-5354 HYDRAULIC AR-AUXILIARY

SMCS-5068

i07398841

	REF SEE NOTE QTY	GRAPHIC NO 1 2 3 4 5 6	(PRODUCT LEVEL)	REF PAGE	PART NAME PART NUMBER	
	1	1	**8C-3451**	1	CAP-DUST (HYDRAULIC OIL)	
	2	1	*180-9286*	1	TEE AS	
		1	**3D-2824**	1	SEAL-O-RING	
		1	**3E-2345**	1	ADAPTER-TEE	
		1	**6V-9746**	1	SEAL-O-RING	
Y	3	1	**223-9974**	1	FILTER GP-OIL (HYDRAULIC)	290
	4	1	*148-8305*	1	ADAPTER AS	
		1	**3J-1907**	1	SEAL-O-RING	
		1	**5P-9617**	1	ADAPTER	
	5	1	*164-5590*	1	VALVE AS-FLUID SAMPLING (FILTER OIL)	
		1	**3J-7354**	1	SEAL-O-RING	
		1	**8C-3446**	1	VALVE-SAMPLING (FILTER OIL)	
	6	1	**8T-4121**	4	WASHER-HARD (11X21X2.5-MM THK)	
M	7	1	**8T-4136**	4	BOLT (M10X1.5X25-MM)	

M - METRIC PART
Y - SEPARATE ILLUSTRATION

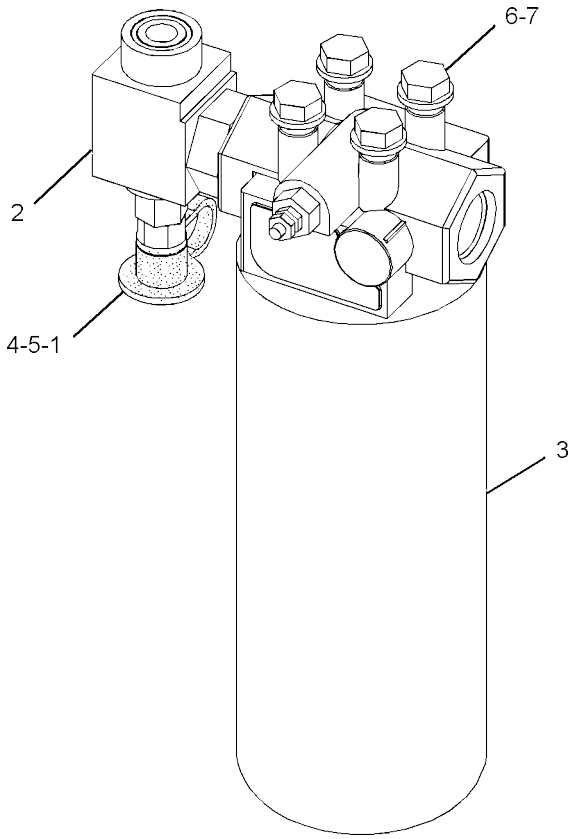

GRAPHIC #1 <END> g02844516

223-9974 FILTER GP-OIL-HYDRAULIC

S/N: 5B41-UP; G441-UP

PART OF 343-6068 FILTER & MTG GP-HYDRAULIC

SMCS-5068

i07398842

REF NO	SEE NOTE	QTY	GRAPHIC 1 2 3 4 5 6	(PRODUCT LEVEL)	REF PAGE	PART NAME / PART NUMBER
1		1		**3J-1907**	1	SEAL-O-RING
2		1		**134-0404**	1	SWITCH AS-PRESSURE (HYDRAULIC OIL)
3		1		**1G-8878**	1	FILTER-OIL (ADVANCED EFFICIENCY) (HYDRAULIC)

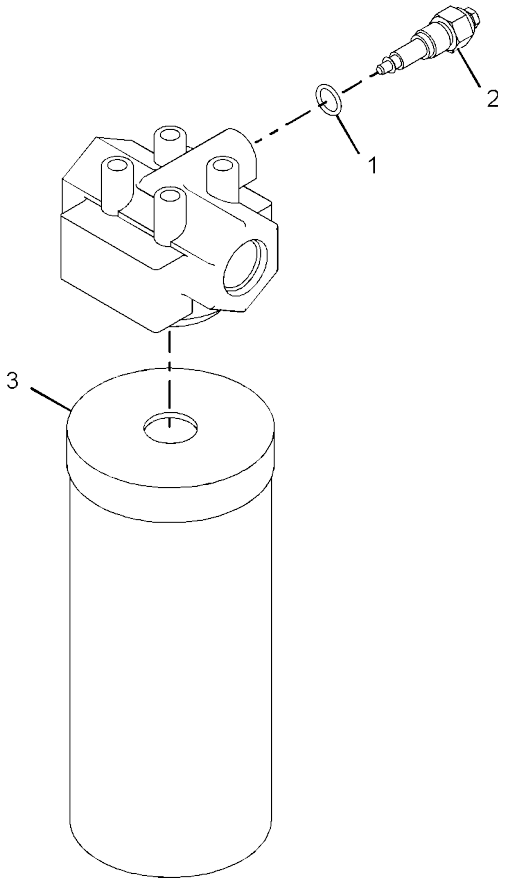

GRAPHIC #1 <END> g01035150

373-2001 HEAD GP-PUMP-PROPEL

S/N: 5B41-UP
PART OF 420-1972 PUMP GP-PISTON AN ATTACHMENT

SMCS-3222, 5070

i07418333

	REF SEE NOTE QTY	GRAPHIC NO 1 2 3 4 5 6	(PRODUCT LEVEL)	REF PAGE	PART NAME PART NUMBER
	1	1	**192-4576**	1	BEARING-ROLLER
	2	1	**161-6154**	2	SEAL-O-RING
	3	1	**5W-1250**	2	PIN
	4	1	**197-1361**	2	VALVE GP-RELIEF (PUMP HEAD, CROSSOVER)
					(EACH INCLUDES)
		1	**6V-5326**	1	SEAL-O-RING
		1	**112-4719**	1	RING-BACKUP
		1	**369-4711**	1	KIT-SEAL
					(INCLUDES O-RING SEALS, BACKUP RINGS, RING AS, RING, SEAL NUT, SHAFT SEAL, SEAL, RETAINING RING & SEALING NUT)
M	5	1	**7X-3340**	4	BOLT-SOCKET HEAD (M14X2X75-MM)
	6	1	**112-4628**	2	SCREW (7/16-20X0.5-IN)
	7	1	**177-6853**	1	VALVE-THROTTLE
	8	1	**422-8379**	2	VALVE GP-SOLENOID (PUMP HEAD)
					(EACH INCLUDES)
		1	**6V-8978**	1	SEAL-O-RING
		1	**033-6043**	1	SEAL-O-RING
		1	**217-3875**	1	SEAL-O-RING
		1	**422-8800**	1	COIL-SOLENOID
	9	1	**192-5284**	1	PLUG
	10	1	**112-4717**	1	SEAL-O-RING

M - METRIC PART

373-2001 **HEAD GP-PUMP** (contd.) **i07418333**

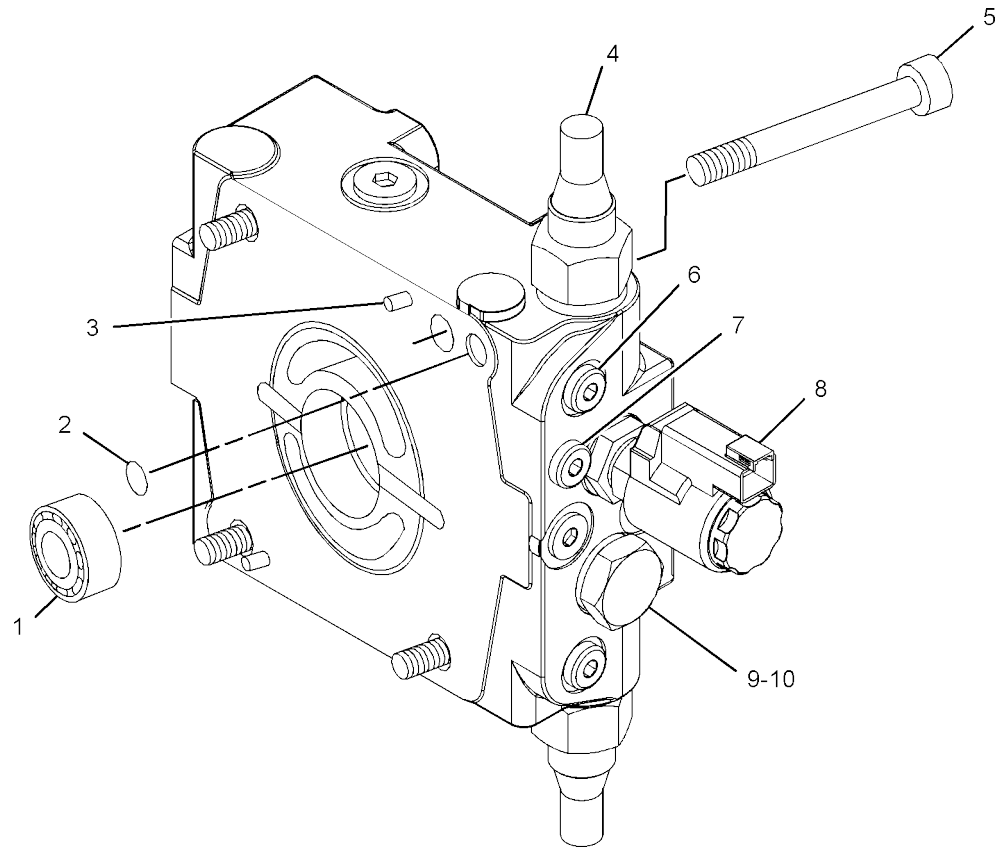

GRAPHIC #1 <END> g03305756

381-1897 HYDRAULIC AR-SOLID DRUM

S/N: G441-UP
PART OF 381-1896, 504-6816 POWER TRAIN AR
AN ATTACHMENT

SMCS-5050

i07416545

NOTE	PART NUMBER	QTY	PART NAME 1 2 3 4 5 6 (PRODUCT LEVEL)	SEE PAGE
Y	*461-2688*	1	LINES GP-BRAKE	267
Y	*386-9551*	1	LINES GP-BRAKE & SHIFT	268
Y	*381-1929*	1	LINES GP-PROPEL	216
Y	*343-6153*	1	MOTOR & MTG GP-PROPEL (PROPEL)	222
Y	*381-1898*	1	PUMP & MTG GP-HYDRAULIC (PROPEL)	318
Y	*351-3398*	1	VALVE & MTG GP-CONTROL (VIBRATORY, BRAKE)	336
Y	*381-1926*	1	VALVE & MTG GP-CONTROL (RETURN)	338

Y - SEPARATE ILLUSTRATION

<END>

386-7544 HYDRAULIC AR

S/N: 5B41-UP
PART OF 386-7954, 504-6841, 537-5500 POWER TRAIN AR AN ATTACHMENT

SMCS-5050

i07418280

NOTE	PART NUMBER	QTY	PART NAME 1 2 3 4 5 6 (PRODUCT LEVEL)	SEE PAGE
Y	*461-2690*	1	KIT-BRAKE RELEASE	266
Y	*458-9401*	1	LINES GP-BRAKE & SHIFT	270
Y	*458-9402*	1	LINES GP-PROPEL	219
Y	*343-8297*	1	MOTOR & MTG GP-PROPEL	224
Y	*458-9403*	1	PUMP & MTG GP-PROPEL	232
Y	*343-6073*	1	VALVE & MTG GP-CONTROL (RETURN)	334
Y	*357-3622*	1	VALVE & MTG GP-SOLENOID (2-SPEED)	342

Y - SEPARATE ILLUSTRATION

<END>

377-5344 HYDRAULIC AR-AUXILIARY

S/N: G441-UP
PART OF 451-3200 COMMON AR

SMCS-5050

i07398825

NOTE	PART NUMBER	QTY	PART NAME 1 2 3 4 5 6 (PRODUCT LEVEL)	SEE PAGE
Y	*343-6075*	1	CYLINDER & MTG GP-STEERING	272
Y	*343-6068*	1	FILTER & MTG GP-HYDRAULIC	289
Y	*381-1920*	1	LINES GP-AUXILIARY HYDRAULIC	295
Y	*381-1928*	1	LINES GP-HYDRAULIC OIL COOLER	304
Y	*383-7239*	1	LINES GP-STEERING	276
Y	*437-8744*	1	PUMP & MTG GP-GEAR	317

Y - SEPARATE ILLUSTRATION

<END>

377-5354 HYDRAULIC AR-AUXILIARY

S/N: 5B41-UP
PART OF 451-3300 COMMON AR

SMCS-5050

i07418048

NOTE	PART NUMBER	QTY	PART NAME 1 2 3 4 5 6 (PRODUCT LEVEL)	SEE PAGE
Y	*343-6075*	1	CYLINDER & MTG GP-STEERING	272
Y	*343-6068*	1	FILTER & MTG GP-HYDRAULIC	289
Y	*381-1921*	1	LINES GP-AUXILIARY HYDRAULIC	296
Y	*341-8825*	1	LINES GP-HYDRAULIC OIL COOLER	302
Y	*343-6070*	1	LINES GP-STEERING	274
Y	*437-8744*	1	PUMP & MTG GP-GEAR	317

Y - SEPARATE ILLUSTRATION

<END>

381-1920 LINES GP-AUXILIARY HYDRAULIC

S/N: G441-UP

PART OF 377-5344 HYDRAULIC AR-AUXILIARY

SMCS-5057

i07398845

	REF SEE NOTE QTY	GRAPHIC NO 1 2 3 4 5 6 (PRODUCT LEVEL)	REF PAGE	PART NAME PART NUMBER
I	1	1 **421-1533**	1	HOSE AS
I	2	1 **364-7544**	1	HOSE AS
I	3	1 **377-0293**	1	HOSE AS
	4	1 **441-6516**	1	HOSE
	5	1 **177-2215**	2	STRAP-DUAL CLAMP
	6	1 **204-2281**	2	STRAP-CABLE
	7	1 **343-2389**	1	CLIP (LOOP)
	8	1 **8T-6703**	2	CLAMP-HOSE
	9	1 **7K-1181**	2	STRAP-CABLE

I - REFER TO HYDRAULIC INFORMATION SYSTEM

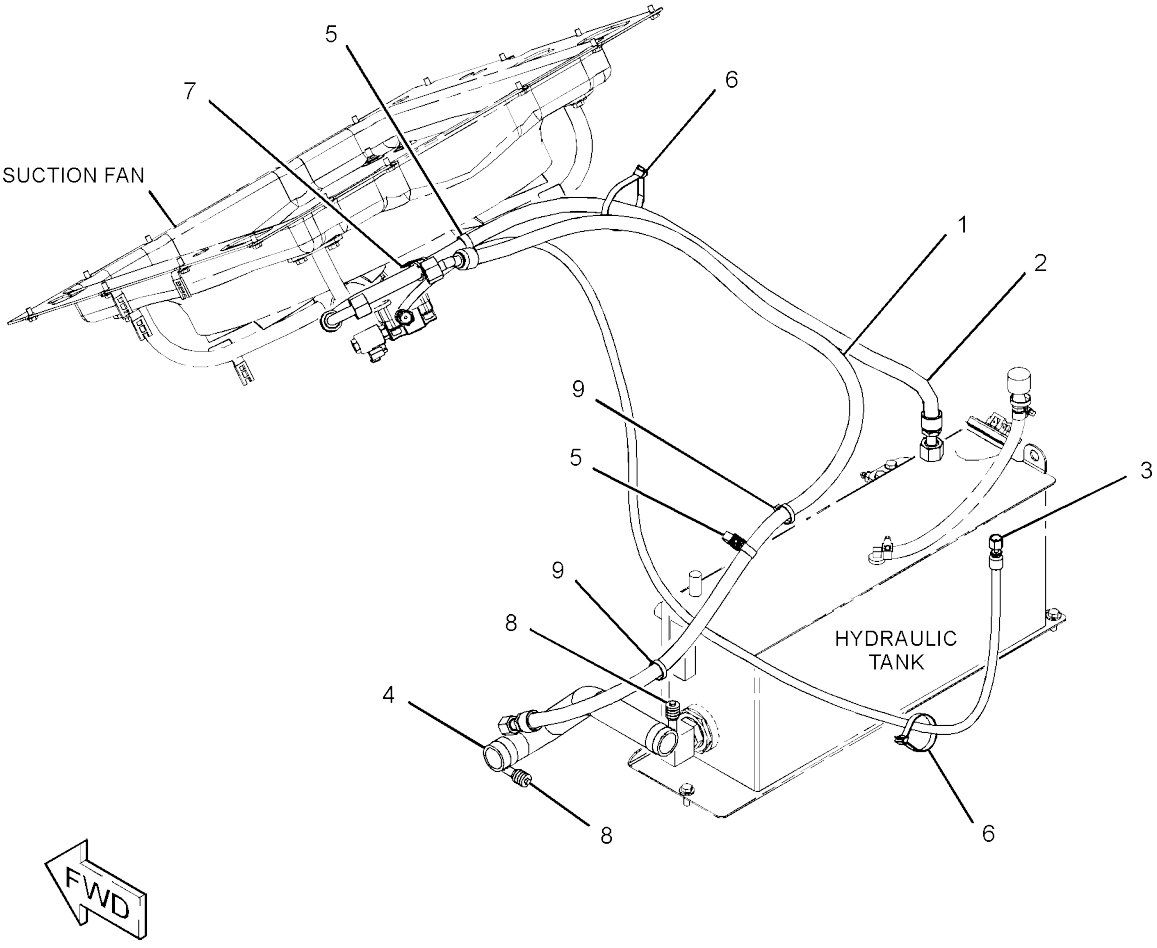

GRAPHIC #1 <END> g03437567

381-1921 LINES GP-AUXILIARY HYDRAULIC

S/N: 5B41-UP

PART OF 377-5354 HYDRAULIC AR-AUXILIARY

SMCS-5057

i07418054

	REF SEE QTY	NOTE	GRAPHIC NO 1 2 3 4 5 6	(PRODUCT LEVEL)	REF PAGE	PART NAME PART NUMBER
I	1		1	**364-7544**	1	HOSE AS
I	2		1	**377-0293**	1	HOSE AS
	3		1	**420-6185**	1	HOSE
I	4		1	**420-6840**	1	HOSE AS
	5		1	**177-2215**	4	STRAP-DUAL CLAMP
	6		1	**204-2281**	2	STRAP-CABLE
	7		1	**343-2389**	1	CLIP (LOOP)
	8		1	**7K-1181**	2	STRAP-CABLE
	9		1	**8T-6703**	2	CLAMP-HOSE

I - REFER TO HYDRAULIC INFORMATION SYSTEM

381-1921 **LINES GP-AUXILIARY HYDRAULIC (**contd.**)** **i07418054**

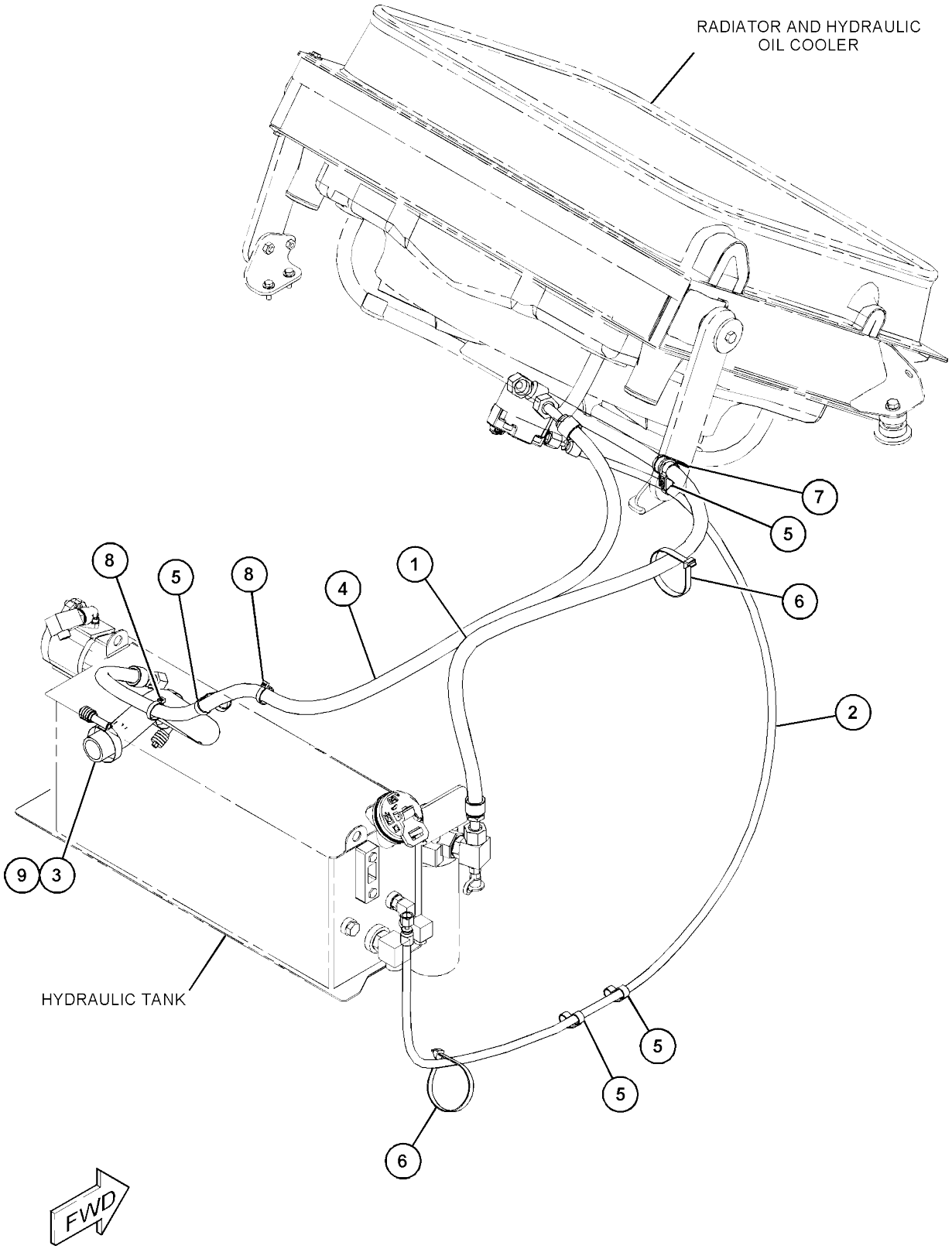

GRAPHIC #1 <END> g03881592

359-9728 LINES GP-HYDRAULIC

S/N: 5B41-UP
PART OF 513-4765 SIDECUTTER
AR AN ATTACHMENT

SMCS-5057

i07418393

	REF SEE NOTE	QTY	GRAPHIC NO 1 2 3 4 5 6	(PRODUCT LEVEL)	REF PAGE	PART NAME PART NUMBER
		1	1	**177-2215**	5	STRAP-DUAL CLAMP
		2	1	**200-6345**	5	SADDLE-MOUNTING (DUAL SWIVEL)
		3	1	**204-2281**	12	STRAP-CABLE
	I	4	1	**261-1124**	1	HOSE AS
	I	5	1	**367-6898**	1	HOSE AS
	I	6	1	**376-7956**	1	HOSE AS
	I	7	1	**369-8098**	1	HOSE AS
	I	8	1	**369-8101**	1	HOSE AS
		9	1	*148-8340*	1	CONNECTOR AS
			1	**3K-0360**	1	SEAL-O-RING
			1	**6V-8398**	1	SEAL-O-RING
			1	**6V-8639**	1	CONNECTOR
		10	1	*148-8361*	1	ELBOW AS (90-DEG)
			1	**3J-7354**	1	SEAL-O-RING
			1	**6V-8397**	1	SEAL-O-RING
			1	**6V-9200**	1	ELBOW
		11	1	*148-8364*	1	ELBOW AS
			1	**3K-0360**	1	SEAL-O-RING
			1	**6V-8398**	1	SEAL-O-RING
			1	**6V-8625**	1	ELBOW
		12	1	**178-3620**	1	STRAP-DUAL CLAMP

I - REFER TO HYDRAULIC INFORMATION SYSTEM

359-9728 **LINES GP-HYDRAULIC** (contd.) **i07418393**

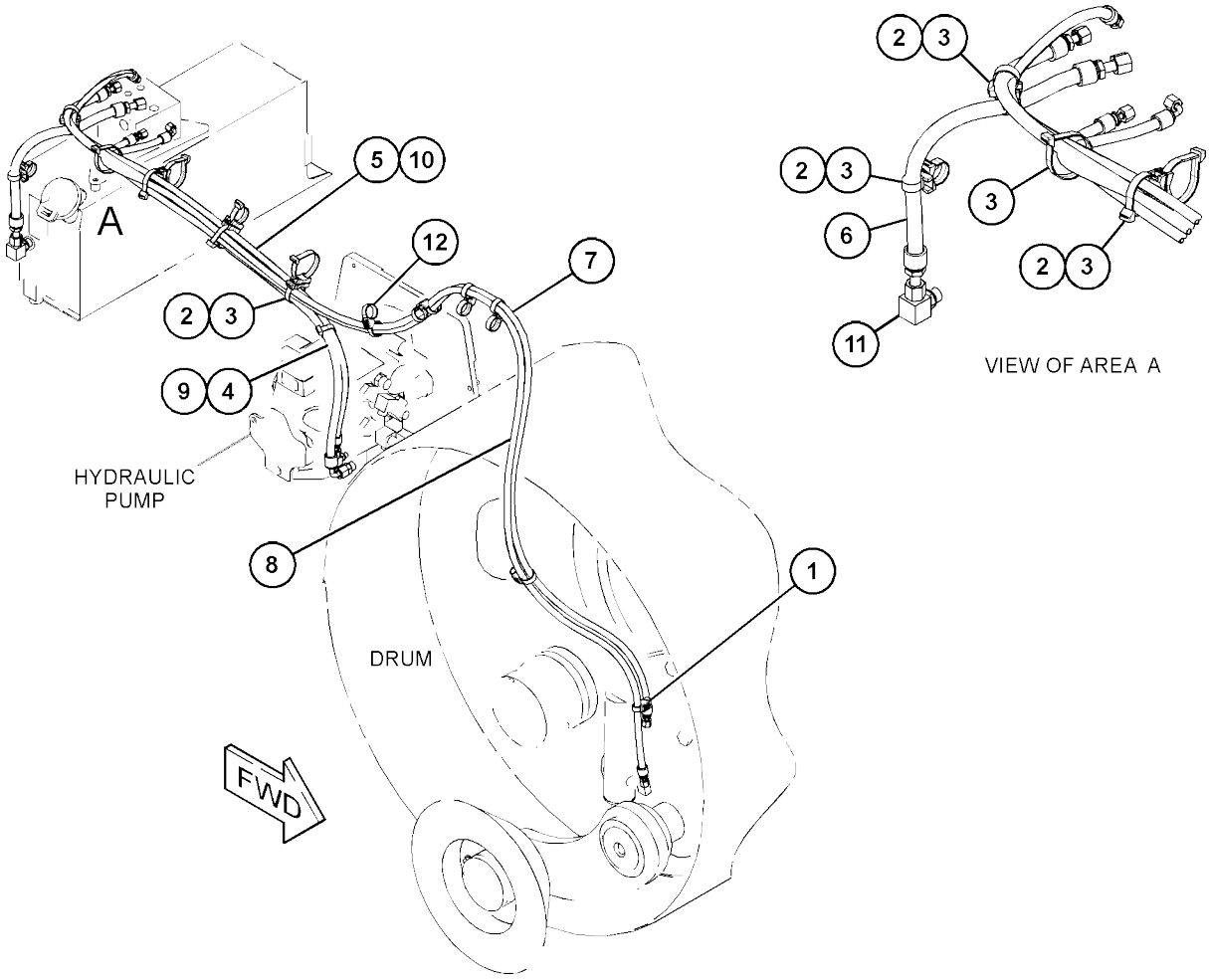

GRAPHIC #1 <END> g03670905

360-6715 LINES GP-HYDRAULIC

S/N: G441-UP
PART OF 513-4763 SIDECUTTER
AR AN ATTACHMENT

SMCS-5057

i07416471

	REF SEE NOTE	QTY	GRAPHIC NO 1 2 3 4 5 6	(PRODUCT LEVEL)	REF PAGE	PART NAME PART NUMBER
I		1	1	**250-4530**	1	HOSE AS
I		2	1	**261-1124**	1	HOSE AS
I		3	1	**367-6898**	1	HOSE AS
I		4	1	**375-7976**	1	HOSE AS
I		5	1	**376-7956**	1	HOSE AS
		6	1	*148-8340*	1	CONNECTOR AS
			1	**3K-0360**	1	SEAL-O-RING
			1	**6V-8398**	1	SEAL-O-RING
			1	**6V-8639**	1	CONNECTOR
		7	1	*148-8361*	1	ELBOW AS (90-DEG)
			1	**3J-7354**	1	SEAL-O-RING
			1	**6V-8397**	1	SEAL-O-RING
			1	**6V-9200**	1	ELBOW
		8	1	*148-8364*	1	ELBOW AS
			1	**3K-0360**	1	SEAL-O-RING
			1	**6V-8398**	1	SEAL-O-RING
			1	**6V-8625**	1	ELBOW
		9	1	**177-2215**	3	STRAP-DUAL CLAMP
		10	1	**200-6345**	6	SADDLE-MOUNTING (DUAL SWIVEL)
		11	1	**204-2281**	15	STRAP-CABLE
		12	1	**204-8000**	1	MOUNTING-CABLE TIE
M		13	1	**5C-7261**	1	NUT (M8X1.25-THD)
		14	1	**5P-4116**	2	WASHER-HARD (8.8X20.5X2-MM THK)
M		15	1	**8T-6912**	1	BOLT (M8X1.25X50-MM)
		16	1	**178-3620**	2	STRAP-DUAL CLAMP

I - REFER TO HYDRAULIC INFORMATION SYSTEM M - METRIC PART

360-6715 **LINES GP-HYDRAULIC (**contd.**)** **i07416471**

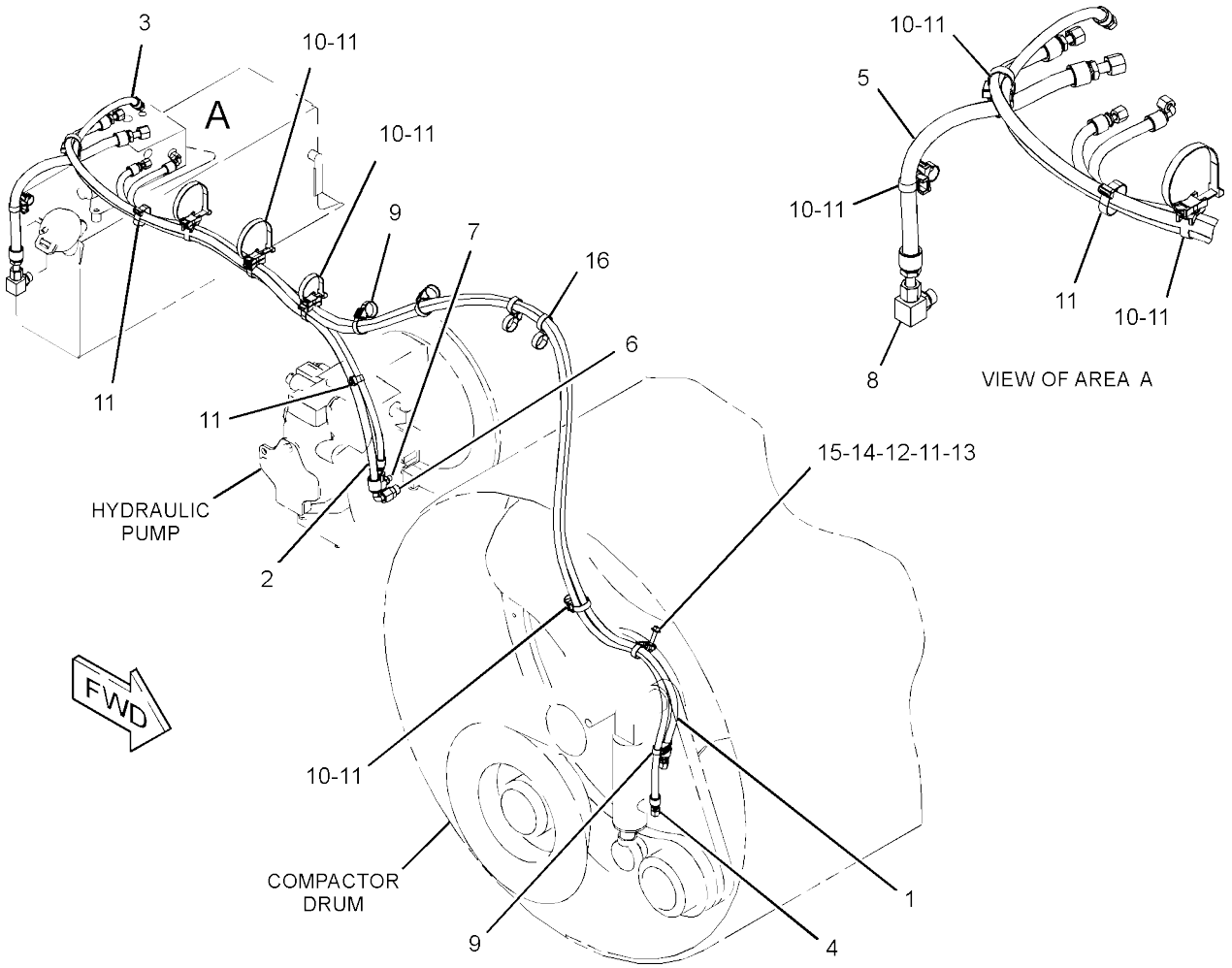

GRAPHIC #1 <END> g03744705

341-8825 LINES GP-HYDRAULIC OIL COOLER

S/N: 5B41-UP

PART OF 377-5354 HYDRAULIC AR-AUXILIARY

SMCS-1374, 5057

i07418051

	REF SEE NOTE QTY	GRAPHIC NO 1 2 3 4 5 6	(PRODUCT LEVEL)	REF PAGE	PART NAME PART NUMBER
	1	1	**124-1008**	1	GUARD
	2	1	**178-3620**	1	STRAP-DUAL CLAMP
	3	1	**203-2287**	1	CLIP
	4	1	**204-2281**	3	STRAP-CABLE
	5	1	**230-3241**	2	ELBOW
	6	1	**158-0851**	1	CLIP
	7	1	**5P-4116**	1	WASHER-HARD (8.8X20.5X2-MM THK)
	8	1	**6V-4356**	1	CLIP (SLOT)
	9	1	**6V-4357**	1	CLIP (TAB)
	10	1	**7K-1181**	6	STRAP-CABLE
	11	1	**7X-7729**	1	WASHER (11X25X3-MM THK)
M	12	1	**8T-4195**	1	BOLT (M10X1.5X30-MM)
M	13	1	**8T-4200**	1	BOLT (M8X1.25X16-MM)
	14	1	**8T-4223**	1	WASHER-HARD (13.5X25.5X3-MM THK)
M	15	1	**8T-4183**	1	BOLT (M12X1.75X40-MM)
	16	1	**8T-4983**	2	CLAMP-HOSE
E	17	1	**5P-1423**		HOSE (49.5-CM)
E	18	1	**5P-1506**		HOSE (238-CM)
E	18A	1	**5P-1506**		HOSE (190-CM)
E	18B	1	**5P-1506**		HOSE (17.5-CM)
E	18C	1	**5P-1506**		HOSE (86.5-CM)
	19	1	**7X-7958**	8	CLAMP-HOSE

E - ORDER BY THE CENTIMETER M - METRIC PART

341-8825 **LINES GP-HYDRAULIC OIL COOLER** (contd.) **i07418051**

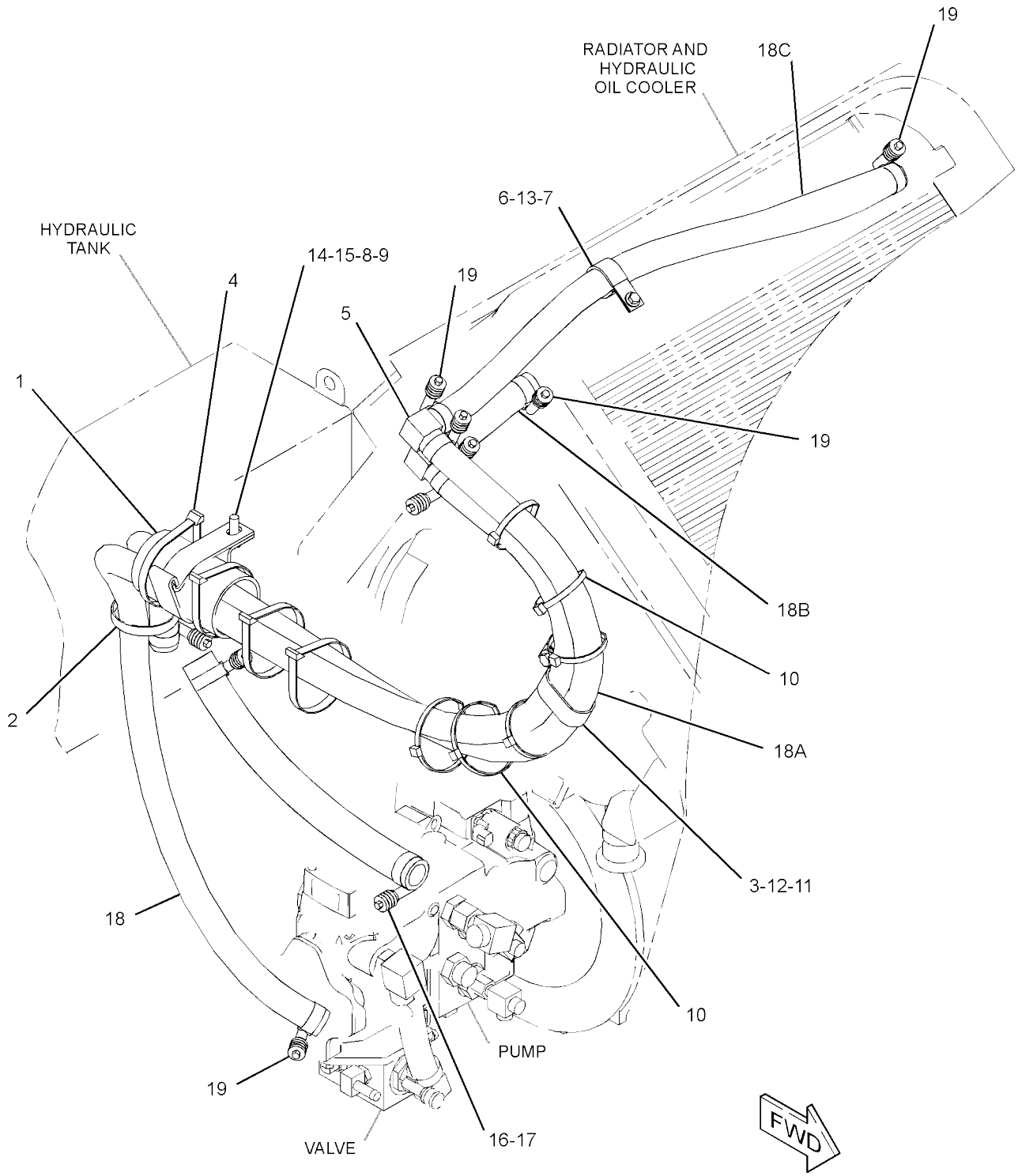

GRAPHIC #1 <END> g03507958

381-1928 LINES GP-HYDRAULIC OIL COOLER-HYDRAULIC

S/N: G441-UP

PART OF 377-5344 HYDRAULIC AR-AUXILIARY

SMCS-1374, 5057

i07398846

REF SEE NOTE	QTY	GRAPHIC NO 1 2 3 4 5 6	(PRODUCT LEVEL)	REF PAGE	PART NAME PART NUMBER
	1	1	**124-1008**	1	GUARD
	2	1	**158-0851**	1	CLIP
	3	1	**203-2287**	1	CLIP
	4	1	**204-2281**	4	STRAP-CABLE
	5	1	**230-3241**	2	ELBOW
	6	1	**5P-4116**	1	WASHER-HARD (8.8X20.5X2-MM THK)
	7	1	**6V-4356**	1	CLIP (SLOT)
	8	1	**6V-4357**	1	CLIP (TAB)
	9	1	**7K-1181**	6	STRAP-CABLE
	10	1	**7X-7729**	1	WASHER (11X25X3-MM THK)
	11	1	**7X-7958**	8	CLAMP-HOSE
M	12	1	**8T-4195**	1	BOLT (M10X1.5X30-MM)
M	13	1	**8T-4200**	1	BOLT (M8X1.25X16-MM)
	14	1	**8T-4223**	1	WASHER-HARD (13.5X25.5X3-MM THK)
M	15	1	**8T-4183**	1	BOLT (M12X1.75X40-MM)
	16	1	**8T-4983**	2	CLAMP-HOSE
E	17	1	**5P-1423**		HOSE (42.5-CM)
E	18	1	**5P-1506**		HOSE (86.5-CM)
E	18A	1	**5P-1506**		HOSE (17.5-CM)
E	18B	1	**5P-1506**		HOSE (228-CM)
E	18C	1	**5P-1506**		HOSE (186-CM)
	19	1	**178-3620**	1	STRAP-DUAL CLAMP

E - ORDER BY THE CENTIMETER M - METRIC PART

381-1928 **LINES GP-HYDRAULIC OIL COOLER** (contd.) **i07398846**

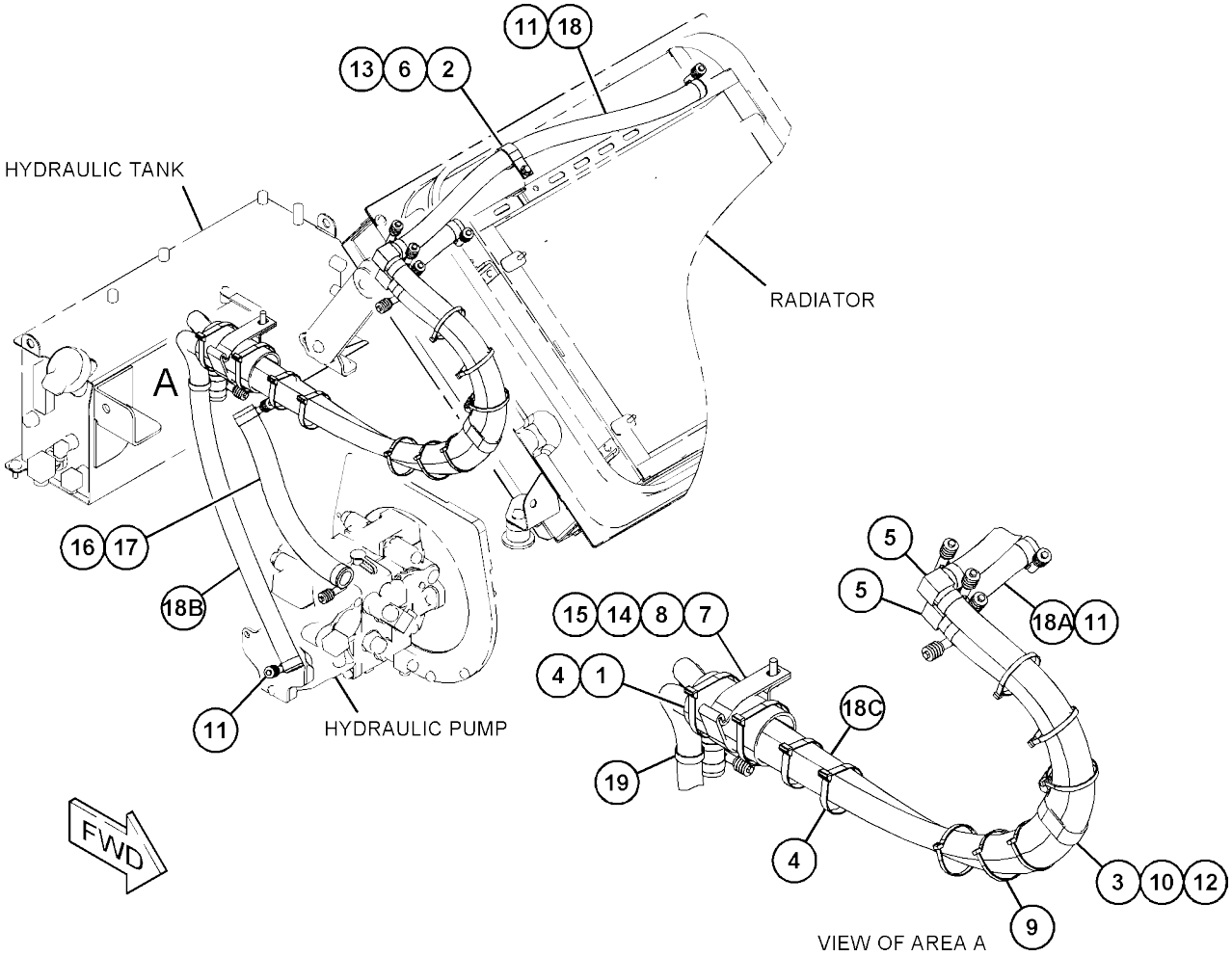

GRAPHIC #1 <END> g03590256

326-3103 MANIFOLD GP-CONTROL

S/N: 5B41-UP
PART OF 357-3622 VALVE & MTG GP-
SOLENOID AN ATTACHMENT

SMCS-5264, 5479

i06864770

	REF SEE NOTE QTY	GRAPHIC NO 1 2 3 4 5 6	(PRODUCT LEVEL)	REF PAGE	PART NAME PART NUMBER
M	1	1	**8T-1158**	1	BOLT-SOCKET HEAD (M8X1.25X20-MM)
	2	1	**245-1181**	1	FLANGE
J	3	1	**277-5676**	1	VALVE GP-SOLENOID (12-VOLT) (DIFFERENTIAL LOCK)
					AVAILABLE REPAIR KIT(S):
J			**245-1912**	1	KIT-SEAL (SOLENOID VALVE)
					(INCLUDES SEAL-O-RINGS)

J - KIT MARKED J SERVICES PART(S)
MARKED J M - METRIC PART

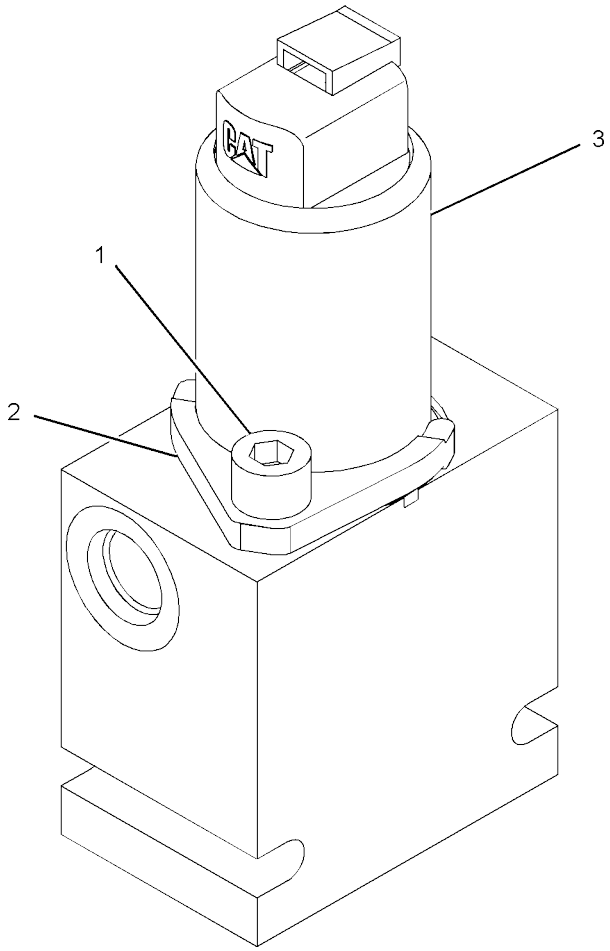

GRAPHIC #1 <END> g01770567

353-5935 MOTOR GP-GEAR

S/N: 5B41-UP; G441-UP

PART OF 355-6236 FAN GP-SUCTION

SMCS-1386, 5061

i05199316

	REF SEE NOTE QTY	GRAPHIC NO 1 2 3 4 5 6	(PRODUCT LEVEL)	REF PAGE	PART NAME PART NUMBER
M	1	1	**160-8499**	1	NUT (M12X1.5-THD)
	2	1	**108-2787**	1	LOCKWASHER
	3	1	**3E-4333**	1	KEY-WOODRUFF
M	4	1	**3E-8028**	4	BOLT-SOCKET HEAD (M10X1.5X150-MM)
L	5	1	**095-0936**	1	RING-RETAINING
	6	1	**095-0919**	1	RING-RETAINING
	7	1	**150-5785**	4	DOWEL
	8	1	**8T-4896**	4	WASHER-HARD (10.2X18.5X2.5-MM THK)
					PARTS SHOWN IN GRAPHIC(S) WITHOUT A REFERENCE NUMBER ARE NOT SERVICED SEPARATELY
					AVAILABLE REPAIR KIT(S):
L			**378-3247**	1	KIT-SEAL (GEAR PUMP)
					(INCLUDES SHAFT SEAL, O-RING SEALS, SEALS & PARTS MARKED J IN GRAPHIC)

L - KIT MARKED L SERVICES PART(S) MARKED L M - METRIC PART

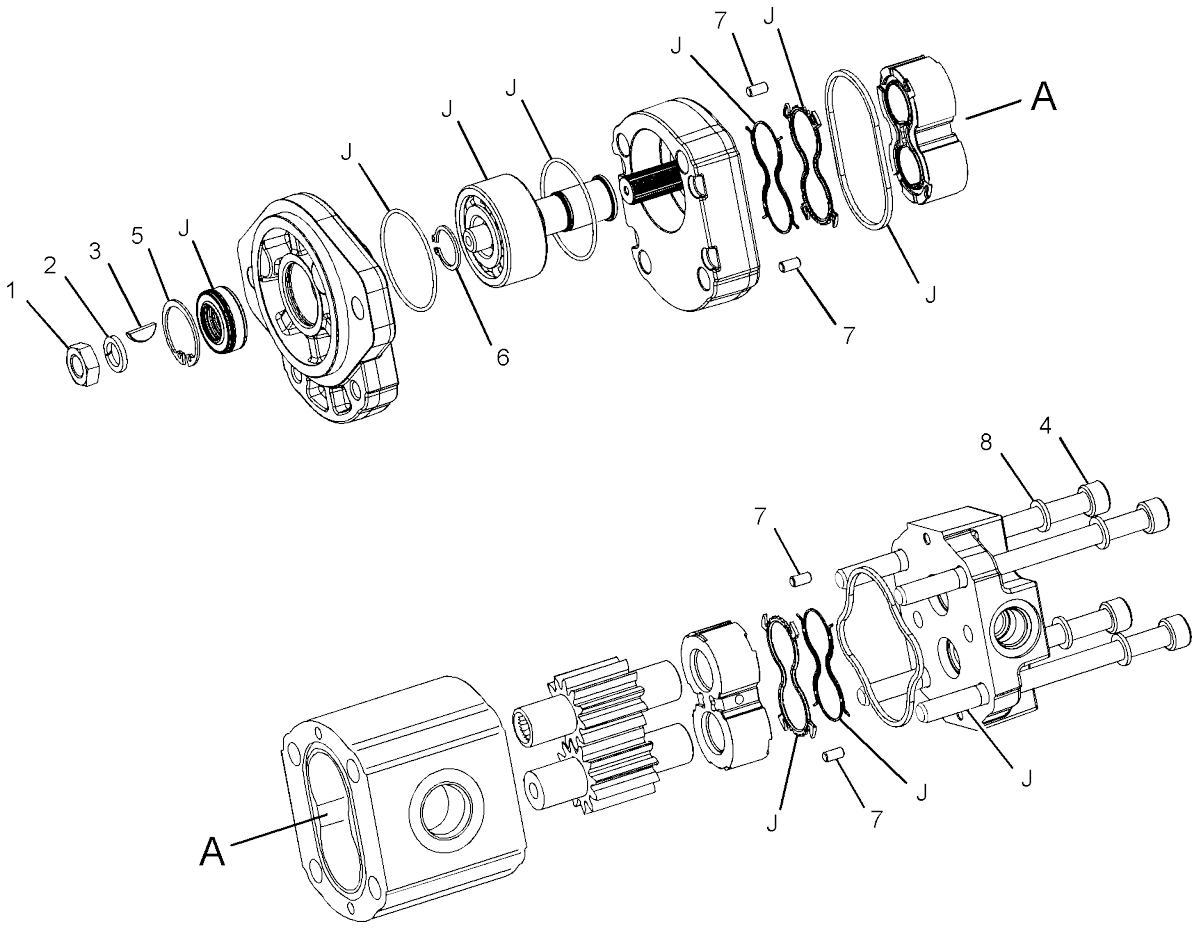

GRAPHIC #1 <END> g02711300

356-0767 MOTOR GP-PISTON

S/N: 5B41-UP
PART OF 343-8297 MOTOR & MTG GP-PROPEL AN ATTACHMENT

SMCS-5058

i07418321

	REF SEE NOTE QTY	GRAPHIC NO 1 2 3 4 5 6	(PRODUCT LEVEL)	REF PAGE	PART NAME PART NUMBER
J	1	1	**270-4497**	1	SEAL AS-DUO-CONE
J	2	1	**7X-4772**	1	SEAL-LIP TYPE
J	3	1	**270-9361**	2	SEAL-RING
	4	1	**270-4578**	10	ROLLER
	5	1	**249-4497**	14	SPRING
J	6	1	**382-4825**	1	SEAL-O-RING
B	7	1	**270-9366**	1	SHIM (0.1-MM THK)
B	8	1	**270-9367**	1	SHIM (0.5-MM THK)
	9	1	**270-9364**	22	PLATE
	10	1	**270-9365**	18	PLATE
J	11	1	**270-9363**	1	SEAL-OUTER
J	12	1	**033-6041**	1	SEAL-O-RING
	13	1	**140-2512**	1	PLUG
M	14	1	**8T-1159**	24	BOLT-SOCKET HEAD (M10X1.5X25-MM)
J	15	1	**323-4703**	1	GASKET
J	16	1	**270-9370**	1	SEAL-RING
M	17	1	**203-1074**	8	BOLT-SOCKET HEAD (M16X2X55-MM)
	18	1	**270-9371**	8	WASHER
M	19	1	**3E-8008**	16	BOLT-SOCKET HEAD (M16X2X90-MM)
J	20	1	**270-9360**	1	SEAL-RING
	21	1	**270-9355**	1	PIN-STOP
J	22	1	**270-9359**	1	SEAL-ROD
	23	1	**270-9354**	1	DISTRIBUTOR
J	24	1	**270-9358**	1	SEAL-ROD
J	25	1	**270-9357**	1	SEAL-ROD
J	26	1	**270-9356**	1	SEAL-ROD
	27	1	**270-4496**	1	RING-SPLIT
	28	1	**271-0606**	1	BEARING AS-SPECIAL
	29	1	**135-3245**	1	BEARING
	30	1	**227-6722**	10	STUD
M	31	1	**303-9445**	10	NUT-HEX FLANGE (M22X1.5-THD)
	32	1	**329-0947**	1	PLUG AS
		1	**3K-0360**	1	SEAL-O-RING
M	33	1	**8T-0267**	2	BOLT-SOCKET HEAD (M6X1X12-MM)
					AVAILABLE REPAIR KIT(S):
J			**382-9273**	1	KIT-SEAL (PISTON MOTOR)
J			**382-9273**	1	KIT-SEAL (PISTON MOTOR)

B - USE AS REQUIRED
J - KIT MARKED J SERVICES PART(S)
MARKED J M - METRIC PART

356-0767 **MOTOR GP-PISTON** (contd.) **i07418321**

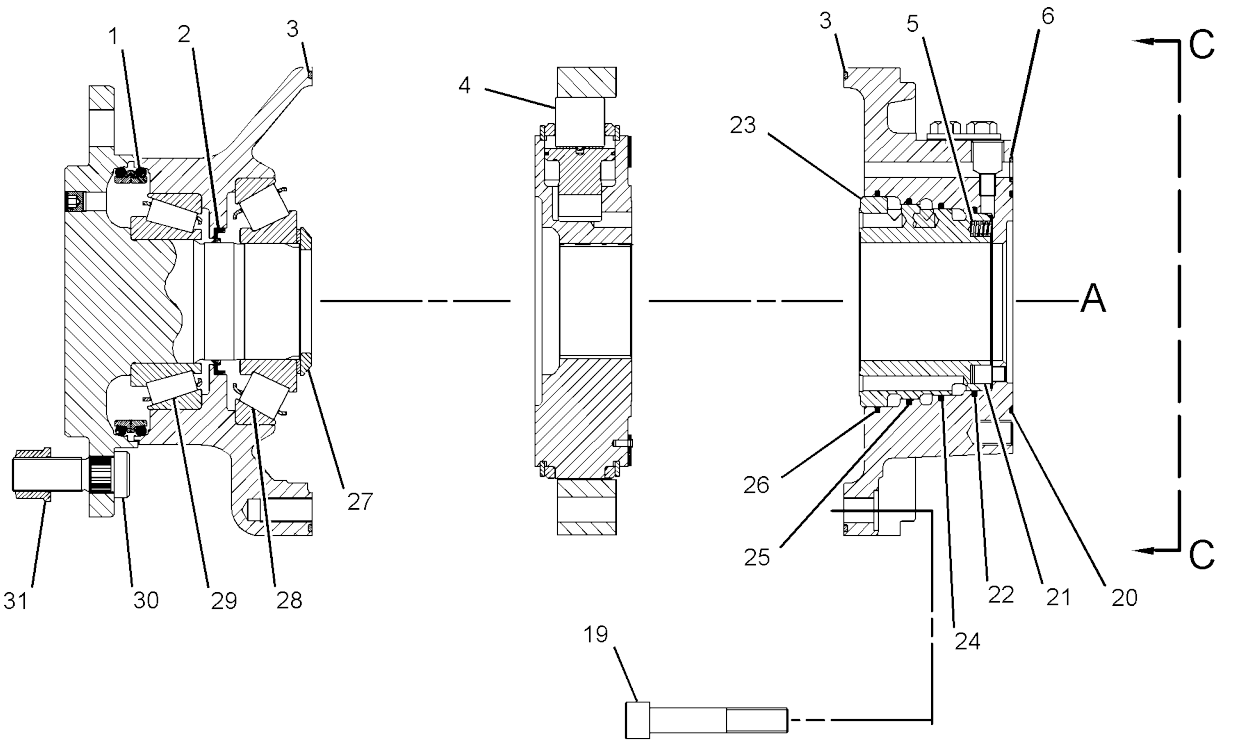

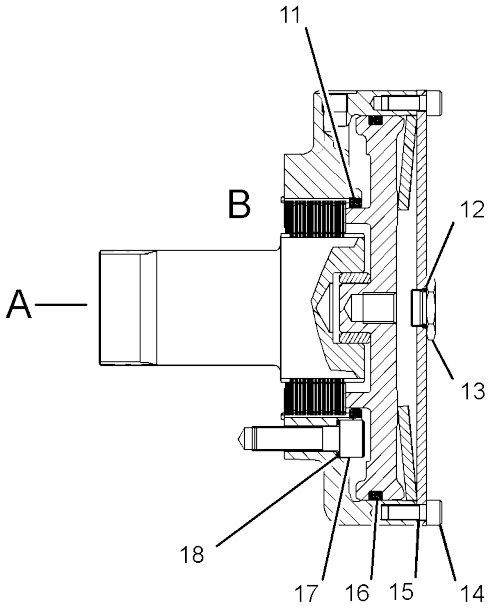

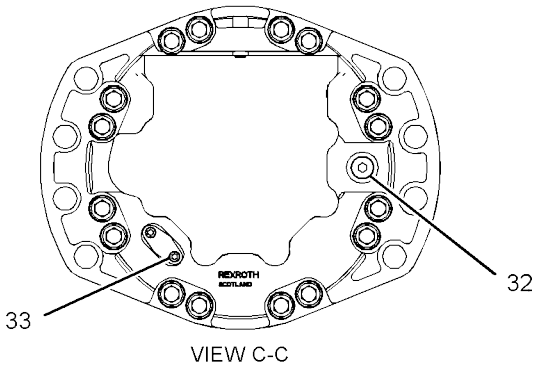

VIEW C-C

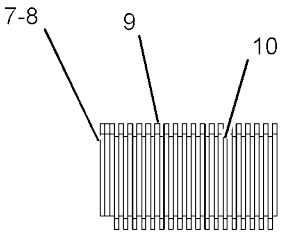

VIEW OF AREA B

GRAPHIC #1 <END> g03313359

375-1476 MOTOR GP-PISTON

S/N: 5B41-UP
PART OF 351-3371 MOTOR & MTG GP-PISTON AN ATTACHMENT

SMCS-5058

i07417974

	REF SEE NOTE QTY	GRAPHIC NO 1 2 3 4 5 6	(PRODUCT LEVEL)	REF PAGE	PART NAME PART NUMBER	
	1	1	**139-2801**	1	COVER	
	2	1	**139-2840**	1	SEAL-SHAFT	
	3	1	**2W-1145**	1	RING-RETAINING (INTERNAL)	
	4	1	**5E-8770**	1	SEAL-O-RING	
Y	5	1	**389-5882**	1	ROTATING GP-MOTOR	327
	6	1	**9S-8005**	2	PLUG (3/4-16-THD)	
	7	1	**3K-0360**	2	SEAL-O-RING	
M	8	1	**6V-5192**	3	BOLT-SOCKET HEAD (M8X1.25X30-MM)	
	9	1	**6J-2244**	2	SEAL-O-RING	
M	10	1	**177-1809**	3	BOLT-SOCKET HEAD (M8X1.25X65-MM)	
	11	1	**242-0814**	1	PIN	
	12	1	**103-8911**	1	SHIM (0.5-MM THK)	
	13	1	**389-5885**	1	ORIFICE	
	14	1	**124-9891**	2	PLUG	
	15	1	**5J-2974**	2	SEAL-O-RING	
	16	1	**124-9899**	2	SPACER	
	17	1	**112-4686**	1	PIN	
M	18	1	**8T-1158**	3	BOLT-SOCKET HEAD (M8X1.25X20-MM)	
M	19	1	**9X-6154**	3	BOLT-SOCKET HEAD (M8X1.25-THD)	

M - METRIC PART
Y - SEPARATE ILLUSTRATION

375-1476 **MOTOR GP-PISTON** (contd.) **i07417974**

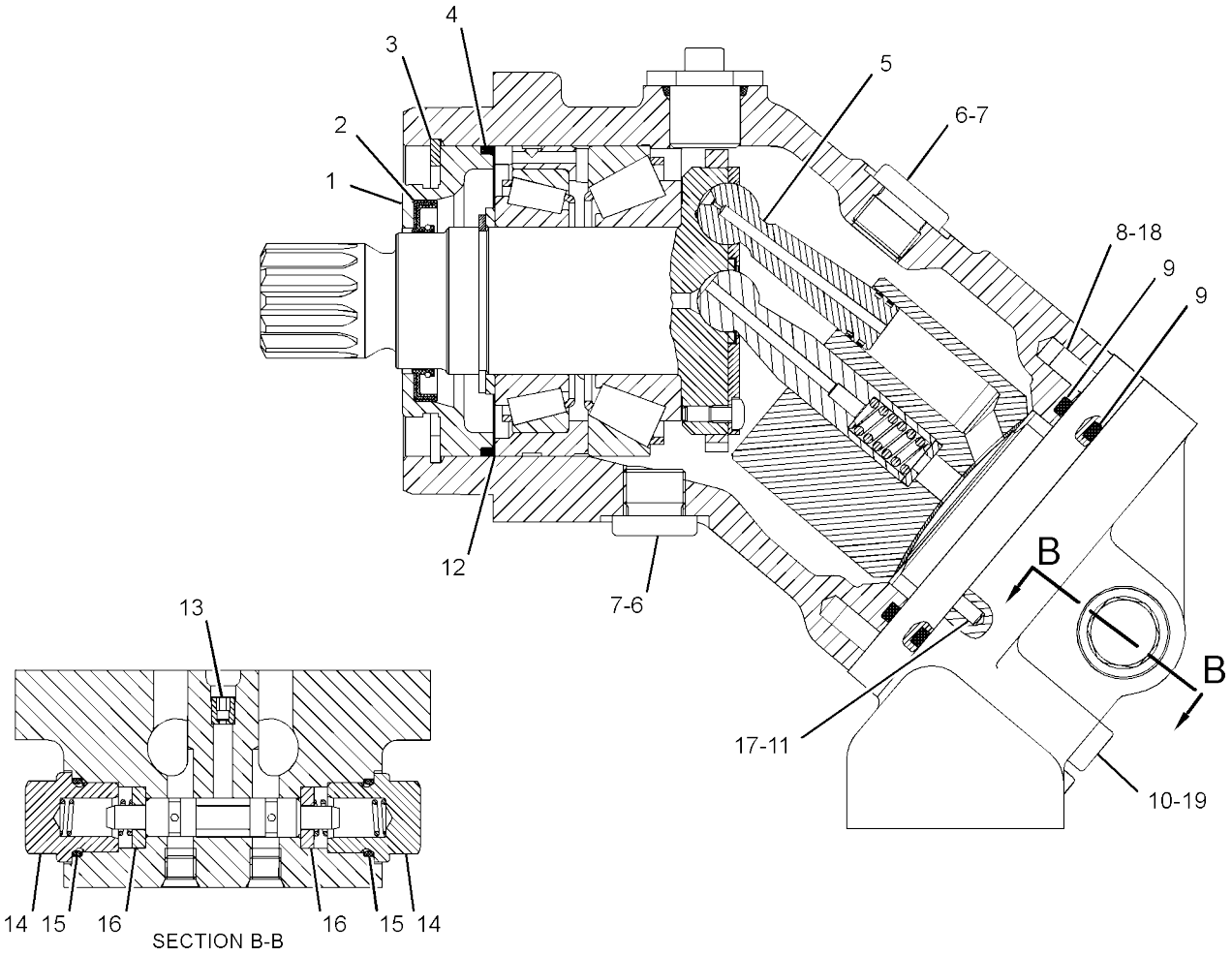

GRAPHIC #1 <END> g03809170

419-3263 MOTOR GP-PISTON

S/N: G441-UP
PART OF 343-6153 MOTOR & MTG GP-PROPEL AN ATTACHMENT

SMCS-5058

i07416595

	REF SEE NOTE QTY	GRAPHIC NO 1 2 3 4 5 6	(PRODUCT LEVEL)	REF PAGE	PART NAME PART NUMBER
M	1	1	**8T-4195**	8	BOLT (M10X1.5X30-MM)
	2	1	**278-8723**	1	KIT-COVER
					(INCLUDES PARTS MARKED 'J' IN THE GRAPHIC)
	3	1	**307-3042**	1	KIT-GEAR
					(INCLUDES O-RINGS, PINON GEARS, PLANET GEARS, CENTERING RING, CIR-CLIPS & REDUCTION AS)
	4	1	**386-6630**	1	KIT-SEAL
					(INCLUDES PARTS MARKED 'L' IN THE GRAPHIC)
	5	1	**386-6631**	1	KIT-ROTATING
	6	1	**386-6632**	1	KIT-SWASHPLATE
					(INCLUDES PISTON, SPRING & BALLS)
	7	1	**490-5486**	1	KIT-SHAFT
					(INCLUDES SHAFT & RETAINING RING)
	8	1	**385-9509**	1	KIT-BEARING
					(INCLUDES ROLLER BEARING & ALSO INCLUDES PARTS MARKED 'S' IN THE GRAPHIC)
	9	1	**490-5487**	1	KIT-ELECTRIC MOTOR
					(INCLUDES BACKUP RINGS, PLUG, COVER, SPRINGS, BRAKE PISTON, DISC, SINTERED DISC, ELASTIC RING, BRAKE SHAFT, ALSO INCLUDES PARTS MARKED 'T' IN THE GRAPHIC)
	9A	1	**5P-5757**	1	SEAL-O-RING
	9B	1	**6D-7146**	2	SEAL-O-RING
	9C	1	**6V-5203**	1	RING-RETAINING
	10	1	**385-9394**	1	KIT-SEAL
					(INCLUDES PARTS MARKED 'U' IN THE GRAPHIC)

M - METRIC PART

419-3263 **MOTOR GP-PISTON** (contd.) **i07416595**

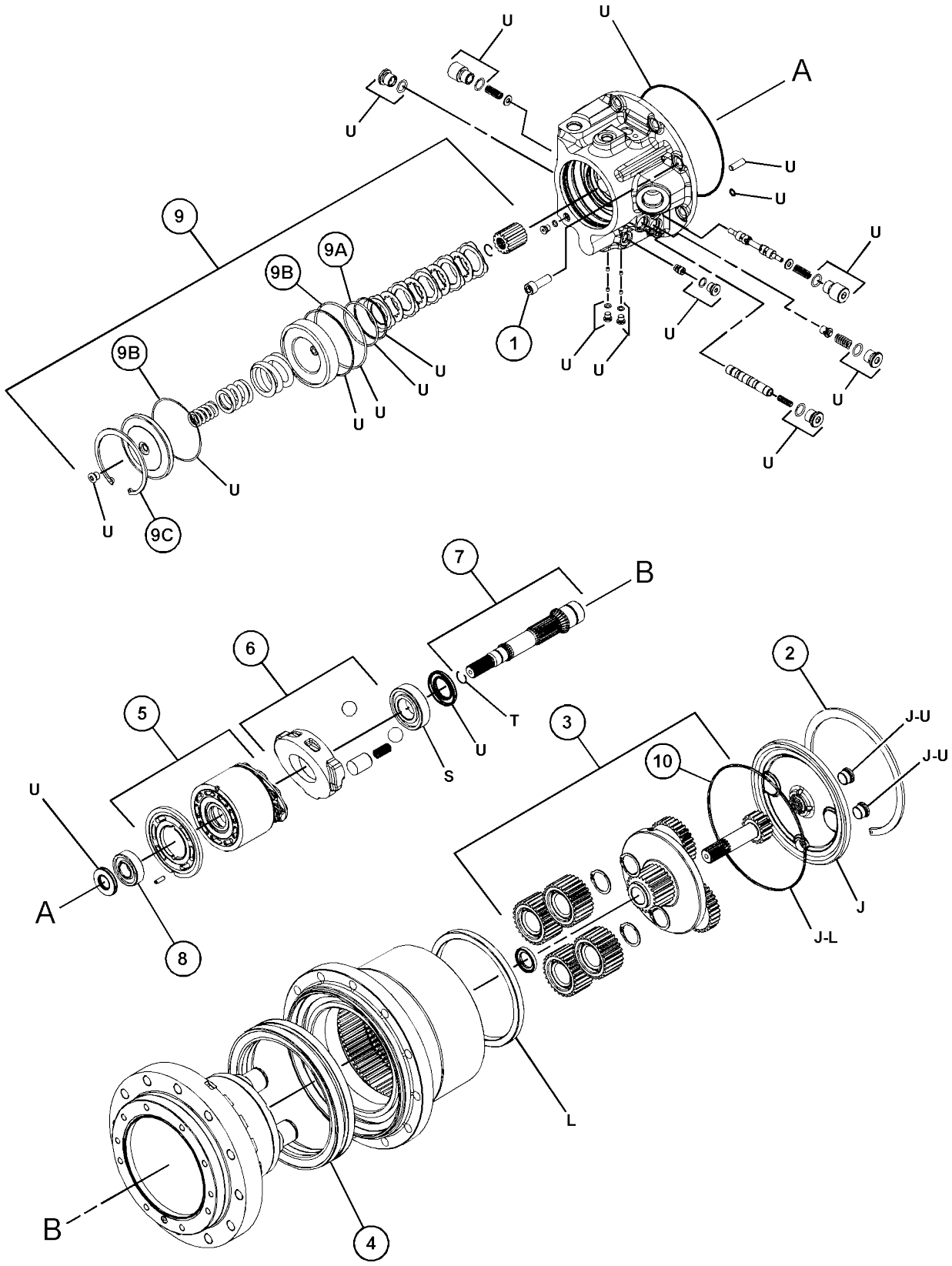
U
U
A
U
U
U

475-3593 MOTOR GP-PISTON-VIBRATORY

S/N: 5B41-UP

PART OF 344-0513 MOTOR & MTG GP-VIBRATORY

AN ATTACHMENT

SMCS-5058

i07417982

	REF NO	GRAPHIC NO	(PRODUCT LEVEL)	REF PAGE	PART NAME / PART NUMBER	
SEE NOTE	QTY	1 2 3 4 5 6				
	1	1	**8T-9597**	1	RING-RETAINING	
	2	1	**185-0303**	1	SEAL-OIL	
	3	1	**155-9122**	1	SWASHPLATE	
Y	4	1	**493-1777**	1	ROTATING GP-MOTOR	328
	5	1	**6V-8352**	1	SEAL-O-RING	
	6	1	**231-4707**	1	SEAL-O-RING	
	7	1	**9X-8979**	1	DOWEL	
	8	1	**191-7583**	1	BEARING-TAPERED	
	9	1	**191-7582**	1	SHIM (2.5-MM THK)	
	10	1	**148-1970**	2	PIN-DOWEL	
	11	1	**9S-8005**	1	PLUG (3/4-16-THD)	
	12	1	**3K-0360**	1	SEAL-O-RING	
	13	1	**364-2043**	1	BEARING-ROLLER	
	14	1	**194-9473**	1	RING	
M	15	1	**9X-6153**	2	BOLT (M6X1X10-MM)	
M	16	1	**8T-0341**	4	BOLT-SOCKET HEAD (M10X1.5X60-MM)	
	17	1	**124-9891**	2	PLUG	
	18	1	**107-3117**	2	SEAL-O-RING	
	19	1	**124-9900**	2	SPRING	
	20	1	**124-9899**	2	SPACER	
	21	1	**124-9898**	1	PLUG	
	22	1	**6V-8351**	1	SEAL-O-RING	
	23	1	**124-9901**	1	SPRING	
	24	1	**1G-6423**	1	VALVE-PISTON	
	25	1	**388-6427**	1	ORIFICE	
	26	1	**125-4572**	1	RING-RETAINING	

M - METRIC PART
Y - SEPARATE ILLUSTRATION

475-3593 **MOTOR GP-PISTON** (contd.) **i07417982**

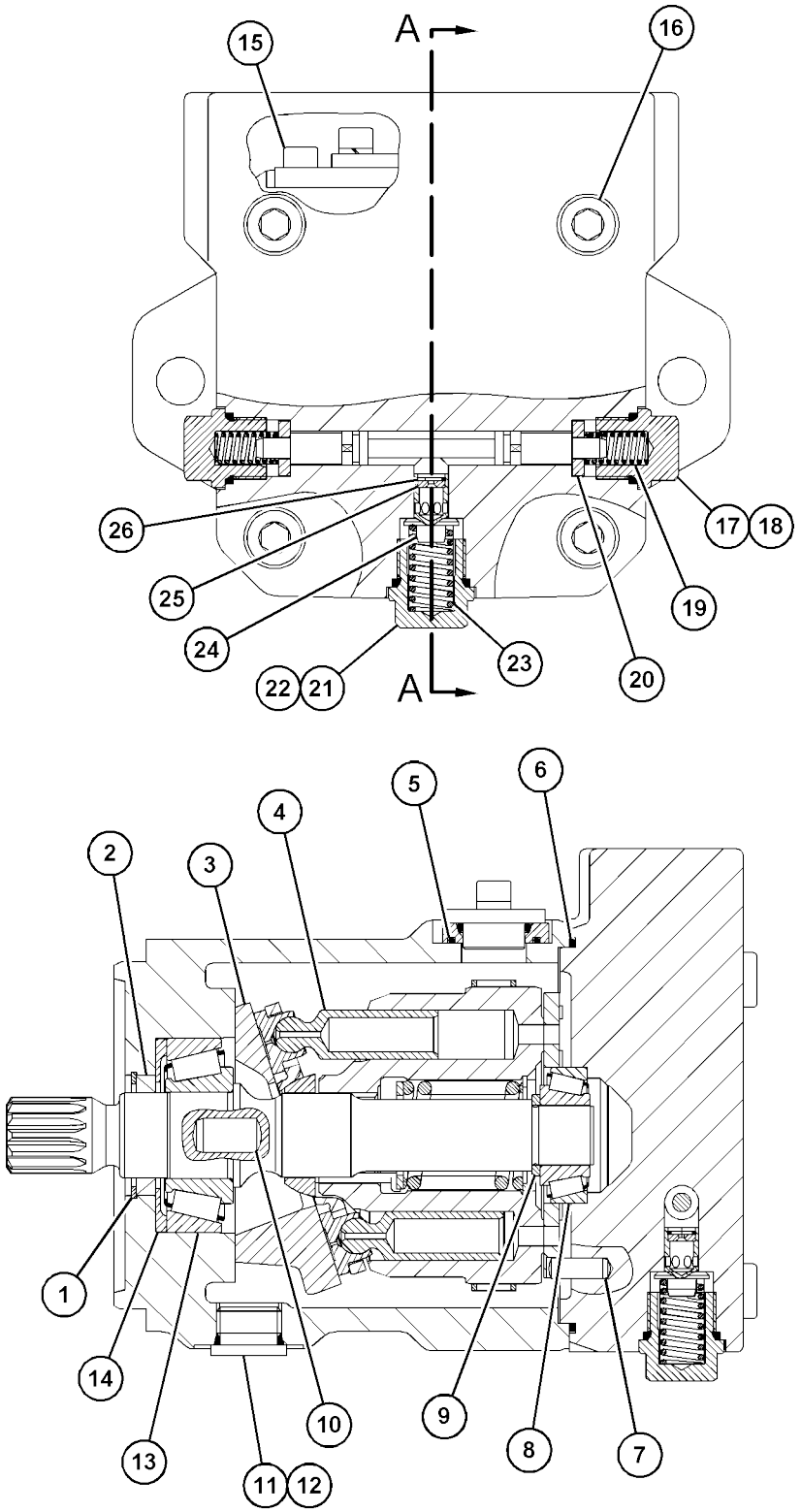

SECTION A-A

GRAPHIC #1 <END> g06082872

475-3595 MOTOR GP-PISTON

S/N: G441-UP
PART OF 343-6139 MOTOR & MTG GP-VIBRATORY
AN ATTACHMENT

SMCS-5058

i07399915

	REF NO	GRAPHIC NO	(PRODUCT LEVEL)	REF PAGE	PART NAME / PART NUMBER	SEE NOTE QTY
	1	1	**8T-9597**	1	RING-RETAINING	
	2	1	**185-0303**	1	SEAL-OIL	
	3	1	**340-2125**	1	SWASHPLATE	
Y	4	1	**493-1777**	1	ROTATING GP-MOTOR	328
	5	1	**6V-8352**	1	SEAL-O-RING	
	6	1	**231-4707**	1	SEAL-O-RING	
	7	1	**9X-8979**	1	DOWEL	
	8	1	**191-7583**	1	BEARING-TAPERED	
	9	1	**191-7582**	1	SHIM (2.5-MM THK)	
	10	1	**148-1970**	2	PIN-DOWEL	
	11	1	**364-2043**	1	BEARING-ROLLER	
	12	1	**194-9473**	1	RING	
	13	1	**295-9554**	1	SHAFT-DRIVE	
M	14	1	**9X-6153**	2	BOLT (M6X1X10-MM)	
M	15	1	**8T-0341**	4	BOLT-SOCKET HEAD (M10X1.5X60-MM)	

M - METRIC PART
Y - SEPARATE ILLUSTRATION

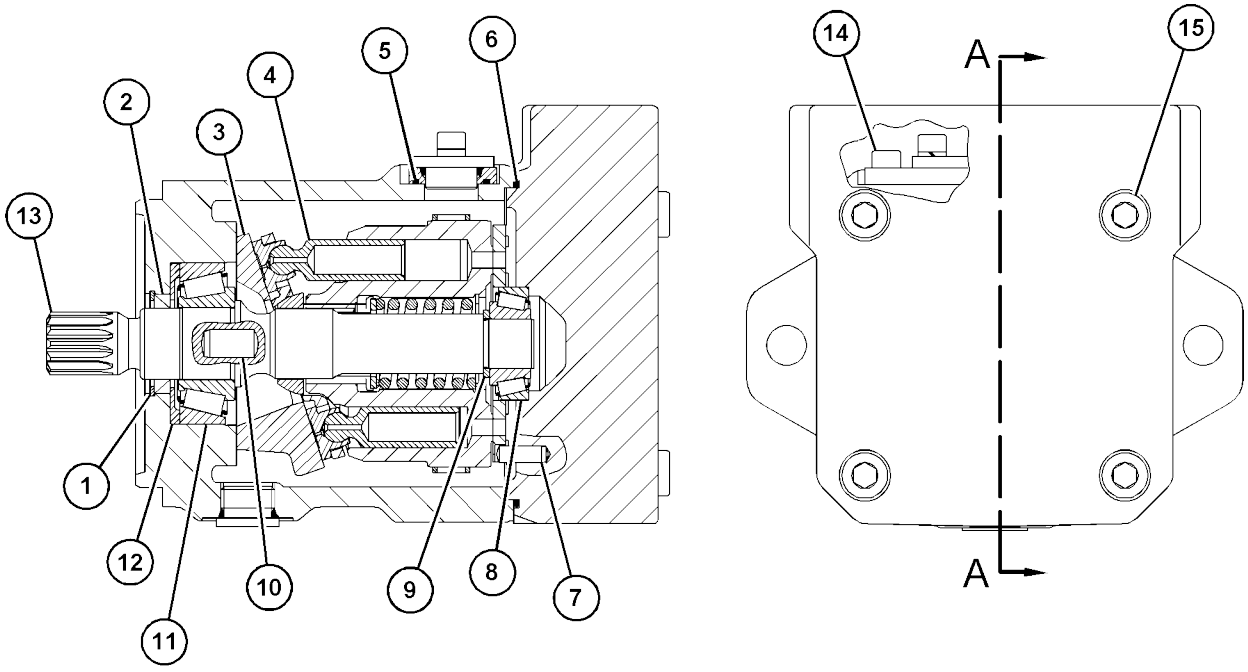

SECTION A-A

GRAPHIC #1 <END> g06082418

437-8744 PUMP & MTG GP-GEAR

S/N: 5B41-UP; G441-UP
PART OF 377-5344, 377-5354 HYDRAULIC AR-AUXILIARY

SMCS-5073

i07398848

	REF SEE NOTE QTY	GRAPHIC NO 1 2 3 4 5 6 (PRODUCT LEVEL)	REF PAGE	PART NAME PART NUMBER	
	1	1 **250-5703**	1	CONNECTOR	
Y	2	1 **420-6184**	1	PUMP GP-GEAR	321
M	3	1 **434-0776**	2	BOLT-12 POINT HEAD (M10X1.5X30-MM)	
	4	1 *148-8346*	1	ELBOW AS	
		1 **3K-0360**	1	SEAL-O-RING	
		1 **6V-8398**	1	SEAL-O-RING	
		1 **8T-1686**	1	ADAPTER-ELBOW	
	5	1 *148-8382*	1	ELBOW AS	
		1 **3D-2824**	1	SEAL-O-RING	
		1 **7J-9108**	1	SEAL-O-RING	
		1 **8T-0404**	1	ELBOW	
	6	1 **6D-1004**	1	GASKET	
	7	1 **7M-8485**	1	SEAL-O-RING	
	8	1 **8T-4121**	2	WASHER-HARD (11X21X2.5-MM THK)	

M - METRIC PART
Y - SEPARATE ILLUSTRATION

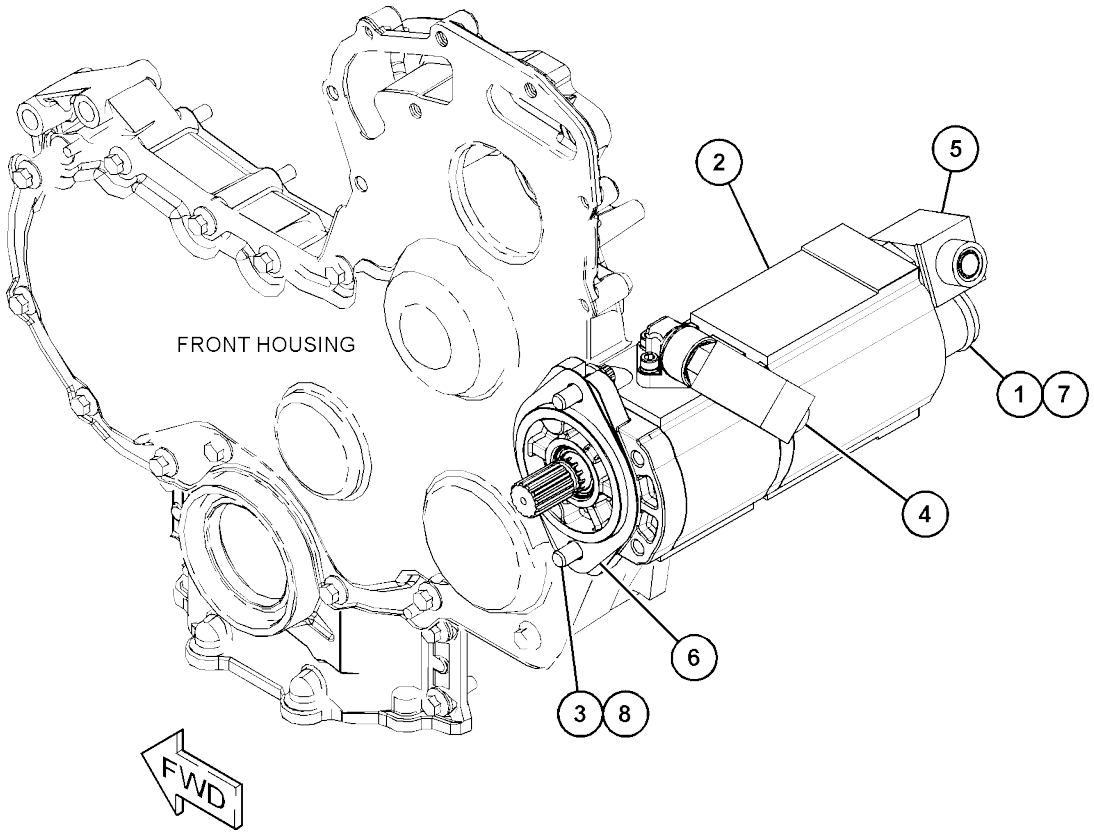

GRAPHIC #1 <END> g03459076

381-1898 PUMP & MTG GP-HYDRAULIC

S/N: G441-UP
PART OF 381-1897 HYDRAULIC
AR AN ATTACHMENT

SMCS-5070, 5073

i07416616

	REF SEE NOTE QTY	GRAPHIC NO 1 2 3 4 5 6	(PRODUCT LEVEL)	REF PAGE	PART NAME PART NUMBER	
	1	1	**102-1733**	1	FLANGE-NYLON	
	2	1	**191-8924**	1	COUPLING AS (HYDRAULIC)	
M		1	**6V-8200**	1	BOLT-SOCKET HEAD (M12X1.75X35-MM)	
Y	3	1	**398-7456**	1	PUMP GP-PISTON (HYDROSTATIC)	323
	4	1	**348-2078**	1	VALVE AS-CHECK (PUMP CASE DRAIN)	
		1	**3D-2824**	1	SEAL-O-RING	
	5	1	**363-7106**	1	SUPPORT-ENGINE	
	6	1	**0T-0924**	8	BOLT (3/8-24X1.5-IN)	
	7	1	*148-8339*	2	CONNECTOR AS	
					(EACH INCLUDES)	
		1	**6V-8716**	1	CONNECTOR (STRAIGHT)	
		1	**6V-9746**	1	SEAL-O-RING	
		1	**7M-8485**	1	SEAL-O-RING	
	8	1	*148-8378*	1	ELBOW AS	
		1	**3J-1907**	1	SEAL-O-RING	
		1	**6V-8397**	1	SEAL-O-RING	
		1	**6V-8724**	1	ELBOW	
	9	1	*148-8390*	1	ELBOW AS	
		1	**2M-9780**	1	SEAL-O-RING	
		1	**6V-8626**	1	ELBOW	
		1	**7J-9108**	1	SEAL-O-RING	
	10	1	*148-8392*	1	ELBOW AS	
		1	**6V-9746**	1	SEAL-O-RING	
		1	**6V-9853**	1	ELBOW	
	11	1	*148-8444*	2	TEE AS-SWIVEL	
					(EACH INCLUDES)	
		1	**6V-8398**	2	SEAL-O-RING	
		1	**6V-9837**	1	TEE-SWIVEL	
	12	1	*153-6252*	2	CONNECTOR AS	
					(EACH INCLUDES)	
		1	**6V-8398**	1	SEAL-O-RING	
		1	**7M-8485**	1	SEAL-O-RING	
		1	**9X-8408**	1	CONNECTOR	
	13	1	*164-5567*	3	COUPLER AS-QUICK DISCONNECT (MALE)	
					(EACH INCLUDES)	
		1	**6V-3965**	1	FITTING (QUICK DISCONNECT)	
		1	**214-7568**	1	SEAL-O-RING	
	14	1	**203-3470**	1	CONNECTOR	
	15	1	*241-6215*	1	ELBOW AS	
		1	**3J-1907**	1	SEAL-O-RING	
		1	**6V-8076**	1	ELBOW	
	16	1	**3J-1907**	1	SEAL-O-RING	
	17	1	**6V-0852**	3	CAP-DUST	
	18	1	**8T-4121**	3	WASHER-HARD (11X21X2.5-MM THK)	
M	19	1	**8T-4183**	2	BOLT (M12X1.75X40-MM)	
M	20	1	**8T-4196**	3	BOLT (M10X1.5X35-MM)	
	21	1	**8T-4223**	2	WASHER-HARD (13.5X25.5X3-MM THK)	

381-1898 **PUMP & MTG GP-HYDRAULIC** (contd.) **i07416616**

REF SEE NOTE QTY	GRAPHIC NO 1 2 3 4 5 6	(PRODUCT LEVEL)	REF PAGE	PART NAME PART NUMBER
22	1	*9U-6998*	1	ADAPTER AS
	1	**3D-2824**	1	SEAL-O-RING
	1	**3E-4041**	1	ELBOW

M - METRIC PART
Y - SEPARATE ILLUSTRATION

381-1898 **PUMP & MTG GP-HYDRAULIC** (contd.) **i07416616**

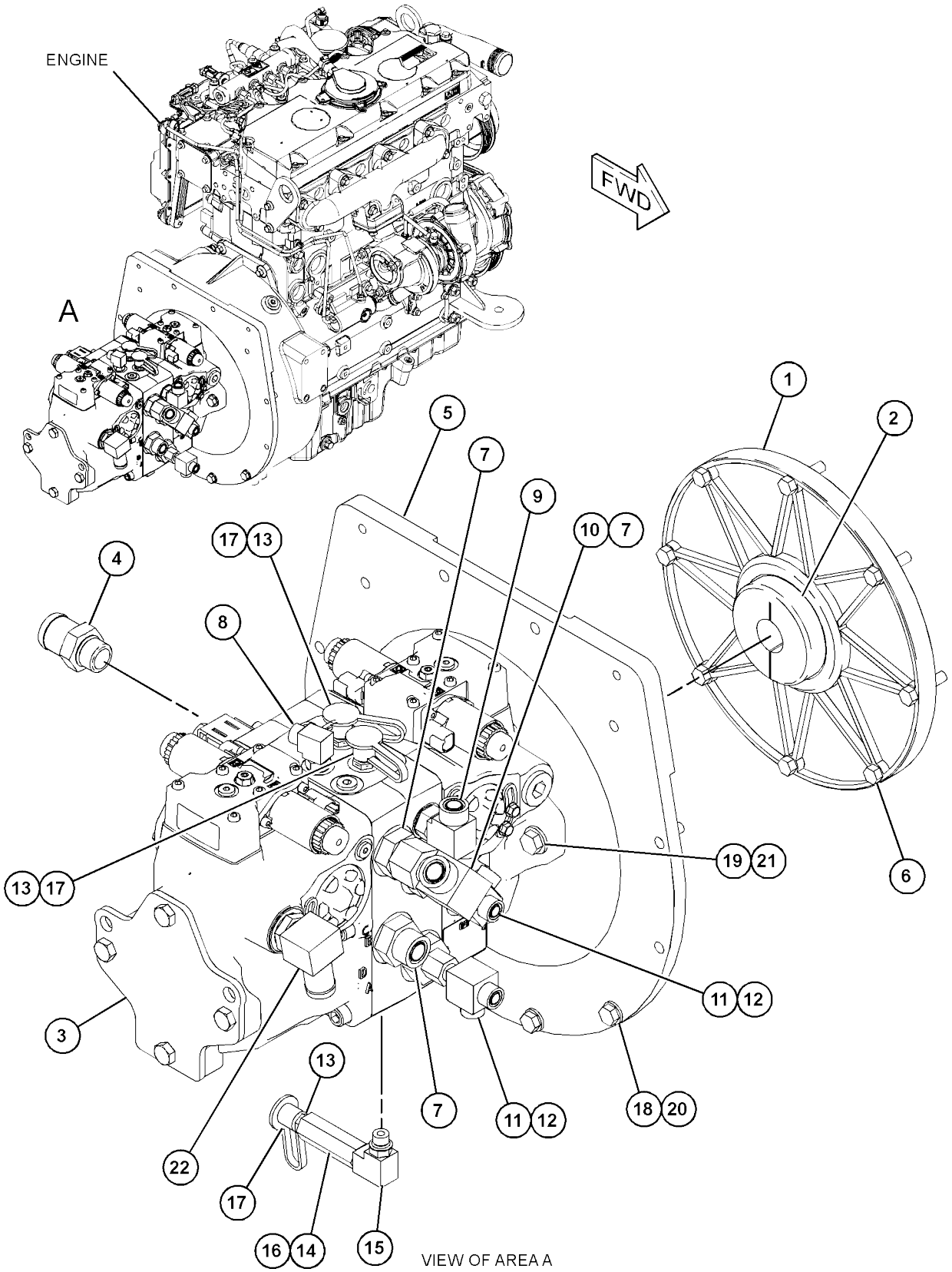

GRAPHIC #1 <END> g03684904

420-6184 PUMP GP-GEAR

S/N: 5B41-UP; G441-UP
PART OF 437-8744 PUMP & MTG GP-GEAR

SMCS-5073

i07398849

	REF SEE NOTE QTY	GRAPHIC NO 1 2 3 4 5 6	(PRODUCT LEVEL)	REF PAGE	PART NAME PART NUMBER
H	1	1	**455-1570**	2	SEAL-LIP TYPE
	2	1	**033-6034**	1	SEAL-O-RING
H	3	1	**095-0936**	1	RING-RETAINING
	4	1	**442-6237**	1	WASHER-BACKUP
	5	1	**150-5785**	4	DOWEL
	6	1	**3V-2431**	4	WASHER (10.2X16X2-MM THK)
	7	1	**421-2993**	2	PIN-SUPPORT
					AVAILABLE REPAIR KIT(S):
H			**457-5518**	1	KIT-SEAL
					(ALSO INCLUDES SERVICES PARTS MARKED "J' IN THE GRAPHIC)

H - (KIT MARKED H SERVICES PARTS H)

420-6184 **PUMP GP-GEAR (**contd.**)** **i07398849**

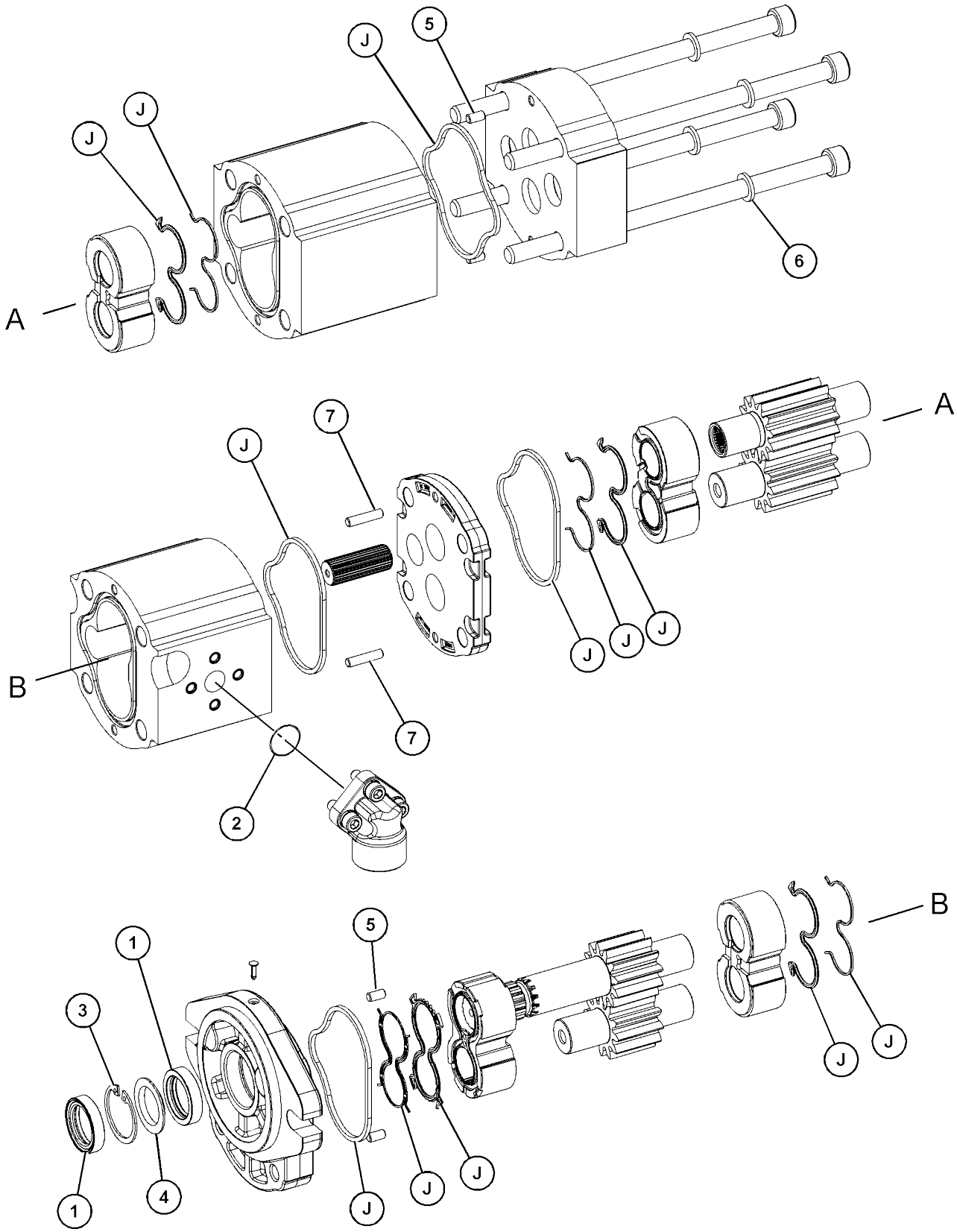

GRAPHIC #1 <END> g03681550

398-7456 PUMP GP-PISTON

S/N: 5B41-UP; G441-UP

PART OF 381-1898 PUMP & MTG GP-HYDRAULIC, 357-3814 PUMP & MTG GP-VIBRATORY AN ATTACHMENT

SMCS-5070

i07550997

	REF SEE NOTE QTY	GRAPHIC NO 1 2 3 4 5 6	(PRODUCT LEVEL)	REF PAGE	PART NAME PART NUMBER
	1	1	**278-8737**	2	VALVE GP-PUMP CONTROL
	2	1	**378-2831**	2	KIT-SWASHPLATE
	3	1	**278-8748**	1	SHAFT-DRIVE
	4	1	**278-8751**	4	SPRING
	5	1	**378-2832**	1	VALVE GP-RELIEF (CHARGE)
	6	1	**278-8743**	1	VALVE GP-SOLENOID
	7	1	**341-7658**	4	VALVE GP-RELIEF (CROSSOVER)
	8	1	**278-8750**	1	PLATE (CCW)
	9	1	**278-8749**	1	PLATE (CW)
	10	1	**278-8747**	1	SHAFT-DRIVE
	11	1	**9S-8002**	4	PLUG (7/16-20-THD)
	12	1	**9S-8008**	2	PLUG (1-1/16-12-THD)
	13	1	**341-7637**	2	KIT-BEARING (PISTON PUMP)
					(EACH INCLUDES BEARING)
	14	1	**278-8739**	2	ROTATING GP-PUMP
M	15	1	**8C-3413**	6	BOLT-SOCKET HEAD (M12X1.75X120-MM)
	16	1	**278-8744**	4	KIT-SOLENOID
					PARTS SHOWN IN GRAPHIC(S) WITHOUT A REFERENCE NUMBER ARE NOT SERVICED SEPARATELY
					AVAILABLE REPAIR KIT(S):
			278-8738	2	KIT-PISTON
			278-8736	1	KIT-SEAL (PISTON PUMP)
					(INCLUDES RINGS, PINS, GASKETS, SHAFT SEAL & RETAINER)
			278-8742	1	KIT-BEARING (PISTON PUMP)
					(INCLUDES RING, SLEEVE, COUPLING & SHAFT BEARING)

M - METRIC PART

398-7456 **PUMP GP-PISTON** (contd.) **i07550997**

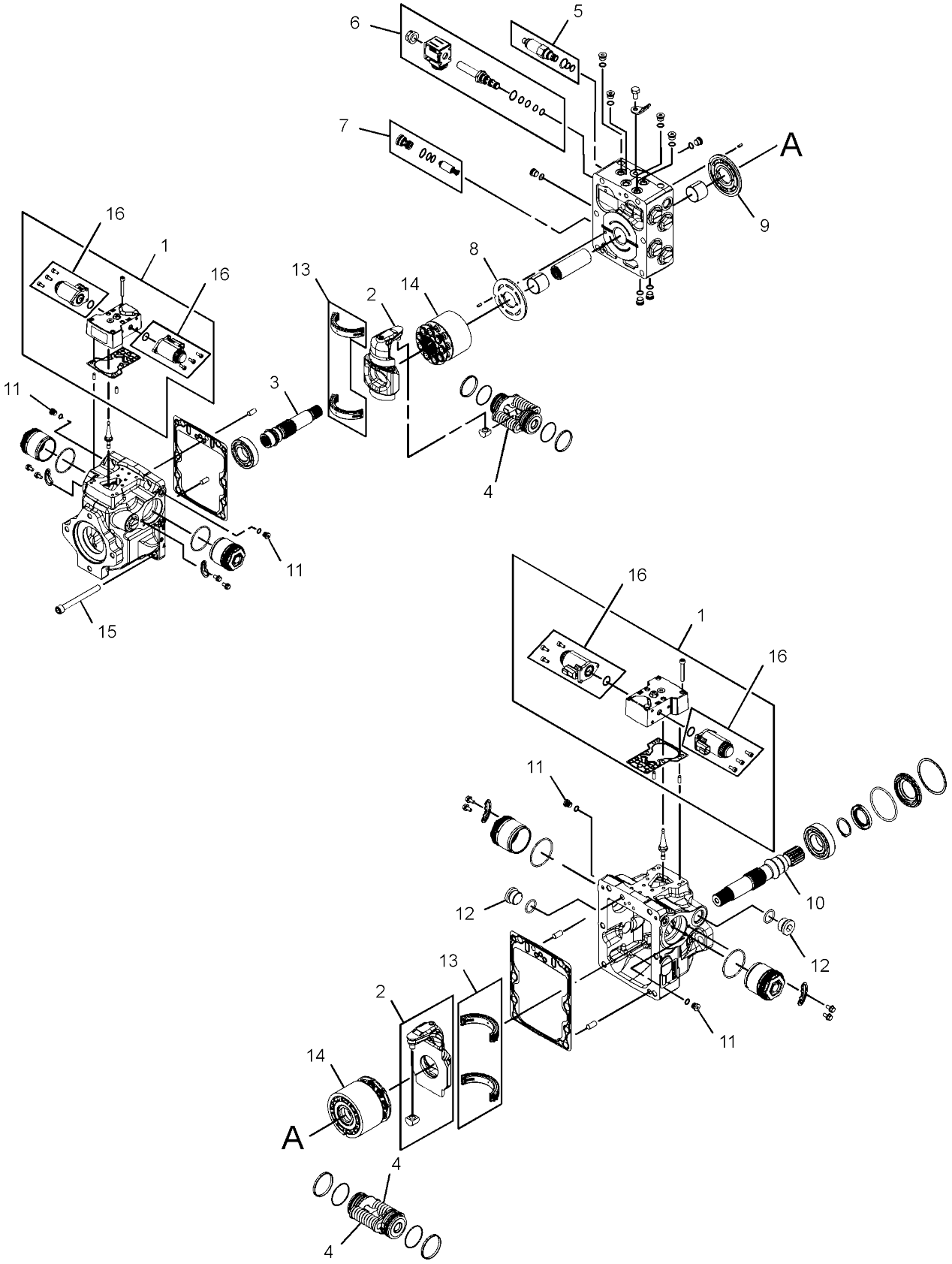

GRAPHIC #1 <END> g03665090

420-1972 PUMP GP-PISTON

S/N: 5B41-UP
PART OF 458-9403 PUMP & MTG GP-PROPEL AN ATTACHMENT

SMCS-5070

i07418309

	REF SEE NOTE QTY	GRAPHIC NO 1 2 3 4 5 6	(PRODUCT LEVEL)	REF PAGE	PART NAME PART NUMBER	
	1	1	**112-4628**	3	SCREW (7/16-20X0.5-IN)	
	2	1	**167-6805**	2	PIN	
Y	3	1	**373-2002**	1	VALVE GP-PUMP CONTROL	347
Y	4	1	**190-7632**	1	ROTATING GP-PUMP	329
J	5	1	**5J-3886**	1	SEAL-O-RING	
	6	1	**202-6535**	1	PIN	
Y	7	1	**373-2001**	1	HEAD GP-PUMP	291
J	8	1	**3K-0715**	2	SEAL-O-RING	
	9	1	**348-0402**	1	COUPLING	
M	10	1	**8T-1159**	4	BOLT-SOCKET HEAD (M10X1.5X25-MM)	
	11	1	**7M-8485**	1	SEAL-O-RING	
	12	1	**112-4630**	1	SCREW (1-5/16-THD)	
	13	1	**3J-1907**	1	SEAL-O-RING	
	14	1	**9S-8004**	1	PLUG (9/16-18-THD)	
	15	1	**384-8359**	1	ACTUATOR GP-PUMP (HYDRAULIC)	
		1	**117-7273**	1	SEAL-O-RING	
		1	**161-6154**	1	SEAL-O-RING	
M	16	1	**8T-1158**	4	BOLT-SOCKET HEAD (M8X1.25X20-MM)	
M	17	1	**160-8499**	1	NUT (M12X1.5-THD)	
	18	1	**145-3812**	2	RING	
J	19	1	**145-3813**	2	RING-SEAL	
	20	1	**2M-9780**	1	SEAL-O-RING	
	21	1	**112-4627**	1	SCREW-LOCK	
	22	1	**9T-3928**	1	PLUG AS	
		1	**187-8001**	1	SEAL	
	23	1	**122-9718**	1	PIN	
	24	1	**3J-7354**	3	SEAL-O-RING	
					AVAILABLE REPAIR KIT(S):	
J			**361-3937**	1	KIT-SEAL	
					(ALSO INCLUDES O-RING SEALS, GASKET, SEALING NUTS, RETAINING RING, BACKUP RINGS, RING AS, RING, NUT SEALS, SHAFT SEAL, SEAL & FACE SEALS)	

J - KIT MARKED J SERVICES PART(S)
MARKED J M - METRIC PART
Y - SEPARATE ILLUSTRATION

420-1972 **PUMP GP-PISTON (**contd.**)** **i07418309**

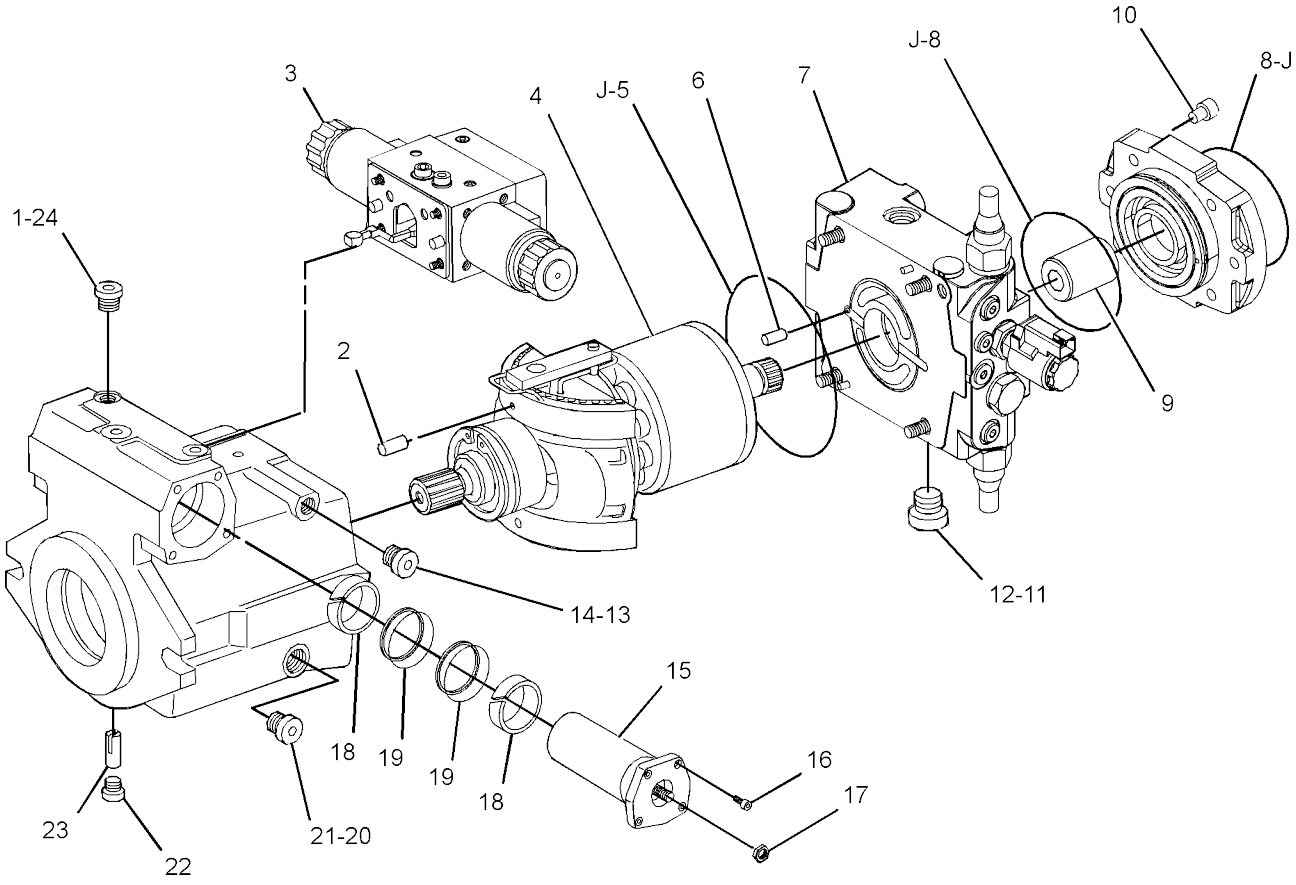

GRAPHIC #1 <END> g03337746

389-5882 ROTATING GP-MOTOR

S/N: 5B41-UP
PART OF 375-1476 MOTOR GP-
PISTON AN ATTACHMENT

SMCS-5058

i07417975

REF SEE NOTE	QTY	GRAPHIC NO 1 2 3 4 5 6	(PRODUCT LEVEL)	REF PAGE	PART NAME PART NUMBER
	1	1	**095-0924**	1	RING-RETAINING
	2	1	**139-2806**	1	BEARING-TAPERED ROLLER
	3	1	**139-2800**	1	RING
	4	1	**139-2805**	1	BEARING-TAPERED ROLLER
	5	1	**139-2803**	1	PLATE
	6	1	**139-2802**	1	DISC
	7	1	**179-9933**	1	PIN-CENTER
	8	1	**389-5886**	1	PLATE-CONTROL
B	9	1	**180-1280**	1	SPACER (2.2-MM THK)
B	10	1	**180-1281**	1	SPACER (2.3-MM THK)
B	11	1	**180-1282**	1	SPACER (2.4-MM THK)
B	12	1	**180-1283**	1	SPACER (2.5-MM THK)
	13	1	**180-1284**	1	SPRING-CUP
	14	1	**293-4373**	7	SCREW-SPECIAL

B - USE AS REQUIRED

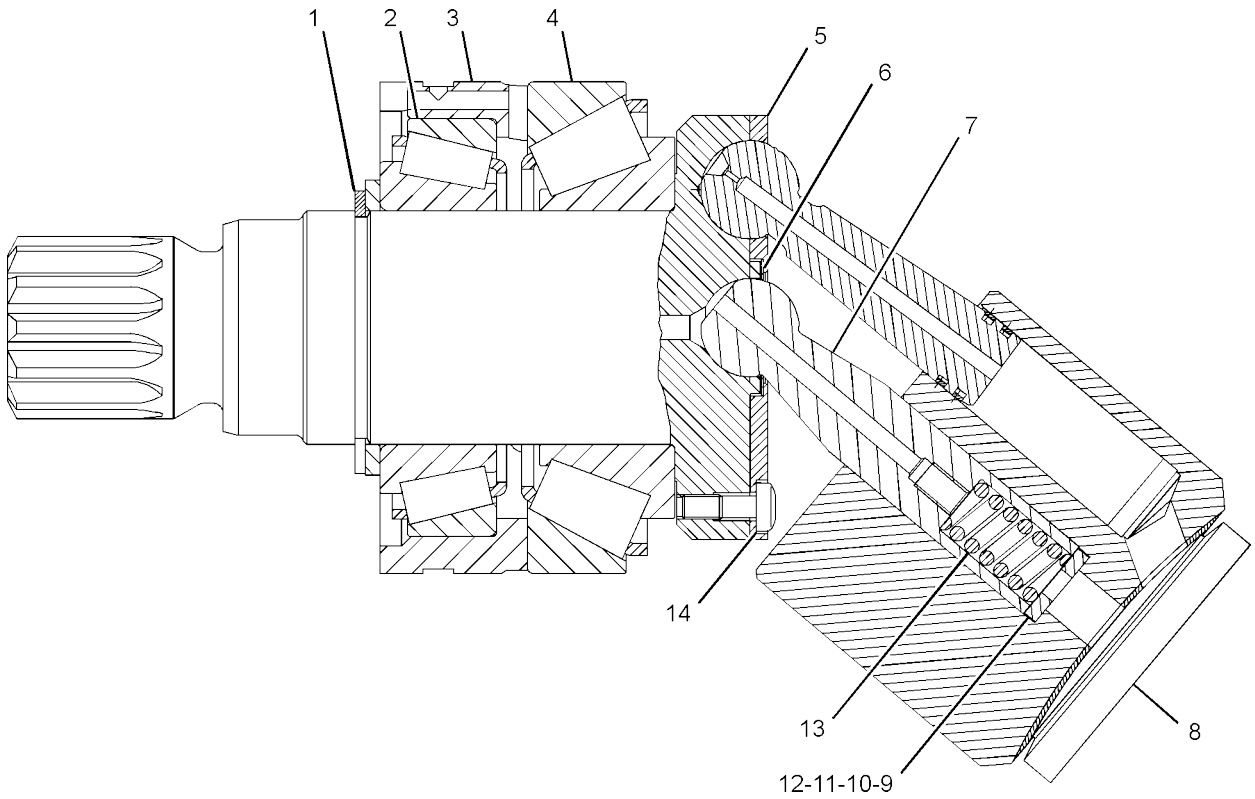

GRAPHIC #1 <END> g03338031

493-1777 ROTATING GP-MOTOR

S/N: 5B41-UP; G441-UP
PART OF 475-3593, 475-3595 MOTOR GP-
PISTON AN ATTACHMENT

SMCS-5058

i07399908

REF NO	SEE NOTE QTY	GRAPHIC 1 2 3 4 5 6	(PRODUCT LEVEL)	REF PAGE	PART NAME PART NUMBER
1	1		**295-9540**	1	RETAINER-BALL
2	1		**266-7837**	1	PLATE
3	1		**259-5501**	9	PISTON AS
4	1		**194-9481**	1	DISC-THRUST
5	1		**233-5125**	1	SPRING
6	1		**194-9480**	1	RING-RETAINING
7	1		**233-2535**	1	PLATE
8	1		**194-9479**	3	PIN

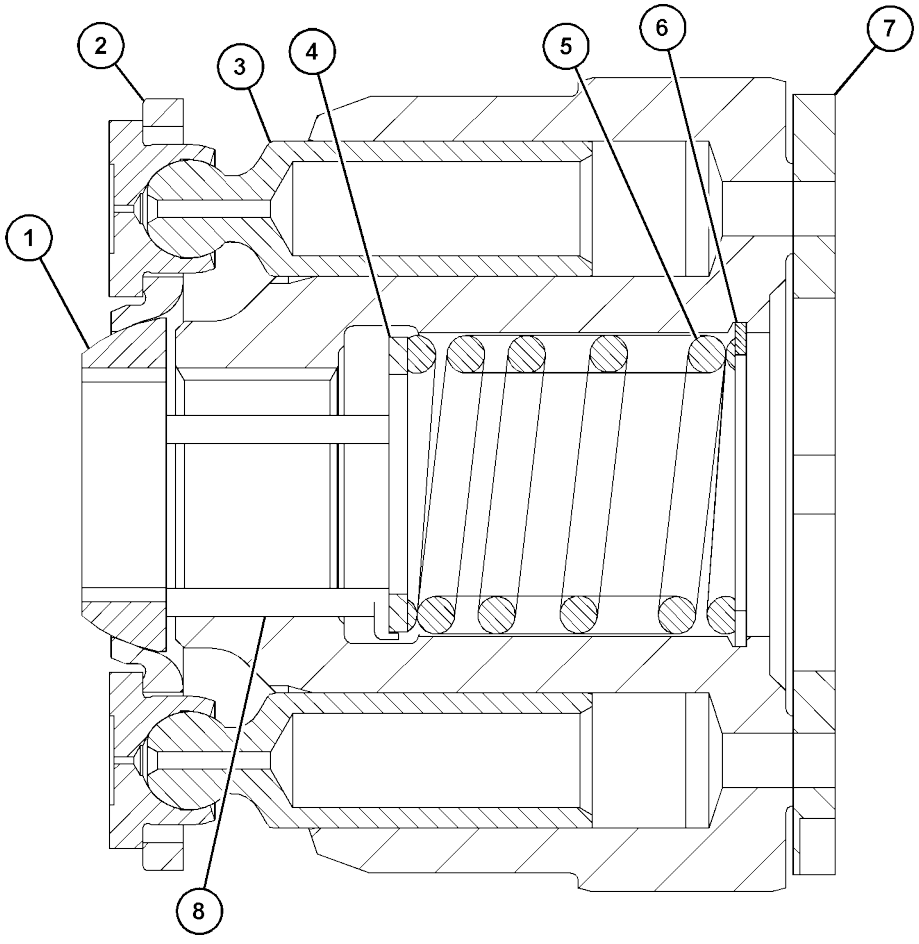

GRAPHIC #1 <END> g06042912

190-7632 ROTATING GP-PUMP

S/N: 5B41-UP
PART OF 420-1972 PUMP GP-
PISTON AN ATTACHMENT

SMCS-5070

i02294042

REF SEE NOTE	QTY	GRAPHIC NO 1 2 3 4 5 6	(PRODUCT LEVEL)	REF PAGE	PART NAME PART NUMBER
	1	1	**194-1983**	1	SEAL-SHAFT
	2	1	**191-4522**	1	SHAFT
	3	1	**6V-5200**	1	RING-RETAINING
	4	1	**122-9068**	1	WIRE
	5	1	**117-7241**	1	PLATE
	6	1	**112-4657**	1	PIN
	8	1	**117-7240**	1	CRADLE
	9	1	**1G-3410**	1	WIRE
	10	1	**6E-0725**	2	ROLLER
	11	1	**117-7252**	1	CAGE
	12	1	**125-9134**	1	BEARING AS
	13	1	**117-7251**	1	BEARING
	14	1	**126-9587**	1	RING-RETAINING
	15	1	**095-0941**	1	RING-RETAINING
JZ	16	1		9	PISTON
JZ	17	1		1	PLATE-RETAINER
JZ	18	1		1	RETAINER
JZ	19	1		1	CYLINDER
JZ	20	1		3	PIN
JZ	21	1		1	SHIM
JZ	22	1		1	SPRING
JZ	23	1		1	RETAINING RING
JZ	24	1		1	PLATE
					AVAILABLE REPAIR KIT(S):
J			**192-2839**	1	KIT-ROTATOR

J - (KIT MARKED J SERVICES PARTS MARKED J) Z - NOT SERVICED SEPARATELY

190-7632 **ROTATING GP-PUMP (**contd.**)** **i02294042**

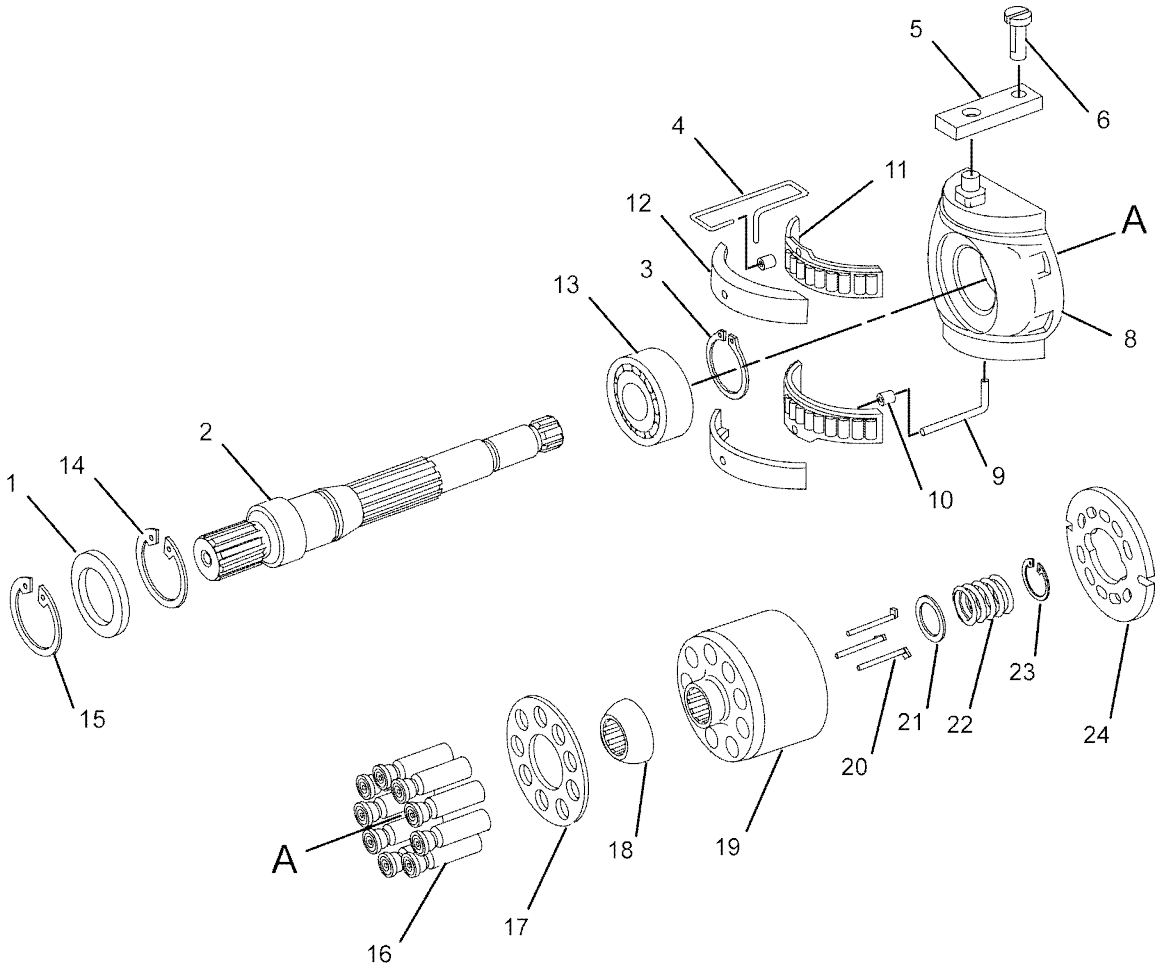

GRAPHIC #1 <END> g01084987

343-6037 TANK & MTG GP-HYDRAULIC

S/N: 5B41-UP; G441-UP
PART OF 451-3120, 451-3220 CHASSIS AR

SMCS-5056

i07398851

	REF SEE NOTE QTY	GRAPHIC NO 1 2 3 4 5 6	(PRODUCT LEVEL)	REF PAGE	PART NAME PART NUMBER	
Y	1	1	*517-3913*	1	TANK GP-HYDRAULIC	332
	2	1	**7K-1181**	1	STRAP-CABLE	
	3	1	**7X-7729**	3	WASHER (11X25X3-MM THK)	
M	4	1	**8T-4196**	3	BOLT (M10X1.5X35-MM)	

M - METRIC PART
Y - SEPARATE ILLUSTRATION

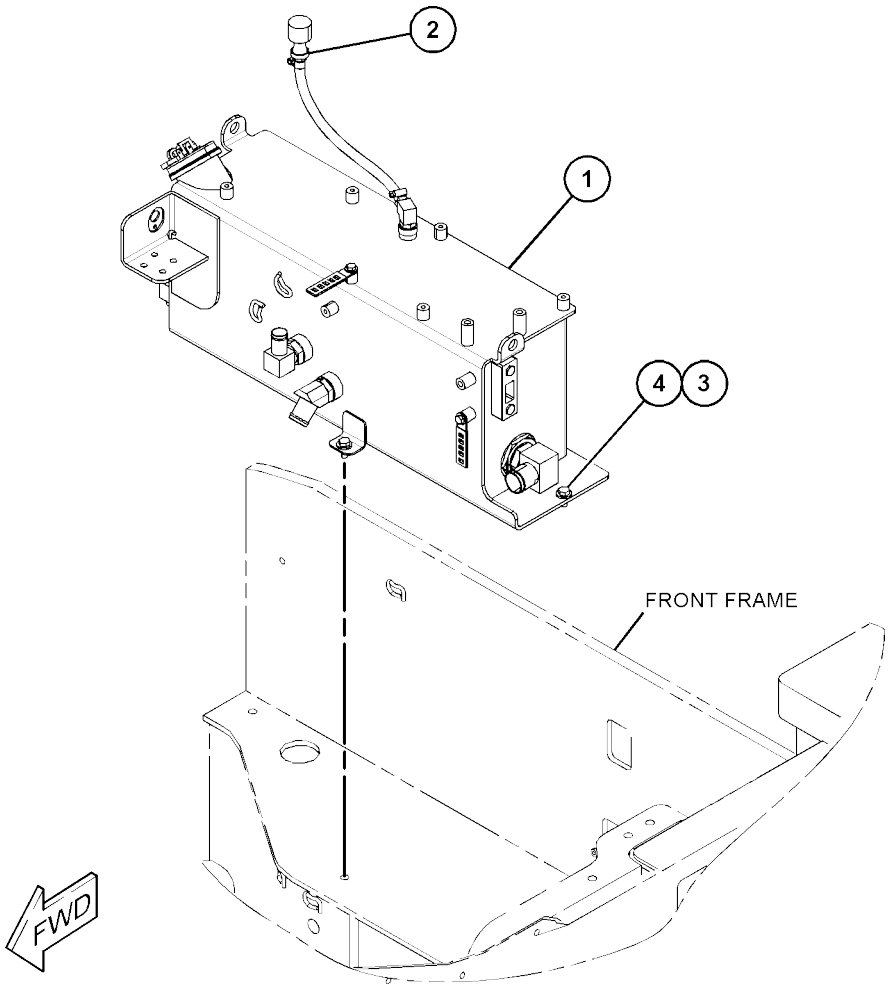

GRAPHIC #1

<END>

g06202673

517-3913 TANK GP-HYDRAULIC

S/N: 5B41-UP; G441-UP
69-LITERS (18.2 US GAL)
PART OF 343-6037 TANK & MTG GP-HYDRAULIC
SMCS-5056

i07398852

REF SEE NOTE	QTY	GRAPHIC NO 1 2 3 4 5 6	(PRODUCT LEVEL)	REF PAGE	PART NAME PART NUMBER
	1	1	**142-8937**	1	CAP AS-FILLER (LOCKABLE)
	2	1	**145-3846**	1	INSERT-NYLON
	3	1	**183-3873**	1	BREATHER
	4	1	**265-5644**	2	GAUGE GP-SIGHT
	5	1	*268-1517*	1	CONNECTOR AS
		1	**3K-0360**	1	SEAL-O-RING
		1	**149-8142**	1	CONNECTOR
	6	1	*341-0087*	1	PLUG AS
		1	**6V-6609**	1	SEAL-O-RING
		1	**9S-4185**	1	PLUG (3/4-16-THD)
	7	1	**364-0879**	1	STRAINER AS
		1	**030-4606**	1	SEAL-O-RING
	8	1	**517-3912**	1	TANK AS-HYDRAULIC
	9	1	**127-5588**	1	COUPLING-REDUCER
	10	1	*148-8347*	1	ELBOW AS
		1	**3D-2824**	1	SEAL-O-RING
		1	**6V-9007**	1	ELBOW
		1	**6V-9746**	1	SEAL-O-RING
	11	1	*148-8364*	1	ELBOW AS
		1	**3K-0360**	1	SEAL-O-RING
		1	**6V-8398**	1	SEAL-O-RING
		1	**6V-8625**	1	ELBOW
	12	1	*148-8374*	1	ELBOW AS
		1	**3K-0360**	1	SEAL-O-RING
		1	**6V-8397**	1	SEAL-O-RING
		1	**6V-8723**	1	ELBOW
	13	1	*194-2903*	1	ELBOW AS
		1	**3K-0360**	1	SEAL-O-RING
		1	**8T-0119**	1	ELBOW
	14	1	**198-7655**	1	CONNECTOR
	15	1	**5P-9436**	1	PLUG
	16	1	**2S-4078**	1	SEAL-O-RING
	17	1	**352-3970**	2	CLIP (LADDER)
	18	1	**5P-4116**	2	WASHER-HARD (8.8X20.5X2-MM THK)
	19	1	**5P-4961**	2	CLAMP-HOSE
	20	1	**7M-8485**	1	SEAL-O-RING
	21	1	**8C-9022**	1	ELBOW
M	22	1	**8T-4200**	2	BOLT (M8X1.25X16-MM)
	23	1	*9U-6999*	1	ELBOW AS
		1	**7M-8485**	1	SEAL-O-RING
		1	**034-4202**	1	ELBOW
G	24	1	**423-1982**		HOSE (13.8-IN)

G - ORDER BY THE INCH M - METRIC PART

517-3913 **TANK GP-HYDRAULIC** (contd.) **i07398852**

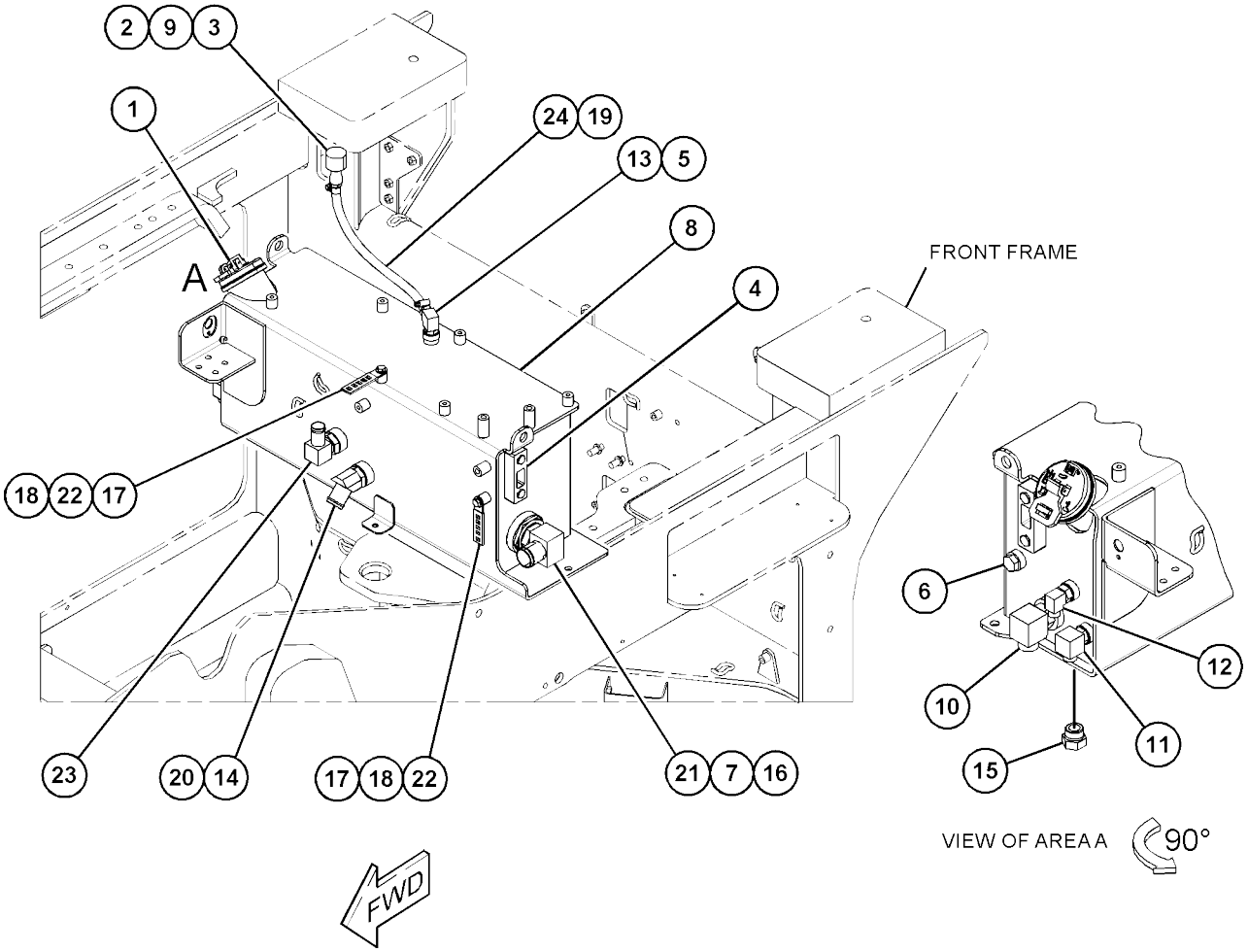

GRAPHIC #1 <END> g06202825

343-6073 VALVE & MTG GP-CONTROL-RETURN

S/N: 5B41-UP
PART OF 386-7544 HYDRAULIC
AR AN ATTACHMENT

SMCS-5051

i07418290

REF SEE NOTE	QTY	GRAPHIC NO 1 2 3 4 5 6	(PRODUCT LEVEL)	REF PAGE	PART NAME PART NUMBER
	1	1	**107-0003**	1	MANIFOLD
	2	1	*150-3026*	2	ELBOW AS
					(EACH INCLUDES)
		1	**3K-0360**	1	SEAL-O-RING
		1	**6V-4292**	1	ELBOW
	3	1	*150-3050*	1	CONNECTOR AS
		1	**6V-7486**	1	CONNECTOR
		1	**7M-8485**	1	SEAL-O-RING
	4	1	**464-9212**	1	PLATE
	5	1	*340-0508*	1	SENSOR GP-TEMPERATURE (HYDRAULIC OIL)
		1	**238-5080**	1	SEAL-O-RING
		1	**256-6453**	1	SENSOR-TEMPERATURE (2-PIN) (HYDRAULIC OIL)
	6	1	**364-9115**	1	PLATE
	7	1	*148-8308*	1	ADAPTER AS
		1	**2S-4078**	1	SEAL-O-RING
		1	**7X-2470**	1	ADAPTER
	8	1	*148-8395*	1	PLUG AS
		1	**3K-0360**	1	SEAL-O-RING
		1	**9S-8005**	1	PLUG (3/4-16-THD)
	9	1	*148-8409*	1	PLUG AS
		1	**3D-2824**	1	SEAL-O-RING
		1	**9S-8008**	1	PLUG (1-1/16-12-THD)
	10	1	*155-7321*	1	ADAPTER AS
		1	**3D-2824**	1	SEAL-O-RING
		1	**6V-1722**	1	ADAPTER
	11	1	**3K-0360**	1	SEAL-O-RING
	12	1	**6V-1230**	1	ELBOW
M	13	1	**7X-7888**	2	BOLT (M6X1X90-MM)
	14	1	**7X-7958**	2	CLAMP-HOSE
M	15	1	**8T-4956**	2	BOLT (M12X1.75X35-MM)
	16	1	**8T-4223**	2	WASHER-HARD (13.5X25.5X3-MM THK)
	17	1	*9U-6999*	1	ELBOW AS
		1	**7M-8485**	1	SEAL-O-RING
		1	**034-4202**	1	ELBOW
	18	1	**9X-8256**	2	WASHER (6.6X12X2-MM THK)
E	19	1	**5P-1506**		HOSE (17.5-CM)

E - ORDER BY THE CENTIMETER M - METRIC PART

343-6073 **VALVE & MTG GP-CONTROL** (contd.) **i07418290**

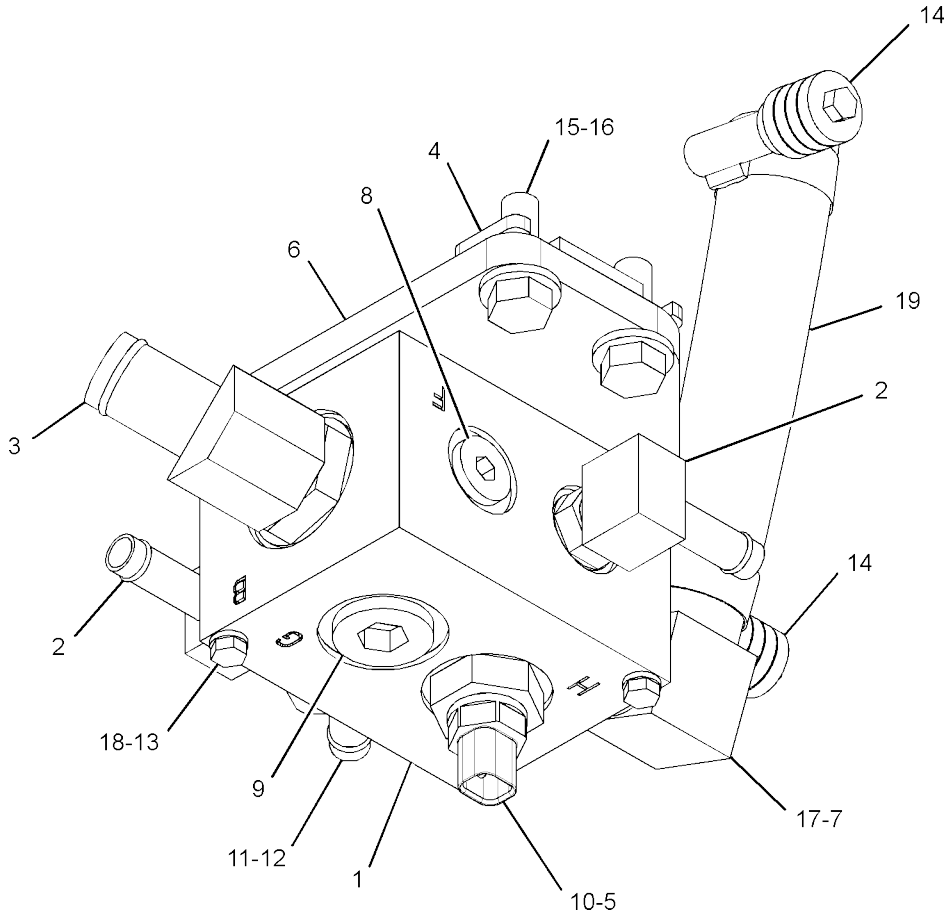

GRAPHIC #1 <END> g03809173

351-3398 VALVE & MTG GP-CONTROL

S/N: G441-UP
PART OF 381-1897 HYDRAULIC
AR AN ATTACHMENT

SMCS-5051

i07416605

	REF SEE NOTE QTY	GRAPHIC NO 1 2 3 4 5 6	(PRODUCT LEVEL)	REF PAGE	PART NAME PART NUMBER	
	1	1	**7X-5308**	3	CAP-DUST	
	2	1	**110-6349**	3	FITTING AS (QUICK DISCONNECT)	
	3	1	*150-3058*	1	TEE AS	
		1	**3J-1907**	1	SEAL-O-RING	
		1	**8C-8431**	1	TEE	
	4	1	**318-4371**	1	FILM-IDENTIFICATION (PARKING BRAKE)	
Y	5	1	**433-5927**	1	VALVE GP-CONTROL (VIBRATORY, BRAKE)	345
	6	1	*148-8326*	1	CONNECTOR AS	
		1	**3J-7354**	1	SEAL-O-RING	
		1	**6V-8397**	1	SEAL-O-RING	
		1	**6V-9872**	1	CONNECTOR	
	7	1	*148-8327*	4	CONNECTOR AS	
					(EACH INCLUDES)	
		1	**3D-2824**	1	SEAL-O-RING	
		1	**6V-8637**	1	CONNECTOR	
		1	**6V-9746**	1	SEAL-O-RING	
	8	1	*148-8340*	1	CONNECTOR AS	
		1	**3K-0360**	1	SEAL-O-RING	
		1	**6V-8398**	1	SEAL-O-RING	
		1	**6V-8639**	1	CONNECTOR	
	9	1	*148-8392*	1	ELBOW AS	
		1	**6V-9746**	1	SEAL-O-RING	
		1	**6V-9853**	1	ELBOW	
	10	1	*148-8428*	1	TEE AS	
		1	**3K-0360**	1	SEAL-O-RING	
		1	**6V-8398**	2	SEAL-O-RING	
		1	**6V-8782**	1	TEE	
	11	1	*150-4043*	1	CONNECTOR AS	
		1	**3J-1907**	1	SEAL-O-RING	
		1	**6V-8398**	1	SEAL-O-RING	
		1	**6V-9873**	1	CONNECTOR	
	12	1	*150-4047*	1	ADAPTER AS	
		1	**3J-7354**	1	SEAL-O-RING	
		1	**8T-2353**	1	ADAPTER	
	13	1	**171-7077**	4	ROD-THREADED	
	14	1	*329-5522*	1	TEE AS	
		1	**6V-8784**	1	TEE-FACE SEAL	
		1	**228-7092**	1	SEAL-O-RING	
		1	**238-5082**	1	SEAL-O-RING	
	15	1	**8T-4121**	4	WASHER-HARD (11X21X2.5-MM THK)	
M	16	1	**8T-4133**	4	NUT (M10X1.5-THD)	

M - METRIC PART
Y - SEPARATE ILLUSTRATION

351-3398 **VALVE & MTG GP-CONTROL** (contd.) **i07416605**

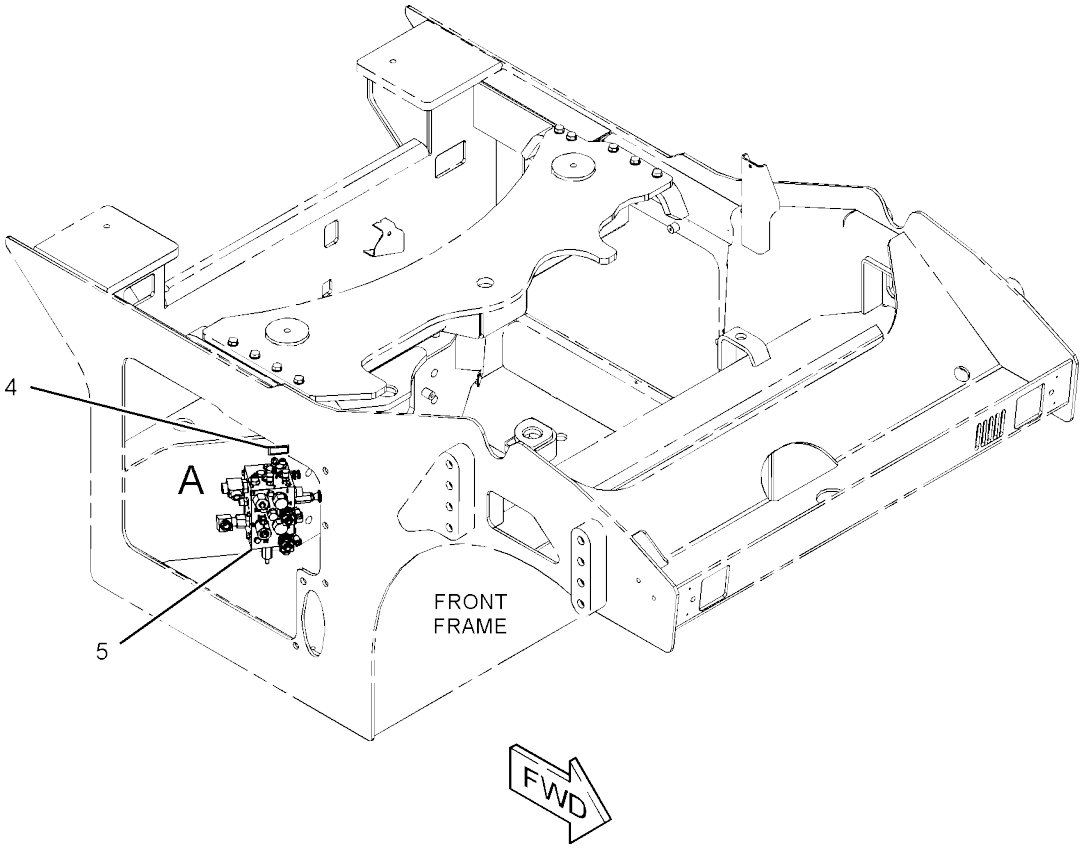

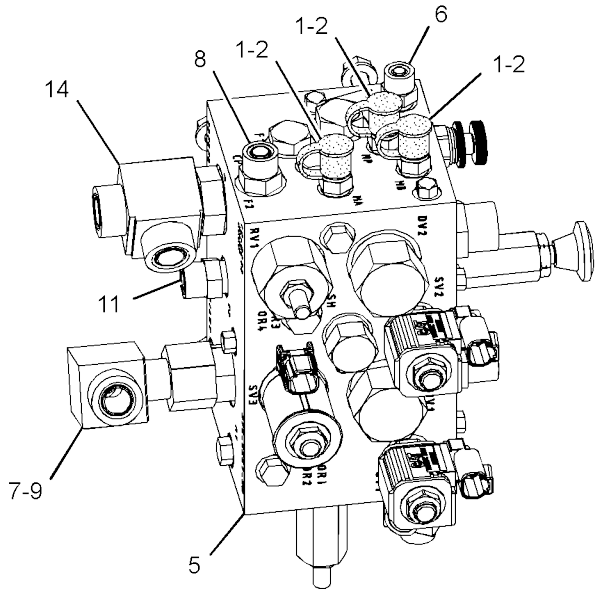

VIEW OF AREA A

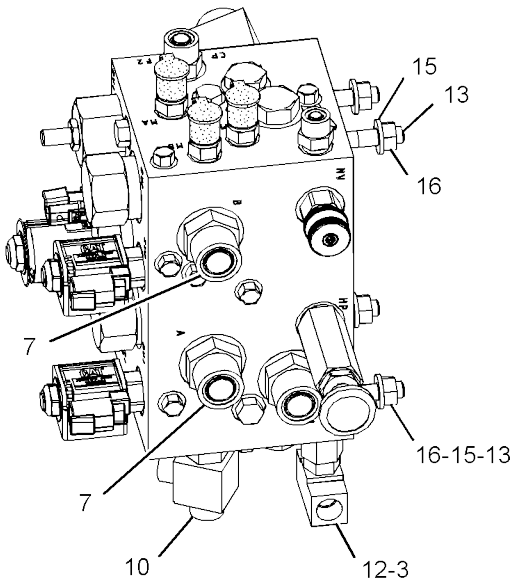

VIEW OF AREA A 90°

GRAPHIC #1 <END> g02877320

381-1926 VALVE & MTG GP-CONTROL

S/N: G441-UP
PART OF 381-1897 HYDRAULIC
AR AN ATTACHMENT

SMCS-5051

i07416627

REF SEE NOTE	QTY	GRAPHIC NO 1 2 3 4 5 6	(PRODUCT LEVEL)	REF PAGE	PART NAME PART NUMBER
	1	1	**107-0003**	1	MANIFOLD
	2	1	*195-2037*	1	FITTING AS
		1	**3K-0360**	1	SEAL-O-RING
		1	**034-3679**	1	ADAPTER
	3	1	*340-0508*	1	SENSOR GP-TEMPERATURE (HYDRAULIC OIL)
		1	**238-5080**	1	SEAL-O-RING
		1	**256-6453**	1	SENSOR-TEMPERATURE (2-PIN) (HYDRAULIC OIL)
	4	1	**381-1927**	1	PLATE
	5	1	*148-8308*	1	ADAPTER AS
		1	**2S-4078**	1	SEAL-O-RING
		1	**7X-2470**	1	ADAPTER
	6	1	*148-8395*	1	PLUG AS
		1	**3K-0360**	1	SEAL-O-RING
		1	**9S-8005**	1	PLUG (3/4-16-THD)
	7	1	*148-8409*	1	PLUG AS
		1	**3D-2824**	1	SEAL-O-RING
		1	**9S-8008**	1	PLUG (1-1/16-12-THD)
	8	1	*150-3026*	1	ELBOW AS
		1	**3K-0360**	1	SEAL-O-RING
		1	**6V-4292**	1	ELBOW
	9	1	*150-3050*	1	CONNECTOR AS
		1	**6V-7486**	1	CONNECTOR
		1	**7M-8485**	1	SEAL-O-RING
	10	1	*155-7321*	1	ADAPTER AS
		1	**3D-2824**	1	SEAL-O-RING
		1	**6V-1722**	1	ADAPTER
	11	1	**3K-0360**	1	SEAL-O-RING
	12	1	**6V-1230**	1	ELBOW
M	13	1	**7X-7888**	2	BOLT (M6X1X90-MM)
	14	1	**7X-7958**	2	CLAMP-HOSE
M	15	1	**8T-4956**	2	BOLT (M12X1.75X35-MM)
	16	1	**8T-4223**	2	WASHER-HARD (13.5X25.5X3-MM THK)
	17	1	*9U-6999*	1	ELBOW AS
		1	**7M-8485**	1	SEAL-O-RING
		1	**034-4202**	1	ELBOW
	18	1	**9X-8256**	2	WASHER (6.6X12X2-MM THK)
E	19	1	**5P-1506**		HOSE (20-CM)
	20	1	**464-9212**	1	PLATE

E - ORDER BY THE CENTIMETER M - METRIC PART

381-1926 **VALVE & MTG GP-CONTROL** (contd.) **i07416627**

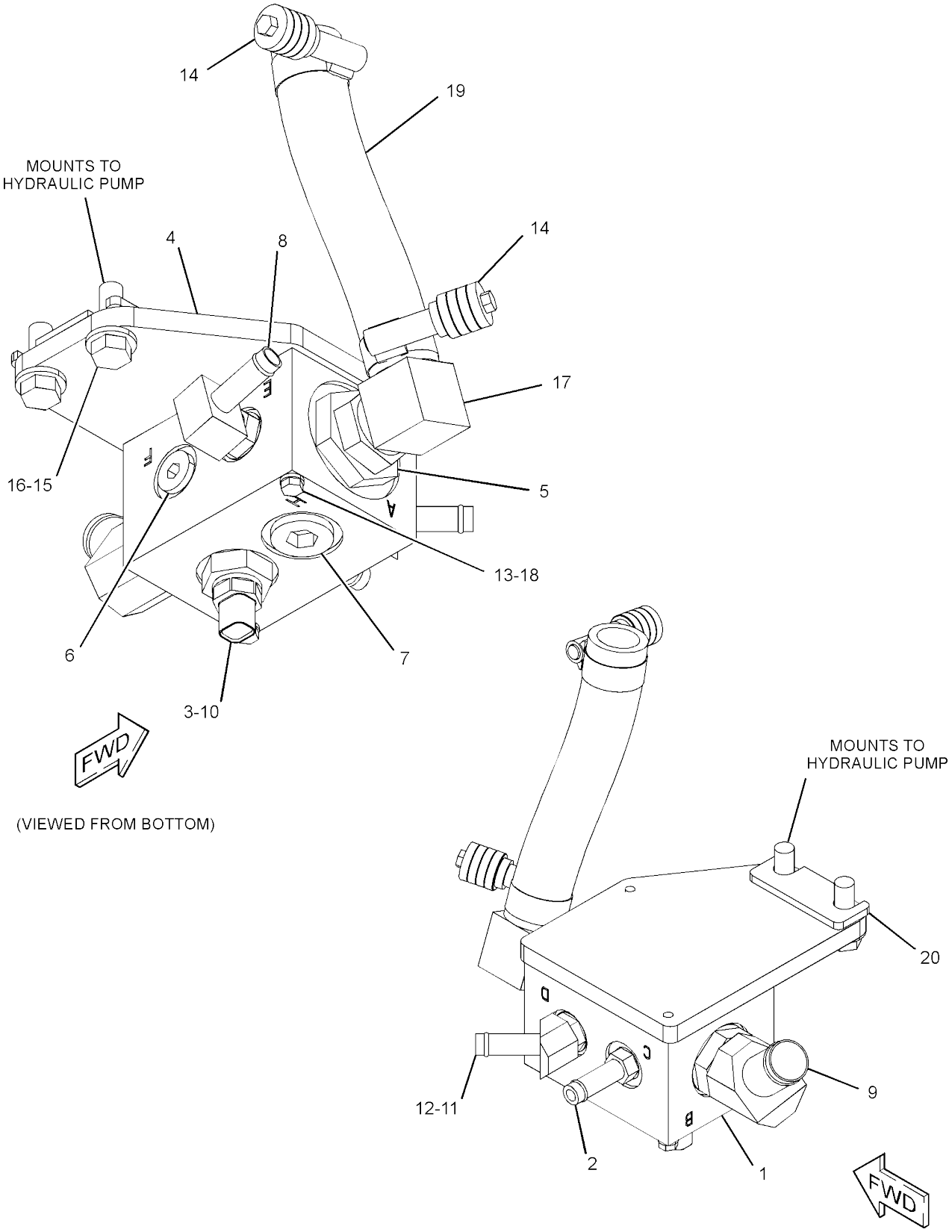

GRAPHIC #1 <END> g06024090

359-9727 VALVE & MTG GP-SIDECUTTER

S/N: 5B41-UP; G441-UP
PART OF 513-4763, 513-4765 SIDECUTTER
AR AN ATTACHMENT

SMCS-5051

i07416467

	REF SEE NOTE QTY	GRAPHIC NO 1 2 3 4 5 6	(PRODUCT LEVEL)	REF PAGE	PART NAME PART NUMBER	
	1	1	**6V-0852**	1	CAP-DUST	
Y	2	1	**366-7938**	1	VALVE GP-CONTROL (SIDECUTTER)	343
	3	1	**367-6813**	1	PLATE AS	
M		1	**8T-3612**	4	NUT-WELD (M8X1.25-THD)	
	4	1	**110-6349**	1	FITTING AS (QUICK DISCONNECT)	
	5	1	*148-8325*	1	CONNECTOR AS	
		1	**3J-1907**	1	SEAL-O-RING	
		1	**4J-5477**	1	SEAL-O-RING	
		1	**6V-8641**	1	CONNECTOR	
	6	1	*148-8368*	1	ELBOW AS	
		1	**3J-1907**	1	SEAL-O-RING	
		1	**4J-5477**	1	SEAL-O-RING	
		1	**6V-8627**	1	ELBOW	
	7	1	*148-8378*	1	ELBOW AS	
		1	**3J-1907**	1	SEAL-O-RING	
		1	**6V-8397**	1	SEAL-O-RING	
		1	**6V-8724**	1	ELBOW	
	8	1	*148-8385*	1	ELBOW AS	
		1	**3J-7354**	1	SEAL-O-RING	
		1	**4J-5477**	1	SEAL-O-RING	
		1	**6V-9000**	1	ELBOW	
	9	1	*162-6802*	1	ELBOW AS	
		1	**3J-7354**	1	SEAL-O-RING	
		1	**151-5145**	1	ELBOW	
	10	1	*296-5744*	1	ELBOW AS	
		1	**3J-1907**	1	SEAL-O-RING	
		1	**6V-8398**	1	SEAL-O-RING	
		1	**296-5743**	1	ELBOW	
	11	1	**5P-4116**	1	WASHER-HARD (8.8X20.5X2-MM THK)	
M	12	1	**7X-2540**	4	BOLT (M8X1.25X120-MM)	
M	13	1	**8T-4200**	1	BOLT (M8X1.25X16-MM)	
	14	1	**8T-4224**	12	WASHER-HARD (8.8X16X2-MM THK)	

M - METRIC PART
Y - SEPARATE ILLUSTRATION

359-9727 **VALVE & MTG GP-SIDECUTTER** (contd.) **i07416467**

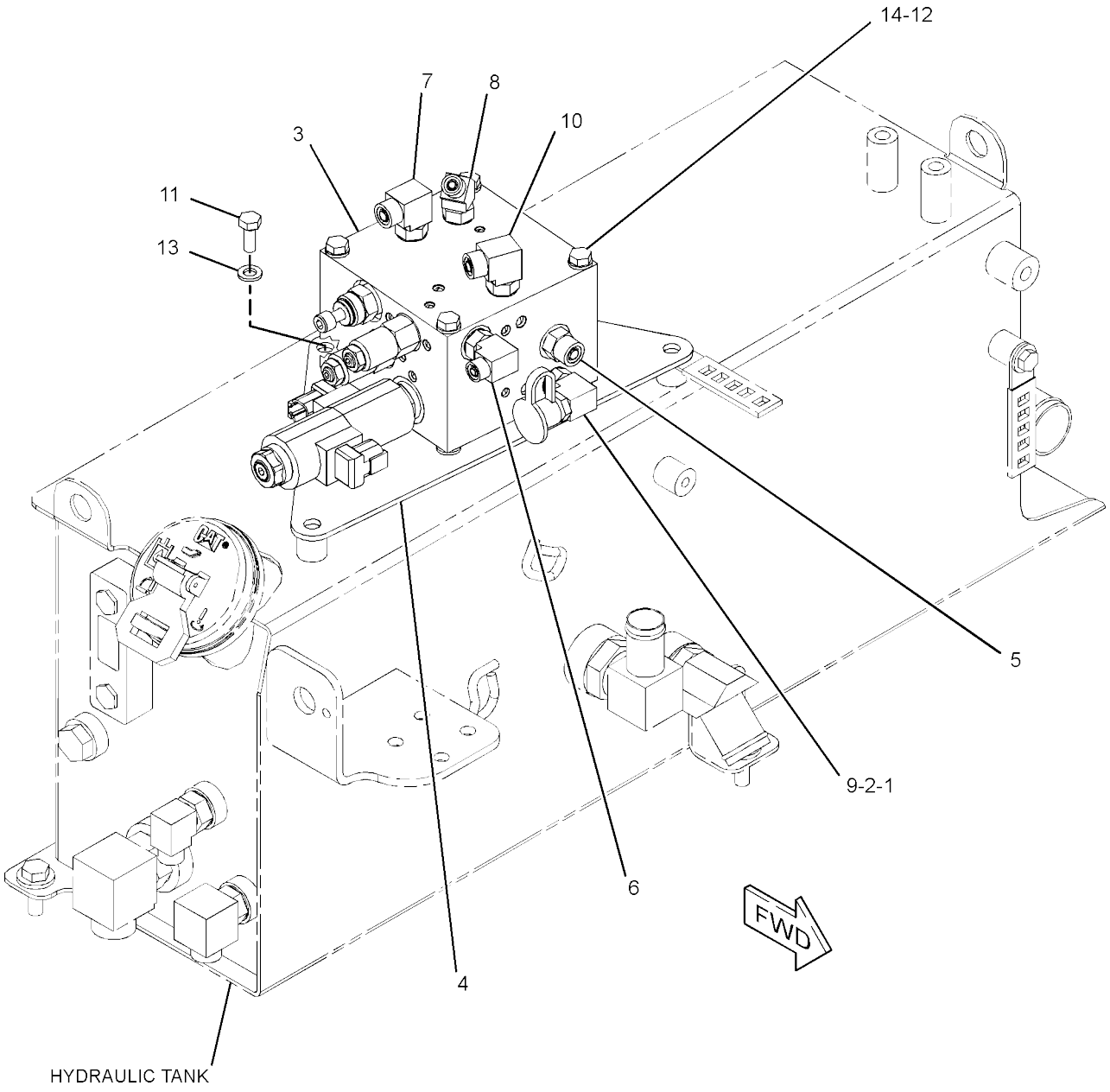

GRAPHIC #1 <END> g06106901

357-3622 VALVE & MTG GP-SOLENOID-2-SPEED

S/N: 5B41-UP
PART OF 386-7544 HYDRAULIC
AR AN ATTACHMENT

SMCS-5479

i07418293

	REF SEE NOTE	QTY	GRAPHIC NO 1 2 3 4 5 6	(PRODUCT LEVEL)	REF PAGE	PART NAME PART NUMBER	
Y	1	1		**326-3103**	1	MANIFOLD GP-CONTROL	306
	2	1		*148-8378*	2	ELBOW AS	
						(EACH INCLUDES)	
		1		**3J-1907**	1	SEAL-O-RING	
		1		**6V-8397**	1	SEAL-O-RING	
		1		**6V-8724**	1	ELBOW	
	3	1		*148-8439*	1	TEE AS	
		1		**3J-1907**	1	SEAL-O-RING	
		1		**6V-8397**	2	SEAL-O-RING	
		1		**6V-8774**	1	TEE	
M	4	1		**5C-2890**	2	NUT (M6X1-THD)	
	5	1		**8T-4205**	4	WASHER-HARD (7.2X14.5X2-MM THK)	
M	6	1		**8T-6974**	2	BOLT (M6X1X80-MM)	

M - METRIC PART
Y - SEPARATE ILLUSTRATION

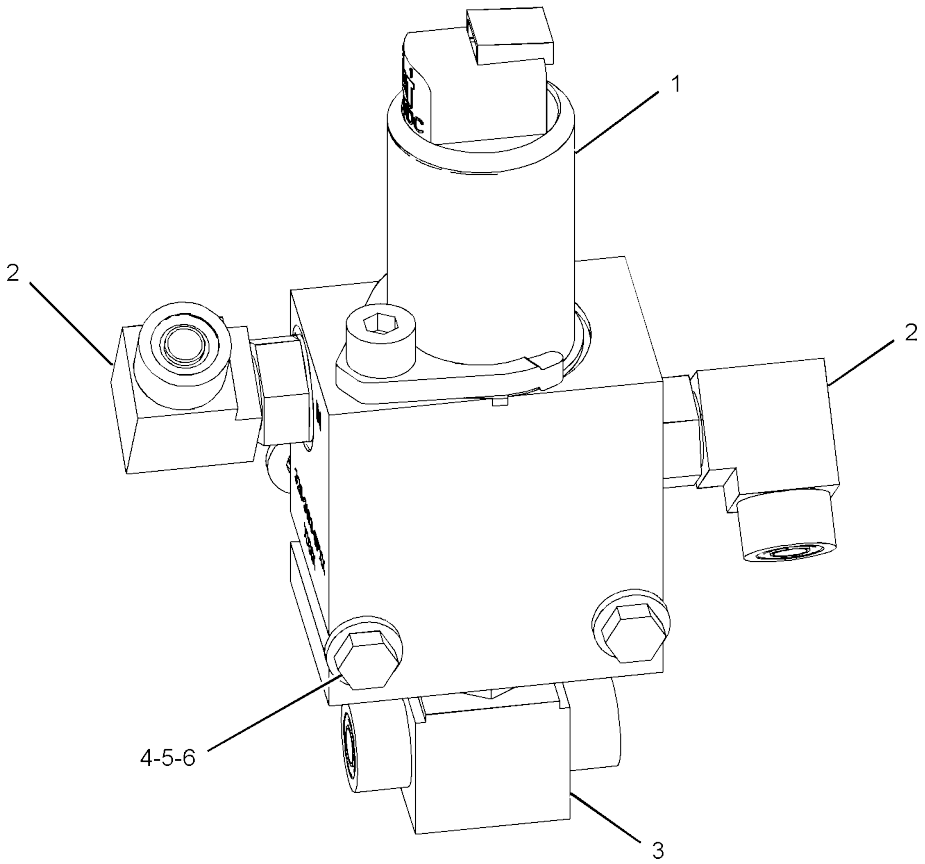

GRAPHIC #1 <END> g02848806

366-7938 VALVE GP-CONTROL

S/N: 5B41-UP; G441-UP
PART OF 359-9727 VALVE & MTG GP-SIDECUTTER AN ATTACHMENT

SMCS-5051

i07416468

	REF SEE NOTE QTY	GRAPHIC NO 1 2 3 4 5 6	(PRODUCT LEVEL)	REF PAGE	PART NAME PART NUMBER	
	1	1	**339-5016**	1	VALVE-RELIEF	
		1	**344-1385**	1	KIT-SEAL	
					(INCLUDES O-RING SEALS & BACKUP RING)	
	2	1	**384-7634**	2	VALVE GP-COUNTERBALANCE	
					(EACH INCLUDES)	
		1	**384-7635**	1	KIT-SEAL	
					(INCLUDES O-RING SEALS & BACKUP RINGS)	
Y	3	1	**339-5017**	1	VALVE GP-SOLENOID (SIDECUTTER)	350
	4	1	**384-7633**	1	VALVE GP-CHECK	
		1	**255-6257**	1	KIT-SEAL (CHECK VALVE)	
					(INCLUDES O-RING SEALS & BACKUP RING)	
J	5	1	**317-0759**	1	VALVE-SHUTTLE (STEERING)	
					PARTS SHOWN IN GRAPHIC(S) WITHOUT A REFERENCE NUMBER ARE NOT SERVICED SEPARATELY	
					AVAILABLE REPAIR KIT(S):	
J			**317-0760**	1	KIT-SEAL	
					(INCLUDES O-RING SEALS & BACKUP RINGS)	

J - KIT MARKED J SERVICES PART(S)
MARKED J Y - SEPARATE ILLUSTRATION

366-7938 **VALVE GP-CONTROL (**contd.**)** **i07416468**

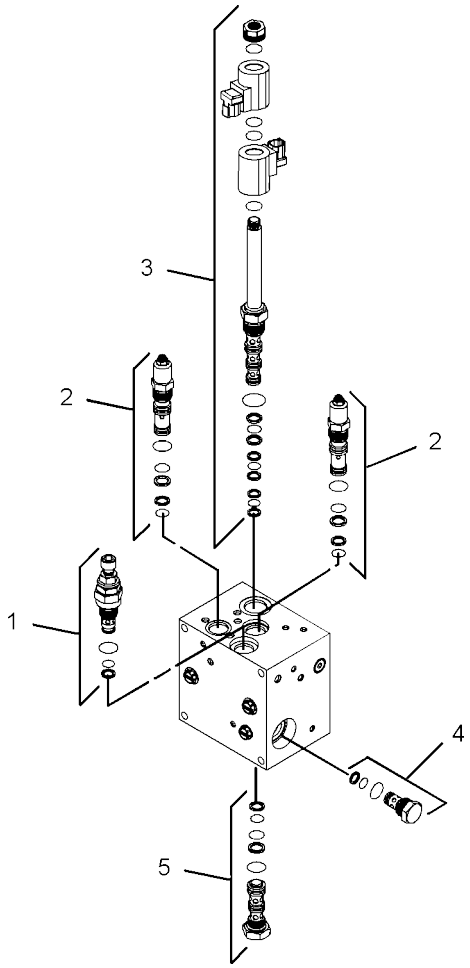

GRAPHIC #1 <END> g02864517

433-5927 VALVE GP-CONTROL

S/N: G441-UP
PART OF 351-3398 VALVE & MTG GP-CONTROL AN ATTACHMENT

SMCS-5051

i07416608

REF SEE NOTE	QTY	GRAPHIC NO 1 2 3 4 5 6	(PRODUCT LEVEL)	REF PAGE	PART NAME PART NUMBER	
H	1	1	**391-8861**	1	CARTRIDGE AS-VALVE	
J	2	1	**391-8862**	1	PUMP GP-HAND (BRAKE RELEASE)	
L	3	1	**391-8864**	1	VALVE GP-RELIEF (VIBRATORY MOTOR FLUSHING)	
N	4	1	**391-8833**	2	VALVE GP-SOLENOID (VIBRATORY CONTROL, REAR DRUM)	
	5	1	**391-9071**	2	COIL-SOLENOID (PROPEL MOTOR SHIFT, HIGH/LOW)	
Y	6	1	**290-6436**	2	VALVE GP-DIVERTER	391
P	7	1	**391-8863**	1	VALVE GP-SOLENOID (PROPEL MOTOR SHIFT, HIGH/LOW)	
		1	**389-2618**	1	COIL-SOLENOID (PROPEL MOTOR SHIFT, HIGH/LOW)	
Y	8	1	**437-2651**	1	VALVE GP-SHUTTLE	349
S	9	1	**279-5771**	1	VALVE GP-RELIEF (VIBRATORY MOTOR, MAKEUP)	
	10	1	**6E-5066**	2	SCREEN (HYDRAULIC)	
					PARTS SHOWN IN GRAPHIC(S) WITHOUT A REFERENCE NUMBER ARE NOT SERVICED SEPARATELY	
					AVAILABLE REPAIR KIT(S):	
H			**391-9060**	1	KIT-SEAL (CARTRIDGE)	
					(INCLUDDES 0-RING SEAL & BACKUP RINGS)	
J			**391-9059**	1	KIT-SEAL (BRAKE RELEASE PUMP)	
					(INCLUDDES 0-RING SEAL & BACKUP RINGS)	
L			**133-5545**	1	KIT-SEAL	
					(INCLUDDES 0-RING SEAL & BACKUP RINGS)	
N			**391-9063**	1	KIT-SEAL (SOLENOID VALVE)	
					(INCLUDDES 0-RING SEAL & BACKUP RINGS)	
P			**391-9058**	1	KIT-SEAL (SOLENOID VALVE)	
					(INCLUDDES 0-RING SEAL, BACKUP RINGS & O-RINGS)	
S			**273-3827**	1	KIT-SEAL (RELIEF VALVE)	
					(INCLUDDES 0-RING SEAL & BACKUP RINGS)	

H - KIT MARKED H SERVICES PART(S) MARKED H J - KIT MARKED J SERVICES PART(S) MARKED J L - KIT MARKED L SERVICES PART(S) MARKED L N - KIT MARKED N SERVICES PART(S) MARKED N P - KIT MARKED P SERVICES PART(S) MARKED P S - KIT MARKED S SERVICES PART(S) MARKED S
Y - SEPARATE ILLUSTRATION

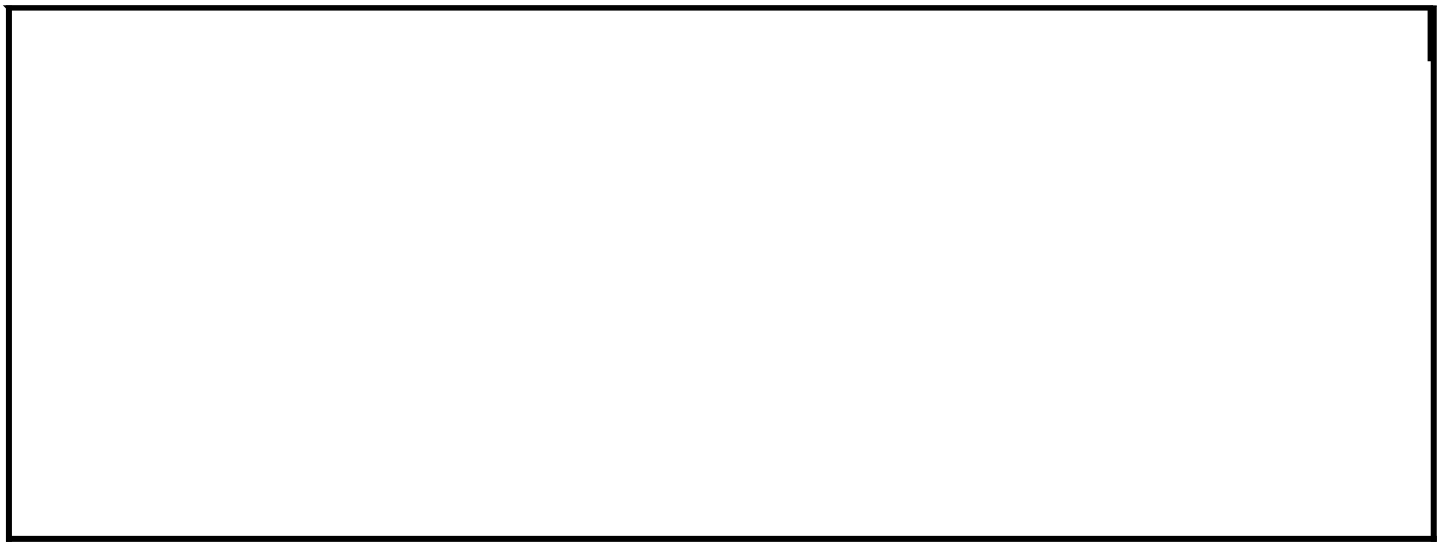

433-5927 **VALVE GP-CONTROL (**contd.**)** **i07416608**

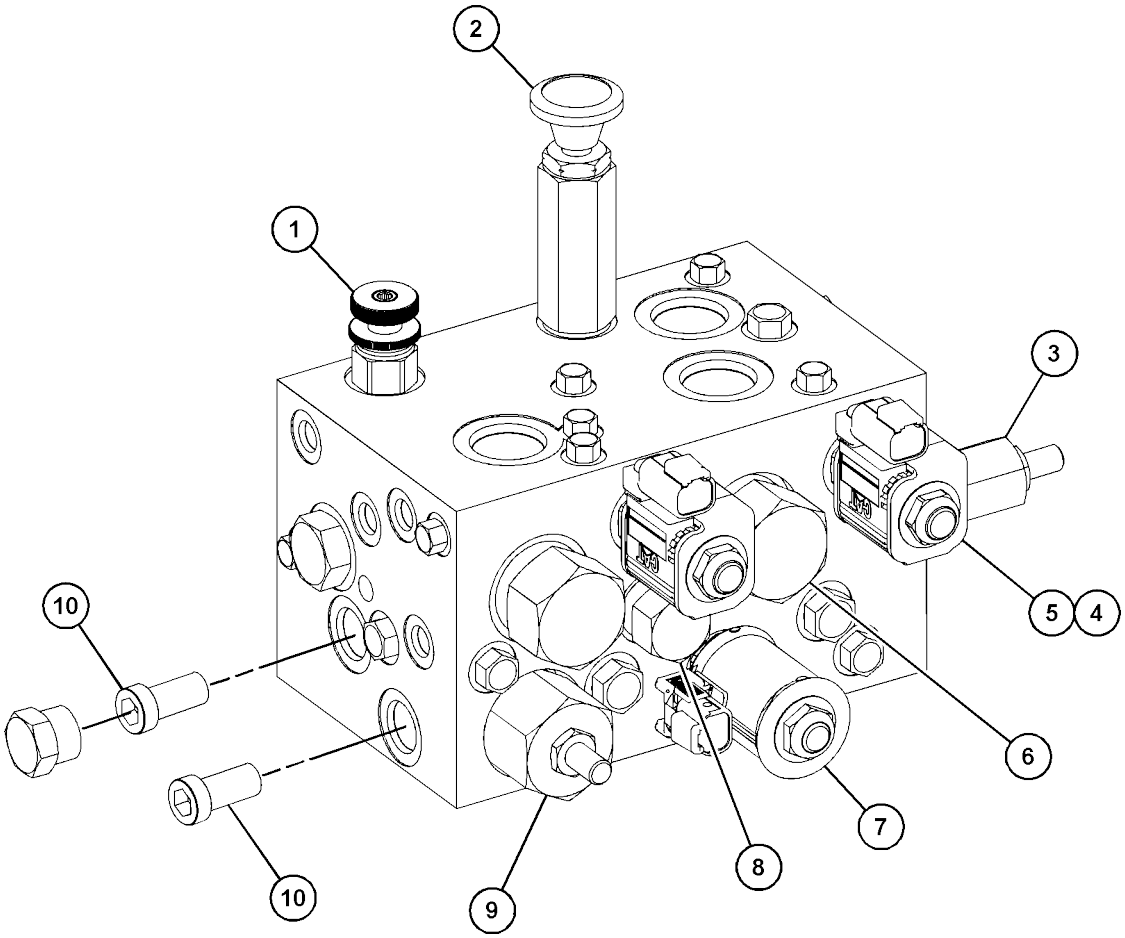

GRAPHIC #1 <END> g03807569

373-2002 VALVE GP-PUMP CONTROL-PROPEL

S/N: 5B41-UP
PART OF 420-1972 PUMP GP-PISTON AN ATTACHMENT

SMCS-5455

i07418334

	REF SEE NOTE QTY	GRAPHIC NO 1 2 3 4 5 6	(PRODUCT LEVEL)	REF PAGE	PART NAME PART NUMBER
	1	1	**316-5999**	2	SOLENOID AS (PUMP CONTROL VALVE)
	2	1	**6H-9691**	1	SEAL-O-RING
	3	1	**337-9102**	1	PIN-ECCENTRIC
	4	1	**215-8010**	1	SHIM (3-MM THK)
	5	1	**215-8011**	1	BOLT-SPECIAL
	6	1	**277-6631**	1	SPRING
	7	1	**352-4703**	1	GASKET
M	8	1	**196-9445**	1	BOLT-SOCKET HEAD (M6X1X45-MM)
M	9	1	**8T-2922**	4	BOLT-SOCKET HEAD (M6X1X65-MM)
	10	1	**202-6535**	2	PIN
B	11	1	**233-9808**	1	SHIM (0.6-MM THK)
B	12	1	**216-4554**	1	SHIM (1.4-MM THK)
B	13	1	**216-4553**	1	SHIM (1.2-MM THK)
B	14	1	**216-4552**	1	SHIM (1-MM THK)
B	15	1	**216-4551**	1	SHIM (0.8-MM THK)
B	16	1	**216-4555**	1	SHIM (1.6-MM THK)
	17	1	**209-3565**	1	SEAL

PARTS SHOWN IN GRAPHIC(S) WITHOUT A REFERENCE NUMBER ARE NOT SERVICED SEPARATELY

B - USE AS REQUIRED M - METRIC PART

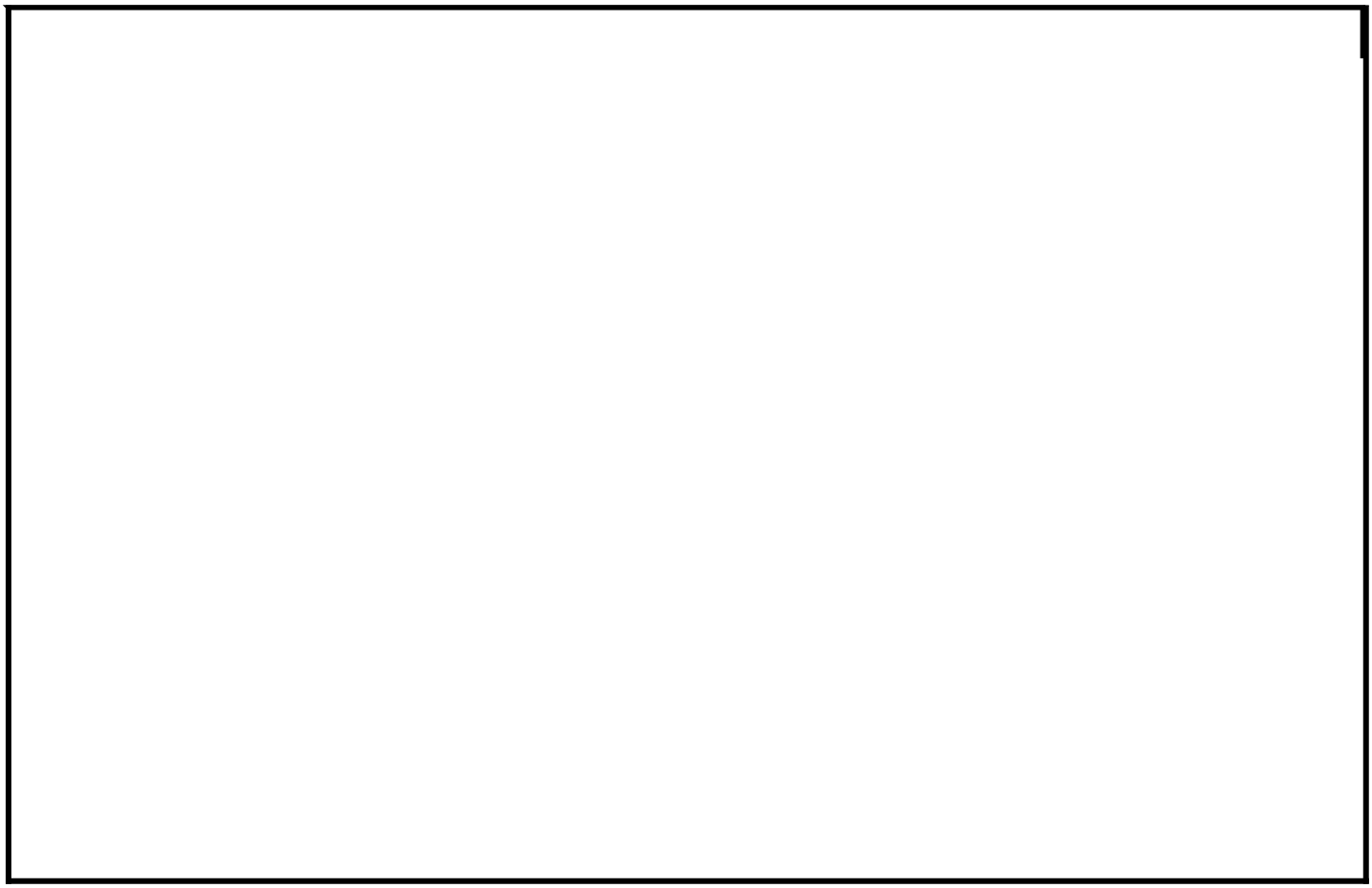

373-2002 **VALVE GP-PUMP CONTROL (**contd.**)** **i07418334**

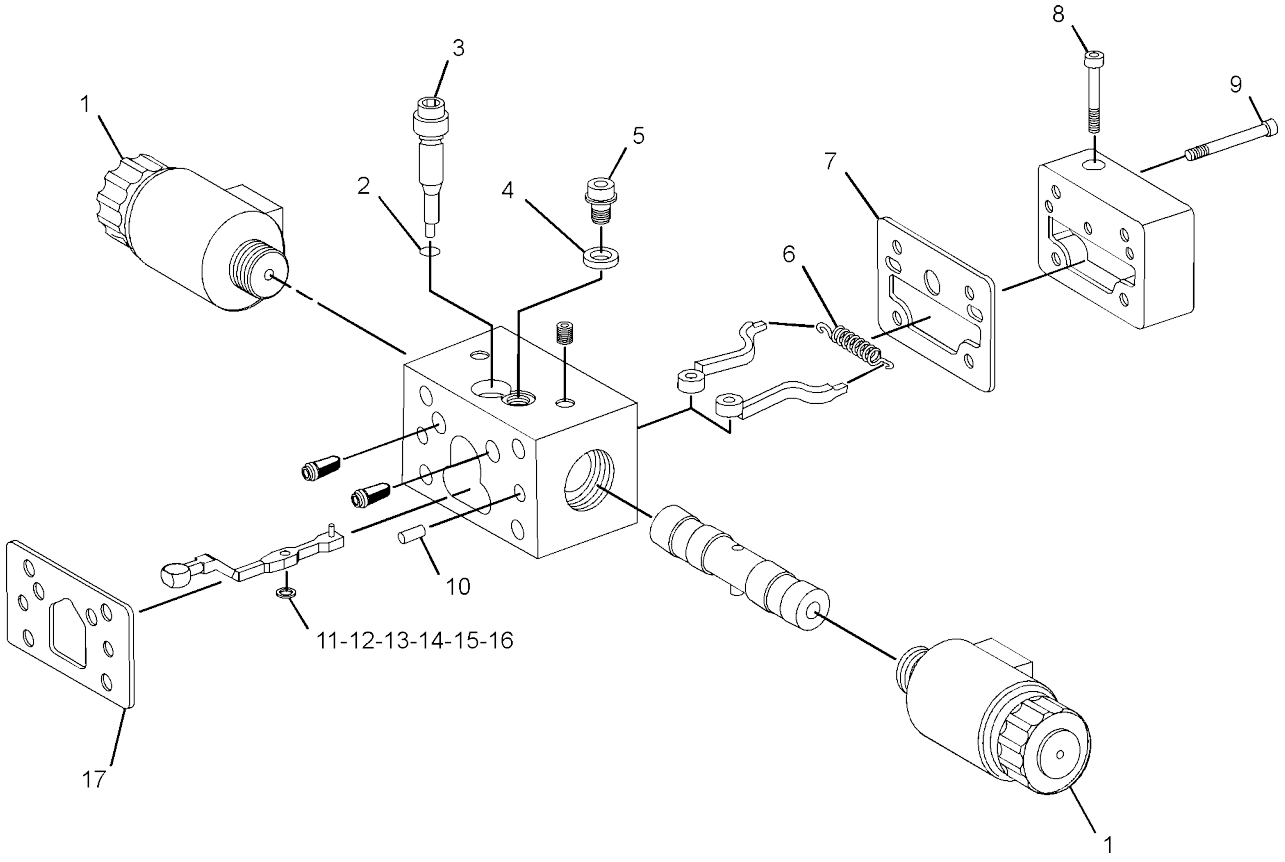

GRAPHIC #1 <END> g03305757

437-2651 VALVE GP-SHUTTLE

S/N: G441-UP
PART OF 433-5927 VALVE GP-
CONTROL AN ATTACHMENT

SMCS-5079

i07416641

	REF SEE NOTE QTY	GRAPHIC NO 1 2 3 4 5 6	(PRODUCT LEVEL)	REF PAGE	PART NAME PART NUMBER
J	1	1	**2M-9780**	1	SEAL-O-RING
J	2	1	**6V-5142**	1	SEAL-O-RING
J	3	1	**169-1617**	2	RING-BACKUP
J	4	1	**095-1751**	1	SEAL-O-RING
J	5	1	**169-1616**	2	RING-BACKUP
					AVAILABLE REPAIR KIT(S):
J			**200-6283**	1	KIT-SEAL (SHUTTLE VALVE)

J - KIT MARKED J SERVICES PART(S) MARKED J

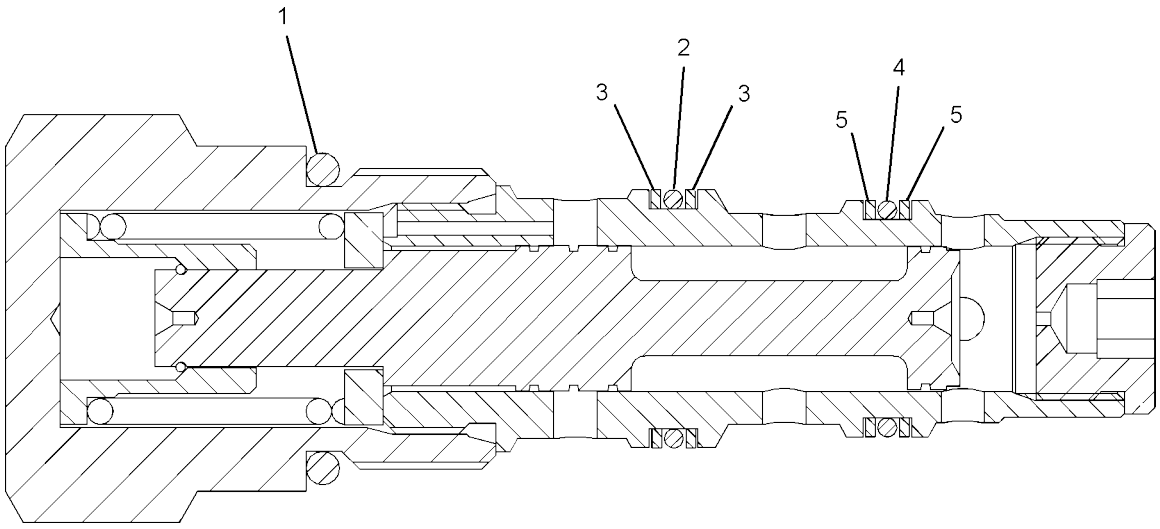

GRAPHIC #1 <END> g03416197

339-5017 VALVE GP-SOLENOID

S/N: 5B41-UP; G441-UP
PART OF 366-7938 VALVE GP-
CONTROL AN ATTACHMENT

SMCS-5479

i07416469

REF SEE NOTE QTY	GRAPHIC NO 1 2 3 4 5 6	(PRODUCT LEVEL)	REF PAGE	PART NAME PART NUMBER
1	1	**344-1386**	1	KIT-SEAL (SOLENOID VALVE)
				(INCLUDES SEALS & RINGS)
2	1	**339-5019**	2	COIL
				PARTS SHOWN IN GRAPHIC(S) WITHOUT A REFERENCE NUMBER ARE NOT SERVICED SEPARATELY
				AVAILABLE REPAIR KIT(S):
		272-3525	1	KIT-COIL NUT
				(INCLUDES PARTS MARKED J IN THE GRAPHICS) (PARTS MARKED J ARE NOT SERVICED SEPARATELY)

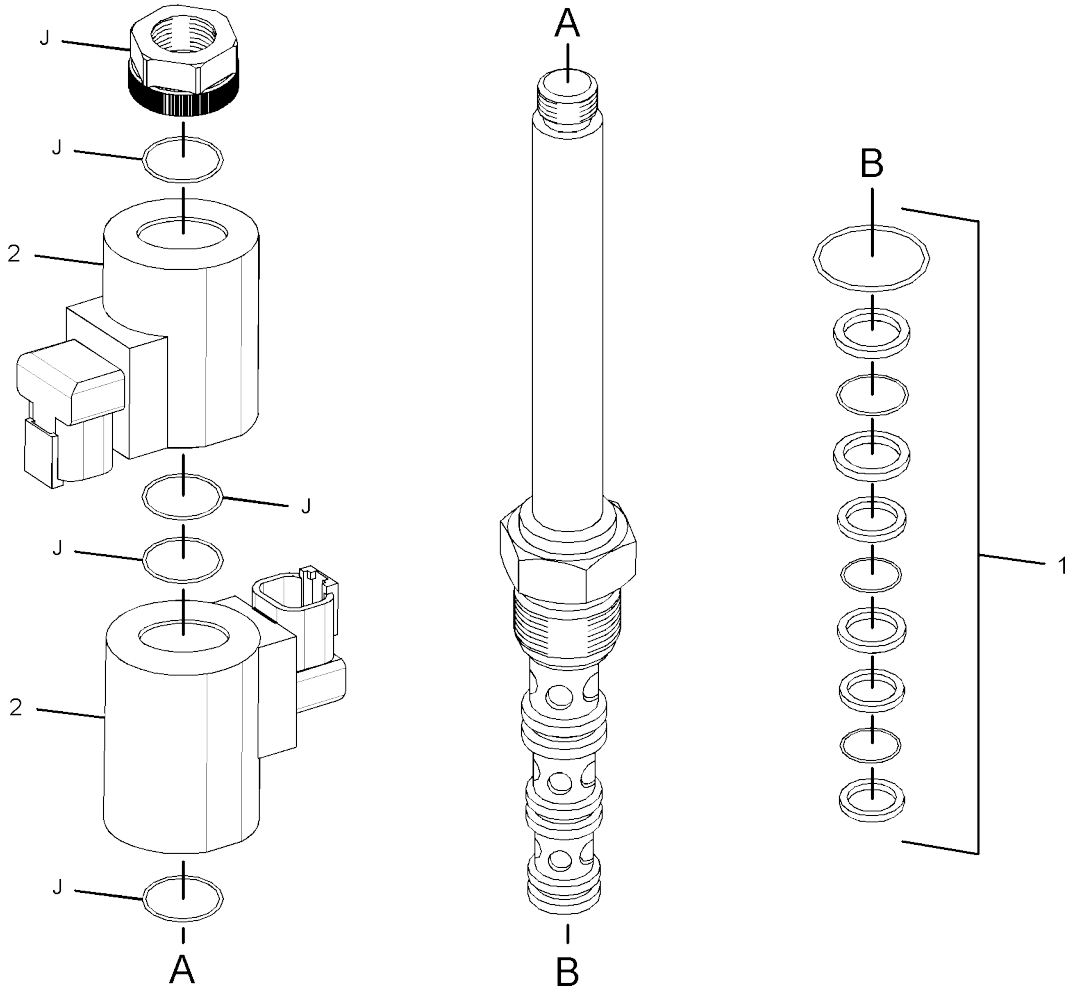

GRAPHIC #1 <END> g01850953

339-5293 VALVE GP-SOLENOID

S/N: 5B41-UP; G441-UP
PART OF 384-9265, 384-9267 VALVE GP-FLOW CONTROL AN ATTACHMENT

SMCS-5479

i07399947

REF SEE NOTE QTY	GRAPHIC NO 1 2 3 4 5 6	(PRODUCT LEVEL)	REF PAGE	PART NAME PART NUMBER
1	1	**339-5299**	1	KIT-SEAL (SOLENOID VALVE)
				(INCLUDES SEAL-O-RINGS & BACKUP RINGS)
2	1	**272-0899**	2	COIL-SOLENOID
				PARTS SHOWN IN GRAPHIC(S) WITHOUT A REFERENCE NUMBER ARE NOT SERVICED SEPARATELY
				AVAILABLE REPAIR KIT(S):
		272-3525	1	KIT-COIL NUT
				(INCLUDES SEAL-O-RINGS & COIL NUT)

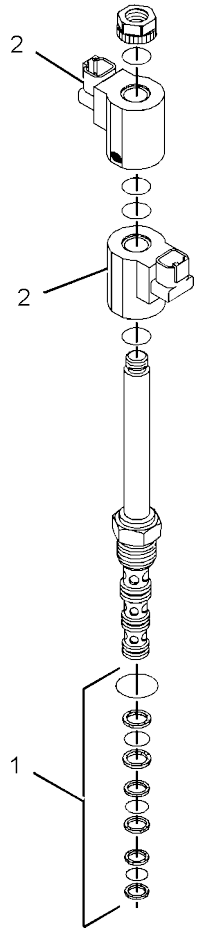

GRAPHIC #1 <END> g01912214

513-4763 SIDECUTTER AR

S/N: G441-
UP SOLID
DRUM
AN ATTACHMENT

SMCS-6601, 6813

i07416464

NOTE	PART NUMBER	QTY	PART NAME 1 2 3 4 5 6 (PRODUCT LEVEL)	SEE PAGE
Y	*360-6715*	1	LINES GP-HYDRAULIC	300
Y	*359-9729*	1	LINES GP-WATER SPRAY	421
Y	*363-8249*	1	SIDECUTTER GP	355
Y	*359-9727*	1	VALVE & MTG GP-SIDECUTTER	340

Y - SEPARATE ILLUSTRATION

<END>

513-4765 SIDECUTTER AR

S/N: 5B41-
UP SOLID
DRUM
AN ATTACHMENT

SMCS-6601, 6813

i07418300

NOTE	PART NUMBER	QTY	PART NAME 1 2 3 4 5 6 (PRODUCT LEVEL)	SEE PAGE
Y	*359-9728*	1	LINES GP-HYDRAULIC (SIDECUTTER)	298
Y	*359-9729*	1	LINES GP-WATER SPRAY (SIDECUTTER)	421
Y	*363-8248*	1	SIDECUTTER GP (SOLID DRUM)	353
Y	*359-9727*	1	VALVE & MTG GP-SIDECUTTER	340

Y - SEPARATE ILLUSTRATION

<END>

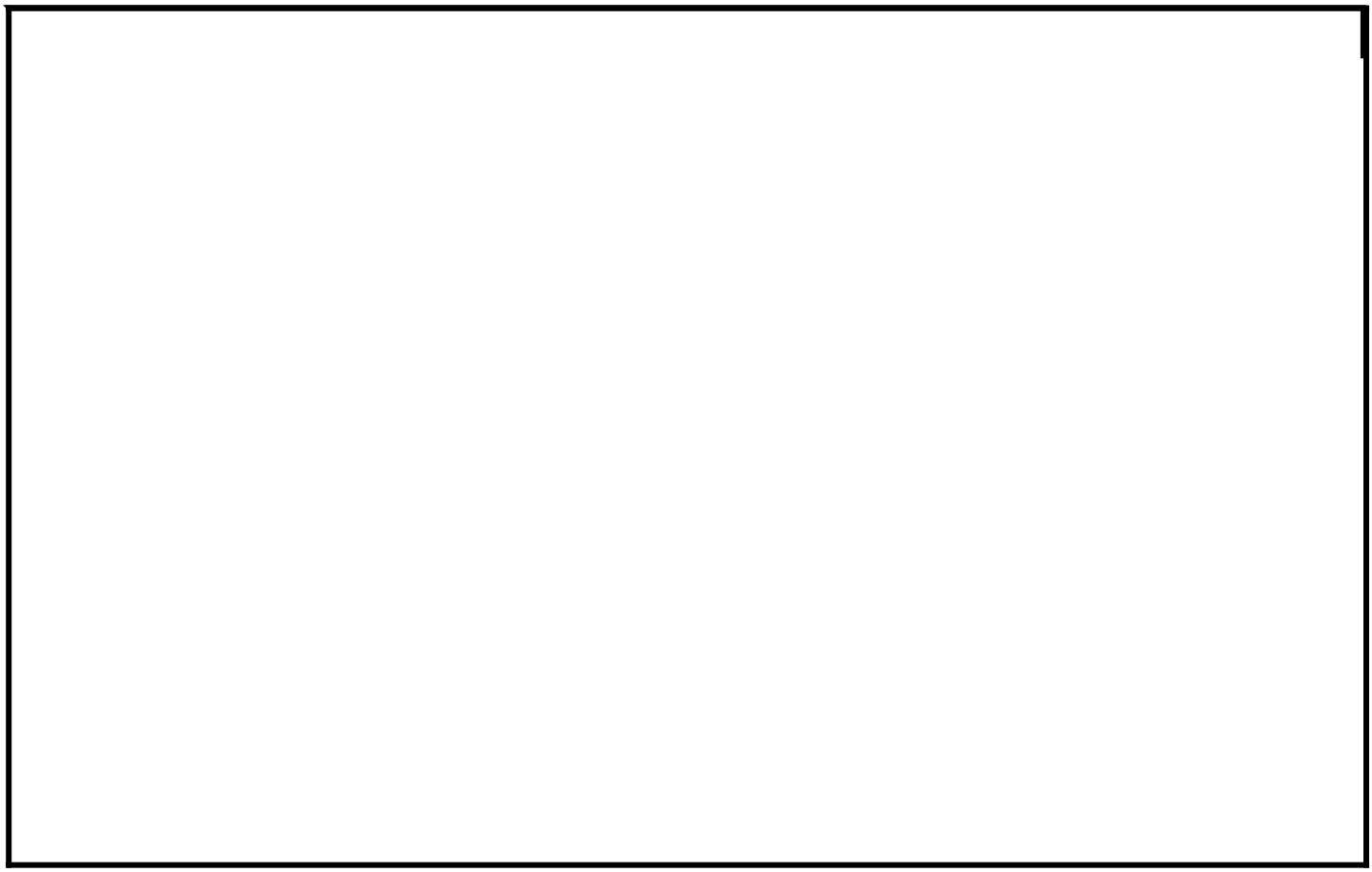

363-8248 SIDECUTTER GP

S/N: 5B41-UP
PART OF 513-4765 SIDECUTTER
AR AN ATTACHMENT

SMCS-6601, 6813

i07418394

	REF SEE NOTE QTY	GRAPHIC NO 1 2 3 4 5 6	(PRODUCT LEVEL)	REF PAGE	PART NAME PART NUMBER	
	1	1	**121-6007**	1	ROLLER-SIDE	
	2	1	**121-6008**	1	DISC-CUTTER	
	3	1	**374-8370**	1	BRACKET	
Y	4	1	**378-7652**	1	SIDECUTTER GP	360
	5	1	*148-8368*	2	ELBOW AS	
					(EACH INCLUDES)	
		1	**3J-1907**	1	SEAL-O-RING	
		1	**4J-5477**	1	SEAL-O-RING	
		1	**6V-8627**	1	ELBOW	
M	6	1	**7X-2532**	4	BOLT (M20X2.5X130-MM)	
M	7	1	**7X-2564**	1	BOLT (M20X2.5X90-MM)	
	8	1	**8T-4121**	2	WASHER-HARD (11X21X2.5-MM THK)	
	9	1	**8T-4123**	6	WASHER (22X35X3.5-MM THK)	
M	10	1	**8T-4131**	1	NUT (M20X2.5-THD)	
M	11	1	**8T-4174**	5	BOLT (M16X2X120-MM)	
M	12	1	**8T-4182**	2	BOLT (M10X1.5X45-MM)	
M	13	1	**8T-4184**	4	BOLT (M12X1.75X45-MM)	
	14	1	**8T-4223**	4	WASHER-HARD (13.5X25.5X3-MM THK)	
	15	1	**9X-8257**	5	WASHER (17.5X30X3.5-MM THK)	

M - METRIC PART
Y - SEPARATE ILLUSTRATION

363-8248 **SIDECUTTER GP (**contd.**)** **i07418394**

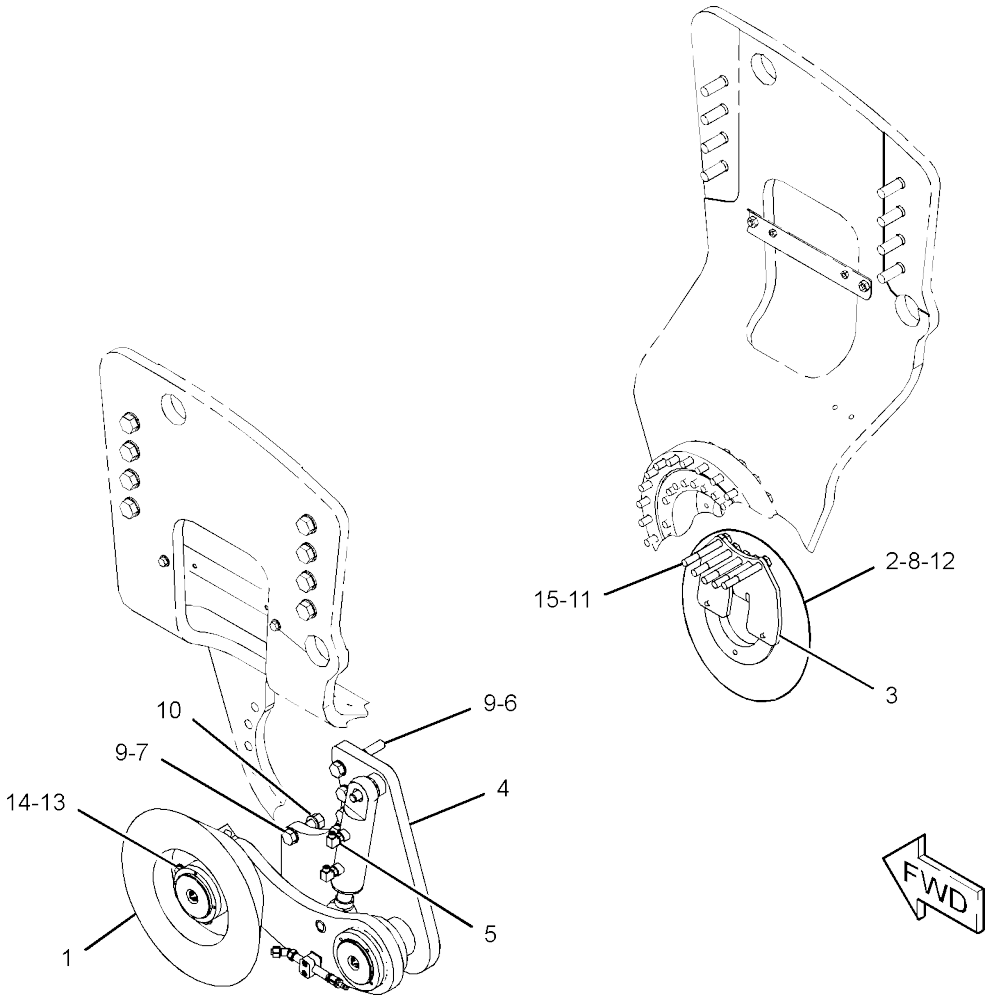

GRAPHIC #1 <END> g02871277

363-8249 SIDECUTTER GP

S/N: G441-UP
PART OF 513-4763 SIDECUTTER
AR AN ATTACHMENT

SMCS-6601, 6813

i07416472

	REF SEE NOTE QTY	GRAPHIC NO 1 2 3 4 5 6	(PRODUCT LEVEL)	REF PAGE	PART NAME PART NUMBER	
	1	1	**121-6007**	1	ROLLER-SIDE	
	2	1	**121-6008**	1	DISC-CUTTER	
Y	3	1	**374-8044**	1	SIDECUTTER GP	357
	4	1	**374-8370**	1	BRACKET	
	5	1	*148-8328*	1	CONNECTOR AS	
		1	**3D-2824**	1	SEAL-O-RING	
		1	**6V-8398**	1	SEAL-O-RING	
		1	**6V-8633**	1	CONNECTOR	
	6	1	*148-8368*	2	ELBOW AS	
					(EACH INCLUDES)	
		1	**3J-1907**	1	SEAL-O-RING	
		1	**4J-5477**	1	SEAL-O-RING	
		1	**6V-8627**	1	ELBOW	
	7	1	*148-8370*	1	ELBOW AS	
		1	**6V-8398**	1	SEAL-O-RING	
		1	**6V-9851**	1	ELBOW	
M	8	1	**7X-2555**	5	BOLT (M16X2X80-MM)	
	9	1	**9X-8257**	10	WASHER (17.5X30X3.5-MM THK)	
	10	1	**8T-4121**	2	WASHER-HARD (11X21X2.5-MM THK)	
M	11	1	**8T-4174**	5	BOLT (M16X2X120-MM)	
M	12	1	**8T-4182**	2	BOLT (M10X1.5X45-MM)	
M	13	1	**8T-4184**	4	BOLT (M12X1.75X45-MM)	
	14	1	**8T-4223**	4	WASHER-HARD (13.5X25.5X3-MM THK)	

M - METRIC PART
Y - SEPARATE ILLUSTRATION

363-8249 **SIDECUTTER GP (**contd.**)** **i07416472**

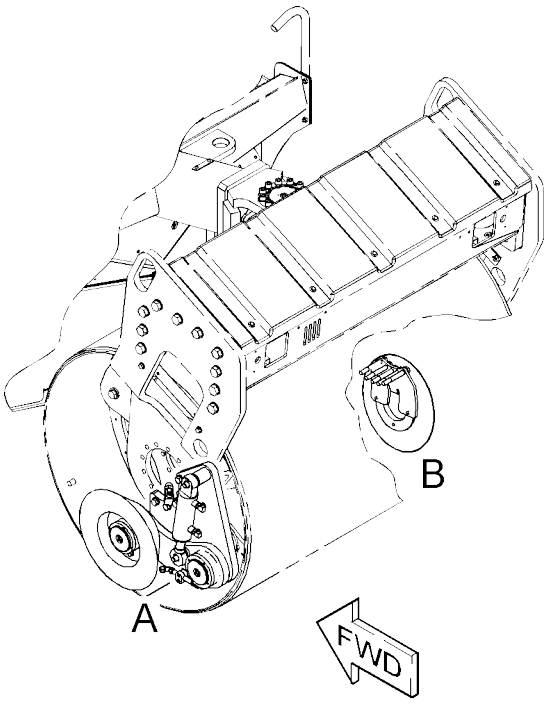

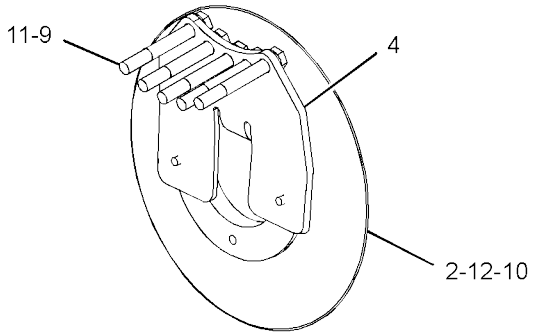

VIEW OF AREA B

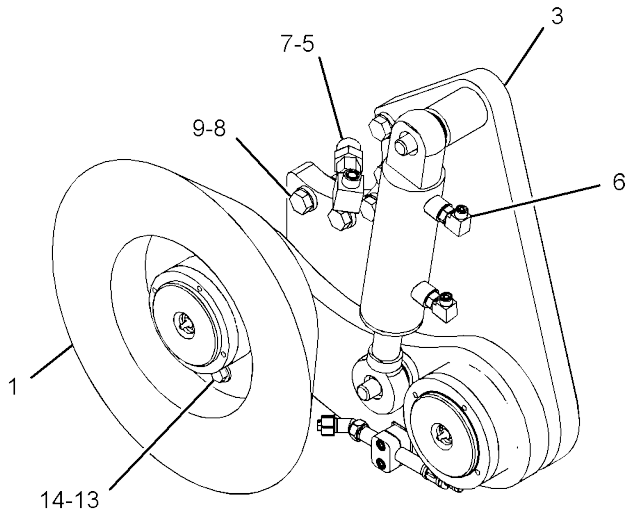

VIEW OF AREA A

GRAPHIC #1 <END> g03005591

374-8044 SIDECUTTER GP

S/N: G441-UP
PART OF 363-8249 SIDECUTTER GP AN ATTACHMENT

SMCS-6601, 6813

i07416483

	REF SEE NOTE QTY	GRAPHIC NO 1 2 3 4 5 6	(PRODUCT LEVEL)	REF PAGE	PART NAME PART NUMBER	
	1	1	**254-1716**	2	SEAL-LIP TYPE	
	2	1	**298-3485**	4	BEARING AS-TAPERED ROLLER	
Y	3	1	**384-7636**	1	CYLINDER GP-SIDECUTTER	288
	4	1	**8T-4123**	2	WASHER (22X35X3.5-MM THK)	
M	5	1	**6V-7688**	2	LOCKNUT (M20X2.5-THD)	
Y	6	1	**326-3085**	1	KIT-WATER SPRAY	418
	7	1	**206-6419**	2	CLAMP-HALF	
M	8	1	**9X-2328**	2	BOLT-SOCKET HEAD (M6X1X25-MM)	
	9	1	**137-3987**	2	WASHER	
	10	1	**137-3986**	2	NUT	
	11	1	**137-4179**	2	SEAL-O-RING	
	12	1	**348-0404**	1	COVER	
	13	1	**3B-4504**	8	LOCKWASHER	
	14	1	**5W-2817**	2	FITTING-GREASE	
M	15	1	**8T-8442**	8	BOLT-SOCKET HEAD (M6X1X30-MM)	
	16	1	**081-2911**	2	PLUG	
	17	1	**137-3999**	1	COVER	
	19	1	**383-1413**	1	SHAFT	
	20	1	**3B-4512**	1	LOCKWASHER	
M	21	1	**7X-2554**	1	BOLT (M16X2X70-MM)	

PARTS SHOWN IN GRAPHIC(S) WITHOUT A REFERENCE NUMBER ARE NOT SERVICED SEPARATELY

M - METRIC PART
Y - SEPARATE ILLUSTRATION

374-8044 **SIDECUTTER GP (**contd.**)** **i07416483**

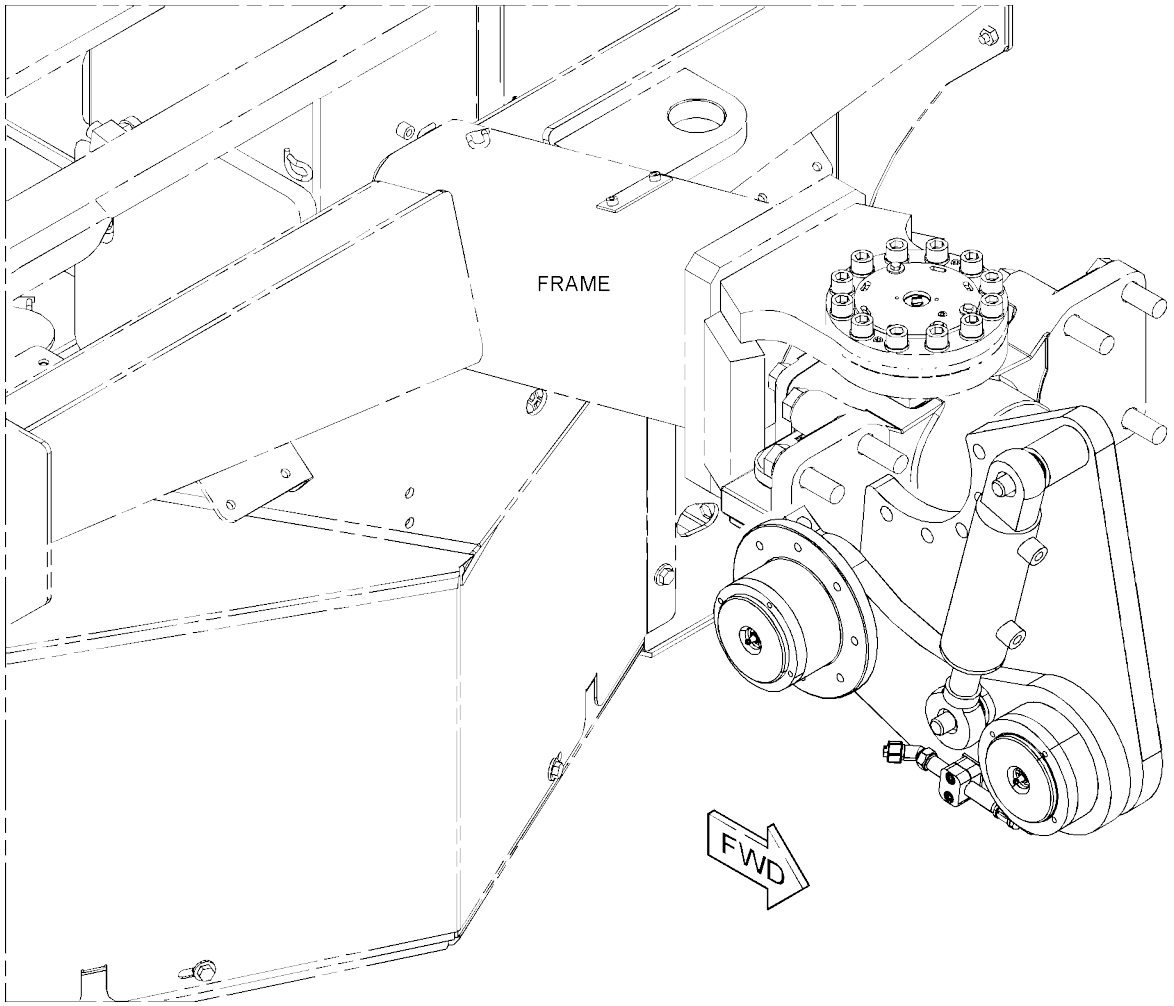

GRAPHIC #1 g03344602

374-8044 **SIDECUTTER GP (**contd.**)** **i07416483**

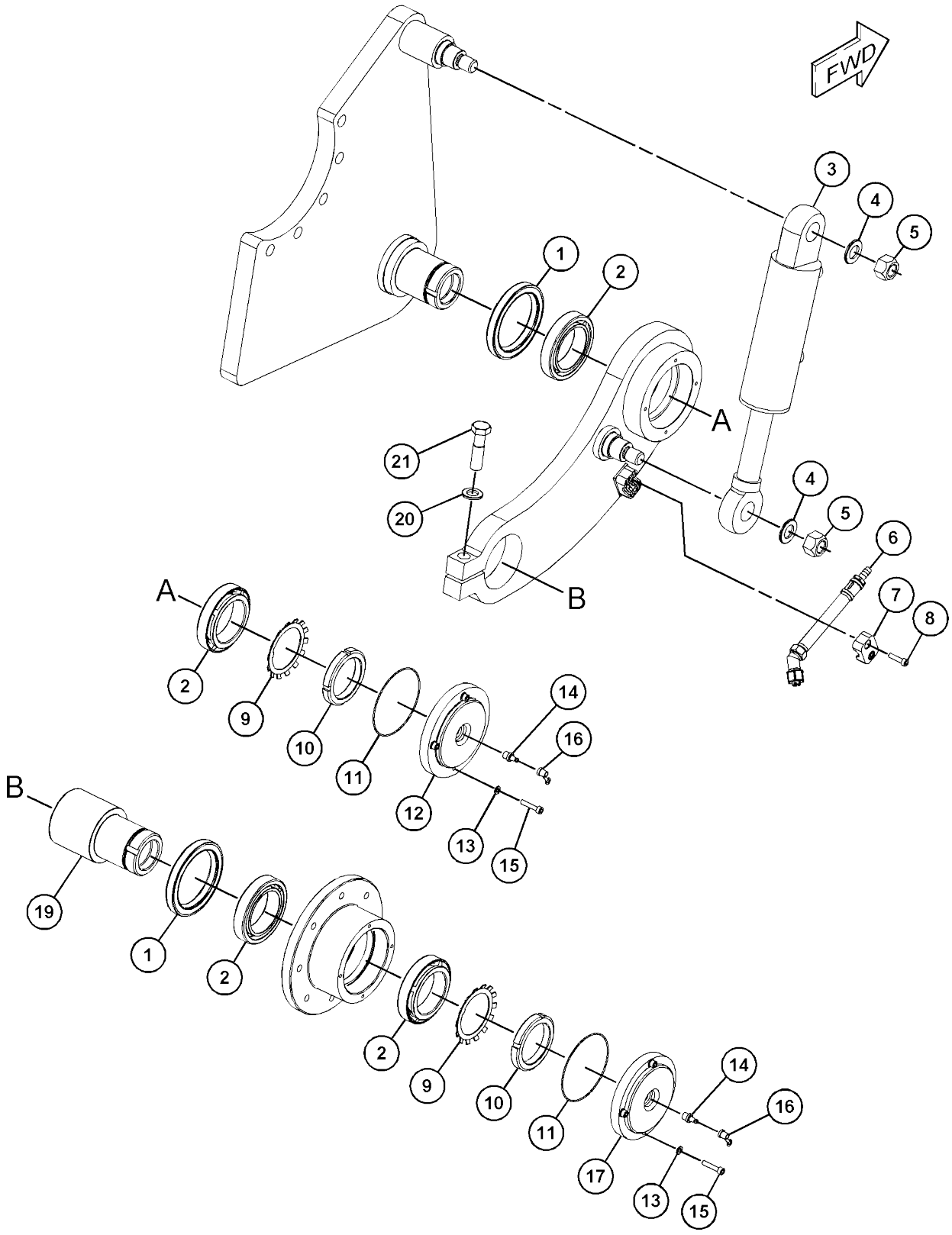

GRAPHIC #2 <END> g03526957

378-7652 SIDECUTTER GP

S/N: 5B41-UP
PART OF 363-8248 SIDECUTTER GP AN ATTACHMENT

SMCS-6601, 6813

i07418395

	REF SEE NOTE QTY	GRAPHIC NO 1 2 3 4 5 6	(PRODUCT LEVEL)	REF PAGE	PART NAME PART NUMBER	
Y	1	1	**385-5948**	1	CYLINDER GP-HYDRAULIC	287
	2	1	**8T-4123**	2	WASHER (22X35X3.5-MM THK)	
M	3	1	**6V-7688**	2	LOCKNUT (M20X2.5-THD)	
	4	1	**254-1716**	2	SEAL-LIP TYPE	
	5	1	**298-3485**	4	BEARING AS-TAPERED ROLLER	
Y	6	1	**326-3085**	1	KIT-WATER SPRAY	418
	7	1	**206-6419**	2	CLAMP-HALF	
M	8	1	**9X-2328**	2	BOLT-SOCKET HEAD (M6X1X25-MM)	
	9	1	**137-3987**	2	WASHER	
	10	1	**137-3986**	2	NUT	
	11	1	**137-4179**	2	SEAL-O-RING	
	12	1	**348-0404**	1	COVER	
	13	1	**3B-4504**	8	LOCKWASHER	
	14	1	**5W-2817**	2	FITTING-GREASE	
M	15	1	**8T-8442**	8	BOLT-SOCKET HEAD (M6X1X30-MM)	
	16	1	**081-2911**	2	PLUG	
	17	1	**137-3999**	1	COVER	
	18	1	**137-3998**	1	SUPPORT	
	19	1	**361-3940**	1	SHAFT	
	20	1	**3B-4512**	1	LOCKWASHER	
M	21	1	**7X-2554**	1	BOLT (M16X2X70-MM)	

PARTS SHOWN IN GRAPHIC(S) WITHOUT A REFERENCE NUMBER ARE NOT SERVICED SEPARATELY

M - METRIC PART
Y - SEPARATE ILLUSTRATION

378-7652 **SIDECUTTER GP** (contd.) **i07418395**

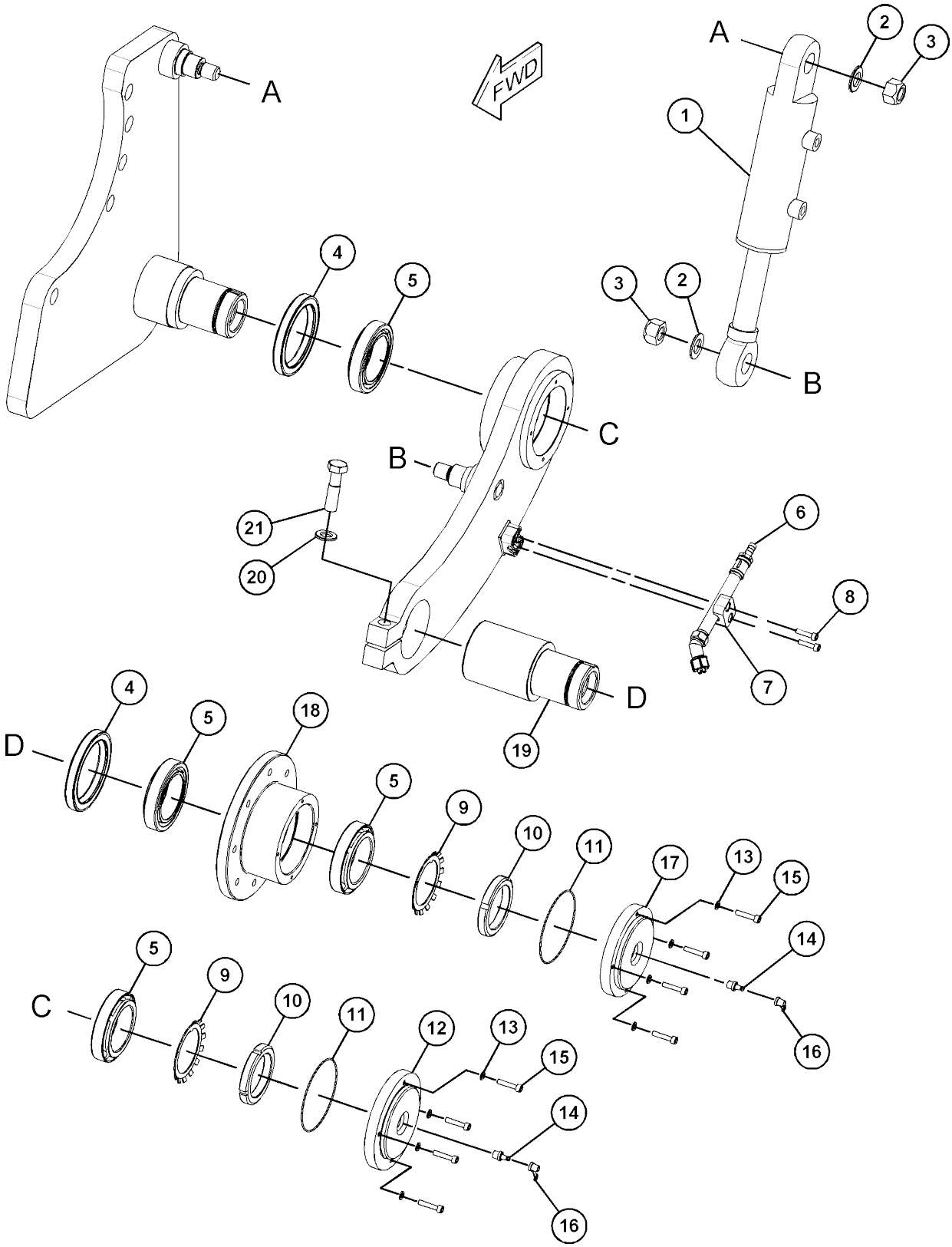

GRAPHIC #1 <END> g03456502

491-2378 DRIVE GP-VIBRATORY

S/N: G441-UP

PART OF 496-5276, 504-6818, 542-0258 VIBRATORY

AR AN ATTACHMENT

SMCS-5622, 6605, 6606

i07416430

	REF SEE NOTE QTY	GRAPHIC NO 1 2 3 4 5 6 (PRODUCT LEVEL)	REF PAGE	PART NAME PART NUMBER
	1	1 **5W-5485**	2	SEAL-O-RING
	2	1 **107-4146**	4	SEAL-LIP TYPE
	3	1 **109-0624**	2	BUSHING
	4	1 **111-1400**	2	SPACER (41.5X46.5X5-MM THK)
	5	1 **113-5215**	2	PLATE
	6	1 **155-9133**	1	KEY
	7	1 **205-2941**	6	SCREW-SPECIAL (SELF LOCKING)
	8	1 **489-8154**	1	HUB-COUPLING
	9	1 **491-2379**	2	HUB
	10	1 **491-2380**	1	SHAFT
	11	1 **491-2382**	1	HOUSING
	12	1 **492-6209**	1	SHIM-PACK
M	13	1 **6V-8200**	1	BOLT-SOCKET HEAD (M12X1.75X35-MM)
	14	1 **530-3088**	2	BEARING AS
M	16	1 **8T-4183**	4	BOLT (M12X1.75X40-MM)
	17	1 **8T-4223**	4	WASHER-HARD (13.5X25.5X3-MM THK)
	18	1 **8T-4224**	12	WASHER-HARD (8.8X16X2-MM THK)
M	19	1 **8T-4908**	12	BOLT (M8X1.25X25-MM)
M	20	1 **8T-9532**	1	SETSCREW-SOCKET (M8X1.25-THD)

M - METRIC PART

491-2378 **DRIVE GP-VIBRATORY** (contd.) **i07416430**

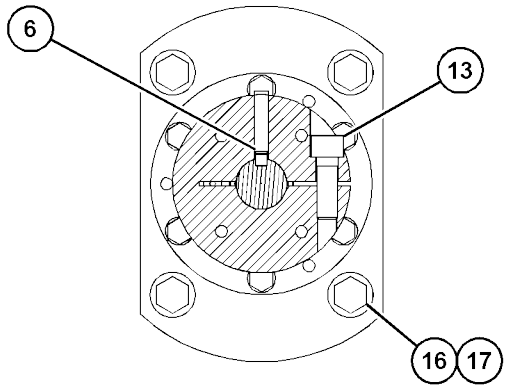

SECTION B-B

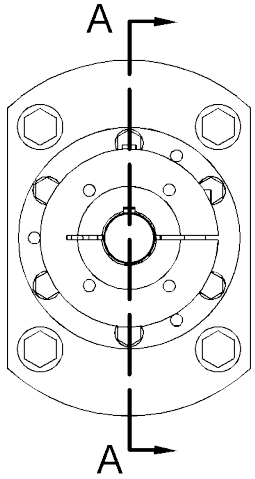

RIGHT SIDE VIEW

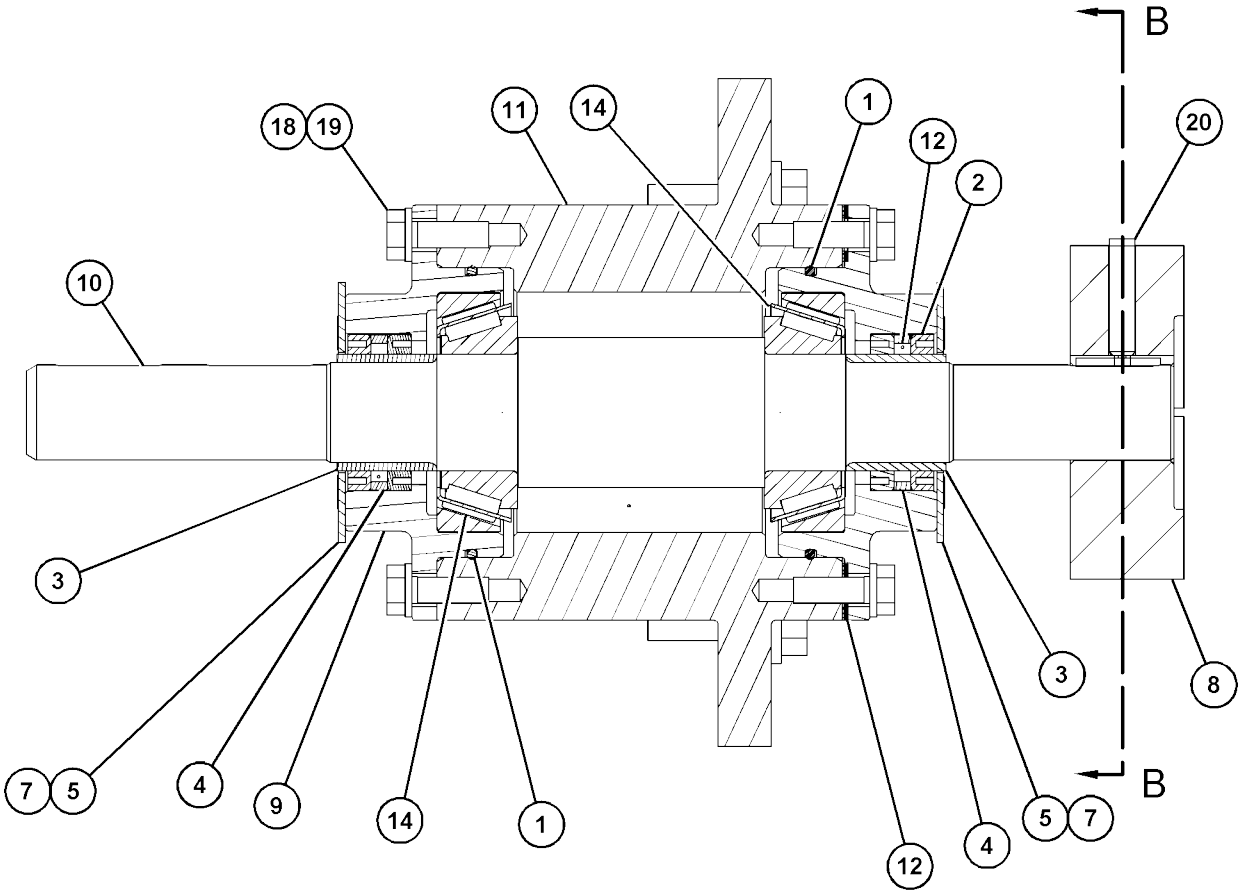

SECTION A-A

GRAPHIC #1 <END> g06255716

501-2184 DRIVE GP-VIBRATORY

S/N: 5B41-UP

PART OF 496-0536, 504-6797, 504-6803, 504-6804, 504-6807, 537-5498 VIBRATORY AR AN ATTACHMENT

TYPE 1

SMCS-5622, 6605, 6606

i07418108

REF SEE NOTE	QTY	GRAPHIC NO 1 2 3 4 5 6	(PRODUCT LEVEL)	REF PAGE	PART NAME PART NUMBER
	1	1	**5W-5485**	2	SEAL-O-RING
	2	1	**107-4146**	4	SEAL-LIP TYPE
	3	1	**109-0624**	2	BUSHING
	4	1	**111-1400**	2	SPACER (41.5X46.5X5-MM THK)
	5	1	**113-5215**	2	PLATE
	6	1	**155-9133**	1	KEY
	7	1	**205-2941**	6	SCREW-SPECIAL (SELF LOCKING)
	8	1	**491-2379**	2	HUB
	9	1	**491-2380**	1	SHAFT
	10	1	**491-2382**	1	HOUSING
	11	1	**492-6209**	1	SHIM-PACK (INCLUDES 9-SHIMS)
	12	1	**501-2183**	1	HUB-COUPLING
M	13	1	**6V-8200**	1	BOLT-SOCKET HEAD (M12X1.75X35-MM)
	14	1	**6Y-2736**	2	CONE-BEARING
	15	1	**6Y-2737**	2	CUP-BEARING
M	16	1	**8T-4183**	4	BOLT (M12X1.75X40-MM)
	17	1	**8T-4223**	4	WASHER-HARD (13.5X25.5X3-MM THK)
	18	1	**8T-4224**	12	WASHER-HARD (8.8X16X2-MM THK)
M	19	1	**8T-4908**	12	BOLT (M8X1.25X25-MM)
M	20	1	**8T-9532**	1	SETSCREW-SOCKET (M8X1.25-THD)

M - METRIC PART

501-2184 **DRIVE GP-VIBRATORY (**contd.**)** **i07418108**

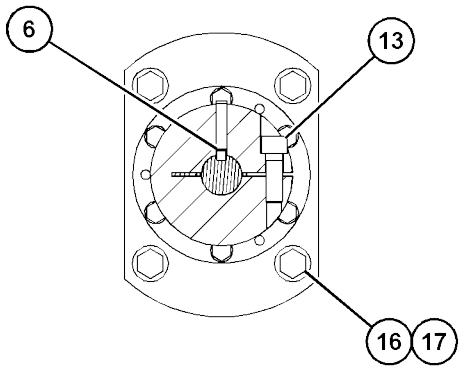

SECTION B-B

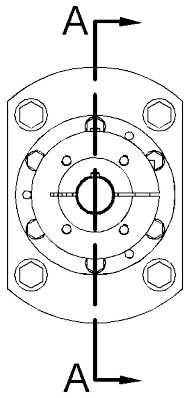

RIGHT SIDE VIEW

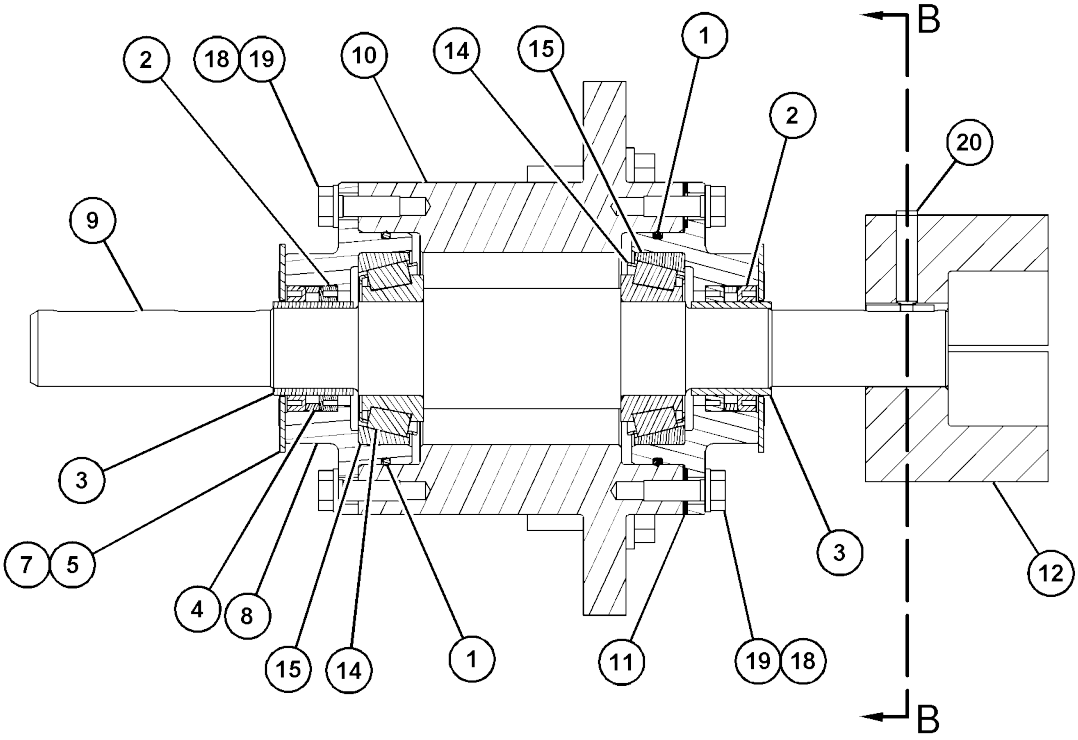

SECTION A-A

GRAPHIC #1 <END> g06124056

501-2184 DRIVE GP-VIBRATORY

S/N: 5B41-UP

PART OF 496-0536, 504-6797, 504-6803, 504-6804, 504-6807, 537-5498 VIBRATORY AR AN ATTACHMENT

TYPE 2

SMCS-5622, 6605, 6606

i07660510

	REF SEE NOTE QTY	GRAPHIC NO 1 2 3 4 5 6	(PRODUCT LEVEL)	REF PAGE	PART NAME PART NUMBER
C	1	1	**526-0604**	4	SEAL-LIP TYPE
	2	1	**109-0624**	2	BUSHING
	3	1	**155-9133**	1	KEY
	4	1	**491-2379**	2	HUB
	5	1	**491-2380**	1	SHAFT
	6	1	**491-2382**	1	HOUSING
B	7	1	**492-6209**	1	SHIM-PACK (INCLUDES 9-SHIMS)
	8	1	**501-2183**	1	HUB-COUPLING
C	9	1	**530-3088**	2	BEARING AS
	10	1	**5W-5485**	2	SEAL-O-RING
M	11	1	**6V-8200**	1	BOLT-SOCKET HEAD (M12X1.75X35-MM)
M	12	1	**8T-4183**	4	BOLT (M12X1.75X40-MM)
	13	1	**8T-4223**	4	WASHER-HARD (13.5X25.5X3-MM THK)
	14	1	**8T-4224**	12	WASHER-HARD (8.8X16X2-MM THK)
M	15	1	**8T-4908**	12	BOLT (M8X1.25X25-MM)
M	16	1	**8T-9532**	1	SETSCREW-SOCKET (M8X1.25-THD)

B - USE AS REQUIRED
C - CHANGE FROM PREVIOUS
TYPE M - METRIC PART

501-2184 **DRIVE GP-VIBRATORY** (contd.) **i07660510**

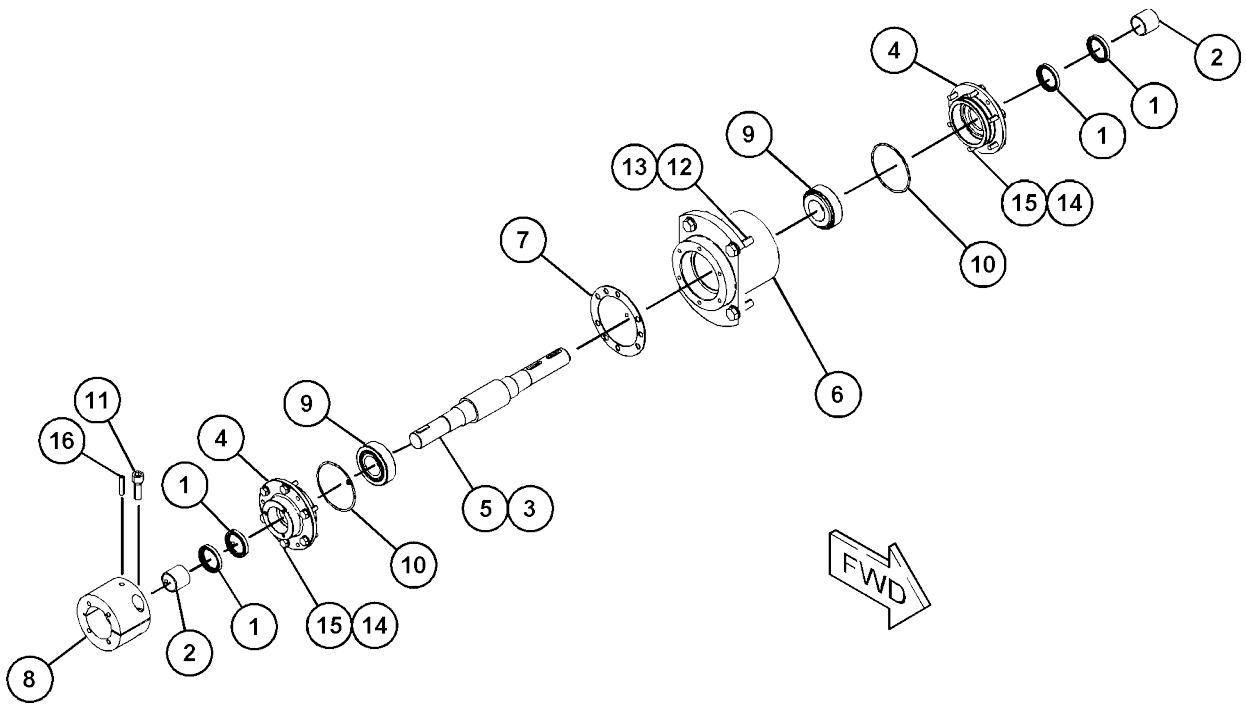

GRAPHIC #1 <END> g06362548

343-5609 HOUSING GP-ECCENTRIC WEIGHT

S/N: 5B41-UP
PART OF 341-8757, 504-6797 VIBRATORY
AR AN ATTACHMENT

SMCS-6606

i07417977

	REF SEE NOTE QTY	GRAPHIC NO 1 2 3 4 5 6	(PRODUCT LEVEL)	REF PAGE	PART NAME PART NUMBER	
	1	1	**184-9902**	1	FAN (6-BLADE)	
	2	1	**394-1261**	1	LEVER	
	3	1	**228-7521**	1	HUB-COUPLING	
	4	1	**394-1259**	1	HANDWHEEL	
Y	5	1	*345-0695*	1	WEIGHT GP-ECCENTRIC	399
M	6	1	**108-1781**	1	BOLT-SOCKET HEAD (M12X1.75X35-MM)	
	7	1	**1B-8705**	1	KEY-WOODRUFF	
M	8	1	**6V-8821**	1	NUT (M14X1.5-THD)	
	9	1	**7X-0510**	1	WASHER-HARD (15.5X29X3-MM THK)	
M	10	1	**7X-2563**	16	BOLT (M20X2.5X60-MM)	
	11	1	**8T-4121**	3	WASHER-HARD (11X21X2.5-MM THK)	
	12	1	**8T-4123**	16	WASHER (22X35X3.5-MM THK)	
M	13	1	**8T-4133**	1	NUT (M10X1.5-THD)	
M	14	1	**8T-4172**	1	BOLT (M10X1.5X80-MM)	

M - METRIC PART
Y - SEPARATE ILLUSTRATION

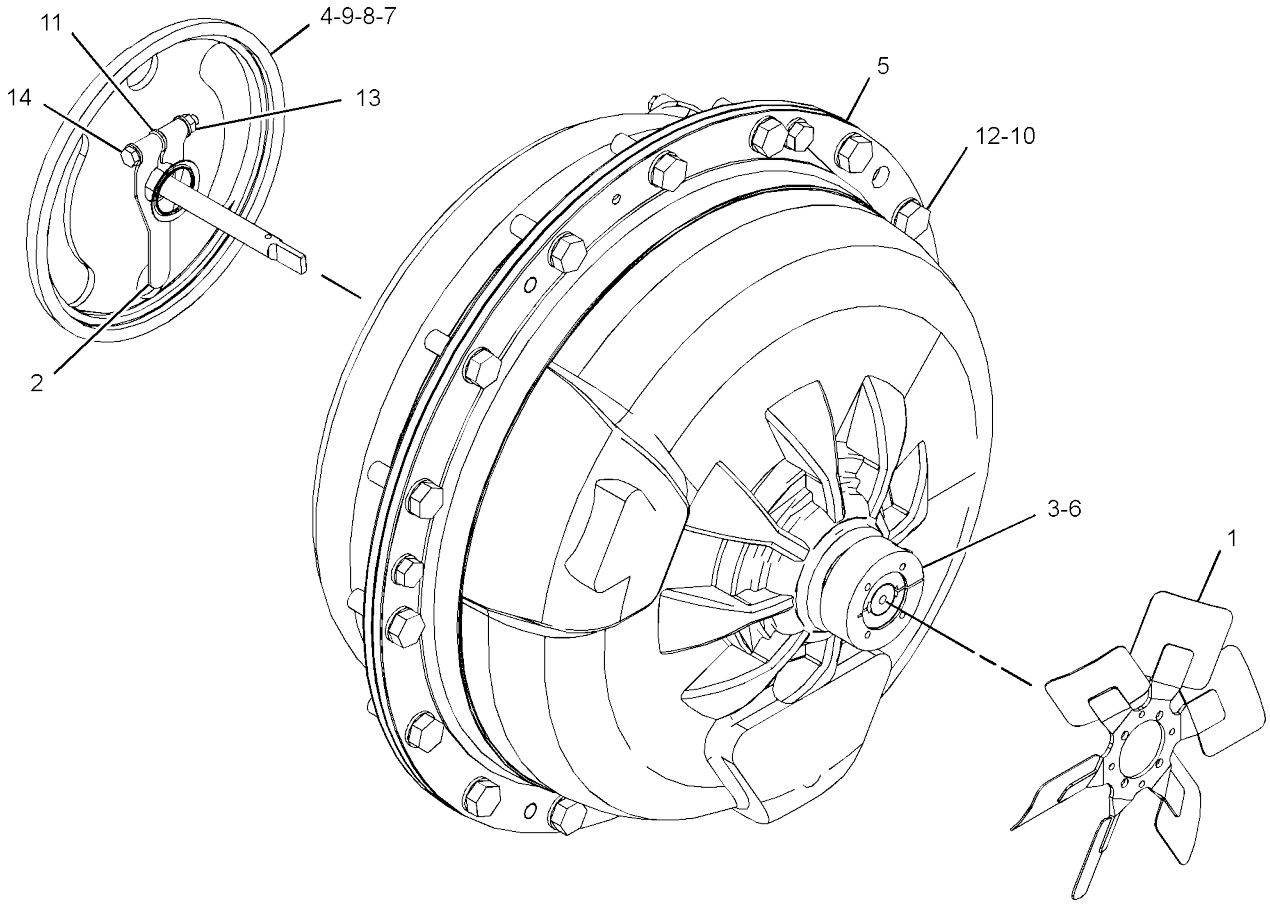

GRAPHIC #1 <END> g02871476

346-5466 HOUSING GP-ECCENTRIC WEIGHT

S/N: 5B41-UP
PART OF 341-8768, 496-0536 VIBRATORY
AR AN ATTACHMENT

SMCS-6606

i07417970

	REF SEE NOTE QTY	GRAPHIC NO 1 2 3 4 5 6	(PRODUCT LEVEL)	REF PAGE	PART NAME PART NUMBER	
	1	1	**184-9902**	1	FAN (6-BLADE)	
	2	1	**394-1261**	1	LEVER	
	3	1	**228-7521**	1	HUB-COUPLING	
Y	4	1	*346-5636*	1	WEIGHT GP-ECCENTRIC	402
	5	1	**394-1260**	1	HANDWHEEL	
M	6	1	**108-1781**	1	BOLT-SOCKET HEAD (M12X1.75X35-MM)	
	7	1	**1B-8705**	1	KEY-WOODRUFF	
M	8	1	**295-4801**	1	NUT (M14X1.5-THD)	
	9	1	**7X-0510**	1	WASHER-HARD (15.5X29X3-MM THK)	
M	10	1	**7X-2563**	16	BOLT (M20X2.5X60-MM)	
	11	1	**8T-4121**	3	WASHER-HARD (11X21X2.5-MM THK)	
	12	1	**8T-4123**	16	WASHER (22X35X3.5-MM THK)	
M	13	1	**8T-4133**	1	NUT (M10X1.5-THD)	
M	14	1	**8T-4172**	1	BOLT (M10X1.5X80-MM)	

M - METRIC PART
Y - SEPARATE ILLUSTRATION

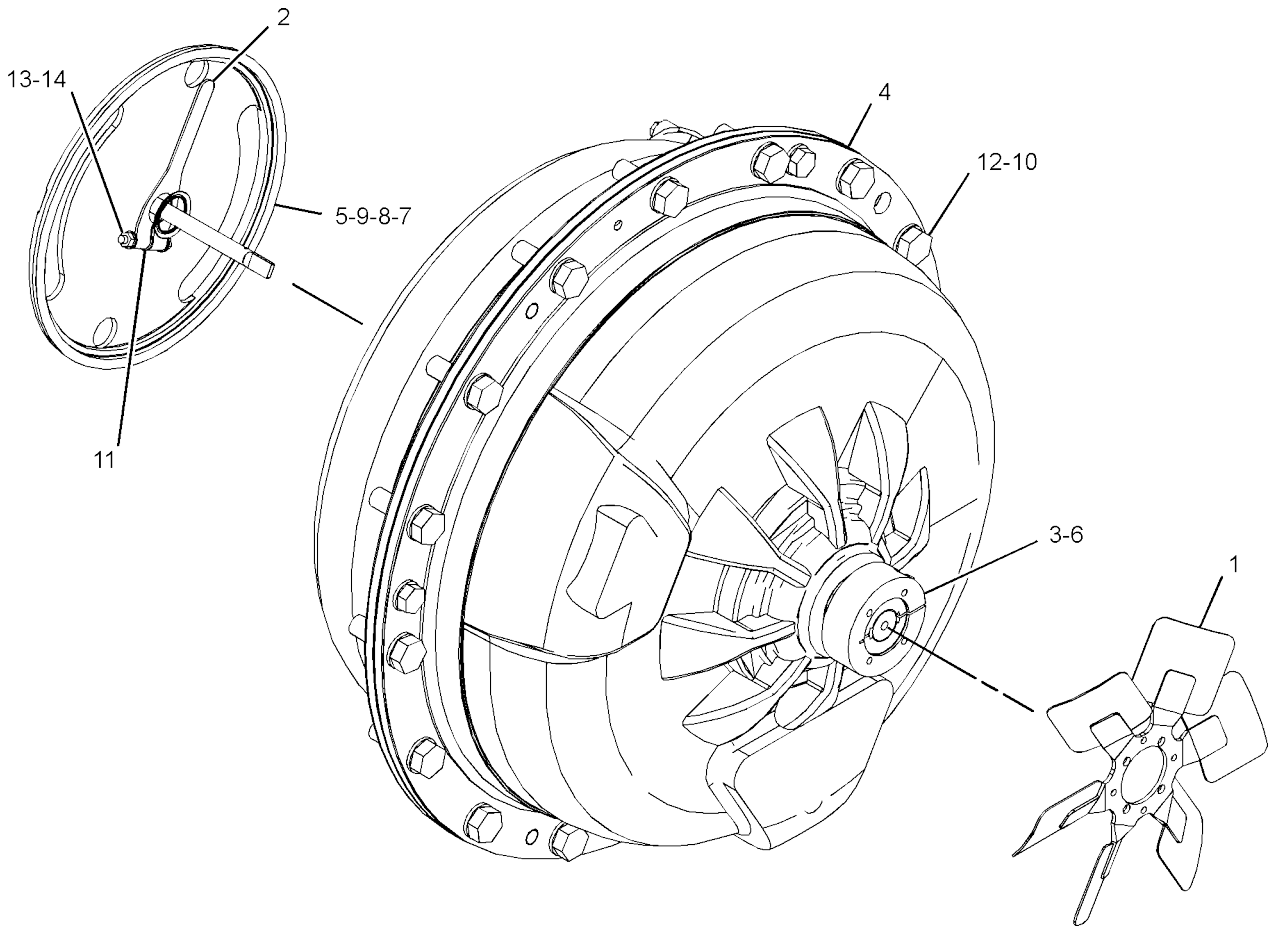

GRAPHIC #1 <END> g02993059

358-2741 HOUSING GP-ECCENTRIC WEIGHT

S/N: 5B41-UP

PART OF 358-2740, 396-4786, 504-6803, 504-6804 VIBRATORY AR AN ATTACHMENT

SMCS-6606

i07417992

REF SEE NOTE	QTY	GRAPHIC NO 1 2 3 4 5 6	(PRODUCT LEVEL)	REF PAGE	PART NAME PART NUMBER	
	1	1	**184-9902**	1	FAN (6-BLADE)	
	2	1	**228-7521**	1	HUB-COUPLING	
Y	3	1	*358-2742*	1	WEIGHT GP-ECCENTRIC	403
M	4	1	**108-1781**	1	BOLT-SOCKET HEAD (M12X1.75X35-MM)	
M	5	1	**7X-2563**	16	BOLT (M20X2.5X60-MM)	
	6	1	**8T-4123**	16	WASHER (22X35X3.5-MM THK)	

M - METRIC PART
Y - SEPARATE ILLUSTRATION

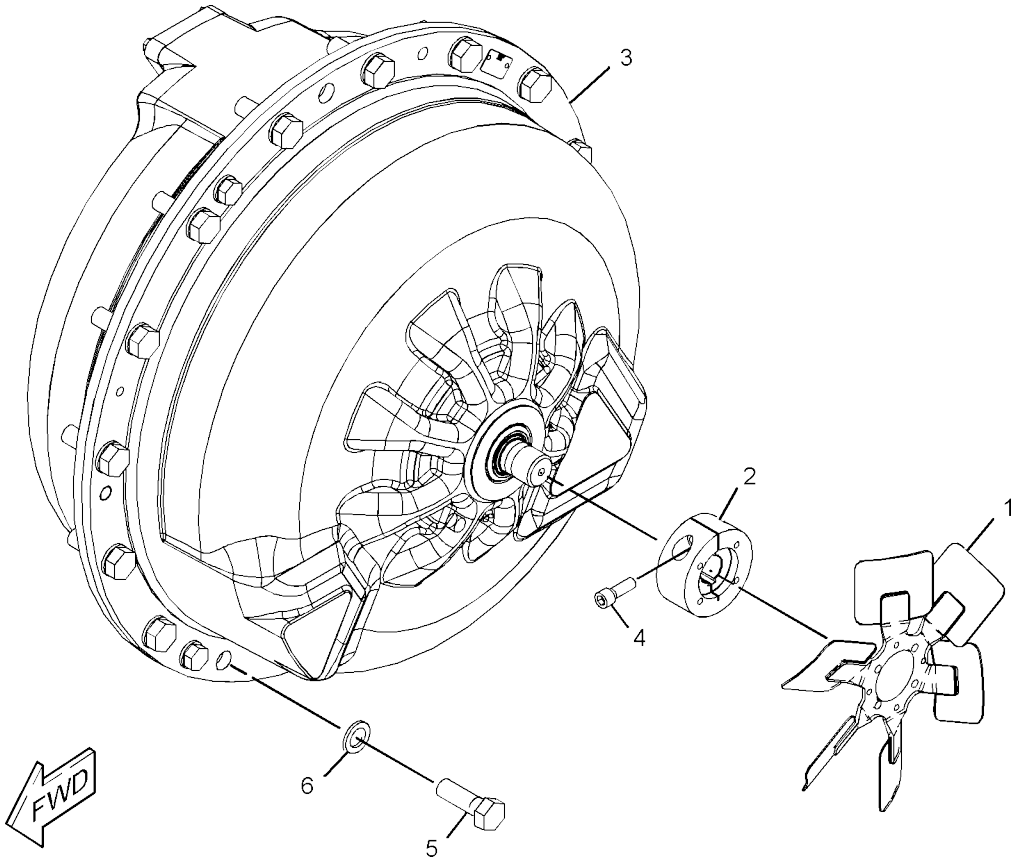

GRAPHIC #1 <END> g02867000

375-8769 HOUSING GP-ECCENTRIC WEIGHT

S/N: G441-UP
PART OF 341-8765, 396-4772, 504-6818, 542-0258 VIBRATORY
AR AN ATTACHMENT

SMCS-6606

i07399926

	REF SEE NOTE QTY	GRAPHIC NO 1 2 3 4 5 6	(PRODUCT LEVEL)	REF PAGE	PART NAME PART NUMBER	
	1	1	**184-9902**	1	FAN (6-BLADE)	
	2	1	**228-7521**	1	HUB-COUPLING	
Y	3	1	*375-8771*	1	WEIGHT GP-ECCENTRIC	406
M	4	1	**108-1781**	1	BOLT-SOCKET HEAD (M12X1.75X35-MM)	
M	5	1	**7X-2563**	16	BOLT (M20X2.5X60-MM)	
	6	1	**8T-4123**	16	WASHER (22X35X3.5-MM THK)	

M - METRIC PART
Y - SEPARATE ILLUSTRATION

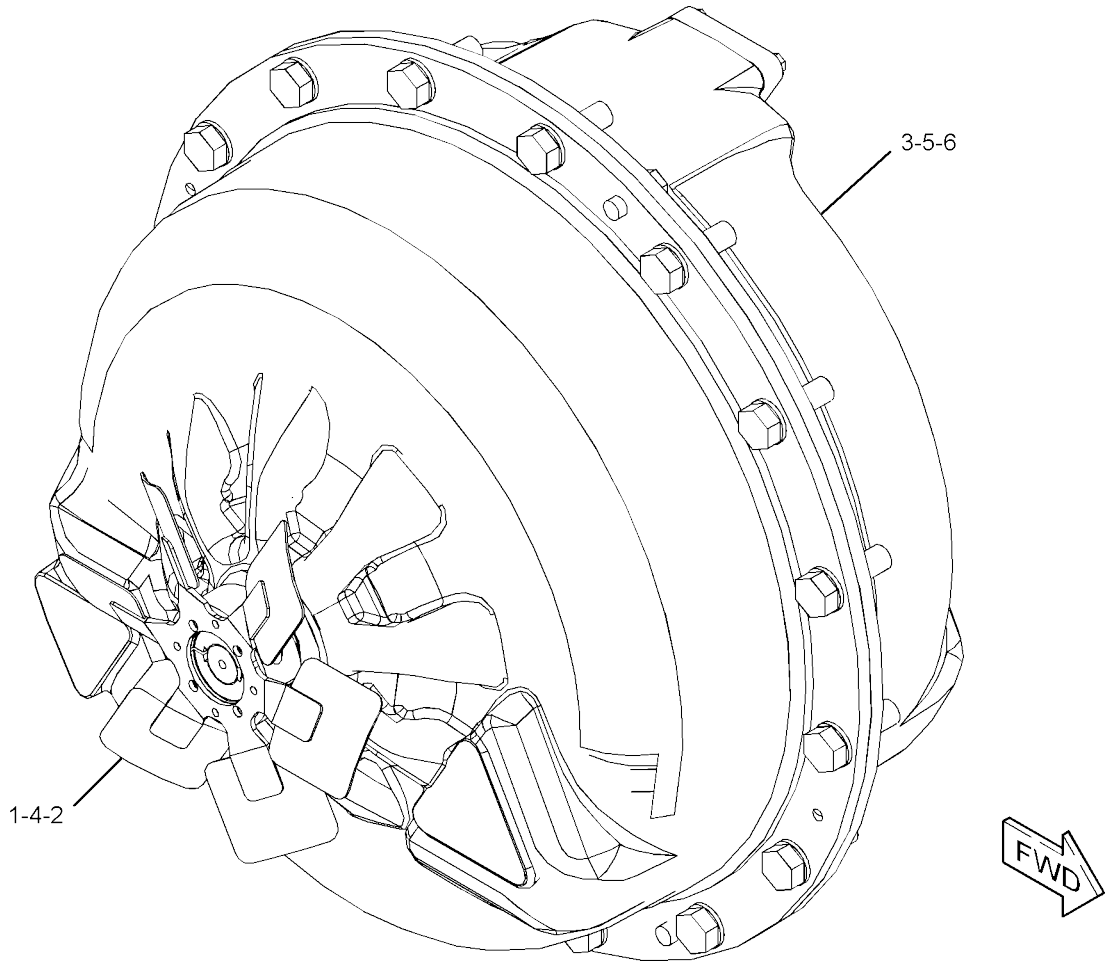

GRAPHIC #1 <END> g02866097

375-8770 HOUSING GP-ECCENTRIC WEIGHT

S/N: G441-UP
PART OF 341-8752, 496-5276 VIBRATORY
AR AN ATTACHMENT

SMCS-6606

i07399910

	REF SEE NOTE QTY	GRAPHIC NO 1 2 3 4 5 6	(PRODUCT LEVEL)	REF PAGE	PART NAME PART NUMBER	
	1	1	**184-9902**	1	FAN (6-BLADE)	
	2	1	**201-7809**	1	LEVER	
	3	1	**228-7521**	1	HUB-COUPLING	
	4	1	**245-4373**	1	HANDWHEEL	
Y	5	1	*375-8772*	1	WEIGHT GP-ECCENTRIC	408
M	6	1	**108-1781**	1	BOLT-SOCKET HEAD (M12X1.75X35-MM)	
	7	1	**1B-8705**	1	KEY-WOODRUFF	
M	8	1	**295-4801**	1	NUT (M14X1.5-THD)	
	9	1	**7X-0510**	1	WASHER-HARD (15.5X29X3-MM THK)	
M	10	1	**7X-2563**	16	BOLT (M20X2.5X60-MM)	
	11	1	**8T-4121**	3	WASHER-HARD (11X21X2.5-MM THK)	
	12	1	**8T-4123**	16	WASHER (22X35X3.5-MM THK)	
M	13	1	**8T-4133**	1	NUT (M10X1.5-THD)	
M	14	1	**8T-4172**	1	BOLT (M10X1.5X80-MM)	

M - METRIC PART
Y - SEPARATE ILLUSTRATION

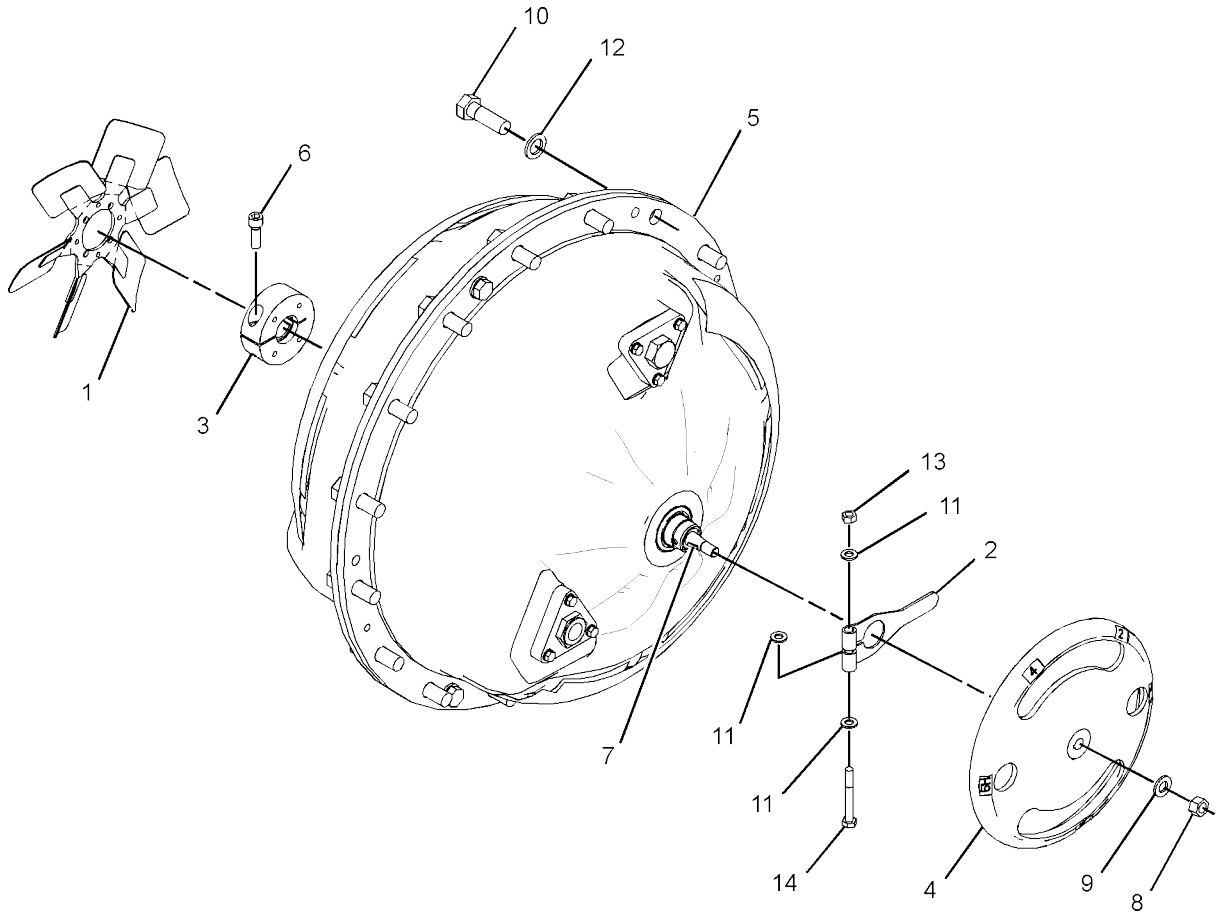

GRAPHIC #1 <END> g02873940

504-6809 HOUSING GP-ECCENTRIC WEIGHT

S/N: G441-UP
PART OF 496-5276, 504-6818, 542-0258 VIBRATORY
AR AN ATTACHMENT

SMCS-6606

i07523465

	REF SEE NOTE QTY	GRAPHIC NO 1 2 3 4 5 6	(PRODUCT LEVEL)	REF PAGE	PART NAME PART NUMBER	
Y	1	1	*561-9382*	1	WEIGHT GP-ECCENTRIC (REAR)	412
M	2	1	**160-0017**	16	BOLT (M16X2X230-MM)	
	3	1	**9X-8257**	16	WASHER (17.5X30X3.5-MM THK)	
	4	1	**526-6370**	1	PLATE	
Y	5	1	*561-9383*	1	WEIGHT GP-ECCENTRIC (FRONT)	413

M - METRIC PART
Y - SEPARATE ILLUSTRATION

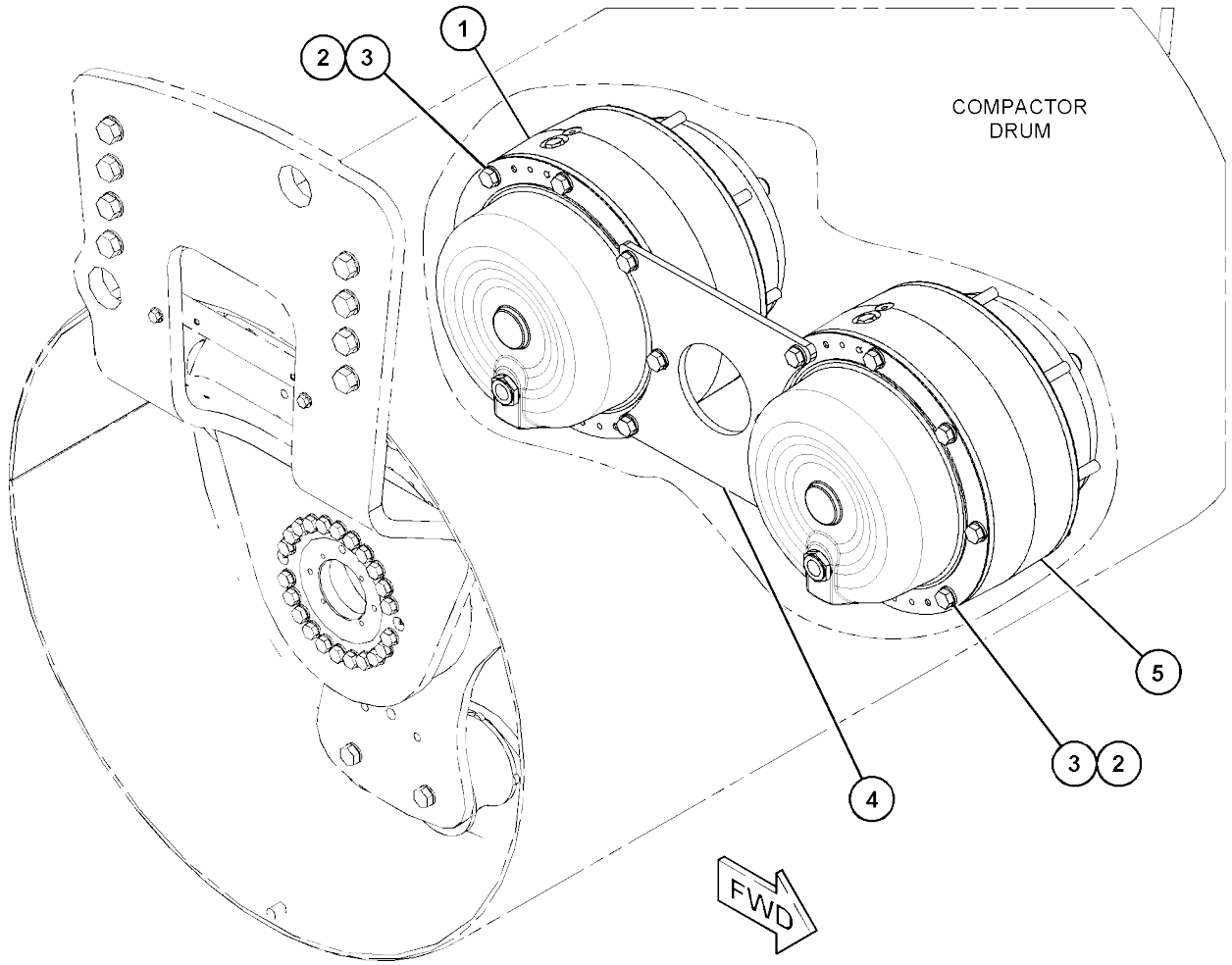

GRAPHIC #1 <END> g06343002

526-9307 HOUSING GP-ECCENTRIC WEIGHT

S/N: 5B41-UP

PART OF 496-0536, 504-6797, 504-6803, 504-6804, 504-6807, 537-5498 VIBRATORY AR AN ATTACHMENT

SMCS-6606

i07527044

	REF SEE NOTE QTY	GRAPHIC NO 1 2 3 4 5 6 (PRODUCT LEVEL)	REF PAGE	PART NAME PART NUMBER	
Y	1	1 *561-9382*	1	WEIGHT GP-ECCENTRIC (REAR)	412
	2	1 **526-6368**	1	PLATE	
M	3	1 **160-0017**	16	BOLT (M16X2X230-MM)	
	4	1 **9X-8257**	16	WASHER (17.5X30X3.5-MM THK)	
Y	5	1 *561-9383*	1	WEIGHT GP-ECCENTRIC (FRONT)	413

M - METRIC PART
Y - SEPARATE ILLUSTRATION

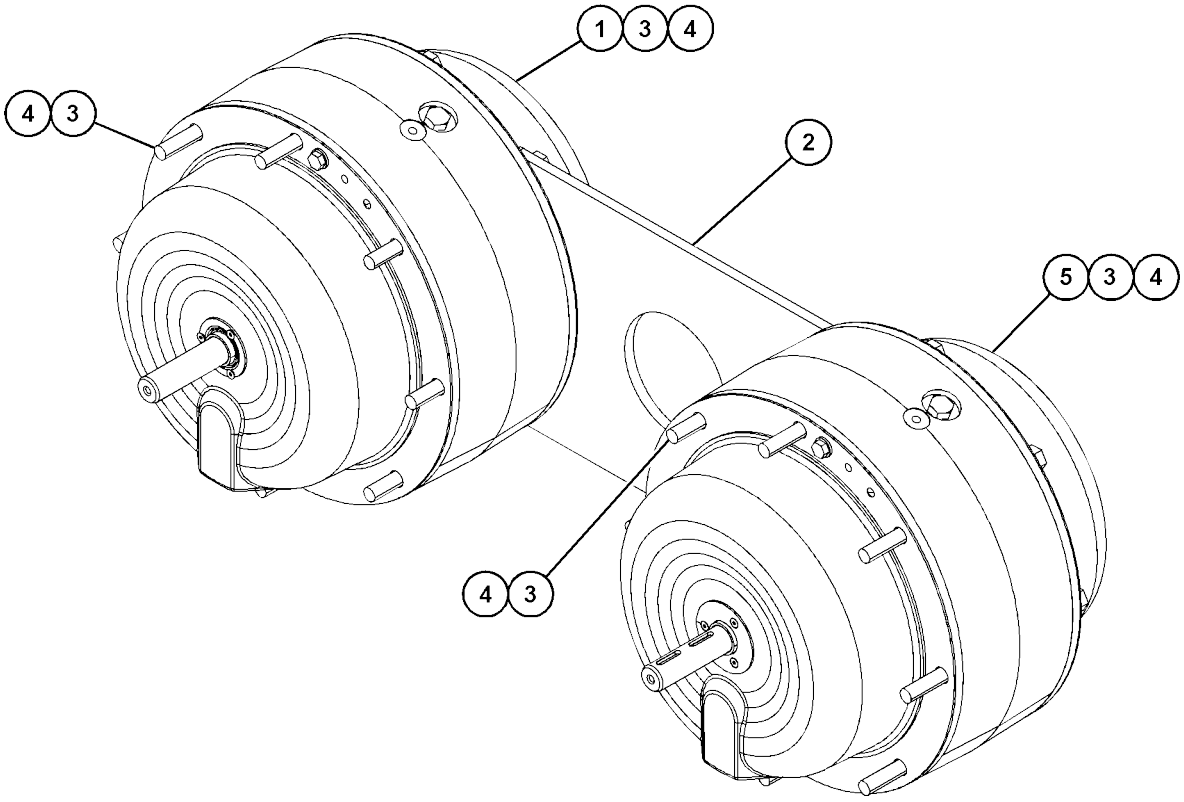

GRAPHIC #1 <END> g06342955

383-7240 LINES GP-VIBRATORY

S/N: G441-UP
PART OF 539-2601, 539-2608 MACHINE
AR AN ATTACHMENT

SMCS-5057

i07424279

	REF SEE NOTE QTY	GRAPHIC NO 1 2 3 4 5 6	(PRODUCT LEVEL)	REF PAGE	PART NAME PART NUMBER
	1	1	**5P-5148**	5	STRAP-CABLE
	2	1	**115-8645**	7	GUARD
	3	1	**207-4499**	2	PLATE-COVER
	4	1	**364-1680**	2	CLAMP
I	5	1	**373-2543**	1	HOSE AS
I	6	1	**552-3171**	1	HOSE AS
I	7	1	**375-0674**	1	HOSE AS
I	8	1	**383-7237**	1	HOSE AS
	9	1	**384-8815**	2	GUARD
I	10	1	**391-0778**	1	HOSE AS
I	11	1	**391-0779**	1	HOSE AS
I	12	1	**391-0780**	1	HOSE AS
I	13	1	**393-9146**	1	HOSE AS
	14	1	**177-2215**	4	STRAP-DUAL CLAMP
	15	1	**200-6345**	1	SADDLE-MOUNTING (DUAL SWIVEL)
	16	1	**204-2281**	30	STRAP-CABLE
	17	1	**206-6413**	2	CLAMP-HALF
	18	1	**2V-6350**	4	CLIP (TAB)
	19	1	**2V-6352**	4	CLIP (SLOT)
	20	1	**5P-4116**	4	WASHER-HARD (8.8X20.5X2-MM THK)
M	21	1	**5P-7970**	1	NUT (M8X1.25-THD)
	22	1	**6V-3964**	1	WASHER-HARD (8.8X25.5X5-MM THK)
	23	1	**7G-5984**	2	CLIP (TAB)
	24	1	**7G-5985**	2	CLIP (SLOT)
	25	1	**7X-7729**	9	WASHER (11X25X3-MM THK)
M	26	1	**8T-3647**	1	BOLT (M8X1.25X80-MM)
M	27	1	**8T-4133**	2	NUT (M10X1.5-THD)
M	28	1	**8T-4196**	5	BOLT (M10X1.5X35-MM)
M	29	1	**8T-6466**	2	BOLT (M10X1.5X60-MM)
M	30	1	**8T-7329**	4	BOLT (M8X1.25X55-MM)
M	31	1	**8T-7547**	1	BOLT (M8X1.25X30-MM)
	32	1	**9X-2488**	4	CLAMP-HOSE
D	33	1	**081-3614**		SEAL (1-M)
E	34	1	**470-7306**		GUARD (27-CM)
G	35	1	**423-1983**		HOSE (116.5-IN)
G	35A	1	**423-1983**		HOSE (61.3-IN)

D - ORDER BY THE METER
E - ORDER BY THE CENTIMETER G - ORDER BY THE INCH
I - REFER TO HYDRAULIC INFORMATION SYSTEM
M - METRIC PART

383-7240 **LINES GP-VIBRATORY (**contd.**)** **i07424279**

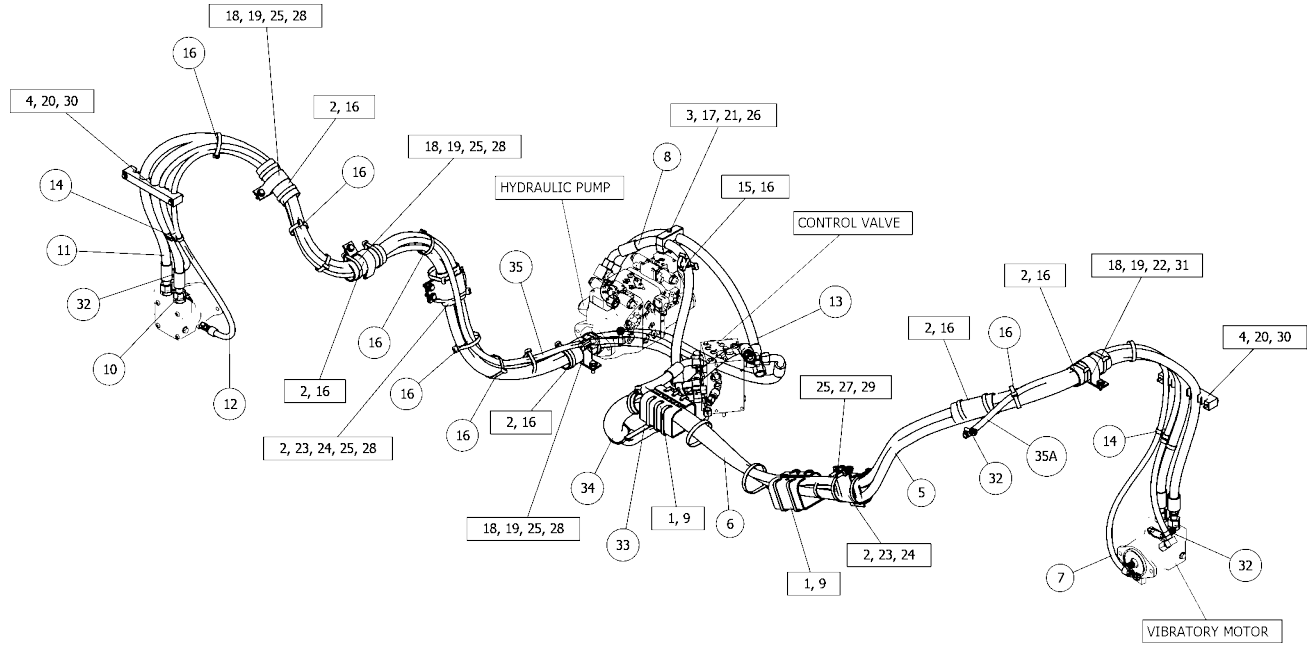

GRAPHIC #1 <END> g06316301

VIBRATORY SYSTEM

383-7260 LINES GP-VIBRATORY

S/N: 5B41-UP

PART OF 504-6839, 516-8451, 537-5499 MACHINE

AR AN ATTACHMENT

SMCS-5057

i07418251

	REF NO	SEE NOTE QTY	GRAPHIC 1 2 3 4 5 6	(PRODUCT LEVEL)	REF PAGE	PART NAME PART NUMBER
	1	1		**5P-5148**	5	STRAP-CABLE
	2	1		**115-8645**	5	GUARD
	3	1		**364-1680**	2	CLAMP
I	4	1		**364-2133**	1	HOSE AS
I	5	1		**364-2134**	1	HOSE AS
I	6	1		**364-2500**	1	HOSE AS
	7	1		**383-7256**	1	MOUNT AS
	8	1		**384-8815**	2	GUARD
I	9	1		**393-9158**	1	HOSE AS
I	10	1		**393-9159**	1	HOSE AS
	11	1		**177-2215**	2	STRAP-DUAL CLAMP
	12	1		**204-2281**	21	STRAP-CABLE
	13	1		**2V-6350**	3	CLIP (TAB)
	14	1		**2V-6352**	3	CLIP (SLOT)
	15	1		**5P-4116**	4	WASHER-HARD (8.8X20.5X2-MM THK)
	16	1		**6V-3964**	1	WASHER-HARD (8.8X25.5X5-MM THK)
	17	1		**7G-3832**	1	GROMMET
	18	1		**7G-3833**	1	CLIP (TAB)
	19	1		**7G-3834**	1	CLIP (SLOT)
	20	1		**7G-5984**	1	CLIP (TAB)
	21	1		**7G-5985**	1	CLIP (SLOT)
	22	1		**7X-7729**	12	WASHER (11X25X3-MM THK)
M	23	1		**8T-4133**	4	NUT (M10X1.5-THD)
M	24	1		**8T-4195**	4	BOLT (M10X1.5X30-MM)
M	25	1		**8T-4196**	2	BOLT (M10X1.5X35-MM)
M	26	1		**8T-6466**	2	BOLT (M10X1.5X60-MM)
M	27	1		**8T-7329**	4	BOLT (M8X1.25X55-MM)
M	28	1		**8T-7547**	1	BOLT (M8X1.25X30-MM)
	29	1		**9X-2488**	4	CLAMP-HOSE
D	30	1		**081-3614**		SEAL (0.17-M)
G	31	1		**423-1983**		HOSE (64.8-IN)
G	31A	1		**423-1983**		HOSE (120.7-IN)

D - ORDER BY THE METER G - ORDER BY THE INCH

I - REFER TO HYDRAULIC INFORMATION SYSTEM

M - METRIC PART

383-7260 **LINES GP-VIBRATORY** (contd.) **i07418251**

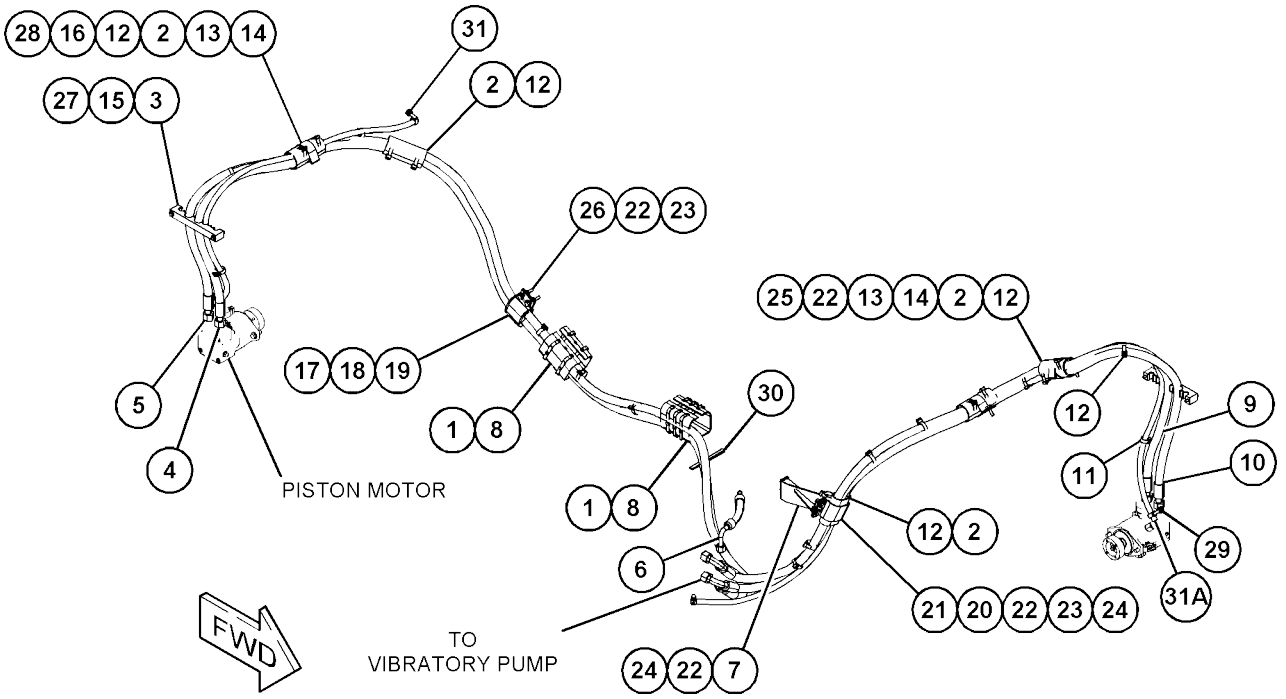

GRAPHIC #1 <END> g06175934

351-3371 MOTOR & MTG GP-PISTON-VERSA VIBE

S/N: 5B41-UP

PART OF 341-8768, 358-2740, 396-4786, 496-0536, 504-6803, 504-6804 VIBRATORY AR AN ATTACHMENT

SMCS-5058

i07417973

	REF SEE NOTE QTY	GRAPHIC NO 1 2 3 4 5 6	(PRODUCT LEVEL)	REF PAGE	PART NAME PART NUMBER	
	1	1	**177-2215**	4	STRAP-DUAL CLAMP	
	2	1	*195-2037*	2	FITTING AS	
					(EACH INCLUDES)	
		1	**3K-0360**	1	SEAL-O-RING	
		1	**034-3679**	1	ADAPTER	
	3	1	**358-2398**	2	SENSOR GP-SPEED (MOTOR)	
	4	1	**374-7457**	2	COUPLING	
Y	5	1	**375-1476**	2	MOTOR GP-PISTON	310
	6	1	**388-2110**	2	HARNESS AS-SENSOR	
					(EACH INCLUDES)	
		1	**9X-3401**	3	PIN-CONNECTOR (16-GA TO 18-GA)	
		1	**230-5008**	1	PLUG AS-CONNECTOR (4-PIN)	
		1	**264-7031**	1	SEAL-CONNECTOR	
		1	**8T-8737**	10	PLUG-SEAL	
		1	**230-4010**	1	RECEPTACLE AS-CONNECTOR (12-PIN)	
		1	**180-9340**	3	SOCKET-CONNECTOR (14-GA TO 18-GA)	
	7	1	**115-6433**	2	WASHER (11X50X6-MM THK)	
	8	1	*153-6237*	4	ELBOW AS	
					(EACH INCLUDES)	
		1	**3D-2824**	1	SEAL-O-RING	
		1	**6V-9004**	1	ELBOW	
		1	**6V-9746**	1	SEAL-O-RING	
	9	1	**351-1904**	2	SEAL-O-RING	
	10	1	**4P-7429**	2	CLIP (LADDER)	
	11	1	**7K-1181**	4	STRAP-CABLE	
	12	1	**8T-4121**	8	WASHER-HARD (11X21X2.5-MM THK)	
M	13	1	**8T-4196**	8	BOLT (M10X1.5X35-MM)	
	14	1	**8T-9382**	2	BOLT (7/16-14X1.25-IN)	

M - METRIC PART
Y - SEPARATE ILLUSTRATION

351-3371 **MOTOR & MTG GP-PISTON** (contd.) **i07417973**

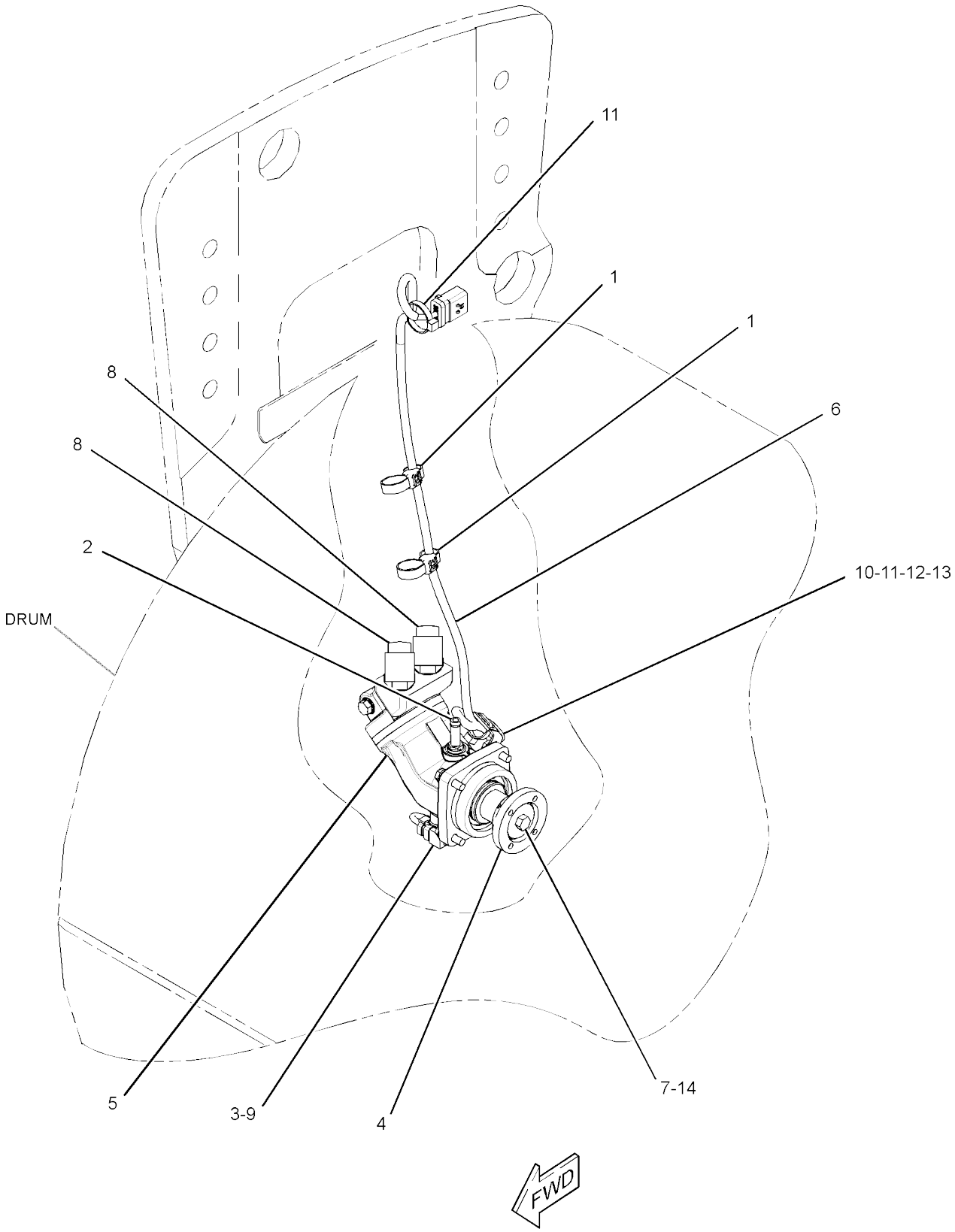

GRAPHIC #1 <END> g02863423

343-6139 MOTOR & MTG GP-VIBRATORY

S/N: G441-UP

PART OF 341-8752, 341-8765, 396-4772, 496-5276, 504-6818, 542-0258 VIBRATORY AR AN ATTACHMENT

SMCS-5058, 5651

i07399905

	REF SEE NOTE QTY	GRAPHIC NO 1 2 3 4 5 6	(PRODUCT LEVEL)	REF PAGE	PART NAME PART NUMBER	
	1	1	**177-2215**	6	STRAP-DUAL CLAMP	
	2	1	**358-2398**	2	SENSOR GP-SPEED (MOTOR)	
	3	1	**363-1627**	2	COUPLING	
Y	4	1	**475-3595**	2	MOTOR GP-PISTON	316
Y	5	1	**388-2110**	2	HARNESS AS-SENSOR	141
	6	1	**115-6433**	2	WASHER (11X50X6-MM THK)	
	7	1	*148-8311*	2	ADAPTER AS	
					(EACH INCLUDES)	
		1	**3K-0360**	1	SEAL-O-RING	
		1	**8T-1715**	1	ADAPTER	
	8	1	*148-8327*	4	CONNECTOR AS	
					(EACH INCLUDES)	
		1	**3D-2824**	1	SEAL-O-RING	
		1	**6V-8637**	1	CONNECTOR	
		1	**6V-9746**	1	SEAL-O-RING	
	9	1	*148-8374*	2	ELBOW AS	
					(EACH INCLUDES)	
		1	**3K-0360**	1	SEAL-O-RING	
		1	**6V-8397**	1	SEAL-O-RING	
		1	**6V-8723**	1	ELBOW	
	10	1	*150-3026*	2	ELBOW AS	
					(EACH INCLUDES)	
		1	**3K-0360**	1	SEAL-O-RING	
		1	**6V-4292**	1	ELBOW	
	11	1	**175-1367**	2	SPACER (8.8X16X10-MM THK)	
	12	1	**351-1904**	2	SEAL-O-RING	
	13	1	**4P-7429**	2	CLIP (LADDER)	
	14	1	**5P-4115**	4	WASHER-HARD (7.2X19X2-MM THK)	
	15	1	**7K-1181**	4	STRAP-CABLE	
	16	1	**8C-0617**	2	BOLT (1/4-20X1.375-IN)	
	17	1	**8T-4223**	6	WASHER-HARD (13.5X25.5X3-MM THK)	
M	18	1	**8T-4956**	4	BOLT (M12X1.75X35-MM)	

M - METRIC PART
Y - SEPARATE ILLUSTRATION

343-6139 **MOTOR & MTG GP-VIBRATORY** (contd.) **i07399905**

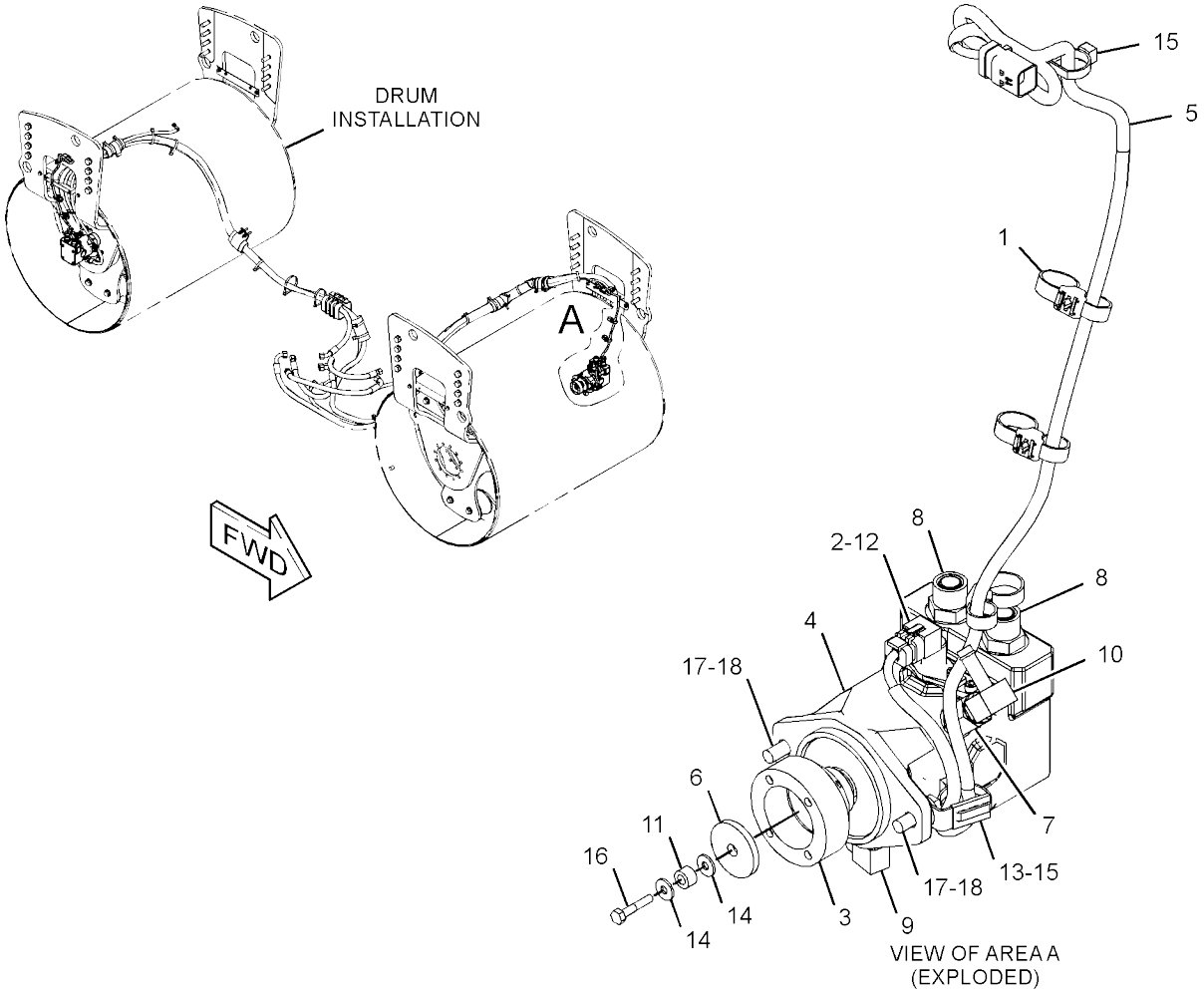

GRAPHIC #1 <END> g02848596

344-0513 MOTOR & MTG GP-VIBRATORY

S/N: 5B41-UP
PART OF 341-8757, 504-6797 VIBRATORY
AR AN ATTACHMENT

SMCS-5058, 5651

i07417981

	REF SEE NOTE QTY	GRAPHIC NO 1 2 3 4 5 6	(PRODUCT LEVEL)	REF PAGE	PART NAME PART NUMBER	
	1	1	*150-3026*	2	ELBOW AS	
					(EACH INCLUDES)	
		1	**3K-0360**	1	SEAL-O-RING	
		1	**6V-4292**	1	ELBOW	
	2	1	**177-2215**	6	STRAP-DUAL CLAMP	
	3	1	**358-2398**	2	SENSOR GP-SPEED (MOTOR)	
	4	1	**363-1627**	2	COUPLING	
Y	5	1	**475-3593**	2	MOTOR GP-PISTON	314
Y	6	1	**388-2110**	2	HARNESS AS-SENSOR (VIBRATORY)	141
	7	1	**115-6433**	2	WASHER (11X50X6-MM THK)	
	8	1	*148-8311*	2	ADAPTER AS	
					(EACH INCLUDES)	
		1	**3K-0360**	1	SEAL-O-RING	
		1	**8T-1715**	1	ADAPTER	
	9	1	*148-8327*	4	CONNECTOR AS	
					(EACH INCLUDES)	
		1	**3D-2824**	1	SEAL-O-RING	
		1	**6V-8637**	1	CONNECTOR	
		1	**6V-9746**	1	SEAL-O-RING	
	10	1	**175-1367**	2	SPACER (8.8X16X10-MM THK)	
	11	1	**351-1904**	2	SEAL-O-RING	
	12	1	**4P-7429**	2	CLIP (LADDER)	
	13	1	**5P-4115**	4	WASHER-HARD (7.2X19X2-MM THK)	
	14	1	**7K-1181**	3	STRAP-CABLE	
	15	1	**8C-0617**	2	BOLT (1/4-20X1.375-IN)	
	16	1	**8T-4223**	6	WASHER-HARD (13.5X25.5X3-MM THK)	
M	17	1	**8T-4956**	4	BOLT (M12X1.75X35-MM)	

M - METRIC PART
Y - SEPARATE ILLUSTRATION

344-0513 **MOTOR & MTG GP-VIBRATORY** (contd.) **i07417981**

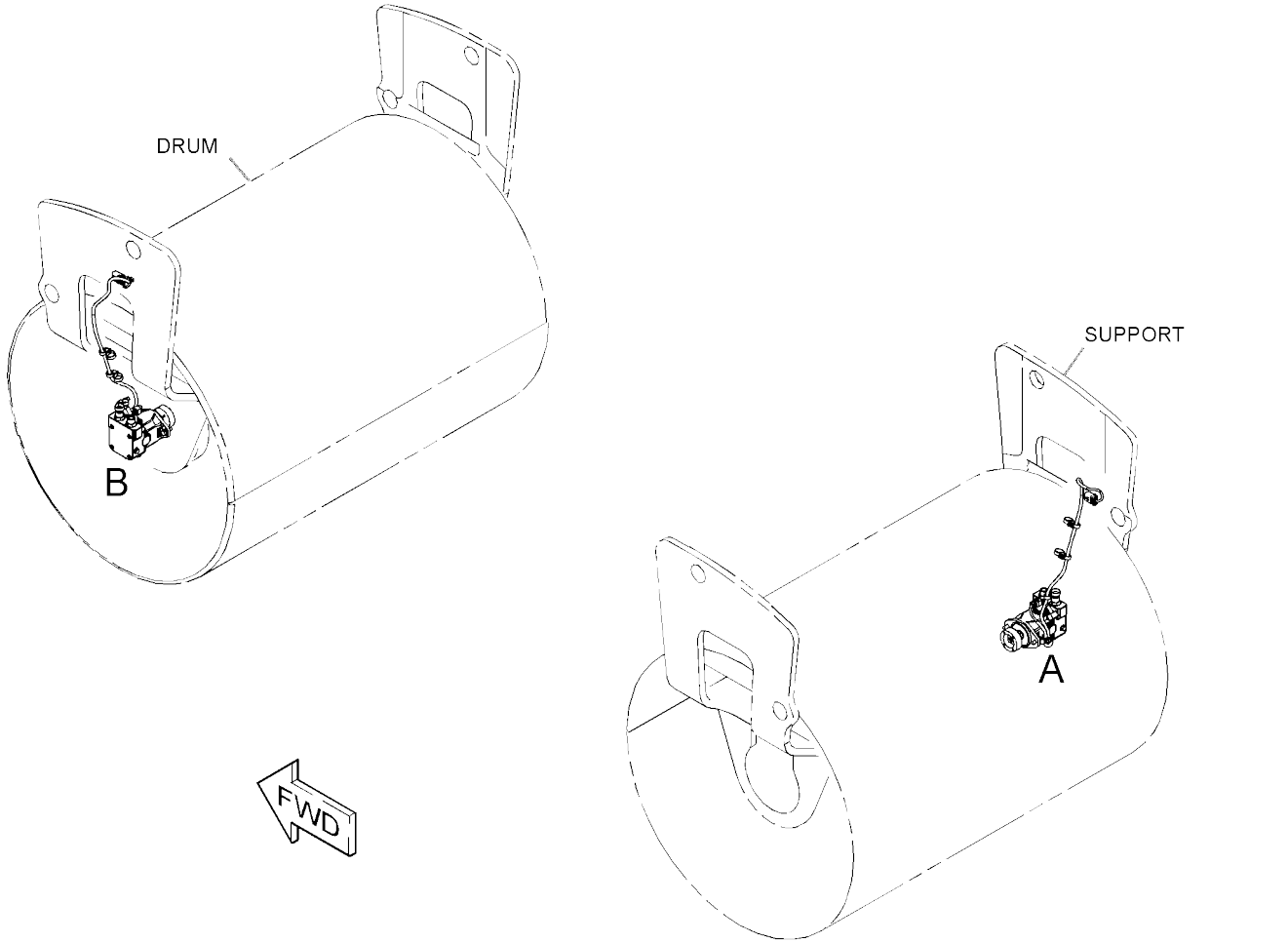

GRAPHIC #1 <END> g02874756

496-0535 PULLEY GP

S/N: 5B41-UP

PART OF 496-0536, 504-6797, 504-6803, 504-6804, 504-6807, 537-5498 VIBRATORY AR AN ATTACHMENT

SMCS-5605

i07418103

REF NO	SEE NOTE	GRAPHIC NO	QTY	(PRODUCT LEVEL)	REF PAGE	PART NAME / PART NUMBER
		1 2 3 4 5 6				
1		1		**155-9133**	4	KEY
2		1		**493-6887**	4	BUSHING
3		1		**493-6888**	4	PULLEY
4		1		**526-4462**	2	BELT

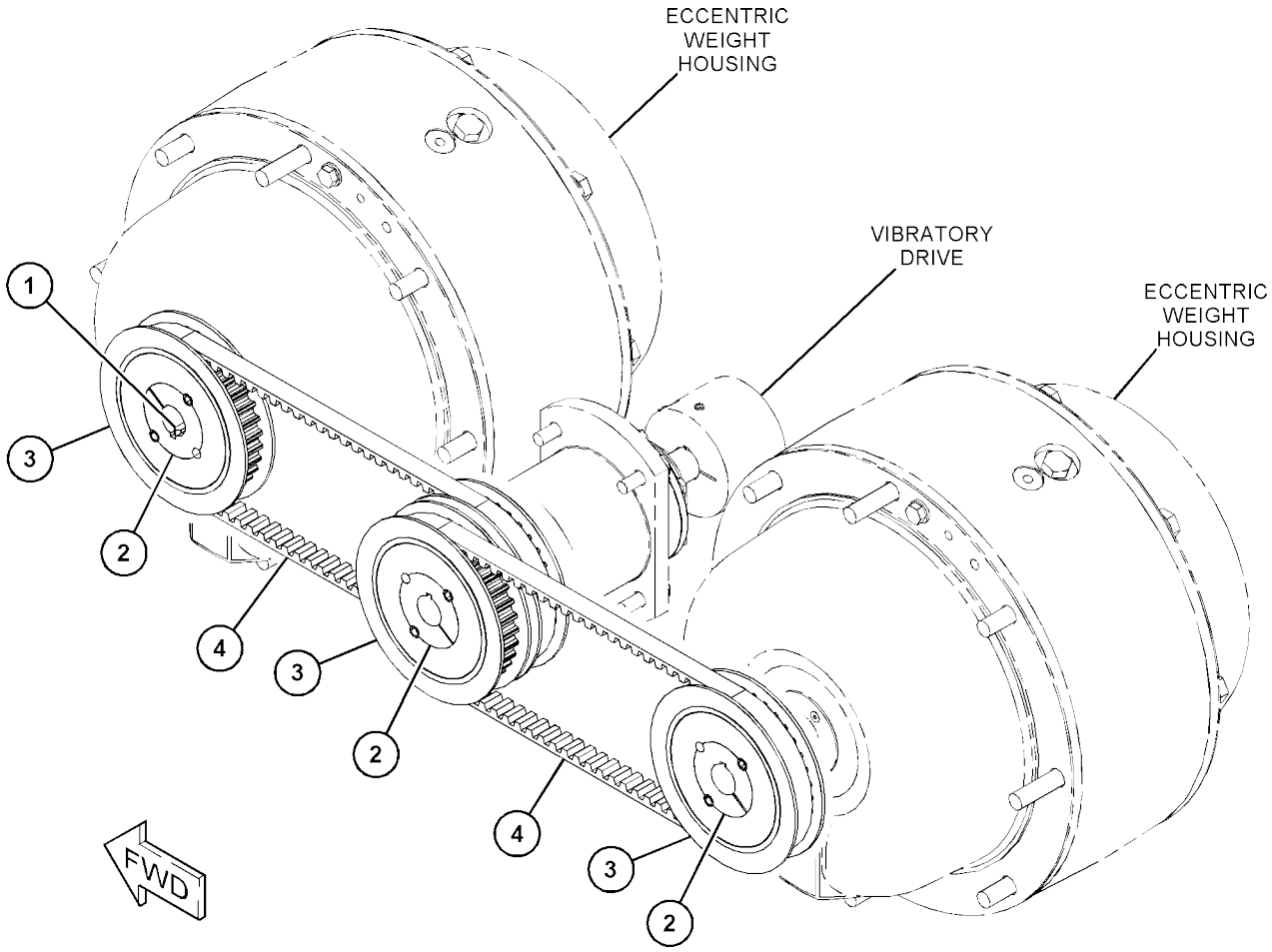

GRAPHIC #1

<END>

g06124491

499-6781 PULLEY GP

S/N: G441-UP
PART OF 496-5276, 504-6818, 542-0258 VIBRATORY
AR AN ATTACHMENT

SMCS-5605

i07416431

REF SEE NOTE QTY	GRAPHIC NO 1 2 3 4 5 6	(PRODUCT LEVEL)	REF PAGE	PART NAME PART NUMBER
1	1	**155-9133**	4	KEY
2	1	**493-6887**	2	BUSHING
3	1	**526-4463**	2	BELT
4	1	**499-3097**	2	PULLEY
5	1	**504-6820**	2	PULLEY
6	1	**504-6821**	2	BUSHING

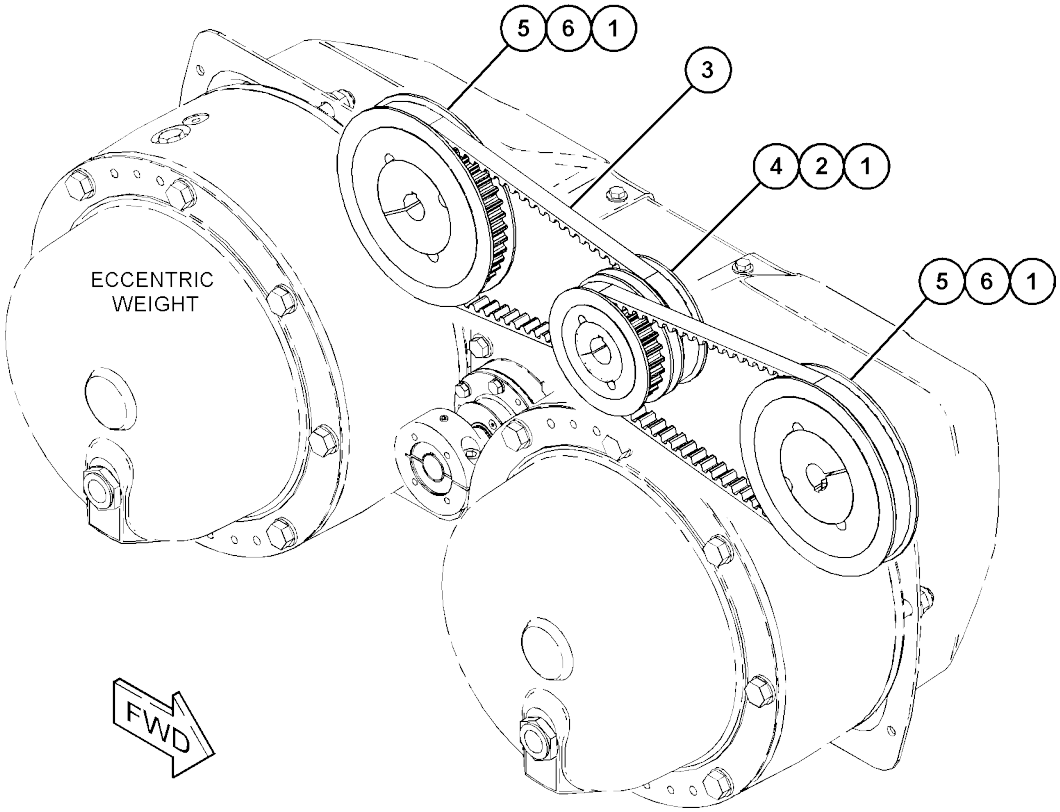

GRAPHIC #1 <END> g06123719

357-3814 PUMP & MTG GP-VIBRATORY

S/N: 5B41-UP
PART OF 504-6839, 516-8451, 537-5499 MACHINE
AR AN ATTACHMENT

SMCS-5070, 5652

i07418213

	REF SEE NOTE QTY	GRAPHIC NO 1 2 3 4 5 6	(PRODUCT LEVEL)	REF PAGE	PART NAME PART NUMBER	
	1	1	**6V-0852**	5	CAP-DUST	
	2	1	*9U-6998*	1	ADAPTER AS	
		1	**3D-2824**	1	SEAL-O-RING	
		1	**3E-4041**	1	ELBOW	
Y	3	1	**398-7456**	1	PUMP GP-PISTON (HYDROSTATIC)	323
	4	1	**348-2078**	1	VALVE AS-CHECK (PUMP CASE DRAIN)	
		1	**3D-2824**	1	SEAL-O-RING	
	5	1	*148-8310*	1	ADAPTER AS	
		1	**3J-1907**	1	SEAL-O-RING	
		1	**8T-0151**	1	ADAPTER	
	6	1	*148-8315*	1	CONNECTOR AS	
		1	**2M-9780**	1	SEAL-O-RING	
		1	**6V-8642**	1	CONNECTOR	
		1	**7J-9108**	1	SEAL-O-RING	
	7	1	*148-8339*	2	CONNECTOR AS	
					(EACH INCLUDES)	
		1	**6V-8716**	1	CONNECTOR (STRAIGHT)	
		1	**6V-9746**	1	SEAL-O-RING	
		1	**7M-8485**	1	SEAL-O-RING	
	8	1	*148-8360*	2	ELBOW AS	
					(EACH INCLUDES)	
		1	**6V-9182**	1	ELBOW	
		1	**6V-9746**	1	SEAL-O-RING	
		1	**7M-8485**	1	SEAL-O-RING	
	9	1	*148-8393*	1	ELBOW AS	
		1	**6V-9852**	1	ELBOW (SWIVEL)	
		1	**7J-9108**	1	SEAL-O-RING	
	10	1	*150-3027*	1	ELBOW AS	
		1	**2M-9780**	1	SEAL-O-RING	
		1	**6V-5653**	1	ELBOW (7/8-14-THD)	
	11	1	*164-5567*	5	COUPLER AS-QUICK DISCONNECT (MALE)	
					(EACH INCLUDES)	
		1	**6V-3965**	1	FITTING (QUICK DISCONNECT)	
		1	**214-7568**	1	SEAL-O-RING	
	12	1	*241-6215*	2	ELBOW AS	
					(EACH INCLUDES)	
		1	**3J-1907**	1	SEAL-O-RING	
		1	**6V-8076**	1	ELBOW	
	13	1	*330-9753*	1	ADAPTER AS	
		1	**3D-2824**	1	SEAL-O-RING	
		1	**5P-2211**	1	ADAPTER (1-1/16-12-THD)	
M	14	1	**8T-4183**	2	BOLT (M12X1.75X40-MM)	
	15	1	**8T-4223**	2	WASHER-HARD (13.5X25.5X3-MM THK)	
	16	1	**3J-1907**	2	SEAL-O-RING	
	17	1	**203-3470**	2	CONNECTOR	

M - METRIC PART
Y - SEPARATE ILLUSTRATION

357-3814 **PUMP & MTG GP-VIBRATORY** (contd.) **i07418213**

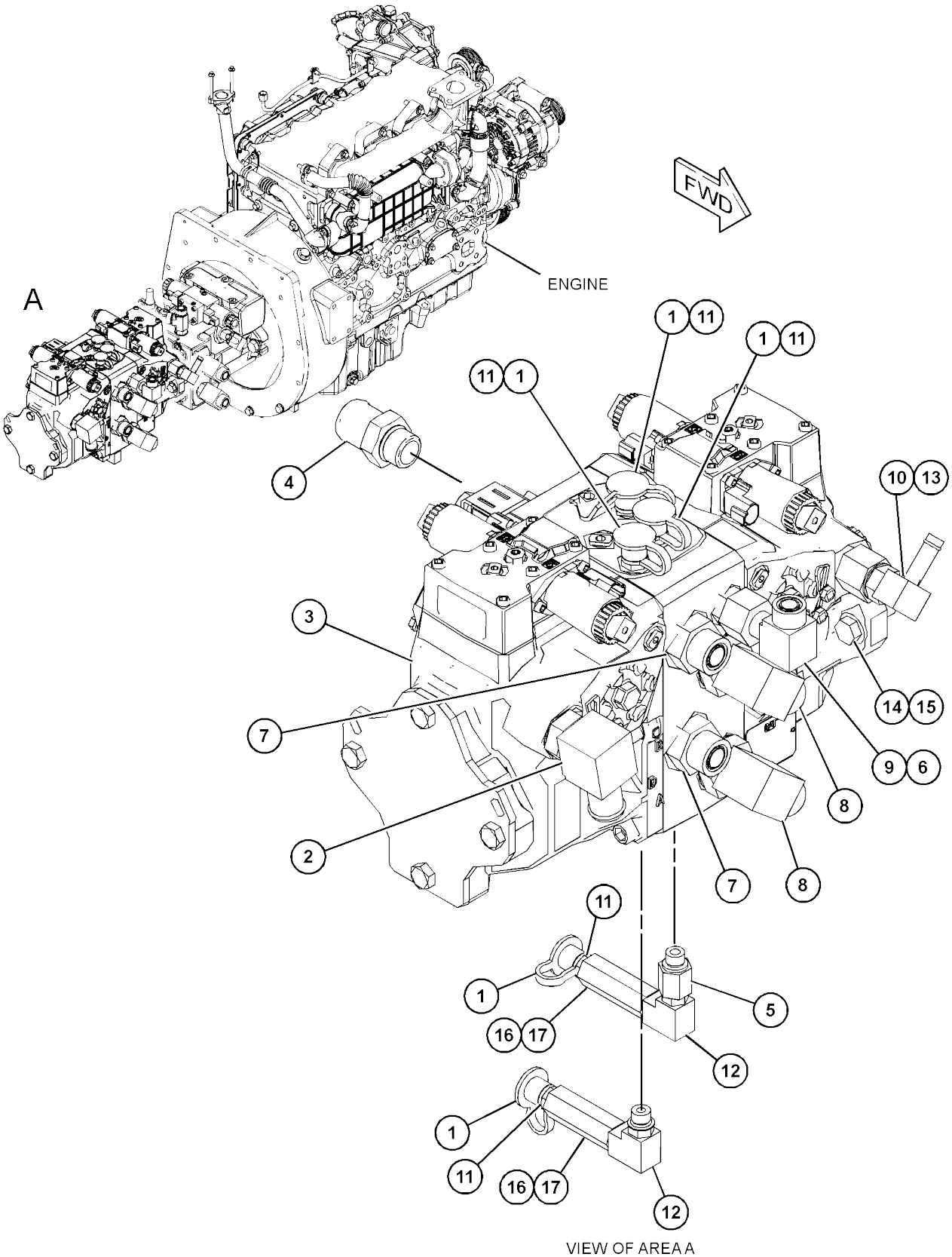

GRAPHIC #1 <END> g03682419

510-4015 SENSOR AR-COMPACTION

S/N: 5B41-UP; G441-
UP SOLID DRUM
AN ATTACHMENT

SMCS-7852

i07416443

NOTE	PART NUMBER	QTY	PART NAME 1 2 3 4 5 6 (PRODUCT LEVEL)	SEE PAGE
Y	*520-1732*	1	MOUNTING GP-DRUM	228
Y	*517-5375*	1	SENSOR & MOUNTING GP (COMPACTION MEASUREMENT)	182

Y - SEPARATE ILLUSTRATION

<END>

260-4738 SHAFT GP-VIBRATORY DRIVE

S/N: 5B41-UP
PART OF 424-1383 SHAFT GP-DRIVE AN ATTACHMENT

SMCS-5622

i07418148

REF NO	SEE NOTE	GRAPHIC 1 2 3 4 5 6	QTY	(PRODUCT LEVEL)	REF PAGE	PART NAME PART NUMBER
1		1		**5E-2620**	2	FLANGE-YOKE
2		1		**124-8545**	2	KIT-UNIVERSAL JOINT (DRIVE SHAFT)
3		1		**027-1287**	1	FITTING-GREASE
4		1		**111-9380**	1	KIT-DUST CAP (DRIVE SHAFT)

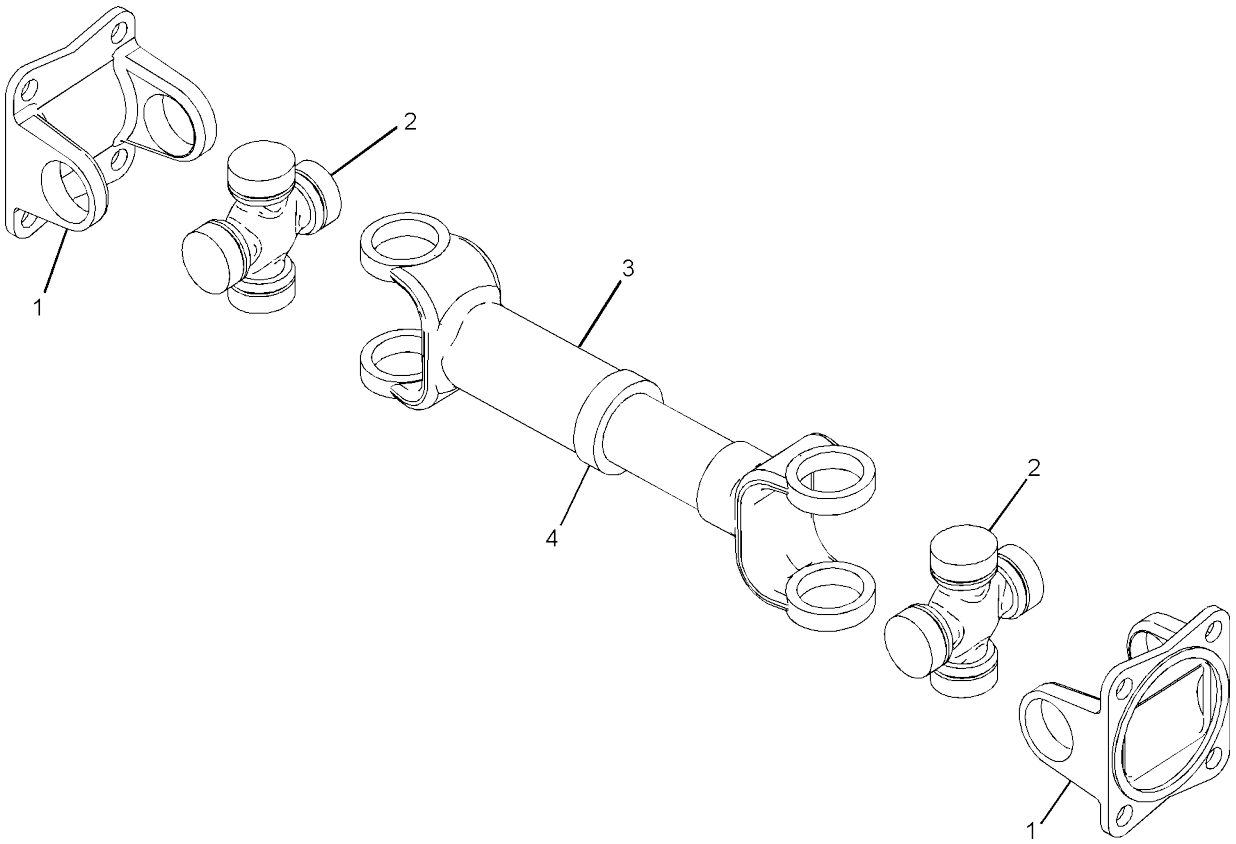

GRAPHIC #1 <END> g01064489

290-6436 VALVE GP-DIVERTER

S/N: G441-UP
PART OF 433-5927 VALVE GP-
CONTROL AN ATTACHMENT

SMCS-5066

i07416604

	REF SEE NOTE QTY	GRAPHIC NO 1 2 3 4 5 6	(PRODUCT LEVEL)	REF PAGE	PART NAME PART NUMBER
J	1	1	**2M-9780**	1	SEAL-O-RING
J	2	1	**6V-5142**	1	SEAL-O-RING
J	3	1	**169-1617**	2	RING-BACKUP
J	4	1	**095-1751**	1	SEAL-O-RING
J	5	1	**169-1616**	2	RING-BACKUP
					AVAILABLE REPAIR KIT(S):
J			**200-6282**	1	KIT-SEAL (DIVERTER VALVE)
					(INCLUDES SEAL-O-RINGS & RING-BACKUPS)

J - KIT MARKED J SERVICES PART(S) MARKED J

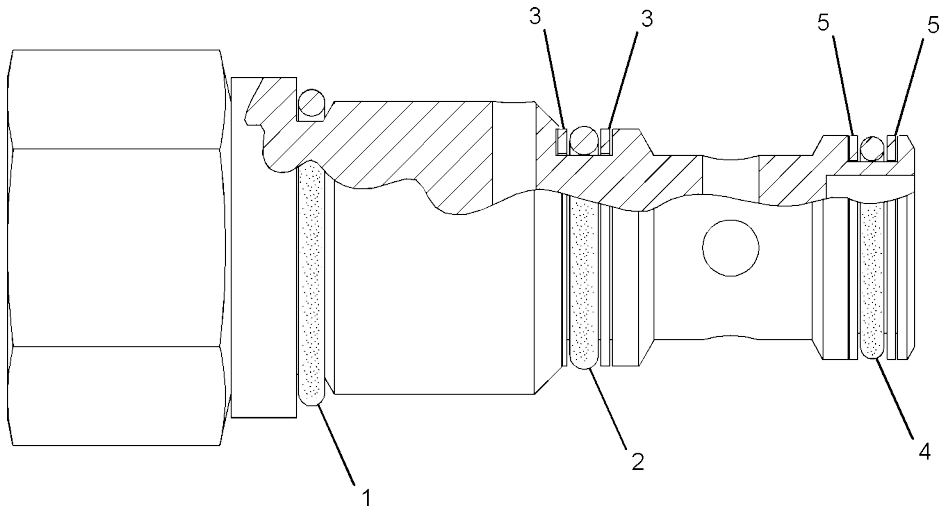

GRAPHIC #1 <END> g01388213

341-8752 VIBRATORY AR

S/N: G441-
UP 5-
AMPLIER
AN ATTACHMENT

SMCS-5057, 5058, 5651, 6606, 6645

i07399904

NOTE	PART NUMBER	QTY	PART NAME 1 2 3 4 5 6 (PRODUCT LEVEL)	SEE PAGE
Y	*375-8770*	2	HOUSING GP-ECCENTRIC WEIGHT	372
Y	*343-6139*	1	MOTOR & MTG GP-VIBRATORY (2, 5-AMPLITUDE, SOLID DRUM)	381

Y - SEPARATE ILLUSTRATION

<END>

341-8757 VIBRATORY AR

S/N: 5B41-
UP AN
ATTACHMENT

SMCS-5057, 5058, 5651, 6606, 6645

i07417967

NOTE	PART NUMBER	QTY	PART NAME 1 2 3 4 5 6 (PRODUCT LEVEL)	SEE PAGE
Y	*343-5609*	2	HOUSING GP-ECCENTRIC WEIGHT	368
Y	*344-0513*	1	MOTOR & MTG GP-VIBRATORY (5-AMPLITUDE, SOLID DRUM)	383

Y - SEPARATE ILLUSTRATION

<END>

341-8765 VIBRATORY AR

S/N: G441-
UP AN
ATTACHMENT

SMCS-5057, 5058, 5651, 6606, 6645

i07399925

NOTE	PART NUMBER	QTY	PART NAME 1 2 3 4 5 6 (PRODUCT LEVEL)	SEE PAGE
Y	*375-8769*	2	HOUSING GP-ECCENTRIC WEIGHT	371
Y	*343-6139*	1	MOTOR & MTG GP-VIBRATORY (2, 5-AMPLITUDE, SOLID DRUM)	381

Y - SEPARATE ILLUSTRATION

<END>

341-8768 VIBRATORY AR–VERSA VIBE, SOLID DRUM

S/N: 5B41-
UP AN
ATTACHMENT

SMCS-5057, 5058, 5651, 6606, 6645

i07417968

NOTE	PART NUMBER	QTY	PART NAME 1 2 3 4 5 6 (PRODUCT LEVEL)	SEE PAGE
Y	*351-3377*	1	FILM GP	596
Y	*346-5466*	2	HOUSING GP-ECCENTRIC WEIGHT	369
Y	*351-3371*	1	MOTOR & MTG GP-PISTON (VERSA VIBE)	379

Y - SEPARATE ILLUSTRATION

<END>

358-2740 VIBRATORY AR

S/N: 5B41-
UP AN
ATTACHMENT

SMCS-5057, 5058, 5651, 6606, 6645

i07417989

NOTE	PART NUMBER	QTY	PART NAME 1 2 3 4 5 6 (PRODUCT LEVEL)	SEE PAGE
Y	*358-2741*	2	HOUSING GP-ECCENTRIC WEIGHT	370
Y	*351-3371*	1	MOTOR & MTG GP-PISTON (VERSA VIBE)	379

Y - SEPARATE ILLUSTRATION

<END>

396-4772 VIBRATORY AR–2-AMPLITUDE, SOLID DRUM

S/N: G441-
UP AN
ATTACHMENT

SMCS-5057, 5058, 5651, 6606, 6645

i07403881

NOTE	PART NUMBER	QTY	PART NAME 1 2 3 4 5 6 (PRODUCT LEVEL)	SEE PAGE
Y	*375-8769*	2	HOUSING GP-ECCENTRIC WEIGHT	371
Y	*343-6139*	1	MOTOR & MTG GP-VIBRATORY (2, 5-AMPLITUDE, SOLID DRUM)	381

Y - SEPARATE ILLUSTRATION

<END>

396-4786 VIBRATORY AR–2-AMPLITUDE, SOLID DRUM, EAME

S/N: 5B41-
UP AN
ATTACHMENT

SMCS-5057, 5058, 5651, 6606, 6645

i07418000

NOTE	PART NUMBER	QTY	PART NAME 1 2 3 4 5 6 (PRODUCT LEVEL)	SEE PAGE
Y	*358-2741*	2	HOUSING GP-ECCENTRIC WEIGHT	370
Y	*351-3371*	1	MOTOR & MTG GP-PISTON (VERSA VIBE)	379

Y - SEPARATE ILLUSTRATION

<END>

496-0536 VIBRATORY AR

S/N: 5B41-
UP AN
ATTACHMENT

SMCS-5057, 5058, 5651, 6606, 6645

i07418089

NOTE	PART NUMBER	QTY	PART NAME 1 2 3 4 5 6 (PRODUCT LEVEL)	SEE PAGE
Y	*499-9118*	1	COVER GP-ACCESS (OSCILLATION)	242
Y	*501-2184*	1	DRIVE GP-VIBRATORY	364
Y	*351-3377*	1	FILM GP (VERSA VIBE)	596
Y	*529-8585*	1	FILM GP (OSCILLATION) (OSCILLATION)	602
Y	*346-5466*	1	HOUSING GP-ECCENTRIC WEIGHT (RH)	369
Y	*526-9307*	1	HOUSING GP-ECCENTRIC WEIGHT (LH)	374
Y	*351-3371*	1	MOTOR & MTG GP-PISTON (VERSA VIBE)	379
Y	*496-0535*	1	PULLEY GP (OSCILLATION)	385

Y - SEPARATE ILLUSTRATION

<END>

496-5276 VIBRATORY AR

S/N: G441-
UP AN
ATTACHMENT

SMCS-5057, 5058, 5651, 6606, 6645

i07416429

NOTE	PART NUMBER	QTY	PART NAME 1 2 3 4 5 6 (PRODUCT LEVEL)	SEE PAGE
Y	*499-9101*	1	COVER GP-ACCESS	241
Y	*491-2378*	1	DRIVE GP-VIBRATORY	362
Y	*529-8585*	1	FILM GP (OSCILLATION)	602
Y	*375-8770*	1	HOUSING GP-ECCENTRIC WEIGHT (RH)	372
Y	*504-6809*	1	HOUSING GP-ECCENTRIC WEIGHT (LH)	373
Y	*343-6139*	1	MOTOR & MTG GP-VIBRATORY (2, 5-AMPLITUDE, SOLID DRUM)	381
Y	*499-6781*	1	PULLEY GP	386

Y - SEPARATE ILLUSTRATION

<END>

504-6797 VIBRATORY AR

S/N: 5B41-
UP AN
ATTACHMENT

SMCS-5057, 5058, 5651, 6606, 6645

i07418090

NOTE	PART NUMBER	QTY	PART NAME 1 2 3 4 5 6 (PRODUCT LEVEL)	SEE PAGE
Y	*499-9118*	1	COVER GP-ACCESS (OSCILLATION)	242
Y	*501-2184*	1	DRIVE GP-VIBRATORY	364
Y	*529-8585*	1	FILM GP (OSCILLATION) (OSCILLATION)	602
Y	*343-5609*	1	HOUSING GP-ECCENTRIC WEIGHT (RH)	368
Y	*526-9307*	1	HOUSING GP-ECCENTRIC WEIGHT (LH)	374
Y	*344-0513*	1	MOTOR & MTG GP-VIBRATORY (5-AMPLITUDE, SOLID DRUM)	383
Y	*496-0535*	1	PULLEY GP (OSCILLATION)	385

Y - SEPARATE ILLUSTRATION

<END>

504-6803 VIBRATORY AR

S/N: 5B41-
UP AN
ATTACHMENT

SMCS-5057, 5058, 5651, 6606, 6645

i07418134

NOTE	PART NUMBER	QTY	PART NAME 1 2 3 4 5 6 (PRODUCT LEVEL)	SEE PAGE
Y	*499-9118*	1	COVER GP-ACCESS (OSCILLATION)	242
Y	*501-2184*	1	DRIVE GP-VIBRATORY	364
Y	*529-8585*	1	FILM GP (OSCILLATION)	602
Y	*358-2741*	1	HOUSING GP-ECCENTRIC WEIGHT (RH)	370
Y	*526-9307*	1	HOUSING GP-ECCENTRIC WEIGHT (LH)	374
Y	*351-3371*	1	MOTOR & MTG GP-PISTON (VERSA VIBE)	379
Y	*496-0535*	1	PULLEY GP (OSCILLATION)	385

Y - SEPARATE ILLUSTRATION

<END>



504-6804 VIBRATORY AR

S/N: 5B41-
UP AN
ATTACHMENT

SMCS-5057, 5058, 5651, 6606, 6645

i07418135

NOTE	PART NUMBER	QTY	PART NAME 1 2 3 4 5 6 (PRODUCT LEVEL)	SEE PAGE
Y	*499-9118*	1	COVER GP-ACCESS (OSCILLATION)	242
Y	*501-2184*	1	DRIVE GP-VIBRATORY	364
Y	*529-8585*	1	FILM GP (OSCILLATION)	602
Y	*358-2741*	1	HOUSING GP-ECCENTRIC WEIGHT (RH)	370
Y	*526-9307*	1	HOUSING GP-ECCENTRIC WEIGHT (LH)	374
Y	*351-3371*	1	MOTOR & MTG GP-PISTON (VERSA VIBE)	379
Y	*496-0535*	1	PULLEY GP (OSCILLATION)	385
Y - SEPARATE ILLUSTRATION				

<END>

504-6807 VIBRATORY AR

S/N: 5B41-
UP AN
ATTACHMENT

SMCS-5057, 5058, 5651, 6606, 6645

i07418136

NOTE	PART NUMBER	QTY	PART NAME 1 2 3 4 5 6 (PRODUCT LEVEL)	SEE PAGE
Y	*499-9118*	1	COVER GP-ACCESS (OSCILLATION)	242
Y	*501-2184*	1	DRIVE GP-VIBRATORY	364
Y	*529-8585*	1	FILM GP (OSCILLATION)	602
Y	*526-9307*	1	HOUSING GP-ECCENTRIC WEIGHT	374
Y	*496-0535*	1	PULLEY GP (OSCILLATION)	385
Y	*424-1383*	1	SHAFT GP-DRIVE	238
	488-5457	1	DRUM AS	
	5C-3370	1	BOSS	
Y - SEPARATE ILLUSTRATION				

<END>

504-6818 VIBRATORY AR

S/N: G441-
UP AN
ATTACHMENT

SMCS-5057, 5058, 5651, 6606, 6645

i07416442

NOTE	PART NUMBER	QTY	PART NAME 1 2 3 4 5 6 (PRODUCT LEVEL)	SEE PAGE
Y	*499-9101*	1	COVER GP-ACCESS	241
Y	*491-2378*	1	DRIVE GP-VIBRATORY	362
Y	*529-8585*	1	FILM GP (OSCILLATION)	602
Y	*375-8769*	1	HOUSING GP-ECCENTRIC WEIGHT (ECCENTRIC, RH)	371
Y	*504-6809*	1	HOUSING GP-ECCENTRIC WEIGHT (ECCENTRIC, LH)	373
Y	*343-6139*	1	MOTOR & MTG GP-VIBRATORY (2, 5-AMPLITUDE, SOLID DRUM)	381
Y	*499-6781*	1	PULLEY GP	386
Y - SEPARATE ILLUSTRATION				

<END>



VIBRATORY SYSTEM

537-5498 VIBRATORY AR

S/N: 5B41-
UP AN
ATTACHMENT

SMCS-5057, 5058, 5651, 6606, 6645

i07418138

NOTE	PART NUMBER	QTY	PART NAME 1 2 3 4 5 6 (PRODUCT LEVEL)	SEE PAGE
Y	*499-9118*	1	COVER GP-ACCESS (OSCILLATION)	242
Y	*501-2184*	1	DRIVE GP-VIBRATORY	364
Y	*529-8585*	1	FILM GP (OSCILLATION)	602
Y	*526-9307*	1	HOUSING GP-ECCENTRIC WEIGHT	374
Y	*496-0535*	1	PULLEY GP (OSCILLATION)	385
Y	*424-1383*	1	SHAFT GP-DRIVE	238
	536-2027	1	DRUM AS	
	5C-3370	1	BOSS	
Y - SEPARATE ILLUSTRATION				

<END>

542-0258 VIBRATORY AR

S/N: G441-
UP AN
ATTACHMENT

SMCS-5057, 5058, 5651, 6606, 6645

i07416654

NOTE	PART NUMBER	QTY	PART NAME 1 2 3 4 5 6 (PRODUCT LEVEL)	SEE PAGE
Y	*499-9101*	1	COVER GP-ACCESS	241
Y	*491-2378*	1	DRIVE GP-VIBRATORY	362
Y	*529-8585*	1	FILM GP (OSCILLATION)	602
Y	*375-8769*	1	HOUSING GP-ECCENTRIC WEIGHT (ECCENTRIC, RH)	371
Y	*504-6809*	1	HOUSING GP-ECCENTRIC WEIGHT (ECCENTRIC, LH)	373
Y	*343-6139*	1	MOTOR & MTG GP-VIBRATORY (2, 5-AMPLITUDE, SOLID DRUM)	381
Y	*499-6781*	1	PULLEY GP	386
Y - SEPARATE ILLUSTRATION				

<END>



343-5610 WEIGHT GP-ECCENTRIC

S/N: 5B41-UP
PART OF 345-0695 WEIGHT GP-ECCENTRIC AN ATTACHMENT

SMCS-6606, 6645

i07680023

	REF SEE NOTE QTY	GRAPHIC NO 1 2 3 4 5 6	(PRODUCT LEVEL)	REF PAGE	PART NAME PART NUMBER
	1	1	**4B-4158**	2	SCREW-DRIVE (NO 4X0.25-IN)
	2	1	**525-1428**	1	SHAFT
	3	1	**9Y-9236**	1	GAUGE-SIGHT (ECCENTRIC WEIGHT)
	4	1	**077-3308**	2	BEARING (TAPERED ROLLER)
	5	1	**081-3292**	2	PIN
	6	1	**081-3627**	2	BUSHING-TERMINAL
	7	1	**081-3814**	1	SEAL-O-RING
	8	1	**081-3853**	1	SEAL-O-RING
	9	1	**081-4050**	2	COVER
	10	1	**106-9045**	2	PLATE-FILLER
	11	1	**146-7512**	1	PLATE-IDENTIFICATION (ECCENTRIC WEIGHT)
	12	1	*165-4929*	1	PLUG AS-MAGNETIC
		1	**5P-4484**	1	PLUG-MAGNETIC (ECCENTRIC WEIGHT)
		1	**7M-8485**	1	SEAL-O-RING
	13	1	**186-2928**	1	BUSHING
	14	1	**188-9926**	2	SEAL
	15	1	**188-9927**	2	SLEEVE
	16	1	**189-3268**	2	RING
	17	1	**190-8762**	1	SHAFT
	18	1	**525-1425**	1	KEY (DRIVE)
	19	1	**218-1767**	1	BLOCK
	20	1	**442-9219**	1	SPRING
	22	1	**269-4698**	1	SHAFT
	23	1	**271-2065**	1	HOUSING
	24	1	**271-2066**	1	HOUSING
	25	1	**343-5611**	1	SHAFT
	26	1	**343-5612**	1	SHAFT AS-WEIGHT
		1	**5E-8200**	1	SHAFT
	27	1	**081-3364**	2	SEAL-O-RING
	28	1	**5P-8245**	8	WASHER-HARD (13.5X25.5X3-MM THK)
M	29	1	**6V-2317**	14	BOLT (M8X1.25X30-MM)
	30	1	**7M-8485**	1	SEAL-O-RING
M	31	1	**7X-2537**	6	BOLT (M8X1.25X35-MM)
M	32	1	**8C-3226**	8	BOLT (M12X1.75X200-MM)
	33	1	**8T-4224**	20	WASHER-HARD (8.8X16X2-MM THK)
M	34	1	**8T-4779**	3	BOLT (M16X2X35-MM)
	35	1	**9X-8257**	3	WASHER (17.5X30X3.5-MM THK)
	36	1	**135-6125**	1	KEY-WOODRUFF
	37	1	**231-4245**	1	WASHER-HARD (9X17X4-MM THK)
M	38	1	**289-9555**	1	BOLT-SOCKET HEAD (M8X1.25X30-MM)

M - METRIC PART

343-5610 **WEIGHT GP-ECCENTRIC** (contd.) **i07680023**

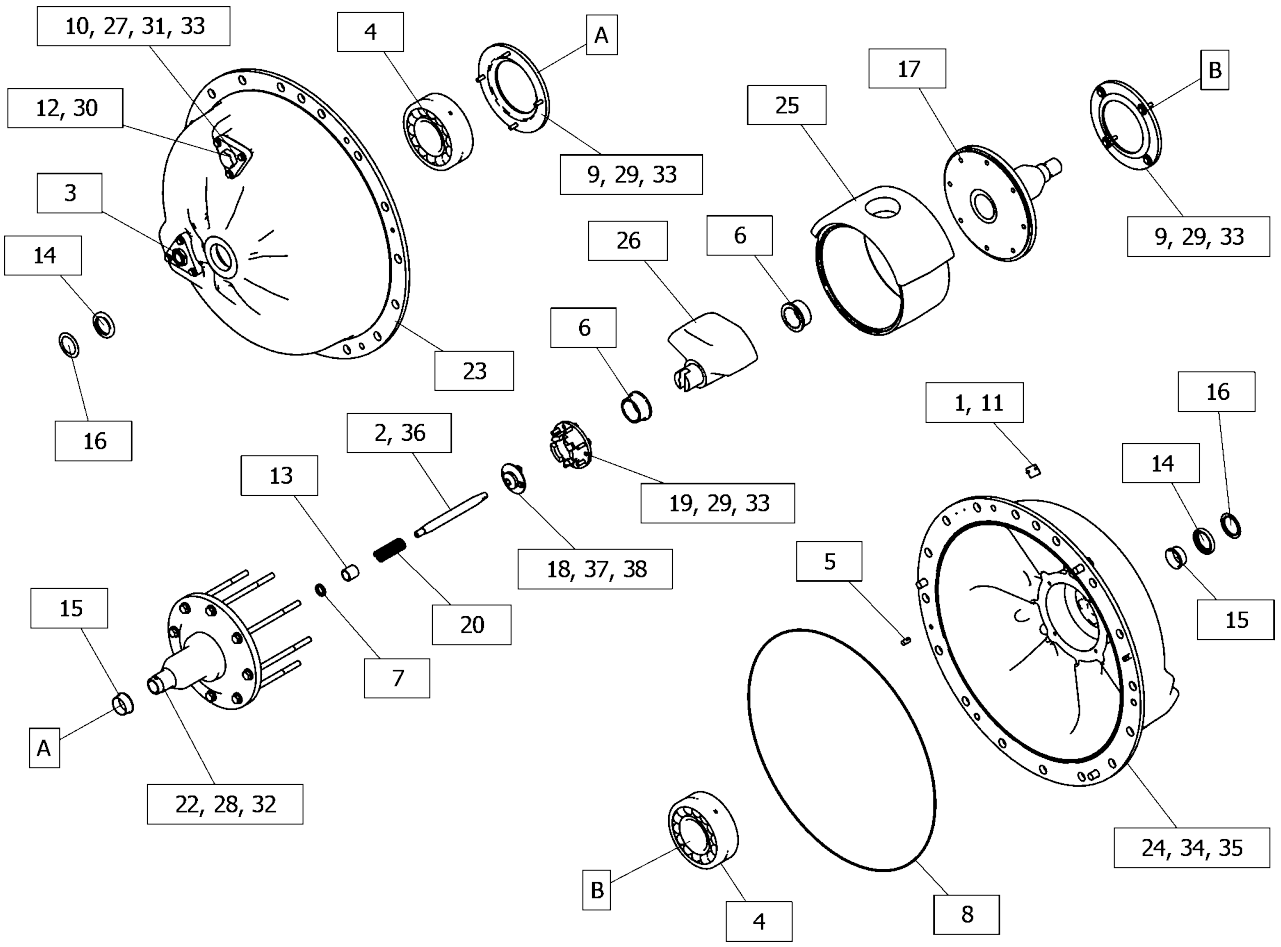

GRAPHIC #1 <END> g06394345

345-0695 WEIGHT GP-ECCENTRIC

S/N: 5B41-UP
PART OF 343-5609 HOUSING GP-ECCENTRIC
WEIGHT AN ATTACHMENT

SMCS-6606, 6645

i07417979

	REF SEE NOTE QTY	GRAPHIC NO 1 2 3 4 5 6	(PRODUCT LEVEL)	REF PAGE	PART NAME PART NUMBER	
Y	1	1	*343-5610*	1	WEIGHT GP-ECCENTRIC	397

Y - SEPARATE ILLUSTRATION

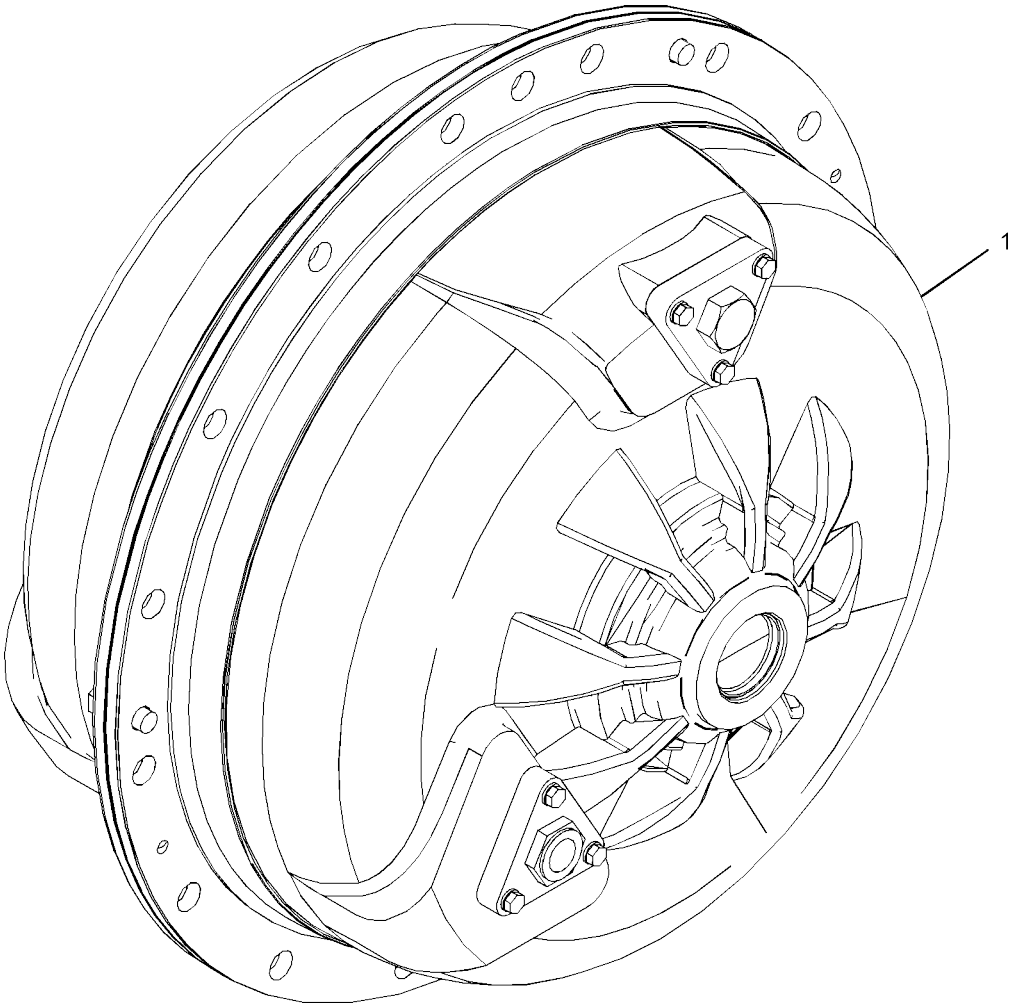

GRAPHIC #1 <END> g02857465

VIBRATORY SYSTEM

346-5470 WEIGHT GP-ECCENTRIC

S/N: 5B41-UP
PART OF 346-5636 WEIGHT GP-ECCENTRIC AN ATTACHMENT

SMCS-6606, 6645

i07694218

	REF SEE NOTE QTY	GRAPHIC NO 1 2 3 4 5 6	(PRODUCT LEVEL)	REF PAGE	PART NAME PART NUMBER
	1	1	**4B-4158**	2	SCREW-DRIVE (NO 4X0.25-IN)
	2	1	**525-1428**	1	SHAFT
	3	1	**9Y-9236**	1	GAUGE-SIGHT (ECCENTRIC WEIGHT)
	4	1	**081-3292**	2	PIN
	5	1	**081-3814**	1	SEAL-O-RING
	6	1	**081-3853**	1	SEAL-O-RING
	7	1	**106-9045**	2	PLATE-FILLER
	8	1	**146-7512**	1	PLATE-IDENTIFICATION (ECCENTRIC WEIGHT)
	9	1	*165-4929*	1	PLUG AS-MAGNETIC
		1	**5P-4484**	1	PLUG-MAGNETIC (ECCENTRIC WEIGHT)
		1	**7M-8485**	1	SEAL-O-RING
	10	1	**186-2928**	1	BUSHING
	11	1	**188-9926**	2	SEAL
	12	1	**188-9927**	2	SLEEVE
	13	1	**189-3268**	2	RING
	14	1	**197-4733**	2	COVER
	15	1	**197-4745**	2	BUSHING
	16	1	**525-1426**	1	KEY (SHAFT)
	17	1	**442-9219**	1	SPRING
	19	1	**271-2067**	1	HOUSING
	20	1	**271-2068**	1	HOUSING
	21	1	**287-4136**	2	BEARING
	22	1	**346-5468**	1	SHAFT GP-ECCENTRIC WEIGHT
		1	**6V-0387**	1	PLUG-PIPE
		1	**197-4731**	1	SHAFT AS-WEIGHT
	23	1	**346-5472**	1	BLOCK-THRUST
	24	1	**346-5474**	1	SHAFT
	25	1	**346-5476**	1	SHAFT
	26	1	**081-3364**	2	SEAL-O-RING
	27	1	**5P-8245**	7	WASHER-HARD (13.5X25.5X3-MM THK)
M	28	1	**6V-2317**	14	BOLT (M8X1.25X30-MM)
	29	1	**7M-8485**	1	SEAL-O-RING
M	30	1	**7X-2537**	6	BOLT (M8X1.25X35-MM)
	31	1	**8T-4224**	20	WASHER-HARD (8.8X16X2-MM THK)
M	32	1	**8T-4779**	3	BOLT (M16X2X35-MM)
M	33	1	**515-4689**	7	BOLT-HEAD (M12X1.75X220-MM)
	34	1	**9X-8257**	3	WASHER (17.5X30X3.5-MM THK)
	35	1	**135-6125**	1	KEY-WOODRUFF
	36	1	**231-4245**	1	WASHER-HARD (9X17X4-MM THK)
M	37	1	**289-9555**	1	BOLT-SOCKET HEAD (M8X1.25X30-MM)

M - METRIC PART

346-5470 **WEIGHT GP-ECCENTRIC** (contd.) **i07694218**

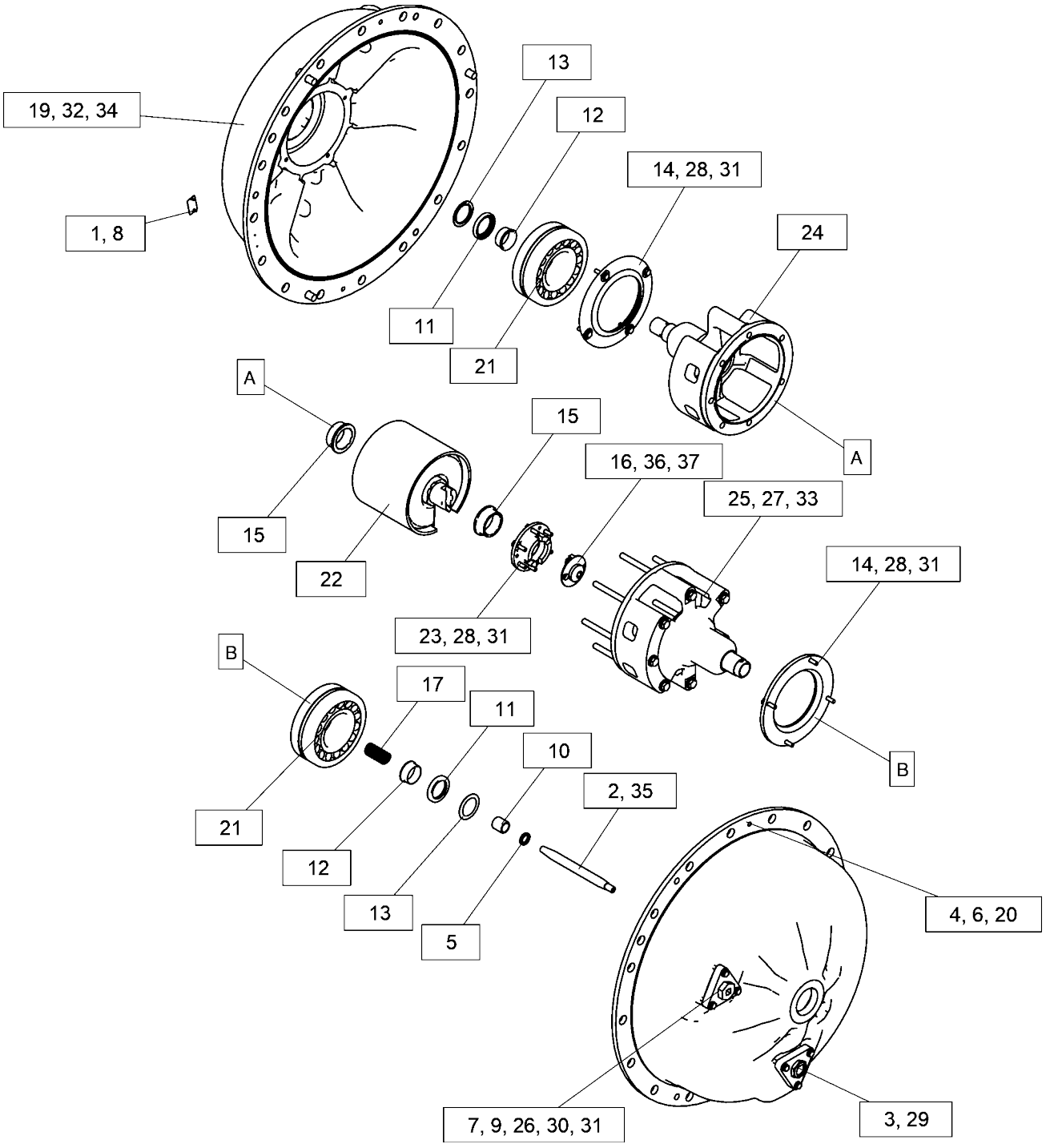

GRAPHIC #1 <END> g06393394

346-5636 WEIGHT GP-ECCENTRIC

S/N: 5B41-UP

PART OF 346-5466 HOUSING GP-ECCENTRIC

WEIGHT AN ATTACHMENT

SMCS-6606, 6645

i07417971

	REF SEE NOTE QTY	GRAPHIC NO 1 2 3 4 5 6	(PRODUCT LEVEL)	REF PAGE	PART NAME PART NUMBER	
Y	1	1	*346-5470*	1	WEIGHT GP-ECCENTRIC	400

Y - SEPARATE ILLUSTRATION

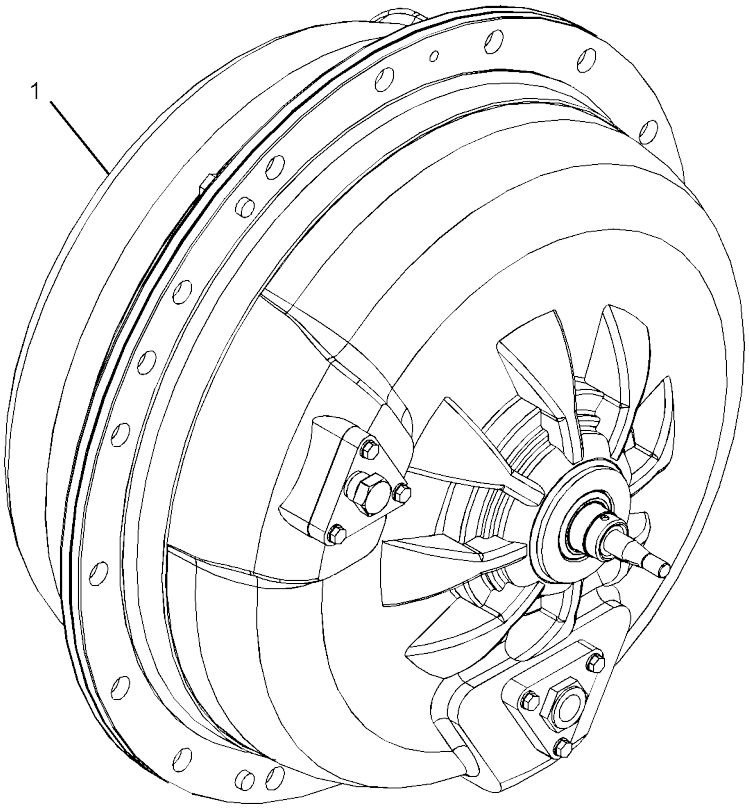

GRAPHIC #1 <END> g02844296

358-2742 WEIGHT GP-ECCENTRIC

S/N: 5B41-UP

PART OF 358-2741 HOUSING GP-ECCENTRIC

WEIGHT AN ATTACHMENT

SMCS-6606, 6645

i07417993

	REF SEE NOTE QTY	GRAPHIC NO 1 2 3 4 5 6	(PRODUCT LEVEL)	REF PAGE	PART NAME PART NUMBER	
Y	1	1	*358-2743*	1	WEIGHT GP-ECCENTRIC	404

Y - SEPARATE ILLUSTRATION

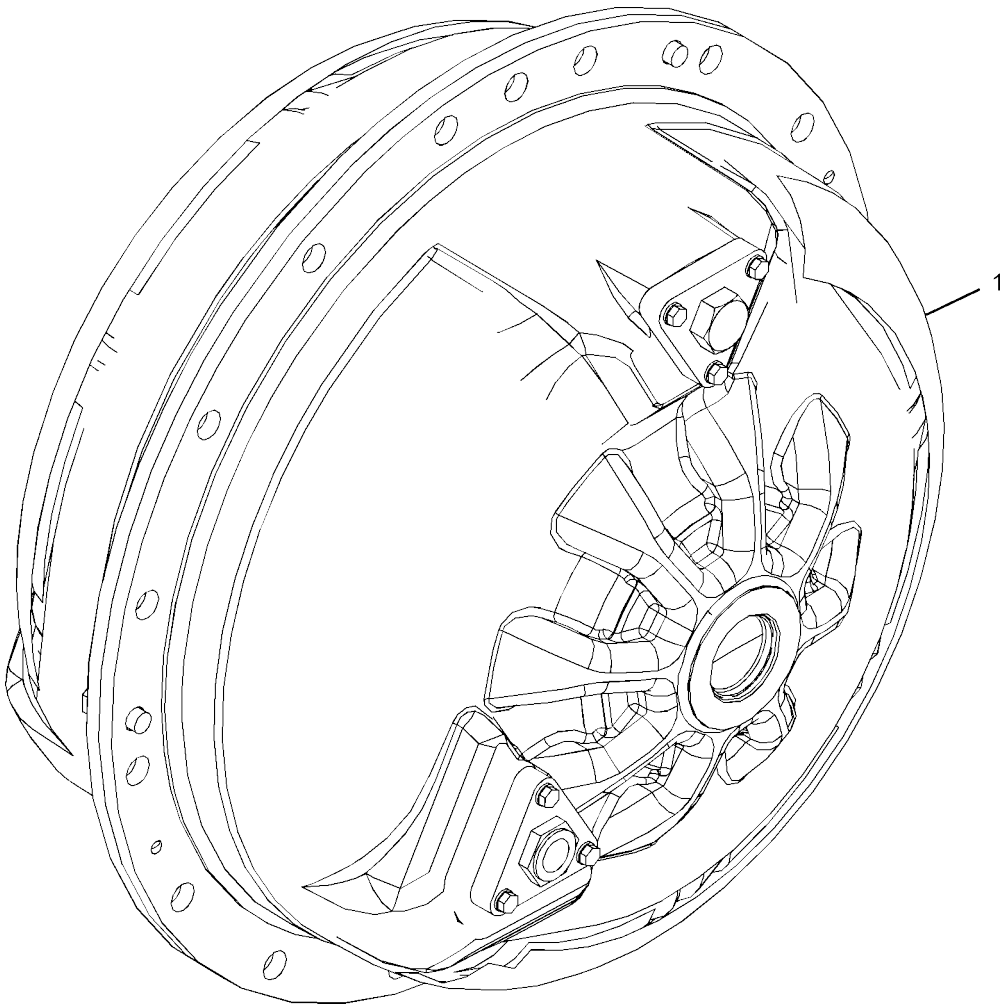

GRAPHIC #1 <END> g02845748

358-2743 WEIGHT GP-ECCENTRIC

S/N: 5B41-UP
PART OF 358-2742 WEIGHT GP-ECCENTRIC AN ATTACHMENT

SMCS-6606, 6645

i07417994

	REF SEE NOTE QTY	GRAPHIC NO 1 2 3 4 5 6	(PRODUCT LEVEL)	REF PAGE	PART NAME PART NUMBER
	1	1	**4B-4158**	2	SCREW-DRIVE (NO 4X0.25-IN)
	2	1	**9Y-9236**	1	GAUGE-SIGHT (ECCENTRIC WEIGHT)
	3	1	**077-3308**	2	BEARING (TAPERED ROLLER)
	4	1	**081-3292**	2	PIN
	5	1	**081-3853**	1	SEAL-O-RING
	6	1	**081-4050**	2	COVER
	7	1	**106-9045**	2	PLATE-FILLER
	8	1	**146-7512**	1	PLATE-IDENTIFICATION (ECCENTRIC WEIGHT)
	9	1	*165-4929*	1	PLUG AS-MAGNETIC
		1	**5P-4484**	1	PLUG-MAGNETIC (ECCENTRIC WEIGHT)
		1	**7M-8485**	1	SEAL-O-RING
	10	1	**180-9503**	1	PLUG-FREEZE
	11	1	**188-9926**	1	SEAL
	12	1	**188-9927**	1	SLEEVE
	13	1	**189-3268**	1	RING
	14	1	**271-2065**	1	HOUSING
	15	1	**271-2066**	1	HOUSING
	16	1	**358-2758**	1	SHAFT GP-ECCENTRIC WEIGHT
		1	**6V-0387**	1	PLUG-PIPE
J		1	**180-7333**		SHOT (STEEL) (5-KG)
	17	1	**081-3364**	2	SEAL-O-RING
M	18	1	**6V-2317**	8	BOLT (M8X1.25X30-MM)
	19	1	**7M-8485**	1	SEAL-O-RING
M	20	1	**7X-2537**	6	BOLT (M8X1.25X35-MM)
	21	1	**8T-4224**	14	WASHER-HARD (8.8X16X2-MM THK)
M	22	1	**8T-4779**	3	BOLT (M16X2X35-MM)
	23	1	**9X-8257**	3	WASHER (17.5X30X3.5-MM THK)

J - ORDER BY THE KILOGRAM M - METRIC PART

358-2743 **WEIGHT GP-ECCENTRIC** (contd.) **i07417994**

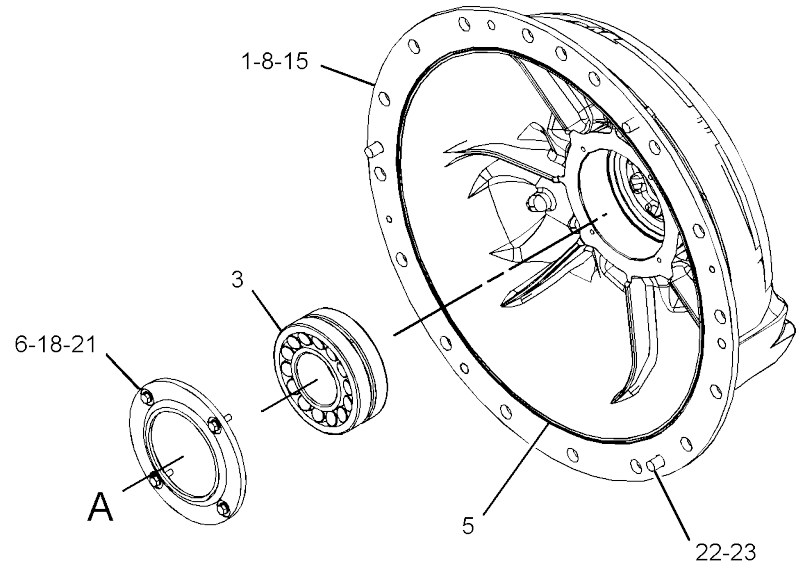

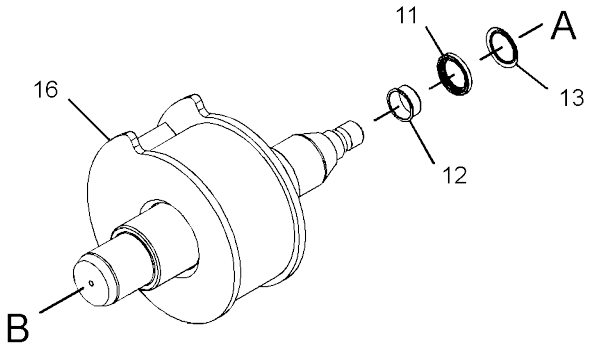

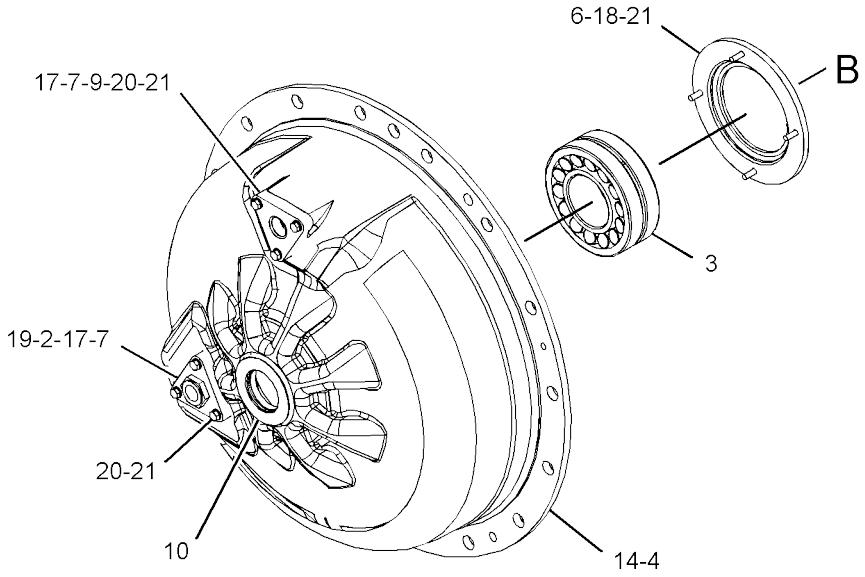

GRAPHIC #1 <END> g02846216

375-8771 WEIGHT GP-ECCENTRIC

S/N: G441-UP

PART OF 375-8769 HOUSING GP-ECCENTRIC

WEIGHT AN ATTACHMENT

SMCS-6606, 6645

i07399928

	REF SEE NOTE QTY	GRAPHIC NO 1 2 3 4 5 6	(PRODUCT LEVEL)	REF PAGE	PART NAME PART NUMBER
	1	1	**4B-4158**	2	SCREW-DRIVE (NO 4X0.25-IN)
	2	1	**5E-8404**	2	RETAINER-BEARING
	3	1	**9Y-9236**	1	GAUGE-SIGHT (ECCENTRIC WEIGHT)
	4	1	**081-3292**	2	PIN
	5	1	**081-3364**	2	SEAL-O-RING
	6	1	**081-3853**	1	SEAL-O-RING
	7	1	**106-9045**	2	PLATE-FILLER
	8	1	**146-7512**	1	PLATE-IDENTIFICATION (ECCENTRIC WEIGHT)
	9	1	*165-4929*	1	PLUG AS-MAGNETIC
		1	**5P-4484**	1	PLUG-MAGNETIC (ECCENTRIC WEIGHT)
		1	**7M-8485**	1	SEAL-O-RING
	10	1	**180-9503**	1	PLUG-FREEZE
	11	1	**186-2901**	1	HOUSING
	12	1	**186-2902**	1	HOUSING
	13	1	**186-2915**	2	BEARING
	14	1	**188-9926**	1	SEAL
	15	1	**188-9927**	1	SLEEVE
	16	1	**189-3268**	1	RING
	17	1	*293-6533*	1	SHAFT GP-ECCENTRIC WEIGHT
		1	**6V-0387**	1	PLUG-PIPE
J		1	**180-7333**		SHOT (STEEL) (3-KG)
		1	**293-6534**	1	SHAFT AS-WEIGHT
M	18	1	**6V-2317**	8	BOLT (M8X1.25X30-MM)
	19	1	**7M-8485**	1	SEAL-O-RING
M	20	1	**7X-2537**	6	BOLT (M8X1.25X35-MM)
	21	1	**8T-4224**	14	WASHER-HARD (8.8X16X2-MM THK)
M	22	1	**8T-4779**	3	BOLT (M16X2X35-MM)
	23	1	**9X-8257**	3	WASHER (17.5X30X3.5-MM THK)

J - ORDER BY THE KILOGRAM M - METRIC PART

375-8771 **WEIGHT GP-ECCENTRIC** (contd.) **i07399928**

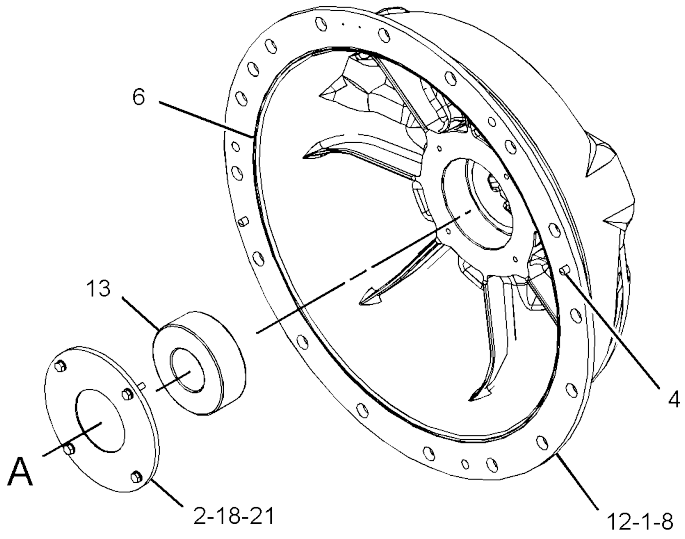

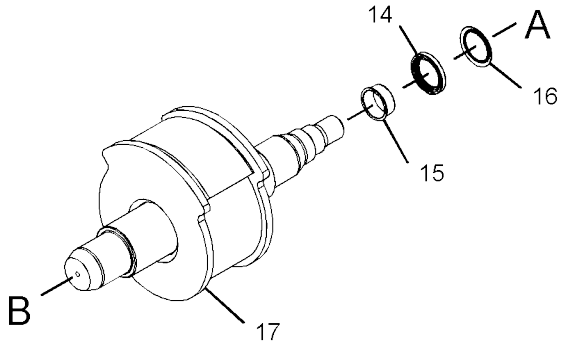

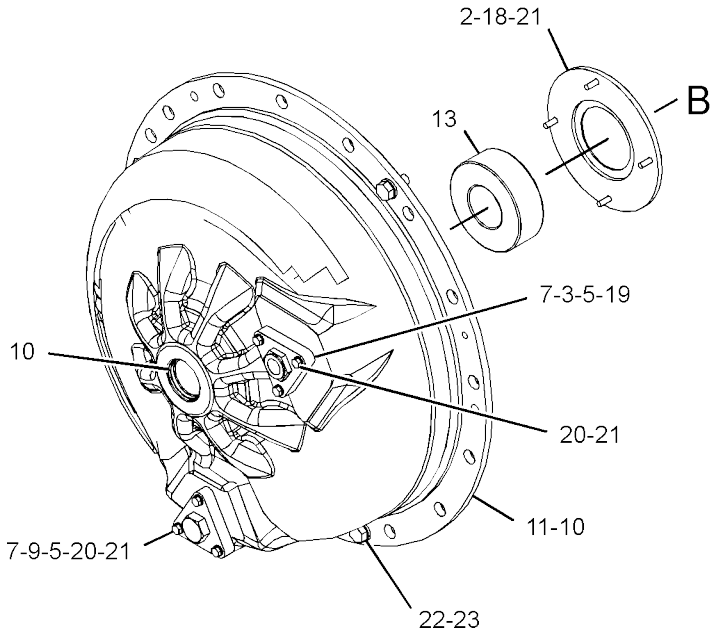

GRAPHIC #1 <END> g02845456

375-8772 WEIGHT GP-ECCENTRIC

S/N: G441-UP

PART OF 375-8770 HOUSING GP-ECCENTRIC

WEIGHT AN ATTACHMENT

SMCS-6606, 6645

i07680019

	REF SEE NOTE QTY	GRAPHIC NO 1 2 3 4 5 6	(PRODUCT LEVEL)	REF PAGE	PART NAME PART NUMBER
	1	1	**4B-4158**	2	SCREW-DRIVE (NO 4X0.25-IN)
	2	1	**525-1428**	1	SHAFT
	3	1	**5E-8404**	2	RETAINER-BEARING
	4	1	**135-6125**	1	KEY-WOODRUFF
	5	1	**9Y-9236**	1	GAUGE-SIGHT (ECCENTRIC WEIGHT)
	6	1	**081-3292**	2	PIN
	7	1	**081-3364**	2	SEAL-O-RING
	8	1	**081-3627**	2	BUSHING-TERMINAL
	9	1	**081-3814**	1	SEAL-O-RING
	10	1	**081-3853**	1	SEAL-O-RING
	11	1	**106-9045**	2	PLATE-FILLER
	12	1	**146-7512**	1	PLATE-IDENTIFICATION (ECCENTRIC WEIGHT)
	13	1	*165-4929*	1	PLUG AS-MAGNETIC
		1	**5P-4484**	1	PLUG-MAGNETIC (ECCENTRIC WEIGHT)
		1	**7M-8485**	1	SEAL-O-RING
	14	1	**186-2901**	1	HOUSING
	15	1	**186-2902**	1	HOUSING
	16	1	**186-2904**	1	SHAFT AS
	17	1	**186-2908**	1	WEIGHT
	18	1	**186-2911**	1	SHAFT (SIDE, VIBRATORY)
	19	1	**186-2913**	1	SHAFT (SIDESHIFT)
	20	1	**186-2915**	2	BEARING
	21	1	**186-2928**	1	BUSHING
	22	1	**188-9926**	2	SEAL
	23	1	**188-9927**	2	SLEEVE
	24	1	**189-3268**	2	RING
	25	1	**525-1425**	1	KEY (DRIVE)
	26	1	**218-1767**	1	BLOCK
	27	1	**442-9219**	1	SPRING
	28	1	**5P-8245**	8	WASHER-HARD (13.5X25.5X3-MM THK)
M	29	1	**6V-2317**	14	BOLT (M8X1.25X30-MM)
	30	1	**7M-8485**	1	SEAL-O-RING
M	31	1	**7X-2537**	6	BOLT (M8X1.25X35-MM)
M	32	1	**8C-3226**	8	BOLT (M12X1.75X200-MM)
	33	1	**8T-4224**	20	WASHER-HARD (8.8X16X2-MM THK)
M	34	1	**8T-4779**	3	BOLT (M16X2X35-MM)
	35	1	**9X-8257**	3	WASHER (17.5X30X3.5-MM THK)
	36	1	**231-4245**	1	WASHER-HARD (9X17X4-MM THK)
M	37	1	**289-9555**	1	BOLT-SOCKET HEAD (M8X1.25X30-MM)

M - METRIC PART

375-8772 **WEIGHT GP-ECCENTRIC** (contd.) **i07680019**

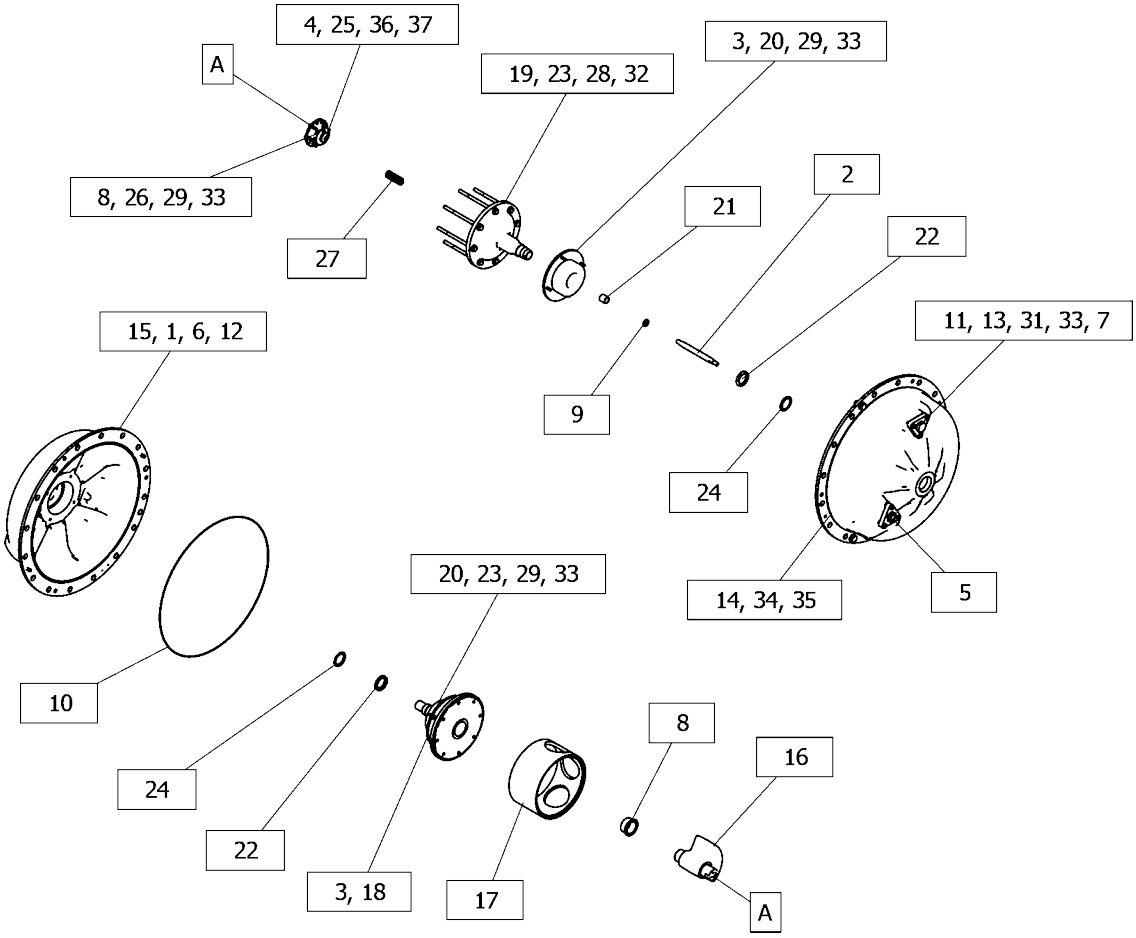

GRAPHIC #1 <END> g06393450

533-1393 WEIGHT GP-ECCENTRIC

S/N: 5B41-UP; G441-UP
PART OF 561-9382, 561-9383 WEIGHT GP-ECCENTRIC AN ATTACHMENT

SMCS-6606, 6645

i07527036

	REF SEE NOTE QTY	GRAPHIC NO 1 2 3 4 5 6	(PRODUCT LEVEL)	REF PAGE	PART NAME PART NUMBER
	1	1	**1G-6781**	2	PLATE
	2	1	**9Y-9236**	1	GAUGE-SIGHT
	3	1	**081-3292**	4	PIN
	4	1	*480-3036*	2	PLUG AS-MAGNETIC
					(EACH INCLUDES)
		1	**3K-0360**	1	SEAL-O-RING
		1	**9X-2230**	1	PLUG-DRAIN (MAGNETIC)
	5	1	**502-6470**	1	HOUSING-BEARING
	6	1	**502-6471**	1	HOUSING-BEARING
	7	1	*504-4864*	1	SHAFT AS
	7A	1	**109-0624**	1	BUSHING
		1	**501-0648**	1	LOBE
		1	**502-4080**	1	SHAFT
	8	1	**504-5098**	1	SPACER
	9	1	**506-0959**	2	BEARING
	10	1	**526-0604**	2	SEAL-LIP TYPE
	11	1	**5M-4454**	2	SEAL-O-RING
	12	1	**5P-0537**	6	WASHER-HARD (7.2X14.5X2-MM THK)
M	13	1	**6V-8837**	6	BOLT (M6X1X16-MM)
	14	1	**7M-8485**	1	SEAL-O-RING
M	15	1	**7X-2546**	2	BOLT (M10X1.5X180-MM)
	16	1	**8T-4121**	2	WASHER-HARD (11X21X2.5-MM THK)

M - METRIC PART

533-1393 **WEIGHT GP-ECCENTRIC** (contd.) **i07527036**

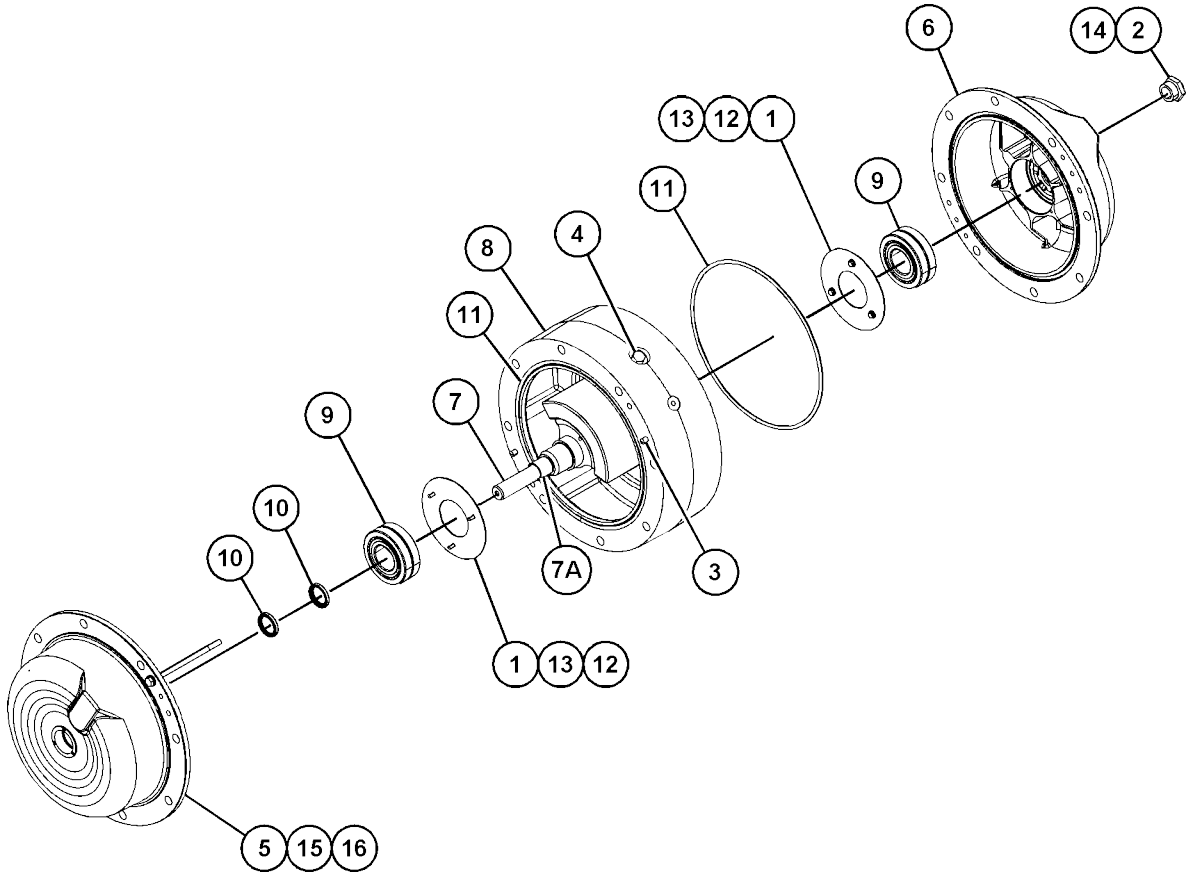

GRAPHIC #1 <END> g06351453

561-9382 WEIGHT GP-ECCENTRIC

S/N: 5B41-UP; G441-UP
PART OF 504-6809, 526-9307 HOUSING GP-ECCENTRIC
WEIGHT AN ATTACHMENT

SMCS-6606, 6645

i07527033

REF SEE NOTE	QTY	GRAPHIC NO 1 2 3 4 5 6	(PRODUCT LEVEL)	REF PAGE	PART NAME PART NUMBER	
Y	1	1	*533-1393*	1	WEIGHT GP-ECCENTRIC	410

Y - SEPARATE ILLUSTRATION

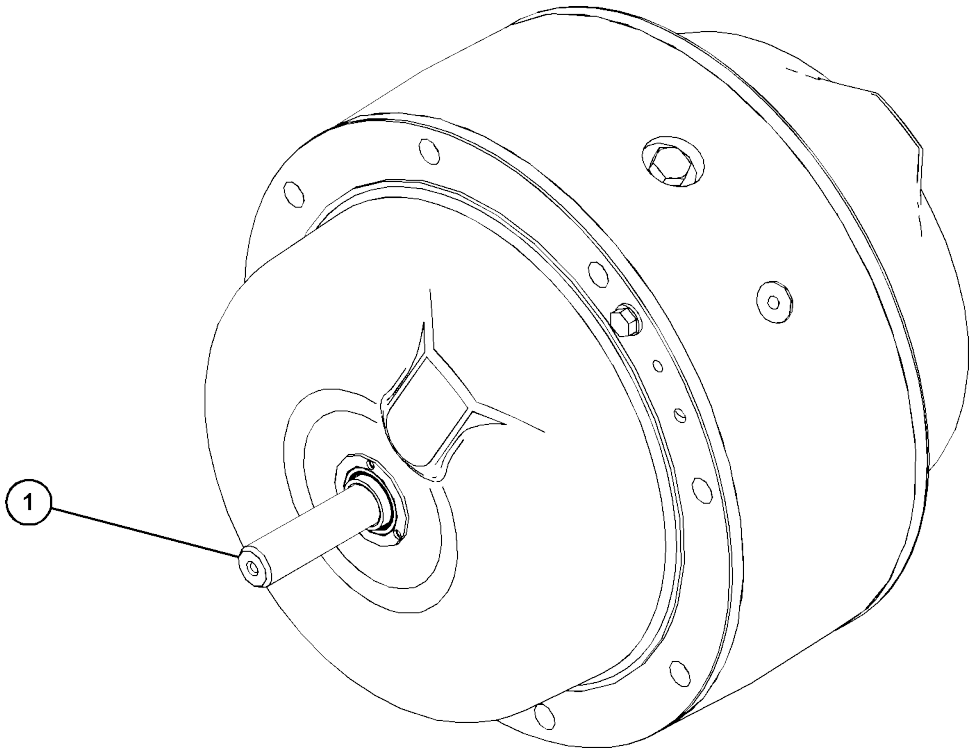

GRAPHIC #1 <END> g06343541

561-9383 WEIGHT GP-ECCENTRIC

S/N: 5B41-UP; G441-UP
PART OF 504-6809, 526-9307 HOUSING GP-ECCENTRIC
WEIGHT AN ATTACHMENT

SMCS-6606, 6645

i07527037

	REF SEE NOTE QTY	GRAPHIC NO 1 2 3 4 5 6	(PRODUCT LEVEL)	REF PAGE	PART NAME PART NUMBER	
Y	1	1	*533-1393*	1	WEIGHT GP-ECCENTRIC	410

Y - SEPARATE ILLUSTRATION

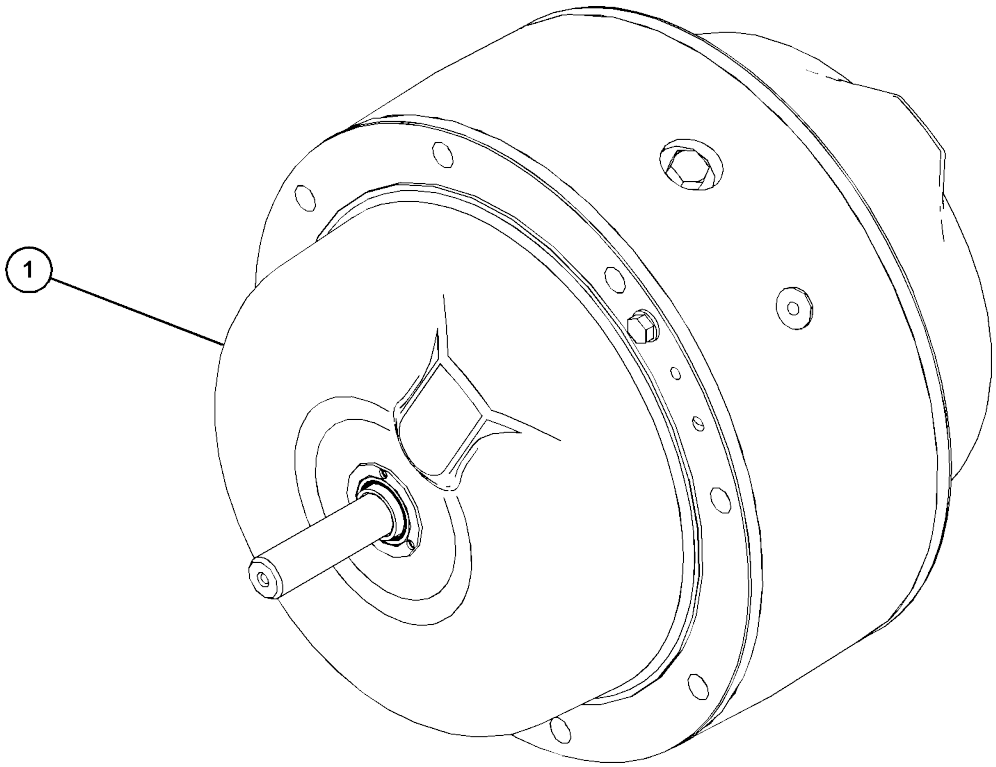

GRAPHIC #1 <END> g06343558

510-4009 BAR GP-SPRAY

S/N: G441-UP
PART OF 510-4013 SPRAY GP-WATER

SMCS-6609

i07399898

REF SEE NOTE QTY	GRAPHIC NO 1 2 3 4 5 6	(PRODUCT LEVEL)	REF PAGE	PART NAME PART NUMBER
1	1	**150-8261**	7	NOZZLE
2	1	**390-7627**	1	CAP AS
3	1	**390-7630**	1	INSERT
4	1	**390-7635**	7	CLAMP AS
5	1	**393-1145**	1	VALVE
6	1	**395-3298**	7	CAP AS
				(EACH INCLUDES)
	1	**6F-5559**	1	SEAL-O-RING
7	1	**416-5396**	7	STRAINER (WATER SPRAY)
8	1	**439-9984**	1	VALVE AS-CHECK
9	1	**450-5295**	1	CAP-END
10	1	**510-0256**	1	PIPE

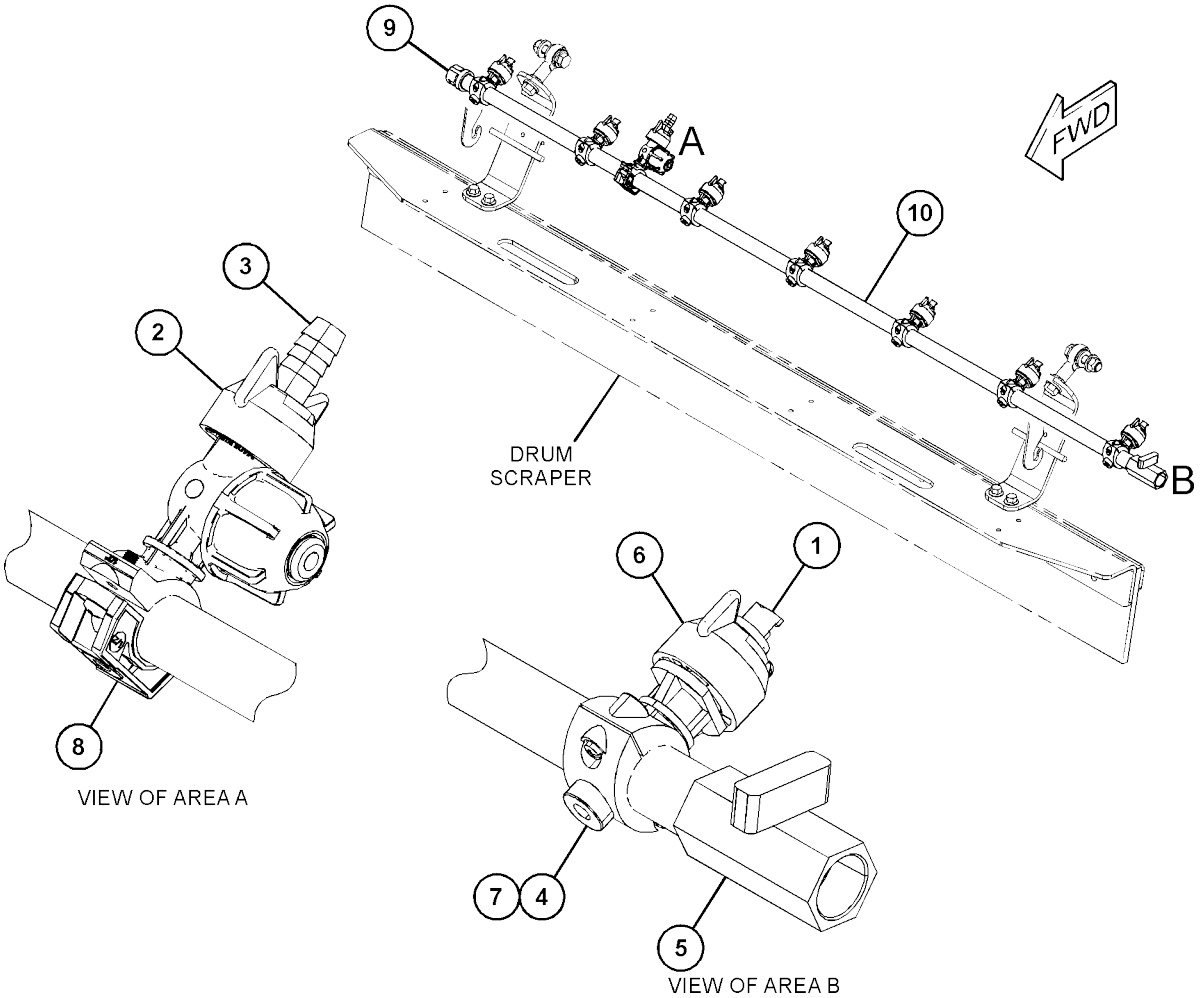

GRAPHIC #1 <END> g06148197

511-7004 BAR GP-SPRAY

S/N: 5B41-UP
PART OF 510-4012 SPRAY GP-WATER

SMCS-6609

i07418086

REF SEE NOTE	QTY	GRAPHIC NO 1 2 3 4 5 6	(PRODUCT LEVEL)	REF PAGE	PART NAME PART NUMBER
	1	1	**150-8261**	7	NOZZLE
	2	1	**390-7627**	1	CAP AS
	3	1	**390-7630**	1	INSERT
	4	1	**390-7635**	7	CLAMP AS
					(EACH INCLUDES)
		1	**6V-4365**	1	SEAL-O-RING
M		1	**6V-9672**	1	SCREW-MACHINE (M4X0.7X16-MM)
	5	1	**393-1145**	1	VALVE (WATER SPRAY)
	6	1	**395-3298**	7	CAP AS
					(EACH INCLUDES)
		1	**6F-5559**	1	SEAL-O-RING
	7	1	**416-5396**	7	STRAINER (WATER SPRAY)
	8	1	**439-9984**	1	VALVE AS-CHECK (WATER SPRAY)
	9	1	**450-5295**	1	CAP-END
	10	1	**511-7005**	1	PIPE

M - METRIC PART

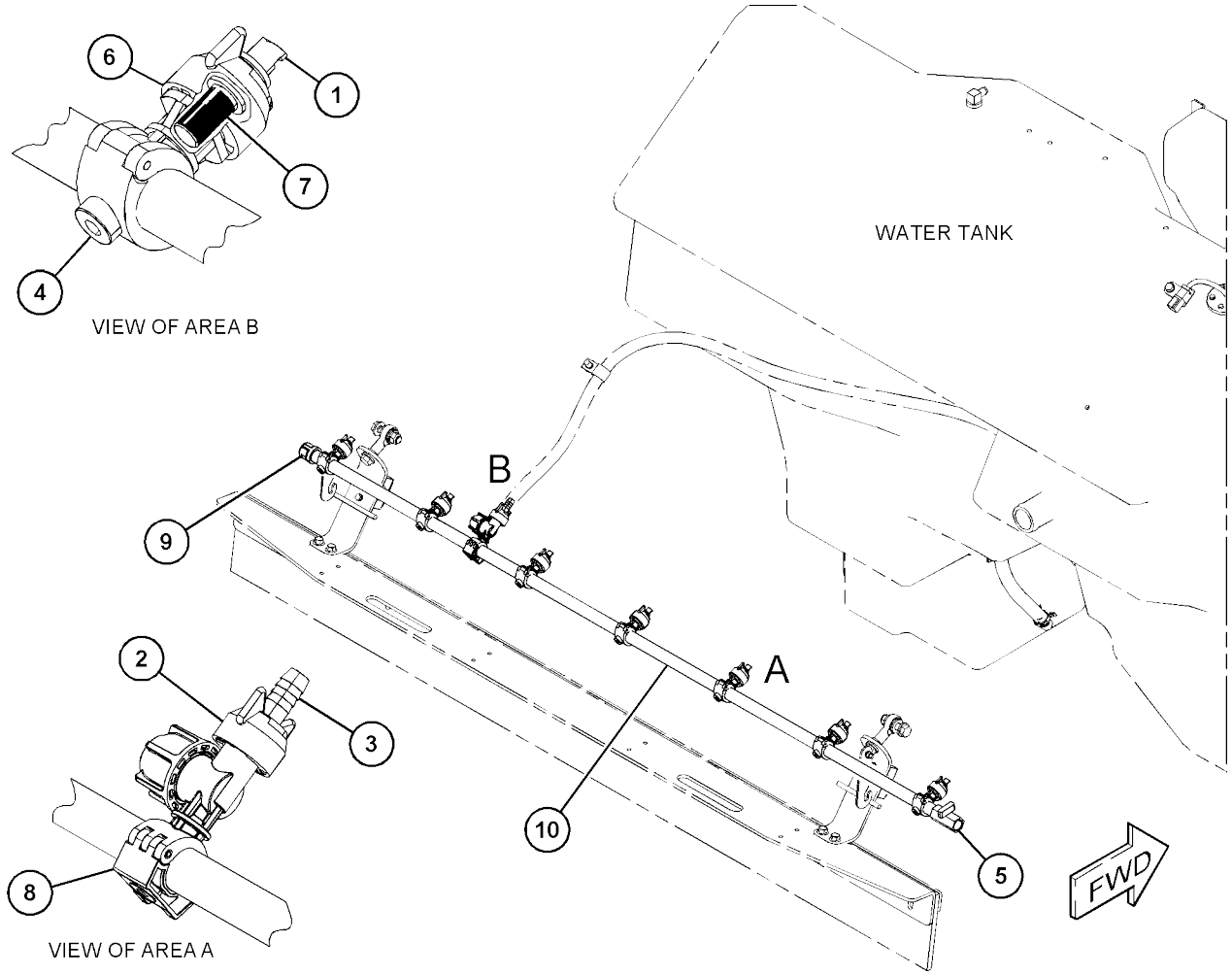

GRAPHIC #1

<END>

g06148112

424-7533 DEFLECTOR GP

S/N: 5B41-UP; G441-UP
PART OF 505-8504, 505-8505 ENCLOSURE GP

SMCS-5612

i07398863

	REF SEE NOTE QTY	GRAPHIC NO 1 2 3 4 5 6	(PRODUCT LEVEL)	REF PAGE	PART NAME PART NUMBER
M	1	1	**3T-0852**	17	LOCKNUT (M8X1.25-THD)
	2	1	**7X-0579**	43	WASHER-HARD (8.8X25.5X2-MM THK)
	3	1	**513-2592**	1	SEAL
M	4	1	**8T-7547**	26	BOLT (M8X1.25X30-MM)
	5	1	**424-7531**	1	SUPPORT (BOTTOM)
	6	1	**425-0282**	2	INSULATION
	7	1	**2Y-5429**	1	GROMMET
	8	1	**433-4179**	1	RETAINER
	9	1	**513-2593**	1	SEAL
	10	1	**512-3278**	1	SUPPORT-TOP

M - METRIC PART

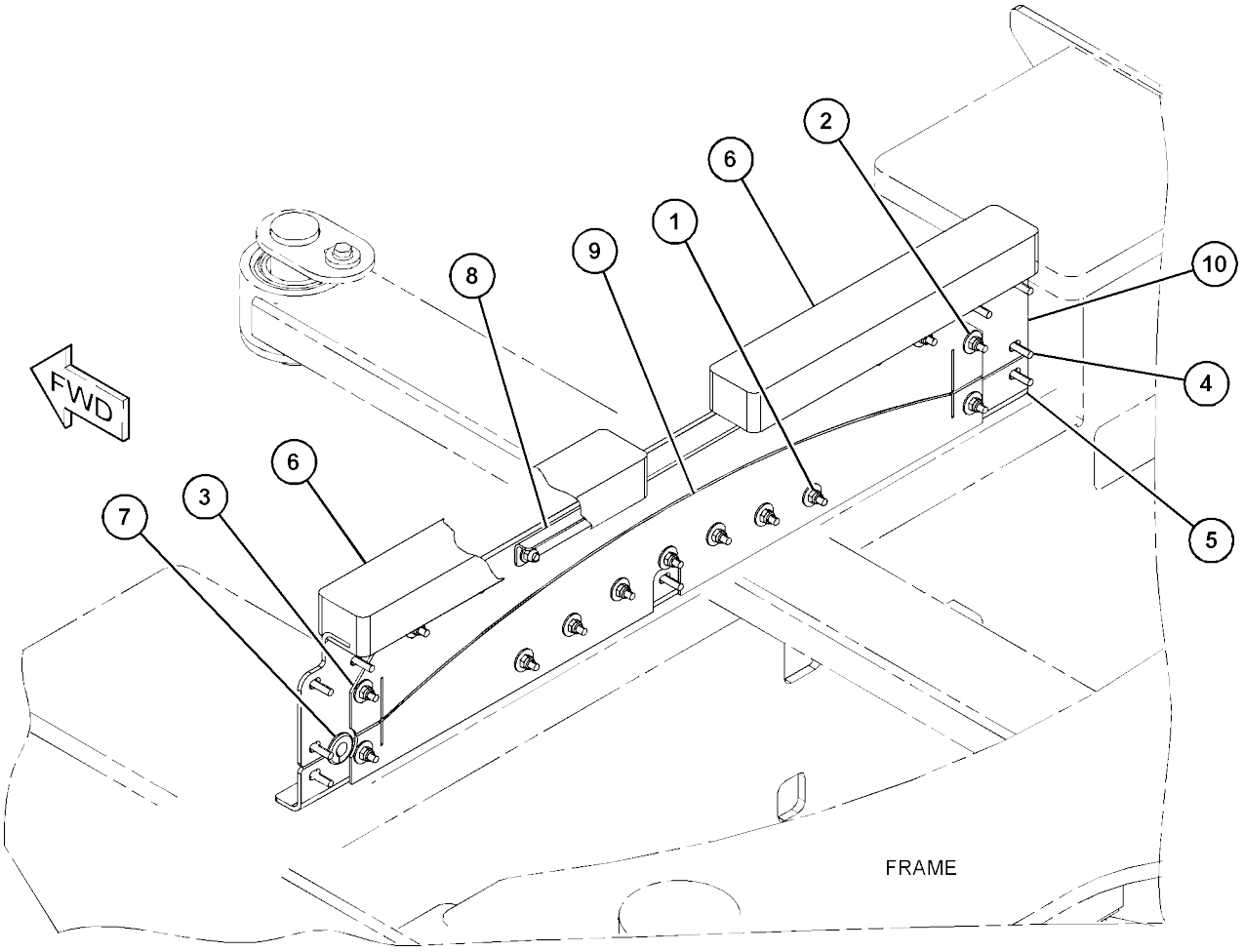

GRAPHIC #1 <END> g06307624

343-6063 FILTER GP-WATER

S/N: 5B41-UP; G441-UP
PART OF 510-0765, 510-0767 SPRAY AR-WATER

SMCS-5612

i07399888

	REF SEE NOTE QTY	GRAPHIC NO 1 2 3 4 5 6 (PRODUCT LEVEL)	REF PAGE	PART NAME PART NUMBER
	1	1 **324-9870**	1	FILTER GP-WATER (WATER SPRAY)
		1 **7H-2444**	1	SEAL-O-RING
		1 **251-7580**	1	STRAINER (WATER SPRAY)
	2	1 **325-0402**	1	ELBOW (PLASTIC)
	3	1 **325-0635**	2	ADAPTER
	4	1 **364-2540**	1	ELBOW (PLASTIC)
M	5	1 **7X-2539**	2	BOLT (M8X1.25X110-MM)
	6	1 **8T-4224**	2	WASHER-HARD (8.8X16X2-MM THK)

M - METRIC PART

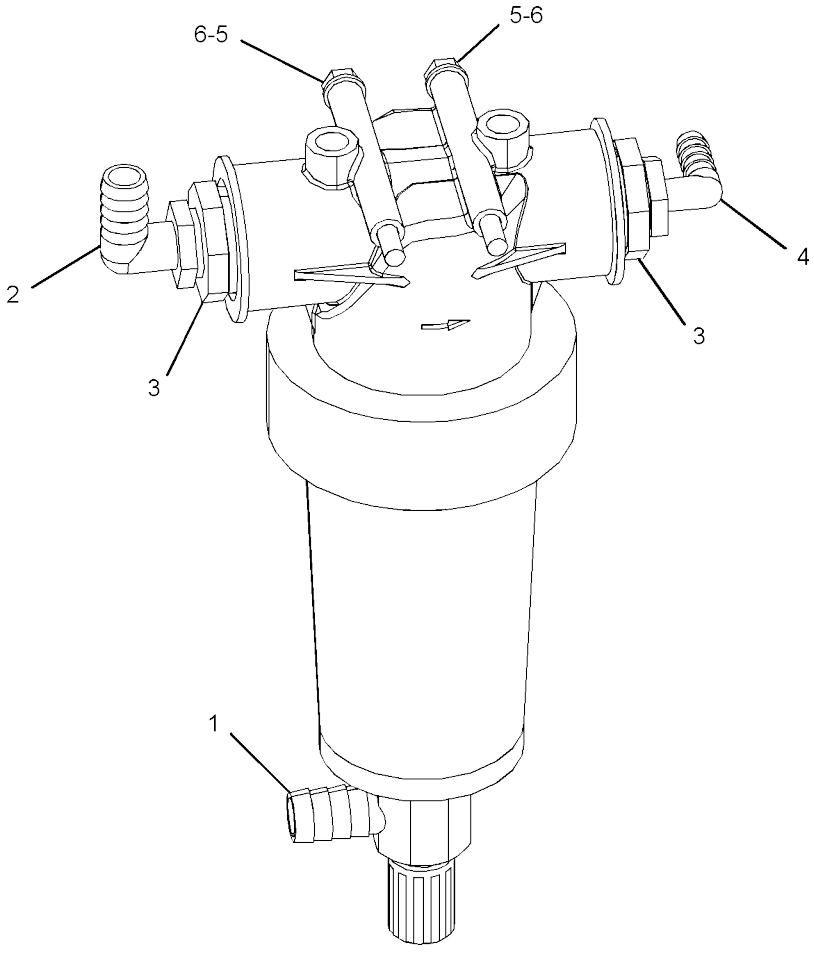

GRAPHIC #1 <END> g02834836

326-3085 KIT-WATER SPRAY

S/N: 5B41-UP; G441-UP
PART OF 374-8044, 378-7652 SIDECUTTER
GP AN ATTACHMENT

SMCS-5612

i06806076

REF NO	SEE NOTE	GRAPHIC 1 2 3 4 5 6	(PRODUCT LEVEL)	REF PAGE	PART NAME / PART NUMBER
1		1	**440-5126**	1	SPRAY GP-WATER
		1	**136-4158**	1	NOZZLE-WATER SPRAY
		1	**136-4165**	1	FILTER-WATER
2		1	**136-4157**	1	ELBOW
3		1	**136-4154**	1	PIPE-WATER
4		1	**5B-1309**	1	COUPLING-PIPE
5		1	**165-3954**	1	CONNECTOR

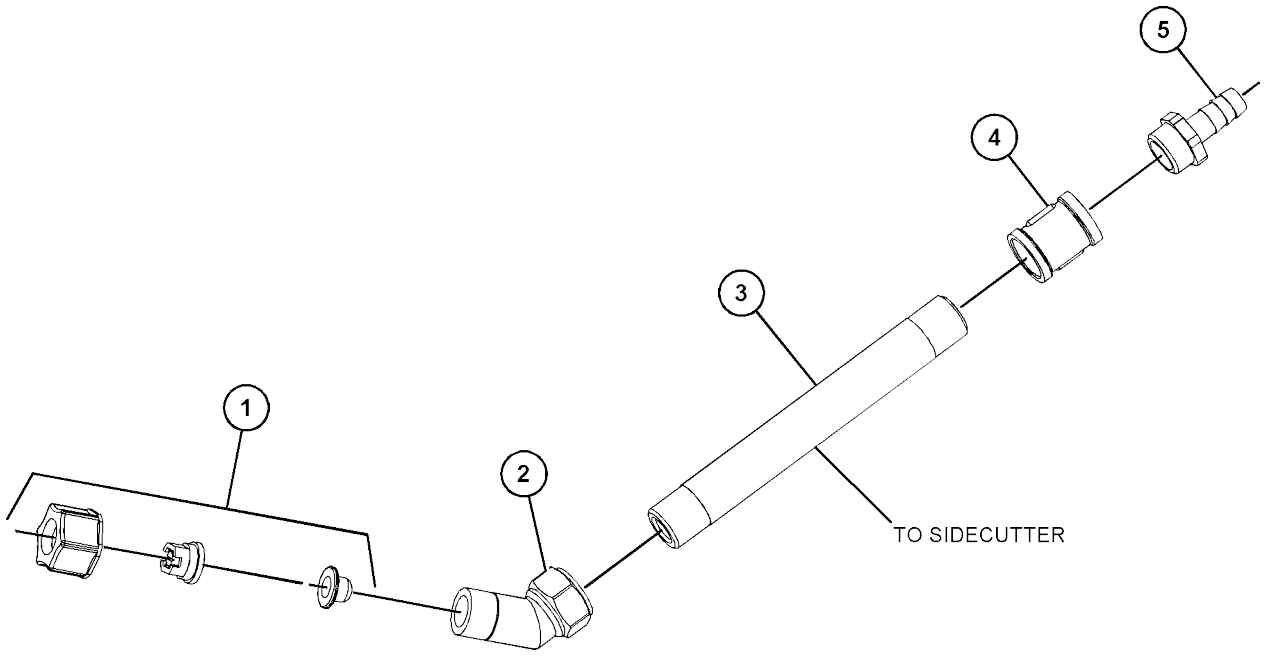

GRAPHIC #1 <END> g03421201

351-3429 LINES GP-WATER SPRAY-CAB

S/N: 5B41-UP; G441-UP AN ATTACHMENT

SMCS-5612

i07400024

REF SEE NOTE	QTY	GRAPHIC NO 1 2 3 4 5 6	(PRODUCT LEVEL)	REF PAGE	PART NAME PART NUMBER
	1	1	**8V-7162**	1	CABLE
	2	1	**129-1090**	1	VALVE-DRAIN (WATER SPRAY, REAR DRUM)
	3	1	**177-2215**	2	STRAP-DUAL CLAMP
	4	1	**200-6345**	1	SADDLE-MOUNTING (DUAL SWIVEL)
	5	1	**204-2281**	6	STRAP-CABLE
	6	1	**253-4115**	1	SPOUT
	7	1	**276-3884**	1	CAP-VENTED (WASHER TANK)
	8	1	**331-9059**	1	ELBOW
	9	1	**331-9060**	4	ADAPTER
	10	1	**331-9072**	2	ADAPTER (PLASTIC)
	11	1	**331-9073**	1	ELBOW (PLASTIC)
	12	1	**336-7700**	2	CLAMP
	13	1	**364-5485**	1	TANK GP (REAR, RH)
	14	1	**365-2919**	1	TANK GP (REAR, LH)
	15	1	**6L-9848**	4	CLAMP
	16	1	**3S-2093**	6	STRAP-CABLE
	17	1	**4P-8134**	2	CLIP (LADDER)
	18	1	**5P-4116**	11	WASHER-HARD (8.8X20.5X2-MM THK)
	19	1	**5P-6264**	1	GROMMET
	20	1	**7C-4354**	1	CLIP
M	21	1	**8T-4200**	11	BOLT (M8X1.25X16-MM)
E	22	1	**5P-1442**		HOSE (199-CM)
E	22A	1	**5P-1442**		HOSE (60-CM)
E	23	1	**144-0195**		HOSE (29-CM)
E	23A	1	**144-0195**		HOSE (38-CM)
E	24	1	**5P-0767**		HOSE (32-CM)
	25	1	**290-5562**	1	MOUNT (DUAL SWIVEL)

E - ORDER BY THE CENTIMETER M - METRIC PART

351-3429 **LINES GP-WATER SPRAY (**contd.**)** **i07400024**

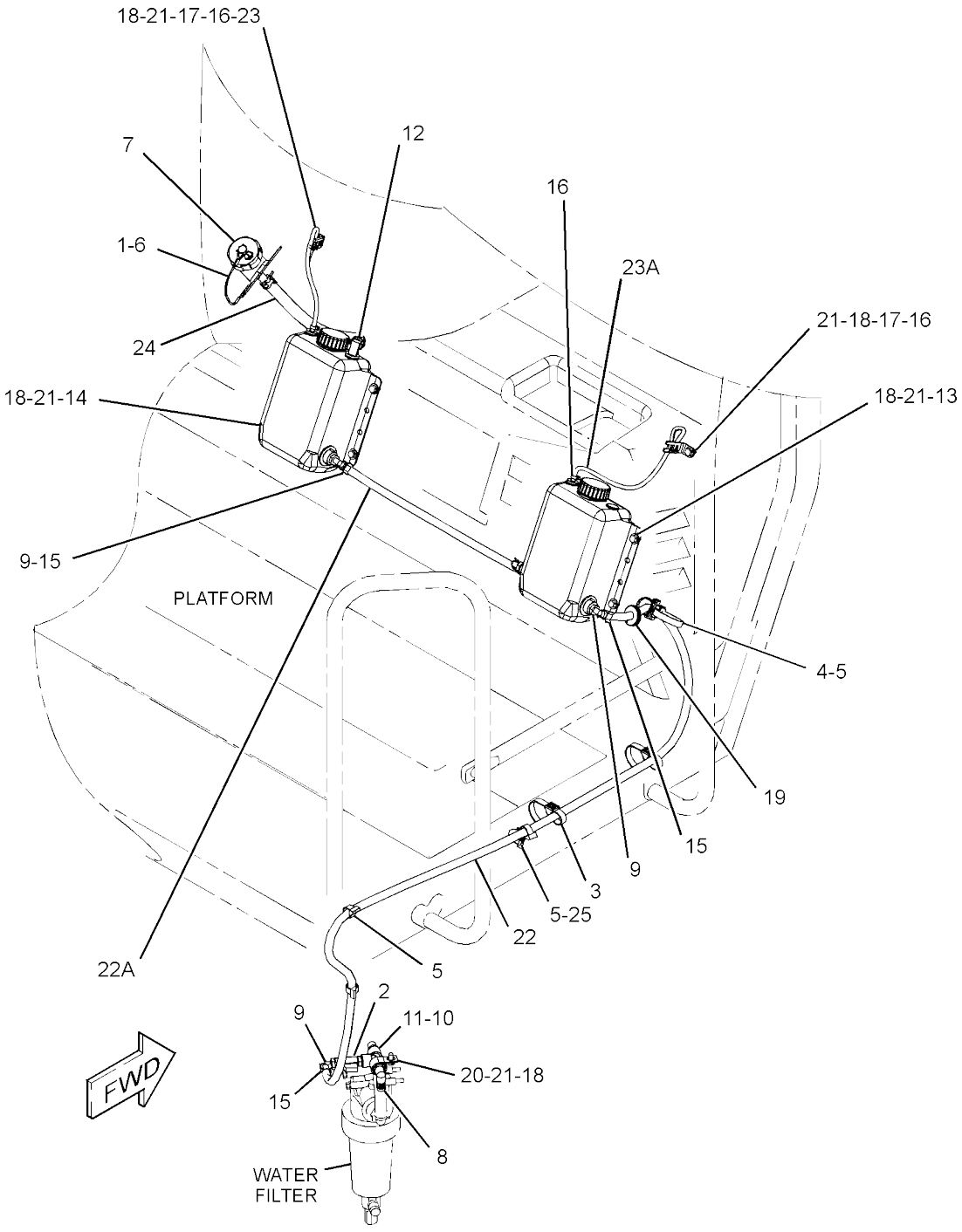

GRAPHIC #1 <END> g06213334

359-9729 LINES GP-WATER SPRAY

S/N: 5B41-UP; G441-UP
PART OF 513-4763, 513-4765 SIDECUTTER
AR AN ATTACHMENT

SMCS-5612

i07416470

	REF SEE NOTE	QTY	GRAPHIC NO 1 2 3 4 5 6	(PRODUCT LEVEL)	REF PAGE	PART NAME PART NUMBER
		1	1	**6V-2372**	1	ELBOW
		2	1	**145-3846**	1	INSERT-NYLON
		3	1	**177-2215**	1	STRAP-DUAL CLAMP
		4	1	**204-2281**	4	STRAP-CABLE
		5	1	**241-8553**	1	INSERT-NYLON
		6	1	**253-0277**	1	INSERT-NYLON
		7	1	**288-1436**	1	VALVE AS-SOLENOID (WATER SPRAY CONTROL)
	D		1	**5P-5995**		TUBE (0.2-M)
			1	**107-2868**	1	CONNECTOR
			1	**8T-8729**	2	PIN-CONNECTOR (16-GA TO 20-GA)
			1	**102-8802**	1	KIT-RECEPTACLE (2-PIN)
						(INCLUDES RECEPTACLE AS & WEDGE)
			1	**107-2869**	1	SEAL
		8	1	**312-0288**	6	CLAMP
		9	1	**6L-9848**	2	CLAMP
	G	10	1	**423-1983**		HOSE (2-IN)
	G	10A	1	**423-1983**		HOSE (5.1-IN)
	G	11	1	**423-1982**		HOSE (54.7-IN)

D - ORDER BY THE METER G - ORDER BY THE INCH

359-9729 **LINES GP-WATER SPRAY** (contd.) **i07416470**

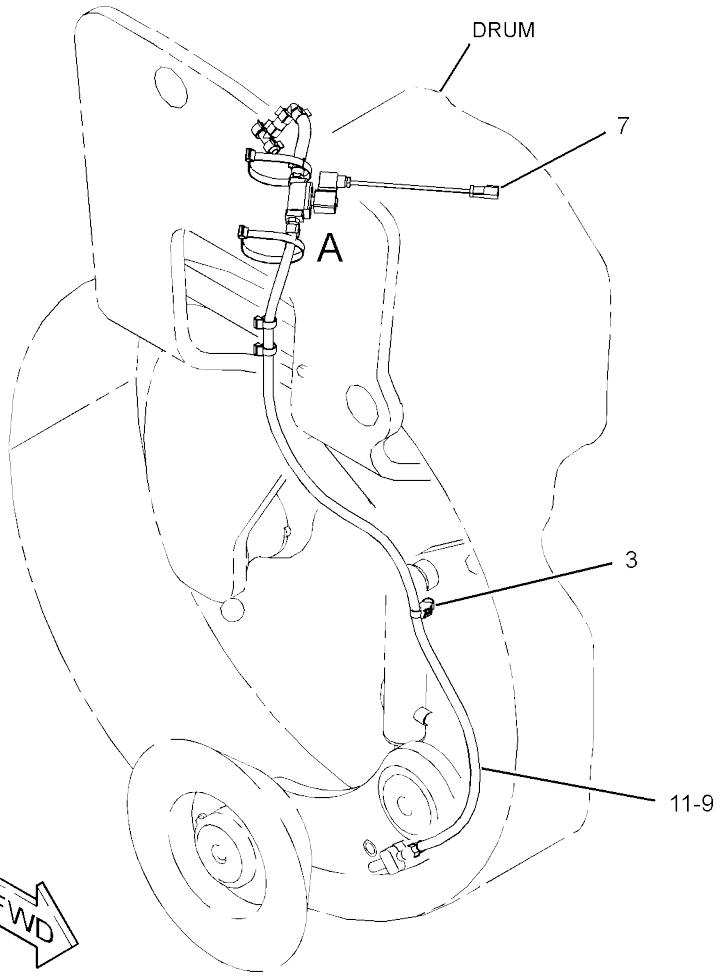

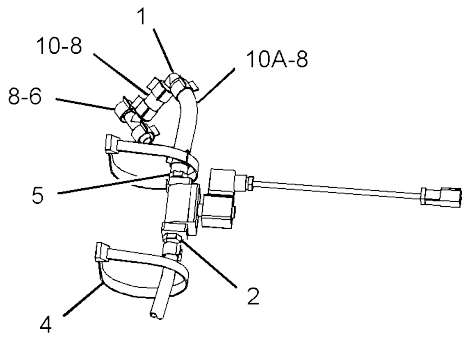

VIEW OF AREA A

GRAPHIC #1 <END> g03729179

510-4010 LINES GP-WATER SPRAY

S/N: 5B41-UP

PART OF 510-0765 SPRAY AR-WATER

SMCS-5612

i07418071

	REF SEE NOTE QTY	GRAPHIC NO 1 2 3 4 5 6	(PRODUCT LEVEL)	REF PAGE	PART NAME PART NUMBER
	1	1	**5P-4961**	2	CLAMP-HOSE
	2	1	**6V-6722**	1	PLUG
	3	1	**129-1090**	3	VALVE-DRAIN (WATER SPRAY)
	4	1	**177-2215**	6	STRAP-DUAL CLAMP
	5	1	**241-8552**	2	INSERT-NYLON
	6	1	**241-8553**	6	INSERT-NYLON
	7	1	**253-0277**	1	INSERT-NYLON
	9	1	**312-0288**	16	CLAMP
	10	1	**331-9070**	4	FITTING (PLASTIC)
	11	1	**331-9072**	2	ADAPTER (PLASTIC)
	12	1	**331-9073**	4	ELBOW (PLASTIC)
	13	1	**336-7700**	8	CLAMP
	14	1	**204-2281**	4	STRAP-CABLE
	15	1	**3S-8665**	1	CLIP (LOOP)
	16	1	**4I-0472**	1	CLIP
	17	1	**8C-8533**	2	CLIP
	18	1	**7C-4354**	5	CLIP
	19	1	**7K-1181**	2	STRAP-CABLE
	20	1	**8T-4121**	6	WASHER-HARD (11X21X2.5-MM THK)
M	21	1	**8T-4191**	6	BOLT (M10X1.5X16-MM)
M	22	1	**8T-4200**	1	BOLT (M8X1.25X16-MM)
	23	1	**8T-4224**	1	WASHER-HARD (8.8X16X2-MM THK)
G	24	1	**423-1983**		HOSE (51.2-IN)
G	24A	1	**423-1983**		HOSE (6.3-IN)
G	24B	1	**423-1983**		HOSE (110.2-IN)
G	24C	1	**423-1983**		HOSE (134-IN)
G	24D	1	**423-1983**		HOSE (13.8-IN)
G	24E	1	**423-1983**		HOSE (16.1-IN)
G	24F	1	**423-1983**		HOSE (12-IN)
G	24G	1	**423-1983**		HOSE (2.7-IN EACH)
G	25	1	**423-1984**		HOSE (59-IN)
G	25A	1	**423-1984**		HOSE (6.3-IN)
G	25B	1	**423-1984**		HOSE (16.5-IN)
G	25C	1	**423-1984**		HOSE (23.3-IN)
	26	1	**200-6345**	1	SADDLE-MOUNTING (DUAL SWIVEL)
	27	1	**331-9059**	1	ELBOW (PLASTIC)

G - ORDER BY THE INCH M - METRIC PART

510-4010 **LINES GP-WATER SPRAY (**contd.**)** **i07418071**

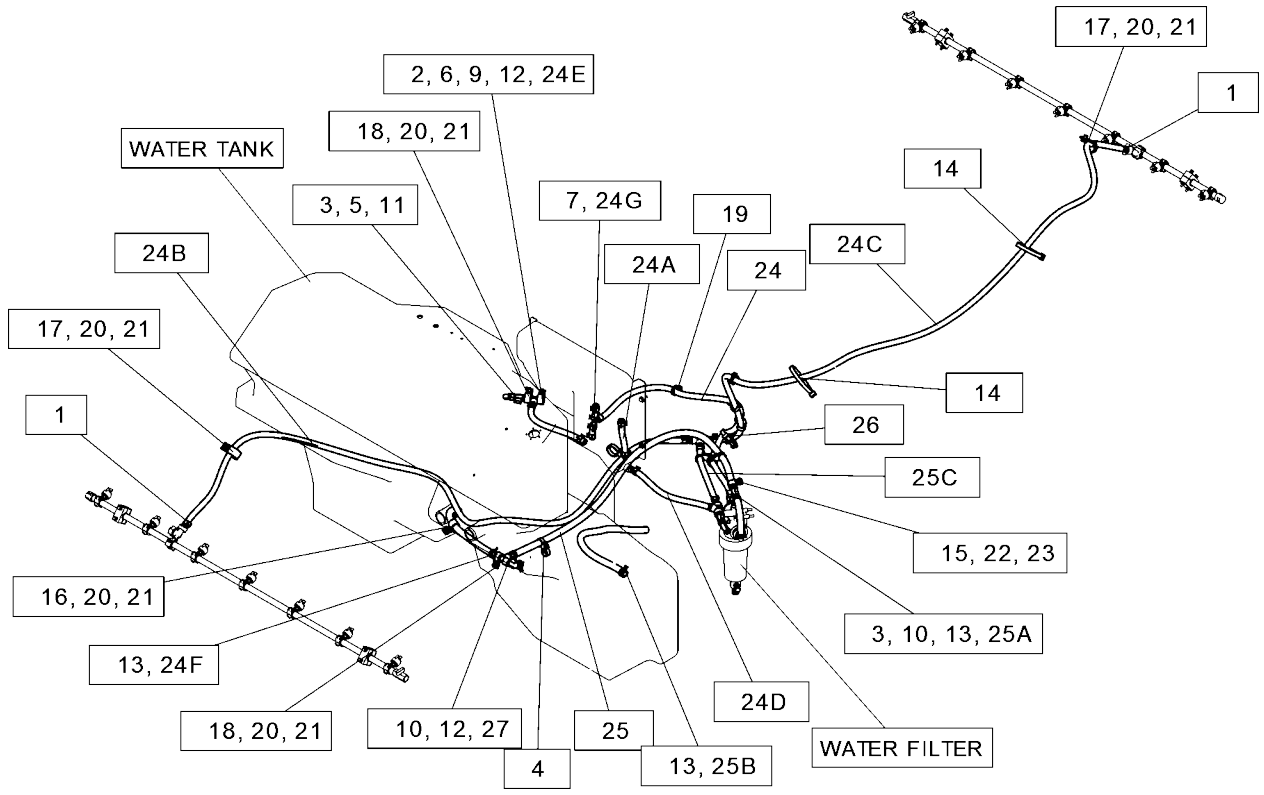

GRAPHIC #1 <END> g06271259

510-4011 LINES GP-WATER SPRAY

S/N: G441-UP

PART OF 510-0767 SPRAY AR-WATER

SMCS-5612

i07399895

	REF SEE NOTE QTY	GRAPHIC NO 1 2 3 4 5 6	(PRODUCT LEVEL)	REF PAGE	PART NAME PART NUMBER
	1	1	**5P-4961**	2	CLAMP-HOSE
	2	2	**6V-6722**	1	PLUG
	3	1,2	**129-1090**	3	VALVE-DRAIN
	4	2	**177-2215**	5	STRAP-DUAL CLAMP
	5	2	**200-6345**	1	SADDLE-MOUNTING (DUAL SWIVEL)
	6	2	**241-8552**	2	INSERT-NYLON
	7	2	**241-8553**	6	INSERT-NYLON
	8	1	**253-0277**	1	INSERT-NYLON
	9	1,2	**312-0288**	16	CLAMP
	10	1	**331-9070**	5	FITTING (PLASTIC)
	11	2	**331-9072**	2	ADAPTER (PLASTIC)
	12	1,2	**331-9073**	4	ELBOW (PLASTIC)
	13	1	**336-7700**	8	CLAMP
	14	1,2	**204-2281**	4	STRAP-CABLE
	15	1	**3S-8665**	1	CLIP (LOOP)
	16	1	**4I-0472**	2	CLIP
	17	1,2	**7C-4354**	5	CLIP
	18	1	**7K-1181**	2	STRAP-CABLE
	19	1	**8C-8533**	2	CLIP
	20	1,2	**8T-4121**	7	WASHER-HARD (11X21X2.5-MM THK)
M	21	1,2	**8T-4191**	7	BOLT (M10X1.5X16-MM)
M	22	1	**8T-4200**	1	BOLT (M8X1.25X16-MM)
	23	1	**8T-4224**	1	WASHER-HARD (8.8X16X2-MM THK)
G	24	1	**423-1983**		HOSE (2.7-IN EACH)
G	24A	1	**423-1983**		HOSE (16.1-IN)
G	24B	1	**423-1983**		HOSE (110.2-IN)
G	24C	1	**423-1983**		HOSE (6.3-IN)
G	24D	2	**423-1983**		HOSE (12.2-IN)
G	24E	1	**423-1983**		HOSE (51.2-IN)
G	24F	1	**423-1983**		HOSE (13.8-IN)
G	24G	1	**423-1983**		HOSE (133.8-IN)
G	25	1	**423-1984**		HOSE (6.3-IN)
G	25A	1	**423-1984**		HOSE (59.1-IN)
G	25B	1	**423-1984**		HOSE (16.5-IN)
G	25C	1	**423-1984**		HOSE (13-IN)

G - ORDER BY THE INCH M - METRIC PART

510-4011 **LINES GP-WATER SPRAY** (contd.) **i07399895**

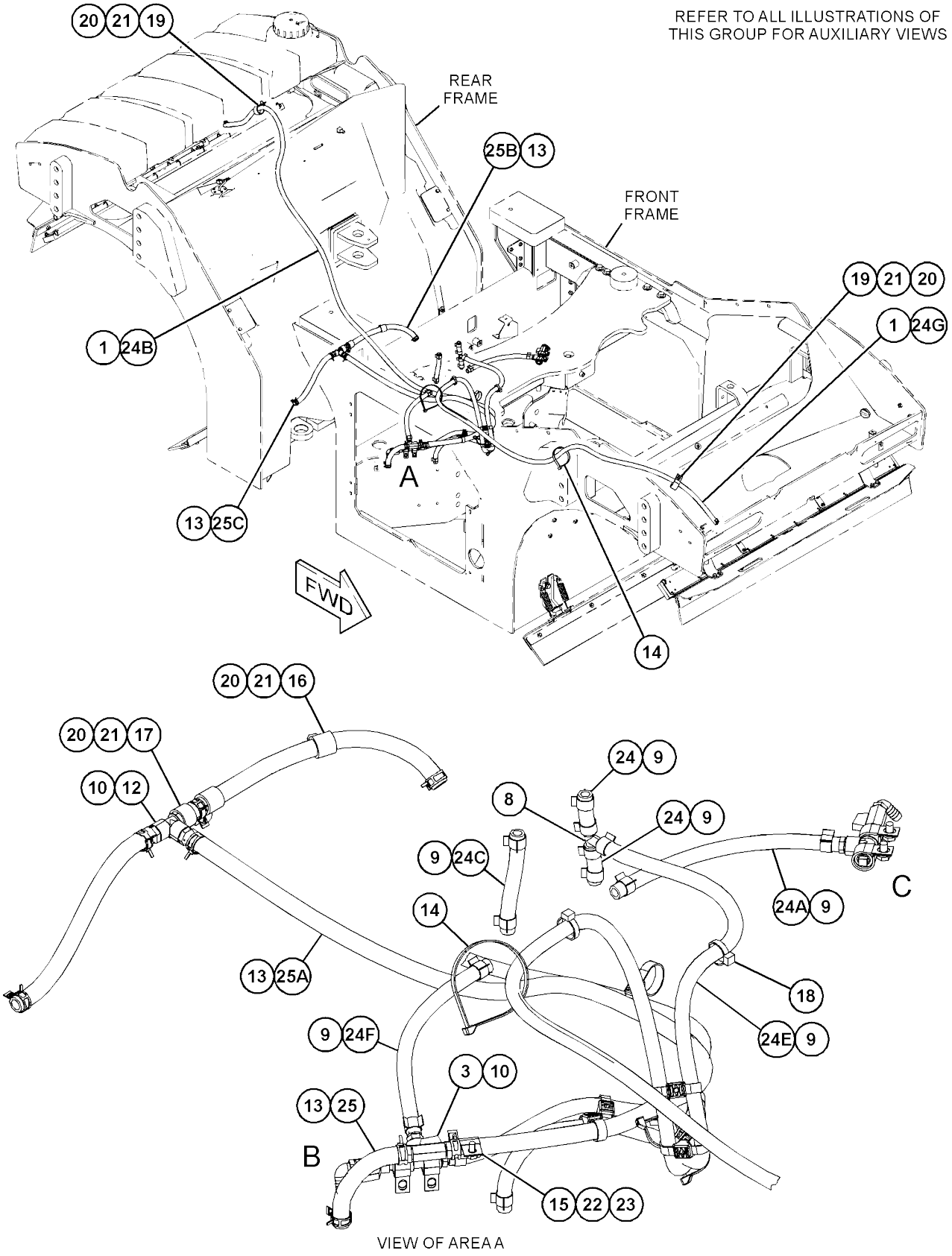

GRAPHIC #1 g06258513

510-4011 **LINES GP-WATER SPRAY (**contd.**)** **i07399895**

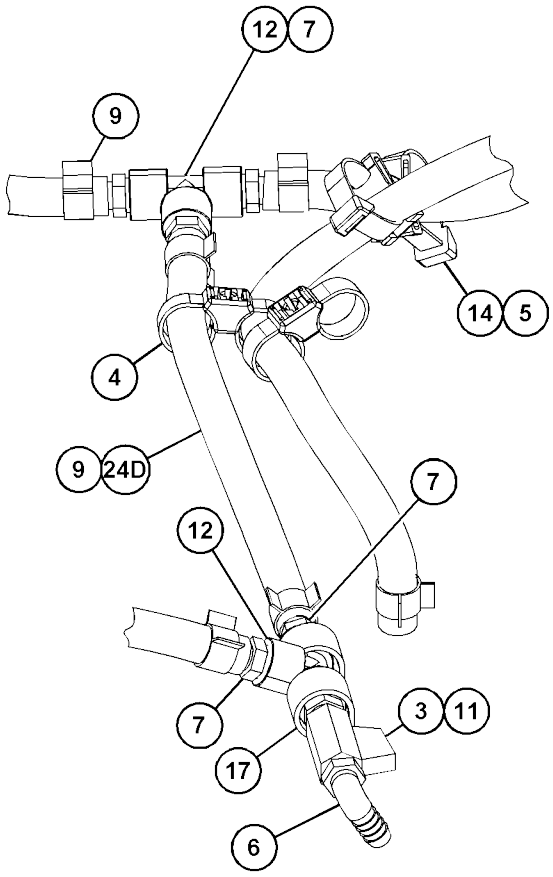

VIEW OF AREA B
(PARTS REMOVED FOR CLARITY)

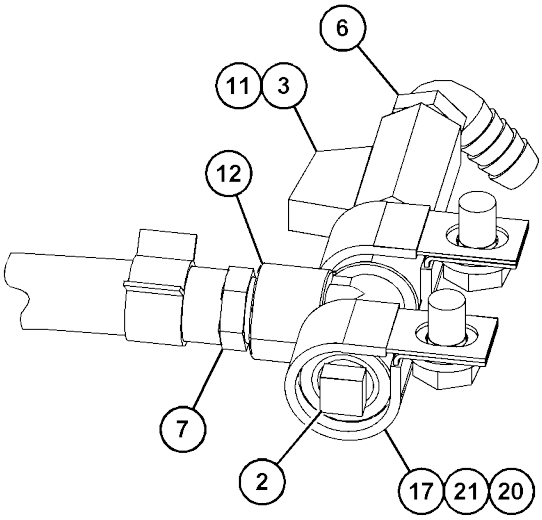

VIEW OF AREA C

GRAPHIC #2 <END> g06258518

511-2363 MAT & MTG GP-WATER

S/N: G441-
UP AN
ATTACHMENT

SMCS-6610

i07416461

	REF SEE NOTE QTY	GRAPHIC NO 1 2 3 4 5 6	(PRODUCT LEVEL)	REF PAGE	PART NAME PART NUMBER
	1	1	**3S-2093**	40	STRAP-CABLE
	2	1	**8C-3392**	4	ROD END
	3	1	**364-9164**	2	MAT-WATER (COCOA)
	4	1	**511-2361**	2	SUPPORT-MAT
M	5	1	**8T-4970**	8	BOLT (M6X1X14-MM)
	6	1	**4B-4674**	8	WASHER (6.4X14.5X1.6-MM THK)
M	7	1	**6V-7687**	4	LOCKNUT (M12X1.75-THD)
M	8	1	**8T-4192**	4	BOLT (M12X1.75X25-MM)
M	9	1	**8T-4194**	4	BOLT (M12X1.75X50-MM)
	10	1	**8T-4223**	16	WASHER-HARD (13.5X25.5X3-MM THK)
	11	1	**525-5873**	4	SUPPORT

M - METRIC PART

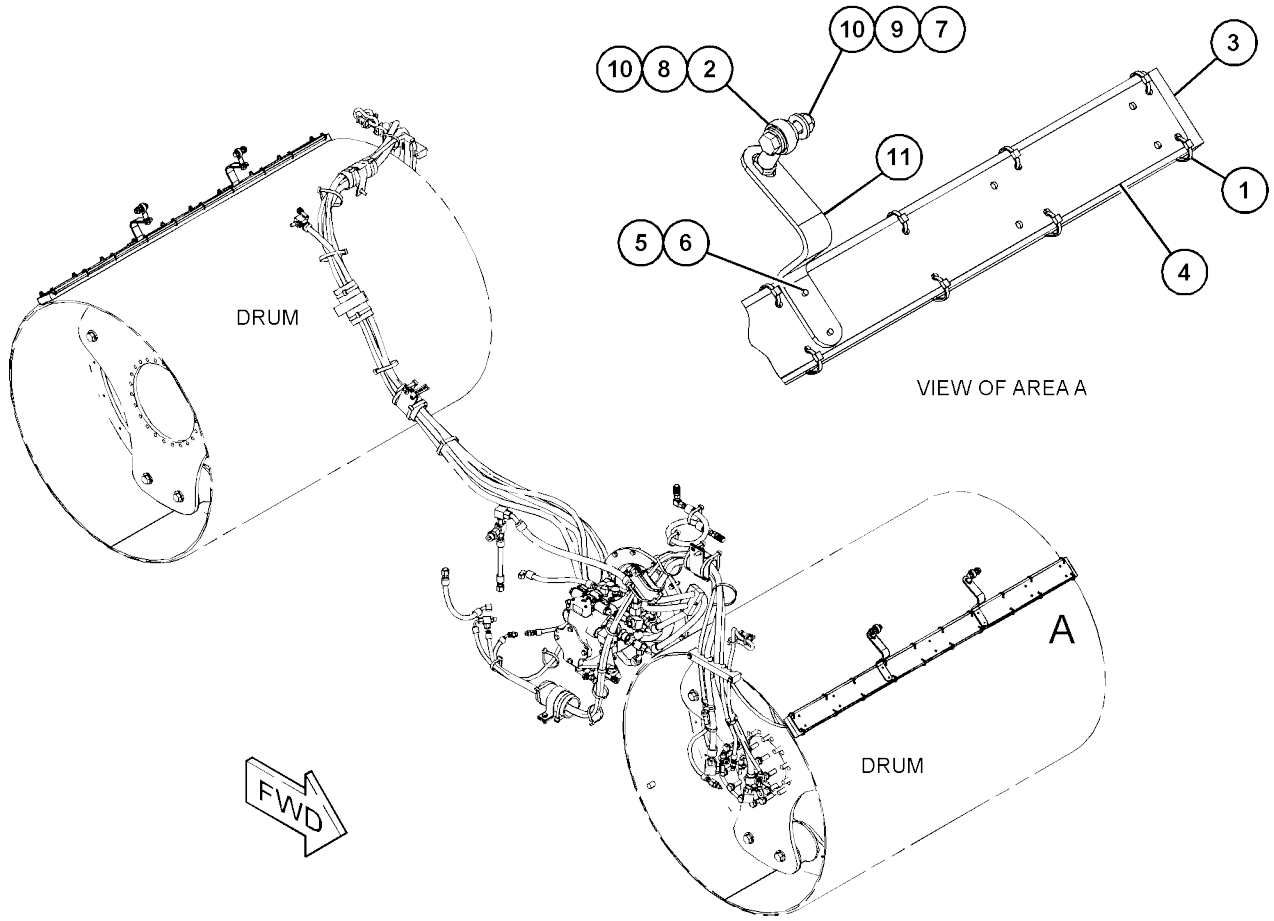

GRAPHIC #1 <END> g06177511

511-2364 MAT & MTG GP-WATER

S/N: G441-
UP AN
ATTACHMENT

SMCS-6610

i07416462

	REF SEE NOTE QTY	GRAPHIC NO 1 2 3 4 5 6	(PRODUCT LEVEL)	REF PAGE	PART NAME PART NUMBER
	1	1	**8C-3392**	4	ROD END
	2	1	**511-2361**	2	SUPPORT-MAT
	3	1	**517-5901**	2	MAT-WATER
	4	1	**8T-4223**	16	WASHER-HARD (13.5X25.5X3-MM THK)
M	5	1	**099-0492**	20	LOCKNUT (M6X1-THD)
M	6	1	**128-2136**	28	SCREW-TRUSS HEAD (M6X1X16-MM)
M	7	1	**6V-7687**	4	LOCKNUT (M12X1.75-THD)
M	8	1	**8T-4192**	4	BOLT (M12X1.75X25-MM)
M	9	1	**8T-4194**	4	BOLT (M12X1.75X50-MM)
	10	1	**525-5873**	4	SUPPORT

M - METRIC PART

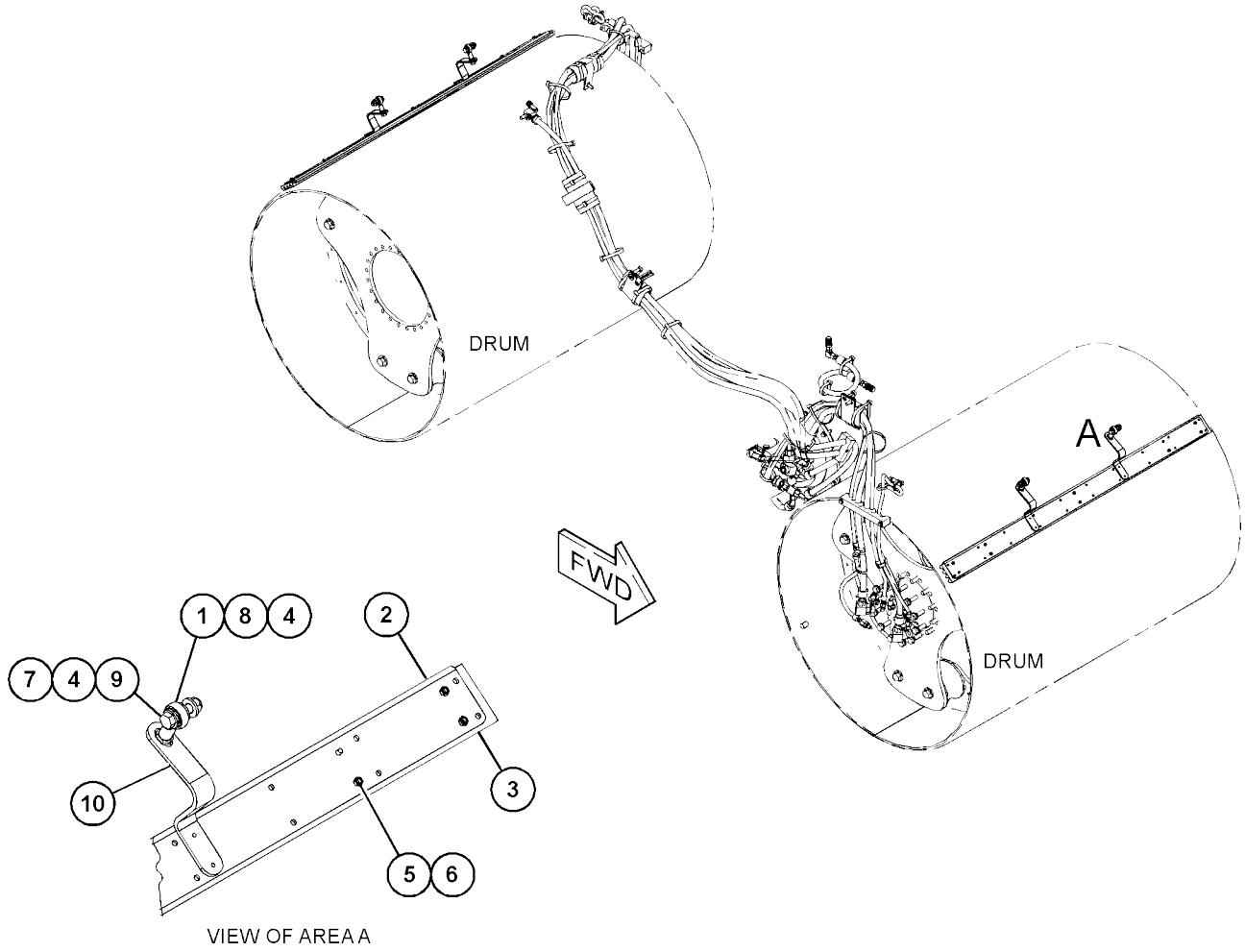

VIEW OF AREA A

GRAPHIC #1 <END> g06173244

511-7006 MAT & MTG GP-WATER

S/N: 5B41-
UP AN
ATTACHMENT

SMCS-6610

i07418159

	REF SEE NOTE QTY	GRAPHIC NO 1 2 3 4 5 6	(PRODUCT LEVEL)	REF PAGE	PART NAME PART NUMBER
	1	1	**8C-3392**	4	ROD END
	2	1	**511-7008**	2	SUPPORT-MAT
	3	1	**517-5902**	2	MAT-WATER
	4	1	**8T-4223**	16	WASHER-HARD (13.5X25.5X3-MM THK)
M	5	1	**099-0492**	20	LOCKNUT (M6X1-THD)
M	6	1	**128-2136**	28	SCREW-TRUSS HEAD (M6X1X16-MM)
M	7	1	**6V-7687**	4	LOCKNUT (M12X1.75-THD)
M	8	1	**8T-4192**	4	BOLT (M12X1.75X25-MM)
M	9	1	**8T-4194**	4	BOLT (M12X1.75X50-MM)
	10	1	**525-5874**	4	SUPPORT

M - METRIC PART

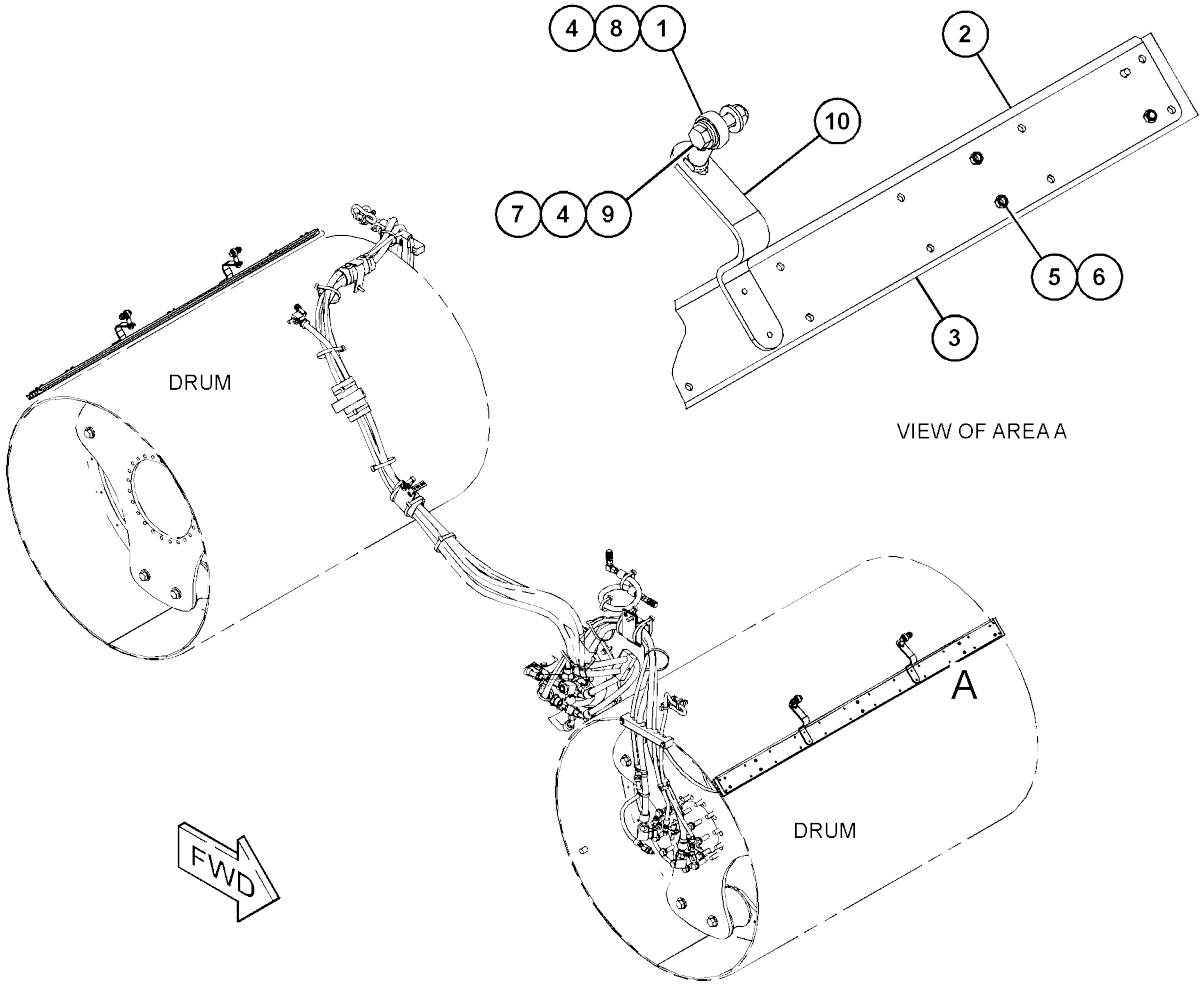

GRAPHIC #1 <END> g06170948

511-7007 MAT & MTG GP-WATER

S/N: 5B41-
UP AN
ATTACHMENT

SMCS-6610

i07418162

	REF SEE NOTE QTY	GRAPHIC NO 1 2 3 4 5 6	(PRODUCT LEVEL)	REF PAGE	PART NAME PART NUMBER
	1	1	**3S-2093**	48	STRAP-CABLE
	2	1	**8C-3392**	4	ROD END
	3	1	**360-5990**	2	MAT-WATER (COCOA)
	4	1	**511-7008**	2	SUPPORT-MAT
M	5	1	**8T-4970**	8	BOLT (M6X1X14-MM)
	6	1	**4B-4674**	8	WASHER (6.4X14.5X1.6-MM THK)
M	7	1	**6V-7687**	4	LOCKNUT (M12X1.75-THD)
M	8	1	**8T-4192**	4	BOLT (M12X1.75X25-MM)
M	9	1	**8T-4194**	4	BOLT (M12X1.75X50-MM)
	10	1	**8T-4223**	16	WASHER-HARD (13.5X25.5X3-MM THK)
	11	1	**525-5874**	4	SUPPORT

M - METRIC PART

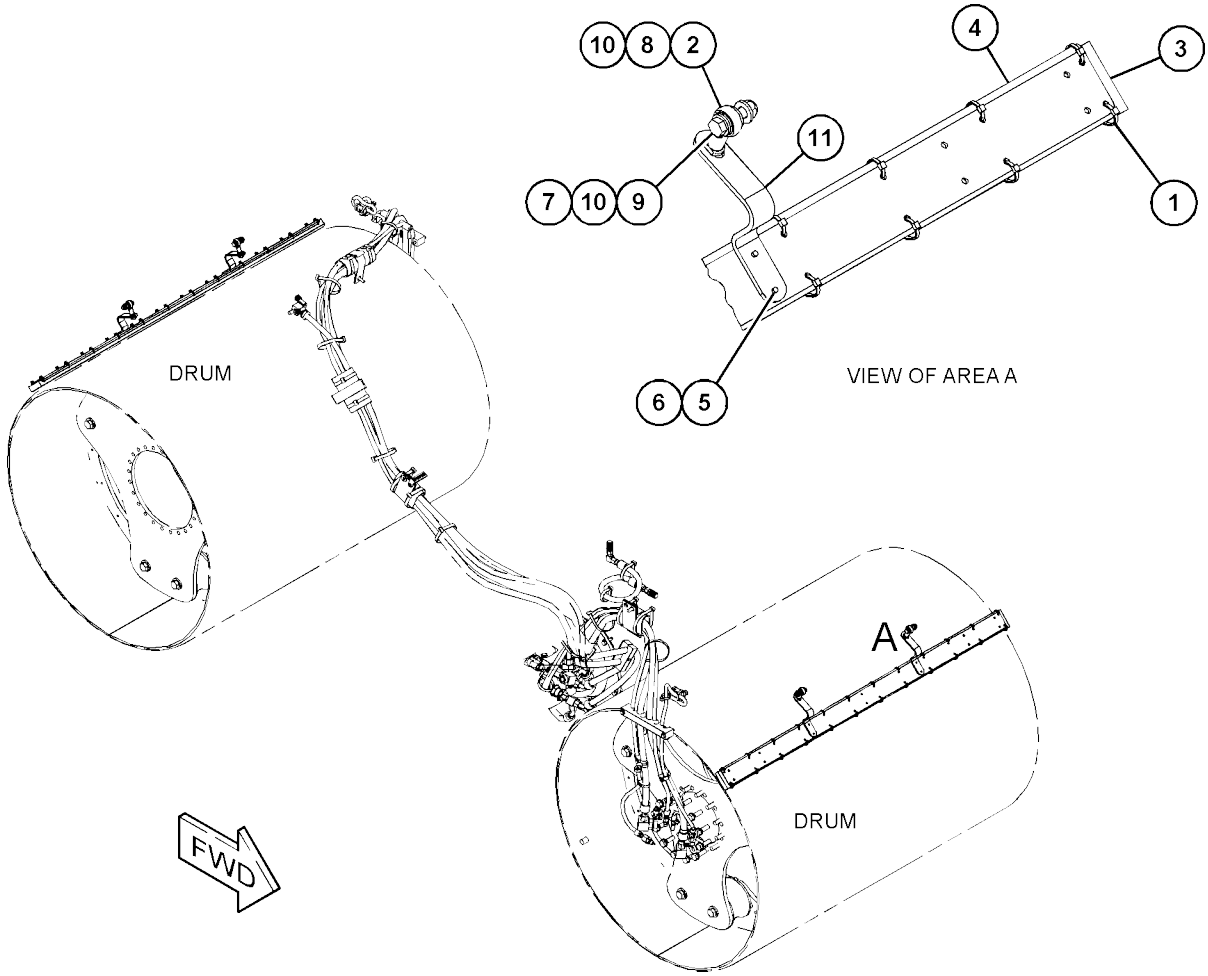

GRAPHIC #1 <END> g06170869

439-7224 PUMP GP-DIAPHRAGM

S/N: 5B41-UP; G441-UP
PART OF 513-6264 SENSOR & MTG GP-TEMPERATURE AN ATTACHMENT

SMCS-5612

i07416488

NOTE	PART NUMBER	QTY	PART NAME 1 2 3 4 5 6 (PRODUCT LEVEL)	SEE PAGE
	9X-3401	2	PIN-CONNECTOR (16-GA TO 18-GA)	
			-OR-	
	126-1767	2	PIN-CONNECTOR (14-GA TO 16-GA)	
	9X-3402	2	SOCKET-CONNECTOR (16-GA TO 18-GA)	
			-OR-	
	126-1768	2	SOCKET-CONNECTOR (14-GA TO 16-GA)	
B	**329-3734**		TAPE-ELECTRICAL	
E	**7X-3159**		TUBE-HEAT SHRINK (5-CM)	
	155-2270	1	KIT-CONNECTING PLUG (2-PIN)	
			(INCLUDES PLUG AS, WEDGE & INTERFACE SEAL)	
	102-8802	1	KIT-RECEPTACLE (2-PIN)	
			(INCLUDES RECEPTACLE AS & WEDGE)	

B - USE AS REQUIRED
E - ORDER BY THE CENTIMETER

<END>

343-6064 PUMP GP-WATER SPRAY

S/N: 5B41-UP; G441-UP
PART OF 510-0765, 510-0767 SPRAY AR-WATER

SMCS-5614

i07399891

	REF SEE NOTE QTY	GRAPHIC NO 1 2 3 4 5 6 (PRODUCT LEVEL)	REF PAGE	PART NAME PART NUMBER
	1	1 **241-8552**	2	INSERT-NYLON
	2	1 **241-8553**	4	INSERT-NYLON
	3	1 **309-9501**	2	PUMP GP-WATER SPRAY (WATER SPRAY)
	4	1 **331-9072**	2	ADAPTER (PLASTIC)
	5	1 **331-9073**	2	ELBOW (PLASTIC)
	6	1 **391-2997**	1	COVER
	7	1 **5P-4115**	16	WASHER-HARD (7.2X19X2-MM THK)
	8	1 **5P-4116**	4	WASHER-HARD (8.8X20.5X2-MM THK)
M	9	1 **6V-7357**	8	BOLT (M6X1X25-MM)
M	10	1 **8T-4908**	4	BOLT (M8X1.25X25-MM)

M - METRIC PART

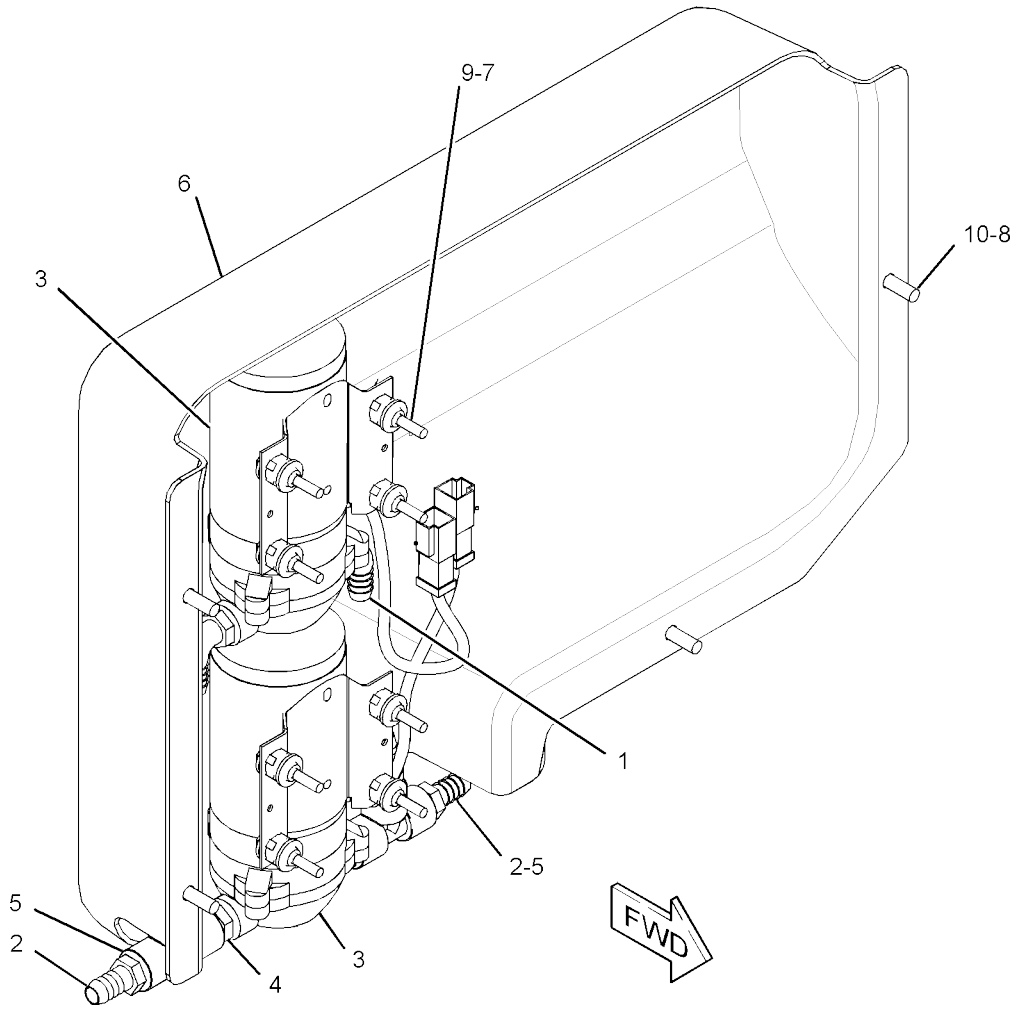

GRAPHIC #1 <END> g03002821

510-0765 SPRAY AR-WATER

S/N: 5B41-UP
PART OF 451-3300 COMMON AR

SMCS-5612

i07418050

NOTE	PART NUMBER	QTY	PART NAME 1 2 3 4 5 6 (PRODUCT LEVEL)	SEE PAGE
Y	*343-6063*	1	FILTER GP-WATER	417
Y	*510-4010*	1	LINES GP-WATER SPRAY	423
Y	*343-6064*	1	PUMP GP-WATER SPRAY	433
Y	*510-4014*	1	SCRAPER GP-DRUM	260
Y	*510-4012*	1	SPRAY GP-WATER	435
Y	*510-0768*	1	TANK GP-WATER	441

Y - SEPARATE ILLUSTRATION

<END>

510-0767 SPRAY AR-WATER

S/N: G441-UP
PART OF 451-3200 COMMON AR

SMCS-5612

i07398829

NOTE	PART NUMBER	QTY	PART NAME 1 2 3 4 5 6 (PRODUCT LEVEL)	SEE PAGE
Y	*343-6063*	1	FILTER GP-WATER	417
Y	*510-4011*	1	LINES GP-WATER SPRAY	425
Y	*343-6064*	1	PUMP GP-WATER SPRAY	433
Y	*510-4016*	1	SCRAPER GP-DRUM	262
Y	*510-4013*	1	SPRAY GP-WATER	436
Y	*514-0969*	1	TANK & MTG GP-WATER	437

Y - SEPARATE ILLUSTRATION

<END>

510-4012 SPRAY GP-WATER

S/N: 5B41-UP
PART OF 510-0765 SPRAY AR-WATER

SMCS-5612

i07418073

	REF SEE NOTE	QTY	GRAPHIC NO 1 2 3 4 5 6	(PRODUCT LEVEL)	REF PAGE	PART NAME PART NUMBER	
		1	1	**1G-4029**	4	INSERT-RUBBER	
		2	1	**1G-4081**	4	CLAMP	
		3	1	**143-9644**	4	PLATE-RETAINER	
	Y	4	1	*511-7004*	2	BAR GP-SPRAY	415
	M	5	1	**5C-2890**	8	NUT (M6X1-THD)	
	M	6	1	**287-8257**	8	BOLT (M6X1X65-MM)	
		7	1	**9X-8256**	8	WASHER (6.6X12X2-MM THK)	

M - METRIC PART
Y - SEPARATE ILLUSTRATION

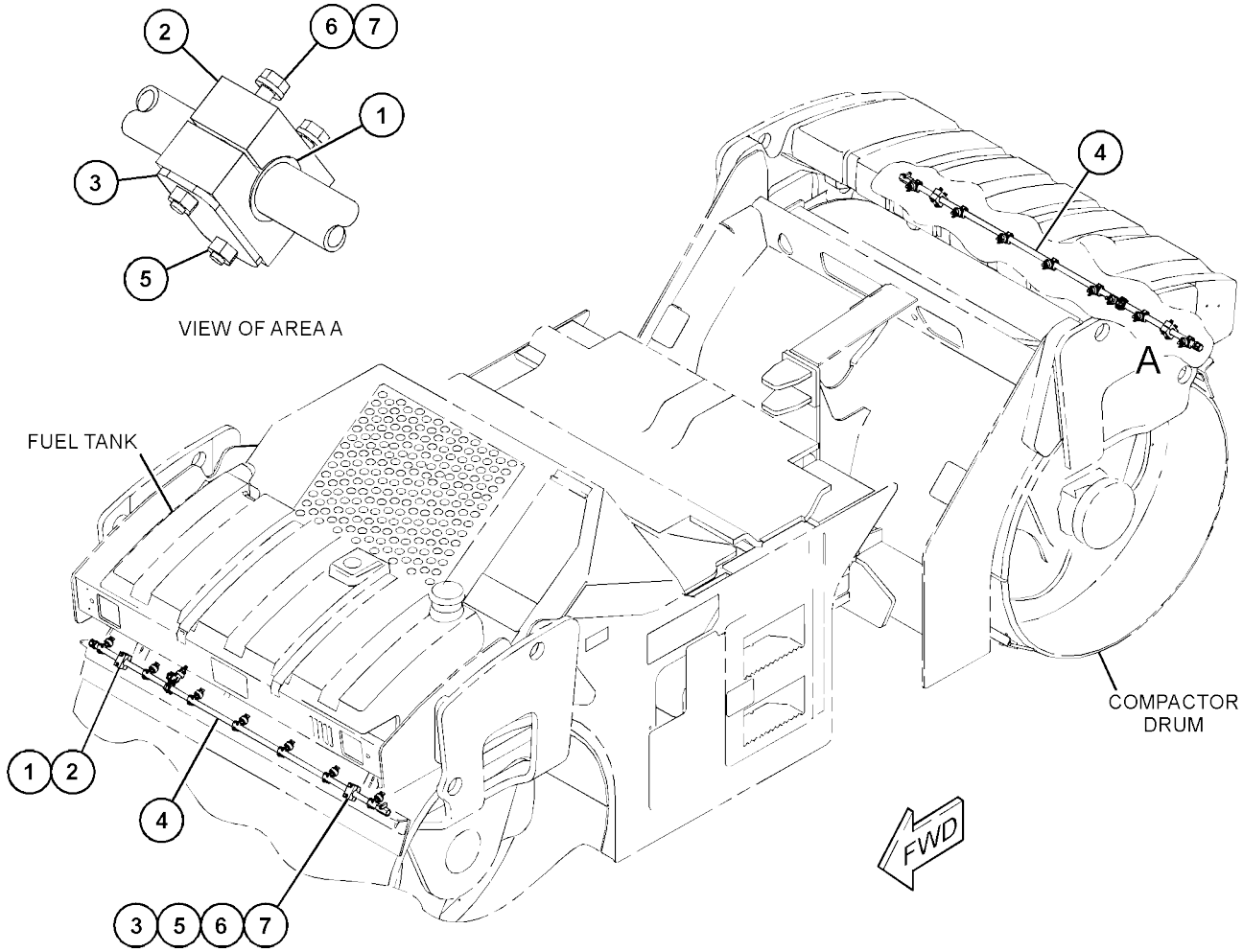

GRAPHIC #1 <END> g06148181

510-4013 SPRAY GP-WATER

S/N: G441-UP
PART OF 510-0767 SPRAY AR-WATER

SMCS-5612

i07399896

	REF SEE NOTE QTY	GRAPHIC NO 1 2 3 4 5 6	(PRODUCT LEVEL)	REF PAGE	PART NAME PART NUMBER	
	1	1	**1G-4029**	4	INSERT-RUBBER	
	2	1	**1G-4081**	4	CLAMP	
	3	1	**143-9644**	4	PLATE-RETAINER	
Y	4	1	*510-4009*	2	BAR GP-SPRAY	414
M	5	1	**5C-2890**	8	NUT (M6X1-THD)	
M	6	1	**287-8257**	8	BOLT (M6X1X65-MM)	
	7	1	**9X-8256**	8	WASHER (6.6X12X2-MM THK)	

M - METRIC PART
Y - SEPARATE ILLUSTRATION

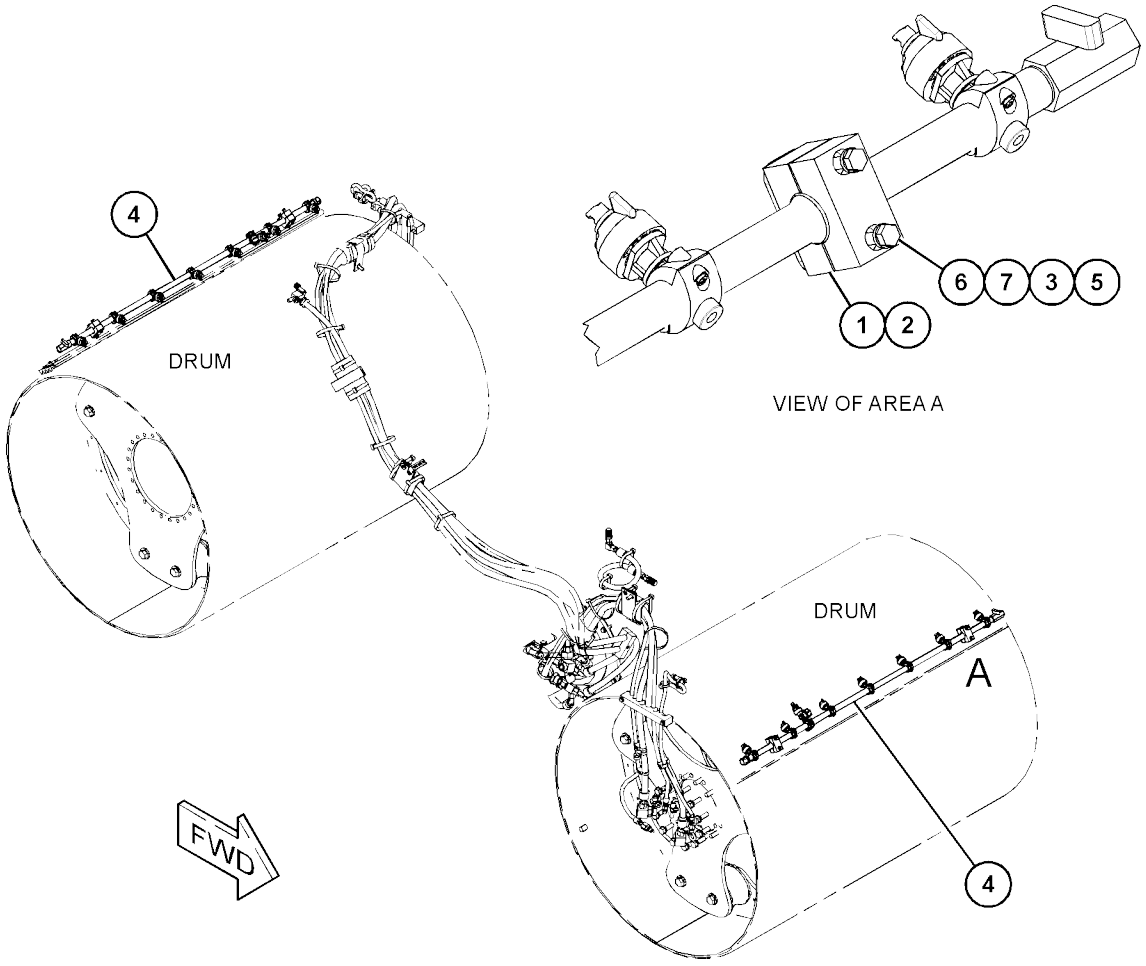

GRAPHIC #1 <END> g06148103

514-0969 TANK & MTG GP-WATER

S/N: G441-UP

PART OF 510-0767 SPRAY AR-WATER

SMCS-5613

i07399900

	REF SEE NOTE QTY	GRAPHIC NO 1 2 3 4 5 6	(PRODUCT LEVEL)	REF PAGE	PART NAME PART NUMBER	
	1	1	**375-9516**	2	PIN	
	2	1	**389-4418**	2	STRAP AS	
	3	1	**458-2916**	2	PIN	
E	4	1	**371-8122**		HOSE (49-CM)	
Y	5	1	*508-6124*	1	TANK GP-WATER (TOP REAR)	439
Y	6	1	*514-0965*	1	TANK GP-WATER (TOP FRONT)	443
	7	1	**519-6252**	2	STRAP AS	
	8	1	**3K-6060**	4	LOCKNUT (3/8-16-THD)	
M	9	1	**6V-7357**	2	BOLT (M6X1X25-MM)	
M	10	1	**6V-7743**	2	LOCKNUT (M6X1-THD)	
	11	1	**7X-7729**	4	WASHER (11X25X3-MM THK)	
	12	1	**8T-4224**	2	WASHER-HARD (8.8X16X2-MM THK)	
M	13	1	**8T-4908**	2	BOLT (M8X1.25X25-MM)	
	14	1	**8T-6703**	2	CLAMP-HOSE	
	15	1	**9X-8256**	4	WASHER (6.6X12X2-MM THK)	

E - ORDER BY THE CENTIMETER M - METRIC PART
Y - SEPARATE ILLUSTRATION

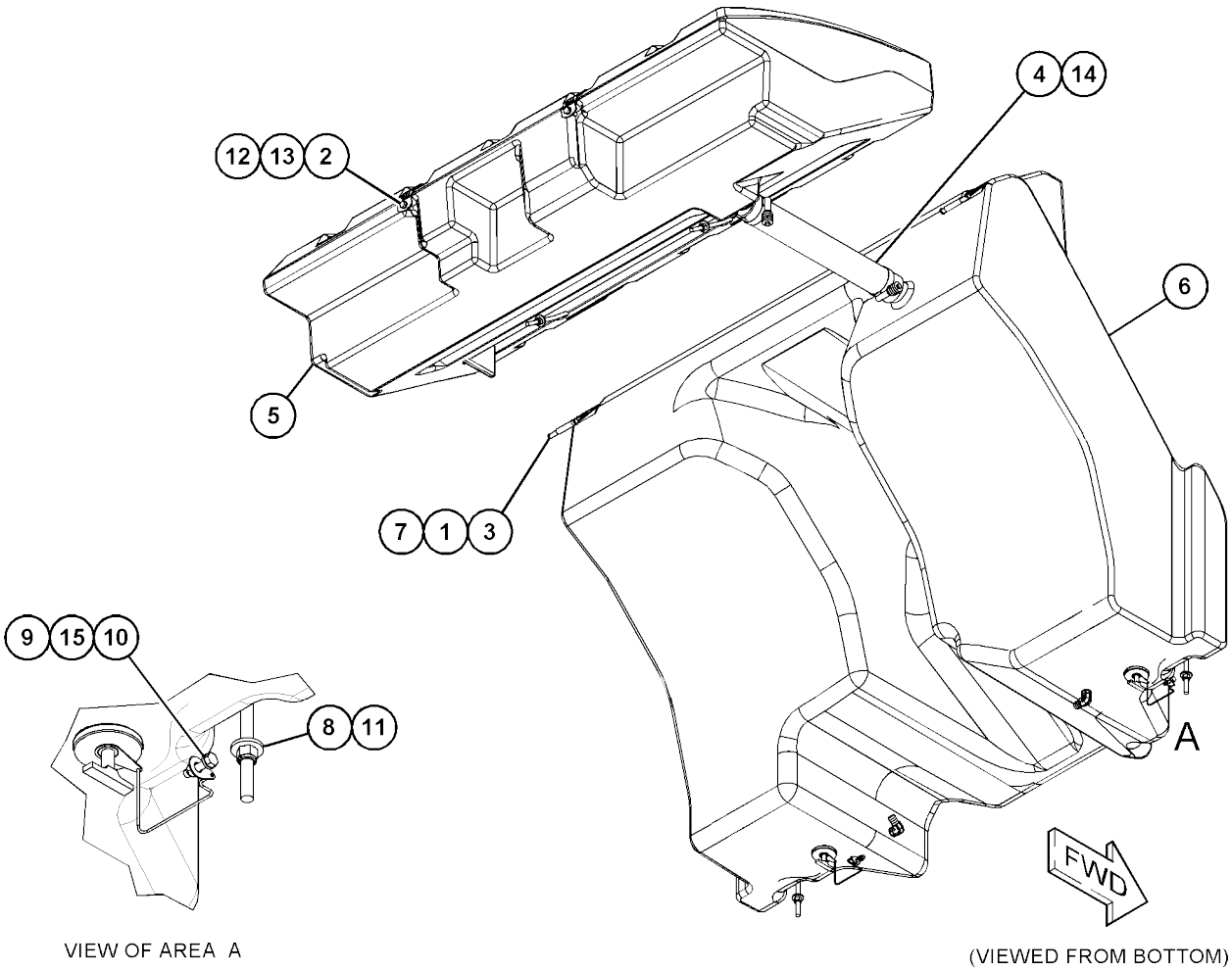

VIEW OF AREA A

(VIEWED FROM BOTTOM)

GRAPHIC #1

<END>

g06266883

434-5082 TANK GP-WATER

S/N: 5B41-99
PART OF 510-0768 TANK GP-WATER

SMCS-5613

i07418084

	REF SEE NOTE QTY	GRAPHIC NO 1 2 3 4 5 6	(PRODUCT LEVEL)	REF PAGE	PART NAME PART NUMBER
	1	1	**185-1505**	2	ELBOW
	2	1	**307-9605**	2	ADAPTER
	3	1	**364-4015**	1	SENDER AS-LEVEL (WATER TANK)
	4	1	**377-7277**	2	GROMMET
	5	1	**388-4934**	2	CAP-FILLER (WATER TANK DRAIN PLUG)
	6	1	**434-5083**	1	TANK-WATER
	7	1	**130-5300**	1	CLIP
M	8	1	**8T-0289**	5	BOLT (M5X0.8X20-MM)
	9	1	**8T-0328**	5	WASHER-HARD (5.5X10X1-MM THK)
M	10	1	**8T-4199**	1	BOLT (M8X1.25X12-MM)
	11	1	**8T-4224**	1	WASHER-HARD (8.8X16X2-MM THK)

M - METRIC PART

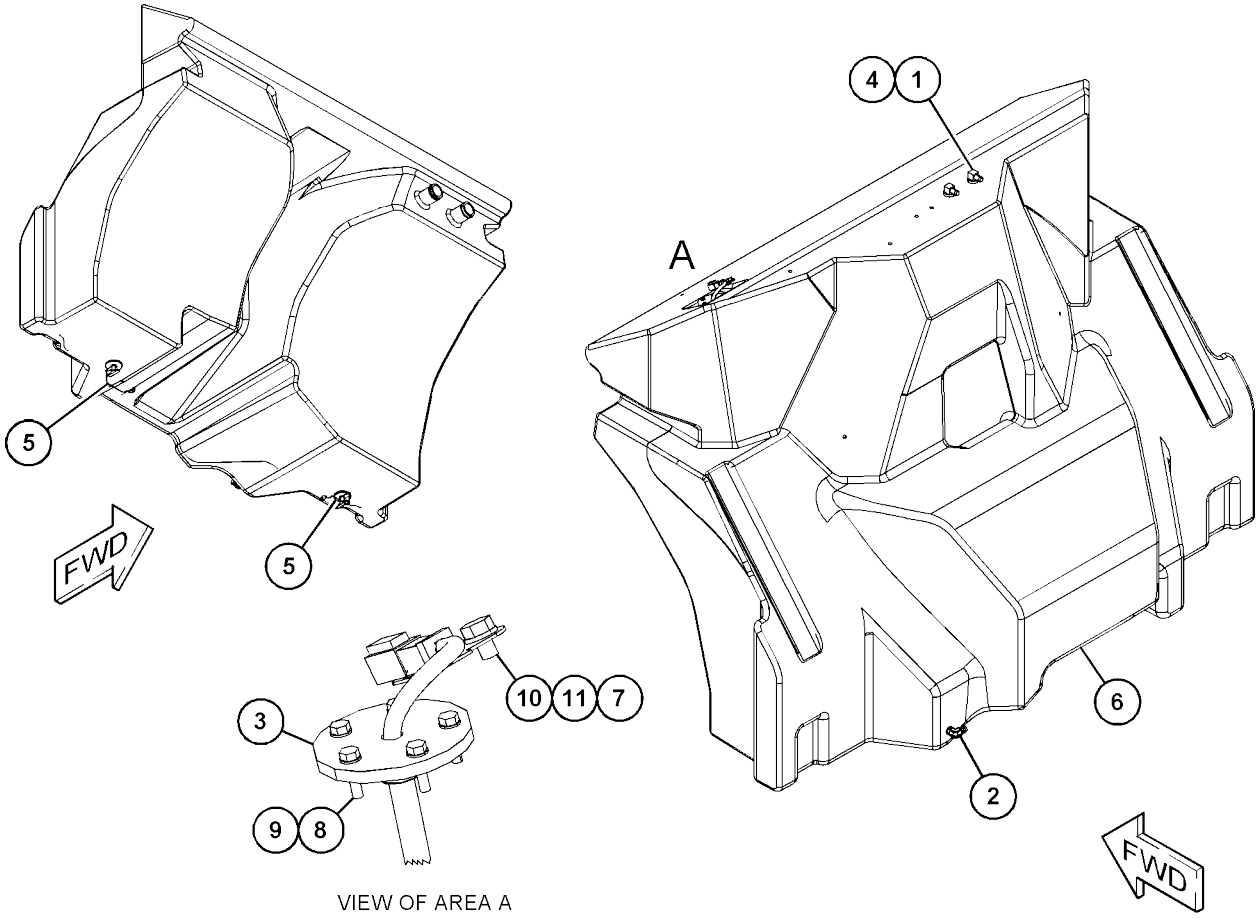

VIEW OF AREA A
(PARTS REMOVED FOR CLARITY)

GRAPHIC #1 <END> g03816526

508-6124 TANK GP-WATER

S/N: G441-UP

PART OF 514-0969 TANK & MTG GP-WATER

SMCS-5613

i07399894

	REF SEE NOTE QTY	GRAPHIC NO 1 2 3 4 5 6	(PRODUCT LEVEL)	REF PAGE	PART NAME PART NUMBER
	1	1	**7R-8578**	1	LANYARD
	2	1	**194-3403**	1	CAP
	3	1	**219-0349**	1	STRAINER
	4	1	**508-6125**	1	TANK-WATER
M	5	1	**099-0492**	1	LOCKNUT (M6X1-THD)
M	6	1	**5C-9553**	1	BOLT (M6X1X16-MM)
M	7	1	**7X-2619**	1	BOLT (M6X1X10-MM)

M - METRIC PART

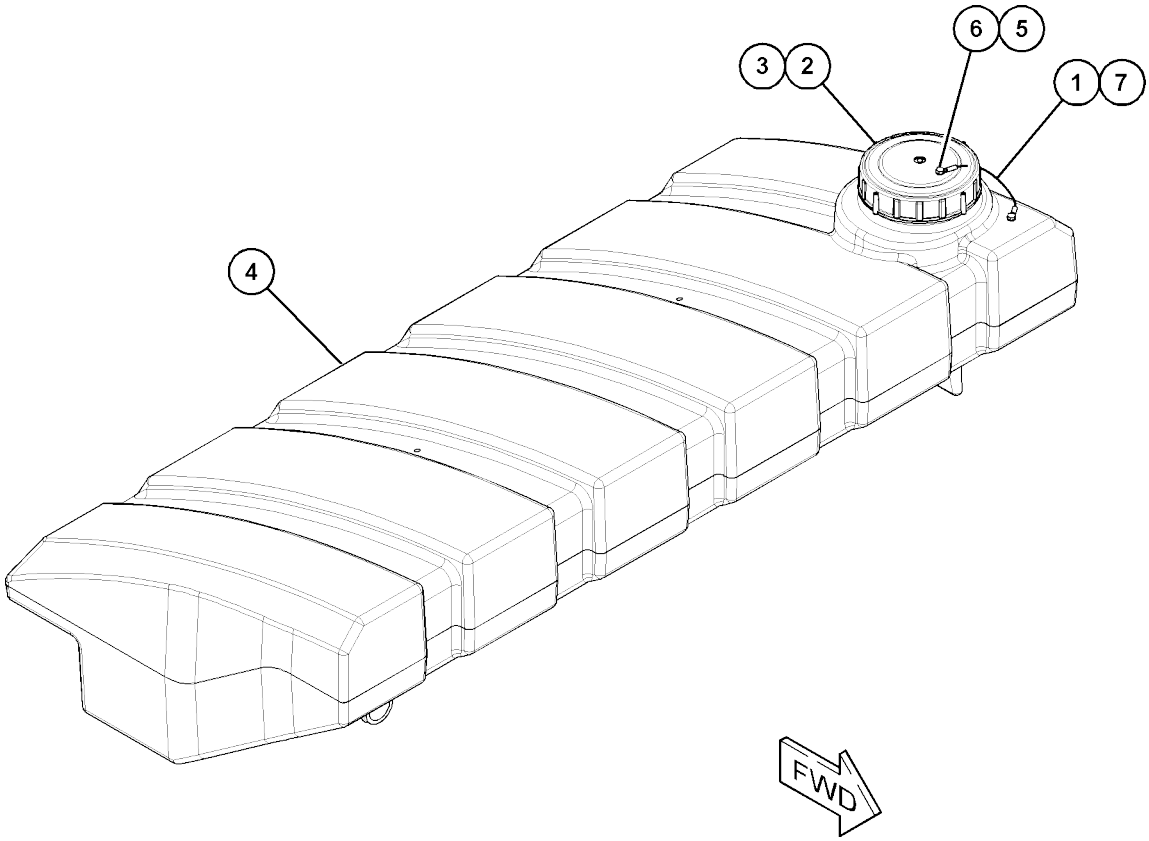

GRAPHIC #1 <END> g06143701

508-6126 TANK GP-WATER

S/N: 5B41-UP
PART OF 510-0768 TANK GP-WATER

SMCS-5613

i07418085

	REF SEE NOTE QTY	GRAPHIC NO 1 2 3 4 5 6	(PRODUCT LEVEL)	REF PAGE	PART NAME PART NUMBER
	1	1	**7R-8578**	1	LANYARD
	2	1	**194-3403**	1	CAP
	3	1	**219-0349**	1	STRAINER
	4	1	**508-6127**	1	TANK-WATER
M	5	1	**099-0492**	1	LOCKNUT (M6X1-THD)
M	6	1	**5C-9553**	1	BOLT (M6X1X16-MM)
M	7	1	**7X-2619**	1	BOLT (M6X1X10-MM)

M - METRIC PART

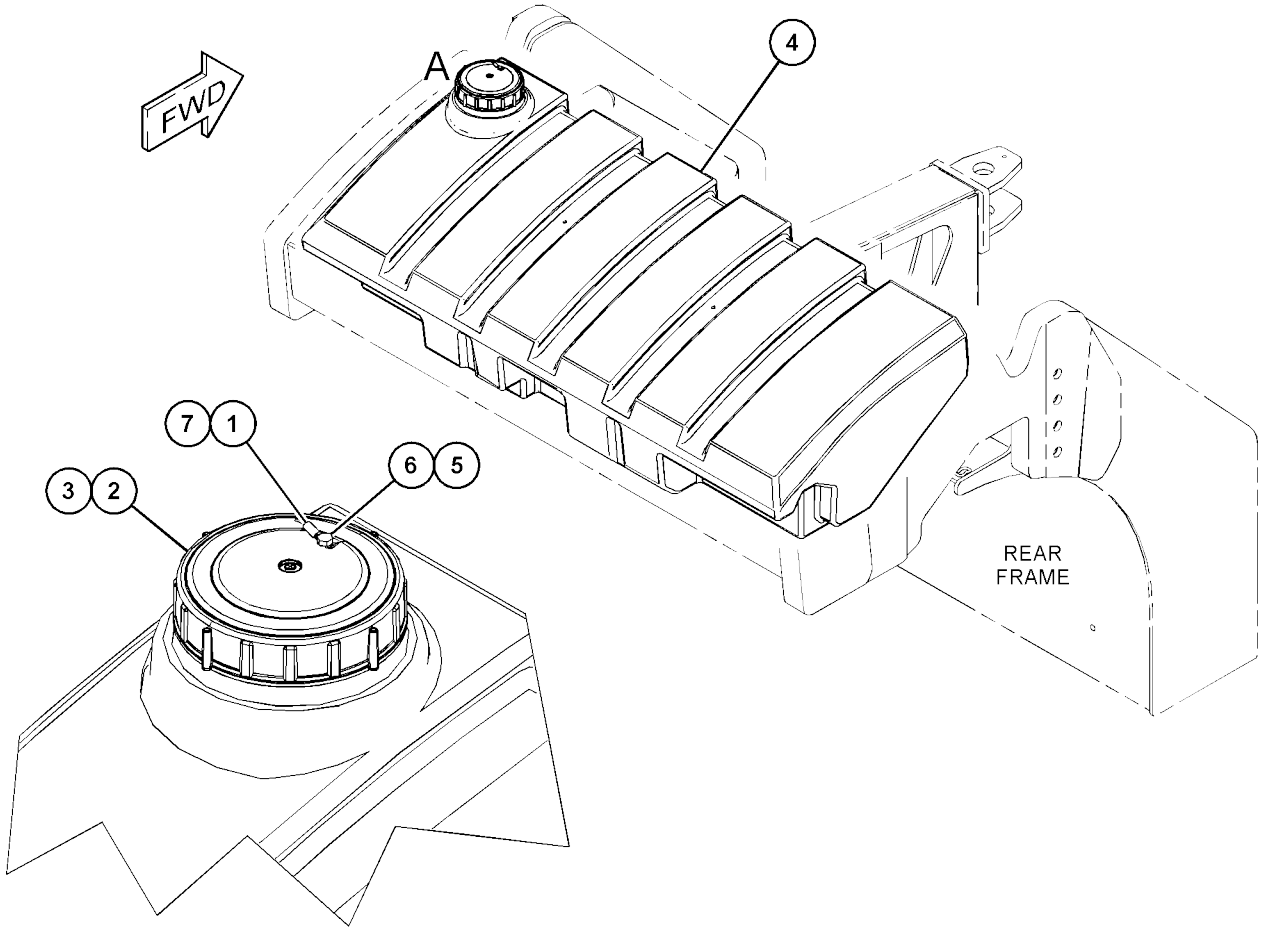

VIEW OF AREA A

GRAPHIC #1 <END> g06099163

510-0768 TANK GP-WATER

S/N: 5B41-UP
PART OF 510-0765 SPRAY AR-WATER

SMCS-5613

i07418070

REF SEE NOTE	QTY	GRAPHIC NO 1 2 3 4 5 6	(PRODUCT LEVEL)	REF PAGE	PART NAME PART NUMBER	
	1	1	**389-4418**	2	STRAP AS	
Y	2	1	**434-5082**	1	TANK GP-WATER (FRONT)	438
	3	1	**434-5084**	2	STRAP AS	
E	4	1	**371-8122**		HOSE (49-CM EACH)	
Y	5	1	*508-6126*	1	TANK GP-WATER (REAR)	440
	6	1	**3K-6060**	6	LOCKNUT (3/8-16-THD)	
M	7	1	**6V-7357**	2	BOLT (M6X1X25-MM)	
M	8	1	**6V-7743**	2	LOCKNUT (M6X1-THD)	
	9	1	**7X-7729**	6	WASHER (11X25X3-MM THK)	
	10	1	**8T-4224**	2	WASHER-HARD (8.8X16X2-MM THK)	
M	11	1	**8T-4908**	2	BOLT (M8X1.25X25-MM)	
	12	1	**8T-6703**	4	CLAMP-HOSE	
	13	1	**9X-8256**	4	WASHER (6.6X12X2-MM THK)	

E - ORDER BY THE CENTIMETER M - METRIC PART
Y - SEPARATE ILLUSTRATION

510-0768 **TANK GP-WATER (**contd.**)** **i07418070**

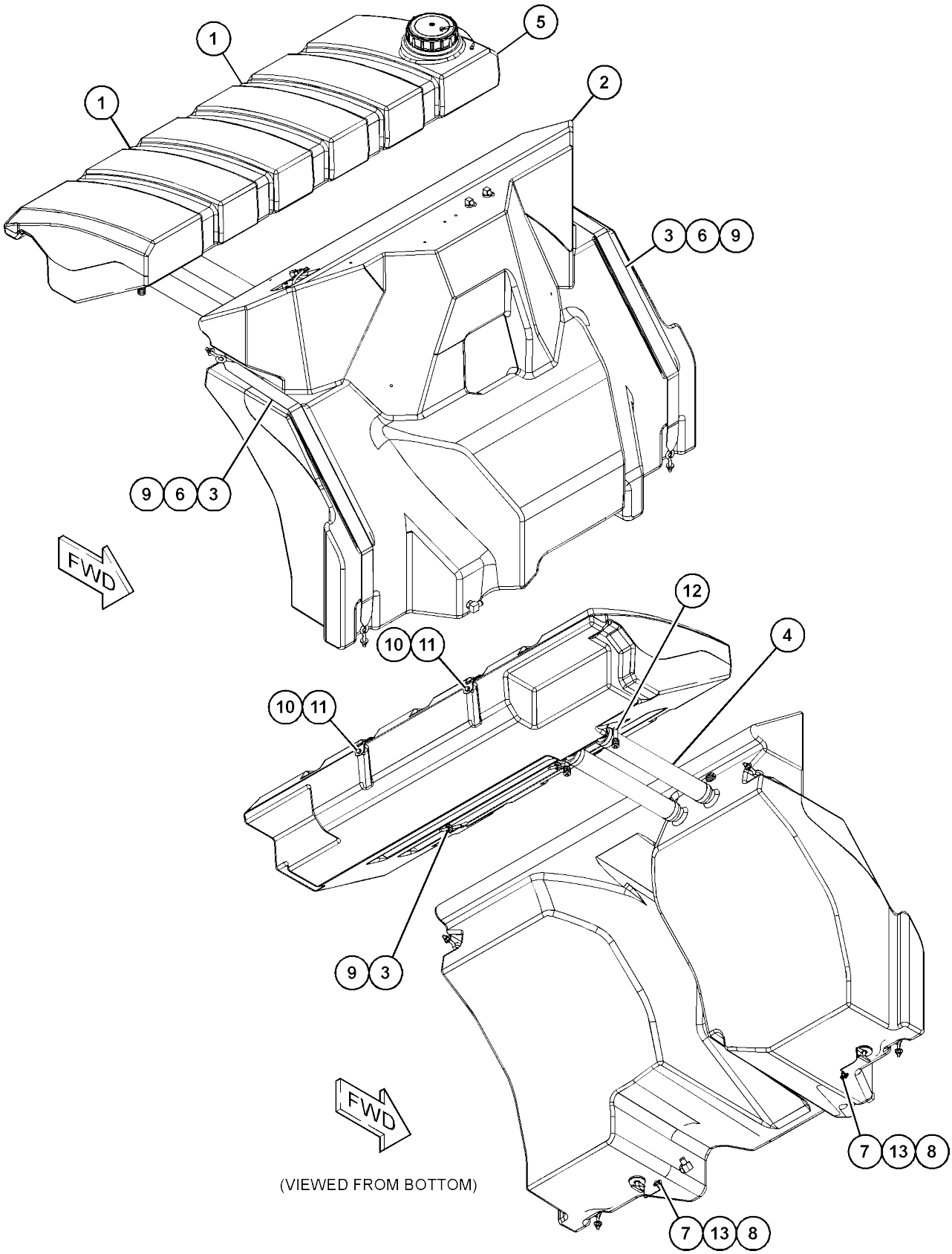

GRAPHIC #1 <END> g06094363

514-0965 TANK GP-WATER

S/N: G441-100
742-LITER (196-US GAL)
PART OF 514-0969 TANK & MTG GP-WATER

SMCS-5613

i07769188

	REF SEE NOTE QTY	GRAPHIC NO 1 2 3 4 5 6	(PRODUCT LEVEL)	REF PAGE	PART NAME PART NUMBER
	1	1	*353-5109*	2	ELBOW AS
					(EACH INCLUDES)
		1	**5P-4906**	1	ELBOW
		1	**238-5080**	1	SEAL-O-RING
	2	1	*148-8307*	2	ADAPTER AS
					(EACH INCLUDES)
		1	**3J-1907**	1	SEAL-O-RING
		1	**5P-8874**	1	ADAPTER
	3	1	**364-4015**	1	SENDER AS-LEVEL (WATER TANK)
	4	1	**377-7277**	1	GROMMET
	5	1	**6G-9333**	2	CAP-FILLER (OIL)
	6	1	**514-0784**	1	TANK-WATER
	7	1	**130-5300**	1	CLIP
M	8	1	**8T-0289**	5	BOLT (M5X0.8X20-MM)
	9	1	**8T-0328**	5	WASHER-HARD (5.5X10X1-MM THK)
M	10	1	**8T-4199**	1	BOLT (M8X1.25X12-MM)
	11	1	**8T-4224**	1	WASHER-HARD (8.8X16X2-MM THK)
	12	1	**185-1505**	1	ELBOW

M - METRIC PART

514-0965 **TANK GP-WATER (**contd.**)** **i07769188**

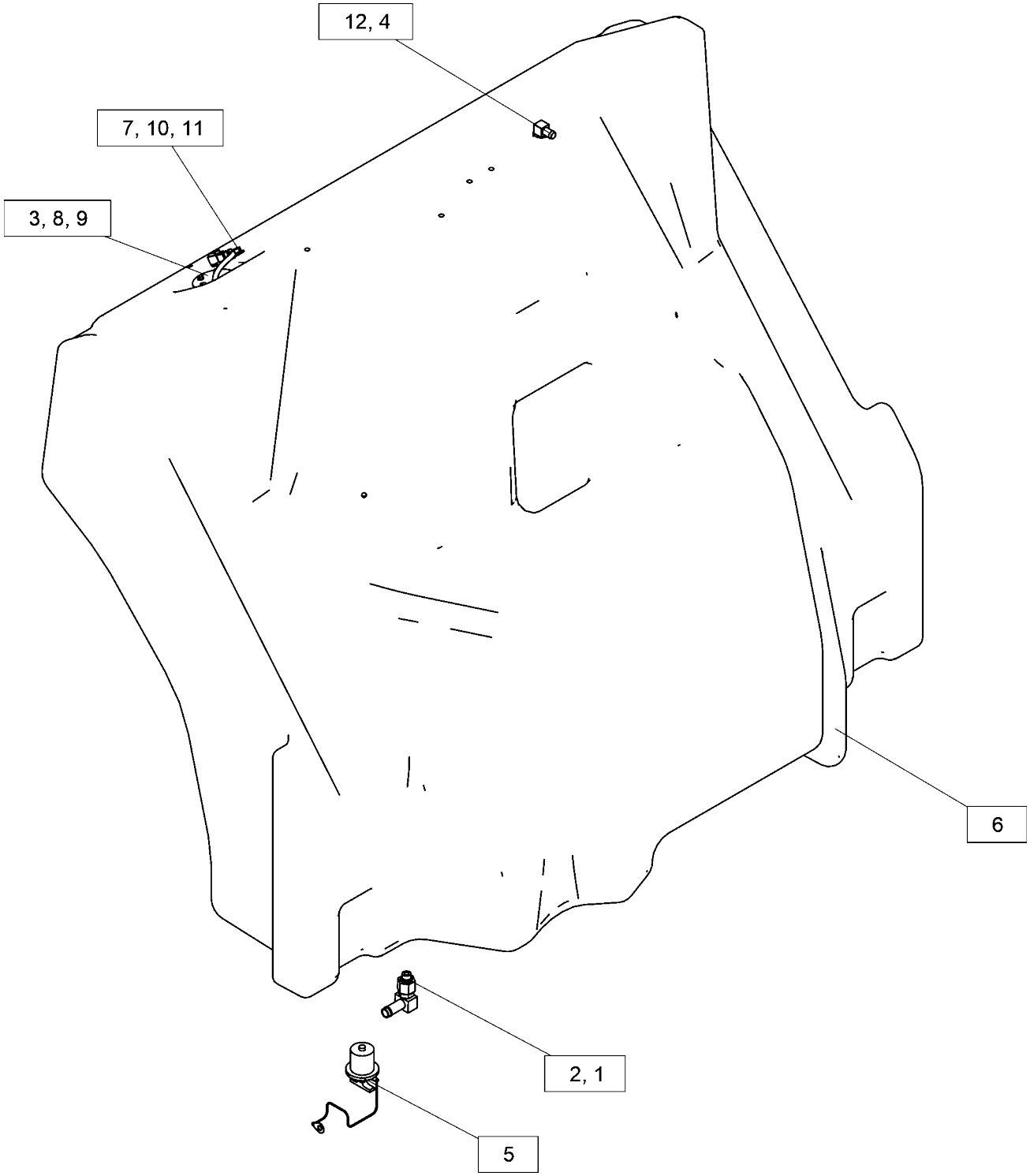

GRAPHIC #1 <END> g06423672

514-0965 TANK GP-WATER

S/N: G44101-UP
742-LITER (196-US GAL)
PART OF 514-0969 TANK & MTG GP-WATER

SMCS-5613

i07715344

	REF SEE NOTE QTY	GRAPHIC NO 1 2 3 4 5 6	(PRODUCT LEVEL)	REF PAGE	PART NAME PART NUMBER
	1	1	**185-1505**	1	ELBOW
	2	1	**364-4015**	1	SENDER AS-LEVEL (WATER TANK)
	3	1	**377-7277**	1	GROMMET
	4	1	**130-5300**	1	CLIP
C	5	1	*474-2599*	2	ELBOW AS
					(EACH INCLUDES)
		1	**3J-1907**	1	SEAL-O-RING
		1	**474-2598**	1	ELBOW
	6	1	**514-0784**	1	TANK-WATER
	7	1	**6G-9333**	2	CAP-FILLER
M	8	1	**8T-0289**	5	BOLT (M5X0.8X20-MM)
	9	1	**8T-0328**	5	WASHER-HARD (5.5X10X1-MM THK)
M	10	1	**8T-4199**	1	BOLT (M8X1.25X12-MM)
	11	1	**8T-4224**	1	WASHER-HARD (8.8X16X2-MM THK)

C - CHANGE FROM PREVIOUS
TYPE M - METRIC PART

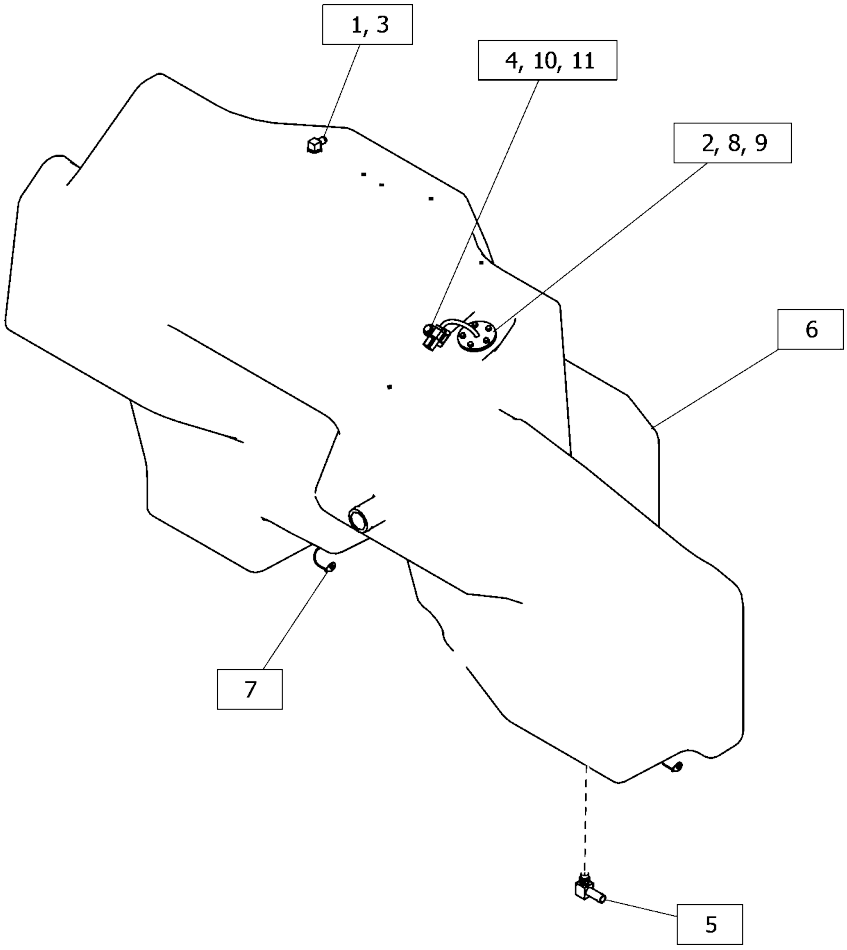

GRAPHIC #1 <END> g06426427

OPERATOR STATION

451-3170 AIR CONDITIONER AR

S/N: G441-
UP AN
ATTACHMENT

SMCS-7320

i07403917

NOTE	PART NUMBER	QTY	PART NAME 1 2 3 4 5 6 (PRODUCT LEVEL)	SEE PAGE
Y	*342-9332*	1	COMPRESSOR GP-REFRIGERANT	480
Y	*344-0576*	1	CONDENSER & MTG GP-REFRIGERANT	481
Y	*377-5343*	1	LINES GP-AIR CONDITIONER	522
Y	*523-8700*	1	WIRING GP-AIR CONDITIONER	196

Y - SEPARATE ILLUSTRATION

<END>

451-3270 AIR CONDITIONER AR

S/N: 5B41-
UP AN
ATTACHMENT

SMCS-7320

i07418006

NOTE	PART NUMBER	QTY	PART NAME 1 2 3 4 5 6 (PRODUCT LEVEL)	SEE PAGE
Y	*342-9332*	1	COMPRESSOR GP-REFRIGERANT	480
Y	*344-0576*	1	CONDENSER & MTG GP-REFRIGERANT	481
Y	*391-0773*	1	LINES GP-AIR CONDITIONER	524
Y	*523-8700*	1	WIRING GP-AIR CONDITIONER	196

Y - SEPARATE ILLUSTRATION

<END>

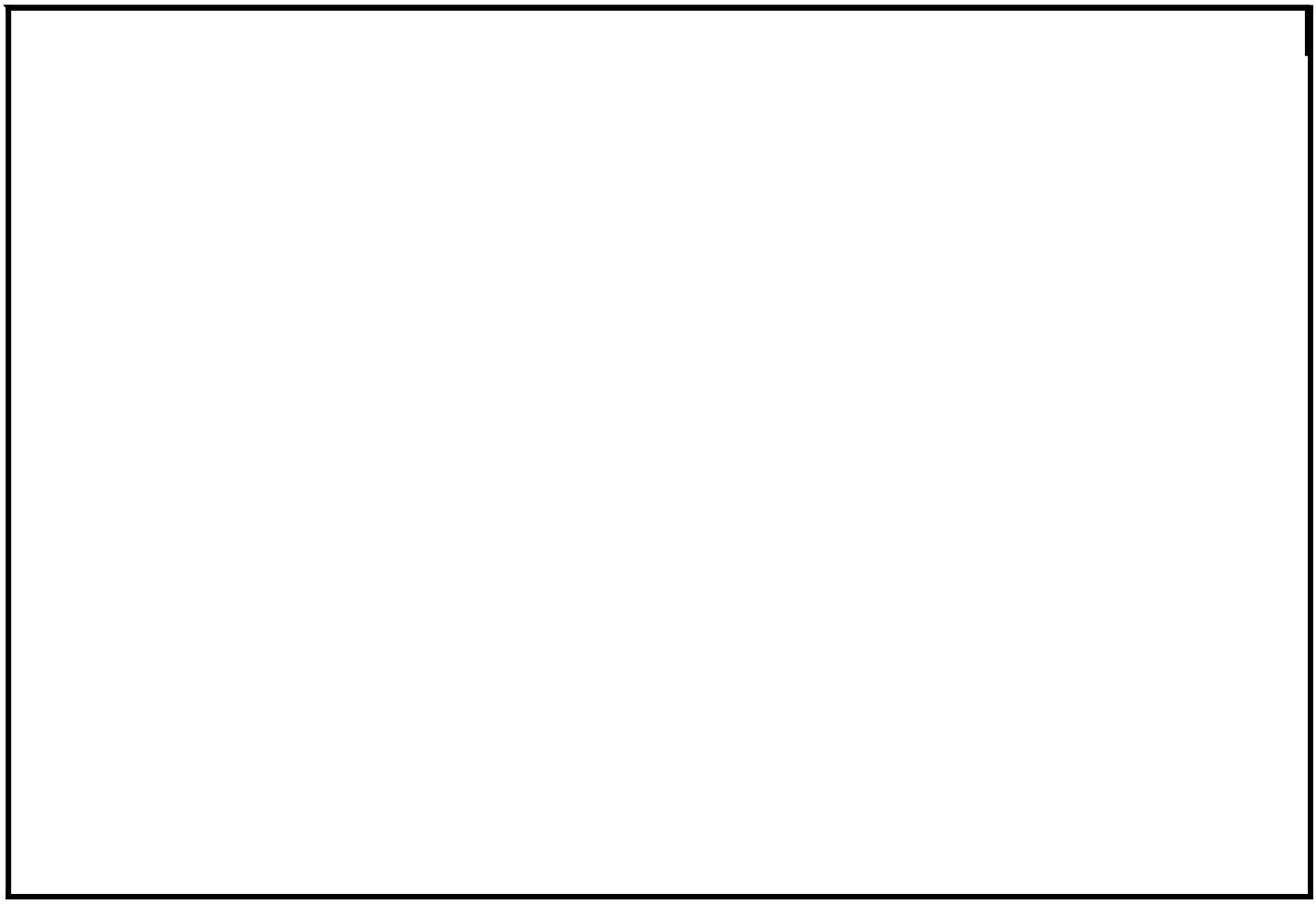

362-2490 AIR CONDITIONER GP

S/N: 5B41-UP; G441-UP

PART OF 424-4579, 424-4580, 424-9007, 424-9010 AIR CONDITIONER GP AN ATTACHMENT

SMCS-7320

i07406144

	REF NO	SEE NOTE	QTY	GRAPHIC 1 2 3 4 5 6	(PRODUCT LEVEL)	REF PAGE	PART NAME / PART NUMBER
	1		1		**9X-7382**	1	SEAL-O-RING
	2		1		**334-2468**	2	FITTING-DRAIN
	3		1		**217-9077**	20	SCREW-PAN HEAD (M2X1.4X16-MM)
	4		1		**212-3416**	1	SCREW-PAN HEAD (8-16X0.5-IN)
	5		1		**391-3907**	1	RESISTOR
	6		1		**391-3908**	1	HARNESS AS-HEATER & AIR COND
	7		1		**391-3905**	1	BLOWER
	8		1		**391-3906**	1	THERMOSTAT (SWITCH)
	9		1		**9X-7381**	1	SEAL-O-RING
	10		1		**306-5618**	1	VALVE-EXPANSION
M	11		1		**8T-6699**	2	BOLT-SOCKET HEAD (M5X0.8X35-MM)
							PARTS SHOWN IN GRAPHIC(S) WITHOUT A REFERENCE NUMBER ARE NOT SERVICED SEPARATELY

M - METRIC PART

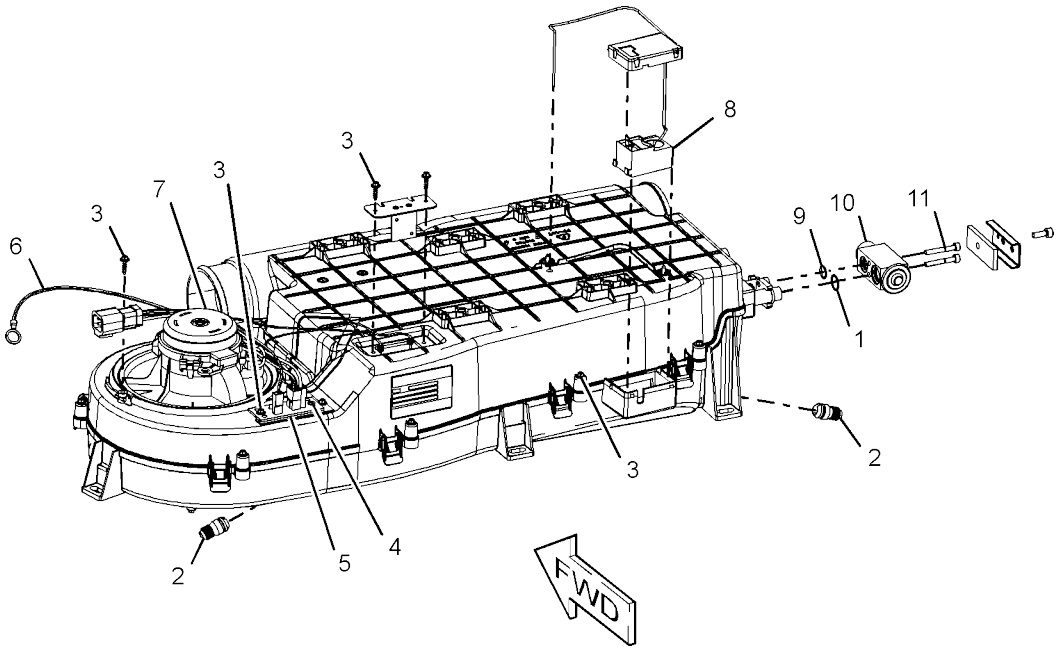

GRAPHIC #1

<END>

g03344826

424-4579 AIR CONDITIONER GP

S/N: G441-UP
PART OF 393-0166 CAB
GP AN ATTACHMENT

SMCS-7320

i07406141

	REF SEE NOTE QTY	GRAPHIC NO 1 2 3 4 5 6	(PRODUCT LEVEL)	REF PAGE	PART NAME PART NUMBER	
M	1	1	**172-8591**	1	NUT-CLIP (M6X1-THD)	
	2	1	**5P-3929**	1	COUPLING AS-REFRIGERANT (SELF-SEALING)	
	3	1	**5P-3948**	1	COUPLING AS-REFRIGERANT (SELF-SEALING)	
	4	1	**102-8703**	1	PLATE-COVER	
	5	1	**131-6143**	4	CLAMP-HOSE	
	6	1	**145-7125**	2	CONNECTOR	
M	7	1	**154-4890**	2	BOLT-STACKING (M8X1.25X33-MM)	
M	8	1	**206-0451**	8	BOLT-STACKING (M8X1.25X44-MM)	
	9	1	**206-0452**	7	PLATE	
	10	1	**232-1732**	1	FILTER ELEMENT AS-CAB AIR (FRONT)	
	11	1	**248-2923**	3	FITTING-DRAIN	
	12	1	**265-6618**	1	FILTER ELEMENT-CAB AIR (RECIRCULATION)	
	13	1	**306-5619**	1	PLATE	
Y	14	1	**306-5620**	1	VALVE GP-WATER	580
Y	15	1	**362-2490**	1	AIR CONDITIONER GP	447
	16	1	**362-2752**	6	CLAMP-HALF	
	17	1	**365-6028**	1	HOSE & TUBE AS	
	18	1	**365-6029**	1	HOSE & TUBE AS	
	19	1	**365-6054**	8	CLAMP-HALF	
	20	1	**365-6055**	8	CLAMP-HALF	
	21	1	**394-6548**	1	MOUNT AS	
	22	1	**394-6555**	2	HOSE	
	23	1	**422-6971**	1	SEAL	
M	24	1	**236-9839**	1	BOLT-SOCKET HEAD (M6X1X15-MM)	
	25	1	**248-6772**	4	SCREW-MACHINE (8-16X7.75-IN)	
M	26	1	**5C-7261**	1	NUT (M8X1.25-THD)	
	27	1	**7K-1181**	4	STRAP-CABLE	
M	28	1	**7X-0818**	1	BOLT (M8X1.25X45-MM)	
M	29	1	**8T-4138**	4	BOLT (M6X1X20-MM)	
M	30	1	**8T-4189**	2	BOLT (M8X1.25X20-MM)	
	31	1	**8T-4224**	3	WASHER-HARD (8.8X16X2-MM THK)	
	32	1	**9X-2488**	6	CLAMP-HOSE	
	33	1	**9X-6165**	4	WASHER (6.5X22X2.5-MM THK)	
	34	1	**9X-7380**	1	SEAL-O-RING	
	35	1	**9X-7383**	2	SEAL-O-RING	
	36	1	**9X-7384**	1	SEAL-O-RING	
	37	1	**9X-8256**	1	WASHER (6.6X12X2-MM THK)	
E	38	1	**5P-0767**		HOSE (10-CM)	
J	39	1	**267-8575**		TUBE (4-DM)	
	39A	1	**267-8575**		TUBE (18-DM)	
	39B	1	**267-8575**		TUBE (5-DM)	
E	40	1	**5P-1468**		HOSE (45.5-CM)	
E	40A	1	**5P-1468**		HOSE (37-CM)	

E - ORDER BY THE CENTIMETER J - ORDER BY THE DECIMETER M - METRIC PART
Y - SEPARATE ILLUSTRATION

424-4579 **AIR CONDITIONER GP** (contd.) **i07406141**

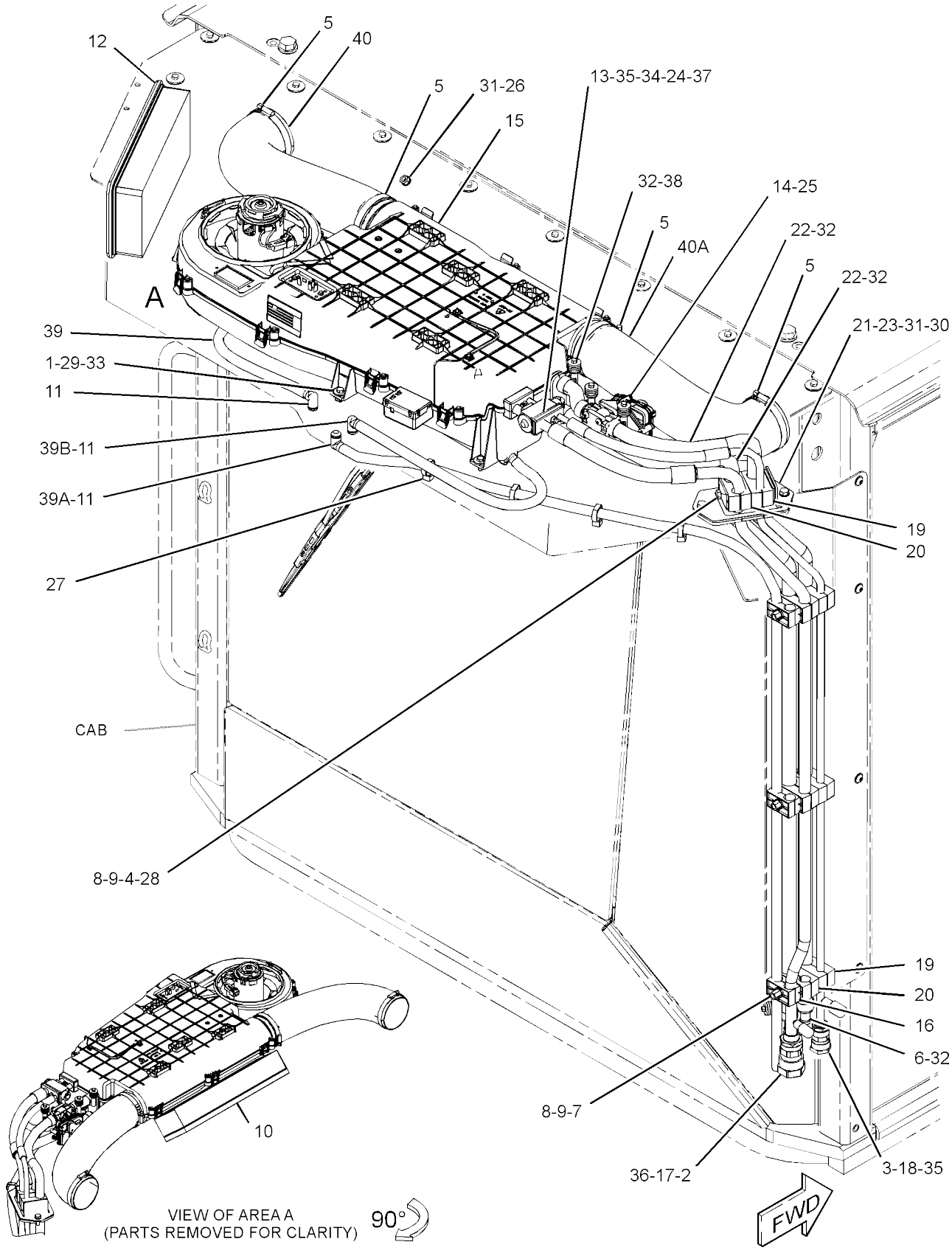

GRAPHIC #1 <END> g03344892

424-4580 AIR CONDITIONER GP

S/N: 5B41-UP
PART OF 393-0167 CAB
GP AN ATTACHMENT

SMCS-7320

i07418018

	REF SEE NOTE QTY	GRAPHIC NO 1 2 3 4 5 6	(PRODUCT LEVEL)	REF PAGE	PART NAME PART NUMBER	
M	1	1	**172-8591**	1	NUT-CLIP (M6X1-THD)	
	2	1	**5P-3929**	1	COUPLING AS-REFRIGERANT (SELF-SEALING)	
	3	1	**5P-3948**	1	COUPLING AS-REFRIGERANT (SELF-SEALING)	
	4	1	**102-8703**	1	PLATE-COVER	
	5	1	**131-6143**	4	CLAMP-HOSE	
	6	1	**145-7125**	2	CONNECTOR	
M	7	1	**154-4890**	2	BOLT-STACKING (M8X1.25X33-MM)	
	8	1	**206-0452**	7	PLATE	
	9	1	**232-1732**	1	FILTER ELEMENT AS-CAB AIR (FRONT)	
	10	1	**248-2923**	3	FITTING-DRAIN	
	11	1	**265-6618**	1	FILTER ELEMENT-CAB AIR (RECIRCULATION)	
	12	1	**306-5619**	1	PLATE	
Y	13	1	**306-5620**	1	VALVE GP-WATER (COOLANT)	580
	14	1	**360-9119**	1	HOSE & TUBE AS	
	15	1	**360-9124**	1	HOSE & TUBE AS	
Y	16	1	**362-2490**	1	AIR CONDITIONER GP	447
	17	1	**362-2752**	6	CLAMP-HALF	
	18	1	**365-6054**	8	CLAMP-HALF	
	19	1	**365-6055**	8	CLAMP-HALF	
	20	1	**394-6548**	1	MOUNT AS	
	21	1	**394-6555**	2	HOSE	
	22	1	**422-6971**	1	SEAL	
M	23	1	**206-0451**	8	BOLT-STACKING (M8X1.25X44-MM)	
M	24	1	**236-9839**	1	BOLT-SOCKET HEAD (M6X1X15-MM)	
	25	1	**248-6772**	4	SCREW-MACHINE (8-16X7.75-IN)	
M	26	1	**5C-7261**	1	NUT (M8X1.25-THD)	
	27	1	**7K-1181**	4	STRAP-CABLE	
M	28	1	**7X-0818**	1	BOLT (M8X1.25X45-MM)	
M	29	1	**8T-4138**	4	BOLT (M6X1X20-MM)	
M	30	1	**8T-4189**	2	BOLT (M8X1.25X20-MM)	
	31	1	**8T-4224**	3	WASHER-HARD (8.8X16X2-MM THK)	
	32	1	**9X-2488**	6	CLAMP-HOSE	
	33	1	**9X-6165**	4	WASHER (6.5X22X2.5-MM THK)	
	34	1	**9X-7380**	1	SEAL-O-RING	
	35	1	**9X-7383**	2	SEAL-O-RING	
	36	1	**9X-7384**	1	SEAL-O-RING	
	37	1	**9X-8256**	1	WASHER (6.6X12X2-MM THK)	
E	38	1	**5P-0767**		HOSE (13-CM)	
E	39	1	**5P-1468**		HOSE (58-CM)	
E	39A	1	**5P-1468**		HOSE (49-CM)	
J	40	1	**267-8575**		TUBE (4-DM)	
J	40A	1	**267-8575**		TUBE (17.4-DM)	
J	40B	1	**267-8575**		TUBE (5-DM)	

E - ORDER BY THE CENTIMETER J - ORDER BY THE DECIMETER M - METRIC PART
Y - SEPARATE ILLUSTRATION

424-4580 **AIR CONDITIONER GP** (contd.) **i07418018**

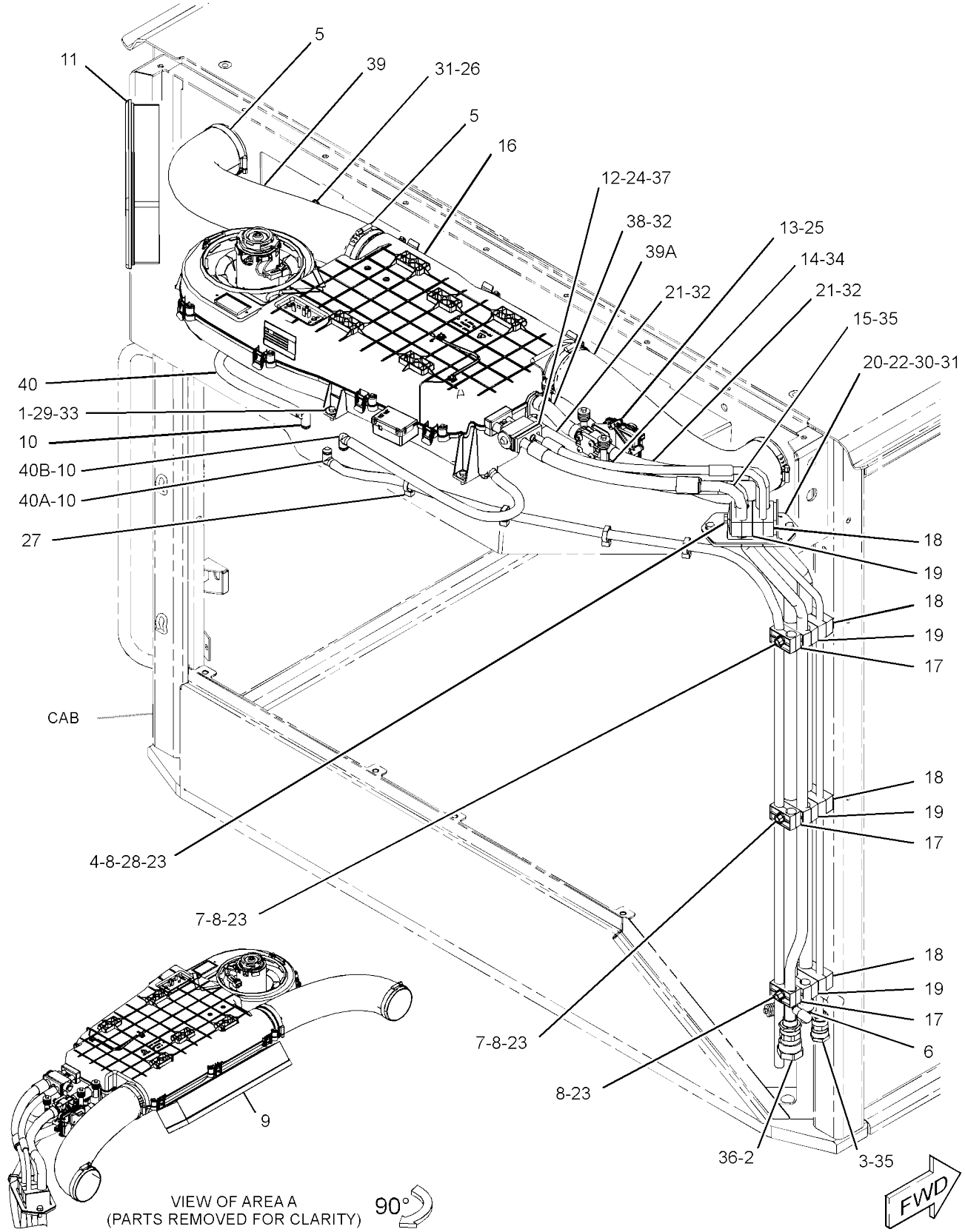

GRAPHIC #1 <END> g03344990

424-9007 AIR CONDITIONER GP

S/N: 5B41-UP
PART OF 462-5780, 509-9422 CAB
GP AN ATTACHMENT

SMCS-7320

i07418043

	REF NO	GRAPHIC NO	(PRODUCT LEVEL)	REF PAGE	PART NAME / PART NUMBER	
SEE NOTE	QTY	1 2 3 4 5 6				
	1	1	**5P-3929**	1	COUPLING AS-REFRIGERANT (SELF-SEALING)	
	2	1	**5P-3948**	1	COUPLING AS-REFRIGERANT (SELF-SEALING)	
	3	1	**102-8703**	1	PLATE-COVER	
	4	1	**131-6143**	4	CLAMP-HOSE	
	5	1	**145-7125**	2	CONNECTOR	
M	6	1	**154-4890**	3	BOLT-STACKING (M8X1.25X33-MM)	
M	7	1	**206-0451**	7	BOLT-STACKING (M8X1.25X44-MM)	
	8	1	**206-0452**	7	PLATE	
	9	1	**232-1732**	1	FILTER ELEMENT AS-CAB AIR (FRONT)	
	10	1	**248-2923**	3	FITTING-DRAIN	
	11	1	**265-6618**	1	FILTER ELEMENT-CAB AIR (RECIRCULATION)	
	12	1	**306-5619**	1	PLATE	
Y	13	1	**306-5620**	1	VALVE GP-WATER (COOLANT)	580
	14	1	**360-9119**	1	HOSE & TUBE AS	
	15	1	**360-9124**	1	HOSE & TUBE AS	
Y	16	1	**362-2490**	1	AIR CONDITIONER GP	447
	17	1	**365-6054**	8	CLAMP-HALF	
	18	1	**365-6055**	8	CLAMP-HALF	
	19	1	**394-6548**	1	MOUNT AS	
	20	1	**394-6555**	2	HOSE	
	21	1	**422-6971**	1	SEAL	
	22	1	**156-3618**	6	CLAMP-HALF	
M	23	1	**172-8591**	1	NUT-CLIP (M6X1-THD)	
M	24	1	**236-9839**	1	BOLT-SOCKET HEAD (M6X1X15-MM)	
	25	1	**248-6772**	4	SCREW-MACHINE (8-16X7.75-IN)	
	26	1	**7K-1181**	4	STRAP-CABLE	
M	27	1	**7X-0818**	1	BOLT (M8X1.25X45-MM)	
M	28	1	**8T-4138**	4	BOLT (M6X1X20-MM)	
	29	1	**8T-4205**	4	WASHER-HARD (7.2X14.5X2-MM THK)	
	30	1	**8T-4224**	2	WASHER-HARD (8.8X16X2-MM THK)	
M	31	1	**8T-4908**	2	BOLT (M8X1.25X25-MM)	
	32	1	**9X-2488**	6	CLAMP-HOSE	
	33	1	**9X-7380**	1	SEAL-O-RING	
	34	1	**9X-7383**	2	SEAL-O-RING	
	35	1	**9X-7384**	1	SEAL-O-RING	
	36	1	**9X-8256**	1	WASHER (6.6X12X2-MM THK)	
E	37	1	**5P-0767**		HOSE (13-CM)	
E	38	1	**527-9715**		HOSE (62-CM)	
E	38A	1	**527-9715**		HOSE (53-CM)	
J	39	1	**267-8575**		TUBE (4-DM)	
J	39A	1	**267-8575**		TUBE (18-DM)	
J	39B	1	**267-8575**		TUBE (5-DM)	

E - ORDER BY THE CENTIMETER J - ORDER BY THE DECIMETER M - METRIC PART
Y - SEPARATE ILLUSTRATION

424-9007 **AIR CONDITIONER GP** (contd.) **i07418043**

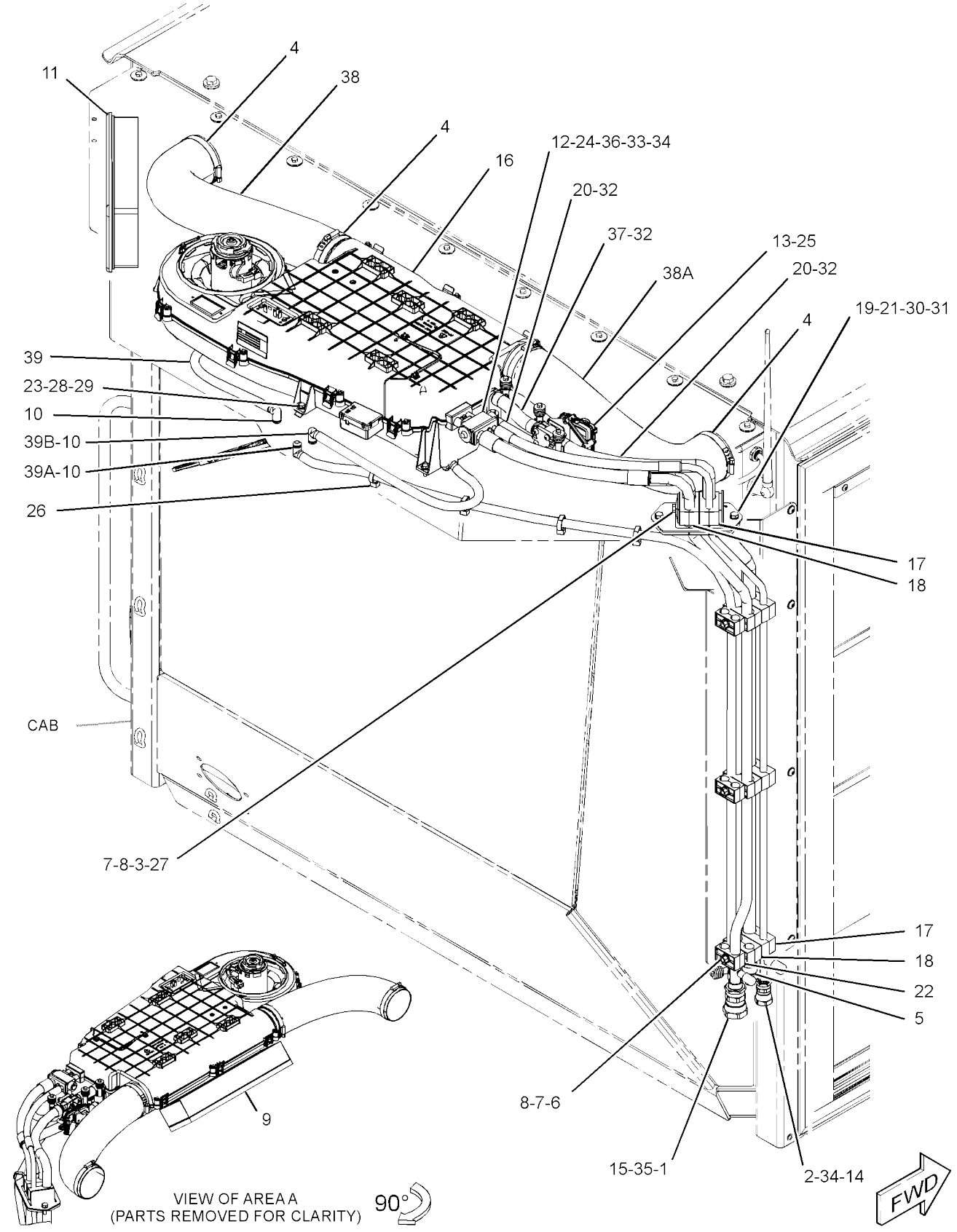

GRAPHIC #1 <END> g03344574

424-9010 AIR CONDITIONER GP

S/N: G441-UP

PART OF 462-5781, 509-9415 CAB GP-ENCLOSED

ROPS AN ATTACHMENT

SMCS-7320

i07406157

	REF NO	GRAPHIC NO	(PRODUCT LEVEL)	REF PAGE	PART NAME / PART NUMBER	
	1	1	**5P-3929**	1	COUPLING AS-REFRIGERANT (SELF-SEALING)	
	2	1	**5P-3948**	1	COUPLING AS-REFRIGERANT (SELF-SEALING)	
	3	1	**102-8703**	1	PLATE-COVER	
	4	1	**131-6143**	4	CLAMP-HOSE	
	5	1	**145-7125**	2	CONNECTOR	
M	6	1	**154-4890**	3	BOLT-STACKING (M8X1.25X33-MM)	
M	7	1	**206-0451**	7	BOLT-STACKING (M8X1.25X44-MM)	
	8	1	**206-0452**	7	PLATE	
	9	1	**232-1732**	1	FILTER ELEMENT AS-CAB AIR (FRONT)	
	10	1	**248-2923**	3	FITTING-DRAIN	
	11	1	**265-6618**	1	FILTER ELEMENT-CAB AIR (RECIRCULATION)	
	12	1	**306-5619**	1	PLATE	
Y	13	1	**306-5620**	1	VALVE GP-WATER	580
Y	14	1	**362-2490**	1	AIR CONDITIONER GP	447
	15	1	**365-6028**	1	HOSE & TUBE AS	
	16	1	**365-6029**	1	HOSE & TUBE AS	
	17	1	**365-6054**	8	CLAMP-HALF	
	18	1	**365-6055**	8	CLAMP-HALF	
	19	1	**394-6548**	1	MOUNT AS	
	20	1	**394-6555**	2	HOSE	
	21	1	**422-6971**	1	SEAL	
	22	1	**156-3618**	6	CLAMP-HALF	
M	23	1	**172-8591**	1	NUT-CLIP (M6X1-THD)	
M	24	1	**236-9839**	1	BOLT-SOCKET HEAD (M6X1X15-MM)	
	25	1	**248-6772**	4	SCREW-MACHINE (8-16X7.75-IN)	
	26	1	**7K-1181**	4	STRAP-CABLE	
M	27	1	**7X-0818**	1	BOLT (M8X1.25X45-MM)	
M	28	1	**8T-4138**	4	BOLT (M6X1X20-MM)	
	29	1	**8T-4205**	4	WASHER-HARD (7.2X14.5X2-MM THK)	
	30	1	**8T-4224**	2	WASHER-HARD (8.8X16X2-MM THK)	
M	31	1	**8T-4908**	2	BOLT (M8X1.25X25-MM)	
	32	1	**9X-2488**	6	CLAMP-HOSE	
	33	1	**9X-7380**	1	SEAL-O-RING	
	34	1	**9X-7383**	2	SEAL-O-RING	
	35	1	**9X-7384**	1	SEAL-O-RING	
	36	1	**9X-8256**	1	WASHER (6.6X12X2-MM THK)	
E	37	1	**5P-0767**		HOSE (8-CM)	
J	38	1	**267-8575**		TUBE (4-DM)	
J	38A	1	**267-8575**		TUBE (168-DM)	
J	38B	1	**267-8575**		TUBE (5-DM)	
E	39	1	**527-9715**		HOSE (52-CM)	
E	39A	1	**527-9715**		HOSE (45-CM)	

E - ORDER BY THE CENTIMETER J - ORDER BY THE DECIMETER M - METRIC PART
Y - SEPARATE ILLUSTRATION

424-9010 **AIR CONDITIONER GP** (contd.) **i07406157**

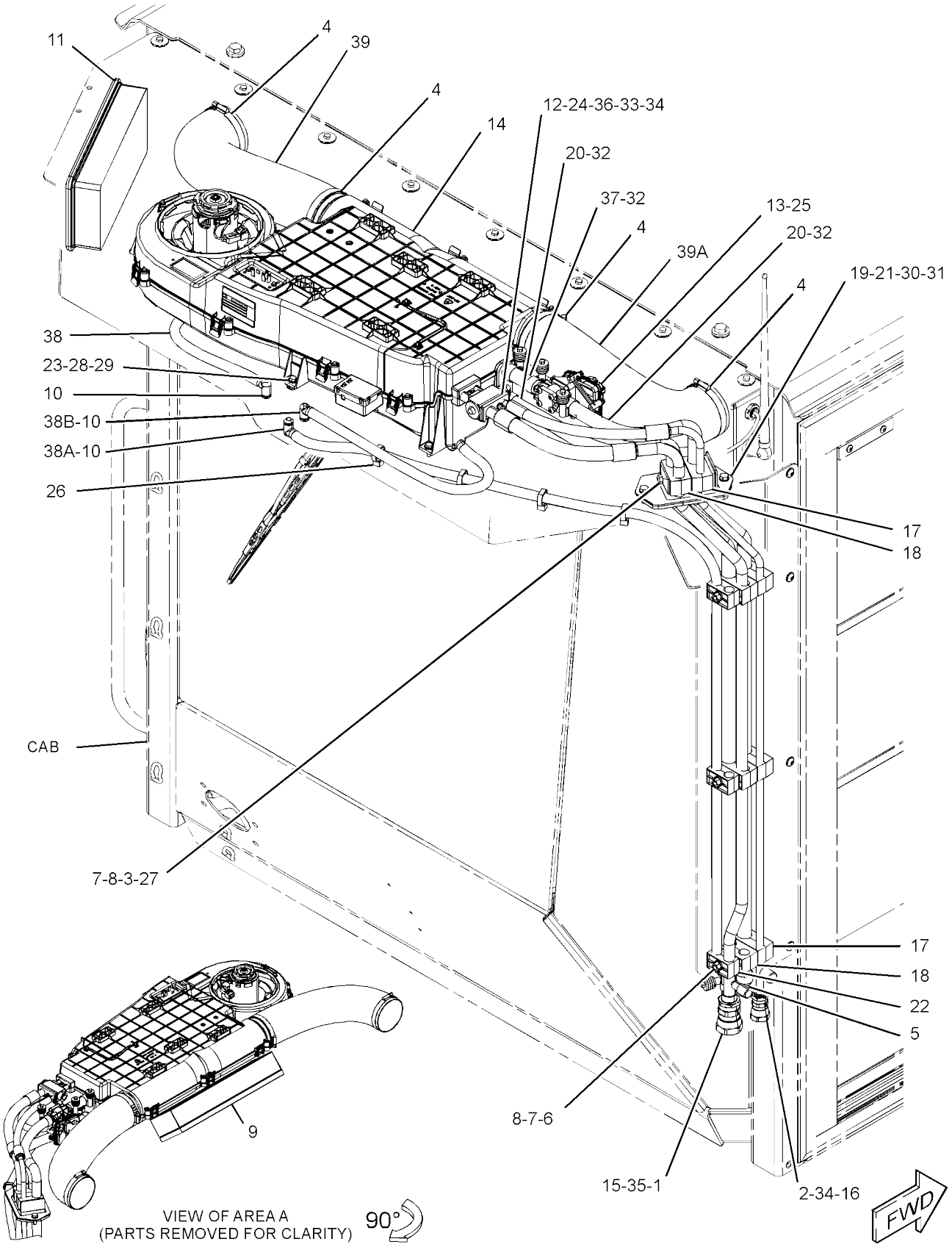

GRAPHIC #1 <END> g06211284

393-0166 CAB GP-BASIC

S/N: G441-UP
PART OF 434-1070 CAB
GP AN ATTACHMENT

SMCS-7301

i07403930

	REF SEE NOTE	QTY	GRAPHIC NO 1 2 3 4 5 6	(PRODUCT LEVEL)	REF PAGE	PART NAME PART NUMBER	
	Y	1	1	*362-2516*	1	LINER GP-CAB	518
	Y	2	1	*362-2517*	1	WIPER GP-WINDOW	592
	Y	3	1	*362-2574*	1	MIRROR GP-REAR VIEW	537
	Y	4	1	*393-0151*	1	WINDOW GP-CAB	589
	Y	5	1	*394-6562*	1	WASHER GP-WINDOW	583
	Y	6	1	*395-0039*	1	DOOR GP-CAB	509
	Y	7	1	*395-0052*	1	CAB GP	460
	Y	8	1	*395-0062*	1	COVER GP-CAB	499
	Y	9	1	*416-4308*	1	WIRING GP-CAB	200
	Y	10	1	*424-4579*	1	AIR CONDITIONER GP	448
	M	11	1	**195-0936**	43	INSERT-THREADED (M6X1-THD)	
		12	1	*466-1706*	1	HANDLE GP-DOOR	
	M		1	**8T-4182**	2	BOLT (M10X1.5X45-MM)	
			1	**8T-5360**	4	WASHER (12X22.5X2.5-MM THK)	
	M		1	**344-5675**	2	NUT (M10X1.5-THD)	
			1	**462-6480**	1	STRAP AS	

M - METRIC PART
Y - SEPARATE ILLUSTRATION

393-0166 **CAB GP** (contd.) **i07403930**

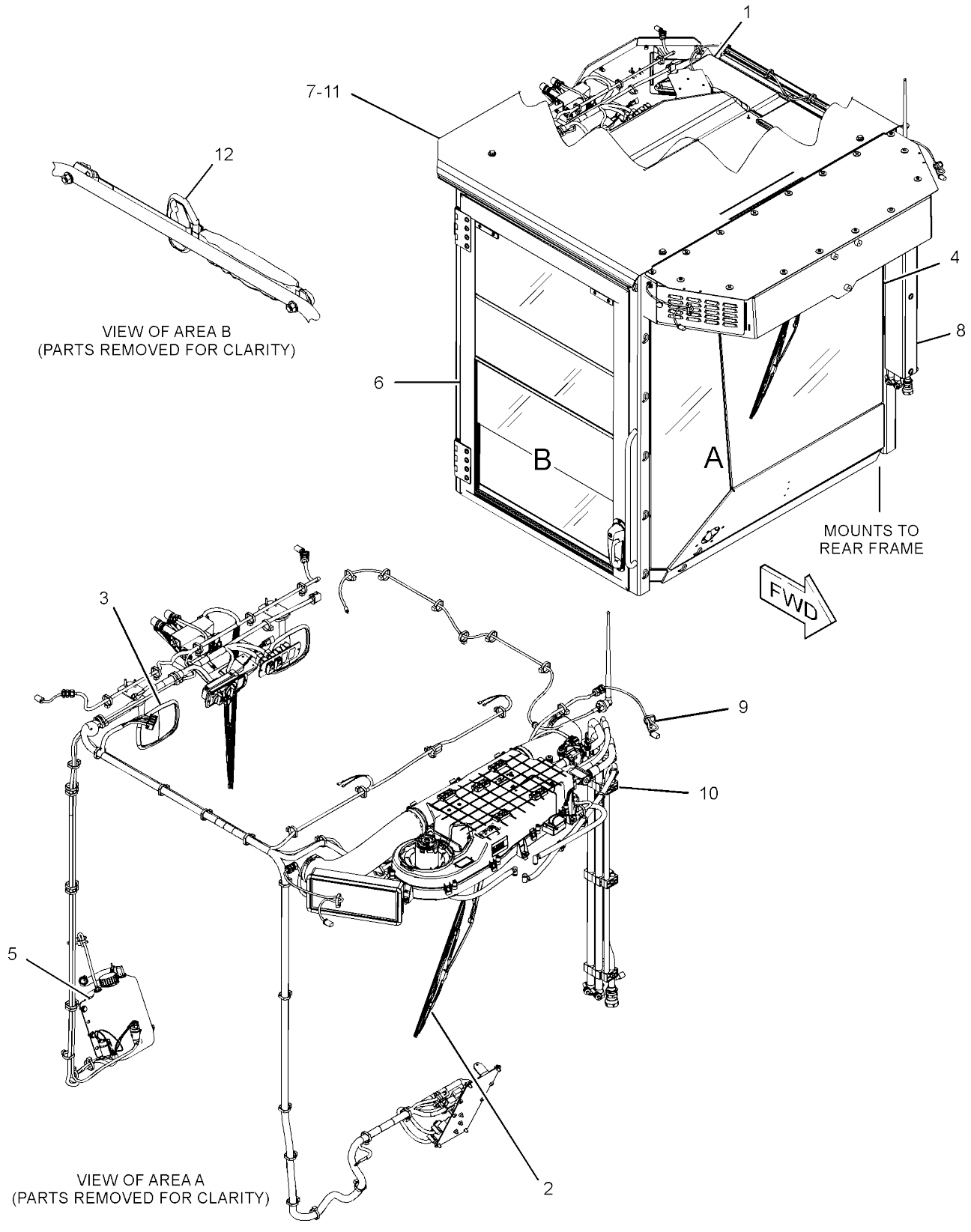

GRAPHIC #1 <END> g06038267

OPERATOR STATION

393-0167 CAB GP

S/N: 5B41-UP
PART OF 434-1071 CAB
GP AN ATTACHMENT

SMCS-7301

i07418013

	REF SEE NOTE	QTY	GRAPHIC NO 1 2 3 4 5 6	(PRODUCT LEVEL)	REF PAGE	PART NAME PART NUMBER	
	Y	1	1	*362-2572*	1	WASHER GP-WINDOW	582
	Y	2	1	*362-2573*	1	LINER GP-CAB	520
	Y	3	1	*362-2574*	1	MIRROR GP-REAR VIEW	537
	Y	4	1	*362-2575*	1	WIPER GP-WINDOW	594
	Y	5	1	*393-0150*	1	WINDOW GP-CAB	588
		6	1	**394-7691**	1	CAB GP	
	Y	7	1	*395-0039*	1	DOOR GP-CAB	509
	Y	8	1	*395-0061*	1	COVER GP-CAB	497
	Y	9	1	*416-4308*	1	WIRING GP-CAB	200
	Y	10	1	**424-4580**	1	AIR CONDITIONER GP	450
	M	11	1	**195-0936**	44	INSERT-THREADED (M6X1-THD)	
		12	1	*466-1706*	1	HANDLE GP-DOOR	
	M		1	**8T-4182**	2	BOLT (M10X1.5X45-MM)	
			1	**8T-5360**	4	WASHER (12X22.5X2.5-MM THK)	
	M		1	**344-5675**	2	NUT (M10X1.5-THD)	
			1	**462-6480**	1	STRAP AS	

M - METRIC PART
Y - SEPARATE ILLUSTRATION

393-0167 **CAB GP** (contd.) **i07418013**

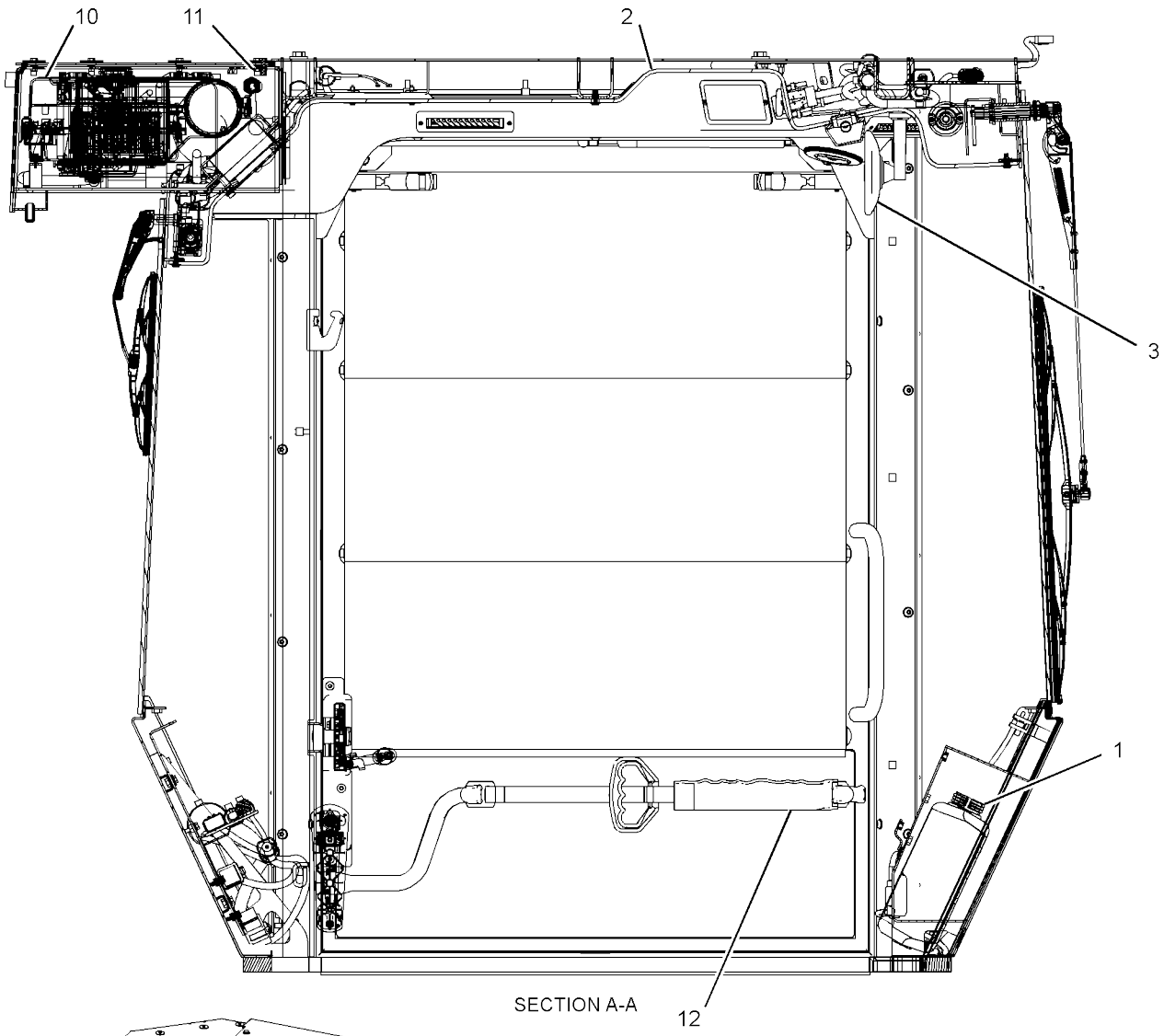

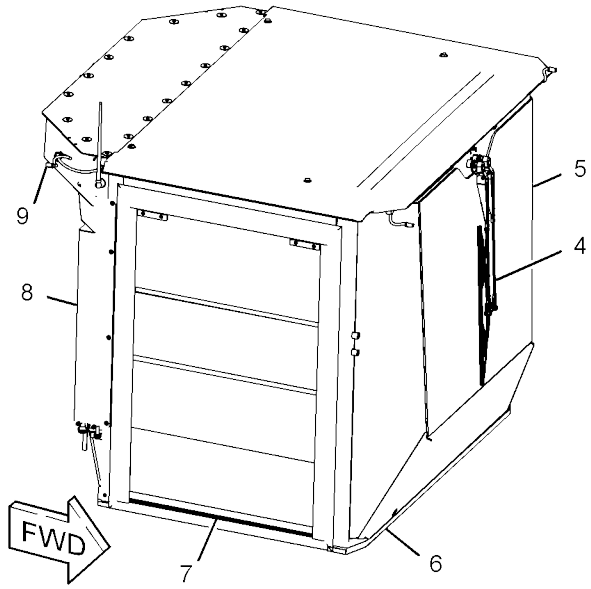

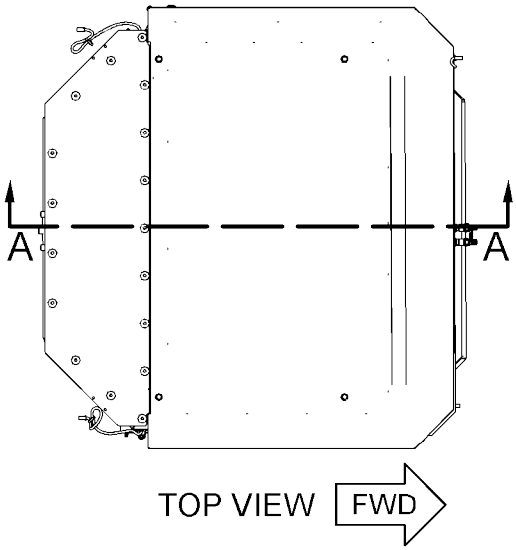

GRAPHIC #1 <END> g06038271

395-0052 CAB GP

S/N: G441-UP
PART OF 393-0166 CAB
GP AN ATTACHMENT

SMCS-7301

i07406136

	REF SEE NOTE	QTY	GRAPHIC NO 1 2 3 4 5 6	(PRODUCT LEVEL)	REF PAGE	PART NAME PART NUMBER
M		1	2	**195-1095**	6	STUD-WELD (M6X1X20-MM)
		2	1	**395-0053**	1	CAB AS
		3	1,2	**7T-1099**	38	LINK
M		4	1	**8T-3636**	1	STUD-WELD (M8X1.25X32-MM)
		5	2	**394-7705**	1	STRIP
		6	2	**394-7708**	1	STRIP
		7	2	**394-7710**	1	STRIP-MOUNTING
		8	2	**394-7711**	1	STRIP-MOUNTING
M		9	1	**9R-2160**	4	BOSS (M8X1.25X25-MM)
M		10	1	**9T-6001**	4	BOSS (M10X1.5-THD)

M - METRIC PART

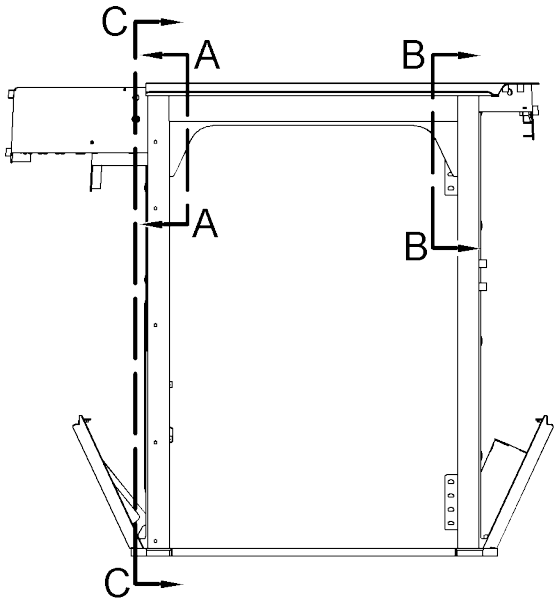

RIGHT SIDE VIEW

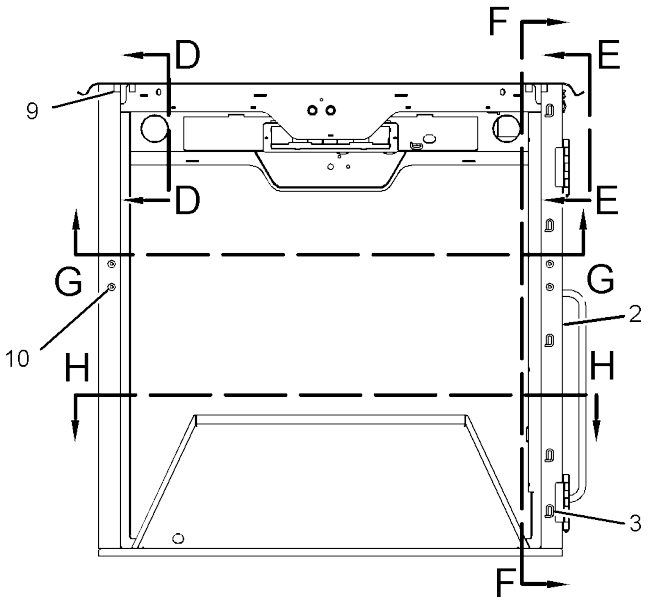

FRONT VIEW

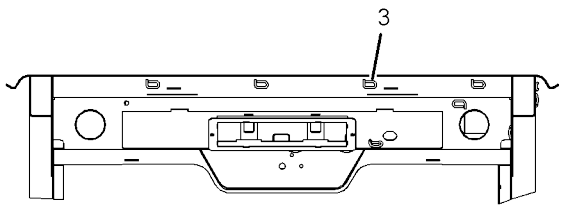

SECTION A-A

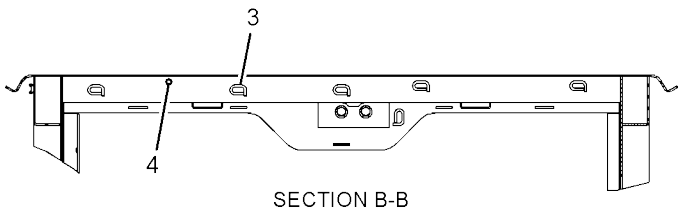

SECTION B-B

REFER TO ALL ILLUSTRATIONS OF
THIS GROUP FOR AUXILIARY VIEWS

GRAPHIC #1

g03344836

395-0052 **CAB GP** (contd.) **i07406136**

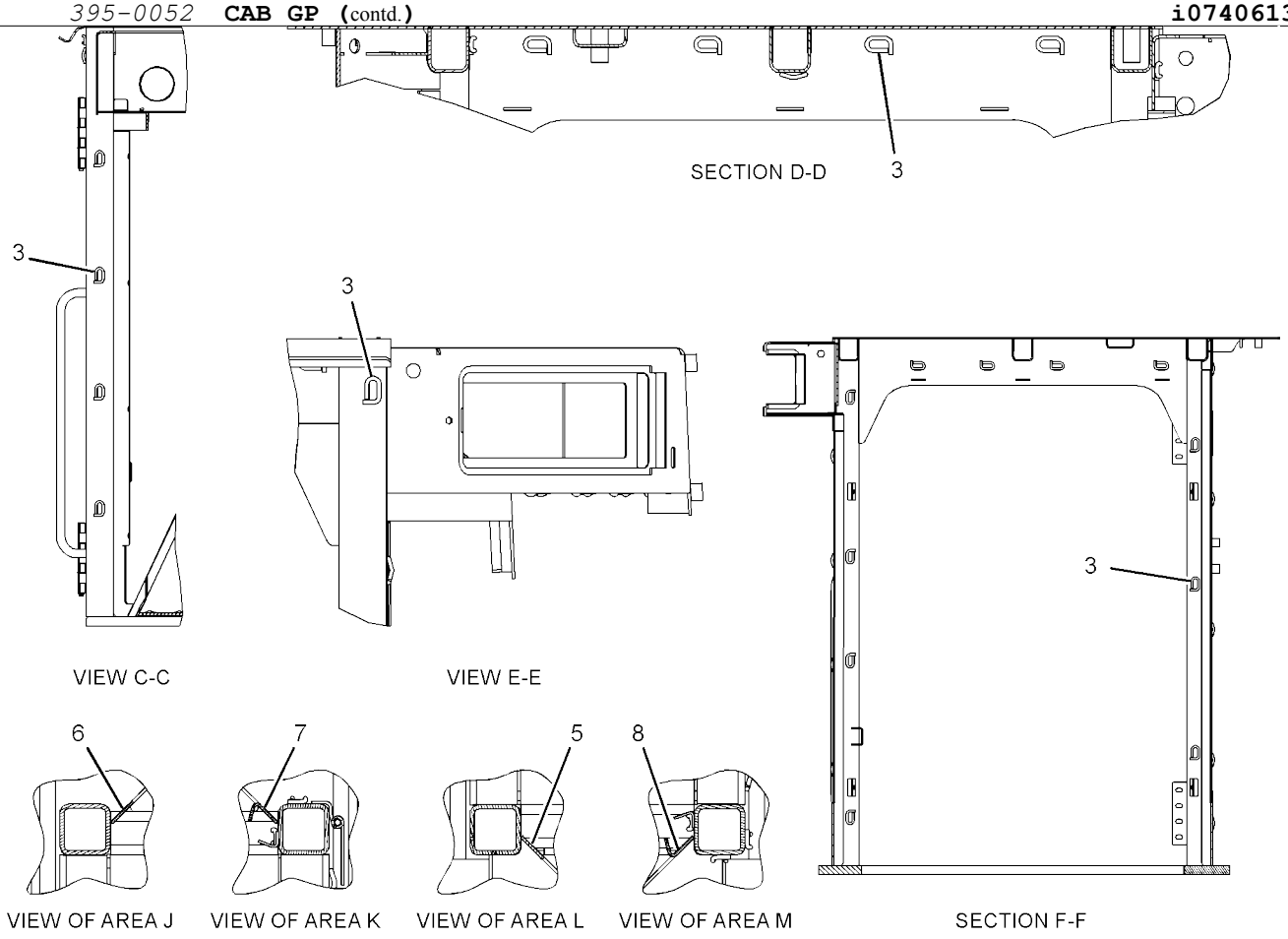

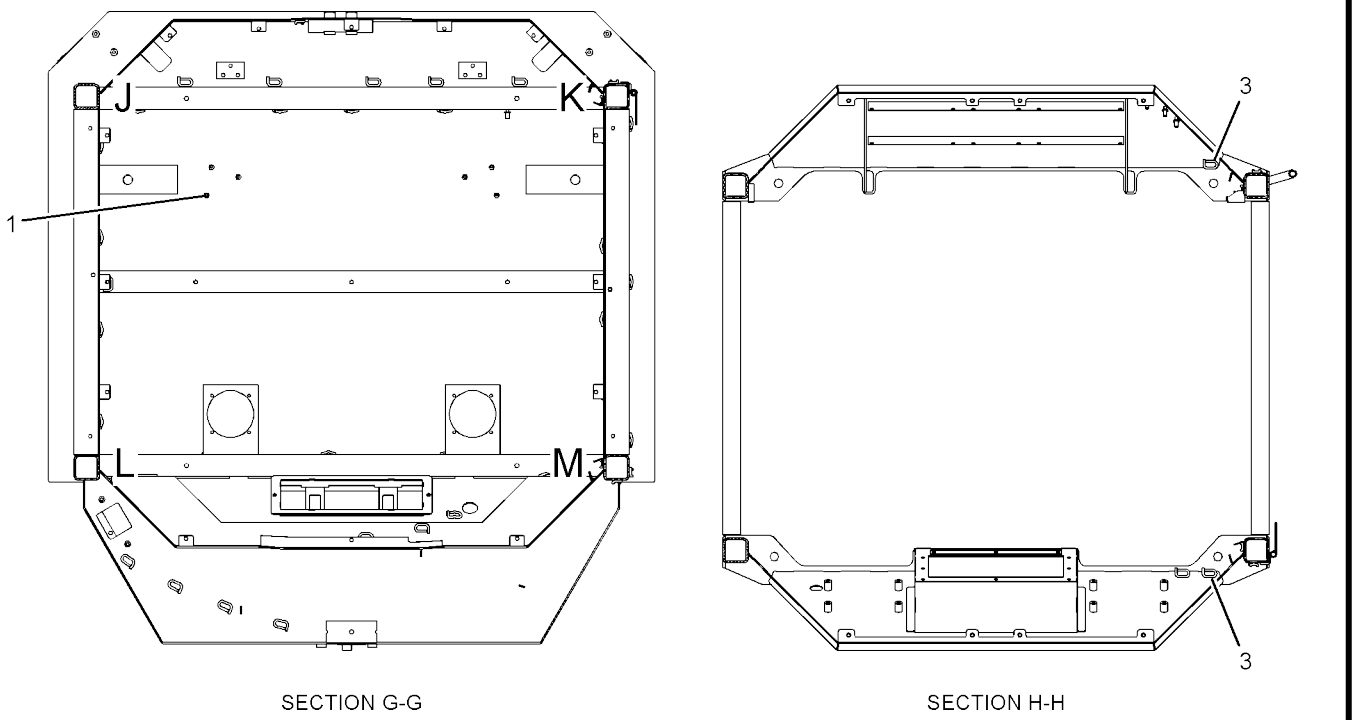

GRAPHIC #2 <END> g03344837

434-1070 CAB GP

S/N: G441-UP
PART OF 451-3180 OPERATOR
AR AN ATTACHMENT

SMCS-7301

i07403929

	REF SEE NOTE QTY	GRAPHIC NO 1 2 3 4 5 6	(PRODUCT LEVEL)	REF PAGE	PART NAME PART NUMBER	
Y	1	1	*393-0166*	1	CAB GP	456
M	2	1	**8T-4141**	4	BOLT (M20X2.5X70-MM)	
	3	1	**8T-5439**	4	WASHER-HARD (21.5X45X6-MM THK)	

M - METRIC PART
Y - SEPARATE ILLUSTRATION

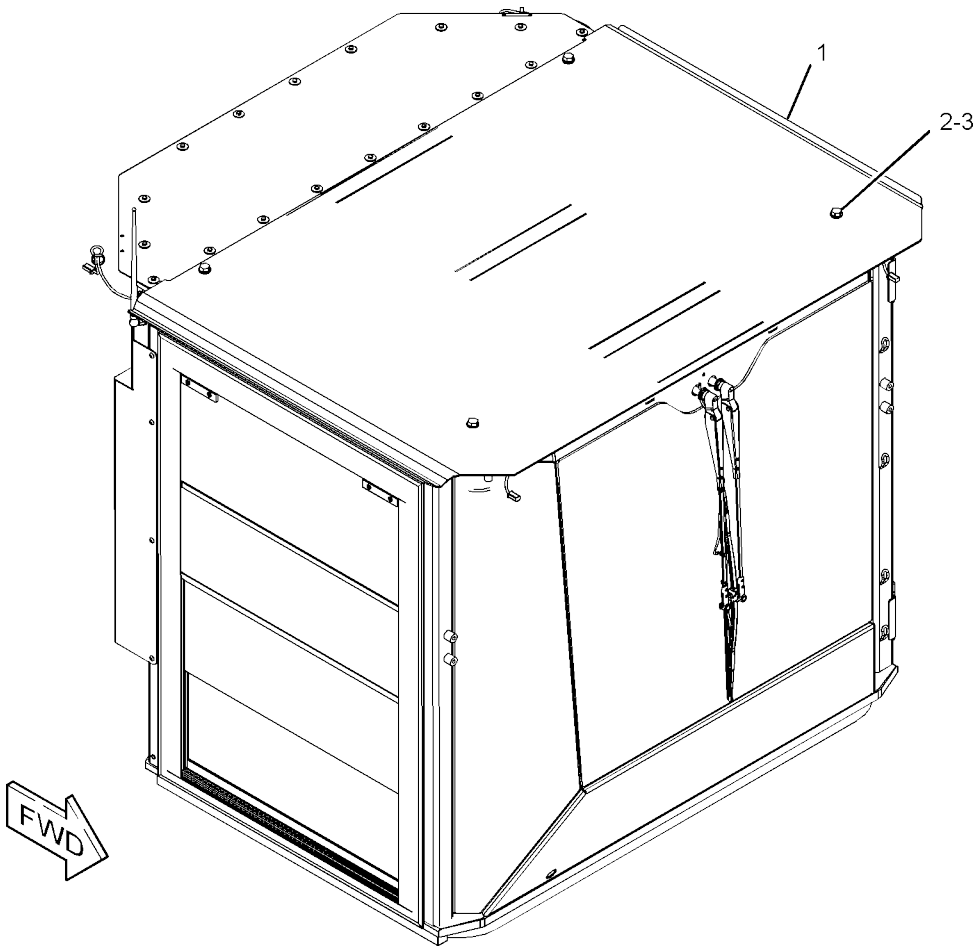

GRAPHIC #1 <END> g03465681

434-1071 CAB GP

S/N: 5B41-UP
PART OF 451-3280 OPERATOR
AR AN ATTACHMENT

SMCS-7301

i07418011

	REF SEE NOTE QTY	GRAPHIC NO 1 2 3 4 5 6	(PRODUCT LEVEL)	REF PAGE	PART NAME PART NUMBER	
Y	1	1	*393-0167*	1	CAB GP	458
M	2	1	**8T-4141**	4	BOLT (M20X2.5X70-MM)	
	3	1	**8T-5439**	4	WASHER-HARD (21.5X45X6-MM THK)	

M - METRIC PART
Y - SEPARATE ILLUSTRATION

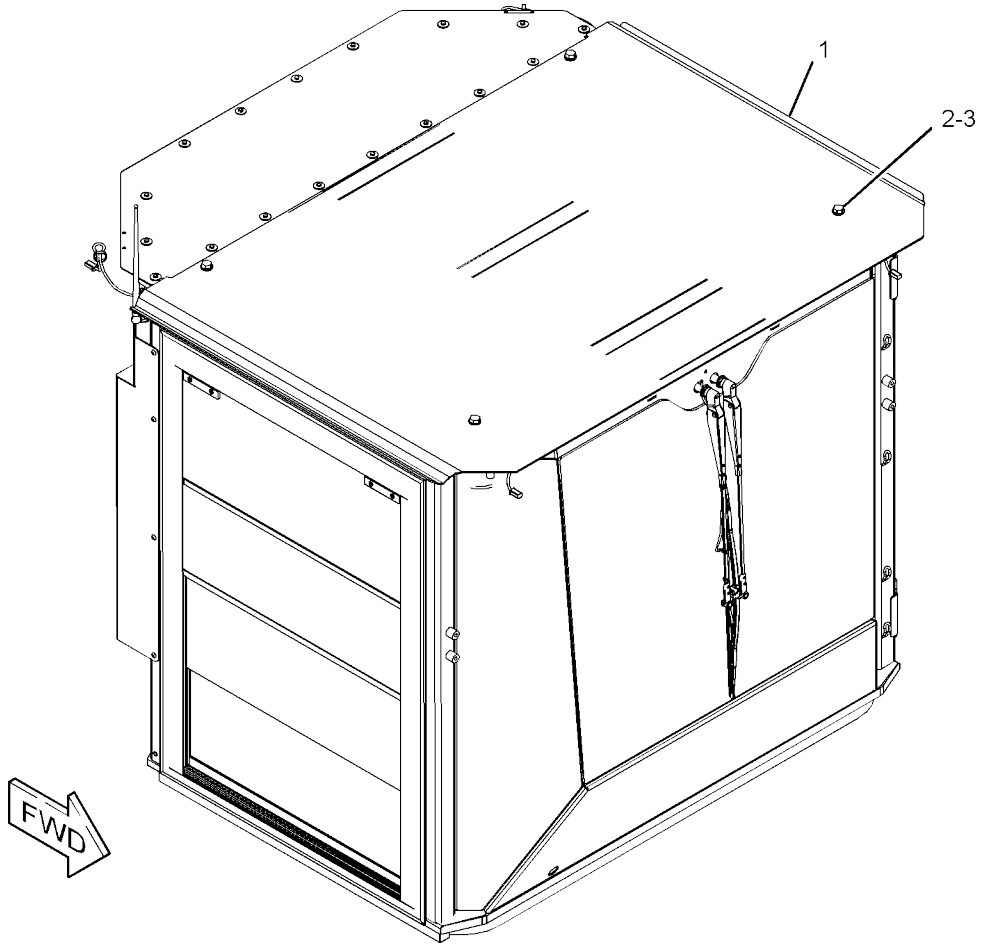

GRAPHIC #1 <END> g03465681

462-5780 CAB GP

S/N: 5B41-UP
FIELD REPLACEMENT ORDER 509-9423–PAGE:
469 PART OF 509-9423 CAB GP
AN ATTACHMENT

SMCS-7301

i07418033

	REF SEE NOTE QTY	GRAPHIC NO 1 2 3 4 5 6	(PRODUCT LEVEL)	REF PAGE	PART NAME PART NUMBER	
Y	1	1	*362-2572*	1	WASHER GP-WINDOW	582
Y	2	1	*362-2573*	1	LINER GP-CAB	520
Y	3	1	*362-2574*	1	MIRROR GP-REAR VIEW	537
Y	4	1	*362-2575*	1	WIPER GP-WINDOW	594
Y	5	1	*362-2577*	1	COVER GP-CAB	495
Y	6	1	*362-2581*	1	WIRING GP-CAB	198
Y	7	1	*362-2583*	1	WINDOW GP-CAB	584
Y	8	1	*394-6556*	1	DOOR GP-CAB	506
Y	9	1	*424-9007*	1	AIR CONDITIONER GP	452
Y	10	1	*462-9050*	1	CAB GP-ENCLOSED ROPS	472
	11	1	*466-1706*	1	HANDLE GP-DOOR	
M		1	**8T-4182**	2	BOLT (M10X1.5X45-MM)	
		1	**8T-5360**	4	WASHER (12X22.5X2.5-MM THK)	
M		1	**344-5675**	2	NUT (M10X1.5-THD)	
		1	**462-6480**	1	STRAP AS	

M - METRIC PART
Y - SEPARATE ILLUSTRATION

462-5780 **CAB GP** (contd.) **i07418033**

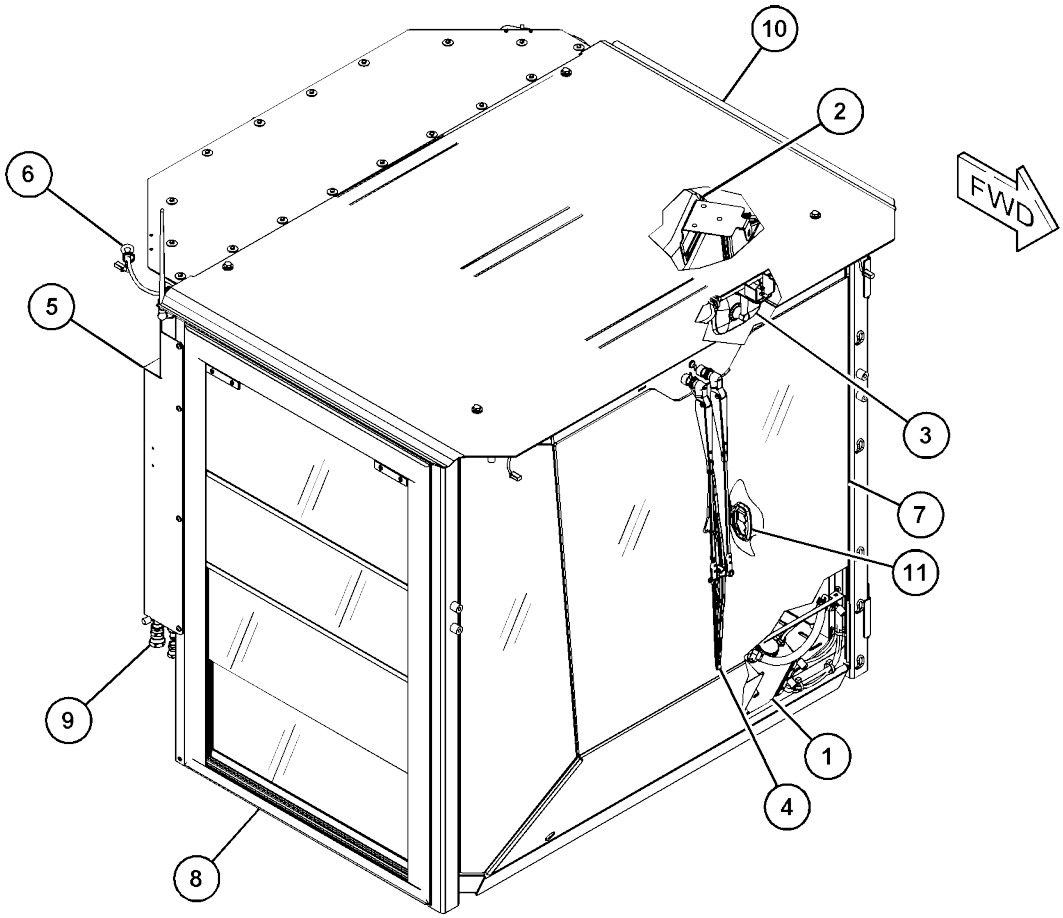

GRAPHIC #1 <END> g06079182

509-9414 CAB GP

S/N: G441-UP
PART OF 509-9415 CAB GP-ENCLOSED
ROPS AN ATTACHMENT

SMCS-7301

i07406158

	REF SEE NOTE QTY	GRAPHIC NO 1 2 3 4 5 6 (PRODUCT LEVEL)	REF PAGE	PART NAME PART NUMBER	
Y	1	1 *362-2603*	1	WINDOW GP-CAB	585
Y	2	1 *394-6556*	1	DOOR GP-CAB	506
	3	1 *509-9413*	1	CAB AS	
M		1 **3E-4304**	7	INSERT-THREADED (M6X1-THD)	
		1 **7T-1099**	64	LINK	
M		1 **9R-2160**	4	BOSS (M8X1.25X25-MM)	
M		1 **9R-2613**	6	BOSS-WELD (M10X1.5X25-MM)	
M		1 **195-0936**	35	INSERT-THREADED (M6X1-THD)	
M		1 **195-1095**	6	STUD-WELD (M6X1X20-MM)	

M - METRIC PART
Y - SEPARATE ILLUSTRATION

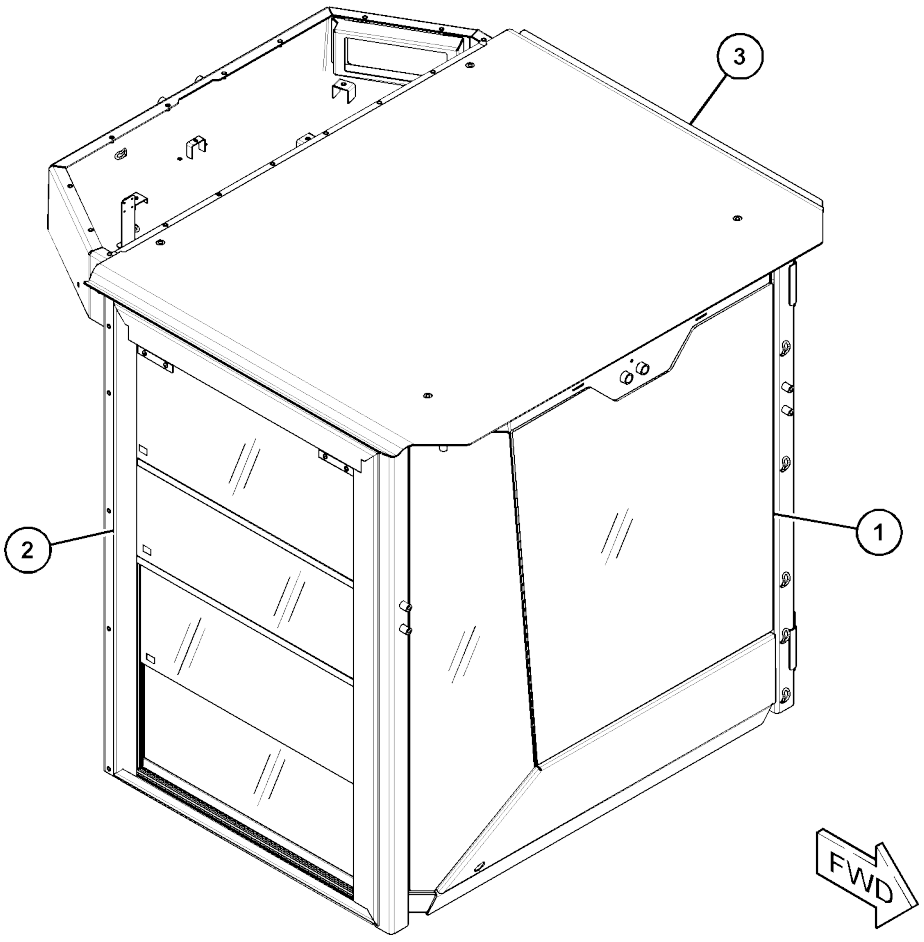

GRAPHIC #1 <END> g06147531

509-9421 CAB GP

S/N: 5B41-UP
PART OF 509-9422 CAB
GP AN ATTACHMENT

SMCS-7301

i07418044

	REF SEE NOTE QTY	GRAPHIC NO 1 2 3 4 5 6	(PRODUCT LEVEL)	REF PAGE	PART NAME PART NUMBER	
Y	1	1	*362-2583*	1	WINDOW GP-CAB	584
Y	2	1	*394-6556*	1	DOOR GP-CAB	506
	3	1	*509-9420*	1	CAB AS	
M		1	**3E-4304**	7	INSERT-THREADED (M6X1-THD)	
		1	**7T-1099**	65	LINK	
M		1	**9R-2160**	4	BOSS (M8X1.25X25-MM)	
M		1	**9R-2613**	6	BOSS-WELD (M10X1.5X25-MM)	
M		1	**195-0936**	36	INSERT-THREADED (M6X1-THD)	
M		1	**195-1095**	6	STUD-WELD (M6X1X20-MM)	

M - METRIC PART
Y - SEPARATE ILLUSTRATION

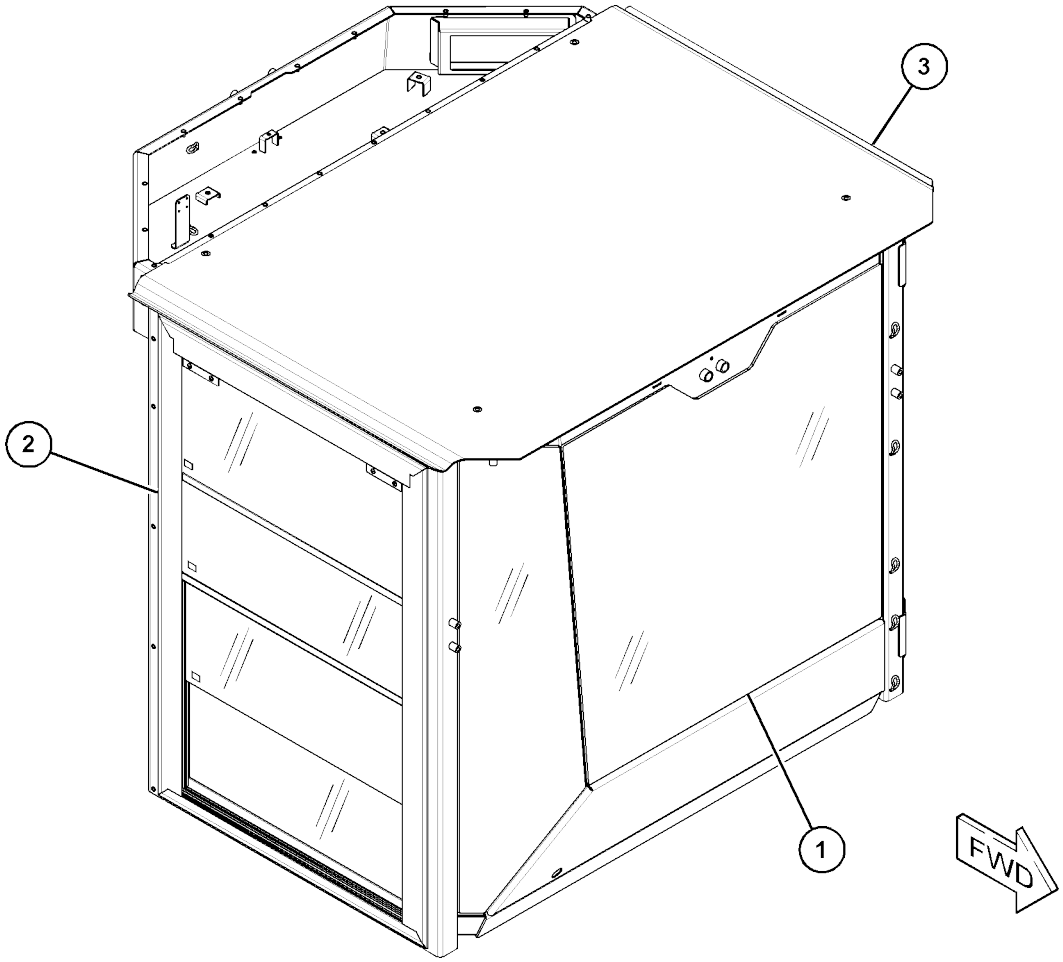

GRAPHIC #1 <END> g06148122

509-9422 CAB GP

S/N: 5B41-UP
FIELD REPLACEMENT ORDER 509-9423–PAGE:
469 PART OF 509-9423 CAB GP
AN ATTACHMENT

SMCS-7301

i07418031

	REF SEE NOTE QTY	GRAPHIC NO 1 2 3 4 5 6	(PRODUCT LEVEL)	REF PAGE	PART NAME PART NUMBER	
Y	1	1	*362-2572*	1	WASHER GP-WINDOW	582
Y	2	1	*362-2573*	1	LINER GP-CAB	520
Y	3	1	*362-2574*	1	MIRROR GP-REAR VIEW	537
Y	4	1	*362-2575*	1	WIPER GP-WINDOW	594
Y	5	1	*362-2577*	1	COVER GP-CAB	495
Y	6	1	*362-2581*	1	WIRING GP-CAB	198
Y	7	1	*424-9007*	1	AIR CONDITIONER GP	452
	8	1	*466-1706*	1	HANDLE GP-DOOR	
M		1	**8T-4182**	2	BOLT (M10X1.5X45-MM)	
		1	**8T-5360**	2	WASHER (12X22.5X2.5-MM THK)	
M		1	**344-5675**	2	NUT (M10X1.5-THD)	
		1	**462-6480**	1	STRAP AS	
Y	9	1	*509-9421*	1	CAB GP	467

M - METRIC PART
Y - SEPARATE ILLUSTRATION

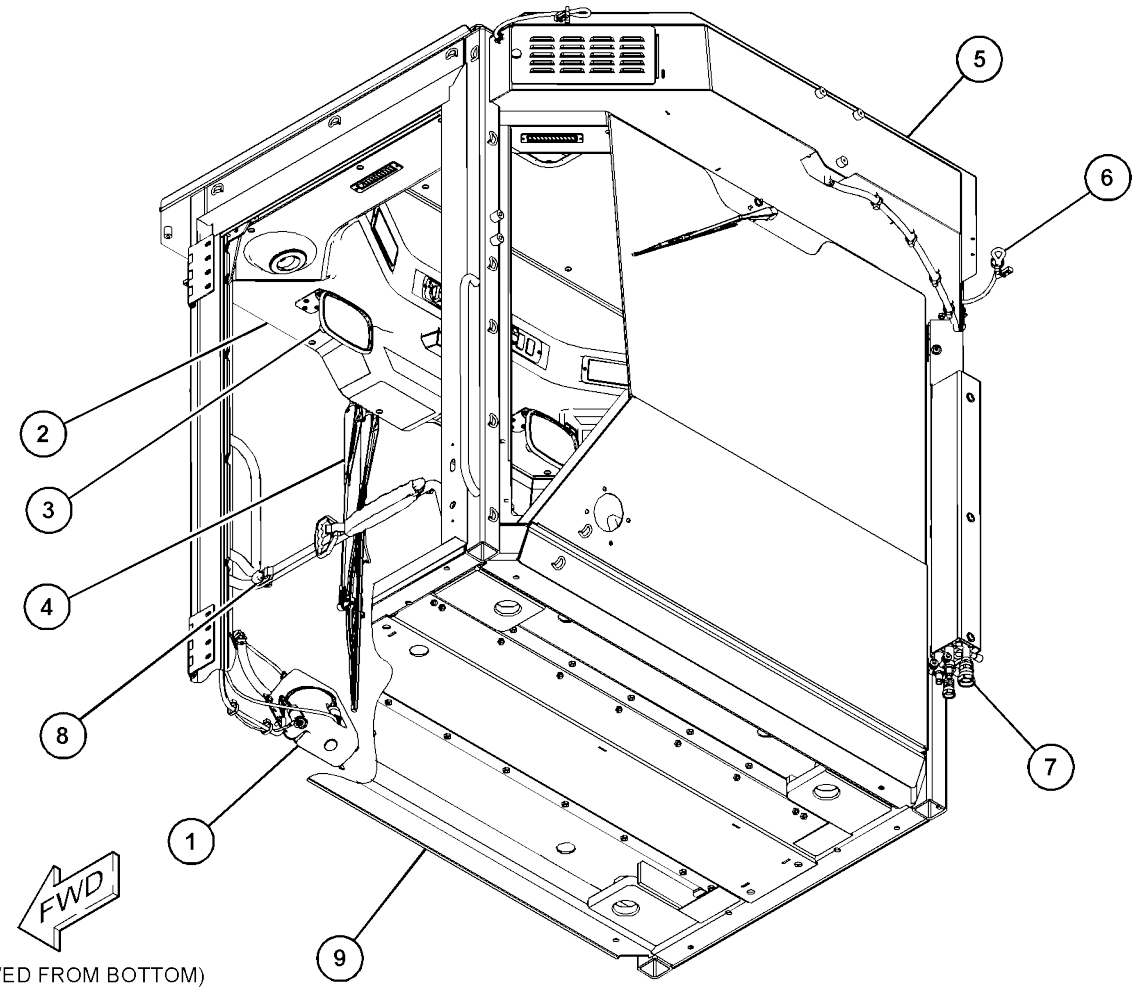

GRAPHIC #1 <END> g06178917

509-9423 CAB GP

S/N: 5B41-UP
FIELD REPLACEMENT FOR 462-5780–PAGE: 464: FOR 509-9422–PAGE: 468 PART OF 451-3290 OPERATOR AR
AN ATTACHMENT

SMCS-7301

i07418035

NOTE	PART NUMBER	QTY	PART NAME 1 2 3 4 5 6 (PRODUCT LEVEL)	SEE PAGE
Y	*462-5780*	1	CAB GP	464
			–OR–	
Y	*509-9422*	1	CAB GP	468

Y - SEPARATE ILLUSTRATION

<END>

462-5781 CAB GP-ENCLOSED ROPS

S/N: G441-UP
PART OF 509-9416 CAB GP-ENCLOSED ROPS AN ATTACHMENT

SMCS-7301

i07406205

	REF SEE NOTE QTY	GRAPHIC NO 1 2 3 4 5 6	(PRODUCT LEVEL)	REF PAGE	PART NAME PART NUMBER	
Y	1	1	*362-2516*	1	LINER GP-CAB	518
Y	2	1	*362-2517*	1	WIPER GP-WINDOW	592
Y	3	1	*362-2518*	1	COVER GP-CAB	493
Y	4	1	*362-2574*	1	MIRROR GP-REAR VIEW	537
Y	5	1	*362-2581*	1	WIRING GP-CAB	198
Y	6	1	*362-2603*	1	WINDOW GP-CAB	585
Y	7	1	*394-6556*	1	DOOR GP-CAB	506
Y	8	1	*394-6562*	1	WASHER GP-WINDOW	583
Y	9	1	*424-9010*	1	AIR CONDITIONER GP	454
	10	1	*462-9049*	1	CAB AS	
M		1	**3E-4304**	7	INSERT-THREADED (M6X1-THD)	
		1	**7T-1099**	64	LINK	
M		1	**9R-2160**	4	BOSS (M8X1.25X25-MM)	
M		1	**9T-6001**	6	BOSS (M10X1.5-THD)	
M		1	**195-0936**	35	INSERT-THREADED (M6X1-THD)	
M		1	**195-1095**	6	STUD-WELD (M6X1X20-MM)	
	11	1	*466-1706*	1	HANDLE GP-DOOR	
M		1	**8T-4182**	2	BOLT (M10X1.5X45-MM)	
		1	**8T-5360**	4	WASHER (12X22.5X2.5-MM THK)	
M		1	**344-5675**	2	NUT (M10X1.5-THD)	
		1	**462-6480**	1	STRAP AS	

M - METRIC PART
Y - SEPARATE ILLUSTRATION

462-5781 **CAB GP-ENCLOSED ROPS** (contd.) **i07406205**

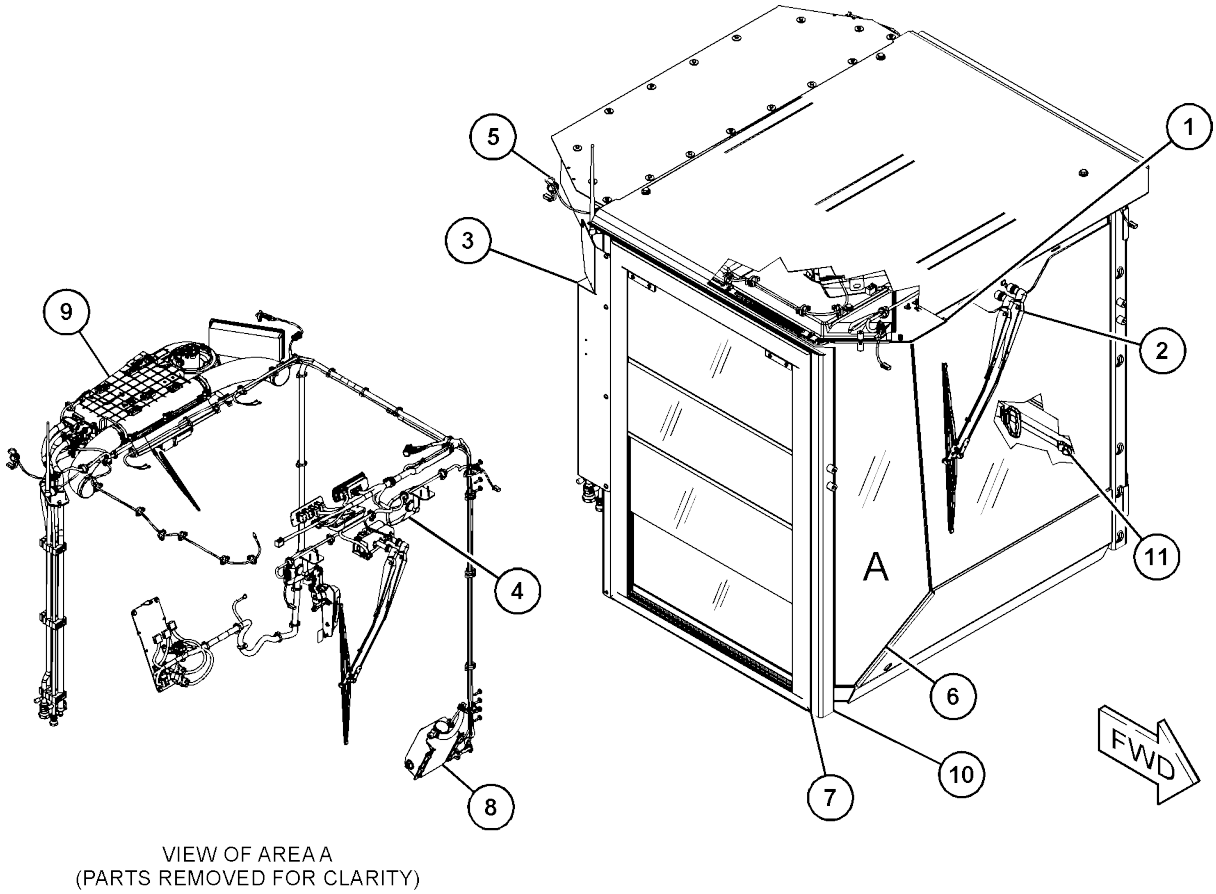

VIEW OF AREA A
(PARTS REMOVED FOR CLARITY)

GRAPHIC #1 <END> g06034582

462-9050 CAB GP-ENCLOSED ROPS

S/N: 5B41-UP
PART OF 462-5780 CAB
GP AN ATTACHMENT

SMCS-7301

i07418046

	REF SEE NOTE QTY	GRAPHIC NO 1 2 3 4 5 6	(PRODUCT LEVEL)	REF PAGE	PART NAME PART NUMBER
M	1	1	**195-1095**	6	STUD-WELD (M6X1X20-MM)
M	2	1	**9T-6001**	6	BOSS (M10X1.5-THD)
M	3	1	**9R-2160**	4	BOSS (M8X1.25X25-MM)
	4	1	*360-4744*	1	PANEL AS
M		1	**8T-3612**	4	NUT-WELD (M8X1.25-THD)
M		1	**9R-2160**	10	BOSS (M8X1.25X25-MM)
	5	1	*362-2460*	1	PANEL AS
M		1	**5G-8871**	4	BOSS (M6X1-THD)
M		1	**8T-3612**	4	NUT-WELD (M8X1.25-THD)
	6	1	**7T-1099**	65	LINK
M	7	1	**3E-4304**	7	INSERT-THREADED (M6X1-THD)
M	8	1	**195-0936**	36	INSERT-THREADED (M6X1-THD)
	9	1	**390-9256**	1	ROPS AS
	10	1	*365-6035*	1	BOX AS
M		1	**6V-9632**	7	NUT-WELD (M6X1-THD)

M - METRIC PART

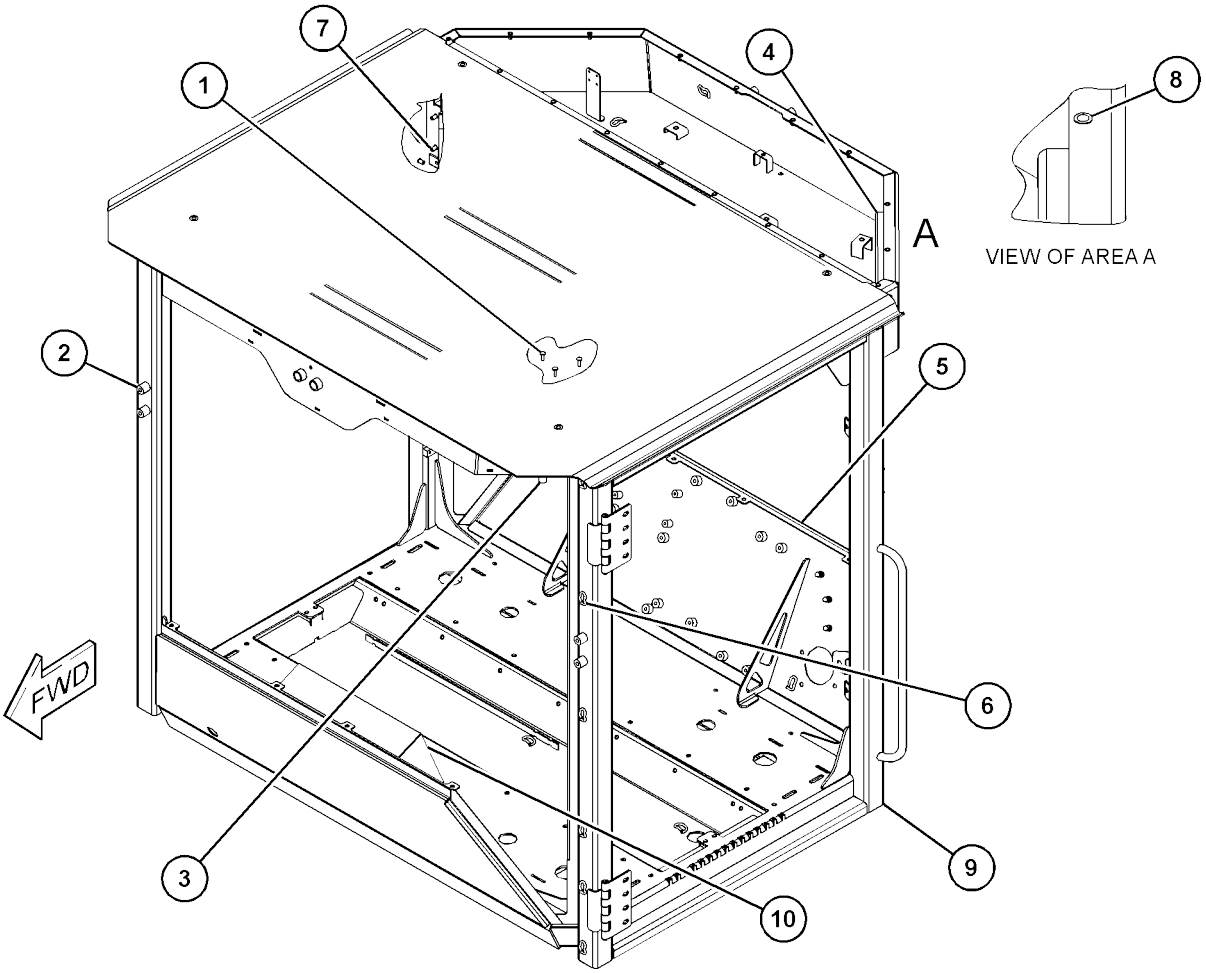

GRAPHIC #1 <END> g06082978

509-9415 CAB GP-ENCLOSED ROPS

S/N: G441-UP
FIELD REPLACEMENT ORDER 509-9416-PAGE:
474 PART OF 509-9416 CAB GP-ENCLOSED ROPS
AN ATTACHMENT

SMCS-7301

i07406154

	REF SEE NOTE QTY	GRAPHIC NO 1 2 3 4 5 6	(PRODUCT LEVEL)	REF PAGE	PART NAME PART NUMBER	
Y	1	1	*362-2516*	1	LINER GP-CAB	518
Y	2	1	*362-2517*	1	WIPER GP-WINDOW (FRONT)	592
Y	3	1	*362-2518*	1	COVER GP-CAB	493
Y	4	1	*362-2574*	1	MIRROR GP-REAR VIEW	537
Y	5	1	*362-2581*	1	WIRING GP-CAB (REAR)	198
Y	6	1	*394-6562*	1	WASHER GP-WINDOW	583
Y	7	1	*424-9010*	1	AIR CONDITIONER GP (AIR)	454
	8	1	*466-1706*	1	HANDLE GP-DOOR (BASIC)	
M		1	**8T-4182**	2	BOLT (M10X1.5X45-MM)	
		1	**8T-5360**	4	WASHER (12X22.5X2.5-MM THK)	
M		1	**344-5675**	2	NUT (M10X1.5-THD)	
		1	**462-6480**	1	STRAP AS	
Y	9	1	*509-9414*	1	CAB GP (BASIC)	466

M - METRIC PART
Y - SEPARATE ILLUSTRATION

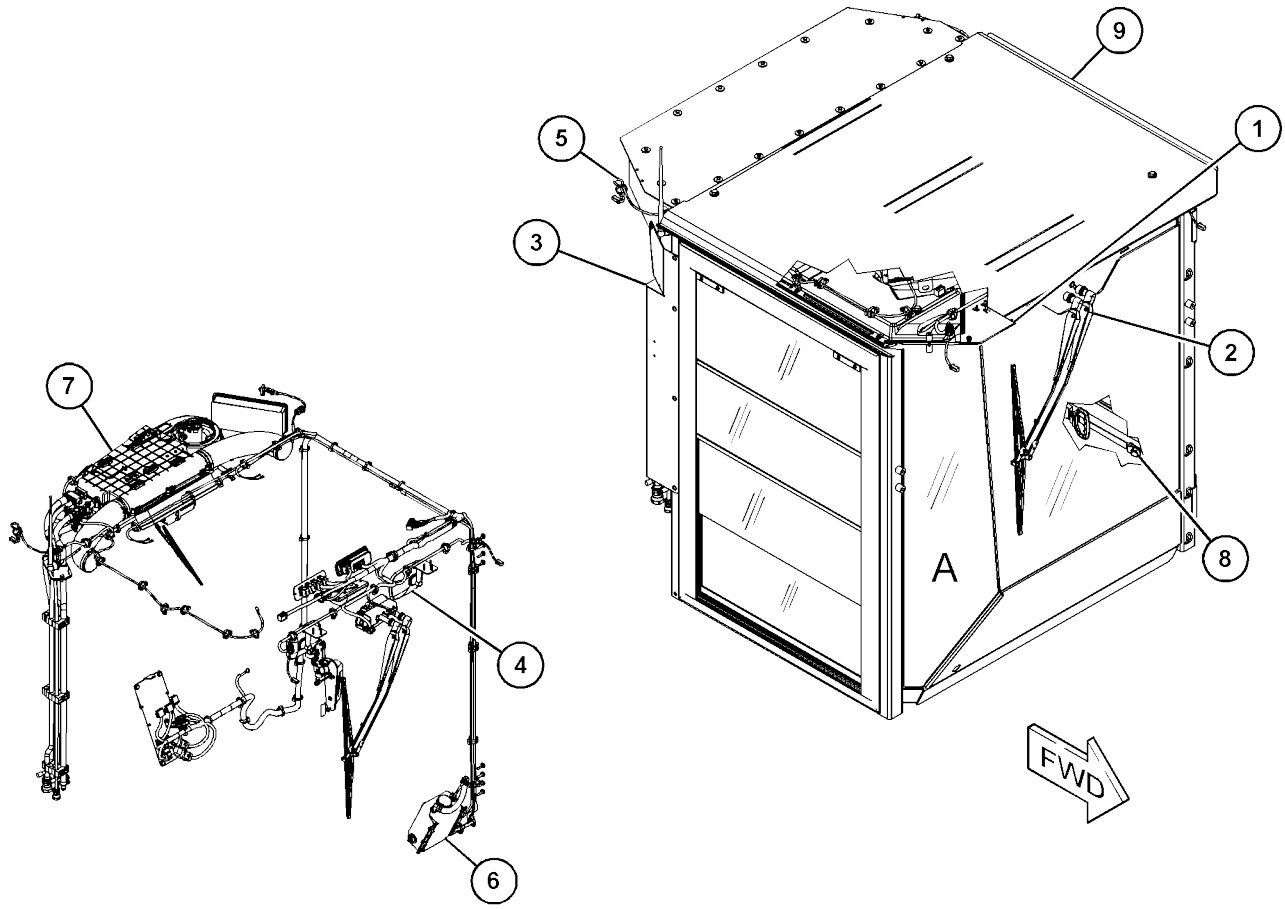

VIEW OF AREA A
(PARTS REMOVED FOR CLARITY)

GRAPHIC #1 <END> g06177783

509-9416 CAB GP-ENCLOSED ROPS

S/N: G441-UP
PART OF 451-3190 OPERATOR
AR AN ATTACHMENT

SMCS-7301

i07406155

NOTE	PART NUMBER	QTY	PART NAME 1 2 3 4 5 6 (PRODUCT LEVEL)	SEE PAGE
Y	*462-5781*	1	CAB GP-ENCLOSED ROPS	470
			-OR-	
Y	*509-9415*	1	CAB GP-ENCLOSED ROPS	473

Y - SEPARATE ILLUSTRATION

<END>

393-0160 CANOPY GP

S/N: G441-UP
PART OF 388-1479 OPERATOR
AR AN ATTACHMENT

SMCS-7302

i07403862

	REF SEE NOTE QTY	GRAPHIC NO 1 2 3 4 5 6	(PRODUCT LEVEL)	REF PAGE	PART NAME PART NUMBER	
	1	1	**356-4241**	1	HANDRAIL AS	
	2	1	**356-4244**	1	PIPE	
	3	1	**365-6071**	1	HANDRAIL AS	
Y	4	1	*393-0162*	1	CANOPY GP	477
	5	1	**393-0208**	1	HANDRAIL AS	
	6	1	**393-0210**	1	HANDRAIL AS	
	7	1	**7X-7729**	8	WASHER (11X25X3-MM THK)	
	8	1	**8T-4121**	14	WASHER-HARD (11X21X2.5-MM THK)	
M	9	1	**8T-4136**	8	BOLT (M10X1.5X25-MM)	
M	10	1	**8T-4141**	4	BOLT (M20X2.5X70-MM)	
M	11	1	**8T-4195**	14	BOLT (M10X1.5X30-MM)	
	12	1	**8T-5439**	4	WASHER-HARD (21.5X45X6-MM THK)	

M - METRIC PART
Y - SEPARATE ILLUSTRATION

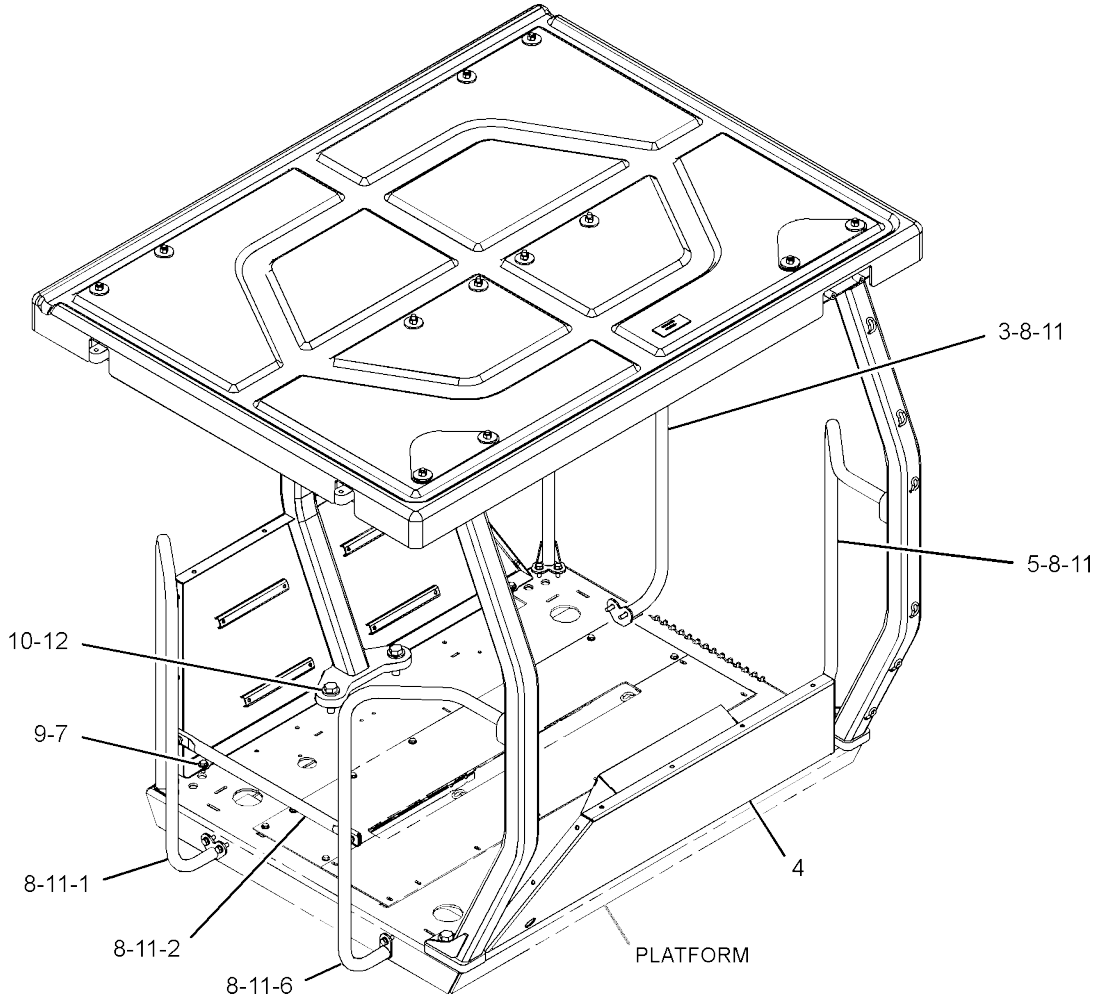

GRAPHIC #1

<END>

g03342286

393-0161 CANOPY GP

S/N: 5B41-UP
PART OF 388-2035 OPERATOR
AR AN ATTACHMENT

SMCS-7302

i07417996

	REF SEE NOTE QTY	GRAPHIC NO 1 2 3 4 5 6	(PRODUCT LEVEL)	REF PAGE	PART NAME PART NUMBER	
	1	1	**356-4241**	1	HANDRAIL AS	
	2	1	**356-4244**	1	PIPE	
	3	1	**365-6071**	1	HANDRAIL AS	
Y	4	1	*393-0163*	1	CANOPY GP	478
	5	1	**393-0208**	1	HANDRAIL AS	
	6	1	**393-0210**	1	HANDRAIL AS	
	7	1	**7X-7729**	8	WASHER (11X25X3-MM THK)	
	8	1	**8T-4121**	14	WASHER-HARD (11X21X2.5-MM THK)	
M	9	1	**8T-4136**	8	BOLT (M10X1.5X25-MM)	
M	10	1	**8T-4141**	4	BOLT (M20X2.5X70-MM)	
M	11	1	**8T-4195**	14	BOLT (M10X1.5X30-MM)	
	12	1	**8T-5439**	4	WASHER-HARD (21.5X45X6-MM THK)	

M - METRIC PART
Y - SEPARATE ILLUSTRATION

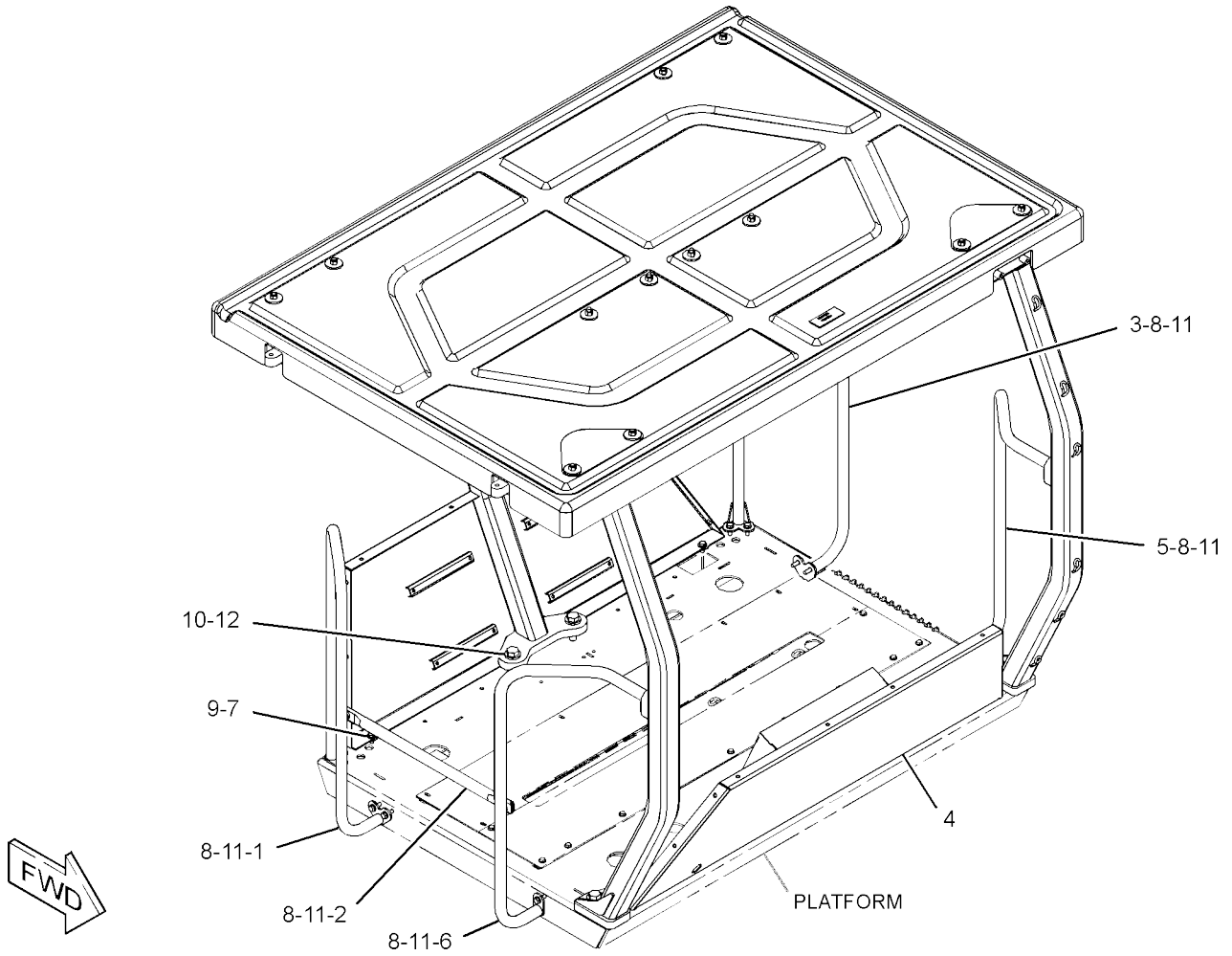

GRAPHIC #1

<END>

g03342298

393-0162 CANOPY GP

S/N: G441-UP
PART OF 393-0160 CANOPY
GP AN ATTACHMENT

SMCS-7302

i07403863

	REF SEE NOTE QTY	GRAPHIC NO 1 2 3 4 5 6	(PRODUCT LEVEL)	REF PAGE	PART NAME PART NUMBER
	1	1	**393-0129**	1	PANEL AS
M		1	**6V-9632**	10	NUT-WELD (M6X1-THD)
	2	1	**393-0146**	1	CANOPY AS
	3	1	**393-0190**	1	CANOPY
	4	1	**393-0206**	10	GASKET
	5	1	**434-1073**	2	PLATE-MOUNTING
M	6	1	**6V-8197**	24	BOLT (M12X1.75X40-MM)
M	7	1	**8T-4184**	4	BOLT (M12X1.75X45-MM)
	8	1	**8T-4223**	28	WASHER-HARD (13.5X25.5X3-MM THK)
M	9	1	**8T-4244**	28	NUT (M12X1.75-THD)
	10	1	**8T-4895**	28	WASHER (13.5X50X5-MM THK)
	11	1	**253-3484**	36	WASHER (13X46X3.5-MM THK)

M - METRIC PART

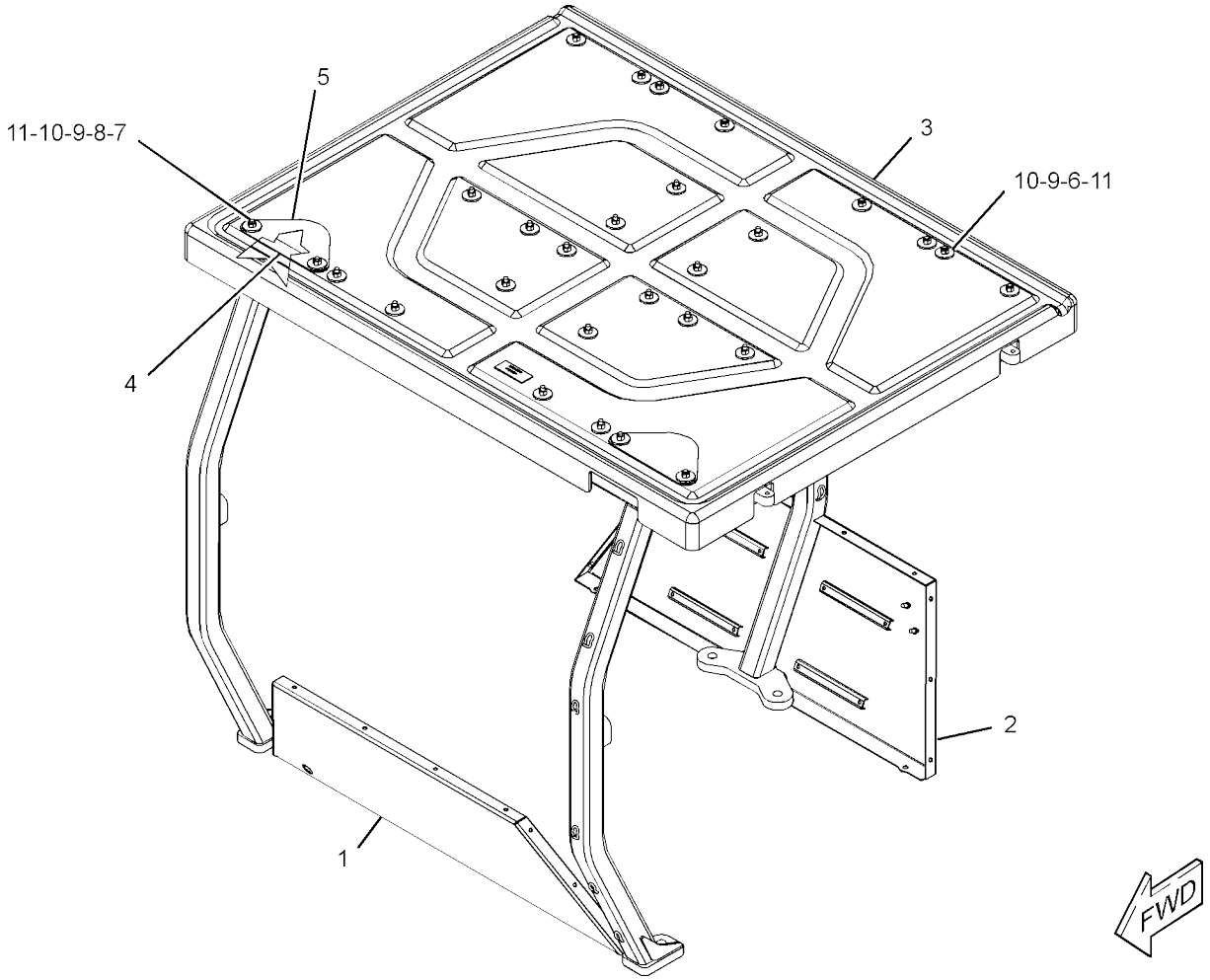

GRAPHIC #1 <END> g03878841

393-0163 CANOPY GP

S/N: 5B41-UP
PART OF 393-0161 CANOPY
GP AN ATTACHMENT

SMCS-7302

i07417997

	REF SEE NOTE QTY	GRAPHIC NO 1 2 3 4 5 6 (PRODUCT LEVEL)	REF PAGE	PART NAME PART NUMBER
	1	1 **393-0140**	1	PANEL AS
	2	1 **393-0147**	1	CANOPY AS
	3	1 **393-0191**	1	CANOPY
	4	1 **393-0206**	10	GASKET
	5	1 **434-1073**	2	PLATE-MOUNTING
M	6	1 **6V-8197**	24	BOLT (M12X1.75X40-MM)
M	7	1 **8T-4184**	4	BOLT (M12X1.75X45-MM)
	8	1 **8T-4223**	28	WASHER-HARD (13.5X25.5X3-MM THK)
M	9	1 **8T-4244**	28	NUT (M12X1.75-THD)
	10	1 **8T-4895**	28	WASHER (13.5X50X5-MM THK)
	11	1 **253-3484**	36	WASHER (13X46X3.5-MM THK)

M - METRIC PART

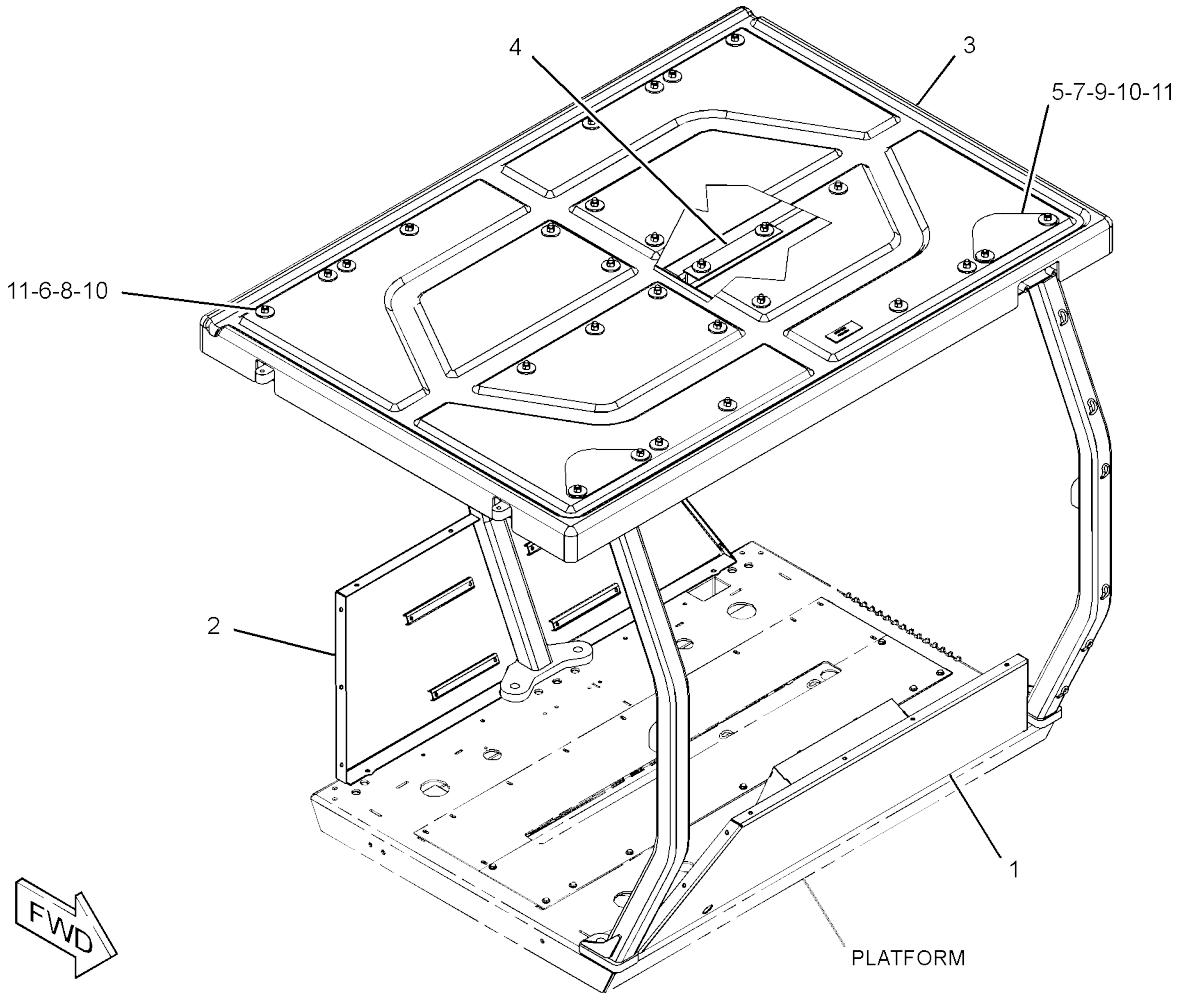

GRAPHIC #1 <END> g03878844

178-9570 COMPRESSOR GP-REFRIGERANT

S/N: 5B41-UP; G441-UP
PART OF 342-9332 COMPRESSOR GP-REFRIGERANT AN ATTACHMENT

SMCS-1802

i06875469

REF SEE NOTE QTY	GRAPHIC NO 1 2 3 4 5 6	(PRODUCT LEVEL)	REF PAGE	PART NAME PART NUMBER
1	1	**102-8802**	1	KIT-RECEPTACLE (2-PIN)
				(INCLUDES RECEPTACLE AS & WEDGE)
2	1	**7T-4532**	1	PLUG AS
3	1	**314-4018**	1	VALVE AS-PRESSURE RELIEF (REFRIGERANT COMPRESSOR)
4	1	**180-9339**	2	PIN-CONNECTOR (14-GA TO 18-GA)

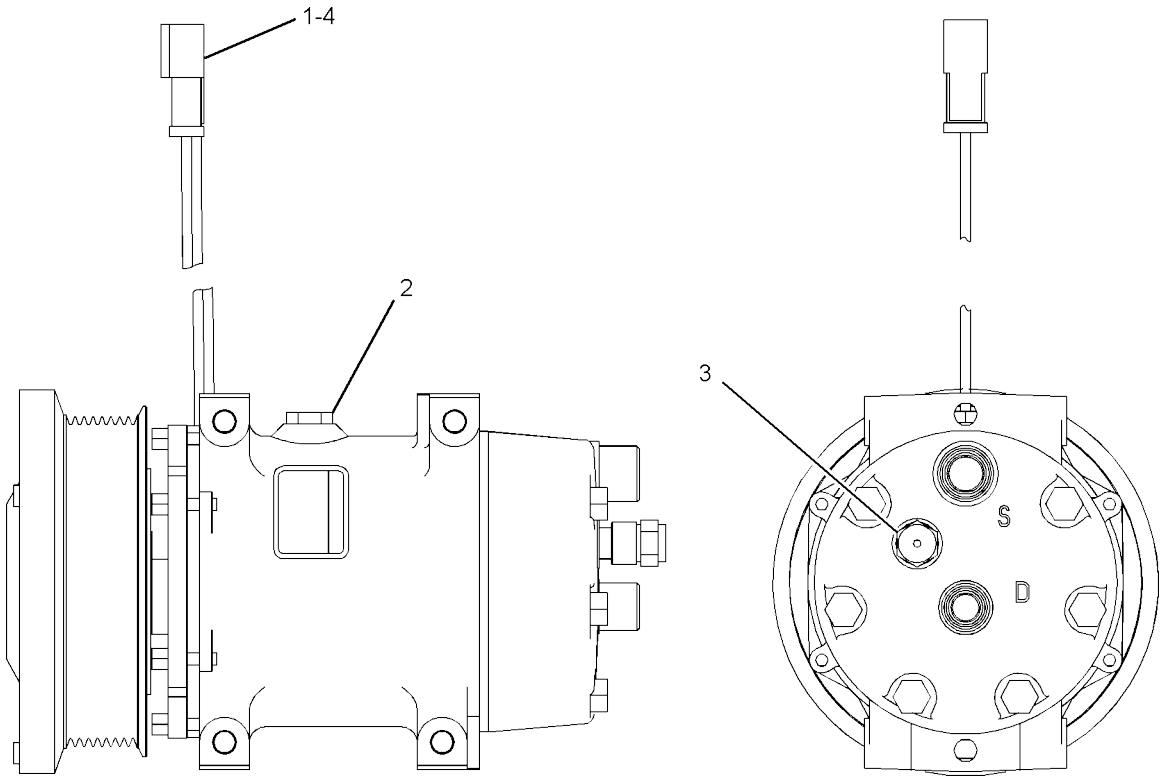

GRAPHIC #1 <END> g02749997

342-9332 COMPRESSOR GP-REFRIGERANT

S/N: 5B41-UP; G441-UP
PART OF 451-3170, 451-3270 AIR CONDITIONER AR
AN ATTACHMENT

SMCS-1802

i07403918

	REF SEE NOTE	QTY	GRAPHIC NO 1 2 3 4 5 6	(PRODUCT LEVEL)	REF PAGE	PART NAME PART NUMBER	
M		1	1	**085-8091**	3	BOLT (M10X1.5X55-MM)	
Y		2	1	**178-9570**	1	COMPRESSOR GP-REFRIGERANT	479
		3	1	**330-1725**	1	BRACKET AS	
			1	**161-9820**	2	PIN	
M		4	1	**7X-2538**	4	BOLT (M8X1.25X100-MM)	
		5	1	**8T-4121**	3	WASHER-HARD (11X21X2.5-MM THK)	
		6	1	**8T-4224**	4	WASHER-HARD (8.8X16X2-MM THK)	

M - METRIC PART
Y - SEPARATE ILLUSTRATION

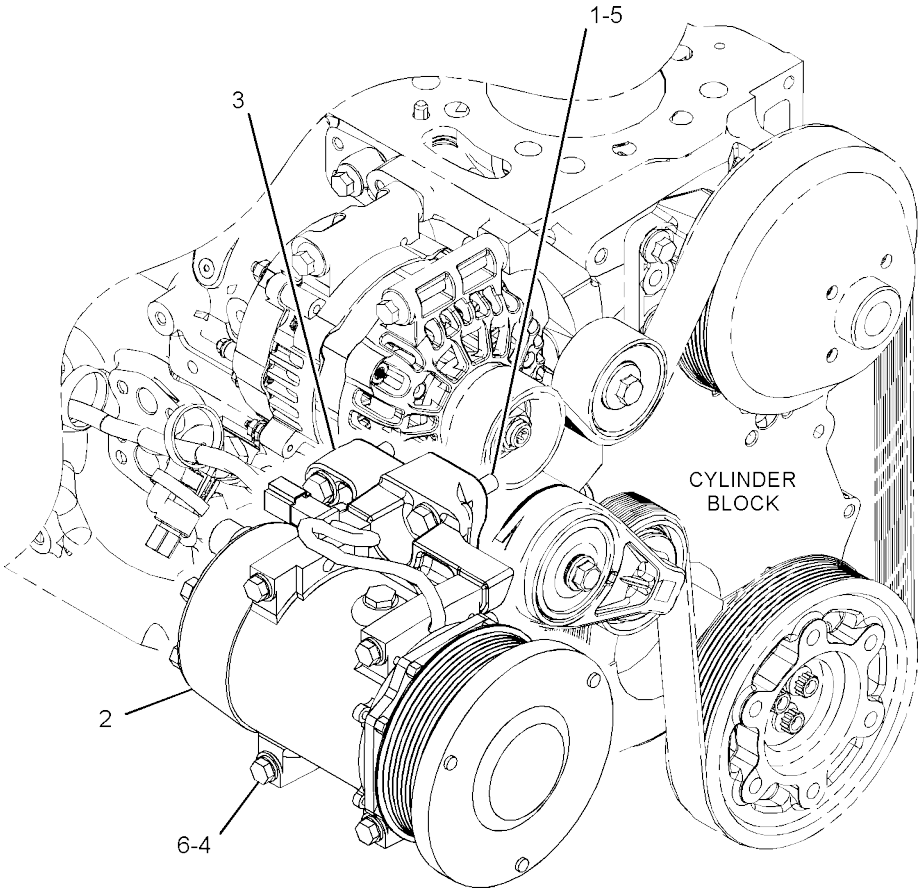

GRAPHIC #1 <END> g02879998

344-0576 CONDENSER & MTG GP-REFRIGERANT

S/N: 5B41-UP; G441-UP
PART OF 451-3170, 451-3270 AIR CONDITIONER AR
AN ATTACHMENT

SMCS-1805

i07403920

	REF SEE NOTE QTY	GRAPHIC NO 1 2 3 4 5 6	(PRODUCT LEVEL)	REF PAGE	PART NAME PART NUMBER
	1	1	**363-2237**	1	CONDENSER AS
M	2	1	**5C-7261**	4	NUT (M8X1.25-THD)
	3	1	**5P-4116**	4	WASHER-HARD (8.8X20.5X2-MM THK)

M - METRIC PART

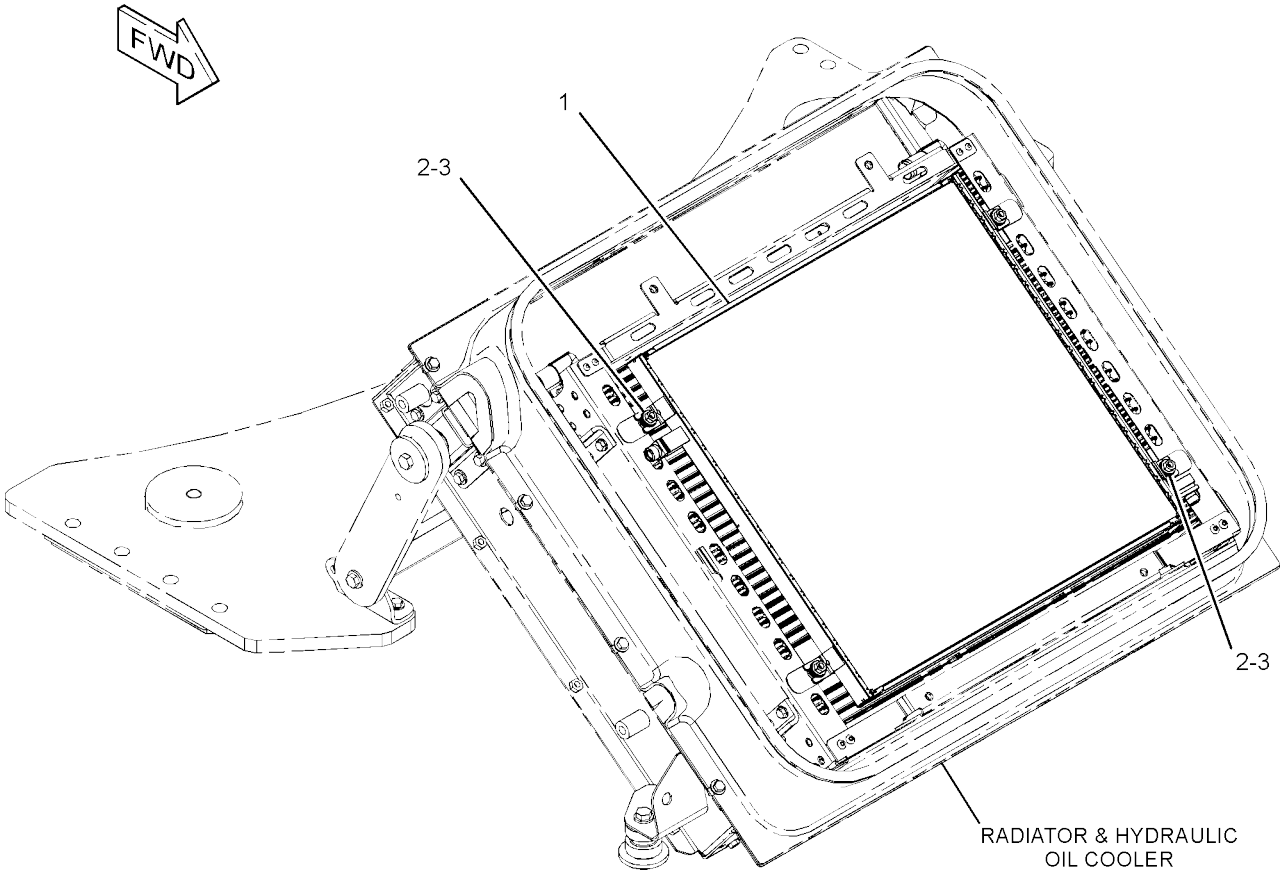

GRAPHIC #1 <END> g02852338

487-5694 CONSOLE GP-OPERATOR-FIELD INSTALLED

S/N: 5B41-UP; G441-
UP AN ATTACHMENT

SMCS-5258

i07416377

	REF SEE NOTE QTY	GRAPHIC NO 1 2 3 4 5 6	(PRODUCT LEVEL)	REF PAGE	PART NAME PART NUMBER
	1	1	**1A-0302**	1	SPRING
	2	1	**7K-1181**	1	STRAP-CABLE
	3	1	**486-2795**	1	MOUNT AS
	4	1	**486-2796**	1	PLATE AS
M		1	**6V-9632**	8	NUT-WELD (M6X1-THD)
	5	1	**486-2797**	1	LEVER AS
	6	1	**486-2798**	1	PLATE
	7	1	**486-2799**	2	SPACER (6.6X14X3.7-MM THK)
	8	1	**486-2800**	1	COVER
	9	1	**486-2801**	1	COVER
	10	1	**487-0814**	1	BOSS
	11	1	**3P-3547**	1	RING-RETAINING
	12	1	**3T-6521**	1	PIN
	13	1	**5P-4115**	2	WASHER-HARD (7.2X19X2-MM THK)
M	14	1	**6V-7357**	1	BOLT (M6X1X25-MM)
M	15	1	**8T-4138**	2	BOLT (M6X1X20-MM)
M	16	1	**8T-4970**	1	BOLT (M6X1X14-MM)
M	17	1	**9X-2044**	4	SCREW-TRUSS HEAD (M6X1X16-MM)
	18	1	**9X-8256**	2	WASHER (6.6X12X2-MM THK)

M - METRIC PART

487-5694 **CONSOLE GP-OPERATOR (**contd.**)** **i07416377**

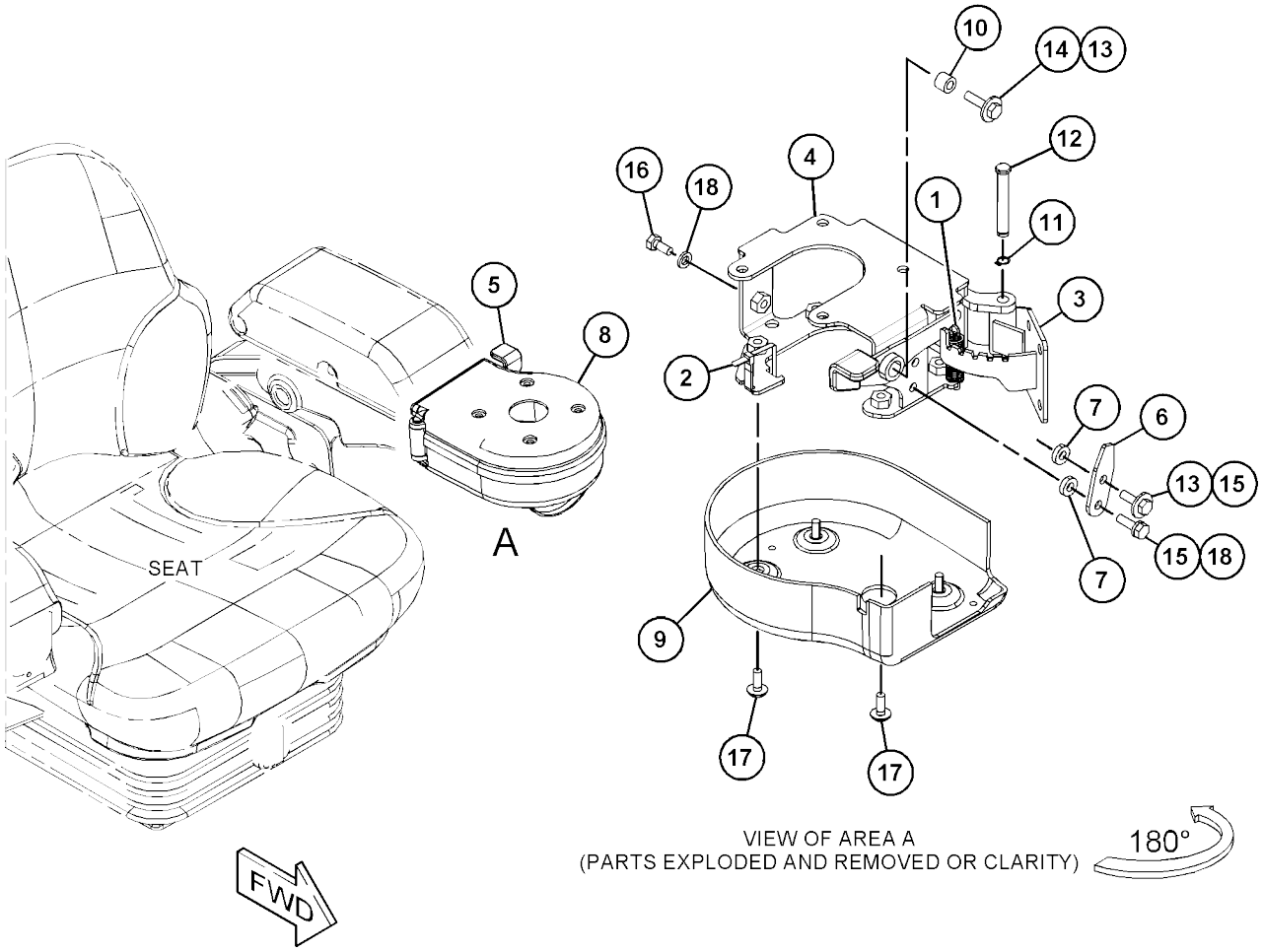

GRAPHIC #1 <END> g03878356

489-6273 CONSOLE GP-OPERATOR

S/N: 5B41-UP; G441-

UP FIXED

AN ATTACHMENT

SMCS-5258

i07416378

	REF SEE NOTE QTY	GRAPHIC NO 1 2 3 4 5 6	(PRODUCT LEVEL)	REF PAGE	PART NAME PART NUMBER	
	1	1	**1V-9385**	1	COVER-EMBLEM	
Y	2	1	**153-7369**	1	KNOB GP-STEERING	273
	3	1	**360-2370**	1	COVER (TOP)	
	4	1	**361-7666**	1	PLATE AS	
	5	1	**361-7681**	1	COVER (BOTTOM)	
	6	1	**362-1469**	1	CONTROL AS-STEERING	
	7	1	**362-3012**	1	WHEEL AS	
	8	1	**135-6125**	1	KEY-WOODRUFF	
M	9	1	**344-5673**	8	NUT (M6X1-THD)	
M	10	1	**344-5674**	1	NUT (M8X1.25-THD)	
	11	1	**5P-4116**	1	WASHER-HARD (8.8X20.5X2-MM THK)	
	12	1	**9K-5635**	3	SCREW-TAPPING (8-18X1-IN)	
	13	1	**117-8929**	4	WASHER (6.6X22X2-MM THK)	
M	14	1	**9X-2045**	4	SCREW-TRUSS HEAD (M6X1X20-MM)	
M	15	1	**9X-2046**	4	SCREW-TRUSS HEAD (M6X1X35-MM)	
	16	1	**9X-8256**	8	WASHER (6.6X12X2-MM THK)	

M - METRIC PART
Y - SEPARATE ILLUSTRATION

489-6273 **CONSOLE GP-OPERATOR (**contd.**)** **i07416378**

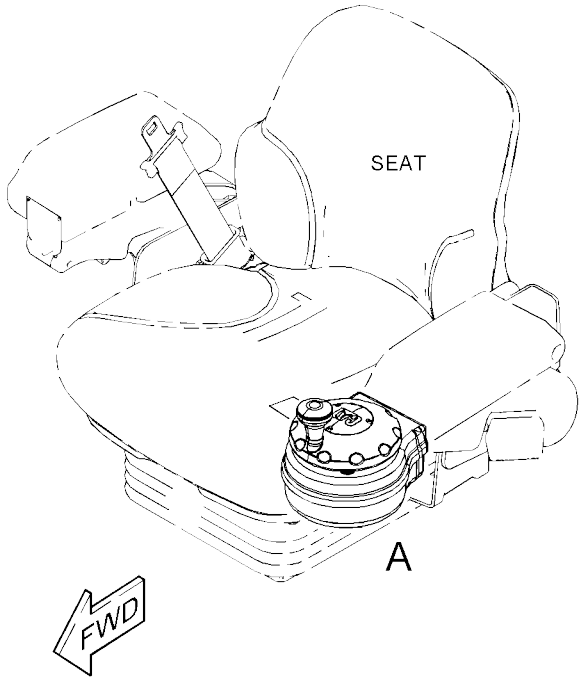

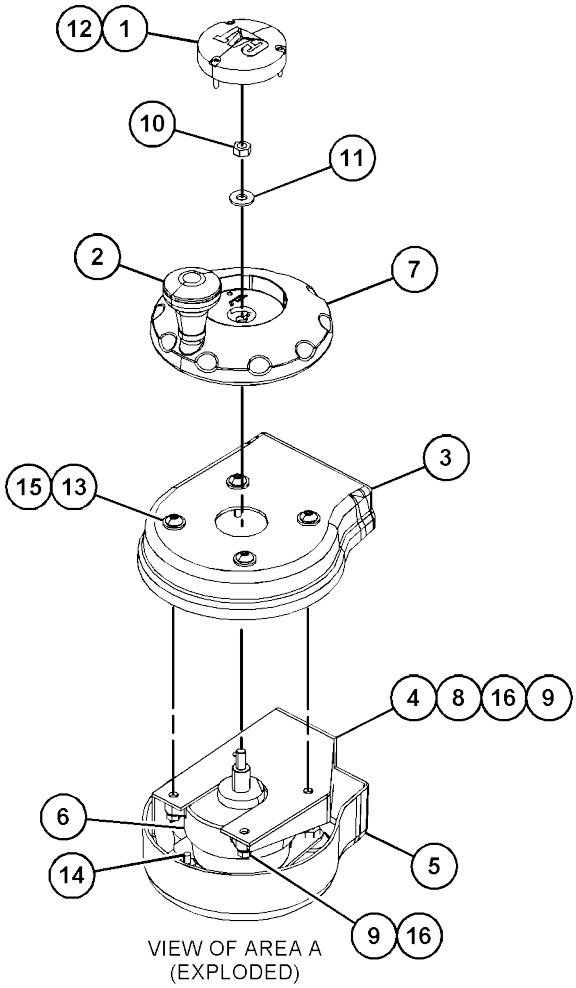

GRAPHIC #1 <END> g06034604

489-6274 CONSOLE GP-OPERATOR

S/N: 5B41-UP; G441-

UP PIVOT

AN ATTACHMENT

SMCS-5258

i07416428

	REF SEE NOTE QTY	GRAPHIC NO 1 2 3 4 5 6	(PRODUCT LEVEL)	REF PAGE	PART NAME PART NUMBER	
	1	1	**1A-0302**	1	SPRING	
	2	1	**1V-9385**	1	COVER-EMBLEM	
	3	1	**7K-1181**	1	STRAP-CABLE	
Y	4	1	**153-7369**	1	KNOB GP-STEERING	273
	5	1	**362-1469**	1	CONTROL AS-STEERING	
	6	1	**362-3012**	1	WHEEL AS	
	7	1	**486-2795**	1	MOUNT AS	
	8	1	**486-2796**	1	PLATE AS	
M		1	**6V-9632**	8	NUT-WELD (M6X1-THD)	
	9	1	**486-2797**	1	LEVER AS	
	10	1	**486-2798**	1	PLATE	
	11	1	**486-2799**	2	SPACER (6.6X14X3.7-MM THK)	
	12	1	**486-2800**	1	COVER (TOP)	
	13	1	**486-2801**	1	COVER (BOTTOM)	
	14	1	**487-0814**	1	BOSS	
	15	1	**135-6125**	1	KEY-WOODRUFF	
M	16	1	**344-5673**	8	NUT (M6X1-THD)	
M	17	1	**344-5674**	1	NUT (M8X1.25-THD)	
M	18	1	**3T-0852**	1	LOCKNUT (M8X1.25-THD)	
M	19	1	**8T-6869**	1	BOLT (M8X1.25X60-MM)	
	20	1	**5P-4115**	2	WASHER-HARD (7.2X19X2-MM THK)	
	21	1	**5P-4116**	1	WASHER-HARD (8.8X20.5X2-MM THK)	
M	22	1	**6V-7357**	1	BOLT (M6X1X25-MM)	
M	23	1	**8T-4138**	2	BOLT (M6X1X20-MM)	
M	24	1	**8T-4970**	1	BOLT (M6X1X14-MM)	
	25	1	**9K-5635**	3	SCREW-TAPPING (8-18X1-IN)	
	26	1	**117-8929**	4	WASHER (6.6X22X2-MM THK)	
M	27	1	**9X-2044**	4	SCREW-TRUSS HEAD (M6X1X16-MM)	
M	28	1	**9X-2046**	4	SCREW-TRUSS HEAD (M6X1X35-MM)	
	29	1	**9X-8256**	10	WASHER (6.6X12X2-MM THK)	

M - METRIC PART
Y - SEPARATE ILLUSTRATION

489-6274 **CONSOLE GP-OPERATOR** (contd.) **i07416428**

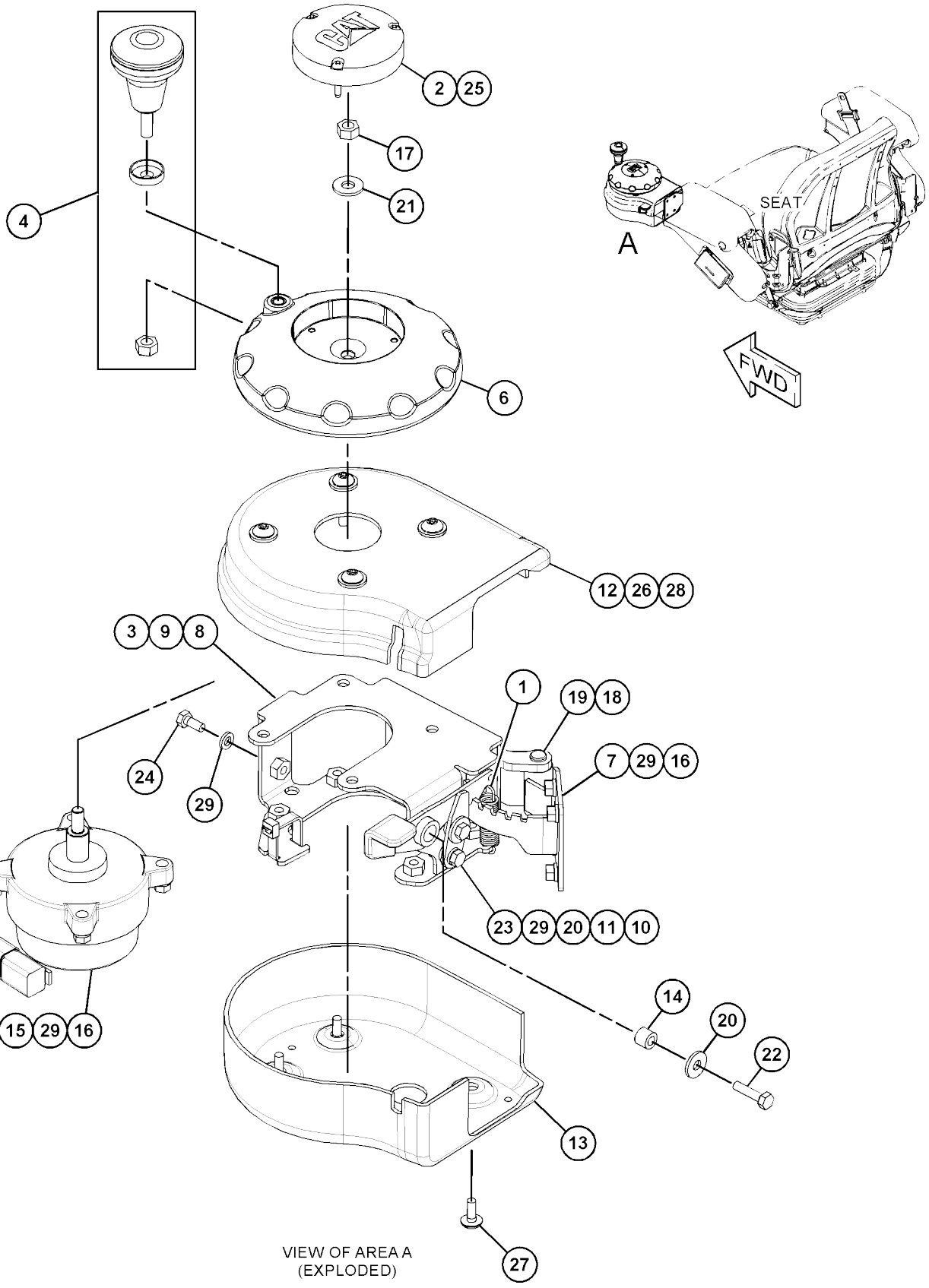

VIEW OF AREA A
(EXPLODED)

GRAPHIC #1 <END> g06039950

OPERATOR STATION

514-0358 CONSOLE GP-OPERATOR

S/N: 5B41-UP; G441-UP
PART OF 505-8543 OPERATOR
AR

SMCS-5258

i07415830

	REF NO	SEE NOTE QTY	GRAPHIC 1 2 3 4 5 6	(PRODUCT LEVEL)	REF PAGE	PART NAME PART NUMBER
	1		1	**2N-7228**	1	WASHER (1X1.5X0.03-IN THK)
	2		1	**3S-2093**	1	STRAP-CABLE
	3		1	**5P-8500**	2	KEY
D	4		1	**6V-2689**		TUBE-HEAT SHRINK (6.35-MM DIA) (0.1-M)
	5		1	**467-8535**	1	SWITCH AS-START (KEY)
			1	**7T-6799**	1	NUT-MOUNTING (1-32-THD)
			1	**8T-8729**	4	PIN-CONNECTOR (16-GA TO 20-GA)
			1	**102-8804**	1	KIT-RECEPTACLE (4-PIN)
						(INCLUDES RECEPTACLE AS & WEDGE)
	6		1	**128-8617**	1	PLATE AS
	7		1	**129-7184**	1	FILM-INSTRUCTION (ENGINE START)
	8		1	**228-6089**	1	PLUG (ROCKER SWITCH)
	9		1	**232-1792**	1	HORN (24-VOLT TO 12-VOLT)
	10		1	**243-0773**	1	SWITCH AS-ROCKER (PARKING BRAKE ON, OFF)
	11		1	**360-1762**	1	SWITCH AS-ROCKER (HORN)
	12		1	**367-0760**	1	COVER
	13		1	**367-9470**	1	SWITCH AS-PUSH BUTTON (EMERGENCY STOP)
			1	**9X-3401**	4	PIN-CONNECTOR (16-GA TO 18-GA)
			1	**102-8804**	1	KIT-RECEPTACLE (4-PIN)
						(INCLUDES RECEPTACLE AS & WEDGE)
	14		1	**368-3063**	1	PLATE
	15		1	**368-4778**	1	FILM-WARNING (EMERGENCY STOP)
	16		1	**493-9683**	1	DISPLAY GP-MONITOR
			1	**510-4075**	1	SOFTWARE
M			1	**155-4098**	4	SCREW-BUTTON HEAD (M3X0.5X1-MM)
	17		1	**514-0357**	1	BRACKET AS
	18		1	**154-8079**	13	NUT-RETAINER
M	19		1	**172-8591**	2	NUT-CLIP (M6X1-THD)
M	20		1	**198-9705**	13	SCREW-TRUSS HEAD (M4X0.7X20-MM)
M	21		1	**344-5673**	6	NUT (M6X1-THD)
M	22		1	**9X-2045**	2	SCREW-TRUSS HEAD (M6X1X20-MM)
	23		1	**9X-8256**	6	WASHER (6.6X12X2-MM THK)

D - ORDER BY THE METER M - METRIC PART

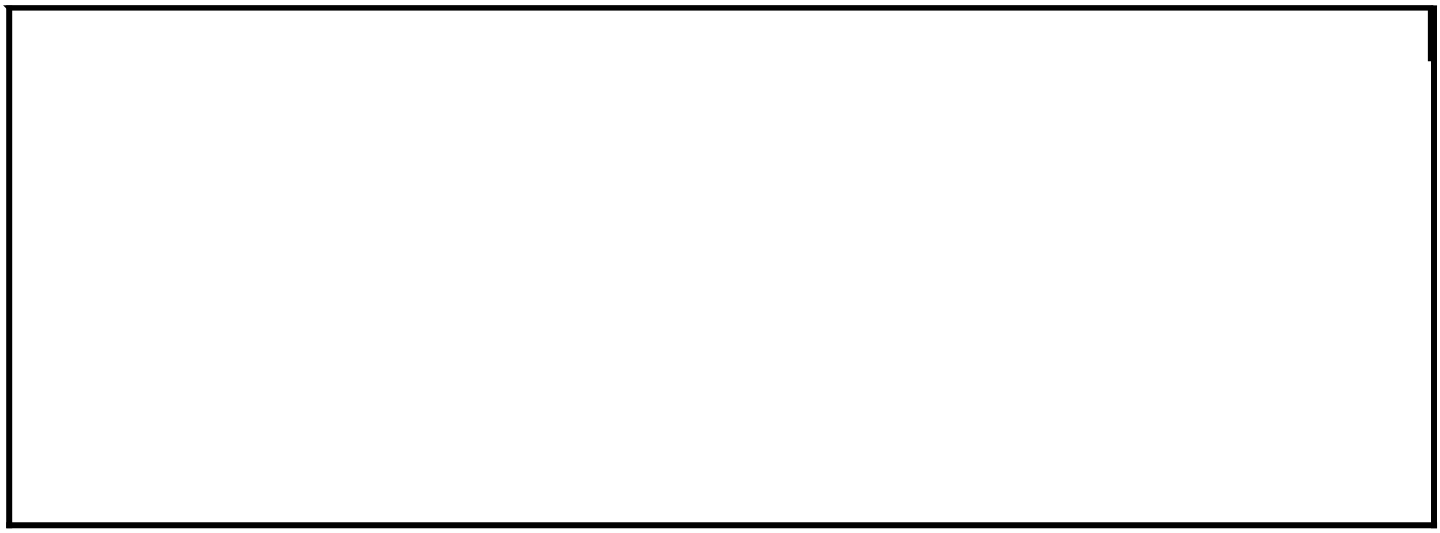

514-0358 **CONSOLE GP-OPERATOR (**contd.**)** **i07415830**

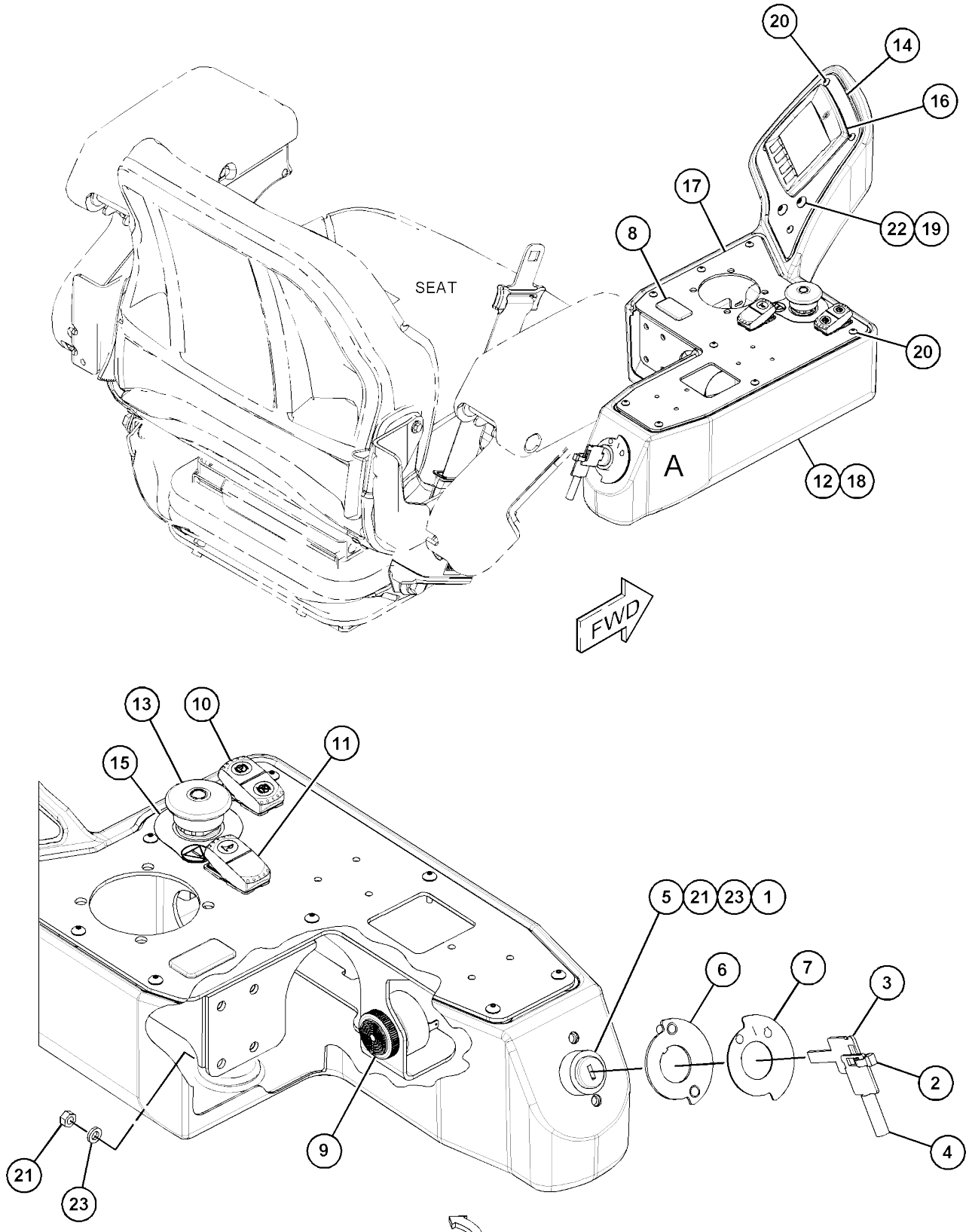

GRAPHIC #1 <END> g06150092

451-3145 CONTROL GP-JOYSTICK

S/N: 5B41-UP; G441-UP
PART OF 451-3140 ELECTRICAL
AR

SMCS-5705

i07748065

	REF SEE NOTE QTY	GRAPHIC NO 1 2 3 4 5 6 (PRODUCT LEVEL)	REF PAGE	PART NAME PART NUMBER	
Y	1	1 **526-5838**	1	CONTROL GP-ELECTRONIC	121
	2	1 **5P-4115**	4	WASHER-HARD (7.2X19X2-MM THK)	
M	3	1 **8T-4971**	4	BOLT (M6X1X30-MM)	

M - METRIC PART
Y - SEPARATE ILLUSTRATION

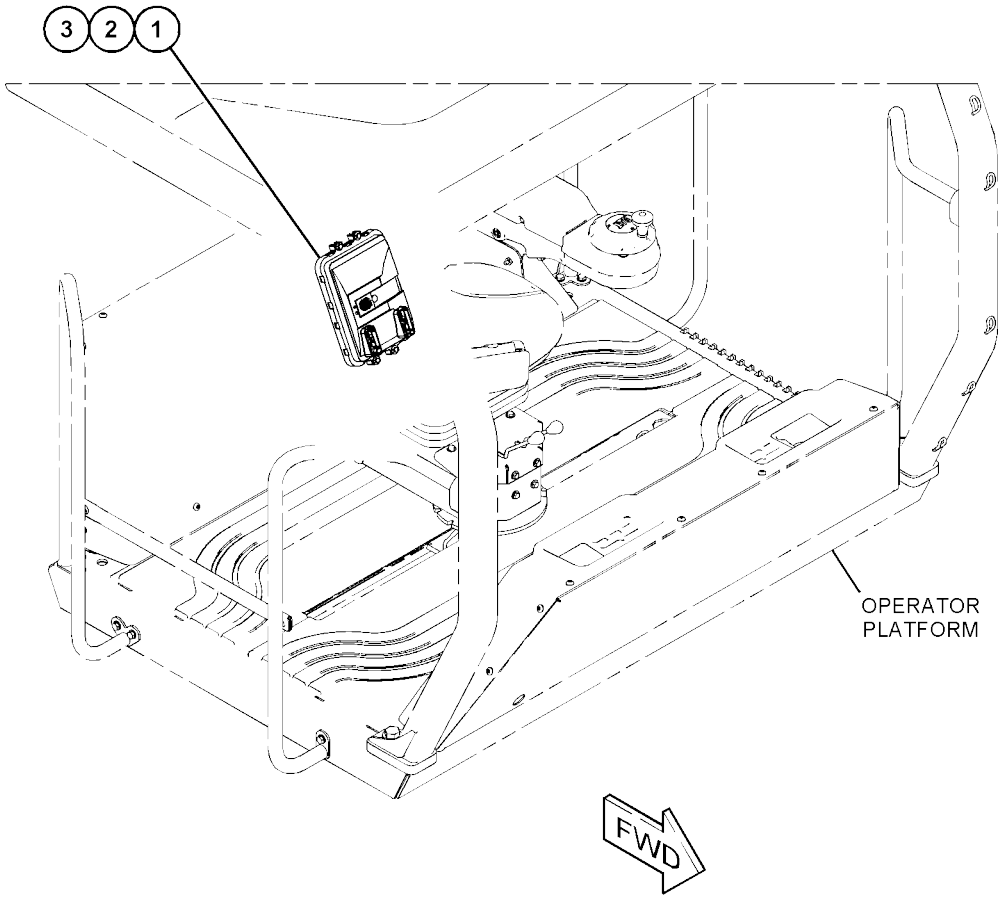

GRAPHIC #1 <END> g06387321

454-3054 CONTROL GP-JOYSTICK-2-BUTTON

S/N: 5B41-UP; G441-
UP AN ATTACHMENT

SMCS-5705

i07409073

REF SEE NOTE QTY	GRAPHIC NO 1 2 3 4 5 6 (PRODUCT LEVEL)	REF PAGE	PART NAME PART NUMBER
1	1 **365-9854**	1	FILM-INSTRUCTION
2	1 **416-8779**	1	LEVER GP
3	1 **1H-3244**	1	LOCKWASHER

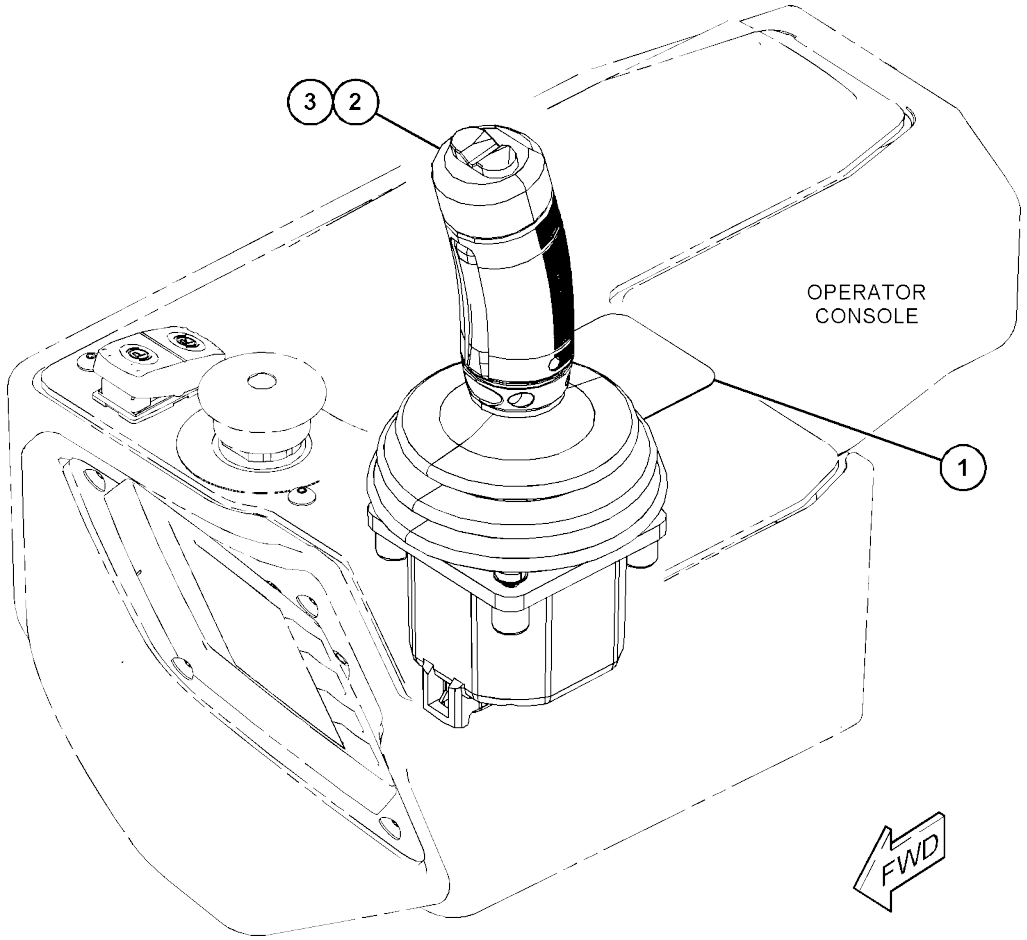

GRAPHIC #1 <END> g03841611

454-3055 CONTROL GP-JOYSTICK-6-BUTTON

S/N: 5B41-UP; G441-
UP AN ATTACHMENT

SMCS-5705

i07409074

REF SEE NOTE QTY	GRAPHIC NO 1 2 3 4 5 6 (PRODUCT LEVEL)	REF PAGE	PART NAME PART NUMBER
1	1 **365-9853**	1	FILM-IDENTIFICATION (JOYSTICK CONTROL)
2	1 **467-9049**	1	LEVER GP-PROPEL
3	1 **1H-3244**	1	LOCKWASHER

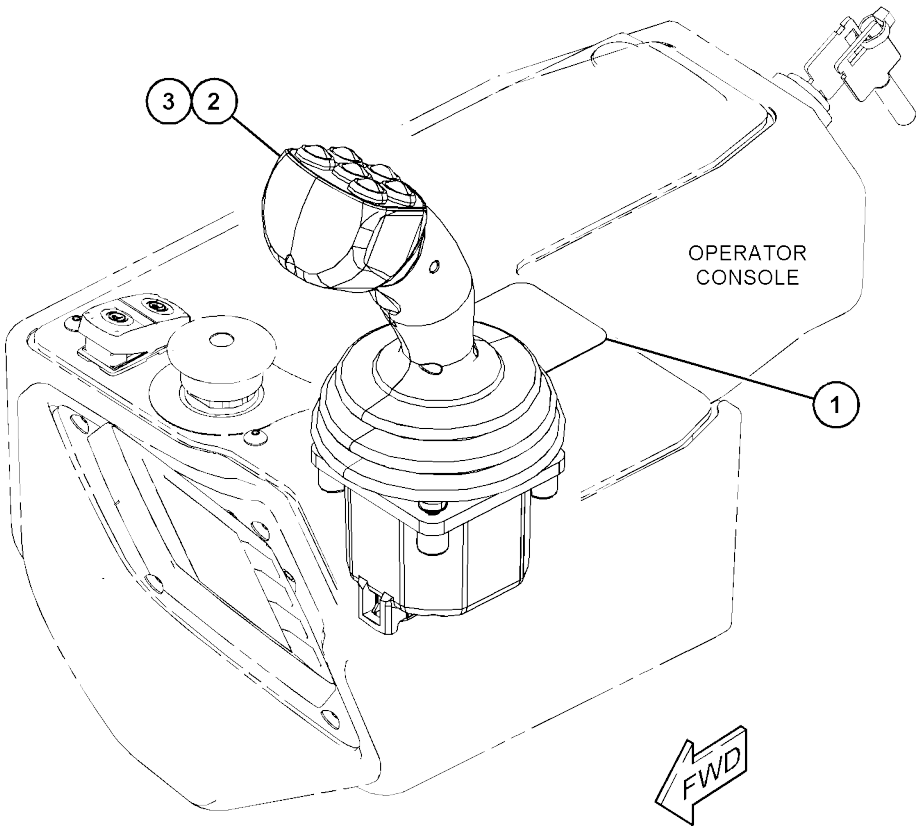

GRAPHIC #1 <END> g03841615

362-2518 COVER GP-CAB

S/N: G441-UP

PART OF 462-5781, 509-9415 CAB GP-ENCLOSED

ROPS AN ATTACHMENT

SMCS-7301

i07406156

	REF SEE NOTE QTY	GRAPHIC NO 1 2 3 4 5 6	(PRODUCT LEVEL)	REF PAGE	PART NAME PART NUMBER
	1	1	**6V-8928**	1	HOOK-COAT
	2	1	**145-4506**	16	WASHER (6X30X2-MM THK)
	3	1	**229-8062**	4	SEAL
	4	1	**357-1750**	1	COVER AS-ACCESS
	5	1	**362-2598**	1	COVER-VENT
	6	1	**362-2601**	1	COVER-ACCESS
	7	1	**362-2773**	1	COVER-VENT
	8	1	**365-6015**	1	COVER
	9	1	**462-9047**	1	COVER AS
	10	1	**367-8653**	1	COVER AS
	11	1	**394-6552**	16	SEAL
	12	1	**394-6570**	1	COVER-DOOR
	13	1	**114-6658**	16	WASHER (6.5X17X1-MM THK)
M	14	1	**127-2170**	4	SCREW-TRUSS HEAD (M8X1.25X20-MM)
M	15	1	**288-3663**	1	SCREW-THUMB (M6X1X25-MM)
	16	1	**5P-1076**	4	WASHER-HARD (13.5X30X4-MM THK)
M	17	1	**6V-7357**	16	BOLT (M6X1X25-MM)
	18	1	**7X-0579**	4	WASHER-HARD (8.8X25.5X2-MM THK)
M	19	1	**8T-4179**	4	BOLT (M12X1.75X20-MM)
M	20	1	**9X-2044**	21	SCREW-TRUSS HEAD (M6X1X16-MM)
M	21	1	**9X-2046**	3	SCREW-TRUSS HEAD (M6X1X35-MM)
D	22	1	**5P-5930**		SEAL (0.9-M)
D	22A	1	**5P-5930**		SEAL (1.1-M)
D	22B	1	**5P-5930**		SEAL (3.4-M)
D	22C	1	**5P-5930**		SEAL (0.2-M)
	23	1	**440-0000**	2	TREAD-NONSKID

D - ORDER BY THE METER M - METRIC PART

362-2518 **COVER GP-CAB** (contd.) **i07406156**

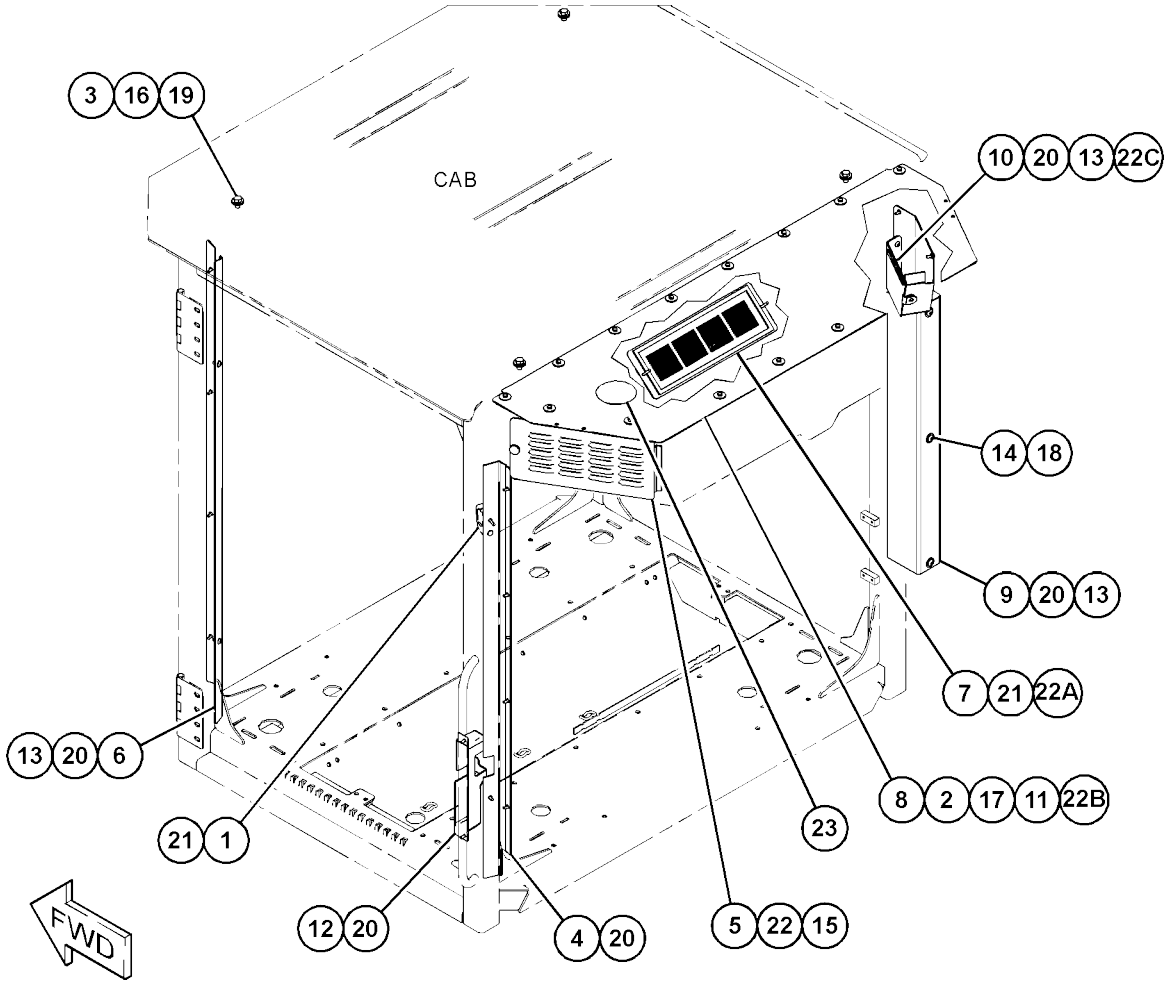

GRAPHIC #1 <END> g06269648

362-2577 COVER GP-CAB

S/N: 5B41-UP
PART OF 462-5780, 509-9422 CAB
GP AN ATTACHMENT

SMCS-7301

i07418042

	REF SEE NOTE QTY	GRAPHIC NO 1 2 3 4 5 6	(PRODUCT LEVEL)	REF PAGE	PART NAME PART NUMBER
	1	1	**6V-8928**	1	HOOK-COAT
	2	1	**114-6658**	16	WASHER (6.5X17X1-MM THK)
	3	1	**357-1750**	1	COVER AS-ACCESS
M		1	**195-1095**	1	STUD-WELD (M6X1X20-MM)
	4	1	**394-6570**	1	COVER-DOOR
	5	1	**462-9048**	1	COVER AS
	6	1	**360-9114**	1	COVER AS
	7	1	**362-2598**	1	COVER-VENT
	8	1	**362-2601**	1	COVER-ACCESS
	9	1	**362-2771**	1	COVER
	10	1	**362-2773**	1	COVER-VENT
M	11	1	**127-2170**	4	SCREW-TRUSS HEAD (M8X1.25X20-MM)
	12	1	**7X-0579**	4	WASHER-HARD (8.8X25.5X2-MM THK)
M	13	1	**288-3663**	1	SCREW-THUMB (M6X1X25-MM)
M	14	1	**6V-7357**	17	BOLT (M6X1X25-MM)
	15	1	**145-4506**	17	WASHER (6X30X2-MM THK)
M	16	1	**9X-2044**	21	SCREW-TRUSS HEAD (M6X1X16-MM)
D	18	1	**5P-5930**		SEAL (3.7-M)
D	18A	1	**5P-5930**		SEAL (1-M)
D	18B	1	**5P-5930**		SEAL (0.8-M)
D	18C	1	**5P-5930**		SEAL (0.2-M)
	19	1	**5P-1076**	4	WASHER-HARD (13.5X30X4-MM THK)
M	20	1	**8T-4179**	4	BOLT (M12X1.75X20-MM)
	21	1	**229-8062**	4	SEAL
	22	1	**394-6552**	17	SEAL
	23	1	**440-0000**	2	TREAD-NONSKID
M	24	1	**9X-2046**	3	SCREW-TRUSS HEAD (M6X1X35-MM)

D - ORDER BY THE METER M - METRIC PART

362-2577 **COVER GP-CAB** (contd.) **i07418042**

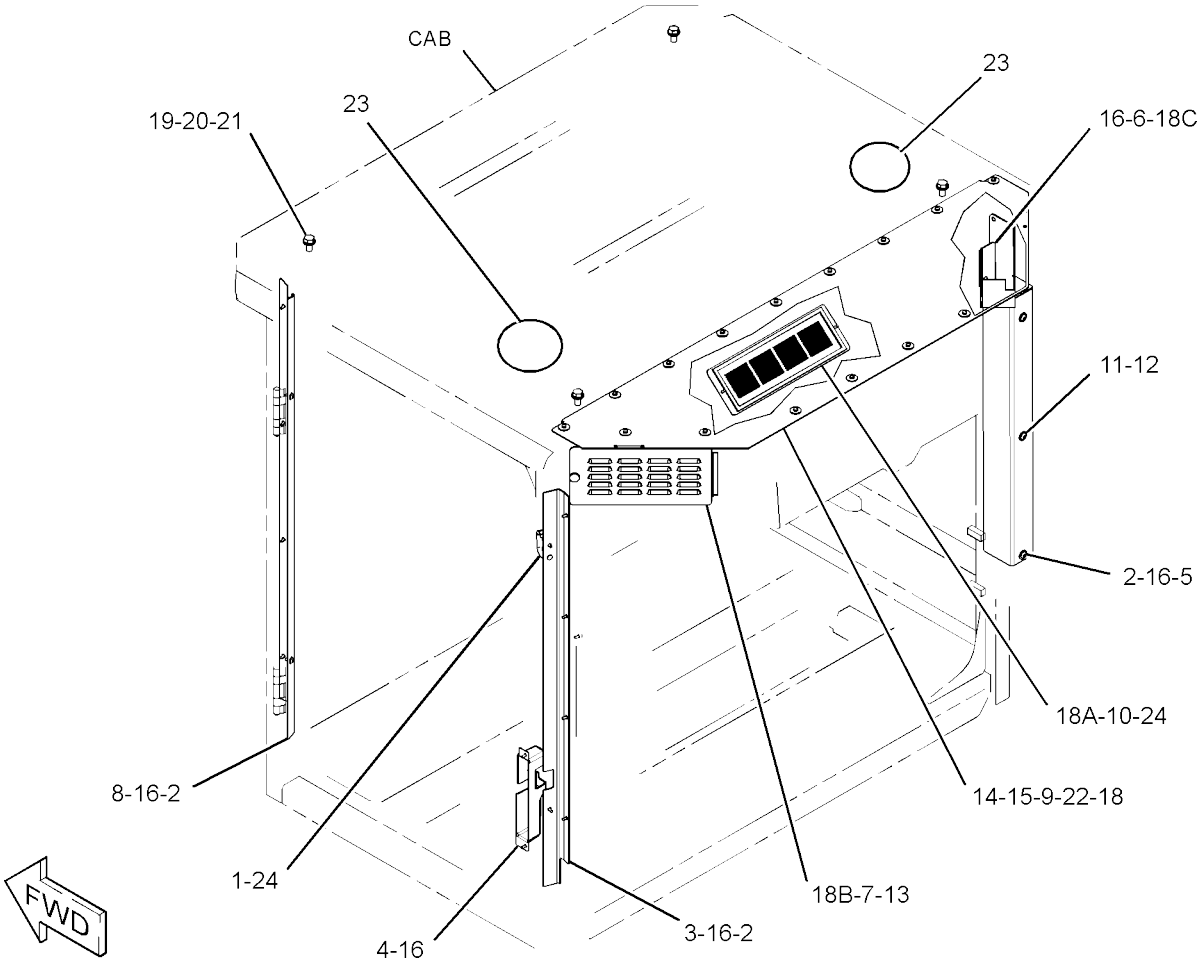

GRAPHIC #1 <END> g06208264

395-0061 COVER GP-CAB

S/N: 5B41-UP
PART OF 393-0167 CAB
GP AN ATTACHMENT

SMCS-7301

i07418020

	REF SEE NOTE QTY	GRAPHIC NO 1 2 3 4 5 6	(PRODUCT LEVEL)	REF PAGE	PART NAME PART NUMBER
	1	1	**6V-8928**	1	HOOK-COAT
	2	1	**254-1126**	17	PLATE
	3	1	**360-9113**	1	COVER AS
	4		**360-9114**	1	COVER AS
	5	1	**362-2598**	1	COVER-VENT
	6	1	**362-2771**	1	COVER
	7	1	**362-2773**	1	COVER-VENT
	8	1	**394-6552**	17	SEAL
	9	1	**394-6570**	1	COVER-DOOR
	10	1	**395-0056**	1	COVER-ACCESS
	11	1	**395-0060**	1	COVER AS
M		1	**195-1095**	1	STUD-WELD (M6X1X20-MM)
	12	1	**434-1072**	2	SEAL
	13	1	**114-6658**	16	WASHER (6.5X17X1-MM THK)
M	14	1	**216-7352**	4	SCREW-TRUSS HEAD (M8X1.25X30-MM)
M	15	1	**288-3663**	1	SCREW-THUMB (M6X1X25-MM)
M	16	1	**3E-8020**	1	SCREW-TRUSS HEAD (M6X1X25-MM)
	17	1	**5P-1076**	4	WASHER-HARD (13.5X30X4-MM THK)
M	18	1	**6V-7357**	17	BOLT (M6X1X25-MM)
	19	1	**7X-0579**	4	WASHER-HARD (8.8X25.5X2-MM THK)
M	20	1	**8T-4139**	4	BOLT (M12X1.75X30-MM)
M	21	1	**9X-2044**	21	SCREW-TRUSS HEAD (M6X1X16-MM)
M	22	1	**9X-2046**	2	SCREW-TRUSS HEAD (M6X1X35-MM)
D	23	1	**5P-5930**		SEAL (1-M)
D	23A	1	**5P-5930**		SEAL (0.9-M)
D	24	1	**5P-5930**		SEAL (3.7-M)
D	24A	1	**5P-5930**		SEAL (0.2-M)

D - ORDER BY THE METER M - METRIC PART

395-0061 **COVER GP-CAB** (contd.) **i07418020**

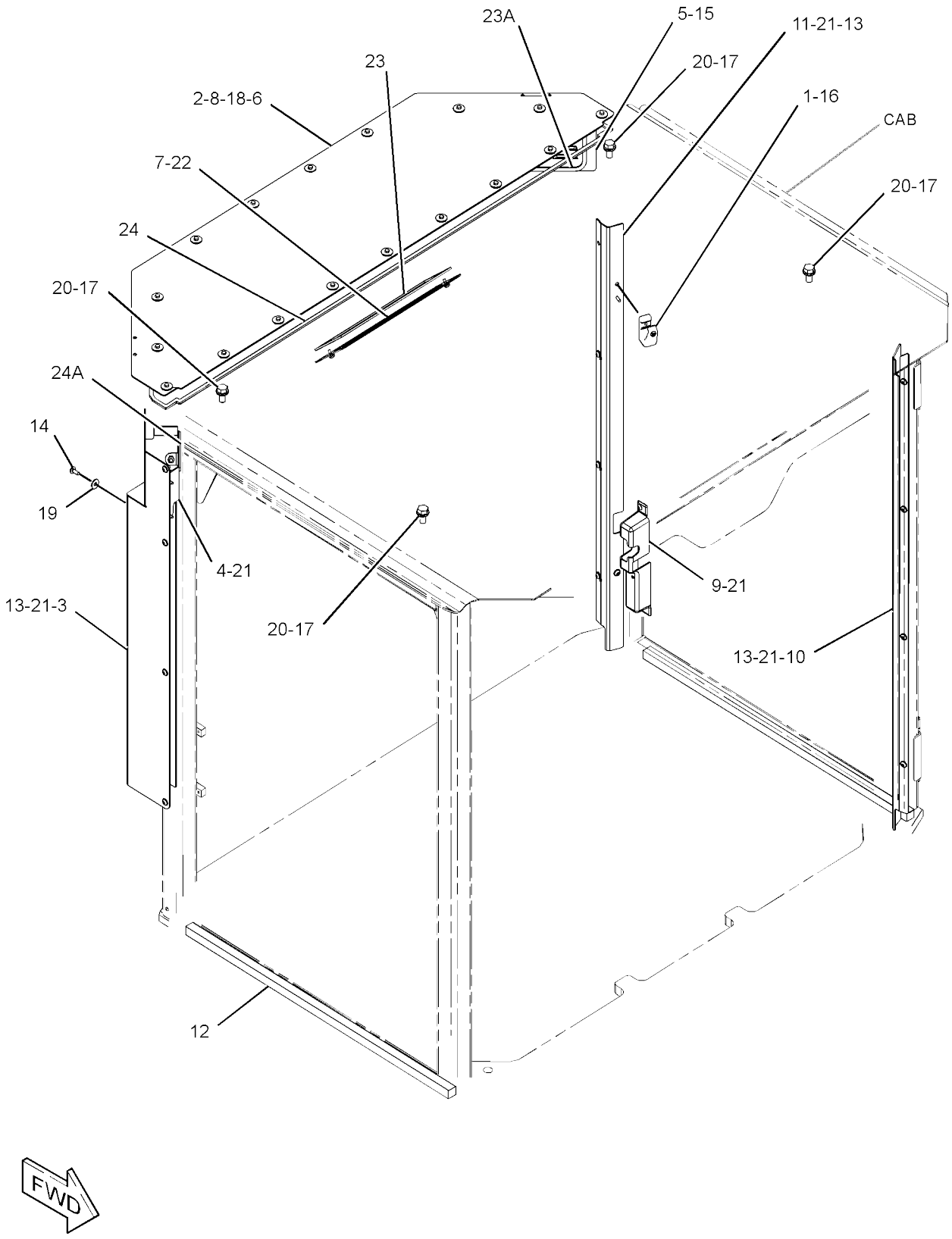

GRAPHIC #1 <END> g03490236

395-0062 COVER GP-CAB

S/N: G441-UP
PART OF 393-0166 CAB
GP AN ATTACHMENT

SMCS-7301

i07406137

	REF SEE NOTE	QTY	GRAPHIC NO 1 2 3 4 5 6	(PRODUCT LEVEL)	REF PAGE	PART NAME PART NUMBER
	1	1		**6V-8928**	1	HOOK-COAT
	2	1		**254-1126**	16	PLATE
	3	1		**362-2598**	1	COVER-VENT
	4	1		**362-2773**	1	COVER-VENT
	5	1		**365-6015**	1	COVER
	6	1		**367-8652**	1	COVER AS
	7	1		**367-8653**	1	COVER AS
	8	1		**394-6552**	16	SEAL
	9	1		**394-6570**	1	COVER-DOOR
	10	1		**395-0056**	1	COVER-ACCESS
	11	1		**395-0060**	1	COVER AS
M		1		**195-1095**	1	STUD-WELD (M6X1X20-MM)
	12	1		**434-1072**	2	SEAL
	13	1		**114-6658**	16	WASHER (6.5X17X1-MM THK)
M	14	1		**216-7352**	4	SCREW-TRUSS HEAD (M8X1.25X30-MM)
M	15	1		**288-3663**	1	SCREW-THUMB (M6X1X25-MM)
M	16	1		**3E-8020**	1	SCREW-TRUSS HEAD (M6X1X25-MM)
	17	1		**5P-1076**	4	WASHER-HARD (13.5X30X4-MM THK)
M	18	1		**6V-7357**	16	BOLT (M6X1X25-MM)
	19	1		**7X-0579**	4	WASHER-HARD (8.8X25.5X2-MM THK)
M	20	1		**8T-4139**	4	BOLT (M12X1.75X30-MM)
M	21	1		**9X-2044**	21	SCREW-TRUSS HEAD (M6X1X16-MM)
M	22	1		**9X-2046**	2	SCREW-TRUSS HEAD (M6X1X35-MM)
D	23	1		**5P-5637**		SEAL (1-M)
D	23A	1		**5P-5637**		SEAL (0.9-M)
D	24	1		**5P-5930**		SEAL (3.4-M)
D	24A	1		**5P-5930**		SEAL (0.2-M)

D - ORDER BY THE METER M - METRIC PART

395-0062 **COVER GP-CAB** (contd.) **i07406137**

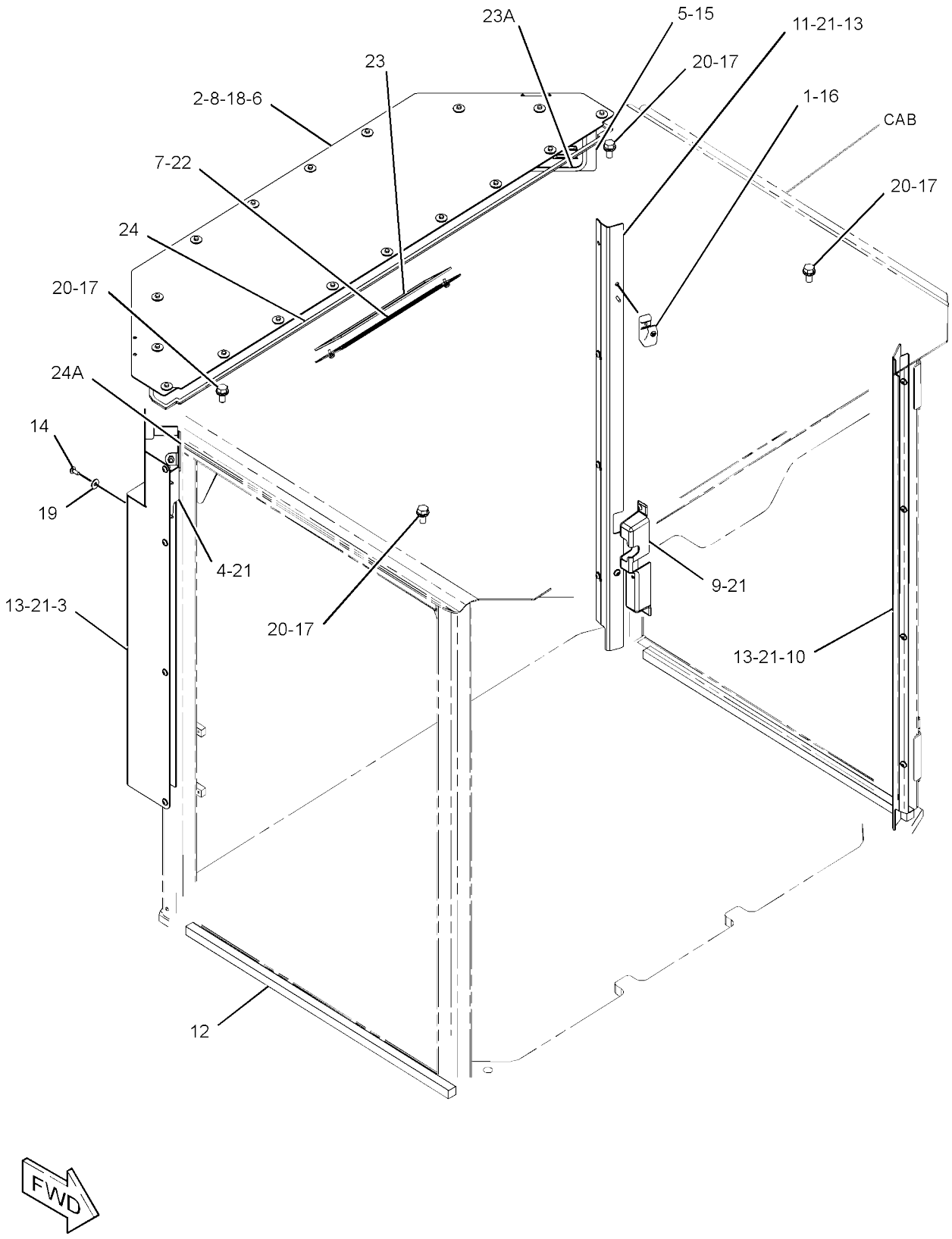

GRAPHIC #1 <END> g03490236

438-7447 DISPLAY GP-MONITOR

S/N: 5B41-UP; G441-UP
PART OF 514-1273, 514-1274 INSTALLATION AR-COMMUNICATION AN ATTACHMENT

SMCS-7490

i07416497

	REF SEE NOTE QTY	GRAPHIC NO 1 2 3 4 5 6 (PRODUCT LEVEL)		REF PAGE	PART NAME PART NUMBER	
	1	1	**290-5664**	1	STRAP-CABLE	
	2	1	**349-4610**	1	MODULE-DISPLAY (CB460)	
	3	1	**9X-8256**	8	WASHER (6.6X12X2-MM THK)	
Y	4	1	**392-9726**	1	HARNESS AS-MONITOR	138
	5	1	**438-7448**	1	PLATE	
	6	1	**7K-1181**	9	STRAP-CABLE	
M	7	1	**8T-0325**	4	BOLT (M5X0.8X14-MM)	
	8	1	**8T-0328**	4	WASHER-HARD (5.5X10X1-MM THK)	
M	9	1	**9X-2046**	4	SCREW-TRUSS HEAD (M6X1X35-MM)	

M - METRIC PART
Y - SEPARATE ILLUSTRATION

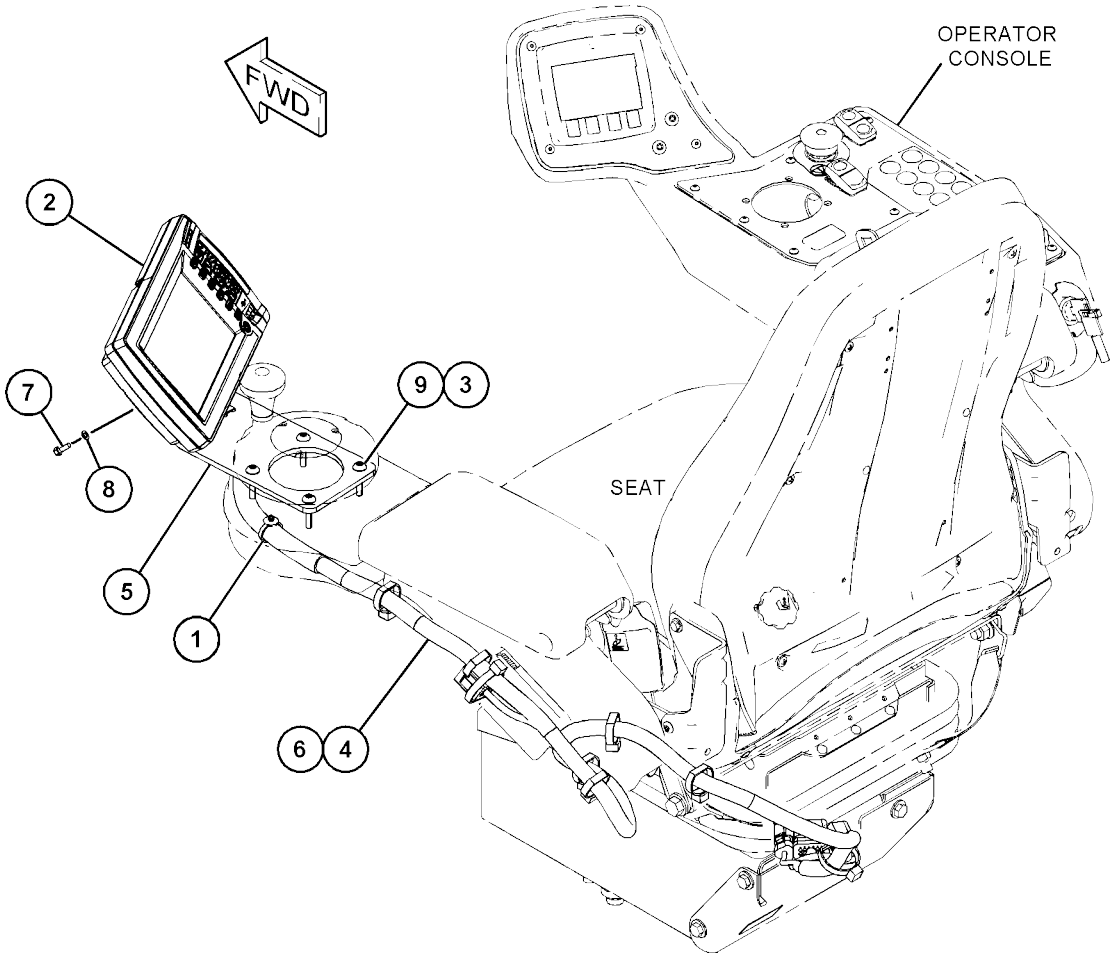

GRAPHIC #1 <END> g03816942

OPERATOR STATION

390-3213 DOOR GP-CAB

S/N: 5B41-UP; G441-UP

PART OF 390-3220 DOOR GP-CAB

AN ATTACHMENT

SMCS-7308

i07406208

	REF SEE NOTE QTY	GRAPHIC NO 1 2 3 4 5 6	(PRODUCT LEVEL)	REF PAGE	PART NAME PART NUMBER
	1	1	**436-3073**	1	KIT-GLASS (LOWER)
	2	1	**436-3076**	1	KIT-GLASS (LOWER)
					(EACH KIT-GLASS INCLUDES GUIDE AS-SEALING & GLASS)
	3	1	**436-3079**	1	KIT-GLASS (UPPER)
					(INCLUDES GUIDE AS-SEALING, GLASS & GUIDE CLAMPING)
	4	1	**436-3080**	1	KIT-GLASS (UPPER)
					(INCLUDES NUTS, HANDLE AS & GLASS)
M	5	1	**8T-4191**	2	BOLT (M10X1.5X16-MM)
	6	1	**099-0643**	2	WASHER (2-MM THK)
	7	1	**436-3068**	2	KIT-SPRING
					(EACH KIT SPRING INCLUDES BUSHING, SCREW, BRACKET, SPRING EXTENSION, RIVET & BUSHING SLEEVE)
M	8	1	**3E-4302**	2	SCREW-FLAT HEAD (M4X0.7X10-MM)
	9	1	**436-3081**	1	FRAME-DOOR
M	10	1	**205-7048**	2	INSERT-THREADED (M6X1-X14.73-MM)
	11	1	**436-3726**	10	BRACKET
	12	1	**436-3072**	1	KIT-SEAL
					(INCLUDES SEAL BULBS)
	13	1	**436-3070**	1	KIT-SEAL (DOOR)
					(INCLUDES GUIDES, GUIDE RAIL & SEALS)

M - METRIC PART

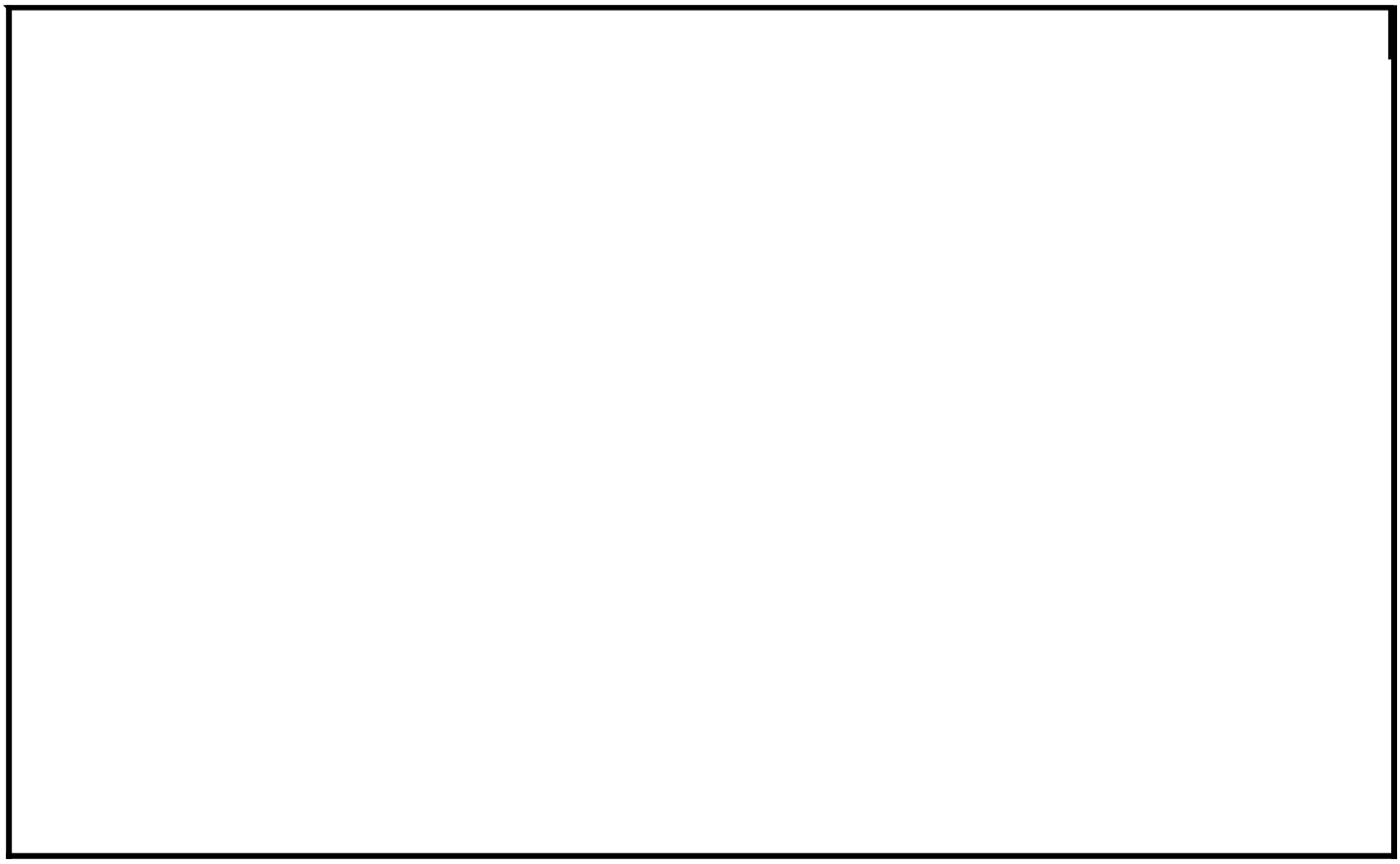

390-3213 **DOOR GP-CAB** (contd.) **i07406208**

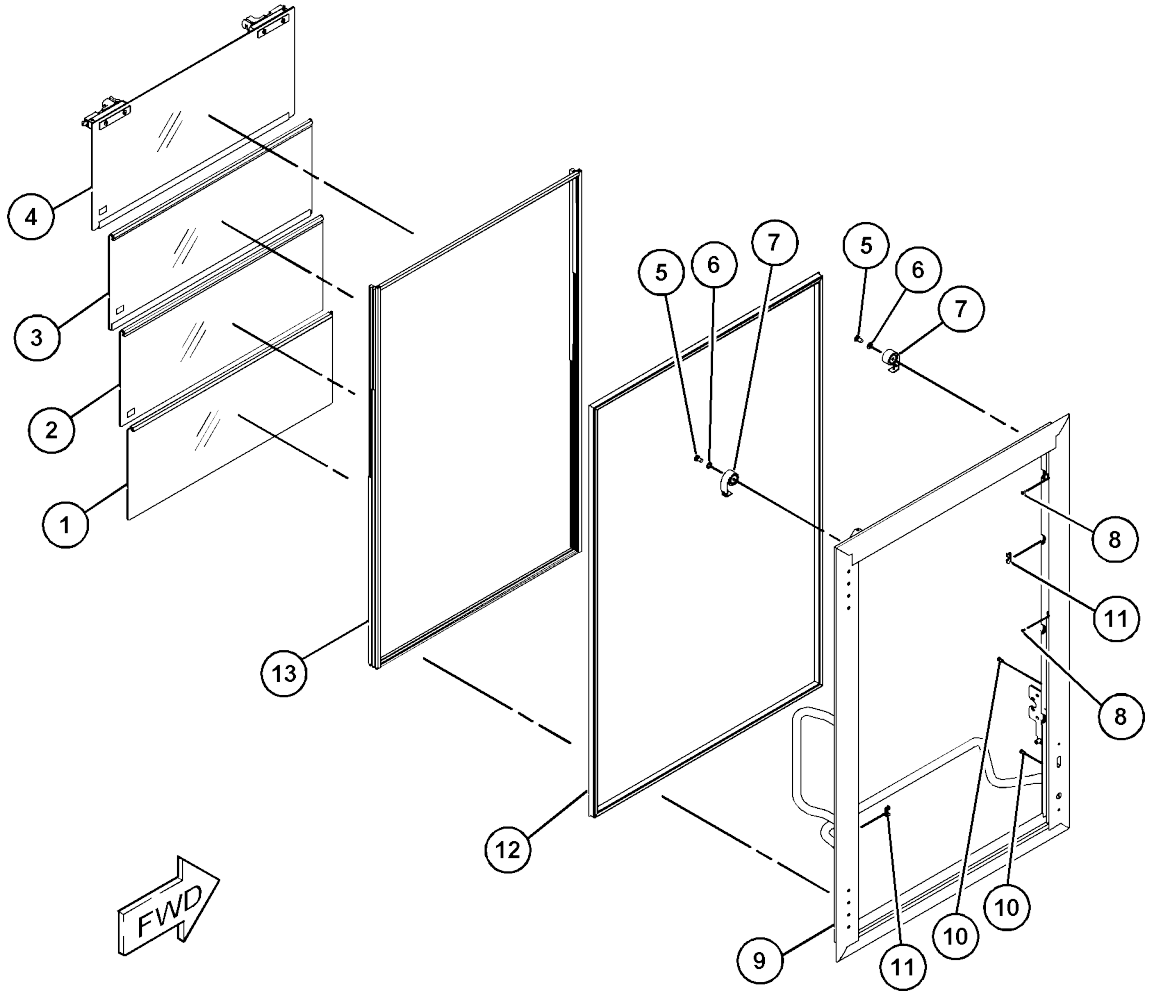

GRAPHIC #1 <END> g03602382

390-3220 DOOR GP-CAB

S/N: 5B41-UP; G441-UP

PART OF 394-6556 DOOR GP-CAB

AN ATTACHMENT

SMCS-7308

i07406162

	REF SEE NOTE QTY	GRAPHIC NO 1 2 3 4 5 6	(PRODUCT LEVEL)	REF PAGE	PART NAME PART NUMBER	
	1	1	**6V-7636**	1	PIN AS-SPRING	
	2	1	**090-9555**	1	CLIP	
M	3	1	**129-3178**	2	LOCKNUT (M6X1-THD)	
	4	1	**232-1473**	3	WASHER (6X18X1-MM THK)	
	5	1	**247-1913**	1	STUD-BALL	
J	6	1	**252-1862**	1	HANDLE AS-PULL	
	7	1	**252-1863**	1	GASKET	
	8	1	**269-2892**	1	PIN	
	9	1	**269-2893**	2	CLIP	
	10	1	**296-4040**	1	STRIKER AS	
	11	1	**465-2511**	1	LATCH AS (LH)	
	12	1	**8T-4224**	1	WASHER-HARD (8.8X16X2-MM THK)	
	13	1	**390-3214**	1	SPACER	
	14	1	**390-3215**	1	CLEVIS	
	15	1	**390-3216**	1	BELLCRANK	
	16	1	*390-3218*	1	LINKAGE GP-DOOR (CAB)	
		1	**6V-8185**	1	NUT (1/4-20-THD)	
		1	**108-5471**	1	CLEVIS	
	17	1	**394-6529**	1	SPRING AS-GAS (CAB)	
	18	1	**394-6557**	1	CLIP	
	19	1	**394-6558**	1	PIN-CLEVIS	
	20	1	**394-6559**	1	PIN-CLEVIS	
	21	1	**394-6560**	1	BRACKET AS	
M		1	**6V-9632**	1	NUT-WELD (M6X1-THD)	
M	22	1	**111-4627**	2	SCREW-MACHINE (M6X1X30-MM)	
M	23	1	**119-5025**	2	SCREW-FLAT HEAD (M6X1X25-MM)	
M	24	1	**184-0983**	1	NUT-HEX FLANGE (M12X1.75-THD)	
M	25	1	**274-7409**	8	SCREW-TRUSS HEAD (M8X1.25X45-MM)	
	26	1	**3E-4352**	8	WASHER-HARD (8.8X20.5X2.5-MM THK)	
M	27	1	**5C-7423**	2	SCREW (M6X1X16-MM)	
M	28	1	**6V-7357**	2	BOLT (M6X1X25-MM)	
M	29	1	**8T-4181**	1	BOLT (M6X1X20-MM)	
	30	1	**8T-4205**	2	WASHER-HARD (7.2X14.5X2-MM THK)	
Y	31	1	**390-3213**	1	DOOR GP-CAB	502

J - REQUIRES CORPORATE
KEY M - METRIC PART
Y - SEPARATE ILLUSTRATION

390-3220 **DOOR GP-CAB** (contd.) **i07406162**

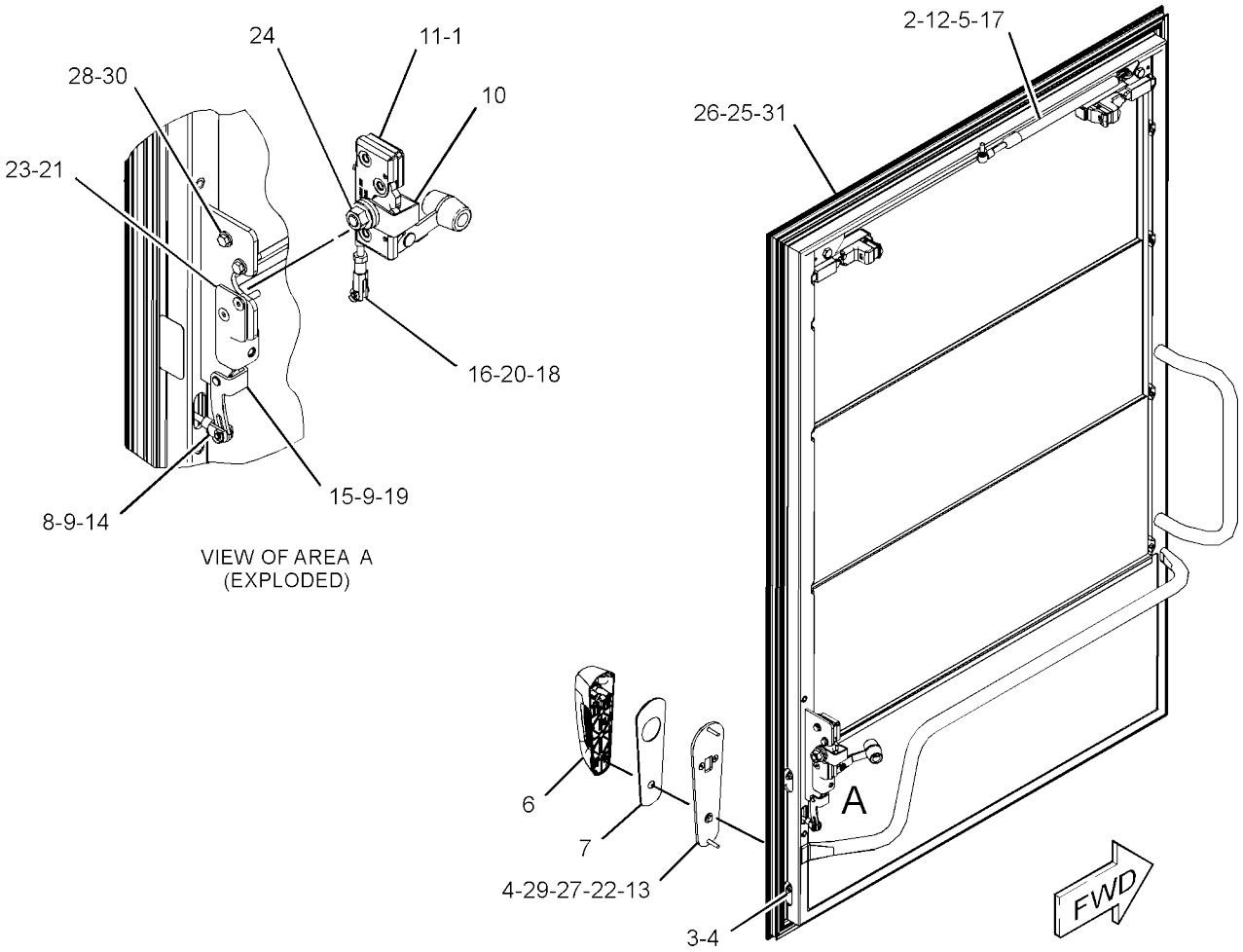

GRAPHIC #1 <END> g03799259

394-6556 DOOR GP-CAB

S/N: 5B41-UP; G441-UP

PART OF 462-5780, 509-9414, 509-9421 CAB GP, 462-5781 CAB GP-ENCLOSED

ROPS AN ATTACHMENT

SMCS-7308

i07406160

	REF SEE NOTE QTY	GRAPHIC NO 1 2 3 4 5 6 (PRODUCT LEVEL)		REF PAGE	PART NAME PART NUMBER	
Y	1	1	**390-3208**	1	WINDOW GP-CAB	586
Y	2	1	*390-3220*	1	DOOR GP-CAB	504

Y - SEPARATE ILLUSTRATION

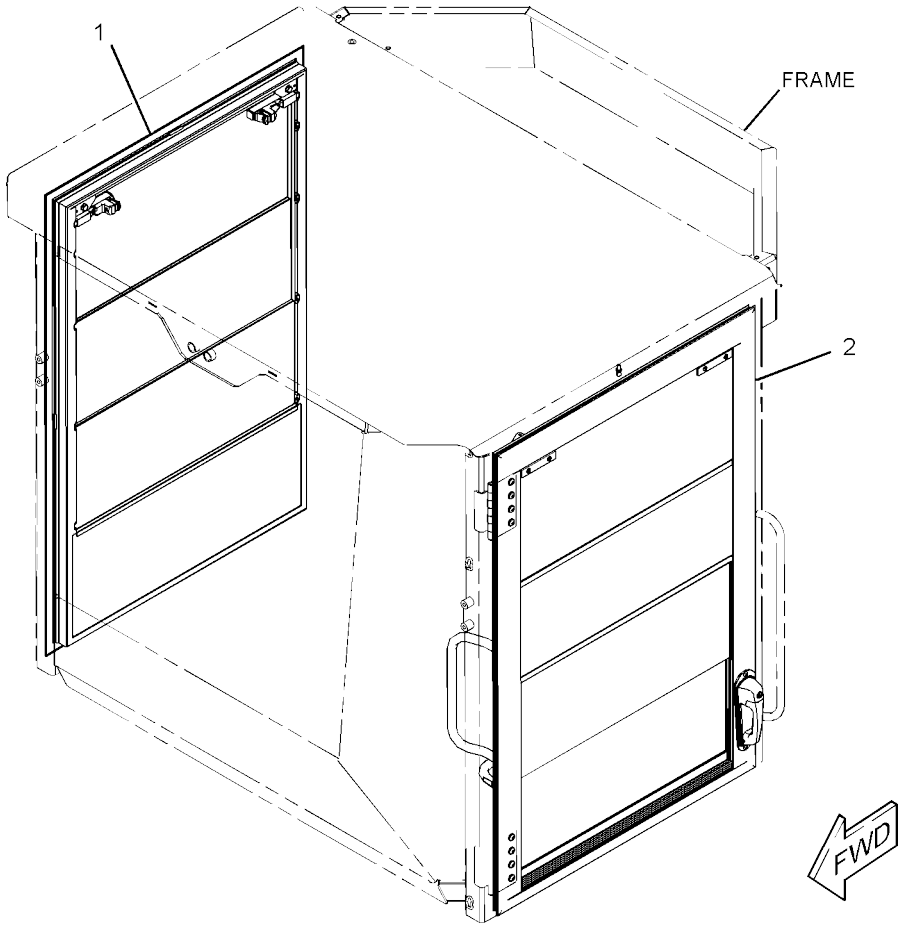

GRAPHIC #1 <END> g03136987

395-0035 DOOR GP-CAB

S/N: 5B41-UP; G441-UP

PART OF 395-0039 DOOR GP-CAB

AN ATTACHMENT

SMCS-7308

i07406133

	REF SEE NOTE QTY	GRAPHIC NO 1 2 3 4 5 6	(PRODUCT LEVEL)	REF PAGE	PART NAME PART NUMBER	
	1	1	**6V-7636**	1	PIN AS-SPRING	
	2	1	**090-9555**	1	CLIP	
M	3	1	**129-3178**	2	LOCKNUT (M6X1-THD)	
	4	1	**114-6658**	3	WASHER (6.5X17X1-MM THK)	
	5	1	**247-1913**	1	STUD-BALL	
J	6	1	**252-1862**	1	HANDLE AS-PULL	
	7	1	**252-1863**	1	GASKET	
	8	1	**269-2892**	1	PIN	
	9	1	**269-2893**	2	CLIP	
	10	1	**296-4040**	1	STRIKER AS	
	11	1	**465-2511**	1	LATCH AS (LH)	
	12	1	**390-3214**	1	SPACER	
	13	1	**390-3215**	1	CLEVIS	
	14	1	**390-3216**	1	BELLCRANK	
	15	1	*390-3218*	1	LINKAGE GP-DOOR (CAB)	
		1	**6V-8185**	1	NUT (1/4-20-THD)	
		1	**108-5471**	1	CLEVIS	
	16	1	**394-6529**	1	SPRING AS-GAS (CAB DOOR)	
	17	1	**394-6557**	1	CLIP	
	18	1	**394-6558**	1	PIN-CLEVIS	
	19	1	**394-6559**	1	PIN-CLEVIS	
	20	1	**394-6560**	1	BRACKET AS	
M		1	**6V-9632**	1	NUT-WELD (M6X1-THD)	
Y	21	1	**420-8303**	1	DOOR GP-CAB	510
M	22	1	**111-4627**	2	SCREW-MACHINE (M6X1X30-MM)	
M	23	1	**280-2651**	2	SCREW-FLAT HEAD (M6X1X25-MM)	
M	24	1	**184-0983**	1	NUT-HEX FLANGE (M12X1.75-THD)	
M	25	1	**274-7409**	8	SCREW-TRUSS HEAD (M8X1.25X45-MM)	
	26	1	**3E-4352**	8	WASHER-HARD (8.8X20.5X2.5-MM THK)	
M	27	1	**5C-7423**	2	SCREW (M6X1X16-MM)	
M	28	1	**6V-7357**	2	BOLT (M6X1X25-MM)	
M	29	1	**8T-4181**	1	BOLT (M6X1X20-MM)	
	30	1	**8T-4205**	2	WASHER-HARD (7.2X14.5X2-MM THK)	
	31	1	**8T-4224**	1	WASHER-HARD (8.8X16X2-MM THK)	

J - REQUIRES CORPORATE
KEY M - METRIC PART
Y - SEPARATE ILLUSTRATION

395-0035 **DOOR GP-CAB** (contd.) **i07406133**

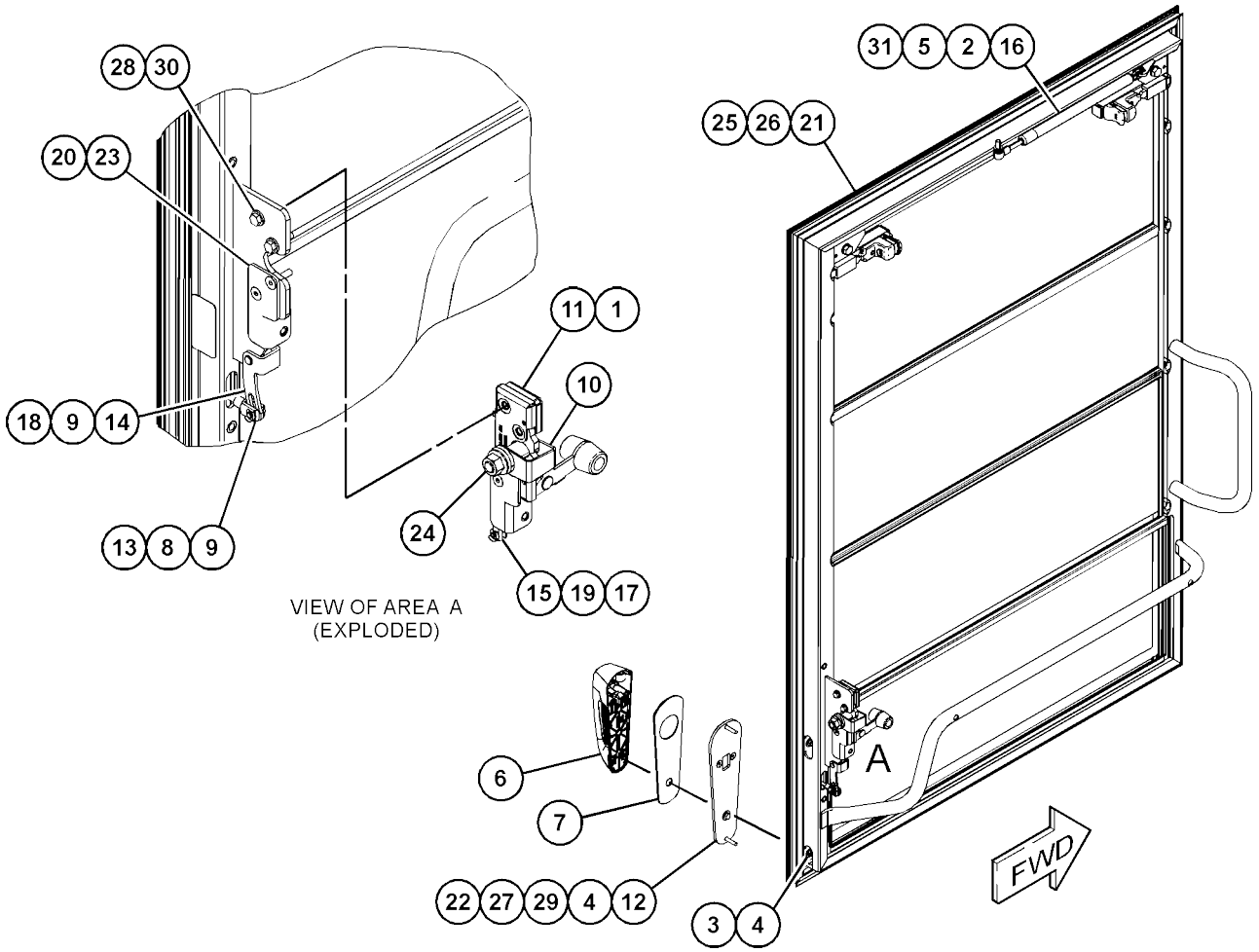

GRAPHIC #1 <END> g03839302

395-0039 DOOR GP-CAB

S/N: 5B41-UP; G441-UP
PART OF 393-0166, 393-0167 CAB
GP AN ATTACHMENT

SMCS-7308

i07406132

REF SEE NOTE	QTY	GRAPHIC NO 1 2 3 4 5 6	(PRODUCT LEVEL)	REF PAGE	PART NAME PART NUMBER	
Y	1	1	*395-0035*	1	DOOR GP-CAB	507
Y	2	1	**420-8302**	1	WINDOW GP-CAB	590

Y - SEPARATE ILLUSTRATION

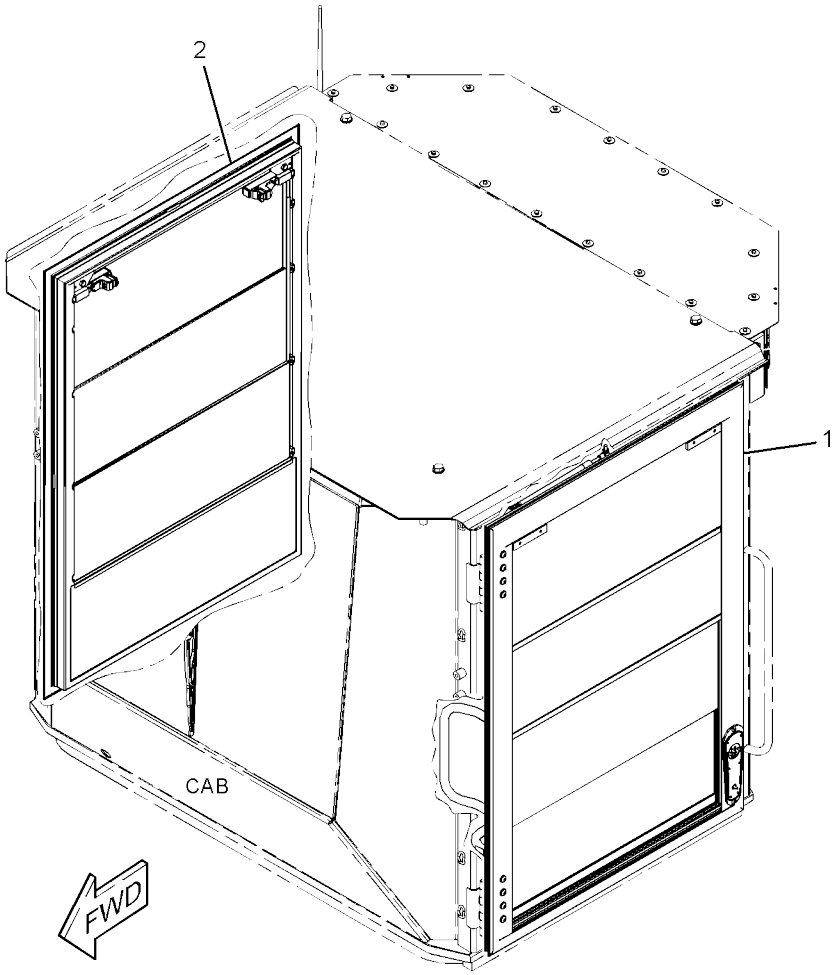

GRAPHIC #1 <END> g03344473

OPERATOR STATION

420-8303 DOOR GP-CAB

S/N: 5B41-UP; G441-UP

PART OF 395-0035 DOOR GP-CAB

AN ATTACHMENT

SMCS-7308

i07406134

	REF SEE NOTE QTY	GRAPHIC NO 1 2 3 4 5 6	(PRODUCT LEVEL)	REF PAGE	PART NAME PART NUMBER
	1	1	**436-3720**	1	KIT-GLASS (LOWER)
					(INCLUDES GUIDE AS & GLASS)
	2	1	**436-3719**	1	KIT-GLASS (LOWER)
					(INCLUDES GUIDE AS & GLASS)
	3	1	**436-3718**	1	KIT-GLASS (UPPER)
					(INCLUDES GUIDE AS, GLASS & GUIDE CLAMPING)
	4	1	**436-3717**	1	KIT-GLASS (UPPER)
					(INCLUDES INSERT NUT, HANDLE AS & GLASS)
M	5	1	**8T-4191**	2	BOLT (M10X1.5X16-MM)
	6	1	**099-0643**	2	WASHER (2-MM THK)
	7	1	**436-3068**	2	KIT-SPRING
					(EACH INCLUDES THREADED BUSHING, SCREW, BRACKET, EXTENSION SPRING, RIVET & SLEEVE BUSHING)
M	8	1	**3E-4302**	2	SCREW-FLAT HEAD (M4X0.7X10-MM)
	9	1	**436-3723**	1	FRAME-DOOR
M	10	1	**205-7048**	2	INSERT-THREADED (M6X1-X14.73-MM)
	11	1	**436-3726**	10	BRACKET
	12	1	**436-3722**	1	KIT-SEAL
					(INCLUDES BULB SEALS)
	13	1	**436-3721**	1	KIT-SEAL (DOOR)
					(INCLUDES GUIDES, GUIDE RAIL & SEALS)

M - METRIC PART

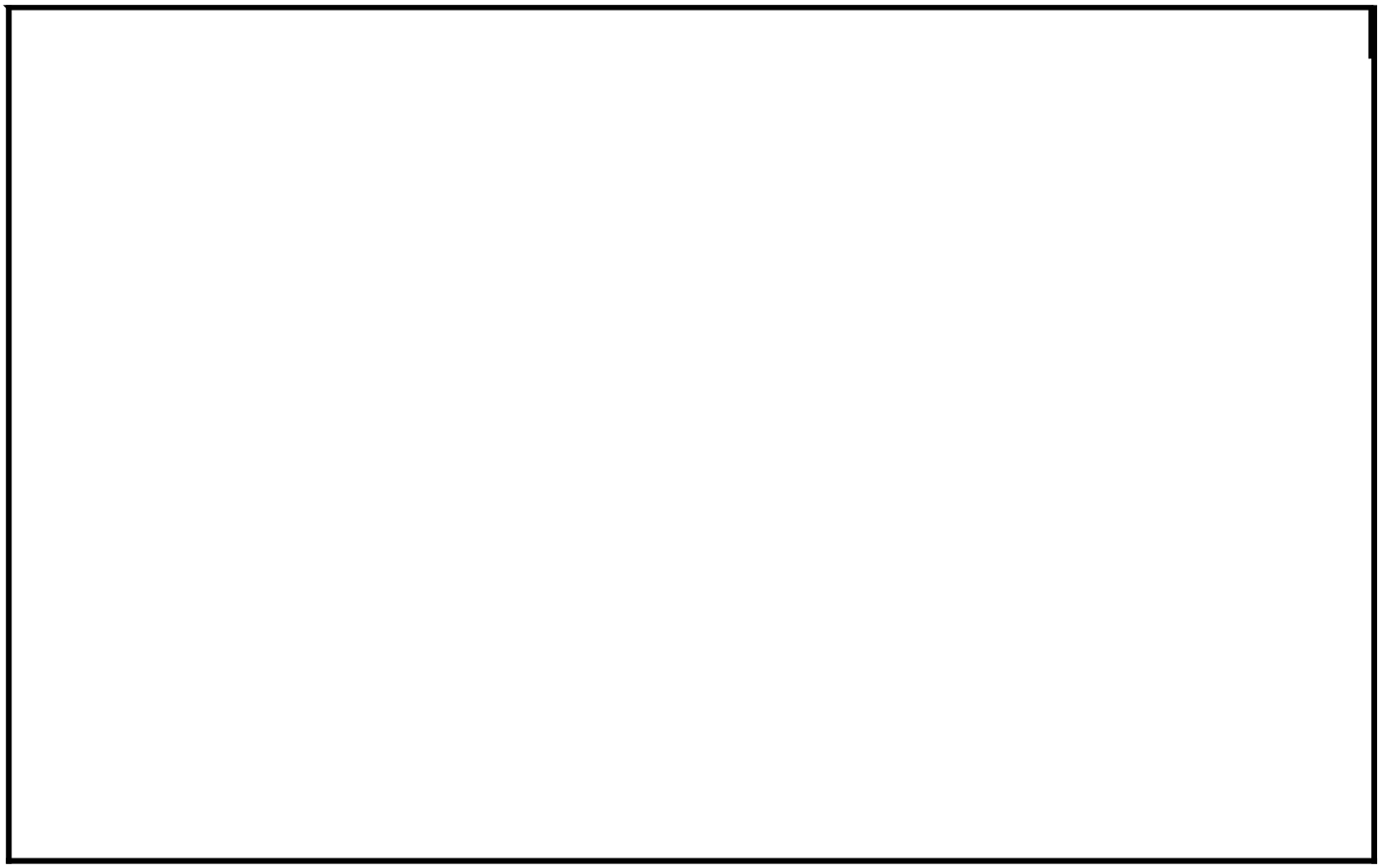

420-8303 **DOOR GP-CAB** (contd.) **i07406134**

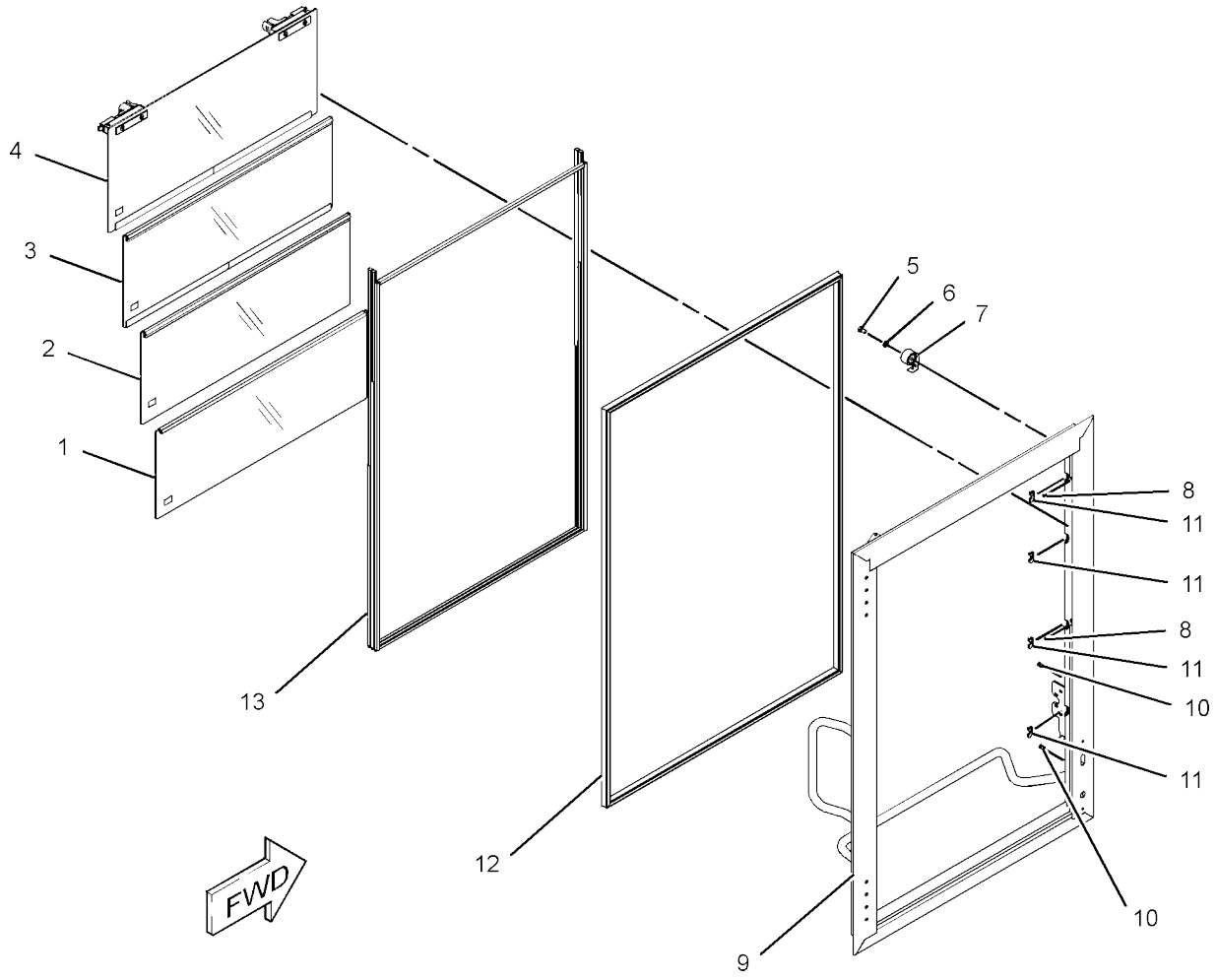

GRAPHIC #1 <END> g03490624

393-0154 FLOOR MAT GP

S/N: G441-UP
PART OF 396-8335 OPERATOR
AR AN ATTACHMENT

SMCS-726M

i07403887

	REF SEE NOTE QTY	GRAPHIC NO 1 2 3 4 5 6	(PRODUCT LEVEL)	REF PAGE	PART NAME PART NUMBER
	1	1	**391-9177**	2	FLOOR MAT AS
	2	1	**393-0196**	2	PLATE AS
					(EACH INCLUDES)
M		1	**8T-3612**	4	NUT-WELD (M8X1.25-THD)
	3	1	**5P-4116**	8	WASHER-HARD (8.8X20.5X2-MM THK)
M	4	1	**7X-2537**	8	BOLT (M8X1.25X35-MM)

M - METRIC PART

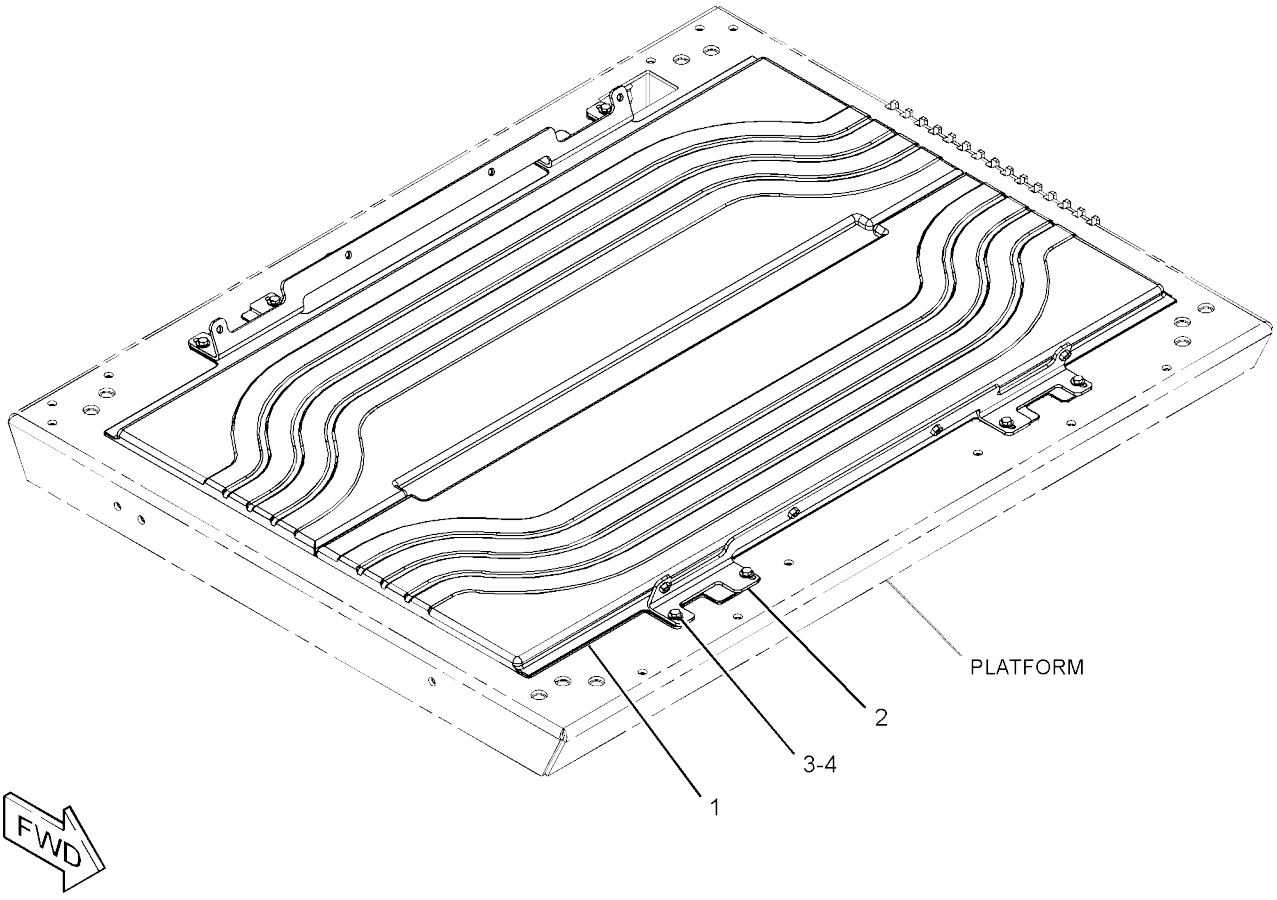

GRAPHIC #1 <END> g03342040

393-0155 FLOOR MAT GP

S/N: 5B41-UP
PART OF 396-8336 OPERATOR
AR AN ATTACHMENT

SMCS-726M

i07418005

	REF SEE NOTE QTY	GRAPHIC NO 1 2 3 4 5 6	(PRODUCT LEVEL)	REF PAGE	PART NAME PART NUMBER
	1	1	**391-9178**	2	FLOOR MAT AS
	2	1	**393-0197**	2	PLATE AS
					(EACH INCLUDES)
M		1	**8T-3612**	4	NUT-WELD (M8X1.25-THD)
	3	1	**5P-4116**	8	WASHER-HARD (8.8X20.5X2-MM THK)
M	4	1	**7X-2537**	8	BOLT (M8X1.25X35-MM)

M - METRIC PART

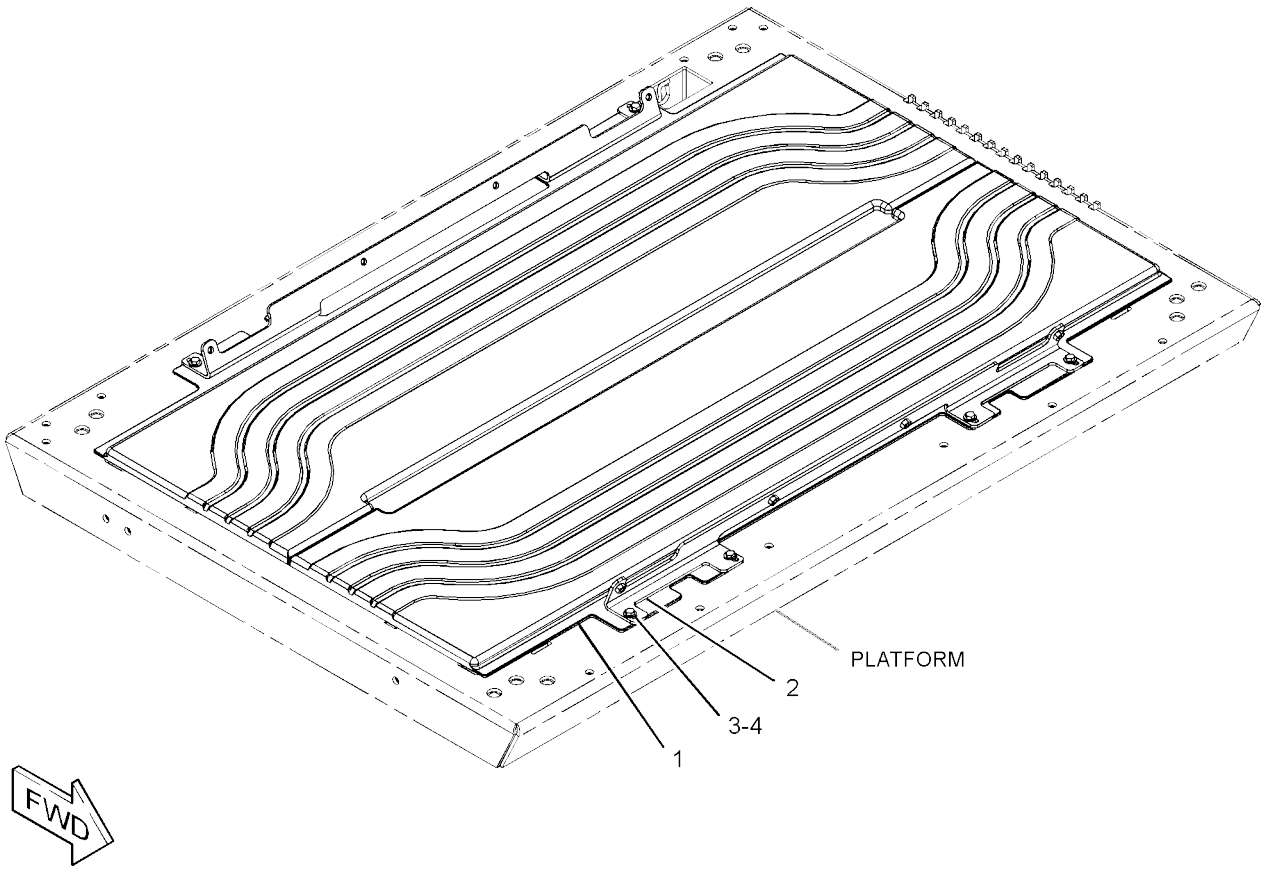

GRAPHIC #1 <END> g03342048

343-8285 FLOOR MAT GP-CAB

S/N: 5B41-UP
PART OF 451-3290 OPERATOR
AR AN ATTACHMENT

SMCS-726M

i07418026

	REF SEE NOTE QTY	GRAPHIC NO 1 2 3 4 5 6	(PRODUCT LEVEL)	REF PAGE	PART NAME PART NUMBER
	1	1	**362-8725**	2	PLATE AS
	2	1	**362-8726**	2	FLOOR MAT AS
	3	1	**5P-4116**	8	WASHER-HARD (8.8X20.5X2-MM THK)
M	4	1	**7X-2537**	8	BOLT (M8X1.25X35-MM)

M - METRIC PART

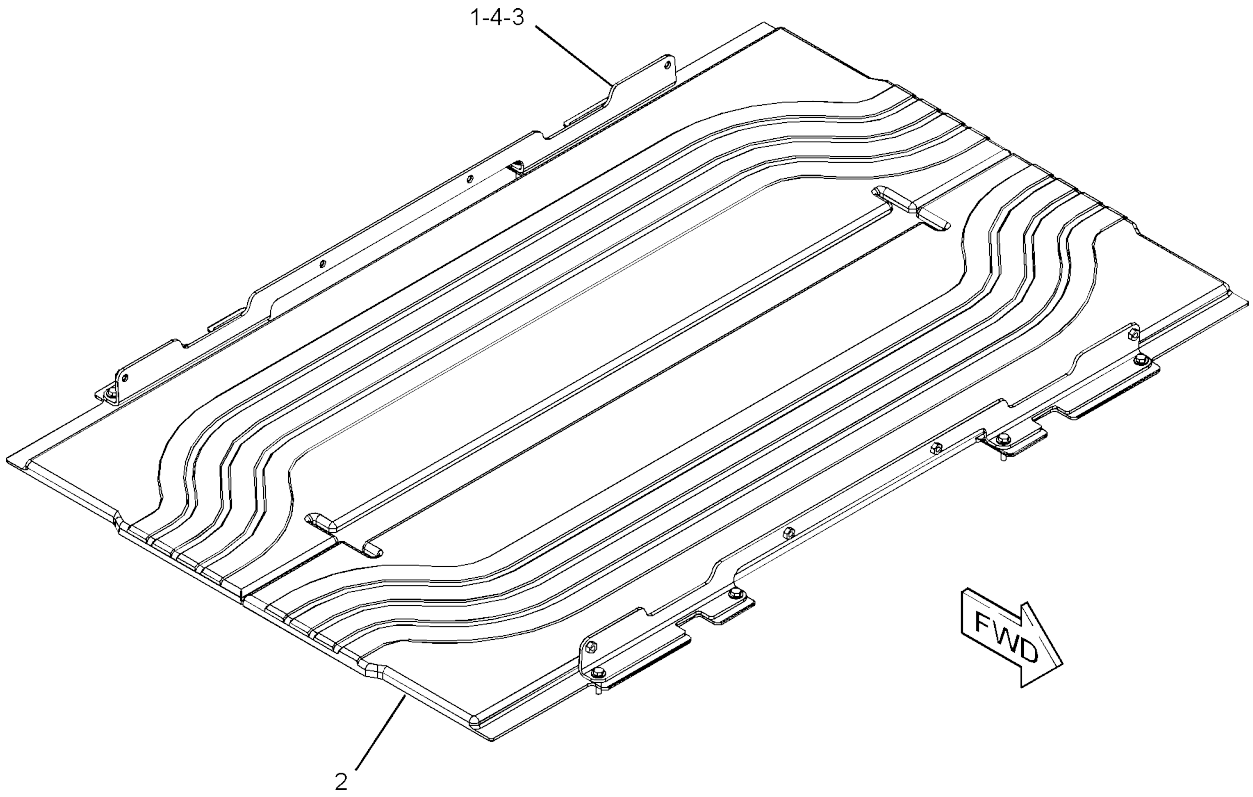

GRAPHIC #1 <END> g02844696

344-0580 FLOOR MAT GP-CAB

S/N: G441-UP
PART OF 451-3190 OPERATOR
AR AN ATTACHMENT

SMCS-726M

i07406149

	REF SEE NOTE QTY	GRAPHIC NO 1 2 3 4 5 6 (PRODUCT LEVEL)	REF PAGE	PART NAME PART NUMBER
	1	1 **362-8728**	2	PLATE AS
	2	1 **362-8729**	2	FLOOR MAT AS
	3	1 **5P-4116**	8	WASHER-HARD (8.8X20.5X2-MM THK)
M	4	1 **7X-2537**	8	BOLT (M8X1.25X35-MM)

M - METRIC PART

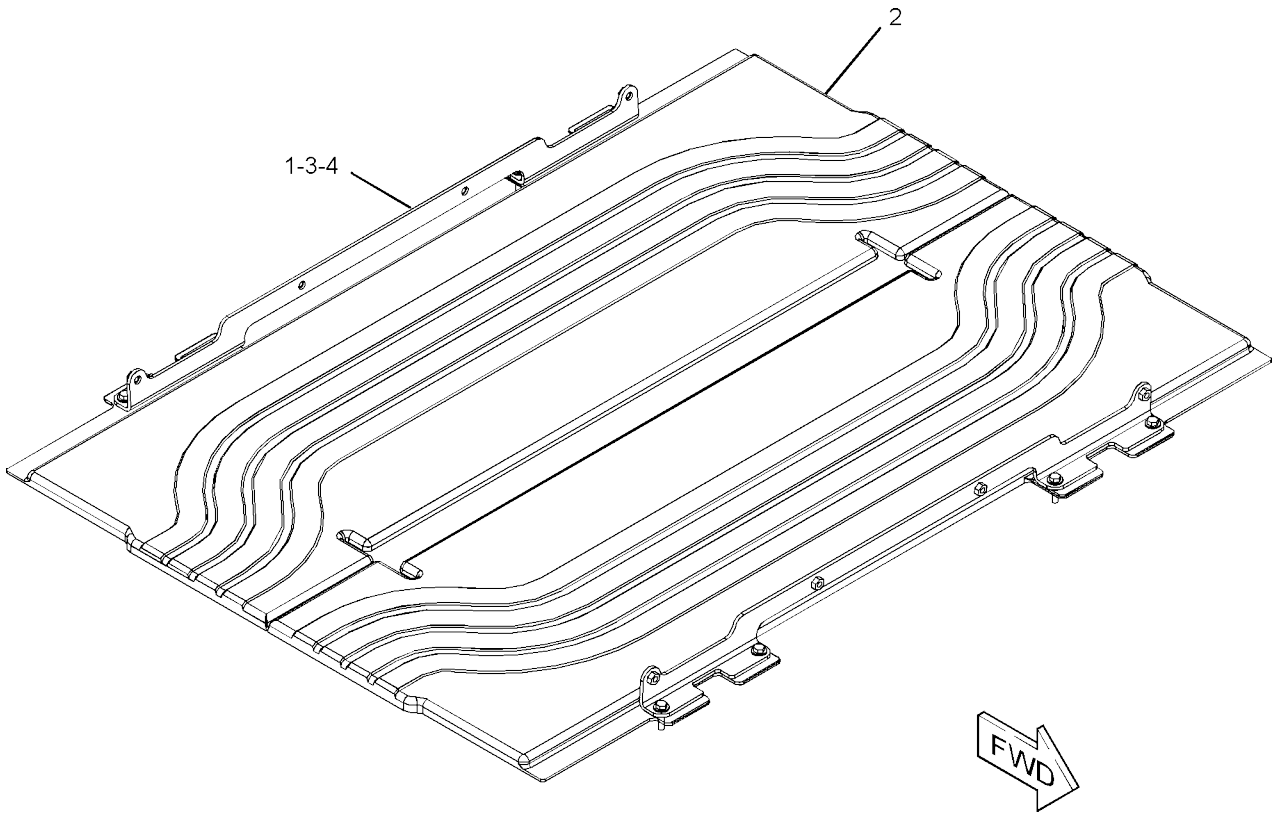

GRAPHIC #1 <END> g02847676

391-8357 GUARD GP-VANDALISM

S/N: 5B41-UP; G441-UP

PART OF 388-1479, 388-2035, 527-0372, 527-0806 OPERATOR AR

AN ATTACHMENT

SMCS-7315

i07403860

	REF SEE NOTE QTY	GRAPHIC NO 1 2 3 4 5 6	(PRODUCT LEVEL)	REF PAGE	PART NAME PART NUMBER
	1	1	**246-2641**	1	PADLOCK GP
		1	**5P-8500**	1	KEY
	2	1	**387-5730**	2	BRACKET
	3	1	**387-5732**	1	GUARD
	4	1	**4B-4863**	3	WASHER (4.7X11X1.2-MM THK)
M	5	1	**121-4405**	3	BOLT (M4X0.7X12-MM)

M - METRIC PART

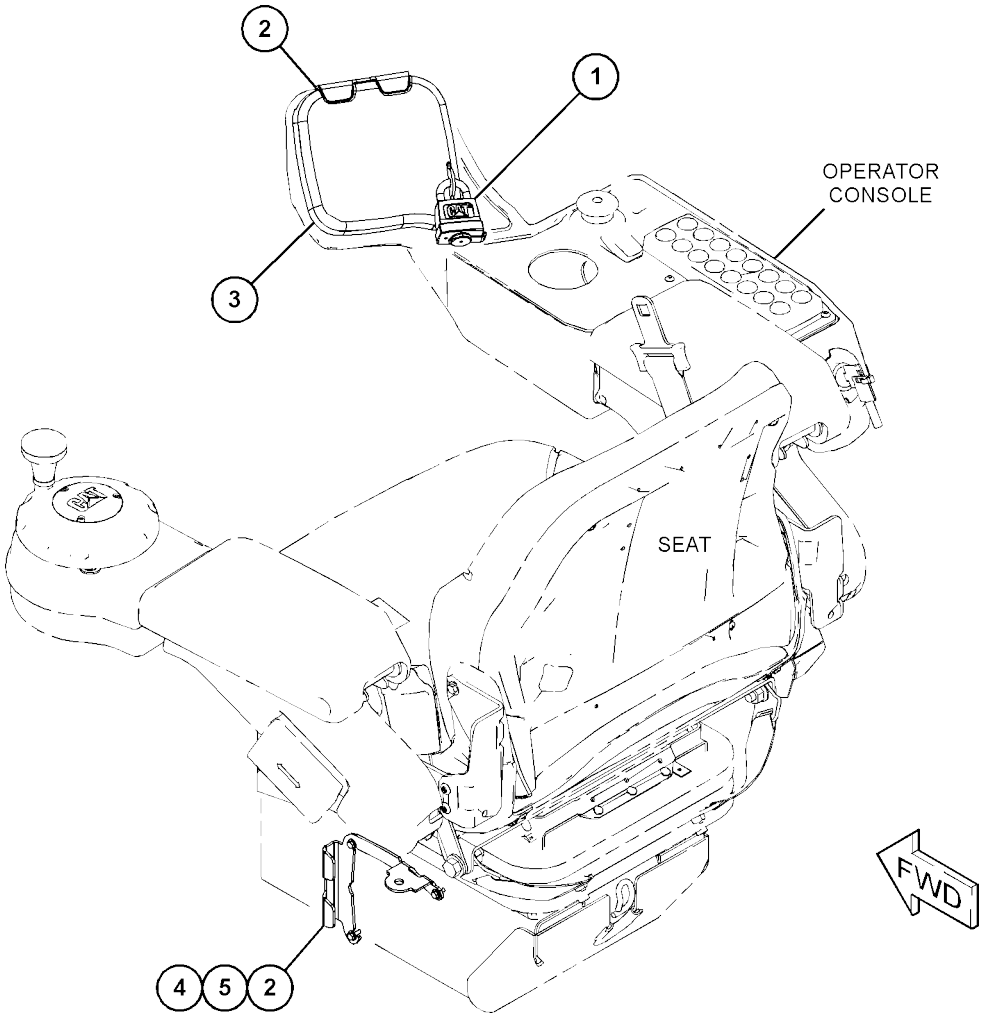

GRAPHIC #1 <END> g03842262

573-4618 INSTALLATION GP-CONTROLS

S/N: 5B41-UP; G441-UP
PART OF 388-1479, 388-2035 OPERATOR
AR AN ATTACHMENT

SMCS-7450

i07678956

	REF SEE NOTE QTY	GRAPHIC NO 1 2 3 4 5 6	(PRODUCT LEVEL)	REF PAGE	PART NAME PART NUMBER
	1	1	**132-5789**	1	CLIP (LADDER)
	2	1	**277-1873**	4	CLIP (LADDER)
	3	1	**352-3964**	1	CLIP (LADDER)
	4	1	**444-3491**	1	PLATE AS
M		1	**6V-9632**	6	NUT-WELD (M6X1-THD)
M		1	**8T-3490**	1	NUT-WELD (M10X1.5-THD)
	5	1	**460-8863**	1	PLATE AS
M		1	**6V-9632**	12	NUT-WELD (M6X1-THD)
M	6	1	**5C-9553**	12	BOLT (M6X1X16-MM)
	7	1	**5P-4115**	12	WASHER-HARD (7.2X19X2-MM THK)

M - METRIC PART

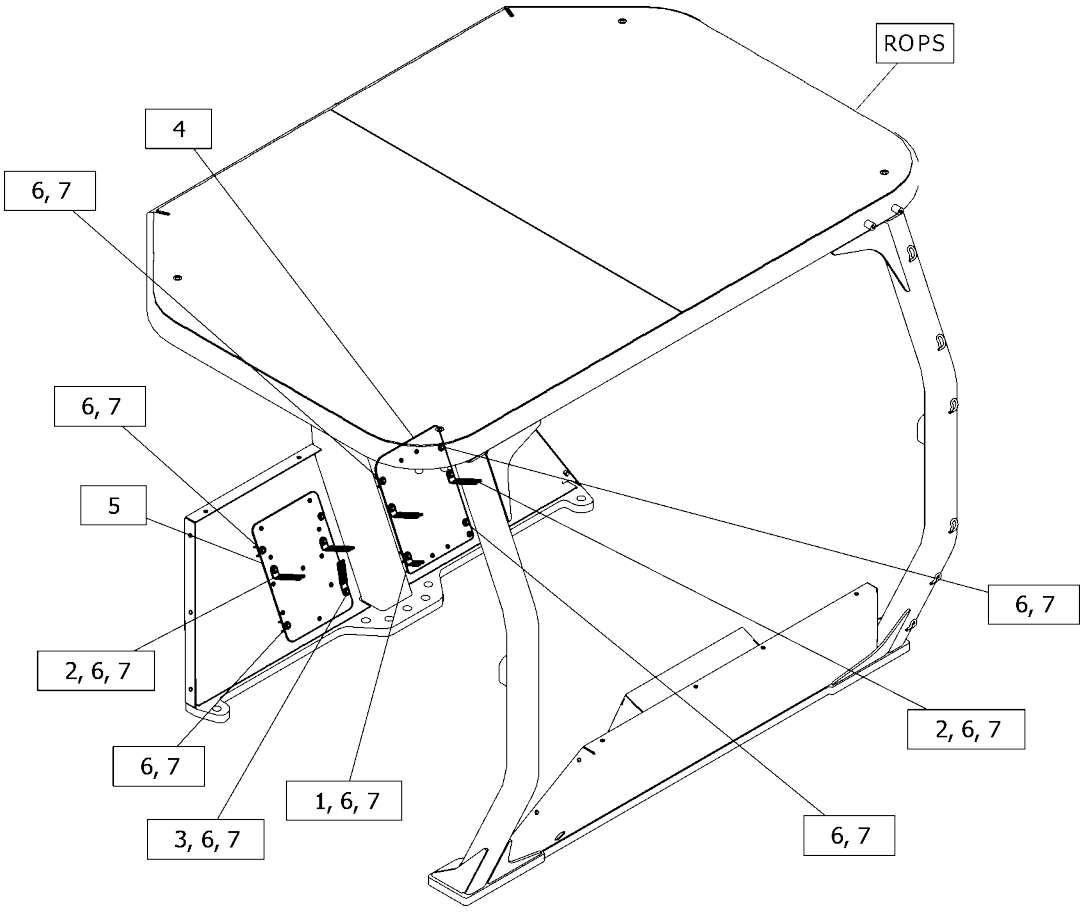

GRAPHIC #1 <END> g06425303

362-2516 LINER GP-CAB

S/N: G441-UP

PART OF 393-0166 CAB GP, 462-5781, 509-9415 CAB GP-ENCLOSED

ROPS AN ATTACHMENT

SMCS-7301, 7329

i07406128

	REF SEE NOTE QTY	GRAPHIC NO 1 2 3 4 5 6	(PRODUCT LEVEL)	REF PAGE	PART NAME PART NUMBER
M	1	1	**172-8591**	22	NUT-CLIP (M6X1-THD)
	2	1	**154-8079**	8	NUT-RETAINER
	3	1	**9U-8263**	2	COVER
	4	1	**101-3055**	2	COVER-SPEAKER
	5	1	**164-8473**	4	LOUVER AS
	6	1	**171-4047**	8	LOUVER AS-VENT
	7	1	**114-6658**	17	WASHER (6.5X17X1-MM THK)
M	8	1	**354-0132**	4	INSERT-HEX (M4X0.7-THD)
	9	1	**360-4746**	2	PLATE-MOUNTING
	10	1	**364-0868**	2	PLATE
	11	1	**394-6539**	1	LINER AS-CAB
	12	1	**148-3626**	32	SCREW-FLAT HEAD (6-20X0.75-IN)
M	13	1	**5C-2890**	6	NUT (M6X1-THD)
	14	1	**5P-4115**	6	WASHER-HARD (7.2X19X2-MM THK)
M	15	1	**8T-0024**	19	SCREW (M4X0.7X30-MM)
M	16	1	**9X-2044**	17	SCREW-TRUSS HEAD (M6X1X16-MM)
D	17	1	**5P-5927**		SEAL (0.2-M EACH)

D - ORDER BY THE METER M - METRIC PART

362-2516 **LINER GP-CAB** (contd.) **i07406128**

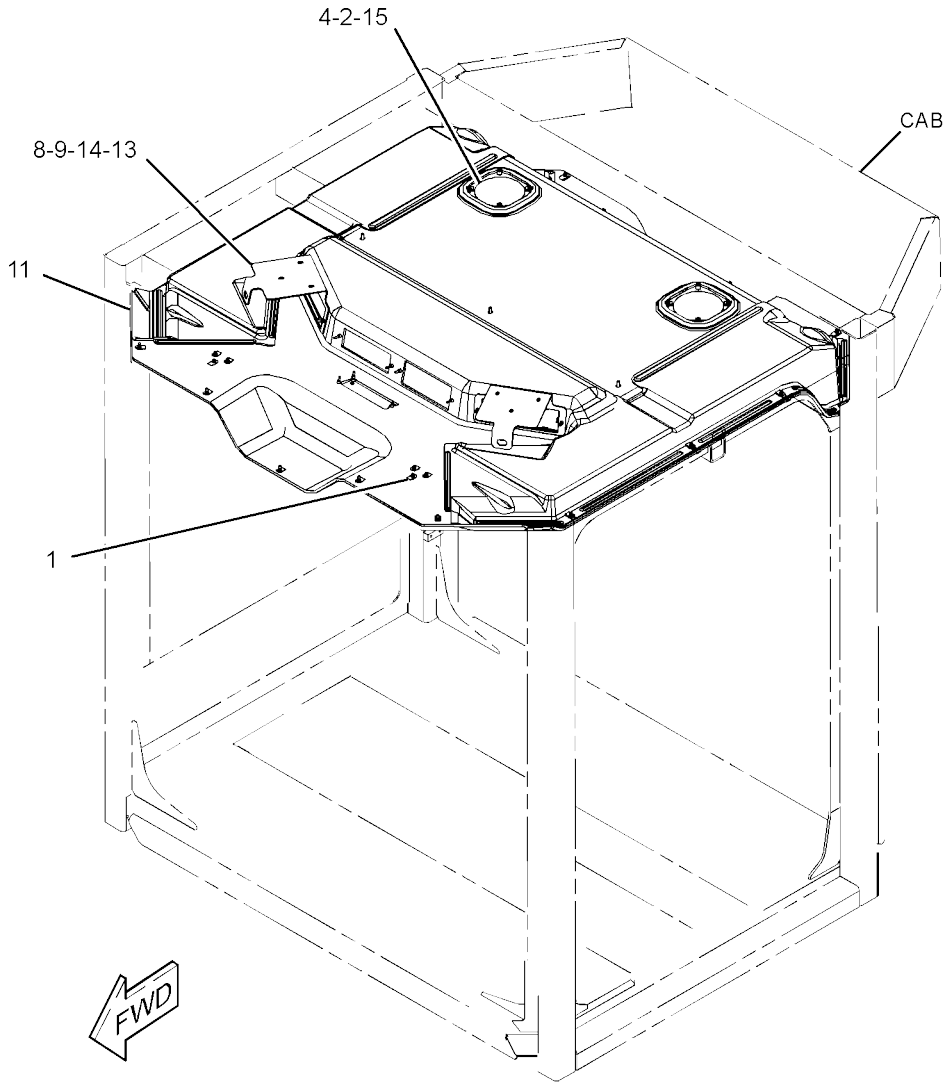

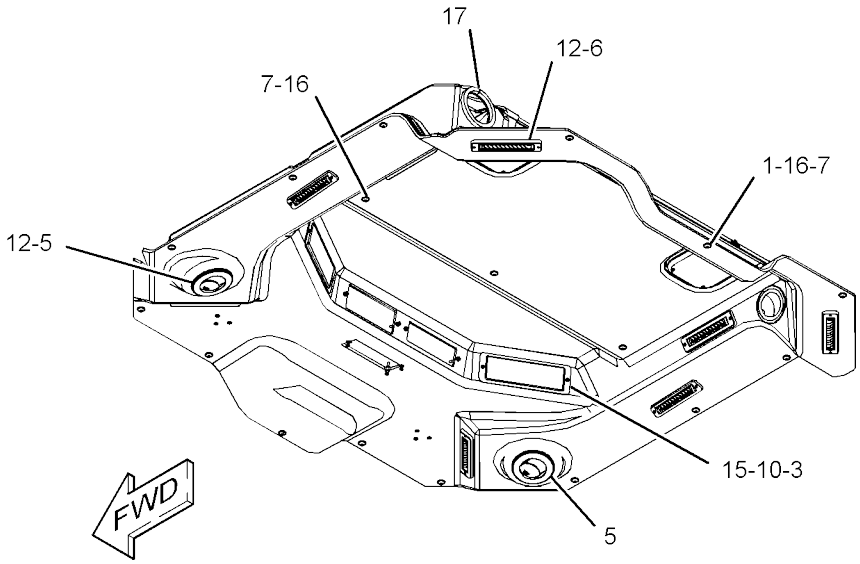

GRAPHIC #1 <END> g03345273

362-2573 LINER GP-CAB

S/N: 5B41-UP

PART OF 393-0167, 462-5780, 509-9422 CAB

GP AN ATTACHMENT

SMCS-7301, 7329

i07418015

	REF SEE NOTE QTY	GRAPHIC NO 1 2 3 4 5 6	(PRODUCT LEVEL)	REF PAGE	PART NAME PART NUMBER
	1	1	**4E-8722**	22	NUT (RETAINER)
	2	1	**154-8079**	8	NUT-RETAINER
	3	1	**9U-8263**	2	COVER
	4	1	**101-3055**	2	COVER-SPEAKER
	5	1	**164-8473**	4	LOUVER AS
	6	1	**171-4047**	8	LOUVER AS-VENT
	7	1	**114-6658**	17	WASHER (6.5X17X1-MM THK)
M	8	1	**354-0132**	4	INSERT-HEX (M4X0.7-THD)
	9	1	**360-4746**	2	PLATE-MOUNTING
	10	1	**394-6541**	1	LINER AS-CAB
	11	1	**364-0868**	2	PLATE
	12	1	**148-3626**	32	SCREW-FLAT HEAD (6-20X0.75-IN)
M	13	1	**5C-2890**	6	NUT (M6X1-THD)
	14	1	**5P-4115**	6	WASHER-HARD (7.2X19X2-MM THK)
M	15	1	**8T-0024**	19	SCREW (M4X0.7X30-MM)
M	16	1	**9X-2045**	17	SCREW-TRUSS HEAD (M6X1X20-MM)
D	17	1	**5P-5927**		SEAL (0.2-M EACH)

D - ORDER BY THE METER M - METRIC PART

362-2573 **LINER GP-CAB** (contd.) **i07418015**

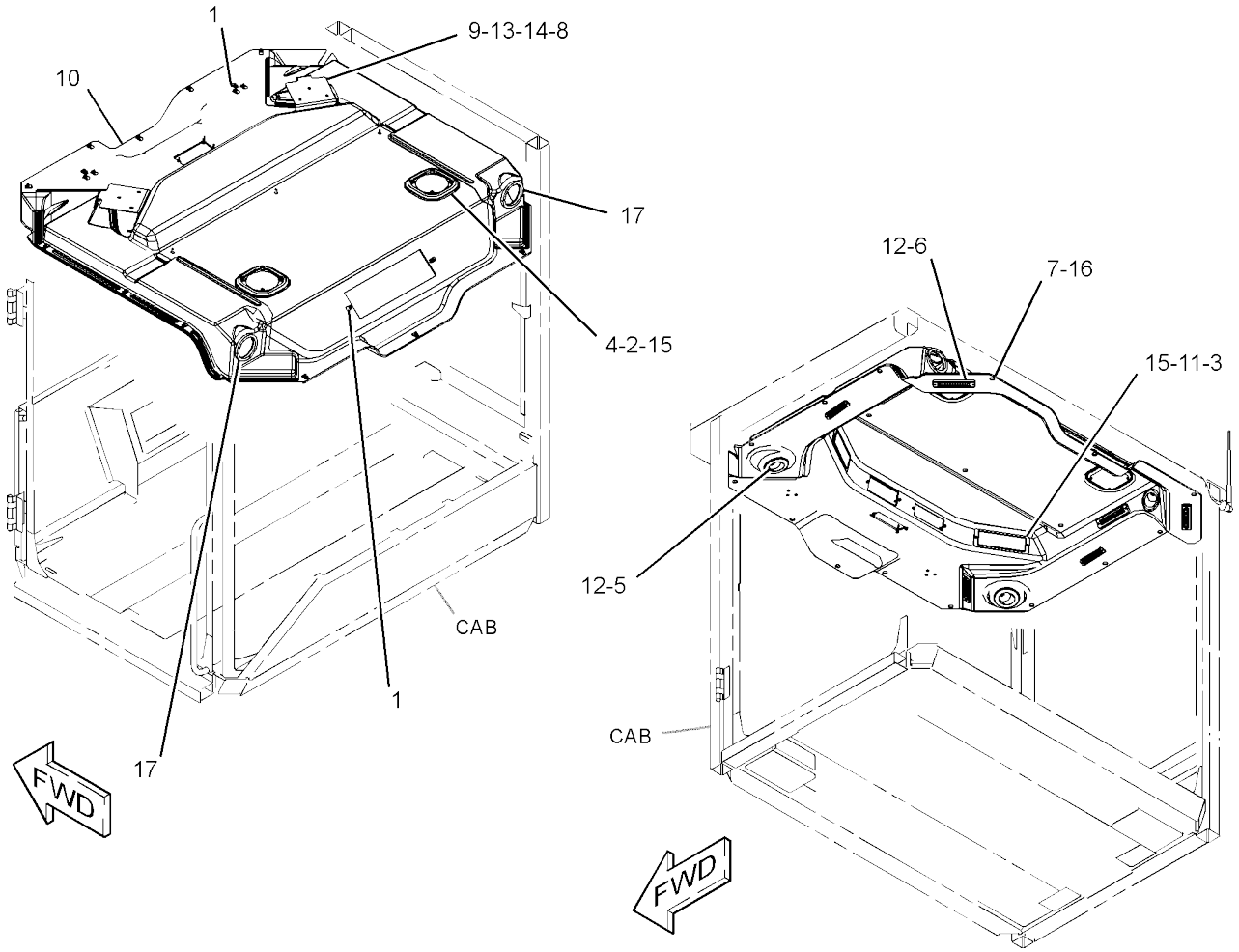

GRAPHIC #1 <END> g03345764

377-5343 LINES GP-AIR CONDITIONER

S/N: G441-UP
PART OF 451-3170 AIR CONDITIONER
AR AN ATTACHMENT

SMCS-1808, 7320

i07403921

	REF SEE NOTE QTY	GRAPHIC NO 1 2 3 4 5 6	(PRODUCT LEVEL)	REF PAGE	PART NAME PART NUMBER
	1	1	**4W-6793**	1	CLAMP
	2	1	**5P-3928**	1	COUPLING AS-REFRIGERANT (SELF-SEALING)
	3	1	**7K-3176**	1	COUPLING AS-REFRIGERANT (SELF-SEALING)
	4	1	**102-8705**	3	PLATE (TOP)
	5	1	**106-5534**	1	DRYER-REFRIGERANT (RECEIVER)
	6	1	**204-2281**	8	STRAP-CABLE
	7	1	**206-0452**	1	PLATE
	8	1	**236-6923**	1	SWITCH AS-PRESSURE (HIGH, LOW) (REFRIGERANT)
	9	1	**365-4038**	1	BRACKET AS
I	10	1	**365-4042**	1	HOSE AS
I	11	1	**393-9156**	1	HOSE AS
I	12	1	**393-9157**	1	HOSE AS
I	13	1	**393-9161**	1	HOSE AS
	14	1	**393-9163**	1	SUPPORT AS
	15	1	**393-9165**	1	SUPPORT AS
					(EACH SUPPORT AS INCLUDES)
		1	**102-8706**	1	PLATE AS
	17	1	**183-4403**	1	CLIP (LOOP)
	18	1	**304-7728**	6	CLAMP-HALF
	19	1	**5P-4116**	5	WASHER-HARD (8.8X20.5X2-MM THK)
M	20	1	**7X-0818**	3	BOLT (M8X1.25X45-MM)
M	21	1	**7X-2537**	4	BOLT (M8X1.25X35-MM)
	22	1	**7X-7729**	2	WASHER (11X25X3-MM THK)
	23	1	**8T-4121**	2	WASHER-HARD (11X21X2.5-MM THK)
M	24	1	**8T-4195**	2	BOLT (M10X1.5X30-MM)
M	25	1	**8T-4200**	1	BOLT (M8X1.25X16-MM)
	26	1	**9X-7378**	1	SEAL-O-RING
	27	1	**9X-7380**	3	SEAL-O-RING
	28	1	**9X-7381**	2	SEAL-O-RING
	29	1	**9X-7382**	1	SEAL-O-RING
	30	1	**9X-7383**	1	SEAL-O-RING
	31	1	**9X-7384**	1	SEAL-O-RING
D	34	1	**5P-5923**		SEAL (0.1-M)
G	35	1	**160-2248**		SLEEVE-ABRASION (20.1-IN)
G	35A	1	**160-2248**		SLEEVE-ABRASION (22.1-IN)
J	36	1	**5P-3945**	1	CAP
J	37	1	**5P-3950**	1	CAP

D - ORDER BY THE METER G - ORDER BY THE INCH
I - REFER TO HYDRAULIC INFORMATION SYSTEM J - DISCARD WHEN CAB IS INSTALLED
M - METRIC PART

377-5343 **LINES GP-AIR CONDITIONER (**contd.**)** **i07403921**

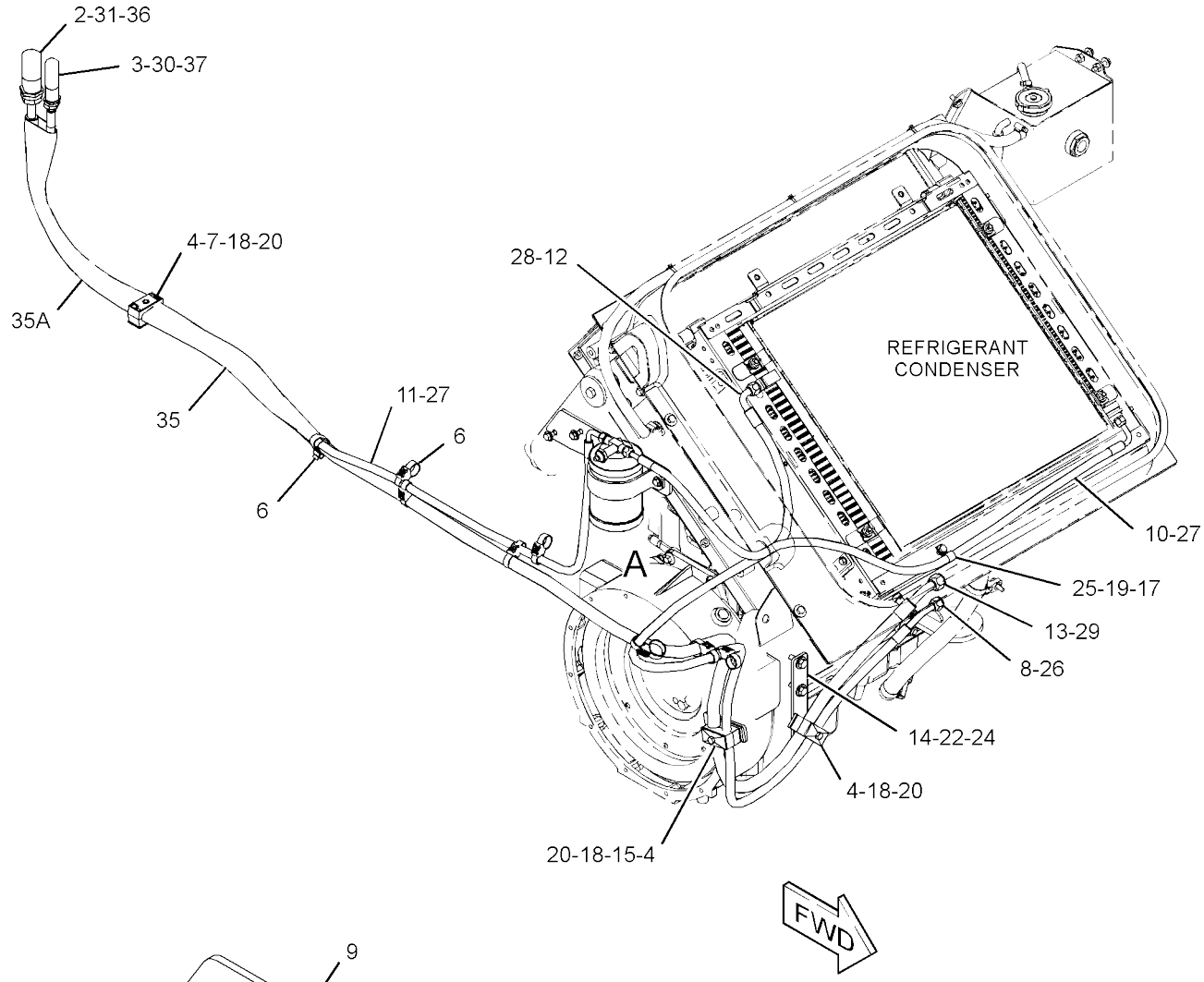

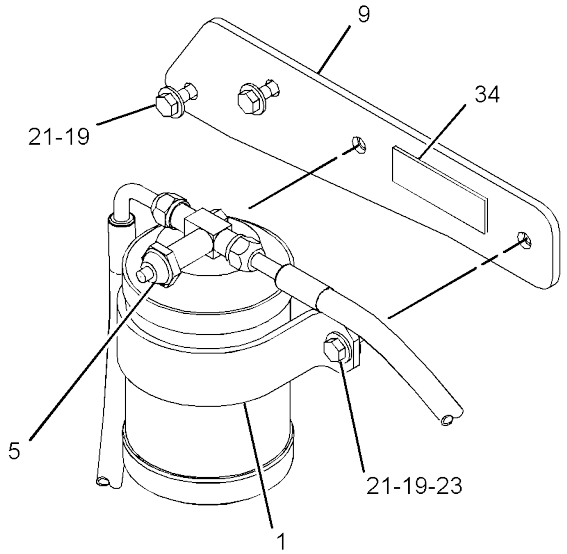

VIEW OF AREA A
(EXPLODED)

GRAPHIC #1 <END> g03636758

391-0773 LINES GP-AIR CONDITIONER

S/N: 5B41-UP
PART OF 451-3270 AIR CONDITIONER
AR AN ATTACHMENT

SMCS-1808, 7320

i07418009

	REF SEE NOTE QTY	GRAPHIC NO 1 2 3 4 5 6	(PRODUCT LEVEL)	REF PAGE	PART NAME PART NUMBER
	1	1	**4W-6793**	1	CLAMP
	2	1	**5P-3928**	1	COUPLING AS-REFRIGERANT (SELF-SEALING)
	3	1	**7K-3176**	1	COUPLING AS-REFRIGERANT (SELF-SEALING)
	4	1	**102-8705**	4	PLATE (TOP)
	5	1	**106-5534**	1	DRYER-REFRIGERANT (RECEIVER)
	6	1	**204-2281**	5	STRAP-CABLE
	7	1	**206-0452**	1	PLATE
	8	1	**236-6923**	1	SWITCH AS-PRESSURE (HIGH, LOW) (REFRIGERANT)
I	9	1	**365-1753**	1	HOSE AS
I	10	1	**365-1755**	1	HOSE AS
	11	1	**365-4055**	1	BRACKET AS
I	12	1	**393-9157**	1	HOSE AS
I	13	1	**393-9161**	1	HOSE AS
	14	1	**393-9163**	1	SUPPORT AS
	15	1	*393-9164*	1	SUPPORT AS
					(EACH SUPPORT AS INCLUDES)
		1	**102-8706**	1	PLATE AS
	17	1	**183-4403**	1	CLIP (LOOP)
	18	1	**304-7728**	8	CLAMP-HALF
	19	1	**5P-4116**	6	WASHER-HARD (8.8X20.5X2-MM THK)
M	20	1	**7X-0818**	4	BOLT (M8X1.25X45-MM)
M	21	1	**7X-2537**	5	BOLT (M8X1.25X35-MM)
	22	1	**7X-7729**	2	WASHER (11X25X3-MM THK)
	23	1	**8T-4121**	2	WASHER-HARD (11X21X2.5-MM THK)
M	24	1	**8T-4195**	2	BOLT (M10X1.5X30-MM)
M	25	1	**8T-4200**	1	BOLT (M8X1.25X16-MM)
	26	1	**9X-7378**	1	SEAL-O-RING
	27	1	**9X-7380**	3	SEAL-O-RING
	28	1	**9X-7381**	2	SEAL-O-RING
	29	1	**9X-7382**	1	SEAL-O-RING
	30	1	**9X-7383**	1	SEAL-O-RING
	31	1	**9X-7384**	1	SEAL-O-RING
G	32	1	**160-2248**		SLEEVE-ABRASION (22.5-IN)
G	32A	1	**160-2248**		SLEEVE-ABRASION (20.5-IN)
D	33	1	**5P-5923**	1	SEAL (0.1-M)
J	34	1	**5P-3945**	1	CAP
J	35	1	**5P-3950**	1	CAP

D - ORDER BY THE METER G - ORDER BY THE INCH
I - REFER TO HYDRAULIC INFORMATION SYSTEM J - DISCARD WHEN CAB IS INSTALLED
M - METRIC PART

391-0773 **LINES GP-AIR CONDITIONER (**contd.**)** **i07418009**

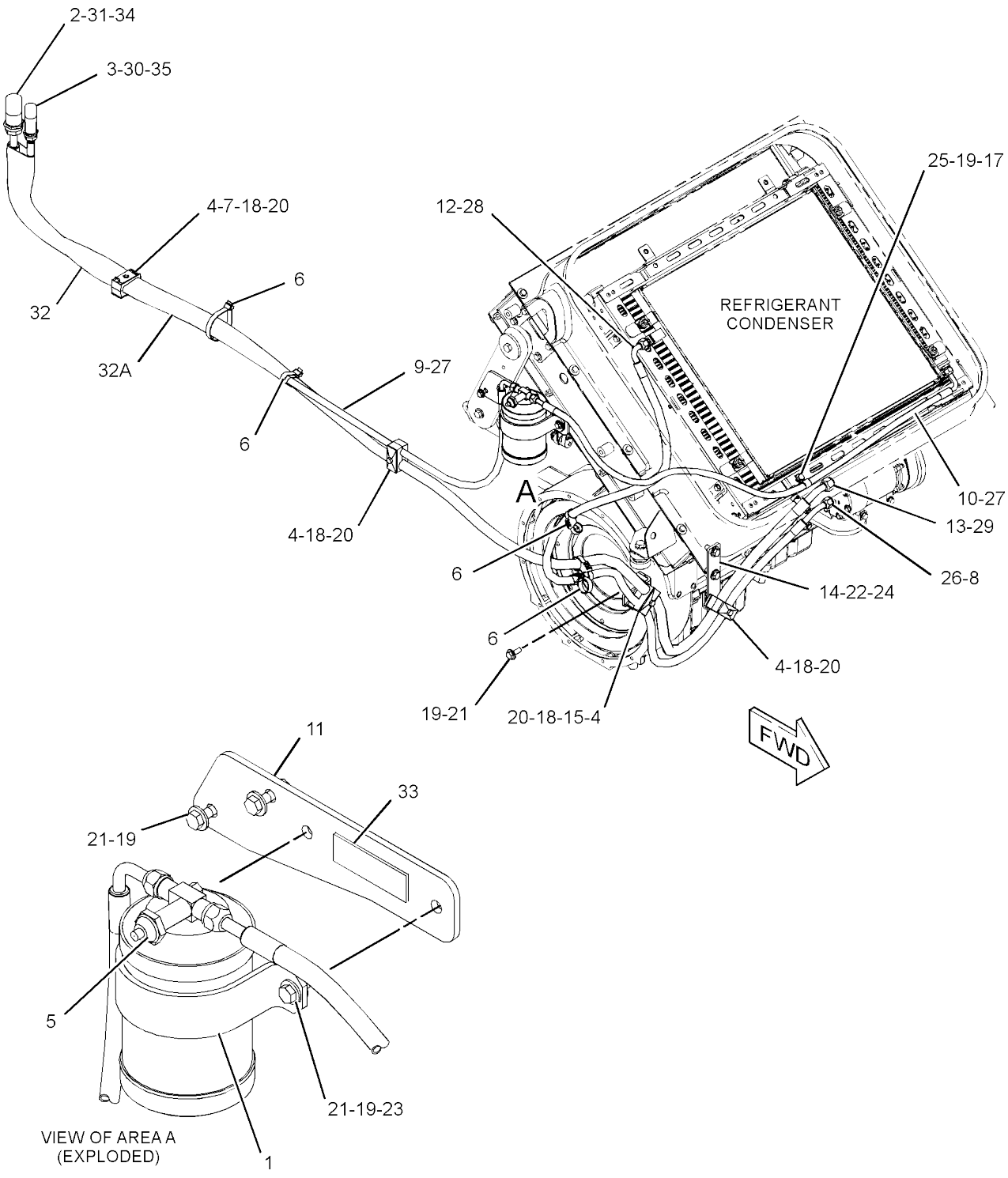

GRAPHIC #1 <END> g03823817

451-3191 LINES GP-HEATER

S/N: G441-UP
PART OF 451-3180 OPERATOR
AR AN ATTACHMENT

SMCS-1380, 1812, 7304

i07403936

	REF SEE NOTE QTY	GRAPHIC NO 1 2 3 4 5 6	(PRODUCT LEVEL)	REF PAGE	PART NAME PART NUMBER
	1	1	*150-4036*	1	TEE AS
		1	**3K-0360**	1	SEAL-O-RING
		1	**118-0911**	1	TEE-O-RING PORT
M	2	1	**206-0451**	1	BOLT-STACKING (M8X1.25X44-MM)
	3	1	**362-2619**	1	COVER
M	4	1	**127-2170**	1	SCREW-TRUSS HEAD (M8X1.25X20-MM)
	5	1	**177-2215**	2	STRAP-DUAL CLAMP
	6	1	**200-6345**	3	SADDLE-MOUNTING (DUAL SWIVEL)
	7	1	**204-2281**	7	STRAP-CABLE
	8	1	**222-9820**	2	CLAMP-HALF
	9	1	*260-9144*	2	CONNECTOR AS
					(EACH INCLUDES)
		1	**3K-0360**	1	SEAL-O-RING
		1	**168-8806**	1	CONNECTOR
	10	1	**8T-0154**	4	CLAMP-HOSE
	11	1	**3E-4321**	1	CLIP (LOOP)
	12	1	**7X-0579**	1	WASHER-HARD (8.8X25.5X2-MM THK)
	13	1	**8T-4121**	1	WASHER-HARD (11X21X2.5-MM THK)
M	14	1	**8T-4195**	1	BOLT (M10X1.5X30-MM)
	15	1	**9X-2038**	2	WASHER (7X19X2-MM THK)
M	16	1	**9X-2045**	2	SCREW-TRUSS HEAD (M6X1X20-MM)
E	17	1	**5P-0767**		HOSE (327.5-CM)
E	17A	1	**5P-0767**		HOSE (235.5-CM)
G	18	1	**160-2248**		SLEEVE-ABRASION (12.4-IN)
G	18A	1	**160-2248**		SLEEVE-ABRASION (26-IN)

E - ORDER BY THE CENTIMETER G - ORDER BY THE INCH
M - METRIC PART

451-3191 **LINES GP-HEATER** (contd.) **i07403936**

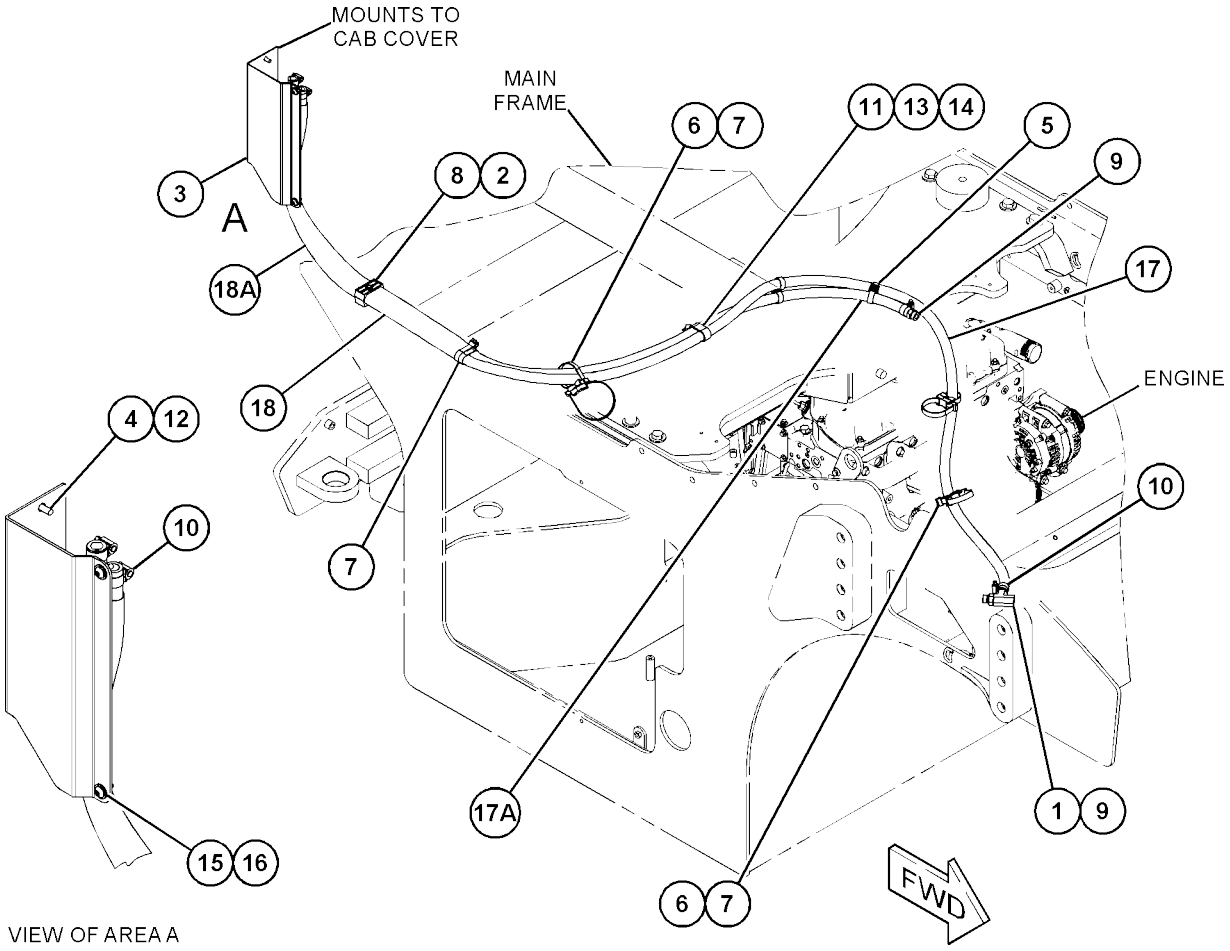

GRAPHIC #1 <END> g06034478

451-3291 LINES GP-HEATER

S/N: 5B41-UP
PART OF 451-3280 OPERATOR
AR AN ATTACHMENT

SMCS-1380, 1812, 7304

i07418012

	REF SEE NOTE QTY	GRAPHIC NO 1 2 3 4 5 6	(PRODUCT LEVEL)	REF PAGE	PART NAME PART NUMBER
	1	1	*150-4036*	1	TEE AS
		1	**3K-0360**	1	SEAL-O-RING
		1	**118-0911**	1	TEE-O-RING PORT
M	2	1	**206-0451**	1	BOLT-STACKING (M8X1.25X44-MM)
	3	1	**362-2619**	1	COVER
M	4	1	**127-2170**	1	SCREW-TRUSS HEAD (M8X1.25X20-MM)
	5	1	**177-2215**	4	STRAP-DUAL CLAMP
	6	1	**200-6345**	3	SADDLE-MOUNTING (DUAL SWIVEL)
	7	1	**204-2281**	7	STRAP-CABLE
	8	1	**222-9820**	2	CLAMP-HALF
	9	1	*260-9144*	2	CONNECTOR AS
					(EACH INCLUDES)
		1	**3K-0360**	1	SEAL-O-RING
		1	**168-8806**	1	CONNECTOR
	10	1	**8T-0154**	4	CLAMP-HOSE
	11	1	**3E-4321**	1	CLIP (LOOP)
	12	1	**7X-0579**	1	WASHER-HARD (8.8X25.5X2-MM THK)
	13	1	**8T-4121**	1	WASHER-HARD (11X21X2.5-MM THK)
M	14	1	**8T-4195**	1	BOLT (M10X1.5X30-MM)
	15	1	**9X-2038**	2	WASHER (7X19X2-MM THK)
M	16	1	**9X-2045**	2	SCREW-TRUSS HEAD (M6X1X20-MM)
G	17	1	**160-2248**		SLEEVE-ABRASION (26-IN)
G	17A	1	**160-2248**		SLEEVE-ABRASION (20.8-IN)
E	18	1	**5P-0767**		HOSE (323.5-CM)
E	18A	1	**5P-0767**		HOSE (250-CM)

E - ORDER BY THE CENTIMETER G - ORDER BY THE INCH
M - METRIC PART

451-3291 **LINES GP-HEATER** (contd.) **i07418012**

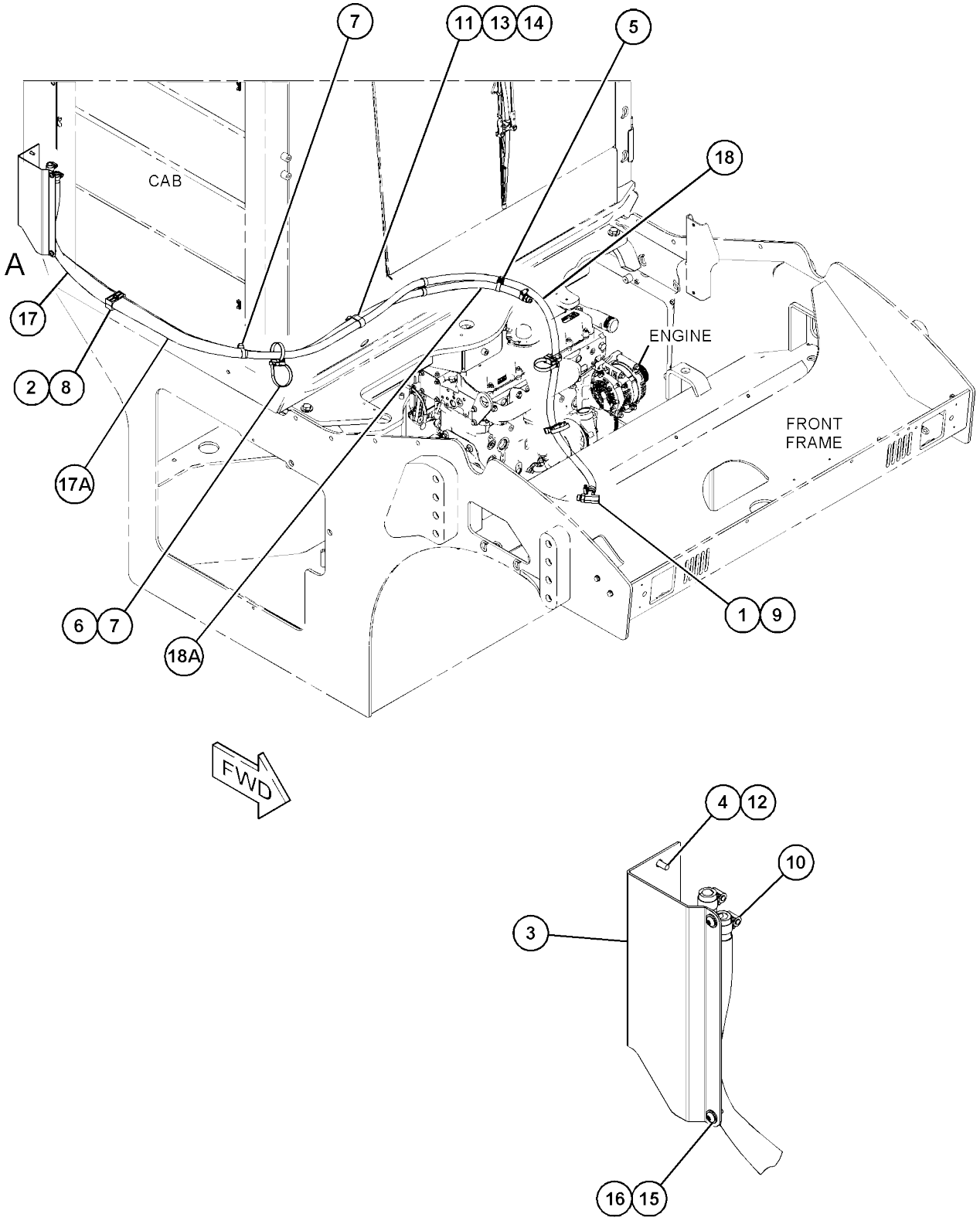

GRAPHIC #1 <END> g06077203

550-4318 LINES GP-HEATER

S/N: G441-UP
PART OF 451-3190 OPERATOR
AR AN ATTACHMENT

SMCS-1380, 1812, 7304

i07406181

	REF SEE NOTE QTY	GRAPHIC NO 1 2 3 4 5 6	(PRODUCT LEVEL)	REF PAGE	PART NAME PART NUMBER
	1	1	*150-4036*	1	TEE AS
		1	**3K-0360**	1	SEAL-O-RING
		1	**118-0911**	1	TEE-O-RING PORT
M	2	1	**206-0451**	1	BOLT-STACKING (M8X1.25X44-MM)
	3	1	**365-6072**	1	COVER
M	4	1	**127-2170**	1	SCREW-TRUSS HEAD (M8X1.25X20-MM)
	5	1	**177-2215**	2	STRAP-DUAL CLAMP
	6	1	**200-6345**	3	SADDLE-MOUNTING (DUAL SWIVEL)
	7	1	**204-2281**	7	STRAP-CABLE
	8	1	**222-9820**	2	CLAMP-HALF
	9	1	*260-9144*	2	CONNECTOR AS
					(EACH INCLUDES)
		1	**3K-0360**	1	SEAL-O-RING
		1	**168-8806**	1	CONNECTOR
	10	1	**8T-0154**	4	CLAMP-HOSE
	11	1	**3E-4321**	1	CLIP (LOOP)
	12	1	**7X-0579**	1	WASHER-HARD (8.8X25.5X2-MM THK)
	13	1	**8T-4121**	1	WASHER-HARD (11X21X2.5-MM THK)
M	14	1	**8T-4195**	1	BOLT (M10X1.5X30-MM)
	15	1	**9X-2038**	2	WASHER (7X19X2-MM THK)
M	16	1	**9X-2045**	2	SCREW-TRUSS HEAD (M6X1X20-MM)
E	17	1	**5P-0767**		HOSE (235.5-CM)
E	17A	1	**5P-0767**		HOSE (328-CM)
G	18	1	**160-2248**		SLEEVE-ABRASION (26-IN)
G	18A	1	**160-2248**		SLEEVE-ABRASION (12.4-IN)

E - ORDER BY THE CENTIMETER G - ORDER BY THE INCH
M - METRIC PART

550-4318 **LINES GP-HEATER** (contd.) **i07406181**

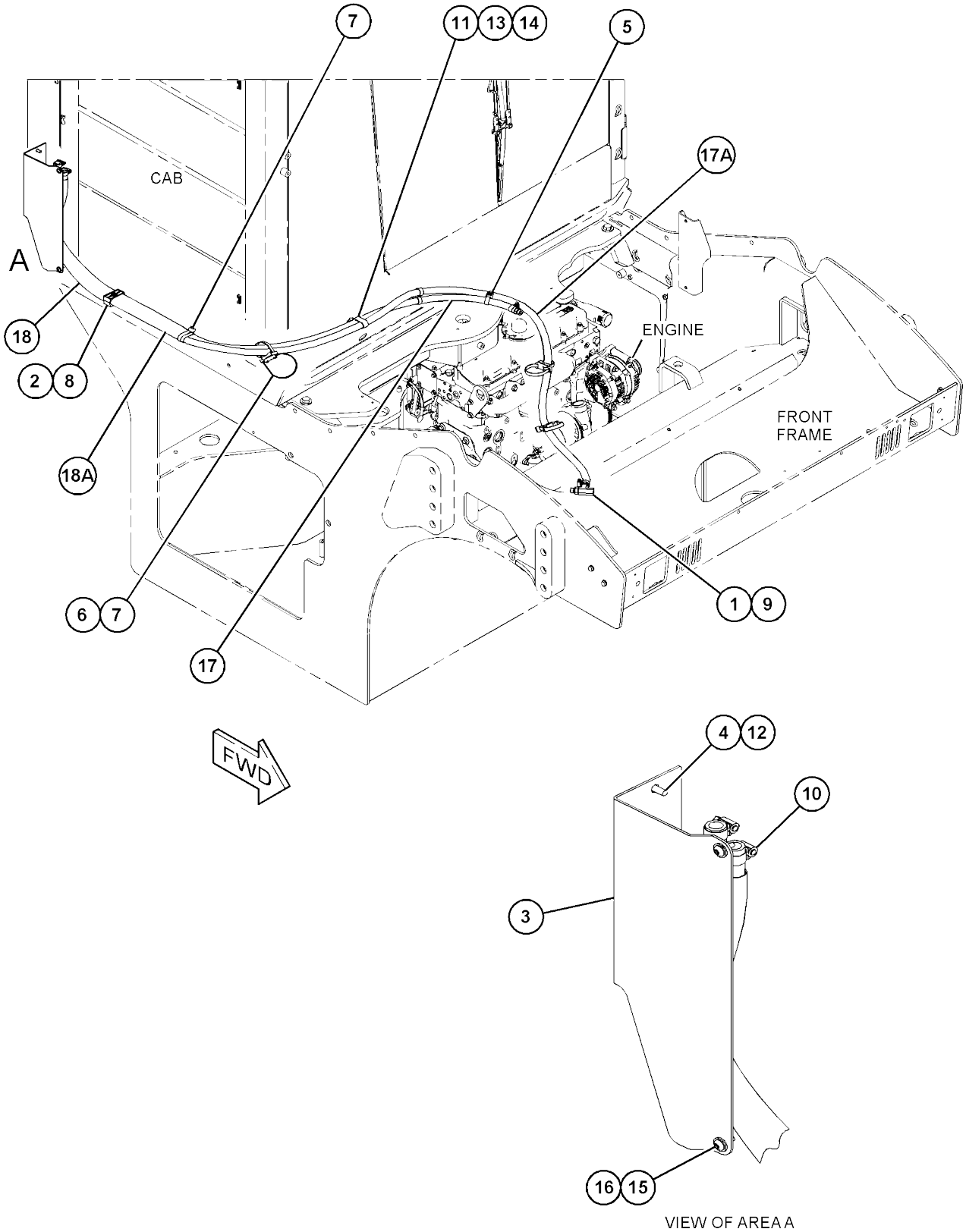

GRAPHIC #1 <END> g06255089

550-4319 LINES GP-HEATER

S/N: 5B41-UP
PART OF 451-3290 OPERATOR
AR AN ATTACHMENT

SMCS-1380, 1812, 7304

i07418037

	REF SEE NOTE QTY	GRAPHIC NO 1 2 3 4 5 6	(PRODUCT LEVEL)	REF PAGE	PART NAME PART NUMBER
	1	1	*150-4036*	1	TEE AS
		1	**3K-0360**	1	SEAL-O-RING
		1	**118-0911**	1	TEE-O-RING PORT
M	2	1	**206-0451**	1	BOLT-STACKING (M8X1.25X44-MM)
	3	1	**365-6072**	1	COVER
M	4	1	**127-2170**	1	SCREW-TRUSS HEAD (M8X1.25X20-MM)
	5	1	**177-2215**	2	STRAP-DUAL CLAMP
	6	1	**200-6345**	3	SADDLE-MOUNTING (DUAL SWIVEL)
	7	1	**204-2281**	7	STRAP-CABLE
	8	1	**222-9820**	2	CLAMP-HALF
	9	1	*260-9144*	2	CONNECTOR AS
					(EACH INCLUDES)
		1	**3K-0360**	1	SEAL-O-RING
		1	**168-8806**	1	CONNECTOR
	10	1	**8T-0154**	4	CLAMP-HOSE
	11	1	**3E-4321**	1	CLIP (LOOP)
	12	1	**7X-0579**	1	WASHER-HARD (8.8X25.5X2-MM THK)
	13	1	**8T-4121**	1	WASHER-HARD (11X21X2.5-MM THK)
M	14	1	**8T-4195**	1	BOLT (M10X1.5X30-MM)
	15	1	**9X-2038**	2	WASHER (7X19X2-MM THK)
M	16	1	**9X-2045**	2	SCREW-TRUSS HEAD (M6X1X20-MM)
G	17	1	**160-2248**		SLEEVE-ABRASION (26-IN)
G	17A	1	**160-2248**		SLEEVE-ABRASION (21-IN)
E	18	1	**5P-0767**		HOSE (324-CM)
E	18A	1	**5P-0767**		HOSE (250-CM)

E - ORDER BY THE CENTIMETER G - ORDER BY THE INCH
M - METRIC PART

550-4319 **LINES GP-HEATER** (contd.) **i07418037**

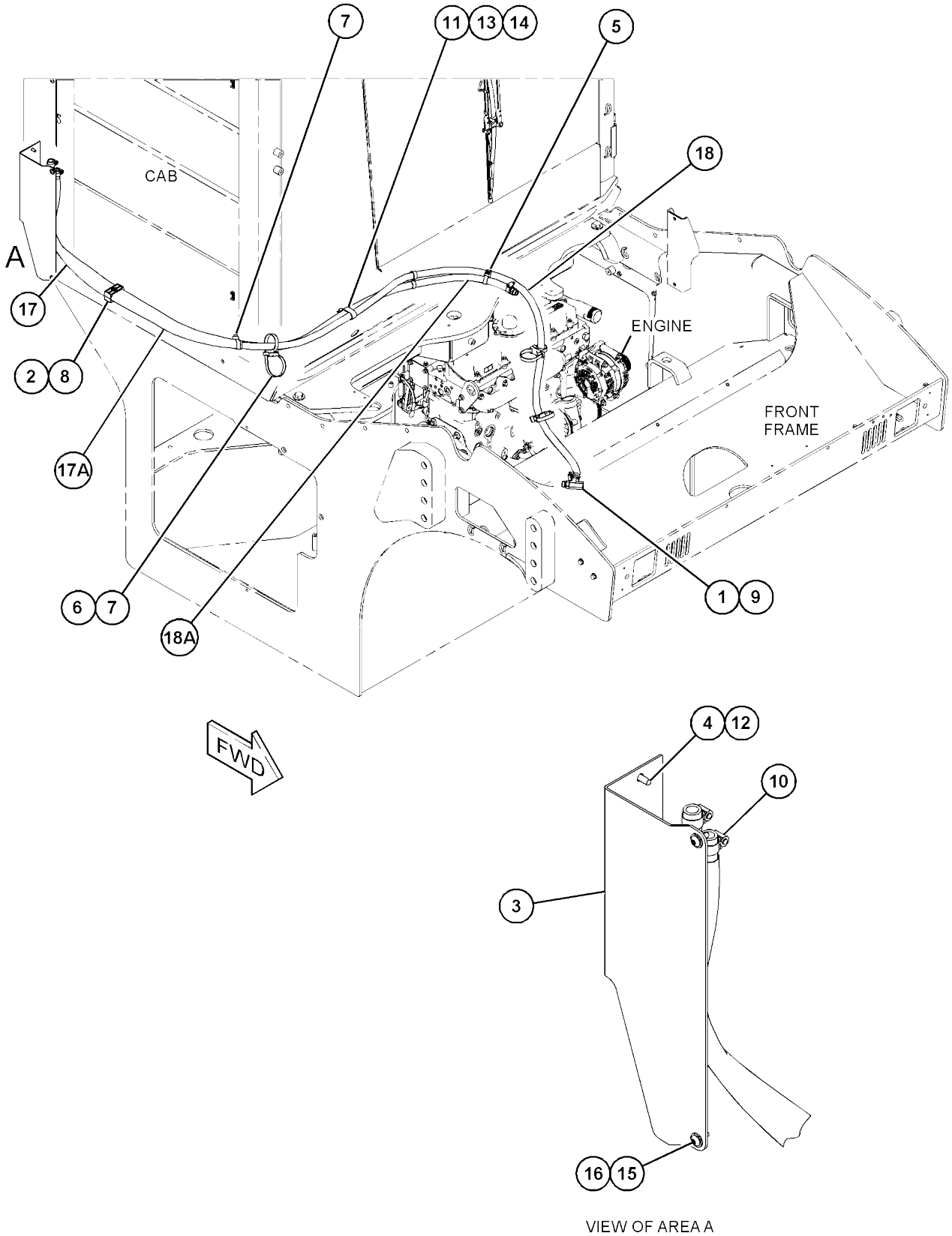

GRAPHIC #1 <END> g06255083

343-6106 LOCK GP-ROTATION

S/N: 5B41-UP; G441-UP
PART OF 505-8543 OPERATOR
AR

SMCS-7253

i07399883

REF SEE NOTE	QTY	GRAPHIC NO 1 2 3 4 5 6	(PRODUCT LEVEL)	REF PAGE	PART NAME PART NUMBER
	1	1	**2R-0364**	1	RING-RETAINING
	2	1	**8T-4742**	2	END-YOKE ROD
	3	1	**8T-4744**	2	PIN AS-SPRING
	4	1	**107-4749**	1	PLATE
	5	1	**422-9051**	1	PIN
	6	1	**214-7229**	1	BRACKET AS
	7	1	**269-2892**	2	PIN
	8	1	**332-0195**	2	CLIP
	9	1	**395-1138**	1	PLATE AS
	10	1	**395-1139**	1	PIN
	11	1	**363-2230**	1	ROD
	12	1	**363-2231**	1	PIN
	13	1	**363-2232**	1	LEVER
	14	1	**363-2233**	1	LEVER AS
	15	1	**491-8123**	1	CABLE
	16	1	**365-6051**	2	LEVER AS
B	17	1	**365-6052**	5	SHIM (0.3-MM THK)
	18	1	**422-0244**	1	SPRING
	19	1	**127-5512**	2	KNOB
	20	1	**5N-3852**	2	BEARING
	21	1	**206-6418**	4	CLAMP-HALF
M	22	1	**5C-2890**	3	NUT (M6X1-THD)
	23	1	**5P-4116**	2	WASHER-HARD (8.8X20.5X2-MM THK)
	24	1	**6V-8491**	8	RING-RETAINING
M	25	1	**7X-2533**	4	BOLT (M6X1X35-MM)
	26	1	**8T-4121**	2	WASHER-HARD (11X21X2.5-MM THK)
M	27	1	**8T-4136**	2	BOLT (M10X1.5X25-MM)
M	28	1	**8T-4189**	2	BOLT (M8X1.25X20-MM)
	29	1	**398-1106**	1	BRACKET
M	30	1	**8T-4138**	1	BOLT (M6X1X20-MM)
	31	1	**375-8402**	2	RELAY AS (12-VOLT) (HORN)
	32	1	**9X-8256**	2	WASHER (6.6X12X2-MM THK)

B - USE AS REQUIRED M - METRIC PART

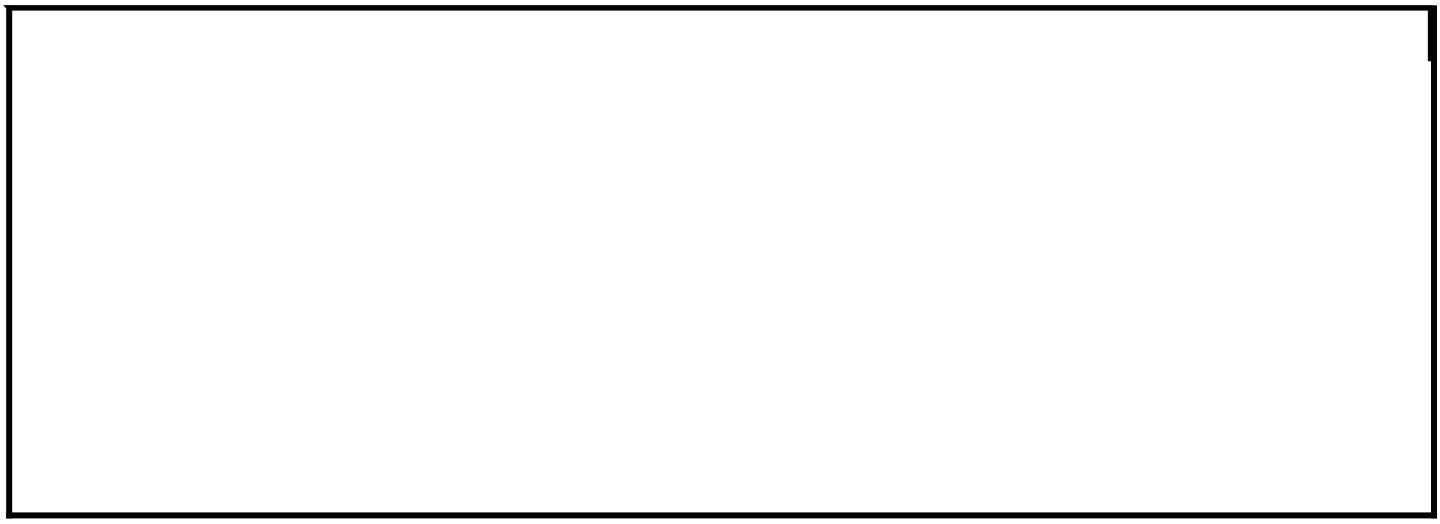

343-6106 **LOCK GP-ROTATION** (contd.) **i07399883**

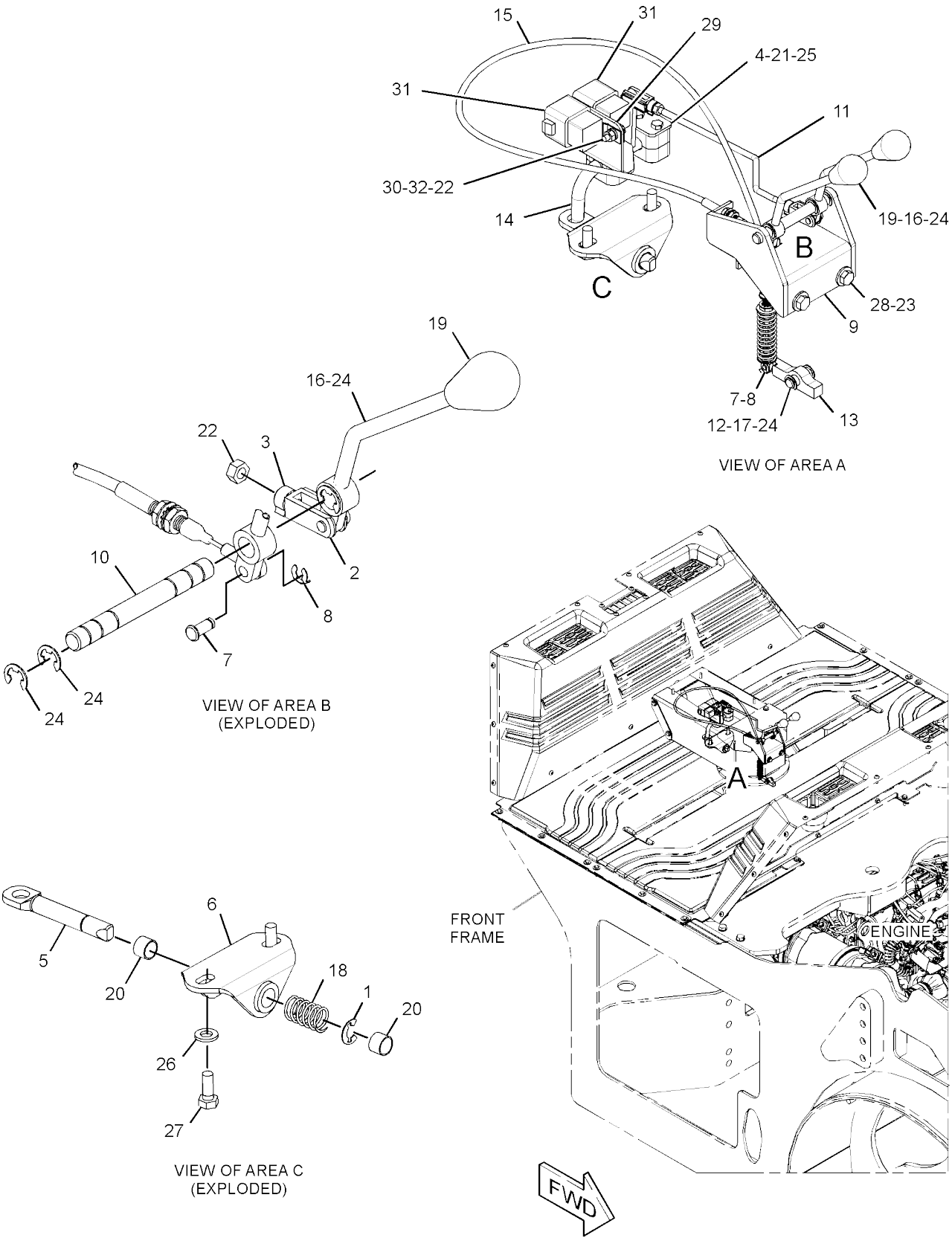

GRAPHIC #1 <END> g03085460

351-3433 MIRROR GP-REAR VIEW

S/N: 5B41-UP; G441-
UP AN ATTACHMENT

SMCS-7319

i07403629

	REF SEE NOTE QTY	GRAPHIC NO 1 2 3 4 5 6	(PRODUCT LEVEL)	REF PAGE	PART NAME PART NUMBER
	1	1	**4D-1326**	2	LOCKWASHER
	2	1	**217-9968**	2	MOUNT
	3	1	**245-6293**	2	BRACKET
	4	1	**364-8104**	2	BRACKET
	5	1	**113-8690**	2	WASHER (11.1X37.9X3.3-MM THK)
	6	1	**132-9983**	2	MIRROR-CONVEX
	7	1	**134-7309**	1	BRACKET AS-MIRROR (LH)
	8	1	**134-7310**	1	BRACKET AS-MIRROR (RH)
M	9	1	**5C-9553**	4	BOLT (M6X1X16-MM)
	10	1	**5P-4115**	4	WASHER-HARD (7.2X19X2-MM THK)
	11	1	**6V-8801**	4	NUT (3/8-16-THD)
	12	1	**7X-7729**	4	WASHER (11X25X3-MM THK)
M	13	1	**8T-0389**	2	LOCKNUT (M10X1.5-THD)
	14	1	**8T-4121**	4	WASHER-HARD (11X21X2.5-MM THK)
M	15	1	**8T-4195**	6	BOLT (M10X1.5X30-MM)
	16	1	**8T-4896**	4	WASHER-HARD (10.2X18.5X2.5-MM THK)

M - METRIC PART

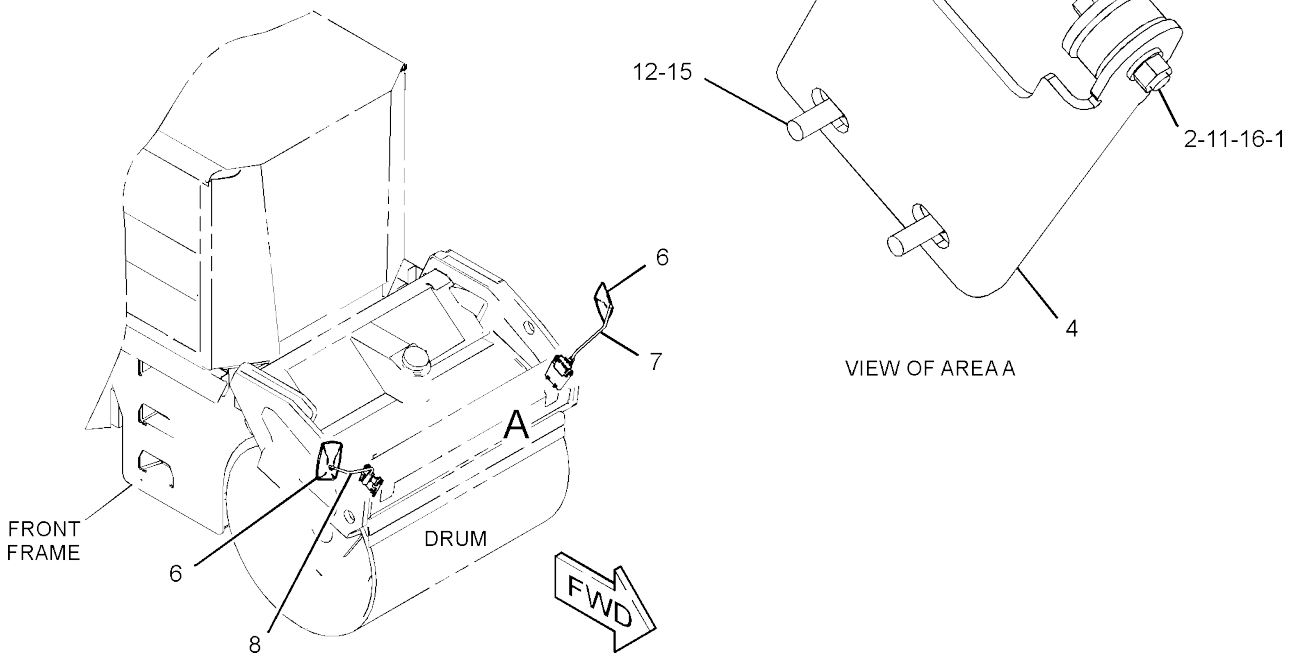

GRAPHIC #1 <END> g02837557

362-2574 MIRROR GP-REAR VIEW

S/N: 5B41-UP; G441-UP

PART OF 393-0166, 393-0167, 462-5780, 509-9422 CAB GP, 462-5781, 509-9415 CAB GP-ENCLOSED ROPS

AN ATTACHMENT

SMCS-7319

i06805982

	REF SEE NOTE QTY	GRAPHIC NO 1 2 3 4 5 6 (PRODUCT LEVEL)	REF PAGE	PART NAME PART NUMBER
	1	1 **199-0929**	2	MIRROR AS
	2	1 **362-2776**	2	PLATE-MOUNTING
	3	1 **096-6166**	4	WASHER-HARD (4.5X9X1-MM THK)
M	4	1 **150-1293**	4	SCREW-BUTTON HEAD (M4X0.7X12-MM)
M	5	1 **8C-6433**	6	SCREW (M6X1X30-MM)

M - METRIC PART

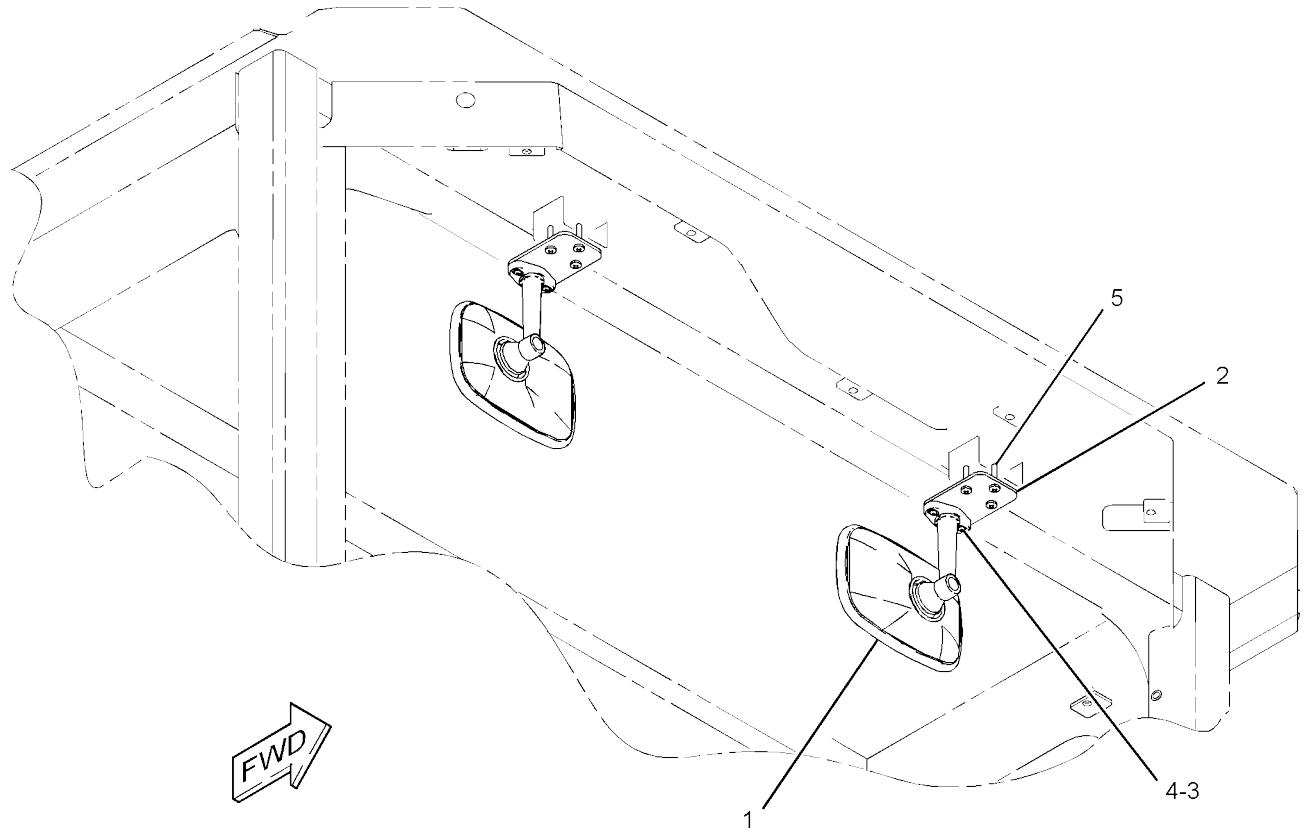

GRAPHIC #1 <END> g02852316

462-0499 MIRROR GP-REAR VIEW

S/N: 5B41-UP; G441-
UP AN ATTACHMENT

SMCS-7319

i07409081

	REF SEE NOTE QTY	GRAPHIC NO 1 2 3 4 5 6	(PRODUCT LEVEL)	REF PAGE	PART NAME PART NUMBER
	1	1	**298-7190**	2	BRACKET
	2	1	**321-5279**	2	ARM-MIRROR
	3	1	**338-1447**	2	PLATE
	4	1	**132-9983**	2	MIRROR-CONVEX
	5	1	**8T-4121**	4	WASHER-HARD (11X21X2.5-MM THK)
M	6	1	**8T-4137**	4	BOLT (M10X1.5X20-MM)
M	7	1	**8T-4138**	4	BOLT (M6X1X20-MM)
	8	1	**8T-4205**	4	WASHER-HARD (7.2X14.5X2-MM THK)

M - METRIC PART

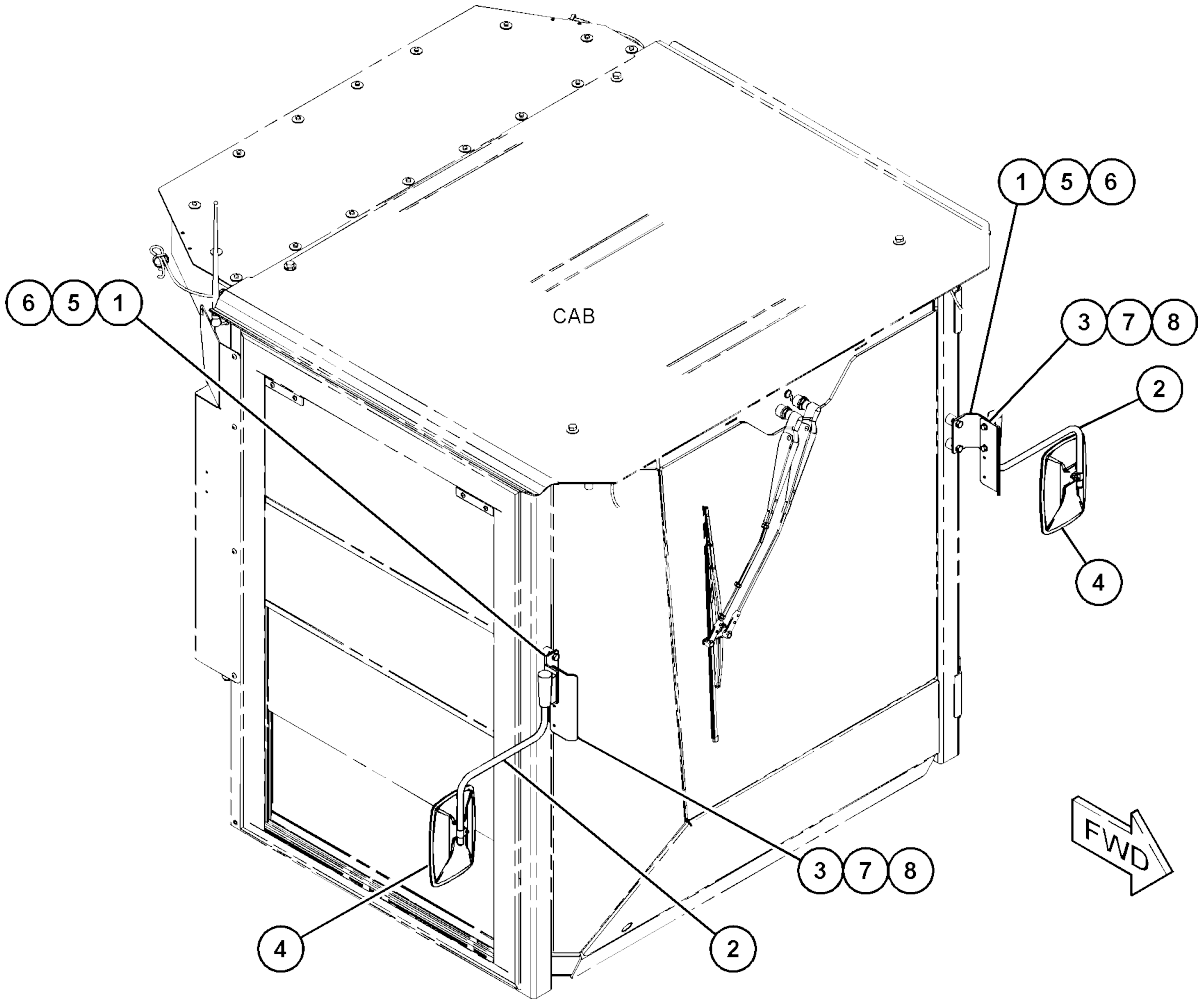

GRAPHIC #1 <END> g03729476

462-0500 MIRROR GP-REAR VIEW

S/N: 5B41-UP; G441-
UP AN ATTACHMENT

SMCS-7319

i07409082

	REF SEE NOTE QTY	GRAPHIC NO 1 2 3 4 5 6	(PRODUCT LEVEL)	REF PAGE	PART NAME PART NUMBER
	1	1	**298-7190**	1	BRACKET
	2	1	**321-5279**	2	ARM-MIRROR
	3	1	**338-1447**	1	PLATE
	4	1	**132-9983**	2	MIRROR-CONVEX
	5	1	**8T-4121**	2	WASHER-HARD (11X21X2.5-MM THK)
M	6	1	**8T-4137**	2	BOLT (M10X1.5X20-MM)
M	7	1	**8T-4138**	2	BOLT (M6X1X20-MM)
	8	1	**8T-4205**	4	WASHER-HARD (7.2X14.5X2-MM THK)
M	9	1	**8T-4970**	2	BOLT (M6X1X14-MM)

M - METRIC PART

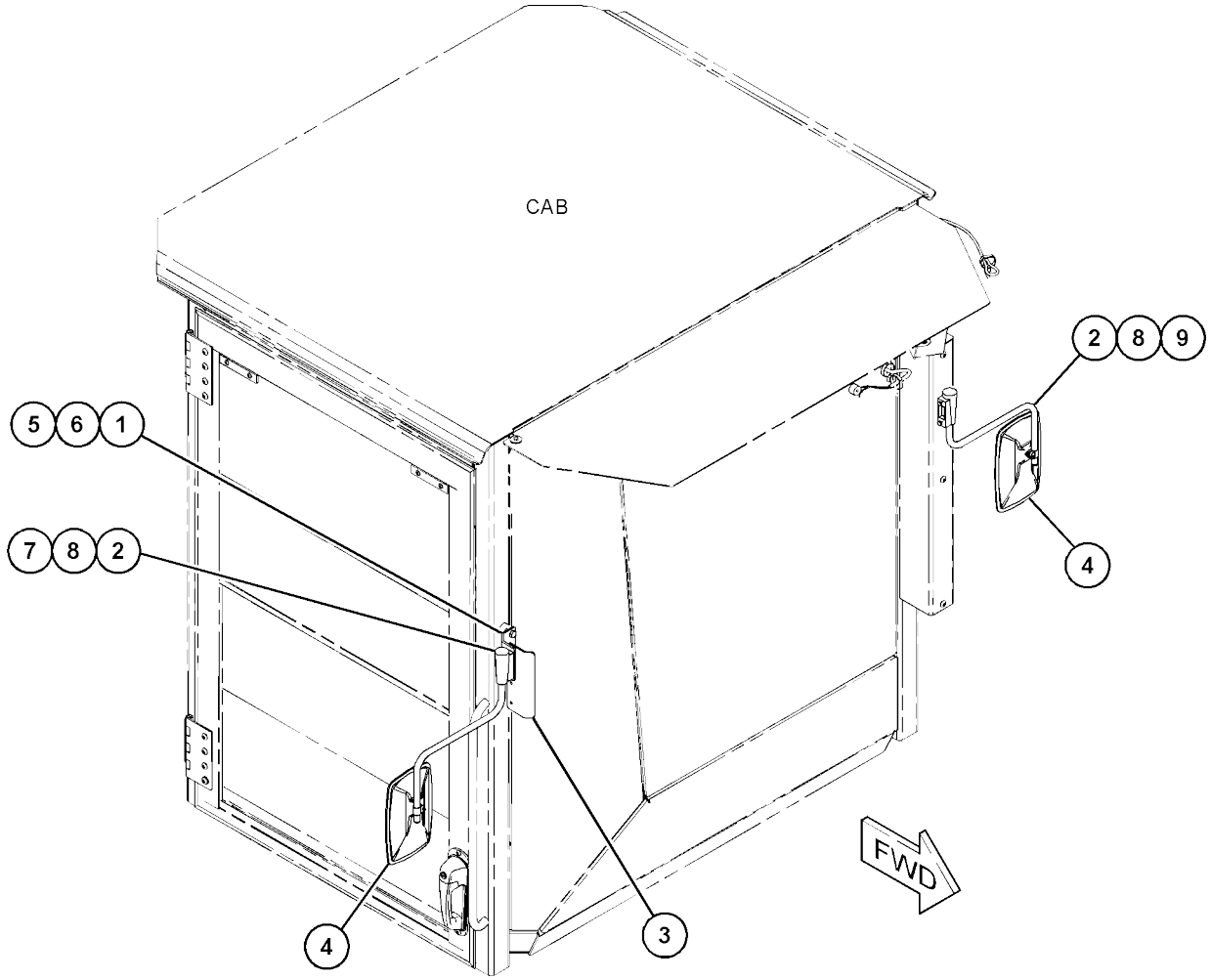

GRAPHIC #1 <END> g03730480

510-6132 MODULE GP-KEYPAD

S/N: 5B41-UP; G441-
UP AN ATTACHMENT

SMCS-7490

i07416458

	REF SEE NOTE QTY	GRAPHIC NO 1 2 3 4 5 6	(PRODUCT LEVEL)	REF PAGE	PART NAME PART NUMBER
	1	1	**515-3035**	1	MODULE GP-KEYPAD
		1	**8F-1326**	2	WASHER (4.2X9.5X0.8-MM THK)
M		1	**8T-2659**	2	LOCKNUT (M4X0.7-THD)
	2	1	**096-6166**	4	WASHER-HARD (4.5X9X1-MM THK)
M	3	1	**138-8454**	4	SCREW-TRUSS HEAD (M4X0.7X10-MM)
M	4	1	**8T-2659**	4	LOCKNUT (M4X0.7-THD)

M - METRIC PART

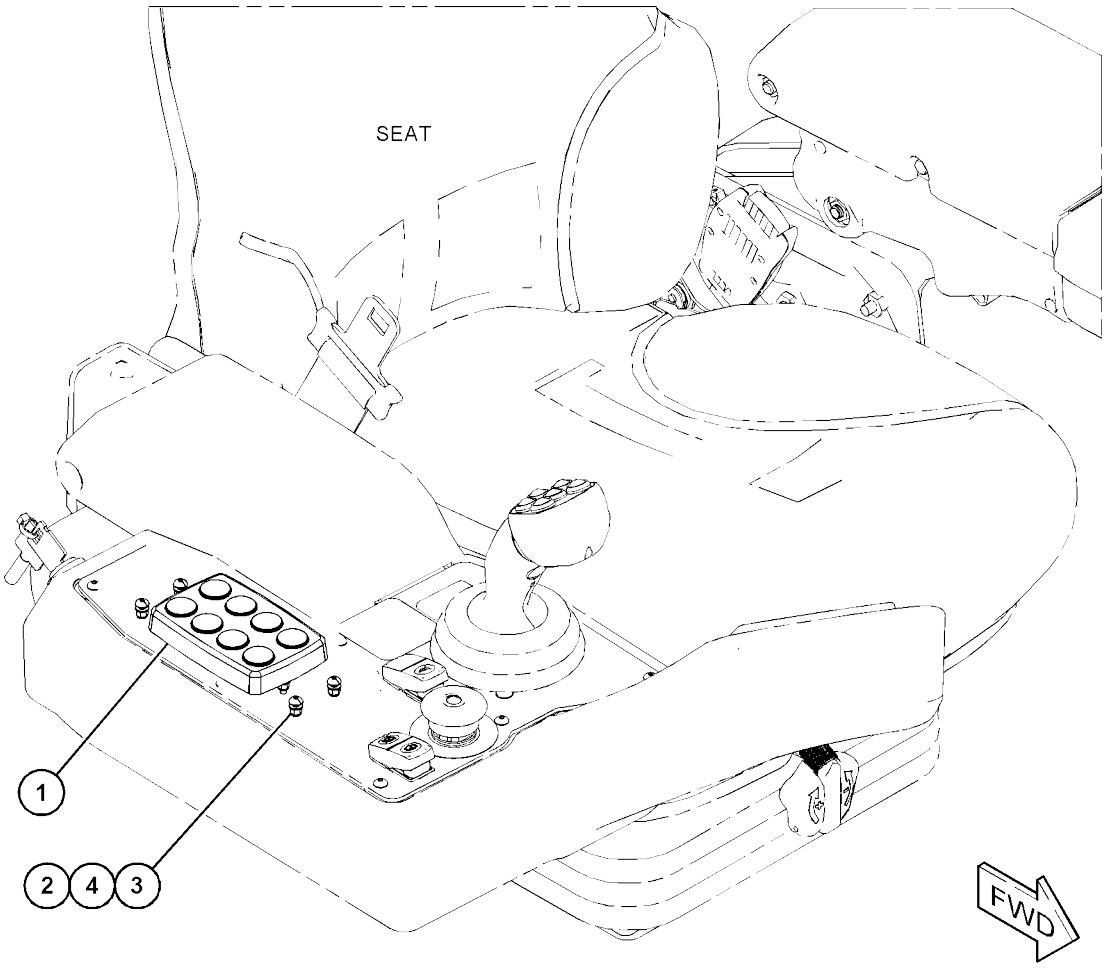

GRAPHIC #1 <END> g06147741

343-6125 MOUNTING GP-PLATFORM

S/N: 5B41-UP; G441-UP
PART OF 396-8335, 396-8336, 451-3190, 451-3290 OPERATOR AR
AN ATTACHMENT

SMCS-7253

i07403885

	REF SEE NOTE QTY	GRAPHIC NO 1 2 3 4 5 6	(PRODUCT LEVEL)	REF PAGE	PART NAME PART NUMBER
	1	1	**9W-6582**	4	SLEEVE
	2	1	**331-4172**	4	MOUNT AS
M	3	1	**7X-2532**	4	BOLT (M20X2.5X130-MM)
	4	1	**8T-4123**	4	WASHER (22X35X3.5-MM THK)
	5	1	**9W-6584**	4	WASHER (20.5X114X10-MM THK)

M - METRIC PART

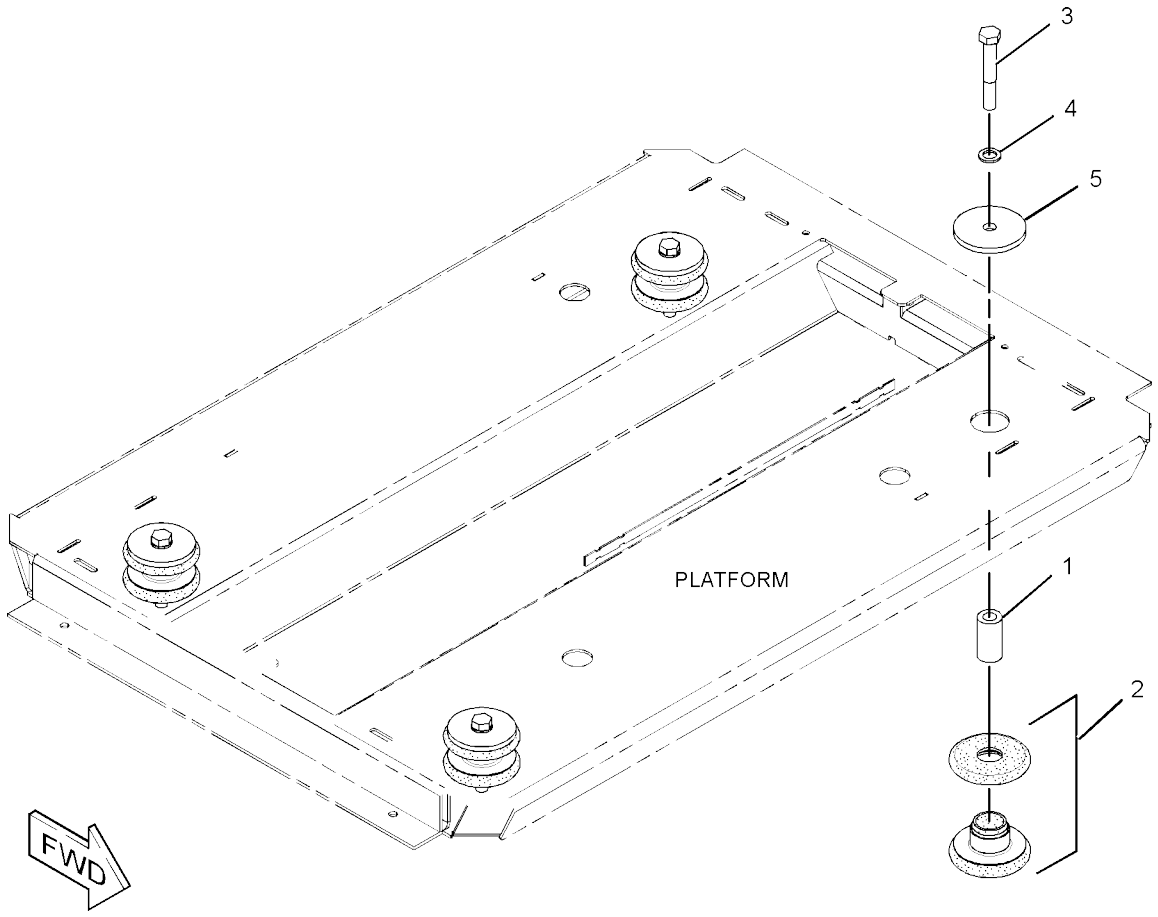

GRAPHIC #1 <END> g02835121

OPERATOR STATION

388-1479 OPERATOR AR

S/N: G441-
UP AN
ATTACHMENT

SMCS-7301

i07678987

NOTE	PART NUMBER	QTY	PART NAME 1 2 3 4 5 6 (PRODUCT LEVEL)	SEE PAGE
Y	*393-0160*	1	CANOPY GP	475
Y	*391-8357*	1	GUARD GP-VANDALISM	516
Y	*573-4618*	1	INSTALLATION GP-CONTROLS	517
Y	*393-0164*	1	PLATFORM GP-OPERATOR	550

Y - SEPARATE ILLUSTRATION

<END>

388-2035 OPERATOR AR

S/N: 5B41-
UP AN
ATTACHMENT

SMCS-7301

i07678985

NOTE	PART NUMBER	QTY	PART NAME 1 2 3 4 5 6 (PRODUCT LEVEL)	SEE PAGE
Y	*393-0161*	1	CANOPY GP	476
Y	*391-8357*	1	GUARD GP-VANDALISM	516
Y	*573-4618*	1	INSTALLATION GP-CONTROLS	517
Y	*393-0165*	1	PLATFORM GP-OPERATOR	551

Y - SEPARATE ILLUSTRATION

<END>

396-8335 OPERATOR AR

S/N: G441-
UP AN
ATTACHMENT

SMCS-7301

i07403884

NOTE	PART NUMBER	QTY	PART NAME 1 2 3 4 5 6 (PRODUCT LEVEL)	SEE PAGE
Y	*393-0154*	1	FLOOR MAT GP	512
Y	*343-6125*	1	MOUNTING GP-PLATFORM	541
Y	*393-0152*	1	PLATFORM GP-OPERATOR	547

Y - SEPARATE ILLUSTRATION

<END>

396-8336 OPERATOR AR

S/N: 5B41-
UP AN
ATTACHMENT

SMCS-7301

i07418001

NOTE	PART NUMBER	QTY	PART NAME 1 2 3 4 5 6 (PRODUCT LEVEL)	SEE PAGE
Y	*393-0155*	1	FLOOR MAT GP	513
Y	*343-6125*	1	MOUNTING GP-PLATFORM	541
Y	*393-0153*	1	PLATFORM GP-CAB	545

Y - SEPARATE ILLUSTRATION

<END>

451-3180 OPERATOR AR

S/N: G441-
UP ROPS
AN ATTACHMENT

SMCS-7301

i07403925

NOTE	PART NUMBER	QTY	PART NAME 1 2 3 4 5 6 (PRODUCT LEVEL)	SEE PAGE
Y	*434-1070*	1	CAB GP	462
Y	*451-3191*	1	LINES GP-HEATER	526
Y	*393-0168*	1	PLATFORM GP-OPERATOR	552

Y - SEPARATE ILLUSTRATION

<END>

451-3190 OPERATOR AR

S/N: G441-
UP CAB
AN ATTACHMENT

SMCS-7301

i07406148

NOTE	PART NUMBER	QTY	PART NAME 1 2 3 4 5 6 (PRODUCT LEVEL)	SEE PAGE
Y	**509-9416**	1	CAB GP-ENCLOSED ROPS	474
Y	*344-0580*	1	FLOOR MAT GP-CAB	515
Y	*550-4318*	1	LINES GP-HEATER	530
Y	*343-6125*	1	MOUNTING GP-PLATFORM	541
Y	*520-2999*	1	PLATE & FILM GP	610
Y	*443-3671*	1	PLATFORM GP-OPERATOR	554

Y - SEPARATE ILLUSTRATION

<END>

451-3280 OPERATOR AR-CAB

S/N: 5B41-
UP AN
ATTACHMENT

SMCS-7301

i07418008

NOTE	PART NUMBER	QTY	PART NAME 1 2 3 4 5 6 (PRODUCT LEVEL)	SEE PAGE
Y	*434-1071*	1	CAB GP	463
Y	*451-3291*	1	LINES GP-HEATER	528
Y	*393-0169*	1	PLATFORM GP-OPERATOR	553

Y - SEPARATE ILLUSTRATION

<END>



451-3290 OPERATOR AR-CAB

S/N: 5B41-
UP AN
ATTACHMENT

SMCS-7301

i07418021

NOTE	PART NUMBER	QTY	PART NAME 1 2 3 4 5 6 (PRODUCT LEVEL)	SEE PAGE
Y	**509-9423**	1	CAB GP	469
Y	*343-8285*	1	FLOOR MAT GP-CAB	514
Y	*550-4319*	1	LINES GP-HEATER	532
Y	*343-6125*	1	MOUNTING GP-PLATFORM	541
Y	*451-3292*	1	PLATE & FILM GP	606
Y	*443-3672*	1	PLATFORM GP-OPERATOR	556

Y - SEPARATE ILLUSTRATION

<END>

505-8543 OPERATOR AR

S/N: 5B41-UP; G441-UP
PART OF 451-3200, 451-3300 COMMON AR

SMCS-7301

i07398828

NOTE	PART NUMBER	QTY	PART NAME 1 2 3 4 5 6 (PRODUCT LEVEL)	SEE PAGE
Y	*514-0358*	1	CONSOLE GP-OPERATOR	488
Y	*343-6106*	1	LOCK GP-ROTATION	534
Y	*343-6109*	1	PLATFORM GP-OPERATOR	546

Y - SEPARATE ILLUSTRATION

<END>

527-0372 OPERATOR AR

S/N: G441-
UP AN
ATTACHMENT

SMCS-7301

i07416520

NOTE	PART NUMBER	QTY	PART NAME 1 2 3 4 5 6 (PRODUCT LEVEL)	SEE PAGE
Y	*391-8357*	1	GUARD GP-VANDALISM	516
Y	*393-0158*	1	PLATFORM GP-OPERATOR	548
Y	*527-0371*	1	ROPS GP	561

Y - SEPARATE ILLUSTRATION

<END>

527-0806 OPERATOR AR

S/N: 5B41-
UP AN
ATTACHMENT

SMCS-7301

i07418303

NOTE	PART NUMBER	QTY	PART NAME 1 2 3 4 5 6 (PRODUCT LEVEL)	SEE PAGE
Y	*391-8357*	1	GUARD GP-VANDALISM	516
Y	*393-0159*	1	PLATFORM GP-OPERATOR	549
Y	*527-0805*	1	ROPS GP	562

Y - SEPARATE ILLUSTRATION

<END>

393-0153 PLATFORM GP-CAB

S/N: 5B41-UP
PART OF 396-8336 OPERATOR
AR AN ATTACHMENT

SMCS-7253

i07418004

	REF SEE NOTE QTY	GRAPHIC NO 1 2 3 4 5 6 (PRODUCT LEVEL)	REF PAGE	PART NAME PART NUMBER
	1	1 **360-2367**	2	PLATE
	2	1 **360-2375**	2	SUPPORT
	3	1 **435-5482**	2	COVER AS
	4	1 **391-9157**	1	PLATFORM AS
	5	1 **5P-4116**	40	WASHER-HARD (8.8X20.5X2-MM THK)
M	6	1 **8T-4908**	40	BOLT (M8X1.25X25-MM)

M - METRIC PART

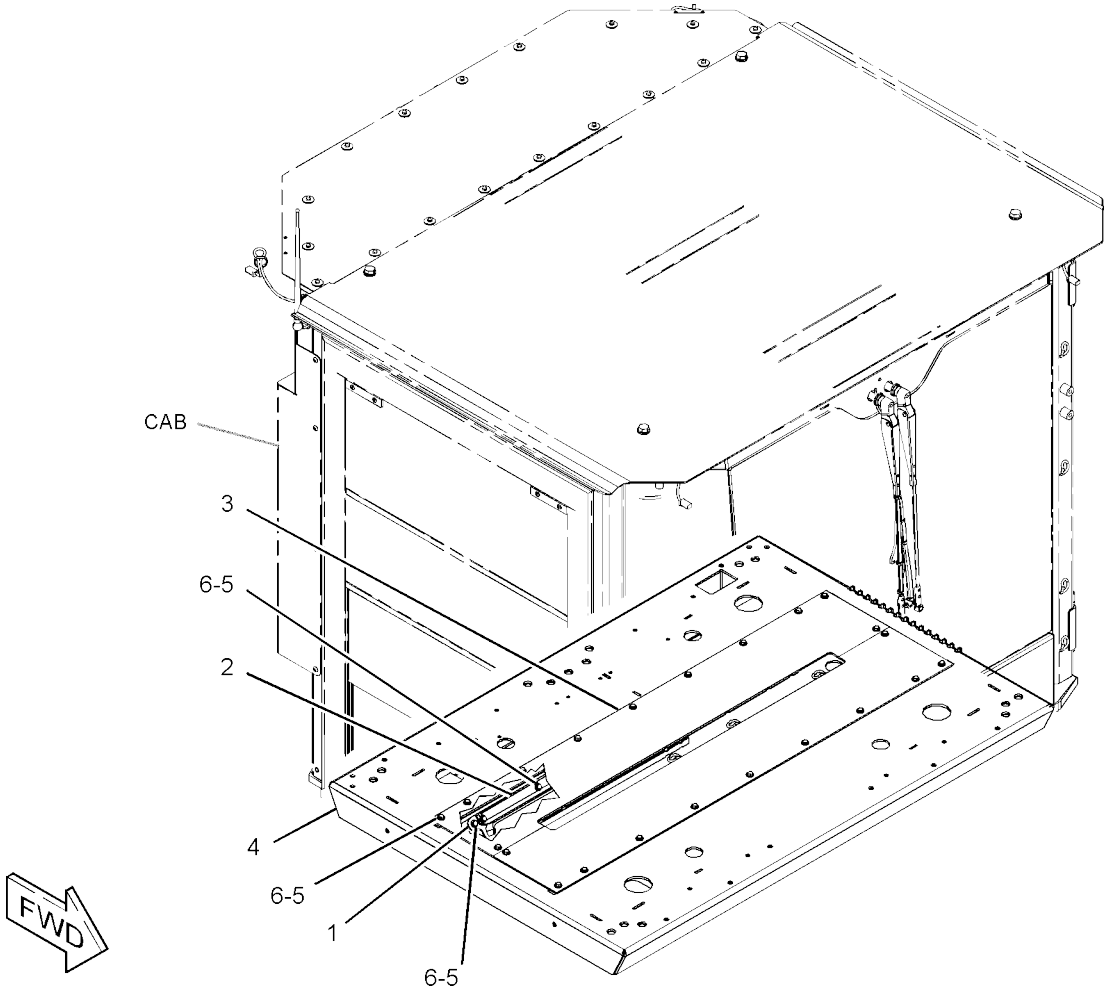

GRAPHIC #1 <END> g03342027

OPERATOR STATION

343-6109 PLATFORM GP-OPERATOR

S/N: 5B41-UP; G441-UP
PART OF 505-8543 OPERATOR
AR

SMCS-7253

i07399886

	REF SEE NOTE	QTY	GRAPHIC NO 1 2 3 4 5 6	(PRODUCT LEVEL)	REF PAGE	PART NAME PART NUMBER
	1	1		**117-9501**	1	BOLT-SPECIAL
	2	1		**357-0818**	1	COVER
	3	1		**485-3438**	1	PLATE AS
		1		**7T-1099**	5	LINK
M		1		**8T-3612**	22	NUT-WELD (M8X1.25-THD)
M		1		**8T-3635**	1	STUD-WELD (M12X1.75X34.93-MM)
M		1		**8X-2779**	3	BOSS (M4X0.7X13-MM)
		1		**178-8507**	2	PLATE-WELD
	4	1		**359-3177**	1	COVER
	5	1		**360-9101**	1	LEVER-STOP
	6	1		**365-6041**	2	WASHER-SPRING
	7	1		**5P-4116**	14	WASHER-HARD (8.8X20.5X2-MM THK)
M	8	1		**8T-4189**	14	BOLT (M8X1.25X20-MM)
D	9	1		**6V-5746**		TRIM (0.2-M)
	10	1		**8T-5360**	2	WASHER (12X22.5X2.5-MM THK)

D - ORDER BY THE METER M - METRIC PART

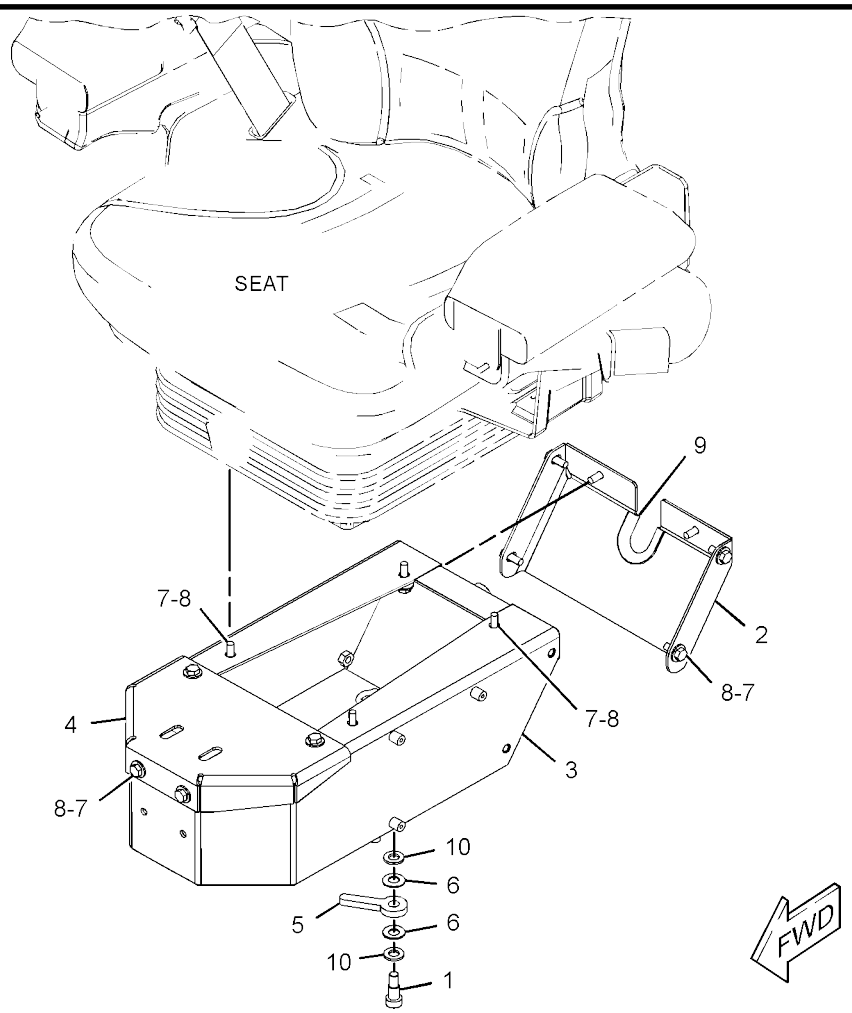

GRAPHIC #1 <END> g03875438

393-0152 PLATFORM GP-OPERATOR

S/N: G441-UP
PART OF 396-8335 OPERATOR
AR AN ATTACHMENT

SMCS-7253

i07403886

	REF SEE NOTE	QTY	GRAPHIC NO 1 2 3 4 5 6	(PRODUCT LEVEL)	REF PAGE	PART NAME PART NUMBER
		1	1	**434-1074**	2	COVER AS
		2	1	**360-2373**	2	SUPPORT
		3	1	**360-2374**	2	PLATE
		4	1	**391-9168**	1	PLATFORM AS
		5	1	**5P-4116**	36	WASHER-HARD (8.8X20.5X2-MM THK)
M		6	1	**8T-4908**	36	BOLT (M8X1.25X25-MM)

M - METRIC PART

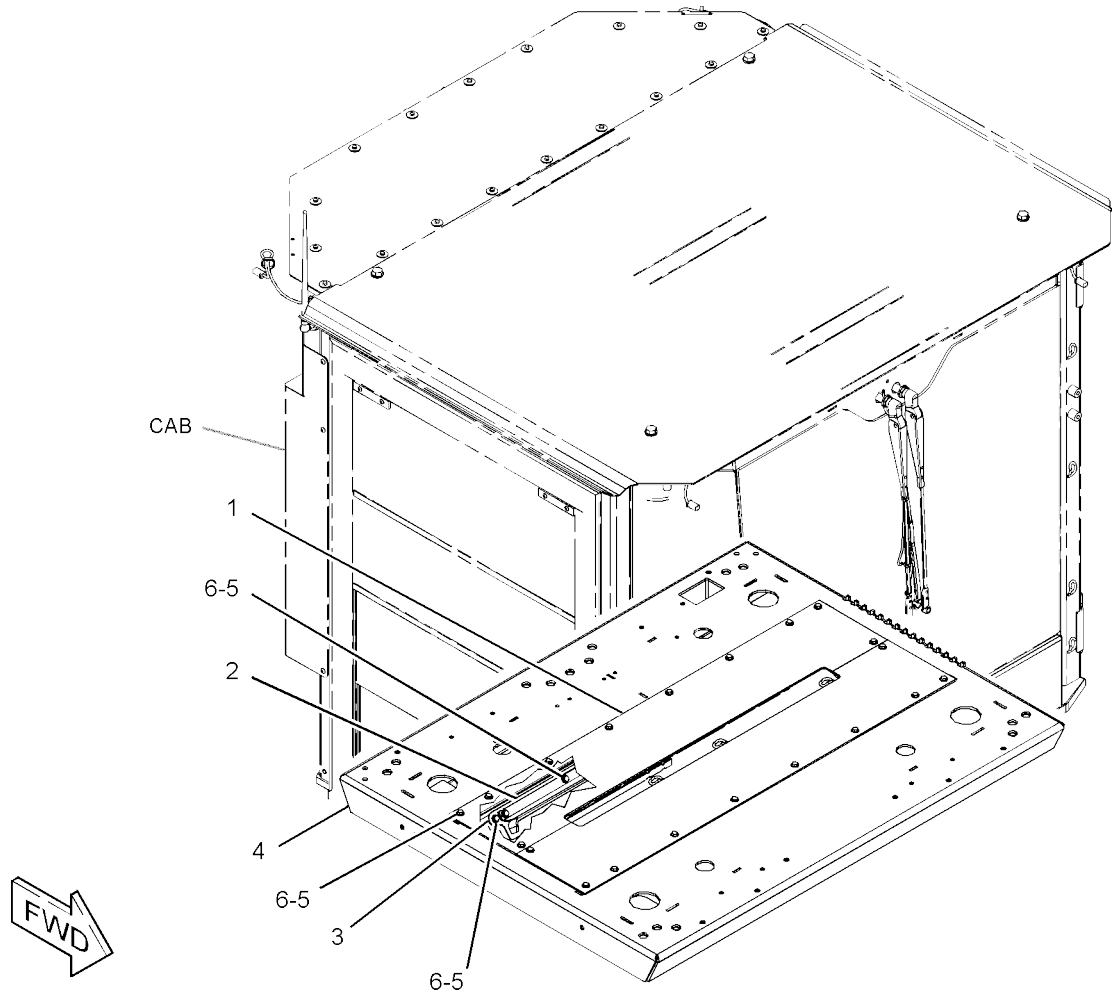

GRAPHIC #1

<END>

g03342013

393-0158 PLATFORM GP-OPERATOR-CANOPY

S/N: G441-UP
PART OF 527-0372 OPERATOR
AR AN ATTACHMENT

SMCS-7253

i07416522

	REF SEE NOTE QTY	GRAPHIC NO 1 2 3 4 5 6	(PRODUCT LEVEL)	REF PAGE	PART NAME PART NUMBER
	1	1	**9G-5582**	1	LOCK AS-CYLINDER
		1	**226-0294**	1	LOCK AS
		1	**226-0340**	1	CAM
	2	1	**357-0830**	1	DOOR-STORAGE
	3	1	**364-2471**	1	COVER
	4	1	**393-0173**	1	PLATE AS
M		1	**8T-3612**	4	NUT-WELD (M8X1.25-THD)
	5	1	**393-0175**	1	COVER AS
	6	1	**393-0179**	1	COVER
M	7	1	**7Y-9099**	33	SCREW-TRUSS HEAD (M8X1.25X25-MM)
M	8	1	**9X-2044**	10	SCREW-TRUSS HEAD (M6X1X16-MM)
D	9	1	**5P-5973**		SEAL (0.7-M)

D - ORDER BY THE METER M - METRIC PART

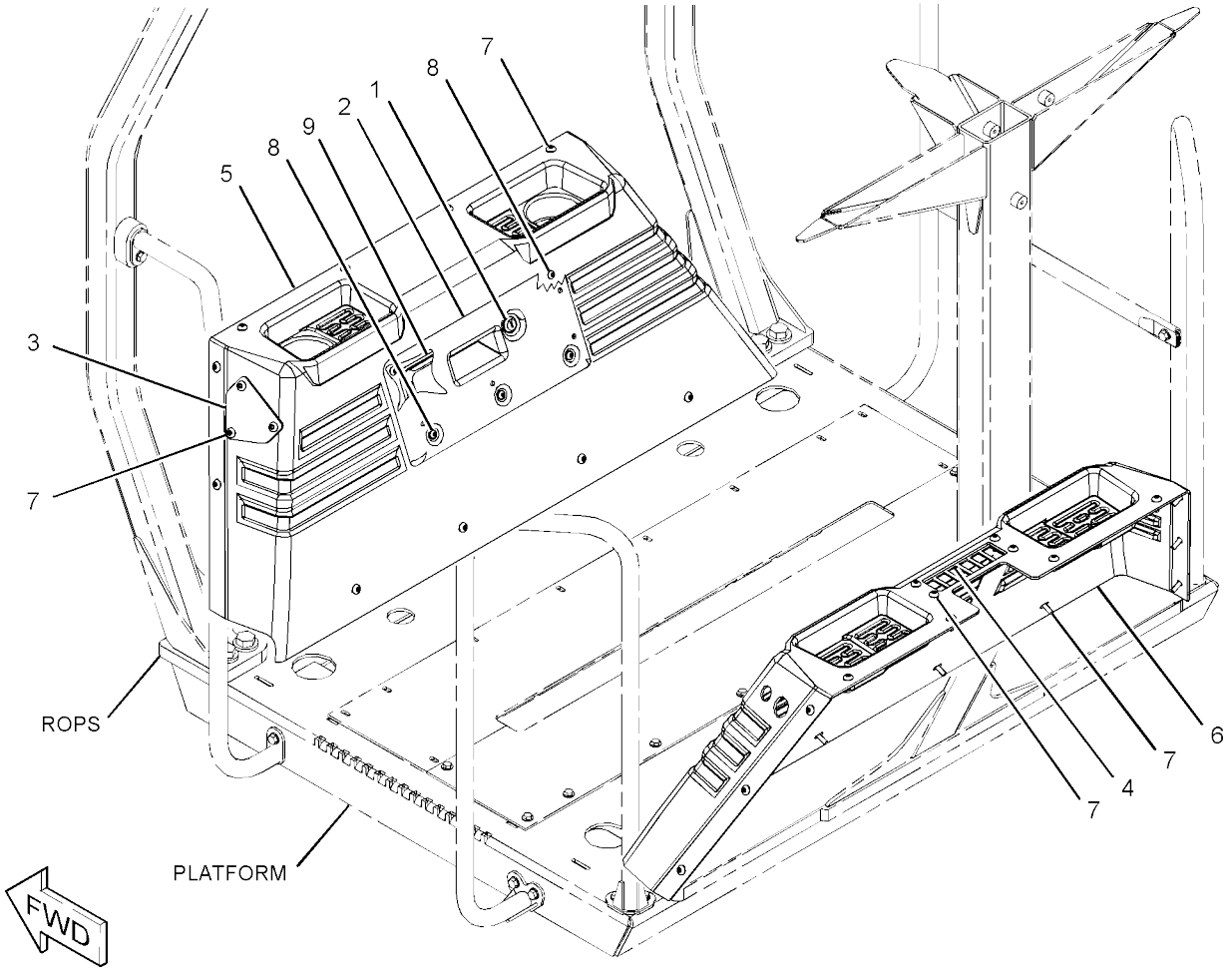

GRAPHIC #1 <END> g06081689

393-0159 PLATFORM GP-OPERATOR

S/N: 5B41-UP
PART OF 527-0806 OPERATOR
AR AN ATTACHMENT

SMCS-7253

i07418400

	REF SEE NOTE QTY	GRAPHIC NO 1 2 3 4 5 6	(PRODUCT LEVEL)	REF PAGE	PART NAME PART NUMBER
	1	1	*9G-5582*	1	LOCK AS-CYLINDER
J		1	**226-0294**	1	LOCK AS
		1	**226-0340**	1	CAM
	2	1	**357-0830**	1	DOOR-STORAGE
	3	1	**364-2471**	1	COVER
	4	1	**393-0172**	1	COVER AS
		1	**357-0827**	2	HOLDER-CUP
	5	1	**393-0173**	1	PLATE AS
M		1	**8T-3612**	4	NUT-WELD (M8X1.25-THD)
	6	1	**393-0183**	1	COVER
M	7	1	**7Y-9099**	33	SCREW-TRUSS HEAD (M8X1.25X25-MM)
M	8	1	**9X-2044**	10	SCREW-TRUSS HEAD (M6X1X16-MM)
D	9	1	**5P-5973**		SEAL (0.7-M)

D - ORDER BY THE METER
J - REQUIRES CORPORATE
KEY M - METRIC PART

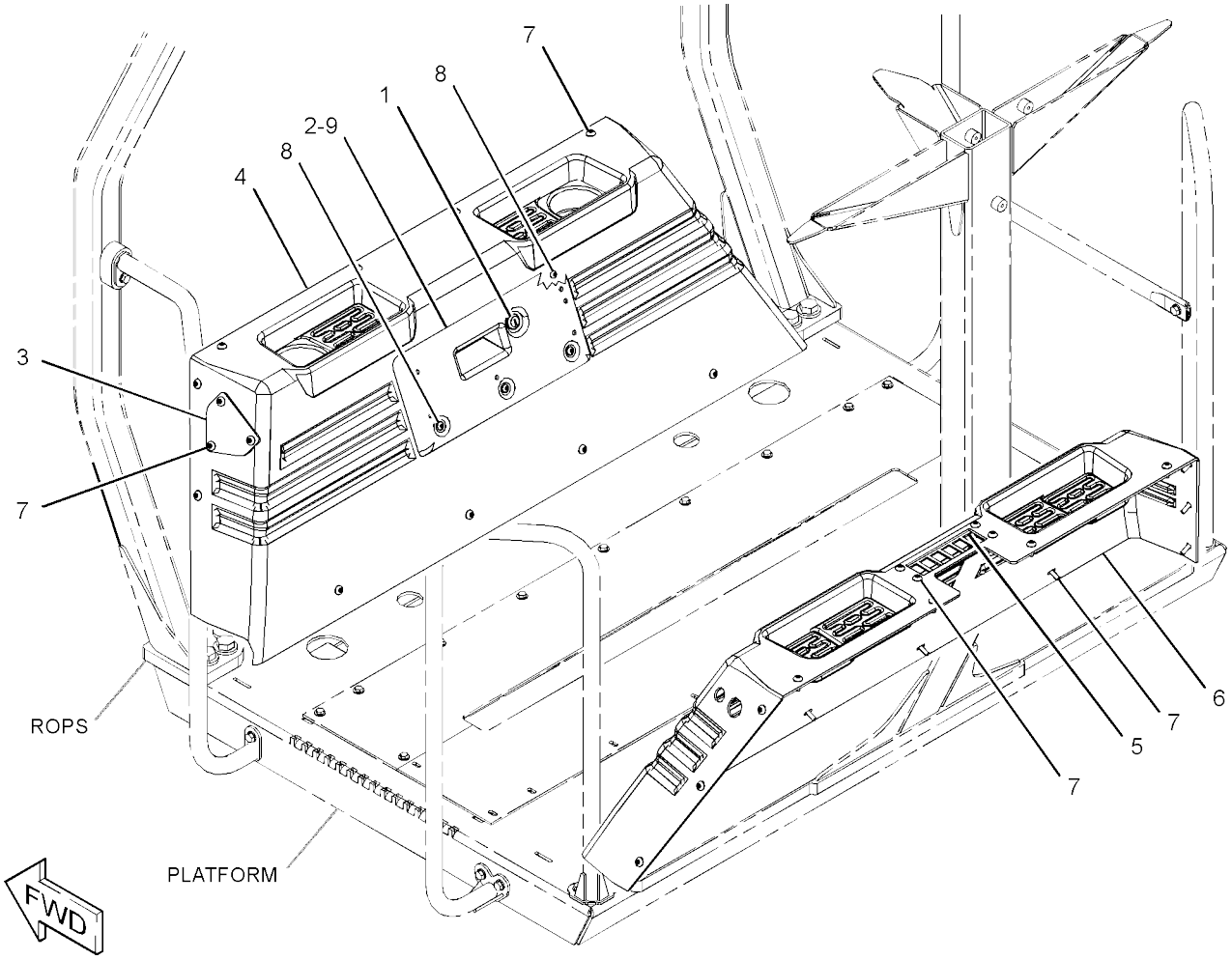

GRAPHIC #1

<END>

g03880271

393-0164 PLATFORM GP-OPERATOR

S/N: G441-UP
PART OF 388-1479 OPERATOR
AR AN ATTACHMENT

SMCS-7253

i07403867

	REF SEE NOTE QTY	GRAPHIC NO 1 2 3 4 5 6	(PRODUCT LEVEL)	REF PAGE	PART NAME PART NUMBER
	1	1	*9G-5582*	1	LOCK AS-CYLINDER
J		1	**226-0294**	1	LOCK AS
		1	**226-0340**	1	CAM
	2	1	**357-0830**	1	DOOR-STORAGE
	3	1	**364-2471**	1	COVER
	4	1	**393-0173**	1	PLATE AS
M		1	**8T-3612**	4	NUT-WELD (M8X1.25-THD)
	5	1	**393-0181**	1	COVER
	6	1	**393-0201**	1	COVER AS
M	7	1	**7Y-9099**	33	SCREW-TRUSS HEAD (M8X1.25X25-MM)
M	8	1	**9X-2044**	10	SCREW-TRUSS HEAD (M6X1X16-MM)
D	9	1	**5P-5973**		SEAL (0.7-M)

D - ORDER BY THE METER
J - REQUIRES CORPORATE
KEY M - METRIC PART

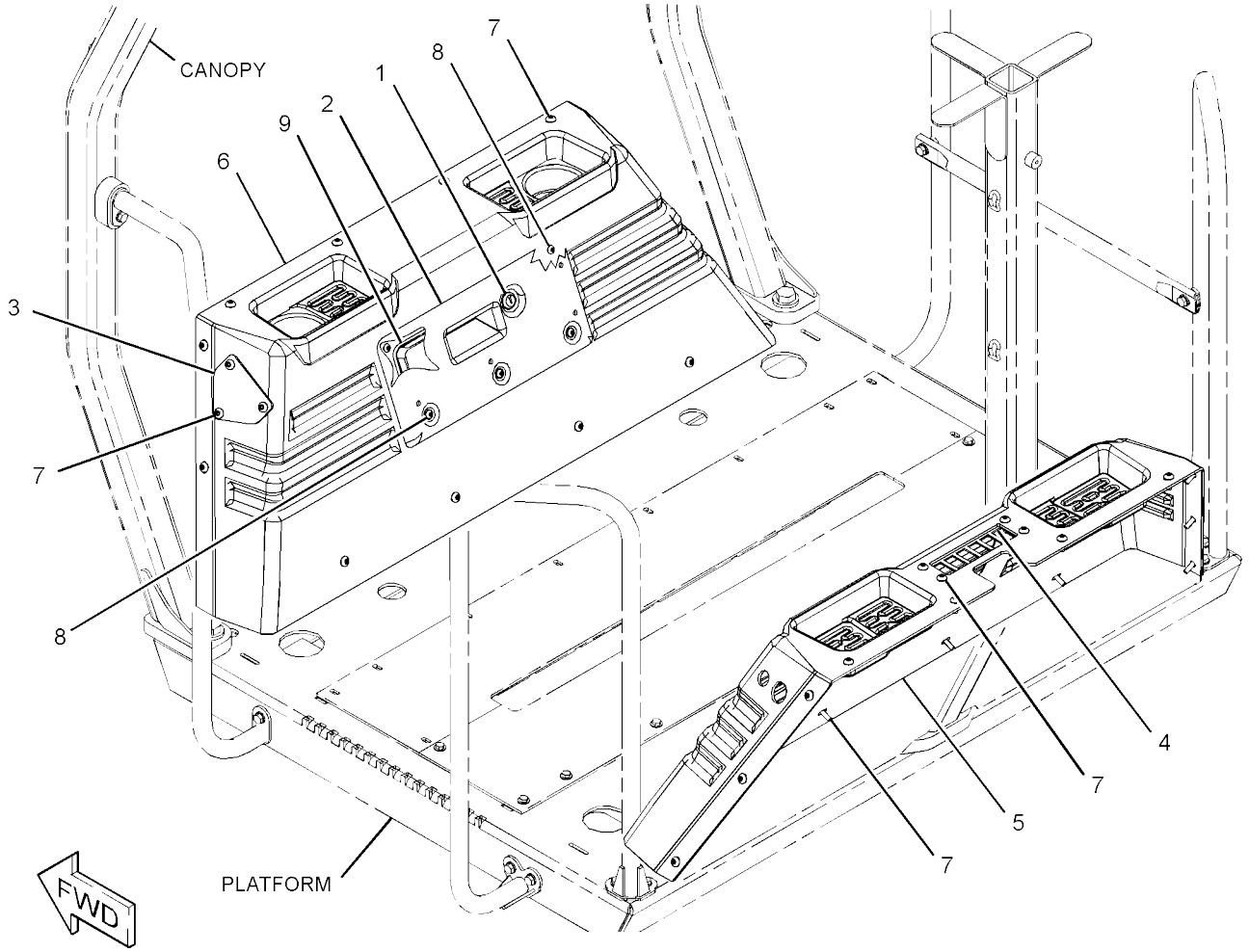

GRAPHIC #1 <END> g06081678

393-0165 PLATFORM GP-OPERATOR

S/N: 5B41-UP
PART OF 388-2035 OPERATOR
AR AN ATTACHMENT

SMCS-7253

i07417999

	REF SEE NOTE QTY	GRAPHIC NO 1 2 3 4 5 6	(PRODUCT LEVEL)	REF PAGE	PART NAME PART NUMBER
	1	1	*9G-5582*	1	LOCK AS-CYLINDER
J		1	**226-0294**	1	LOCK AS
		1	**226-0340**	1	CAM
	2	1	**357-0830**	1	DOOR-STORAGE
	3	1	**364-2471**	1	COVER
	4	1	**393-0173**	1	PLATE AS
M		1	**8T-3612**	4	NUT-WELD (M8X1.25-THD)
	5	1	**393-0185**	1	COVER
	6	1	**393-0200**	1	COVER AS
M	7	1	**7Y-9099**	33	SCREW-TRUSS HEAD (M8X1.25X25-MM)
M	8	1	**9X-2044**	10	SCREW-TRUSS HEAD (M6X1X16-MM)
	9	1	**5P-5973**		SEAL (0.7-M)

J - REQUIRES CORPORATE
KEY M - METRIC PART

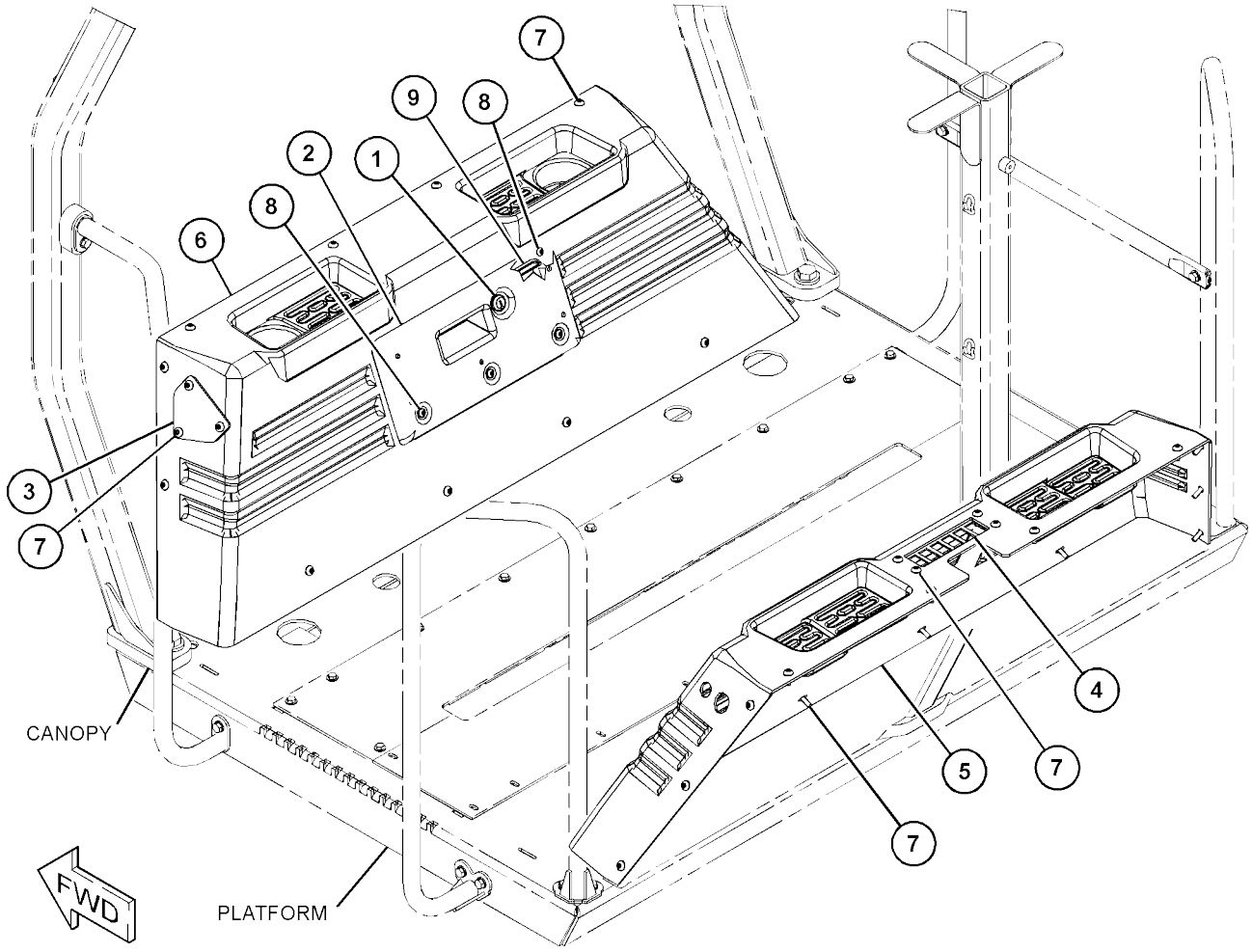

GRAPHIC #1 <END> g06166590

393-0168 PLATFORM GP-OPERATOR

S/N: G441-UP
PART OF 451-3180 OPERATOR
AR AN ATTACHMENT

SMCS-7253

i07403928

	REF SEE NOTE QTY	GRAPHIC NO 1 2 3 4 5 6	(PRODUCT LEVEL)	REF PAGE	PART NAME PART NUMBER
	1	1	**8V-7162**	1	CABLE
	2	1	*9G-5582*	1	LOCK AS-CYLINDER
J		1	**226-0294**	1	LOCK AS
		1	**226-0340**	1	CAM
	3	1	**253-4115**	1	SPOUT
	4	1	**276-3884**	1	CAP-VENTED (WASHER TANK)
	5	1	**357-0830**	1	DOOR-STORAGE
	6	1	**393-0173**	1	PLATE AS
M		1	**8T-3612**	4	NUT-WELD (M8X1.25-THD)
	7	1	**393-0189**	1	COVER
	8	1	**393-0219**	1	COVER AS
M	9	1	**7Y-9099**	23	SCREW-TRUSS HEAD (M8X1.25X25-MM)
M	10	1	**9X-2044**	10	SCREW-TRUSS HEAD (M6X1X16-MM)
D	11	1	**5P-5973**		SEAL (0.7-M)

D - ORDER BY THE METER
J - REQUIRES CORPORATE
KEY M - METRIC PART

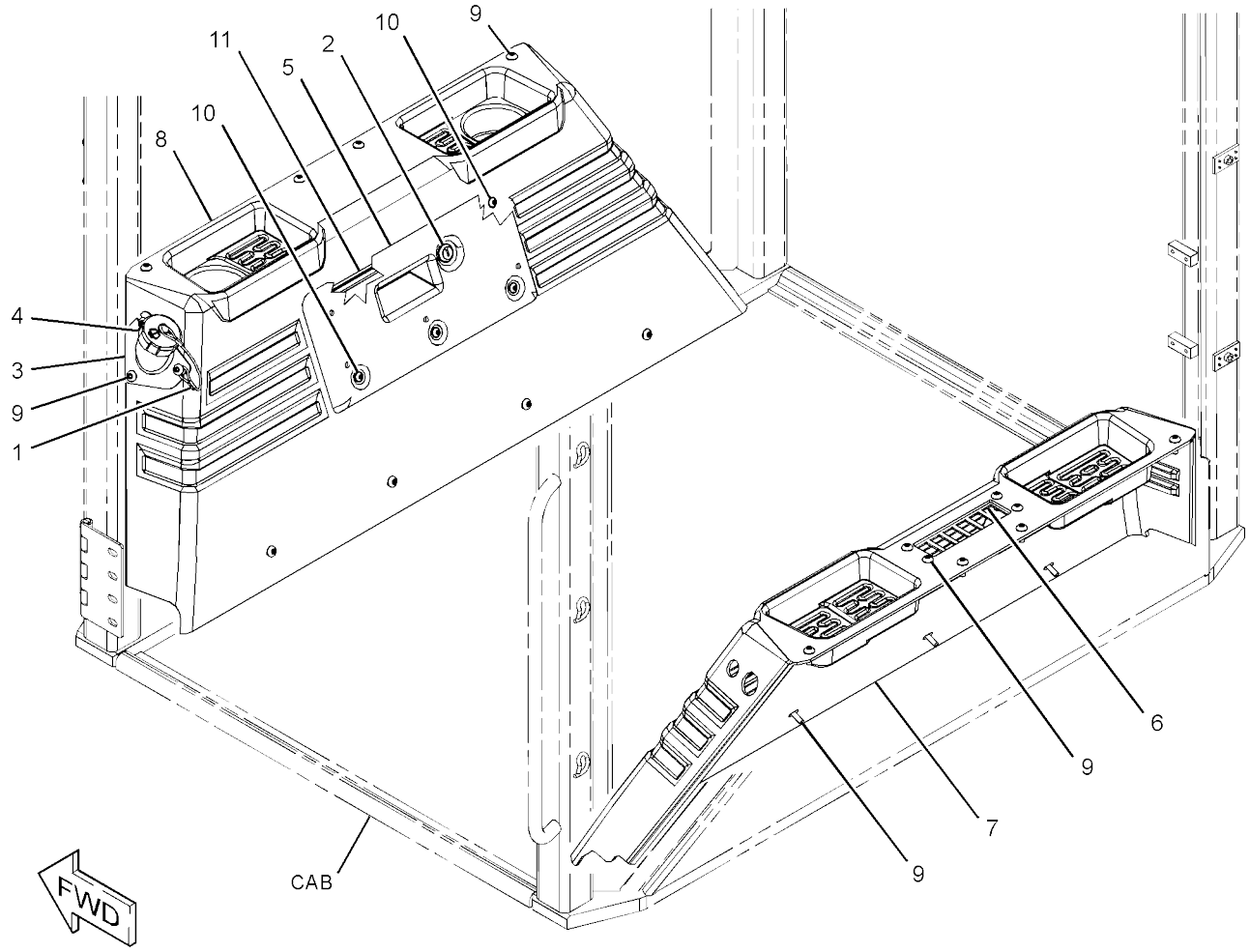

GRAPHIC #1 <END> g06082236

393-0169 PLATFORM GP-OPERATOR

S/N: 5B41-UP
PART OF 451-3280 OPERATOR
AR AN ATTACHMENT

SMCS-7253

i07418010

	REF SEE NOTE QTY	GRAPHIC NO 1 2 3 4 5 6	(PRODUCT LEVEL)	REF PAGE	PART NAME PART NUMBER
	1	1	**8V-7162**	1	CABLE
	2	1	*9G-5582*	1	LOCK AS-CYLINDER
J		1	**226-0294**	1	LOCK AS
		1	**226-0340**	1	CAM
	3	1	**253-4115**	1	SPOUT
	4	1	**276-3884**	1	CAP-VENTED (WASHER TANK)
	5	1	**357-0830**	1	DOOR-STORAGE
	6	1	**393-0173**	1	PLATE AS
M		1	**8T-3612**	4	NUT-WELD (M8X1.25-THD)
	7	1	**393-0187**	1	COVER
	8	1	**393-0221**	1	COVER AS
		1	**357-0827**	2	HOLDER-CUP
M	9	1	**7Y-9099**	23	SCREW-TRUSS HEAD (M8X1.25X25-MM)
M	10	1	**9X-2044**	10	SCREW-TRUSS HEAD (M6X1X16-MM)
D	11	1	**5P-5973**		SEAL (0.7-M)

D - ORDER BY THE METER
J - REQUIRES CORPORATE
KEY M - METRIC PART

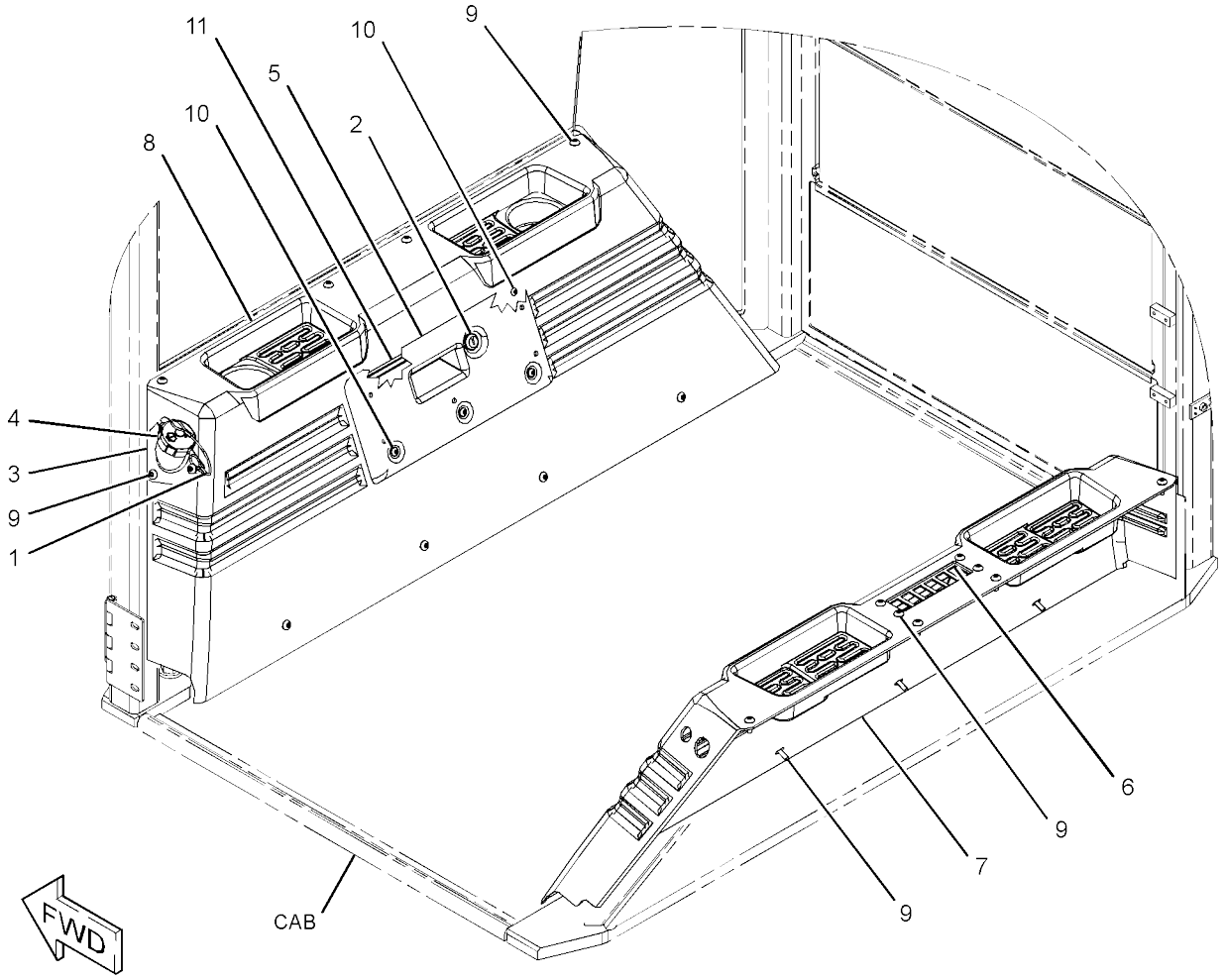

GRAPHIC #1 <END> g06082243

443-3671 PLATFORM GP-OPERATOR

S/N: G441-UP
PART OF 451-3190 OPERATOR
AR AN ATTACHMENT

SMCS-7253

i07406150

	REF SEE NOTE QTY	GRAPHIC NO 1 2 3 4 5 6	(PRODUCT LEVEL)	REF PAGE	PART NAME PART NUMBER
	1	1	**8V-7162**	1	CABLE
	2	1	*9G-5582*	1	LOCK AS-CYLINDER
J		1	**226-0294**	1	LOCK AS
		1	**226-0340**	1	CAM
	3	1	**253-4115**	1	SPOUT
	4	1	**276-3884**	1	CAP-VENTED (WASHER TANK)
	5	1	**357-0830**	1	DOOR-STORAGE
	6	1	**360-2373**	2	SUPPORT
	7	1	**360-2374**	2	PLATE
	8	1	**365-6047**	1	COVER AS
	9	1	**365-6048**	1	PLATE AS
M		1	**8T-3612**	4	NUT-WELD (M8X1.25-THD)
	10	1	**367-9297**	1	SEAL
	11	1	**396-1193**	1	COVER
	12	1	**396-1194**	1	COVER AS
	13	1	**434-1074**	2	COVER AS
	14	1	**5P-4116**	40	WASHER-HARD (8.8X20.5X2-MM THK)
M	15	1	**7Y-9099**	23	SCREW-TRUSS HEAD (M8X1.25X25-MM)
M	16	1	**8T-4908**	20	BOLT (M8X1.25X25-MM)
M	17	1	**8T-7547**	20	BOLT (M8X1.25X30-MM)
M	18	1	**9X-2044**	10	SCREW-TRUSS HEAD (M6X1X16-MM)
D	19	1	**5P-5973**		SEAL (0.7-M)

D - ORDER BY THE METER
J - REQUIRES CORPORATE
KEY M - METRIC PART

443-3671 **PLATFORM GP-OPERATOR (**contd.**)** **i07406150**

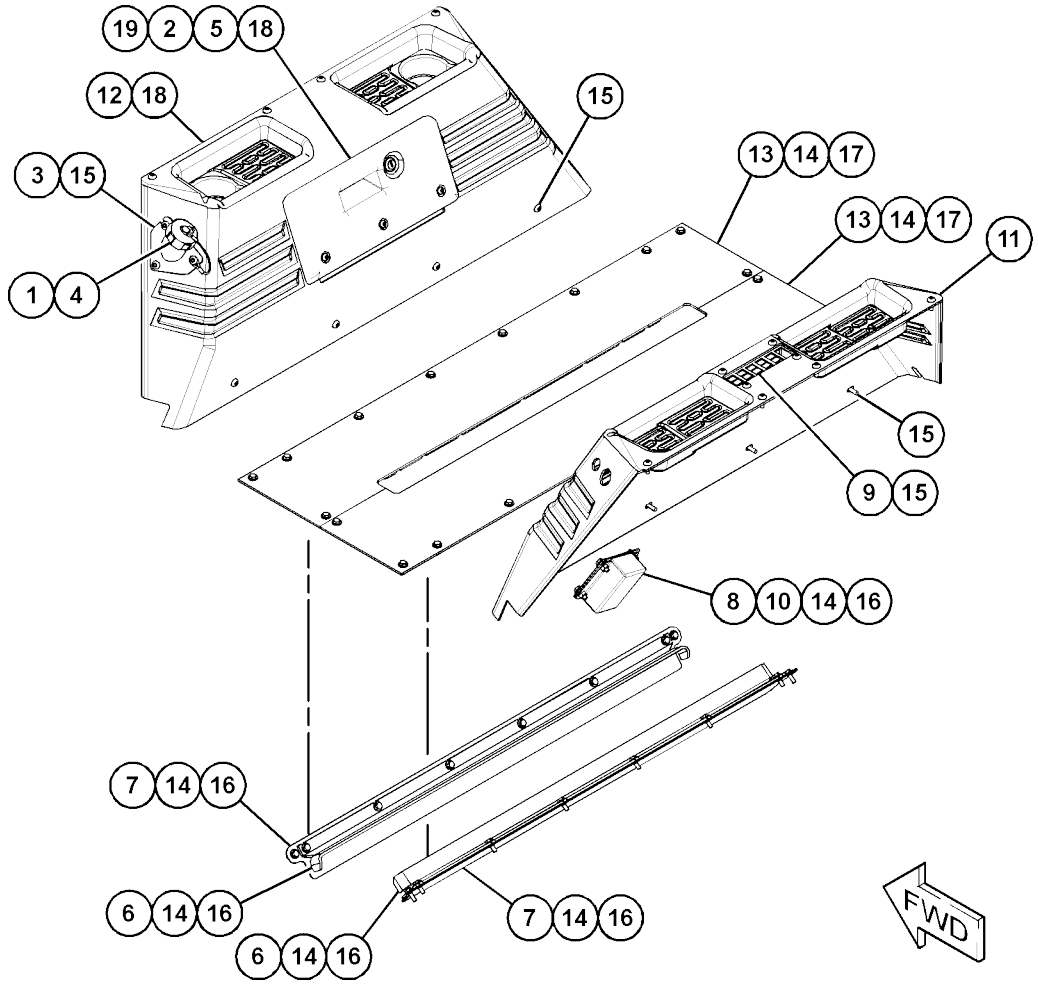

GRAPHIC #1 <END> g03549337

443-3672 PLATFORM GP-OPERATOR

S/N: 5B41-UP
PART OF 451-3290 OPERATOR
AR AN ATTACHMENT

SMCS-7253

i07418027

	REF SEE NOTE QTY	GRAPHIC NO 1 2 3 4 5 6	(PRODUCT LEVEL)	REF PAGE	PART NAME PART NUMBER
	1	1	**8V-7162**	1	CABLE
	2	1	*9G-5582*	1	LOCK AS-CYLINDER
J		1	**226-0294**		LOCK AS
		1	**226-0340**		CAM
	3	1	**253-4115**	1	SPOUT
	4	1	**276-3884**	1	CAP-VENTED (WASHER TANK)
	5	1	**357-0830**	1	DOOR-STORAGE
	6	1	**360-2367**	2	PLATE
	7	1	**360-2375**	2	SUPPORT
	8	1	**365-6047**	1	COVER AS
	9	1	**365-6048**	1	PLATE AS
M		1	**8T-3612**	4	NUT-WELD (M8X1.25-THD)
	10	1	**367-9297**	1	SEAL
	11	1	**396-1195**	1	COVER
	12	1	**396-1196**	1	COVER AS
	13	1	**435-5482**	2	COVER AS
	14	1	**5P-4116**	44	WASHER-HARD (8.8X20.5X2-MM THK)
M	15	1	**7Y-9099**	23	SCREW-TRUSS HEAD (M8X1.25X25-MM)
M	16	1	**8T-4908**	22	BOLT (M8X1.25X25-MM)
M	17	1	**8T-7547**	22	BOLT (M8X1.25X30-MM)
M	18	1	**9X-2044**	10	SCREW-TRUSS HEAD (M6X1X16-MM)
D	19	1	**5P-5973**		SEAL (0.7-M)

D - ORDER BY THE METER
J - REQUIRES CORPORATE
KEY M - METRIC PART

443-3672 **PLATFORM GP-OPERATOR (**contd.**)** **i07418027**

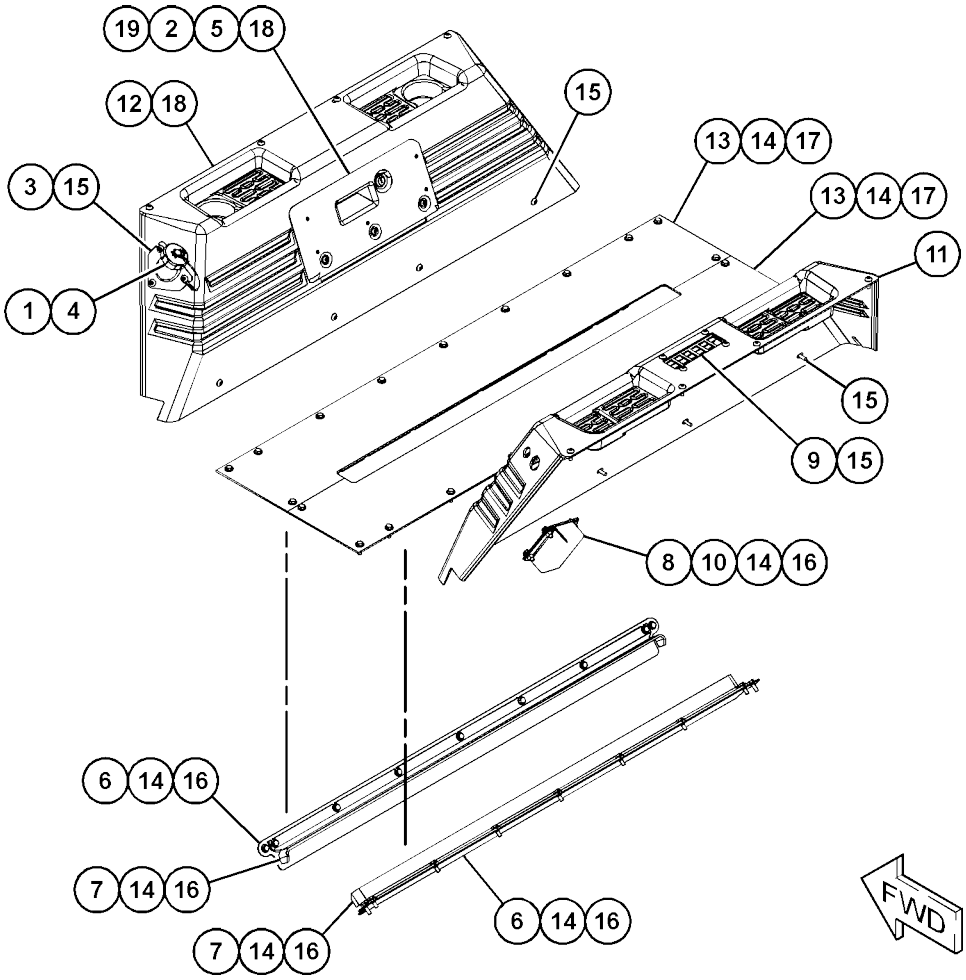

GRAPHIC #1 <END> g03549436

343-6115 PLATFORM GP-SLIDE

S/N: 5B41-UP; G441-
UP AN ATTACHMENT

SMCS-7300

i07399998

	REF SEE NOTE QTY	GRAPHIC NO 1 2 3 4 5 6 (PRODUCT LEVEL)	REF PAGE	PART NAME PART NUMBER
	1	1 **160-2226**	8	BALL BEARING
	2	1 **358-9307**	2	SUPPORT AS
	3	1 **358-9314**	1	PLATE
	4	1 **365-6075**	1	PLATFORM AS
		1 **7T-1099**	1	LINK
		1 **178-8505**	1	PLATE-WELD
	5	1 **359-3176**	1	BEARING-PIVOT
M	6	1 **099-3649**	12	BOLT (M8X1.25X40-MM)
	7	1 **8T-4121**	16	WASHER-HARD (11X21X2.5-MM THK)
M	8	1 **8T-4189**	12	BOLT (M8X1.25X20-MM)
M	9	1 **8T-4196**	8	BOLT (M10X1.5X35-MM)
	10	1 **8T-4224**	24	WASHER-HARD (8.8X16X2-MM THK)

M - METRIC PART

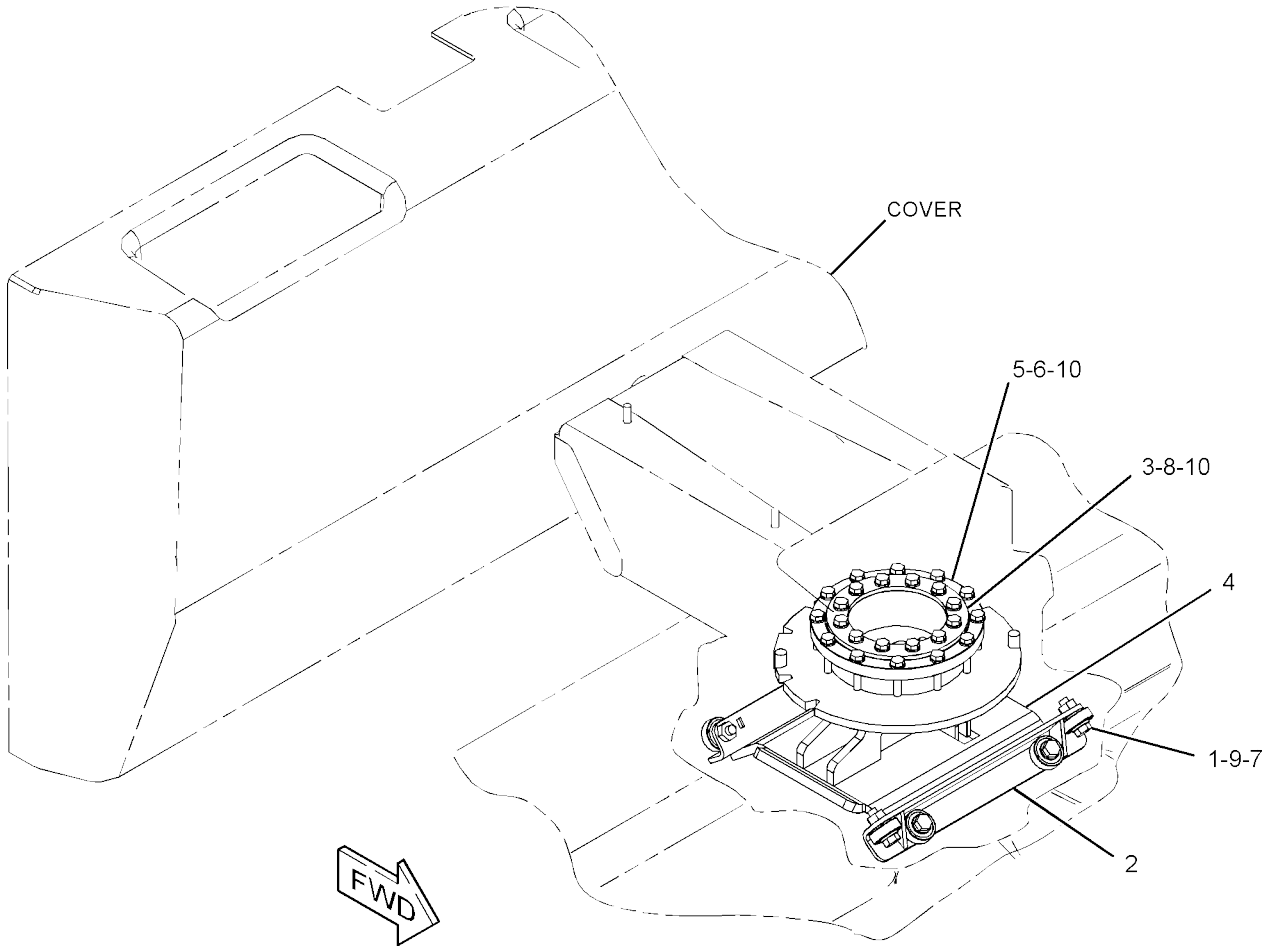

GRAPHIC #1 <END> g03345191

356-0924 PLATFORM GP-SLIDE

S/N: 5B41-UP; G441-
UP AN ATTACHMENT

SMCS-7300

i07403855

	REF SEE NOTE QTY	GRAPHIC NO 1 2 3 4 5 6	(PRODUCT LEVEL)	REF PAGE	PART NAME PART NUMBER
	1	1	**154-5428**	1	ALARM AS (BACKUP)
		1	**102-8802**	1	KIT-RECEPTACLE (2-PIN)
					(INCLUDES RECEPTACLE AS & WEDGE)
BD		1	**5P-5623**		WIRE-ELECTRICAL (16-GA, BLACK)
		1	**8T-8729**	2	PIN-CONNECTOR (16-GA TO 20-GA)
	2	1	**160-2226**	8	BALL BEARING
	3	1	**164-9425**	1	HORN AS (12-VOLT, LOW TONE)
	4	1	**358-9307**	2	SUPPORT AS
	5	1	**365-6074**	1	PLATFORM AS
		1	**7T-1099**	1	LINK
		1	**178-8505**	1	PLATE-WELD
	6	1	**358-9314**	1	PLATE
	7	1	**358-9315**	1	PLATE-SENSOR
	8	1	**359-3176**	1	BEARING-PIVOT
	9	1	**382-1822**	2	SENSOR GP-POSITION (SEAT)
M	10	1	**099-3649**	12	BOLT (M8X1.25X40-MM)
	11	1	**5P-4116**	2	WASHER-HARD (8.8X20.5X2-MM THK)
	12	1	**8T-4121**	18	WASHER-HARD (11X21X2.5-MM THK)
M	13	1	**8T-4133**	1	NUT (M10X1.5-THD)
M	14	1	**8T-4136**	1	BOLT (M10X1.5X25-MM)
M	15	1	**8T-4189**	11	BOLT (M8X1.25X20-MM)
M	16	1	**8T-4196**	8	BOLT (M10X1.5X35-MM)
	17	1	**8T-4224**	30	WASHER-HARD (8.8X16X2-MM THK)
M	18	1	**8T-4908**	3	BOLT (M8X1.25X25-MM)

B - USE AS REQUIRED
D - ORDER BY THE METER M - METRIC PART

356-0924 **PLATFORM GP-SLIDE** (contd.) **i07403855**

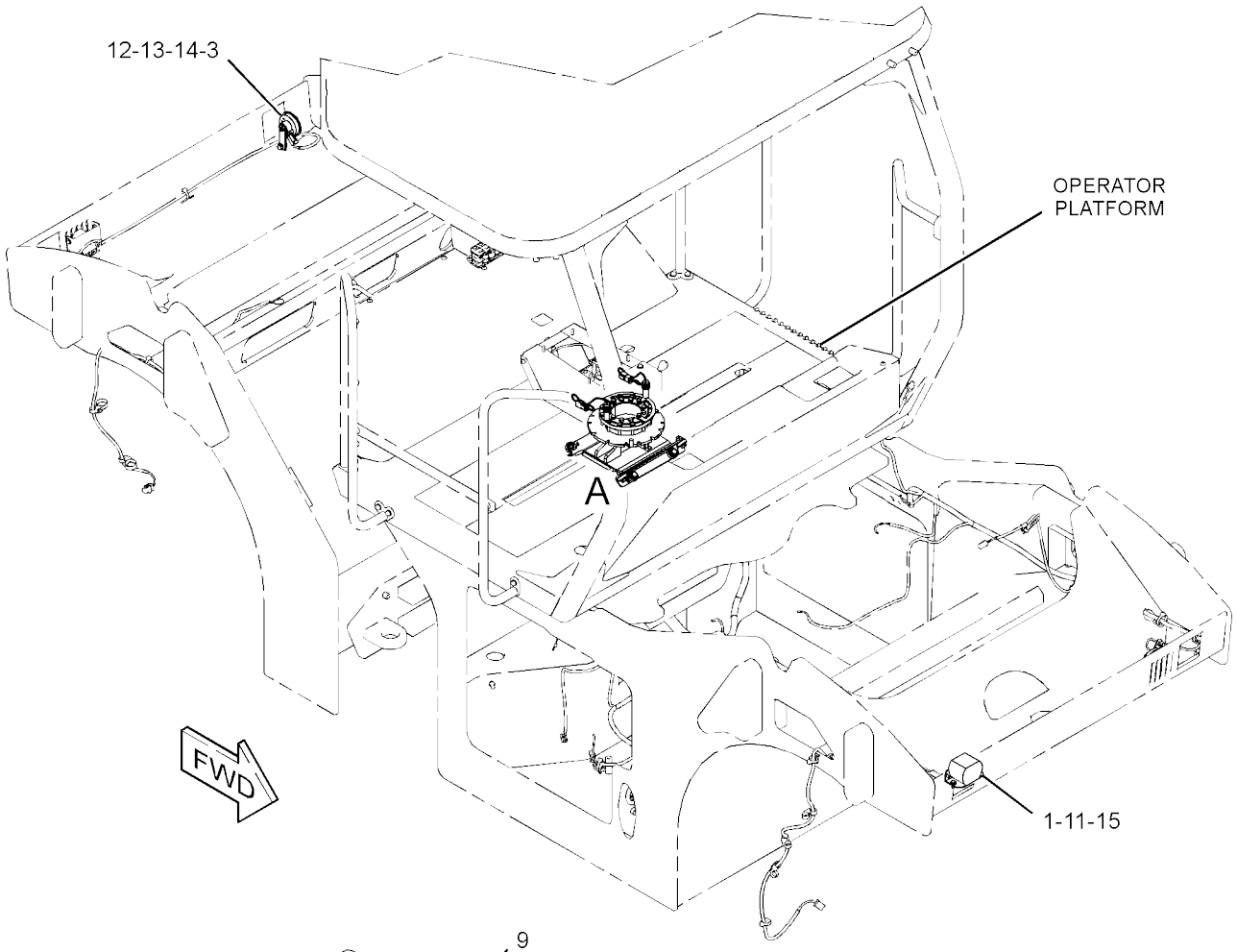

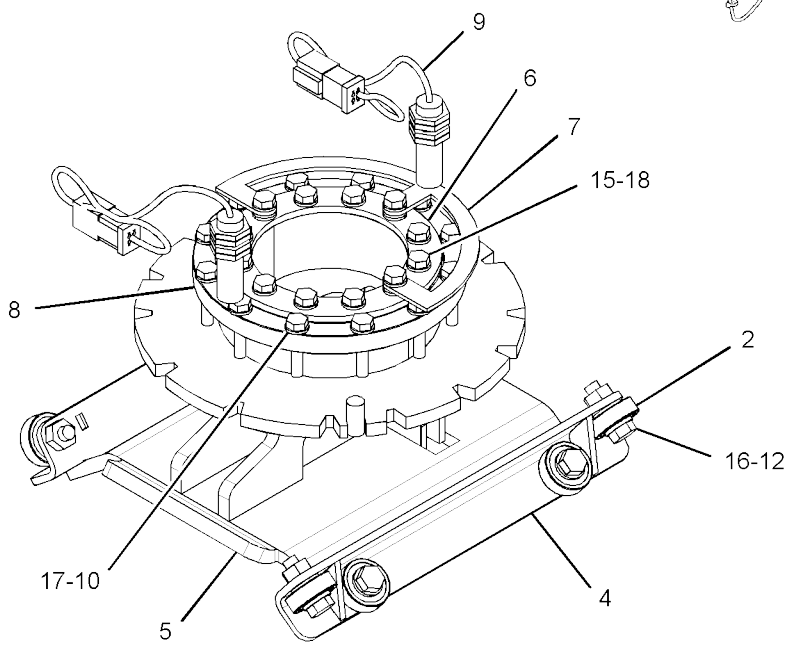

VIEW OF AREA A

GRAPHIC #1 <END> g06301395

OPERATOR STATION

527-0371 ROPS GP

S/N: G441-UP
PART OF 527-0372 OPERATOR
AR AN ATTACHMENT

SMCS-7323

i07416524

	REF SEE NOTE	QTY	GRAPHIC NO 1 2 3 4 5 6	(PRODUCT LEVEL)	REF PAGE	PART NAME PART NUMBER
		1	1	**510-8280**	1	FILM-IDENTIFICATION (ROPS,FOPS, READ OMM)
		2	1	**219-0305**	1	FILM-WARNING (NO WELD, NO DRILL, READ OMM)
		3	1	**356-4241**	1	HANDRAIL AS
		4	1	**356-4244**	1	PIPE
		5	1	**365-6071**	1	HANDRAIL AS
		6	1	**393-0125**	1	ROPS AS (ROLL)
		7	1	**393-0208**	1	HANDRAIL AS
		8	1	**393-0210**	1	HANDRAIL AS
		9	1	**8T-4121**	14	WASHER-HARD (11X21X2.5-MM THK)
M		10	1	**8T-4141**	13	BOLT (M20X2.5X70-MM)
M		11	1	**8T-4195**	14	BOLT (M10X1.5X30-MM)
		12	1	**8T-5439**	13	WASHER-HARD (21.5X45X6-MM THK)

M - METRIC PART

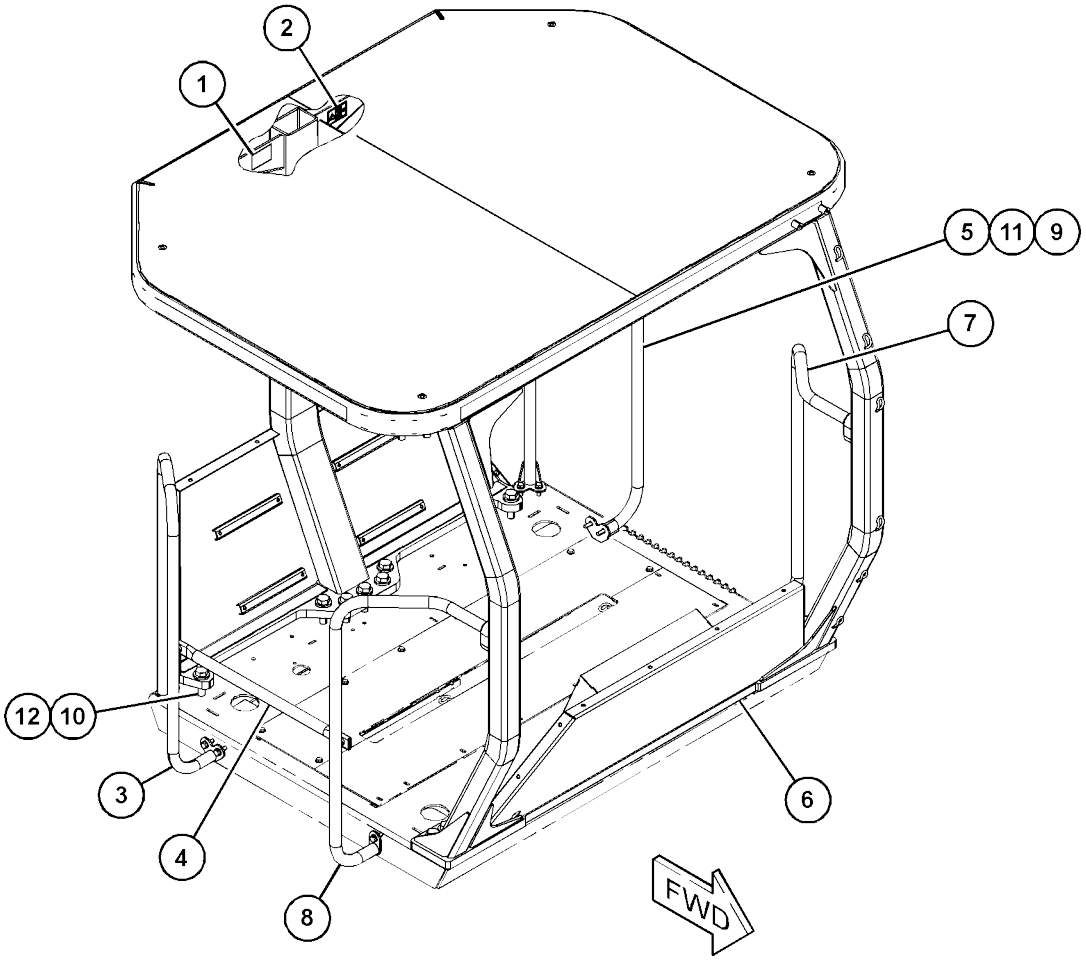

GRAPHIC #1 <END> g06176709

527-0805 ROPS GP

S/N: 5B41-UP
PART OF 527-0806 OPERATOR
AR AN ATTACHMENT

SMCS-7323

i07418403

	REF SEE NOTE QTY	GRAPHIC NO 1 2 3 4 5 6	(PRODUCT LEVEL)	REF PAGE	PART NAME PART NUMBER
	1	1	**219-0305**	1	FILM-WARNING (NO WELD, NO DRILL, READ OMM)
	2	1	**356-4241**	1	HANDRAIL AS
	3	1	**356-4244**	1	PIPE
	4	1	**365-6071**	1	HANDRAIL AS
	5	1	**393-0124**	1	ROPS AS
		1	**7T-1099**	34	LINK
M		1	**9R-2160**	12	BOSS (M8X1.25X25-MM)
	6	1	**393-0208**	1	HANDRAIL AS
	7	1	**393-0210**	1	HANDRAIL AS
	8	1	**510-8278**	1	FILM-IDENTIFICATION (ROPS,FOPS, READ OMM)
	9	1	**8T-4121**	14	WASHER-HARD (11X21X2.5-MM THK)
M	10	1	**8T-4141**	13	BOLT (M20X2.5X70-MM)
M	11	1	**8T-4195**	14	BOLT (M10X1.5X30-MM)
	12	1	**8T-5439**	13	WASHER-HARD (21.5X45X6-MM THK)

M - METRIC PART

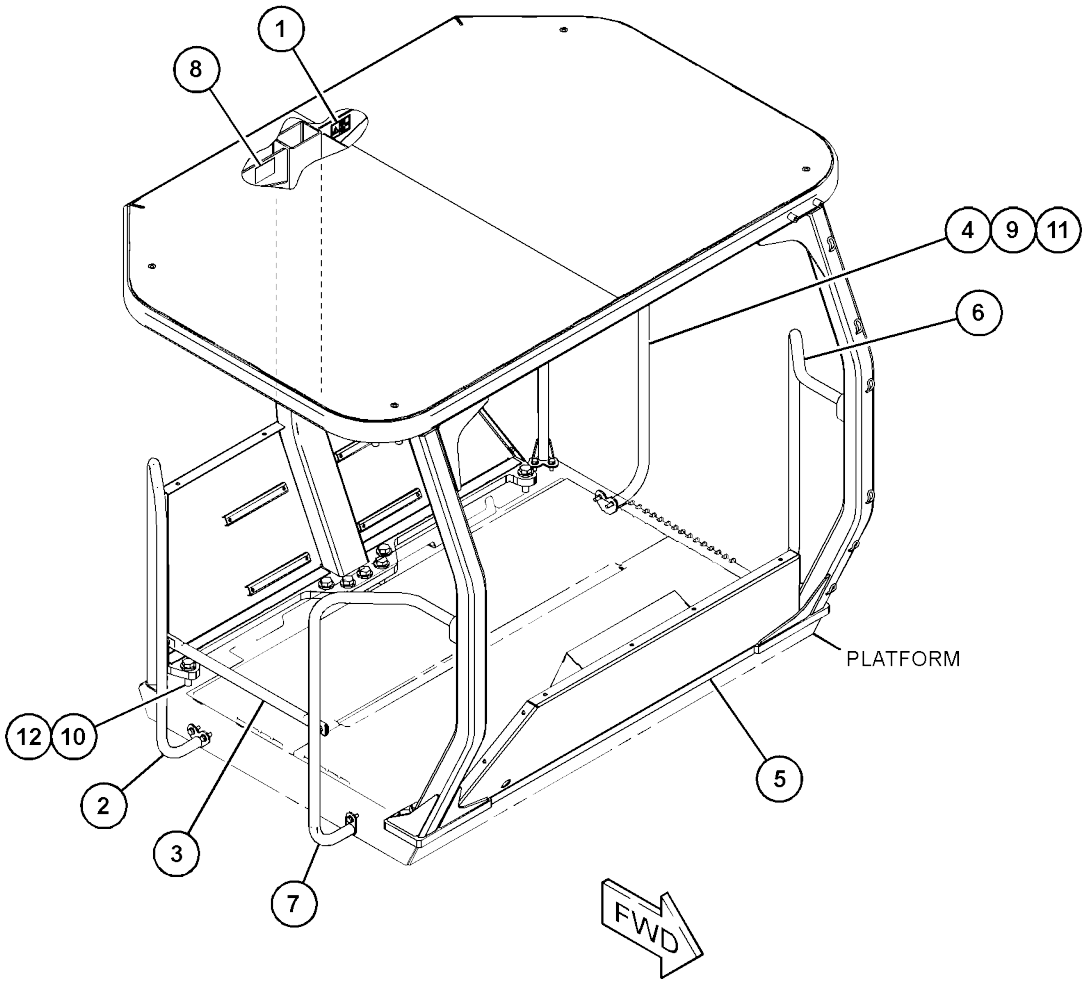

GRAPHIC #1 <END> g06179589

343-6129 SEAT & ARMREST GP-VINYL

S/N: 5B41-UP; G441-
UP AN ATTACHMENT

SMCS-7307, 7312

i07399999

	REF SEE NOTE QTY	GRAPHIC NO 1 2 3 4 5 6 (PRODUCT LEVEL)	REF PAGE	PART NAME PART NUMBER	
Y	1	1 **258-4095**	1	SEAT BELT GP (RETRACTABLE, 51-MM (2-IN))	571
Y	2	1 **357-4886**	1	SEAT & ARMREST GP (VINYL)	565
	3	1 **7X-0507**	2	WASHER-HARD (12X22.5X5-MM THK)	
	4	1 **8S-0934**	2	LOCKNUT-FLANGE (7/16-20-THD)	
	5	1 **8S-4723**	2	BOLT (7/16-20X1.5-IN)	
	6	1 **8T-4223**	2	WASHER-HARD (13.5X25.5X3-MM THK)	

Y - SEPARATE ILLUSTRATION

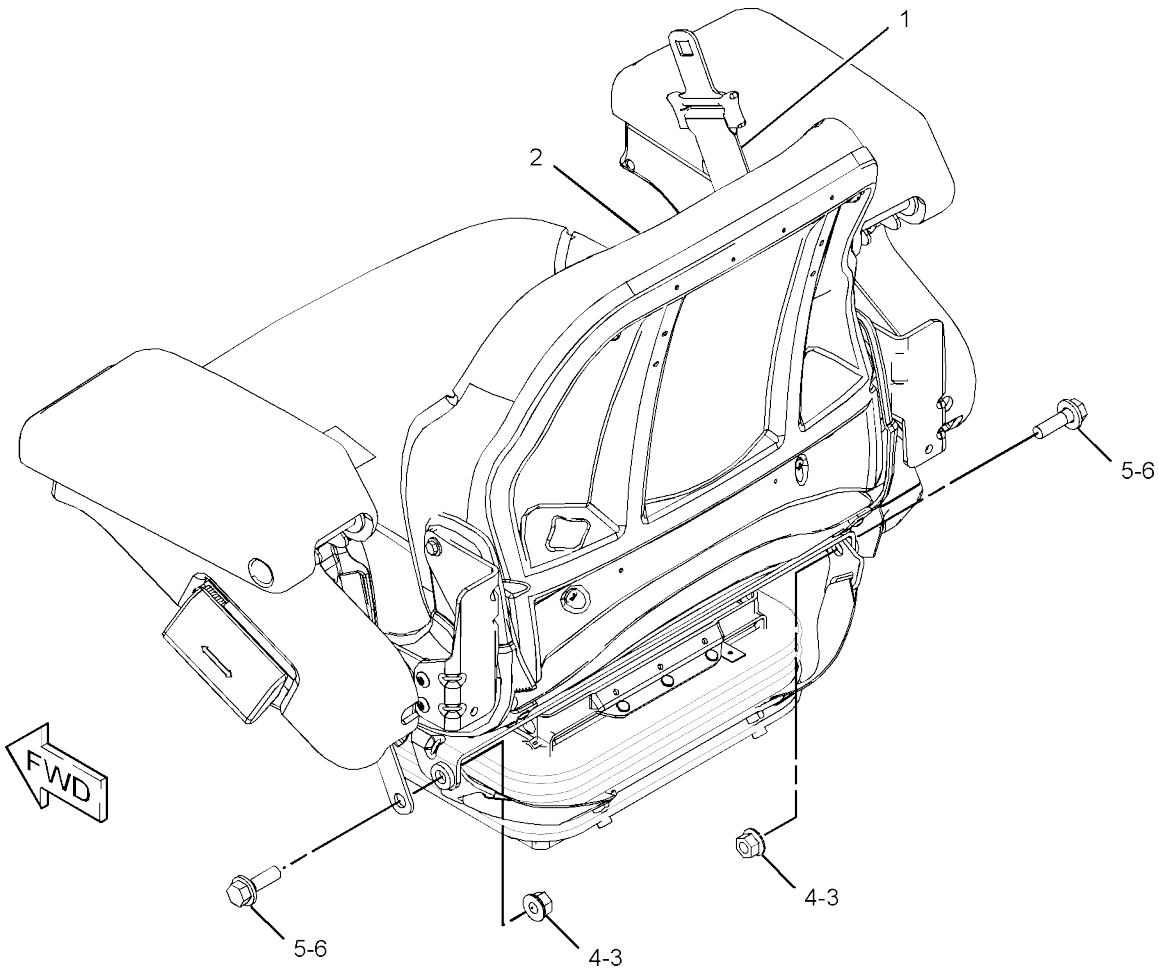

GRAPHIC #1 <END> g02841478

344-0124 SEAT & ARMREST GP–CLOTH

S/N: 5B41-UP; G441-
UP AN ATTACHMENT

SMCS-7307, 7312

i07400009

	REF SEE NOTE	QTY	GRAPHIC NO 1 2 3 4 5 6	(PRODUCT LEVEL)	REF PAGE	PART NAME PART NUMBER	
Y		1	1	**258-4095**	1	SEAT BELT GP (RETRACTABLE, 51-MM (2-IN))	571
Y		2	1	**357-4888**	1	SEAT & ARMREST GP (CLOTH)	567
		3	1	**7X-0507**	2	WASHER-HARD (12X22.5X5-MM THK)	
		4	1	**8S-0934**	2	LOCKNUT-FLANGE (7/16-20-THD)	
		5	1	**8S-4723**	2	BOLT (7/16-20X1.5-IN)	
		6	1	**8T-4223**	2	WASHER-HARD (13.5X25.5X3-MM THK)	

Y - SEPARATE ILLUSTRATION

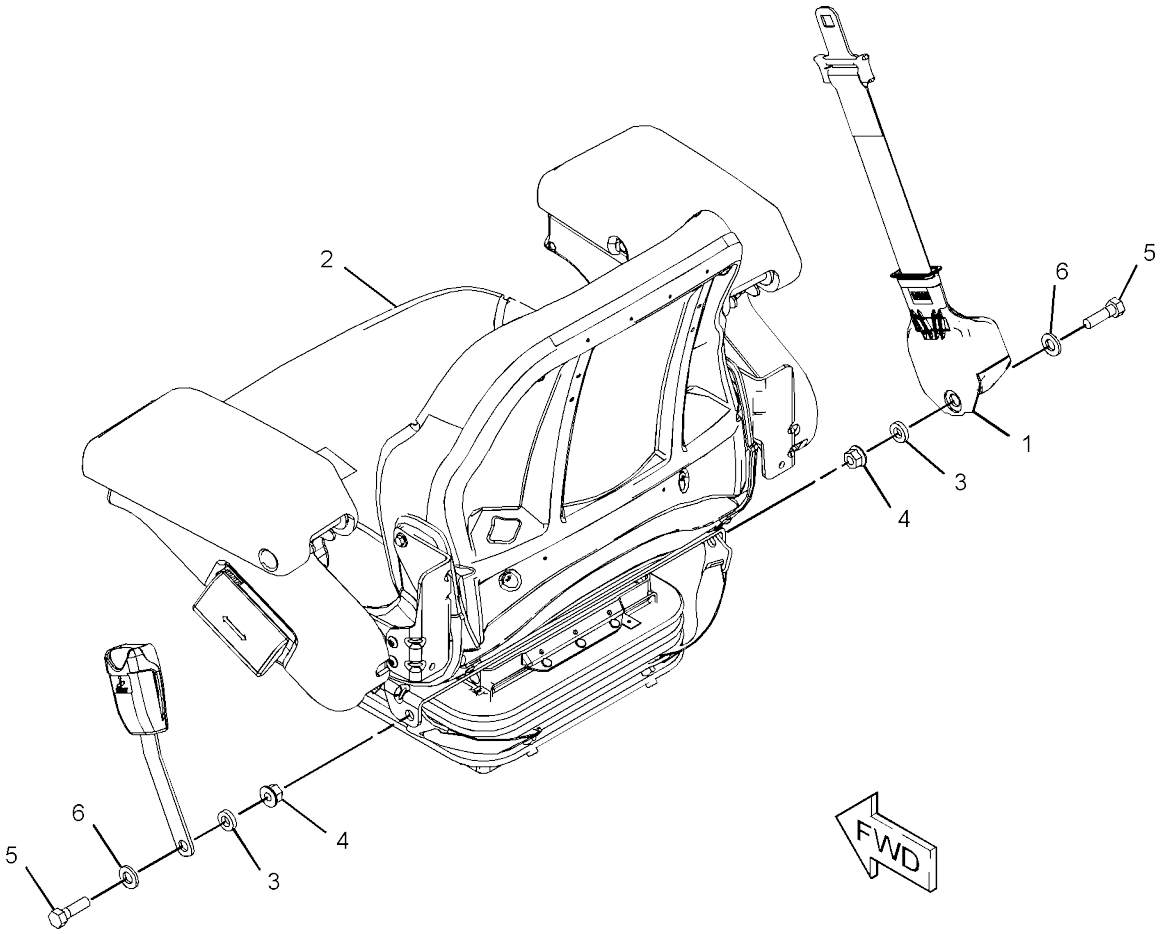

GRAPHIC #1 <END> g02845237

357-4886 SEAT & ARMREST GP-VINYL

S/N: 5B41-UP; G441-UP
PART OF 343-6129 SEAT & ARMREST GP
AN ATTACHMENT

SMCS-7307, 7312

i07400004

	REF SEE NOTE QTY	GRAPHIC NO 1 2 3 4 5 6	(PRODUCT LEVEL)	REF PAGE	PART NAME PART NUMBER	
	1	1	**307-2955**	2	LANYARD	
	2	1	**354-4947**	2	PLATE AS	
	3	1	**354-4951**	1	BRACKET	
	4	1	**357-1722**	1	SUPPORT GP-CONTROL	
	5	1	**357-1723**	1	SUPPORT GP-CONTROL	
					(EACH SUPPORT GP-CONTROL INCLUDES)	
		1	**5P-4116**	1	WASHER-HARD (8.8X20.5X2-MM THK)	
M		1	**7X-2537**	1	BOLT (M8X1.25X35-MM)	
		1	**390-9320**	1	HANDLE	
	6	1	**364-2638**	1	COVER-INNER (RH)	
	7	1	**364-2639**	1	COVER-OUTER (RH)	
	8	1	**364-2640**	1	COVER	
	9	1	**366-5826**	1	BRACKET (RH)	
	10	1	**366-5827**	1	BRACKET (LH)	
	11	1	**367-7482**	1	COVER	
	12	1	**385-0229**	8	SCREW-FORMING (12-16X0.75-IN)	
	13	1	**385-7265**	1	ARMREST AS (RH)	
	14	1	**385-7266**	1	ARMREST AS (LH)	
Y	15	1	**390-9305**	1	SUSPENSION GP-SEAT (MECHANICAL)	576
Y	16	1	**392-9285**	1	SEAT GP (VINYL)	572
	17	1	**5P-1075**	4	WASHER-HARD (10.2X22.5X3-MM THK)	
	18	1	**5P-1076**	2	WASHER-HARD (13.5X30X4-MM THK)	
	19	1	**6D-2354**	4	BOSS (1/2-13X0.75-IN)	
M	20	1	**6V-8097**	2	BOLT (M12X1.75X30-MM)	
M	21	1	**6V-9189**	10	LOCKNUT (M8X1.25-THD)	
M	22	1	**7X-0818**	4	BOLT (M8X1.25X45-MM)	
M	23	1	**8R-3275**	10	SCREW (M8X1.25X30-MM)	
M	24	1	**8T-8549**	2	LOCKNUT (M12X1.75-THD)	
	25	1	**8T-9501**	6	SCREW (10-16X0.75-IN)	

M - METRIC PART
Y - SEPARATE ILLUSTRATION

357-4886 **SEAT & ARMREST GP** (contd.) **i07400004**

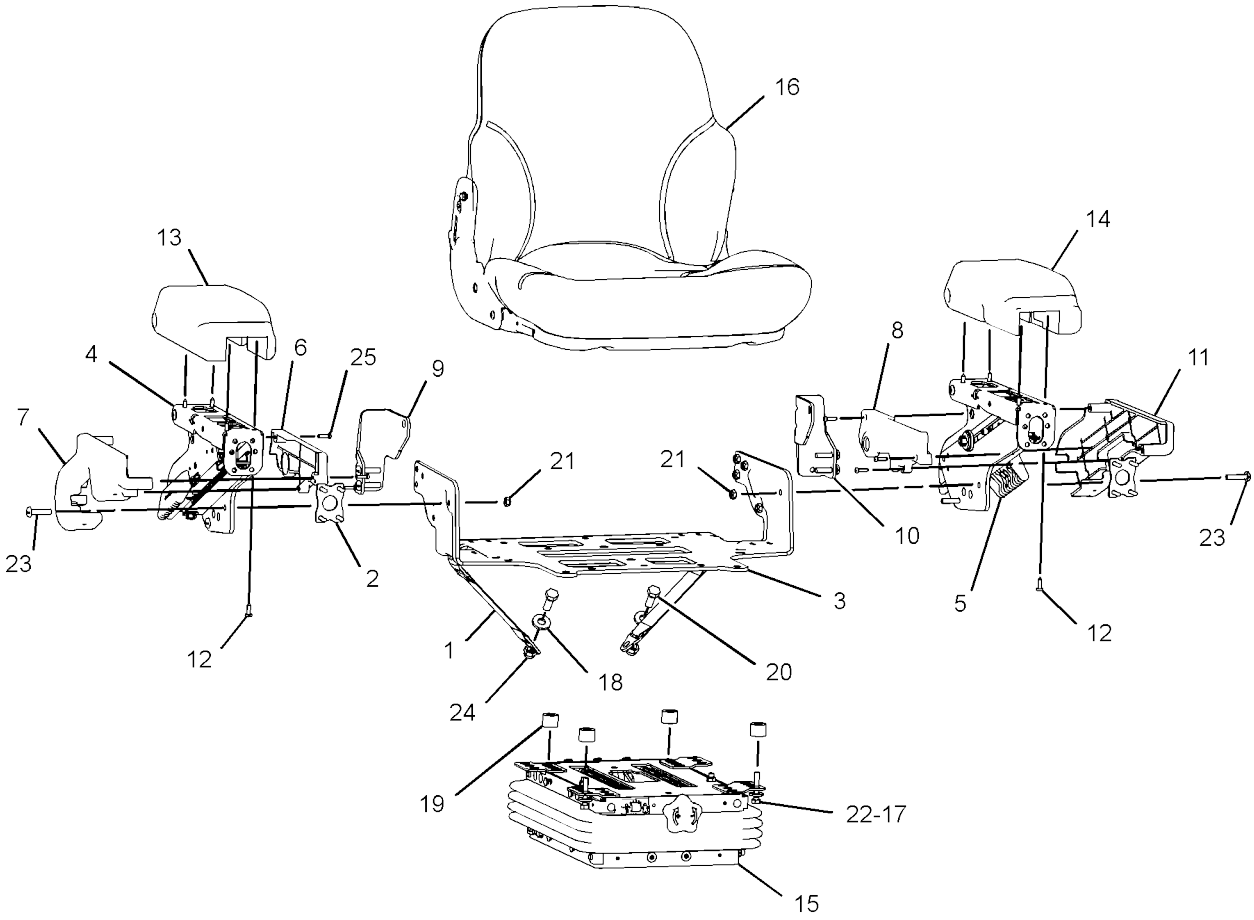

FRONT VIEW
(UPPER RIGHT)

GRAPHIC #1 <END> g03288847

357-4888 SEAT & ARMREST GP-CLOTH

S/N: 5B41-UP; G441-UP
PART OF 344-0124 SEAT & ARMREST GP
AN ATTACHMENT

SMCS-7307, 7312

i07400011

	REF SEE NOTE QTY	GRAPHIC NO 1 2 3 4 5 6	(PRODUCT LEVEL)	REF PAGE	PART NAME PART NUMBER	
	1	1	**307-2955**	2	LANYARD	
	2	1	**354-4947**	2	PLATE AS	
	3	1	**354-4951**	1	BRACKET	
	4	1	**357-1722**	1	SUPPORT GP-CONTROL (RH)	
	5	1	**357-1723**	1	SUPPORT GP-CONTROL (LH)	
					(EACH SUPPORT GP INCLUDES)	
		1	**5P-4116**	1	WASHER-HARD (8.8X20.5X2-MM THK)	
M		1	**7X-2537**	1	BOLT (M8X1.25X35-MM)	
		1	**390-9320**	1	HANDLE	
	6	1	**364-2638**	1	COVER-INNER (RH)	
	7	1	**364-2639**	1	COVER-OUTER (RH)	
	8	1	**364-2640**	1	COVER	
	9	1	**366-5826**	1	BRACKET (RH)	
	10	1	**366-5827**	1	BRACKET (LH)	
	11	1	**367-7482**	1	COVER	
	12	1	**385-0229**	8	SCREW-FORMING (12-16X0.75-IN)	
	13	1	**385-7265**	1	ARMREST AS (RH)	
	14	1	**385-7266**	1	ARMREST AS (LH)	
Y	15	1	**390-9305**	1	SUSPENSION GP-SEAT (MECHANICAL)	576
Y	16	1	**392-9286**	1	SEAT GP (CLOTH)	573
	17	1	**5P-1075**	4	WASHER-HARD (10.2X22.5X3-MM THK)	
	18	1	**5P-1076**	2	WASHER-HARD (13.5X30X4-MM THK)	
	19	1	**6D-2354**	4	BOSS (1/2-13X0.75-IN)	
M	20	1	**6V-8097**	2	BOLT (M12X1.75X30-MM)	
M	21	1	**6V-9189**	1	LOCKNUT (M8X1.25-THD)	
M	22	1	**7X-0818**	4	BOLT (M8X1.25X45-MM)	
M	23	1	**166-1222**	1	SCREW-BUTTON HEAD (M8X1.25X30-MM)	
M	24	1	**8T-8549**	2	LOCKNUT (M12X1.75-THD)	
	25	1	**8T-9501**	12	SCREW (10-16X0.75-IN)	

M - METRIC PART
Y - SEPARATE ILLUSTRATION

357-4888 **SEAT & ARMREST GP** (contd.) **i07400011**

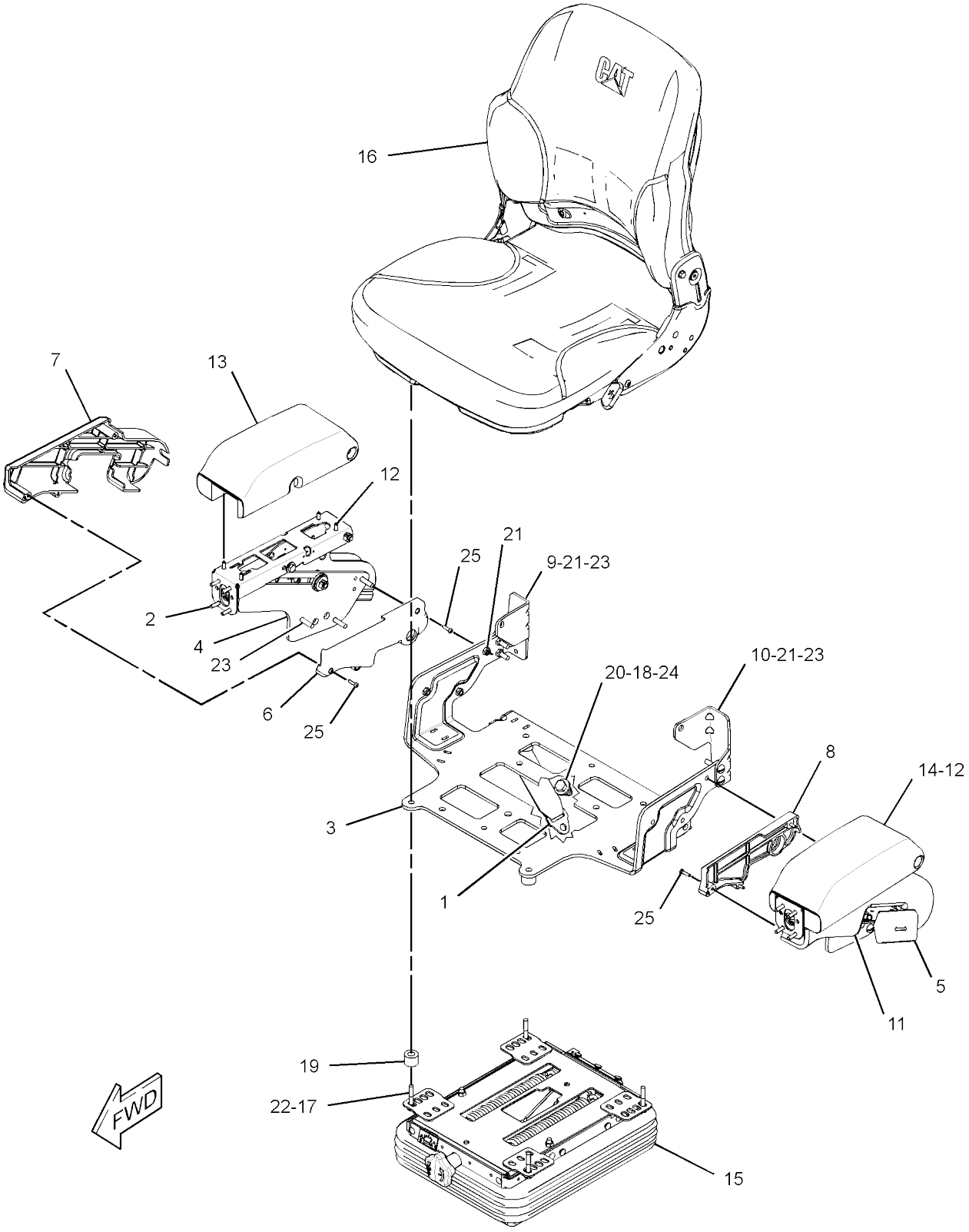

GRAPHIC #1 <END> g06256979

357-4889 SEAT & ARMREST GP-12-VOLT, VINYL, HEATED

S/N: 5B41-UP; G441-UP
PART OF 355-3084 SEAT GP-
SUSPENSION AN ATTACHMENT

SMCS-7307, 7312

i07403831

	REF SEE NOTE QTY	GRAPHIC NO 1 2 3 4 5 6	(PRODUCT LEVEL)	REF PAGE	PART NAME PART NUMBER	
	1	1	**307-2955**	2	LANYARD	
	2	1	**354-4947**	2	PLATE AS	
	3	1	**354-4951**	1	BRACKET	
	4	1	**357-1722**	1	SUPPORT GP-CONTROL (RH)	
	5	1	**357-1723**	1	SUPPORT GP-CONTROL (LH)	
					(EACH SUPPORT GP INCLUDES)	
		1	**5P-4116**	1	WASHER-HARD (8.8X20.5X2-MM THK)	
M		1	**7X-2537**	1	BOLT (M8X1.25X35-MM)	
		1	**390-9320**	1	HANDLE	
	6	1	**364-2638**	1	COVER-INNER (RH)	
	7	1	**364-2639**	1	COVER-OUTER (RH)	
	8	1	**364-2640**	1	COVER	
	9	1	**366-5826**	1	BRACKET (RH)	
	10	1	**366-5827**	1	BRACKET (LH)	
	11	1	**367-7482**	1	COVER	
	12	1	**385-0229**	8	SCREW-FORMING (12-16X0.75-IN)	
	13	1	**385-7265**	1	ARMREST AS (RH)	
	14	1	**385-7266**	1	ARMREST AS (LH)	
Y	15	1	**392-9278**	1	SUSPENSION GP-SEAT	578
Y	16	1	**392-9287**	1	SEAT GP (VINYL)	574
	17	1	**5P-1075**	4	WASHER-HARD (10.2X22.5X3-MM THK)	
	18	1	**5P-1076**	2	WASHER-HARD (13.5X30X4-MM THK)	
	19	1	**6D-2354**	4	BOSS (1/2-13X0.75-IN)	
M	20	1	**6V-8097**	2	BOLT (M12X1.75X30-MM)	
M	21	1	**166-1222**	10	SCREW-BUTTON HEAD (M8X1.25X30-MM)	
M	22	1	**7X-0818**	4	BOLT (M8X1.25X45-MM)	
M	23	1	**8R-3275**	10	SCREW (M8X1.25X30-MM)	
M	24	1	**8T-8549**	2	LOCKNUT (M12X1.75-THD)	
	25	1	**8T-9501**	12	SCREW (10-16X0.75-IN)	

M - METRIC PART
Y - SEPARATE ILLUSTRATION

357-4889 **SEAT & ARMREST GP** (contd.) **i07403831**

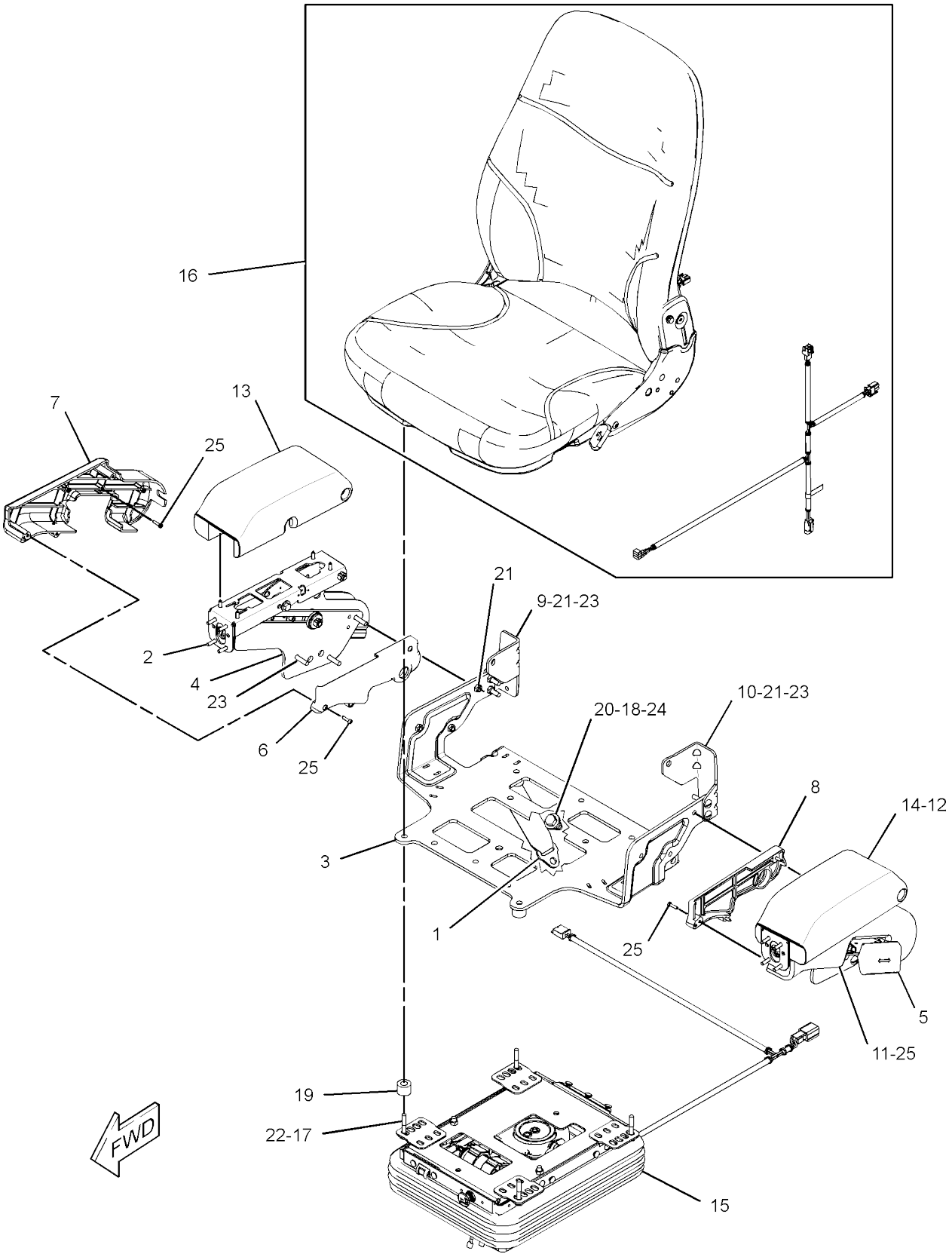

GRAPHIC #1 <END> g06241722

258-4095 SEAT BELT GP-RETRACTABLE

S/N: 5B41-UP; G441-
UP 51-MM (2-IN)
PART OF 343-6129, 344-0124 SEAT & ARMREST GP, 355-3084 SEAT GP-SUSPENSION
AN ATTACHMENT

SMCS-7327

i05208475

REF SEE NOTE QTY	GRAPHIC NO 1 2 3 4 5 6	(PRODUCT LEVEL)	REF PAGE	PART NAME PART NUMBER
F		**2D-6412**	2	WASHER (7/16X15/16X1/4-IN THK)
F		**8S-0934**	2	LOCKNUT-FLANGE (7/16-20-THD)
F		**8S-4723**	2	BOLT (7/16-20X1.5-IN)
F		**8T-4223**	2	WASHER-HARD (13.5X25.5X3-MM THK)

F - NOT SHOWN

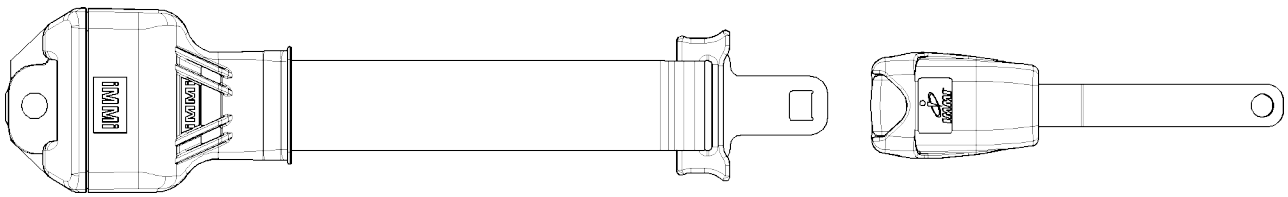

GRAPHIC #1 <END> g01345229

392-9285 SEAT GP-VINYL

S/N: 5B41-UP; G441-UP
PART OF 357-4886 SEAT & ARMREST GP
AN ATTACHMENT

SMCS-7312

i07400006

	REF SEE NOTE	QTY	GRAPHIC NO 1 2 3 4 5 6	(PRODUCT LEVEL)	REF PAGE	PART NAME PART NUMBER
	1	1		**305-7089**	1	CUSHION-SEAT (VINYL)
	2	1		**385-0229**	2	SCREW-FORMING (12-16X0.75-IN)
	3	1		**385-0230**	4	SCREW-FORMING (1/4-15-1-IN)
	4	1		**385-5503**	1	CUSHION AS
	5	1		**385-5506**	1	PAN AS
	6	1		**3E-4352**	2	WASHER-HARD (8.8X20.5X2.5-MM THK)
	7	1		**5P-0537**	2	WASHER-HARD (7.2X14.5X2-MM THK)
M	8	1		**6V-7727**	2	BOLT (M6X1X16-MM)
M	9	1		**6V-7744**	4	LOCKNUT (M10X1.5-THD)

M - METRIC PART

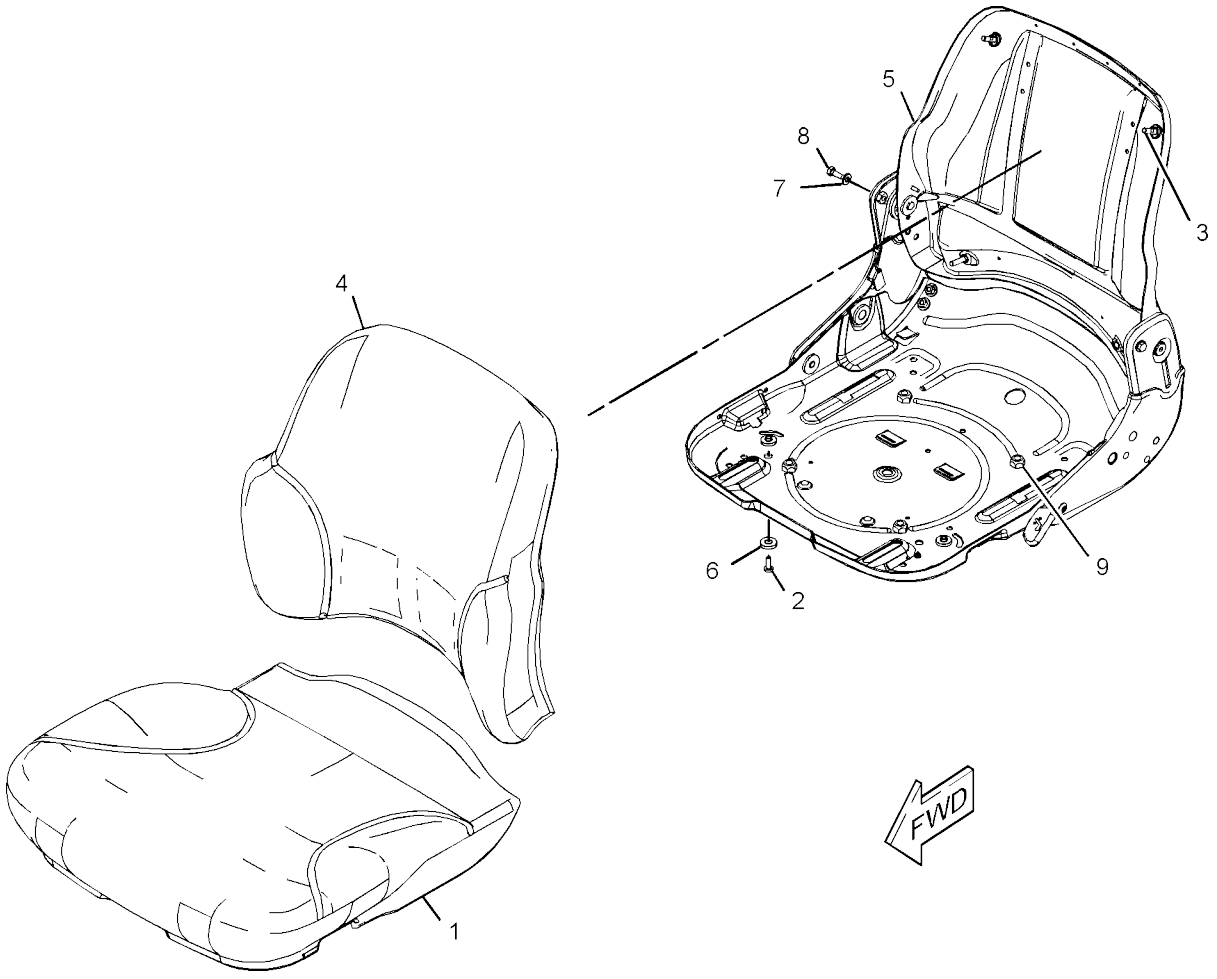

GRAPHIC #1 <END> g03255998

392-9286 SEAT GP-CLOTH

S/N: 5B41-UP; G441-UP
PART OF 357-4888 SEAT & ARMREST GP
AN ATTACHMENT

SMCS-7312

i07400012

	REF SEE NOTE	QTY	GRAPHIC NO 1 2 3 4 5 6	(PRODUCT LEVEL)	REF PAGE	PART NAME PART NUMBER
	1	1		**305-7086**	1	CUSHION AS-BACKREST (CLOTH)
	2	1		**305-7087**	1	CUSHION AS-SEAT (CLOTH)
	3	1		**385-0229**	2	SCREW-FORMING (12-16X0.75-IN)
	4	1		**385-0230**	4	SCREW-FORMING (1/4-15-1-IN)
	5	1		**385-5506**	1	PAN AS
	6	1		**3E-4352**	2	WASHER-HARD (8.8X20.5X2.5-MM THK)
	7	1		**5P-0537**	2	WASHER-HARD (7.2X14.5X2-MM THK)
M	8	1		**6V-7727**	2	BOLT (M6X1X16-MM)
M	9	1		**6V-7744**	4	LOCKNUT (M10X1.5-THD)

M - METRIC PART

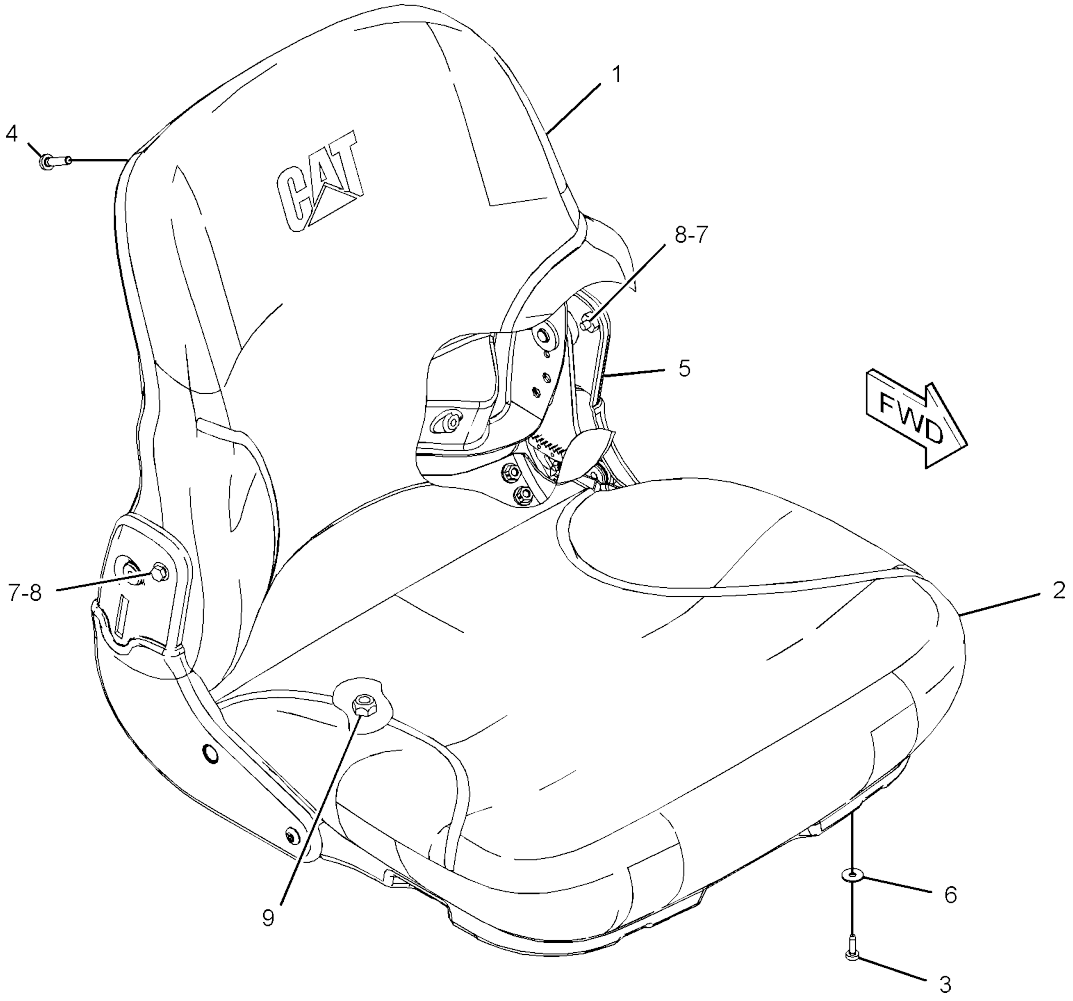

GRAPHIC #1 <END> g03226696

392-9287 SEAT GP-VINYL

S/N: 5B41-UP; G441-UP
PART OF 357-4889 SEAT & ARMREST GP
AN ATTACHMENT

SMCS-7312

i07403832

	REF SEE NOTE QTY	GRAPHIC NO 1 2 3 4 5 6	(PRODUCT LEVEL)	REF PAGE	PART NAME PART NUMBER
	1	1	**385-0229**	2	SCREW-FORMING (12-16X0.75-IN)
	2	1	**385-0230**	6	SCREW-FORMING (1/4-15-1-IN)
	3	1	**385-5510**	1	PAN AS
	4	1	**385-5513**	1	PLATE AS-LUMBAR
	5	1	**390-9314**	1	HOUSING AS-SWITCH
	6	1	**440-8473**	1	HARNESS AS-HEATER
	7	1	**390-9318**	1	CUSHION AS-SEAT (VINYL)
	8	1	**390-9319**	1	CUSHION AS-BACKREST (VINYL)
	9	1	**392-9277**	1	SWITCH-ROCKER (HEATED SEAT) (SEAT ADJUSTMENT)
	10	1	**3E-4352**	2	WASHER-HARD (8.8X20.5X2.5-MM THK)
	11	1	**4B-4311**	4	RIVET (BUTTON HEAD)
	12	1	**5P-0537**	2	WASHER-HARD (7.2X14.5X2-MM THK)
M	13	1	**8C-3210**	2	BOLT (M6X1X16-MM)
M	14	1	**6V-7744**	4	LOCKNUT (M10X1.5-THD)
	15	1	**9X-8918**	2	SCREW-FLAT HEAD (8-32X0.5-IN)

M - METRIC PART

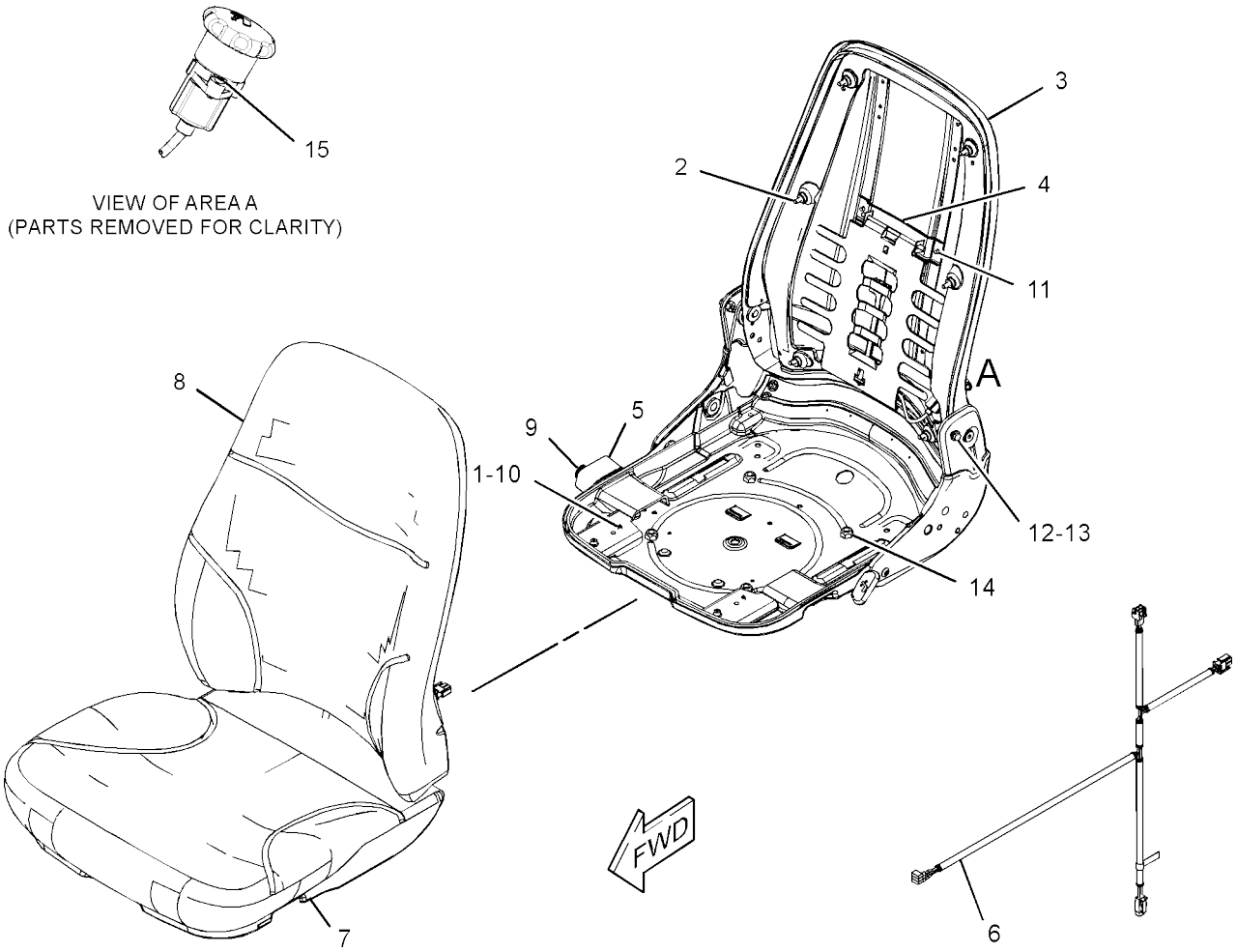

GRAPHIC #1 <END> g03847474

355-3084 SEAT GP-SUSPENSION-12-VOLT, VINYL, HEATED

S/N: 5B41-UP; G441-
UP AN ATTACHMENT

SMCS-7324

i07403830

REF SEE NOTE	QTY	GRAPHIC NO 1 2 3 4 5 6	(PRODUCT LEVEL)	REF PAGE	PART NAME PART NUMBER	
Y	1	1	**258-4095**	1	SEAT BELT GP (RETRACTABLE, 51-MM (2-IN))	571
Y	2	1	**357-4889**	1	SEAT & ARMREST GP (12-VOLT, VINYL, HEATED)	569
	3	1	**7X-0507**	2	WASHER-HARD (12X22.5X5-MM THK)	
	4	1	**8S-0934**	2	LOCKNUT-FLANGE (7/16-20-THD)	
	5	1	**8S-4723**	2	BOLT (7/16-20X1.5-IN)	
	6	1	**8T-4223**	2	WASHER-HARD (13.5X25.5X3-MM THK)	

Y - SEPARATE ILLUSTRATION

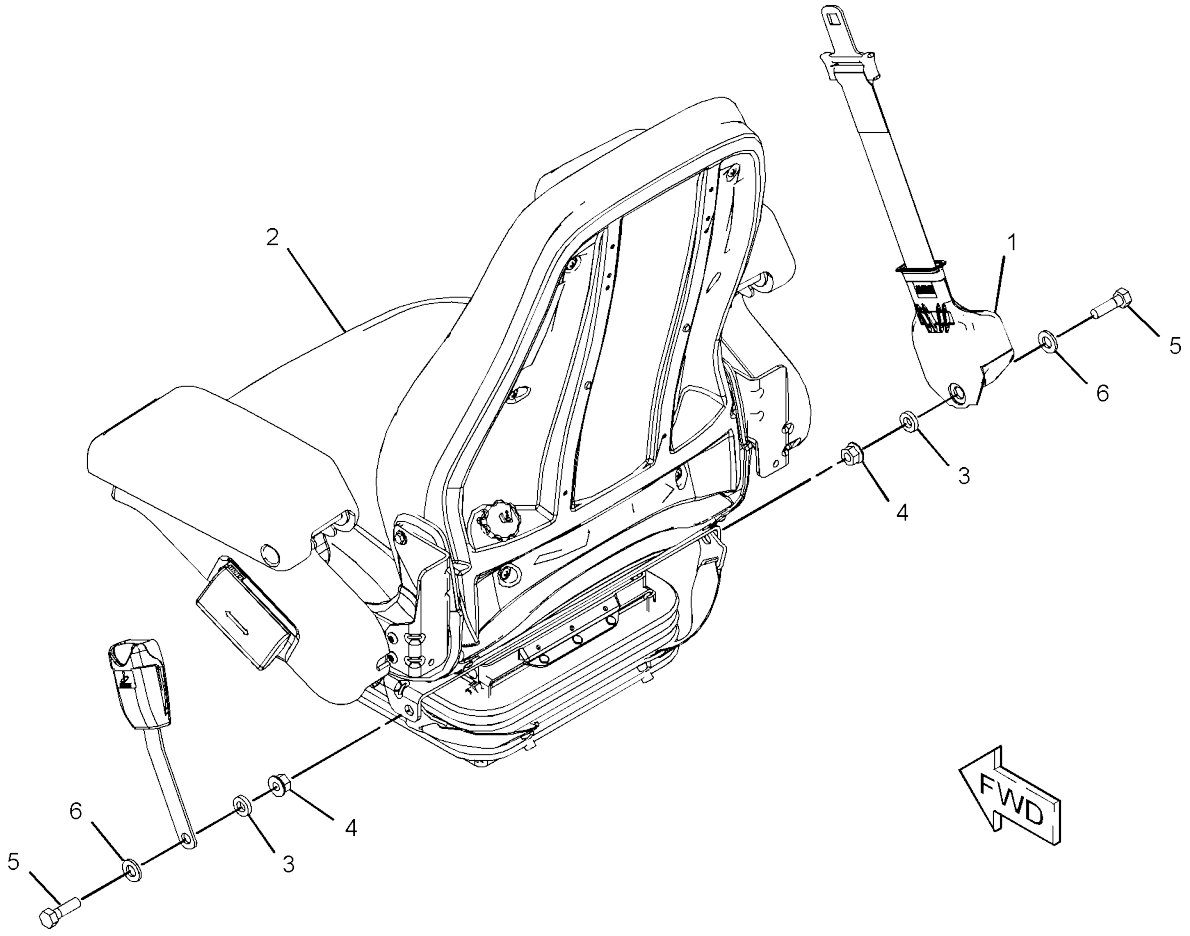

GRAPHIC #1 <END> g02847996

390-9305 SUSPENSION GP-SEAT-MECHANICAL

S/N: 5B41-UP; G441-UP
PART OF 357-4886, 357-4888 SEAT & ARMREST
GP AN ATTACHMENT

SMCS-7324

i06806028

	REF SEE NOTE QTY	GRAPHIC NO 1 2 3 4 5 6	(PRODUCT LEVEL)	REF PAGE	PART NAME PART NUMBER
	1	1	**4B-4278**	2	WASHER (10.2X20.5X1.6-MM THK)
	2	1	**4V-8577**	6	BEARING
	3	1	**5V-1497**	3	RETAINER
	4	1	**144-4108**	13	FASTENER
	5	1	**163-1146**	2	FASTENER
	6	1	**166-6781**	2	FASTENER
	7	1	**195-7055**	1	WASHER-HARD (9.9X28.5X3.2-MM THK)
	8	1	**304-1021**	2	ROLLER
	9	1	**304-1022**	2	BLOCK
	10	1	**304-1023**	2	BUMPER
	18	1	**304-1034**	2	BRACKET
	19	1	**304-1035**	2	BUMPER
	20	1	**304-1038**	1	BOOT
	22	1	**304-1043**	1	LINK
	23	1	**305-4351**	2	BOLT (5/16-18X1.65-IN)
	25	1	**305-4353**	2	SPACER (6.4X24X6-MM THK)
	29	1	**385-5507**	1	HANDLE
	30	1	**031-4155**	2	LOCKNUT (5/16-18-THD)
	31	1	**095-0878**	1	PIN-SPRING
	32	1	**1B-2705**	2	BOLT-CARRIAGE (5/16-18X0.75-IN)
	33	1	**2K-4973**	5	LOCKNUT (3/8-16-THD)
	34	1	**3E-9860**	2	LOCKNUT (5/16-18-THD)
M	35	1	**5C-2890**	2	NUT (M6X1-THD)
	36	1	**5H-9839**	1	PIN-SPRING
	37	1	**6V-7412**	2	SCREW-WASHER HEAD

PARTS SHOWN IN GRAPHIC(S) WITHOUT A REFERENCE NUMBER ARE NOT SERVICED SEPARATELY

M - METRIC PART

390-9305 **SUSPENSION GP-SEAT** (contd.) **i06806028**

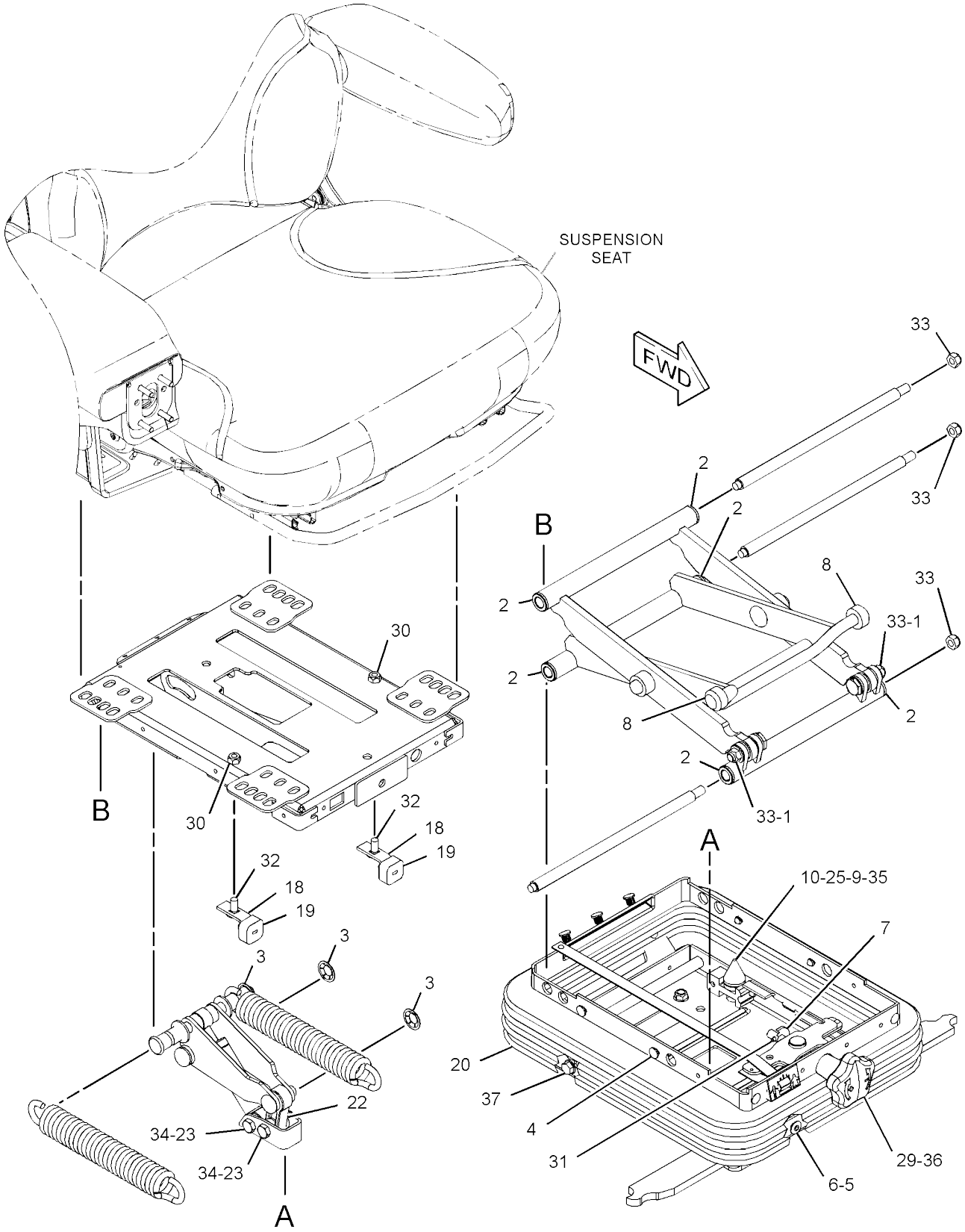

GRAPHIC #1 <END> g02959523

392-9278 SUSPENSION GP-SEAT-AIR

S/N: 5B41-UP; G441-UP
PART OF 357-4889 SEAT & ARMREST GP
AN ATTACHMENT

SMCS-7324

i07424268

REF SEE NOTE	QTY	GRAPHIC NO 1 2 3 4 5 6	(PRODUCT LEVEL)	REF PAGE	PART NAME PART NUMBER
	1	1	**304-1055**	1	KIT-TOGGLE BOLT
	1A	1	**304-1029**	4	BUSHING
	1B	1	**304-1030**	2	BUSHING
		1	**2K-4973**	2	LOCKNUT (3/8-16-THD)
		1	**4B-4278**	2	WASHER (10.2X20.5X1.6-MM THK)
		1	**304-1031**	2	BOLT-SPECIAL
	2	1	**144-4108**	15	FASTENER
	3	1	**163-1135**	1	SPRING (AIR)
	4	1	**163-1146**	2	FASTENER
	5	1	**166-6781**	2	FASTENER
	6	1	**304-1021**	2	ROLLER
	7	1	**304-1022**	2	BLOCK
	8	1	**304-1023**	2	BUMPER
	9	1	**304-1034**	2	BRACKET
	10	1	**304-1035**	2	BUMPER
	11	1	**304-1036**	1	BOOT
	12	1	**304-1056**	1	KIT-VALVE
		1	**214-6102**	1	KNOB AS
					(ALSO INCLUDES FITTING, LOCK WASHER, NUT & VALVE)
	13	1	**305-4353**	2	SPACER (6.4X24X6-MM THK)
	14	1	**397-6415**	1	KIT-SEAT AIR COMPRESSOR
	14A	1	**3S-2093**	4	STRAP-CABLE
		1	**186-5107**	2	SCREW-DRIVE (NO 8-16X1.25-IN)
					(ALSO INCLUDES FITTING, COMPRESSOR AS, BRACKET MOUNT, HARNESS AS, ELBOW, CONDUIT & HOSE BULK)
	15	1	**452-6719**	1	HARNESS AS-VALVE (SEAT AIR COMPRESSOR)
	16	1	**031-4155**	2	LOCKNUT (5/16-18-THD)
	17	1	**108-4311**	1	SCREW-MACHINE (3/8-16X0.75-IN)
	18	1	**1B-2705**	2	BOLT-CARRIAGE (5/16-18X0.75-IN)
	19	1	**3K-6881**	2	SCREW-MACHINE (1/4-20X0.625-IN)
M	20	1	**5C-2890**	2	NUT (M6X1-THD)
	21	1	**6V-7412**	2	SCREW-WASHER HEAD
	22	1	**8T-9371**	1	BOLT (3/8-16X0.5-IN)
	23	1	**304-1052**	1	KIT-SHOCK ABSORBER
	23A	1	**304-1027**	4	BUSHING
		1	**2M-7819**	2	RING-RETAINING
M		1	**129-3178**	1	LOCKNUT (M6X1-THD)
		1	**304-1026**	1	SHOCK ABSORBER
		1	**304-1042**	1	PIN
		1	**8T-4224**	4	WASHER-HARD (8.8X16X2-MM THK)
	24	1	**304-1054**	3	KIT-SHAFT
					(EACH INCLUDES)
	24A	1	**4V-8577**	2	BEARING
		1	**2K-4973**	1	LOCKNUT (3/8-16-THD)

M - METRIC PART

392-9278 **SUSPENSION GP-SEAT** (contd.) **i07424268**

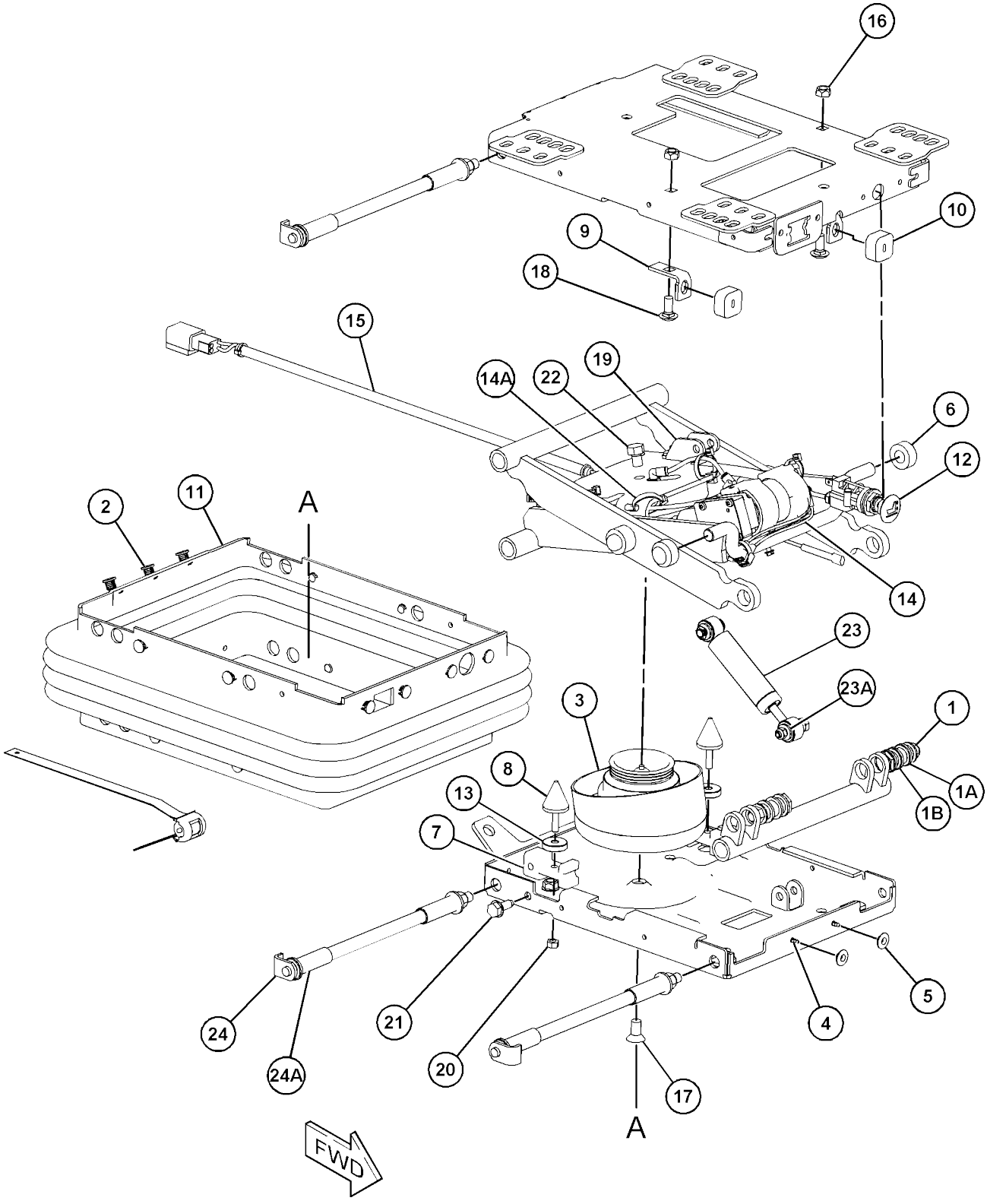

GRAPHIC #1 <END> g06318298

306-5620 VALVE GP-WATER

S/N: 5B41-UP; G441-UP

PART OF 424-4579, 424-4580, 424-9007, 424-9010 AIR CONDITIONER

GP AN ATTACHMENT

SMCS-7304, 7320

i07406145

REF SEE NOTE QTY	GRAPHIC NO 1 2 3 4 5 6	(PRODUCT LEVEL)	REF PAGE	PART NAME PART NUMBER
1	1	**9X-2185**	3	SCREW (8-15X0.44-IN)
2	1	**131-3093**	1	BUSHING
3	1	**248-6772**	8	SCREW-MACHINE (8-16X7.75-IN)
4	1	**265-9620**	1	ACTUATOR (ELECTRONIC)
5	1	**268-8769**	1	VALVE & MOUNTING AS-WATER
6	1	**275-6692**	2	TUBE
7	1	**4D-2297**	2	SEAL-O-RING

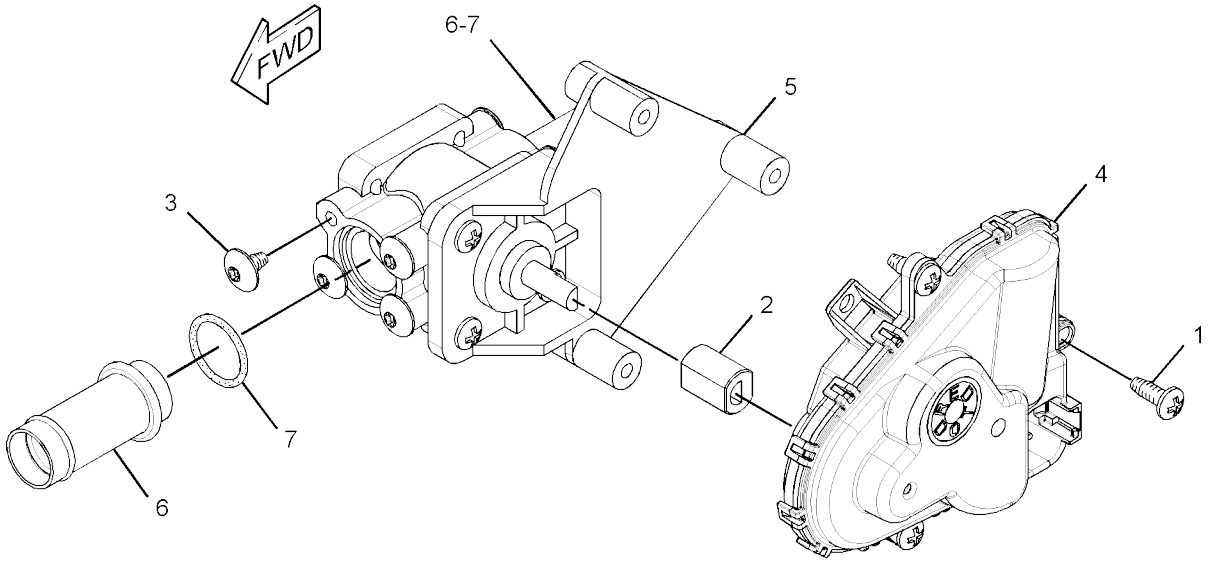

GRAPHIC #1 <END> g01525190

351-3438 VISOR GP-CAB

S/N: 5B41-UP; G441-

UP AN ATTACHMENT

SMCS-7301

i06805960

REF SEE NOTE QTY	GRAPHIC NO 1 2 3 4 5 6	(PRODUCT LEVEL)	REF PAGE	PART NAME PART NUMBER
1	1	**362-2777**	1	VISOR AS (LH)
2	1	**362-2778**	1	VISOR AS (RH)

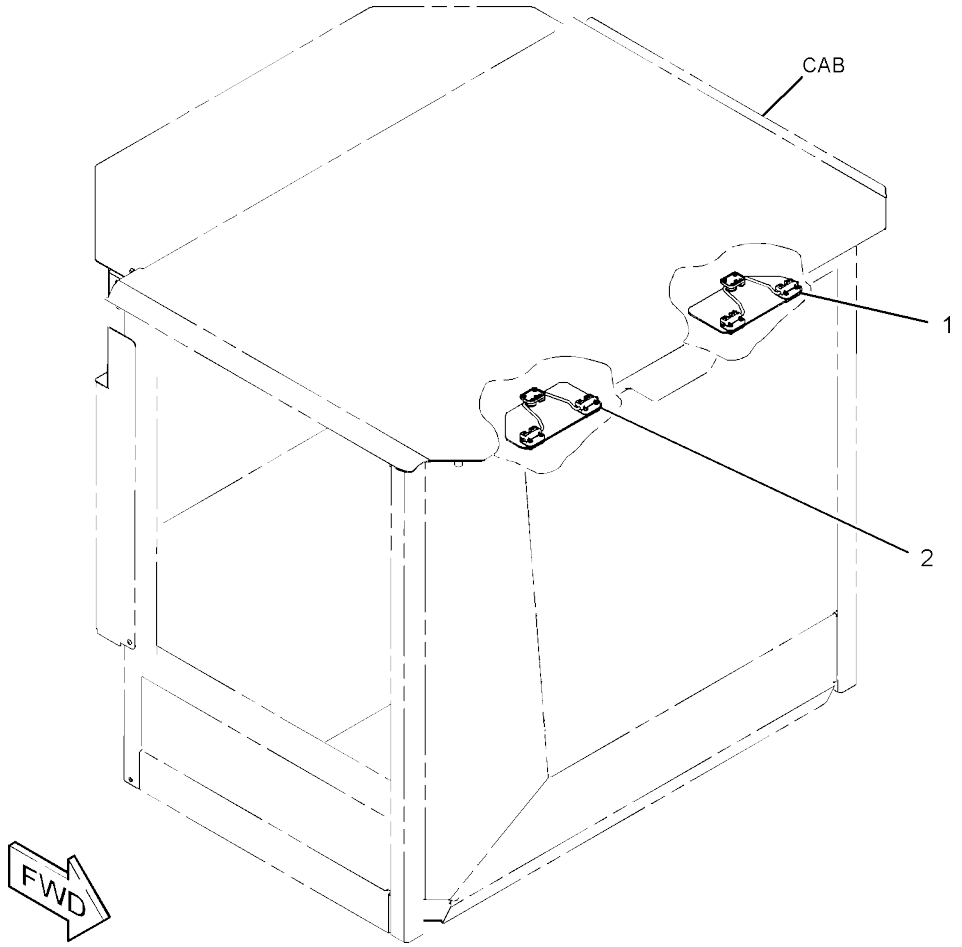

GRAPHIC #1 <END> g02852922

362-2572 WASHER GP-WINDOW

S/N: 5B41-UP
PART OF 393-0167, 462-5780, 509-9422 CAB
GP AN ATTACHMENT

SMCS-7306

i07418014

	REF SEE NOTE QTY	GRAPHIC NO 1 2 3 4 5 6	(PRODUCT LEVEL)	REF PAGE	PART NAME PART NUMBER
	1	1	**3S-2093**	2	STRAP-CABLE
	2	1	**8T-5383**	2	VALVE AS-CHECK (WASHER, WIPER SYSTEM)
	3	1	**365-7607**	1	TANK GP-WINDOW WASHER
	4	1	**4P-7429**	1	CLIP (LADDER)
	5	1	**5P-4116**	5	WASHER-HARD (8.8X20.5X2-MM THK)
	6	1	**7K-1181**	15	STRAP-CABLE
M	7	1	**8T-4189**	5	BOLT (M8X1.25X20-MM)
	8	1	**8T-5400**	2	CONNECTOR
E	9	1	**153-2817**		HOSE (32-CM)
E	10	1	**144-0195**		HOSE (262.5-CM)
E	10A	1	**144-0195**		HOSE (21.5-CM)
E	10B	1	**144-0195**		HOSE (326-CM)
E	10C	1	**144-0195**		HOSE (26-CM)
E	11	1	**295-1939**		HOSE (27-CM)

E - ORDER BY THE CENTIMETER M - METRIC PART

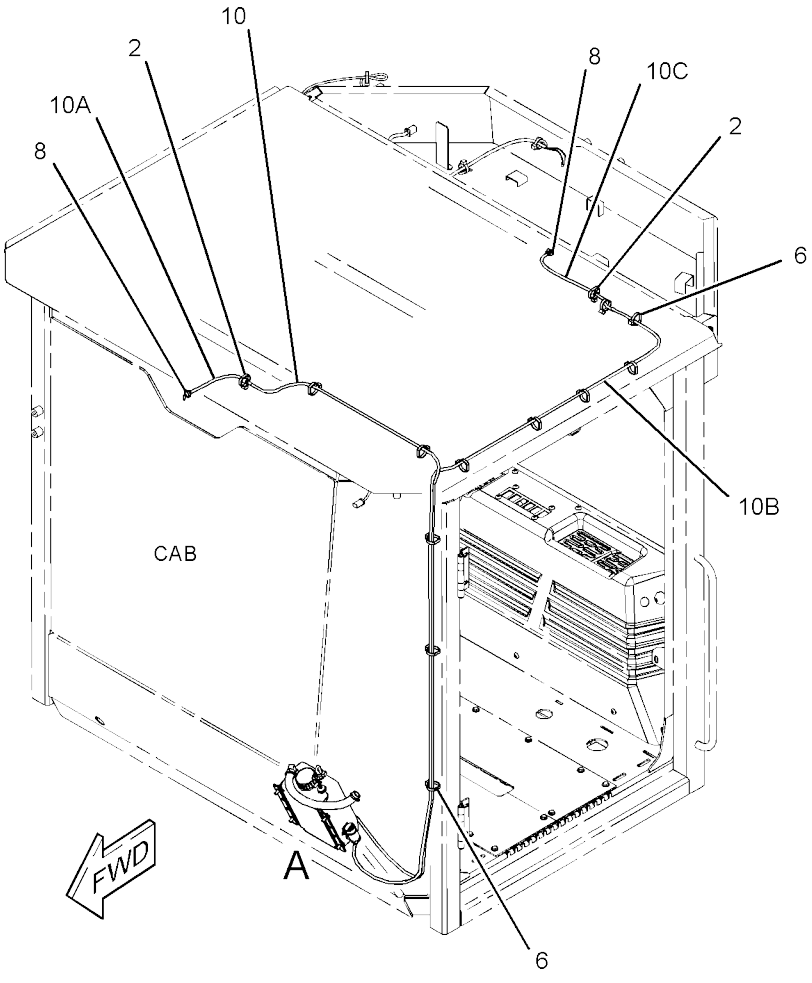

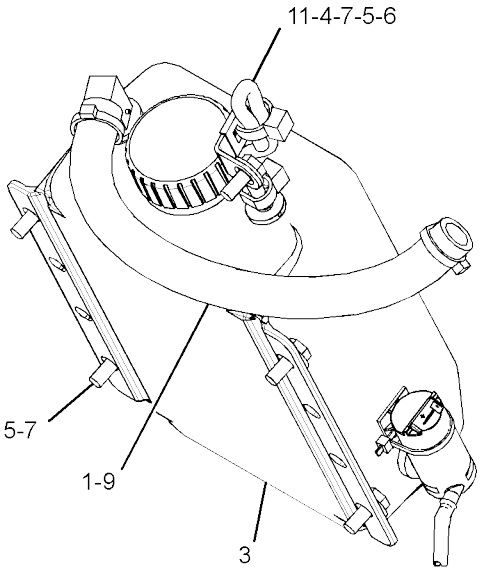

VIEW OF AREA A

GRAPHIC #1 <END> g03428440

394-6562 WASHER GP-WINDOW

S/N: G441-UP

PART OF 393-0166 CAB GP, 462-5781, 509-9415 CAB GP-ENCLOSED ROPS AN ATTACHMENT

SMCS-7306

i07406131

	REF SEE NOTE	QTY	GRAPHIC NO 1 2 3 4 5 6	(PRODUCT LEVEL)	REF PAGE	PART NAME PART NUMBER
	1	1		**3S-2093**	1	STRAP-CABLE
	2	1		**8T-5383**	2	VALVE AS-CHECK (WASHER, WIPER SYSTEM)
	3	1		**336-7700**	1	CLAMP
	4	1		**365-7607**	1	TANK GP-WINDOW WASHER
	5	1		**4P-7429**	1	CLIP (LADDER)
	6	1		**5P-4116**	5	WASHER-HARD (8.8X20.5X2-MM THK)
	7	1		**7K-1181**	15	STRAP-CABLE
M	8	1		**8T-4189**	5	BOLT (M8X1.25X20-MM)
	9	1		**8T-5400**	2	CONNECTOR
E	10	1		**153-2817**		HOSE (23-CM)
E	11	1		**295-1939**		HOSE (25-CM)
E	12	1		**144-0195**		HOSE (20-CM)
E	12A	1		**144-0195**		HOSE (26-CM)
E	12B	1		**144-0195**		HOSE (244-CM)
E	12C	1		**144-0195**		HOSE (308-CM)

E - ORDER BY THE CENTIMETER M - METRIC PART

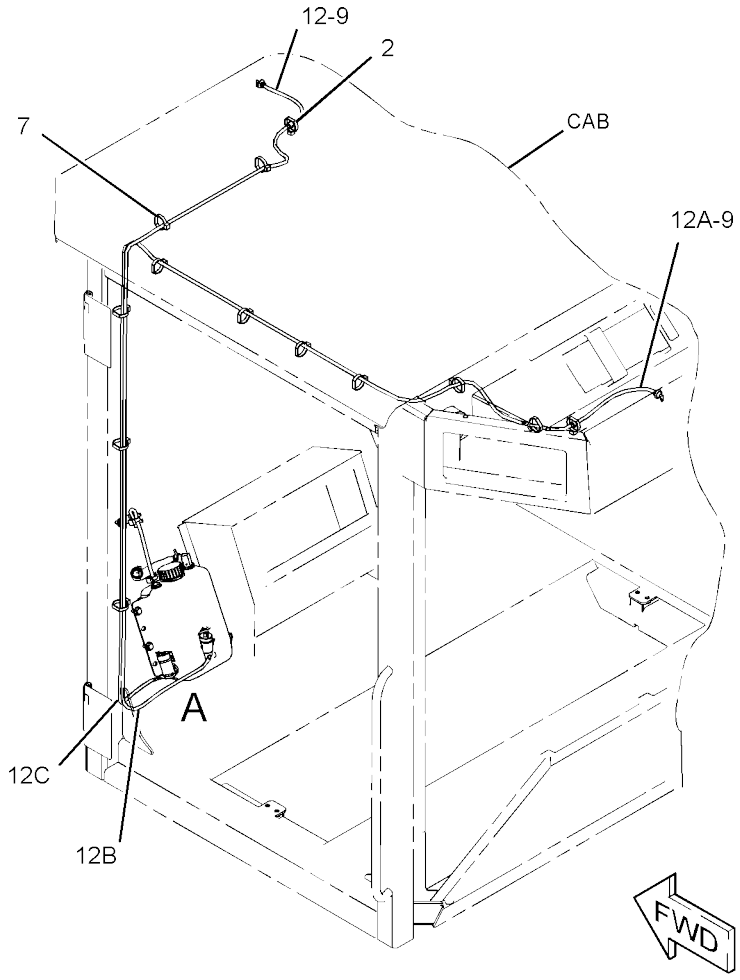

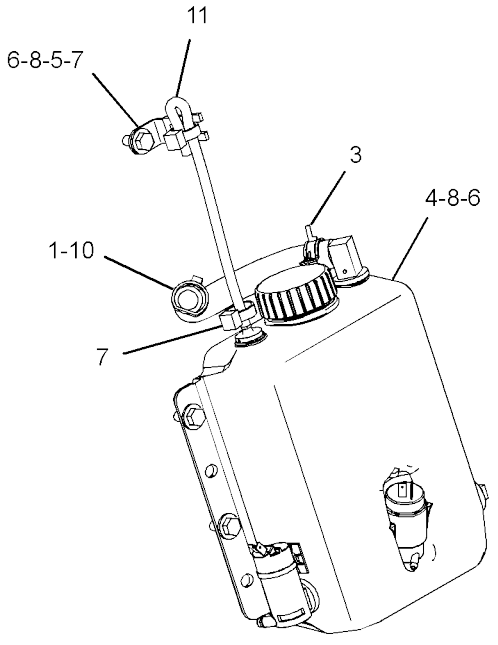

VIEW OF AREA A
(HOSES REMOVED FOR CLARITY)

GRAPHIC #1 <END> g03419802

362-2583 WINDOW GP-CAB

S/N: 5B41-UP
PART OF 462-5780, 509-9421 CAB
GP AN ATTACHMENT

SMCS-7310

i07418045

REF NO	SEE NOTE QTY	GRAPHIC 1 2 3 4 5 6	(PRODUCT LEVEL)	REF PAGE	PART NAME PART NUMBER
1	1	1	**362-2462**	1	GLASS
2	1	1	**362-2463**	1	GLASS
3	1	1	**362-2464**	1	GLASS
4	1	1	**362-2465**	1	GLASS
5	1	1	**362-2466**	1	GLASS
6	1	1	**362-2467**	1	GLASS

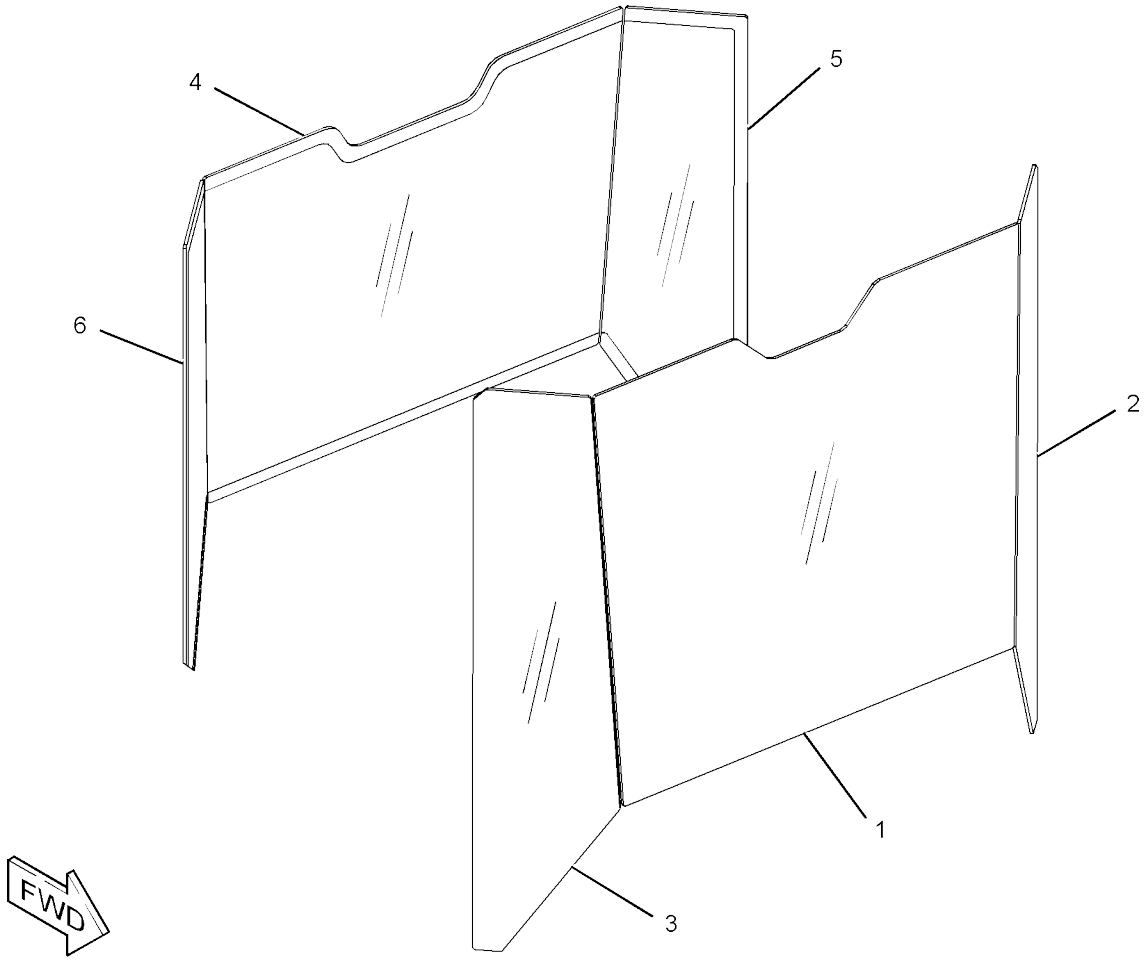

GRAPHIC #1 <END> g03032076

362-2603 WINDOW GP-CAB

S/N: G441-UP

PART OF 509-9414 CAB GP, 462-5781 CAB GP-ENCLOSED

ROPS AN ATTACHMENT

SMCS-7310

i07406159

REF NO	SEE NOTE QTY	GRAPHIC NO 1 2 3 4 5 6	(PRODUCT LEVEL)	REF PAGE	PART NAME PART NUMBER
1	1		**362-2463**	1	GLASS
2	1		**362-2464**	1	GLASS
3	1		**362-2466**	1	GLASS
4	1		**362-2467**	1	GLASS
5	1		**365-6018**	1	GLASS
6	1		**365-6011**	1	GLASS

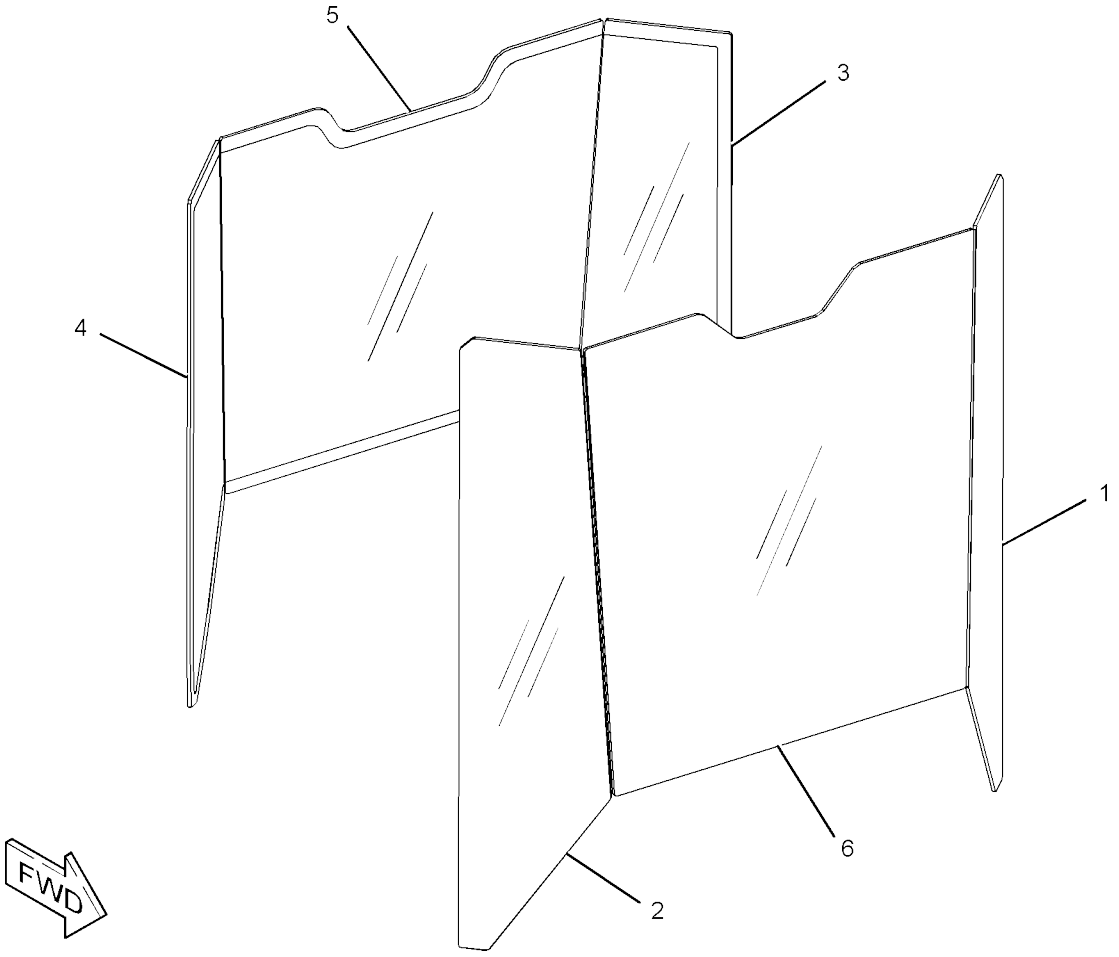

GRAPHIC #1 <END> g02970216

390-3208 WINDOW GP-CAB

S/N: 5B41-UP; G441-UP

PART OF 394-6556 DOOR GP-CAB

AN ATTACHMENT

SMCS-7310

i07406161

	REF SEE NOTE QTY	GRAPHIC NO 1 2 3 4 5 6	(PRODUCT LEVEL)	REF PAGE	PART NAME PART NUMBER
	1	1	**436-3727**	1	FRAME-WINDOW
	2	1	**436-3068**	2	KIT-SPRING
					(INCLUDES BUSHINGS, SCREW, BRACKET, SPRING & RIVET)
	3	1	**436-3726**	10	BRACKET
M	4	1	**3E-4302**	2	SCREW-FLAT HEAD (M4X0.7X10-MM)
	5	1	**099-0643**	2	WASHER (2-MM THK)
	6	1	**206-6941**	2	BOLT (M10X1.5X16-MM)
	7	1	**436-3069**	1	KIT-SEAL
					(INCLUDES GUIDES & SEALS)
	8	1	**436-3080**	1	KIT-GLASS
					(INCLUDES NUTS, HANDLE AS & GLASS)
	9	1	**436-3079**	1	KIT-GLASS
					(INCLUDES GUIDE AS- SEALING, GLASS & GUIDE CLAMPING)
	10	1	**436-3076**	1	KIT-GLASS
					(INCLUDES GUIDE AS-SEALING & GLASS)
	11	1	**436-3073**	1	KIT-GLASS
					(INCLUDES GUIDE AS-SEALING & GLASS)

M - METRIC PART

390-3208 **WINDOW GP-CAB** (contd.) **i07406161**

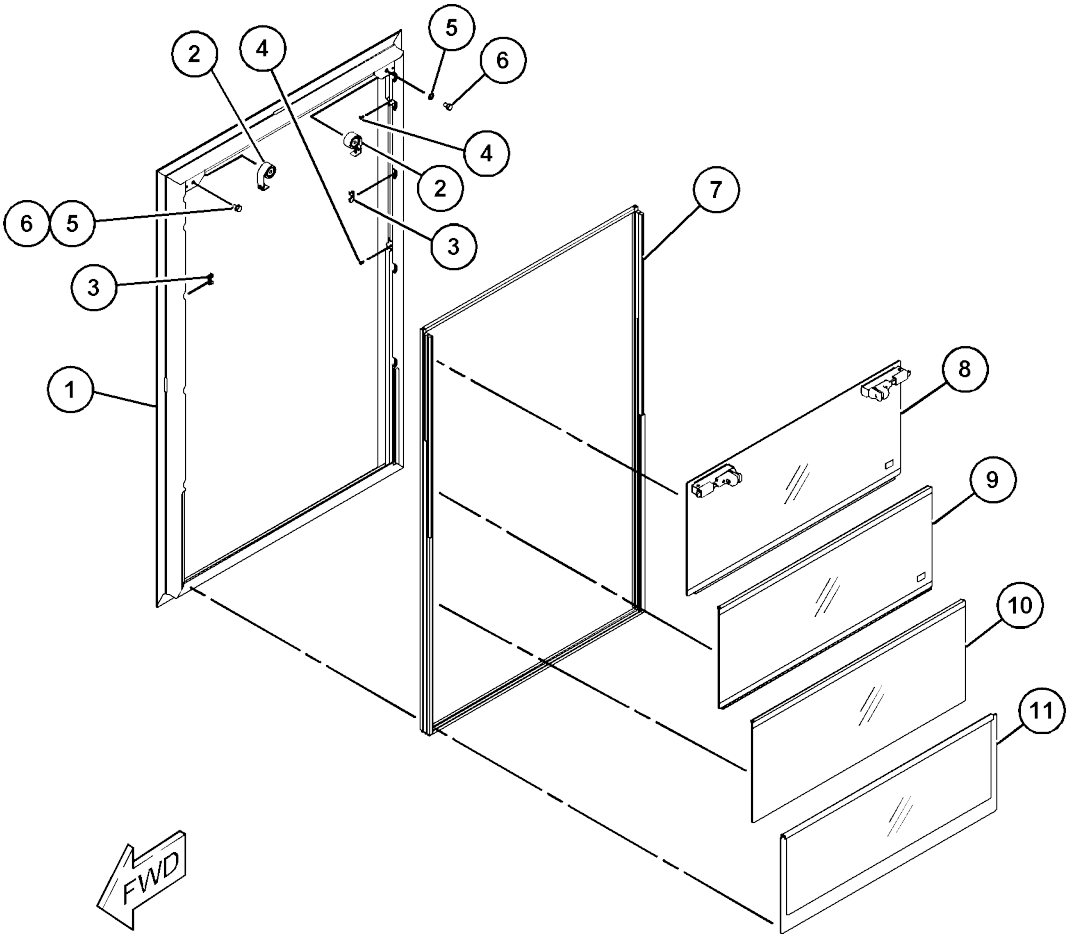

GRAPHIC #1 <END> g03601958

393-0150 WINDOW GP-CAB

S/N: 5B41-UP
PART OF 393-0167 CAB
GP AN ATTACHMENT

SMCS-7310

i07418017

REF SEE NOTE QTY	GRAPHIC NO 1 2 3 4 5 6	(PRODUCT LEVEL)	REF PAGE	PART NAME PART NUMBER
1	1	**394-5946**	1	GLASS
2	1	**398-3999**	1	GLASS
3	1	**398-4000**	1	GLASS
4	1	**398-4001**	1	GLASS
5	1	**398-4002**	1	GLASS
6	1	**398-4003**	1	GLASS

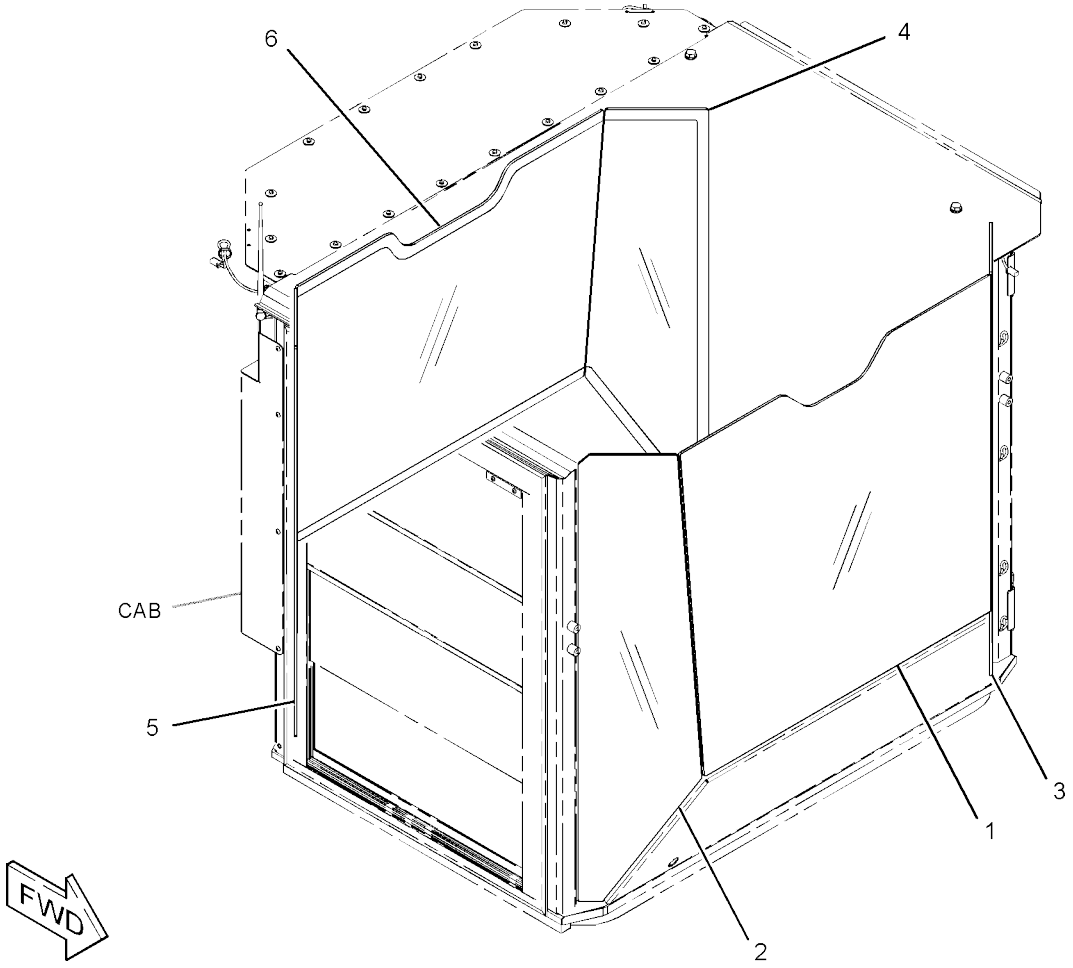

GRAPHIC #1 <END> g03341987

393-0151 WINDOW GP-CAB

S/N: G441-UP
PART OF 393-0166 CAB
GP AN ATTACHMENT

SMCS-7310

i07406130

REF SEE NOTE QTY	GRAPHIC NO 1 2 3 4 5 6	(PRODUCT LEVEL)	REF PAGE	PART NAME PART NUMBER
1	1	**394-5944**	1	GLASS
2	1	**394-5945**	1	GLASS
3	1	**398-3999**	1	GLASS
4	1	**398-4000**	1	GLASS
5	1	**398-4001**	1	GLASS
6	1	**398-4002**	1	GLASS

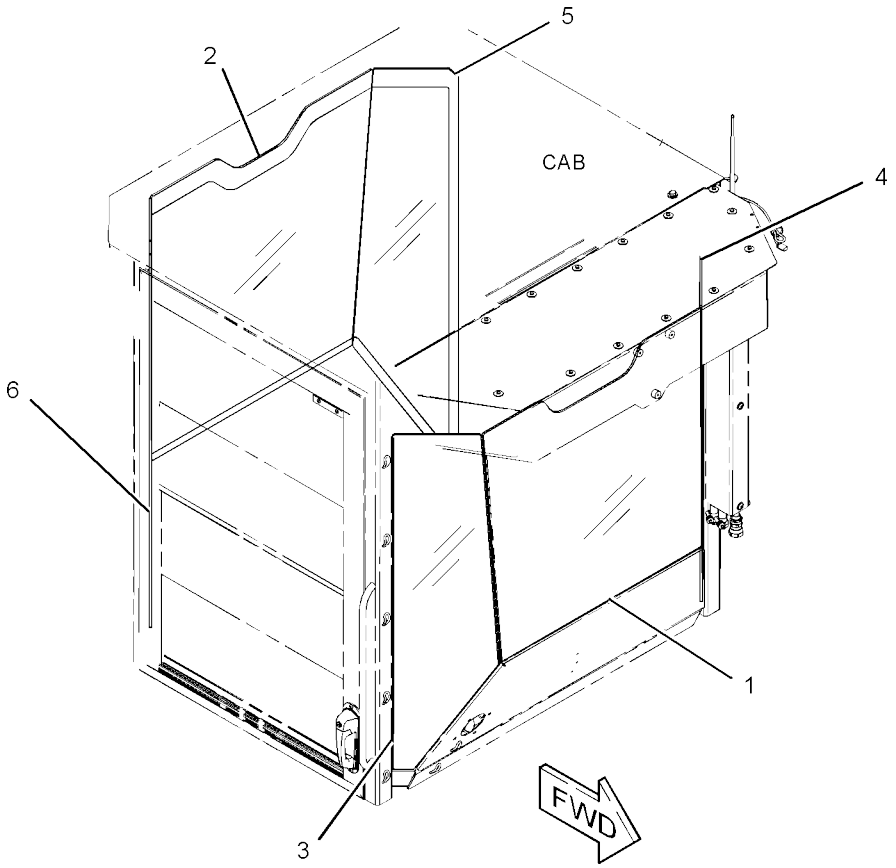

GRAPHIC #1 <END> g03345179

OPERATOR STATION

420-8302 WINDOW GP-CAB

S/N: 5B41-UP; G441-UP

PART OF 395-0039 DOOR GP-CAB

AN ATTACHMENT

SMCS-7310

i07406135

	REF SEE NOTE QTY	GRAPHIC NO 1 2 3 4 5 6	(PRODUCT LEVEL)	REF PAGE	PART NAME PART NUMBER
	1	1	**436-3725**	1	FRAME-WINDOW
	2	1	**436-3068**	2	KIT-SPRING
					(EACH INCLUDES BUSHING THREADED, SCREW, BRACKET, SPRING EXTENSION, RIVET, BUSHING SLEEVE)
	3	1	**436-3726**	10	BRACKET
M	4	1	**3E-4302**	2	SCREW-FLAT HEAD (M4X0.7X10-MM)
	5	1	**099-0643**	2	WASHER (2-MM THK)
M	6	1	**8T-4191**	2	BOLT (M10X1.5X16-MM)
	7	1	**436-3724**	1	KIT-SEAL
					(INCLUDES GUIDES, GUIDE RAIL & SEALS)
	8	1	**436-3717**	1	KIT-GLASS
					(INCLUDES NUT INSERT HANDLE AS & GLASS)
	9	1	**436-3718**	1	KIT-GLASS
					(INCLUDES GUIDE AS SEALING, GLASS & GUIDE CLAMPING)
	10	1	**436-3719**	1	KIT-GLASS
	11	1	**436-3720**	1	KIT-GLASS
					(EACH KIT GLASS INCLUDES GUIDE & GLASS)

M - METRIC PART

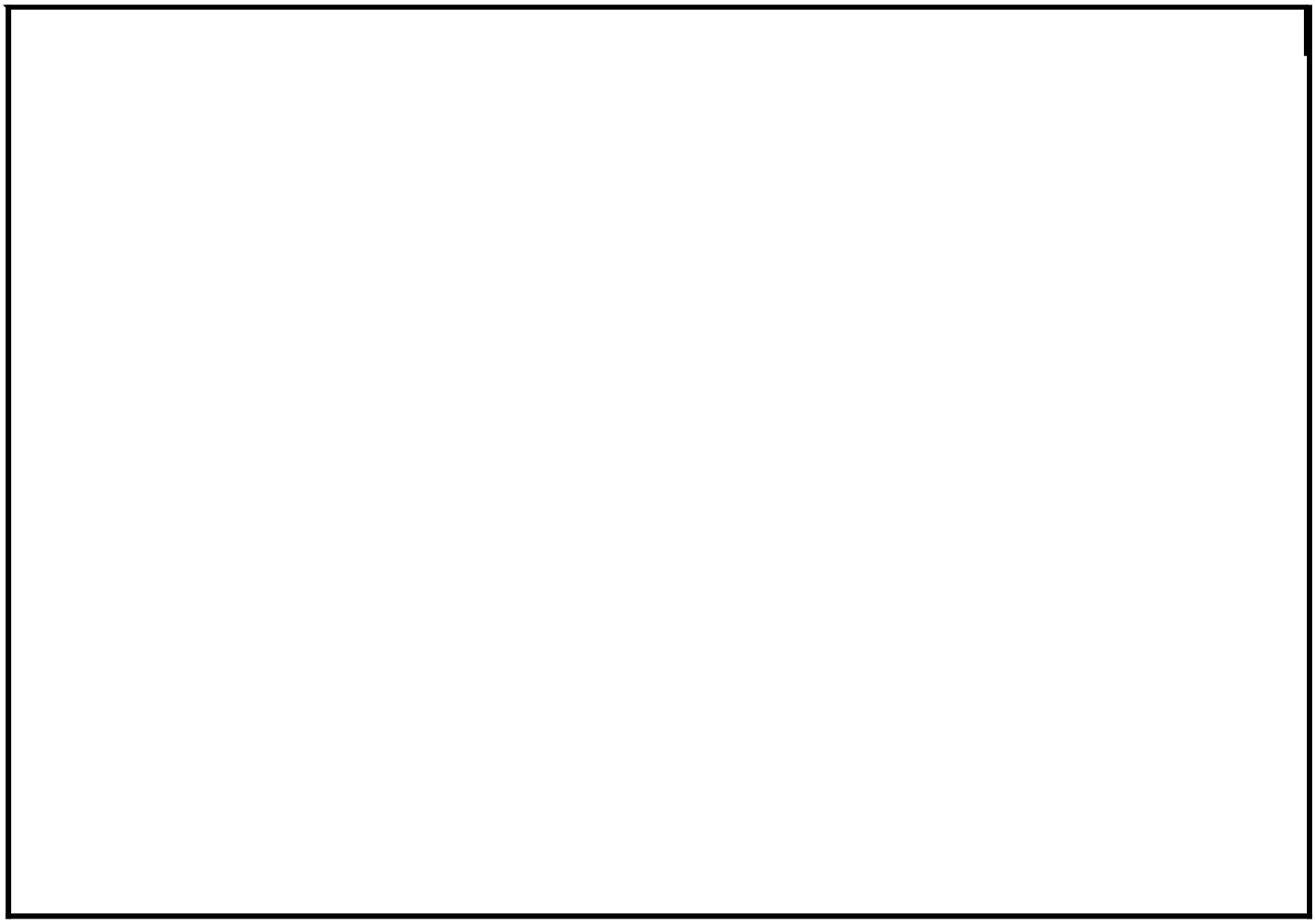

590 OPERATOR STATION

M0094033-03

420-8302 **WINDOW GP-CAB** (contd.) **i07406135**

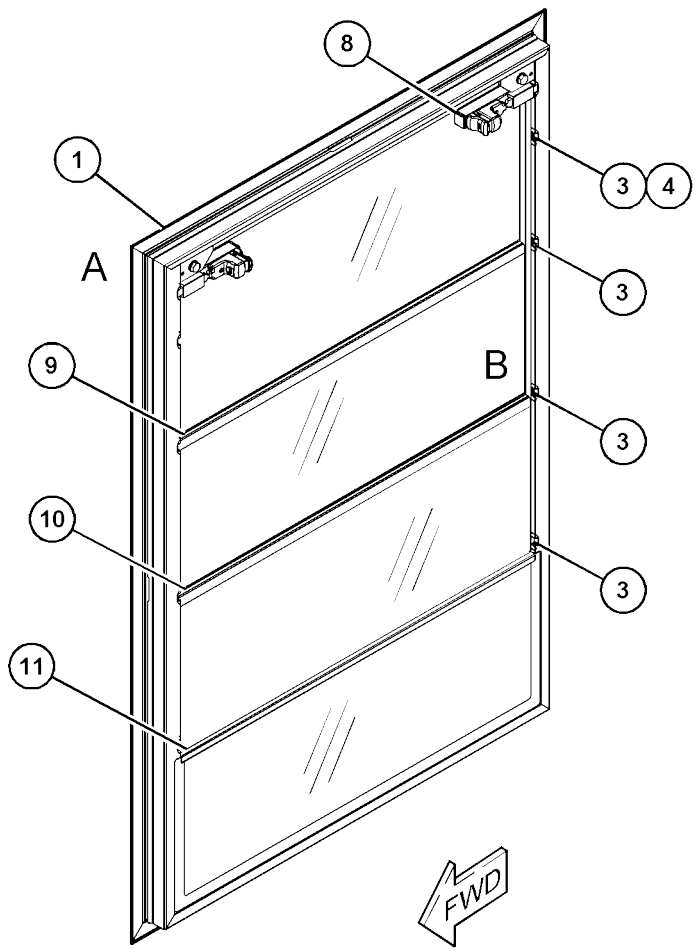

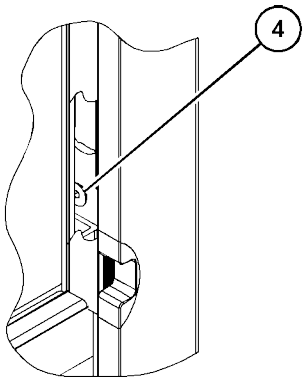

VIEW OF AREA B

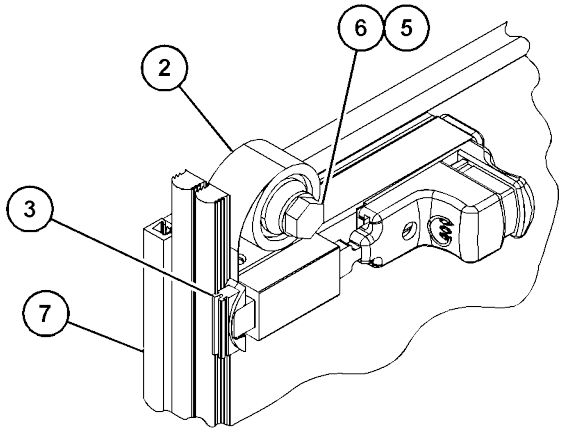

VIEW OF AREA A
(PARTS REMOVED FOR CLARITY)

GRAPHIC #1 <END> g03431675

362-2517 WIPER GP-WINDOW

S/N: G441-UP

PART OF 393-0166 CAB GP, 462-5781, 509-9415 CAB GP-ENCLOSED

ROPS AN ATTACHMENT

SMCS-7305

i07406129

REF SEE NOTE QTY	GRAPHIC NO 1 2 3 4 5 6	(PRODUCT LEVEL)	REF PAGE	PART NAME PART NUMBER
1	1	**362-2620**	1	ARM-WINDOW WIPER
2	1	**362-2637**	1	BLADE AS-WIPER (500-MM) (REAR WINDOW)
3	1	**362-2710**	1	ARM-WINDOW WIPER
4	1	**6V-7419**	1	BLADE AS-WIPER (700-MM) (FRONT WINDOW)
5	1	**365-6089**	1	MOTOR-WIPER (FRONT WINDOW)
6	1	**365-6092**	1	MOTOR-WIPER (REAR WINDOW)

362-2517 **WIPER GP-WINDOW** (contd.) **i07406129**

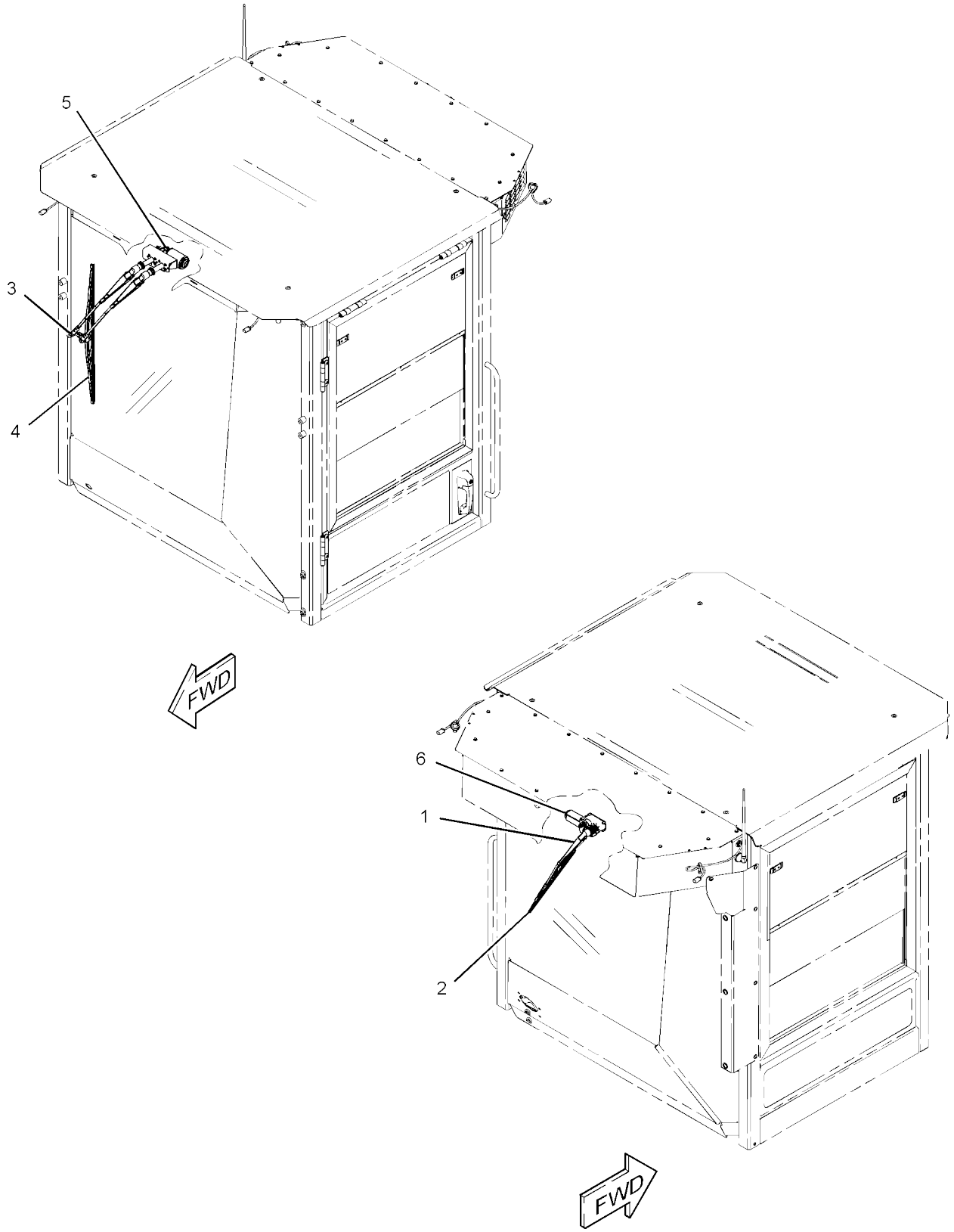

GRAPHIC #1 <END> g03457297

362-2575 WIPER GP-WINDOW

S/N: 5B41-UP
PART OF 393-0167, 462-5780, 509-9422 CAB
GP AN ATTACHMENT

SMCS-7305

i07418016

REF SEE NOTE QTY	GRAPHIC NO 1 2 3 4 5 6	(PRODUCT LEVEL)	REF PAGE	PART NAME PART NUMBER
1	1	**362-2620**	1	ARM-WINDOW WIPER (REAR)
2	1	**362-2637**	1	BLADE AS-WIPER (500-MM) (REAR WINDOW)
3	1	**362-2652**	1	MOTOR-WIPER (FRONT)
4	1	**362-2710**	1	ARM-WINDOW WIPER (FRONT)
5	1	**6V-7419**	1	BLADE AS-WIPER (700-MM) (FRONT WINDOW)
6	1	**362-2780**	1	MOTOR-WIPER (REAR)

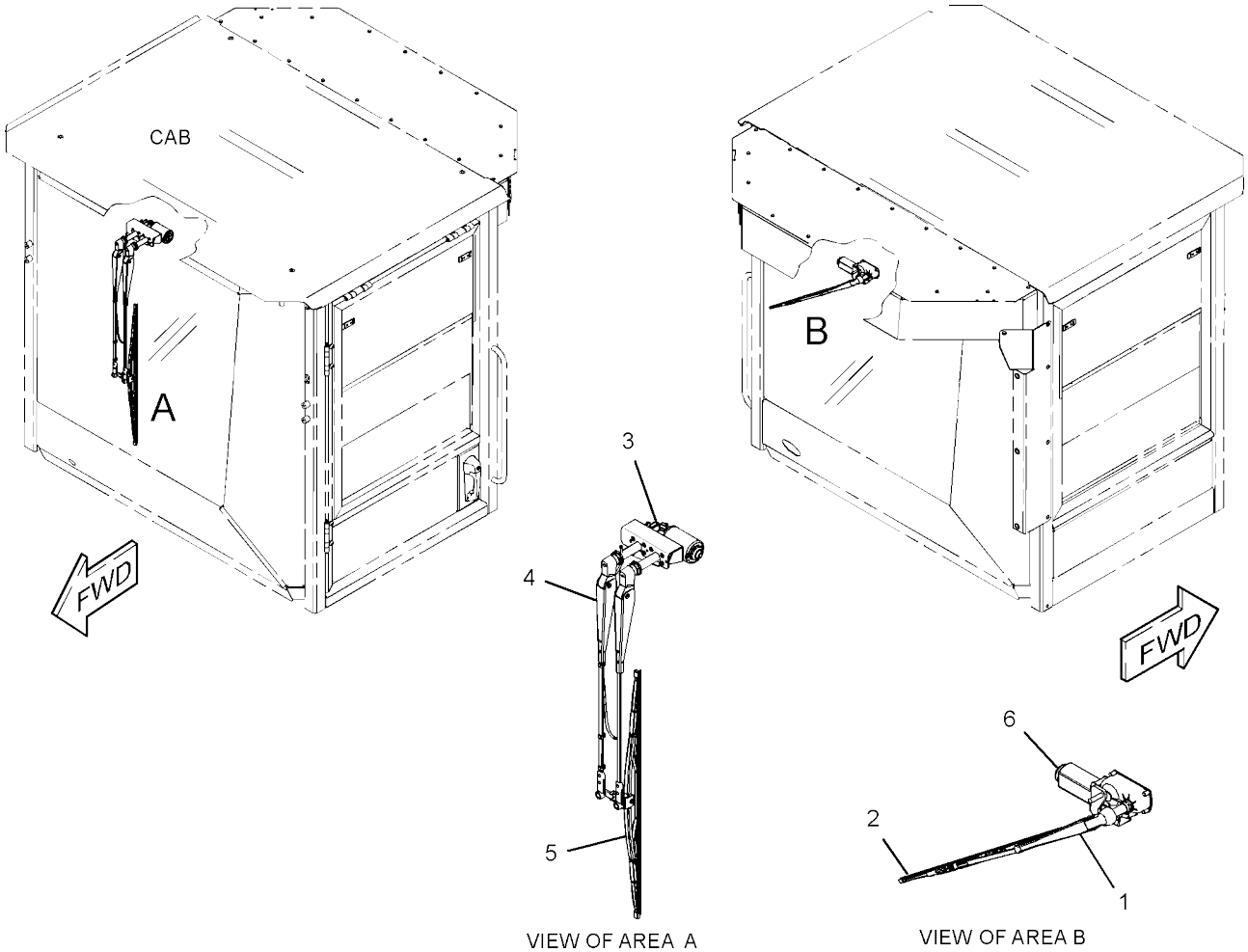

VIEW OF AREA A

VIEW OF AREA B

GRAPHIC #1

<END>

g03453248

329-8098 FILM GP

S/N: 2W21-UP
PART OF 435-7493, 435-7494 ENGINE AR-
PRIMARY AN ATTACHMENT

SMCS-7405, 7557

i07420893

REF SEE NOTE QTY	GRAPHIC NO 1 2 3 4 5 6	(PRODUCT LEVEL)	REF PAGE	PART NAME PART NUMBER
1	1	**451-7225**	1	FILM-IDENTIFICATION (CAT)

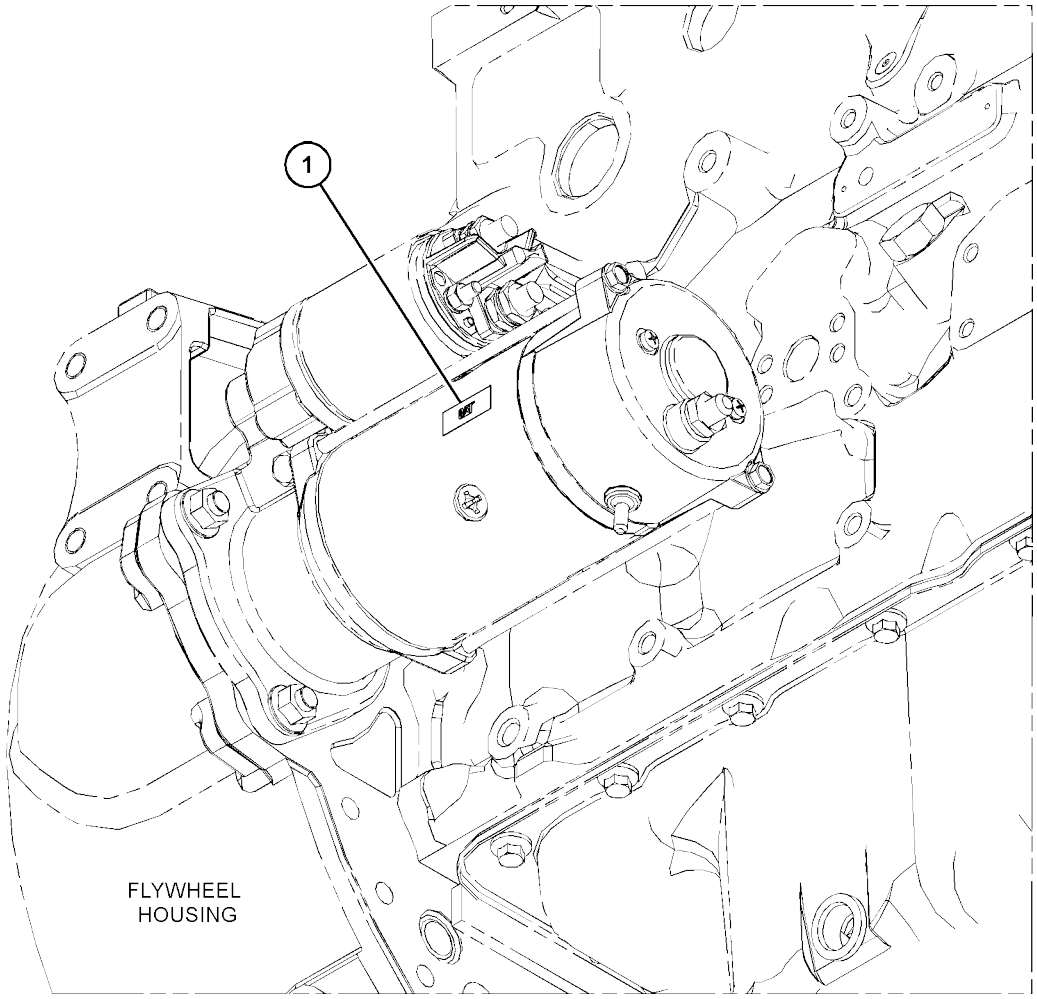

GRAPHIC #1 <END> g03667489

351-3377 FILM GP

S/N: 5B41-UP
PART OF 341-8768, 496-0536 VIBRATORY
AR AN ATTACHMENT

SMCS-7405, 7557

i07417976

REF SEE NOTE QTY	GRAPHIC NO 1 2 3 4 5 6	(PRODUCT LEVEL)	REF PAGE	PART NAME PART NUMBER
1	1	**525-5797**	2	FILM-IDENTIFICATION (VERSA VIBE)

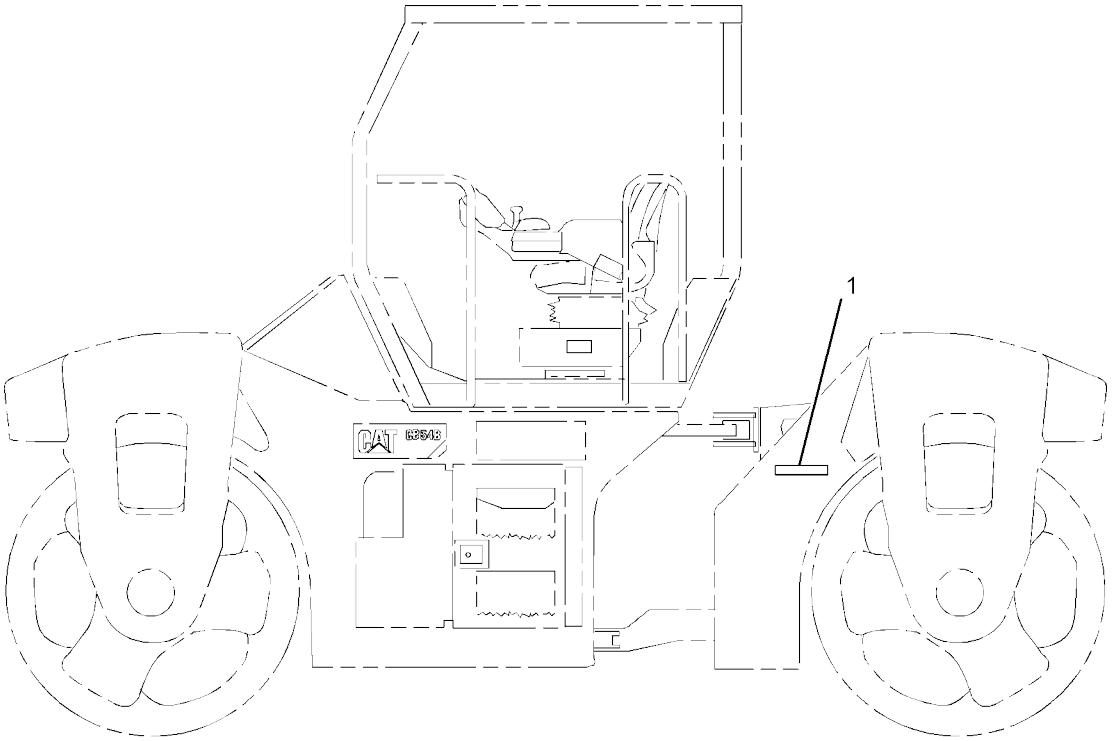

LEFT SIDE VIEW

GRAPHIC #1 <END> g06202582

416-8716 FILM GP

S/N: 2W21-UP
PART OF 435-7493, 435-7494 ENGINE AR-
PRIMARY AN ATTACHMENT

SMCS-7405, 7557

i06281170

REF SEE NOTE QTY	GRAPHIC NO 1 2 3 4 5 6	(PRODUCT LEVEL)	REF PAGE	PART NAME PART NUMBER
1	1	**451-7225**	1	FILM-IDENTIFICATION (CAT)

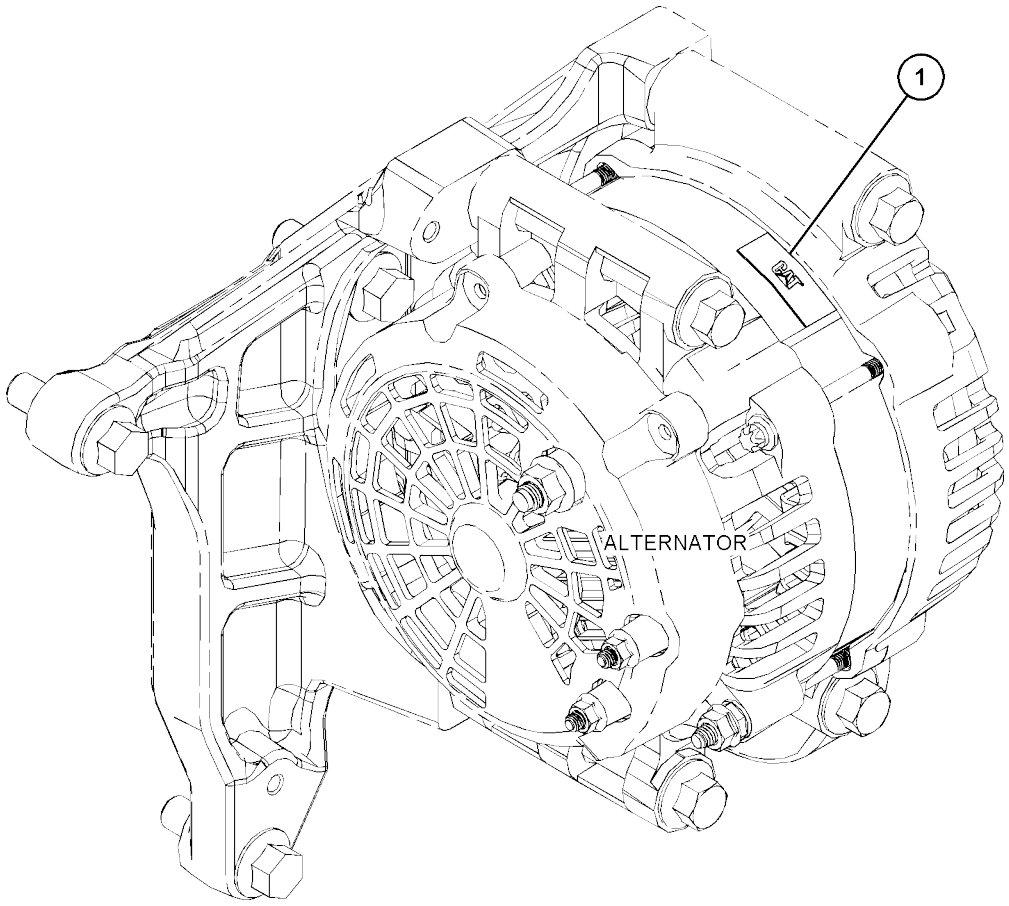

GRAPHIC #1 <END> g03818177

SERVICE EQUIPMENT AND SUPPLIES

417-4284 FILM GP

S/N: 2W21-
UP
EMISSIONS
PART OF 435-7493, 435-7494 ENGINE AR-
PRIMARY AN ATTACHMENT

SMCS-7405, 7557

i06801319

REF SEE NOTE QTY	GRAPHIC NO 1 2 3 4 5 6	(PRODUCT LEVEL)	REF PAGE	PART NAME PART NUMBER
1	1	**326-9053**	1	FILM-WARNING (DO NOT SPRAY, READ OMM)
2	1	**346-8219**	2	FILM-WARNING (UNIVERSAL WARNING)
3	1	**355-3486**	1	STRIP-ADHESIVE
4	1	**450-9772**	1	PLATE-IDENTIFICATION (CAT)

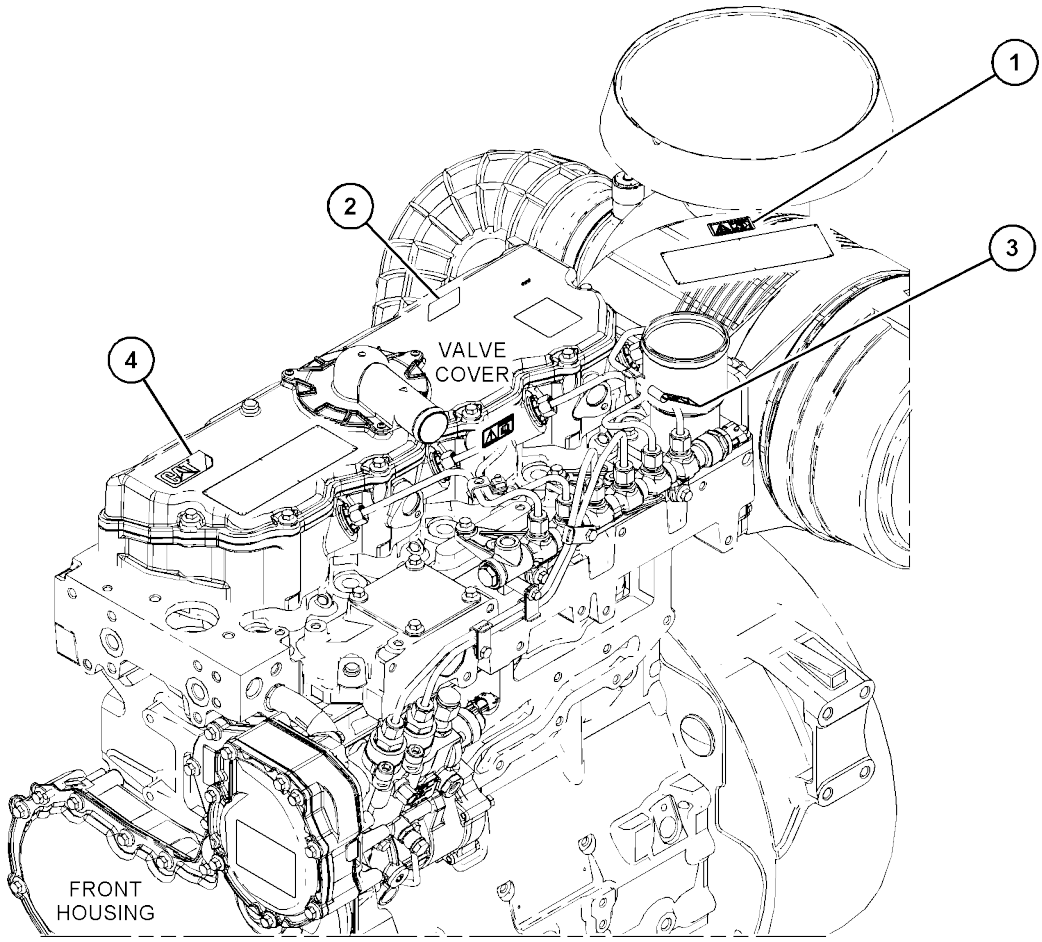

GRAPHIC #1 <END> g06117384

508-4319 FILM GP

S/N: G441-UP
PART OF 451-3120 CHASSIS AR

SMCS-7405, 7557

i07398866

REF SEE NOTE QTY	GRAPHIC NO 1 2 3 4 5 6	(PRODUCT LEVEL)	REF PAGE	PART NAME PART NUMBER
1	1	**506-9575**	1	FILM-IDENTIFICATION (CAT CB7, RH)
2	1	**506-9574**	1	FILM-IDENTIFICATION (CAT CB7, LH)
3	1	**365-8085**	2	FILM-IDENTIFICATION (CAT)

508-4319 **FILM GP** (contd.) **i07398866**

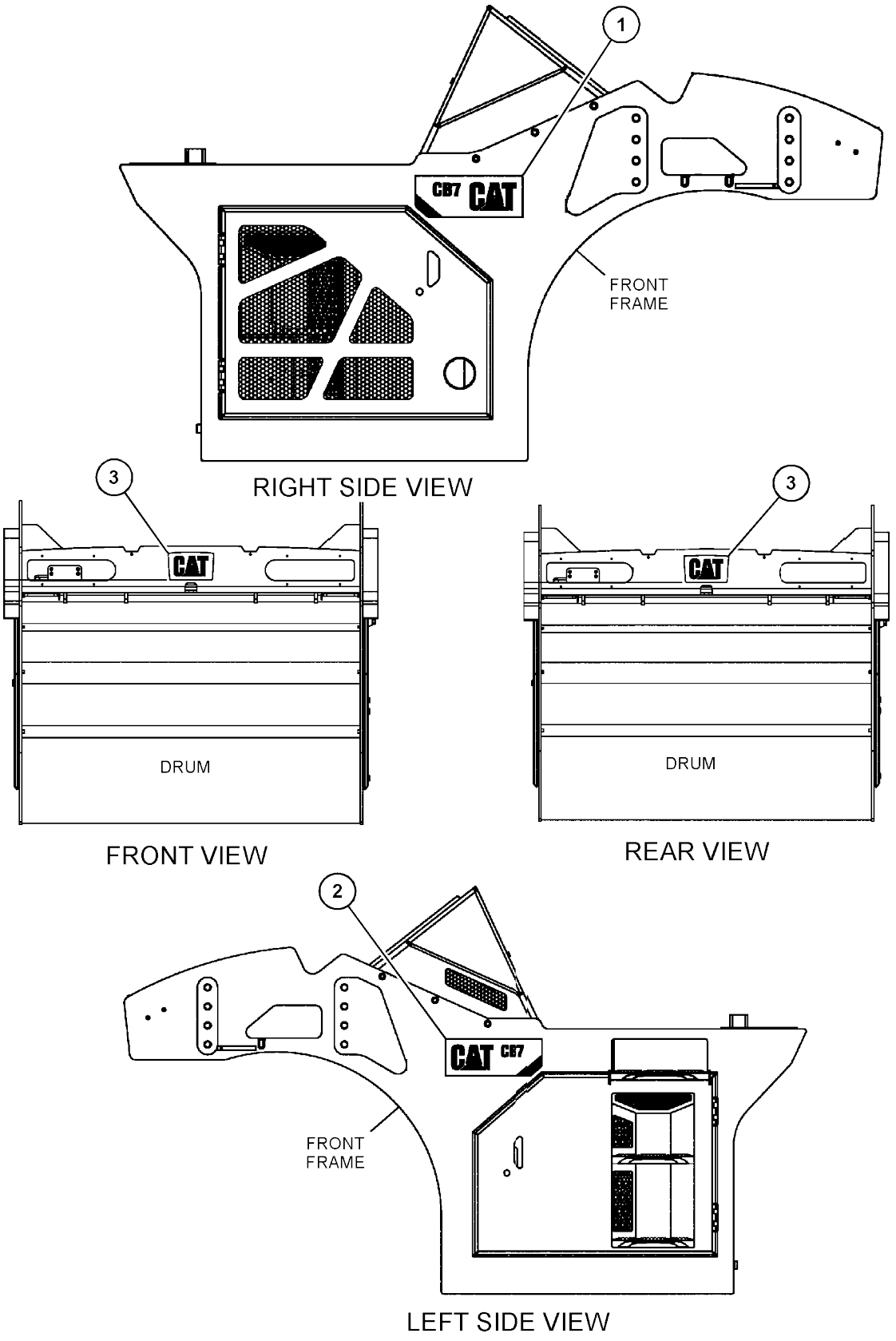

GRAPHIC #1 <END> g06147465

508-4321 FILM GP

S/N: 5B41-UP
PART OF 451-3220 CHASSIS AR

SMCS-7405, 7557

i07418065

REF SEE NOTE QTY	GRAPHIC NO 1 2 3 4 5 6	(PRODUCT LEVEL)	REF PAGE	PART NAME PART NUMBER
1	1	**506-9579**	1	FILM-IDENTIFICATION (CAT CB10, RH)
2	1	**506-9578**	1	FILM-IDENTIFICATION (CAT CB10, LH)
3	1	**365-8085**	2	FILM-IDENTIFICATION (CAT)

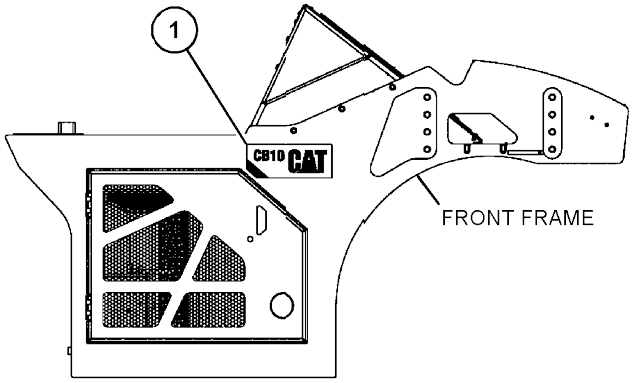

RIGHT SIDE VIEW

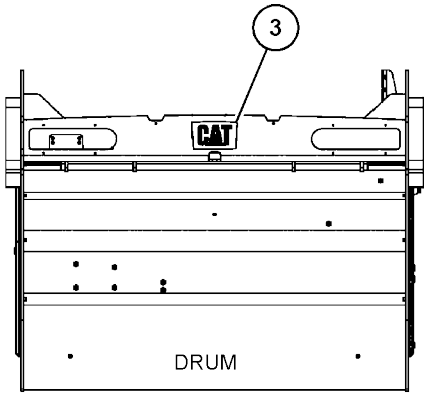

FRONT VIEW

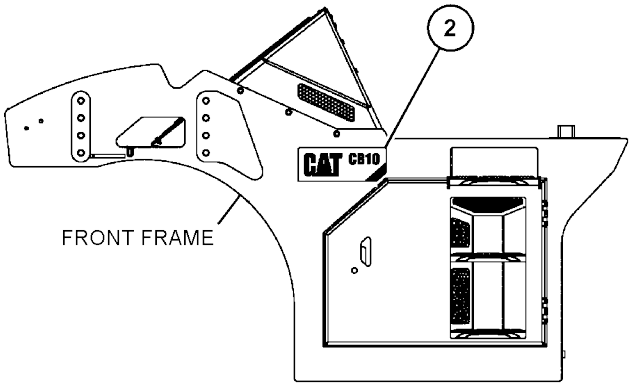

LEFT SIDE VIEW

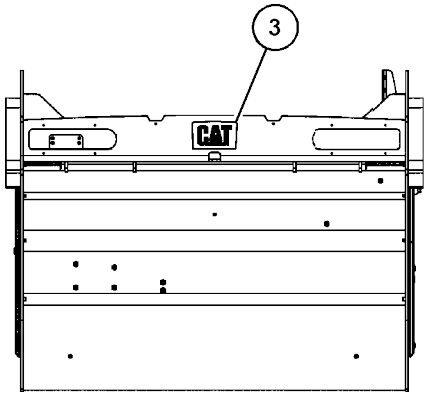

REAR VIEW

GRAPHIC #1 <END> g06147781

529-8585 FILM GP

S/N: 5B41-UP; G441-UP

PART OF 496-0536, 496-5276, 504-6797, 504-6803, 504-6804, 504-6807, 504-6818, 537-5498, 542-0258 VIBRATORY

AR AN ATTACHMENT

SMCS-7405, 7557

i07416434

REF SEE NOTE QTY	GRAPHIC NO 1 2 3 4 5 6	(PRODUCT LEVEL)	REF PAGE	PART NAME PART NUMBER
1	1	**525-2060**	2	FILM-IDENTIFICATION (OSCILLATION)

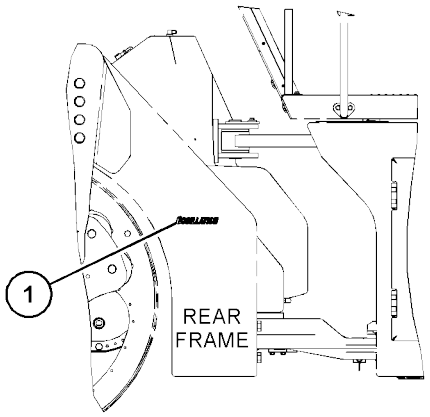

RIGHT SIDE VIEW
(CB MODEL)

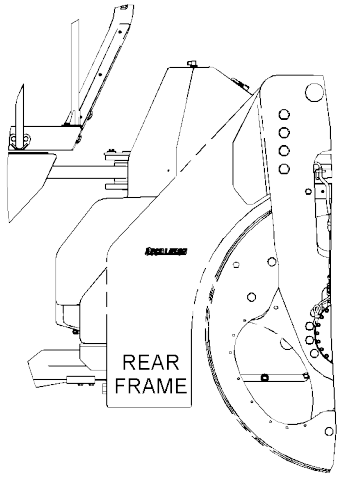

LEFT SIDE VIEW
(CB MODEL)

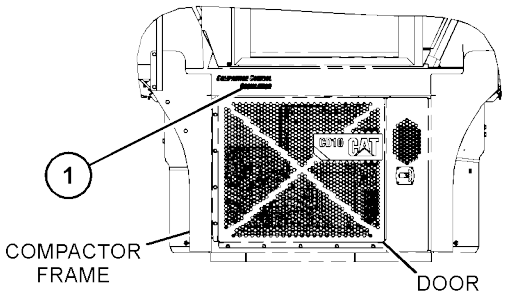

RIGHT SIDE VIEW
(CD MODEL)

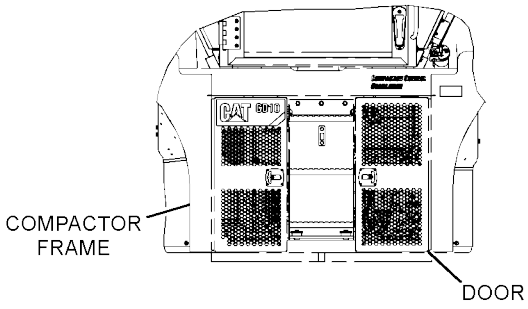

LEFT SIDE VIEW
(CD MODEL)

GRAPHIC #1 <END> g06226601

554-1057 FILM GP

S/N: 5B41-UP; G441-
UP BRAZIL
AN ATTACHMENT

SMCS-7405, 7557

i07621975

REF SEE NOTE QTY	GRAPHIC NO 1 2 3 4 5 6	(PRODUCT LEVEL)	REF PAGE	PART NAME PART NUMBER
1	1	**202-9824**	1	FILM-INFORMATION (BRAZIL)



GRAPHIC #1 <END> g06419403

451-3121 PLATE & FILM GP

S/N: G441-UP
PART OF 451-3120 CHASSIS AR

SMCS-7405, 7557, 7563

i07398858

REF SEE NOTE QTY	GRAPHIC NO 1 2 3 4 5 6	(PRODUCT LEVEL)	REF PAGE	PART NAME PART NUMBER
1	1	**246-2641**	1	PADLOCK GP
	1	**5P-8500**	1	KEY
2	1	**239-6986**	1	PLATE-SERIAL NUMBER (MACHINE)
3	1	**419-5721**	1	FILM-IDENTIFICATION (FUSE, RELAY PANEL)

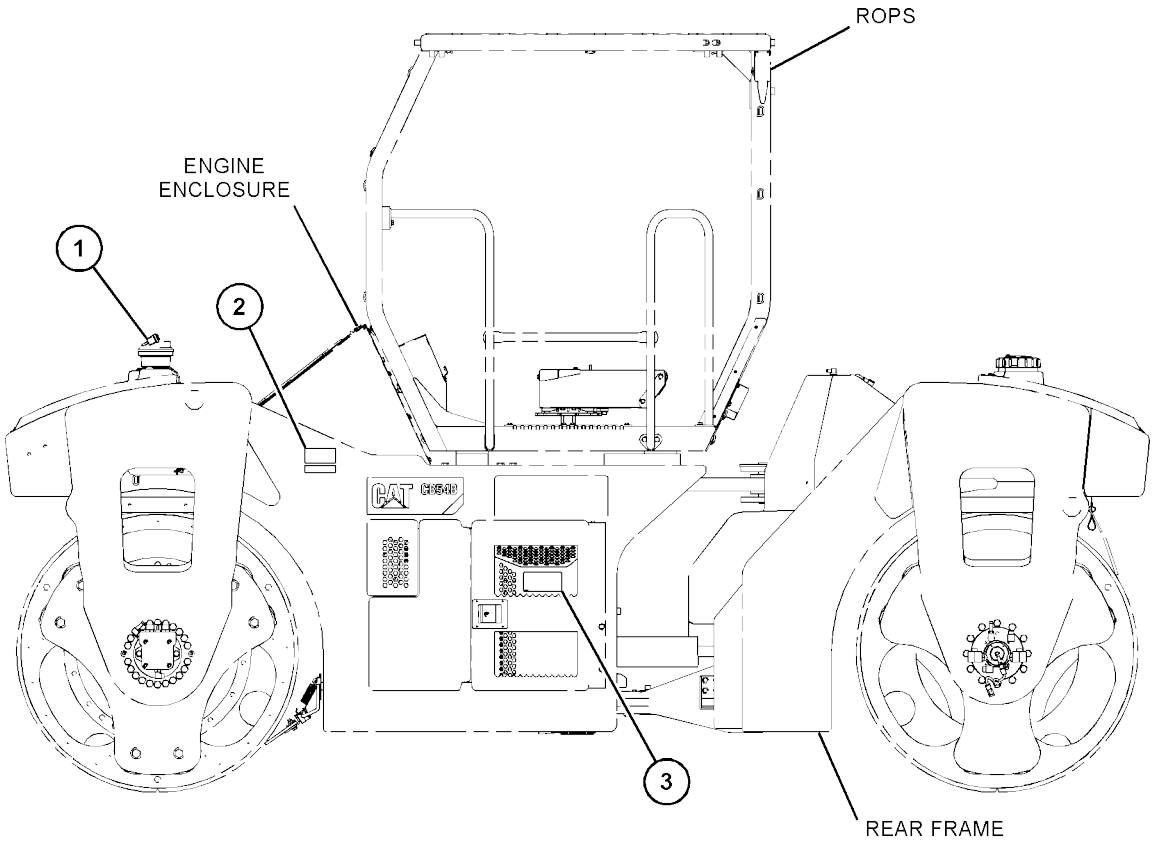

LEFT SIDE VIEW

GRAPHIC #1 <END> g06036076

451-3221 PLATE & FILM GP

S/N: 5B41-UP
PART OF 451-3220 CHASSIS AR

SMCS-7405, 7557, 7563

i07418067

REF SEE NOTE QTY	GRAPHIC NO 1 2 3 4 5 6 (PRODUCT LEVEL)	REF PAGE	PART NAME PART NUMBER
1	1 **246-2641**	1	PADLOCK GP
	1 **5P-8500**	1	KEY
2	1 **239-6986**	1	PLATE-SERIAL NUMBER (MACHINE)
3	1 **419-5721**	1	FILM-IDENTIFICATION (FUSE, RELAY PANEL)

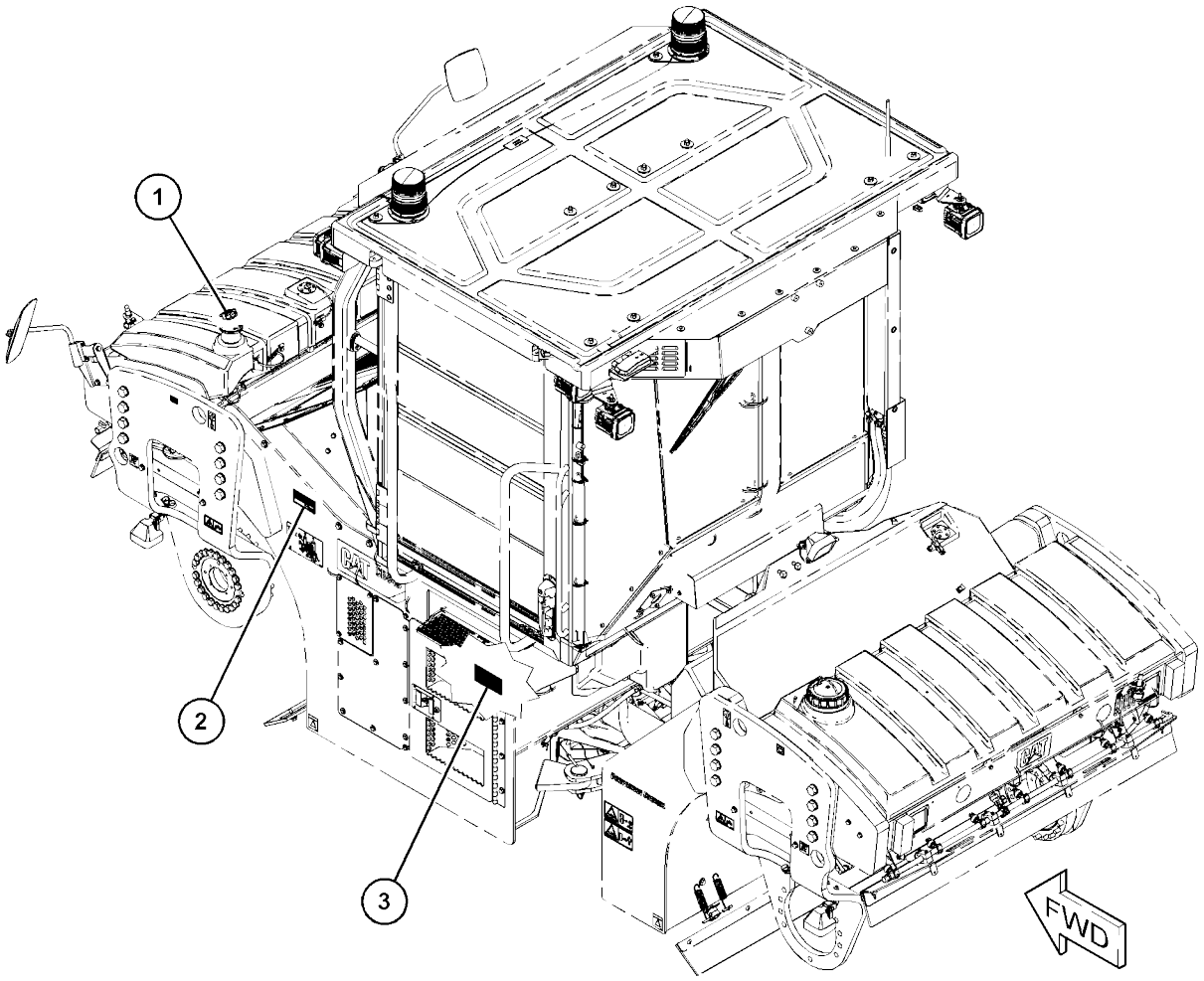

GRAPHIC #1 <END> g06079550

451-3292 PLATE & FILM GP

S/N: 5B41-UP
PART OF 451-3290 OPERATOR
AR AN ATTACHMENT

SMCS-7405, 7557, 7563

i07748067

	REF SEE NOTE QTY	GRAPHIC NO 1 2 3 4 5 6	(PRODUCT LEVEL)	REF PAGE	PART NAME PART NUMBER
	1	1	**205-4933**	1	FILM-IDENTIFICATION (SECONDARY EXIT)
	2	1	**219-0305**	1	FILM-WARNING (NO WELD, NO DRILL, READ OMM)
	3	1	**510-8278**	1	FILM-IDENTIFICATION (ROPS,FOPS, READ OMM)
	4	1	**451-3193**	1	PLATE AS
M		1	**6V-9632**	6	NUT-WELD (M6X1-THD)
	5	1	**5P-4116**	4	WASHER-HARD (8.8X20.5X2-MM THK)
M	6	1	**8T-4200**	4	BOLT (M8X1.25X16-MM)
	7	1	**132-5789**	1	CLIP (LADDER)
M	8	1	**5C-9553**	6	BOLT (M6X1X16-MM)
	9	1	**5P-4115**	6	WASHER-HARD (7.2X19X2-MM THK)
	10	1	**277-1873**	4	CLIP (LADDER)
	11	1	**352-3964**	1	CLIP (LADDER)

M - METRIC PART

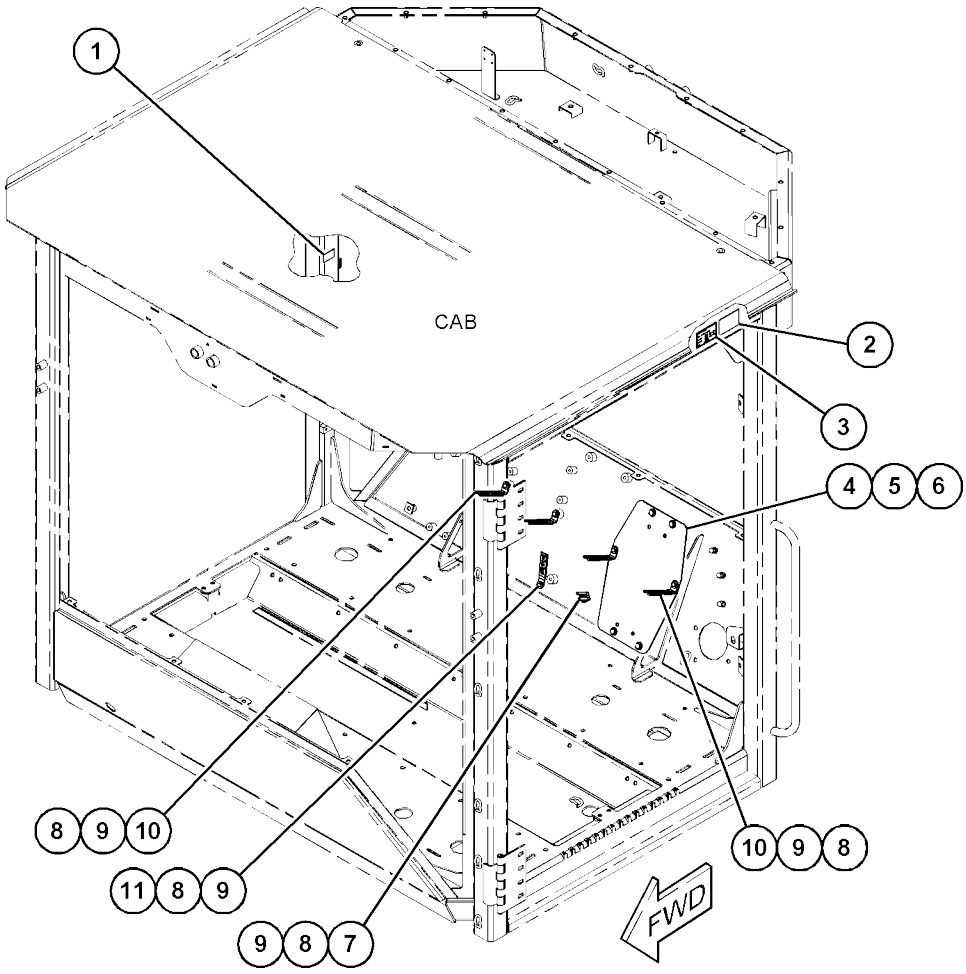

GRAPHIC #1 <END> g06420844

518-6238 PLATE & FILM GP

S/N: 5B41-UP; G441-

UP AN ATTACHMENT

SMCS-7405, 7557, 7563

i07416519

REF SEE NOTE	QTY	GRAPHIC NO 1 2 3 4 5 6	(PRODUCT LEVEL)	REF PAGE	PART NAME PART NUMBER
	1	2	**1P-2807**	4	FILM-IDENTIFICATION (LIFT EYE LOCATION)
	2	2	**7X-7644**	4	FILM-IDENTIFICATION (TIE-DOWN)
	3	1	**134-7258**	1	FILM-INFORMATION (EXTENDED LIFE COOLANT)
	4	2	**159-7297**	1	FILM-IDENTIFICATION (WATER FOR WATER SPRAY)
	5	1	**169-2876**	1	FILM-IDENTIFICATION (POWER RECEPTACLE, 12- VOLT)
	6	2	**214-1737**	4	FILM-INFORMATION (JACKING POINT)
	7	1	**221-8045**	1	FILM-WARNING (SEAT BELT, INTERNATIONAL)
	8	1	**224-0554**	1	FILM-WARNING (UNIVERSAL, READ OMM)
	9	1	**224-8946**	1	FILM-WARNING (NO ETHER SPRAY/AIR INTK, INTL)
	10	1	**224-9855**	1	FILM-INSTRUCTION (START AID, READ OMM)
	11	1	**225-0312**	1	FILM-WARNING (JUMP START, READ OMM, INTL)
	12	1	**225-4257**	1	FILM-WARNING (HOT FLUID UNDER PRESS)
	13	2	**226-1240**	2	FILM-WARNING (CRUSH HAZARD, STAY BACK, INTL)
	14	2	**226-1274**	2	FILM-WARNING (CRUSH HAZARD, READ OMM, INTL)
B	15	2	**230-1341**	1	FILM-WARNING (PRODUCT LINK RADIO, INTL)
	17	2	**247-3812**	4	FILM-WARNING (ARM CRUSHING HAZARD)
	18	2	**252-6646**	2	REFLECTOR-RED
B	19	1	**307-0047**	1	FILM-INFORMATION (PRODUCT LINK, READ OMM)
	20	1	**308-6985**	1	FILM-IDENTIFICATION (CIRCUIT PANEL)
	21	1	**334-6758**	1	FILM-WARNING (COLD START, READ OMM)
	22	2	**367-0844**	1	FILM-INSTRUCTION (FUEL, READ OMM)
	23	2	**376-8696**	1	FILM-INSTRUCTION (SEAT ADJUSTMENT)
	24	1	**395-1016**	1	PLATE-FILM
M	26	1	**344-5673**	5	NUT (M6X1-THD)
	27	1	**5P-4115**	5	WASHER-HARD (7.2X19X2-MM THK)
M	28	1	**9X-2044**	5	SCREW-TRUSS HEAD (M6X1X16-MM)

B - USE AS REQUIRED M - METRIC PART

518-6238 **PLATE & FILM GP** (contd.) **i07416519**

REFER TO ALL ILLUSTRATIONS OF
THIS GROUP FOR AUXILIARY VIEWS

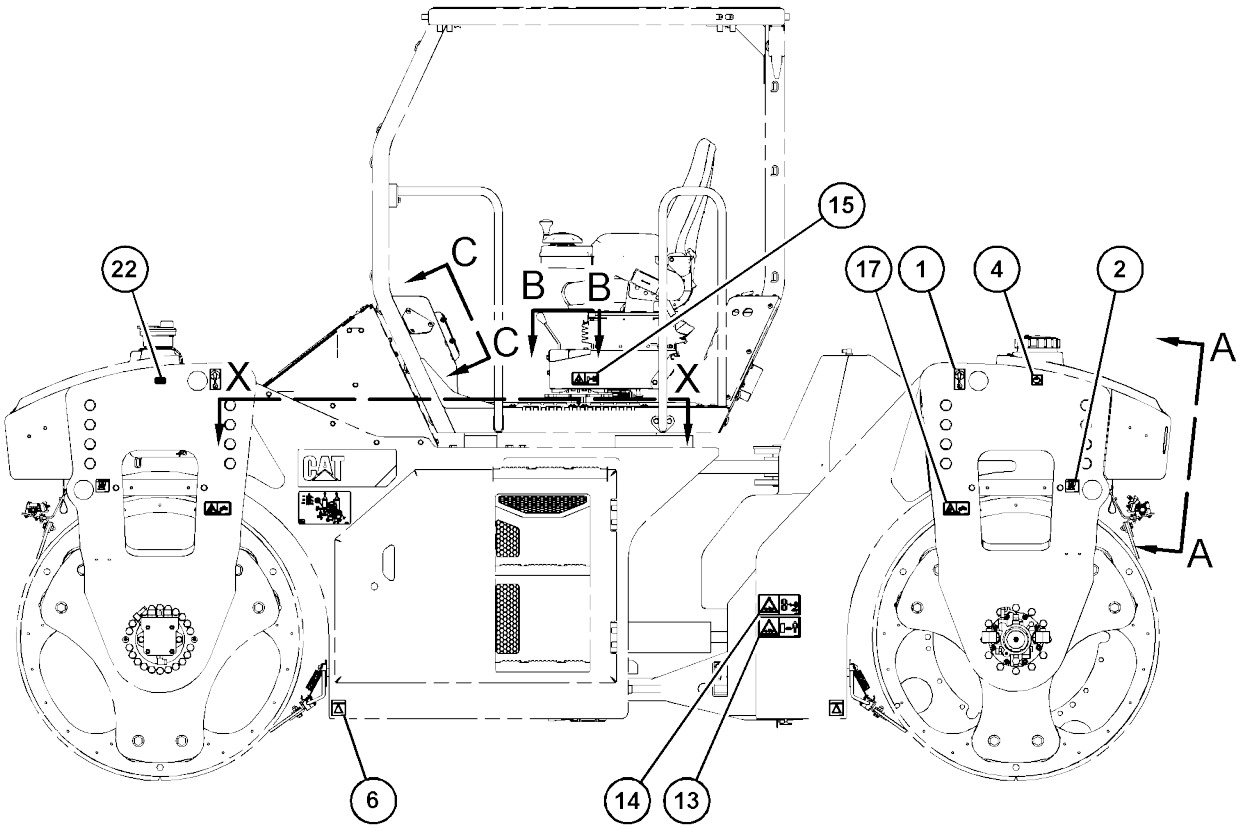

LEFT SIDE VIEW

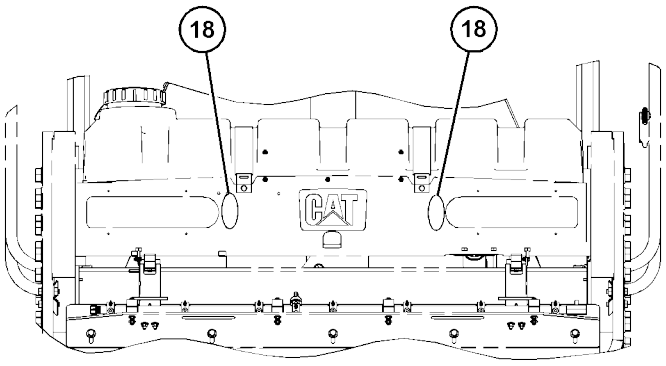

VIEW A-A

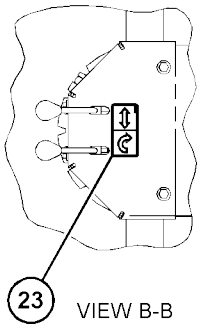

VIEW B-B

GRAPHIC #1 g06176702

518-6238 **PLATE & FILM GP** (contd.) **i07416519**

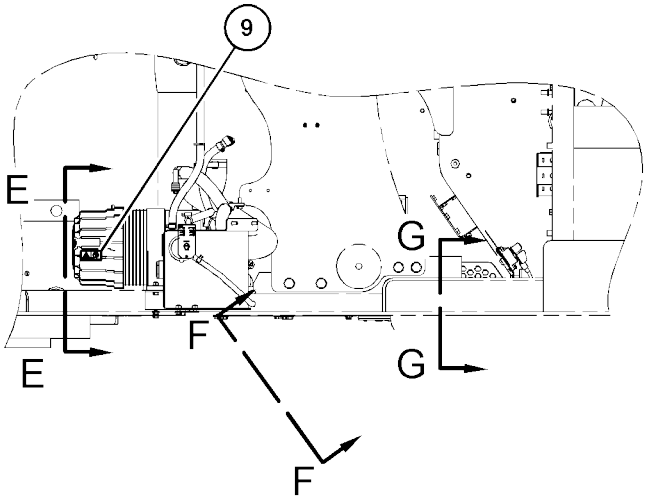

VIEW X-X

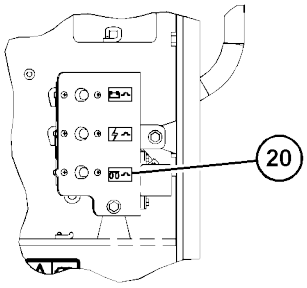

VIEW G-G

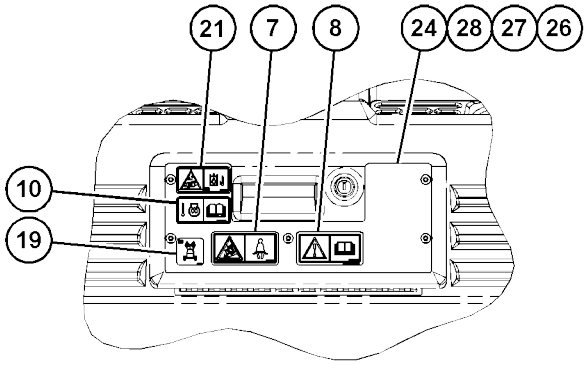

VIEW C-C

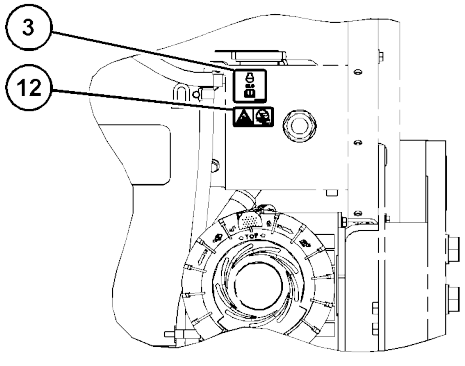

VIEW E-E

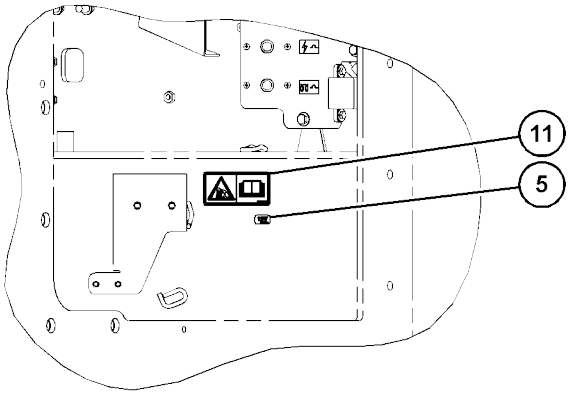

VIEW F-F

GRAPHIC #2 <END> g06176703

520-2999 PLATE & FILM GP

S/N: G441-UP
PART OF 451-3190 OPERATOR
AR AN ATTACHMENT

SMCS-7405, 7557, 7563

i07406179

	REF SEE NOTE QTY	GRAPHIC NO 1 2 3 4 5 6	(PRODUCT LEVEL)	REF PAGE	PART NAME PART NUMBER
	1	1	**510-8280**	1	FILM-IDENTIFICATION (ROPS,FOPS, READ OMM)
	2	1	**205-4933**	1	FILM-IDENTIFICATION (SECONDARY EXIT)
	3	1	**219-0305**	1	FILM-WARNING (NO WELD, NO DRILL, READ OMM)
	4	1	**451-3193**	1	PLATE AS
M		1	**6V-9632**	6	NUT-WELD (M6X1-THD)
	5	1	**5P-4116**	4	WASHER-HARD (8.8X20.5X2-MM THK)
M	6	1	**8T-4200**	4	BOLT (M8X1.25X16-MM)

M - METRIC PART

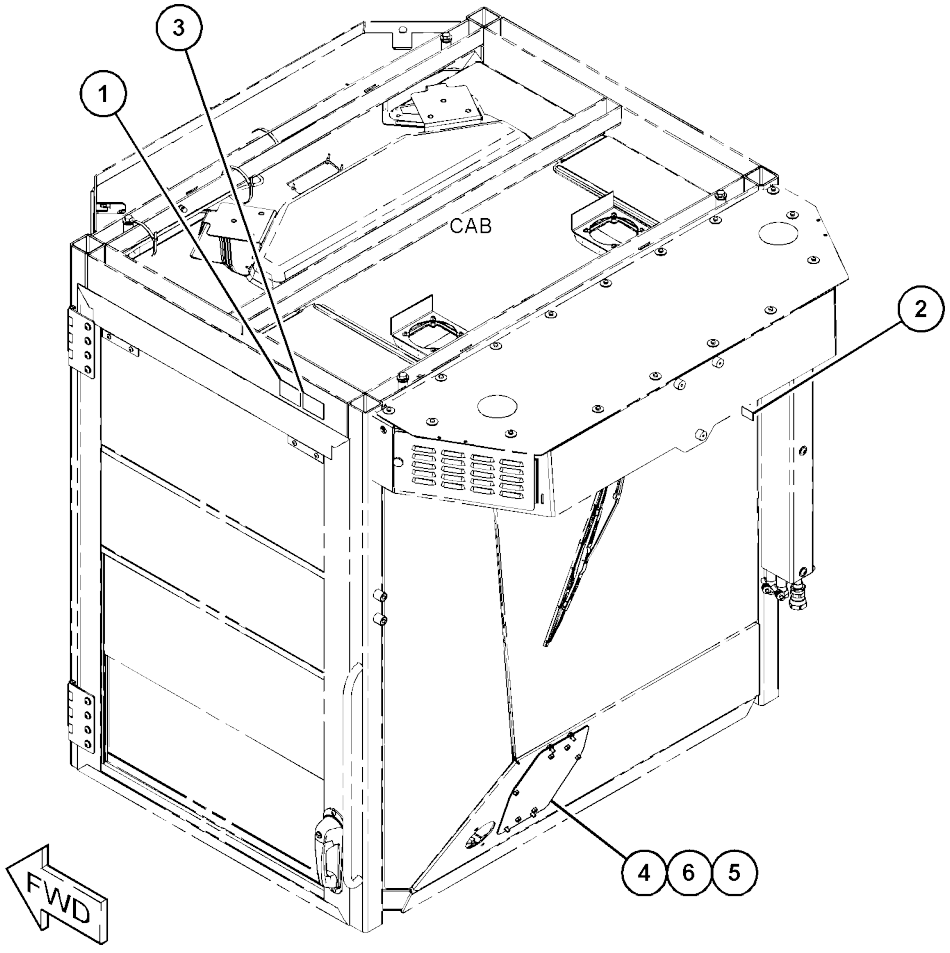

GRAPHIC #1 <END> g06178703

431-1629 PLATE & FILM GP-CERTIFICATION

S/N: 5B41-
UP AN
ATTACHMENT

SMCS-7405, 7557, 7563

i07418002

REF SEE NOTE QTY	GRAPHIC NO 1 2 3 4 5 6	(PRODUCT LEVEL)	REF PAGE	PART NAME PART NUMBER
1	1	**172-1241**	1	FILM-IDENTIFICATION (LIFT EYE, TIE-DOWN LOCATION)
2	1	**225-4148**	1	PLATE-CERTIFICATION (MACHINE)

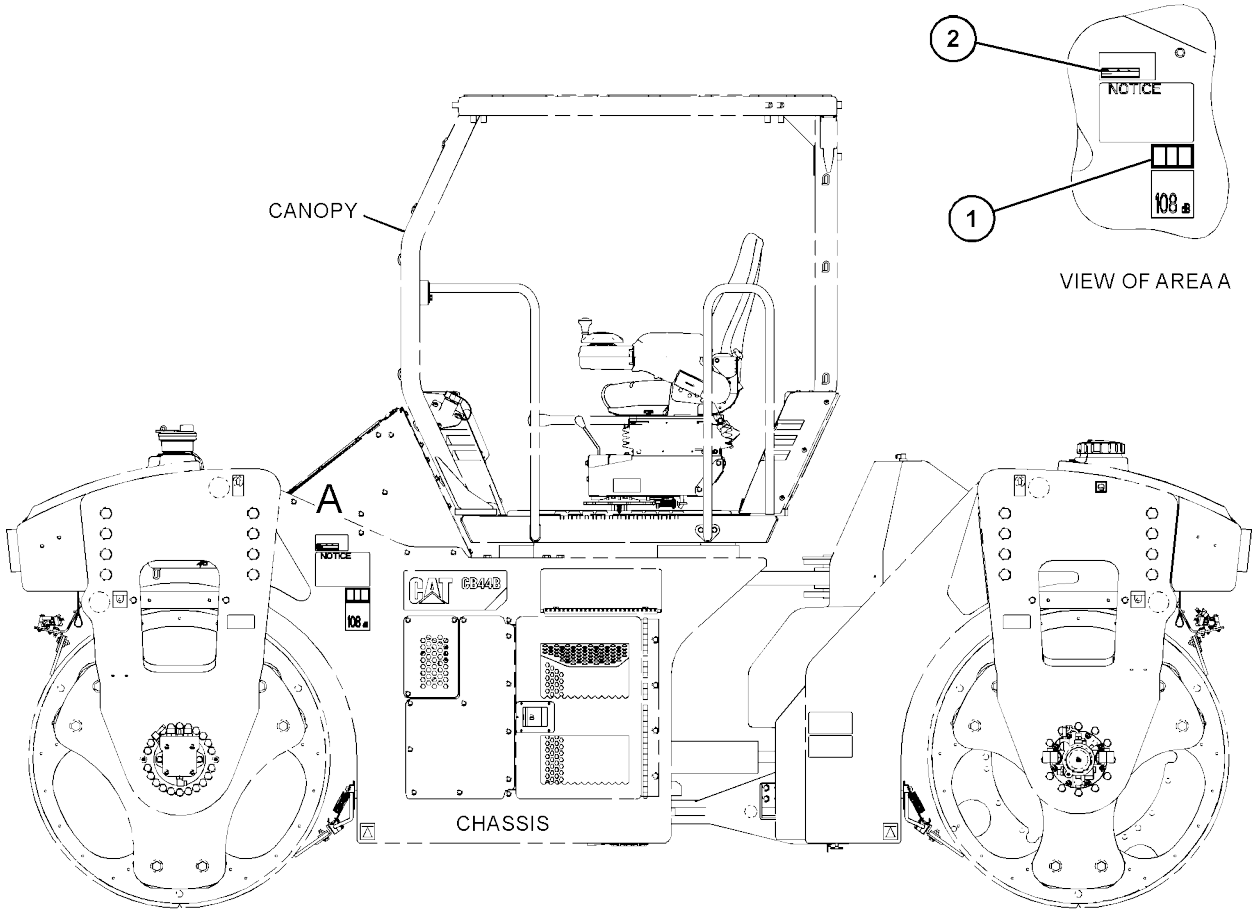

LEFT SIDE VIEW

GRAPHIC #1 <END> g03497860

434-1984 PLATE & FILM GP-CERTIFICATION

S/N: G441-
UP AN
ATTACHMENT

SMCS-7405, 7557, 7563

i07403915

REF SEE NOTE QTY	GRAPHIC NO 1 2 3 4 5 6 (PRODUCT LEVEL)	REF PAGE	PART NAME PART NUMBER
1	1 **172-1241**	1	FILM-IDENTIFICATION (LIFT EYE, TIE-DOWN LOCATION)
2	1 **225-4148**	1	PLATE-CERTIFICATION (MACHINE)

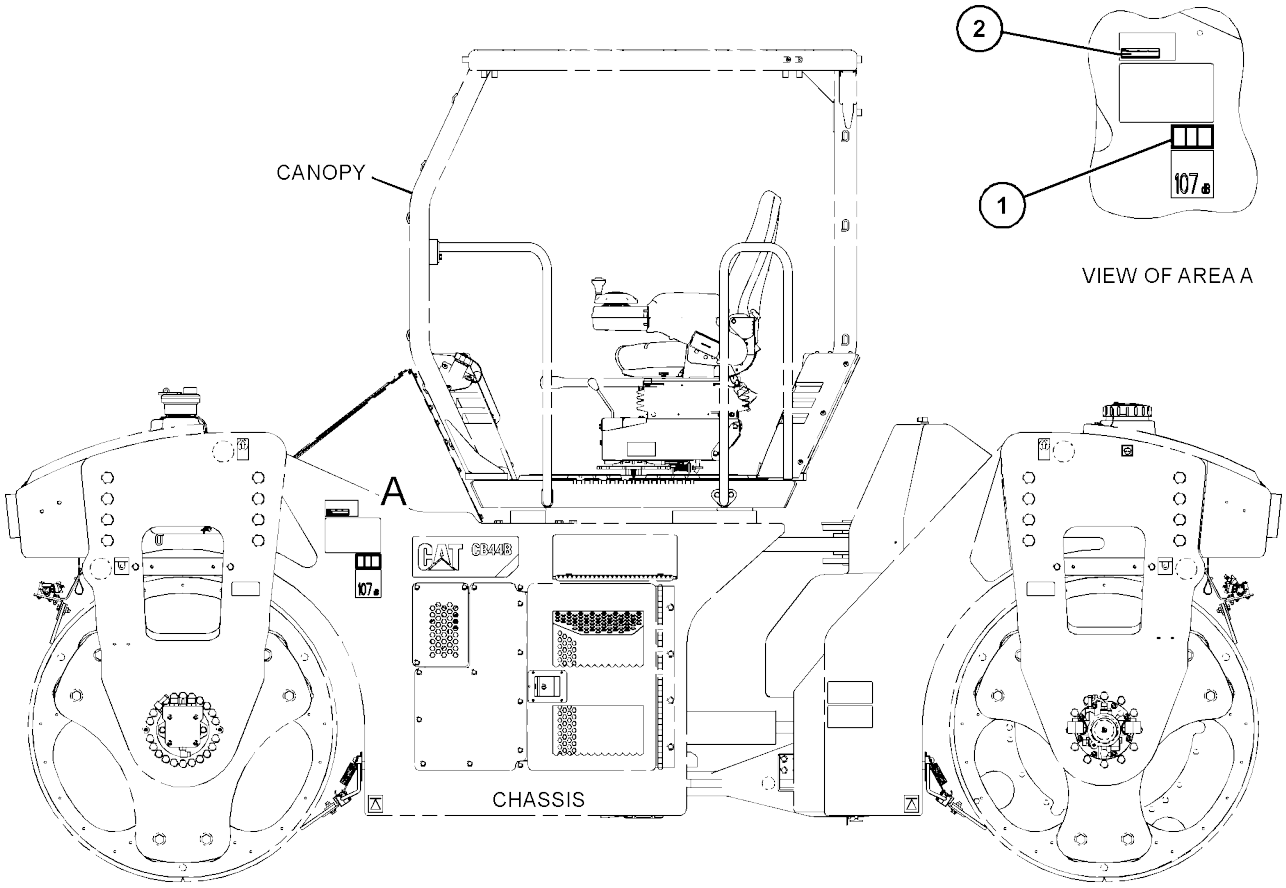

LEFT SIDE VIEW

GRAPHIC #1 <END> g03497820

354-8706 PLATE-SERIAL NUMBER

S/N: 5B41-UP; G441-
UP AN ATTACHMENT

SMCS-7557

i06656237

REF SEE NOTE QTY	GRAPHIC NO 1 2 3 4 5 6 (PRODUCT LEVEL)	REF PAGE	PART NAME PART NUMBER

(NO SERVICED PARTS)

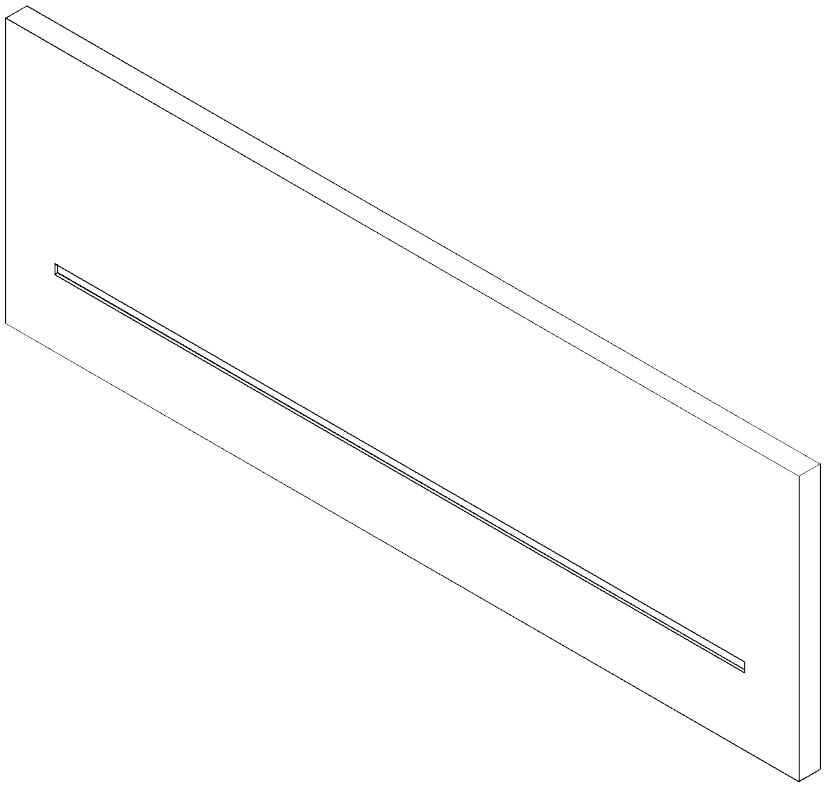

GRAPHIC #1 <END> g06065710

PART NUMBER INDEX

0S-1603 . . . 25
0T-0924 . . . 23
2
31
8

1A-0302 . . . .
1B-2705 . . . 48
2
48
1B-8705 . . . 6
57
6
1G-3410 . . . 57
8
1G-4029 . . . 36
8
1G-4081 . . . 36
9
37
1G-6423 . . . 2
32
1G-6781 . . . 9
1G-8878 . . . 43
1H-0159 . . . 5
43
1H-3244 . . . 6
43
5
43
1H-4393 . . . 6
31
1J-6472 . . . 4
41
1M-6119 . . . 0
1M-6120 . . . 29
0
1P-0810 . . . 17
6
20
4
20
9
49
1P-2807 . . . 1
49
1P-4278 . . . 2
17
1S-4915 . . . 2
17
1S-7251 . . . 6
25
1U-1648 . . . 4
1U-2012 . . . 25
6

2L-8061 . . . 13
5
2L-8067 . . . 13
3
2L-8068 . . . 13
3
13
5
2L-8071 . . . 12
7
2L-8076 . . . 13
0
2L-8077 . . . 13
3
2L-8081 . . . 13
3
2M-7819 . . . 14
2M-9780 . . . 0
13
3
14
0
2N-7228 . . . 14
0
2P-1279 . . . 57
8
2R-0364 . . . 23
2S-4078 . . . 2
27
8
28
2V-6350 . . . 0
31
8
32
5
34
9
2V-6352 . . . 38
7
39
1
48
8
2V-8259 . . . 25
6
2W-1145 . . . 53
2Y-5429 . . . 4
33
2
33
4
3B-4504 . . . 33
8
21
3B-4512 . . . 6
21
9
3B-8488 . . . 26
8
27

3E-2345 383
387
289
3E-3371 188
3E-3377 184
3E-3383 182
3E-4041 319
387
3E-4302 502
510
586
590
3E-4304 466
467
470
472
3E-4321 526
528
530
532
3E-4333 . . . 307
3E-4352 204
504
507
572
573
574
3E-5226 . . . 127
129
3E-5519 . . . 132
131
139
3E-7301 . . . . . ▶16
0
198
200
3E-8008 . . . 308
3E-8020 . . . 497
499
3E-8028 . . . 307
3E-8320 . . . 113
3E-9375 . . . 187
3E-9860 . . . 576
3J-1907 . . . 58
100
102
222
224
232
268
278
280
289
290
318

3K-0715 . . . 62
81
3K-6060 . . . 10
0
10
2
3K-6454 . . . 11
0
22
2
3K-6881 . . . 22
4
3P-1932 . . . 23
2
3P-3547 . . . 29
8
3S-2093 . . . 30
0
30
8
31
0
31
4
31
7
33
2
33
4
33
6
33
8
37
9
38
1
38
3
41
0
52
6
52
8
53
0
53
2
.
23
2
32
5
.
10
9
43
7
44
1
3S-6050 . . . .
25
6
3S-8665 . . . .
57
3T-0852 . . . 8
.
45
.
48
2
3T-6521 . . . .

► PRIMARY REFERENCE

PART NUMBER INDEX

Part	Page
4B-4274	40
4B-4278	8
4B-4311	57
4B-4674	6
4B-4863	57
4D-1326	4
4D-2297	42
4D-7794	8
4D-8123	43
4E-5724	1
4E-8722	51
4F-2294	6
4I-0472	58
4J-5267	0
4J-5477	22
4M-5281	6
4P-7429	17
4P-7581	3
4P-8134	11
4V-8577	6
4W-6793	42
5A-3604	5
5C-7261	22
5C-7423	4
5C-8312	18
5C-9553	9
5D-1026	37
5E-2620	9
5E-7763	38
5E-7764	1
5E-7765	38
5E-7767	3
5E-8200	58
5E-8404	2
5E-8770	58
5G-2934	3
5G-8871	58
5H-9839	4
5J-2974	58
5J-3886	5
5L-3233	58
5M-4454	6
5M-	62
	67
	76
	81
	16
	1
	16
	2
	16
	8
	16
	9
	17
	0
	17
	1
	20
	0
	20
	2
	20
	4
	27
	3
	30
	0
	44
	8
	45
	0
	48
	1
	.
	50
	4
	50
	7
	.
	17
	2
	17
	6
	.
	15
	6
	15
	7
	15
	8
	15
	9
	18
	1
	20
	4
	25
	6
	43
	9
	44
	0
	51
	7
	53
	6
	60
	6
	.
	45
	.
	23
	4
	23
	7
	24
	3
	56
	5
5P-1076	56
	7
	56
	9
	.
	33
	76
	21
	6
	21
	9
	25
	4
	25
	6
	26
5P-1423	0
	26
	2
5P-1442	49
	3
5P-1468	49
	5
	49
5P-1506	7
	49
	9
	56
	5
	56
5P-2211	7
5P-3455	56
	9
	.
5P-3928	30
	2
	30
5P-3929	4
	.
	41
	9
	.
5P-3945	44
	8
	45
5P-3948	0
	.
	30
	2
	30
5P-3950	4
	33
	4
5P-4115	33
	8
	.
	38
	7
	.
	13
	3
	13
	7
	.
	52
	2
	52
	4
	.
	44
	8
5P-4484	81
	85
	87
	100
	102
	118
	144
	146
	148
	150
	152
	154
	155
	168
	169
	170
	171
	173
	175
	180
	198
	202
	204
	216
	219
	241
	242
	245
	247
	276
	300
	302
	304
	332
	340
	375
	377
	419
	433
	481
	484
	486
	512
	513
	514
	515
	522
	524
	534
	545
	546
	547
	554
	556
	559
	565
	567
	569
	582
	583
	606
	610
5P-4571	397
	400
	404
	406
	408
	127
	129
5P-4906	443
5P-	

► PRIMARY REFERENCE

PART NUMBER INDEX

Part	Page
6	
5P-5148	274
5P-5623	204
5P-5637	241
5P-5687	65
5P-5757	312
5P-5923	522
5P-5927	518
5P-5930	493
5P-5973	548
5P-5995	421
5P-6006	127
5P-6264	60
6A-3361	204
6D-1004	317
6D-2354	565
6D-7146	312
6E-0725	329
6E-5066	345
6F-5559	414
6F-7045	195
6G-9333	443
6H-3568	256
6H-3592	137
6H-3616	34
6H-3957	30
6H-9691	347
6I-0217	111
6I-0254	48
6I-0260	35
6V-0894	181
6V-1230	100
6V-1392	65
6V-1506	287
6V-1722	334
6V-2317	161
6V-2372	421
6V-2689	488
6V-2803	65
6V-3964	85
6V-3965	318
6V-4292	100
6V-7412	576
6V-7419	592
6V-7420	232
6V-7486	334
6V-7636	504
6V-7687	209
6V-7688	357
6V-7727	572
6V-7743	202

► PRIMARY REFERENCE

PART NUMBER INDEX

Part	Page
6V-8398	38
	1
	45
	58
	21
	6
	21
	9
	22
	2
	22
	4
	27
	8
	28
	0
	29
6V-8491	8
6V-8523	30
6V-8625	0
	31
	7
	31
	8
	33
6V-8626	2
6V-8627	33
	6
	34
	0
	35
6V-8633	5
6V-8636	53
	4
	45
6V-8637	29
	8
	30
	0
6V-8639	33
	2
	31
6V-8641	8
	34
6V-8642	0
6V-8713	35
6V-8716	3
	35
6V-8721	5
	23
6V-8723	2
	27
6V-8724	8
	28
	0
	58
6V-8774	33
6V-8781	6
6V-8782	38
6V-	1
	38
	3
	23
6V-8398	30
6V-9632	0
	11
	8
	14
	4
	14
	8
	15
	0
	20
	0
	20
	4
	26
	4
	47
6V-9672	2
6V-9746	47
	7
	48
	2
	48
	6
	50
	4
	50
	7
	51
	7
	60
	6
	61
6V-9836	0
	.
6V-9837	41
6V-9851	5
6V-9852	.
6V-9853	58
	22
	4
	23
	2
	27
6V-9872	8
	28
6V-9873	0
	28
	9
	31
	8
	33
	2
	33
6Y-2736	6
6Y-2737	37
	9
	38
	1
	38
	3
	38
7B-1251	7
	.
	23
7C-0351	2
7C-4354	.
	31
	8
	.
	35
7C-	5
	.
	36
7J-9108	.
	21
	6
	21
	9
	23
	2
7K-1181	31
	7
	31
	8
	38
	7
	.
	69
	71
	10
	0
	10
	2
	11
	3
	11
	8
	14
	4
	14
	6
	14
	8
	15
	0
	15
	2
	15
	4
	15
	5
	15
	6
	15
	7
	15
	8
	15
	9
	16
	9
	17
	0
	17
	1
	17
	3
	17
	5
	17
	6
	17
	8
	18
	2
	18
7K-3176	4
	19
	6
7M-8485	19
	8
	20
	0
	20
	2
	20
	4
	20
7M-9957	406
7N-0718	408
	410
	.
	160
	.
	113
7N-7221	▶1
	9
	5
	.
	127
7R-2750	129
7R-2751	139
	.
7R-7908	132
	.
7R-8578	132
	.
	114
7S-1800	.
7T-0020	439
7T-1099	440
	.
	165
	.
	160
	.
	189
	250
	460
	466
	467
	470
	472
	546
7T-4532	558
7T-6799	559
7T-9234	562
	.
7T-9988	479
	.
7V-5628	488
	.
	184
	.
	113
7V-6089	.
7V-9275	113
7W-2326	209
	.
7W-2632	209
	.
7X-0345	116
	.
	49
	.
	120
7X-0507	.
	154
	155
	.
7X-0510	563
	564
	575
	.
	368
7X-0579	369
	372
	.
	58
	65
	416
	493

PART NUMBER INDEX

Part	Page
7X-2470	33
	4
7X-2475	33
	8
7X-2532	22
	6
	22
7X-2533	8
	35
	3
7X-2537	54
	1
	18
	2
	26
	2
	53
	4
	69
	39
	7
	40
	0
	40
7X-2538	4
7X-2539	40
	6
	40
	8
7X-2540	51
7X-2545	51
	3
	51
7X-2546	4
7X-2549	51
7X-2554	5
	52
	2
	52
	4
7X-2555	56
	5
	56
	7
7X-2556	56
	9
7X-2557	48
7X-2563	0
	45
	41
	7
7X-2564	34
	0
7X-2565	27
7X-2576	8
	28
	0
7X-2577	41
	0
7X-2619	26
	4
	33
7X-7888	30
	4
	33
	1
	37
	5
	37
	7
	43
	7
	44
	1
	47
7X-7958	5
	47
	6
	52
	2
	52
	4
	53
7Y-9099	6
	33
	4
	33
	8
	69
	71
	30
	2
	30
	4
	33
	4
	33
8C-0617	8
	24
	5
8C-3056	24
8C-3210	7
	54
8C-3226	8
	54
	9
8C-3392	55
	0
	55
	1
	55
	2
	55
8C-3413	3
	55
8C-3445	4
	55
8C-3446	6
8C-3451	
8C-3681	
8C-6433	
8C-6438	38
	1
	38
	3
8C-6872	
	11
8C-8431	3
	57
8C-9451	4
8N-1547	13
8P-8540	2
	15
8R-3275	8
	15
	9
8R-9137	56
	5
8S-0934	56
	9
	19
	6
8S-3159	20
	2
8S-4723	56
	3
	56
	4
8S-6959	57
	1
8T-0024	57
	5
	18
	9
8T-0119	56
8T-0122	3
	56
8T-0151	4
	57
8T-0154	1
	57
	5
	25
8T-0164	6
8T-0267	17
	2
	17
8T-0269	6
	51
8T-0289	8
	52
	0
8T-0325	33
	2
8T-0328	11
	6
	38
	7
8T-0341	52
	6
	52
	8
8T-0389	53
	0
	53
	2
8T-0404	22
	4
8T-1158	22
	4
8T-3612	76
	23
	9
	24
	0
	24
	5
	24
	7
	26
	76
	85
	87
	10
	2
	18
	9
	23
	9
	24
	0
	24
	1
	24
	2
	24
	3
	24
	5
	24
	7
8T-3635	25
8T-3636	0
8T-3647	34
	0
	47
	2
	51
8T-4121	2
	51
	3
	54
	6
	54
	8
	54
	9
	55
	0
	55
	1
	55
	2
	55
	3
	55
	4
	55
	6
	.
	546
	.
	460
	.
	204
	37
	5
	.
	58
	62
	81
	85
	87

PART NUMBER INDEX

Part	Page
8T-4122	33
8T-4123	21
8T-4137	62
8T-4138	114
8T-4139	254
8T-4141	462
8T-4183	33
8T-4184	33
8T-4186	85
8T-4188	184
8T-4189	26
8T-4192	260
8T-4193	222
8T-4194	239
8T-4195	85
8T-4196	58
8T-PRIMARY REFERENCE	47
351	47
355	47
366	47
368	47
369	53
370	53
372	55
379	62
410	81
423	114
425	156
475	157
476	158
480	159
522	196
524	200
526	205
528	209
530	209
532	209
536	209
561	209
562	209
58	209
65	209
85	209
87	209
216	209
502	209
510	209
590	209
262	209
428	209
429	209
430	209
431	209
232	209
249	209
250	209
240	209
260	209
262	209
428	209
429	209
430	209
431	209
87	209
114	209
226	209
228	209
274	209
276	209
302	209
304	209
312	209
377	209
475	209
476	209
522	209
524	209
526	209
528	209
530	209
532	209
536	209
561	209
562	209
58	209
65	209
85	209
87	209
216	209

PART NUMBER INDEX

Part	Page
	67
	102
	114
	180
	198
	205
	302
	304
	332
	340
	419
	423
	425
	522
	524
	606
	610
8T-4205	181
	202
	205
	342
	452
	454
	504
	507
	538
	539
8T-4223	33
	65
	205
	209
	239
	240
	254
	257
	260
	262
	264
	302
	304
	318
	334
	338
	353
	355
	362
	159
	161
	162
	189
	200
	202
	205
	219
	235
	236
	237
	238
	243
	273
	340
	362
	364
	366
	397
	400
	404
	406
	408
	417
	423
	425
	437
	438
	441
	443
	445
	448
	450
	452
	454
	480
	504
	507
	558
	559
	578
8T-4244	65
	477
	478
8T-4648	65
8T-4742	53
	241
	242
	276
	362
	364
	366
	433
	437
	441
	452
	454
	545
	547
	554
	556
	559
8T-4956	216
	219
	334
	338
	381
	383
8T-4970	200
	428
	431
	482
	486
	539
8T-4971	490
8T-4983	45
	302
	304
8T-4984	62
	76
	78
	81
8T-4985	76
8T-4986	76
	78
8T-5005	266
	270
8T-5360	456
	458
	464
	468
	470
	295
	296
	437
	441
8T-6868	65
8T-6869	216
	273
	486
8T-6912	78
	168
	169
	170
	171
	173
	175
	300
8T-6974	342
8T-7329	219
	375
	377
8T-7338	254
	257
8T-7547	62
	65
	67
	76
	81
	85
	87
	100
	102
	118
	146
	148
	152
	202
	375
	377
	416
	554
	556
8T-7566	189
8T-8442	264
	357
	360
8T-8549	56

► PRIMARY REFERENCE

PART NUMBER INDEX

Part	Page
8T-9371	20
8T-9382	4
8T-9501	57
8T-9532	8
8T-9597	37
8U-2588	9
8V-7162	56
8X-2779	5
8Y-4499	56
9B-7237	7
9C-0995	56
9C-5344	9
9D-8508	56
9F-2247	2
9G-5582	36
9K-5635	4
9R-2053	36
9R-2160	6
9R-2613	31
9R-3572	4
9R-7216	31
9T-6001	6
9U-6998	55
9U-6999	2
9U-8263	55
9W-0607	3
9W-3324	55
9W-3326	4
9W-6582	55
9W-6584	6
9W-9952	54
9W-9953	6
9X-1054	54
9X-1055	1
9X-1056	54
9X-1386	1
9X-1813	54
9X-2038	1
9X-2041	33
9X-2044	33
9X-2230	12
9X-2328	41
9X-2488	0
9X-3401	47
9X-3402	0
9X-3965	47
9X-4244	2
9X-5699	31
9X-6153	9
9X-6154	38
9X-6165	7
9X-7378	33
9X-7380	2
9X-7381	33
9X-7408	8
9X-7549	46
9X-8256	1
9X-8257	16
9X-8408	4
9X-8918	16
9X-8979	5
9Y-9236	16
454	6
522	1
524	17
191	2
257	17
118	6
144	1
146	16
148	2
150	52
152	8
154	33
155	2
182	33
184	4
189	36
198	2
200	36
202	4
205	36
226	6
228	31
254	4
257	31
260	6
262	55
334	3
338	55
435	4
436	55
437	6
441	54
448	6
450	54
452	1
454	55
482	2
484	55
486	3
488	55
501	4
534	55
222	6
226	54
228	6
232	25
239	0
240	24
254	3
257	21
353	6
355	25
373	1
374	25
397	2
400	19
404	8
406	20
408	0
318	25
574	7
314	54
316	8
69	54
397	8
466	57

► PRIMARY REFERENCE

PART NUMBER INDEX

0

027-1287 23
4
23
030-1707 7
030-1708 39
030-1712 0
030-4606 . . . . .
031-1119 13
031-4155 5
.
033-6028 20
2
.
69
033-6034 . . . . .
57
033-6041 6
57
033-6043 8
.
033-7687 91
28
034-3679 2
28
4
.
32
1
.
034-4202 30
8
.
29
035-8068 1
.
067-3045 25
.
62
067-6002 81
10
067-6006 2
22
067-6043 2
33
067-6135 8
37
9
.
067-6179 33
2
067-6213 33
4
067-6823 33
8
077-3308 . . . . .
17
.
081-2714 45
50
.
081-2911 17
.
17
081-3292 . . . . .
17
.

095-0878 50
7
.
095-0919 57
6
095-0924 . . . . .
30
095-0936 7
.
32
095-0941 7
.
095-1751 30
7
32
096-6166 1
.
32
097-7234 9
.
099-0492 34
9
39
1
.
099-0643 57
.
53
7
54
099-3649 0
.
26
0
26
100-3751 2
42
9
100-4458 43
0
100-4461 . . . . .
50
100-4830 2
51
0
100-4841 58
6
100-5041 59
0
.
45
55
8
100-6674 55
9
101-3055 . . . . .
101-3771 . . . . .
101-3895 28
56
.
101-7402 97
.
102-1733 53
.

1

102-1781 18
4
20
4
42
1
102-8803 43
2
47
102-8804 9
55
9
.
13
2
16
0
16
102-8805 4
18
103-2543 7
18
103-5687 8
.
103-5705 13
6
103-8911 16
5
106-5534 18
4
19
106-6340 1
48
8
106-8916 . . . . . .
18
2
.
106-9045 20
5
.
55
.
107-0003 11
.
31
0
107-2868 . . . . . .
52
107-2869 2
52
107-3117 4
.
107-4146 27
2
28
6
107-4746 . . . . . .
107-4749 51
89
108-1781 90
.
39
7
40
0
108-2787 40
4
108-4311 40
6
108-5471 40
8
.
108- 33
4

111-6816 . . . . . .
111-8222 13
1
111-9380 . . . . . .
80
.
112-3928 23
112-4628 7
39
112-4627 0
.
112-4630 25
112-4657 7
112-4686 32
112-4717 5
.
112-4719 29
1
112-9717 32
113-5215 5
.
113-8129 32
9
.
113-8490 31
0
113-8491 . . . . . .
29
113-8492 1
.
113-8690 29
1
114-6658 . . . . . .
74
.
114-8843 36
2
114-9284 36
4
.
114- 64
115-1615 13
1
115-3519 . . . . . .
13
1
115-6433 . . . . . .
53
6
.
115-8645 49
3
116-5763 49
5
49
7
49
116- 9
50
7
51

PART NUMBER INDEX

Part	Page
121-4405	51, 56
121-6007	35, 53
	35, 55
121-6008	35, 53
	35, 55
122-2228	67
122-9068	32, 59
122-9718	32, 55
123-2899	55
123-3132	91
123-7615	12, 57
	13, 51
124-1008	21, 56
	21, 59
	26, 58
	30, 52
	30, 54
124-3536	36
	37
124-3548	13, 51
124-3815	28
	51
	80
	18, 56
124-5640	13, 56
124-8545	23, 54
	23, 57
	39, 50
124-9891	31, 50
	31, 54
124-9898	31, 54
124-9899	31, 50
	31, 54
124-9900	31, 54
124-	.
126-3212	30
126-8928	240
	25, 54
126-9093	93
	10, 50
	10, 52
126-9587	329
127-2170	493
	49, 55
	52, 56
	52, 58
	53, 50
	53, 52
127-3361	50
127-5483	131
127-5484	135
127-5512	534
127-5588	332
127-7056	224
128-2136	429
	43, 50
128-4123	132
128-4178	127
	12, 59
128-5016	132
128-8617	488
129-1090	60
	41, 59
	42
134-2540	132
	135
	138
	139
134-7258	607
134-7309	536
134-7310	536
135-3245	308
135-5009	140
135-5010	133
	140
135-6125	397
	400
	408
	484
	486
136-4154	418
136-4157	418
136-4158	418
136-4165	418
137-3986	357
	360
137-3987	357
	360
137-3998	360
137-3999	357
	360
137-4002	287
	288
137-4003	287
	288
137-4004	287
	288
137-4179	357
	360
146-7512	39, 47
	40, 00
	40, 04
	40, 06
	40, 08
146-9439	13, 52
148-1970	31, 54
	31, 56
148-3626	51, 58
	52, 00
148-8305	28, 59
148-8307	44, 53
148-8308	33, 54
	33, 58
148-8310	38, 57
148-8311	38, 51
	38, 53
148-8313	22, 54
148-8315	38, 57
148-8325	22, 52
	34, 00
148-8326	26, 57
	33, 56
148-8327	58
	33, 56
	38, 11
	38, 53
148-8328	35, 55
148-8336	23, 52
	27, 58
	28, 00
148-8339	31, 58
	38, 57
148-	.

► PRIMARY REFERENCE

PART NUMBER INDEX

Part	Page
148-8428	336
148-8433	232
148-8435	268
148-8439	342
148-8444	318
149-7373	132
149-8142	45
	332
150-1293	537
150-3026	100
	102
	232
	334
	338
	381
	383
150-3027	387
150-3033	224
150-3050	334
	338
150-3058	336
150-4036	45
	526
	528
	530
	532
150-4043	58
	222
	224
	278
	280
	336
150-4047	336
150-5785	307
	321
150-8261	414
	415
151-5145	278
	280
155-2270	116
155-2271	127
155-2274	131
155-4098	488
155-7321	334
155-9122	314
155-9133	362
156-3618	452
156-5782	226
157-0670	45
157-2348	216
158-0851	302
159-7297	607
159-8047	135
159-8049	113
164-7468	97
164-7556	161
164-8473	518
164-9425	204
165-2273	45
165-3954	418
165-4929	397
165-4931	100
166-0692	189
166-1222	567
166-6781	576
167-6805	325
168-8806	526
169-0705	129
169-1616	349
169-1617	349
169-2876	607
170-6705	222
171-2206	116
171-2209	116
171-2215	116
177-6853	291
177-9645	127
177-9648	131
177-9653	135
177-9656	127
178-2510	107
178-3336	243
178-3620	69

► PRIMARY REFERENCE

PART NUMBER INDEX

Part	Page
184-0983	504, 507
184-9902	368, 369, 370, 371, 372
185-0303	314, 316
185-0884	17
185-1505	438, 443, 445
185-1860	127, 129, 132, 134, 139
185-1861	127, 129, 132
185-5622	239, 240
185-6627	80
186-0358	204
186-2901	406, 408
186-2902	406, 408
186-2904	408
186-2908	408
186-2911	408
186-2913	408
186-2915	406, 408
186-2928	397, 400, 408
186-3735	160
186-5107	578
187-0555	52
187-8001	325
188-5072	226, 228
188-9926	397, 400, 404, 406, 408
188-	397
192-	32
2839	9
192-4576	29
192-	1
5284	29
192-	1
9207	1
193-	1
6984	93
194-	25
1983	6
194-	32
2888	9
194-	2
2903	43
194-	9
3403	44
194-	58
5226	33
194-	43
5227	9
194-	44
5390	13
194-	2
9473	14
194-	1
9479	22
194-	13
9480	2
194-	14
9481	1
195-0936	22, 2
195-	89, 90
1095	4, 31
195-	32
2037	8
195-	45, 6, 45, 8
2132	46
195-	6
2134	46
195-	7
2136	47
195-	0
2221	47
195-	2
7055	46
195-	0
9245	46
196-	
200-	
6283	349
200-	
6345	60, 11, 3, 20, 4, 26, 8, 27, 0, 27, 4, 27, 5, 27, 6, 29, 8, 30
201-7809	0, 37
201-	5
7833	41, 9, 42, 3
202-	42
0313	5
202-	52
0314	6
202-	52
0315	8
202-	53
5397	0, 53, 2, 372
202-	
6535	144
202-	15
6614	0, 15
202-	6
9824	15
203-	7
1074	132
203-	
2287	133
203-	
3470	132
203-	
9007	129, 13
204-	1
1297	13, 2, 13, 9
204-	
2281	325, 34, 7, 161, 16, 2, 603, 308
204-	
8000	69, 71, 100, 102, 113, 204, 270, 276
205-	
2941	362
205-	
4933	606
205-	
7048	502
206-	
0451	448, 450, 452, 454, 522
206-	
0452	448, 450, 452, 454, 522
206-	
1345	134
206-	
1826	186
206-	
4441	110
206-	
6413	219
206-	
6418	534
206-	
6419	357, 360
206-	
6941	586
207-	
4499	216, 219
208-	
9311	245, 247
209-	
3565	347
209-	
9219	16
211-	
2095	58, ►91
212-	
0316	237
	425, 522, 524, 526, 528, 530, 532
205-	300
2941	362, 364
4933	606, 610
7048	502, 510
0451	448, 450, 452, 454, 522
0452	524
1345	134
1826	186
4441	110
6413	219, 375
6418	534
6419	357, 360
6941	586
4499	216, 219, 375
9311	245, 247
3565	347
9219	16
2095	58, ►91
0316	237

► PRIMARY REFERENCE

PART NUMBER INDEX

Part	Page
215-8010	347
215-8011	347
216-4551	347
216-4552	347
216-4553	347
216-4554	347
216-4555	347
216-7352	497
	499
216-8314	12
	14
216-9633	54
217-0099	120
217-3875	291
217-6234	216
217-9039	134
	142
217-9077	447
217-9968	536
218-1767	397
	408
219-0305	561
	562
	606
	610
219-0349	439
	440
221-8045	607
222-9020	75
222-9021	75
222-9820	526
	528
	530
	532
223-4779	133
223-5856	114
223-9974	28
	24
226-0340	548
	549
	550
	551
	552
	553
	554
	556
226-1240	607
226-1274	607
226-5684	282
	284
226-5687	282
	284
226-8766	28
226-8767	28
227-6722	308
228-6089	198
	200
	204
	488
228-7089	52
228-7092	336
228-7100	97
228-7521	368
	369
	370
	371
	372
229-2820	252
229-8062	493
	495
230-0913	91
230-1341	607
230-3241	302
	304
232-3751	57
232-4810	254
	256
232-7449	16
232-7596	17
232-7597	17
232-7599	17
233-2535	328
233-5125	328
233-9808	347
235-1061	30
235-1063	30
235-4123	127
	130
	140
236-6923	522
	524
236-9839	448
	450
	452
	454
	580
237-0166	131
237-2858	274
238-0112	186
238-5080	334
	338
238-5082	336
238-8288	80
238-8292	83
239-6986	604
	605
240-3163	275
240-7878	132
	135
241-6157	76
	78
246-4423	219
247-1913	504
	507
247-3812	607
247-4928	97
	99
248-2923	448
	450
	452
	454
248-2980	282
	284
248-6772	448
	450
	452
	454
249-0974	57
249-4497	308
250-1448	45
250-4530	300
250-5703	317
251-1198	196
251-4336	28
251-7580	417
252-1862	504
	507
252-1863	504
	507
252-6646	607
253-0277	421
	423
	425
253-2111	116
253-2590	69
	71
253-3484	477

► PRIMARY REFERENCE

PART NUMBER INDEX

Part	Page
	135
	138
260-9144	526
	528
	530
	532
261-0524	132
261-1124	298
	300
262-3764	►19
	1
263-9574	222
264-3518	113
	100
264-3522	102
264-3617	102
	180
264-7031	195
	141
265-5644	379
265-6618	332
	448
	450
	452
265-9620	454
266-1467	580
	181
266-1484	►18 7
266-7837	►18 8
267-5239	189
	328
267-7207	198
	200
267-8575	134
	135
	448
267-9572	450
	452
	454
268-1517	134
	135
268-1573	45
268-6052	332
268-6377	216
268-6677	232
268-8769	232
269-2892	202
	580
270-9370	30
270-9371	8
271-0606	30
271-2065	8
271-2066	30
	39
	7
	40
271-2067	4
271-2068	39
271-5590	7
271-5600	40
271-5602	4
271-5604	40
271-7312	0
	13
272-0899	9
272-3089	13
272-3525	9
	14
273-3827	0
273-7309	13
274-1639	9
274-3774	19
274-3778	8
	20
	0
	35
274-3780	1
274-3781	11
274-3783	3
274-3785	35
	0
	35
	1
274-7409	34
	5
274-8353	33
275-1442	18
275-1443	6
275-1444	12
	7
	13
275-6692	8
275-9891	13
276-1786	2
	13
	5
277-3012	28
277-3013	28
277-4993	97
277-5676	30
277-6631	6
277-9938	34
278-0361	7
278-3242	97
278-5111	83
278-5112	64
278-5113	42
278-5126	42
278-5170	10
278-5203	96
278-5226	12
278-7339	0
278-8723	18
278-8736	6
278-8737	18
278-8738	4
278-8739	31
278-8742	2
278-8743	32
278-8744	3
278-8747	32
278-8748	3
278-8749	32
278-8750	3
278-8751	32
278-8844	3
279-5771	32
280-1912	3
280-1913	32
280-1914	3
280-2651	32
280-8298	3
281-3121	32
281-5562	60
290-5664	209
290-6436	345
290-8160	►3 9
292-2893	1
292-2896	163
292-7635	134
293-1875	134
293-4373	270
293-6119	97
293-6533	327
293-6534	131
293-9452	406
294-3155	406
294-4550	113
295-1939	67
295-4670	250
295-4801	582
	583
	97
295-6661	369
	372
295-9540	20
295-9554	21
296-4040	328
296-5743	316
296-5744	504
297-1225	507
297-7964	340
	267
298-3485	100
	102
	224
298-4527	357
298-4528	360
298-4533	19
	19
298-	►4 2

► PRIMARY REFERENCE

PART NUMBER INDEX

Part	Page
304-1029	578
304-1030	578
304-1031	578
304-1034	576
	578
304-1035	576
	578
304-1036	578
304-1038	576
304-1042	578
304-1043	576
304-1052	578
304-1054	578
304-1055	578
304-1056	578
304-7728	522
	524
304-9465	182
305-4351	576
305-4353	576
	578
305-5624	256
305-7086	573
305-7087	573
305-7089	572
306-0282	131
306-0348	131
306-0350	131
306-0351	131
306-5618	447
306-5619	448
	450
	452
	454
306-5620	448
	450
	452
	454
321-6131	40
321-8927	112
321-8952	112
323-4703	308
323-7347	142
323-9312	36
	37
324-0444	28
324-2981	27
324-9870	417
325-0402	417
325-0635	417
326-3085	357
	360
	▶418
326-3103	▶306
	342
326-5331	▶73
	76
326-5332	73
	▶ 74
326-9053	598
327-0325	204
327-4444	33
329-0947	308
329-3356	260
329-3734	127
	129
	133
	135
	139
	432
329-5522	336
329-8098	4
	6
	▶595
330-	
334-2468	447
334-6758	607
334-9334	41
335-5365	204
335-7585	23
335-8270	41
336-0099	243
336-2009	272
	286
336-3749	272
	286
336-7700	419
	423
	425
	583
337-9102	347
338-1447	538
	539
339-4419	184
339-5016	343
339-5017	343
	▶350
339-5019	350
339-5293	282
	284
	▶351
339-5297	282
	284
339-5299	351
339-5303	282
	284
339-5304	282
	284
339-5305	282
	284
339-5431	182
339-	
342-9332	446
	▶480
342-9922	260
	262
343-2389	295
	296
343-4072	243
343-5609	▶368
	392
	394
343-5610	▶397
	399
343-5611	397
343-5612	397
343-6037	1
	▶331
343-6058	124
	▶180
343-6063	▶417
	434
343-6064	▶433
	434
343-6068	▶289
	293
	294
343-6070	▶274
	294
343-6073	293
	▶334
343-6075	▶272
	293
	294
343-6084	7
	▶65
343-6106	▶534
	544
343-6109	544
	▶546

▶ PRIMARY REFERENCE

PART NUMBER INDEX

Part	Page
344-0576	44 ▶481
344-0580	▶515 543
344-1385	343
344-1386	350
344-1686	134
344-5673	484 486 488
344-5674	118 146 148 152 173 175 484 486
344-5675	182 266 456 458 464 468 470 473
344-7521	256
345-0695	368 ▶399
345-5640	243
346-0006	106
346-0007	106
346-0408	28
346-4709	43
346-5466	▶369 392 393
346-5468	400
346-5470	▶400 402
346-5472	400
351-3377	392 393 ▶596
351-3398	293 ▶336
351-3406	253 ▶256
351-3408	253 ▶275
351-3409	▶181 253
351-3424	▶251
351-3425	▶252
351-3427	▶60
351-3429	▶419
351-3433	▶536
351-3438	▶581
351-3439	▶168
351-3441	▶169
351-3443	▶178
352-3964	170 171 196 202 204 517 606
352-3968	100 113 156 157 158 159 196 202
352-3969	216 219
352-3970	202 332
352-4703	347 395
354-4951	565 567 569 ▶613 394
354-8706	▶8 ▶9
355-1670	▶575
355-1671	598
355-3084	7 ▶58
355-3486	33
355-6236	224 ▶308
355-8941	97
356-0767	475
356-0787	476 561 562
356-0924	475 476 561 562
356-3720	211 214
356-3986	100 268
356-4241	546 549 553 548 549 550 551 552 553 554 556
356-4244	565
356-8448	393 ▶596
356-9301	204 517 606
357-0818	216 219
357-0827	202 332
357-0830	347 395
358-2740	▶393
358-2741	▶370 393 394 395
358-2742	370 ▶403
358-2743	403 ▶404
358-2758	404
358-6705	254 256
358-9307	558 559
358-9314	558 559
358-9315	559
359-0719	36 37
359-1511	211 212 213 214 215
359-3099	232
359-3176	558 559
359-3177	546
359-9727	▶340 352
359-9728	▶298 352
359-9729	352 ▶421
360-1324	58
360-1758	198 200
360-1759	198 200
360-1760	178
360-1761	176
360-1762	488

▶ PRIMARY REFERENCE

PART NUMBER INDEX

Part	Page
360-6715	▶300 352
360-7602	65
360-7603	65
360-8958	▶92 94
360-8960	92
360-9101	546
360-9113	497
360-9114	495 497
360-9119	450 452
360-9124	450 452
361-1045	118 144 146 148 150 152
361-1901	254 256
361-1902	254 256
361-1903	254 256
361-1904	254 256
361-1905	254 256
361-1906	254 256
361-2220	69 71
361-2221	71
361-2445	168 169 170
362-2517	456 470 473 ▶493
362-2518	470 473 ▶493
362-2572	458 464 468 ▶582
362-2573	458 464 468 ▶520
362-2574	456 458 464 468 ▶537
362-2575	458 464 468 ▶594
362-2577	464 468 ▶495
362-2581	▶198 464 468 470 473
362-2583	464 467 ▶584
362-2598	493
362-3905	33
362-5412	92 94
362-6442	78
362-6528	254 256
362-8725	514
362-8726	514
362-8728	515
362-8729	515
362-9689	94
363-0591	78
363-0782	254 256
363-1627	381 383
363-2230	534
363-2231	534
363-2232	534
363-2233	534
363-2237	481
363-4075	260
363-5221	87
363-5795	262
363-5809	262
363-5813	50
363-5846	262
363-5913	113
363-5914	113
363-7106	318
363-7549	▶75 78
363-8248	352 ▶353
363-8249	352 ▶355
363-9046	262
363-9167	25
364-3603	254 256
364-3605	256
364-3642	116
364-4015	438 443 445
364-5485	60
364-5500	76
364-5768	47
364-5879	286
364-5962	58
364-5989	275
364-6004	65
364-7544	295 296
364-7557	216
364-7558	216
364-8099	265
364-8101	265
364-8104	536
364-8423	47
364-8467	265
364-9115	334
364-9164	428
364-9375	170
364-9376	170
365-0066	256
365-0067	256
365-1753	524
365-1755	524
365-2919	419
365-2985	9
365-4038	522
365-4042	522
365-4055	524
365-6011	585

▶ PRIMARY REFERENCE

PART NUMBER INDEX

Part	Page
365-6653	67
365-6654	67
365-7607	582, 583
365-8085	599, 601
365-9853	492
365-9854	491
366-1981	198
366-5826	565, 567, 569
366-5827	565, 567, 569
366-7938	340, ▶343
366-8853	17
367-0760	488
367-0844	607
367-6813	340
367-6898	298, 300
367-7482	565, 567, 569
367-8509	55
367-8512	55
367-8652	499
367-8653	493, 499
367-9297	554, 556
367-9342	254
367-9470	488
368-3063	488
368-3147	193
368-4536	176
368-4778	488
369-1255	9
369-3707	21
369-4711	291
369-7799	96
369-8098	298
369-8101	298
369-	▶
374-7466	131
374-7467	129
374-7468	129, 131
374-8044	355, ▶357
374-8370	353, 355
374-8372	129, 133, 139
375-0107	124
375-0674	375
375-1476	▶310, 379
375-2255	204
375-2647	▶105, 106
375-6060	▶136, 178
375-6567	249
375-6568	250
375-6988	107
375-7976	300
375-8254	105
375-8402	204, 534
375-8769	▶371, 392, 393, 395, 396
375-8770	▶372, 392, 394
375-8771	371, ▶406
375-8772	372, ▶408
375-8930	69, 71
375-9272	27
375-9516	437
375-9898	85, 87
376-	
▶	87
377-5357	7, ▶33
377-5359	7, ▶78
377-5361	7, ▶71
377-5364	81
377-5367	81
377-5368	62, 81
377-5369	81
377-5373	81
377-5374	78
377-5377	62
377-5378	62
377-5379	62
377-5384	62
377-7277	438, 443, 445
377-9082	8
377-9255	24
378-2831	323
378-2832	323
378-3247	307
378-6901	▶166, 178
378-7652	353, ▶360
379-8445	181
379-8454	268
380-2065	36, 37
380-6851	219
380-9615	11
381-1893	62
381-1896	3, ▶230
381-1897	230, ▶293
381-1898	293, ▶318
381-1908	7, ▶26
381-	
383-7254	62
383-7256	377
383-7260	2, 3, ▶377
384-0738	254, 256
384-0739	254, 256
384-1773	113
384-3887	186
384-3888	186
384-7633	343
384-7634	343
384-7635	343
384-7636	▶288, 357
384-8359	325
384-8815	375, 377
384-9265	278, ▶282
384-9267	280, ▶284
385-0229	565, 567, 569
385-0230	572, 573, 574
385-1398	99
385-5503	572
385-5506	572, 573
385-5507	576
385-5510	574
385-5513	574
385-5948	▶287, 360
385-7265	565, 567, 569
385-	

▶ PRIMARY REFERENCE

PART NUMBER INDEX

Part	Page
	102
387-5730	516
387-5732	516
387-7705	124
	▶202
387-7864	85
	87
388-1362	110
388-1479	▶542
388-2035	▶542
388-2109	224
388-2110	▶141
	379
	381
	383
388-4934	438
388-6292	▶163
	169
	170
388-6427	314
388-7009	85
	87
389-1233	67
389-1234	67
389-1235	67
389-2618	345
389-3996	266
389-4418	109
	437
	441
389-5708	166
389-5882	310
	▶327
389-5885	310
389-5886	327
390-1735	182
390-1736	182
390-3208	506
	▶586
390-3213	▶502
	504
390-3214	504
	507
390-	
391-0760	85
391-0761	76
391-0771	216
391-0772	268
391-0773	446
	▶524
391-0774	216
391-0775	216
391-0776	216
391-0777	216
391-0778	375
391-0779	375
391-0780	375
391-2997	433
391-3905	447
391-3906	447
391-3907	447
391-3908	447
391-8357	▶516
	542
	544
391-8833	345
391-8861	345
391-8862	345
391-8863	345
391-8864	345
391-9058	345
391-9059	345
391-9060	345
391-9063	345
391-9071	345
391-9157	545
391-9168	547
391-9177	512
391-9178	513
392-9277	574
392-9278	569
	▶578
392-9285	565
	▶572
392-9286	567
	▶573
392-9287	569
	▶577
393-0160	▶475
	542
393-0161	▶476
	542
393-0162	475
	▶477
393-0163	476
	▶478
393-0164	542
	▶550
393-0165	542
	▶551
393-0166	▶456
	462
393-0167	▶458
	463
393-0168	543
	▶552
393-0169	543
	▶553
393-0172	549
393-0173	548
	549
	550
	551
	552
	553
393-0175	548
393-0179	548
393-0181	550
393-0183	549
393-0185	551
393-0187	553
393-0189	552
393-0190	477
393-0191	478
393-0196	512
393-0197	513
393-0200	551
393-0201	550
393-0206	477
393-	
393-9162	85
	87
393-9163	522
	524
393-9164	524
393-9165	522
393-9166	85
	87
394-1259	368
394-1260	369
394-1261	368
	369
394-5944	589
394-5945	589
394-5946	588
394-6381	76
	78
394-6529	504
	507
394-6539	518
394-6541	520
394-6548	448
	450
	452
	454
394-6552	493
	495
	497
	499
394-6555	448
	450
	452
	454
394-6556	464
	466
	467
	470
	▶506
394-6557	504
	507
394-6558	504
	507
394-6559	504
	507

▶ PRIMARY REFERENCE

PART NUMBER INDEX

Part	Page
395-0060	497, 499
395-0061	458, ▶49
395-0062	7, 456, ▶49
395-1016	9
395-1138	607
395-1139	534
395-3298	534
396-1193	414, 415
396-1194	554
396-1195	554
396-1196	556
396-2052	556
396-2421	107
396-2602	97
396-2603	107
396-2604	107
396-2606	107
396-2607	107
396-2608	107
396-2609	107
396-2610	107
396-2611	107
396-4638	107
396-4772	52
396-4786	▶39
396-5615	3
396-8335	▶39, 3
396-8336	142
397-1559	▶54, 2
397-6221	▶54, 2, ▶19, 20
397-6222	21
397-6223	172, 176
397-6225	176
415-5518	18, ▶36
415-5519	4, 6, ▶37
415-5520	4, 6, ▶21
415-5522	4, 6, ▶96
415-5523	4, 6, ▶10
415-5527	6, 4, 6, ▶10
415-5535	7
415-7105	4, 6, ▶12, 0
415-7116	4, 6, ▶11
415-7119	4, 6, ▶28
415-7947	4, 6, ▶97
415-7948	4, 6, ▶43
415-7949	4, 6, 18, ▶31
415-9833	4, 6, ▶17
415-9834	9, 18
416-1030	5, 7
416-1047	4, 6, ▶27
416-1051	4, 6, ▶40
416-1055	4, 6, ▶35
416-	4, 6, ▶30
416-8775	4, 6, ▶84
416-8779	491
416-9543	4, 6, ▶80
417-3391	4, 6, ▶25
417-3394	4, 6, ▶49
417-3407	7, ▶89
417-3453	4, 6, ▶19, 3
417-3458	4, 6, ▶32
417-4119	4, 6, ▶34
417-4186	4, 6, ▶48
417-4187	4, 6, ▶23
417-4213	5, 7, ▶54
417-4284	4, 6, ▶59, 8
417-4286	4, 6, ▶39
418-2222	33
418-3840	113
418-7659	4, 6, ▶57
418-7917	▶13, 7, 170, 171
419-3263	222
419-3740	▶31
419-4040	2
421-7411	6, ▶83
421-8498	222
422-0244	189
422-6971	534
422-8379	448, 450, 452, 454
422-8800	291
422-9051	291
423-1940	534, ▶12
423-1981	9, 198
423-1982	69, 71
423-1983	60, 332, 421
423-1984	216, 219, 220, 375, 377, 421, 423, 425
423-7576	45, 423, 425
423-7972	24
423-9865	254, 256
424-1372	254, 257
424-1383	3, ▶23, 7
424-4322	2, 3, ▶23
424-4579	8, 3, 9
424-4580	5, 396
424-6727	131
424-7531	▶44, 8
424-7533	456, ▶45

▶ PRIMARY REFERENCE

PART NUMBER INDEX

Part	Page
430-5204	4, 6, ▶192
431-1629	▶611
433-0190	99
433-1316	97, ▶99
433-1900	50
433-2688	50
433-4179	416
433-5258	4, 6, ▶50
433-5927	336, ▶345
433-6323	▶12, 18
433-6810	202
434-0776	317
434-1070	▶462, 543
434-1071	▶463, 543
434-1072	497, 499
434-1073	477, 478
434-1074	547, 554
434-1984	▶612
434-3828	184
434-5082	▶438, 441
434-5083	438
434-5084	441
434-7537	154
434-7540	155
435-1281	176
435-2001	85
435-2002	87
435-5482	545, 556
435-7493	▶4
435-7494	▶6
435-7501	51
436-3718	510, 590
436-3719	510, 590
436-3720	510, 590
436-3721	510
436-3722	510
436-3723	510
436-3724	590
436-3725	590
436-3726	502, 510
436-3727	586, 590
437-2651	345, ▶349
437-8682	274, 276
437-8744	293, 294, ▶317
438-7447	143, ▶501
438-7448	501
438-7763	▶93, 100, 102
439-1840	100, 102
439-1841	93
439-5037	93
439-5039	93
439-5040	93
439-7224	184, ▶432
439-9984	414, 415
440-0000	493, 495
440-2105	▶122, 144
444-3666	7, ▶45
444-5943	45
444-6758	▶136, 196
444-8091	5, ▶90
444-9582	4, 6, ▶24
445-9016	106
447-5149	▶134, 142
447-5249	37
447-5250	37
447-5251	36
447-5252	37
448-2620	14
448-8980	100, 102
448-8981	100, 102
449-3315	96
449-3333	106
450-5295	414, 415
450-9199	154, 155
450-9646	62, 81
450-9772	598
451-3120	▶1
451-3121	1, ▶604
451-3130	1, ▶7
451-3131	7, ▶62
451-3132	7, ▶100
451-3139	102
451-3140	1, 2, ▶124
451-3270	▶446
451-3280	▶543
451-3290	▶544
451-3291	▶528, 543
451-3292	544, ▶606
451-3300	▶2
451-7225	595, 597
451-7736	16, ▶17
451-8019	132
452-3112	193
452-6719	578
452-7386	▶18
452-7397	▶22
452-8547	▶94, 95
453-0790	105
453-3537	5
453-3538	7
453-4742	163
453-7163	4, 6, ▶95
454-0683	10
454-3054	▶491
454-3055	▶492
454-5109	105
454-7795	264
454-8389	219
454-8475	270
454-9914	97
455-0704	132, 134
455-0705	132, 134, 135
455-0706	132
455-0707	139
455-0708	132
455-0709	132, 139

▶ PRIMARY REFERENCE

PART NUMBER INDEX

Part	Page
462-0499	▶53 8
462-0500	▶53 9
462-5780	▶46 4
462-5781	469
462-6480	▶47 0
462-9047	474 456 458 464 468
462-9048	470 473
462-9049	493
462-9050	495
463-7544	470 464 ▶47 2
463-7568	118 144 148 150
463-8336	118
464-9212	146 148 152
465-2511	107
466-1706	334 338 504 507 456 458
466-4849	464 468
467-8535	470 473
467-9049	36
468-7762	37 488
468-7769	492
468-7770	12 37
470-1857	12 37
470-1858	12 37 226
474-2599	445
475-3593	▶31 4
475-3595	383 ▶31 6
475-4984	381
475-8373	157
475-8436	12
478-8210	113 ▶12 4
478-8212	144 148
479-0025	▶12 5
479-0028	150
479-0905	118
479-4114	73 ▶13 5
479-4115	202
479-8444	143 ▶15 4
480-3036	143 ▶15 5
480-4406	173
482-0233	175
483-0535	410
483-0536	35
483-2126	90
483-2127	226 228
483-2128	▶22 6
484-9581	156 157 156 157 158 159 138 139 546 64
485-3438	
485-4894	
485-4895	
486-2795	
486-2796	
491-2379	394 395 396 362 364 366
491-2380	362 364 366
491-2382	362 364 366 534 156 4 6 ▶14 2 362 364 366
491-8123	
492-2631	
492-2947	
492-6209	
493-1777	314 316 ▶32 8 272 385 386 385 488 ▶38 5 393 394 395 396
493-6139	
493-6887	
493-6888	
493-9683	
496-0535	
496-0536	
496-4814	▶39 3
496-5276	
499-3096	242
499-3097	▶39 4
499-3589	241
499-6781	386 176
499-9101	▶38 6 394 395 396
499-9118	▶24 1 394 395
504-4864	
504-5098	410
504-6797	410
504-6803	▶394
504-6804	▶394
504-6805	▶395
504-6807	▶213 231
504-6809	▶395
504-6816	▶373 394 395 396 3
504-6817	▶230
504-6818	▶214 230
504-6820	▶395
504-6821	386
504-6836	386
504-6839	184
504-6841	▶2 2
505-8504	▶231 1
505-8505	▶245 1
505-8543	▶247 1
506-0959	▶544
506-7954	410
506-7958	▶249 1
506-7961	249
506-9574	249
506-9575	599
506-9578	599
506-9579	▶601
507-1554	601
507-1556	▶250 1
507-5015	250 89 90

► PRIMARY REFERENCE

PART NUMBER INDEX

Part	Page
509-9421	▶467
	468
509-9422	▶468
	469
509-9423	▶469
	544
510-0256	414
510-0764	.1 ▶109
510-0765	.2 ▶434
510-0767	.1 ▶434
510-0768	434 ▶441
510-3955	.1 ▶265
510-3956	.1 ▶ 47
510-4009	▶414
	436
510-4010	▶423
	434
510-4011	▶425
	434
510-4012	434 ▶435
510-4013	434 ▶436
510-4014	▶260
	434
510-4015	▶389
510-4016	▶262
	434
510-4075	488
510-5297	.4 6
	▶ 14
510-6132	▶540
510-8278	562
	▶437
514-1273	▶143
514-1274	▶143
514-6423	▶113
	124
514-6670	. 1 ▶243
514-6684	247
514-9008	247
515-1429	▶173
515-1430	▶175
515-1544	247
515-2352	245
515-3035	540
515-3709	245
	247
515-3913	245
515-3994	245
515-4689	400
516-0729	226
	228
516-0908	124
516-8451	▶2
517-3912	332
517-3913	331 ▶332
517-5373	▶157
517-5375	▶182
	389
517-5901	429
517-5902	430
517-8243	96
518-3891	47
518-4191	265
518-4192	47
	265
518-4947	124 ▶204
518-5437	12
	14
525-1428	397
	400
	408
525-2060	602
525-5773	256
525-5797	596
525-5873	428
	429
525-5874	430
	431
525-7114	168
	169
	171
	173
	175
526-0604	366
	410
526-2606	243
526-4297	241
	242
526-4336	241
	242
526-4452	243
526-4462	385
526-4463	386
526-5013	241
	242
526-5837	121
526-5838	▶121
	490
526-6368	374
526-6370	373
526-9307	▶374
	393
	394
	395
	396
527-0371	544 ▶561
527-0372	▶54
525-1428	▶437
	400
525-2060	602
525-5773	256
525-5797	596
525-5873	428
	429
525-5874	430
	431
525-7114	168
	169
	171
	173
	175
526-0604	366
	410
526-2606	243
526-4297	241
	242
526-4336	241
	242
526-4452	243
526-4462	385
526-4463	386
526-5013	241
	242
526-5837	121
526-5838	▶121
	490
526-6368	374
526-6370	373
526-9307	▶374
	393
	394
	395
	396
527-0371	544 ▶561
527-0372	▶54
539-2601	▶ 3
539-2608	▶ 3
542-0258	▶396
543-3032	264
544-2908	158
544-2919	158
	159
544-2921	158
	159
545-7119	124
546-0311	▶131
	204
548-0589	250
548-8002	159
549-5085	239
549-5086	239
549-5087	240
549-5088	240
550-4318	▶530
	543
550-4319	▶532
	544
552-3171	375
552-7386	264
552-7387	264
552-7388	264
553-0234	125
553-0235	125
553-0236	125
553-0237	125
553-0238	126
553-0239	126
554-1057	▶603
559-2414	243
559-2416	247
559-9492	123
	125
560-0261	124
561-9382	373
	▶231
539-2601	▶ 3
539-2608	▶ 3
542-0258	▶396
543-3032	264
544-2908	158
544-2919	158
	159
544-2921	158
	159
545-7119	124
546-0311	▶131
	204
548-0589	250
548-8002	159
549-5085	239
549-5086	239
549-5087	240
549-5088	240
550-4318	▶530
	543
550-4319	▶532
	544
552-3171	375
552-7386	264
552-7387	264
552-7388	264
553-0234	125
553-0235	125
553-0236	125
553-0237	125
553-0238	126
553-0239	126
554-1057	▶603
559-2414	243
559-2416	247
559-9492	123
	125
560-0261	124
561-9382	373

▶ PRIMARY REFERENCE



©2019 Caterpillar All Rights Reserved

CAT, CATERPILLAR, their respective logos, “Caterpillar Yellow”, and the POWER EDGE trade dress as well as corporate and product identity used herein, are trademarks of Caterpillar and may not be used without permission.