RUTHZIL TRATOR COMERCIAL DE PEÇAS LTDA 11 97083-6812 ROLANDO CITRANGULO

DYNAPAC
CC102

SPARE PARTS CATALOGUE

SCC102-2EN4

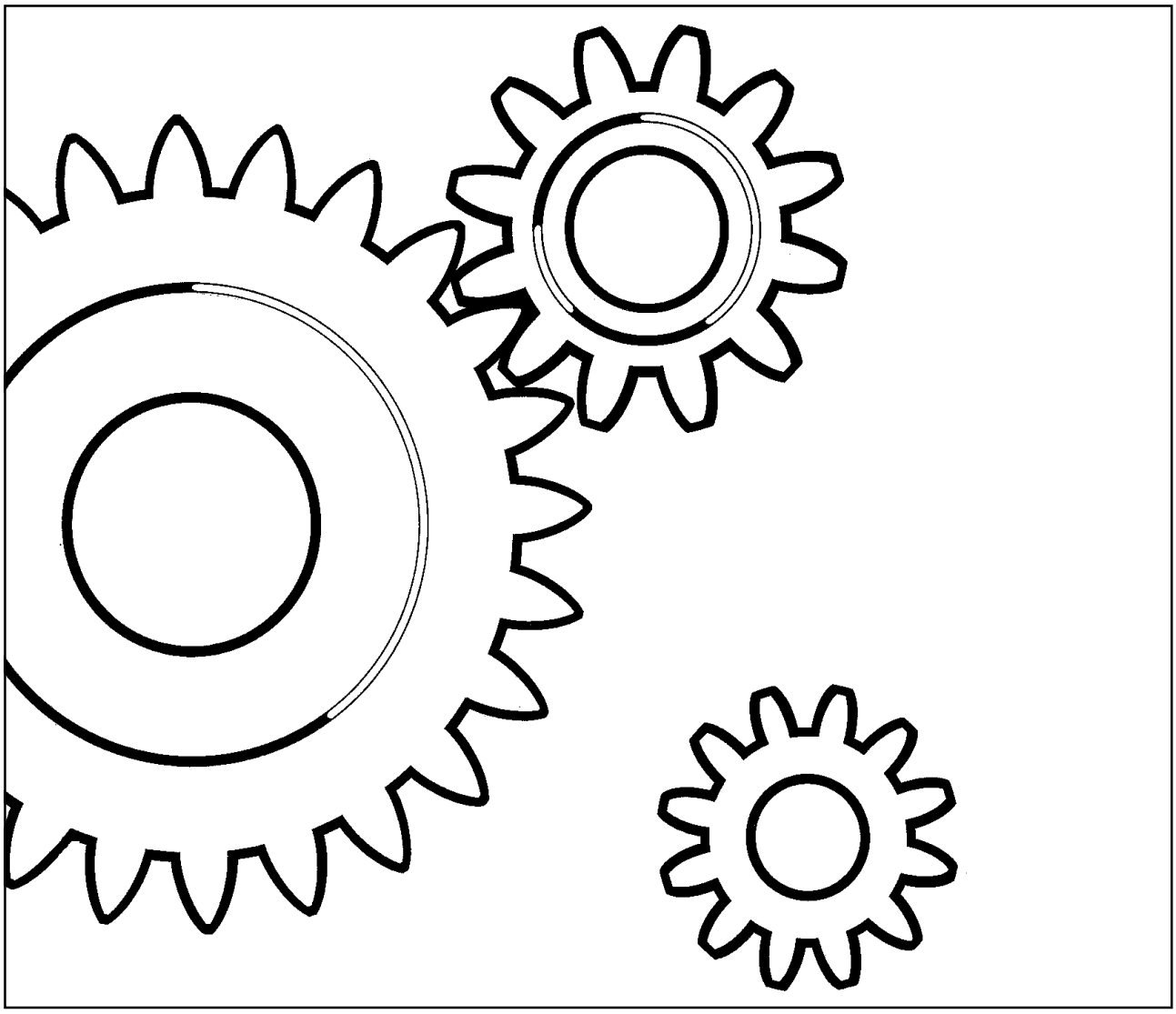

DYNAPAC

Box 504, SE-371 23 Karlskrona, Sweden
Phone: +46 455 30 60 00, Fax: +46 455 30 60 10
www.dynapac.com

DYNAPAC

Vibratory Tandem Roller
CC102

Spare Parts Catalogue
SCC102-2EN4

Valid from roller serial number:

**60117500* - *60119076* CC102 DEUTZ*
**60127500* - *60129076* CC102 ISUZU*

Diesel engines:

DEUTZ F2L 2011
ISUZU 3LD1 PW-05

Published catalogue issues valid for these rollers:

Catalogue	*Issue date*	*Valid for serial numbers*
SCC102-2EN1	*2004-01*	*Replaced by SCC102-2EN2*
SCC102-2EN2	*2005-03*	*Replaced by SCC102-2EN3*
SCC102-2EN3	*2006-07*	*Replaced by SCC102-2EN4*
SCC102-2EN4	*2006-11*	*See above*



We reserve the right to change specifications without notice.
Printed in Sweden.

DYNAPAC

RESERVDELSBESTÄLLNING

Följande uppgifter ska lämnas vid beställning av reservdelar för att undvika leveransfel:

1. Maskintyp.
2. Vältens serienummer.
3. Antal av önskad reservdel.
4. Reserdelens artikelnummer.
5. Reservdelens benämning.
6. Måttuppgifter vid beställning av metervara.

ORDERING SPARE PARTS

To avoid errors in delivery, please give the following information when ordering spare parts:

1. Type of machine.
2. Roller serial number.
3. Quantity required.
4. Part number.
5. Parts denomination.
6. Dimensions when ordering per length.

ERSATZTEILBESTELLUNG

Zur Vermeidung von Fehllieferungen sind bei der Bestellung von Ersatzteilen folgende Angaben zu machen:

1. Maschinentyp.
2. Herstellungsnummer.
3. Bestellmenge. (Quantity)
4. Ersatzteilnummer. (Part Nº)
5. Ersatzteilbenennung. (Denomination)
6. Massangaben bei Bestellung von Meterware.

ORDINI DI RICAMBI

Per evitare errori nelle consegne di ricambi, Vi preghiamo di comunicarci le seguenti informazioni al momento dell 'ordinazione:

1. Tipo di macchina.
2. Numero di serie della macchina.
3. Quantità dei pezzi desiderati. (Quantity)
4. Numero di codice del pezzo. (Part Nº)
5. Descrizione del pezzo di ricambio. (Denomination)
6. Misura, in caso di ordine per metro.

PEDIDO DE RECAMBIOS

Para evitar errores en las entregas, deberán indicarse los siguientes datos al hacer un pedido de recambios:

1. Tipo de máquina.
2. Número de serie.
3. Cantidad de piezas deseadas. (Quantity)
4. Número de artículo de la pieza de recambio. (Part Nº)
5. Denominación de la pieza. (Denomination)
6. Indíquese la medida al solicitar un artículo que se expide por metros.

COMMANDE DE PIECES DE RECHANGE

Les indications suivantes doivent être fournies lors de la commande de piéces de rechange, afin d'éviter toute erreur de livraison:

1. Type de machine.
2. Numéro de série.
3. Quantité désirée de pièce de rechange. (Quantity)
4. Numéro de la piéce de rechange. (Part Nº)
5. Dénomination de la piéce de rechange. (Denomination)
6. Longueur en cas de commande au mètre.

YOUR AGENT/DEALER:

DYNAPAC

Text pages

The text pages is structured as the picture on the right.

1. This is the remarks for specific items and the descriptions of the remarks is at the bottom of the parts list.
2. Parts indicated by a dot and moved to the right are included when buying the assembled unit above.
3. Spare parts and service code for a specific part, mainly for internal use at Dynapac. "A" = Service part, "B" = Fast moving part, "C" = Suggested exchanged part and "D" = Regular spare part.

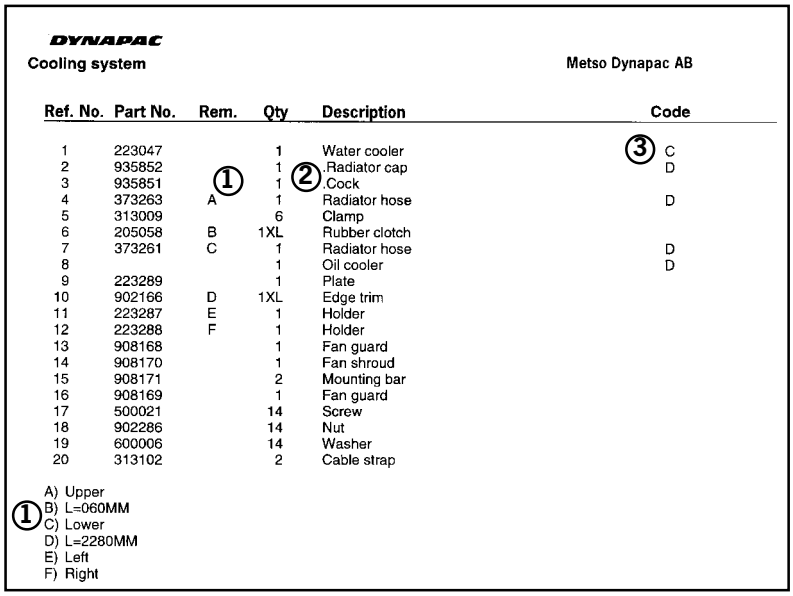

DYNAPAC

Cooling system — Metso Dynapac AB

Ref. No.	Part No.	Rem.	Qty	Description	Code
1	223047		1	Water cooler	③ C
2	935852		1	Radiator cap	D
3	935851	①	1	② Cock	
4	373263	A	1	Radiator hose	D
5	313009		6	Clamp	
6	205058	B	1XL	Rubber clotch	
7	373261	C	1	Radiator hose	D
8			1	Oil cooler	D
9	223289		1	Plate	
10	902166	D	1XL	Edge trim	
11	223287	E	1	Holder	
12	223288	F	1	Holder	
13	908168		1	Fan guard	
14	908170		1	Fan shroud	
15	908171		2	Mounting bar	
16	908169		1	Fan guard	
17	500021		14	Screw	
18	902286		14	Nut	
19	600006		14	Washer	
20	313102		2	Cable strap	

① A) Upper
B) L=060MM
C) Lower
D) L=2280MM
E) Left
F) Right

Changes

PARTS INFO	SERVICE INFO	GROUP	PAGE	NOTES

Notes

Notes

DYNAPAC

PÄRMETIKETT

För att undvika fel vid reservdelsbeställning finns här nedan två etiketter som passar i fickorna på pärmarnas ryggar. På dessa kan man se från vilket vältnummer av aktuell maskin reservdelskatalogen gäller. Gör så här:

1. Tag denna sida ur pärmen.
2. Klipp ut etiketten till **VÄNSTER** (1) och sätt in den i fickan på **DENNA** pärmens rygg.
3. Finns det en etikett till **HÖGER** (2), kan denna användas på pärmen för **FÖREGÅENDE** utgåva av denna katalog.
4. Kasta detta papper.

BINDER LABEL

To avoid errors when ordering spare parts use the labels below to identify the catalogues on the back of the binder. The label contain the serial number range for which the catalogue is valid. Do like this:

1. Remove this page from the binder.
2. Cut out the **LEFT** label (1) and put it on **THIS** binders back.
3. If there is a label to the **RIGHT** (2), it can be used on the binder for **PRECEDING** issue of this catalogue.
4. Throw away this paper.

KATALOG-BESCHRIFTUNG

Zur Vermeidung von Fehlen bei der Ersatzteilbestellung benutzen Sie bitte die unteren Beschriftungen, um die Kataloge auf der Rückseite zu kennzeichen. Auf der Beschriftung ist angegaben, für welche Maschinennummern der jeweilige Katalog gültig ist. Ablauf:

1. Nehmen Sie dieses Blatt aus dem Katalog.
2. Schneiden Sie die **LINKE** Beschriftung (1) aus. Schieben Sie die Beschriftung in die tasche auf **DEM** Katalogrücke.
3. Sollte die Beschriftung unten **RECHTS** (2) mitgeliefert werden, kennzeichen Sie damit bitte die **ÄLTERE** Ausführung dieses Kataloges.
4. Den Rest dieses Blattes bitte vernichten.

ETICHETTA POSTA SUL RACCOGLITORE

Per evitare errori quando ordinate pezzi di ricambio, usate le etichette in calce che servono ad identificare i cataloghi sul retro del raccoglitore. L'etichetta indica il numero di matricola delle maccine prese in considerazione nel catalogo.

1. Rimuovete questa pagina dal raccoglitore.
2. Ritagliate l'etichetta posta a **SINISTRA** (1) e ponetela sul retro **DEL** raccoglitore.
3. Se trovate anche un'etichetta sulla **DESTRA** (2), ritagliatela e ponetela sul raccoglitore relativo alla **PRECEDENTE** edizione del catalogo.
4. Distruggete questo foglio.

ETIQUETA PARA LA CARPETA

Para evitar errores al pedir repuestos utilicen las etiquetas abajo descritas para identificar los catálogos en la parte trasera de la carpeta. En la etiqueta se ven los números de referencia de la serie para la cual es válido el catálogo. Instrucciones:

1. Quitar esta página de la carpeta.
2. Corta la etiqueta **IZQUIERDA** (1) y ponerla est **ESTA** carpeta en la parte trasera.
3. Si hay una etiqueta en la parte **DERECHA** (2) se puede utilizar en la carpeta para el catálogo que **PRECEDE** a esta.
4. Tirar esta hoja.

ETIQUETAGE DU CATALOGUE

Afin d'éviter des erreurs lors de commandes de pièces de rechange, nous vous conseillons d'apposer les marquages ci-dessous à l'arrière du classeur, pour identifier les catalogues. Ce marquage indique les numéros de série pour lesquels le catalogue est adapté. Il convient de procéder de la façon suivante:

1. Retirez cette page du classeur.
2. Découpez l'étiquette de **GAUCHE** (1), et apposez-la à l'arrière de **CE** catalogue.
3. Si il y a une étiquette à **DROITE** (2), vous pourrez l'apposer sur le classeur de l'edition **PRECEDENTE** du catalogue.
4. Détruire cetta feuille.

1.



CC102

Catalogue **SCC102-2EN4**
Valid **from** serial number:
601x7500* - *601x9076

CC102 SN 601X7500 - 601X9076 2

Service kits 4

Service kits 6
938542 Service kit, Deutz F2L 1011F/2011, F3L 2011 50 h 8
938539 Service kit, Isuzu 50 h 10
938543 Service kit, Deutz F2L 1011F/2011, F3L 2011 500 h 12
938540 Service kit, Isuzu 500 h 14
938544 Service kit, Deutz F2L 1011F/2011 1000 h 16
938541 Service kit, Isuzu 1000 h 18

Repair kits 20

Repair kits 22
938908 Eccentric shaft kit 24
938892 Drum rotation kit 26
938913 Scraper kit CC102 - (12 mm) 28
938885 Shock absorber kit, drum 30
938575 Steering hitch kit 32

Frame 34

Frames Up to 601X8707 36
Frames From 601X8708 38
Scrapers, standard drums Up to 601X7649 40
Scrapers, STD From 601X7650 Up to 601X9029 42
Scrapers, STD From 601X9030 44
Scrapers, spring loaded, front drum Up to 601X7649 46
Scrapers, spring loaded, rear drum Up to 601X7649 48
Scrapers, spring loaded From 601X7650 50
Steering hitch 52
Structure DEUTZ, F2L Up to 601X8206 54
Structure DEUTZ, F2L From 601X8207 58
Structure ISUZU 62
Sprinkler system Front tank Up to 601X8648 66
Sprinkler system Front tank From 601X8649 68
Sprinkler, front/rear Up to 601X7649 72
Sprinkler front/rear From 601X7650 74

Drum 76

Drum 78

Engine 80

Engine DEUTZ F2L 2011 82
Engine ISUZU 3LD1 PW-05 86
Cooling system ISUZU 88
Intake system DEUTZ 90
Intake system ISUZU 92
Fuel system DEUTZ 94
Fuel system ISUZU 96
Exhaust system DEUTZ 98
Exhaust system ISUZU 100

Hydraulic system 102

Hydraulic diagram 104
Propulsion system DEUTZ / ISUZU 106
372352 Hydraulic pump, propulsion 110

	Rotating group, valves, charge pump	112
	Control unit, cpl	114
375631	Hydraulic motor, propulsion, drum	116
380736	Junction block	118
	Vibration system DEUTZ	120
	Vibration system ISUZU	124
359524	Hydraulic pump, vibration DEUTZ	128
375649	Hydraulic pump, vibration ISUZU	130
370173	Vibration valve ISUZU	132
	Steering system Up to 601X7956	134
	Steering system From 601X7957 Up to 601X8939	136
	Steering system From 601X8940	138
902099	Steering valve	140
374603	Steering cylinder	142
	Brake system DEUTZ / ISUZU	144
	Electrical equipment	**146**
	Electrical equipment DEUTZ Up to 601X7525	148
	Electrical equipment DEUTZ From 601X7526	152
	Electrical equipment ISUZU	156
	Control panel	160
	Electric battery switch DEUTZ	164
	Interlock	166
	Interlock Loxam From 601X8311	168
	Sprinkler timer	170
	Driving & side direction lights Up to 601X7576	172
	Driving & side direction lights From 601X7577	176
	Working lights	180
	Licence plate light, parking lights	182
	Rotating beacon	184
	Drivers platform	**186**
	Drivers platform Up to 601X8977	188
	Drivers platform From 601X8978	190
	Seat	192
	Control panel	194
	Arm rests, seat belt, laterally adjusting Up to 601X8977	196
	Arm rests, seat belt, laterally adjusting From 601X8978	198
	Comfort drivers seat, laterally adjusting and seat belt Up to 601X8977	200
	Comfort drivers seat, laterally adjusting and seat belt From 601X8978	202
	Engine and forward/reverse controls DEUTZ	204
	Engine and forward/reverse controls ISUZU	206
	F/r controls dual, control panel mounted	208
	F/r control dual left side, platform mounted	210
	Rops and fops	212
	Decals	**214**
	Plates and decals, ce-marking approved	216
	Standard equipment	**220**
	Standard equipment	222
	Optional equipment	**224**
	Cab, exterior Up to 601X8560	226
	Cab, interior Up to 601X8560	232
	Cab, heater Up to 601X8560	234
	Canopy	236

SMV sign 238
SMV sign placed on platform 240
Tool equipment 242
Noise suppression DEUTZ , 78 dB Up to 601X8206 244
Noise suppression DEUTZ , 78 dB From 601X8207 246
Noise suppression DEUTZ , 73 dB Up to 601X8206 248
Noise suppression DEUTZ , 73 dB From 601X8207 250
Noise suppression ISUZU 252
Back-up alarm 254
Rear mirror 256
Combination water supply 258
Combination water supply 2 rear sprinkler pipes 260
Brake release, propulsion motor 262
Cassette receiver 264
Towing valve 266
Flow divider 268
Vibration shut-off, front drum DEUTZ 270
Vibration shut-off, front drum ISUZU 272
Vibration shut-off, rear drum DEUTZ 274
Vibration shut-off, rear drum ISUZU 276
Automatic vibration control 278
Service brake 280
Driving, restriction 282
Bio-hydraulic oil lock Old design 284
High torque drum drive " Long" 286
372118 Hydraulic motor high torque 288
High torque drum drive " Short" 290
380594 Hydraulic motor, propulsion, drum 292
Brake release, propulsion motor 294

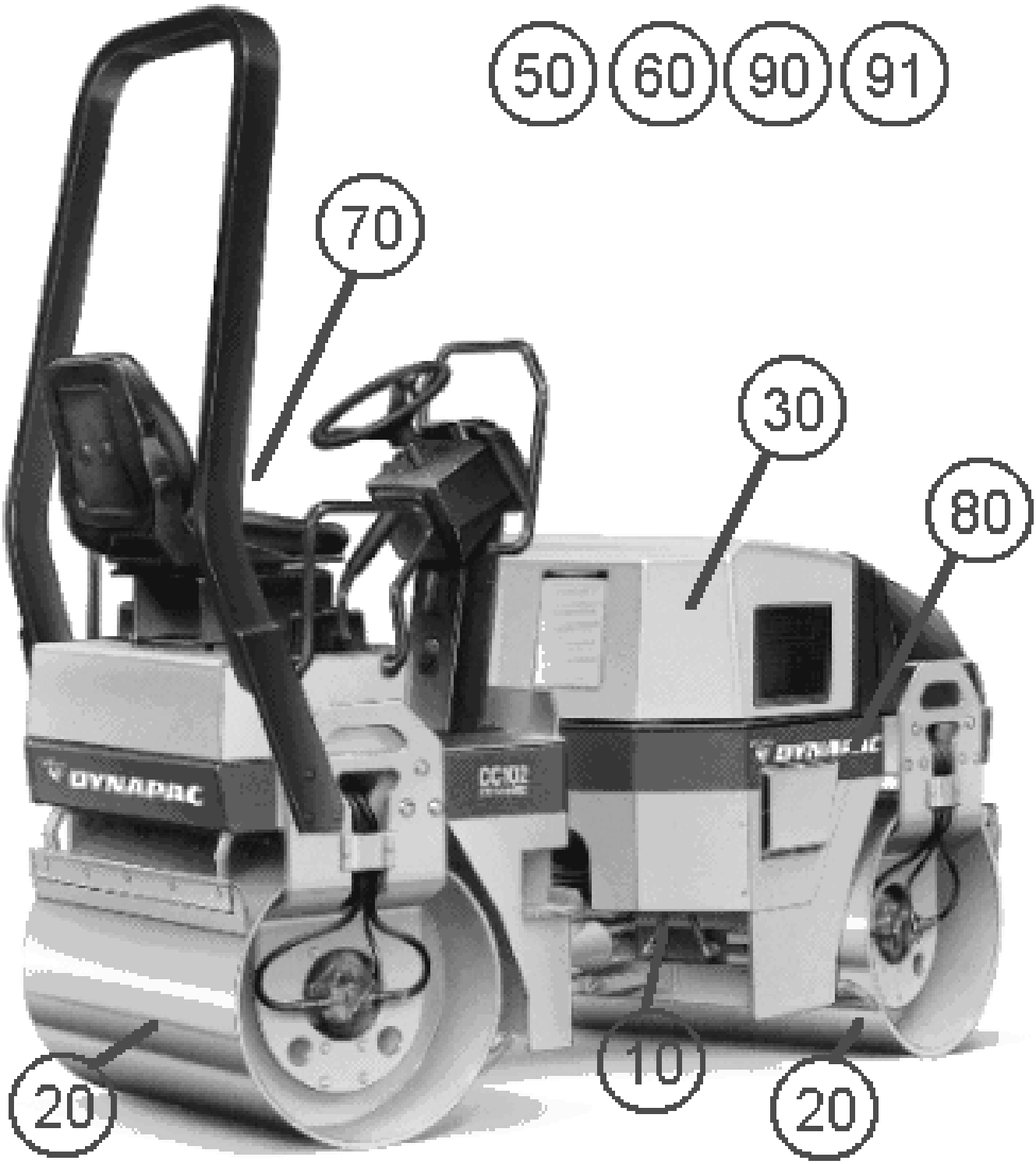
50
60
90
91
70
30
80
10
20
20

Ref. No.	Part No.	Rem.	Qty	Description	Code
				Service kits (Page 4)	
				Repair kits (Page 20)	
10				Frame (Page 34)	
20				Drum (Page 76)	
30				Engine (Page 80)	
50				Hydraulic system (Page 102)	
60				Electrical equipment (Page 146)	
70				Drivers platform (Page 186)	
80				Decals (Page 214)	
90				Standard equipment (Page 220)	
91				Optional equipment (Page 224)	

Service kits

Ref. No.	Part No.	Rem.	Qty	Description	Code
				Service kits (Page 6)	
1	938542			Service kit, Deutz F2L 1011F/2011, F3L 201150 hıge 8)	
	938539			Service kit, Isuzu (Page 10) 50 h	
2	938543			Service kit, Deutz F2L 1011F/2011, F3L 2011500 hje 12)	
	938540			Service kit, Isuzu (Page 14) 500 h	
3	938544			Service kit, Deutz F2L 1011F/2011 (Page 161000 h	
	938541			Service kit, Isuzu (Page 18) 1000 h	

Service kits

Ref. No.	Part No.	Rem.	Qty	Description	Code
1	938542			Service kit, Deutz F2L 1011F/2011, F3L 2011	50 h (Page 8)
	938539			Service kit, Isuzu (Page 10)	50 h
2	938543			Service kit, Deutz F2L 1011F/2011, F3L 2011	500 h (Page 12)
	938540			Service kit, Isuzu (Page 14)	500 h
3	938544			Service kit, Deutz F2L 1011F/2011 (Page 16	1000 h
	938541			Service kit, Isuzu (Page 18)	1000 h

938542 Service kit, Deutz F2L 1011F/2011, F3L 2011 50 h

17423

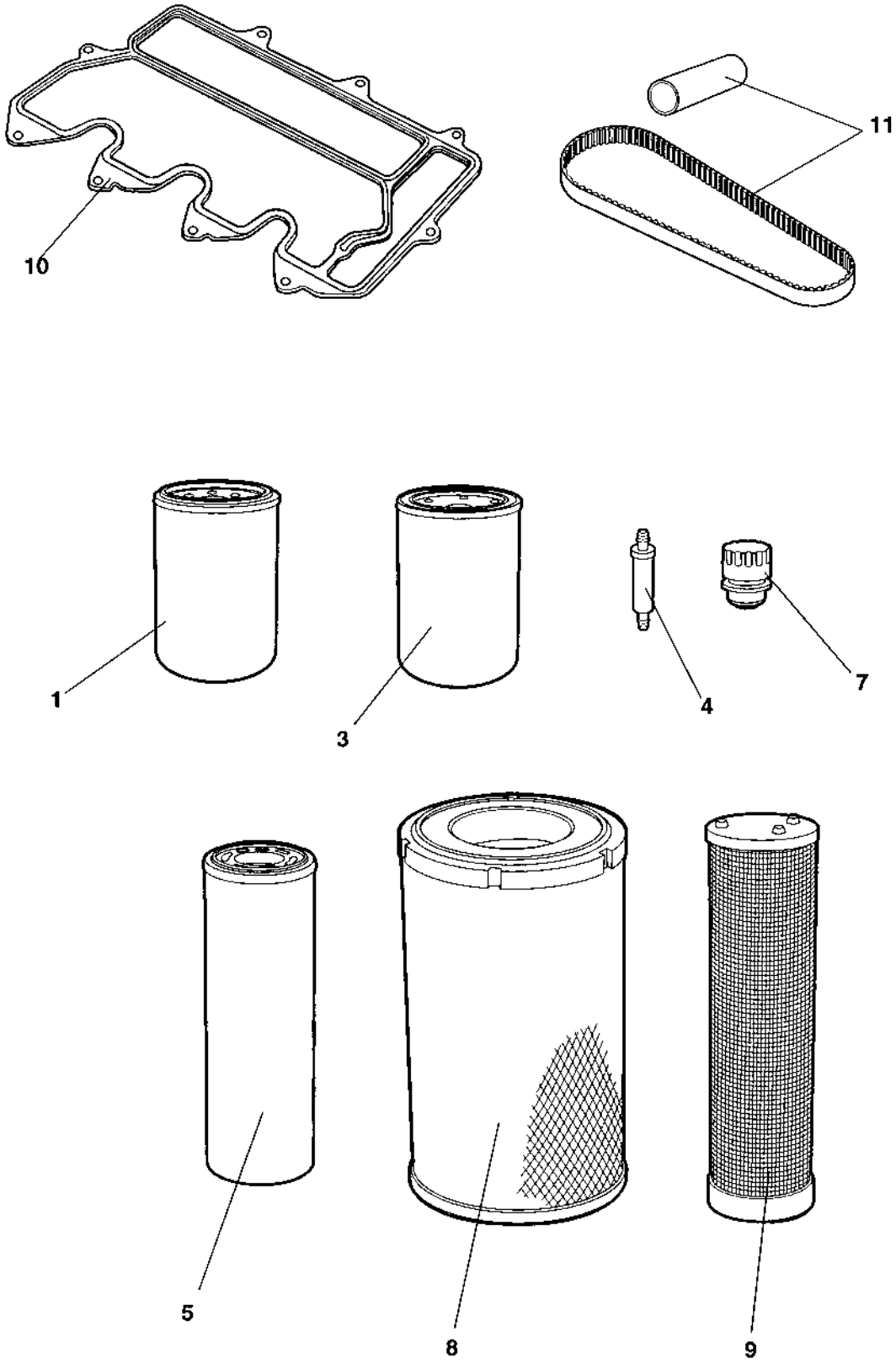

938542 Service kit, Deutz F2L 1011F/2011, F3L 2011 50 h

Ref. No.	Part No.	Rem.	Qty	Description	Code
1	939515		1	Oil filter	
3	903938		1	Fuel filter	
4	929322		1	Fuel strainer	
5	903247		1	Filter element	

938539 Service kit, Isuzu 50 h

17423

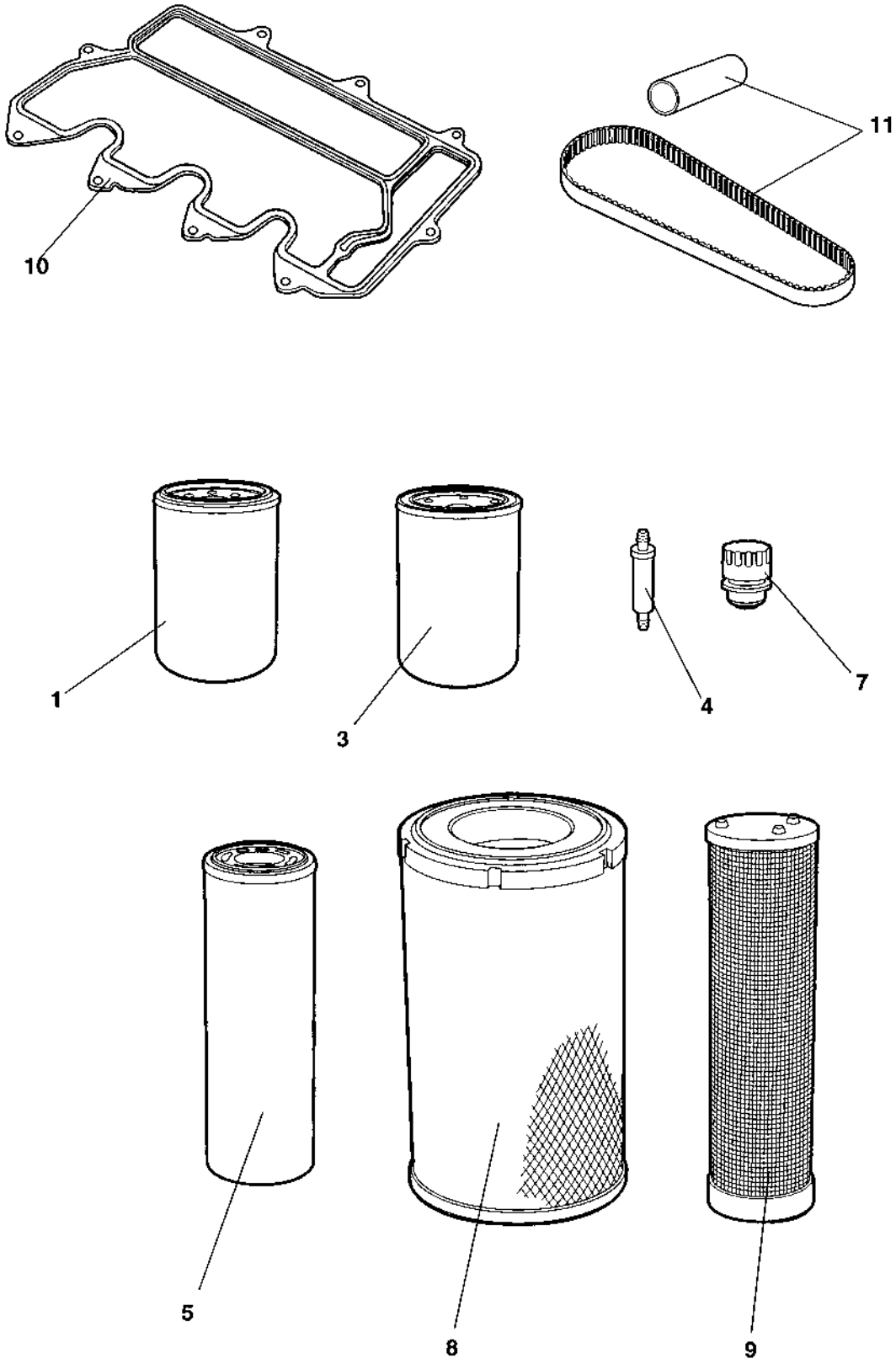

938539 Service kit, Isuzu 50 h

Ref. No.	Part No.	Rem.	Qty	Description	Code
1	908404		1	Oil filter	
3	908405		1	Fuel filter	
5	903247		1	Filter element	

938543 Service kit, Deutz F2L 1011F/2011, F3L 2011 500 h

17423

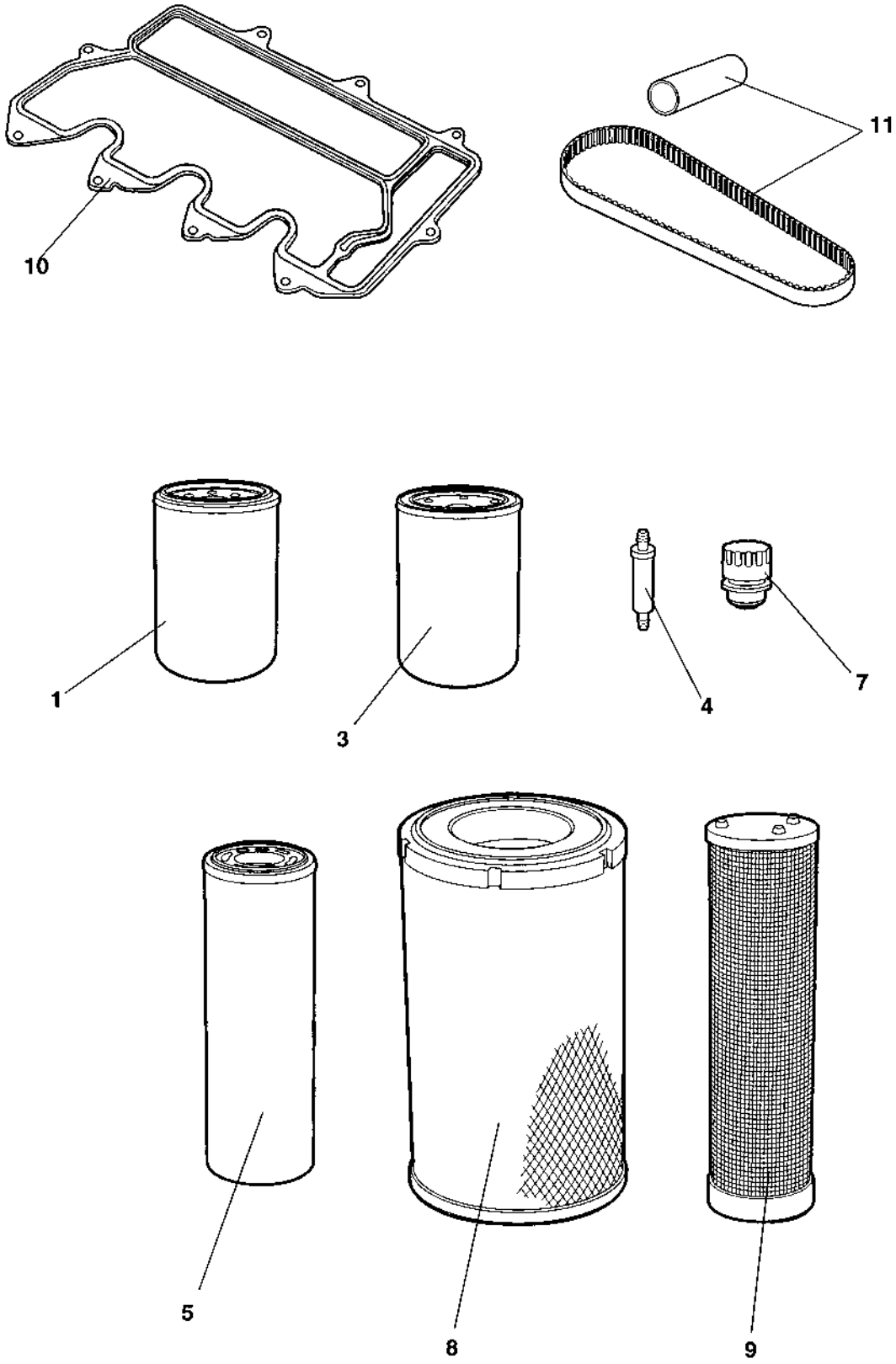

938543 Service kit, Deutz F2L 1011F/2011, F3L 2011 500 h

Ref. No.	Part No.	Rem.	Qty	Description	Code
1	939515		1	Oil filter	

938540 Service kit, Isuzu 500 h

17423

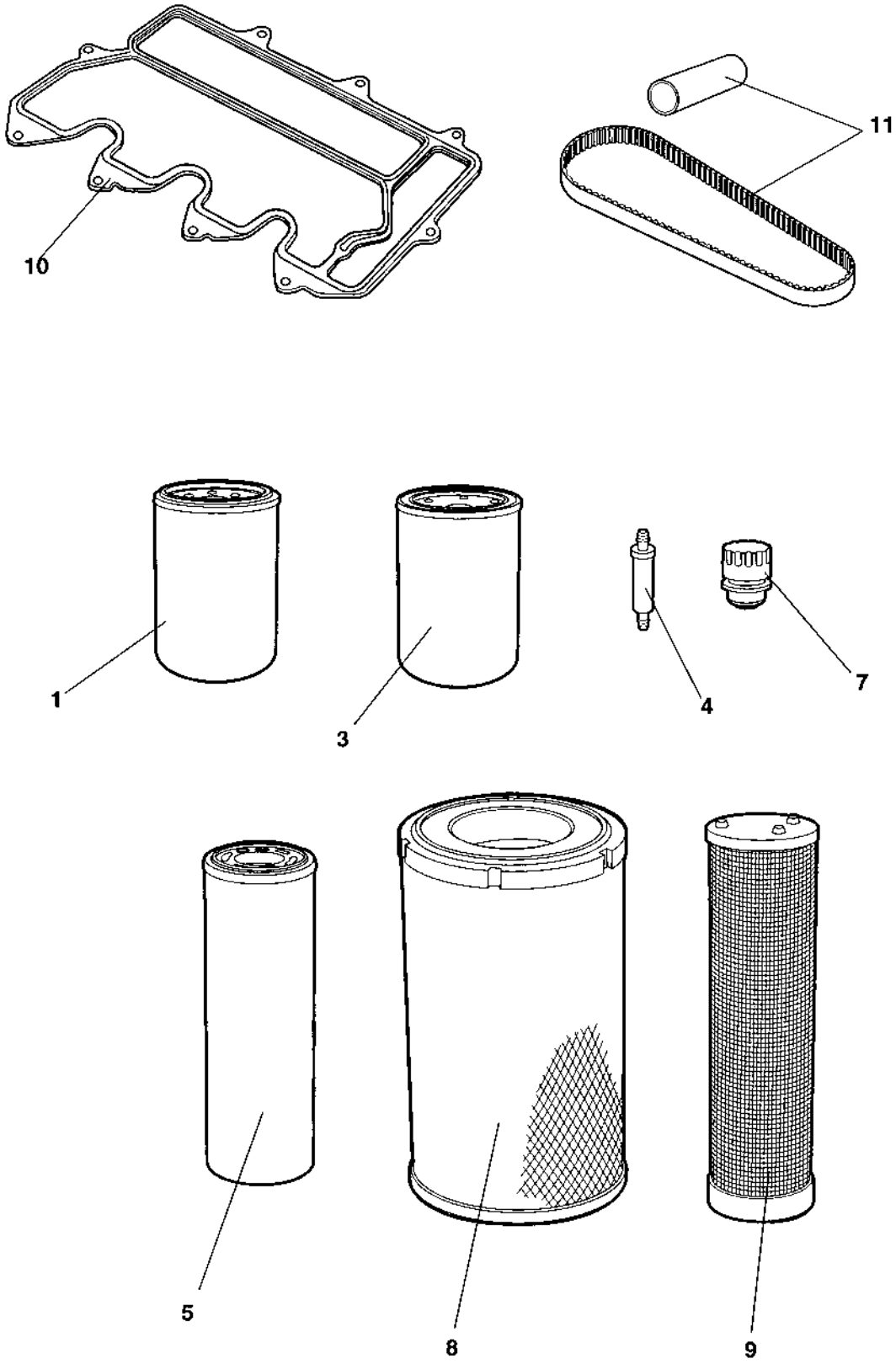

938540 Service kit, Isuzu 500 h

Ref. No.	Part No.	Rem.	Qty	Description	Code
1	908404		1	Oil filter	
3	908405		1	Fuel filter	

938544 Service kit, Deutz F2L 1011F/2011 1000 h

17423

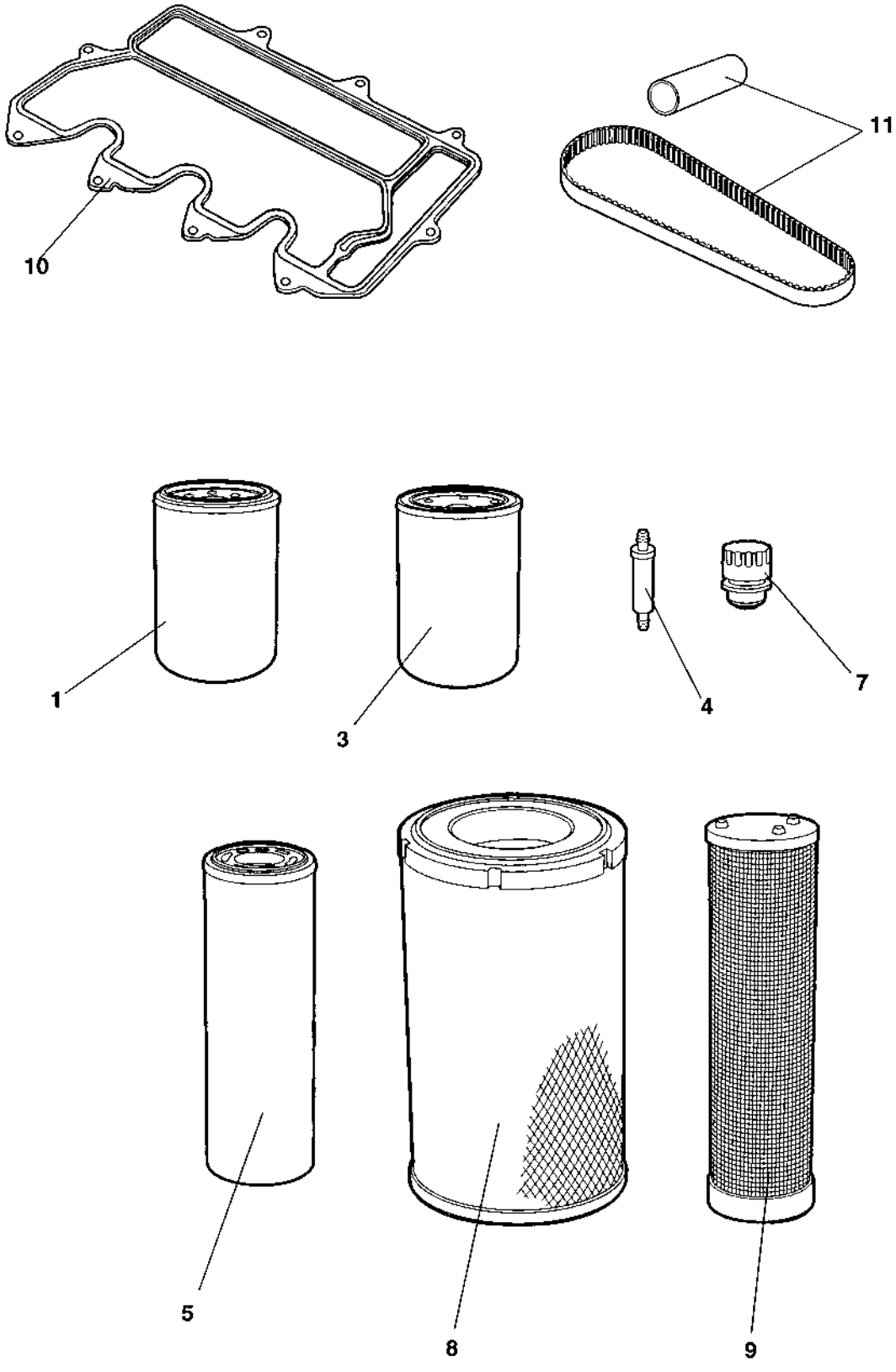

938544 Service kit, Deutz F2L 1011F/2011 1000 h

Ref. No.	Part No.	Rem.	Qty	Description	Code
1	939515		1	Oil filter	
3	903938		1	Fuel filter	
4	929322		1	Fuel strainer	
5	903247		1	Filter element	
7	357138		1	Ventilating filter	
8	380295		1	Main filter	
9	380294		1	Safety filter	
10	938584		1	Valve cover gasket	

938541 Service kit, Isuzu 1000 h

17423

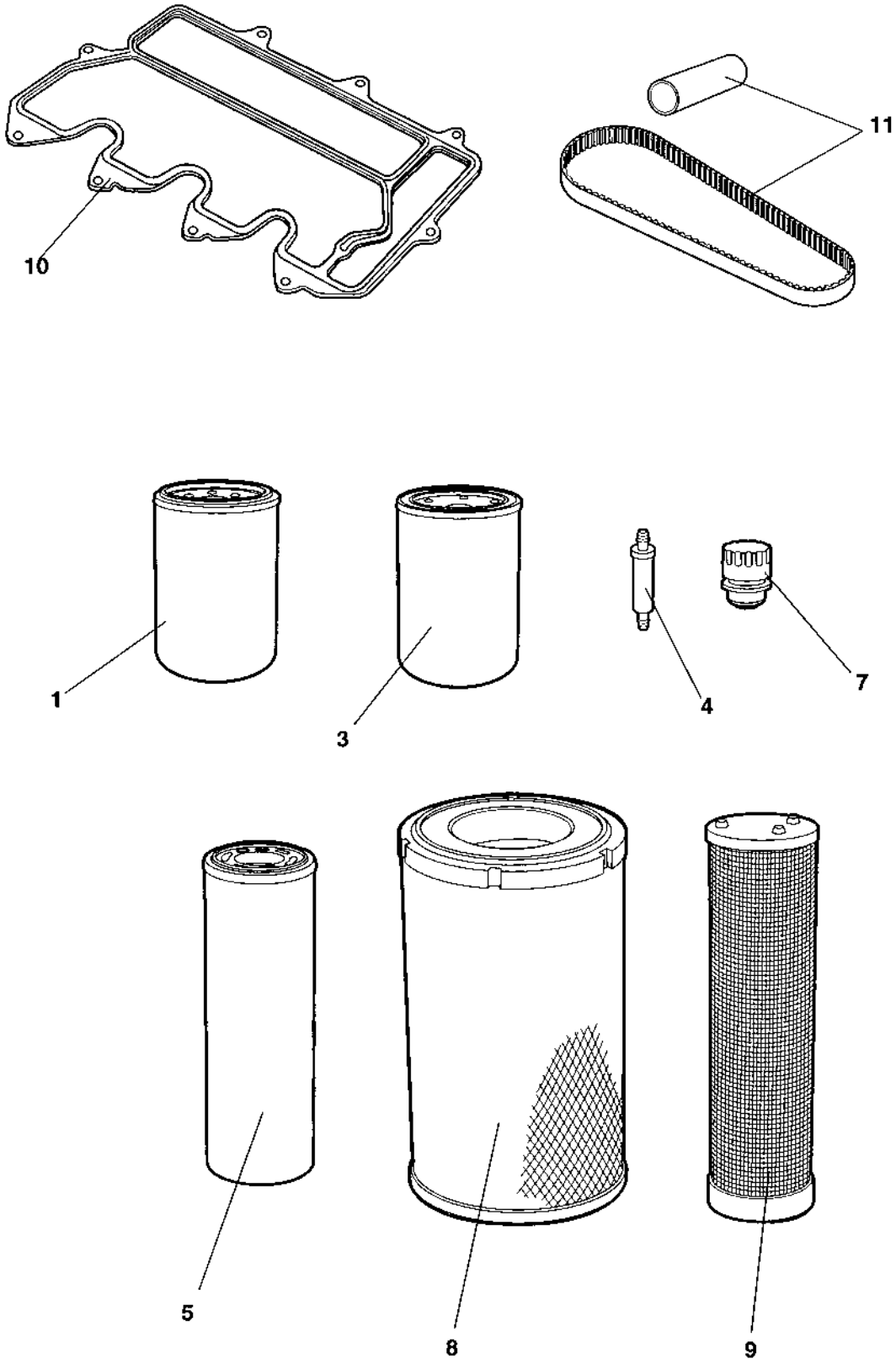

938541 Service kit, Isuzu 1000 h

Ref. No.	Part No.	Rem.	Qty	Description	Code
1	908404		1	Oil filter	
3	908405		1	Fuel filter	
5	903247		1	Filter element	
7	357138		1	Ventilating filter	
8	380295		1	Main filter	
9	380294		1	Safety filter	
10	938581		1	Valve cover gasket	

Ref. No.	Part No.	Rem.	Qty	Description	Code
				Repair kits (Page 22)	
1	938908		2	Eccentric shaft kit (Page 24)	
2	938892		2	Drum rotation kit (Page 26)	
3	938913			Scraper kit (Page 28)	CC102 - (12 mm)
4	938885		2	Shock absorber kit, drum (Page 30)	
5	938575			Steering hitch kit (Page 32)	

Repair kits

Ref. No.	Part No.	Rem.	Qty	Description	Code
1	938908		2	Eccentric shaft kit (Page 24)	
2	938892		2	Drum rotation kit (Page 26)	
3	938913			Scraper kit (Page 28)	CC102 - (12 mm)
4	938885		2	Shock absorber kit, drum (Page 30)	
5	938575			Steering hitch kit (Page 32)	

938908 Eccentric shaft kit

938908

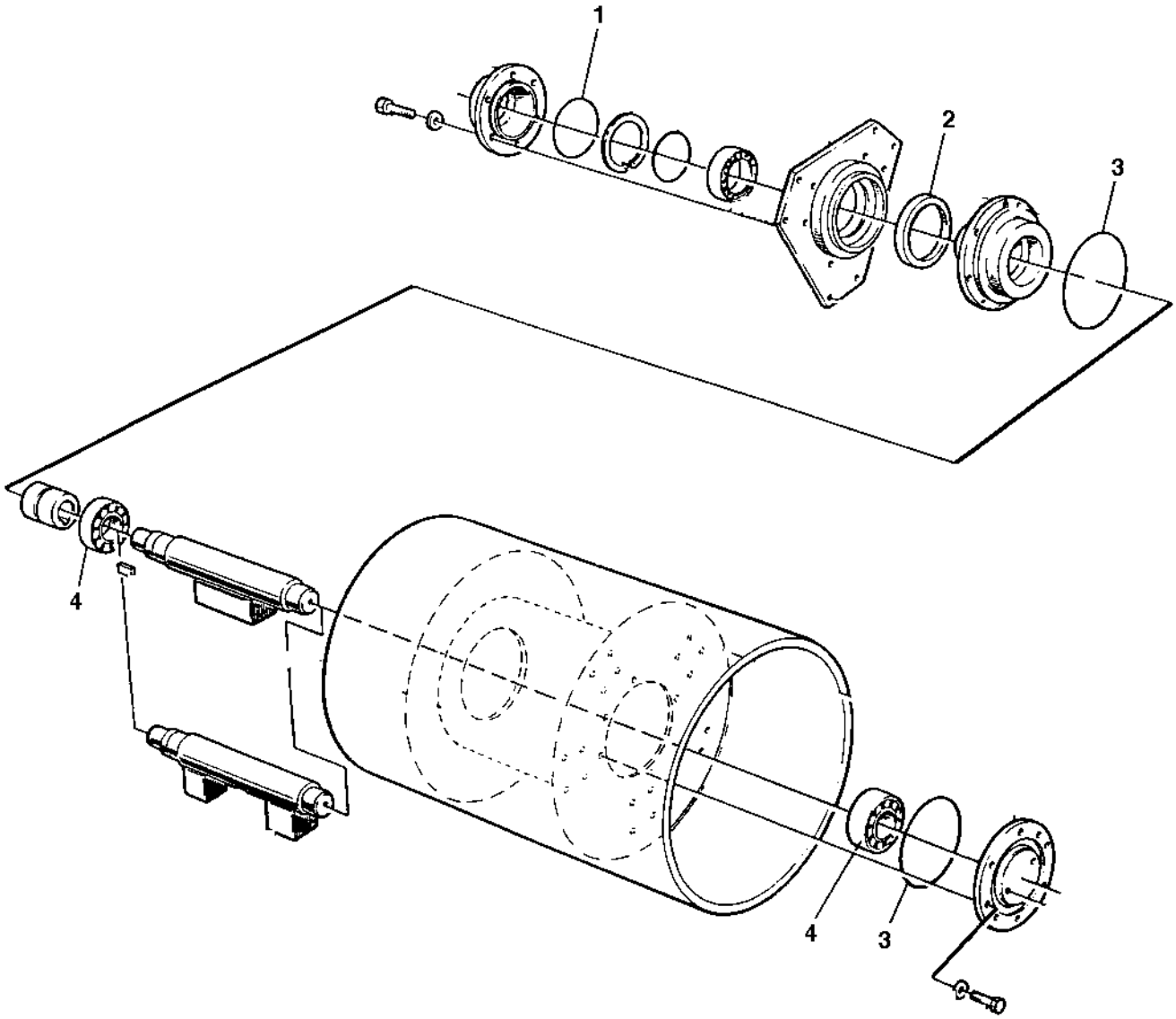

938908 Eccentric shaft kit

Ref. No.	Part No.	Rem.	Qty	Description	Code
1	160132		1	O-ring	124, 50x3, 00
2	163049		1	Sealing	
3	923951		2	O-ring	
4	904258		2	Spherical roller bearing	

938892 Drum rotation kit

938892

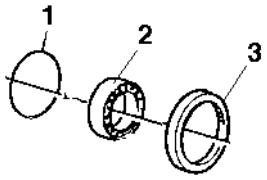

938892 Drum rotation kit

Ref. No.	Part No.	Rem.	Qty	Description	Code
1	160132		1	O-ring	124, 50x3, 00
2	111018		1	Ball bearing	
3	163049		1	Sealing	

938913 Scraper kit CC102 - (12 mm)

SCRAPER

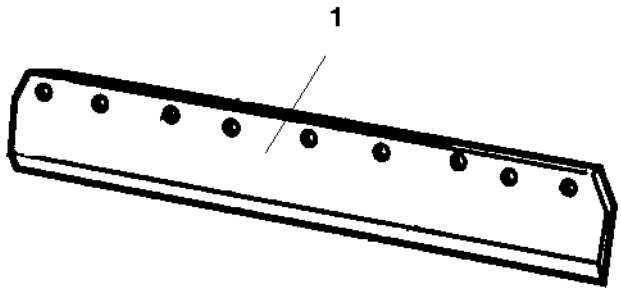

938913 Scraper kit CC102 - (12 mm)

Ref. No.	Part No.	Rem.	Qty	Description	Code
1	385216		4	Scraper	

938885 Shock absorber kit, drum

SHOCK ABSORB.

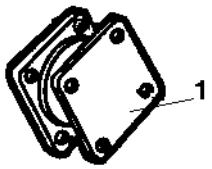

938885 Shock absorber kit, drum

Ref. No.	Part No.	Rem.	Qty	Description	Code
1	345215		8	Shock absorber	

938575 Steering hitch kit

938575

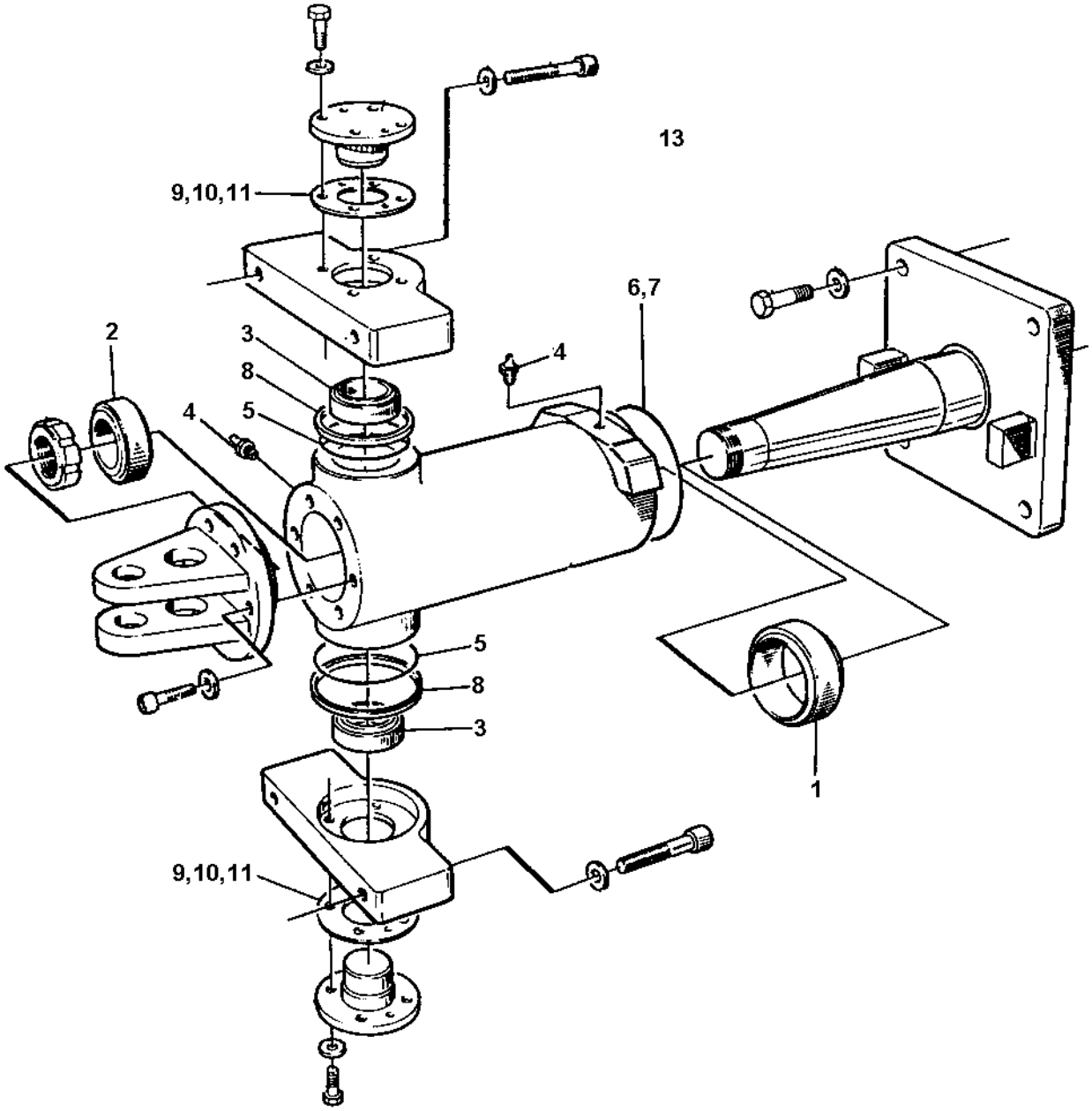

938575 Steering hitch kit

Ref. No.	Part No.	Rem.	Qty	Description	Code
1	902063		1	Bushing	
2	902062		1	Bushing	
3	902061		2	Bushing	
4	926214		1	Grease fitting	
5	167044	A	2	V-ring	
6	160112		1	O-ring	
7	892179		1	O-ring	
8	357418		2	Sealing	
9	347153		2	Shim	T=0,2 mm
10	347154		2	Shim	T=0,4 mm
11	347155		2	Shim	T=0,8 mm
13	938534		1	Lube grease	
14			1	Workshop manual	W1048***

A) For improved function this replaces earlier used 160032

Ref. No.	Part No.	Rem.	Qty	Description	Code
120				Frames Up to 601X8707 (Page 36)	
130				Frames From 601X8708 (Page 38)	
205				Scrapers, standard drums Up to 601X7649 (Page 40)	
220				Scrapers, STD From 601X7650 Up to 601X9029 (Page 42)	
230				Scrapers, STD From 601X9030 (Page 44)	
250				Scrapers, spring loaded, front drum Up to 601X7649 (Page 46)	
275				Scrapers, spring loaded, rear drum Up to 601X7649 (Page 48)	
280				Scrapers, spring loaded From 601X7650 (Page 50)	
300				Steering hitch (Page 52)	
410				Structure Up to 601X8206 (Page 54)	DEUTZ, F2L
420				Structure From 601X8207 (Page 58)	DEUTZ, F2L
450				Structure (Page 62)	ISUZU
505				Sprinkler system Up to 601X8648 (Page 66)	Front tank
510				Sprinkler system From 601X8649 (Page 68)	Front tank
520				Sprinkler, front/rear Up to 601X7649 (Page 72)	
530				Sprinkler front/rear From 601X7650 (Page 74)	

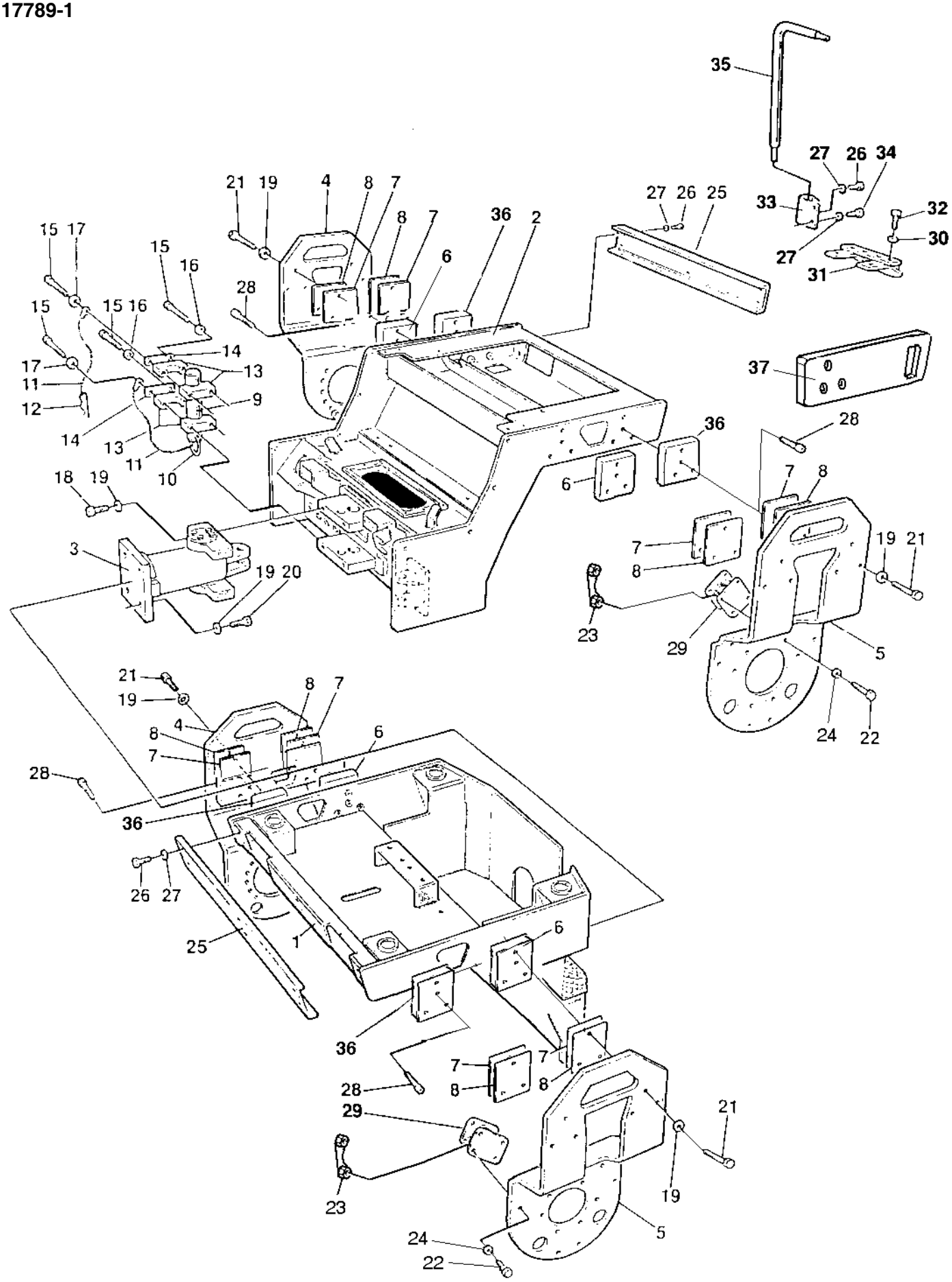
35
27 26 34
33
32
30
27
31
27 26 25
21 19 4 8 7
8 7
36 2
6
28
15 17
15 16
15 16
15
17
11
12
14
13
11
10
14
13
9
18 19
3
19 20
37
36
28
6
7 8
7
8
19 21
23
29
5
24
22
21
19
4
8
7
8 7
6
28
36
26 27
25
1
6
36
7
8
7
8
28
29
23
24
22
21
19
5

Ref. No.	Part No.	Rem.	Qty	Description	Code
1	357190		1	Frame, rear	
2	357120		1	Frame, front	
3			1	Steering hitch (Page 52)	
4	357235		2	Fork	
5	357236		2	Fork	
6	357218		4	Spacer block	
7	357222		N	Shim	T=1 mm
8	357221		N	Shim	T=3 mm
9	357486		1	Shaft	
10	357488		1	Spring	
11	343775		2	Wire	
12	357483		1	Hair pin	
13	902171	A	2	Clamp	
14	902172		2	Cover plate	
15	500016		4	Screw	M6-1,0x55 8,8
16	600004		2	Washer	
17	615076		2	Washer	7,0x25x1,5
18	902100		4	Screw	
19	904232		32	Washer	17x30x3
20	927396		4	Screw	
21	500094		24	Screw	
22	500030		24	Screw	M10-1,5x35H 8,8
23	379179	G	12	Holder	
24	904230		24	Washer	10,5x22x2
25	373628	C	2	Cover	
26	500053		12	Screw	M8-1,25x20 8,8
27	904229		12	Washer	8,4x16x1,5
28	508065		8	Screw	
29			16	Shock absorber	See group 20
30	904231		6	Washer	13x24x2
31	358743	D	1	Towing device	
32	947687	E	6	Screw	M12-1,75x30 10,9
33	358861	E	1	Mirror bracket	
34	500188	E	1	Screw	M8-1,25x14 8.8
35	373999	E	1	Rod	
36	357218		4	Spacer block	
37	387429	D	4	Tie down eyelet	

A) 2 pcs
C) New, reinforced
D) Option, front/rear
E) Option
G) Replaces earlier used Lock nut 586018; each holder has two nuts

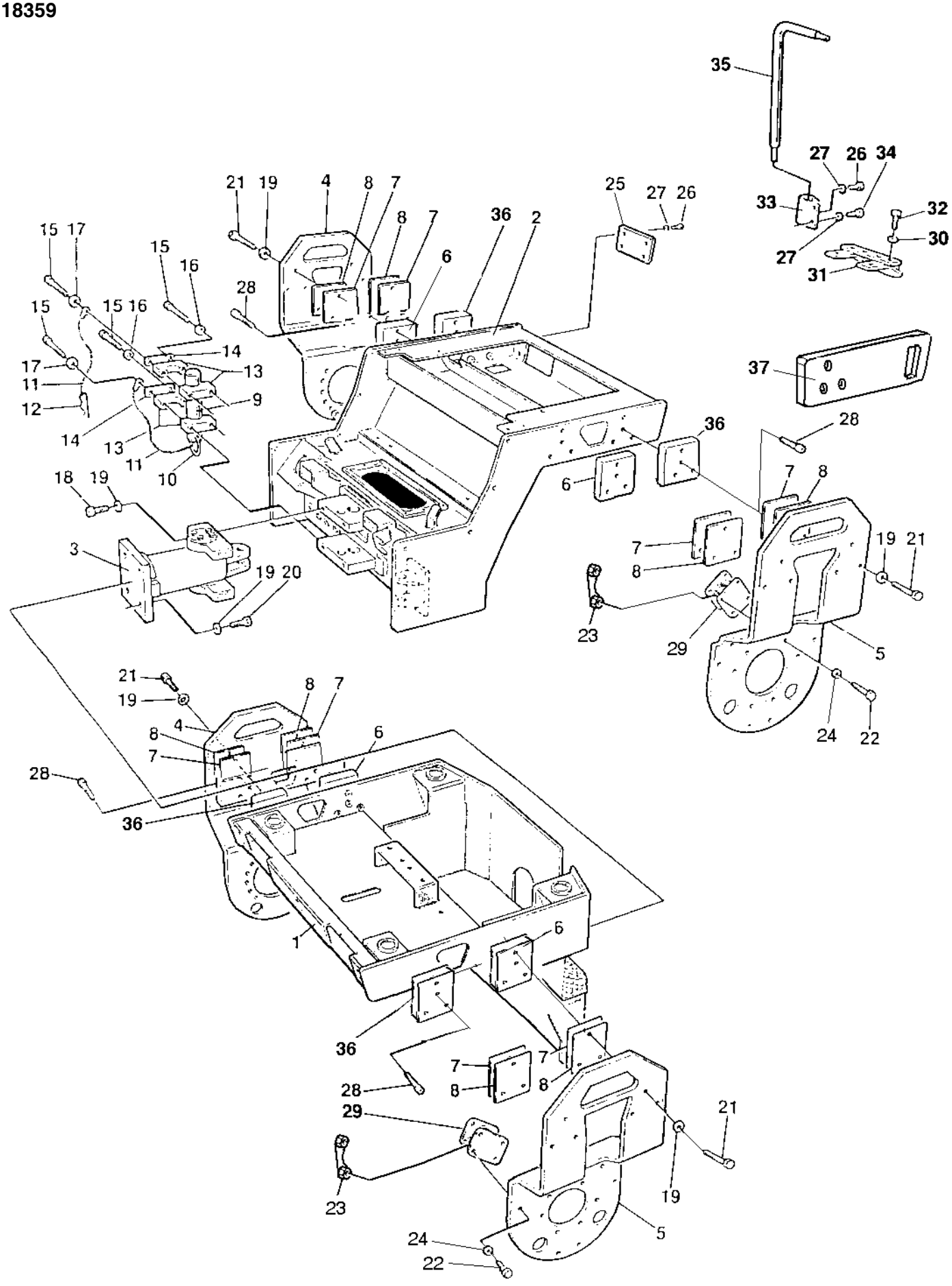
35
27 26 34
33
32
30
27
31
21 19 4 8 7
8 7
36 2
25 27 26
6
15 17
15 16
15
15 16
28
14
13
9
17
11
12
14
13
11
10
18 19
3
19 20
37
36
28
6
7 8
7
8
19 21
23
29
5
24
22
21
19
4
8
7
8 7
6
28
36
1
6
36
7
8
7
8
28
29
23
24
22
21
19
5

Ref. No.	Part No.	Rem.	Qty	Description	Code
1	378361		1	Frame, rear	
2	378359		1	Frame, front	
3			1	Steering hitch (Page 52)	
4	357235		2	Fork	
5	357236		2	Fork	
6	357218		4	Spacer block	
7	357222		N	Shim	T=1 mm
8	357221		N	Shim	T=3 mm
9	357486		1	Shaft	
10	357488		1	Spring	
11	343775		2	Wire	
12	357483		1	Hair pin	
13	902171	A	2	Clamp	
14	902172		2	Cover plate	
15	500016		4	Screw	M6-1,0x55 8,8
16	600004		2	Washer	
17	615076		2	Washer	7,0x25x1,5
18	902100		4	Screw	
19	904232		32	Washer	17x30x3
20	927396		4	Screw	
21	500094		24	Screw	
22	500030		24	Screw	M10-1,5x35H 8,8
23	379179	G	12	Holder	
24	904230		24	Washer	10,5x22x2
25	378868		4	Cover	
26	792187		16	Screw	M5x14
27	904281		16	Washer	5,3x10x1
28	508065		8	Screw	
29			16	Shock absorber	See group 20
30	904231		6	Washer	13x24x2
31	358743	D	1	Towing device	
32	947687	E	6	Screw	M12-1,75x30 10,9
33	358861	E	1	Mirror bracket	
34	500188	E	1	Screw	M8-1,25x14 8.8
35	373999	E	1	Rod	
36	357218		4	Spacer block	
37	387429	D	4	Tie down eyelet	

A) 2 pcs
D) Option, front/rear
E) Option
G) Replaces earlier used Lock nut 586018; each holder has two nuts

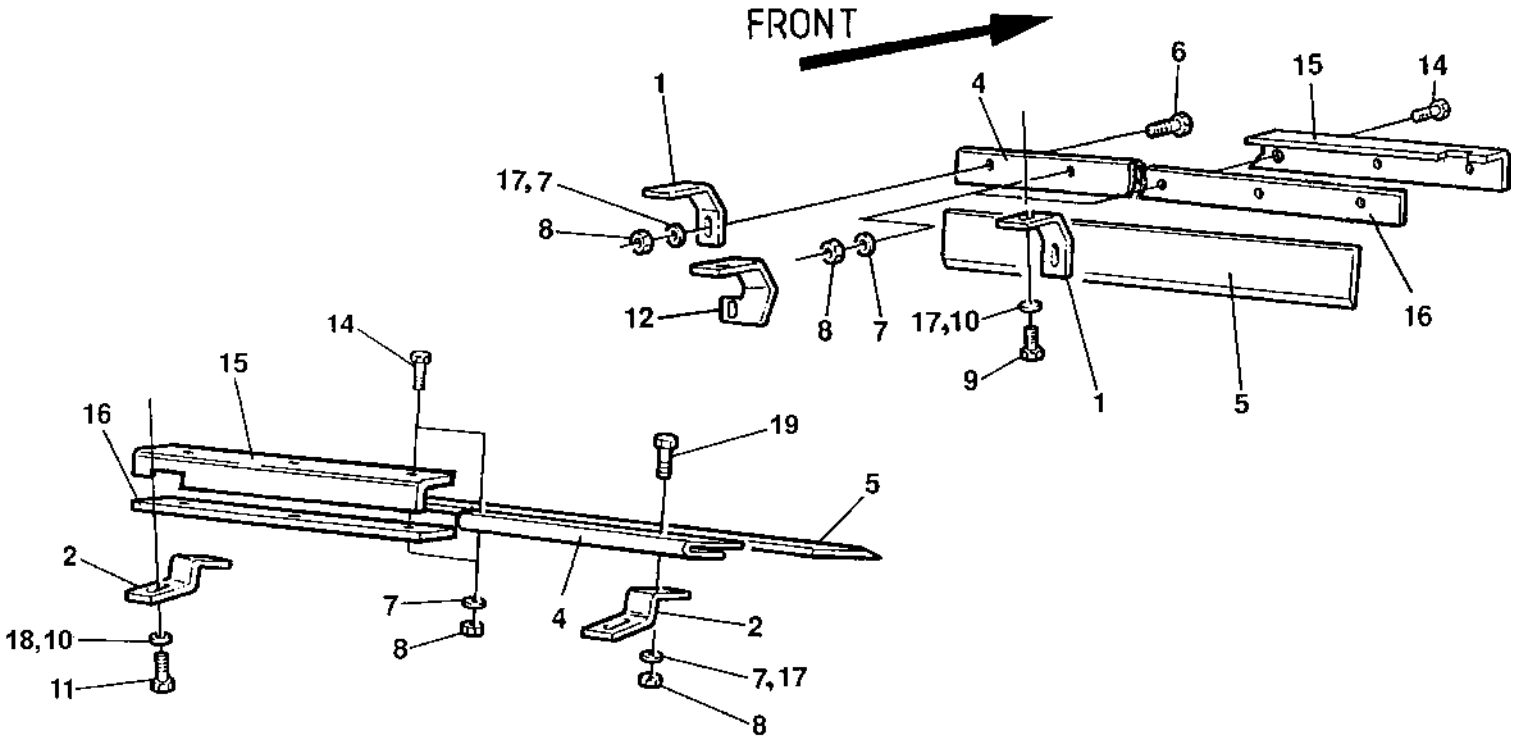
FRONT
1
17,7
8
12
4
6
15
14
16
8
7
17,10
9
1
5
14
15
16
19
5
2
18,10
11
7
8
4
2
7,17
8

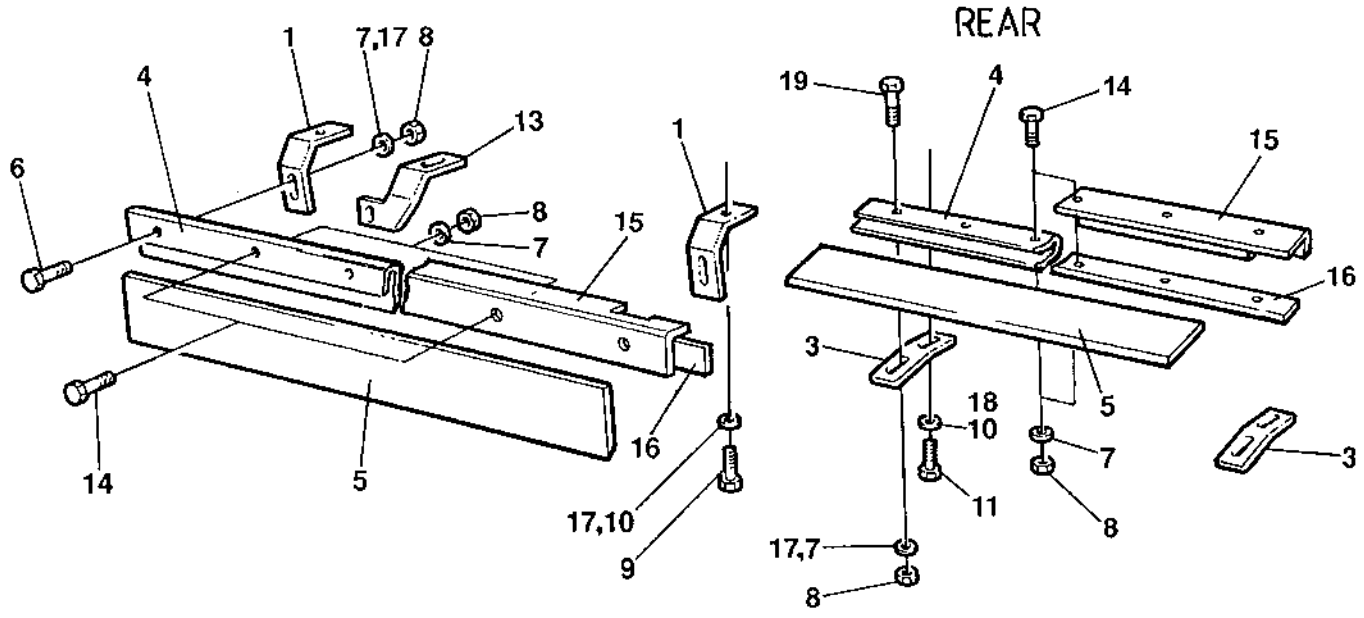
1
7,17
8
4
13
6
8
7
15
1
16
14
5
17,10
9
REAR
19
4
14
15
16
3
18
10
5
7
11
8
3
17,7
8

Ref. No.	Part No.	Rem.	Qty	Description	Code
1	374018		4	Scraper bracket	
2	358588		2	Scraper bracket	
3	358589		2	Scraper bracket	
4				Not used on this model	
5	385216		4	Scraper	
6	500049		4	Screw	M12-1,75x60 8.8
7	904231		20	Washer	13x24x2
8	586019		20	Lock nut	M12
9	500046		4	Screw	M12x30H 8,8 FZB
10				Not used on this model	
11	500056		4	Screw	M12x45 8,8
12				Not used on this model	
13				Not used on this model	
14	904342		12	Screw	M12x45
15	385671		4	Scraper bracket	
16	383996		4	Scraper bracket	
17	904213		12	Washer	13x30x4
18	384493		4	Spacer sleeve	
19	904343		4	Screw	

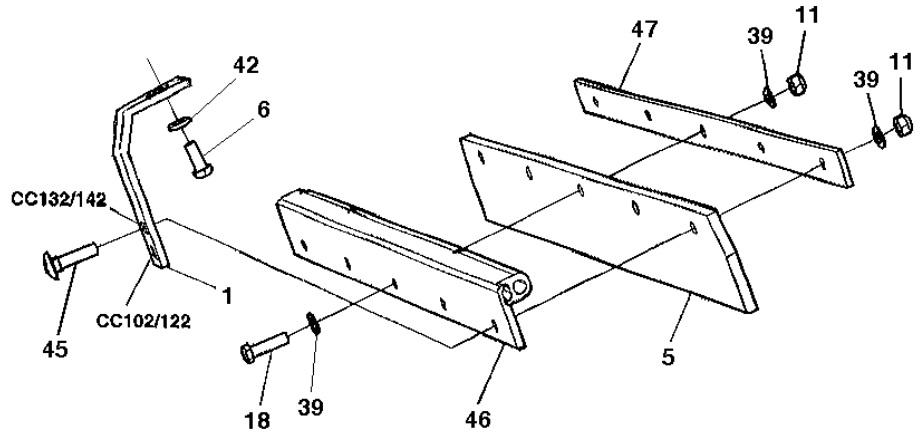
47
39
11
39
11
42
6
CC132/142
1
CC102/122
45
18
39
46
5

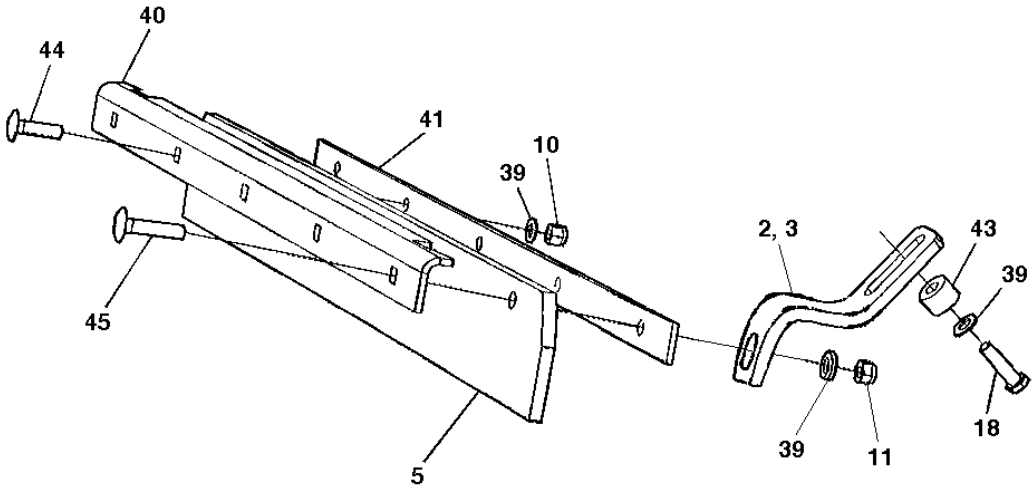
40
44
41
10
39
2, 3
43
39
45
5
39
11
18

Ref. No.	Part No.	Rem.	Qty	Description	Code
1	376624		4	Scraper bracket	
2	358588	A	2	Scraper bracket	
3	358589	B	2	Scraper bracket	
5	385216		4	Scraper	
6	500046		4	Screw	M12x30H 8,8 FZB
10	586019		6	Lock nut	M12
11	791963		14	Lock nut	M12
18	500056		10	Screw	M12x45 8,8
39	904231		30	Washer	13x24x2
40	385671		2	Scraper bracket	
41	383996		2	Scraper bracket	
42	904703		4	Washer	13x24x4
43	384493		4	Spacer sleeve	
44	904342		6	Screw	M12x45
45	904424		8	Screw	M12x55
46	389147		2	Sprinkler pipe/bracket	
47	377794		2	Scraper bracket	

A) Front lower
B) Rear lower

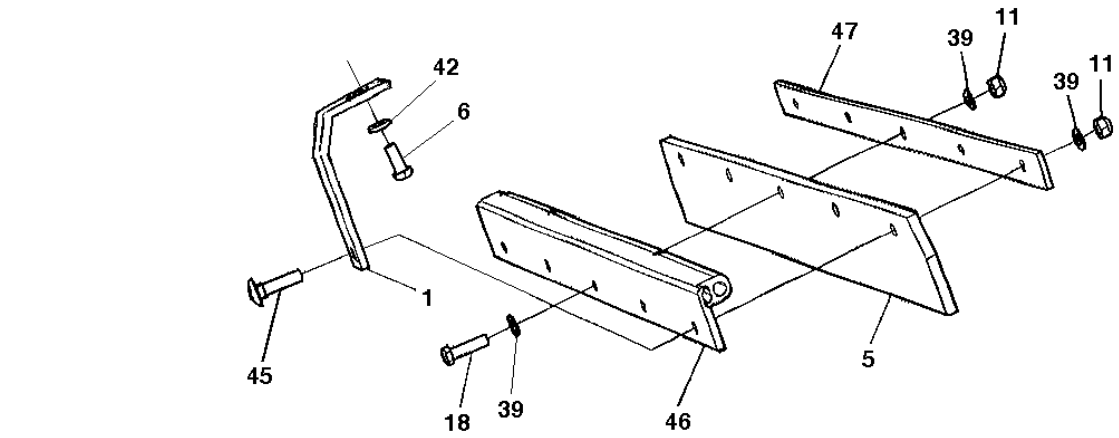
47
39
11
39
11
42
6
1
45
18
39
46
5

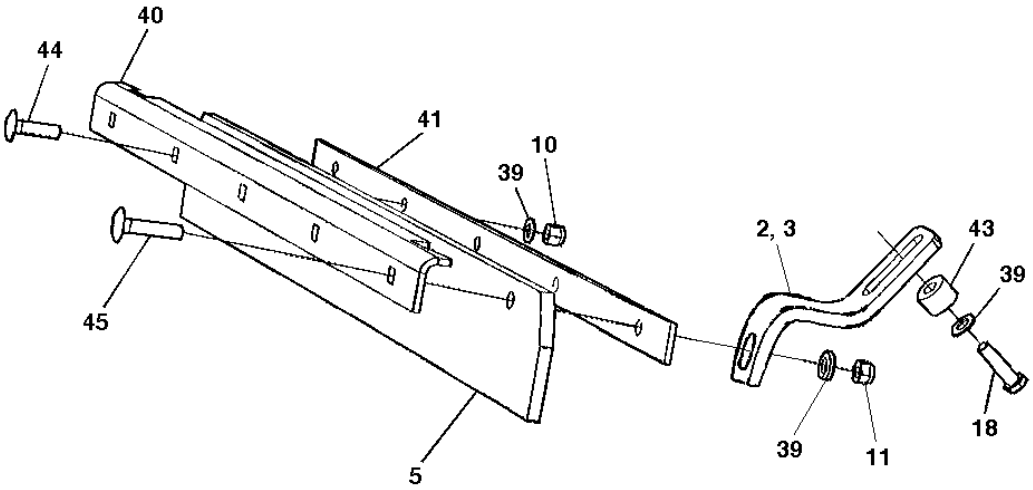
40
44
41
10
39
2, 3
43
39
45
5
39
11
18

Ref. No.	Part No.	Rem.	Qty	Description	Code
1	376624	C	4	Scraper bracket	
2	358588	A	2	Scraper bracket	
3	358589	B	2	Scraper bracket	
5	385216		4	Scraper	
6	500046		4	Screw	M12x30H 8,8 FZB
10	586019		6	Lock nut	M12
11	791963		14	Lock nut	M12
18	500056		10	Screw	M12x45 8,8
39	904231		30	Washer	13x24x2
40	385671		2	Scraper bracket	
41	383996		2	Scraper bracket	
42	904703		4	Washer	13x24x4
43	384493		4	Spacer sleeve	
44	904342		6	Screw	M12x45
45	904424		8	Screw	M12x55
46	389147		2	Sprinkler pipe/bracket	
47	377794		2	Scraper bracket	

A) Front lower
B) Rear lower
C) Improved design has only one square mounting hole

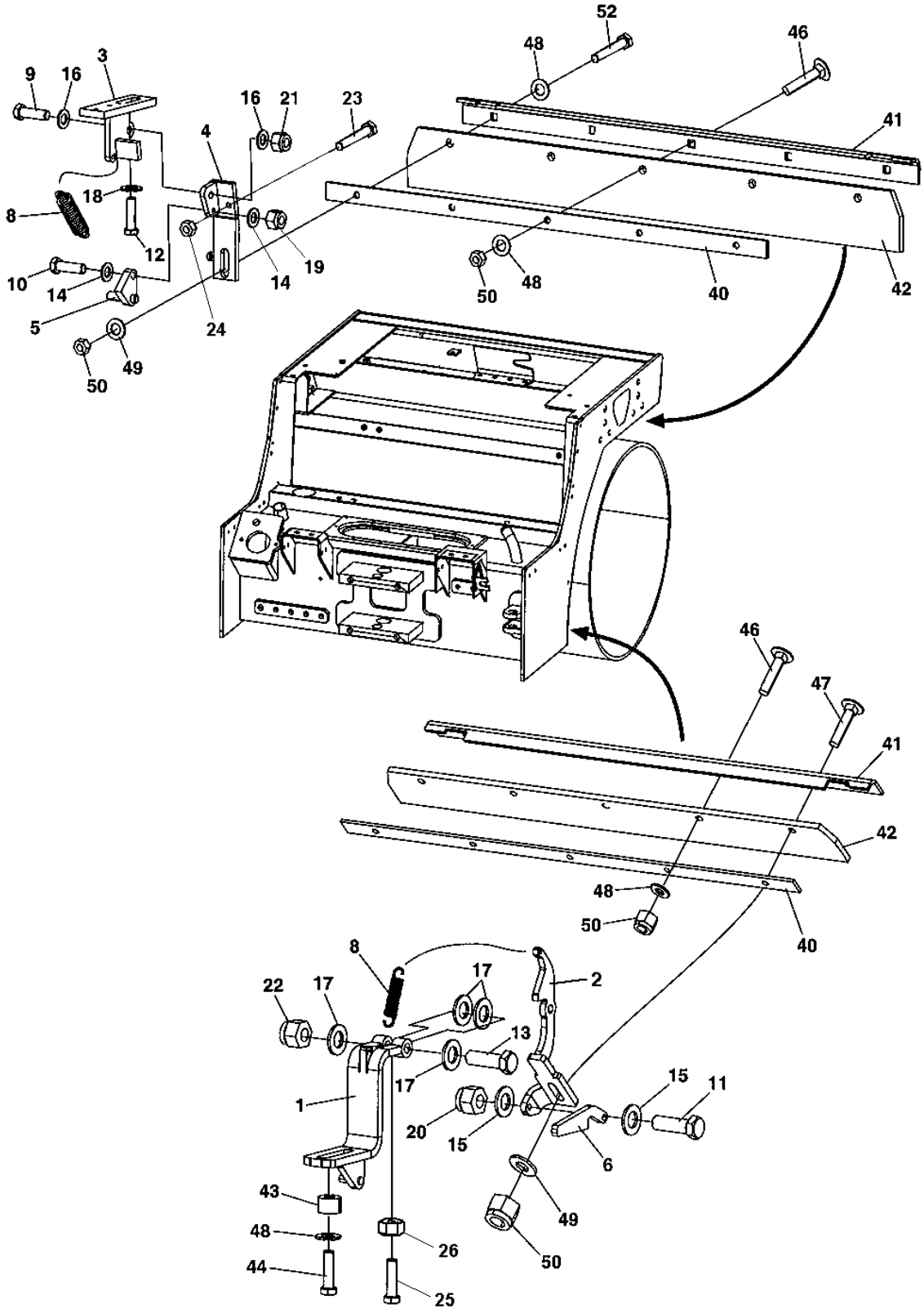
52
48
46
3
9
16
16
21
23
41
4
18
8
12
10
14
14
19
50
48
40
42
5
24
49
50
46
47
41
42
48
50
40
8
17
2
22
17
13
17
1
15
11
20
15
6
43
49
48
26
50
44
25

Scrapers, spring loaded, front drum

Ref. No.	Part No.	Rem.	Qty	Description	Code
1	387806		2	Scraper bracket	
2	387807		2	Scraper bracket	
3	387808		2	Scraper bracket	
4	387809		2	Scraper bracket	
5	358874		2	Stop	
6	385613		2	Hook	
8	358876		4	Spring	
9	380255		2	Screw	
10	500015		2	Screw	M6-1x30 8,8
11	500047		2	Screw	M8-1,25x35 8,8
12	500046		2	Screw	M12x30H 8,8 FZB
13	500133		2	Screw	M12x70
14	904228		4	Washer	6,4x12x1,5
15	904229		4	Washer	8,4x16x1,5
16	904230		4	Washer	10,5x22x2
17	904231		4	Washer	13x24x2
18	904703		2	Washer	13x24x4
19	586002		2	Lock nut	M6
20	791182		2	Lock nut	M8
21	586018		2	Lock nut	M10
22	586019		2	Lock nut	M12
23	791082		2	Screw	M10x60
24	570006		2	Nut	M10
25	904241		2	Screw	M8x40
26	570005		2	Nut	M8
40	383996		2	Scraper bracket	
41	385671		2	Scraper bracket	
42	385216		2	Scraper	
43	384493		2	Spacer sleeve	
44	500056		2	Screw	M12x45 8,8
46	904342		6	Screw	M12x45
47	904343		2	Screw	
48	904231		10	Washer	13x24x2
49	904703		4	Washer	13x24x4
50	586019		10	Lock nut	M12
52	500111		2	Screw	M12x55 8,8

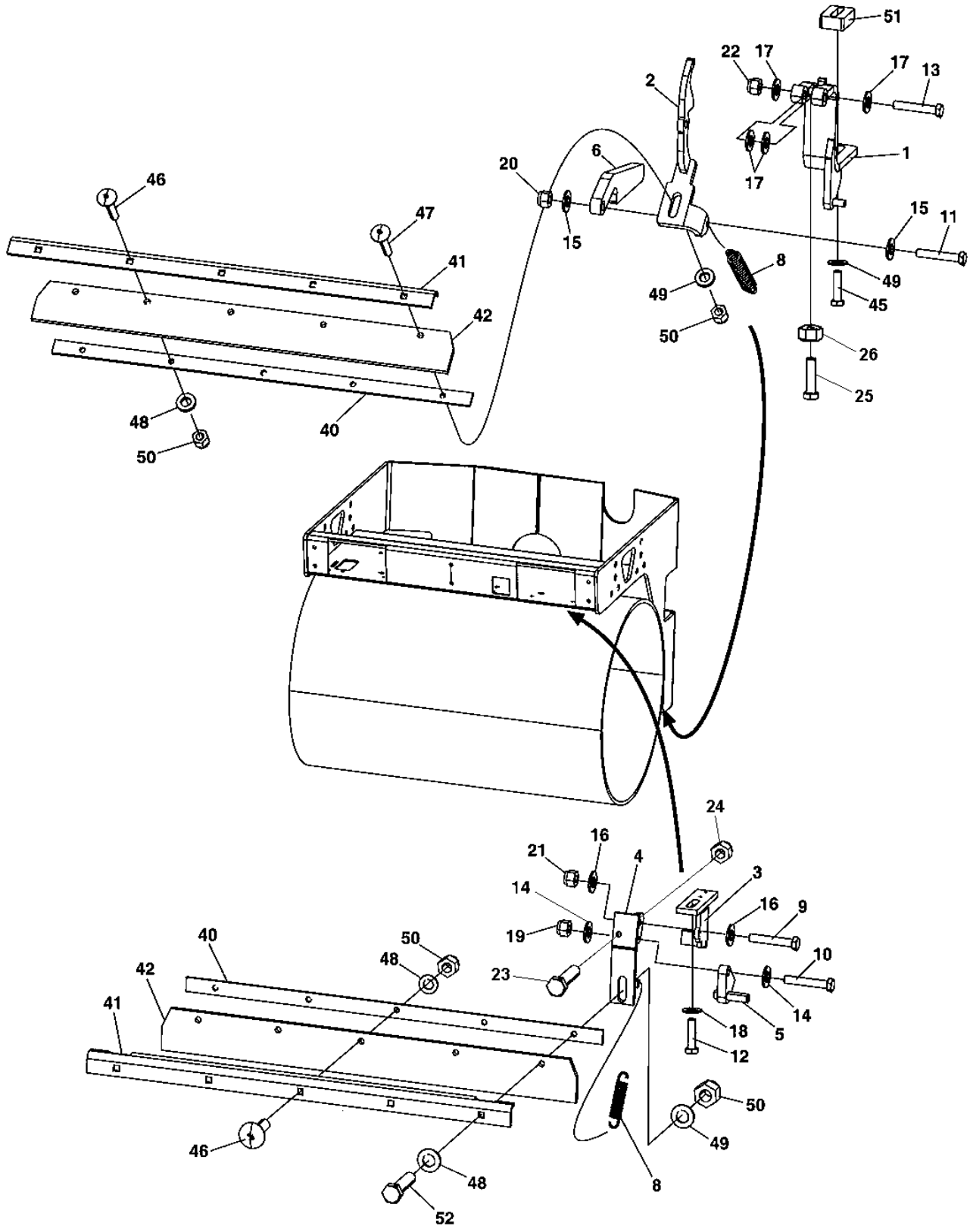
51
22
17
17
13
2
1
17
6
20
15
46
47
41
42
48
50
40
15
11
8
49
45
49
50
26
25
24
16
21
4
3
14
16
9
19
10
23
14
18
5
12
40
50
48
42
41
50
49
46
48
52
8

Ref. No.	Part No.	Rem.	Qty	Description	Code
1	387806		2	Scraper bracket	
2	387807		2	Scraper bracket	
3	387808		2	Scraper bracket	
4	387809		2	Scraper bracket	
5	358874		2	Stop	
6	385613		2	Hook	
8	358876		4	Spring	
9	380255		2	Screw	
10	500015		2	Screw	M6-1x30 8,8
11	500047		2	Screw	M8-1,25x35 8,8
12	500046		2	Screw	M12x30H 8,8 FZB
13	500133		2	Screw	M12x70
14	904228		4	Washer	6,4x12x1,5
15	904229		4	Washer	8,4x16x1,5
16	904230		4	Washer	10,5x22x2
17	904231		4	Washer	13x24x2
18	904703		2	Washer	13x24x4
19	586002		2	Lock nut	M6
20	791182		2	Lock nut	M8
21	586018		2	Lock nut	M10
22	586019		2	Lock nut	M12
23	791082		2	Screw	M10x60
24	570006		2	Nut	M10
25	904241		2	Screw	M8x40
26	570005		2	Nut	M8
40	383996		2	Scraper bracket	
41	385671		2	Scraper bracket	
42	385216		2	Scraper	
45	500049		2	Screw	M12-1,75x60 8.8
46	904342		6	Screw	M12x45
47	904343		2	Screw	
48	904231		8	Washer	13x24x2
49	904703		6	Washer	13x24x4
50	586019		10	Lock nut	M12
51	385628		2	Spacer	
52	500111		2	Screw	M12x55 8,8

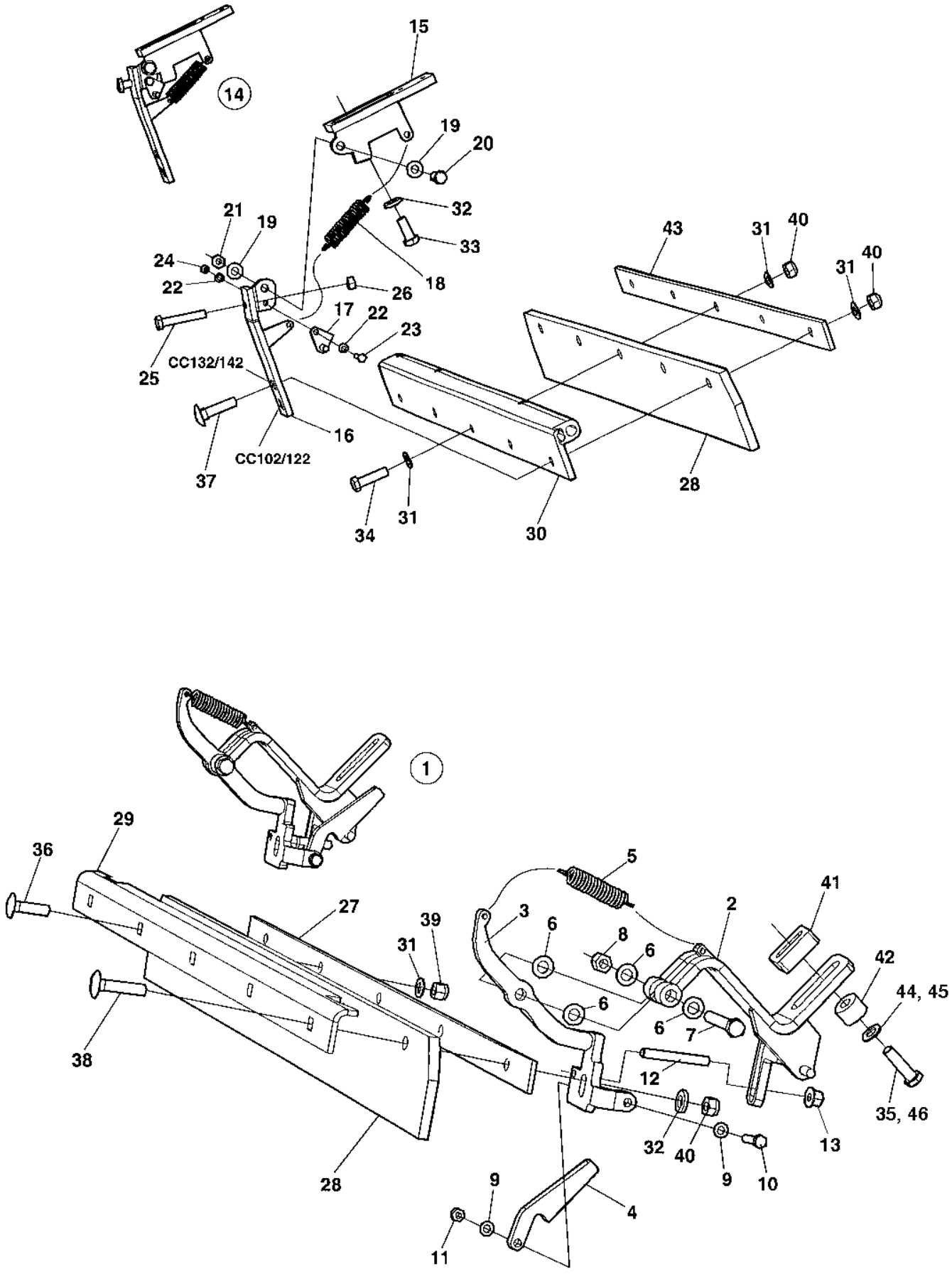
14
15
19
20
32
21
19
33
43
31
40
24
18
31
40
22
26
17
22
23
25
CC132/142
16
CC102/122
37
34
31
30
28
1
29
36
5
41
27
3
2
39
6
8
6
31
42
6
44, 45
6
7
38
12
35, 46
32
40
9
10
13
28
9
4
11

Ref. No.	Part No.	Rem.	Qty	Description	Code
1	389999		4	Scraper bracket	
2		D	1	.Bracket	
3		D	1	.Bracket	
4		D	1	.Hook	
5	358876		1	.Spring	
6	904231		4	.Washer	13x24x2
7	500133		1	.Screw	M12x70
8	586019		1	.Lock nut	M12
9	904229		2	.Washer	8,4x16x1,5
10	500047		1	.Screw	M8-1,25x35 8,8
11	791182		1	.Lock nut	M8
12		D	1	.Stud	
13	902287		1	.Nut	
14	389998		4	Scraper bracket	
15		D	1	.Bracket	
16		D,C	1	.Bracket	
17		D	1	.Stop	
18	358876		1	.Spring	
19	904230		2	.Washer	10,5x22x2
20	380255		1	.Screw	
21	586018		1	.Lock nut	M10
22	904228		3	.Washer	6,4x12x1,5
23	500015		1	.Screw	M6-1x30 8,8
24	586002		1	.Lock nut	M6
25	791082		1	.Screw	M10x60
26	570006		1	.Nut	M10
27	383996		2	Scraper bracket	
28	385216		4	Scraper	
29	385671		2	Scraper bracket	
30	389147		2	Sprinkler pipe/bracket	
31	904231		22	Washer	13x24x2
32	904703		8	Washer	13x24x4
33	500046		4	Screw	M12x30H 8,8 FZB
34	500056		6	Screw	M12x45 8,8
35	500049	A	2	Screw	M12-1,75x60 8.8
36	904342		6	Screw	M12x45
37	901330		4	Screw	M12x50
38	904424		4	Screw	M12x55
39	586019		6	Lock nut	M12
40	791963		14	Lock nut	M12
41	385628	A	2	Spacer	
42	384493	B	2	Spacer sleeve	
43	377794		2	Scraper bracket	
44	904231	B	2	Washer	13x24x2
45	904703	A	2	Washer	13x24x4
46	500056	B	2	Screw	M12x45 8,8

A) In use at rear lower scraper
B) In use at front lower scraper
C) Mounting hole to be used for item 37 depending on model
D) Not sold separately

Steering hitch

15465-1

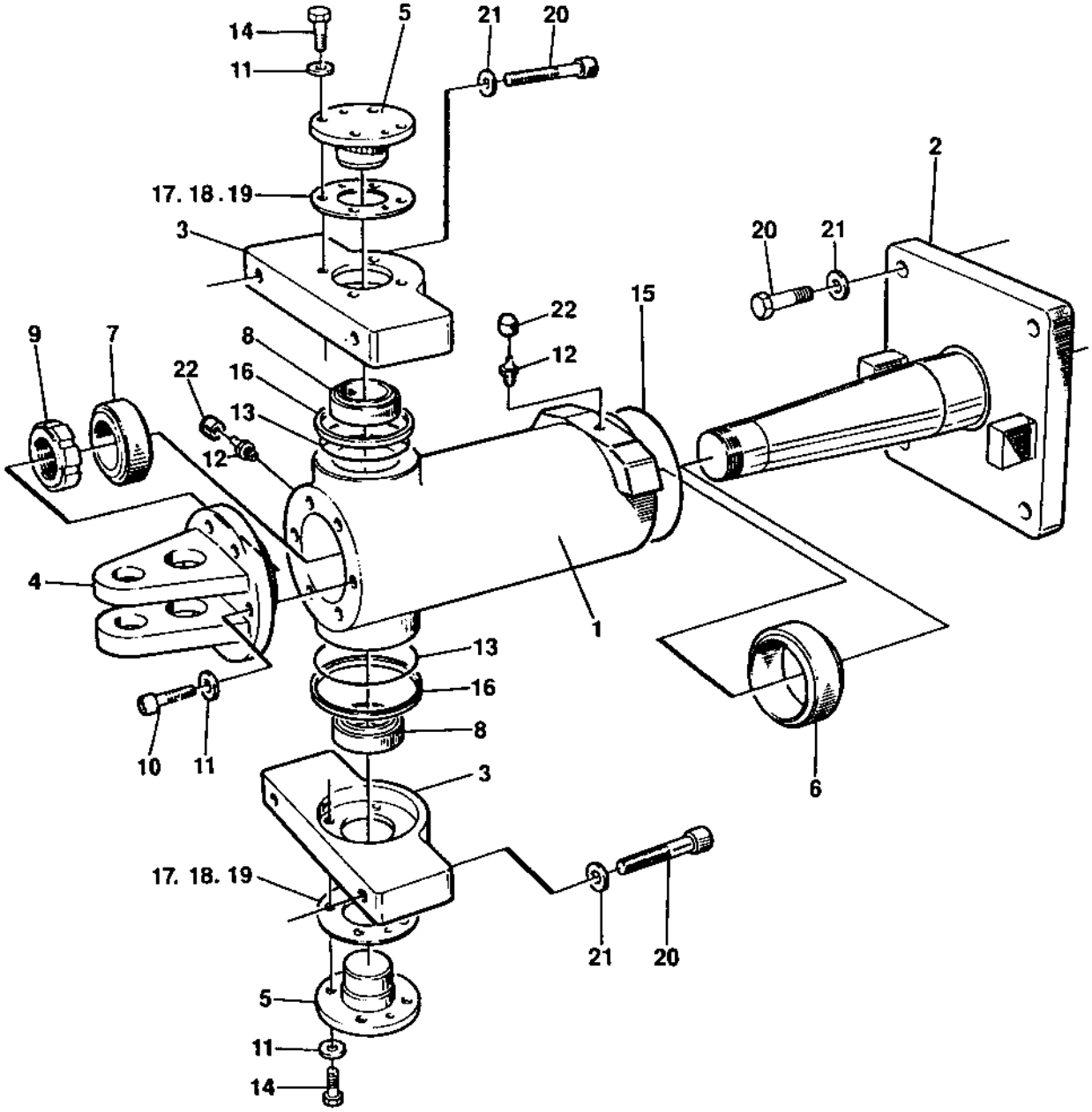

Steering hitch

Ref. No.	Part No.	Rem.	Qty	Description	Code
1	358976		1	Bearing housing	
2	358978		1	Hitch shaft	
3	357031		2	Bracket	
4	357038		1	Bracket	
5	357039		2	Shaft	
6	902063		1	Bushing	
7	902062		1	Bushing	
8	902061		2	Bushing	
9	902060		1	Lock nut	
10	902059		6	Screw	
11	600008		14	Washer	
12	926214		2	Grease fitting	
13	167044	A	2	V-ring	
14	500028		8	Screw	M10-1,5x25 8,8
15	892179		1	O-ring	
16	357418		2	Sealing	
17	347153		N	Shim	T=0,2 mm
18	347154		N	Shim	T=0,4 mm
19	347155		N	Shim	T=0,8 mm
20			8	Screw	
21			8	Washer	
22	902576		2	Cover	

A) For improved function this replaces earlier used 160032

Structure DEUTZ, F2L

16637-1

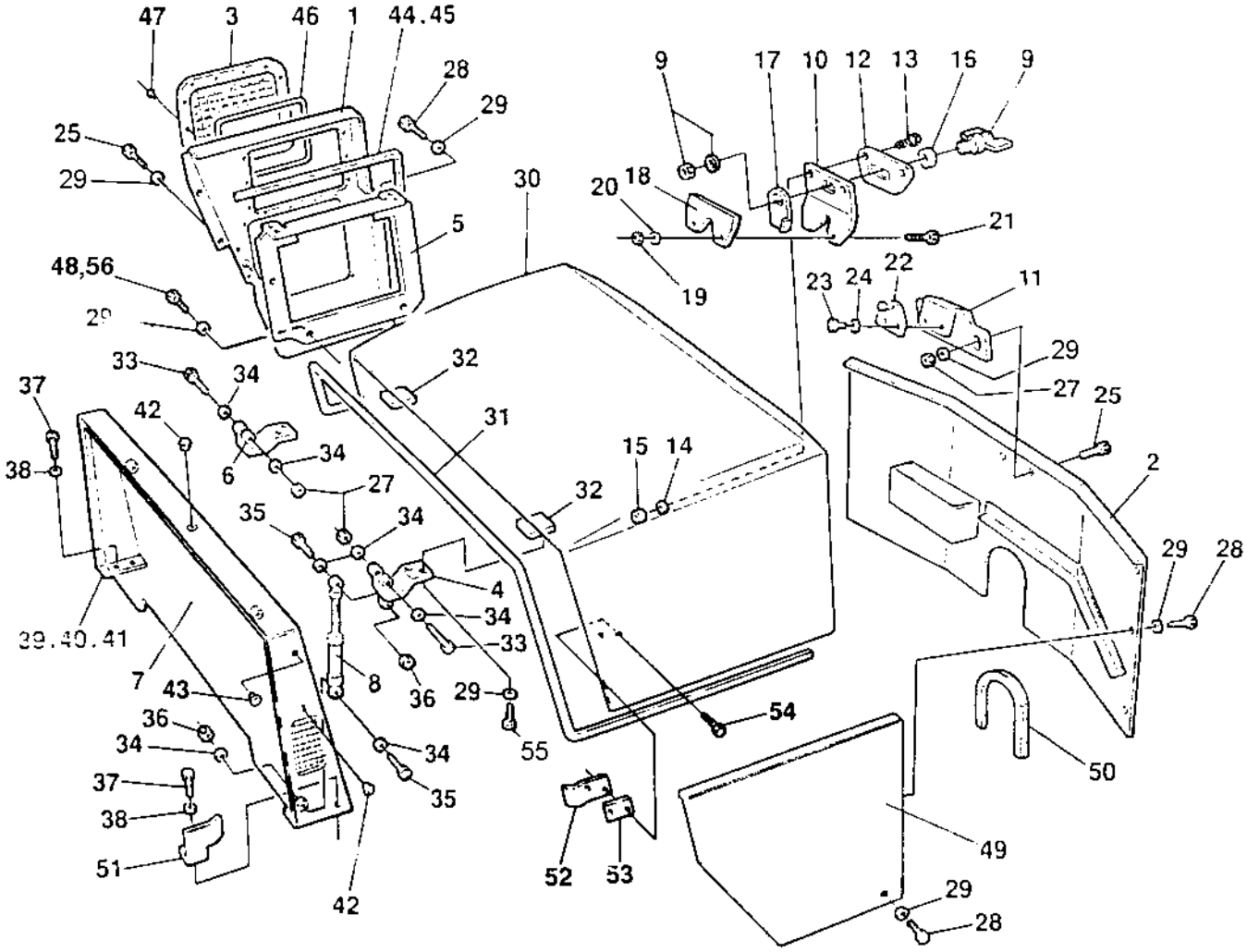

Ref. No.	Part No.	Rem.	Qty	Description	Code
1	374657	A	1	Cover	
	904206	1	4	Screw	
	373476	1	4	Insulating washer	
2	382565	J	1	Cover	
3	374627		1	Grid	
4	357276		1	Hinge	
5	374625		1	Cooler frame	
6	357280		1	Hinge	
7	357248		1	Hood frame	
8	902256		1	Gas spring	
9	904368		1	Lock, outer	
	902866		1	Key	Marked "455"
10	374400		1	Holder plate	
11	358160		1	Bracket	
12	376129		1	Spacer	
13	900485		2	Screw	
14	904228		2	Washer	6,4x12x1,5
15	586002		2	Lock nut	M6
16	374401		1	Spacer sleeve	
17	374402		1	Lever	
18	371380		1	Lock	
19	586001		2	Lock nut	M5
20	600003		2	Washer	
21	904374		2	Screw	
22	374403		1	Lock pin	
23	500059		2	Screw	M6x10
24	904639		2	Washer	6,7x14x1,5
25	500021		2	Screw	M8-1,25x25 8,8
27	586003		4	Lock nut	M8
28	500053		16	Screw	M8-1,25x20 8,8
29	904640		22	Washer	8,4x22x3
30	370645		1	Engine hood	
31	902166	C	1XL	.Edge trim	
32	357863		N	Shim	T=2 mm
33	500249		2	Screw	
34	904229		7	Washer	8,4x16x1,5
35	508027		2	Screw	
36	570005		2	Nut	M8
37	500029		4	Screw	M10-1,5x30 8,8
38	904557		4	Washer	10,5x22x4
39	371994		N	Shim	T=2 mm
40	904090		N	Washer	
41	904091		N	Washer	
42	900519		3	Plug	
43	902804		4	Plug	
44	202042	D	1XL	Rubber strip	
45	202046	E	1XL	Rubber strip	25x10
46	904076	F	1XL	Edge trim	
47	624018		14	Rivet	
48	500047		2	Screw	M8-1,25x35 8,8
49	376866	G	1	Cover	

1) For absorbent
A) Right
C) L=3,680 m
D) L=0,800 m
E) L=0,850 m
F) L=0,998 m
G) Left
J) New design has to be slightly modified to fit

Structure DEUTZ, F2L

16637-1

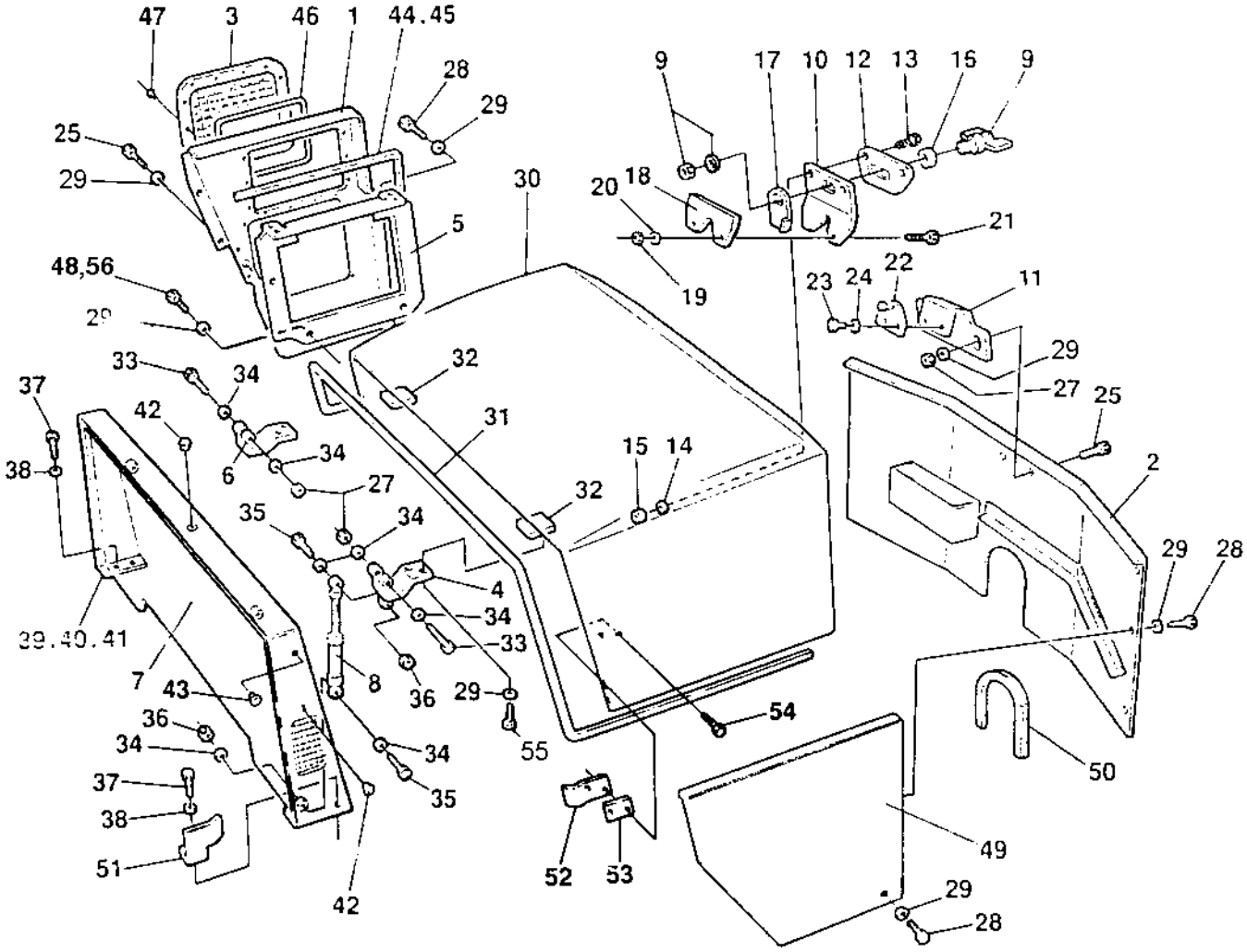

Ref. No.	Part No.	Rem.	Qty	Description		Code
50	202028	H	1XL	Edge trim		
51	357866		1	Stop		
52	375594		1	Holder		
53	375595		1	Spacer		
54	904206		2	Screw		
55	500020		4	Screw	M8-1,25x22 8,8	
56	500022		1	Screw	M8-1,25x30 8,8	

H) L=0,457 m

Structure DEUTZ, F2L

18349

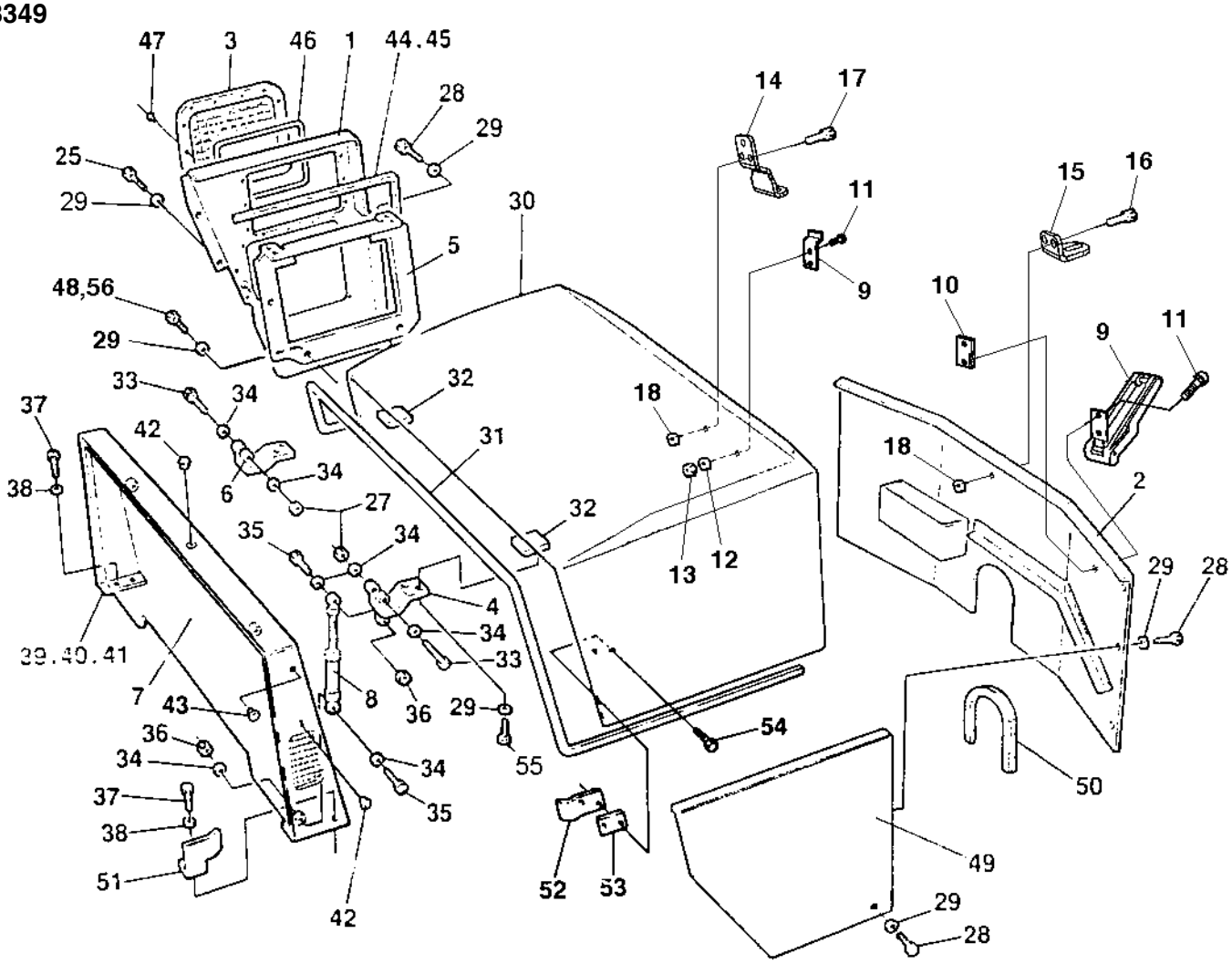

Ref. No.	Part No.	Rem.	Qty	Description	Code
1	374657	A	1	Cover Up to 601X9105	
	391121	A	1	Cover, cpl From 601X9106	
	904206	K,J	4	.Screw	
	373476	K,J	4	.Insulating washer	
2	382565		1	Cover	
3	374627		1	Grid Up to 601X9105	
	391118	L	1	Grid From 601X9106	
4	357276		1	Hinge	
5	374625		1	Cooler frame	
6	357280		1	Hinge	
7	357248		1	Hood frame	
8	902256		1	Gas spring	
9	388846		2	Latch	
10	387956		2	Stop plate	
11	508022		8	Screw	M4x16
12	904698		4	Washer	4,3x8x0,8
13	923976		4	Nut	
14	377061		1	Lock plate	
15	388852		1	Lock plate	
16	791754		2	Blind rivet	
17	792180		3	Blind rivet	
18	904228		5	Washer	6,4x12x1,5
25	500021		2	Screw	M8-1,25x25 8,8
27	586003		2	Lock nut	M8
28	500053		16	Screw	M8-1,25x20 8,8
29	904640		20	Washer	8,4x22x3
30	377952		1	Engine hood	
31	902166	C	1XL	.Edge trim	
32	357863		N	Shim	T=2 mm
33	500249		2	Screw	
34	904229		7	Washer	8,4x16x1,5
35	508027		2	Screw	
36	570005		2	Nut	M8
37	500029		4	Screw	M10-1,5x30 8,8
38	904557		4	Washer	10,5x22x4
39	371994		N	Shim	T=2 mm
40	904090		N	Washer	
41	904091		N	Washer	
42	900519		3	Plug	
43	902804		4	Plug	
44	202042	D	1XL	Rubber strip	
45	202046	E	1XL	Rubber strip	25x10
46	904076	F	1XL	Edge trim	
47	624018		14	Rivet Up to 601X9105	
	792210		10	Screw torx From 601X9106	
48	500047		2	Screw	M8-1,25x35 8,8
49	376866	G	1	Cover	
50	202028	H	1XL	Edge trim	
51	357866		1	Stop	
52	375594		1	Holder	
53	375595		1	Spacer	

A) Right
C) L=3,680 m
D) L=0,800 m
E) L=0,850 m
F) L=0,998 m
G) Left
H) L=0,457 m
J) Not illustrated
K) For absorbent
L) Included in 391121, item 1

Structure DEUTZ, F2L

18349

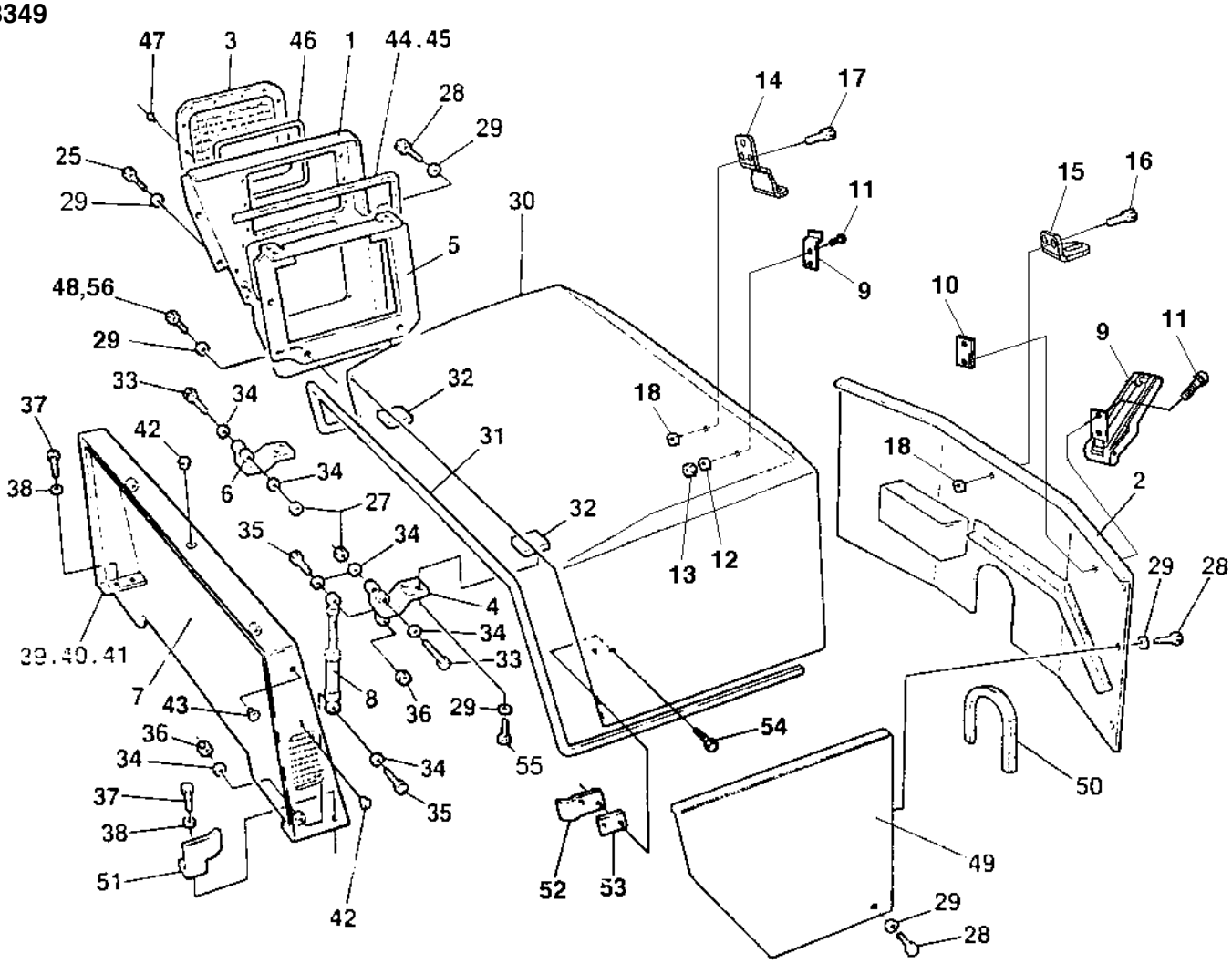

Ref. No.	Part No.	Rem.	Qty	Description	Code
54	904206		2	Screw	
55	500020		4	Screw M8-1,25x22 8,8	
56	500022		1	Screw M8-1,25x30 8,8	

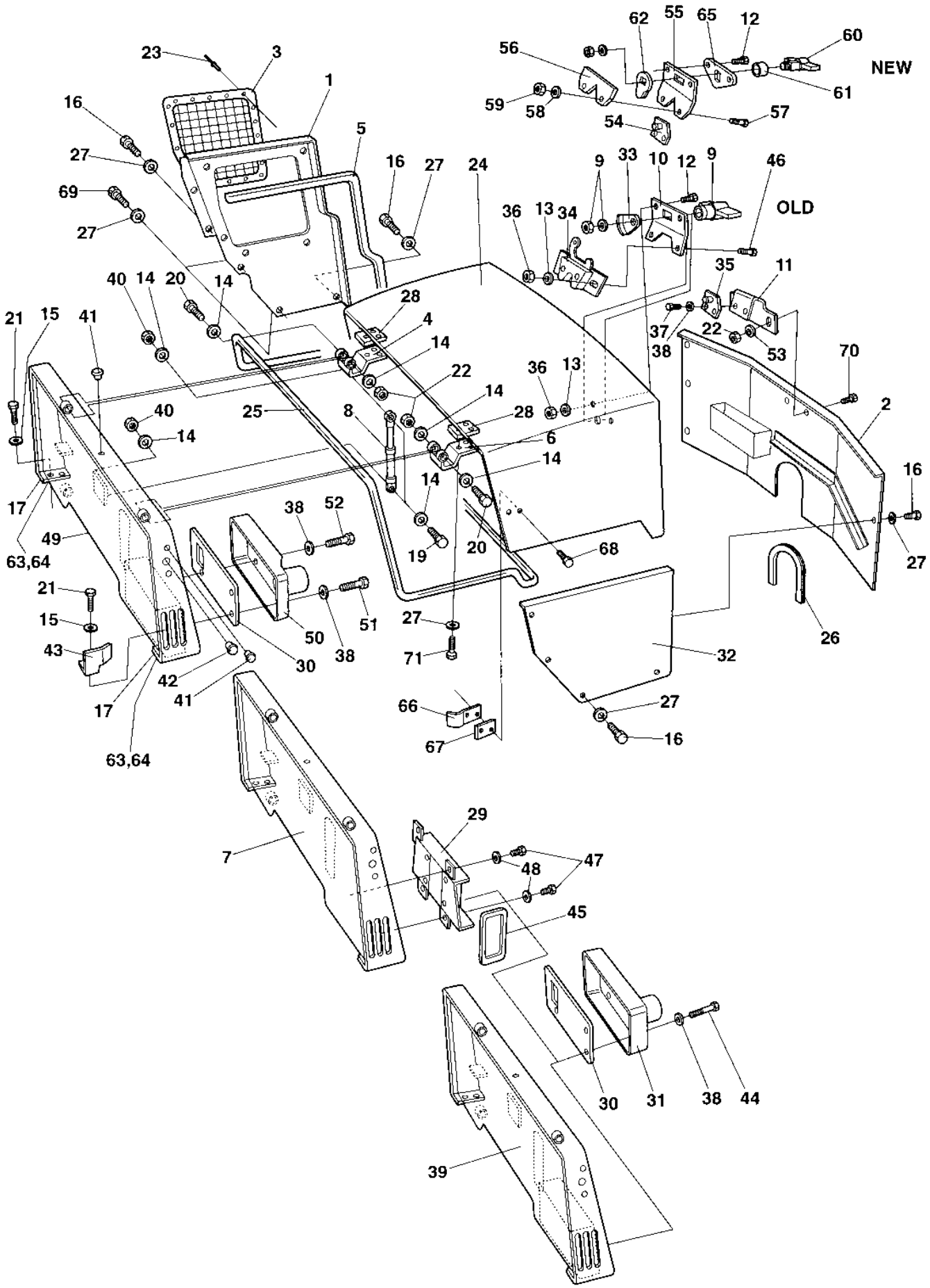
NEW
OLD

Ref. No.	Part No.	Rem.	Qty	Description	Code
1	370647	A	1	Cover	
2	382565	H	1	Cover	
3	370646		1	Grid	
4	370638		1	Hinge	
5	202043	B	1XL	Rubber strip	
6	357280		1	Hinge	
7				Not used on this model	
8	902256		1	Gas spring	
9	902591		1	Lock, outer	
	903064	C	1	Key	Marked "624"
10	358162		1	Bracket	
11	358160		1	Bracket	
12	500015		2	Screw	M6-1x30 8,8
13	904228		4	Washer	6,4x12x1,5
14	904229		7	Washer	8,4x16x1,5
15	904557		4	Washer	10,5x22x4
16	500053		14	Screw	M8-1,25x20 8,8
17	371994		N	Shim	T=2 mm
19	508027		2	Screw	
20	500249		2	Screw	
21	500029		4	Screw	M10-1,5x30 8,8
22	586003		4	Lock nut	M8
23	903369		19	Rivet	
24	370645		1	Engine hood	
25	902166	D	1XL	Edge trim	
26	202028	E	1XL	Edge trim	
27	904640		22	Washer	8,4x22x3
28	357863		N	Shim	T=2 mm
29				Not used on this model	
30	370636		1	Plate	
31	370637		1	Cover	
32	357259	F	1	Cover	
33	358161		1	Lever	
34	902585		1	Lock, inner	
35	902586		1	Lock pin	
36	586002		4	Lock nut	M6
37	500059		2	Screw	M6x10
38	904639		6	Washer	6,7x14x1,5
39				Not used on this model	
40	570005		2	Nut	M8
41	900519		3	Plug	
42	903653		4	Plug	
43	357866		1	Stop	
44	500292		4	Screw	M6x75
45	370975		1	Gasket	
46	513012		2	Screw	
47	500059		4	Screw	M6x10
48	615042		4	Conical spring washer	
49	370627		1	Hood frame	
50	370637		1	Cover	
51	500079		2	Screw	M6-1x50 8,8
52	500292		2	Screw	M6x75
53	904229		2	Washer	8,4x16x1,5

A) Right
B) L=1,610 m
C) Marked ``624``
D) L=3,680 m
E) L=0,457 m
F) Left
H) New design has to be slightly modified to fit

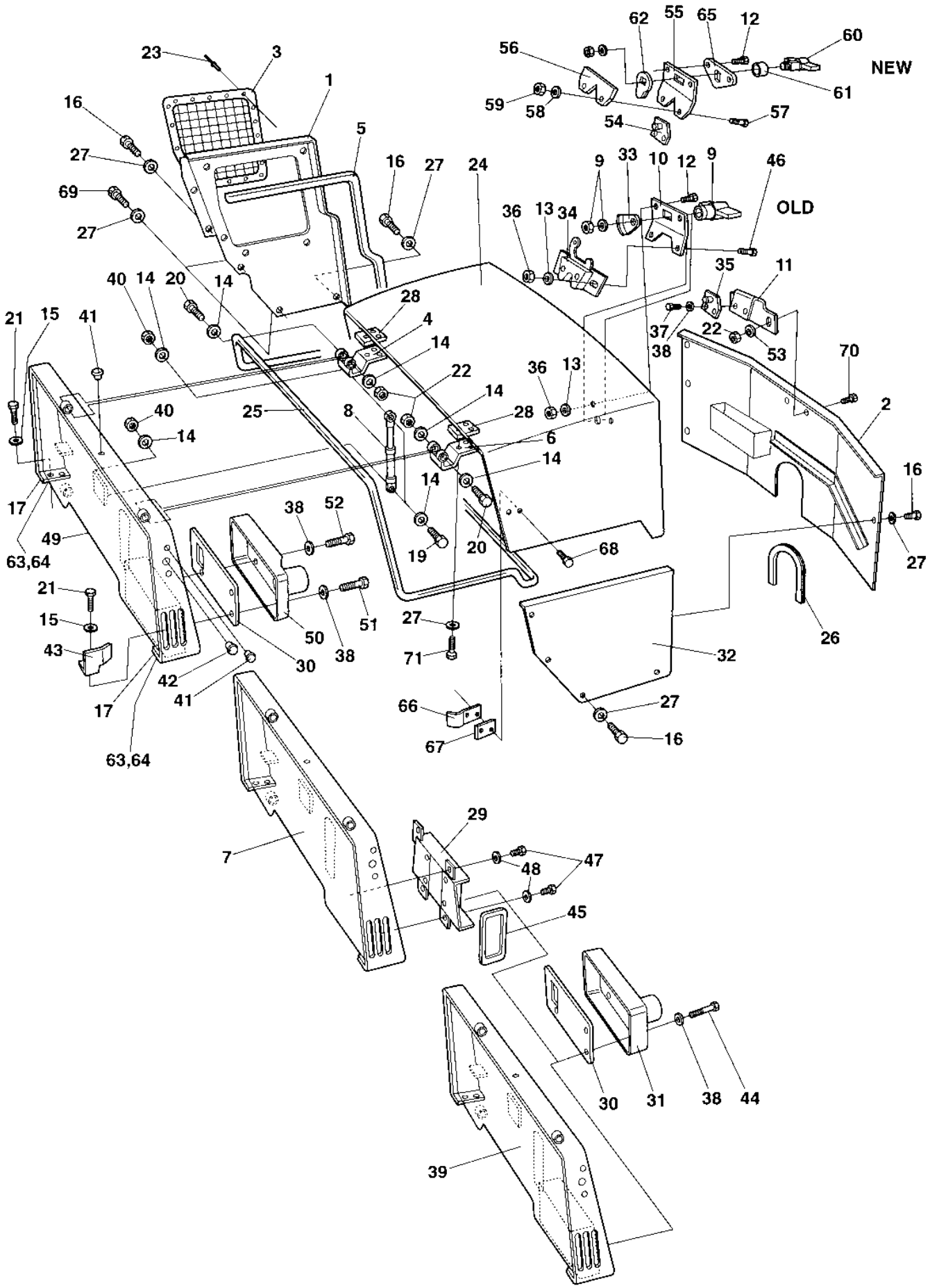
NEW
OLD

Ref. No.	Part No.	Rem.	Qty	Description		Code
54	374403		1	Lock pin		
55	374400		1	Holder plate		
56	371380		1	Lock		
57	904374		2	Screw		
58	904281		2	Washer	5,3x10x1	
59	586001		2	Lock nut	M5	
60	904368		1	Lock, outer		
	902866		1	Key	Marked "455"	
61	374401		1	Spacer sleeve		
62	374402		1	Lever		
63	904090		N	Washer		
64	904091		N	Washer		
65	376129		1	Spacer		
66	375594		1	Holder		
67	375595		1	Spacer		
68	904206		2	Screw		
69	500188		2	Screw	M8-1,25x14 8.8	
70	500021		2	Screw	M8-1,25x25 8,8	
71	500020		4	Screw	M8-1,25x22 8,8	

Sprinkler system Front tank

17198

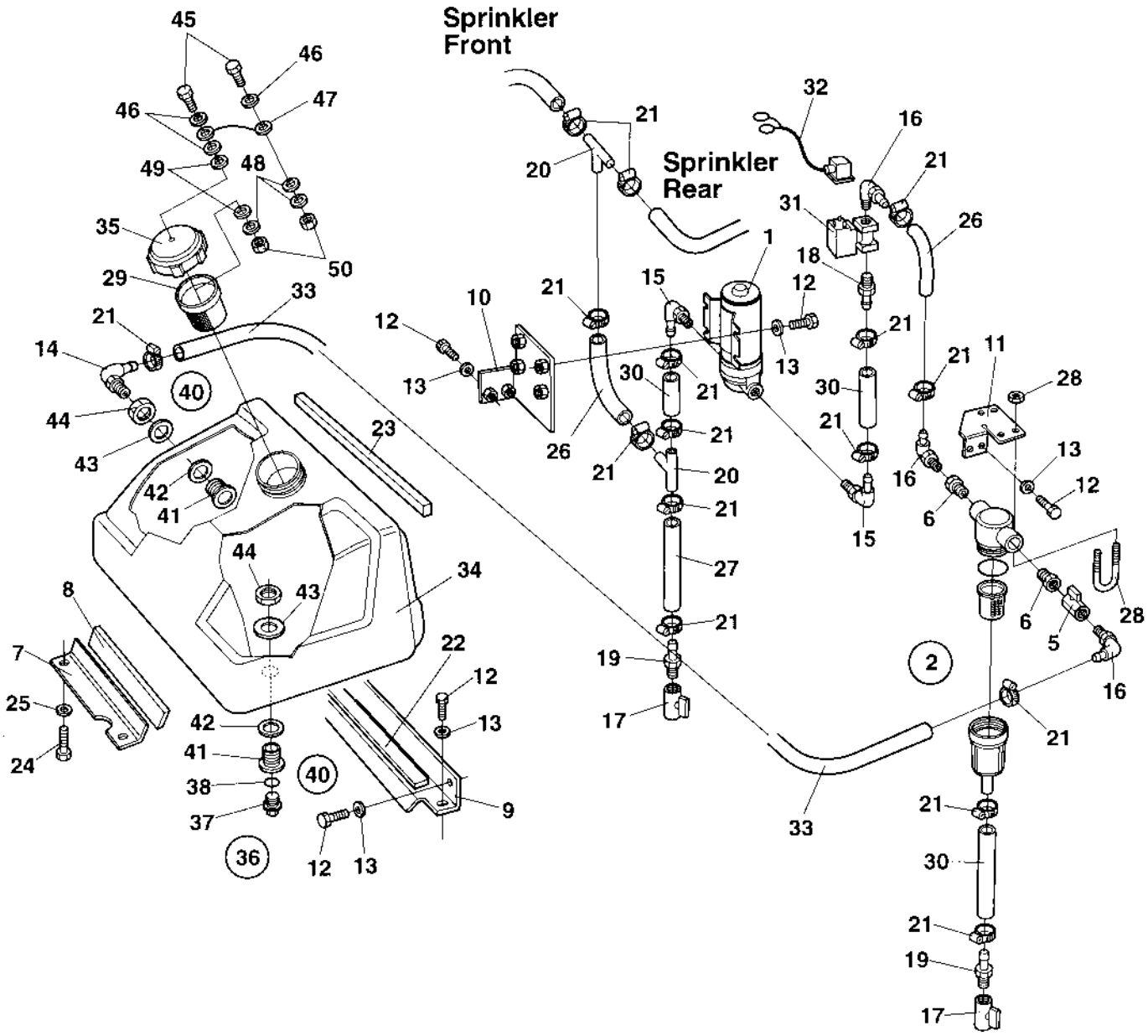

Sprinkler system Front tank

Ref. No.	Part No.	Rem.	Qty	Description	Code
1	904808		1	Water pump	
2	904877		1	Strainer cpl	
3	938307		1	.O-ring	
4	938306		1	.Strainer	
5	924986		1	Valve	
6	903886		2	Adapter	
7	357395		1	Holder plate	
8	926911	A	1XL	Rubber strip	
9	357142		1	Holder plate	
10	382181		1	Holder plate	
11	382180		1	Holder plate	
12	500021		13	Screw	M8-1,25x25 8,8
13	904229		13	Washer	8,4x16x1,5
14	901431		1	Hose connection	
15	923734		2	Hose connection	
16	924996		3	Hose connection	
17	925599		2	Valve	
18	901432		1	Hose connection	
19	924544		2	Hose connection	
20	923735		2	Hose connection	
21	313002		16	Hose clamp	13 - 20 mm
22	903478	B	1XL	Absorbent	
23	202042	C	1XL	Rubber strip	
24	500028		2	Screw	M10-1,5x25 8,8
25	904230		2	Washer	10,5x22x2
26	904878	D	2XL	Hose reinforced	
27	904878	D	1XL	Hose reinforced	
28	927568		2	Clamp	
29	358846		1	Strainer	
30	904878	E	3XL	Hose reinforced	
31	287713		1	Solenoid valve	
32	358809		1	Cable harness	
33	904878	C	1XL	Hose reinforced	
34	373797		1	Sprinkling tank	
35	359003		1	.Cap	
36	937053		1	.Plug, cpl	
37			1	..Plug	
38			1	..Gasket	
40	902916		2	.Adapter kit	
41			1	..Pipe fitting	
42			1	..Sealing	
43			1	..Washer	
44			1	..Nut	
45	500040		2	Screw	M6-1x20 8,8
46	904228		3	Washer	6,4x12x1,5
47	357643		1	Wire	
48	615042		3	Conical spring washer	
49	615076		2	Washer	7,0x25x1,5
50	586002		2	Lock nut	M6

A) L=0,430 m
B) L=0,670 m
C) Length as required
D) L=0,300 m
E) L=0,070 m

Sprinkler system Front tank

18406

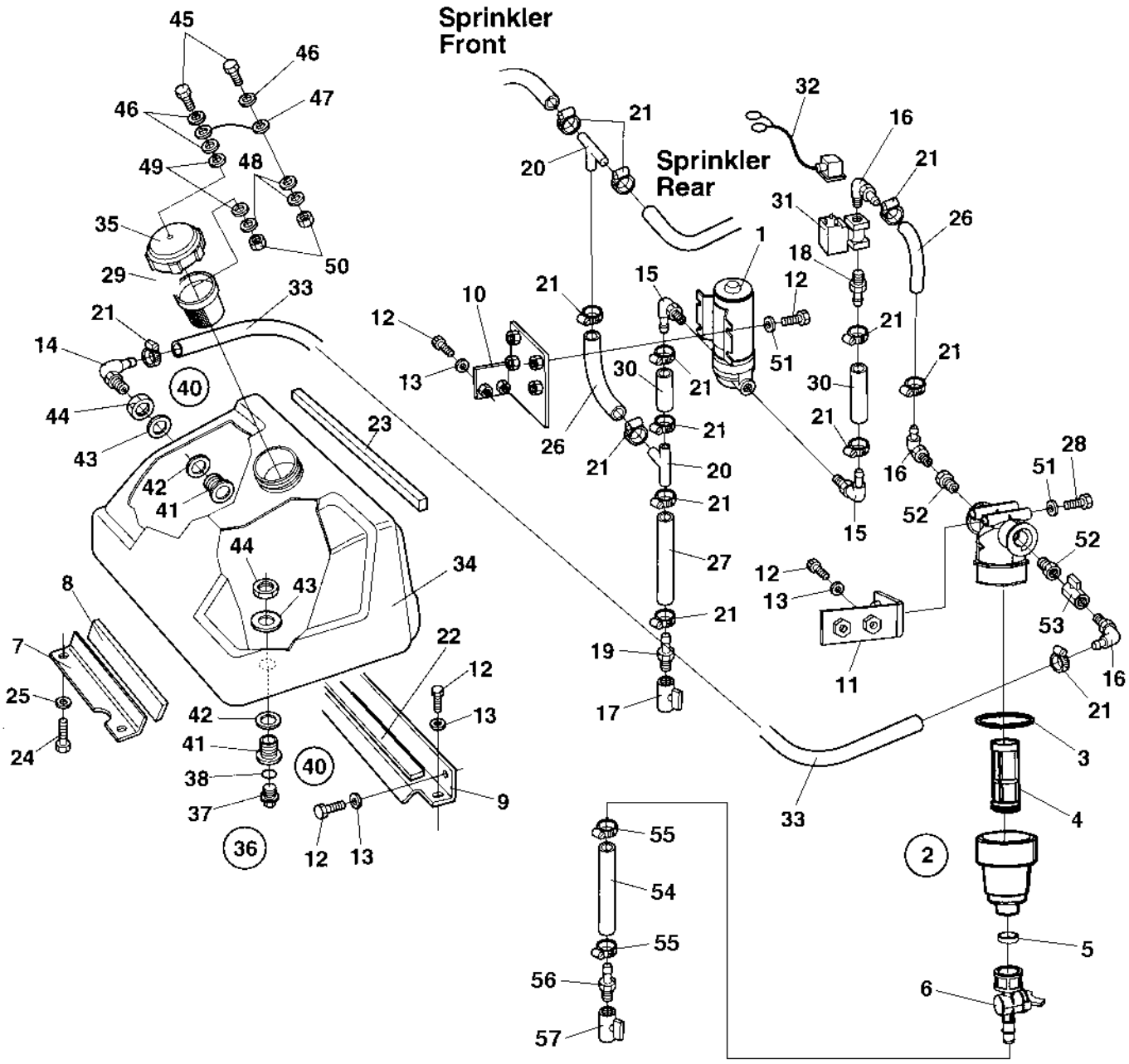

Sprinkler system Front tank

Ref. No.	Part No.	Rem.	Qty	Description	Code
1	383697		1	Water pump	
2	791950		1	Water strainer, cpl	
3	791959		1	.O-ring	
4	791949		1	.Filter element	
5	791568		1	.Gasket	
6	379009		1	.Valve	
7	357395		1	Holder plate	
8	926911	A	1XL	Rubber strip	
9	357142		1	Holder plate	
10	382181		1	Holder plate	
11	390840		1	Filter bracket	
12	500053		13	Screw	M8-1,25x20 8,8
13	904229		13	Washer	8,4x16x1,5
14	901431		1	Hose connection	
15	923734		2	Hose connection	
16	924996		3	Hose connection	
17	925599		1	Valve	
18	901432		1	Hose connection	
19	924544		1	Hose connection	
20	923735		2	Hose connection	
21	313002	J	14	Hose clamp	13 - 20 mm
	313001		14	Hose clamp	11 - 17 mm
22	903478	B	1XL	Absorbent	
23	202042	C	1XL	Rubber strip	
24	500028		2	Screw	M10-1,5x25 8,8
25	904230		2	Washer	10,5x22x2
26	904878	D	2XL	Hose reinforced	
27	904878	D	1XL	Hose reinforced	
28	500190		2	Screw	M8-1,25x80 8.8
29	358846		1	Strainer	
30	904878	E	3XL	Hose reinforced	
31	287713		1	Solenoid valve	
32	358809		1	Cable harness	
33	904878	C	1XL	Hose reinforced	
34	373797		1	Sprinkling tank	
35	359003		1	.Cap	
36	937053		1	.Plug, cpl	
37			1	..Plug	
38			1	..Gasket	
40	902916		2	.Adapter kit	
41			1	..Pipe fitting	
42			1	..Sealing	
43			1	..Washer	
44			1	..Nut	
45	500040		2	Screw	M6-1x20 8,8
46	904228		3	Washer	6,4x12x1,5
47	357643		1	Wire	
48	615042		3	Conical spring washer	
49	615076		2	Washer	7,0x25x1,5
50	586002		2	Lock nut	M6
51	904640		6	Washer	8,4x22x3

A) L=0,430 m
B) L=0,670 m
C) Length as required
D) L=0,300 m
E) L=0,070 m
J) In use together with transparent hose; old design of 904878

Sprinkler system Front tank

18406

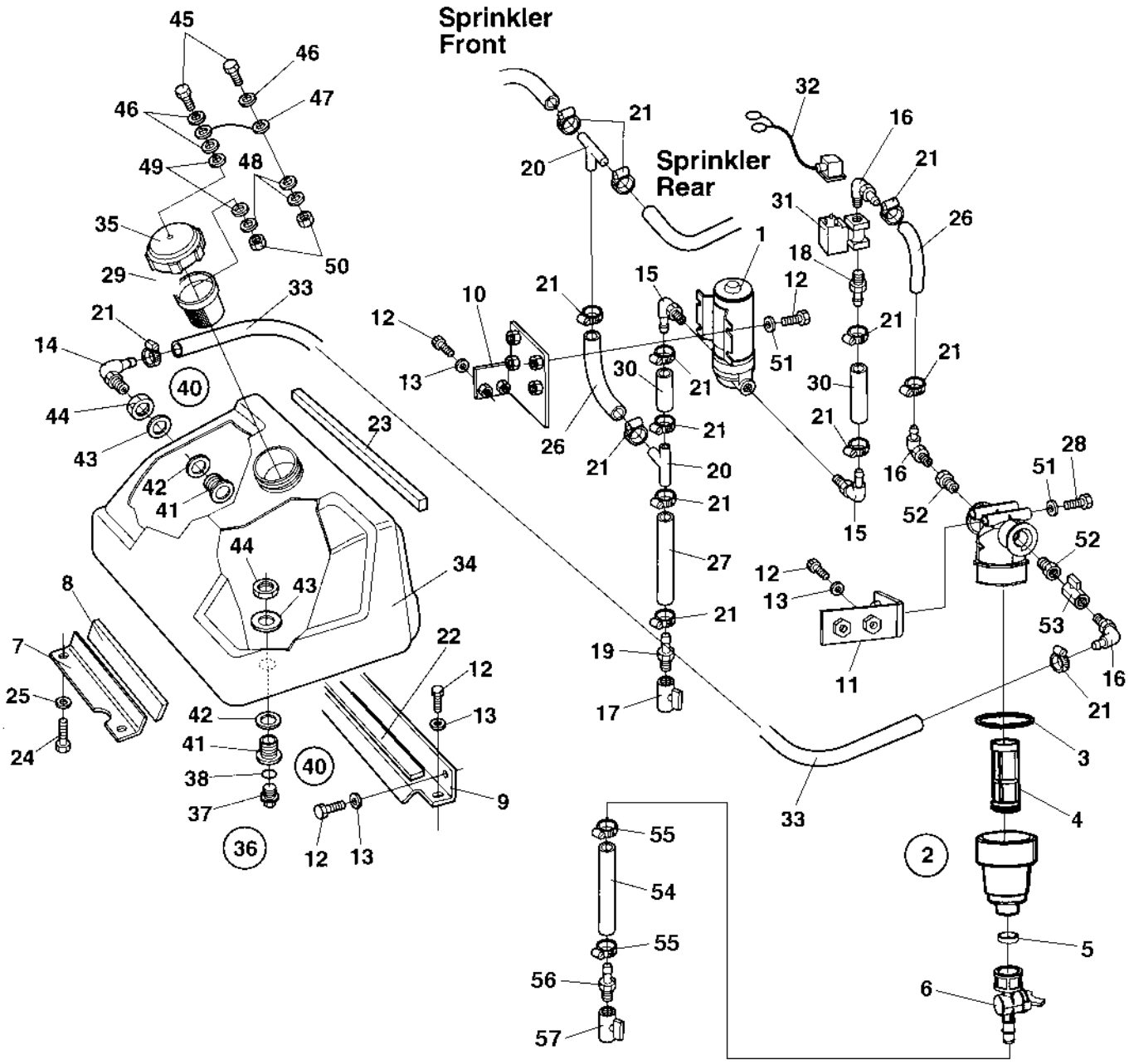

Sprinkler system Front tank

Ref. No.	Part No.	Rem.	Qty	Description	Code
52	903886		2	Adapter	
53	924986		1	Valve	
54	904878	E,H	1	Hose reinforced	
55	313001	H	2	Hose clamp	11 - 17 mm
56	924544	H	1	Hose connection	
57	925599	H	1	Valve	

E) L=0,070 m
H) In use together with option: Noise suppression; See section for Optional equipment

Sprinkler, front/rear

17197

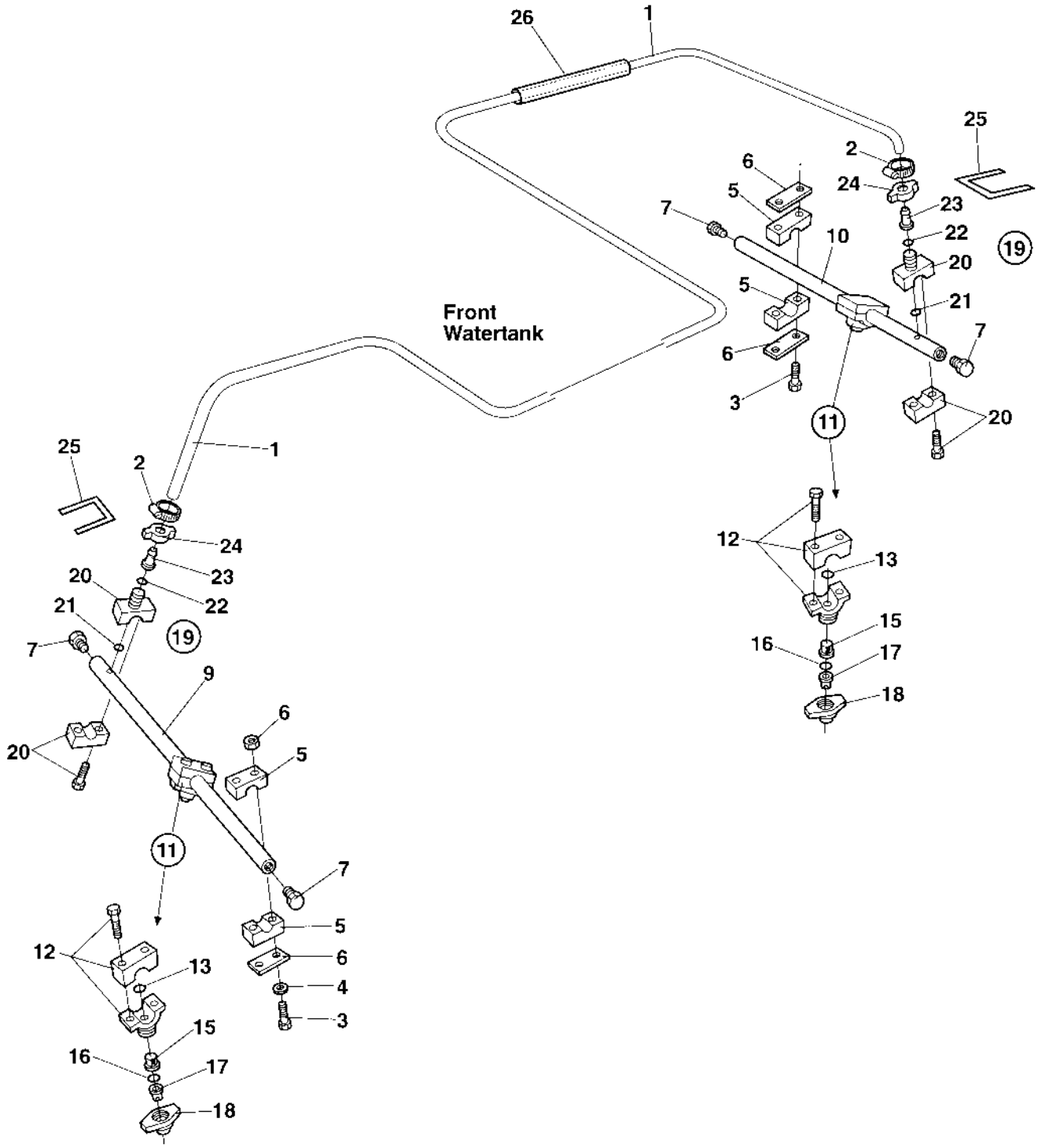

Sprinkler, front/rear

Ref. No.	Part No.	Rem.	Qty	Description	Code
1	904878	A	2XL	Hose reinforced	
2	313002	G	2	Hose clamp	13 - 20 mm
	313001		2	Hose clamp	11 - 17 mm
3	500079		8	Screw	M6-1x50 8,8
4	904228		8	Washer	6,4x12x1,5
5	923876	B	4	Clamp	
6	923859		8	Cover plate	
7	923683		4	Plug	
9	382467	C	1	Sprinkler pipe	
	382468	F,C	1	Sprinkler pipe	
10	382467	D	1	Sprinkler pipe	
	382468	F,D	1	Sprinkler pipe	
11	928781		8	Sprinkler, cpl	
12	923680		1	.Nozzle clamp	
13	923962		1	..O-ring	
15	499444		1	.Strainer	
16	904116		1	.Gasket	
17	923679		1	.Nozzle	
	791117	1	1	.Nozzle body	Orange
18	923681		1	.Quick coupling, black	
19	903959		2	Hose connection, cpl	
20	923680		1	.Nozzle clamp	
21	923962		1	..O-ring	
22	904116		1	.Gasket	
23	903957		1	.Hose connection	
24	903958		1	.Coupling	
25	902379	A	2XL	Edge trim	
26	901191	E	1XL	Protective hose	

1) Can replace PN 923679.
A) Length as required
B) 2 pieces
C) Front
D) Rear
E) L=0,340 m
F) US-market
G) In use together with transparent hose; old design of 904878

Sprinkler front/rear

18152

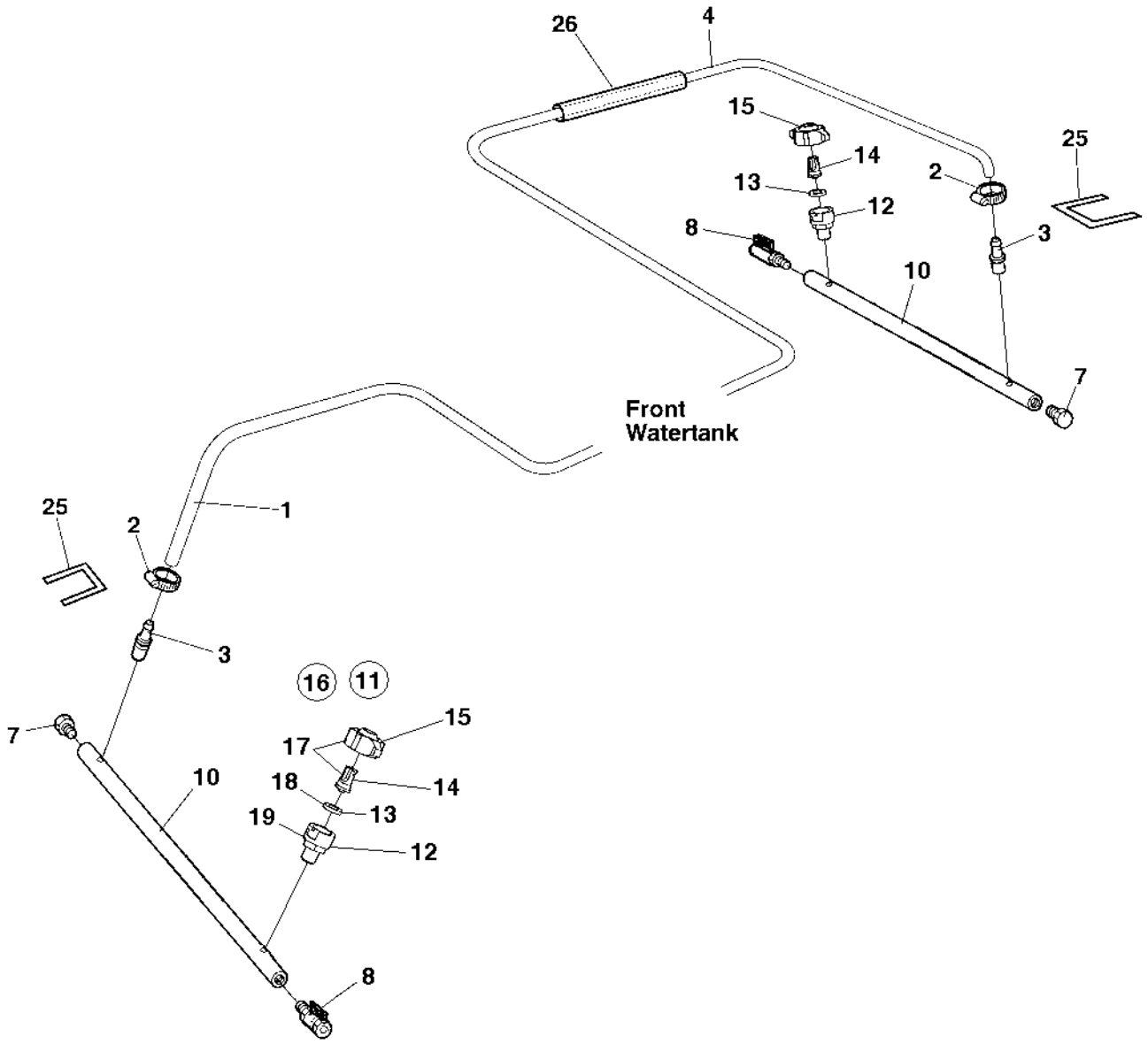

Sprinkler front/rear

Ref. No.	Part No.	Rem.	Qty	Description	Code
1	904878	B	1XL	Hose reinforced	
2	313002	D	2	Hose clamp	13 - 20 mm
	313001		2	Hose clamp	11 - 17 mm
3	791977		2	Hose connection	
4	904878	C	1XL	Hose reinforced	
7	791974		2	Plug threaded	
8	233215		2	Ball valve	
10		A	2	Sprinkler pipe/bracket	
11	376873	F	4	Spraying nozzle, cpl	
12	376874	F	1	.Housing	
13	376876	F	1	.Gasket	
14	376877	F	1	.Nozzle and strainer, yellow	0,8
15	376875	F	1	.Retainer	
16	392011	E	4	Spraying nozzle, cpl	
17	392509	E	1	.Retainer, nozzle, strainer, yellow	0,8
18	392510	E	1	.Gasket	
19	392508	E	1	.Housing	
25	902379		2XL	Edge trim	
26	901191		1XL	Protective hose	

A) For correct view and PN; see scraper assembly for same SN.
B) L=1,4 m
C) L=2,1 m
D) In use together with transparent hose; old design of 904878
E) Improved design
F) Recommendation: Replace with improved design item 16; interchangeable as a cpl. unit

Ref. No.	Part No.	Rem.	Qty	Description	Code
100				Drum (Page 78)	

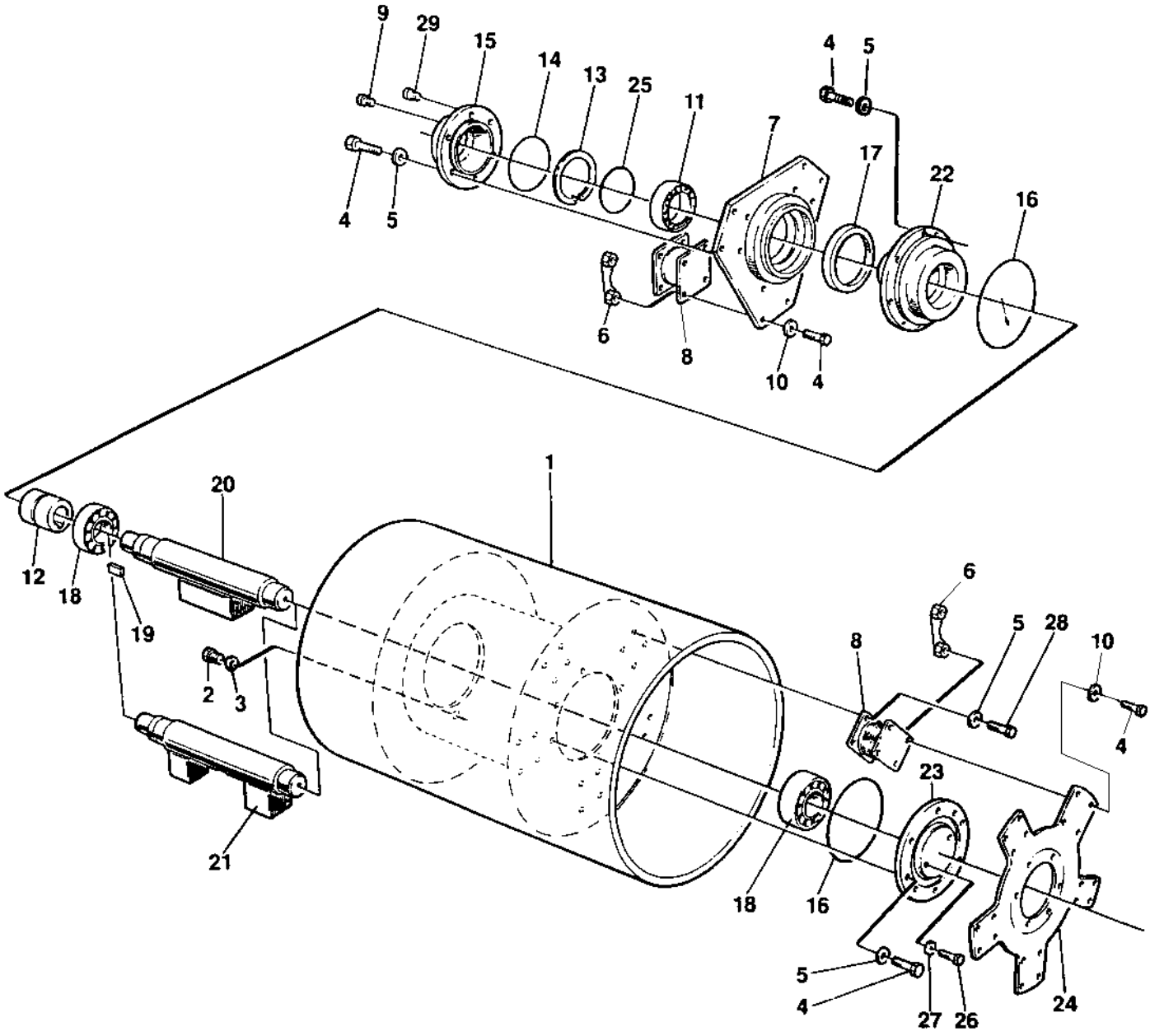
9
29
15
14
13
25
11
7
4
5
17
22
16
4
5
6
8
10
4
1
20
12
18
19
2
3
21
6
5
28
10
8
4
23
18
16
5
4
27
26
24

Ref. No.	Part No.	Rem.	Qty	Description	Code
1	357049		1	Drum	
2	343744		1	Magnetic plug	M30
3	162017		1	Seal ring	M30
4	500029		50	Screw	M10-1,5x30 8,8
5	904230		38	Washer	10,5x22x2
6	379179	B	16	Holder	
7	346505		1	Mounting plate	
8	345215		8	Shock absorber	
9	343490		1	Air breather	
10	904230		32	Washer	10,5x22x2
11	111018		1	Ball bearing	
12	349202	A	1	Coupling	
	212160		1	.Rubber cross	
13	903154		1	Retaining ring	
14	160132		1	O-ring	124, 50x3, 00
15	358666		1	Adapter	
16	923951		2	O-ring	
17	163049		1	Sealing	
18	904258		2	Spherical roller bearing	
19	350029		1	Key	
20	357054		1	Eccentric shaft	
21				Not used on this model	
22	358587		1	Bearing housing	
23	357020		1	Bearing housing	
24	357055		1	Drive disc	
25	358689		1	Spacer ring	
26	500044		2	Screw	M6x8
27	904228		2	Washer	6,4x12x1,5
28	508028		20	Screw	
29	903287		7	Plug	

A) CPL
B) Replaces earlier used Lock nut 586018; each holder has two nuts

Ref. No.	Part No.	Rem.	Qty	Description	Code
110				Engine (Page 82)	DEUTZ F2L 2011
150				Engine (Page 86)	ISUZU 3LD1 PW-05
200				Cooling system (Page 88)	ISUZU
305				Intake system (Page 90)	DEUTZ
355				Intake system (Page 92)	ISUZU
400				Fuel system (Page 94)	DEUTZ
450				Fuel system (Page 96)	ISUZU
520				Exhaust system (Page 98)	DEUTZ
555				Exhaust system (Page 100)	ISUZU

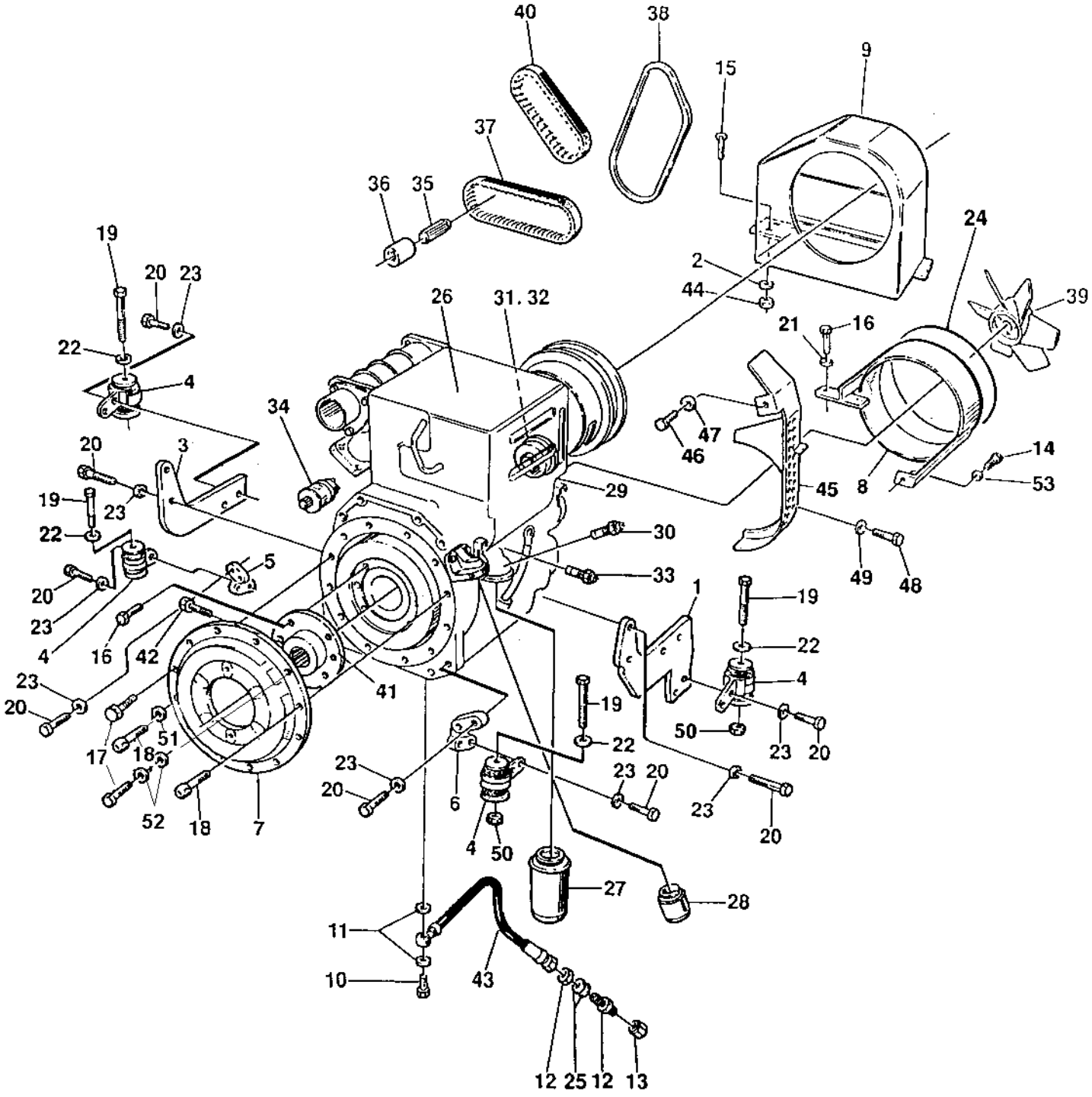
40
38
15
9
37
36
35
19
20
23
24
2
44
39
26
31. 32
21
16
22
4
34
47
46
14
20
3
29
45
8
53
19
23
22
30
5
33
49
48
20
1
19
23
4
16
42
22
4
41
19
50
23
20
23
20
22
17
18
51
23
20
23
20
23
20
6
52
18
7
4
50
27
28
11
10
43
12
25
12
13

Ref. No.	Part No.	Rem.	Qty	Description	Code
1	358370		1	Engine bracket	
2	904640		2	Washer	8,4x22x3
3	358371		1	Engine bracket	
4	902902	A	4	Shock absorber	
5	357165		1	Engine bracket	
6	357166		1	Engine bracket	
7	357005		1	Pump bracket	
8	387491		1	Cover	
9	370355		1	Cover	
10	904292		1	Hollow screw	
11	330331		2	Washer	18,2x23,9x1,5
12	230515		1	Connector	
13	330383		1	Cap hydraulic	
14	500053		1	Screw	M8-1,25x20 8,8
15	500047		2	Screw	M8-1,25x35 8,8
16	500021		8	Screw	M8-1,25x25 8,8
17	508096		6	Screw	M10-1,5x25H 8,8
	508029		3	Screw	M10-1,5x30H 8,8
18	508053		2	Screw	M10-1,5x35H 8,8
19	500122		4	Screw	
20	500050		16	Screw	
21	904640		5	Washer	8,4x22x3
22	904231		4	Washer	13x24x2
23	600017		16	Washer	
24	288129		1XL	Edge trim	
25	904233		2	Washer	21x36x3
26	388500		1	Diesel engine	
27	939515		1	.Oil filter	
28	903938		1	.Fuel filter	
29		D	1	.Solenoid	
30			1	.Oil temp guard	
31	909370		1	.Alternator	
32	939478		1	..Charging regulator	
33			1	.Oil pressure switch	
34	939593		1	.Starter	
35		E,J	1	.Splined shaft	
36	945442	E	1	.Splined sleeve	
37	939976	E	1	.Toothed belt	
38	902521		1	.V-belt	
39			1	.Fan	
40	939840	F	1	.Toothed belt kit	
41	357003		1	Coupling	
42	508095		1	.Screw	
43	386133		1	Hydraulic hose	
44	586003		2	Lock nut	M8
45	390722	H	1	Belt guard	
46	508025		1	Screw	
47	904228		1	Washer	6,4x12x1,5
48	500185		2	Screw	M6-1x14 8,8
49	904228		2	Washer	6,4x12x1,5
50	586019		2	Lock nut	M12

A) Included in item 26
D) Engine shut-off
E) For vibration pump drive
F) Belt and roller
H) Replaces earlier used 359869
J) Not sold separately. If damaged; the housing cpl with gear has to be exchanged: PN 945443 and sleeve 945442. The sleeve has to be lubricated with graphite grease before assembly !

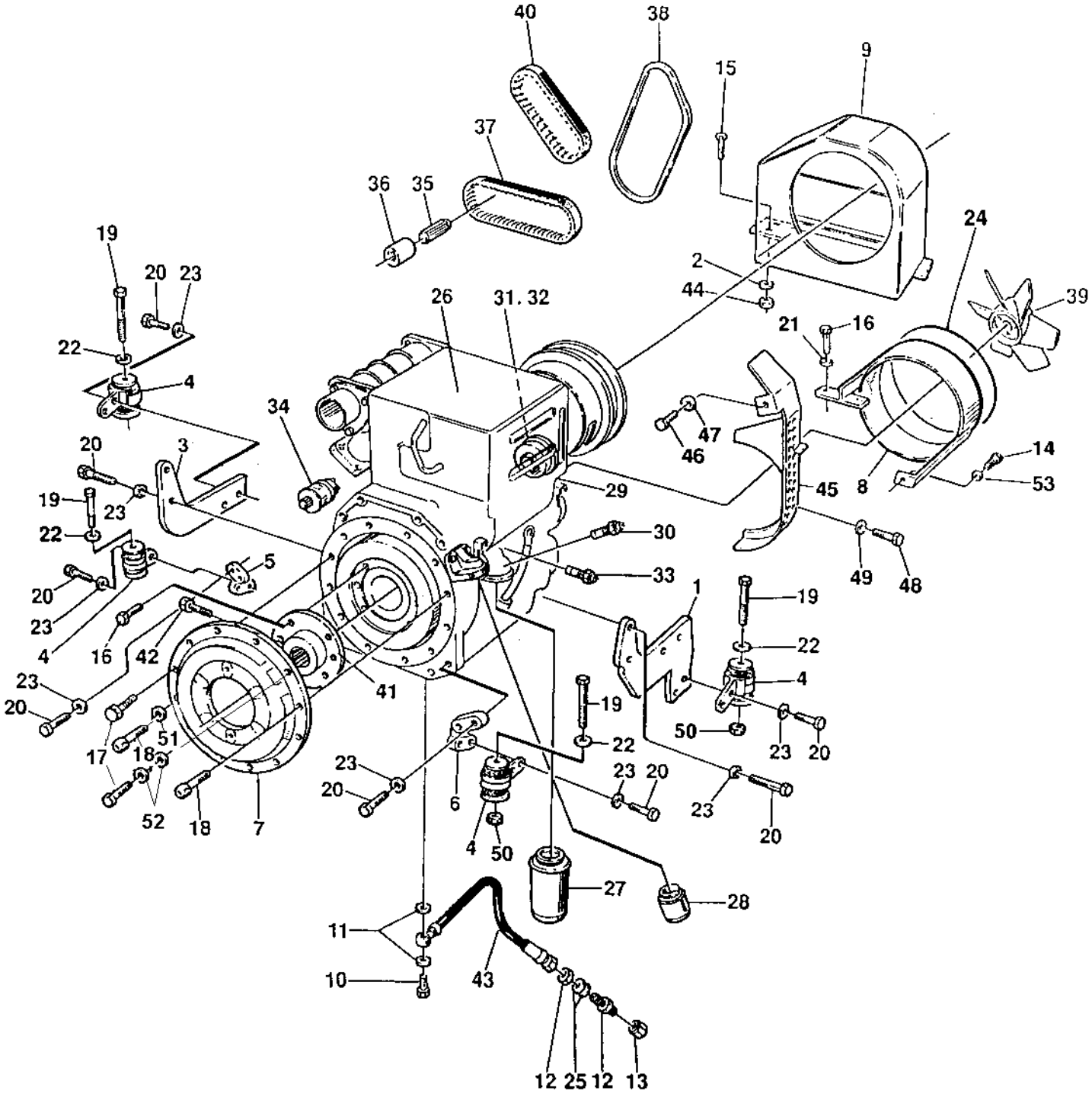
40
38
15
9
37
36
35
19
20
23
24
2
44
39
26
31. 32
21
16
22
4
34
47
46
14
20
3
29
45
8
53
19
23
22
30
5
49
48
20
33
1
19
23
4
16
42
22
41
4
23
20
19
50
51
23
20
17
18
22
23
23
20
23
20
52
18
7
6
4
50
27
28
11
10
43
12
25
12
13

Ref. No.	Part No.	Rem.	Qty	Description	Code
51	904557		2	Washer 10,5x22x4	
52	904230		2	Washer 10,5x22x2	
53	904229		1	Washer 8,4x16x1,5	

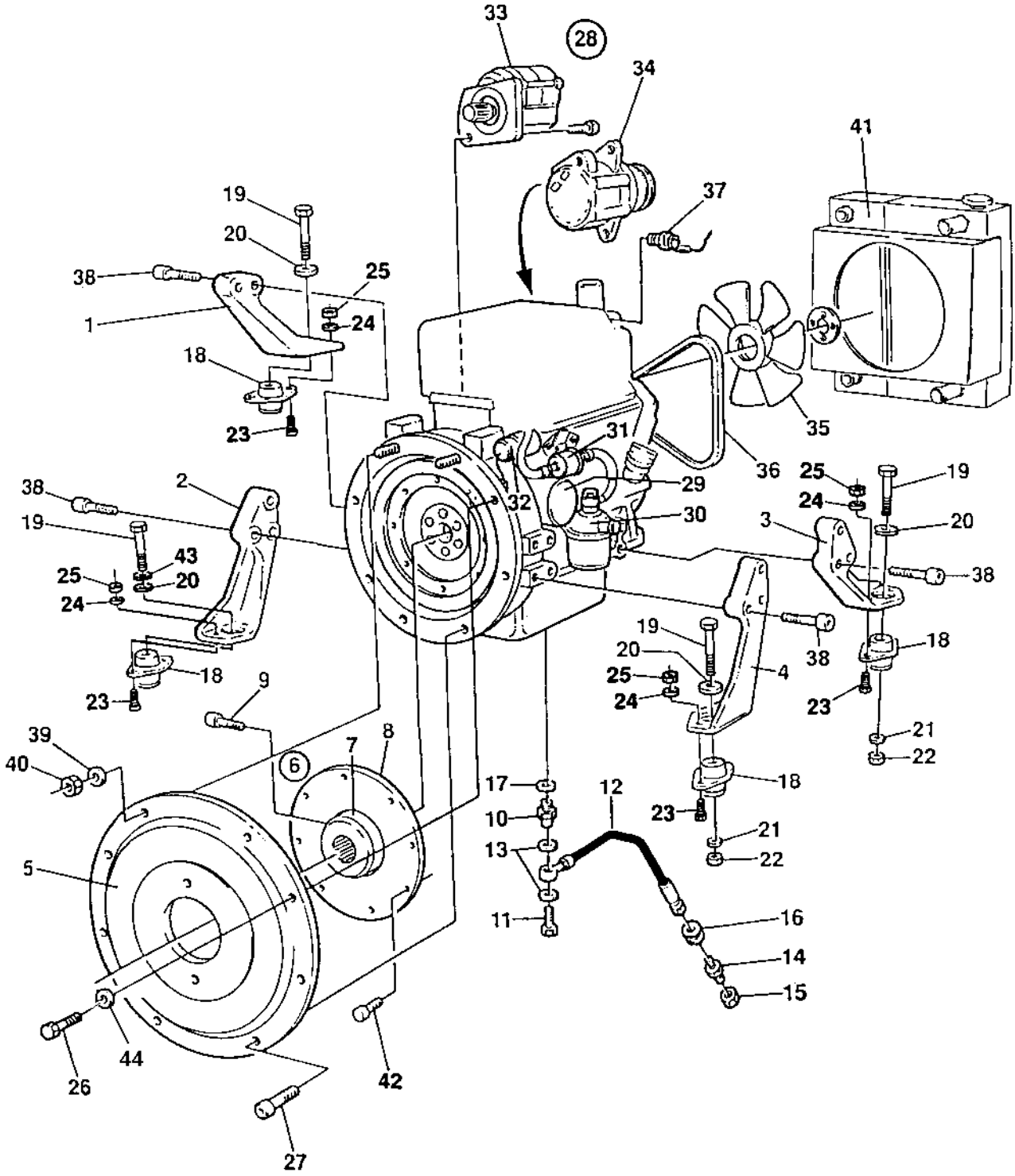
33
28
34
41
19
20
38
25
1
24
18
37
23
31
35
36
29
32
30
2
38
19
43
25
20
24
18
23
9
39
40
6
7
8
5
17
10
13
11
12
16
14
15
44
26
42
27
3
38
19
20
25
24
4
18
23
21
22

Ref. No.	Part No.	Rem.	Qty	Description	Code
1	386477		1	Engine bracket	
2	372142		1	Engine bracket	
3	372141		1	Engine bracket	
4	372140		1	Engine bracket	
5	370083		1	Pump bracket	
6	370081		1	Coupling, cpl	
7		A	1	.Hub	
8	903624		1	.Flange	
9	508095		1	.Screw	
10	370142		1	Nipple	
11	904292		1	Hollow screw	
12	386133		1	Hydraulic hose	
13	330331		2	Washer	18,2x23,9x1,5
14	230515		1	Connector	
15	330383		1	Cap hydraulic	
16	904233		2	Washer	21x36x3
17	330332		1	Washer	
18	900478		4	Shock absorber	
19	500117		4	Screw	M12x80H 8,8
20	903912		4	Washer	
21	904231		2	Washer	13x24x2
22	586019		2	Lock nut	M12
23	500029		8	Screw	M10-1,5x30 8,8
24	904230		8	Washer	10,5x22x2
25	586018		8	Lock nut	M10
26	508053		2	Screw	M10-1,5x35H 8,8
27	508096		3	Screw	M10-1,5x25H 8,8
	508029		1	Screw	M10-1,5x30H 8,8
28	384699	D	1	Diesel engine	
	389610		1	Diesel engine	
	908411		3	.Glow plug	
	937060		1	.Oil pressure switch	
29	908404		1	.Oil filter	
30	908405		1	.Fuel filter	
31	903704		1	.Fuel pump	
32	903706		1	.Stop solenoid	
33	908410		1	.Starter	
34	939494		1	.Alternator	PCD = 70 mm
35	908653		1	.Fan	
36	939495		1	.Fan belt	POC = 915 mm, A-type
37	903707		1	Thermo sensor	
38	902059		12	Screw	
39	904557	B	1	Washer	10,5x22x4
	904637	C	1	Washer	10x18x2
40	586018		2	Lock nut	M10
41				Cooling system (Page 88)	ISUZU
42	500021		8	Screw	M8-1,25x25 8,8
43	904703		1	Washer	13x24x4
44	904230		2	Washer	10,5x22x2

A) Not sold separately
B) Left
C) Right
D) Replaced by 389610

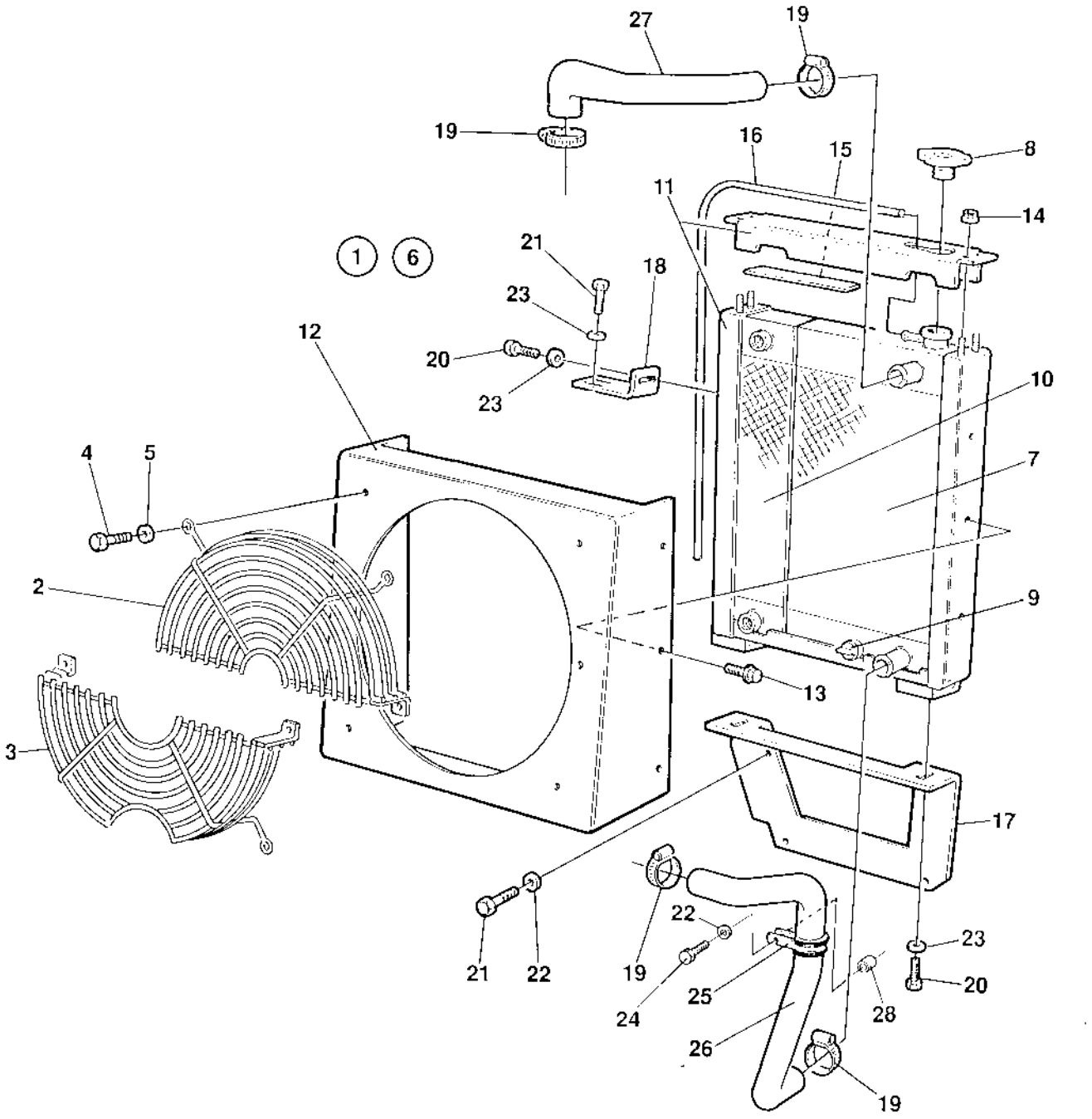
27
19
19
16
15
8
11
14
1
6
21
18
23
12
20
23
10
4
5
7
2
9
13
3
17
22
21
22
19
23
22
20
25
24
28
26
19

Ref. No.	Part No.	Rem.	Qty	Description	Code
1	370360	A	1	Radiator	
2	370139	B	1	.Fan guard	
3	370323	C	1	.Fan guard	
4	500053		6	.Screw	M8-1,25x20 8,8
5	904229		6	.Washer	8,4x16x1,5
6			1	.Radiator	
7	908629		1	..Water radiator	
8	908630		1	...Cap	
9	939470		1	...Plug	
10	908631		1	..Oil cooler	
11	908633		1	..Frame	
12	908634		1	..Cover	
13	902989		6	..Screw	
14	570102		4	..Nut	M8
15	908632		1	..Rubber strip	
16			1	..Plastic hose	
17	370140		1	Radiator bracket	
18	370141		1	Radiator bracket	
19	313008		4	Hose clamp	
20	500053		4	Screw	M8-1,25x20 8,8
21	500021		5	Screw	M8-1,25x25 8,8
22	904229		4	Washer	8,4x16x1,5
23	904640		5	Washer	8,4x22x3
24	508056		1	Screw	M8x40
25	921118		1	Clamp	
26	370138		1	Radiator hose	
27	370137		1	Radiator hose	
28	343748		1	Spacer sleeve	

A) CPL
B) Upper
C) Lower

Intake system DEUTZ

16930

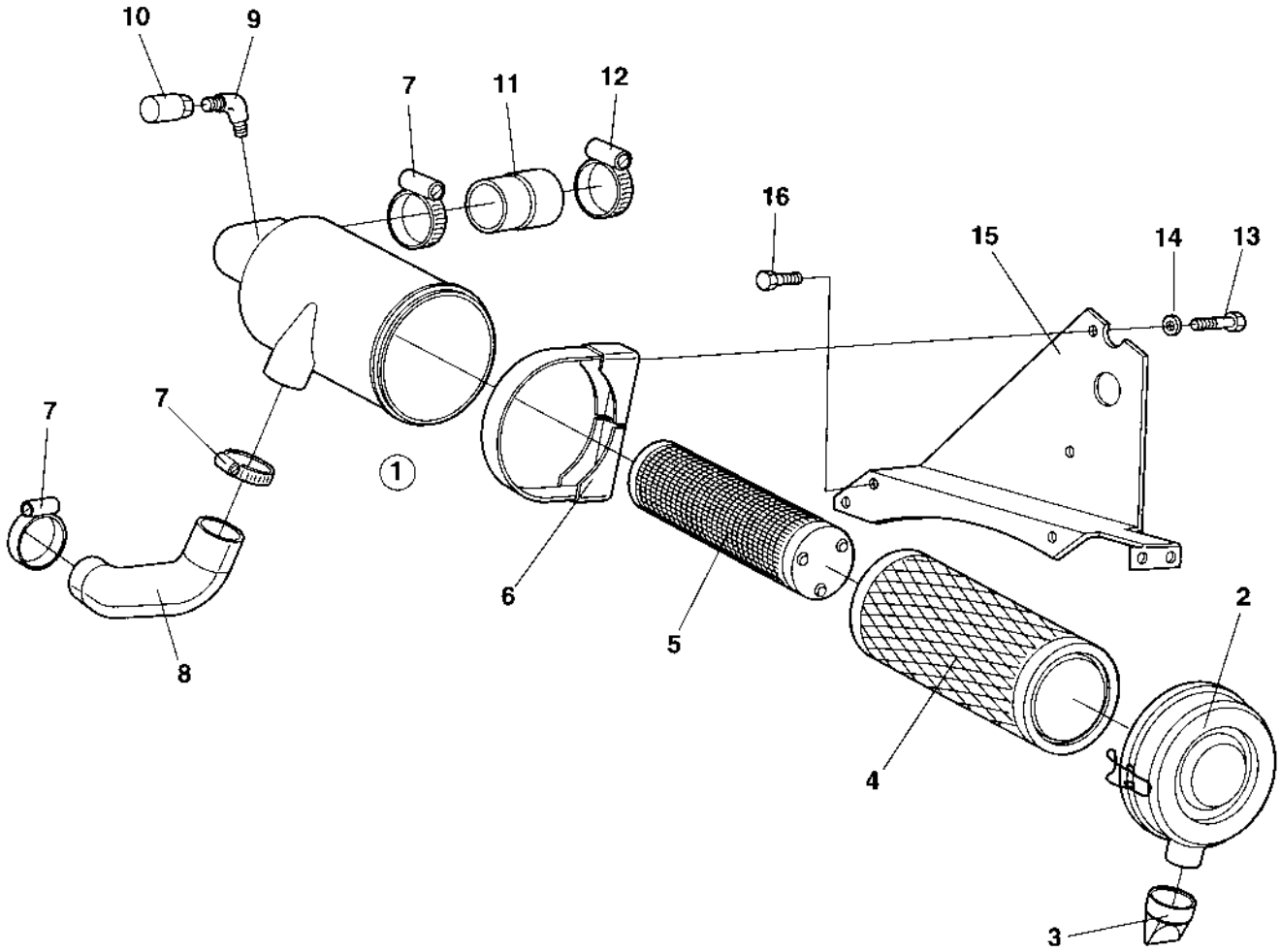

Intake system DEUTZ

Ref. No.	Part No.	Rem.	Qty	Description		Code
1	385712		1	Air cleaner, cpl		
2	385713		1	.Service cover		
3	380293		1	.Vacuator valve		
4	380295		1	.Main filter		
5	380294		1	.Safety filter		
6	380296		1	Holder		
7	313023		3	Hose clamp		
8	380297		1	Air inlet hose		
9				Not used on this model		
10	902168		1	Indicator		
11	380299		1	Air inlet hose		
12	313023		1	Hose clamp		
13	500022		2	Screw	M8-1,25x30 8,8	
14	904640		2	Washer	8,4x22x3	
15	380300		1	Bracket		
16	500509		3	Screw		

Intake system ISUZU

16868

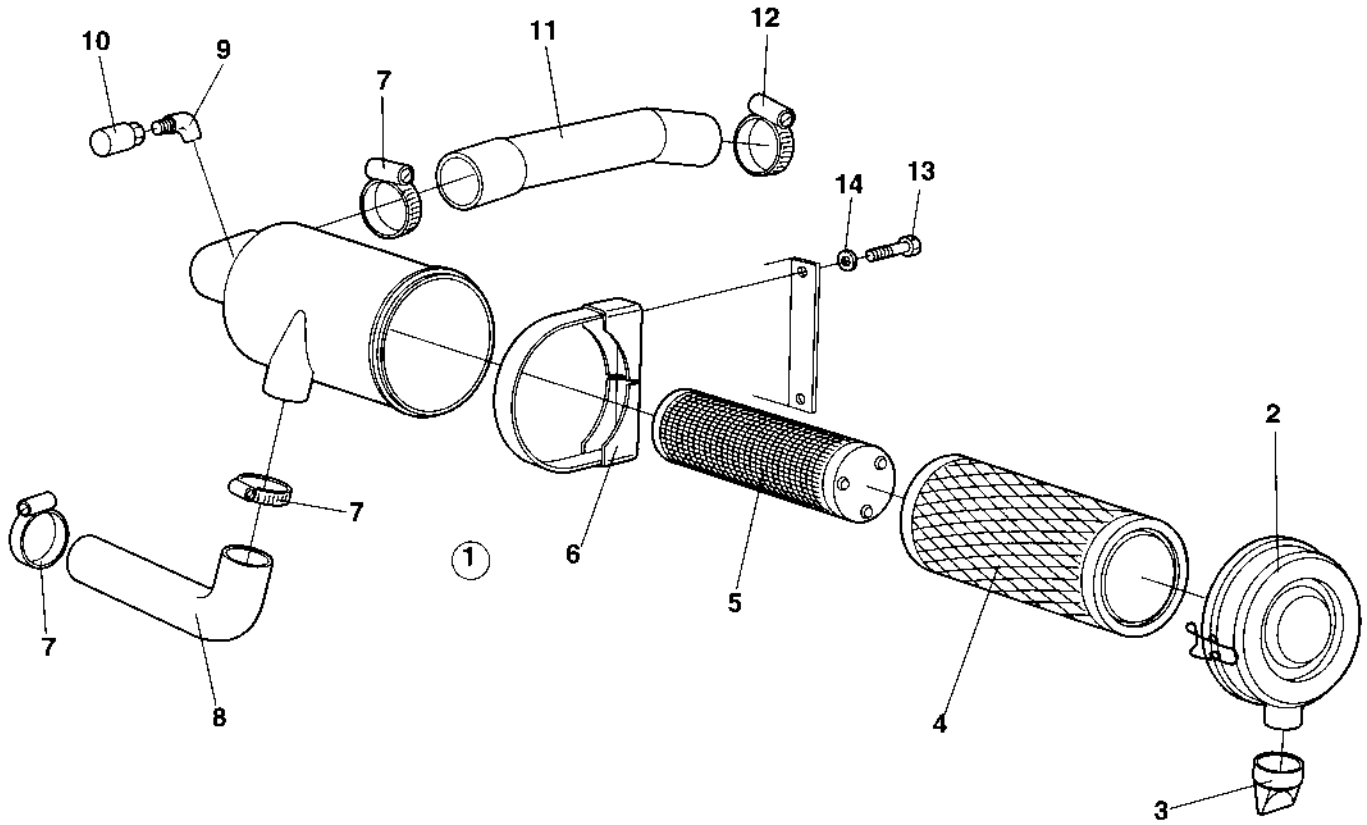

Intake system ISUZU

Ref. No.	Part No.	Rem.	Qty	Description		Code
1	385712		1	Air cleaner, cpl		
2	385713		1	.Service cover		
3	380293		1	.Vacuator valve		
4	380295		1	.Main filter		
5	380294		1	.Safety filter		
6	380296		1	Holder		
7	313023		3	Hose clamp		
8	380602		1	Air inlet hose		
9	891228		1	Adapter		
10	499497		1	Indicator		
11	380601		1	Air inlet hose		
12	313010		1	Hose clamp		
13	500022		2	Screw	M8-1,25x30 8,8	
14	904640		2	Washer	8,4x22x3	

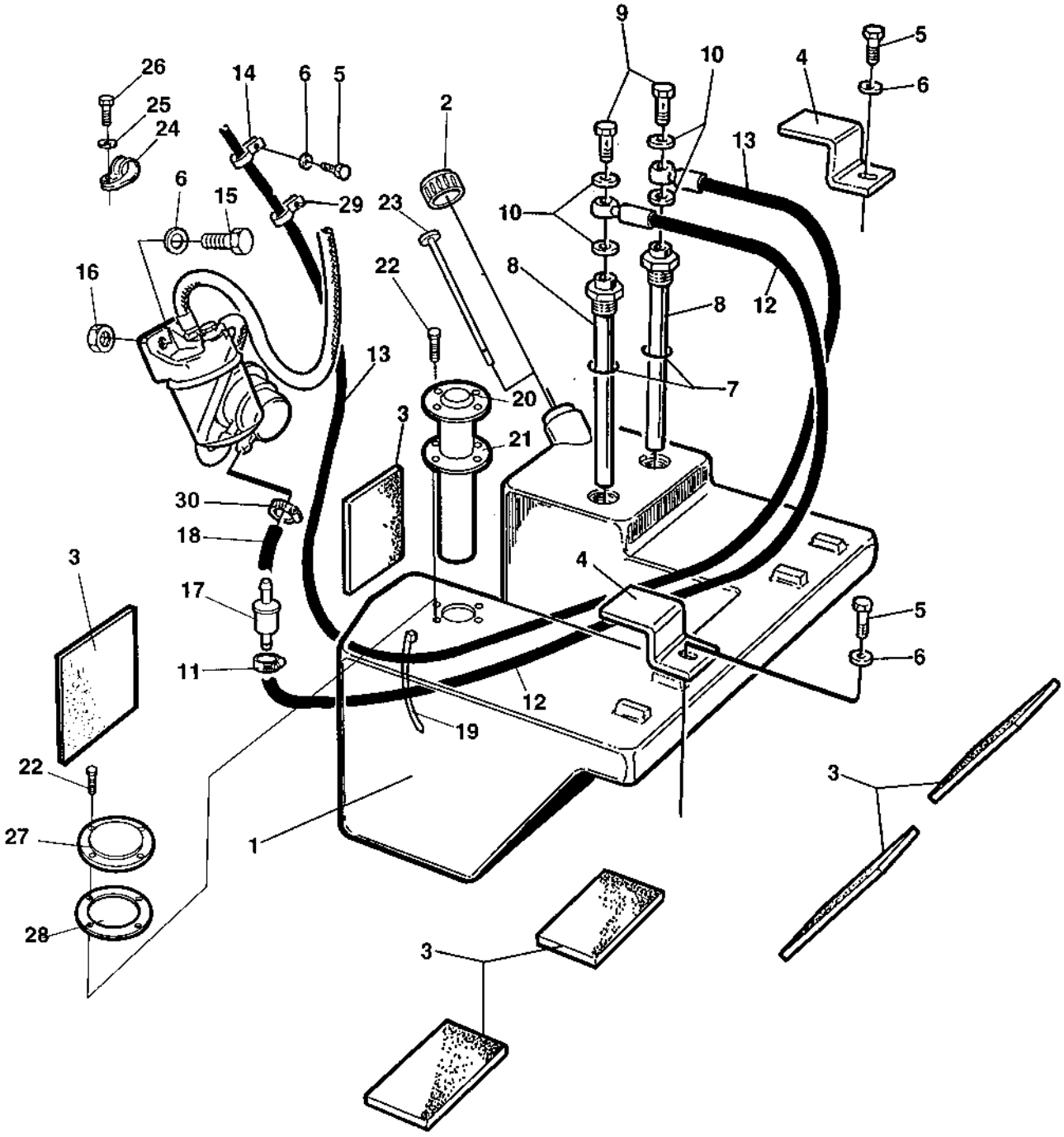
9
10
5
4
6
26
14
6
5
2
25
24
13
6
15
29
23
10
16
22
8
8
12
13
7
20
3
21
30
18
3
4
17
5
11
6
12
19
22
3
27
1
28
3

Ref. No.	Part No.	Rem.	Qty	Description	Code
1	384726		1	Fuel tank, cpl	
2	373461		1	Cap	
	902866		1	.Key	Marked "455"
	380459	F	1	Cap	
3	357459		6	Rubber cloth	
4	357466		2	Holder plate	
5	500053		3	Screw	M8-1,25x20 8,8
6	904640		5	Washer	8,4x22x3
7	160012		2	O-ring	
8	357468		2	Fuel pipe	
9	330171		2	Hollow screw	
10	747282		4	Copper washer	14x20x1,5
11	313001		3	Hose clamp	11 - 17 mm
12	902893		1	Fuel hose	
13	357470		1	Fuel hose	
14	921072		1	Clamp	
15	500021		2	Screw	M8-1,25x25 8,8
16	570005		2	Nut	M8
17	929322		1	Fuel strainer	
18	904984	C	1XL	Fuel hose	
19	925802		N	Cable ties	L=142 mm
20	348923	E	1	Level sender	
21	348924	E	1	.Gasket	
22	903236	1	5	Screw, Thread rolling	K40x20
23	358355	E	1	Dipstick	
27	372627	1	1	Cover	
28	348924	1	1	Gasket	
29	313075		1	Hose clamp	
30	313108		1	Hose clamp	

1) Included in Fuel tank, cpl PN 384726.
C) L=200 mm
E) Option
F) Italy market

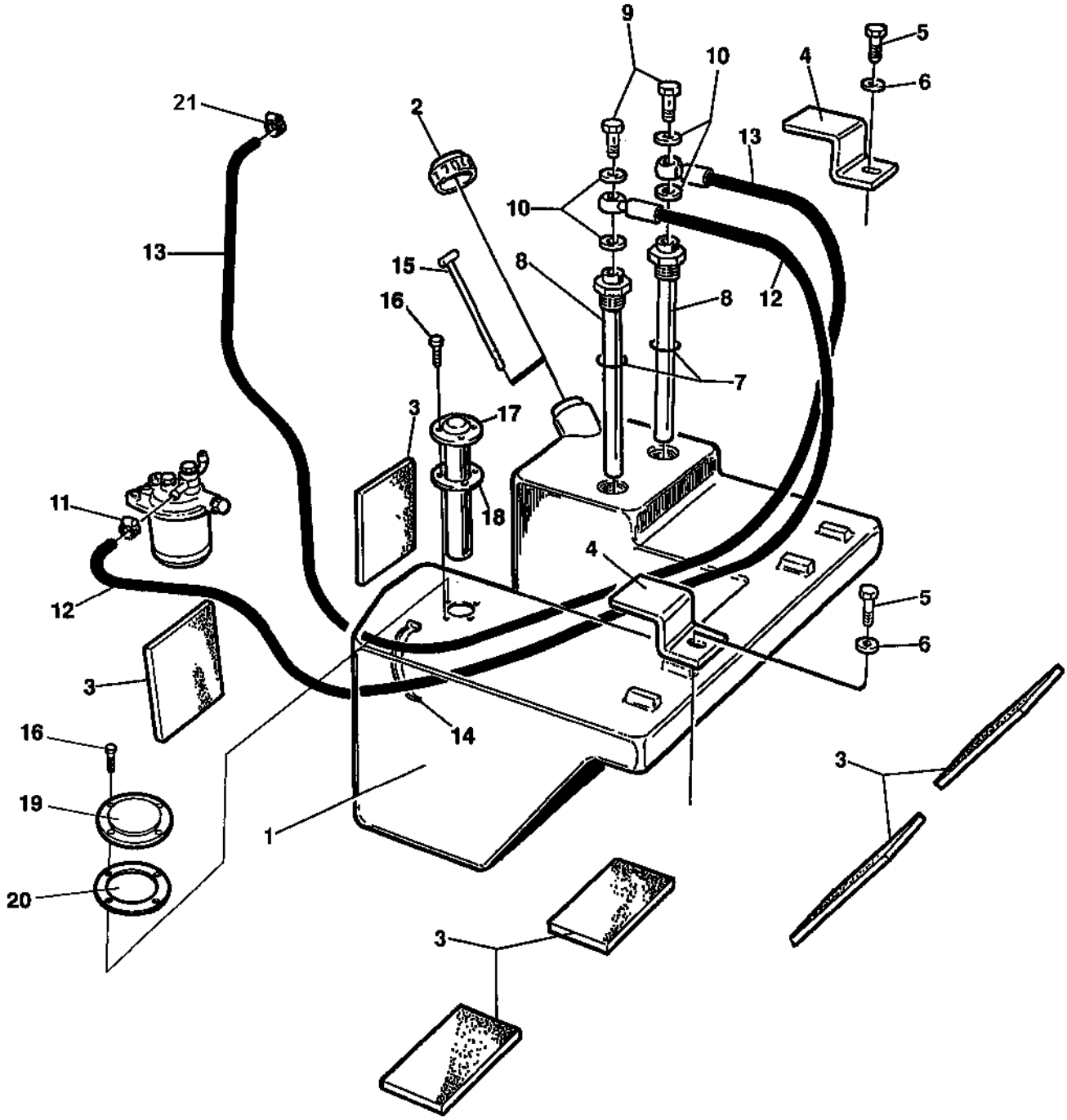
9
10
4
5
6
21
2
13
10
13
15
8
16
8
12
7
3
17
18
11
4
12
5
6
3
14
16
3
19
1
20
3

Ref. No.	Part No.	Rem.	Qty	Description	Code
1	384726		1	Fuel tank, cpl	
2	373461		1	Cap	
	902866		1	.Key	Marked "455"
	380459	E	1	Cap	
3	357459		6	Rubber cloth	
4	357466		2	Holder plate	
5	500053		2	Screw	M8-1,25x20 8,8
6	615043		2	Washer	8,4x18x2
7	160012		2	O-ring	
8	357468		2	Fuel pipe	
9	330171		2	Hollow screw	
10	747282		4	Copper washer	14x20x1,5
11	313108		1	Hose clamp	
12	357469		1	Fuel hose	
13	357470		1	Fuel hose	
14	925802		N	Cable ties	L=142 mm
15	358355	D	1	Dipstick	
16	903236	1	5	Screw, Thread rolling	K40x20
17	348923	D	1	Level sender	
18	348924		1	.Gasket	
19	372627	1	1	Cover	
20	348924	1	1	Gasket	
21	313075		1	Hose clamp	

1) Included in Fuel tank, cpl PN 384726.
D) Option
E) Italy market

Exhaust system DEUTZ

18355

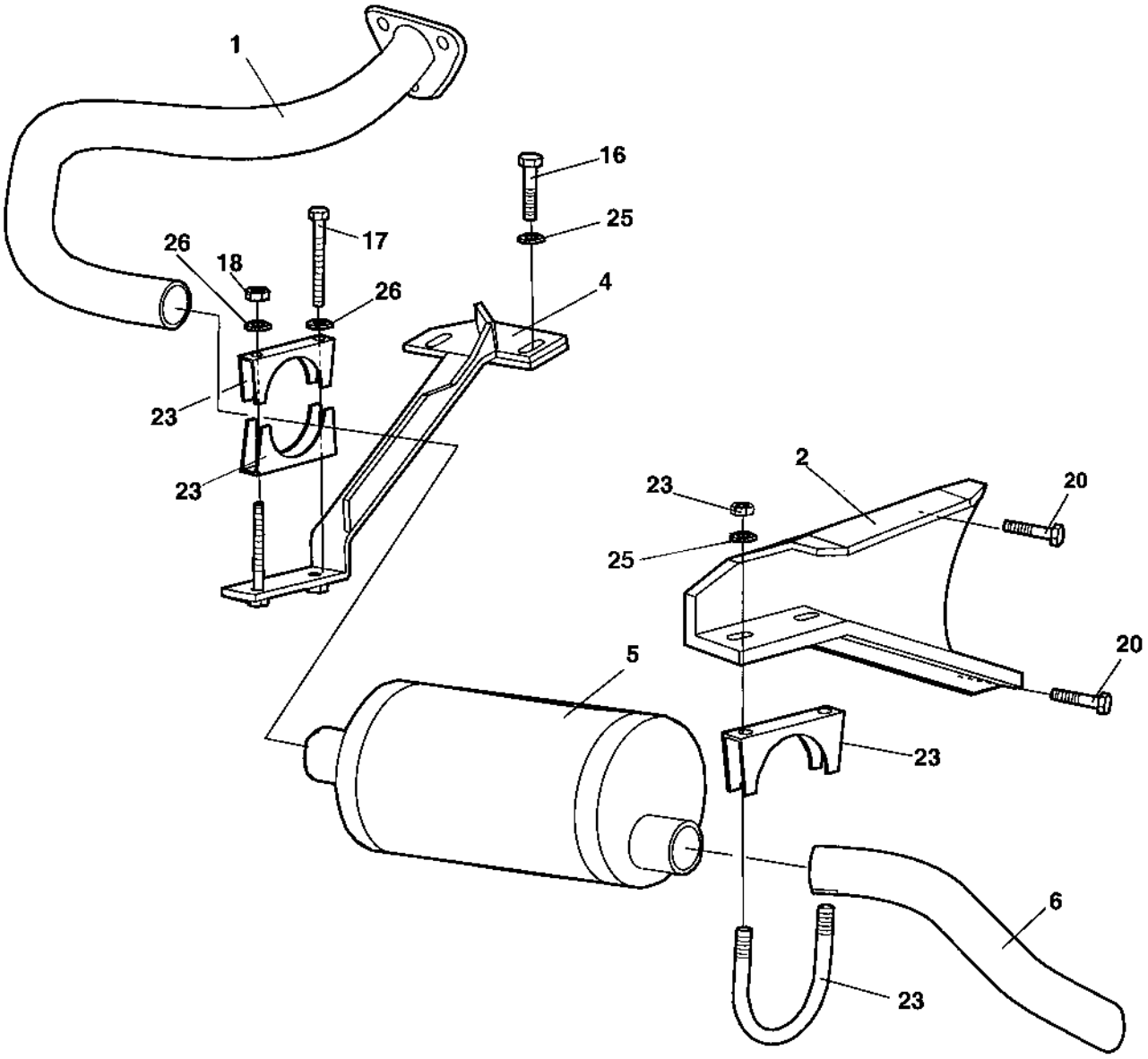

Exhaust system DEUTZ

Ref. No.	Part No.	Rem.	Qty	Description	Code
1	359161		1	Exhaust pipe	
2	359119		1	Holder plate	
4	387471		1	Holder	
5	359163		1	Muffler	
6	376941		1	Exhaust pipe	
16	500021		2	Screw M8-1,25x25 8,8	
17	500190		1	Screw M8-1,25x80 8.8	
18	570005		1	Nut M8	
20	508029		2	Screw M10-1,5x30H 8,8	
23	313086		3	Clamp	
25	904640		4	Washer 8,4x22x3	
26	904229		2	Washer 8,4x16x1,5	

Exhaust system ISUZU

17185

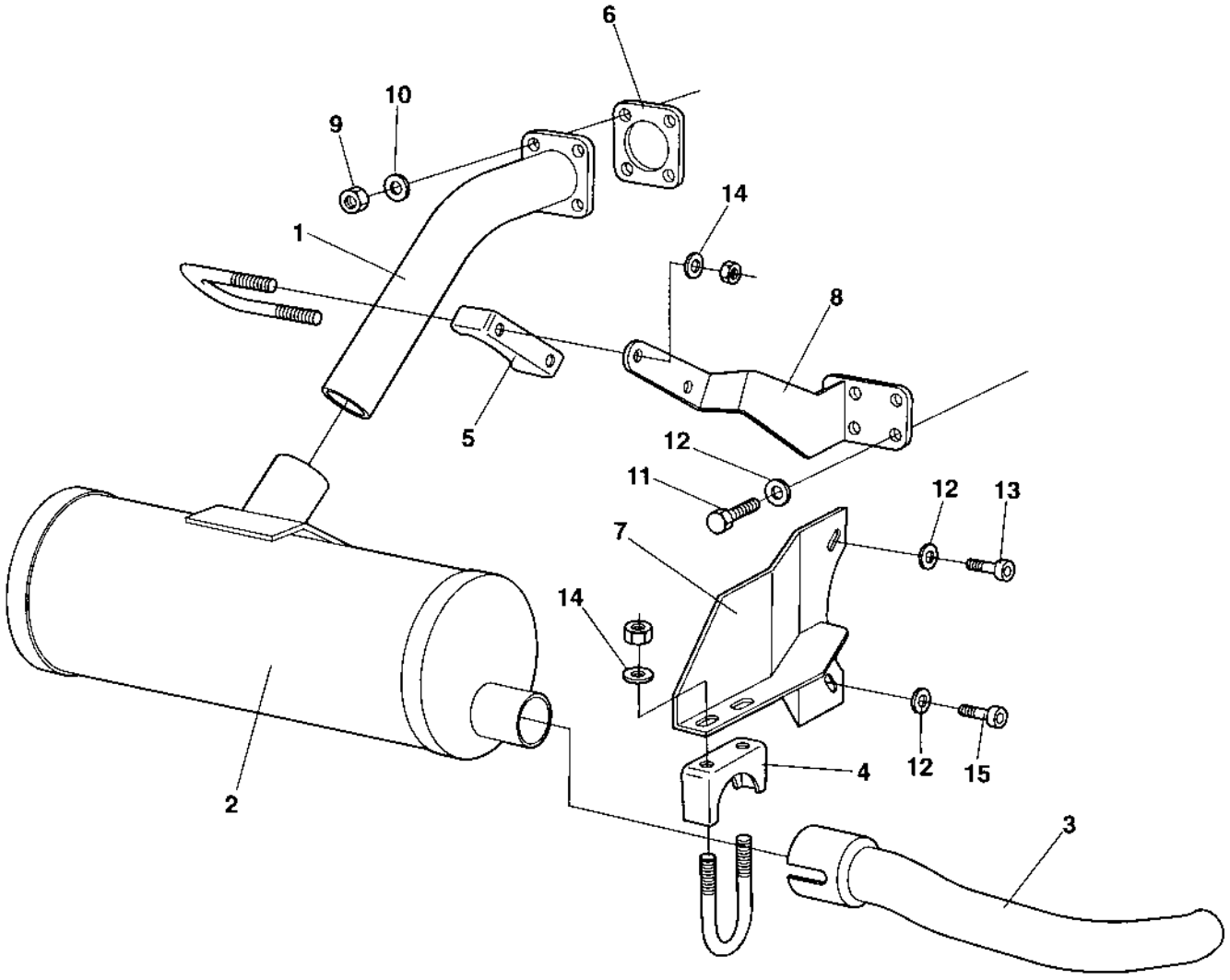

Exhaust system ISUZU

Ref. No.	Part No.	Rem.	Qty	Description	Code
1	381381		1	Exhaust pipe	
2	381734		1	Muffler	
3	381438		1	Exhaust pipe	
4	313086		1	Clamp	
5	313100		1	Clamp	
6	903680		1	Gasket	
7	381394		1	Bracket	
8	381521		1	Bracket	
9	570005		4	Nut M8	
10	904229		4	Washer 8,4x16x1,5	
11	500028		4	Screw M10-1,5x25 8,8	
12	904557		6	Washer 10,5x22x4	
13	508029		1	Screw M10-1,5x30H 8,8	
14	904640		4	Washer 8,4x22x3	
15	508053		1	Screw M10-1,5x35H 8,8	

Ref. No.	Part No.	Rem.	Qty	Description	Code
100				Hydraulic diagram (Page 104)	
230				Propulsion system (Page 106)	DEUTZ / ISUZU
315	372352			Hydraulic pump, propulsion (Page 110)	
316				Rotating group, valves, charge pump (Page 112)	
317				Control unit, cpl (Page 114)	
350	375631			Hydraulic motor, propulsion, drum (Page 116)	
360	380736			Junction block (Page 118)	
425				Vibration system (Page 120)	DEUTZ
475				Vibration system (Page 124)	ISUZU
510	359524			Hydraulic pump, vibration (Page 128)	DEUTZ
552	375649			Hydraulic pump, vibration (Page 130)	ISUZU
555	370173			Vibration valve (Page 132)	ISUZU
611				Steering system Up to 601X7956 (Page 134)	
612				Steering system From 601X7957 Up to 601X8939 (Page 136)	
613				Steering system From 601X8940 (Page 138)	
650	902099			Steering valve (Page 140)	
710	374603			Steering cylinder (Page 142)	
860				Brake system (Page 144)	DEUTZ / ISUZU

Hydraulic diagram

15473-1

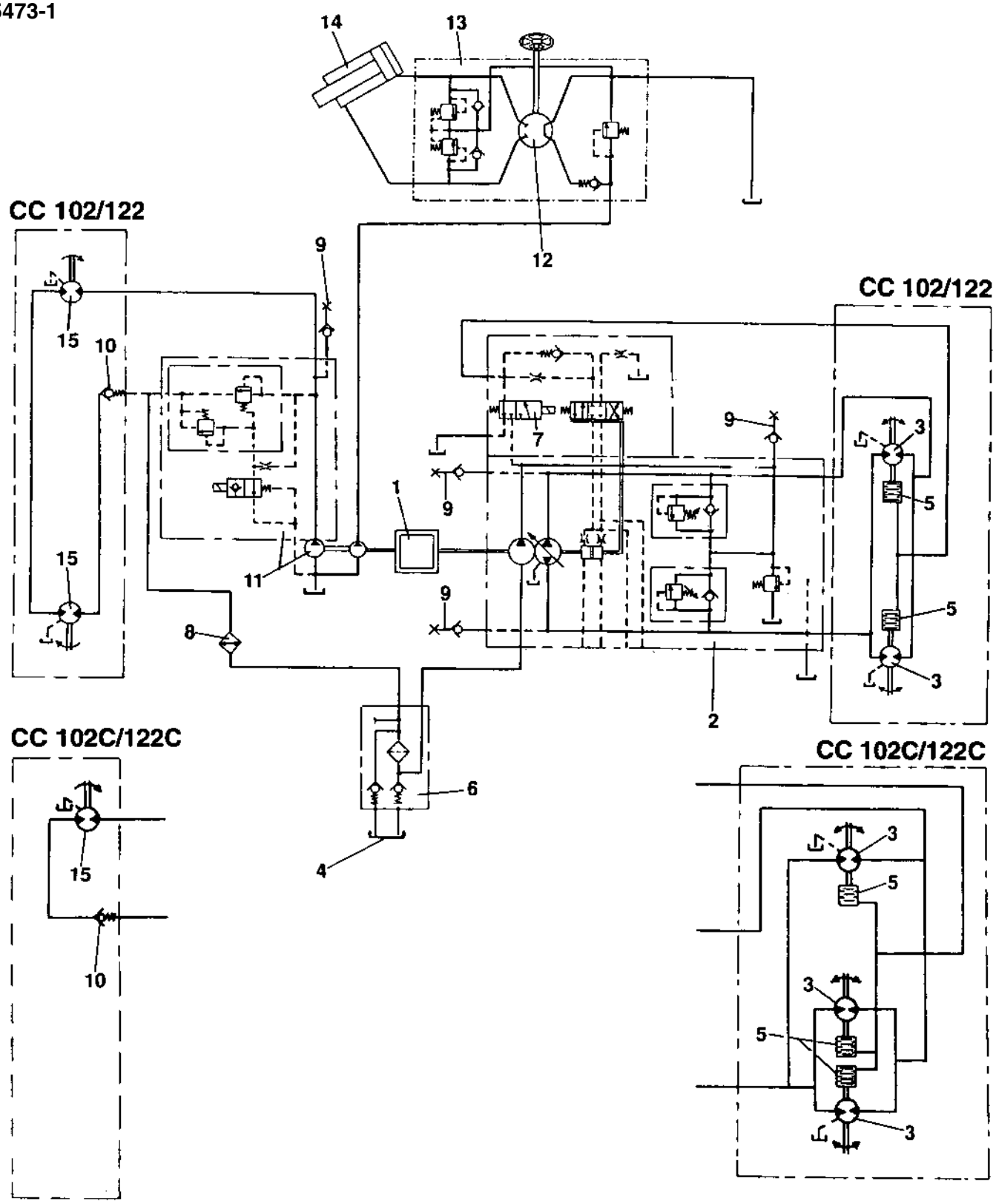

Hydraulic diagram

Ref. No.	Part No.	Rem.	Qty	Description	Code
1			1	Diesel engine	
2			1	Propulsion pump	
3			2	Propulsion motor	
4			1	Hydraulic oil tank	
5			2	Brake	
6			1	Filter	
7			1	Brake valve	
8			1	Oil cooler	
9			4	Measuring nipple	
10			1	Check valve	
11		A	1	Vibration pump	
12			1	Steering valve	
13			1	Valve block	
14			1	Steering cylinder	
15			2		

A) Incl. steering pump

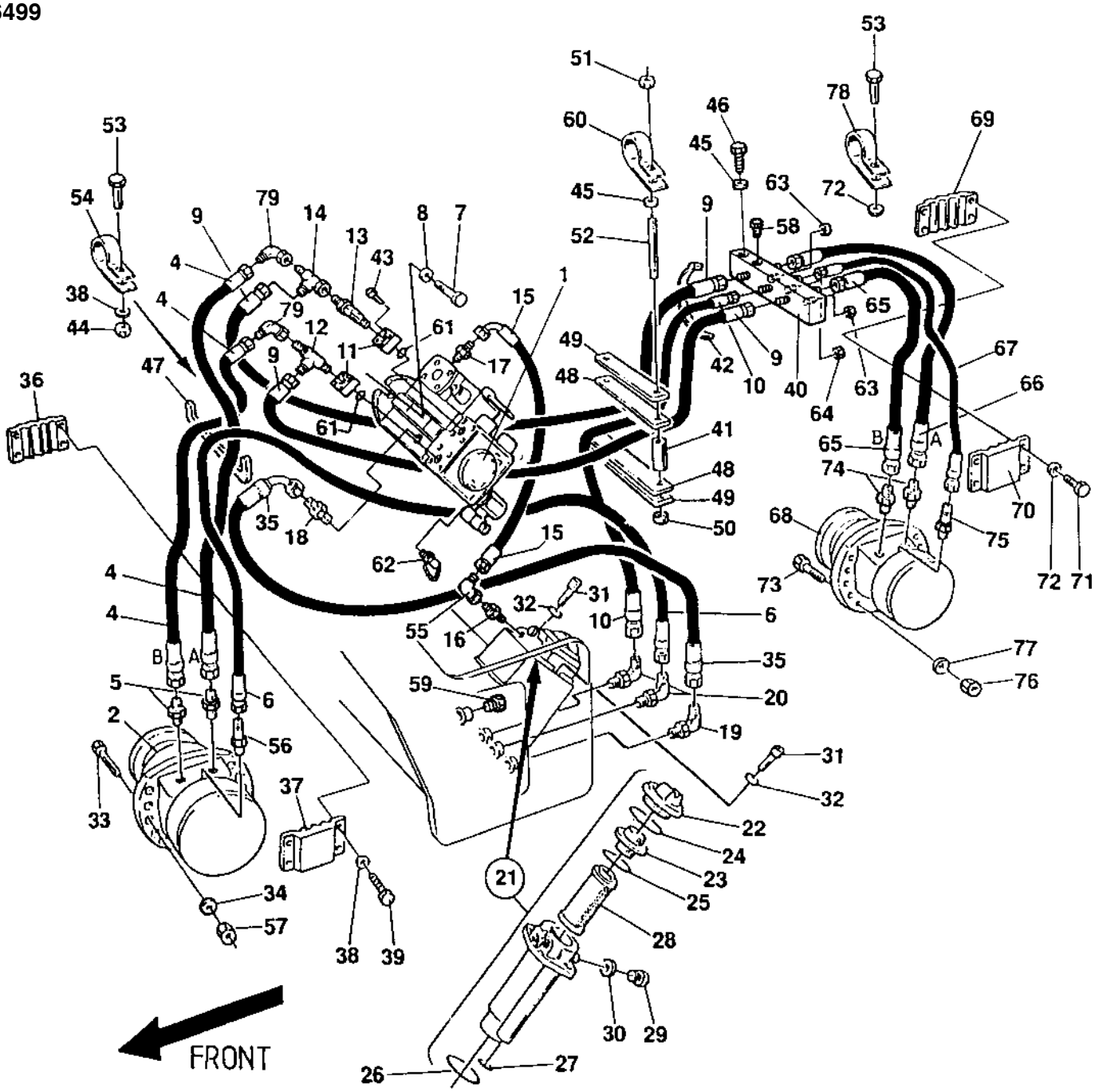
FRONT

Ref. No.	Part No.	Rem.	Qty	Description	Code
1	372352		1	Hydraulic pump, propulsion (Page 110)	
2	375631		1	Hydraulic motor, propulsion, drum (Page 116)	
4	482998		2	Hydraulic hose	
5	334134		2	Connector	
6	482830		1	Hydraulic hose	
7	500037		2	Screw	M12-1,75x35 8,8
8	904703		2	Washer	13x24x4
9	482898		2	Hydraulic hose	
10	482452		1	Hydraulic hose	
11	373402		2	Flange	
12	234218		1	Tee connector	
13	813444		1	Elbow 90, O-ring	
14	334135		1	Tee-connector	
15	483118		1	Hydraulic hose	
16	334156		1	Adapter	
17	901156		1	Connector	
18	903925		1	Connector	
19	813435		1	Elbow 90 Up to 601X7519	
	334238		1	Elbow 90 o-ring From 601X7520	
20	813321		2	Elbow 90 Up to 601X7519	
	334235		2	Elbow 90 From 601X7520	
21	371183		1	Hydraulic oil filter	
22	902377		1	.Cover	
23	902378		1	.Insert	
24	902229		1	.Sealing	
25	902230		1	.O-ring	
26	902231		1	.O-ring	
27	902232		1	.O-ring	
28	903247		1	.Filter element	
29	901313		1	.Plug	
30	230277		1	.Copper washer	
31	508029		2	Screw	M10-1,5x30H 8,8
32	615044		2	Conical spring washer	
33	500056		10	Screw	M12x45 8,8
34	904231		10	Washer	13x24x2
35	482553		1	Hydraulic hose	
36	371313		1	Hose clamp	
37	371314		1	Hose clamp	
38	904229		5	Washer	8,4x16x1,5
39	500020		4	Screw	M8-1,25x22 8,8
40	380736		1	Junction block (Page 118)	
41	357113		2	Spacer sleeve	
42	313102		N	Cable ties	
43	508096		8	Screw	M10-1,5x25H 8,8
44	586003		1	Lock nut	M8
45	904230		6	Washer	10,5x22x2
46	500109		2	Screw	M10-1,5x65 8,8
47	902379	A	1XL	Edge trim	
48	357111		2	Rubber cloth	
49	357112		2	Cover plate	
50	355869		2	Spacer sleeve	
51	586018		4	Lock nut	M10
52	902233		2	Threaded stud	
53	513013		1	Screw	
54	921119		1	Pipe clamp	
55	334155		1	Elbow 90	
56	902551		1	Connector	
57	586019		10	Lock nut	M12
58	232070		3	Plug	
59	892446		1	Plug Up to 601X7519	

A) L=0,185 m

Propulsion system DEUTZ / ISUZU

16499

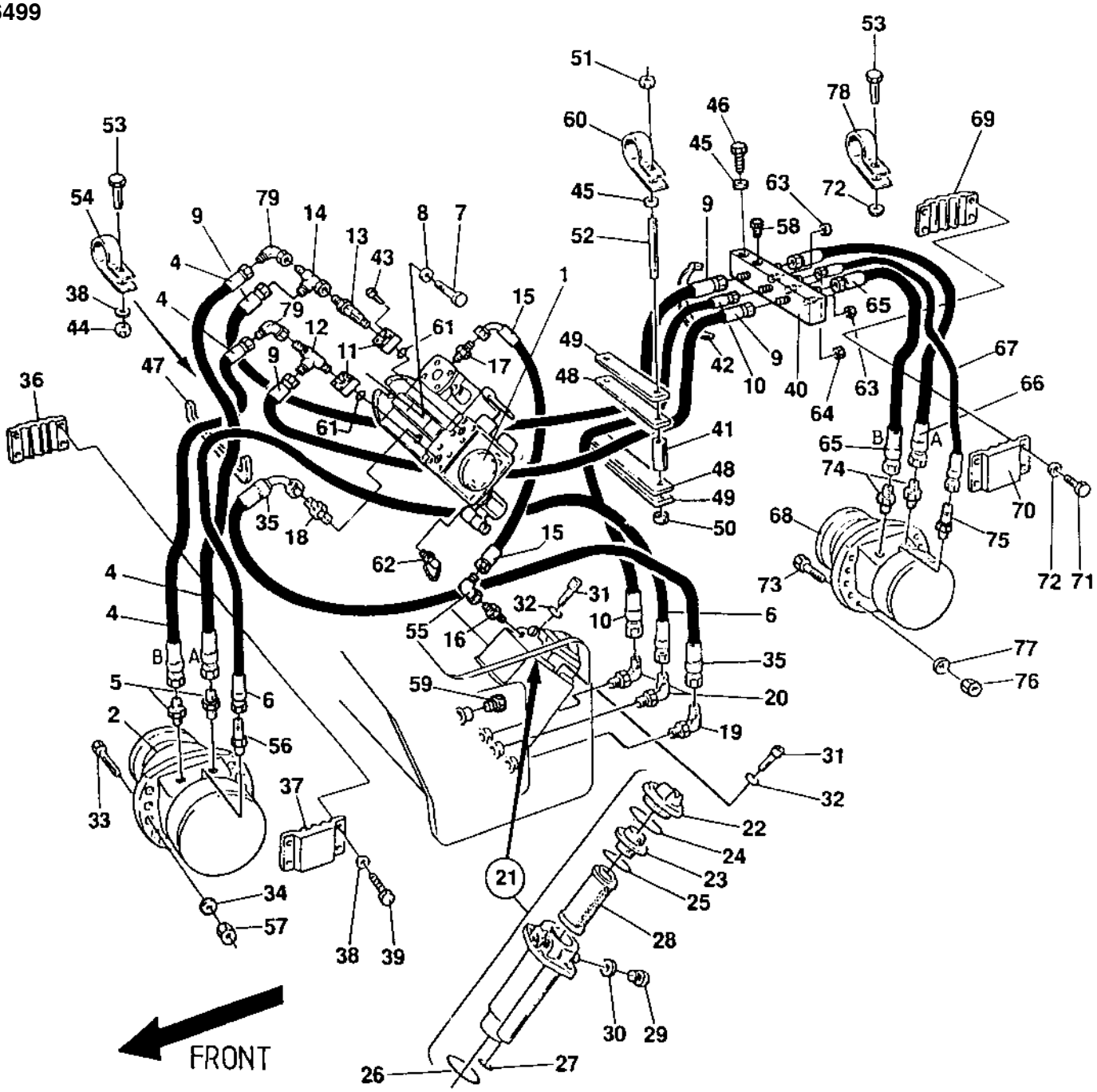

Ref. No.	Part No.	Rem.	Qty	Description	Code
60	921099		1	Clamp	
61	813443		2	O-ring	
62	901157		2	Measuring nipple	
63	330383		2	Cap hydraulic	
64	230400		1	Cap	
65	482998		1	Hydraulic hose	
66	483164		1	Hydraulic hose	
67	483069		1	Hydraulic hose	
68	375631		1	Hydraulic motor, propulsion, drum (Page 116)	
69	371313		1	Hose clamp	
70	371314		1	Hose clamp	
71	500053		5	Screw M8-1,25x20 8,8	
72	904229		5	Washer 8,4x16x1,5	
73	500056		10	Screw M12x45 8,8	
74	334134		2	Connector	
75	902551		1	Connector	
76	586019		10	Lock nut M12	
77	904231		10	Washer 13x24x2	
78	921119		1	Pipe clamp	
79	334197		2	Elbow 90	

372352 Hydraulic pump, propulsion

16514

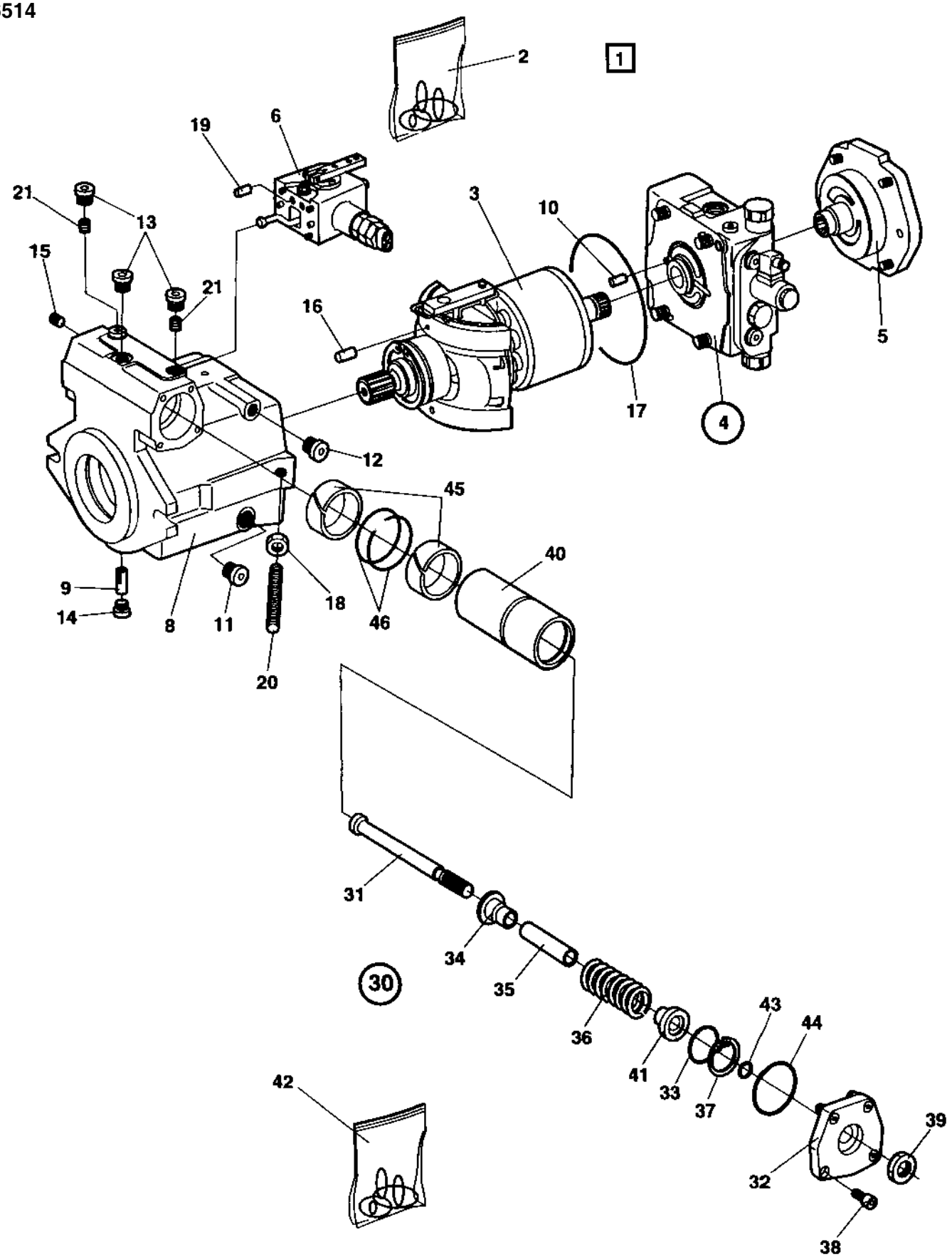

372352 Hydraulic pump, propulsion

Ref. No.	Part No.	Rem.	Qty	Description	Code
1		A	1	Hydraulic pump	
2	936690	1	1	.Seal kit	
3		2	1	.Rotating group, cpl	
4		2	1	.Valve block, cpl	
5		2	1	.Charge pump, cpl	
6			1	.Control unit, cpl (Page 114)	
8			1	.Housing	
9	935158		1	.Pin	
10	902670		1	.Pin	
11	935219		1	.Plug	
12	902724		1	.Plug	
13	902625		3	.Screw	
14	902624		1	.Screw	
15	909514		1	.Pin	
16	902792		1	.Pin	
17	935159		1	.O-ring	
18	902695		1	.Nut	
19	935160		1	.Orifice	
20	902687		1	.Pin	
21	902696		2	.Orifice	
30	909757		1	.Control valve	
31			1	..Rod	
32			1	..Cover	
33			1	..Ring	
34			1	..Spring collar	
35			1	..Spacer	
36			1	..Spring	
37			1	..Snap ring	
38			4	..Screw	
39			1	..Nut	
40			1	..Piston	
41			1	..Spring collar	
42	909758		1	..Seal kit	
43			1	...O-ring	
44			1	...O-ring	
45			2	...Seal ring	
46			2	...Seal ring	

1) Includes all gaskets and o-rings for the hydraulic pump
2) Exploded in section "Rotating group, valves, charge pump
A) CPL

Rotating group, valves, charge pump

15940

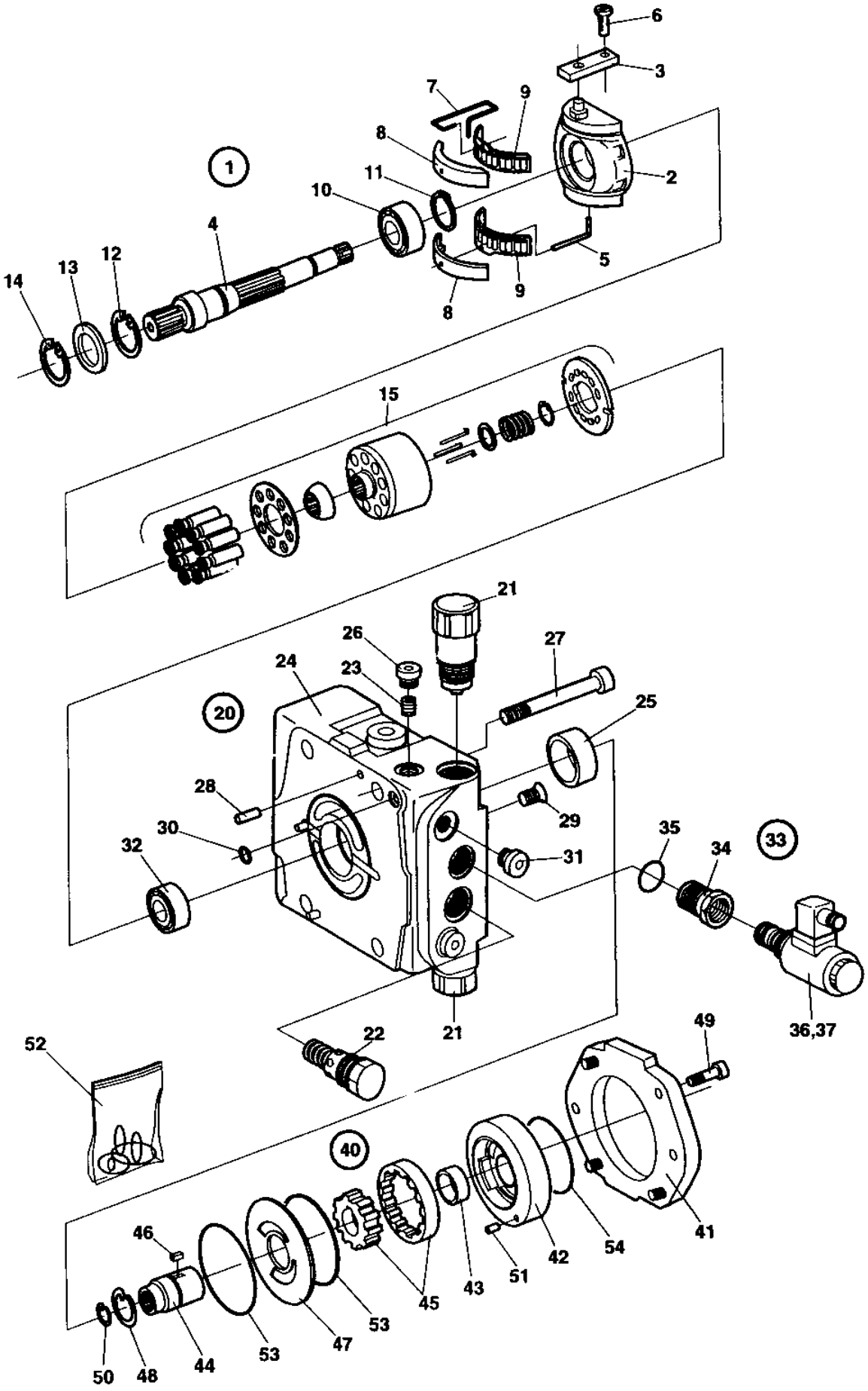

Rotating group, valves, charge pump

Ref. No.	Part No.	Rem.	Qty	Description	Code
1	935161		1	Rotating group	
2	935171		1	.Cradle	
3	935162		1	.Ring	
4	935163		1	.Shaft	
5	902644		1	.Wire pin	
6	935164		1	.Pin	
7	935165		1	.Wire pin	
8	935166	A	1	.Bearing liner	
9	902620		1	.Bearing	
10	902619		1	.Roller bearing	
11	901750		1	.Retaining ring	
12	935170		1	.Retaining ring	
13	936691		1	.Seal ring	
14	935170		1	.Retaining ring	
15	935167		1	.Cylinder with pistons, cpl	
20			1	Valve block	
21	935172		2	.Relief valve	
22	903471		1	.Relief valve	
23	936692		1	.Check valve	
24	936693		1	.Valve block	
25	903557		1	.Bearing bushing	
26	935176		1	.Plug	
27	935177		4	.Screw	
28	908384		2	.Pin	
29	909514		2	.Pin	
30	902641		2	.O-ring	
31	902625		2	.Screw	
32	901744		1	.Roller bearing	
33		B	1	.Solenoid valve	
34	935178		1	..Adapter	
35	927278		1	..O-ring	
36	935179		1	..Valve, cpl	
37	935180		1	...Solenoid	
40	935181		1	Charge pump	
41	935182		1	.Cover	
42	935183		1	.Housing	
43	903557		1	.Bearing bushing	
44	935184		1	.Shaft	
45	936706		1	.Wheel set	
46	935186		1	.Key	
47	935187		1	.Wear plate	
48	902654		1	.Retaining ring	
49	935188		4	.Screw	
50	935189		1	.Retaining ring	
51	935190		1	.Cylindrical pin	
52	935191		1	.Seal kit	
53			2	..Seal	
54			1	..O-ring	

A) One pair
B) CPL

Control unit, cpl

15941

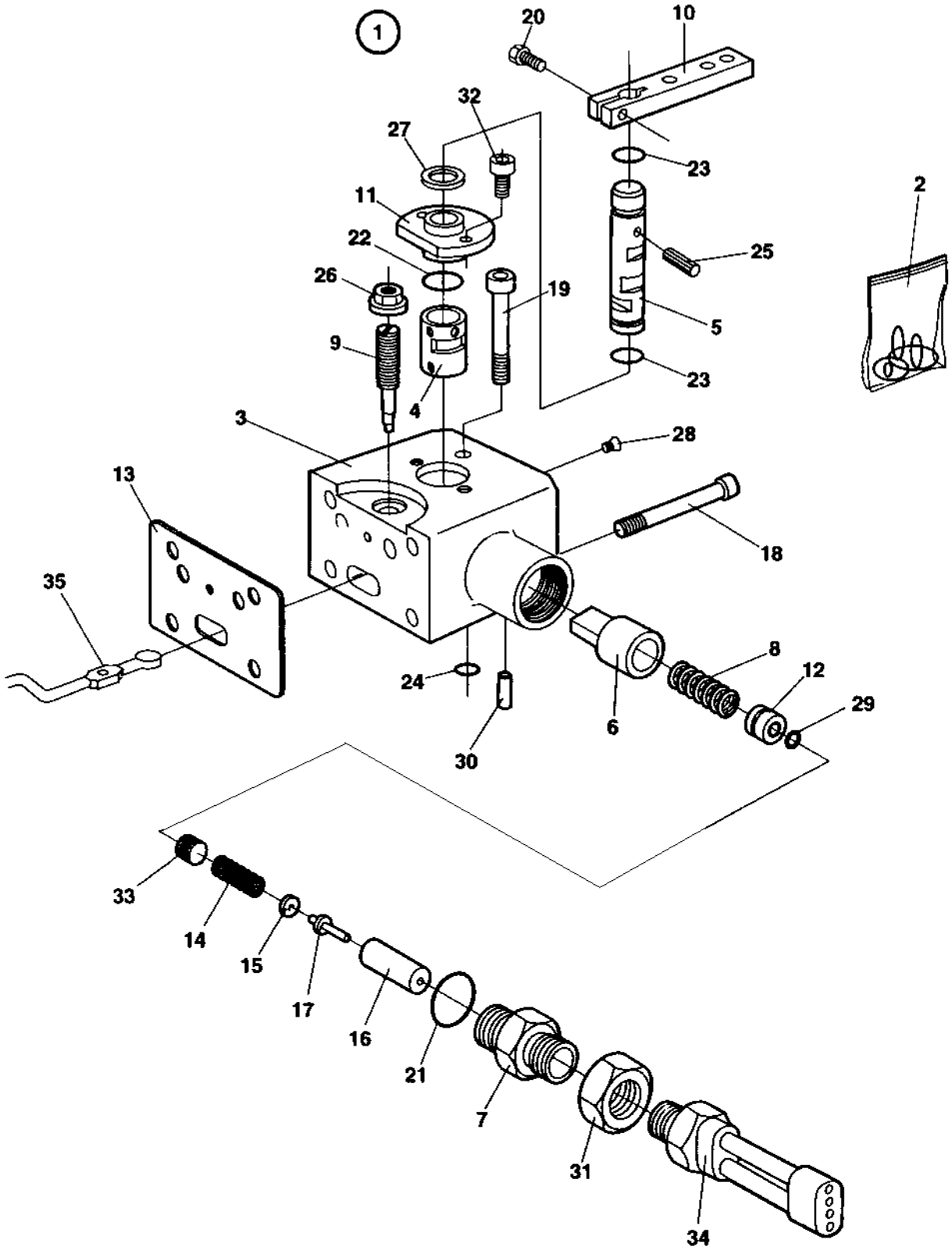

Control unit, cpl

Ref. No.	Part No.	Rem.	Qty	Description	Code
1	935194	A	1	Control unit	
2	935195		1	.Seal kit	
3	935196		1	.Housing	
4	935197		1	.Bushing	
5	935198		1	.Shaft	
6	935199		1	.Spring bush	
7	935201		1	.Adapter	
8	935202		1	.Pressure spring	
9	935203		1	.Eccentric pin	
10			1	.Lever	
11	935204		1	.Cover	
12	935205		1	.Bushing	
13	935218	B	1	.Gasket	
14	935206		1	.Spring	
15	935207		1	.Spring collar	
16	935208		1	.Spring cage	
17	935209		1	.Pin	
18	935210		4	.Screw	
19	935211		1	.Screw	
20	902770		1	.Screw	
21		B	1	.O-ring	
22		B	1	.O-ring	
23		B	3	.O-ring	
24		B	1	.O-ring	
25	902767		1	.Needle roller	
26		B	1	.Nut	
27	902773		1	.Shim	
28	935212		1	.Pin	
29		B	1	.O-ring	
30	935190		1	.Cylindrical pin	
31	935214		1	.Nut	
32	902771		2	.Screw	
33	935215		1	.Plug	
34	935200		1	.Switch, cpl	
35	935216		1	Lever	

A) CPL
B) Incl. in item 2

375631 Hydraulic motor, propulsion, drum

16591

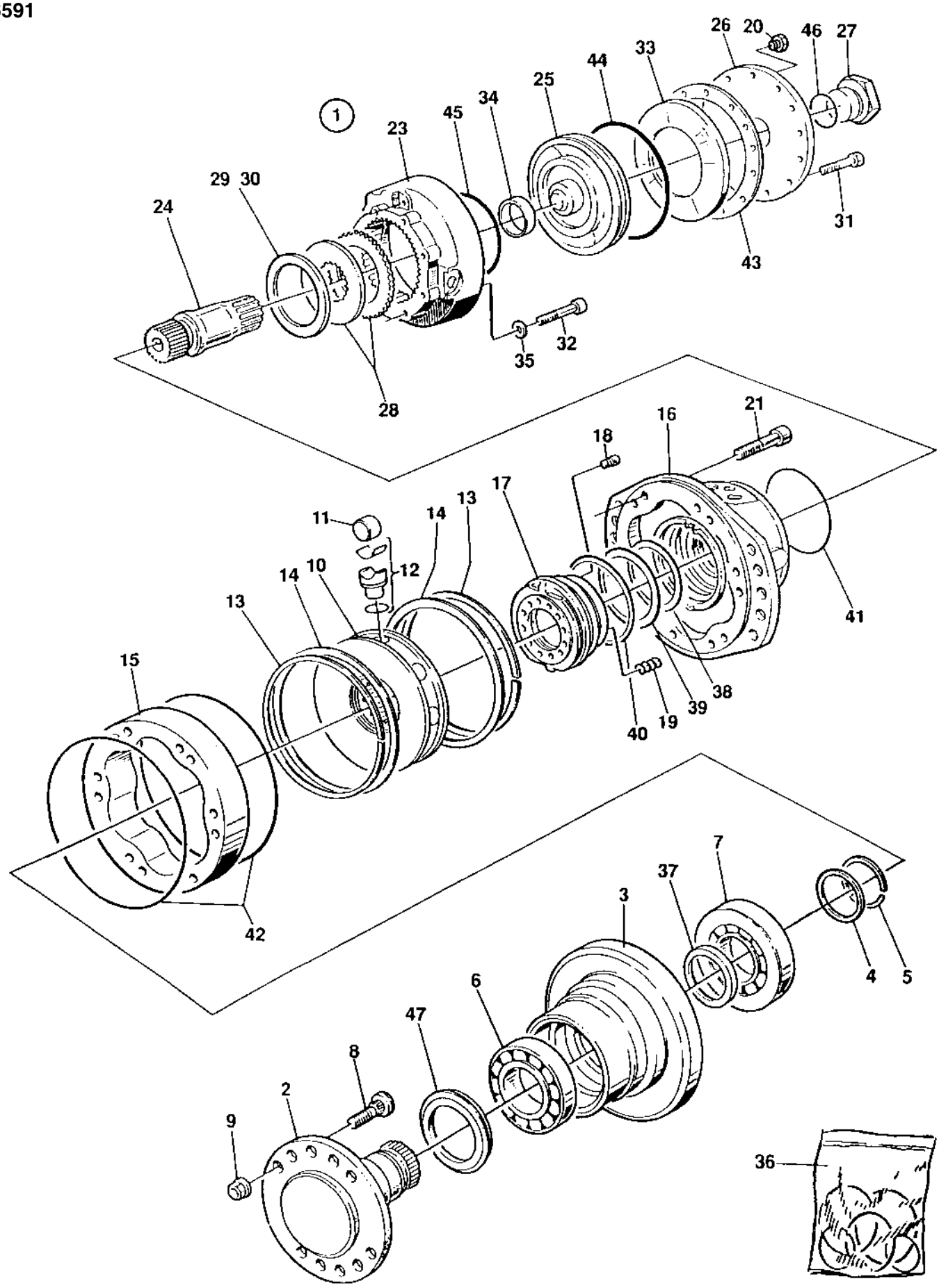

375631 Hydraulic motor, propulsion, drum

Ref. No.	Part No.	Rem.	Qty	Description	Code
1			1	Hydraulic motor, Cpl	
2	908788		1	.Shaft	
3	903292		1	.Housing	
4	902387		1	.Washer	T=2,0 mm
5	902388		1	.Split ring	
6	902389		1	.Bearing	
7	902390		1	.Bearing	
8	902391		5	.Wheel stud	
9	902392		5	.Wheel nut	
10	908795		1	.Cylinder block	
11	903453		8	.Roller	
12	937091		8	.Piston	
13	937092		2	.Circlip	
14	908798		2	.Ring	
15	902394		1	.Piston cam	
16	937093		1	.Housing	
17	937094		1	.Distributor ring	
18	902397		1	.Pin	
19	902398		9	.Spring	
20	902399	A	1	.Plug	
21	902799		6	.Screw	
23	908790		1	.Brake housing	
24	908791		1	.Shaft	
25	908792		1	.Piston	
26	908328	A	1	.End cover	
27	903295		1	.Plug	
28	908800	B	1	.Disc kit	
29	902410		N	.Shim	T=0,1 mm
30	902411		N	.Shim	T=0,3 mm
31	902412		12	.Screw	
32	902413		8	.Screw	
33	902416		1	.Spring	
34	908794		1	.Nylon buch	
35	903450		8	.Washer	
36	937089		1	.Seal kit	
37	903324		1	..Shaft seal	
38			1	..Sealing	
39			1	..Sealing	
40			1	..Sealing	
41			1	..O-ring	
42			1	..O-ring	
43	902800		1	..Gasket	
44	903455		1	..Quad ring	
45			1	..Sealing	
46	903327		1	..O-ring	
47			1	..Shaft seal	

A) CPL
B) 15+13 pcs

380736 Junction block

16940

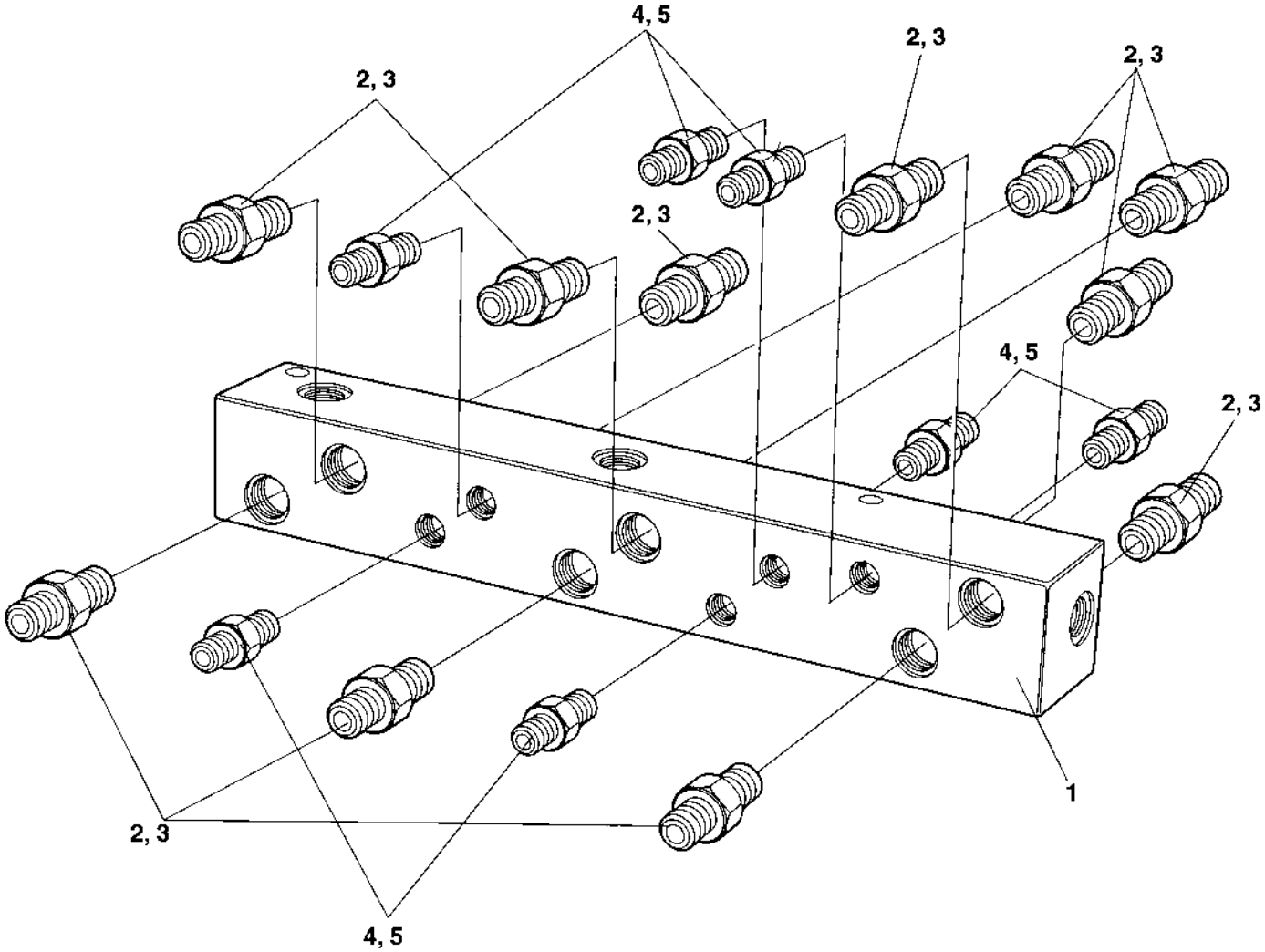

380736 Junction block

Ref. No.	Part No.	Rem.	Qty	Description	Code
			1	Junction block	
1			1	.Body	
2	334121		11	.Straight connector	
3	904724		1	..O-ring	
4	234233	1	7	.Adapter	
	234233		5	.Adapter	
5	904725		1	..O-ring	

1) 7 pieces needed when machine is equipped with leakage hoses.

Vibration system DEUTZ

17785

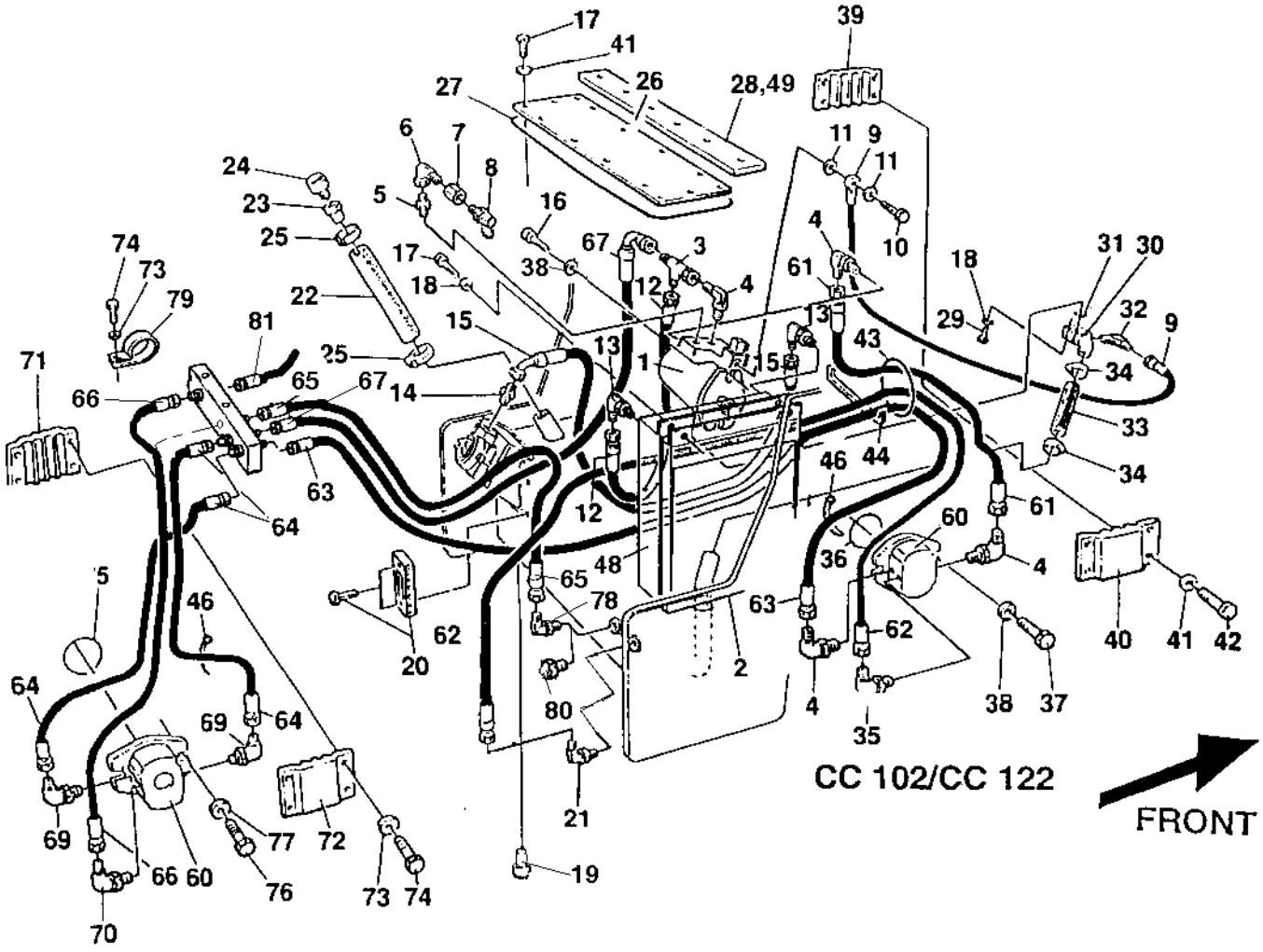

Ref. No.	Part No.	Rem.	Qty	Description	Code
1	359524		1	Hydraulic pump, vibration (Page 128)	DEUTZ
2	357373		1	Radiator	
3	334135		1	Tee-connector	
4	334238		4	Elbow 90 o-ring	
5	234390		1	Connector	
6	334524		1	Connector	
7	433830401		1	Connector	
8	910161		1	Measuring nipple	
9	386134		1	Hydraulic hose	
10	901692		1	Screw	
11	480124		2	Washer	
12	482606		1	Hydraulic hose	
13	234993		2	Elbow	
14	334156		1	Adapter	
15	483281		1	Hydraulic hose	
16	508096		2	Screw	M10-1,5x25H 8,8
17	500019		16	Screw	M8-1,25x16 8.8
18	904556		8	Washer	8,4x16x3,0
19	232122		1	Plug	3/4NPTF
20	989151		1	Oil level glass	
21	813321		1	Elbow 90 Up to 601X7519	
	334235		1	Elbow 90 From 601X7520	
22	373478		1	Rubber hose	
23	357139		1	Connector	
24	357138		1	Ventilating filter	
25	313008		2	Hose clamp	
26	349879		1	Cover	
27	349880		1	O-ring	
28	358486		1	Rubber strip	
29	500067		4	Screw	M8-1,25x55 8,8
30	359834		1	Flange	
31	160016		1	O-ring	
32	234341		1	Elbow 45	
33	358504	A	1XL	Rubber hose	
34	902295		2	Clamp	
35	234481		1	Connector	
36	160032		1	O-ring	
37	508029		2	Screw	M10-1,5x30H 8,8
38	904557		4	Washer	10,5x22x4
39	371313		1	Hose clamp	
40	371314		1	Hose clamp	
41	904229		18	Washer	8,4x16x1,5
42	500021		4	Screw	M8-1,25x25 8,8
43	902379	B	1XL	Edge trim	
44	902379	C	1XL	Edge trim	
46	313102		N	Cable ties	
48	374626		1	Cooling air cover	
49	904901	D	1XL	Tape	
60	389078	G	2	Hydraulic motor Up to 601X9307	
	391270		2	Hydraulic motor From 601X9308	
61	482242		1	Hydraulic hose	
62	482892		1	Hydraulic hose	
63	483155		1	Hydraulic hose	
64	483157		2	Hydraulic hose	

A) L=0,260 m
B) L=0,305 m
C) L=0,150 m
D) L=2,0 m
G) Replaced by 391270

Vibration system DEUTZ

17785

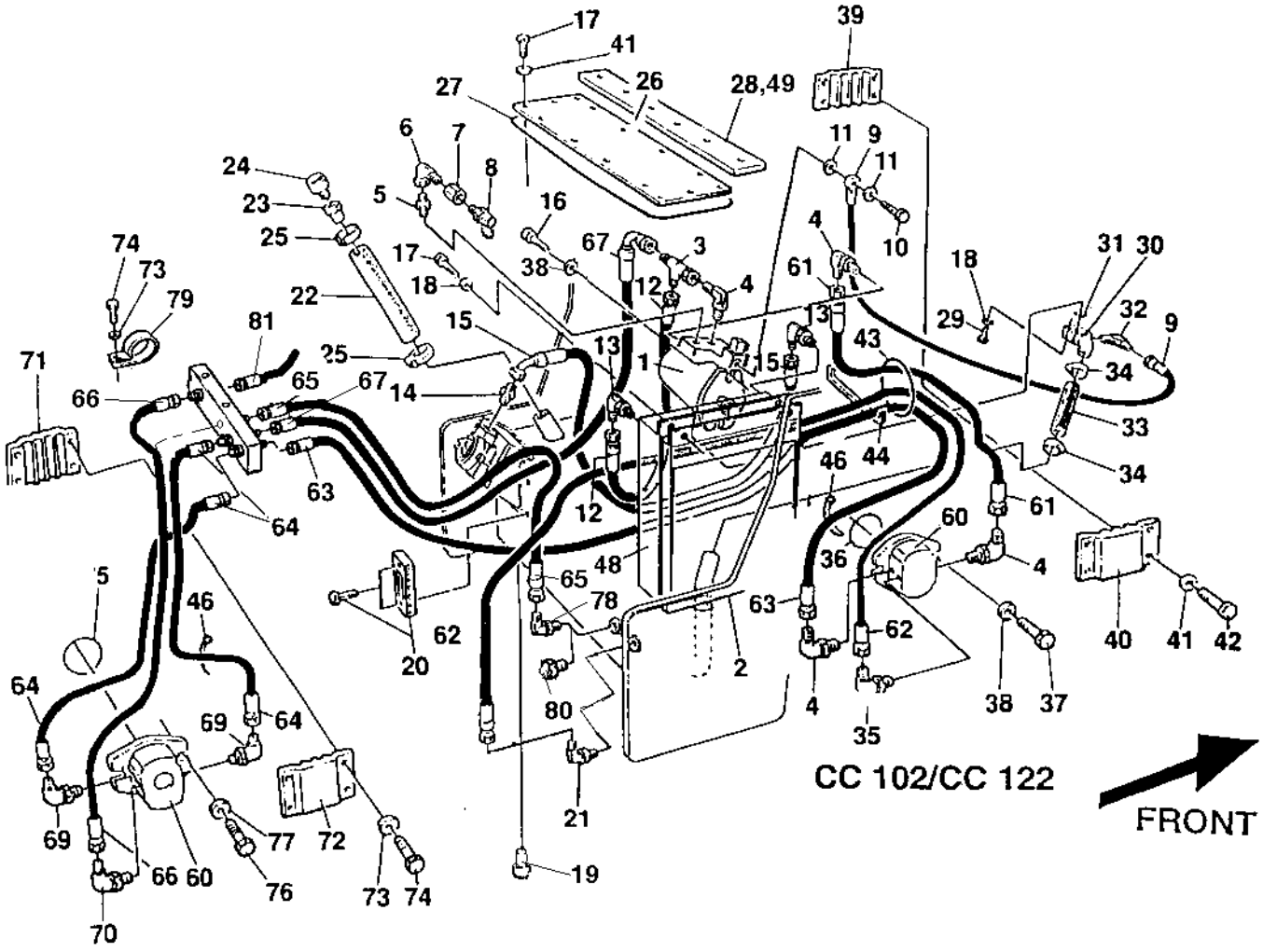

Ref. No.	Part No.	Rem.	Qty	Description	Code
66	483162	F	1	Hydraulic hose	
67	483282		1	Hydraulic hose	
69	334238		2	Elbow 90 o-ring	
70	234481		1	Connector	
71	371313		1	Hose clamp	
72	371314		1	Hose clamp	
73	904229		5	Washer	8,4x16x1,5
74	500053		5	Screw	M8-1,25x20 8,8
75	160032		1	O-ring	
76	508029		2	Screw	M10-1,5x30H 8,8
77	603018		2	Washer	10x18x4
79	921119		1	Pipe clamp	
80	892446		1	Plug Up to 601X7519	
81		H	1	Hydraulic hose	

F) Moved to new port
H) See section "Propulsion system"

Vibration system ISUZU

17786

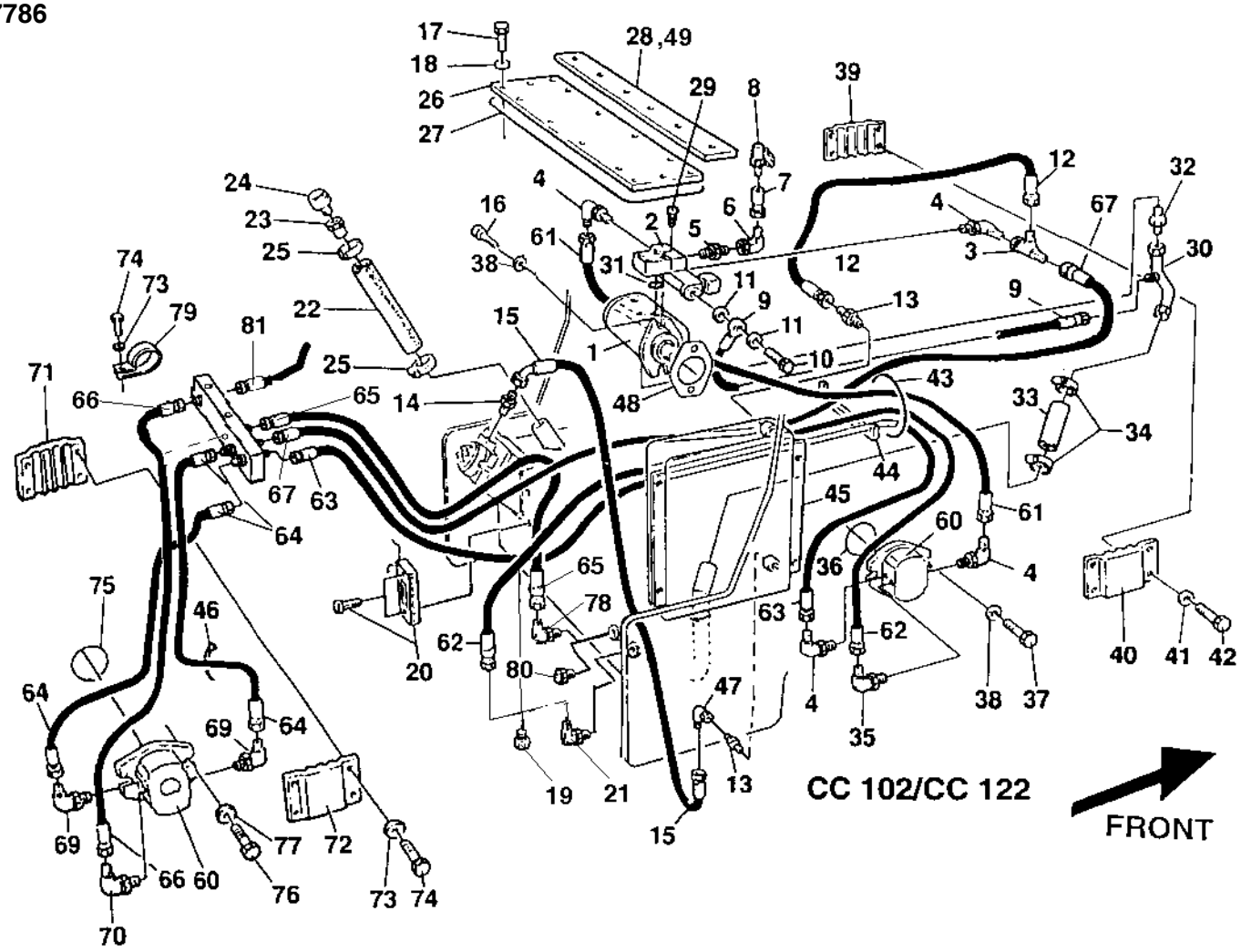

Ref. No.	Part No.	Rem.	Qty	Description	Code
1	375649		1	Hydraulic pump, vibration (Page 130)	ISUZU
2	370173		1	Vibration valve (Page 132)	ISUZU
3	334135		1	Tee-connector	
4	334238		4	Elbow 90 o-ring	
5	234390		1	Connector	
6	334524		1	Connector	
7	433830401		1	Connector	
8	910161		1	Measuring nipple	
9	386134		1	Hydraulic hose	
10	901692		1	Screw	
11	480124		2	Washer	
12	482963		1	Hydraulic hose	
13	334137		2	Adapter	
14	334156		1	Adapter	
15	482962		1	Hydraulic hose	
16	508096		2	Screw	M10-1,5x25H 8,8
17	500019		16	Screw	M8-1,25x16 8.8
18	904229		8	Washer	8,4x16x1,5
19	232122		1	Plug	3/4NPTF
20	989151		1	Oil level glass	
21	813321		1	Elbow 90 Up to 601X7519	
	334235		1	Elbow 90 From 601X7520	
22	373478		1	Rubber hose	
23	357139		1	Connector	
24	357138		1	Ventilating filter	
25	313008		2	Hose clamp	
26	349879		1	Cover	
27	349880		1	O-ring	
28	358486		1	Rubber strip	
29	508057		4	Screw	
30	372721		1	Hydraulic pipe	
31	903728	1	1	O-ring	
32	234958		1	Connector	
33	370979	A	1XL	Rubber hose	
34	902295		2	Clamp	
35	234481		1	Connector	
36	160032		1	O-ring	
37	508029		2	Screw	M10-1,5x30H 8,8
38	904557		4	Washer	10,5x22x4
39	371313		1	Hose clamp	
40	371314		1	Hose clamp	
41	904229		18	Washer	8,4x16x1,5
42	500021		4	Screw	M8-1,25x25 8,8
43	902379	B	1XL	Edge trim	
44	902379	C	1XL	Edge trim	
45			1	Radiator	
46	313102		N	Cable ties	
47	334198		1	Adapter	
48	370312		1	Gasket	
49	904901	F	1XL	Tape	
60	359525		2	Hydraulic motor	Replaced by 391272
	903431	E	1	.Seal kit	
61	482242		1	Hydraulic hose	
62	482892		1	Hydraulic hose	

1) Delivered with item 2.
A) L=0,215 m
B) L=0,305 m
C) L=0,150 m
E) Valid for 359525
F) L=2,0 m

Vibration system ISUZU

17786

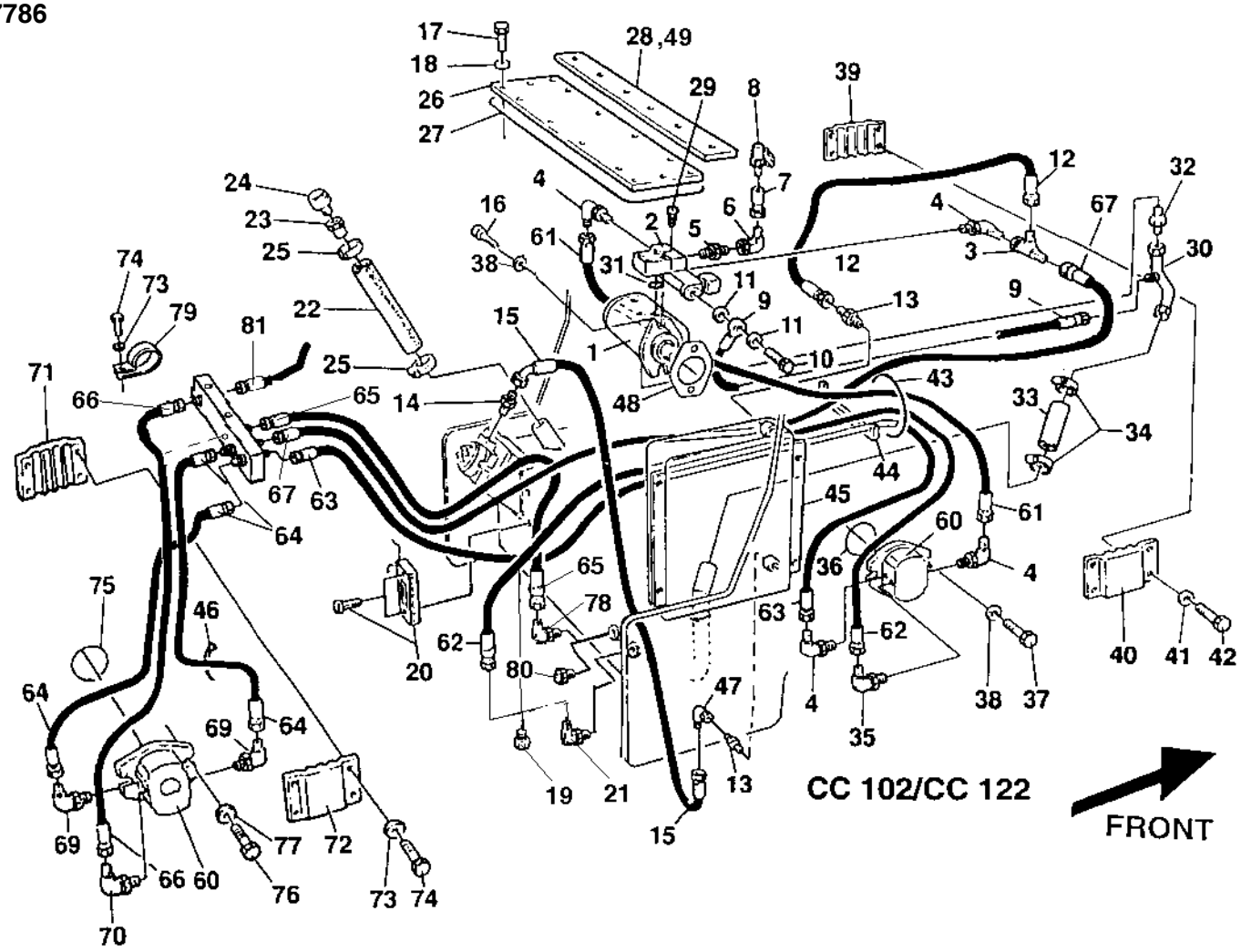

Ref. No.	Part No.	Rem.	Qty	Description		Code
63	483155		1	Hydraulic hose		
64	483157		2	Hydraulic hose		
66	483162	G	1	Hydraulic hose		
67	482897		1	Hydraulic hose		
69	334238		2	Elbow 90 o-ring		
70	234481		1	Connector		
71	371313		1	Hose clamp		
72	371314		1	Hose clamp		
73	904229		5	Washer	8,4x16x1,5	
74	500021		5	Screw	M8-1,25x25 8,8	
75	160032		1	O-ring		
76	508029		2	Screw	M10-1,5x30H 8,8	
77	603018		2	Washer	10x18x4	
79	921119		1	Pipe clamp		
80	892446		1	Plug Up to 601X7519		
81	482452		1	Hydraulic hose		

G) Moved to new port

359524 Hydraulic pump, vibration DEUTZ

15818

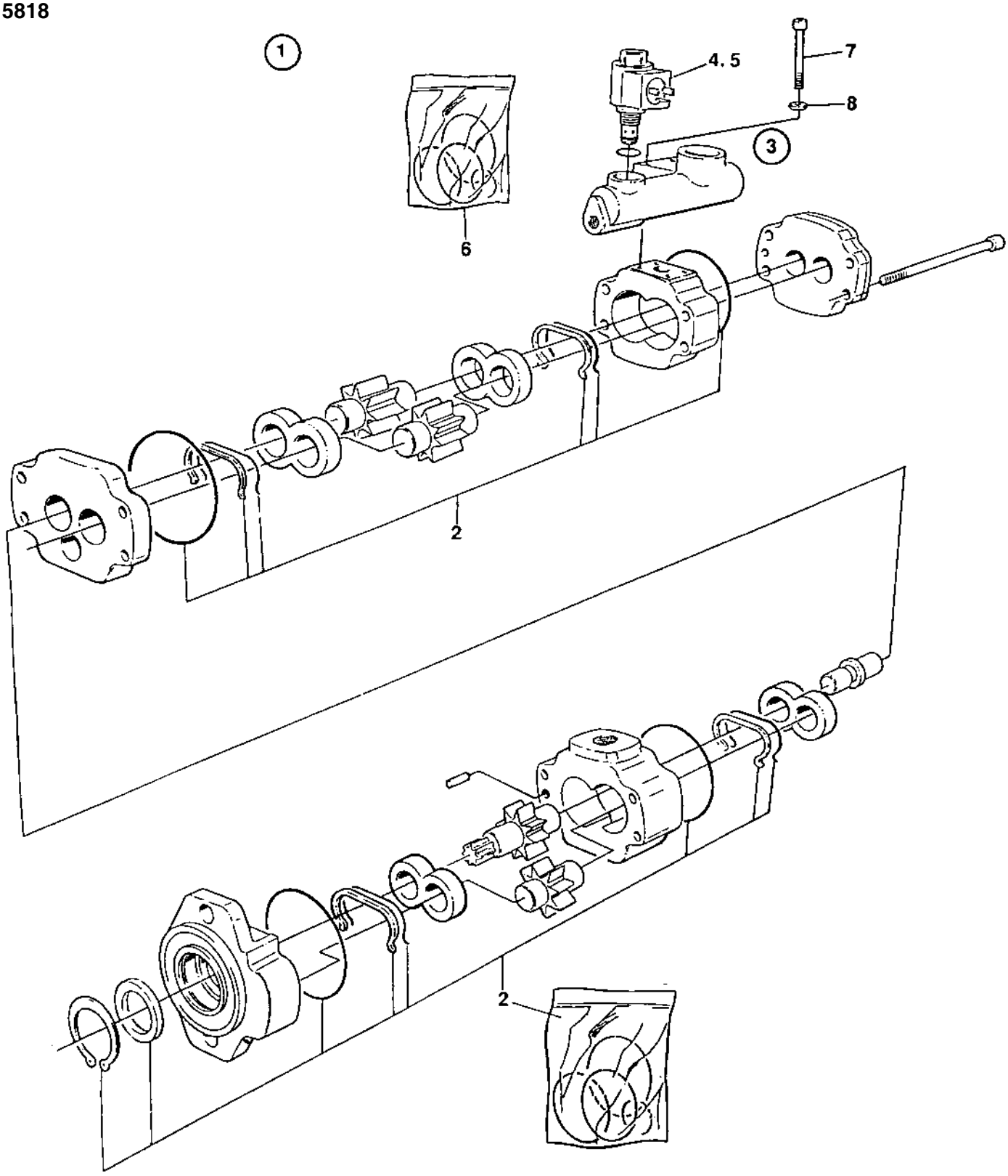

359524 Hydraulic pump, vibration DEUTZ

Ref. No.	Part No.	Rem.	Qty	Description	Code
1		A	1	Hydraulic pump	
			1	.Pump	
2	903430		1	..Seal kit	
3	903637	A,B	1	.Valve	
4	903330		1	..Solenoid valve	
5	908804		1	...Solenoid	
6	902810		1	..Seal kit	
7	909483		4	.Screw	
8	909484		4	.Washer	

A) CPL
B) Included in cpl pump, item 1

375649 Hydraulic pump, vibration ISUZU

16692

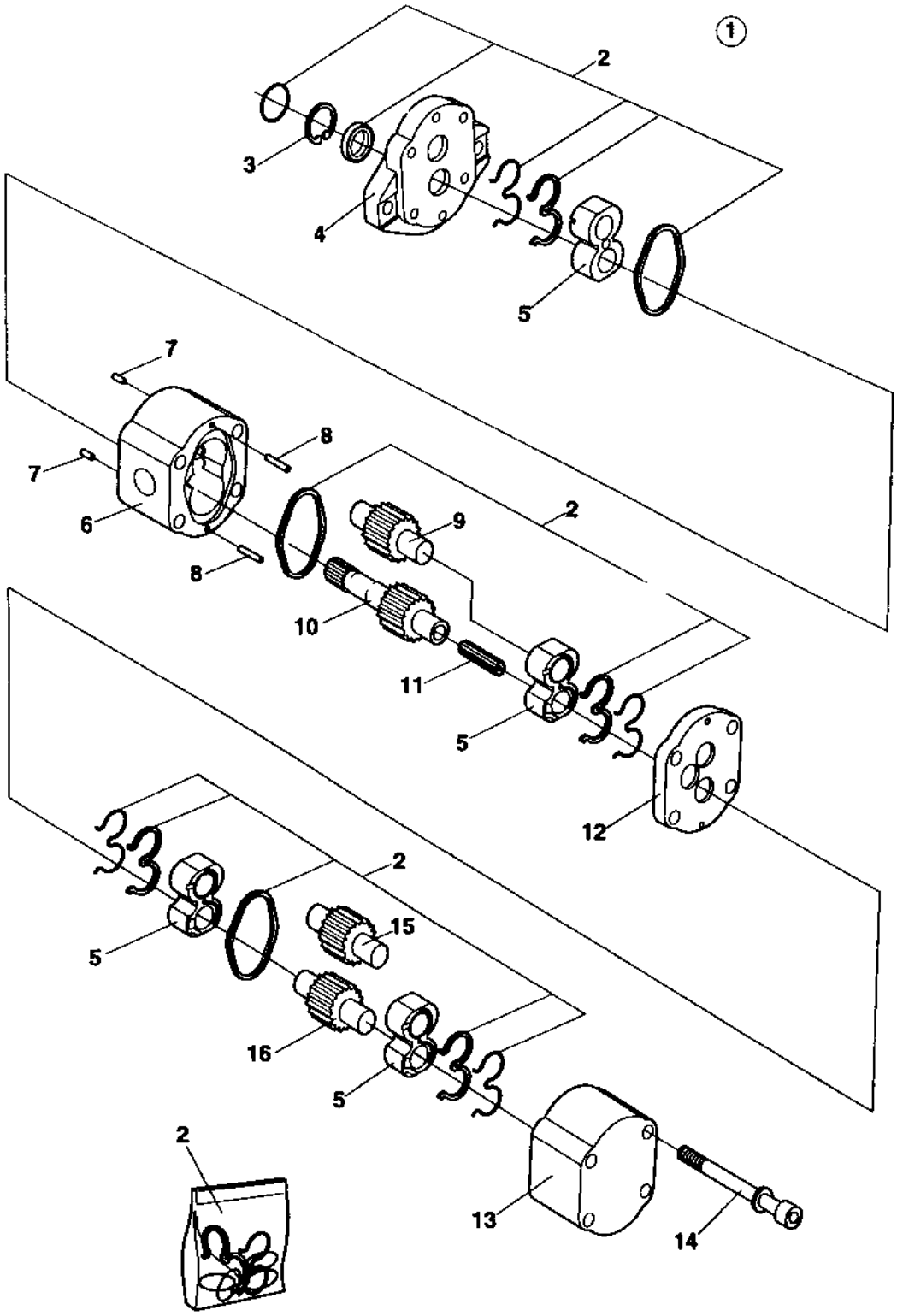

375649 Hydraulic pump, vibration ISUZU

Ref. No.	Part No.	Rem.	Qty	Description	Code
1		A	1	Hydraulic pump	
2	903430		1	.Seal kit	
3			1	.Snap ring	
4			1	.Flange	
5			4	.Bearing block	
6			1	.Housing	
7			2	.Pin	
8			2	.Pin	
9			1	.Gear	
10			1	.Drive shaft	
11			1	.Coupling	
12			1	.Distance plate	
13			1	.End housing	
14			4	.Bolt	
15			1	.Gear	
16			1	.Gear	

A) CPL

370173 Vibration valve ISUZU

15770

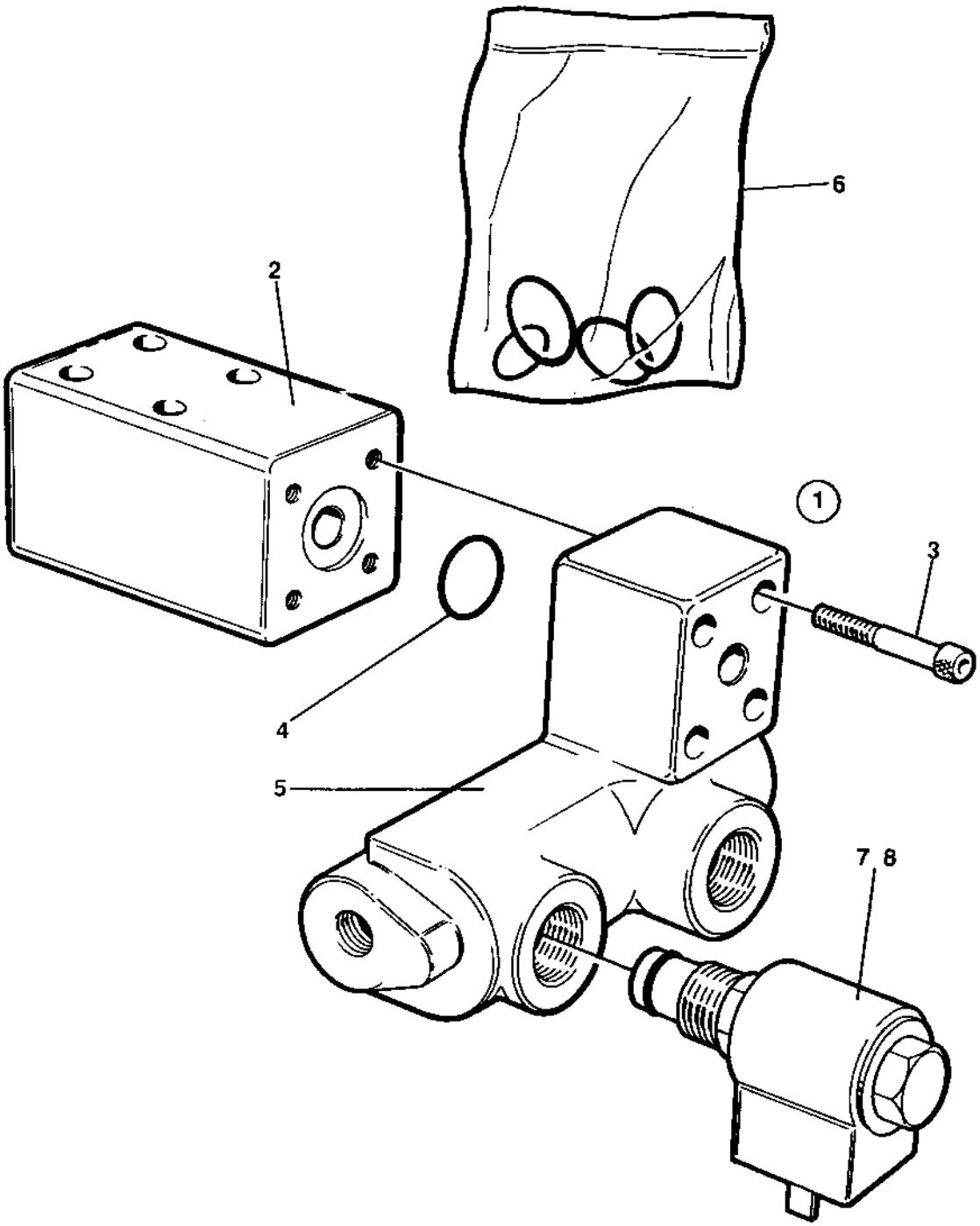

370173 Vibration valve ISUZU

Ref. No.	Part No.	Rem.	Qty	Description	Code
1		A	1	Vibration valve	
2	903730		1	.Adapter	
3	903729		4	.Screw	
4	160145		1	.O-ring	
5	903637	A	1	.Valve	
6	902810		1	..Seal kit	
7	903330	A	1	..Solenoid valve	
8	908804		1	...Solenoid	

A) CPL

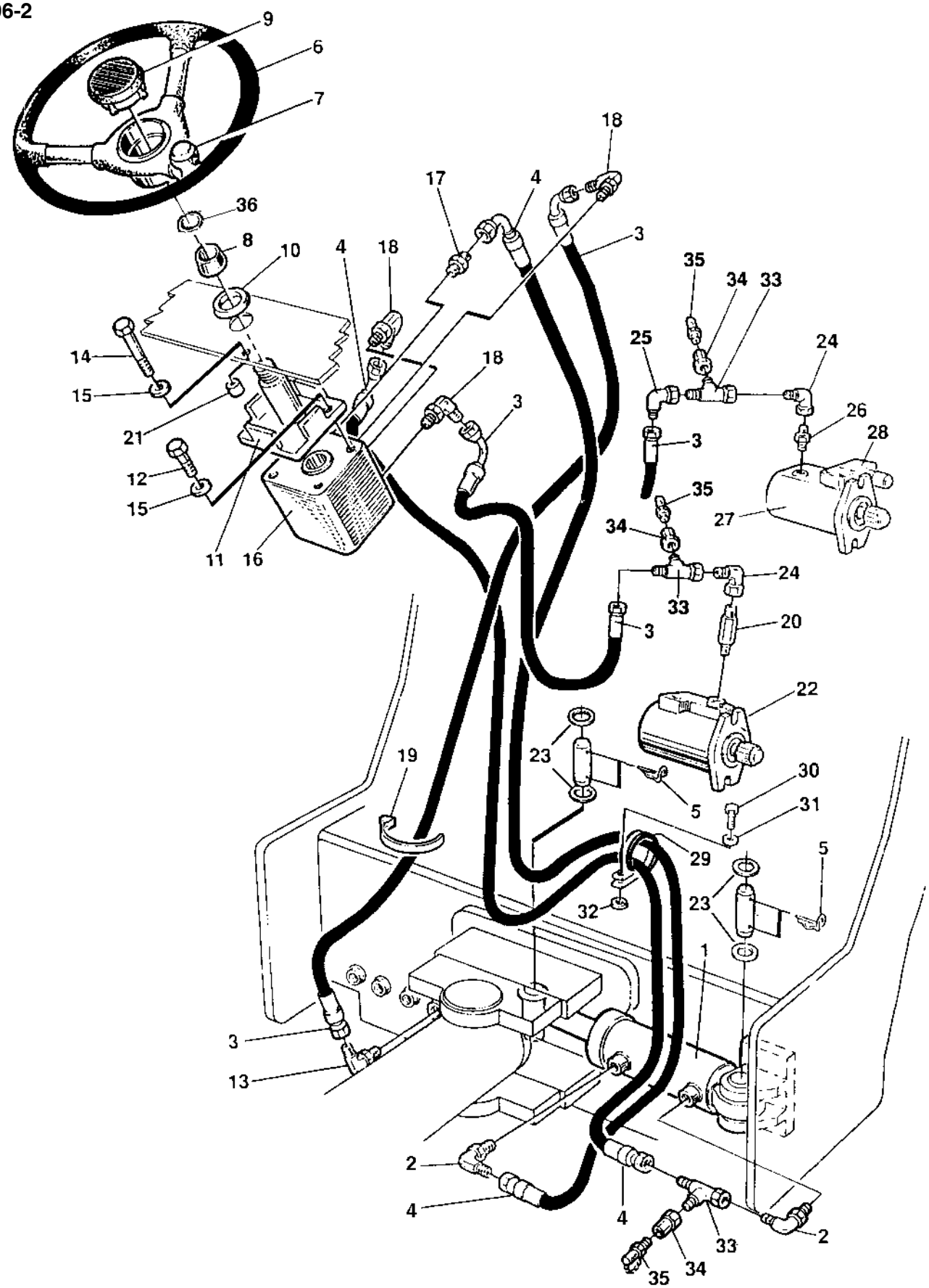
9
6
7
36
8
10
4
18
17
4
18
3
35
34
33
25
24
14
15
21
18
3
26
28
3
12
15
35
27
34
11
16
24
33
3
20
22
19
23
30
5
31
29
5
32
23
1
3
13
2
4
4
33
2
35
34

Ref. No.	Part No.	Rem.	Qty	Description	Code
1	374603		1	Steering cylinder (Page 142)	
2	334235		2	Elbow 90	
3	831179		2	Hydraulic hose	
4	482398		2	Hydraulic hose	
5	630019		4	Cotter pin	
6	902183		1	Steering wheel	
7	902184		1	Turning knob	
8	902185		1	Insert adapter	
9	902186		1	Cover plate	
10	928830		1	Rubber washer	
11	902123		1	Steering column	
12	500048		2	Screw	M10-1,5x20 8,8
13	813321		1	Elbow 90 Up to 601X7519	
	334235		1	Elbow 90 From 601X7520	
14	500030		2	Screw	M10-1,5x35H 8,8
15	904230		4	Washer	10,5x22x2
16	902099		1	Steering valve (Page 140)	
17	234390		1	Connector	
18	903003		3	Connector	
19	313102		N	Cable ties	
20	357377	1	1	Connector	
21	355869		2	Spacer sleeve	
22	359524		1	Hydraulic pump, vibration (Page 128)	DEUTZ
23	600016		4	Washer	26x45x4
24	334524		1	Connector	
25	334524		1	Connector	
26	334236		1	Adapter	
27	375649		1	Hydraulic pump, vibration (Page 130)	ISUZU
28	370173		1	Vibration valve (Page 132)	ISUZU
29	923008	2	1	Clamp	
30	500021	2	1	Screw	M8-1,25x25 8,8
31	904556	2	1	Washer	8,4x16x3,0
32	904556	2	1	Washer	8,4x16x3,0
33	334234		2	Tee-connector	
34	433830401		2	Connector	
35	910161		2	Measuring nipple	
36	904703		1	Washer	13x24x4

1) For machines with Deutz engine
2) For machines with Isuzu engine

18086

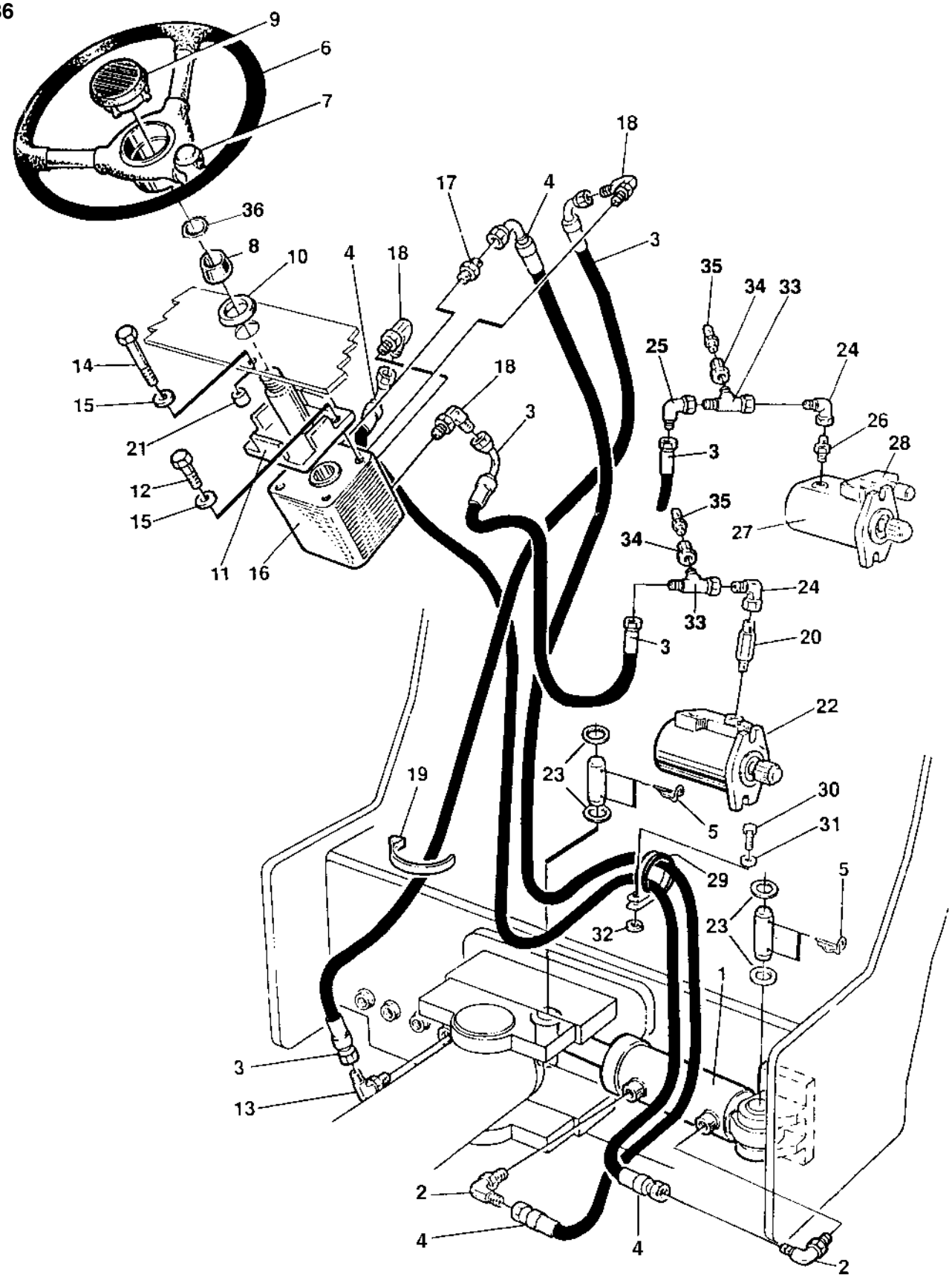
9
6
7
36
8
10
4
18
17
4
18
3
35
34
33
25
24
18
3
26
28
14
15
21
12
15
11
16
3
35
27
34
24
33
3
20
22
19
23
30
5
31
29
5
23
32
1
3
13
2
4
4
2

Ref. No.	Part No.	Rem.	Qty	Description	Code
1	374603		1	Steering cylinder (Page 142)	
2	334235		2	Elbow 90	
3	831179		2	Hydraulic hose	
4	482398		2	Hydraulic hose	
5	630019		4	Cotter pin	
6	902183		1	Steering wheel	
7	902184		1	Turning knob	
8	902185		1	Insert adapter	
9	902186		1	Cover plate	
10	928830		1	Rubber washer	
11	902123		1	Steering column	
12	500048		2	Screw	M10-1,5x20 8,8
13	334235		1	Elbow 90	
14	500030		2	Screw	M10-1,5x35H 8,8
15	904230		4	Washer	10,5x22x2
16	902099		1	Steering valve (Page 140)	
17	234390		1	Connector	
18	903003		3	Connector	
19	313102		N	Cable ties	
20	357377	1	1	Connector	
21	355869		2	Spacer sleeve	
22	359524		1	Hydraulic pump, vibration (Page 128)	DEUTZ
23	600016		4	Washer	26x45x4
24	334524		1	Connector	
25	334524		1	Connector	
26	334236		1	Adapter	
27	375649		1	Hydraulic pump, vibration (Page 130)	ISUZU
28	370173		1	Vibration valve (Page 132)	ISUZU
29	923008	2	1	Clamp	
30	500021	2	1	Screw	M8-1,25x25 8,8
31	904556	2	1	Washer	8,4x16x3,0
32	904556	2	1	Washer	8,4x16x3,0
33	334234		1	Tee-connector	
34	433830401		1	Connector	
35	910161		1	Measuring nipple	
36	904703		1	Washer	13x24x4

1) For machines with Deutz engine
2) For machines with Isuzu engine

18086

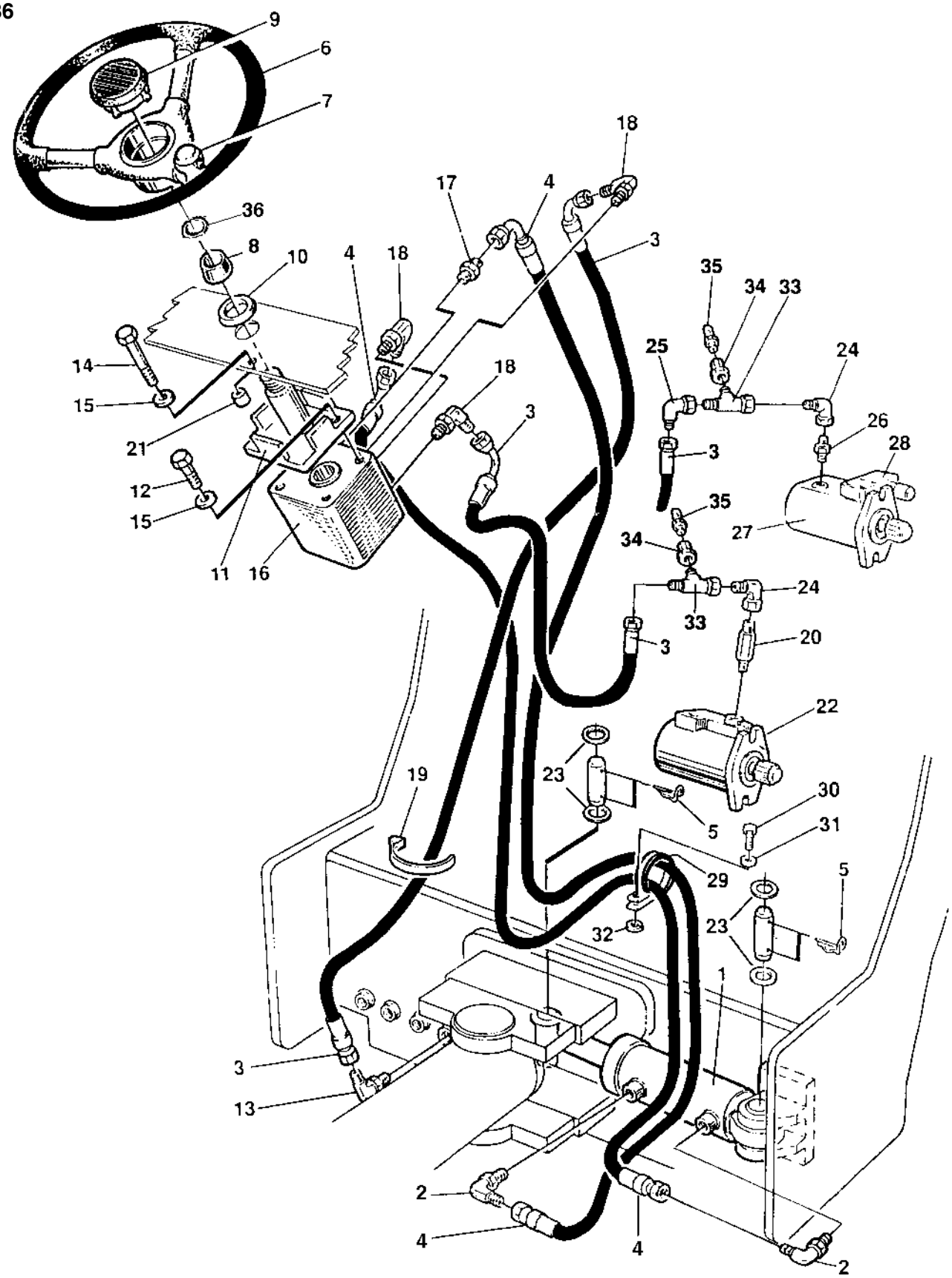
9
6
7
36
8
10
4
18
17
4
18
3
35
34
33
25
24
26
28
27
14
15
21
12
15
11
16
18
3
3
35
34
33
24
20
22
23
19
5
30
31
29
5
23
32
1
3
13
2
4
4
2

Ref. No.	Part No.	Rem.	Qty	Description	Code
1	374603		1	Steering cylinder (Page 142)	
2	334235		2	Elbow 90	
3	831179		2	Hydraulic hose	
4	482398		2	Hydraulic hose	
5	630019		4	Cotter pin	
6	372964		1	Steering wheel, cpl	
7	935614		1	.Turning knob	
9	935613		1	.Cover	
10	928830		1	Rubber washer	
11	902123		1	Steering column	
12	500048		2	Screw	M10-1,5x20 8,8
13	334235		1	Elbow 90	
14	500030		2	Screw	M10-1,5x35H 8,8
15	904230		4	Washer	10,5x22x2
16	902099		1	Steering valve (Page 140)	
17	234390		1	Connector	
18	903003		3	Connector	
19	313102		N	Cable ties	
20	357377	1	1	Connector	
21	355869		2	Spacer sleeve	
22	359524		1	Hydraulic pump, vibration (Page 128)	DEUTZ
23	600016		4	Washer	26x45x4
24	334524		1	Connector	
25	334524		1	Connector	
26	334236		1	Adapter	
27	375649		1	Hydraulic pump, vibration (Page 130)	ISUZU
28	370173		1	Vibration valve (Page 132)	ISUZU
29	923008	2	1	Clamp	
30	500021	2	1	Screw	M8-1,25x25 8,8
31	904556	2	1	Washer	8,4x16x3,0
32	904556	2	1	Washer	8,4x16x3,0
33	334234		1	Tee-connector	
34	433830401		1	Connector	
35	910161		1	Measuring nipple	

1) For machines with Deutz engine
2) For machines with Isuzu engine

902099 Steering valve

15480-1

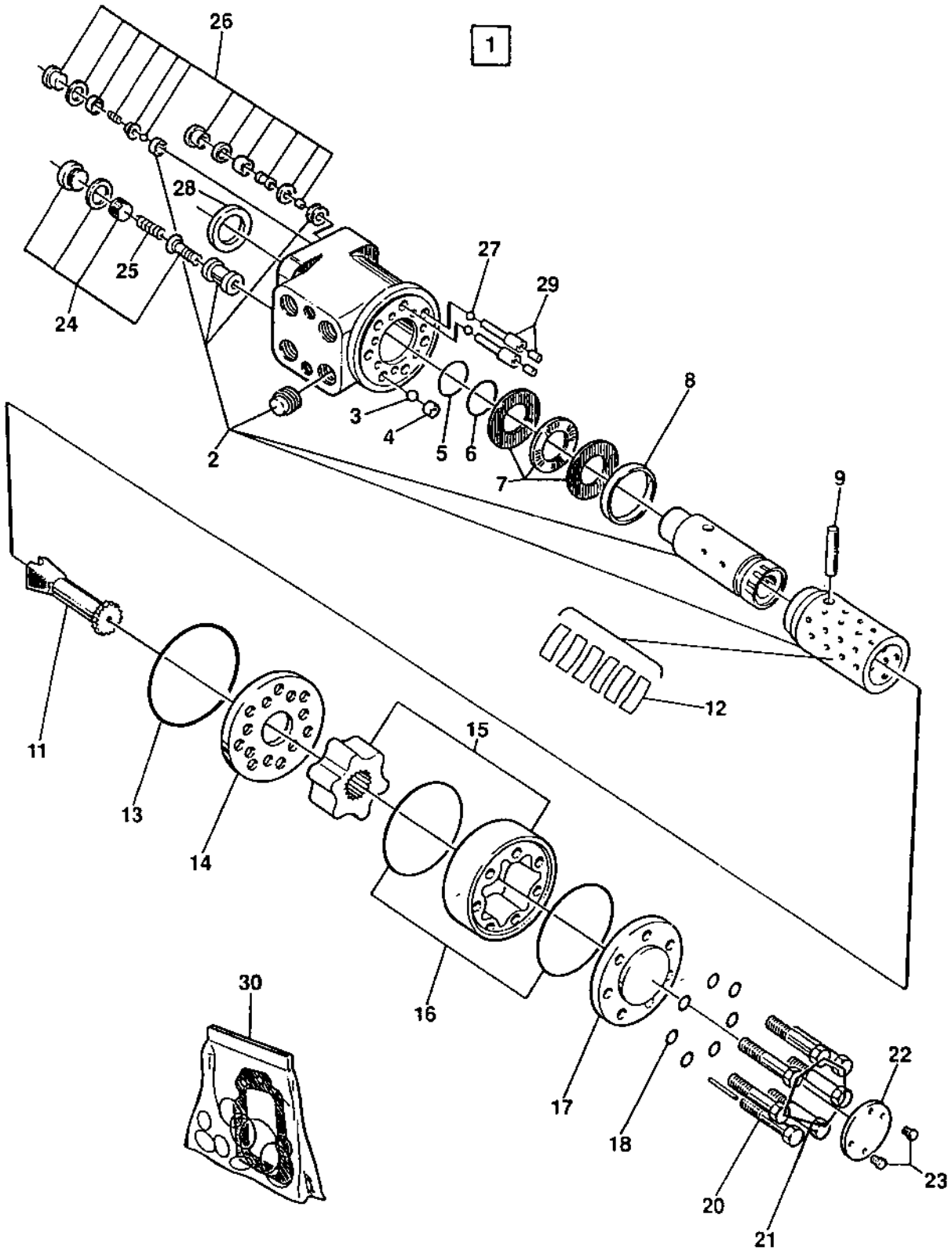

902099 Steering valve

Ref. No.	Part No.	Rem.	Qty	Description	Code
1		A	1	Steering valve	
2			1	.Spool and sleeve	
3	480468		1	.Ball	
4	480446		1	.Threaded bushing	
5		B	1	.O-ring	
6		B	1	.Ring	
7	911620		1	.Bearing	
8	480449		1	.Ring	
9	480447		1	.Cross pin	
11	902861		1	.Cardan shaft	
12	903521		1	.Spring kit	
13		B	1	.O-ring	
14	902862		1	.Valve plate	
15	902863		1	.Gear kit	
16		B	1	.O-ring	
17	480450		1	.End cap	
18		B	1	.Washer	
20	929008		1	.Screw with bore	
21	929009		6	.Screw	
22	481303		1	.Name plate	
23	480464		2	.Drive screw	
24	929010	A	1	.Relief valve	17,0-17,5MPa
25	902864		1	.Spring	
26	929012		2	.Shock valve	22,5-24,0 MPa
27	929013		2	.Ball	
28		B	1	.Seal ring	
29	929014		2	.Rolled pin	
30	480457		1	Spare parts kit	

A) CPL
B) Included in item 30

374603 Steering cylinder

16513

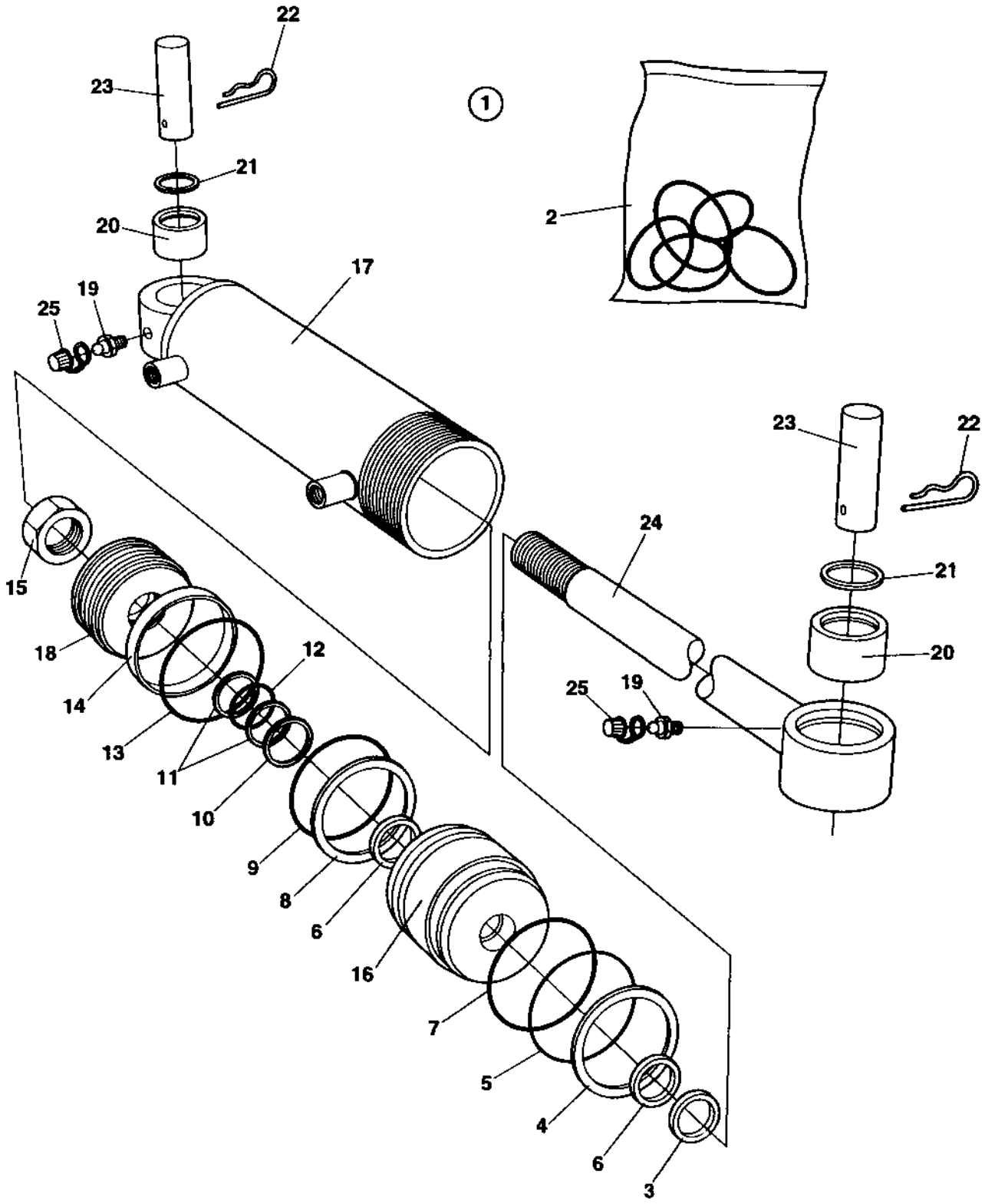

374603 Steering cylinder

Ref. No.	Part No.	Rem.	Qty	Description	Code
1		A	1	Steering cylinder	
2	909760		1	.Seal kit	
3			1	..Scraper ring	
4			1	..Retaining ring	
5			1	..O-ring	
6			2	..Guide ring	
7			1	..Lock ring	
8			1	..Sealing	
9	160025		1	..O-ring	
10			1	..Sealing	
11			2	..Back-up ring	
12			1	..O-ring	
13			1	..Sealing	
14			1	..Guide ring	
15			1	..Nut	
16	909766		1	.Guide	
17	909765		1	.Cylinder tube	
18	909764		1	.Piston block	
19	926214		2	.Grease fitting	
20	238272		2	.Slide bearing	
21	151012		2	.Retaining ring	
22	635061		4	.Hair clip	
23	909761		2	.Shaft	
24	909759		1	.Piston rod	
25	902576		2	.Cover	

A) CPL

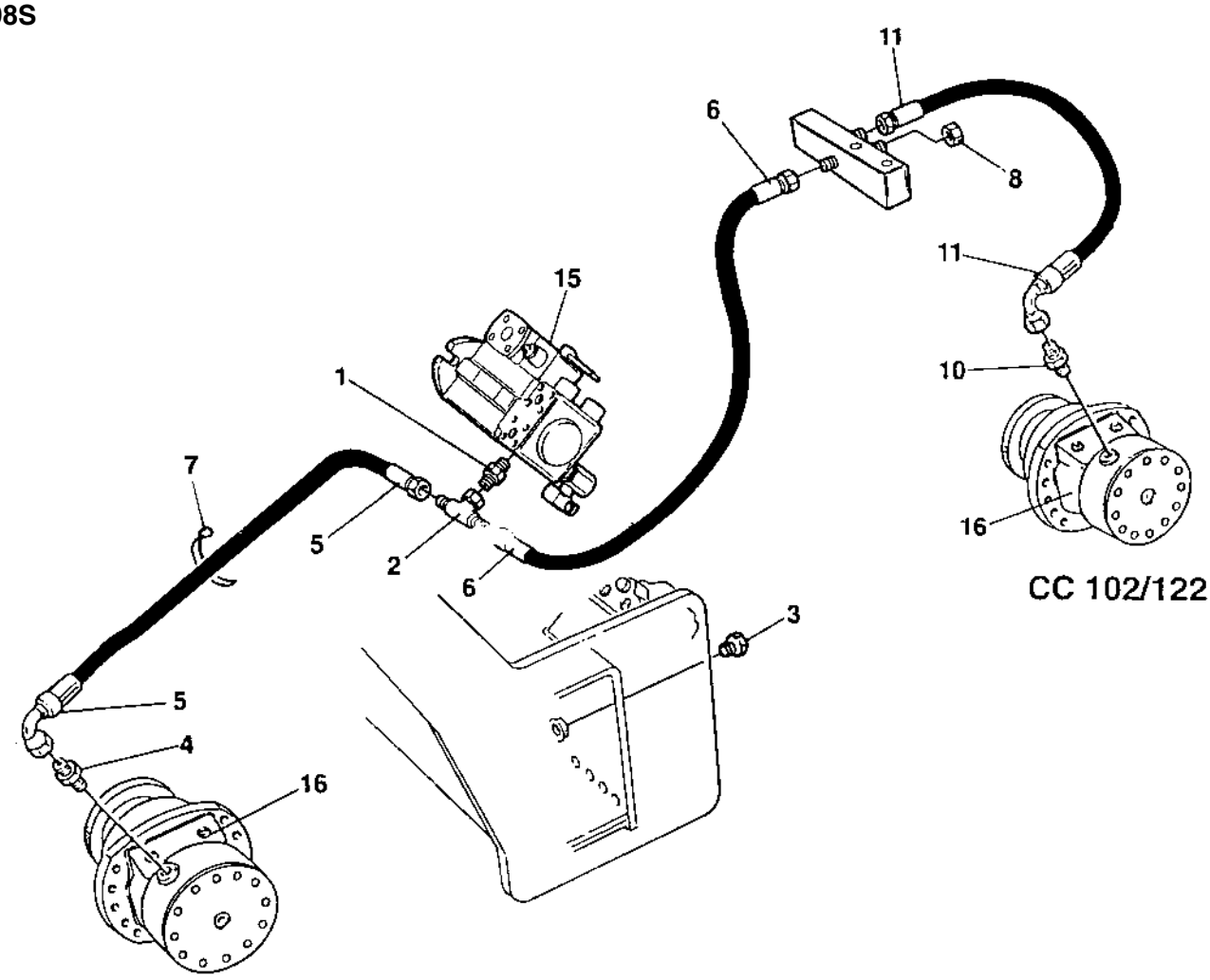
11
6
8
11
15
1
10
7
5
2
6
16
CC 102/122
3
5
4
16

Ref. No.	Part No.	Rem.	Qty	Description	Code
1	334463		1	Connector	
2	234888		1	Tee-connector	
3	892446		1	Plug Up to 601X7519	
4	234233		1	Adapter	
5	483167		1	Hydraulic hose	
6	482865		1	Hydraulic hose	
7	313102		N	Cable ties	
8	230400		1	Cap	
10	234233		1	Adapter	
11	223299		1	Hydraulic hose	
15			1	Hydraulic pump, propulsion	
16			2	Hydraulic motor, propulsion	

Ref. No.	Part No.	Rem.	Qty	Description	Code
120				Electrical equipment Up to 601X7525 (Page	DEUTZ
130				Electrical equipment From 601X7526 (Page	DEUTZ
180				Electrical equipment (Page 156)	ISUZU
215				Control panel (Page 160)	
240				Electric battery switch (Page 164)	DEUTZ
245				Interlock (Page 166)	
255				Interlock Loxam From 601X8311 (Page 168)	
300				Sprinkler timer (Page 170)	
352				Driving & side direction lights Up to 601X7576 (Page 172)	
353				Driving & side direction lights From 601X7577 (Page 176)	
355				Working lights (Page 180)	
358				Licence plate light, parking lights (Page 182)	
380				Rotating beacon (Page 184)	

Electrical equipment DEUTZ

16515-1

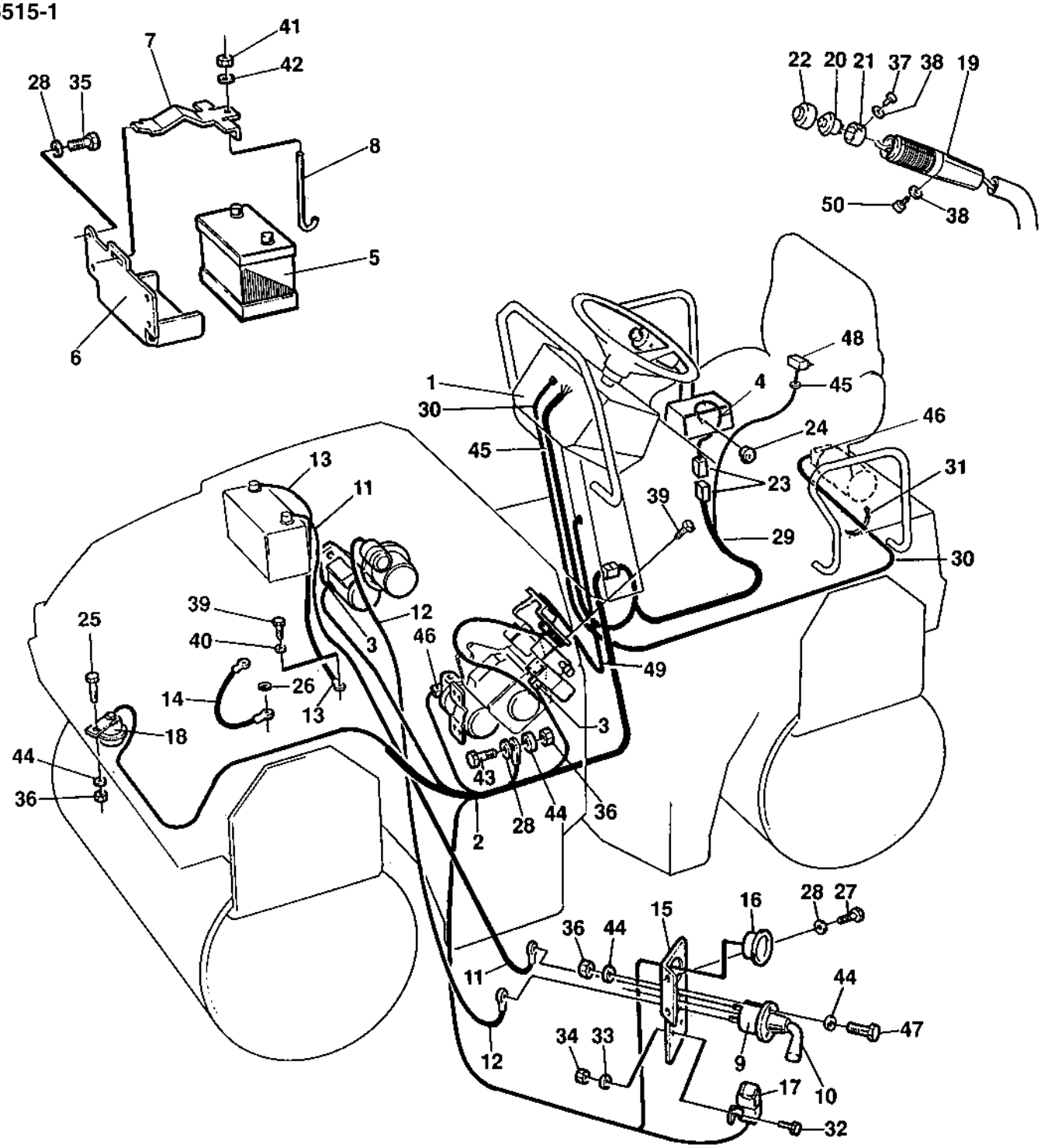

Ref. No.	Part No.	Rem.	Qty	Description	Code
1			1	Control panel (Page 160)	
2	383961		1	Cable harness	
3	960796		2	.Connector	black, MPM 182 09 ND
4	357583	C	1	Cable harness	
5	902550	K	1	Battery	
6	357471	L	1	Battery shelf	
7	357684		1	Battery holder	
8	903372		1	Battery screw	
9	357567		1	Battery switch, cpl	
10	902560		1	.Handle	
11	904961		1	Battery cable	(+)
12	904963		1	Connection wire	
13	902384		1	Battery cable	(-)
14	345728		1	Ground cable	
15	357584		1	Holder plate	
16	801567		1	Hour meter	
17	287597	G	1	Relay	
18	999027		1	Horn	
19	285909		1	Grab handle	
20	928497	H	1	Push button	
21	285911		1	Bushing	
22	348481		1	Cover	
23	925958		2	Connection	
24	902203		1	Plug	
25	500020		1	Screw	M8-1,25x22 8,8
26	904557		1	Washer	10,5x22x4
27	500019		2	Screw	M8-1,25x16 8.8
28	904229		8	Washer	8,4x16x1,5
29		2	1	Cable harness	
30				Not used on this model	
31				Not used on this model	
32	508020		1	Screw	M5x20
33	904281		1	Washer	5,3x10x1
34	586001		1	Lock nut	M5
35	500053		4	Screw	M8-1,25x20 8,8
36	586003		4	Lock nut	M8
37	533001		3	Screw	
38	904697		5	Washer	3,2x6x0,5
39	500053		1	Screw	M8-1,25x20 8,8
40	904640		1	Washer	8,4x22x3
41	586003		1	Lock nut	M8
42	904229		1	Washer	8,4x16x1,5
43	500047		2	Screw	M8-1,25x35 8,8
44	904229		7	Washer	8,4x16x1,5
45	909107		1	Grommet	
46	901766		1	Connector	2-POL
47	500021		2	Screw	M8-1,25x25 8,8

2) See section " Control panel "
C) F/R control
G) Start
H) Vibration
K) This part has unfortunately become obsolete. In this case we recommend you to buy locally; The measurements are 271x161x226 mm, Voltage= 12 V, Capacity= 75 Ah
L) Available; a modification kit 376797, which includes battery shelf, shock absorber 4 pcs (which replaces earlier screw and washer), nut 4 pcs, and drawing.

Electrical equipment DEUTZ

16515-1

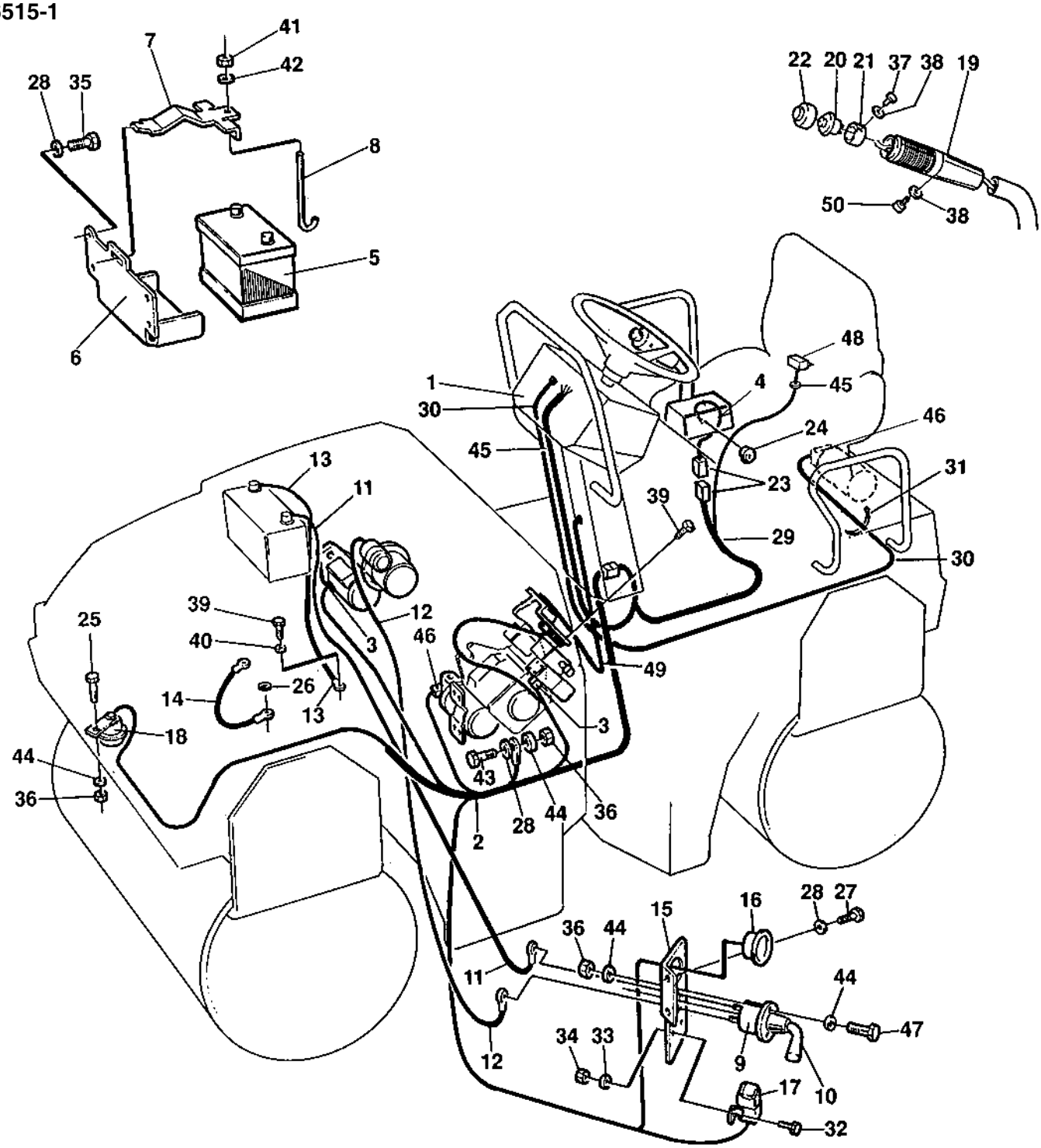

Ref. No.	Part No.	Rem.	Qty	Description	Code
48		3	1	Seat switch	
49	385580		1	Cable harness	
50	901767		1	Screw	ST3,5x9,5 Black

3) See section " Drivers platform "

Electrical equipment DEUTZ

18089

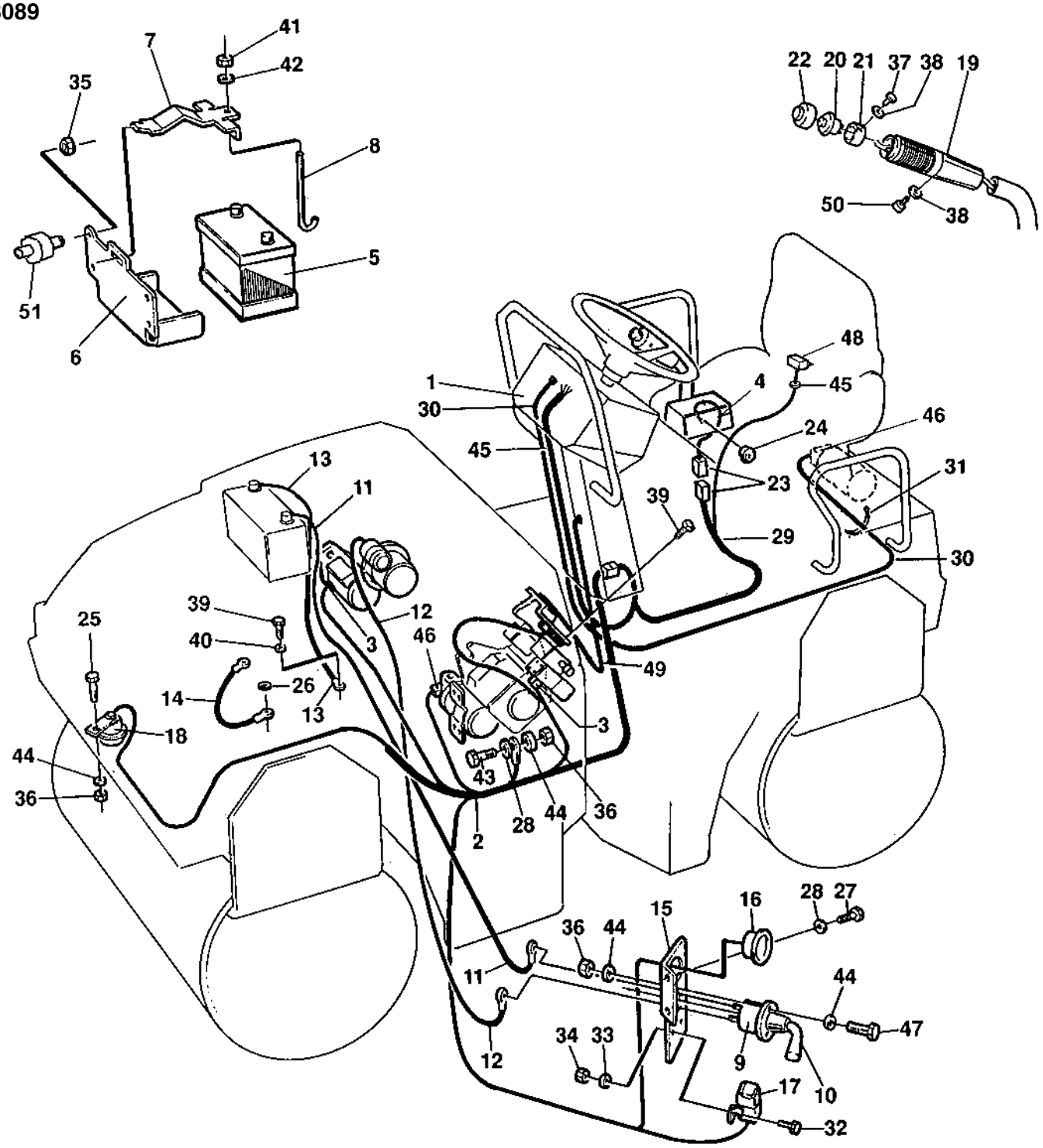

Ref. No.	Part No.	Rem.	Qty	Description	Code
1			1	Control panel (Page 160)	
2	383961		1	Cable harness	
3	960796		2	.Connector	black, MPM 182 09 ND
4	357583	C	1	Cable harness	
5	902550	K	1	Battery Up to 601X8050	
		L	1	Battery From 601X8051	
6	377051		1	Battery shelf	
7	357684		1	Battery holder Up to 601X8050	
	378370		1	Battery holder From 601X8051	
8	903372		1	Battery screw	
9	357567		1	Battery switch, cpl	
10	902560		1	.Handle	
11	378743		1	Battery cable	(+)
12	904963		1	Connection wire	
13	902384		1	Battery cable	(-)
14	345728		1	Ground cable	
15	357584		1	Holder plate	
16	801567		1	Hour meter	
17	287597	G	1	Relay	
18	999027		1	Horn	
19	285909		1	Grab handle	
20	928497	H	1	Push button	
21	285911		1	Bushing	
22	348481		1	Cover	
23	925958		2	Connection	
24	902203		1	Plug	
25	500020		1	Screw	M8-1,25x22 8,8
26	904557		1	Washer	10,5x22x4
27	500019		2	Screw	M8-1,25x16 8.8
28	904229		4	Washer	8,4x16x1,5
29		2	1	Cable harness	
30				Not used on this model	
31				Not used on this model	
32	508020		1	Screw	M5x20
33	904281		1	Washer	5,3x10x1
34	586001		1	Lock nut	M5
35	791182		4	Lock nut	M8
36	586003		4	Lock nut	M8
37	533001		3	Screw	
38	904697		5	Washer	3,2x6x0,5
39	500053		1	Screw	M8-1,25x20 8,8
40	904640		1	Washer	8,4x22x3
41	586003		1	Lock nut	M8
42	904229		1	Washer	8,4x16x1,5

2) See section " Control panel "
C) F/R control
G) Start
H) Vibration
K) This part has unfortunately become obsolete. In this case we recommend you to buy locally; The measurements are 271x161x226 mm, Voltage= 12 V, Capacity= 75 Ah
L) Obsolete. The reason is that we don't have a dry charged version available. In this situation we recommend you to buy locally; The measurements are 278x175x205 mm, Voltage= 12 V, Capacity= 75 Ah, CCA (EN)= 600 A

Electrical equipment DEUTZ

18089

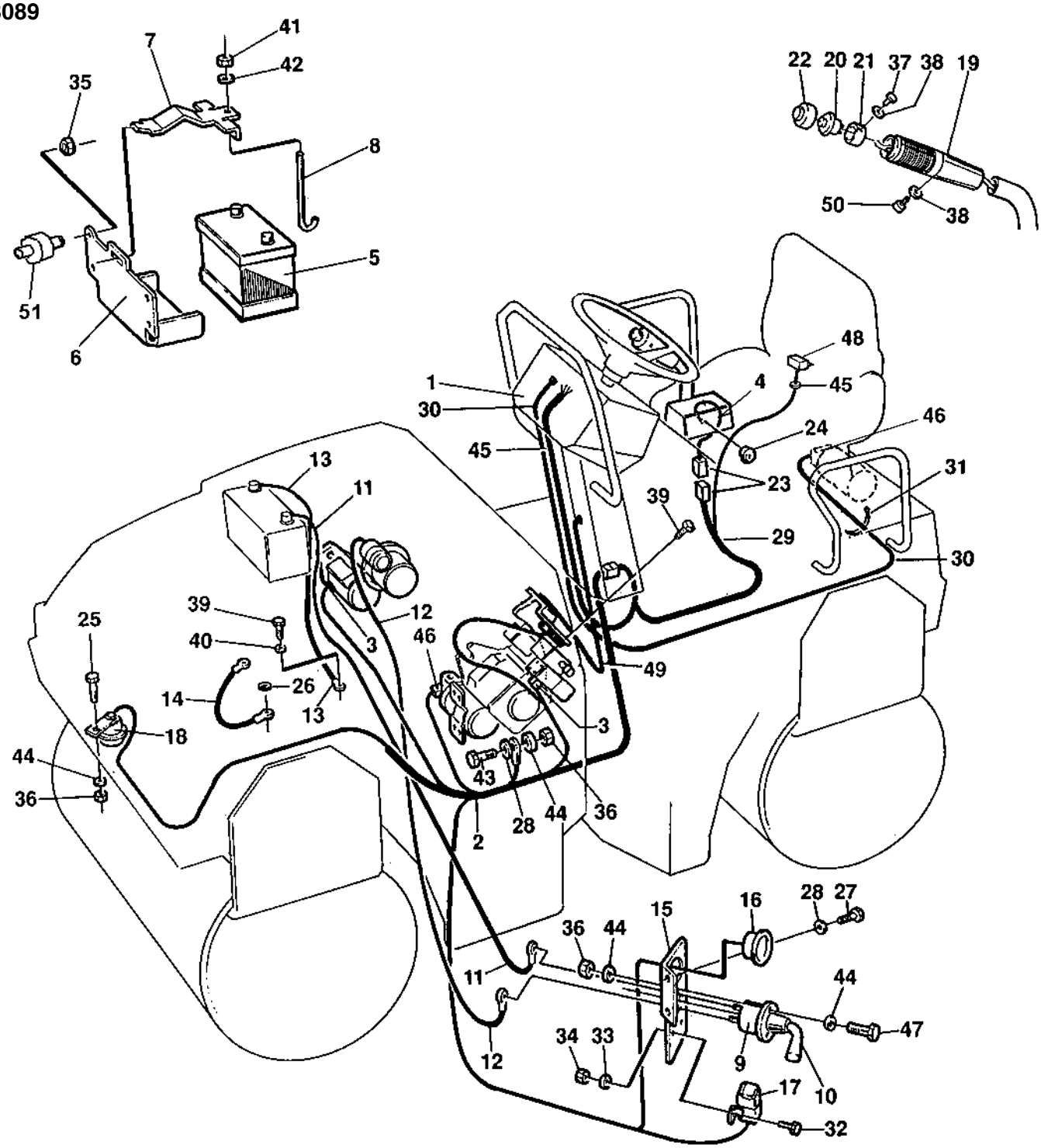

Ref. No.	Part No.	Rem.	Qty	Description		Code
43	500047		2	Screw	M8-1,25x35 8,8	
44	904229		7	Washer	8,4x16x1,5	
45	909107		1	Grommet		
46	901766		1	Connector	2-POL	
47	500021		2	Screw	M8-1,25x25 8,8	
48		3	1	Seat switch		
49	385580		1	Cable harness		
50	901767		1	Screw	ST3,5x9,5 Black	
51	376796		4	Shock absorber		

3) See section " Drivers platform "

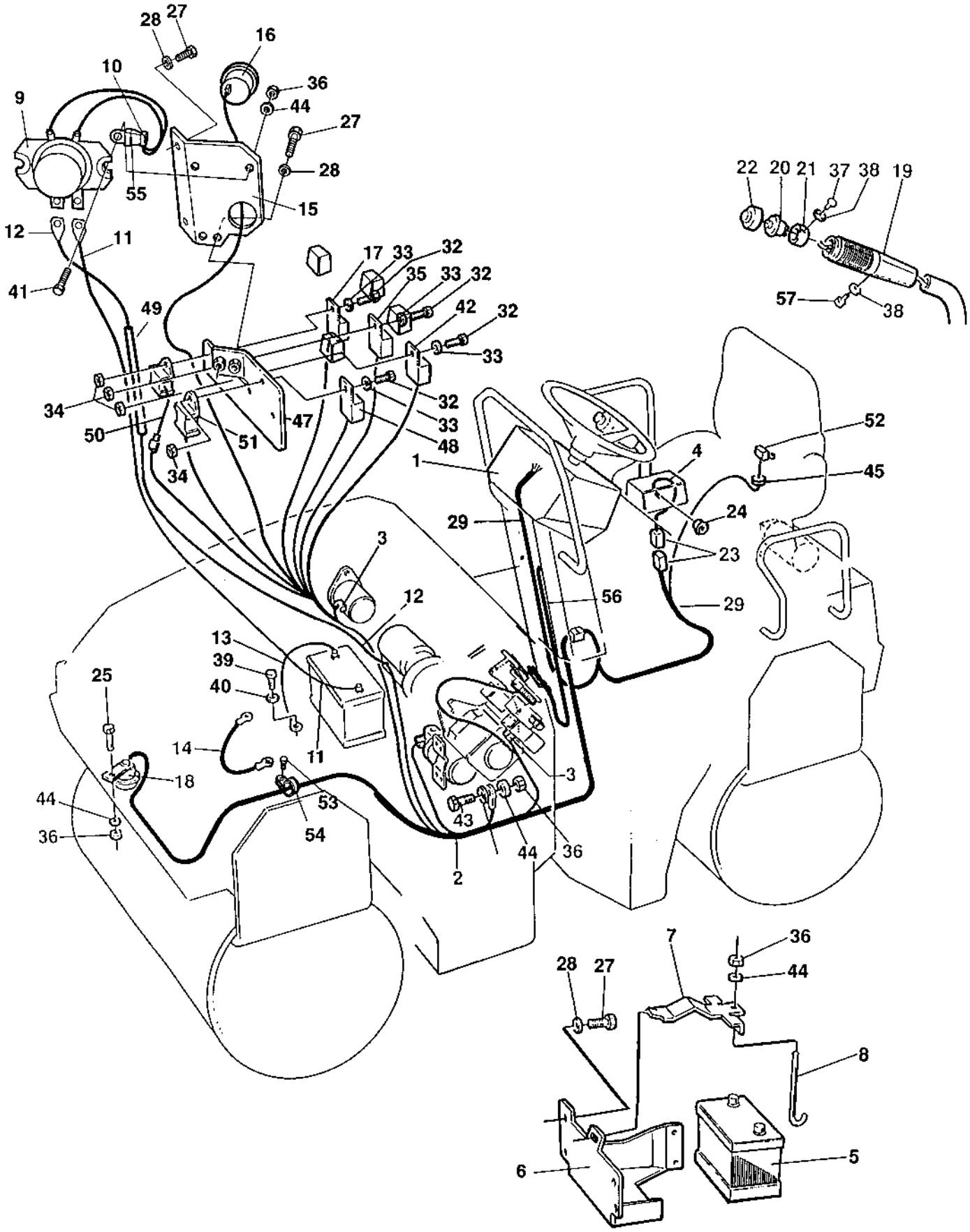
28
27
16
10
36
9
44
27
28
55
15
12
11
41
49
17
33
32
35
33
32
42
32
33
34
32
33
48
50
51
47
34
1
52
4
45
24
29
23
3
12
56
29
13
39
40
25
14
11
18
44
36
53
54
43
44
36
2
22
20
21
37
38
19
57
38
7
36
28
27
44
8
6
5

Ref. No.	Part No.	Rem.	Qty	Description	Code
1			1	Control panel (Page 160)	
2	384264	A	1	Cable harness	
3	960796		2	.Connector	black, MPM 182 09 ND
4	357583	C	1	Cable harness	
5	902550	1	1	Battery Up to 601X8050	
		P	1	Battery From 601X8051	
6	380960		1	Battery shelf	
7	357684		1	Battery holder Up to 601X8050	
	378370		1	Battery holder From 601X8051	
8	903372		1	Battery screw	
9	791078	3	1	Electric battery switch	
10	791079	3	1	Diode	
11	378742		1	Battery cable	
12	791091	E	1	Connection cable	
13	903757		1	Battery cable	(-)
14	345728		1	Ground cable	
15	384099		1	Holder plate	
16	801567		1	Hour meter	
17	287597	G	1	Relay	
18	999027		1	Horn	
19	285909		1	Grab handle	
20	928497	H	1	Push button	
21	285911		1	Bushing	
22	348481		1	Cover	
23	925958		2	Connection	
24	902203		1	Plug	
25	500020		1	Screw	M8-1,25x22 8,8
27	500019		8	Screw	M8-1,25x16 8.8
28	904229		10	Washer	8,4x16x1,5
29		2	1	Cable harness	
32	508020		4	Screw	M5x20
33	904281		4	Washer	5,3x10x1
34	586001		4	Lock nut	M5
35	287597	K	1	Relay	
36	586003		5	Lock nut	M8
37	533001		3	Screw	
38	904697		3	Washer	3,2x6x0,5
39	500048		1	Screw	M10-1,5x20 8,8

1) This part has unfortunately become obsolete. In this case we recommend you to buy locally; The measurements are 271x161x226 mm, Voltage= 12 V, Capacity= 75 Ah
2) See section " Control panel "
3) Delivered with engine.
A) Engine
C) F/R control
E) Switch-starter
G) Start
H) Vibration
K) Stop
P) Obsolete. The reason is that we don't have a dry charged version available. In this situation we recommend you to buy locally; The measurements are 278x175x205 mm, Voltage= 12 V, Capacity= 75 Ah, CCA (EN)= 600 A

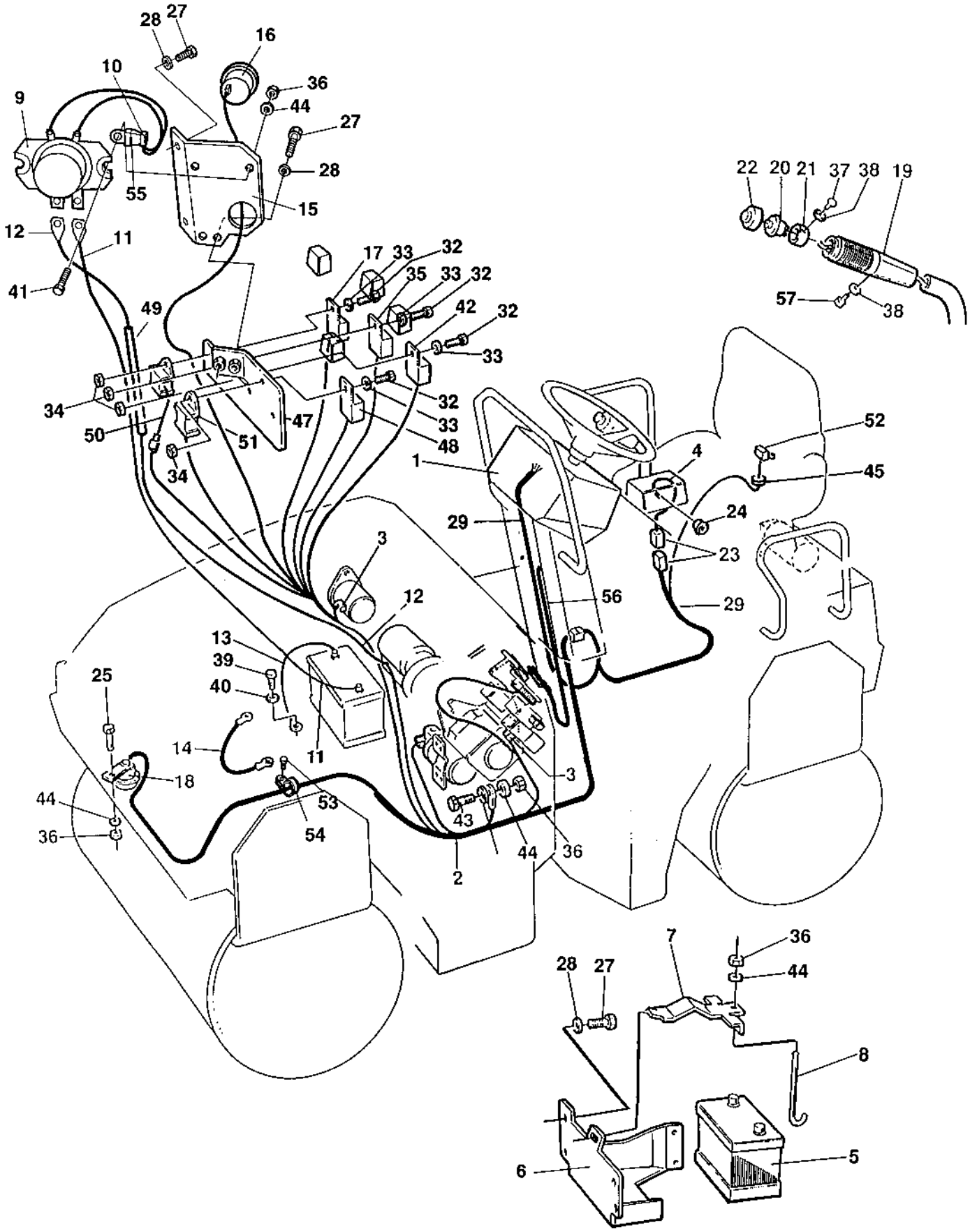
28
27
16
10
36
9
44
27
28
55
15
12
11
41
49
17
33
32
35
33
32
42
32
33
34
32
33
48
50
51
47
34
1
52
4
45
24
29
23
3
12
56
29
13
39
40
25
14
11
18
44
36
53
54
43
44
36
2
22
20
21
37
38
19
57
38
7
36
28
27
44
8
6
5

Ref. No.	Part No.	Rem.	Qty	Description	Code
40	904637		2	Washer	10x18x2
41	500022		2	Screw	M8-1,25x30 8,8
42	287597	L	1	Relay	
43	500047		2	Screw	M8-1,25x35 8,8
44	904229		7	Washer	8,4x16x1,5
45	909107		1	Grommet	
47	371893		1	Holder plate	
48	903817	M	1	Relay	
49	903082		1	Hose shield	
50	903705		1	Safety unit	
51	903708		1	Timer	Glow
52		N	1	Seat switch	
53	500053		1	Screw	M8-1,25x20 8,8
54	921119		1	Pipe clamp	
55	901225		1	Fuse	5A
56	385580		1	Cable harness	
57	901767		1	Screw	ST3,5x9,5 Black

L) For safety unit
M) Glow
N) See Section " Drivers Platform "

Control panel

16517

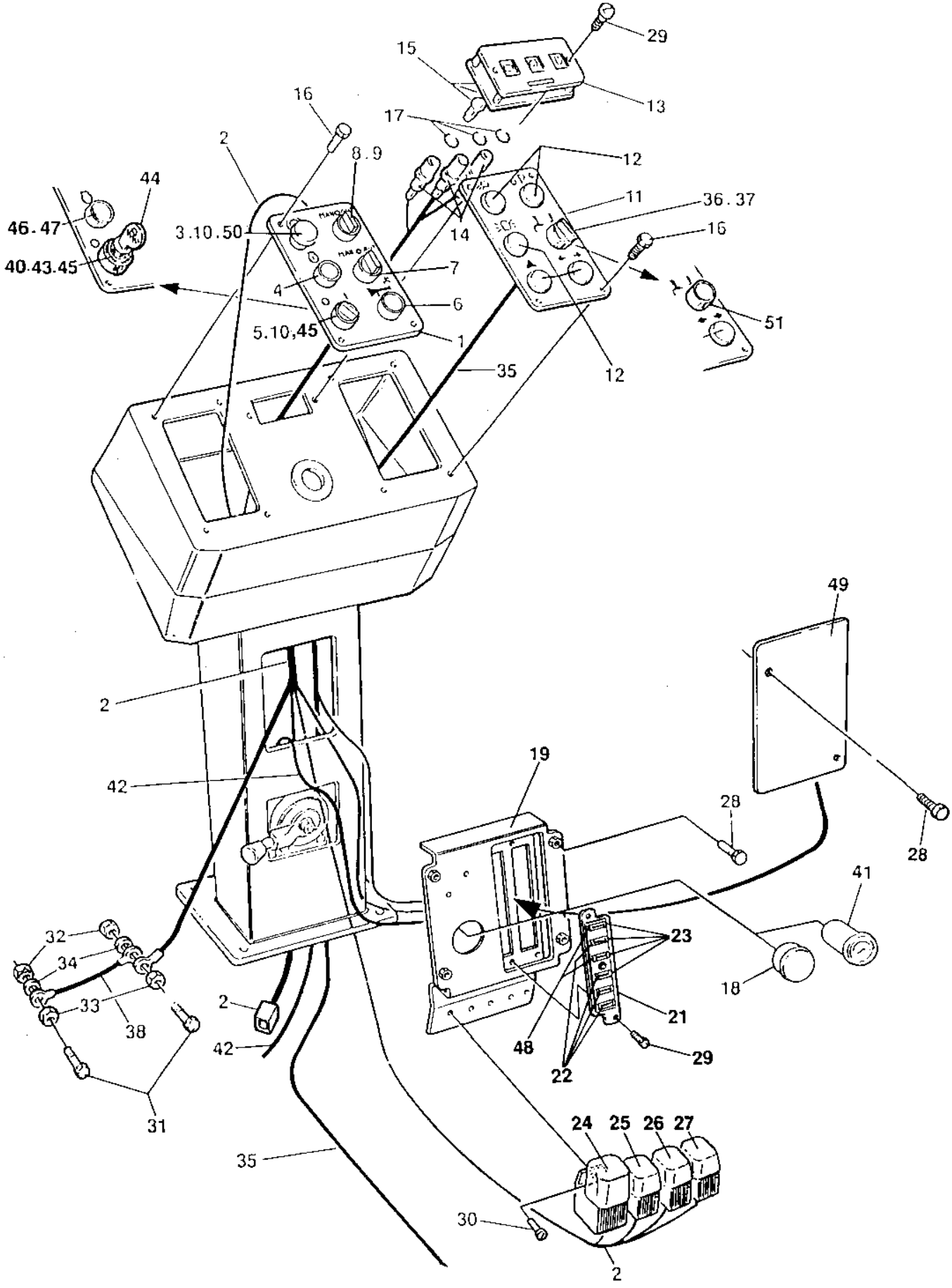

Control panel

Ref. No.	Part No.	Rem.	Qty	Description	Code
1	358663		1	Control panel plate	
2	384263		1	Cable harness	
3	930200		1	Emergency stop	
	930154		1	.Contact piece, NC	
4	928928	B	1	Push button	
5	930151	C	1	Switch	
	930153	H,M	1	Switch	
	385644		1	Decal	Electrical battery switch
6	932032	D	1	Push button	
7	930153	E	1	Switch	
8	932058	F	1	Switch	
9	930155		1	Connector	
10	930163		2	Contact piece, NO	
11	357574		1	Control panel plate	
12	911456		6	Hole plug	
13	357585		1	Display panel	
14	902225		3	Lamp socket	2-POL
15	985125		3	Bulb	12V
16	902224		8	Screw	M6x10
17	160269		3	O-ring	
18	345870		1	Plug	
19	371326		1	Distribution control plate	
21	903820		1	Fuse box	
	909527		1	.Cover	
22	901226	G	4	Fuse	7.5A
23	901240		3	Connector	
24	382782		1	Relay, VBS	
25	287597	I	1	Relay	
26	287597		1	Relay	
27	287597		1	Relay	
28	541702		6	Screw	M6x12
29	901767		4	Screw	ST3,5x9,5 Black
30	902223		4	Screw	
31	500075		2	Screw	M6-1,0x25 8.8
32	586002		2	Lock nut	M6
33	570004		2	Nut	M6
34	904228		2	Washer	6,4x12x1,5
35				Not used on this model	
36				Not used on this model	
37				Not used on this model	
38	903063		1	Ground cable	
40	930182	J	1	Contact block	
41	355468	J	1	Fuel gauge	
	355258	J	1	.Lamp holder	
	985012	J	1	.Bulb	
42	358418	K	1	Cable harness	
43	903239	L	1	Switch	
44	902866		1	.Key	Marked "455"

B) Starter
C) Ignition
D) Horn
E) Sprinkler
F) Vibration
G) Other fuses, options
H) Ignition, electrical battery switch
I) Hour meter
J) Option
K) Option, fuel gauge
L) Option, key starter
M) Three fixed positions.

Control panel

16517

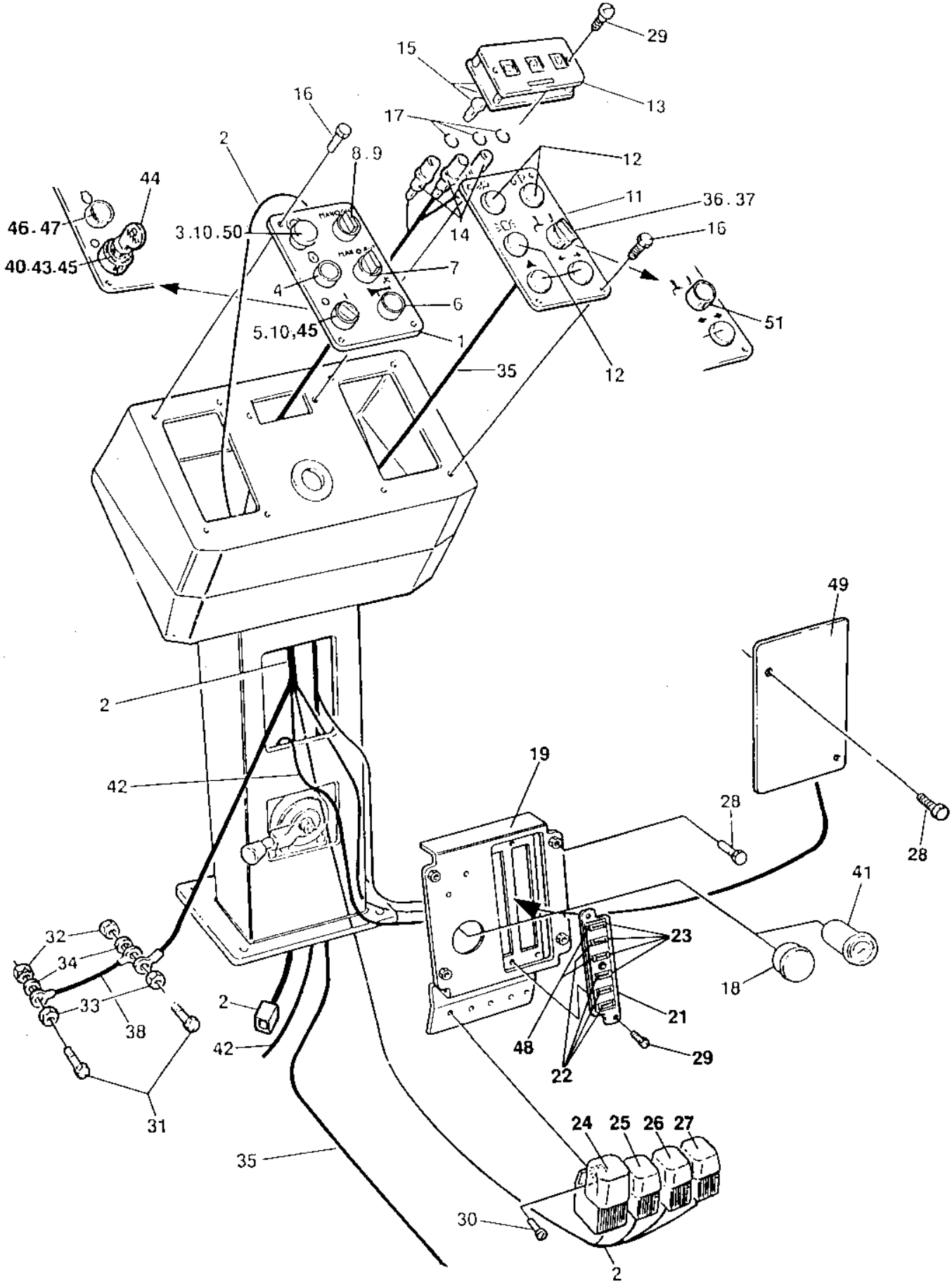

Ref. No.	Part No.	Rem.	Qty	Description	Code
45	930154	H	4	Contact piece, NC	
46	932059	J	1	Pilot lamp cpl	Yellow
47	985012	J	1	Bulb	
48	901227	N	2	Fuse	10A
49	371344		1	Cover	
50	930154		2	Contact piece, NC	
51				Not used on this model	

H) Ignition, electrical battery switch
J) Option
N) Other fuses, options

Electric battery switch DEUTZ

17433

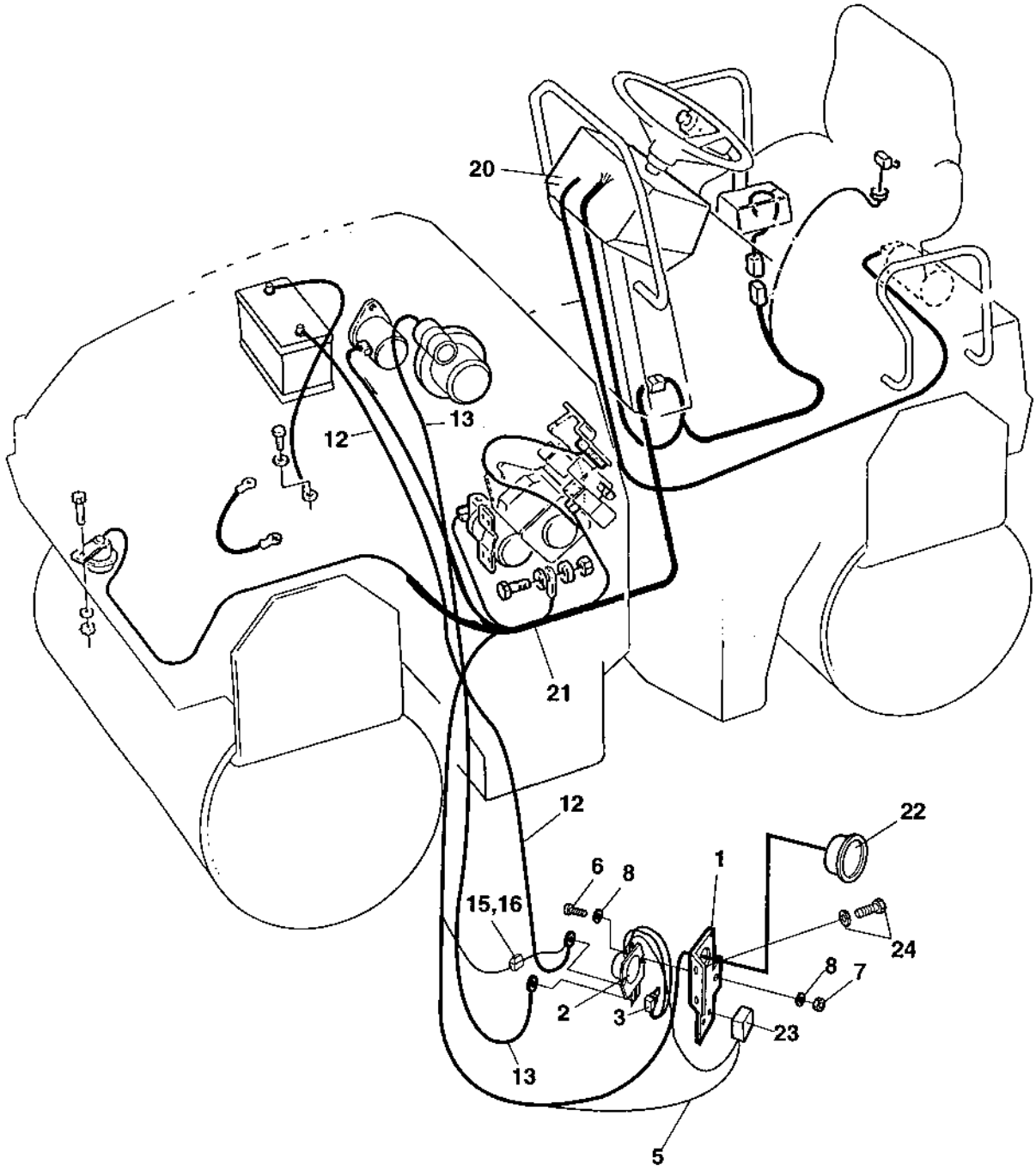

Electric battery switch DEUTZ

Ref. No.	Part No.	Rem.	Qty	Description	Code
1	384083		1	Holder plate	
2	791078		1	Electric battery switch	
3	791079	2	1	Diode	
5	384191		1	Cable harness	
6	500022		2	Screw	M8-1,25x30 8,8
7	570005		2	Nut	M8
8	904229		4	Washer	8,4x16x1,5
12	378742		1	Battery cable	
13	791472		1	Connection cable, coarse	
15	904015		1	Fuse holder	
16	901225		1	Fuse	5A
20				Control panel	
21		1		Cable harness	
22		1		Hour meter	
23		1		Starter relay	
24		1		Fastener	

1) See section " Electrical equipment ".
2) Delivered with Cable harness PN 384191.

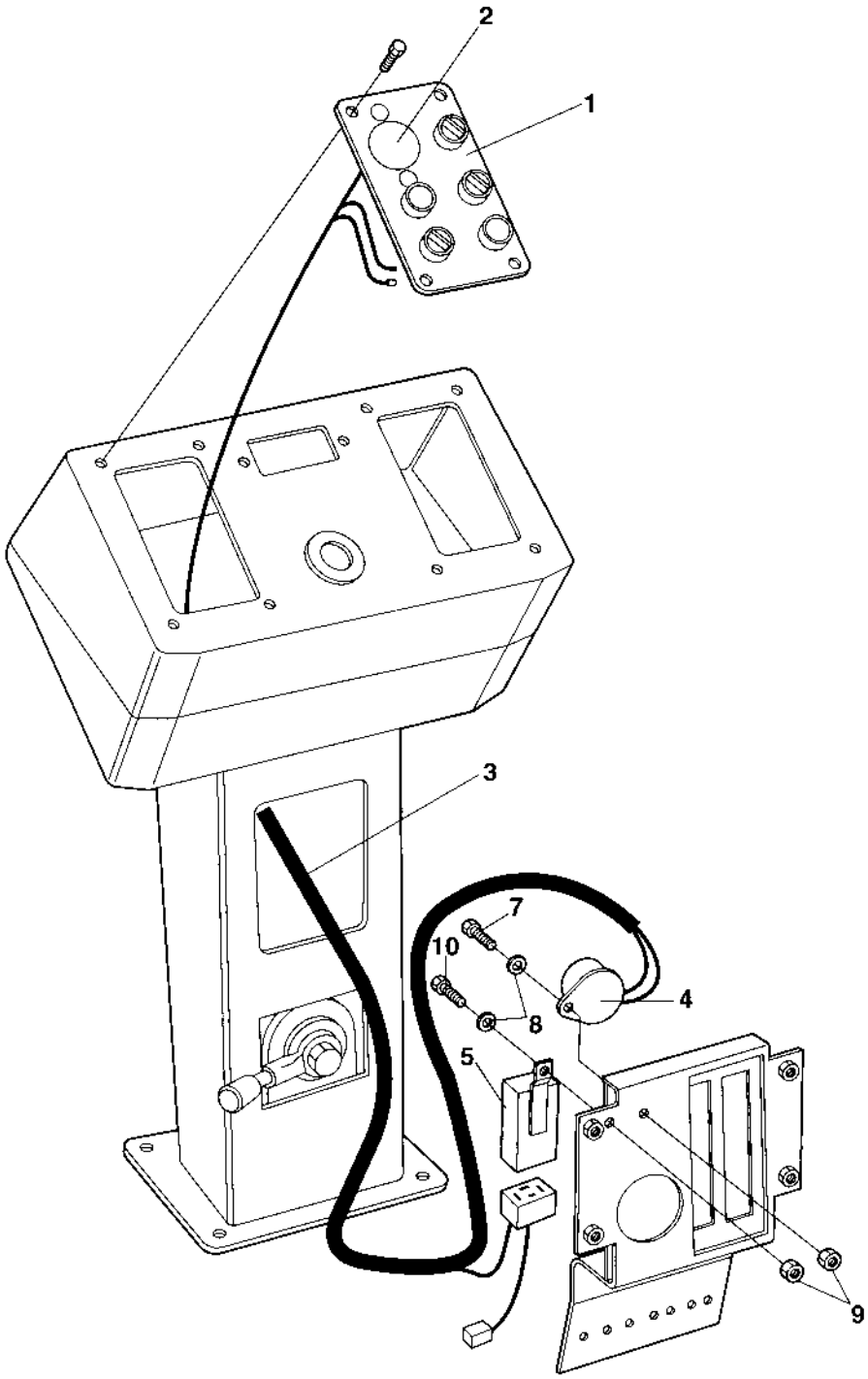
2
1
3
7
10
8
4
5
9

Ref. No.	Part No.	Rem.	Qty	Description		Code
1		A	1	Control panel plate		
2			1	Emergency stop		
3	381994		1	Cable harness		
4	355301		1	Buzzer		
5	904846		1	Delay relay		
7	533070		1	Screw		
8	904281		2	Washer	5,3x10x1	
9	586001		2	Lock nut	M5	
10	533025		1	Screw	M5x12	

A) Left

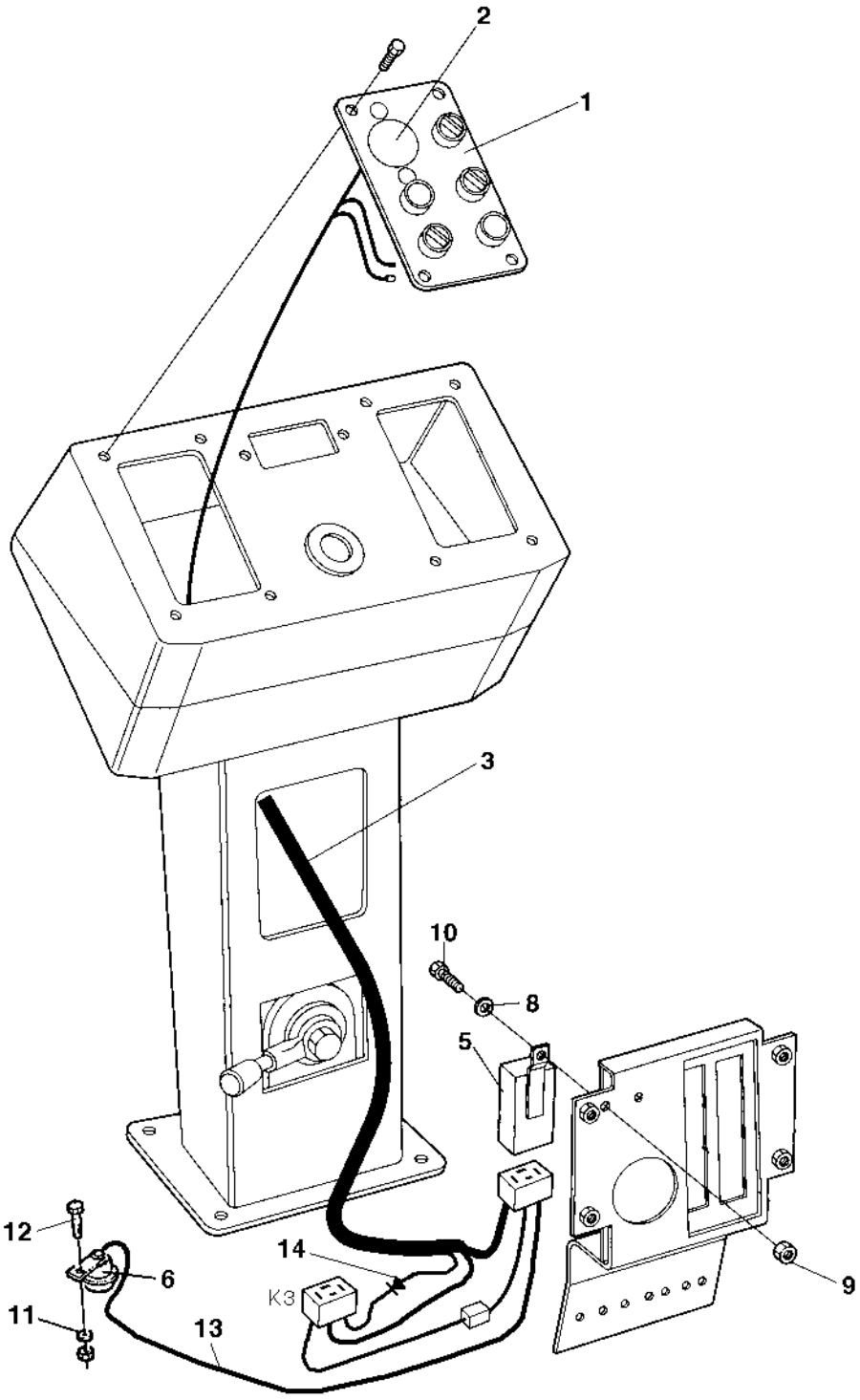
2
1
3
10
8
5
9
12
14
6
K3
11
13

Ref. No.	Part No.	Rem.	Qty	Description	Code
1		A	1	Control panel plate	
2			1	Emergency stop	
3	381994		1	Cable harness	
5	904846		1	Delay relay	
6	999027	C	1	Horn	
7	533070		1	Screw	
8	904281		2	Washer	5,3x10x1
9	586001		2	Lock nut	M5
10	533025		1	Screw	M5x12
11	904734		2	Washer	8,4x26x4
12	500022		2	Screw	M8-1,25x30 8,8
13	377697		1	Cable harness	
14	903593		1	Diode	

A) Left
C) Extra horn for interlock placed beside STD horn, font left

Sprinkler timer

17434

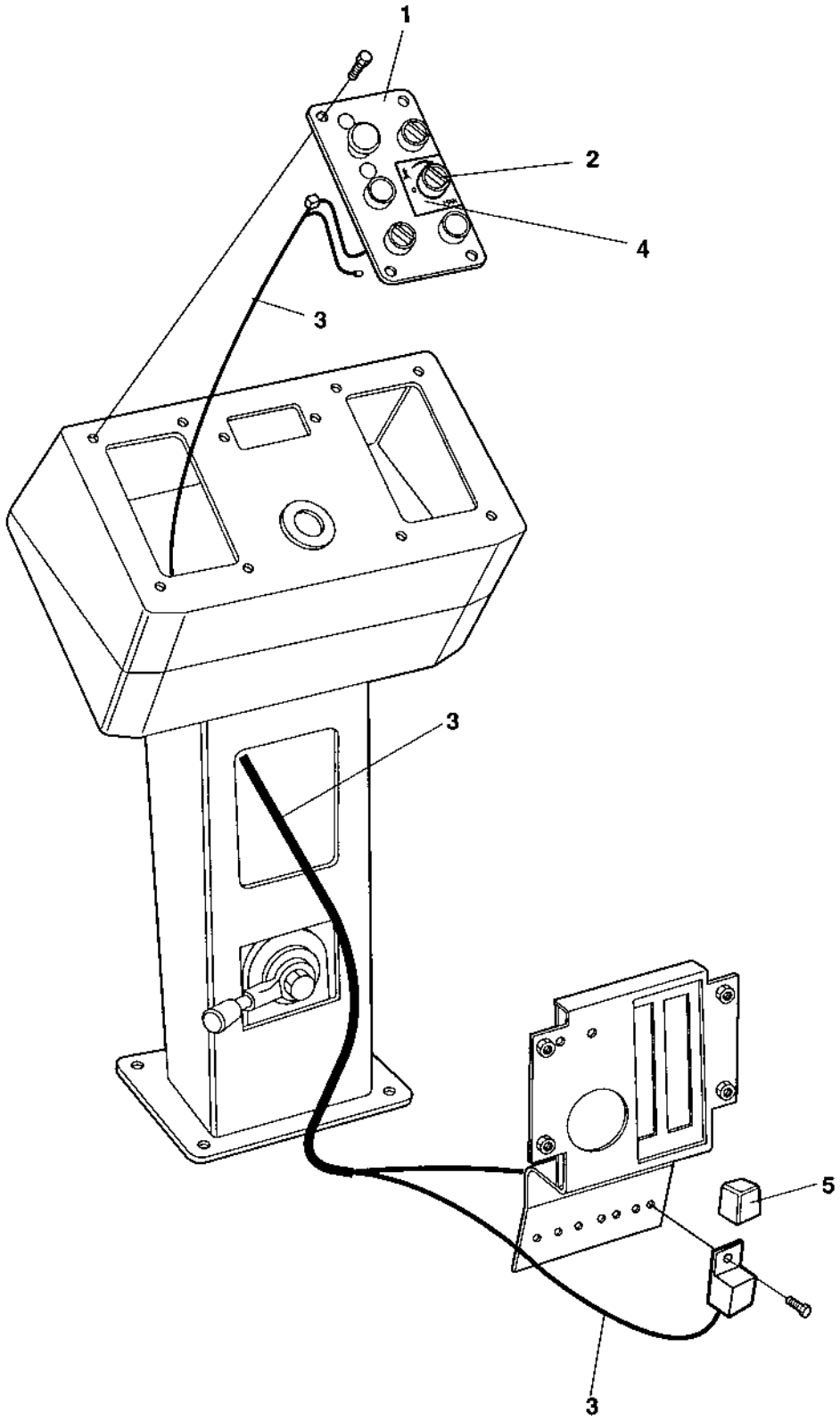

Sprinkler timer

Ref. No.	Part No.	Rem.	Qty	Description	Code
1			1	Control panel plate	
2	383960		1	Switch, cpl	
3	383967		1	Cable harness	
	357562		1	.Relay holder	
4	384359		1	Decal	
5	374213		1	Time relay	

Driving & side direction lights

16688-1

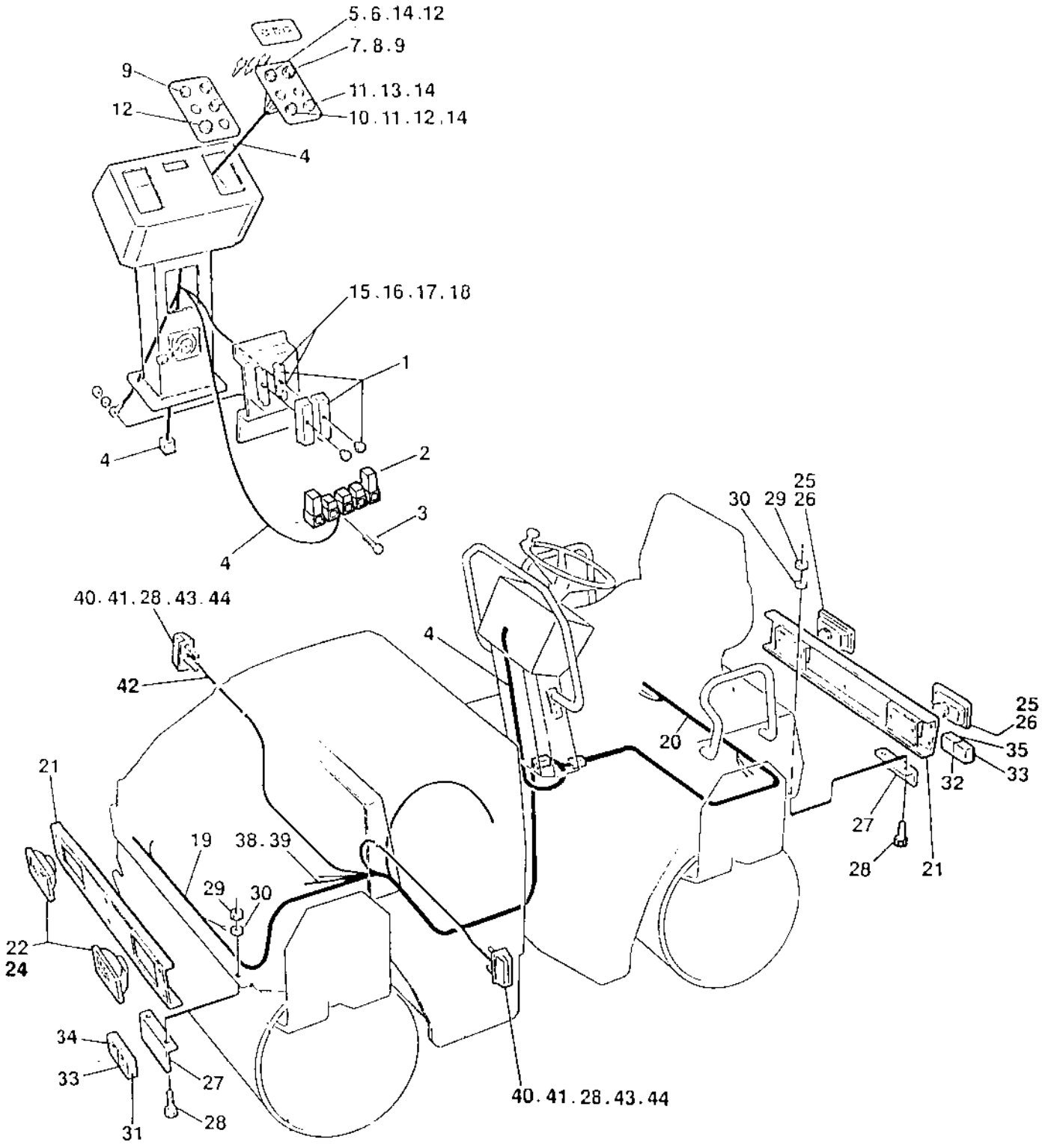

Driving & side direction lights

Ref. No.	Part No.	Rem.	Qty	Description	Code
1	903820		1	Fuse box	
2	904989		1	Flash relay	Option
3	902223		1	Screw	
4	373493	A	1	Cable harness	
5	932055	B	1	Switch	
6	930165		1	Contact block	
7	932058	C	1	Switch	
8	930182		1	Contact block	
9	930154	D	2	Contact piece, NC	
10	932056	E	1	Switch	
11	930162		2	Connector	
12	930163	D	3	Contact piece, NO	
13	930161	F	1	Switch	
14	985012	G	3	Bulb	
15	901240		1	Connector	
16	901225		2	Fuse	5A
17	901227		1	Fuse	10A
18	901228		2	Fuse	15A
19	373490	H	1	Cable harness	
20	357812	I	1	Cable harness	
21	371561	J	2	Lights bracket	
	380192	K	2	Lights bracket	
22	902066	L	2	Headlight	
	904313	M	2	Headlight	
24	900790	N	2	Bulb	60/55w H4
25	902227	O	2	Work light	
26	901369	P	2	Bulb	55w H3
27	349795		4	Holder plate	
28	508020		12	Screw	M5x20
29	586001		8	Lock nut	M5
30	904281		8	Washer	5,3x10x1
31	900794		2	Turn signals	
32	900793		2	Tail light	
33	928502	F	4	Bulb	21w
34	985014	Q	2	Bulb	5w
35	900791	R	2	Bulb	
38	904229		1	Washer	8,4x16x1,5
39	586003		1	Lock nut	M8
40	902064		2	Direction lights	
41	985013		2	Bulb	12V,5W
42	358000	S	1	Cable harness	
43	600002		4	Washer	

A) Driving lights
B) Head light
C) Lights
D) Small
E) Hazard
F) Turn signal
G) Switch
H) Front
I) Rear
J) Red
K) Yellow
L) Right asym, H4, front
M) Left asym, H4, front
N) H4, head light, front
O) H3, rear
P) H3, rear light
Q) Parking light
R) Tail/stop light
S) Direction lights

Driving & side direction lights

16688-1

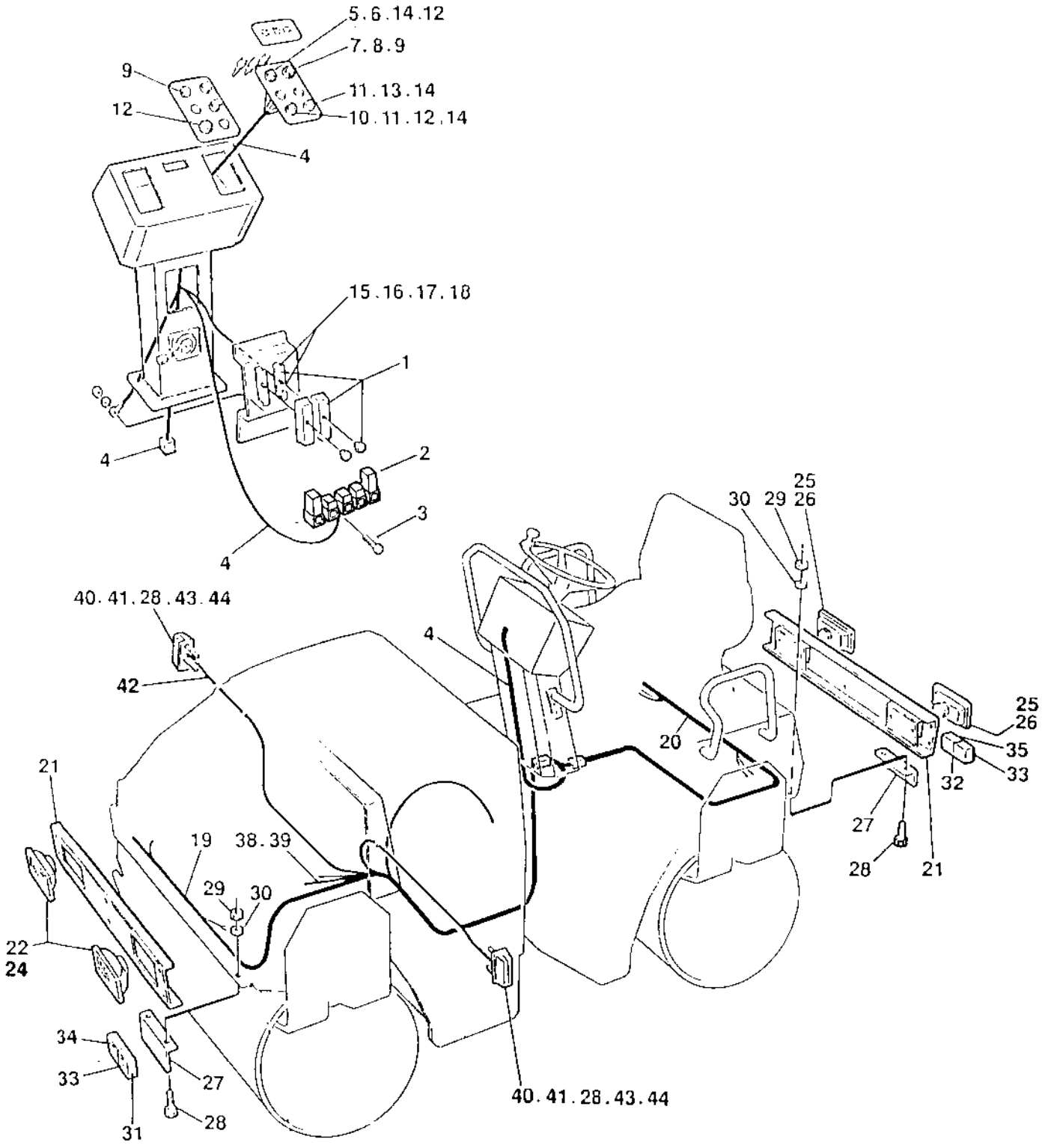

Ref. No.	Part No.	Rem.	Qty	Description	Code
44	923976		4	Nut	

Driving & side direction lights

18097

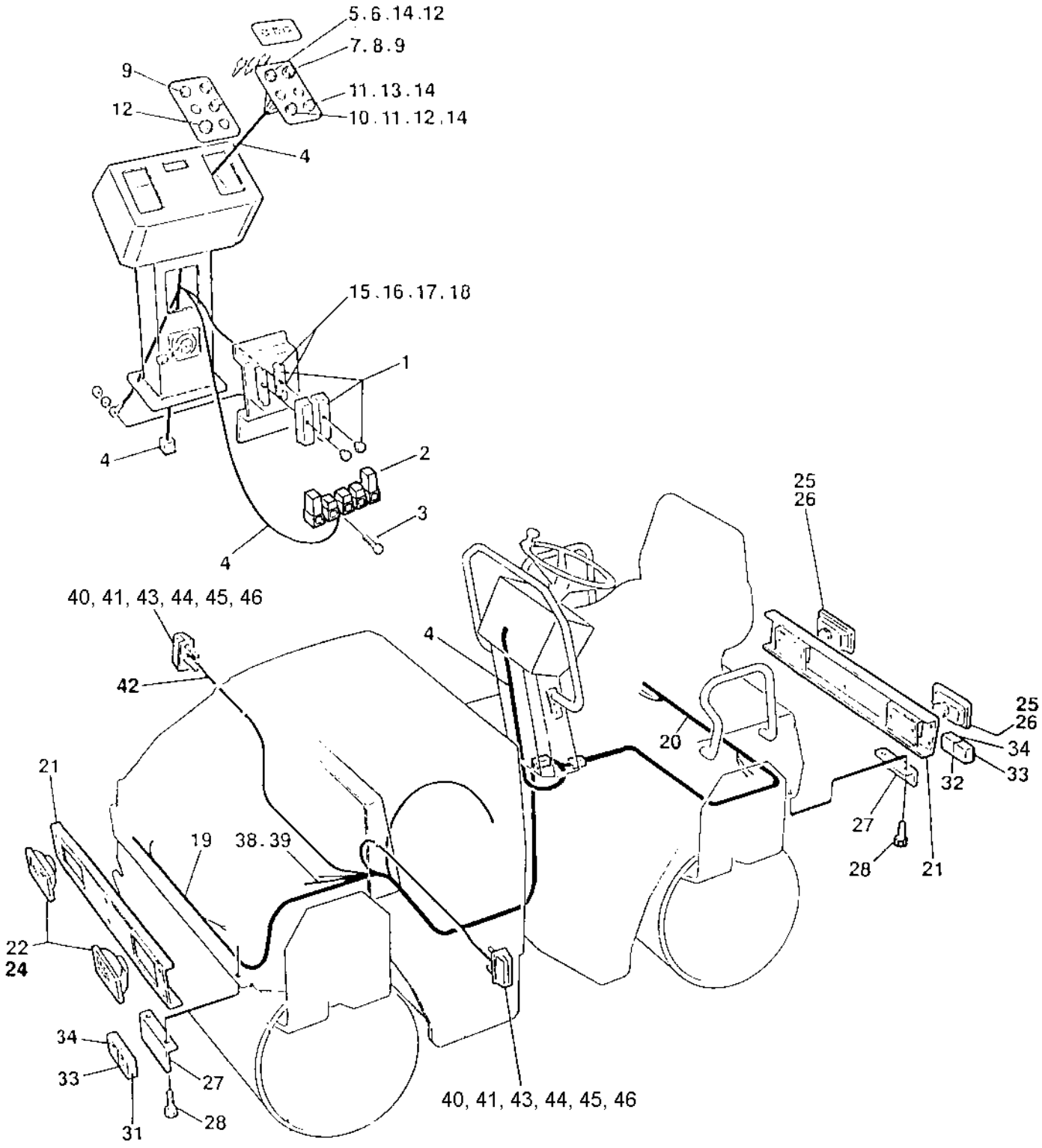

Driving & side direction lights

Ref. No.	Part No.	Rem.	Qty	Description	Code
1	903820		1	Fuse box	
2	904989		1	Flash relay	Option
3	902223		1	Screw	
4	373493	A	1	Cable harness	
5	932055	B	1	Switch	
6	930165		1	Contact block	
7	932058	C	1	Switch	
8	930182		1	Contact block	
9	930154	D	2	Contact piece, NC	
10	932056	E	1	Switch	
11	930162		2	Connector	
12	930163	D	3	Contact piece, NO	
13	930161	F	1	Switch	
14	985012	G	3	Bulb	
15	901240		1	Connector	
16	901225		2	Fuse	5A
17	901227		1	Fuse	10A
18	901228		2	Fuse	15A
19	373490	H	1	Cable harness	
20	357812	I	1	Cable harness	
21	371561	J	2	Lights bracket	
	380192	K	2	Lights bracket	
22	902066	L	2	Headlight	
	904313	M	2	Headlight	
24	900790	N	2	Bulb	60/55w H4
25	902227	O	2	Work light	
26	901369	P	2	Bulb	55w H3
27	389631		4	Holder plate	
28	791965		8	Screw	M5x16
	904281	R	8	Washer	5,3x10x1
31	904315	U	1	Direction lamp	
	904316	V	1	Direction lamp	
32	904317	X	1	Direction lamp	
	904318	Y	1	Direction lamp	
33	928502	F	6	Bulb	21w
34	985014	Q	4	Bulb	5w

A) Driving lights
B) Head light
C) Lights
D) Small
E) Hazard
F) Turn signal/stop light
G) Switch
H) Front
I) Rear
J) Red
K) Yellow
L) Right asym, H4, front
M) Left asym, H4, front
N) H4, head light, front
O) H3, rear
P) H3, rear light
Q) Parking light
R) Not illustrated
U) Front left
V) Front right
X) Rear left
Y) Rear right

Driving & side direction lights

18097

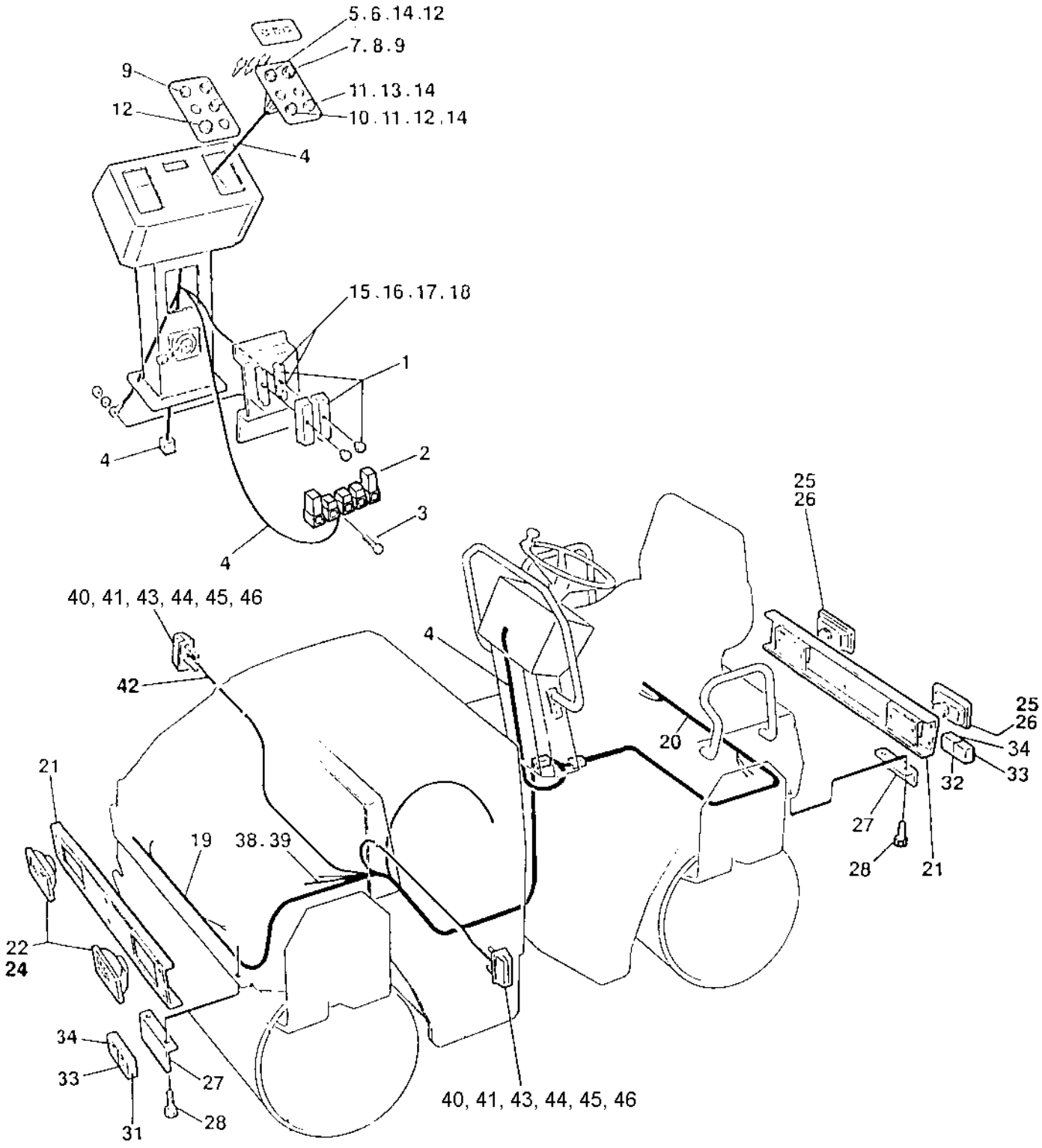

Driving & side direction lights

Ref. No.	Part No.	Rem.	Qty	Description	Code
38	904229		1	Washer	8,4x16x1,5
39	586003		1	Lock nut	M8
40	902064		2	Direction lights	
41	985013		2	Bulb	12V,5W
42	358000	S	1	Cable harness	
43	600002	T	4	Washer	
44	923976	T	4	Nut	
45	508020	T	4	Screw	M5x20
46	508075		4	Screw	M5x12

S) Direction lights
T) This item is not used in new design; where the holes in the hood frame are threaded.

Working lights

16666-1

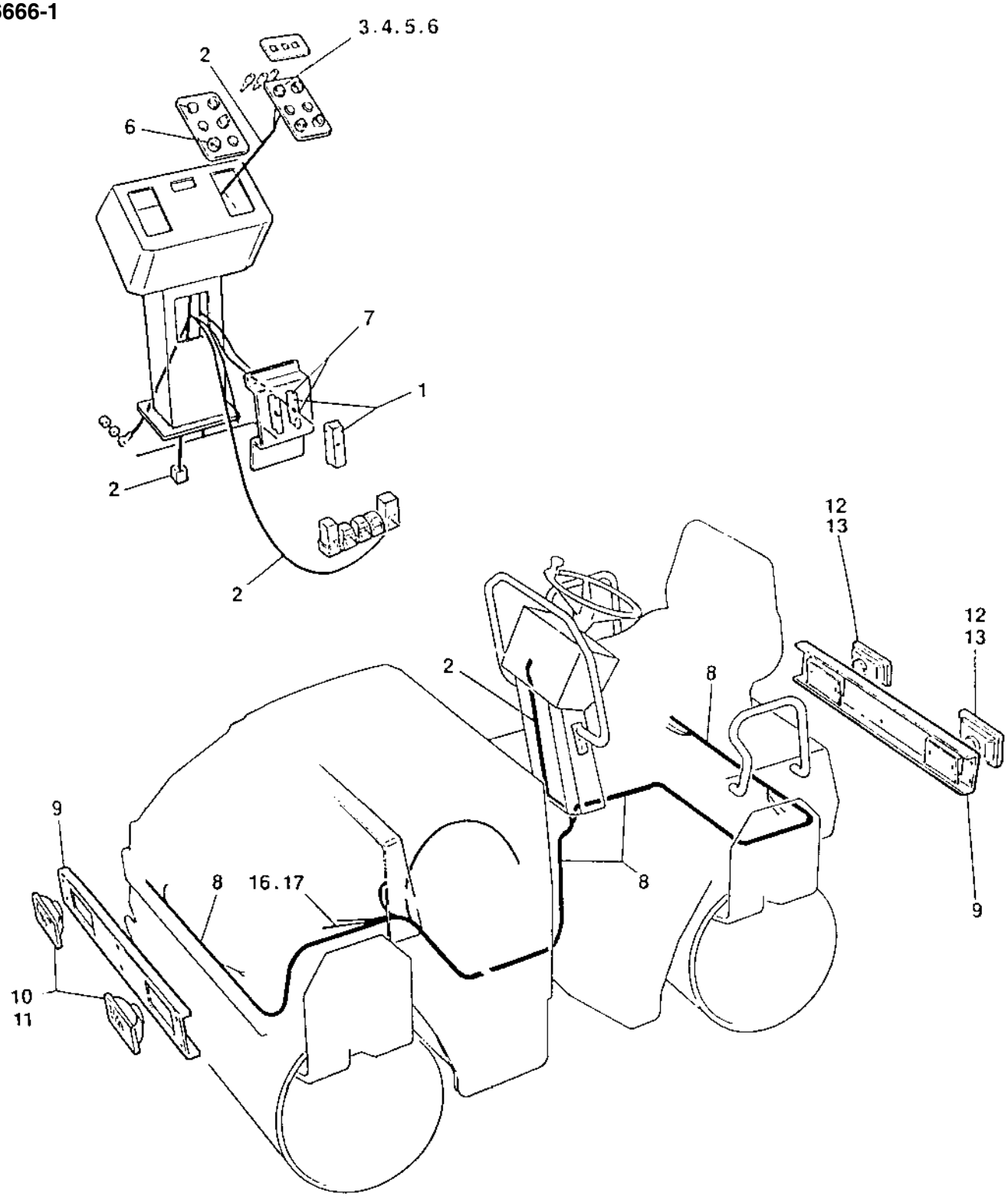

Working lights

Ref. No.	Part No.	Rem.	Qty	Description	Code
1	903820		1	Fuse box	
2	358102	A	1	Cable harness	
3	932055	A	1	Switch	
4	930165		1	Contact block	
5	985012	B	1	Bulb	
6	930163	C	3	Contact piece, NO	
7	901227		2	Fuse	10A
8	376113	A	1	Cable harness	
9	371561	4	2	Lights bracket	
10	902227	E	2	Work light	
11	901369	F	2	Bulb	55w H3
12	902227	G	2	Work light	
13	901369	H	2	Bulb	55w H3
16	904229		1	Washer	8,4x16x1,5
17	586003		1	Lock nut	M8

4) Right asym., including machines originally delivered to France
A) Work lights
B) Switch
C) Small
E) H3, front
F) H3, head light, front
G) H3, rear
H) H3, rear light

Licence plate light, parking lights

16667

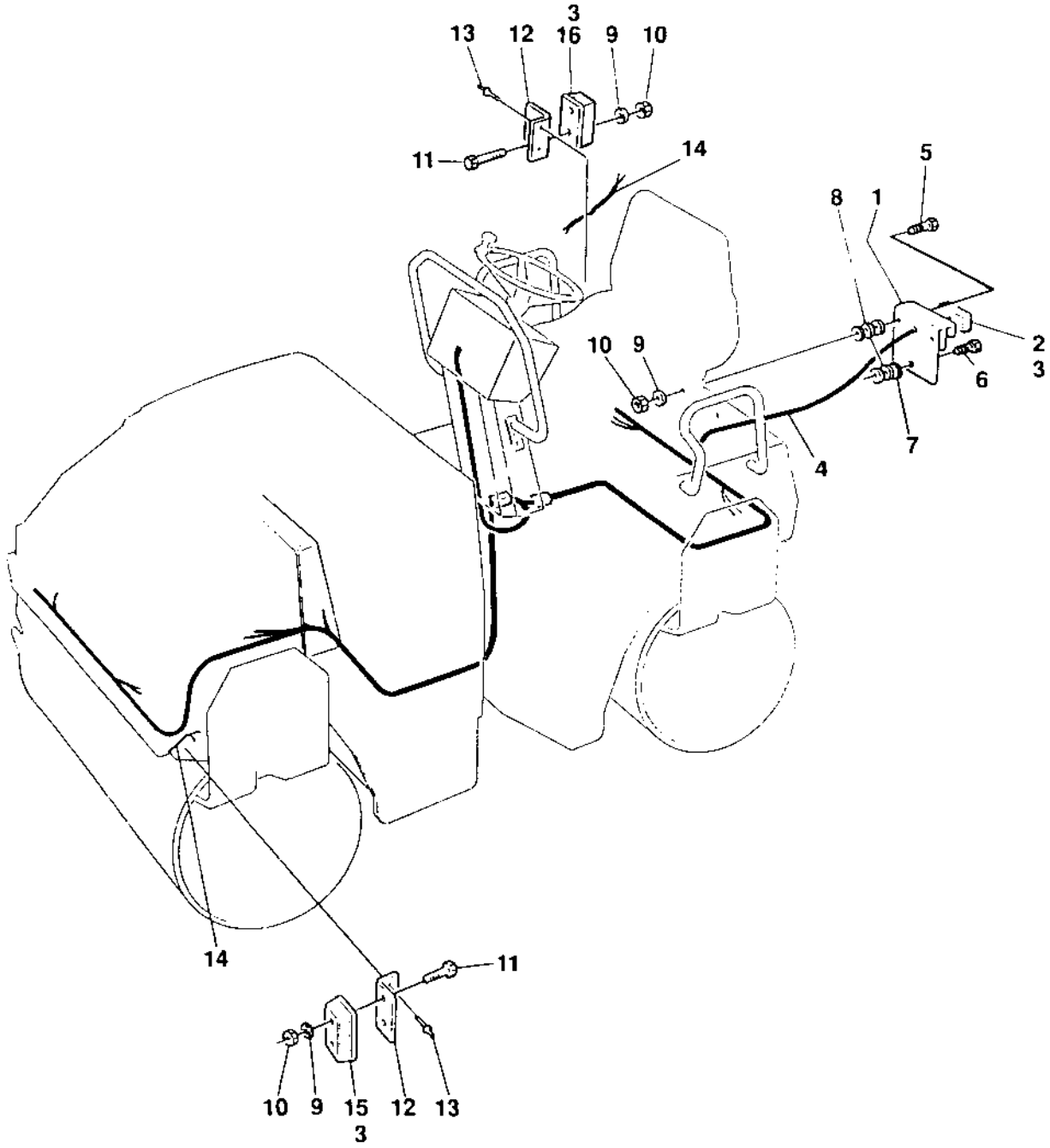

Licence plate light, parking lights

Ref. No.	Part No.	Rem.	Qty	Description	Code
1	355797		1	Licence plate holder	
2	929455		1	Licence plate light	
3	985013	A	5	Bulb	12V,5W
4	355829	B	1	Cable harness	
5	533032		3	Screw	
6	535010		1	Screw	
7	615042		1	Conical spring washer	
8	570003		3	Nut	M5
9	600003		23	Washer	
10	586001		11	Lock nut	M5
11	508020		8	Screw	M5x20
12	358563		4	Lamp socket	
13	624027		8	Rivet	
14	903081	C	4	Cable	
	909152		4	.Rubber grommet	
15	903078	D	2	Position light	
16	903079	E	2	Position light	

A) Turn/position light
B) Licence plate light
C) Position light
D) Front
E) Rear

Rotating beacon

15489-3

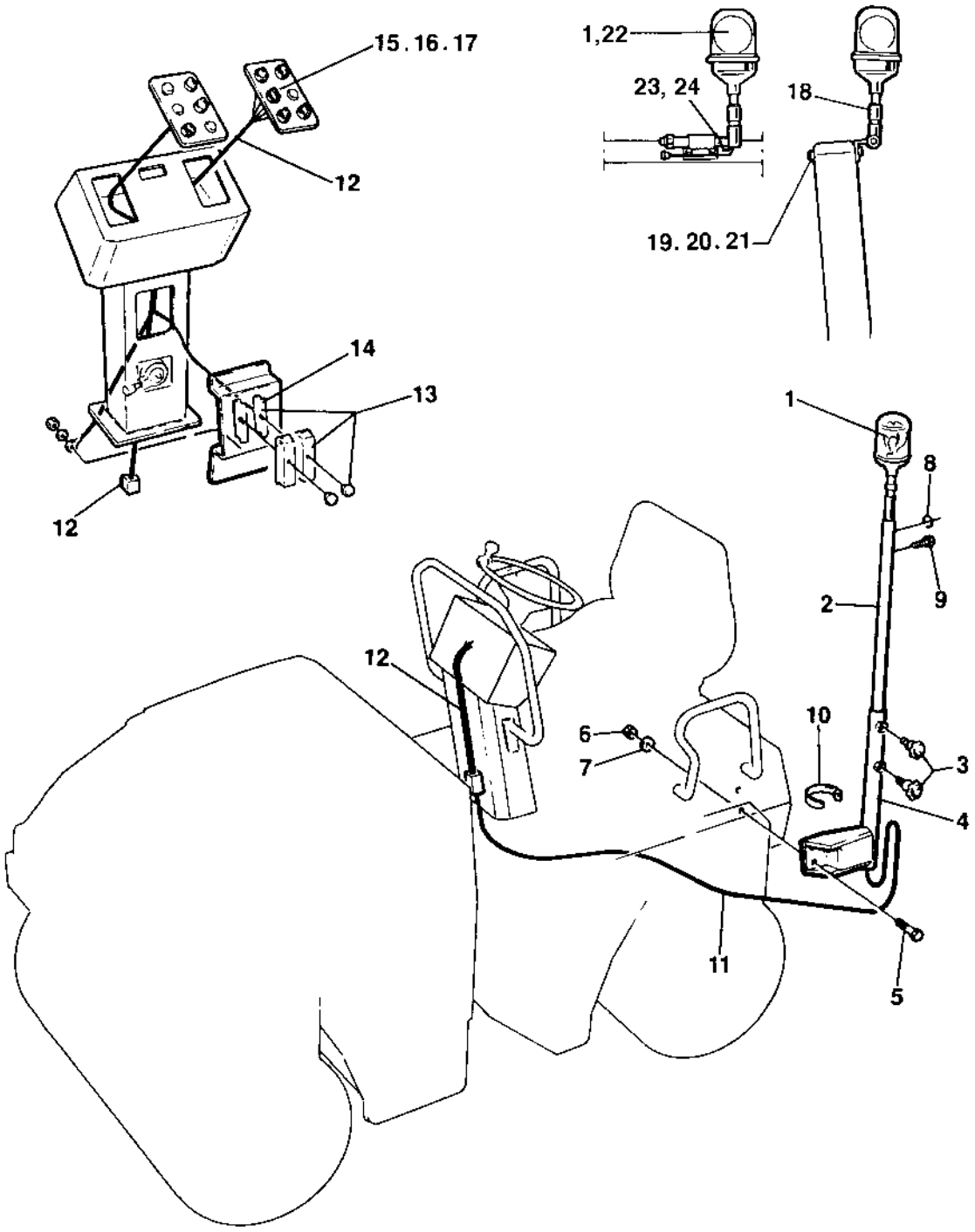

Rotating beacon

Ref. No.	Part No.	Rem.	Qty	Description	Code
1				Not used on this model	
2	357663	1	1	Lamp holder	
3	499162	1	2	Hand knob	
4	357679	1	1	Lamp holder	
5	500028	1	2	Screw	M10-1,5x25 8,8
6	586018	1	2	Lock nut	M10
7	904230	1	2	Washer	10,5x22x2
8	909152	1	1	Rubber grommet	
9	500044		1	Screw	M6x8
10	313041		N	Cable ties	L=186 mm
11	357666		1	Cable harness	
12	357668	2	1	Cable harness	
13	903820	2	1	Fuse box	
14	901227		1	Fuse	10A
15	930166	C	1	Switch	
16	985012	E	1	Bulb	
17	930165		1	Contact block	
18	358452	3	1	Lamp holder	
19	500237	3	2	Screw	M8x120
20	586003	3	2	Lock nut	M8
21	904229	3	2	Washer	8,4x16x1,5
22	389577	5	1	Rotating beacon	
23	500044		1	Screw	M6x8
24	902542		1	Lock fluid	

1) Not valid for rollers with rops
2) Existing on rollers with driving lights
3) Valid only for rollers with rops
5) Replaces PN 999011.
C) Rot. beacon
E) Switch

Ref. No.	Part No.	Rem.	Qty	Description	Code
120				Drivers platform Up to 601X8977 (Page 188)	
130				Drivers platform From 601X8978 (Page 190)	
150				Control panel (Page 194)	
175				Arm rests, seat belt, laterally adjusting Up to 601X8977 (Page 196)	
180				Arm rests, seat belt, laterally adjusting From 601X8978 (Page 198)	
185				Comfort drivers seat, laterally adjusting Up to and seat beltÞage 200)	
187				Comfort drivers seat, laterally adjusting From and seat beltÞage 202)	
220				Engine and forward/reverse controls (Page 2DEUTZ	
260				Engine and forward/reverse controls (Page 2ISUZU	
300				F/r controls dual, control panel mounted (Page 208)	
350				F/r control dual left side, platform mounted (Page 210)	
400				Rops and fops (Page 212)	

Drivers platform

16518

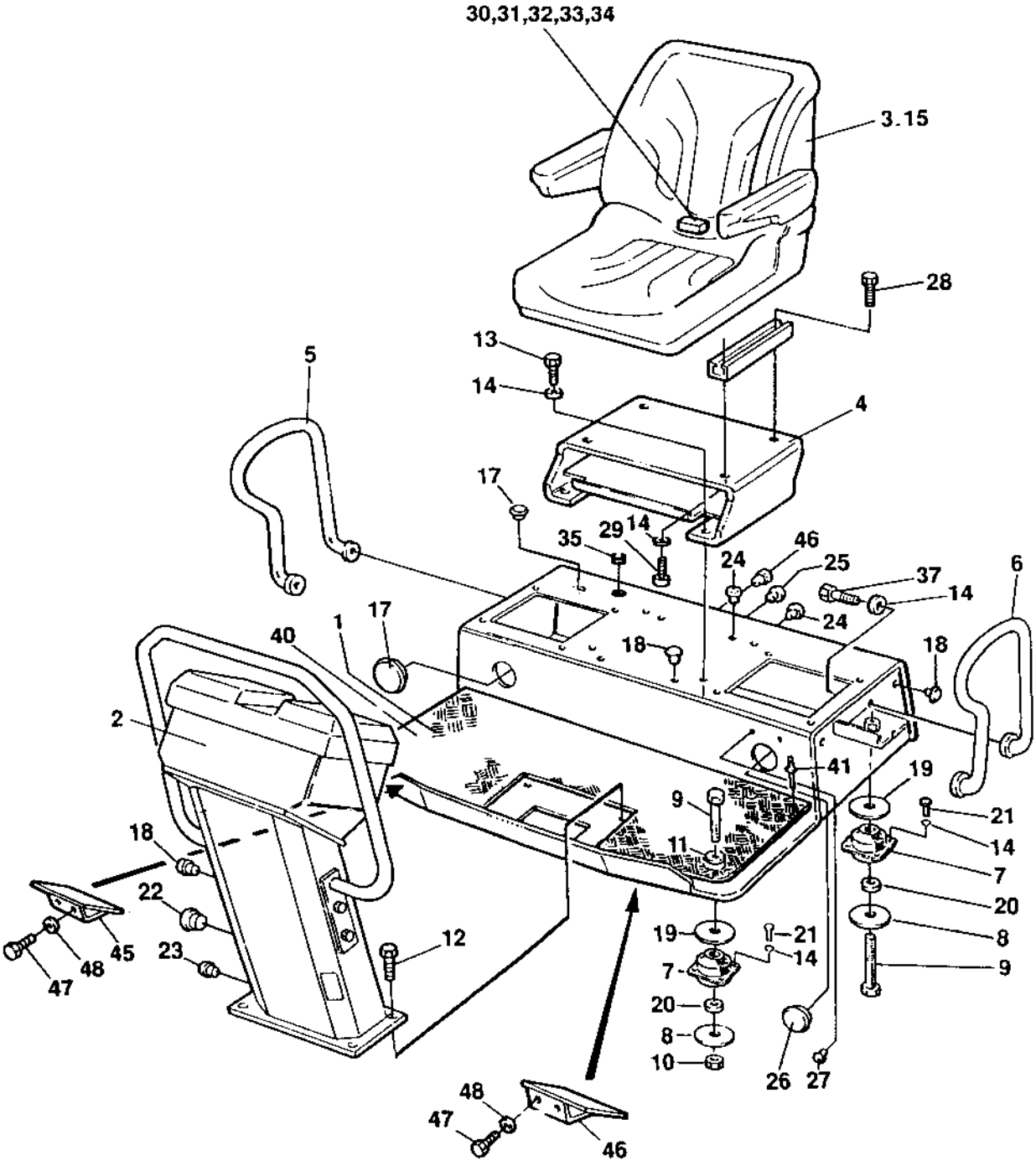

Drivers platform

Ref. No.	Part No.	Rem.	Qty	Description	Code
1	358213		1	Platform	
2			1	Control panel (Page 194)	
3	372570	A,2	1	Seat	
	909535	B	1	.Sliding rail	
	909536	C	1	.Sliding rail, cpl	
	936283		1	.Seat switch	
4	372523		1	Seat frame	
5	357407	B	1	Hand rail	
6	357408	C	1	Hand rail	
7	902797	1	4	Shock absorber	
8	358232		4	Washer	
9	500117		4	Screw	M12x80H 8,8
10	586019		2	Lock nut	M12
11	904231		2	Washer	13x24x2
12	500509		4	Screw	
13	500020		4	Screw	M8-1,25x22 8,8
14	904229		22	Washer	8,4x16x1,5
15	348331		1	Seat cover	
17	923844		2	Plug	
18	902919		8	Plug	
19	615096		N	Washer	
20	902892		4	Washer	
21	500019		16	Screw	M8-1,25x16 8.8
22	902890		1	Plug	
23	900986		2	Plug	
24	926215		7	Plug	
25	902804		2	Plug	
26	904131		1	Plug	
27	901274		2	Plug	
28	508092		4	Screw	M8-1,25x20H 8,8
29	500053		2	Screw	M8-1,25x20 8,8
30	904218		1	Holder	
31	533070		1	Screw	
32	570003		1	Nut	M5
33	904281		1	Washer	5,3x10x1
34	313041		1	Cable ties	L=186 mm
35	903192		1	Grommet	
36	904225		1	Plug	
37	500020		4	Screw	M8-1,25x22 8,8
40	358089	D	1	Floor mat	
41	902569	E	4	Rivet	
45	374132	F	1	Step	
46	374133	G	1	Step	
47	500053	D	4	Screw	M8-1,25x20 8,8
48	600006	D	4	Washer	

1) For rollers with cab
2) Without arm rests.
A) Black galon
B) Left
C) Right
D) Option
E) To floor mat
F) Option, right
G) Option, left

Drivers platform

18392

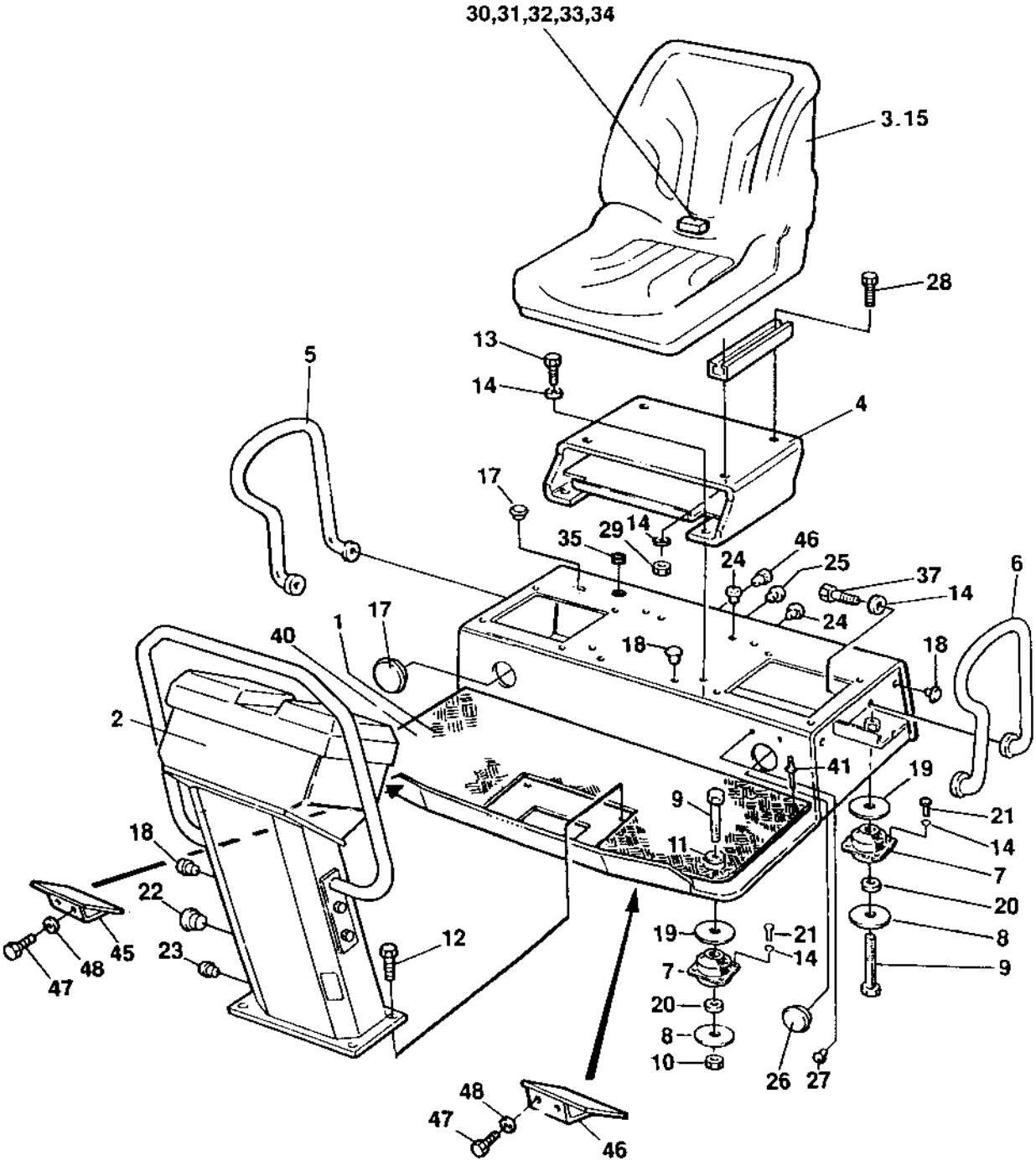

Ref. No.	Part No.	Rem.	Qty	Description	Code
1	358213		1	Platform	
2			1	Control panel (Page 194)	
3			1	Seat (Page 192)	
4	372523		1	Seat frame	
5	357407	B	1	Hand rail	
6	357408	C	1	Hand rail	
7	902797	1	4	Shock absorber	
8	358232		4	Washer	
9	500117		4	Screw	M12x80H 8,8
10	586019		2	Lock nut	M12
11	904231		2	Washer	13x24x2
12	500509		4	Screw	
13	500020		4	Screw	M8-1,25x22 8,8
14	904229		28	Washer	8,4x16x1,5
15	348331		1	Seat cover	
17	923844		2	Plug	
18	902919		8	Plug	
19	615096		N	Washer	
20	902892		4	Washer	
21	500019		16	Screw	M8-1,25x16 8.8
22	902890		1	Plug	
23	900986		2	Plug	
24	926215		7	Plug	
25	902804		2	Plug	
26	904131		1	Plug	
27	901274		2	Plug	
29	586003		4	Lock nut	M8
35	903192		1	Grommet	
36	904225		1	Plug	
37	500020		4	Screw	M8-1,25x22 8,8
40	358089	D	1	Floor mat	
41	902569	E	4	Rivet	
45	374132	F	1	Step	
46	374133	G	1	Step	
47	500053	D	4	Screw	M8-1,25x20 8,8
48	600006	D	4	Washer	

1) For rollers with cab
B) Left
C) Right
D) Option
E) To floor mat
F) Option, right
G) Option, left

Seat

18391

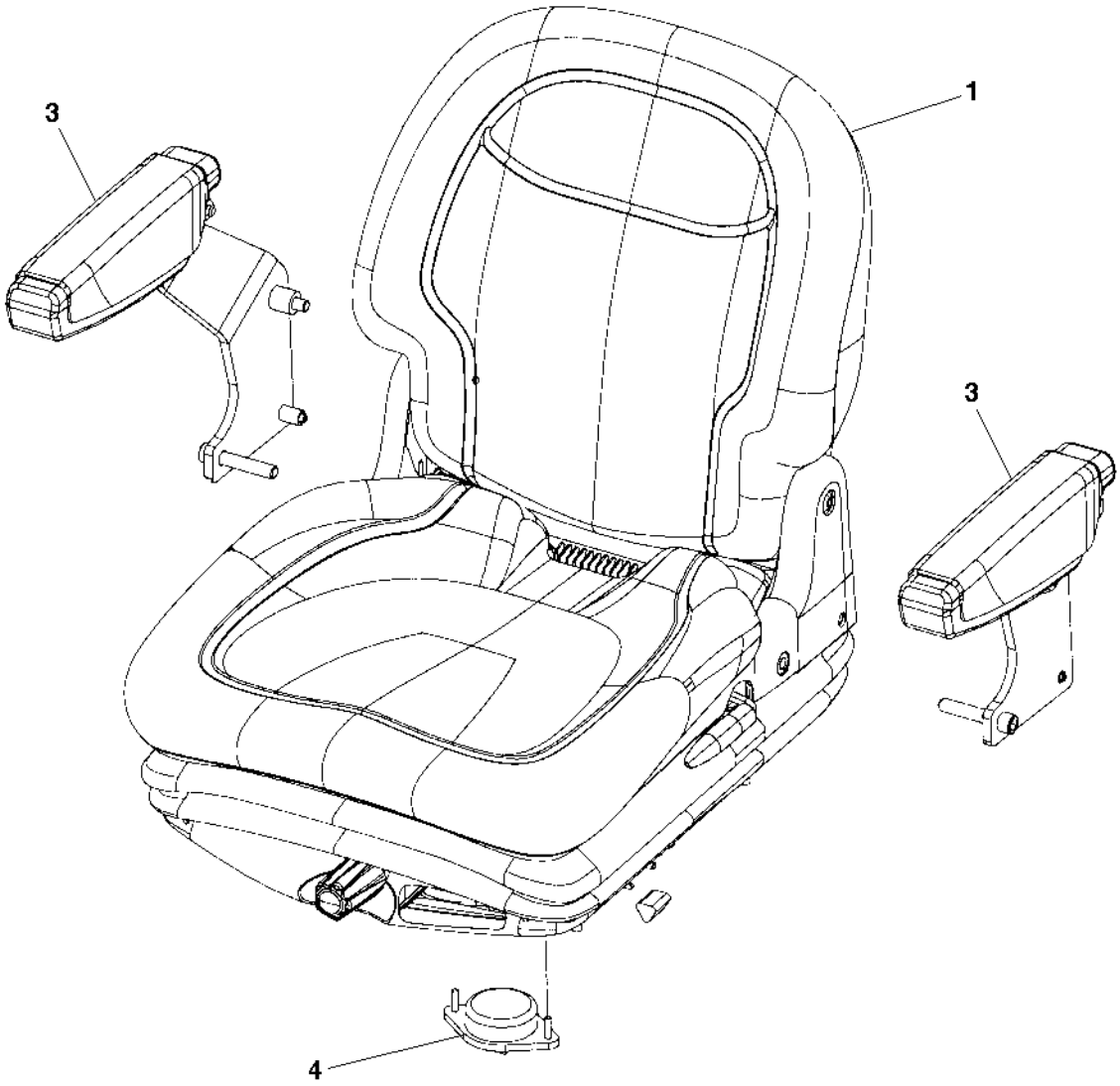

Seat

Ref. No.	Part No.	Rem.	Qty	Description	Code
1	377518	A	1	Seat	
4	945622		1	.Seat switch	

A) Black vinyl

Control panel

17697

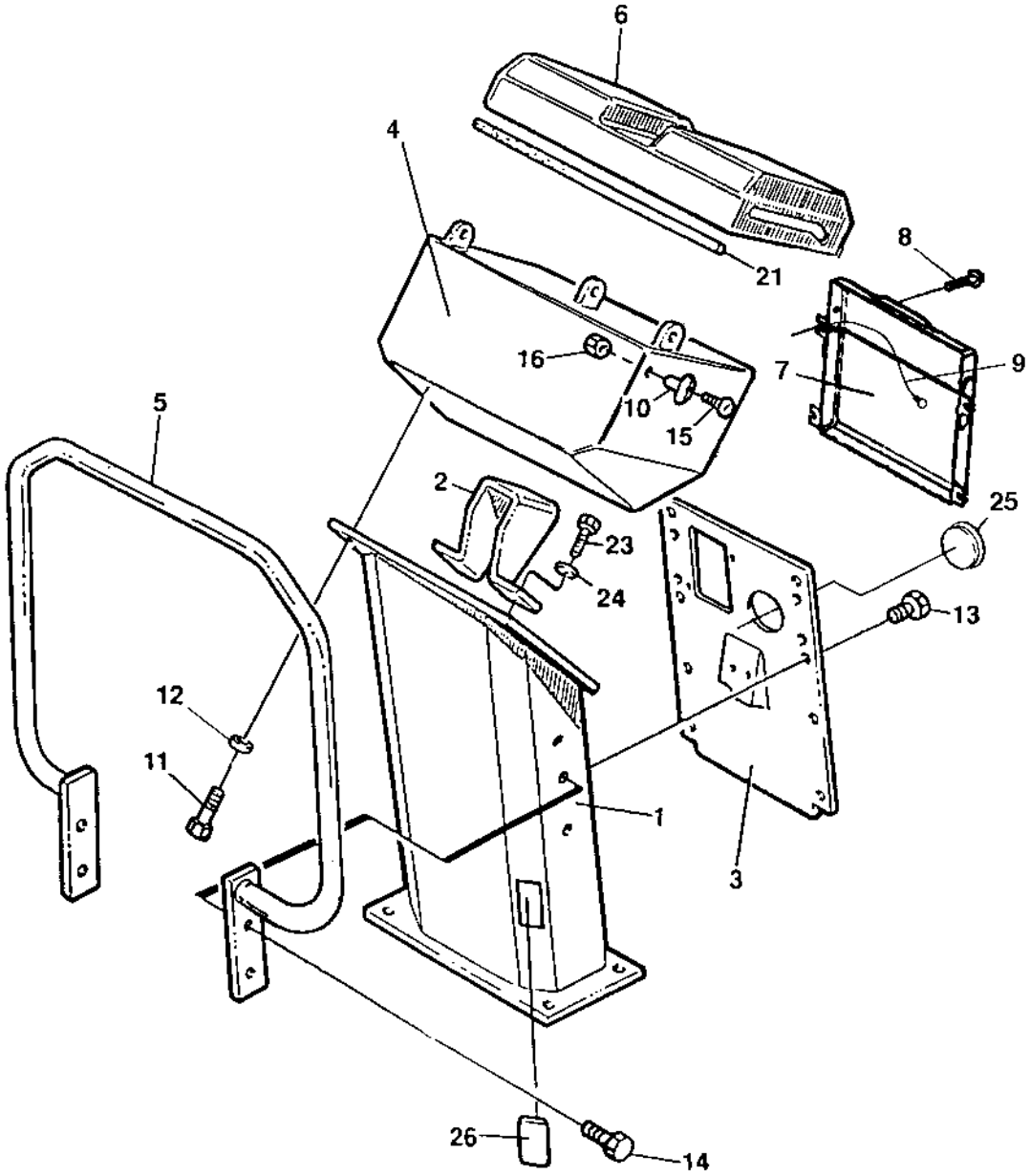

Control panel

Ref. No.	Part No.	Rem.	Qty	Description	Code
1	358142		1	Control panel	
2	357316		1	Bracket	
3	358143		1	Cover	
4	357320		1	Instrument box	
5	357330	A	1	Hand rail	
6	357424		1	Cover	
7	383705		1	Instruction book holder	
8	791226		4	Screw	
9	357643		1	Wire	
10	357855		2	Bushing	
11	500040		4	Screw	M6-1x20 8,8
12	904228		4	Washer	6,4x12x1,5
13	541702		8	Screw	M6x12
14	500509		4	Screw	
15	924875		2	Screw	M6x35
16	586002		2	Lock nut	M6
21	902379	D	1XL	Edge trim	
23	500021		4	Screw	M8-1,25x25 8,8
24	904640		4	Washer	8,4x22x3
25	345870		1	Plug	
26	903727		1	Plug	

A) Front
D) L=0,350 m

Arm rests, seat belt, laterally adjusting

16672

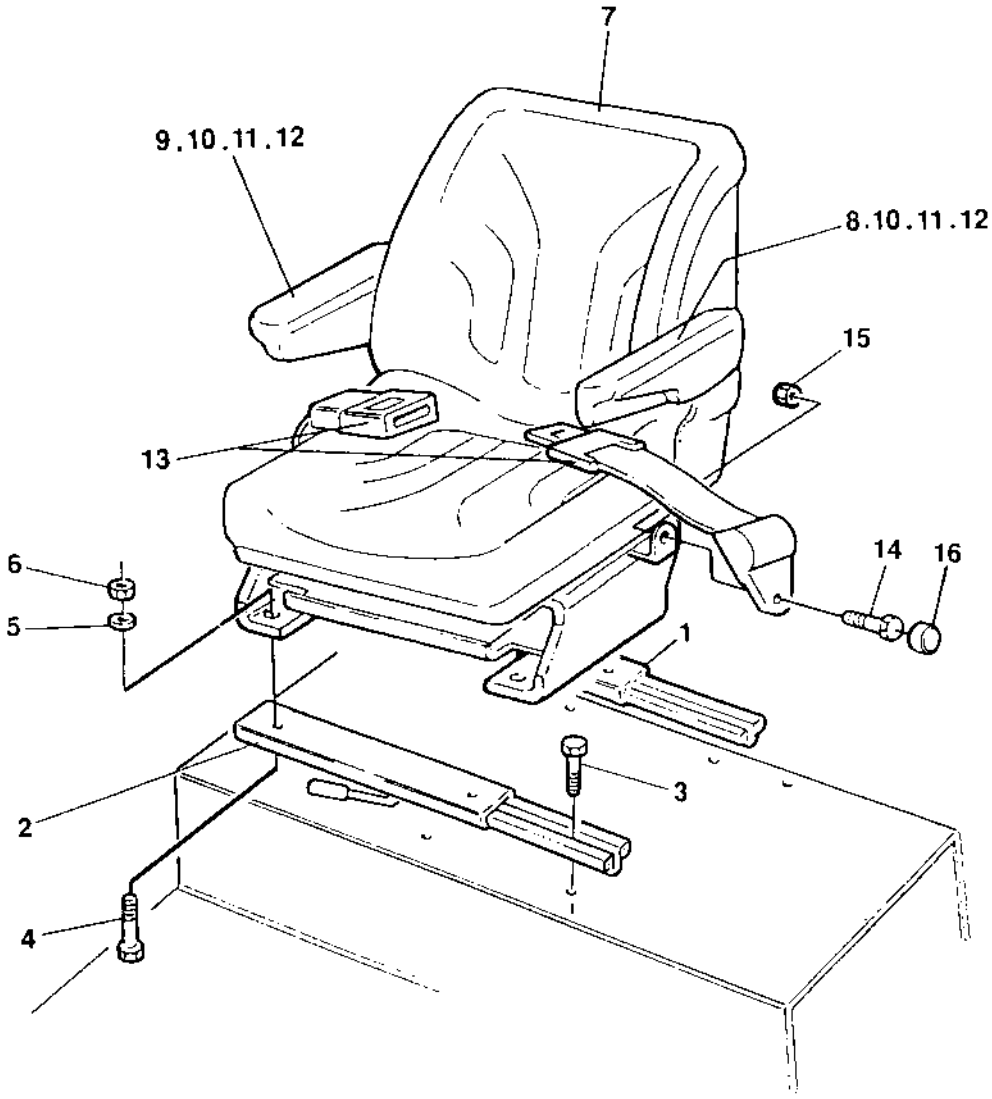

Arm rests, seat belt, laterally adjusting

Ref. No.	Part No.	Rem.	Qty	Description	Code
1	909536	A	1	Sliding rail, cpl	
2	909535	B	1	Sliding rail	
3	508092		4	Screw	M8-1,25x20H 8,8
4	500020		4	Screw	M8-1,25x22 8,8
5	904229		4	Washer	8,4x16x1,5
6	586003		4	Lock nut	M8
7	372570		1	Seat	
8	372696	C	1	Arm rest	
9	372697	D	1	Arm rest	
10	513013	E	4	Screw	
11	570005	E	4	Nut	M8
12		E	4	Nut protection	
13	372659	F	1	Seat belt	
	383200	G	1	Seat belt	3"
14			2	.Screw	
15			2	.Nut	
16			2	.Protection cap	

A) Rear
B) Front
C) Left
D) Right
E) Incl in armrests
F) CPL
G) Option, 3 "

Arm rests, seat belt, laterally adjusting

16672

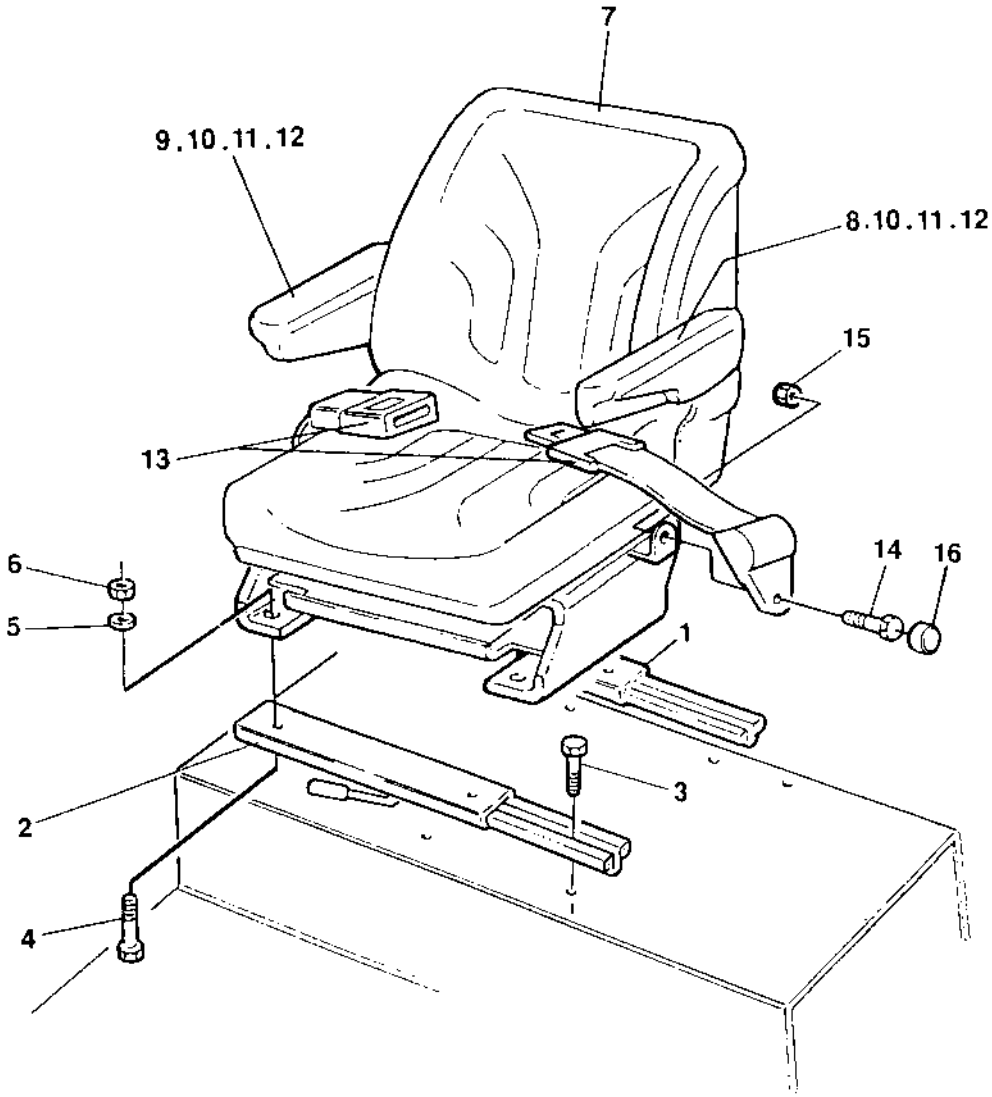

Arm rests, seat belt, laterally adjusting

Ref. No.	Part No.	Rem.	Qty	Description	Code
1	909536	A	1	Sliding rail, cpl	
2	909535	B	1	Sliding rail	
3	508092		4	Screw	M8-1,25x20H 8,8
4	500020		4	Screw	M8-1,25x22 8,8
5	904229		4	Washer	8,4x16x1,5
6	586003		4	Lock nut	M8
7	372570		1	Seat	
8	372696	C	1	Arm rest	
9	372697	D	1	Arm rest	
10	513013	E	4	Screw	
11	570005	E	4	Nut	M8
12		E	4	Nut protection	
13	377677	F	1	Seat belt	
	379637	G	1	Seat belt	3"
14			2	.Screw	
15			2	.Nut	
16			2	.Protection cap	

A) Rear
B) Front
C) Left
D) Right
E) Incl in armrests
F) CPL
G) Option, 3 "

Comfort drivers seat, laterally adjusting and seat belt

18091

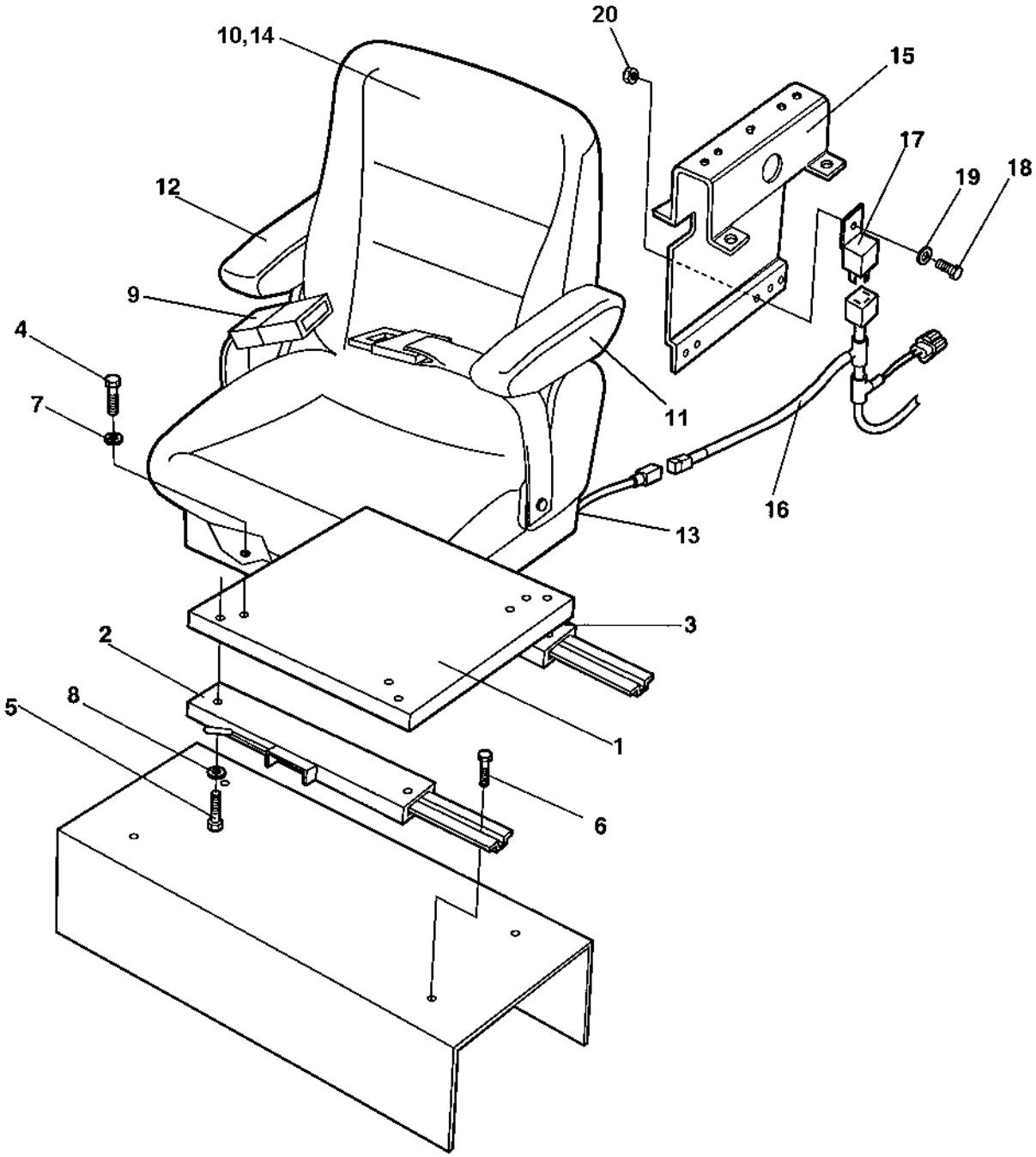

Comfort drivers seat, laterally adjusting and seat belt

Ref. No.	Part No.	Rem.	Qty	Description	Code
1	382237		1	Bracket	
2	909535	A	1	Sliding rail	
3	909536		1	Sliding rail, cpl	
4	508005		6	Screw	
5	508005		4	Screw	
6	508092		4	Screw	M8-1,25x20H 8,8
7	904556		6	Washer	8,4x16x3,0
8	904556		4	Washer	8,4x16x3,0
9	903671		1	Seat belt	
	383200	B	1	Seat belt	3"
10	381750		1	Drivers seat	
11	938738		1	.Arm rest, left	
12	938739		1	.Arm rest, right	
13	938740		1	.Seat switch	
14	386075		1	Seat protection	
15		C	1	Framing	
16	384532		1	Cable harness	
17	975077		1	Relay	
18	500006		1	Screw	M5x16
19	904281		1	Washer	5,3x10x1
20	570003		1	Nut	M5

A) With handle
B) Option, 3 "
C) See section "F/r controls dual, control panel mounted"

Comfort drivers seat, laterally adjusting and seat belt

18091

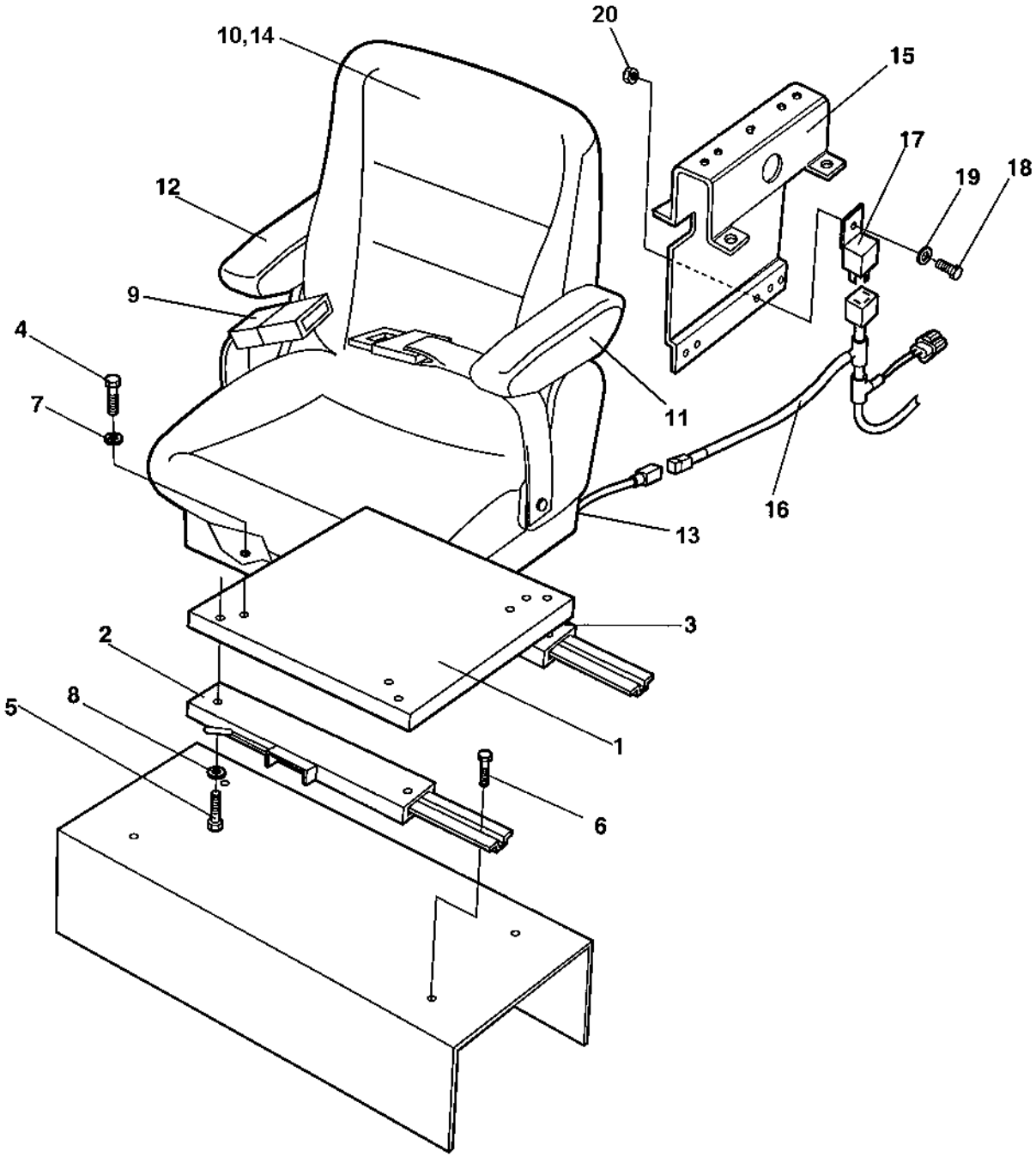

Comfort drivers seat, laterally adjusting and seat belt

Ref. No.	Part No.	Rem.	Qty	Description	Code
1	382237		1	Bracket	
2	909535	A	1	Sliding rail	
3	909536		1	Sliding rail, cpl	
4	508005		6	Screw	
5	508005		4	Screw	
6	508092		4	Screw	M8-1,25x20H 8,8
7	904556		6	Washer	8,4x16x3,0
8	904556		4	Washer	8,4x16x3,0
9	377677		1	Seat belt	
	379637	B	1	Seat belt	3"
10	381750		1	Drivers seat	
11	938738		1	.Arm rest, left	
12	938739		1	.Arm rest, right	
13	938740		1	.Seat switch	
14	386075		1	Seat protection	
15		C	1	Framing	
16	384532		1	Cable harness	
17	975077		1	Relay	
18	500006		1	Screw	M5x16
19	904281		1	Washer	5,3x10x1
20	570003		1	Nut	M5

A) With handle
B) Option, 3 "
C) See section "F/r controls dual, control panel mounted"

Engine and forward/reverse controls DEUTZ

16520

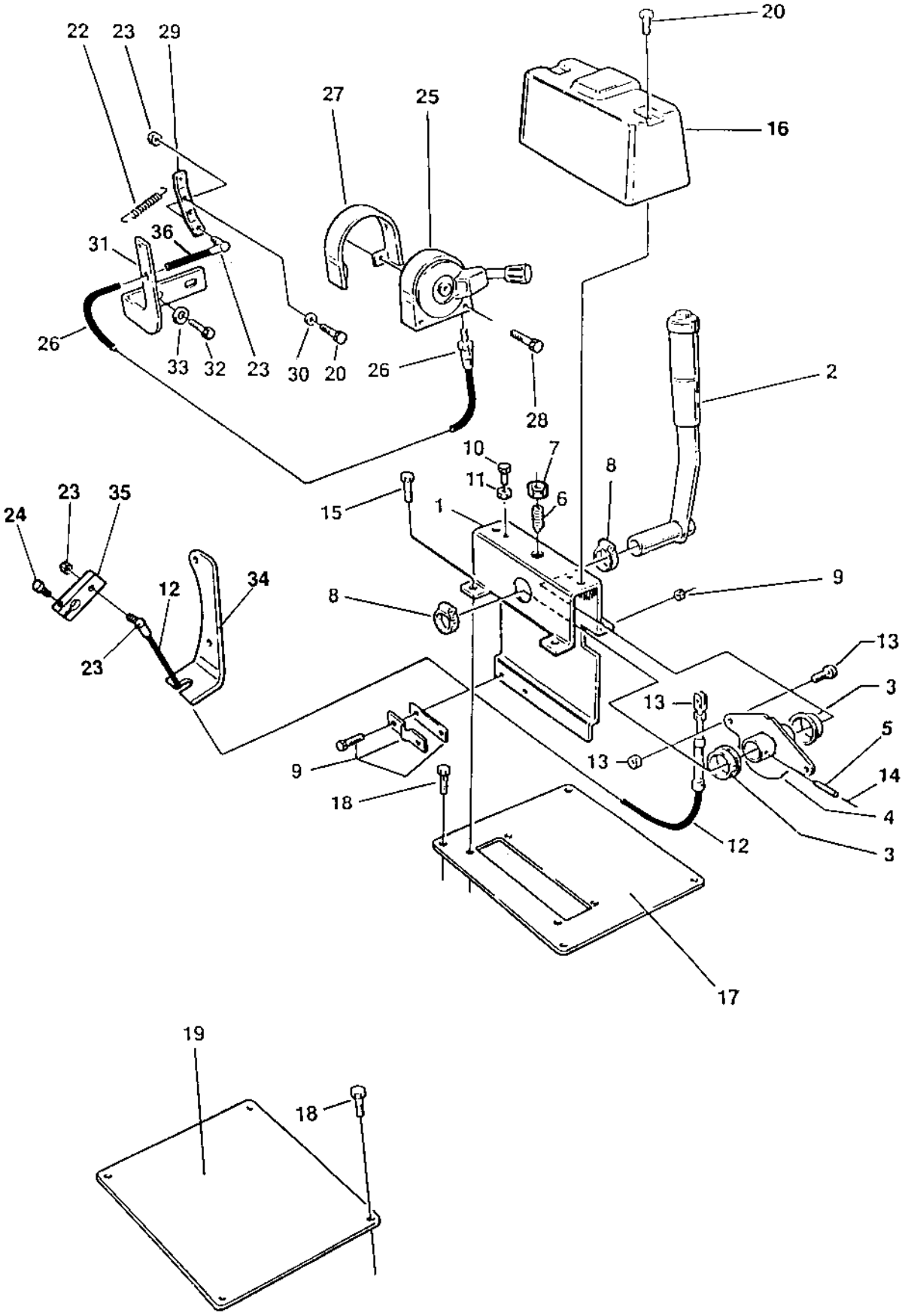

Ref. No.	Part No.	Rem.	Qty	Description	Code
1	902896		1	Framing	
2	357501	A	1	Control lever	
3	902187		2	Bearing	
4	902895		1	Cam disc	
5	629016		2	Expanding	
6	922325		1	Spring ball plunger	
7	573004		1	Nut	
8	313035		2	Hose clamp	
9	902189		1	Bracket	
10	500040		2	Screw	M6-1x20 8,8
11	570004		2	Nut	M6
12	902191	B	1	Control cable	
13	416004		1	Fork	
14	903395		2	Spirol pin	
15	541703		4	Screw	M6x16
16	357494		1	Cover	
17	357495	C	1	Control bracket	
18	500501		8	Screw	
19	357496	D	1	Cover plate	
20	541703		4	Screw	M6x16
22	357500		1	Spring	
23	416034		2	Ball joint	
24	508020		1	Screw	M5x20
25	382213	E	1	Control Up to 601X7762	
	389175		1	Control From 601X7763	
26	902193	E	1	Control cable Up to 601X7762	
	389176		1	Control cable From 601X7763	
27	382226		1	Snap plate Up to 601X7762	
	374981	F	1	Snap plate Up to 601X7762	
	389177	G	1	Snap plate From 601X7763	
28	904545		2	Screw	
29	357498		1	Control lever	
30	615042		2	Conical spring washer	
31	357499		1	Control bracket	
32	500021		2	Screw	M8-1,25x25 8,8
33	904556		2	Washer	8,4x16x3,0
34	390810		1	Control bracket	
35	372705		1	Control lever	
36	382349		1	Bellows	

A) Right, for electrical equipment see section " Electrical equipment "
B) F/R control
C) Right
D) Left
E) Throttle
F) Option, dual frequency
G) Not designed as illustrated

Engine and forward/reverse controls ISUZU

16525

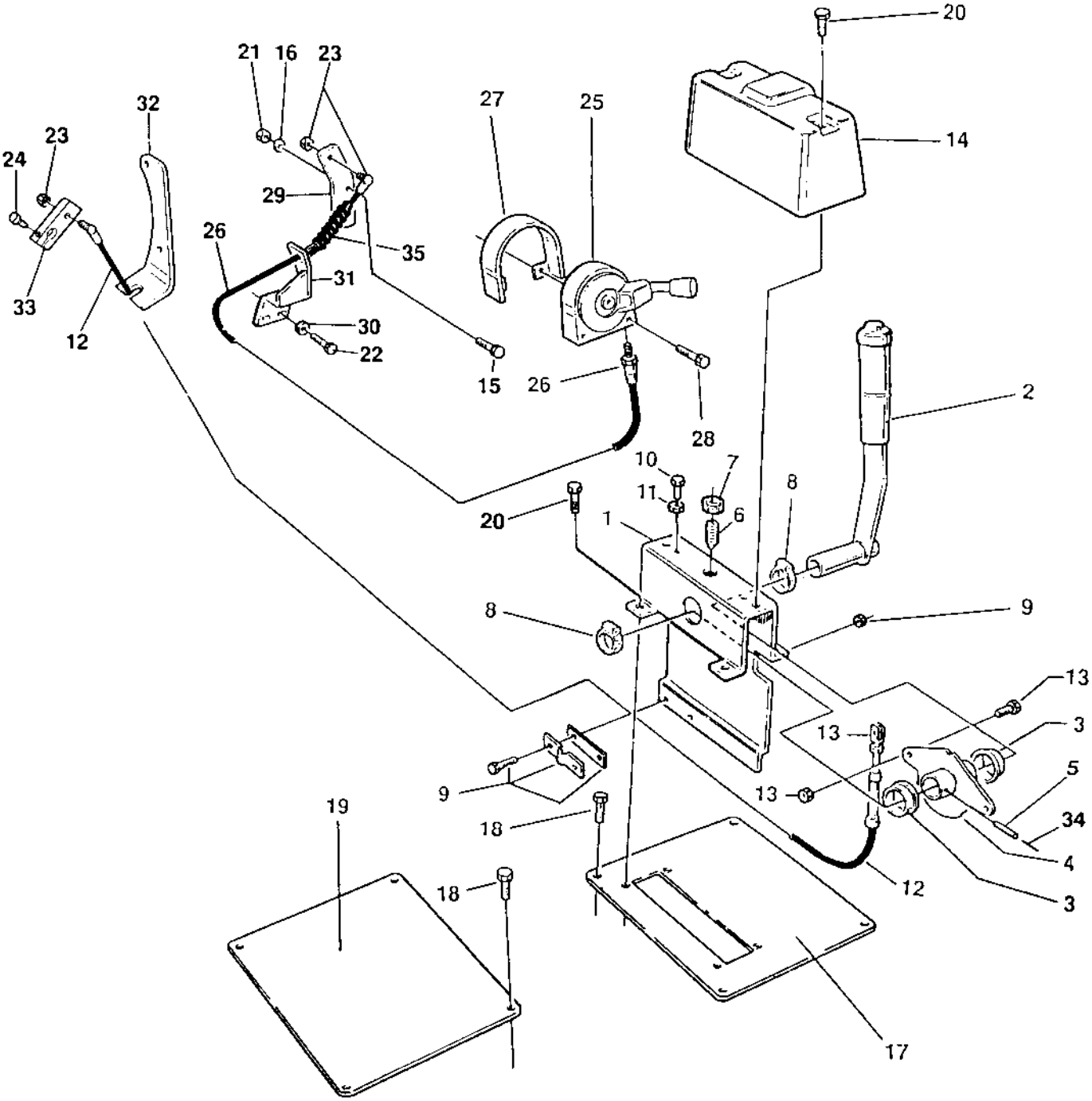

Ref. No.	Part No.	Rem.	Qty	Description	Code
1	902896		1	Framing	
2	357501	A	1	Control lever	
3	902187		2	Bearing	
4	902895		1	Cam disc	
5	629016		1	Expanding	
6	922325		1	Spring ball plunger	
7	573004		1	Nut	
8	313035		2	Hose clamp	
9	902189		1	Bracket	
10	500040		2	Screw	M6-1x20 8,8
11	570004		2	Nut	M6
12	902191	B	1	Control cable	
13	416004		1	Fork	
14	357494		1	Cover	
15	500013		1	Screw	M6-1x16 8,8
16	904228		1	Washer	6,4x12x1,5
17	357495	C	1	Control bracket	
18	500501		8	Screw	
19	357496	D	1	Cover plate	
20	541703		6	Screw	M6x16
21	586002		1	Lock nut	M6
22	500185		3	Screw	M6-1x14 8,8
23	416034		2	Ball joint	
24	508020		1	Screw	M5x20
25	382213	E	1	Control Up to 601X7762	
	389175		1	Control From 601X7763	
26	902193	E	1	Control cable Up to 601X7762	
	389176		1	Control cable From 601X7763	
27	382226		1	Snap plate Up to 601X7762	
	389177	F	1	Snap plate From 601X7763	
28	904545		2	Screw	
29	370248		1	Control lever	
30	904639		3	Washer	6,7x14x1,5
31	370247		1	Control bracket	
32	373898		1	Control bracket	
33	372705		1	Control lever	
34	903395		1	Spirol pin	
35	382349		1	Bellows	

A) Right, for electrical equipment see section " Electrical equipment "
B) F/R control
C) Right
D) Left
E) Throttle
F) Not designed as illustrated

F/r controls dual, control panel mounted

15745-1

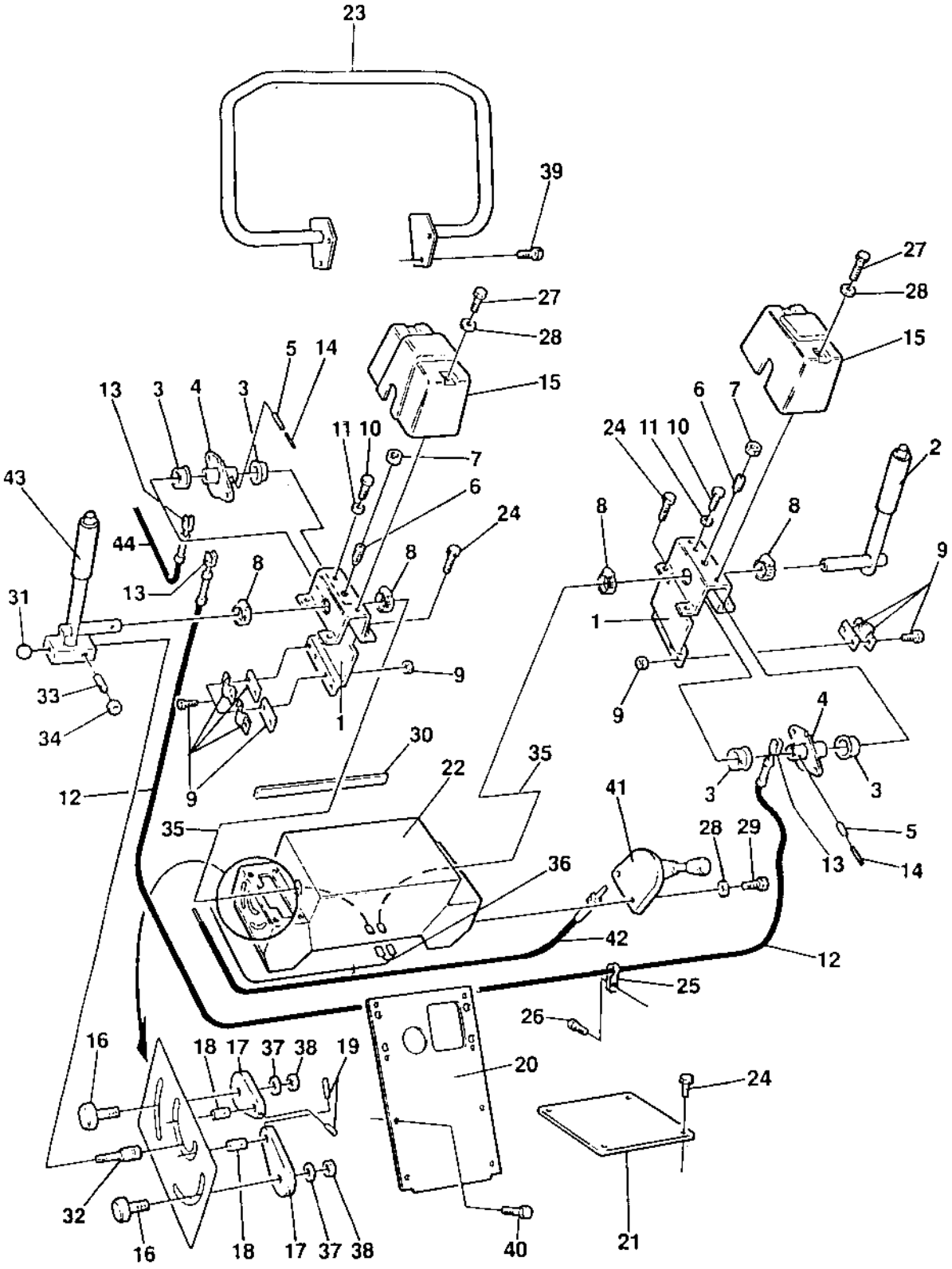

F/r controls dual, control panel mounted

Ref. No.	Part No.	Rem.	Qty	Description	Code
1	902896		2	Framing	
2	370263	A	1	Control lever	
3	902187		4	Bearing	
4	902895		2	Cam disc	
5	629016		4	Expanding	
6	922325		2	Spring ball plunger	
7	573004		2	Nut	
8	313035		4	Hose clamp	
9	902189		3	Bracket	
10	500040		4	Screw	M6-1x20 8,8
11	570004		4	Nut	M6
12	903675		1	Control cable	
13	416004		3	Fork	
14	903395		4	Spirol pin	
15	370241		2	Cover	
16	370242		2	Knob	
17	370273		1	Plate	
18	370272		1	Shaft	
19	516010		1	Screw	
20	370244		1	Cover	
21	357496		1	Cover plate	
22	370174		1	Instrument box	
23	371088		1	Hand rail	
24	541702		12	Screw	M6x12
25	921070		1	Clamp	
26	541705		1	Screw	
27	500013		4	Screw	M6-1x16 8,8
28	600004		6	Washer	
29	500061		2	Screw	M6-1X35 8,8
30	202028	B	1XL	Edge trim	
31	312001		1	Handle grip	
32	346431		1	Bolt	
33	923900		1	Spring loaded pin	
34	570005		1	Nut	M8
35	357583		1	Cable harness	
36	370274		1	Cable harness	
37	600006		2	Washer	
38	586003		2	Lock nut	M8
39	500509		4	Screw	
40	541702		8	Screw	M6x12
41	382213	C	1	Control Up to 601X7762	
	389175		1	Control From 601X7763	
42	902193	C	1	Control cable Up to 601X7762	
	389176		1	Control cable From 601X7763	
43	370266	D	1	Control lever	
44	903676	E	1	Control cable	

A) Right, for electrical equipment see section " Electrical equipment "
B) L=0,225 m
C) Throttle
D) Left, for electrical equipment see section " Electrical equipment "
E) F/R control

F/r control dual left side, platform mounted

17969

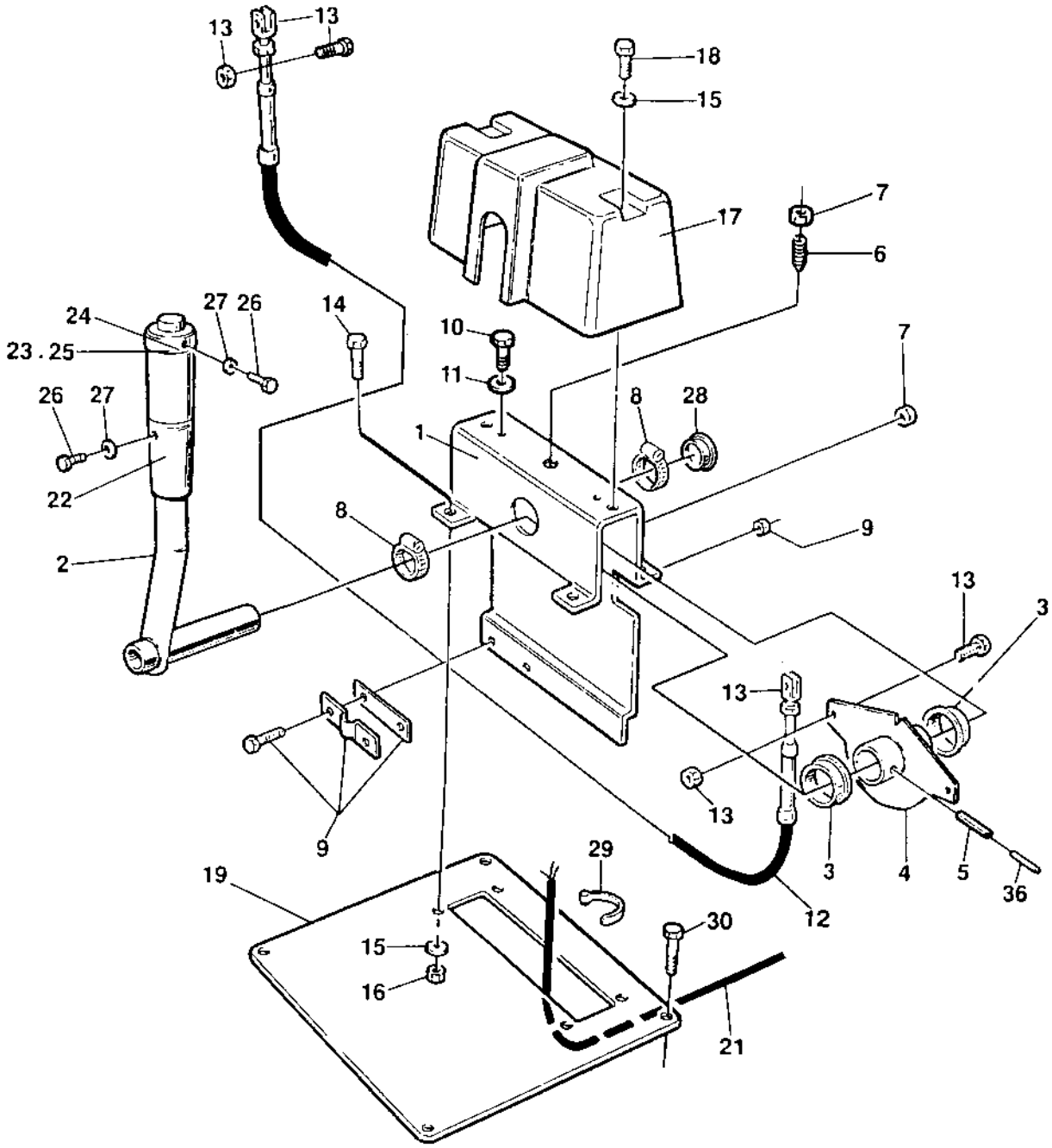

F/r control dual left side, platform mounted

Ref. No.	Part No.	Rem.	Qty	Description	Code
1	902896		1	Framing	
2	357502	A	1	Control lever	
3	902187		2	Bearing	
4	902895		1	Cam disc	
5	629016		2	Expanding	
6	922325		1	Spring ball plunger	
7	573004		1	Nut	
8	313035		2	Hose clamp	
9	902189		2	Bracket	
10	500040		2	Screw	M6-1x20 8,8
11	570004		2	Nut	M6
12	908484		1	Control cable	
13	416004		2	Fork	
14	500040		4	Screw	M6-1x20 8,8
15	904228		6	Washer	6,4x12x1,5
16	586002		4	Lock nut	M6
17	357494		1	Cover	
18	500013		2	Screw	M6-1x16 8,8
19	357495	A	1	Control bracket	
21	357896		1	Cable harness	
22	285909		1	Grab handle	
23	928497	C	1	Push button	
24	285911		1	Bushing	
25	348481		1	Cover	
26	533001		3	Screw	
27	904697		5	Washer	3,2x6x0,5
28	902203		1	Plug	
29	313068		2	Cable ties	L=92 mm
30			4	Screw	
36	903395		2	Spirol pin	

A) Left
C) Vibration

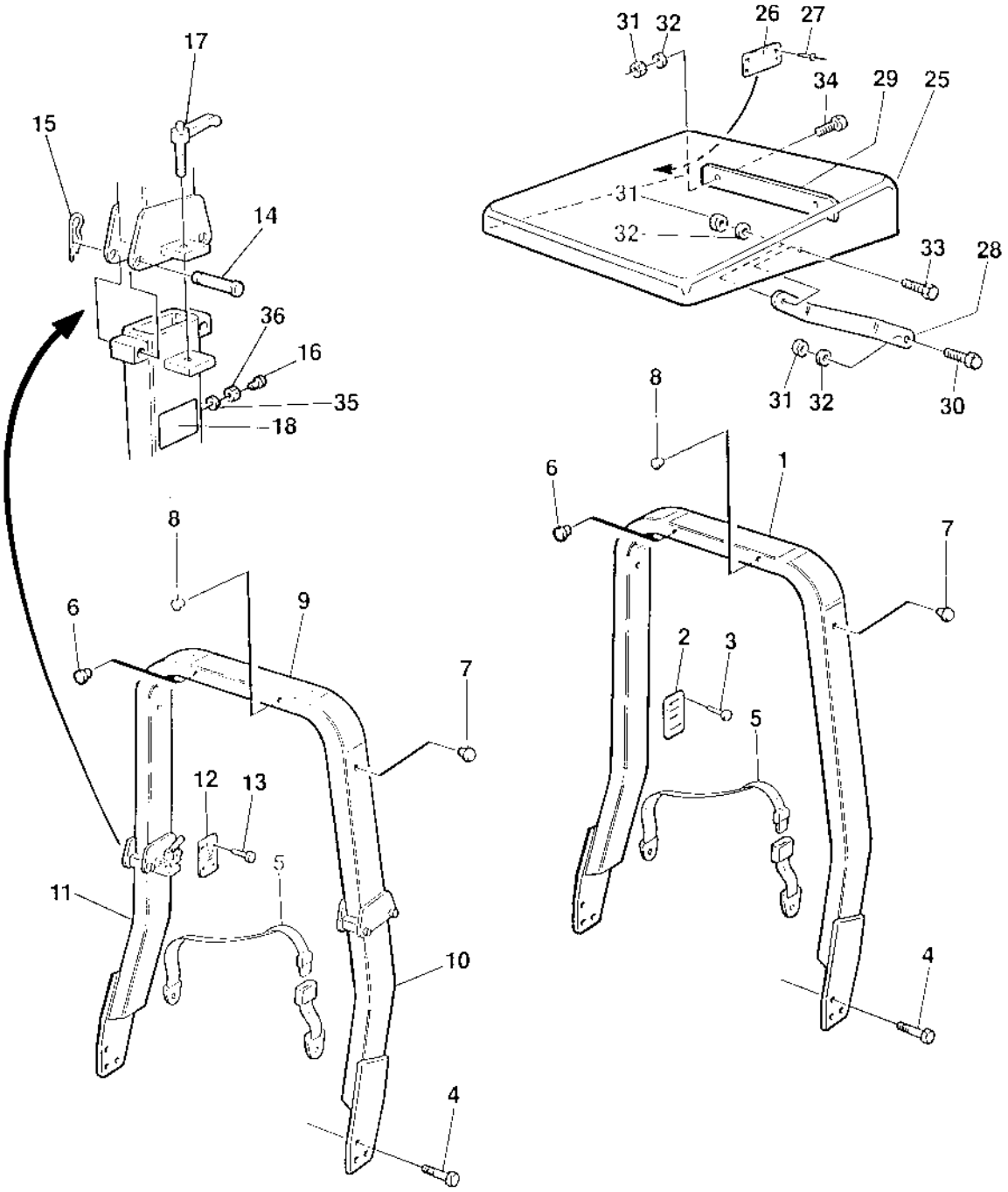
17
15
14
36
16
35
18
31
32
26
27
34
29
25
33
28
30
8
6
1
7
2
3
5
4
9
12
13
11
10

Ref. No.	Part No.	Rem.	Qty	Description	Code
1		A,B	1	Rops	
2	370803		1	.Sign, rops	
3	902093		4	.Screw	
4	902889		6	Screw	
5		D	1	Seat belt	
6	900986		4	Plug	
7	902203		5	Plug	
	902203	C	3	Plug	
8	903378		8	Plug	
9		A,B	1	Rops, upper part	
10		A,B	1	Rops, lower part	
11		A,B	1	Rops, lower part	
12	370803		1	Sign, rops	
13	902093		4	Screw	
14	374009		4	Shaft	
15	635061		4	Hair clip	
16	288357	E	2	Shock absorber	
17	904429		2	Lock handle	
18	908229		2	Safety decal	
25	359074		1	Roof	
26			1	Sign, fops	
27	624016		4	Blind rivet	
28	359063		2	Support bar	
29	359062		1	Holder plate	
30	500094		2	Screw	
31	586021		6	Nut	M16
32	904232		12	Washer	17x30x3
33	500070		2	Screw	M16x50
34	500164		2	Screw	M16-2,0x150 8,8
35	904229		2	Washer	8,4x16x1,5
36	570005		2	Nut	M8

A) Not sold separately due to safety regulations
B) Only available as a complete ROPS kit; please check the machine SN, and contact Dynapac for valid PN
C) Foldable rops
D) See section for Drivers seat
E) Needs hole: threaded M8; 190 mm from the top of Rops, lower part, rear in the middle.

Ref. No.	Part No.	Rem.	Qty	Description	Code
100				Plates and decals, ce-marking approved (Page 216)	

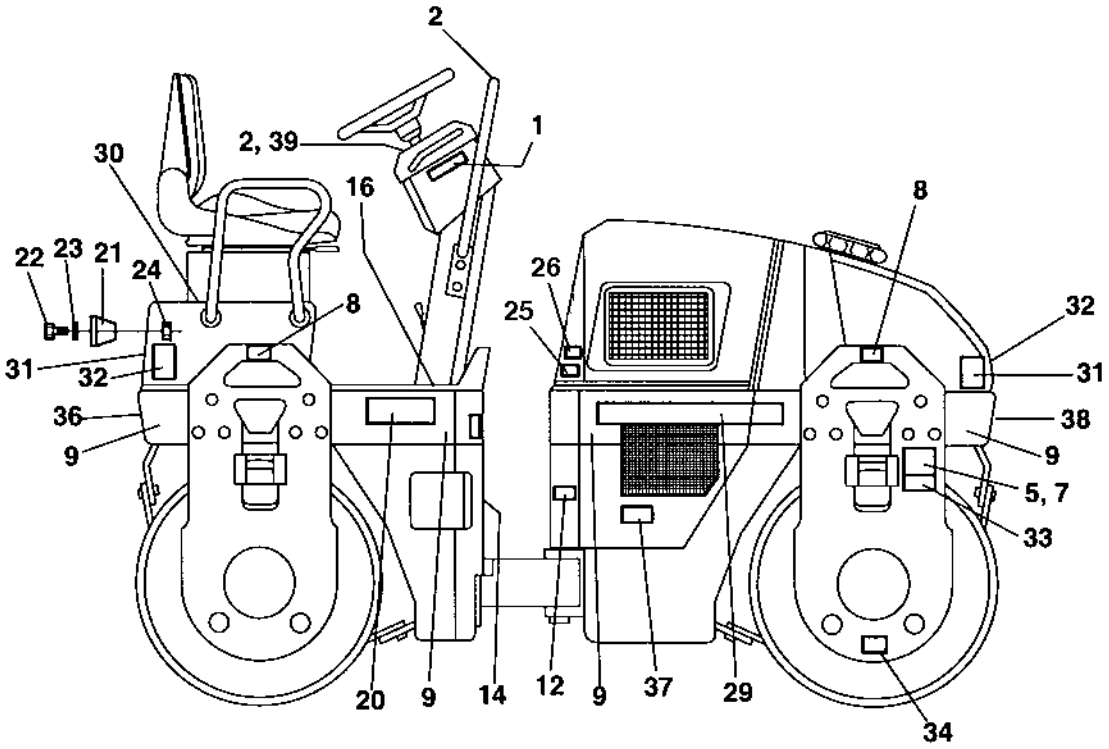
2
2, 39
1
30
16
8
22
23
21
24
26
25
32
8
31
32
31
36
38
9
9
5, 7
33
20
9
14
12
9
37
29
34

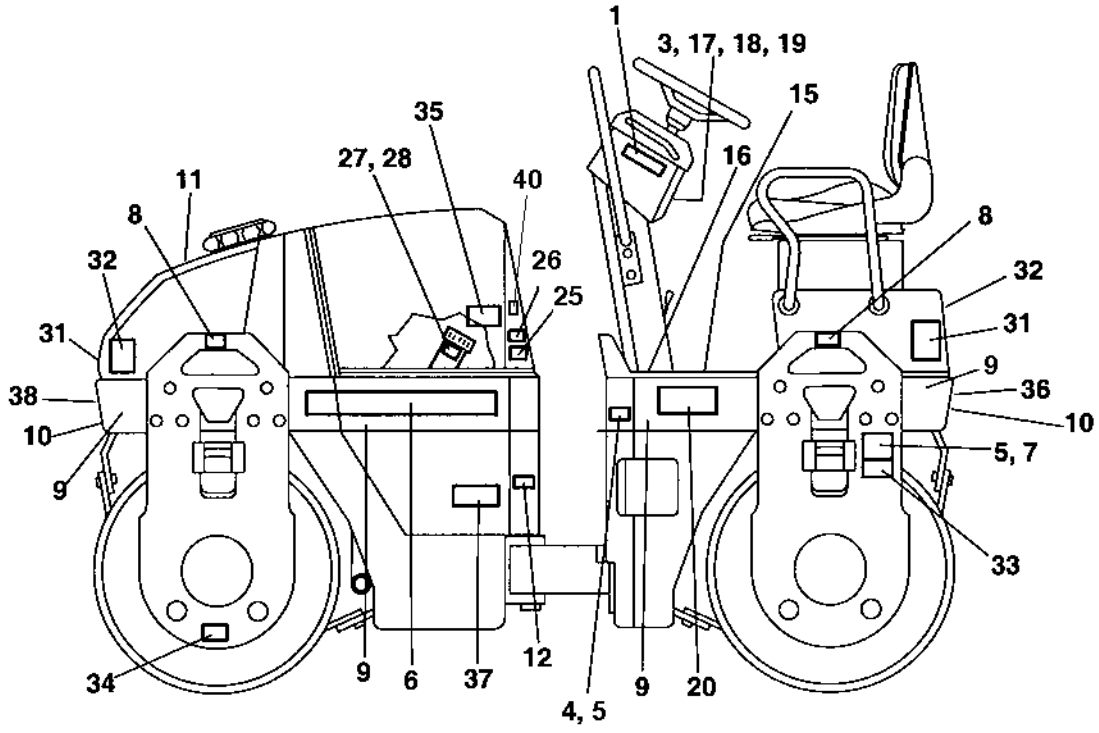
1
3, 17, 18, 19
15
35
27, 28
16
40
11
8
8
32
26
32
25
31
31
9
38
36
10
10
9
5, 7
33
34
9
6
37
12
4, 5
9
20

Plates and decals, ce-marking approved

Ref. No.	Part No.	Rem.	Qty	Description	Code
1	903459	A	2	Decal "SAFETY"	
2	386084SE		1	Warning plate	Swedish
	386084EN		1	Warning plate	English
	386084DE		1	Warning plate	German
	386084IT		1	Warning plate	Italian
	386084ES		1	Warning plate	Spanish
	386084FR		1	Warning plate	French
	386084NO		1	Warning plate	Norwegian
	386084DK		1	Warning plate	Danish
	386084FI		1	Warning plate	Finnish
	386084PT		1	Warning plate	Portuguese
	386084NL		1	Warning plate	Dutch
	386084GR		1	Warning plate	Greek
	386084IS		1	Warning plate	Icelandic
	386084CN		1	Warning plate	Chinese
3	903425		1	Decal "SAFETY MANUAL"	
4			1	Product identification plate	
			1	Product identification plate CE	
	357130	J	1	Plate cert. appr.	
	371173	K	1	Product plate	
5	624005	Z	12	Blind rivet	3,2x6,1
6	904096		1	Decal "DYNAPAC"	L=420 mm
7	904870		2	Lifting sign	
8	357587		2	Decal "LIFT POINT"	
9	357592	M	NXL	Decal "RED"	W=148 mm
10	904094		2	Decal "DYNAPAC" Up to 601X8707	L=670 mm
	904096	O	2	Decal "DYNAPAC" Up to 601X8707	L=420 mm
	904097		2	Decal "DYNAPAC" From 601X8708	L=290 mm
	379982	M	NXL	Decal "RED" From 601X8708	W=120 mm
11	991657		1	Decal "WATER"	
12	903422	P	2	Decal "SAFETY"	
14	991658		1	Decal "FUEL"	
15	357604	Q	1	Protection	
16	357605	R	2	Protection	
17	357643		1	Wire	
18	904697		1	Washer	3,2x6x0,5
19	358254		1	Key-ring	
20	902217		2	Decal "MODEL CODE"	CC102
	371169	S	2	Decal "MODEL CODE"	CC102 II
21	900684	X	1	Name plate "DYNAPAC"	
22	535008		2	Screw	M5x20
23	600003		2	Washer	
24	586001		2	Lock nut	M5
25	903423	U	2	Decal "SAFETY"	
26	903424	V	2	Decal "HOT SURFACE"	
27	370127		1	Decal "HYDRAULIC OIL"	
28	925802		2	Cable ties	L=142 mm
29	904097		1	Decal "DYNAPAC"	L=290 mm

A) Read instr manual
J) Italy only
K) Japan only
M) Length as required
O) For machines with lights
P) Hazardous area
Q) Rear
R) Front
S) Japan
U) Engine fan
V) Hot surface
X) Option
Z) Replaces earlier used 624015

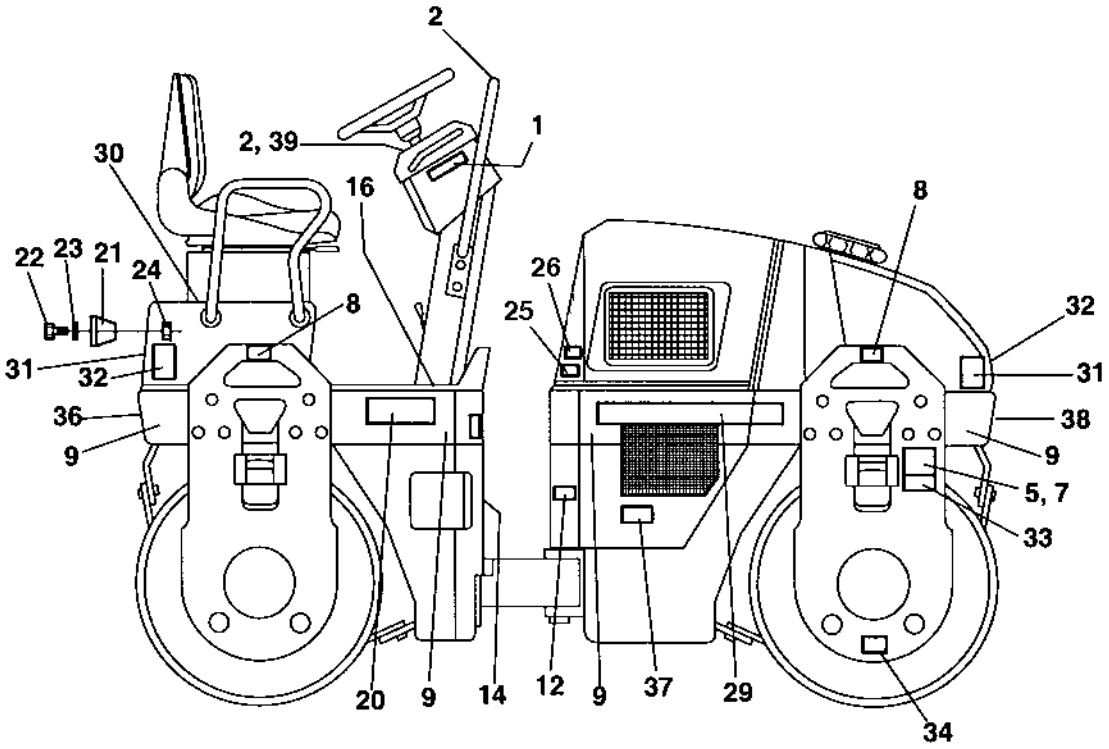
2
2, 39
1
30
16
8
22
23
21
24
26
25
32
8
31
32
31
36
38
9
9
5, 7
33
20
9
14
12
9
37
29
34

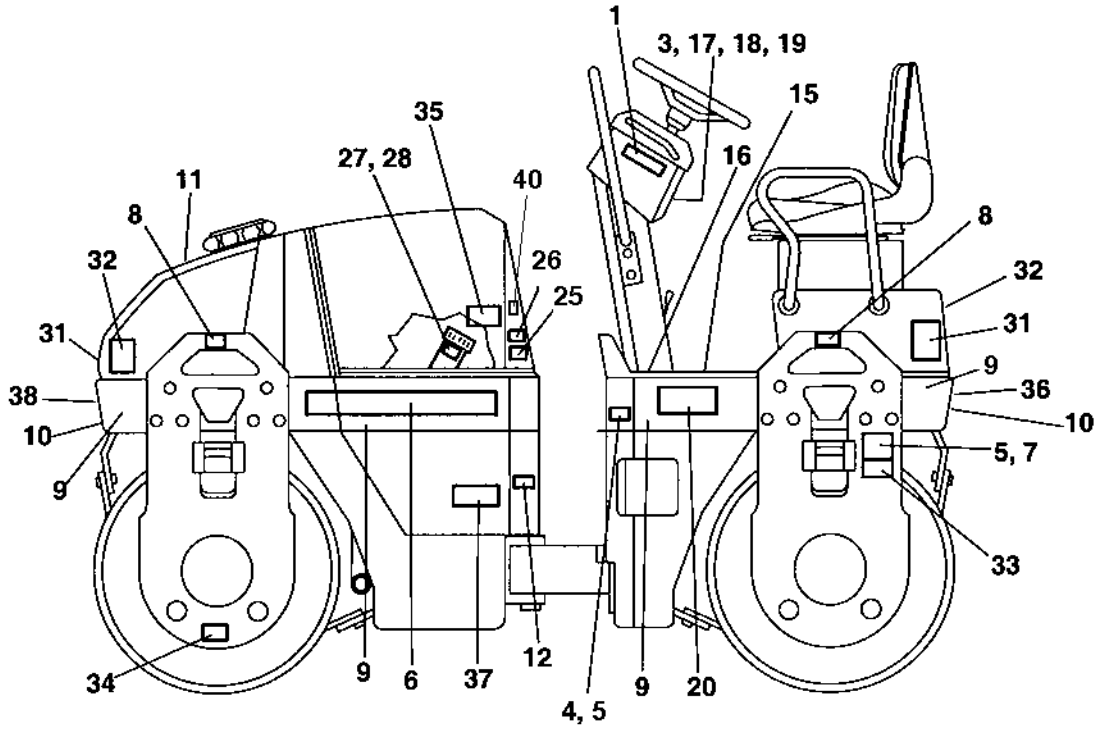
1
3, 17, 18, 19
15
35
27, 28
16
40
11
8
8
32
26
32
25
31
31
9
38
36
10
10
9
5, 7
33
34
9
6
37
12
4, 5
9
20

Ref. No.	Part No.	Rem.	Qty	Description	Code
30				Not used on this model	
31	904403		4	Decal "Risk location"	
32	904404		4	Decal "Risk location"	
33	908229		2	Safety decal	
34	382751		2	Decal "TIE DOWN POINT"	
35	904835		1	Decal "BATTERY POWER"	
36	377742		2	Reflector, red	
37	377744		2	Reflector, yellow	
38	377743		2	Reflector, white	
39	624017		2	Blind rivet	
40	791262		1	Decal "Sound power level"	100dB, Option
	791272		1	Decal "Sound power level"	102dB, Option
	791275		1	Decal "Sound power level"	105dB

Ref. No.	Part No.	Rem.	Qty	Description	Code
100				Standard equipment (Page 222)	

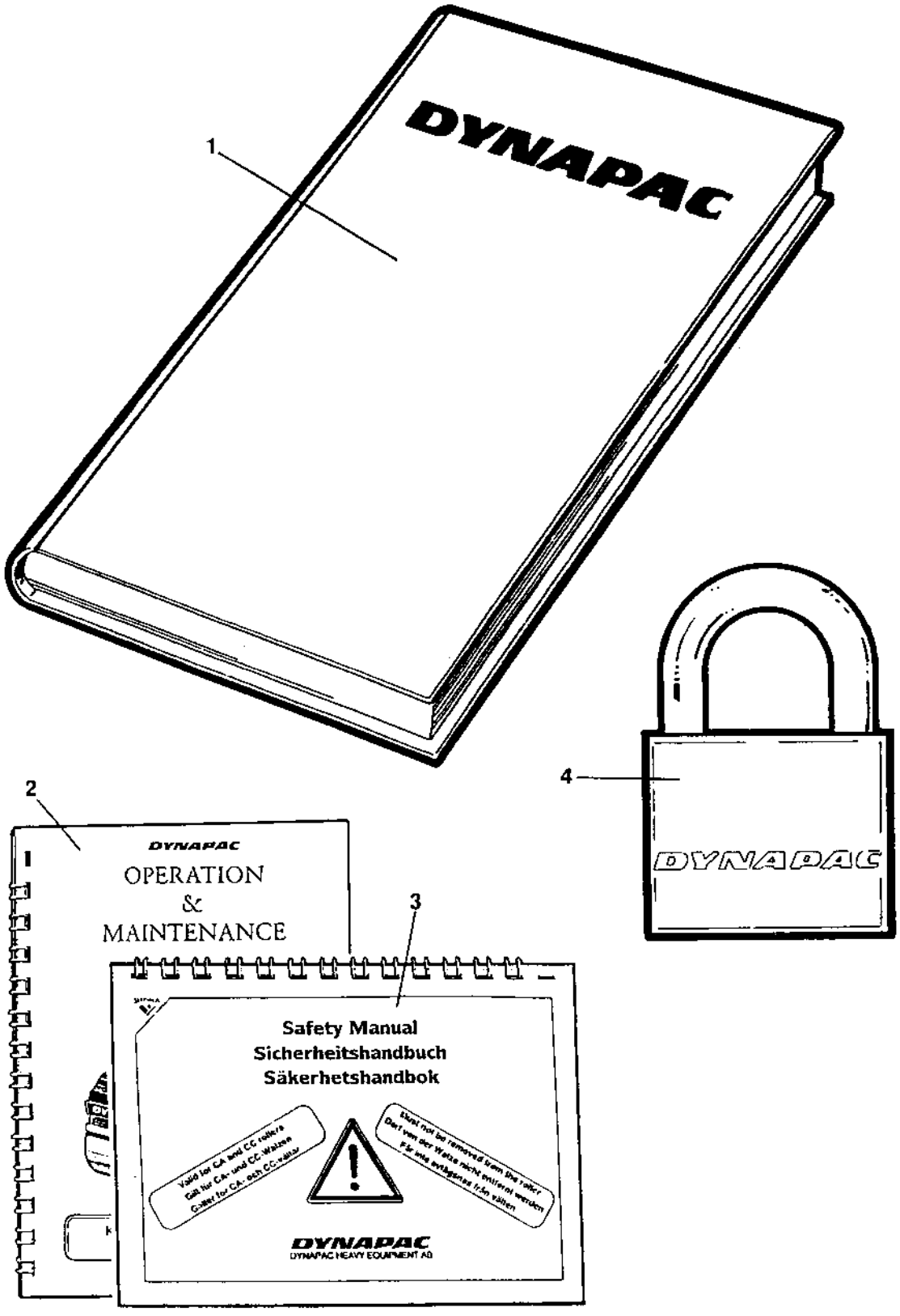
1
DYNAPAC
2
DYNAPAC
OPERATION
&
MAINTENANCE
3
Safety Manual
Sicherheitshandbuch
Säkerhetshandbok
DYNAPAC
DYNAPAC HEAVY EQUIPMENT AB
4
DYNAPAC

Standard equipment

Ref. No.	Part No.	Rem.	Qty	Description	Code
1			1	Documentation	OMS102
			1	.Warranty registration card	
			1	.Operating instruction	O102
			1	.Maintenance instruction	M102
			1	.Spare parts catalogue	SCC102
			1	.Instruction manual	DEUTZ / ISUZU
2			1	.Operating / maintenance instruction	OM102
3			1	.Safety manual	RSAFE
4	358881		1	Pad lock	

Ref. No.	Part No.	Rem.	Qty	Description	Code
10				Cab, exterior Up to 601X8560 (Page 226)	
20				Cab, interior Up to 601X8560 (Page 232)	
30				Cab, heater Up to 601X8560 (Page 234)	
41				Canopy (Page 236)	
60				SMV sign (Page 238)	
65				SMV sign placed on platform (Page 240)	
90				Tool equipment (Page 242)	
100				Noise suppression Up to 601X8206 (Page 24	DEUTZ , 78 dB
101				Noise suppression From 601X8207 (Page 24	DEUTZ , 78 dB
105				Noise suppression Up to 601X8206 (Page 24	DEUTZ , 73 dB
106				Noise suppression From 601X8207 (Page 25	DEUTZ , 73 dB
107				Noise suppression (Page 252)	ISUZU
110				Back-up alarm (Page 254)	
120				Rear mirror (Page 256)	
180				Combination water supply (Page 258)	
185				Combination water supply (Page 260)	2 rear sprinkler pipes
195				Brake release, propulsion motor (Page 262)	
200				Cassette receiver (Page 264)	
310				Towing valve (Page 266)	
400				Flow divider (Page 268)	
432				Vibration shut-off, front drum (Page 270)	DEUTZ
434				Vibration shut-off, front drum (Page 272)	ISUZU
436				Vibration shut-off, rear drum (Page 274)	DEUTZ
438				Vibration shut-off, rear drum (Page 276)	ISUZU
440				Automatic vibration control (Page 278)	
460				Service brake (Page 280)	
480				Driving, restriction (Page 282)	
500				Bio-hydraulic oil lock (Page 284)	Old design
520				High torque drum drive (Page 286)	" Long"
540				High torque drum drive (Page 290)	" Short"
560				Brake release, propulsion motor (Page 294)	

Cab, exterior

15631-1

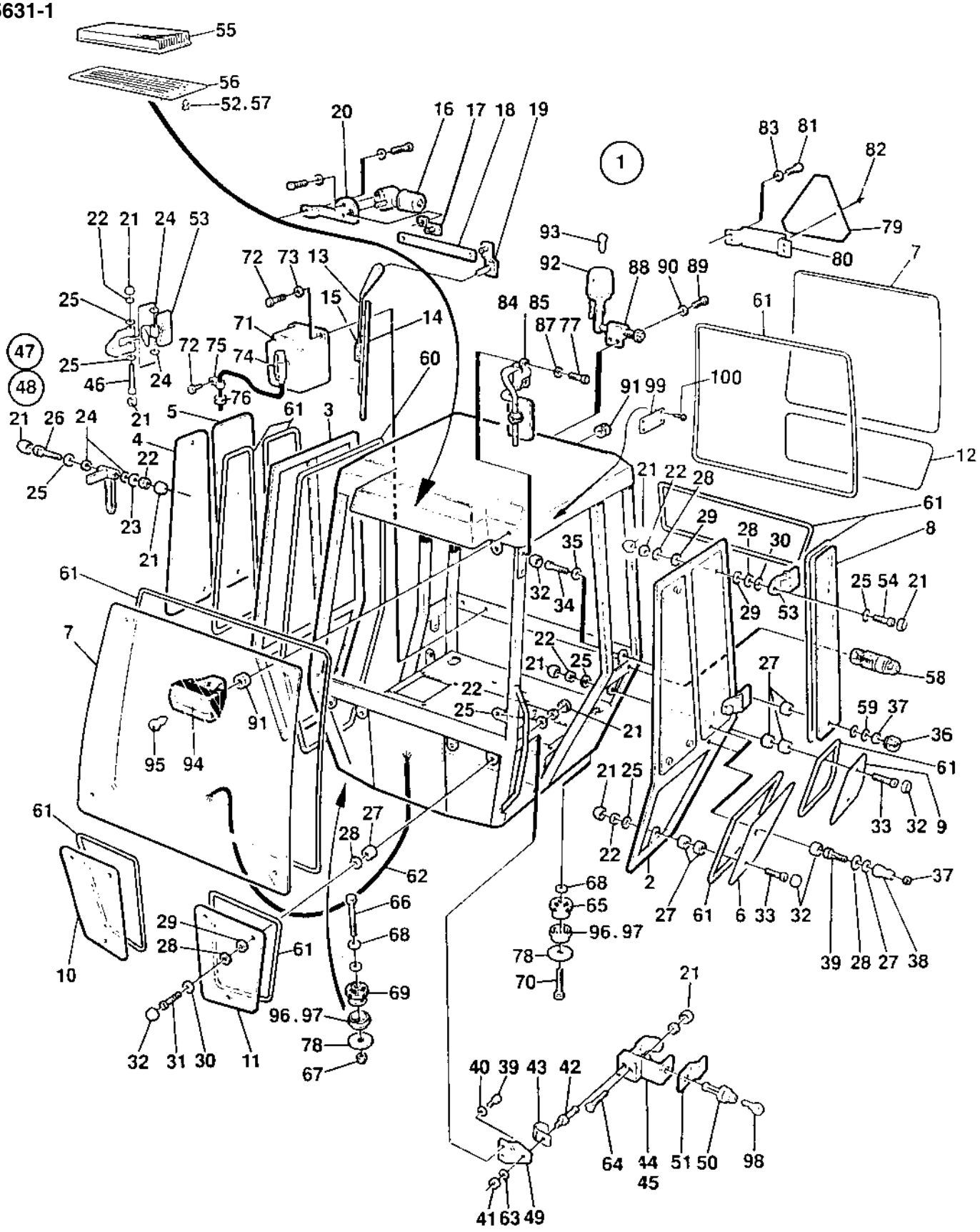

Cab, exterior

Ref. No.	Part No.	Rem.	Qty	Description	Code
1	358440		1	Cab	
2	903100		1	.Door left	
3	903101		1	.Door right	
4	358379	A	2	..Screen	
5	358380	B	2	..Screen	
6	358386	C	2	..Screen	
7	358378	D	2	.Screen	
8	358381	E	2	.Screen	
9	358385	F	2	.Screen	
10	358383	G	1	.Screen	
11	358384	H	1	.Screen	
12	358382	I	1	.Screen	
13	903089		2	.Windshield wiper	
14	929965		2	..Wiper blade	
15	903000		2	.Nozzle	
16	903123		2	.Wiper motor	
17	903125		2	.Shaft	
18	903126		2	.Connecting rod	
19	903127		2	.Shaft	
20	903124		2	.Bracket	
21	901341		63	.Nut cup	
22	586003		61	.Lock nut	M8
23	601003		2	.Washer	8,4x25x2
24	903094		24	.Spacer	
25	600006		24	.Washer	
26	500189		2	.Screw	
27	903104		40	.Spacer	
28	903103		32	.Plastic washer	
29	903105		4	.Rubber washer	
30	615117		12	.Washer	
31	903083		26	.Screw	
32	901340		40	.Screw cap	
33	903084		4	.Screw	
34	500015		2	.Screw	M6-1x30 8,8
35	600004		2	.Washer	
36	929957		4	.Holder	Female
37	586002		2	.Lock nut	M6
38	929956		4	.Holder	Male
39	500061		4	.Screw	M6-1X35 8,8
40	606015		4	.Washer	
41	903092		2	.Nut	

A) Upper dorr, front
B) Upper door, rear
C) Lower door
D) Upper front/rear
E) Upper side
F) Lower side
G) Lower front, RH
H) Lower front, LH
I) Lower rear

Cab, exterior

15631-1

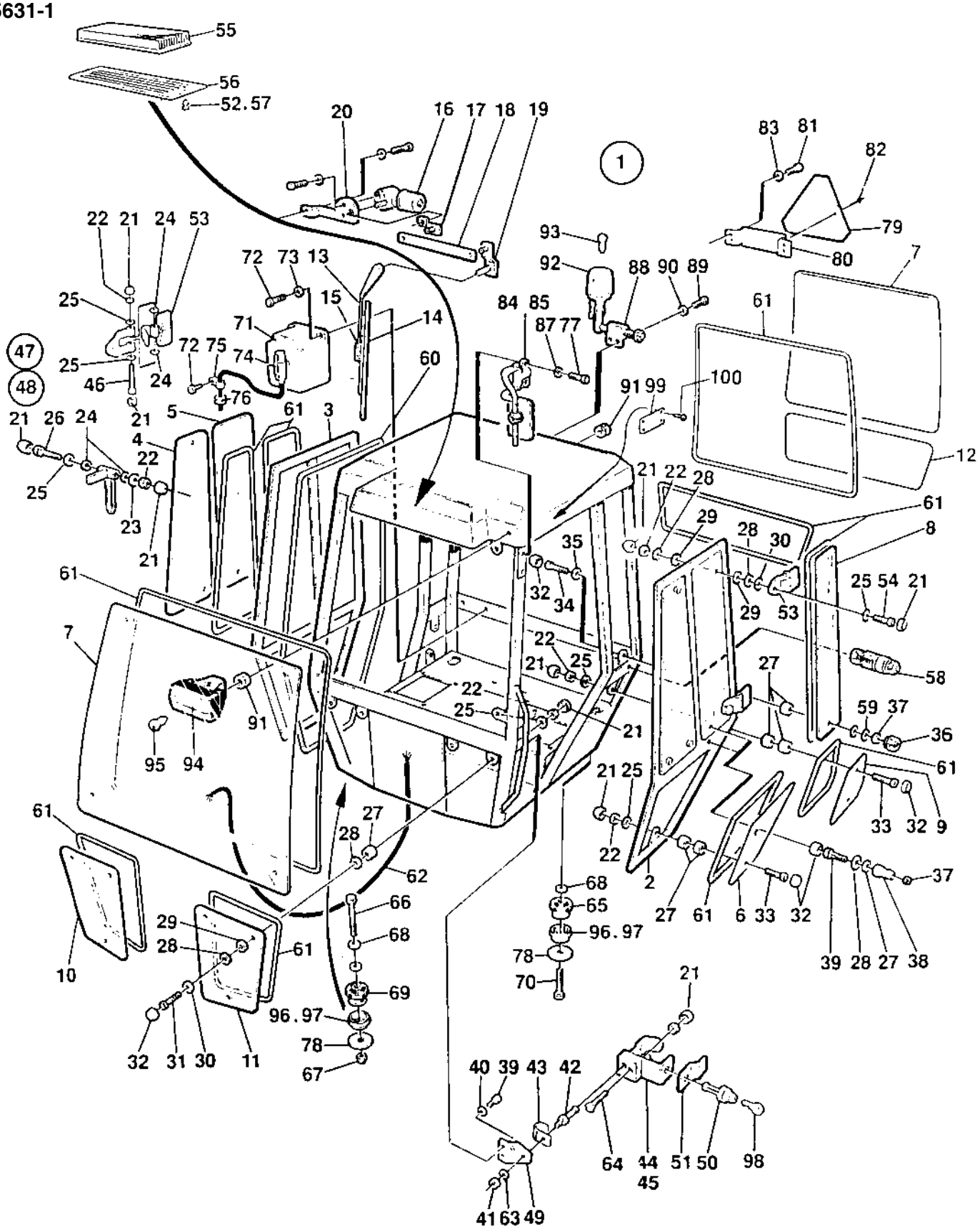

Ref. No.	Part No.	Rem.	Qty	Description		Code
42	345388		2	.Bolt		
43	901242		2	.Hook		
44	901249	J	1	.Lock		
45	901273	K	1	.Lock		
46	500237		4	.Screw	M8x120	
47	903097	L	1	.Grab handle		
48	903096	M	1	.Grab handle		
49	903326		2	.Holder plate		
50	903106		2	.Lock		
51	903107		2	.Lever		
52	903087		2	.Clips		
53	903095		4	.Hinge		
54	500189		4	.Screw		
55	901296		1	.Air filter		
56	903085		1	.Air inlet cover		
57	903086		2	.Quick fastener		
58	903102		2	.Door stop		
59	606003		1	.Washer		
60	901365		N	.Sealing strip		
61	901275		N	.Sealing strip		
62	358458	N	1	.Cable harness		
63	903323		2	.Washer		
64	927637		4	.Screw	M8x35	
65	450166	O	2	Shock absorber		
66	500142		2	Screw		
67	586021		2	Nut	M16	
68	600011		N	Washer		
69	801698	P	2	Shock absorber		
70	500094		2	Screw		
71	900998		1	Water reservoir		
72	541703		3	Screw	M6x16	
73	615042		2	Conical spring washer		
74	900999		1	Pump		
75	921039		1	Pipe clamp		
76	909107		1	Grommet		
77	500013		4	Screw	M6-1x16 8,8	
78	358224		4	Washer		
79	476019		1	SMV sign		
80	358579		1	Holder plate		
81	500012		4	Screw	M6x12	
82	903148		4	Rivet		

J) Right door
K) Left door
L) Right
M) Left
N) Main
O) Rear
P) Front

Cab, exterior

15631-1

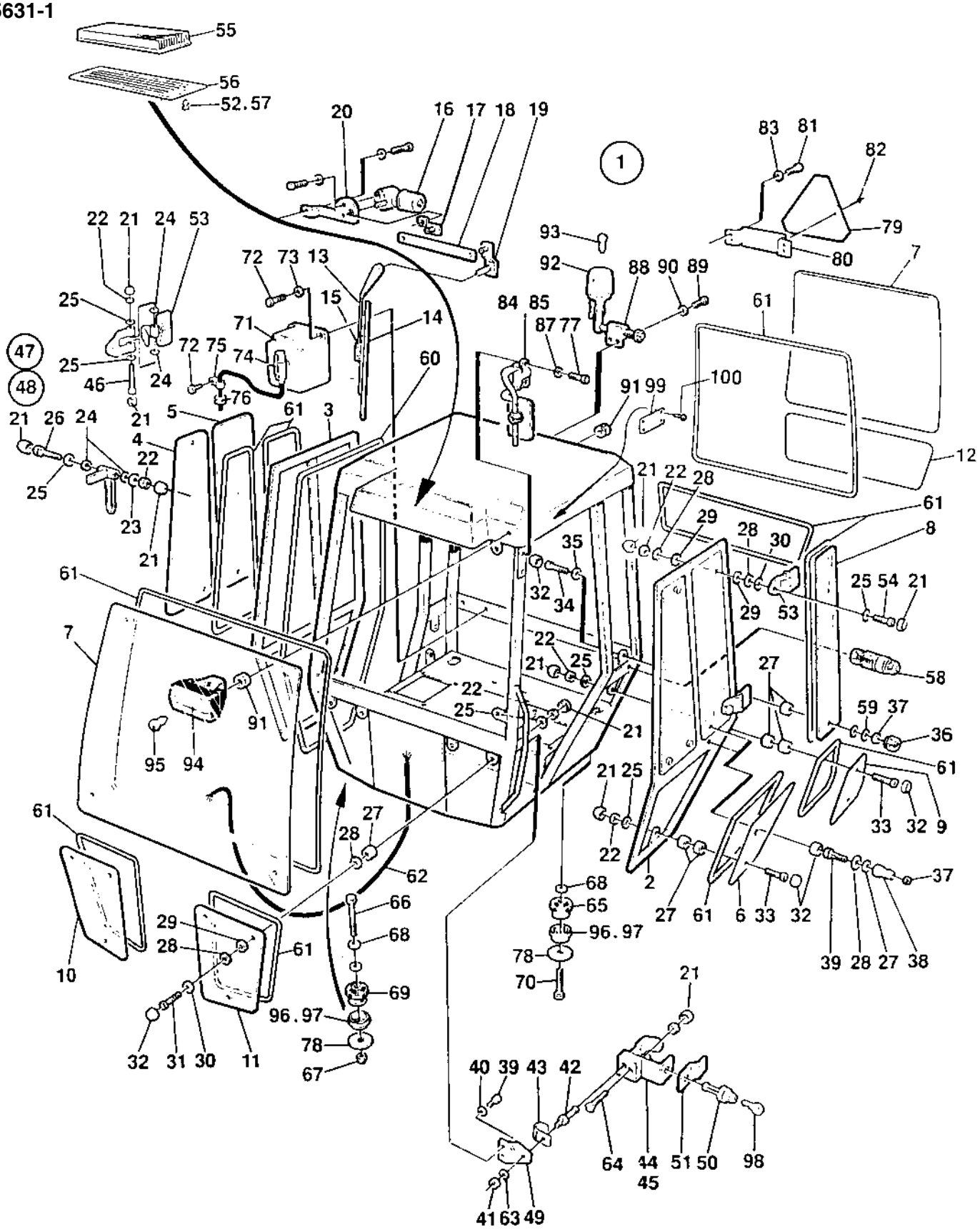

Ref. No.	Part No.	Rem.	Qty	Description	Code
83	600004		4	Washer	
84	901266	Q	1	Rear mirror	
85	901267	R	1	Rear mirror	
86	901375		1	.Mirror	
87	600004		4	Washer	
88	358452		1	Lamp holder	
89	500019		2	Screw	M8-1,25x16 8.8
90	615043		2	Washer	8,4x18x2
91	902891		3	Grommet	
92	999011	S	1	Rotating beacon	
93	985126		1	.Bulb	
94	901258		4	Work light	
95	901369	U	4	Bulb	55w H3
96	358228		4	Spacer ring	
97	929164		16	Screw	
98	928672		2	Key	Marked "1001"
99	370803		1	Sign, rops	
100	527002		4	Drive screw	

Q) Right, CPL
R) Left, CPL
S) CPL, orange
U) Work light

Cab, interior

15632

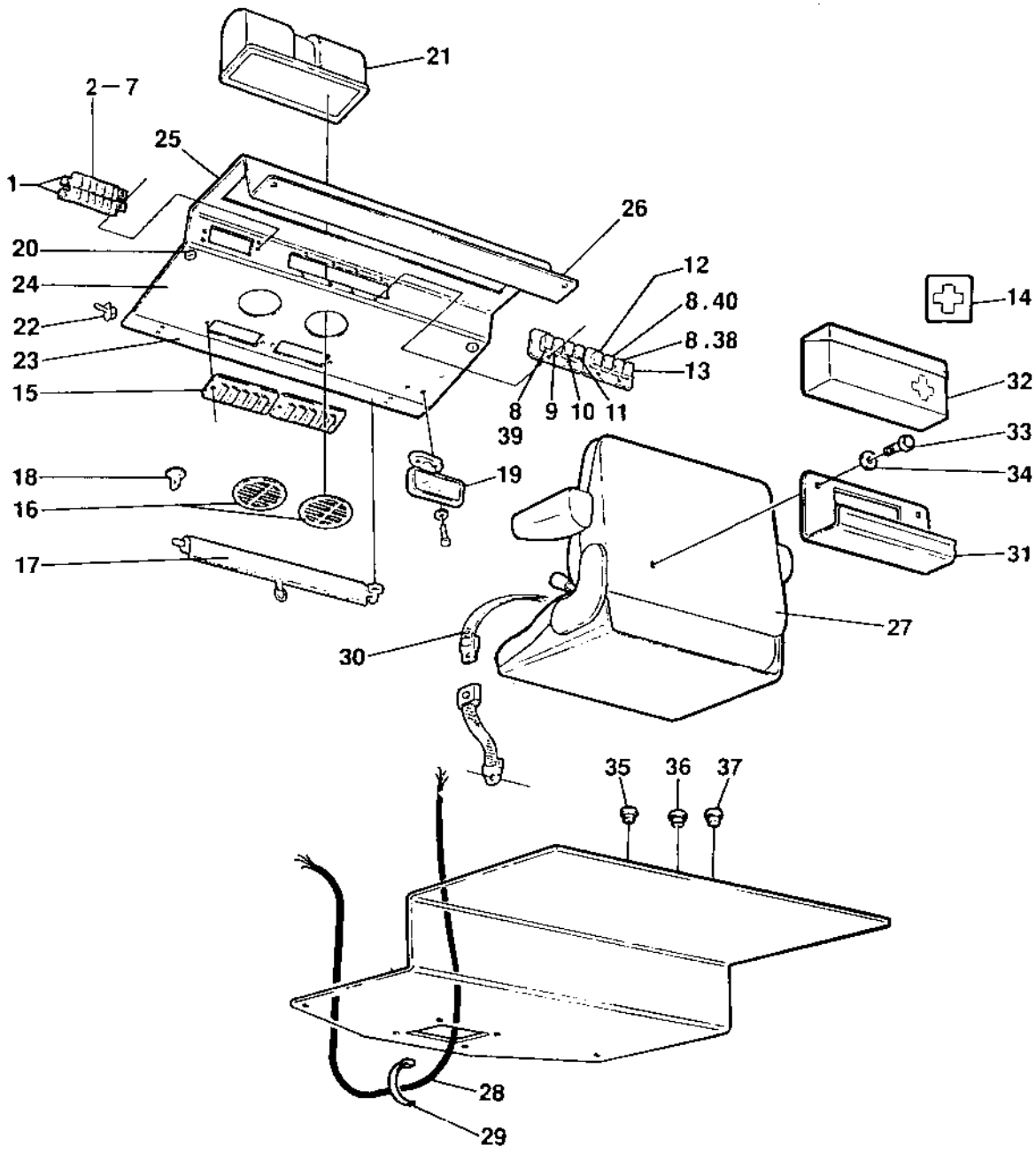

Cab, interior

Ref. No.	Part No.	Rem.	Qty	Description	Code
1	903820		1	Fuse box	
2	901227		5	Fuse	10A
3	901224		2	Fuse	3A
4	901228		3	Fuse	15A
5	901226		2	Fuse	7.5A
6	901229		1	Fuse	25A
7	901225		1	Fuse	5A
8	903128		3	Cover plate	
9	357924	A	1	Switch	Front
10	357925	B	1	Switch	Rear
11	357928	C	1	Switch	Rear
12	357927	D	1	Switch	Front
13	901679	E	1	Switch	
14	902509	F	1	Decal	
15	903110		2	Air inlet	
16	901366		2	Air inlet	
17	901239		1	Roller blind	
18	901245		2	Suction grip	
19	901572		1	Rear mirror	
20	901578		2	Screw	
21	901143		1	Fan	
22	901238		2	Switch	
23	903118		1	Sun-blind	
24	903119	G	1	Roof	
25	903120	H	1	Roof	
26	903121	I	1	Roof	
27	356415	J	1	Drivers seat	
28	358458		1	Cable harness	
29	313102		N	Cable ties	
30			1	Seat belt	
31	358098		1	Box holder	
32	902508		1	First aid kit	
33	541508		2	Screw	
34	600002		2	Washer	
35	926215		N	Plug	
36	902919		2	Plug	
37	902804		3	Plug	
38	358462	K	1	Switch	
39	357930	L	1	Switch	
40	357922	M	1	Switch	

A) Wiper front
B) Wiper rear
C) Washer rear
D) Washer front
E) Fan
F) First aid box
G) Front
H) Headliner
I) Rear
J) Grey cloth
K) Rot. beacon
L) Rear work light
M) Front work light

Cab, heater

15633

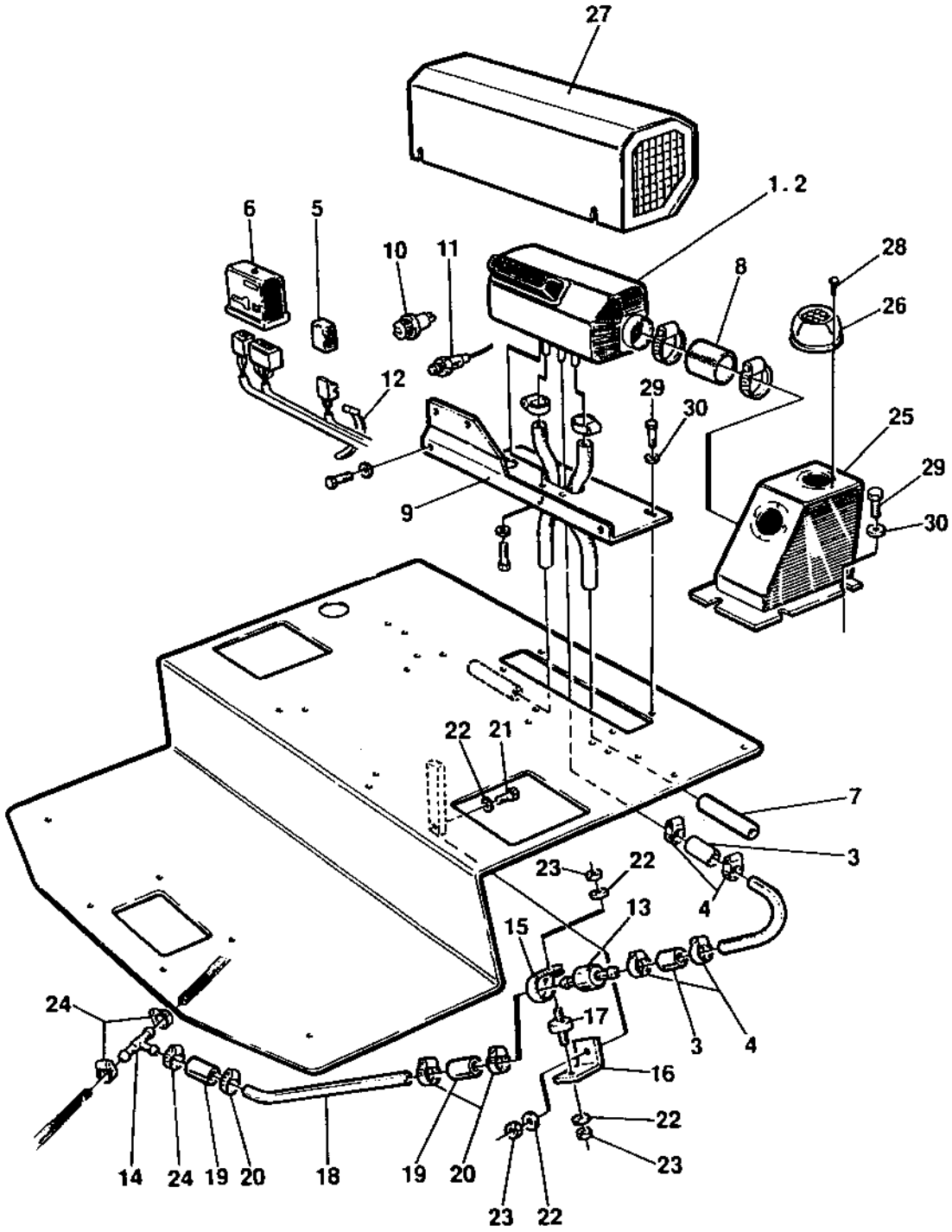

Ref. No.	Part No.	Rem.	Qty	Description	Code
1	901561		1	Heater	
2	901562		1	Heater plug	M24
3	901556	B	2XL	Fuel hose	
4	901559		4	Hose clamp	
5	901565	C	1	Relay	
6	901564		1	Control unit	
7	901563		1	Exhaust hose	
8	901587	B	1XL	Warm air hose	
9	358622		1	Holder plate	
10	901568		1	Control	
11	901566		1	Sensor	
12	925802		N	Cable ties	L=142 mm
13	901550		1	Fuel pump	
14	903140		1	Connector	
15	901552		1	Clamp	
16	901553		1	Bracket	
17	901554		1	Shock absorber	
18	901555	B	2XL	Fuel pipe	
19	901557	B	2XL	Fuel hose	
20	901558		3	Hose clamp	
21	500013		1	Screw	M6-1x16 8,8
22	615042		4	Conical spring washer	
23	570004		3	Nut	M6
24	313108		3	Hose clamp	
25	358595		1	Air inlet cover	
26	901571		2	Air nozzle	
27	358620		1	Protecting cover	
28	526007		6	Screw	
29	500012		10	Screw	M6x12
30	600004		10	Washer	

B) Length as required
C) Heater

Canopy

16647

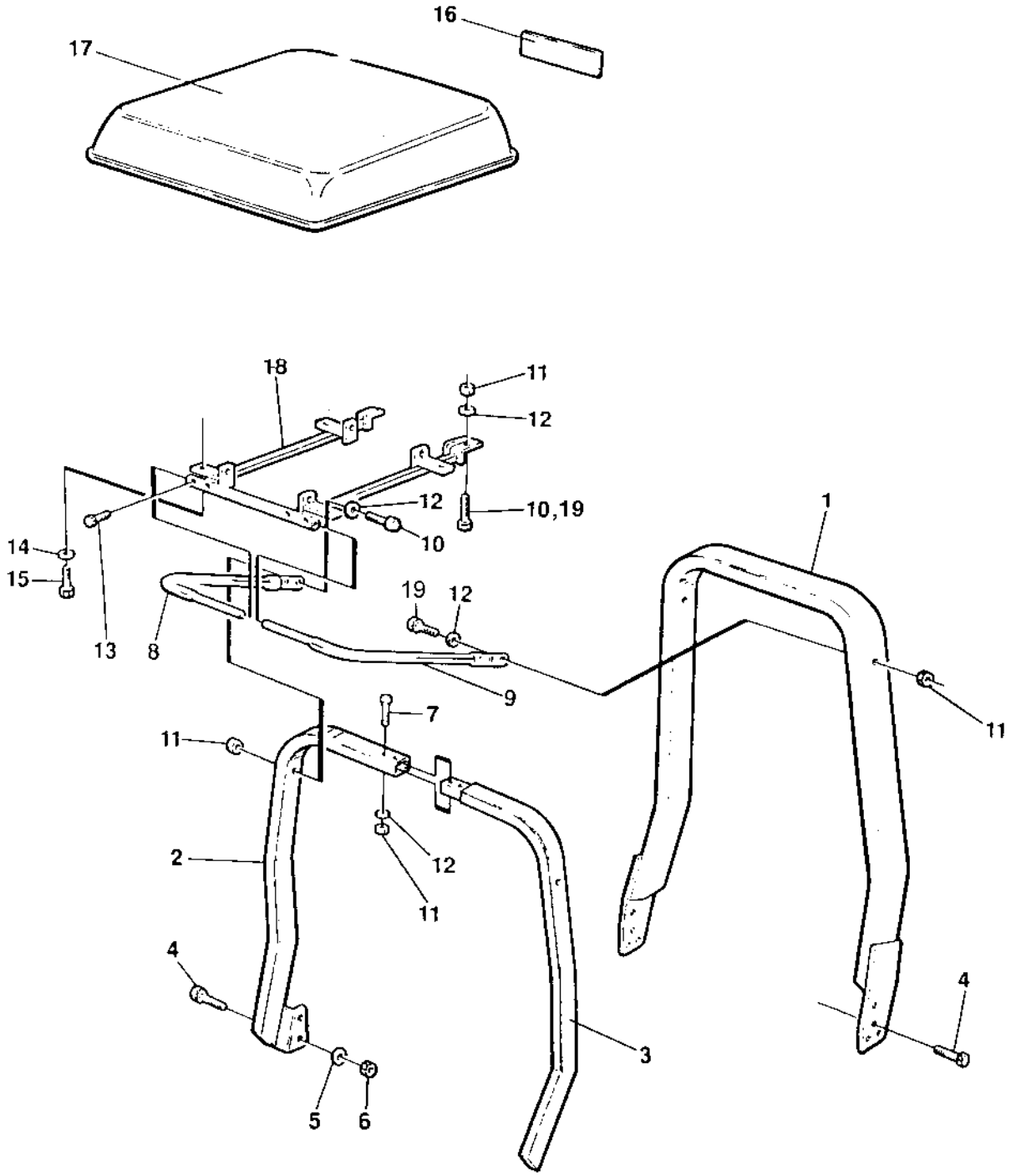

Canopy

Ref. No.	Part No.	Rem.	Qty	Description	Code
1		1		Rops	
2	358801	A	1	Frame	
3	358802	B	1	Frame	
4	500030		4	Screw	M10-1,5x35H 8,8
5	600008		6	Washer	
6	586018		2	Lock nut	M10
7	500195		2	Screw	M12-1,75x50 8.8
8	358789	A	1	Frame	
9	358790	B	1	Frame	
10	500111		2	Screw	M12x55 8,8
	500133		2	Screw	M12x70
11	586019		6	Lock nut	M12
	586019	2	4	Lock nut	M12
12	904231		12	Washer	13x24x2
	904231	2	8	Washer	13x24x2
13	516042		4	Stop screw	
14	904229		4	Washer	8,4x16x1,5
15	500021		4	Screw	M8-1,25x25 8,8
16	904094		1	Decal "DYNAPAC"	L=670 mm
17	358782		1	Canopy	
18	358783		1	Frame	
19	500071	2	4	Screw	M12-1,75x75 8,8

1) Rops, see section " Rops "
2) Canopy for rops
A) Right
B) Left

SMV sign

16668

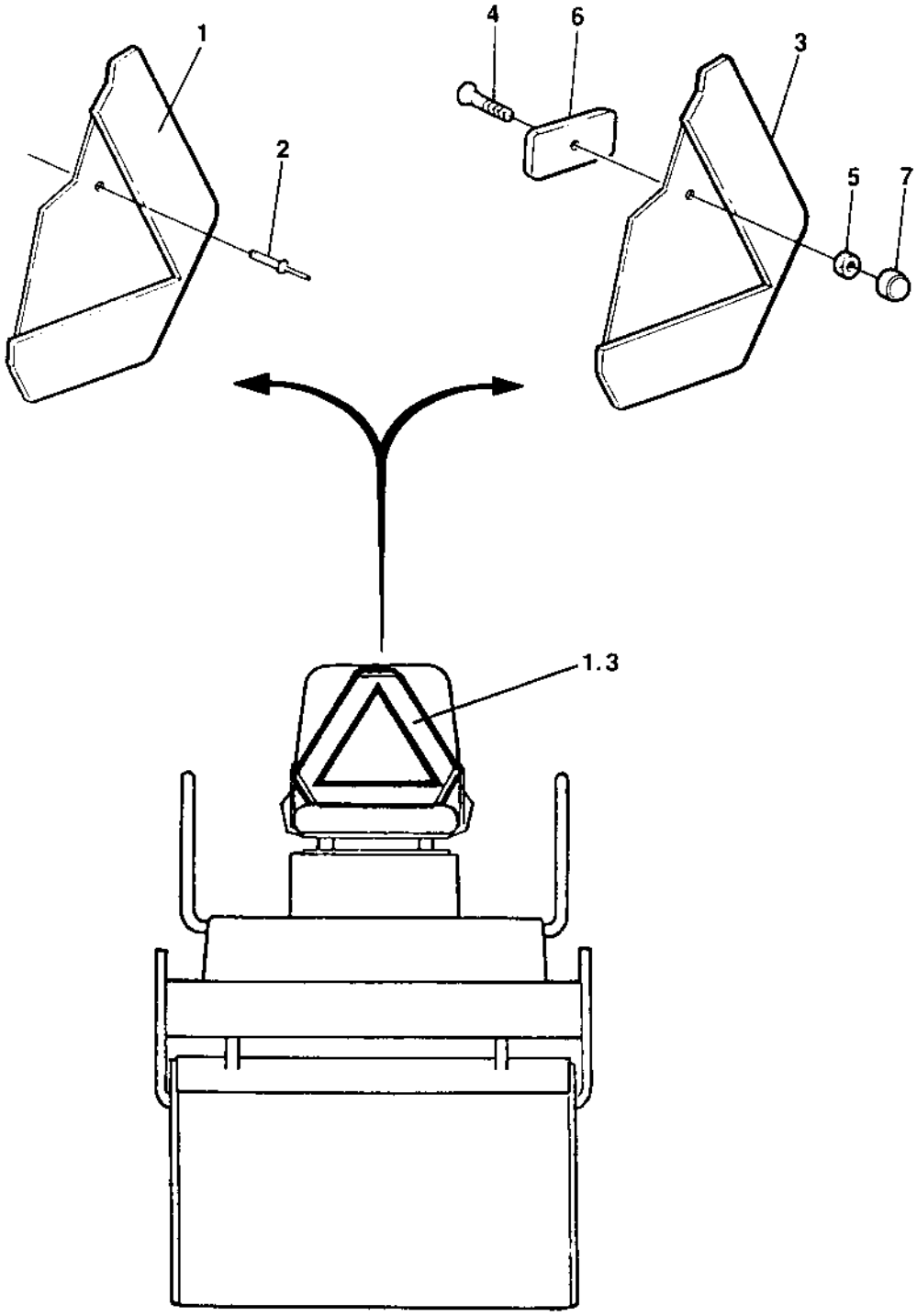

SMV sign

Ref. No.	Part No.	Rem.	Qty	Description	Code
1	476019		1	SMV sign	
2	624011		6	Pop rivet	
3	476019		1	SMV sign	
4	513013	A	2	Screw	
5	570005	A	2	Nut	M8
6	374460	A	2	Spacer	
7	904203	A	2	Nut protection	

A) S/N see item 3, on seats with armrests use existing

SMV sign placed on platform

18404

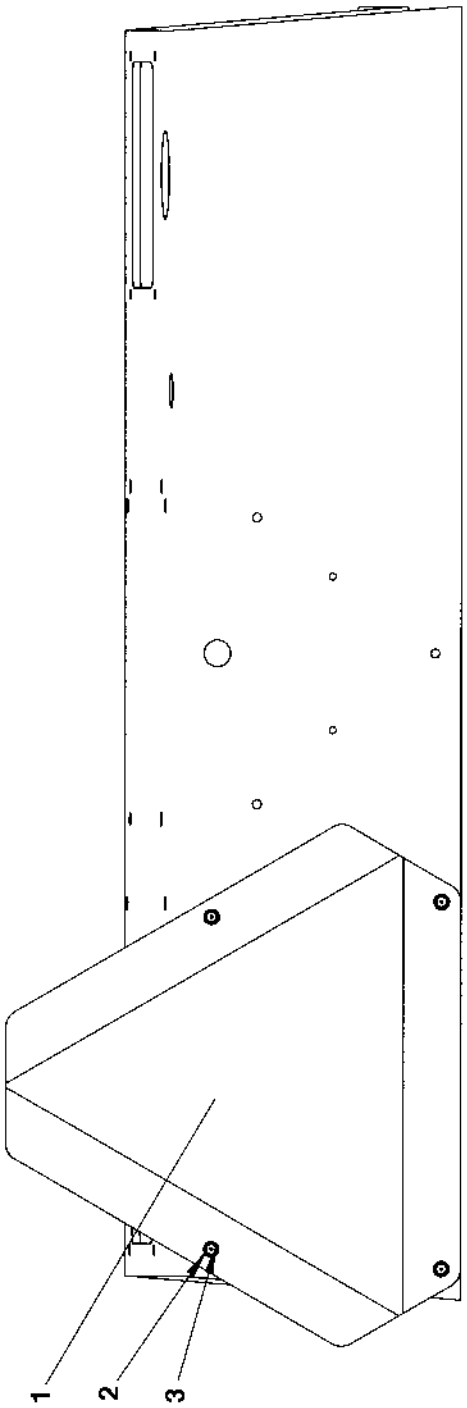

SMV sign placed on platform

Ref. No.	Part No.	Rem.	Qty	Description	Code
1	476019		1	SMV sign	
2	601001		4	Washer	
3	923253		4	Rivet	

Tool equipment

15581

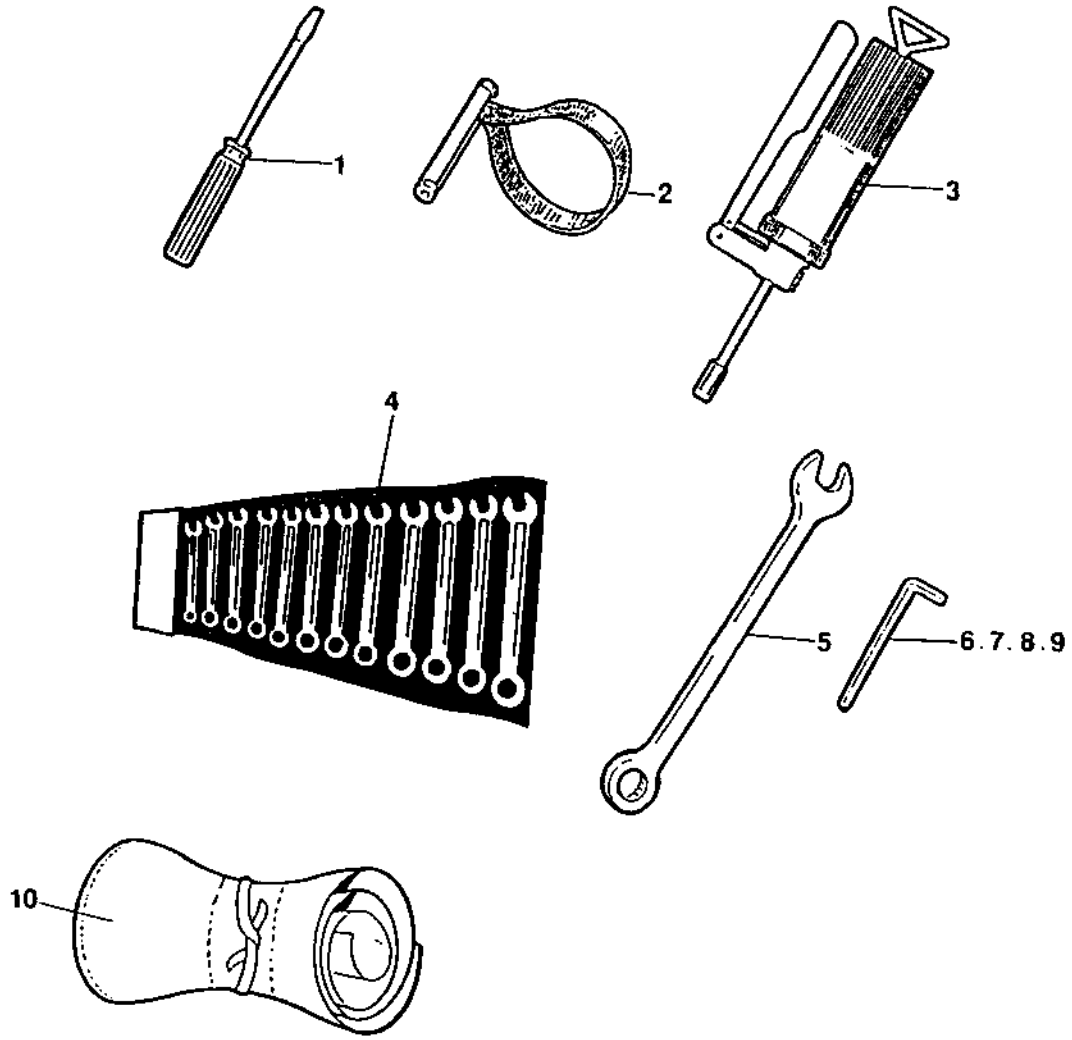

Ref. No.	Part No.	Rem.	Qty	Description	Code
1	485019		1	Screw driver	
2	902610		1	Belt pliers	
3	311016		1	Grease gun	
4	901212	A	1	Open end spanner	
5	902578		1	Open end spanner	22 mm
6	485005		1	Allen wrench	1/4"
7	485037		1	Allen wrench	3/8"
8	485388		1	Allen wrench	6MM
9	485006		1	Allen wrench	8MM
10	277992		1	Tool bag	

A) Kit

Noise suppression DEUTZ , 78 dB

15586-1

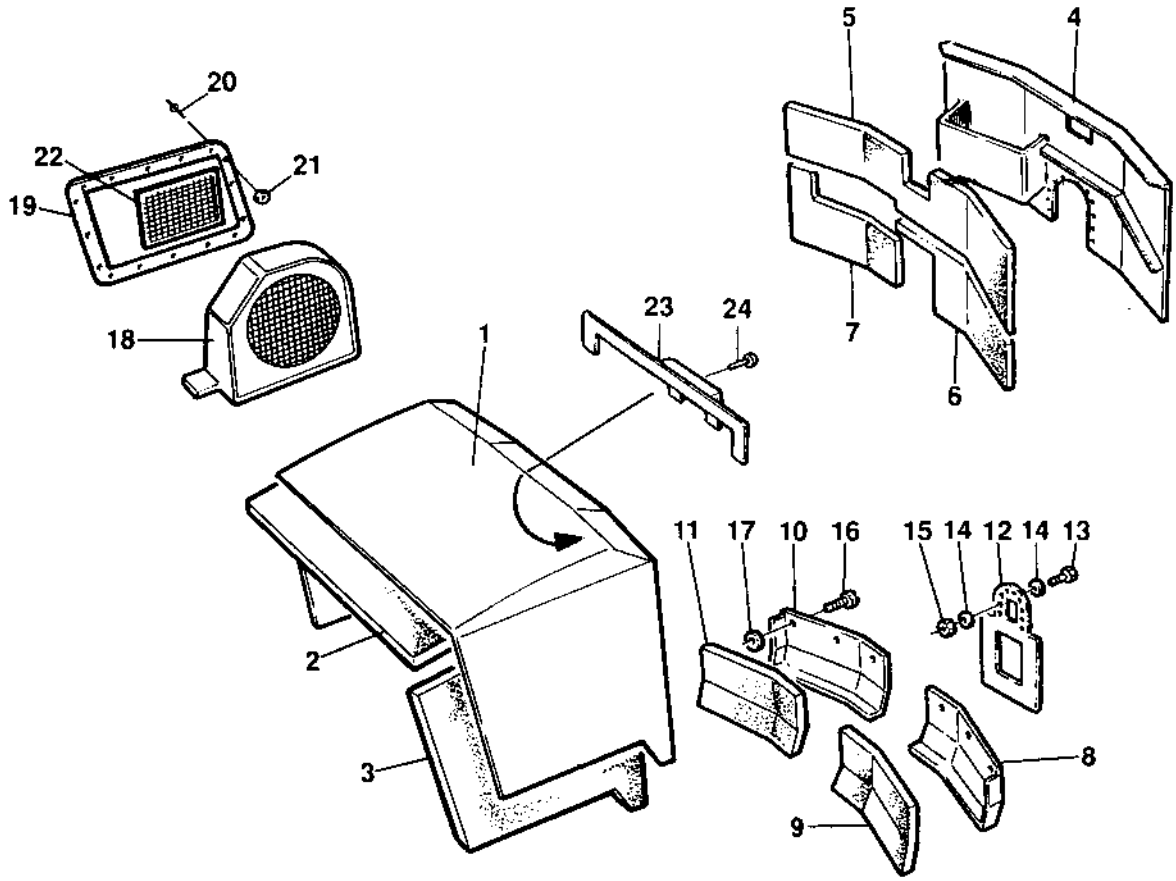

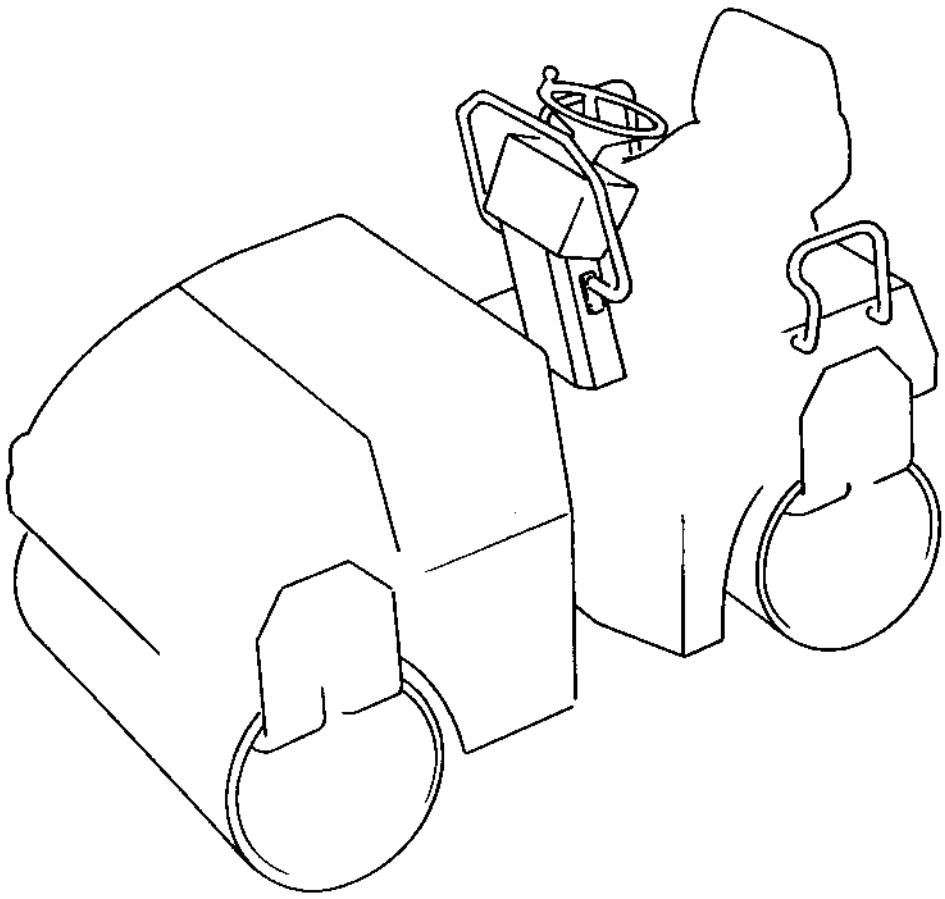

Noise suppression DEUTZ , 78 dB

Ref. No.	Part No.	Rem.	Qty	Description	Code
1		1	1	Hood	
2	358324		1	Absorbent	
3	358325		1	Absorbent	
4	382563	B	1	Cover	
5	358333		1	Absorbent	
6	358332		1	Absorbent	
7	382568		1	Absorbent	
8	358338		1	Cover	
9	358339		1	Absorbent	
10	358335		1	Cover	
11	358336		1	Absorbent	
12	358342		1	Rubber cloth	
13	500040		9	Screw	M6-1x20 8,8
14	615065		18	Washer	
15	586002		9	Lock nut	M6
16	922875		6	Lock pin	
17	926985		6	Quick lock washer	
18	374087		1	Cover	
	358558		1	.Absorbent	
	358561		1	.Absorbent	
19	358551		1	Cover	
20	903369		20	Rivet	
21	902111		20	Washer	
22	902166	A	1XL	Edge trim	
23	374100		1	Holder	
24	500075		2	Screw	M6-1,0x25 8.8

1) See section " Structure "
A) Length as required
B) New design has to be slightly modified to fit

Noise suppression DEUTZ , 78 dB

18365

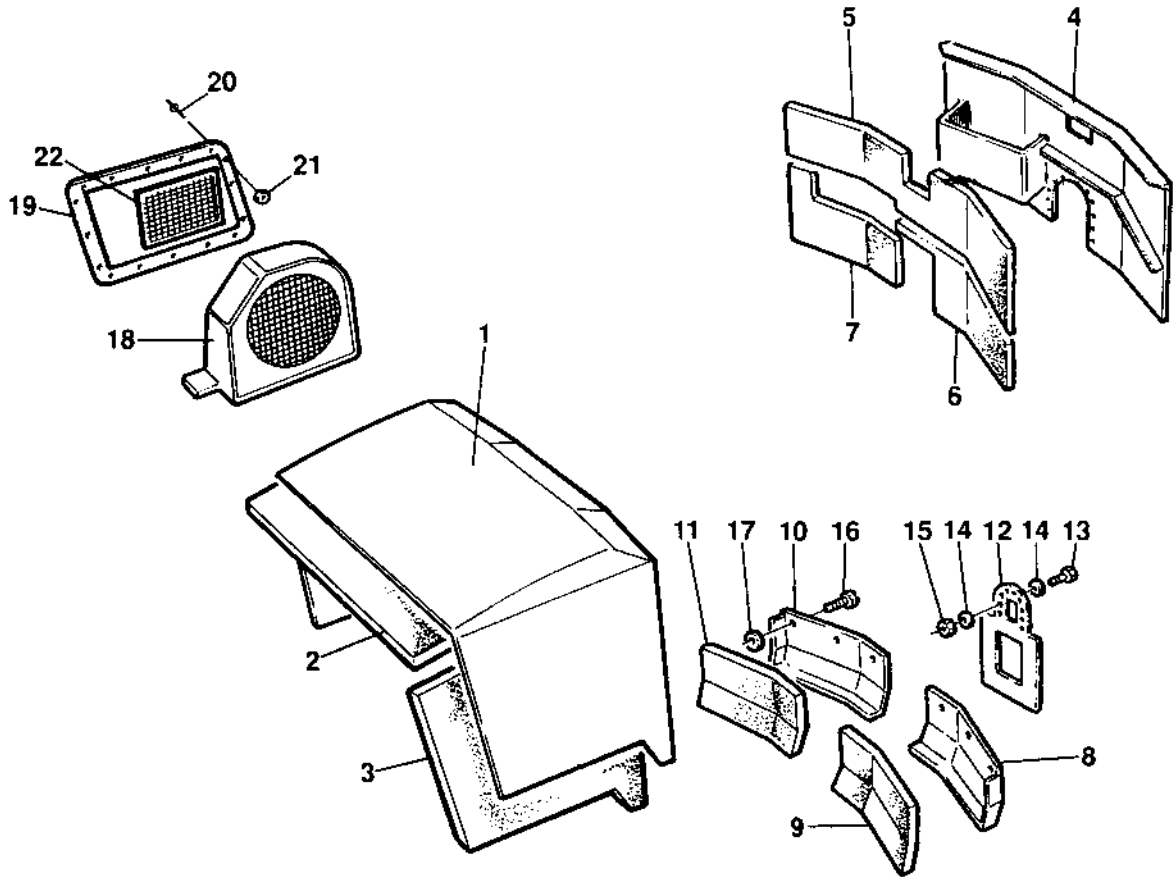

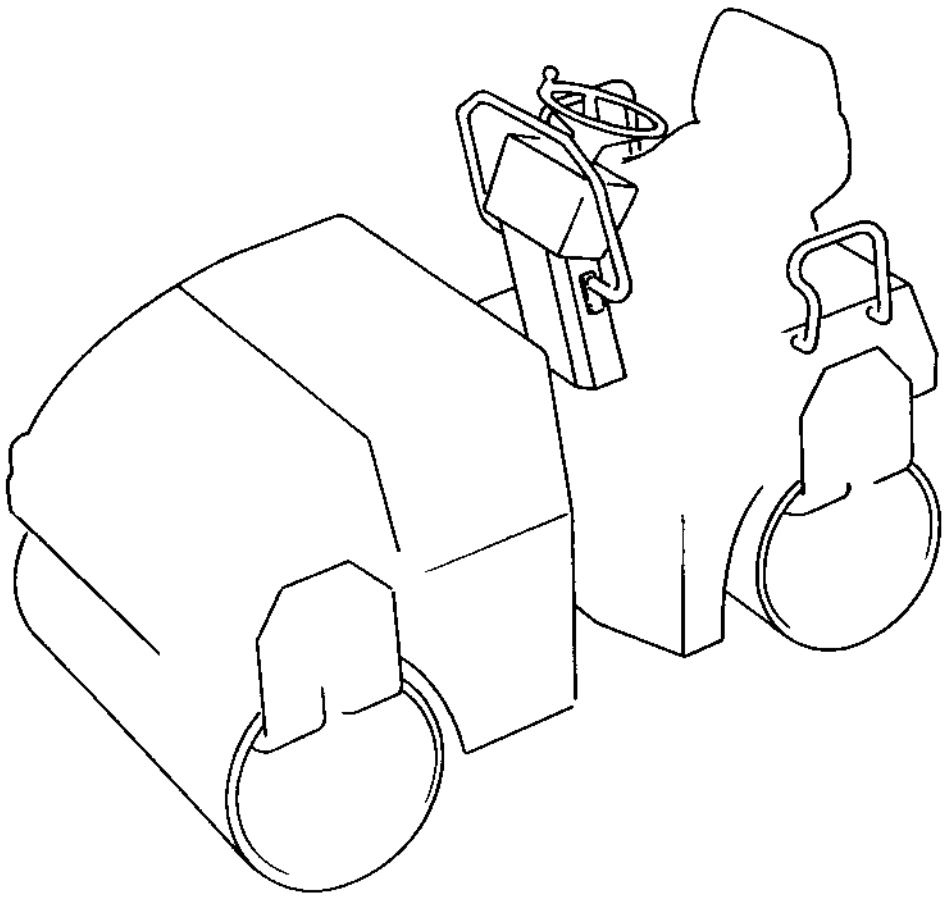

Noise suppression DEUTZ , 78 dB

Ref. No.	Part No.	Rem.	Qty	Description	Code
1		1	1	Hood	
2	358324		1	Absorbent	
3	358325		1	Absorbent	
4	382563		1	Cover	
5	358333		1	Absorbent	
6	358332		1	Absorbent	
7	382568		1	Absorbent	
8	358338		1	Cover	
9	358339		1	Absorbent	
10	358335		1	Cover	
11	358336		1	Absorbent	
12	358342		1	Rubber cloth	
13	500040		9	Screw	M6-1x20 8,8
14	615065		18	Washer	
15	586002		9	Lock nut	M6
16	922875		6	Lock pin	
17	926985		6	Quick lock washer	
18	374087		1	Cover	
	358558		1	.Absorbent	
	358561		1	.Absorbent	
19	358551		1	Cover	
20	903369		20	Rivet	
21	902111		20	Washer	
22	902166	A	1XL	Edge trim	

1) See section " Structure "
A) Length as required

Noise suppression DEUTZ , 73 dB

15587-2

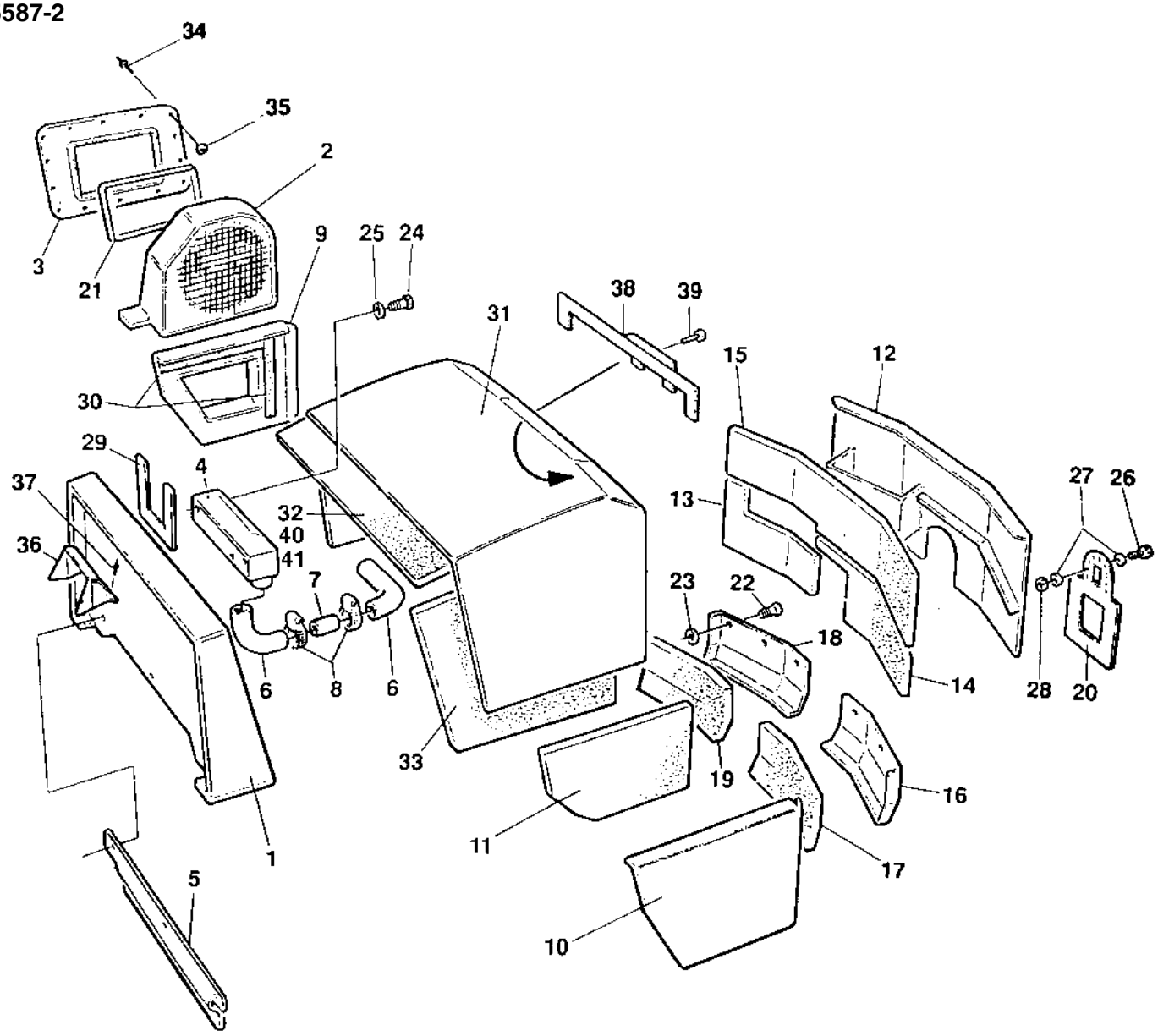

Noise suppression DEUTZ , 73 dB

Ref. No.	Part No.	Rem.	Qty	Description	Code
1	358540		1	Hood frame	
2	374087		1	Cover	
	358558		1	.Absorbent	
	358561		1	.Absorbent	
3	358551		1	Cover	
4	358545		1	Cover	
5	358536		1	Cover	
6	358552		2	Air inlet hose	
7	358553		1	Pipe	
8	313023		2	Hose clamp	
9	358557		1	Cover	
10		1	1	Cover	
11	358341		1	Absorbent	
12	382563	B	1	Cover	
13	382568		1	Absorbent	
14	358332		1	Absorbent	
15	358333		1	Absorbent	
16	358338		1	Cover	
17	358339		1	Absorbent	
18	358335		1	Cover	
19	358336		1	Absorbent	
20	358342		1	Rubber cloth	
21	902166	A	1XL	Edge trim	
22	922875		6	Lock pin	
23	926985		6	Quick lock washer	
24	500190		3	Screw	M8-1,25x80 8.8
25	600006		3	Washer	
26	500040		9	Screw	M6-1x20 8,8
27	615065		18	Washer	
28	586002		9	Lock nut	M6
29	928937	A	1XL	Rubber strip	
30	202043	A	1XL	Rubber strip	
31		1	1	Hood	
32	358324		1	Absorbent	
33	358325		1	Absorbent	
34	903369		20	Rivet	
35	902111		20	Washer	
36	359769		1	Protecting cover	
37	903436		5	Blind rivet	
38	374100		1	Holder	
39	500075		2	Screw	M6-1,0x25 8.8
40	904798		4	Screw	
41	373476		4	Insulating washer	

1) See section " Structure "
A) Length as required
B) New design has to be slightly modified to fit

Noise suppression DEUTZ , 73 dB

18364

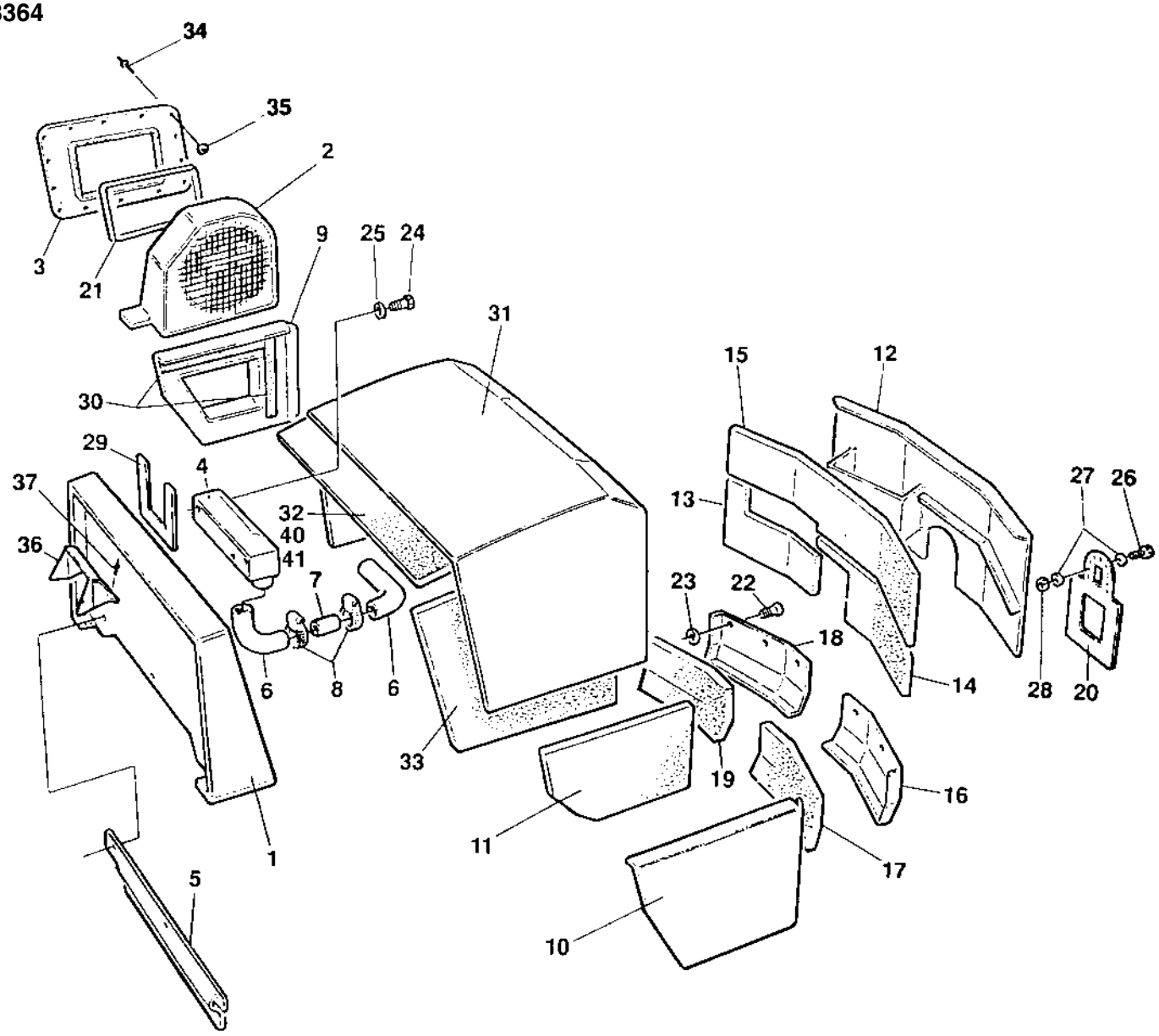

Noise suppression DEUTZ , 73 dB

Ref. No.	Part No.	Rem.	Qty	Description	Code
1	358540		1	Hood frame	
2	374087		1	Cover	
	358558		1	.Absorbent	
	358561		1	.Absorbent	
3	358551		1	Cover	
4	358545		1	Cover	
5	358536		1	Cover	
6	358552		2	Air inlet hose	
7	358553		1	Pipe	
8	313023		2	Hose clamp	
9	358557		1	Cover	
10		1	1	Cover	
11	358341		1	Absorbent	
12	382563		1	Cover	
13	382568		1	Absorbent	
14	358332		1	Absorbent	
15	358333		1	Absorbent	
16	358338		1	Cover	
17	358339		1	Absorbent	
18	358335		1	Cover	
19	358336		1	Absorbent	
20	358342		1	Rubber cloth	
21	902166	A	1XL	Edge trim	
22	922875		6	Lock pin	
23	926985		6	Quick lock washer	
24	500190		3	Screw	M8-1,25x80 8.8
25	600006		3	Washer	
26	500040		9	Screw	M6-1x20 8,8
27	615065		18	Washer	
28	586002		9	Lock nut	M6
29	928937	A	1XL	Rubber strip	
30	202043	A	1XL	Rubber strip	
31		1	1	Hood	
32	358324		1	Absorbent	
33	358325		1	Absorbent	
34	903369		20	Rivet	
35	902111		20	Washer	
36	359769		1	Protecting cover	
37	903436		5	Blind rivet	
40	791233		4	Holder	
41	791234		4	Insulating washer	

1) See section " Structure "
A) Length as required

Noise suppression ISUZU

15695-2

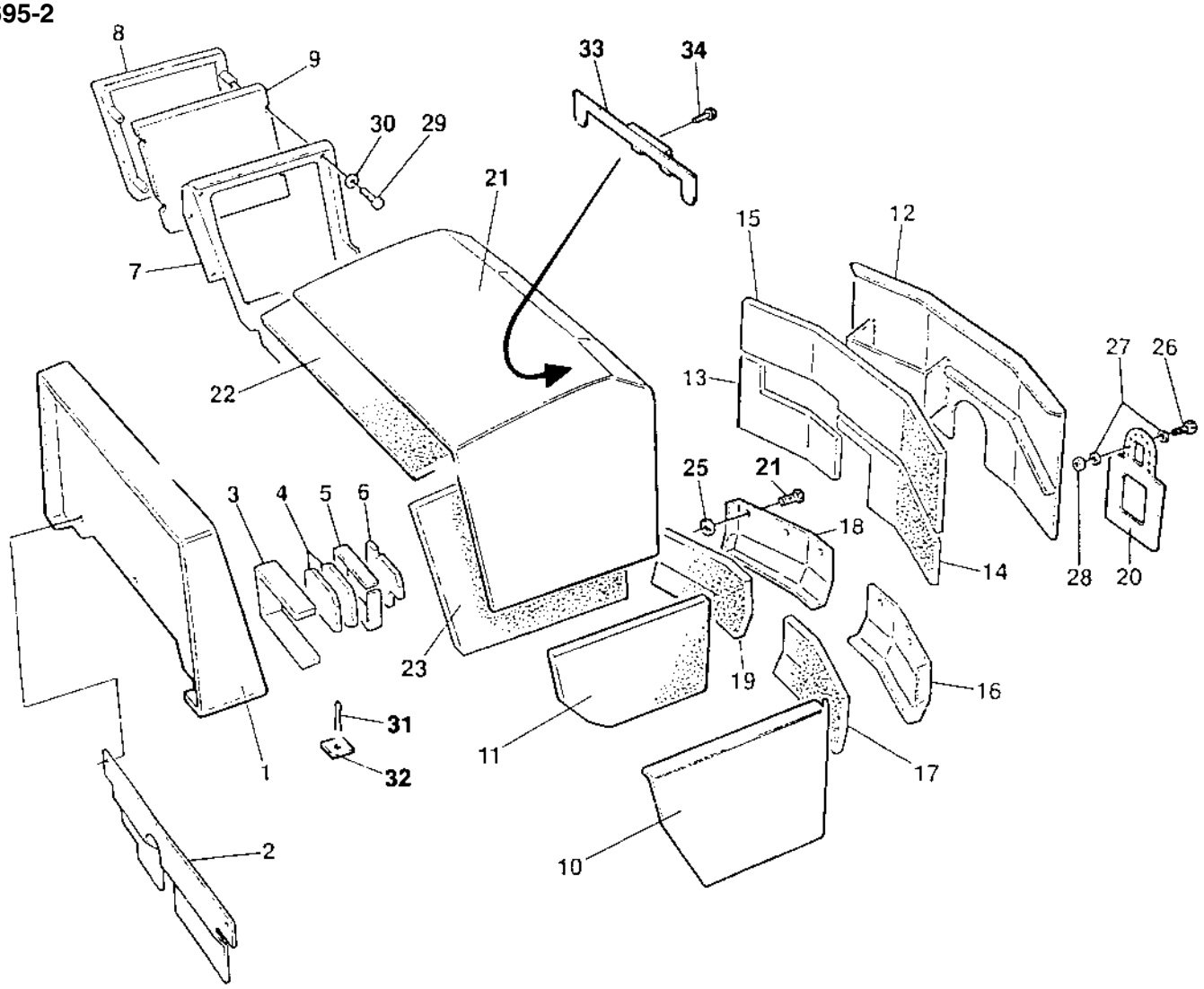

Ref. No.	Part No.	Rem.	Qty	Description	Code
1		1	1	Hood frame	
2	370719		1	Cover	
3	370740		1	Absorbent	
4	370741		2	Absorbent	
5	370742		1	Absorbent	
6	370743		1	Absorbent	
7	370647		1	Cover	
8	370721		1	Cover	
9	370722		1	Absorbent	
10		1	1	Cover	
11	358341		1	Absorbent	
12	382563	A	1	Cover	
13	382568		1	Absorbent	
14	358332		1	Absorbent	
15	358333		1	Absorbent	
16	358338		1	Cover	
17	358339		1	Absorbent	
18	358335		1	Cover	
19	358336		1	Absorbent	
20	358342		1	Rubber cloth	
21		1	1	Engine hood	
22	358324		1	Absorbent	
23	358325		1	Absorbent	
24	922875		6	Lock pin	
25	926985		6	Quick lock washer	
26	500040		9	Screw	M6-1x20 8,8
27	615065		18	Washer	
28	586002		9	Lock nut	M6
29	500018		4	Screw	M8-1,25x12 8,8
30	615043		4	Washer	8,4x18x2
31	630035		10	Split pin	
32	358646		10	Washer	
33	374100		1	Holder	
34	500075		2	Screw	M6-1,0x25 8.8

1) See section "Structure"
A) New design has to be slightly modified to fit

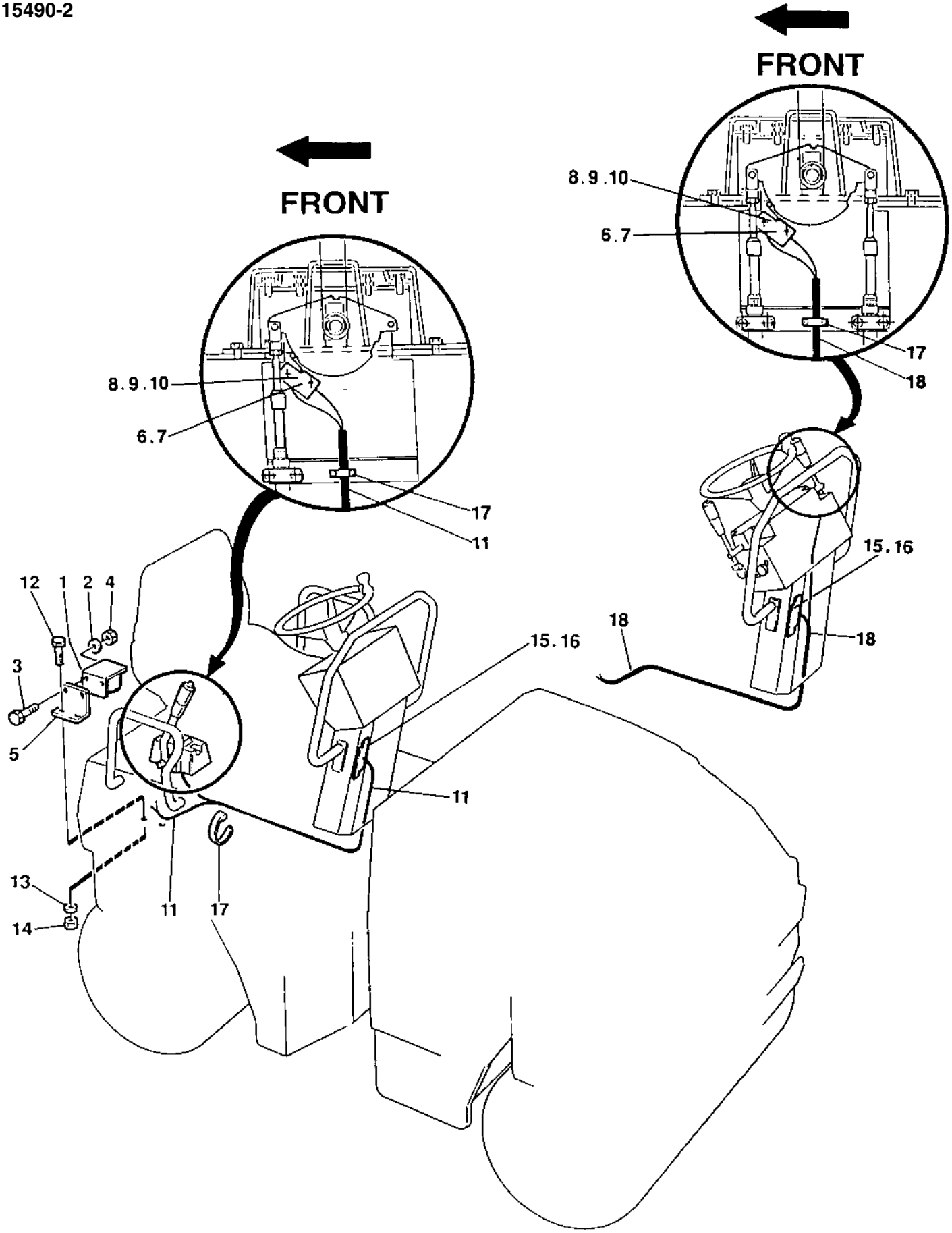
FRONT
8.9.10
6.7
17
18
FRONT
8.9.10
6.7
17
11
15.16
18
18
12
1
2
4
3
5
15.16
11
13
14
11
17

Back-up alarm

Ref. No.	Part No.	Rem.	Qty	Description	Code
1	903241		1	Back-up alarm	97 dB
2			4	.Washer	
3			4	.Screw	
4			4	.Nut	
5	357993		1	Holder plate	
6	357994		1	Spacer nut	
7	902528		1	Micro switch	
8	533057		2	Screw	
9	929602		2	Washer	
10	375892		1	Spacer nut	
11	357973	A	1	Cable harness	
12	500040		2	Screw	M6-1x20 8,8
13	600004		2	Washer	
14	586002		2	Lock nut	M6
15	901240		2	Connector	
16	901226		1	Fuse	7.5A
17	313068		N	Cable ties	L=92 mm
18	370660	C	1	Cable harness	

A) DEUTZ
C) ISUZU

Rear mirror

15491-2

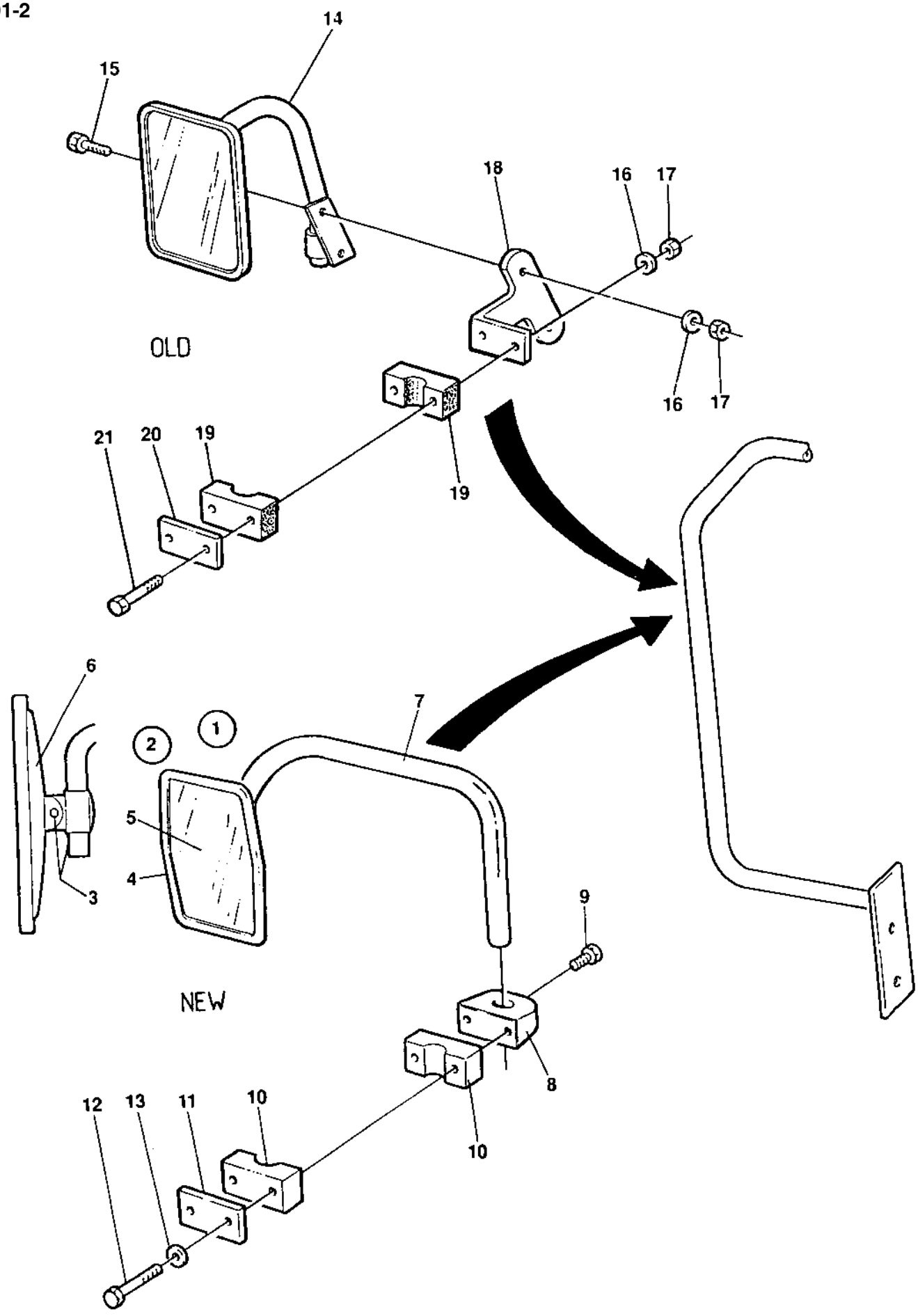

Rear mirror

Ref. No.	Part No.	Rem.	Qty	Description	Code
1	359662	A	1	Rear mirror	
2	909498		1	.Mirror	
3			1	..Mirror	
4			1	..Frame	
5	903722	B	1	..Mirror glass	
6			1	..Mirror cap	
7	359661		1	.Arm	
8	359660		1	Mirror bracket	
9	516043		1	Set screw	
10	902496	C	1	Clamp	
11	923859		1	Cover plate	
12	500079		2	Screw	M6-1x50 8,8
13	615042		2	Conical spring washer	
14	355705		1	Rear mirror	
15	902845		2	Screw	
16	600004		4	Washer	
17	586002		4	Lock nut	M6
18	357939		1	Holder plate	
19	902496	C	1	Clamp	
20	923859		1	Cover plate	
21	500016		2	Screw	M6-1,0x55 8,8

A) CPL
B) W. tape
C) 2 pcs

Combination water supply

15584-1

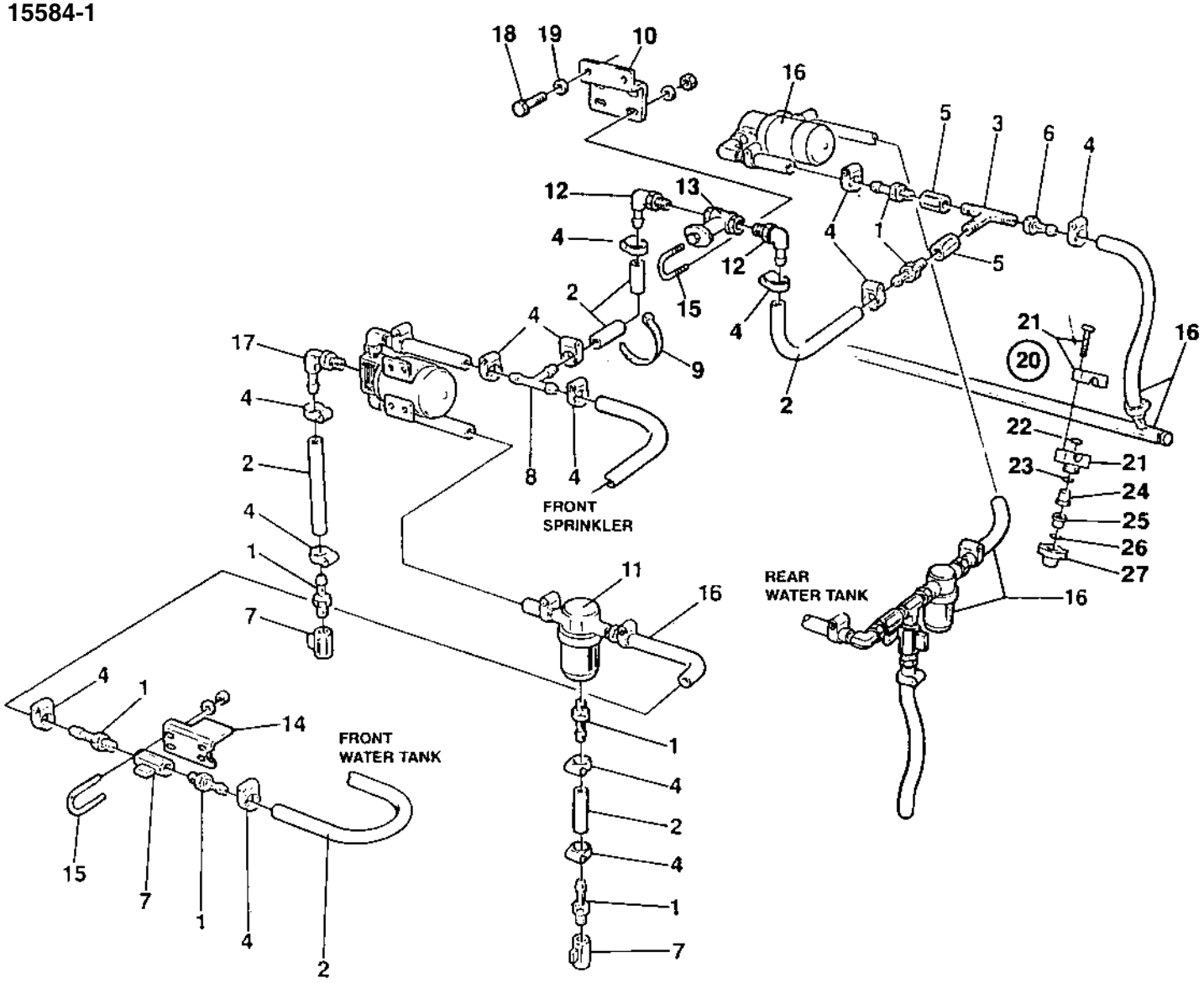

Ref. No.	Part No.	Rem.	Qty	Description	Code
1	924544		7	Hose connection	
2	244054	A	5XL	Hose reinforced	
3	902105		1	Connector	
4	313002		14	Hose clamp	13 - 20 mm
5	358507		2	Check valve	
6	901300		1	Hose connection	
7	925599		3	Valve	
	379753	D	8	Gasket	
8	923735		1	Hose connection	
9	313102		N	Cable ties	
10	370600		1	Holder plate	
11	358736	C	1	Strainer	
	921423		1	.Gasket	
	921424		1	.Strainer	
12	924996		2	Hose connection	
13	904364		1	Valve	
14	358845		1	Holder plate	
15	313107		4	Clamp	
16			N	Existing	
17	901431		1	Hose connection	
18	500021		2	Screw	M8-1,25x25 8,8
19	600006		4	Washer	
20	902874		4	Sprinkler, cpl	
21	923680		1	.Nozzle clamp	
22	903962		1	..Blind rivet	
23	903010		1	.Gasket	
24	902869		1	.Strainer	
25	923679		1	.Nozzle	
26	904116		1	.Gasket	
27	902868		1	.Coupling, red	

A) Length as required
C) CPL
D) Not illustrated

Combination water supply 2 rear sprinkler pipes

15767-1

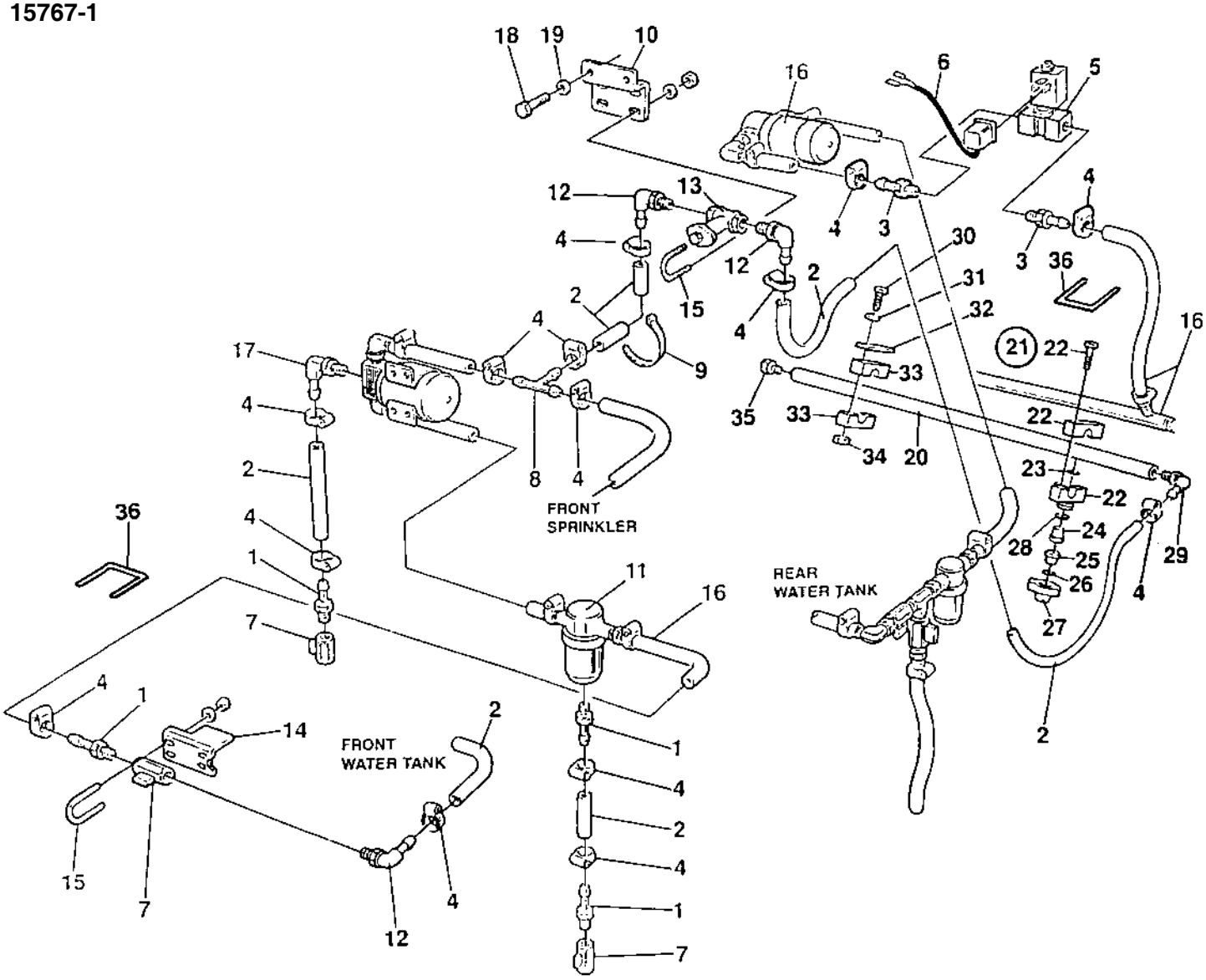

Combination water supply 2 rear sprinkler pipes

Ref. No.	Part No.	Rem.	Qty	Description	Code
1	924544		4	Hose connection	
2	244054	A	5XL	Hose reinforced	
3	901432		2	Hose connection	
4	313002		14	Hose clamp	13 - 20 mm
5	287713		1	Solenoid valve	
6	358809		1	Cable harness	
7	925599		3	Valve	
	379753	E	8	Gasket	
8	923735		1	Hose connection	
9	313102		N	Cable ties	
10	370600		1	Holder plate	
11	358736	B	1	Strainer	
	921423		1	.Gasket	
	921424		1	.Strainer	
12	924996		3	Hose connection	
13	904364		1	Valve	
14	358845		1	Holder plate	
15	313107		4	Clamp	
16			N	Existing	
17	901431		1	Hose connection	
18	500021		2	Screw	M8-1,25x25 8,8
19	600006		4	Washer	
20				Not used on this model	
21	902874		4	Sprinkler, cpl	
22	923680		1	.Nozzle clamp	
23	923962		1	..O-ring	
24	902869		1	.Strainer	
25	923679		1	.Nozzle	
26	904116		1	.Gasket	
27	902868		1	.Coupling, red	
28	903010		1	.Gasket	
29	923684		1	Hose connection	
30	500016		4	Screw	M6-1,0x55 8,8
31	600004		4	Washer	
32	923859		2	Cover plate	
33	923876	C	2	Clamp	
34	586002		4	Lock nut	M6
35	923683		1	Plug	
36	902379	D	2XL	Edge trim	

A) Length as required
B) CPL
C) 2 pcs
D) L=0,18 m
E) Not illustrated

Brake release, propulsion motor

15856

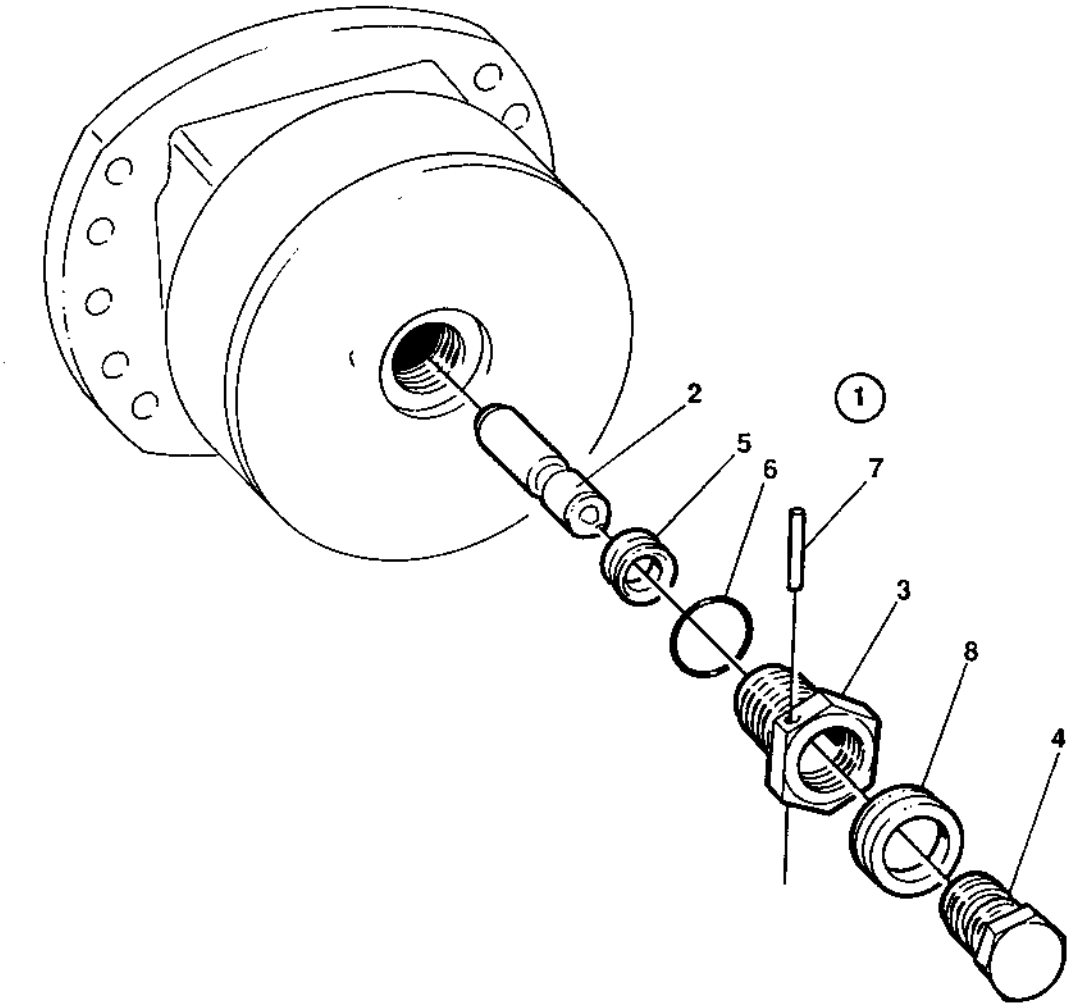

Brake release, propulsion motor

Ref. No.	Part No.	Rem.	Qty	Description	Code
1	373057	1	2	Brake release kit	
2	373029		1	.Stud	
3	381253		1	.Plug	
4	381252		1	.Plug	
5	904030		1	.Seal	
6	160363		1	.O-ring	
7	904029		1	.Pin	
8	903835		1	.Seal	

1) For hydraulic motors P/N 371542 and P/N 375631.

Cassette receiver

15120

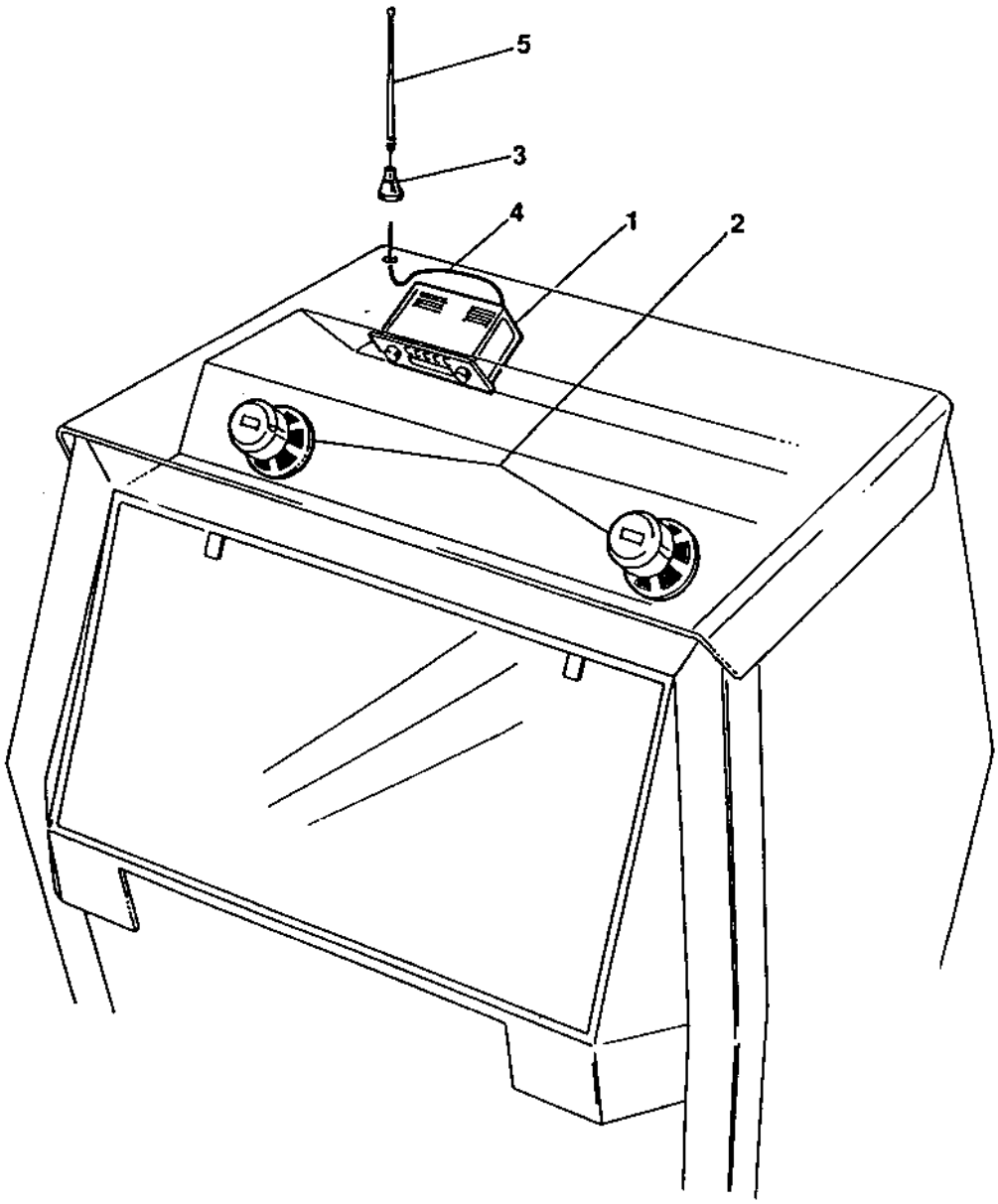

Cassette receiver

Ref. No.	Part No.	Rem.	Qty	Description	Code
1	901165		1	Cassette receiver	
2	901166	A	1	Loud speakers	
3	901168		1	Antenna holder	
4	901169		1	Antenna cable	
5	901167		1	Antenna	

A) 2 pcs

Towing valve

16570

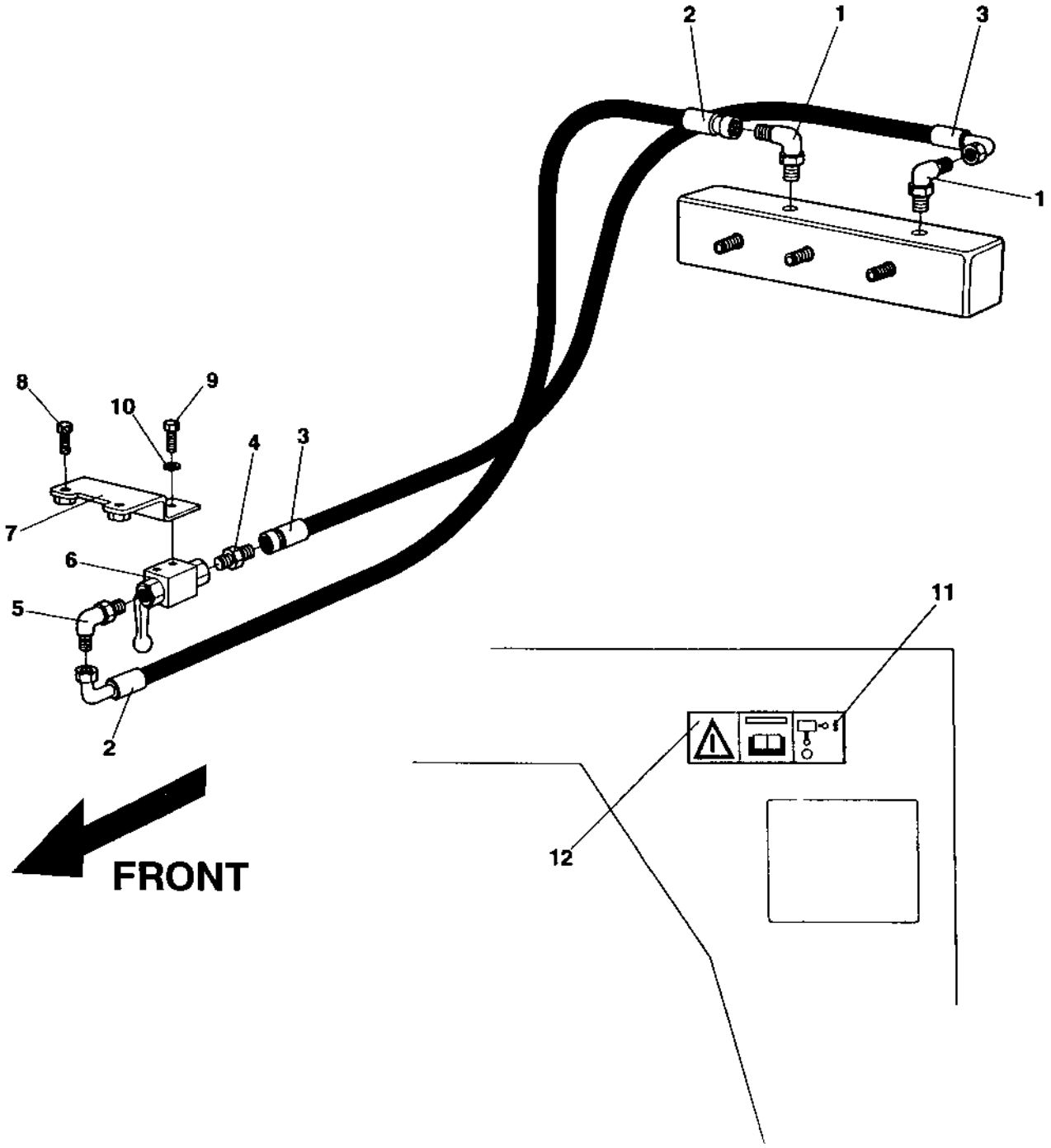

Towing valve

Ref. No.	Part No.	Rem.	Qty	Description	Code
1	813444		2	Elbow 90, O-ring	
2	831150		1	Hydraulic hose	
3	831150		1	Hydraulic hose	
4	334117		1	Adapter	
5	813435		1	Elbow 90	
6	344138		1	Ball valve	
7	358586		1	Holder plate	
8	500022		2	Screw	M8-1,25x30 8,8
9	500184		2	Screw	M5-0,8x14 8,8
10	615041		2	Washer	5,3x11
11	374101		1	Decal "SHUT-OFF VALVE"	
12	903459		1	Decal "SAFETY"	

Flow divider

16677

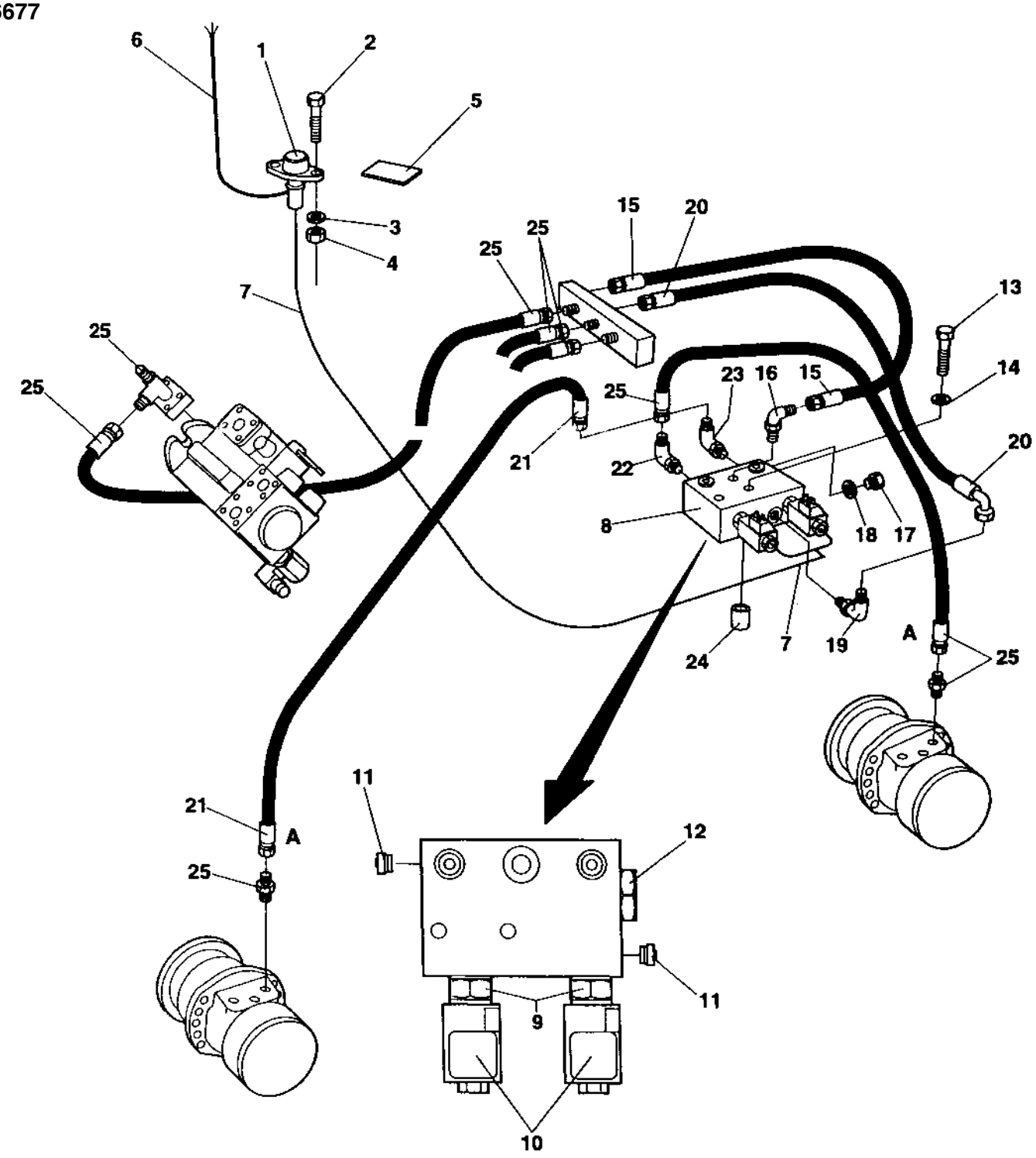

Flow divider

Ref. No.	Part No.	Rem.	Qty	Description	Code
1	358239		1	Contact	
2	533016		2	Screw	
3	600002		2	Washer	
4	923976		2	Nut	
5	355981		1	Decal	
6	358614		1	Cable harness	
7	358615		1	Cable harness	
8	358003		1	Flow divider	
9	903141		2	.Valve	
10	903142		2	.Coil	
11	903144		2	.Check valve	
12	903143		1	.Valve	
13	500034		2	Screw	M10-1,5x100 8,8
14	904230		2	Washer	10,5x22x2
15	482773		1	Hydraulic hose	
16	334235		1	Elbow 90	
17	332038		2	Plug	
18	162004		2	Sealing	
19	923407		1	Adapter	
20	482208		1	Hydraulic hose	
21	482214		1	Hydraulic hose	
22	904175		1	Connector	
23	923407		1	Adapter	
24	355869		2	Spacer sleeve	
25			N	Hydraulic details	

Vibration shut-off, front drum DEUTZ

16684-2

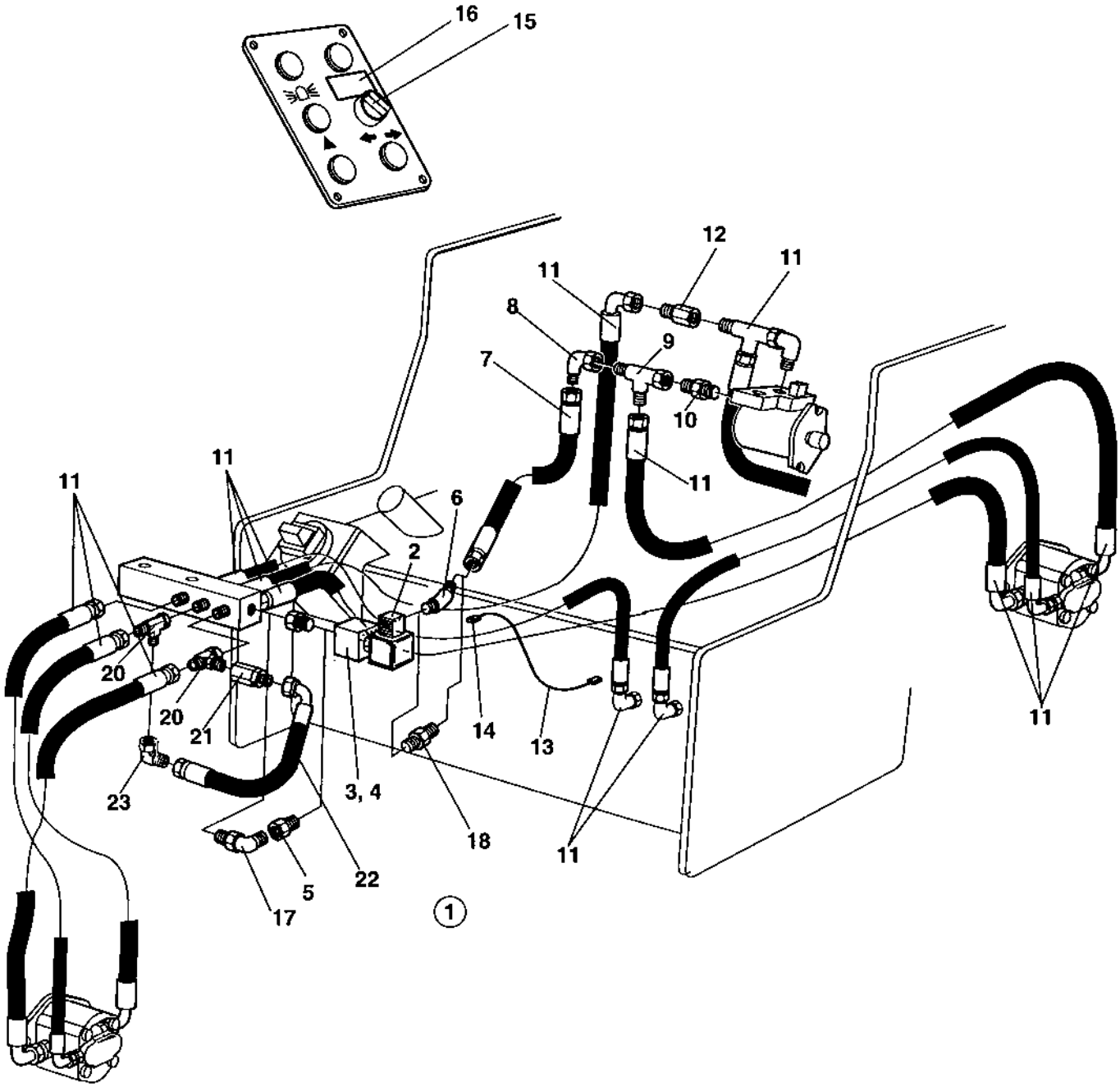

Vibration shut-off, front drum DEUTZ

Ref. No.	Part No.	Rem.	Qty	Description	Code
1	357934		1	Solenoid valve	
2	902535		1	.Coil	
3	902536		1	.Valve	
4	902537		1	.Housing	
5	923406		1	Connector	
6	904175		1	Connector	
7	482889		1	Hydraulic hose	
8	334197		1	Elbow 90	
9	334135		1	Tee-connector	
10	334116		1	Straight o-ring connector	
11			N	Hydraulic details	
12	357543		1	Valve	
13	373849		1	Cable harness	
14	960796		1	.Connector	black, MPM 182 09 ND
15	930151		1	Switch	
16	904224	B	1	Decal	
17	813500		1	Elbow 45, O-ring	
18	334165		1	Adapter	
20	334135	C	2	Tee-connector	
21	357543	C	1	Valve	
22	483585	C	1	Hydraulic hose	
23	334197	C	1	Elbow 90	

B) Vibr. shut-off front
C) Used in new machines

Vibration shut-off, front drum ISUZU

16685-2

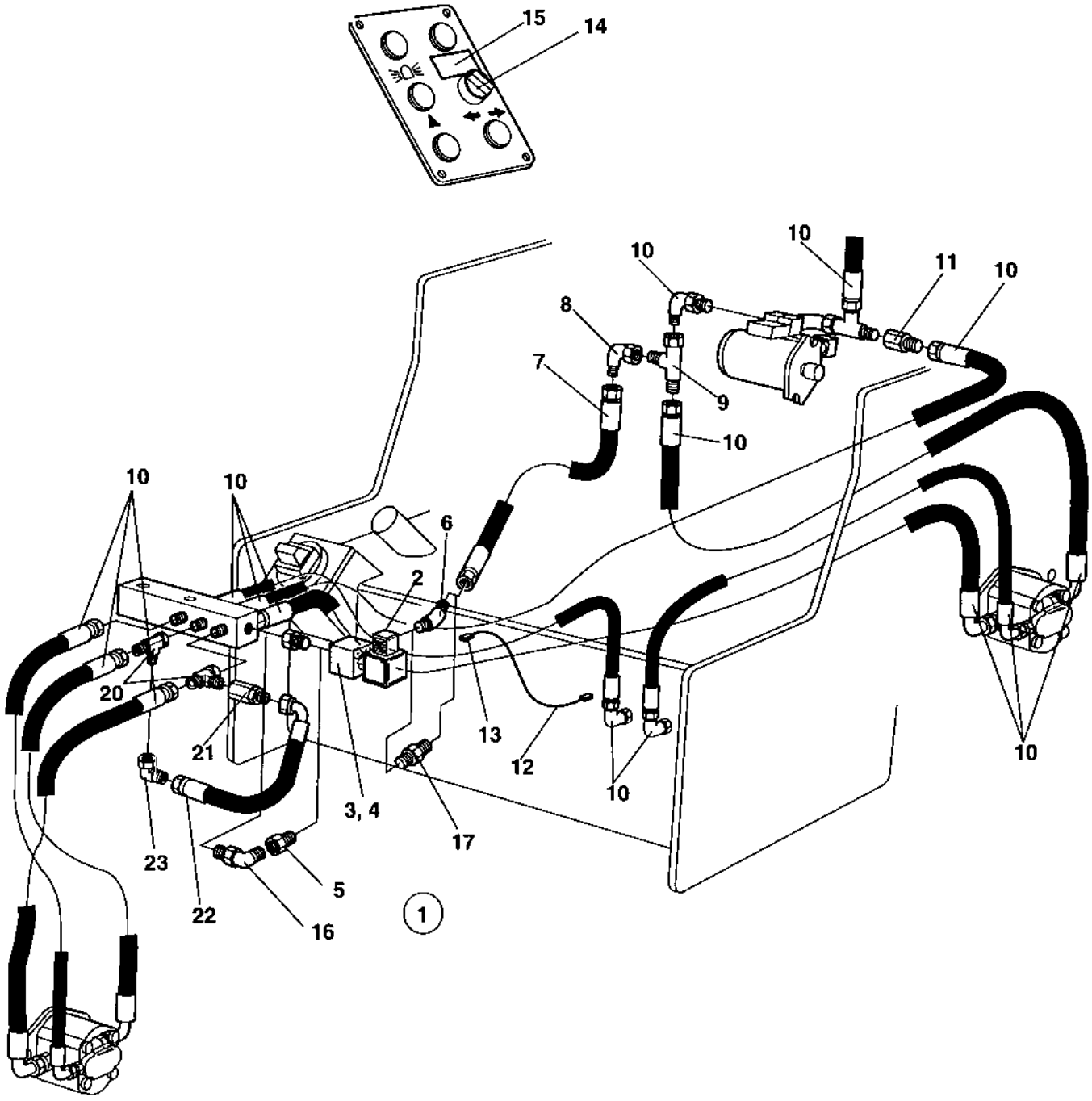

Vibration shut-off, front drum ISUZU

Ref. No.	Part No.	Rem.	Qty	Description	Code
1	357934		1	Solenoid valve	
2	902535		1	.Coil	
3	902536		1	.Valve	
4	902537		1	.Housing	
5	923406		1	Connector	
6	904175		1	Connector	
7	482889		1	Hydraulic hose	
8	334197		1	Elbow 90	
9	334135		1	Tee-connector	
10			N	Hydraulic details	
11	357543		1	Valve	
12	373849		1	Cable harness	
13	960796		1	.Connector	black, MPM 182 09 ND
14	930151		1	Switch	
15	904224	B	1	Decal	
16	813500		1	Elbow 45, O-ring	
17	334165		1	Adapter	
20	334135	C	2	Tee-connector	
21	357543	C	1	Valve	
22	483585	C	1	Hydraulic hose	
23	334197	C	1	Elbow 90	

B) Vibr. shut-off front
C) Used on new machines

Vibration shut-off, rear drum DEUTZ

16686-2

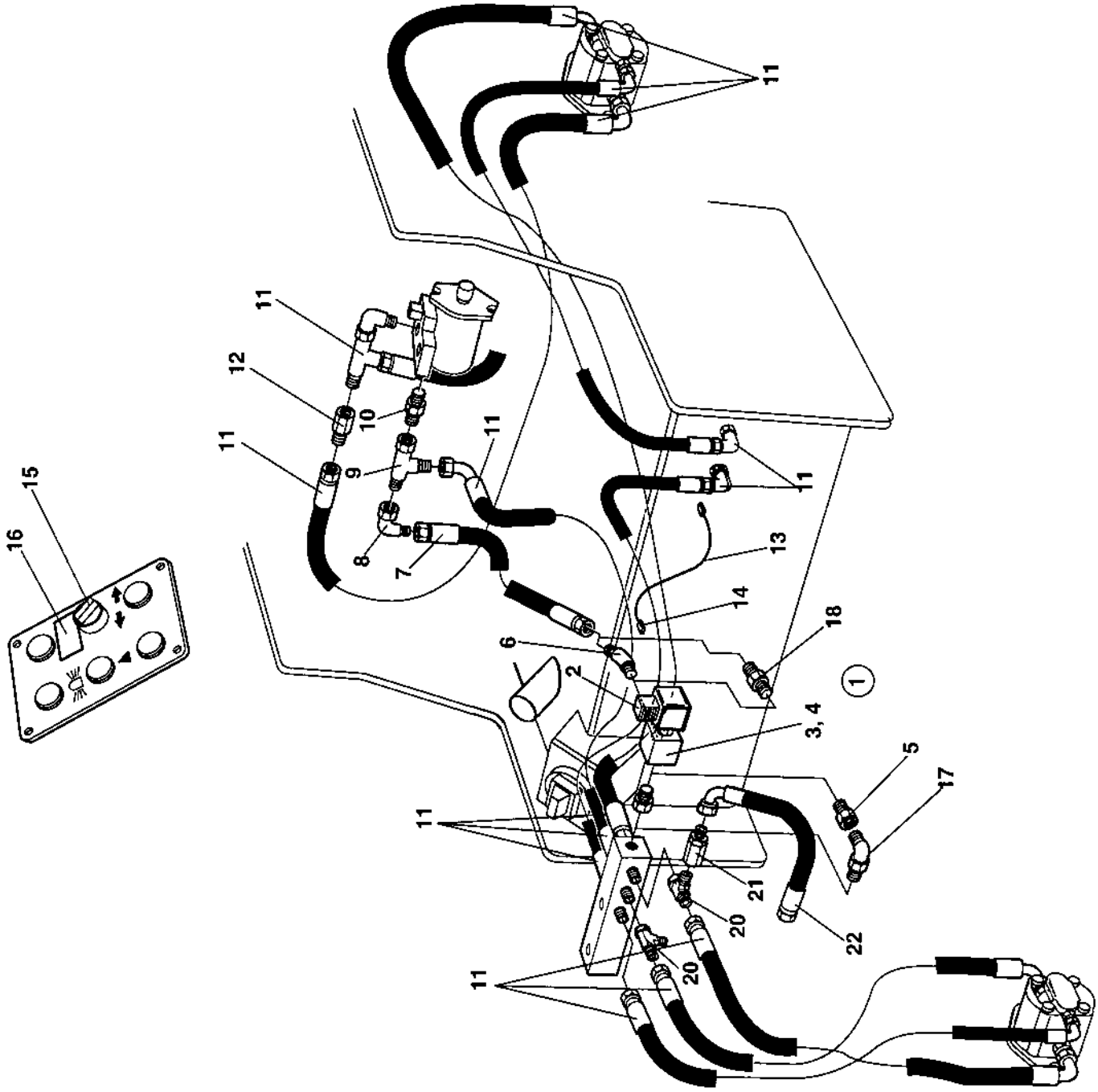

Vibration shut-off, rear drum DEUTZ

Ref. No.	Part No.	Rem.	Qty	Description	Code
1	357934		1	Solenoid valve	
2	902535		1	.Coil	
3	902536		1	.Valve	
4	902537		1	.Housing	
5	923406		1	Connector	
6	904175		1	Connector	
7	482889		1	Hydraulic hose	
8	334197		1	Elbow 90	
9	334135		1	Tee-connector	
10	334116		1	Straight o-ring connector	
11			N	Hydraulic details	
12	357543		1	Valve	
13	373849		1	Cable harness	
14	960796		1	.Connector	black, MPM 182 09 ND
15	930151		1	Switch	
16	904223	B	1	Decal	
17	813500		1	Elbow 45, O-ring	
18	334165		1	Adapter	
20	334135	C	2	Tee-connector	
21	357543	C	1	Valve	
22	483585	C	1	Hydraulic hose	

B) Vibr. shut-off rear
C) Used in new machines

Vibration shut-off, rear drum ISUZU

16687-2

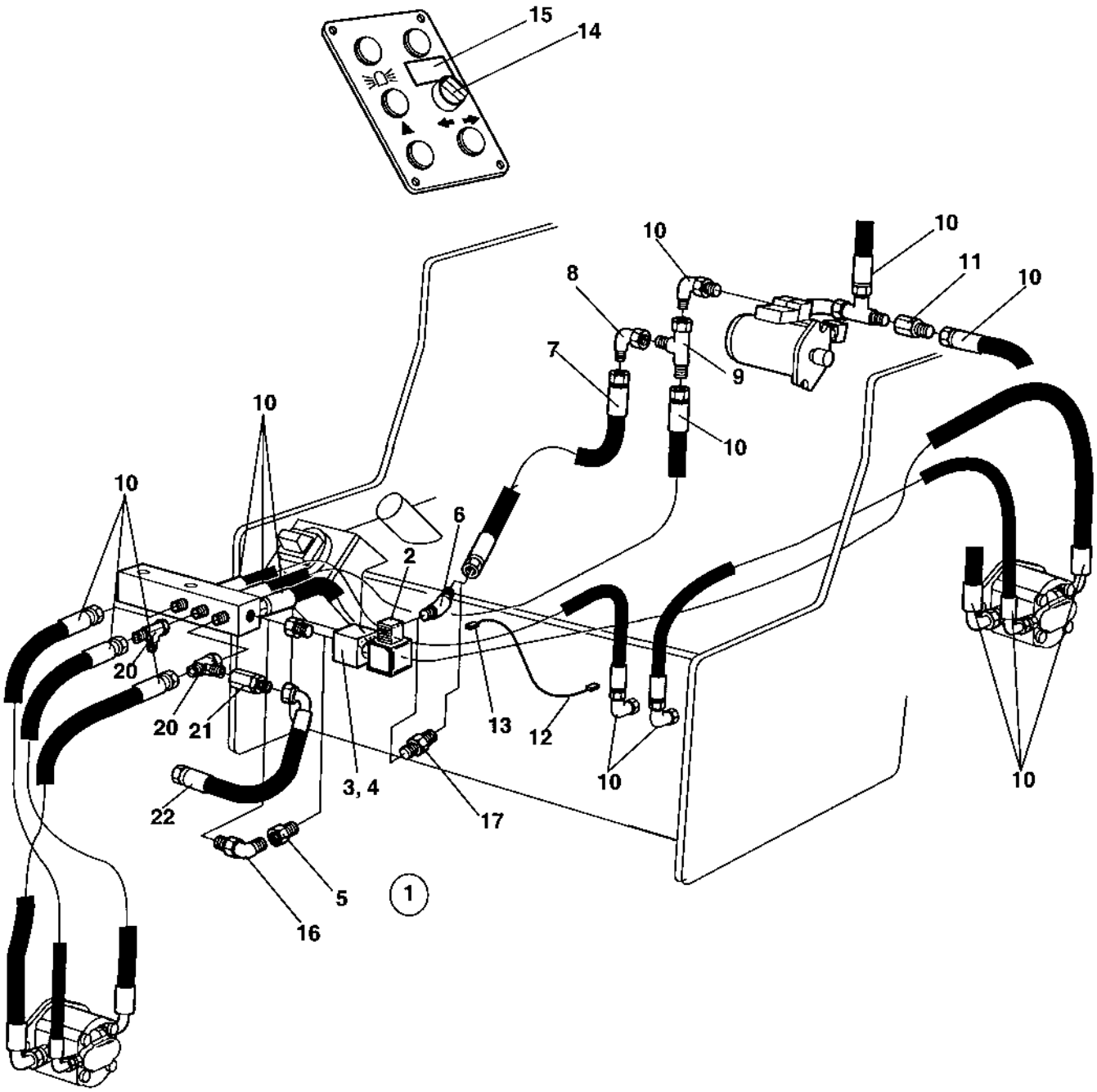

Vibration shut-off, rear drum ISUZU

Ref. No.	Part No.	Rem.	Qty	Description	Code
1	357934		1	Solenoid valve	
2	902535		1	Coil	
3	902536		1	.Valve	
4	902537		1	.Housing	
5	923406		1	.Connector	
6	904175		1	Connector	
7	482889		1	Hydraulic hose	
8	334197		1	Elbow 90	
9	334135		1	Tee-connector	
10			N	Hydraulic details	
11	357543		1	Valve	
12	373849		1	Cable harness	
13	960796		1	.Connector	black, MPM 182 09 ND
14	930151		1	Switch	
15	904223	B	1	Decal	
16	813500		1	Elbow 45, O-ring	
17	334165		1	Adapter	
20	334135	C	2	Tee-connector	
21	357543	C	1	Valve	
22	483585	C	1	Hydraulic hose	

B) Vibr. shut-off rear
C) Used in new machines

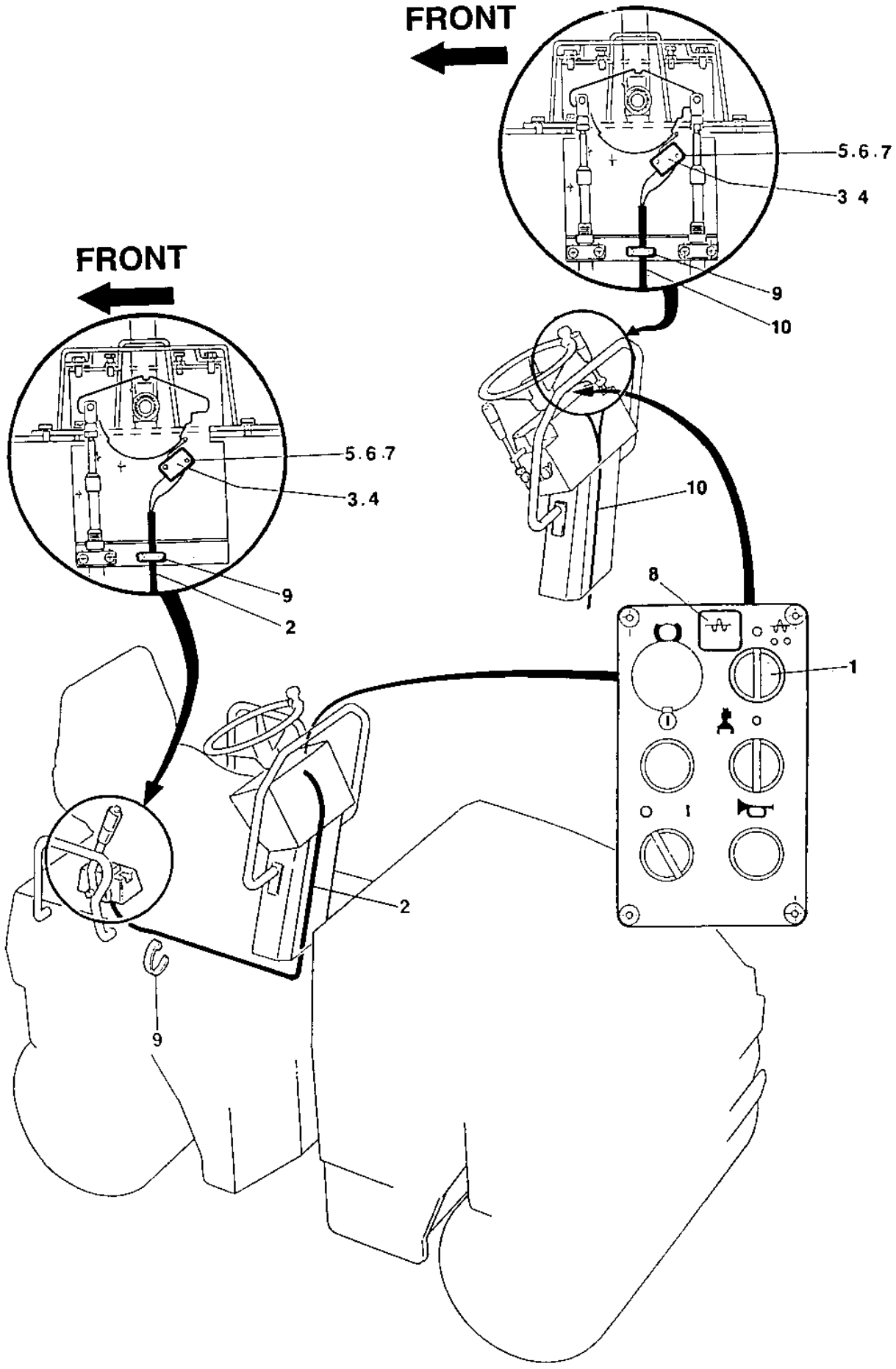
FRONT
5.6.7
3 4
9
10
FRONT
5.6.7
3.4
9
2
10
8
1
2
9

Ref. No.	Part No.	Rem.	Qty	Description		Code
1	930163		1	Contact piece, NO		
2	374483		1	Cable harness		
3	902528		1	Micro switch		
4	357994		1	Spacer nut		
5	533057		2	Screw		
6	929602		2	Washer		
7	375892		2	Spacer nut		
8	359136	A	1	Decal		
9	313068		N	Cable ties	L=92 mm	
10	370660		1	Cable harness		

A) Vib. auto

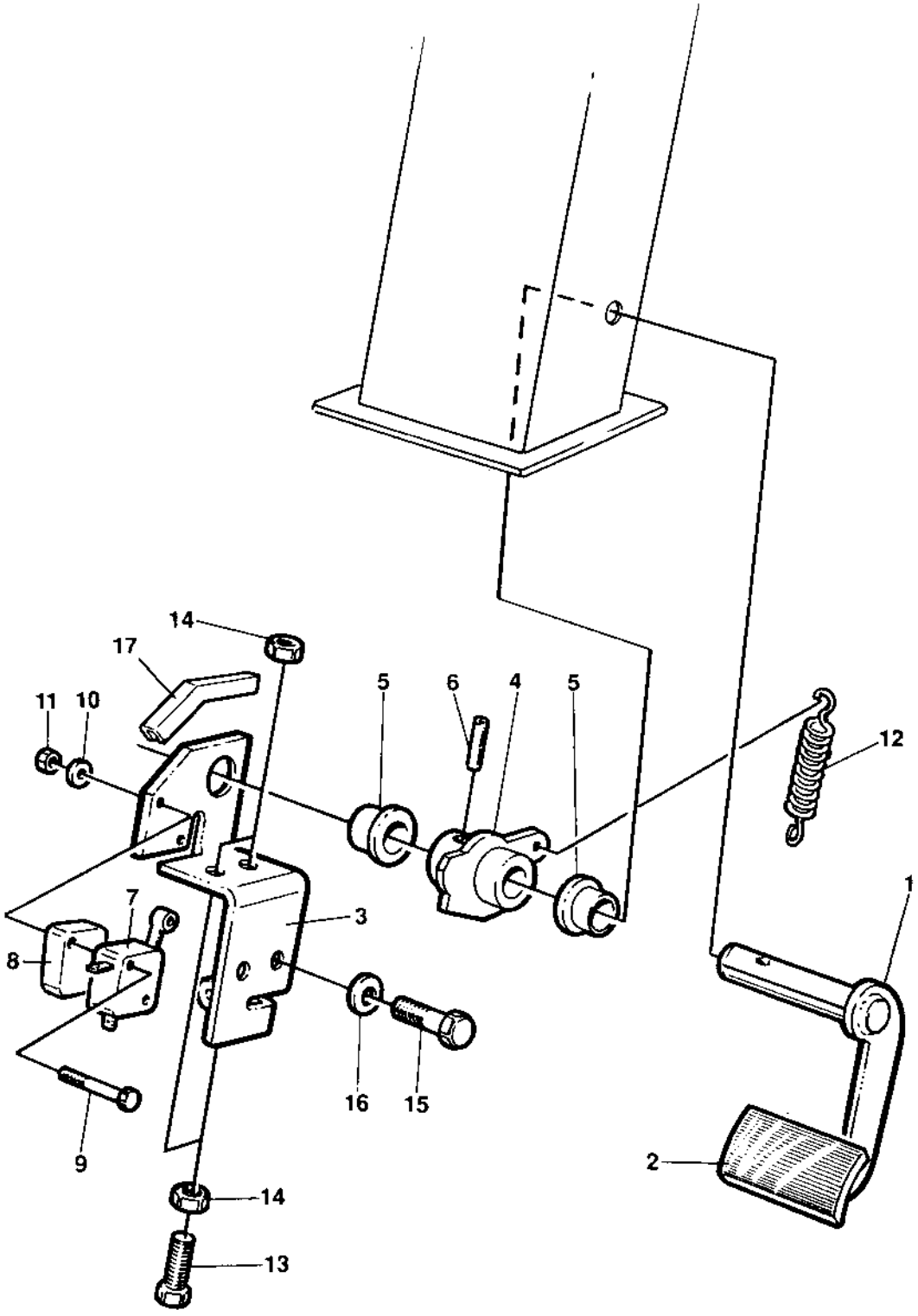
14
17
11
10
5
6
4
5
12
1
7
3
8
16
15
9
2
14
13

Service brake

Ref. No.	Part No.	Rem.	Qty	Description		Code
1	358299		1	Brake pedal		
2	345800		1	Pedal rubber		
3	358302		1	Bracket		
4	358303		1	Camshaft		
5	349492		2	Bushing		
6	629024		1	Pin		
7	902528	2	1	Micro switch		
	382396	1	1	Micro switch		
8	357994		1	Spacer nut		
9	533057		2	Screw		
10	929602		2	Washer		
11	570001		2	Nut		
12	358306		1	Spring		
13	500022	B	1	Screw	M8-1,25x30	8,8
14	570005	B	1	Nut	M8	
15	500053		2	Screw	M8-1,25x20	8,8
16	904229		2	Washer	8,4x16x1,5	
17	900904	A	1XL	Grommet		

1) Can replace 902528
2) Can be replaced by 382396
A) L=0,06 m
B) Not valid for 382396

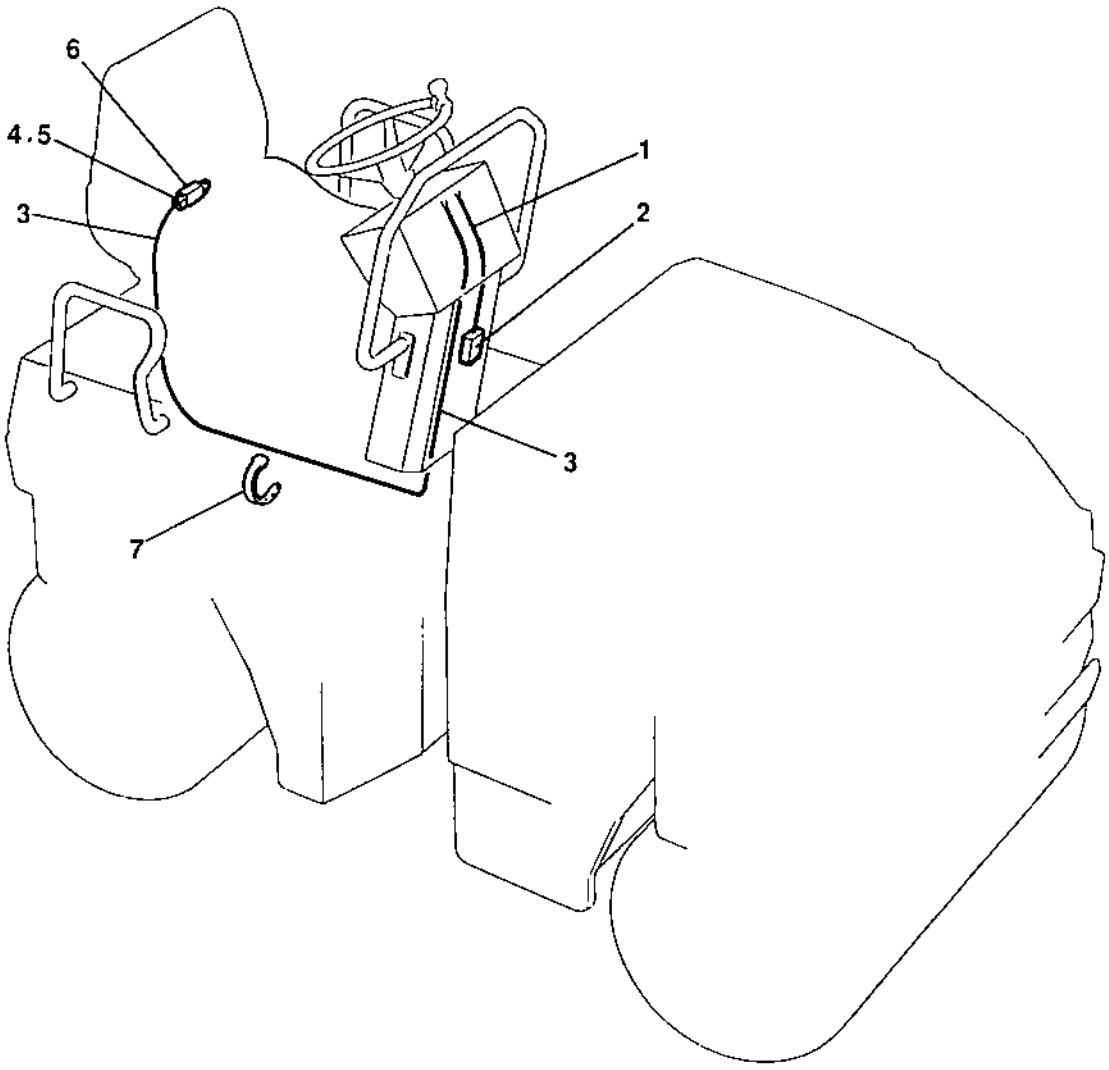
6
4.5
3
1
2
3
7

Ref. No.	Part No.	Rem.	Qty	Description		Code
1	371908		1	Cable harness		
2	287597		1	.Relay		
3		1	1	Cable harness		
4	903823		1	Connector		
5	960274		4	Terminal		
6			1	Seat switch		
7	925802		N	Cable ties	L=142 mm	

1) See section " Electrical equipment "

Bio-hydraulic oil lock Old design

16689-1

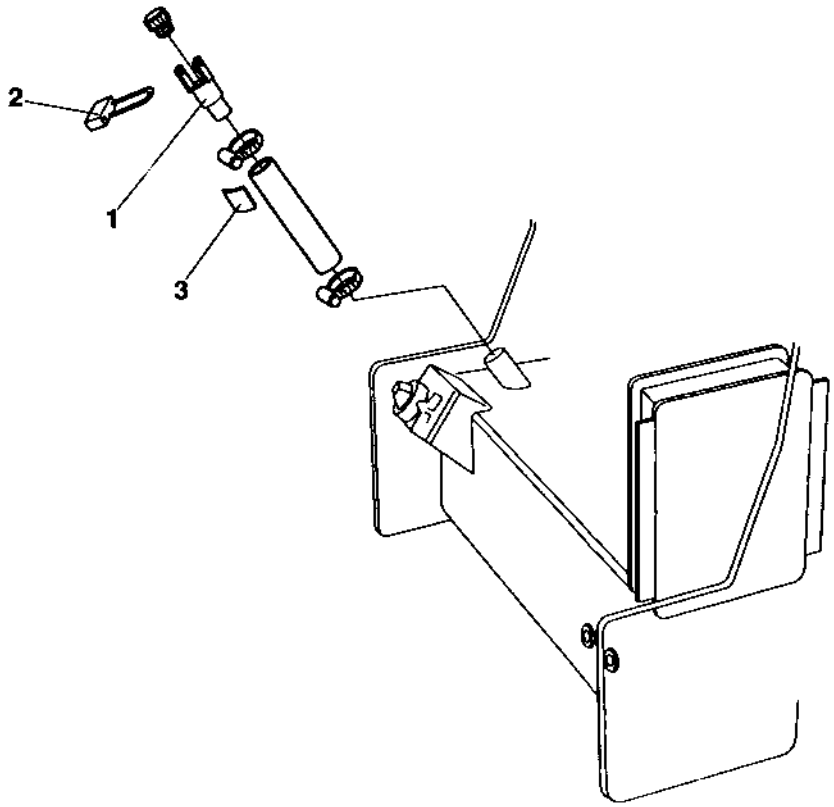

Bio-hydraulic oil lock Old design

Ref. No.	Part No.	Rem.	Qty	Description	Code
1	376449	B,C	1	Connector	
2	904603	B	1	Padlock	
	904711	B	2	.Key	
3	380343	A	1	Decal	

A) Bio-hydr.
B) Not used in new design
C) In new design; replaced by 357139, which is the same STD part as used in the unlocked version; See "Vibration system" in Hydraulic section.

High torque drum drive " Long"

16690

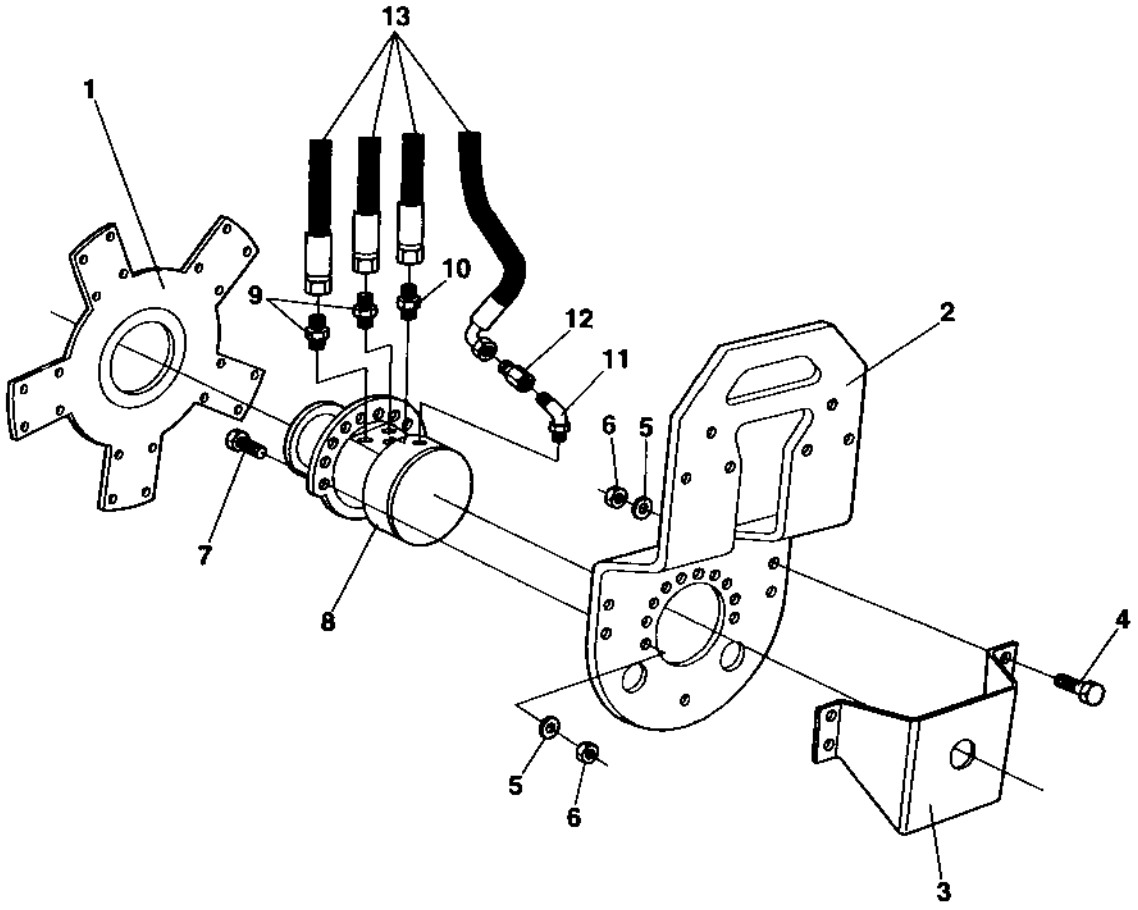

High torque drum drive " Long"

Ref. No.	Part No.	Rem.	Qty	Description		Code
1	371916		1	Drive disc		
2	371085		1	Fork		
3	371124		1	Protecting cover		
4	500070		4	Screw	M16x50	
5	904232		14	Washer	17x30x3	
6	586021		14	Nut	M16	
7	500134		10	Screw	M16x60	
8	372118		1	Hydraulic motor high torque (Page 288)		
9	334190		2	Connector		
10	334236		1	Adapter		
11	234992		1	Adapter		
12	334523	A	1	Reducing		
13			N	Hydraulic details		

A) For DEUTZ

372118 Hydraulic motor high torque

16691

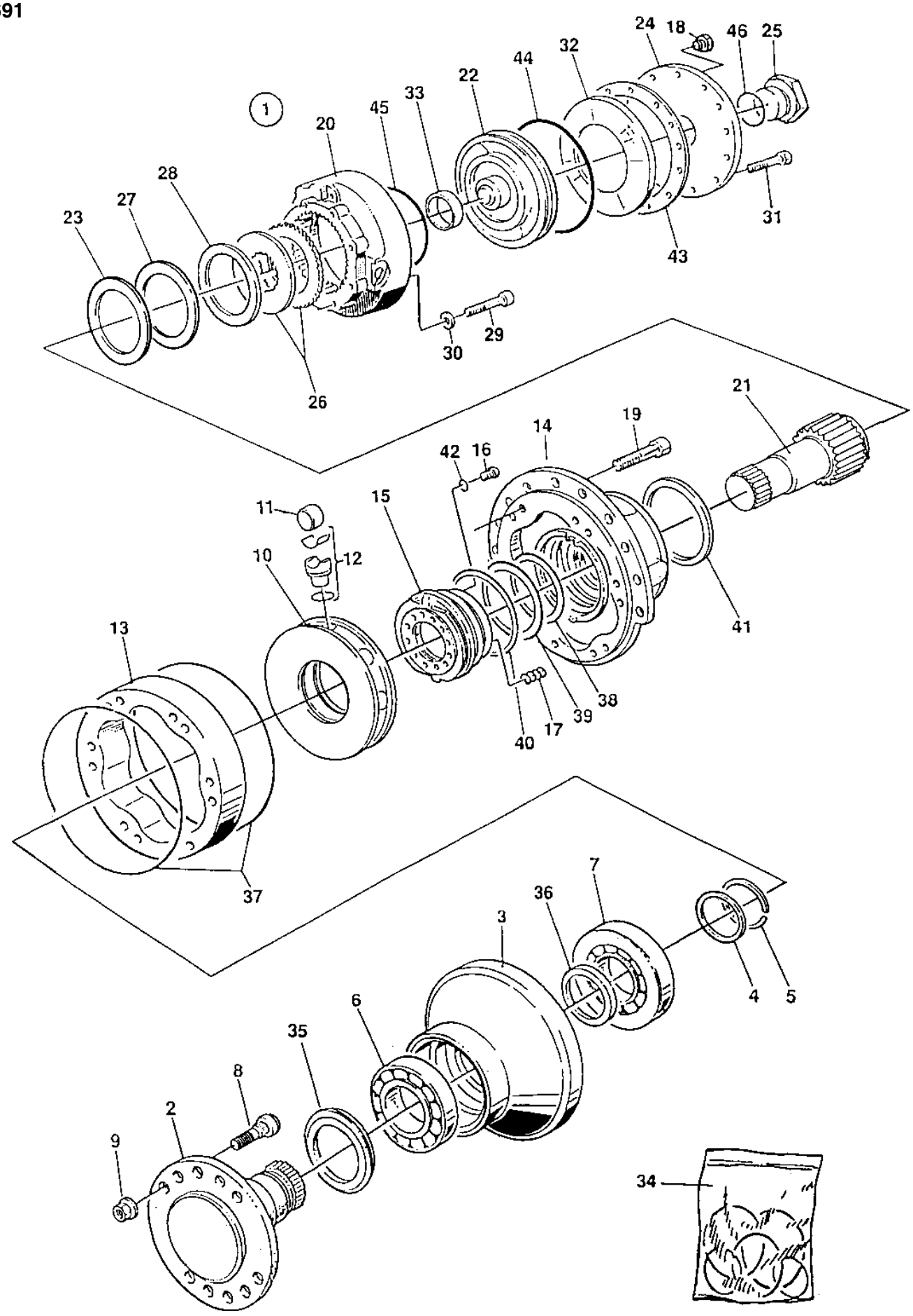

372118 Hydraulic motor high torque

Ref. No.	Part No.	Rem.	Qty	Description	Code
1		A	1	Hydraulic motor	
2	937363		1	.Shaft	
3	909658		1	.Housing	
4	909659		1	.Washer	
5	909662		1	.Split ring	
6	935977		1	.Bearing	
7	909661		1	.Bearing	
8	902391		5	.Wheel stud	
9	902392		5	.Wheel nut	
10	935981		1	.Cylinder block	
11	909666		8	.Roller	
12	937364		8	.Piston	
13	909668		1	.Piston cam	
14	909670		1	.Housing	
15	937365		1	.Distributor ring	
16	909672		1	.Pin	
17	902398		9	.Spring	
18	909674	A	1	.Plug	
19	909682		12	.Screw	
20	937367		1	.Brake housing	
21	937368		1	.Shaft	
22	937369		1	.Piston	
23	937370		1	.Washer	
24	937372	A	1	.End cover	
25	903295		1	.Plug	
26	937374	B	1	.Disc kit	
27	909700		1	.Shim	T=0,1 mm
28	909701		1	.Shim	T=0,3 mm
29	909708		8	.Screw	
30	903450		8	.Washer	
31	909709		24	.Screw	
32	909711		1	.Spring	
33	937375		1	.Bush	
34	937376		1	.Seal kit	
35			1	..Shaft seal	
36	903324		1	..Shaft seal	
37			2	..O-ring	
38			1	..Sealing	
39			1	..Sealing	
40			1	..Sealing	
41	937366		1	..Quad ring	
42			1	..O-ring	
43	937373		1	..Gasket	
44	909703		1	..Quad ring	
45			1	..Sealing	
46	903327		1	..O-ring	

A) CPL
B) 16+14 pcs

High torque drum drive " Short"

17485

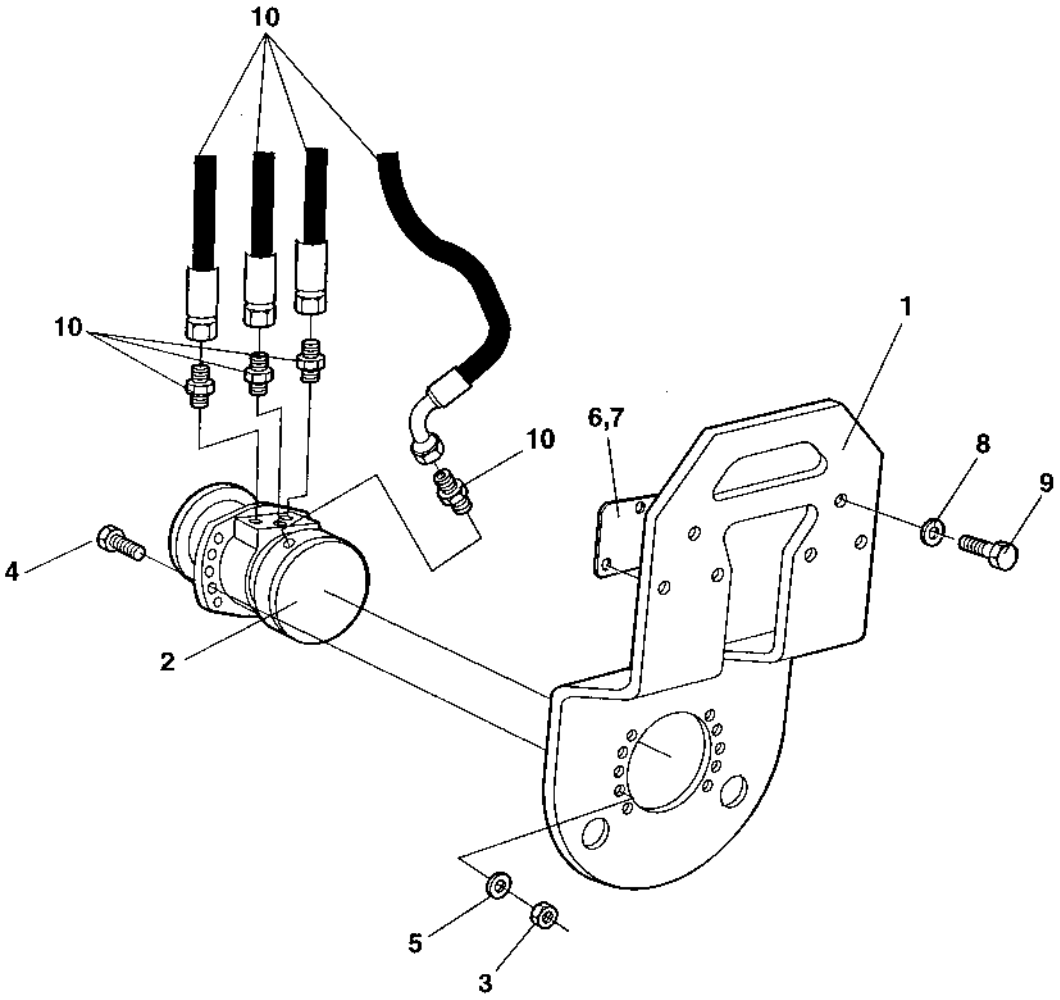

High torque drum drive " Short"

Ref. No.	Part No.	Rem.	Qty	Description	Code
1	381370		1	Fork	
2	380594		1	Hydraulic motor, propulsion, drum (Page 292)	
3	586019		10	Lock nut	M12
4	500056		10	Screw	M12x45 8,8
5	904231		14	Washer	13x24x2
6	357222		2	Shim	T=1 mm
7	357221		2	Shim	T=3 mm
8	904232		6	Washer	17x30x3
9	500094		6	Screw	
10			N	Hydraulic details	

380594 Hydraulic motor, propulsion, drum

16591

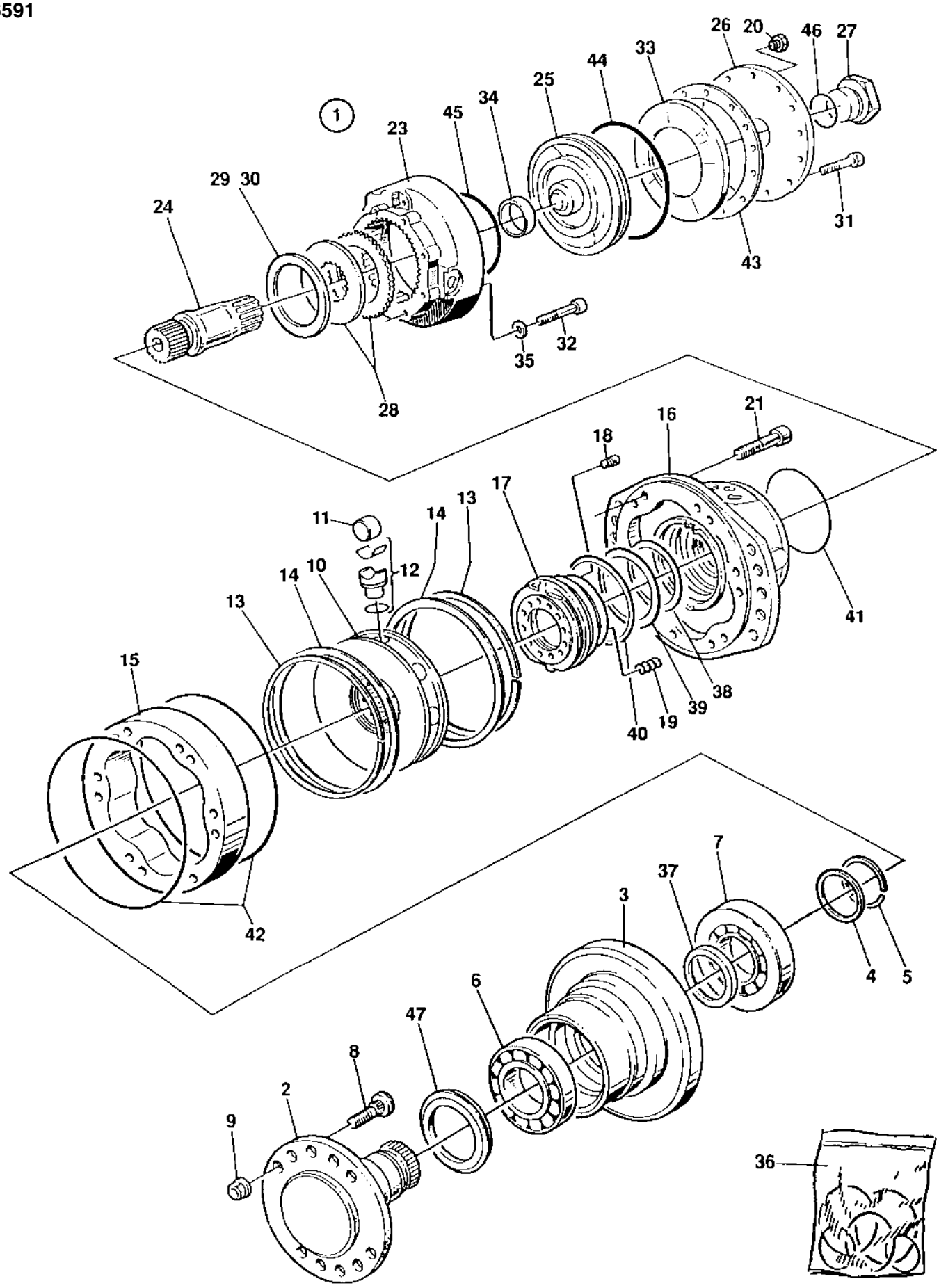

380594 Hydraulic motor, propulsion, drum

Ref. No.	Part No.	Rem.	Qty	Description	Code
1		A	1	Hydraulic motor	
2	908788		1	.Shaft	
3	937875		1	.Housing	
4	902387		1	.Washer	T=2,0 mm
5	902388		1	.Split ring	
6	902389		1	.Bearing	
7	902390		1	.Bearing	
8	902391		5	.Wheel stud	
9	902392		5	.Wheel nut	
10	937876		1	.Cylinder block	
11	903453		8	.Roller	
12	937091		8	.Piston	
13	937092		2	.Circlip	
14	937877		2	.Retaining ring	
15	937878		1	.Piston cam	
16	937879		1	.Housing	
17	937880		1	.Distributor ring	
18	902397		1	.Pin	
19	902398		9	.Spring	
20	902399	A	1	.Plug	
21	937881		10	.Screw	
23	937882		1	.Brake housing	
24	908791		1	.Shaft	
25	908792		1	.Piston	
26	908328	A	1	.End cover	
27	903295		1	.Plug	
28	908800	B	1	.Disc kit	
29	902410		N	.Shim	T=0,1 mm
30	902411		N	.Shim	T=0,3 mm
31	902412		12	.Screw	
32	902413		8	.Screw	
33	902416		1	.Spring	
34	908794		1	.Nylon buch	
35	903450		8	.Washer	
36	937089		1	.Seal kit	
37	903324		1	..Shaft seal	
38			1	..Sealing	
39			1	..Sealing	
40			1	..Sealing	
41			1	..O-ring	
42			1	..O-ring	
43	902800		1	..Gasket	
44	903455		1	..Quad ring	
45	937812		1	..Sealing	
46	903327		1	..O-ring	
47	937090		1	..Shaft seal	

A) CPL
B) 15+13 pcs

Brake release, propulsion motor

15492

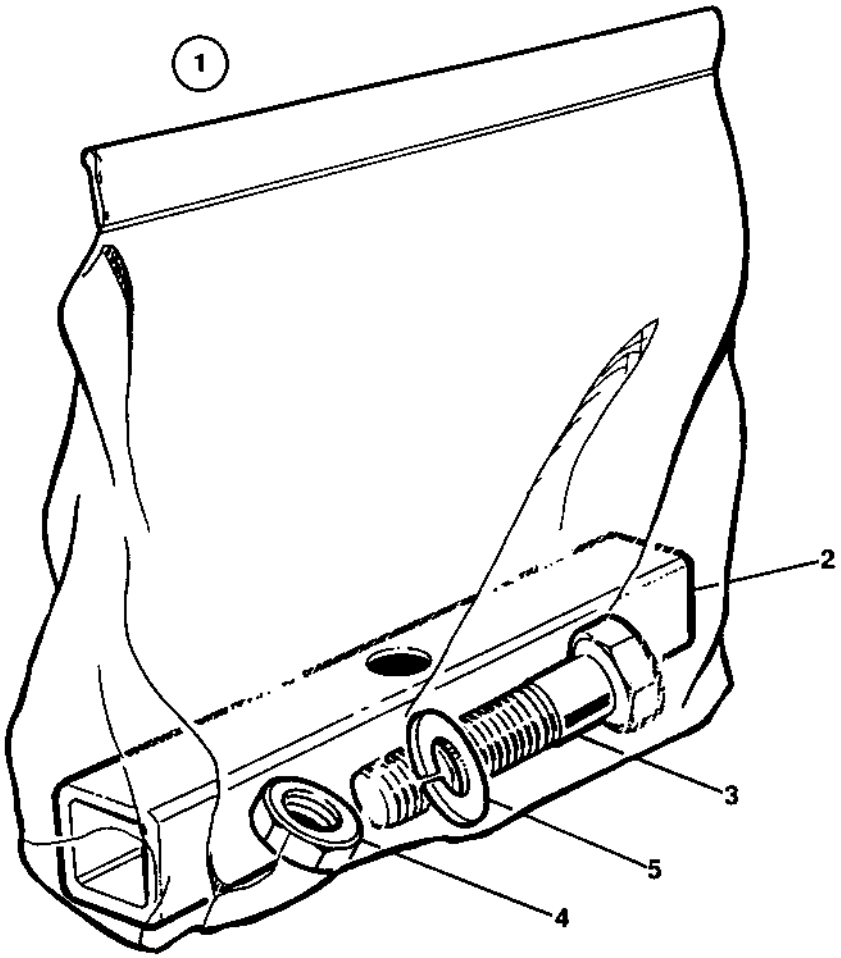

Brake release, propulsion motor

Ref. No.	Part No.	Rem.	Qty	Description	Code
1	376210	A	1	Brake release kit	
2	357892		1	.Stirrup	
3	904564		1	.Screw	
4	570008		1	.Nut	M16 -8
5	904232		1	.Washer	17x30x3

A) CPL

NUMERICAL INDEX

Part Number	Page	Part Number	Page	Part Number	Page
111018	27,79	313108	95,97,235	357005	83
151012	143	330171	95,97	357020	79
160012	95,97	330331	83,87	357031	53
160016	121	330332	87	357038	53
160025	143	330383	83,87,109	357039	53
160032	121,123,125,127	332038	269	357049	79
160112	33	334116	271,275	357054	79
160132	25,27,79	334117	267	357055	79
160145	133	334121	119	357111	107
160269	161	334134	107,109	357112	107
160363	263	334135	107,121,125,271,27	357113	107
162004	269		275,277	357120	37
162017	79	334137	125	357130	217
163049	25,27,79	334155	107	357138	17,19,121,125
167044	33,53	334156	107,121,125	357139	121,125
202028	55,59,63,209	334165	271,273,275,277	357142	67,69
202042	55,59,67,69	334190	287	357165	83
202043	63,249,251	334197	109,271,273,275,27	357166	83
202046	55,59	334198	125	357190	37
212160	79	334234	135,137,139	357218	37,39
223299	145	334235	107,121,125,135,13	357221	37,39,291
230277	107		139,269	357222	37,39,291
230400	109,145	334236	135,137,139,287	357235	37,39
230515	83,87	334238	107,121,123,125,12	357236	37,39
232070	107	334463	145	357248	55,59
232122	121,125	334523	287	357259	63
233215	75	334524	121,125,135,137,13	357276	55,59
234218	107	343490	79	357280	55,59,63
234233	119,145	343744	79	357316	195
234341	121	343748	89	357320	195
234390	121,125,135,137,13	343775	37,39	357330	195
234481	121,123,125,127	344138	267	357373	121
234888	145	345215	31,79	357377	135,137,139
234958	125	345388	227	357395	67,69
234992	287	345728	149,153,157	357407	189,191
234993	121	345800	281	357408	189,191
238272	143	345870	161,195	357418	33,53
244054	259,261	346431	209	357424	195
277992	243	346505	79	357459	95,97
285909	149,153,157,211	347153	33,53	357466	95,97
285911	149,153,157,211	347154	33,53	357468	95,97
287597	149,153,157,159,16	347155	33,53	357469	97
	283	348331	189,191	357470	95,97
287713	67,69,261	348481	149,153,157,211	357471	149
288129	83	348923	95,97	357483	37,39
288357	213	348924	95,97	357486	37,39
311016	243	349202	79	357488	37,39
312001	209	349492	281	357494	205,207,211
313001	69,71,73,75,95	349795	173	357495	205,207,211
313002	67,69,73,75,259,26	349879	121,125	357496	205,207,209
313008	89,121,125	349880	121,125	357498	205
313010	93	350029	79	357499	205
313023	91,93,249,251	355258	161	357500	205
313035	205,207,209,211	355301	167	357501	205,207
313041	185,189	355468	161	357502	211
313068	211,255,279	355705	257	357543	271,273,275,277
313075	95,97	355797	183	357562	171
313086	99,101	355829	183	357567	149,153
313100	101	355869	107,135,137,139,26	357574	161
313102	107,121,125,135,13	355981	269	357583	149,153,157,209
	139,145,233,259,26	356415	233	357584	149,153
313107	259,261	357003	83	357585	161

NUMERICAL INDEX

Part Number	Page	Part Number	Page	Part Number	Page
357587	217	358380	227	359161	99
357592	217	358381	227	359163	99
357604	217	358382	227	359524	103,121,129,135,
357605	217	358383	227		139
357643	67,69,195,217	358384	227	359525	125
357663	185	358385	227	359660	257
357666	185	358386	227	359661	257
357668	185	358418	161	359662	257
357679	185	358440	227	359769	249,251
357684	149,153,157	358452	185,231	359834	121
357812	173,177	358458	229,233	370081	87
357855	195	358462	233	370083	87
357863	55,59,63	358486	121,125	370127	217
357866	57,59,63	358504	121	370137	89
357892	295	358507	259	370138	89
357896	211	358536	249,251	370139	89
357922	233	358540	249,251	370140	89
357924	233	358545	249,251	370141	89
357925	233	358551	245,247,249,251	370142	87
357927	233	358552	249,251	370173	103,125,133,135,
357928	233	358553	249,251		139
357930	233	358557	249,251	370174	209
357934	271,273,275,277	358558	245,247,249,251	370241	209
357939	257	358561	245,247,249,251	370242	209
357973	255	358563	183	370244	209
357993	255	358579	229	370247	207
357994	255,279,281	358586	267	370248	207
358000	173,179	358587	79	370263	209
358003	269	358588	41,43,45	370266	209
358089	189,191	358589	41,43,45	370272	209
358098	233	358595	235	370273	209
358102	181	358614	269	370274	209
358142	195	358615	269	370312	125
358143	195	358620	235	370323	89
358160	55,63	358622	235	370355	83
358161	63	358646	253	370360	89
358162	63	358663	161	370600	259,261
358213	189,191	358666	79	370627	63
358224	229	358689	79	370636	63
358228	231	358736	259,261	370637	63
358232	189,191	358743	37,39	370638	63
358239	269	358782	237	370645	55,63
358254	217	358783	237	370646	63
358299	281	358789	237	370647	63,253
358302	281	358790	237	370660	255,279
358303	281	358801	237	370719	253
358306	281	358802	237	370721	253
358324	245,247,249,251,25	358809	67,69,261	370722	253
358325	245,247,249,251,25	358845	259,261	370740	253
358332	245,247,249,251,25	358846	67,69	370741	253
358333	245,247,249,251,25	358861	37,39	370742	253
358335	245,247,249,251,25	358874	47,49	370743	253
358336	245,247,249,251,25	358876	47,49,51	370803	213,231
358338	245,247,249,251,25	358881	223	370975	63
358339	245,247,249,251,25	358976	53	370979	125
358341	249,251,253	358978	53	371085	287
358342	245,247,249,251,25	359003	67,69	371088	209
358355	95,97	359062	213	371124	287
358370	83	359063	213	371169	217
358371	83	359074	213	371173	217
358378	227	359119	99	371183	107
358379	227	359136	279	371313	107,109,121,123,

NUMERICAL INDEX

Part Number	Page	Part Number	Page	Part Number	Page
371313	127	375649	139	382180	67
371314	107,109,121,123,12	375892	255,279	382181	67,69
	127	376113	181	382213	205,207,209
371326	161	376129	55,65	382226	205,207
371344	163	376210	295	382237	201,203
371380	55,65	376449	285	382349	205,207
371561	173,177,181	376624	43,45	382396	281
371893	159	376796	155	382467	73
371908	283	376866	55,59	382468	73
371916	287	376873	75	382563	245,247,249,251,
371994	55,59,63	376874	75	382565	55,59,63
372118	287,289	376875	75	382568	245,247,249,251,
372140	87	376876	75	382751	219
372141	87	376877	75	382782	161
372142	87	376941	99	383200	197,201
372352	103,107,111	377051	153	383697	69
372523	189,191	377061	59	383705	195
372570	189,197,199	377518	193	383960	171
372627	95,97	377677	199,203	383961	149,153
372659	197	377697	169	383967	171
372696	197,199	377742	219	383996	41,43,45,47,49,51
372697	197,199	377743	219	384083	165
372705	205,207	377744	219	384099	157
372721	125	377794	43,45,51	384191	165
372964	139	377952	59	384263	161
373029	263	378359	39	384264	157
373057	263	378361	39	384359	171
373402	107	378370	153,157	384493	41,43,45,47,51
373461	95,97	378742	157,165	384532	201,203
373476	55,59,249	378743	153	384699	87
373478	121,125	378868	39	384726	95,97
373490	173,177	379009	69	385216	29,41,43,45,47,49
373493	173,177	379179	37,39,79	385580	151,155,159
373628	37	379637	199,203	385613	47,49
373797	67,69	379753	259,261	385628	49,51
373849	271,273,275,277	379982	217	385644	161
373898	207	380192	173,177	385671	41,43,45,47,49,51
373999	37,39	380255	47,49,51	385712	91,93
374009	213	380293	91,93	385713	91,93
374018	41	380294	17,19,91,93	386075	201,203
374087	245,247,249,251	380295	17,19,91,93	386084CN	217
374100	245,249,253	380296	91,93	386084DE	217
374101	267	380297	91	386084DK	217
374132	189,191	380299	91	386084EN	217
374133	189,191	380300	91	386084ES	217
374213	171	380343	285	386084FI	217
374400	55,65	380459	95,97	386084FR	217
374401	55,65	380594	291,293	386084GR	217
374402	55,65	380601	93	386084IS	217
374403	55,63	380602	93	386084IT	217
374460	239	380736	103,107,119	386084NL	217
374483	279	380960	157	386084NO	217
374603	103,135,137,139,14	381252	263	386084PT	217
374625	55,59	381253	263	386084SE	217
374626	121	381370	291	386133	83,87
374627	55,59	381381	101	386134	121,125
374657	55,59	381394	101	386477	87
374981	205	381438	101	387429	37,39
375594	57,59,65	381521	101	387471	99
375595	57,59,65	381734	101	387491	83
375631	103,107,109,117	381750	201,203	387806	47,49
375649	103,125,131,135,13	381994	167,169	387807	47,49

NUMERICAL INDEX

Part Number	Page	Part Number	Page	Part Number	Page
387808	47	483164	109	500133	47,49,51,237
387809	47,49	483167	145	500134	287
387956	59	483281	121	500142	229
388500	83	483282	123	500164	213
388846	59	483585	271,273,275,277	500184	267
388852	59	485005	243	500185	83,207
389078	121	485006	243	500188	37,39,65
389147	43,45,51	485019	243	500189	227,229
389175	205,207,209	485037	243	500190	69,99,249,251
389176	205,207,209	485388	243	500195	237
389177	205,207	499162	185	500237	185,229
389577	185	499444	73	500249	55,59,63
389610	87	499497	93	500292	63
389631	177	500006	201,203	500501	205,207
389998	51	500012	229,235	500509	91,189,191,195,2
389999	51	500013	207,209,211,229,23	508005	201,203
390722	83	500015	47,49,51,63,227	508020	149,153,157,173,
390810	205	500016	37,39,257,261		183,205,207
390840	69	500018	253	508022	59
391118	59	500019	121,125,149,153,15	508025	83
391121	59		189,191,231	508027	55,59,63
391270	121	500020	57,61,65,107,149,15	508028	79
392011	75		157,189,191,197,19	508029	83,87,99,101,107
392508	75	500021	55,59,65,67,83,87,89		123,125,127
392509	75		95,99,121,125,127	508053	83,87,101
392510	75		135,137,139,149,15	508056	89
416004	205,207,209,211		195,205,237,259,26	508057	125
416034	205,207	500022	57,61,91,93,159,165	508065	37,39
433830401	121,125,135,137,139		169,267,281	508075	179
450166	229	500028	53,67,69,101,185	508092	189,197,199,201,
476019	229,239,241	500029	55,59,63,79,87	508095	83,87
480124	121,125	500030	37,39,135,137,139	508096	83,87,107,121,12
480446	141		237	513012	63
480447	141	500034	269	513013	107,197,199,239
480449	141	500037	107	516010	209
480450	141	500040	67,69,195,205,207	516042	237
480457	141		209,211,245,247,24	516043	257
480464	141		251,253,255	526007	235
480468	141	500044	79,185	527002	231
481303	141	500046	41,43,45,47,49,51	533001	149,153,157,211
482208	269	500047	47,49,51,55,59,83,1	533016	269
482214	269		153,159	533025	167,169
482242	121,125	500048	135,137,139,157	533032	183
482398	135,137,139	500049	41,49,51	533057	255,279,281
482452	107,127	500050	83	533070	167,169,189
482553	107	500053	37,55,59,63,69,83,8	535008	217
482606	121		95,97,109,123,149	535010	183
482773	269		153,159,189,191,28	541508	233
482830	107	500056	41,43,45,47,51,107	541702	161,195,209
482865	145		109,291	541703	205,207,229
482889	271,273,275,277	500059	55,63	541705	209
482892	121,125	500061	209,227	570001	281
482897	127	500067	121	570003	183,189,201,203
482898	107	500070	213,287	570004	161,205,207,209,
482962	125	500071	237		235
482963	125	500075	161,245,249,253	570005	47,49,55,59,63,95
482998	107,109	500079	63,73,257		101,165,197,199,
483069	109	500094	37,39,213,229,291		213,239,281
483118	107	500109	107	570006	47,49,51
483155	121,125	500111	47,49,237	570008	295
483157	121,127	500117	87,189,191	570102	89
483162	121,127	500122	83	573004	205,207,209,211

NUMERICAL INDEX

Part Number	Page
586001	55,65,149,153,157
	167,169,173,183,21
586002	47,49,51,55,63,67,6
	161,195,207,211,22
	245,247,249,251,25
	255,257,261
586003	55,59,63,83,107,149
	153,157,173,179,18
	185,191,197,199,20
	227
586018	47,49,51,87,107,185
	237
586019	41,43,45,47,49,51,8
	87,107,109,189,191
	237,291
586021	213,229,287
600002	173,179,233,269
600003	55,183,217
600004	37,39,209,227,229
	231,235,255,257,26
600006	189,191,209,227,24
	251,259,261
600008	53,237
600011	229
600016	135,137,139
600017	83
601001	241
601003	227
603018	123,127
606003	229
606015	227
615041	267
615042	63,67,69,183,205,22
	235,257
615043	97,231,253
615044	107
615065	245,247,249,251,25
615076	37,39,67,69
615096	189,191
615117	227
624005	217
624011	239
624016	213
624017	219
624018	55,59
624027	183
629016	205,207,209,211
629024	281
630019	135,137,139
630035	253
635061	143,213
747282	95,97
791078	157,165
791079	157,165
791082	47,49,51
791091	157
791117	73
791182	47,49,51,153
791226	195
791233	251
791234	251
791262	219
791272	219
791275	219
791472	165
791568	69
791754	59
791949	69
791950	69
791959	69
791963	43,45,51
791965	177
791974	75
791977	75
792180	59
792187	39
792210	59
801567	149,153,157
801698	229
813321	107,121,125,135
813435	107,267
813443	109
813444	107,267
813500	271,273,275,277
831150	267
831179	135,137,139
891228	93
892179	33,53
892446	107,123,127,145
900478	87
900485	55
900519	55,59,63
900684	217
900790	173,177
900791	173
900793	173
900794	173
900904	281
900986	189,191,213
900998	229
900999	229
901143	233
901156	107
901157	109
901165	265
901166	265
901167	265
901168	265
901169	265
901191	73,75
901212	243
901224	233
901225	159,165,173,177,23
901226	161,233,255
901227	163,173,177,181,18
	233
901228	173,177,233
901229	233
901238	233
901239	233
901240	161,173,177,255
901242	229
901245	233
901249	229
901258	231
901266	229
901267	231
901273	229
901274	189,191
901275	229
901296	229
901300	259
901313	107
901330	51
901340	227
901341	227
901365	229
901366	233
901369	173,177,181,231
901375	231
901431	67,69,259,261
901432	67,69,261
901550	235
901552	235
901553	235
901554	235
901555	235
901556	235
901557	235
901558	235
901559	235
901561	235
901562	235
901563	235
901564	235
901565	235
901566	235
901568	235
901571	235
901572	233
901578	233
901587	235
901679	233
901692	121,125
901744	113
901750	113
901766	149,155
901767	151,155,159,161
902059	53,87
902060	53
902061	33,53
902062	33,53
902063	33,53
902064	173,179
902066	173,177
902093	213
902099	103,135,137,139,
902100	37,39
902105	259
902111	245,247,249,251
902123	135,137,139
902166	55,59,63,245,247
	251
902168	91
902171	37,39
902172	37,39

NUMERICAL INDEX

Part Number	Page	Part Number	Page	Part Number	Page
902183	135,137	902620	113	903101	227
902184	135,137	902624	111	903102	229
902185	135,137	902625	111,113	903103	227
902186	135,137	902641	113	903104	227
902187	205,207,209,211	902644	113	903105	227
902189	205,207,209,211	902654	113	903106	229
902191	205,207	902670	111	903107	229
902193	205,207,209	902687	111	903110	233
902203	149,153,157,211,21	902695	111	903118	233
902217	217	902696	111	903119	233
902223	161,173,177	902724	111	903120	233
902224	161	902767	115	903121	233
902225	161	902770	115	903123	227
902227	173,177,181	902771	115	903124	227
902229	107	902773	115	903125	227
902230	107	902792	111	903126	227
902231	107	902797	189,191	903127	227
902232	107	902799	117	903128	233
902233	107	902800	117,293	903140	235
902256	55,59,63	902804	55,59,189,191,233	903141	269
902287	51	902810	129,133	903142	269
902295	121,125	902845	257	903143	269
902377	107	902861	141	903144	269
902378	107	902862	141	903148	229
902379	73,75,107,121,125	902863	141	903154	79
	195,261	902864	141	903192	189,191
902384	149,153	902866	55,65,95,97,161	903236	95,97
902387	117,293	902868	259,261	903239	161
902388	117,293	902869	259,261	903241	255
902389	117,293	902874	259,261	903247	9,11,17,19,107
902390	117,293	902889	213	903287	79
902391	117,289,293	902890	189,191	903292	117
902392	117,289,293	902891	231	903295	117,289,293
902394	117	902892	189,191	903323	229
902397	117,293	902893	95	903324	117,289,293
902398	117,289,293	902895	205,207,209,211	903326	229
902399	117,293	902896	205,207,209,211	903327	117,289,293
902410	117,293	902902	83	903330	129,133
902411	117,293	902916	67,69	903369	63,245,247,249,2
902412	117,293	902919	189,191,233	903372	149,153,157
902413	117,293	902989	89	903378	213
902416	117,293	903000	227	903395	205,207,209,211
902496	257	903003	135,137,139	903422	217
902508	233	903010	259,261	903423	217
902509	233	903063	161	903424	217
902521	83	903064	63	903425	217
902528	255,279,281	903078	183	903430	129,131
902535	271,273,275,277	903079	183	903431	125
902536	271,273,275,277	903081	183	903436	249,251
902537	271,273,275,277	903082	159	903450	117,289,293
902542	185	903083	227	903453	117,293
902550	149,153,157	903084	227	903455	117,293
902551	107,109	903085	229	903459	217,267
902560	149,153	903086	229	903471	113
902569	189,191	903087	229	903478	67,69
902576	53,143	903089	227	903521	141
902578	243	903092	227	903557	113
902585	63	903094	227	903593	169
902586	63	903095	229	903624	87
902591	63	903096	229	903637	129,133
902610	243	903097	229	903653	63
902619	113	903100	227	903671	201

NUMERICAL INDEX

Part Number	Page
903675	209
903676	209
903680	101
903704	87
903705	159
903706	87
903707	87
903708	159
903722	257
903727	195
903728	125
903729	133
903730	133
903757	157
903817	159
903820	161,173,177,181,18
	233
903823	283
903835	263
903886	67,69
903912	87
903925	107
903938	9,17,83
903957	73
903958	73
903959	73
903962	259
904015	165
904029	263
904030	263
904076	55,59
904090	55,59,65
904091	55,59,65
904094	217,237
904096	217
904097	217
904116	73,259,261
904131	189,191
904175	269,271,273,275,27
904203	239
904206	55,57,59,65
904213	41
904218	189
904223	275,277
904224	271,273
904225	189,191
904228	47,49,51,55,59,63,6
	69,73,79,83,161,19
	207,211
904229	37,47,49,51,55,59,6
	67,69,85,89,99,101
	107,109,121,123,12
	127,149,153,155,15
	159,165,173,177,18
	185,189,191,197,19
	213,237,281
904230	37,39,47,49,51,67,6
	79,85,87,107,135,13
	139,185,269
904231	37,39,41,43,45,47,4
	51,83,87,107,109,18
	191,237,291
904232	37,213,287,295
904233	83,87
904241	47,49
904258	25,79
904281	39,65,149,153,157
	167,169,173,177,18
	201,203
904292	83,87
904313	173,177
904315	177
904316	177
904317	177
904318	177
904342	41,43,45,47,49,51
904343	41,47,49
904364	259,261
904368	55,65
904374	55,65
904403	219
904404	219
904424	43,45,51
904429	213
904545	205,207
904556	121,135,137,139,20
	203,205
904557	55,59,63,83,87,101
	121,125,149,153
904564	295
904603	285
904637	87,157
904639	55,63,207
904640	55,59,63,69,83,89,9
	93,95,99,101,149,15
	195
904697	149,153,157,211,21
904698	59
904703	43,45,47,49,51,87,1
	135,137
904711	285
904724	119
904725	119
904734	169
904798	249
904808	67
904835	219
904846	167,169
904870	217
904877	67
904878	67,69,71,73,75
904901	121,125
904961	149
904963	149,153
904984	95
904989	173,177
908229	213,219
908328	117,293
908384	113
908404	11,15,19,87
908405	11,15,19,87
908410	87
908411	87
908484	211
908629	89
908630	89
908631	89
908632	89
908633	89
908634	89
908653	87
908788	117,293
908790	117
908791	117,293
908792	117,293
908794	117,293
908795	117
908798	117
908800	117,293
908804	129,133
909107	149,155,159,229
909152	183,185
909370	83
909483	129
909484	129
909498	257
909514	111,113
909527	161
909535	189,197,199,201,
909536	189,197,199,201,
909658	289
909659	289
909661	289
909662	289
909666	289
909668	289
909670	289
909672	289
909674	289
909682	289
909700	289
909701	289
909703	289
909708	289
909709	289
909711	289
909757	111
909758	111
909759	143
909760	143
909761	143
909764	143
909765	143
909766	143
910161	121,125,135,137,
911456	161
911620	141
921039	229
921070	209
921072	95
921099	107
921118	89
921119	107,109,123,127,
921423	259,261
921424	259,261
922325	205,207,209,211

NUMERICAL INDEX

Part Number	Page	Part Number	Page	Part Number	Page
922875	245,247,249,251,25	930166	185	935977	289
923008	135,137,139	930182	161,173,177	935981	289
923253	241	930200	161	936283	189
923406	271,273,275,277	932032	161	936690	111
923407	269	932055	173,177,181	936691	113
923679	73,259,261	932056	173,177	936692	113
923680	73,259,261	932058	161,173,177	936693	113
923681	73	932059	163	936706	113
923683	73,261	935158	111	937053	67,69
923684	261	935159	111	937060	87
923734	67,69	935160	111	937089	117,293
923735	67,69,259,261	935161	113	937090	293
923844	189,191	935162	113	937091	117,293
923859	73,257,261	935163	113	937092	117,293
923876	73,261	935164	113	937093	117
923900	209	935165	113	937094	117
923951	25,79	935166	113	937363	289
923962	73,261	935167	113	937364	289
923976	59,173,175,179,269	935170	113	937365	289
924544	67,69,71,259,261	935171	113	937366	289
924875	195	935172	113	937367	289
924986	67,71	935176	113	937368	289
924996	67,69,259,261	935177	113	937369	289
925599	67,69,71,259,261	935178	113	937370	289
925802	95,97,217,235,283	935179	113	937372	289
925958	149,153,157	935180	113	937373	289
926214	33,53,143	935181	113	937374	289
926215	189,191,233	935182	113	937375	289
926911	67,69	935183	113	937376	289
926985	245,247,249,251,25	935184	113	937812	293
927278	113	935186	113	937875	293
927396	37,39	935187	113	937876	293
927568	67	935188	113	937877	293
927637	229	935189	113	937878	293
928497	149,153,157,211	935190	113,115	937879	293
928502	173,177	935191	113	937880	293
928672	231	935194	115	937881	293
928781	73	935195	115	937882	293
928830	135,137,139	935196	115	938306	67
928928	161	935197	115	938307	67
928937	249,251	935198	115	938534	33
929008	141	935199	115	938539	5,7,11
929009	141	935200	115	938540	5,7,15
929010	141	935201	115	938541	5,7,19
929012	141	935202	115	938542	5,7,9
929013	141	935203	115	938543	5,7,13
929014	141	935204	115	938544	5,7,17
929164	231	935205	115	938575	21,23,33
929322	9,17,95	935206	115	938581	19
929455	183	935207	115	938584	17
929602	255,279,281	935208	115	938738	201,203
929956	227	935209	115	938739	201,203
929957	227	935210	115	938740	201,203
929965	227	935211	115	938885	21,23,31
930151	161,271,273,275,27	935212	115	938892	21,23,27
930153	161	935214	115	938908	21,23,25
930154	161,163,173,177	935215	115	938913	21,23,29
930155	161	935216	115	939470	89
930161	173,177	935218	115	939478	83
930162	173,177	935219	111	939494	87
930163	161,173,177,181,27	935613	139	939495	87
930165	173,177,181,185	935614	139	939515	9,13,17,83

NUMERICAL INDEX

Part Number	Page	Part Number	Page	Part Number	Page
939593	83				
939840	83				
939976	83				
945442	83				
945622	193				
947687	37,39				
960274	283				
960796	149,153,157,271,273 275,277				
975077	201,203				
985012	161,163,173,177,181 185				
985013	173,179,183				
985014	173,177				
985125	161				
985126	231				
989151	121,125				
991657	217				
991658	217				
999011	231				
999027	149,153,157,169				