Parts Catalogue

DYNAPAC
FAYAT GROUP

MARÇO 2018

CC1100 VI

Vibratory roller

CC1100 VI s/n 10000391xxA021487 -
Kubota D1803-CR (T4f) (28 kW)

RUTHZIL TRATOR COMERCIAL DE PEÇAS LTDA 11 97083-6812 ROLANDO CITRANGULO



© 2017 Dynapac Compaction Equipment AB | No. 4812161451| 2018-03

Your Partner on the Road Ahead

dynapac.com

General information

Use only authorized parts. Any damage or malfunction caused by the use of unauthorized parts is not covered by Warranty or Product Liability.
Any unauthorized use or copying of the contents or any part thereof is prohibited. This applies in particular to trademarks, model denominations, part numbers, and drawings.

Instructions for use
This spare parts list contains no safety regulations and is merely intended to assist in the ordering of spare parts.
For information about operating, servicing, or repairing, the relevant Safety and operating instructions must be consulted at all costs.
Please observe the safety instructions listed in the relevant Safety and operating instructions!

CC1100 VI (28 kW) (T4) s/n 10000391xxA021487 -

Service kits

4812161674 Service kit, 50h . . . 1
4812161675 Service kit, 50h Plus . . . 3
4812160462 Service kit, 250 / 750h . . . 5
4812161677 Service kit, 250 / 750h Plus . . . 7
4812161684_Service kit, 500h . . . 9
4812161685 Service kit, 500h Plus . . . 11
4812161686_Service kit, 1000h . . . 13
4812161687 Service kit, 1000h Plus . . . 15

Repair kits

4700938908 Eccentric shaft kit . . . 17
4700938892 Drum rotation kit . . . 19
4812162273 Shock absorber kit, drum . . . 21
4812162272 Scraper kit CC1100 VI . . . 23

General - Keys and others

Keys . . . 25
Fuses . . . 27

Frame

Forks, front . . . 29
Forks, rear . . . 31
Scraper, fixed . . . 33
Spring loaded scraper (Front) . . . 35
Spring loaded scraper (Rear) . . . 37
Steering hitch . . . 39
Front frame . . . 41
Rear frame . . . 43
Sprinkler pump . . . 45

Drum

Drum . . . 47

Engine room

Engine module . . . 51
4812124031 Diesel engine D1803-CR-E4B - 28 kW . . . 53
Exhaust system . . . 56
Air cleaner . . . 59
Air hose . . . 61
Engine hood, cpl. . . . 63
Bracket . . . 65
Coupling . . . 67
Expansion tank . . . 69
Coolant hose module . . . 71
Fuel hoses . . . 73
Cooler . . . 75
Fuel tank . . . 77
Battery holder . . . 79
Fan . . . 81
Hydraulic oil tank . . . 83
Belt guard . . . 85
Bracket module . . . 87

Hydraulic system

Hydraulic, Cooler and fan . . . 89

Vibration system

Vibration system, external vibration valve - common . . . 91
Vibration system, external vibration valve - without acc valves . . . 95
4812160957 Seal kit . . . 99

Vibration system, Accessorie valves . . . 101
Vibration, int vibvlv . . . 103
Hydraulic motor . . . 107
Hydraulic pump module . . . 109
4812127310 Hydraulic pump . . . 111
Hydraulic pump module . . . 113
4812127309 Hydraulic pump . . . 115

Propulsion system

Propulsion system . . . 117
4812120558 Hydraulic motor . . . 119
4812126969 Hydraulic pump . . . 123

Steering system

Steering system . . . 125
4812125395 Hydraulic cylinder . . . 127
Brake system . . . 129

Edge cutter (optional)

Edge cutter . . . 131
Hydraulic cylinder module . . . 133
4812125907 Hydraulic cylinder . . . 135
Flow divider . . . 137
Chip spreader (option) . . . 139

Electrical equipment

Circuit board and fuses . . . 141
Backup alarm . . . 143
Cable harness . . . 145
Cable harness - Quick release disconnector . . . 147
Cable harness - Battery disconnector . . . 149
Cable harness - Working lights / ROPS . . . 151
Cable harness - Driving lights . . . 153
Cable harness - Flow divider . . . 155
Cable harness - Edge cutter, Chip spreader . . . 157
Cable harness - Seat heater . . . 159
Cable harness - Dual vibration . . . 161
Cable harness - Rotating beacon . . . 163
Cable harness - Working lights incl. Rotating beacon . . . 165
Cable harness - Working lights, tank x2 . . . 167
Battery holder . . . See page 79
Driving lights (option) . . . 169
Working lights (option) . . . 171
Registration plate light . . . 173

Drivers platform

Platform . . . 175
Single lifting point . . . 177
Hand rail . . . 179
Control panel . . . 181
Water tank . . . 183
Canopy . . . 185
ROPS . . . 187
Slideable seat . . . 189
Fixed seat . . . 191
Rear view mirror . . . 193
Control module (Single 1-button) . . . 195
Control module (Dual, 2 buttons) - Left side . . . 199
Control module (Single 2-buttons) . . . 201
Controle module (Single 3-buttons) - Right side . . . 205
Driver's seat, without armrests . . . 209
Comfort seat with heat module . . . 211
Comfort seat without heat module . . . 213
ECU module . . . 215

Cup and can holder 217

Decals

Decals 219

Optional equipment

Edge cutter 221
Cutting disc 223
Pressing roller 225
Hydraulic cylinder 227
Chip spreader 229
Fire extinguisher 231
SMV-sign 233
Fleetlinkg GPS module 235
GPS module 237
4812013038 GPS module 239
Bracket (GPS) 241
Appendix B:Parts Index 243

Service kits 4812161674 Service kit, 50h

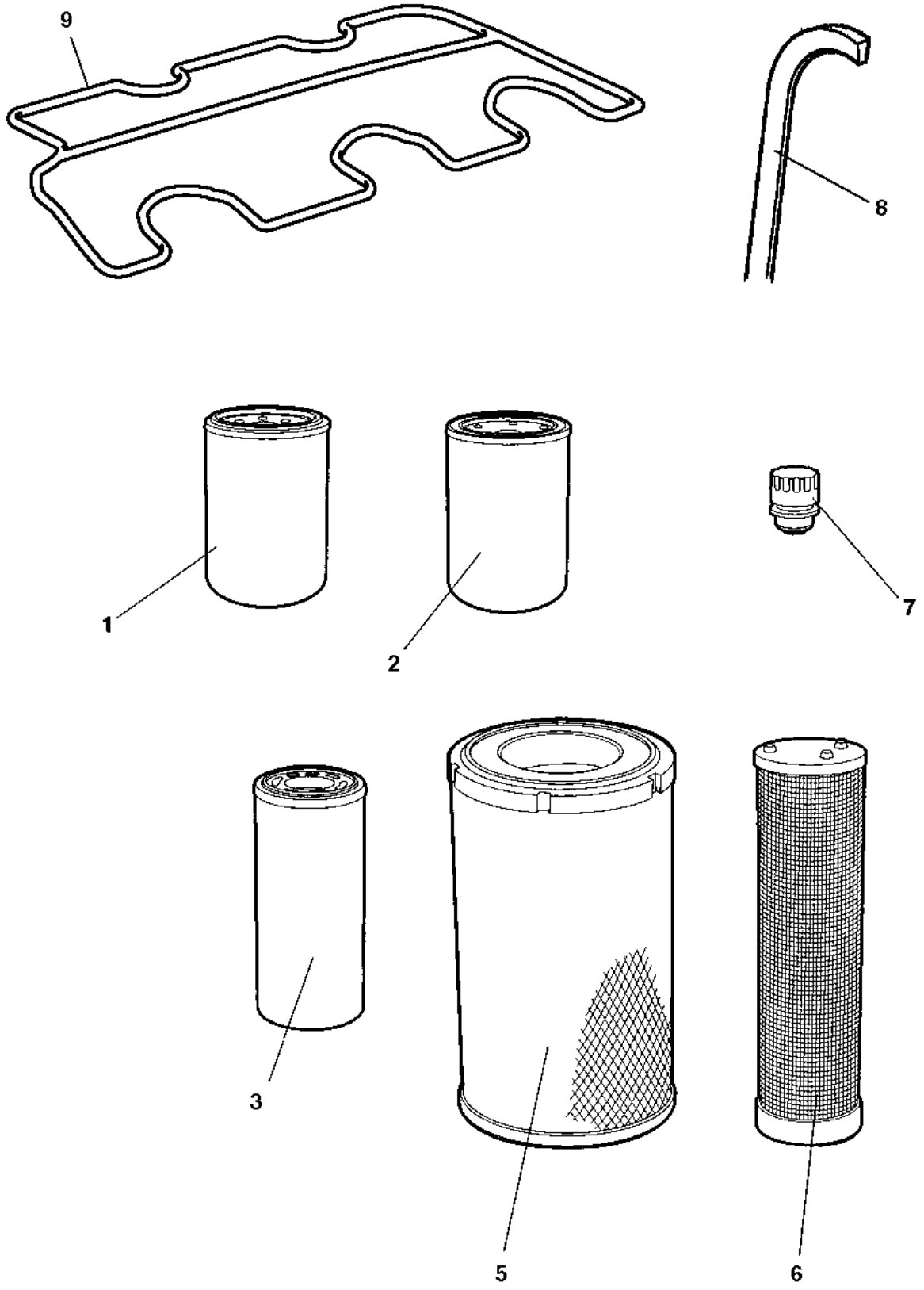

Item	Part No.	Name	Qty	L	SN INFO
0	4812161674	Service kit, 50h	1		
1	4812160480	Engine oil filter element	1		
2	4812113328	Hydraulic oil filter element	1		

Service kits 4812161675 Service kit, 50h Plus

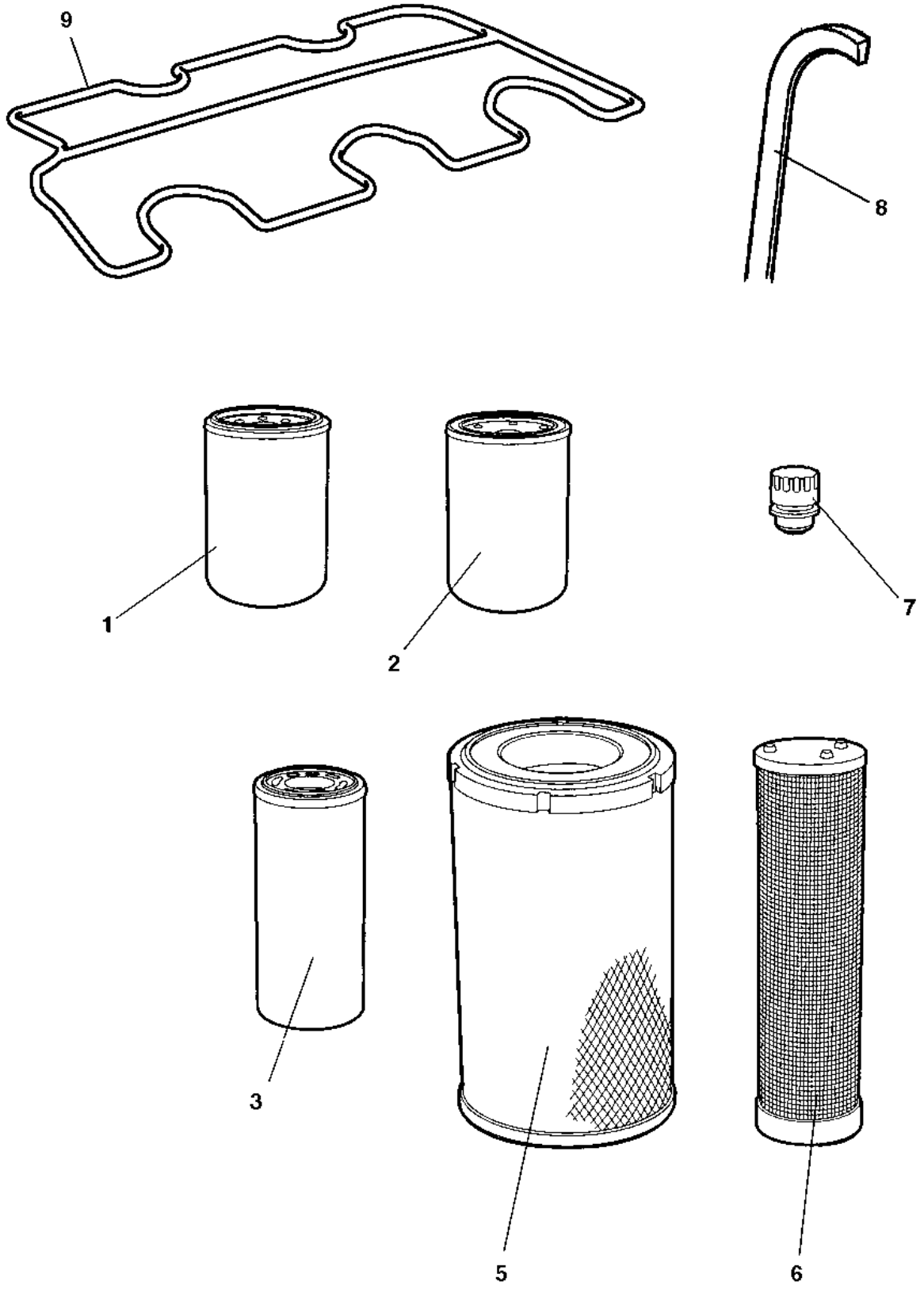

Item	Part No.	Name	Qty	L	SN INFO
0	4812161675	Service kit, 50h Plus	1		
1	4812160480	Engine oil filter element	1		
2	4812113328	Hydraulic oil filter element	1		
3	4812161855	Dynapac Engine oil 200, 5 Liter/1.32 Gallon	2		
4	4812030096	Dynapac Roller Grease	1		

Service kits 4812160462 Service kit, 250 / 750h

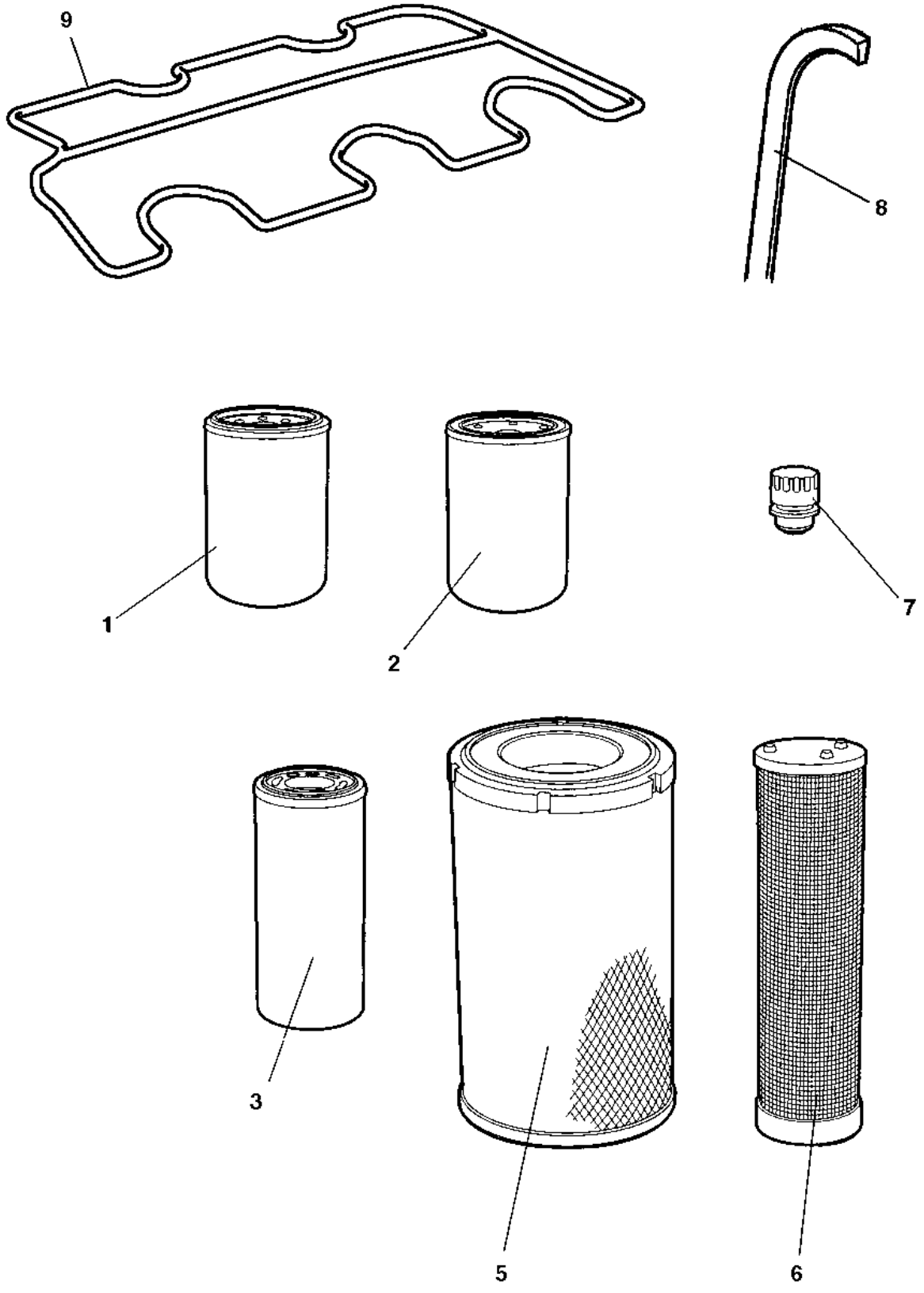

Item	Part No.	Name	Qty	L	SN INFO
0	4812160462	Service kit, 250 / 750h	1		
1	4812160480	Engine oil filter element	1		

Service kits 4812161677 Service kit, 250 / 750h Plus

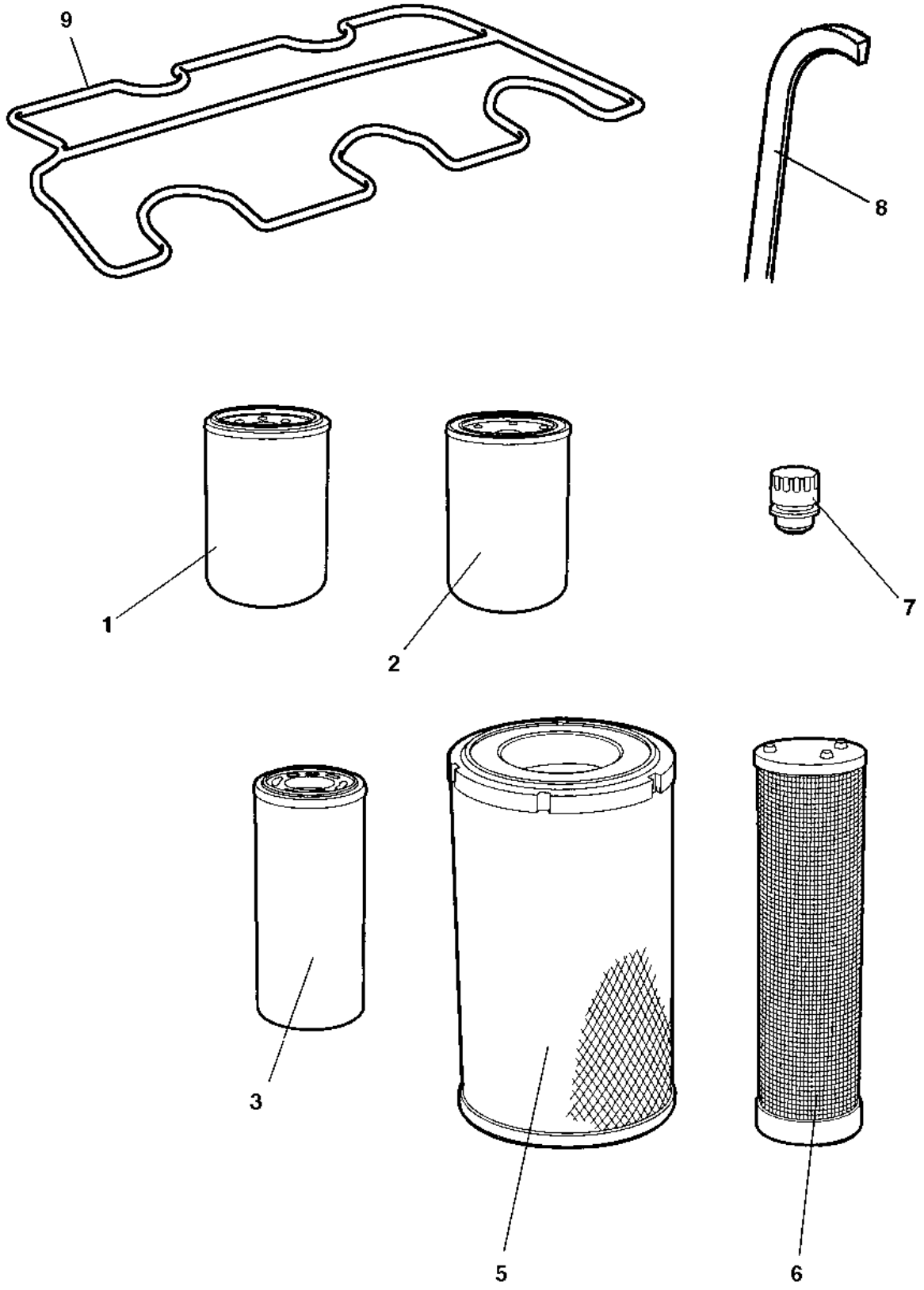

Item	Part No.	Name	Qty	L	SN INFO
0	4812161677	Service kit, 250 / 750h Plus	1		
1	4812160480	Engine oil filter element	1		
2	4812161855	Dynapac Engine oil 200, 5 Liter/1.32 Gallon	2		

Service kits 4812161684_Service kit, 500h

Image does not exist

Item	Part No.	Name	Qty	L	SN INFO
0	4812161684	Service kit, 500h	1		
1	4812160480	Engine oil filter element	1		
2	4812161672	Fuel filter element	1		
3	4812159594	Pre Fuel filter element	1		
4	4812156260	V-belt	1		
5	4812161586	Air filter, main	1		

Service kits 4812161685 Service kit, 500h Plus

Image does not exist

Item	Part No.	Name	Qty	L	SN INFO
0	4812161685	Service kit, 500h Plus	1		
1	4812160480	Engine oil filter element	1		
2	4812161672	Fuel filter element	1		
3	4812159594	Pre Fuel filter element	1		
4	4812156260	V-belt	1		
5	4812161586	Air filter, main	1		
6	4812161855	Dynapac Engine oil 200, 5 Liter/1.32 Gallon	2		
7	4812030096	Dynapac Roller Grease	1		

Service kits 4812161686_Service kit, 1000h

Image does not exist

Item	Part No.	Name	Qty	L	SN INFO
0	4812161686	Service kit, 1000h	1		
1	4812160480	Engine oil filter element	1		
2	4812161672	Fuel filter element	1		
3	4812159594	Pre Fuel filter element	1		
4	4812156260	V-belt	1		
5	4812113328	Hydraulic oil filter element	1		
6	4812161586	Air filter, main	1		
7	4812161587	Air filter element, Safety	1		
8	4812156261	Valve cover gasket	1		
9	4700357138	Ventilating filter	1		

Service kits 4812161687 Service kit, 1000h Plus

Image does not exist

Item	Part No.	Name	Qty	L	SN INFO
0	4812161687	Service kit, 1000h Plus	1		
1	4812160480	Engine oil filter element	1		
2	4812161672	Fuel filter element	1		
3	4812159594	Pre Fuel filter element	1		
4	4812156260	V-belt	1		
5	4812113328	Hydraulic oil filter element	1		
6	4812161586	Air filter, main	1		
7	4812161587	Air filter element, Safety	1		
8	4812156261	Valve cover gasket	1		
9	4700357138	Ventilating filter	1		
10	4812161855	Dynapac Engine oil 200, 5 Liter/1.32 Gallon	2		
11	4812030096	Dynapac Roller Grease	1		

Repair kits 4700938908 Eccentric shaft kit

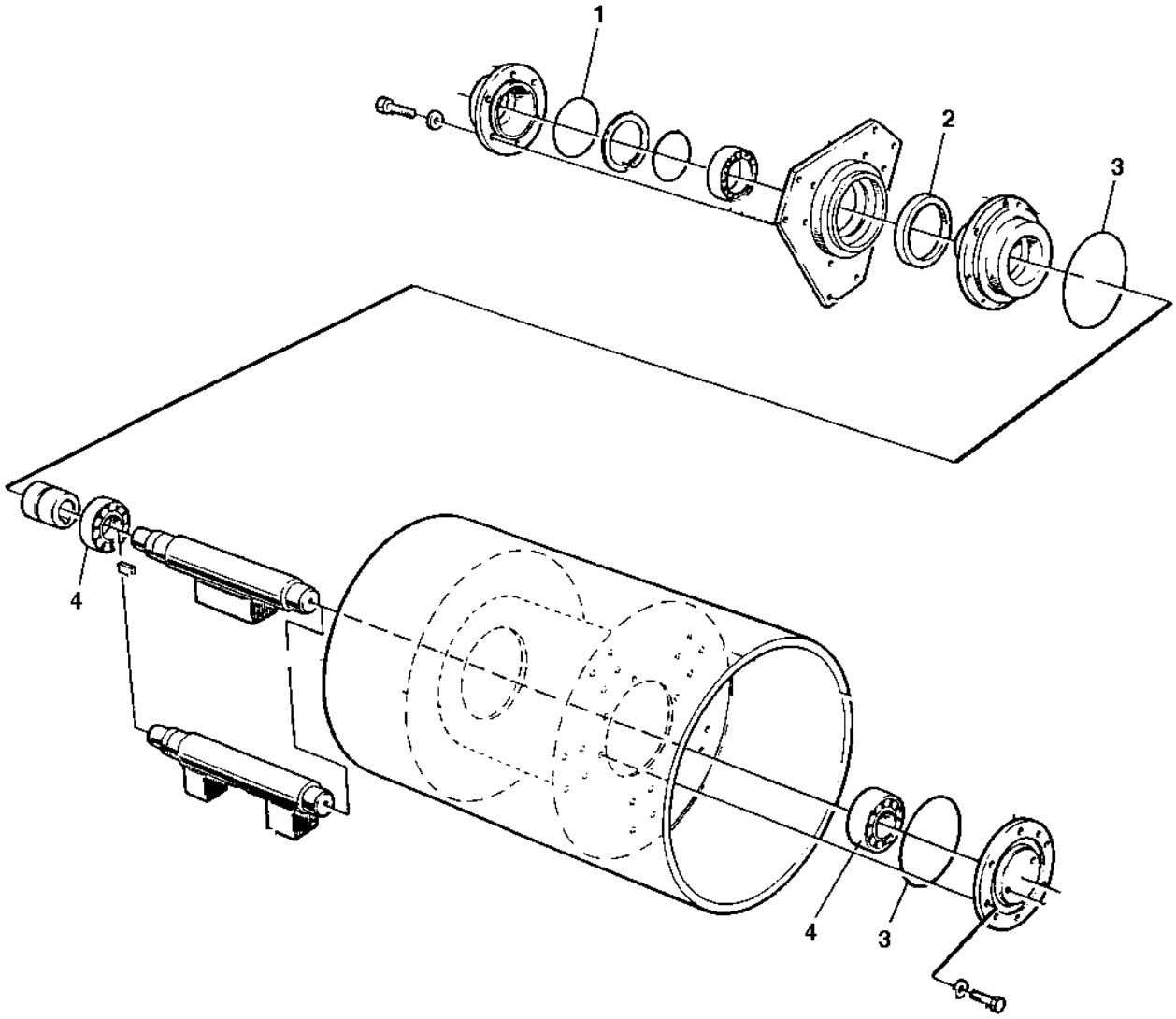

Item	Part No.	Name	Qty	L	SN INFO
0	4700938908	Eccentric shaft kit			
1	4700160132	O-ring 70	1		
2	4700163049	Radial lip-type seal	1		
3	4700923951	O-ring	2		
4	4700904258	Spherical roller bearing	2		

Repair kits 4700938892 Drum rotation kit

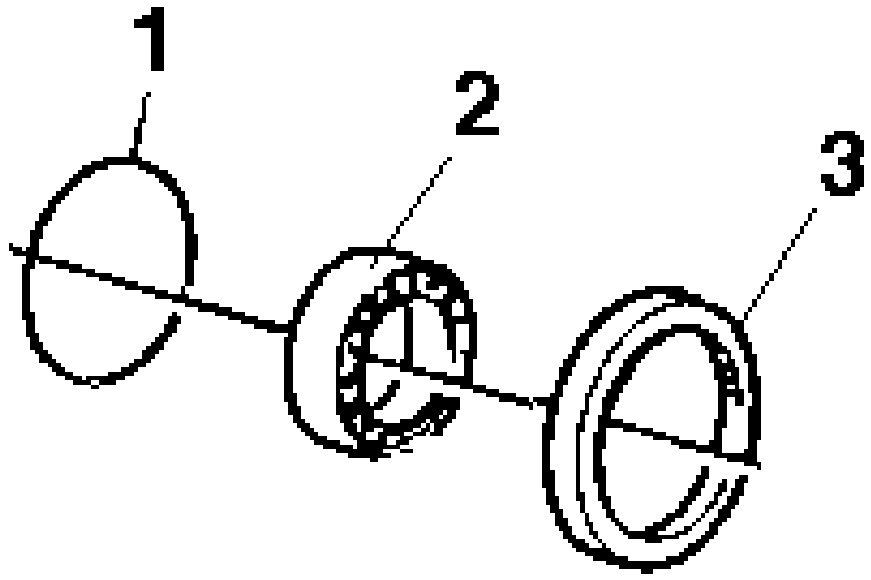

Item	Part No.	Name	Qty	L	SN INFO
0	4700938892	Drum rotation kit			
1	4700160132	O-ring 70	1		
2	4700111018	Ball bearing	1		
3	4700163049	Radial lip-type seal	1		

Repair kits 4812162273 Shock absorber kit, drum

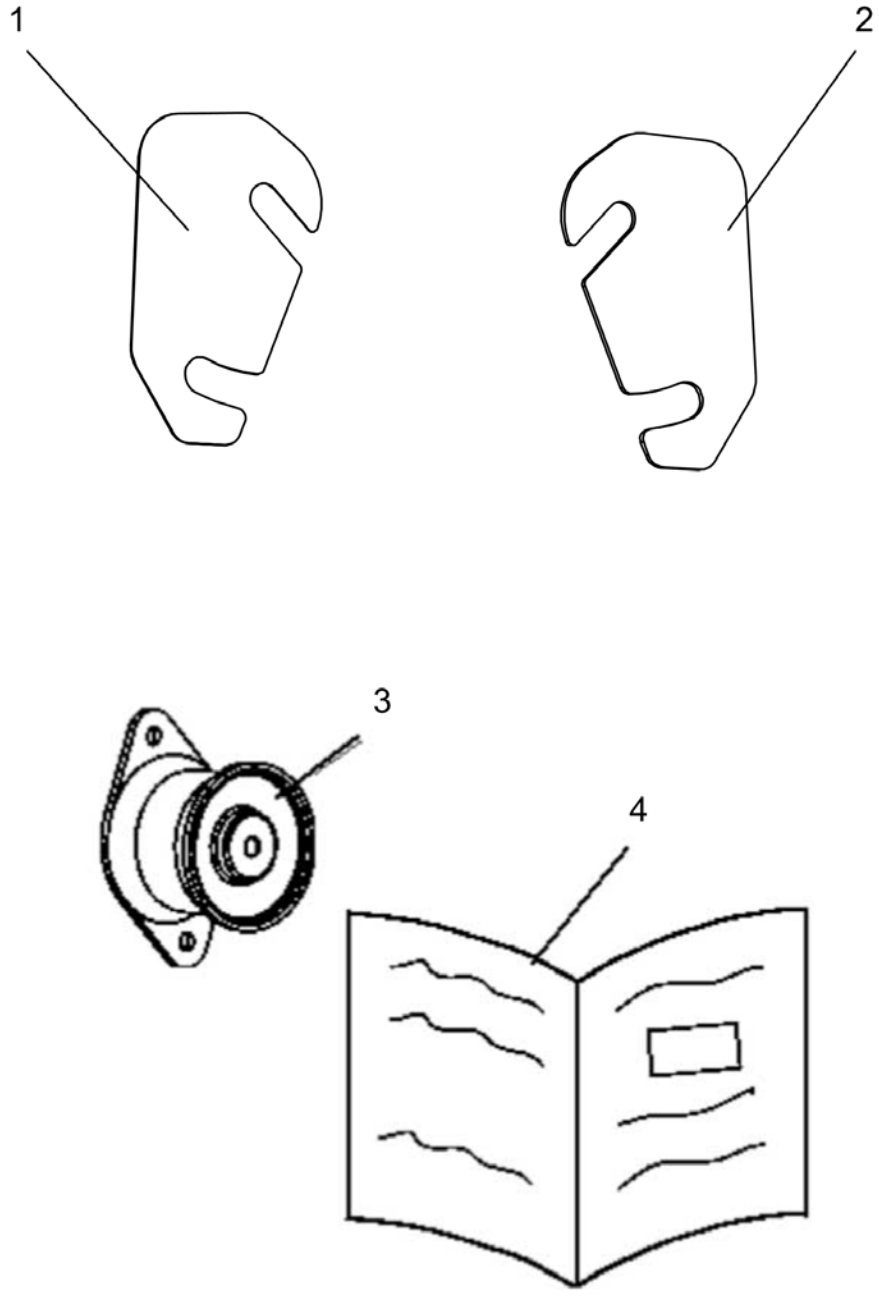

Item	Part No.	Name	Qty	L	SN INFO
0	4812162273	Shock absorber kit, drum			
1	4812126093	Shim	4		
2	4812126094	Shim	4		
3	4700391984	Shock absorber	16		
4	4812156170	Instructions	1		

Repair kits 4812162272 Scraper kit CC1100 VI

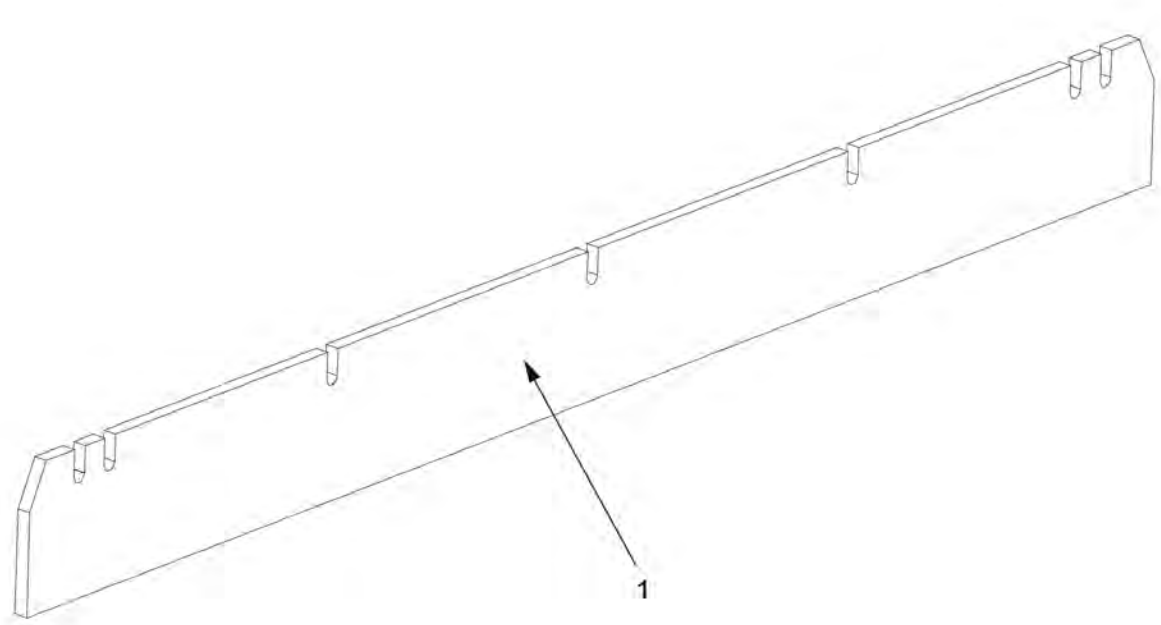

Item	Part No.	Name	Qty	L	SN INFO
0	4812162272	Scraper kit	1		
1	4812125957	Scraper blade	4		

General - Keys and others Keys

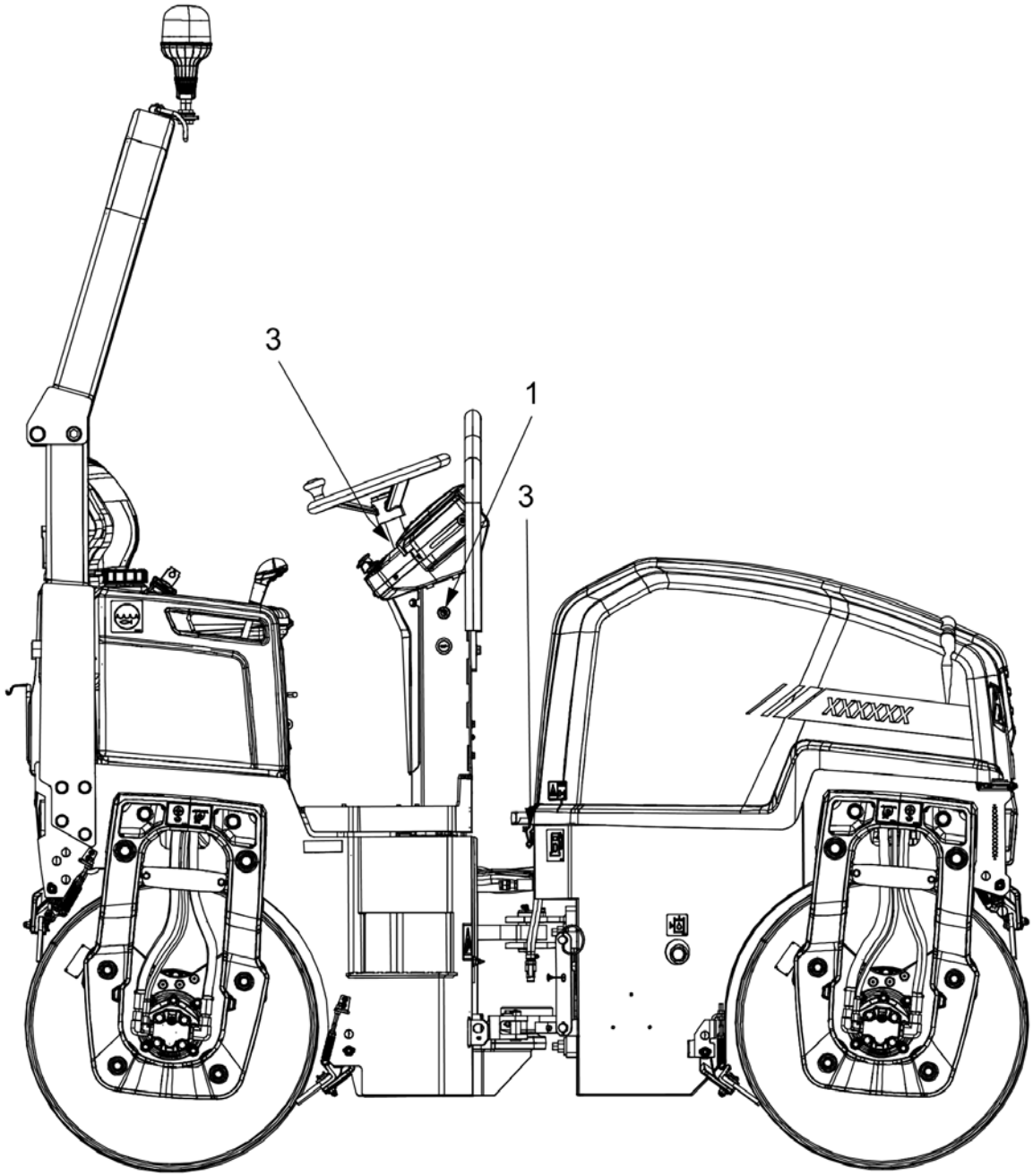

Item	Part No.	Name	Qty	L	SN INFO
1	-	Ignition switch			
1	4700940451	Ignition key			
3	4700358881	Pad lock			
3	4812161396	Key			

General - Keys and others Fuses

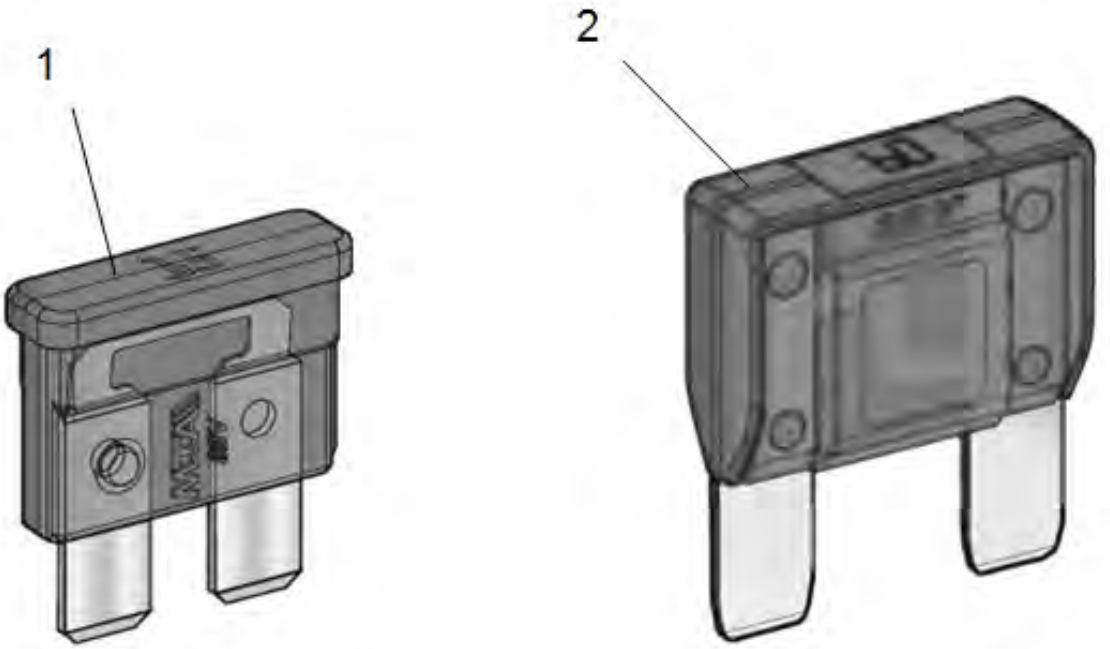

Item	Part No.	Name	Qty	L	SN INFO
1	-	Fuse, blade type Medium			
1	4700901224	Fuse, 3A Violet			
1	4700901225	Fuse 5A Tan			
1	4700901226	Fuse 7.5A Brown			
1	4700901227	Fuse 10A Red			
1	4700901228	Fuse, 15A Blue			
1	4700903741	Fuse 20A Yellow			
1	4700901229	Fuse, 25A Natural			
1	4700901230	Fuse, 30A Green			
2	-	Fuse, blade typ High			
2	4700904294	Fuse 20A Yellow			
2	4700904037	Fuse 30A Green			
2	4700904038	Fuse 40A Orange			
2	4700904039	Fuse 50A Red			
2	4700904040	Fuse 60A Blue			
2	4700904041	Fuse 70A Tan			
2	4700904042	Fuse 80A Natural (White)			

Frame Forks, front

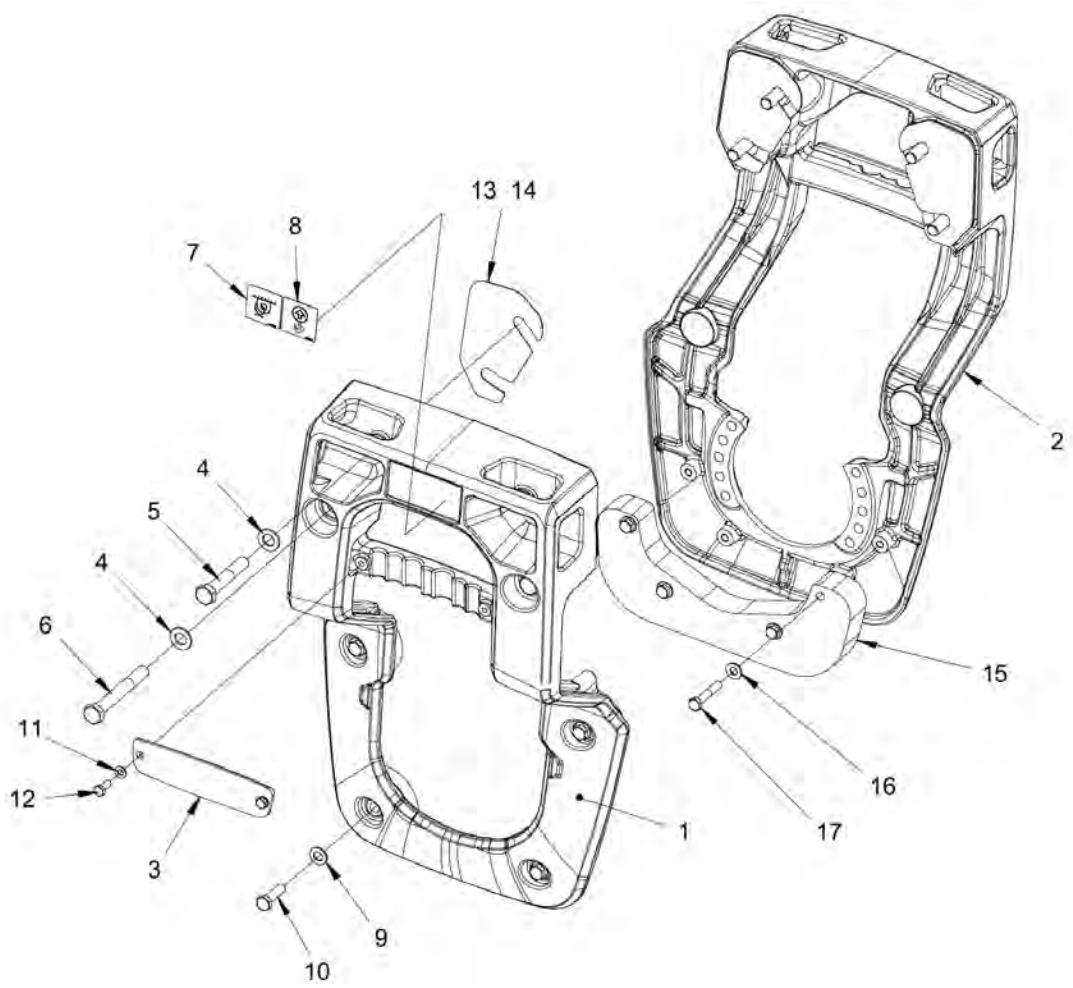

Item	Part No.	Name	Qty	L	SN INFO
1	4812125807	Fork	1		
2	4812125817	Fork	1		
3	4812125471	Cover plate	2		
4	4700904232	Steel plain washer	8		
5	4700500094	Hex. screw	4		
6	4700500142	Screw	4		
7	4700382751	Decal "SECURING POINT/TIE DOWN"	2		
8	4700357587	Label lifting point	2		
9	4700904231	Washer, 13x24x2 mm 300 HV	4		
10	4700947689	Hex. head screw M12	4		
11	4700904229	Washer, 8.4x 6x1.5 mm 300HV	4		
12	4700500053	Screw, M8x20 mm 8.8 A2K	4		
13	4812126093	Shim	N		
14	4812126094	Shim	N		
15	4812127737	Weight	1		
16	4700904230	Plain washer 10.5x22x2 mm	4		
17	4700500032	Screw M10 x 55	4		

Frame Forks, rear

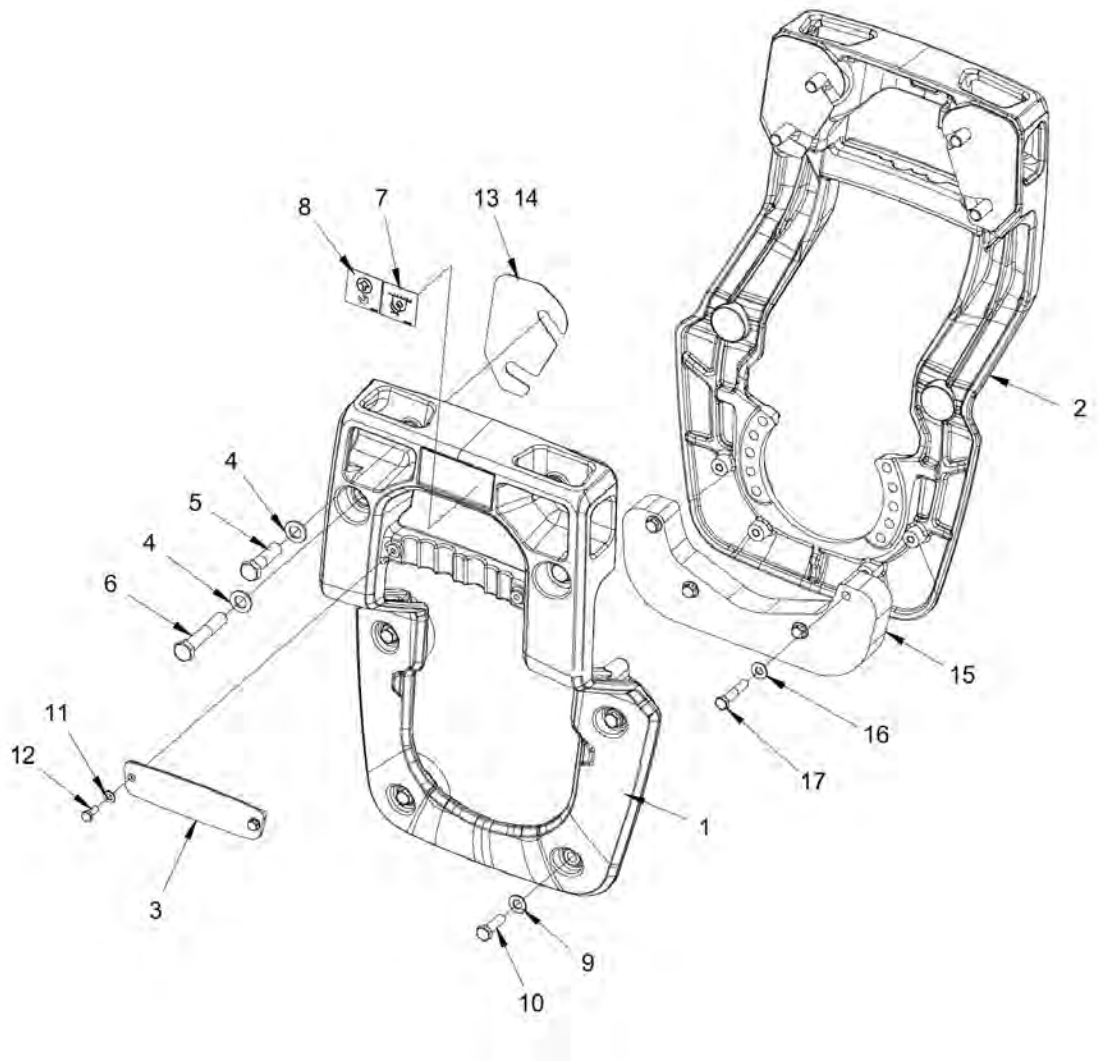

Item	Part No.	Name	Qty	L	SN INFO
1	4812125808	Fork	1		
2	4812125818	Fork	1		
3	4812125471	Cover plate	2		
4	4700904232	Steel plain washer	8		
5	4700500076	Screw M16x55	4		
6	4700500094	Hex. screw	4		
7	4700382751	Decal "SECURING POINT/TIE DOWN"	2		
8	4700357587	Label lifting point	2		
9	4700904231	Washer, 13x24x2 mm 300 HV	4		
10	4700947689	Hex. head screw M12	4		
11	4700904229	Washer, 8.4x 6x1.5 mm 300HV	4		
12	4700500053	Screw, M8x20 mm 8.8 A2K	4		
13	4812126093	Shim	N		
14	4812126094	Shim	N		
15	4812127737	Weight	1		
16	4700904230	Plain washer 10.5x22x2 mm	4		
17	4700500032	Screw M10 x 55	4		

Frame Scraper, fixed

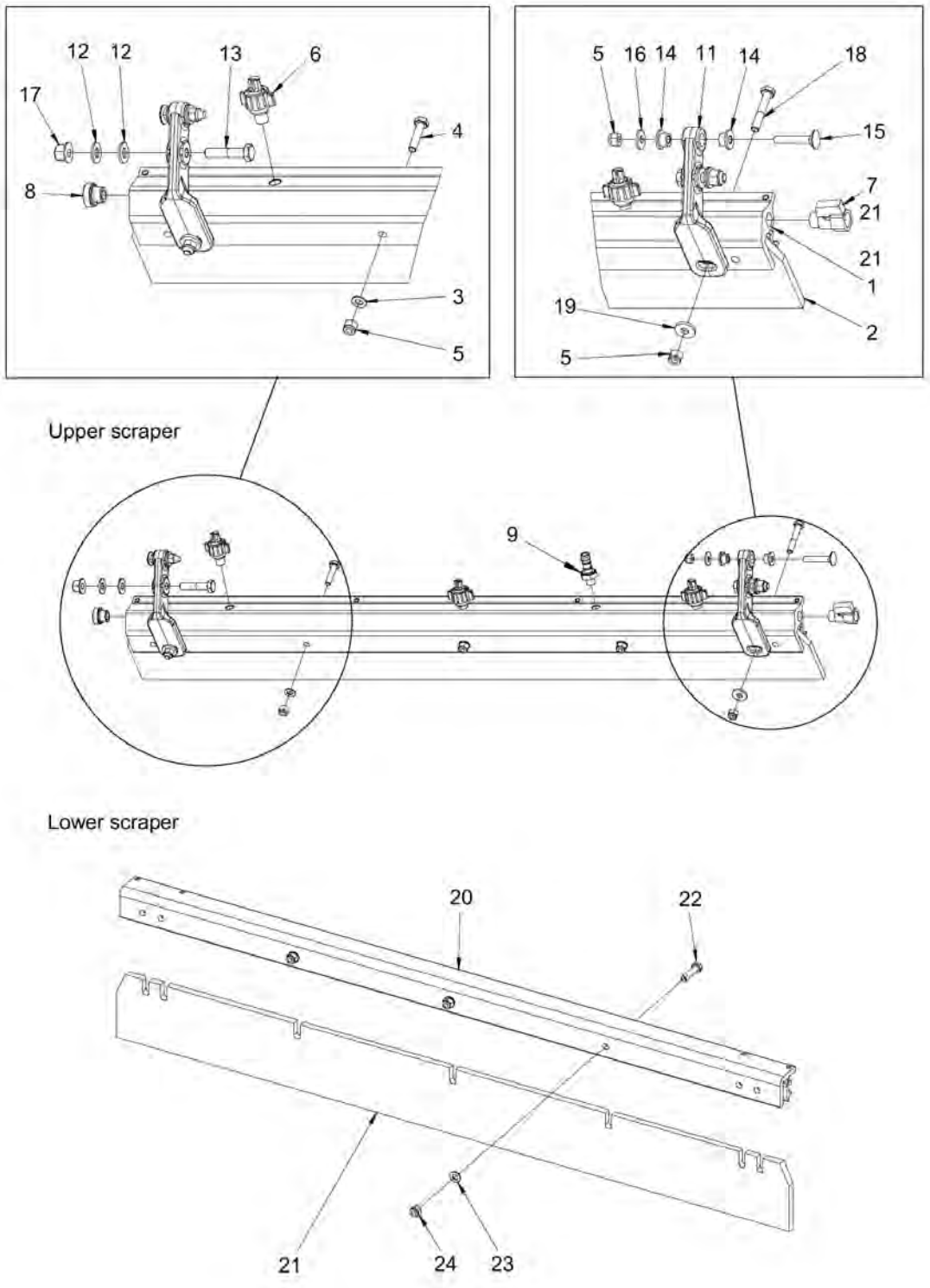

Item	Part No.	Name	Qty	L	SN INFO
1	4812125956	Sprinkler pipe	1		
2	4812125957	Scraper blade	1		
3	4700904229	Washer, 8.4x 6x1.5 mm 300HV	3		
4	4700500230	Hex. screw	3		
5	4700586003	Lock nut M8	11		
6	4812124321	Spraying nozzle, cpl	3		
7	4700233215	Ball valve	1		
8	4700792072	End plug	1		
9	4700901432	Hose connection	1		
11	4812121858	Bracket	4		
12	4700791938	Washer	8		
13	4700500105	Hex. screw	4		
14	4700791939	Bushing	8		
15	4700791775	Bolt	4		
16	4700791304	Steel plain washer	4		
17	4700902287	Nut, M10	4		
18	4700500025	Screw, M8x50 mm 8.8 A2K	4		
19	4700904640	Washer, 8.4x22x3 mm 300HV	4		
20	4812125958	Sprinkler pipe	1		
21	4812125957	Scraper blade	1		
22	4700500230	Hex. screw	3		
23	4700904229	Washer, 8.4x 6x1.5 mm 300HV	3		
24	4700586003	Lock nut M8	3		

Frame Spring loaded scraper (Front)

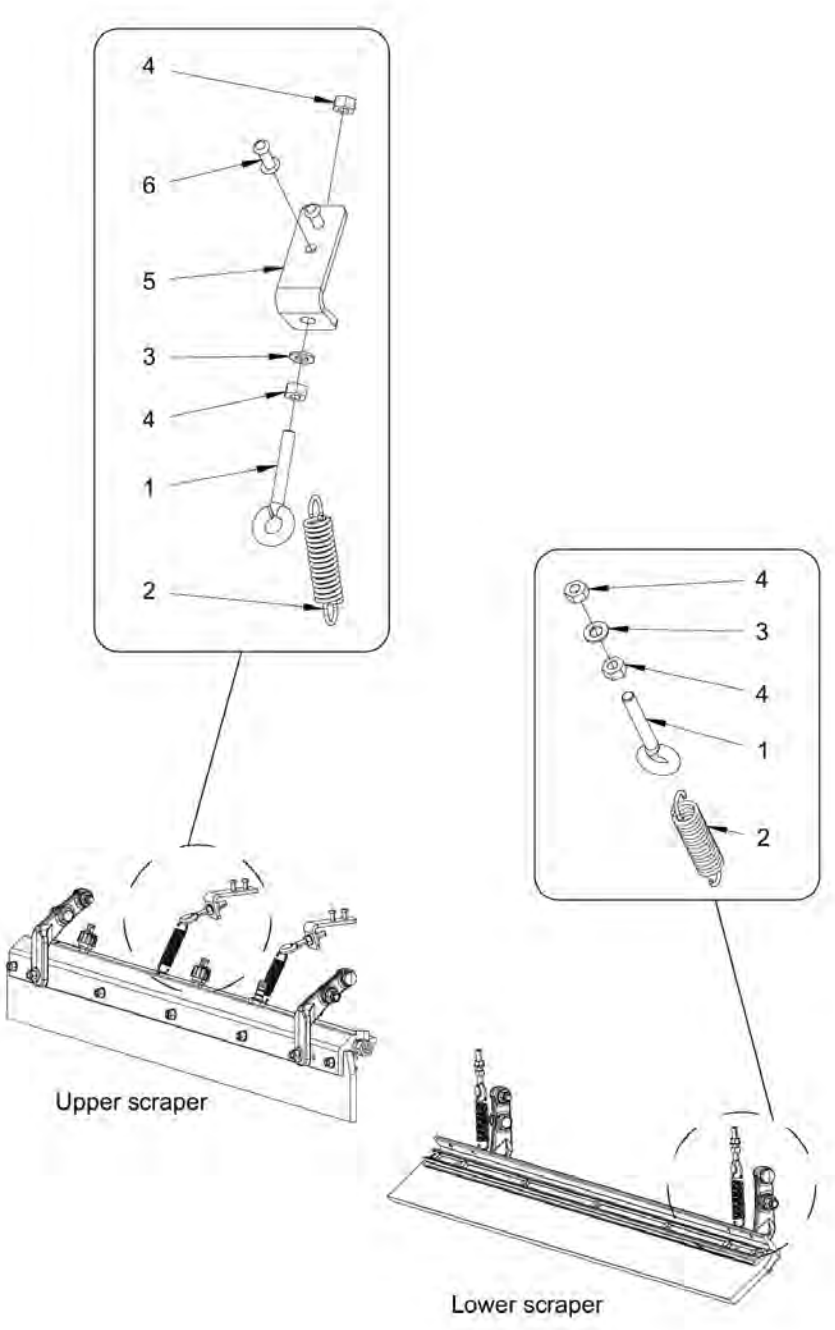

Item	Part No.	Name	Qty	L	SN INFO
1	4700792189	Eye bolt	4		
2	4700359043	Spring	4		
3	4700904229	Washer, 8.4x 6x1.5 mm 300HV	4		
4	4700570005	Hexagon nut	8		
5	4812126891	Bracket	2		
6	4700791666	Blind rivet	4		

Frame Spring loaded scraper (Rear)

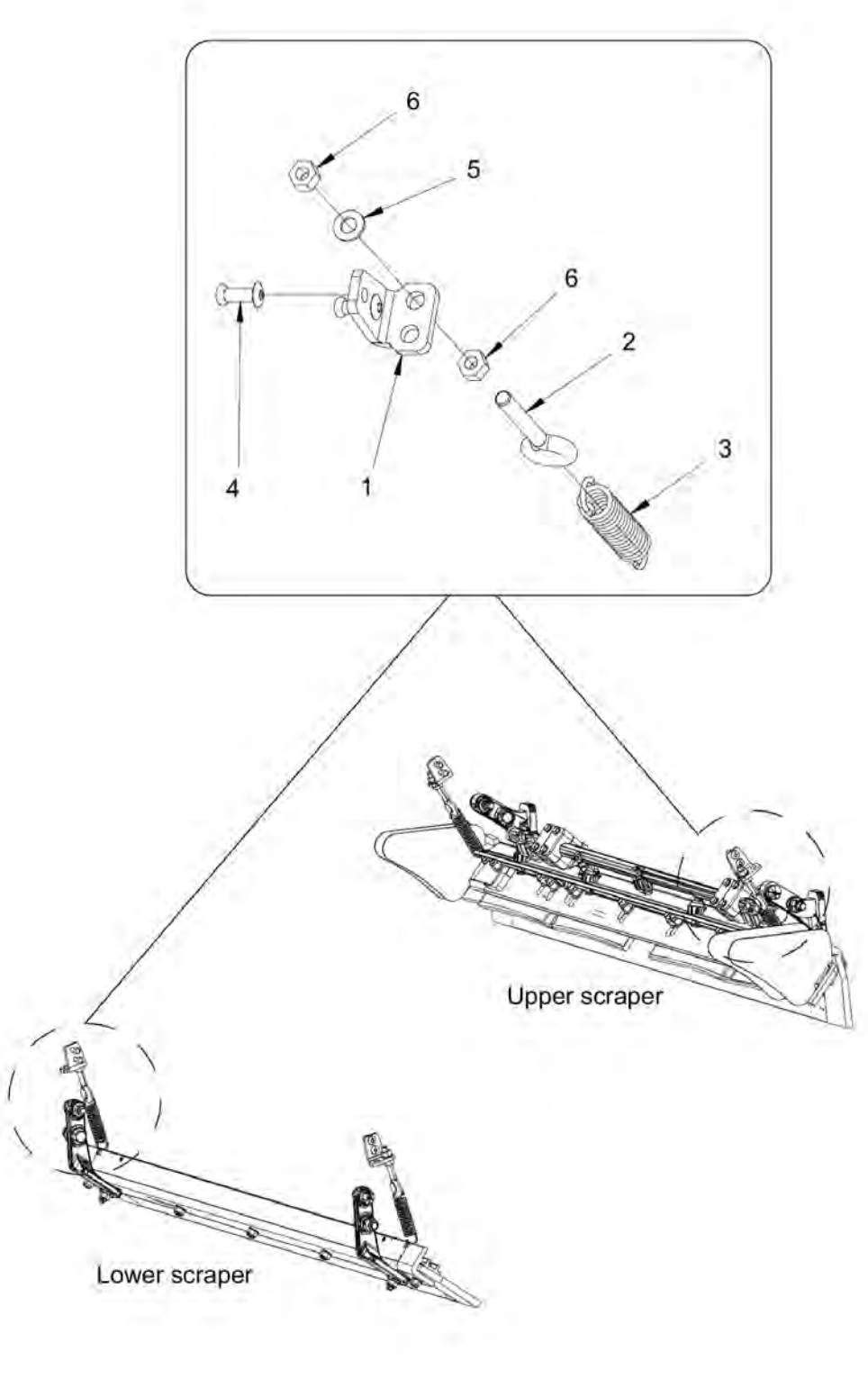

Item	Part No.	Name	Qty	L	SN INFO
1	4812126984	Bracket	4		
2	4700792189	Eye bolt	4		
3	4700359043	Spring	4		
4	4700791666	Blind rivet	8		
5	4700904229	Washer, 8.4x 6x1.5 mm 300HV	4		
6	4700570005	Hexagon nut	8		

Frame Steering hitch

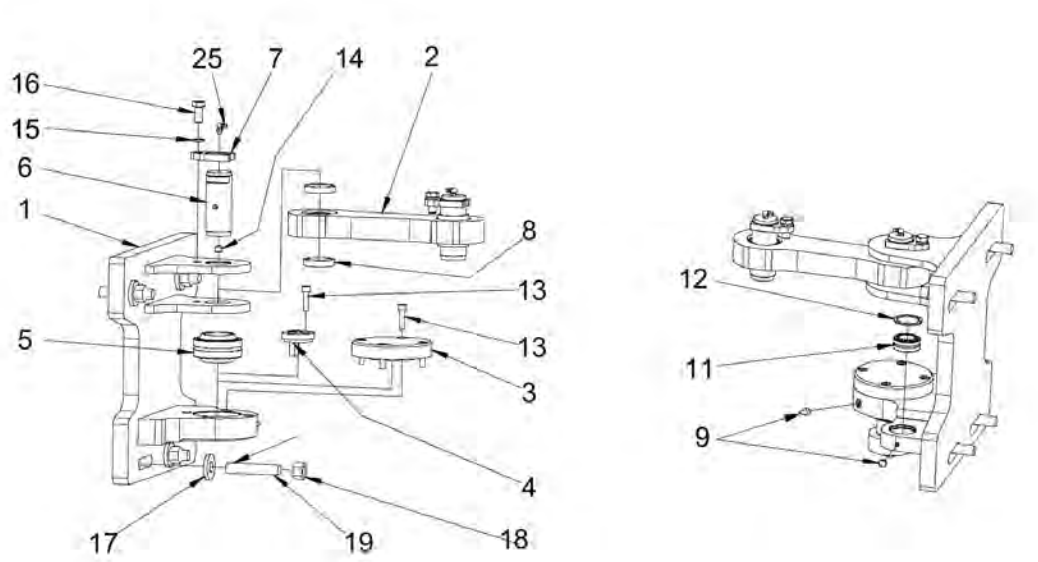

Item	Part No.	Name	Qty	L	SN INFO
1	4812125132	Articulated joint plate	1		
2	4812125133	Bearing	1		
3	4812125136	Bearing cap	1		
4	4812125137	Cover cap	1		
5	4812125392	Bearing	1		
6	4812125398	Shaft	2		
7	4812125399	Washer	2		
8	4812125140	Spacer sleeve	2		To xxA021811
8	4812128394	Spacer sleeve	2		From xxA021812
9	4700926214	Grease fitting	4		
11	4812125414	Bearing	1		
12	4700151012	Retaining ring	1		
13	4700508048	Hexagon socket head cap screw M	6		
14	4700792083	Plug	2		
15	4700900994	Lock washer	2		
16	4700500051	Hex. screw	2		
17	0300027623	Plain washer	4		
18	4700570008	Hex. nut	4		
19	4812125416	Stud	4		
25	0544110011	Lubricant nipple	2		

Frame Front frame

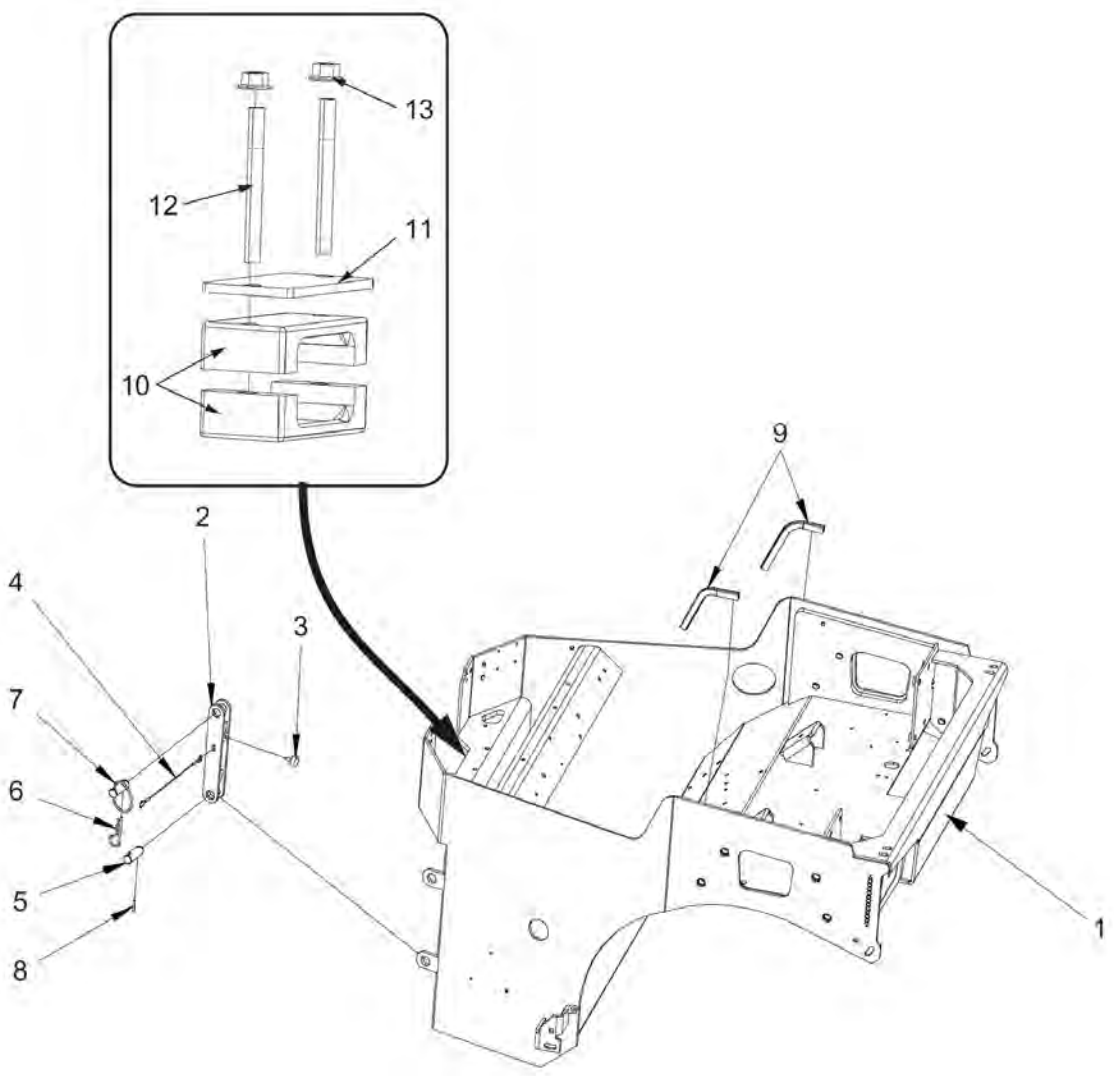

Item	Part No.	Name	Qty	L	SN INFO
1	4812125563	Front frame	1		
2	4812126081	Articulated joint lock	1		
3	4700792607	Shock absorber	1		
4	4700343775	Plastic insulated steelwire	1		
5	4812126082	Shaft	2		
6	4700635061	Pin	1		
7	4700357488	Spring	1		
8	4700629016	Expanding	2		
9	4700902379	Edge trim	2		
10	4700343732	Hose clamp	2		
11	4700335914	Cover plate	1		
12	4700904629	Stud	2		
13	4700792817	Hexagon nut with flange	2		

Frame Rear frame

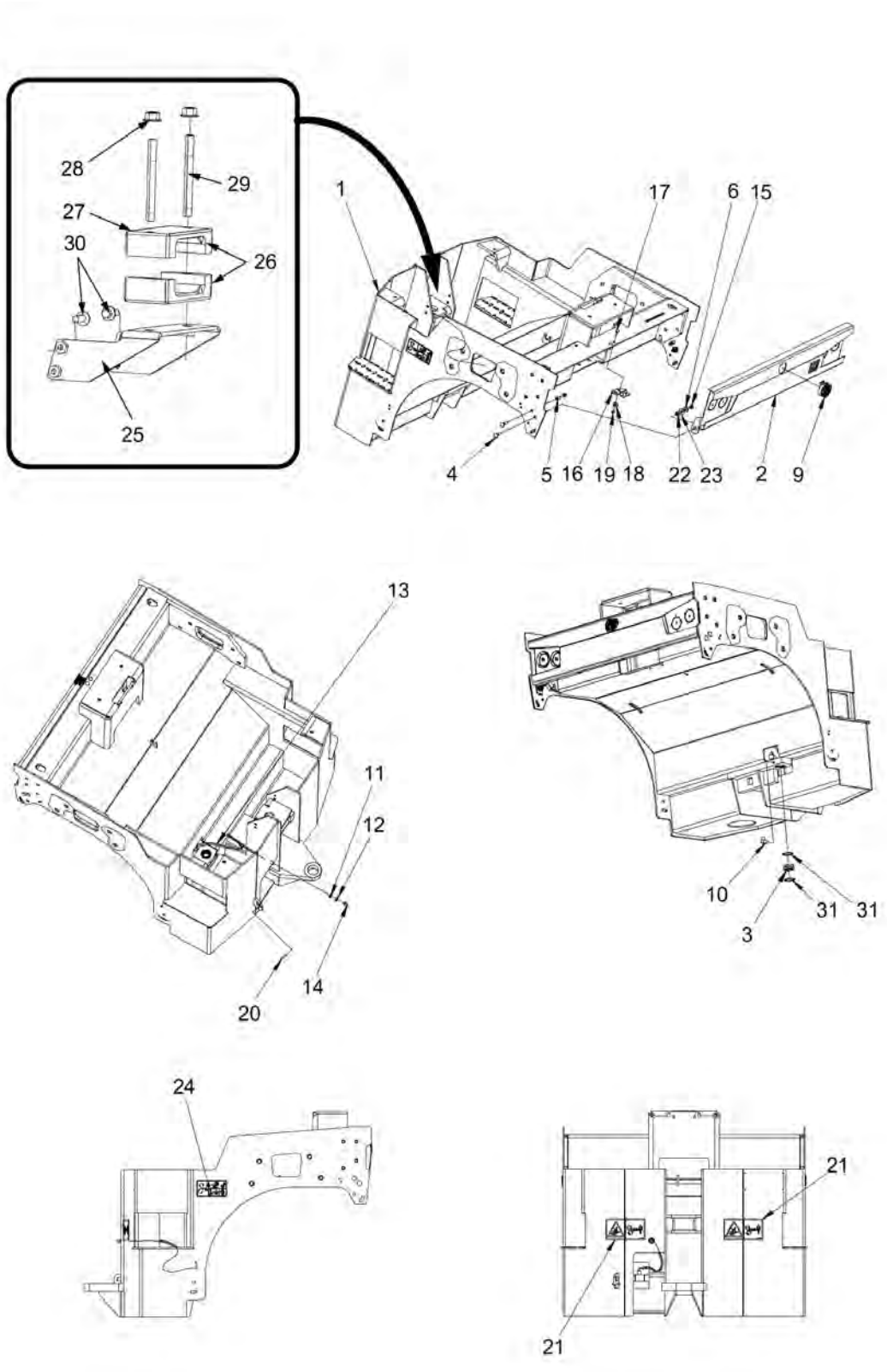

Item	Part No.	Name	Qty	L	SN INFO
1	4812125592	Rear frame	1		
2	4812125976	Cover	1		
3	4812125414	Bearing	1		
4	4812117106	Cup square neck bolt	4		
5	4700371728	Spacer sleeve	2		
6	4700904640	Washer, 8.4x22x3 mm 300HV	2		
9	4812125978	Latch	1		
10	4700373183	Elbow 90°	1		
11	4700904231	Washer, 13x24x2 mm 300 HV	1		
12	4700903831	Hexagon nut	1		
13	4812117733	Hydraulic hose	1		
14	4700926214	Grease fitting	1		
15	4700586003	Lock nut M8	4		
16	4812126012	Lock fittings	1		
17	4700903923	Cup square neck bolt	2		
18	4700904735	Steel plain washer	2		
19	4700586002	Lock nut M6 -8	2		
20	4700629024	Pin	1		
21	4700903422	Safety decal "CRUSH AREA"	2		
22	4812126957	Spacer sleeve	2		
23	4700903662	Washer	2		
24	4812125363	Safety decal "RISK OF CRUSHING"	1		
25	4812125468	Bracket	1		
26	4700343732	Hose clamp	2		
27	4700335914	Cover plate	1		
28	4700904629	Stud	2		
29	4700792817	Hexagon nut with flange	2		
30	4700500505	Screw, M8x20 mm 8.8 A2K	4		
31	4700151012	Retaining ring	2		

Frame Sprinkler pump

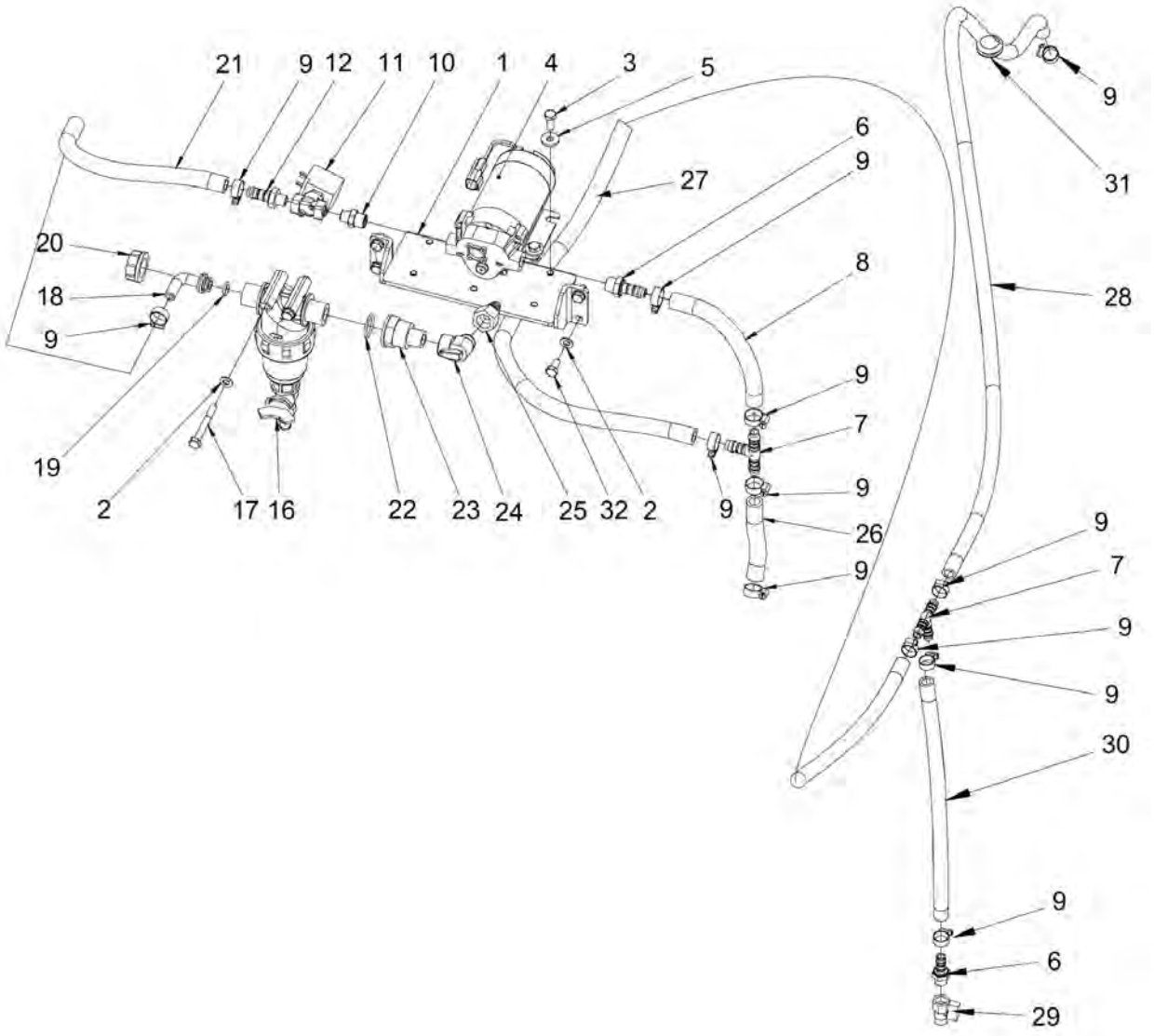

Item	Part No.	Name	Qty	L	SN INFO
1	4812125973	Bracket	1		
2	4700904229	Washer, 8.4x 6x1.5 mm 300HV	6		
3	4700500053	Screw, M8x20 mm 8.8 A2K	4		
4	4812125871	Sprinkler pump	1		
5	4700904640	Washer, 8.4x22x3 mm 300HV	4		
6	4700234931	Adapter	2		
7	4700923735	Hose connection	2		
8	4812112074	Plastic hose (x m)	0,17		
9	4700313002	Hose clamp	12		
10	4700377611	Straight connector	1		
11	4700287713	Solenoid valve	1		
12	4700901432	Hose connection	1		
16	4812111325	Water filter	1		
17	4700500068	Screw M08x65	2		
18	4812111330	Hose connection	1		
19	4700480852	O-ring 70	1		
20	4700792779	Swivel nut	1		
21	4812112074	Plastic hose (x m)	0,27		
22	4700160313	O-ring 70	1		
23	4812111331	Reducer nipple	1		
24	4812126907	Ball valve	1		
25	4812112451	Hose connection	1		
26	4812112074	Plastic hose (x m)	0,14		
27	4812112074	Plastic hose (x m)	1,41		
28	4812112074	Plastic hose (x m)	1,31		
29	4700233215	Ball valve	1		
30	4812112074	Plastic hose (x m)	0,43		
31	4700903192	Grommet	1		
31	4812119127	Grommet with membrane	1	A = Interchangeable together with 4812125563 only	
32	4700500019	Hexagon screw	4		

Drum Drum

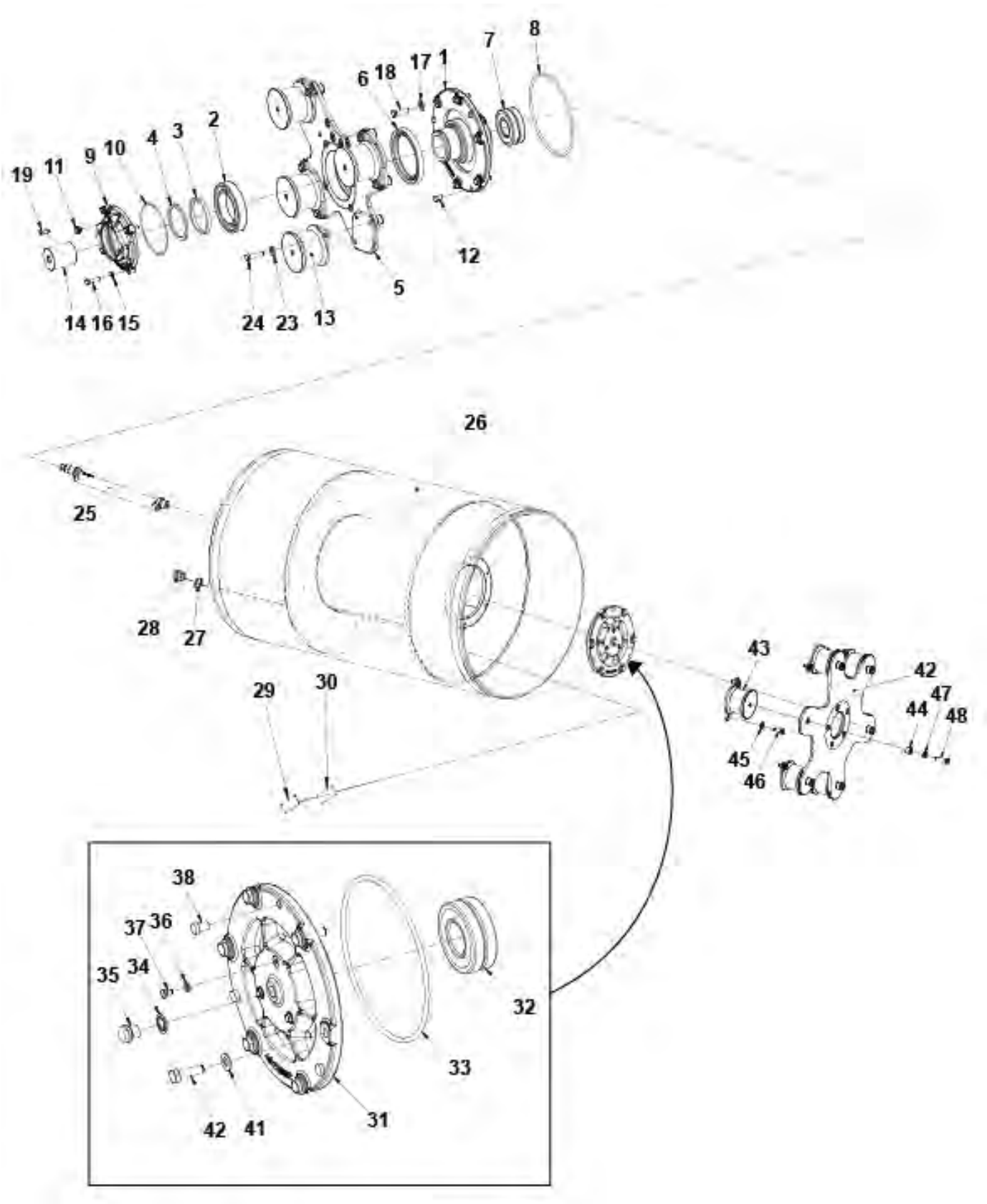
1
2
3
4
5
6
7
8
9
10
11
12
13
14
15
16
17
18
19
23
24
25
26
27
28
29
30
31
32
33
34
35
36
37
38
41
42
43
44
45
46
47
48

Item	Part No.	Name	Qty	L	SN INFO
1	4812126595	Drum bearing housing	1		
2	4700111018	Ball bearing	1		
3	4700358689	Spacer ring	1		
4	4700903154	Retaining ring	1		
5	4812124899	Bearing housing	1		
6	4700163049	Radial lip-type seal	1		
7	4700904258	Spherical roller bearing	1		
8	4700923951	O-ring	1		
9	4812124904	Adapter	1		
10	4700160132	O-ring 70	1		
11	4700343490	Air breather	1		
12	4700903287	Plug	3		
13	4700391984	Shock absorber	4		
14	4700349202	Coupling	1		
15	4700904229	Washer, 8.4x 6x1.5 mm 300HV	4		
16	4700500022	Screw	4		
17	4700904230	Plain washer 10.5x22x2 mm	6		
18	4700500030	Hexagon head screw	6		
19	4700350029	Feather key	1		
23	4700904557	Washer, 10.5x22x4 mm 300 HV	8		
24	4812110596	Hexagon head screw M10x40 10,9 A3K	8		
25	4812119820	Eccentric shaft	1		
26	4812124791	Drum	1		
27	4700162017	Seal ring	1		
28	4700343744	Magnetic plug	1		
29	4700343801	Sign plate	1		
30		Tape	1		
31	4812118692	Bearing housing	1		To: xA021238
31	4812127097	Bearing housing	1		From: xA021239
32	4700904258	Spherical roller bearing	1		
33	4700923951	O-ring	1		
34	4700162011	Washer, 16.7x24x1.5 mm Type A M16	1		
35	4700232143	Plug, M16	1		
36	4700904228	Washer 6,4x12x1,5	3		
37	4700500044	Screw M6x8	3		
38	4700903287	Plug	3		
40	4700904230	Plain washer 10.5x22x2 mm	6		
41	4700500030	Hexagon head screw	6		

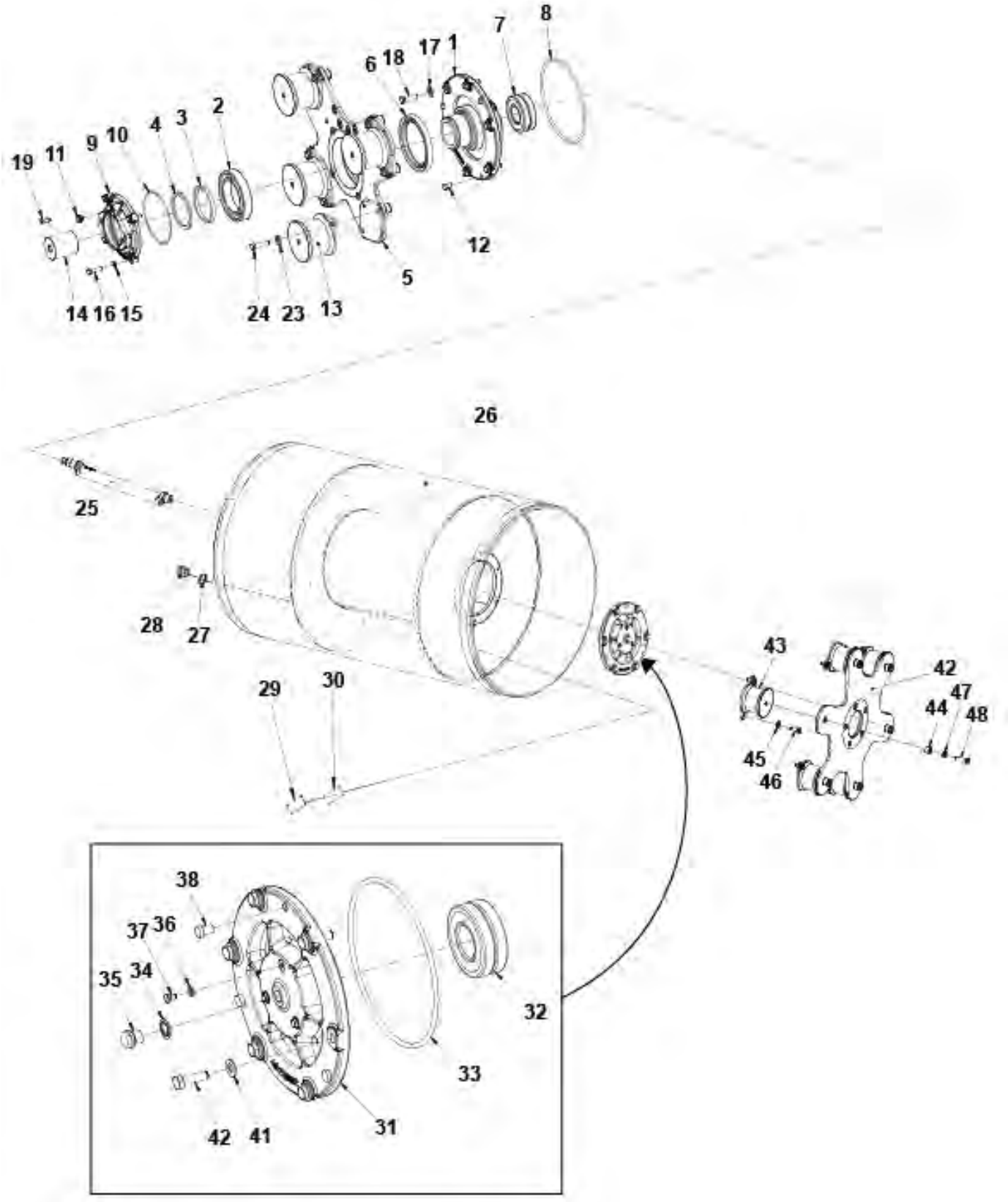
1
2
3
4
5
6
7
8
9
10
11
12
13
14
15
16
17
18
19
23
24
25
26
27
28
29
30
31
32
33
34
35
36
37
38
41
42
43
44
45
46
47
48

Item	Part No.	Name	Qty	L	SN INFO
42	4812124832	Drive disc	1		
43	4700391984	Shock absorber	6		
44	4812110346	Spacer	6		
45	4700904557	Washer, 10.5x22x4 mm 300 HV	12		
46	4812110663	Hexagon head screw M10x25H 10,9 A3K	12		
47	4700904231	Washer, 13x24x2 mm 300 HV	6		
48	4812125739	Screw	6		

Engine room Engine module

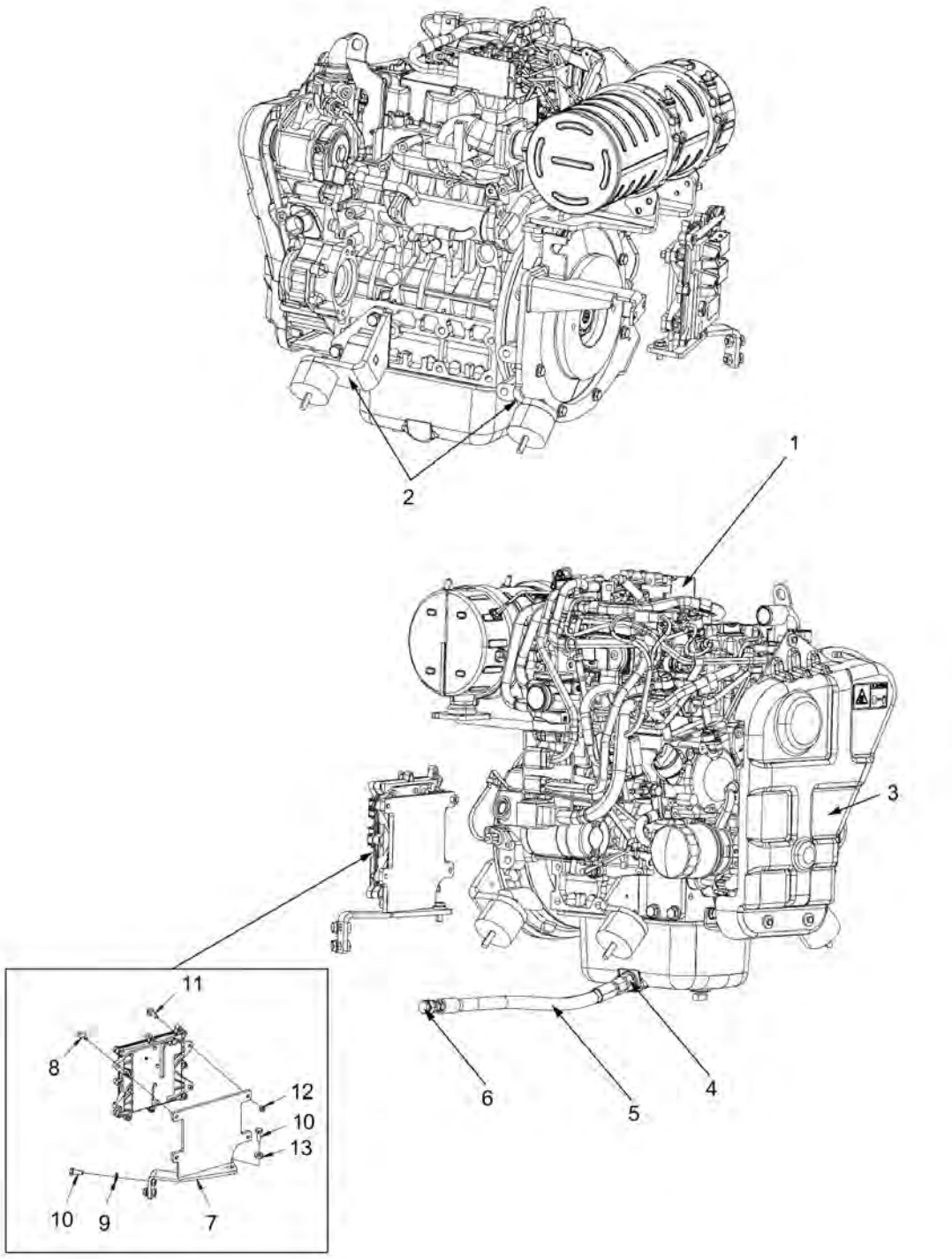

Item	Part No.	Name	Qty	L	SN INFO
1	4812124031	Diesel engine, Kuboat D1803-CR-TE4B (28 kW)	1		
2	-	Bracket module	1		
3	-	Belt guard module	1		
4	4700791635	Straight connector	1		
5	4812125854	Hydraulic hose	1		
6	4700791493	Steel plug threaded	1		
7	4812126939	Bracket	1		
8	4700500505	Screw, M8x20 mm 8.8 A2K	3		
9	4700904230	Plain washer 10.5x22x2 mm	2		
10	4700500028	Screw, M10 x 25 mm 8.8 A3K	3		
11	4700500506	Screw, M8x30 mm 8.8 A2K	1		
12	4700570005	Hexagon nut	1		
13	4700904557	Washer, 10.5x22x4 mm 300 HV	1		

Engine room 4812124031 Diesel engine D1803-CR-E4B - 28 kW

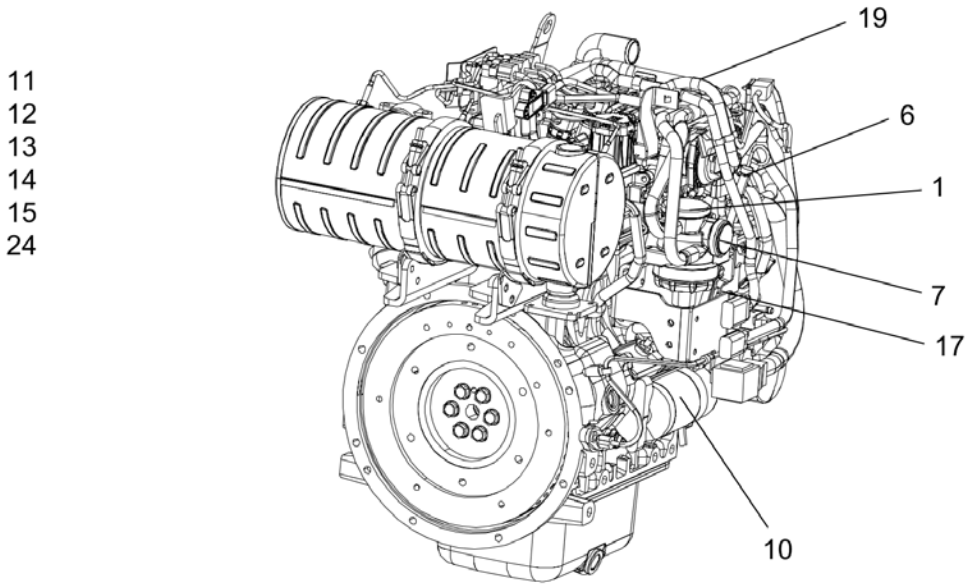

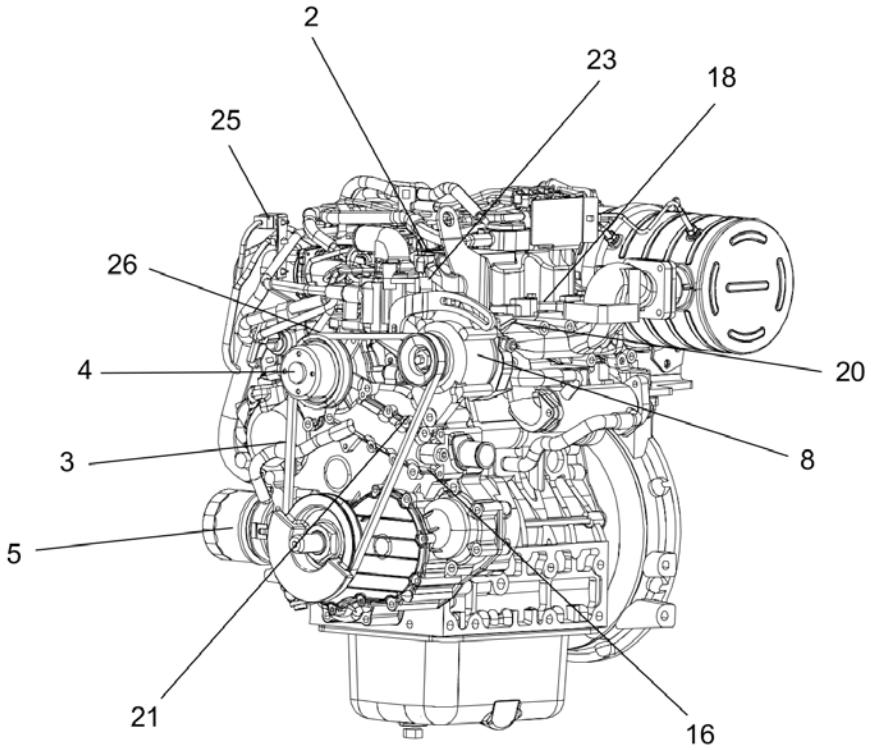

Item	Part No.	Name	Qty	L	SN INFO
0	4812124031	Diesel engine, Kuboat D1803-CR-TE4B (28 kW)	1		
1	4812160561	Supply pump	1		
2	4812156358	Oil cap	1		
2	4812156359	O-ring	1		
3	4812156260	V-belt	1		
4	-	Pulley, Fan	1		
5	4812160480	Engine oil filter element	1		
6	4812160567	Dip stick	1		
7	4812161192	Oil separator	1		
7	4812159478	Oil separator element	1		
8	4812160564	Alternator	1		
10	4812156354	Starter	1		
11	4812162284	Fuel filter, cpl.	1		
11-1	4812161672	Fuel filter element	1		
12	4812160565	Glow plug	3		
13	4812161673	Pre fuel filter, cpl.	1	A	
14	4812159594	Pre Fuel filter element	1	A	
14	4812161562	Sensor, water in fuel	1		
15	4812161258	Thermostat	1		
15	4812161181	Gasket, thermostat	1		
15	4812161182	Gasket, flange water	1		
16	4812161178	Water pump	1		
16	4812161180	Gasket, water pump	1		
26	4812161179	Impeller	1		
17	4812160562	Fuel pump	1		
17	4812161174	O-ring	1		
18	4812156261	Valve cover gasket	1		
19	4812161176	Gasket, inlet manifold	1		
19	4812161177	Gasket, inlet flange	2		
20	4812161175	Gasket, exhaust manifold	1		
21	4812160566	Switch, oil	1		
Not Shown	-	Sensors	1		
23	4812161187	Sensor, water temp	1		
23	4812161188	O-ring	1		
24	4812161189	Sensor	1		
25	4812161190	Sensor	1		

Comments for Page: 4812124031 Diesel engine D1803-CR-E4B - 28 kW

(L)OCAL REMARKS

A | en_US | Shown in section for Fuel system.

This page intentionally left blank

Engine room Exhaust system

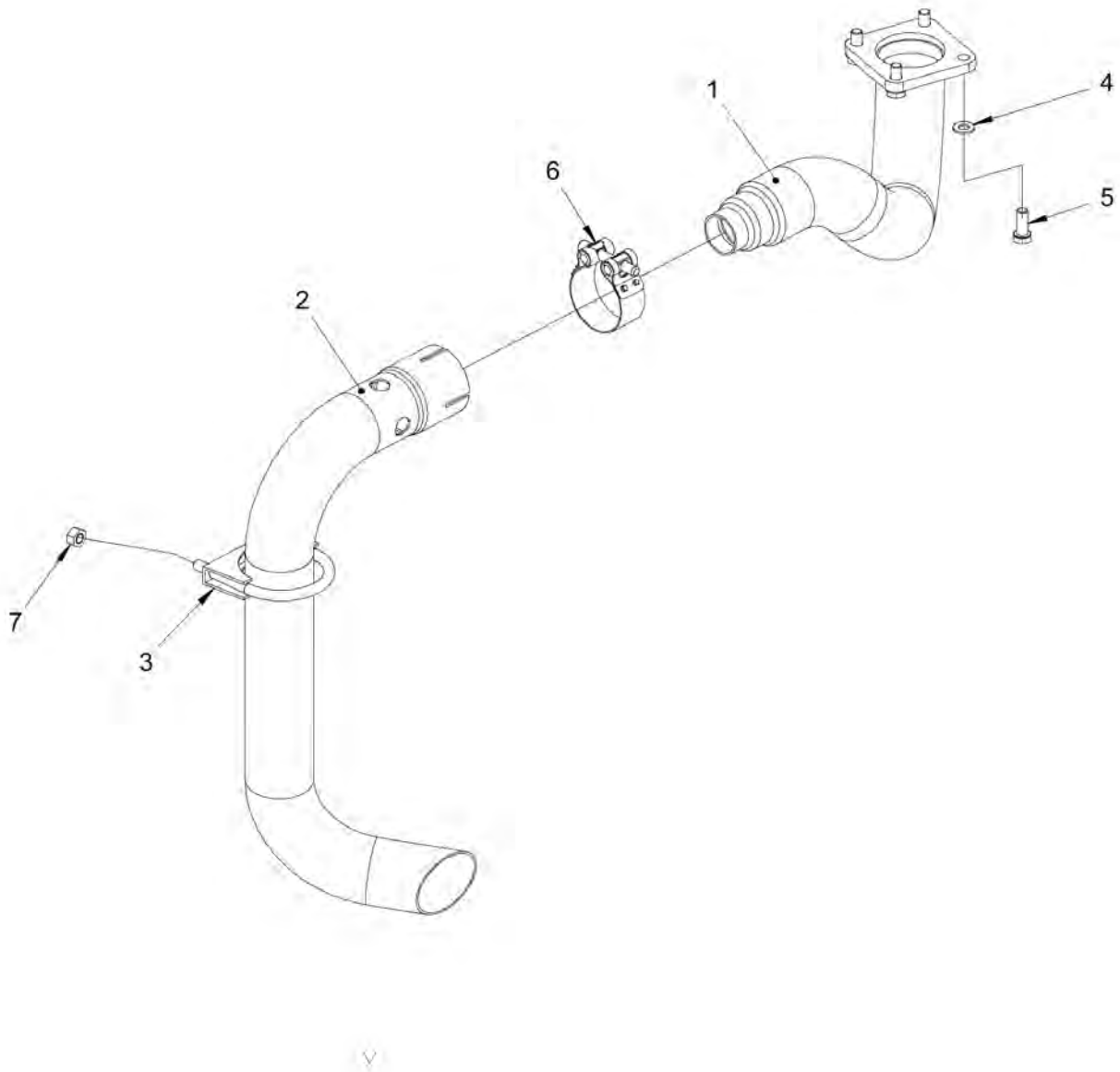

Item	Part No.	Name	Qty	L	SN INFO
1	4812125255	Exhaust pipe	1		
2	4812125256	Exhaust pipe	1		
3	4700313036	Pipe clamp	1		
4	4700904229	Washer, 8.4x 6x1.5 mm 300HV	4		
5	4700500053	Screw, M8x20 mm 8.8 A2K	4		
6	4812124068	Clamp	1		
7	4700570005	Hexagon nut	2		

Engine room Air cleaner

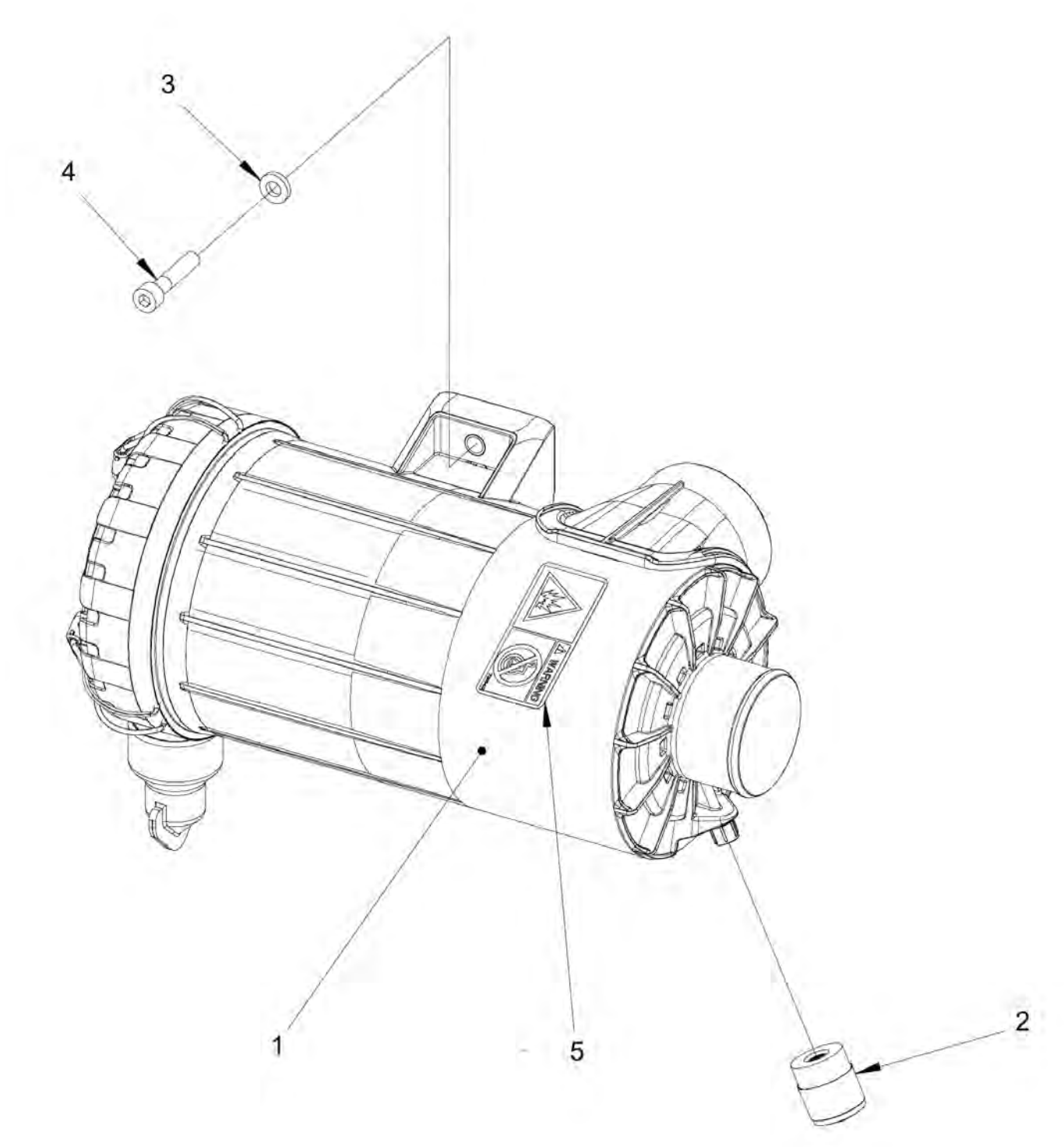

Item	Part No.	Name	Qty	L	SN INFO
1	4812125527	Air filter	1		
1	4812161586	Air filter, main	1		
1	4812161587	Air filter element, Safety	1		
2	4700499497	Indicator	1		
3	4700904556	Steel plain washer 8,4x16x3,0	2		
4	4700508056	Screw M8x40	2		
5	4700791642	Decal "WARNING" Use of starting fluid prohib.	1		

Engine room Air hose

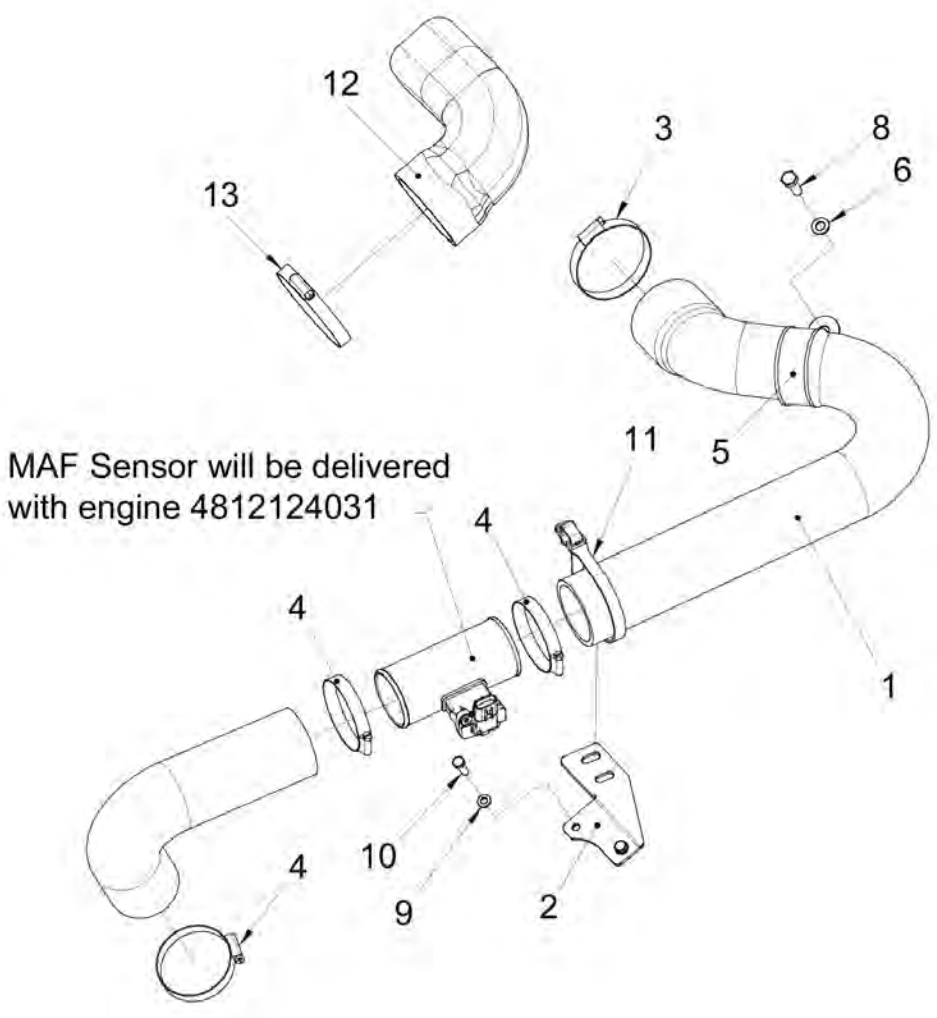

Item	Part No.	Name	Qty	L	SN INFO
1	4812125520	Air hose	1		
2	4812125821	Bracket	1		
3	4700313023	Hose clamp	1		
4	4700313023	Hose clamp	3		
5	4700903703	Clamp	1		
6	4700904229	Washer, 8.4x 6x1.5 mm 300HV	1		
8	4700500021	Screw, M8x25 mm 8.8 A2K	1		
9	4700904228	Washer 6,4x12x1,5	2		
10	4700500040	Screw, M6x20 mm 8.8 A2K	2		
11	4812115835	Cable tie	1		
12	4812126945	Air hose	1		
13	4700313038	Hose clamp	1		

Engine room Engine hood, cpl.

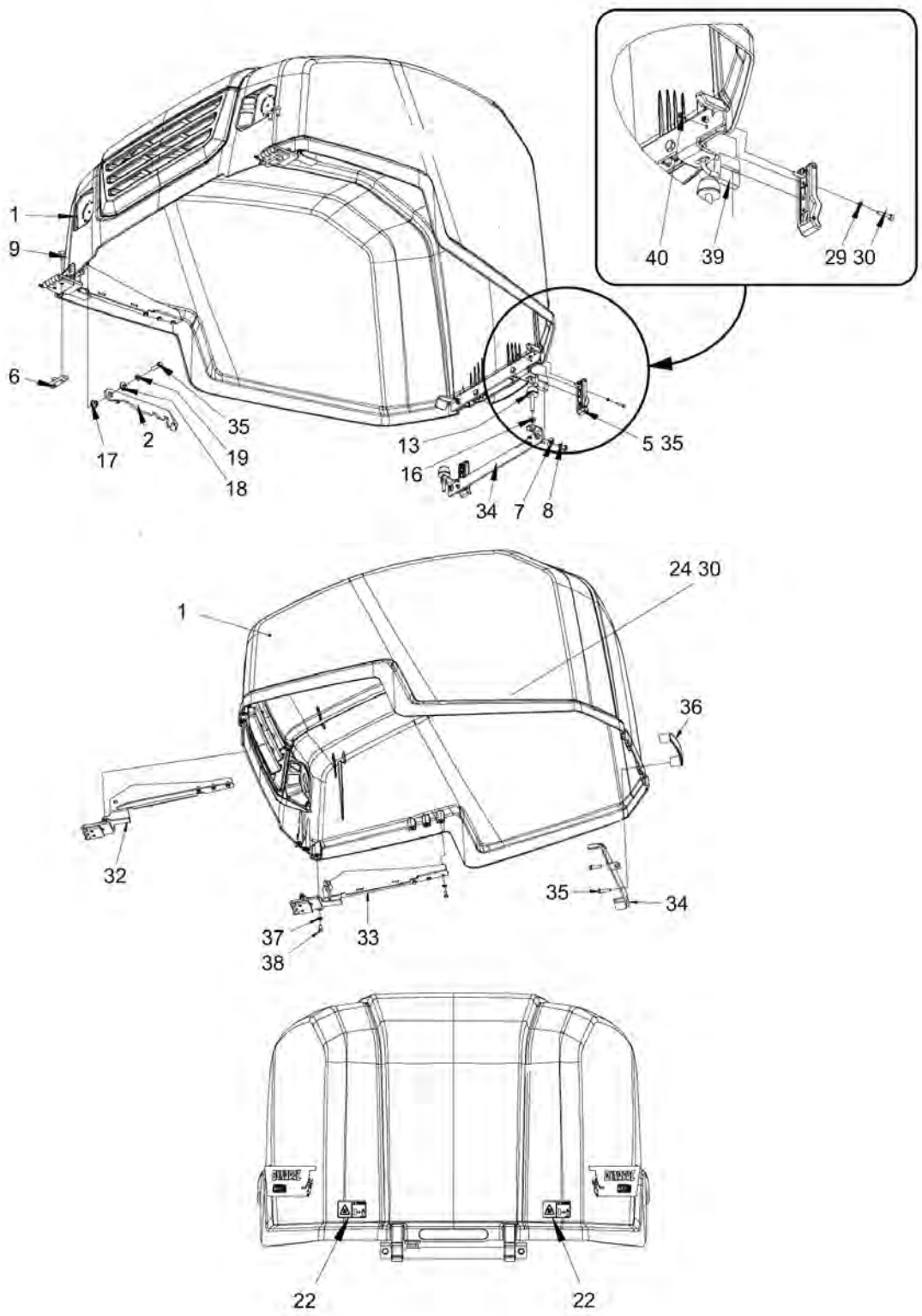

Item	Part No.	Name	Qty	L	SN INFO
1	4812127220	Engine hood	1		
2	4812126979	Lock	1		
4	4812125831	Bracket	1		
5	4700388846	Latch	2		
6	4812127078	Nut plate	2		
7	4700904640	Washer, 8.4x22x3 mm 300HV	2		
8	4700500053	Screw, M8x20 mm 8.8 A2K	2		
9	4700513003	Screw	4		
13	4812114318	Shock absorber	2		
16	4700570005	Hexagon nut	2		
17	4700791939	Bushing	1		
18	4700791938	Washer	1		
19	4700904229	Washer, 8.4x 6x1.5 mm 300HV	1		
22	4700903424	Safety label, hot surfaces	2		
29	4700904698	Plain washer	8		
30	4700903386	Screw	8		
31	4812125636	Engine hood	1		
32	4812127090	Hinge	1		
33	4812127091	Hinge	1		
34	4812125831	Bracket	1		
35	4700500022	Screw	1		
36	4700387948	Handle	1		
37	4700904228	Washer 6,4x12x1,5	12		
38	4700500185	Screw	12		
39	4700358881	Pad lock	1		
40	4700923976	Lock nut	8		

Engine room Bracket

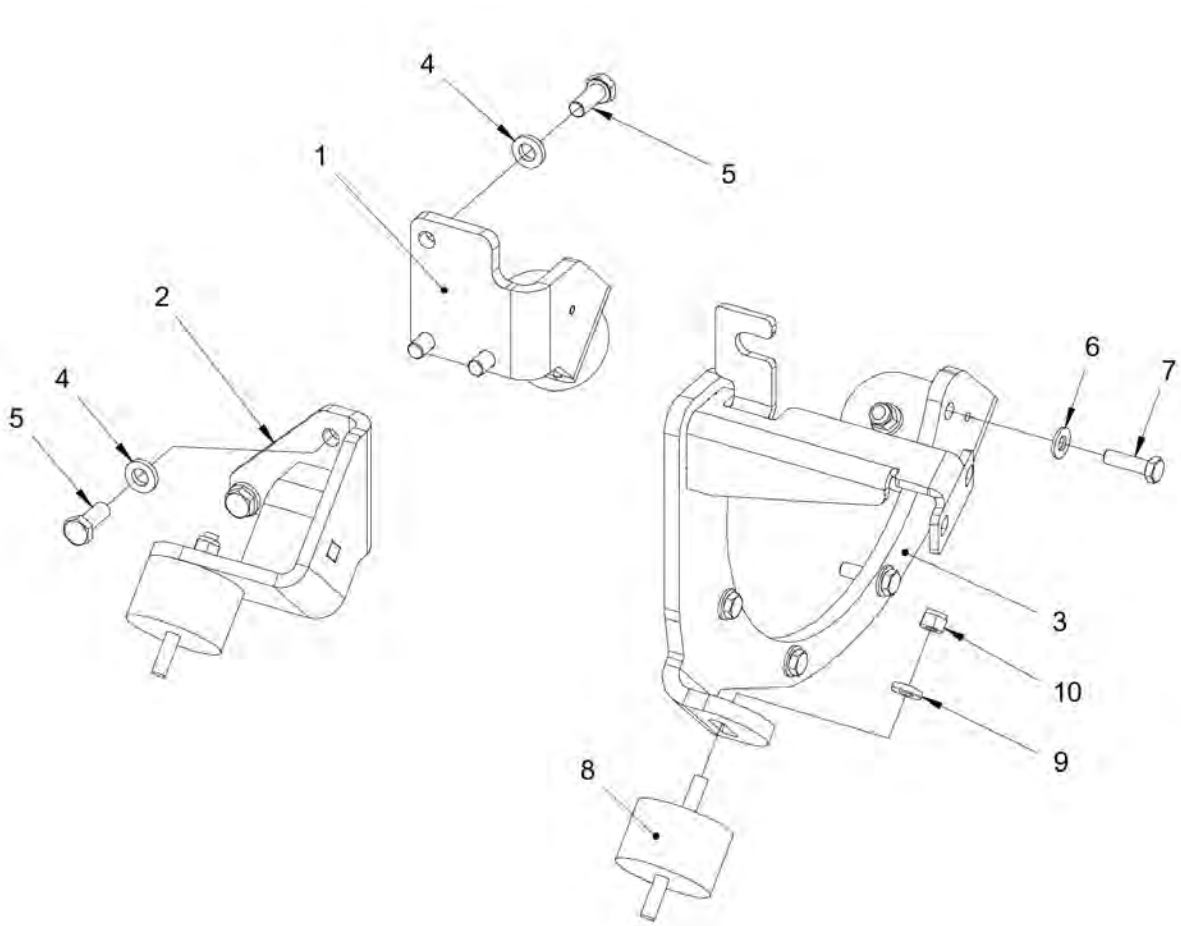

Item	Part No.	Name	Qty	L	SN INFO
1	4812125384	Bracket	1		
2	4812127327	Bracket	1		
3	4812125394	Bracket	1		
4	4700904703	Plain washer 13x24x4 mm	6		
5	4700792250	Screw	6		
6	4700904230	Plain washer 10.5x22x2 mm	5		
7	4700500030	Hexagon head screw	5		
8	4812125630	Shock absorber	4		
9	4700904557	Washer, 10.5x22x4 mm 300 HV	4		
10	4700586018	Lock nut M10	4		

Engine room Coupling

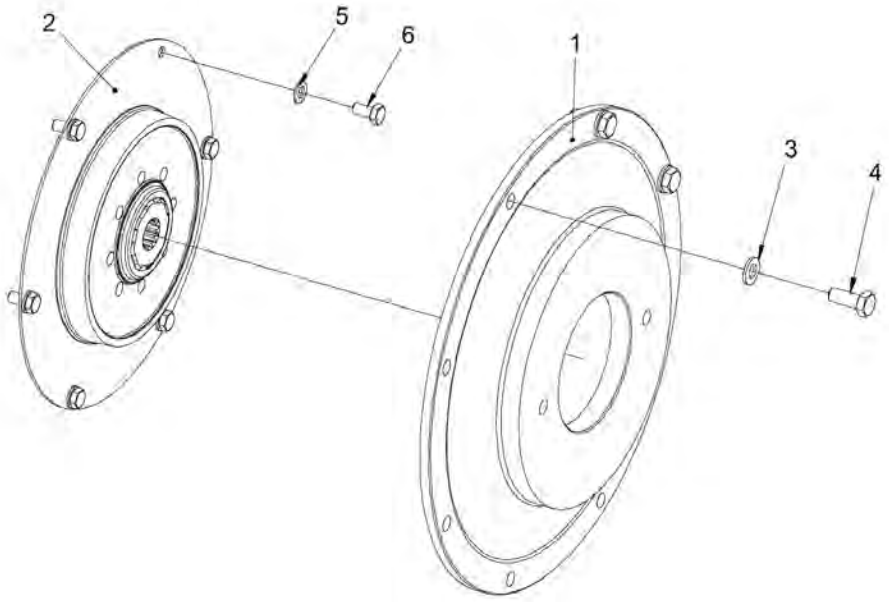

Item	Part No.	Name	Qty	L	SN INFO
1	4812122554	Coupling	1		
2	4812125794	Bracket	1		
3	4812122654	Steel plain washer	3		
4	4700500028	Screw, M10 x 25 mm 8.8 A3K	3		
5	4700904229	Washer, 8.4x 6x1.5 mm 300HV	6		
6	4700500019	Hexagon screw	6		

Engine room Expansion tank

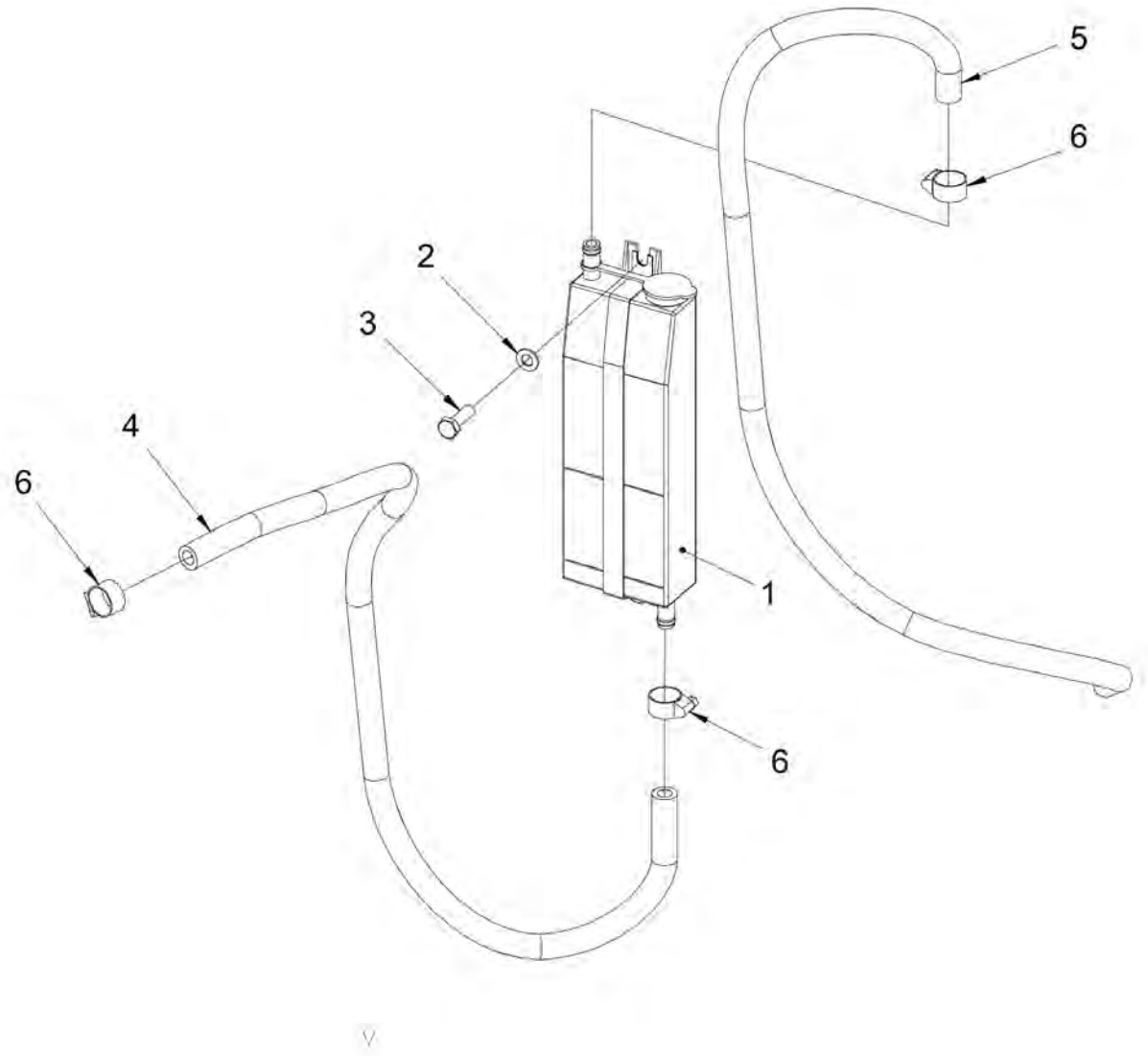

Item	Part No.	Name	Qty	L	SN INFO
1	4812125796	Expansion tank	1		
2	4700904229	Washer, 8.4x 6x1.5 mm 300HV	2		
3	4700500021	Screw, M8x25 mm 8.8 A2K	2		
4	4812122244	Coolant hose	1		
5	4812122244	Coolant hose	0,9		
6	4700313108	Hose clamp	3		

Engine room Coolant hose module

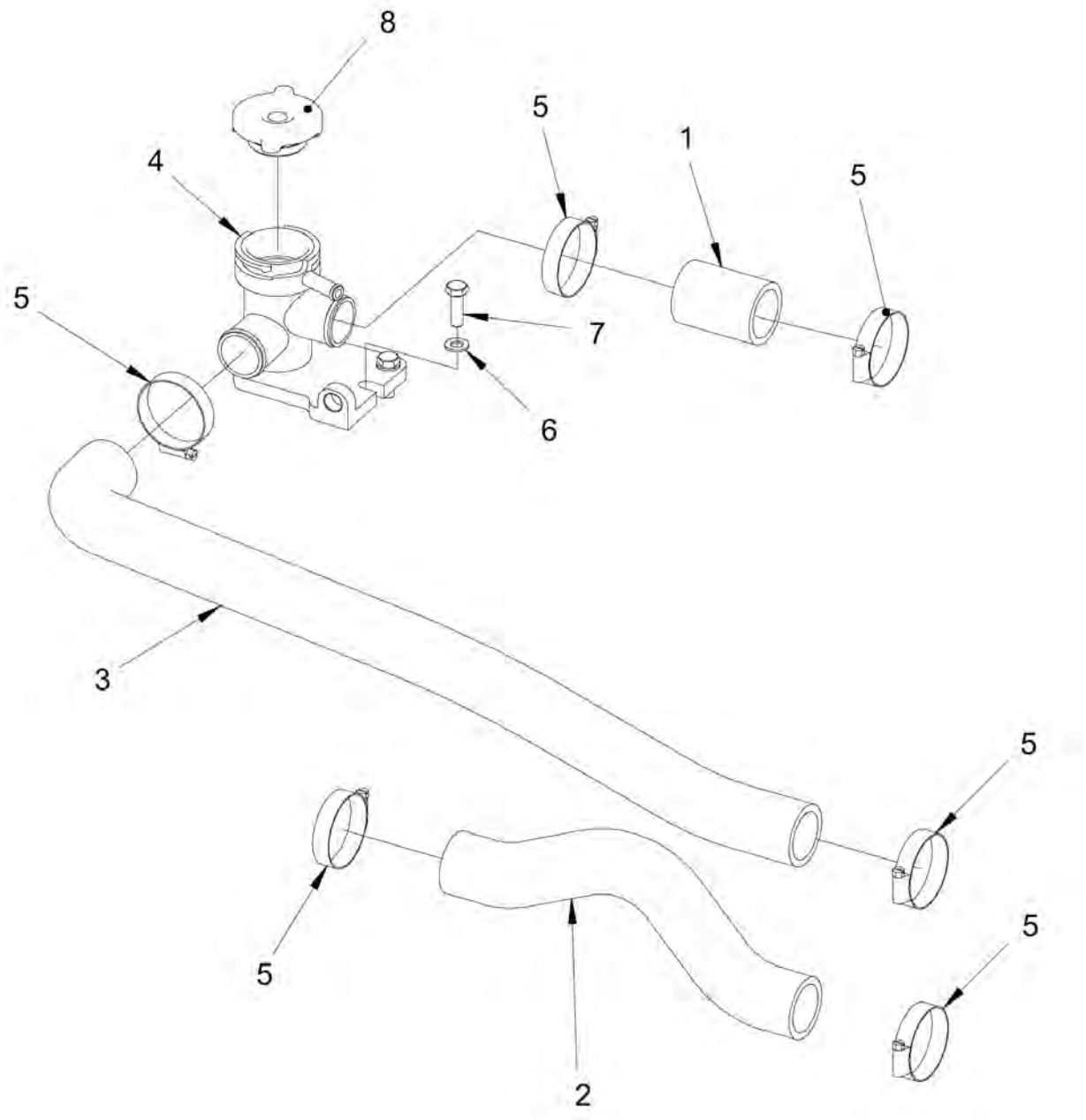

Item	Part No.	Name	Qty	L	SN INFO
1	4812125526	Cooler hose	1		
2	4812125516	Cooler hose	1		
3	4812125517	Cooler hose	1		
4	4812125661	Filling pipe	1		
5	4700313007	Hose clamp	6		
6	4700904229	Washer, 8.4x 6x1.5 mm 300HV	2		
7	4700500021	Screw, M8x25 mm 8.8 A2K	2		
8	4812125508	Cap	1		

Engine room Fuel hoses

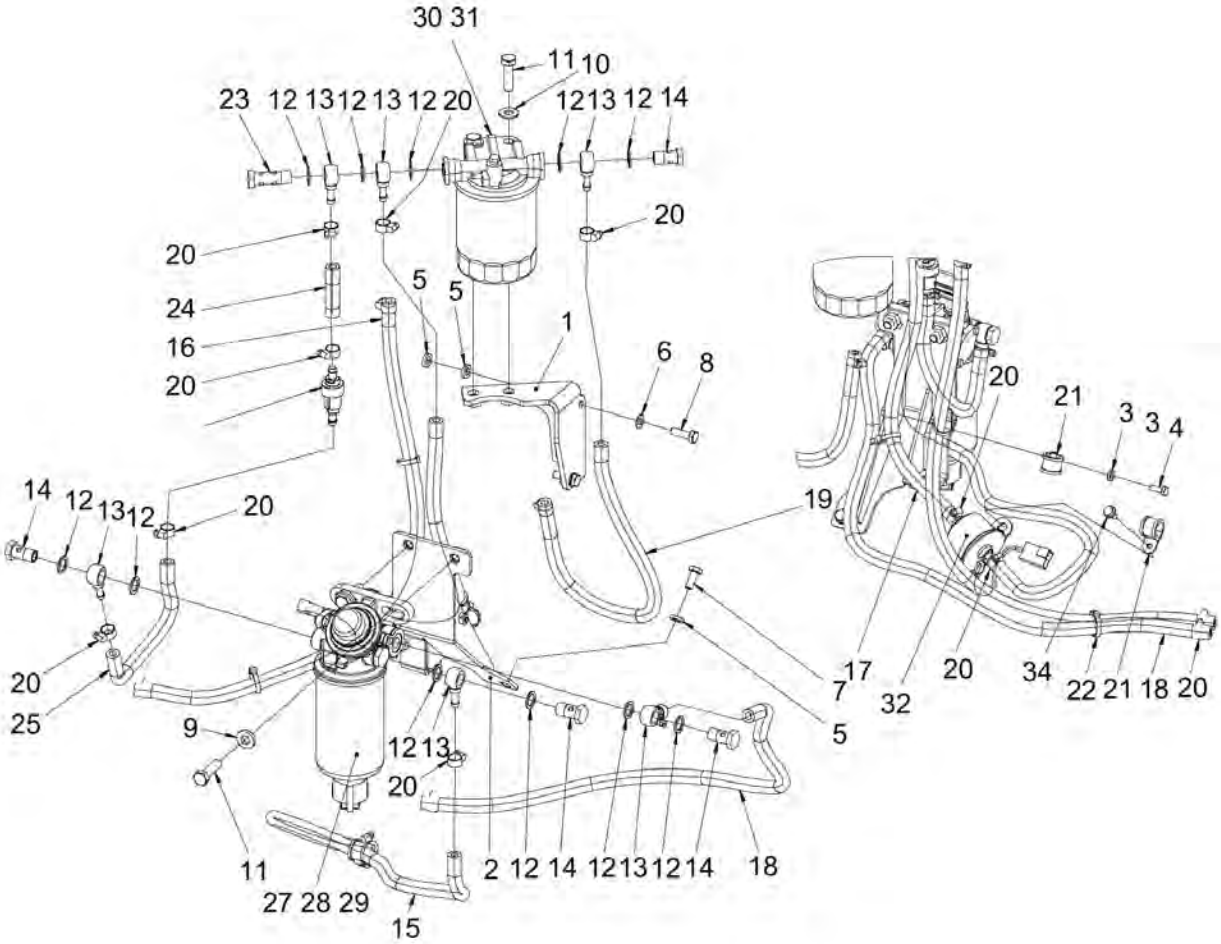

Item	Part No.	Name	Qty	L	SN INFO
1	4812125586	Bracket	1		
2	4812125585	Bracket	1		
3	4700603010	Washer 6,4x12x3	1		
4	4700500013	Screw, M6x16 mm 8.8 A2K	1		
5	4700904556	Steel plain washer 8,4x16x3,0	6		
6	4700904229	Washer, 8.4x 6x1.5 mm 300HV	2		
7	4700500053	Screw, M8x20 mm 8.8 A2K	2		
8	4700500021	Screw, M8x25 mm 8.8 A2K	2		
9	4700904557	Washer, 10.5x22x4 mm 300 HV	2		
10	4700904230	Plain washer 10.5x22x2 mm	2		
11	4700500030	Hexagon head screw	4		
12	4700747282	Copper washer	11		
13	4700901121	Banjo nipple	6		
14	4700330171	Hollow screw, M14	4		
15	4700904984	Fuel hose	0,63		
16	4700904984	Fuel hose	0,74		
17	4700904984	Fuel hose	0,42		
18	4700904984	Fuel hose	0,55		
19	4700904984	Fuel hose	0,52		
20	4700313108	Hose clamp	14		
21	4700921078	Clamp	2		
22	4700313041	Cable ties, L=200 mm	N		
23	4812127370	Hollow screw, M14	1		
24	4700904984	Fuel hose	0,07		
27	4812161673	Pre fuel filter, cpl.	1		
28	4812159594	Pre Fuel filter element	1		
29	4812161562	Sensor, water in fuel	1		
25	4700904984	Fuel hose	0,26		
30	4812162284	Fuel filter, cpl.	1		
31	4812161672	Fuel filter element	1		
32	4812117689	Fuel pump	1		
34	4700541703	Thread forming screw	2		

Engine room Cooler

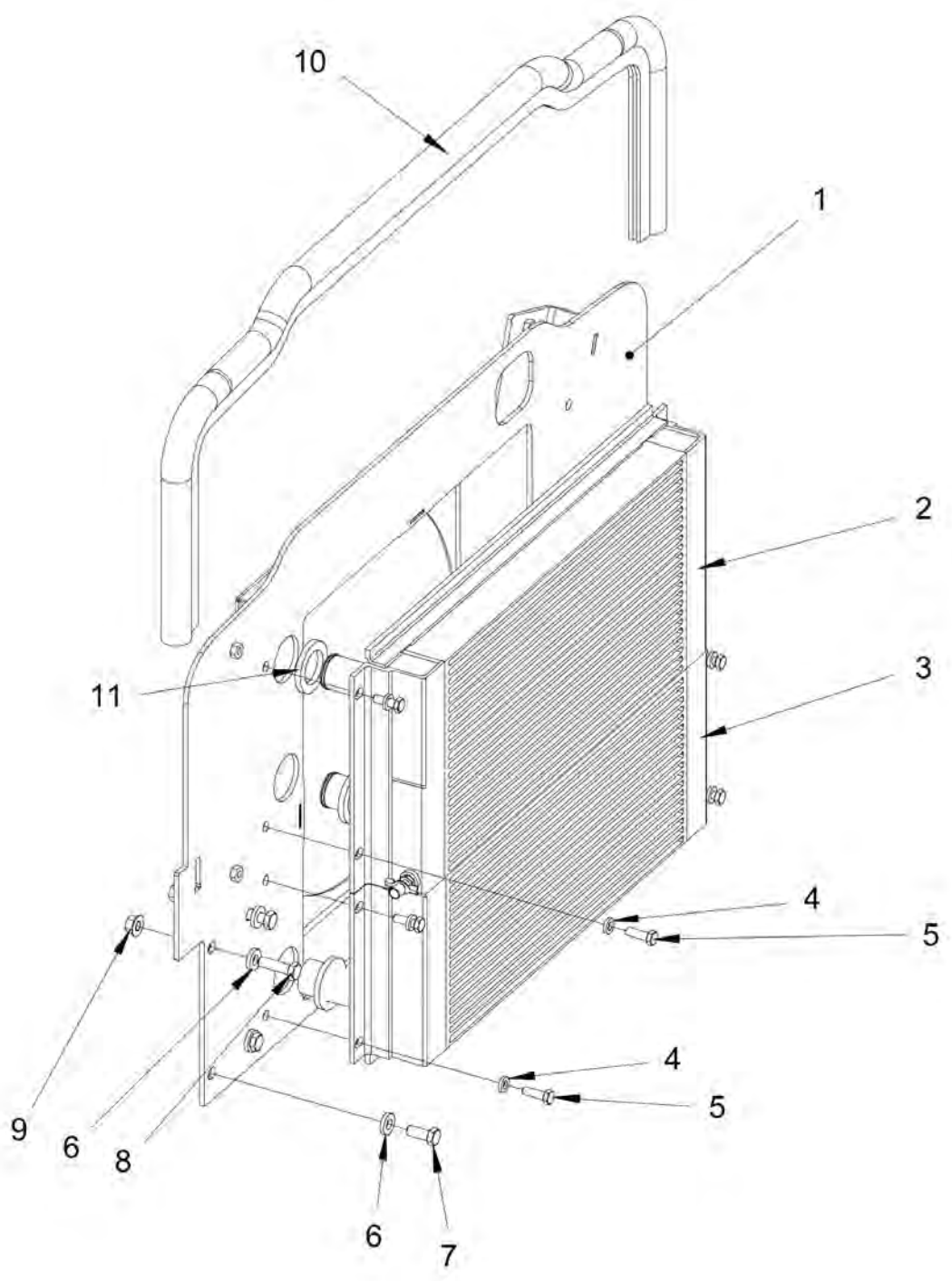

Item	Part No.	Name	Qty	L	SN INFO
1	4812125397	Fan shroud	1		
2	4812126898	Water cooler	1		
3	4812126899	Hydraulic oil cooler	1		
4	4700904556	Steel plain washer 8,4x16x3,0	8		
5	4700500021	Screw, M8x25 mm 8.8 A2K	8		
6	4700904557	Washer, 10.5x22x4 mm 300 HV	8		
7	4700500028	Screw, M10 x 25 mm 8.8 A3K	6		
8	4700500030	Hexagon head screw	2		
9	4700792817	Hexagon nut with flange	2		
10	4812127643	Sealing strip	1,325 M		
11	4812126953	Insulation	4		

Engine room Fuel tank

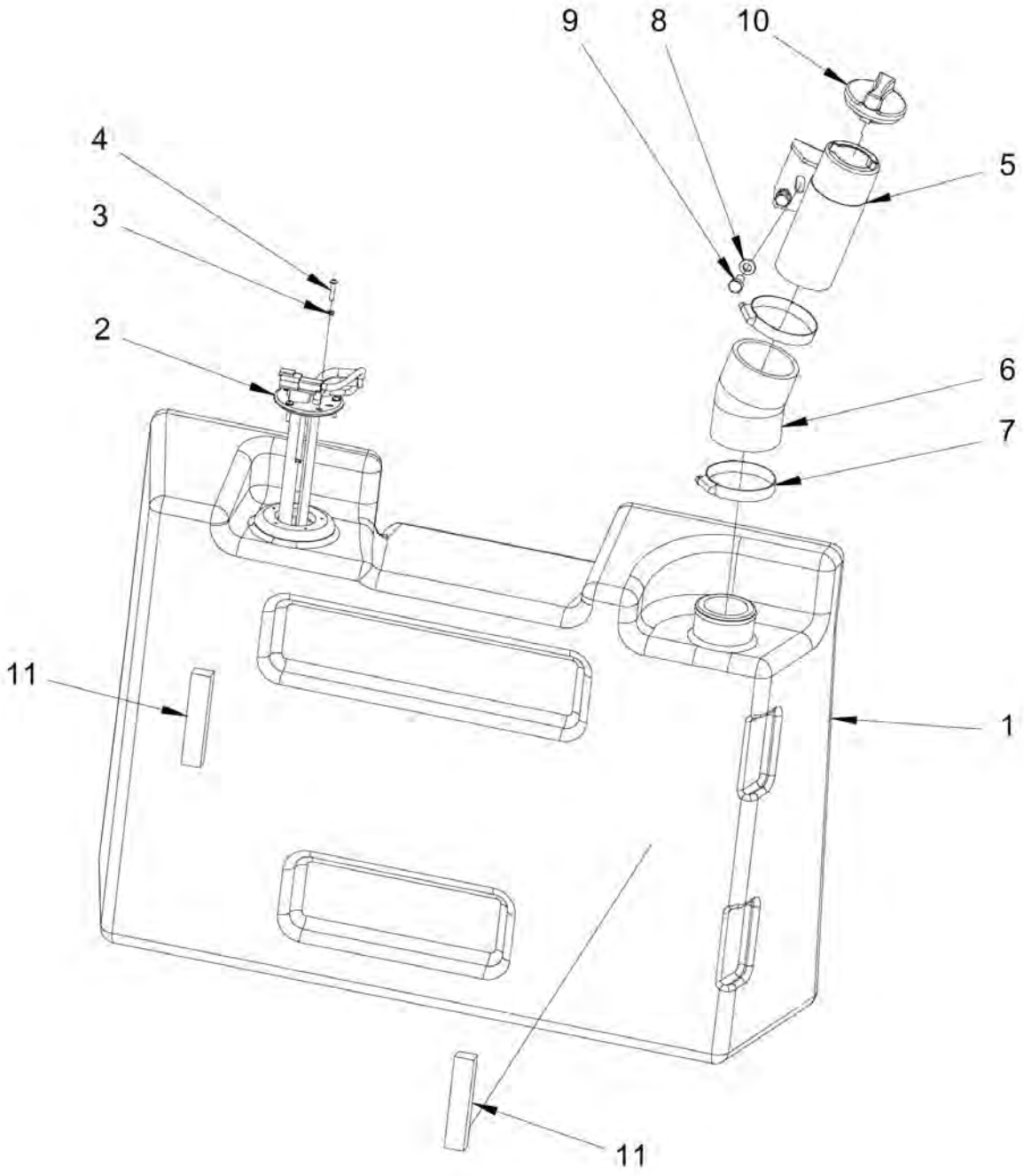

Item	Part No.	Name	Qty	L	SN INFO
1	4812125018	Fuel tank	1		
2	4700378574	Level sender	1		
3	4700904698	Plain washer	5		
4	4700903236	Screw, Thread rolling K40x20	5		
5	4812125657	Bracket	1		
6	4812125587	Hose	1		
7	4700313023	Hose clamp	2		
8	4700904556	Steel plain washer 8,4x16x3,0	2		
9	4700500019	Hexagon screw	2		
10	4812125710	Cap	1		
11	4700202041	Rubber strip	2	L = 0,10 m	

Engine room Battery holder

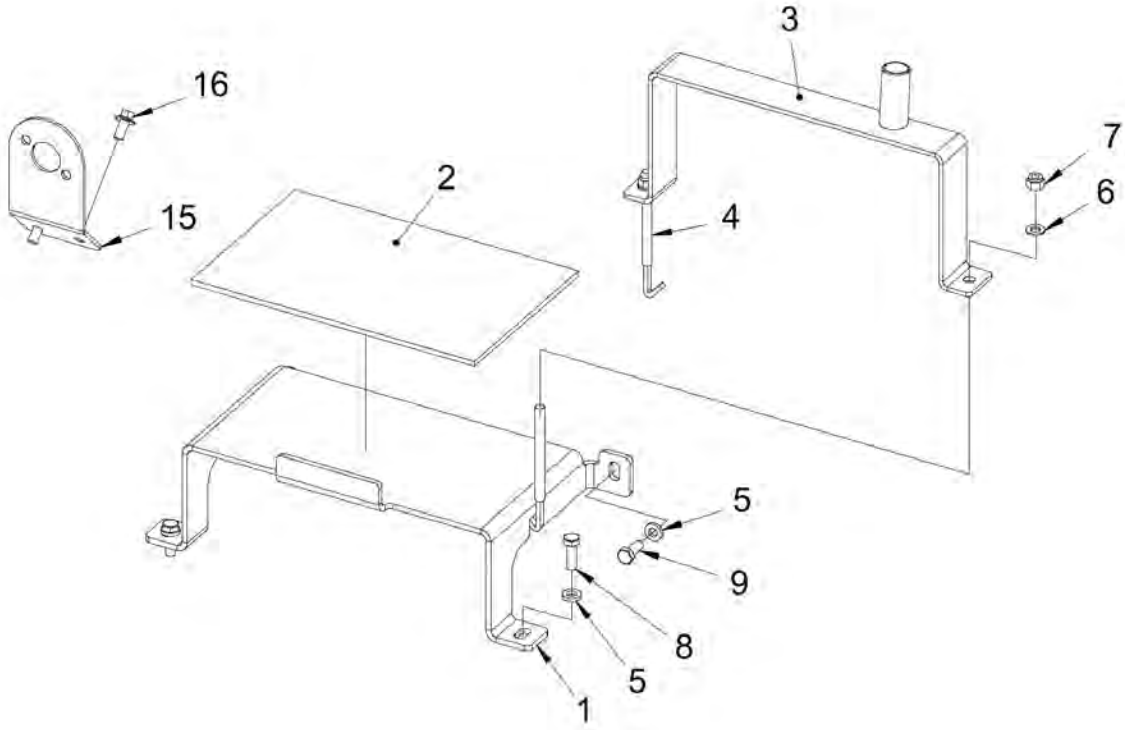

Item	Part No.	Name	Qty	L	SN INFO
1	4812126956	Bracket	1		
2	4812124988	Rubber cloth	1		
3	4812125704	Bracket	1		
4	4700379064	Screw, M8	2		
5	4700904556	Steel plain washer 8,4x16x3,0	3		
6	4700904229	Washer, 8.4x 6x1.5 mm 300HV	2		
7	4700586003	Lock nut M8	2		
8	4700500021	Screw, M8x25 mm 8.8 A2K	2		
9	4700500053	Screw, M8x20 mm 8.8 A2K	1		
15	4812126940	Bracket	1		
16	4700901832	Screw, M08x16, 8.8	2		

Engine room Fan

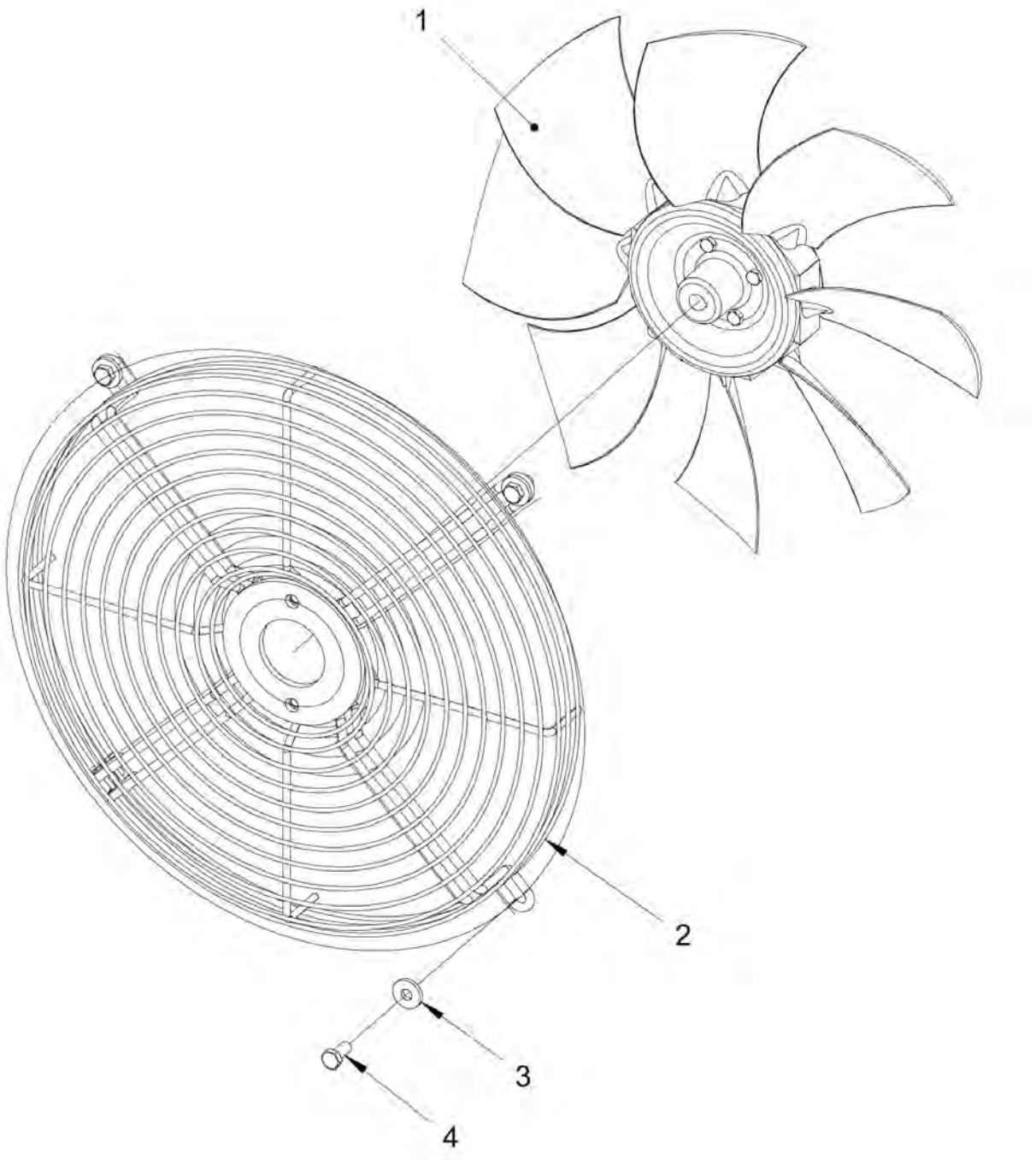

Item	Part No.	Name	Qty	L	SN INFO
1	4812125655	Fan	1		
2	4812125641	Fan protection	1		
3	4700904640	Washer, 8.4x22x3 mm 300HV	4		
4	4700500100	Hexagon screw	4		

Engine room Hydraulic oil tank

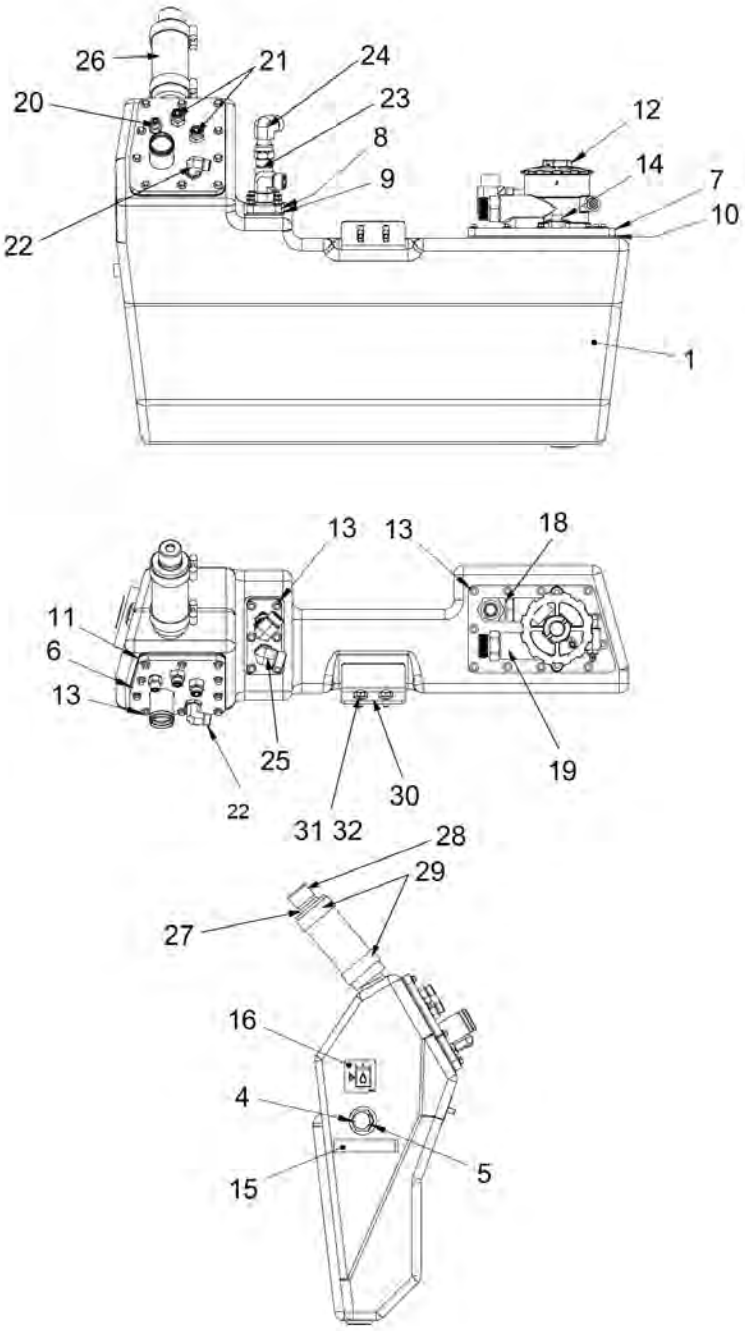

Item	Part No.	Name	Qty	L	SN INFO
1	4812125476	Hydarulic oil tank	1		
4	4700813443	O-ring	1		
5	4700791395	Sight plug	1		
6	4812125477	Lid	1		
7	4812125478	Lid	1		
8	4812125651	Lid	1		
9	4812125652	Gasket	1		
10	4812125479	Gasket	1		
11	4812125480	Gasket	1		
12	4812113327	Hydraulic oil filter, cpl.	1		
12	4812113328	Hydraulic oil filter element	1		
13	4700500501	Screw M6x20	27		
14	4700508028	Screw, M10x20H	2		
15	4700202041	Rubber strip	0,1 M		
16	4700272373	Label, hydraulic oil level	1		
18	4700791698	Connector elbow 90 ORFS	1		
19	4700792338	Adapter	1		
20	4700791914	Adapter	1		
21	4700791828	Adapter	2		
22	4700791840	Adapter	1		
23	4700791821	Straight connector orfs	1		
24	4700904766	Elbow connector 90°	1		
25	4700791843	Elbow 90, O-ring with swivel	1		
26	4812119321	Hydraulic hose	1		
27	4700357139	Connector	1		
28	4700357138	Ventilating filter	1		
29	4700313126	Clamp	2		
30	4812125676	Bracket	1		
31	4700904640	Washer, 8.4x22x3 mm 300HV	2		
32	4700500053	Screw, M8x20 mm 8.8 A2K	2		

Engine room Belt guard

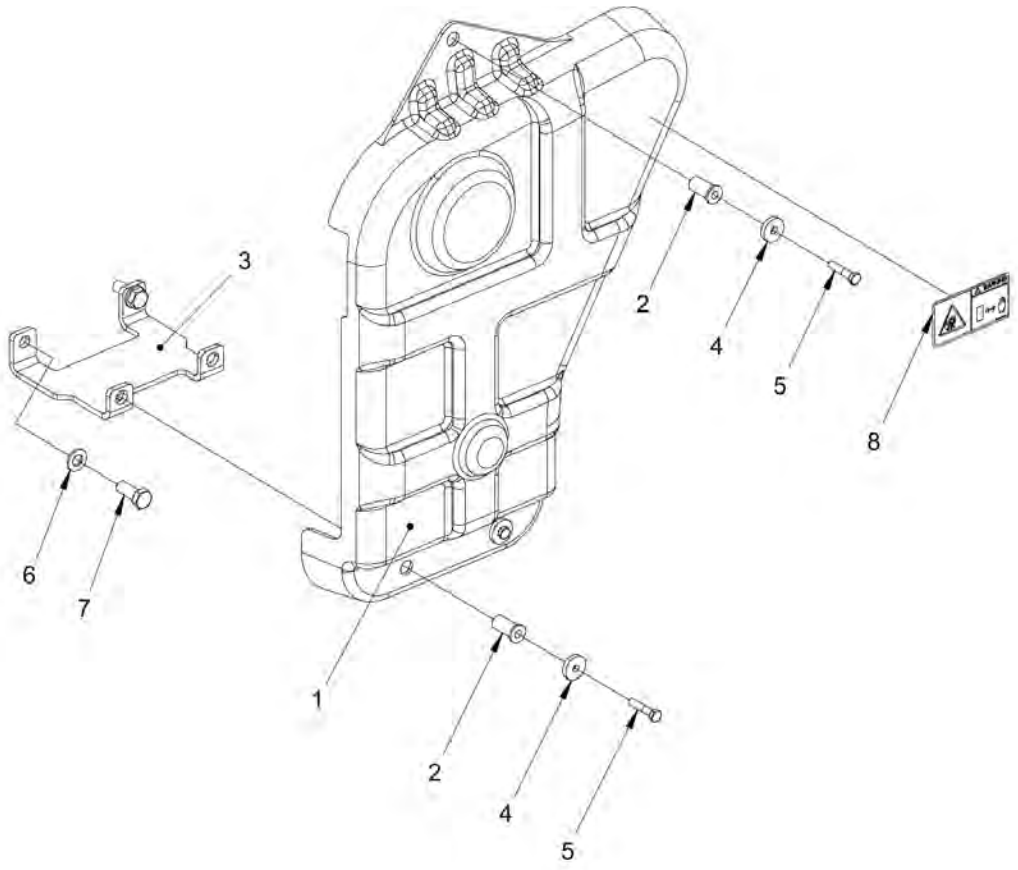

Item	Part No.	Name	Qty	L	SN INFO
1	4812125400	Belt guard	1		
2	4812125875	Nut	3		
3	4812125446	Bracket	1		
4	4700904735	Steel plain washer	3		
5	4700500015	Hex. screw	3		
6	4812122654	Steel plain washer	2		
7	0147195903	Screw DIN961	2		
8	4700903423	Safety label, Rotating engine components	1		

Engine room Bracket module

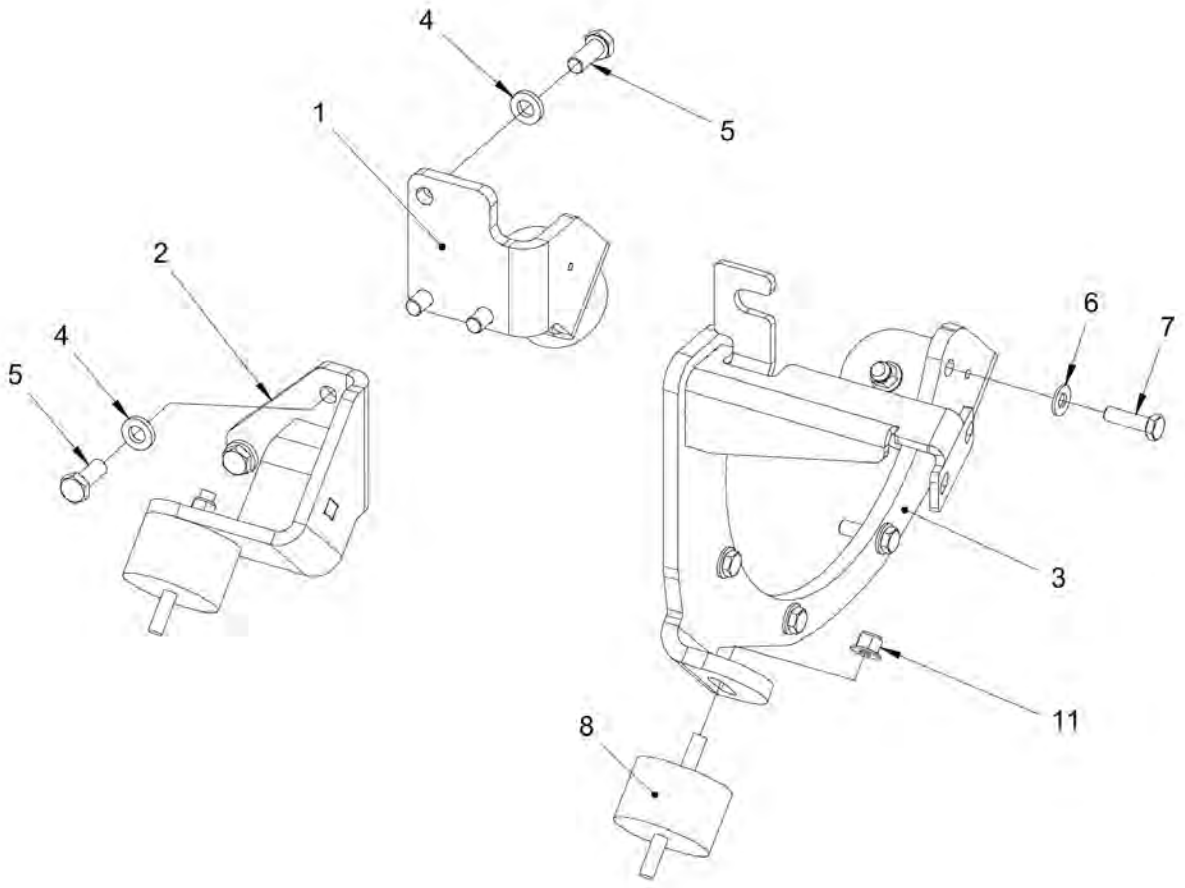

Item	Part No.	Name	Qty	L	SN INFO
1	4812125384	Bracket	1		
2	4812127327	Bracket	1		
3	4812125394	Bracket	1		
4	4700904703	Plain washer 13x24x4 mm	6		
5	4700792250	Screw	6		
6	4700904230	Plain washer 10.5x22x2 mm	5		
7	4700500030	Hexagon head screw	5		
8	4812125630	Shock absorber	4		
11	4700902287	Nut, M10	4		

Hydraulic system Hydraulic, Cooler and fan

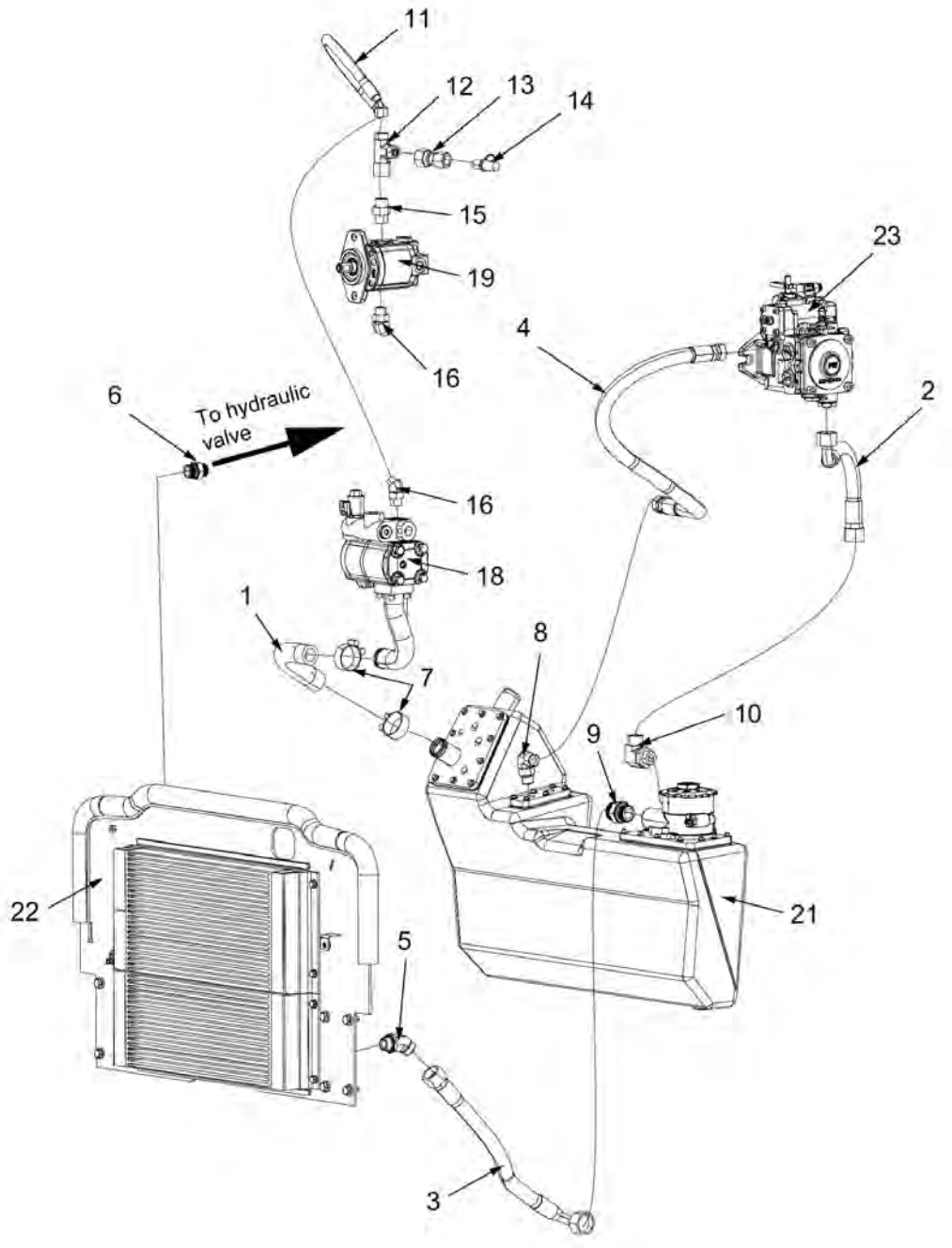

Item	Part No.	Name	Qty	L	SN INFO
1	4812125708	Hydraulic hose	1		
2	4812126968	Hydraulic hose	1		
3	4812125709	Hydraulic hose	1		
4	4812125770	Hydraulic hose	1		
5	4700791808	Elbow adapter 45	1		
6	0570702503	Straight connector	1		
7	4700923378	Hose clamp	1		
8	4700791843	Elbow 90, O-ring with swivel	1		
9	4700792338	Adapter	1		
10	4700791698	Connector elbow 90 ORFS	1		
11	4812125731	Hydraulic hose	1		
12	4700791414	T-connection, O-ring with swivel	1		
13	4700791847	Straight connector	1		
14	4700923405	Measuring nipple	1		
15	4700791404	Straight o-ring connector	1		
16	4700791416	Elbow 45, O-ring	2		
18	-	Hydraulic pump	1		
19	-	Hydraulic motor	1		
21	-	Hydraulic oil tank	1		
22	-	Cooler	1		
23	-	Hydraulic pump	1		

Vibration system Vibration system, external vibration valve - common

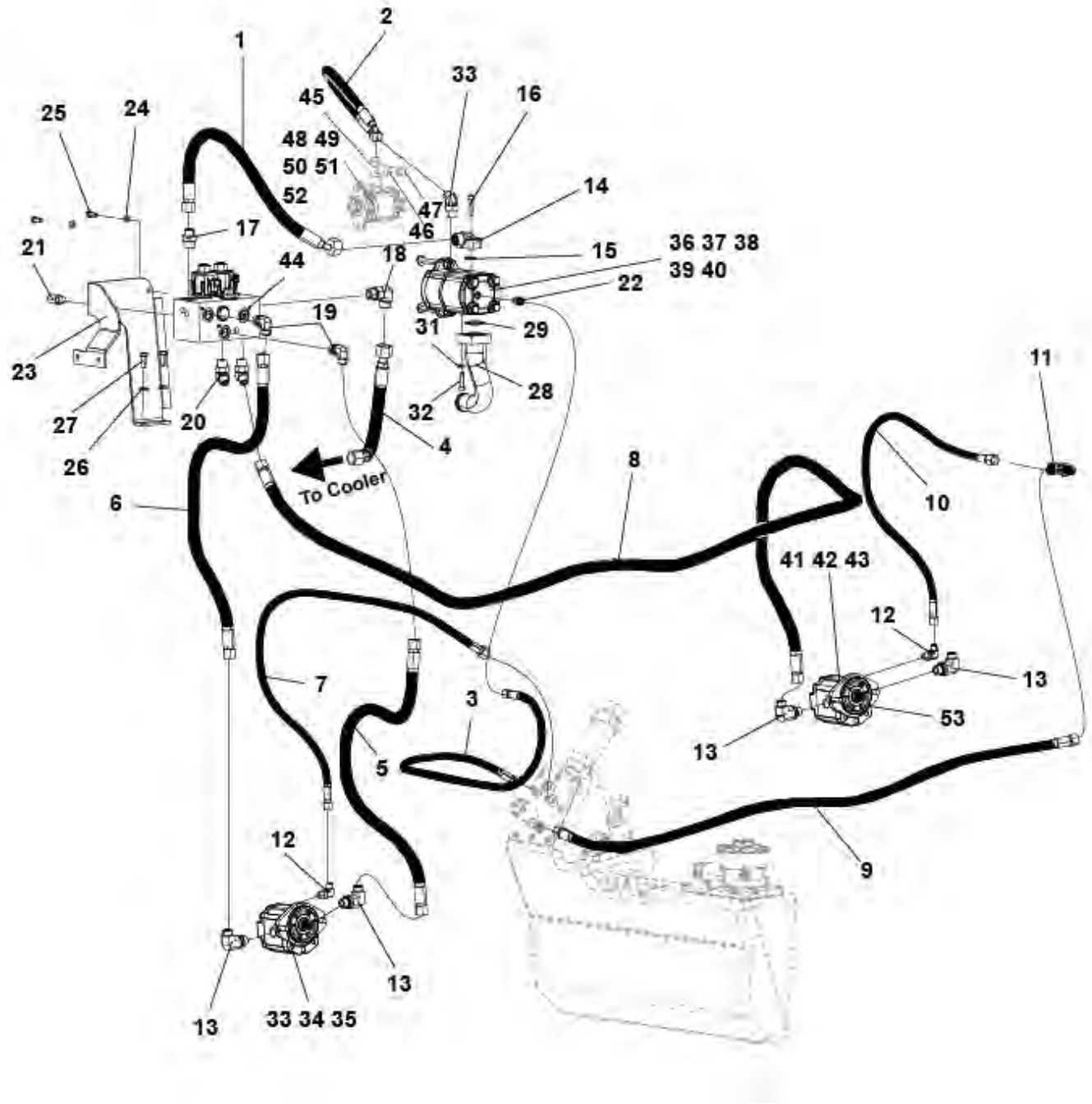

Item	Part No.	Name	Qty	L	SN INFO
1	4812125730	Hydraulic hose	1		
2	4812125731	Hydraulic hose	1		
3	4700483906	Hydraulic hose	1		
4	4812125732	Hydraulic hose	1		
5	4812125740	Hydraulic hose	1		
6	4812125741	Hydraulic hose	1		
7	4812125742	Hydraulic hose	1		
8	4812125743	Hydraulic hose	1		
9	4812125737	Hydraulic hose	1		
10	4812125744	Hydraulic hose	1		
11	4812114492	Bulkhead union	1		
12	4700791397	Connector	2		
13	4700791699	Elbow 90	4		
14	4812113633	Flange connector	1		
15	4700904774	O-ring	1		
16	4700508027	Screw	4		
17	4700791410	Straight o-ring connector	1		
18	4700791843	Elbow 90, O-ring with swivel	1		
19	4700791841	Elbow 90 orfs	2		
20	4700791796	Elbow 45, O-ring with swivel	2		
21	4700900229	Measuring fitting	1		
22	4700791744	Adapter	1		
23	4812125501	Bracket	1		
24	4700904229	Washer, 8.4x 6x1.5 mm 300HV	2		
25	4700500053	Screw, M8x20 mm 8.8 A2K	2		
26	4700904557	Washer, 10.5x22x4 mm 300 HV	2		
27	4700500028	Screw, M10 x 25 mm 8.8 A3K	2		
28	4812125469	Flange connector	1		
29	4700160016	O-ring	1		
30	4700923378	Hose clamp	2		
31	4700904556	Steel plain washer 8,4x16x3,0	4		
32	4700508048	Hexagon socket head cap screw M	4		
33	4700791416	Elbow 45, O-ring	1		
34	4700792389	Elbow 45 orfs	2		
35	4700792602	Cable tie with holder	3		
36	4812127309	Hydraulic pump	1		
37	4700379458	Gasket	1		
38	4700500078	Hex. screw	2		

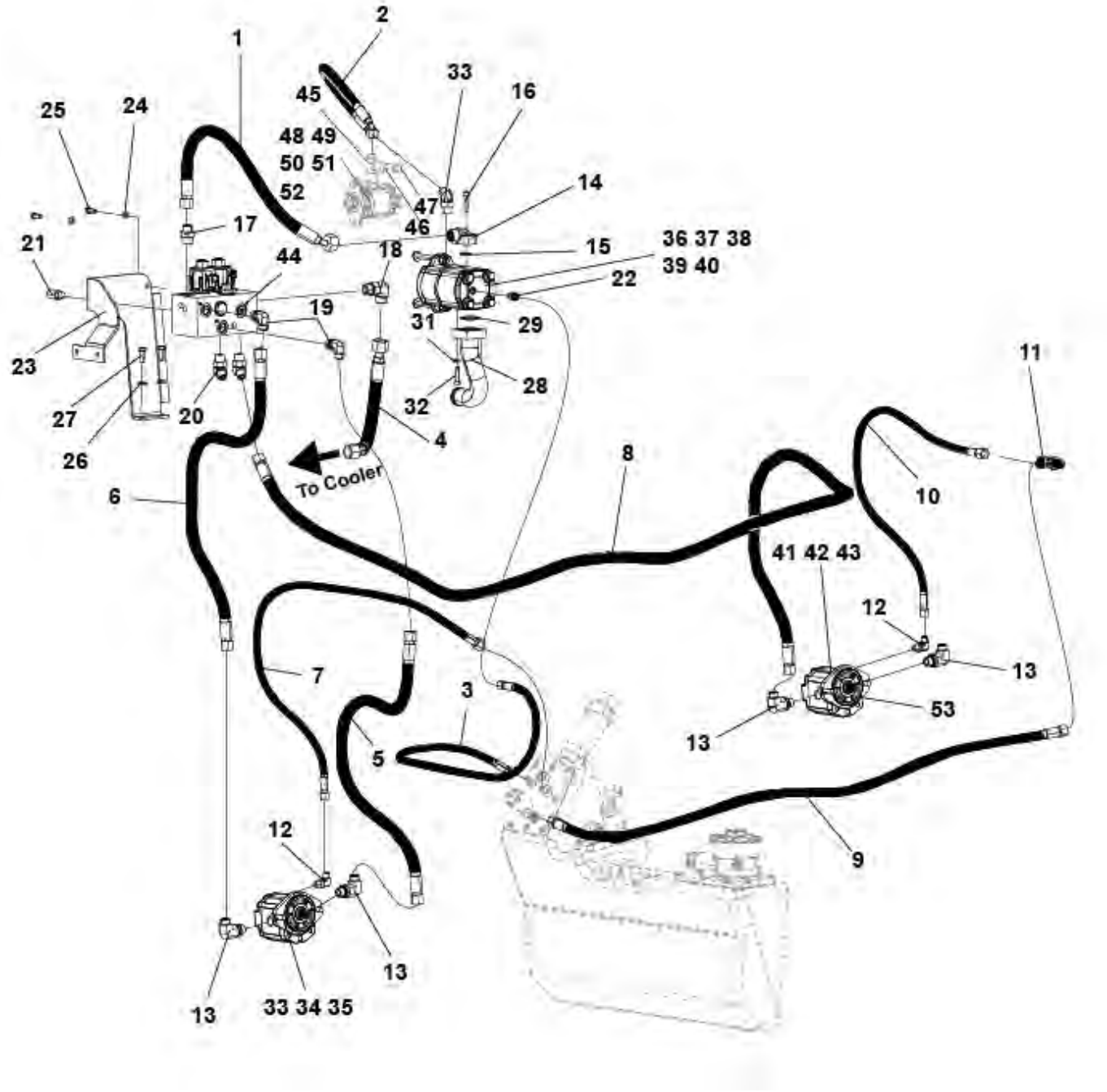
1
2
45
33
16
25
24
48 49
50 51
52
14
47
17
46
21
44
18
15
36 37 38
39 40
22
19
31
29
23
28
11
27
20
32
4
26
To Cooler
8
6
10
41 42 43
12
7
3
13
53
5
13
12
9
13
13
33 34 35

Item	Part No.	Name	Qty	L	SN INFO
39	4700904230	Plain washer 10.5x22x2 mm	2		
40	4700902287	Nut, M10	2		
41	4812118172	Hydraulic motor	2		
42	4700603018	Washer 10x18x4	2		
43	4700508029	Cylinder screw	2		
44	4812125749	Hydraulic valve	1		
45	4700791414	T-connection, O-ring with swivel	1		
46	4700791847	Straight connector	1		
47	4700923405	Measuring nipple	1		
48		Hydraulic motor	1		
49	4700904229	Washer, 8.4x 6x1.5 mm 300HV	2		
50	4700500021	Screw, M8x25 mm 8.8 A2K	2		
51	4700904735	Steel plain washer	1		
52	4700508002	Cylinder screw	1		
53	4700160031	O-ring	1		

Vibration system Vibration system, external vibration valve - without acc valves

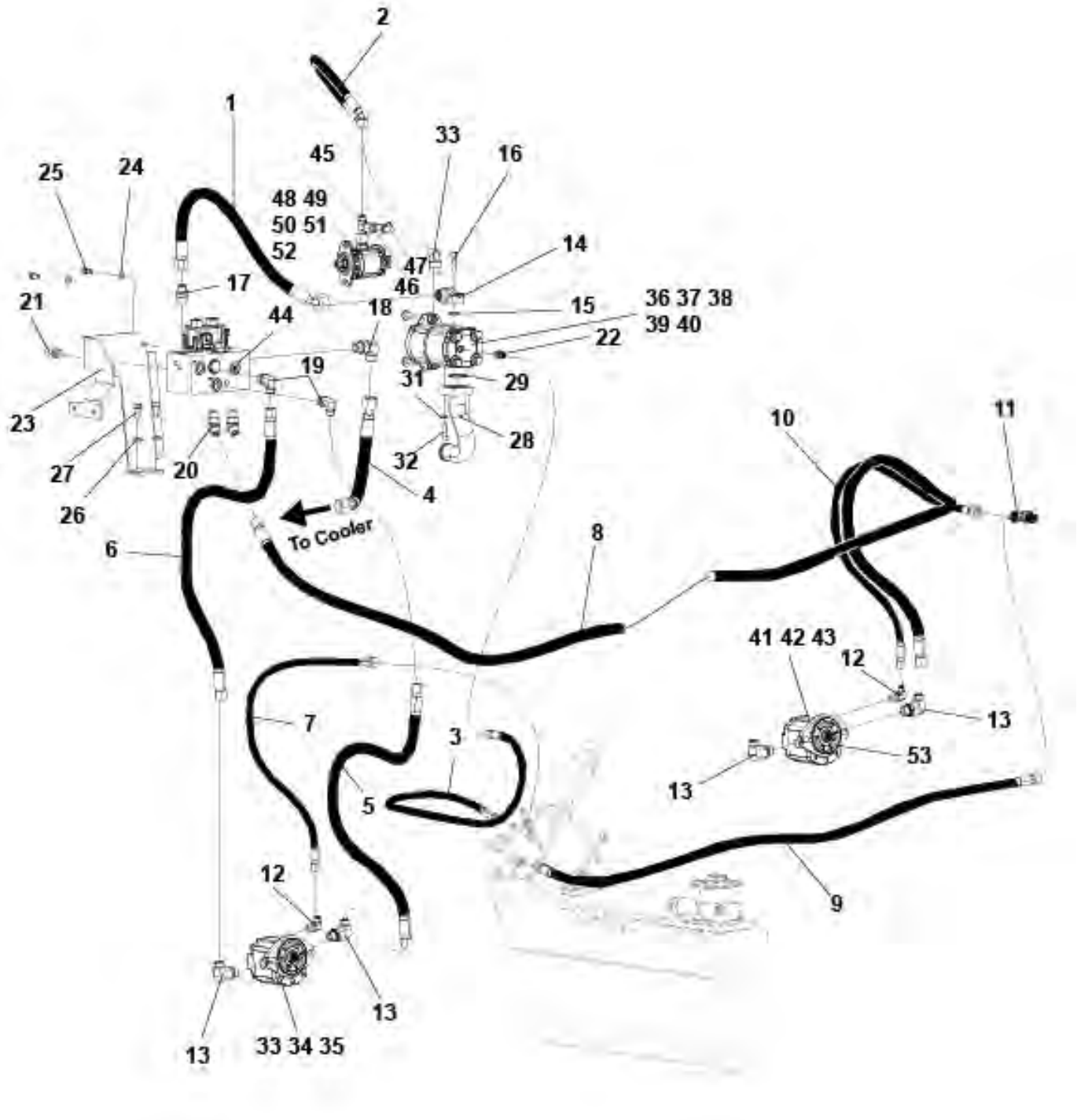

Item	Part No.	Name	Qty	L	SN INFO
1	4812125730	Hydraulic hose	1		
2	4812125731	Hydraulic hose	1		
3	4700483906	Hydraulic hose	1		
4	4812125732	Hydraulic hose	1		
5	4812125733	Hydraulic hose	1		
6	4812125734	Hydraulic hose	1		
7	4812125735	Hydraulic hose	1		
8	4812125746	Hydraulic hose	1		
9	4812125737	Hydraulic hose	1		
10	4812125738	Hydraulic hose	1		
11	4812114492	Bulkhead union	1		
12	4700791397	Connector	2		
13	4700791699	Elbow 90	4		
14	4812113633	Flange connector	1		
15	4700904774	O-ring	1		
16	4700508027	Screw	4		
17	4700791410	Straight o-ring connector	1		
18	4700791843	Elbow 90, O-ring with swivel	1		
19	4700791841	Elbow 90 orfs	2		
20	4700791796	Elbow 45, O-ring with swivel	2		
21	4700900229	Measuring fitting	1		
22	4700791744	Adapter	1		
23	4812125501	Bracket	1		
24	4700904229	Washer, 8.4x 6x1.5 mm 300HV	2		
25	4700500053	Screw, M8x20 mm 8.8 A2K	2		
26	4700904557	Washer, 10.5x22x4 mm 300 HV	2		
27	4700500028	Screw, M10 x 25 mm 8.8 A3K	2		
28	4812125469	Flange connector	1		
29	4700160016	O-ring	1		
30	4700923378	Hose clamp	2		
31	4700904556	Steel plain washer 8,4x16x3,0	4		
32	4700508048	Hexagon socket head cap screw M	4		
33	4700791416	Elbow 45, O-ring	1		
34	4700792389	Elbow 45 orfs	2		
35	4700792602	Cable tie with holder	3		
36	4812127309	Hydraulic pump	1		
37	4700379458	Gasket	1		
38	4700500078	Hex. screw	2		

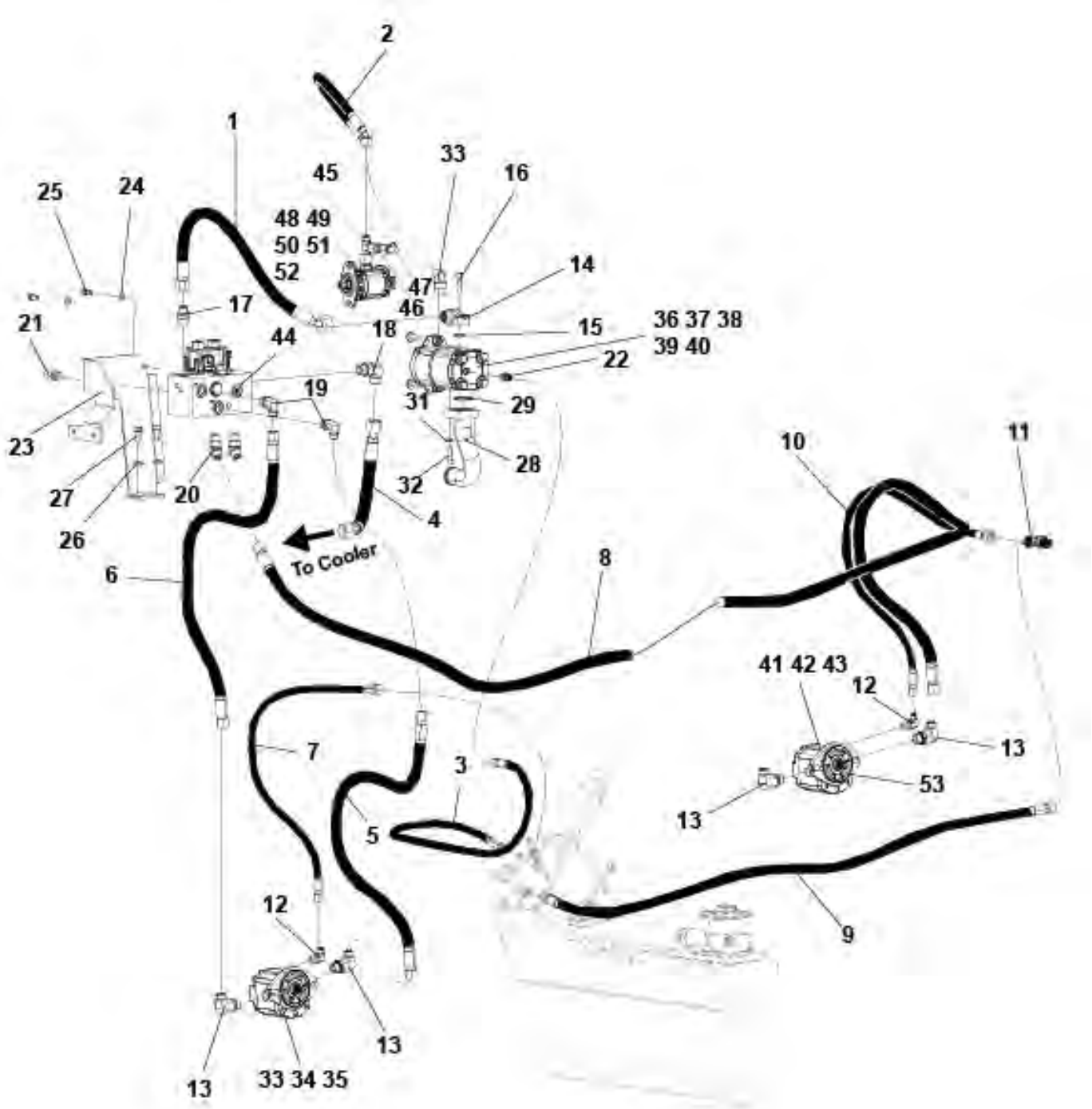
2
1
45
33
16
25
24
48 49
50 51
52
14
47
17
46
21
18
15
36 37 38
39 40
44
22
19
31
29
23
28
10
11
27
20
32
4
26
To Cooler
6
8
41 42 43
12
7
3
13
53
5
13
12
9
13
13
33 34 35

Item	Part No.	Name	Qty	L	SN INFO
39	4700904230	Plain washer 10.5x22x2 mm	2		
40	4700902287	Nut, M10	2		
41	4812118172	Hydraulic motor	2		
42	4700603018	Washer 10x18x4	2		
43	4700508029	Cylinder screw	2		
44	4812125749	Hydraulic valve	1		
45	4700791414	T-connection, O-ring with swivel	1		
46	4700791847	Straight connector	1		
47	4700923405	Measuring nipple	1		
48		Hydraulic motor	1		
49	4700904229	Washer, 8.4x 6x1.5 mm 300HV	2		
50	4700500021	Screw, M8x25 mm 8.8 A2K	2		
51	4700904735	Steel plain washer	1		
52	4700508002	Cylinder screw	1		
53	4700160031	O-ring	1		

Vibration system 4812160957 Seal kit

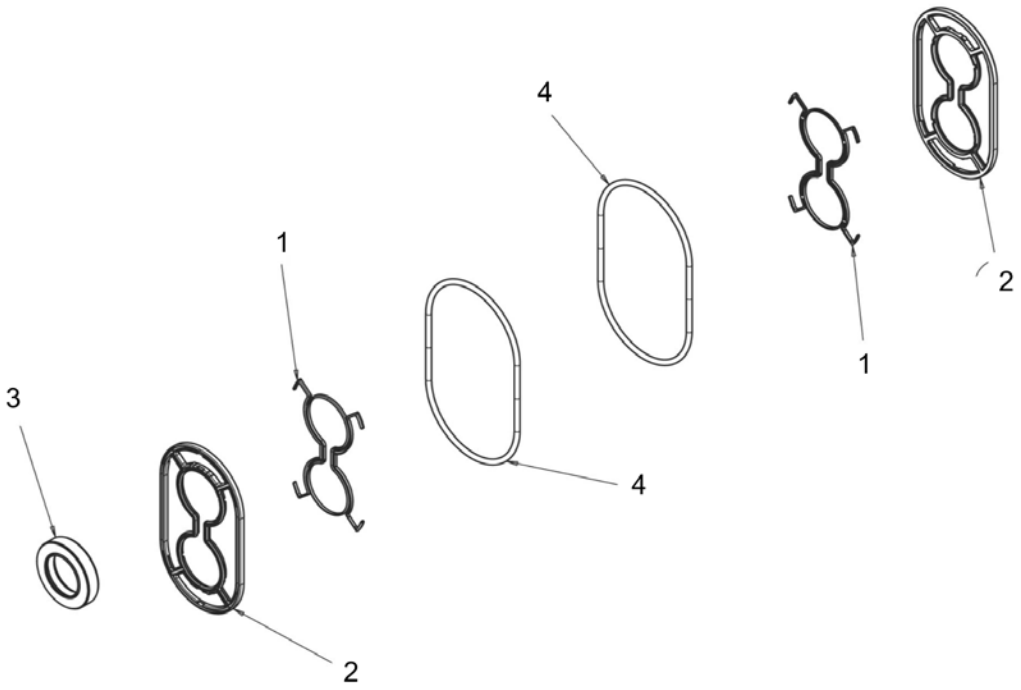

Item	Part No.	Name	Qty	L	SN INFO
0	4812160957	Seal kit	1		
1	-	Backing ring	2		
2	-	Pressure seal	2		
3	-	Shaft seal	1		
4	-	O-ring seal	2		

Vibration system Vibration system, Accessorie valves

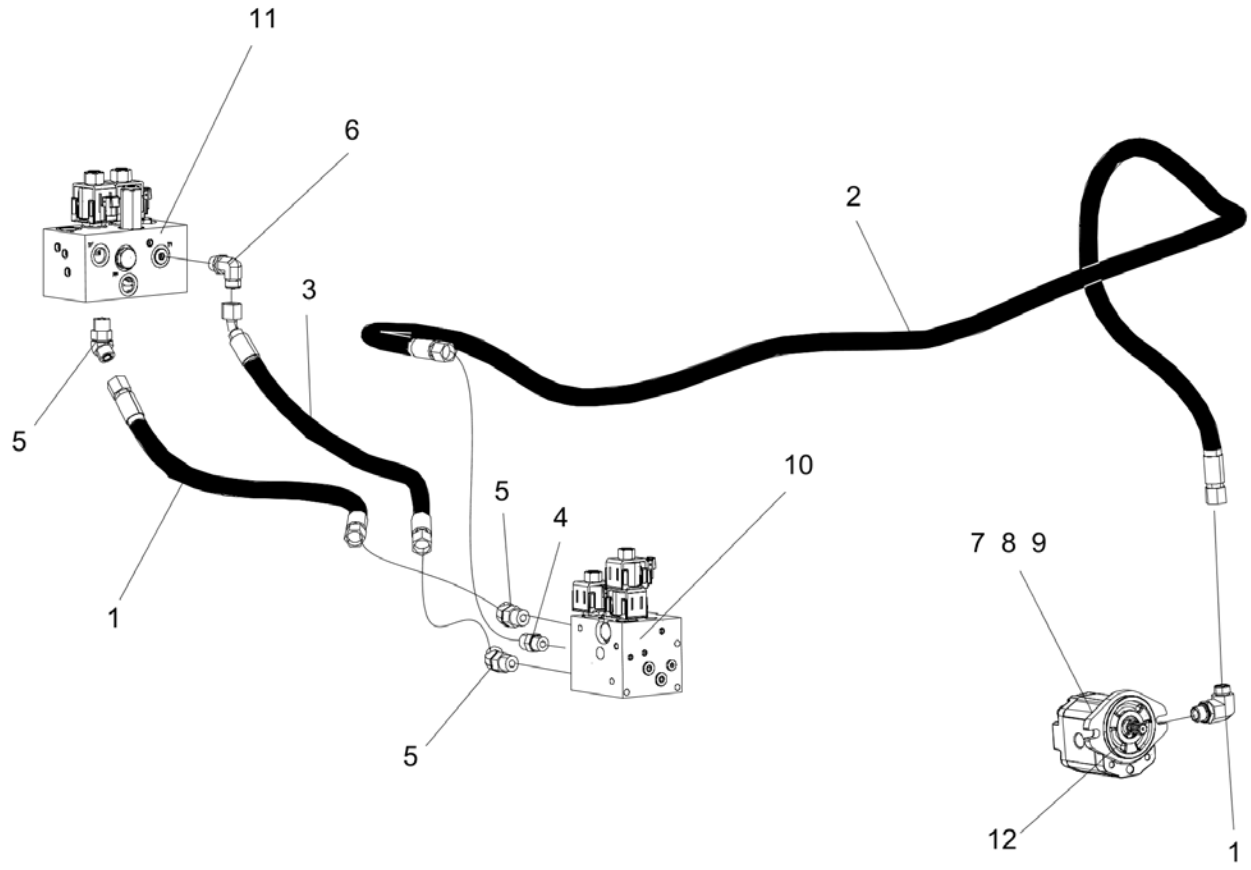

Item	Part No.	Name	Qty	L	SN INFO
1	4812125974	Hydraulic hose	1		
2	4812125771	Hydraulic hose	1		
3	4812125975	Hydraulic hose	1		
4	4700791799	Straight connector orfs	1		
5	4700791796	Elbow 45, O-ring with swivel	1		
6	4700791841	Elbow 90 orfs	1		
7	4812118172	Hydraulic motor	1		
8	4700603018	Washer 10x18x4	2		
9	4700508029	Cylinder screw	2		
10	4812125681	Hydraulic valve	1		
11	4812125749	Hydraulic valve	1		
12	4700160031	O-ring	1		

Vibration system Vibration, int vibvlv

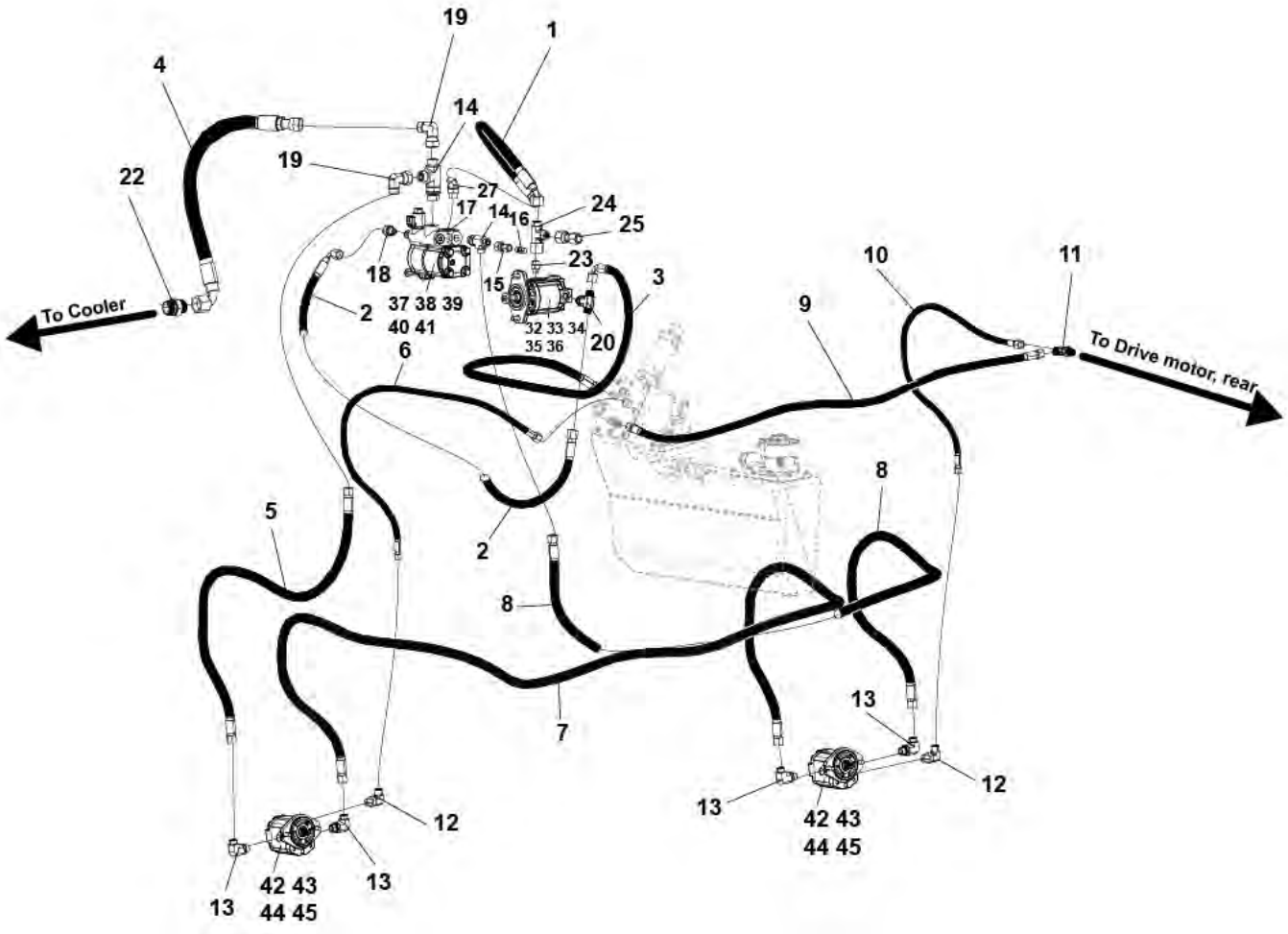

Item	Part No.	Name	Qty	L	SN INFO
1	4812125731	Hydraulic hose	1		
2	4812125747	Hydraulic hose	1		
3	4812125748	Hydraulic hose	1		
4	4812125750	Hydraulic hose	1		
5	4812125754	Hydraulic hose	1		
6	4812125742	Hydraulic hose	1		
7	4812126756	Hydraulic hose	1		
8	4812125755	Hydraulic hose	1		
9	4812125737	Hydraulic hose	1		
10	4812125744	Hydraulic hose	1		
11	4812114492	Bulkhead union	1		
12	4700791397	Connector	2		
13	4700791699	Elbow 90	4		
14	4700791792	Tee-connector	2		
15	4700792219	Straight connector	1		
16	4700923405	Measuring nipple	1		
17	4812123298	Plug	1		
18	4700791541	Adapter	1		
19	4700791745	Elbow 90, O-ring with swivel	2		
20	4812125653	Tee-connector	1		
21	4700791808	Elbow adapter 45	1		
22	0570702503	Straight connector	1		
23	4700791404	Straight o-ring connector	1		
24	4700791414	T-connection, O-ring with swivel	1		
25	4700791847	Straight connector	1		
26	4700923405	Measuring nipple	1		
27	4700791416	Elbow 45, O-ring	2		
32	4812125795	Hydraulic motor	1		
33	4700904229	Washer, 8.4x 6x1.5 mm 300HV	2		
34	4700500021	Screw, M8x25 mm 8.8 A2K	2		
35	4700904735	Steel plain washer	1		
36	4700508002	Cylinder screw	1		
37	4812127310	Hydraulic pump	1		
37	4700903430	Seal kit	1		
38	4700379458	Gasket	1		
39	4700500078	Hex. screw	2		
40	4700904230	Plain washer 10.5x22x2 mm	2		
41	4700902287	Nut, M10	2		

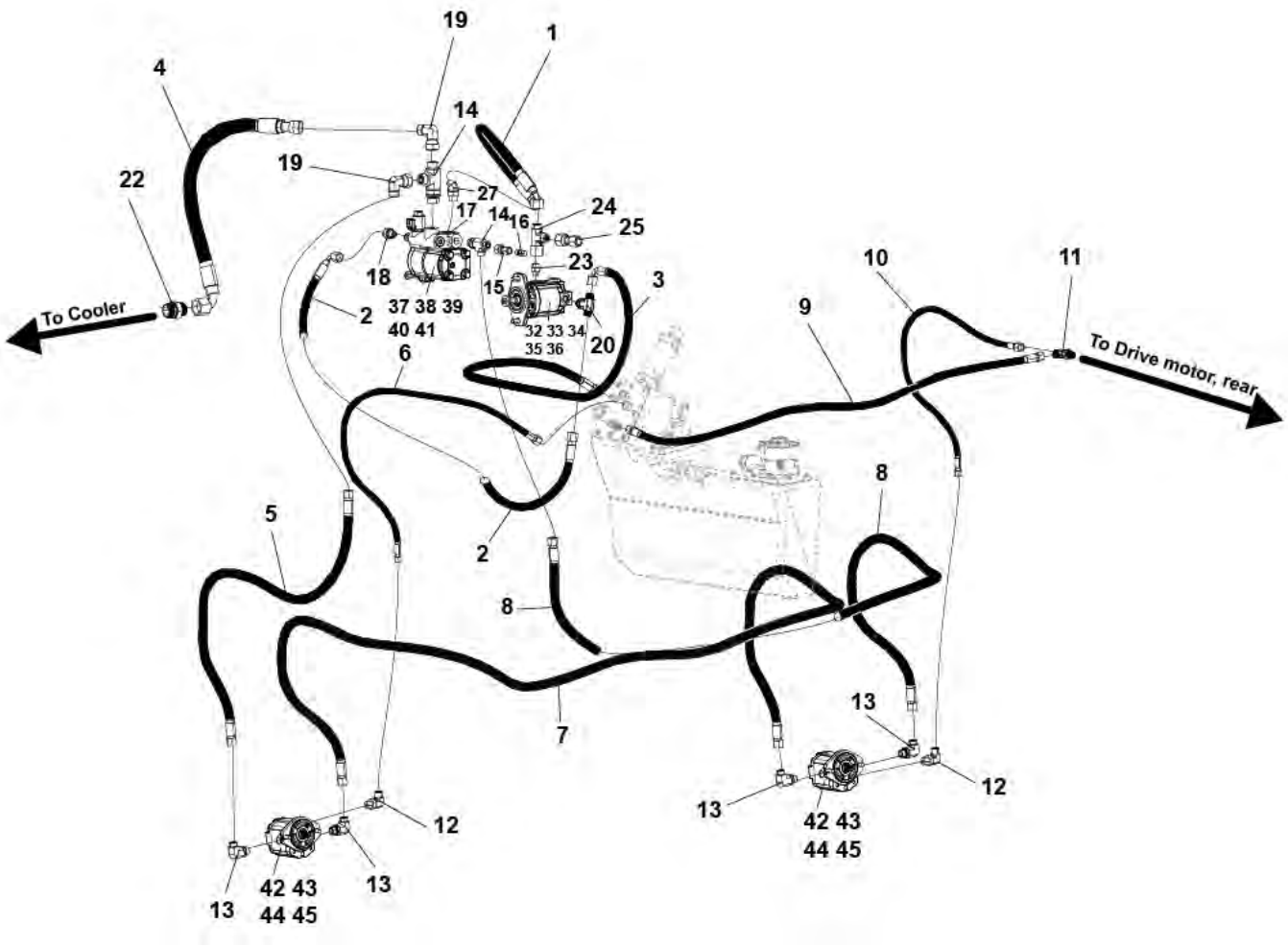
19
1
4
14
19
22
27
17
14
16
24
25
18
23
15
3
10
11
To Cooler
2
37 38 39
40 41
32 33 34
35 36
20
9
To Drive motor, rear
6
8
5
2
8
7
13
12
13
42 43
44 45
12
13
13
42 43
44 45

Item	Part No.	Name	Qty	L	SN INFO
42	4812118172	Hydraulic motor	2		
43	4700603018	Washer 10x18x4	4		
44	4700508029	Cylinder screw	4		
45	4700160031	O-ring	2		

Vibration system Hydraulic motor

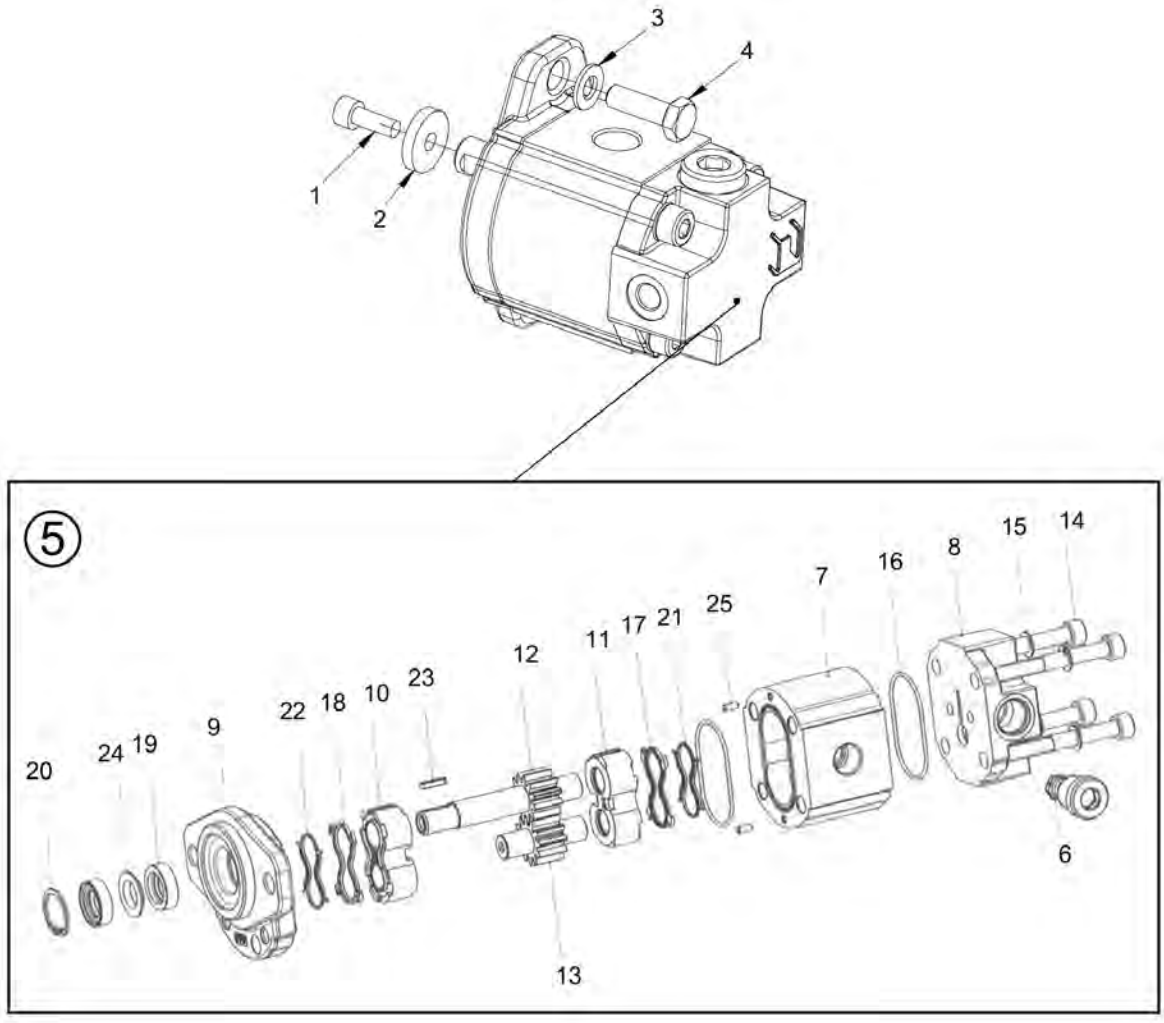

Item	Part No.	Name	Qty	L	SN INFO
1	4700508002	Cylinder screw	1		
2	4700904735	Steel plain washer	1		
3	4700904229	Washer, 8.4x 6x1.5 mm 300HV	2		
4	4700500021	Screw, M8x25 mm 8.8 A2K	2		
5	4812125795	Hydraulic motor	1		
6	-	Valve	1		
7	-	House	1		
8	-	Cover, rear	1		
9	-	Cover, front	1		
10	-	Plate	1		
11	-	Plate	1		
12	-	Shaft	1		
13	-	Gear	1		
14	-	Screw, M8x70	4		
15	-	Washer	4		
16	-	O-ring	2		
17	-	Repair kit	1		
18	-	Repair kit	1		
19	-	Repair kit	2		
20	-	Ring	1		
23	-	Key	1		
24	-	Washer	1		
25	-	Pin	2		

Vibration system Hydraulic pump module

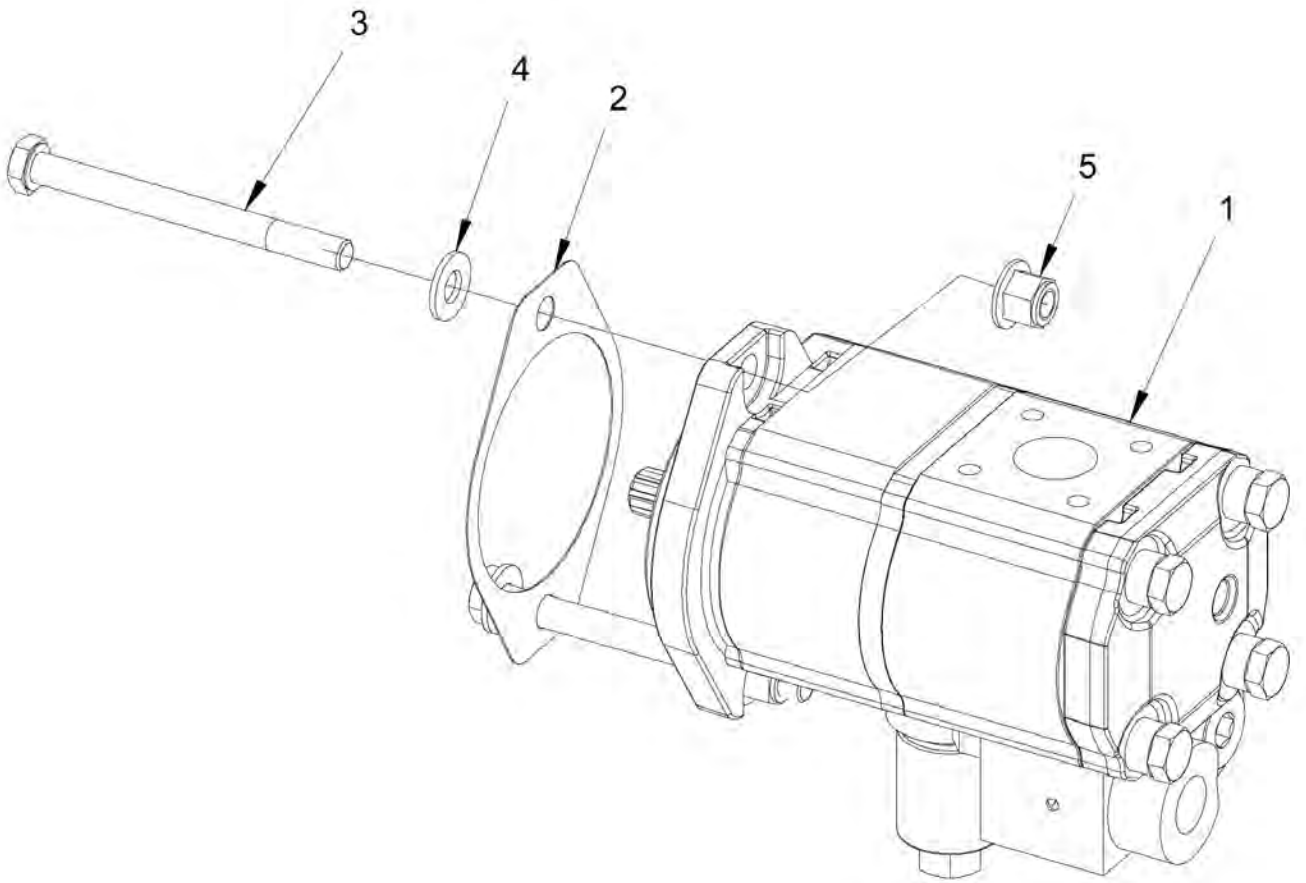

Item	Part No.	Name	Qty	L	SN INFO
1	4812127310	Hydraulic pump	1		
2	4700379458	Gasket	1		
3	4700500078	Hex. screw	2		
4	4700904230	Plain washer 10.5x22x2 mm	2		
5	4700902287	Nut, M10	2		

Vibration system 4812127310 Hydraulic pump

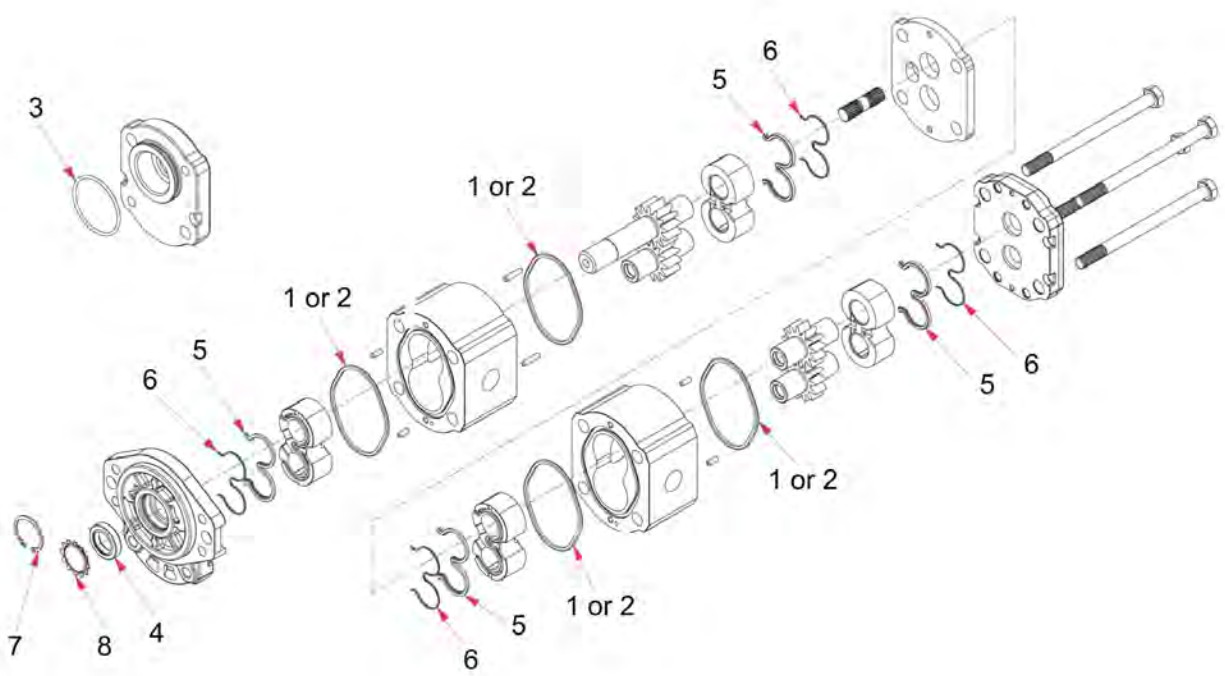

Item	Part No.	Name	Qty	L	SN INFO
0	4700903430	Seal kit	1		
1	-	O-ring	4		
2	-	O-ring	4		
3	-	O-ring	1		
4	-	Shaft seal	1		
5	-	Seal	4		
6	-	Back-up ring	4		
7	-	Snap ring	1		
8	-	Toothed ring	1		

Vibration system Hydraulic pump module

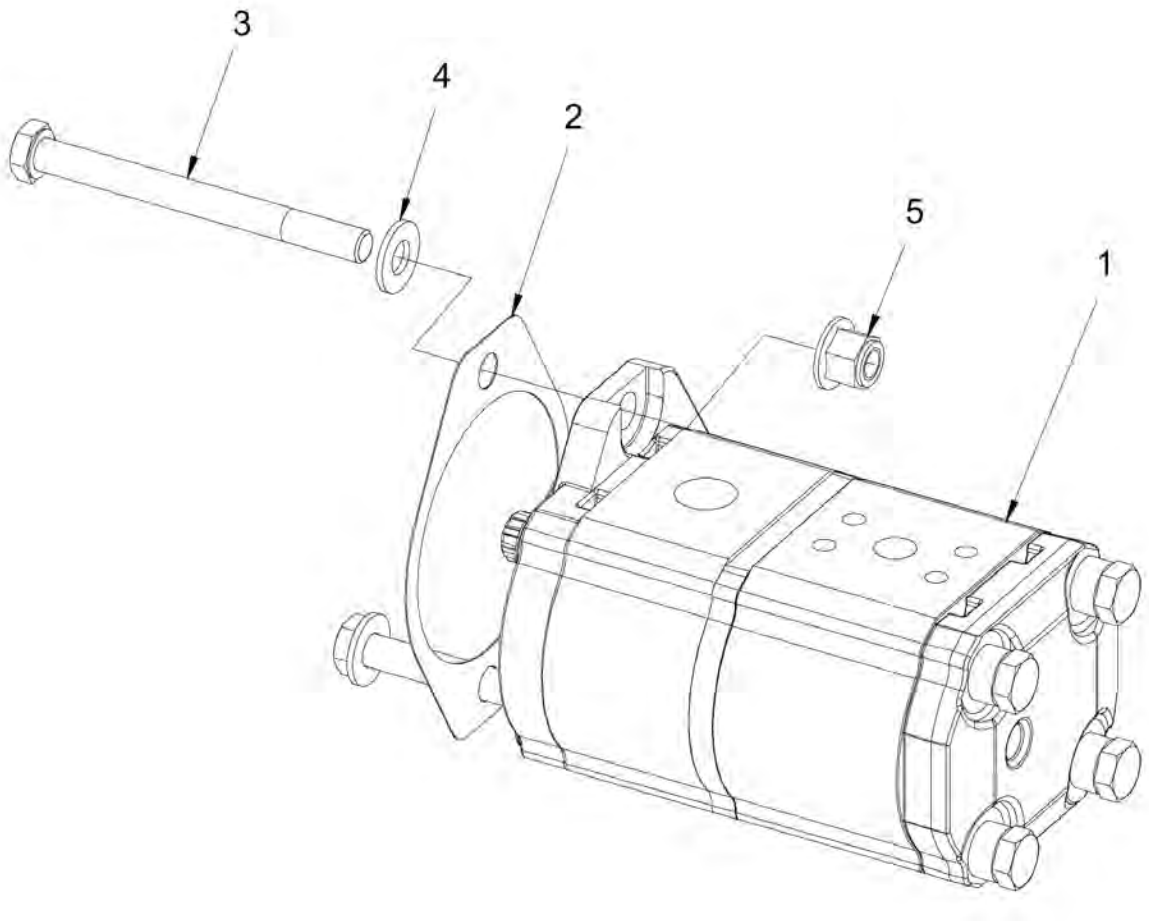

Item	Part No.	Name	Qty	L	SN INFO
1	4812127309	Hydraulic pump	1		
2	4700379458	Gasket	1		
3	4700500078	Hex. screw	2		
4	4700904230	Plain washer 10.5x22x2 mm	2		
5	4700902287	Nut, M10	2		

Vibration system 4812127309 Hydraulic pump

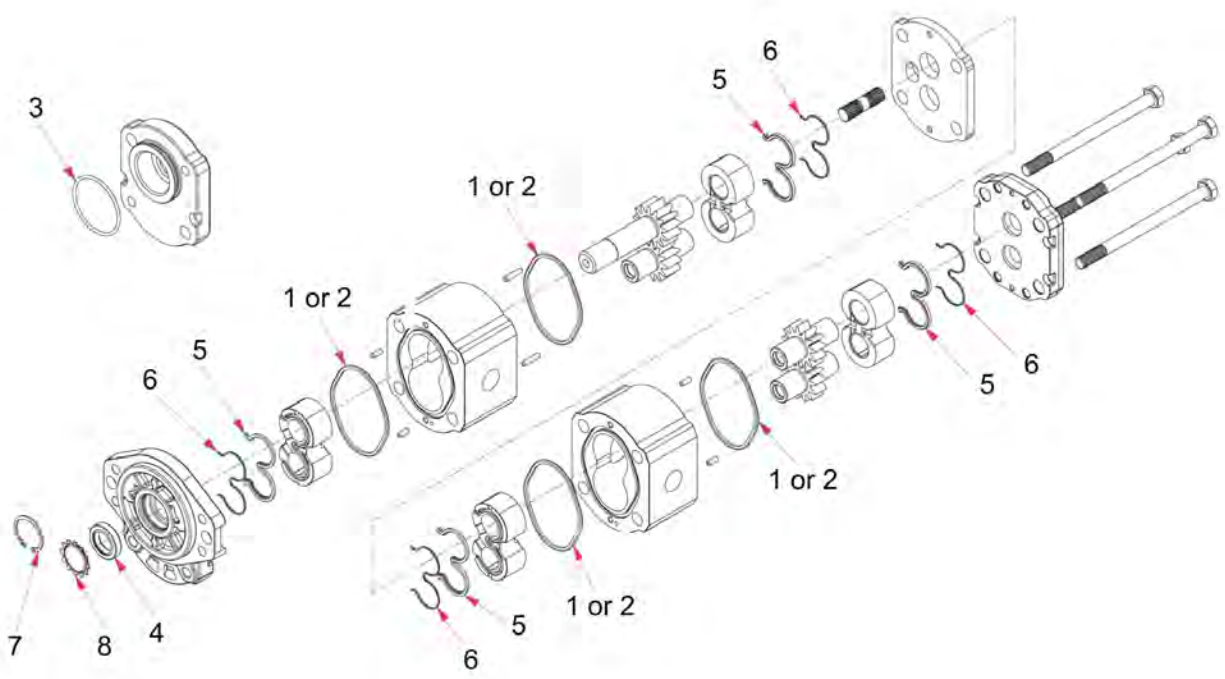

Item	Part No.	Name	Qty	L	SN INFO
0	4812127309	Hydraulic pump	1		
1	-	O-ring	4		
2	-	O-ring	4		
3	-	O-ring	1		
4	-	Shaft seal	1		
5	-	Seal	4		
6	-	Back-up ring	4		
7	-	Snap ring	1		
8	-	Toothed ring	1		

Propulsion system Propulsion system

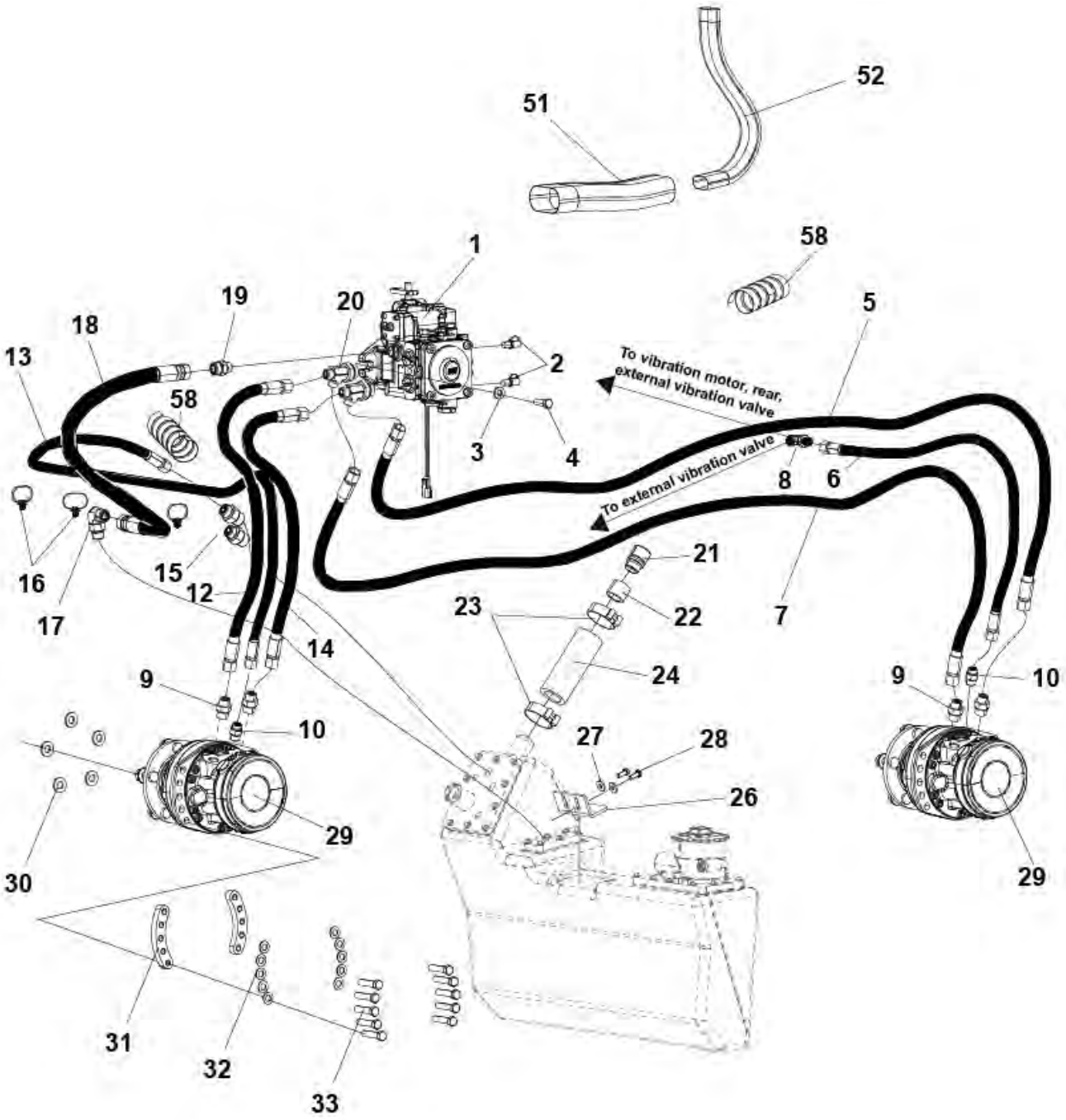

Item	Part No.	Name	Qty	L	SN INFO
1	4812126969	Hydraulic pump	1		
2	4700923405	Measuring nipple	2		
3	4700904703	Plain washer 13x24x4 mm	2		
4	4700500046	Hex. head screw M12x030H	2		
5	4812125716	Hydraulic hose	1		
6	4812125718	Hydraulic hose	1		
7	4812125723	Hydraulic hose	1		
8	4812114492	Bulkhead union	1		
9	4700791410	Straight o-ring connector	4		
10	4700791828	Adapter	2		
12	4812125722	Hydraulic hose	1		
13	4812125717	Hydraulic hose	1		
14	4812125715	Hydraulic hose	1		
15	4700791828	Adapter	2		
16	4700792602	Cable tie with holder	5		
17	4700791843	Elbow 90, O-ring with swivel	1		
18	4812125770	Hydraulic hose	1		
19	4700792074	Straight connector	1		
20	4812127214	Tee-connector	2		
21	4700357138	Ventilating filter	1		
22	4700357139	Connector	1		
23	4700313126	Clamp	2		
24	4812119321	Hydraulic hose	1		
26	4812125676	Bracket	1		
27	4700904640	Washer, 8.4x22x3 mm 300HV	2		
28	4700500053	Screw, M8x20 mm 8.8 A2K	2		
29		Hydraulic motor	2		
30	4700904214	Washer 15x30x4 300 HV	5		
31	4812110490	Holder	4		
32	4700904231	Washer, 13x24x2 mm 300 HV	20		
33	4700925519	Screw M12x55 10.9 GEOMET	20		
51	4700792701	Hose guard	0,32 M		
52	4700792696	Hose guard	1		
58	4700904623	Hose guard	0,15 M		

Propulsion system 4812120558 Hydraulic motor

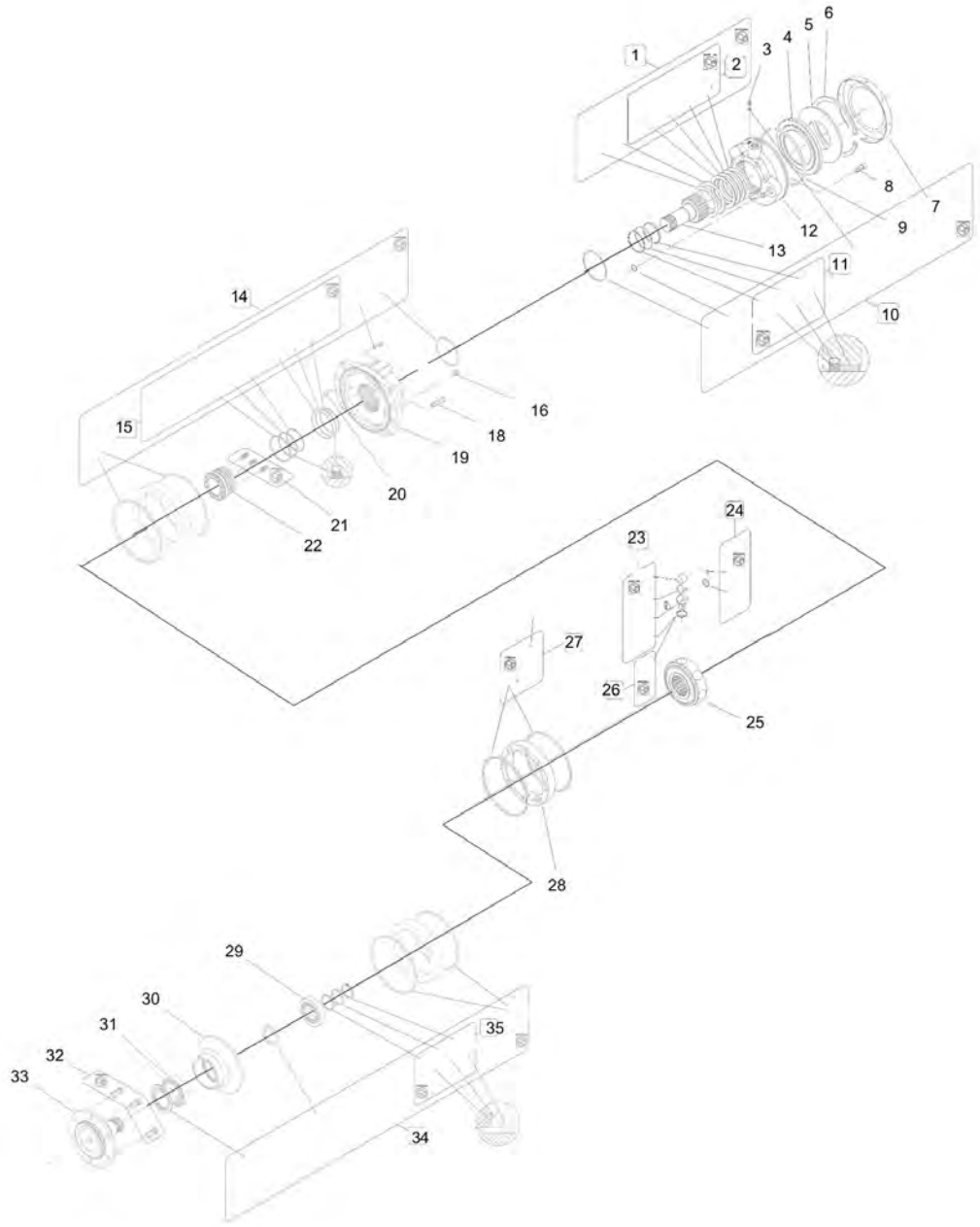

Item	Part No.	Name	Qty	L	SN INFO
0	4812120558	Hydraulic motor	1		
1	4812162174	Repair kit	1		
1	-	Brake disc	20		
1	-	Brake disc	21		
2	4812162175	Shim	1		
3	4812162176	Screw	1		
4	4812162177	Brake piston	1		
5	4812162178	Washer	1		
6	4812162179	Snap ring	1		
8	4812162181	Screw	10		
10	4812160275	Repair kit	1		
7	-	Shield	1		
9	-	Repair kit	1		
11	4812162182	Seal	1		
11	-	Bushing	1		
11	-	Repair kit	1		
11	-	Repair kit	1		
12	4812162183	Brake housing	1		
13	4812162184	Brake shaft	1		
14	4812162185	Seal kit	1		
14	-	Repair kit	2		
15	4812162186	Seal kit	1		
16	4812162187	Plug	1		
18	4812162188	Screw	12		
19	4812162189	Cover	1		
20	4812162190	Pin	1		
21	4812162191	Seal kit	1		
22	4812162192	Valve	1		
23	4812162193	Piston	8		
23	-	Roller	1		
23	-	Repair kit	1		
23	-	Piston	1		
23	-	Piston bushing	1		
24	4812162194	Repair kit	1		
24	-	Lunambule	16		
24	-	Clip	8		
25	-	Cylinder block	1		
26	4812162195	Seal	10		

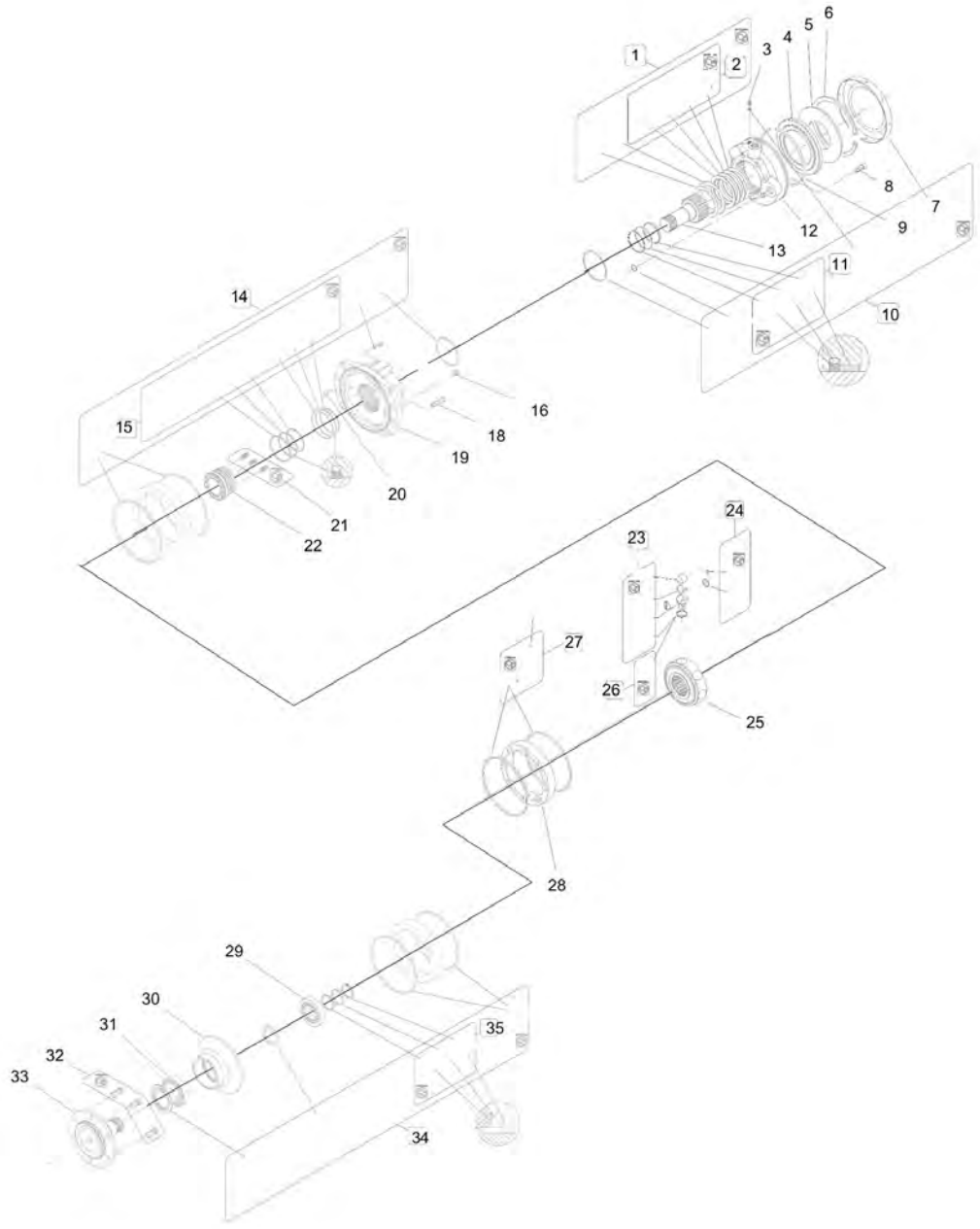
1
2
3
4
5
6
7
8
9
10
11
12
13
14
15
16
18
19
20
21
22
23
24
25
26
27
28
29
30
31
32
33
34
35

Item	Part No.	Name	Qty	L	SN INFO
27	4812162196	Seal kit	1		
27	-	Plug	1		
27	-	Repair kit	2		
28	4812162197	Cam	1		
29	4812162198	Bearing	1		
30	4812162199	Bearing support	1		
31	4812162251	Bearing	1		
32	4812162252	Bolt	1		
33	4812162253	Shaft	1		
34	4812162254	Repair kit	1		
34	-	Repair kit	2		
34	-	Repair kit	1		
35	-	Repair kit	1		
35	-	Shim	1		
35	-	Guide ring	1		
35	-	Snap ring	1		
35	4812162255	Repair kit	1		

Propulsion system 4812126969 Hydraulic pump

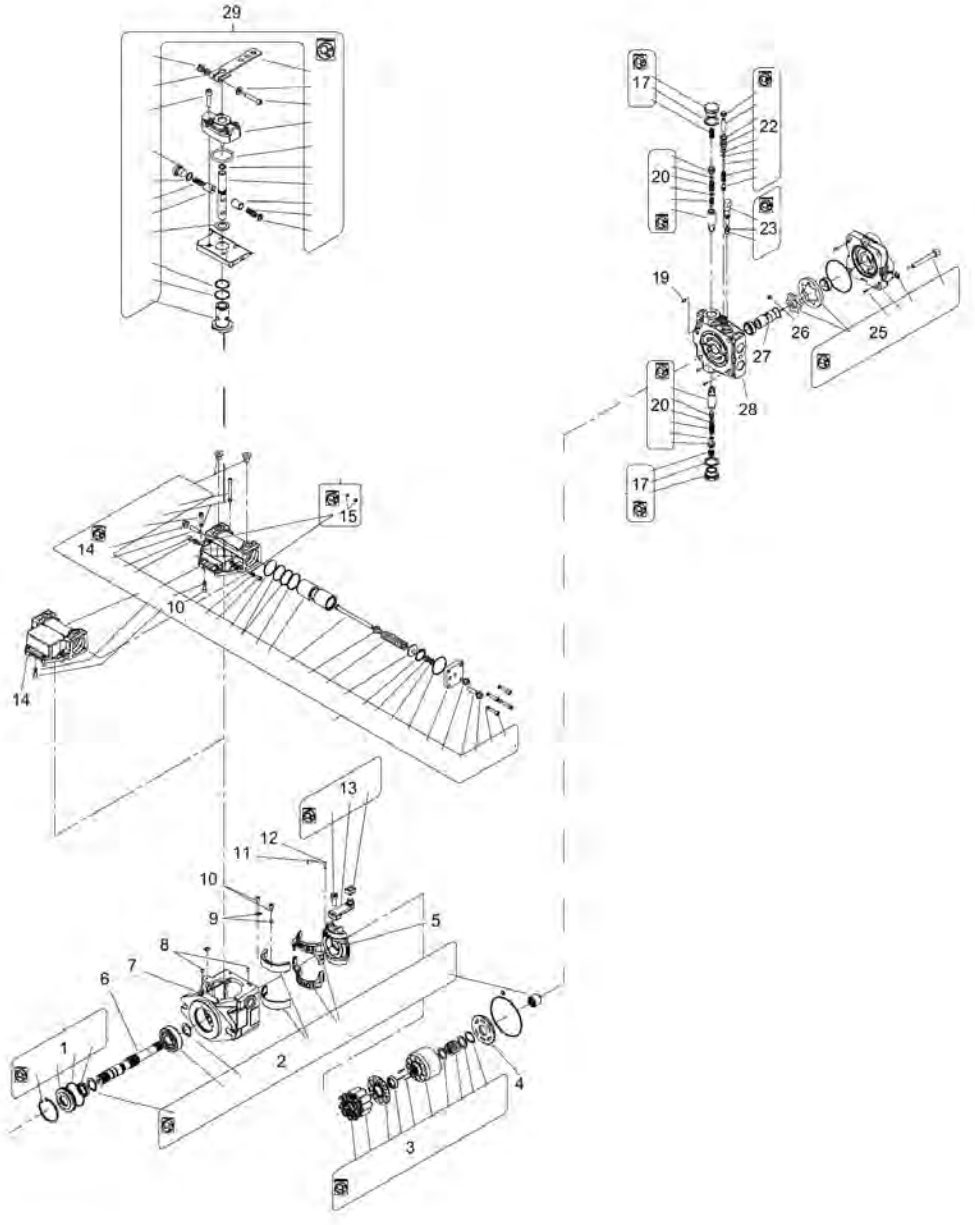

Item	Part No.	Name	Qty	L	SN INFO
0	4812126969	Hydraulic pump	1		
1	-	Shaft seal kit	1		
2	-	Bearing kit	1		
3	-	Rotating group kit	1		
4	-	Valve plate	1		
5	-	Swash plate	1		
6	-	Shaft	1		
7	-	Housing	1		
8	-	Pin	1		
9	-	Retaining ring	2		
10	-	Screw	3		
11	-	Retaining lever	1		
12	-	Pin	1		
13	-	Block slide hydraulic kit	1		
14	-	Hydraulic servo control kit	1		
15	-	Restrictor kit	1		
17	-	High pressure relief valve kit	1		
19	-	Pin	2		
20	-	High pressure relief valve kit	2		
22	-	Low pressure relief valve kit	1		
23	-	Screw bypass kit	1		
25	-	Charge pump kit	1		
26	-	Key	1		
27	-	Coupling shaft	1		
28	-	End cover	1		
29	-	Direct mechanical controls with return spring	1		

Steering system Steering system

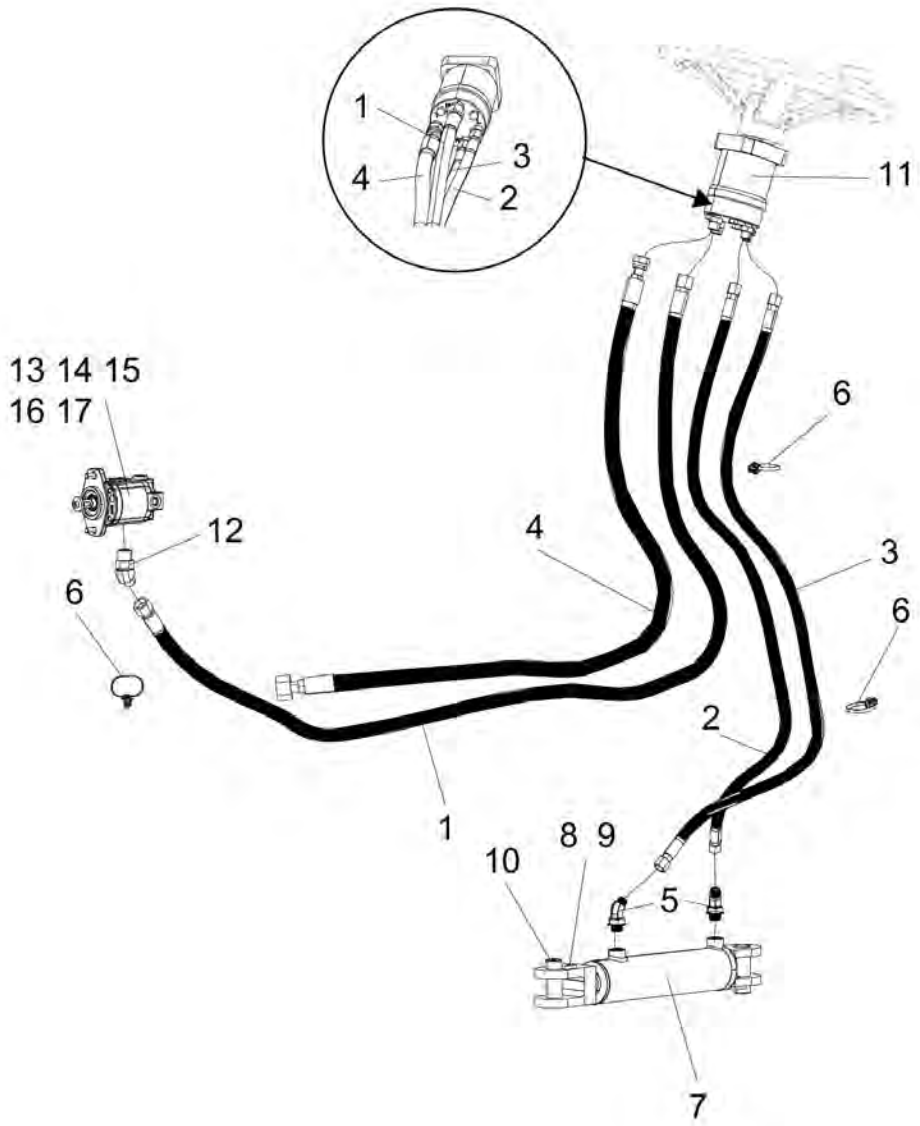

Item	Part No.	Name	Qty	L	SN INFO
1	4812125757	Hydraulic hose	1		
2	4812125760	Hydraulic hose	1		
3	4812125761	Hydraulic hose	1		
4	4812125762	Hydraulic hose	1		
5	4700792389	Elbow 45 orfs	2		
6	4700792602	Cable tie with holder	3		
7		Hydraulic cylinder	1		
8	4700904228	Washer 6,4x12x1,5	4		
9	4812127030	Screw	4		
10	4700926215	Protective plug	2		
11	4812112109	Steering valve	1		
-	4812160665	Special adapter 11/16"	2		
-	4812161199	Special adapter 9/16"	2		
12	4700791416	Elbow 45, O-ring	1		
13	4812125795	Hydraulic motor	1		
14	4700904229	Washer, 8.4x 6x1.5 mm 300HV	2		
15	4700500021	Screw, M8x25 mm 8.8 A2K	2		
16	4700904735	Steel plain washer	1		
17	4700508002	Cylinder screw	1		

Steering system 4812125395 Hydraulic cylinder

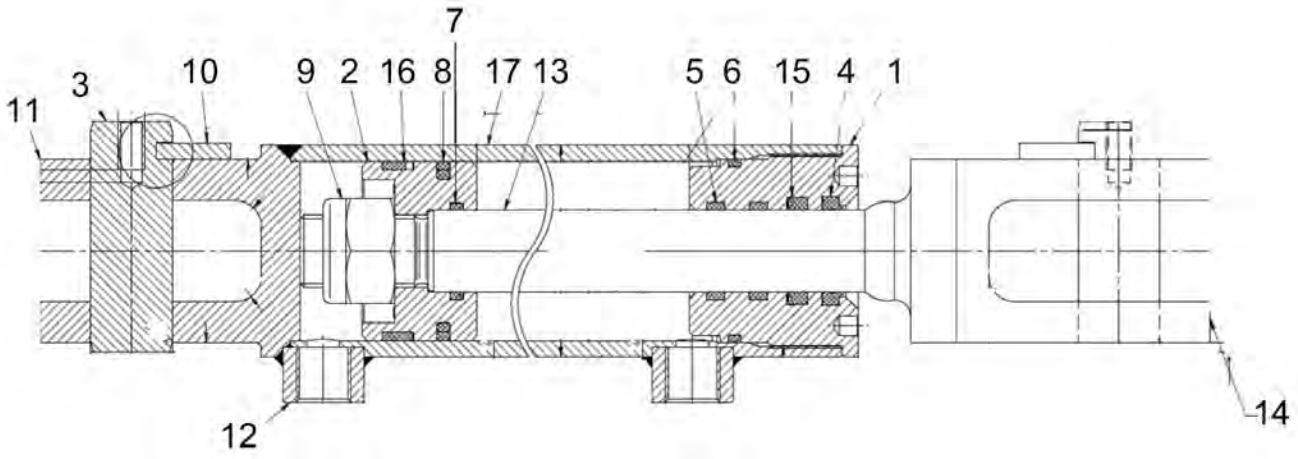

Item	Part No.	Name	Qty	L	SN INFO
0	4812125395	Hydraulic cylinder	1		
1	-	Pilot boss	1		
2	-	Piston	1		
3	-	Pin	2		
4	-	Wiper	1		
5	-	Rod guide	2		
6	-	Static seal	1		
7	-	O-ring	1		
8	-	Piston seal	1		
9	-	Lock nut	1		
10	-	Pin lock	2		
11	-	Cylinder end	1		
12	-	Connection	2		
13	-	Rod	1		
14	-	Fork	1		
15	-	Rod seal	1		
16	-	Piston guide	1		
17	-	Cylinder tube	1		

Hydraulic system Brake system

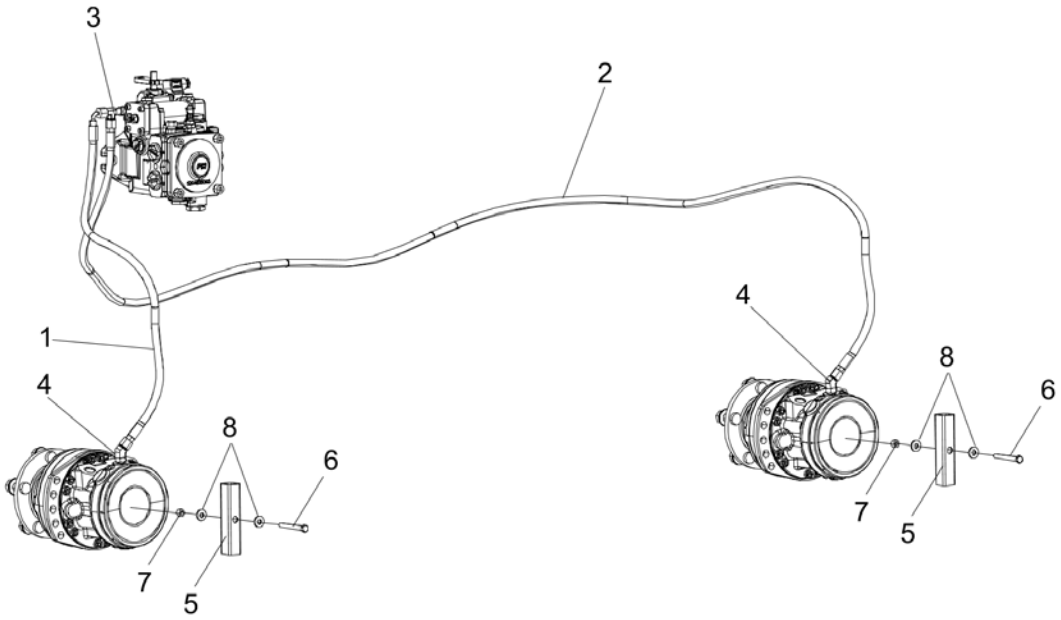

Item	Part No.	Name	Qty	L	SN INFO
1	4812125767	Hydraulic hose	1		
2	4812125768	Hydraulic hose	1		
3	4812121239	T-Connector	1		
4	4812116050	Adapter	2		
5	4700357892	Stirrup	2		
6	4700792550	Screw M12x100 10.9	2		
7	4700928849	Nut	2		
8	4700904213	Steel Plain Washer	4		

Edge cutter (optional) Edge cutter

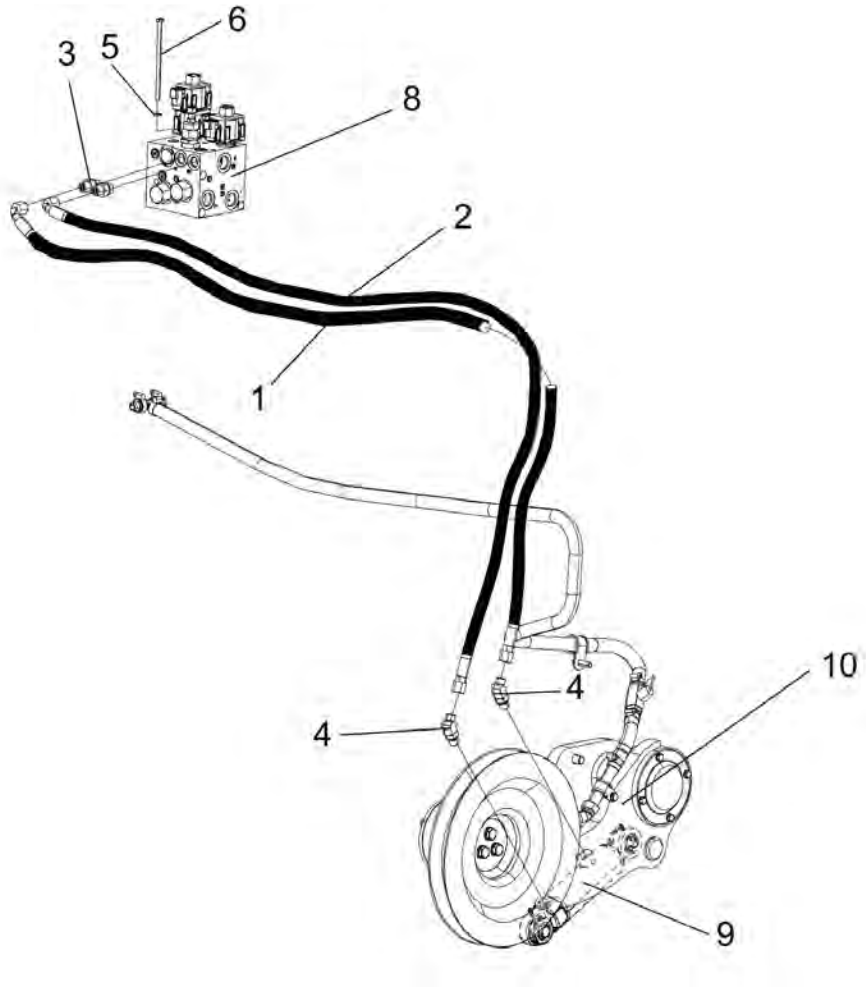

Item	Part No.	Name	Qty	L	SN INFO
1	4812125775	Hydraulic hose	0,465 M		
2	4812125776	Hydraulic hose	0,535 M		
3	4700791914	Adapter	2		
4	4812116050	Adapter	2		
5	4700904228	Washer 6,4x12x1,5	2		
6	4700500062	Screw	2		
7	4700792686	Cable tie with holder	1		
8	4812125681	Hydraulic valve	1		
9	-	Hydraulic cylinder	1		
10	-	Edge cutter	1		

Edge cutter (optional) Hydraulic cylinder module

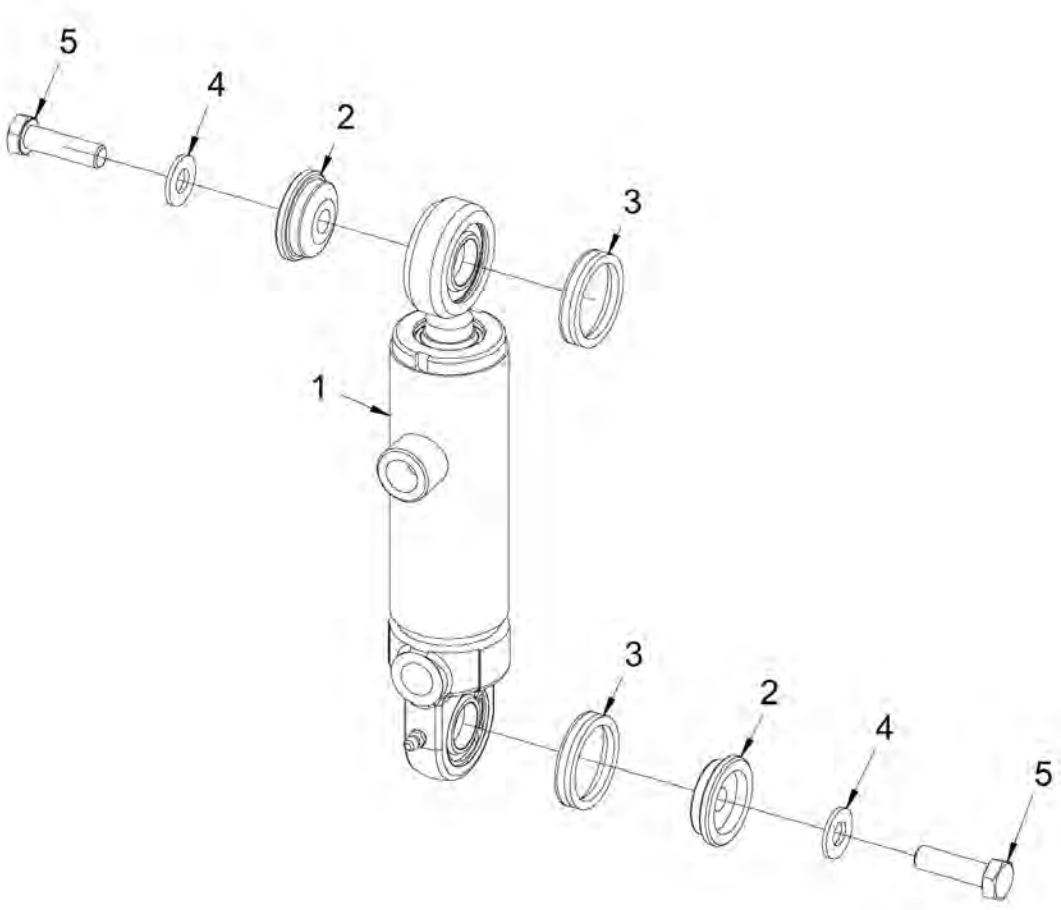

Item	Part No.	Name	Qty	L	SN INFO
1	4812125907	Hydraulic cylinder	1		
2	4812125937	Washer	2		
3	4700167054	Sealing	2		
4	4700904230	Plain washer 10.5x22x2 mm	2		
5	4700500030	Hexagon head screw	2		

Edge cutter (optional) 4812125907 Hydraulic cylinder

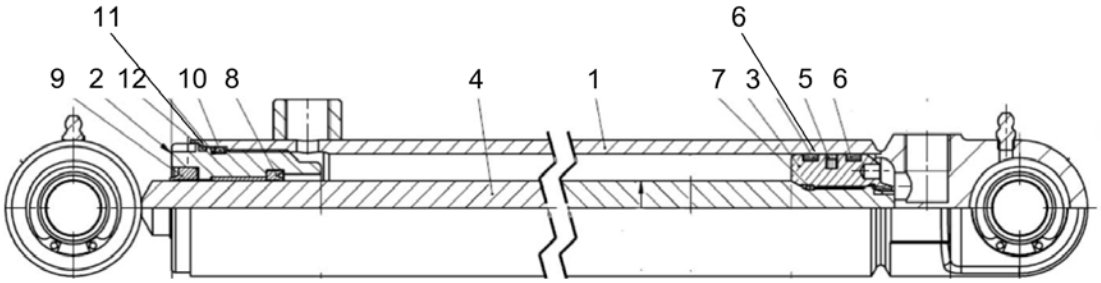

Item	Part No.	Name	Qty	L	SN INFO
0	4812125907	Hydraulic cylinder	1		
5	-	Piston seal	1		
6	-	Guide ring	2		
7	-	O-ring	1		
8	-	Rod seal	1		
9	-	Scraper	1		
10	-	O-ring	1		
11	-	Backup ring	1		
12	-	O-ring	1		

Hydraulic system Flow divider

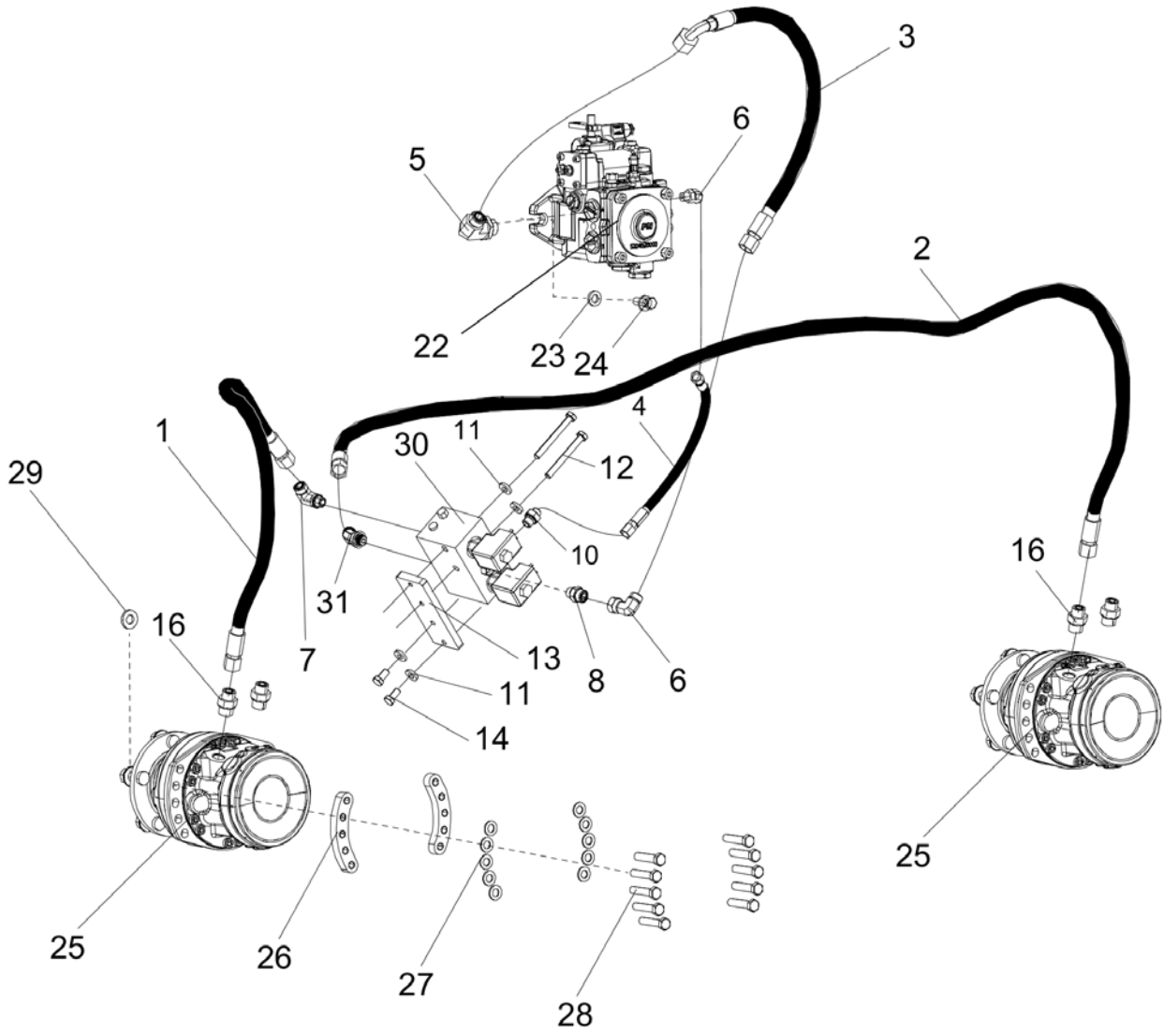

Item	Part No.	Name	Qty	L	SN INFO
1	4812125724	Hydraulic hose	1		
2	4812125725	Hydraulic hose	1		
3	4812125726	Hydraulic hose	1		
4	4812125727	Hydraulic hose	1		
5	4700792068	Elbow 90°	1		
6	4700791415	Elbow 45, O-ring	2		
7	4700791845	Elbow 90, O-ring with swivel	1		
8	4700904727	Adapter	1		
10	4700791452	Lock handle	1		
11	4700904557	Washer, 10.5x22x4 mm 300 HV	4		
12	4700500077	Hexagon head screw M10x90	2		
13	4812125470	Bracket	1		
14	4700500048	Screw, M10x20 mm 8.8 A3K	2		
16	4700791410	Straight o-ring connector	4		
22	4812126969	Hydraulic pump	1		
23	4700904703	Plain washer 13x24x4 mm	2		
24	4700500037	Hex. screw	2		
25	4812120558	Hydraulic motor	2		
26	4812110490	Holder	2		
27	4700904231	Washer, 13x24x2 mm 300 HV	10		
28	4700925519	Screw M12x55 10.9 GEOMET	10		
29	4700904214	Washer 15x30x4 300 HV	5		
30	4700358003	Flow divider	1		
31	4812122719	Elbow 45	1		

Hydraulic system Chip spreader (option)

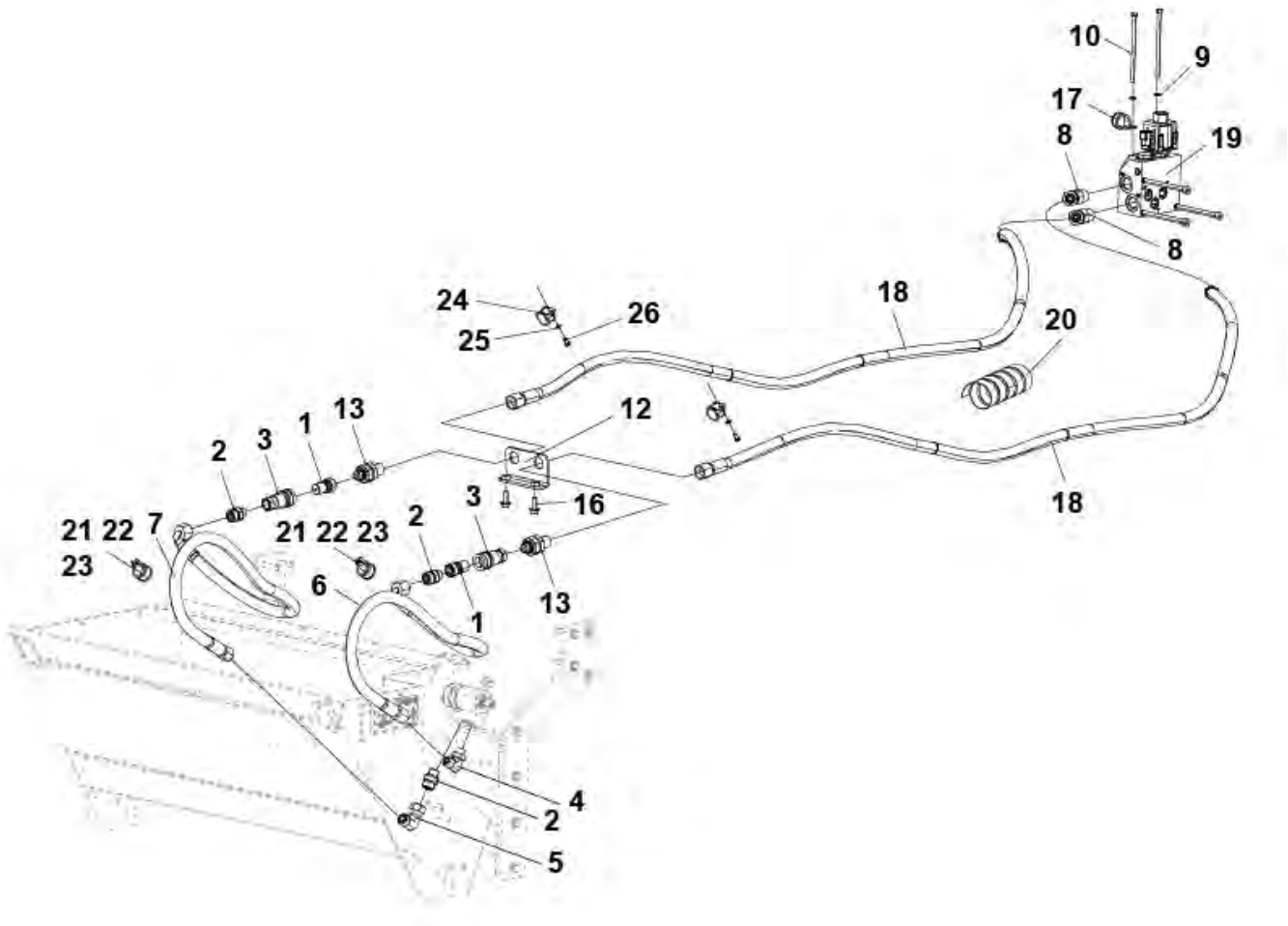

Item	Part No.	Name	Qty	L	SN INFO
1	4700792822	Quick disconnect coupling	1		
2	4700904727	Adapter	3		
3	4700792046	Quick disconnect coupling	1		
4	4700791398	Elbow 90, O-ring	1		
5	4700791745	Elbow 90, O-ring with swivel	1		
6	4812125866	Hydraulic hose	1		
7	4812126711	Hydraulic hose	1		
8	4700792436	Elbow 45°	2		
9	4700904228	Washer 6,4x12x1,5	2		
10	4700500062	Screw	2		
12	4812125664	Bracket	1		
13	4812125869	Connector	2		
14	4700792046	Quick disconnect coupling	1		
15	4700792822	Quick disconnect coupling	1		
16	4700500505	Screw, M8x20 mm 8.8 A2K	2		
17	4700921036	Clamp	1		
18	4812125778	Hydraulic hose	2		
19	4812125682	Hydraulic valve	1		
20	4700904623	Hose guard	0,15 M		
21	4700921028	Pipe clamp	2		
22	4700904281	Washer, 5,3x10x1 300HV	2		
23	4700500003	Hex. screw	2		
24	4700921028	Pipe clamp	2		
25	4700904281	Washer, 5,3x10x1 300HV	2		
26	4700500003	Hex. screw	2		
27	4812124515	Rubber part	2		

Electrical equipment Circuit board and fuses

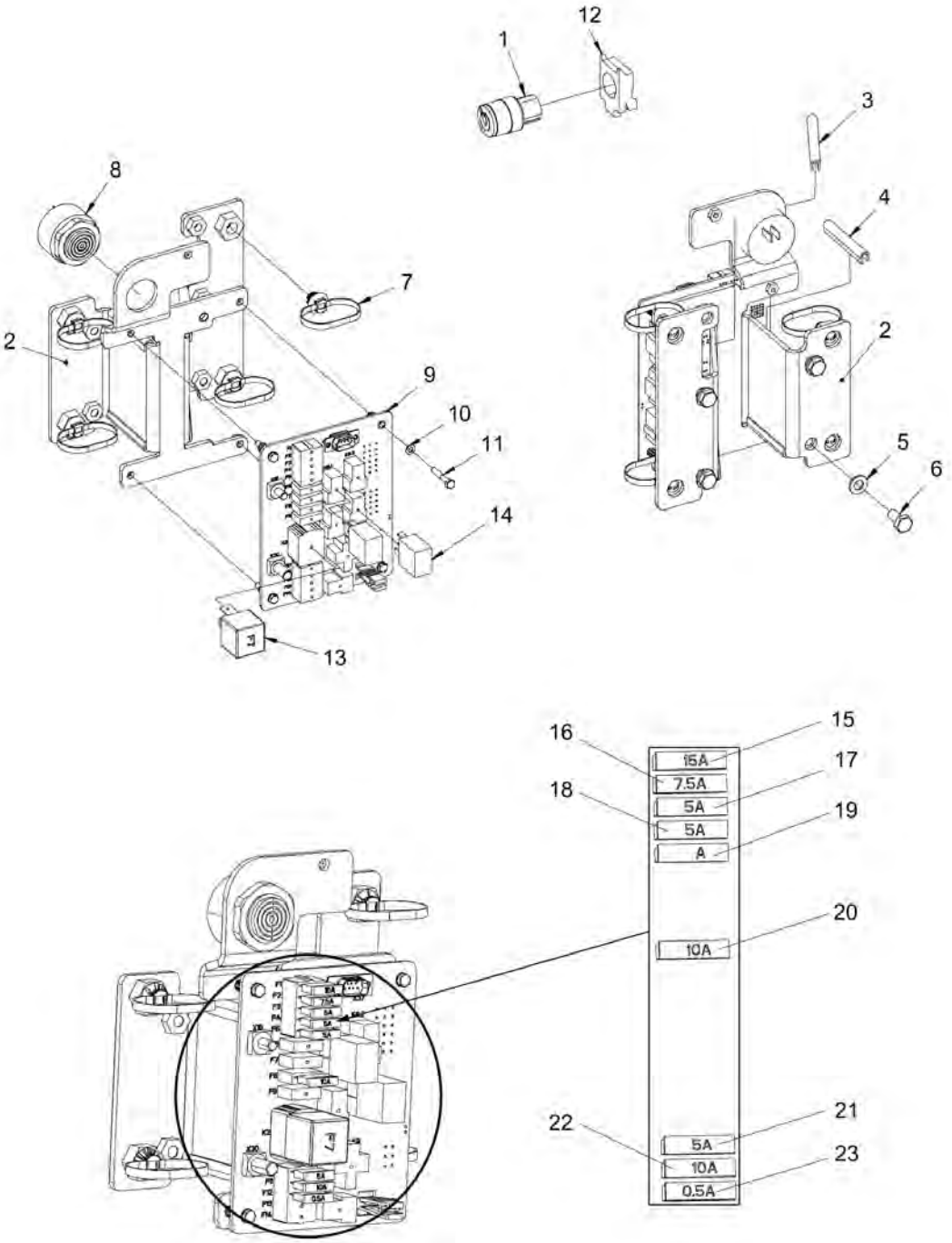

Item	Part No.	Name	Qty	L	SN INFO
1	4811000333	Ignition switch	1		
1.1	4700940451	Ignition key	1		
2	4812126033	Bracket	1		
3	4700202028	Edge trim	0,07 3 M		
4	4700202028	Edge trim	0,05 9 M		
5	4700904229	Washer, 8.4x 6x1.5 mm 300HV	4		
6	4700500019	Hexagon screw	4		
7	4700792602	Cable tie with holder	4		
8	4700385599	Buzzer	1		
9	4812126176	Circuit board	1		
10	4700904698	Plain washer	4		
11	4700904312	Screw	4		
12	4700791733	Fixing collar	1		
13	4812126108	Relay	1		
14	4700381390	Relay	2		
15	4700901228	Fuse, 15A Blue	1		
16	4700901226	Fuse 7.5A Brown	1		
17	4700901225	Fuse 5A Tan	1		
18	4700901225	Fuse 5A Tan	1		
19	4700901224	Fuse, 3A Violet	1		
19	4700901225	Fuse 5A Tan	1		
20	4700901227	Fuse 10A Red	1		
21	4700901225	Fuse 5A Tan	1		
22	4700901227	Fuse 10A Red	1		
23	4812127367	Fuse 0,5A	1		

Comments for Page: Circuit board and fuses

A) D1703

B) D1803

Electrical equipment Backup alarm

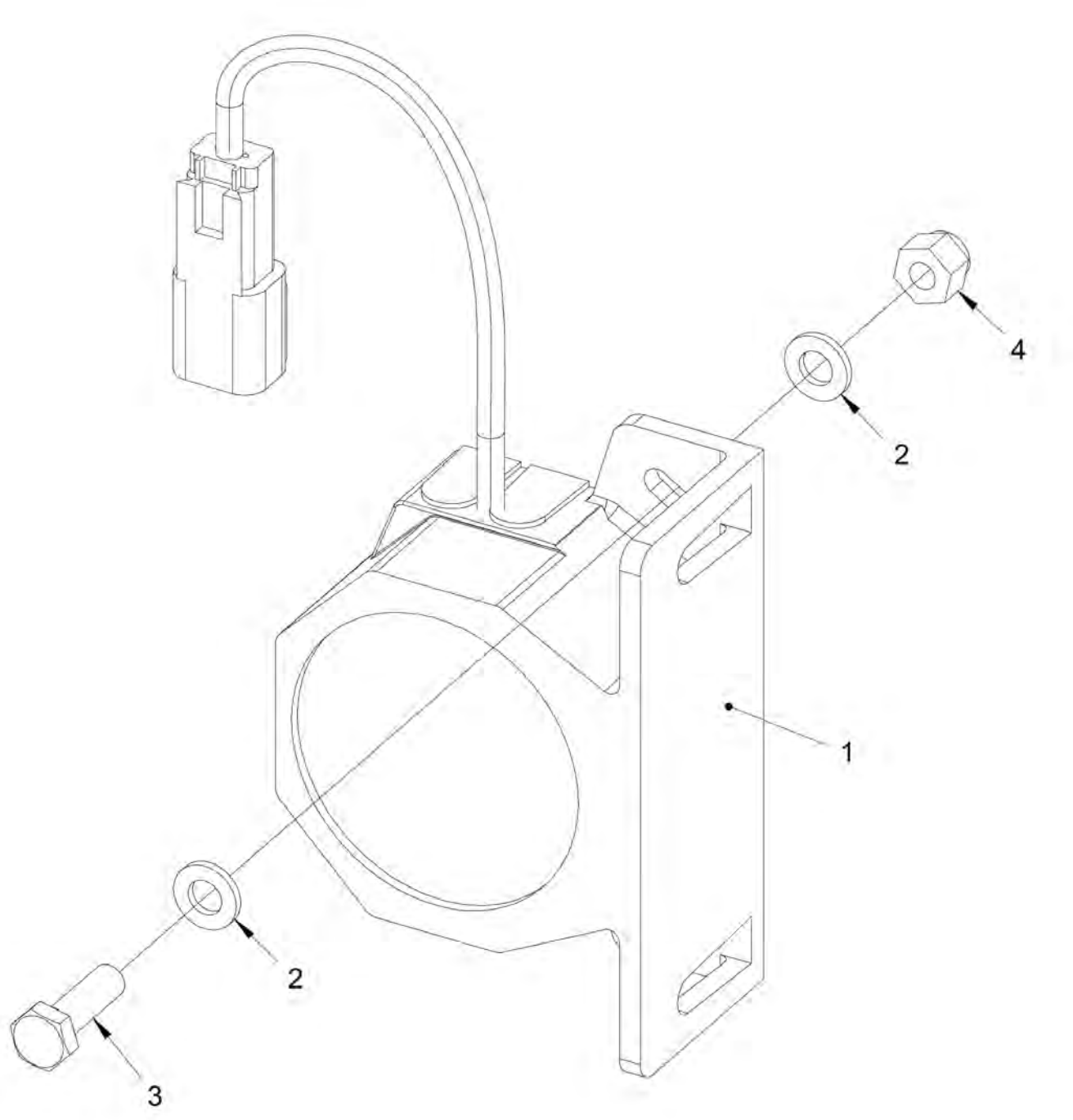

Item	Part No.	Name	Qty	L	SN INFO
1	4700792098	Back-up alarm	1		
2	4700904228	Washer 6,4x12x1,5	4		
3	4700500040	Screw, M6x20 mm 8.8 A2K	2		
4	4700586002	Lock nut M6 -8	2		

Electrical equipment Cable harness

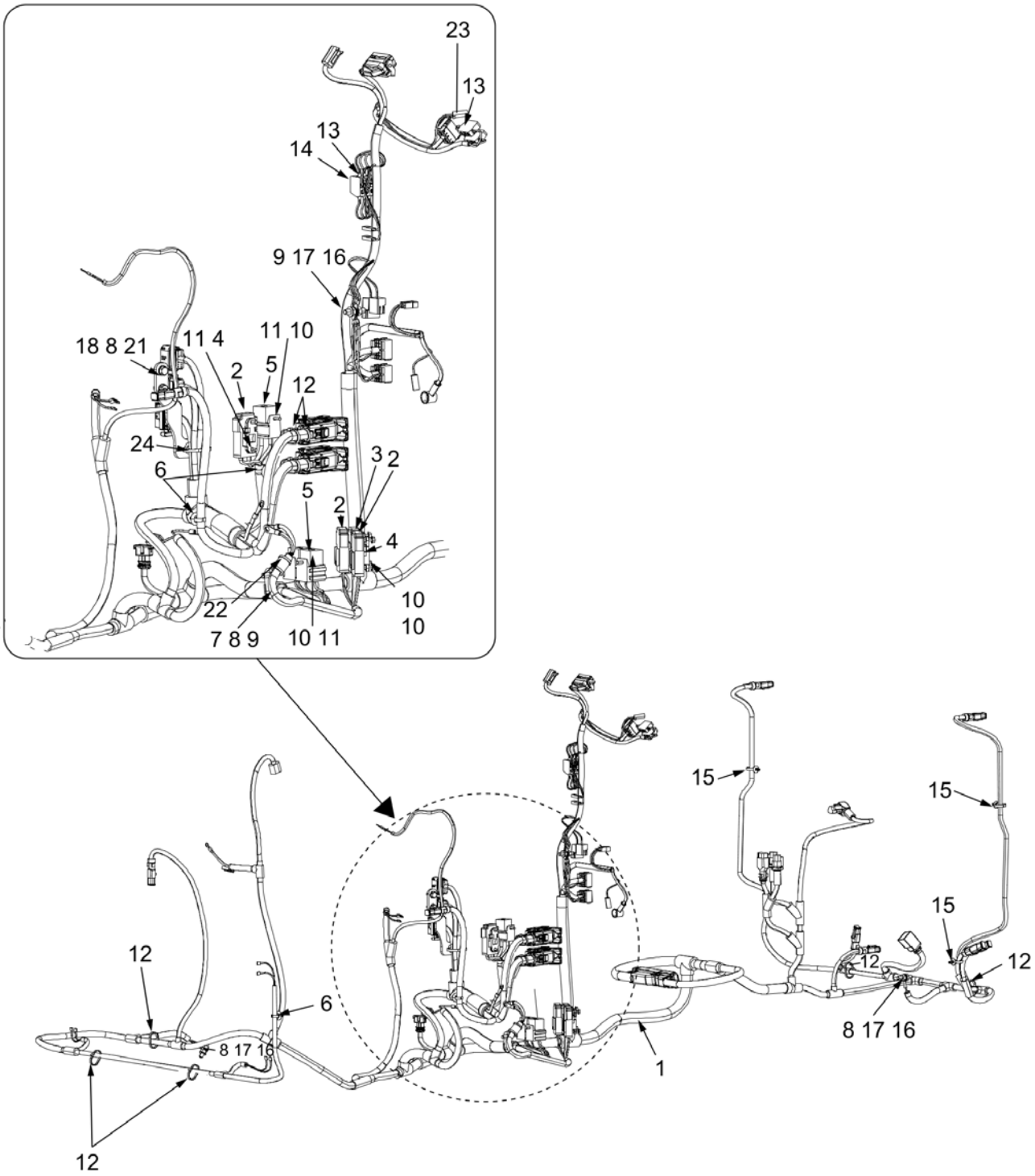

Item	Part No.	Name	Qty	L	SN INFO
1	4812125948	Cable harness	1		
2	4700904038	Fuse 40A Orange	3		
3	4700904039	Fuse 50A Red	1		
4	4700904036	Bracket	3		
5	4812126090	Relay	3		
6	4700792441	Cable tie with holder	3		
7	4700960727	Clamp	1		
8	4700904229	Washer, 8.4x 6x1.5 mm 300HV	9		
9	4700500019	Hexagon screw	1		
10	4812117868	Screw M05x16	4		
11	4700903782	Screw M5x12	5		
12	4700313041	Cable ties, L=200 mm	N		
13	4700791723	Connector	4		
14	4700791736	Connector N/O	1		
15	4812115911	Cable tie with holder	2		
16	4700570005	Hexagon nut	6		
17	4700903768	Threaded stud	3		
18	4812126189	Bracket	1		
21	4700500053	Screw, M8x20 mm 8.8 A2K	2		
22	4700904346	Clamp	1		
23	4812128174	Connection cable	1		
24	4700792602	Cable tie with holder	1		

Electrical equipment Cable harness - Quick release disconnector

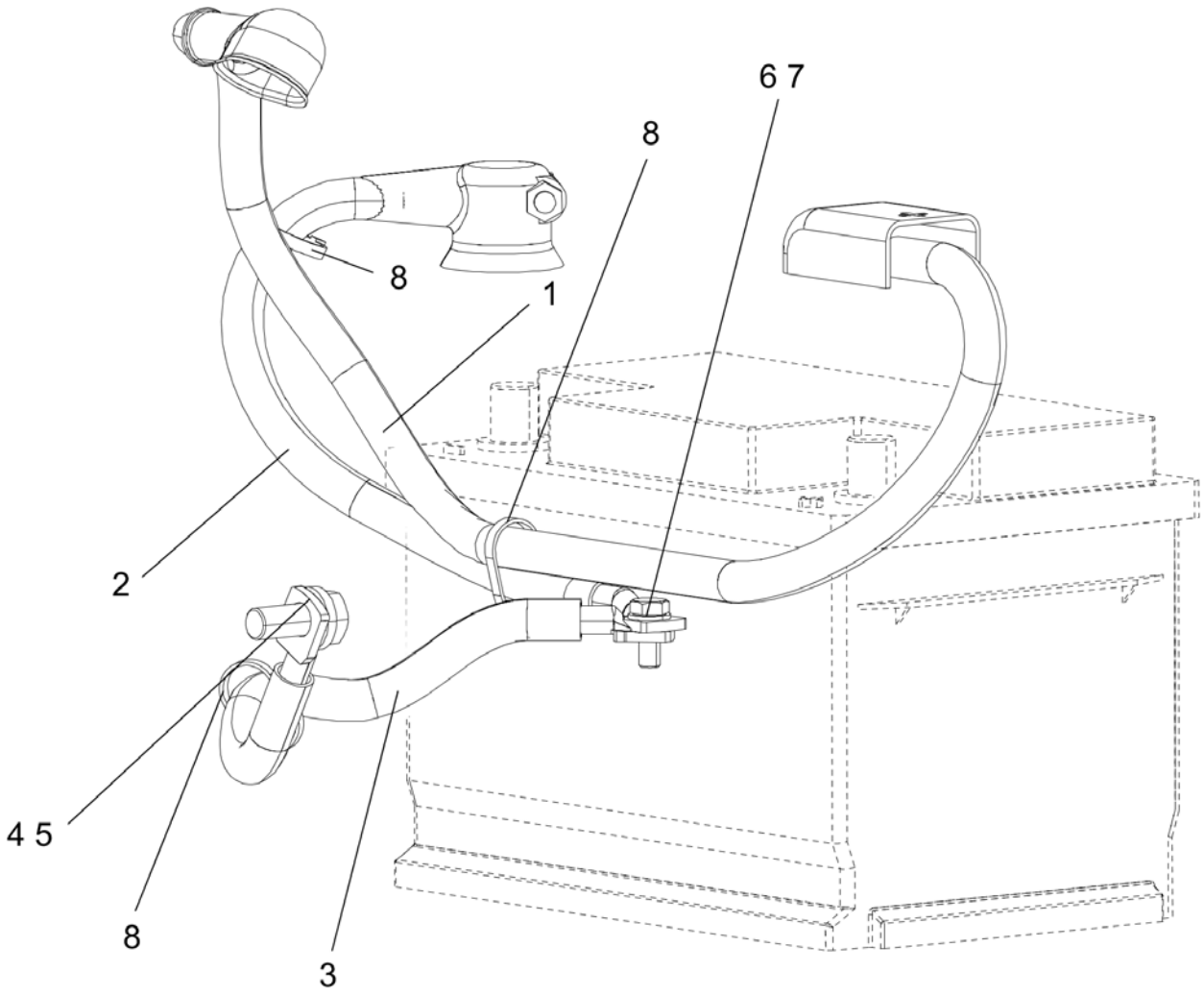

Item	Part No.	Name	Qty	L	SN INFO
1	4812125962	Battery cable	1		
2	4700791818	Battery cable	1		
3	4700903760	Connection cable coarse	1		
4	4700904703	Plain washer 13x24x4 mm	1		
5	4700792250	Screw	1		
6	4700904229	Washer, 8.4x 6x1.5 mm 300HV	3		
7	4700500053	Screw, M8x20 mm 8.8 A2K	1		
8	4700313041	Cable ties, L=200 mm	3		

Electrical equipment Cable harness - Battery disconnector

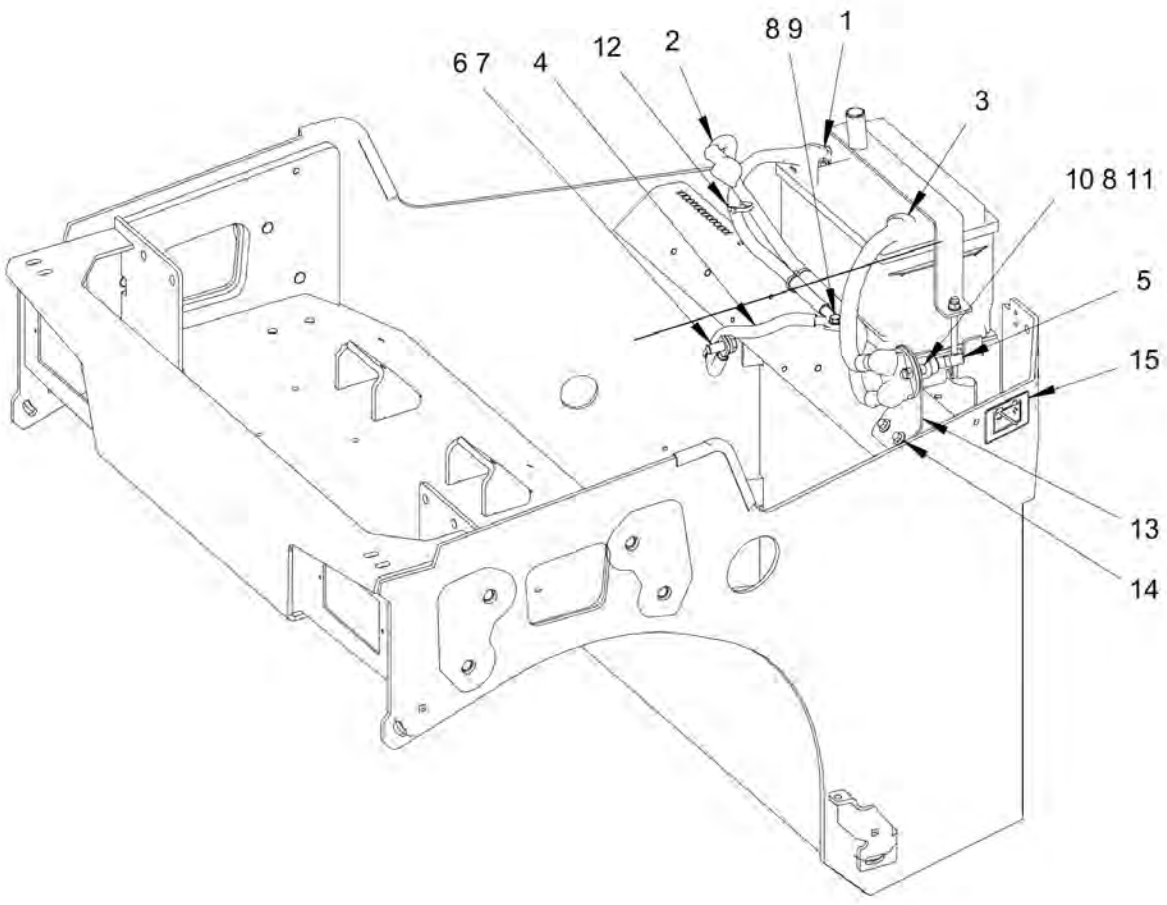

Item	Part No.	Name	Qty	L	SN INFO
1	4700791818	Battery cable	1		
2	4812127099	Connection cable coarse	1		
3	4812126031	Battery cable	1		
4	4700903760	Connection cable coarse	1		
5	4700357567	Battery switch, cpl	1		
6	4700904703	Plain washer 13x24x4 mm	1		
7	4700792250	Screw	1		
8	4700904229	Washer, 8.4x 6x1.5 mm 300HV	3		
9	4700500053	Screw, M8x20 mm 8.8 A2K	1		
10	4700508019	Cylinder screw	2		
11	4700586003	Lock nut M8	2		
12	4700313041	Cable ties, L=200 mm	3		
13	4812126940	Bracket	1		
14	4700901832	Screw, M08x16, 8.8	2		
15	4700904835	Decal "BATTERY POWER"	1		

Electrical equipment Cable harness - Working lights / ROPS



Item	Part No.	Name	Qty	L	SN INFO
1	4812125777	Cable harness	1		
2	4700313041	Cable ties, L=200 mm	N		
3	4700901227	Fuse 10A Red	1		
4	4700381390	Relay	1		

Electrical equipment Cable harness - Driving lights

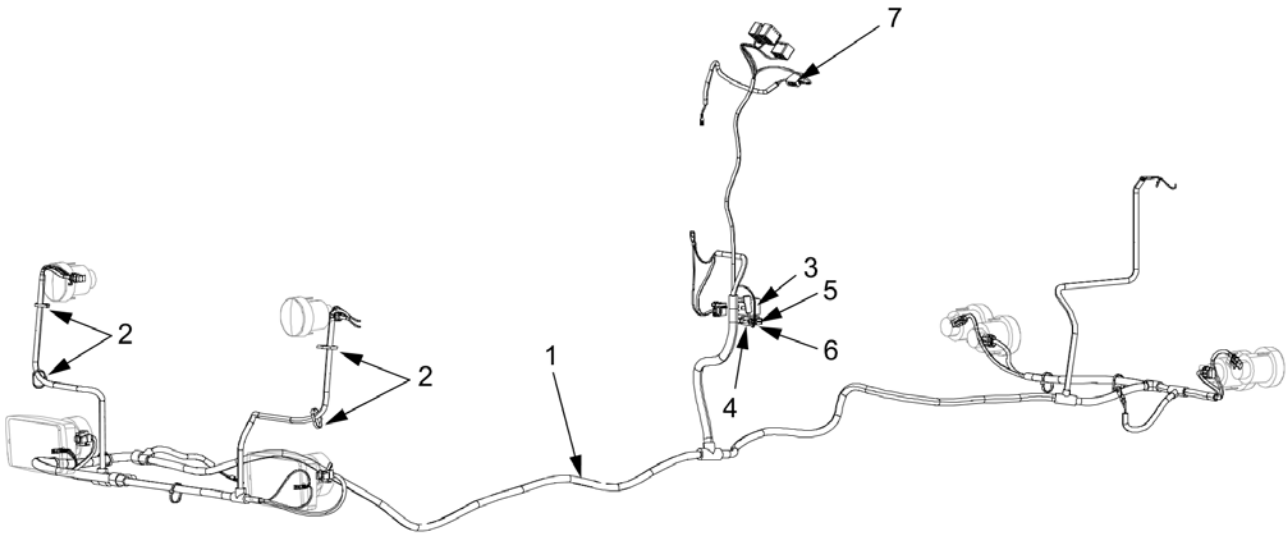

Item	Part No.	Name	Qty	L	SN INFO
1	4812125678	Cable harness	1		
2	4700313041	Cable ties, L=200 mm	N		
3	4700904989	Flash relay	1		
4	4700381390	Relay	1		
5	4700901227	Fuse 10A Red	1		
6	4700901228	Fuse, 15A Blue	1		
7	4700791723	Connector	1		

Electrical equipment Cable harness - Flow divider

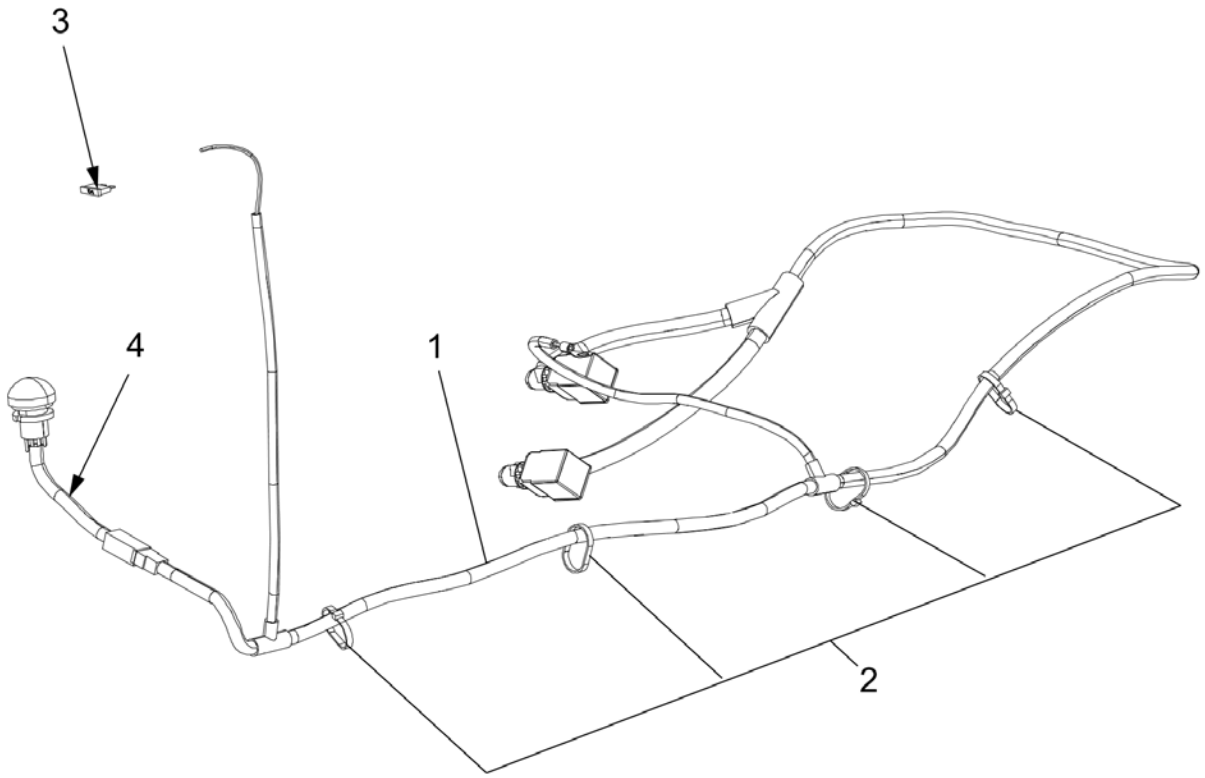

Item	Part No.	Name	Qty	L	SN INFO
1	4812125881	Cable harness	1		
2	4700313041	Cable ties, L=200 mm	4		
3	4700901227	Fuse 10A Red	1		
4	4812127015	Cable harness	1		

Electrical equipment Cable harness - Edge cutter, Chip spreader

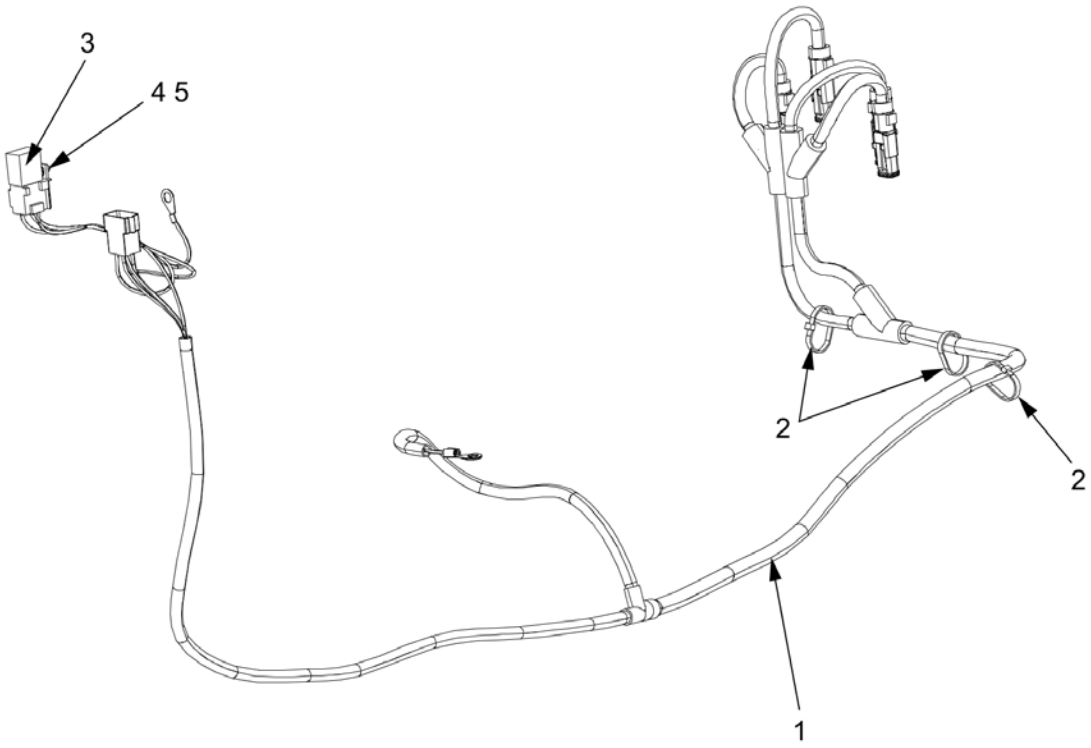

Item	Part No.	Name	Qty	L	SN INFO
1	4812125880	Cable harness	1		
2	4700313041	Cable ties, L=200 mm	3		
3	4700381390	Relay	1		
4	4700904281	Washer, 5,3x10x1 300HV	1		
5	4700500003	Hex. screw	1		

Electrical equipment Cable harness - Seat heater

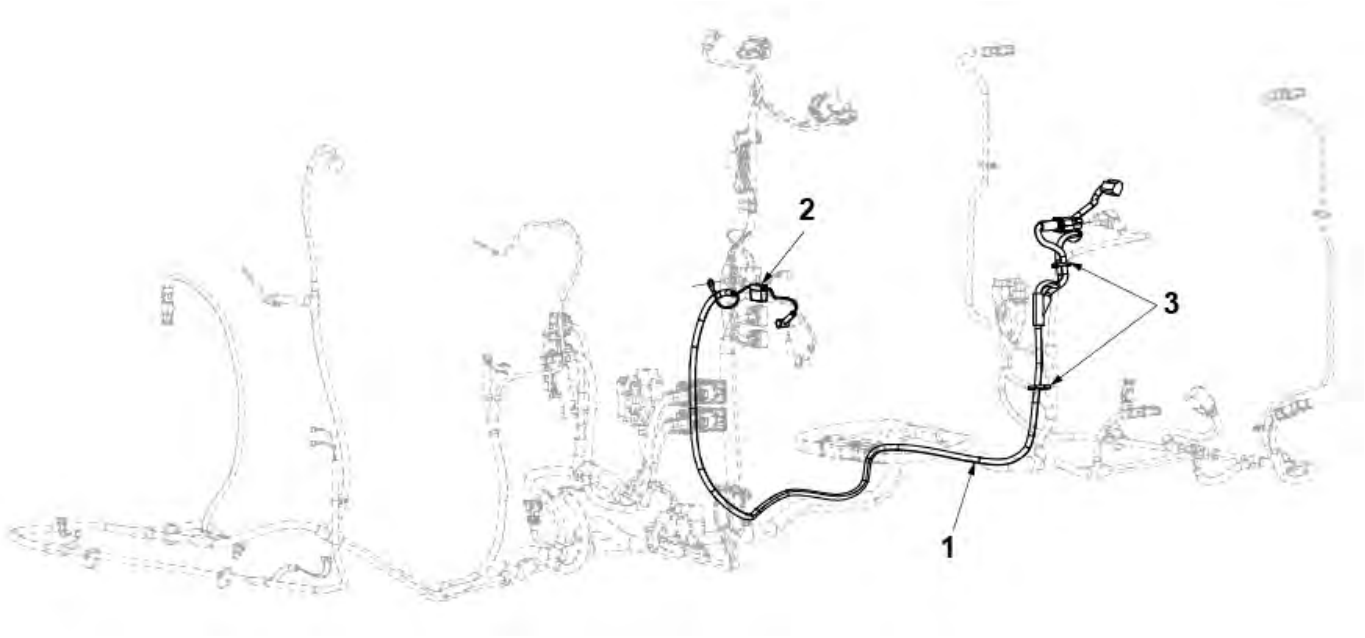

Item	Part No.	Name	Qty	L	SN INFO
1	4812127324	Cable harness	1		
2	4700901225	Fuse 5A Tan	1		
3	4700313041	Cable ties, L=200 mm	2		

Electrical equipment Cable harness - Dual vibration

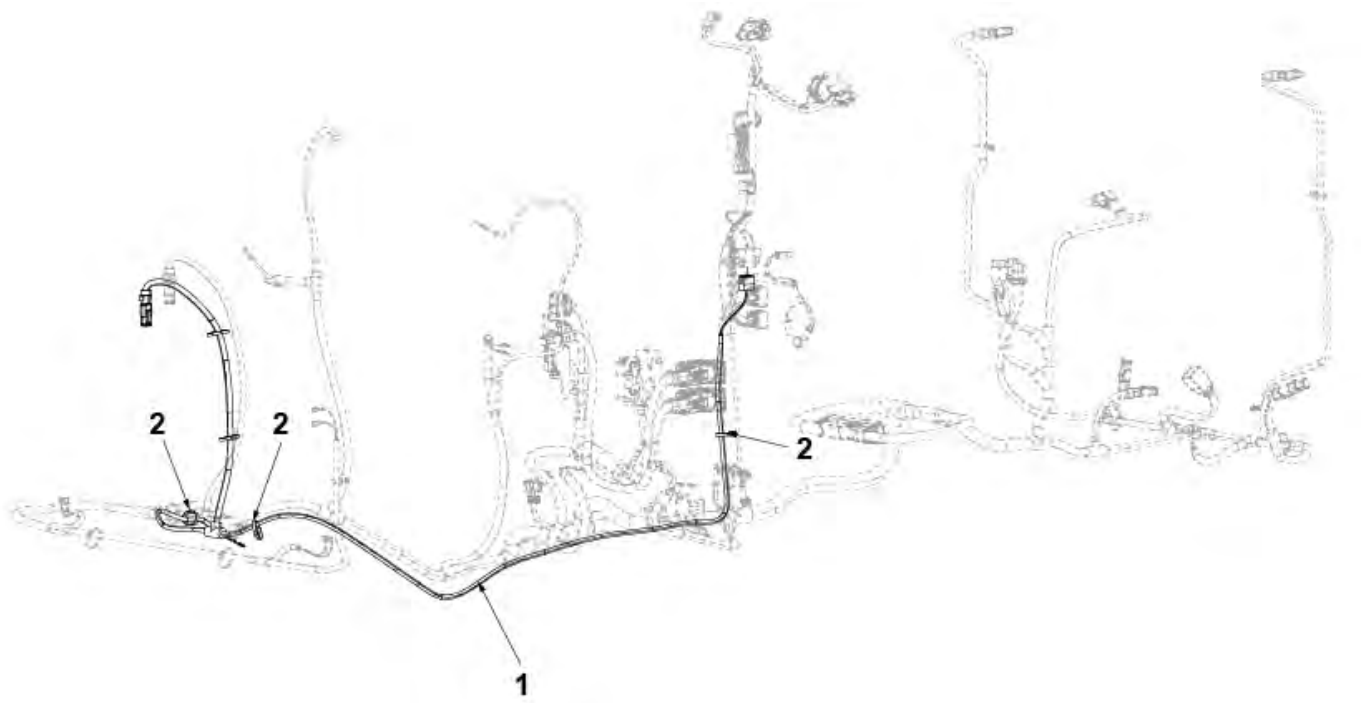

Item	Part No.	Name	Qty	L	SN INFO
1	4812125883	Cable harness	1		
2	4700313041	Cable ties, L=200 mm	5		

Electrical equipment Cable harness - Rotating beacon

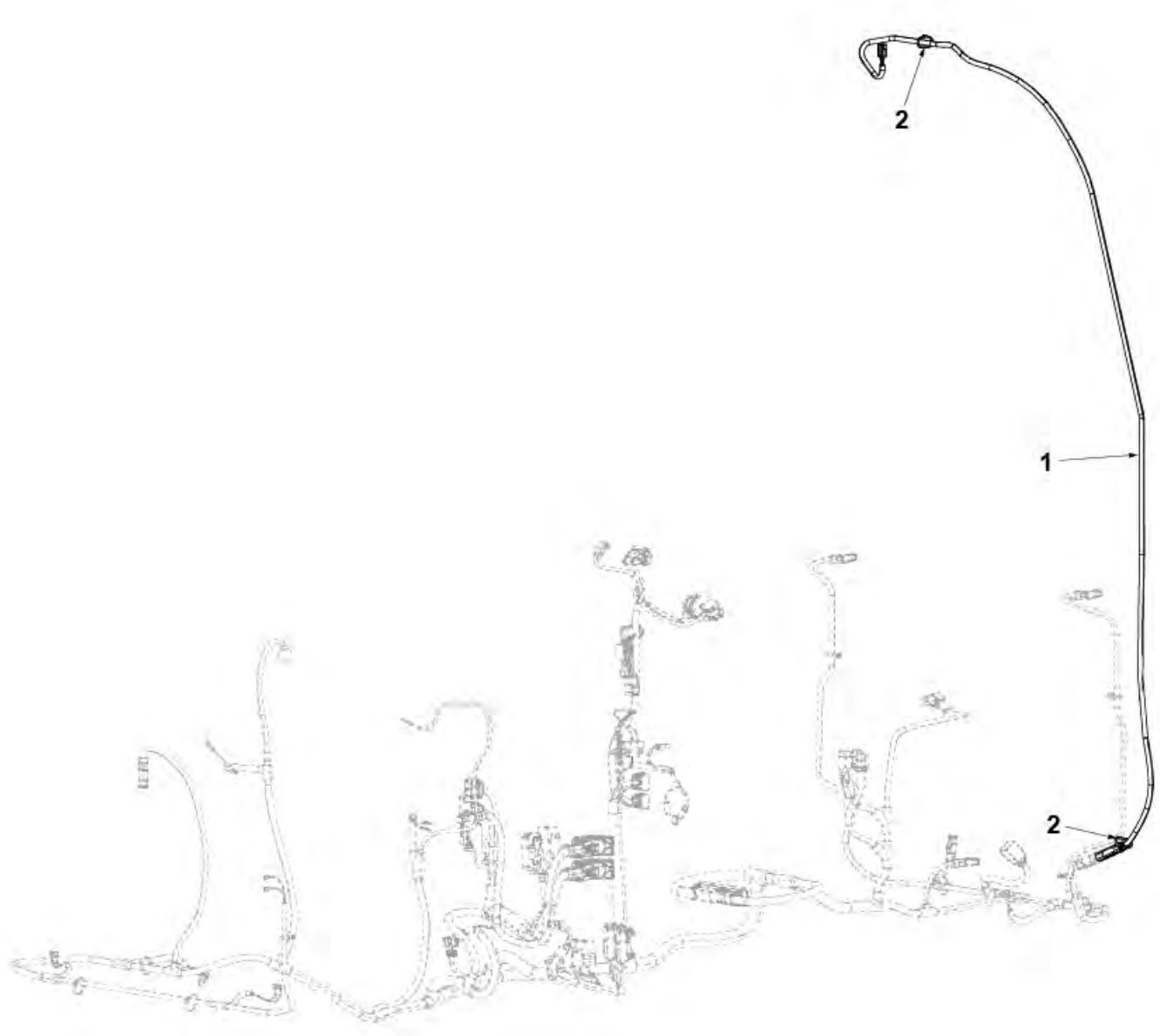

Item	Part No.	Name	Qty	L	SN INFO
1	4812125861	Cable harness	1		
2	4700313041	Cable ties, L=200 mm	2		

Electrical equipment Cable harness - Working lights incl. Rotating beacon



Item	Part No.	Name	Qty	L	SN INFO
1	4812125777	Cable harness	1		
2	4700313041	Cable ties, L=200 mm	1		
3	4700901227	Fuse 10A Red	1		
4	4700381390	Relay	1		

Electrical equipment Cable harness - Working lights, tank x2

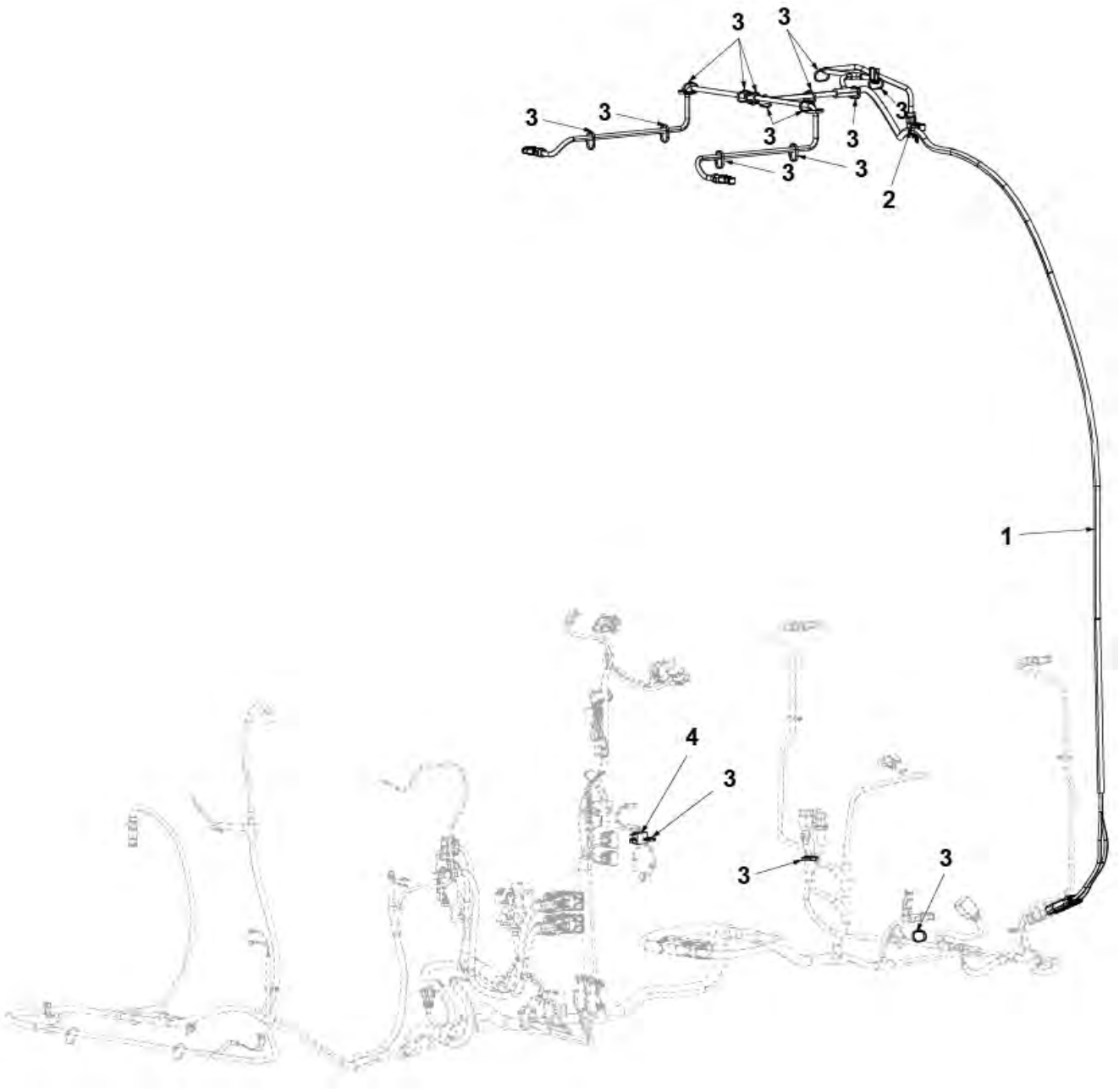

Item	Part No.	Name	Qty	L	SN INFO
1	4812125949	Cable harness	1		
2	4812115911	Cable tie with holder	1		
3	4700313041	Cable ties, L=200 mm	17		
4	4700901225	Fuse 5A Tan	1		
5	4700381390	Relay	1		

Electrical equipment Driving lights (option)

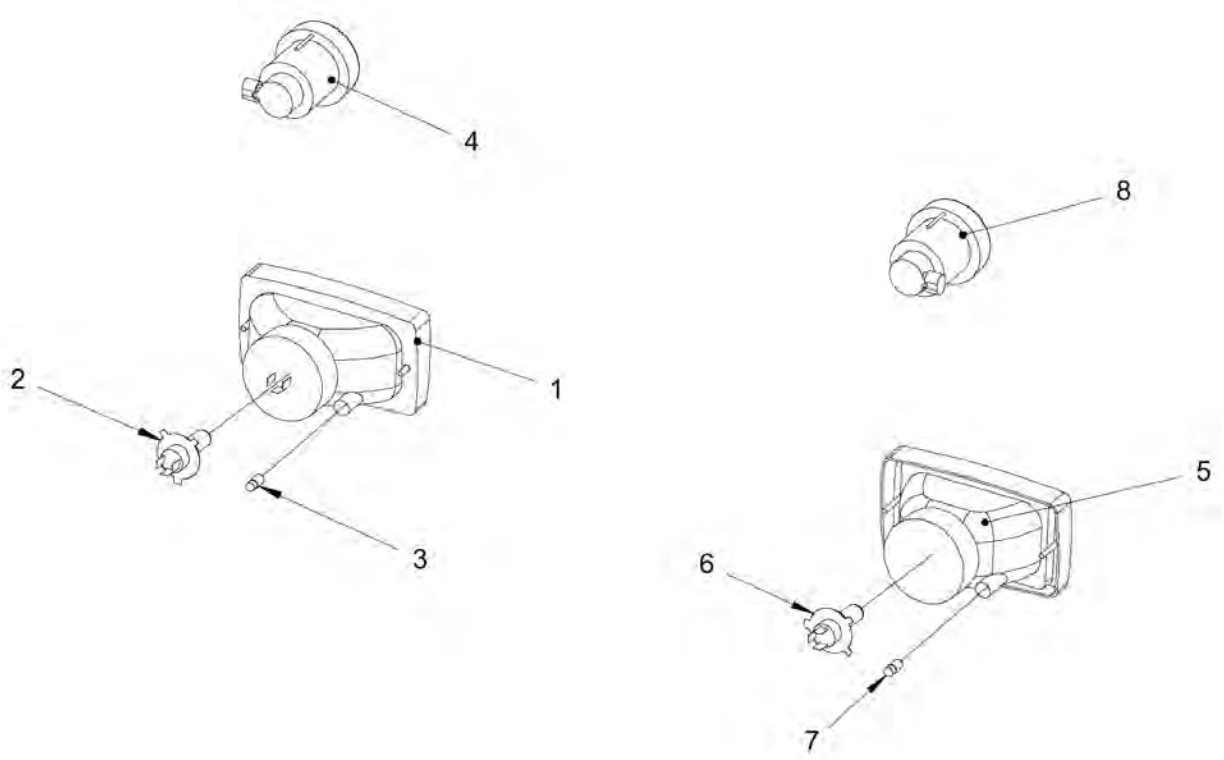

Item	Part No.	Name	Qty	L	SN INFO
1	4700792059	Headlight left hand asym. with parking light	2		
2	4700900790	Bulb 60/55w H4	2		
3	4700985012	Bulb	2		
4	4700791953	Direction indicator	2		
5	4700791951	Headlight right hand asym. with parking light	2		
6	4700900790	Bulb 60/55w H4	2		
7	4700985012	Bulb	2		
8	4700791953	Direction indicator	2		

Electrical equipment Working lights (option)

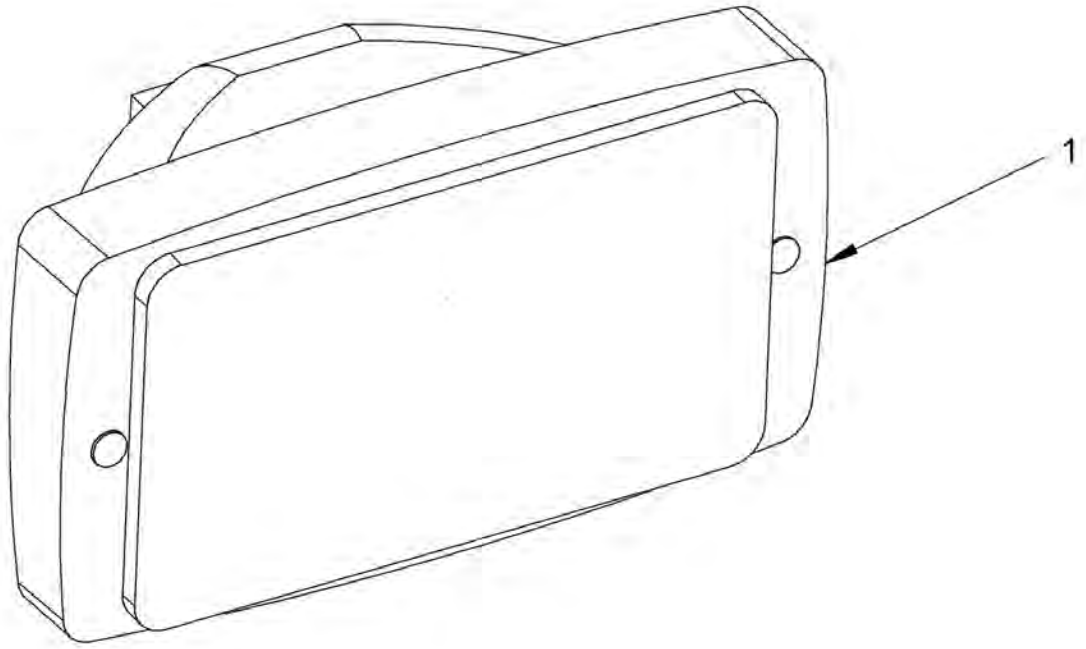

Item	Part No.	Name	Qty	L	SN INFO
1	4700902227	Work light	2		

Electrical equipment Registration plate light

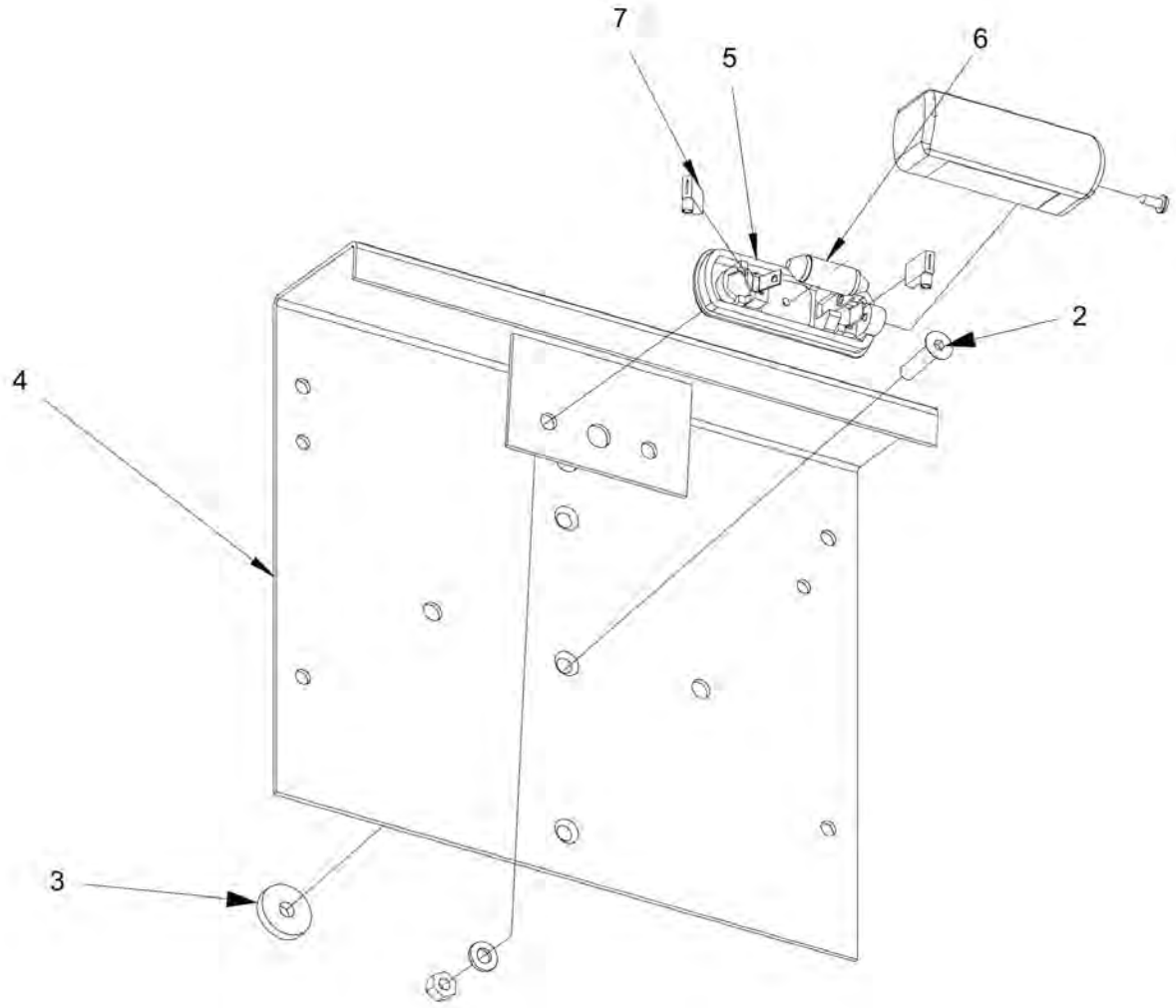

Item	Part No.	Name	Qty	L	SN INFO
2	4700928784	Screw	2		
3	4700904735	Steel plain washer	2		
4	4700355797	Licence plate holder	1		
5	4700929455	Licence plate light	1		
6	4700985013	Bulb 12V,5W	1		
7	4700792035	Push-on terminal	2		

Drivers platform Platform

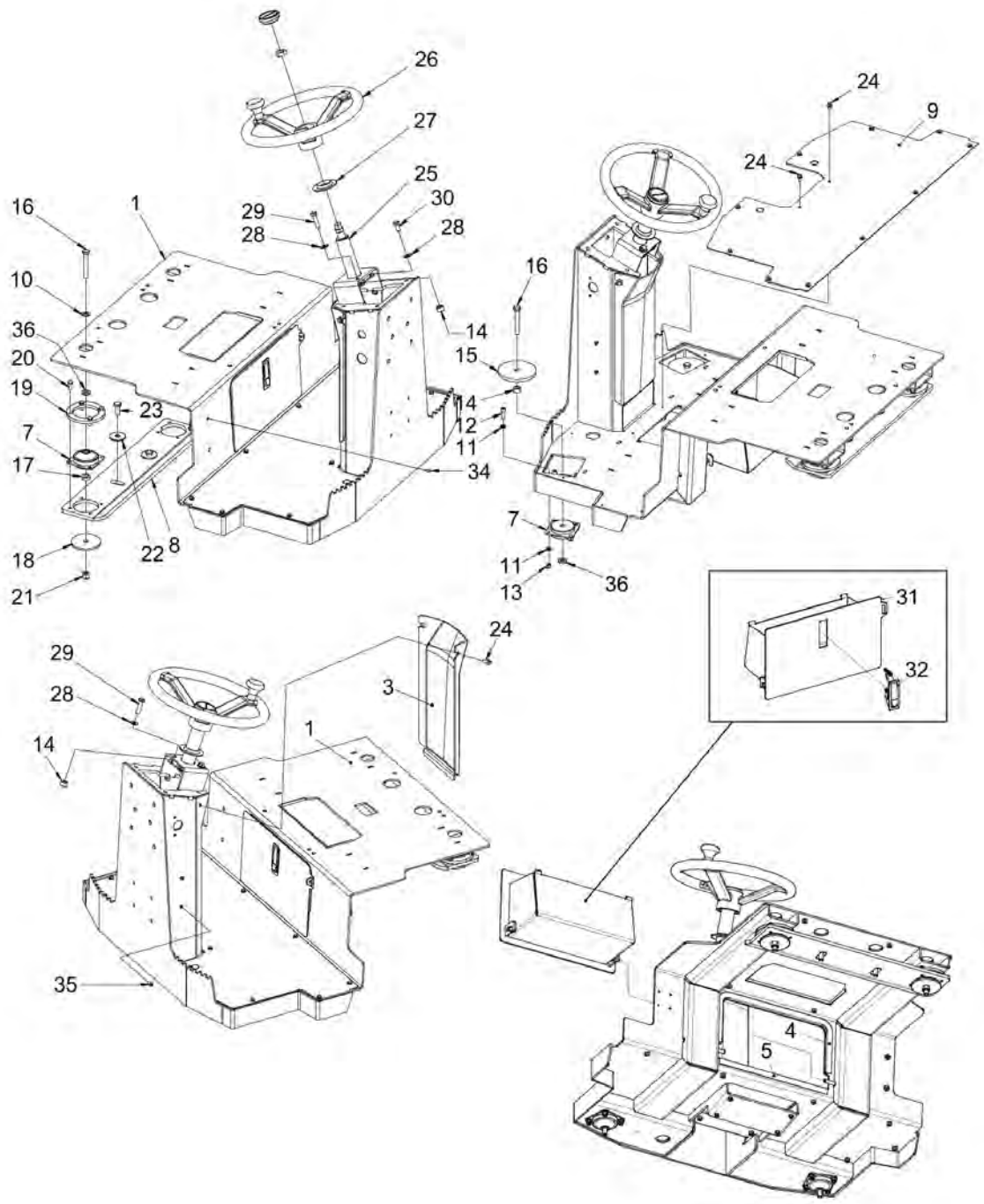

Item	Part No.	Name	Qty	L	SN INFO
1		Platform	1		
3	4812125902	Front cover	1		
4	4700902379	Edge trim	0,6 M		
5	4700902379	Edge trim	0,36 M		
7	4700902797	Shock absorber	4		
8	4812125852	Bracket	1		
9	4812124793	Floor plate	1		
10	4700904231	Washer, 13x24x2 mm 300 HV	2		
11	4700904229	Washer, 8.4x 6x1.5 mm 300HV	16		
12	4700508019	Cylinder screw	8		
13	4700586003	Lock nut M8	8		
14	4700355869	Spacer sleeve	4		
15	4812125887	Washer	2		
16	4700500196	Screw M12-1,75x80 8.8	4		
17	4700902892	Washer	2		
18	4700358232	Washer	2		
19	4812125886	Backup ring	2		
20	4700500053	Screw, M8x20 mm 8.8 A2K	8		
21	4700586019	Lock nut	2		
22	4700791165	Washer, 13 x 45 x 4 mm, 0.51 x 1.77 x 0.16 A2K	2		
23	4700500046	Hex. head screw M12x030H	2		
24	4700902989	Hexagon screw with flange M6x12	12		
25	4700902123	Steering column	1		
26	4700372964	Steering wheel	1		
27	4700928830	Rubber part	1		
28	4700904230	Plain washer 10.5x22x2 mm	4		
29	4700500240	Hex. screw	2		
30	4700500048	Screw, M10x20 mm 8.8 A3K	2		
31	4812125851	Box	1		
32	4812125915	Lock	1		
33	4700901832	Screw, M08x16, 8.8	2		
34	4700926215	Protective plug	2		
35	4700904206	Screw, M6x16 mm	2		
36	4700904703	Plain washer 13x24x4 mm	4		

Drivers platform Single lifting point

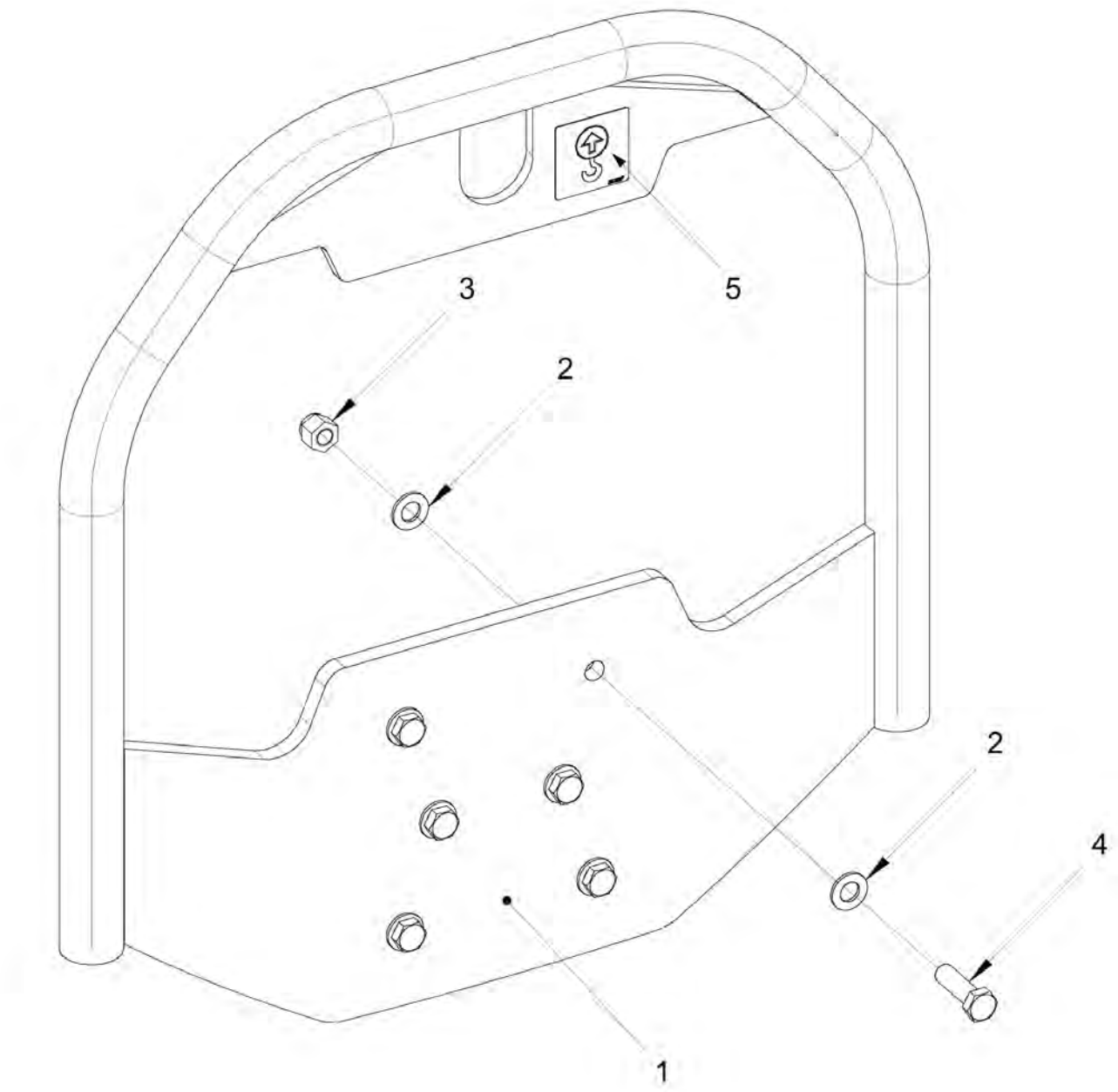

Item	Part No.	Name	Qty	L	SN INFO
1	4812125521	Hand rail	1		
2	4700904231	Washer, 13x24x2 mm 300 HV	12		
3	4812110968	Lock nut	6		
4	4700947689	Hex. head screw M12	6		
5	4700357587	Label lifting point	1		

Drivers platform Hand rail

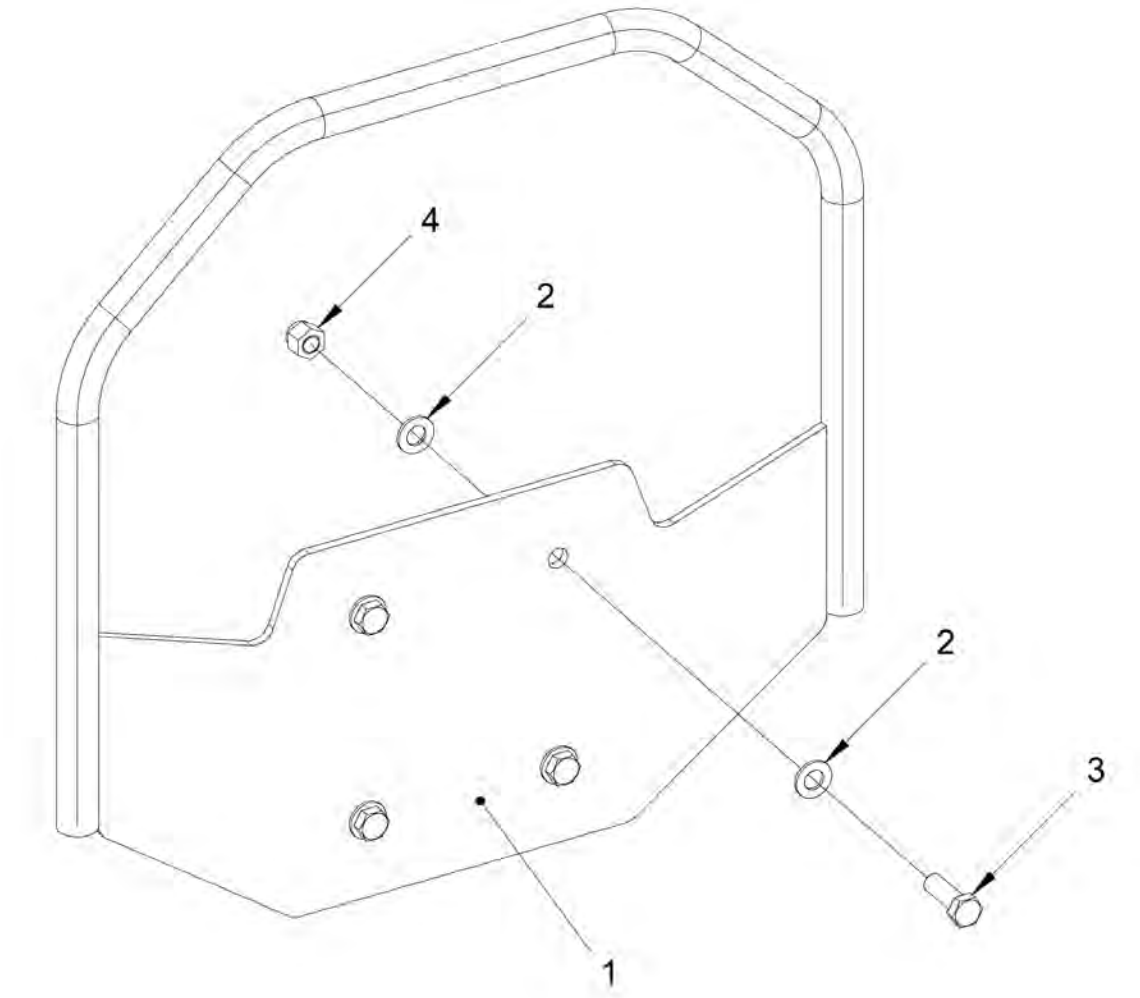

Item	Part No.	Name	Qty	L	SN INFO
1	4812125631	Hand rail	1		
2	4700904231	Washer, 13x24x2 mm 300 HV	8		
3	4700947689	Hex. head screw M12	4		
4	4812110968	Lock nut	4		

Drivers platform Control panel

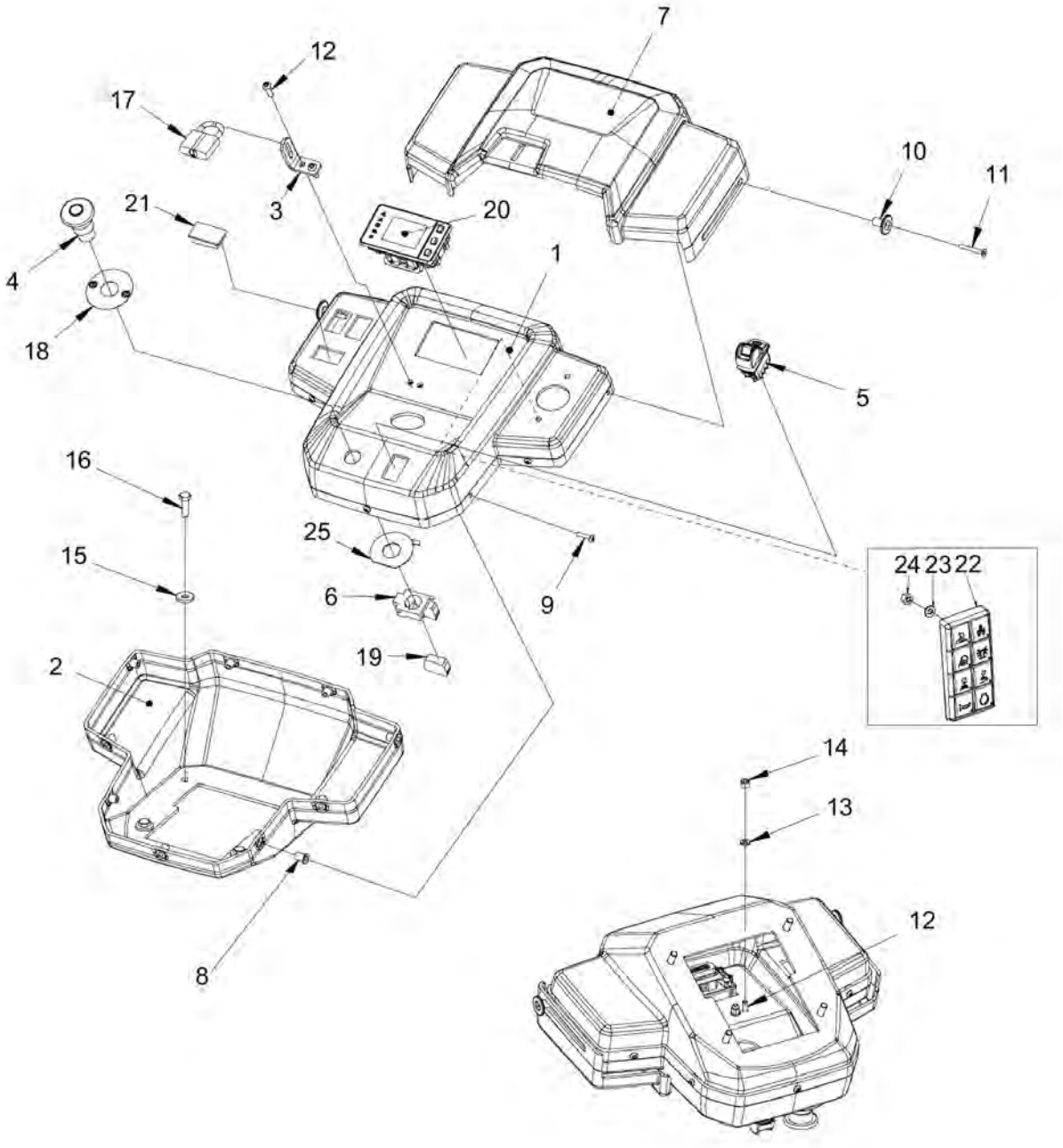

Item	Part No.	Name	Qty	L	SN INFO
1	4812125959	Cover	1		
2	4812125960	Cover	1		
3	4812126008	Bracket	1		
4	4700791739	Emergency stop	1		
5	4812118697	Switch, parking brake	1		
6	4700389840	Connector	1		
7	4812126007	Cover	1		
8	4700792536	Rubber nut	9		
9	4700792589	Screw	7		
10	4700357855	Bushing	2		
11	4700792742	Screw, M5 x 20	2		
12	4700791524	Screw, M6 x 20 mm A2-70	2		
13	4700904228	Washer 6,4x12x1,5	2		
14	4700586002	Lock nut M6 -8	2		
15	4700904640	Washer, 8.4x22x3 mm 300HV	4		
16	4700500021	Screw, M8x25 mm 8.8 A2K	4		
17	4700358881	Pad lock	1		
18	4811000128	Contrast plate, yellow	1		
19	4700791723	Connector	1		
20	4812126175	Display	1		
21	4700791588	Panel plug	3		
22	4812126908	Keypad	1		
23	4700904228	Washer 6,4x12x1,5	2		
24	4700570004	Hexagon nut M6	2		
25	4812128078	Washer	1		

Drivers platform Water tank

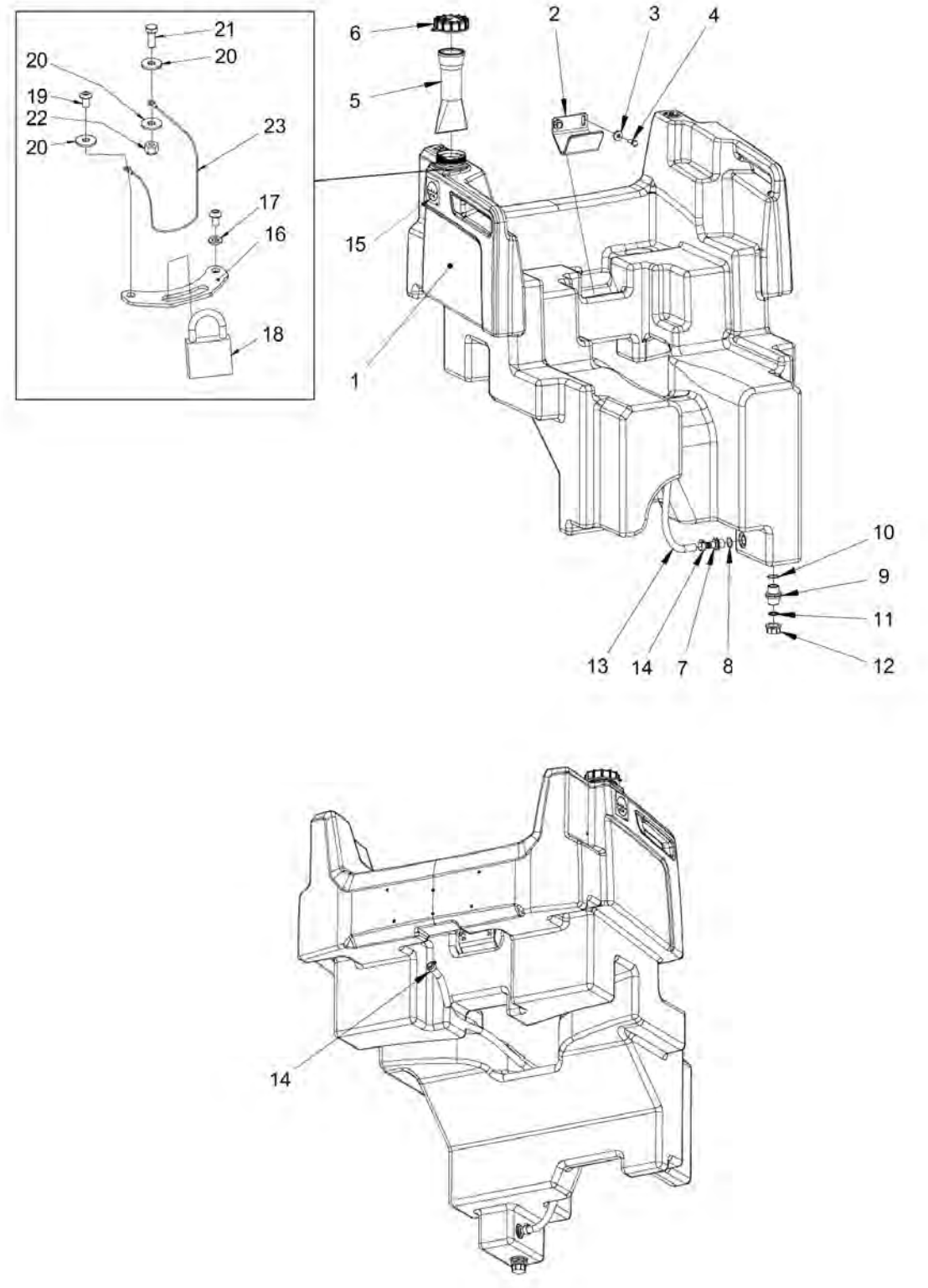

Item	Part No.	Name	Qty	L	SN INFO
1	4812124060	Water tank	1		
2	4700387935	Bracket	1		
3	4700904567	Washer, 10.5x28x6 mm	2		
4	4700500029	Steel plain washer	2		
5	4812125924	Strainer	1		
6	4700388087	Tank cap	1		
7	4700396673	Hose connection	1		
8	4700160313	O-ring 70	1		
9	4812125982	Nipple	1		
10	4700160318	O-ring 70	1		
11	4812125984	Gasket	1		
12	4812125983	Cap	1		
13	4812112074	Plastic hose (x m)	1,25 M		
14	4700313003	Hose clamp	2		
15	4700991657	Decal "WATER"	1		
16	4812125972	Bracket	1		
17	4700904228	Washer 6,4x12x1,5	1		
18	4700358881	Pad lock	1		
19	4700902224	Screw, M6x10 mm A2-70	2		
20	4700928381	Washer, 6.4x18x1.6 mm	3		
21	4700500013	Screw, M6x16 mm 8.8 A2K	1		
22	4700586002	Lock nut M6 -8	1		
23	4700377253	Wire	1		

Drivers platform Canopy

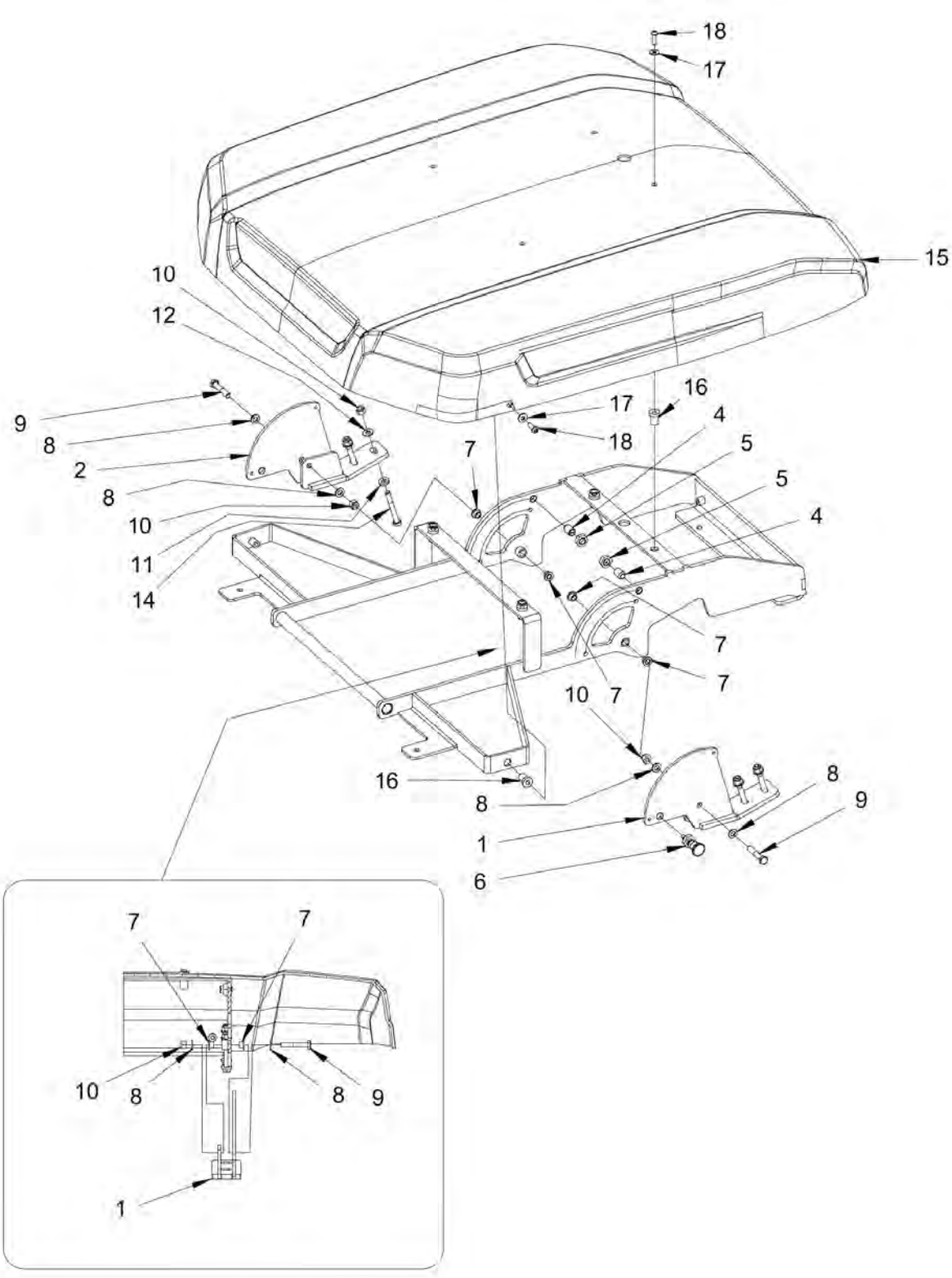

Item	Part No.	Name	Qty	L	SN INFO
1	4812126467	Bracket	1		
2	4812126468	Bracket	1		
3	4812126281	Frame	1		
4	4700922325	Spring ball plunger	2		
5	4700573004	Nut	2		
6	4812126529	Locking pin	1		
7	4700792380	Plastic bushing	4		
8	4700904570	Steel plain washer	4		
9	4700500032	Screw M10 x 55	2		
10	4700586018	Lock nut M10	2		
11	4700904557	Washer, 10.5x22x4 mm 300 HV	4		
12	4700904230	Plain washer 10.5x22x2 mm	4		
14	4700500192	Hexagon head screw M10x80	4		
15	4812126283	Canopy	1		
16	4812113177	Nut	8		
17	4700791304	Steel plain washer	8		
18	4700904654	Screw, M8 x 25 mm A2-70	8		

Drivers platform ROPS

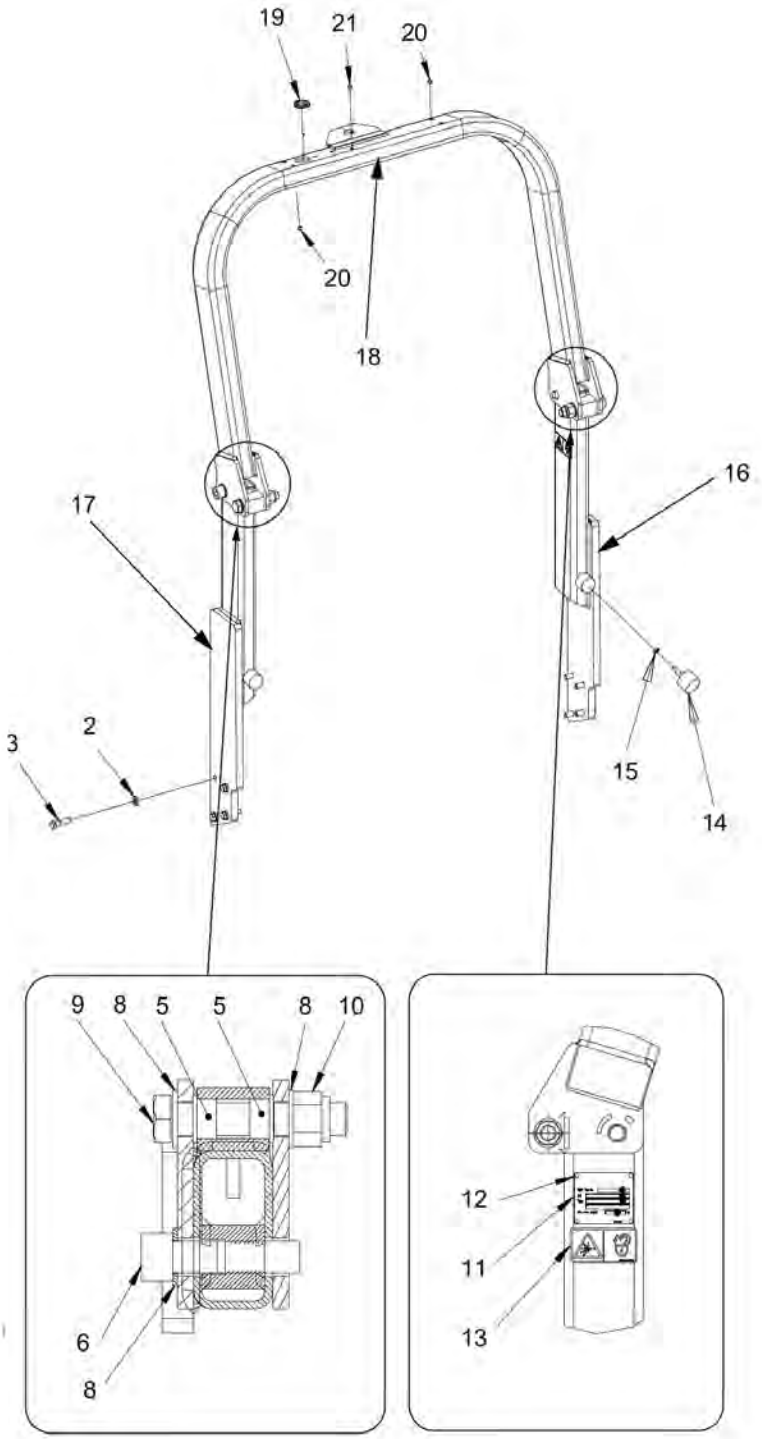

Item	Part No.	Name	Qty	L	SN INFO
2	4700904558	Washer, 17x30x6 mm 300 HV	8		
3	4700500070	Hex. screw	8		
5	4700904574	Bushing	4		
6	0211110375	Hexagon head screw	2		
8	4700904233	Steel plain washer 21x36x3	6		
9	4700901381	Screw	2		
10	0291112843	Lock nut	2		
11	-	Sign plate	1		
12	4700624018	Blind rivet	4		
13	4700908229	Safety decal	2		
14	4700288357	Shock absorber	2		
15	4700573008	Nut M8	2		
16	-	Lower part right	1		
17	-	Lower part left	1		
18	-	Upper part	1		
19	4812114465	Grommet with membrane	2		
20	4700792083	Plug	8		
21	4700902919	Plug	2		

Drivers platform Slideable seat

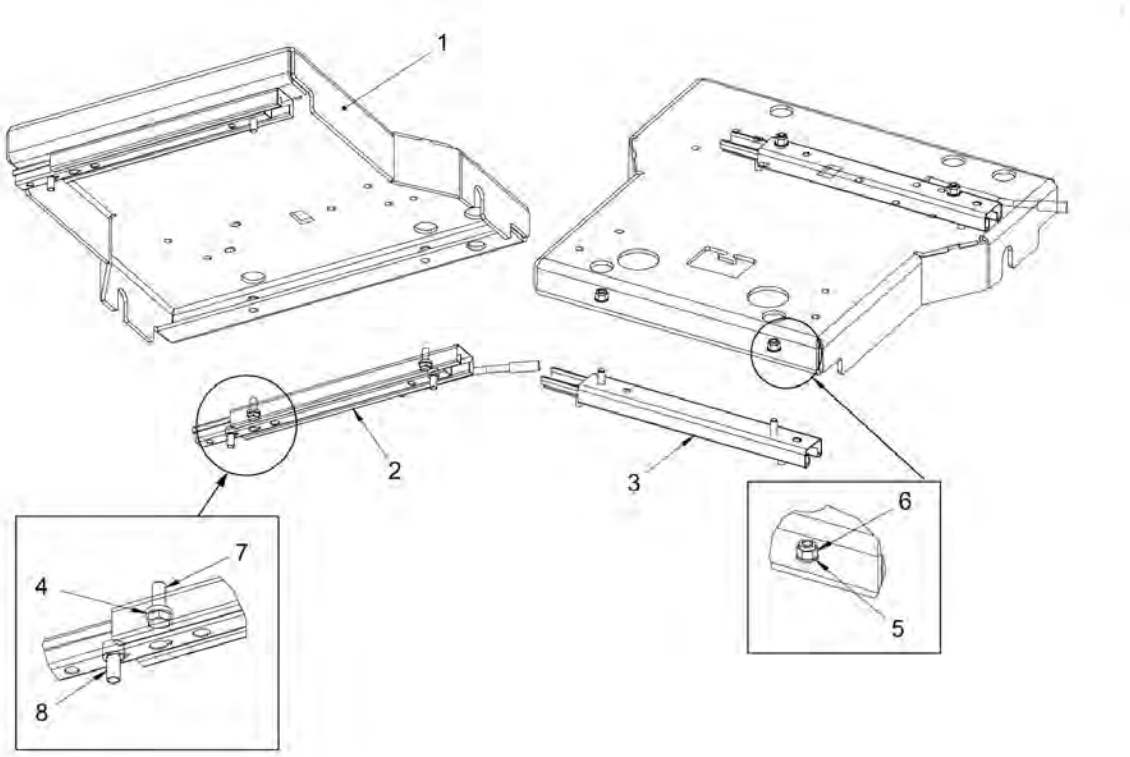

Item	Part No.	Name	Qty	L	SN INFO
1	4812126021	Seat frame	1		
2	4700909535	Sliding rail with handle	1		
3	4700909536	Sliding rail	1		
5	4700904556	Steel plain washer 8,4x16x3,0	4		
6	4700586003	Lock nut M8	4		
7	4700500053	Screw, M8x20 mm 8.8 A2K	4		
8	4700508005	Screw	4		

Drivers platform Fixed seat

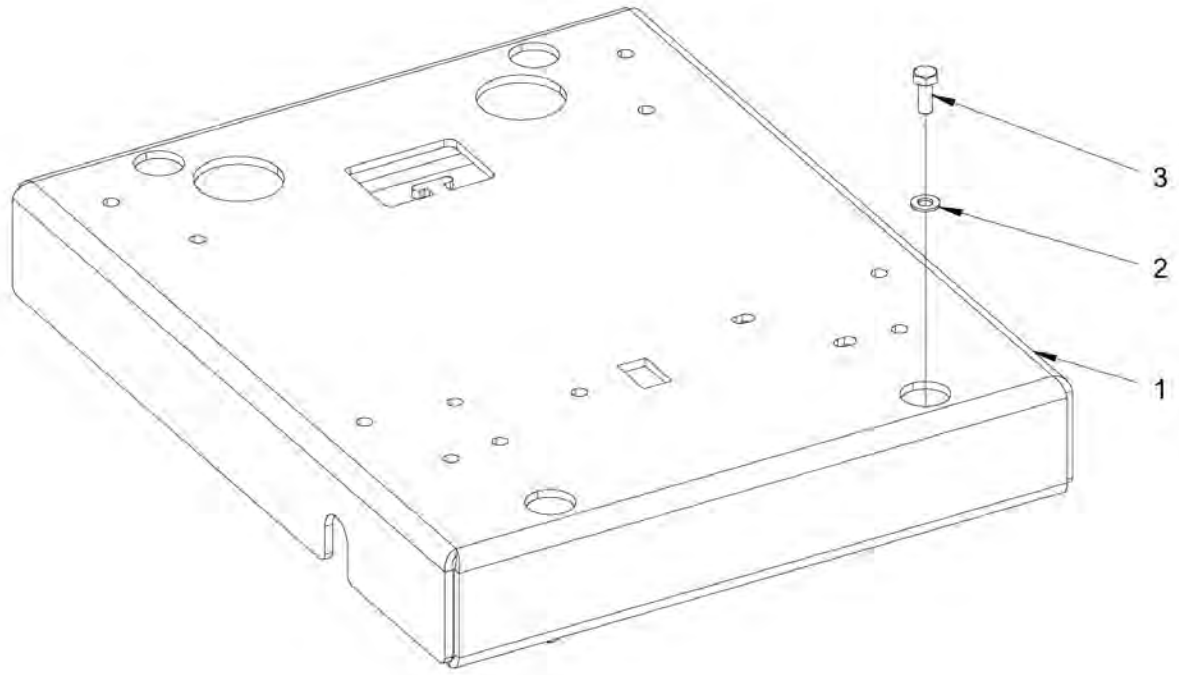

Item	Part No.	Name	Qty	L	SN INFO
1	4812126022	Seat frame	1		
2	4700904229	Washer, 8.4x 6x1.5 mm 300HV	4		
3	4700500053	Screw, M8x20 mm 8.8 A2K	4		

Drivers platform Rear view mirror

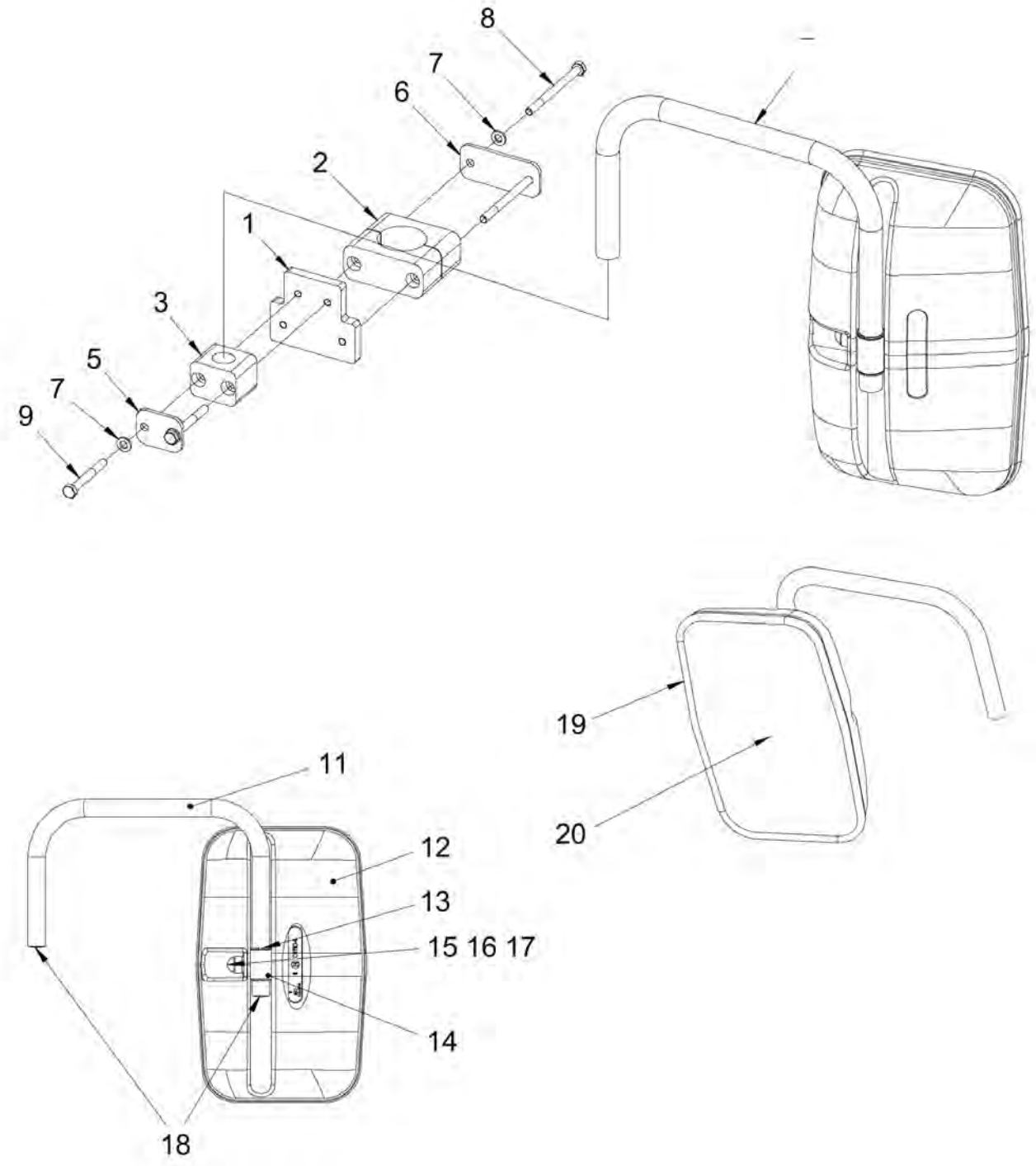

Item	Part No.	Name	Qty	L	SN INFO
1	4812126234	Bracket	1		
2	4700924790	Pipe clamp	1		
3	4700791453	Pipe clamp block	1		
5	4700791454	Cover plate	1		
6	4700924791	Cover plate	1		
7	4700904228	Washer 6,4x12x1,5	4		
8	4700500292	Screw M6x75	2		
9	4700500079	Screw M6-1x50 8,8	2		
10	4700393204	Rear mirror	1		
11	4700359661	Arm	1		
12	4700393205	Mirror	1		
13	-	Bushing	1		
14	-	Clamp	1		
15	4700500023	Screw, M8x40 mm 8.8 A2K	1		
16	4700904229	Washer, 8.4x 6x1.5 mm 300HV	1		
17	4700904203	Nut protection	1		
18	4700900519	Plug	2		
19	4700393206	Edge trim	1		
20	4700903722	Mirror glass	1		

Drivers platform Control module (Single 1-button)

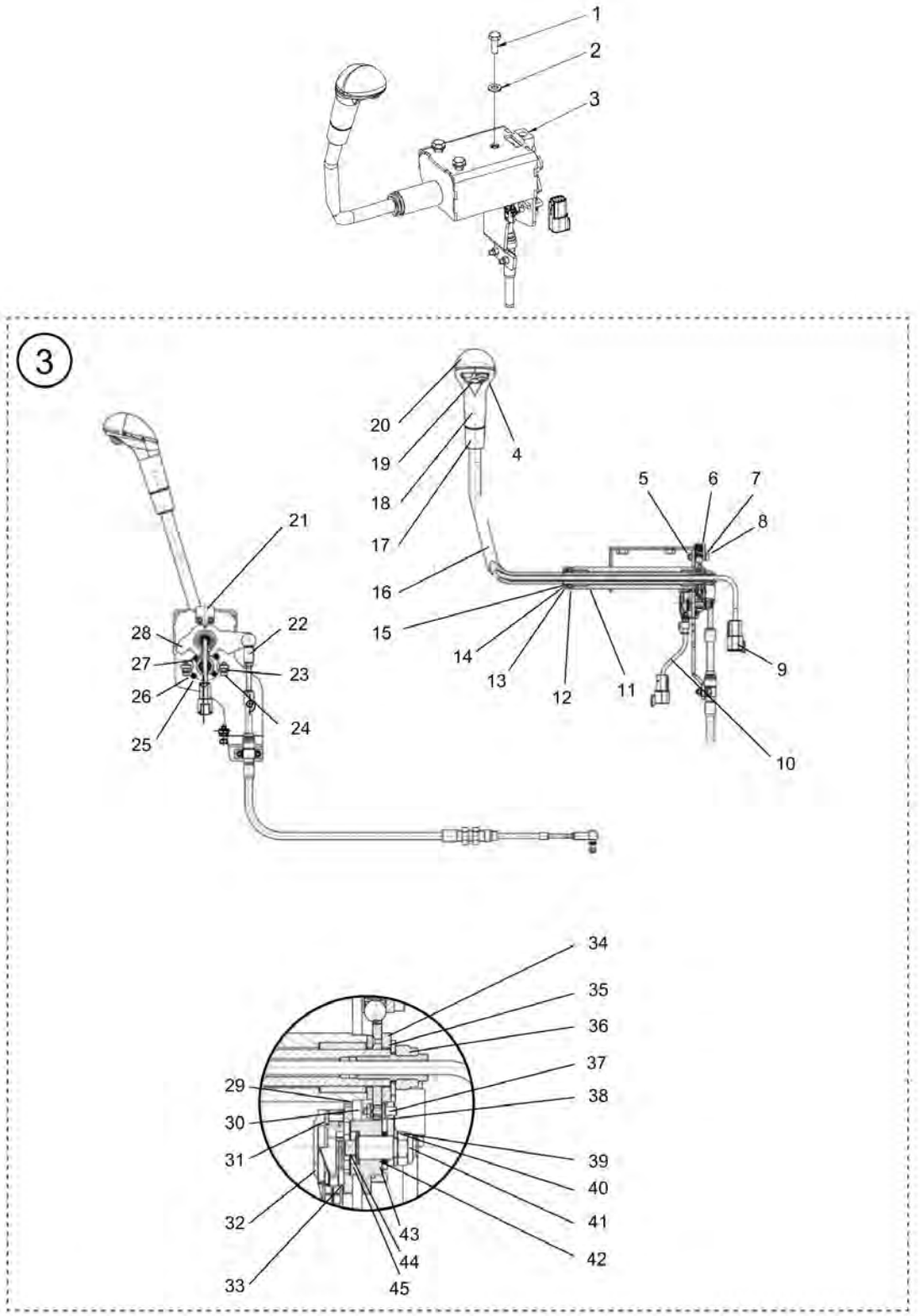

Item	Part No.	Name	Qty	L	SN INFO
1	4700500053	Screw, M8x20 mm 8.8 A2K	3		
2	4700904229	Washer, 8.4x 6x1.5 mm 300HV	3		
3	4812126118	F/R lever (1 button, single), cpl.	1		
4	-	Button	1		
5	-	Screw, M5x25	2		
6	-	Lock Nut	1		
7	-	Sphere	1		
8	-	Washer	2		
9	-	Harness (2-poles)	1		
10	-	Sensor harness	1		
11	-	Bushing	2		
12	-	Washer	2		
13	-	Ring	2		
14	-	Washer	2		
16	-	Control lever	1		
17	-	Handle safety part	1		
18	-	Handle body	1		
19	-	Button cap	2		
20	-	Handle top	1		
21	-	Holder	1		
22	-	Cable	1		
23	-	Nut	2		
24	-	Screw, M5x18	2		
25	-	Washer	2		
26	-	Lock Nut	4		
27	-	Screw, M3x14	2		
28	-	Bracket	1		
29	-	Washer	1		
30	-	Nut	1		
31	-	Screw, M3x20	2		
32	-	Sensor	1		
33	-	Sensor holder, internal	1		
34	-	Washer	2		
35	-	Washer	1		
36	-	Lock Nut	1		
37	-	Pin	1		
38	-	Sensor	1		
39	-	Washer	1		

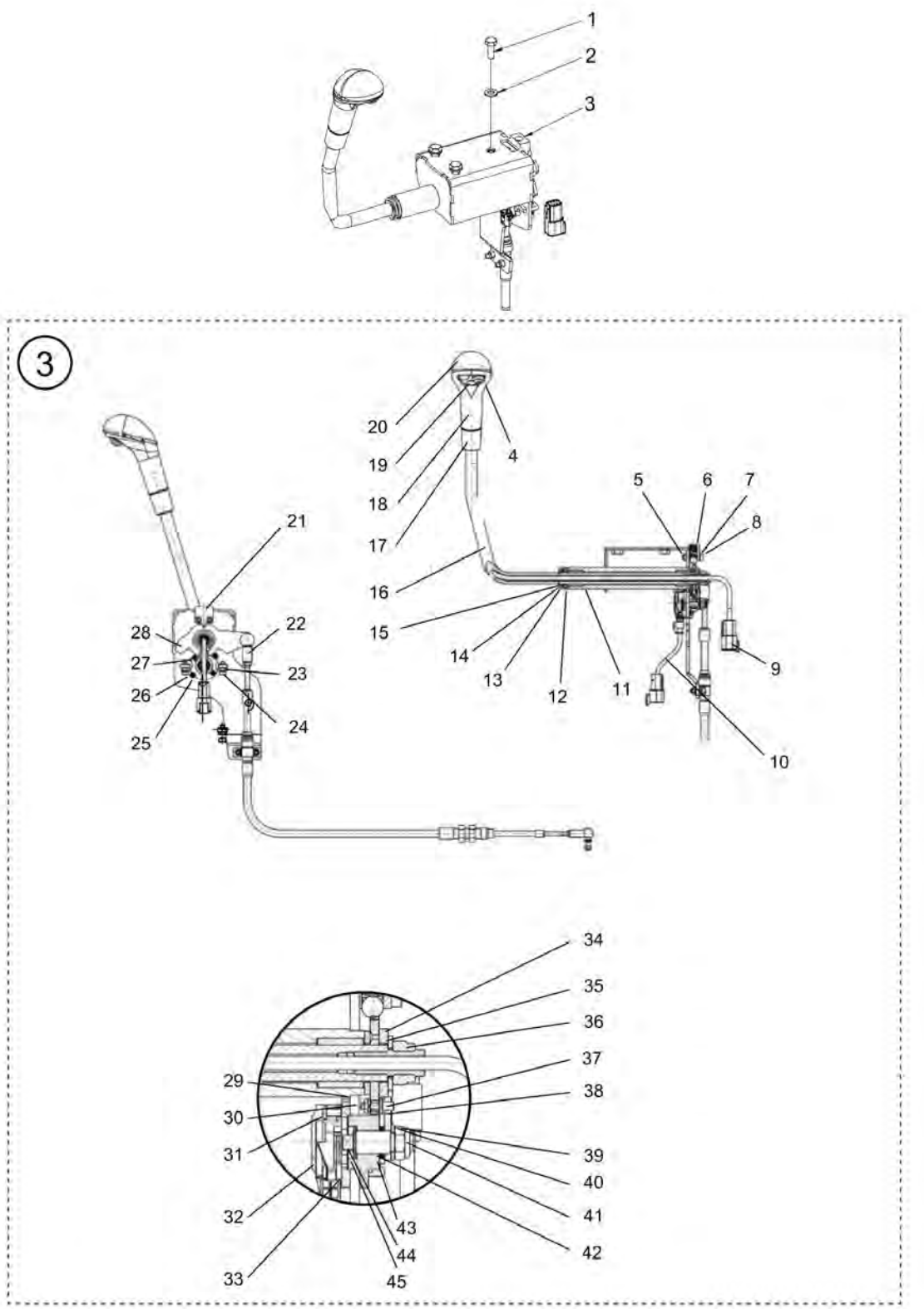
1
2
3
3
20
19
18
17
16
15
14
13
12
11
4
5
6
7
8
9
10
21
22
23
24
25
26
27
28
34
35
36
37
38
39
40
41
42
43
44
45
29
30
31
32
33

Item	Part No.	Name	Qty	L	SN INFO
40	-	Lock Nut	1		
41	-	Shaft	1		
42	-	Ring	2		
43	-	Washer	3		
45	-	Sensor holder, external	1		

Drivers platform Control module (Dual, 2 buttons) - Left side

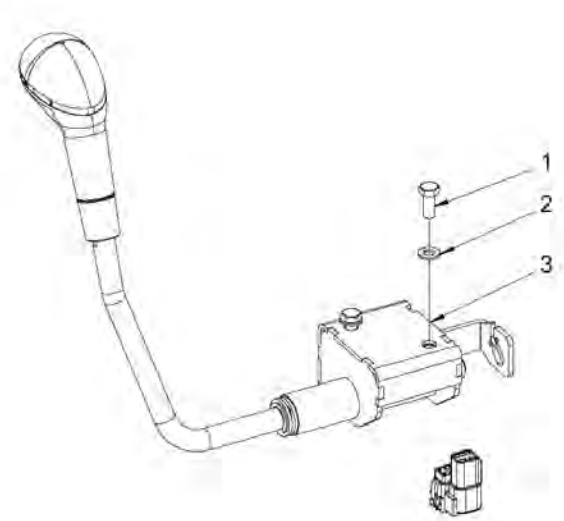

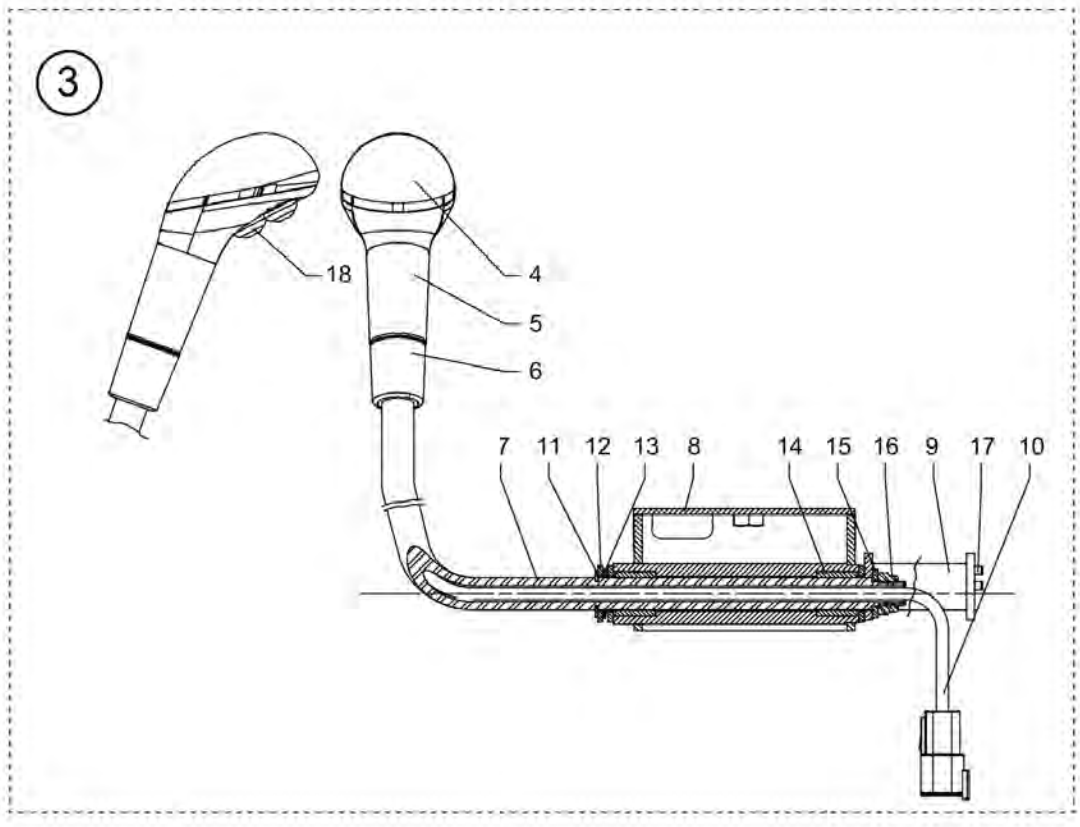

Item	Part No.	Name	Qty	L	SN INFO
1	4700500053	Screw, M8x20 mm 8.8 A2K	2		
2	4700904229	Washer, 8.4x 6x1.5 mm 300HV	2		
3	4812126121	F/R lever (2 buttons, dual), cpl.	1		
4	-	Handle cap	1		
5	-	Handle body	1		
7	-	Shaft	1		
9	-	Fork	2		
10	-	Wire harness	2		
12	-	Gasket	2		
13	-	Sealing	2		
14	-	Bushing	2		
15	-	Gasket	2		
16	-	Lock nut	1		
17	-	Pin	2		
18	-	Button	2		

Drivers platform Control module (Single 2-buttons)

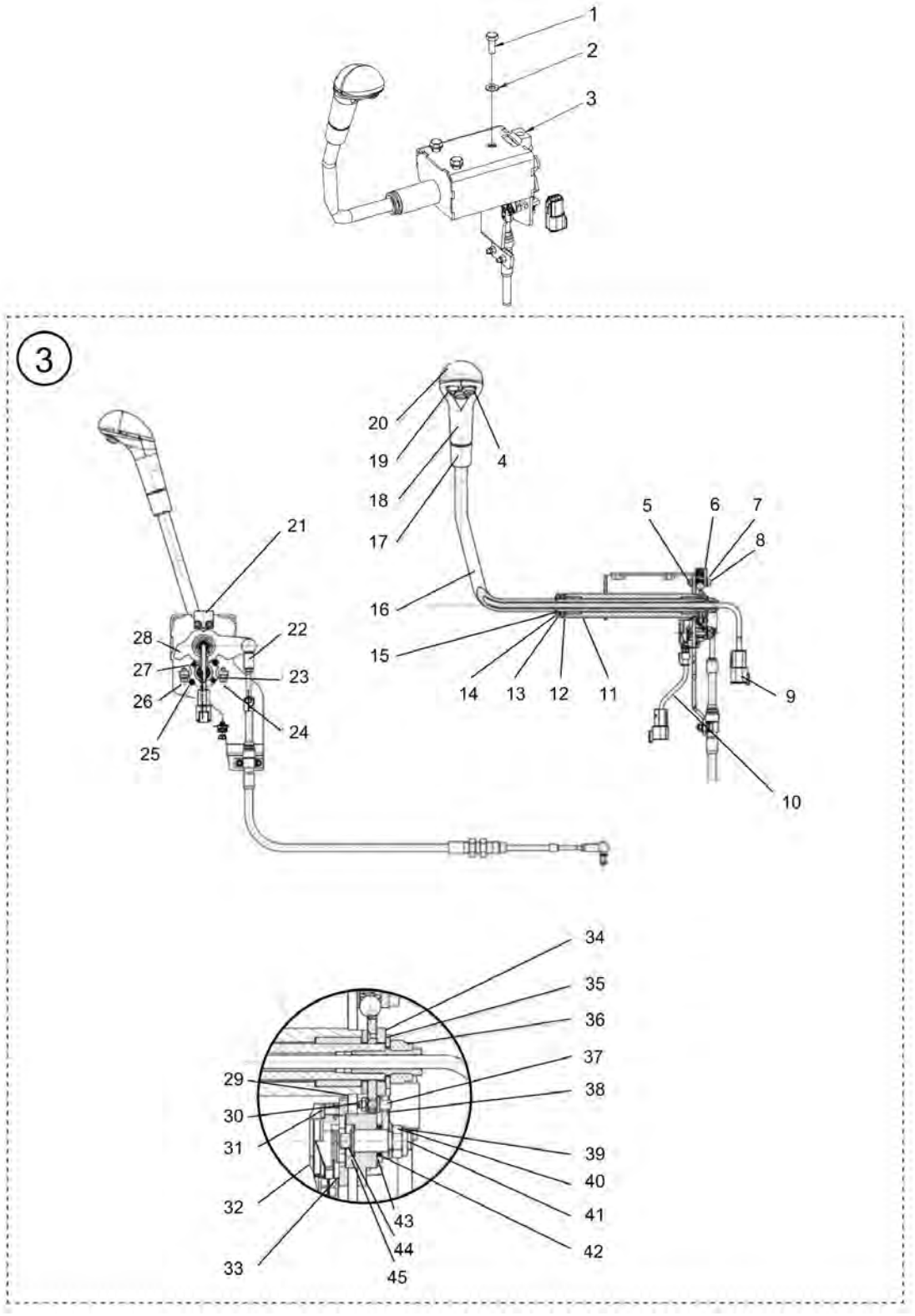

Item	Part No.	Name	Qty	L	SN INFO
1	4700500053	Screw, M8x20 mm 8.8 A2K	3		
2	4700904229	Washer, 8.4x 6x1.5 mm 300HV	3		
3	4812126119	F/R lever (2 buttons, single), cpl.	1		
4	-	Button	2		
5	-	Screw, M5x25	2		
6	-	Lock Nut	1		
7	-	Sphere	1		
8	-	Washer	2		
9	-	Harness (2-poles)	1		
10	-	Sensor harness	1		
11	-	Bushing	2		
12	-	Washer	2		
13	-	Ring	2		
14	-	Washer	2		
16	-	Control lever	1		
17	-	Handle safety part	1		
18	-	Handle body	1		
19	-	Button cap	1		
20	-	Handle top	1		
21	-	Holder	1		
22	-	Cable	1		
23	-	Nut	2		
24	-	Screw, M5x18	2		
25	-	Washer	2		
26	-	Lock Nut	4		
27	-	Screw, M3x14	2		
28	-	Screw, M3x20	2		
29	-	Washer	1		
30	-	Nut	1		
31	-	Screw, M3x20	2		
32	-	Sensor	1		
33	-	Sensor holder, internal	1		
34	-	Washer	2		
35	-	Washer	1		
36	-	Lock Nut	1		
37	-	Pin	1		
38	-	Sensor	1		
39	-	Washer	1		

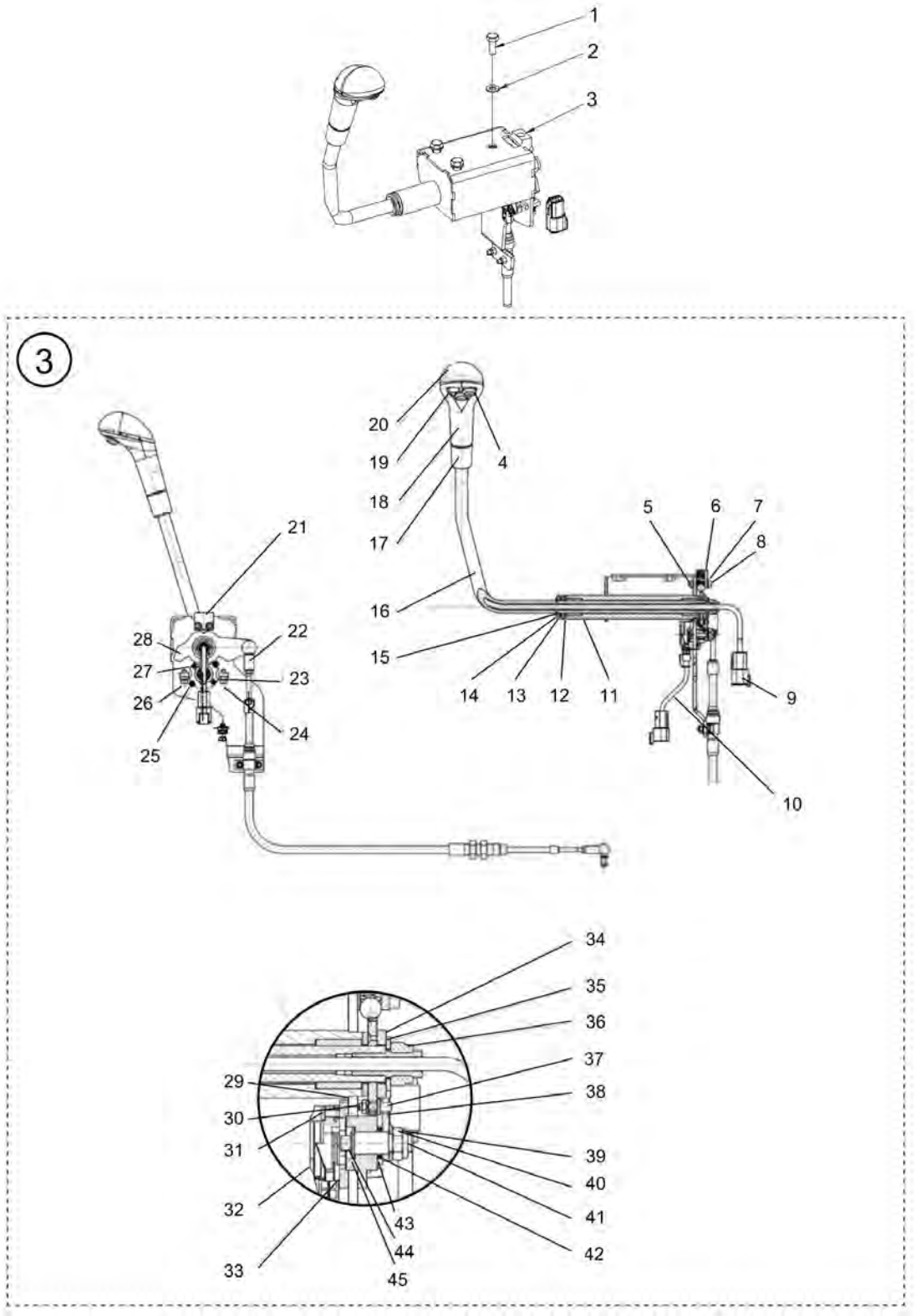
1
2
3
3
20
19
18
17
4
5
6
7
8
16
15
14
13
12
11
9
10
21
28
27
26
25
22
23
24
34
35
36
37
38
29
30
31
32
33
39
40
41
42
43
44
45

Item	Part No.	Name	Qty	L	SN INFO
40	-	Lock Nut	1		
41	-	Shaft	1		
42	-	Ring	2		
43	-	Washer	3		
45	-	Sensor holder, external	1		

Drivers platform Controle module (Single 3-buttons) - Right side

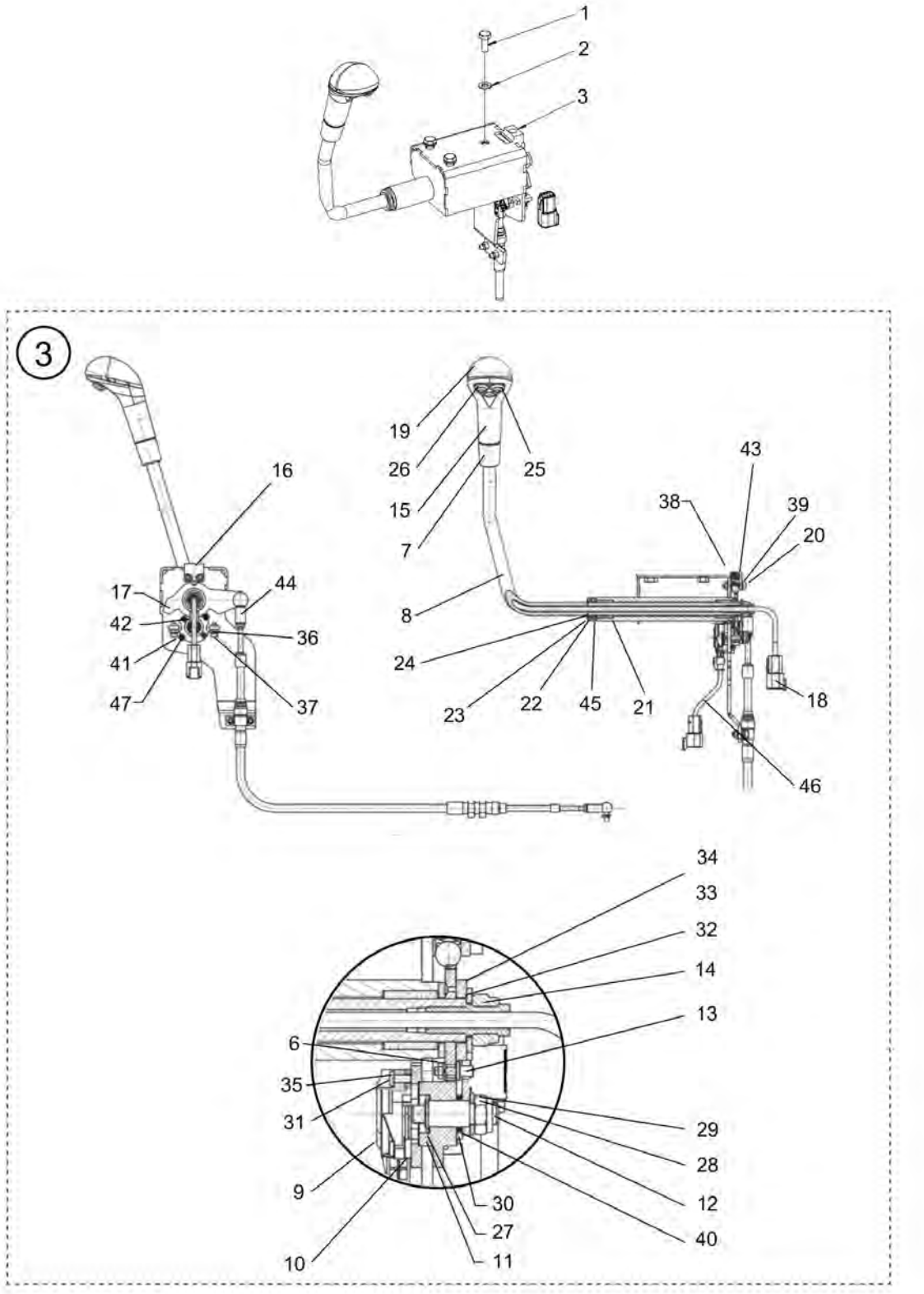

Item	Part No.	Name	Qty	L	SN INFO
1	4700500053	Screw, M8x20 mm 8.8 A2K	3		
2	4700904229	Washer, 8.4x 6x1.5 mm 300HV	3		
3	4812126120	F/R lever (3 buttons, single), cpl.	1		
6	-	Nut	1		
7	-	Handle safety part	1		
8	-	Control lever	1		
9	-	Sensor	1		
10	-	Sensor holder, internal	1		
11	-	Sensor holder, external	1		
12	-	Sensor shaft	1		
13	-	Sensor arm	1		
14	-	Pin	1		
15	-	Handle body	1		
16	-	Holder	1		
17	-	Cable bracket	1		
18	-	Wire harness	1		
19	-	Handle top	1		
20	-	Nut	1		
21	-	Bushing	2		
22	-	Washer	2		
23	-	Sealing	2		
25	-	Button	3		
26	-	Button cap	1		
28	-	Lock Nut	1		
29	-	Washer	1		
30	-	Washer	3		
31	-	Screw, M3x20	2		
32	-	Lock Nut	1		
33	-	Washer	1		
34	-	Washer	2		
35	-	Lock Nut	1		
36	-	Screw, M5x18	2		
37	-	Washer	1		
38	-	Lock Nut	2		
39	-	Ring	2		
40	-	Sealing	2		
41	-	Washer	4		
42	-	Lock Nut	2		

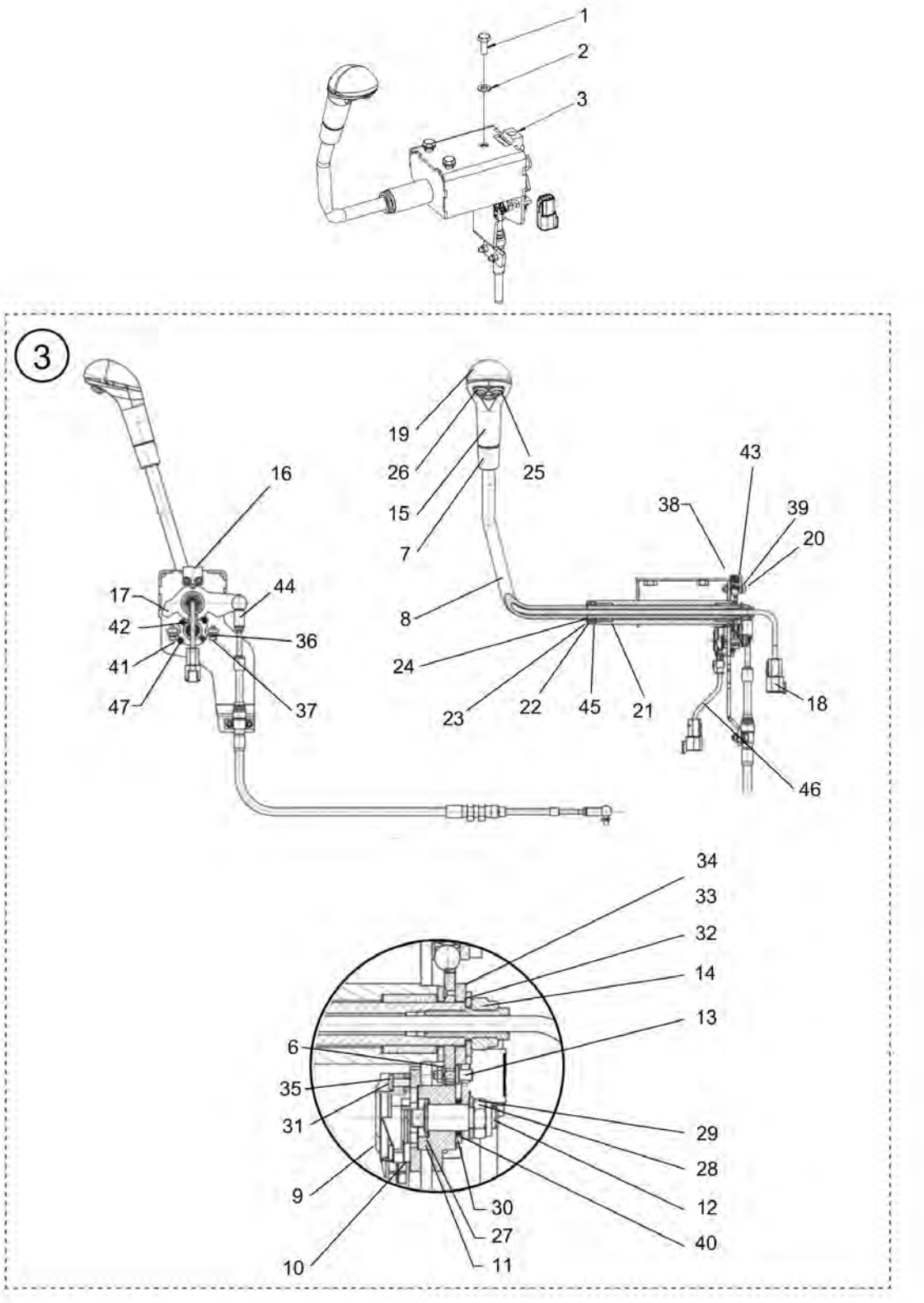
1
2
3
3
16
17
42
41
47
44
36
37
19
26
15
7
8
24
23
22
45
21
25
43
38
39
20
18
46
34
33
32
14
13
6
35
31
9
10
30
27
11
29
28
12
40

Item	Part No.	Name	Qty	L	SN INFO
43	4812156565	Sphere	1		
44	-	Cable	1		
45	-	Washer	2		
46	-	Sensor harness	1		
47	-	Sphere	2		

Drivers platform Driver's seat, without armrests

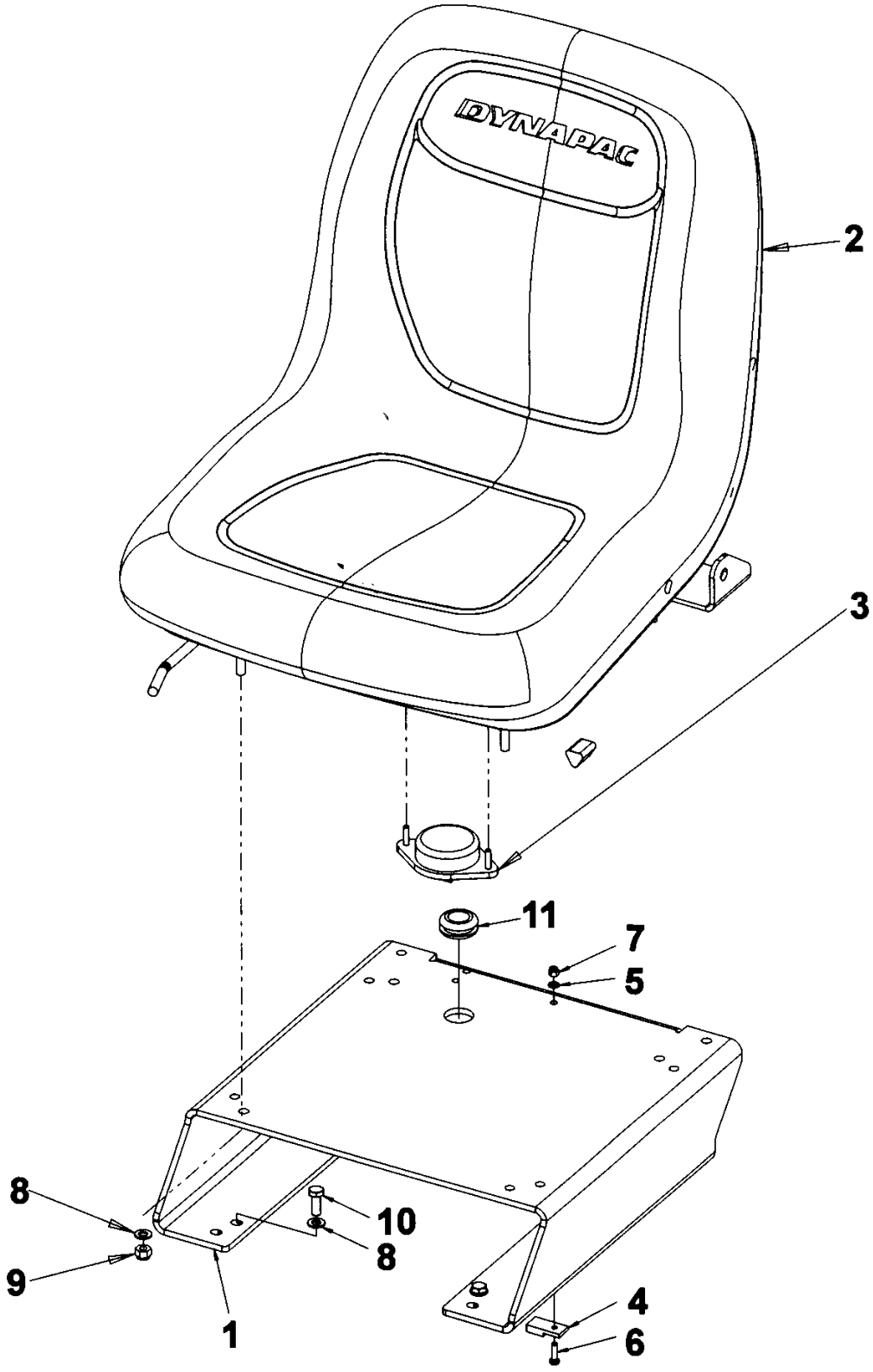

Item	Part No.	Name	Qty	L	SN INFO
1	4812112669	Seat frame	1		
2	4812114466	Drivers seat, cpl	1		
3	4700379636	Seat switch	1		
4	4700904218	Holder	1		
5	4700904281	Washer, 5,3x10x1 300HV	1		
6	4700533070	Screw	1		
7	4700586001	Lock nut	1		
8	4700904229	Washer, 8.4x 6x1.5 mm 300HV	8		
9	4700586003	Lock nut M8	4		
10	4700500020	Hex. screw	4		
11	4700903192	Grommet	1		

Drivers platform Comfort seat with heat module

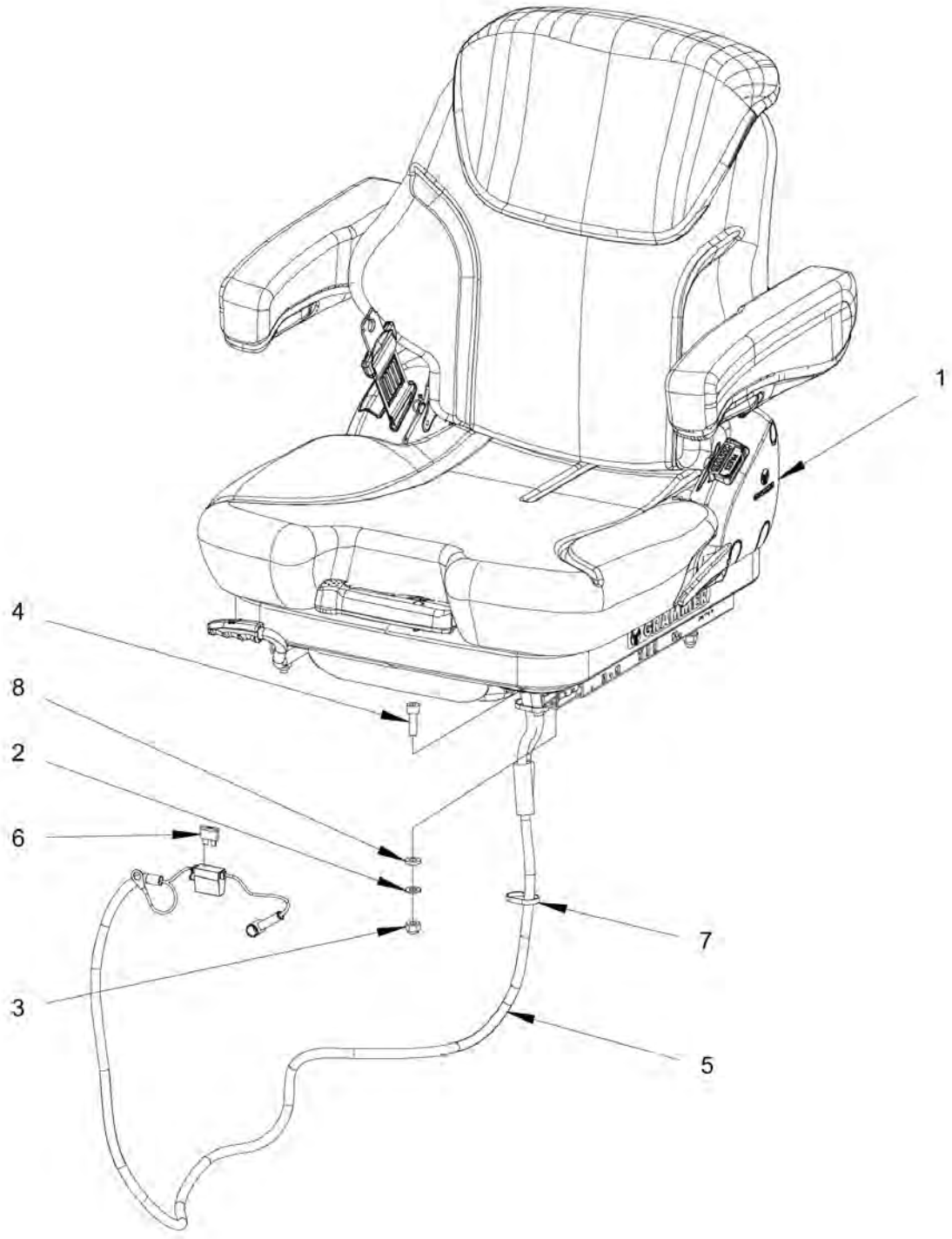

Item	Part No.	Name	Qty	L	SN INFO
1	4812127213	Comfort seat, with heat module	1		
2	4700904229	Washer, 8.4x 6x1.5 mm 300HV	4		
3	4700586003	Lock nut M8	4		
4	4700900777	Screw	4		
5	4812127324	Cable harness	1		
6	4700901227	Fuse 10A Red	1		
7	4700313041	Cable ties, L=200 mm	N		
8	4700904556	Steel plain washer 8,4x16x3,0	4		

Drivers platform Comfort seat without heat module

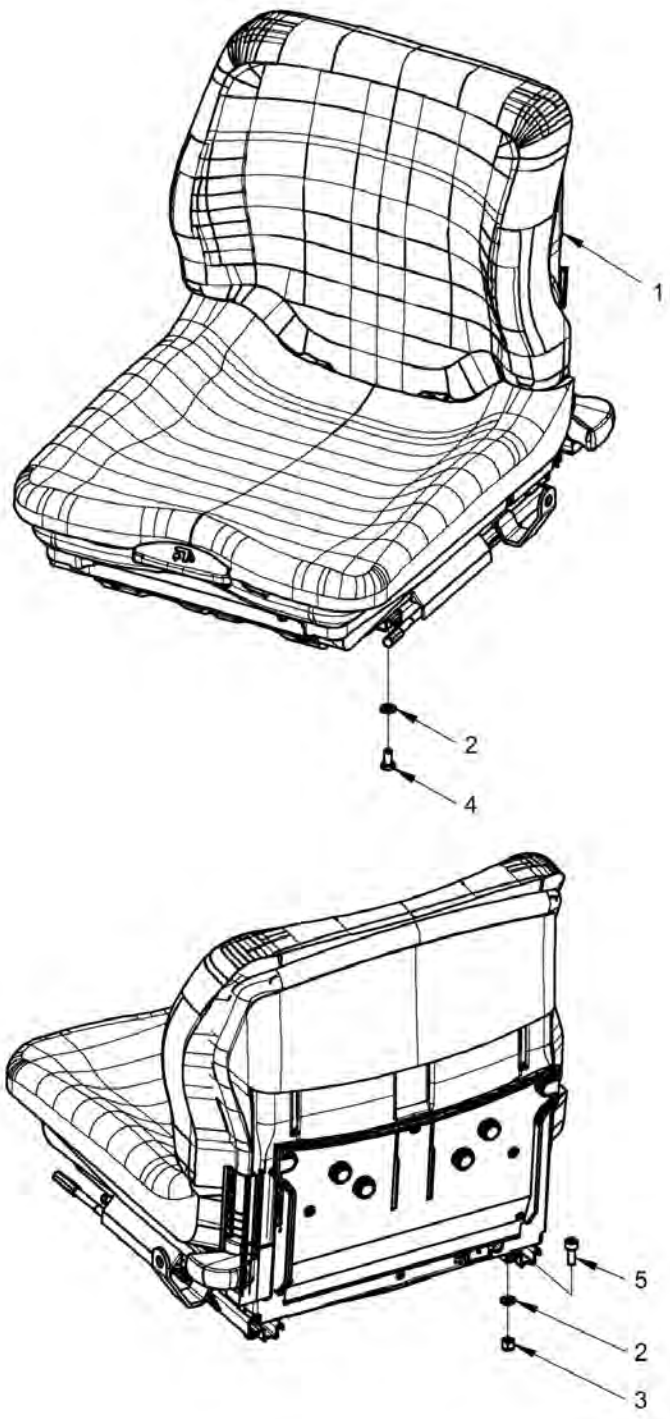

Item	Part No.	Name	Qty	L	SN INFO
1	4700372570	Seat, galon suspensioned	1		
2	4700904229	Washer, 8.4x 6x1.5 mm 300HV	4		
3	4700586003	Lock nut M8	2		
4	4700500019	Hexagon screw	2		
5	4700508009	Screw	2		

Drivers platform ECU module

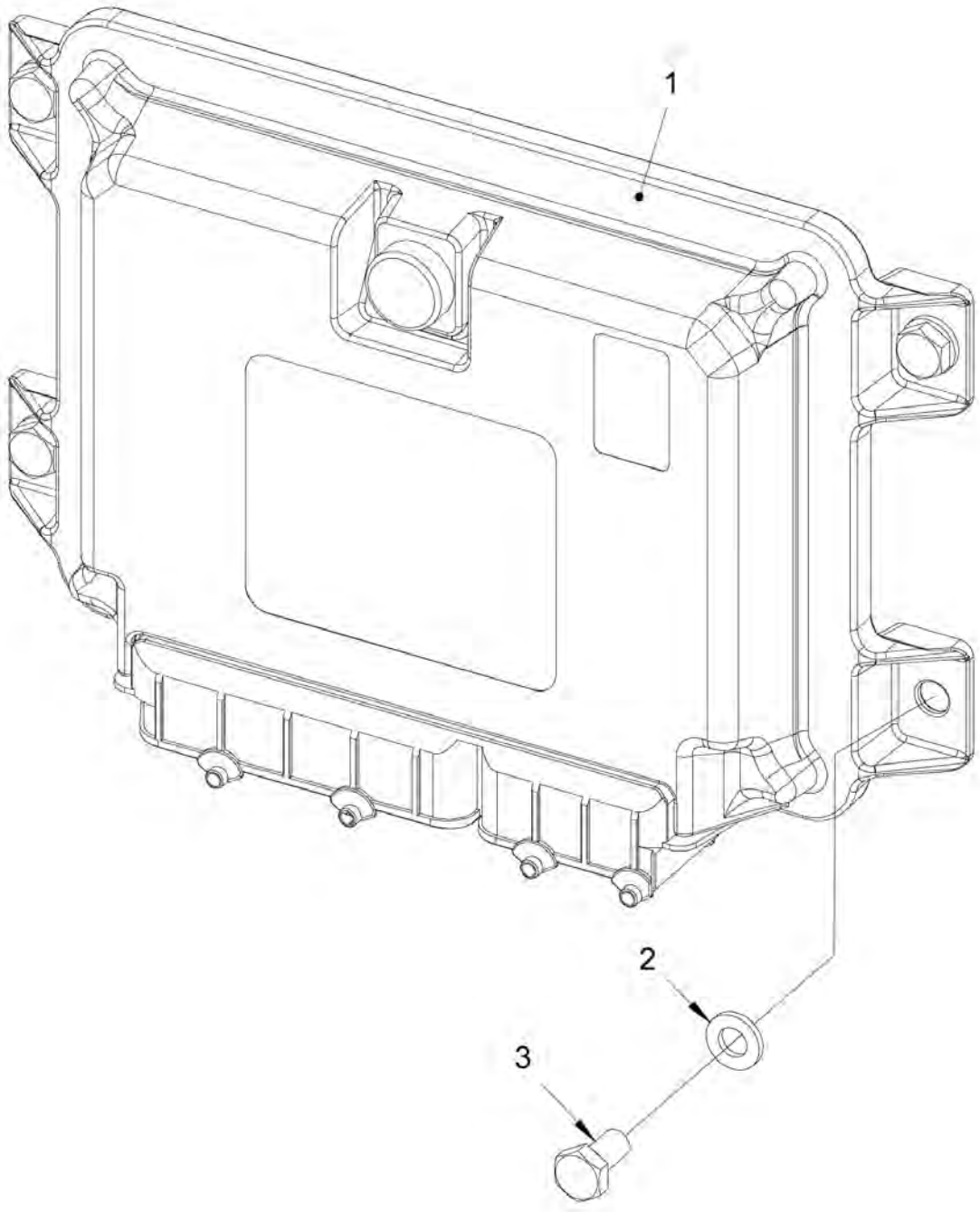

Item	Part No.	Name	Qty	L	SN INFO
1	4812125677	Control unit, ECU	1		
2	4700904228	Washer 6,4x12x1,5	4		
3	4700500012	Hex. screw	4		

Drivers platform Cup and can holder

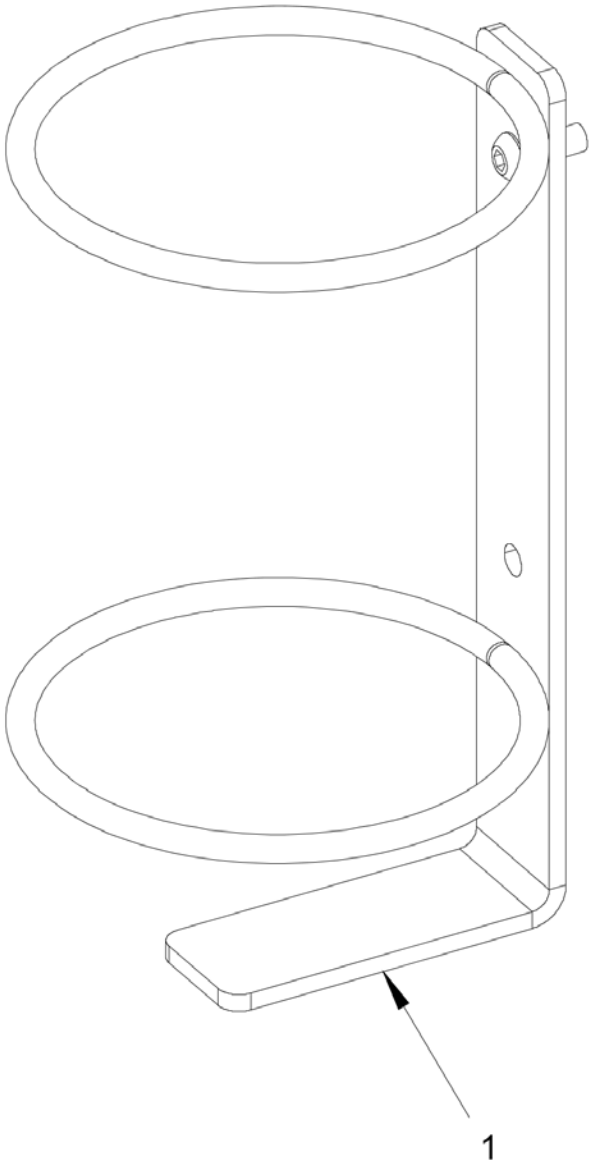

Item	Part No.	Name	Qty	L	SN INFO
1	4812127395	Bracket	1		

Decals Decals

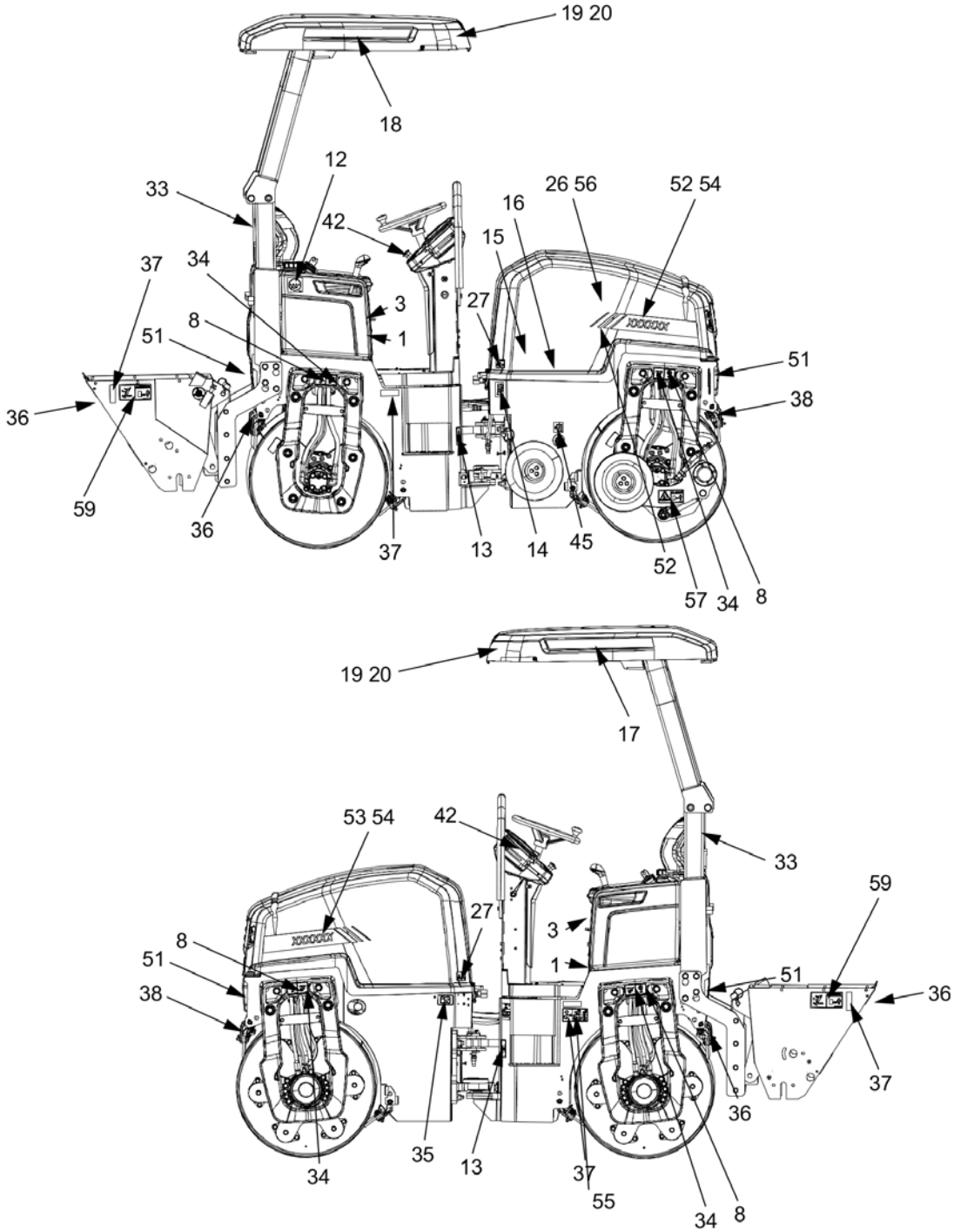

Item	Part No.	Name	Qty	L	SN INFO
1	4700903459	Decal "SAFETY"	1		
3	4700903425	Safety decal "READ SAFETY INSTRUCTIONS"	1		
7	4700904083	Safety decal	1		
8	4700357587	Label lifting point	4		
12	4700991657	Decal "WATER"	1		
13	4700903422	Safety decal "CRUSH AREA"	2		
14	4700991658	Decal "FUEL"	1		
14-2	4811000345	Decal "ULTRA LOW SULFUR FUEL ONLY"	1		
15	4811000344	Decal, low sulfur	1		
16	4700792772	Decal "BIO HYDRAULIC OIL" PANOLIN	1		
17	4812128236	Decal, cosmetic	1		
18	4812128221	Decal, cosmetic	1		
19	4812127713	Decal "FAYAT DYNAPAC", 280-WH	1		
20	4812128167	Decal, cosmetic	1		
26	4700903423	Safety label, Rotating engine components	1		
27	4700903424	Safety label, hot surfaces	2		
28	4700272372	Decal "HYDRAULIC OIL"	1		
33	4700908229	Safety decal	2		
34	4700382751	Decal "SECURING POINT/TIE DOWN"	4		
35	4700904835	Decal "BATTERY POWER"	1		
36	4700377742	Reflector, red	2		
37	4700377744	Reflector, yellow	2		
38	4700377743	Reflector, white	2		
40	4700791274	Decal "Sound power level" 104 dB	1		
42	4811000128	Contrast plate, yellow	1		
45	4700272373	Label, hydraulic oil level	1		
51	4812127714	Decal "FAYAT DYNAPAC", 350-WH	2		
52	4812127729	Decal "GRAPHIC ELEMENT"Right	1		
53	4812127728	Decal "GRAPHIC ELEMENT" Left	1		
54	4812127828	Decal "MODEL CODE" CC1100	2		
55	4812125363	Safety decal "RISK OF CRUSHING"	1		
56	4812161669	Service kit decal (D1703)	1		
56	4812161670	Service kit decal (D1803)	1		
57	4700904083	Safety decal	1		
59	4811000080	Safety decal	2		

Optional equipment Edge cutter

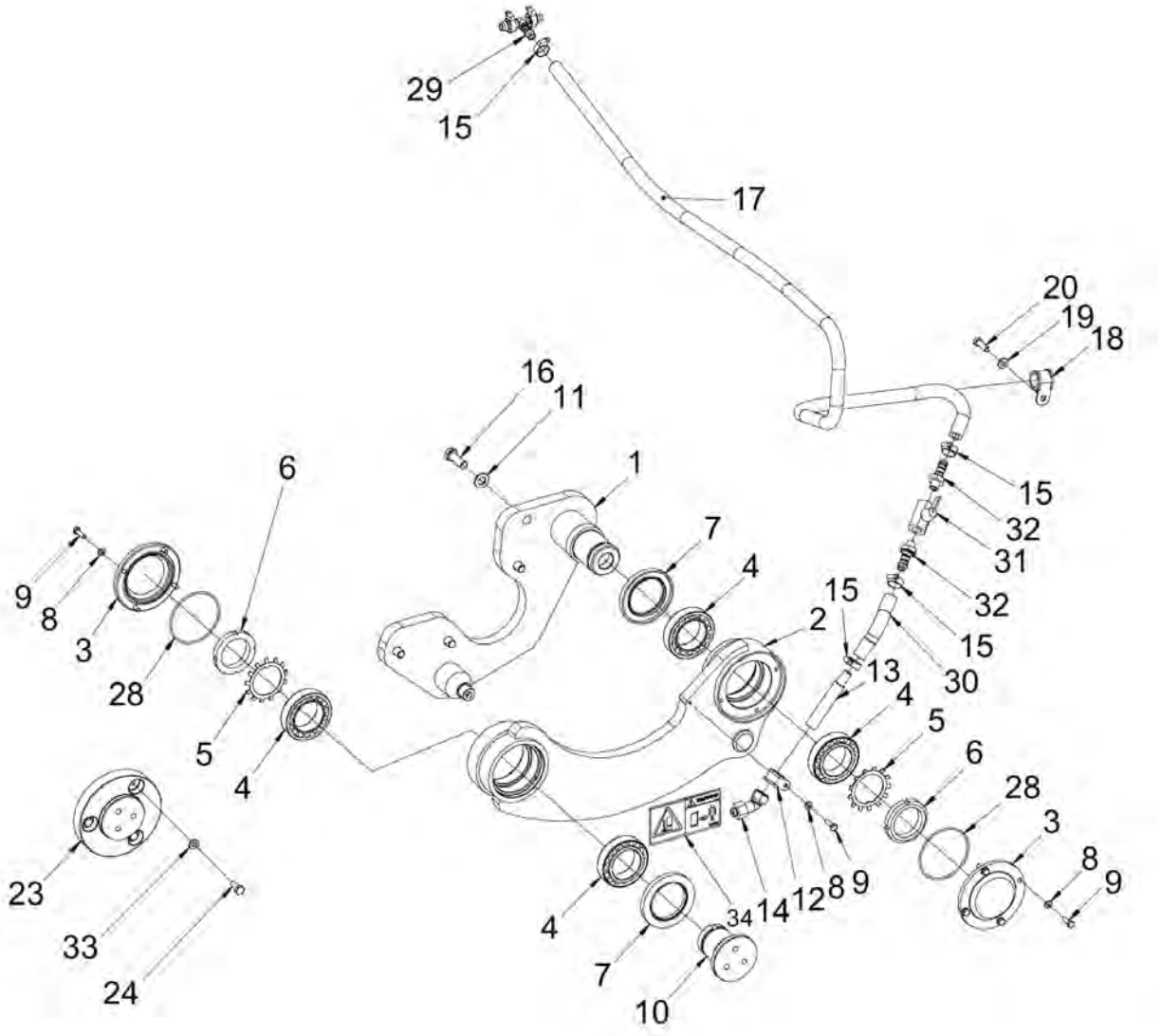

Item	Part No.	Name	Qty	L	SN INFO
1	4812125867	HOLDER	1		
2	4812125878	CUTTER	1		
3	4812125890	BEARING COVER	2		
4	4812125913	TAPER ROLLER BEARING	4		
5	4700136009	Lock washer	2		
6	4700135009	Shaft nut	2		
7	4812125891	RADIAL LIP-TYPE SEAL	2		
8	4700904228	Washer 6,4x12x1,5	9		
9	4700500040	Screw, M6x20 mm 8.8 A2K	9		
10	4812125894	SHAFT	1		
11	4700904231	Washer, 13x24x2 mm 300 HV	4		
12	4700921078	Clamp	1		
13	4700392058	Pipe	1		
14	4700392123	Nozzle body	1		
15	4700313002	Hose clamp	6		
16	4700500037	Hex. screw	4		
17	4812118968	Coolant hose	1,6 M		
18	4700960727	Clamp	1		
19	4700904229	Washer, 8.4x 6x1.5 mm 300HV	1		
20	4700500021	Screw, M8x25 mm 8.8 A2K	1		
23	4812125910	HOLDER	1		
24	4700500053	Screw, M8x20 mm 8.8 A2K	3		
28	4700160276	O-ring	2		
29	4700923735	Hose connection	1		
30	4812118968	Coolant hose	0,11 M		
31	4700925599	Ball valve	1		
32	4700901432	Hose connection	2		
33	4700904556	Steel plain washer 8,4x16x3,0	3		
34	4700904083	Safety decal	1		

Optional equipment Cutting disc

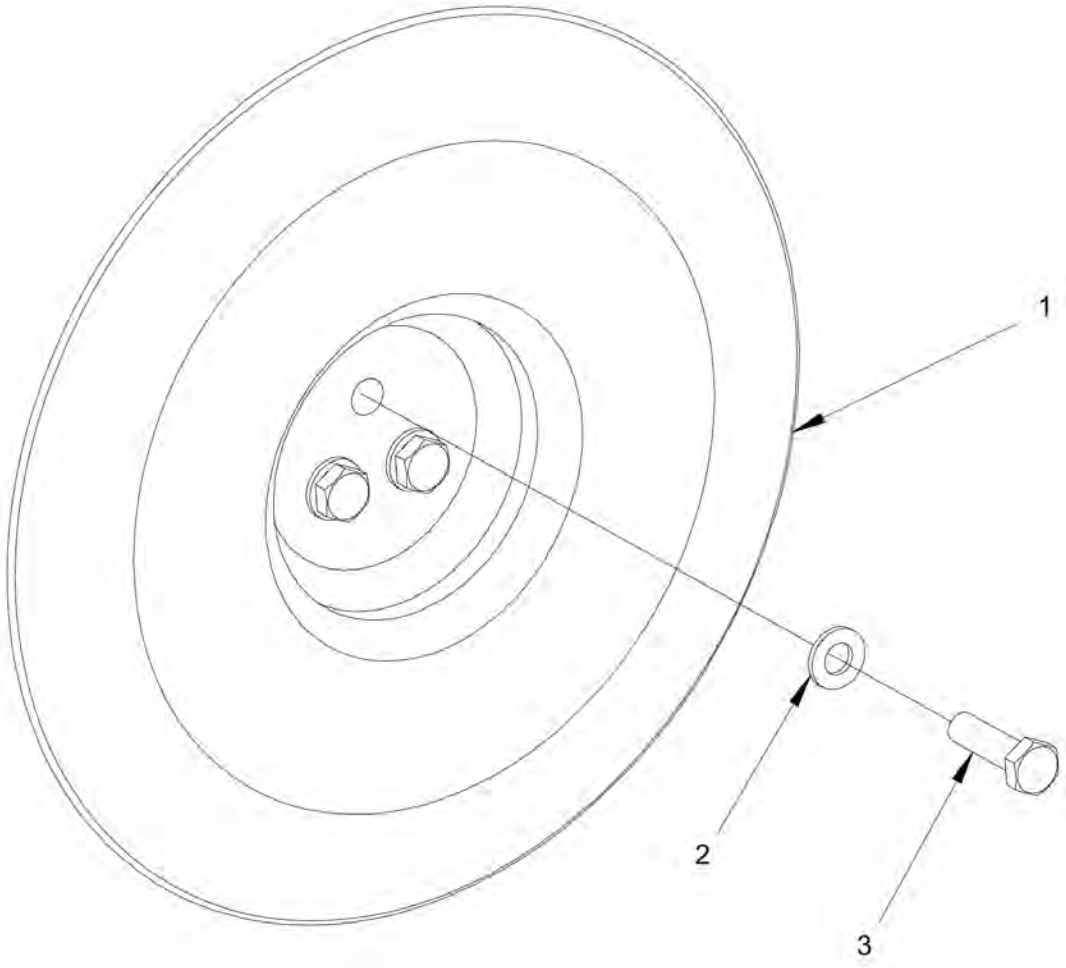

Item	Part No.	Name	Qty	L	SN INFO
1	4812125936	Cutting disc	1		
2	4812122654	Steel plain washer	3		
3	4700500030	Hexagon head screw	3		

Optional equipment Pressing roller

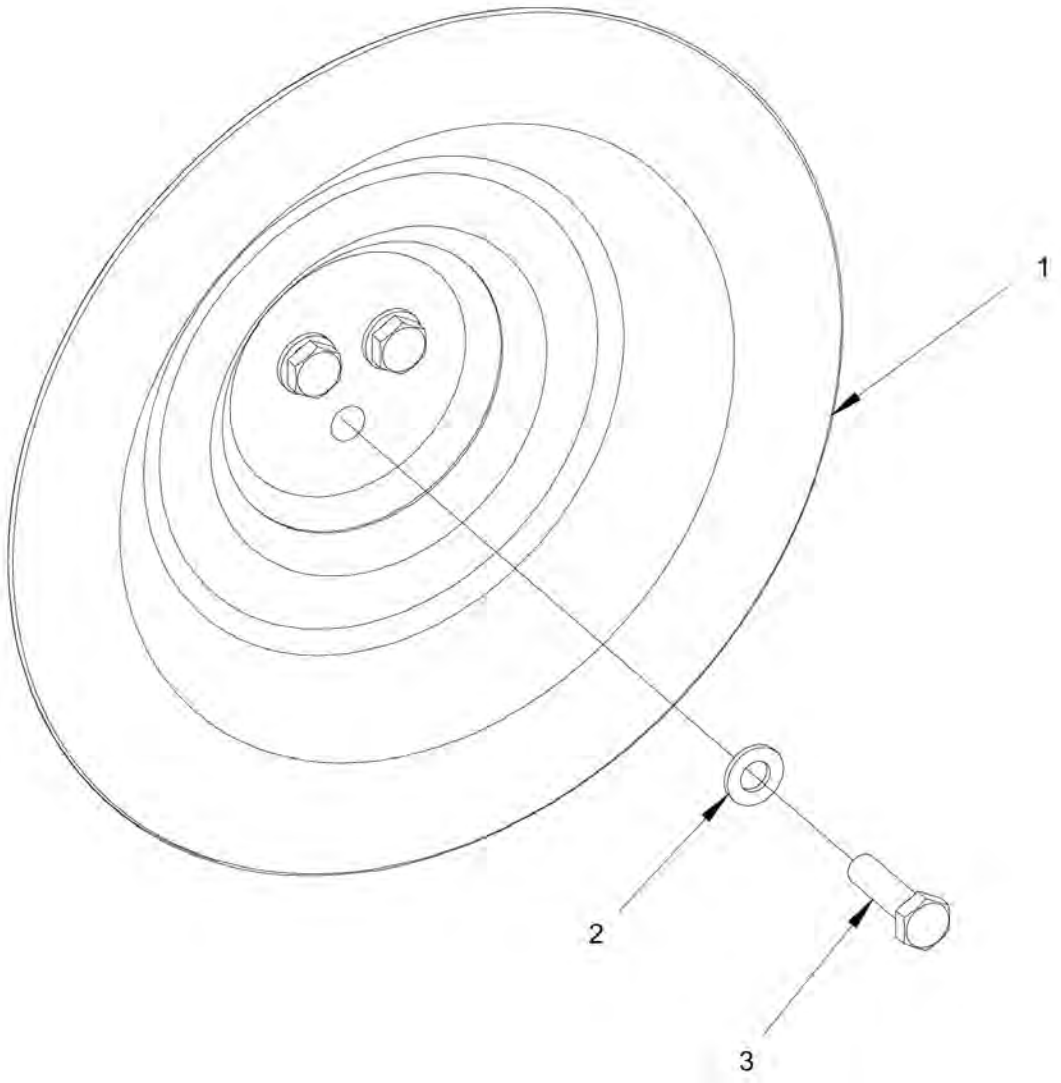

Item	Part No.	Name	Qty	L	SN INFO
1	4812125892	Pressing roller	1		
2	4812122654	Steel plain washer	3		
3	4700500030	Hexagon head screw	3		

Optional equipment Hydraulic cylinder

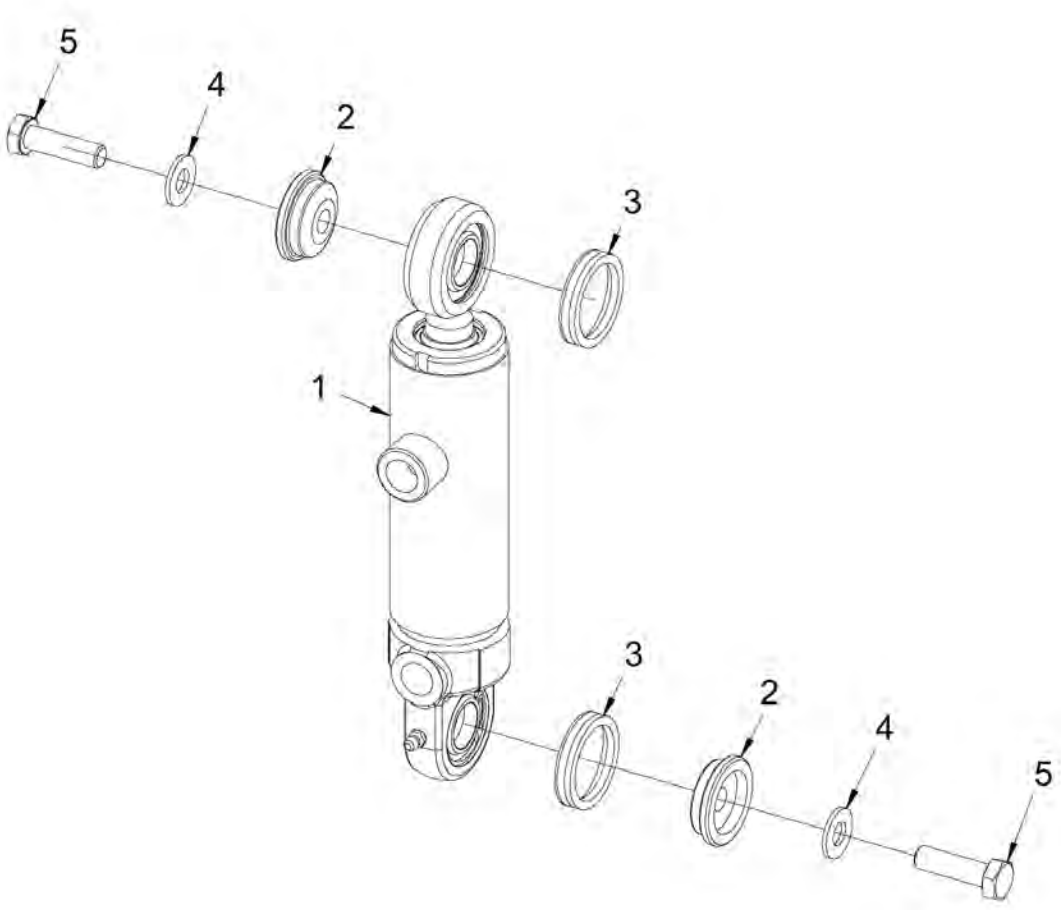

Item	Part No.	Name	Qty	L	SN INFO
1	4812125907	Hydraulic cylinder	1		
2	4812125937	Washer	2		
3	4700167054	Sealing	2		
4	4700904230	Plain washer 10.5x22x2 mm	2		
5	4700500030	Hexagon head screw	2		

Optional equipment Chip spreader

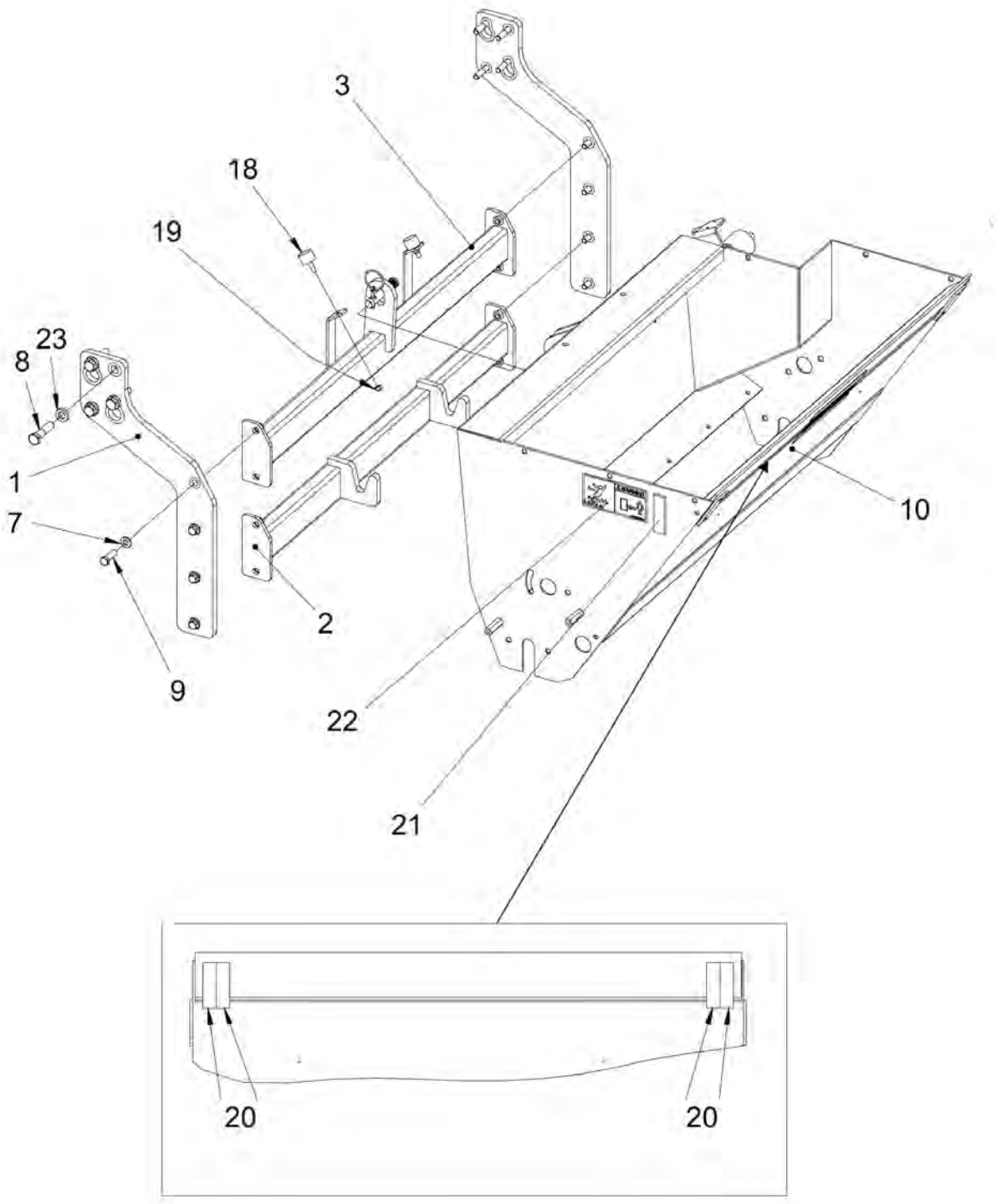

Item	Part No.	Name	Qty	L	SN INFO
1	4812126332	Fork	2		
2	4812126333	Bottom support	1		
3	4812126334	Top support	1		
6	4812110663	Hexagon head screw M10x25H 10,9 A3K	4		
7	4700904703	Plain washer 13x24x4 mm	8		
8	4700500058	Screw M16-2,0x65 8,8	8		
9	4700500194	Hexagon head screw w Tuflok M12x40H 8.8 A3K	8		
10	4812126405	Chip spreader	1		
18	4700280101	Shock absorber	2		
19	4700586003	Lock nut M8	2		
20	4700377742	Reflector, red	4		
21	4700377744	Reflector, yellow	2		
22	4811000080	Safety decal	2		
23	4700904558	Washer, 17x30x6 mm 300 HV	8		

Optional equipment Fire extinguisher

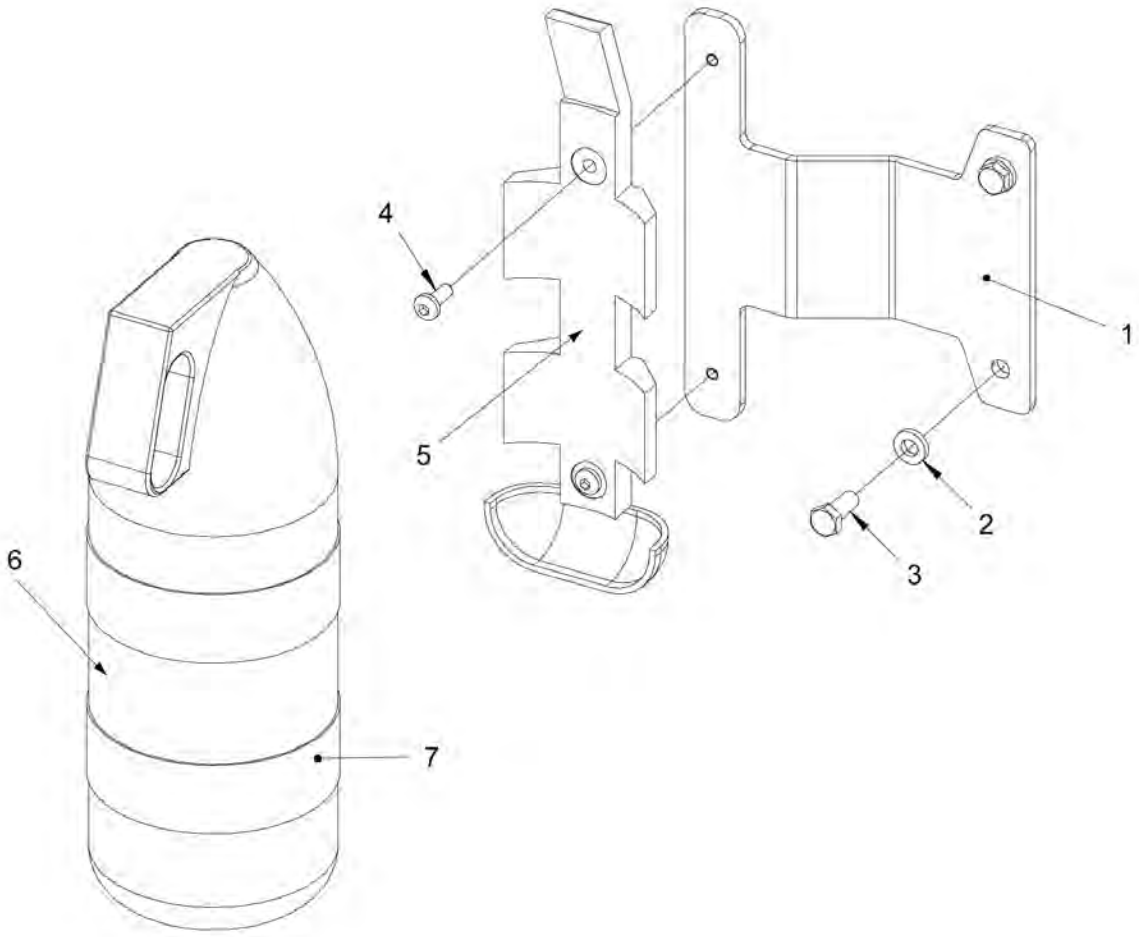

Item	Part No.	Name	Qty	L	SN INFO
1	4812125990	Bracket	1		
2	4700904556	Steel plain washer 8,4x16x3,0	2		
3	4700500053	Screw, M8x20 mm 8.8 A2K	2		
4	4700792185	Screw M6x16	2		
5	4700378857	Holder	1		
6	-	Fire extinguisher	1		
7	4700378858	Strap	2		

Optional equipment SMV-sign

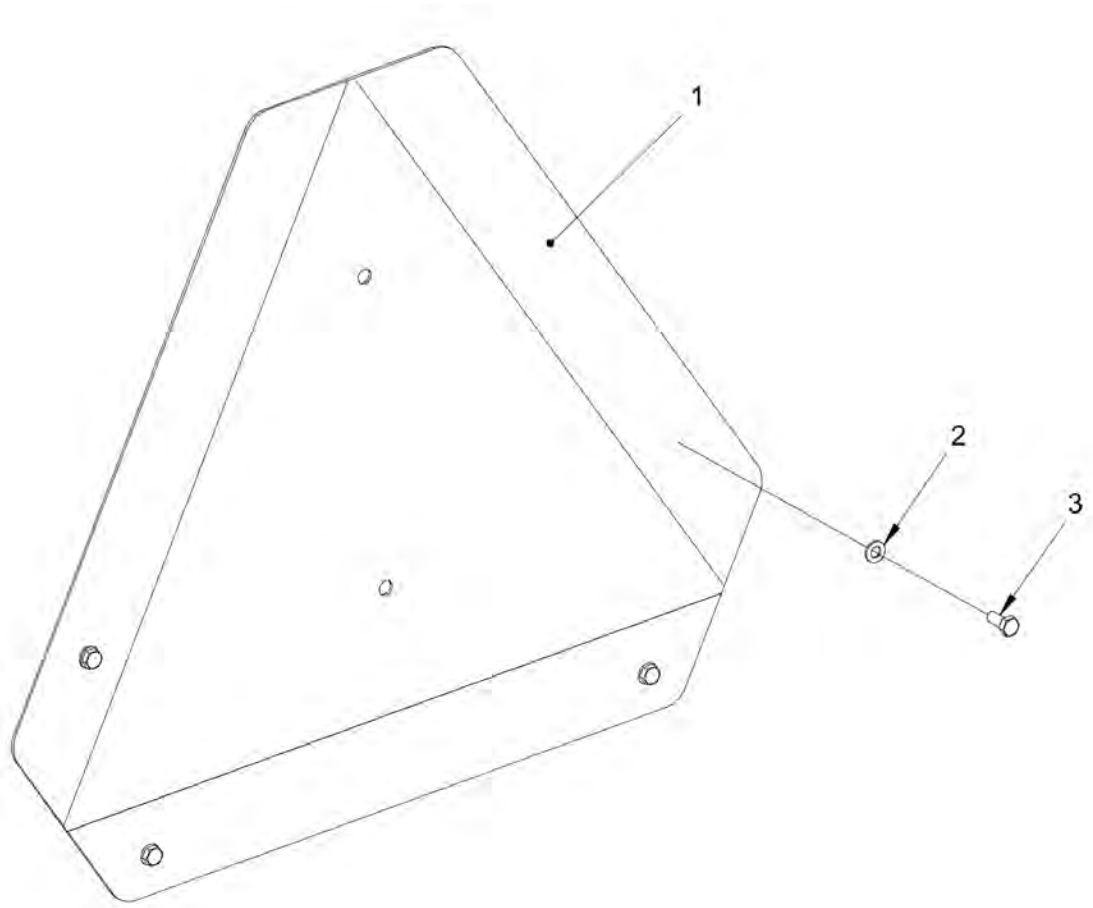

Item	Part No.	Name	Qty	L	SN INFO
1	4700476019	SMV-sign	1		
2	4700904281	Washer, 5,3x10x1 300HV	4		
3	4700500004	Screw M5x12 8,8	4		

Optional equipment Fleetlinkg GPS module

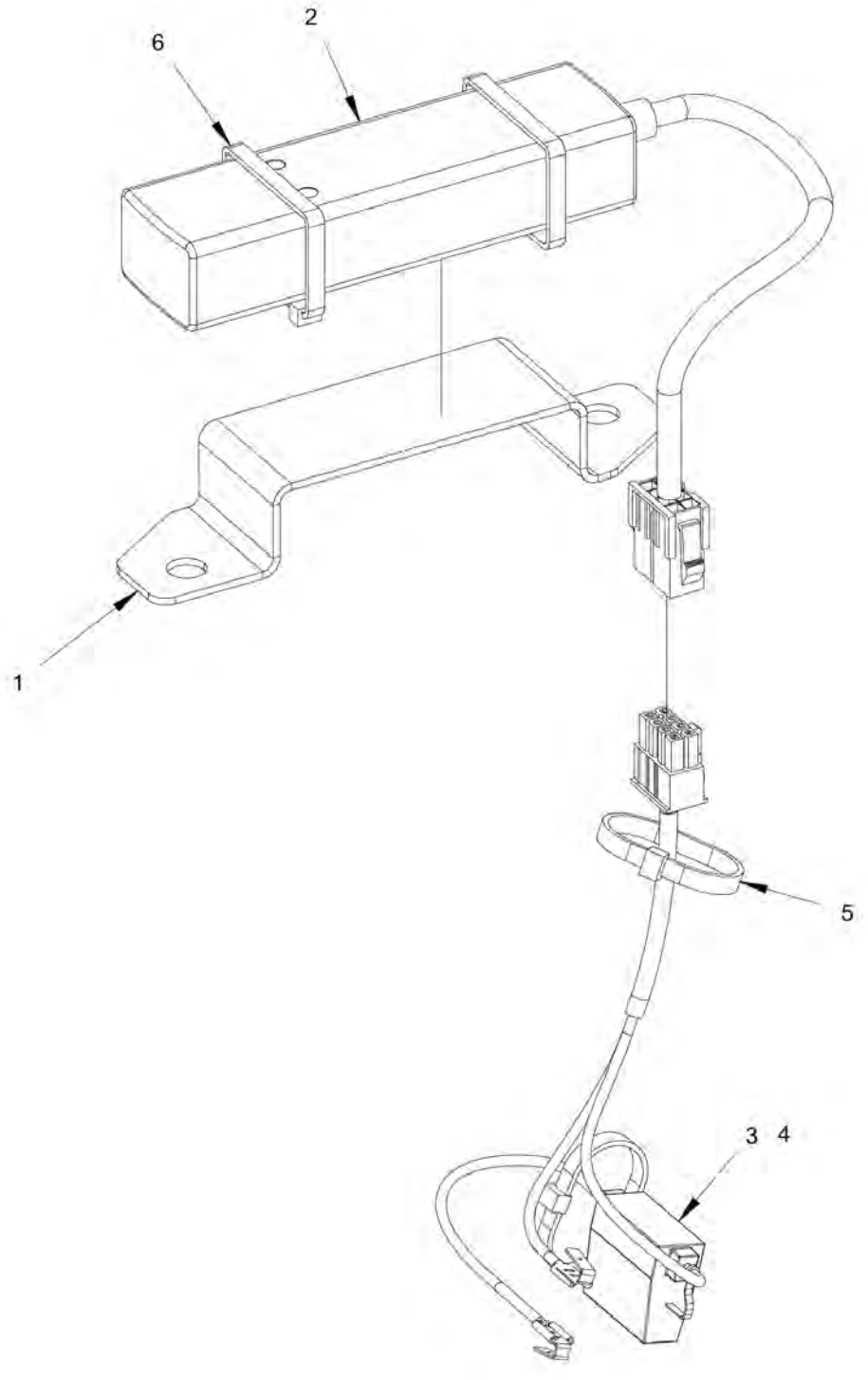

Item	Part No.	Name	Qty	L	SN INFO
1	4812127270	Bracket	1		
2	4812013038	GPS module	1		
3	4812124961	4812124961	1		
4	4700901225	Fuse 5A Tan	1		
5	4700313041	Cable ties, L=200 mm	2		
6	4700792609	Cable ties	2		

Optional equipment GPS module

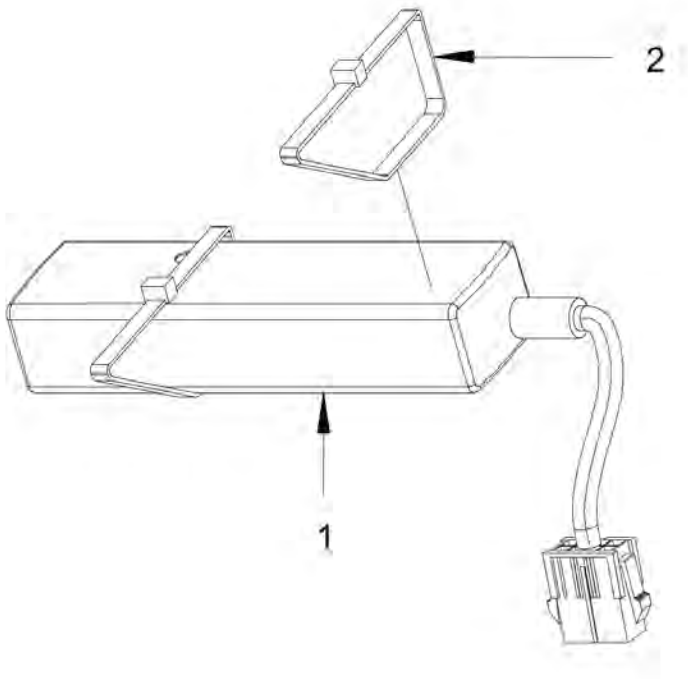

Item	Part No.	Name	Qty	L	SN INFO
1	4812013038	GPS module	1		
2	4700792609	Cable ties	2		

Optional equipment 4812013038 GPS module

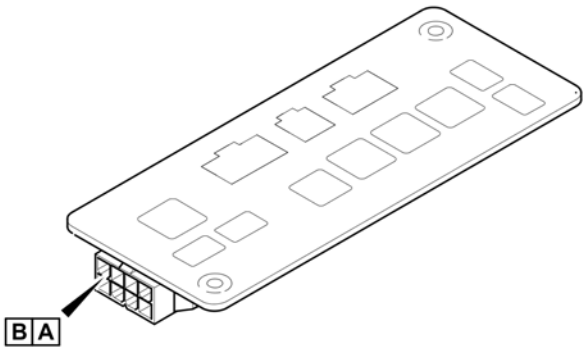

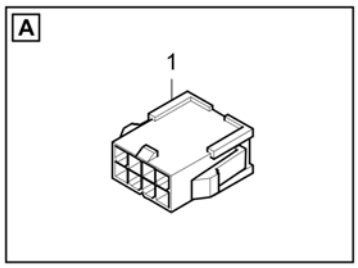

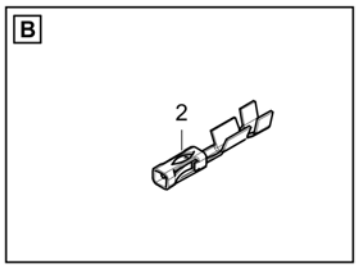

Item	Part No.	Name	Qty	L	SN INFO
1	4812013160	Socket shell	1		
2	4812013161	Male contact	3		

Optional equipment Bracket (GPS)

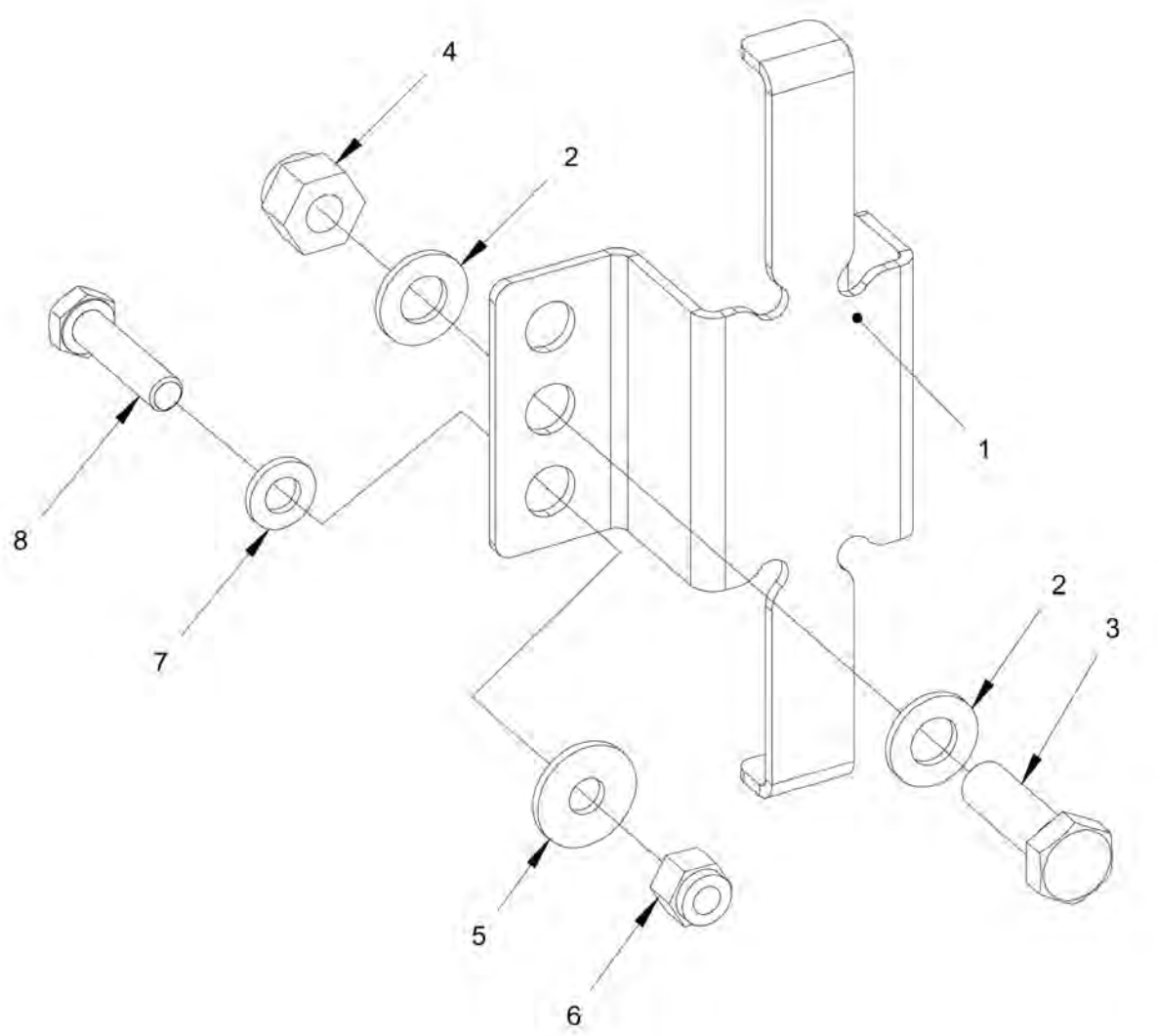

Item	Part No.	Name	Qty	L	SN INFO
1	4812124461	Bracket	1		
2	4700904229	Washer, 8.4x 6x1.5 mm 300HV	2		
3	4700500021	Screw, M8x25 mm 8.8 A2K	1		
4	4700586003	Lock nut M8	1		
5	4700928381	Washer, 6.4x18x1.6 mm	1		
6	4700586002	Lock nut M6 -8	1		
7	4700904228	Washer 6,4x12x1,5	1		
8	4700500075	Screw, M6-1,0x25 mm 8.8	1		

Appendix B:Parts Index

0147195903 86
0211110375 188
0291112843 188
0300027623 40
0544110011 40
0570702503 . . . . . 90, 104
4700111018 . . . . . 20, 48
4700135009 222
4700136009 222
4700151012 . . . . . 40, 44
4700160016 . . . . . 92, 96
4700160031 . . . . . 94, 98, 102, 106
4700160132 . . . . . 18, 20, 48
4700160276 222
4700160313 . . . . . 46, 184
4700160318 184
4700162011 48
4700162017 48
4700163049 . . . . . 18, 20, 48
4700167054 . . . . . 134, 228
4700202028 . . . . . 142, 142
4700202041 . . . . . 78, 84
4700232143 48
4700233215 . . . . . 34, 46
4700234931 46
4700272372 220
4700272373 . . . . . 84, 220
4700280101 230
4700287713 46
4700288357 188
4700313002 . . . . . 46, 222
4700313003 184
4700313007 72
4700313023 . . . . . 62, 62, 78
4700313036 58
4700313038 62
4700313041 . 74, 146, 148, 150, 152, 154, 156, 158, 160, 162, 164, 166, 168, 212, 236
4700313108 . . . . . 70, 74
4700313126 . . . . . 84, 118
4700330171 74
4700335914 . . . . . 42, 44
4700343490 48
4700343732 . . . . . 42, 44
4700343744 48
4700343775 42
4700343801 48
4700349202 48
4700350029 48
4700355797 174
4700355869 176
4700357138 . . . . . 14, 16, 84, 118
4700357139 . . . . . 84, 118
4700357488 42
4700357567 150
4700357587 . . . . . 30, 32, 178, 220
4700357855 182
4700357892 130
4700358003 138
4700358232 176
4700358689 48
4700358881 . . . . . 26, 64, 182, 184
4700359043 . . . . . 36, 38
4700359661 194
4700371728 44
4700372570 214
4700372964 176
4700373183 44
4700377253 184
4700377611 46
4700377742 . . . . . 220, 230
4700377743 220
4700377744 . . . . . 220, 230
4700378574 78
4700378857 232
4700378858 232
4700379064 80
4700379458 . . . . . 92, 96, 104, 110, 114
4700379636 210
4700381390 . . . . . 142, 152, 154, 158, 166, 168
4700382751 . . . . . 30, 32, 220
4700385599 142
4700387935 184
4700387948 64
4700388087 184
4700388846 64
4700389840 182
4700391984 . . . . . 22, 48, 50
4700392058 222
4700392123 222
4700393204 194
4700393205 194
4700393206 194
4700396673 184
4700476019 234
4700480852 46
4700483906 . . . . . 92, 96
4700499497 60
4700500003 . . . . . 140, 140, 158
4700500004 234
4700500012 216

4700500013 . . . . . 74, 184
4700500015 86
4700500019 . . . . . 46, 68, 78, 142, 146, 214
4700500020 210
4700500021 62, 70, 72, 74, 76, 80, 94, 98, 104, 108, 126, 182, 222, 242
4700500022 . . . . . 48, 64
4700500023 194
4700500025 34
4700500028 . . . . . 52, 68, 76, 92, 96
4700500029 184
4700500030 . . . . . 48, 48, 66, 74, 76, 88, 134, 224, 226, 228
4700500032 . . . . . 30, 32, 186
4700500037 . . . . . 138, 222
4700500040 . . . . . 62, 144, 222
4700500044 48
4700500046 . . . . . 118, 176
4700500048 . . . . . 138, 176
4700500051 40
4700500053 . . 30, 32, 46, 58, 64, 74, 80, 84, 92, 96, 118, 146, 148, 150, 176, 190, 192, 196, 200, 202, 206, 222, 232
4700500058 230
4700500062 . . . . . 132, 140
4700500068 46
4700500070 188
4700500075 242
4700500076 32
4700500077 138
4700500078 . . . . . 92, 96, 104, 110, 114
4700500079 194
4700500094 . . . . . 30, 32
4700500100 82
4700500105 34
4700500142 30
4700500185 64
4700500192 186
4700500194 230
4700500196 176
4700500230 . . . . . 34, 34
4700500240 176
4700500292 194
4700500501 84
4700500505 . . . . . 44, 52, 140
4700500506 52
4700508002 . . . . . 94, 98, 104, 108, 126
4700508005 190
4700508009 214
4700508019 . . . . . 150, 176
4700508027 . . . . . 92, 96
4700508028 84
4700508029 . . . . . 94, 98, 102, 106
4700508048 . . . . . 40, 92, 96
4700508056 60
4700513003 64
4700533070 210
4700541703 74
4700570004 182
4700570005 . . . . . 36, 38, 52, 58, 64, 146
4700570008 40
4700573004 186
4700573008 188
4700586001 210
4700586002 . . . . . 44, 144, 182, 184, 242
4700586003 . . . . . 34, 34, 44, 80, 150, 176, 190, 210, 212, 214, 230, 242
4700586018 . . . . . 66, 186
4700586019 176
4700603010 74
4700603018 . . . . . 94, 98, 102, 106
4700624018 188
4700629016 42
4700629024 44
4700635061 42
4700747282 74
4700791165 176
4700791274 220
4700791304 . . . . . 34, 186
4700791395 84
4700791397 . . . . . 92, 96, 104
4700791398 140
4700791404 . . . . . 90, 104
4700791410 . . . . . 92, 96, 118, 138
4700791414 . . . . . 90, 94, 98, 104
4700791415 138
4700791416 . . . . . 90, 92, 96, 104, 126
4700791452 138
4700791453 194
4700791454 194
4700791493 52
4700791524 182
4700791541 104
4700791588 182
4700791635 52
4700791642 60
4700791666 . . . . . 36, 38
4700791698 . . . . . 84, 90
4700791699 . . . . . 92, 96, 104
4700791723 . . . . . 146, 154, 182
4700791733 142
4700791736 146
4700791739 182
4700791744 . . . . . 92, 96
4700791745 . . . . . 104, 140

4700791775 34
4700791792 104
4700791796 . . . . . 92, 96, 102
4700791799 102
4700791808 . . . . . 90, 104
4700791818 . . . . . 148, 150
4700791821 84
4700791828 . . . . . 84, 118, 118
4700791840 84
4700791841 . . . . . 92, 96, 102
4700791843 . . . . . 84, 90, 92, 96, 118
4700791845 138
4700791847 . . . . . 90, 94, 98, 104
4700791914 . . . . . 84, 132
4700791938 . . . . . 34, 64
4700791939 . . . . . 34, 64
4700791951 170
4700791953 . . . . . 170, 170
4700792035 174
4700792046 . . . . . 140, 140
4700792059 170
4700792068 138
4700792072 34
4700792074 118
4700792083 . . . . . 40, 188
4700792098 144
4700792185 232
4700792189 . . . . . 36, 38
4700792219 104
4700792250 . . . . . 66, 88, 148, 150
4700792338 . . . . . 84, 90
4700792380 186
4700792389 . . . . . 92, 96, 126
4700792436 140
4700792441 146
4700792536 182
4700792550 130
4700792589 182
4700792602 . . . . . 92, 96, 118, 126, 142, 146
4700792607 42
4700792609 . . . . . 236, 238
4700792686 132
4700792696 118
4700792701 118
4700792742 182
4700792772 220
4700792779 46
4700792817 . . . . . 42, 44, 76
4700792822 . . . . . 140, 140
4700813443 84
4700900229 . . . . . 92, 96
4700900519 194
4700900777 212
4700900790 . . . . . 170, 170
4700900994 40
4700901121 74
4700901224 . . . . . 28, 142
4700901225 . . . . . 28, 142, 142, 142, 142, 160, 168, 236
4700901226 . . . . . 28, 142
4700901227 . . . . . 28, 142, 142, 152, 154, 156, 166, 212
4700901228 . . . . . 28, 142, 154
4700901229 28
4700901230 28
4700901381 188
4700901432 . . . . . 34, 46, 222
4700901832 . . . . . 80, 150, 176
4700902123 176
4700902224 184
4700902227 172
4700902287 . . . . . 34, 88, 94, 98, 104, 110, 114
4700902379 . . . . . 42, 176, 176
4700902797 176
4700902892 176
4700902919 188
4700902989 176
4700903154 48
4700903192 . . . . . 46, 210
4700903236 78
4700903287 . . . . . 48, 48
4700903386 64
4700903422 . . . . . 44, 220
4700903423 . . . . . 86, 220
4700903424 . . . . . 64, 220
4700903425 220
4700903430 . . . . . 104, 112
4700903459 220
4700903662 44
4700903703 62
4700903722 194
4700903741 28
4700903760 . . . . . 148, 150
4700903768 146
4700903782 146
4700903831 44
4700903923 44
4700904036 146
4700904037 28
4700904038 . . . . . 28, 146
4700904039 . . . . . 28, 146
4700904040 28
4700904041 28
4700904042 28

4700904083 . . . . . 220, 220, 222
4700904203 194
4700904206 176
4700904213 130
4700904214 . . . . . 118, 138
4700904218 210
4700904228 . 48, 62, 64, 126, 132, 140, 144, 182, 182, 184, 194, 216, 222, 242
4700904229 . 30, 32, 34, 34, 36, 38, 46, 48, 58, 62, 64, 68, 70, 72, 74, 80, 92, 94, 96, 98, 104, 108, 126, 142, 146, 148, 150, 176, 192, 194, 196, 200, 202, 206, 210, 212, 214, 222, 242
4700904230 . . 30, 32, 48, 48, 52, 66, 74, 88, 94, 98, 104, 110, 114, 134, 176, 186, 228
4700904231 . . . . . 30, 32, 44, 50, 118, 138, 176, 178, 180, 222
4700904232 . . . . . 30, 32
4700904233 188
4700904258 . . . . . 18, 48, 48
4700904281 . . . . . 140, 140, 158, 210, 234
4700904294 28
4700904312 142
4700904346 146
4700904556 . . . . . 60, 74, 76, 78, 80, 92, 96, 190, 212, 222, 232
4700904557 . . . . . 48, 50, 52, 66, 74, 76, 92, 96, 138, 186
4700904558 . . . . . 188, 230
4700904567 184
4700904570 186
4700904574 188
4700904623 . . . . . 118, 140
4700904629 . . . . . 42, 44
4700904640 . . . . . 34, 44, 46, 64, 82, 84, 118, 182
4700904654 186
4700904698 . . . . . 64, 78, 142
4700904703 . . . . . 66, 88, 118, 138, 148, 150, 176, 230
4700904727 . . . . . 138, 140
4700904735 . . . . . 44, 86, 94, 98, 104, 108, 126, 174
4700904766 84
4700904774 . . . . . 92, 96
4700904835 . . . . . 150, 220
4700904984 . . . . . 74, 74, 74, 74, 74, 74, 74
4700904989 154
4700908229 . . . . . 188, 220
4700909535 190
4700909536 190
4700921028 . . . . . 140, 140
4700921036 140
4700921078 . . . . . 74, 222
4700922325 186
4700923378 . . . . . 90, 92, 96
4700923405 . . . . . 90, 94, 98, 104, 104, 118
4700923735 . . . . . 46, 222
4700923951 . . . . . 18, 48, 48
4700923976 64
4700924790 194
4700924791 194
4700925519 . . . . . 118, 138
4700925599 222
4700926214 . . . . . 40, 44
4700926215 . . . . . 126, 176
4700928381 . . . . . 184, 242
4700928784 174
4700928830 176
4700928849 130
4700929455 174
4700938892 20
4700938908 18
4700940451 . . . . . 26, 142
4700947689 . . . . . 30, 32, 178, 180
4700960727 . . . . . 146, 222
4700985012 . . . . . 170, 170
4700985013 174
4700991657 . . . . . 184, 220
4700991658 220
4811000080 . . . . . 220, 230
4811000128 . . . . . 182, 220
4811000333 142
4811000344 220
4811000345 220
4812013038 . . . . . 236, 238
4812013160 240
4812013161 240
4812030096 . . . . . 4, 12, 16
4812110346 50
4812110490 . . . . . 118, 138
4812110596 48
4812110663 . . . . . 50, 230
4812110968 . . . . . 178, 180
4812111325 46
4812111330 46
4812111331 46
4812112074 . . . . . 46, 46, 46, 46, 46, 46, 184
4812112109 126
4812112451 46
4812112669 210
4812113177 186
4812113327 84
4812113328 . . . . . 2, 4, 14, 16, 84
4812113633 . . . . . 92, 96
4812114318 64
4812114465 188
4812114466 210
4812114492 . . . . . 92, 96, 104, 118
4812115835 62

4812115911 . . . . . 146, 168
4812116050 . . . . . 130, 132
4812117106 44
4812117689 74
4812117733 44
4812117868 146
4812118172 . . . . . 94, 98, 102, 106
4812118692 48
4812118697 182
4812118968 . . . . . 222, 222
4812119127 46
4812119321 . . . . . 84, 118
4812119820 48
4812120558 . . . . . 118, 120, 138
4812121239 130
4812121858 34
4812122244 . . . . . 70, 70
4812122554 68
4812122654 . . . . . 68, 86, 224, 226
4812122719 138
4812123298 104
4812124031 . . . . . 52, 54
4812124060 184
4812124068 58
4812124321 34
4812124461 242
4812124515 140
4812124791 48
4812124793 176
4812124832 50
4812124899 48
4812124904 48
4812124961 236
4812124988 80
4812125018 78
4812125132 40
4812125133 40
4812125136 40
4812125137 40
4812125140 40
4812125255 58
4812125256 58
4812125353 48
4812125363 . . . . . 44, 220
4812125384 . . . . . 66, 88
4812125392 40
4812125394 . . . . . 66, 88
4812125395 . . . . . 126, 128
4812125397 76
4812125398 40
4812125399 40
4812125400 86
4812125414 . . . . . 40, 44
4812125416 40
4812125446 86
4812125468 44
4812125469 . . . . . 92, 96
4812125470 138
4812125471 . . . . . 30, 32
4812125476 84
4812125477 84
4812125478 84
4812125479 84
4812125480 84
4812125501 . . . . . 92, 96
4812125508 72
4812125516 72
4812125517 72
4812125520 62
4812125521 178
4812125526 72
4812125527 60
4812125563 42
4812125585 74
4812125586 74
4812125587 78
4812125592 44
4812125630 . . . . . 66, 88
4812125631 180
4812125636 64
4812125641 82
4812125651 84
4812125652 84
4812125653 104
4812125655 82
4812125657 78
4812125661 72
4812125664 140
4812125676 . . . . . 84, 118
4812125677 216
4812125678 154
4812125681 . . . . . 102, 132
4812125682 140
4812125704 80
4812125708 90
4812125709 90
4812125710 78
4812125715 118
4812125716 118
4812125717 118
4812125718 118
4812125722 118

4812125723 118
4812125724 138
4812125725 138
4812125726 138
4812125727 138
4812125730 . . . . . 92, 96
4812125731 . . . . . 90, 92, 96, 104
4812125732 . . . . . 92, 96
4812125733 96
4812125734 96
4812125735 96
4812125737 . . . . . 92, 96, 104
4812125738 96
4812125739 50
4812125740 92
4812125741 92
4812125742 . . . . . 92, 104
4812125743 92
4812125744 . . . . . 92, 104
4812125746 96
4812125747 104
4812125748 104
4812125749 . . . . . 94, 98, 102
4812125750 104
4812125754 104
4812125755 104
4812125757 126
4812125760 126
4812125761 126
4812125762 126
4812125767 130
4812125768 130
4812125770 . . . . . 90, 118
4812125771 102
4812125775 132
4812125776 132
4812125777 . . . . . 152, 166
4812125778 140
4812125794 68
4812125795 . . . . . 94, 98, 104, 108, 126
4812125796 70
4812125807 30
4812125808 32
4812125817 30
4812125818 32
4812125821 62
4812125831 . . . . . 64, 64
4812125851 176
4812125852 176
4812125854 52
4812125861 164
4812125866 140
4812125867 222
4812125869 140
4812125871 46
4812125875 86
4812125878 222
4812125880 158
4812125881 156
4812125883 162
4812125886 176
4812125887 176
4812125890 222
4812125891 222
4812125892 226
4812125894 222
4812125902 176
4812125907 . . . . . 134, 136, 228
4812125910 222
4812125913 222
4812125915 176
4812125924 184
4812125936 224
4812125937 . . . . . 134, 228
4812125948 146
4812125949 168
4812125956 34
4812125957 . . . . . 24, 34, 34
4812125958 34
4812125959 182
4812125960 182
4812125962 148
4812125972 184
4812125973 46
4812125974 102
4812125975 102
4812125976 44
4812125978 44
4812125982 184
4812125983 184
4812125984 184
4812125990 232
4812126007 182
4812126008 182
4812126012 44
4812126021 190
4812126022 192
4812126031 150
4812126033 142
4812126081 42
4812126082 42
4812126090 146

4812126093 . . . . . 22, 30, 32
4812126094 . . . . . 22, 30, 32
4812126108 142
4812126118 196
4812126119 202
4812126120 206
4812126121 200
4812126175 182
4812126176 142
4812126189 146
4812126234 194
4812126281 186
4812126283 186
4812126332 230
4812126333 230
4812126334 230
4812126405 230
4812126467 186
4812126468 186
4812126529 186
4812126595 48
4812126711 140
4812126756 104
4812126891 36
4812126898 76
4812126899 76
4812126907 46
4812126908 182
4812126939 52
4812126940 . . . . . 80, 150
4812126945 62
4812126953 76
4812126956 80
4812126957 44
4812126968 90
4812126969 . . . . . 118, 124, 138
4812126973 176
4812126979 64
4812126984 38
4812127015 156
4812127030 126
4812127078 64
4812127090 64
4812127091 64
4812127097 48
4812127099 150
4812127213 212
4812127214 118
4812127220 64
4812127270 236
4812127309 . . . . . 92, 96, 114, 116
4812127310 . . . . . 104, 110
4812127324 . . . . . 160, 212
4812127327 . . . . . 66, 88
4812127367 142
4812127370 74
4812127395 218
4812127643 76
4812127713 220
4812127714 220
4812127728 220
4812127729 220
4812127737 . . . . . 30, 32
4812127828 220
4812128078 182
4812128167 220
4812128174 146
4812128221 220
4812128236 220
4812128394 40
4812156170 22
4812156260 . . . . . 10, 12, 14, 16, 54
4812156261 . . . . . 14, 16, 54
4812156354 54
4812156358 54
4812156359 54
4812156565 208
4812159478 54
4812159594 . . . . . 10, 12, 14, 16, 54, 74
4812160275 120
4812160462 6
4812160480 . . . . . 2, 4, 6, 8, 10, 12, 14, 16, 54
4812160561 54
4812160562 54
4812160564 54
4812160565 54
4812160566 54
4812160567 54
4812160665 126
4812160957 100
4812161174 54
4812161175 54
4812161176 54
4812161177 54
4812161178 54
4812161179 54
4812161180 54
4812161181 54
4812161182 54
4812161187 54
4812161188 54
4812161189 54

4812161190 54
4812161192 54
4812161199 126
4812161258 54
4812161396 26
4812161562 . . . . . 54, 74
4812161586 . . . . . 10, 12, 14, 16, 60
4812161587 . . . . . 14, 16, 60
4812161669 220
4812161670 220
4812161672 . . . . . 10, 12, 14, 16, 54, 74
4812161673 . . . . . 54, 74
4812161674 2
4812161675 4
4812161677 8
4812161684 10
4812161685 12
4812161686 14
4812161687 16
4812161855 . . . . . 4, 8, 12, 16
4812162174 120
4812162175 120
4812162176 120
4812162177 120
4812162178 120
4812162179 120
4812162181 120
4812162182 120
4812162183 120
4812162184 120
4812162185 120
4812162186 120
4812162187 120
4812162188 120
4812162189 120
4812162190 120
4812162191 120
4812162192 120
4812162193 120
4812162194 120
4812162195 120
4812162196 122
4812162197 122
4812162198 122
4812162199 122
4812162251 122
4812162252 122
4812162253 122
4812162254 122
4812162255 122
4812162272 24
4812162273 22
4812162284 . . . . . 54, 74

Dynapac Compaction Equipment AB
Box 504, SE 371 23 Karlskrona, Sweden

www.dynapac.com