Parts Catalogue

DYNAPAC
FAYAT GROUP

FEVEREIRO 2018

CC1200

Vibratory roller

CC1200 s/n 10000332xxA012669 - xxA021038

Kubota D1703 M-E3B (26 kW)

RUTHZIL TRATOR COMERCIAL DE PEÇAS LTDA 11 97083-6812 ROLANDO



© 2018 Dynapac Compaction Equipment AB | No. 4812156179_C| 2018-02

Your Partner on the Road Ahead

dynapac.com

General information

Use only authorized parts. Any damage or malfunction caused by the use of unauthorized parts is not covered by Warranty or Product Liability.
Any unauthorized use or copying of the contents or any part thereof is prohibited. This applies in particular to trademarks, model denominations, part numbers, and drawings.

Instructions for use
This spare parts list contains no safety regulations and is merely intended to assist in the ordering of spare parts.
For information about operating, servicing, or repairing, the relevant Safety and operating instructions must be consulted at all costs.
Please observe the safety instructions listed in the relevant Safety and operating instructions!

CC1200 Plus S/N 10000332xxA012669 - xxA021038 . . . 1

Service kits

4812156265 Service kit 50h . . . 3
4812159563 Service kit 50h Plus . . . 5
4812156288 Service kit 250 / 750 h . . . 7
4812159564 Service kit 250/750h Plus . . . 9
4812156266 Service kit 500h . . . 11
4812159565 Service kit 500h Plus . . . 13
4812156267 Service kit 1000 h . . . 15
4812159566 Service kit 1000h Plus . . . 17
4812159571 Start-up kit . . . 19

Repair kits

4700938908 Eccentric shaft kit . . . 21
4700938892 Drum rotation kit . . . 23
4700938885 Shock absorber kit, drum . . . 25
4700938575 Steering hitch kit . . . 27
4812159961 Scraper kit . . . 29

General - Keys and others

Keys . . . 31
Fuses . . . 33

Frame

Frames To A014775

Frame, front . . . 35
Frame, rear . . . 37

Frames From A014776

Frame, front . . . 39
Frame, rear . . . 41
Sprinkler system . . . 43
Scraper . . . 48
Scrapers, spring loaded (option) . . . 51
Towing device (option) . . . 53

Steering hitch To A014837 (incl. 14840-14888)

4700358975 Steering hitch . . . 55

Steering hitch From A014838 (excl. 14840-14888)

4812120871 Steering hitch . . . 57
Protective plate, front lights (Option) . . . 59

Drum

Drum . . . 61

Engine room

Engine room . . . 64
Engine module . . . 67
4812110881 Diesel engine Kubota D1703 M-E3B (26 kW) . . . 71
Exhaust system . . . 73
Fan . . . 75
Air filter . . . 77

Water cooler To A015094

Water cooler . . . 79

Water cooler From A015095

Water cooler . . . 81
Engine hood, cpl . . . 83
Casing . . . 85
Cooler hoses . . . 87

Air hoses . . . 89
Fuel hoses . . . 91

Fuel system To A013025
Fuel system . . . 93

Fuel system From A013026
Fuel system . . . 95

Hydraulic system

Propulsion system To A015094
Propulsion system . . . 97

4700372352 Hydraulic pump, propulsion
4700372352 Hydraulic pump, propulsion . . . 102
Rotating group, valves, charge pump . . . 106
Control unit, cpl . . . 111
4812110281 Junction block . . . 114

4700390742 Hydraulic motor, propulsion, drum To A012964 (incl. 12966)
4700390742 Hydraulic motor, propulsion, drum . . . 117

Propulsion system From A015095
Propulsion system . . . 119
4812120928 Connection block . . . 123
4812120558 Hydraulic motor . . . 125
4812120091 Hydraulic pump . . . 129

Vibration system To A015094
Vibration system . . . 131
4812160957 Seal kit . . . 135

4812119251 Hydraulic pump To A012667 (excl. 12607-12610, incl. 12754)
4812119251 Hydraulic pump . . . 137

4812112054 Hydraulic pump From A012668 (incl. 12607-12610, excl. 12754)
4812112054 Hydraulic pump . . . 139

Vibration system From A015095
Vibration system . . . 141
4812121617 Hydraulic pump . . . 145
4812160957 Seal kit . . . See page 135

Steering system
Steering system . . . 147

Steering cylinder To A013002 (excl. 12769, 12994, 12997)
4700374603 Steering cylinder . . . 149

Steering cylinder From A013003 (incl. 12769, 12994, 12997)
4812120737 Hydraulic cylinder . . . 151

Flow divider To A015108
Flow divider (option) . . . 153

Flow divider From A015109
Flow divider (option) . . . 155

Brake system To A015094
Brake system . . . 157

Brake system From A015095 To A016077
Brake system . . . 159

Brake system From A016078

Brake system . . . 161
Vibration shut-off Front drum (option) . . . 163

Electrical equipment

Cable harness

Cable harness To A015127 (excl. 15110, 15112-15113, 15119, 15122, 15125)

Cable harness . . . 165

Cable harness From A015128 (incl. 15110, 15112-15113, 15119, 15122, 15125) To xA019682

Cable harness . . . 167

Cable harness From xA019683

Cable harness . . . 169
Horn module . . . 171
Battery module . . . 173
Battery disconnector . . . 175

Working lights

Working lights . . . 177
Working lights front . . . 179
Working light rear . . . 181
Working light (option) rear . . . 183
Casing rear . . . 185
Cover plate rear . . . 187

Driving lights Front RH (option)

Driving lights Front RH (option) . . . 189
Driving lights Front . . . 191
Driving lights Rear (option) . . . 193

Driving lights Front LH (option)

Driving lights Front LH (option) . . . 195
Driving lights Front . . . 197
Driving lights Rear (option) . . . See page 193

Rotating beacon

Rotating beacon for ROPS (option) . . . 199
Rotating beacon for ROPS ignition controlled (option) . . . 201
Rotating beacon, without rops (option) . . . 203
Direction indicator (option) . . . 205
Back-up alarm . . . 207

Drivers platform

Drivers platform . . . 209

Platform module

Platform module To A014353

Platform module . . . 211
Platform mount . . . 213

Platform module From A014354

Platform module . . . 215
Platform . . . 217

Platform module From xx019267

Platform module . . . 219
Platform . . . 221
Instrument panel module . . . 223
Steering wheel . . . 225

Control module . . . 227

Standard ECU module

Standard ECU To xA019966
Standard ECU module . . . 229

Standard ECU From xA019967
ECU . . . 231

Forward-Reverse control module

Forward-Reverse control module To A014358
Forward-Reverse control module . . . 233
4812113676 Forward and reverse control handle . . . 235
Forward-reverse control left (option) . . . 239
Cover plate, Dual F&R-control left side . . . 241

Forward-Reverse control module From A014359 - A015764
Forward-reverse control, Right side, single . . . 243
4812121384 Forward & Reverse control . . . 245
Cover plate, Dual F&R-control, left side . . . 249
Forward-Reverse Control module, Dual lever (option) . . . 251

Forward-Reverse control module From A015765
Forward-Reverse control module . . . 253
4812122939 Forward & Reverse control . . . 255
4812121384 Forward & Reverse control . . . See page 245
Cover plate, Dual F&R-control, left side . . . See page 249
Forward-Reverse Control module, Dual lever (option) . . . 259

Throttle control
Throttle control, cpl . . . 261

Throttle control cpl - Dual frequency To A014939
Throttle control cpl, Dual frequency . . . 263

Throttle control cpl - Dual frequency From A014940
Throttle control cpl, Dual frequency (option) . . . 265
Seat laterally adjusting . . . 267
Step (option) . . . 269
Driver seat, Std . . . 271
Driver seat, Luxury (option) . . . 273
Driver's seat, without armrests . . . 275
Seat belt module 3" . . . 277
Seat belt module 2" . . . 279
Rear view mirror (option) . . . 281
ROPS, foldable . . . 283
Rops (option) . . . 285
Canopy (option) . . . 287

Decals
Decals . . . 289
Plain Dynapac decals, kit . . . 291

Optional equipment
Fire extinguisher . . . 293
Tool equipment . . . 295
SMV-sign and Licence plate . . . 297
Brake release, propulsion motor Poclain . . . 299
Brake release, "high torque" drum drive . . . 301

High torque drum drive " Short"
High torque drum drive " Short" . . . 303

4700380594 Hydraulic motor, propulsion, drum 305
FleetLink module 309
4812013038 GPS module 311
Appendix B:Parts Index 313

CC1200 Plus S/N 10000332xxA012669 - xxA021038



Item	Part No.	Name	Qty	L	SN INFO
0	-	Service kits	1		
0	-	Repair kits	1		
10	-	Operator platform	1		
20	-	Drum	2		
30	-	Engine room	1		
50	-	Hydraulic system	1		
60	-	Electric equipment	1		
70	-	Drivers platform	1		
80	-	Decals	1		
91	-	Optional equipment	1		

Service kits 4812156265 Service kit 50h

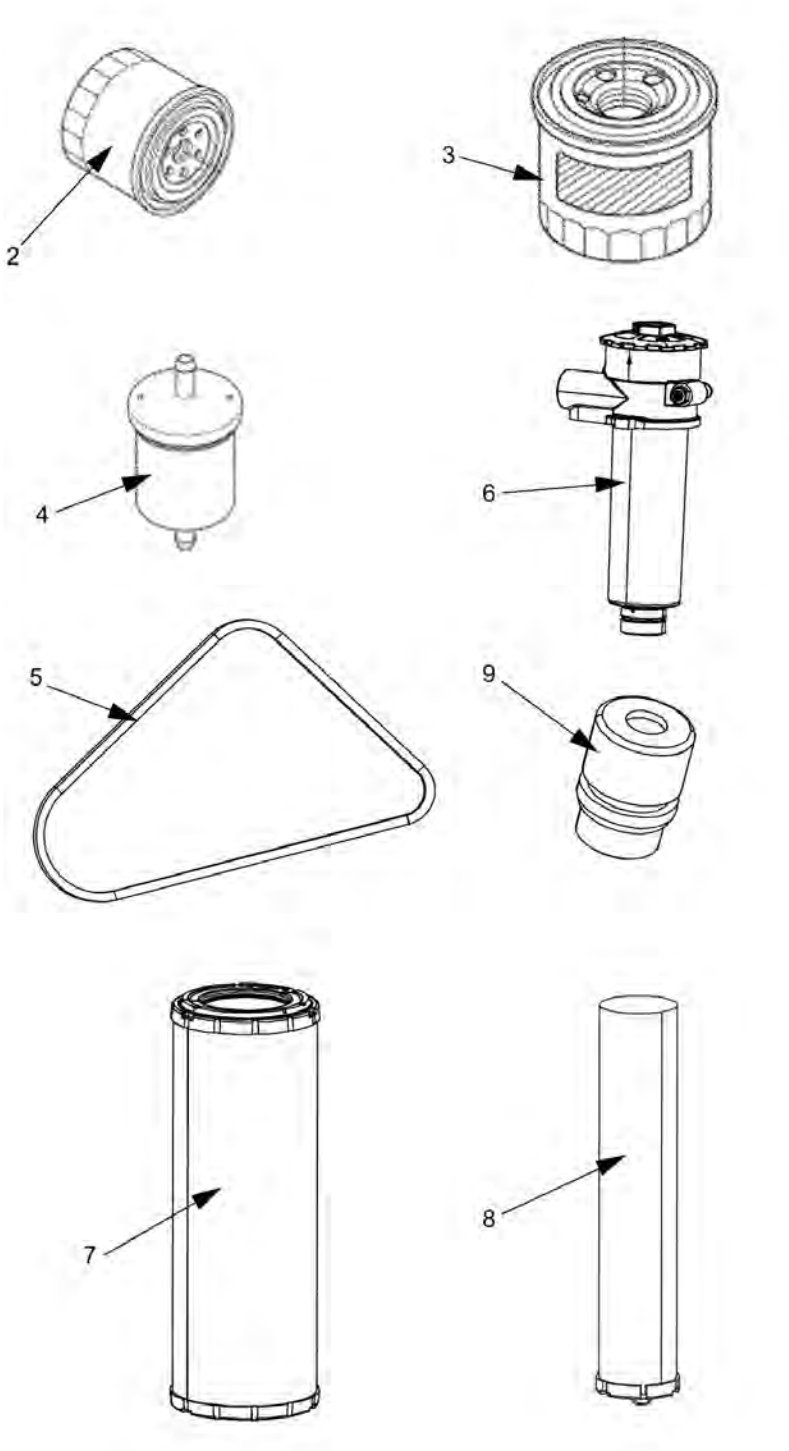

Item	Part No.	Name	Qty	L	SN INFO
0	4812156265	Service kit 50h	1		
2	4812156259	Engine oil filter element	1		
3	4812156263	Fuel filter element	1		
4	4812156264	Pre-fuel filter element	1		
6	4812113328	Hydraulic oil filter element	1		

Service kits 4812159563 Service kit 50h Plus

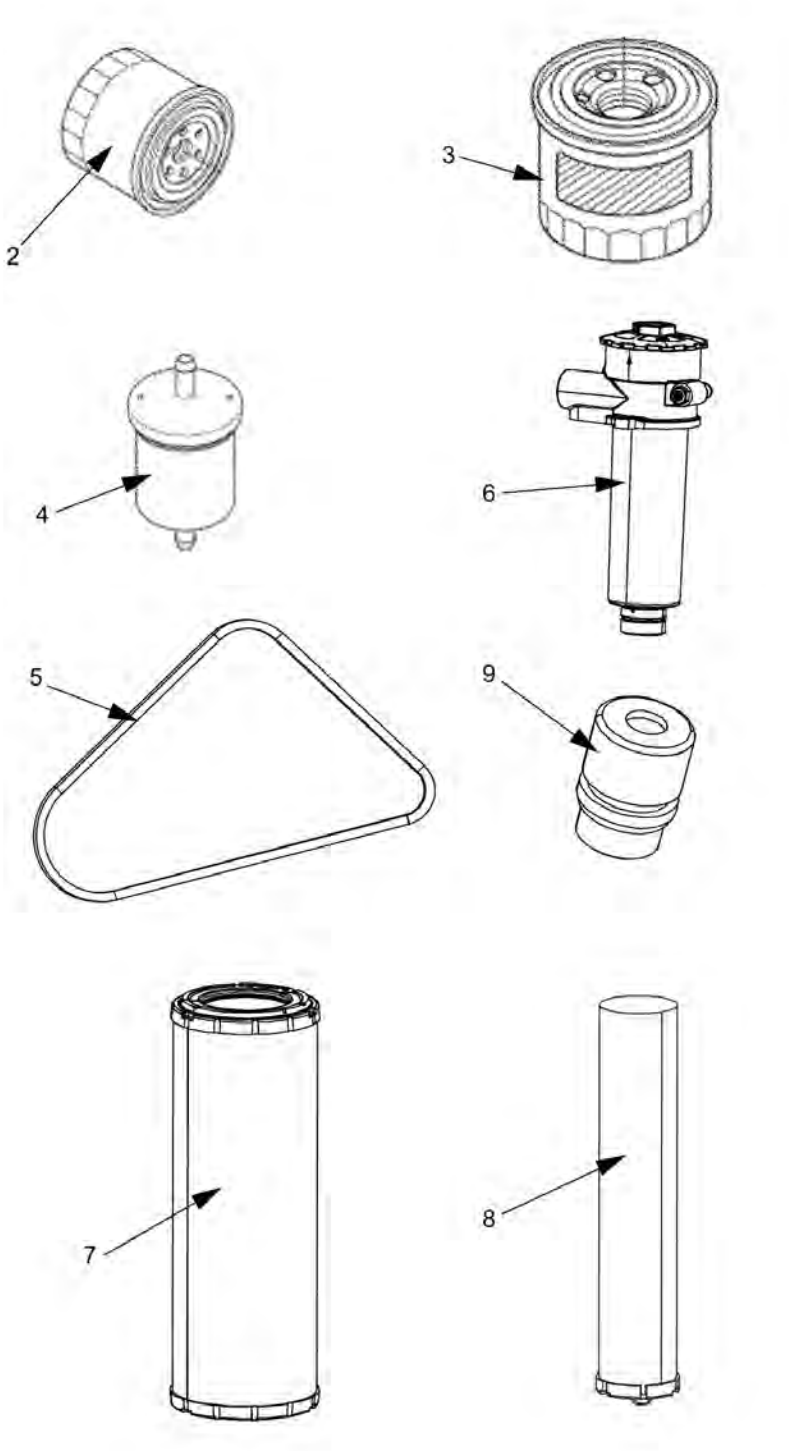

Item	Part No.	Name	Qty	L	SN INFO
0	4812159563	Service kit 50h Plus			
2	4812156259	Engine oil filter element	1		
3	4812156263	Fuel filter element	1		
4	4812156264	Pre-fuel filter element	1		
6	4812113328	Hydraulic oil filter element	1		
10	5580020624	Engine oil 100 / 5 ltr.	2		
11	4812030096	Dynapac Roller Grease	1		

Service kits 4812156288 Service kit 250 / 750 h

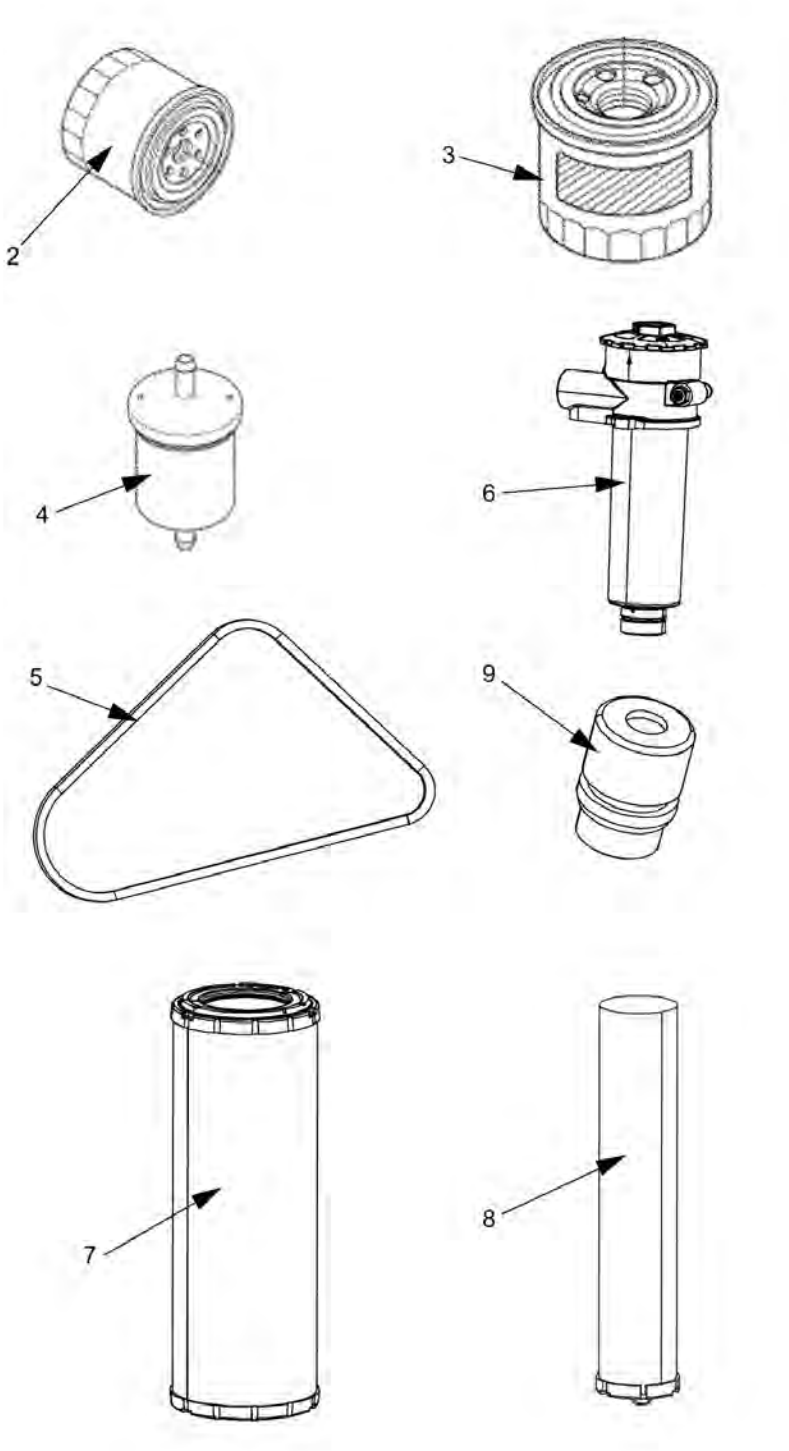

Item	Part No.	Name	Qty	L	SN INFO
0	4812156288	Service kit 250 / 750 h	1		
2	4812156259	Engine oil filter element	1		

Service kits 4812159564 Service kit 250/750h Plus

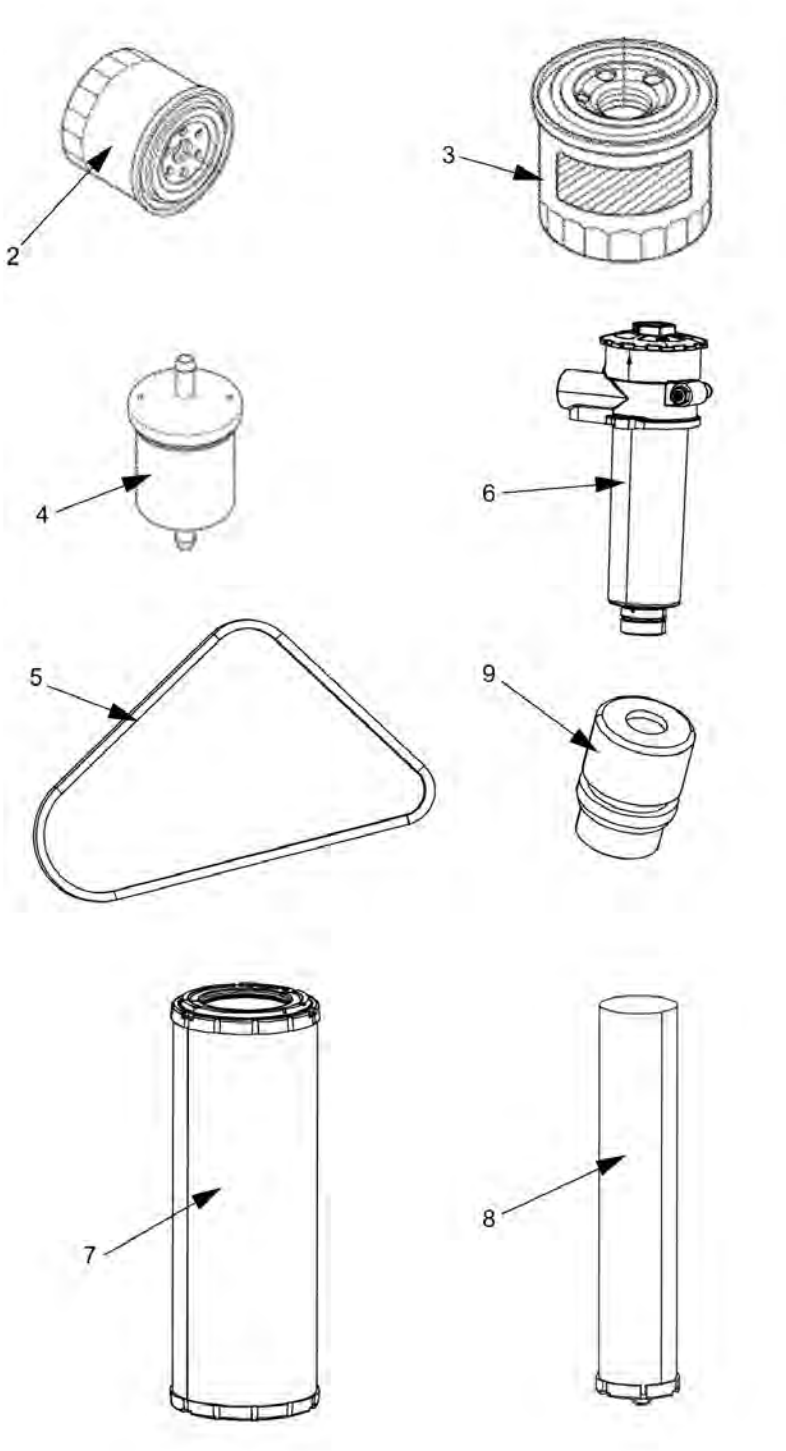

Item	Part No.	Name	Qty	L	SN INFO
0	4812159564	Service kit 250/750h Plus			
2	4812156259	Engine oil filter element	1		
10	5580020624	Engine oil 100 / 5 ltr.	2		

Service kits 4812156266 Service kit 500h

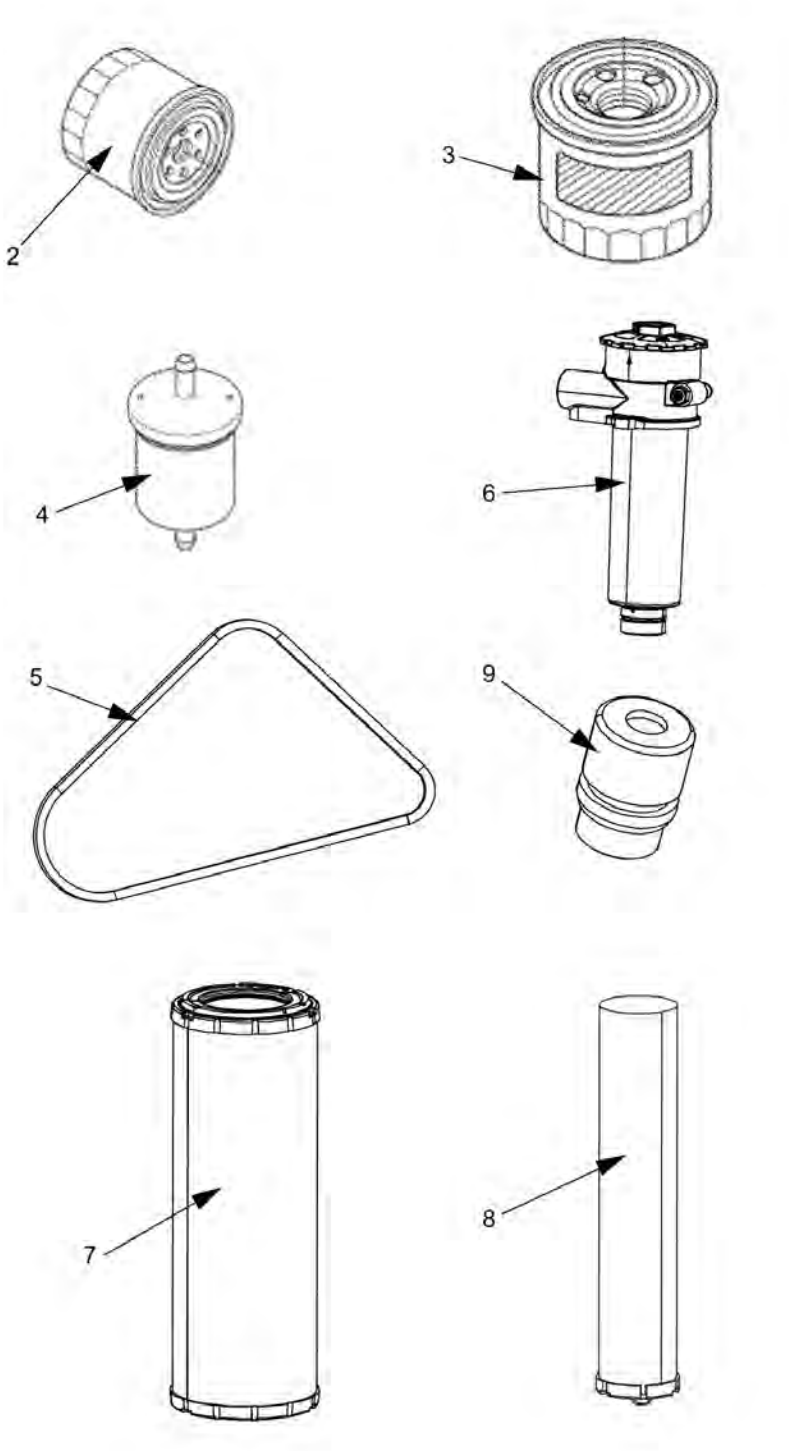

Item	Part No.	Name	Qty	L	SN INFO
0	4812156266	Service kit 500h	1		
2	4812156259	Engine oil filter element	1		
3	4812156263	Fuel filter element	1		
4	4812156264	Pre-fuel filter element	1		
5	4812156260	V-belt	1		

Service kits 4812159565 Service kit 500h Plus

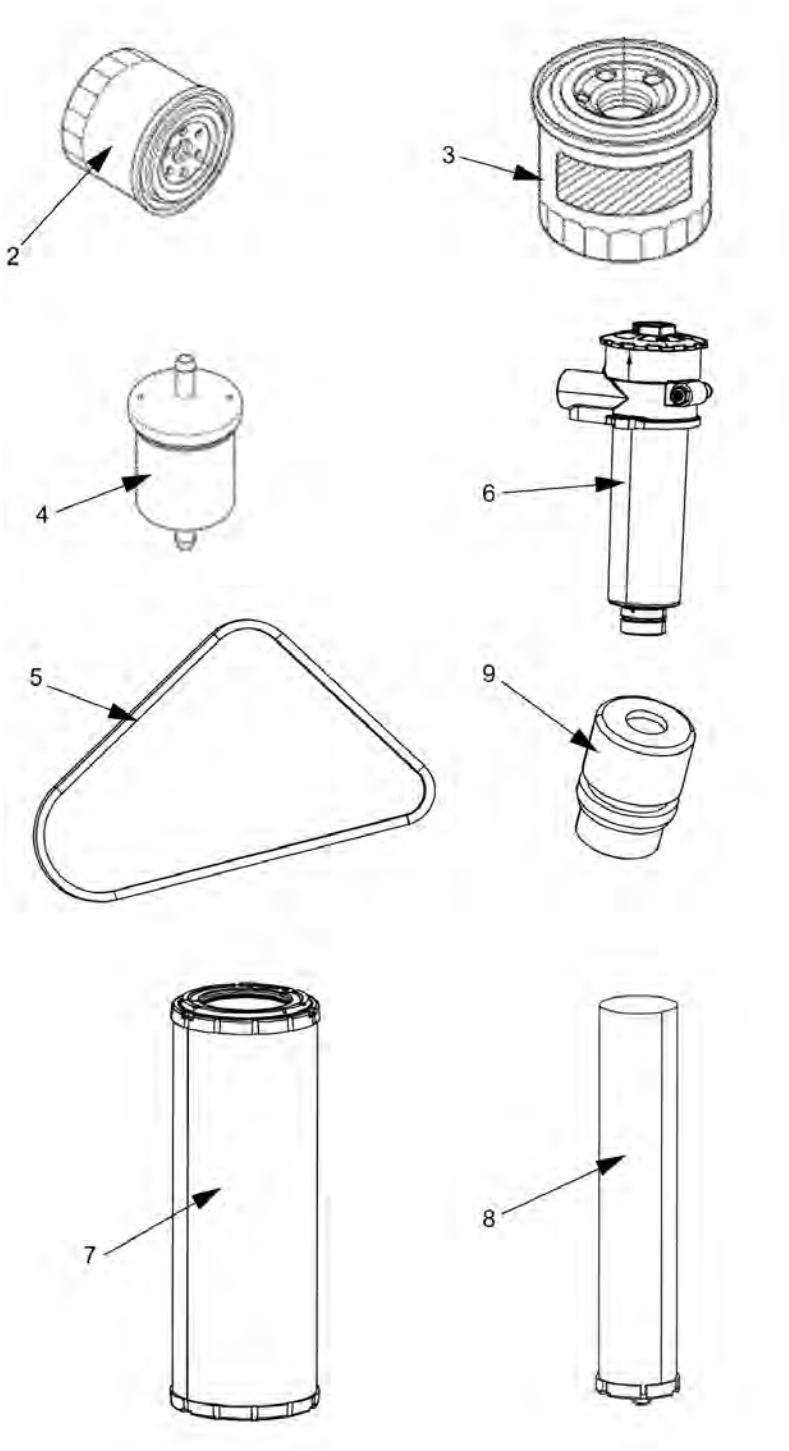

Item	Part No.	Name	Qty	L	SN INFO
0	4812159565	Service kit 500h Plus			
2	4812156259	Engine oil filter element	1		
3	4812156263	Fuel filter element	1		
4	4812156264	Pre-fuel filter element	1		
5	4812156260	V-belt	1		
10	4812030096	Dynapac Roller Grease	1		

Service kits 4812156267 Service kit 1000 h

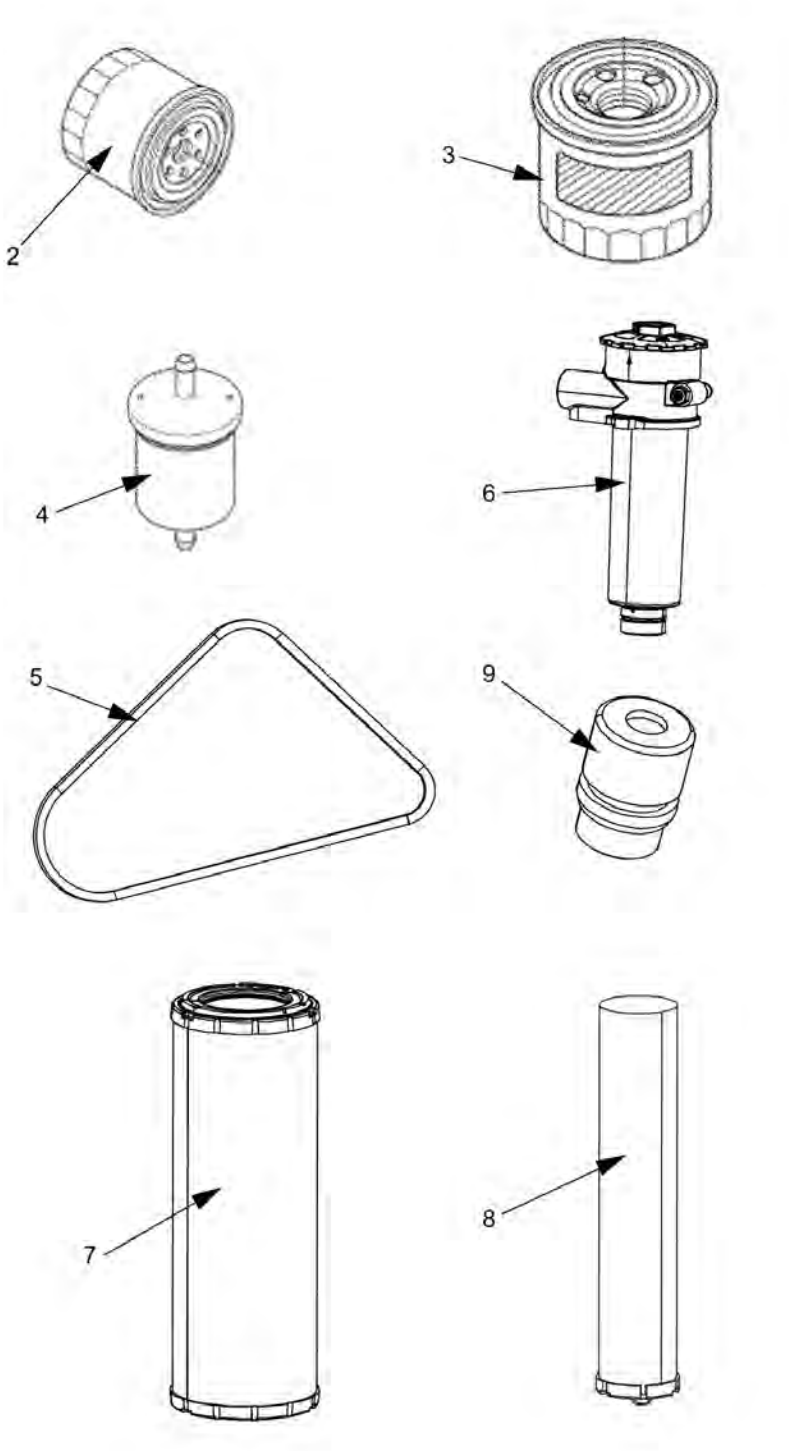

Item	Part No.	Name	Qty	L	SN INFO
0	4812156267	Service kit 1000 h	1		
2	4812156259	Engine oil filter element	1		
3	4812156263	Fuel filter element	1		
4	4812156264	Pre-fuel filter element	1		
5	4812156260	V-belt	1		
6	4812113328	Hydraulic oil filter element	1		
7	4700939802	Air filter element Main	1		
8	4700939803	Air filter element Safety	1		
9	4700357138	Ventilating filter	1		
10	4812156261	Valve cover gasket	1		

Service kits 4812159566 Service kit 1000h Plus

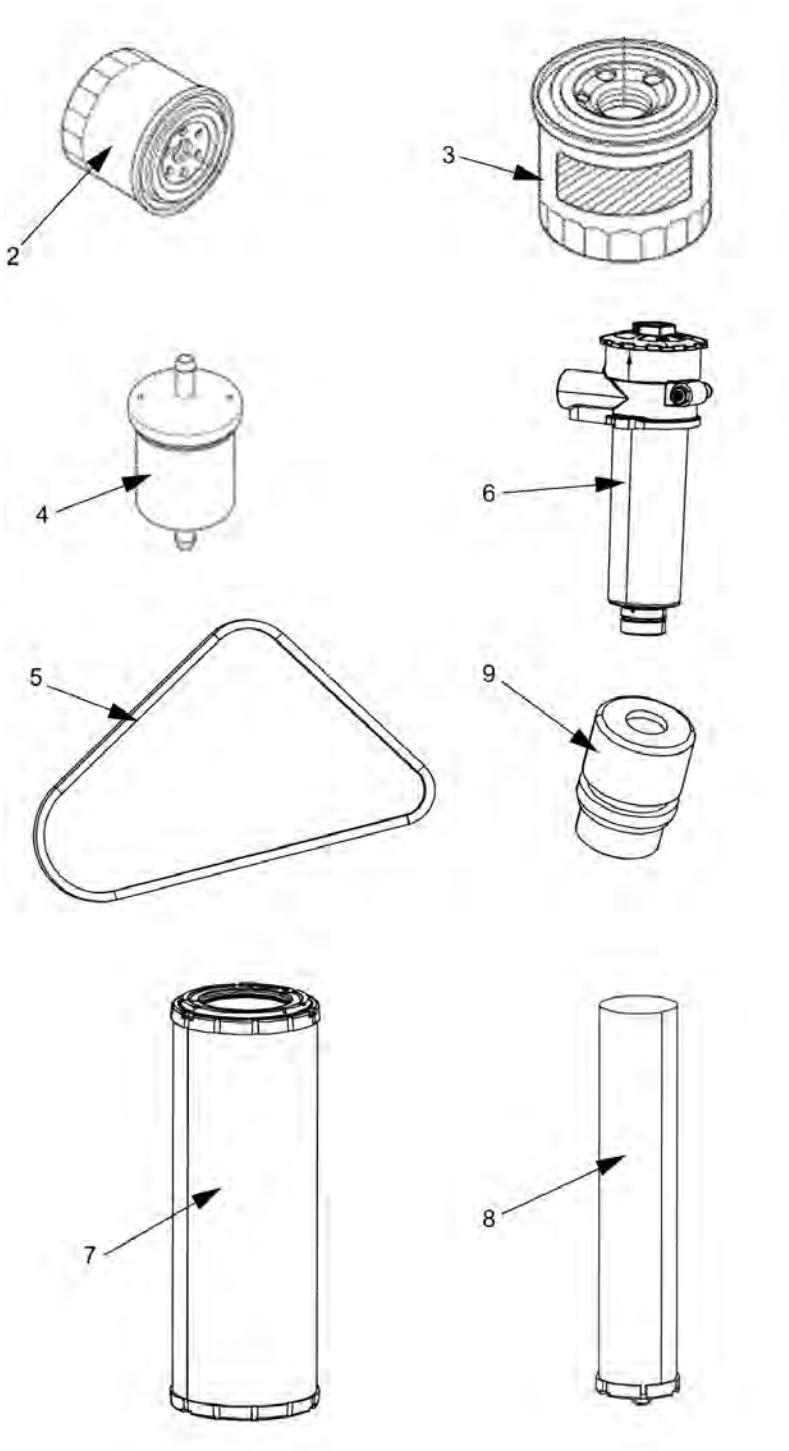

Item	Part No.	Name	Qty	L	SN INFO
0	4812159566	Service kit 1000h Plus			
2	4812156259	Engine oil filter element	1		
3	4812156263	Fuel filter element	1		
4	4812156264	Pre-fuel filter element	1		
5	4812156260	V-belt	1		
6	4812113328	Hydraulic oil filter element	1		
7	4700939802	Air filter element Main	1		
8	4700939803	Air filter element Safety	1		
9	4700357138	Ventilating filter	1		
10	4812156261	Valve cover gasket	1		
11	5580020624	Engine oil 100 / 5 ltr.	2		
12	9106230330	Atlas Copco fluid hydraulic oil 300 / 20 liters	3		
13	4812008274	AC Fluid Gearbox 100 / 5 ltr.	3		

Service kits 4812159571 Start-up kit

NO EXPLODED VIEW
AVAILABLE
FOR THIS BOM

Item	Part No.	Name	Qty	L	SN INFO
0	4812159571	Start-up kit			
1	4812159563	Service kit 50h Plus	1		
2	4812159564	Service kit 250/750h Plus	2		
3	4812159565	Service kit 500h Plus	1		
4	4812159568	Service kit 1000h Plus	1		

Repair kits 4700938908 Eccentric shaft kit

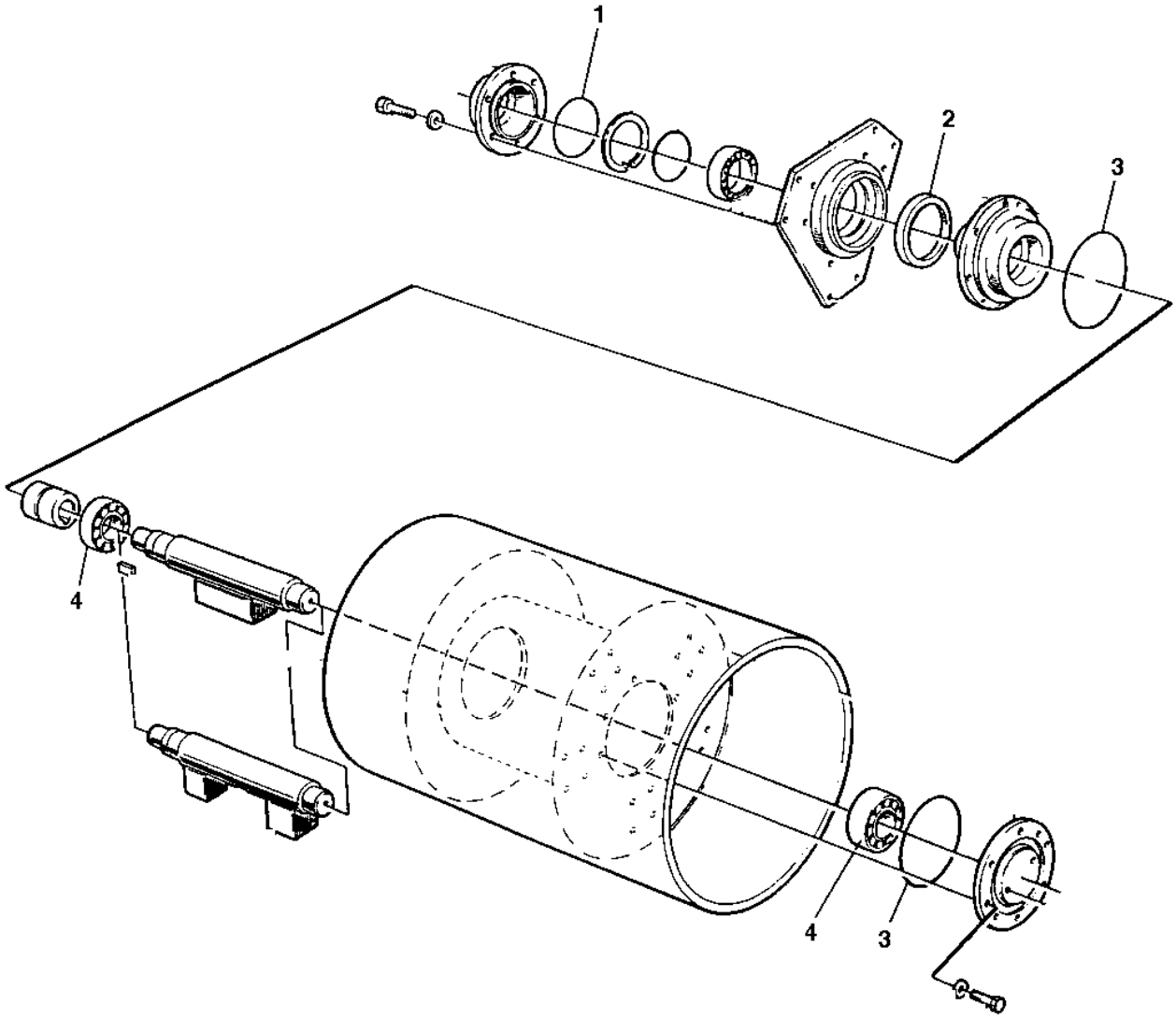

Item	Part No.	Name	Qty	L	SN INFO
0	4700938908	Eccentric shaft kit			
1	4700160132	O-ring 70	1		
2	4700163049	Radial lip-type seal	1		
3	4700923951	O-ring	2		
4	4700904258	Spherical roller bearing	2		

Repair kits 4700938892 Drum rotation kit

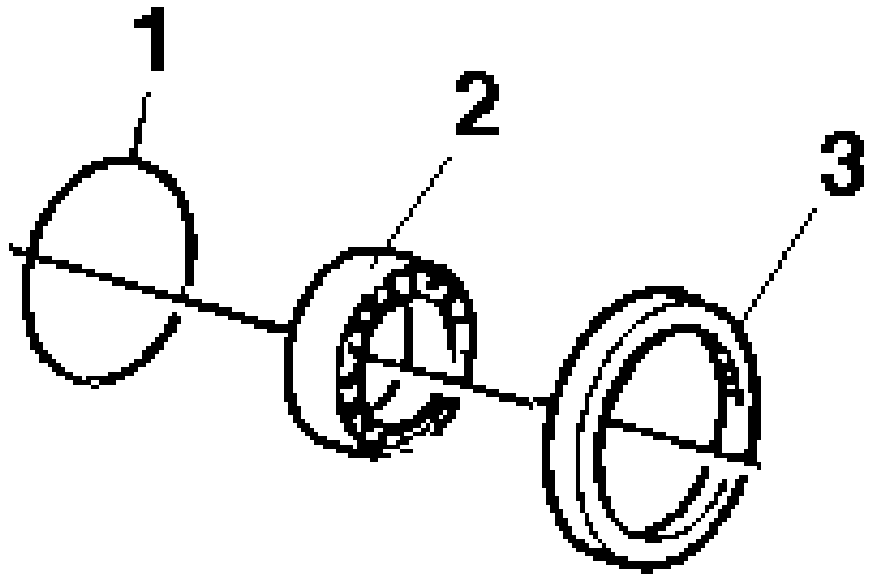

Item	Part No.	Name	Qty	L	SN INFO
0	4700938892	Drum rotation kit			
1	4700160132	O-ring 70	1		
2	4700111018	Ball bearing	1		
3	4700163049	Radial lip-type seal	1		

Repair kits 4700938885 Shock absorber kit, drum

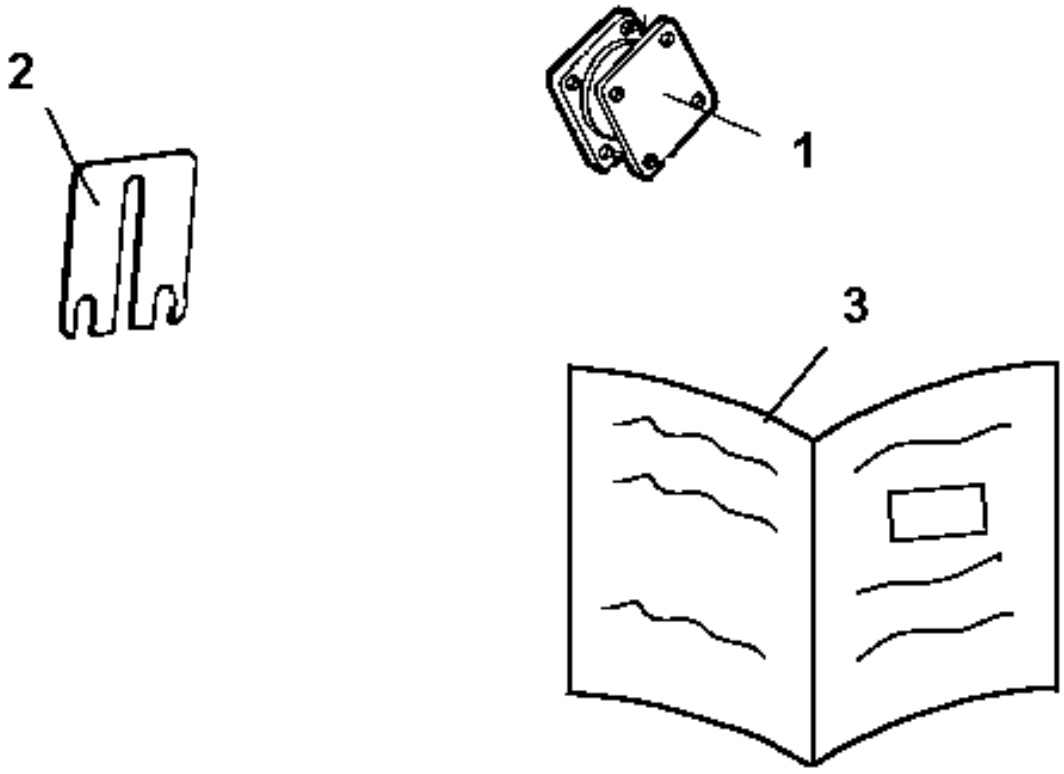

Item	Part No.	Name	Qty	L	SN INFO
0	4700938885	Shock absorber kit, drum			
1	4700345215	Shock absorber	8		
2	4700357222	Shim T=1 mm	4		
3	4812156170	Instructions	1		

Repair kits 4700938575 Steering hitch kit

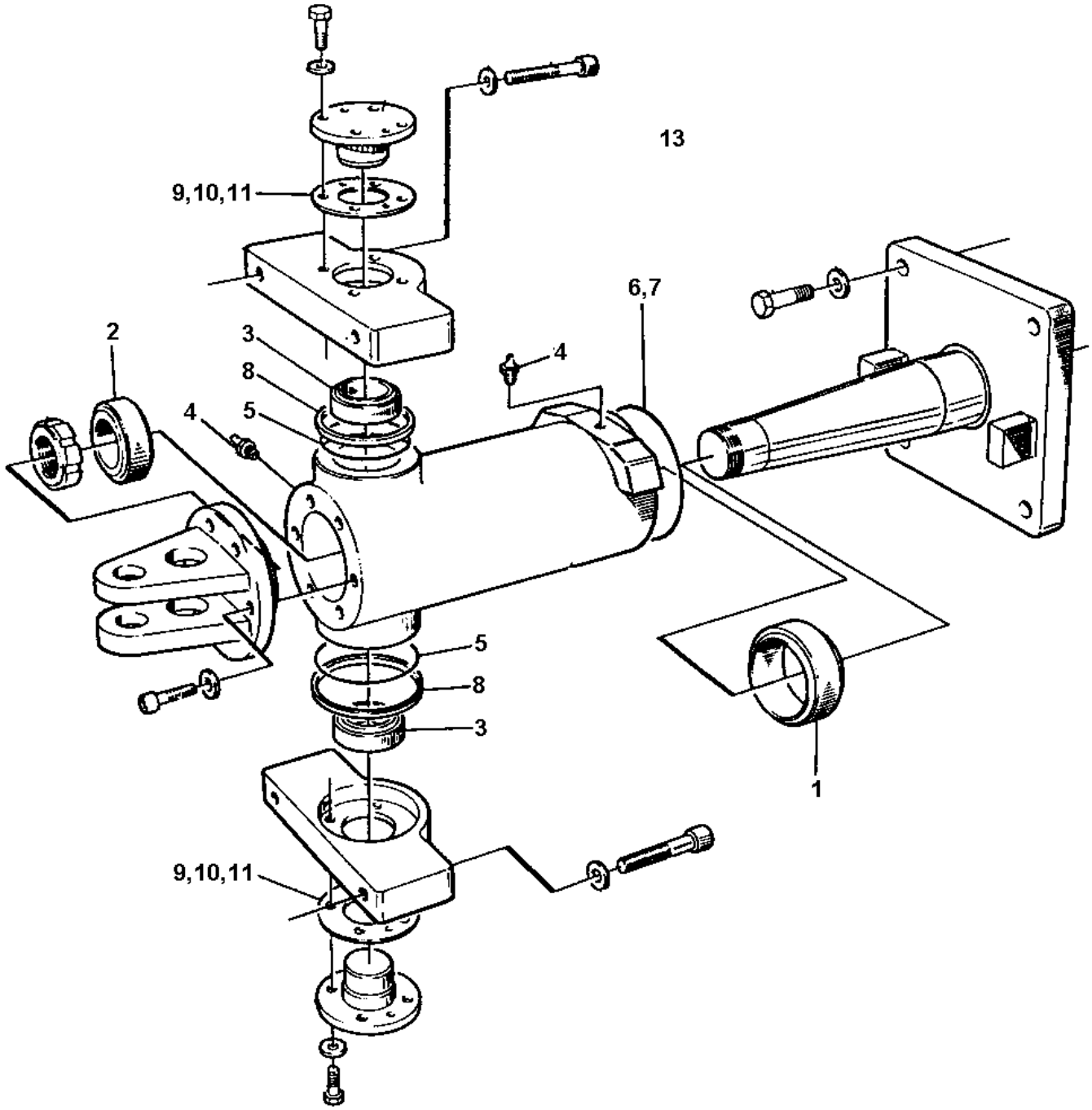

Item	Part No.	Name	Qty	L	SN INFO
0	4700938575	Steering hitch kit			
1	4700902063	Bushing	1		
2	4700902062	Bushing	1		
3	4700902061	Bushing	2		
4	4700926214	Grease fitting	1		
5	4700167044	V-ring	2	A	
6	4700160112	O-ring	1		
7	4700892179	O-ring	1		
8	4700357418	Sealing	2		
9	4700347153	Shim T=0,2 mm	2		
10	4700347154	Shim T=0,4 mm	2		
11	4700347155	Shim T=0,8 mm	2		
13	4700938534	Lube grease	1		

Comments for Page: 4700938575 Steering hitch kit

(L)OCAL REMARKS

A | en_US | For improved function this replaces earlier used 4700160032

Repair kits 4812159961 Scraper kit

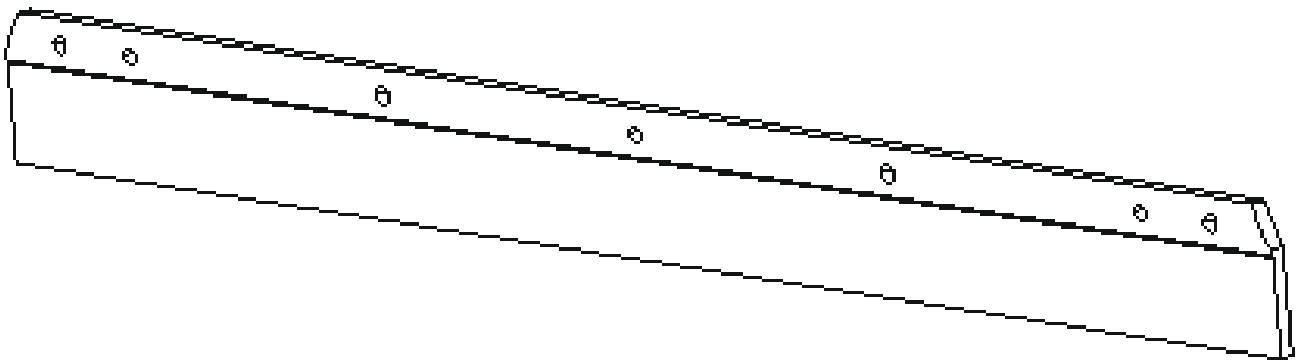

Item	Part No.	Name	Qty	L	SN INFO
0	4812159961	Scraper kit	1		
1	4812120024	Scraper blade	4		

General - Keys and others Keys

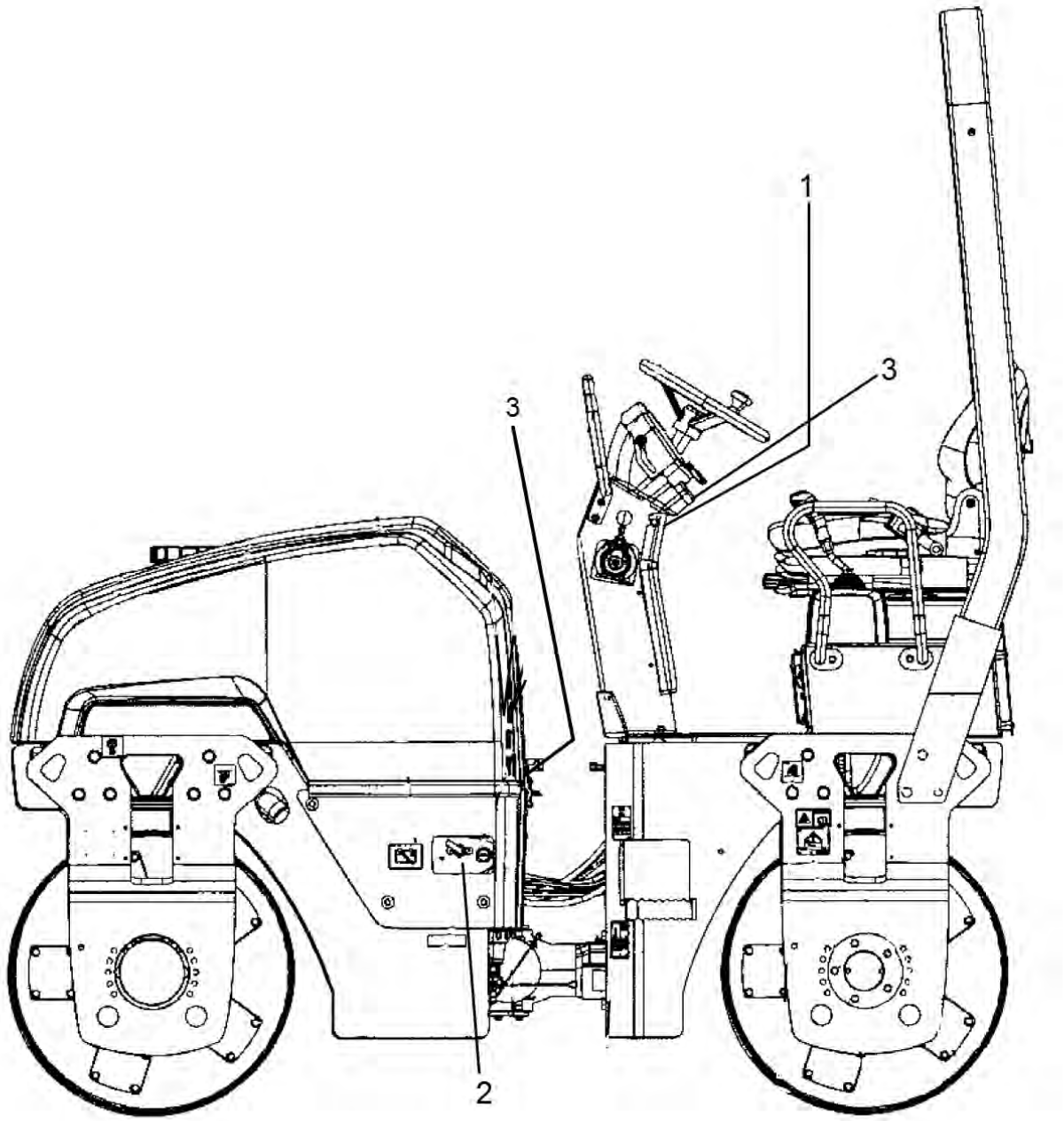

Item	Part No.	Name	Qty	L	SN INFO
1	-	Ignition switch			
1	4700940451	Ignition key			
2	-	Fuel cap			
2	4700945753	Key 2 pcs "921"			To 0A012700
2	4812118885	Key "044"			From 0A012701
3	4700358881	Pad lock			
3	4812161396	Key			

General - Keys and others Fuses

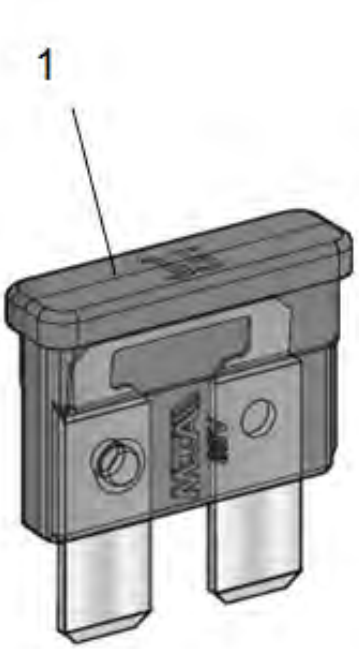

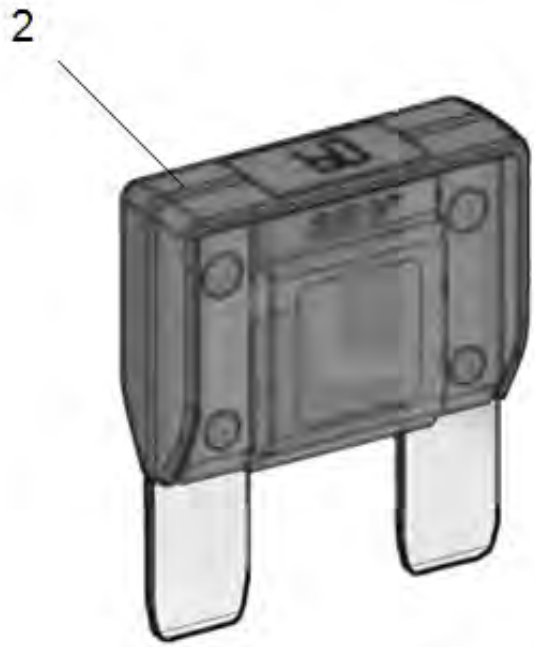

Item	Part No.	Name	Qty	L	SN INFO
1	-	Fuse, blade type Medium			
1	4700901224	Fuse, 3A Violet			
1	4700901225	Fuse 5A Tan			
1	4700901226	Fuse 7.5A Brown			
1	4700901227	Fuse 10A Red			
1	4700901228	Fuse, 15A Blue			
1	4700903741	Fuse 20A Yellow			
1	4700901229	Fuse, 25A Natural			
1	4700901230	Fuse, 30A Green			
2	-	Fuse, blade typ High			
2	4700904294	Fuse 20A Yellow			
2	4700904037	Fuse 30A Green			
2	4700904038	Fuse 40A Orange			
2	4700904039	Fuse 50A Red			
2	4700904040	Fuse 60A Blue			
2	4700904041	Fuse 70A Tan			
2	4700904042	Fuse 80A Natural (White)			

Frames To A014775 Frame, front

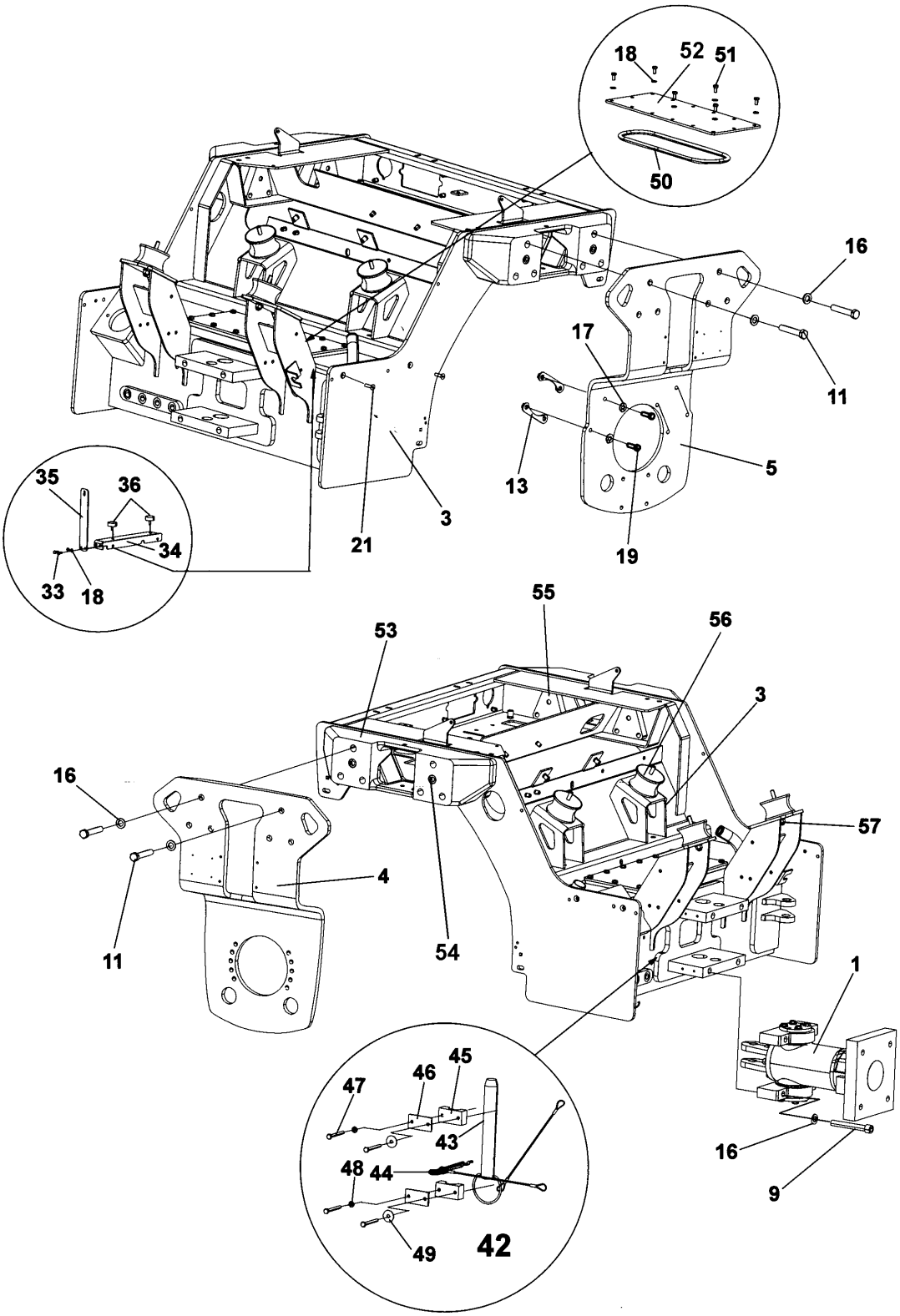

Item	Part No.	Name	Qty	L	SN INFO
1	-	Steering hitch	1		
3	4812119733	Frame, front	1		
4	4812120578	Fork	1		
5	4812120579	Fork	1		
9	4700902100	Screw	4		
11	4700923247	Screw M16x160	12		
13	4700379179	Holder	6		
16	4700904232	Steel plain washer	16		
17	4700904230	Plain washer 10.5x22x2 mm	12		
18	4700904229	Washer, 8.4x 6x1.5 mm 300HV	16		
19	4812110288	Screw	12		
21	4700902520	Screw	2		
33	4700500100	Hexagon screw	2		
34	4812116681	Bracket	1		
35	4812113080	Bracket	1		
36	4700792601	Shock absorber	2		
42	-	Steering hitch lock	1		
43	4812125927	Shaft	1		
44	4700357489	Hair pin	1		
45	4700902171	Clamp	2		
46	4700902172	Cover plate	2		
47	4700500016	Screw M6x55 8.8 A2K	4		
48	4700600004	Washer	2		
49	4700615076	Washer 7,0x25x1,5	2		
50	4700349880	O Ring	1		
51	4700500019	Hexagon screw	14		
52	4700349879	Cover	1		
53	4812113924	Spacer block	2		To 0A013002
53	4812120470	Spacer block	2		From 0A013003
54	4700902101	Screw	4		
55	4700393540	Threaded plate	4		
56	4812113018	Shock absorber	4		
57	4700586018	Lock nut M10	4		

Frames To A014775 Frame, rear

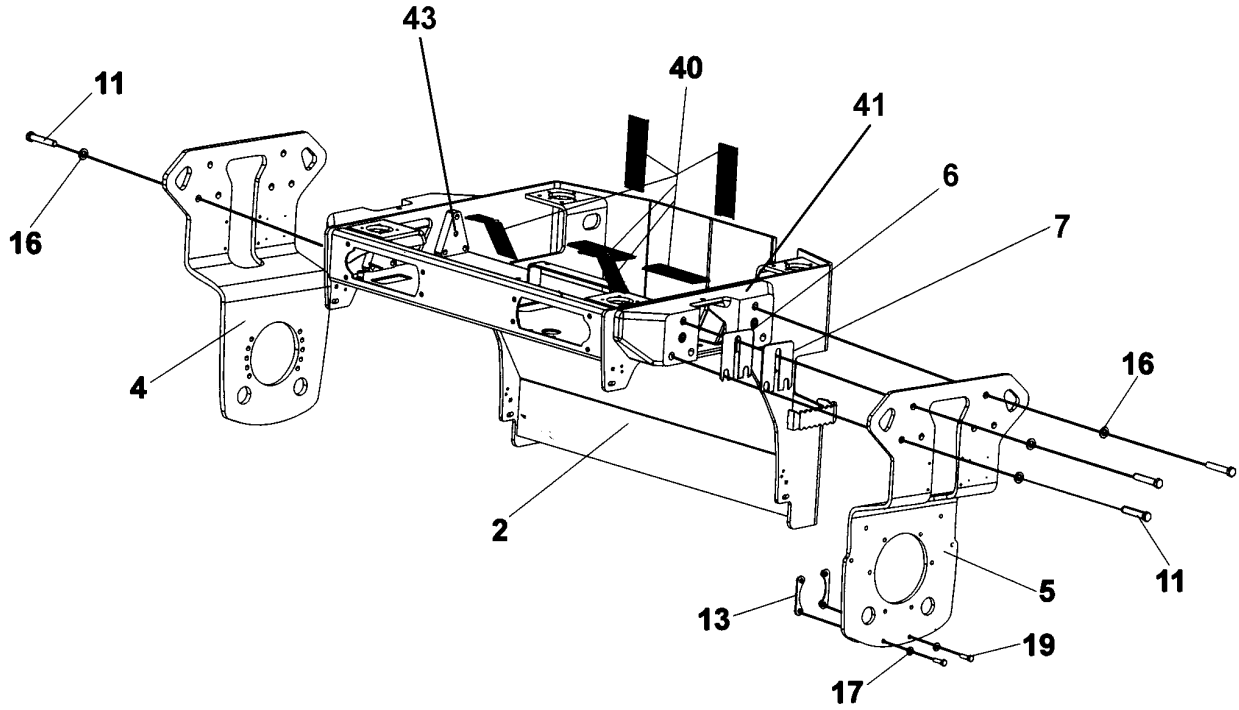

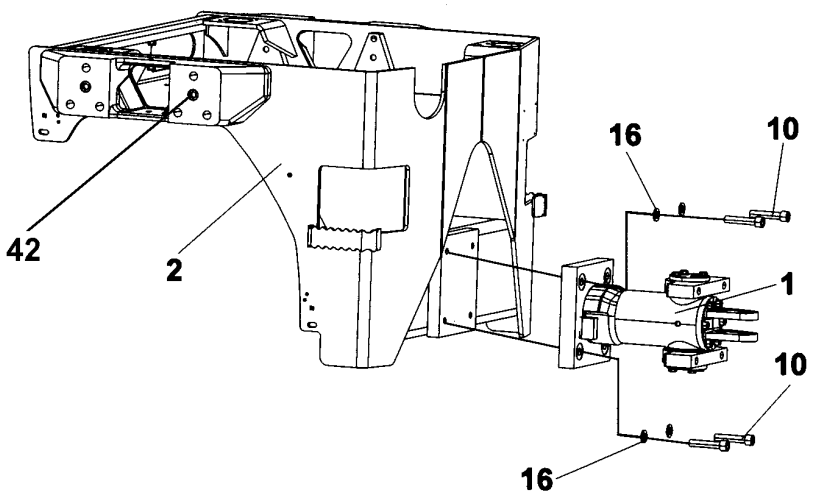

Item	Part No.	Name	Qty	L	SN INFO
1	-	Steering hitch	1		
2	4812119732	Frame, rear	1		
4	4812120578	Fork	1		
5	4812120579	Fork	1		
6	4700357222	Shim T=1 mm	N		
7	4700357221	Shim T=3 mm	N		
10	4700927396	Screw	4		
11	4700923247	Screw M16x160	12		
13	4700379179	Holder	6		
16	4700904232	Steel plain washer	16		
17	4700904230	Plain washer 10.5x22x2 mm	12		
19	4812110288	Screw	12		
40	4700357459	Rubber cloth	6		
41	4812120470	Spacer block	2		
42	4700902101	Screw	4		
43	4700393540	Threaded plate	4		

Frames From A014776 Frame, front

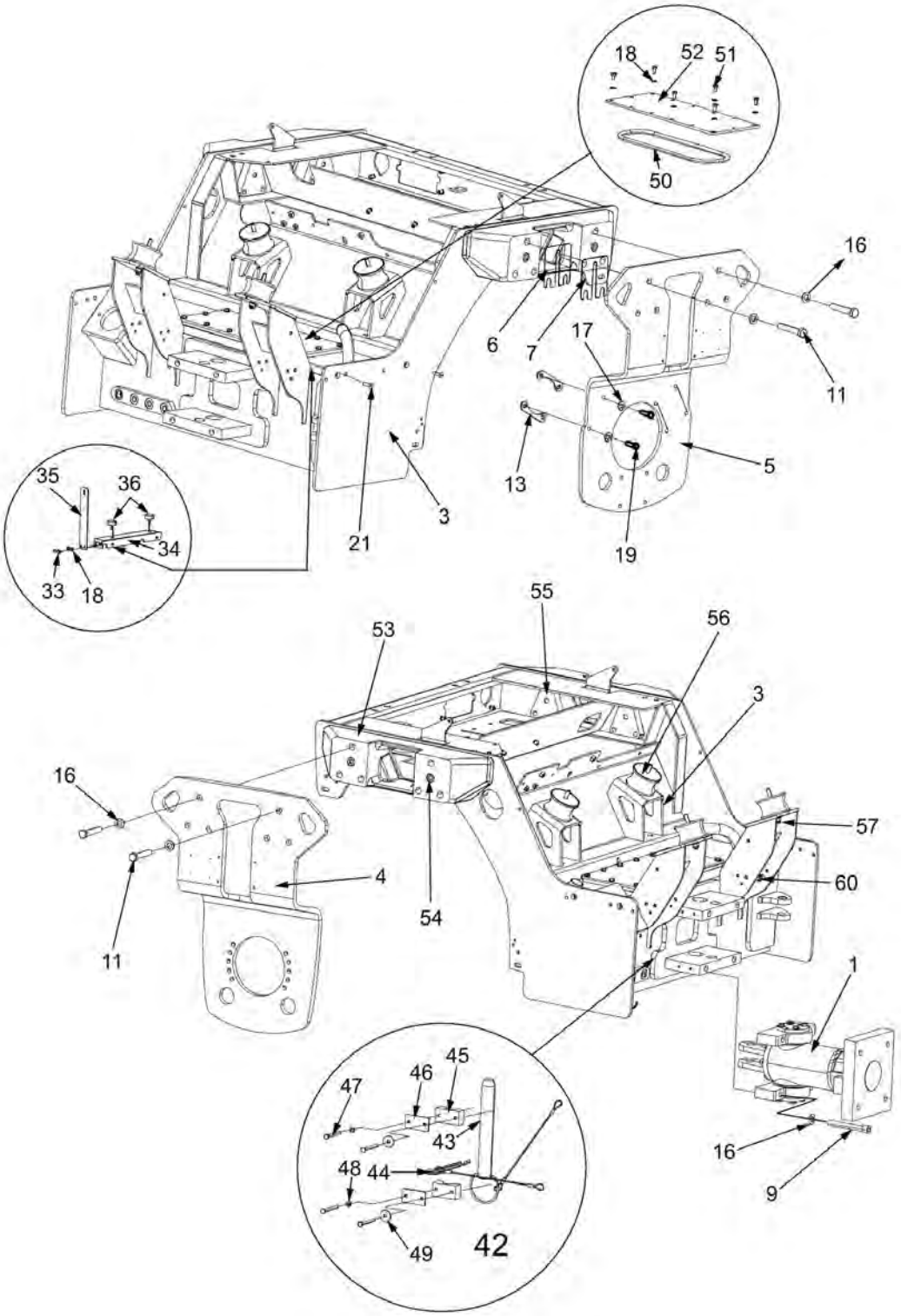

Item	Part No.	Name	Qty	L	SN INFO
1	4812120871	Steering hitch	1		
3	4812122477	Frame, front	1		
4	4812120578	Fork	1		
5	4812120579	Fork	1		
6	4700357222	Shim T=1 mm	N		
7	4700357221	Shim T=3 mm	N		
9	4700902100	Screw	4		
11	4700923247	Screw M16x160	12		
13	4700379179	Holder	6		
16	4700904232	Steel plain washer	16		
17	4700904230	Plain washer 10.5x22x2 mm	16		
18	4700904229	Washer, 8.4x 6x1.5 mm 300HV	16		
19	4812110288	Screw	12		
21	4700902520	Screw	2		
33	4700500100	Hexagon screw	2		
34	4812116681	Bracket	1		
35	4812113080	Bracket	1		
36	4700792601	Shock absorber	2		
42	-	Steering hitch lock	1		
43	4812125927	Shaft	1		
44	4700357489	Hair pin	1		
45	4700902171	Clamp	2		
46	4700902172	Cover plate	2		
47	4700500016	Screw M6x55 8.8 A2K	4		
48	4700600004	Washer	2		
49	4700615076	Washer 7,0x25x1,5	2		
50	4700349880	O Ring	1		
51	4700500019	Hexagon screw	14		
52	4700349879	Cover	1		
53	4812120470	Spacer block	2		
54	4700902101	Screw	4		
55	4700393540	Threaded plate	4		
56	4812113018	Shock absorber	4		
57	4700586018	Lock nut M10	4		
58	4812119157	Blind insert nut	2		
59	4812119156	Blind insert nut	10		
60	4812120993	Clip	1		

Frames From A014776 Frame, rear

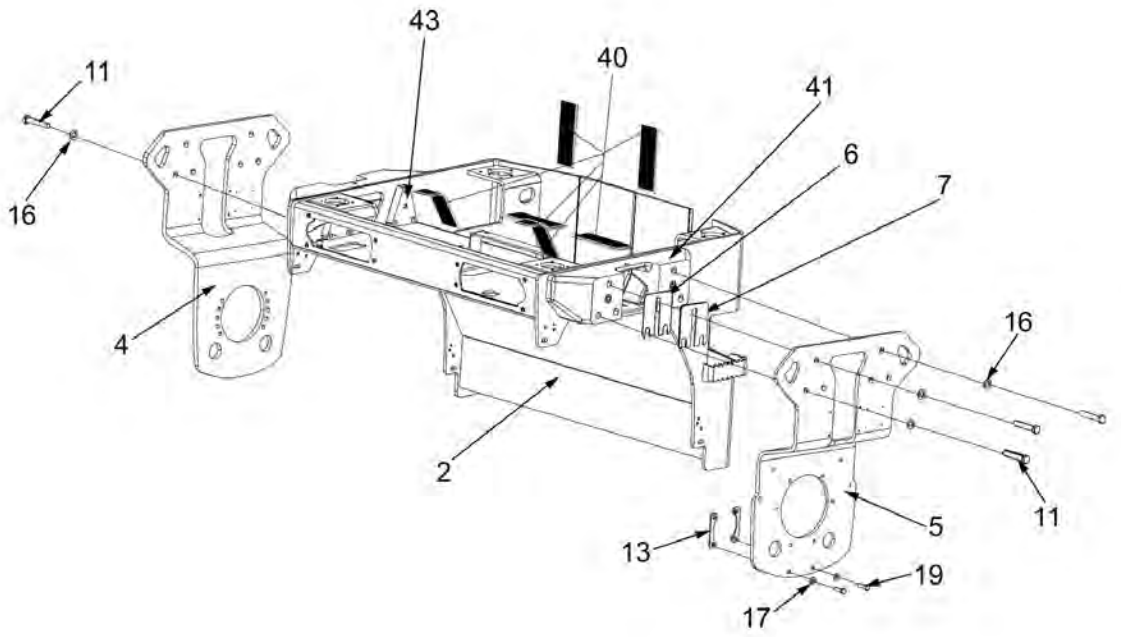

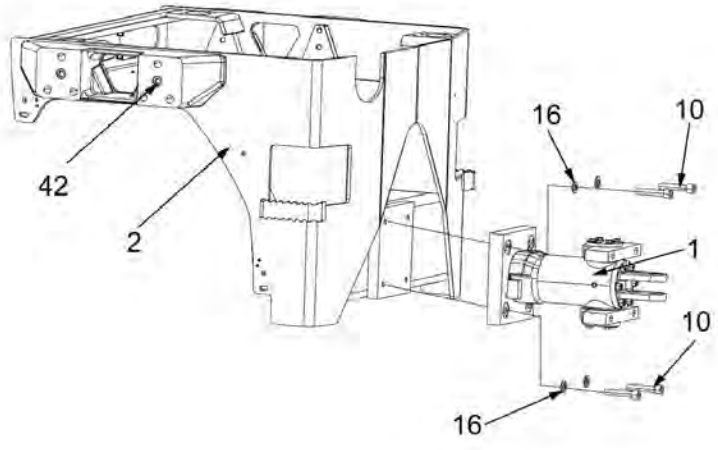

Item	Part No.	Name	Qty	L	SN INFO
1	-	Steering hitch	1		
2	4812120184	Frame, rear	1		
4	4812120578	Fork	1		
5	4812120579	Fork	1		
6	4700357222	Shim T=1 mm	N		
7	4700357221	Shim T=3 mm	N		
10	4700927396	Screw	4		
11	4700923247	Screw M16x160	12		
13	4700379179	Holder	6		
16	4700904232	Steel plain washer	16		
17	4700904230	Plain washer 10.5x22x2 mm	12		
19	4812110288	Screw	12		
40	4700357459	Rubber cloth	6		
41	4812120470	Spacer block	2		
42	4700902101	Screw	4		
43	4700393540	Threaded plate	4		

Frame Sprinkler system

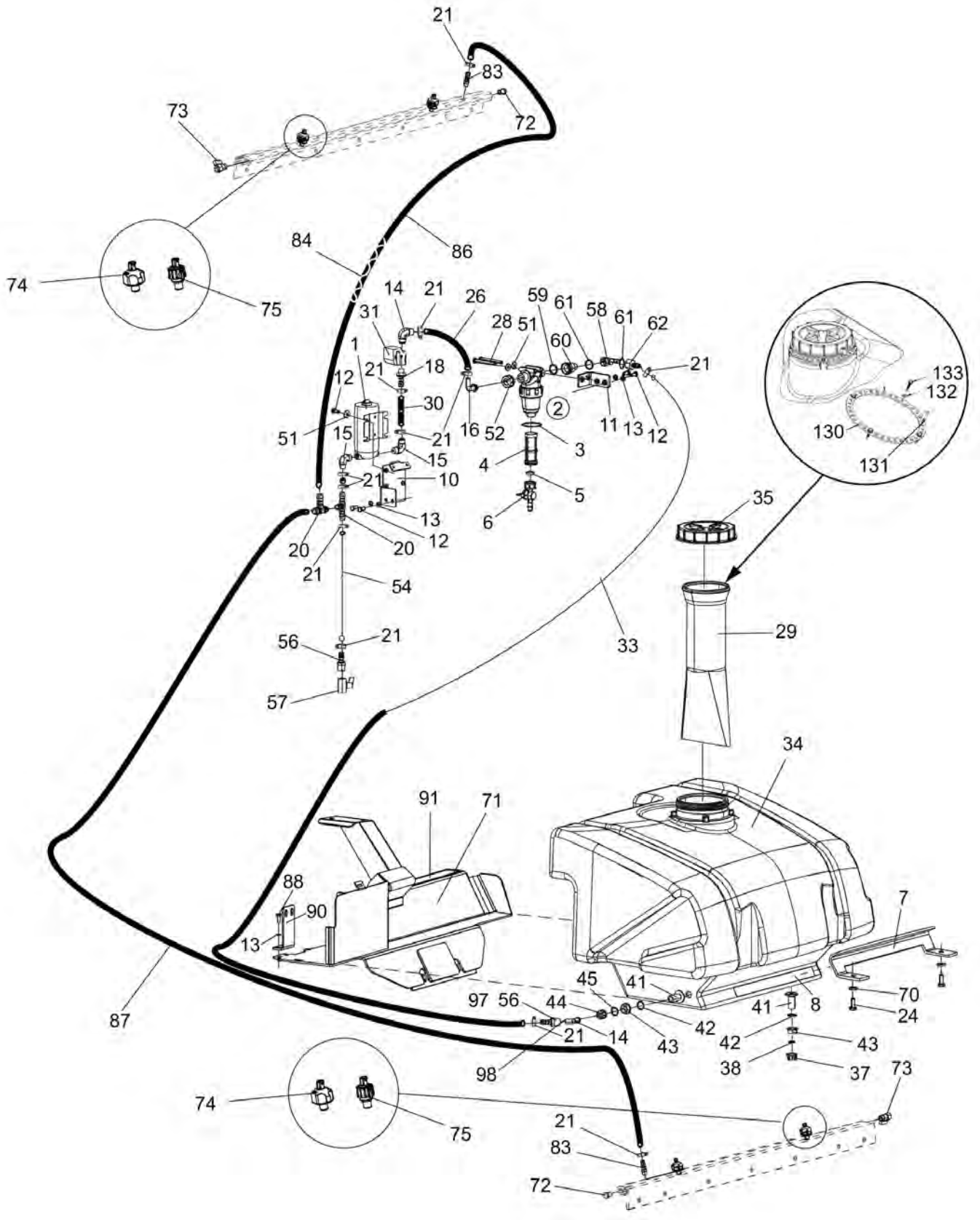

Item	Part No.	Name	Qty	L	SN INFO
1	4812113822	Water pump	1		
2	4812111325	Water filter	1		
3	4700791959	O-ring	1		
4	4700791949	Filter element	1		
5	4700791568	Gasket	1		
6	4700379009	Valve	1		
7	4700357395	Holder plate	1		
8	4700926911	Rubber strip	1XL	A	
10	4812113066	Bracket	1		
11	4812113067	Bracket	1		
12	4700500053	Screw, M8x20 mm 8.8 A2K	15		To A018474
12	4700500053	Screw, M8x20 mm 8.8 A2K	17		From A018475
13	4700904229	Washer, 8.4x 6x1.5 mm 300HV	6		
14	4700901431	Hose connection	1		
15	4700923734	Hose connection	2		
16	4812111330	Hose connection	1		
18	4700901432	Hose connection	1		
20	4700923735	Hose connection	2		
21	4700313002	Hose clamp	16		
22	4700903478	Fabric Tape	1XL	B	
24	4700500028	Screw, M10 x 25 mm 8.8 A3K	4		
26	4812112074	Plastic hose (x m)	1XL	D	
28	4700500190	Screw	2		
29	4700358846	Strainer	1		
30	4812112074	Plastic hose (x m)	1XL	E	
31	4700287713	Solenoid valve	1		
33	4812112074	Plastic hose (x m)	1XL	C	
34	4812111969	Sprinkler tank, cpl.	1		
35	4700359003	Tank Cap	1		
37	4811000168	Cap	1		
38	4700392229	Plane gasket	1		
41	4700392230	Grommet	2		
42	4700160219	O-ring	2		
43	4700392232	Nut	2		
44	4700392227	Swivel nut	1		
45	4700792600	O-ring 70	1		
51	4700904640	Washer, 8.4x22x3 mm 300HV	6		
52	4700792779	Swivel nut	1		

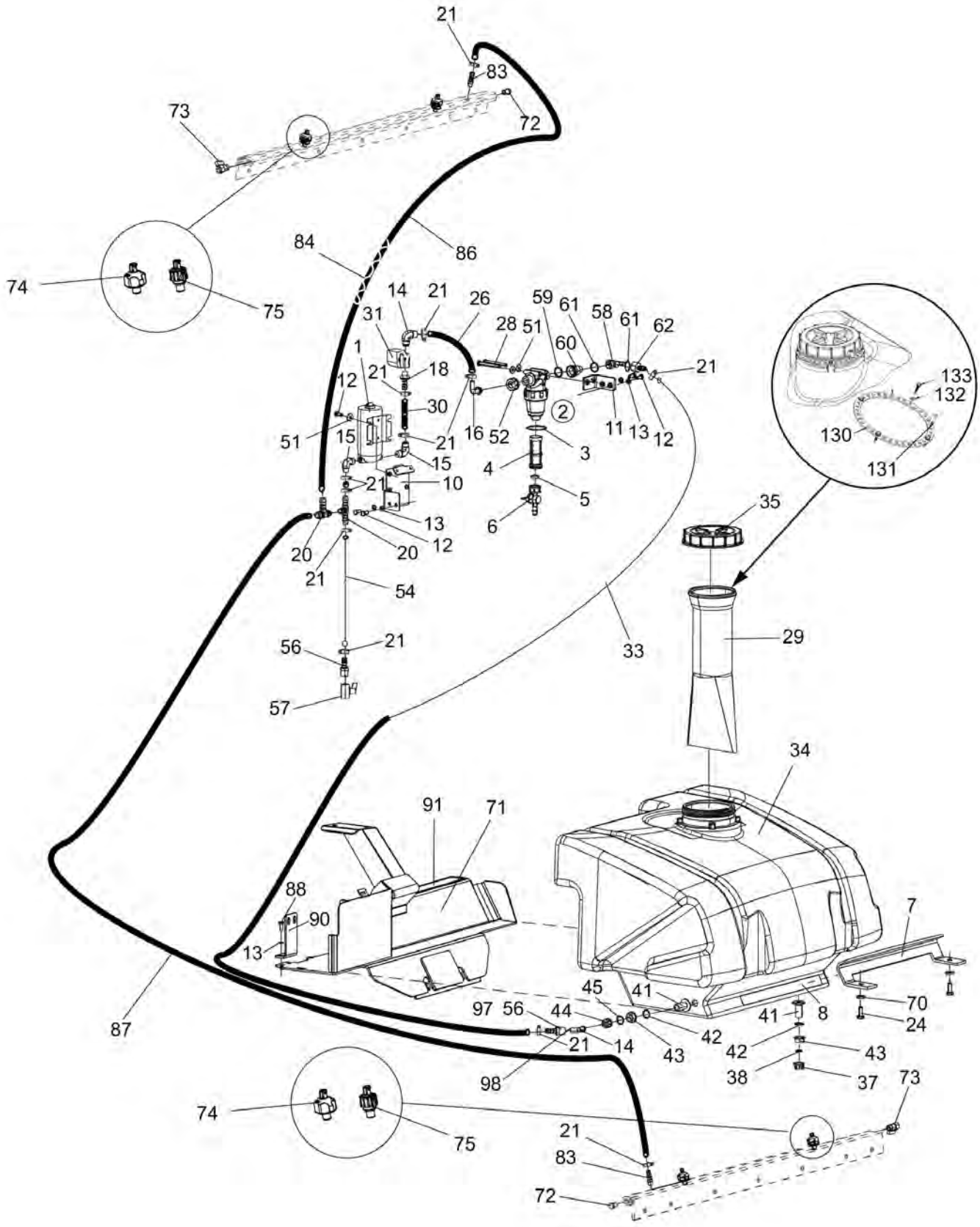
21
83
72
73
74
75
84
86
14
21
26
59
61
58
61
62
31
28
51
60
1
21
18
21
12
30
51
15
21
16
52
3
4
15
21
10
5
6
13
20
12
20
21
54
56
21
57
33
35
29
34
91
71
88
90
13
87
97
56
44
45
41
42
43
21
14
98
41
8
70
24
7
42
43
38
37
73
74
75
21
83
72
133
132
130
131
2
11
13
12

Item	Part No.	Name	Qty	L	SN INFO
54	4812112074	Plastic hose (x m)	1XL	H	
56	4700924544	Hose connection	2		
57	4700925599	Ball valve	1		
58	4812112831	Ball valve	1		To A020066
58	4812126907	Ball valve	1		From A020067
59	4700160313	O-ring 70	1		
60	4812111331	Reducer nipple	1		
61	4700379753	Gasket	4		
62	4812112451	Hose connection	1		
70	4700904557	Washer, 10.5x22x4 mm 300 HV	4		
71	4812117746	Heat protection	1		To A019089
71	4812126431	Heat protection	1		From A019090
72	4700792072	End plug	2		
73	4700233215	Ball valve	2		
74	4700392011	Spraying nozzle, cpl	6		
-	4700392509	Retainer, nozzle, strainer, yellow	1		
--	4700392510	Gasket	1		
--	4700393697	Nozzle and strainer, yellow 0.8	1		
75	4812124321	Spraying nozzle, cpl	6		
-	4812124323	Cap, blue	1		
-	4812124324	Strainer	1		
-	4812124325	Gasket	1		
-	4700160268	O-ring	1		
-	4812124327	Nozzle, yellow 0.8	1		
83	4700791977	Hose connection	2		
84	4700901191	Protective hose	1	J	
86	4812112074	Plastic hose (x m)	1	K	
87	4812112074	Plastic hose (x m)	1	L	
88	4700500020	Hex. screw	2		
90	4812112994	Bracket	1		To A018474
90	4812124835	Bracket	1		From A018475
91	4812113781	Rubber strip	1		
97	4700393542	Hose connection	1		
98	4700792600	O-ring 70	1		
130	4812118056	Lock plate	1		
131	4700370699	Lock w key	1		
132	4700904228	Washer 6,4x12x1,5	4		
133	4811000457	Thread rolling screw	4		

Comments for Page: Sprinkler system

(L)OCAL REMARKS

A | L = 0,43 m

B | L = 1,00 m

C | L = 1,80 m

D | L = 0,22 m

E | L = 0,21 m

H | L = 0,15 m

J | L = 0,34 m

K | L = 2,10 m

L | L = 1,40 m

M | en_US | Not shown in illustration

This page intentionally left blank

Frame Scraper

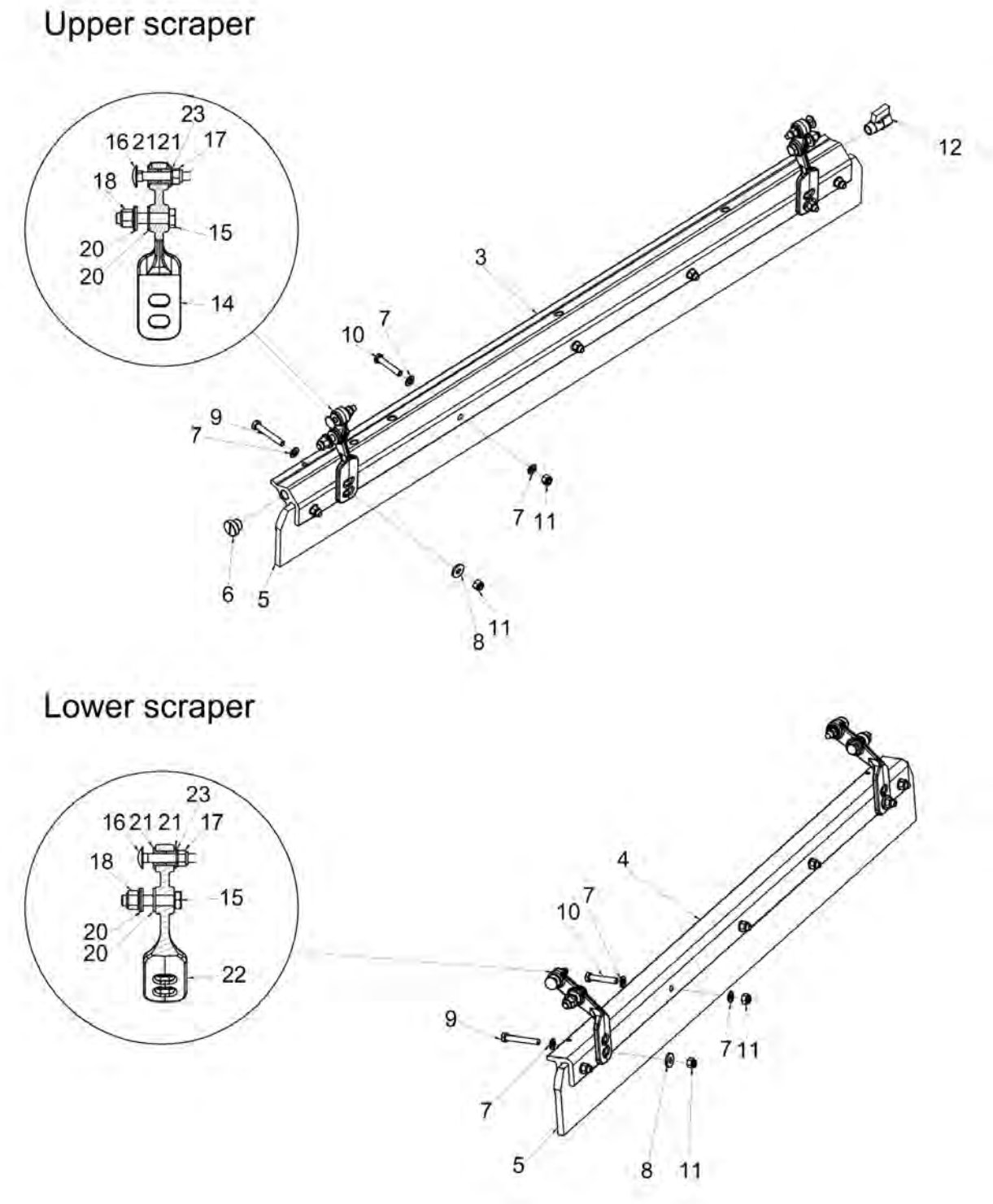

Item	Part No.	Name	Qty	L	SN INFO
3	4812120017	Sprinkler pipe	2		
4	4812120023	Bracket	2		
5	4812120024	Scraper blade	4		
6	4700792072	End plug	2		
7	4700904229	Washer, 8.4x 6x1.5 mm 300HV	32		
8	4700904640	Washer, 8.4x22x3 mm 300HV	8		
9	4700500067	Screw	8		
10	4700500024	Screw M8x45	12		
11	4700586003	Lock nut M8	20		
12	4700233215	Ball valve	2		
14	4812121856	Bracket	4		
15	4700500105	Hex. screw	8		
16	4700792134	Bolt	8		
17	4700586003	Lock nut M8	8		
18	4700902287	Nut, M10	8		
20	4700791938	Washer	16		
21	4700791939	Bushing	16		
22	4812121858	Bracket	4		
23	4700791304	Steel plain washer	8		

Frame Scrapers, spring loaded (option)

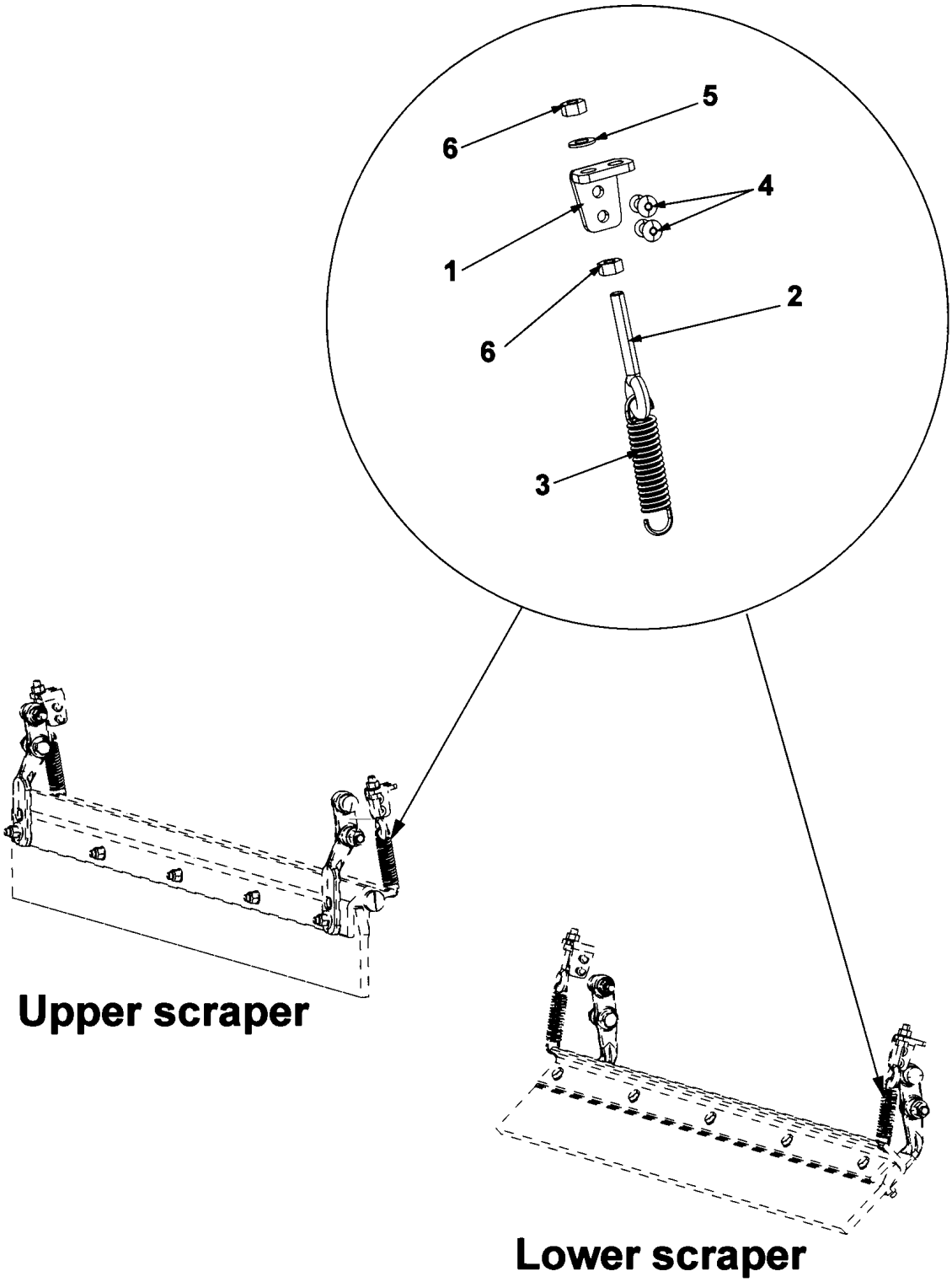

Item	Part No.	Name	Qty	L	SN INFO
1	4812120026	Bracket	4		
2	4700792189	Eye bolt	4		
3	4700359043	Spring	4		
4	4700791666	Blind rivet	8		
5	4700904229	Washer, 8.4x 6x1.5 mm 300HV	4		
6	4700570005	Hexagon nut	8		

Frame Towing device (option)

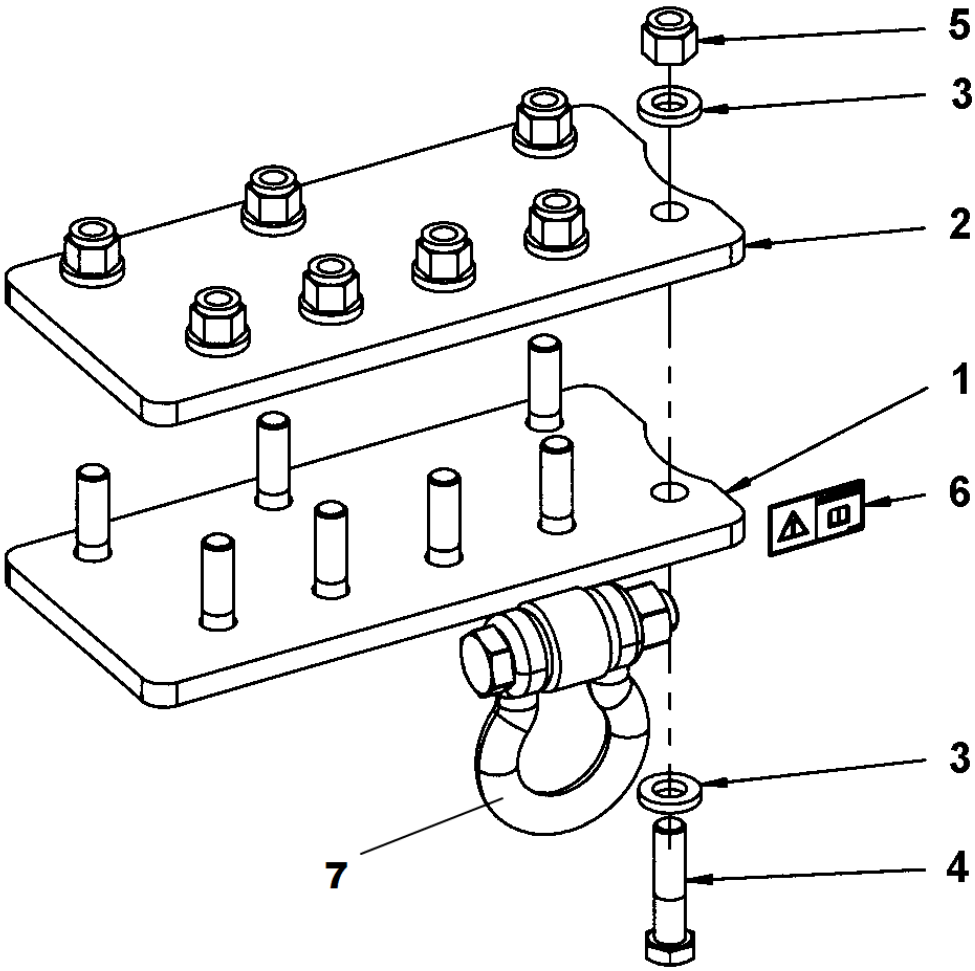

Item	Part No.	Name	Qty	L	SN INFO
1	4812115567	Towing device	1		
2	4812115419	Plate	1		
3	4700904703	Plain washer 13x24x4 mm	16		
4	4700500195	Screw	8		
5	4700586019	Lock nut	8		
6	4700904367	Decal "SAFETY"	1		
7	4811000484	Schackle	1		

Steering hitch To A014837 (incl. 14840-14888) 4700358975 Steering hitch

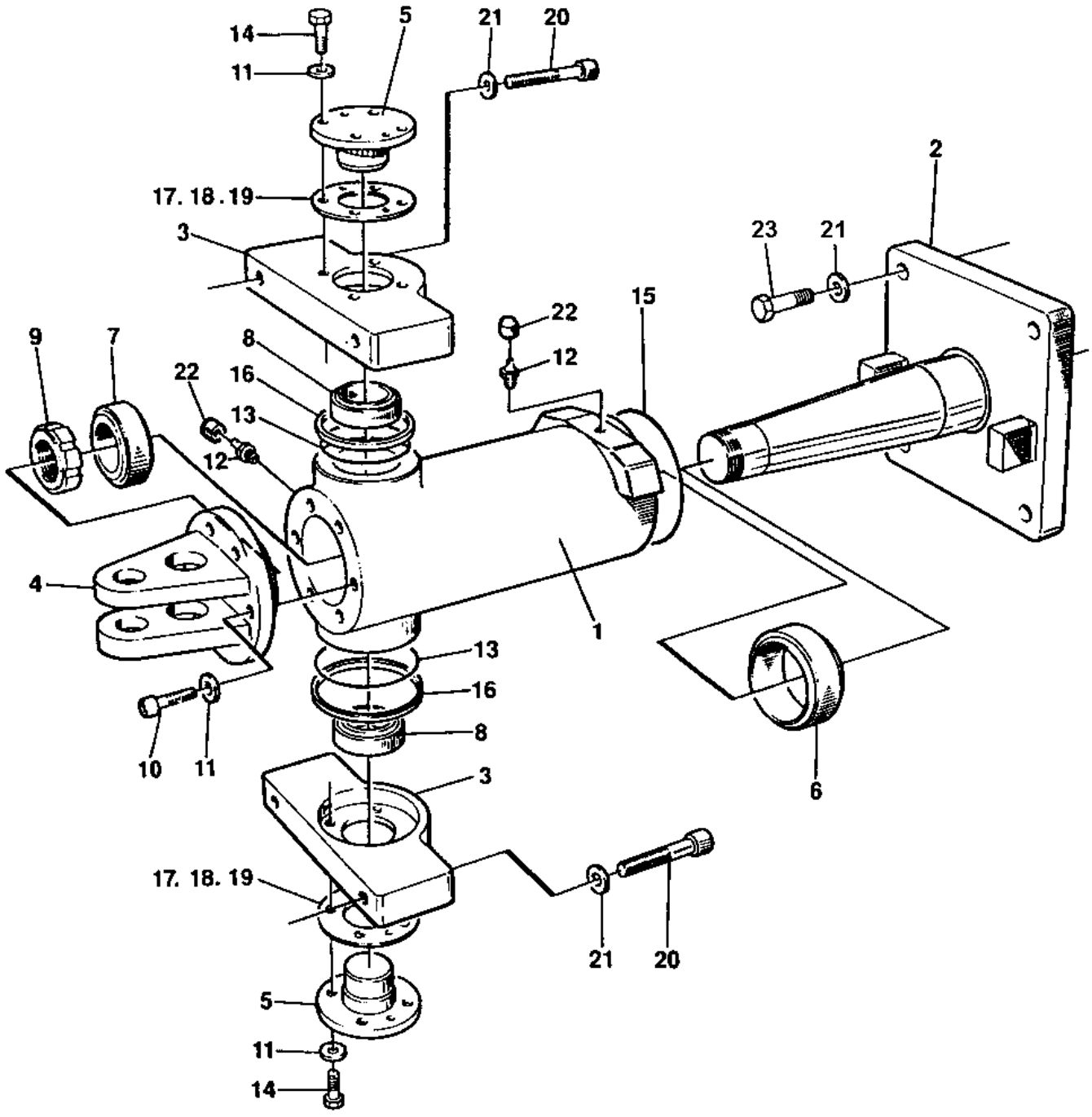

Item	Part No.	Name	Qty	L	SN INFO
0	4700358975	Steering hitch, cpl.	1		
1	4700358976	Bearing housing	1		
2	4700358978	Hitch shaft	1		
3	4700357031	Bracket	2		
4	4700357038	Bracket	1		
5	4700357039	Shaft	2		
6	4700902063	Bushing	1		
7	4700902062	Bushing	1		
8	4700902061	Bushing	2		
9	4700902060	Lock nut	1		
10	4700902059	Screw	6		
11	4812122654	Steel plain washer	14		
12	4700926214	Grease fitting	2		
13	4700167044	V-ring	2	A	
14	4700500028	Screw, M10 x 25 mm 8.8 A3K	8		
15	4700892179	O-ring	1		
16	4700357418	Sealing	2		
17	4700347153	Shim T=0,2 mm	N		
18	4700347154	Shim T=0,4 mm	N		
19	4700347155	Shim T=0,8 mm	N		
20	4700902100	Screw	4		
21	4700904232	Steel plain washer	8		
22	4700902576	Cover	2		
23	4700927396	Screw	4		

Comments for Page: 4700358975 Steering hitch

(L)OCAL REMARKS

A | en_US | For improved function this replaces earlier used 4700160032

Steering hitch From A014838 (excl. 14840-14888) 4812120871 Steering hitch

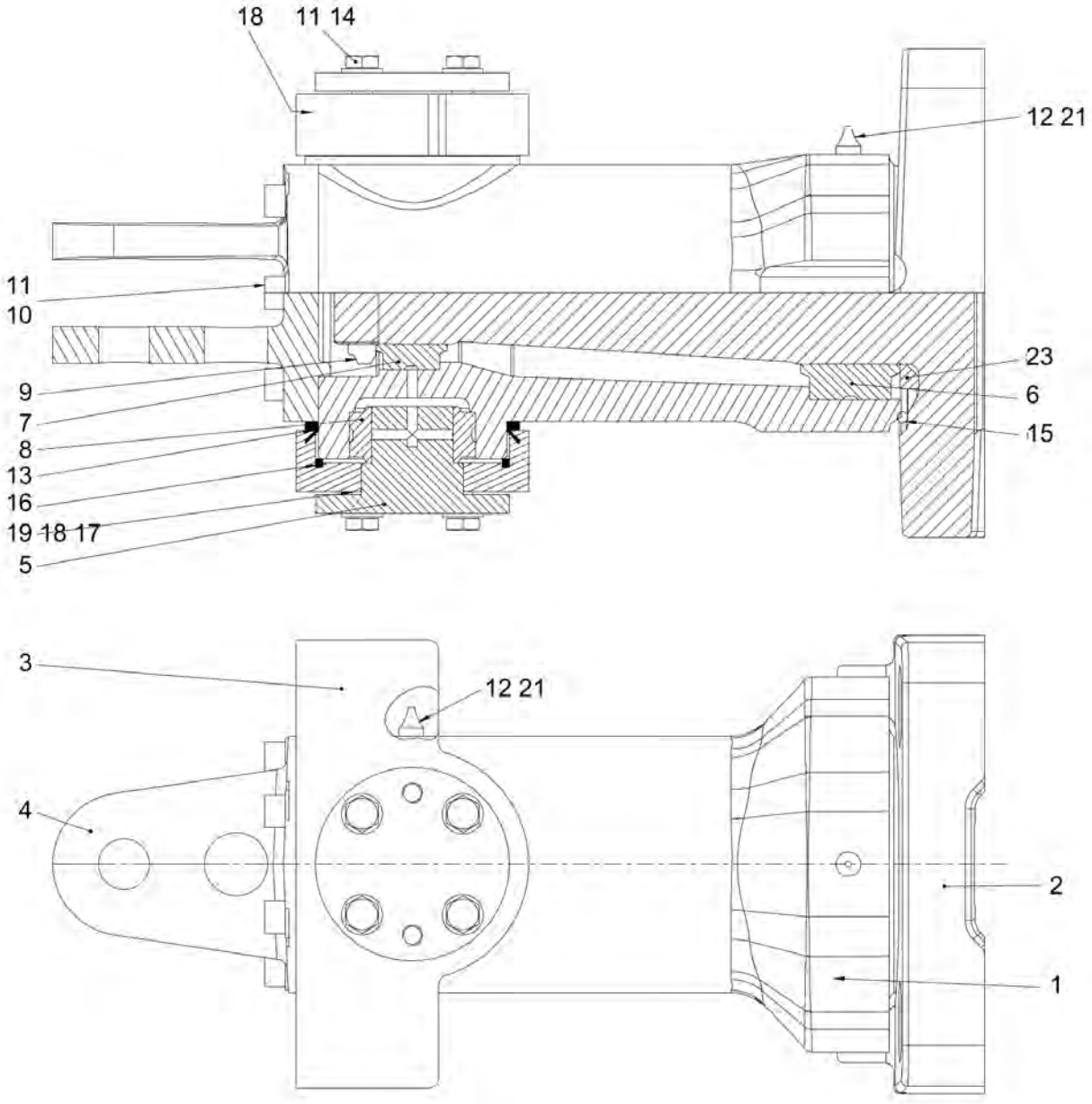

Item	Part No.	Name	Qty	L	SN INFO
1	4700358976	Bearing housing	1		
2	4812120586	Shaft	1		
3	4700357031	Bracket	2		
4	4700357038	Bracket	1		
5	4700357039	Shaft	2		
6	4700902063	Bushing	1		
7	4700902062	Bushing	1		
8	4700902061	Bushing	2		
9	4700902060	Lock nut	1		
10	4700902059	Screw	6		
11	4812122654	Steel plain washer	14		
12	4700926214	Grease fitting	2		
13	4700167044	V-ring	2		
14	4700500028	Screw, M10 x 25 mm 8.8 A3K	8		
15	4700892179	O-ring	1		
16	4700357418	Sealing	2		
17	4700347153	Shim T=0,2 mm	1		
18	4700347154	Shim T=0,4 mm	1		
19	4700347155	Shim T=0,8 mm	1		
21	4700902576	Cover	2		
23	4812120874	Spacer ring	1		

Frame Protective plate, front lights (Option)

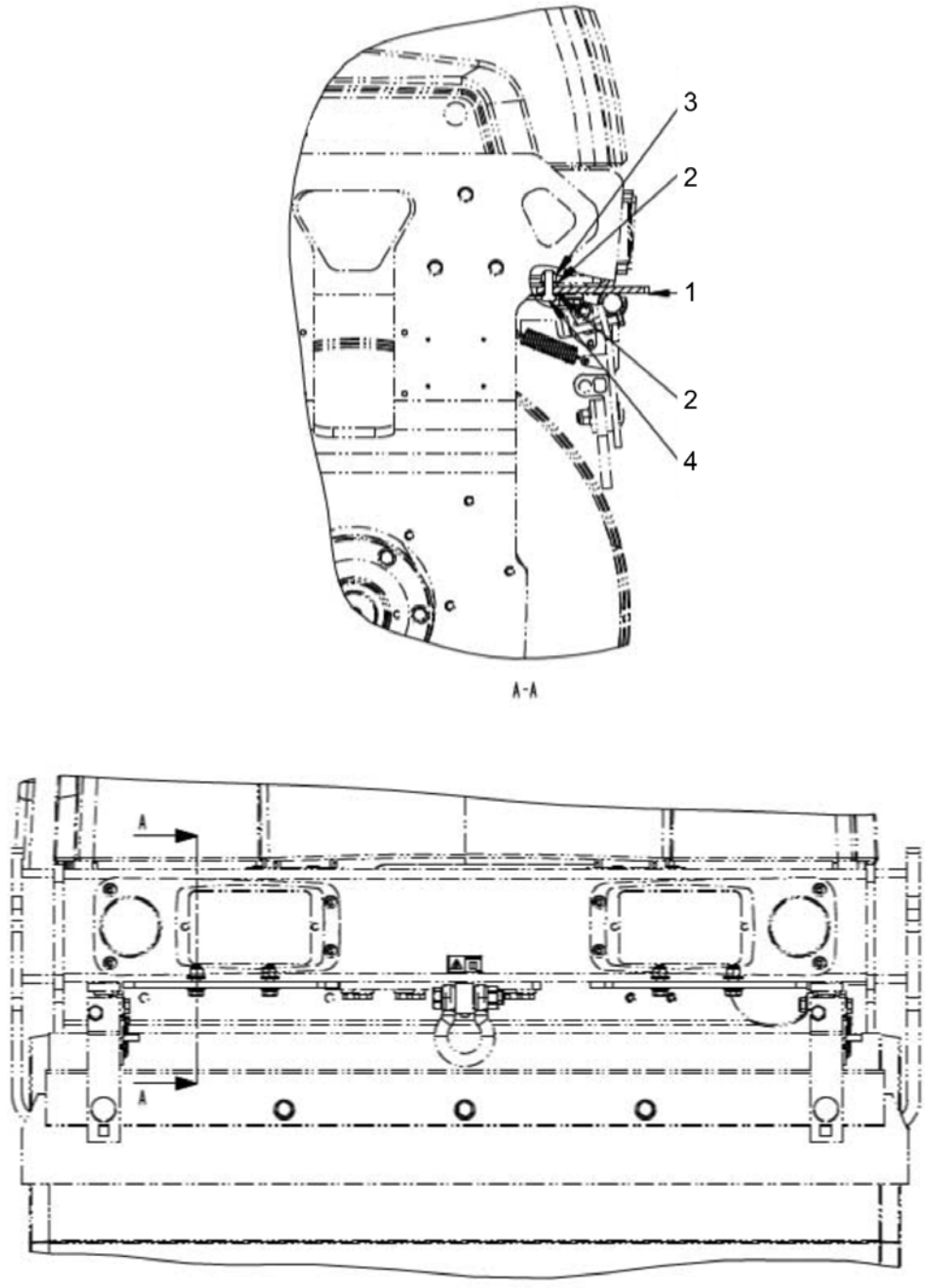

Item	Part No.	Name	Qty	L	SN INFO
1	4812117591	Protective plate	2		
2	4700904230	Plain washer 10.5x22x2 mm	8		
3	4700586018	Lock nut M10	4		
4	4700500029	Screw M10x30	4		

Drum Drum

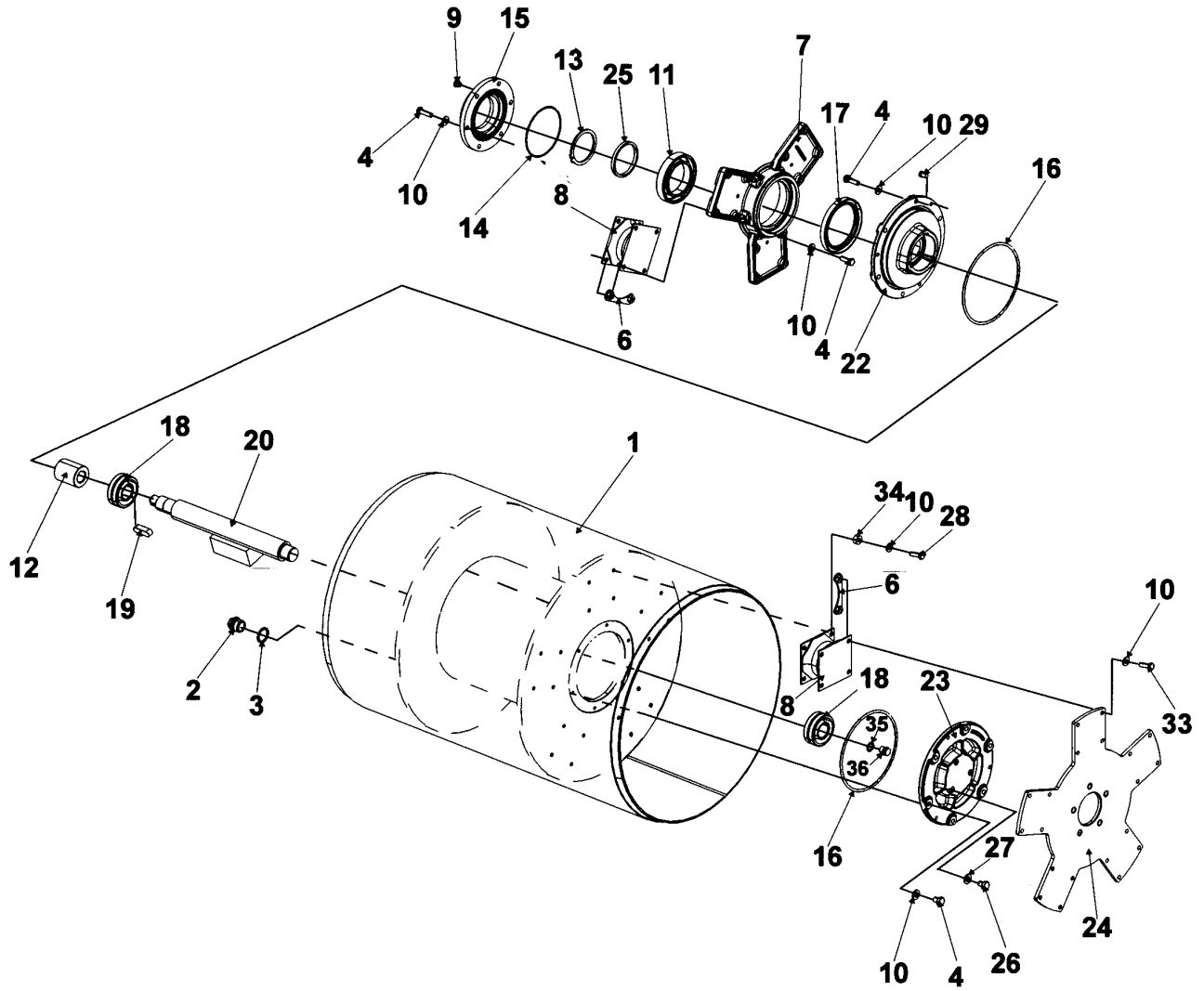
9
15
13
25
11
7
17
4
10
29
16
4
10
14
8
6
10
4
22
18
20
1
12
19
34
10
28
6
10
2
3
8
18
23
35
36
33
16
27
24
10
4
26

Item	Part No.	Name	Qty	L	SN INFO
1	4700357058	Drum	1		
2	4700343744	Magnetic plug	1		
3	4700162017	Seal ring	1		
4	4700500030	Screw hexagon	12		
6	4700379179	Holder	10	B	
7	4812120391	Bearing housing	1		
8	4812121607	Shock absorber	8		
9	4700343490	Air breather	1		
10	4700904230	Plain washer 10.5x22x2 mm	70		
11	4700111018	Ball bearing	1		
12	4700349202	Coupling	1	A	
12	4700391929	Rubber cross	1		
13	4700903154	Retaining ring	1		
14	4700160132	O-ring 70	1		
15	4700358666	Adapter	1		
16	4700923951	O-ring	2		
17	4700163049	Radial lip-type seal	1		
18	4700904258	Spherical roller bearing	2		
19	4700350029	Feather key	1		
20	4700357060	Eccentric shaft	1		To A016100 (incl. 16129, 16161)
20	4812119822	Eccentric shaft	1		From A016101 (excl. 16129, 16161)
22	4812118694	Bearing housing	1		
23	4812118692	Bearing housing	1		
24	4700357055	Drive disc	1		
25	4700358689	Spacer ring	1		
26	4700500044	Screw M6x8	3		
27	4700904228	Washer 6,4x12x1,5	3		
28	4812110639	Hexagon socket head cap screw M10x030H 8.8	32		
29	4700903287	Plug	6		
33	4812110620	Hexagon head screw M10x30H 8.8 A3K	26		
34	4812110673	Spacer	20		
35	4700162011	Washer, 16.7x24x1.5 mm Type A M16	1		
36	4700232143	Plug, M16	1		

Comments for Page: Drum

(L)OCAL REMARKS

A | en_US | CPL

B | en_US | Replaces earlier used Lock nut 4700586018; each holder has two nuts

This page intentionally left blank

Engine room Engine room

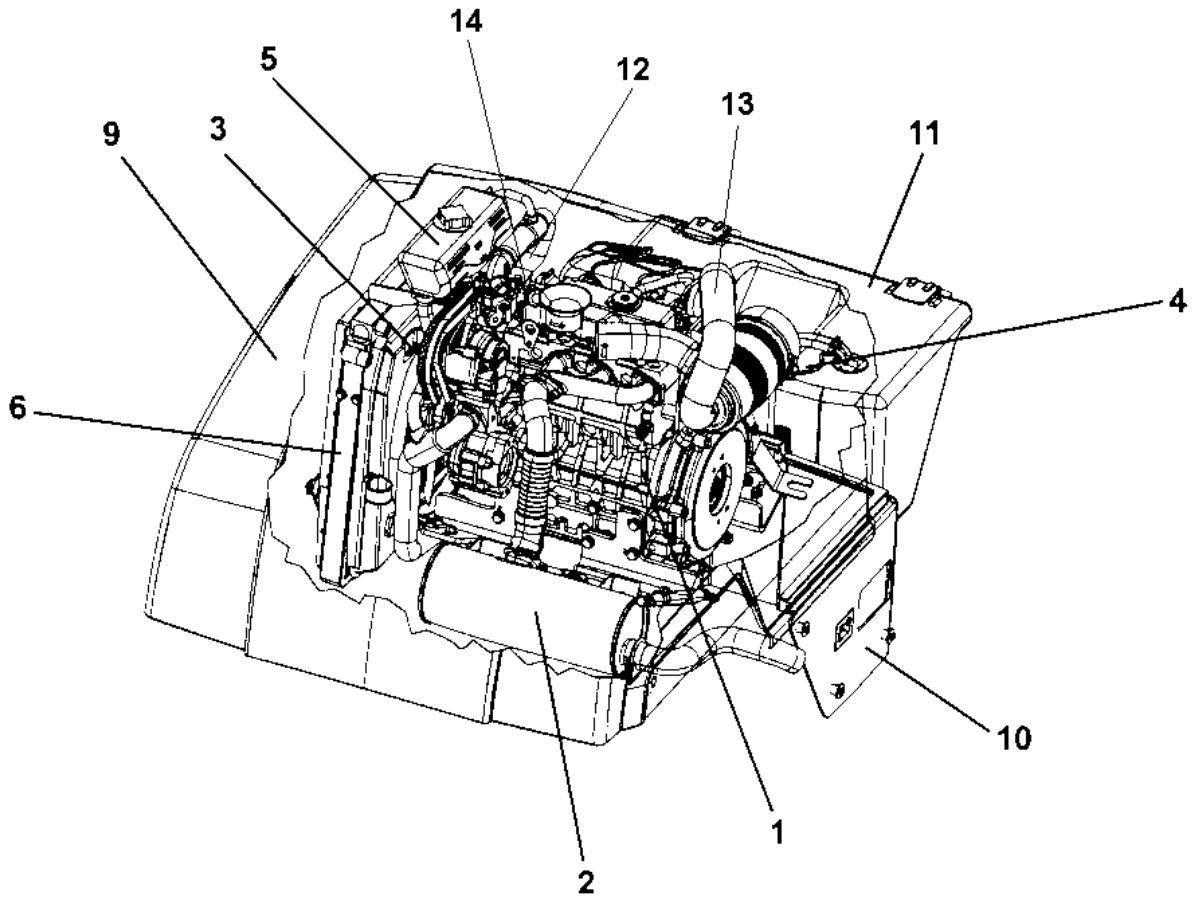

Item	Part No.	Name	Qty	L	SN INFO
1	-	Engine Module			
2	-	Exhaust system			
3	-	Fan			
4	-	Air filter			
5	-	Expansion tank			
6	-	Water cooler			
9	4812118163	Engine hood, cpl			
10	-	casing			
11	-	Fuel system			
12	-	Cooler hoses			
13	-	Air hoses			
14	-	Fuel hoses			

Engine room Engine module

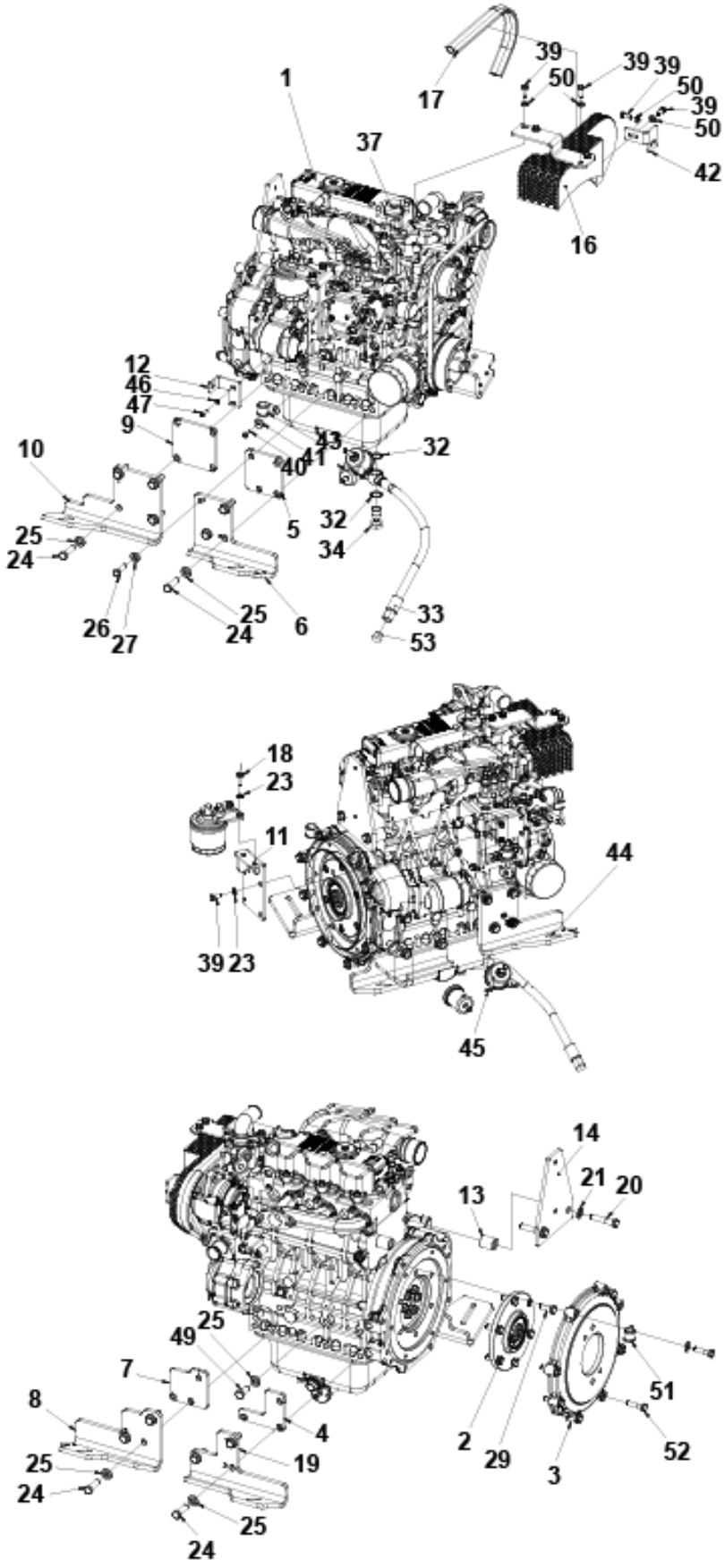

Item	Part No.	Name	Qty	L	SN INFO
1	4812110881	Diesel engine Kubota D1703 M-E3B (26 kW)	1		
1	4812120584	Diesel engine Kubota D1703-M-E3B (26 kW)	1		
2	4812112390	Clutch	1		
3	4812112391	Bracket	1		
4	4812113780	Shim	1		
5	4812111868	Shim	1		
6	4812111865	Bracket	1		
7	4812111866	Shim	1		
8	4812111863	Bracket	1		
9	4812111867	Shim	1		
10	4812111899	Bracket	1		
11	4812111883	Bracket	1		
12	4812111880	Bracket	1		
13	4812113235	Spacer sleeve	2		
14	4812113233	Bracket	1		
15	4812113566	Bracket	1		To A013589
16	4812113468	Belt guard	1		
17	4700288129	Rubber edge trim	1	A	
18	4700500021	Screw, M8x25 mm 8.8 A2K	2		
19	4812111900	Bracket	1		
20	4812113980	Screw	2		
21	4700904231	Washer, 13x24x2 mm 300 HV	2		
23	4700904229	Washer, 8.4x 6x1.5 mm 300HV	6		
24	4812113022	Screw	13		
25	4700904703	Plain washer 13x24x4 mm	14		
26	4812113044	Screw	1		
27	4700904557	Washer, 10.5x22x4 mm 300 HV	1		
28	4811000456	Screw M10x1,25x045 8.8	2		To A013589
29	4700500046	Hex. head screw M12x030H	6		
30	4812156263	Fuel filter element	1		
31	4700904230	Plain washer 10.5x22x2 mm	8		To A013589
32	4700330333	Copper washer	2		
33	4812111905	Engine oil drain hose	1		
34	4700330081	Screw, M22x1,5	1		
39	4700500053	Screw, M8x20 mm 8.8 A2K	10		
40	4700500013	Screw, M6x16 mm 8.8 A2K	1		
41	4700904735	Steel plain washer	1		
42	4812114177	Bracket	1		

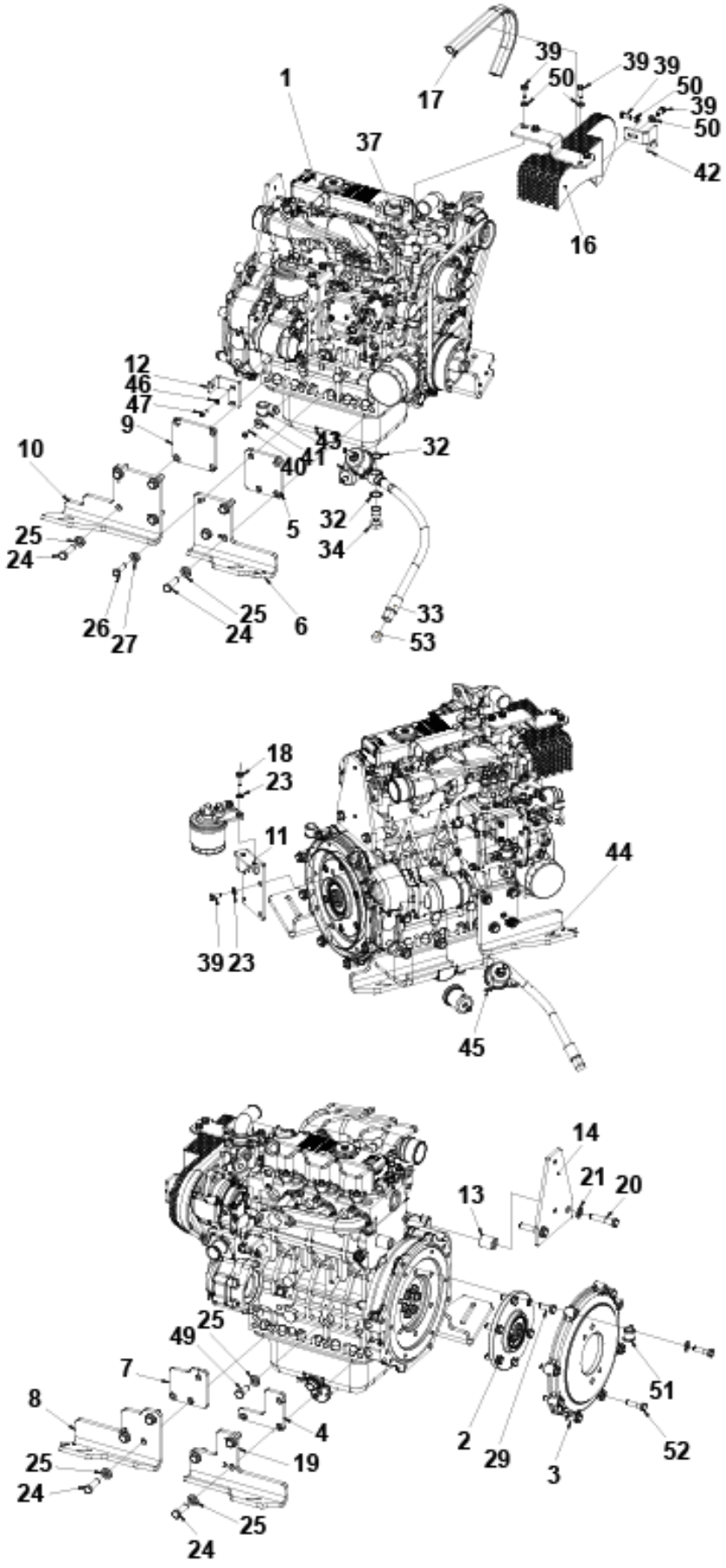
1
17
39
50
39
39
50
39
50
42
16
37
12
46
47
9
10
25
24
26
27
25
24
6
5
43
41
40
32
32
34
33
53
18
23
11
39
23
44
45
14
21
20
13
25
49
7
8
25
24
4
19
25
24
2
29
3
51
52

Item	Part No.	Name	Qty	L	SN INFO
43	4700921116	Clamp	1		
44	4700792119	Screw, M6x16 mm 8.8 A2K	2		
45	4700902287	Nut, M10	4		
46	4700904228	Washer 6,4x12x1,5	2		
47	4700500040	Screw, M6x20 mm 8.8 A2K	2		
49	4700792250	Screw	1		
50	4700904556	Steel plain washer 8,4x16x3,0	6		
51	4700921104	Pipe clamp	1		
52	4811000285	Screw	6		
53	4700232095	Plug	1		

Comments for Page: Engine module

(L)OCAL REMARKS

A | en_US | L = 0,33 m

Engine room 4812110881 Diesel engine Kubota D1703 M-E3B (26 kW)

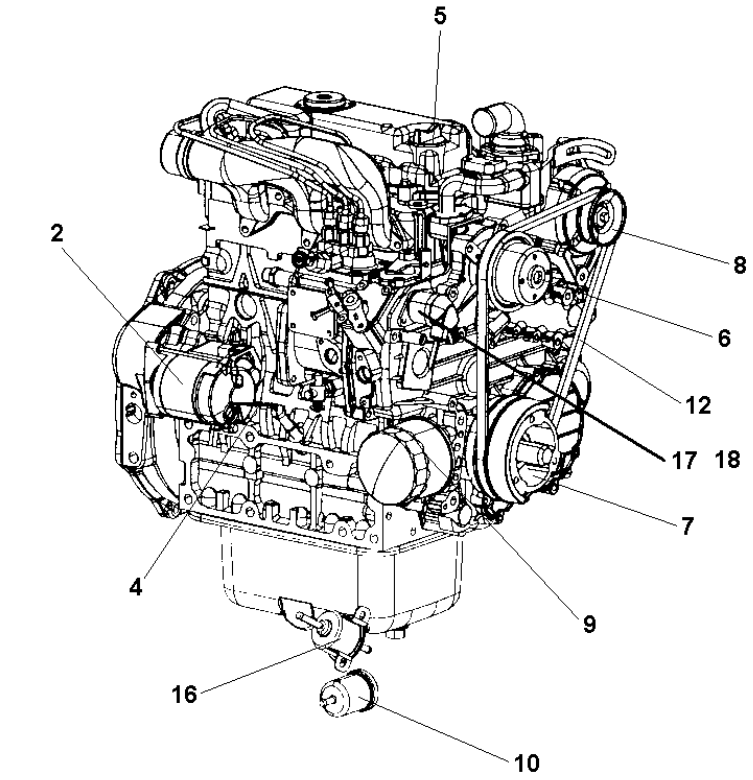

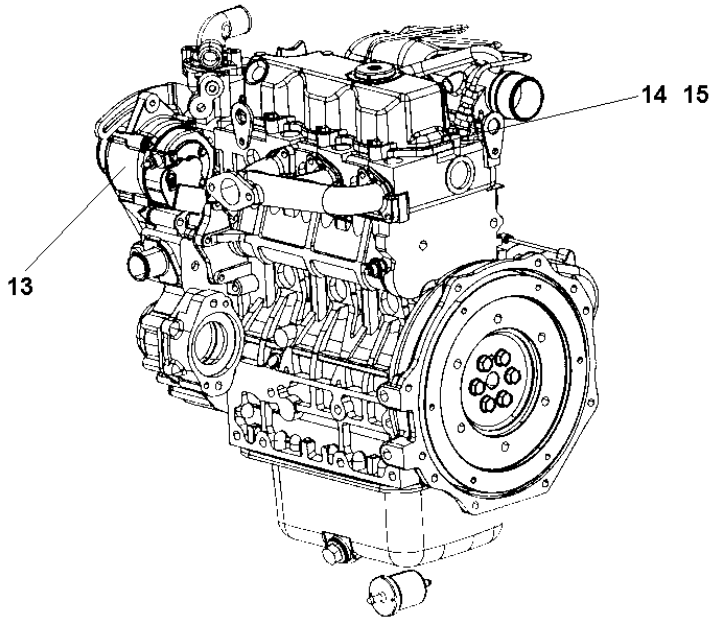

Item	Part No.	Name	Qty	L	SN INFO
2	4812156355	Starter	1		
4	4812156357	Oil dipstick	1		
5	4812156358	Oil cap	1		
5	4812156359	O-ring	1		
6	4812156360	Pulley, V-belt	1		
7	4812156362	Alternator, Fan	1		
8	4812156363	Pulley, alternator	1		
9	4812156259	Engine oil filter element	1		
10	4812156264	Pre-fuel filter element	1		
11	4812156263	Fuel filter element	1		
12	4812156260	V-belt	1		
13	4812156364	Alternator	1		
14	4812156261	Valve cover gasket	1		
15	4812156356	Piston ring set	1		
16	4812156389	Fuel pump	1		
17	4812157598	Fuel solenoid	1		
18	4812157680	O-ring	1		

Engine room Exhaust system

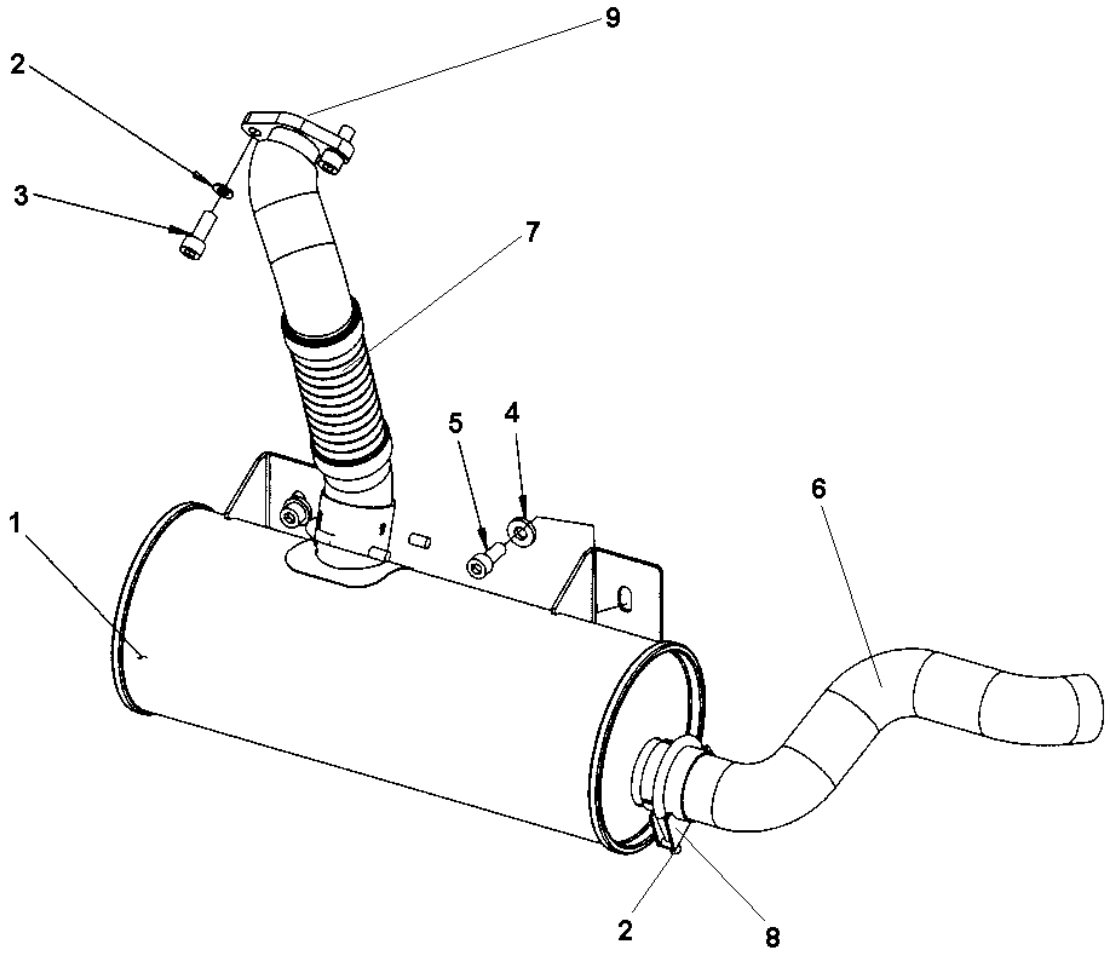

Item	Part No.	Name	Qty	L	SN INFO
1	4812112019	Muffler	1		
2	4700904229	Washer, 8.4x 6x1.5 mm 300HV	6		
3	4811000389	Screw	2		
4	4700904557	Washer, 10.5x22x4 mm 300 HV	2		
5	4700508096	Hexagon socket head cap screw	2		
6	4812113228	End pipe	1		
7	4812112021	Flexible pipe	1		
8	4700904475	Clamp	2		
9	4812159753	Gasket	1	A	

Comments for Page: Exhaust system

(L)OCAL REMARKS

A | en_US | Supplied with the engine

Engine room Fan

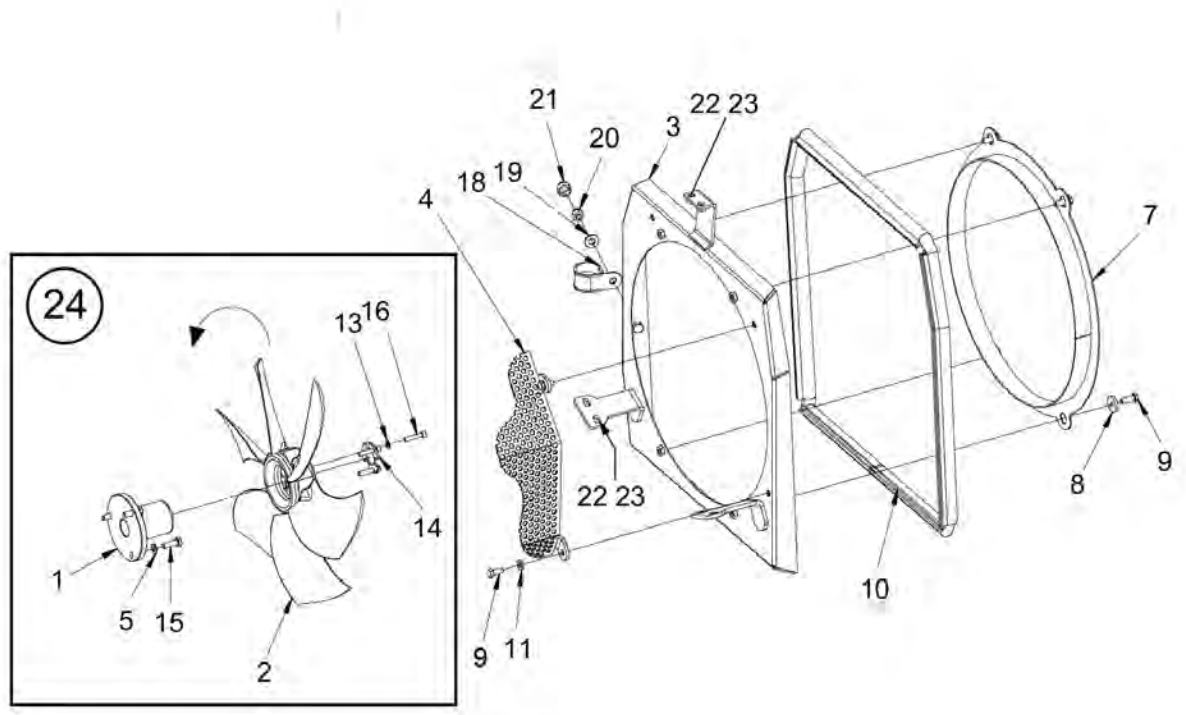

Item	Part No.	Name	Qty	L	SN INFO
1	4812122208	Fan hub	1	C	
2	4812122207	Fan	1	C	
3	4812113472	Fan shroud	1		
4	4812112029	Fan protection	1		
5	4700904229	Washer, 8.4x 6x1.5 mm 300HV	3		
7	4812118517	Fan ring	1	H	
8	4700904734	Washer, 8.4x26x4 mm 300 HV	4		
9	4700500053	Screw, M8x20 mm 8.8 A2K	6		
10	4700288129	Rubber edge trim	1	A	
11	4700904556	Steel plain washer 8,4x16x3,0	2		
13	4700904231	Washer, 13x24x2 mm 300 HV	1		
14	4812122334	Shim	1		
15	4700500021	Screw, M8x25 mm 8.8 A2K	3		
16	4700508018	Screw	3		
18	4700923008	Clamp	1		
19	4700904230	Plain washer 10.5x22x2 mm	1		
20	4700586018	Lock nut M10	1		
21	4812121186	Protective plug	1		
22	4700904556	Steel plain washer 8,4x16x3,0	4		
23	4700500053	Screw, M8x20 mm 8.8 A2K	4	L	
24	4812161085	Fan kit	1	B	

Comments for Page: Fan

(L)OCAL REMARKS

A | L = 1,80 m

B | Contains items; 1, 2, 5, 13, 14, 15, 16

C | For machines up to s/n 0A012585 please use fan kit 4812160757

L | Not shown in illustration

Engine room Air filter

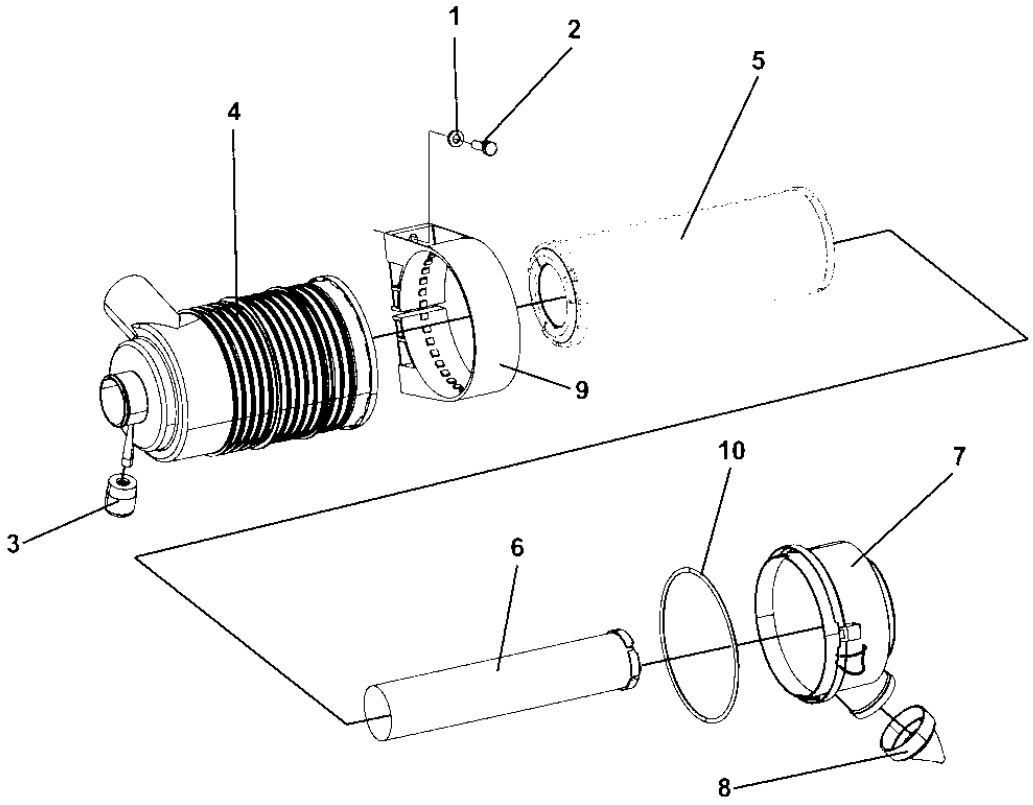

Item	Part No.	Name	Qty	L	SN INFO
1	4700904556	Steel plain washer 8,4x16x3,0	2		
2	4700508019	Cylinder screw	2		
3	4700499497	Indicator	1		
4	4700386951	Air filter	1		
5	4700939802	Air filter element Main	1		
6	4700939803	Air filter element Safety	1		
7	4700939804	Dust cap	1		
8	4700939805	Vacuator cap	1		
9	4700939806	Plastic mounting band	1		
10	4700939807	O-ring	1		

Water cooler To A015094 Water cooler

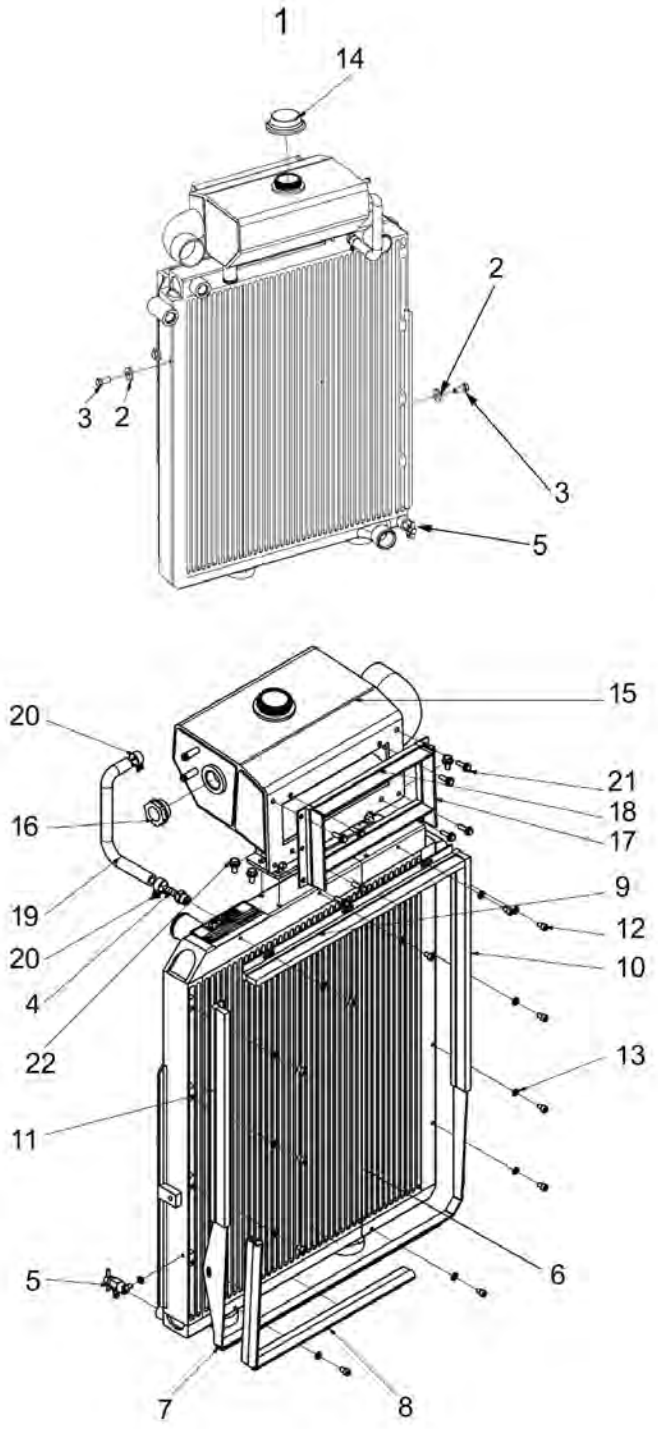

Item	Part No.	Name	Qty	L	SN INFO
1		Water/Oil cooler, cpl	1		
2	4700904640	Washer, 8.4x22x3 mm 300HV	3		
3	4700500100	Hexagon screw	3		
4	4812157872	Hose connection	1		
5	4812157873	Drain valve	1		
6	4812157870	Water/Oil cooler matrix	1		
7	4812157871	Bracket	1		
8	4812157874	Sealing	1		
9	4812157875	Brush	1		
10	4812157876	Brush	1		
11	4812157877	Brush	1		
12	-	Hexagon socket head cap screw M5x8	13		
13	-	Hose clamp	13		
14	4700903714	Cooler cap	1		
15	4812160251	Expansion tank	1		
16	4812160252	Level gauge	1		
17	4812160253	Brush	2		
18	4812160254	Brush	2		
19	-	Hose clamp	1		
20	-	Hose clamp	2		
21	-	Bolt M5x16	8		
22	-	Bolt M6x12	4		

Water cooler From A015095 Water cooler

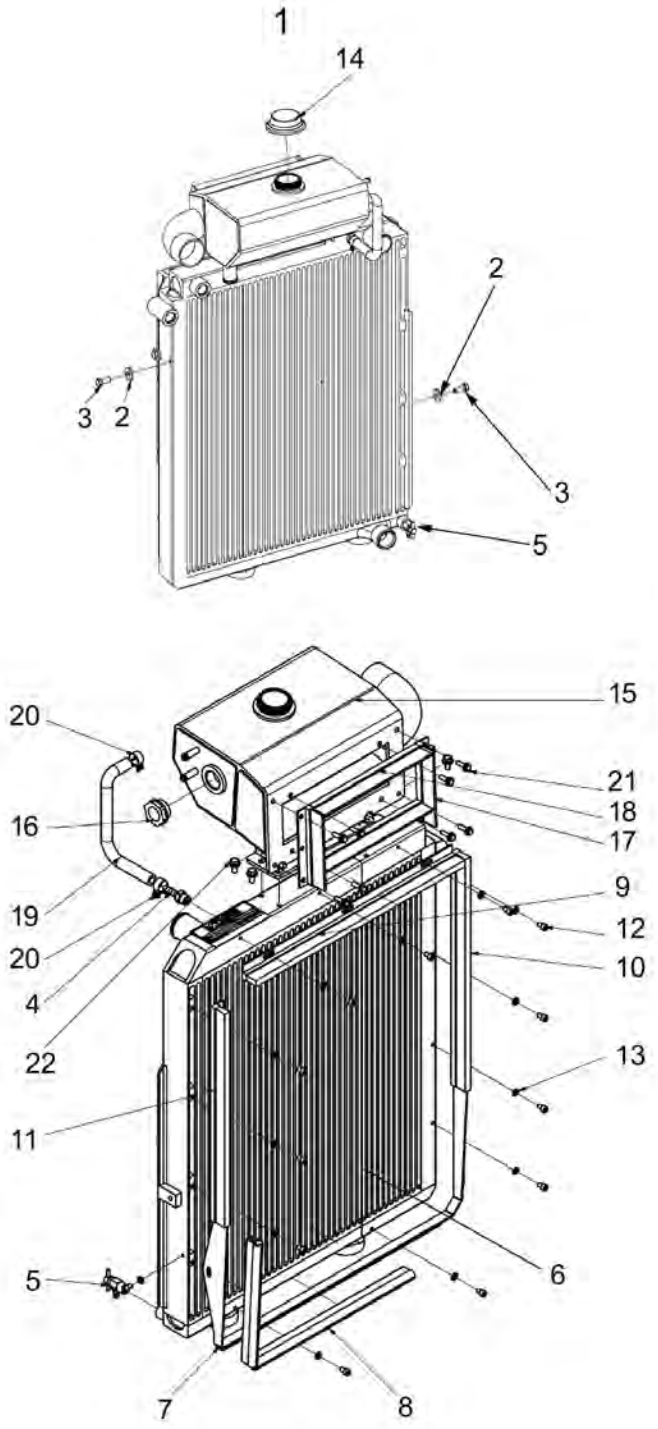

Item	Part No.	Name	Qty	L	SN INFO
1	4812124272	Water/Oil cooler, cpl	1		
2	4700904640	Washer, 8.4x22x3 mm 300HV	3		
3	4700500100	Hexagon screw	3		
4	4812157872	Hose connection	1		
5	4812157873	Drain valve	1		
6	4812161079	Water / Oil cooler	1		
7	4812157871	Bracket	1		
8	4812157874	Sealing	1		
9	4812157875	Brush	1		
10	4812157876	Brush	1		
11	4812157877	Brush	1		
12	-	Hexagon socket head cap screw M5x8	13		
13	-	Hose clamp	13		
14	4700903714	Cooler cap	1		
15	4812160251	Expansion tank	1		
16	4812160252	Level gauge	1		
17	4812160253	Brush	2		
18	4812160254	Brush	2		
19	-	Hose clamp	1		
20	-	Hose clamp	2		
21	-	Bolt M5x16	8		
22	-	Bolt M6x12	4		

Engine room Engine hood, cpl

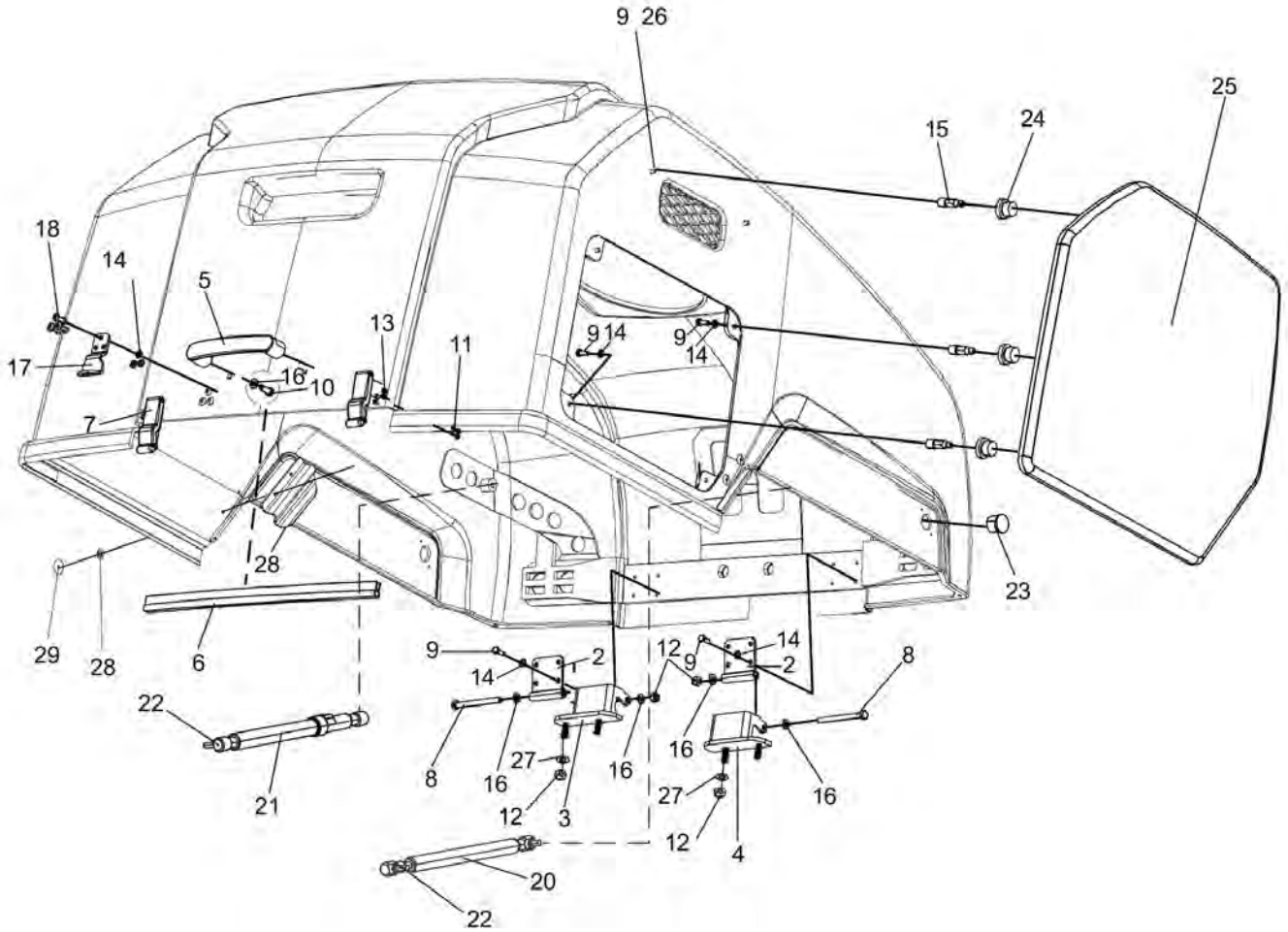

Item	Part No.	Name	Qty	L	SN INFO
0	4812123608	Engine hood, cpl	1		
1	4812120571	Engine hood	1		
2	4812113598	Hinge	2		
3	4812113626	Hinge	1		
4	4812113627	Hinge	1		
5	4700387948	Handle	1		
6	4700902166	Edge trim	1	A	
7	4700388846	Latch	2		
8	4700500115	Screw	2		
9	4700500013	Screw, M6x16 mm 8.8 A2K	14		
10	4700500053	Screw, M8x20 mm 8.8 A2K	2		
11	4811000425	Screw M4x16 10,9 A2'K	4		
12	4700586003	Lock nut M8	2		
13	4700923976	Lock nut	4		
14	4700904228	Washer 6,4x12x1,5	15		
15	4811000488	Ball stud	6		
16	4700904229	Washer, 8.4x 6x1.5 mm 300HV	6		
17	4700377061	Lock plate	1		
18	4700791666	Blind rivet	3		
20	4812114152	Gas spring Right	1		
21	4812114153	Gas spring Left	1		
22	4700902286	Lock nut, M8x1.25 mm A2K	2		
23	4700902890	Plug	2		
24	4811000489	Coupling	4		
25	4812118165	Cover	1		
26	4700928381	Washer, 6.4x18x1.6 mm	1	B	
27	4812124345	Bracket	2		From xA018329
28	4700904281	Washer, 5,3x10x1 300HV	4		From xA018329
29	4700902569	Rivet	4		From xA018329

Comments for Page: Engine hood, cpl

(L)OCAL REMARKS

A | en_US | L = 0,50 m

B | en_US | Not shown in illustration. Placed inside the hood.

Engine room Casing

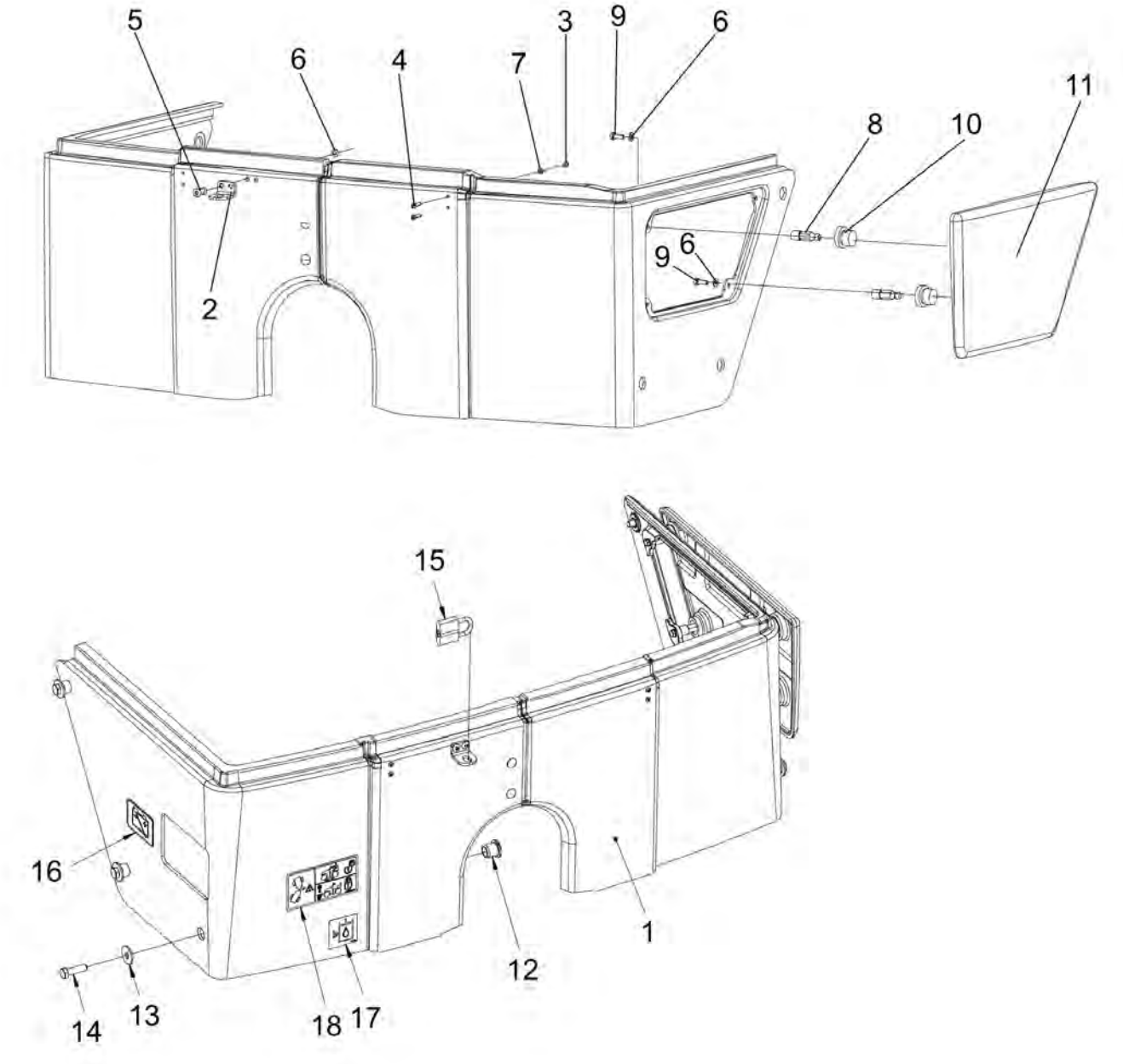

Item	Part No.	Name	Qty	L	SN INFO
1	4812115560	Casing, cpl.	1		To A018853
1	4812125370	Casing, cpl.	1		From A018854
2	4812118203	Shock absorber	6		
2	4700388852	Lock plate	1		
3	4700928441	Washer, 21 x 45 mm	6		
3	4700923976	Lock nut	4		
4	4700500030	Screw hexagon	6		
4	4811000426	Screw M4x20 10.9 A2K	4		
5	4700388852	Lock plate	1		
5	4700791666	Blind rivet	2		
6	4700923976	Lock nut	4		
6	4700904228	Washer 6,4x12x1,5	6		
7	4811000426	Screw M4x20 10.9 A2K	4		
7	4700904698	Plain washer	4		
8	4700791666	Blind rivet	2		
8	4811000488	Ball stud	4		
9	4700904228	Washer 6,4x12x1,5	2		
9	4700500013	Screw, M6x16 mm 8.8 A2K	4		
10	4700904698	Plain washer	4		
10	4811000489	Coupling	4		
11	4812114962	Cover	1		
12	4812118203	Shock absorber	6		
13	4700928441	Washer, 21 x 45 mm	6		
14	4700500030	Screw hexagon	6		
15	4700358881	Pad lock	1		From A018636
16	4700904835	Decal "BATTERY POWER"	1		From A018636
17	4700272373	Label, hydraulic oil level	1		From A018636
18	4812125363	Safety decal "RISK OF CRUSHING"	1		From A018636

Engine room Cooler hoses

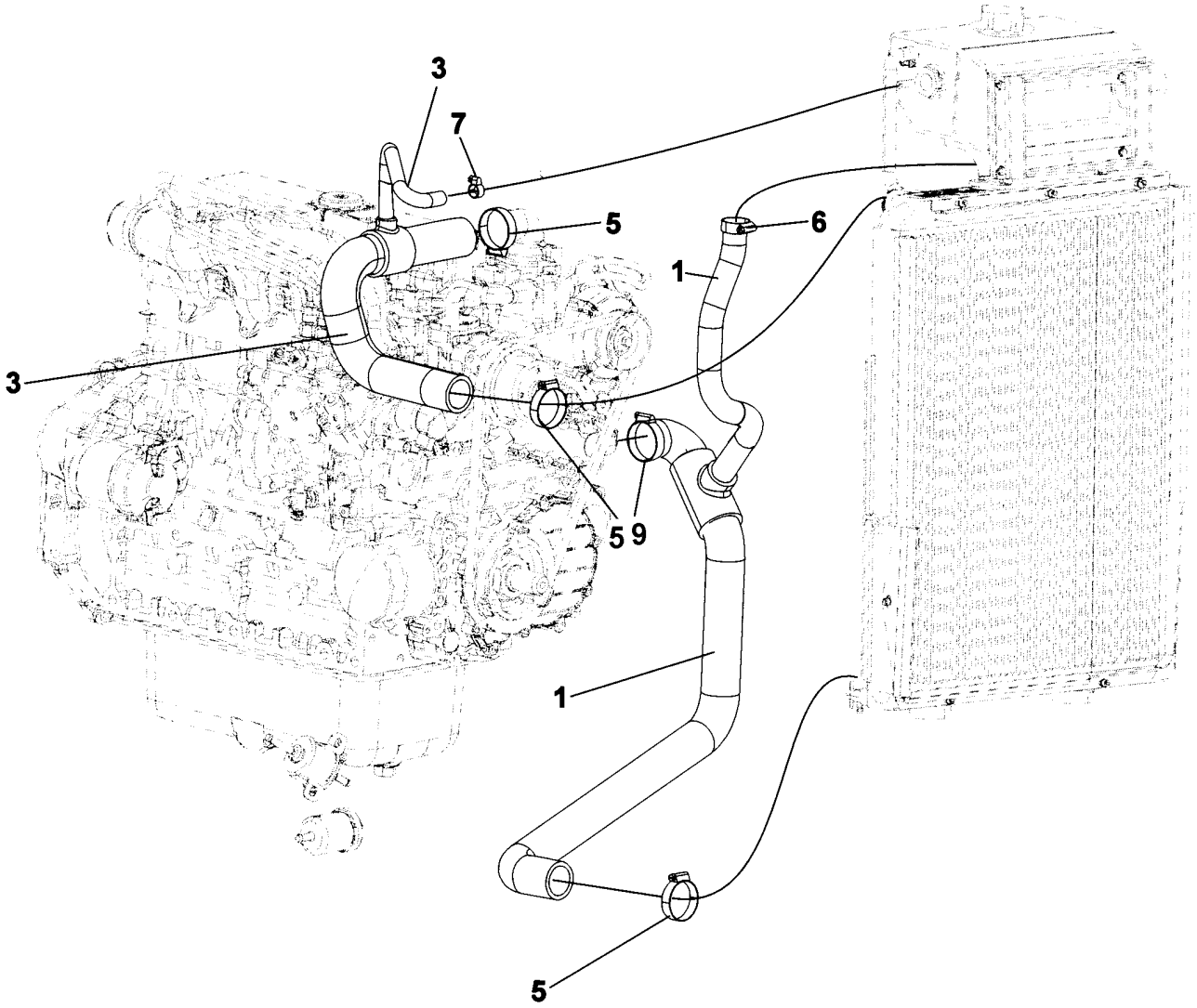

Item	Part No.	Name	Qty	L	SN INFO
1	4812113697	Cooler hose	1		
3	4812113694	Cooler hose	1		
5	4700313008	Hose clamp	3		
6	4700313004	Hose clamp 19-29mm	1		
7	4700313108	Hose clamp	1		
9	4700902295	Hose clamp	1		

Engine room Air hoses

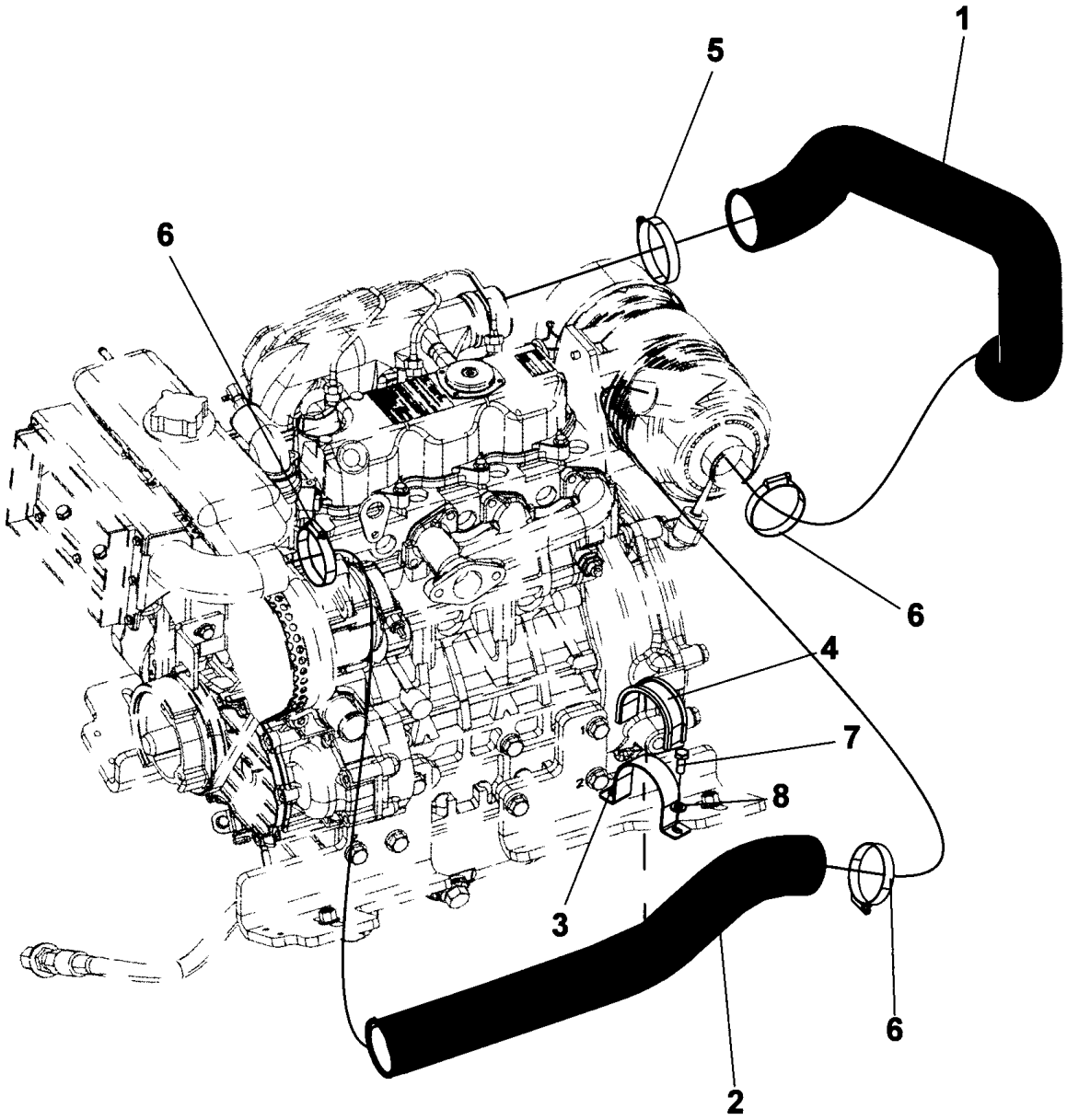

Item	Part No.	Name	Qty	L	SN INFO
1	4812111877	Air inlet hose	1		
2	4812118375	Air hose	1		
3	4812117802	Clamp	1		
4	4812117602	Strip	1	A	
5	4700313023	Hose clamp	1		
6	4700313010	Hose clamp	3		
7	4700500053	Screw, M8x20 mm 8.8 A2K	2		
8	4700904229	Washer, 8.4x 6x1.5 mm 300HV	2		

Comments for Page: Air hoses

(L)OCAL REMARKS

A | en_US | L = 0.14 m

Engine room Fuel hoses

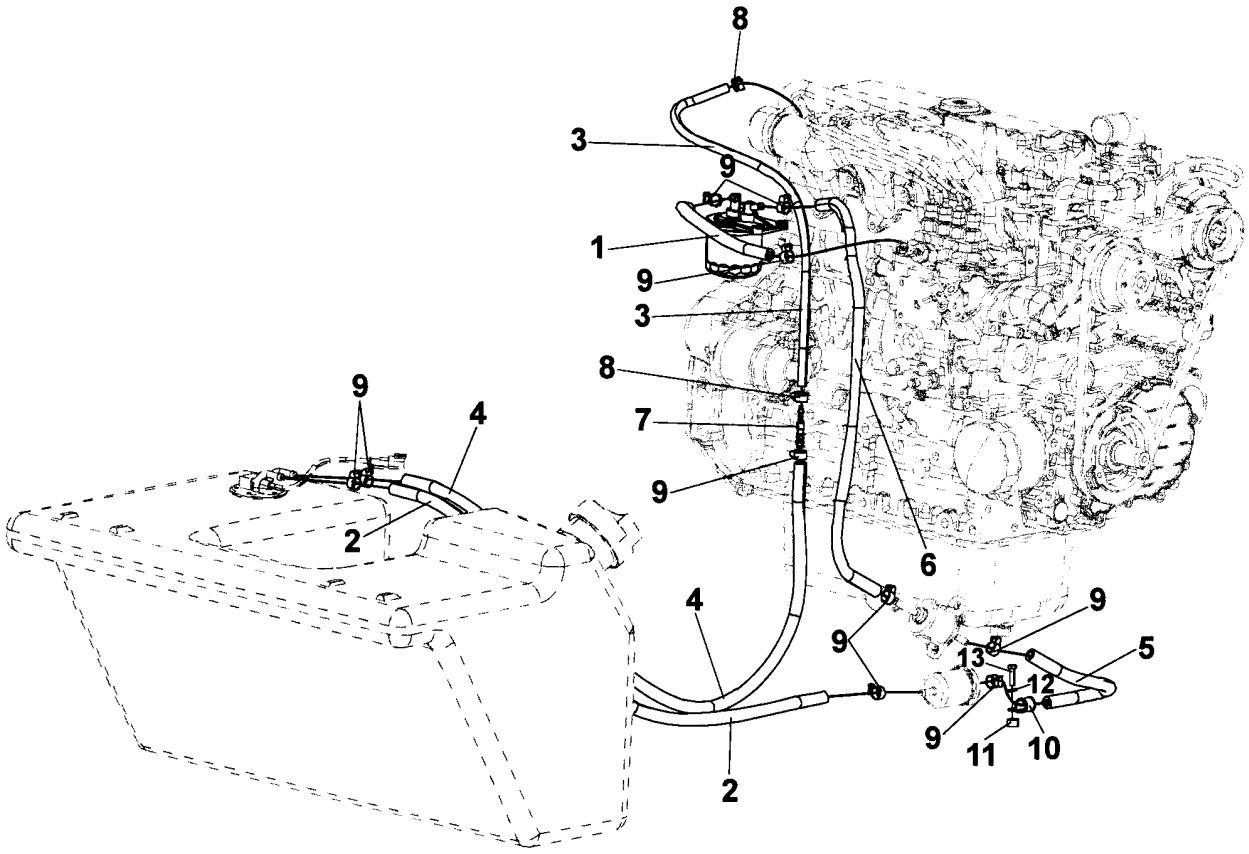

Item	Part No.	Name	Qty	L	SN INFO
1	4700904984	Fuel hose	1	A	
2	4700904984	Fuel hose	1	B	
3	4700791422	Hose	1	C	
4	4700904984	Fuel hose	1	D	
5	4700904984	Fuel hose	1	E	
6	4700904984	Fuel hose	1	F	
7	4700791774	Hose connection	1		
8	4700313075	Hose clamp	2		
9	4700313108	Hose clamp	10		
10	4700921116	Clamp	1		
11	4700355869	Spacer sleeve	1		
12	4700904229	Washer, 8.4x 6x1.5 mm 300HV	1		
13	4700500022	Screw	1		

Comments for Page: Fuel hoses

(L)OCAL REMARKS

A | en_US | L = 0,20 m

B | en_US | L = 0.97 m

C | en_US | L = 0.62 m

D | en_US | L = 0.80 m

E | en_US | L = 0.30 m

F | en_US | L = 0.60 m

Fuel system To A013025 Fuel system

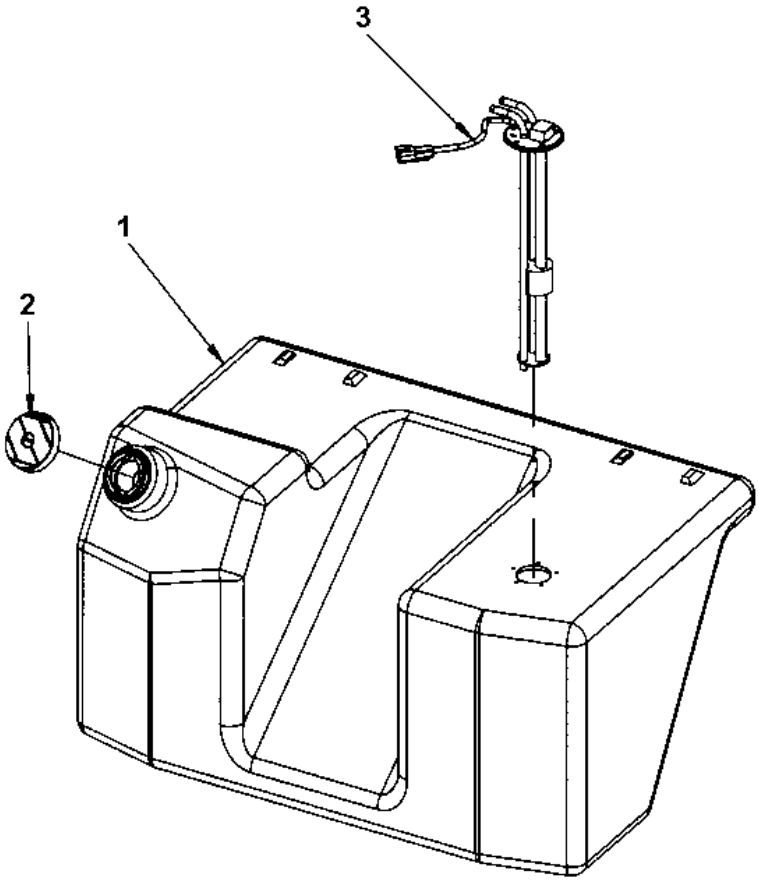

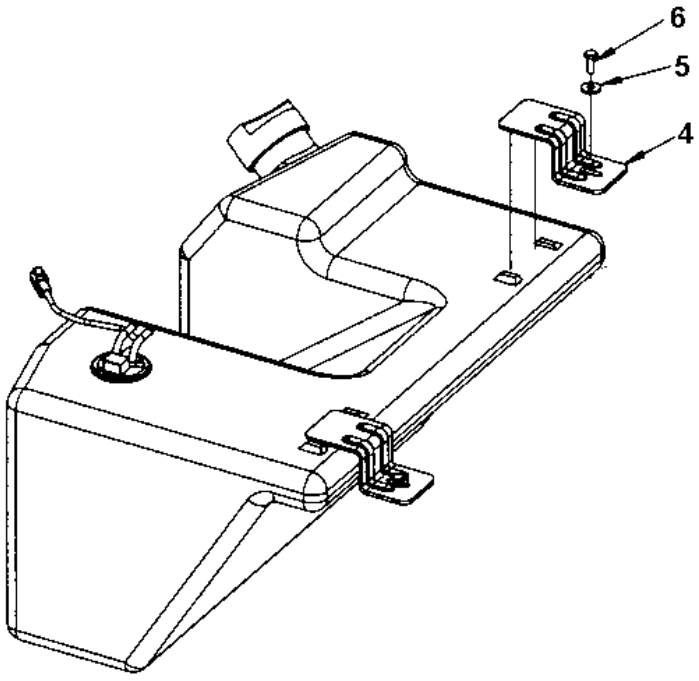

Item	Part No.	Name	Qty	L	SN INFO
1	4812113207	Fuel tank	1		
2	4700394253	Fuel cap	1		
2	4700945753	Key 2 pcs "921"	1		
3	4700387552	Level gauge	1		
4	4700357466	Holder plate	2		
5	4700904640	Washer, 8.4x22x3 mm 300HV	2		
6	4700500053	Screw, M8x20 mm 8.8 A2K	2		

Fuel system From A013026 Fuel system

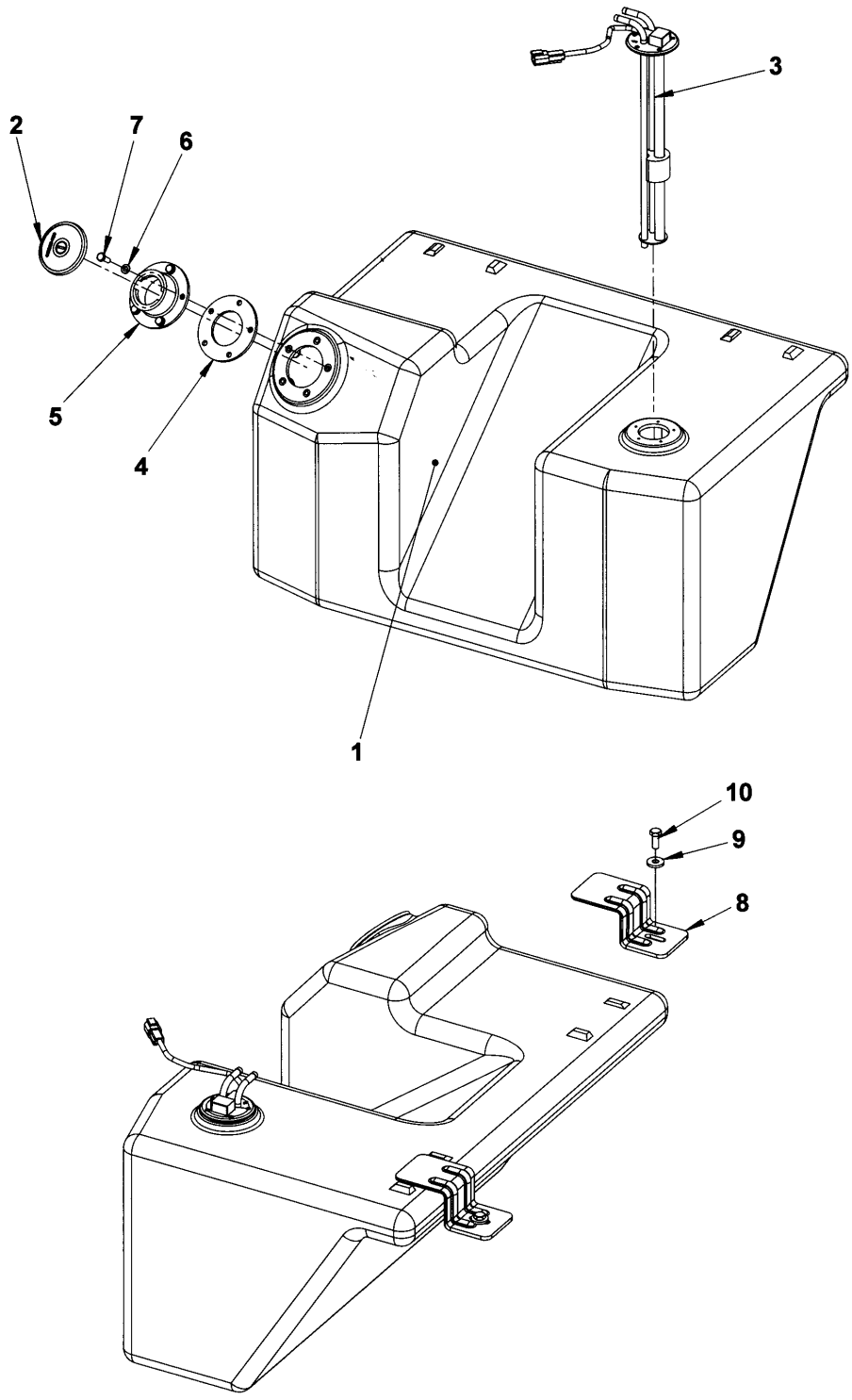

Item	Part No.	Name	Qty	L	SN INFO
1	4812118133	Fuel tank	1		
2	4812118459	Fuel cap	1		
2	4812118885	Key "044"	2		
3	4700387552	Level gauge	1		
4	4812118126	Flange gasket	1		
5	4812118125	Filler neck end	1		
6	4700904228	Washer 6,4x12x1,5	5		
7	4700500013	Screw, M6x16 mm 8.8 A2K	5		
8	4700357466	Holder plate	2		
9	4700904640	Washer, 8.4x22x3 mm 300HV	2		
10	4700500053	Screw, M8x20 mm 8.8 A2K	2		

Propulsion system To A015094 Propulsion system

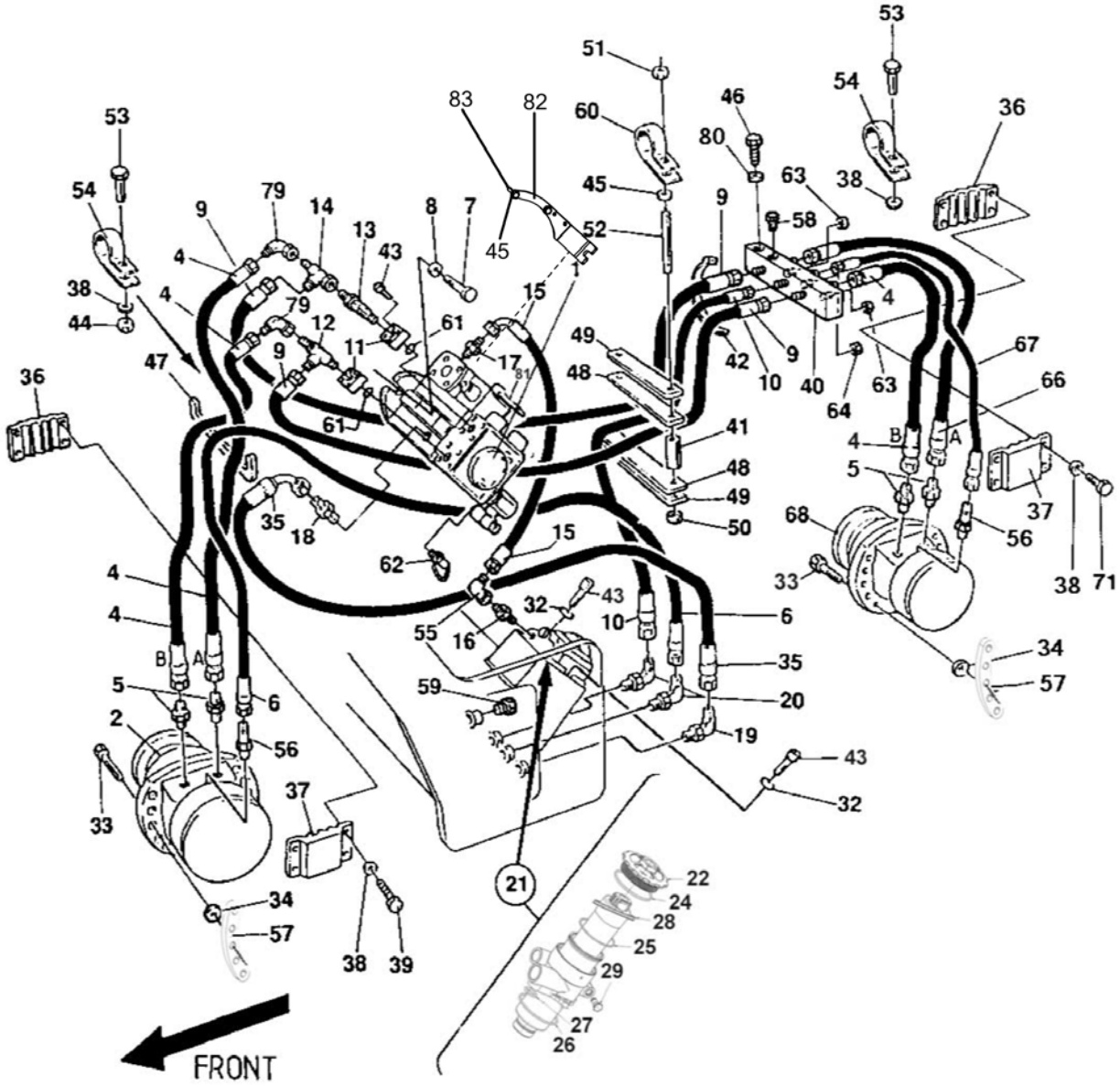

Item	Part No.	Name	Qty	L	SN INFO
1	4700372352	Hydraulic pump, propulsion	1		
2	4700390742	Hydraulic motor, propulsion, drum	1		To A012964 (incl. A012966)
2	4812120558	Hydraulic motor	1		From A012965 (excl. A012966)
4	4700482998	Hydraulic hose	3	B	
5	4700334134	Connector	4		
6	4700482830	Hydraulic hose	1	F	
7	4700500037	Hex. screw	2		
8	4700904703	Plain washer 13x24x4 mm	2		
9	4811000084	Hydraulic hose	2	C	
10	4700482452	Hydraulic hose	1	D	
11	4700373402	Flange	2		
12	4700234218	Tee-connector JIC	1		
13	4700813444	Connector elbow 90 JIC	1		
14	4700334135	Tee-connector	1		
15	4700483118	Hydraulic hose	1		
16	4700334156	Straight connector JIC	1		
17	4700901156	Connector	1		
18	4700903925	Connector	1		
19	4700334238	Elbow 90 o-ring	1		
20	4700334235	Elbow 90	2		
21	4812113327	Hydraulic oil filter, cpl.	1		
22	4812156882	Cover	1		
24	4812156881	O-ring	1		
25	4812156880	Safety ring	1		
26	4812156878	O-ring	1		
27	4812156877	O-ring	1		
28	4812113328	Hydraulic oil filter element	1		
29	4812156879	Plug	1		
32	4700904637	Washer	2		
33	4700500269	Screw	20		
34	4700904231	Washer, 13x24x2 mm 300 HV	20		
35	4700482553	Hydraulic hose	1		
36	4700371313	Hose clamp	2		
37	4700371314	Hose clamp	2		
38	4700904229	Washer, 8.4x 6x1.5 mm 300HV	11		
39	4700500020	Hex. screw	4		
40	4812110281	Junction block	1		
41	4700375616	Spacer sleeve	2		

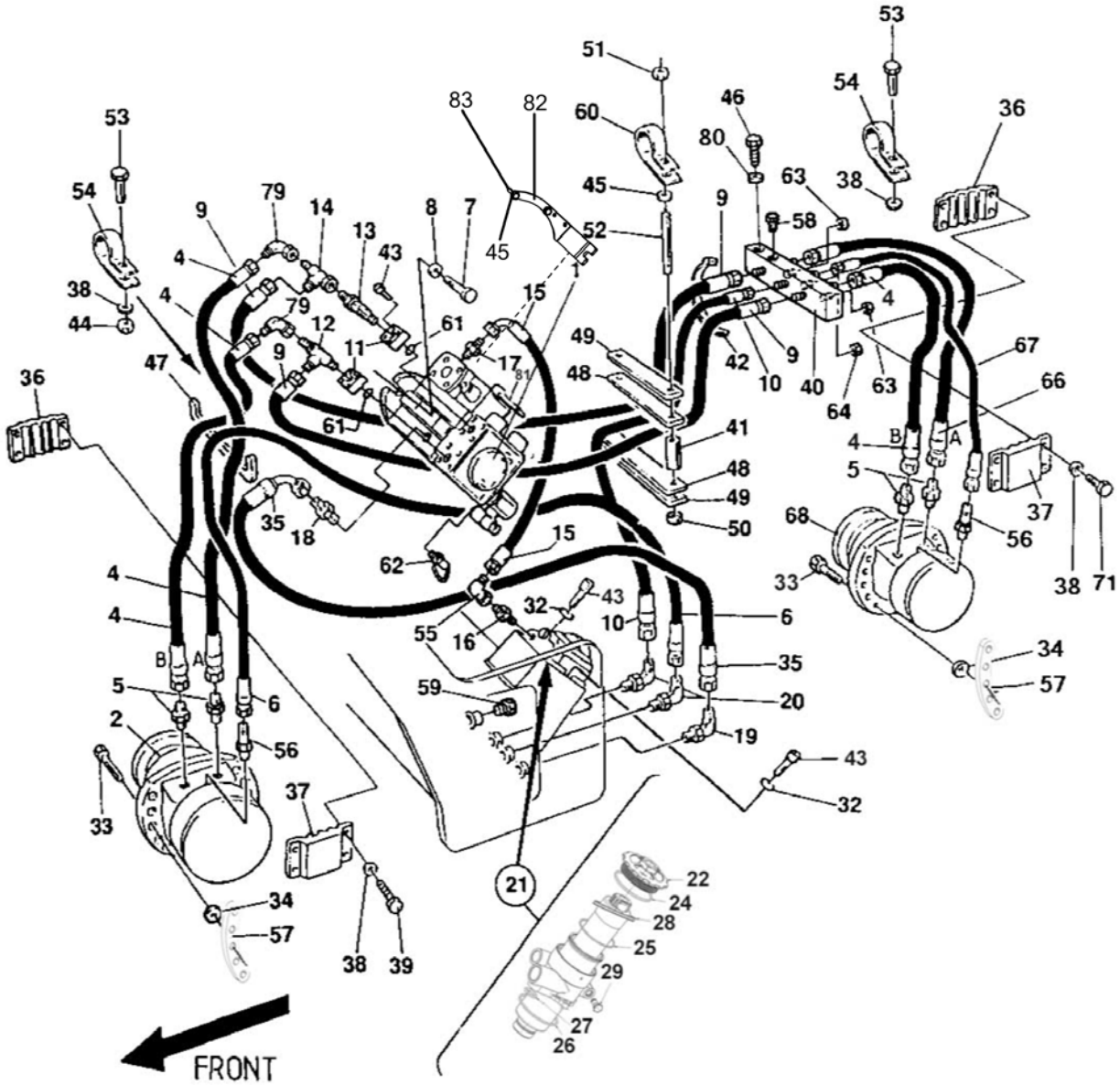
FRONT

Item	Part No.	Name	Qty	L	SN INFO
42	4700313102	Cable ties	N		
43	4700508096	Hexagon socket head cap screw	10		
44	4700586003	Lock nut M8	1		
45	4700904230	Plain washer 10.5x22x2 mm	4		To A013589
45	4700904230	Plain washer 10.5x22x2 mm	6		From A013590
46	4700500068	Screw M08x65	2		
47	4700902379	Edge trim	1XL	A	
48	4700357111	Rubber cloth	2		
49	4700357112	Cover plate	2		
50	4700355869	Spacer sleeve	2		
51	4700586018	Lock nut M10	4		
52	4700902233	Threaded stud	2		
53	4700500047	Hexagon head screw	1		
54	4700921022	Hose clamp	1		
55	4700334155	Elbow 90°	1		
56	4700924731	Connector	2		
57	4812110490	Holder	2		
58	4700232070	Plug	3		
59	4700892446	Plug	1		
60	4700921099	Clamp	1		
61	4700813443	O-ring	2		
62	4700901157	Measuring nipple	2		
63	4700330383	Cap JIC, steel	2		
64	4700230400	Cap	1		
66	4700483164	Hydraulic hose	1		
67	4700483069	Hydraulic hose	1		
68	4700390742	Hydraulic motor, propulsion, drum	1		
71	4700500053	Screw, M8x20 mm 8.8 A2K	1		
79	4700334197	Connector elbow 90 JIC	2		
80	4700904640	Washer, 8.4x22x3 mm 300HV	2		
81	4812118374	Control arm	1		
82	4812111881	Bracket	1		From A013590
83	4811000456	Screw M10x1,25x045 8.8	1		From A013590

Comments for Page: Propulsion system

(L)OCAL REMARKS

A | en_US | L=0,185 m

B | en_US | L = 1,18 m

C | en_US | L = 1,80 m

D | en_US | L = 1,25 m

F | en_US | L = 1,70 m

This page intentionally left blank

4700372352 Hydraulic pump, propulsion 4700372352 Hydraulic pump, propulsion

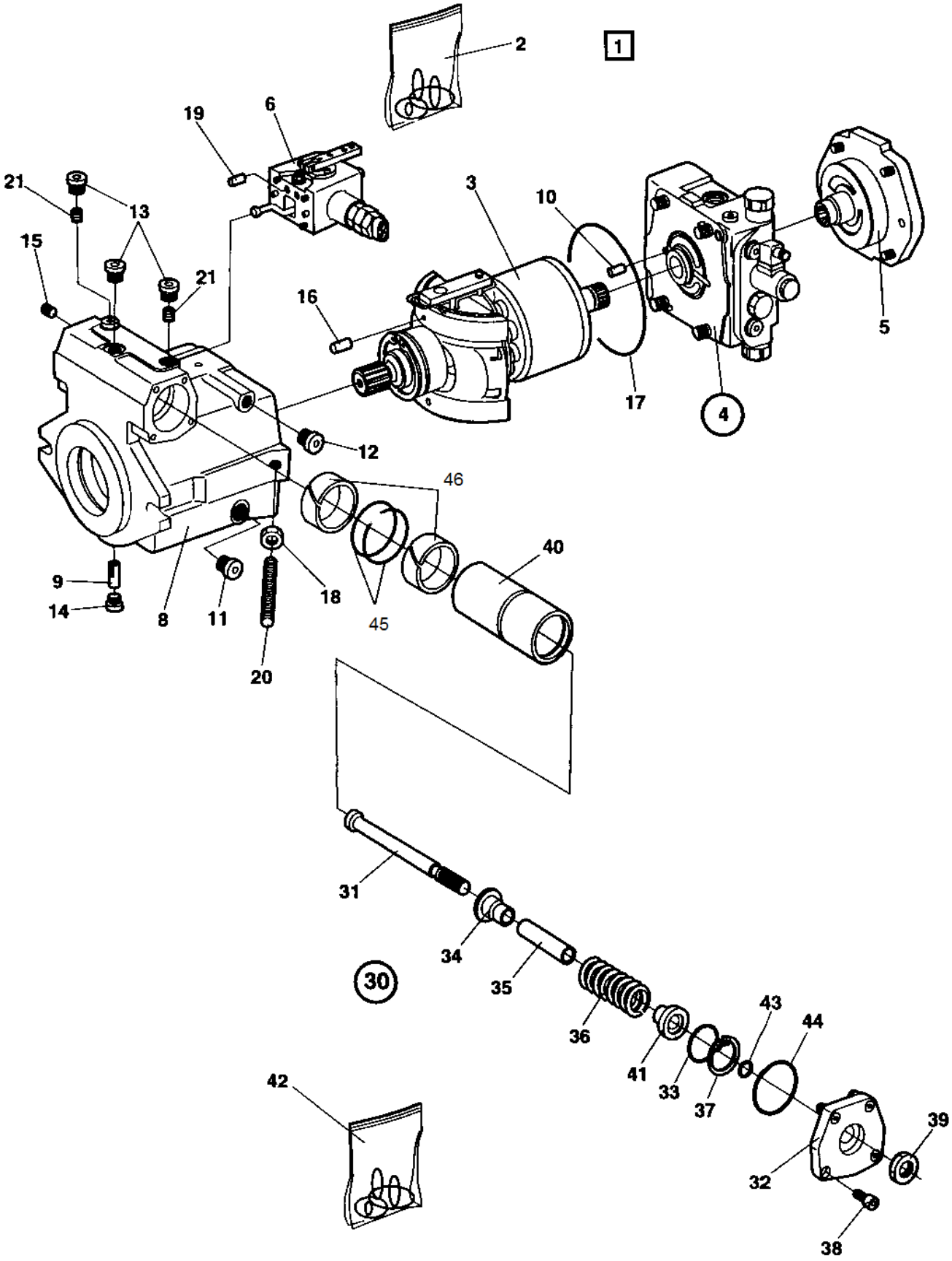

Item	Part No.	Name	Qty	L	SN INFO
1	-	Hydraulic pump	1	A	
2	4700936690	Seal kit	1	1	
3	--	Rotating group, cpl	1	2	
4	--	Valve block, cpl	1	2	
5	--	Charge pump, cpl	1	2	
6	--	Control unit, cpl	1		
8	--	Housing	1		
9	4700935158	Pin	1		
10	4700902670	Pin	1		
11	4700935219	Plug	1		
12	4700902724	Plug	1		
13	4700902625	Plug	3		
14	4700902624	Screw	1		
15	4700909514	Double break-off pin	1		
16	4700902792	Pin	1		
17	4700935159	O-ring	1		
18	4700902695	Nut	1		
19	4700935160	Orifice	1		
20	4700902687	Pin	1		
21	4700902696	Orifice 0,8	2		
30	4700909757	Control valve	1		
31	---	Rod	1		
32	---	Cover	1		
33	---	Ring	1		
34	---	Spring collar	1		
35	---	Spacer	1		
36	---	Spring	1		
37	---	Snap ring	1		
38	---	Screw	4		
39	---	Nut	1		
40	---	Piston	1		
41	---	Spring collar	1		
42	4700909758	Seal kit hydraulic control	1		
43	----	O-ring	1		
44	----	O-ring	1		
45	----	Seal ring	2		
46	4812157794	Guide ring	2		

Comments for Page: 4700372352 Hydraulic pump, propulsion

(L)OCAL REMARKS

A | en_US | CPL

1 | en_US | Includes all gaskets and o-rings for the hydraulic pump

2 | en_US | Exploded in section "Rotating group, valves, charge pump

This page intentionally left blank

4700372352 Hydraulic pump, propulsion Rotating group, valves, charge pump

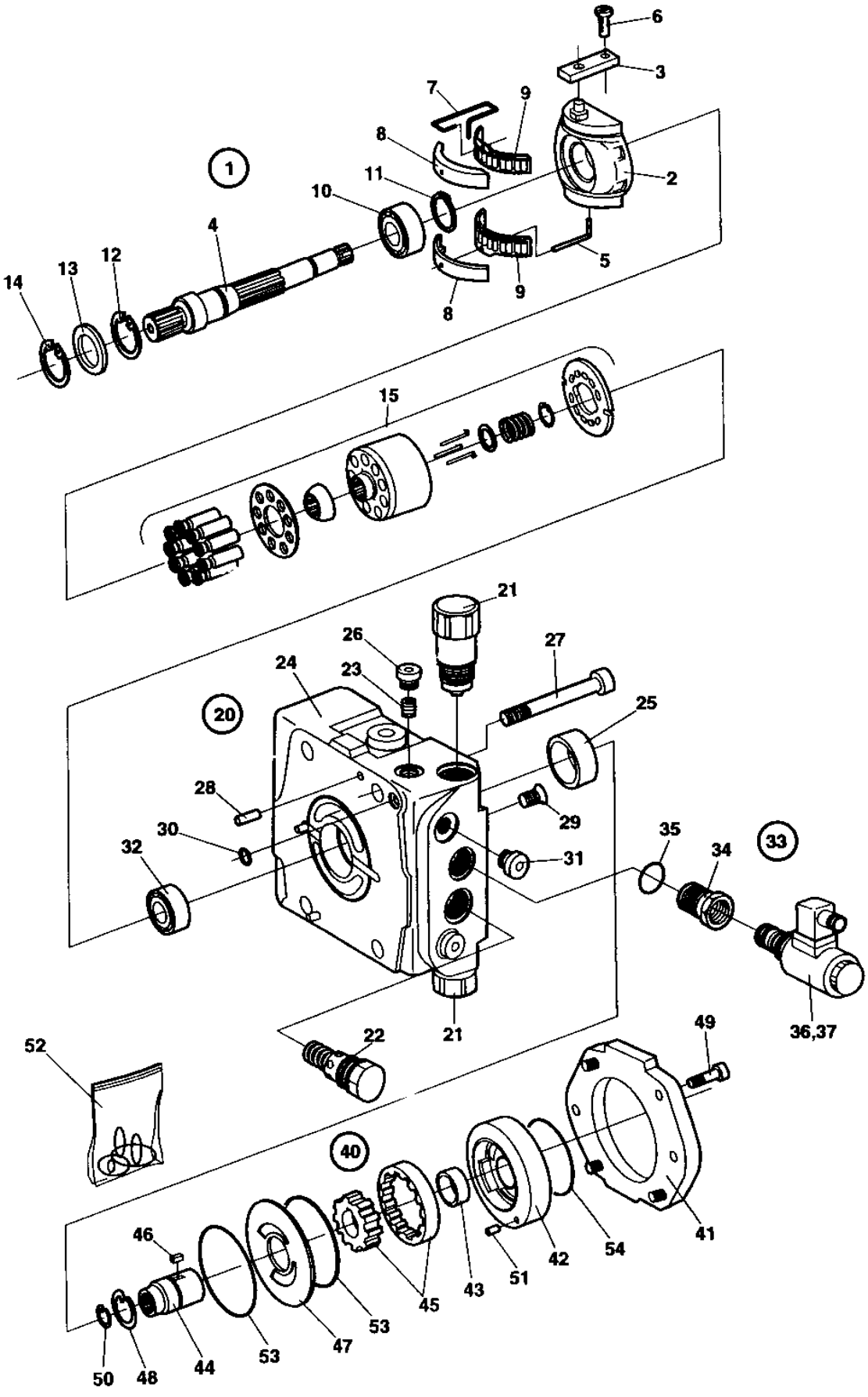

Item	Part No.	Name	Qty	L	SN INFO
1	4700935161	Rotating group	1		
2	4700935171	Cradle	1		
3	4700935162	Ring	1		
4	4700935163	Shaft	1		
5	4700902644	Wire pin	1		
6	4700935164	Pin	1		
7	4700935165	Wire pin	1		
8	4700935166	Bearing liner	1	A	
9	4700902620	Cradle bearing assy (Set)	1		
10	4700902619	Roller bearing	1		
11	4700901750	Retaining ring	1		
12	4700935170	Retaining ring	1		
13	4700936691	Seal ring	1		
14	4700935170	Retaining ring	1		
15	4700935167	Cylinder with pistons, cpl	1		
20	-	Valve block	1		
21	4700935172	Pressure relief valve 350 bar	2		
22	4700903471	Relief valve	1		
23	4700936692	Check valve	1		
24	4700936693	Valve block	1		
25	4700903557	Bearing bushing	1		
26	4700935176	Plug	1		
27	4700935177	Screw	4		
28	4700908384	Pin	2		
29	4700909514	Double break-off pin	2		
30	4700902641	O-ring	2		
31	4700902625	Plug	2		
32	4700901744	Plain roller bearing	1		
33	-	Solenoid valve	1	B	
34	4700935178	Adapter	1		
35	4700927278	O-ring	1		
36	4700935179	Valve, cpl	1		
37	-	Solenoid	1	C	
40	4700935181	Charge pump	1		
41	4700935182	Cover	1		
42	4700935183	Housing	1		
43	4700903557	Bearing bushing	1		
44	4700935184	Shaft	1		

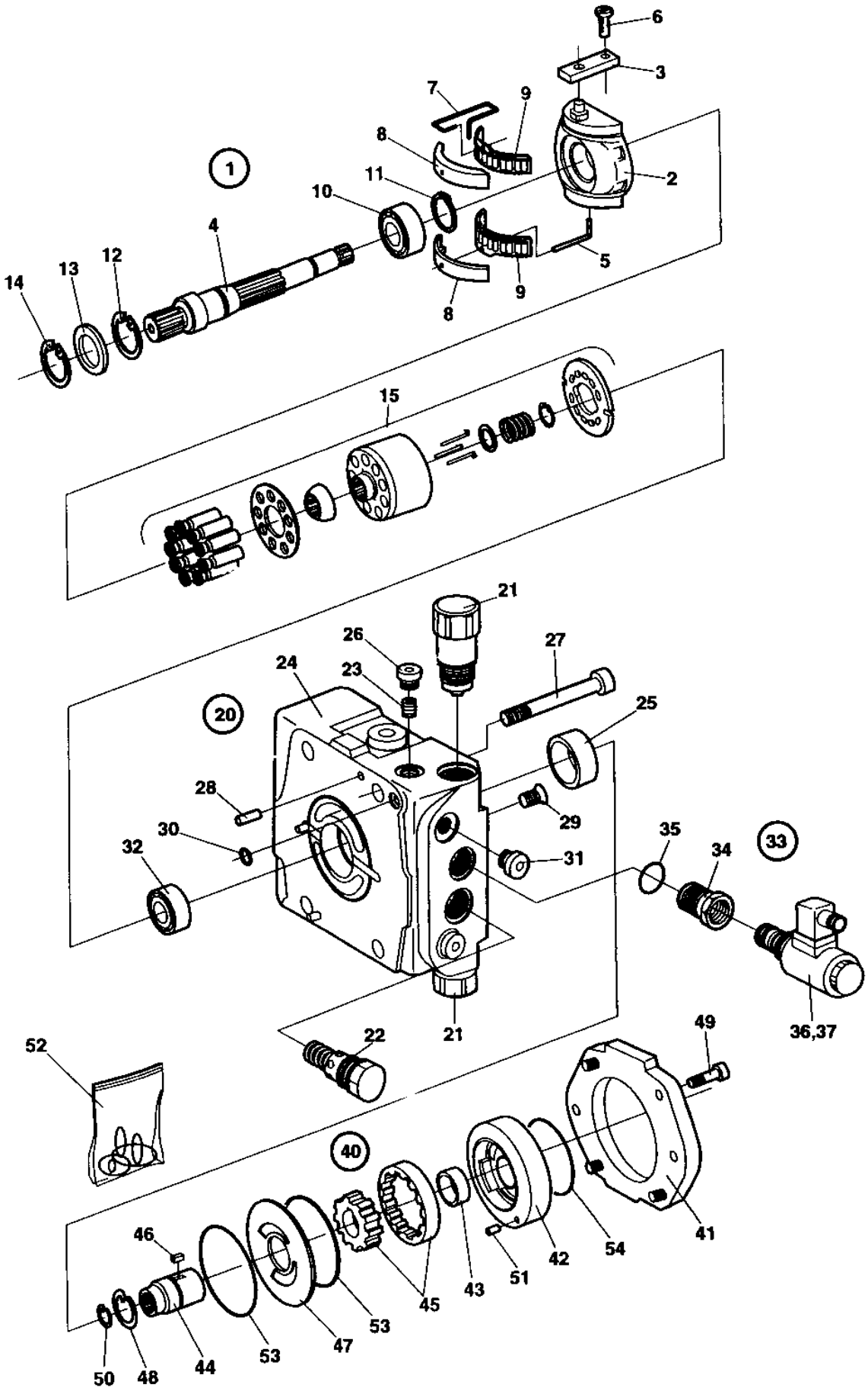
6
3
7
9
8
2
1
11
10
4
5
12
13
14
8
9
15
21
26
27
24
23
25
20
28
29
30
35
34
33
32
31
21
36,37
49
52
22
40
46
41
54
42
51
43
45
53
47
53
44
50
48

Item	Part No.	Name	Qty	L	SN INFO
45	4700936706	Wheel set	1		
46	4700935186	Key	1		
47	4700935187	Wear plate	1		
48	4700902654	Retaining ring	1		
49	4700935188	Screw	4		
50	4700935189	Retaining ring	1		
51	4700935190	Cylindrical pin	1		
52	4700935191	Seal kit	1		
53	-	Seal	2		
54	-	O-ring	1		

Comments for Page: Rotating group, valves, charge pump

(L)OCAL REMARKS

A | en_US | One pair

B | en_US | CPL

C | en_US | Does not sales separatly. Included in the valve.

4700372352 Hydraulic pump, propulsion Control unit, cpl

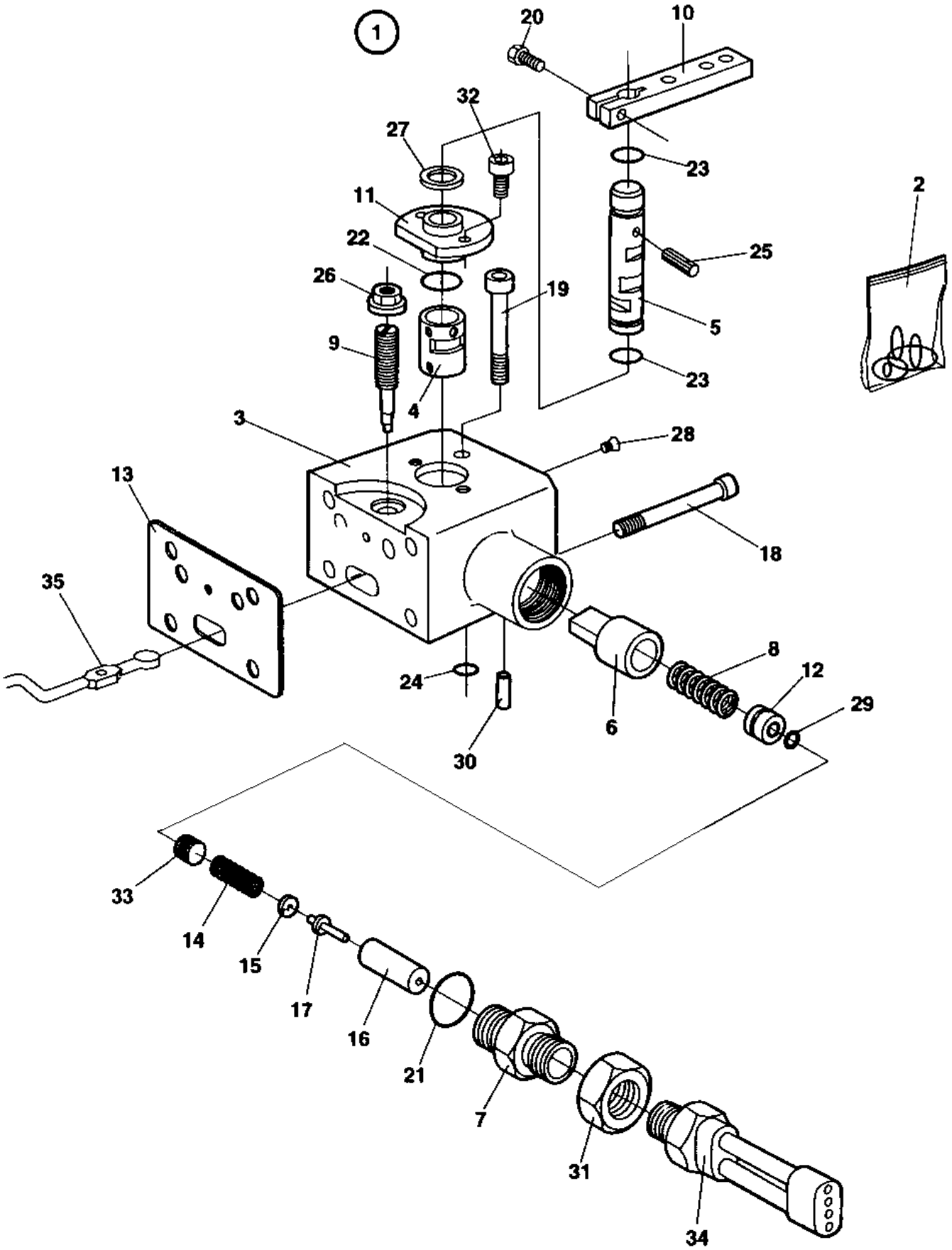

Item	Part No.	Name	Qty	L	SN INFO
1	4700935194	Control unit	1	A	
2	4700935195	Seal kit	1		
3	4700935196	Housing	1		
4	4700935197	Bushing	1		
5	4700935198	Shaft	1		
6	4700935199	Spring bush	1		
7	4700935201	Adapter	1		
8	4700935202	Pressure spring	1		
9	4700935203	Eccentric pin	1		
10	-	Lever	1		
11	4700935204	Cover	1		
12	4700935205	Bushing	1		
13	4700935218	Gasket	1	B	
14	4700935206	Spring	1		
15	4700935207	Spring collar	1		
16	4700935208	Spring cage	1		
17	4700935209	Pin	1		
18	4700935210	Screw	4		
19	4700935211	Screw	1		
20	4700902770	Screw	1		
21	-	O-ring	1	B	
22	-	O-ring	1	B	
23	-	O-ring	3	B	
24	-	O-ring	1	B	
25	4700902767	Needle roller	1		
26	-	Lock Nut	1	B	
27	4700902773	Shim	1		
28	4700935212	Pin	1		
29	-	O-ring	1	B	
30	4700935190	Cylindrical pin	1		
31	4700935214	Nut	1		
32	4700902771	Screw	2		
33	4700935215	Plug	1		
34	4700935200	Neutral start switch Cpl.	1		
35	4700935216	Lever	1		

Comments for Page: Control unit, cpl

(L)OCAL REMARKS

A | en_US | CPL

B | en_US | Incl. in item 2

This page intentionally left blank

Propulsion system To A015094 4812110281 Junction block

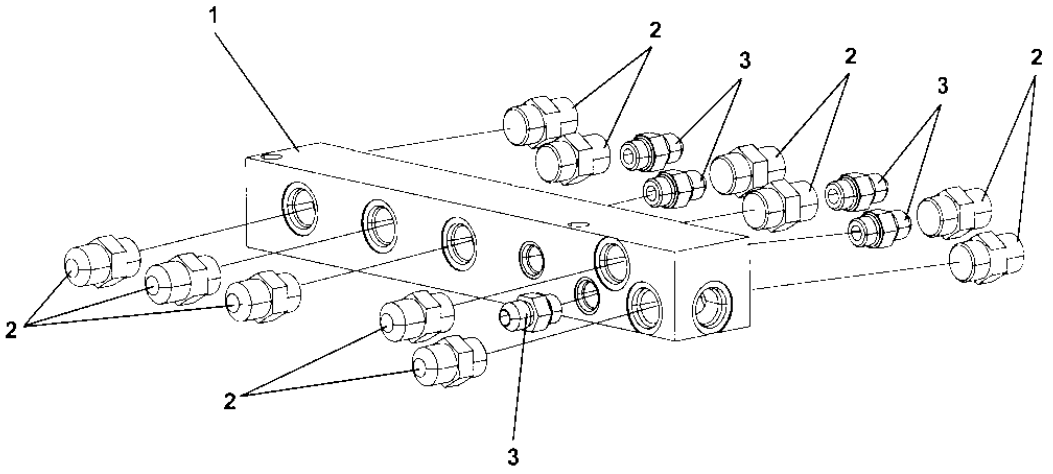

Item	Part No.	Name	Qty	L	SN INFO
1	4812110282	Junction block	1		
2	4700334121	Straight connector	11		
3	4700234233	Adapter	5		

4700390742 Hydraulic motor, propulsion, drum To A012964 (incl. 12966) 4700390742 Hydraulic motor, propulsion, drum

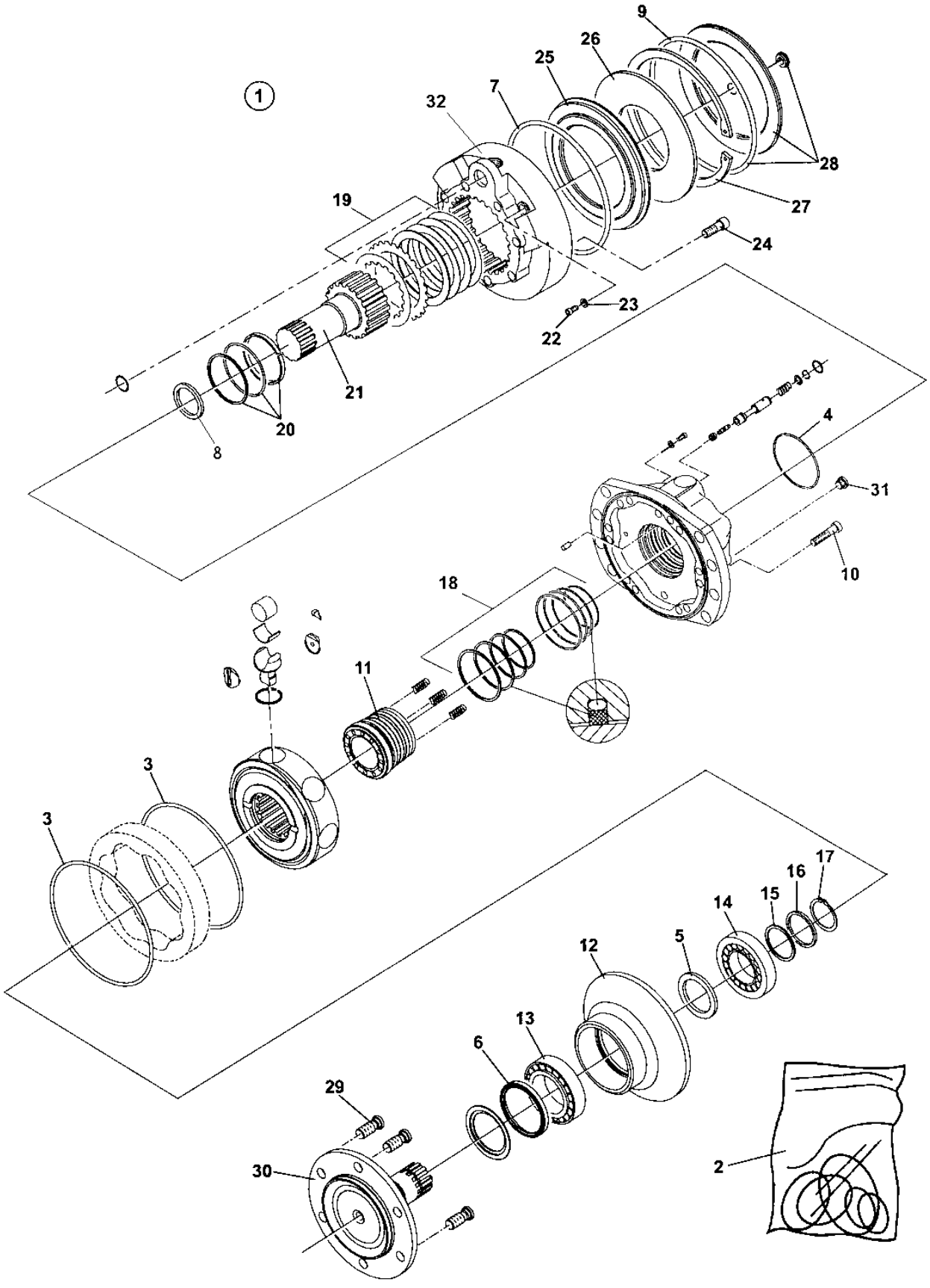

Item	Part No.	Name	Qty	L	SN INFO
1	4700390742	Hydraulic motor, propulsion, drum	1		
2	4700950414	Seal kit	1		
3	---	O-ring	2		
4	---	O-ring	1		
5	---	Seal kit	1		
6	---	Seal	1		
7	4700950293	O-ring	1		
8	---	Seal	1		
9	---	O-ring	1		
10	--	Screw	12		
11	4812158054	Distributor	1		
12	4812158055	Bearing support	1		
13	4812156164	Bearing	1		
14	4812156165	Bearing	1		
15	--	Shim kit	1		
16	--	Supporting plate	1		
17	--	Snap ring	1		
18	4700950416	Seal kit	1		
19	4700950415	Brake disc kit	1		
20	4812160854	Seal kit	1		
21	--	Shaft	1		
22	--	Screw	1		
23	--	Bonded seal	1		
24	--	Screw	1		
25	4812156755	Brake piston	1		
26	4812159789	Spring washer	1		
27	4812159788	Snap ring	1		
28	4700950226	End cap kit	1		
29	--	Set of studs	1		
30	4812157787	Shaft	1		
31	--	Plug	1		
32	4812155168	Brake housing	1		

Propulsion system From A015095 Propulsion system

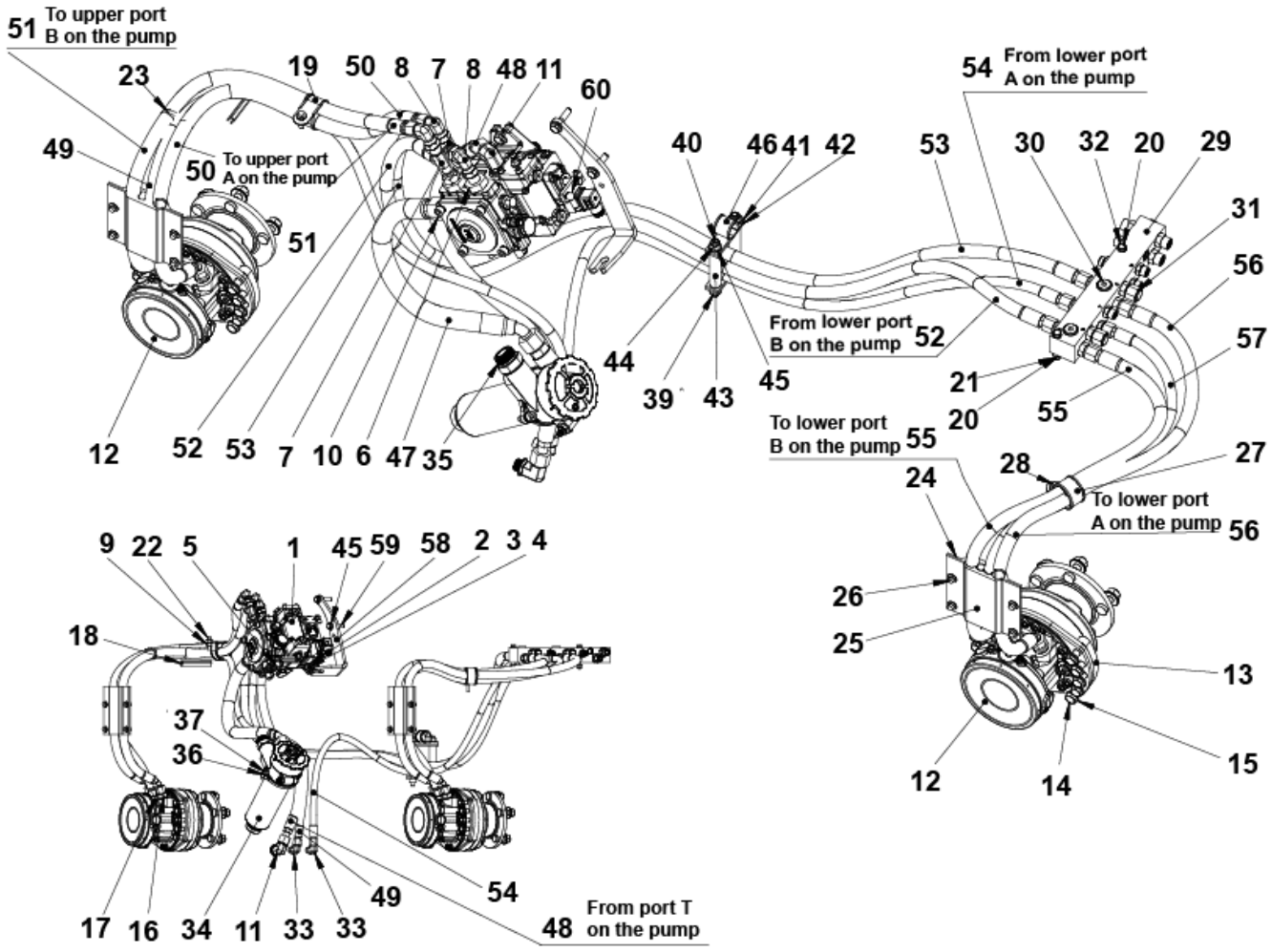

Item	Part No.	Name	Qty	L	SN INFO
1	4812120091	Hydraulic pump	1		
1	4812161797	Stop solenoid	1		
2	4700904703	Plain washer 13x24x4 mm	2		
3	4700500037	Hex. screw	2		
5	4700923405	Measuring nipple	2		
6	4700791408	Straight o-ring connector	2		
7	4700791798	Adapter	2		
8	4700791745	Elbow 90, O-ring with swivel	3		
9	4700902286	Lock nut, M8x1.25 mm A2K	1		
10	4700904728	Straight connector ORFS	2		
11	4700792332	Elbow 90 orfs	2		
12		Hydraulic motor	2		
13	4812110490	Holder	4		
14	4700500269	Screw	20		
15	4700904231	Washer, 13x24x2 mm 300 HV	20		
16	4700791410	Straight o-ring connector	4		
17	4700791828	Adapter	2		
18	4700902379	Edge trim	0,185		
19	4700921022	Hose clamp	1		
20	4700904229	Washer, 8.4x 6x1.5 mm 300HV	4		
21	4700586003	Lock nut M8	2		
22	4700500506	Screw, M8x30 mm 8.8 A2K	1		
23	4700313102	Cable ties	1		
24	4700371313	Hose clamp	2		
25	4700371314	Hose clamp	2		
26	4700901832	Screw, M08x16, 8.8	8		
27	4700921119	Pipe clamp	1		
28	4700902041	Screw, M8x25mm 8.8 A2K	1		
29	4812120928	Connection block	1		
30	4700792512	Steel plug threaded	3		
31	4700791851	Plug ORFS	2		
32	4700500068	Screw M08x65	2		
33	4700791398	Elbow 90, O-ring	2		
34	4812113327	Hydraulic oil filter, cpl.	1		
35	4700792338	Adapter	1		
36	4700904637	Washer	2		
37	4700508096	Hexagon socket head cap screw	2		

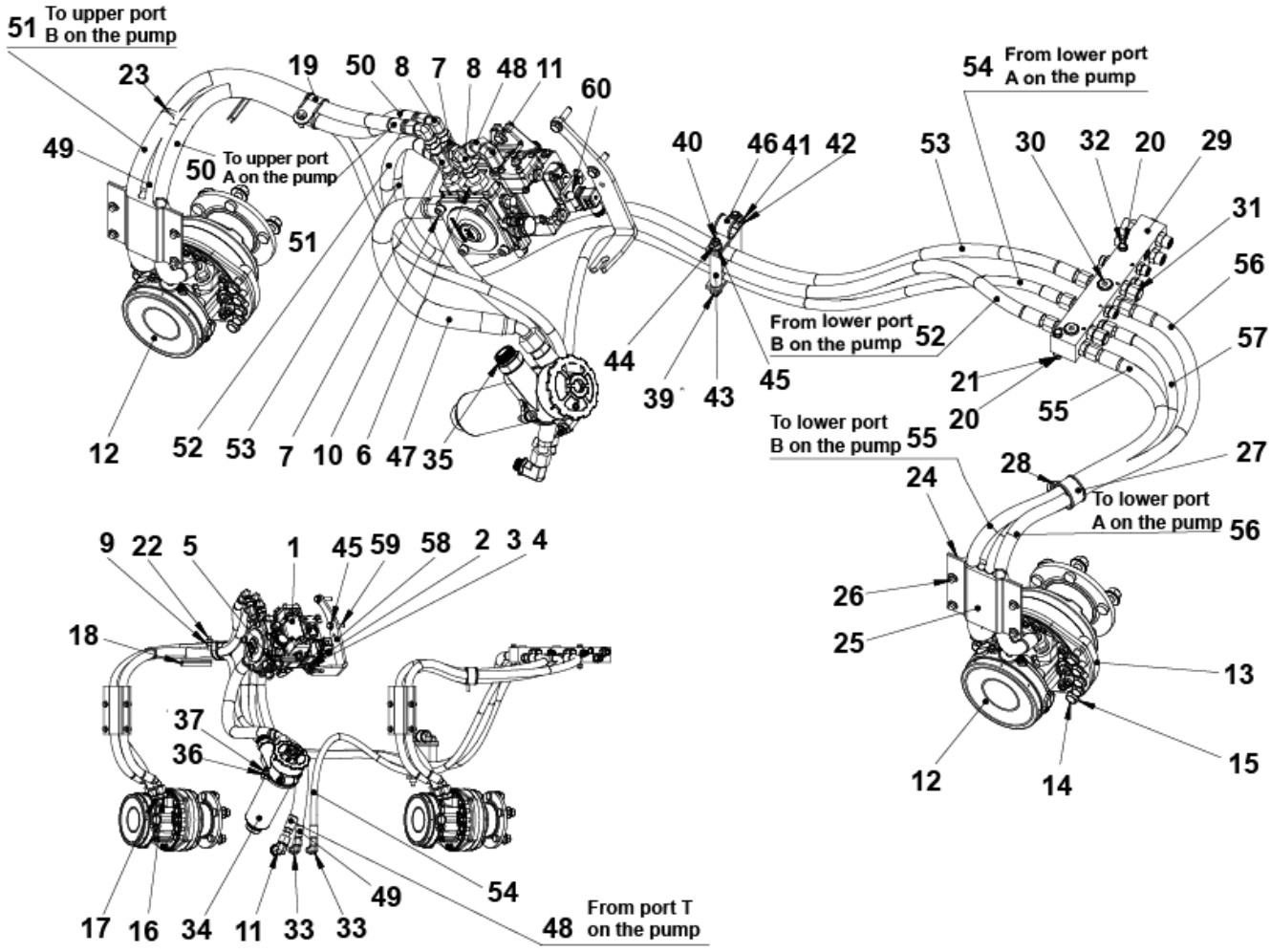
51 To upper port B on the pump
23
19
50
8
7
8
48
11
60
49
50 To upper port A on the pump
51
12
52
53
7
10
6
47
35
40
46
41
42
44
39
43
45
From lower port B on the pump
52
54 From lower port A on the pump
53
30
32
20
29
31
56
57
21
20
55
To lower port B on the pump
55
28
27
24
To lower port A on the pump
56
26
25
13
15
12
14
9
22
5
1
45
59
58
2
3
4
18
37
36
17
16
34
11
33
33
49
54
48 From port T on the pump

Item	Part No.	Name	Qty	L	SN INFO
39	4700355869	Spacer sleeve	2		
40	4700902233	Threaded stud	2		
41	4700357112	Cover plate	2		
42	4700357111	Rubber cloth	2		
43	4700357113	Spacer sleeve	2		
44	4700586018	Lock nut M10	2		
45	4700904230	Plain washer 10.5x22x2 mm	4		
46	4700921099	Clamp	1		
47	4812120885	Hydraulic hose	1		
48	4812121228	Hydraulic hose	1		
49	4700484092	Hydraulic hose	1		
50	4700484316	Hydraulic hose	1		
51	4700484316	Hydraulic hose	1		
52	4812121226	Hydraulic hose	1		
53	4812121226	Hydraulic hose	1		
54	4812121769	Hydraulic hose	1		
55	4812121785	Hydraulic hose	1		
56	4812121785	Hydraulic hose	1		
57	4812121229	Hydraulic hose	1		
58	4812121463	Bracket	1		
59	4811000456	Screw M10x1,25x045 8.8	2		
60	4700416034	Universal joint, M6	1		From A015765

Comments for Page: Propulsion system

(L)OCAL REMARKS

A | See illustration B

Propulsion system From A015095 4812120928 Connection block

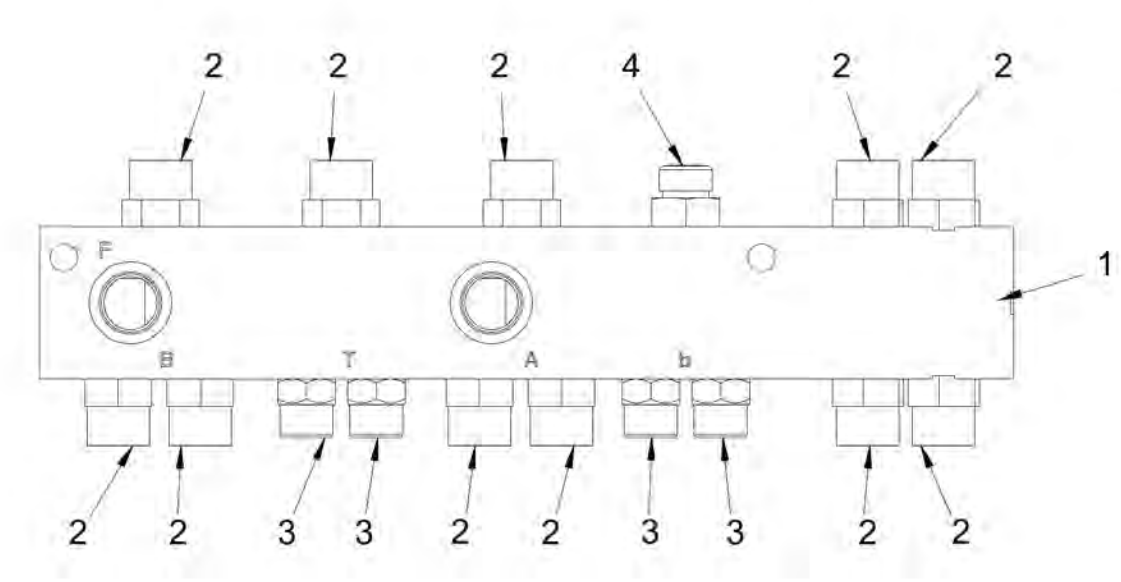

Item	Part No.	Name	Qty	L	SN INFO
1	-	Connection block	1		
2	4700791799	Straight connector orfs	11		
3	4700791409	Straight connector orfs	4		
4	4700791828	Adapter	1		

Propulsion system From A015095 4812120558 Hydraulic motor

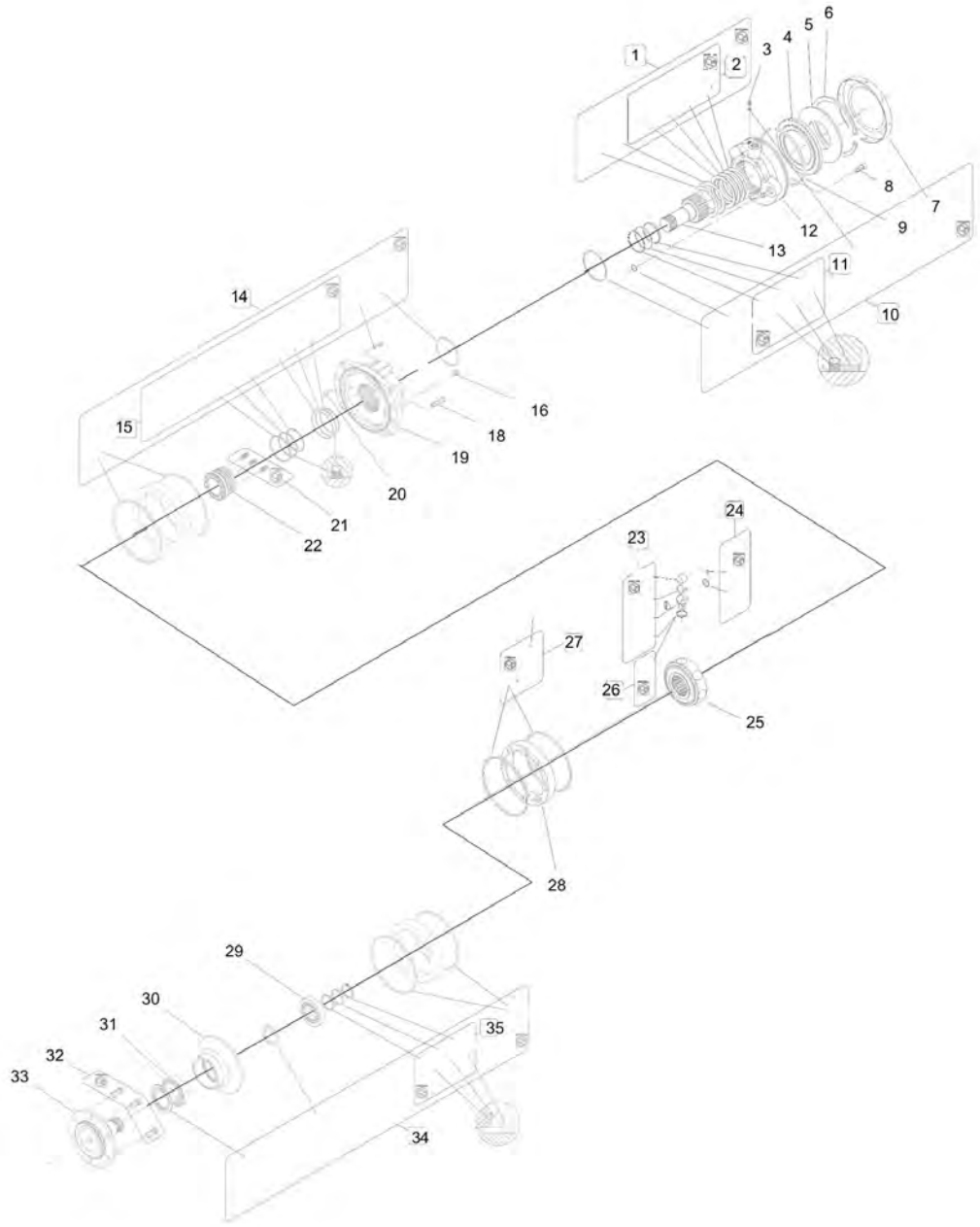

Item	Part No.	Name	Qty	L	SN INFO
0	4812120558	Hydraulic motor	1		
1	4812162174	Repair kit	1		
1	-	Brake disc	20		
1	-	Brake disc	21		
2	4812162175	Shim	1		
3	4812162176	Screw	1		
4	4812162177	Brake piston	1		
5	4812162178	Washer	1		
6	4812162179	Snap ring	1		
8	4812162181	Screw	10		
10	4812160275	Repair kit	1		
7	-	Shield	1		
9	-	Repair kit	1		
11	4812162182	Seal	1		
11	-	Bushing	1		
11	-	Repair kit	1		
11	-	Repair kit	1		
12	4812162183	Brake housing	1		
13	4812162184	Brake shaft	1		
14	4812162185	Seal kit	1		
14	-	Repair kit	2		
15	4812162186	Seal kit	1		
16	4812162187	Plug	1		
18	4812162188	Screw	12		
19	4812162189	Cover	1		
20	4812162190	Pin	1		
21	4812162191	Seal kit	1		
22	4812162192	Valve	1		
23	4812162193	Piston	8		
23	-	Roller	1		
23	-	Repair kit	1		
23	-	Piston	1		
23	-	Piston bushing	1		
24	4812162194	Repair kit	1		
24	-	Lunambule	16		
24	-	Clip	8		
25	-	Cylinder block	1		
26	4812162195	Seal	10		

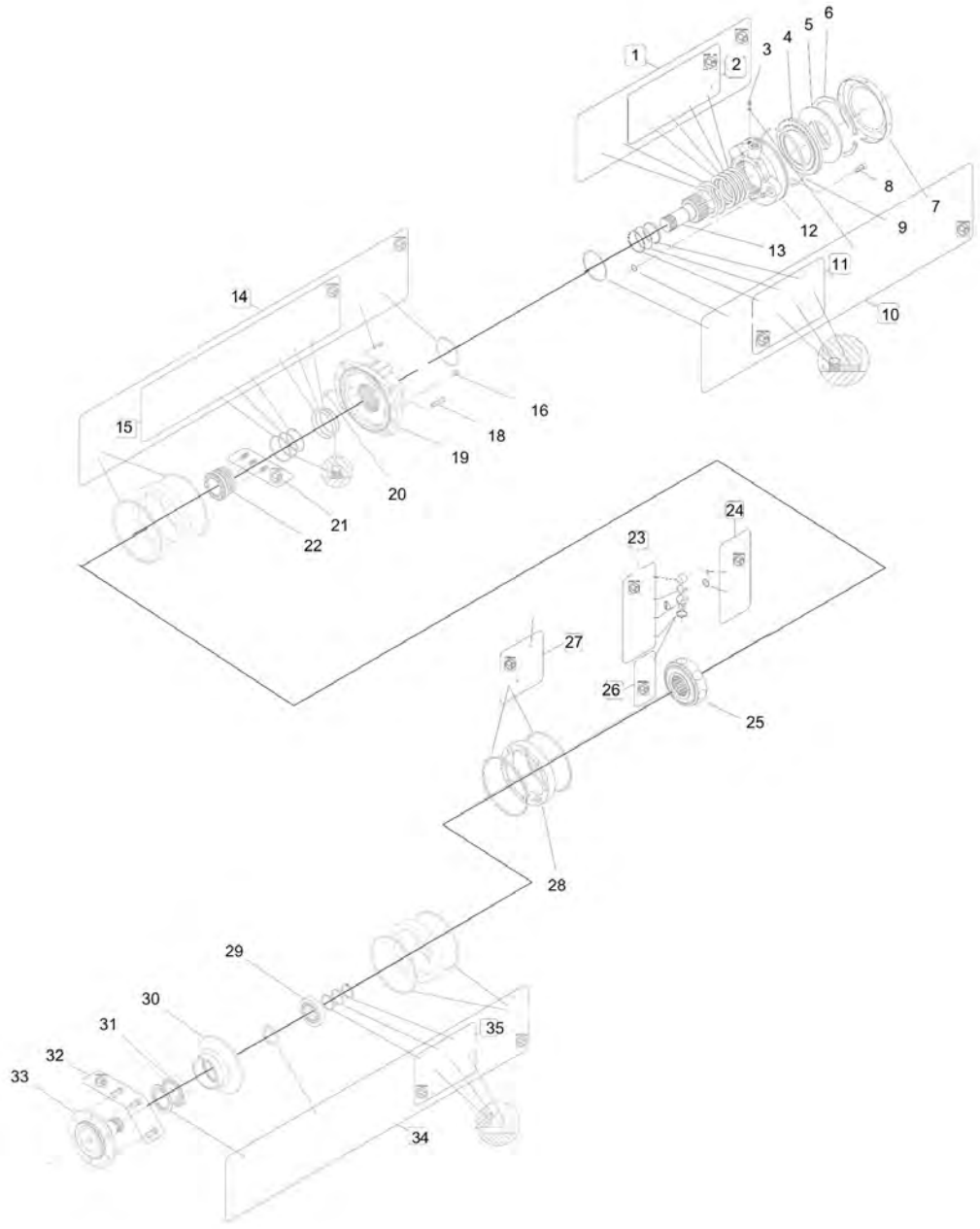
1
2
3
4
5
6
7
8
9
10
11
12
13
14
15
16
18
19
20
21
22
23
24
25
26
27
28
29
30
31
32
33
34
35

Item	Part No.	Name	Qty	L	SN INFO
27	4812162196	Seal kit	1		
27	-	Plug	1		
27	-	Repair kit	2		
28	4812162197	Cam	1		
29	4812162198	Bearing	1		
30	4812162199	Bearing support	1		
31	4812162251	Bearing	1		
32	4812162252	Bolt	1		
33	4812162253	Shaft	1		
34	4812162254	Repair kit	1		
34	-	Repair kit	2		
34	-	Repair kit	1		
35	-	Repair kit	1		
35	-	Shim	1		
35	-	Guide ring	1		
35	-	Snap ring	1		
35	4812162255	Repair kit	1		

Propulsion system From A015095 4812120091 Hydraulic pump

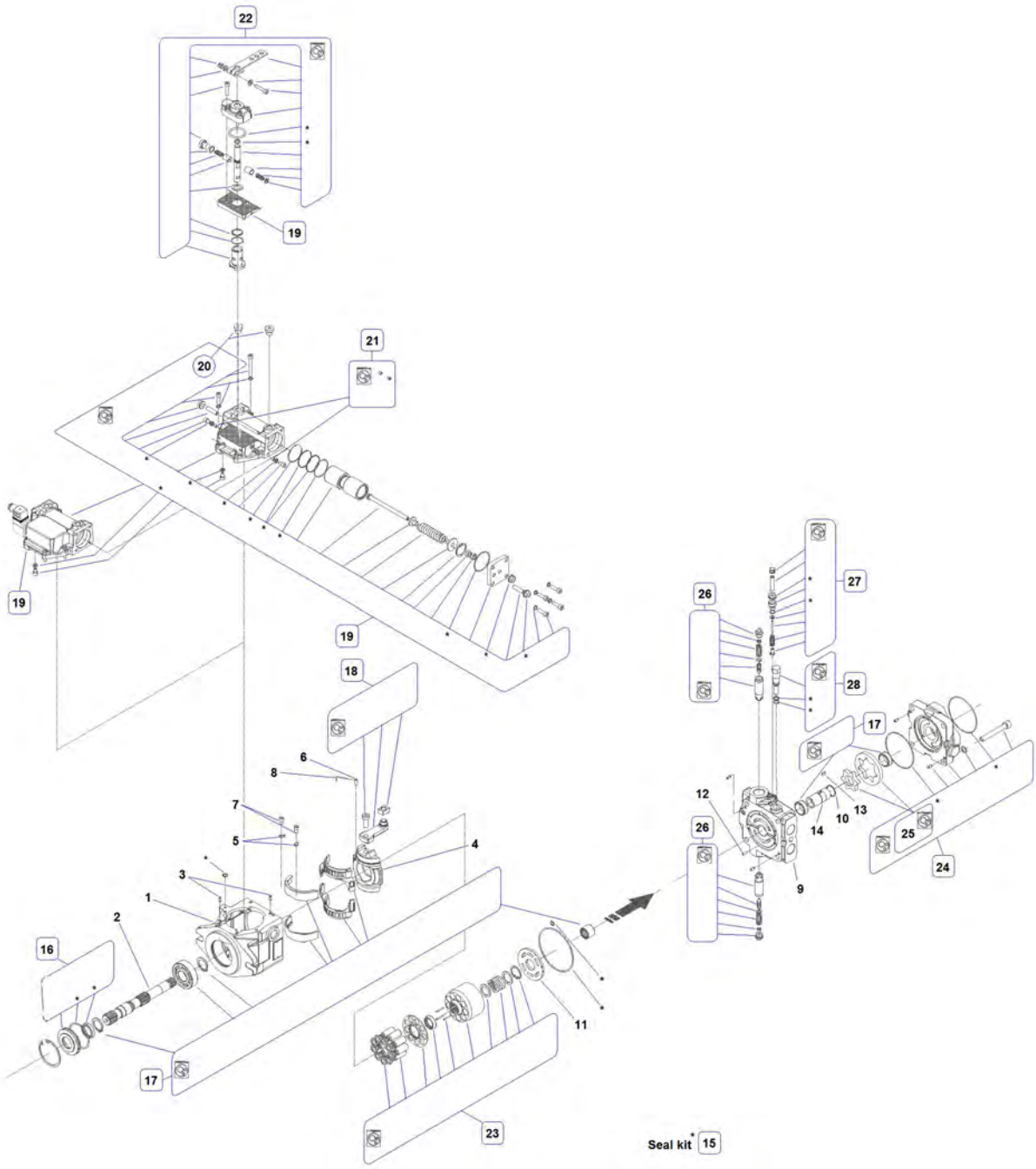

Item	Part No.	Name	Qty	L	SN INFO
1	-	Housing	1		
2	-	Shaft	1		
3	-	Pin	2		
4	-	Swash plate	1		
5	-	Retaining wire	2		
6	-	Pin	1		
7	-	Screw	3		
8	-	Retaining wire	1		
9	-	Distribution block	1		
10	-	Ring	1		
11	-	Distribution valve	1		
12	-	Pin	1		
13	-	Pin	1		
14	-	Bushing	1		
15	4812161278	Seal kit, overhaul	1	1	
16	4812161282	Pump shaft kit	1		
17	-	Repair kit, housing	1		
18	-	Repair kit	1		
19	-	Control valve, kit	1		
19.1	4812161797	Stop solenoid	1		
19.2	4812161566	Coil	1		
20	--	Plug	2		
21	-	Repair kit, control valve	1		
22	4812161990	Control unit	1		
23	-	Rotating group, kit	1		
24	-	Repair kit, valve block	1		
25	--	Gerotor kit	1		
26	-	Pressure control valve	2		
27	4812161058	Low pressure relief valve kit	1		
28	-	Repair kit, valve block	1		

Comments for Page: 4812120091 Hydraulic pump

(L)OCAL REMARKS

1 | Parts in picture marked with * is included in Seal kit.

Vibration system To A015094 Vibration system

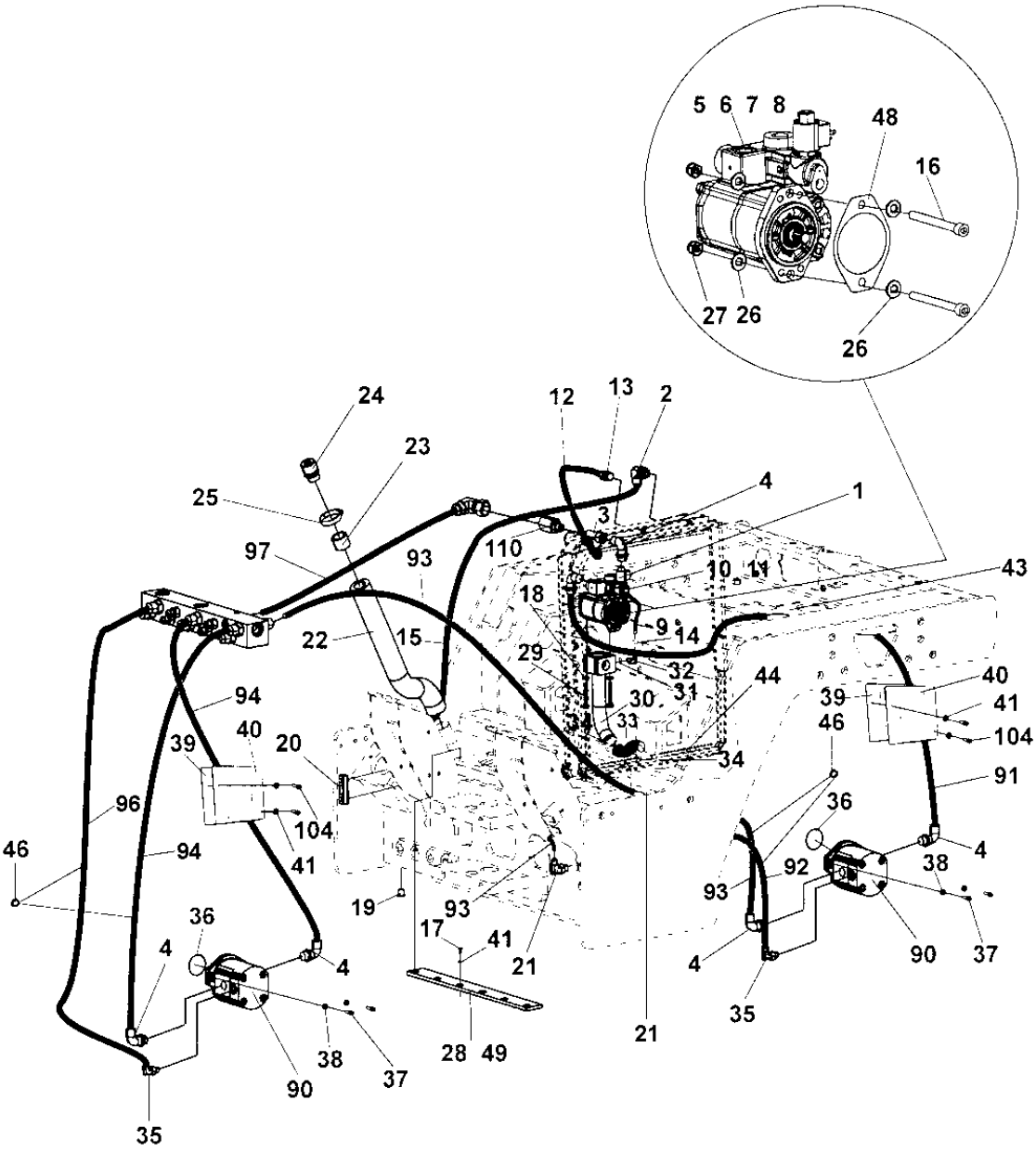

Item	Part No.	Name	Qty	L	SN INFO
1	4812112054	Hydraulic pump	1		To A012667 (excl. 12607-12610, incl. 12754)
1	4812119251	Hydraulic pump	1		From A012668 (incl. 12607-12610, excl. 12754)
2	4700927459	Elbow with O-ring	1		
3	4700334135	Tee-connector	2		
4	4700334238	Elbow 90 o-ring	5		
5	4700234390	Connector	1		
6	4700334524	Elbow 90°	1		
7	D433830401	Connector	1		
8	4700910161	Measuring nipple	1		
9	4700386134	Hydraulic hose	1		
10	4700901692	Screw	1		
11	4700480124	Washer	2		
12	4700482306	Hydraulic hose	1		
13	4700334121	Straight connector	1		
14	4700923371	Straight connector JIC	1		
15	4811000383	Hydraulic hose	1		
16	4700500078	Hex. screw	2		
17	4700500019	Hexagon screw	2		
18	4700904556	Steel plain washer 8,4x16x3,0	8		
19	4700232122	Steel plug threaded	1		
20	4700989151	Oil level glass	1		
21	4700334235	Elbow 90	1		
22	4700373478	Rubber hose	1		
23	4700357139	Connector	1		
24	4700357138	Ventilating filter	1		
25	4700313008	Hose clamp	2		
26	4700904230	Plain washer 10.5x22x2 mm	2		
27	4700902287	Nut, M10	2		
28	4700358486	Rubber strip	1		
29	4700500067	Screw	4		
30	4812113333	Flange	1		
31	4700160016	O-ring	1		
32	4700234341	Elbow 45°	1		
33	4811000372	Hydraulic hose	1XL	H	
34	4700902295	Hose clamp	2		
35	4700234481	Connector	2		
36	4700160031	O-ring	2		

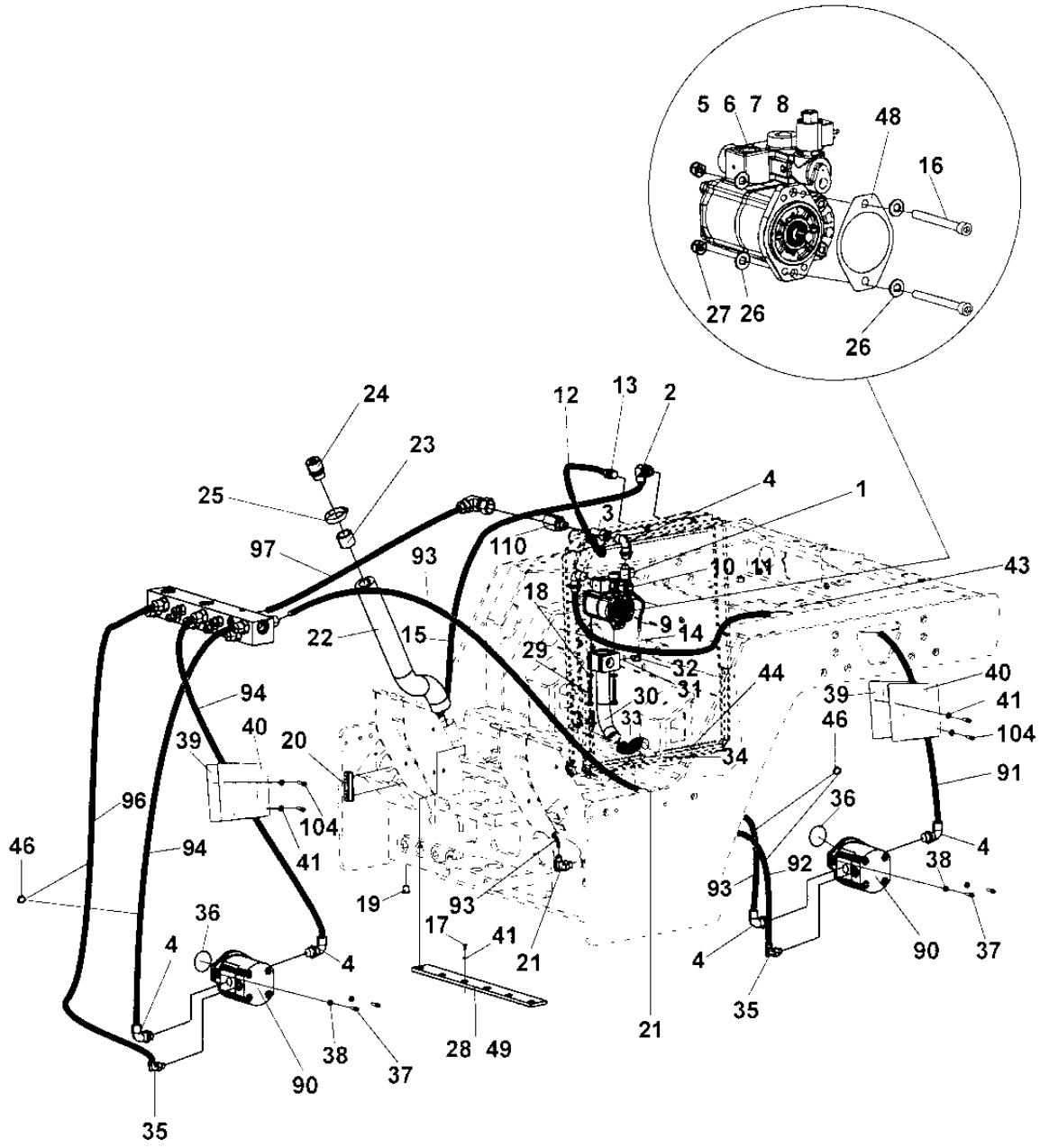
5 6 7 8
48
16
27 26
26
24
23
25
97
93
110
12
13
2
4
1
3
43
10 11
18
9
14
22
15
29
32
31
30
33
34
44
40
39
41
104
46
91
36
4
38
92
90
37
35
94
96
20
17
19
28 49
21

Item	Part No.	Name	Qty	L	SN INFO
37	4700508029	Cylinder screw	2		
38	4700904557	Washer, 10.5x22x4 mm 300 HV	2		
39	4700371313	Hose clamp	1		
40	4700371314	Hose clamp	1		
41	4700904229	Washer, 8.4x 6x1.5 mm 300HV	9		
43	4700902379	Edge trim	1XL		
44	4700902379	Edge trim	1XL		
46	4700313102	Cable ties	N		
48	4700379458	Gasket	1		
49	4700904901	Tape	2XL		
90	4812118172	Hydraulic motor	2		
91	4700482242	Hydraulic hose	1		
92	4811000382	Hydraulic hose	1		
93	4700483155	Hydraulic hose	1	A	
94	4700483157	Hydraulic hose	1	B	
96	4700483162	Hydraulic hose	1	C	
97	4700482525	Hydraulic hose	1	K	
99	4700334238	Elbow 90 o-ring	2		
101	4700371313	Hose clamp	1		
102	4700371314	Hose clamp	1		
104	4700500053	Screw, M8x20 mm 8.8 A2K	5		
106	4700508029	Cylinder screw	2		
107	4700603018	Washer 10x18x4	2		
110	4700357543	Valve	1		
111	4700921119	Pipe clamp	1		
112	4700500053	Screw, M8x20 mm 8.8 A2K	1		

Comments for Page: Vibration system

(L)OCAL REMARKS

A | en_US | L = 1,80 m

B | en_US | L = 1,05 m

C | en_US | L = 1,20 m

H | en_US | L = 0,26 m

K | en_US | L = 1,80 m

Vibration system To A015094 4812160957 Seal kit

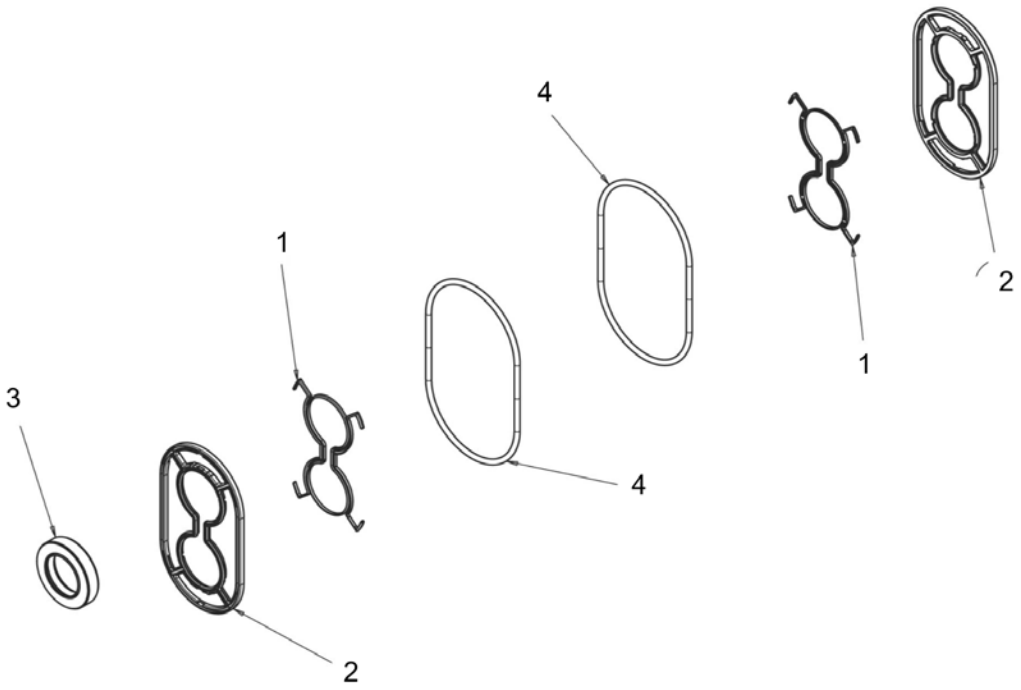

Item	Part No.	Name	Qty	L	SN INFO
0	4812160957	Seal kit	1		
1	-	Backing ring	2		
2	-	Pressure seal	2		
3	-	Shaft seal	1		
4	-	O-ring seal	2		

4812119251 Hydraulic pump To A012667 (excl. 12607-12610, incl. 12754) 4812119251 Hydraulic pump

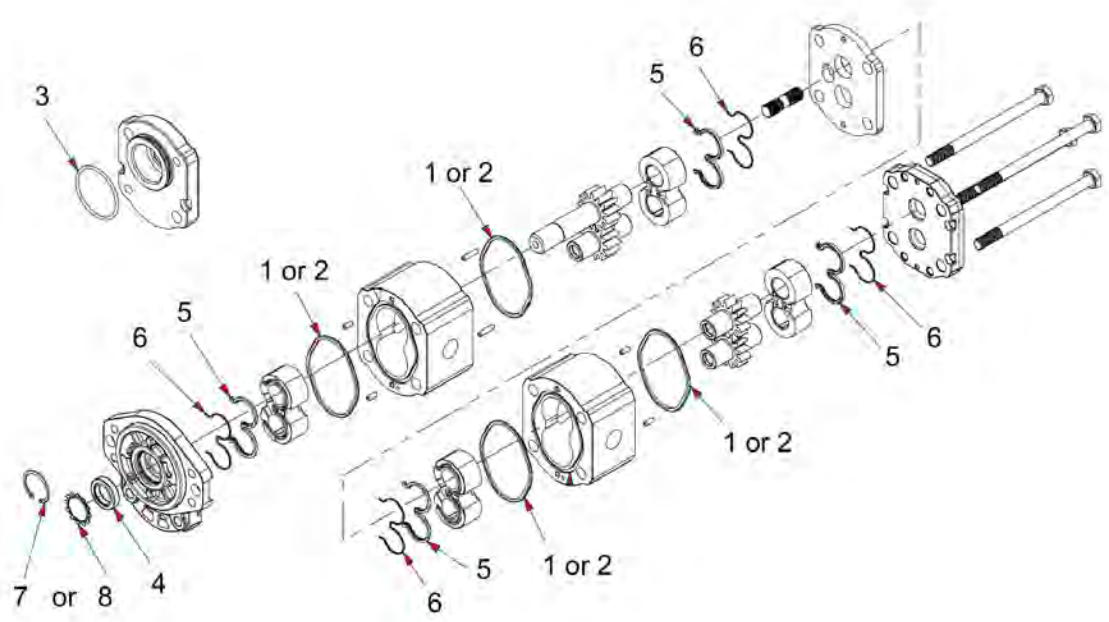

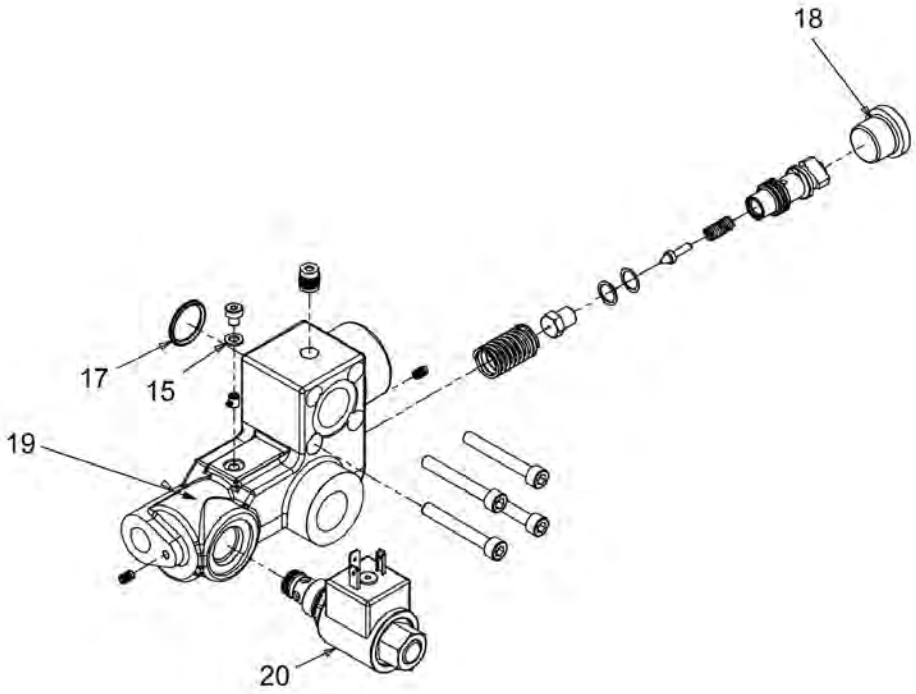

Item	Part No.	Name	Qty	L	SN INFO
0	4812160796	Seal kit			
1	--	O-ring	4		
2	--	O-ring	4		
3	--	O-ring	1		
4	--	Shaft seal	1		
5	--	Seal	4		
6	--	Backup ring	4		
7	--	Snap ring	1		
8	--	Toothed ring	1		
14	4700902810	Seal kit			
15	--	Seal	2		
17	--	O-ring	1		
18	--	Plug	1		
19	4700903637	Valve	1		
20	4700903330	Solenoid valve	1		

4812112054 Hydraulic pump From A012668 (incl. 12607-12610, excl. 12754) 4812112054 Hydraulic pump

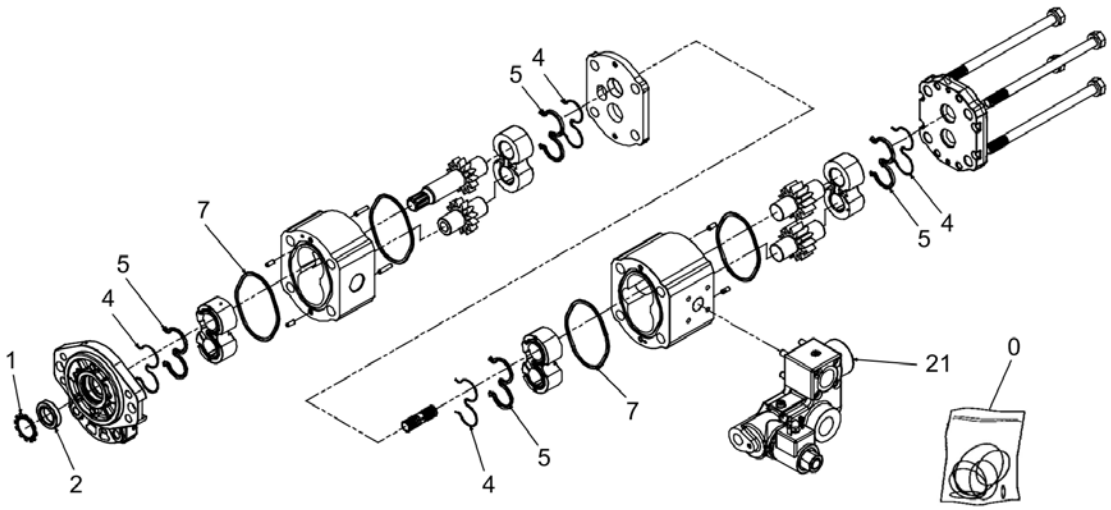

Item	Part No.	Name	Qty	L	SN INFO
0	4700903430	Seal kit	1		
1	--	Star ring	1		
2	--	Shaft seal	1		
4	--	Back-up ring	4		
5	--	Seal	4		
7	--	O-ring	4		
21	4700903637	Valve	1		
21	4700903330	Solenoid valve	1		
21	4700902810	Seal kit	1		

Vibration system From A015095 Vibration system

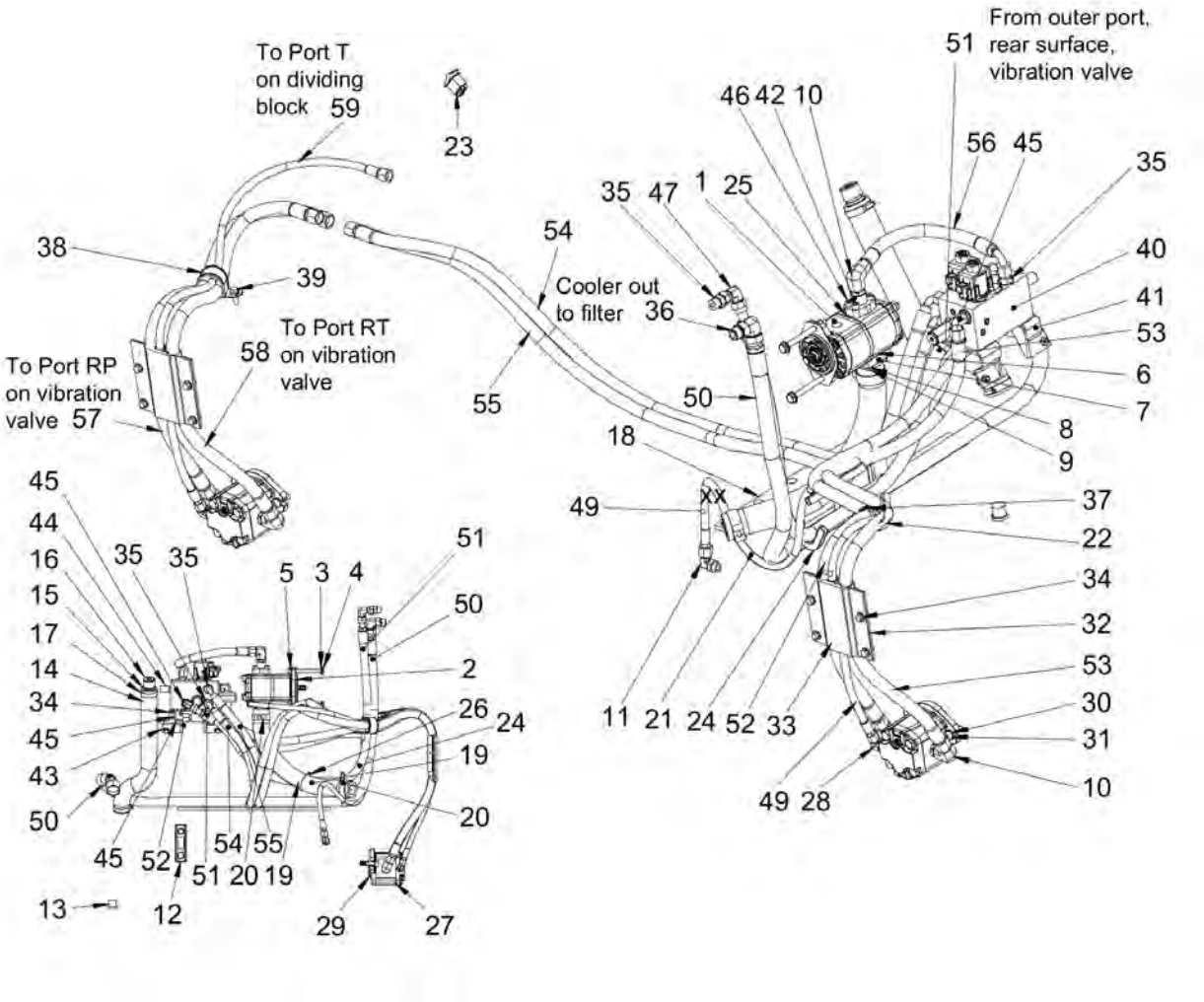

Item	Part No.	Name	Qty	L	SN INFO
1	4812121617	Hydraulic pump	1		
2	4700379458	Gasket	1		
3	4700904230	Plain washer 10.5x22x2 mm	2		
4	4700500078	Hex. screw	2		
5	4700902287	Nut, M10	2		
6	4700160016	O-ring	1		
7	4812121711	Flange connector	1		
8	4700904556	Steel plain washer 8,4x16x3,0	4		
9	4700500022	Screw	4		
10	4700791699	Elbow 90	5		
11	4700791398	Elbow 90, O-ring	1		
12	4700989151	Oil level glass	1		
13	4700232122	Steel plug threaded	1		
14	4700373478	Rubber hose	1		
15	4700357139	Connector	1		
16	4700357138	Ventilating filter	1		
17	4700313008	Hose clamp	2		
18	4700358486	Rubber strip	2		
19	4812121710	Hydraulic hose	1		
19	4812122581	Hydraulic hose	1		
20	4700902295	Hose clamp	2		
21	4700902379	Edge trim	0,15		
22	4700902379	Edge trim	0,30		
23	4700791581	Switch	1		
24	4700902379	Edge trim	0,11		
24	4700904623	Hose guard	0,30		
25	4700904774	O-ring	1		
26	4700902379	Edge trim	0,11		
27	4812118172	Hydraulic motor	2		
28	4700791397	Connector	2		
29	4700160031	O-ring	2		
30	4700603018	Washer 10x18x4	4		
31	4700508029	Cylinder screw	4		
32	4700371313	Hose clamp	2		
33	4700371314	Hose clamp	2		
34	4700901832	Screw, M08x16, 8.8	10		
35	4700791799	Straight connector orfs	4		To A015852
35-1	4700791799	Straight connector orfs	2		From A015853

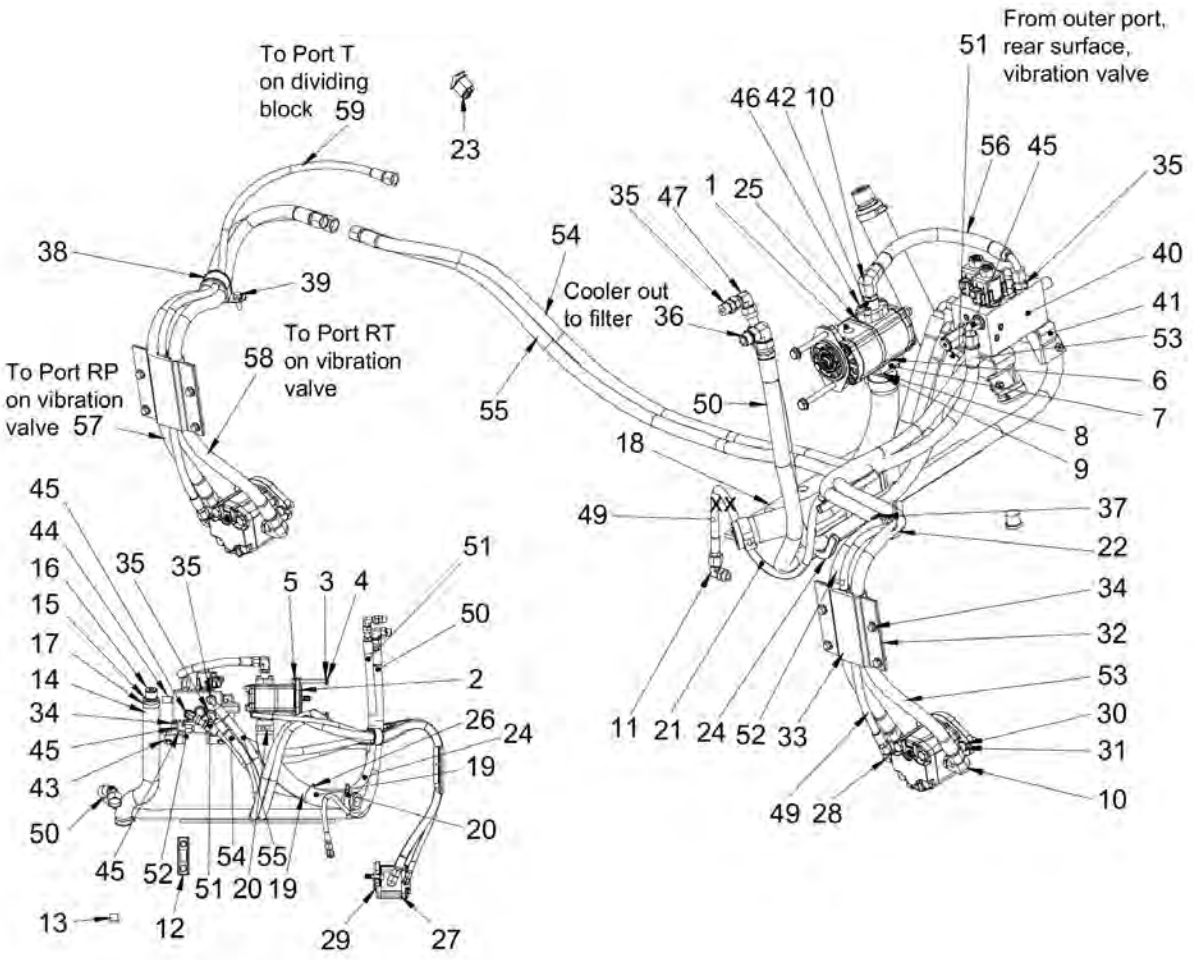
To Port T
on dividing
block 59
23
From outer port,
rear surface,
vibration valve
51
46 42 10
56 45
35
35 47 1 25
54
38
39
Cooler out
to filter 36
40
41
53
6
7
8
9
To Port RT
on vibration
valve
58
To Port RP
on vibration
valve 57
55
50
18
49
xx
37
22
34
32
53
30
31
10
45
44
16
15
17
14
34
45
43
50
35 35
5 3 4
51
50
2
26
24
19
20
45 52 54 55
51 20 19
13
12
29
27
11 21 24 52 33
49 28

Item	Part No.	Name	Qty	L	SN INFO
36	4700791843	Elbow 90, O-ring with swivel	1		
37	4700313102	Cable ties	1		
38	4700921119	Pipe clamp	1		
39	4700902041	Screw, M8x25mm 8.8 A2K	1		
40	4812121508	Hydraulic valve	1		
40.1	4812160760	Solenoid valve	2		
40.2	4812161588	Pressure relief valve	1		
41	4812122182	Bracket	1		
42	4812117698	Flange connector	1		
43	4700500505	Screw, M8x20 mm 8.8 A2K	2		
44	4700900229	Measuring fitting	1		
45	4700791841	Elbow 90 orfs	3		To A015852
45-1	4700791841	Elbow 90 orfs	5	A	From A015853
46	4700508048	Hexagon socket head cap screw M	4		
47	4700791745	Elbow 90, O-ring with swivel	1		
49	4812120878	Hydraulic hose	1		
50	4812121219	Hydraulic hose	1		
51	4812121708	Hydraulic hose	1		
52	4812121214	Hydraulic hose	1		
53	4812120877	Hydraulic hose	1		
54	4812121220	Hydraulic hose	1		To A015852
54	4812123096	Hydraulic hose	1	B	From A015853
55	4812121220	Hydraulic hose	1		To A015852
55	4812123096	Hydraulic hose	1	B	From A015853
56	4812121709	Hydraulic hose	1		
57	4812121215	Hydraulic hose	1		
58	4700483854	Hydraulic hose	1		
59	4700483875	Hydraulic hose	1		

Comments for Page: Vibration system

(L)OCAL REMARKS

A | Interchangeable together with item 54 and 55.

B | Interchangeable together with item 45.

Vibration system From A015095 4812121617 Hydraulic pump

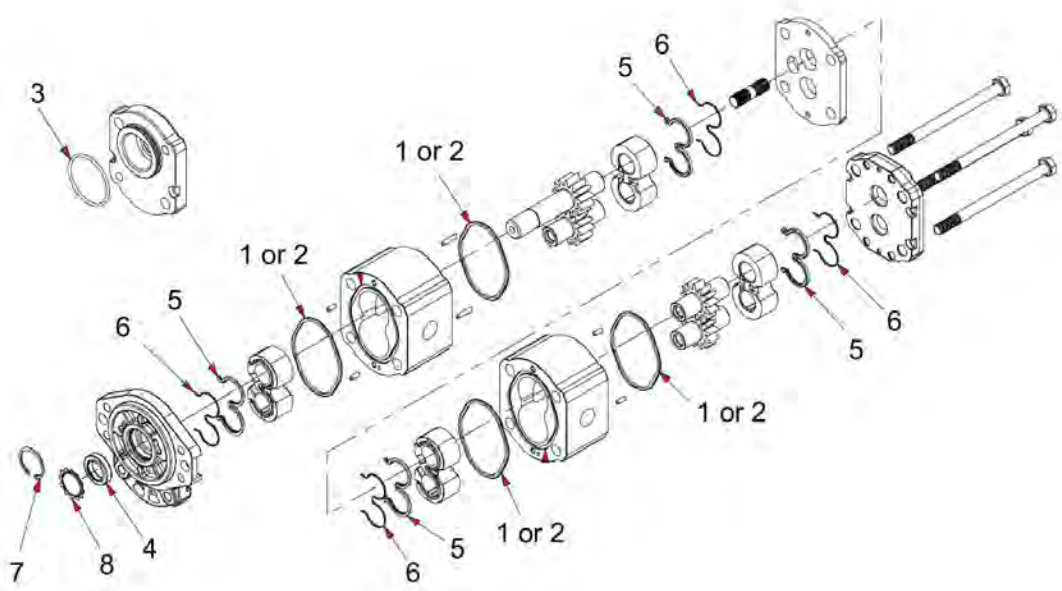

Item	Part No.	Name	Qty	L	SN INFO
0	4812160797	Seal kit, cpl	1		
1	--	O-ring	4		
2	--	O-ring	4		
3	--	O-ring	1		
4	--	Shaft seal	1		
5	--	Seal	4		
6	--	Back-up ring	4		
7	--	Snap ring	1		
8	--	Toothed ring	1		

Steering system Steering system

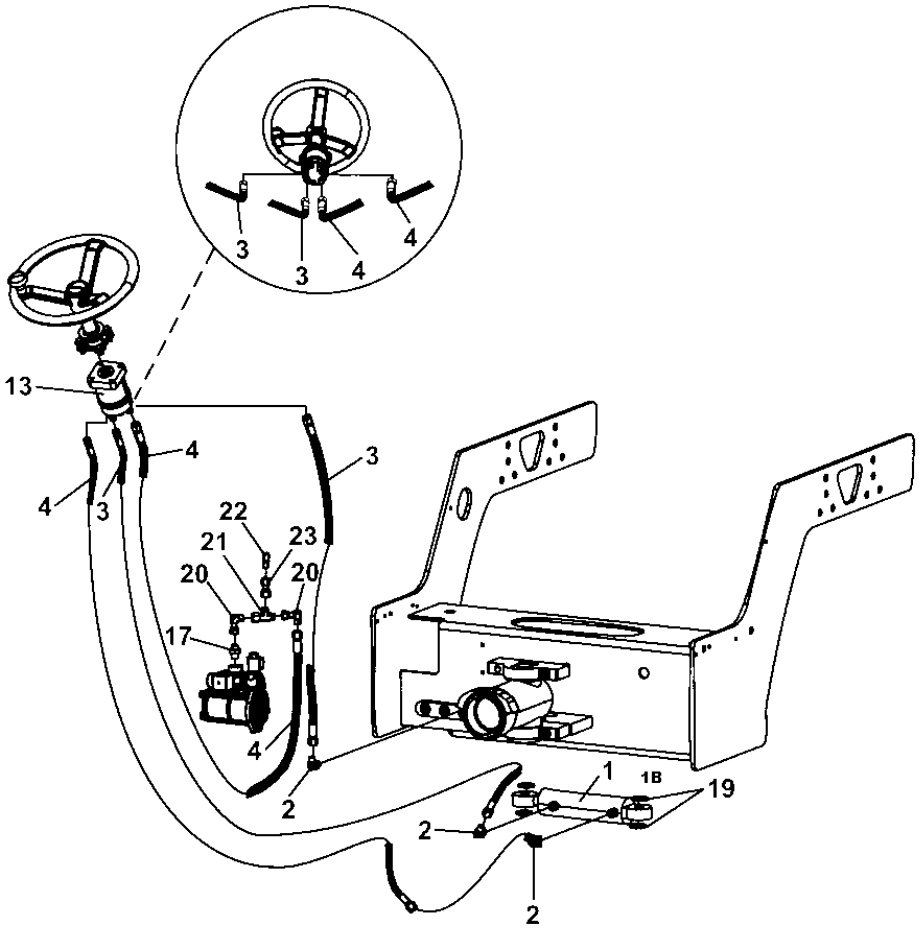

Item	Part No.	Name	Qty	L	SN INFO
1A	4700374603	Steering cylinder	1		To A013002 (excl. 12769, 12994, 12997)
1B	4812120737	Steering cylinder	1		From A013003 (incl. 12769, 12994, 12997)
2	4700791398	Elbow 90, O-ring	3		
3	4700483765	Hydraulic hose	2	A	
4	4811000428	Hydraulic hose	2	B	
5	4700630019	Split pin	4		
6	4700313102	Cable ties	2		
13	4812112109	Steering valve	1		
-	4812160665	Special adapter 11/16"	2		
-	4812161199	Special adapter 9/16"	2		
17	4700791405	Straight o-ring connector	1		
19	4700600016	Steel plain washer	4		
20	4700791401	Elbow 90, O-ring with swivel	2		
21	4700791414	T-connection, O-ring with swivel	1		
22	4700791847	Straight connector	1		
23	4700923405	Measuring nipple	1		

Comments for Page: Steering system

(L)OCAL REMARKS

A | en_US | L = 1,99 m

B | en_US | L = 1,96 m

Steering cylinder To A013002 (excl. 12769, 12994, 12997) 4700374603 Steering cylinder

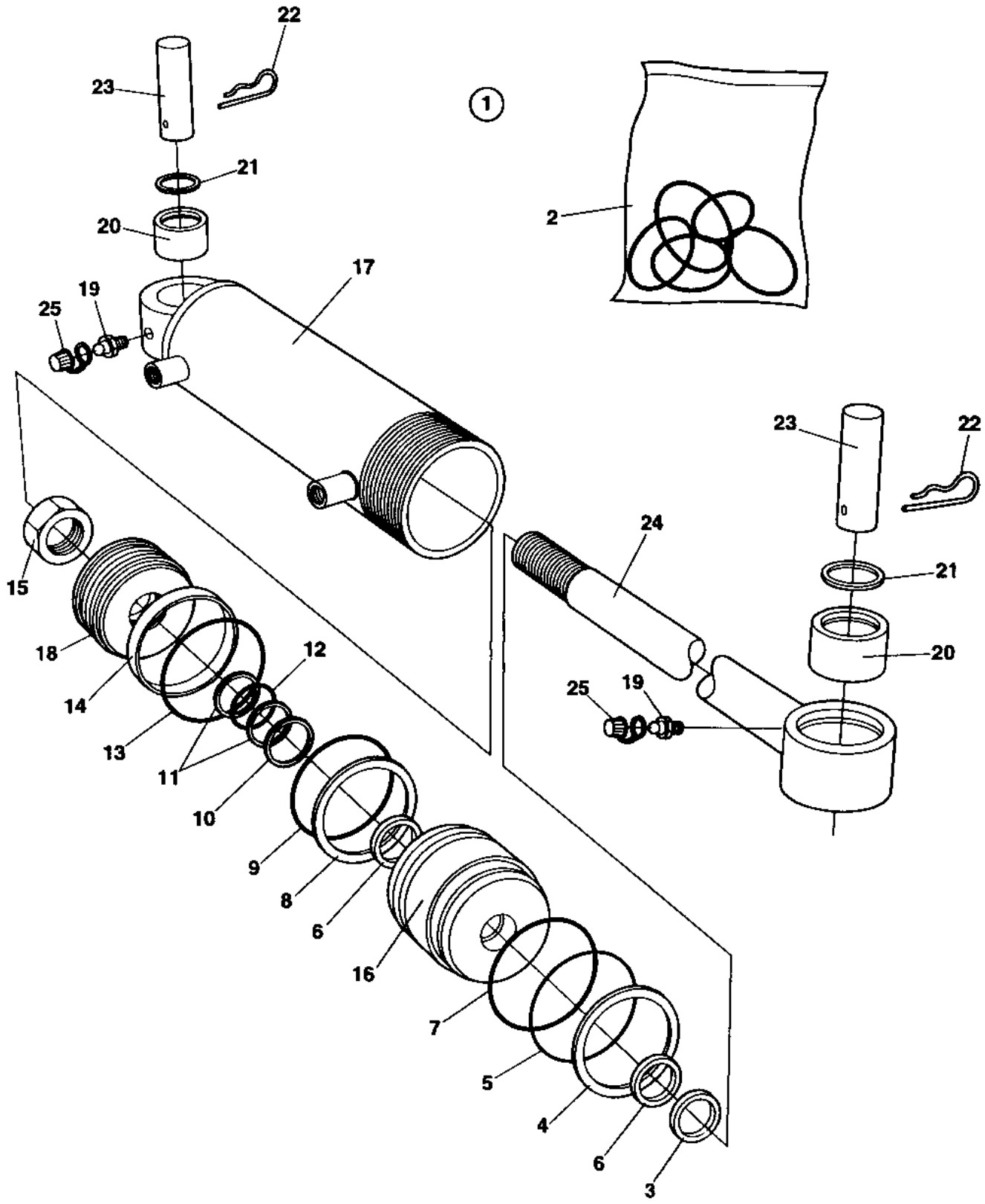

Item	Part No.	Name	Qty	L	SN INFO
1	4700374603	Steering cylinder	1	A	
2	4700909760	Seal kit	1		
3	--	Scraper ring	1		
4	--	Retaining ring	1		
5	--	O-ring	1		
6	--	Guide Ring	2		
7	--	Lock ring	1		
8	--	Sealing	1		
9	4700160025	O-ring	1		
10	--	Sealing	1		
11	--	Back-up ring	2		
12	--	O-ring	1		
13	--	Sealing	1		
14	--	Guide Ring	1		
15	--	Nut	1		
16	4700909766	Guide	1		
17	4700909765	Cylinder tube	1		
18	4700909764	Piston block	1		
19	4700926214	Grease fitting	2		
20	4700238272	Slide bearing	2		
21	4700151012	Retaining ring	2		
22	4700635061	Hair clip	4		
23	4700909761	Shaft	2		
24	4700909759	Piston rod	1		
25	4700902576	Cover	2		

Comments for Page: 4700374603 Steering cylinder

(L)OCAL REMARKS

A | en_US | CPL

Steering cylinder From A013003 (incl. 12769, 12994, 12997) 4812120737 Hydraulic cylinder

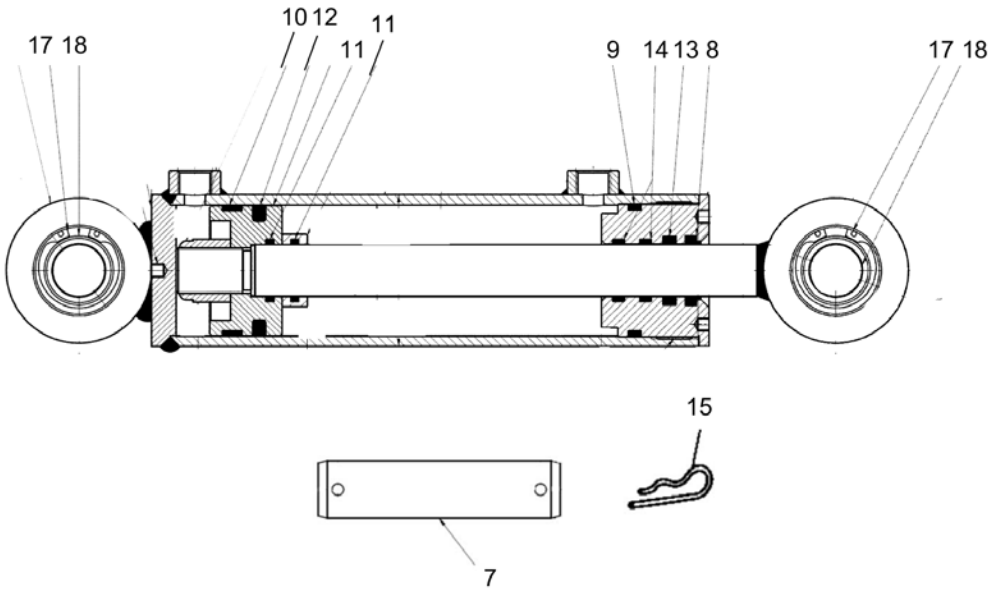

Item	Part No.	Name	Qty	L	SN INFO
0	4812120737	Steering cylinder	1		
1	4812160651	Seal kit	1		
7	-	Shaft	2		
8	-	O-ring	1		
8	-	O-ring	1		
9	-	Rod seal	1		
9	-	Rod seal	1		
10	-	Piston guides	1		
10	-	Piston guides	1		
11	-	Seal o-ring	1		
11	-	Seal o-ring	1		
12	-	Rod seal	1		
12	-	Rod seal	1		
13	-	Rod seal	1		
13	-	Rod seal	1		
14	-	Rod guides	2		
14	-	Rod guides	2		
15	-	Hair clip	4		
17	4812160656	Snap ring	4		
18	4812160657	Bearing	2		

Flow divider To A015108 Flow divider (option)

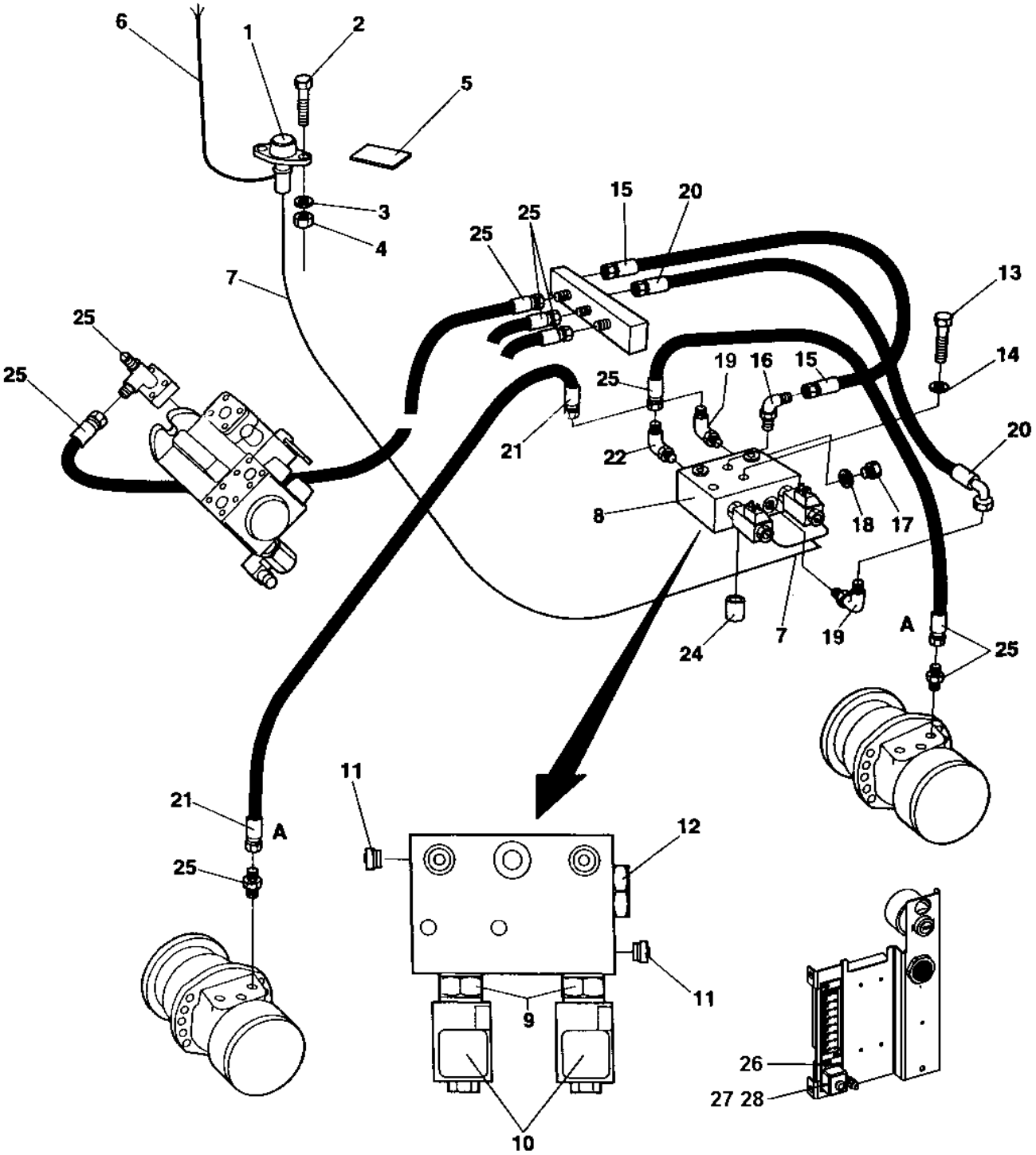

Item	Part No.	Name	Qty	L	SN INFO
1	4812113326	Contact	1		
2	4700533016	Screw	2		
3	4700600002	Washer	2		
4	4700923976	Lock nut	2		
5	4700355981	Decal	1		
6	4812112470	Cable harness	1		
7	4812112566	Cable harness	1		
8	4700358003	Flow divider	1		
9	4700903141	Valve	2		
10	4700903142	Coil	2		
11	4700903144	Check valve	2		
12	4700903143	Valve	1		
13	4700500034	Screw M10-1,5x100 8,8	2		
14	4700904230	Plain washer 10.5x22x2 mm	2		
15	4700482773	Hydraulic hose	1		
16	4700334235	Elbow 90	1		
17	4700332038	Plug	2		
18	4700162004	Sealing	2		
19	4700923407	Adapter	2		
20	4700482208	Hydraulic hose	1		
21	4700482214	Hydraulic hose	1	A	
22	4700904175	Connector	1		
24	4700355869	Spacer sleeve	2		
25	-	Hydraulic details	N		
26	4700901767	Screw	2		
27	4700901225	Fuse 5A Tan	1		
28	4700792091	Fuse holder	1		

Comments for Page: Flow divider (option)

(L)OCAL REMARKS

A | en_US | L = 2,8 m

Flow divider From A015109 Flow divider (option)

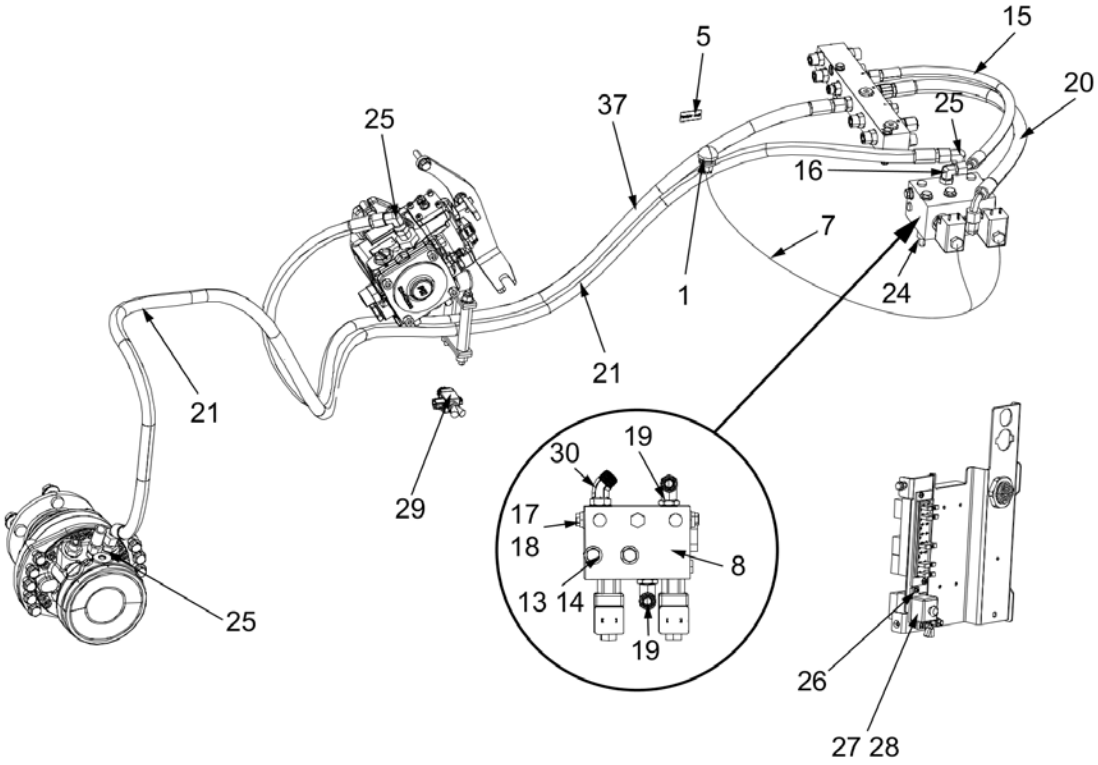

Item	Part No.	Name	Qty	L	SN INFO
1	4812113326	Contact	1		
5	4700355981	Decal	1		
7	4812112566	Cable harness	1		
8	4700358003	Flow divider	1		
9	4700903141	Valve	2		
10	4700903142	Coil	2		
11	4700903144	Check valve	2		
12	4700903143	Valve	1		
13	4700500034	Screw M10-1,5x100 8,8	2		
14	4700904230	Plain washer 10.5x22x2 mm	2		
15	4812123024	Hydraulic hose	1		
16	4700791398	Elbow 90, O-ring	1		
17	4700332038	Plug	2		
18	4700162004	Sealing	2		
19	4700791845	Elbow 90, O-ring with swivel	2		
20	4700484346	Hydraulic hose	1		
21	4812123023	Hydraulic hose	1		
24	4700355869	Spacer sleeve	2		
25	-	Hydraulic details	N		
26	4700901767	Screw	2		
27	4700901225	Fuse 5A Tan	1		
28	4700792091	Fuse holder	1		
29	4812112470	Cable harness	1		
30	4812122719	Elbow 45	1		
37	4812121226	Hydraulic hose	1		

Comments for Page: Flow divider (option)

(L)OCAL REMARKS

A | en_US | L = 2,8 m

Brake system To A015094 Brake system

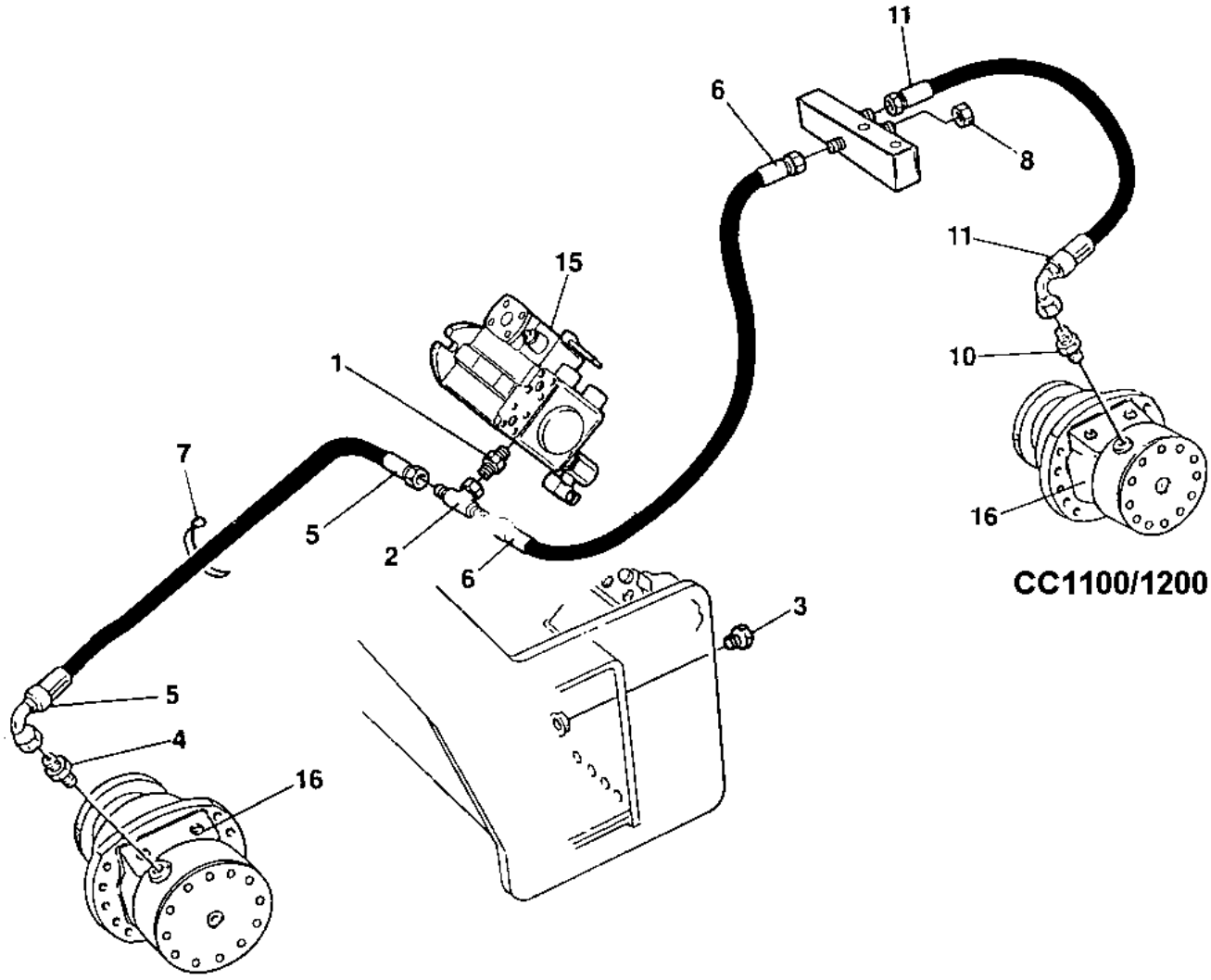

Item	Part No.	Name	Qty	L	SN INFO
1	4700334463	Connector	1		
2	4700234888	Tee-connector	1		
4	4700234233	Adapter	1		
5	4700483420	Hydraulic hose	1	A	
6	4700483404	Hydraulic hose	1	B	
7	4700313102	Cable ties	N		
8	4700230400	Cap	1		
10	4700234233	Adapter	1		
11	4700482483	Hydraulic hose	1	C	
15	-	Hydraulic pump, propulsion	1		
16	-	Hydraulic motor, propulsion	2		

Comments for Page: Brake system

(L)OCAL REMARKS

A | en_US | L = 1,18 m

B | en_US | L = 1,60 m

C | en_US | L = 1,25 m

Brake system From A015095 To A016077 Brake system

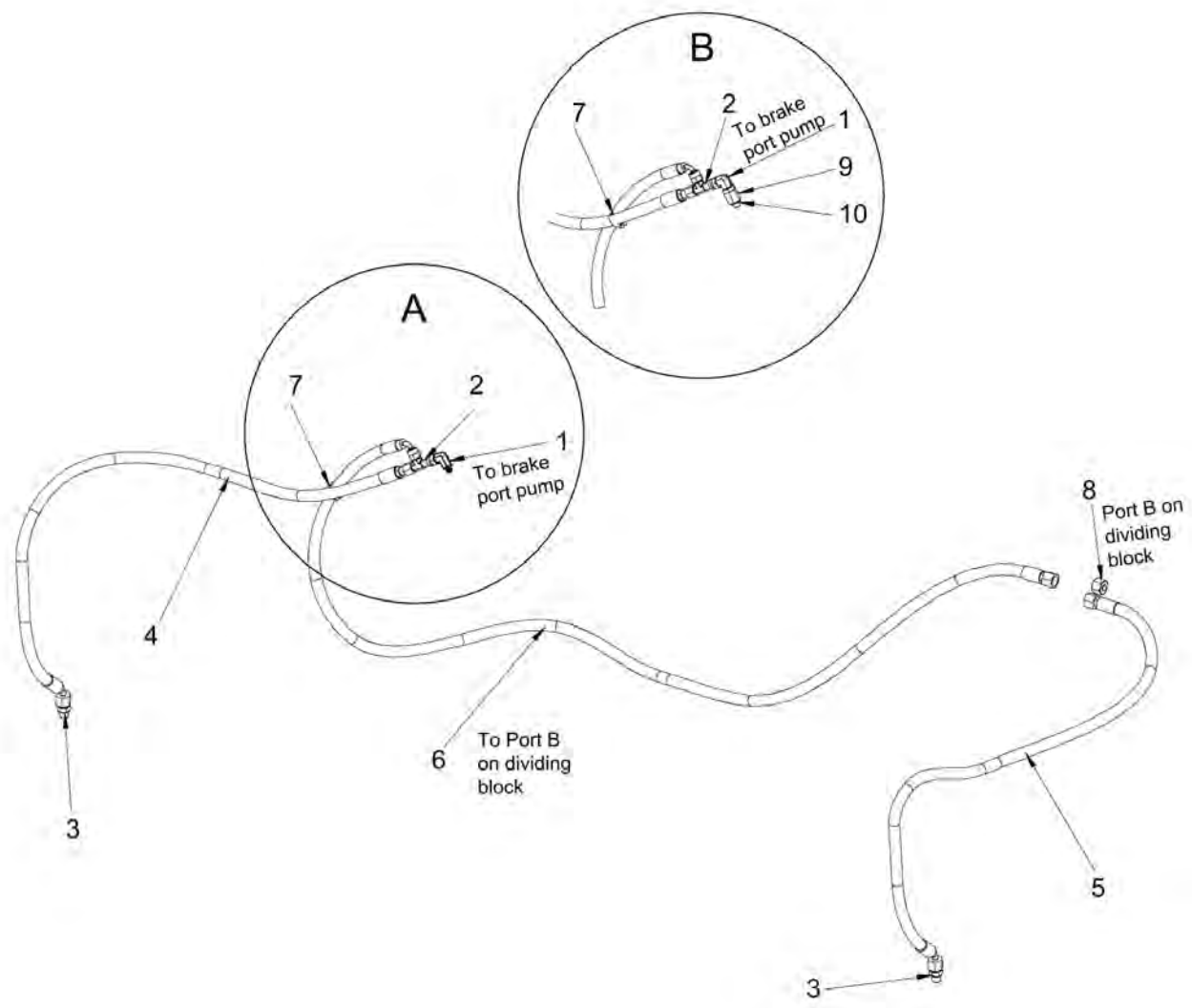

Item	Part No.	Name	Qty	L	SN INFO
1	0570704138	Connector elbow 90 orfs	1	A	
1	4700791397	Connector	1	B	
2	4812121239	T-Connector	1		
3	4700791409	Straight connector orfs	2		
4	4812121236	Hydraulic hose	1		
5	4700484080	Hydraulic hose	1		
6	4812121235	Hydraulic hose	1		
7	4700313102	Cable ties	0		
8	4700791820	Plug	1		
9	4700792551	Adapter	1	B	
10	4700792552	Sealing	1	B	

Comments for Page: Brake system

(L)OCAL REMARKS

A | See figure A

B | See figure B

Brake system From A016078 Brake system

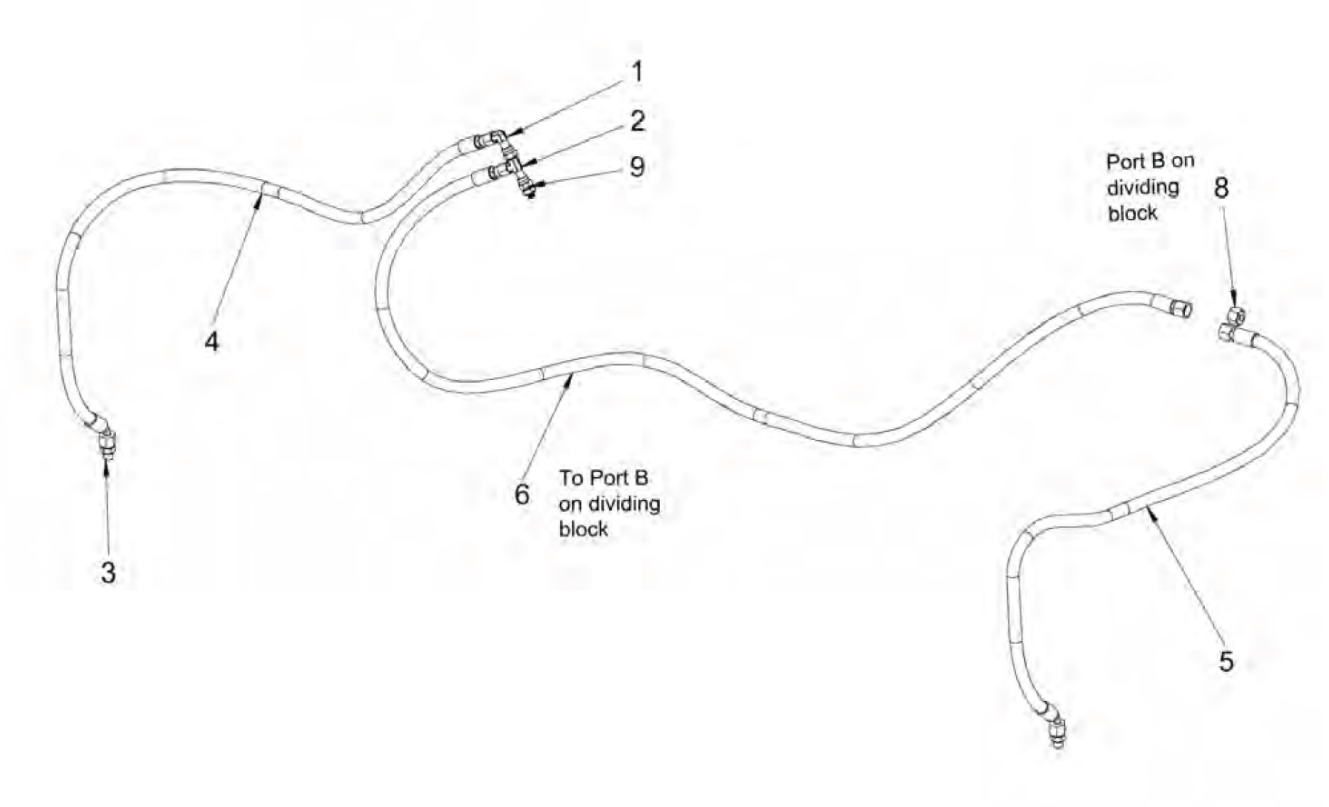

Item	Part No.	Name	Qty	L	SN INFO
1	4812113110	Adapter	1		
2	4812121239	T-Connector	1		
3	4700791409	Straight connector orfs	2		
4	4812121236	Hydraulic hose	1		
5	4700484080	Hydraulic hose	1		
6	4812123537	Hydraulic hose	1		
8	4700791820	Plug	1		
9	4812123538	Straight connector orfs	1		

Comments for Page: Brake system

(L)OCAL REMARKS

A | See figure A

B | See figure B

Hydraulic system Vibration shut-off Front drum (option)

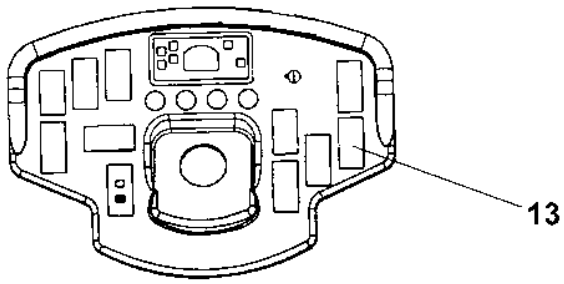

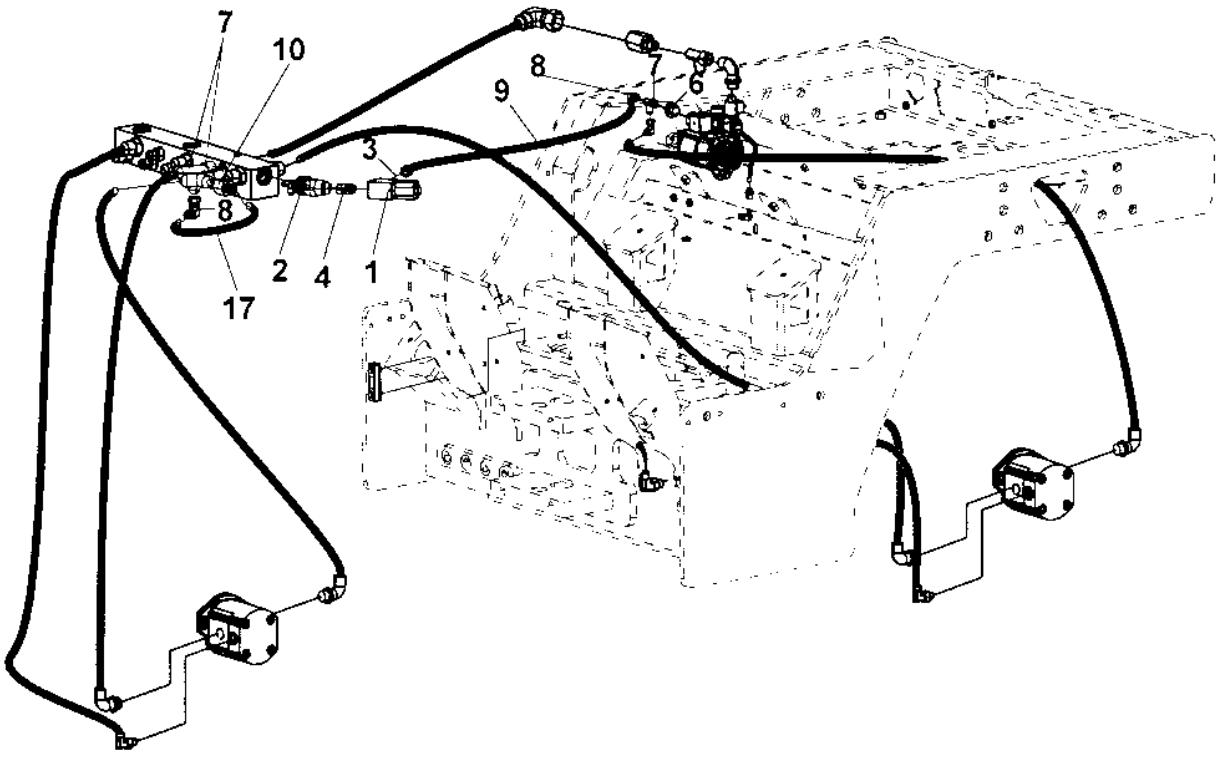

Item	Part No.	Name	Qty	L	SN INFO
1	4700357934	Solenoid valve	1		To A013944
1	4812120392	Solenoid valve	1		From A013945
2	4700813500	Elbow 45, O-ring	1		
3	4700334165	Adapter	1		
4	4700923406	Connector	1		
6	4700334116	Straight o-ring connector	1		
7	4700334135	Tee-connector	3		
8	4700334197	Connector elbow 90 JIC	2		
9	4700482898	Hydraulic hose	1	A	
10	4700357543	Valve	2		
13	4811000347	Switch Vibration shut-off	1		
17	4700483585	Hydraulic hose	0,23 m		

Comments for Page: Vibration shut-off Front drum (option)

(L)OCAL REMARKS

A | en_US | L = 1,70 m

Cable harness To A015127 (excl. 15110, 15112-15113, 15119, 15122, 15125) Cable harness

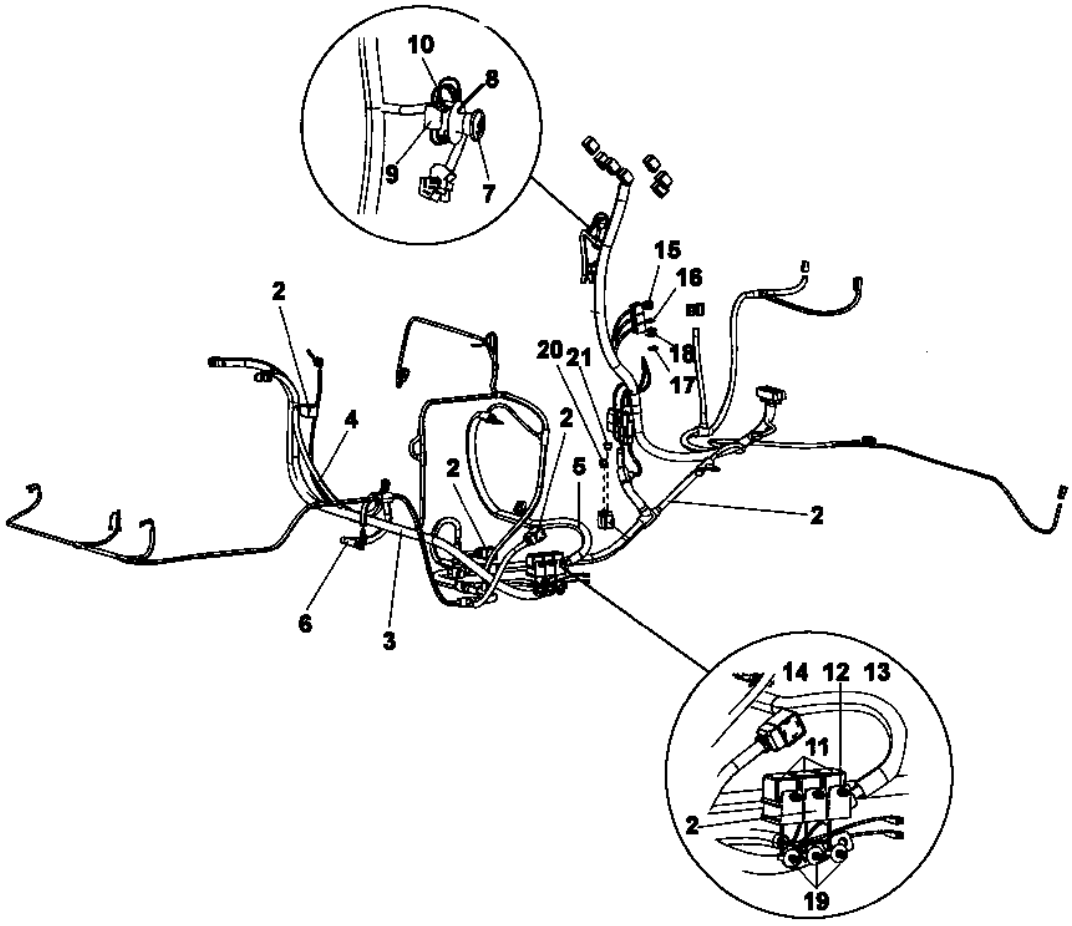

Item	Part No.	Name	Qty	L	SN INFO
2	4700960796	Connector black, MPM 182 09 ND	4		
2	4700357562	Relay holder	3		
2	4812119569	Cable harness	1		
3	4811000320	Battery cable (+)	1		
4	4811000321	Battery cable (-)	1		
5	4811000323	Connection cable	1		
6	4811000322	Connection cable	1		
7	4700791739	Emergency stop	1		
8	4811000128	Contrast plate, yellow	1		
9	4700389840	Connector	1		
10	4700791723	Connector	1		
11	4700903956	Relay	3		
12	4700904281	Washer, 5,3x10x1 300HV	6		
13	4700500006	Hex. screw	3		
14	4700586001	Lock nut	3		
15	4700903741	Fuse 20A Yellow	1		
16	4700901227	Fuse 10A Red	2		
17	4700901225	Fuse 5A Tan	1		
18	4700901228	Fuse, 15A Blue	2		
19	4700792441	Cable tie with holder	3		
20	4700901230	Fuse, 30A Green	1		
21	4700904039	Fuse 50A Red	1		

Cable harness From A015128 (incl. 15110, 15112-15113, 15119, 15122, 15125) To xA019682 Cable harness

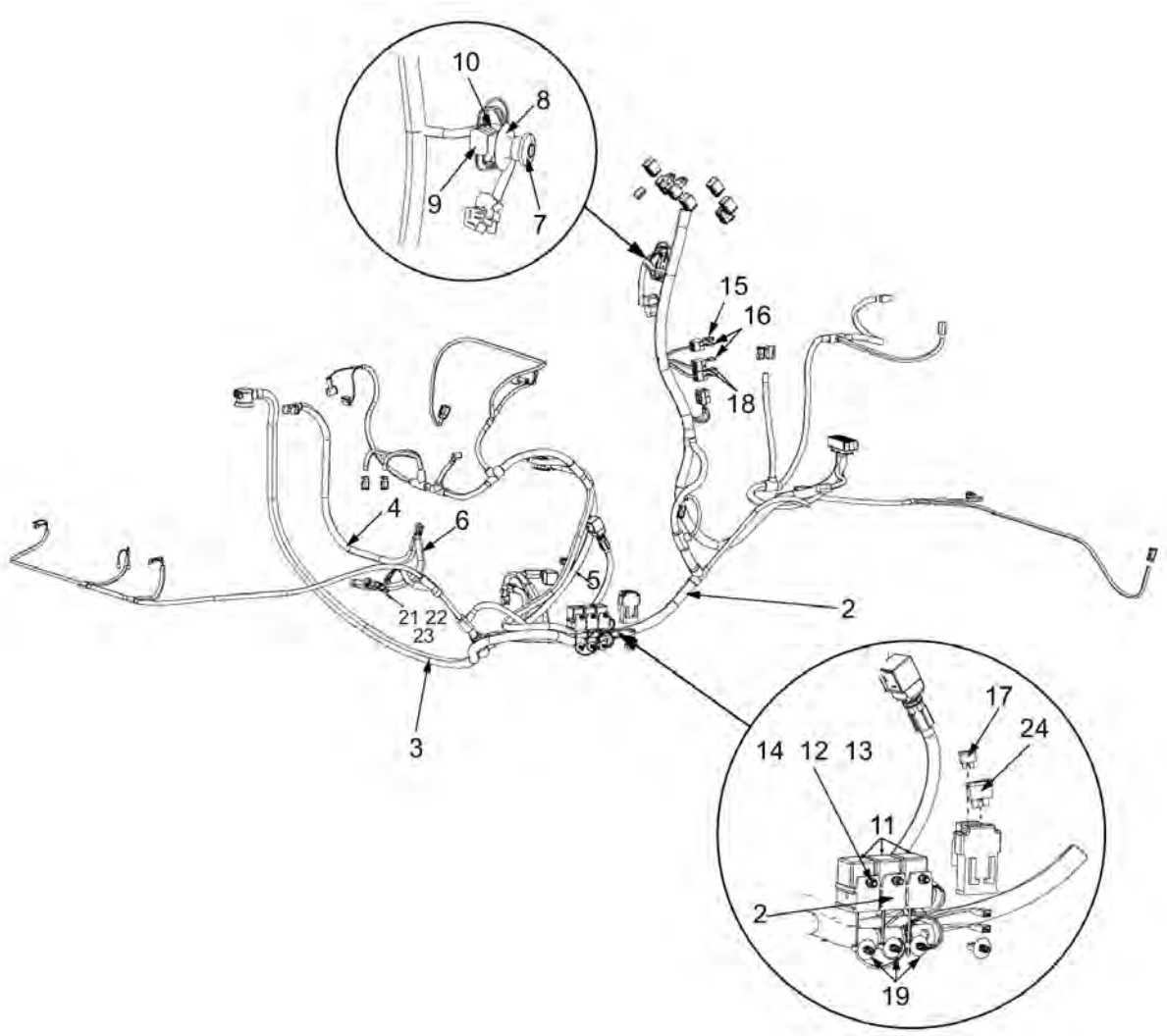

Item	Part No.	Name	Qty	L	SN INFO
2	4812121849	Cable harness	1		
2	4700960796	Connector black, MPM 182 09 ND	2		
2	4700357562	Relay holder	3		
3	4811000320	Battery cable (+)	1		
4	4811000321	Battery cable (-)	1		
5	4811000323	Connection cable	1		
6	4811000322	Connection cable	1		
7	4700791739	Emergency stop	1		
8	4811000128	Contrast plate, yellow	1		
9	4700389840	Connector	1		
10	4700791723	Connector	1		
11	4700903956	Relay	3		
12	4700904281	Washer, 5,3x10x1 300HV	6		
13	4700500006	Hex. screw	3		
14	4700586001	Lock nut	3		
15	4700903741	Fuse 20A Yellow	1		
16	4700901227	Fuse 10A Red	2		
17	4700901230	Fuse, 30A Green	1		
18	4700901228	Fuse, 15A Blue	2		
19	4700792441	Cable tie with holder	3		
20	4700313041	Cable ties, L=200 mm	N		
21	4700904229	Washer, 8.4x 6x1.5 mm 300HV	4		
22	4700500022	Screw	2		
23	4700586003	Lock nut M8	2		
24	4700904039	Fuse 50A Red	1		

Cable harness From xA019683 Cable harness

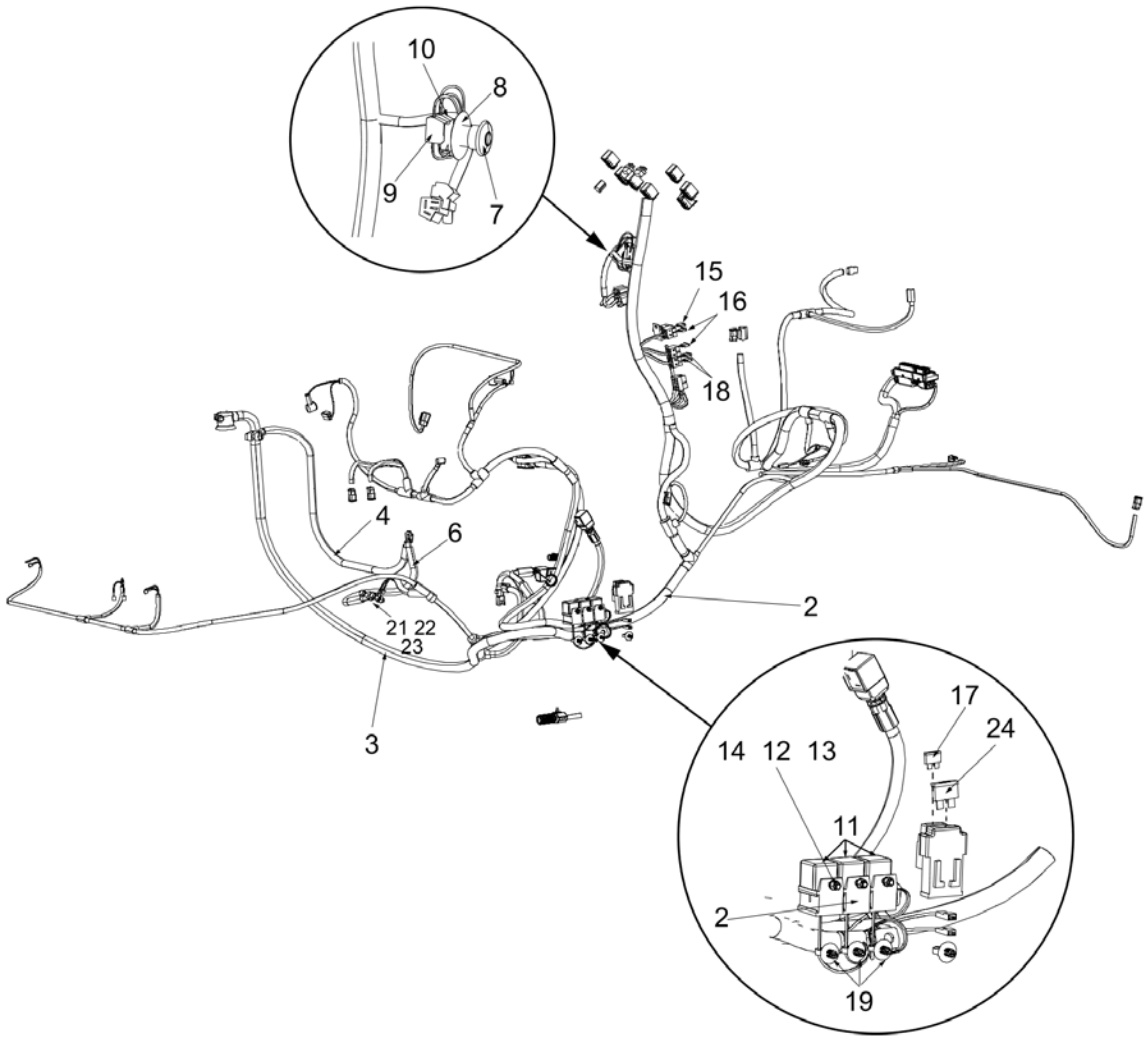

Item	Part No.	Name	Qty	L	SN INFO
2	4812126131	Cable harness	1		
2	4700960796	Connector black, MPM 182 09 ND	2		
2	4700357562	Relay holder	3		
3	4811000320	Battery cable (+)	1		
4	4811000321	Battery cable (-)	1		
5	4811000323	Connection cable	1		
6	4811000322	Connection cable	1		
7	4700791739	Emergency stop	1		
8	4811000128	Contrast plate, yellow	1		
9	4700389840	Connector	1		
10	4700791723	Connector	1		
11	4700903956	Relay	3		
12	4700904281	Washer, 5,3x10x1 300HV	6		
13	4700500006	Hex. screw	3		
14	4700586001	Lock nut	3		
15	4700903741	Fuse 20A Yellow	1		
16	4700901227	Fuse 10A Red	2		
17	4700901230	Fuse, 30A Green	1		
18	4700901228	Fuse, 15A Blue	2		
19	4700792441	Cable tie with holder	3		
20	4700313041	Cable ties, L=200 mm	N		
21	4700904229	Washer, 8.4x 6x1.5 mm 300HV	4		
22	4700500022	Screw	2		
23	4700586003	Lock nut M8	2		
24	4700904039	Fuse 50A Red	1		

Electrical equipment Horn module

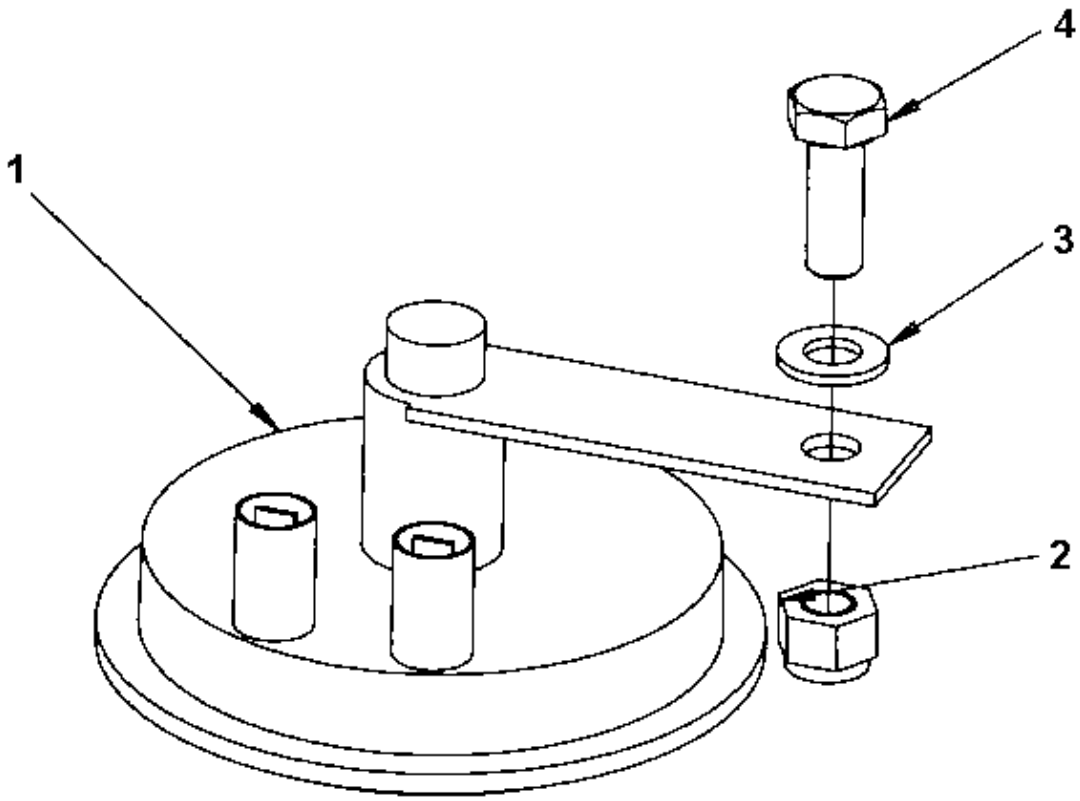

Item	Part No.	Name	Qty	L	SN INFO
1	4700999027	Horn	1		
2	4700586003	Lock nut M8	1		
3	4700904229	Washer, 8.4x 6x1.5 mm 300HV	1		
4	4700500020	Hex. screw	1		

Electrical equipment Battery module

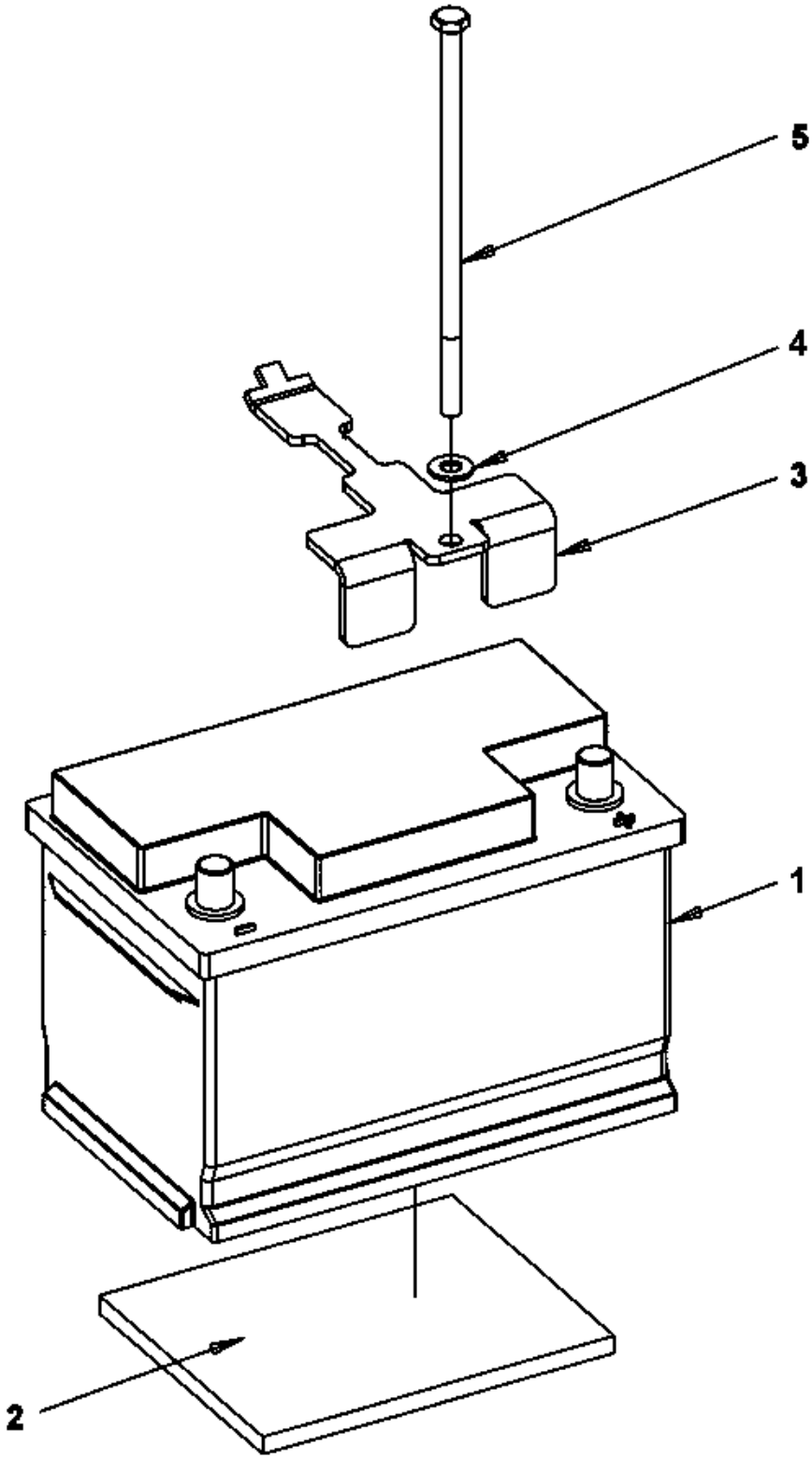

Item	Part No.	Name	Qty	L	SN INFO
1	-	Battery	1		
2	4812114557	Rubber cloth	1		
3	4812113557	Holder	1		
4	4700904230	Plain washer 10.5x22x2 mm	1		
5	0147195880	Hexagon screw M10x220, 8.8	1		

Electrical equipment Battery disconnector

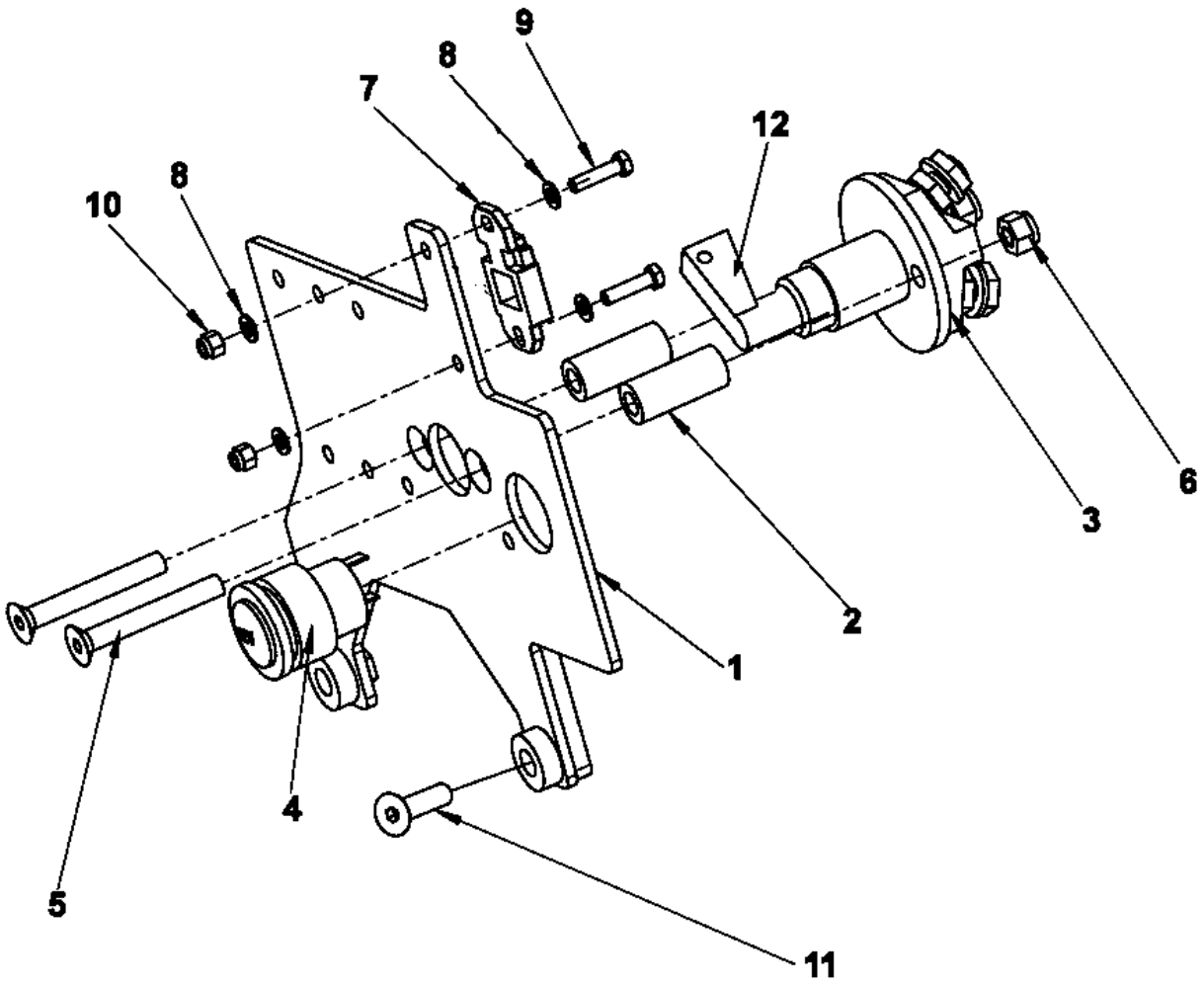

Item	Part No.	Name	Qty	L	SN INFO
1	4812115926	Bracket	1		
2	4700391115	Spacer sleeve	2		
3	4700357567	Battery switch, cpl	1		
4	4812110560	Power socket 12V	1		
5	4700903732	Screw	2		
6	4700586003	Lock nut M8	2		
7	4700904036	Bracket	1		
8	4700904281	Washer, 5,3x10x1 300HV	4		
9	4700500060	Screw M5-0,8x20 8.8	2		
10	4700586001	Lock nut	2		
11	4700902520	Screw	2		
12	4700902560	Handle	1		

Working lights Working lights

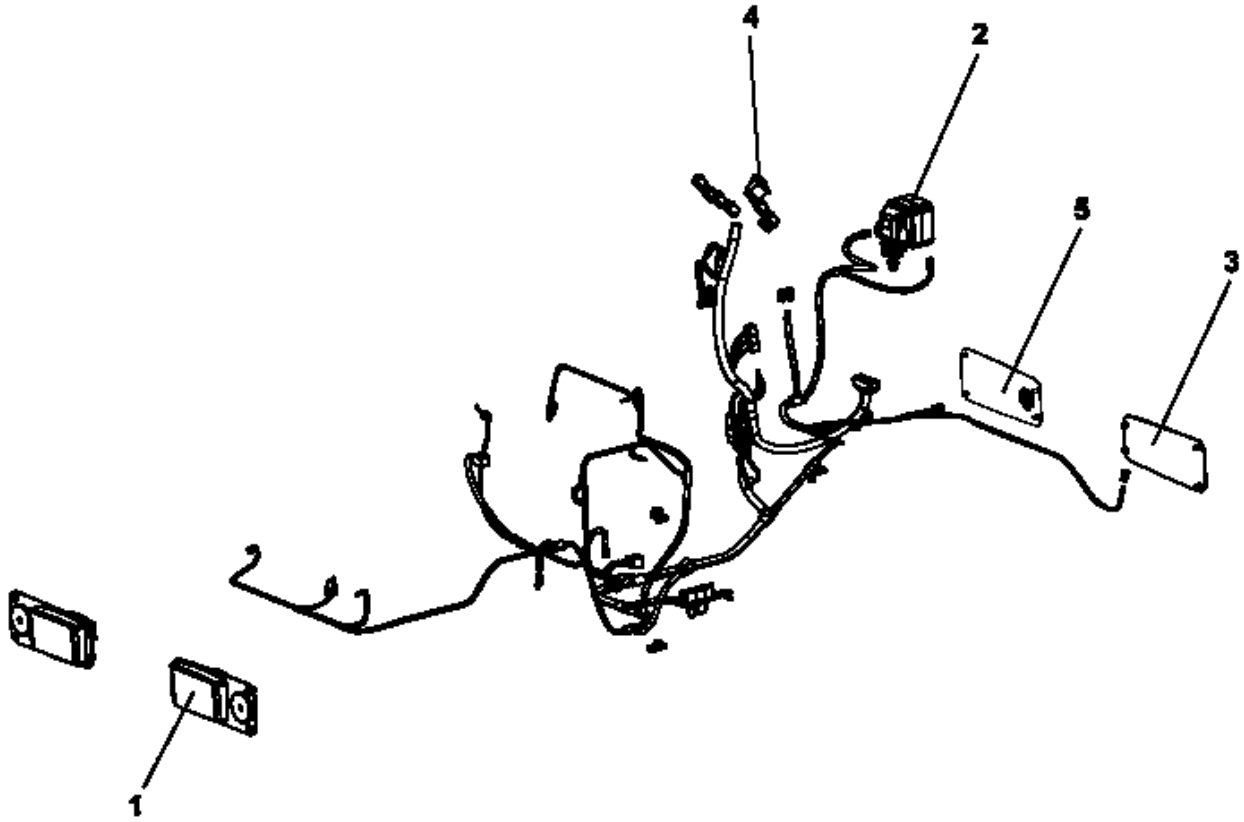

Item	Part No.	Name	Qty	L	SN INFO
1	-	Working lights front	2		
2	-	Working light rear	1		
2	-	Working light (option) rear	1		
3	-	Casing rear	2		
4	4700791587	Switch, working light	1		
5	-	Cover plate rear	1		

Working lights Working lights front

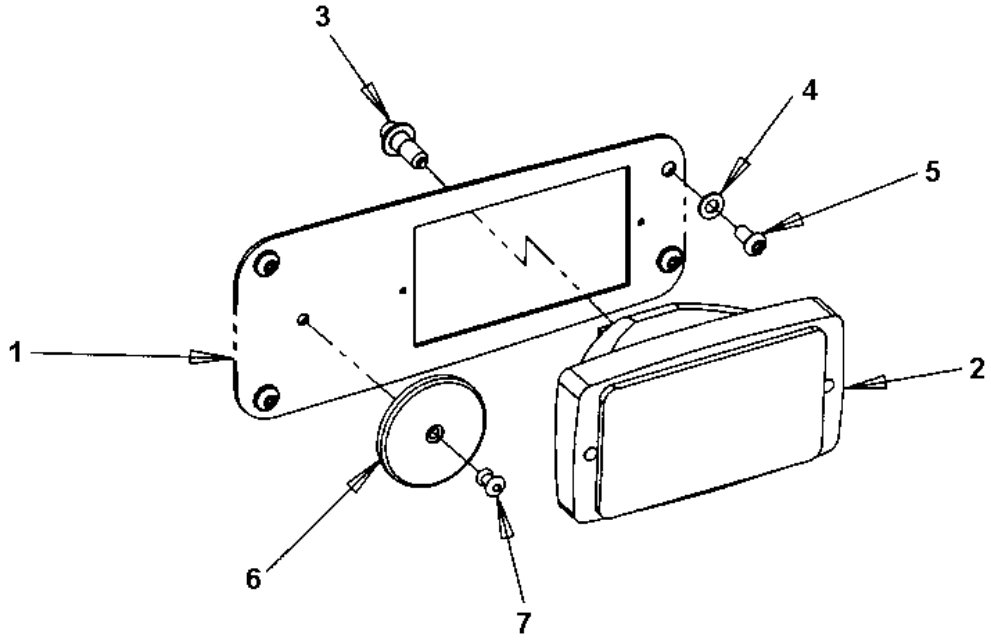

Right side mount

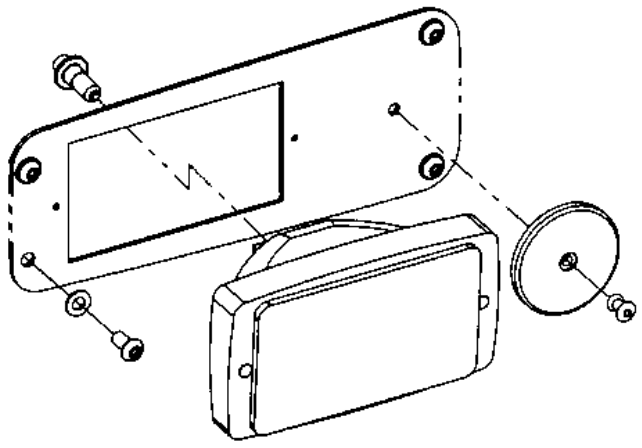

Left side mount

Item	Part No.	Name	Qty	L	SN INFO
1	4812113531	Bracket	1		
2	4700902227	Work light	1		
3	4700901369	Bulb 55w H3	1	A	
4	4700904229	Washer, 8.4x 6x1.5 mm 300HV	4		
5	4700904956	Screw	4		
6	4700791957	Reflector, white	1		
7	4700791754	Blind rivet	1		

Comments for Page: Working lights front

(L)OCAL REMARKS

A | en_US | Included in work light (p/n 4700902227)

Working lights Working light rear

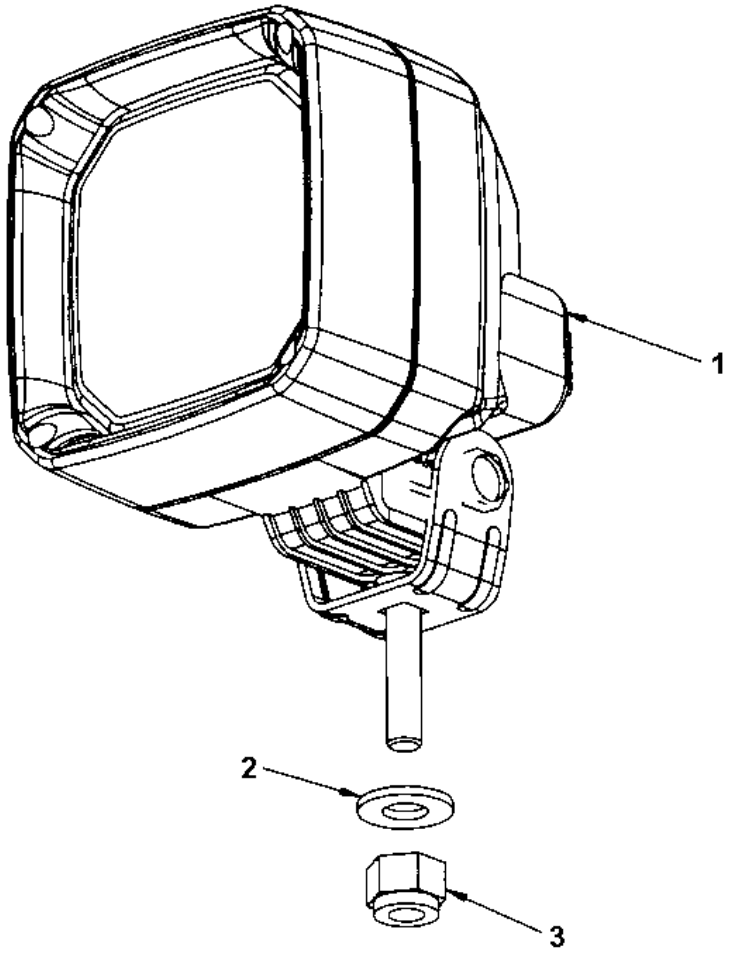

Item	Part No.	Name	Qty	L	SN INFO
1	4812110216	Work lamp	1		
2	4700904230	Plain washer 10.5x22x2 mm	1		
3	4700586018	Lock nut M10	1		

Working lights Working light (option) rear

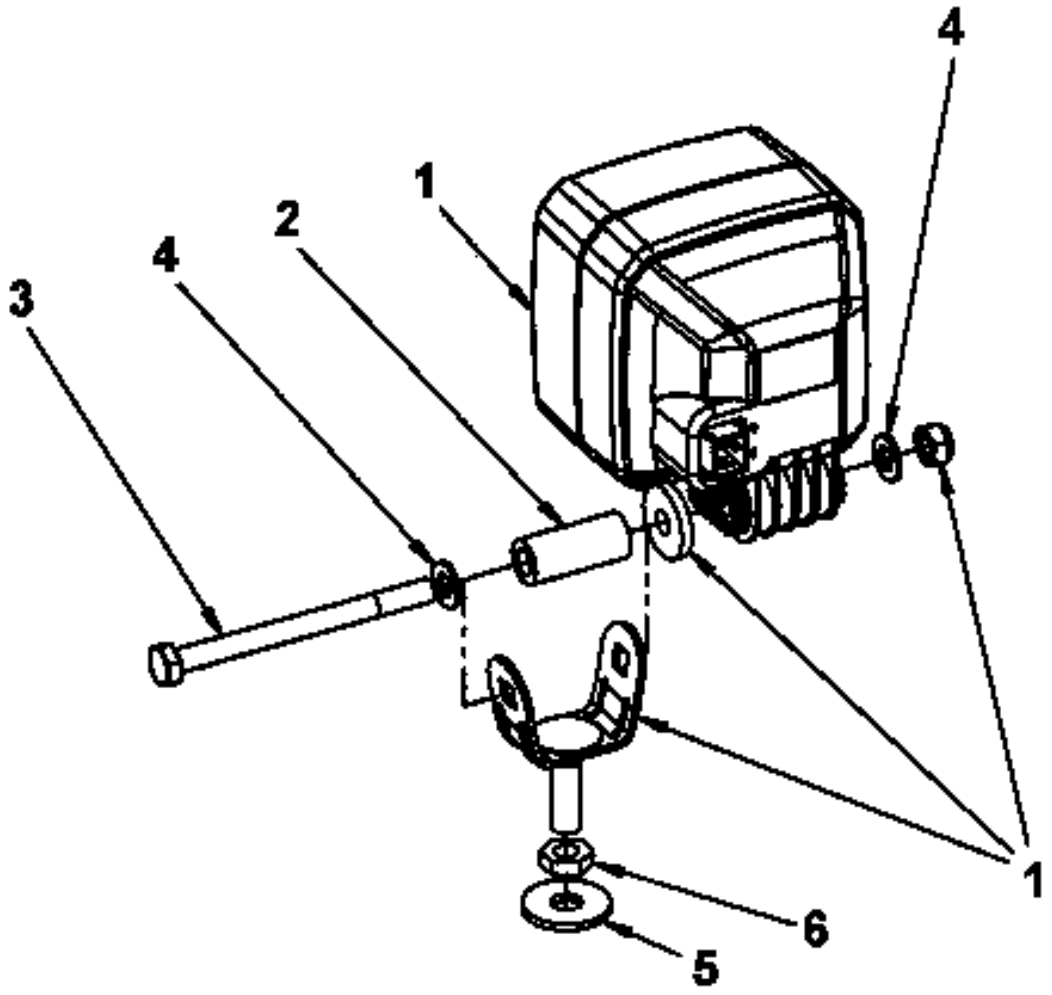

Item	Part No.	Name	Qty	L	SN INFO
1	4812110216	Work lamp	1		
2	4700391115	Spacer sleeve	1		
3	4700500096	Screw	1		
4	4700904229	Washer, 8.4x 6x1.5 mm 300HV	2		
5	4700928441	Washer, 21 x 45 mm	1		
6	4700573005	Nut	1		

Working lights Casing rear

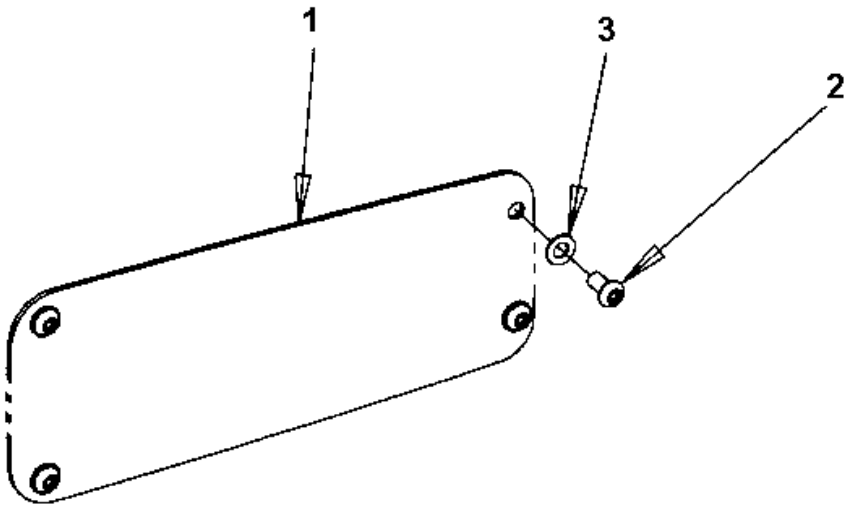

Item	Part No.	Name	Qty	L	SN INFO
1	4812111950	Cover plate	1		
2	4700904956	Screw	4		
3	4700904229	Washer, 8.4x 6x1.5 mm 300HV	4		

Working lights Cover plate rear

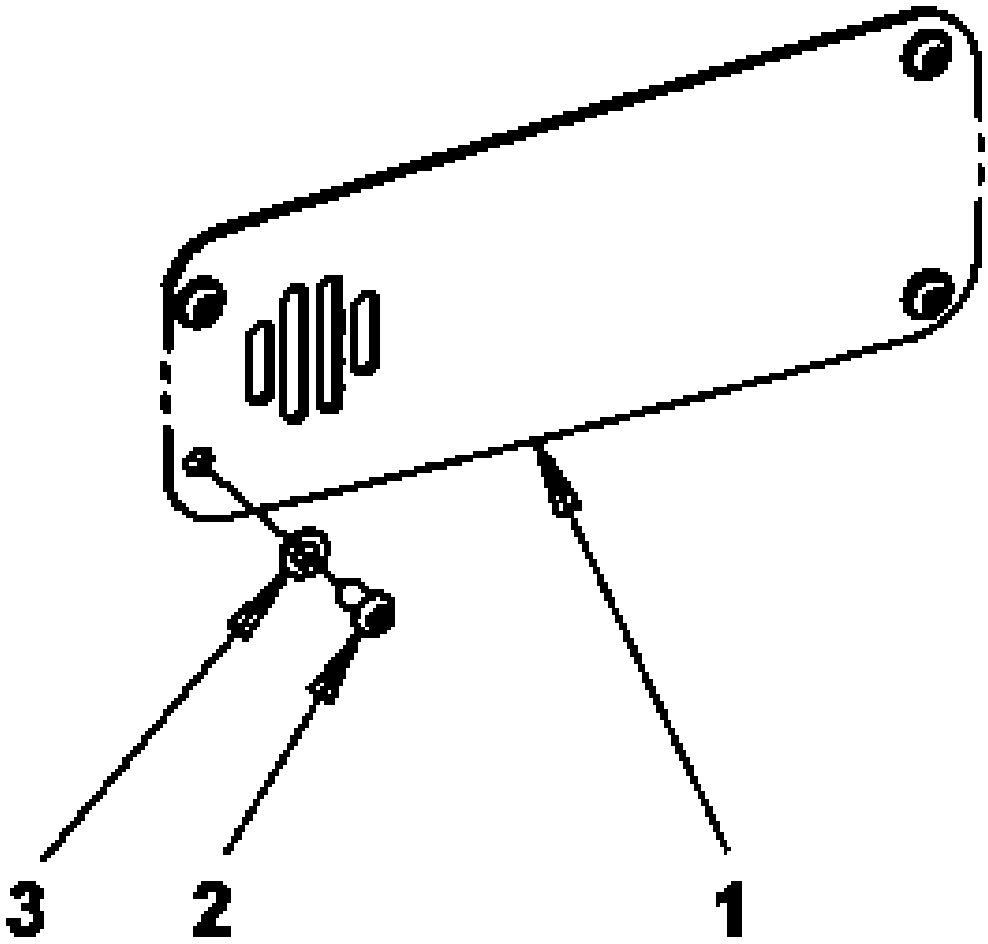

Item	Part No.	Name	Qty	L	SN INFO
1	4812114872	Cover plate	1		
2	4700904956	Screw	4		
3	4700904229	Washer, 8.4x 6x1.5 mm 300HV	4		

Driving lights Front RH (option) Driving lights Front RH (option)

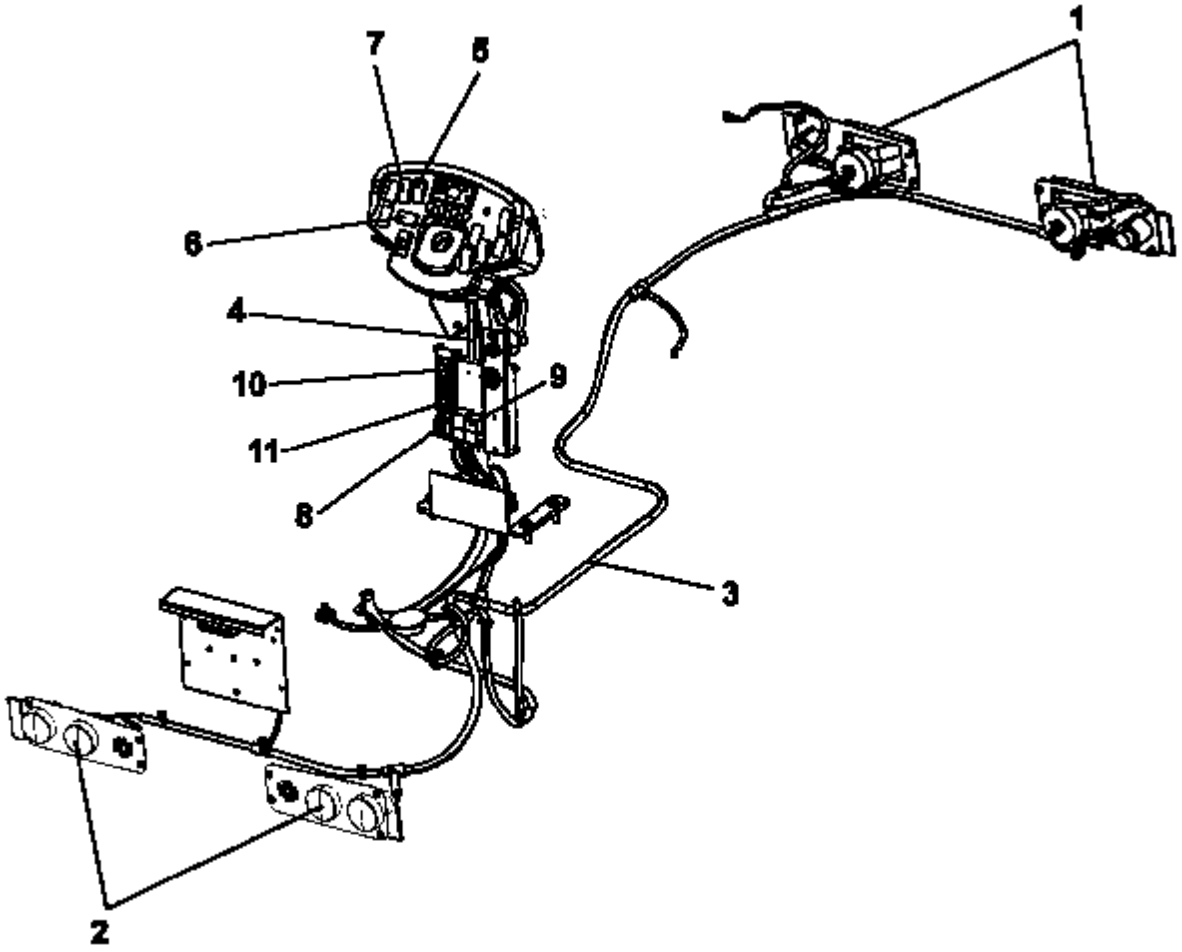

Item	Part No.	Name	Qty	L	SN INFO
1	-	Driving lights Front	2		
2	-	Driving lights Rear (option)	2		
3	4812112472	Cable harness	1		
4	4812112468	Cable harness	1		
5	4700791584	Switch, hazard flashers	1		
6	4700792413	Switch, drive direction	1		
7	4700791583	Switch, driving light	1		
8	4700904989	Flash relay	1		
9	4700903956	Relay	1		
10	4700901225	Fuse 5A Tan	2		
11	4700901227	Fuse 10A Red	1		
12	4700791916	Screw	2		
13	4700313041	Cable ties, L=200 mm	N		

Driving lights Front RH (option) Driving lights Front

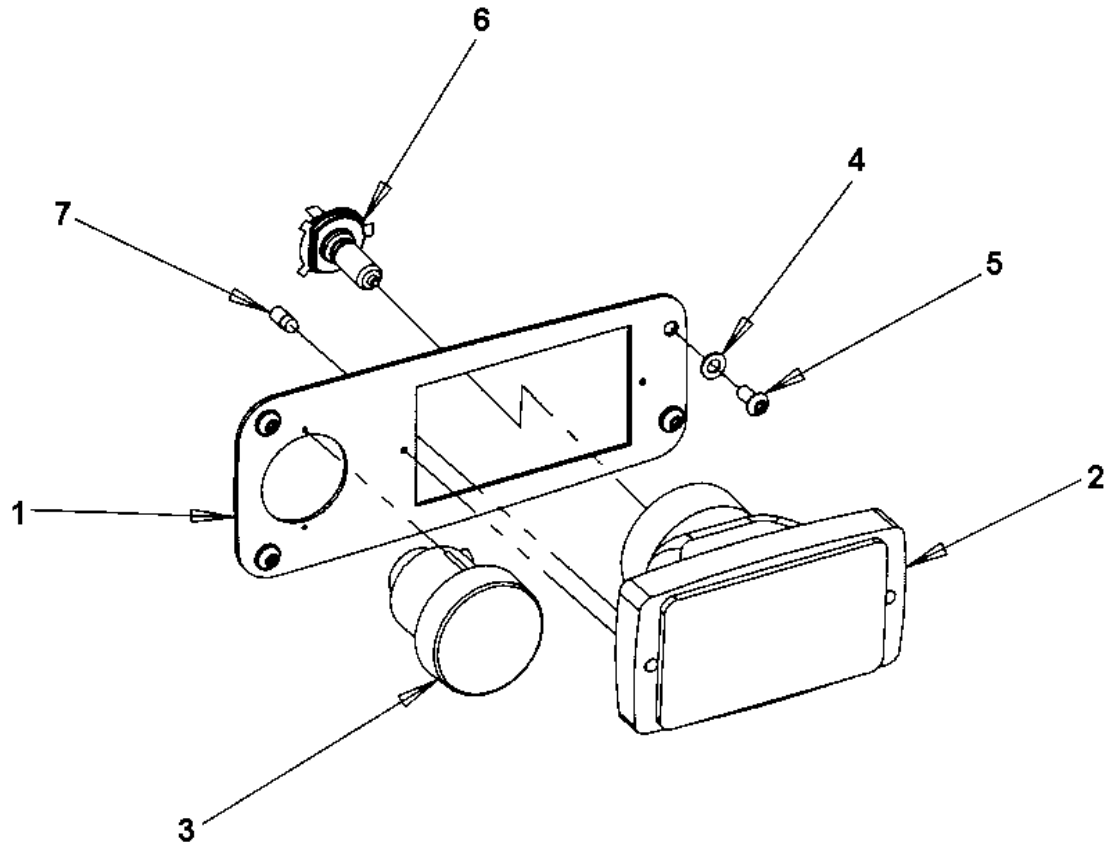

Item	Part No.	Name	Qty	L	SN INFO
1	4812111951	Light bracket	1		
2	4700791951	Headlight right hand asym. with parking light	1		
3	4700791953	Direction indicator	1		
4	4700904229	Washer, 8.4x 6x1.5 mm 300HV	4		
5	4700904956	Screw	4		
6	4700900790	Bulb 60/55w H4	1	A	
7	4700985012	Bulb	1	A	

Comments for Page: Driving lights Front

(L)OCAL REMARKS

A | en_US | Included in head light (p/n 4700791951)

Driving lights Front RH (option) Driving lights Rear (option)

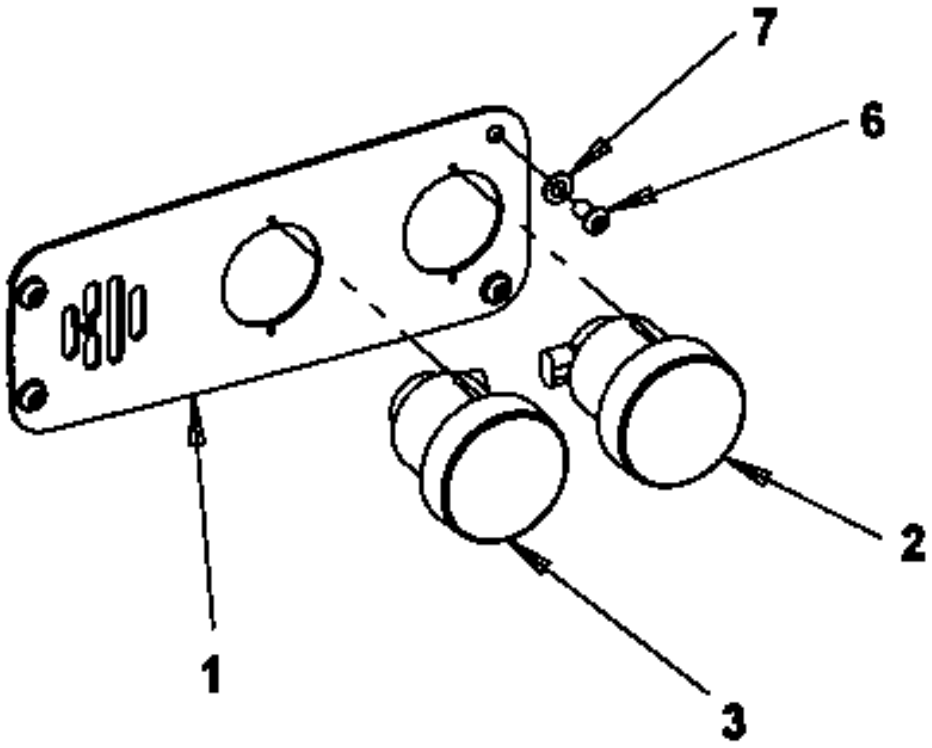

Item	Part No.	Name	Qty	L	SN INFO
1	4812111952	Bracket	1		
2	4700791954	Direction indicator	1		
3	4700791955	Brake/position light	1		
6	4700904229	Washer, 8.4x 6x1.5 mm 300HV	4		
7	4700904956	Screw	4		

Driving lights Front LH (option) Driving lights Front LH (option)

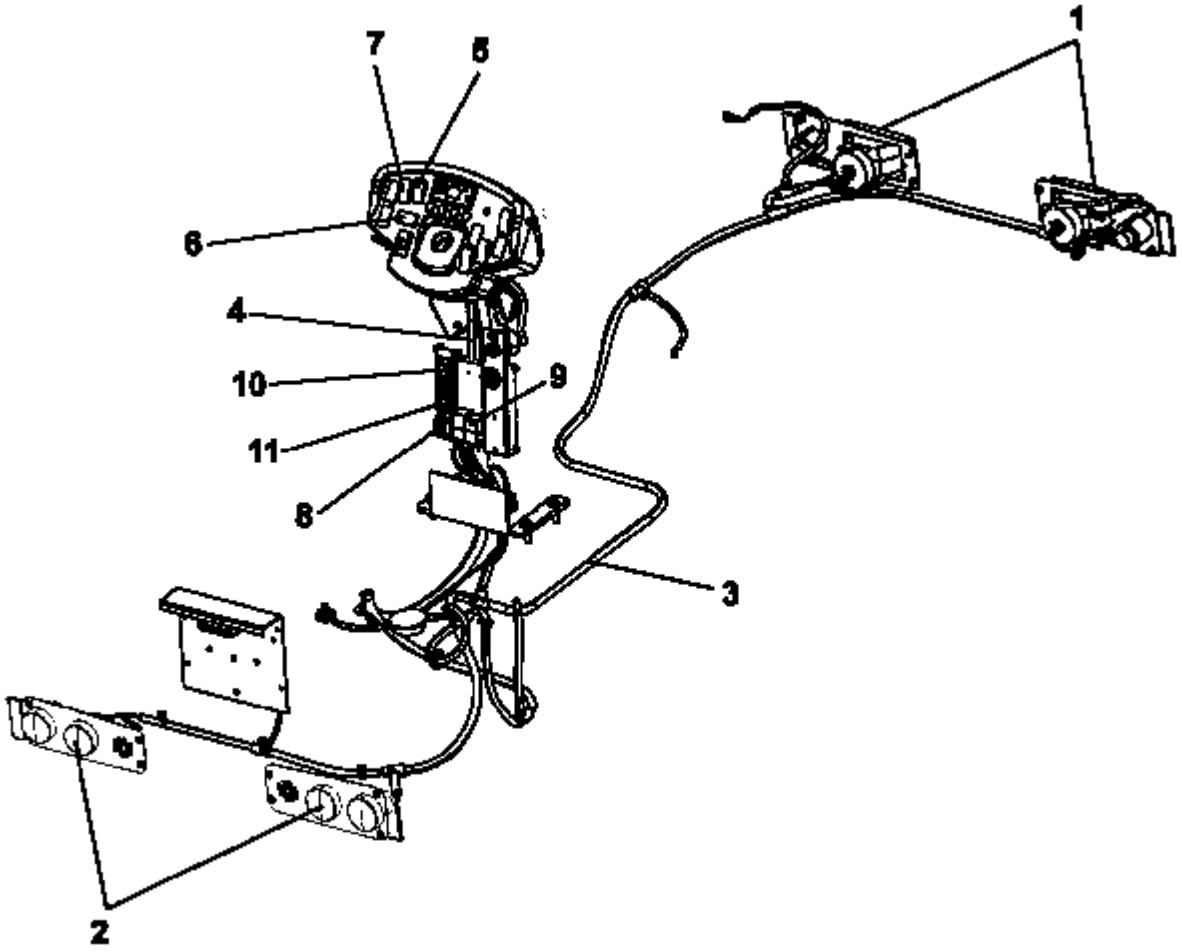

Item	Part No.	Name	Qty	L	SN INFO
1	-	Driving lights Front	2		
2	-	Driving lights Rear (option)	2		
3	4812112472	Cable harness	1		
4	4812112468	Cable harness	1		
5	4700791584	Switch, hazard flashers	1		
6	4700792413	Switch, drive direction	1		
7	4700791583	Switch, driving light	1		
8	4700904989	Flash relay	1		
9	4700903956	Relay	1		
10	4700901225	Fuse 5A Tan	2		
11	4700901227	Fuse 10A Red	1		
12	4700791916	Screw	2		
13	4700313041	Cable ties, L=200 mm	N		

Driving lights Front LH (option) Driving lights Front

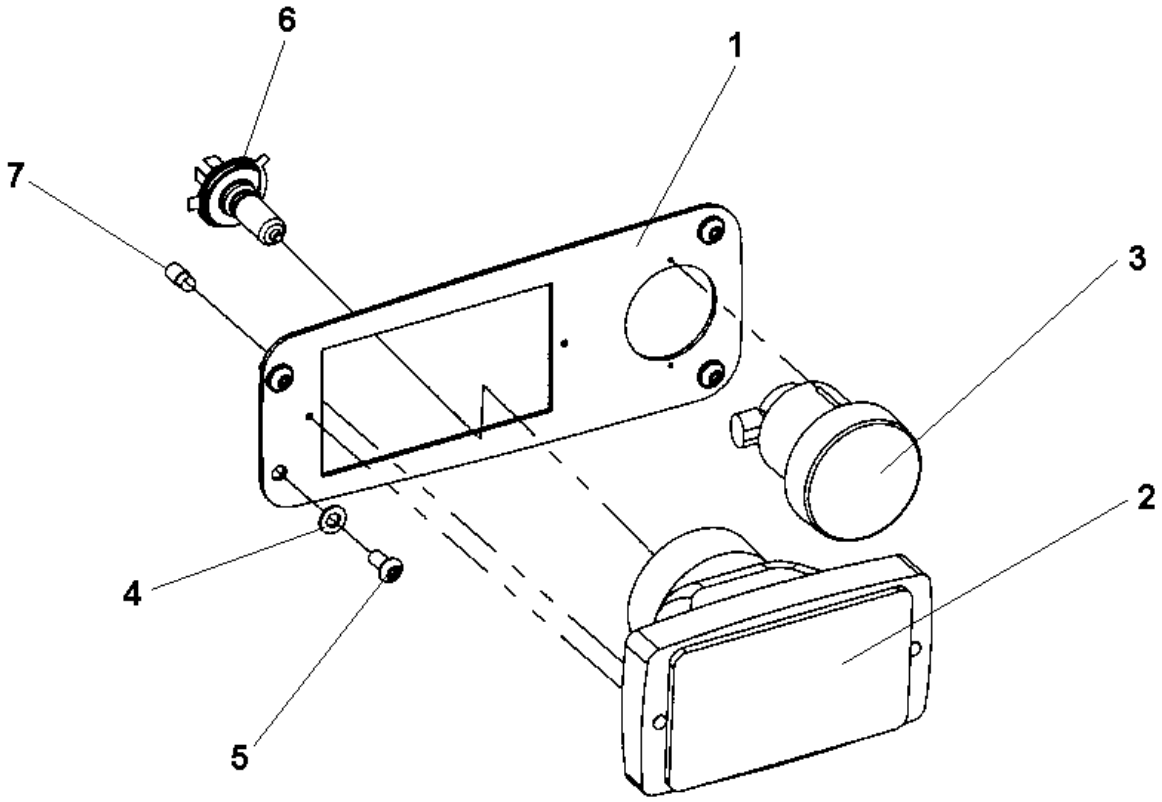

Item	Part No.	Name	Qty	L	SN INFO
1	4812111951	Light bracket	1		
2	4700792059	Headlight left hand asym. with parking light	1		
3	4700791953	Direction indicator	1		
4	4700904229	Washer, 8.4x 6x1.5 mm 300HV	4		
5	4700904956	Screw	4		
6	4700900790	Bulb 60/55w H4	1	A	
7	4700985012	Bulb	1	A	

Comments for Page: Driving lights Front

(L)OCAL REMARKS

A | en_US | Included in head light (p/n 4700792059)

Rotating beacon Rotating beacon for ROPS (option)

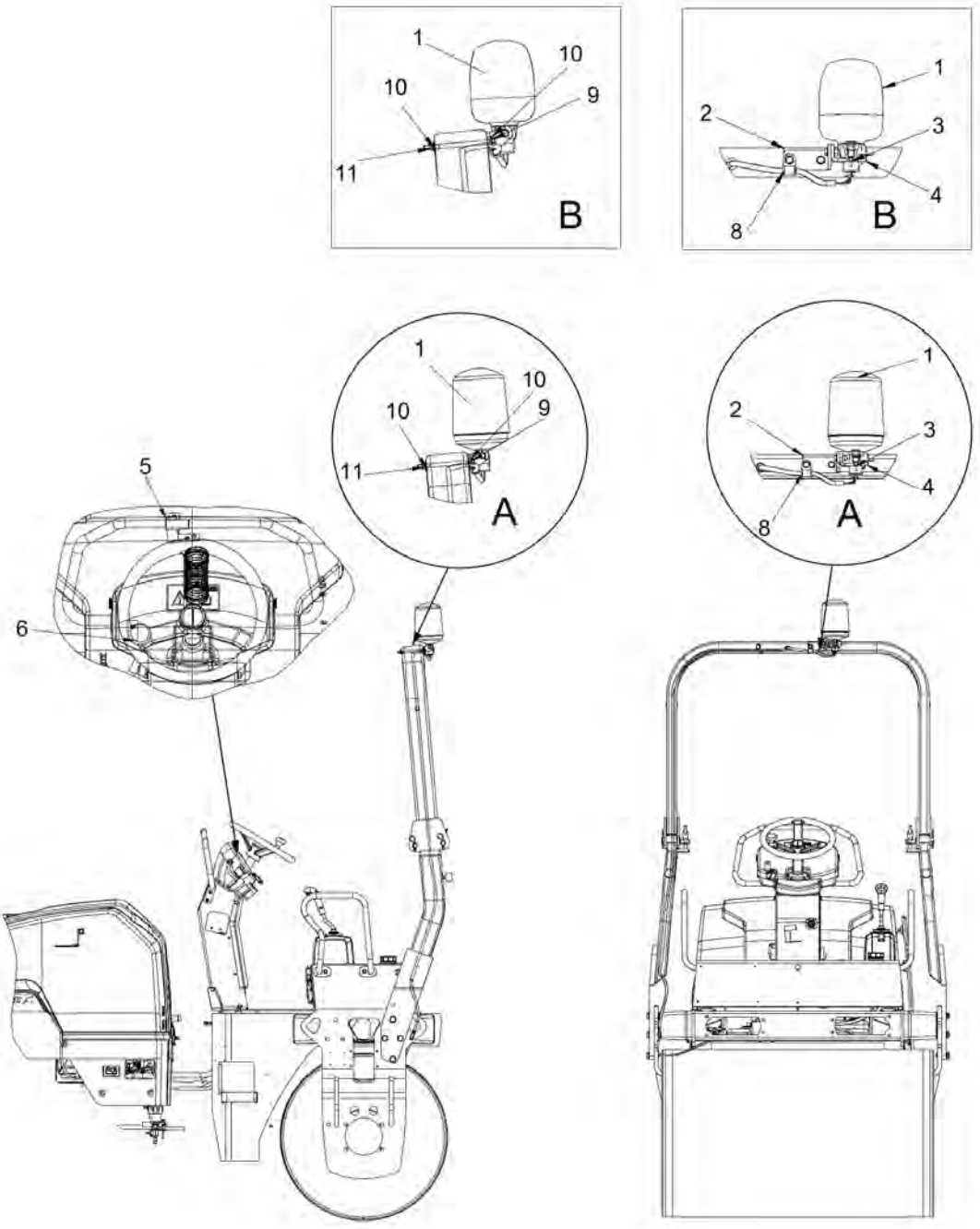

Item	Part No.	Name	Qty	L	SN INFO
1	4700389577	Rotating beacon 12V	1	A	To A016521
1	4812122610	Rotating beacon 12V	1	B	From A016522
2	4700389561	Bracket	1		
3	4700791981	Connector plug	1		
4	4700791980	Rubber protection	1		
5	4812121272	Holder	1		
6	4700791585	Switch, rotating beacon	1		
7	4812113077	Cable harness	1		
8	4700921072	Clamp	1		
9	4700500143	Screw	2		
10	4700904229	Washer, 8.4x 6x1.5 mm 300HV	4		
11	4700586003	Lock nut M8	2		
12	4700313041	Cable ties, L=200 mm	N		

Rotating beacon Rotating beacon for ROPS ignition controlled (option)

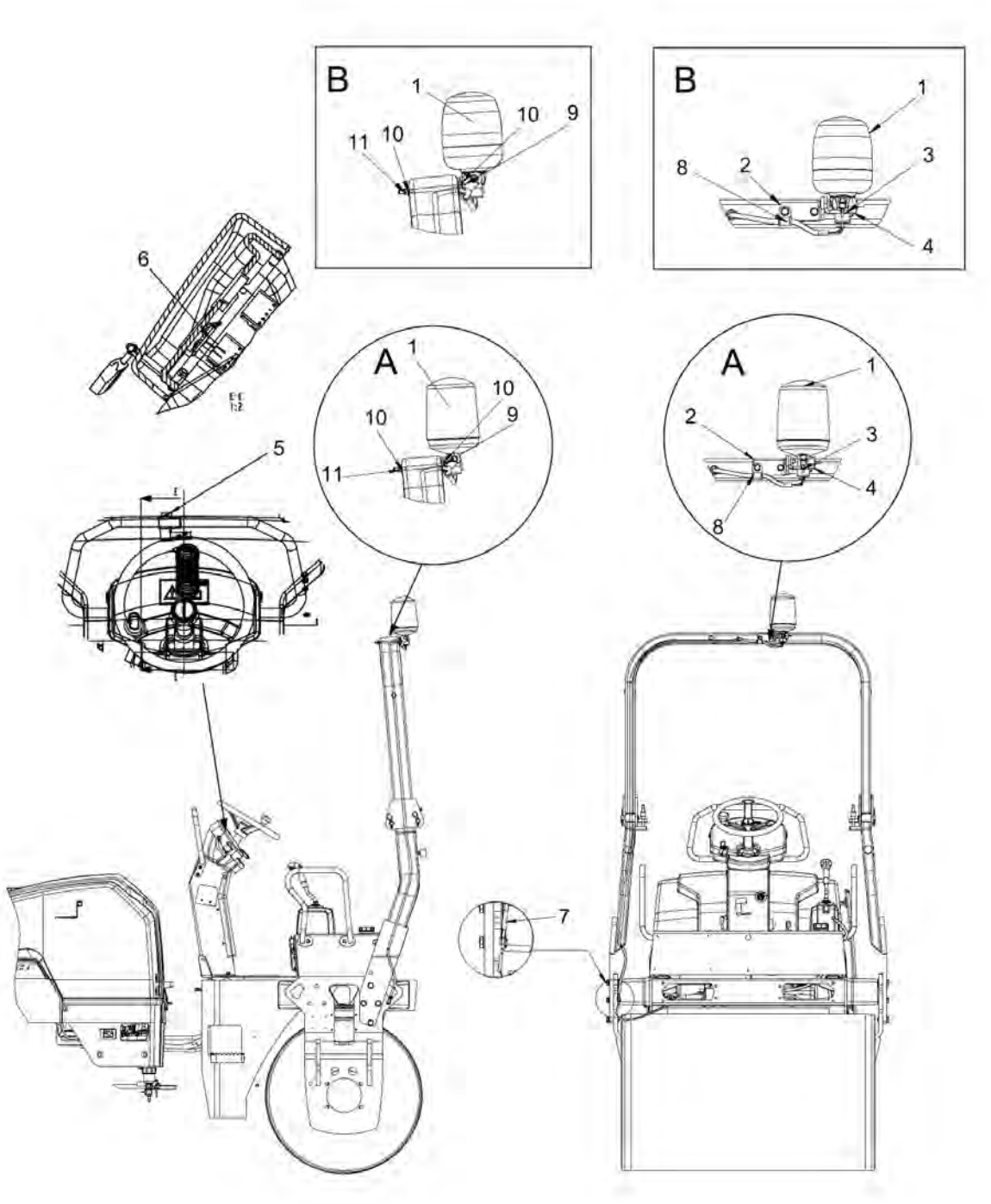

Item	Part No.	Name	Qty	L	SN INFO
1	4700389577	Rotating beacon 12V	1	A	To A016521
1	4812122610	Rotating beacon 12V	1	B	From A016522
1	4700985126	Bulb	1		
2	4700389561	Bracket	1		
3	4700791981	Connector plug	1		
4	4700791980	Rubber protection	1		
5	4812121272	Holder	1		
6	4811000077	Connection cable	1		
7	4812113077	Cable harness	1		
8	4700921072	Clamp	1		
9	4700500143	Screw	2		
10	4700904229	Washer, 8.4x 6x1.5 mm 300HV	4		
11	4700586003	Lock nut M8	2		
12	4700313041	Cable ties, L=200 mm	N	A	

Rotating beacon Rotating beacon, without rops (option)

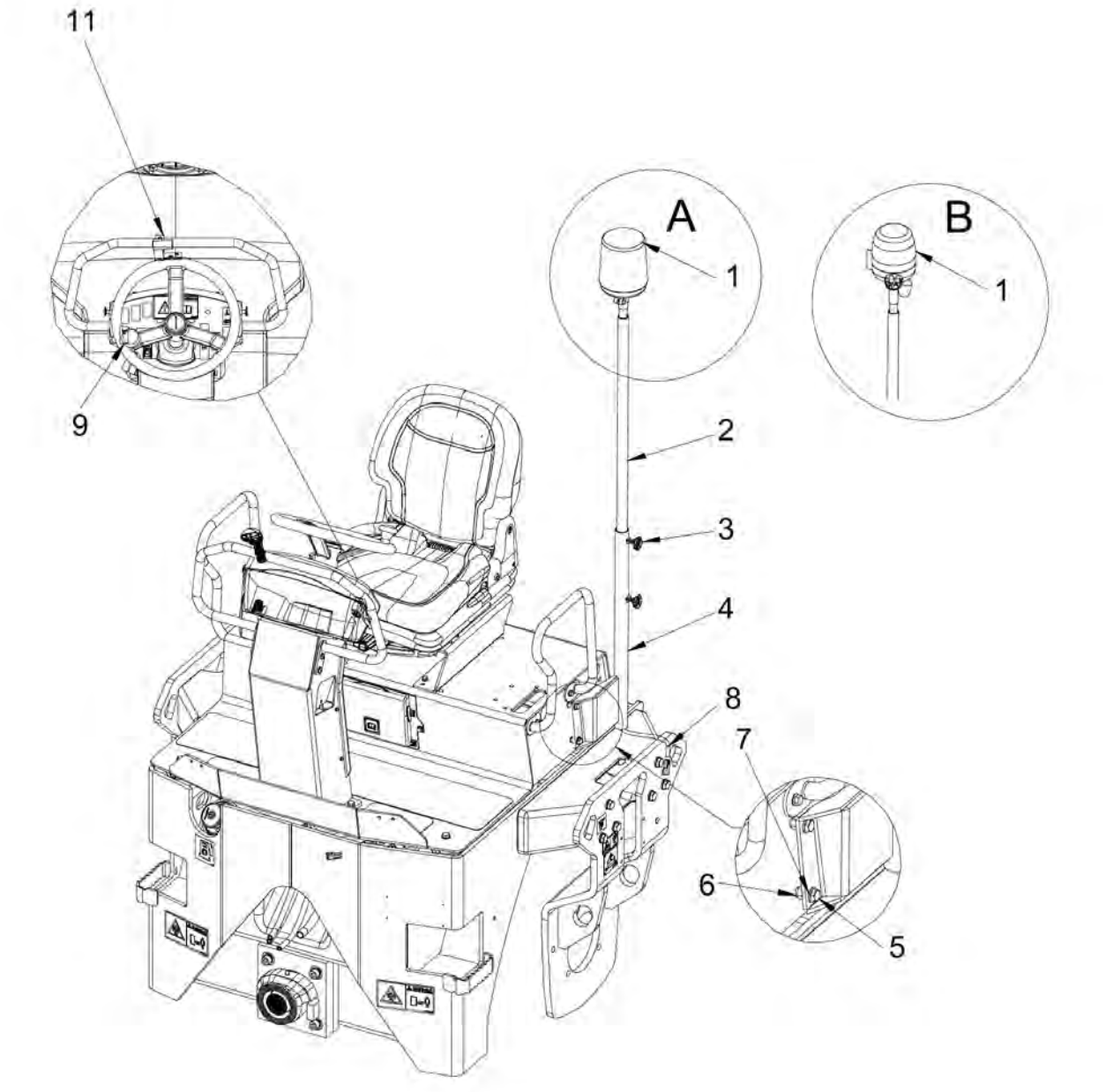

Item	Part No.	Name	Qty	L	SN INFO
1	4700389577	Rotating beacon 12V	1	A	To A016521
1	4812122610	Rotating beacon 12V	1	B	From A016522
1	4700985126	Bulb	1		
2	4700357663	Lamp holder	1		
3	4700499162	Turning knob	2		
4	4700357679	Lamp holder	1		
5	4700500028	Screw, M10 x 25 mm 8.8 A3K	2		
6	4700586018	Lock nut M10	2		
7	4700904230	Plain washer 10.5x22x2 mm	2		
8	4812113077	Cable harness	1		
9	4700791585	Switch, rotating beacon	1		
10	4700313041	Cable ties, L=200 mm	N		
11	4812121272	Holder	1		

Electrical equipment Direction indicator (option)

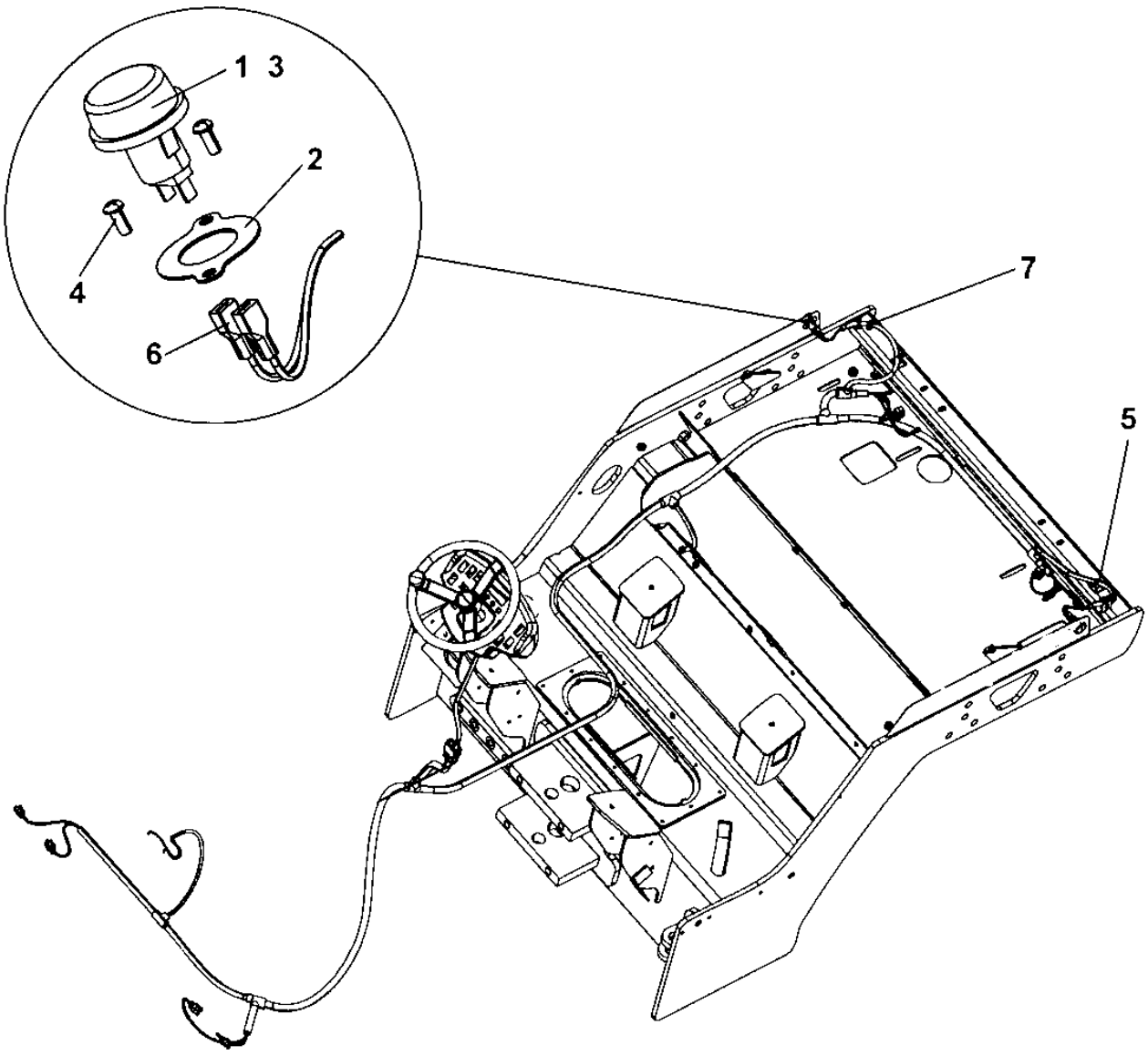

Item	Part No.	Name	Qty	L	SN INFO
1	4700791704	Side direction light	2		
2	4700388382	Holder side light	2		
3	4700904889	Bulb	2		
4	4700791643	Screw	4		
5	4700903810	Cable tie holder	4		
6	4700960079	Connector	4		
7	4700313041	Cable ties, L=200 mm	N		

Electrical equipment Back-up alarm

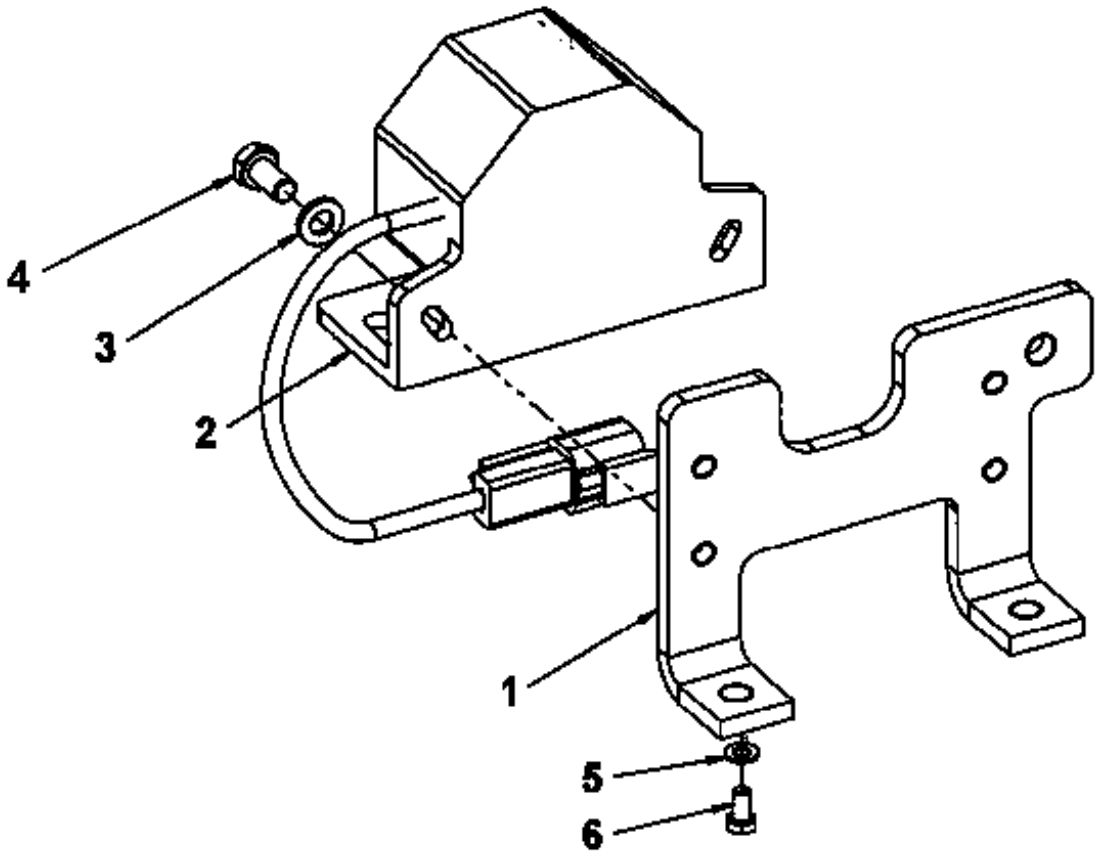

Item	Part No.	Name	Qty	L	SN INFO
1	4700396768	Bracket	1		
2	4700792098	Back-up alarm	1		
3	4700904228	Washer 6,4x12x1,5	2		
4	4700500012	Hex. screw	2		
5	4700904229	Washer, 8.4x 6x1.5 mm 300HV	2		
6	4700500019	Hexagon screw	2		

Drivers platform Drivers platform

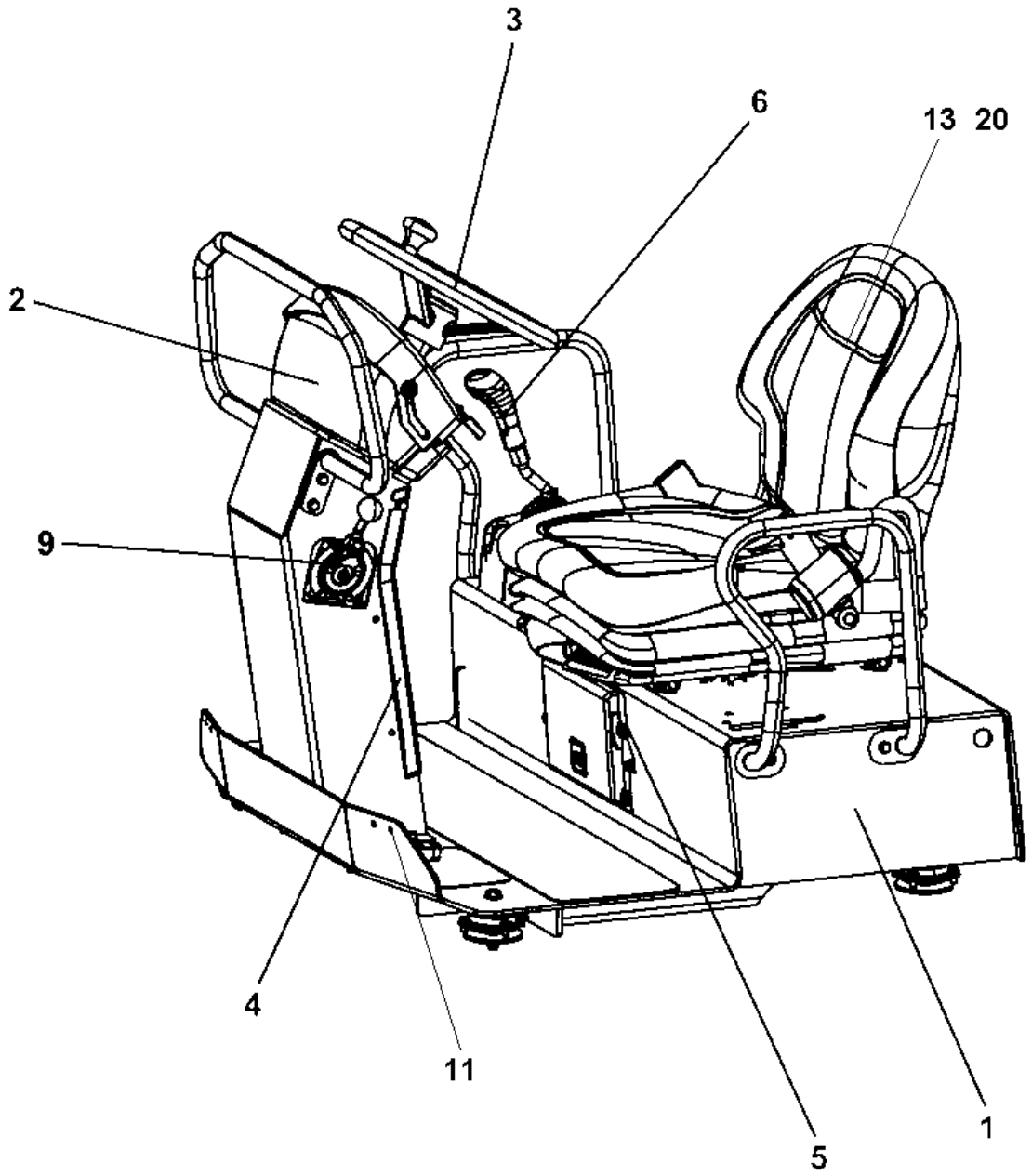

Item	Part No.	Name	Qty	L	SN INFO
1	-	Platform module			
2	-	Instrument panel module			
3	-	Steering wheel			
4	-	Control module			
5	-	Standard ECU module			
6	-	Forward-Reverse control module			
6	-	Forward-reverse control left (option)			
8	-	Cover plate, Dual F&R-control left side			
9	-	Throttle control, cpl			
9	-	Throttle control cpl, Dual frequency (option)			
11	-	Arm rests, seat belt, laterally adjusting			
12	-	Step (option)			
13	-	Driver seat, Std			
13	-	Driver seat, Luxury (option)			
13	-	Driver's seat, without armrests (option)			
14	4700379637	Seat belt kit, static 3"			
14	-	Seat belt module 3"			
15	-	Seat belt module 2"			
16	-	Rear view mirror (option)			
17	-	ROPS, foldable (option)			
18	-	Rops (option)			
19	-	Canopy (option)			
20	4700348331	Seat protection	1		

Comments for Page: Drivers platform

(L)OCAL REMARKS

A | en_US | For driver seat 4812118730 only.

Platform module To A014353 Platform module

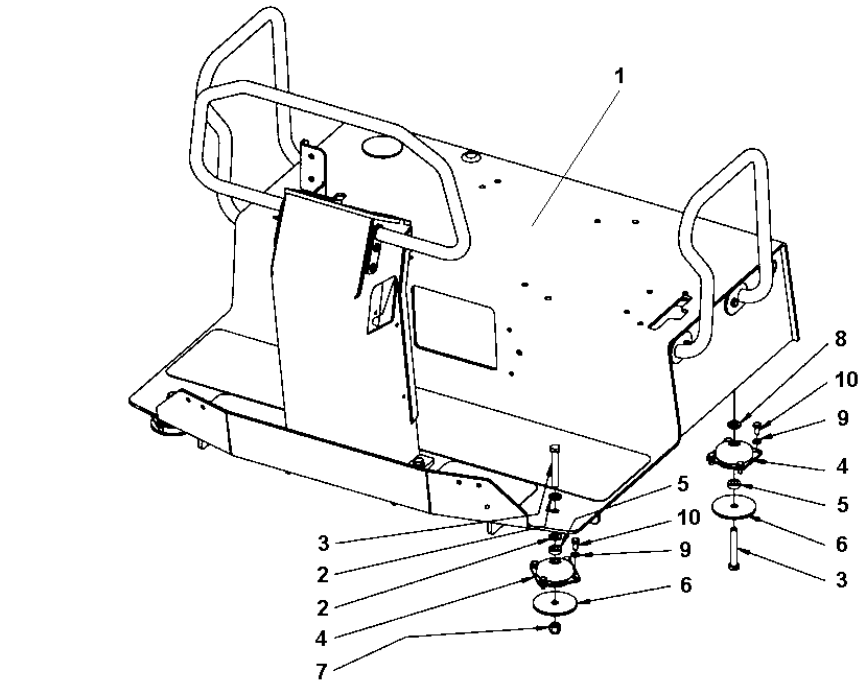

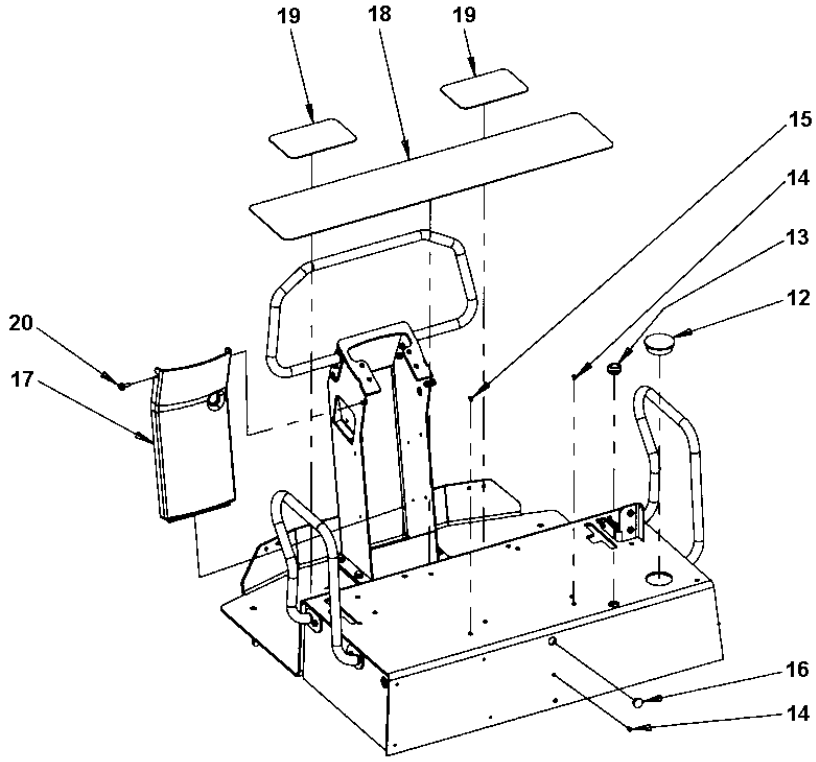

Item	Part No.	Name	Qty	L	SN INFO
1	-	Platform mount	1		
2	4700904231	Washer, 13x24x2 mm 300 HV	4		
3	4700500117	Screw M12x80H 8.8	4		
4	4700902797	Shock absorber	4		
5	4700902892	Washer	4		
6	4700358232	Washer	4		
7	4700586019	Lock nut	2		
8	4700904703	Plain washer 13x24x4 mm	2		
9	4700904229	Washer, 8.4x 6x1.5 mm 300HV	16		
10	4700500019	Hexagon screw	16		
12	4700923844	Shutter	1		
13	4700903192	Grommet	2		
14	4700926215	Protective plug	4		
15	4700902919	Plug	2		
16	4700904225	Plug	1		
17	4700387226	Column cover	1		
18	4700357604	Protection	1		
19	4700357605	Slip protection	2		
20	4700500505	Screw, M8x20 mm 8.8 A2K	2		

Platform module To A014353 Platform mount

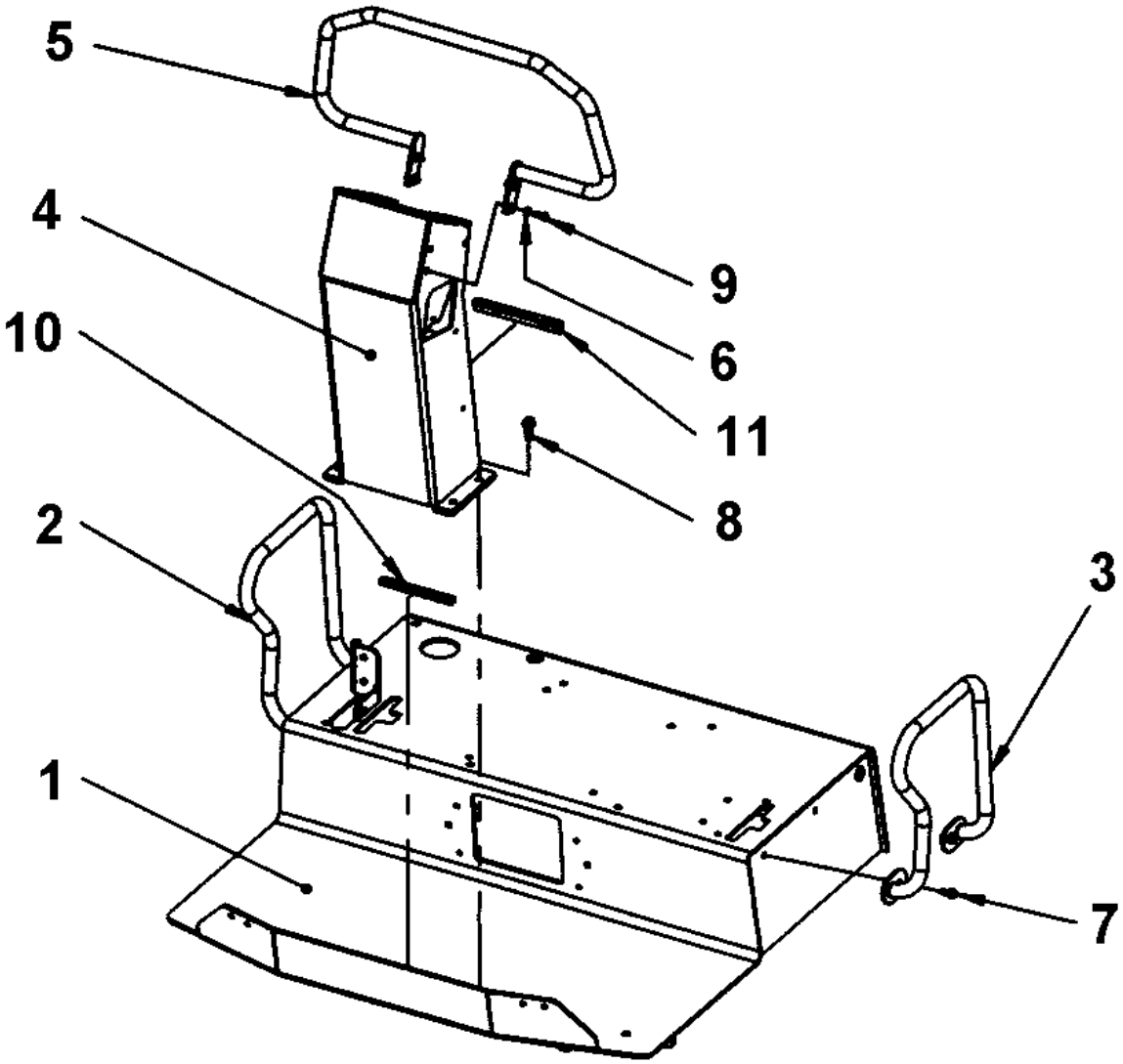

Item	Part No.	Name	Qty	L	SN INFO
1	4812111164	Platform	1		
2	4812113106	Hand rail Right	1		
3	4812113107	Hand rail Left	1		
4	4812112091	Steering column	1		
5	4812112532	Hand rail Front	1		
6	4700904556	Steel plain washer 8,4x16x3,0	4		
7	4700500505	Screw, M8x20 mm 8.8 A2K	4		
8	4700791343	Screw	4		
9	4700791333	Screw, M8 x 20 mm A2-70	4		
10	4700902379	Edge trim	1	A	
11	4700902166	Edge trim	1	B	

Comments for Page: Platform mount

(L)OCAL REMARKS

A | en_US | L = 0,15 m

B | en_US | L = 0,18 m

Platform module From A014354 Platform module

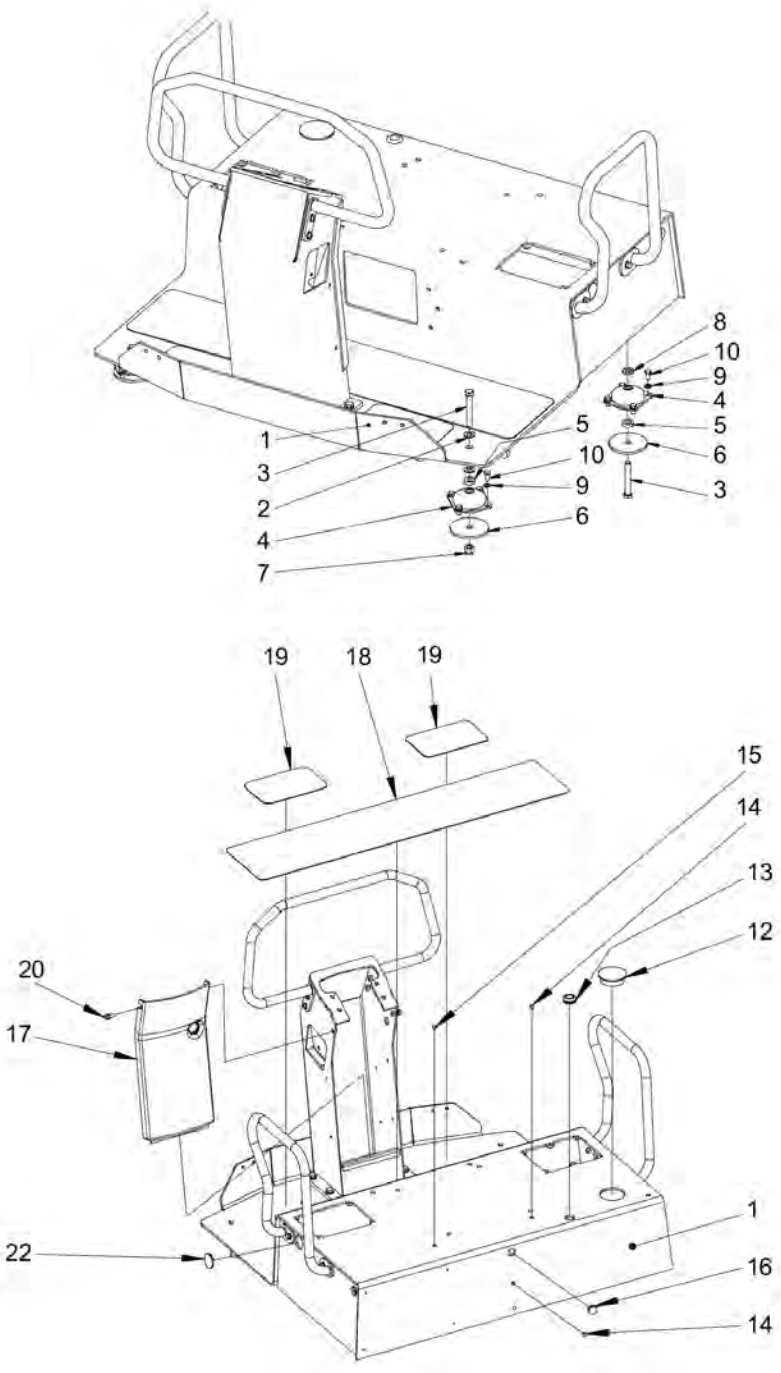

Item	Part No.	Name	Qty	L	SN INFO
1	4812121376	Platform	1		
2	4700904231	Washer, 13x24x2 mm 300 HV	4		
3	4700500117	Screw M12x80H 8.8	4		
4	4700902797	Shock absorber	4		
5	4700902892	Washer	4		
6	4700358232	Washer	4		
7	4700586019	Lock nut	2		
8	4700904703	Plain washer 13x24x4 mm	2		
9	4700904229	Washer, 8.4x 6x1.5 mm 300HV	16		
10	4700500019	Hexagon screw	16		
12	4700923844	Shutter	1		
13	4700903192	Grommet	2		
14	4700926215	Protective plug	4		
15	4700902919	Plug	2		
16	4700904225	Plug	1		
17	4700387226	Column cover	1		
18	4700357604	Protection	1		
19	4700357605	Slip protection	2		
20	4700500505	Screw, M8x20 mm 8.8 A2K	2		
22	4700921849	Plug	2		

Platform module From A014354 Platform

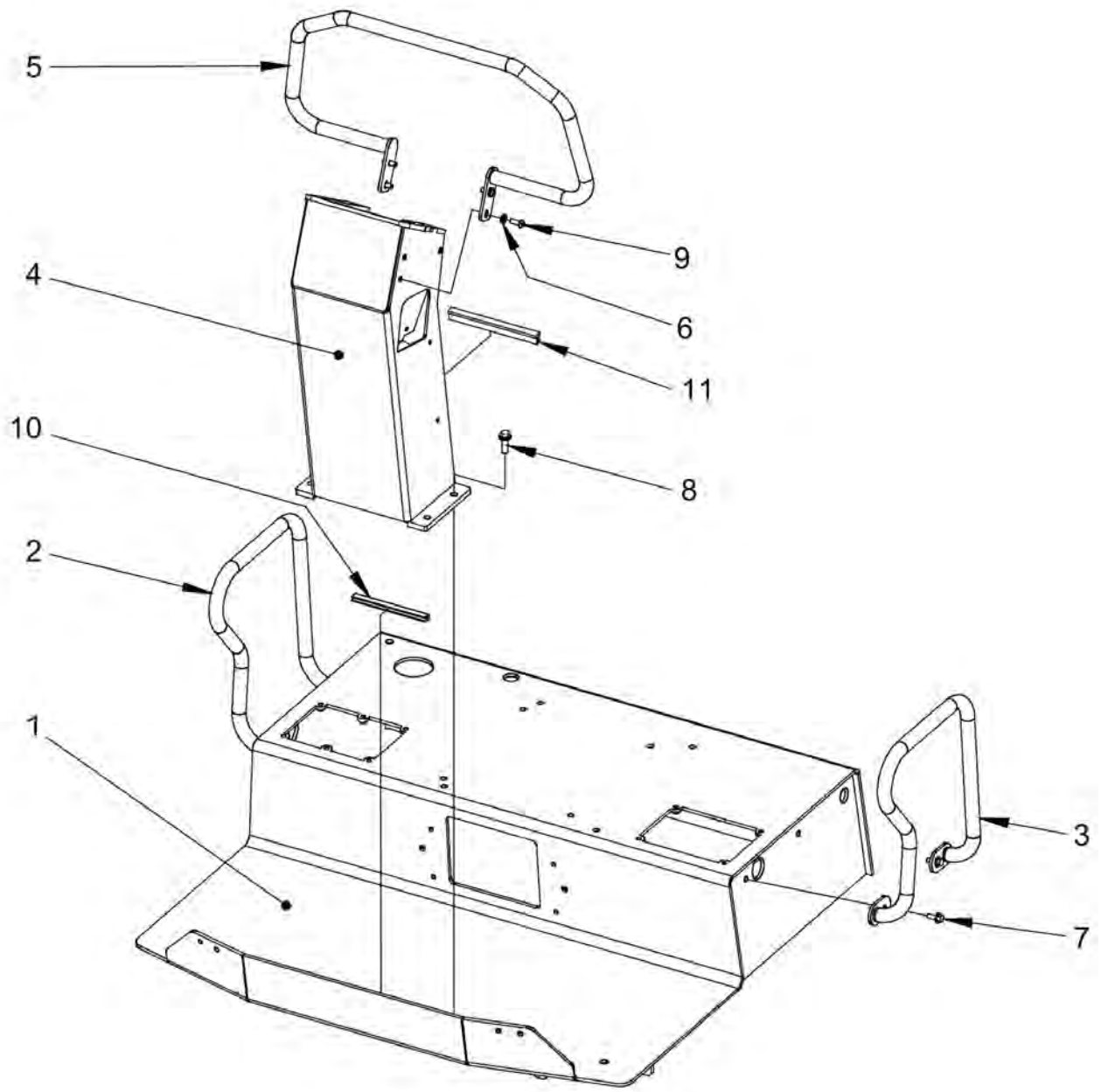

Item	Part No.	Name	Qty	L	SN INFO
1	4812121464	Platform	1		
2	4812113106	Hand rail Right	1		
3	4812113107	Hand rail Left	1		
4	4812112091	Steering column	1		
5	4812112532	Hand rail Front	1		
6	4700904556	Steel plain washer 8,4x16x3,0	4		
7	4700500505	Screw, M8x20 mm 8.8 A2K	4		
8	4700791343	Screw	4		
9	4700791333	Screw, M8 x 20 mm A2-70	4		
10	4700902379	Edge trim	1	A	
11	4700902166	Edge trim	1	B	

Comments for Page: Platform

A | L = 0,15 m

B | L = 0,18 m

Platform module From xx019267 Platform module

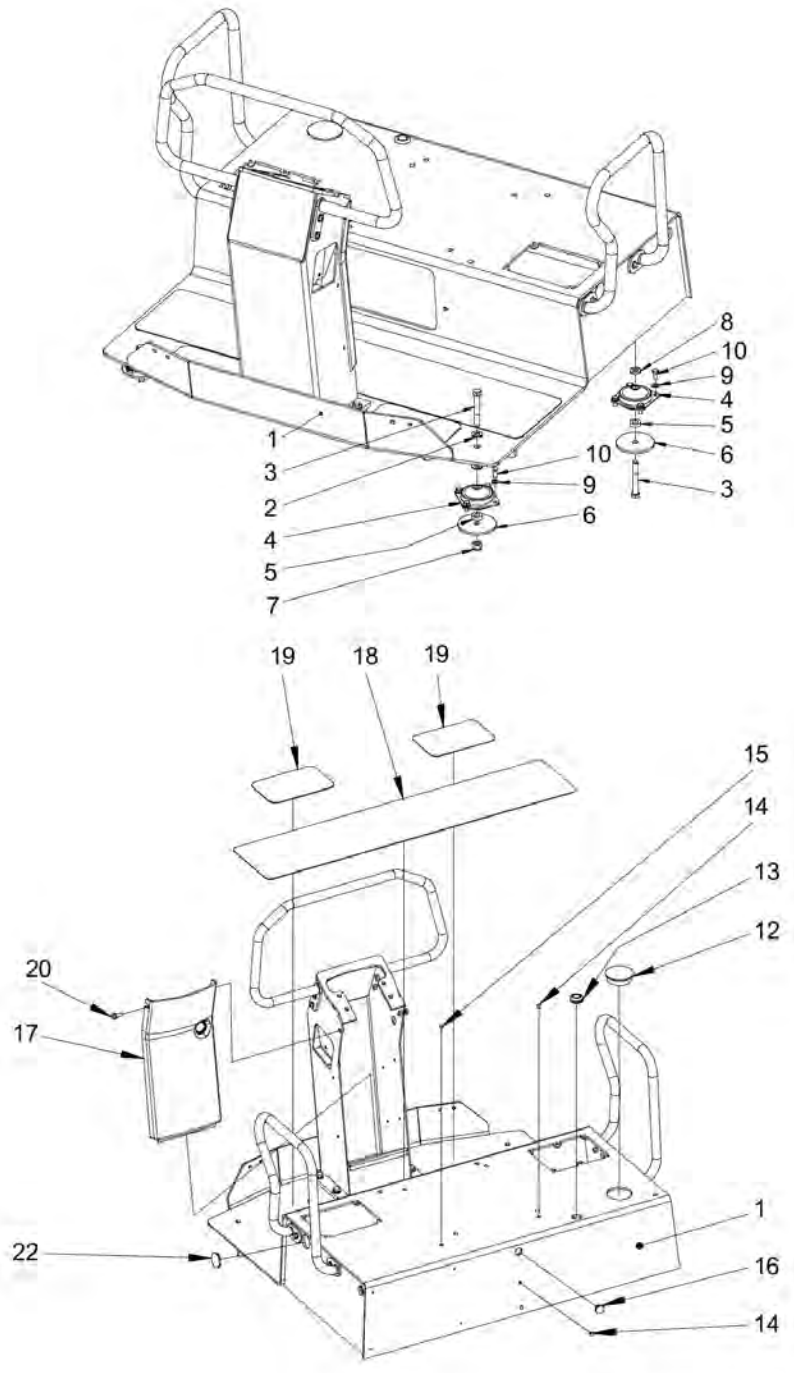

Item	Part No.	Name	Qty	L	SN INFO
1	4812121376	Platform	1		
2	4700904231	Washer, 13x24x2 mm 300 HV	4		
3	4700500196	Screw M12-1,75x80 8.8	4		
4	4700902797	Shock absorber	4		
5	4700902892	Washer	4		
6	4700358232	Washer	4		
7	4700586019	Lock nut	2		
8	4700904703	Plain washer 13x24x4 mm	2		
9	4700904229	Washer, 8.4x 6x1.5 mm 300HV	16		
10	4700500019	Hexagon screw	16		
12	4700923844	Shutter	1		
13	4700903192	Grommet	2		
14	4700926215	Protective plug	4		
15	4700902919	Plug	2		
16	4700904225	Plug	1		
17	4700387226	Column cover	1		
18	4700357604	Protection	1		
19	4700357605	Slip protection	2		
20	4700500505	Screw, M8x20 mm 8.8 A2K	2		
22	4700921849	Plug	2		

Platform module From xx019267 Platform

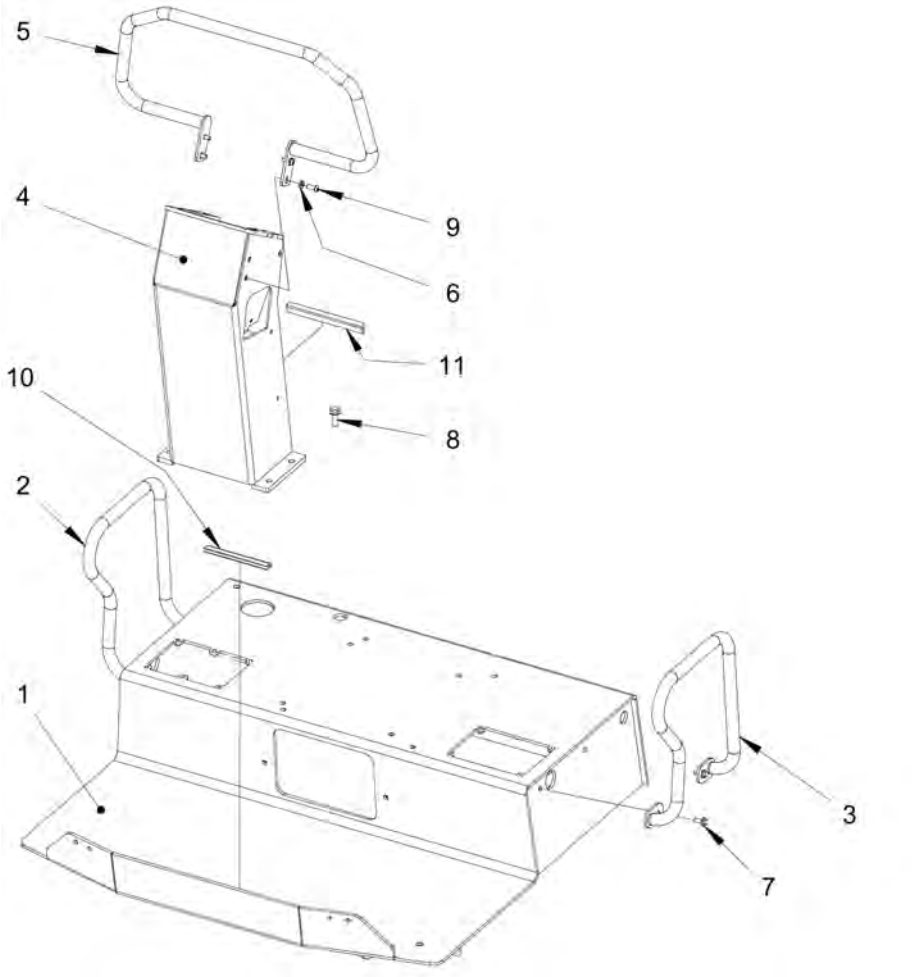

Item	Part No.	Name	Qty	L	SN INFO
1	4812125908	Platform	1		
2	4812113106	Hand rail Right	1		
3	4812113107	Hand rail Left	1		
4	4812112091	Steering column	1		
5	4812112532	Hand rail Front	1		
6	4700904556	Steel plain washer 8,4x16x3,0	4		
7	4700500505	Screw, M8x20 mm 8.8 A2K	4		
8	4700791343	Screw	4		
9	4700791333	Screw, M8 x 20 mm A2-70	4		
10	4700902379	Edge trim	1	A	
11	4700902166	Edge trim	1	B	

Comments for Page: Platform

A | L = 0,15 m

B | L = 0,18 m

Drivers platform Instrument panel module

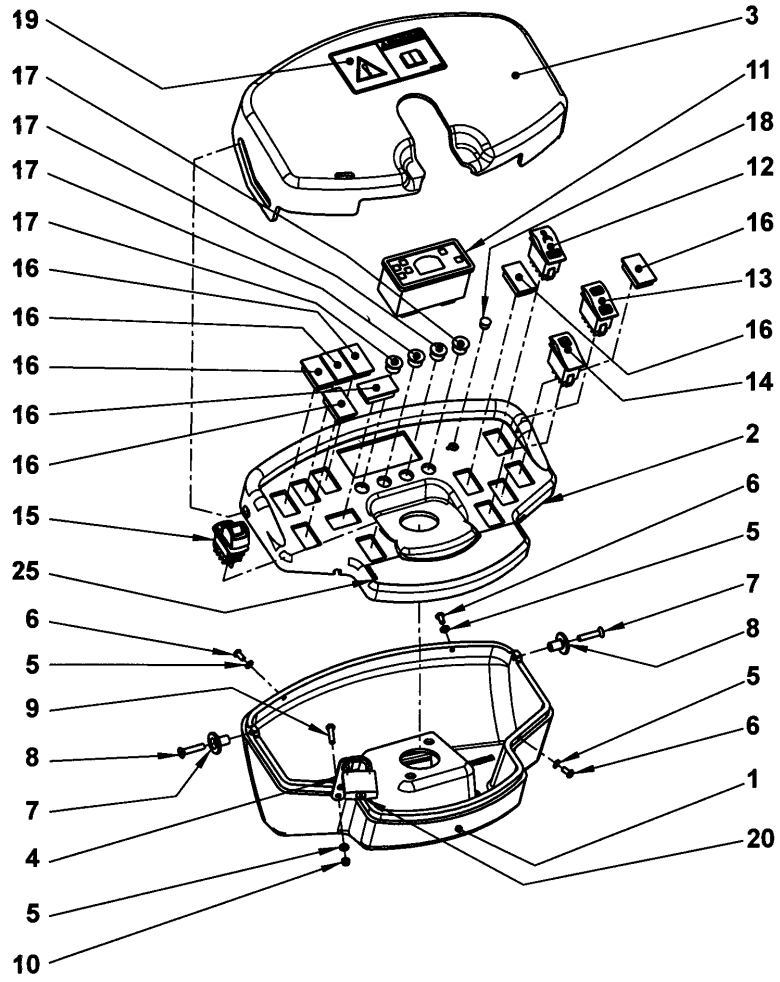

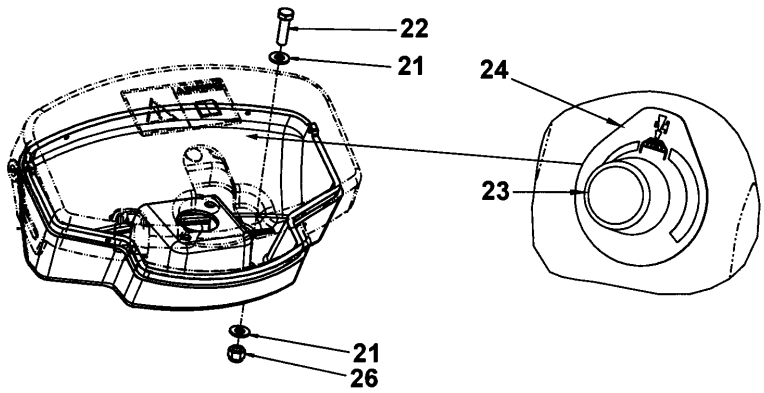

Item	Part No.	Name	Qty	L	SN INFO
1	4812118686	Control panel	1		
2	4700391784	Control panel	1		
3	4700387227	Control panel cover	1		
4	4700387545	Latch	1		
5	4700904281	Washer, 5,3x10x1 300HV	4		
6	4700903658	Screw M5x10	3		
7	4700357855	Bushing	2		
8	4700513017	Screw	2		
9	4700500007	Hex. screw	1		
10	4700791476	Lock nut	1		
11	4700395394	Control panel	1		
12	4700791579	Switch, sprinkler	1		
13	4700791580	Switch, vibration	1		
14	4700791578	Switch, horn	1		
15	4812118697	Switch, parking brake	1		
16	4700791588	Panel plug	7		
17	4700792320	Plug	4		
18	4700792083	Plug	1		
19	4700903459	Decal "SAFETY"	1		
20	4700358881	Pad lock	1		
21	4700904230	Plain washer 10.5x22x2 mm	8		
22	4700500030	Screw hexagon	4		
23	4700388737	Potentiometer	1	A	
24	4700377139	Decal	1	A	
25	4812115918	Decal "Starting instruction"	1		
26	4700586018	Lock nut M10	4		

Comments for Page: Instrument panel module

(L)OCAL REMARKS

A | en_US | Option on CC1100 and CC1200

Drivers platform Steering wheel

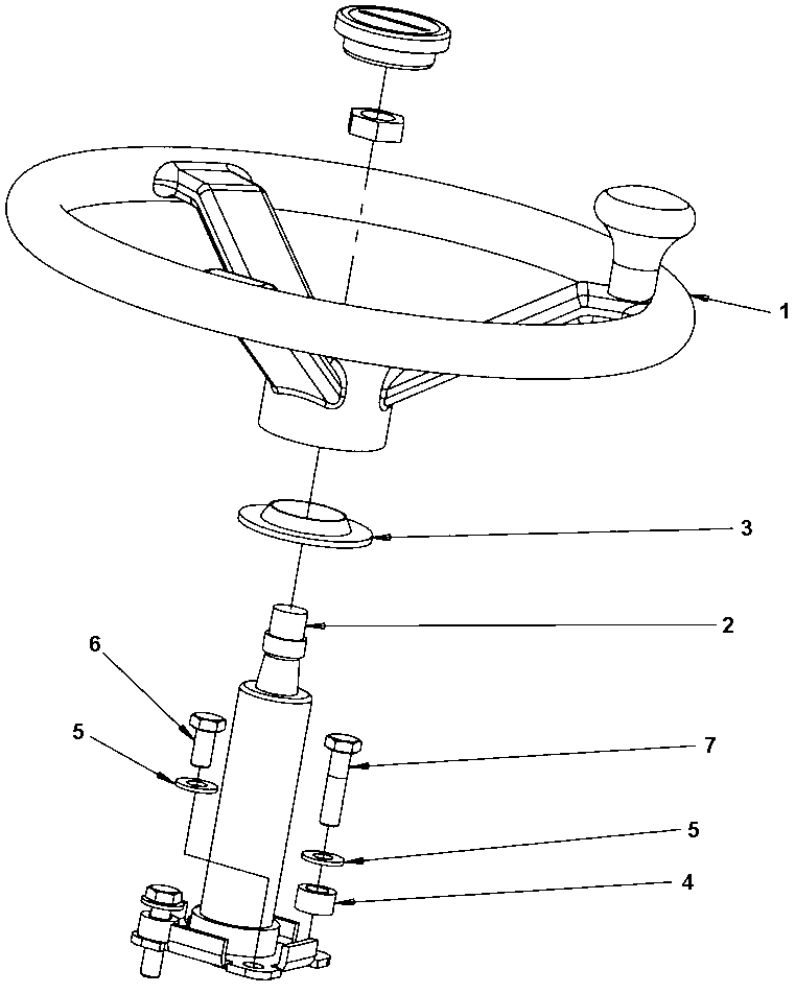

Item	Part No.	Name	Qty	L	SN INFO
1	4700372964	Steering wheel	1		
1	4700935614	Turning knob	1		
1	4700935613	Cover	1		
2	4700902123	Steering column	1	A	
3	4700928830	Rubber part	1		
4	4700355869	Spacer sleeve	2		
5	4700904230	Plain washer 10.5x22x2 mm	4		
6	4700500048	Screw, M10x20 mm 8.8 A3K	2		
7	4700500031	Screw M10x40	2		

Comments for Page: Steering wheel

(L)OCAL REMARKS

A | en_US | Cap/Nut supplied with steering wheel/column only.

Drivers platform Control module

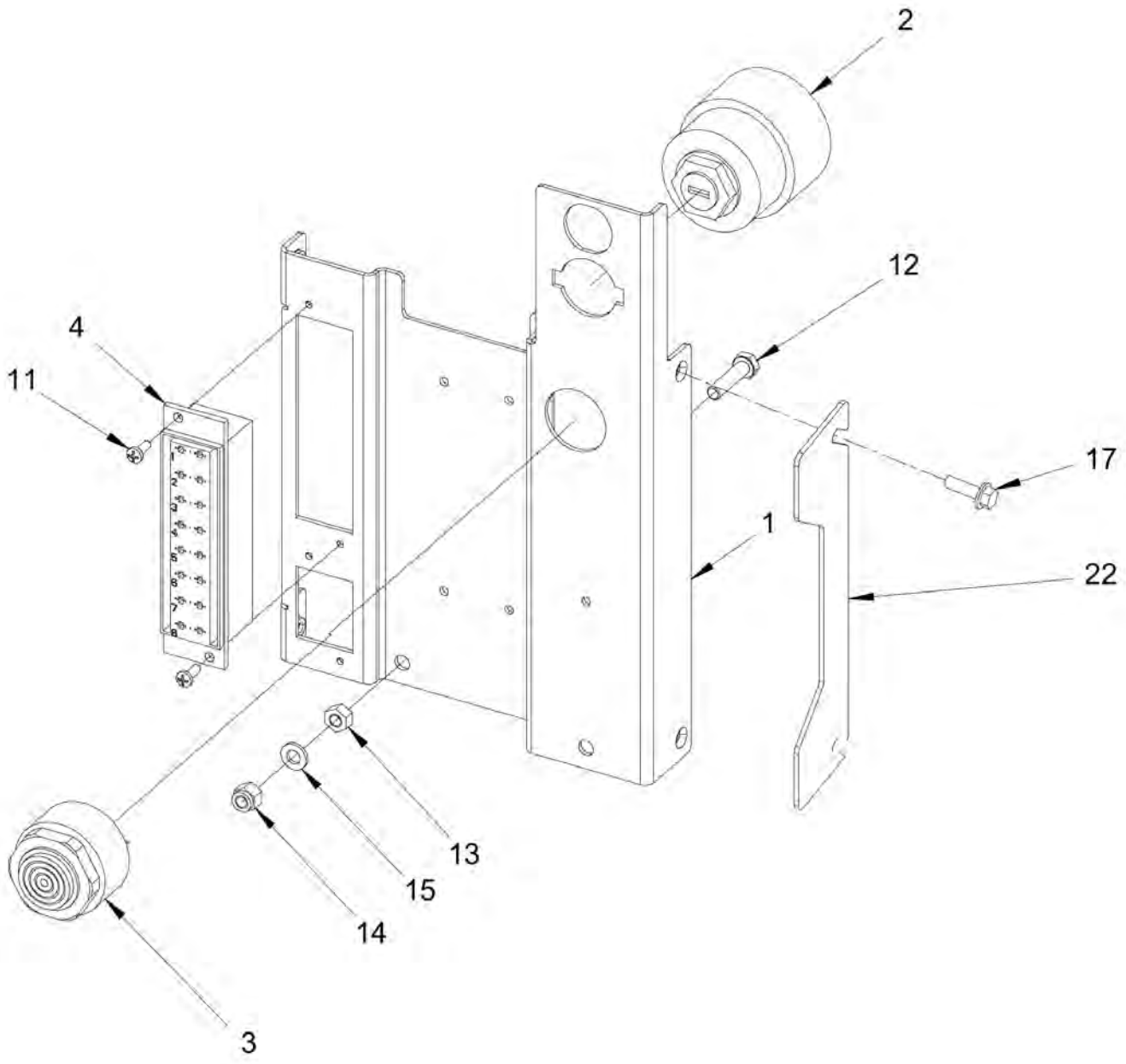

Item	Part No.	Name	Qty	L	SN INFO
1	4700387683	Distribution control plate	1		
2	4700238158	Ignition switch	1		To A016518 (excl. 16459-16464)
2	4812110901	Ignition switch	1		From A016519 (incl. 16459-16464)
2	4700940451	Ignition key	1		
3	4700385599	Buzzer	1		
4	4700791185	Fuse box	1		
5	4700792091	Fuse holder	1	B	
6	4700791211	Contact bridge	2		
11	4700901767	Screw	4		
12	4700500075	Screw, M6-1,0x25 mm 8.8	1		
13	4700570004	Hexagon nut M6	1		
14	4700586002	Lock nut M6 -8	1		
15	4700904228	Washer 6,4x12x1,5	1		
17	4812117868	Screw M05x16	4		
18	4700903741	Fuse 20A Yellow	1		
19	4700901227	Fuse 10A Red	2		
20	4700901228	Fuse, 15A Blue	2		
21	4700901225	Fuse 5A Tan	1		
22	4812117864	Shim	2		

Comments for Page: Control module

(L)OCAL REMARKS

A | en_US | L = 0,07 m

B | en_US | Available on Combi rollers and tandem rollers equipped with flow divider (option) only.

Standard ECU To xA019966 Standard ECU module

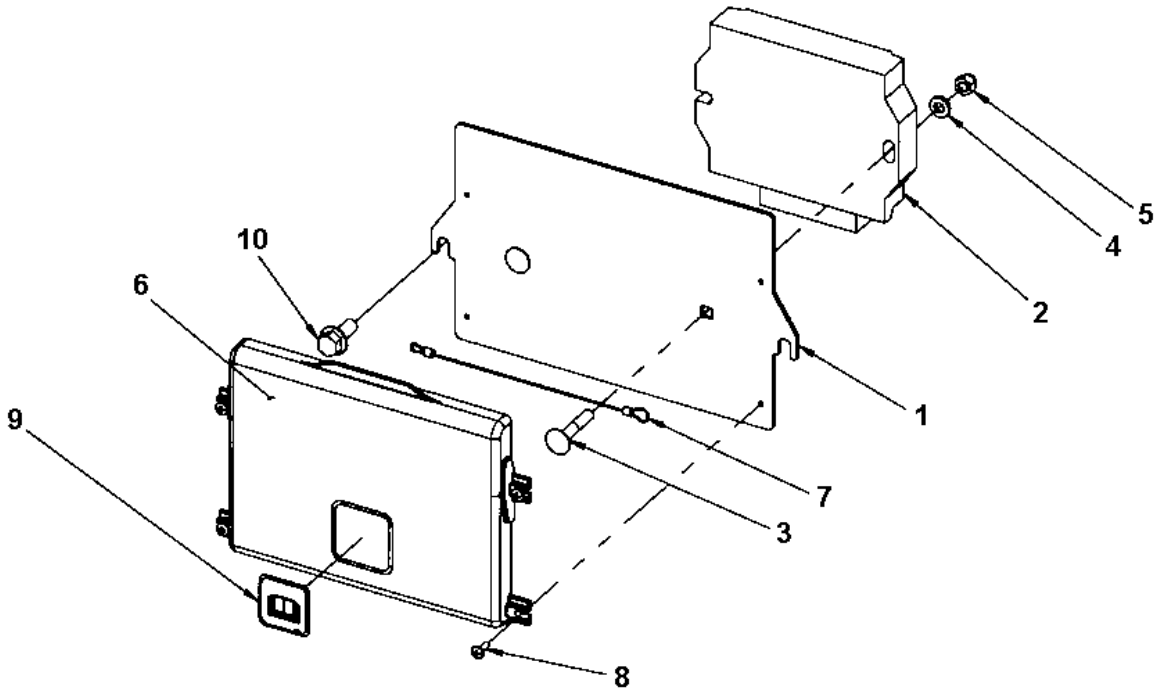

Item	Part No.	Name	Qty	L	SN INFO
1	4700388447	Cover	1		
2	4812114386	Control unit, ECU	1		
3	4700791775	Bolt	2		
4	4700904556	Steel plain washer 8,4x16x3,0	2		
5	4700586003	Lock nut M8	2		
6	4700383705	Instruction manual box	1		
7	4700357643	Wire	1		
8	4700791226	Screw	4		
9	4700903425	Safety decal "READ SAFETY INSTRUCTIONS"	1		
10	4700500505	Screw, M8x20 mm 8.8 A2K	2		

Standard ECU From xA019967 ECU

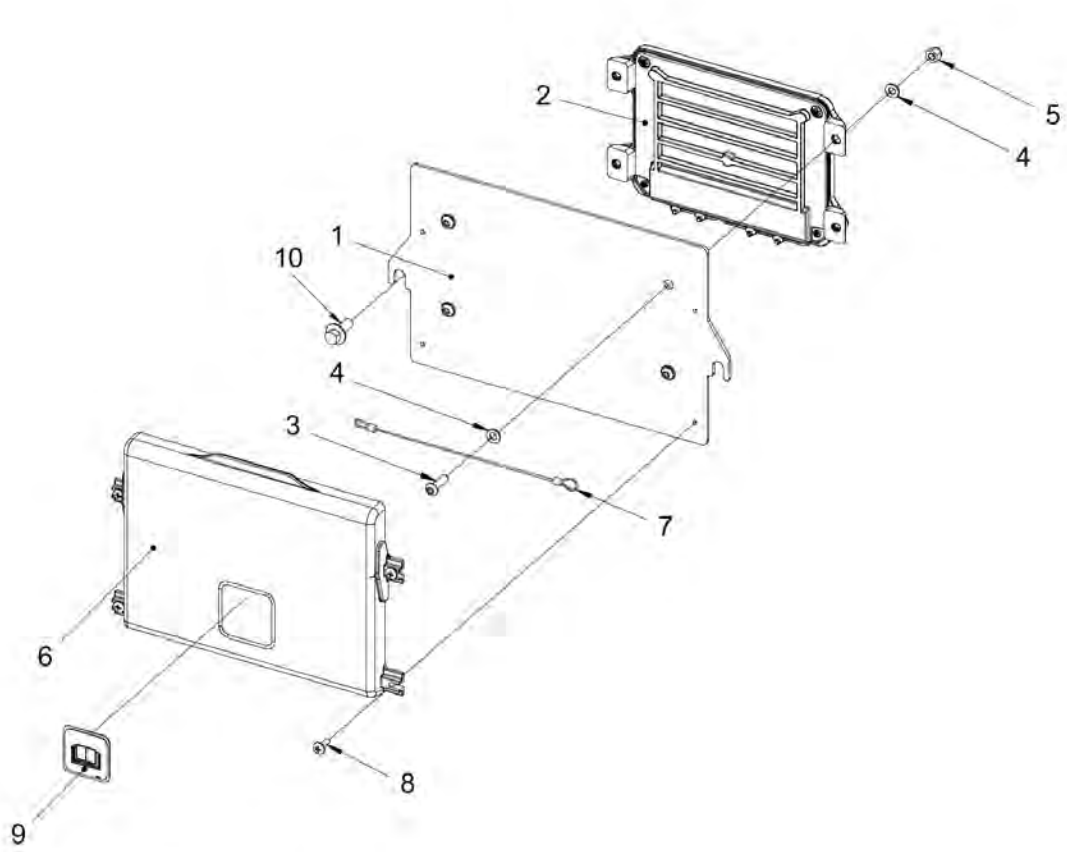

Item	Part No.	Name	Qty	L	SN INFO
1	4812126298	Cover plate	1		
2	4812125677	Control unit, ECU	1		
3	4700791524	Screw, M6 x 20 mm A2-70	4		
4	4700904228	Washer 6,4x12x1,5	8		
5	4700586002	Lock nut M6 -8	4		
6	4700383705	Instruction manual box	1		
7	4700357643	Wire	1		
8	4700791226	Screw	4		
9	4700903425	Safety decal "READ SAFETY INSTRUCTIONS"	1		
10	4700500505	Screw, M8x20 mm 8.8 A2K	2		

Forward-Reverse control module To A014358 Forward-Reverse control module

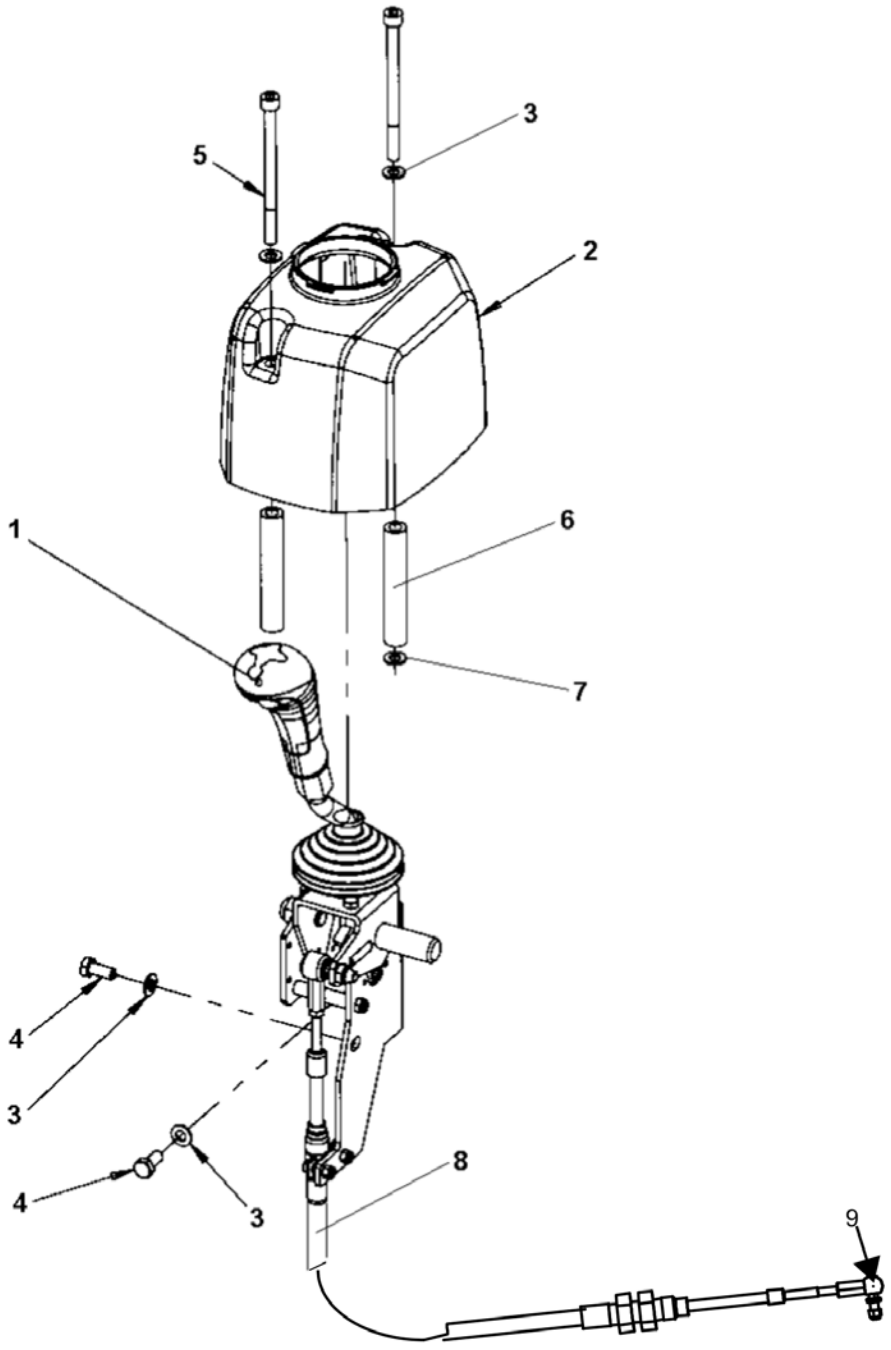

Item	Part No.	Name	Qty	L	SN INFO
1	4812113676	Forward and reverse control handle	1		
2	4812111128	Casing	1		
3	4700904229	Washer, 8.4x 6x1.5 mm 300HV	5		
4	4700508092	Screw	3		
5	4700500180	Hex. screw	2		
6	4812113523	Spacer sleeve	2		
7	4700904044	Lock washer	2		
8	4812156577	Cable	1	A	
9	4700416034	Universal joint, M6	1		

Comments for Page: Forward-Reverse control module

(L)OCAL REMARKS

A | L = 2,80 m

Forward-Reverse control module To A014358 4812113676 Forward and reverse control handle

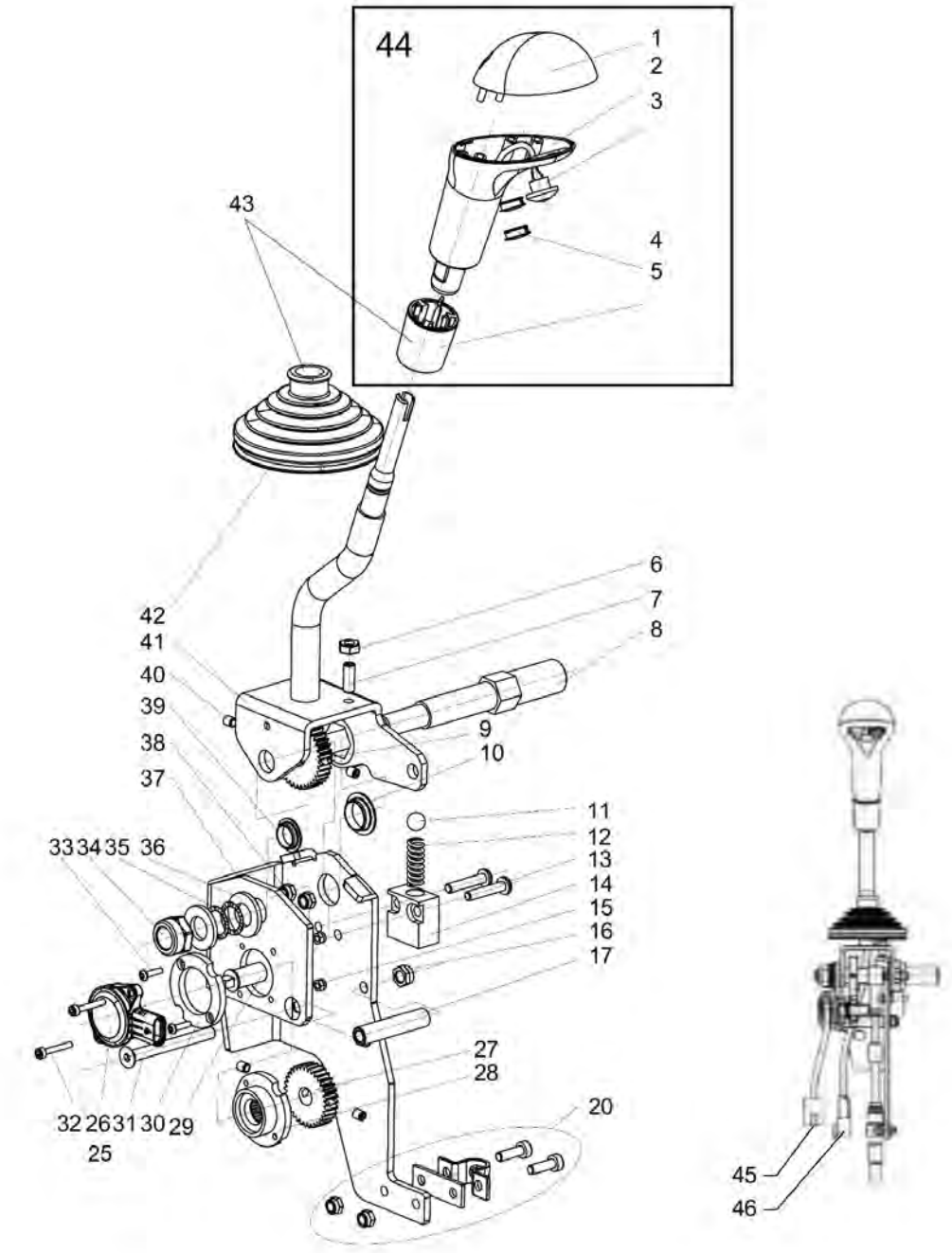

Item	Part No.	Name	Qty	L	SN INFO
0	4812113676	Forward and reverse control handle	1		
1	4812156558	Handle top	1		
2	4812156559	Handle	1		
3	4812156560	Push button switch with cable	1		
4	4812156561	Protection plug	2		
5	4812156562	Sleeve (knob)	1		
6	4812159290	Nut M5	2		
7	4812159291	Screw M5	2		
8	4812156563	Central shaft	1		
9	4812156564	Gear	1		
10	4812158258	Bushing	1		
11	4812156565	Sphere	1		
12	4812156566	Spring	1		
13	-	Screw M5	2		
14	4812156567	Spring house	1		
15	-	Lock nut M3	4		
16	-	Lock nut M6	1		
17	4812156568	Spacer	1		
20	4700902189	Bracket	1		
25	4812160381	Cable	1	A	
26	4812156490	Potentiometer	1		
27	4812156569	Gear	1		
28	4812156570	Internal spacer	1		
29	4812156571	Shaft	1		
30	4812156572	External spacer	1		
31	4812159197	Screw M6	1		
32	4812159198	Screw M3	2		
33	4812159199	Screw M3	2		
34	4812159251	Lock nut M12	2		
35	4812156573	Sealing	2		
36	4812158260	Washer	2		
37	4812156574	Bracket	1		
38	-	Lock nut M5	2		
39	4812158259	Bushing	1		
40	4812159292	Screw M5	4		
41	4812156575	Lever	1		
42	4812156576	Bellow	1		
43	4812157556	Bellows kit	1		

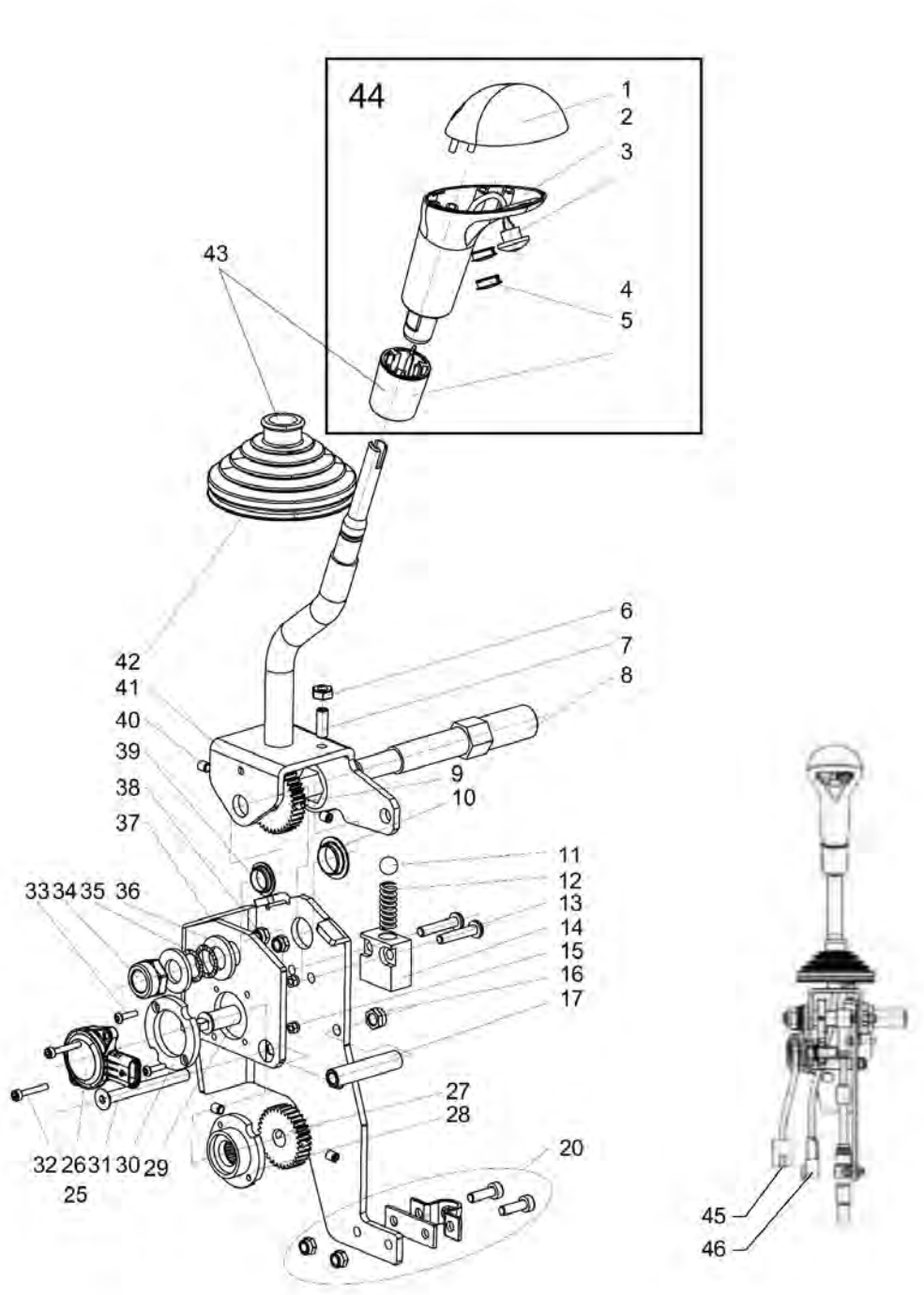
44
1
2
3
4
5
43
42
41
40
39
38
37
6
7
8
9
10
11
12
13
14
15
16
17
33 34 35 36
27
28
20
32 26 31 30 29
25
45
46

Item	Part No.	Name	Qty	L	SN INFO
43_05	4812156562	Sleeve (knob)	1		
43_42	4812156576	Bellow	1		
44	4812158267	Handle top + Button kit	1		
44	4812156558	Handle top	1		
44	4812156559	Handle	1		
44	4812156560	Push button switch with cable	1		
44	4812156561	Protection plug	2		
44	4812156562	Sleeve (knob)	1		
45	4812160593	Connector, 3-poles	1		
46	4812160594	Connector, 2-poles	1		

Comments for Page: 4812113676 Forward and reverse control handle

(L)OCAL REMARKS

A | L = 0,13 m

Forward-Reverse control module To A014358 Forward-reverse control left (option)

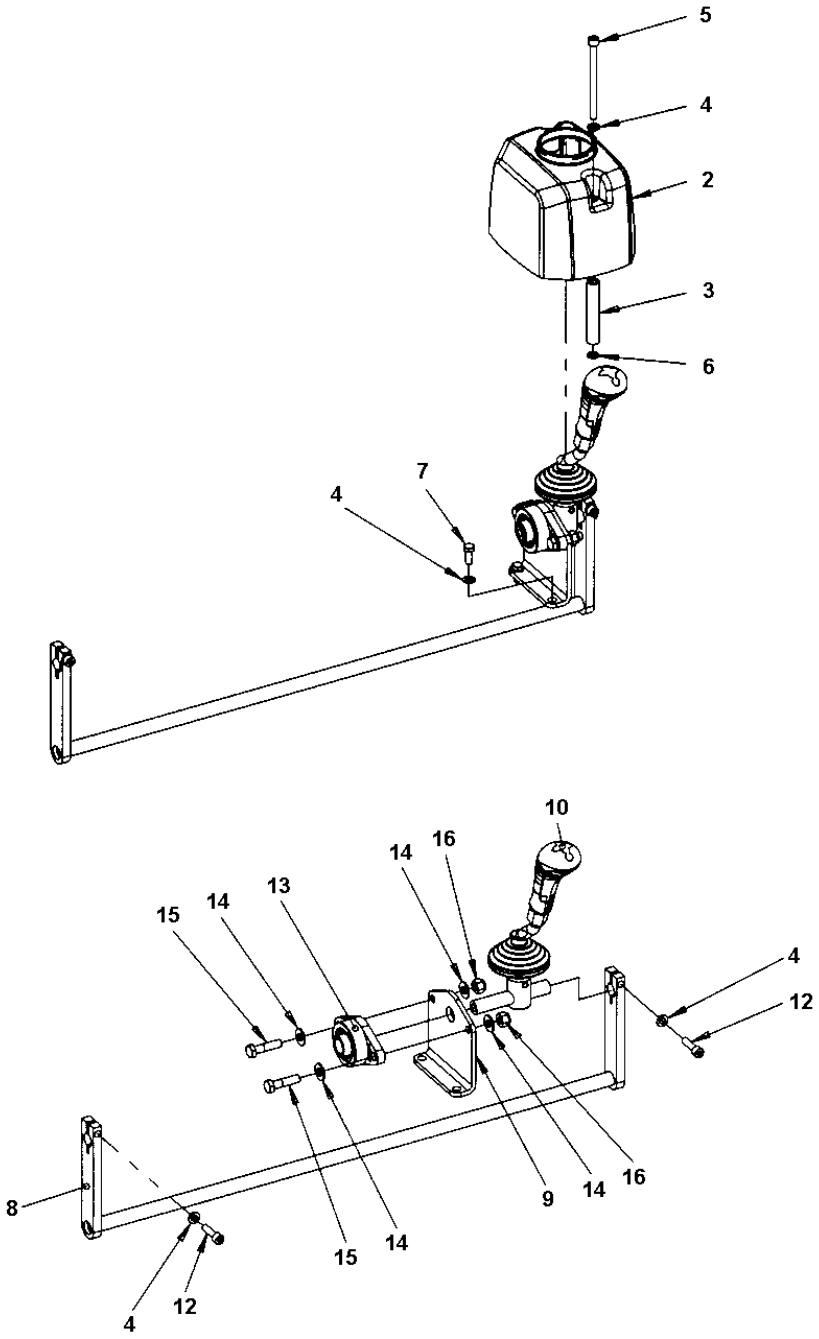

Item	Part No.	Name	Qty	L	SN INFO
2	4812111128	Casing	1		
3	4812113523	Spacer sleeve	1		
4	4700904229	Washer, 8.4x 6x1.5 mm 300HV	6		
5	4700500180	Hex. screw	2		
6	4700904044	Lock washer	2		
7	4700500053	Screw, M8x20 mm 8.8 A2K	2		
8	4812112014	Connection link	1		
9	4812112013	Bracket	1		
10	4812113677	Forward-reverse control	1		
12	4700508048	Hexagon socket head cap screw M	2		
13	4700791926	Y-bearing unit	1		
14	4700904230	Plain washer 10.5x22x2 mm	4		
15	4700500031	Screw M10x40	2		
16	4700586018	Lock nut M10	2		

Forward-Reverse control module To A014358 Cover plate, Dual F&R-control left side

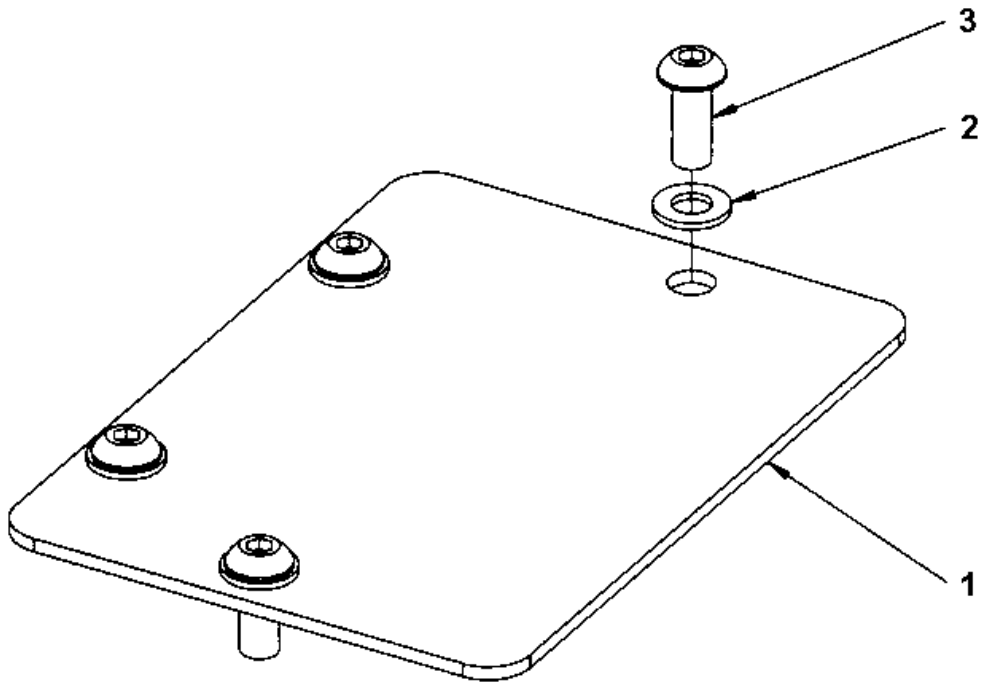

Item	Part No.	Name	Qty	L	SN INFO
1	4812113987	Cover plate	1		
2	4700904229	Washer, 8.4x 6x1.5 mm 300HV	4		
3	4700791333	Screw, M8 x 20 mm A2-70	4		

Forward-Reverse control module From A014359 - A015764 Forward-reverse control, Right side, single

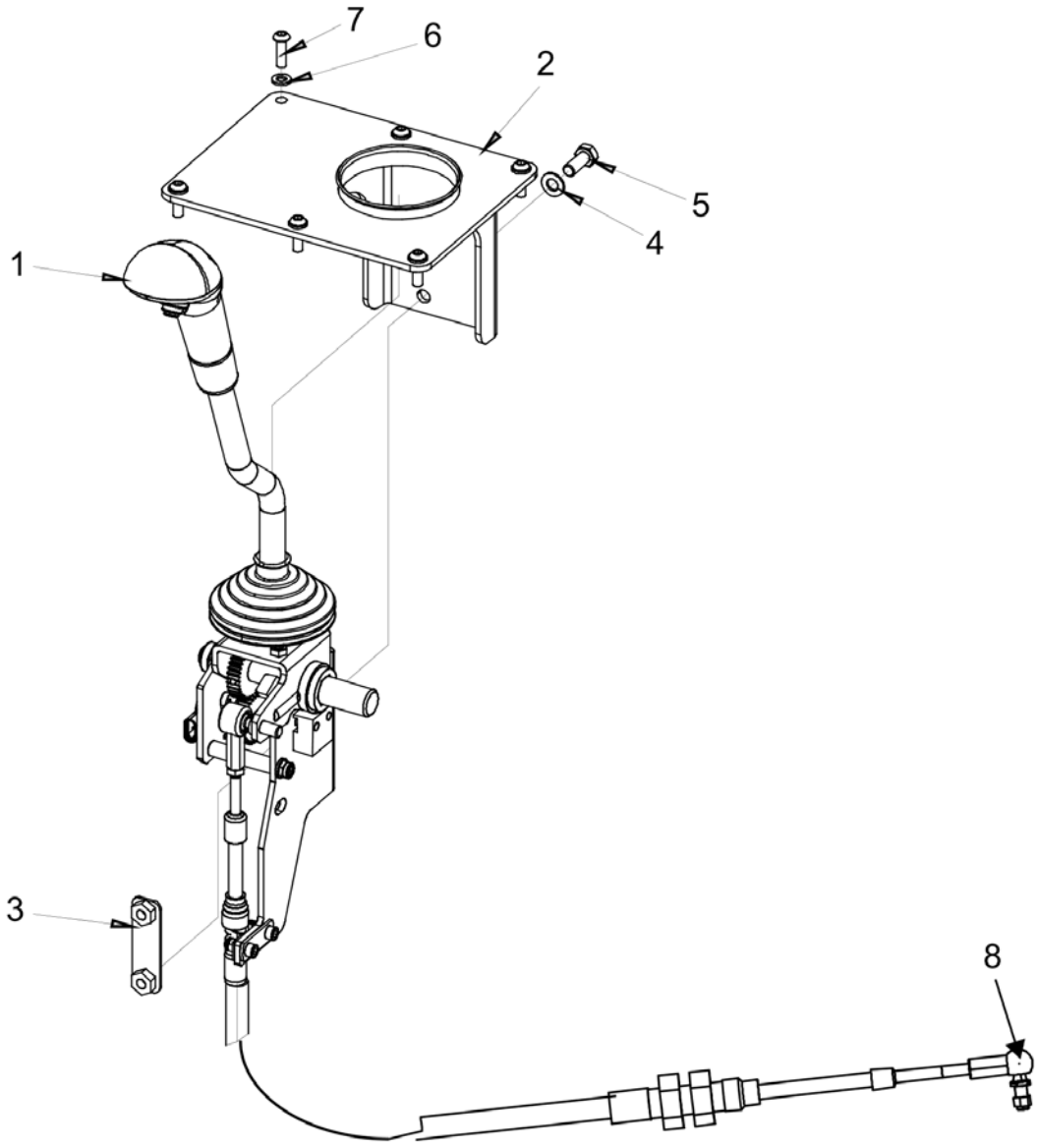

Item	Part No.	Name	Qty	L	SN INFO
1	4812121384	Forward and reverse control handle	1		
2	4812121386	Bracket	1		
3	4812117990	Bracket	1		
4	4700904229	Washer, 8.4x 6x1.5 mm 300HV	2		
5	4700500053	Screw, M8x20 mm 8.8 A2K	2		
6	4700904228	Washer 6,4x12x1,5	6		
7	4700791524	Screw, M6 x 20 mm A2-70	6		
8	4812156577	Cable	1		
8	4700416034	Universal joint, M6	1	A	
8	4812160389	Universal joint, M8	1	B	

Comments for Page: Forward-reverse control, Right side, single

(L)OCAL REMARKS

A | For "PLUS"-versions only.

B | For "CC"-versions only.

Forward-Reverse control module From A014359 - A015764 4812121384 Forward & Reverse control

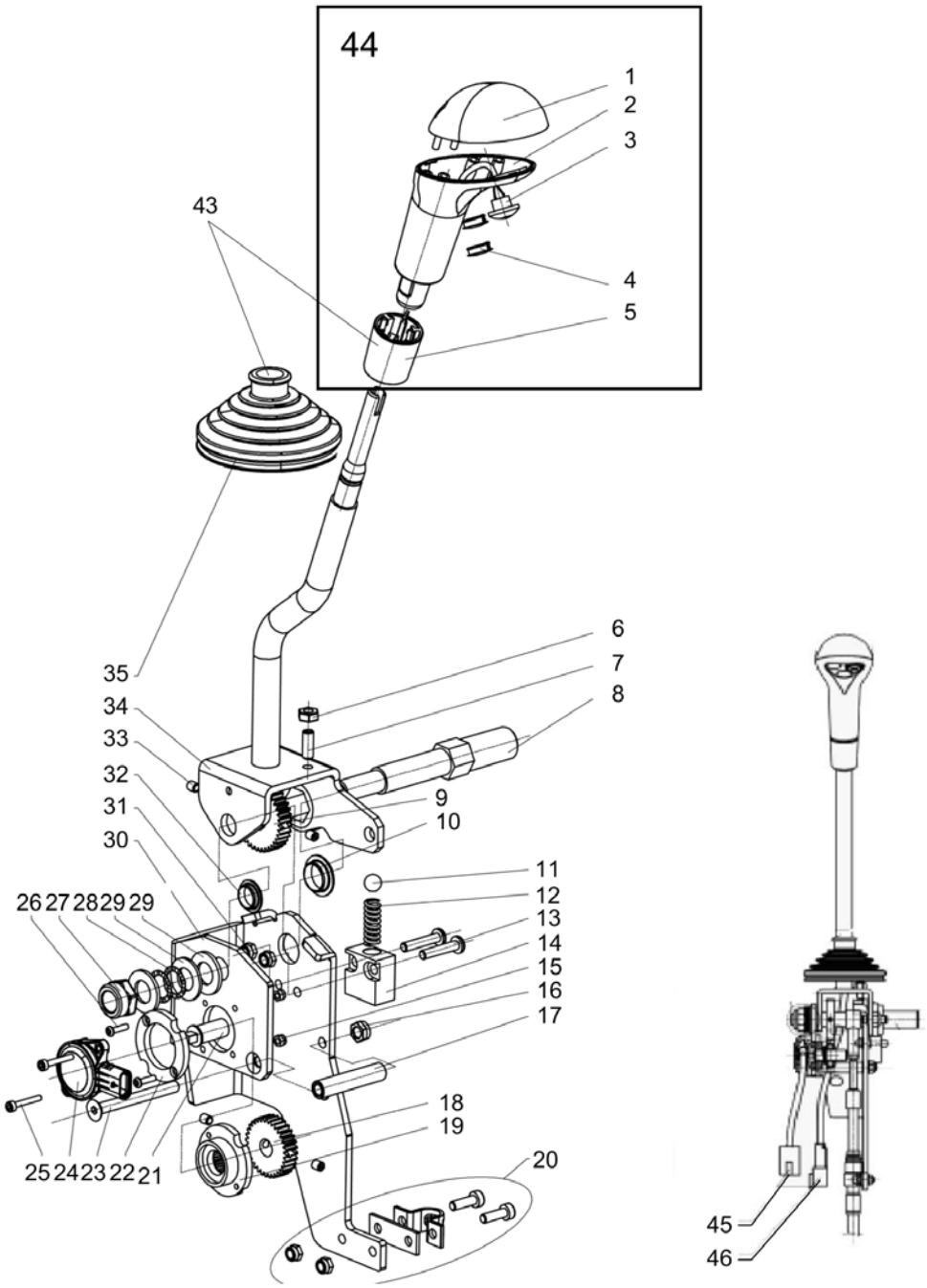

Item	Part No.	Name	Qty	L	SN INFO
1	4812156558	Handle top	1		
2	4812156559	Handle	1		
3	4812156560	Push button switch with cable	1		
4	4812156561	Protection plug	2		
5	4812156562	Sleeve (knob)	1		
6	4812159290	Nut M5	2		
7	4812159291	Screw M5	2		
8	4812156563	Central shaft	1		
9	4812156564	Gear	1		
10	4812158258	Bushing	1		
11	4812156565	Sphere	1		
12	4812156566	Spring	1		
13	4812160082	Screw M5	2		
14	4812160379	Spring house	1		
15	4812160083	Nut M3	1		
16	4812160084	Nut M6	1		
17	4812156568	Spacer	1		
18	4812156569	Gear	1		
19	4812156570	Internal spacer	1		
20	4700902189	Bracket	1		
21	4812156571	Shaft	1		
22	4812156572	External spacer	1		
23	4812159197	Screw M6	1		
24	4812156490	Potentiometer	1		
25	4812159198	Screw M3	2		
26	4812159199	Screw M3	2		
27	4812159251	Lock nut M12	1		
28	4812156573	Sealing	2		
29	4812158260	Washer	2		
30	4812156574	Bracket	1		
31	4812160087	Nut M5	2		
32	4812158259	Bushing	1		
33	4812160380	Screw M5	4		
34	4812160263	Lever	1		
35	4812156576	Bellow	1		
36	4812160381	Cable	1		
43	4812157556	Bellows kit	1		
43	4812156562	Sleeve (knob)	1		

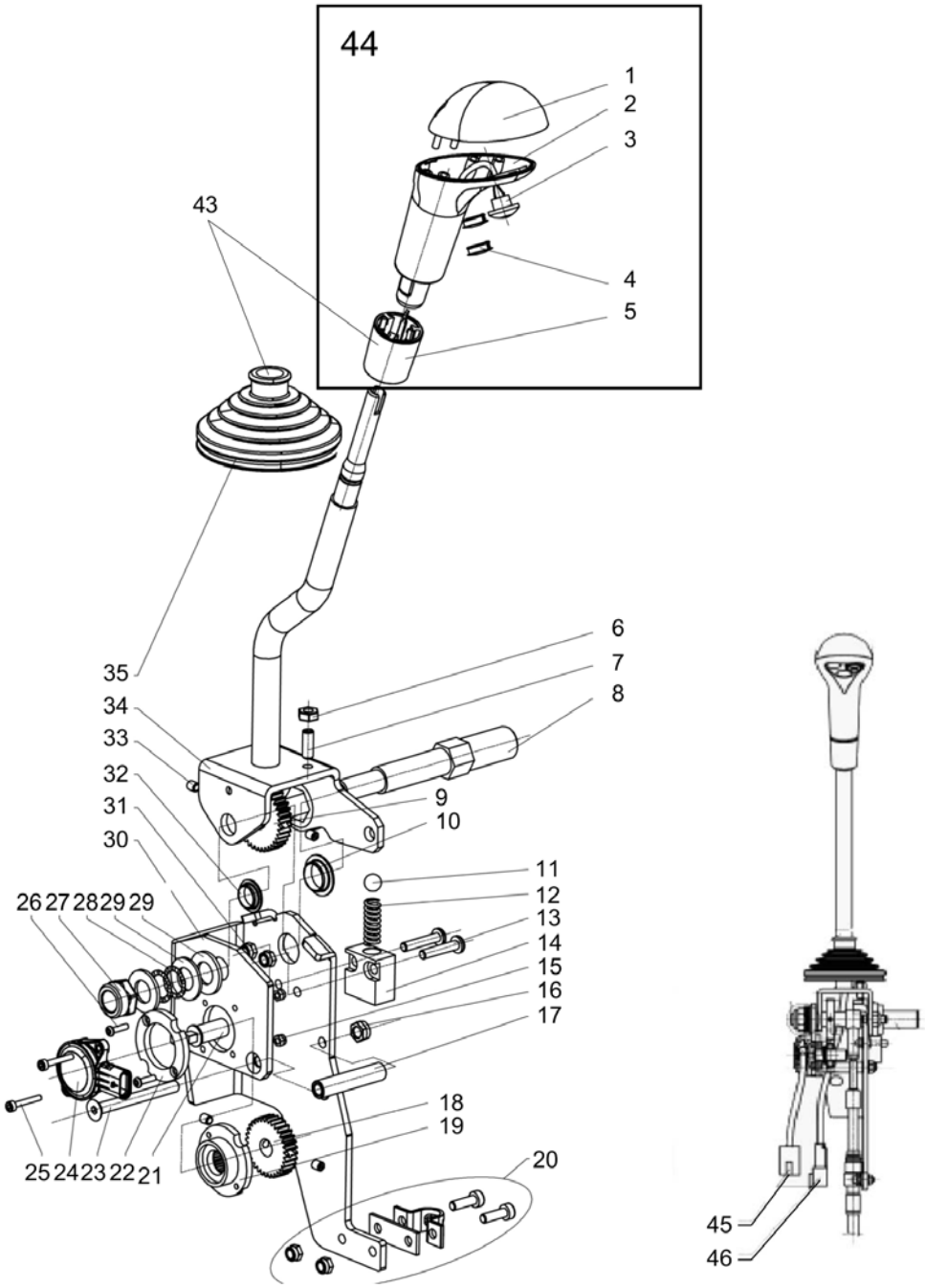
44
1
2
3
4
5
43
35
34
33
32
31
30
26 27 28 29 29
25 24 23 22 21
6
7
8
9
10
11
12
13
14
15
16
17
18
19
20
45
46

Item	Part No.	Name	Qty	L	SN INFO
43	4812156576	Bellow	1		
44	4812158267	Handle top + Button kit	1		
44	4812156558	Handle top	1		
44	4812156559	Handle	1		
44	4812156560	Push button switch with cable	1		
44	4812156561	Protection plug	2		
44	4812156562	Sleeve (knob)	1		
45	4812160593	Connector, 3-poles	1		
46	4812160594	Connector, 2-poles	1		

Forward-Reverse control module From A014359 - A015764 Cover plate, Dual F&R-control, left side

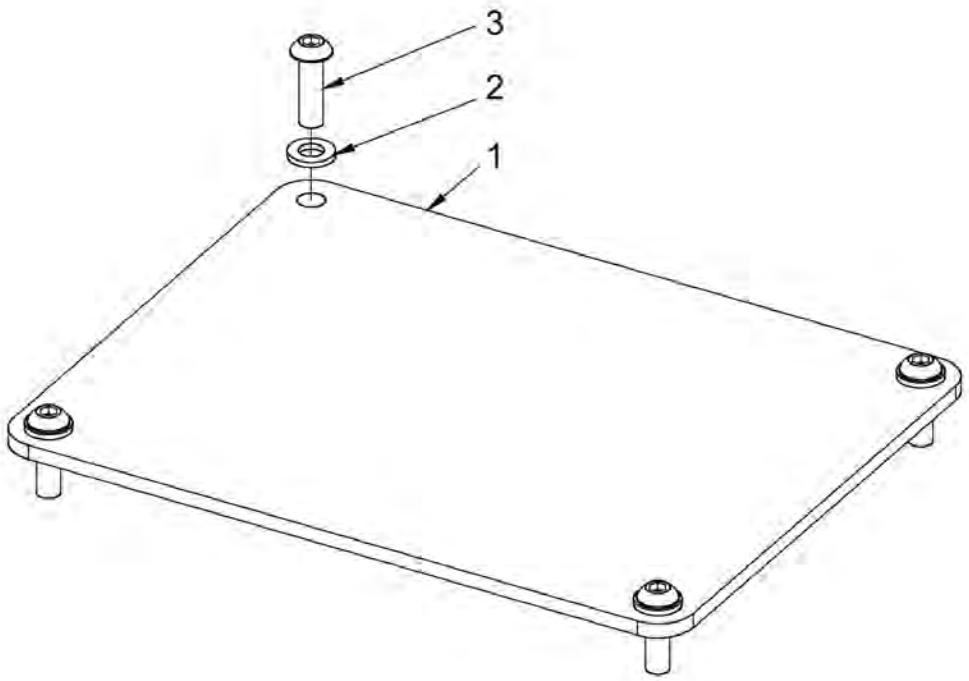

Item	Part No.	Name	Qty	L	SN INFO
1	4812121387	Cover plate	1		
2	4700904228	Washer 6,4x12x1,5	4		
3	4700791524	Screw, M6 x 20 mm A2-70	4		

Forward-Reverse control module From A014359 - A015764 Forward-Reverse Control module, Dual lever (option)

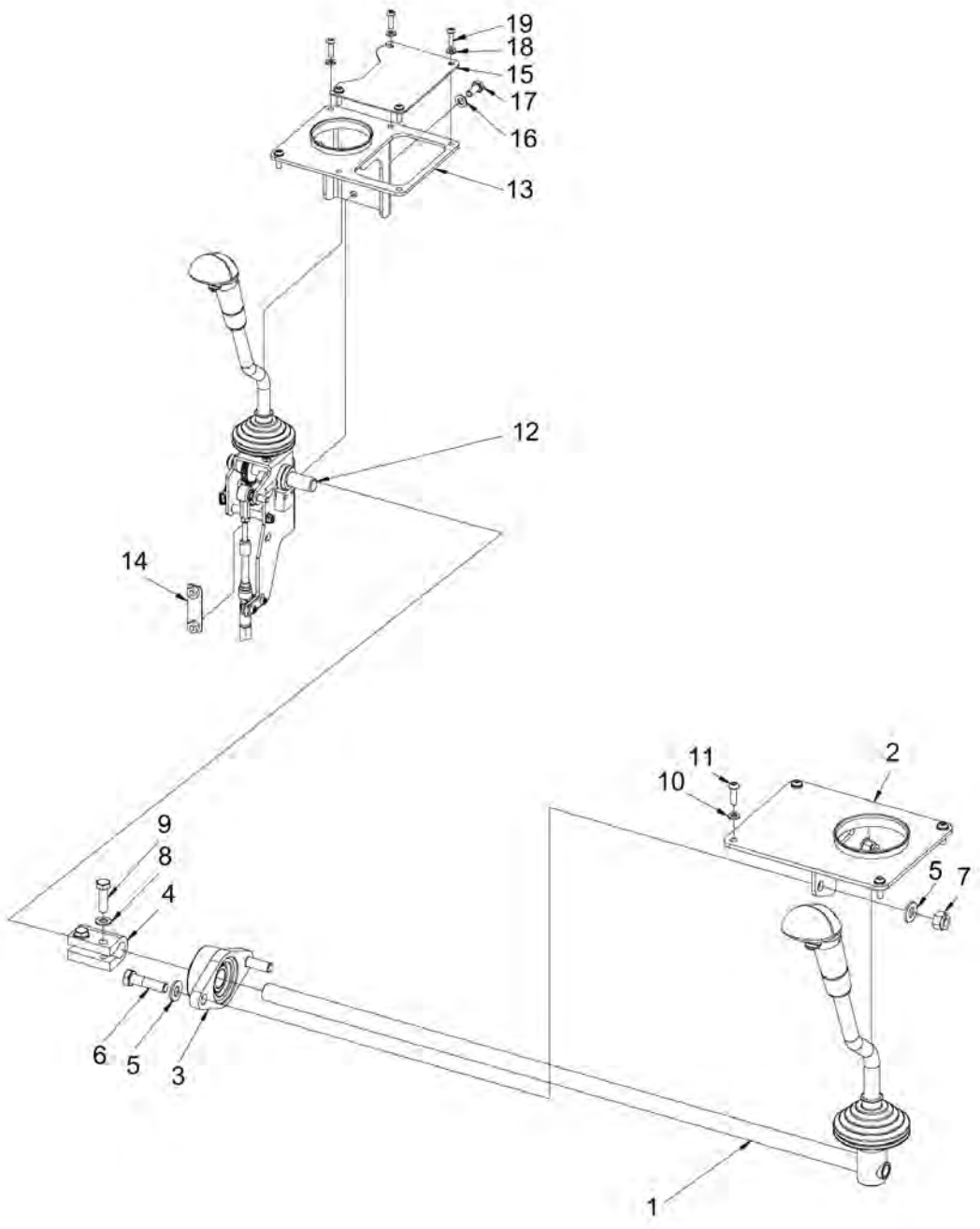

Item	Part No.	Name	Qty	L	SN INFO
1	4812121385	Forward and reverse control handle	1		
2	4812121207	Bracket	1		
3	4700791926	Y-bearing unit	1		
4	4700346420	Coupling	1		
5	4700904230	Plain washer 10.5x22x2 mm	4		
6	4700500031	Screw M10x40	2		
7	4700586018	Lock nut M10	2		
8	4700904229	Washer, 8.4x 6x1.5 mm 300HV	2		
9	4700500022	Screw	2		
10	4700904228	Washer 6,4x12x1,5	4		
11	4700791524	Screw, M6 x 20 mm A2-70	4		
12	4812121384	Forward and reverse control handle	1		
13	4812121206	Bracket	1		
14	4812117990	Bracket	1		
15	4812121379	Cover plate	1		
16	4700904229	Washer, 8.4x 6x1.5 mm 300HV	2		
17	4700500053	Screw, M8x20 mm 8.8 A2K	2		
18	4700904228	Washer 6,4x12x1,5	6		
19	4700791524	Screw, M6 x 20 mm A2-70	6		

Forward-Reverse control module From A015765 Forward-Reverse control module

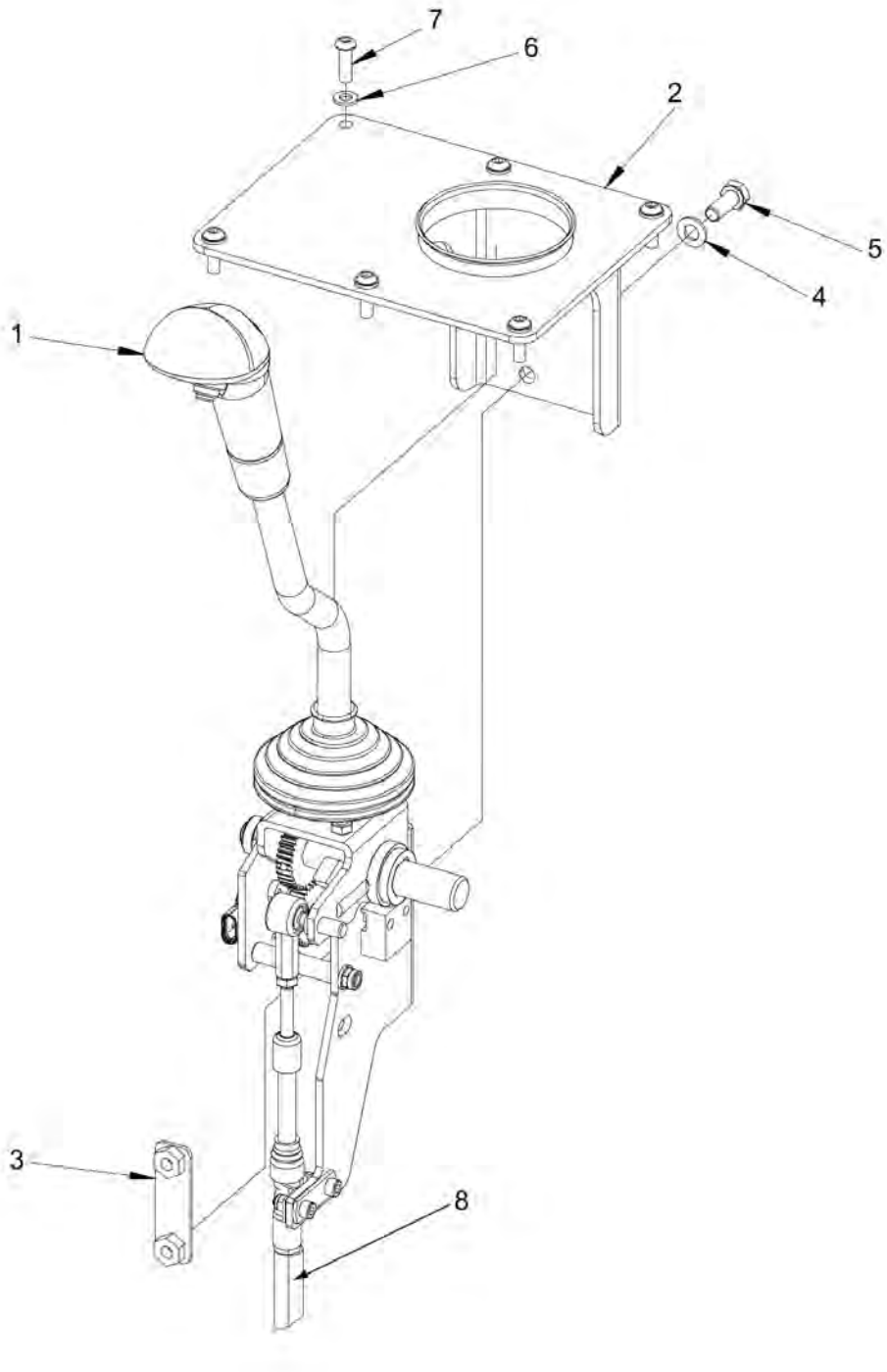

Item	Part No.	Name	Qty	L	SN INFO
1	4812122939	Forward and reverse control handle	1		
2	4812121386	Bracket	1		
3	4812117990	Bracket	1		
4	4700904229	Washer, 8.4x 6x1.5 mm 300HV	2		
5	4700500053	Screw, M8x20 mm 8.8 A2K	2		
6	4700904228	Washer 6,4x12x1,5	6		
7	4700791524	Screw, M6 x 20 mm A2-70	6		
8	4812156577	Cable	1		

Forward-Reverse control module From A015765 4812122939 Forward & Reverse control

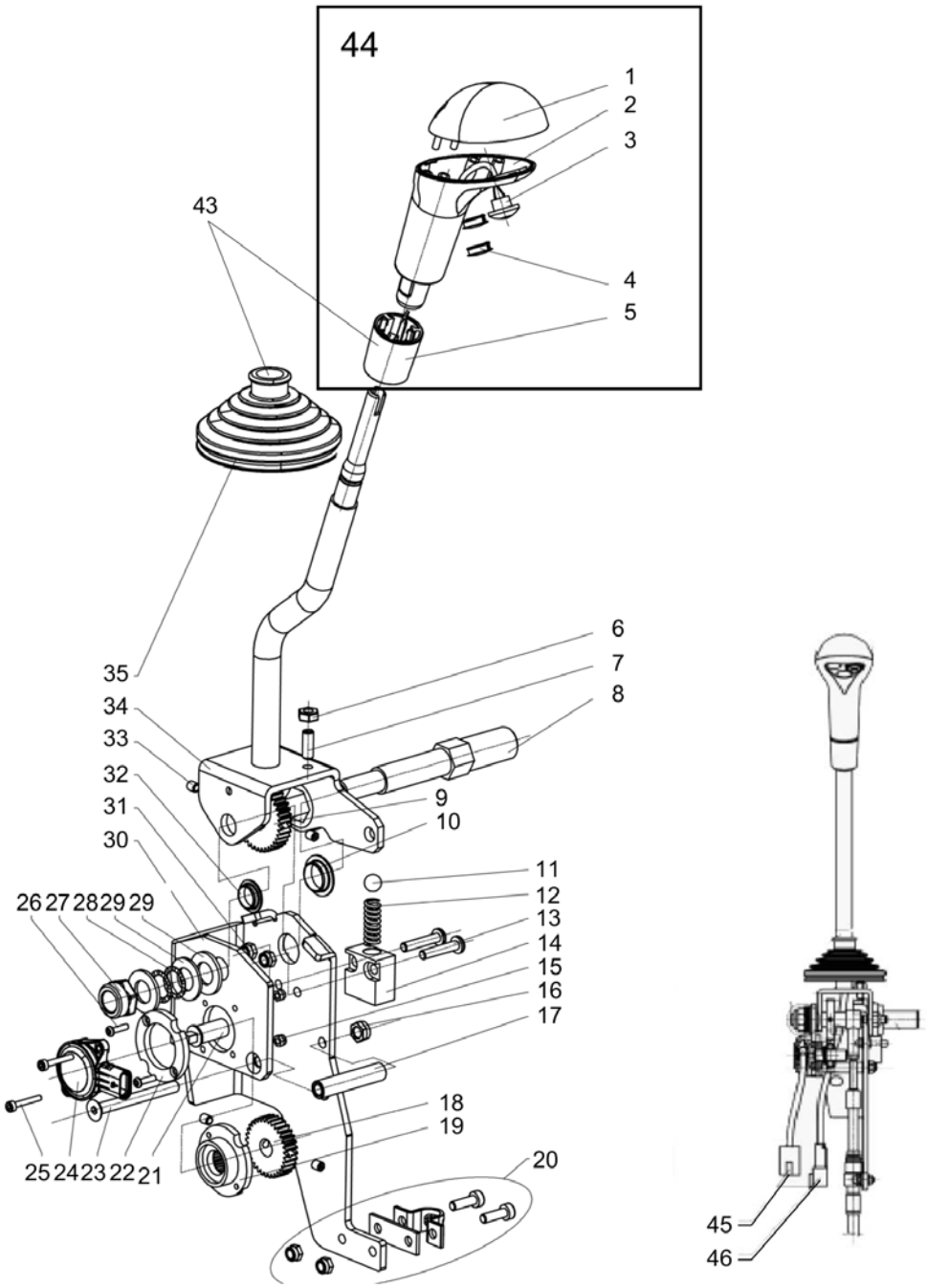

Item	Part No.	Name	Qty	L	SN INFO
1	4812156558	Handle top	1		
2	4812156559	Handle	1		
3	4812156560	Push button switch with cable	1		
4	4812156561	Protection plug	2		
5	4812156562	Sleeve (knob)	1		
6	4812159290	Nut M5	2		
7	4812159291	Screw M5	2		
8	4812156563	Central shaft	1		
9	4812156564	Gear	1		
10	4812158258	Bushing	1		
11	4812156565	Sphere	1		
12	4812156566	Spring	1		
13	4812160082	Screw M5	2		
14	4812160379	Spring house	1		
15	4812160083	Nut M3	1		
16	4812160084	Nut M6	1		
17	4812156568	Spacer	1		
18	4812156569	Gear	1		
19	4812156570	Internal spacer	1		
20	4700902189	Bracket	1		
21	4812156571	Shaft	1		
22	4812156572	External spacer	1		
23	4812159197	Screw M6	1		
24	4812156490	Potentiometer	1		
24	4812160381	Cable	1		
25	4812159198	Screw M3	2		
26	4812159199	Screw M3	2		
27	4812159251	Lock nut M12	1		
28	4812156573	Sealing	2		
29	4812158260	Washer	2		
30	4812156574	Bracket	1		
31	4812160087	Nut M5	2		
32	4812158259	Bushing	1		
33	4812160380	Screw M5	4		
34	4812160263	Lever	1		
35	4812156576	Bellow	1		
43	4812157556	Bellows kit	1		
43	4812156562	Sleeve (knob)	1		

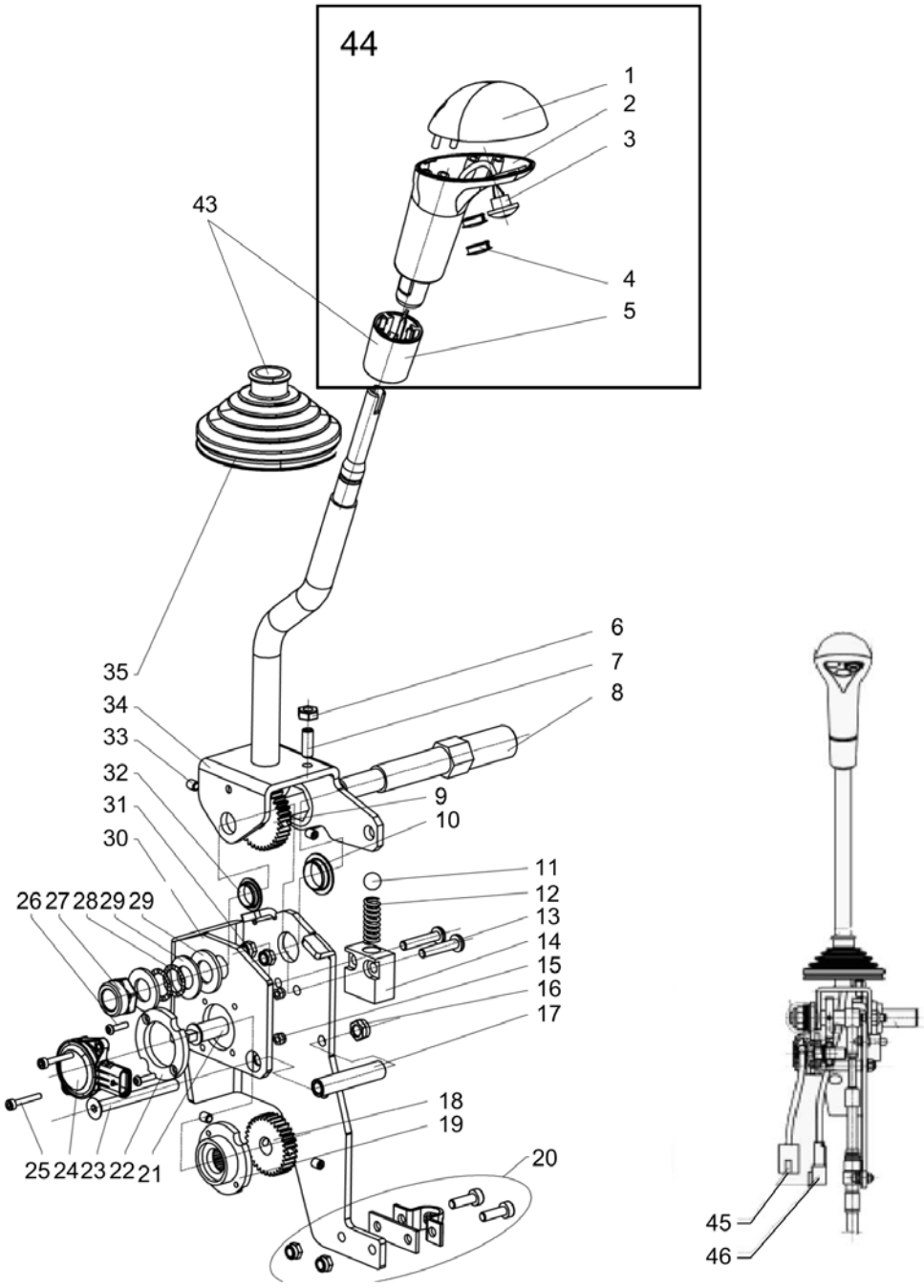
44
1
2
3
4
5
43
35
34
33
32
31
30
26 27 28 29 29
25 24 23 22 21
6
7
8
9
10
11
12
13
14
15
16
17
18
19
20
45
46

Item	Part No.	Name	Qty	L	SN INFO
43	4812156576	Bellow	1		
44	4812158267	Handle top + Button kit	1		
44	4812156558	Handle top	1		
44	4812156559	Handle	1		
44	4812156560	Push button switch with cable	1		
44	4812156561	Protection plug	2		
44	4812156562	Sleeve (knob)	1		
45	4812160593	Connector, 3-poles	1		
46	4812160594	Connector, 2-poles	1		

Forward-Reverse control module From A015765 Forward-Reverse Control module, Dual lever (option)

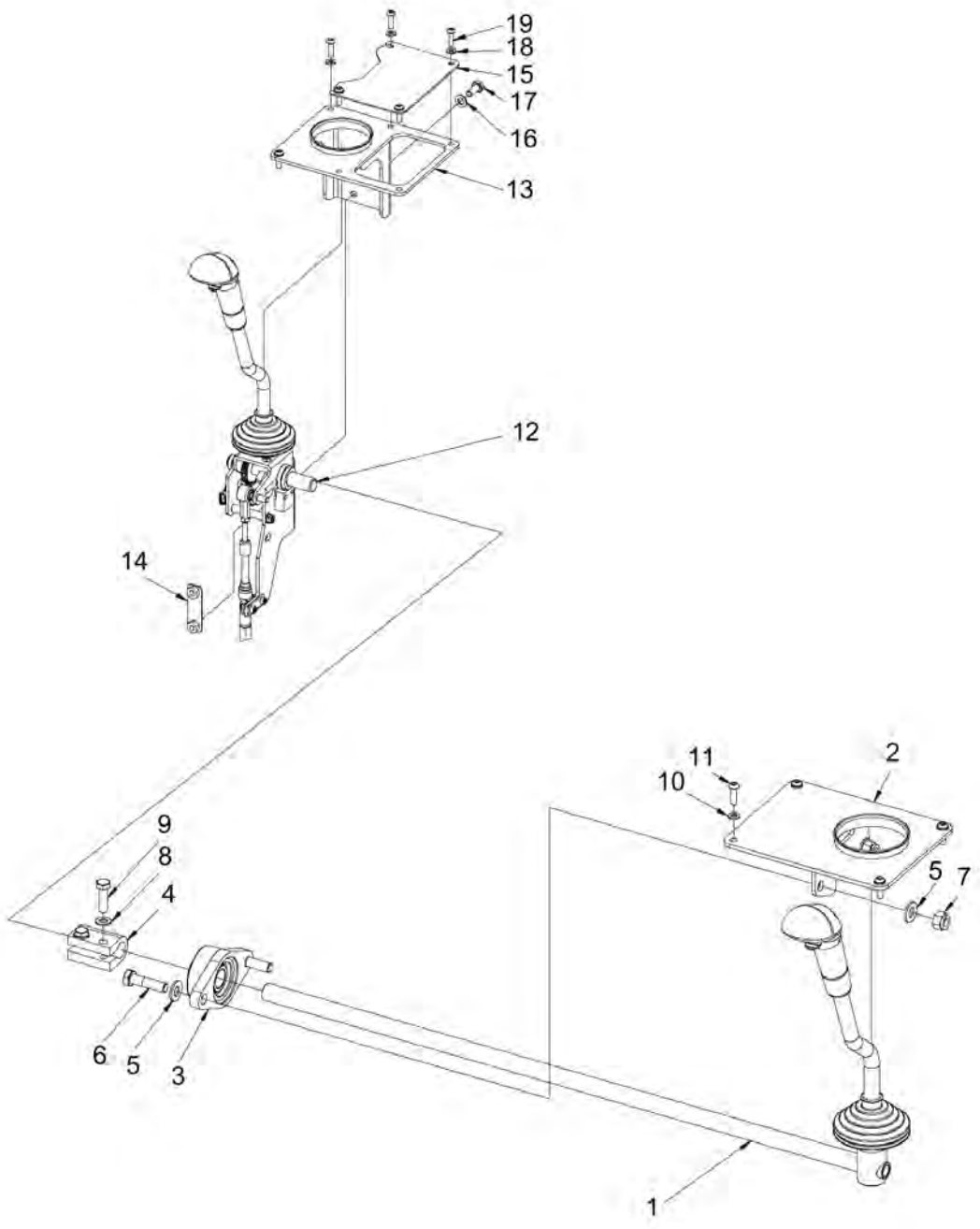

Item	Part No.	Name	Qty	L	SN INFO
1	4812121385	Forward and reverse control handle	1		
2	4812121207	Bracket	1		
3	4700791926	Y-bearing unit	1		
4	4700346420	Coupling	1		
5	4700904230	Plain washer 10.5x22x2 mm	4		
6	4700500031	Screw M10x40	2		
7	4700586018	Lock nut M10	2		
8	4700904229	Washer, 8.4x 6x1.5 mm 300HV	2		
9	4700500022	Screw	2		
10	4700904228	Washer 6,4x12x1,5	4		
11	4700791524	Screw, M6 x 20 mm A2-70	4		
12	4812122939	Forward and reverse control handle	1		
13	4812121206	Bracket	1		
14	4812117990	Bracket	1		
15	4812121379	Cover plate	1		
16	4700904229	Washer, 8.4x 6x1.5 mm 300HV	2		
17	4700500053	Screw, M8x20 mm 8.8 A2K	2		
18	4700904228	Washer 6,4x12x1,5	6		
19	4700791524	Screw, M6 x 20 mm A2-70	6		

Throttle control Throttle control, cpl

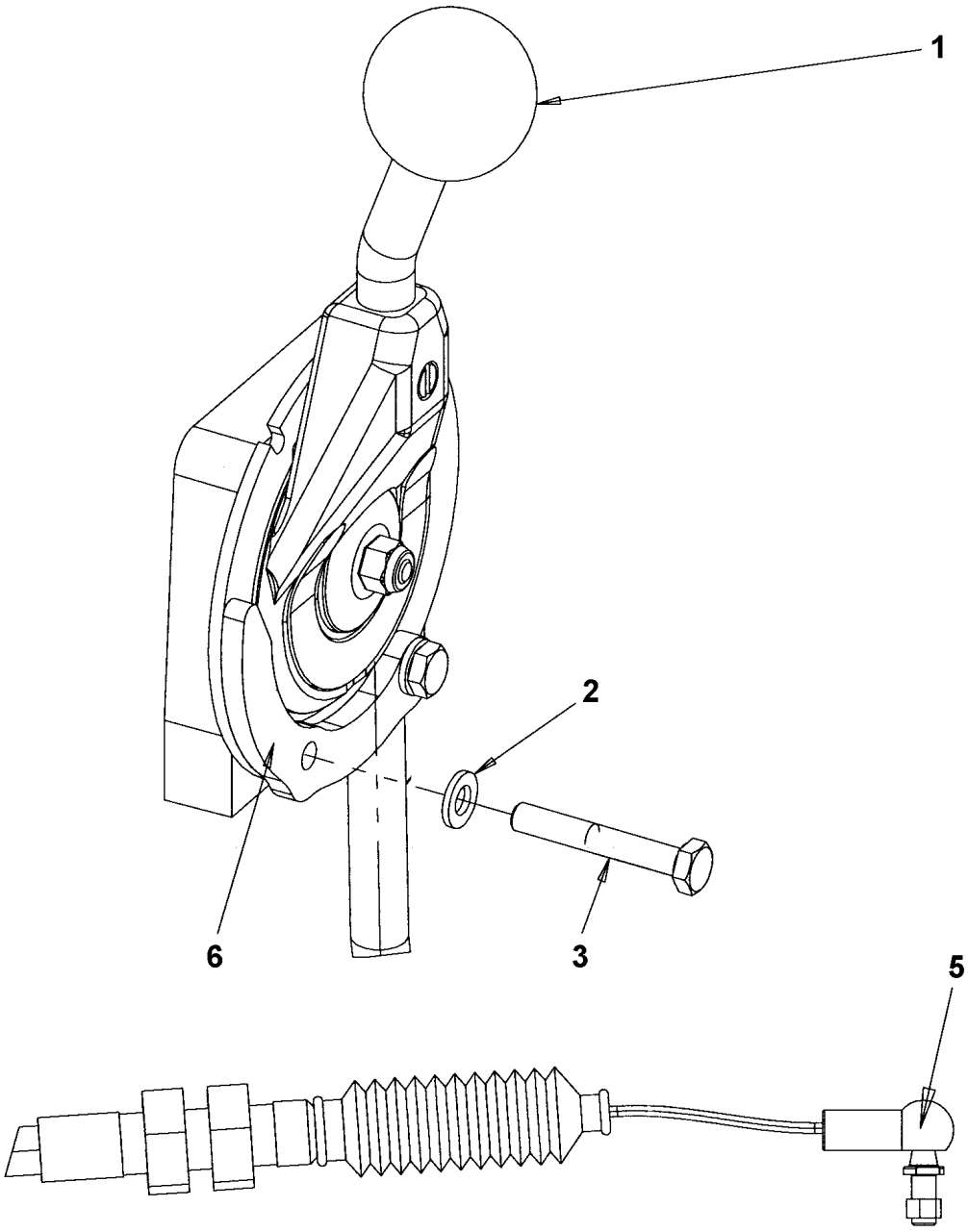

Item	Part No.	Name	Qty	L	SN INFO
1	4812113165	Throttle control	1		
1	4812113164	Cable	1	A	
1	4700389177	Snap plate	1		
1	4700382349	Bellows	1		
1	-	Connection	1		
1	4700396215	Control	1		
2	4700904228	Washer 6,4x12x1,5	2		
3	4700500088	Screw M6x40	2		
5	4700416034	Universal joint, M6	1		
6	4812115865	Stop plate	1		

Comments for Page: Throttle control, cpl

(L)OCAL REMARKS

A | en_US | L = 2,23 m

Throttle control cpl - Dual frequency To A014939 Throttle control cpl, Dual frequency

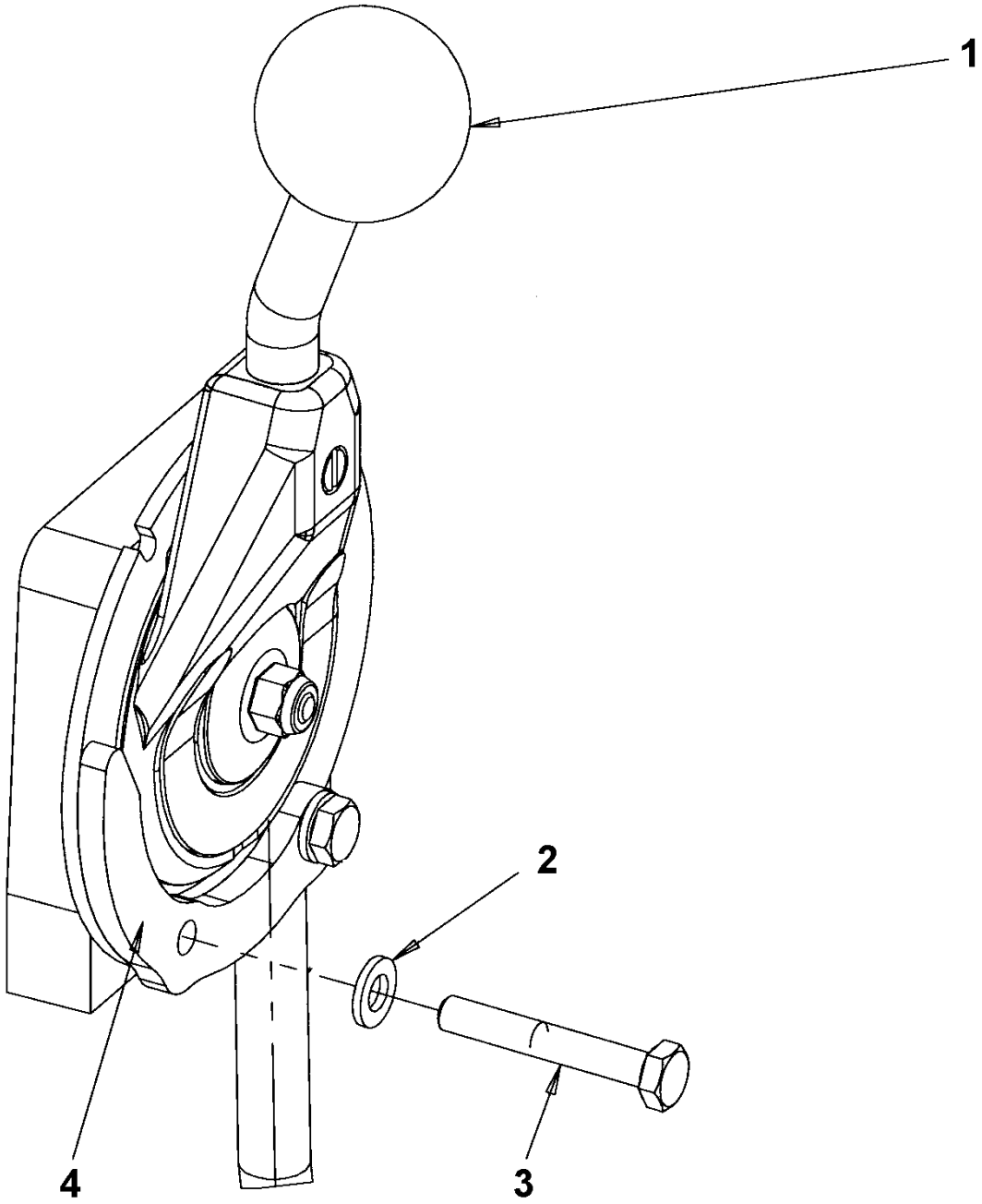

Item	Part No.	Name	Qty	L	SN INFO
1	4812113166	Throttle control	1		
1	4812113164	Cable	1	A	
1	4812113937	Snap plate	1		
1	4700382349	Bellows	1		
1	-	Connection	1		
1	4700396215	Control	1		
2	4700904228	Washer 6,4x12x1,5	2		
3	4700500088	Screw M6x40	2		
4	4812115865	Stop plate	1		

Comments for Page: Throttle control cpl, Dual frequency

(L)OCAL REMARKS

A | en_US | L = 2,23 m

Throttle control cpl - Dual frequency From A014940 Throttle control cpl, Dual frequency (option)

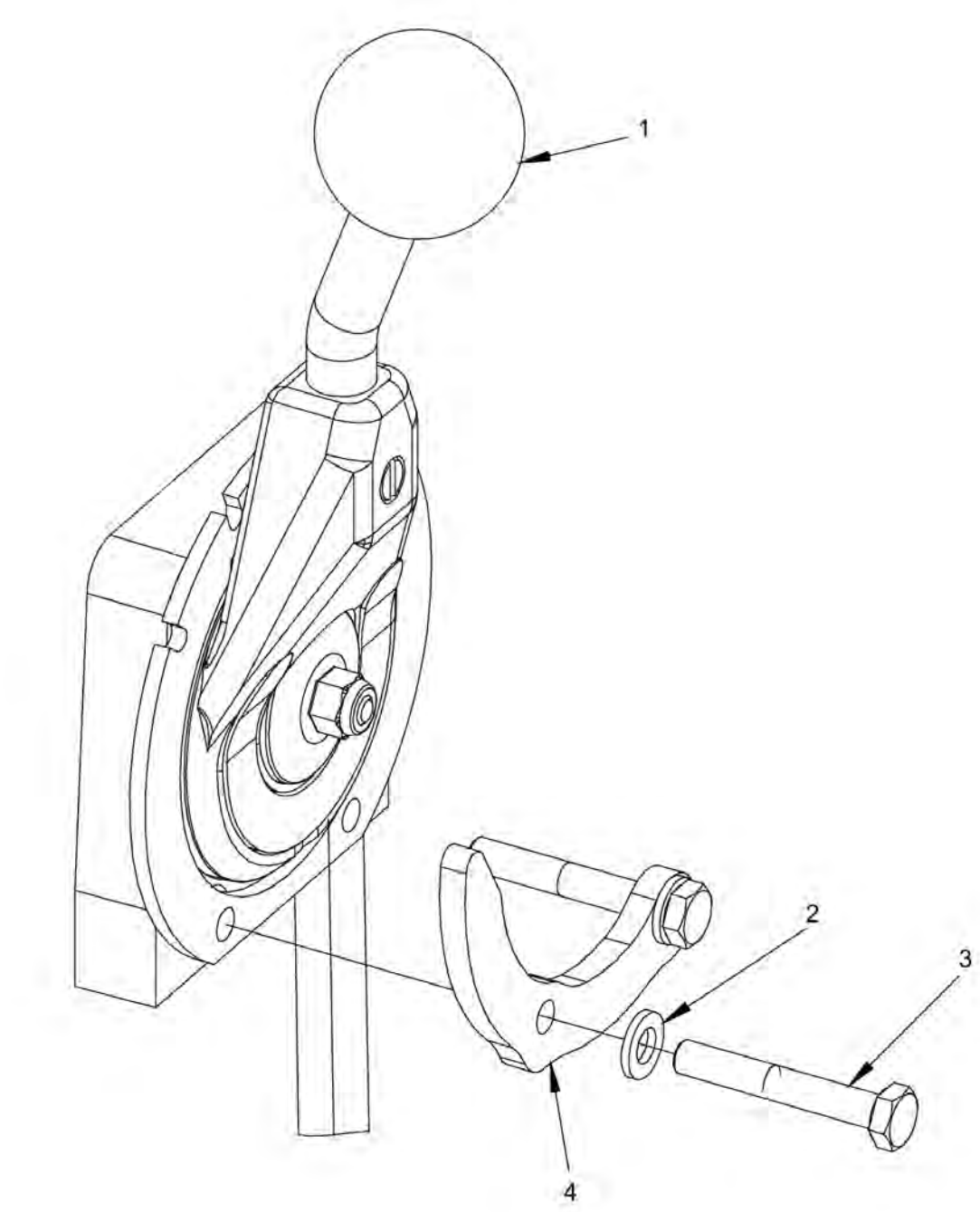

Item	Part No.	Name	Qty	L	SN INFO
1	4812121703	Throttle control	1		
1	4812113164	Cable	1	A	
1	4700389187	Snap plate	1		
1	4700382349	Bellows	1		
1	-	Connection	1		
1	4700396215	Control	1		
2	4700904228	Washer 6,4x12x1,5	2		
3	4700500088	Screw M6x40	2		
4	4812115865	Stop plate	1		

Comments for Page: Throttle control cpl, Dual frequency (option)

(L)OCAL REMARKS

A | en_US | L = 2,23 m

Drivers platform Seat laterally adjusting

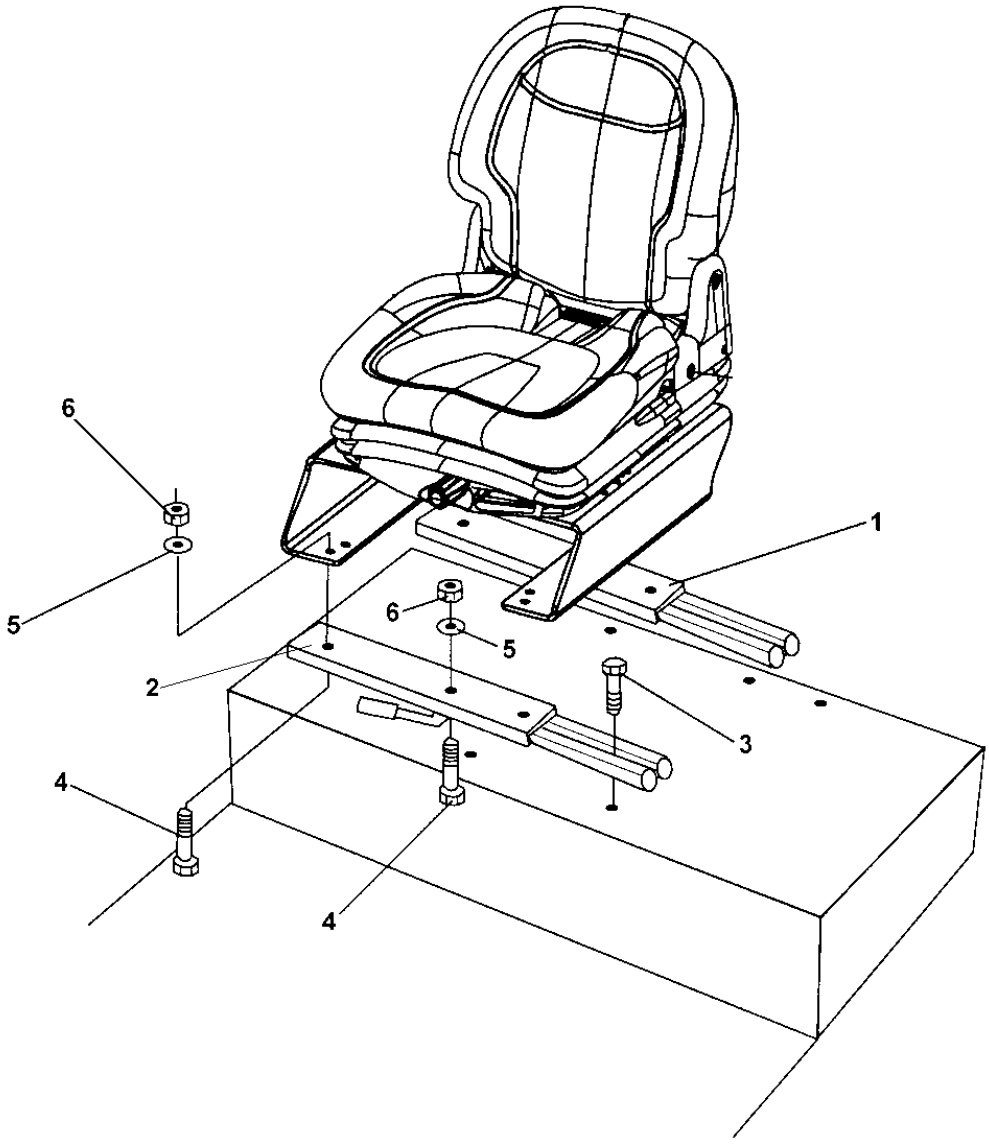

Item	Part No.	Name	Qty	L	SN INFO
1	4700909536	Sliding rail	1	A	
2	4700909535	Sliding rail with handle	1	B	
3	4700508092	Screw	10		
4	4700500020	Hex. screw	4		
5	4700904229	Washer, 8.4x 6x1.5 mm 300HV	6		
6	4700586003	Lock nut M8	4		

Comments for Page: Seat laterally adjusting

(L)OCAL REMARKS

A | en_US | Rear

B | en_US | Front

Drivers platform Step (option)

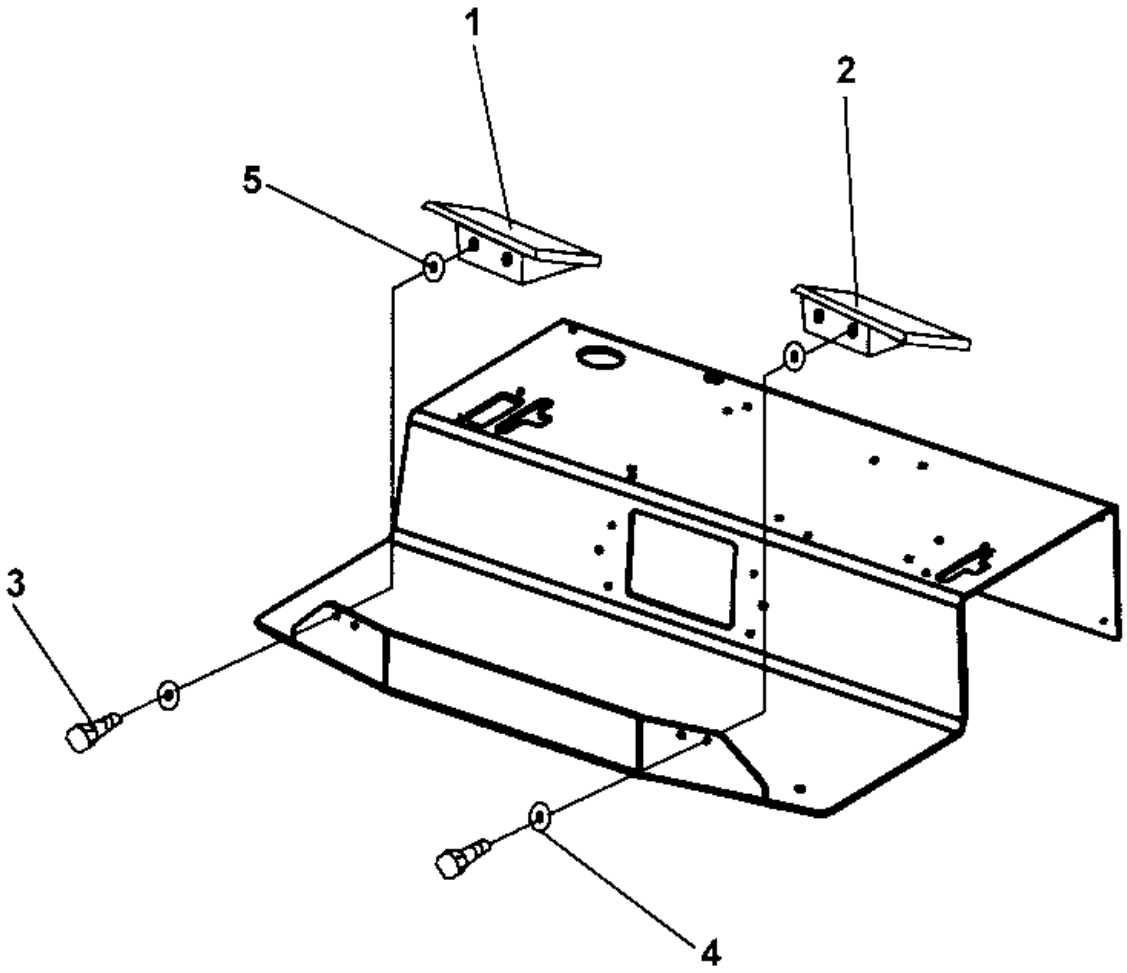

Item	Part No.	Name	Qty	L	SN INFO
1	4700374132	Step	1		
2	4700374133	Step	1		
3	4700500021	Screw, M8x25 mm 8.8 A2K	4		
4	4700904229	Washer, 8.4x 6x1.5 mm 300HV	4		
5	4700603009	Washer, 8.4x26x5 mm	4		

Drivers platform Driver seat, Std

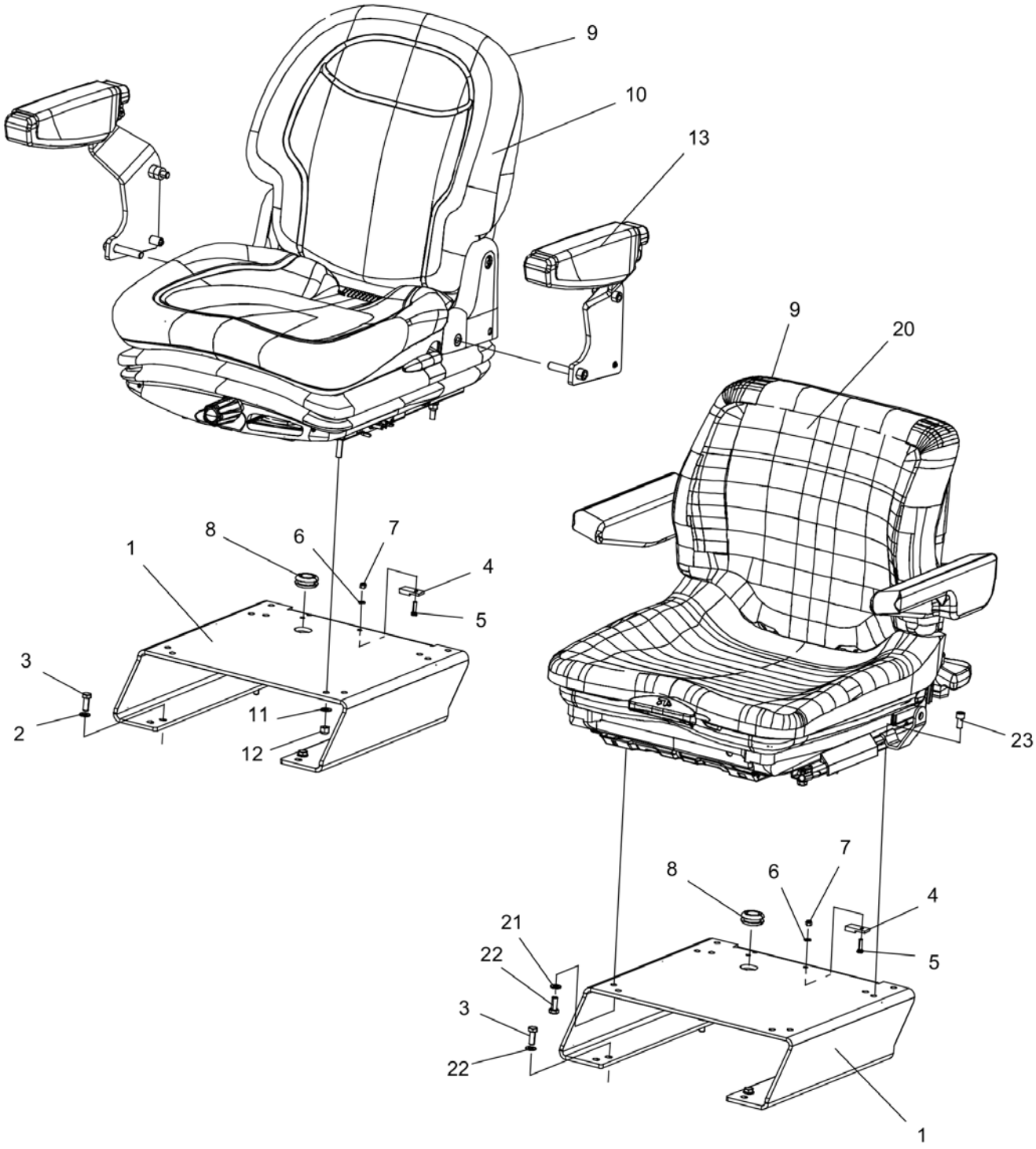

Item	Part No.	Name	Qty	L	SN INFO
1	4812112669	Seat frame	1		
2	4700904229	Washer, 8.4x 6x1.5 mm 300HV	4		
3	4700500020	Hex. screw	4		
4	4700904218	Holder	1		
5	4700533070	Screw	1		
6	4700904281	Washer, 5,3x10x1 300HV	1		
7	4700586001	Lock nut	1		
8	4700903192	Grommet	1		
9	4700348331	Seat protection	1		
10	4700377518	Seat, galon suspensioned	1		
-	4700945622	Seat switch	1		
-	4700945660	Seat cushion	1		
-	4700945661	Adjuster kit, slide	1		
11	4700904229	Washer, 8.4x 6x1.5 mm 300HV	4		
12	4700586003	Lock nut M8	4		
13	4700390963	Arm rest kit	2		
20	4700370234	Seat, galon suspensioned	1		
-	4700909535	Sliding rail with handle	1		
-	4700909536	Sliding rail	1		
-	4700936283	Seat switch	1		
-	4700372696	Arm rest, left	1		
-	4700372697	Arm rest, right	1		
21	4700904229	Washer, 8.4x 6x1.5 mm 300HV	2		
22	4700500053	Screw, M8x20 mm 8.8 A2K	2		
23	4700508005	Screw	2		

Drivers platform Driver seat, Luxury (option)

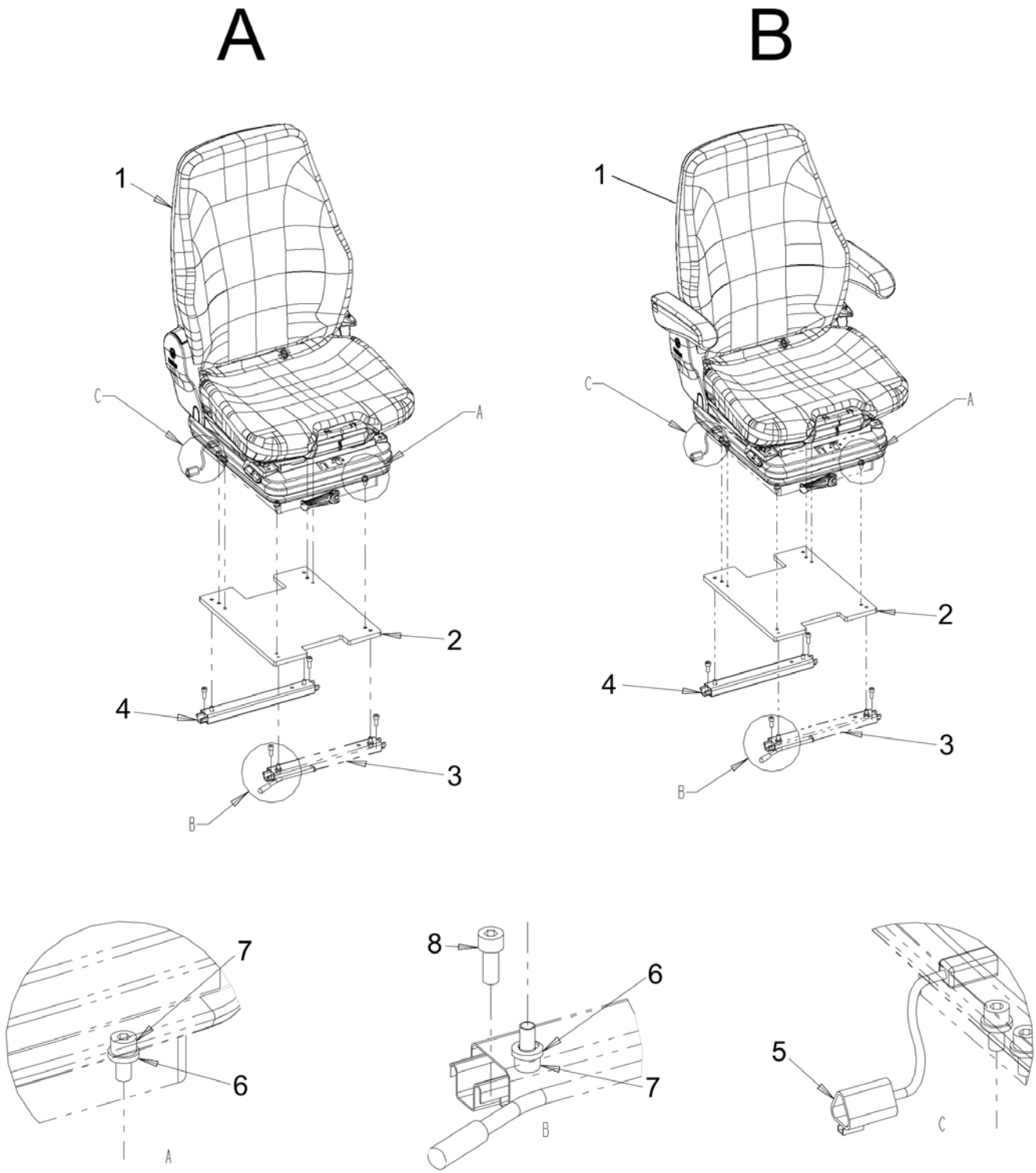

Item	Part No.	Name	Qty	L	SN INFO
1	4812114975	Driver seat (without armrests)	1		
1	4700381750	Drivers seat (with armrests)	1		
1	4812160157	Armrest, right	1		
1	4812160158	Armrest, left	1		
1	4700938740	Seat switch	1		
2	4700382237	Bracket	1		
3	4700909535	Sliding rail with handle	1		
4	4700909536	Sliding rail	1		
5	4812115001	Cable harness	1		
6	4700904556	Steel plain washer 8,4x16x3,0	10		
7	4700508005	Screw	10		
8	4700508092	Screw	4		
9	4700386075	Seat protection	1		

Drivers platform Driver's seat, without armrests

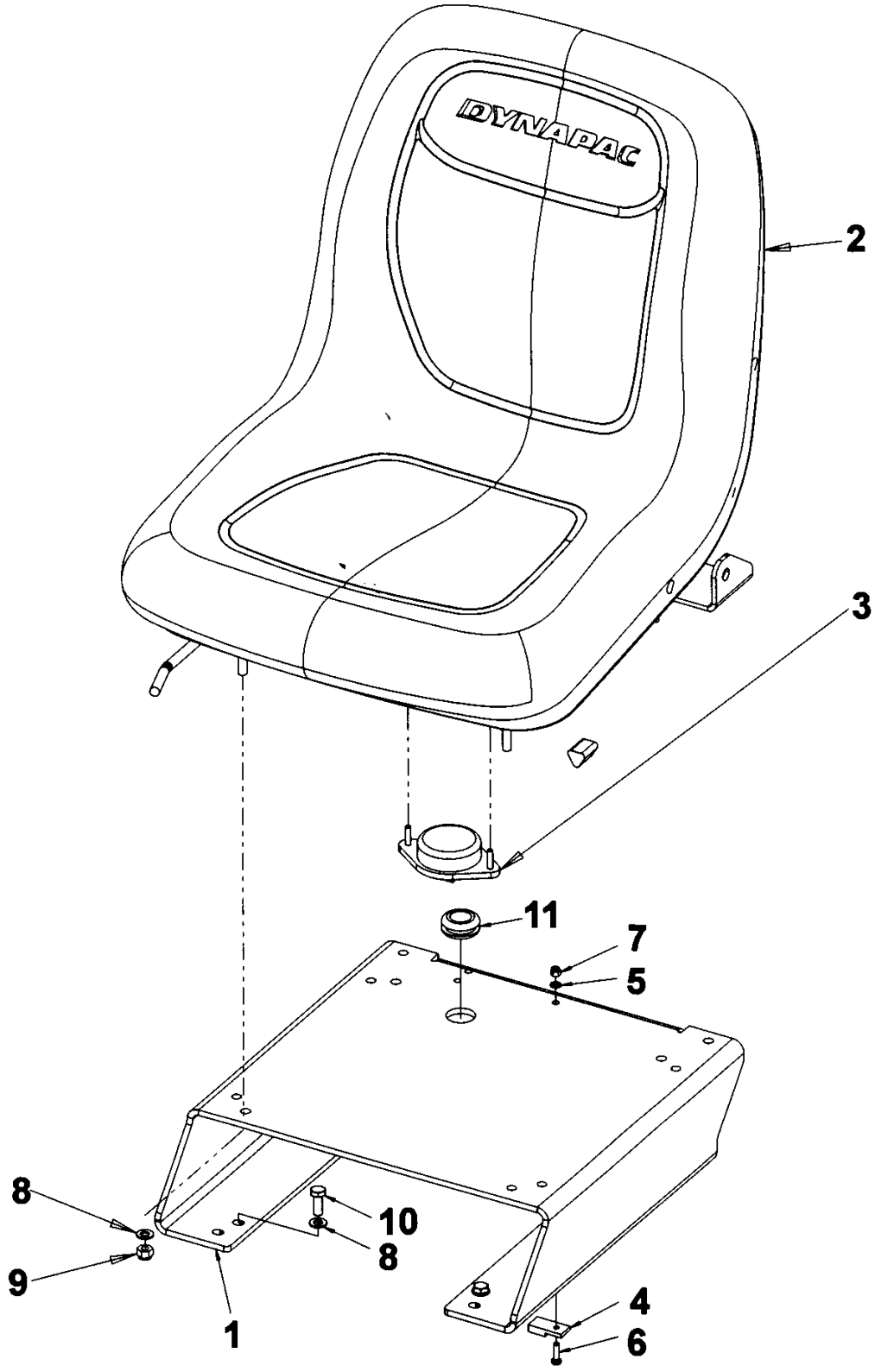

Item	Part No.	Name	Qty	L	SN INFO
1	4812112669	Seat frame	1		
2	4812114466	Drivers seat, cpl	1		
3	4700379636	Seat switch	1		
4	4700904218	Holder	1		
5	4700904281	Washer, 5,3x10x1 300HV	1		
6	4700533070	Screw	1		
7	4700586001	Lock nut	1		
8	4700904229	Washer, 8.4x 6x1.5 mm 300HV	8		
9	4700586003	Lock nut M8	4		
10	4700500020	Hex. screw	4		
11	4700903192	Grommet	1		

Drivers platform Seat belt module 3"

For seat 4700377518

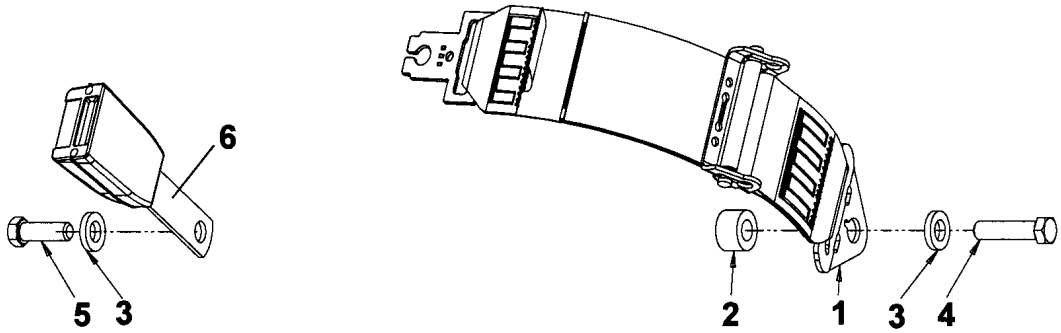

For seat 4812114466

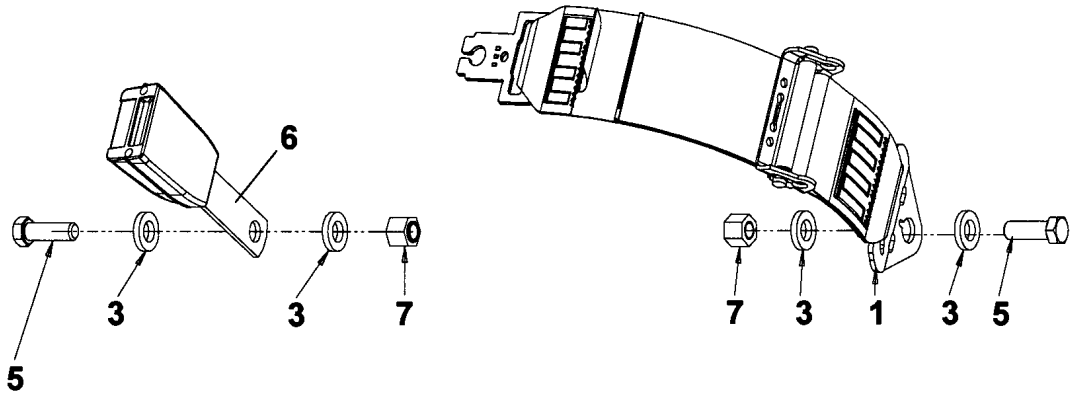

Item	Part No.	Name	Qty	L	SN INFO
1	4812117923	Seat belt	1		
2	4700791572	Spacer washer	1		
3	4700904703	Plain washer 13x24x4 mm	4		
4	4700792527	Screw	1	A	
5	4700928347	Hexagon screw	1	A, B	
6	4812117924	Buckle	1		
7	4700586020	Lock nut	2		

Comments for Page: Seat belt module 3"

(L)OCAL REMARKS

A | en_US | Used with seat 4700377518.

B | en_US | Used with seat 4812114466.

Drivers platform Seat belt module 2"

For seat 4700377518

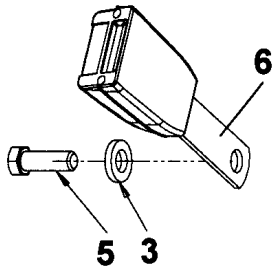

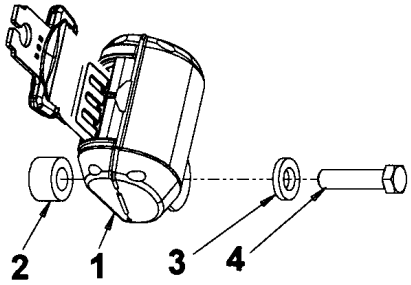

For seat 4812114466

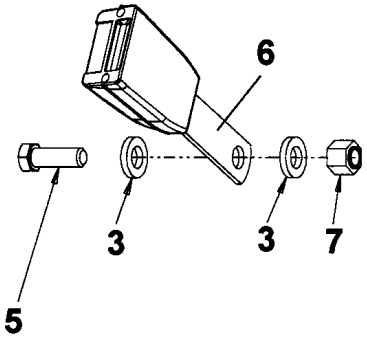

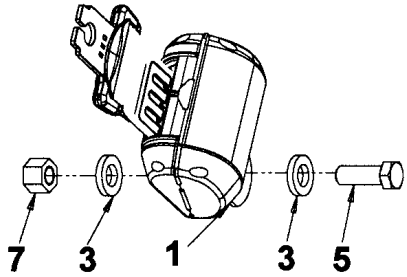

Item	Part No.	Name	Qty	L	SN INFO
1	4812117922	Seat belt 2"	1		
2	4700791572	Spacer washer	1		
3	4700904703	Plain washer 13x24x4 mm	4		
4	4700792527	Screw	1	A	
5	4700928347	Hexagon screw	1	A, B	
6	4812117924	Buckle	1		
7	4700586020	Lock nut	2		

Comments for Page: Seat belt module 2"

(L)OCAL REMARKS

A | en_US | Used with seat 4700377518

B | en_US | Used with seat 4812114466

Drivers platform Rear view mirror (option)

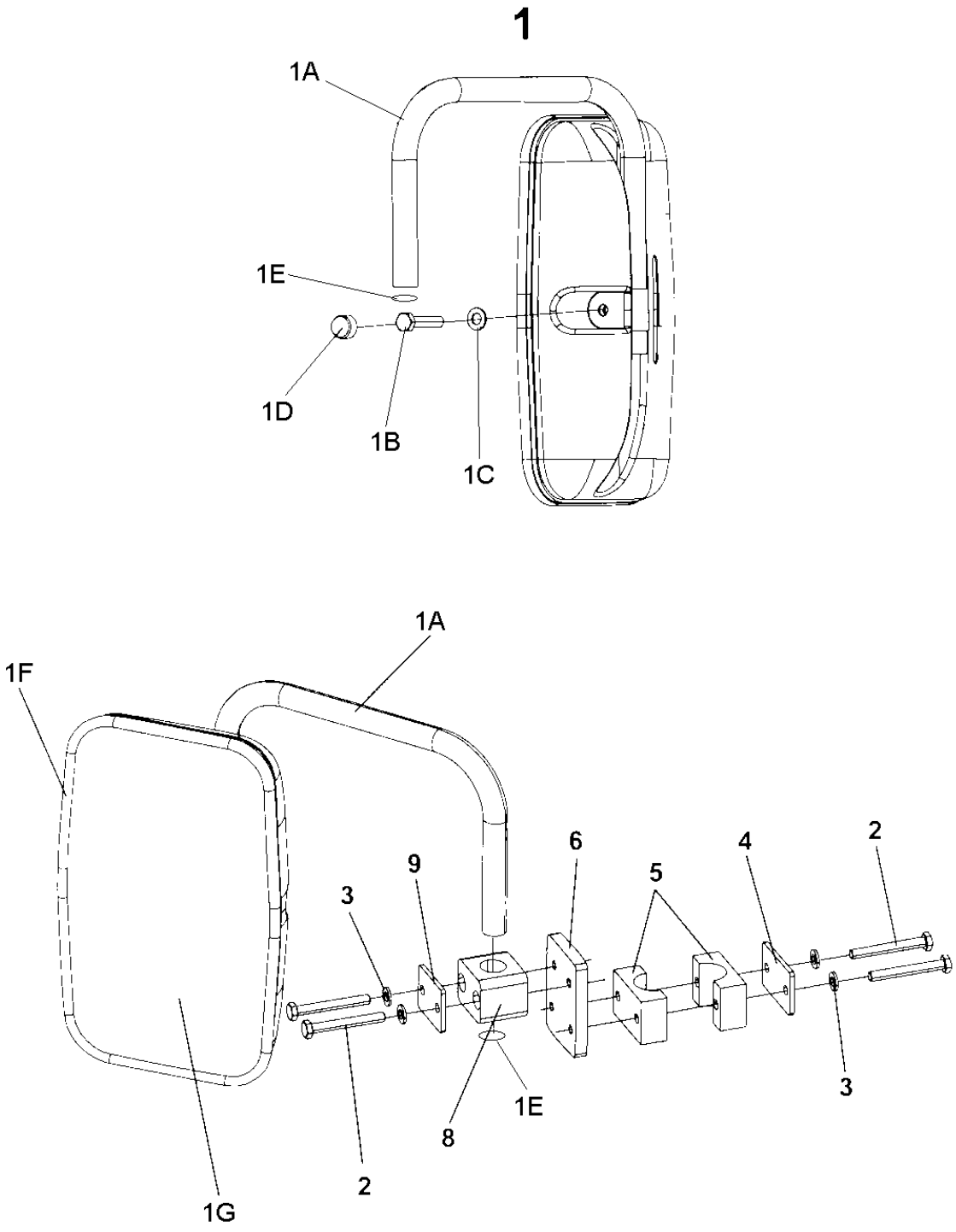

Item	Part No.	Name	Qty	L	SN INFO
1	4700393204	Rear mirror	1		
1-A	4700359661	Arm	1		
1-B	4700500023	Screw, M8x40 mm 8.8 A2K	1		
1-C	4700904229	Washer, 8.4x 6x1.5 mm 300HV	1		
1-D	4700904203	Nut protection	1		
1-E	4700900519	Plug	2		
1-F	4700393206	Edge trim	1		
1-G	4700903722	Mirror glass	1		
2	4700500079	Screw M6-1x50 8,8	4		
3	4700904228	Washer 6,4x12x1,5	4		
4	4700923859	Cover plate	1		
5	4700902496	Clamp	1		
6	4812110283	Bracket	1		
8	4700791453	Pipe clamp block	1		
9	4700791454	Cover plate	1		

Drivers platform ROPS, foldable

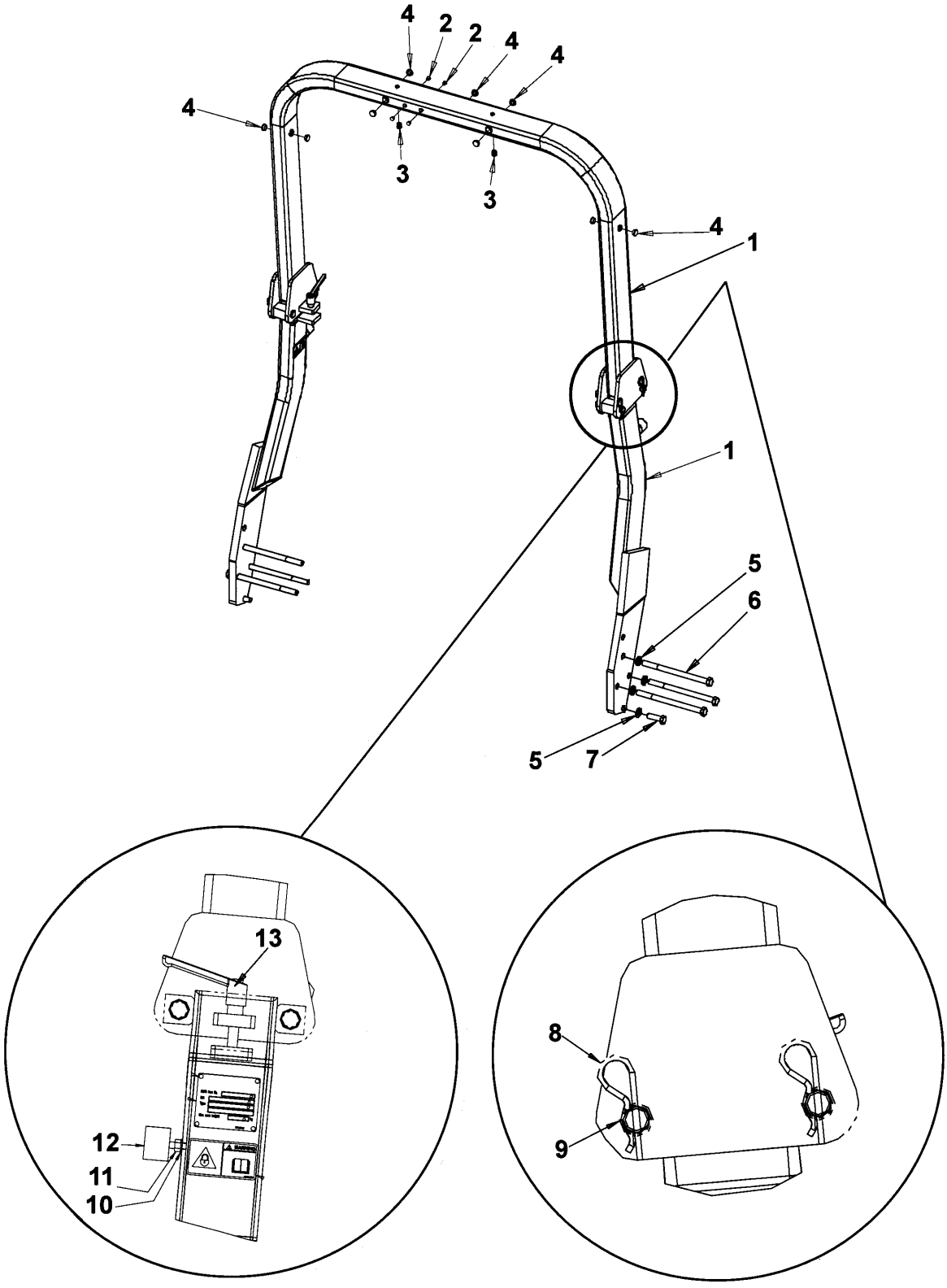

Item	Part No.	Name	Qty	L	SN INFO
1	-	Rops lower part	1	A, B	
1	-	Rops upper part	1	A, B	
2	4700900986	Plug	4		
3	4700902203	Plug	3		
4	4700791396	Protective plug	8		
5	-	n/a on this model	1		
6	4700903634	Screw	6		
7	-	n/a on this model	1		
8	4700635061	Hair clip	4		
9	4700374009	Shaft	4		
10	4700904229	Washer, 8.4x 6x1.5 mm 300HV	2		
11	4700570005	Hexagon nut	2		
12	4700288357	Shock absorber	2		
13	4700904429	Lock handle	2		

Comments for Page: ROPS, foldable

(L)OCAL REMARKS

A | en_US | Not sold separately due to safety regulations

B | en_US | Only available as a complete ROPS kit; please check the machine SN.

Please contact your local OEM representative (Dealer / Customer Center / Product Company) for valid PN.

Drivers platform Rops (option)

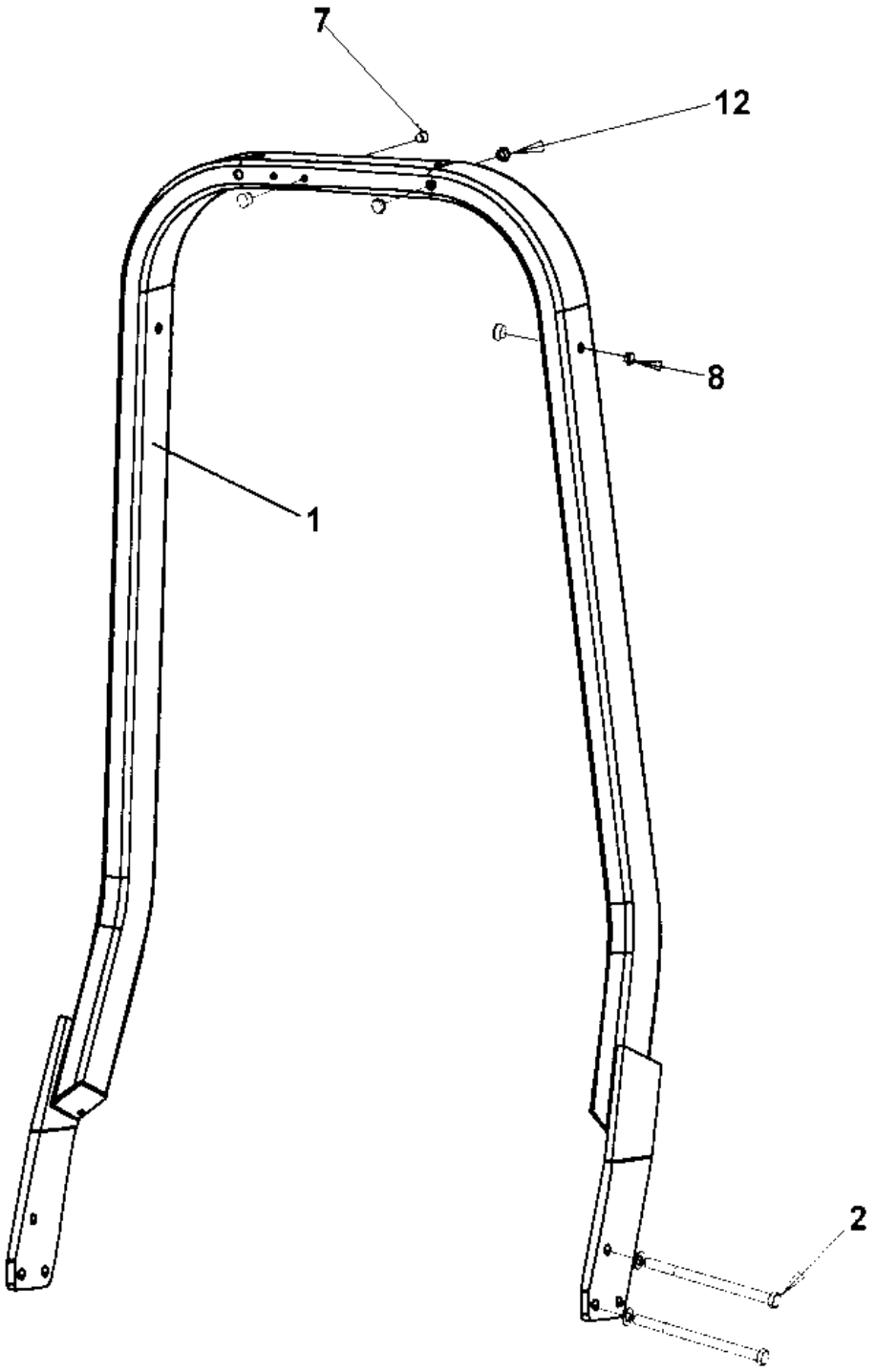

Item	Part No.	Name	Qty	L	SN INFO
1	-	ROPS	1	A, B	
2	4700903634	Screw	6		
7	4700900986	Plug	4		
8	4700902203	Plug	5		
12	4700791396	Protective plug	8		

Comments for Page: Rops (option)

(L)OCAL REMARKS

A | en_US | Not sold separately due to safety regulations

B | en_US | Only available as a complete ROPS kit; please check the machine SN.

Please contact your local OEM representative (Dealer / Customer Center / Product Company) for valid PN.

Drivers platform Canopy (option)

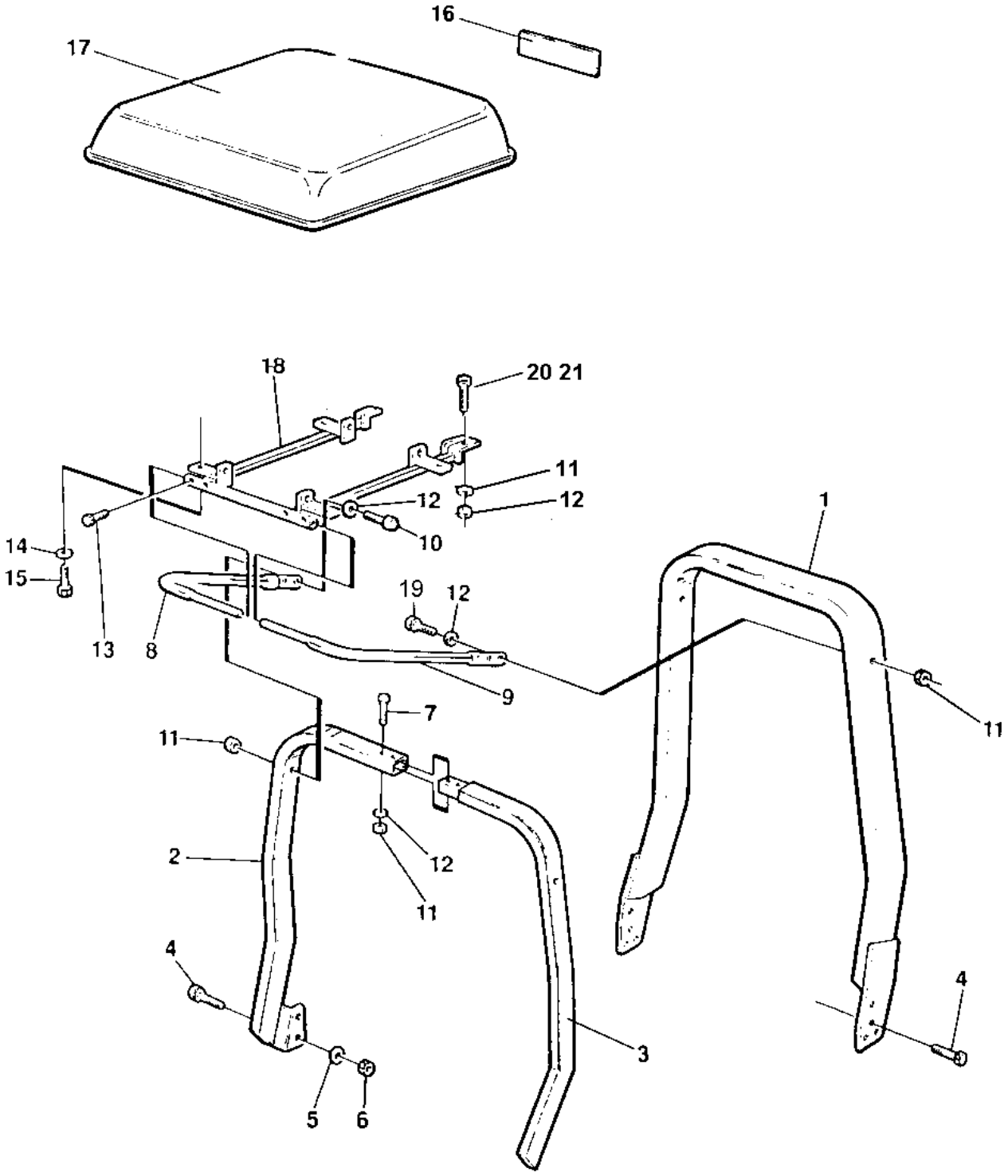

Item	Part No.	Name	Qty	L	SN INFO
1	-	ROPS		1	
2	4700358801	Frame	1	A	
3	4700358802	Frame	1	B	
4	4700500030	Screw hexagon	4		
5	4700600008	Washer	6		
6	4700586018	Lock nut M10	2		
7	4700500195	Screw	2		
8	4700358789	Frame	1	A	
9	4700358790	Frame	1	B	
11	4700586019	Lock nut	4	2	
12	4700904231	Washer, 13x24x2 mm 300 HV	6	2	
13	4700516042	Screw	4		
14	4700904229	Washer, 8.4x 6x1.5 mm 300HV	4		
15	4700500021	Screw, M8x25 mm 8.8 A2K	4		
16	4700904094	Decal "DYNAPAC" L=670 mm	1		
17	4700358782	Canopy	1		
18	4700358783	Frame	1		
19	4700500071	Screw	4	2	
20	4700904703	Plain washer 13x24x4 mm	2		
21	4700500196	Screw M12-1,75x80 8.8	2		

Comments for Page: Canopy (option)

(L)OCAL REMARKS

A | en_US | Right

B | en_US | Left

1 | en_US | Rops, see section " Rops "

2 | en_US | Canopy for rops

Decals Decals

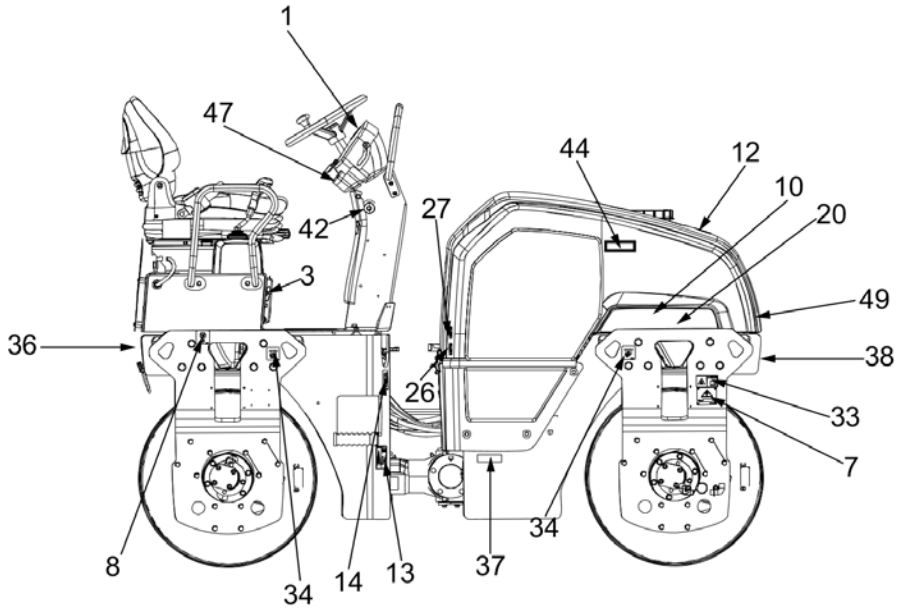

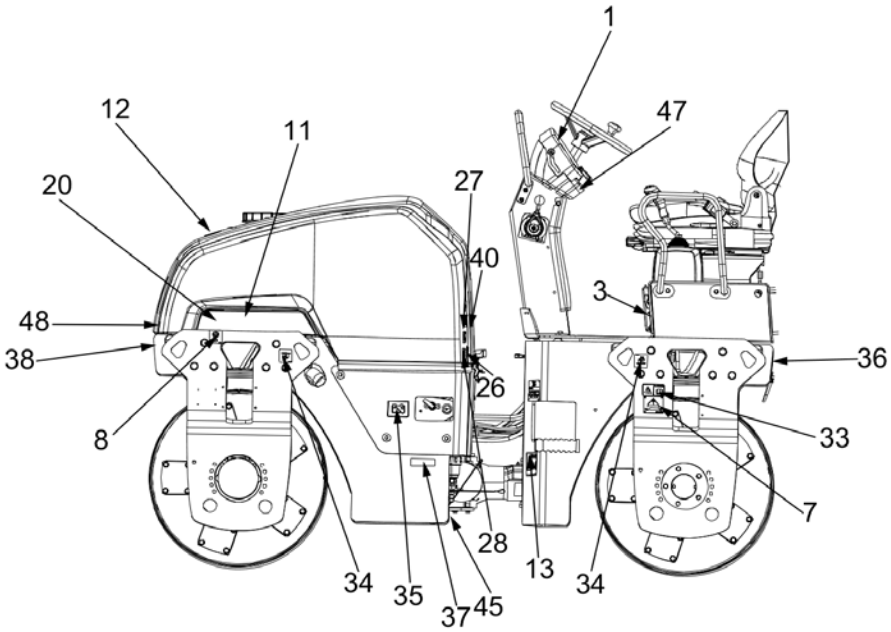

Item	Part No.	Name	Qty	L	SN INFO
1	4700903459	Decal "SAFETY"	1		
3	4700903425	Safety decal "READ SAFETY INSTRUCTIONS"	1		
7	4700904870	Lifting data plate	2		
8	4700357587	Label lifting point	2		
10	4812120127	Decal "COMPACTING ROCKS" Right side	1		
11	4812120313	Decal "COMPACTING ROCKS" Left side	1		
12	4700991657	Decal "WATER"	1		
13	4700903422	Safety decal "CRUSH AREA"	2		
14	4700991658	Decal "FUEL"	1		
20	4812120109	Decal "MODEL CODE" CC1200	2		
26	4700903423	Safety label, Rotating engine components	2		
27	4700903424	Safety label, hot surfaces	2		
28	4700272372	Decal "HYDRAULIC OIL"	1		
33	4700908229	Safety decal	2		
34	4700382751	Decal "SECURING POINT/TIE DOWN"	4		
35	4700904835	Decal "BATTERY POWER"	1		
36	4700377742	Reflector, red	2		
37	4700377744	Reflector, yellow	2		
38	4700377743	Reflector, white	2		
40	4700791274	Decal "Sound power level" 104 dB	1		
42	4811000128	Contrast plate, yellow	1		
45	4700272373	Label, hydraulic oil level	1		
47	4812115918	Decal "Starting instruction"	1		
48	4700904399	Decal "Risk location"	2		
49	4700904396	Decal "Risk location"	2		

Decals Plain Dynapac decals, kit

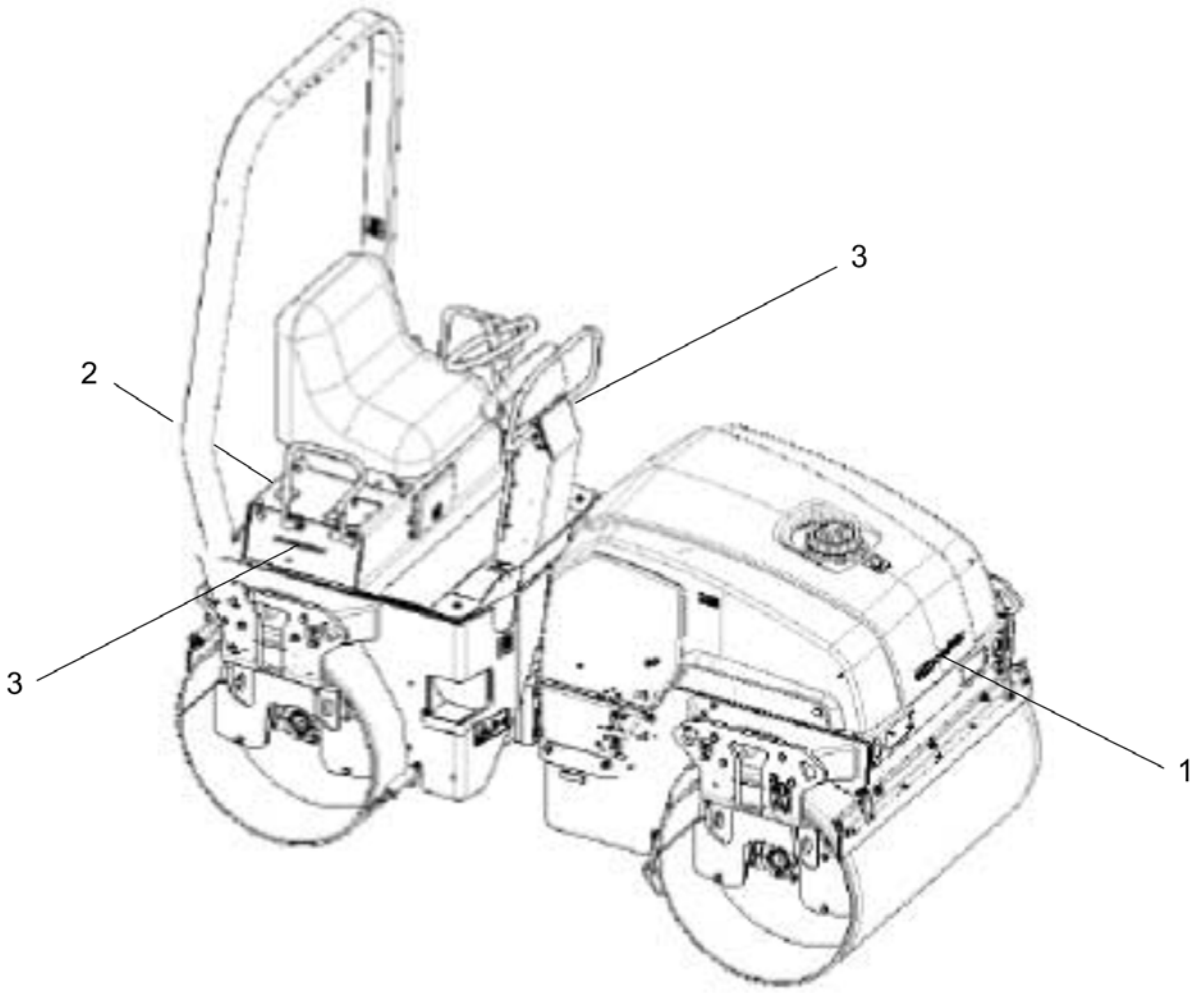

Item	Part No.	Name	Qty	L	SN INFO
0	4812127927	Plain Dynapac decals, kit			
1	4700904097	Decal "DYNAPAC" L=290 mm	1		
2	4812127820	Decal "DYNAPAC", black 420	1		
3	4812127923	Decal "DYNAPAC", black 420	2		
4	-	Drawing for instruction	1		

Optional equipment Fire extinguisher

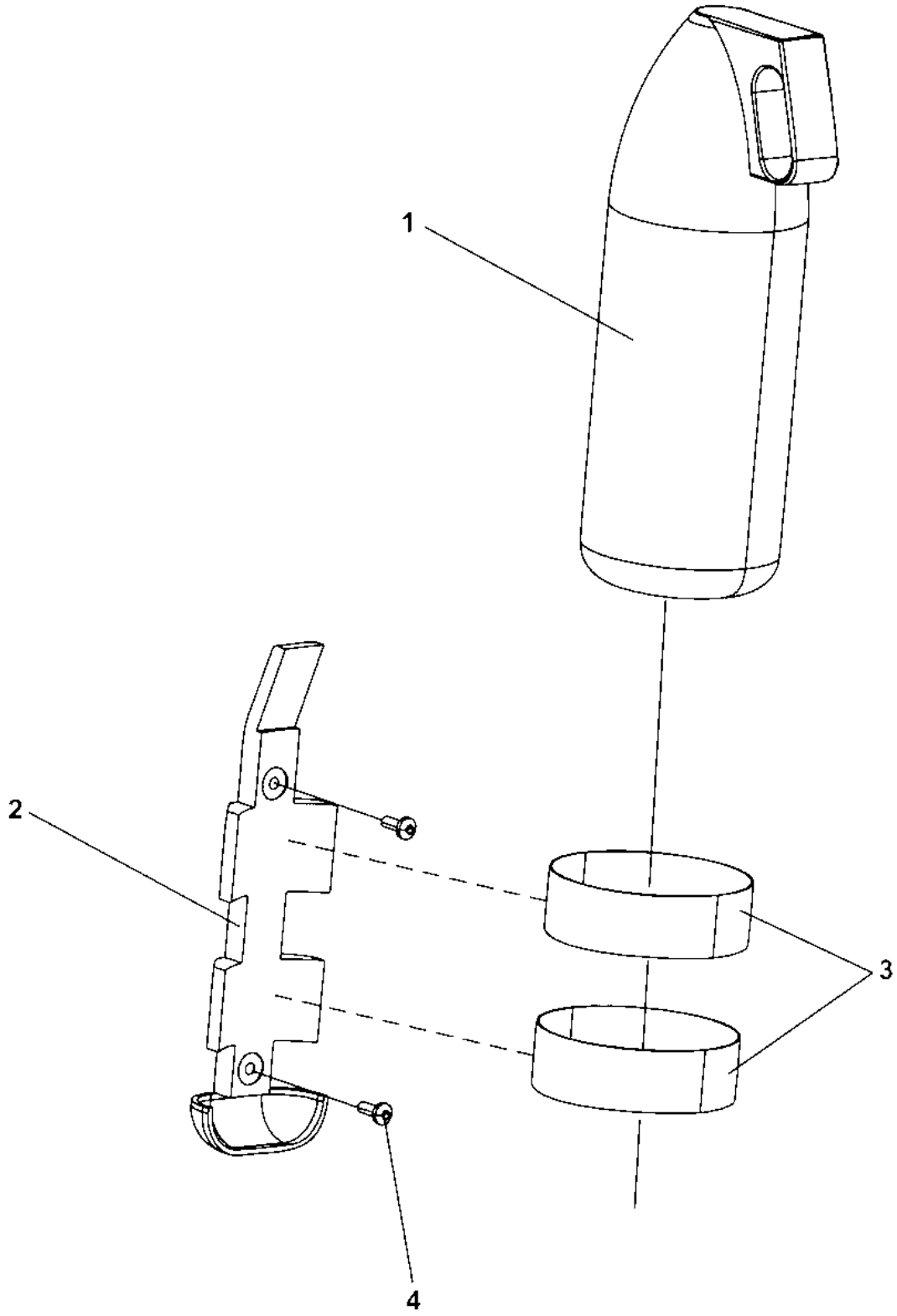

Item	Part No.	Name	Qty	L	SN INFO
1	-	Fire extinguisher	1		
2	4700378857	Holder	1		
3	4700378858	Strap	2		
4	4700792185	Screw M6x16	2		

Optional equipment Tool equipment

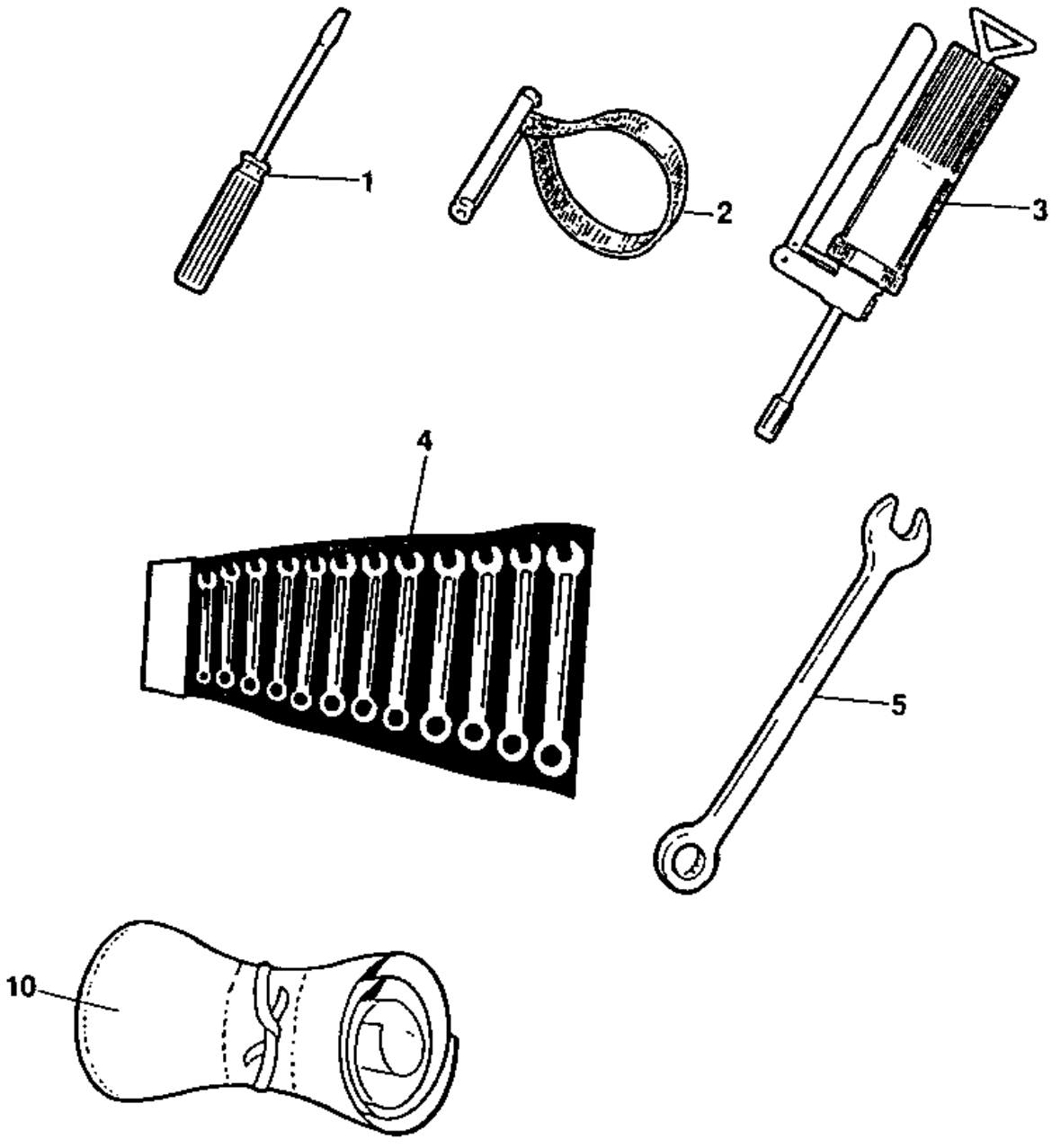

Item	Part No.	Name	Qty	L	SN INFO
1	4700485019	Screw driver	1		
2	4700902610	Belt pliers	1		
3	4700311016	Grease gun	1		
4	4700792137	Open end spanner 10 mm	1		
4	4700792138	Open end spanner 13 mm	1		
4	4700792139	Open end spanner 16 mm	1		
4	4700792140	Open end spanner 18 mm	1		
5	4700792141	Wrench 250 mm	1		
10	4700277992	Tool bag	1		

Optional equipment SMV-sign and Licence plate

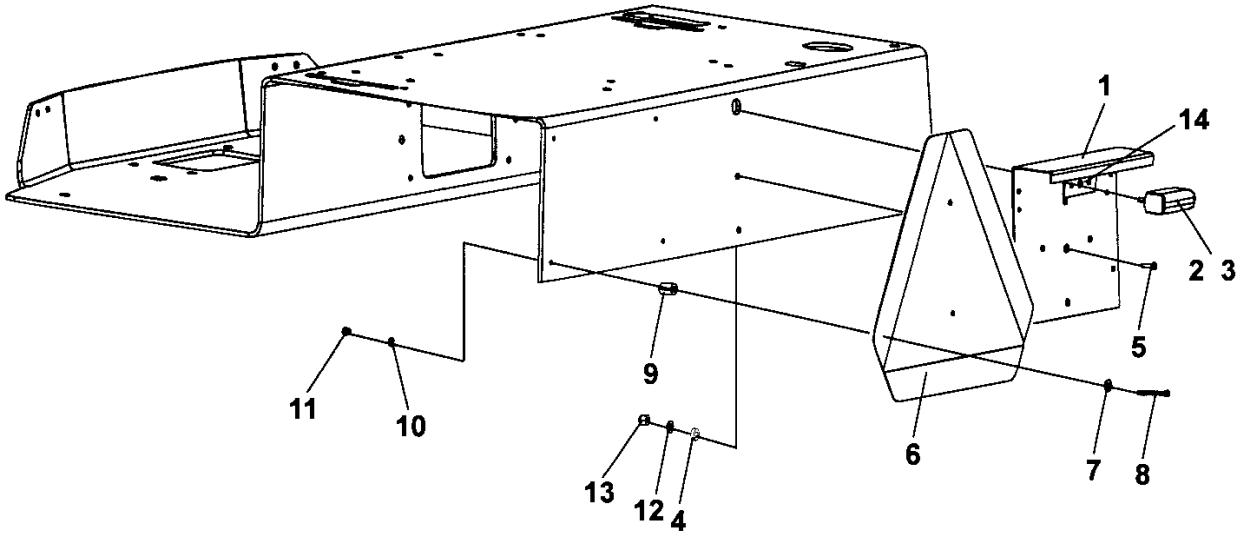

Item	Part No.	Name	Qty	L	SN INFO
1	4700355797	Licence plate holder	1		
2	4700929455	Licence plate light	1		
3	4700985013	Bulb 12V,5W	1		
4	4700394301	Spacer sleeve	2		
5	4700535008	Screw M5x20	2		
6	4700476019	SMV-sign	1		
7	4700601001	Washer	4		
8	4700500080	Screw	4		
9	4700355704	Spacer sleeve	4		
10	4700904281	Washer, 5,3x10x1 300HV	4		
11	4700586001	Lock nut	4		
12	4700904228	Washer 6,4x12x1,5	2		
13	4700586002	Lock nut M6 -8	2		
14	4812114665	Cable harness	1		

Optional equipment Brake release, propulsion motor Poclain

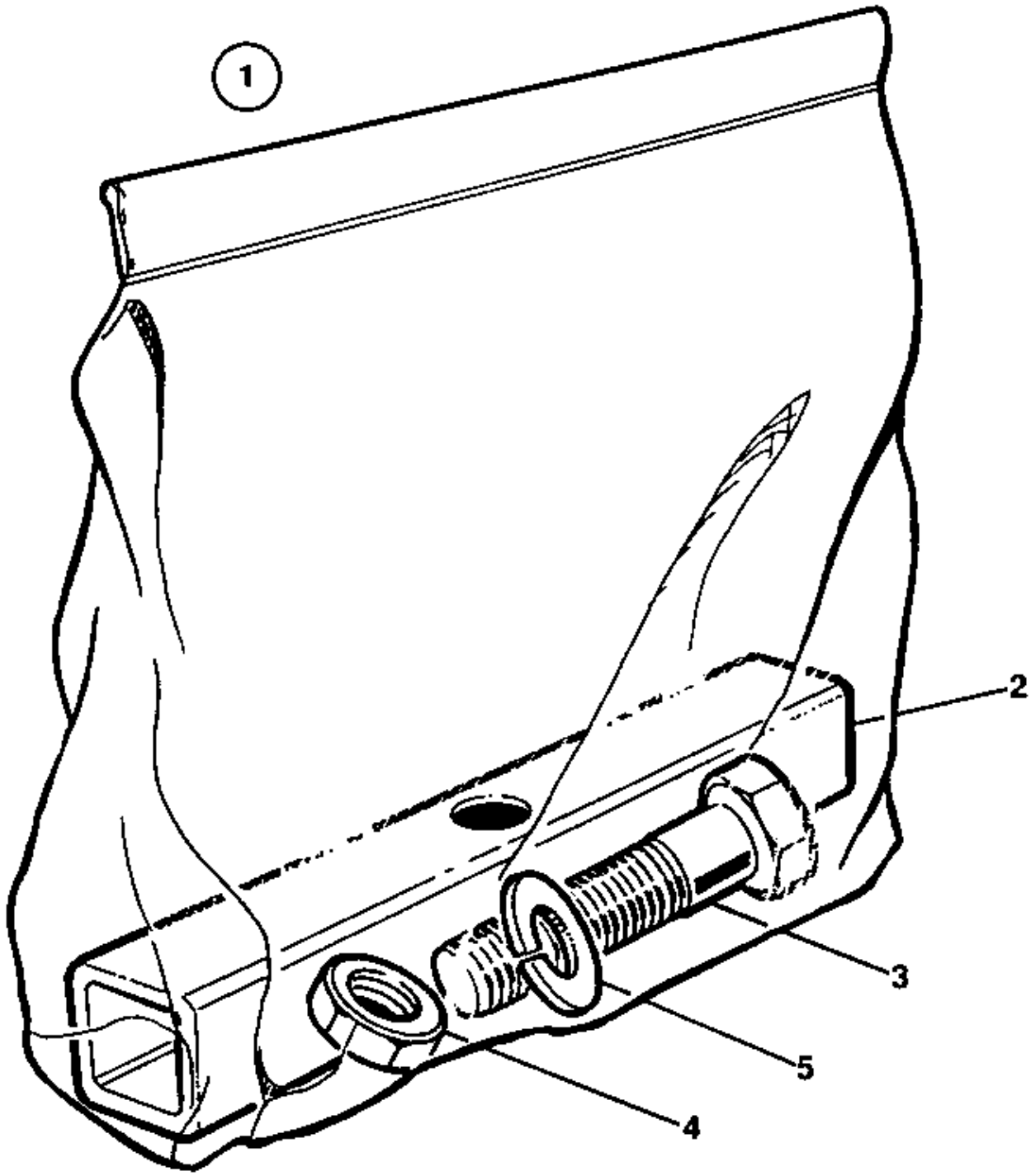

Item	Part No.	Name	Qty	L	SN INFO
1	4700392070	Brake release kit	1		
2	4700357892	Stirrup	2		
3	4700792550	Screw M12x100 10.9	2		
4	4700928849	Nut	2		
5	4700904213	Steel Plain Washer	4		

Optional equipment Brake release, "high torque" drum drive

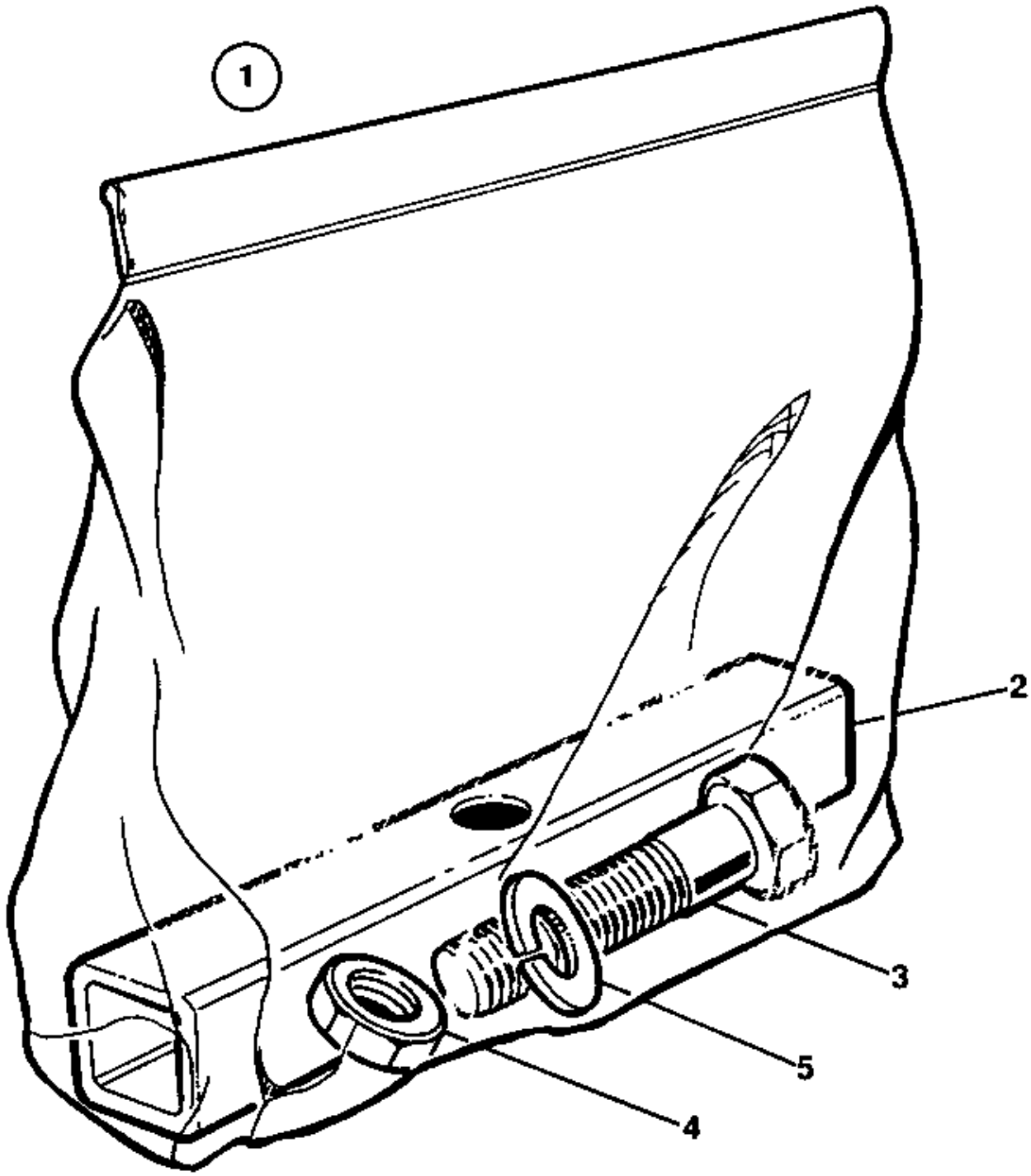

Item	Part No.	Name	Qty	L	SN INFO
2	4700357892	Stirrup	1		
3	4700792550	Screw M12x100 10.9	1		
4	4700928849	Nut	1		
5	4700904213	Steel Plain Washer	2		

High torque drum drive " Short" High torque drum drive " Short"

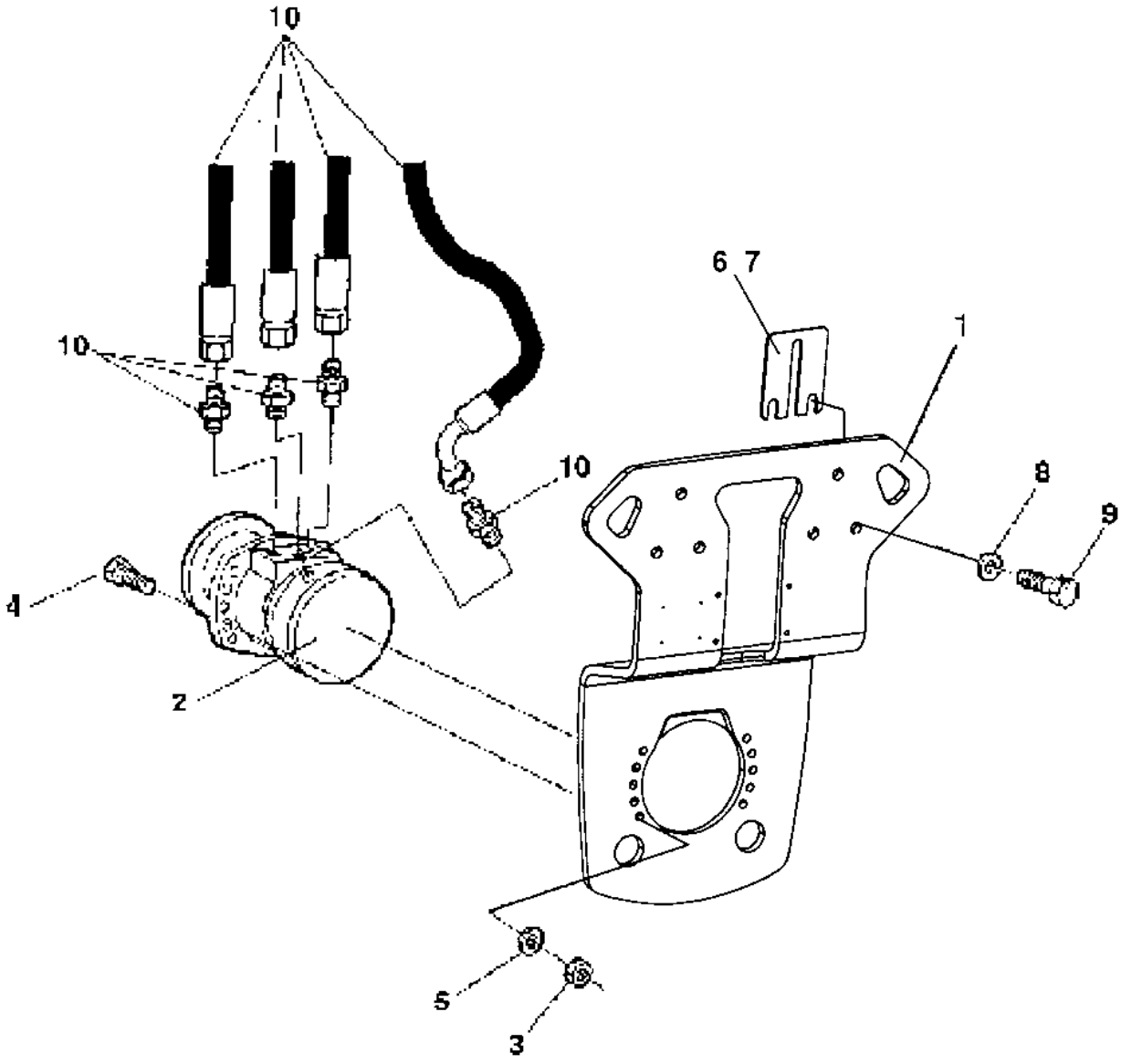

Item	Part No.	Name	Qty	L	SN INFO
1	4812113950	Fork	1		
2	4700380594	Hydraulic motor, propulsion, drum	1		
3	4700586019	Lock nut	10		
4	4700500056	Screw, M12x45 mm 8.8 A3K	10		
5	4700904231	Washer, 13x24x2 mm 300 HV	14		
6	4700357222	Shim T=1 mm	2		
7	4700357221	Shim T=3 mm	2		
8	4700904232	Steel plain washer	6		
9	4700500094	Hex. screw	6		
10	-	Hydraulic details	N		

High torque drum drive " Short" 4700380594 Hydraulic motor, propulsion, drum

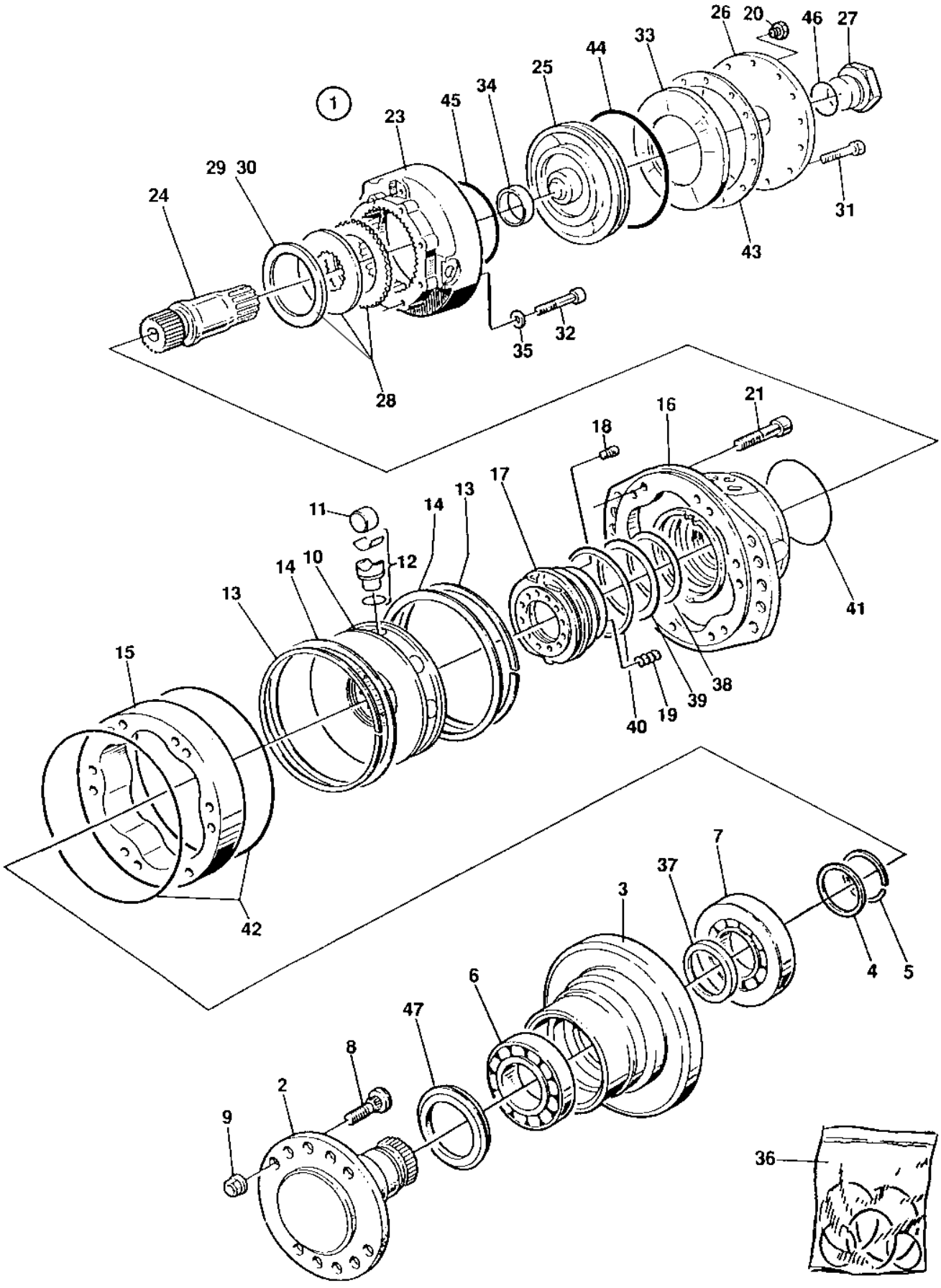

Item	Part No.	Name	Qty	L	SN INFO
1	-	Hydraulic motor	1	A	
2	4700908788	Shaft	1		
3	4700937875	Housing	1		
4	4700902387	Washer T=2,0 mm	1		
5	4700902388	Split ring	1		
6	4700902389	Bearing	1		
7	4700902390	Bearing	1		
8	4700902391	Wheel stud	5		
9	4700902392	Wheel nut	5		
10	4700937876	Cylinder block	1		
11	4700903453	Roller	8		
12	4700937091	Piston	8		
13	4700937092	Circlip	2		
14	4700937877	Retaining ring	2		
15	4700937878	Piston cam	1		
16	4700937879	Housing	1		
17	4700937880	Distributor ring	1		
18	4700902397	Pin	1		
19	4700902398	Spring	9		
20	4700902399	Plug	1	A	
21	4700937881	Screw	10		
23	4700937882	Brake housing	1		
24	4700908791	Shaft	1		
25	4700908792	Piston	1		
26	4700908328	End cover	1	A	
27	4700903295	Plug	1		
28	4812161096	Brake pack	1		
28	4700908800	Disc kit	1	B	
29	4700902410	Shim T=0,1 mm	1		
30	4700902411	Shim T=0,3 mm	1		
31	4700902412	Screw	12		
32	4700902413	Screw	8		
33	4700902416	Disc spring	1		
34	4700908794	Nylon buch	1		
35	4700903450	Washer	8		
36	4700937089	Seal kit	1		
37	4700903324	Shaft seal	1		
38	---	Sealing	1		

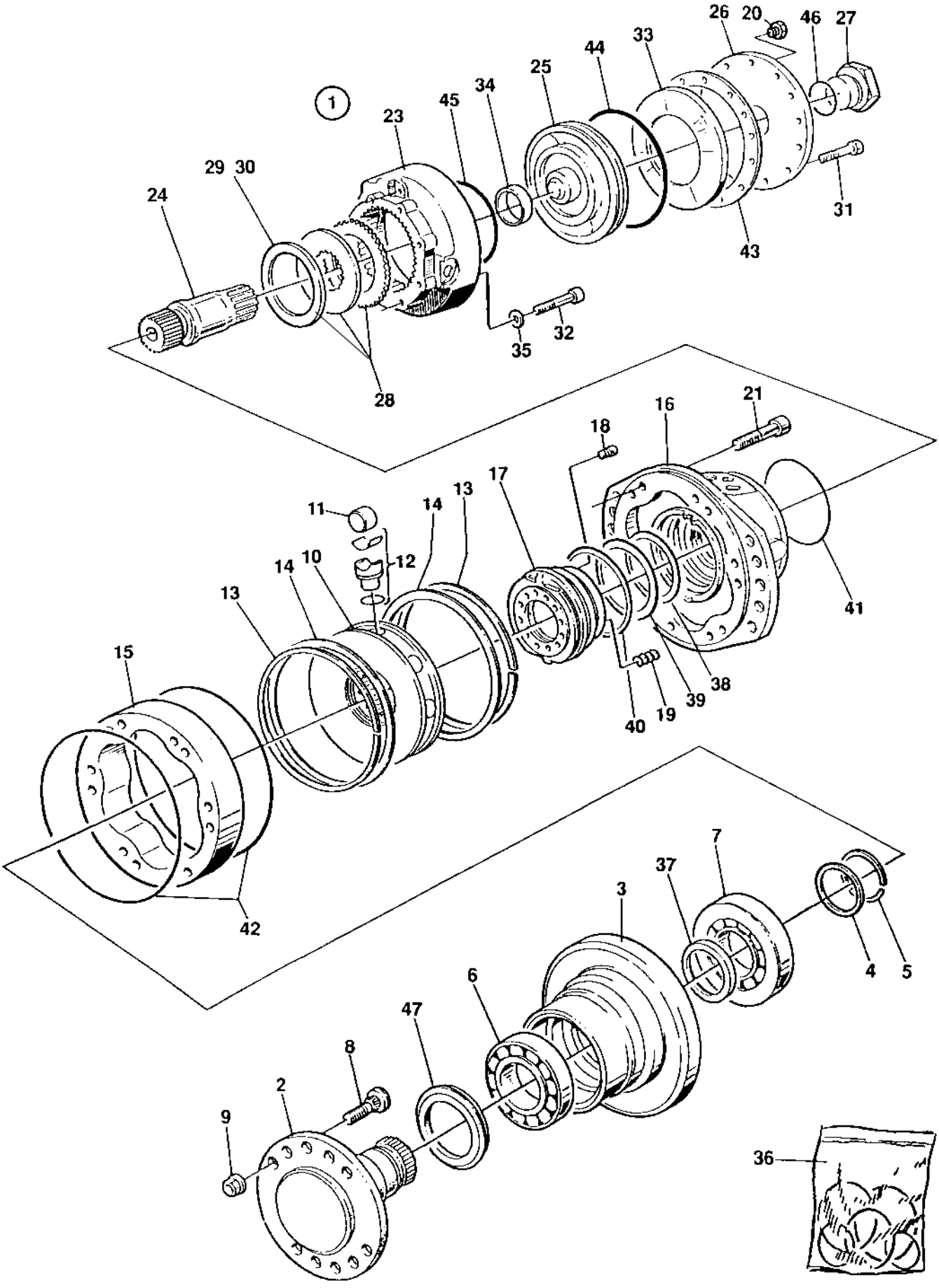
1
2
3
4
5
6
7
8
9
10
11
12
13
14
15
16
17
18
19
20
21
23
24
25
26
27
28
29
30
31
32
33
34
35
36
37
38
39
40
41
42
43
44
45
46
47

Item	Part No.	Name	Qty	L	SN INFO
39	---	Sealing	1		
40	---	Sealing	1		
41	---	O-ring	1		
42	---	O-ring	1		
43	4700902800	Gasket	1		
44	4700903455	Quad ring	1		
45	4700937812	Sealing	1		
46	4700903327	O-ring	1		
47	4700937090	Face seal	1		

Comments for Page: 4700380594 Hydraulic motor, propulsion, drum

(L)OCAL REMARKS

A | en_US | CPL

B | en_US | 15+13 pcs

Optional equipment FleetLink module

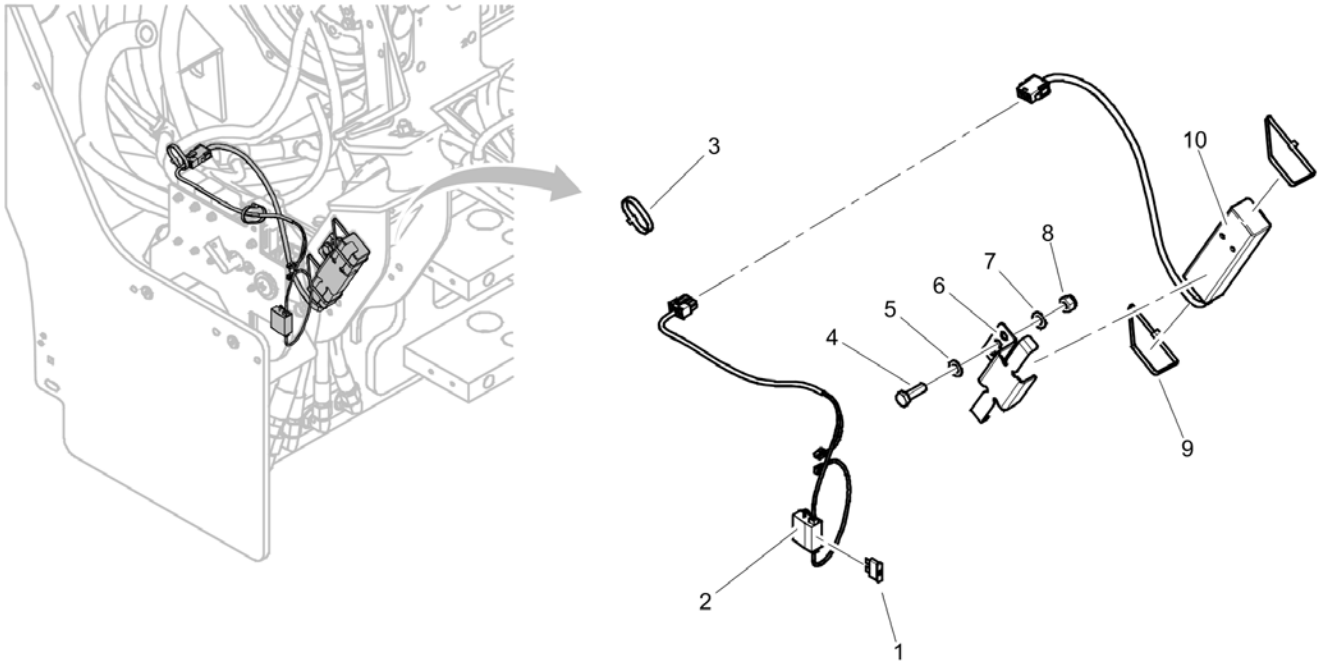

Item	Part No.	Name	Qty	L	SN INFO
1	4700901225	Fuse 5A Tan	1		
2	4812124961	4812124961	1		
3	4700313041	Cable ties, L=200 mm	2		
4	4700500021	Screw, M8x25 mm 8.8 A2K	1		
5	4700904229	Washer, 8.4x 6x1.5 mm 300HV	1		
6	4812124461	Bracket	1		
7	4700904229	Washer, 8.4x 6x1.5 mm 300HV	1		
8	4700586003	Lock nut M8	1		
9	4700792609	Cable ties	2		
10	4812013038	GPS module	1		

Optional equipment 4812013038 GPS module

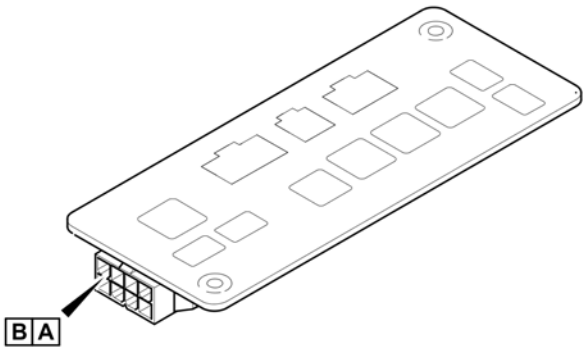

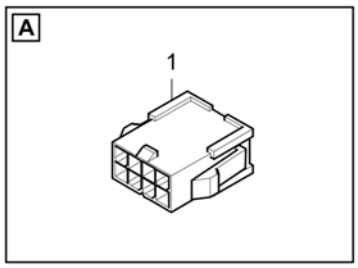

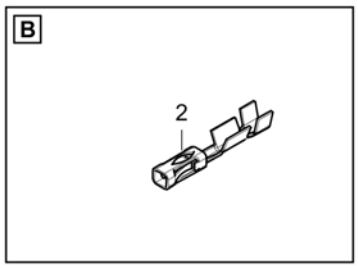

Item	Part No.	Name	Qty	L	SN INFO
1	4812013160	Socket shell	1		
2	4812013161	Male contact	3		

Appendix B:Parts Index

0147195880 174
0570704138 160
4700111018 . . . . . 24, 62
4700151012 150
4700160016 . . . . . 132, 142
4700160025 150
4700160031 . . . . . 132, 142
4700160112 28
4700160132 . . . . . 22, 24, 62
4700160219 44
4700160268 46
4700160313 46
4700162004 . . . . . 154, 156
4700162011 62
4700162017 62
4700163049 . . . . . 22, 24, 62
4700167044 . . . . . 28, 56, 58
4700230400 . . . . . 100, 158
4700232070 100
4700232095 70
4700232122 . . . . . 132, 142
4700232143 62
4700233215 . . . . . 46, 50
4700234218 98
4700234233 . . . . . 116, 158, 158
4700234341 132
4700234390 132
4700234481 132
4700234888 158
4700238158 228
4700238272 150
4700272372 290
4700272373 . . . . . 86, 290
4700277992 296
4700287713 44
4700288129 . . . . . 68, 76
4700288357 284
4700311016 296
4700313002 44
4700313004 88
4700313008 . . . . . 88, 132, 142
4700313010 90
4700313023 90
4700313041 . . . . . 168, 170, 190, 196, 200, 202, 204, 206, 310
4700313075 92
4700313102 . . . . . 100, 120, 134, 144, 148, 158, 160
4700313108 . . . . . 88, 92
4700330081 68
4700330333 68
4700330383 100
4700332038 . . . . . 154, 156
4700334116 164
4700334121 . . . . . 116, 132
4700334134 98
4700334135 . . . . . 98, 132, 164
4700334155 100
4700334156 98
4700334165 164
4700334197 . . . . . 100, 164
4700334235 . . . . . 98, 132, 154
4700334238 . . . . . 98, 132, 134
4700334463 158
4700334524 132
4700343490 62
4700343744 62
4700345215 26
4700346420 . . . . . 252, 260
4700347153 . . . . . 28, 56, 58
4700347154 . . . . . 28, 56, 58
4700347155 . . . . . 28, 56, 58
4700348331 . . . . . 210, 272
4700349202 62
4700349879 . . . . . 36, 40
4700349880 . . . . . 36, 40
4700350029 62
4700355704 298
4700355797 298
4700355869 . . . . . 92, 100, 122, 154, 156, 226
4700355981 . . . . . 154, 156
4700357031 . . . . . 56, 58
4700357038 . . . . . 56, 58
4700357039 . . . . . 56, 58
4700357055 62
4700357058 62
4700357060 62
4700357111 . . . . . 100, 122
4700357112 . . . . . 100, 122
4700357113 122
4700357138 . . . . . 16, 18, 132, 142
4700357139 . . . . . 132, 142
4700357221 . . . . . 38, 40, 42, 304
4700357222 . . . . . 26, 38, 40, 42, 304
4700357395 44
4700357418 . . . . . 28, 56, 58
4700357459 . . . . . 38, 42
4700357466 . . . . . 94, 96
4700357489 . . . . . 36, 40
4700357543 . . . . . 134, 164
4700357562 . . . . . 166, 168, 170
4700357567 176
4700357587 290

4700357604 . . . . . 212, 216, 220
4700357605 . . . . . 212, 216, 220
4700357643 . . . . . 230, 232
4700357663 204
4700357679 204
4700357855 224
4700357892 . . . . . 300, 302
4700357934 164
4700358003 . . . . . 154, 156
4700358232 . . . . . 212, 216, 220
4700358486 . . . . . 132, 142
4700358666 62
4700358689 62
4700358782 288
4700358783 288
4700358789 288
4700358790 288
4700358801 288
4700358802 288
4700358846 44
4700358881 . . . . . 32, 86, 224
4700358975 56
4700358976 . . . . . 56, 58
4700358978 56
4700359003 44
4700359043 52
4700359661 282
4700370234 272
4700370699 46
4700371313 . . . . . 98, 120, 134, 134, 142
4700371314 . . . . . 98, 120, 134, 134, 142
4700372352 98
4700372696 272
4700372697 272
4700372964 226
4700373402 98
4700373478 . . . . . 132, 142
4700374009 284
4700374132 270
4700374133 270
4700374603 . . . . . 148, 150
4700375616 98
4700377061 84
4700377139 224
4700377518 272
4700377742 290
4700377743 290
4700377744 290
4700378857 294
4700378858 294
4700379009 44
4700379179 . . . . . 36, 38, 40, 42, 62
4700379458 . . . . . 134, 142
4700379636 276
4700379637 210
4700379753 46
4700380594 304
4700381750 274
4700382237 274
4700382349 . . . . . 262, 264, 266
4700382751 290
4700383705 . . . . . 230, 232
4700385599 228
4700386075 274
4700386134 132
4700386951 78
4700387226 . . . . . 212, 216, 220
4700387227 224
4700387545 224
4700387552 . . . . . 94, 96
4700387683 228
4700387948 84
4700388382 206
4700388447 230
4700388737 224
4700388846 84
4700388852 . . . . . 86, 86
4700389177 262
4700389187 266
4700389561 . . . . . 200, 202
4700389577 . . . . . 200, 202, 204
4700389840 . . . . . 166, 168, 170
4700390742 . . . . . 98, 100, 118
4700390963 272
4700391115 . . . . . 176, 184
4700391784 224
4700391929 62
4700392011 46
4700392070 300
4700392227 44
4700392229 44
4700392230 44
4700392232 44
4700392509 46
4700392510 46
4700393204 282
4700393206 282
4700393540 . . . . . 36, 38, 40, 42
4700393542 46
4700393697 46
4700394253 94
4700394301 298

4700395394 224
4700396215 . . . . . 262, 264, 266
4700396768 208
4700416034 . . . . . 122, 234, 244, 262
4700476019 298
4700480124 132
4700482208 154
4700482214 154
4700482242 134
4700482306 132
4700482452 98
4700482483 158
4700482525 134
4700482553 98
4700482773 154
4700482830 98
4700482898 164
4700482998 98
4700483069 100
4700483118 98
4700483155 134
4700483157 134
4700483162 134
4700483164 100
4700483404 158
4700483420 158
4700483585 164
4700483765 148
4700483854 144
4700483875 144
4700484080 . . . . . 160, 162
4700484092 122
4700484316 . . . . . 122, 122
4700484346 156
4700485019 296
4700499162 204
4700499497 78
4700500006 . . . . . 166, 168, 170
4700500007 224
4700500012 208
4700500013 . . . . . 68, 84, 86, 96
4700500016 . . . . . 36, 40
4700500019 . . . . . 36, 40, 132, 208, 212, 216, 220
4700500020 . . . . . 46, 98, 172, 268, 272, 276
4700500021 . . . . . 68, 76, 270, 288, 310
4700500022 . . . . . 92, 142, 168, 170, 252, 260
4700500023 282
4700500024 50
4700500028 . . . . . 44, 56, 58, 204
4700500029 60
4700500030 . . . . . 62, 86, 86, 224, 288
4700500031 . . . . . 226, 240, 252, 260
4700500034 . . . . . 154, 156
4700500037 . . . . . 98, 120
4700500040 70
4700500044 62
4700500046 68
4700500047 100
4700500048 226
4700500053 . 44, 44, 68, 76, 76, 84, 90, 94, 96, 100, 134, 134, 240, 244, 252, 254, 260, 272
4700500056 304
4700500060 176
4700500067 . . . . . 50, 132
4700500068 . . . . . 100, 120
4700500071 288
4700500075 228
4700500078 . . . . . 132, 142
4700500079 282
4700500080 298
4700500088 . . . . . 262, 264, 266
4700500094 304
4700500096 184
4700500100 . . . . . 36, 40, 80, 82
4700500105 50
4700500115 84
4700500117 . . . . . 212, 216
4700500143 . . . . . 200, 202
4700500180 . . . . . 234, 240
4700500190 44
4700500195 . . . . . 54, 288
4700500196 . . . . . 220, 288
4700500269 . . . . . 98, 120
4700500505 . . . . . 144, 212, 214, 216, 218, 220, 222, 230, 232
4700500506 120
4700508005 . . . . . 272, 274
4700508018 76
4700508019 78
4700508029 . . . . . 134, 134, 142
4700508048 . . . . . 144, 240
4700508092 . . . . . 234, 268, 274
4700508096 . . . . . 74, 100, 120
4700513017 224
4700516042 288
4700533016 154
4700533070 . . . . . 272, 276
4700535008 298
4700570004 228
4700570005 . . . . . 52, 284
4700573005 184
4700586001 . . . . . 166, 168, 170, 176, 272, 276, 298
4700586002 . . . . . 228, 232, 298

4700586003 . 50, 50, 84, 100, 120, 168, 170, 172, 176, 200, 202, 230, 268, 272, 276, 310
4700586018 36, 40, 60, 76, 100, 122, 182, 204, 224, 240, 252, 260, 288
4700586019 . . . . . 54, 212, 216, 220, 288, 304
4700586020 . . . . . 278, 280
4700600002 154
4700600004 . . . . . 36, 40
4700600008 288
4700600016 148
4700601001 298
4700603009 270
4700603018 . . . . . 134, 142
4700615076 . . . . . 36, 40
4700630019 148
4700635061 . . . . . 150, 284
4700791185 228
4700791211 228
4700791226 . . . . . 230, 232
4700791274 290
4700791304 50
4700791333 . . . . . 214, 218, 222, 242
4700791343 . . . . . 214, 218, 222
4700791396 . . . . . 284, 286
4700791397 . . . . . 142, 160
4700791398 . . . . . 120, 142, 148, 156
4700791401 148
4700791405 148
4700791408 120
4700791409 . . . . . 124, 160, 162
4700791410 120
4700791414 148
4700791422 92
4700791453 282
4700791454 282
4700791476 224
4700791524 . . . . . 232, 244, 250, 252, 252, 254, 260, 260
4700791568 44
4700791572 . . . . . 278, 280
4700791578 224
4700791579 224
4700791580 224
4700791581 142
4700791583 . . . . . 190, 196
4700791584 . . . . . 190, 196
4700791585 . . . . . 200, 204
4700791587 178
4700791588 224
4700791643 206
4700791666 . . . . . 52, 84, 86, 86
4700791699 142
4700791704 206
4700791723 . . . . . 166, 168, 170
4700791739 . . . . . 166, 168, 170
4700791745 . . . . . 120, 144
4700791754 180
4700791774 92
4700791775 230
4700791798 120
4700791799 . . . . . 124, 142, 142
4700791820 . . . . . 160, 162
4700791828 . . . . . 120, 124
4700791841 . . . . . 144, 144
4700791843 144
4700791845 156
4700791847 148
4700791851 120
4700791916 . . . . . 190, 196
4700791926 . . . . . 240, 252, 260
4700791938 50
4700791939 50
4700791949 44
4700791951 192
4700791953 . . . . . 192, 198
4700791954 194
4700791955 194
4700791957 180
4700791959 44
4700791977 46
4700791980 . . . . . 200, 202
4700791981 . . . . . 200, 202
4700792059 198
4700792072 . . . . . 46, 50
4700792083 224
4700792091 . . . . . 154, 156, 228
4700792098 208
4700792119 70
4700792134 50
4700792137 296
4700792138 296
4700792139 296
4700792140 296
4700792141 296
4700792185 294
4700792189 52
4700792250 70
4700792320 224
4700792332 120
4700792338 120
4700792413 . . . . . 190, 196
4700792441 . . . . . 166, 168, 170
4700792512 120

4700792527 . . . . . 278, 280
4700792550 . . . . . 300, 302
4700792551 160
4700792552 160
4700792600 . . . . . 44, 46
4700792601 . . . . . 36, 40
4700792609 310
4700792779 44
4700813443 100
4700813444 98
4700813500 164
4700892179 . . . . . 28, 56, 58
4700892446 100
4700900229 144
4700900519 282
4700900790 . . . . . 192, 198
4700900986 . . . . . 284, 286
4700901156 98
4700901157 100
4700901191 46
4700901224 34
4700901225 . . . . . 34, 154, 156, 166, 190, 196, 228, 310
4700901226 34
4700901227 . . . . . 34, 166, 168, 170, 190, 196, 228
4700901228 . . . . . 34, 166, 168, 170, 228
4700901229 34
4700901230 . . . . . 34, 166, 168, 170
4700901369 180
4700901431 44
4700901432 44
4700901692 132
4700901744 108
4700901750 108
4700901767 . . . . . 154, 156, 228
4700901832 . . . . . 120, 142
4700902041 . . . . . 120, 144
4700902059 . . . . . 56, 58
4700902060 . . . . . 56, 58
4700902061 . . . . . 28, 56, 58
4700902062 . . . . . 28, 56, 58
4700902063 . . . . . 28, 56, 58
4700902100 . . . . . 36, 40, 56
4700902101 . . . . . 36, 38, 40, 42
4700902123 226
4700902166 . . . . . 84, 214, 218, 222
4700902171 . . . . . 36, 40
4700902172 . . . . . 36, 40
4700902189 . . . . . 236, 246, 256
4700902203 . . . . . 284, 286
4700902227 180
4700902233 . . . . . 100, 122
4700902286 . . . . . 84, 120
4700902287 . . . . . 50, 70, 132, 142
4700902295 . . . . . 88, 132, 142
4700902379 . . . . . 100, 120, 134, 134, 142, 142, 142, 142, 214, 218, 222
4700902387 306
4700902388 306
4700902389 306
4700902390 306
4700902391 306
4700902392 306
4700902397 306
4700902398 306
4700902399 306
4700902410 306
4700902411 306
4700902412 306
4700902413 306
4700902416 306
4700902496 282
4700902520 . . . . . 36, 40, 176
4700902560 176
4700902569 84
4700902576 . . . . . 56, 58, 150
4700902610 296
4700902619 108
4700902620 108
4700902624 104
4700902625 . . . . . 104, 108
4700902641 108
4700902644 108
4700902654 110
4700902670 104
4700902687 104
4700902695 104
4700902696 104
4700902724 104
4700902767 112
4700902770 112
4700902771 112
4700902773 112
4700902792 104
4700902797 . . . . . 212, 216, 220
4700902800 308
4700902810 . . . . . 138, 140
4700902890 84
4700902892 . . . . . 212, 216, 220
4700902919 . . . . . 212, 216, 220
4700903141 . . . . . 154, 156
4700903142 . . . . . 154, 156
4700903143 . . . . . 154, 156
4700903144 . . . . . 154, 156

4700903154 62
4700903192 . . . . . 212, 216, 220, 272, 276
4700903287 62
4700903295 306
4700903324 306
4700903327 308
4700903330 . . . . . 138, 140
4700903422 290
4700903423 290
4700903424 290
4700903425 . . . . . 230, 232, 290
4700903430 140
4700903450 306
4700903453 306
4700903455 308
4700903459 . . . . . 224, 290
4700903471 108
4700903478 44
4700903557 . . . . . 108, 108
4700903634 . . . . . 284, 286
4700903637 . . . . . 138, 140
4700903658 224
4700903714 . . . . . 80, 82
4700903722 282
4700903732 176
4700903741 . . . . . 34, 166, 168, 170, 228
4700903810 206
4700903925 98
4700903956 . . . . . 166, 168, 170, 190, 196
4700904036 176
4700904037 34
4700904038 34
4700904039 . . . . . 34, 166, 168, 170
4700904040 34
4700904041 34
4700904042 34
4700904044 . . . . . 234, 240
4700904094 288
4700904097 292
4700904175 154
4700904203 282
4700904213 . . . . . 300, 302
4700904218 . . . . . 272, 276
4700904225 . . . . . 212, 216, 220
4700904228 . 46, 62, 70, 84, 86, 86, 96, 208, 228, 232, 244, 250, 252, 252, 254, 260, 260, 262, 264, 266, 282, 298
4700904229 36, 40, 44, 50, 52, 68, 74, 76, 84, 90, 92, 98, 120, 134, 168, 170, 172, 180, 184, 186, 188, 192, 194, 198, 200, 202, 208, 212, 216, 220, 234, 240, 242, 244, 252, 252, 254, 260, 260, 268, 270, 272, 272, 272, 276, 282, 284, 288, 310, 310
4700904230 36, 38, 40, 42, 60, 62, 68, 76, 100, 100, 122, 132, 142, 154, 156, 174, 182, 204, 224, 226, 240, 252, 260
4700904231 . . . . . 68, 76, 98, 120, 212, 216, 220, 288, 304
4700904232 . . . . . 36, 38, 40, 42, 56, 304
4700904258 . . . . . 22, 62
4700904281 . . . . . 84, 166, 168, 170, 176, 224, 272, 276, 298
4700904294 34
4700904367 54
4700904396 290
4700904399 290
4700904429 284
4700904475 74
4700904556 . . . . . 70, 76, 76, 78, 132, 142, 214, 218, 222, 230, 274
4700904557 . . . . . 46, 68, 74, 134
4700904623 142
4700904637 . . . . . 98, 120
4700904640 . . . . . 44, 50, 80, 82, 94, 96, 100
4700904698 . . . . . 86, 86
4700904703 . . . . . 54, 68, 98, 120, 212, 216, 220, 278, 280, 288
4700904728 120
4700904734 76
4700904735 68
4700904774 142
4700904835 . . . . . 86, 290
4700904870 290
4700904889 206
4700904901 134
4700904956 . . . . . 180, 186, 188, 192, 194, 198
4700904984 . . . . . 92, 92, 92, 92, 92
4700904989 . . . . . 190, 196
4700908229 290
4700908328 306
4700908384 108
4700908788 306
4700908791 306
4700908792 306
4700908794 306
4700908800 306
4700909514 . . . . . 104, 108
4700909535 . . . . . 268, 272, 274
4700909536 . . . . . 268, 272, 274
4700909757 104
4700909758 104
4700909759 150
4700909760 150
4700909761 150
4700909764 150
4700909765 150
4700909766 150
4700910161 132
4700921022 . . . . . 100, 120
4700921072 . . . . . 200, 202

4700921099 . . . . . 100, 122
4700921104 70
4700921116 . . . . . 70, 92
4700921119 . . . . . 120, 134, 144
4700921849 . . . . . 216, 220
4700923008 76
4700923247 . . . . . 36, 38, 40, 42
4700923371 132
4700923405 . . . . . 120, 148
4700923406 164
4700923407 154
4700923734 44
4700923735 44
4700923844 . . . . . 212, 216, 220
4700923859 282
4700923951 . . . . . 22, 62
4700923976 . . . . . 84, 86, 86, 154
4700924544 46
4700924731 100
4700925599 46
4700926214 . . . . . 28, 56, 58, 150
4700926215 . . . . . 212, 216, 220
4700926911 44
4700927278 108
4700927396 . . . . . 38, 42, 56
4700927459 132
4700928347 . . . . . 278, 280
4700928381 84
4700928441 . . . . . 86, 86, 184
4700928830 226
4700928849 . . . . . 300, 302
4700929455 298
4700935158 104
4700935159 104
4700935160 104
4700935161 108
4700935162 108
4700935163 108
4700935164 108
4700935165 108
4700935166 108
4700935167 108
4700935170 . . . . . 108, 108
4700935171 108
4700935172 108
4700935176 108
4700935177 108
4700935178 108
4700935179 108
4700935181 108
4700935182 108
4700935183 108
4700935184 108
4700935186 110
4700935187 110
4700935188 110
4700935189 110
4700935190 . . . . . 110, 112
4700935191 110
4700935194 112
4700935195 112
4700935196 112
4700935197 112
4700935198 112
4700935199 112
4700935200 112
4700935201 112
4700935202 112
4700935203 112
4700935204 112
4700935205 112
4700935206 112
4700935207 112
4700935208 112
4700935209 112
4700935210 112
4700935211 112
4700935212 112
4700935214 112
4700935215 112
4700935216 112
4700935218 112
4700935219 104
4700935613 226
4700935614 226
4700936283 272
4700936690 104
4700936691 108
4700936692 108
4700936693 108
4700936706 110
4700937089 306
4700937090 308
4700937091 306
4700937092 306
4700937812 308
4700937875 306
4700937876 306
4700937877 306
4700937878 306
4700937879 306
4700937880 306

4700937881 306
4700937882 306
4700938534 28
4700938575 28
4700938740 274
4700938885 26
4700938892 24
4700938908 22
4700939802 . . . . . 16, 18, 78
4700939803 . . . . . 16, 18, 78
4700939804 78
4700939805 78
4700939806 78
4700939807 78
4700940451 . . . . . 32, 228
4700945622 272
4700945660 272
4700945661 272
4700945753 . . . . . 32, 94
4700950226 118
4700950293 118
4700950414 118
4700950415 118
4700950416 118
4700960079 206
4700960796 . . . . . 166, 168, 170
4700985012 . . . . . 192, 198
4700985013 298
4700985126 . . . . . 202, 204
4700989151 . . . . . 132, 142
4700991657 290
4700991658 290
4700999027 172
4811000077 202
4811000084 98
4811000128 . . . . . 166, 168, 170, 290
4811000168 44
4811000285 70
4811000320 . . . . . 166, 168, 170
4811000321 . . . . . 166, 168, 170
4811000322 . . . . . 166, 168, 170
4811000323 . . . . . 166, 168, 170
4811000347 164
4811000372 132
4811000382 134
4811000383 132
4811000389 74
4811000425 84
4811000426 . . . . . 86, 86
4811000428 148
4811000456 . . . . . 68, 100, 122
4811000457 46
4811000484 54
4811000488 . . . . . 84, 86
4811000489 . . . . . 84, 86
4812008274 18
4812013038 310
4812013160 312
4812013161 312
4812030096 . . . . . 6, 14
4812110216 . . . . . 182, 184
4812110281 98
4812110282 116
4812110283 282
4812110288 . . . . . 36, 38, 40, 42
4812110490 . . . . . 100, 120
4812110560 176
4812110620 62
4812110639 62
4812110673 62
4812110881 68
4812110901 228
4812111128 . . . . . 234, 240
4812111164 214
4812111325 44
4812111330 44
4812111331 46
4812111863 68
4812111865 68
4812111866 68
4812111867 68
4812111868 68
4812111877 90
4812111880 68
4812111881 100
4812111883 68
4812111899 68
4812111900 68
4812111905 68
4812111950 186
4812111951 . . . . . 192, 198
4812111952 194
4812111969 44
4812112013 240
4812112014 240
4812112019 74
4812112021 74
4812112029 76
4812112054 132
4812112074 . . . . . 44, 44, 44, 46, 46, 46
4812112091 . . . . . 214, 218, 222
4812112109 148

4812112390 68
4812112391 68
4812112451 46
4812112468 . . . . . 190, 196
4812112470 . . . . . 154, 156
4812112472 . . . . . 190, 196
4812112532 . . . . . 214, 218, 222
4812112566 . . . . . 154, 156
4812112669 . . . . . 272, 276
4812112831 46
4812112994 46
4812113018 . . . . . 36, 40
4812113022 68
4812113044 68
4812113066 44
4812113067 44
4812113077 . . . . . 200, 202, 204
4812113080 . . . . . 36, 40
4812113106 . . . . . 214, 218, 222
4812113107 . . . . . 214, 218, 222
4812113110 162
4812113164 . . . . . 262, 264, 266
4812113165 262
4812113166 264
4812113207 94
4812113228 74
4812113233 68
4812113235 68
4812113326 . . . . . 154, 156
4812113327 . . . . . 98, 120
4812113328 . . . . . 4, 6, 16, 18, 98
4812113333 132
4812113468 68
4812113472 76
4812113523 . . . . . 234, 240
4812113531 180
4812113557 174
4812113566 68
4812113598 84
4812113626 84
4812113627 84
4812113676 . . . . . 234, 236
4812113677 240
4812113694 88
4812113697 88
4812113780 68
4812113781 46
4812113822 44
4812113924 36
4812113937 264
4812113950 304
4812113980 68
4812113987 242
4812114152 84
4812114153 84
4812114177 68
4812114386 230
4812114466 276
4812114557 174
4812114665 298
4812114872 188
4812114962 86
4812114975 274
4812115001 274
4812115419 54
4812115560 86
4812115567 54
4812115865 . . . . . 262, 264, 266
4812115918 . . . . . 224, 290
4812115926 176
4812116681 . . . . . 36, 40
4812117591 60
4812117602 90
4812117698 144
4812117746 46
4812117802 90
4812117864 228
4812117868 228
4812117922 280
4812117923 278
4812117924 . . . . . 278, 280
4812117990 . . . . . 244, 252, 254, 260
4812118056 46
4812118125 96
4812118126 96
4812118133 96
4812118163 66
4812118165 84
4812118172 . . . . . 134, 142
4812118203 . . . . . 86, 86
4812118374 100
4812118375 90
4812118459 96
4812118517 76
4812118686 224
4812118692 62
4812118694 62
4812118697 224
4812118885 . . . . . 32, 96
4812119156 40
4812119157 40
4812119251 132

4812119569 166
4812119732 38
4812119733 36
4812119822 62
4812120017 50
4812120023 50
4812120024 . . . . . 30, 50
4812120026 52
4812120091 120
4812120109 290
4812120127 290
4812120184 42
4812120313 290
4812120391 62
4812120392 164
4812120470 . . . . . 36, 38, 40, 42
4812120478 80
4812120558 . . . . . 98, 120, 126
4812120571 84
4812120578 . . . . . 36, 38, 40, 42
4812120579 . . . . . 36, 38, 40, 42
4812120584 68
4812120586 58
4812120737 . . . . . 148, 152
4812120871 40
4812120874 58
4812120877 144
4812120878 144
4812120885 122
4812120928 120
4812120993 40
4812121186 76
4812121206 . . . . . 252, 260
4812121207 . . . . . 252, 260
4812121214 144
4812121215 144
4812121219 144
4812121220 . . . . . 144, 144
4812121226 . . . . . 122, 122, 156
4812121228 122
4812121229 122
4812121235 160
4812121236 . . . . . 160, 162
4812121239 . . . . . 160, 162
4812121272 . . . . . 200, 202, 204
4812121376 . . . . . 216, 220
4812121379 . . . . . 252, 260
4812121384 . . . . . 244, 252
4812121385 . . . . . 252, 260
4812121386 . . . . . 244, 254
4812121387 250
4812121463 122
4812121464 218
4812121508 144
4812121607 62
4812121617 142
4812121703 266
4812121708 144
4812121709 144
4812121710 142
4812121711 142
4812121769 122
4812121785 . . . . . 122, 122
4812121849 168
4812121856 50
4812121858 50
4812122182 144
4812122207 76
4812122208 76
4812122334 76
4812122477 40
4812122581 142
4812122610 . . . . . 200, 202, 204
4812122654 . . . . . 56, 58
4812122719 156
4812122939 . . . . . 254, 260
4812123023 156
4812123024 156
4812123096 . . . . . 144, 144
4812123537 162
4812123538 162
4812123608 84
4812124272 82
4812124321 46
4812124323 46
4812124324 46
4812124325 46
4812124327 46
4812124345 84
4812124461 310
4812124835 46
4812124961 310
4812125363 86
4812125370 86
4812125677 232
4812125908 222
4812125927 . . . . . 36, 40
4812126131 170
4812126298 232
4812126431 46
4812126907 46
4812127820 292

4812127923 292
4812127927 292
4812155168 118
4812156164 118
4812156165 118
4812156170 26
4812156259 . . . . . 4, 6, 8, 10, 12, 14, 16, 18, 72
4812156260 . . . . . 12, 14, 16, 18, 72
4812156261 . . . . . 16, 18, 72
4812156263 . . . . . 4, 6, 12, 14, 16, 18, 68, 72
4812156264 . . . . . 4, 6, 12, 14, 16, 18, 72
4812156265 4
4812156266 12
4812156267 16
4812156288 8
4812156355 72
4812156356 72
4812156357 72
4812156358 72
4812156359 72
4812156360 72
4812156362 72
4812156363 72
4812156364 72
4812156389 72
4812156490 . . . . . 236, 246, 256
4812156558 . . . . . 236, 238, 246, 248, 256, 258
4812156559 . . . . . 236, 238, 246, 248, 256, 258
4812156560 . . . . . 236, 238, 246, 248, 256, 258
4812156561 . . . . . 236, 238, 246, 248, 256, 258
4812156562 . . . . . 236, 238, 238, 246, 246, 248, 256, 256, 258
4812156563 . . . . . 236, 246, 256
4812156564 . . . . . 236, 246, 256
4812156565 . . . . . 236, 246, 256
4812156566 . . . . . 236, 246, 256
4812156567 236
4812156568 . . . . . 236, 246, 256
4812156569 . . . . . 236, 246, 256
4812156570 . . . . . 236, 246, 256
4812156571 . . . . . 236, 246, 256
4812156572 . . . . . 236, 246, 256
4812156573 . . . . . 236, 246, 256
4812156574 . . . . . 236, 246, 256
4812156575 236
4812156576 . . . . . 236, 238, 246, 248, 256, 258
4812156577 . . . . . 234, 244, 254
4812156755 118
4812156877 98
4812156878 98
4812156879 98
4812156880 98
4812156881 98
4812156882 98
4812157556 . . . . . 236, 246, 256
4812157598 72
4812157680 72
4812157787 118
4812157794 104
4812157870 80
4812157871 . . . . . 80, 82
4812157872 . . . . . 80, 82
4812157873 . . . . . 80, 82
4812157874 . . . . . 80, 82
4812157875 . . . . . 80, 82
4812157876 . . . . . 80, 82
4812157877 . . . . . 80, 82
4812158054 118
4812158055 118
4812158258 . . . . . 236, 246, 256
4812158259 . . . . . 236, 246, 256
4812158260 . . . . . 236, 246, 256
4812158267 . . . . . 238, 248, 258
4812159197 . . . . . 236, 246, 256
4812159198 . . . . . 236, 246, 256
4812159199 . . . . . 236, 246, 256
4812159251 . . . . . 236, 246, 256
4812159290 . . . . . 236, 246, 256
4812159291 . . . . . 236, 246, 256
4812159292 236
4812159563 . . . . . 6, 20
4812159564 . . . . . 10, 20
4812159565 . . . . . 14, 20
4812159566 18
4812159568 20
4812159571 20
4812159753 74
4812159788 118
4812159789 118
4812159961 30
4812160082 . . . . . 246, 256
4812160083 . . . . . 246, 256
4812160084 . . . . . 246, 256
4812160087 . . . . . 246, 256
4812160157 274
4812160158 274
4812160251 . . . . . 80, 82
4812160252 . . . . . 80, 82
4812160253 . . . . . 80, 82
4812160254 . . . . . 80, 82
4812160263 . . . . . 246, 256
4812160275 126
4812160379 . . . . . 246, 256

4812160380 . . . . . 246, 256
4812160381 . . . . . 236, 246, 256
4812160389 244
4812160593 . . . . . 238, 248, 258
4812160594 . . . . . 238, 248, 258
4812160651 152
4812160656 152
4812160657 152
4812160665 148
4812160760 144
4812160796 138
4812160797 146
4812160854 118
4812160957 136
4812161058 130
4812161079 82
4812161085 76
4812161096 306
4812161199 148
4812161278 130
4812161282 130
4812161396 32
4812161566 130
4812161588 144
4812161797 . . . . . 120, 130
4812161990 130
4812162174 126
4812162175 126
4812162176 126
4812162177 126
4812162178 126
4812162179 126
4812162181 126
4812162182 126
4812162183 126
4812162184 126
4812162185 126
4812162186 126
4812162187 126
4812162188 126
4812162189 126
4812162190 126
4812162191 126
4812162192 126
4812162193 126
4812162194 126
4812162195 126
4812162196 128
4812162197 128
4812162198 128
4812162199 128
4812162251 128
4812162252 128
4812162253 128
4812162254 128
4812162255 128
5580020624 . . . . . 6, 10, 18
9106230330 18
D433830401 132

Dynapac Compaction Equipment AB
Box 504, SE 371 23 Karlskrona, Sweden

www.dynapac.com