Parts Catalogue

DYNAPAC
FAYAT GROUP

FEVEREIRO 2018

CC1200 CC
Vibratory roller

CC1200 s/n 10000364xxA013743 - xxA020793
Kubota D1703 M-E3B (26 kW)

RUTHZIL TRATOR COMERCIAL DE PEÇAS LTDA 11 97083-6812 ROLANDO CITRANGULO



© 2018 Dynapac Compaction Equipment AB | No. 4812159867_B| 2018-02

Your Partner on the Road Ahead

dynapac.com

General information

Use only authorized parts. Any damage or malfunction caused by the use of unauthorized parts is not covered by Warranty or Product Liability.
Any unauthorized use or copying of the contents or any part thereof is prohibited. This applies in particular to trademarks, model denominations, part numbers, and drawings.

Instructions for use
This spare parts list contains no safety regulations and is merely intended to assist in the ordering of spare parts.
For information about operating, servicing, or repairing, the relevant Safety and operating instructions must be consulted at all costs.
Please observe the safety instructions listed in the relevant Safety and operating instructions!

CC1200 CC S/N 10000364x0A013743 - xxA020793 . . . 1

Service kits

4812156265 Service kit 50h . . . 3
4812159563 Service kit 50h Plus . . . 5
4812156288 Service kit 250 / 750 h . . . 7
4812159564 Service kit 250/750h Plus . . . 9
4812156266 Service kit 500h . . . 11
4812159565 Service kit 500h Plus . . . 13
4812156267 Service kit 1000 h . . . 15
4812159566 Service kit 1000h Plus . . . 17
4812159571 Start-up kit . . . 19

Repair kits

4700938908 Eccentric shaft kit . . . 21
4700938892 Drum rotation kit . . . 23
4700938885 Shock absorber kit, drum . . . 25
4700938575 Steering hitch kit . . . 27
4812159961 Scraper kit . . . 29

General - Keys and others

Keys . . . 31
Fuses . . . 33

Frame

Frame

Frames To 0A014775

Frame, front . . . 35
Frame, rear . . . 37

Frames From 0A014776

Frame, front . . . 39
Frame, rear . . . 41
Scraper . . . 43
Scrapers, spring loaded (option) . . . 45
Sprinkler system . . . 47
Towing device (option) . . . 52

Steering hitch

Steering hitch To 0A014837 incl. 0A014840 - 0A014888

4700358975 Steering hitch . . . 55

Steering hitch From 0A014838 excl. 0A014840 - 0A014888

4812120871 Steering hitch . . . 57
Protective plate, front lights (Option) . . . 59

Drum

Drum . . . 61

Engine room

Engine room . . . 64
Engine module . . . 67
4812110881 Diesel engine Kubota D1703 M-E3B (26 kW) . . . 71
Exhaust system . . . 73
Fan . . . 75
Air filter . . . 77

Water cooler

Water cooler To 0A015094

Water cooler . . . 79

Water cooler From 0A015095
Water cooler . . . 81

Engine hood, cpl

Engine hood, cpl To 0A015756
4812118163 Engine hood, cpl . . . 83

Engine hood cpl, From 0A015757 - xA018328
Engine hood, cpl . . . 85

Engine hood cpl, From xA018329
Engine hood, cpl . . . 87
Casing . . . 89
Cooler hoses . . . 91
Air hoses . . . 93
Fuel hoses . . . 95
Fuel system . . . 97

Hydraulic system

Propulsion system To A017368
Propulsion system . . . 99
4812119250 Hydraulic pump . . . 103
4812120089 Hydraulic motor . . . 105

Propulsion system From A017369
Propulsion system . . . 107
4812120558 Hydraulic motor . . . 111
4812120091 Hydraulic pump . . . 115

Vibration system

Vibration system To 0A014951
Vibration system . . . 117
4812160957 Seal kit . . . 121

Vibration system From 0A014952
Vibration system . . . 123
4812160957 Seal kit . . . See page 121
Steering system . . . 127
4812120737 Hydraulic cylinder . . . 129

Brake system To A017368
Brake system . . . 131

Brake system From A017369
Brake system . . . 133
Flow divider (option) . . . 135
Vibration shut-off Front drum (option) . . . 137
Rotating group, valves, charge pump . . . 139

Electrical equipment
Horn module . . . 143
Battery module . . . 145
Battery disconnector . . . 147

Cable harness

Cable harness To 0A015028 incl. 0A015030, 0A015032 - 0A015033, 0A015035 - 0A015036, 0A015038 - 0A015041, 0A015043 - 0A015044
Cable harness . . . 149

Cable harness From 0A015029 excl. 0A015030, 0A015032 - 0A015033, 0A015035 - 0A015036, 0A015038 - 0A015041, 0A015043 - 0A015044 To xA019769
Cable harness . . . 151

Cable harness From xA019770
Cable harness . . . 153

Working lights
Working lights . . . 155
Working lights front . . . 157
Working light rear . . . 159
Working light (option) rear . . . 161
Casing rear . . . 163
Cover plate rear . . . 165
Rotating beacon for ROPS (option) . . . 167
Back-up alarm . . . 169

Drivers platform
Drivers platform . . . 171

Platform module

Platform module To 0A013742 incl. 0A013744 - 0A013745, 0A013747 - 0A013749, 0A013751, 0A013753 - 0A013760
Platform module . . . 173
Platform mount . . . 175

Platform module From 0A013743 excl. 0A013744 - 0A013745, 0A013747 - 0A013749, 0A013751, 0A013753 - 0A013760
Platform module . . . 177
Platform . . . 179

Platform module From xx019397
Platform module . . . 181
Platform . . . 183
Instrument panel module . . . 185
Steering wheel . . . 187
Control module . . . 189

Standard ECU module

Standard ECU module To xA019769
Standard ECU module . . . 191

Standard ECU From xA019770
ECU . . . 193

Forward-Reverse control module

Forward-Reverse control module To A015617
Forward-Reverse control module . . . 195
4812121384 Forward & Reverse control . . . 197
Cover plate, Dual F&R-control, left side . . . 201
4812124935 Modification kit control cable . . . 203

Forward-Reverse control module From A015618 To A017368
Forward-Reverse control module . . . 205
4812122939 Forward & Reverse control . . . 207
Cover plate, Dual F&R-control, left side . . . See page 201
4812124935 Modification kit control cable . . . See page 203

Forward-reverse control module From A017369
Forward-Reverse control module . . . 211
4812122939 Forward & Reverse control . . . See page 207

Cover plate, Dual F&R-control, left side . . . . . See page 201

Throttle control

Throttle control, cpl 213

Throttle control cpl - Dual frequency To 0A014939

Throttle control cpl, Dual frequency 215

Throttle control cpl - Dual frequency From 0A014940

Throttle control cpl, Dual frequency (option) 217

Seat laterally adjusting 219

Driver's seat, without armrests 221

Seat belt module 3" 223

Seat belt module 2" 225

Rops (option) 227

ROPS, foldable 229

Decals

Decals 231

Plain Dynapac decals, kit 233

Optional equipment

FleetLink module 235

4812013038 GPS module 237

Appendix B:Parts Index 239

CC1200 CC S/N 10000364x0A013743 - xxA020793



Item	Part No.	Name	Qty	L	SN INFO
0	-	Service kits	1		
0	-	Repair kits	1		
10	-	Operator platform	1		
20	-	Drum	2		
30	-	Engine room	1		
50	-	Hydraulic system	1		
60	-	Electric equipment	1		
70	-	Drivers platform	1		
80	-	Decals	1		
91	-	Optional equipment	1		

Service kits 4812156265 Service kit 50h

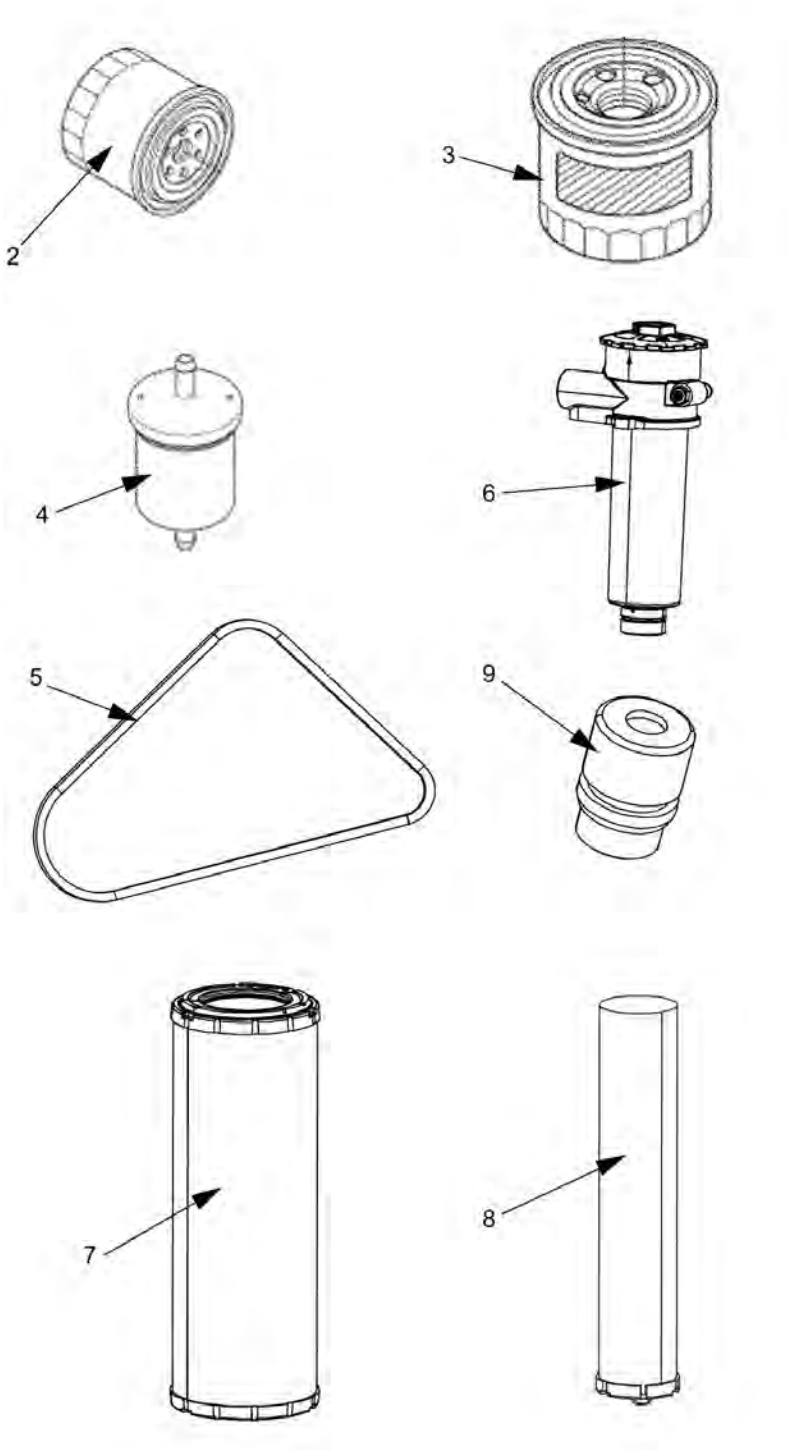

Item	Part No.	Name	Qty	L	SN INFO
0	4812156265	Service kit 50h	1		
2	4812156259	Engine oil filter element	1		
3	4812156263	Fuel filter element	1		
4	4812156264	Pre-fuel filter element	1		
6	4812113328	Hydraulic oil filter element	1		

Service kits 4812159563 Service kit 50h Plus

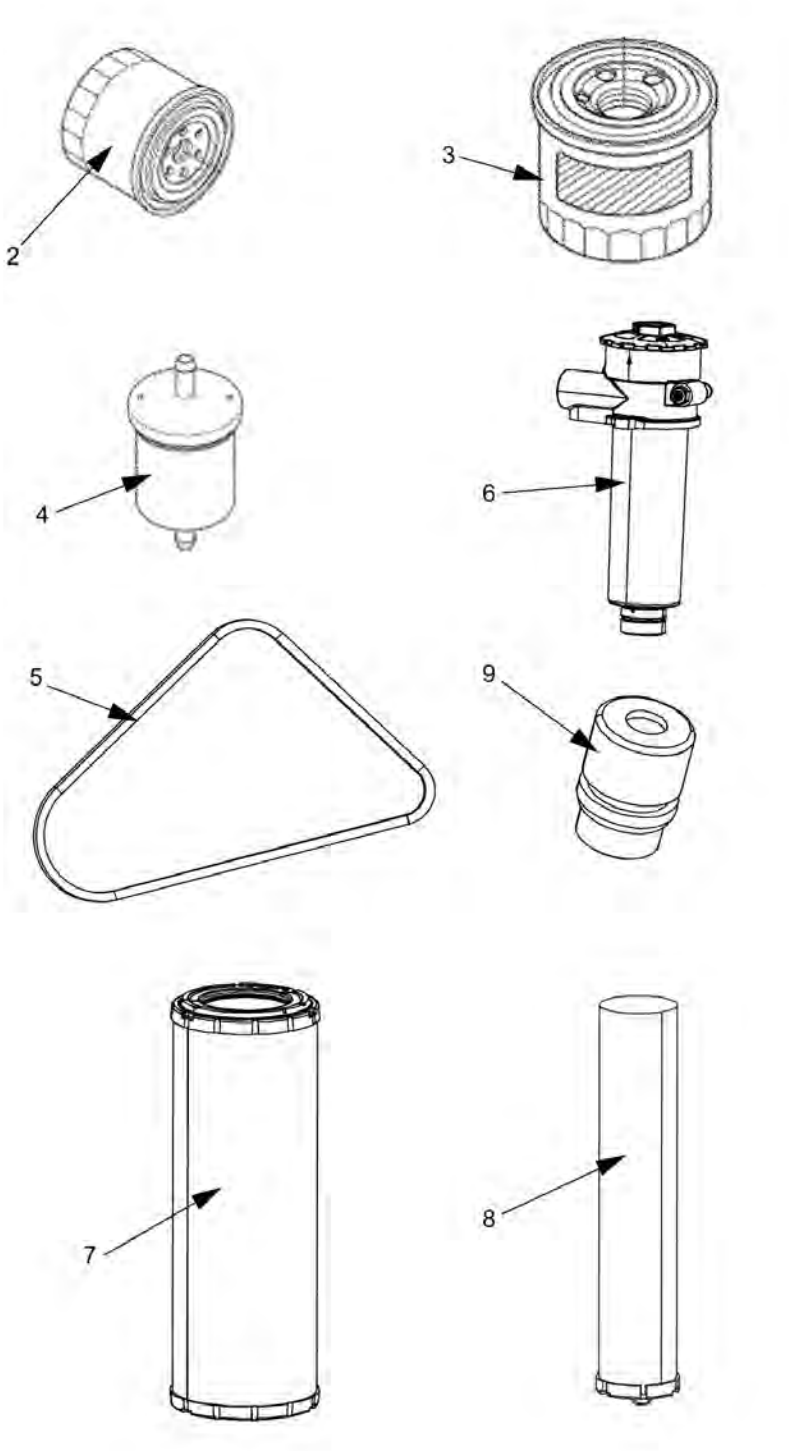

Item	Part No.	Name	Qty	L	SN INFO
0	4812159563	Service kit 50h Plus			
2	4812156259	Engine oil filter element	1		
3	4812156263	Fuel filter element	1		
4	4812156264	Pre-fuel filter element	1		
6	4812113328	Hydraulic oil filter element	1		
10	5580020624	Engine oil 100 / 5 ltr.	2		
11	4812030096	Dynapac Roller Grease	1		

Service kits 4812156288 Service kit 250 / 750 h

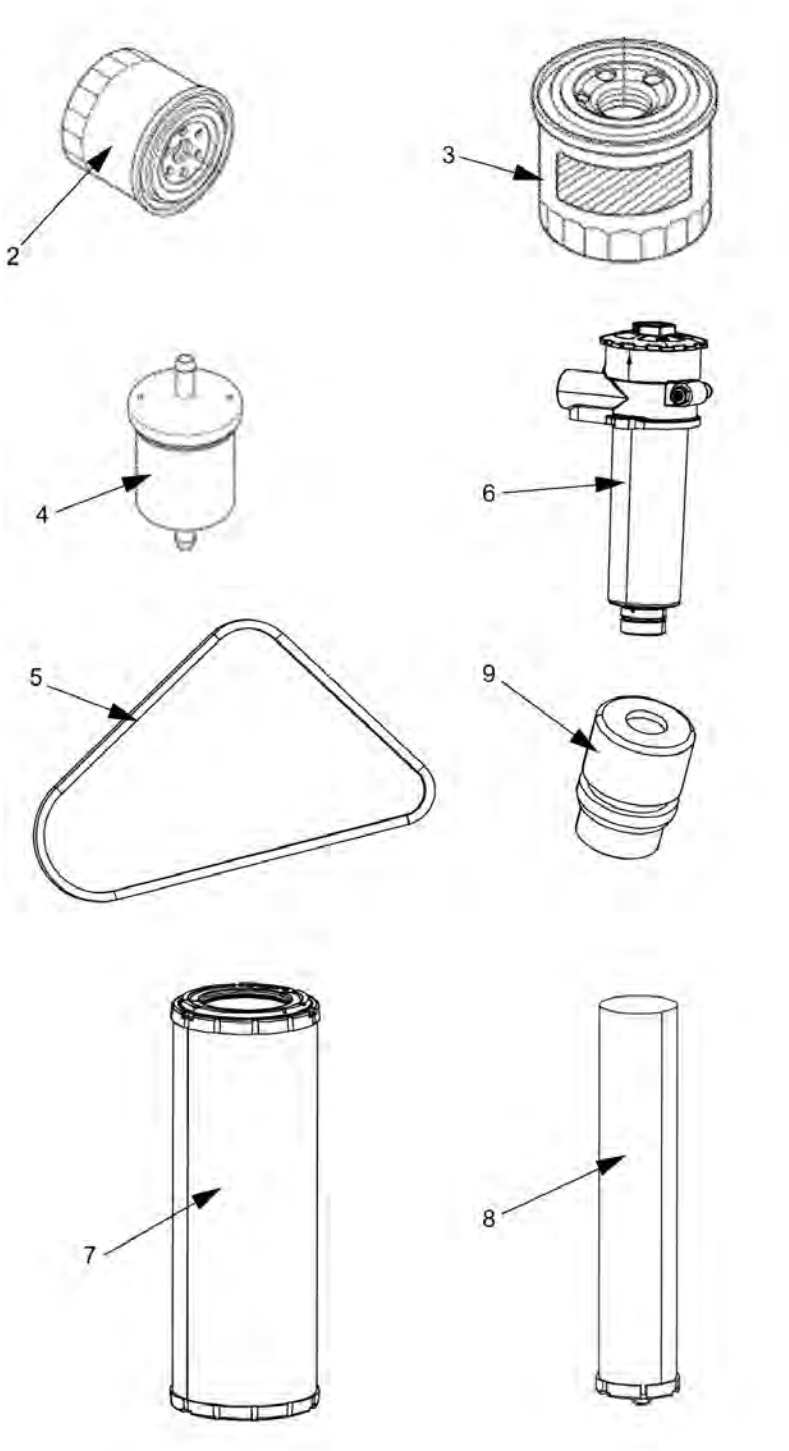

Item	Part No.	Name	Qty	L	SN INFO
0	4812156288	Service kit 250 / 750 h	1		
2	4812156259	Engine oil filter element	1		

Service kits 4812159564 Service kit 250/750h Plus

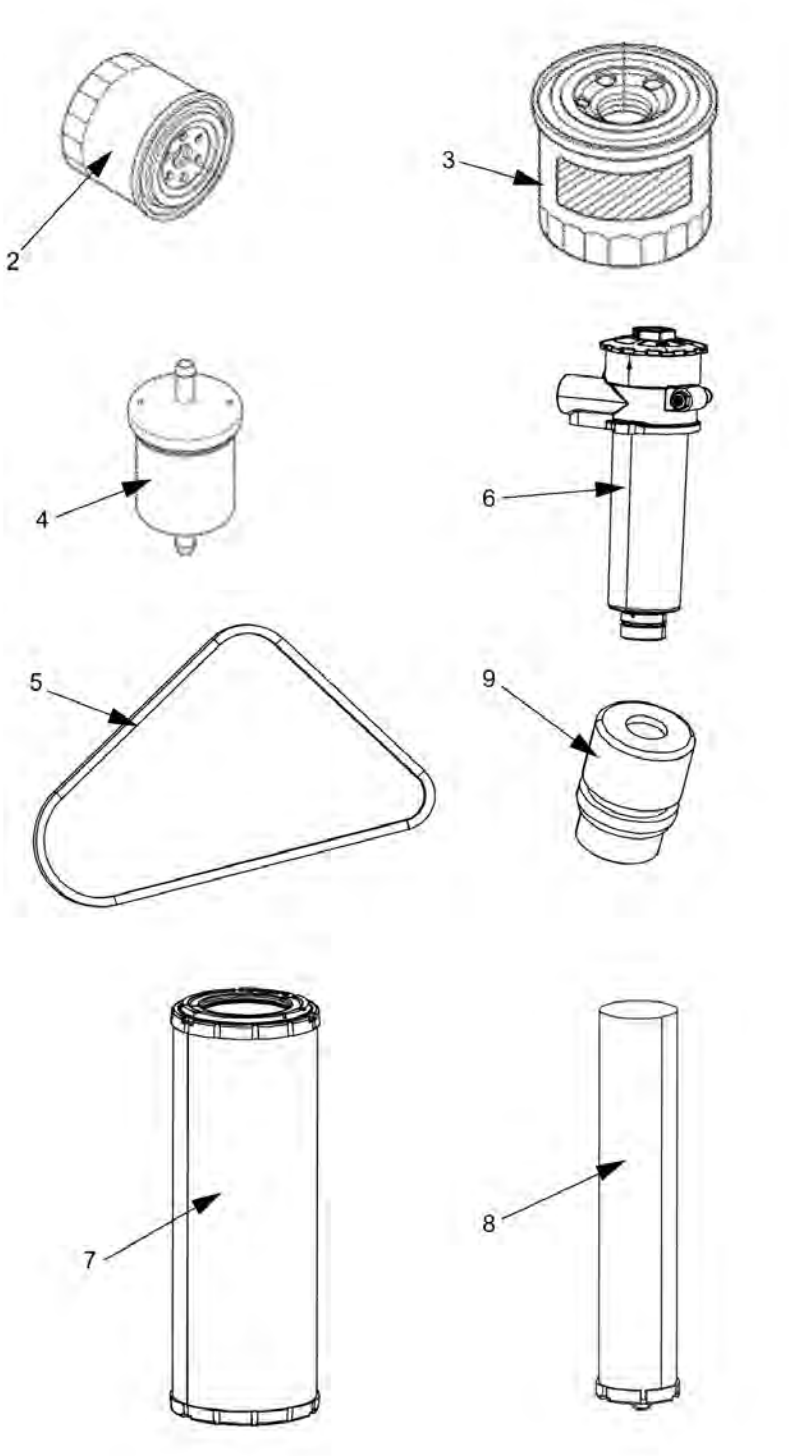

Item	Part No.	Name	Qty	L	SN INFO
0	4812159564	Service kit 250/750h Plus			
2	4812156259	Engine oil filter element	1		
10	5580020624	Engine oil 100 / 5 ltr.	2		

Service kits 4812156266 Service kit 500h

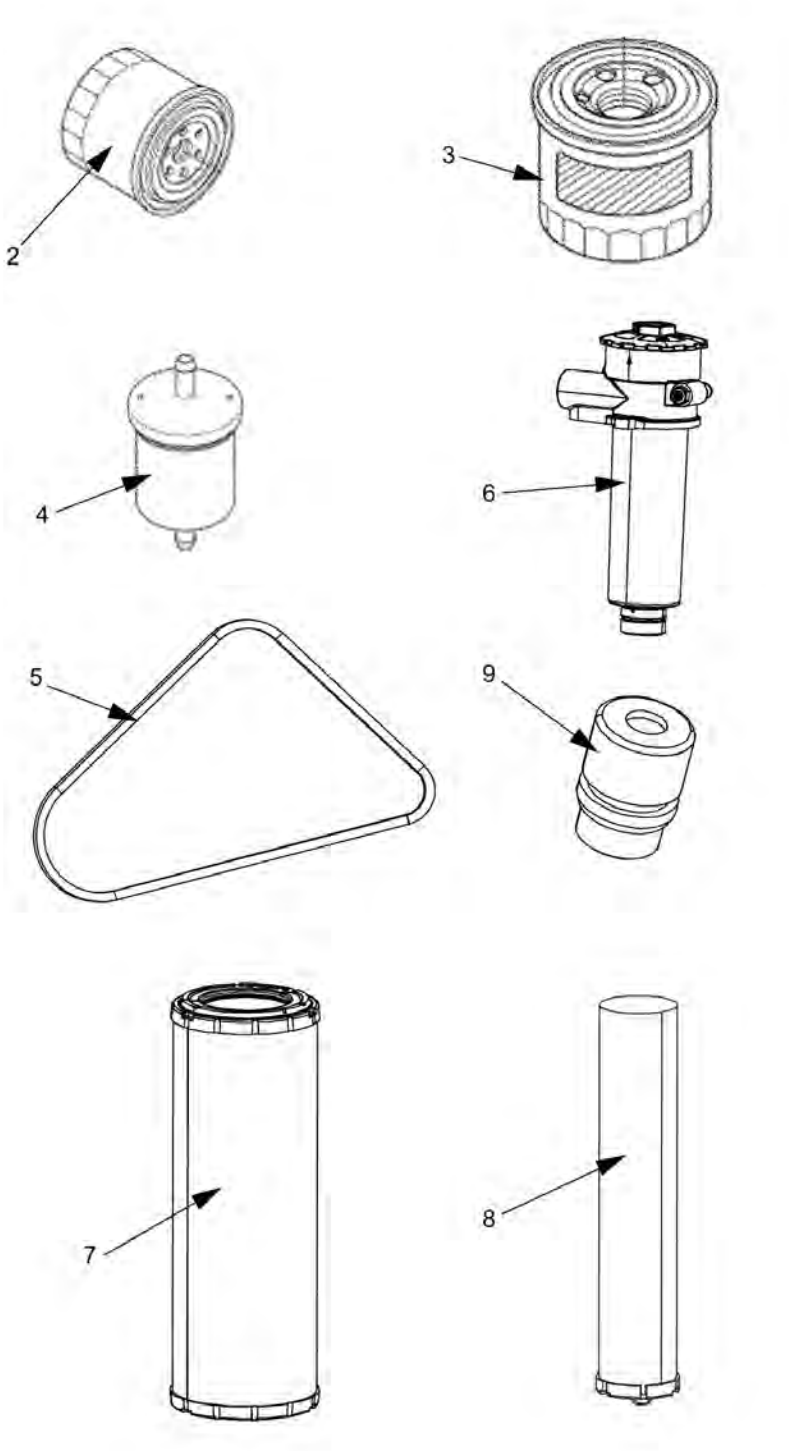

Item	Part No.	Name	Qty	L	SN INFO
0	4812156266	Service kit 500h	1		
2	4812156259	Engine oil filter element	1		
3	4812156263	Fuel filter element	1		
4	4812156264	Pre-fuel filter element	1		
5	4812156260	V-belt	1		

Service kits 4812159565 Service kit 500h Plus

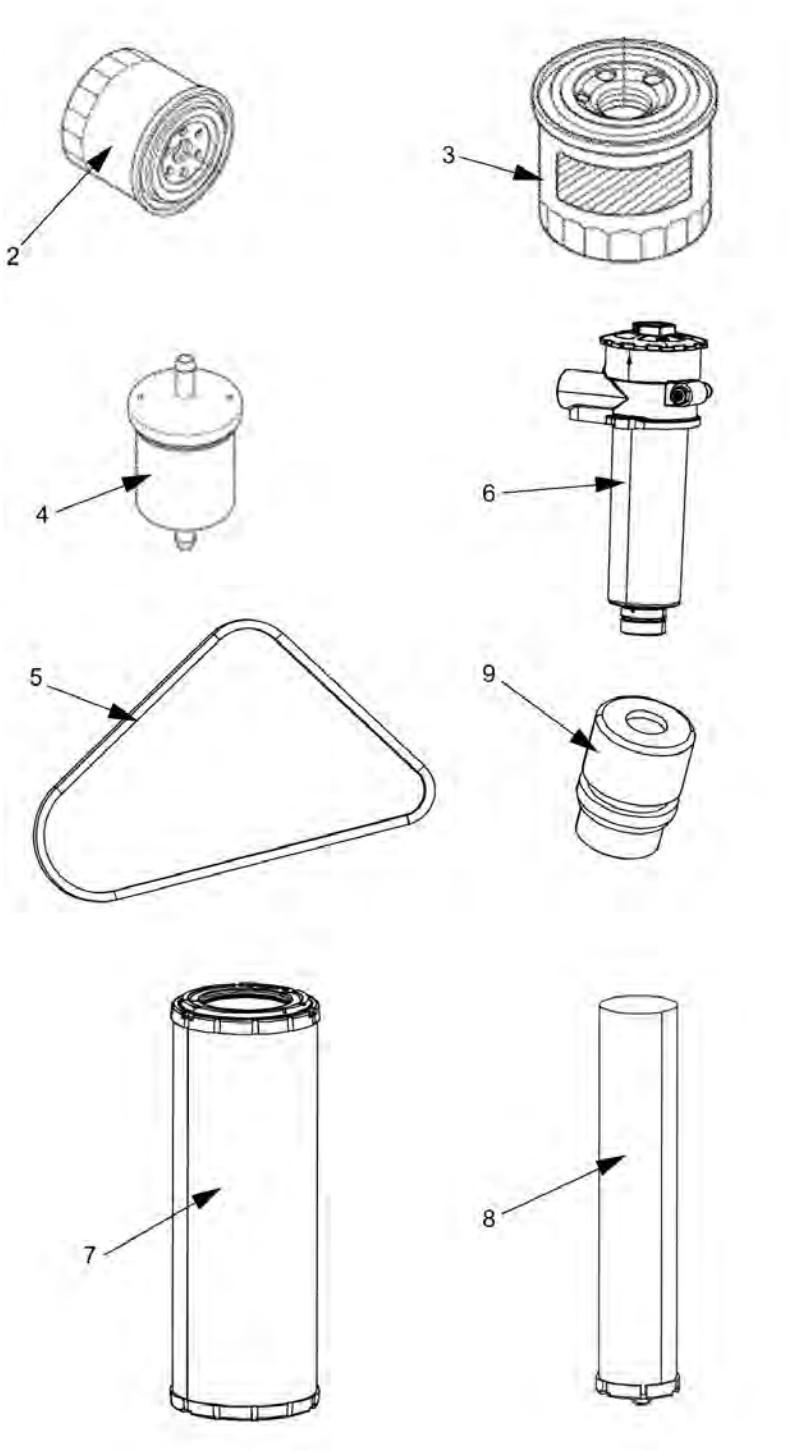

Item	Part No.	Name	Qty	L	SN INFO
0	4812159565	Service kit 500h Plus			
2	4812156259	Engine oil filter element	1		
3	4812156263	Fuel filter element	1		
4	4812156264	Pre-fuel filter element	1		
5	4812156260	V-belt	1		
10	4812030096	Dynapac Roller Grease	1		

Service kits 4812156267 Service kit 1000 h

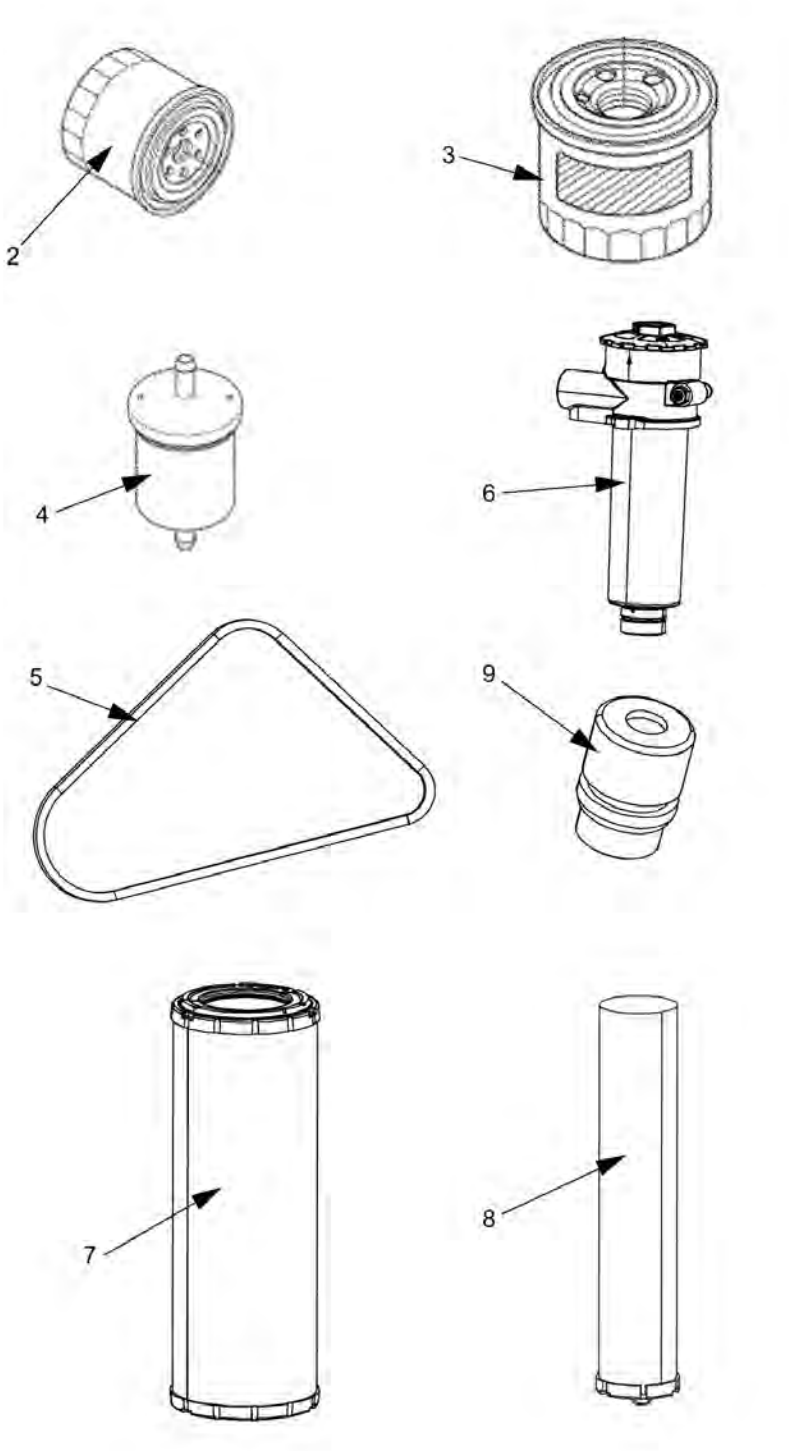

Item	Part No.	Name	Qty	L	SN INFO
0	4812156267	Service kit 1000 h	1		
2	4812156259	Engine oil filter element	1		
3	4812156263	Fuel filter element	1		
4	4812156264	Pre-fuel filter element	1		
5	4812156260	V-belt	1		
6	4812113328	Hydraulic oil filter element	1		
7	4700939802	Air filter element Main	1		
8	4700939803	Air filter element Safety	1		
9	4700357138	Ventilating filter	1		
10	4812156261	Valve cover gasket	1		

Service kits 4812159566 Service kit 1000h Plus

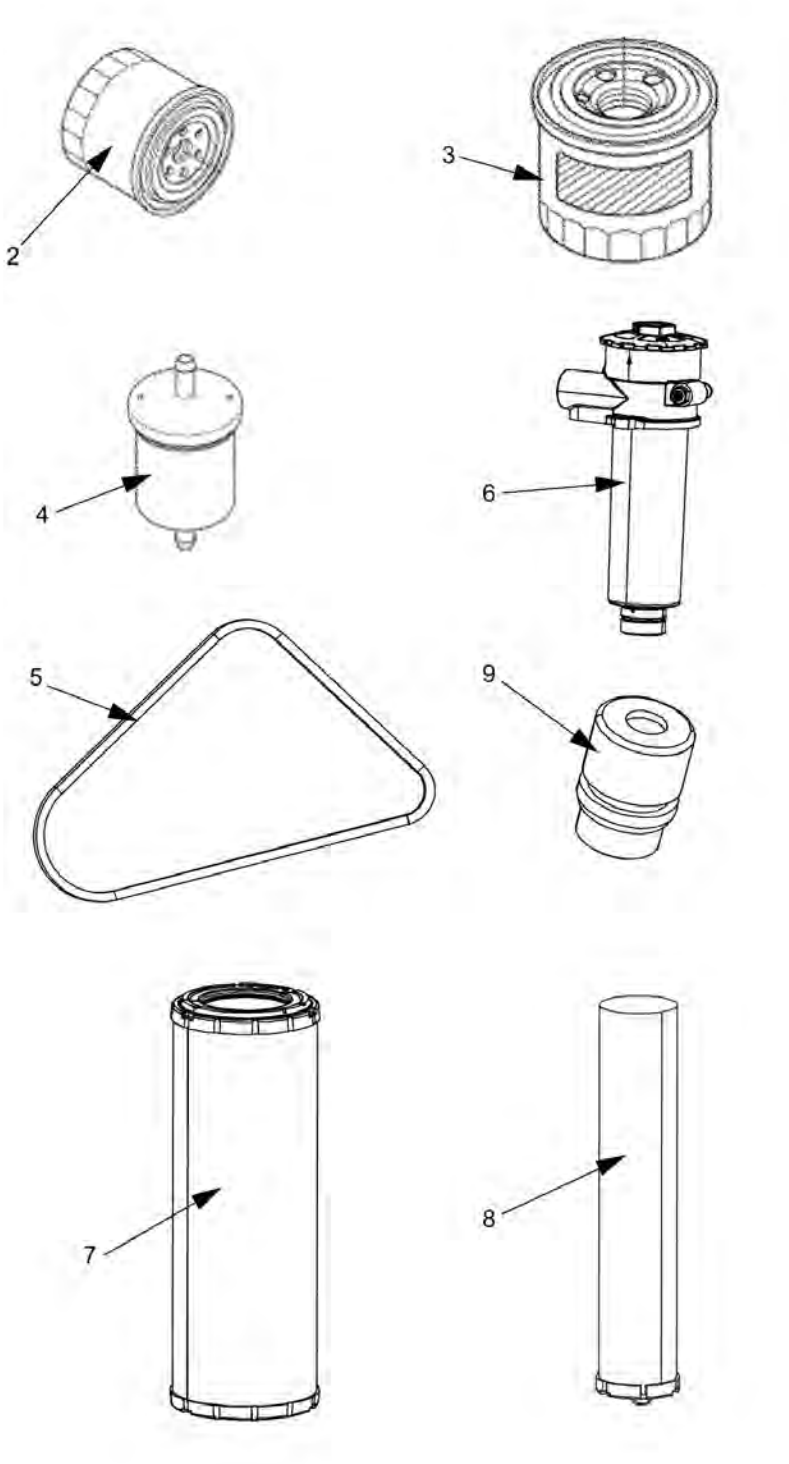

Item	Part No.	Name	Qty	L	SN INFO
0	4812159566	Service kit 1000h Plus			
2	4812156259	Engine oil filter element	1		
3	4812156263	Fuel filter element	1		
4	4812156264	Pre-fuel filter element	1		
5	4812156260	V-belt	1		
6	4812113328	Hydraulic oil filter element	1		
7	4700939802	Air filter element Main	1		
8	4700939803	Air filter element Safety	1		
9	4700357138	Ventilating filter	1		
10	4812156261	Valve cover gasket	1		
11	5580020624	Engine oil 100 / 5 ltr.	2		
12	9106230330	Atlas Copco fluid hydraulic oil 300 / 20 liters	3		
13	4812008274	AC Fluid Gearbox 100 / 5 ltr.	3		

Service kits 4812159571 Start-up kit

NO EXPLODED VIEW
AVAILABLE
FOR THIS BOM

Item	Part No.	Name	Qty	L	SN INFO
0	4812159571	Start-up kit			
1	4812159563	Service kit 50h Plus	1		
2	4812159564	Service kit 250/750h Plus	2		
3	4812159565	Service kit 500h Plus	1		
4	4812159568	Service kit 1000h Plus	1		

Repair kits 4700938908 Eccentric shaft kit

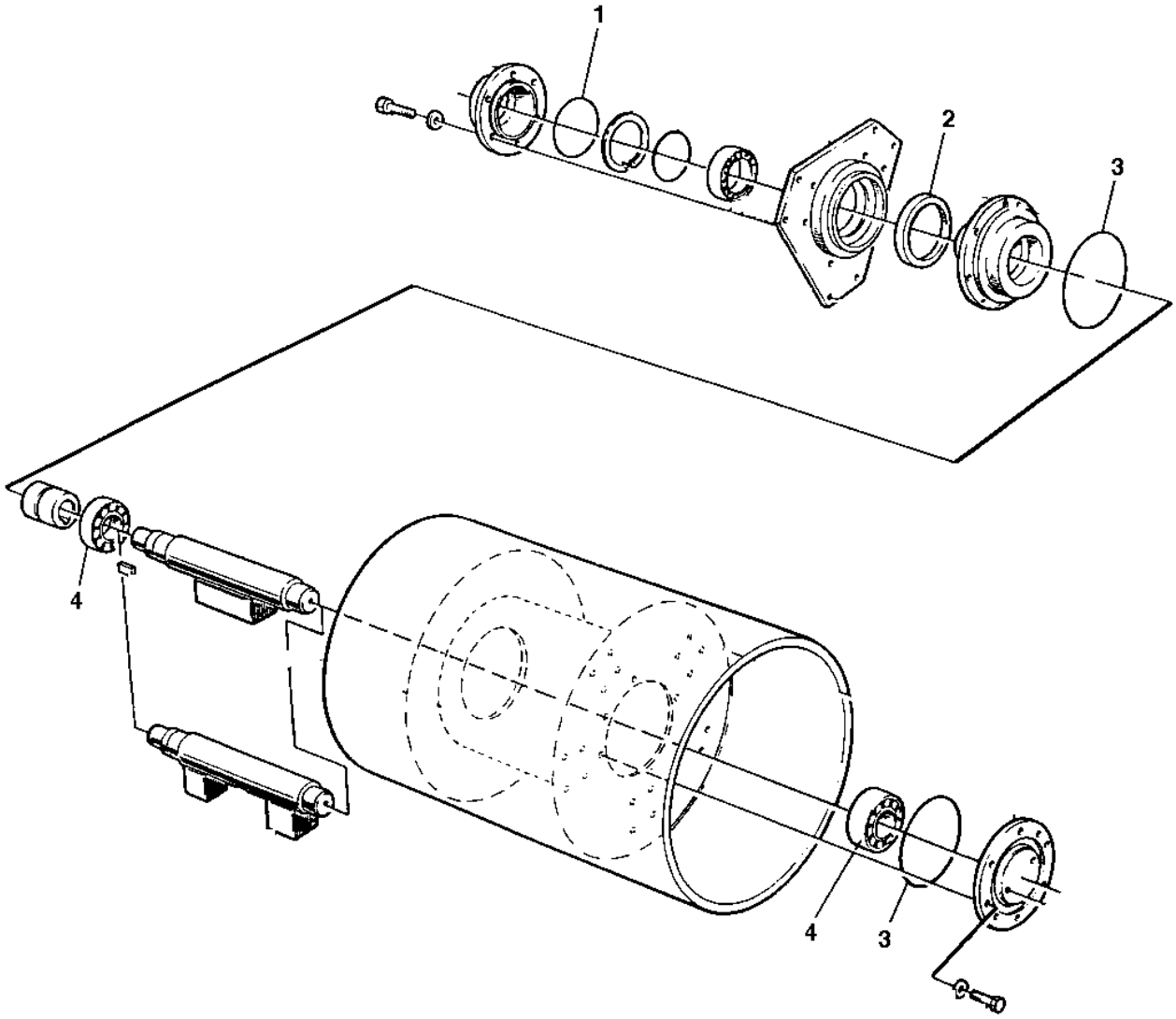

Item	Part No.	Name	Qty	L	SN INFO
0	4700938908	Eccentric shaft kit			
1	4700160132	O-ring 70	1		
2	4700163049	Radial lip-type seal	1		
3	4700923951	O-ring	2		
4	4700904258	Spherical roller bearing	2		

Repair kits 4700938892 Drum rotation kit

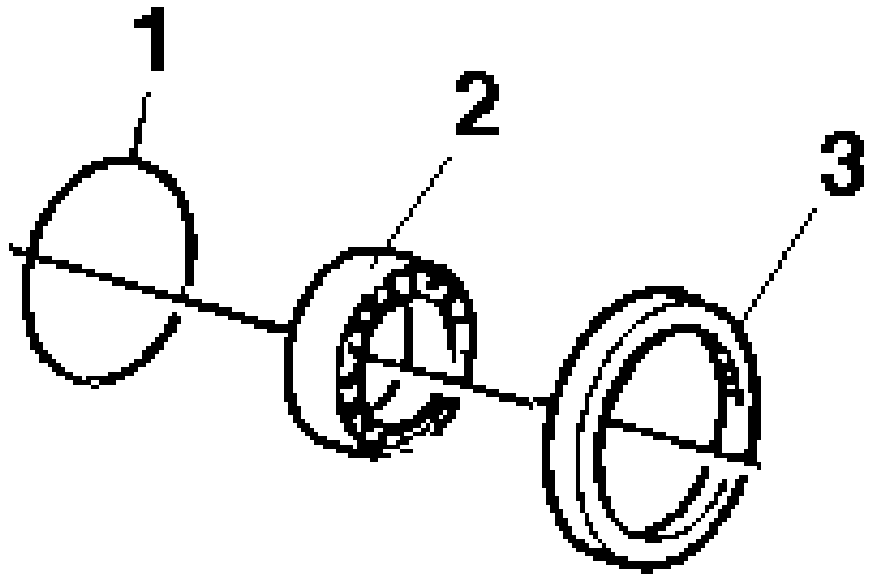

Item	Part No.	Name	Qty	L	SN INFO
0	4700938892	Drum rotation kit			
1	4700160132	O-ring 70	1		
2	4700111018	Ball bearing	1		
3	4700163049	Radial lip-type seal	1		

Repair kits 4700938885 Shock absorber kit, drum

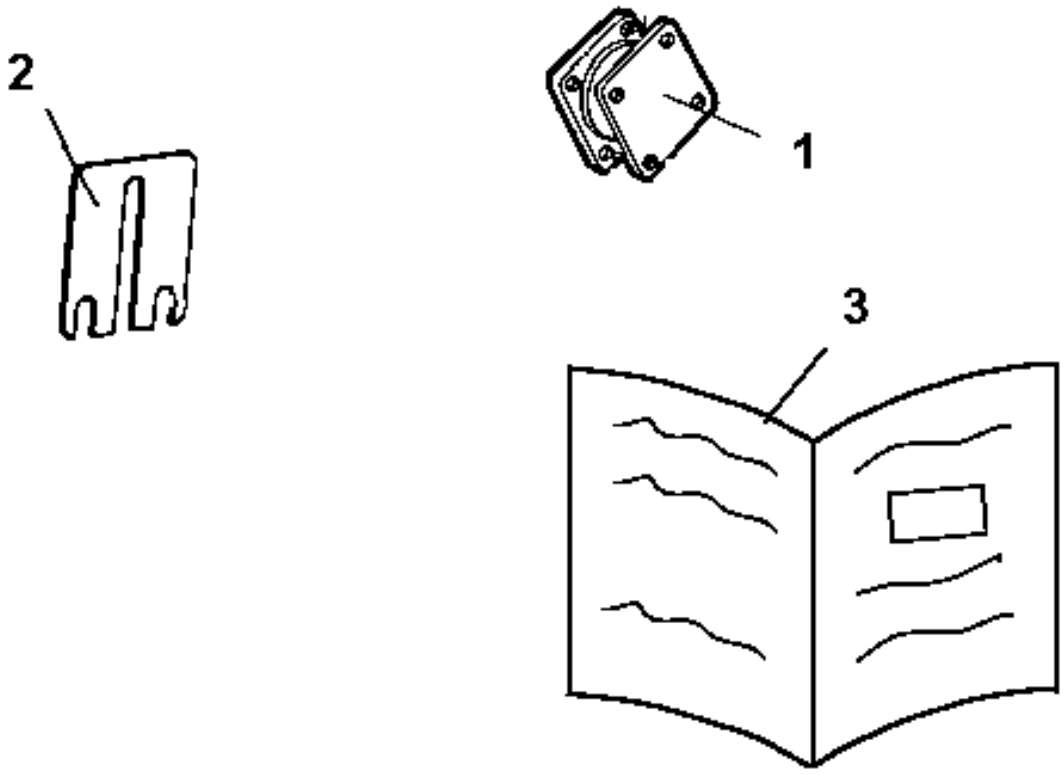

Item	Part No.	Name	Qty	L	SN INFO
0	4700938885	Shock absorber kit, drum			
1	4700345215	Shock absorber	8		
2	4700357222	Shim T=1 mm	4		
3	4812156170	Instructions	1		

Repair kits 4700938575 Steering hitch kit

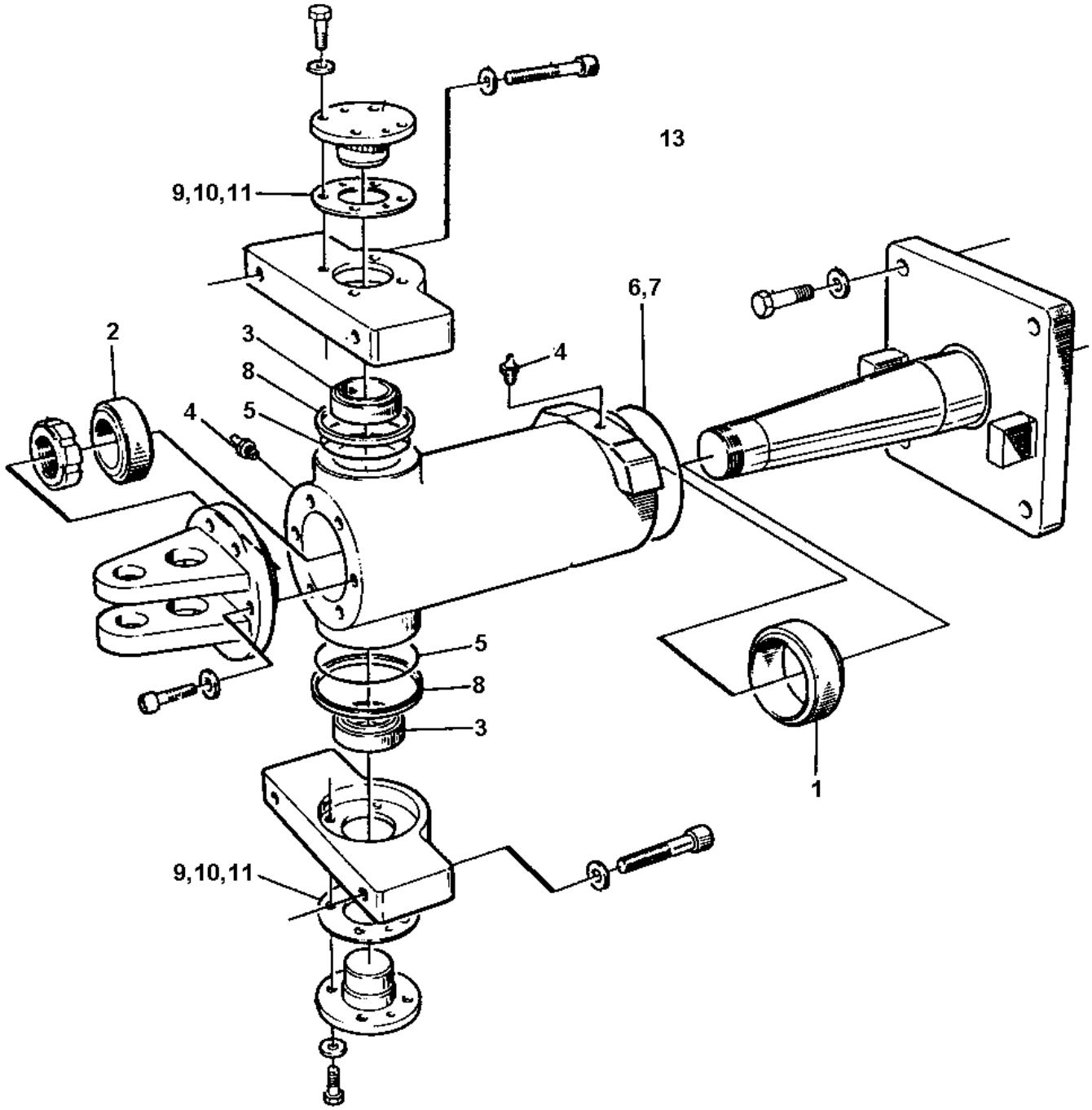

Item	Part No.	Name	Qty	L	SN INFO
0	4700938575	Steering hitch kit			
1	4700902063	Bushing	1		
2	4700902062	Bushing	1		
3	4700902061	Bushing	2		
4	4700926214	Grease fitting	1		
5	4700167044	V-ring	2	A	
6	4700160112	O-ring	1		
7	4700892179	O-ring	1		
8	4700357418	Sealing	2		
9	4700347153	Shim T=0,2 mm	2		
10	4700347154	Shim T=0,4 mm	2		
11	4700347155	Shim T=0,8 mm	2		
13	4700938534	Lube grease	1		

Comments for Page: 4700938575 Steering hitch kit

(L)OCAL REMARKS

A | en_US | For improved function this replaces earlier used 4700160032

Repair kits 4812159961 Scraper kit

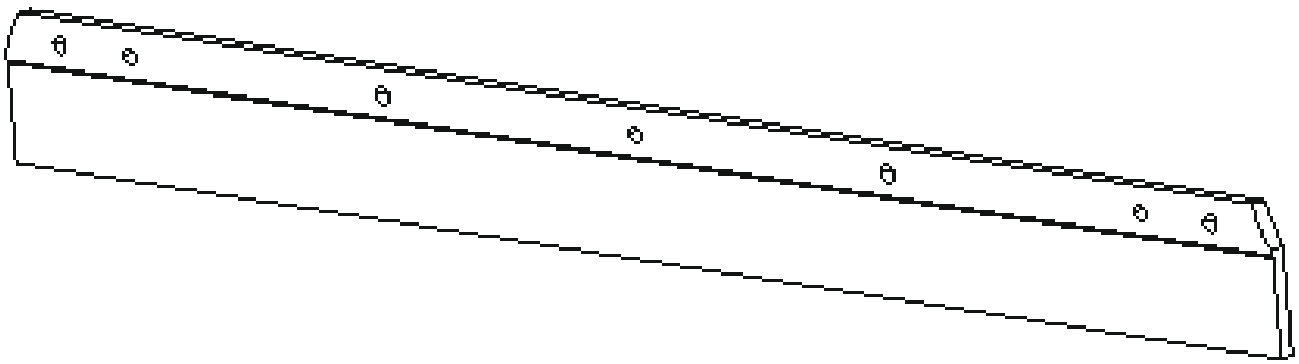

Item	Part No.	Name	Qty	L	SN INFO
0	4812159961	Scraper kit	1		
1	4812120024	Scraper blade	4		

General - Keys and others Keys

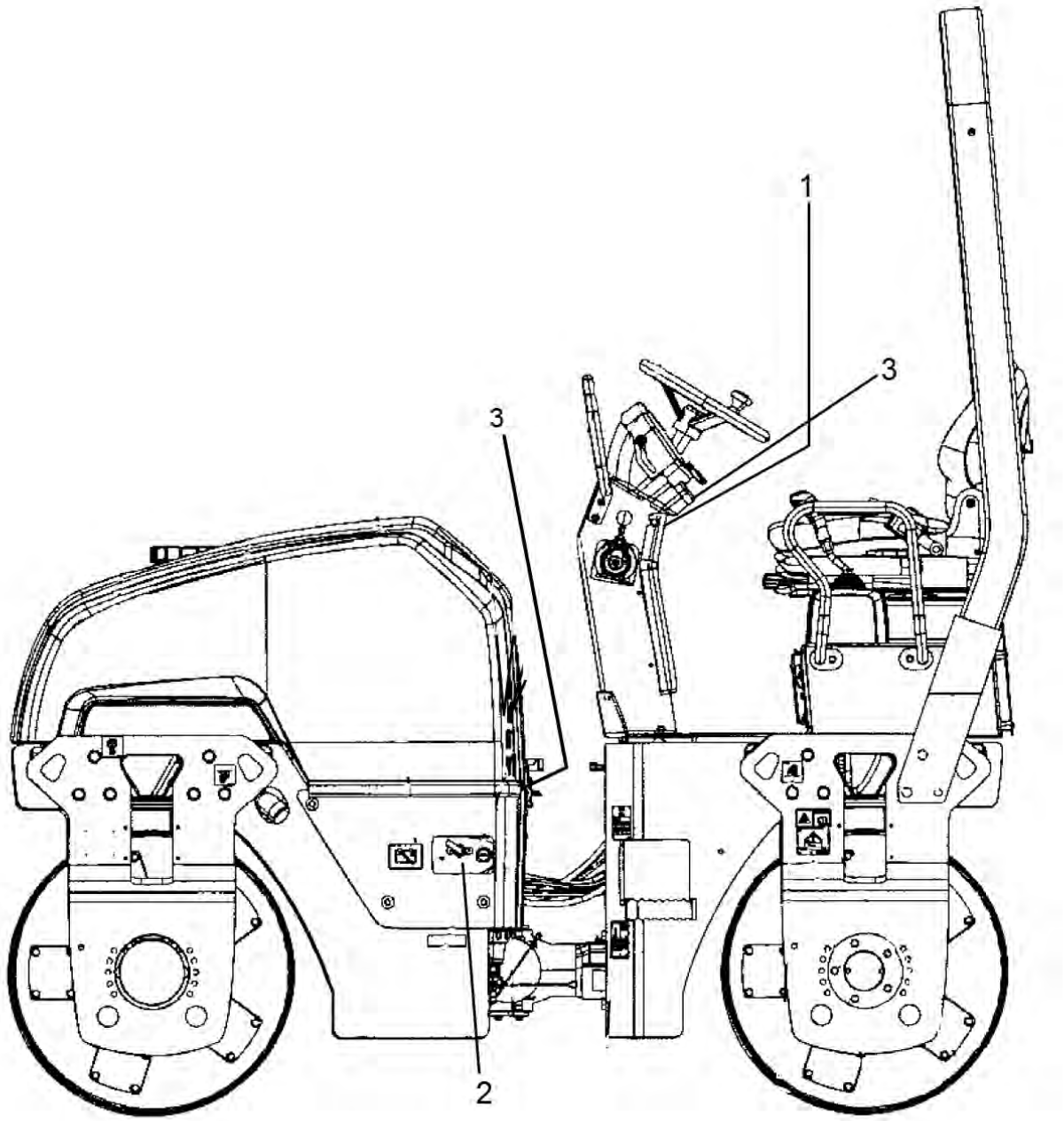

Item	Part No.	Name	Qty	L	SN INFO
1	-	Ignition switch			
1	4700940451	Ignition key			
2	-	Fuel cap			
2	4812118885	Key "044"			
3	4700358881	Pad lock			

General - Keys and others Fuses

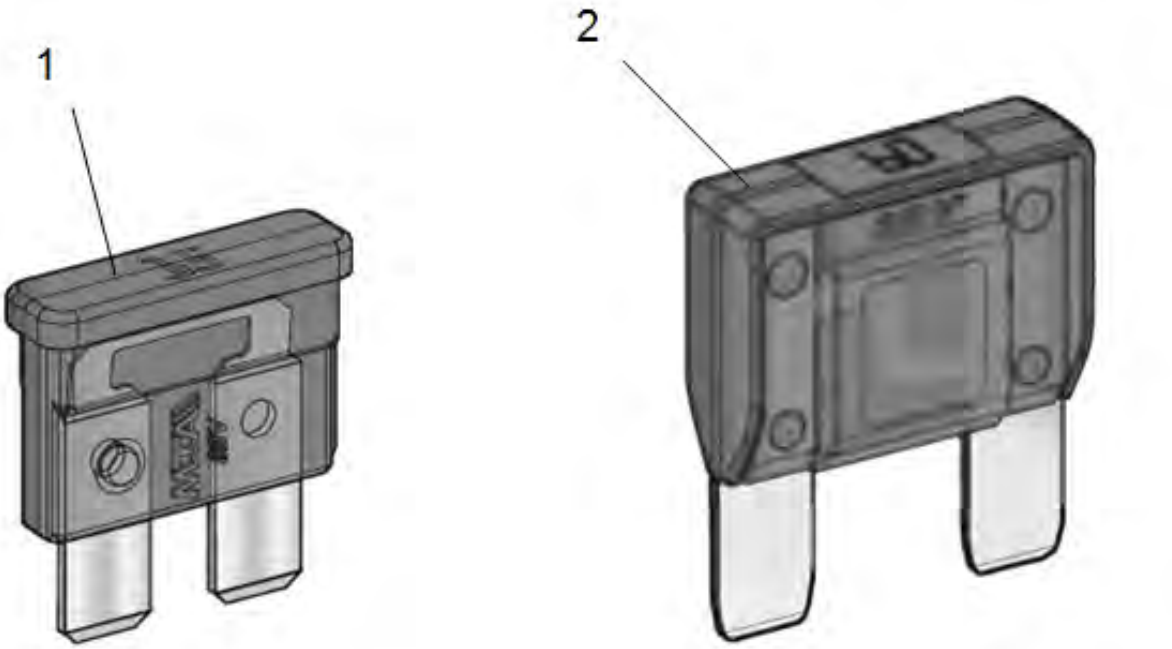

Item	Part No.	Name	Qty	L	SN INFO
1	-	Fuse, blade type Medium			
1	4700901224	Fuse, 3A Violet			
1	4700901225	Fuse 5A Tan			
1	4700901226	Fuse 7.5A Brown			
1	4700901227	Fuse 10A Red			
1	4700901228	Fuse, 15A Blue			
1	4700903741	Fuse 20A Yellow			
1	4700901229	Fuse, 25A Natural			
1	4700901230	Fuse, 30A Green			
2	-	Fuse, blade typ High			
2	4700904294	Fuse 20A Yellow			
2	4700904037	Fuse 30A Green			
2	4700904038	Fuse 40A Orange			
2	4700904039	Fuse 50A Red			
2	4700904040	Fuse 60A Blue			
2	4700904041	Fuse 70A Tan			
2	4700904042	Fuse 80A Natural (White)			

Frames To 0A014775 Frame, front

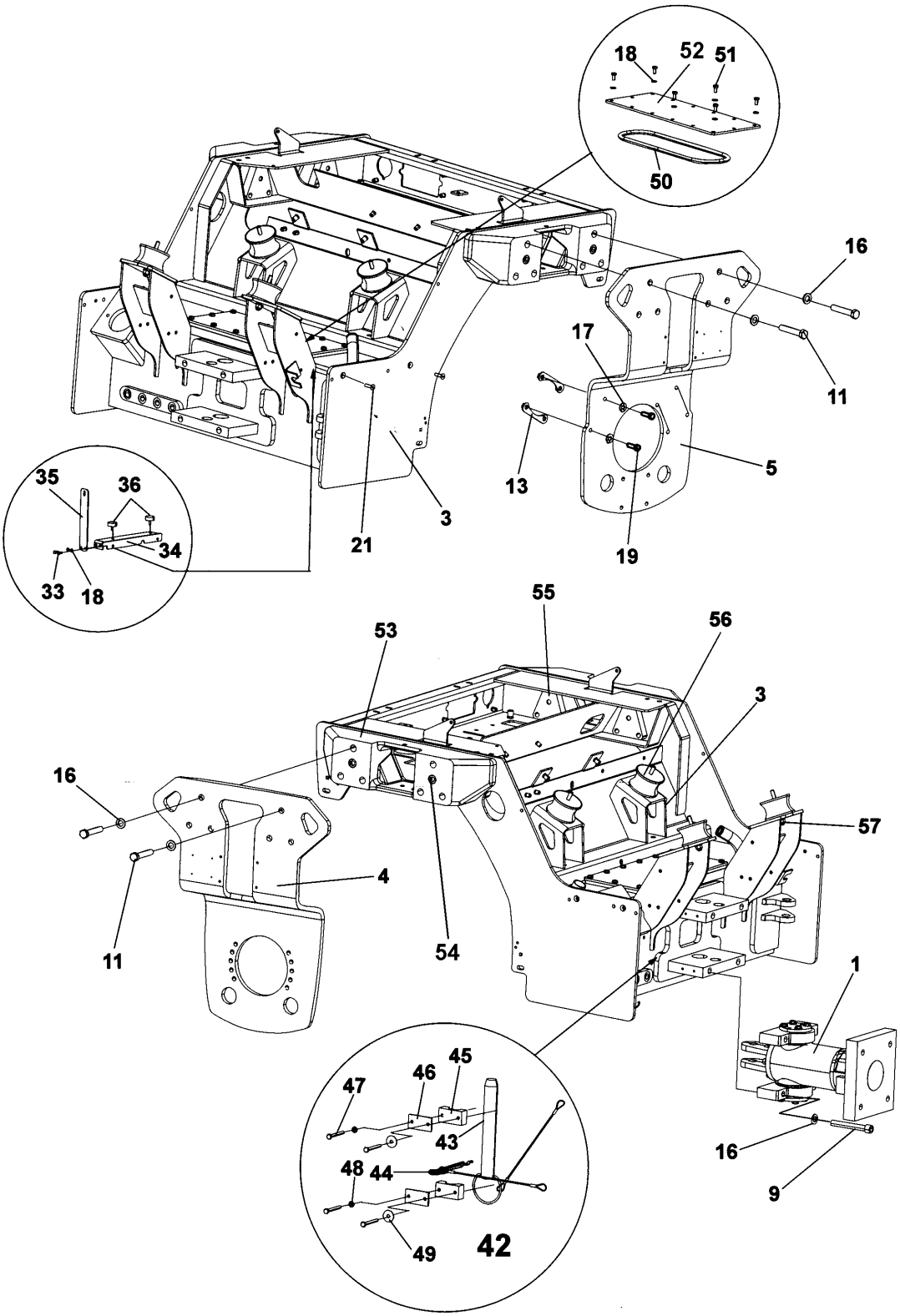

Item	Part No.	Name	Qty	L	SN INFO
1	-	Steering hitch	1		
3	4812119733	Frame, front	1		
4	4812120578	Fork	1		
5	4812120579	Fork	1		
9	4700902100	Screw	4		
11	4700923247	Screw M16x160	12		
13	4700379179	Holder	6		
16	4700904232	Steel plain washer	16		
17	4700904230	Plain washer 10.5x22x2 mm	12		
18	4700904229	Washer, 8.4x 6x1.5 mm 300HV	16		
19	4812110288	Screw	12		
21	4700902520	Screw	2		
33	4700500100	Hexagon screw	2		
34	4812116681	Bracket	1		
35	4812113080	Bracket	1		
36	4700792601	Shock absorber	2		
42	-	Steering hitch lock	1		
43	4812125927	Shaft	1		
44	4700357489	Hair pin	1		
45	4700902171	Clamp	2		
46	4700902172	Cover plate	2		
47	4700500016	Screw M6x55 8.8 A2K	4		
48	4700600004	Washer	2		
49	4700615076	Washer 7,0x25x1,5	2		
50	4700349880	O Ring	1		
51	4700500019	Hexagon screw	14		
52	4700349879	Cover	1		
53	4812113924	Spacer block	2		To 0A013002
53	4812120470	Spacer block	2		From 0A013003
54	4700902101	Screw	4		
55	4700393540	Threaded plate	4		
56	4812113018	Shock absorber	4		
57	4700586018	Lock nut M10	4		

Frames To 0A014775 Frame, rear

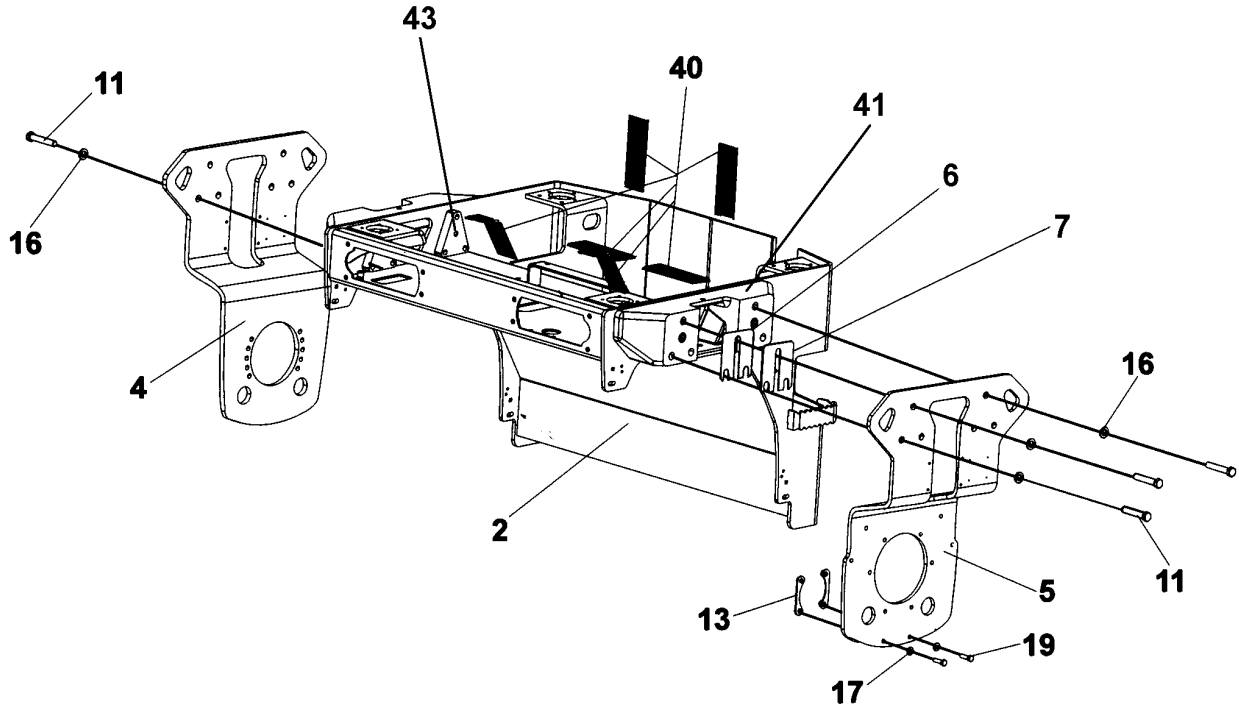

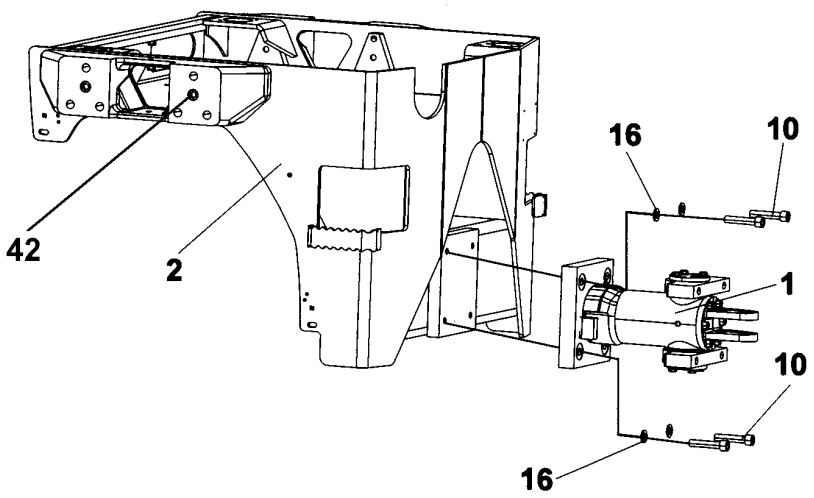

Item	Part No.	Name	Qty	L	SN INFO
1	-	Steering hitch	1		
2	4812119732	Frame, rear	1		
4	4812120578	Fork	1		
5	4812120579	Fork	1		
6	4700357222	Shim T=1 mm	N		
7	4700357221	Shim T=3 mm	N		
10	4700927396	Screw	4		
11	4700923247	Screw M16x160	12		
13	4700379179	Holder	6		
16	4700904232	Steel plain washer	16		
17	4700904230	Plain washer 10.5x22x2 mm	12		
19	4812110288	Screw	12		
40	4700357459	Rubber cloth	6		
41	4812120470	Spacer block	2		
42	4700902101	Screw	4		
43	4700393540	Threaded plate	4		

Frames From 0A014776 Frame, front

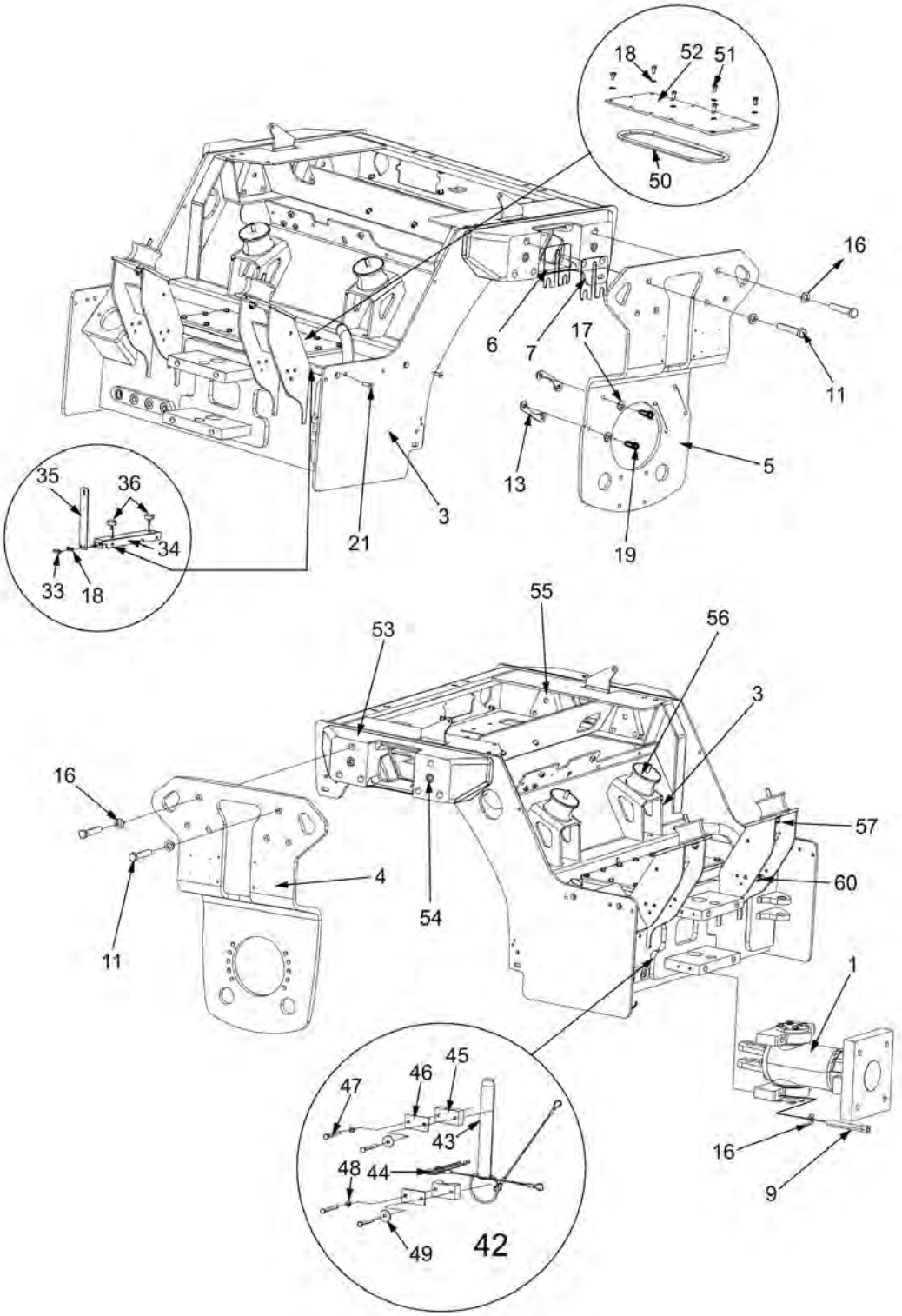

Item	Part No.	Name	Qty	L	SN INFO
1	4812120871	Steering hitch	1		
3	4812122477	Frame, front	1		
4	4812120578	Fork	1		
5	4812120579	Fork	1		
6	4700357222	Shim T=1 mm	N		
7	4700357221	Shim T=3 mm	N		
9	4700902100	Screw	4		
11	4700923247	Screw M16x160	12		
13	4700379179	Holder	6		
16	4700904232	Steel plain washer	16		
17	4700904230	Plain washer 10.5x22x2 mm	16		
18	4700904229	Washer, 8.4x 6x1.5 mm 300HV	16		
19	4812110288	Screw	12		
21	4700902520	Screw	2		
33	4700500100	Hexagon screw	2		
34	4812116681	Bracket	1		
35	4812113080	Bracket	1		
36	4700792601	Shock absorber	2		
42	-	Steering hitch lock	1		
43	4812125927	Shaft	1		
44	4700357489	Hair pin	1		
45	4700902171	Clamp	2		
46	4700902172	Cover plate	2		
47	4700500016	Screw M6x55 8.8 A2K	4		
48	4700600004	Washer	2		
49	4700615076	Washer 7,0x25x1,5	2		
50	4700349880	O Ring	1		
51	4700500019	Hexagon screw	14		
52	4700349879	Cover	1		
53	4812120470	Spacer block	2		
54	4700902101	Screw	4		
55	4700393540	Threaded plate	4		
56	4812113018	Shock absorber	4		
57	4700586018	Lock nut M10	4		
58	4812119157	Blind insert nut	2		
59	4812119156	Blind insert nut	10		
60	4812120993	Clip	1		

Frames From 0A014776 Frame, rear

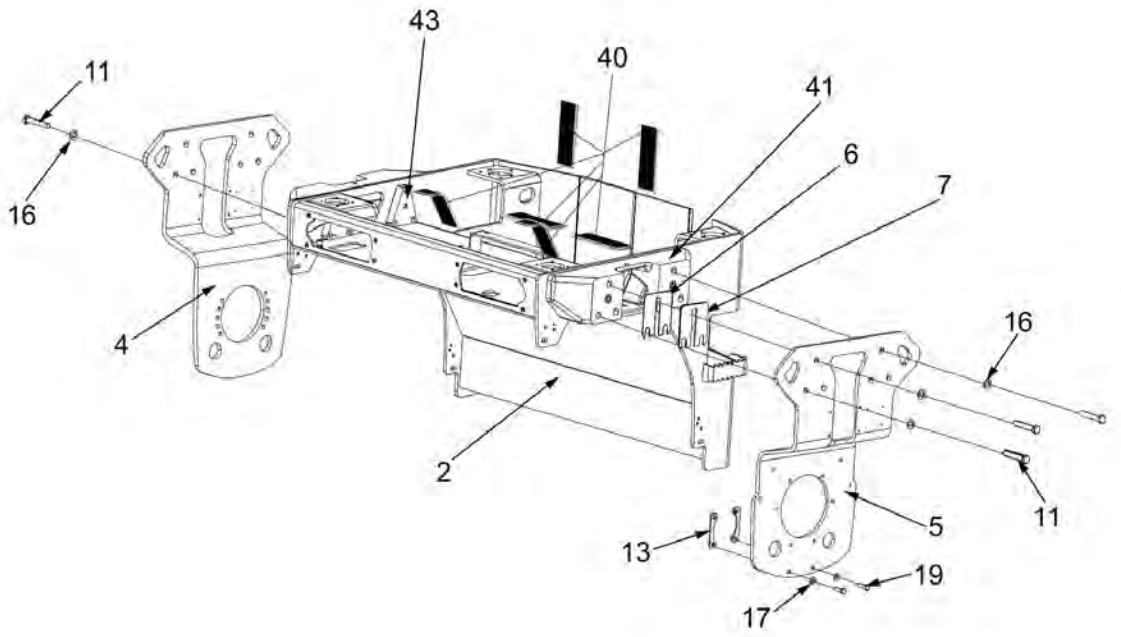

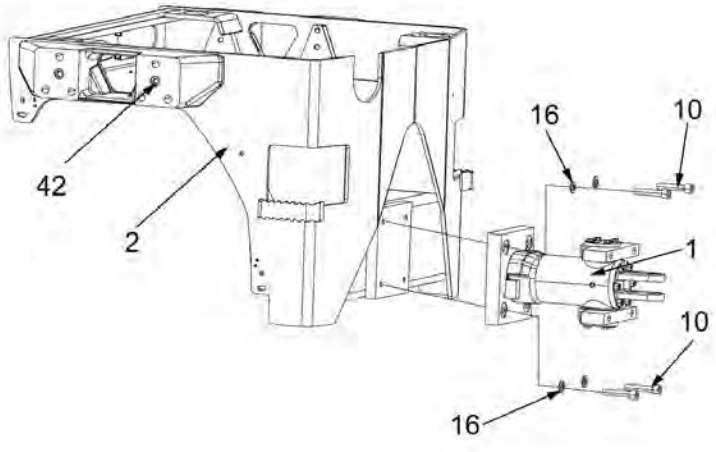

Item	Part No.	Name	Qty	L	SN INFO
1	-	Steering hitch	1		
2	4812120184	Frame, rear	1		
4	4812120578	Fork	1		
5	4812120579	Fork	1		
6	4700357222	Shim T=1 mm	N		
7	4700357221	Shim T=3 mm	N		
10	4700927396	Screw	4		
11	4700923247	Screw M16x160	12		
13	4700379179	Holder	6		
16	4700904232	Steel plain washer	16		
17	4700904230	Plain washer 10.5x22x2 mm	12		
19	4812110288	Screw	12		
40	4700357459	Rubber cloth	6		
41	4812120470	Spacer block	2		
42	4700902101	Screw	4		
43	4700393540	Threaded plate	4		

Frame Scraper

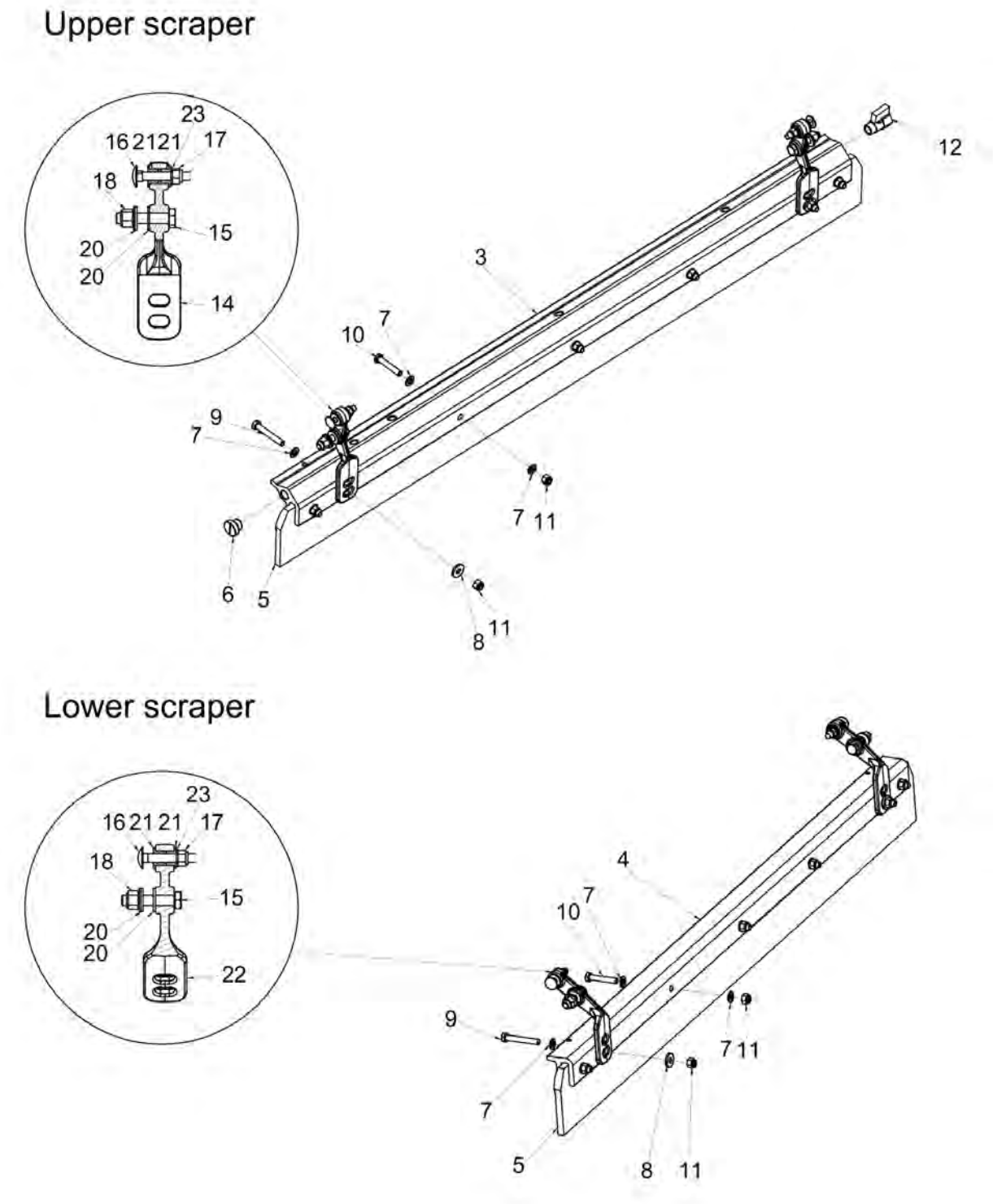

Item	Part No.	Name	Qty	L	SN INFO
3	4812120017	Sprinkler pipe	2		
4	4812120023	Bracket	2		
5	4812120024	Scraper blade	4		
6	4700792072	End plug	2		
7	4700904229	Washer, 8.4x 6x1.5 mm 300HV	32		
8	4700904640	Washer, 8.4x22x3 mm 300HV	8		
9	4700500067	Screw	8		
10	4700500024	Screw M8x45	12		
11	4700586003	Lock nut M8	20		
12	4700233215	Ball valve	2		
14	4812121856	Bracket	4		
15	4700500105	Hex. screw	8		
16	4700792134	Bolt	8		
17	4700586003	Lock nut M8	8		
18	4700902287	Nut, M10	8		
20	4700791938	Washer	16		
21	4700791939	Bushing	16		
22	4812121858	Bracket	4		
23	4700791304	Steel plain washer	8		

Frame Scrapers, spring loaded (option)

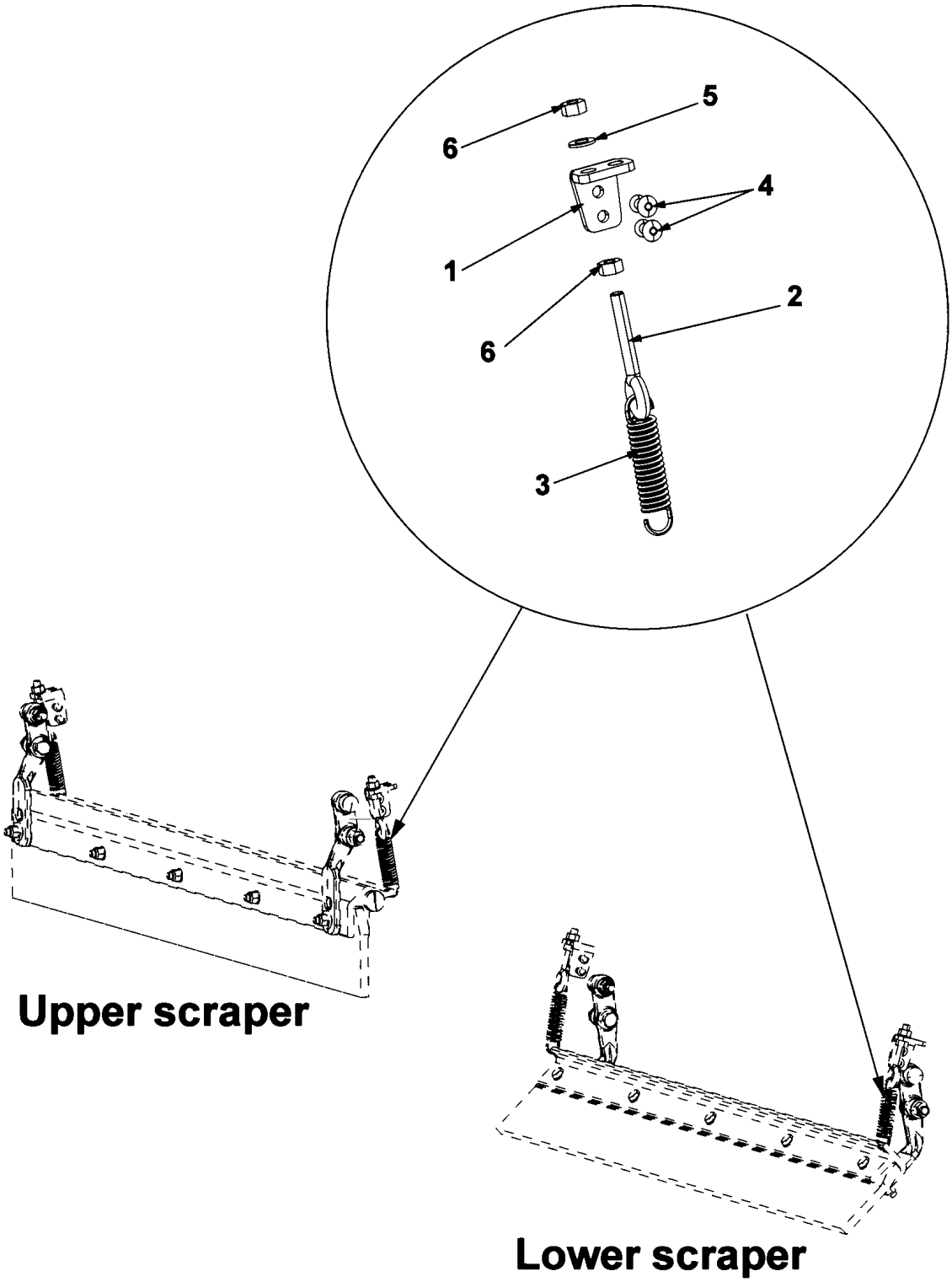

Item	Part No.	Name	Qty	L	SN INFO
1	4812120026	Bracket	4		
2	4700792189	Eye bolt	4		
3	4700359043	Spring	4		
4	4700791666	Blind rivet	8		
5	4700904229	Washer, 8.4x 6x1.5 mm 300HV	4		
6	4700570005	Hexagon nut	8		

Frame Sprinkler system

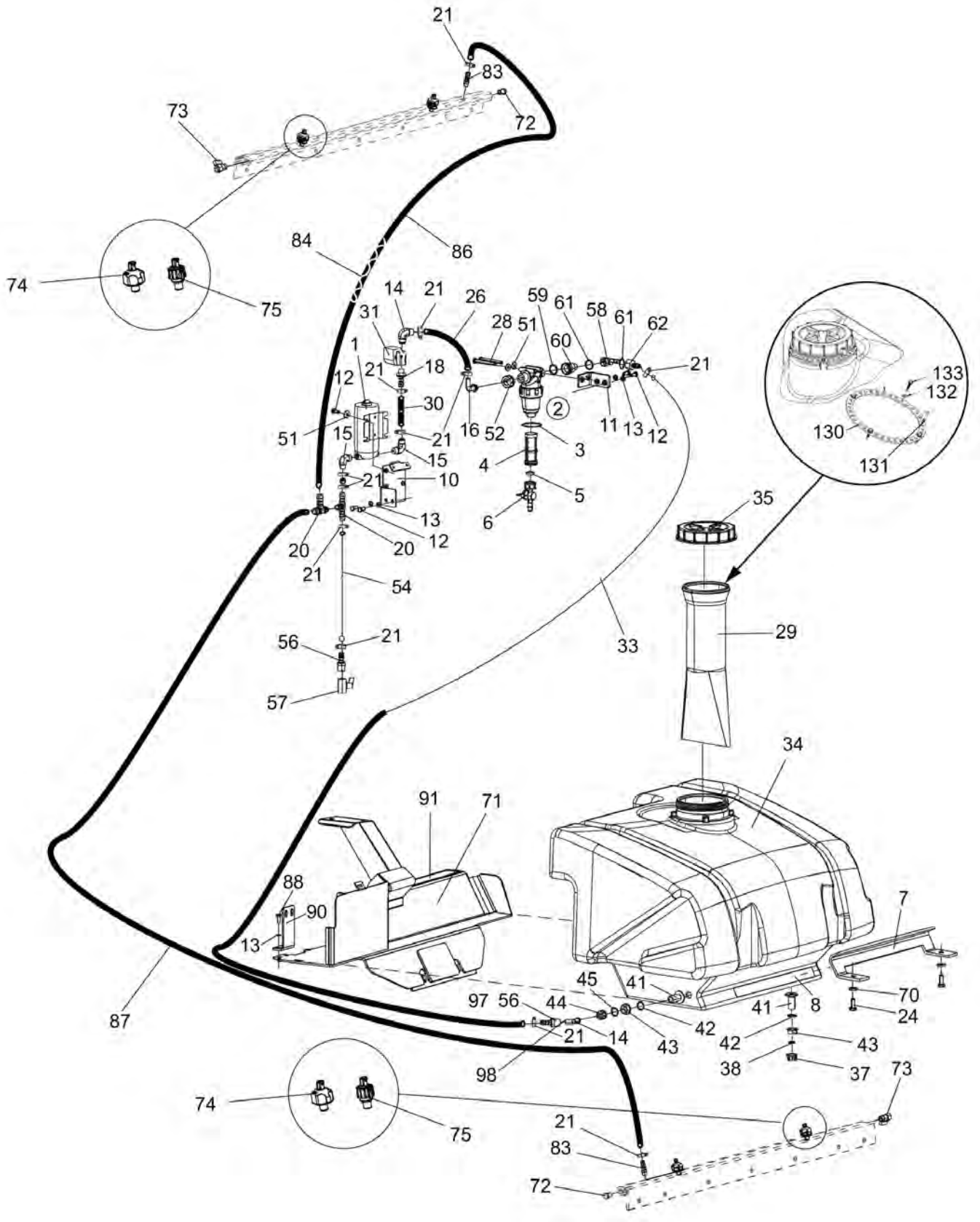

Item	Part No.	Name	Qty	L	SN INFO
1	4812113822	Water pump	1		
2	4812111325	Water filter	1		
3	4700791959	O-ring	1		
4	4700791949	Filter element	1		
5	4700791568	Gasket	1		
6	4700379009	Valve	1		
7	4700357395	Holder plate	1		
8	4700926911	Rubber strip	1XL	A	
10	4812113066	Bracket	1		
11	4812113067	Bracket	1		
12	4700500053	Screw, M8x20 mm 8.8 A2K	15		To A018474
12	4700500053	Screw, M8x20 mm 8.8 A2K	17		From A018475
13	4700904229	Washer, 8.4x 6x1.5 mm 300HV	6		
14	4700901431	Hose connection	1		
15	4700923734	Hose connection	2		
16	4812111330	Hose connection	1		
18	4700901432	Hose connection	1		
20	4700923735	Hose connection	2		
21	4700313002	Hose clamp	16		
22	4700903478	Fabric Tape	1XL	B	
24	4700500028	Screw, M10 x 25 mm 8.8 A3K	4		
26	4812112074	Plastic hose (x m)	1XL	D	
28	4700500190	Screw	2		
29	4700358846	Strainer	1		
30	4812112074	Plastic hose (x m)	1XL	E	
31	4700287713	Solenoid valve	1		
33	4812112074	Plastic hose (x m)	1XL	C	
34	4812111969	Sprinkler tank, cpl.	1		
35	4700359003	Tank Cap	1		
37	4811000168	Cap	1		
38	4700392229	Plane gasket	1		
41	4700392230	Grommet	2		
42	4700160219	O-ring	2		
43	4700392232	Nut	2		
44	4700392227	Swivel nut	1		
45	4700792600	O-ring 70	1		
51	4700904640	Washer, 8.4x22x3 mm 300HV	6		
52	4700792779	Swivel nut	1		

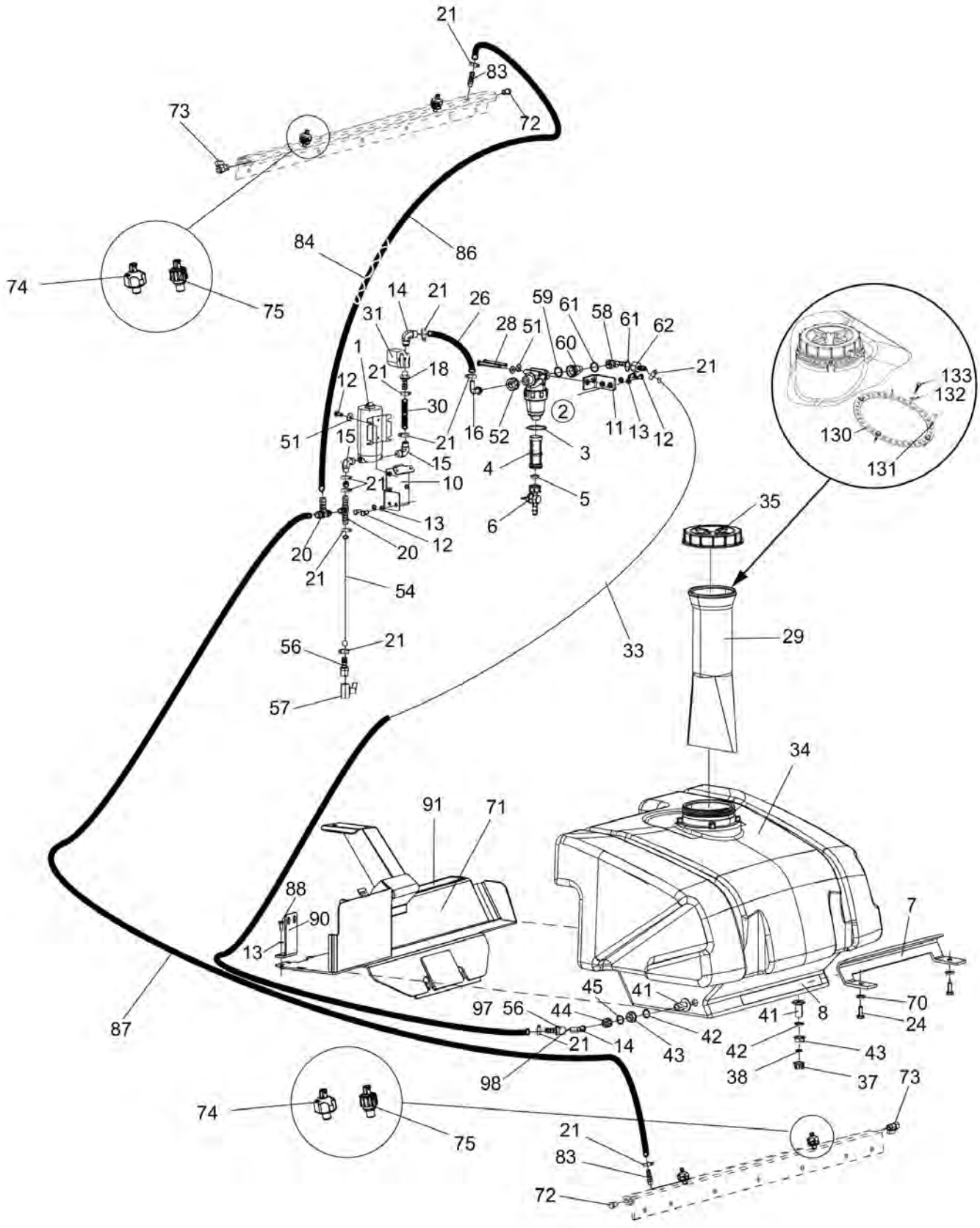
21
83
72
73
74
75
84
86
14
21
26
31
28
51
59
61
58
61
62
60
21
1
21
18
12
30
51
15
21
16
52
2
11
13
12
3
4
15
21
10
5
6
13
12
20
20
21
54
133
132
130
131
35
29
33
56
21
57
34
91
71
88
90
13
7
45
41
70
97
56
44
41
8
24
87
21
14
43
42
42
43
98
38
37
73
74
75
21
83
72

Item	Part No.	Name	Qty	L	SN INFO
54	4812112074	Plastic hose (x m)	1XL	H	
56	4700924544	Hose connection	2		
57	4700925599	Ball valve	1		
58	4812112831	Ball valve	1		To A020066
58	4812126907	Ball valve	1		From A020067
59	4700160313	O-ring 70	1		
60	4812111331	Reducer nipple	1		
61	4700379753	Gasket	4		
62	4812112451	Hose connection	1		
70	4700904557	Washer, 10.5x22x4 mm 300 HV	4		
71	4812117746	Heat protection	1		To A019089
71	4812126431	Heat protection	1		From A019090
72	4700792072	End plug	2		
73	4700233215	Ball valve	2		
74	4700392011	Spraying nozzle, cpl	6		
-	4700392509	Retainer, nozzle, strainer, yellow	1		
--	4700392510	Gasket	1		
--	4700393697	Nozzle and strainer, yellow 0.8	1		
75	4812124321	Spraying nozzle, cpl	6		
-	4812124323	Cap, blue	1		
-	4812124324	Strainer	1		
-	4812124325	Gasket	1		
-	4700160268	O-ring	1		
-	4812124327	Nozzle, yellow 0.8	1		
83	4700791977	Hose connection	2		
84	4700901191	Protective hose	1	J	
86	4812112074	Plastic hose (x m)	1	K	
87	4812112074	Plastic hose (x m)	1	L	
88	4700500020	Hex. screw	2		
90	4812112994	Bracket	1		To A018474
90	4812124835	Bracket	1		From A018475
91	4812113781	Rubber strip	1		
97	4700393542	Hose connection	1		
98	4700792600	O-ring 70	1		
130	4812118056	Lock plate	1		
131	4700370699	Lock w key	1		
132	4700904228	Washer 6,4x12x1,5	4		
133	4811000457	Thread rolling screw	4		

Comments for Page: Sprinkler system

(L)OCAL REMARKS

A | L = 0,43 m

B | L = 1,00 m

C | L = 1,80 m

D | L = 0,22 m

E | L = 0,21 m

H | L = 0,15 m

J | L = 0,34 m

K | L = 2,10 m

L | L = 1,40 m

M | en_US | Not shown in illustration

This page intentionally left blank

Frame Towing device (option)

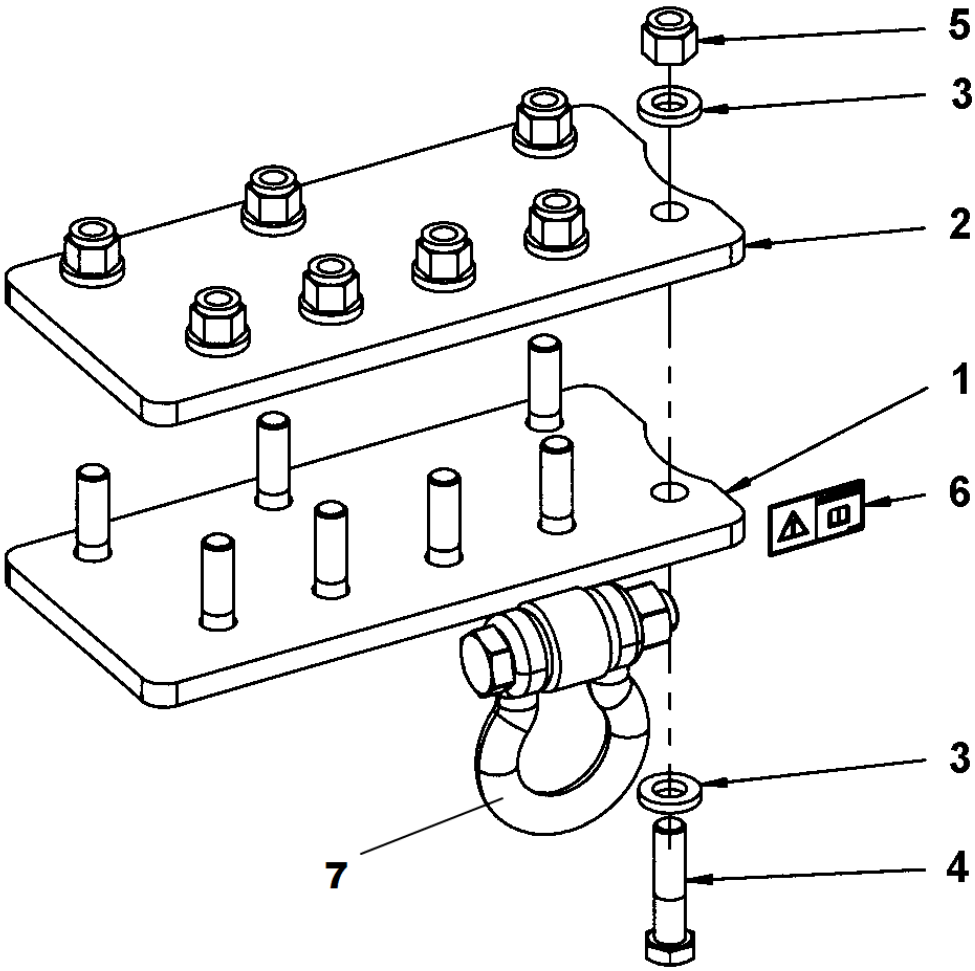

Item	Part No.	Name	Qty	L	SN INFO
1	4812115567	Towing device	1		
2	4812115419	Plate	1		
3	4700904703	Plain washer 13x24x4 mm	16		
4	4700500195	Screw	8		
5	4700586019	Lock nut	8		
6	4700904367	Decal "SAFETY"	1		
7	4811000484	Schackle	1		

Steering hitch To 0A014837 incl. 0A014840 - 0A014888 4700358975 Steering hitch

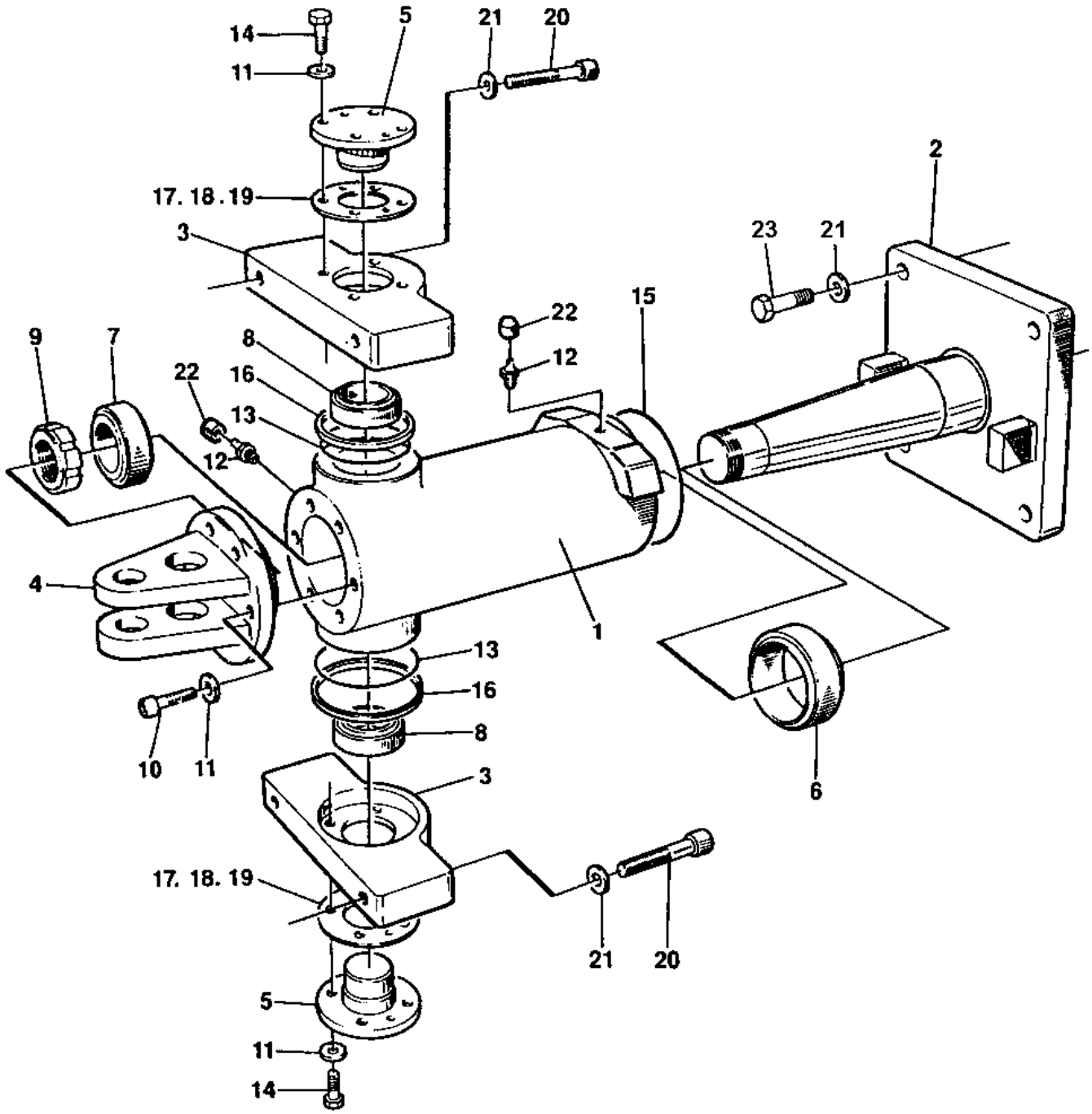

Item	Part No.	Name	Qty	L	SN INFO
0	4700358975	Steering hitch, cpl.	1		
1	4700358976	Bearing housing	1		
2	4700358978	Hitch shaft	1		
3	4700357031	Bracket	2		
4	4700357038	Bracket	1		
5	4700357039	Shaft	2		
6	4700902063	Bushing	1		
7	4700902062	Bushing	1		
8	4700902061	Bushing	2		
9	4700902060	Lock nut	1		
10	4700902059	Screw	6		
11	4812122654	Steel plain washer	14		
12	4700926214	Grease fitting	2		
13	4700167044	V-ring	2	A	
14	4700500028	Screw, M10 x 25 mm 8.8 A3K	8		
15	4700892179	O-ring	1		
16	4700357418	Sealing	2		
17	4700347153	Shim T=0,2 mm	N		
18	4700347154	Shim T=0,4 mm	N		
19	4700347155	Shim T=0,8 mm	N		
20	4700902100	Screw	4		
21	4700904232	Steel plain washer	8		
22	4700902576	Cover	2		
23	4700927396	Screw	4		

Comments for Page: 4700358975 Steering hitch

(L)OCAL REMARKS

A | en_US | For improved function this replaces earlier used 4700160032

Steering hitch From 0A014838 excl. 0A014840 - 0A014888 4812120871 Steering hitch

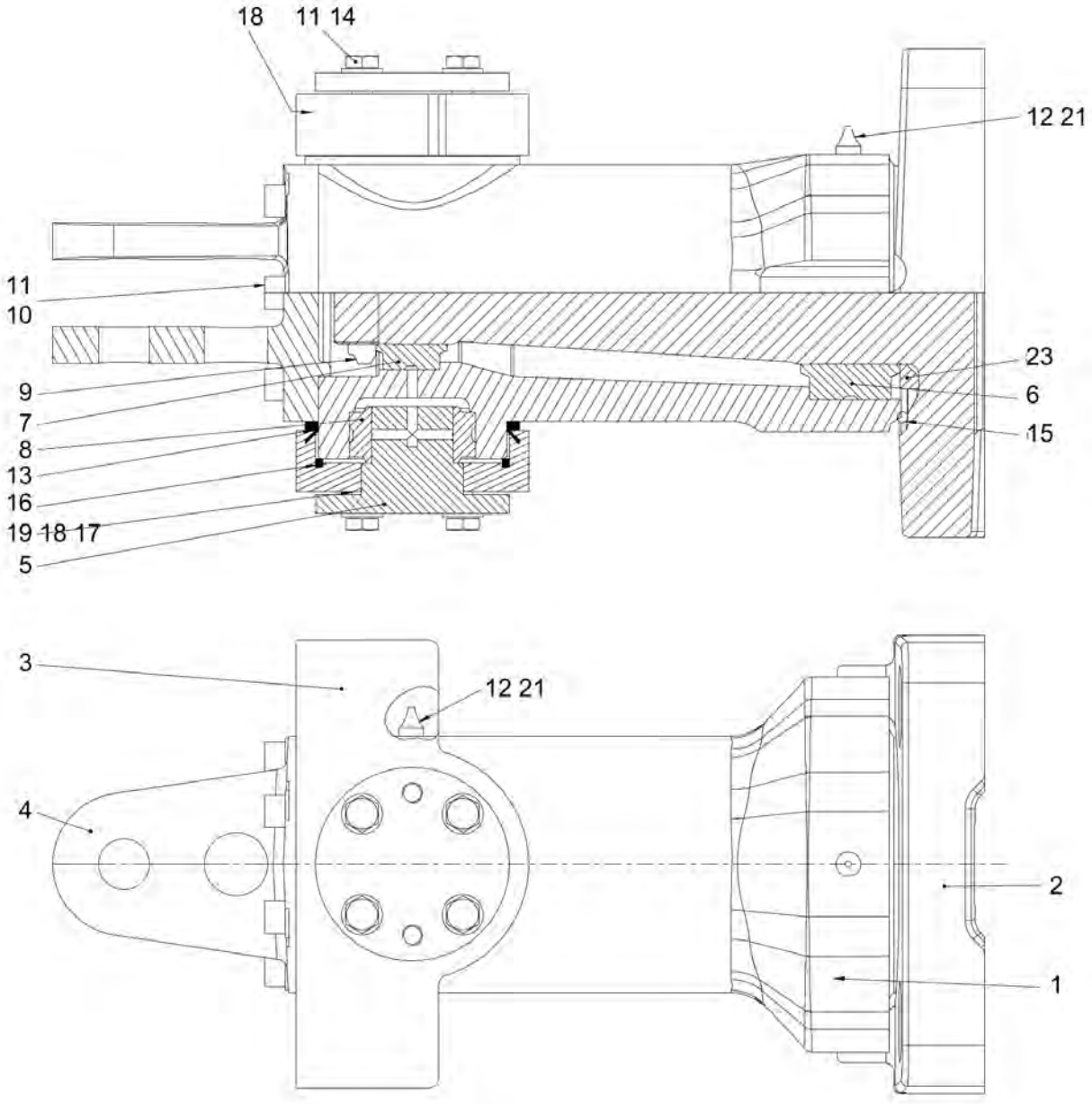

Item	Part No.	Name	Qty	L	SN INFO
1	4700358976	Bearing housing	1		
2	4812120586	Shaft	1		
3	4700357031	Bracket	2		
4	4700357038	Bracket	1		
5	4700357039	Shaft	2		
6	4700902063	Bushing	1		
7	4700902062	Bushing	1		
8	4700902061	Bushing	2		
9	4700902060	Lock nut	1		
10	4700902059	Screw	6		
11	4812122654	Steel plain washer	14		
12	4700926214	Grease fitting	2		
13	4700167044	V-ring	2		
14	4700500028	Screw, M10 x 25 mm 8.8 A3K	8		
15	4700892179	O-ring	1		
16	4700357418	Sealing	2		
17	4700347153	Shim T=0,2 mm	1		
18	4700347154	Shim T=0,4 mm	1		
19	4700347155	Shim T=0,8 mm	1		
21	4700902576	Cover	2		
23	4812120874	Spacer ring	1		

Frame Protective plate, front lights (Option)

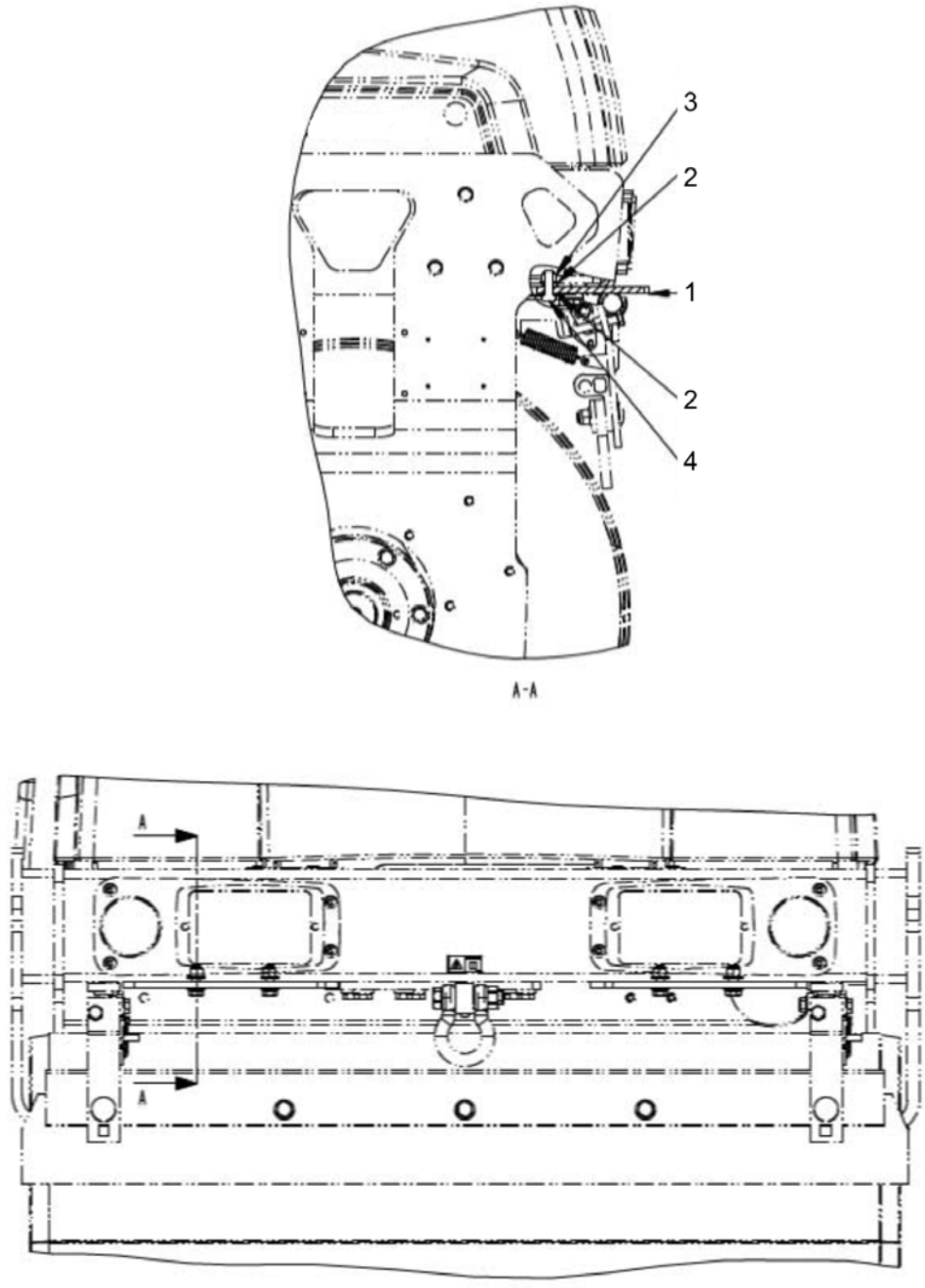

Item	Part No.	Name	Qty	L	SN INFO
1	4812117591	Protective plate	2		
2	4700904230	Plain washer 10.5x22x2 mm	8		
3	4700586018	Lock nut M10	4		
4	4700500029	Screw M10x30	4		

Drum Drum

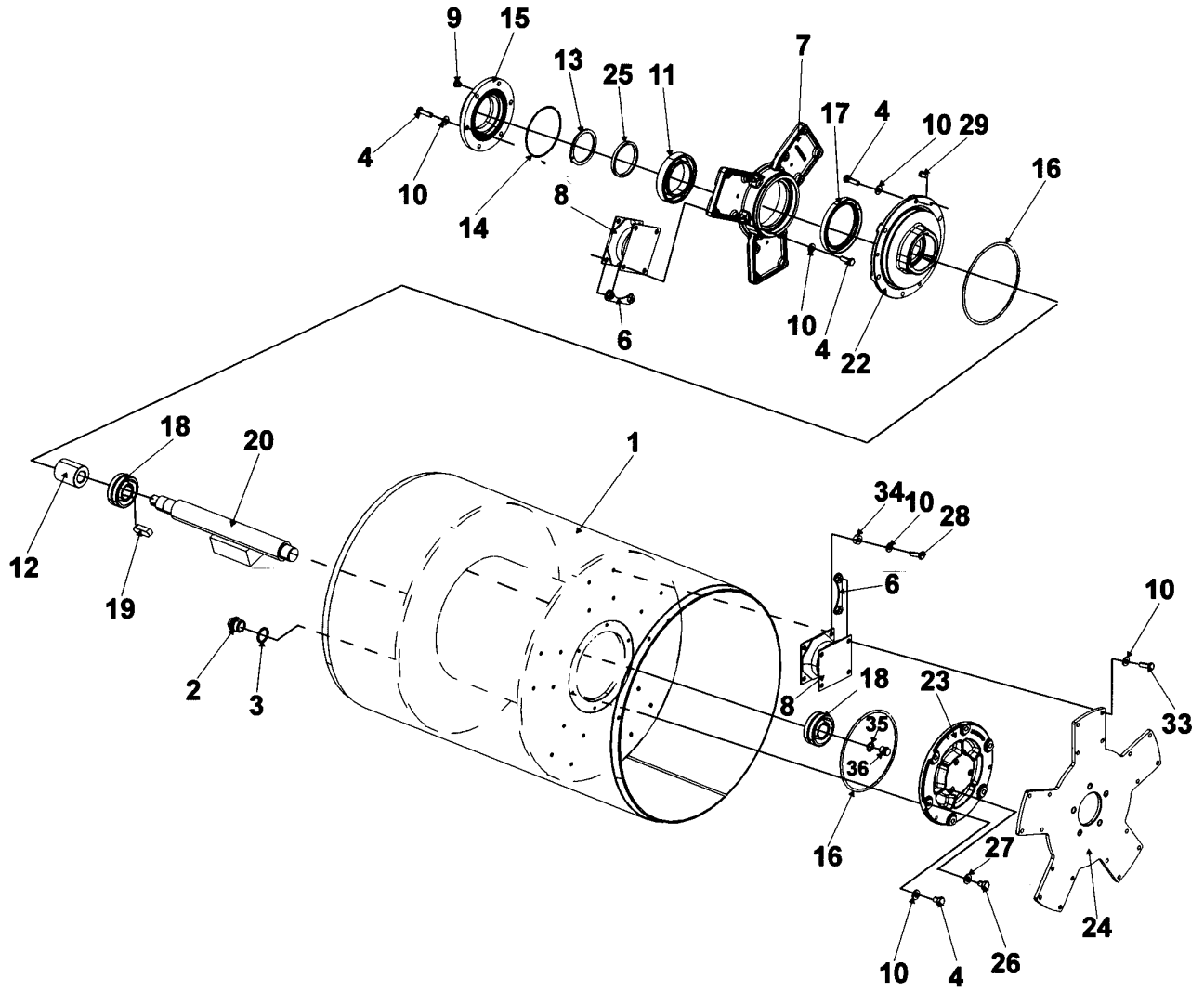
9
15
13
25
11
7
17
4
10
29
16
4
10
14
8
6
10
4
22
18
20
1
12
19
34
10
28
6
10
2
3
8
18
23
35
36
33
16
27
24
10
4
26

Item	Part No.	Name	Qty	L	SN INFO
1	4700357058	Drum	1		
2	4700343744	Magnetic plug	1		
3	4700162017	Seal ring	1		
4	4700500030	Screw hexagon	12		
6	4700379179	Holder	10	B	
7	4812120391	Bearing housing	1		
8	4812121607	Shock absorber	8		
9	4700343490	Air breather	1		
10	4700904230	Plain washer 10.5x22x2 mm	70		
11	4700111018	Ball bearing	1		
12	4700349202	Coupling	1	A	
12	4700391929	Rubber cross	1		
13	4700903154	Retaining ring	1		
14	4700160132	O-ring 70	1		
15	4700358666	Adapter	1		
16	4700923951	O-ring	2		
17	4700163049	Radial lip-type seal	1		
18	4700904258	Spherical roller bearing	2		
19	4700350029	Feather key	1		
20	4700357060	Eccentric shaft	1		To A016100 (incl. 16129, 16161)
20	4812119822	Eccentric shaft	1		From A016101 (excl. 16129, 16161)
22	4812118694	Bearing housing	1		
23	4812118692	Bearing housing	1		
24	4700357055	Drive disc	1		
25	4700358689	Spacer ring	1		
26	4700500044	Screw M6x8	3		
27	4700904228	Washer 6,4x12x1,5	3		
28	4812110639	Hexagon socket head cap screw M10x030H 8.8	32		
29	4700903287	Plug	6		
33	4812110620	Hexagon head screw M10x30H 8.8 A3K	26		
34	4812110673	Spacer	20		
35	4700162011	Washer, 16.7x24x1.5 mm Type A M16	1		
36	4700232143	Plug, M16	1		

Comments for Page: Drum

(L)OCAL REMARKS

A | en_US | CPL

B | en_US | Replaces earlier used Lock nut 4700586018; each holder has two nuts

This page intentionally left blank

Engine room Engine room

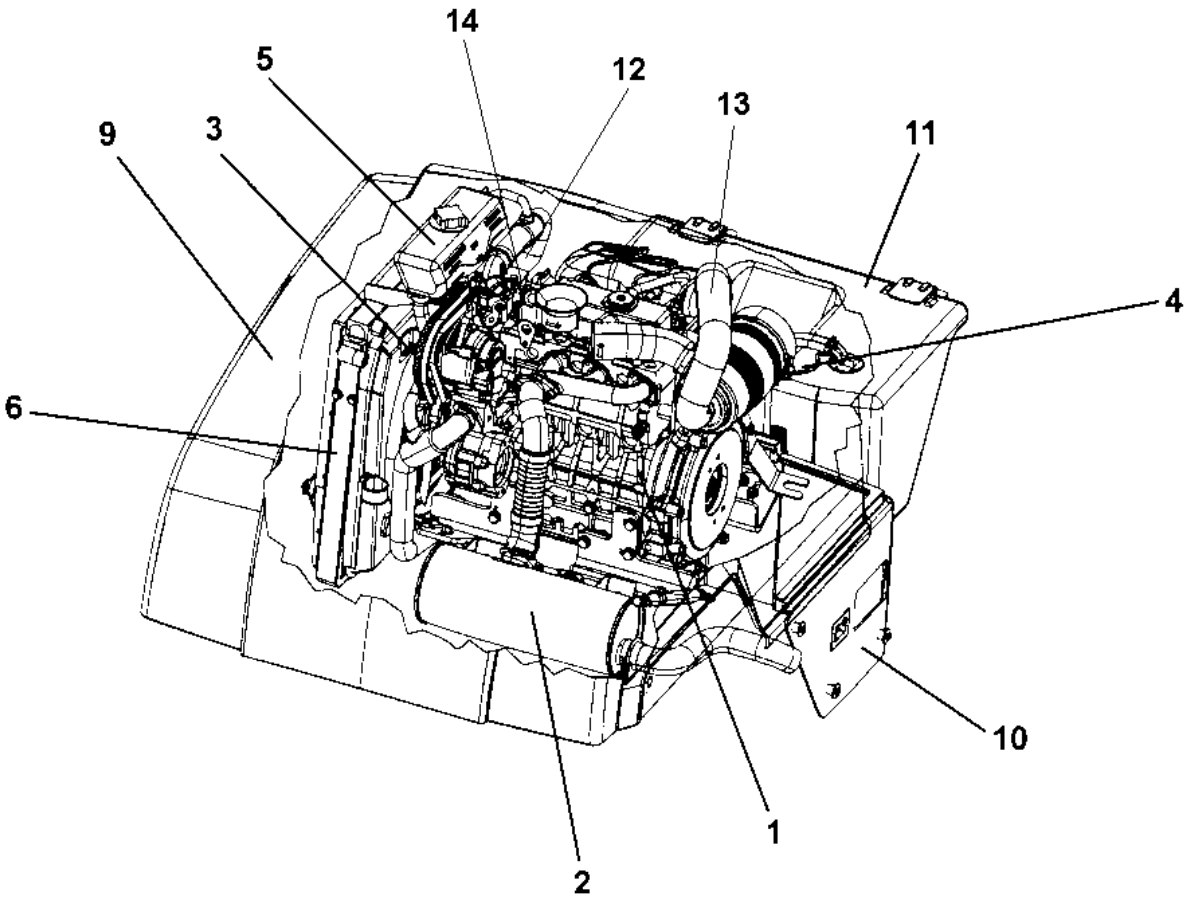

Item	Part No.	Name	Qty	L	SN INFO
1	-	Engine Module			
2	-	Exhaust system			
3	-	Fan			
4	-	Air filter			
5	-	Expansion tank			
6	-	Water cooler			
9	4812118163	Engine hood, cpl			
10	-	casing			
11	-	Fuel system			
12	-	Cooler hoses			
13	-	Air hoses			
14	-	Fuel hoses			

Engine room Engine module

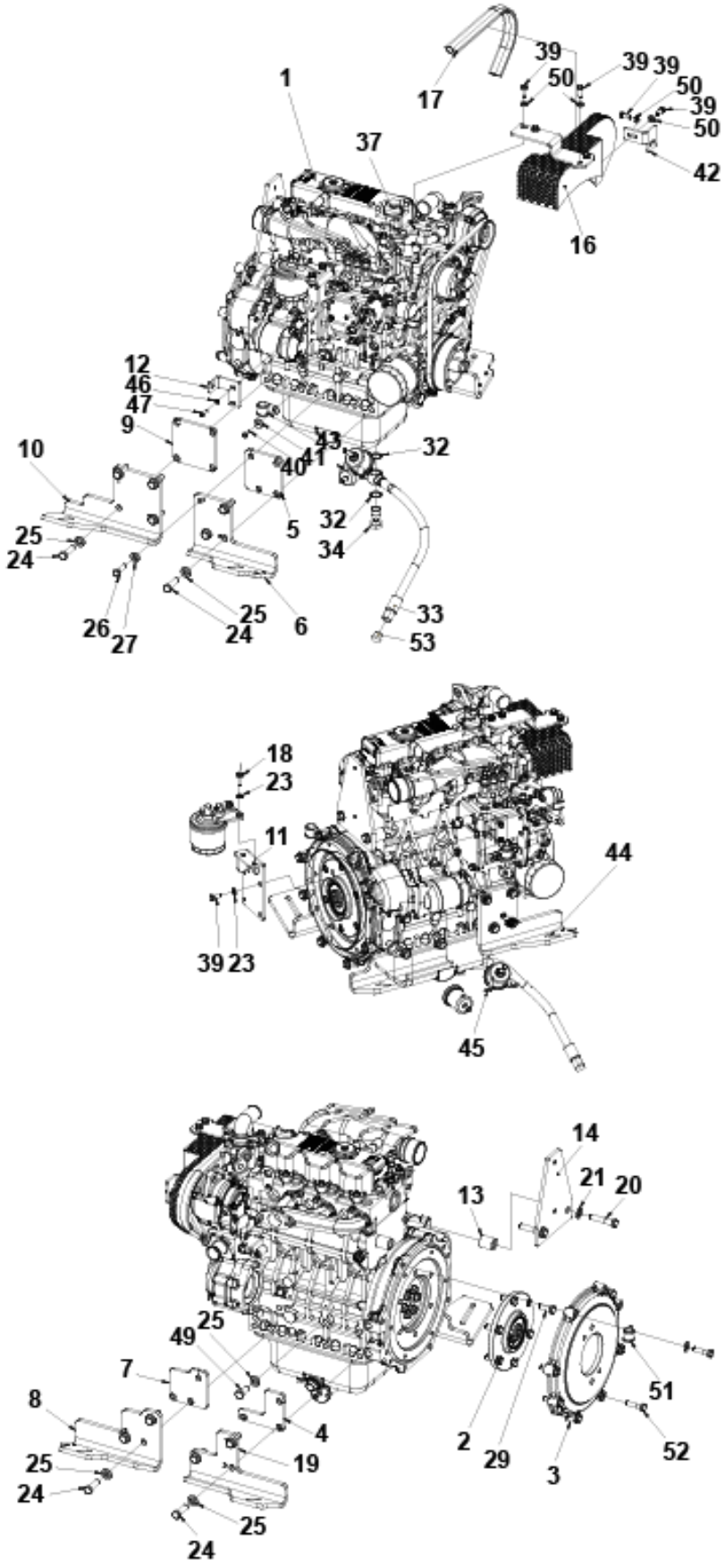

Item	Part No.	Name	Qty	L	SN INFO
1	4812110881	Diesel engine Kubota D1703 M-E3B (26 kW)	1		
1	4812120584	Diesel engine Kubota D1703-M-E3B (26 kW)	1		
2	4812112390	Clutch	1		
3	4812112391	Bracket	1		
4	4812113780	Shim	1		
5	4812111868	Shim	1		
6	4812111865	Bracket	1		
7	4812111866	Shim	1		
8	4812111863	Bracket	1		
9	4812111867	Shim	1		
10	4812111899	Bracket	1		
11	4812111883	Bracket	1		
12	4812111880	Bracket	1		
13	4812113235	Spacer sleeve	2		
14	4812113233	Bracket	1		
16	4812113468	Belt guard	1		
17	4700288129	Rubber edge trim	1	A	
18	4700500021	Screw, M8x25 mm 8.8 A2K	2		
19	4812111900	Bracket	1		
20	4812113980	Screw	2		
21	4700904231	Washer, 13x24x2 mm 300 HV	2		
23	4700904229	Washer, 8.4x 6x1.5 mm 300HV	6		
24	4812113022	Screw	13		
25	4700904703	Plain washer 13x24x4 mm	14		
26	4812113044	Screw	1		
27	4700904557	Washer, 10.5x22x4 mm 300 HV	1		
29	4700500046	Hex. head screw M12x030H	6		
30	4812156263	Fuel filter element	1		
32	4700330333	Copper washer	2		
33	4812111905	Engine oil drain hose	1		
34	4700330081	Screw, M22x1,5	1		
39	4700500053	Screw, M8x20 mm 8.8 A2K	10		
40	4700500013	Screw, M6x16 mm 8.8 A2K	1		
41	4700904735	Steel plain washer	1		
42	4812114177	Bracket	1		
43	4700921116	Clamp	1		
44	4700792119	Screw, M6x16 mm 8.8 A2K	2		
45	4700902287	Nut, M10	4		

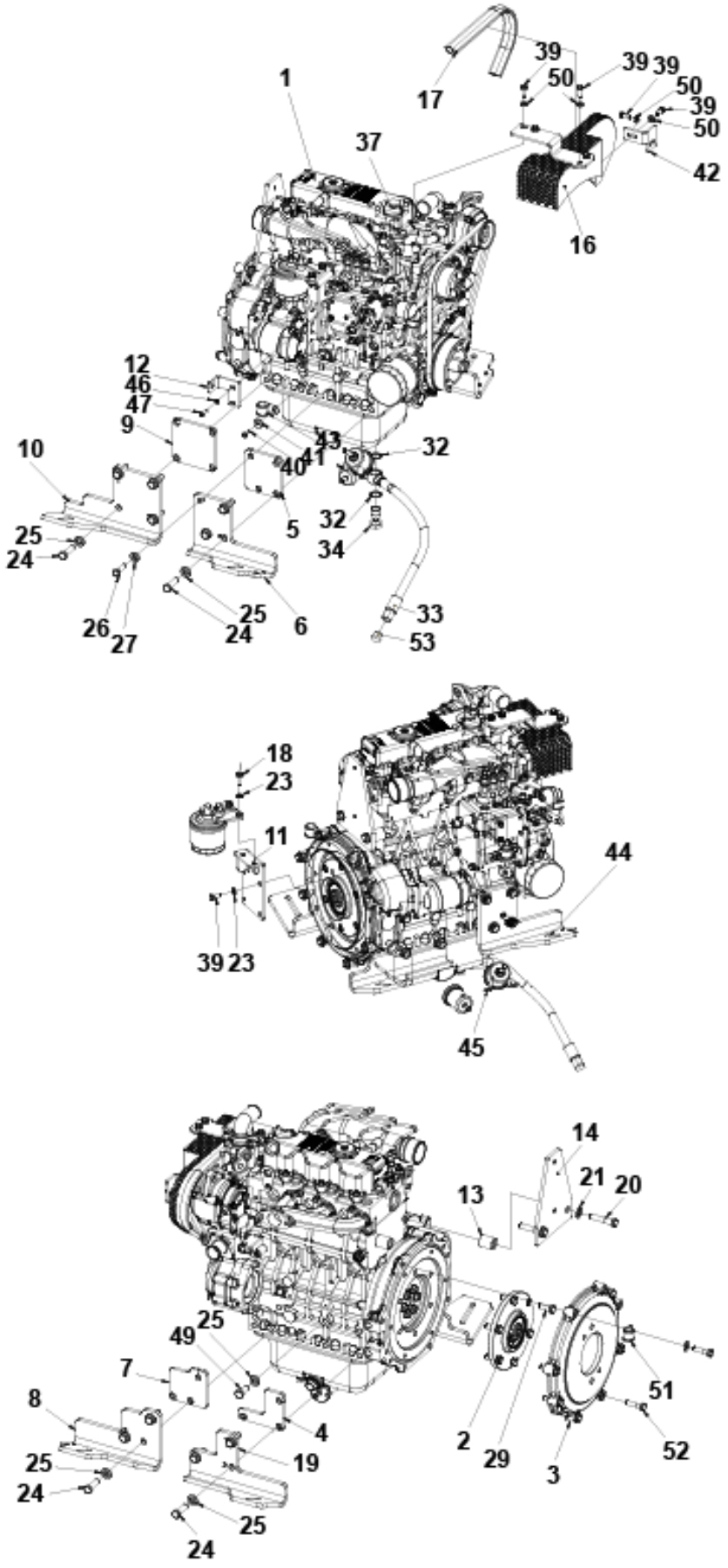
1
17
39
50
39
39
50
39
50
42
16
37
12
46
47
9
10
25
24
26
27
25
24
6
5
43
41
40
32
32
34
33
53
18
23
11
39
23
44
45
14
21
20
13
25
49
7
8
25
24
4
19
25
24
2
29
3
51
52

Item	Part No.	Name	Qty	L	SN INFO
46	4700904228	Washer 6,4x12x1,5	2		
47	4700500040	Screw, M6x20 mm 8.8 A2K	2		
49	4700792250	Screw	1		
50	4700904556	Steel plain washer 8,4x16x3,0	6		
51	4700921104	Pipe clamp	1		
52	4811000285	Screw	6		
53	4700232095	Plug	1		

Comments for Page: Engine module

(L)OCAL REMARKS

A | en_US | L = 0,33 m

Engine room 4812110881 Diesel engine Kubota D1703 M-E3B (26 kW)

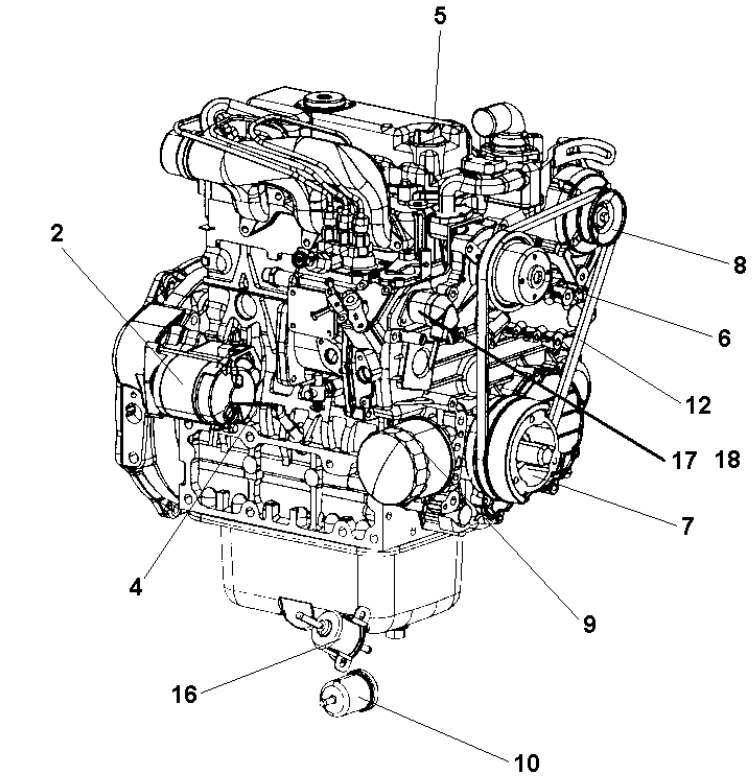

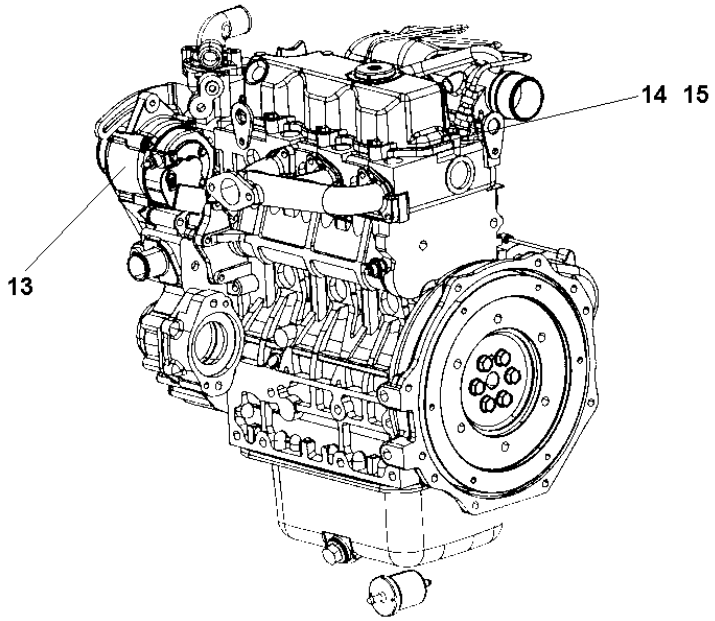

Item	Part No.	Name	Qty	L	SN INFO
2	4812156355	Starter	1		
4	4812156357	Oil dipstick	1		
5	4812156358	Oil cap	1		
5	4812156359	O-ring	1		
6	4812156360	Pulley, V-belt	1		
7	4812156362	Alternator, Fan	1		
8	4812156363	Pulley, alternator	1		
9	4812156259	Engine oil filter element	1		
10	4812156264	Pre-fuel filter element	1		
11	4812156263	Fuel filter element	1		
12	4812156260	V-belt	1		
13	4812156364	Alternator	1		
14	4812156261	Valve cover gasket	1		
15	4812156356	Piston ring set	1		
16	4812156389	Fuel pump	1		
17	4812157598	Fuel solenoid	1		
18	4812157680	O-ring	1		

Engine room Exhaust system

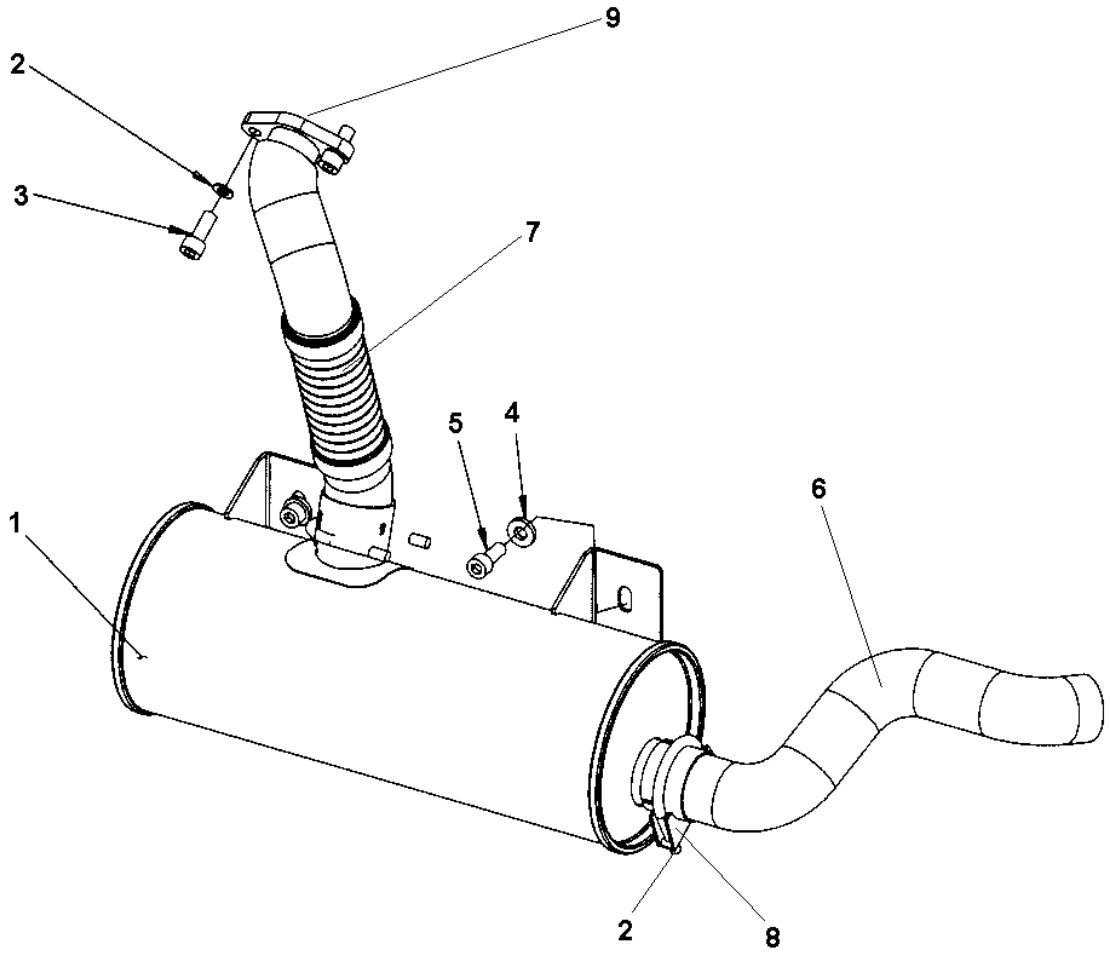

Item	Part No.	Name	Qty	L	SN INFO
1	4812112019	Muffler	1		
2	4700904229	Washer, 8.4x 6x1.5 mm 300HV	6		
3	4811000389	Screw	2		
4	4700904557	Washer, 10.5x22x4 mm 300 HV	2		
5	4700508096	Hexagon socket head cap screw	2		
6	4812113228	End pipe	1		
7	4812112021	Flexible pipe	1		
8	4700904475	Clamp	2		
9	4812159753	Gasket	1	A	

Comments for Page: Exhaust system

(L)OCAL REMARKS

A | en_US | Supplied with the engine

Engine room Fan

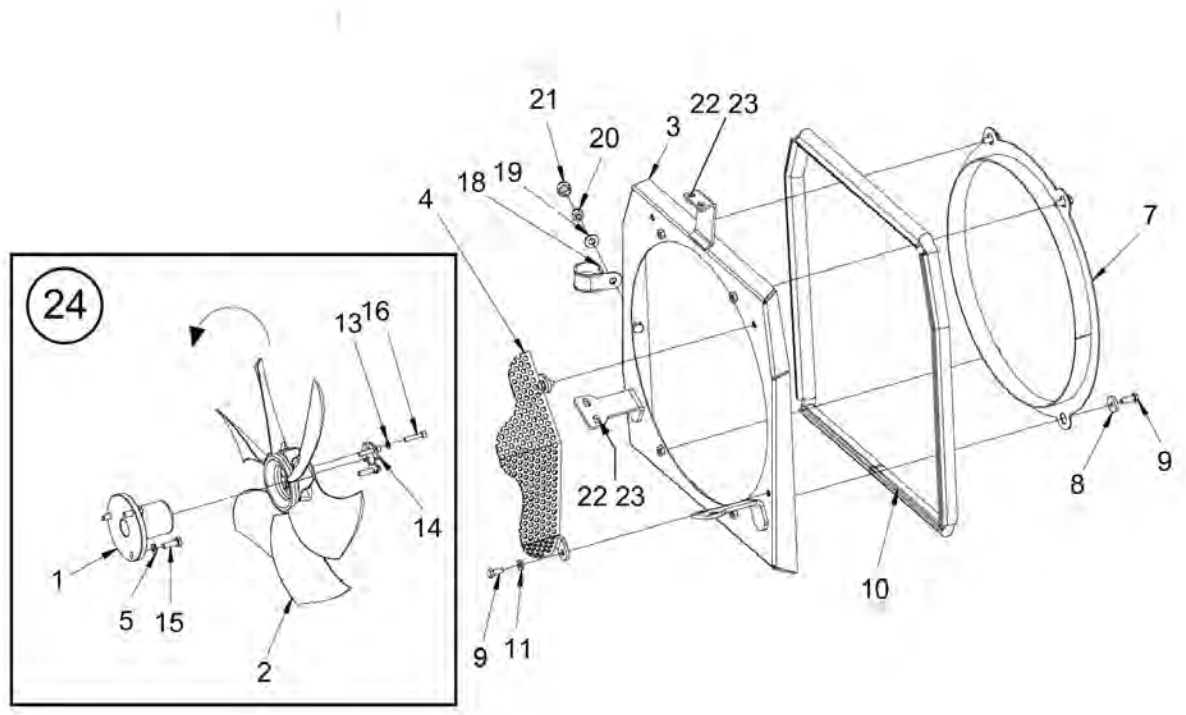

Item	Part No.	Name	Qty	L	SN INFO
1	4812122208	Fan hub	1	C	
2	4812122207	Fan	1	C	
3	4812113472	Fan shroud	1		
4	4812112029	Fan protection	1		
5	4700904229	Washer, 8.4x 6x1.5 mm 300HV	3		
7	4812118517	Fan ring	1	H	
8	4700904734	Washer, 8.4x26x4 mm 300 HV	4		
9	4700500053	Screw, M8x20 mm 8.8 A2K	6		
10	4700288129	Rubber edge trim	1	A	
11	4700904556	Steel plain washer 8,4x16x3,0	2		
13	4700904231	Washer, 13x24x2 mm 300 HV	1		
14	4812122334	Shim	1		
15	4700500021	Screw, M8x25 mm 8.8 A2K	3		
16	4700508018	Screw	3		
18	4700923008	Clamp	1		
19	4700904230	Plain washer 10.5x22x2 mm	1		
20	4700586018	Lock nut M10	1		
21	4812121186	Protective plug	1		
22	4700904556	Steel plain washer 8,4x16x3,0	4		
23	4700500053	Screw, M8x20 mm 8.8 A2K	4	L	
24	4812161085	Fan kit	1	B	

Comments for Page: Fan

(L)OCAL REMARKS

A | L = 1,80 m

B | Contains items; 1, 2, 5, 13, 14, 15, 16

C | For machines up to s/n 0A012585 please use fan kit 4812160757

L | Not shown in illustration

Engine room Air filter

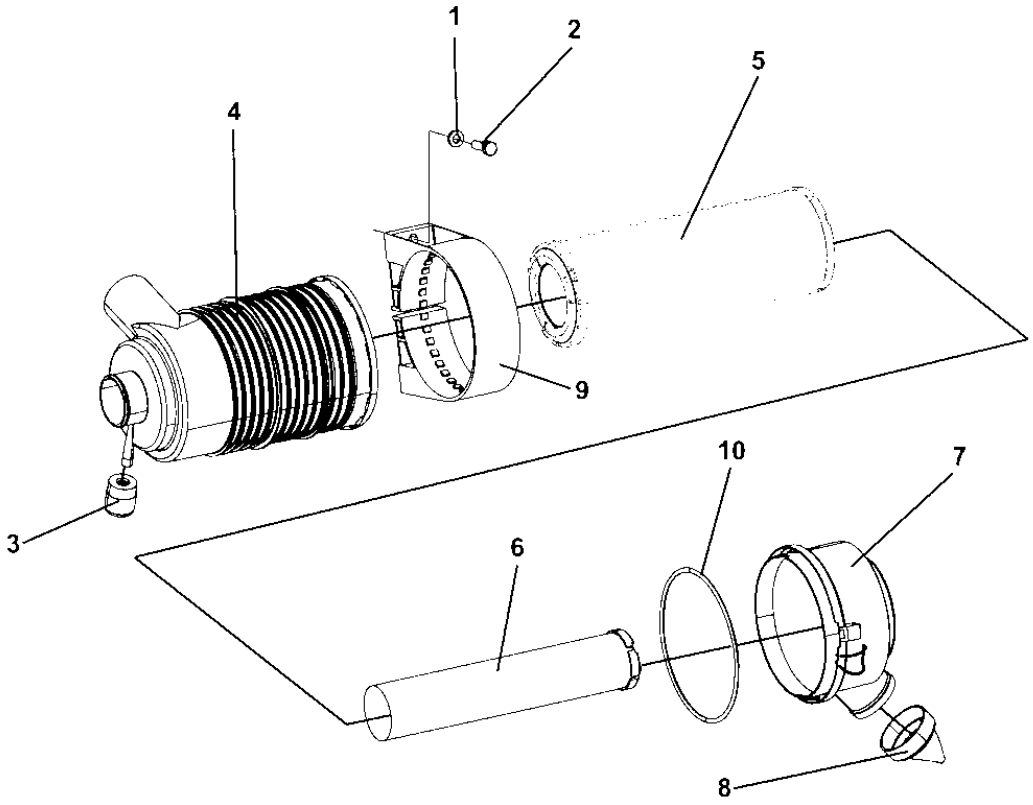

Item	Part No.	Name	Qty	L	SN INFO
1	4700904556	Steel plain washer 8,4x16x3,0	2		
2	4700508019	Cylinder screw	2		
3	4700499497	Indicator	1		
4	4700386951	Air filter	1		
5	4700939802	Air filter element Main	1		
6	4700939803	Air filter element Safety	1		
7	4700939804	Dust cap	1		
8	4700939805	Vacuator cap	1		
9	4700939806	Plastic mounting band	1		
10	4700939807	O-ring	1		

Water cooler To 0A015094 Water cooler

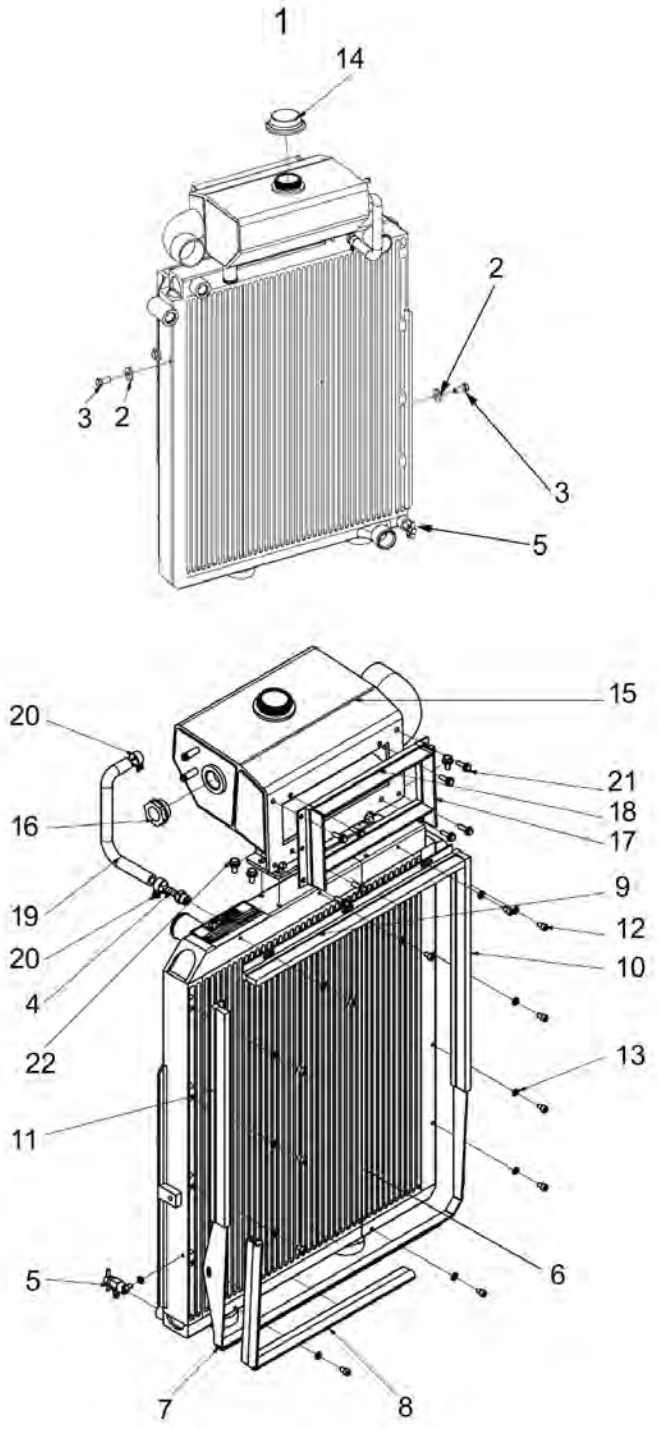

Item	Part No.	Name	Qty	L	SN INFO
1		Water/Oil cooler, cpl	1		
2	4700904640	Washer, 8.4x22x3 mm 300HV	3		
3	4700500100	Hexagon screw	3		
4	4812157872	Hose connection	1		
5	4812157873	Drain valve	1		
6	4812157870	Water/Oil cooler matrix	1		
7	4812157871	Bracket	1		
8	4812157874	Sealing	1		
9	4812157875	Brush	1		
10	4812157876	Brush	1		
11	4812157877	Brush	1		
12	-	Hexagon socket head cap screw M5x8	13		
13	-	Hose clamp	13		
14	4700903714	Cooler cap	1		
15	4812160251	Expansion tank	1		
16	4812160252	Level gauge	1		
17	4812160253	Brush	2		
18	4812160254	Brush	2		
19	-	Hose clamp	1		
20	-	Hose clamp	2		
21	-	Bolt M5x16	8		
22	-	Bolt M6x12	4		

Water cooler From 0A015095 Water cooler

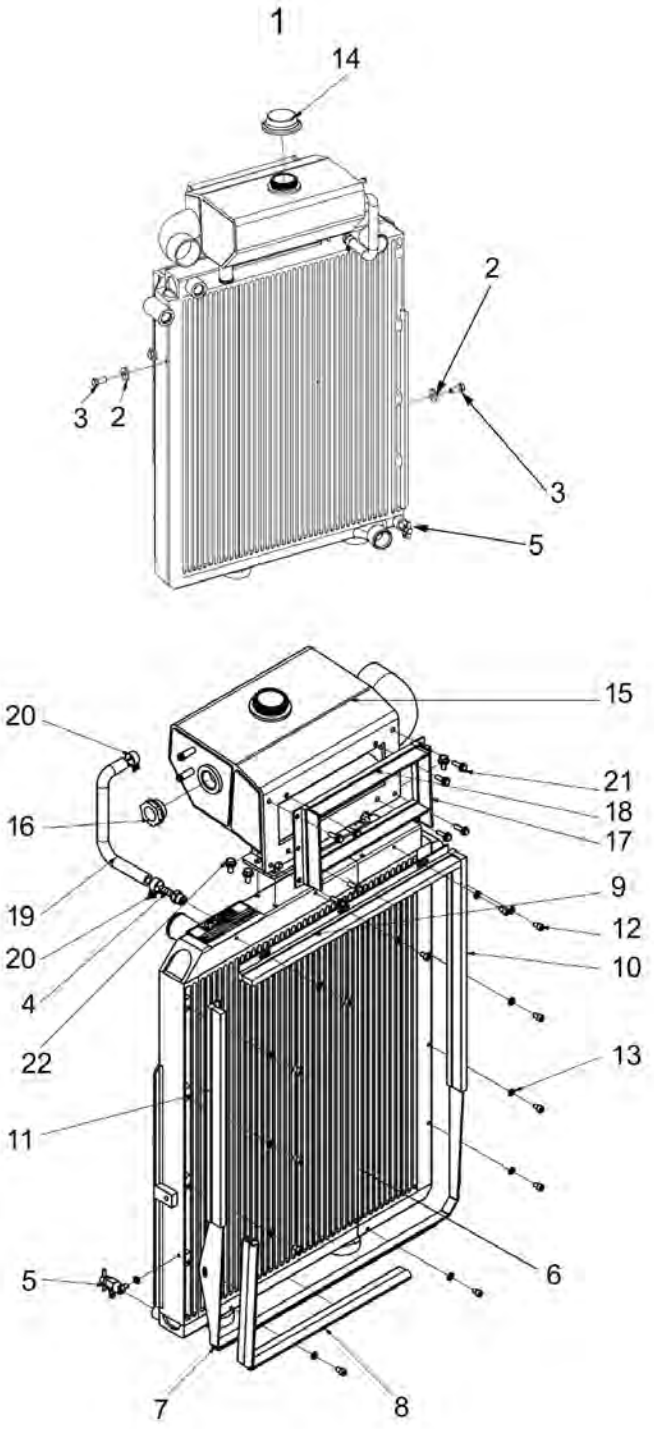

Item	Part No.	Name	Qty	L	SN INFO
1	4812124272	Water/Oil cooler, cpl	1		
2	4700904640	Washer, 8.4x22x3 mm 300HV	3		
3	4700500100	Hexagon screw	3		
4	4812157872	Hose connection	1		
5	4812157873	Drain valve	1		
6	4812161079	Water / Oil cooler	1		
7	4812157871	Bracket	1		
8	4812157874	Sealing	1		
9	4812157875	Brush	1		
10	4812157876	Brush	1		
11	4812157877	Brush	1		
12	-	Hexagon socket head cap screw M5x8	13		
13	-	Hose clamp	13		
14	4700903714	Cooler cap	1		
15	4812160251	Expansion tank	1		
16	4812160252	Level gauge	1		
17	4812160253	Brush	2		
18	4812160254	Brush	2		
19	-	Hose clamp	1		
20	-	Hose clamp	2		
21	-	Bolt M5x16	8		
22	-	Bolt M6x12	4		

Engine hood, cpl To 0A015756 4812118163 Engine hood, cpl

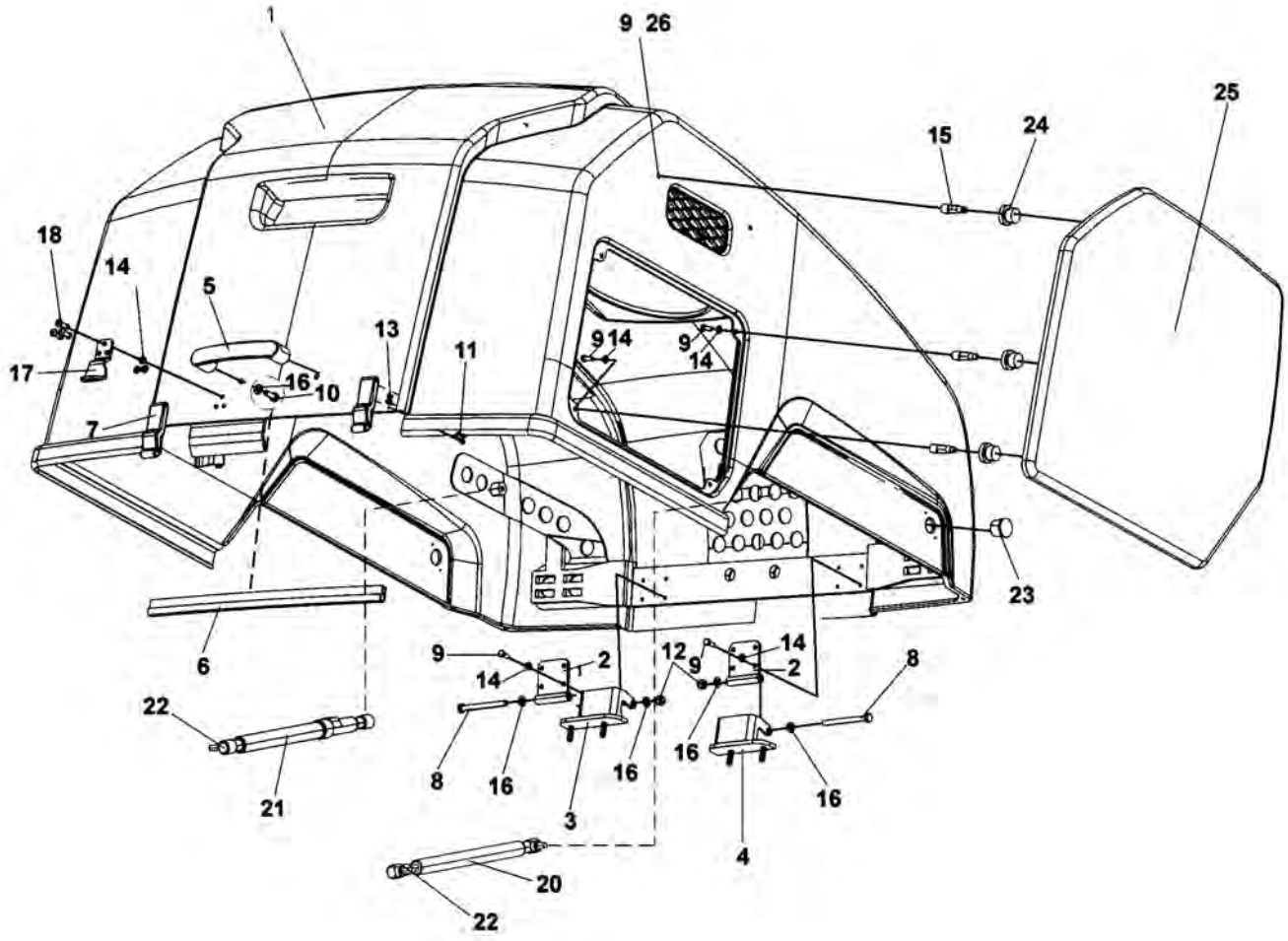

Item	Part No.	Name	Qty	L	SN INFO
0	4812118163	Engine hood, cpl	1		
1	4812120571	Engine hood	1		
2	4812113598	Hinge	2		
3	4812113626	Hinge	1		
4	4812113627	Hinge	1		
5	4700387948	Handle	1		
6	4700902166	Edge trim	1	A	
7	4700388846	Latch	2		
8	4700500115	Screw	2		
9	4700500013	Screw, M6x16 mm 8.8 A2K	14		
10	4700500053	Screw, M8x20 mm 8.8 A2K	2		
11	4811000425	Screw M4x16 10,9 A2'K	4		
12	4700586003	Lock nut M8	2		
13	4700923976	Lock nut	4		
14	4700904228	Washer 6,4x12x1,5	15		
15	4811000488	Ball stud	6		
16	4700904229	Washer, 8.4x 6x1.5 mm 300HV	6		
17	4700377061	Lock plate	1		
18	4700791666	Blind rivet	3		
20	4812114152	Gas spring Right	1		
21	4812114153	Gas spring Left	1		
22	4700902286	Lock nut, M8x1.25 mm A2K	2		
23	4700902890	Plug	2		
24	4811000489	Coupling	4		
25	4812118165	Cover	1		
26	4700928381	Washer, 6.4x18x1.6 mm	1	B	

Comments for Page: 4812118163 Engine hood, cpl

(L)OCAL REMARKS

A | en_US | L = 0,50 m

B | en_US | Not shown in illustration. Placed inside the hood.

Engine hood cpl, From 0A015757 - xA018328 Engine hood, cpl

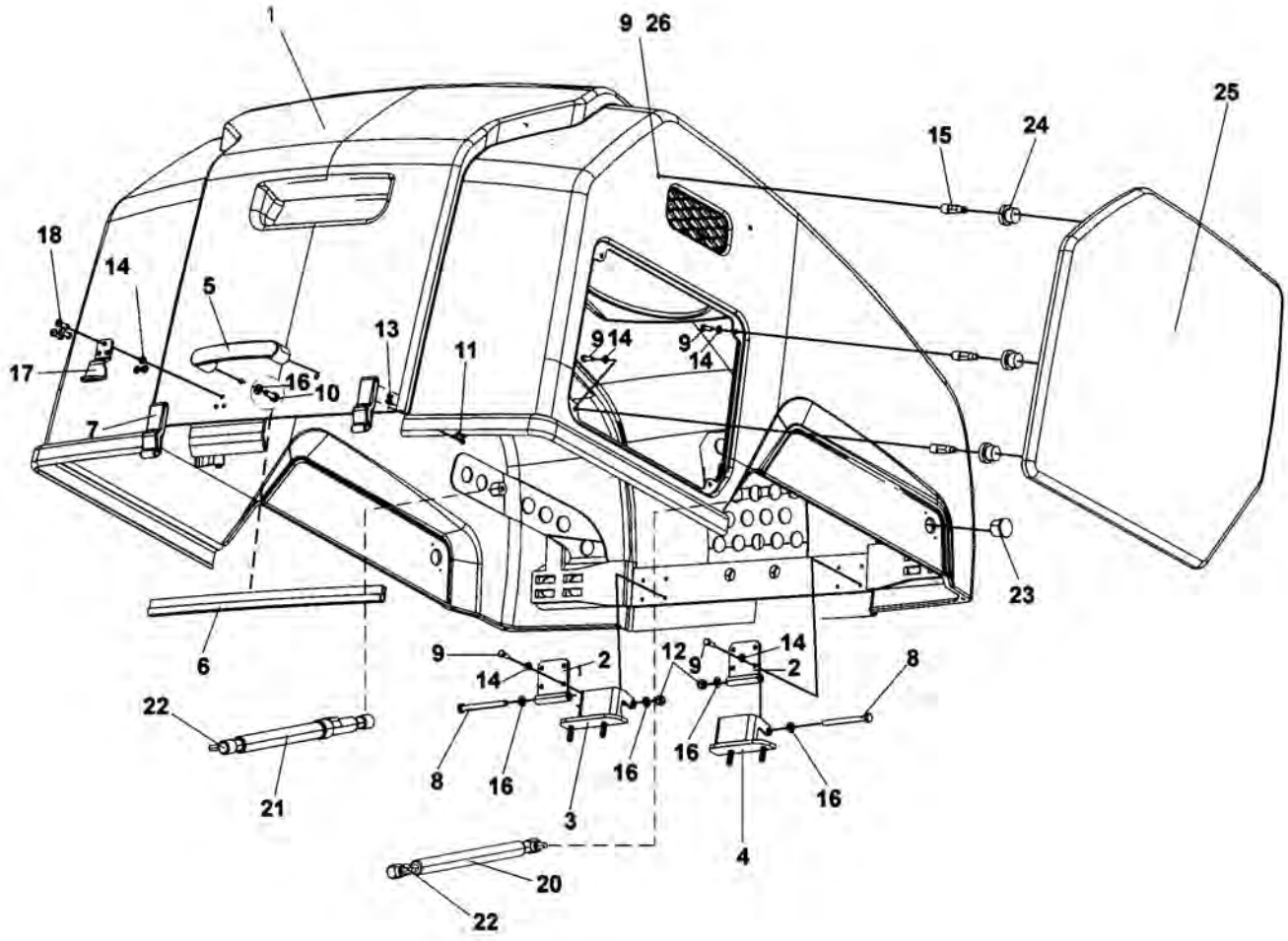

Item	Part No.	Name	Qty	L	SN INFO
0	4812123608	Engine hood, cpl	1		
1	4812120571	Engine hood	1		
2	4812113598	Hinge	2		
3	4812113626	Hinge	1		
4	4812113627	Hinge	1		
5	4700387948	Handle	1		
6	4700902166	Edge trim	1	A	
7	4700388846	Latch	2		
8	4700500115	Screw	2		
9	4700500013	Screw, M6x16 mm 8.8 A2K	14		
10	4700500053	Screw, M8x20 mm 8.8 A2K	2		
11	4811000425	Screw M4x16 10,9 A2'K	4		
12	4700586003	Lock nut M8	2		
13	4700923976	Lock nut	4		
14	4700904228	Washer 6,4x12x1,5	15		
15	4811000488	Ball stud	6		
16	4700904229	Washer, 8.4x 6x1.5 mm 300HV	6		
17	4700377061	Lock plate	1		
18	4700791666	Blind rivet	3		
20	4812114152	Gas spring Right	1		
21	4812114153	Gas spring Left	1		
22	4700902286	Lock nut, M8x1.25 mm A2K	2		
23	4700902890	Plug	2		
24	4811000489	Coupling	4		
25	4812118165	Cover	1		
26	4700928381	Washer, 6.4x18x1.6 mm	1	B	

Comments for Page: Engine hood, cpl

(L)OCAL REMARKS

A | en_US | L = 0,50 m

B | en_US | Not shown in illustration. Placed inside the hood.

(L)OCAL REMARKS

A | en_US | L = 0,50 m

B | en_US | Not shown in illustration. Placed inside the hood.

Engine hood cpl, From xA018329 Engine hood, cpl

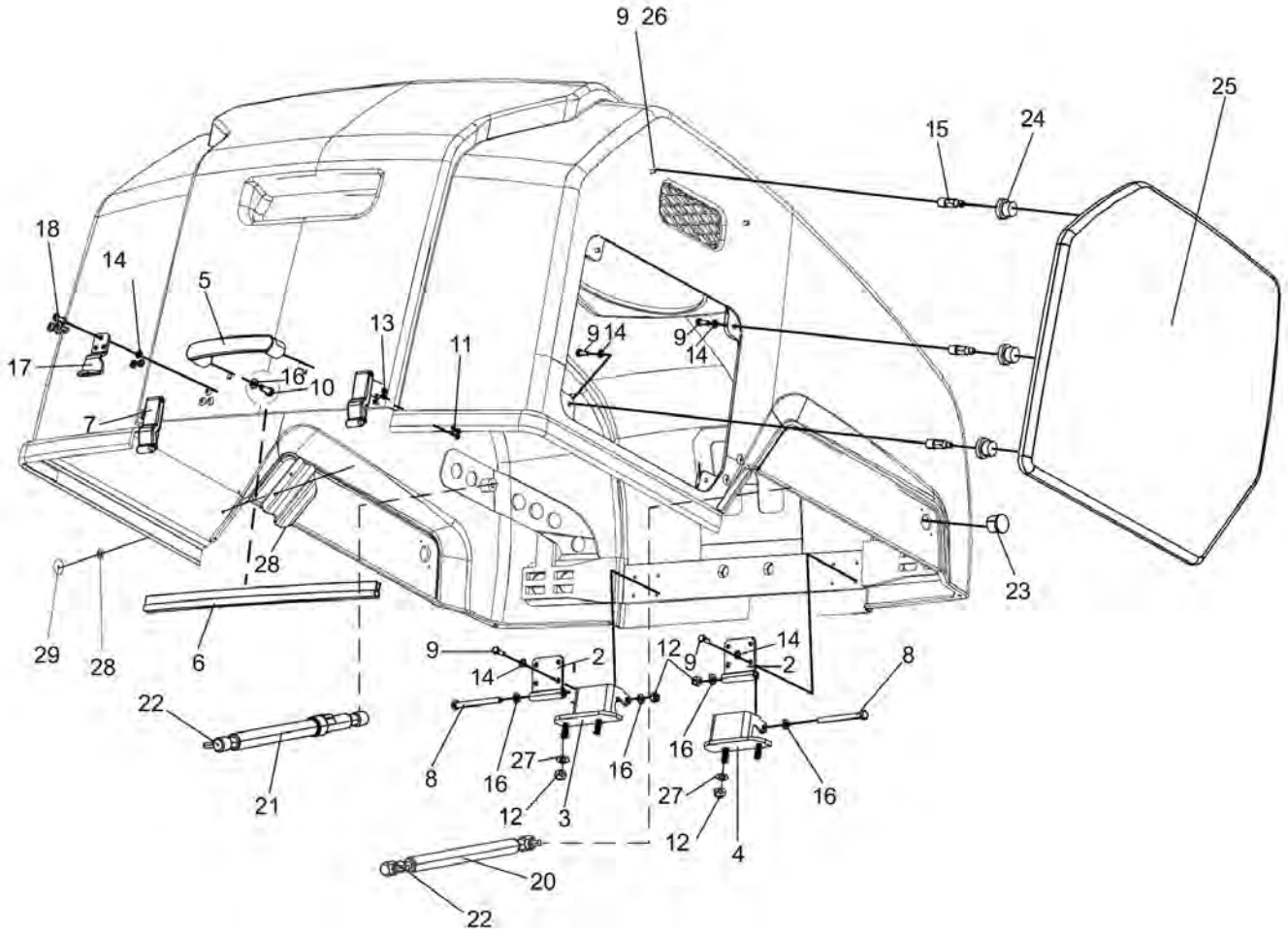

Item	Part No.	Name	Qty	L	SN INFO
0	4812123608	Engine hood, cpl	1		
1	4812120571	Engine hood	1		
2	4812113598	Hinge	2		
3	4812113626	Hinge	1		
4	4812113627	Hinge	1		
5	4700387948	Handle	1		
6	4700902166	Edge trim	1	A	
7	4700388846	Latch	2		
8	4700500115	Screw	2		
9	4700500013	Screw, M6x16 mm 8.8 A2K	14		
10	4700500053	Screw, M8x20 mm 8.8 A2K	2		
11	4811000425	Screw M4x16 10,9 A2'K	4		
12	4700586003	Lock nut M8	2		
13	4700923976	Lock nut	4		
14	4700904228	Washer 6,4x12x1,5	15		
15	4811000488	Ball stud	6		
16	4700904229	Washer, 8.4x 6x1.5 mm 300HV	6		
17	4700377061	Lock plate	1		
18	4700791666	Blind rivet	3		
20	4812114152	Gas spring Right	1		
21	4812114153	Gas spring Left	1		
22	4700902286	Lock nut, M8x1.25 mm A2K	2		
23	4700902890	Plug	2		
24	4811000489	Coupling	4		
25	4812118165	Cover	1		
26	4700928381	Washer, 6.4x18x1.6 mm	1	B	
27	4812124345	Bracket	2		From xA018329
28	4700904281	Washer, 5,3x10x1 300HV	4		From xA018329
29	4700902569	Rivet	4		From xA018329

Comments for Page: Engine hood, cpl

(L)OCAL REMARKS

A | en_US | L = 0,50 m

B | en_US | Not shown in illustration. Placed inside the hood.

Engine room Casing

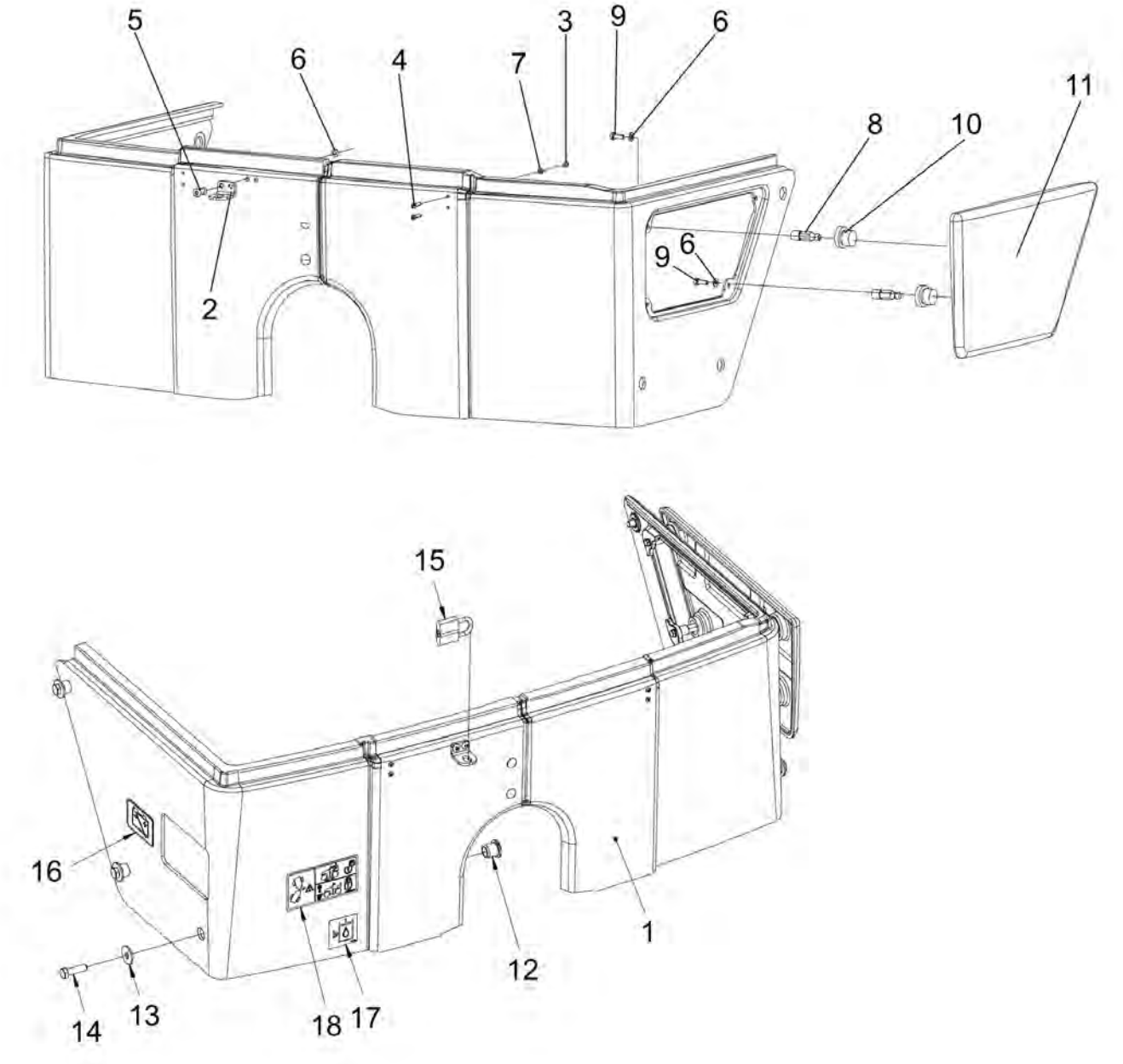

Item	Part No.	Name	Qty	L	SN INFO
1	4812115560	Casing, cpl.	1		To A018853
1	4812125370	Casing, cpl.	1		From A018854
2	4812118203	Shock absorber	6		
2	4700388852	Lock plate	1		
3	4700928441	Washer, 21 x 45 mm	6		
3	4700923976	Lock nut	4		
4	4700500030	Screw hexagon	6		
4	4811000426	Screw M4x20 10.9 A2K	4		
5	4700388852	Lock plate	1		
5	4700791666	Blind rivet	2		
6	4700923976	Lock nut	4		
6	4700904228	Washer 6,4x12x1,5	6		
7	4811000426	Screw M4x20 10.9 A2K	4		
7	4700904698	Plain washer	4		
8	4700791666	Blind rivet	2		
8	4811000488	Ball stud	4		
9	4700904228	Washer 6,4x12x1,5	2		
9	4700500013	Screw, M6x16 mm 8.8 A2K	4		
10	4700904698	Plain washer	4		
10	4811000489	Coupling	4		
11	4812114962	Cover	1		
12	4812118203	Shock absorber	6		
13	4700928441	Washer, 21 x 45 mm	6		
14	4700500030	Screw hexagon	6		
15	4700358881	Pad lock	1		From A018636
16	4700904835	Decal "BATTERY POWER"	1		From A018636
17	4700272373	Label, hydraulic oil level	1		From A018636
18	4812125363	Safety decal "RISK OF CRUSHING"	1		From A018636

Engine room Cooler hoses

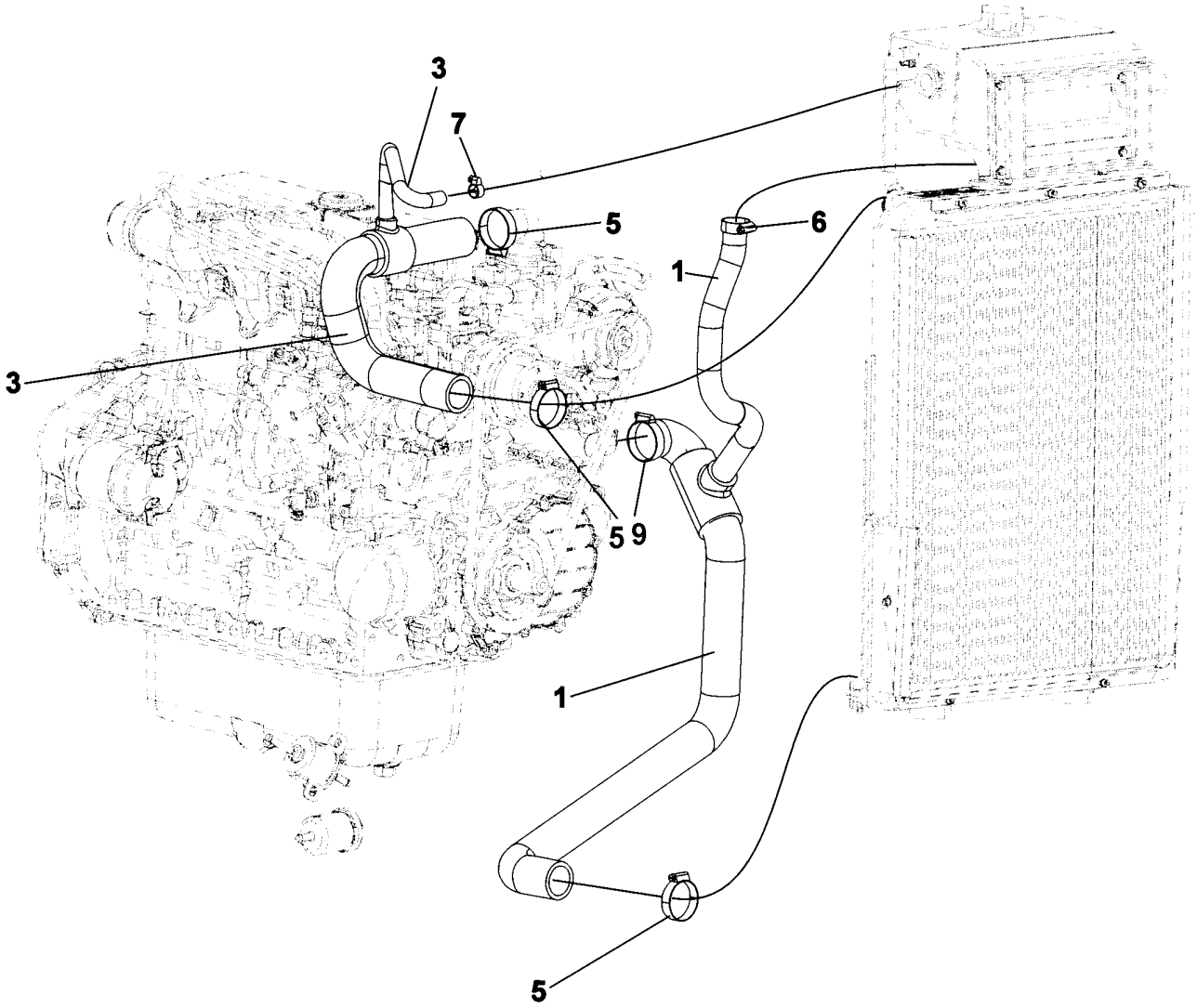

Item	Part No.	Name	Qty	L	SN INFO
1	4812113697	Cooler hose	1		
3	4812113694	Cooler hose	1		
5	4700313008	Hose clamp	3		
6	4700313004	Hose clamp 19-29mm	1		
7	4700313108	Hose clamp	1		
9	4700902295	Hose clamp	1		

Engine room Air hoses

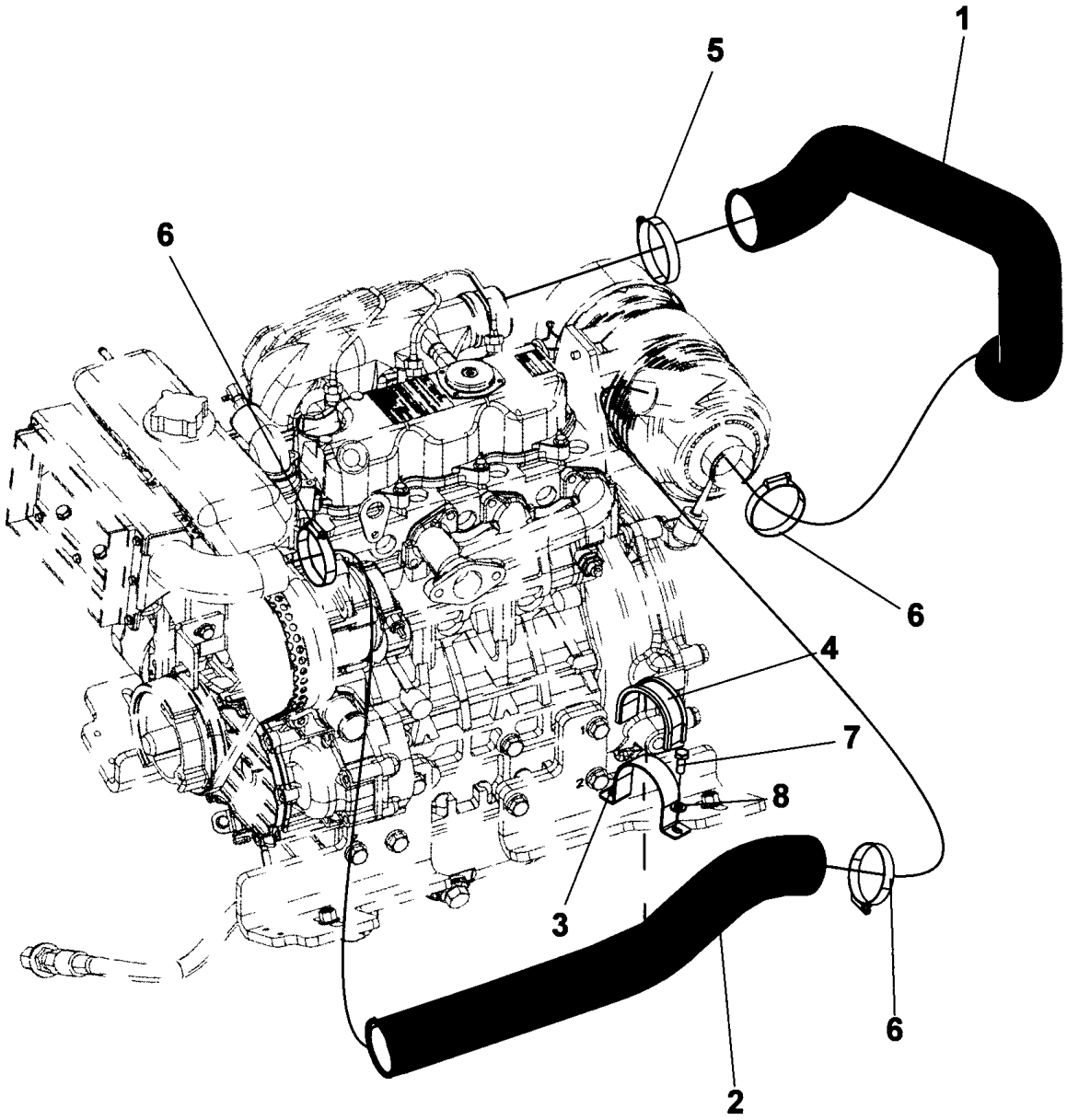

Item	Part No.	Name	Qty	L	SN INFO
1	4812111877	Air inlet hose	1		
2	4812118375	Air hose	1		
3	4812117802	Clamp	1		
4	4812117602	Strip	1	A	
5	4700313023	Hose clamp	1		
6	4700313010	Hose clamp	3		
7	4700500053	Screw, M8x20 mm 8.8 A2K	2		
8	4700904229	Washer, 8.4x 6x1.5 mm 300HV	2		

Comments for Page: Air hoses

(L)OCAL REMARKS

A | en_US | L = 0.14 m

Engine room Fuel hoses

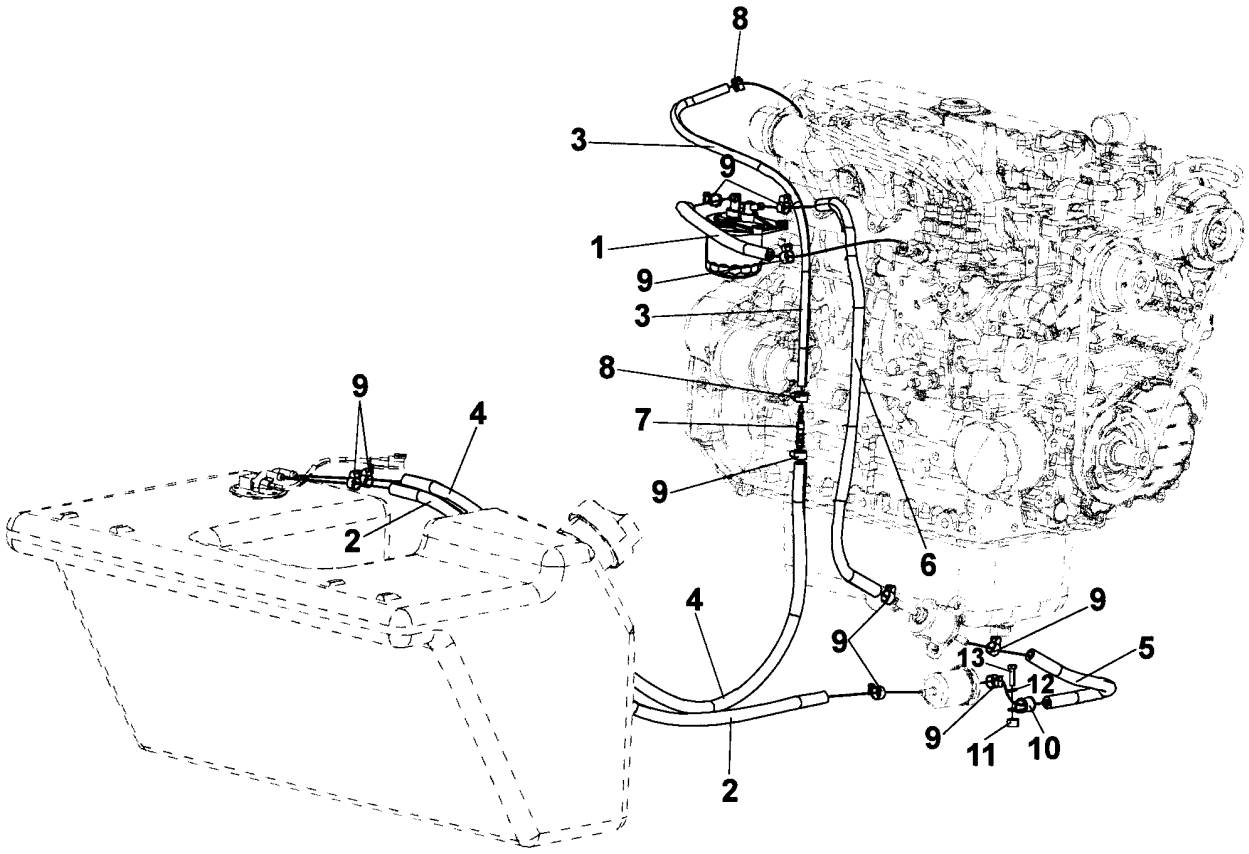

Item	Part No.	Name	Qty	L	SN INFO
1	4700904984	Fuel hose	1	A	
2	4700904984	Fuel hose	1	B	
3	4700791422	Hose	1	C	
4	4700904984	Fuel hose	1	D	
5	4700904984	Fuel hose	1	E	
6	4700904984	Fuel hose	1	F	
7	4700791774	Hose connection	1		
8	4700313075	Hose clamp	2		
9	4700313108	Hose clamp	10		
10	4700921116	Clamp	1		
11	4700355869	Spacer sleeve	1		
12	4700904229	Washer, 8.4x 6x1.5 mm 300HV	1		
13	4700500022	Screw	1		

Comments for Page: Fuel hoses

(L)OCAL REMARKS

A | en_US | L = 0,20 m

B | en_US | L = 0.97 m

C | en_US | L = 0.62 m

D | en_US | L = 0.80 m

E | en_US | L = 0.30 m

F | en_US | L = 0.60 m

Engine room Fuel system

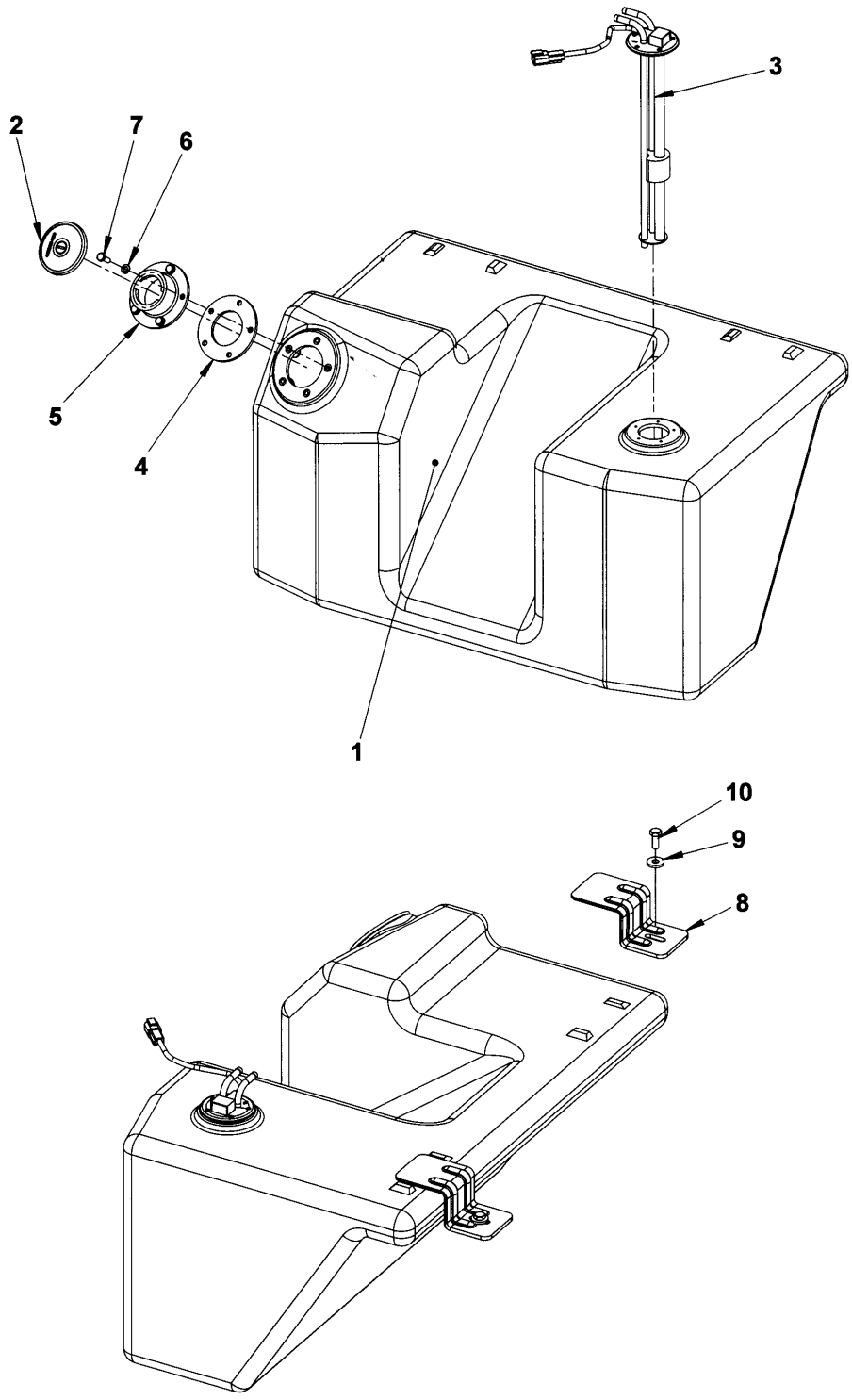

Item	Part No.	Name	Qty	L	SN INFO
1	4812118133	Fuel tank	1		
2	4812118459	Fuel cap	1		
2	4812118885	Key "044"	2		
3	4700387552	Level gauge	1		
4	4812118126	Flange gasket	1		
5	4812118125	Filler neck end	1		
6	4700904228	Washer 6,4x12x1,5	5		
7	4700500013	Screw, M6x16 mm 8.8 A2K	5		
8	4700357466	Holder plate	2		
9	4700904640	Washer, 8.4x22x3 mm 300HV	2		
10	4700500053	Screw, M8x20 mm 8.8 A2K	2		

Propulsion system To A017368 Propulsion system

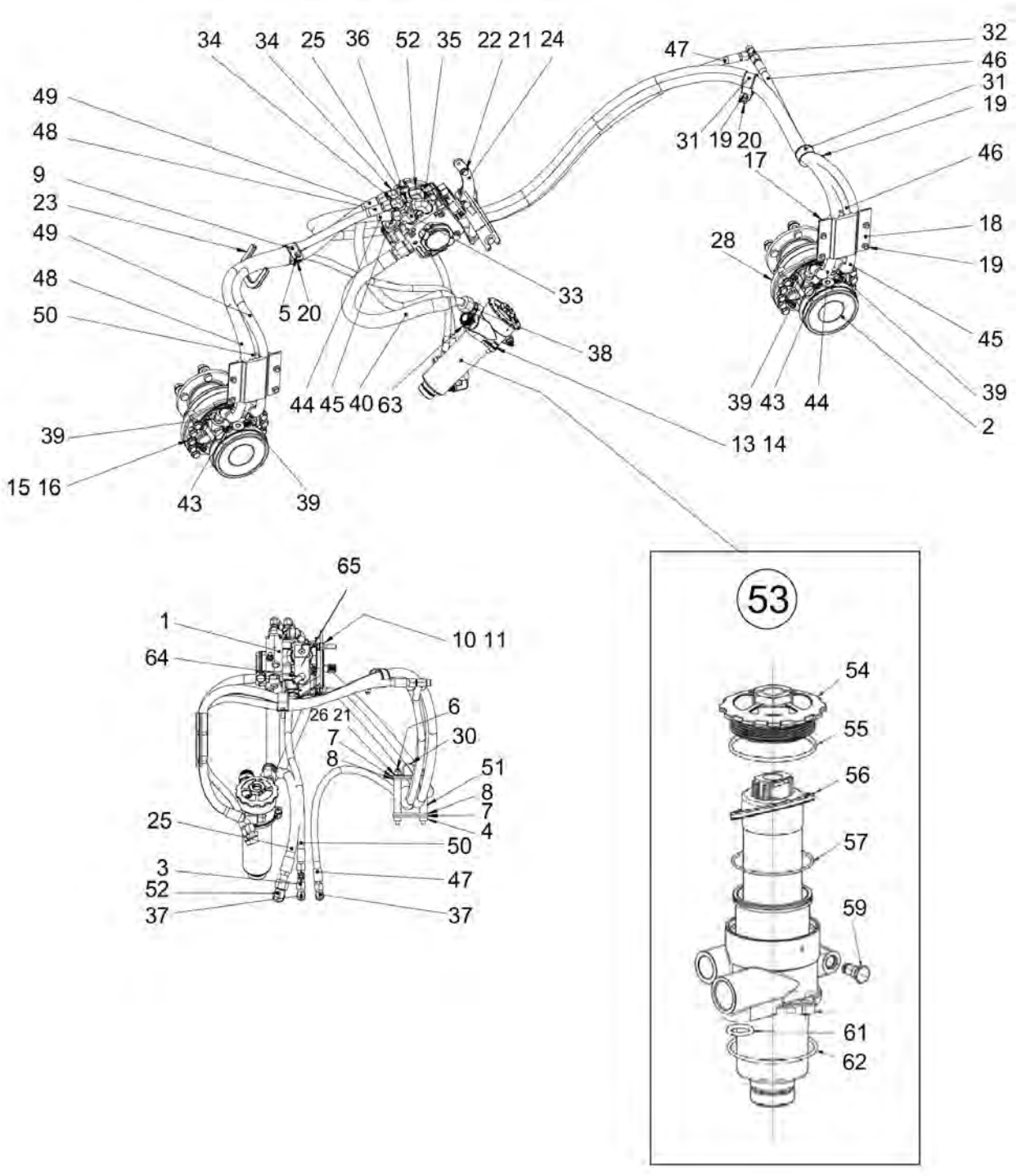

Item	Part No.	Name	Qty	L	SN INFO
1	4812119250	Hydraulic pump	1		
2	4812120089	Hydraulic motor	2		
3	4700791414	T-connection, O-ring with swivel	1		
4	4700355869	Spacer sleeve	2		
5	4700500506	Screw, M8x30 mm 8.8 A2K	1		
6	4700902233	Threaded stud	2		
7	4700357112	Cover plate	2		
8	4700357111	Rubber cloth	2		
9	4700921022	Hose clamp	1		
10	4700500046	Hex. head screw M12x030H	2		
11	4700904703	Plain washer 13x24x4 mm	2		
12	4812113327	Hydraulic oil filter, cpl.	1		
13	4700508096	Hexagon socket head cap screw	2		
14	4700904637	Washer	2		
15	4700500269	Screw	20		
16	4700904231	Washer, 13x24x2 mm 300 HV	20		
17	4700371313	Hose clamp	2		
18	4700371314	Hose clamp	2		
19	4700500505	Screw, M8x20 mm 8.8 A2K	10		
20	4700902286	Lock nut, M8x1.25 mm A2K	2		
21	4700904230	Plain washer 10.5x22x2 mm	4		
22	4811000456	Screw M10x1,25x045 8.8	2		
23	4700902379	Edge trim	1		
24	4812120683	Bracket	1		
25	4812120889	Hydraulic hose	1		
26	4700586018	Lock nut M10	2		
28	4812110490	Holder	4		
30	4700921099	Clamp	1		
31	4700921119	Pipe clamp	2		
32	4700791546	T-connector	1		
33	4700791833	T-connector	1		To 0A015617
33	4700791792	Tee-connector	1		From 0A015618
34	4700791745	Elbow 90, O-ring with swivel	2		
35	4700791841	Elbow 90 orfs	1		To 0A015617
35	4700791699	Elbow 90	1		From 0A015618
36	4700791798	Adapter	1		
37	4700791398	Elbow 90, O-ring	2		
38	4700904728	Straight connector ORFS	2		

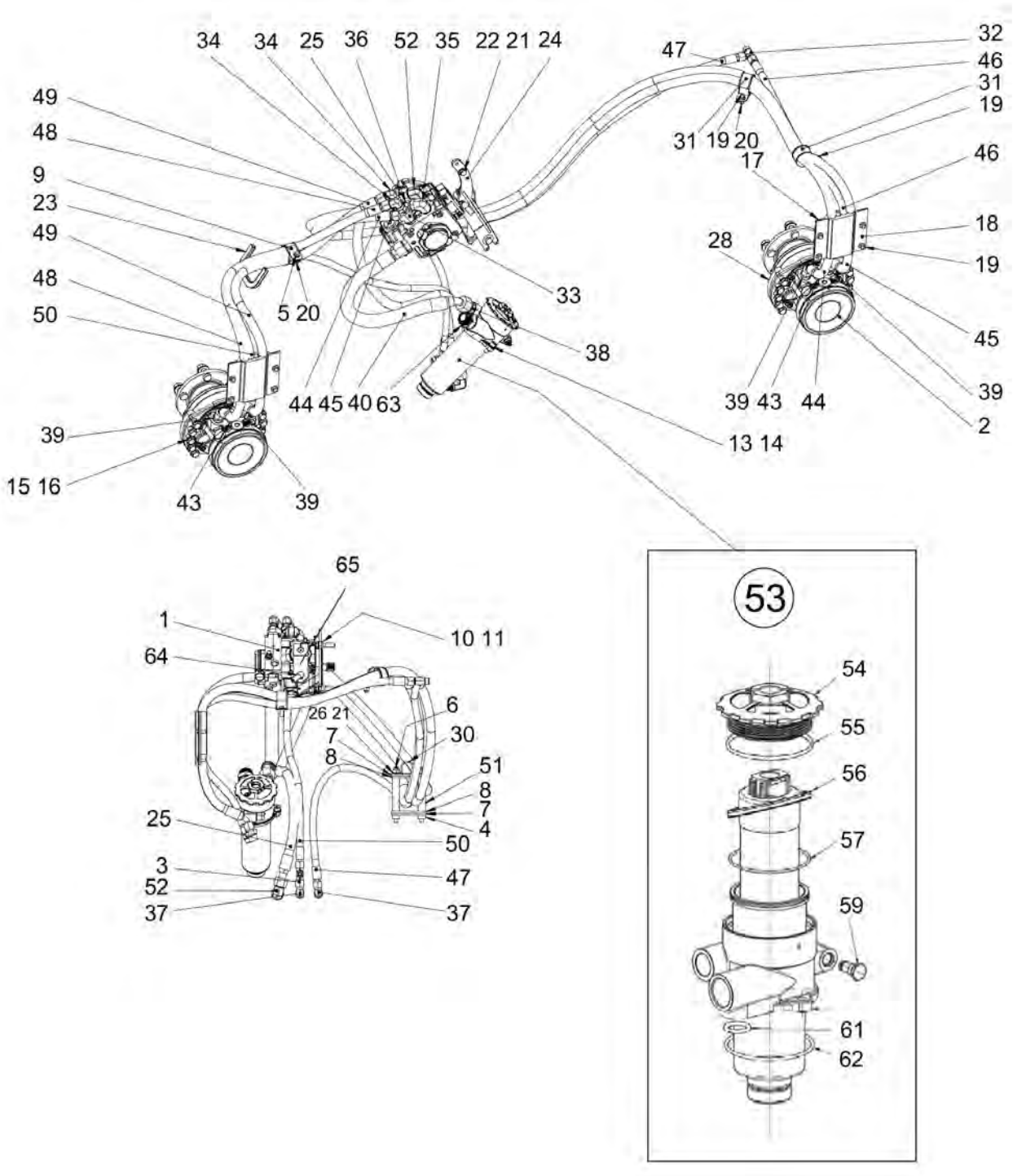
34 34 25 36 52 35 22 21 24
49
48
9
23
49
48
50
5 20
33
38
44 45 40 63
39
15 16
43
39
13 14
47
32
46
31
19
31 19 20
17
46
18
28
19
45
39
39 43 44
2
65
1
64
10 11
26 21
6
7
8
30
51
8
7
4
25
50
3
52
37
47
37
53
54
55
56
57
59
61
62

Item	Part No.	Name	Qty	L	SN INFO
39	4700791410	Straight o-ring connector	4		
40	4812120885	Hydraulic hose	1		
43	4700791828	Adapter	2		
44	4812121826	Hydraulic hose	1		
45	4812121827	Hydraulic hose	1		
46	4812120886	Hydraulic hose	1		
47	4700483764	Hydraulic hose	1		
48	4812121824	Hydraulic hose	1		
49	4812121825	Hydraulic hose	1		
50	4700483764	Hydraulic hose	1		
51	4700357113	Spacer sleeve	2		
52	4700792332	Elbow 90 orfs	2		
53	4812113327	Hydraulic oil filter, cpl.	1		
54	4812156882	Cover	1		
55	4812156881	O-ring	1		
56	4812113328	Hydraulic oil filter element	1		
57	4812156880	Safety ring	1		
59	4812156879	Plug	1		
61	4812156877	O-ring	1		
62	4812156878	O-ring	1		
63	4700792338	Adapter	1		From 0A015618
64	4812160389	Universal joint, M8	1		From 0A015618
65	4812160692	Control arm	1		

Comments for Page: Propulsion system

(L)OCAL REMARKS

A | en_US | L = 0,11 m

Propulsion system To A017368 4812119250 Hydraulic pump

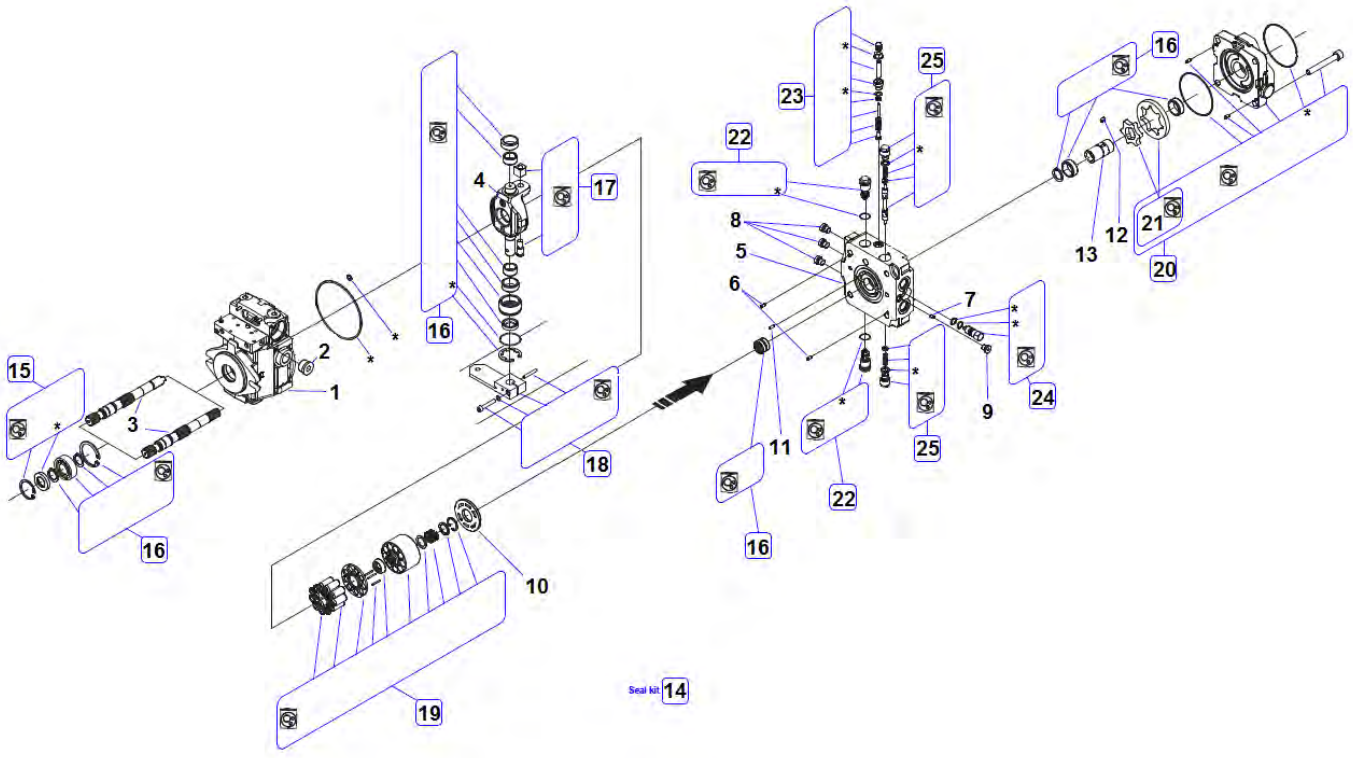

Item	Part No.	Name	Qty	L	SN INFO
1	-	Housing	1		
2	-	Plug	1		
3	-	Shaft	1		
4	-	Swash plate	1		
5	-	Repair kit	1		
6	-	Pin	2		
7	-	Jet	1		
8	-	Plug	3		
9	-	Plug	1		
10	-	Distribution valve	1		
11	-	Pin	1		
12	-	Pin	1		
13	-	Bushing	1		
14	-	Seal kit	1		
15	-	Seal kit	1		
16	-	Repair kit	1		
17	-	Repair kit	1		
18	4812125070	Control arm kit	1		
19	-	Repair kit	1		
20	-	Other subassembly	1		
21	-	Pump	1		
22	4812160855	Valve	2		
23	4812161058	Low pressure relief valve kit	1		
24	-	Repair kit	1		
25	-	Repair kit	1		

Propulsion system To A017368 4812120089 Hydraulic motor

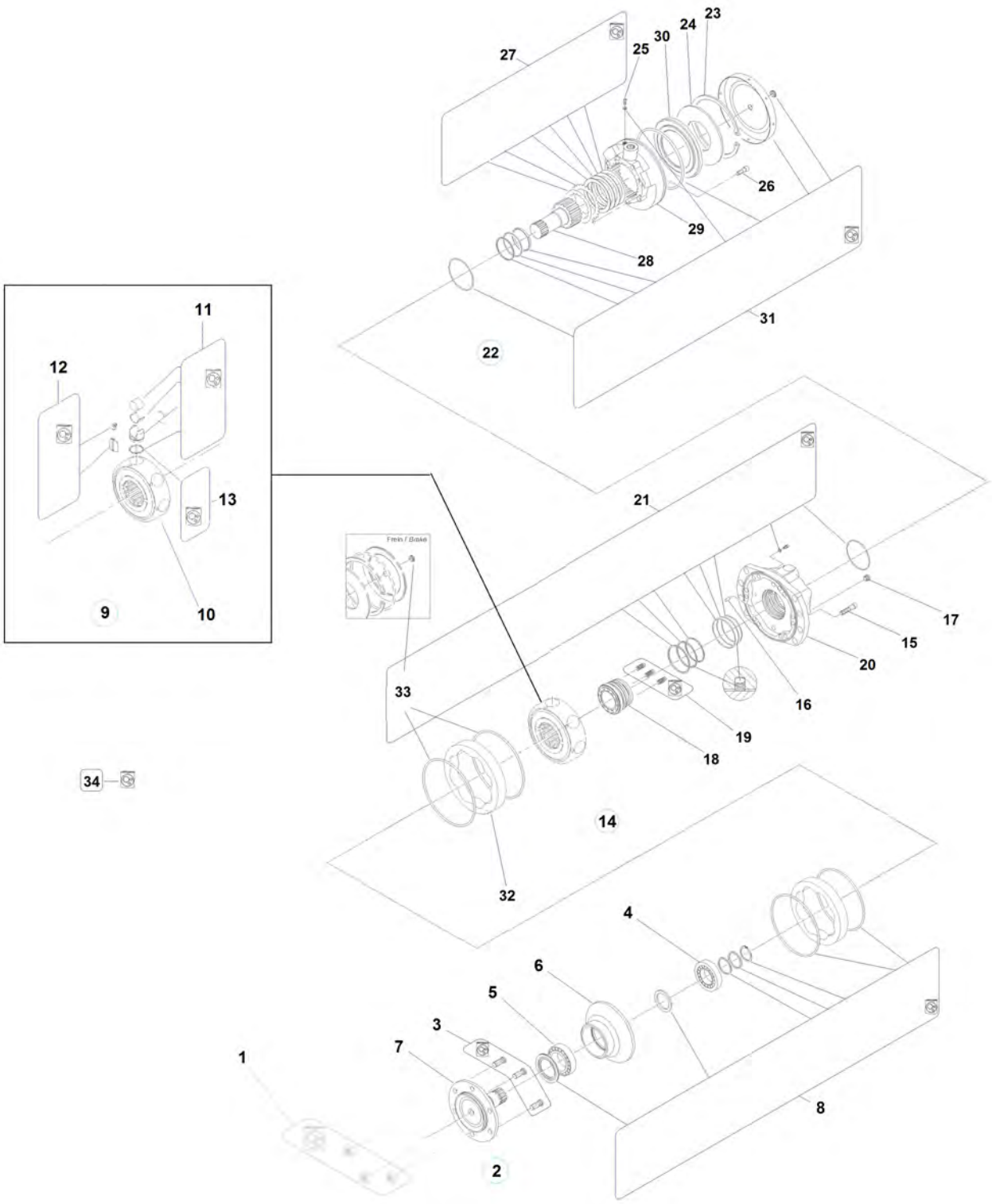

Item	Part No.	Name	Qty	L	SN INFO
1	-	Repair kit	1		
2	4812106412	Other subassembly	1		
3	4812106421	Bolt	1		
4	4812156164	Bearing	1		
5	4812156165	Bearing	1		
6	4812106413	Bearing support	1		
7	4812106414	Shaft	1		
8	4812106417	Repair kit	1		
9	-	Cylinder block cpl	1		
10	-	Cylinder block	1		
11	-	Radial piston	8		
12	-	Repair kit	1		
13	-	Seal kit	1		
14	4812106443	Cover	1		
15	4812106446	Screw	12		
16	4812106445	Pin	1		
17	4812106448	Plug	1		
18	-	Distribution valve	1		
19	-	Seal kit	1		
20	4812106444	Cover	1		
21	4812106449	Seal kit	1		
22	4812106422	Brake subassembly	1		
23	4812106426	Snap ring	1		
24	4812106425	Washer	1		
25	4700928310	Screw	1		
26	4812106424	Screw	10		
27	4812106435	Repair kit	1		
28	-	Brake shaft	1		
29	4812106423	Brake housing	1		
30	-	Brake piston	1		
31	4812106430	Repair kit	1		
32	-	Cam	1		
33	4812106442	Seal kit	1		
34	4812106452	Seal Kit	1		

Propulsion system From A017369 Propulsion system

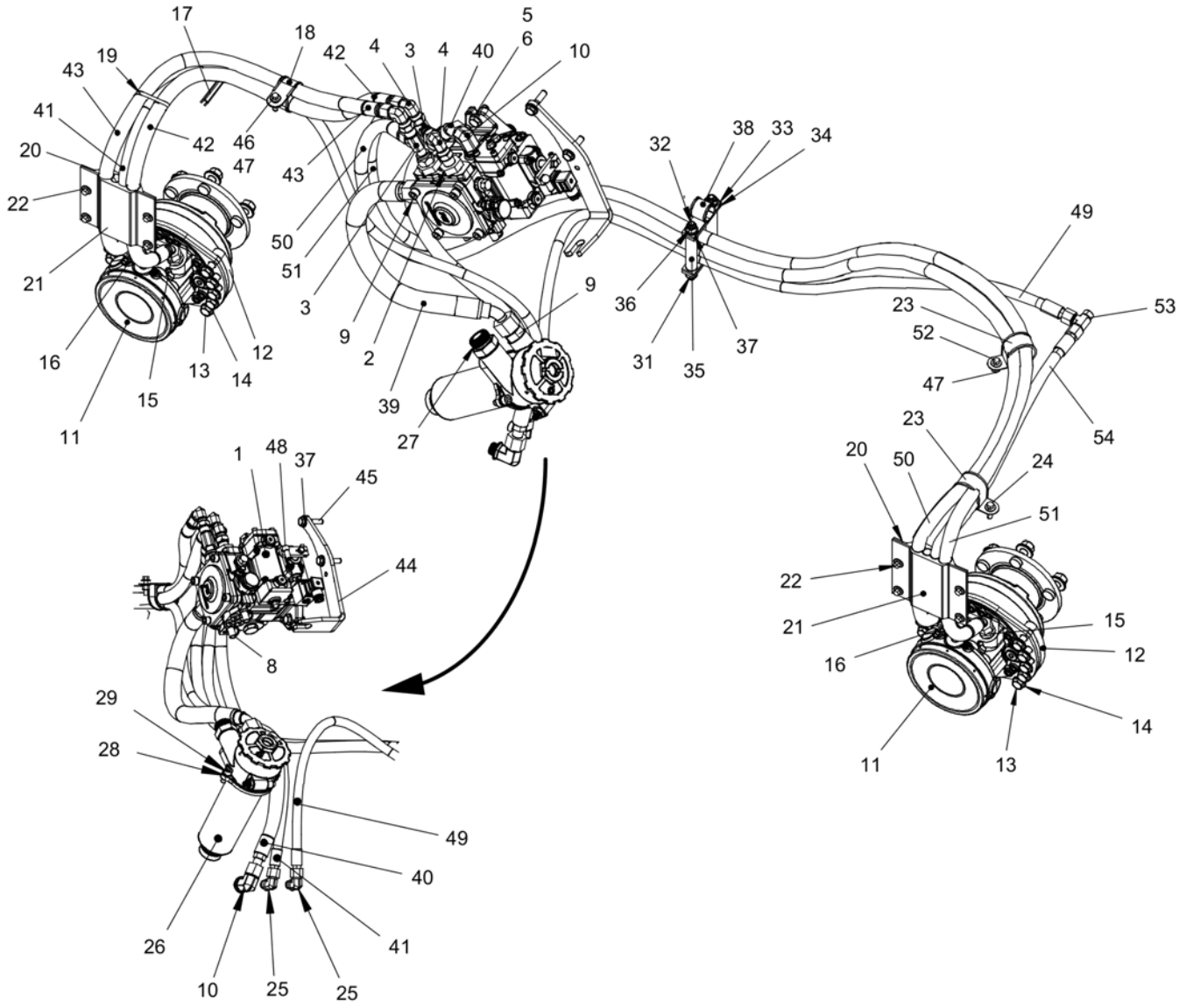

Item	Part No.	Name	Qty	L	SN INFO
1	4812120091	Hydraulic pump	1		
1	4812161797	Stop solenoid	1		
2	4700791408	Straight o-ring connector	2		
3	4700791798	Adapter	2		
4	4700791745	Elbow 90, O-ring with swivel	3		
5	4700904703	Plain washer 13x24x4 mm	2		
6	4700500037	Hex. screw	2		
8	4700923405	Measuring nipple	2		
9	4700904728	Straight connector ORFS	2		
10	4700792332	Elbow 90 orfs	2		
11		Hydraulic motor	2		
12	4812110490	Holder	4		
13	4700500269	Screw	20		
14	4700904231	Washer, 13x24x2 mm 300 HV	20		
15	4700791410	Straight o-ring connector	4		
16	4700791828	Adapter	2		
17	4700902379	Edge trim	0,185		
18	4700921022	Hose clamp	1		
19	4700313102	Cable ties	1		
20	4700371313	Hose clamp	2		
21	4700371314	Hose clamp	2		
22	4700901832	Screw, M08x16, 8.8	8		
23	4700921119	Pipe clamp	2		
24	4700902041	Screw, M8x25mm 8.8 A2K	1		
25	4700791398	Elbow 90, O-ring	2		
26	4812113327	Hydraulic oil filter, cpl.	1		
26	4812156882	Cover	1		
26	4812113328	Hydraulic oil filter element	1		
27	4700792338	Adapter	1		
28	4700904637	Washer	2		
29	4700508096	Hexagon socket head cap screw	2		
31	4700355869	Spacer sleeve	2		
32	4700902233	Threaded stud	2		
33	4700357112	Cover plate	2		
34	4700357111	Rubber cloth	2		
35	4700357113	Spacer sleeve	2		
36	4700586018	Lock nut M10	2		

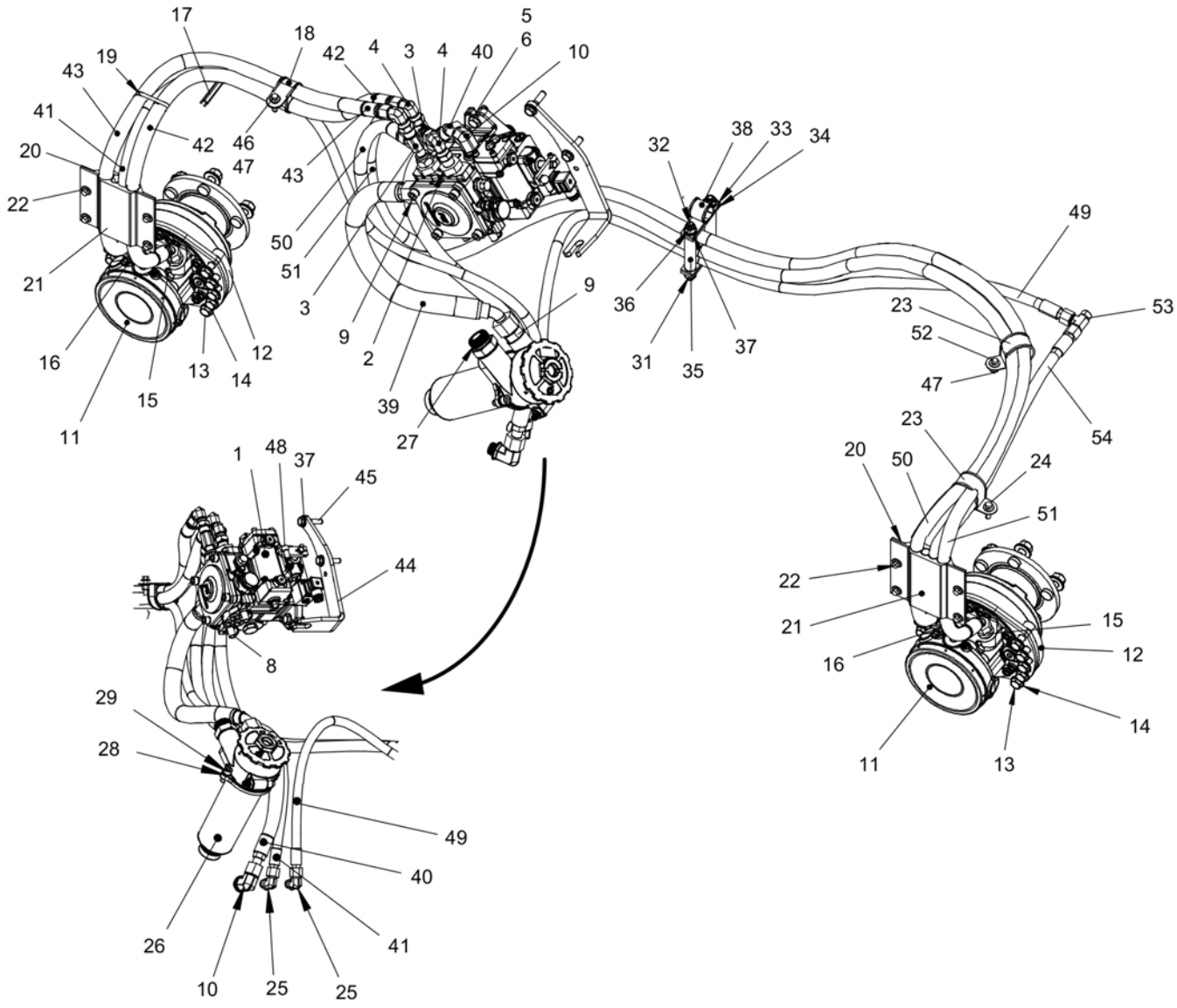
17
18
19
43
41
20
22
21
16
11
15
13
14
12
42
46
47
42
4
3
4
40
5
6
10
43
50
51
3
9
2
39
27
9
36
31
35
32
38
33
34
37
49
53
23
52
47
54
23
20
50
24
51
22
21
16
11
13
15
12
14
1
48
37
45
44
8
29
28
49
40
41
26
10
25
25

Item	Part No.	Name	Qty	L	SN INFO
37	4700904230	Plain washer 10.5x22x2 mm	4		
38	4700921099	Clamp	1		
39	4812120885	Hydraulic hose	1		
40	4812121228	Hydraulic hose	1		
41	4700484092	Hydraulic hose	1		
42	4700484316	Hydraulic hose	1		
43	4700484316	Hydraulic hose	1		
44	4812121463	Bracket	1		
45	4811000456	Screw M10x1,25x045 8.8	2		
46	4700500506	Screw, M8x30 mm 8.8 A2K	1		
47	4700902286	Lock nut, M8x1.25 mm A2K	2		
48	4700416034	Universal joint, M6	1		
49	4700483764	Hydraulic hose	1		
50	4812121826	Hydraulic hose	1		
51	4812121827	Hydraulic hose	1		
52	4700500505	Screw, M8x20 mm 8.8 A2K	1		
53	4700791546	T-connector	1		
54	4812120886	Hydraulic hose	1		

Propulsion system From A017369 4812120558 Hydraulic motor

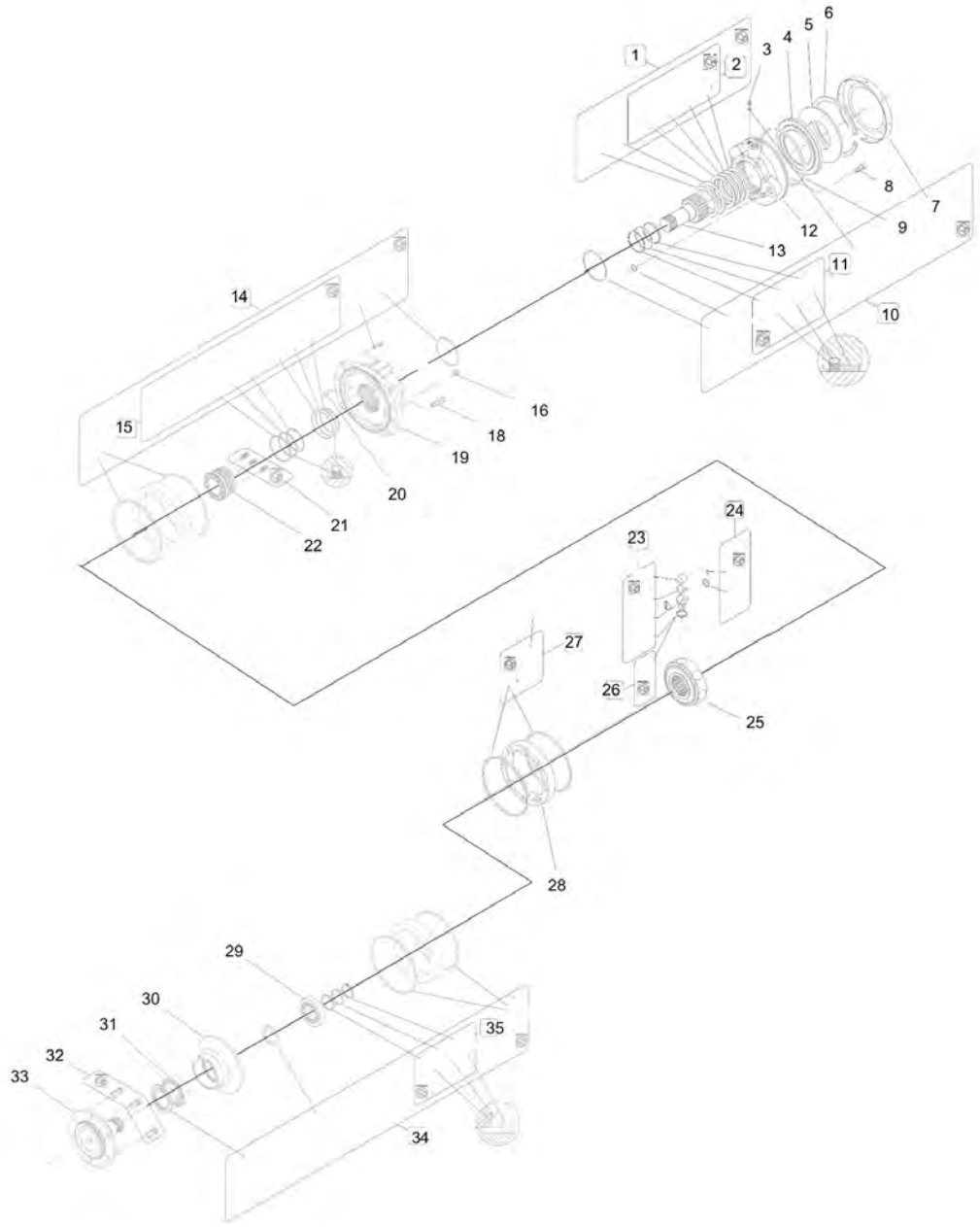

Item	Part No.	Name	Qty	L	SN INFO
0	4812120558	Hydraulic motor	1		
1	4812162174	Repair kit	1		
1	-	Brake disc	20		
1	-	Brake disc	21		
2	4812162175	Shim	1		
3	4812162176	Screw	1		
4	4812162177	Brake piston	1		
5	4812162178	Washer	1		
6	4812162179	Snap ring	1		
8	4812162181	Screw	10		
10	4812160275	Repair kit	1		
7	-	Shield	1		
9	-	Repair kit	1		
11	4812162182	Seal	1		
11	-	Bushing	1		
11	-	Repair kit	1		
11	-	Repair kit	1		
12	4812162183	Brake housing	1		
13	4812162184	Brake shaft	1		
14	4812162185	Seal kit	1		
14	-	Repair kit	2		
15	4812162186	Seal kit	1		
16	4812162187	Plug	1		
18	4812162188	Screw	12		
19	4812162189	Cover	1		
20	4812162190	Pin	1		
21	4812162191	Seal kit	1		
22	4812162192	Valve	1		
23	4812162193	Piston	8		
23	-	Roller	1		
23	-	Repair kit	1		
23	-	Piston	1		
23	-	Piston bushing	1		
24	4812162194	Repair kit	1		
24	-	Lunambule	16		
24	-	Clip	8		
25	-	Cylinder block	1		
26	4812162195	Seal	10		

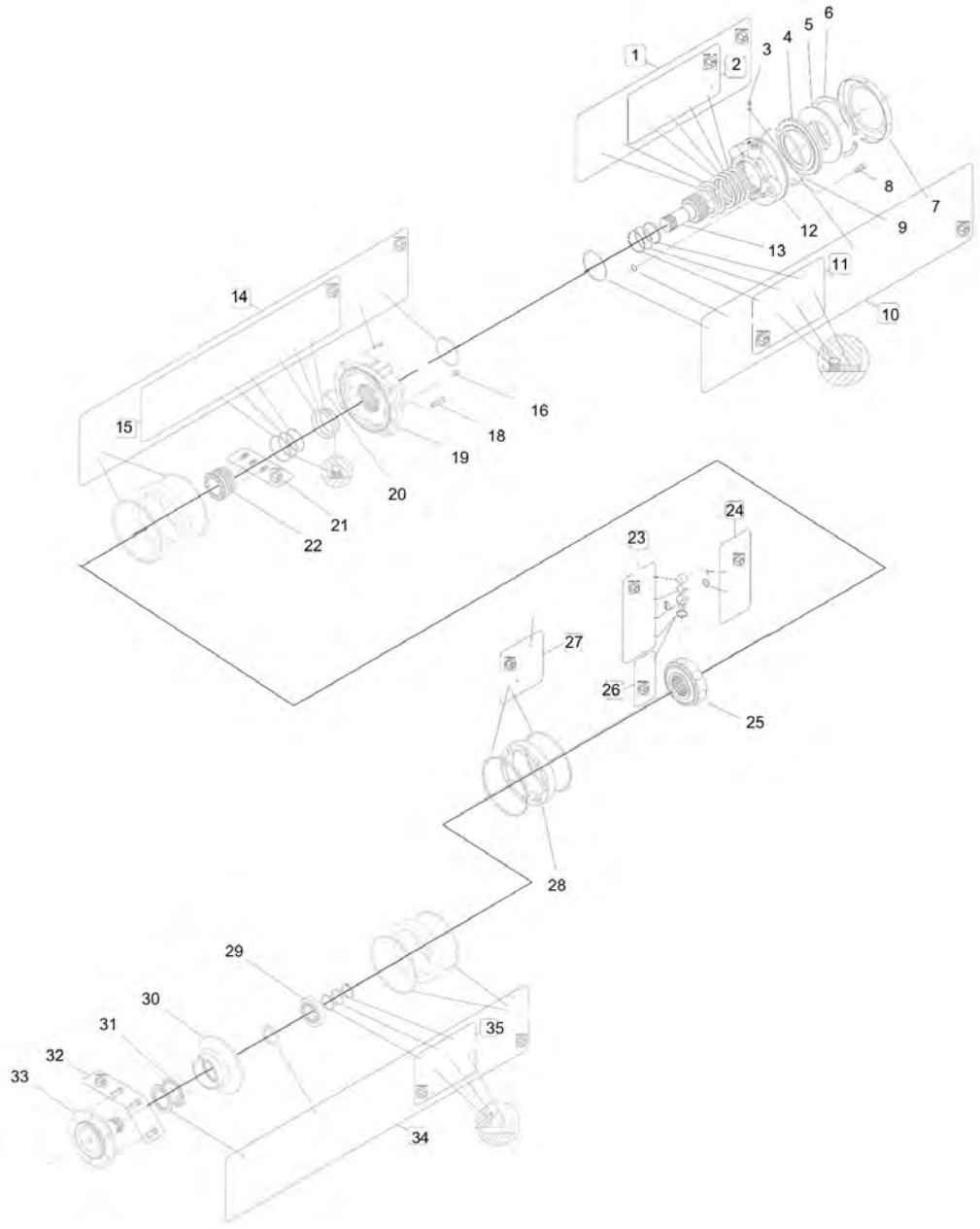
1
2
3
4
5
6
7
8
9
10
11
12
13
14
15
16
18
19
20
21
22
23
24
25
26
27
28
29
30
31
32
33
34
35

Item	Part No.	Name	Qty	L	SN INFO
27	4812162196	Seal kit	1		
27	-	Plug	1		
27	-	Repair kit	2		
28	4812162197	Cam	1		
29	4812162198	Bearing	1		
30	4812162199	Bearing support	1		
31	4812162251	Bearing	1		
32	4812162252	Bolt	1		
33	4812162253	Shaft	1		
34	4812162254	Repair kit	1		
34	-	Repair kit	2		
34	-	Repair kit	1		
35	-	Repair kit	1		
35	-	Shim	1		
35	-	Guide ring	1		
35	-	Snap ring	1		
35	4812162255	Repair kit	1		

Propulsion system From A017369 4812120091 Hydraulic pump

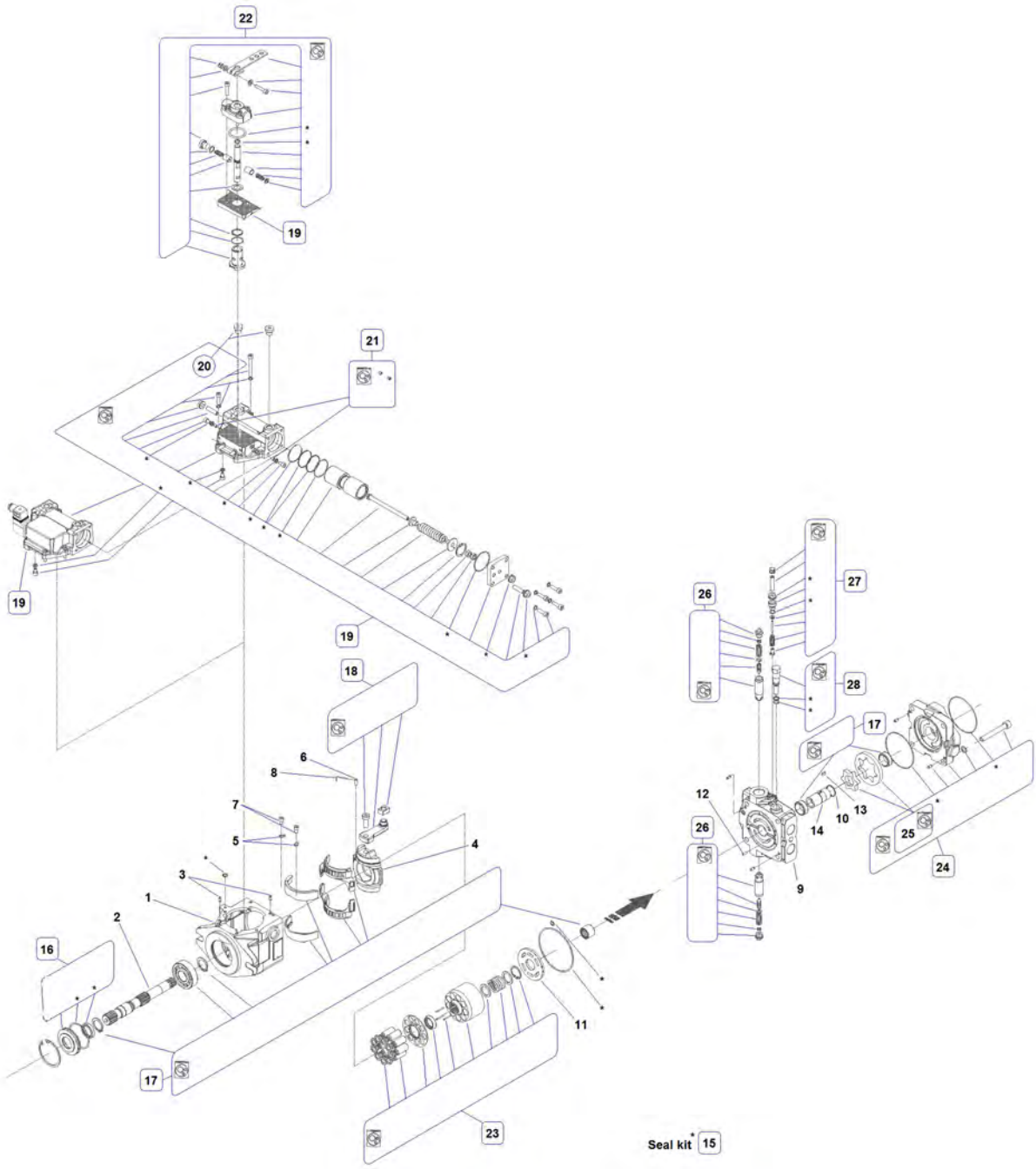

Item	Part No.	Name	Qty	L	SN INFO
1	-	Housing	1		
2	-	Shaft	1		
3	-	Pin	2		
4	-	Swash plate	1		
5	-	Retaining wire	2		
6	-	Pin	1		
7	-	Screw	3		
8	-	Retaining wire	1		
9	-	Distribution block	1		
10	-	Ring	1		
11	-	Distribution valve	1		
12	-	Pin	1		
13	-	Pin	1		
14	-	Bushing	1		
15	4812161278	Seal kit, overhaul	1	1	
16	4812161282	Pump shaft kit	1		
17	-	Repair kit, housing	1		
18	-	Repair kit	1		
19	-	Control valve, kit	1		
19.1	4812161797	Stop solenoid	1		
19.2	4812161566	Coil	1		
20	--	Plug	2		
21	-	Repair kit, control valve	1		
22	4812161990	Control unit	1		
23	-	Rotating group, kit	1		
24	-	Repair kit, valve block	1		
25	--	Gerotor kit	1		
26	-	Pressure control valve	2		
27	4812161058	Low pressure relief valve kit	1		
28	-	Repair kit, valve block	1		

Comments for Page: 4812120091 Hydraulic pump

(L)OCAL REMARKS

1 | Parts in picture marked with * is included in Seal kit.

Vibration system To 0A014951 Vibration system

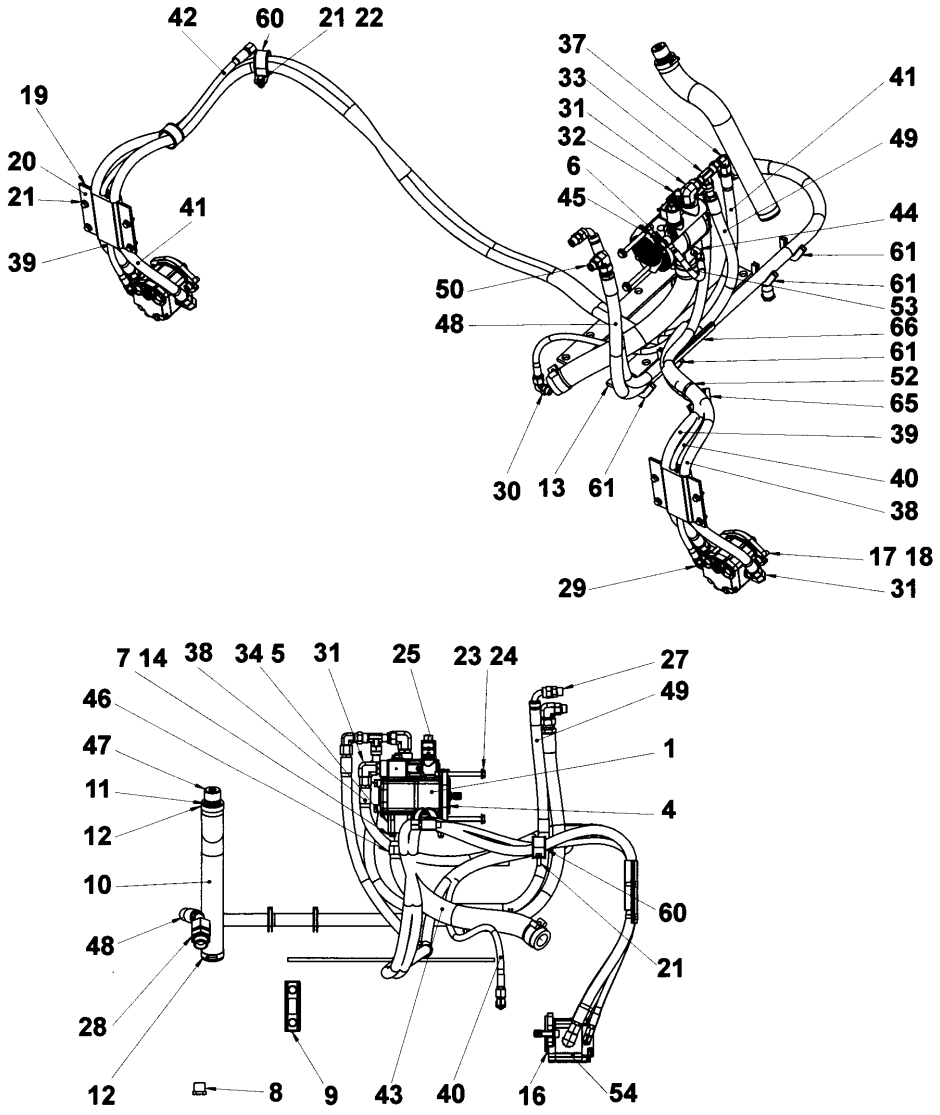

Item	Part No.	Name	Qty	L	SN INFO
1	4812119251	Hydraulic pump	1		
4	4700379458	Gasket	1		
5	4812120801	Flange	1		
6	4700480124	Washer	2		
7	4700904556	Steel plain washer 8,4x16x3,0	4		
8	4700232122	Steel plug threaded	1		
9	4700989151	Oil level glass	1		
10	4700373478	Rubber hose	1		
11	4700357139	Connector	1		
12	4700313008	Hose clamp	2		
13	4700358486	Rubber strip	2		
14	4700500067	Screw	4		
16	4700160031	O-ring	2		
17	4700603018	Washer 10x18x4	4		
18	4700508029	Cylinder screw	4		
19	4700371313	Hose clamp	2		
20	4700371314	Hose clamp	2		
21	4700500505	Screw, M8x20 mm 8.8 A2K	10		
22	4700902286	Lock nut, M8x1.25 mm A2K	1		
23	4700904230	Plain washer 10.5x22x2 mm	2		
24	4700500078	Hex. screw	2		
25	4700902287	Nut, M10	2		
27	4700791799	Straight connector orfs	1		
28	4700792338	Adapter	1		
29	4700791397	Connector	2		
30	4700791398	Elbow 90, O-ring	1		
31	4700791699	Elbow 90	6		
32	4700232056	Steel plug threaded	1		
33	4700791798	Adapter	1		
34	4700160016	O-ring	1		
37	4700791745	Elbow 90, O-ring with swivel	1		
38	4812120877	Hydraulic hose	1		
39	4812120879	Hydraulic hose	1		
40	4812120878	Hydraulic hose	1		
41	4700483694	Hydraulic hose	1		
42	4812120880	Hydraulic hose	1		
43	4811000118	Hydraulic hose	1		
44	4700791415	Elbow 45, O-ring	1		

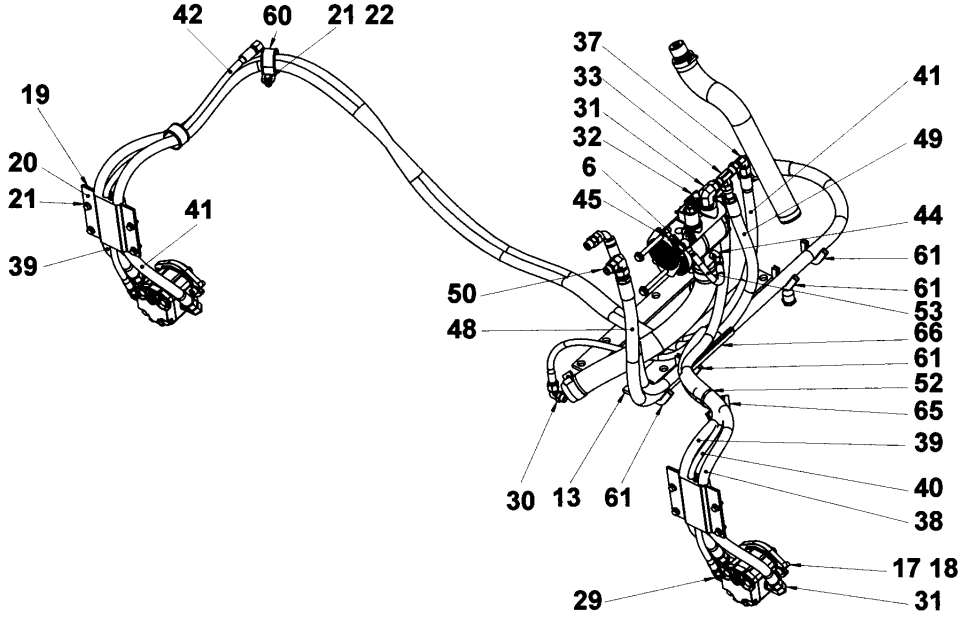
42
60
21 22
19
20
21
39
41
37
33
31
32
6
45
50
48
41
49
44
61
61
53
66
61
52
65
39
40
38
17 18
31
29
30
13
61

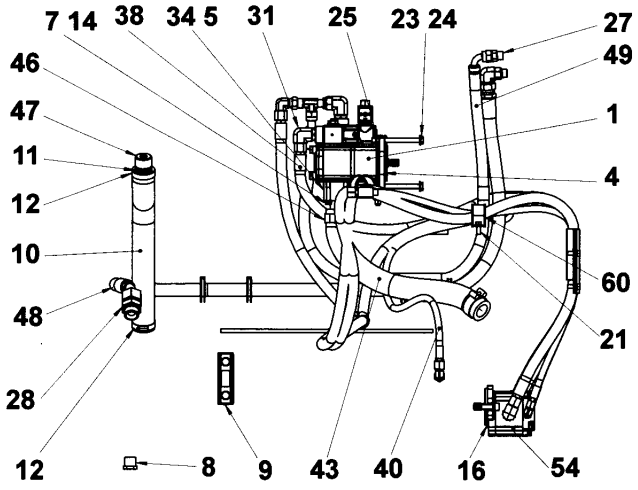
7 14
38
34 5
31
25
23 24
27
49
1
4
60
21
46
47
11
12
10
48
28
12
8
9
43
40
16
54

Item	Part No.	Name	Qty	L	SN INFO
45	4700901692	Screw	1		
46	4700902295	Hose clamp	2		
47	4700357138	Ventilating filter	1		
48	4812121219	Hydraulic hose	1		
49	4812121210	Hydraulic hose	1		
50	4700791843	Elbow 90, O-ring with swivel	1		
52	4700313102	Cable ties	1		
53	4812120876	Hydraulic hose	1		
54	4812118172	Hydraulic motor	2		
60	4700921119	Pipe clamp	2		
61	4700902379	Edge trim	4	A	
65	4700902379	Edge trim	1	B	
66	4700902379	Edge trim	1	C	

Comments for Page: Vibration system

(L)OCAL REMARKS

A | en_US | L = 0,11 m

B | en_US | L = 0,305 m

C | en_US | L = 0,15 m

Vibration system To 0A014951 4812160957 Seal kit

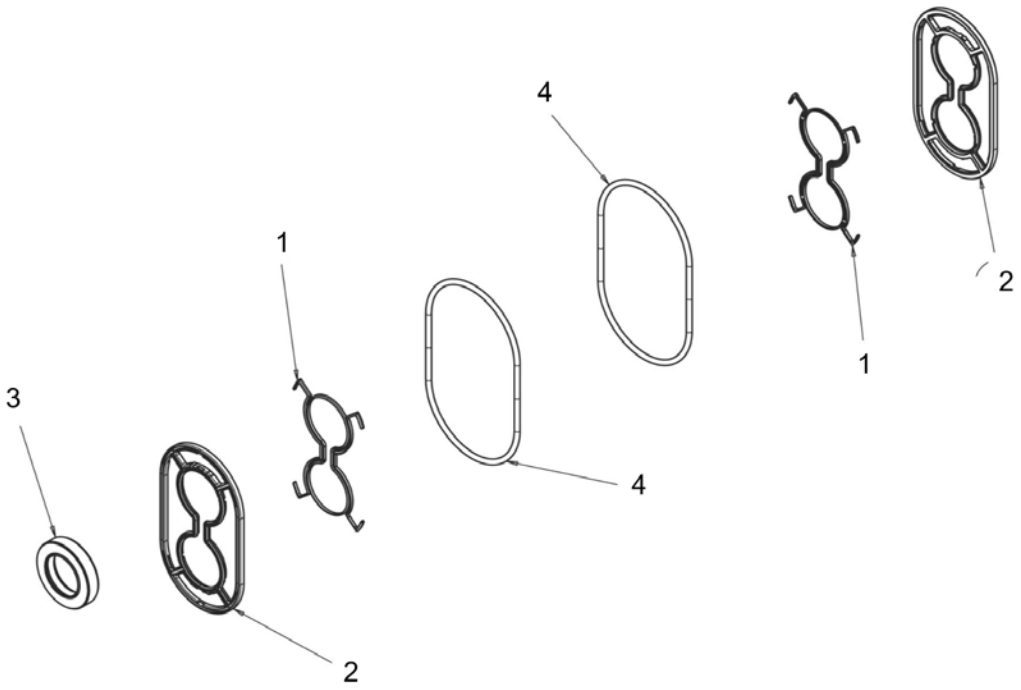

Item	Part No.	Name	Qty	L	SN INFO
0	4812160957	Seal kit	1		
1	-	Backing ring	2		
2	-	Pressure seal	2		
3	-	Shaft seal	1		
4	-	O-ring seal	2		

Vibration system From 0A014952 Vibration system

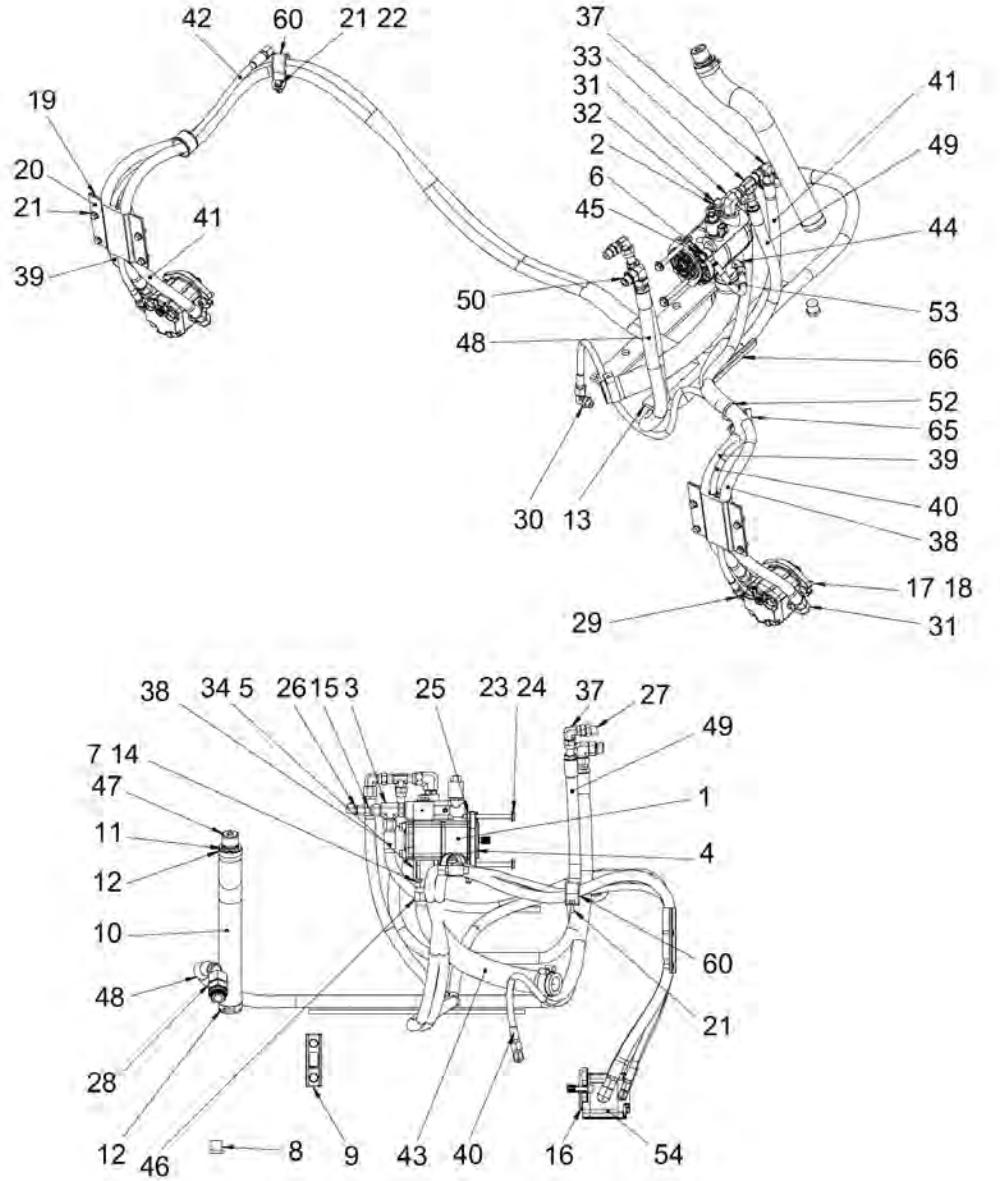

Item	Part No.	Name	Qty	L	SN INFO
1	4812121922	Hydraulic pump	1		
2	4700162006	Seal ring	1		
3	4700791792	Tee-connector	1		
4	4700379458	Gasket	1		
5	4812120801	Flange	1		
6	4700480124	Washer	2		
7	4700904556	Steel plain washer 8,4x16x3,0	4		
8	4700232122	Steel plug threaded	1		
9	4700989151	Oil level glass	1		
10	4700373478	Rubber hose	1		
11	4700357139	Connector	1		
12	4700313008	Hose clamp	2		
13	4700358486	Rubber strip	2		
14	4700500067	Screw	4		
15	4700792219	Straight connector	1		
16	4700160031	O-ring	2		
17	4700603018	Washer 10x18x4	4		
18	4700508029	Cylinder screw	4		
19	4700371313	Hose clamp	2		
20	4700371314	Hose clamp	2		
21	4700500505	Screw, M8x20 mm 8.8 A2K	10		
22	4700902286	Lock nut, M8x1.25 mm A2K	1		
23	4700904230	Plain washer 10.5x22x2 mm	2		
24	4700500078	Hex. screw	2		
25	4700902287	Nut, M10	2		
26	4700923405	Measuring nipple	1		
27	4700791799	Straight connector orfs	1		
28	4700791822	Straight connector orfs	1		
28	4700792338	Adapter	1		
29	4700791397	Connector	2		
30	4700791398	Elbow 90, O-ring	1		
31	4700791699	Elbow 90	5		
32	4700232056	Steel plug threaded	1		
33	4700791798	Adapter	1		
34	4700160016	O-ring	1		
37	4700791745	Elbow 90, O-ring with swivel	1		
38	4812120877	Hydraulic hose	1		
39	4812120879	Hydraulic hose	1		

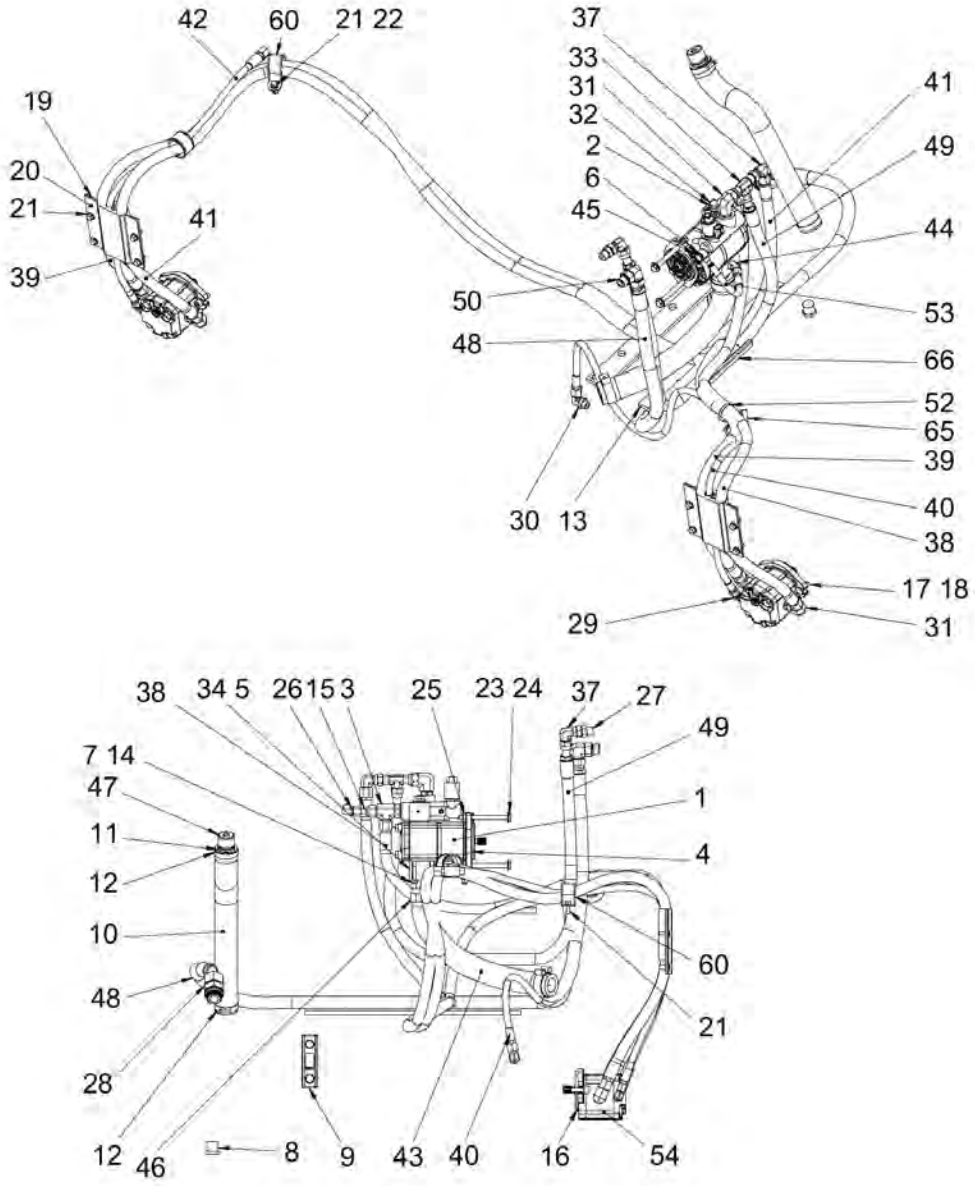
42
60
21 22
19
20
21
39
41
37
33
31
32
2
6
45
41
49
44
50
48
53
66
52
65
39
40
38
30
13
17 18
29
31
38
34 5
26 15 3
25
23 24
37
27
49
7 14
47
11
12
10
48
28
12
46
8
9
43
40
16
54
1
4
60
21

Item	Part No.	Name	Qty	L	SN INFO
40	4812120878	Hydraulic hose	1		
41	4700483694	Hydraulic hose	1		
42	4812120880	Hydraulic hose	1		
43	4812122581	Hydraulic hose	1		To FA015852
43	4812121710	Hydraulic hose	1		From FA015853
44	4700791415	Elbow 45, O-ring	1		
45	4700901692	Screw	1		
46	4700902295	Hose clamp	2		
47	4700357138	Ventilating filter	1		
48	4812121219	Hydraulic hose	1		
49	4812121210	Hydraulic hose	1		
50	5501178300	Connector elbow 90 orfs	1		
50	4700791843	Elbow 90, O-ring with swivel	1		
52	4700313102	Cable ties	1		
53	4812120876	Hydraulic hose	1		
54	4812118172	Hydraulic motor	2		
60	4700921119	Pipe clamp	2		
65	4700902379	Edge trim	1	B	
66	4700902379	Edge trim	1	C	

Comments for Page: Vibration system

(L)OCAL REMARKS

B | en_US | L = 0,305 m

C | en_US | L = 0,15 m

Hydraulic system Steering system

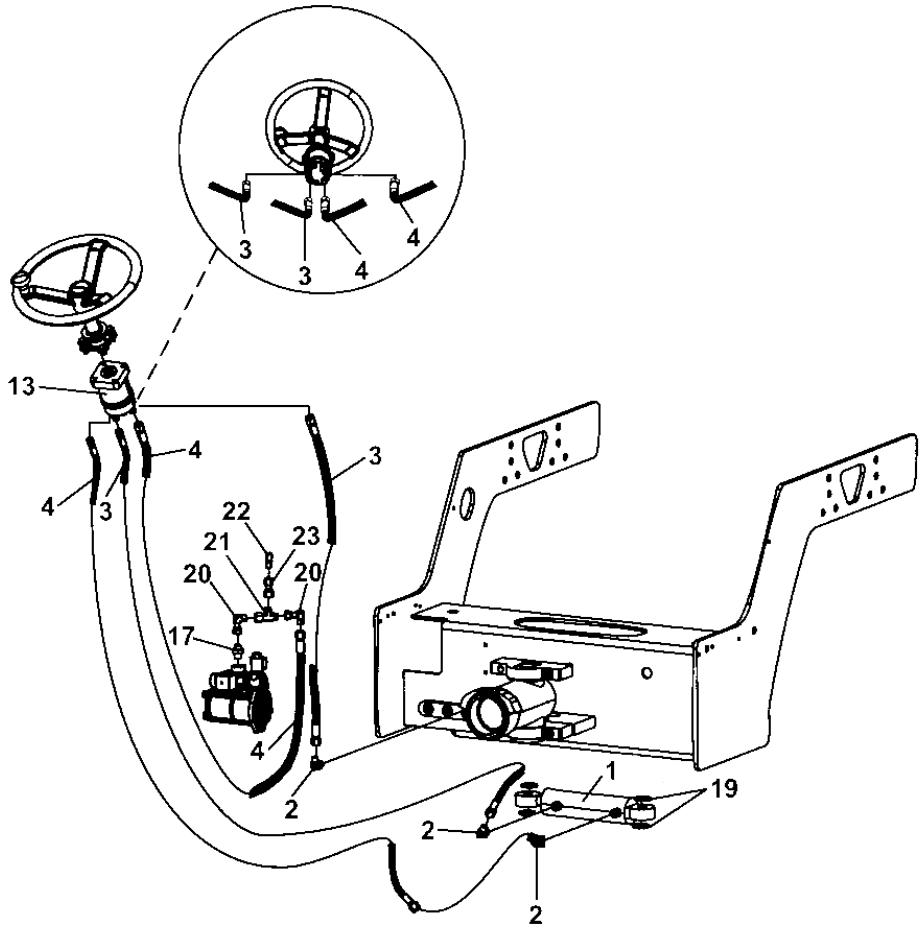

Item	Part No.	Name	Qty	L	SN INFO
1	4812120737	Steering cylinder	1		
2	4700791398	Elbow 90, O-ring	3		
3	4700483765	Hydraulic hose	2	A	
4	4811000428	Hydraulic hose	2	B	
5	4700630019	Split pin	4		
6	4700313102	Cable ties	2		
13	4812112109	Steering valve	1		
-	4812160665	Special adapter 11/16"	2		
-	4812161199	Special adapter 9/16"	2		
17	4700791405	Straight o-ring connector	1		
19	4700600016	Steel plain washer	4		
20	4700791401	Elbow 90, O-ring with swivel	2		
21	4700791414	T-connection, O-ring with swivel	1		
22	4700791847	Straight connector	1		
23	4700923405	Measuring nipple	1		

Comments for Page: Steering system

(L)OCAL REMARKS

A | en_US | L = 1,99 m

B | en_US | L = 1,96 m

Hydraulic system 4812120737 Hydraulic cylinder

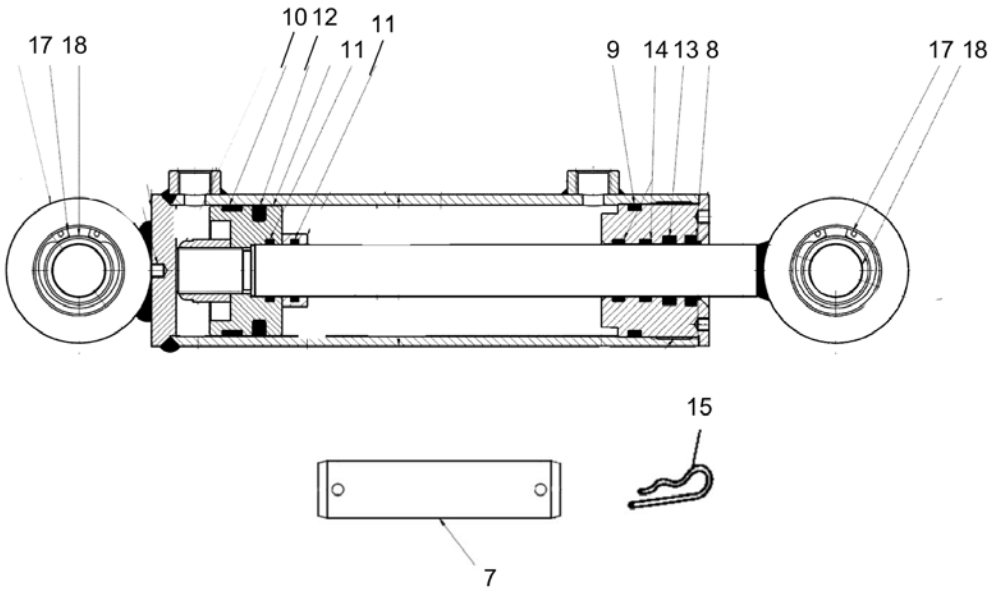

Item	Part No.	Name	Qty	L	SN INFO
0	4812120737	Steering cylinder	1		
1	4812160651	Seal kit	1		
7	-	Shaft	2		
8	-	O-ring	1		
8	-	O-ring	1		
9	-	Rod seal	1		
9	-	Rod seal	1		
10	-	Piston guides	1		
10	-	Piston guides	1		
11	-	Seal o-ring	1		
11	-	Seal o-ring	1		
12	-	Rod seal	1		
12	-	Rod seal	1		
13	-	Rod seal	1		
13	-	Rod seal	1		
14	-	Rod guides	2		
14	-	Rod guides	2		
15	-	Hair clip	4		
17	4812160656	Snap ring	4		
18	4812160657	Bearing	2		

Brake system To A017368 Brake system

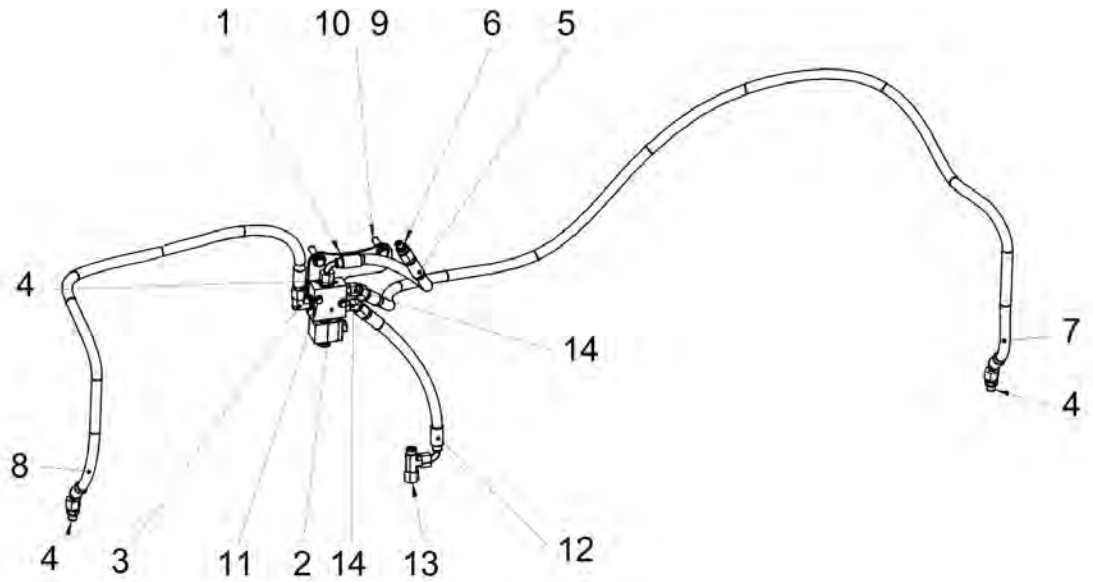

Item	Part No.	Name	Qty	L	SN INFO
1	4812120653	Bracket	1		
2	4812119704	Hydraulic valve	1		
3	4700791846	Adapter	1		
4	4700791409	Straight connector orfs	3		
5	4700483593	Hydraulic hose	1		
6	4700792177	Straight connector	1		
7	4812120888	Hydraulic hose	1		
8	4700484186	Hydraulic hose	1		
9	4700904230	Plain washer 10.5x22x2 mm	2		
10	4700500161	Screw	2		
11	4811000166	Screw M06x45 8.8	2		
12	4700483593	Hydraulic hose	1		
13	4700791414	T-connection, O-ring with swivel	1		To 0A015210
14	4700792658	Elbow 45°	2		

Brake system From A017369 Brake system

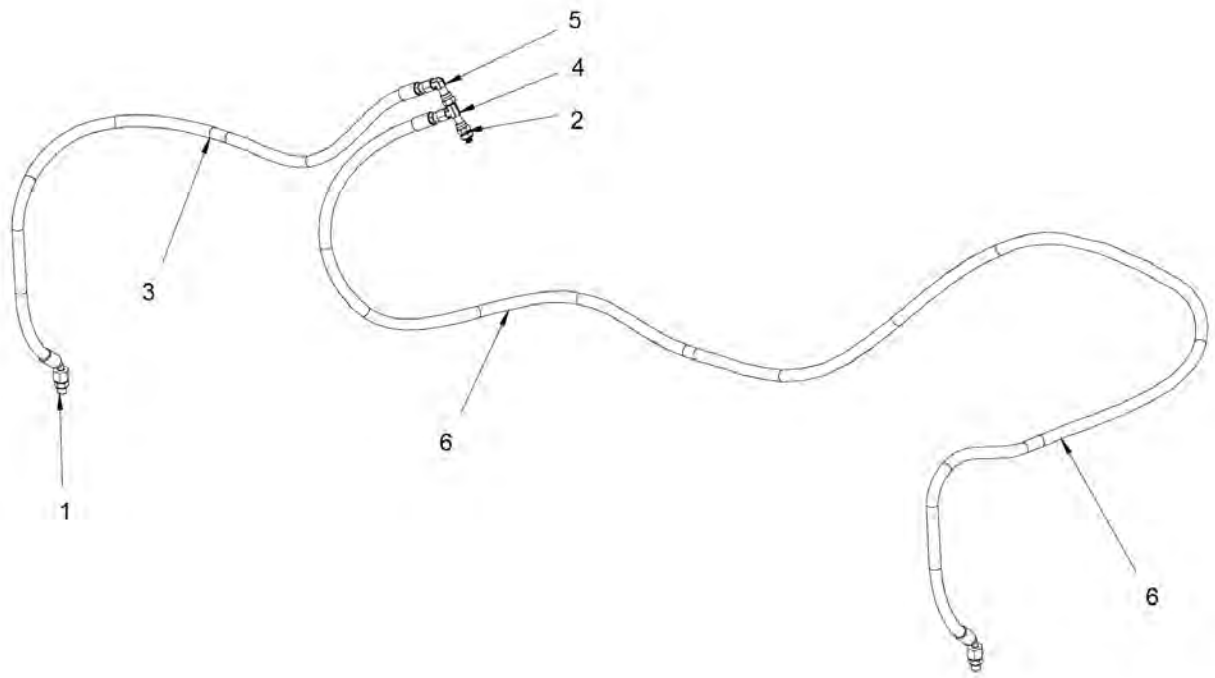

Item	Part No.	Name	Qty	L	SN INFO
1	4700791409	Straight connector orfs	2		
2	4812123538	Straight connector orfs	1		
3	4812121236	Hydraulic hose	1		
4	4812121239	T-Connector	1		
5	4812113110	Adapter	1		
6	4812125175	Hydraulic hose	1		

Comments for Page: Brake system

(L)OCAL REMARKS

A | See figure A

B | See figure B

Hydraulic system Flow divider (option)

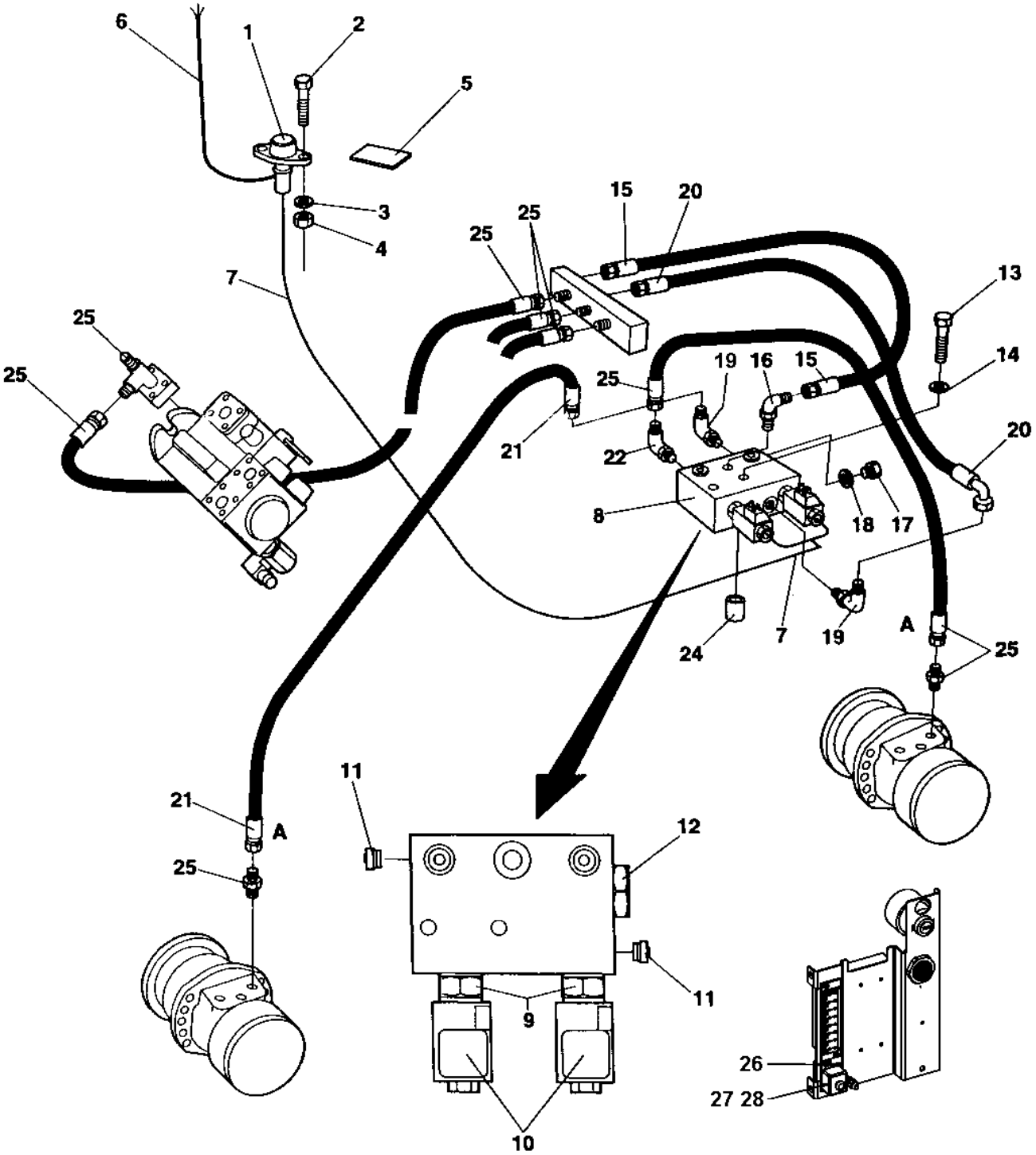

Item	Part No.	Name	Qty	L	SN INFO
1	4812113326	Contact	1		
2	4700533016	Screw	2		
3	4700600002	Washer	2		
4	4700923976	Lock nut	2		
5	4700355981	Decal	1		
6	4812112470	Cable harness	1		
7	4812112566	Cable harness	1		
8	4700358003	Flow divider	1		
9	4700903141	Valve	2		
10	4700903142	Coil	2		
11	4700903144	Check valve	2		
12	4700903143	Valve	1		
13	4700500034	Screw M10-1,5x100 8,8	2		
14	4700904230	Plain washer 10.5x22x2 mm	2		
15	4700482773	Hydraulic hose	1		
16	4700334235	Elbow 90	1		
17	4700332038	Plug	2		
18	4700162004	Sealing	2		
19	4700923407	Adapter	2		
20	4700482208	Hydraulic hose	1		
21	4700482214	Hydraulic hose	1	A	
22	4700904175	Connector	1		
24	4700355869	Spacer sleeve	2		
25	-	Hydraulic details	N		
26	4700901767	Screw	2		
27	4700901225	Fuse 5A Tan	1		
28	4700792091	Fuse holder	1		

Comments for Page: Flow divider (option)

(L)OCAL REMARKS

A | en_US | L = 2,8 m

Hydraulic system Vibration shut-off Front drum (option)

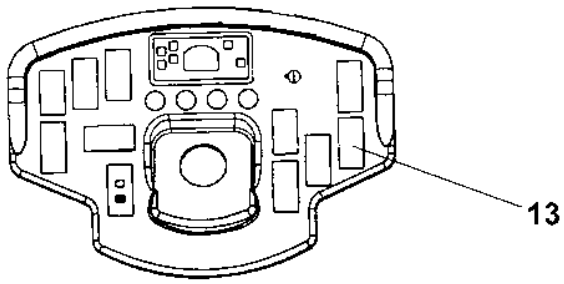

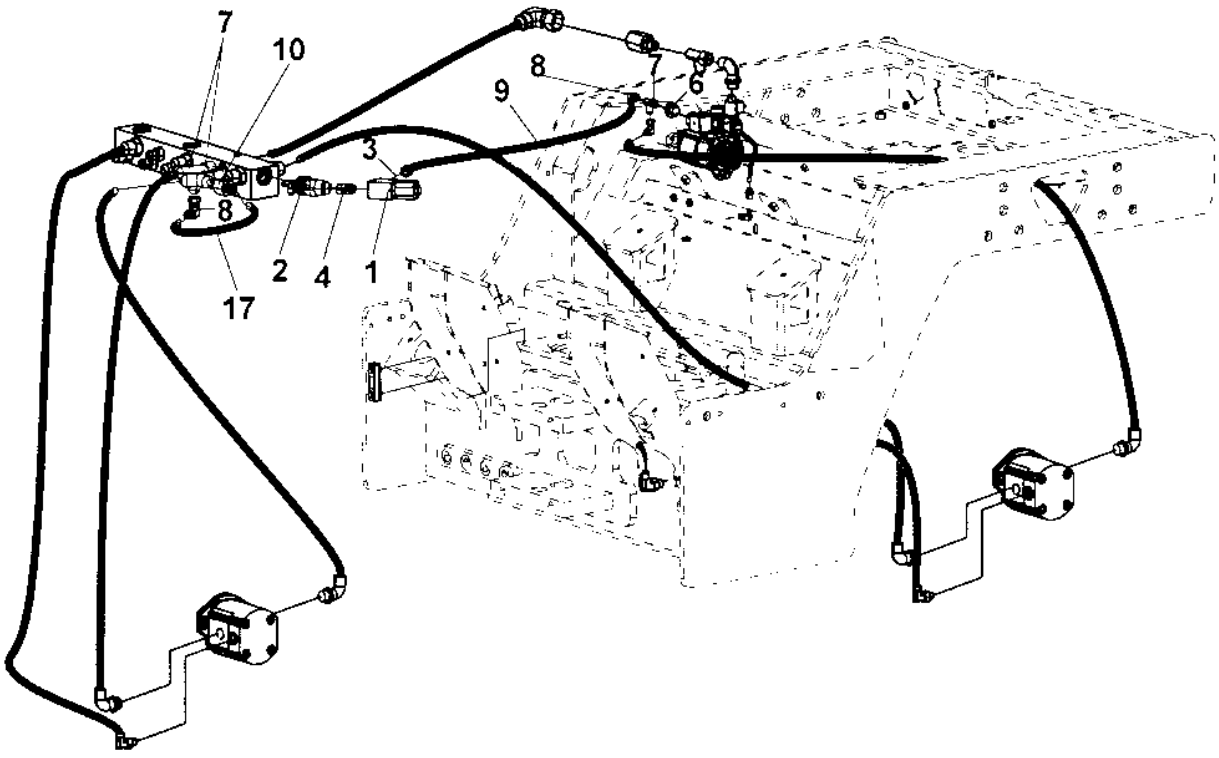

Item	Part No.	Name	Qty	L	SN INFO
1	4700357934	Solenoid valve	1		To A013944
1	4812120392	Solenoid valve	1		From A013945
2	4700813500	Elbow 45, O-ring	1		
3	4700334165	Adapter	1		
4	4700923406	Connector	1		
6	4700334116	Straight o-ring connector	1		
7	4700334135	Tee-connector	3		
8	4700334197	Connector elbow 90 JIC	2		
9	4700482898	Hydraulic hose	1	A	
10	4700357543	Valve	2		
13	4811000347	Switch Vibration shut-off	1		
17	4700483585	Hydraulic hose	0,23 m		

Comments for Page: Vibration shut-off Front drum (option)

(L)OCAL REMARKS

A | en_US | L = 1,70 m

Hydraulic system Rotating group, valves, charge pump

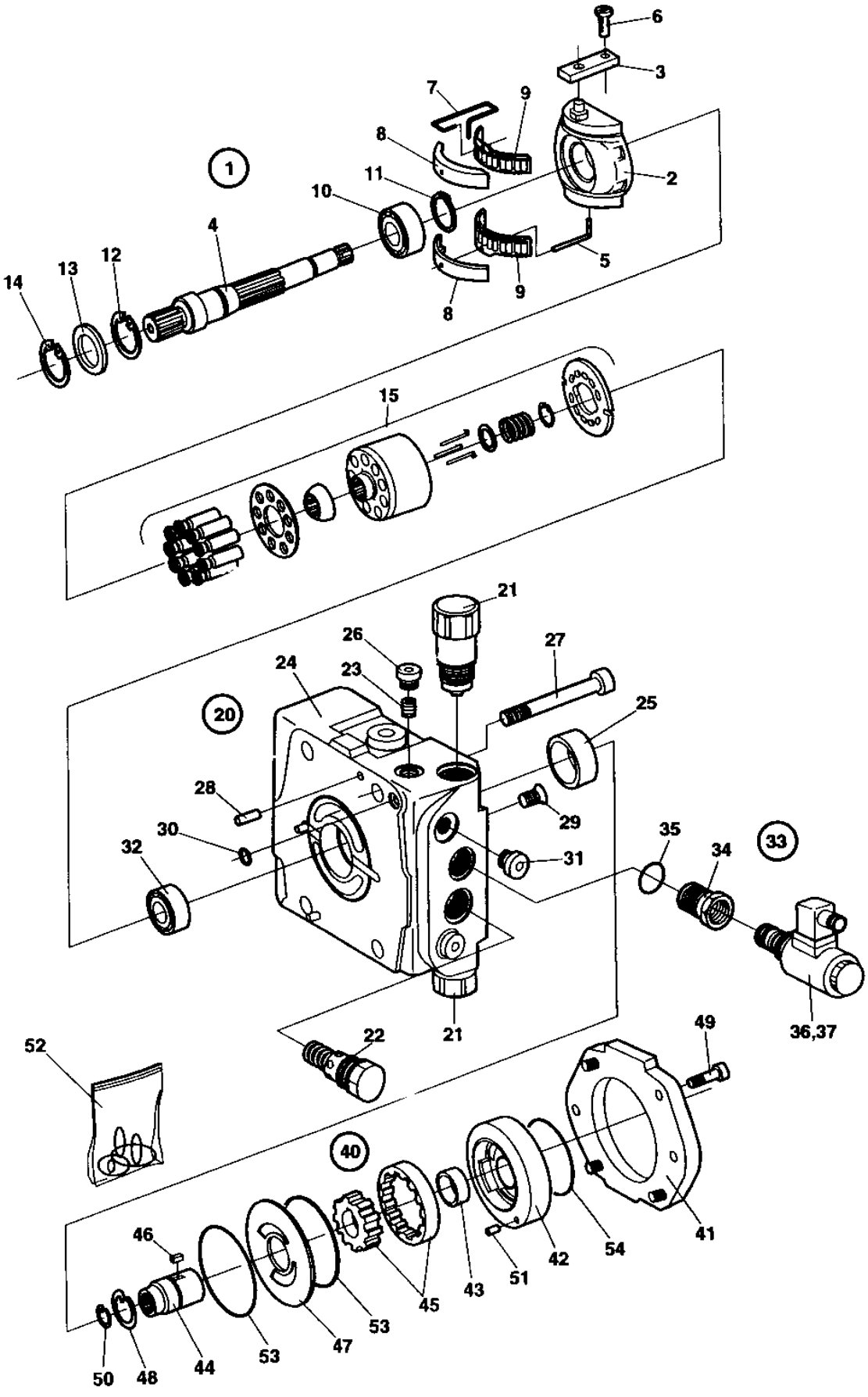

Item	Part No.	Name	Qty	L	SN INFO
1	4700935161	Rotating group	1		
2	4700935171	Cradle	1		
3	4700935162	Ring	1		
4	4700935163	Shaft	1		
5	4700902644	Wire pin	1		
6	4700935164	Pin	1		
7	4700935165	Wire pin	1		
8	4700935166	Bearing liner	1	A	
9	4700902620	Cradle bearing assy (Set)	1		
10	4700902619	Roller bearing	1		
11	4700901750	Retaining ring	1		
12	4700935170	Retaining ring	1		
13	4700936691	Seal ring	1		
14	4700935170	Retaining ring	1		
15	4700935167	Cylinder with pistons, cpl	1		
20	-	Valve block	1		
21	4700935172	Pressure relief valve 350 bar	2		
22	4700903471	Relief valve	1		
23	4700936692	Check valve	1		
24	4700936693	Valve block	1		
25	4700903557	Bearing bushing	1		
26	4700935176	Plug	1		
27	4700935177	Screw	4		
28	4700908384	Pin	2		
29	4700909514	Double break-off pin	2		
30	4700902641	O-ring	2		
31	4700902625	Plug	2		
32	4700901744	Plain roller bearing	1		
33	-	Solenoid valve	1	B	
34	4700935178	Adapter	1		
35	4700927278	O-ring	1		
36	4700935179	Valve, cpl	1		
37	-	Solenoid	1	C	
40	4700935181	Charge pump	1		
41	4700935182	Cover	1		
42	4700935183	Housing	1		
43	4700903557	Bearing bushing	1		
44	4700935184	Shaft	1		

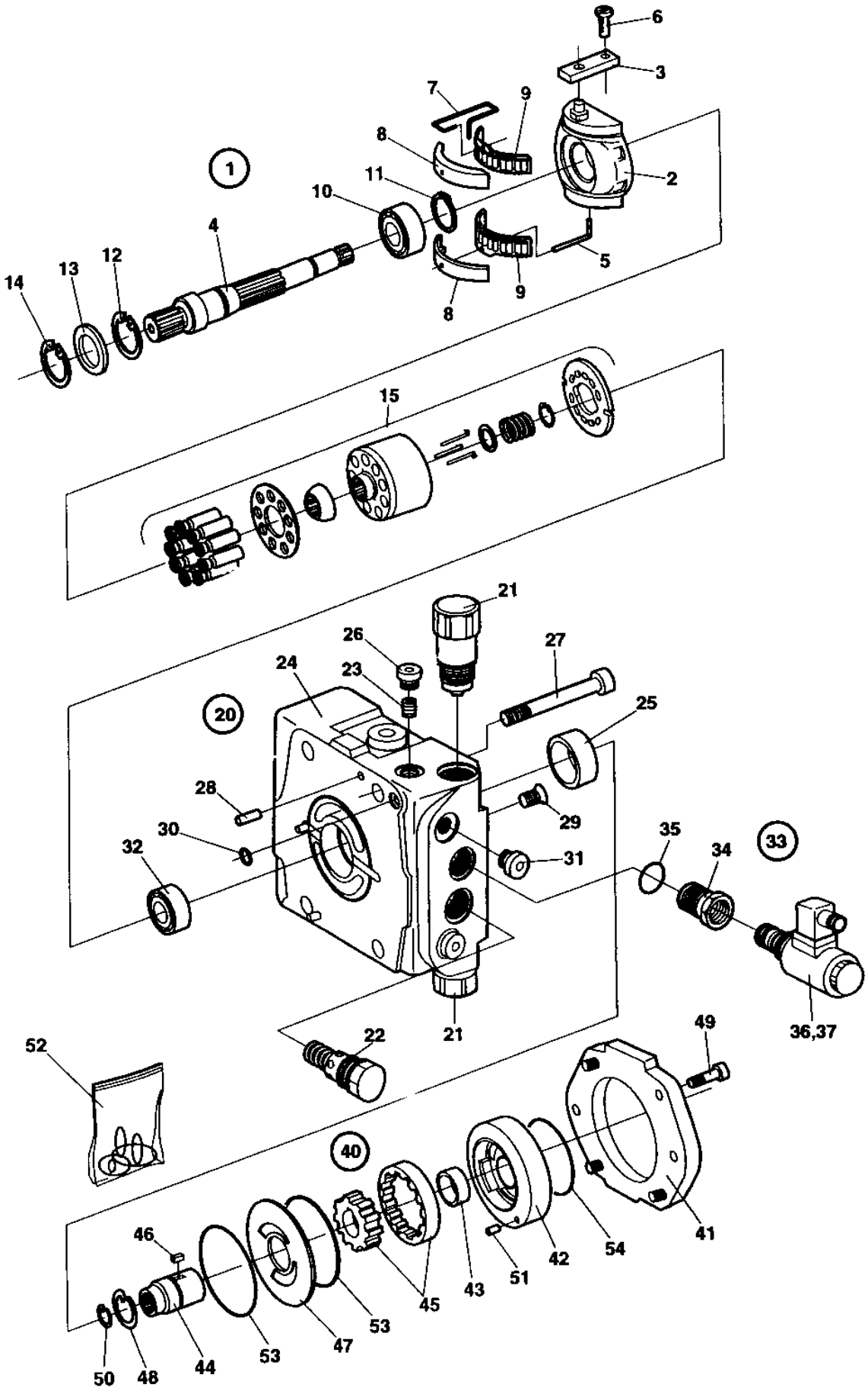
6
3
7
9
8
1
11
2
10
4
12
13
14
5
9
8
15
21
26
27
24
23
20
25
28
29
30
35
33
32
31
34
21
36,37
52
22
49
40
46
41
54
42
51
43
45
53
47
53
44
48
50

Item	Part No.	Name	Qty	L	SN INFO
45	4700936706	Wheel set	1		
46	4700935186	Key	1		
47	4700935187	Wear plate	1		
48	4700902654	Retaining ring	1		
49	4700935188	Screw	4		
50	4700935189	Retaining ring	1		
51	4700935190	Cylindrical pin	1		
52	4700935191	Seal kit	1		
53	-	Seal	2		
54	-	O-ring	1		

Comments for Page: Rotating group, valves, charge pump

(L)OCAL REMARKS

A | en_US | One pair

B | en_US | CPL

C | en_US | Does not sales separatly. Included in the valve.

Electrical equipment Horn module

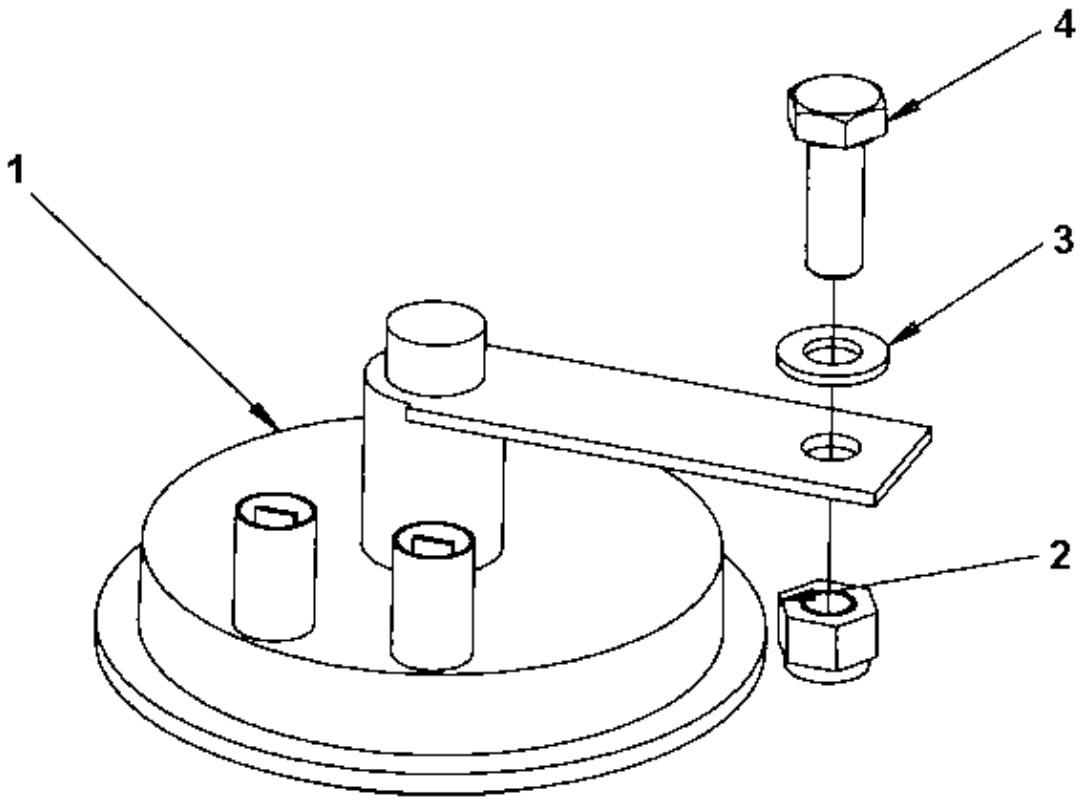

Item	Part No.	Name	Qty	L	SN INFO
1	4700999027	Horn	1		
2	4700586003	Lock nut M8	1		
3	4700904229	Washer, 8.4x 6x1.5 mm 300HV	1		
4	4700500020	Hex. screw	1		

Electrical equipment Battery module

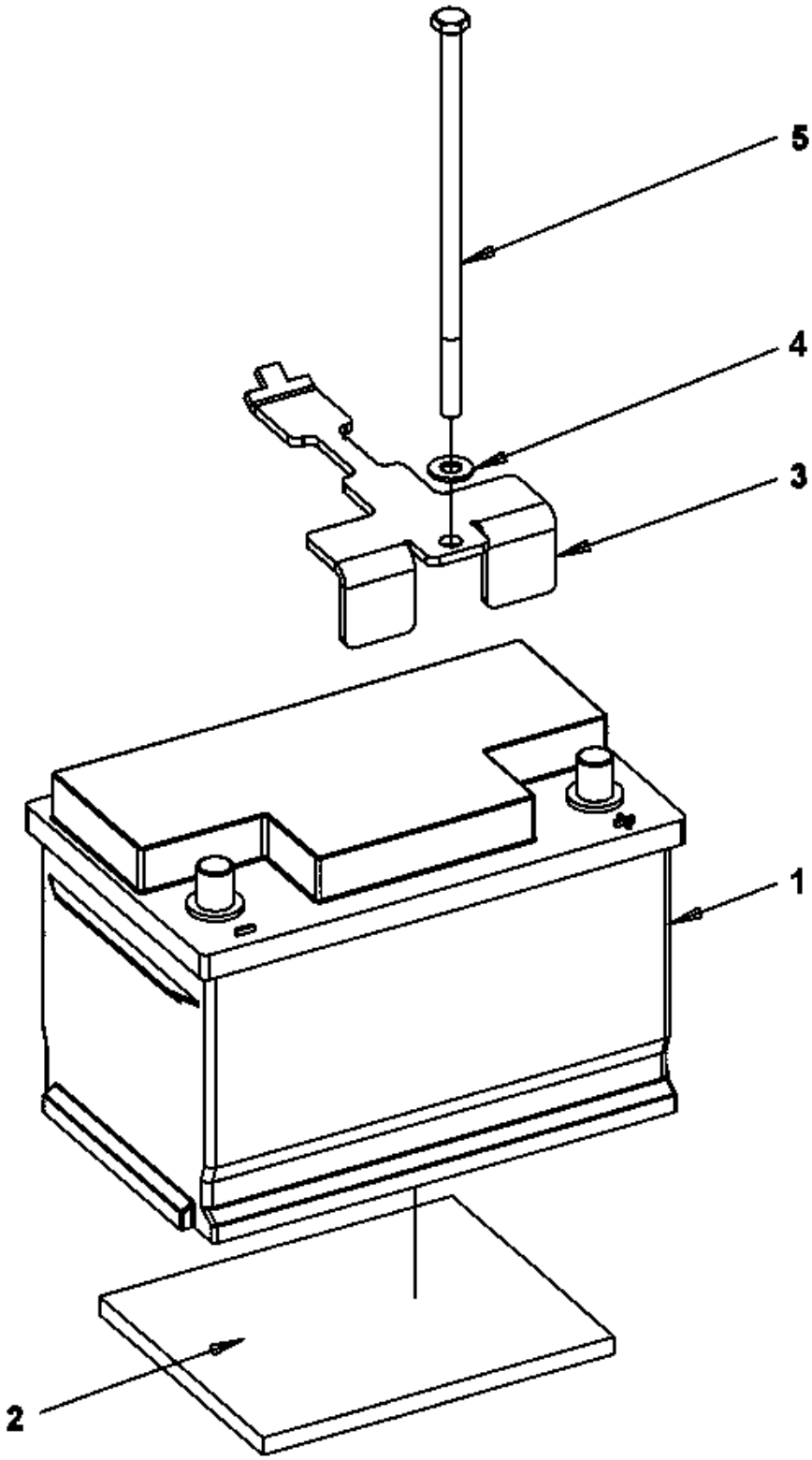

Item	Part No.	Name	Qty	L	SN INFO
1	-	Battery	1		
2	4812114557	Rubber cloth	1		
3	4812113557	Holder	1		
4	4700904230	Plain washer 10.5x22x2 mm	1		
5	4811000440	Screw	1		

Electrical equipment Battery disconnector

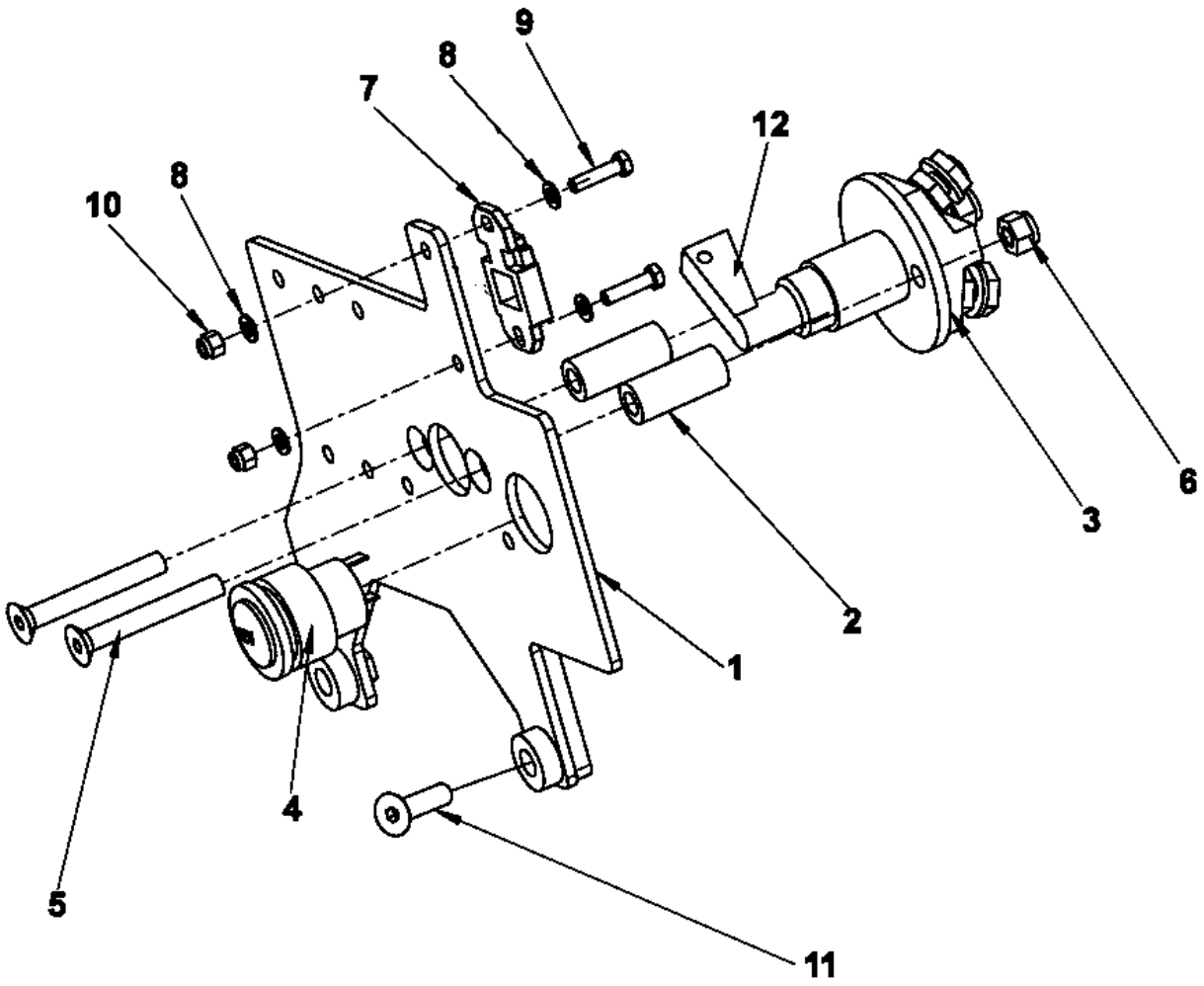

Item	Part No.	Name	Qty	L	SN INFO
1	4812115926	Bracket	1		
2	4700391115	Spacer sleeve	2		
3	4700357567	Battery switch, cpl	1		
4	4812110560	Power socket 12V	1		
5	4700903732	Screw	2		
6	4700586003	Lock nut M8	2		
7	4700904036	Bracket	1		
8	4700904281	Washer, 5,3x10x1 300HV	4		
9	4700500060	Screw M5-0,8x20 8.8	2		
10	4700586001	Lock nut	2		
11	4700902520	Screw	2		
12	4700902560	Handle	1		

Cable harness To 0A015028 incl. 0A015030, 0A015032 - 0A015033, 0A015035 - 0A015036, 0A015038 - 0A015041, 0A015043 - 0A015044 Cable harness

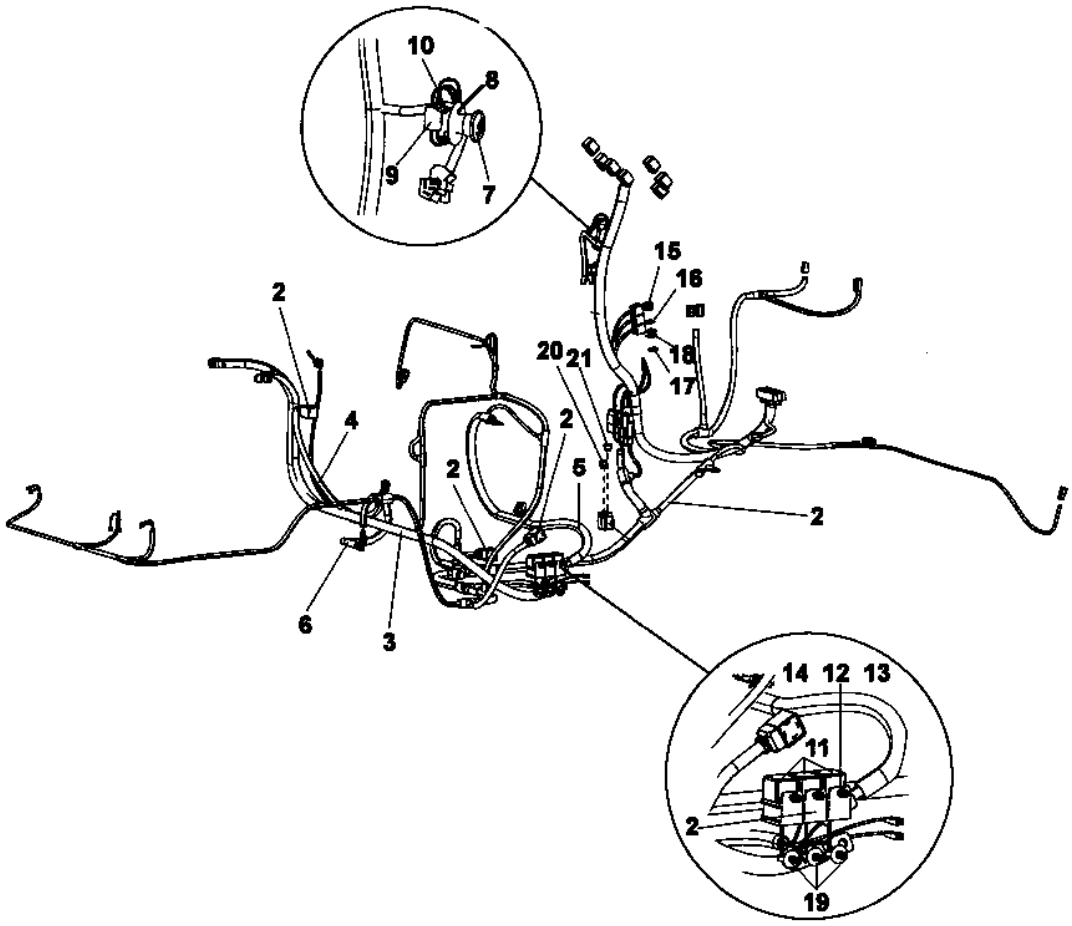

Item	Part No.	Name	Qty	L	SN INFO
2	4700960796	Connector black, MPM 182 09 ND	4		
2	4700357562	Relay holder	3		
2	4812119569	Cable harness	1		
3	4811000320	Battery cable (+)	1		
4	4811000321	Battery cable (-)	1		
5	4811000323	Connection cable	1		
6	4811000322	Connection cable	1		
7	4700791739	Emergency stop	1		
8	4811000128	Contrast plate, yellow	1		
9	4700389840	Connector	1		
10	4700791723	Connector	1		
11	4700903956	Relay	3		
12	4700904281	Washer, 5,3x10x1 300HV	6		
13	4700500006	Hex. screw	3		
14	4700586001	Lock nut	3		
15	4700903741	Fuse 20A Yellow	1		
16	4700901227	Fuse 10A Red	2		
17	4700901225	Fuse 5A Tan	1		
18	4700901228	Fuse, 15A Blue	2		
19	4700792441	Cable tie with holder	3		
20	4700901230	Fuse, 30A Green	1		
21	4700904039	Fuse 50A Red	1		

Cable harness From 0A015029 excl. 0A015030, 0A015032 - 0A015033, 0A015035 - 0A015036, 0A015038 - 0A015041, 0A015043 - 0A015044 To xA019769 Cable harness

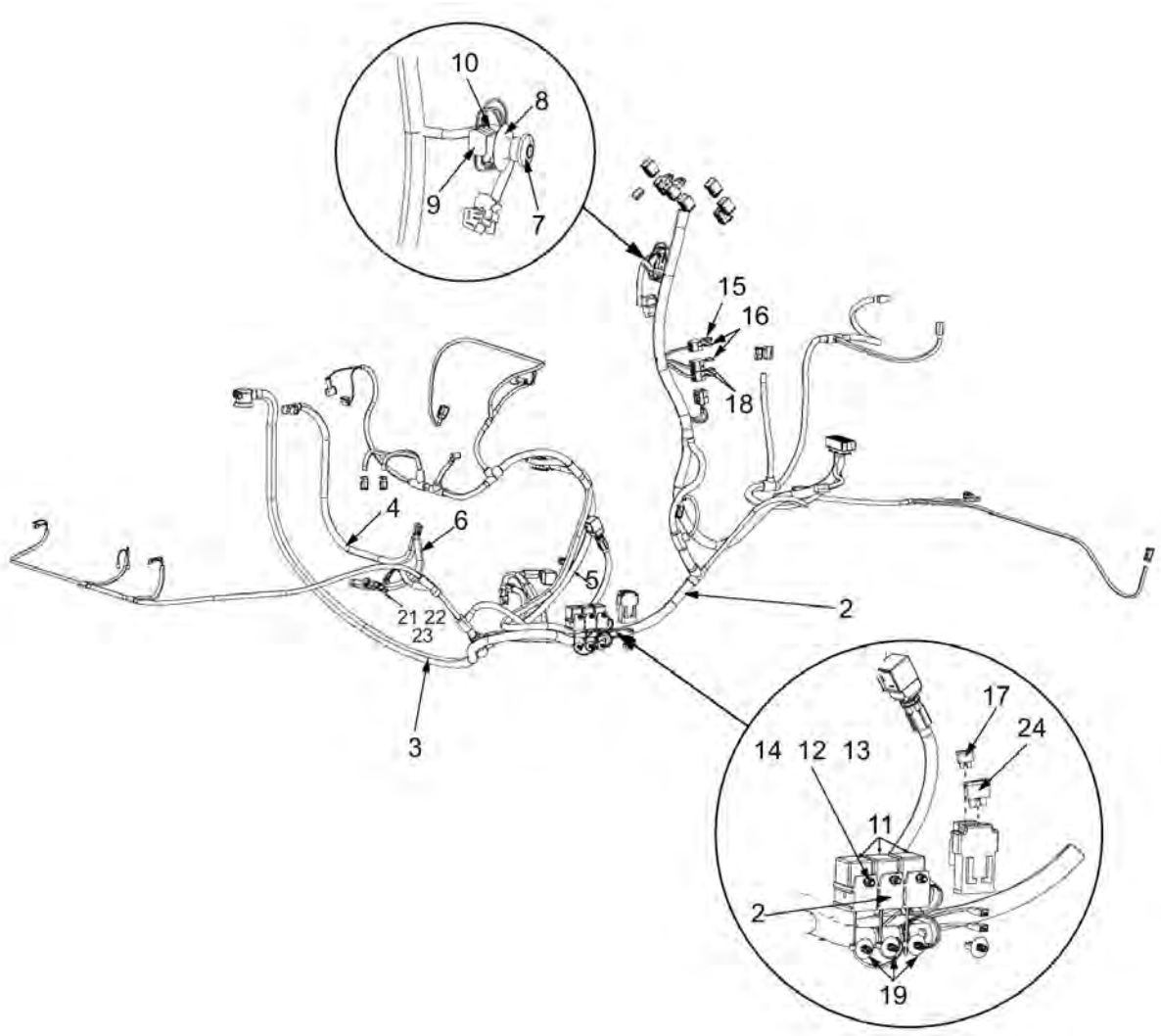

Item	Part No.	Name	Qty	L	SN INFO
2	4812121849	Cable harness	1		
2	4700960796	Connector black, MPM 182 09 ND	2		
2	4700357562	Relay holder	3		
3	4811000320	Battery cable (+)	1		
4	4811000321	Battery cable (-)	1		
5	4811000323	Connection cable	1		
6	4811000322	Connection cable	1		
7	4700791739	Emergency stop	1		
8	4811000128	Contrast plate, yellow	1		
9	4700389840	Connector	1		
10	4700791723	Connector	1		
11	4700903956	Relay	3		
12	4700904281	Washer, 5,3x10x1 300HV	6		
13	4700500006	Hex. screw	3		
14	4700586001	Lock nut	3		
15	4700903741	Fuse 20A Yellow	1		
16	4700901227	Fuse 10A Red	2		
17	4700901230	Fuse, 30A Green	1		
18	4700901228	Fuse, 15A Blue	2		
19	4700792441	Cable tie with holder	3		
20	4700313041	Cable ties, L=200 mm	N		
21	4700904229	Washer, 8.4x 6x1.5 mm 300HV	4		
22	4700500022	Screw	2		
23	4700586003	Lock nut M8	2		
24	4700904039	Fuse 50A Red	1		

Cable harness From xA019770 Cable harness

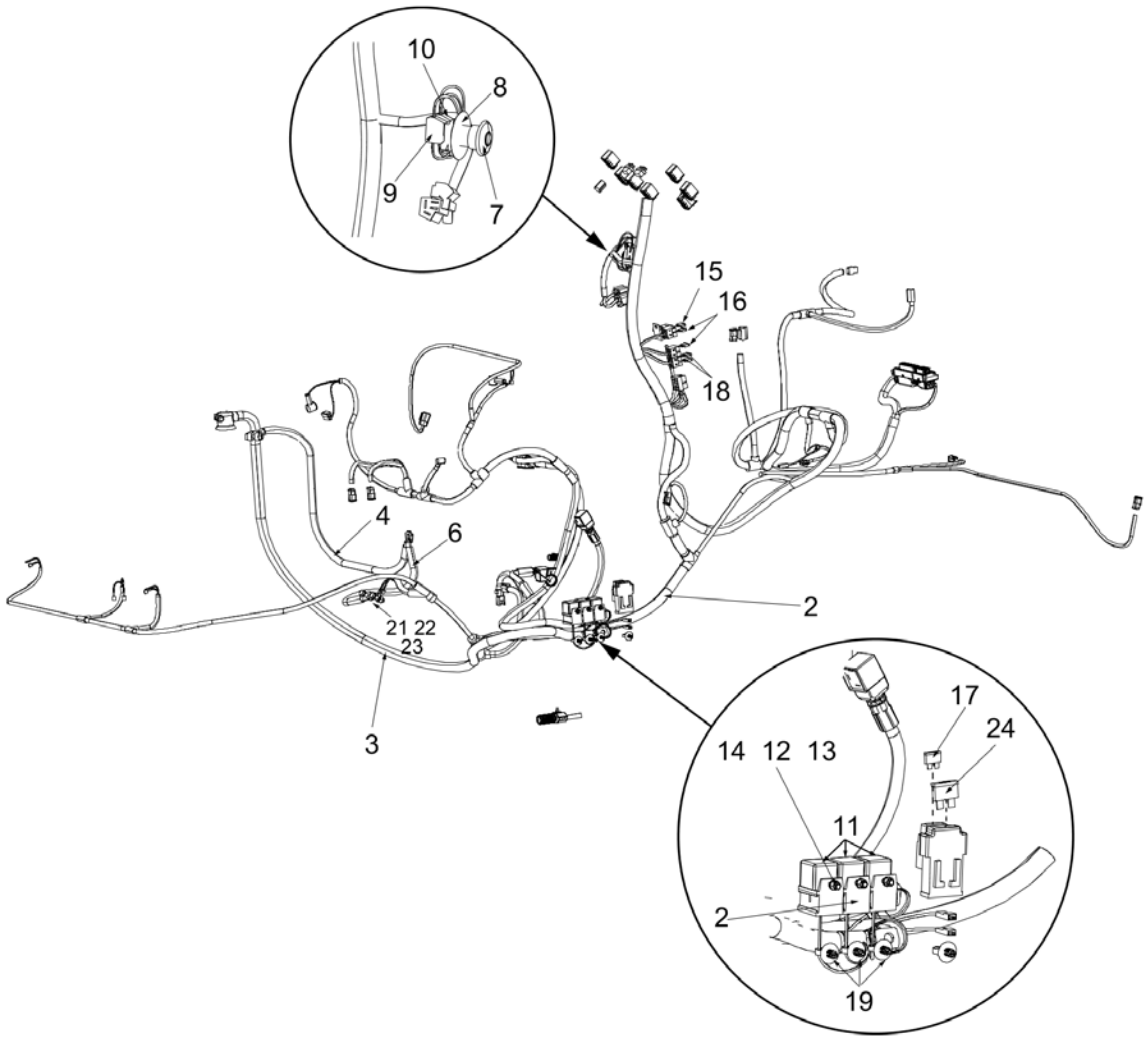

Item	Part No.	Name	Qty	L	SN INFO
2	4812126131	Cable harness	1		
2	4700960796	Connector black, MPM 182 09 ND	2		
2	4700357562	Relay holder	3		
3	4811000320	Battery cable (+)	1		
4	4811000321	Battery cable (-)	1		
5	4811000323	Connection cable	1		
6	4811000322	Connection cable	1		
7	4700791739	Emergency stop	1		
8	4811000128	Contrast plate, yellow	1		
9	4700389840	Connector	1		
10	4700791723	Connector	1		
11	4700903956	Relay	3		
12	4700904281	Washer, 5,3x10x1 300HV	6		
13	4700500006	Hex. screw	3		
14	4700586001	Lock nut	3		
15	4700903741	Fuse 20A Yellow	1		
16	4700901227	Fuse 10A Red	2		
17	4700901230	Fuse, 30A Green	1		
18	4700901228	Fuse, 15A Blue	2		
19	4700792441	Cable tie with holder	3		
20	4700313041	Cable ties, L=200 mm	N		
21	4700904229	Washer, 8.4x 6x1.5 mm 300HV	4		
22	4700500022	Screw	2		
23	4700586003	Lock nut M8	2		
24	4700904039	Fuse 50A Red	1		

Working lights Working lights

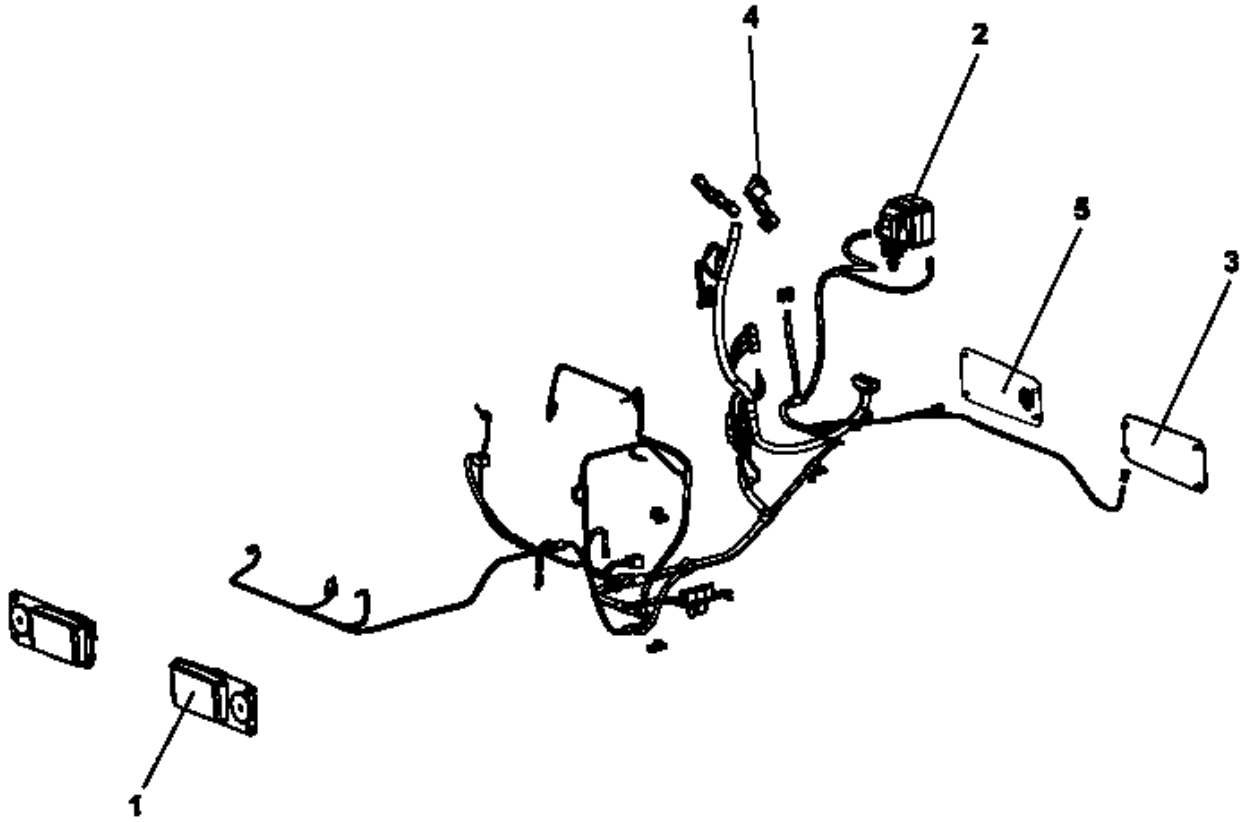

Item	Part No.	Name	Qty	L	SN INFO
1	-	Working lights front	2		
2	-	Working light rear	1		
2	-	Working light (option) rear	1		
3	-	Casing rear	2		
4	4700791587	Switch, working light	1		
5	-	Cover plate rear	1		

Working lights Working lights front

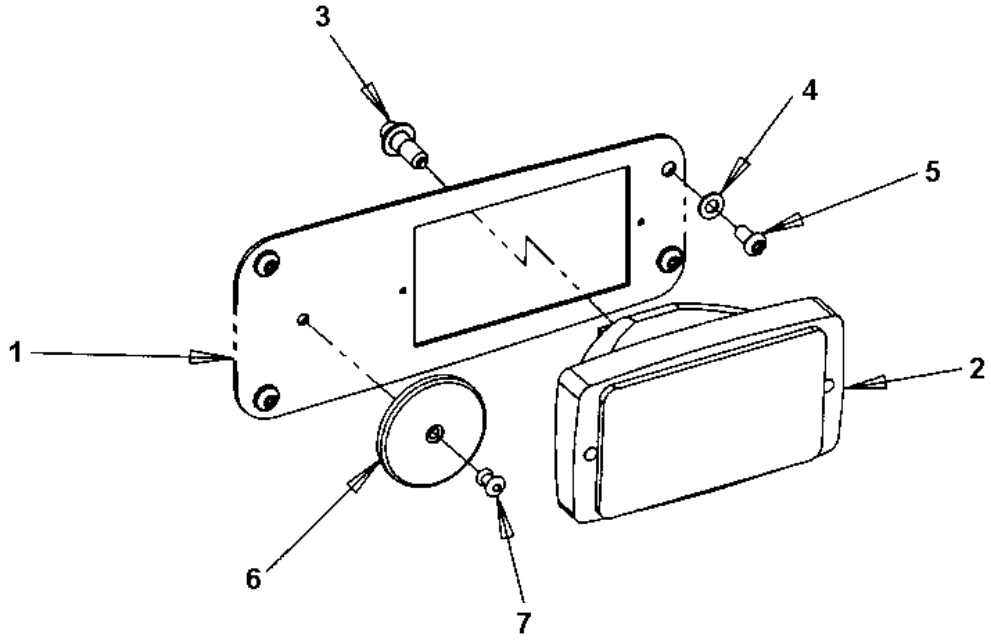

Right side mount

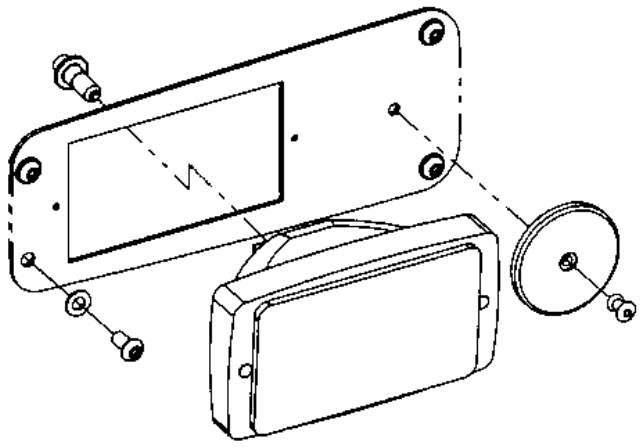

Left side mount

Item	Part No.	Name	Qty	L	SN INFO
1	4812113531	Bracket	1		
2	4700902227	Work light	1		
3	4700901369	Bulb 55w H3	1	A	
4	4700904229	Washer, 8.4x 6x1.5 mm 300HV	4		
5	4700904956	Screw	4		
6	4700791957	Reflector, white	1		
7	4700791754	Blind rivet	1		

Comments for Page: Working lights front

(L)OCAL REMARKS

A | en_US | Included in work light (p/n 4700902227)

Working lights Working light rear

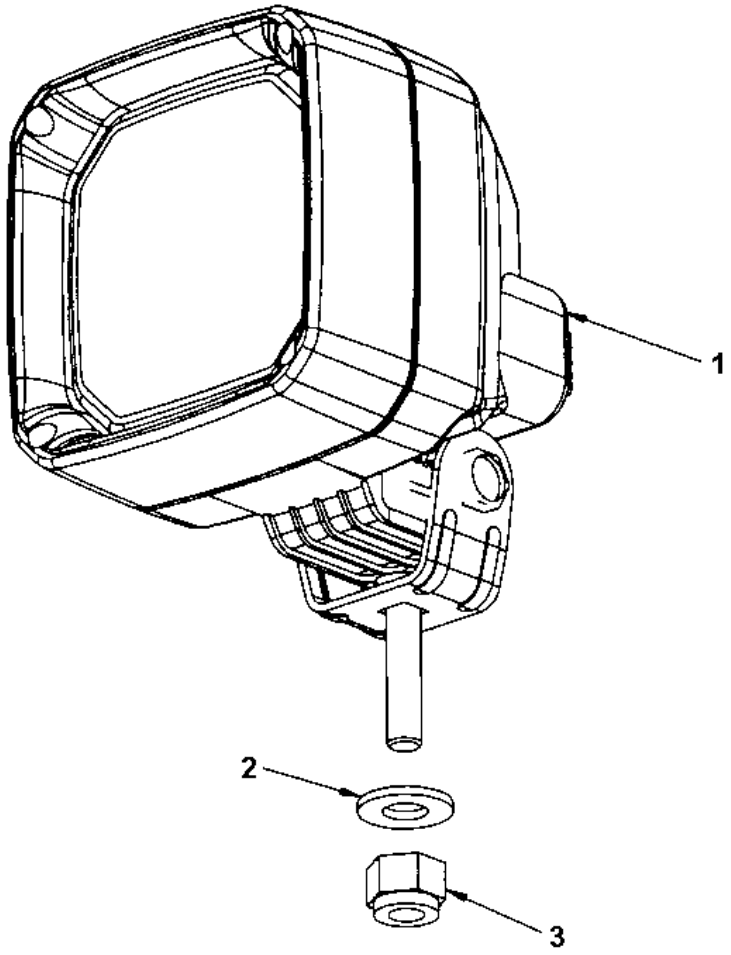

Item	Part No.	Name	Qty	L	SN INFO
1	4812110216	Work lamp	1		
2	4700904230	Plain washer 10.5x22x2 mm	1		
3	4700586018	Lock nut M10	1		

Working lights Working light (option) rear

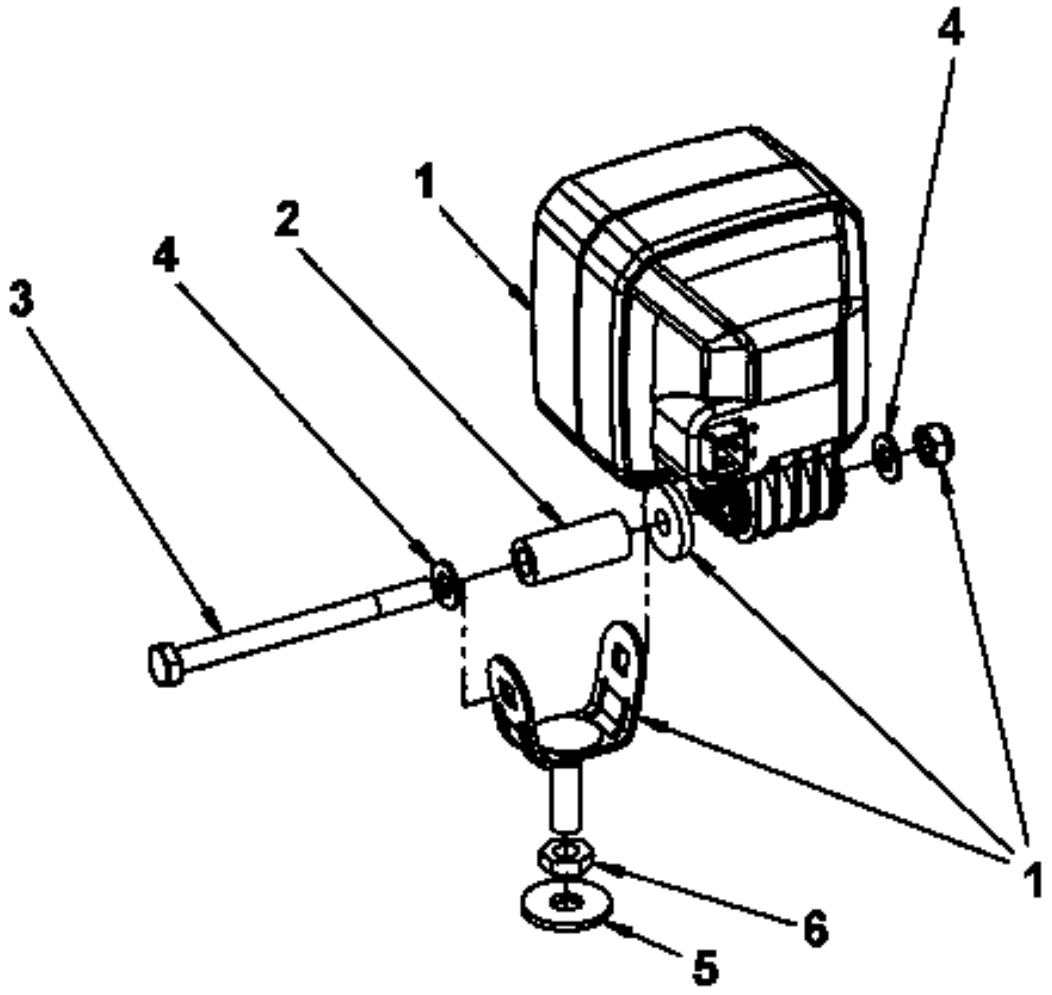

Item	Part No.	Name	Qty	L	SN INFO
1	4812110216	Work lamp	1		
2	4700391115	Spacer sleeve	1		
3	4700500096	Screw	1		
4	4700904229	Washer, 8.4x 6x1.5 mm 300HV	2		
5	4700928441	Washer, 21 x 45 mm	1		
6	4700573005	Nut	1		

Working lights Casing rear

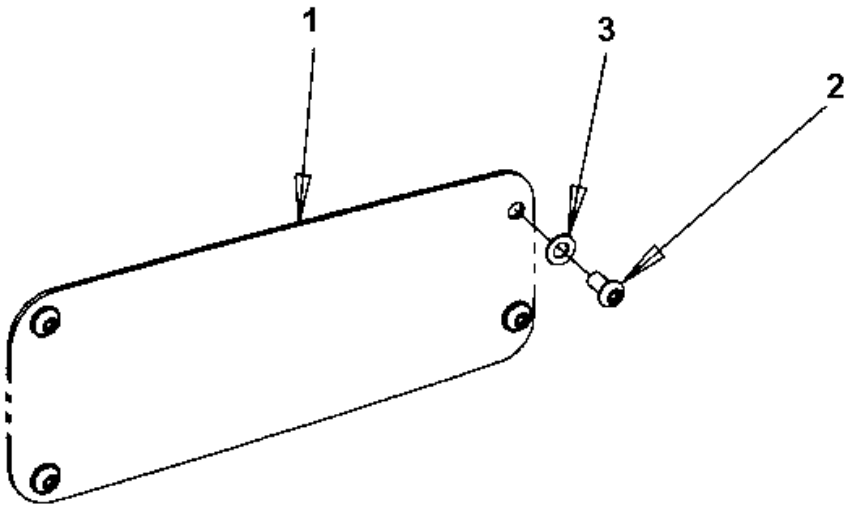

Item	Part No.	Name	Qty	L	SN INFO
1	4812111950	Cover plate	1		
2	4700904956	Screw	4		
3	4700904229	Washer, 8.4x 6x1.5 mm 300HV	4		

Working lights Cover plate rear

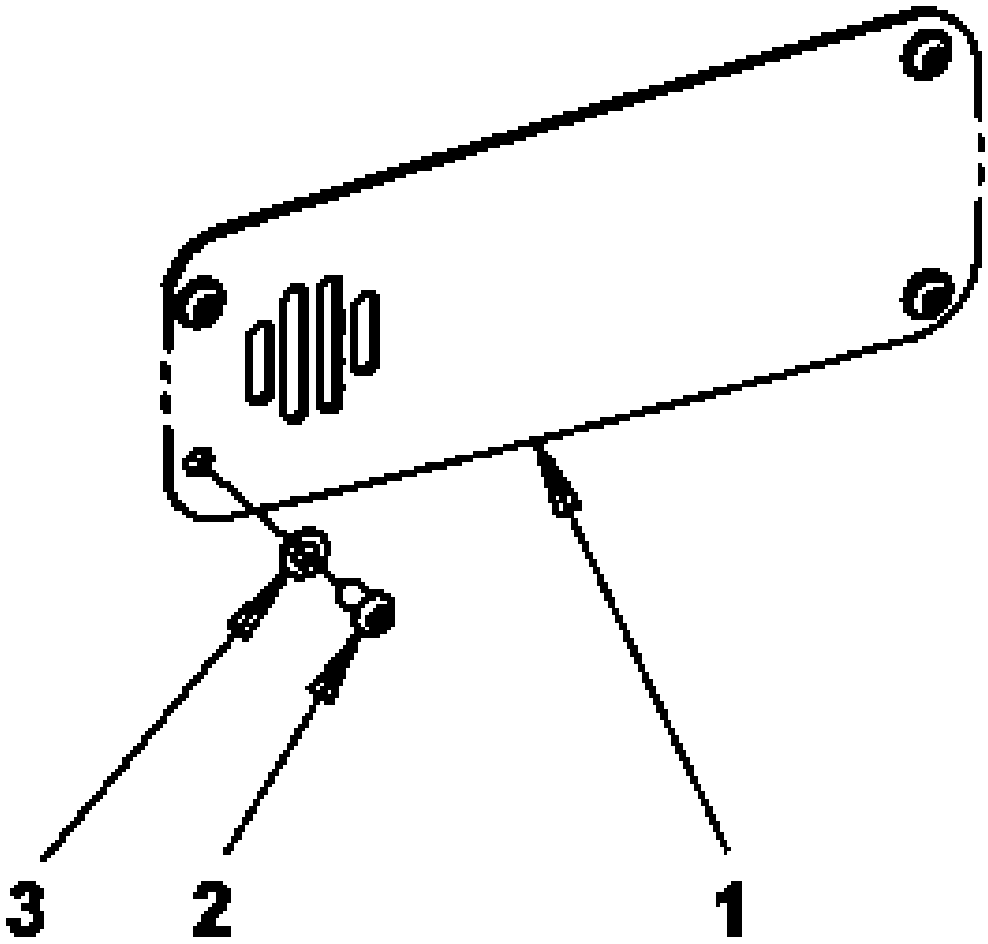

Item	Part No.	Name	Qty	L	SN INFO
1	4812114872	Cover plate	1		
2	4700904956	Screw	4		
3	4700904229	Washer, 8.4x 6x1.5 mm 300HV	4		

Electrical equipment Rotating beacon for ROPS (option)

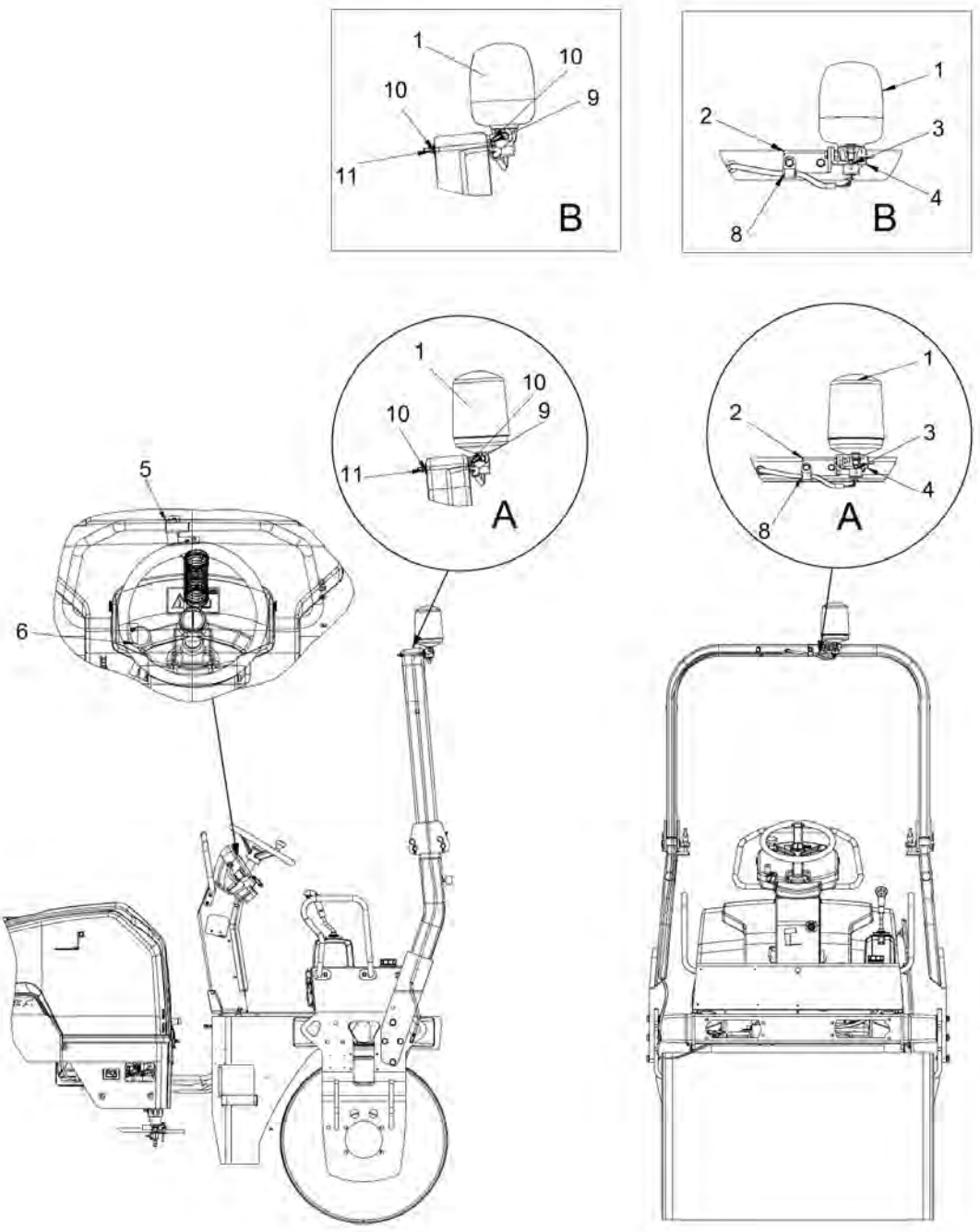

Item	Part No.	Name	Qty	L	SN INFO
1	4700389577	Rotating beacon 12V	1	A	To A016521
1	4812122610	Rotating beacon 12V	1	B	From A016522
2	4700389561	Bracket	1		
3	4700791981	Connector plug	1		
4	4700791980	Rubber protection	1		
5	4812121272	Holder	1		
6	4700791585	Switch, rotating beacon	1		
7	4812113077	Cable harness	1		
8	4700921072	Clamp	1		
9	4700500143	Screw	2		
10	4700904229	Washer, 8.4x 6x1.5 mm 300HV	4		
11	4700586003	Lock nut M8	2		
12	4700313041	Cable ties, L=200 mm	N		

Electrical equipment Back-up alarm

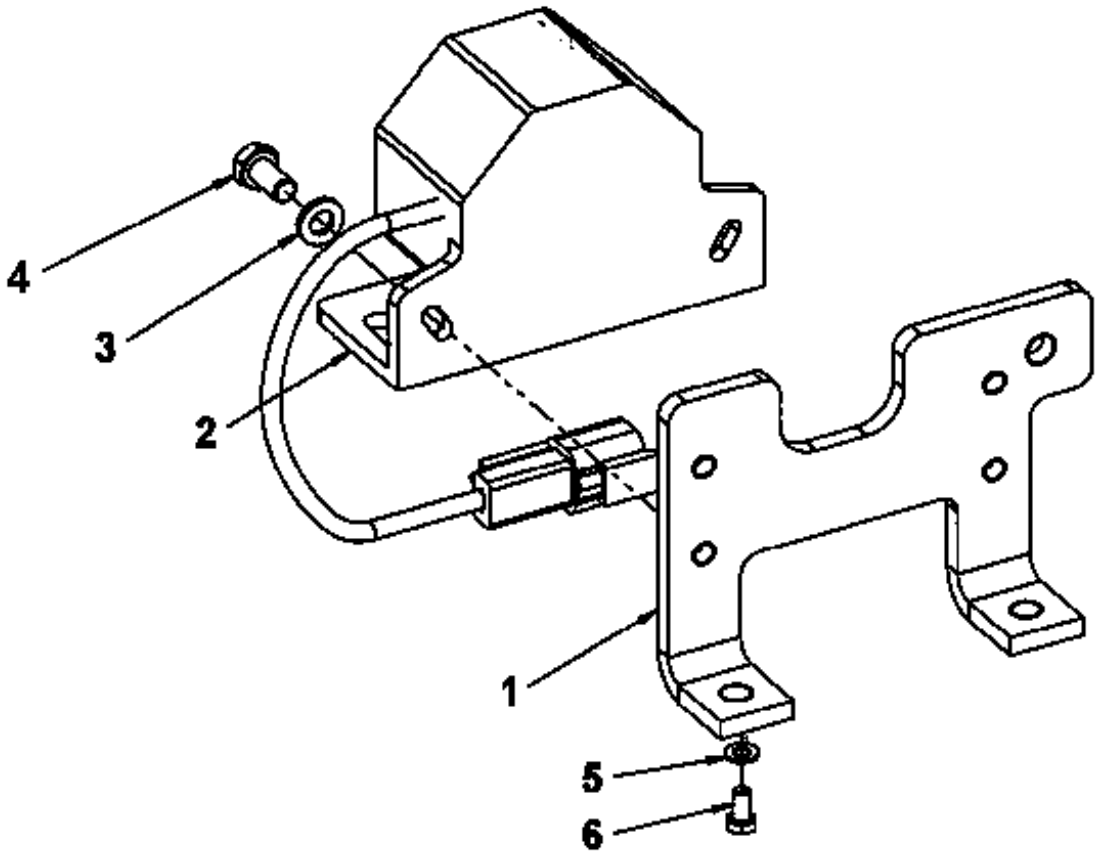

Item	Part No.	Name	Qty	L	SN INFO
1	4700396768	Bracket	1		
2	4700792098	Back-up alarm	1		
3	4700904228	Washer 6,4x12x1,5	2		
4	4700500012	Hex. screw	2		
5	4700904229	Washer, 8.4x 6x1.5 mm 300HV	2		
6	4700500019	Hexagon screw	2		

Drivers platform Drivers platform

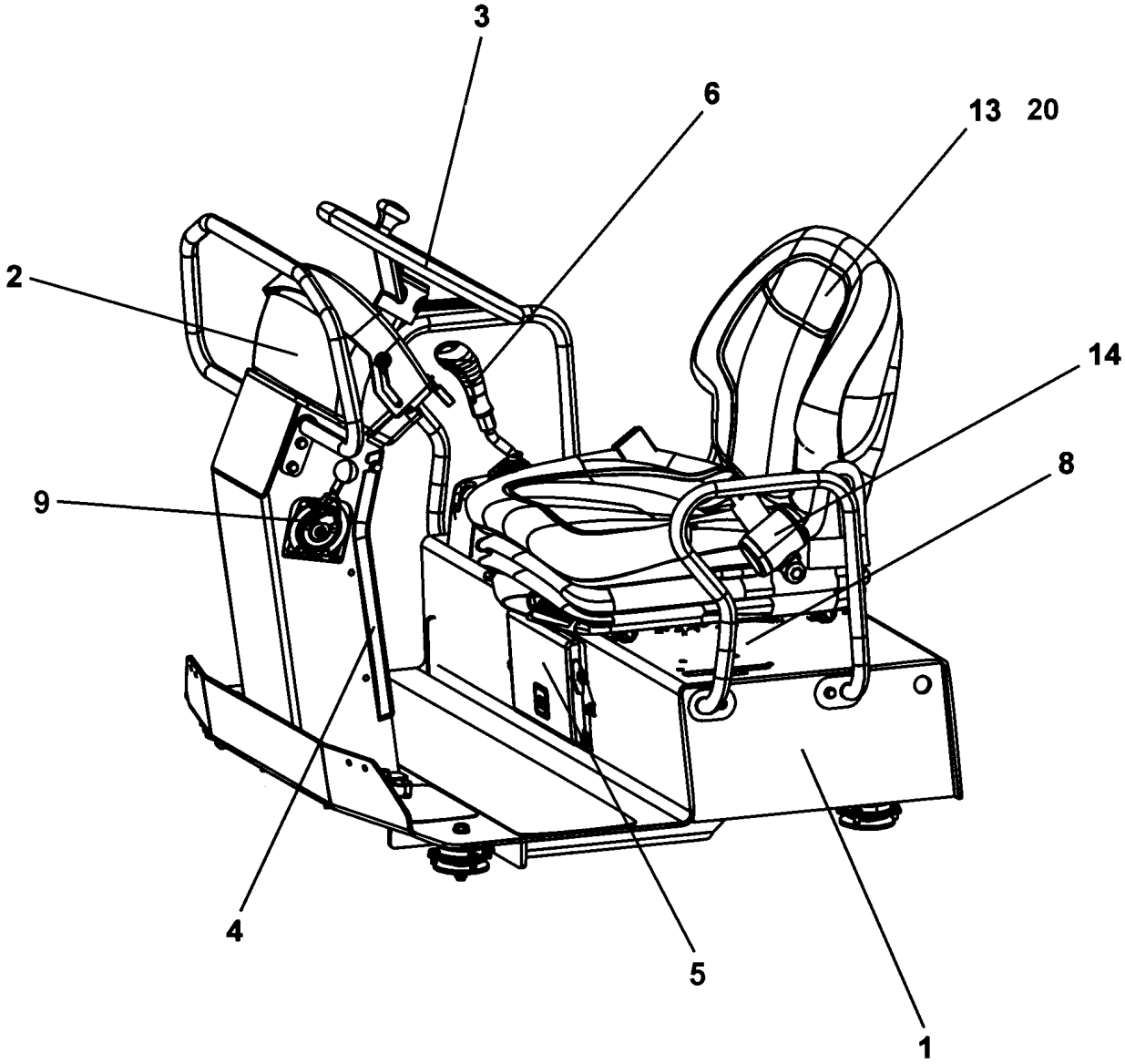

Item	Part No.	Name	Qty	L	SN INFO
1	-	Platform module			
2	-	Instrument panel module			
3	-	Steering wheel			
4	-	Control module			
5	-	Standard ECU module			
6	-	Forward-Reverse control module			
8	-	Cover plate, Dual F&R-control left side			
9	-	Throttle control cpl, Dual frequency (option)			
11	-	Arm rests, seat belt, laterally adjusting			
13	-	Driver's seat, without armrests (option)			
14	4700379637	Seat belt kit, static 3"			
14	-	Seat belt module 3"			
17	-	ROPS, foldable (option)		A	
18	-	Rops (option)		A	
20	4700348331	Seat protection	1	B	

Comments for Page: Drivers platform

(L)OCAL REMARKS

A | en_US | Not shown in illustration

B | en_US | For driver seat 4812118730 only.

Platform module To 0A013742 incl. 0A013744 - 0A013745, 0A013747 - 0A013749, 0A013751, 0A013753 - 0A013760 Platform module

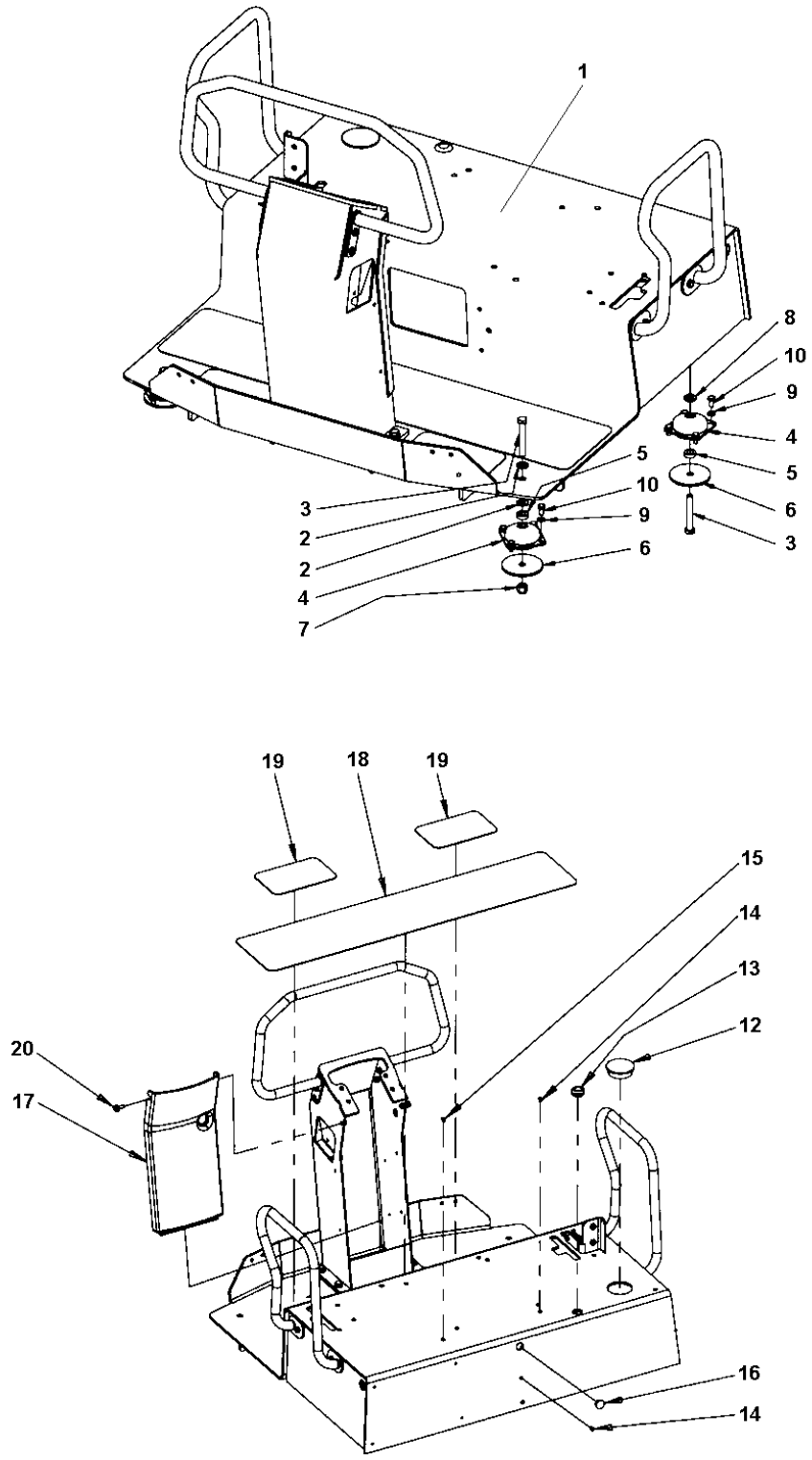

Item	Part No.	Name	Qty	L	SN INFO
1	-	Platform mount	1		
2	4700904231	Washer, 13x24x2 mm 300 HV	4		
3	4700500117	Screw M12x80H 8.8	4		
4	4700902797	Shock absorber	4		
5	4700902892	Washer	4		
6	4700358232	Washer	4		
7	4700586019	Lock nut	2		
8	4700904703	Plain washer 13x24x4 mm	2		
9	4700904229	Washer, 8.4x 6x1.5 mm 300HV	16		
10	4700500019	Hexagon screw	16		
12	4700923844	Shutter	1		
13	4700903192	Grommet	2		
14	4700926215	Protective plug	4		
15	4700902919	Plug	2		
16	4700904225	Plug	1		
17	4700387226	Column cover	1		
18	4700357604	Protection	1		
19	4700357605	Slip protection	2		
20	4700500505	Screw, M8x20 mm 8.8 A2K	2		

Platform module To 0A013742 incl. 0A013744 - 0A013745, 0A013747 - 0A013749, 0A013751, 0A013753 - 0A013760 Platform mount

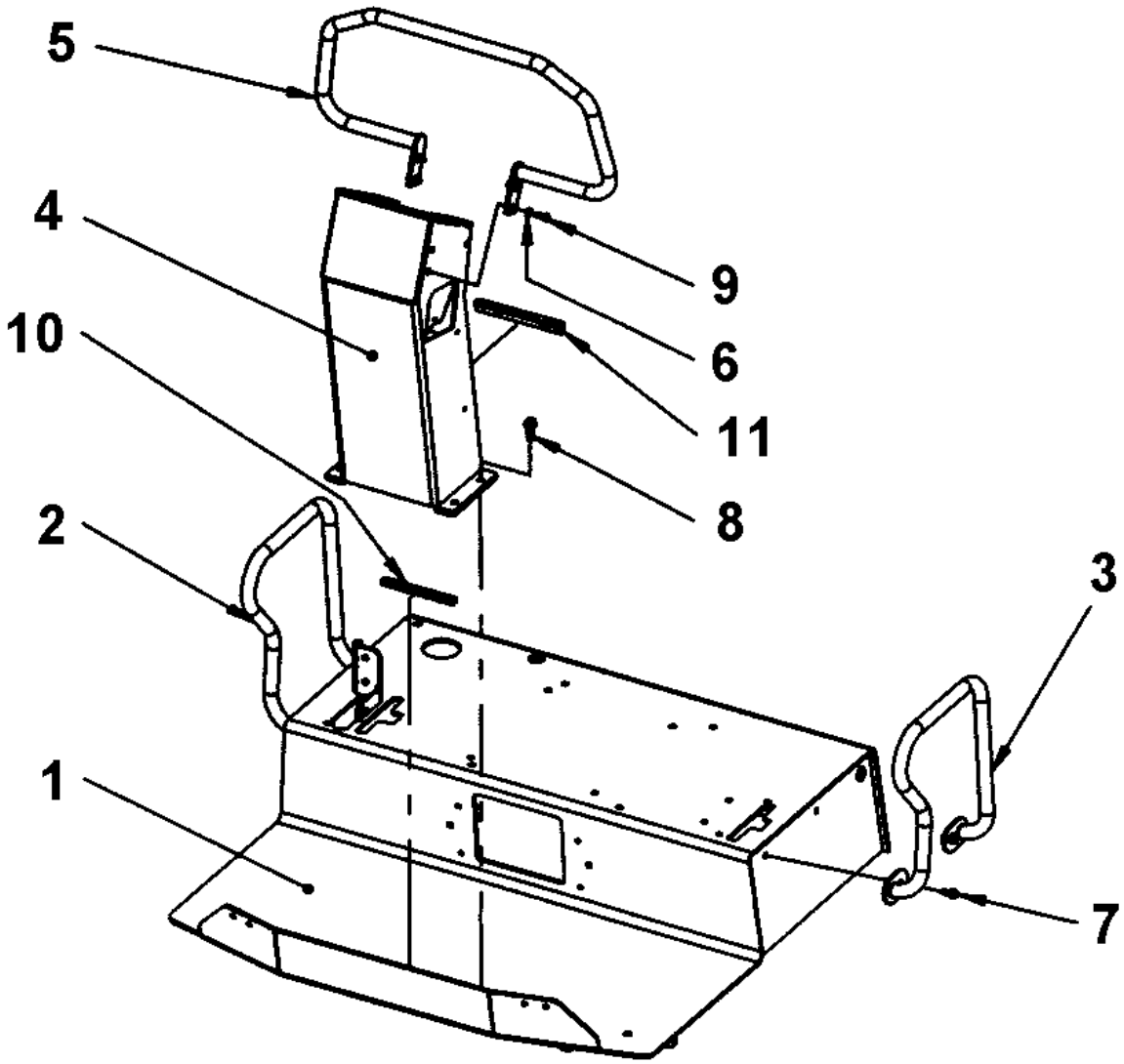

Item	Part No.	Name	Qty	L	SN INFO
1	4812111164	Platform	1		
2	4812113106	Hand rail Right	1		
3	4812113107	Hand rail Left	1		
4	4812112091	Steering column	1		
5	4812112532	Hand rail Front	1		
6	4700904556	Steel plain washer 8,4x16x3,0	4		
7	4700500505	Screw, M8x20 mm 8.8 A2K	4		
8	4700791343	Screw	4		
9	4700791333	Screw, M8 x 20 mm A2-70	4		
10	4700902379	Edge trim	1	A	
11	4700902166	Edge trim	1	B	

Comments for Page: Platform mount

(L)OCAL REMARKS

A | en_US | L = 0,15 m

B | en_US | L = 0,18 m

Platform module From 0A013743 excl. 0A013744 - 0A013745, 0A013747 - 0A013749, 0A013751, 0A013753 - 0A013760 Platform module

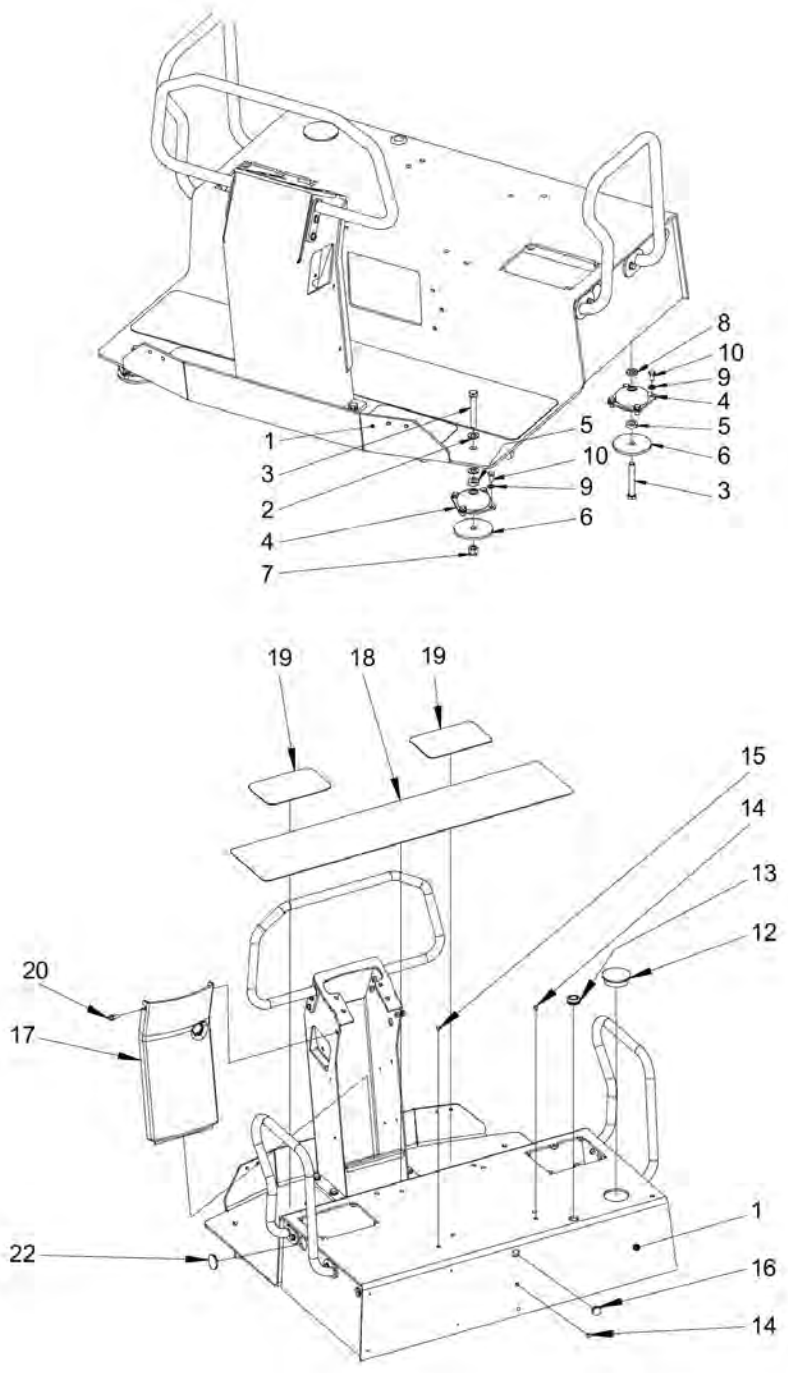

Item	Part No.	Name	Qty	L	SN INFO
1	4812121376	Platform	1		
2	4700904231	Washer, 13x24x2 mm 300 HV	4		
3	4700500117	Screw M12x80H 8.8	4		
4	4700902797	Shock absorber	4		
5	4700902892	Washer	4		
6	4700358232	Washer	4		
7	4700586019	Lock nut	2		
8	4700904703	Plain washer 13x24x4 mm	2		
9	4700904229	Washer, 8.4x 6x1.5 mm 300HV	16		
10	4700500019	Hexagon screw	16		
12	4700923844	Shutter	1		
13	4700903192	Grommet	2		
14	4700926215	Protective plug	4		
15	4700902919	Plug	2		
16	4700904225	Plug	1		
17	4700387226	Column cover	1		
18	4700357604	Protection	1		
19	4700357605	Slip protection	2		
20	4700500505	Screw, M8x20 mm 8.8 A2K	2		
22	4700921849	Plug	2		

Platform module From 0A013743 excl. 0A013744 - 0A013745, 0A013747 - 0A013749, 0A013751, 0A013753 - 0A013760 Platform

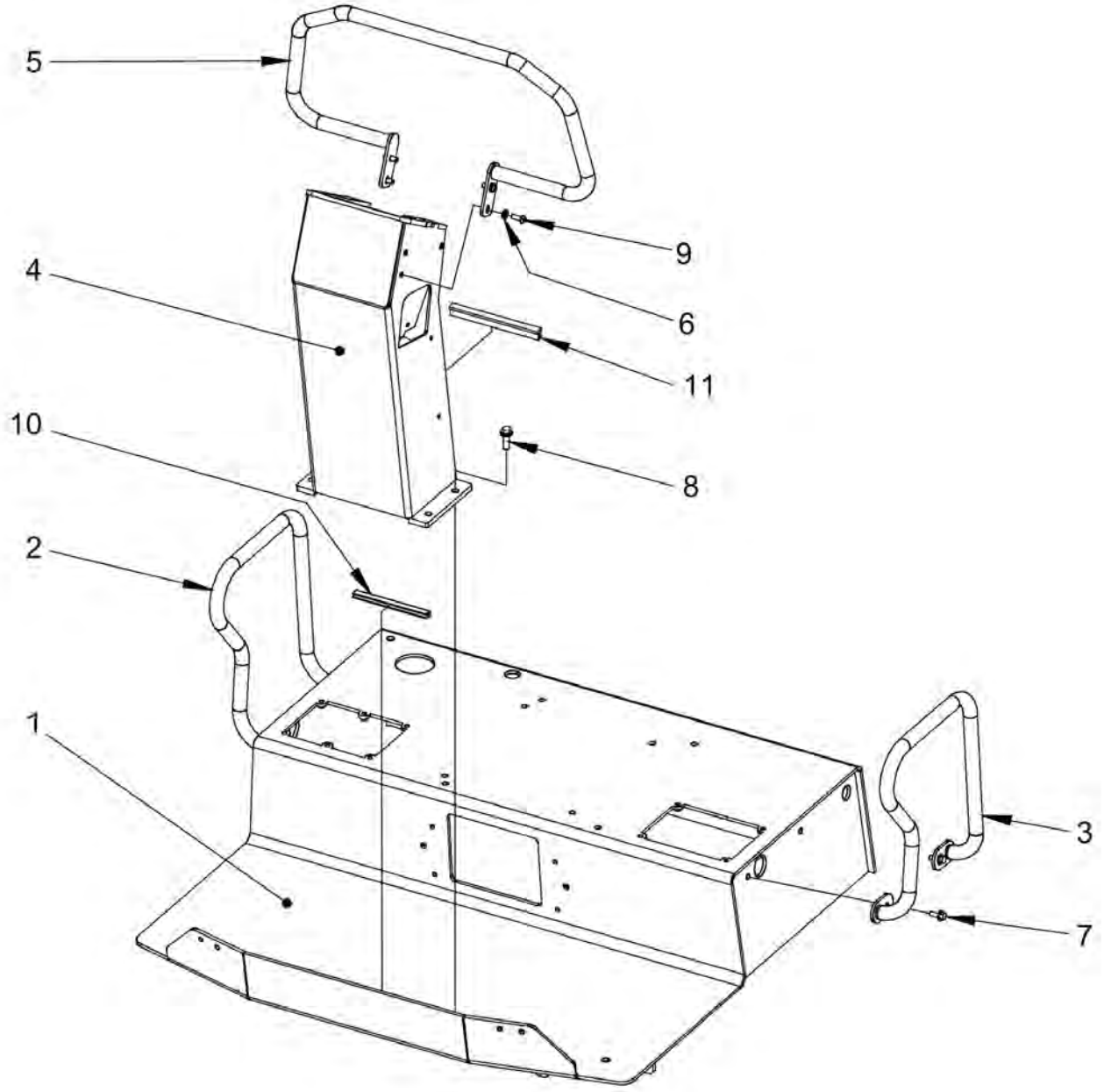

Item	Part No.	Name	Qty	L	SN INFO
1	4812121464	Platform	1		
2	4812113106	Hand rail Right	1		
3	4812113107	Hand rail Left	1		
4	4812112091	Steering column	1		
5	4812112532	Hand rail Front	1		
6	4700904556	Steel plain washer 8,4x16x3,0	4		
7	4700500505	Screw, M8x20 mm 8.8 A2K	4		
8	4700791343	Screw	4		
9	4700791333	Screw, M8 x 20 mm A2-70	4		
10	4700902379	Edge trim	1	A	
11	4700902166	Edge trim	1	B	

Comments for Page: Platform

A | L = 0,15 m

B | L = 0,18 m

Platform module From xx019397 Platform module

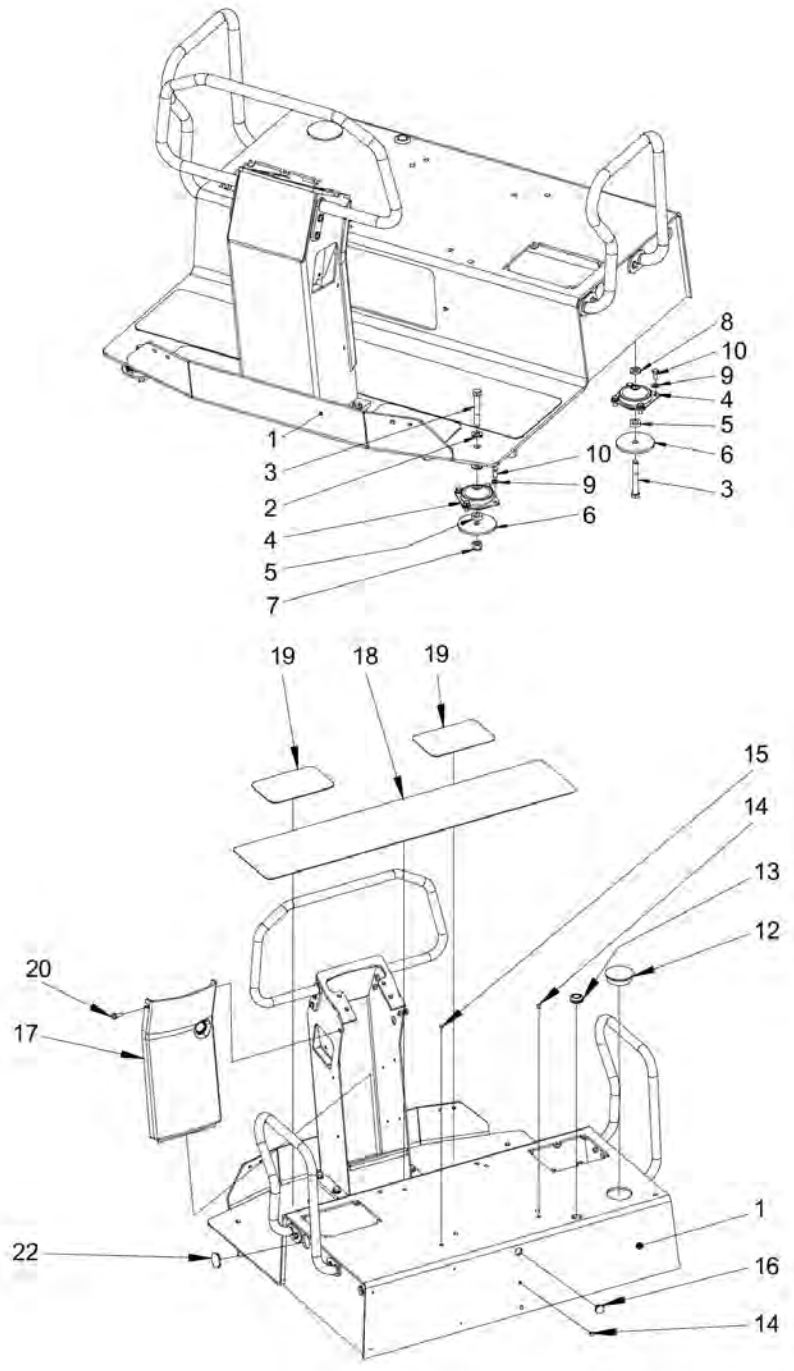

Item	Part No.	Name	Qty	L	SN INFO
1	4812121376	Platform	1		
2	4700904231	Washer, 13x24x2 mm 300 HV	4		
3	4700500196	Screw M12-1,75x80 8.8	4		
4	4700902797	Shock absorber	4		
5	4700902892	Washer	4		
6	4700358232	Washer	4		
7	4700586019	Lock nut	2		
8	4700904703	Plain washer 13x24x4 mm	2		
9	4700904229	Washer, 8.4x 6x1.5 mm 300HV	16		
10	4700500019	Hexagon screw	16		
12	4700923844	Shutter	1		
13	4700903192	Grommet	2		
14	4700926215	Protective plug	4		
15	4700902919	Plug	2		
16	4700904225	Plug	1		
17	4700387226	Column cover	1		
18	4700357604	Protection	1		
19	4700357605	Slip protection	2		
20	4700500505	Screw, M8x20 mm 8.8 A2K	2		
22	4700921849	Plug	2		

Platform module From xx019397 Platform

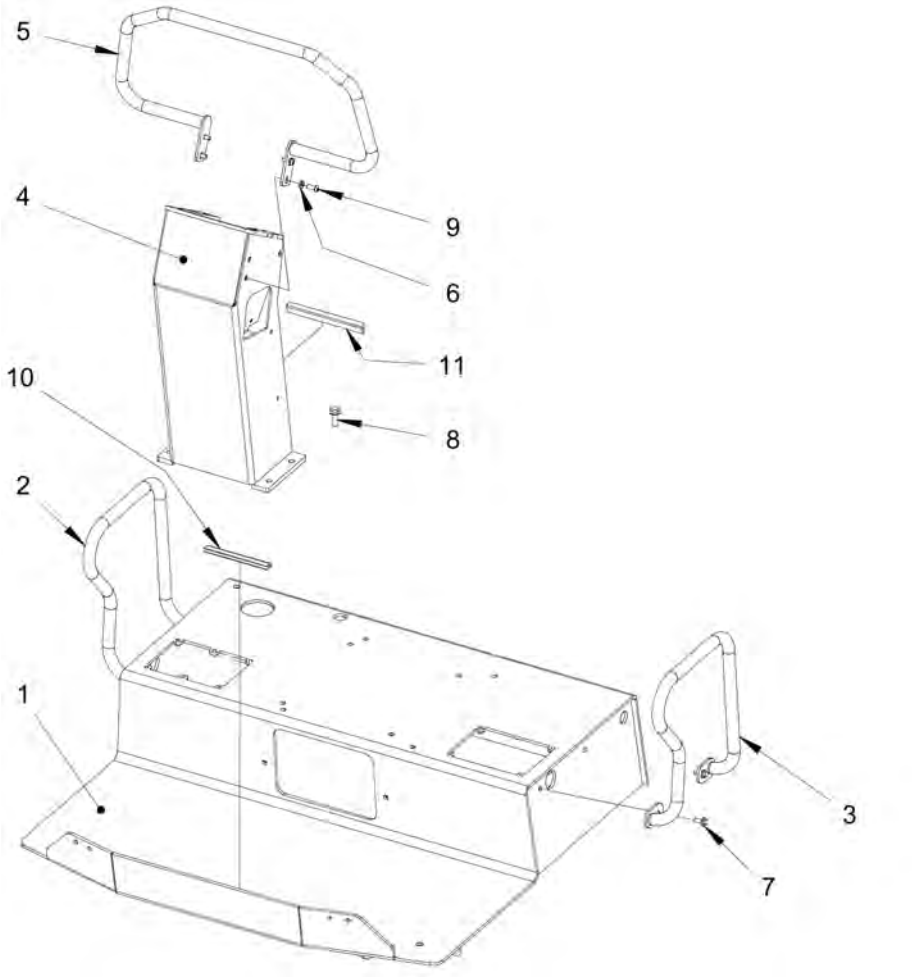

Item	Part No.	Name	Qty	L	SN INFO
1	4812125908	Platform	1		
2	4812113106	Hand rail Right	1		
3	4812113107	Hand rail Left	1		
4	4812112091	Steering column	1		
5	4812112532	Hand rail Front	1		
6	4700904556	Steel plain washer 8,4x16x3,0	4		
7	4700500505	Screw, M8x20 mm 8.8 A2K	4		
8	4700791343	Screw	4		
9	4700791333	Screw, M8 x 20 mm A2-70	4		
10	4700902379	Edge trim	1	A	
11	4700902166	Edge trim	1	B	

Comments for Page: Platform

A | L = 0,15 m

B | L = 0,18 m

Drivers platform Instrument panel module

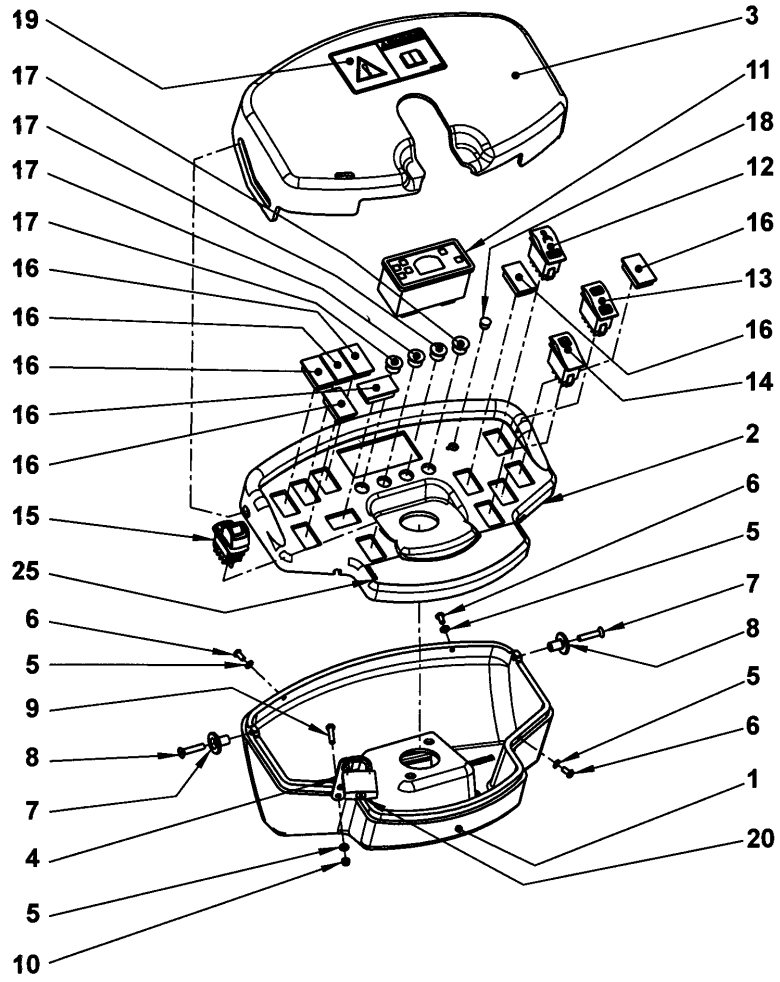

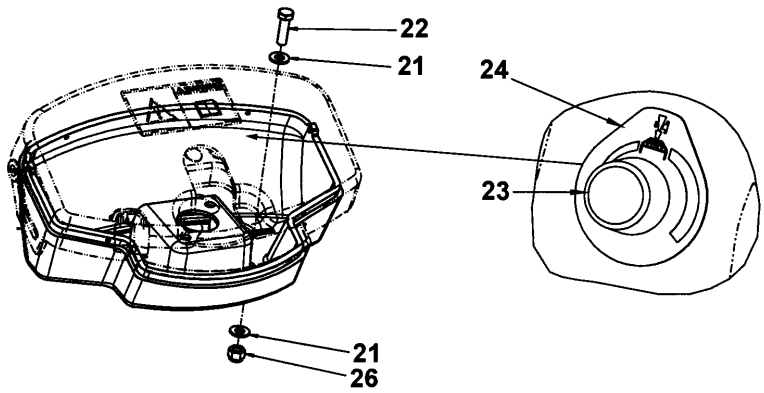

Item	Part No.	Name	Qty	L	SN INFO
1	4812118686	Control panel	1		
2	4700391784	Control panel	1		
3	4700387227	Control panel cover	1		
4	4700387545	Latch	1		
5	4700904281	Washer, 5,3x10x1 300HV	4		
6	4700903658	Screw M5x10	3		
7	4700357855	Bushing	2		
8	4700513017	Screw	2		
9	4700500007	Hex. screw	1		
10	4700791476	Lock nut	1		
11	4700395394	Control panel	1		
12	4700791579	Switch, sprinkler	1		
13	4700791580	Switch, vibration	1		
14	4700791578	Switch, horn	1		
15	4812118697	Switch, parking brake	1		
16	4700791588	Panel plug	7		
17	4700792320	Plug	4		
18	4700792083	Plug	1		
19	4700903459	Decal "SAFETY"	1		
20	4700358881	Pad lock	1		
21	4700904230	Plain washer 10.5x22x2 mm	8		
22	4700500030	Screw hexagon	4		
23	4700388737	Potentiometer	1	A	
24	4700377139	Decal	1	A	
25	4812115918	Decal "Starting instruction"	1		
26	4700586018	Lock nut M10	4		

Comments for Page: Instrument panel module

(L)OCAL REMARKS

A | en_US | Option on CC1100 and CC1200

Drivers platform Steering wheel

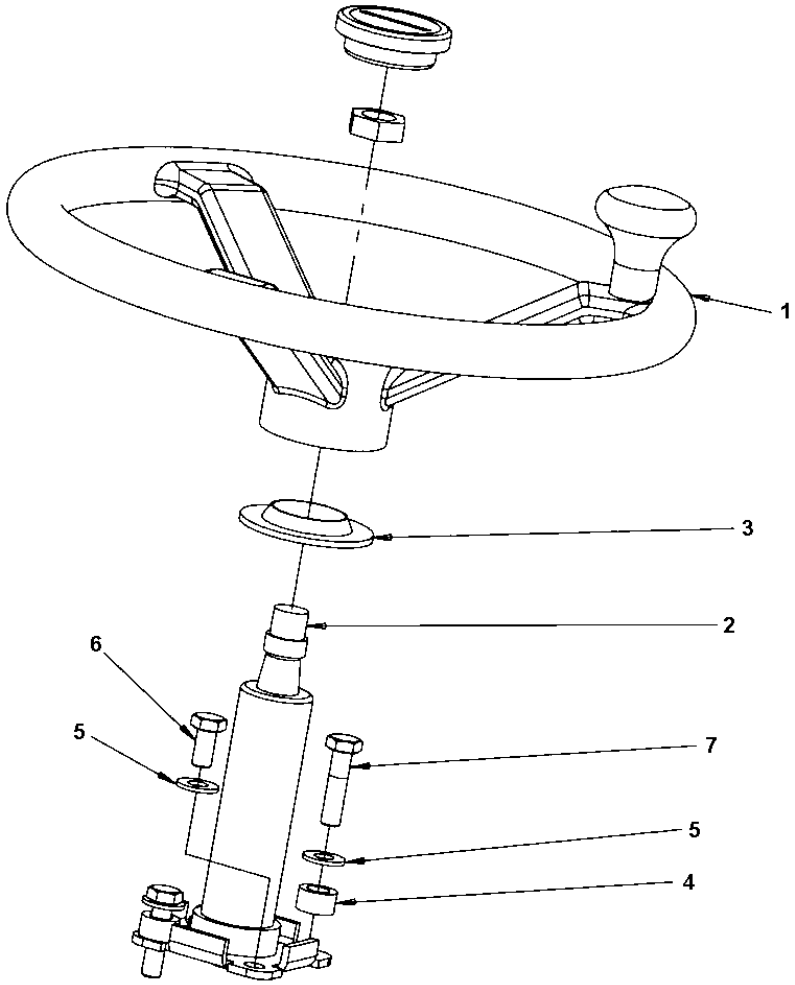

Item	Part No.	Name	Qty	L	SN INFO
1	4700372964	Steering wheel	1		
1	4700935614	Turning knob	1		
1	4700935613	Cover	1		
2	4700902123	Steering column	1	A	
3	4700928830	Rubber part	1		
4	4700355869	Spacer sleeve	2		
5	4700904230	Plain washer 10.5x22x2 mm	4		
6	4700500048	Screw, M10x20 mm 8.8 A3K	2		
7	4700500031	Screw M10x40	2		

Comments for Page: Steering wheel

(L)OCAL REMARKS

A | en_US | Cap/Nut supplied with steering wheel/column only.

Drivers platform Control module

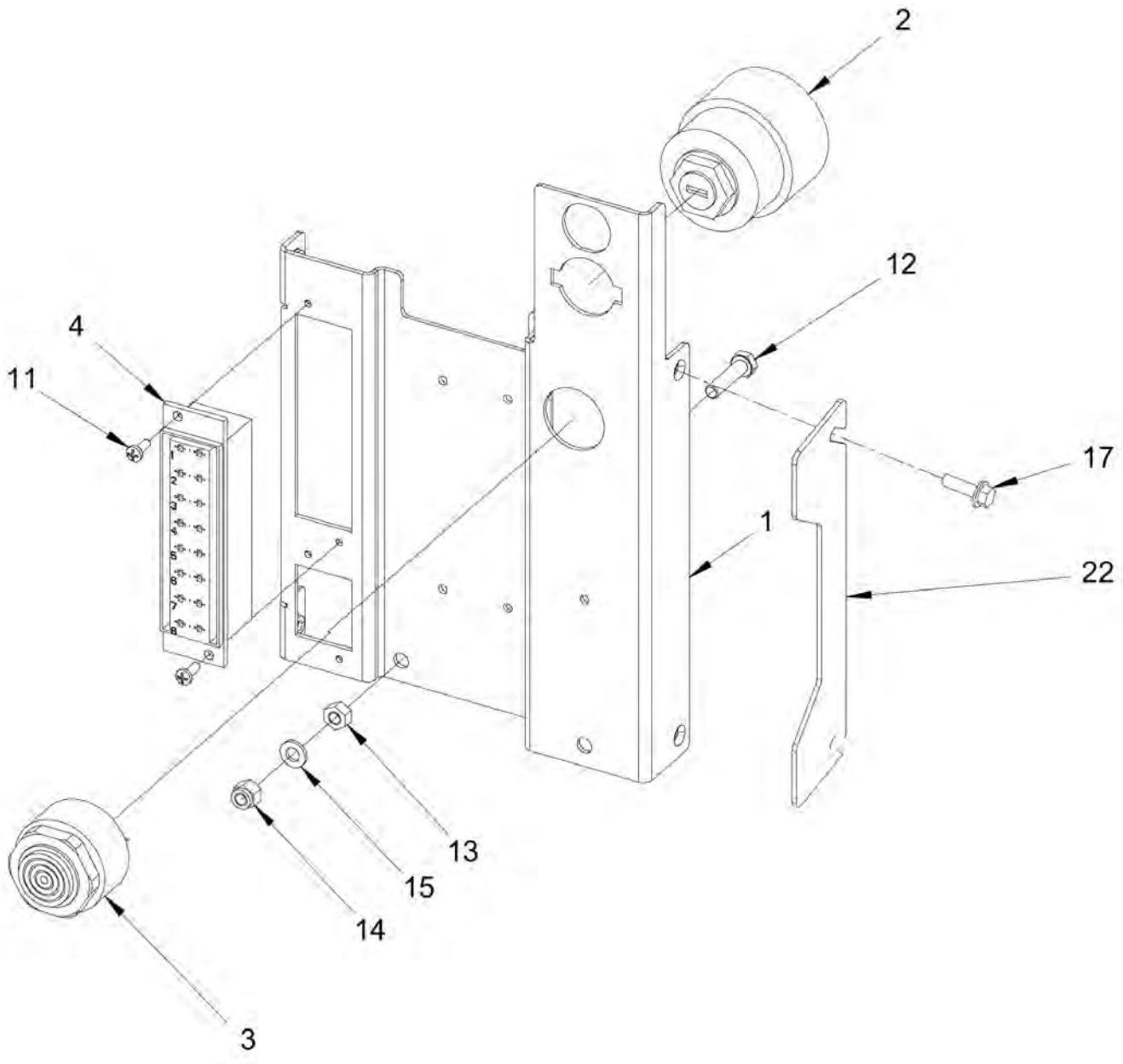

Item	Part No.	Name	Qty	L	SN INFO
1	4700387683	Distribution control plate	1		
2	4700238158	Ignition switch	1		To A016518 (excl. 16459-16464)
2	4812110901	Ignition switch	1		From A016519 (incl. 16459-16464)
2	4700940451	Ignition key	1		
3	4700385599	Buzzer	1		
4	4700791185	Fuse box	1		
5	4700792091	Fuse holder	1	B	
6	4700791211	Contact bridge	2		
11	4700901767	Screw	4		
12	4700500075	Screw, M6-1,0x25 mm 8.8	1		
13	4700570004	Hexagon nut M6	1		
14	4700586002	Lock nut M6 -8	1		
15	4700904228	Washer 6,4x12x1,5	1		
17	4812117868	Screw M05x16	4		
18	4700903741	Fuse 20A Yellow	1		
19	4700901227	Fuse 10A Red	2		
20	4700901228	Fuse, 15A Blue	2		
21	4700901225	Fuse 5A Tan	1		
22	4812117864	Shim	2		

Comments for Page: Control module

(L)OCAL REMARKS

A | en_US | L = 0,07 m

B | en_US | Available on Combi rollers and tandem rollers equipped with flow divider (option) only.

Standard ECU module To xA019769 Standard ECU module

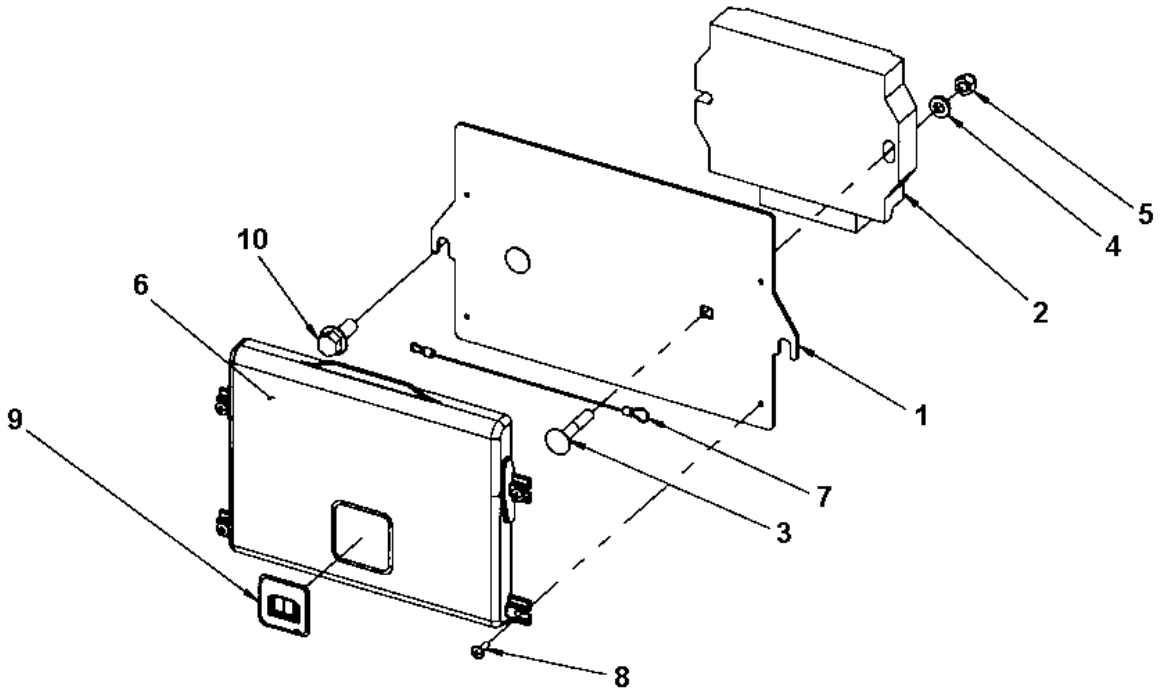

Item	Part No.	Name	Qty	L	SN INFO
1	4700388447	Cover	1		
2	4812114386	Control unit, ECU	1		
3	4700791775	Bolt	2		
4	4700904556	Steel plain washer 8,4x16x3,0	2		
5	4700586003	Lock nut M8	2		
6	4700383705	Instruction manual box	1		
7	4700357643	Wire	1		
8	4700791226	Screw	4		
9	4700903425	Safety decal "READ SAFETY INSTRUCTIONS"	1		
10	4700500505	Screw, M8x20 mm 8.8 A2K	2		

Standard ECU From xA019770 ECU

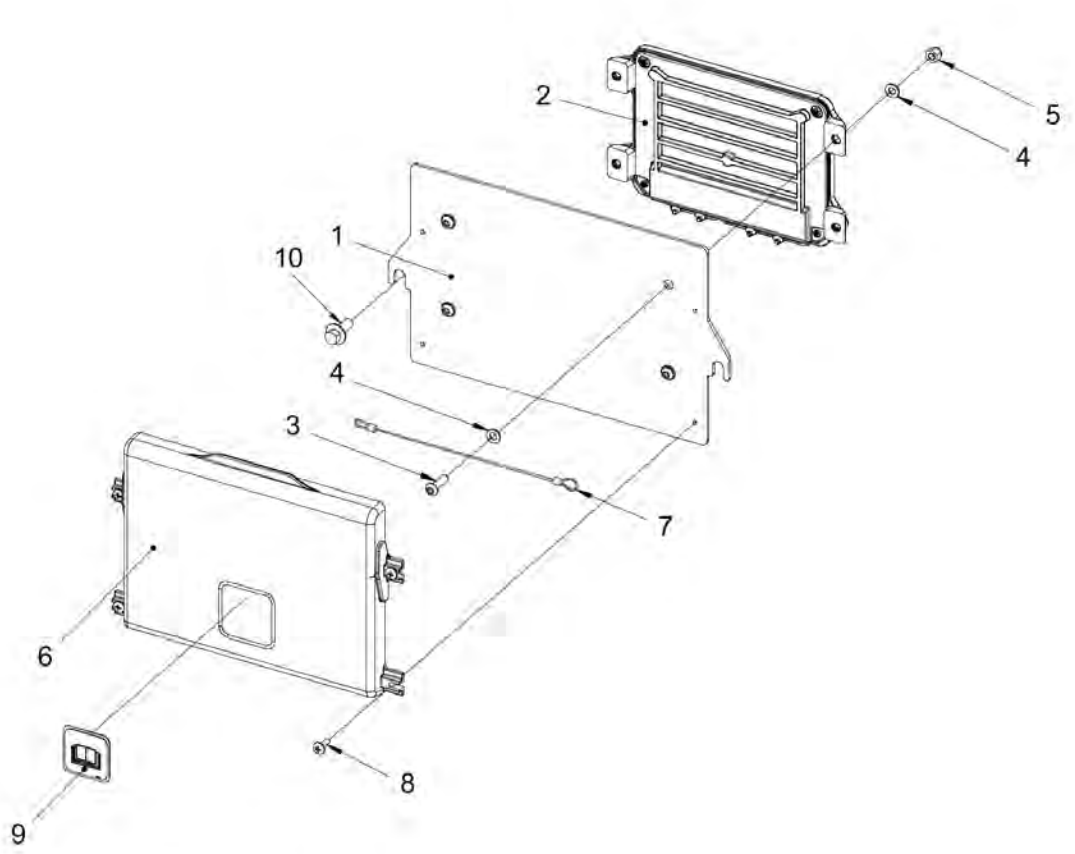

Item	Part No.	Name	Qty	L	SN INFO
1	4812126298	Cover plate	1		
2	4812125677	Control unit, ECU	1		
3	4700791524	Screw, M6 x 20 mm A2-70	4		
4	4700904228	Washer 6,4x12x1,5	8		
5	4700586002	Lock nut M6 -8	4		
6	4700383705	Instruction manual box	1		
7	4700357643	Wire	1		
8	4700791226	Screw	4		
9	4700903425	Safety decal "READ SAFETY INSTRUCTIONS"	1		
10	4700500505	Screw, M8x20 mm 8.8 A2K	2		

Forward-Reverse control module To A015617 Forward-Reverse control module

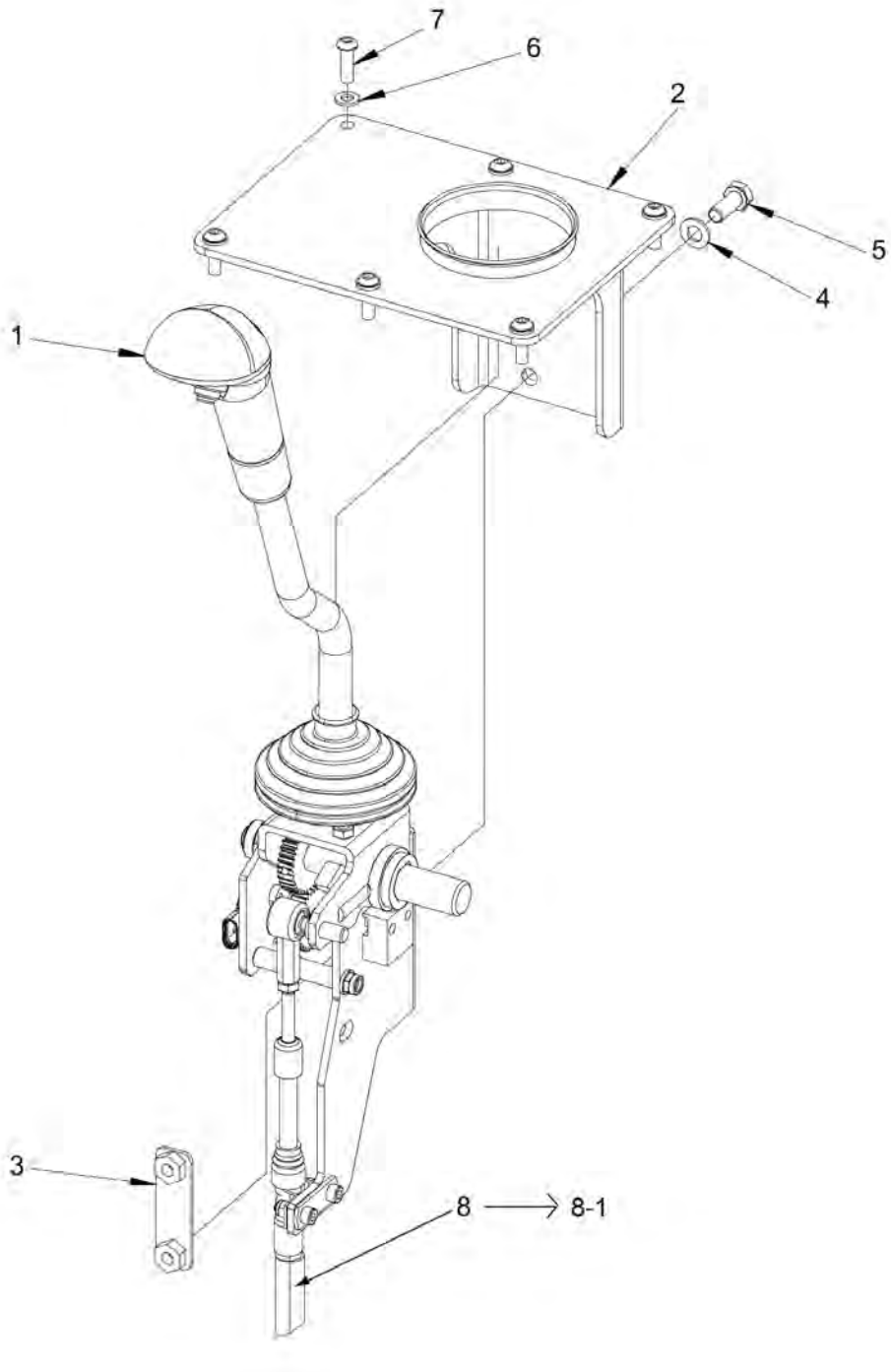

Item	Part No.	Name	Qty	L	SN INFO
1	4812121384	Forward and reverse control handle	1		
2	4812121386	Bracket	1		
3	4812117990	Bracket	1		
4	4700904229	Washer, 8.4x 6x1.5 mm 300HV	2		
5	4700500053	Screw, M8x20 mm 8.8 A2K	2		
6	4700904228	Washer 6,4x12x1,5	6		
7	4700791524	Screw, M6 x 20 mm A2-70	6		
8	-	Cable	1		
8-1	-	Modification kit control cable			

Forward-Reverse control module To A015617 4812121384 Forward & Reverse control

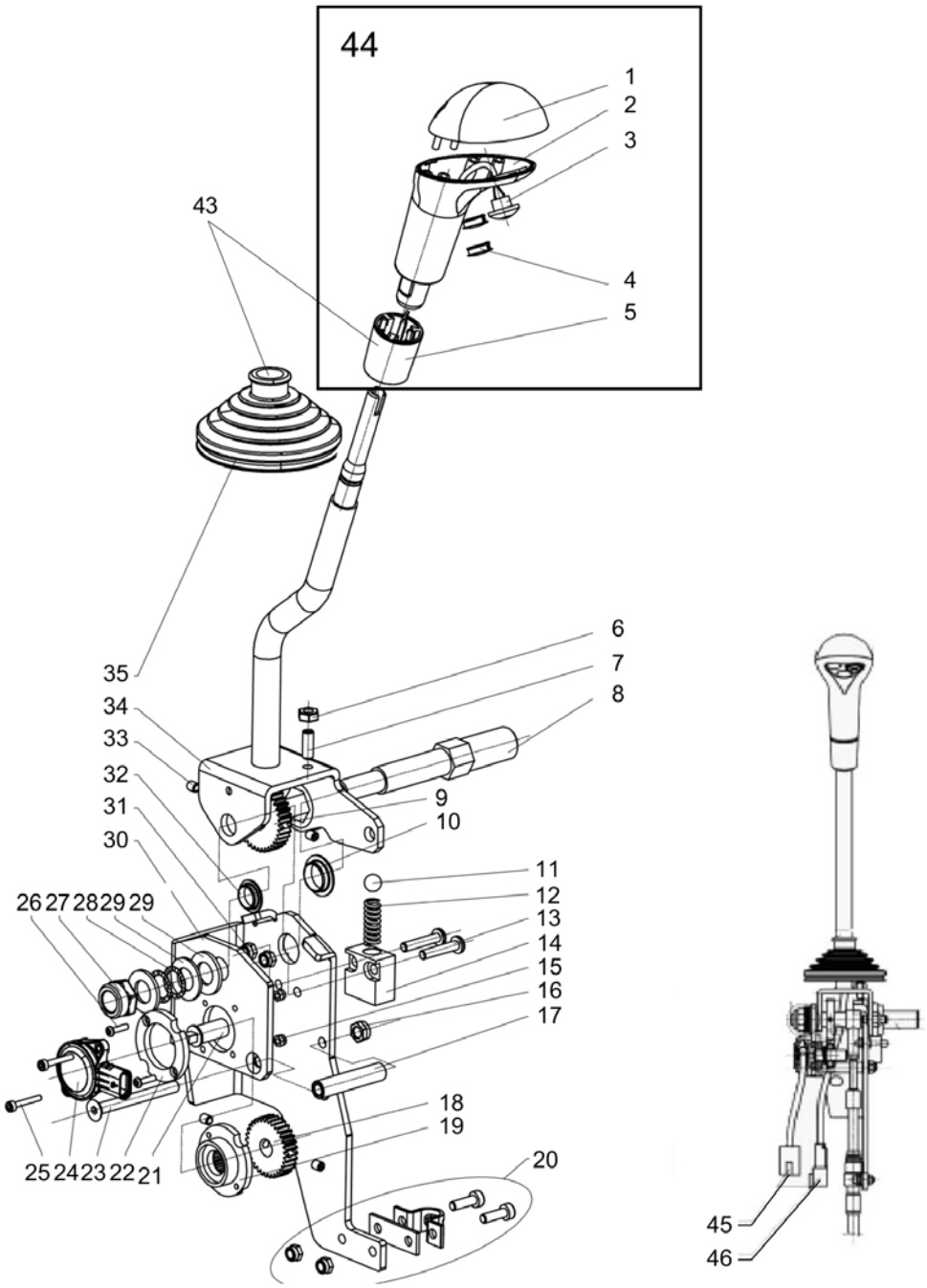

Item	Part No.	Name	Qty	L	SN INFO
1	4812156558	Handle top	1		
2	4812156559	Handle	1		
3	4812156560	Push button switch with cable	1		
4	4812156561	Protection plug	2		
5	4812156562	Sleeve (knob)	1		
6	4812159290	Nut M5	2		
7	4812159291	Screw M5	2		
8	4812156563	Central shaft	1		
9	4812156564	Gear	1		
10	4812158258	Bushing	1		
11	4812156565	Sphere	1		
12	4812156566	Spring	1		
13	4812160082	Screw M5	2		
14	4812160379	Spring house	1		
15	4812160083	Nut M3	1		
16	4812160084	Nut M6	1		
17	4812156568	Spacer	1		
18	4812156569	Gear	1		
19	4812156570	Internal spacer	1		
20	4700902189	Bracket	1		
21	4812156571	Shaft	1		
22	4812156572	External spacer	1		
23	4812159197	Screw M6	1		
24	4812156490	Potentiometer	1		
25	4812159198	Screw M3	2		
26	4812159199	Screw M3	2		
27	4812159251	Lock nut M12	1		
28	4812156573	Sealing	2		
29	4812158260	Washer	2		
30	4812156574	Bracket	1		
31	4812160087	Nut M5	2		
32	4812158259	Bushing	1		
33	4812160380	Screw M5	4		
34	4812160263	Lever	1		
35	4812156576	Bellow	1		
36	4812160381	Cable	1		
43	4812157556	Bellows kit	1		
43	4812156562	Sleeve (knob)	1		

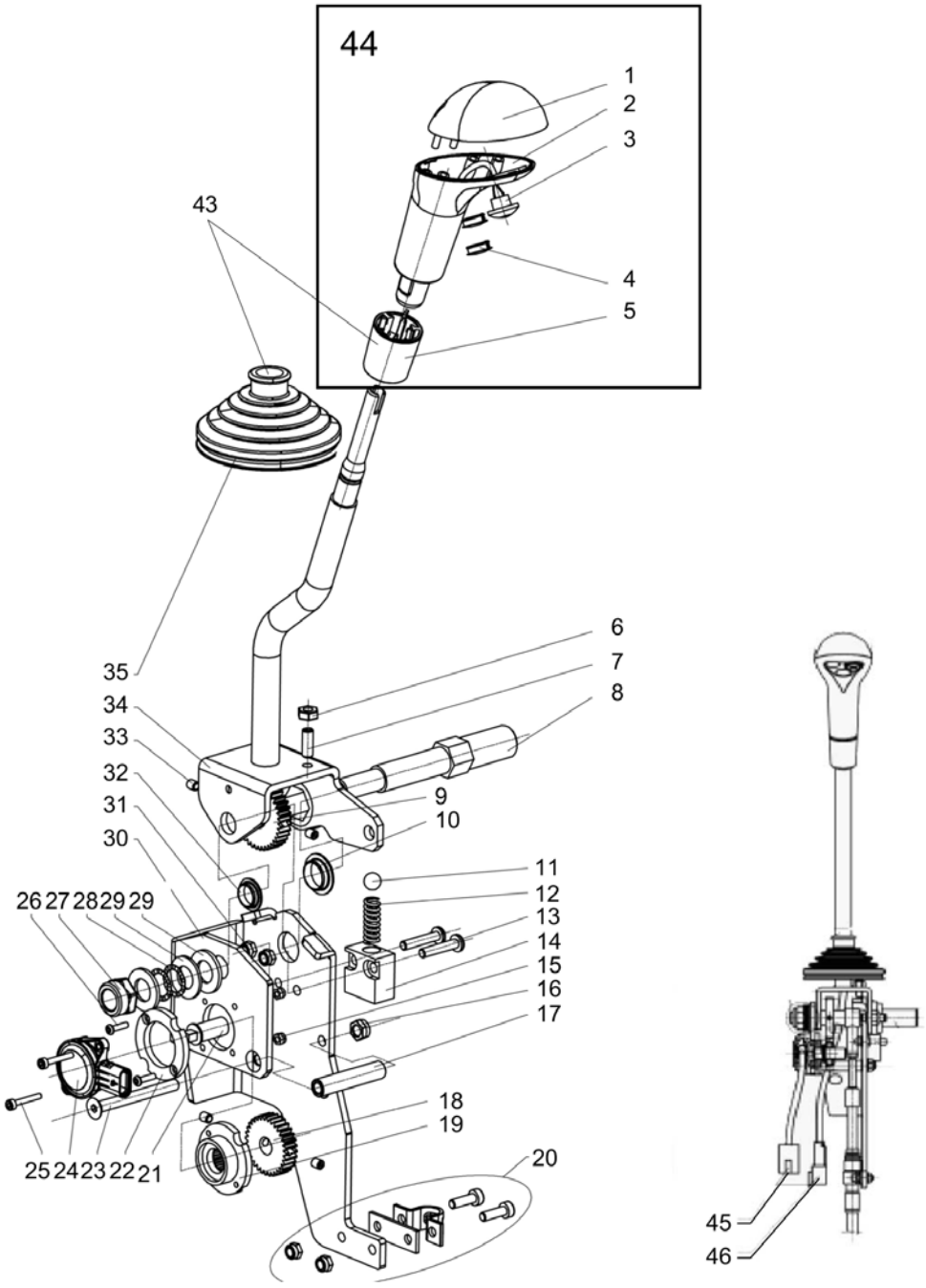
44
1
2
3
4
5
43
35
34
33
32
31
30
26 27 28 29 29
25 24 23 22 21
6
7
8
9
10
11
12
13
14
15
16
17
18
19
20
45
46

Item	Part No.	Name	Qty	L	SN INFO
43	4812156576	Bellow	1		
44	4812158267	Handle top + Button kit	1		
44	4812156558	Handle top	1		
44	4812156559	Handle	1		
44	4812156560	Push button switch with cable	1		
44	4812156561	Protection plug	2		
44	4812156562	Sleeve (knob)	1		
45	4812160593	Connector, 3-poles	1		
46	4812160594	Connector, 2-poles	1		

Forward-Reverse control module To A015617 Cover plate, Dual F&R-control, left side

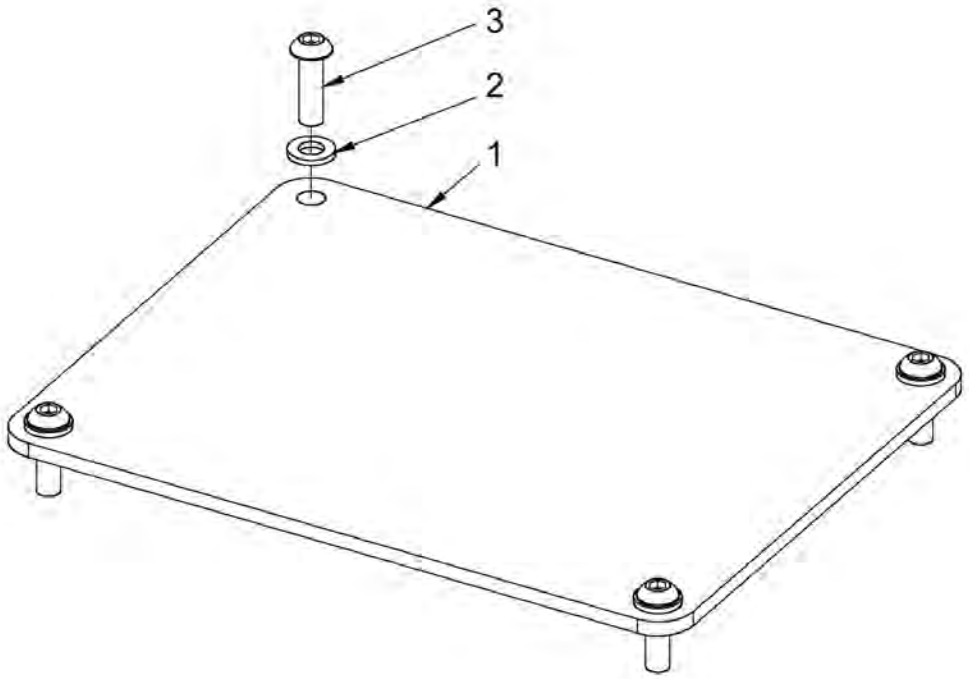

Item	Part No.	Name	Qty	L	SN INFO
1	4812121387	Cover plate	1		
2	4700904228	Washer 6,4x12x1,5	4		
3	4700791524	Screw, M6 x 20 mm A2-70	4		

Forward-Reverse control module To A015617 4812124935 Modification kit control cable

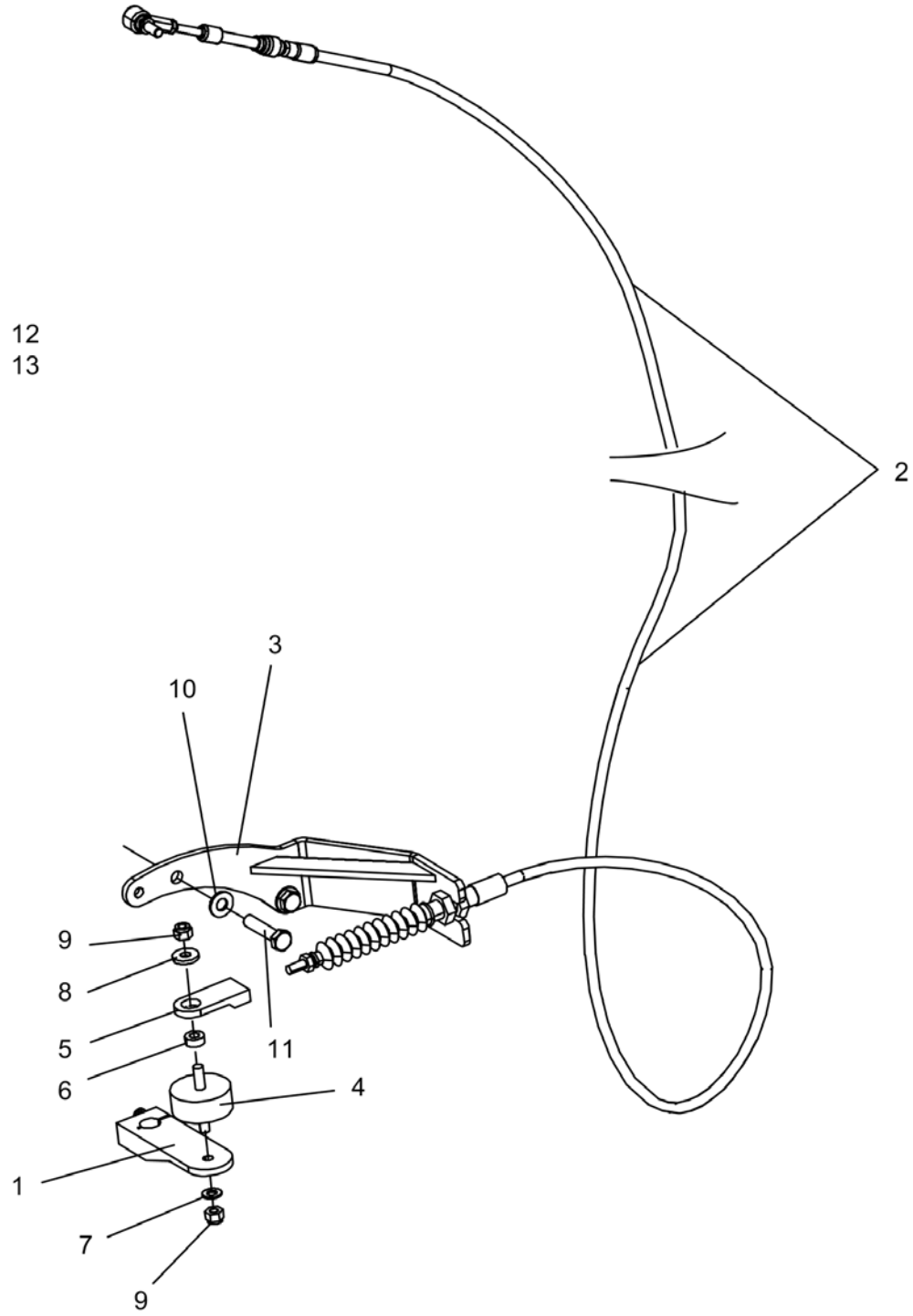

Item	Part No.	Name	Qty	L	SN INFO
-	4812124935	Modification kit control cable		1	
1	4812125070	Control arm kit	1		
2	4812126460	Control wire	1		
3	4812124905	Bracket	1		
4	4812124907	Shock absorber	1		
5	4812124906	Braket	1		
6	4812124933	Spacer sleeve	1		
7	4700904229	Washer, 8.4x 6x1.5 mm 300HV	1		
8	4700904640	Washer, 8.4x22x3 mm 300HV	1		
9	4700586003	Lock nut M8	2		
10	4700904230	Plain washer 10.5x22x2 mm	2		
11	4811000456	Screw M10x1,25x045 8.8	2		
12		For instruction BM	1		
13		For instruction DWG	1		

Comments for Page: 4812124935 Modification kit control cable

(L)OCAL REMARKS

1 |en_US| Kit is only valid for machines with Hydraulic pump PN 4812119250.

Forward-Reverse control module From A015618 To A017368 Forward-Reverse control module

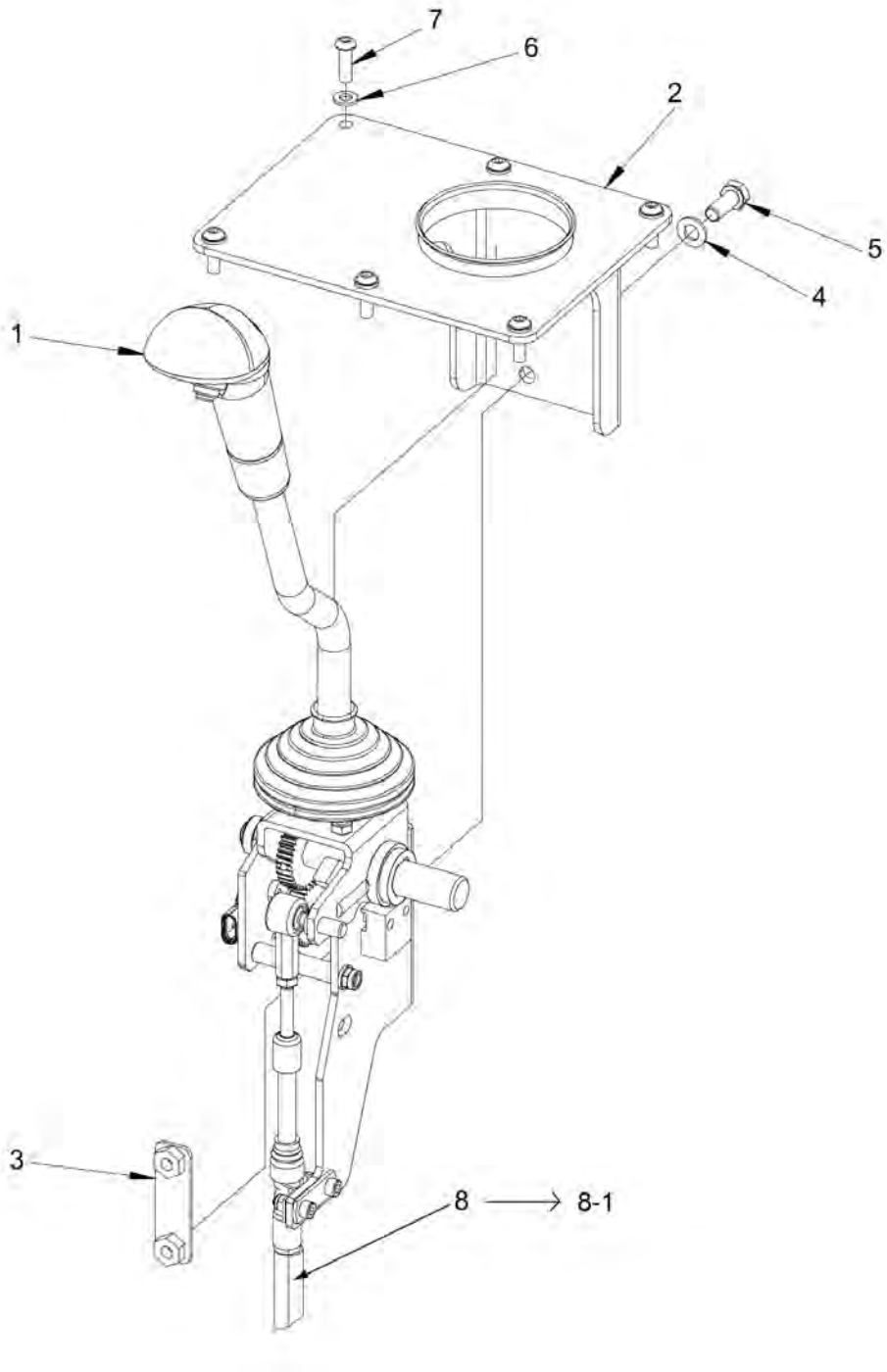

Item	Part No.	Name	Qty	L	SN INFO
1	4812122939	Forward and reverse control handle	1		
2	4812121386	Bracket	1		
3	4812117990	Bracket	1		
4	4700904229	Washer, 8.4x 6x1.5 mm 300HV	2		
5	4700500053	Screw, M8x20 mm 8.8 A2K	2		
6	4700904228	Washer 6,4x12x1,5	6		
7	4700791524	Screw, M6 x 20 mm A2-70	6		
8	-	Cable	1		
8-1	-	Modification kit control cable			

Forward-Reverse control module From A015618 To A017368 4812122939 Forward & Reverse control

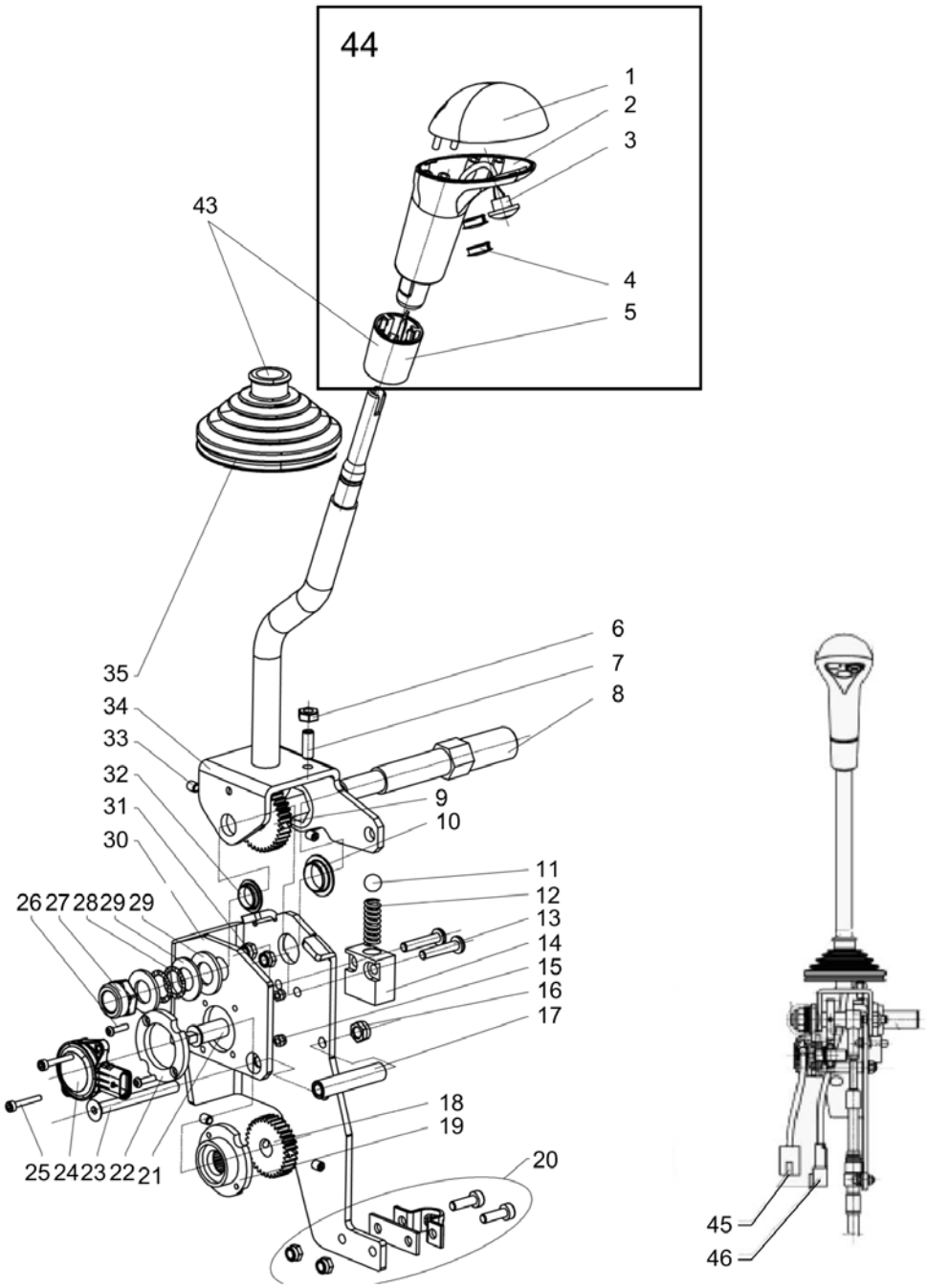

Item	Part No.	Name	Qty	L	SN INFO
1	4812156558	Handle top	1		
2	4812156559	Handle	1		
3	4812156560	Push button switch with cable	1		
4	4812156561	Protection plug	2		
5	4812156562	Sleeve (knob)	1		
6	4812159290	Nut M5	2		
7	4812159291	Screw M5	2		
8	4812156563	Central shaft	1		
9	4812156564	Gear	1		
10	4812158258	Bushing	1		
11	4812156565	Sphere	1		
12	4812156566	Spring	1		
13	4812160082	Screw M5	2		
14	4812160379	Spring house	1		
15	4812160083	Nut M3	1		
16	4812160084	Nut M6	1		
17	4812156568	Spacer	1		
18	4812156569	Gear	1		
19	4812156570	Internal spacer	1		
20	4700902189	Bracket	1		
21	4812156571	Shaft	1		
22	4812156572	External spacer	1		
23	4812159197	Screw M6	1		
24	4812156490	Potentiometer	1		
24	4812160381	Cable	1		
25	4812159198	Screw M3	2		
26	4812159199	Screw M3	2		
27	4812159251	Lock nut M12	1		
28	4812156573	Sealing	2		
29	4812158260	Washer	2		
30	4812156574	Bracket	1		
31	4812160087	Nut M5	2		
32	4812158259	Bushing	1		
33	4812160380	Screw M5	4		
34	4812160263	Lever	1		
35	4812156576	Bellow	1		
43	4812157556	Bellows kit	1		
43	4812156562	Sleeve (knob)	1		

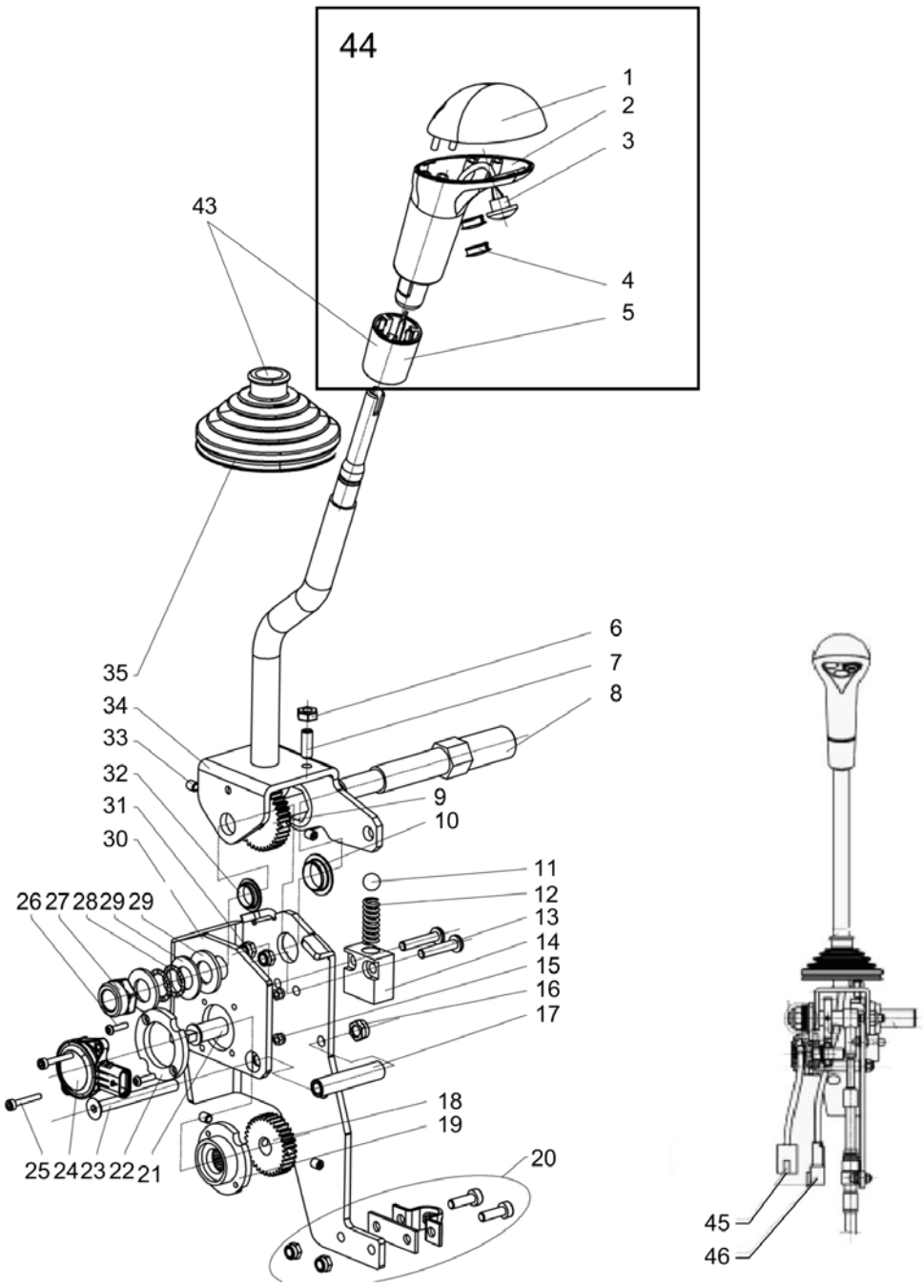
44
1
2
3
4
5
43
35
34
33
32
31
30
26 27 28 29 29
25 24 23 22 21
6
7
8
9
10
11
12
13
14
15
16
17
18
19
20
45
46

Item	Part No.	Name	Qty	L	SN INFO
43	4812156576	Bellow	1		
44	4812158267	Handle top + Button kit	1		
44	4812156558	Handle top	1		
44	4812156559	Handle	1		
44	4812156560	Push button switch with cable	1		
44	4812156561	Protection plug	2		
44	4812156562	Sleeve (knob)	1		
45	4812160593	Connector, 3-poles	1		
46	4812160594	Connector, 2-poles	1		

Forward-reverse control module From A017369 Forward-Reverse control module

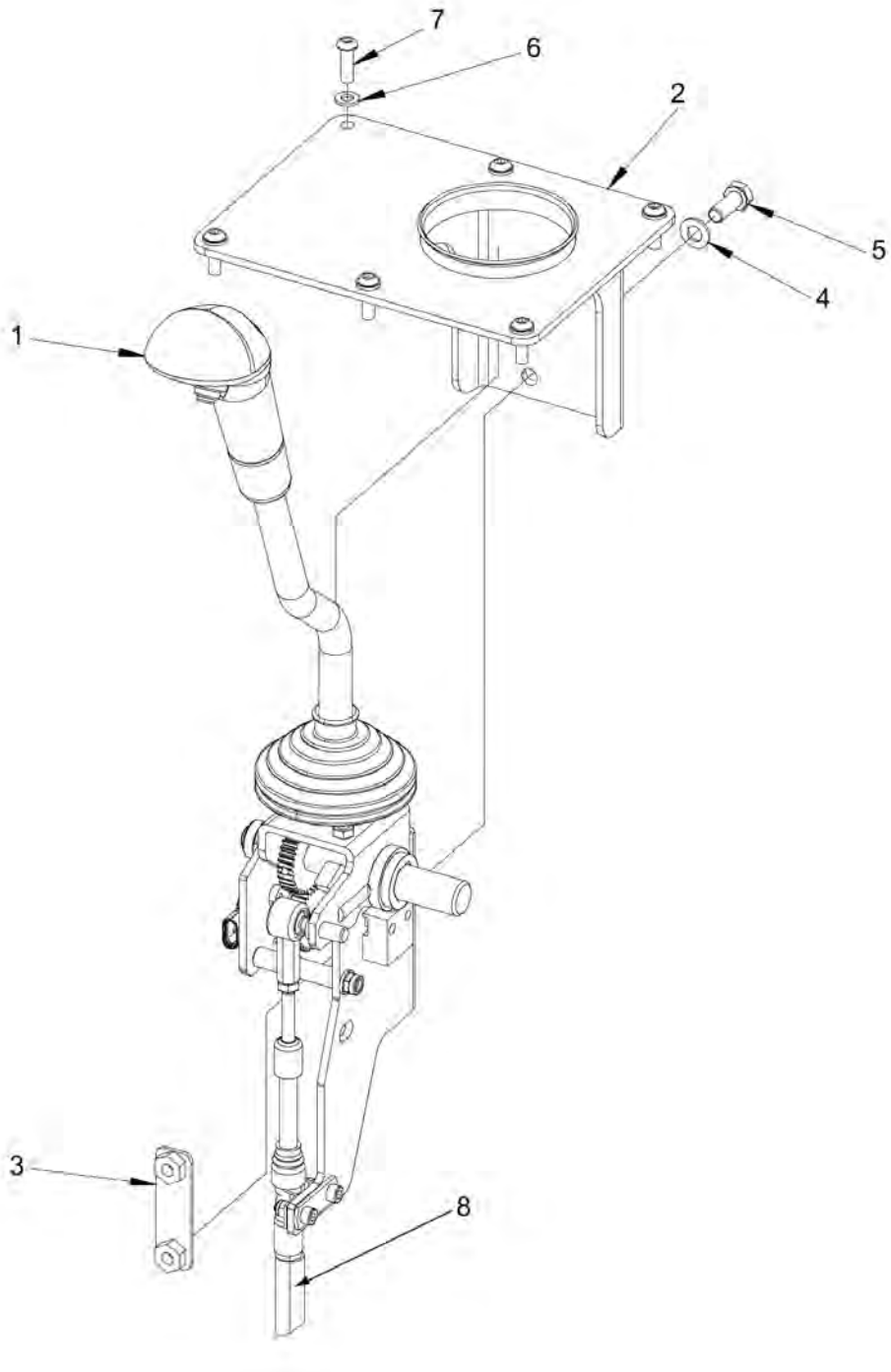

Item	Part No.	Name	Qty	L	SN INFO
1	4812122939	Forward and reverse control handle	1		
2	4812121386	Bracket	1		
3	4812117990	Bracket	1		
4	4700904229	Washer, 8.4x 6x1.5 mm 300HV	2		
5	4700500053	Screw, M8x20 mm 8.8 A2K	2		
6	4700904228	Washer 6,4x12x1,5	6		
7	4700791524	Screw, M6 x 20 mm A2-70	6		
8	4812156577	Cable	1		

Throttle control Throttle control, cpl

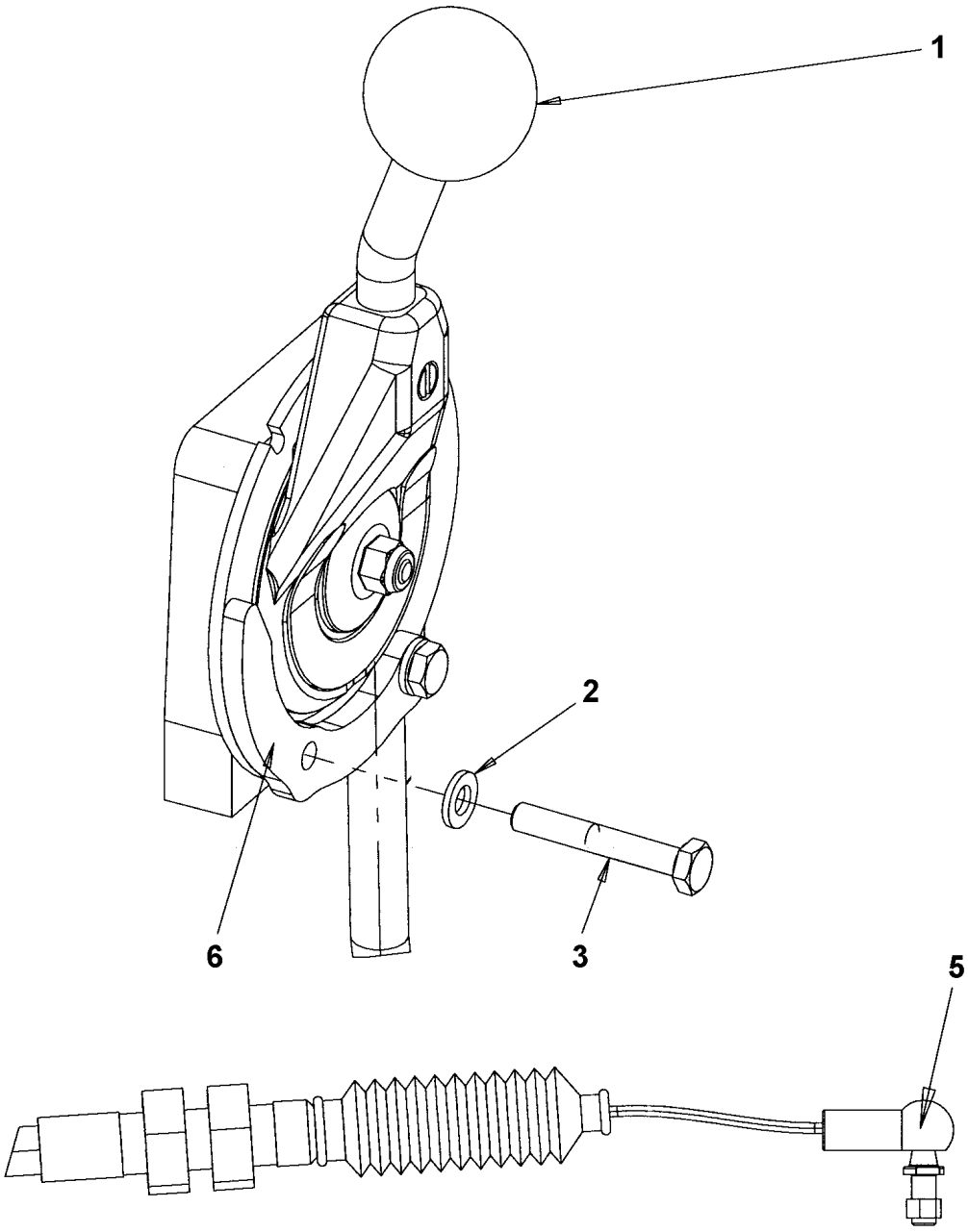

Item	Part No.	Name	Qty	L	SN INFO
1	4812113165	Throttle control	1		
1	4812113164	Cable	1	A	
1	4700389177	Snap plate	1		
1	4700382349	Bellows	1		
1	-	Connection	1		
1	4700396215	Control	1		
2	4700904228	Washer 6,4x12x1,5	2		
3	4700500088	Screw M6x40	2		
5	4700416034	Universal joint, M6	1		
6	4812115865	Stop plate	1		

Comments for Page: Throttle control, cpl

(L)OCAL REMARKS

A | en_US | L = 2,23 m

Throttle control cpl - Dual frequency To 0A014939 Throttle control cpl, Dual frequency

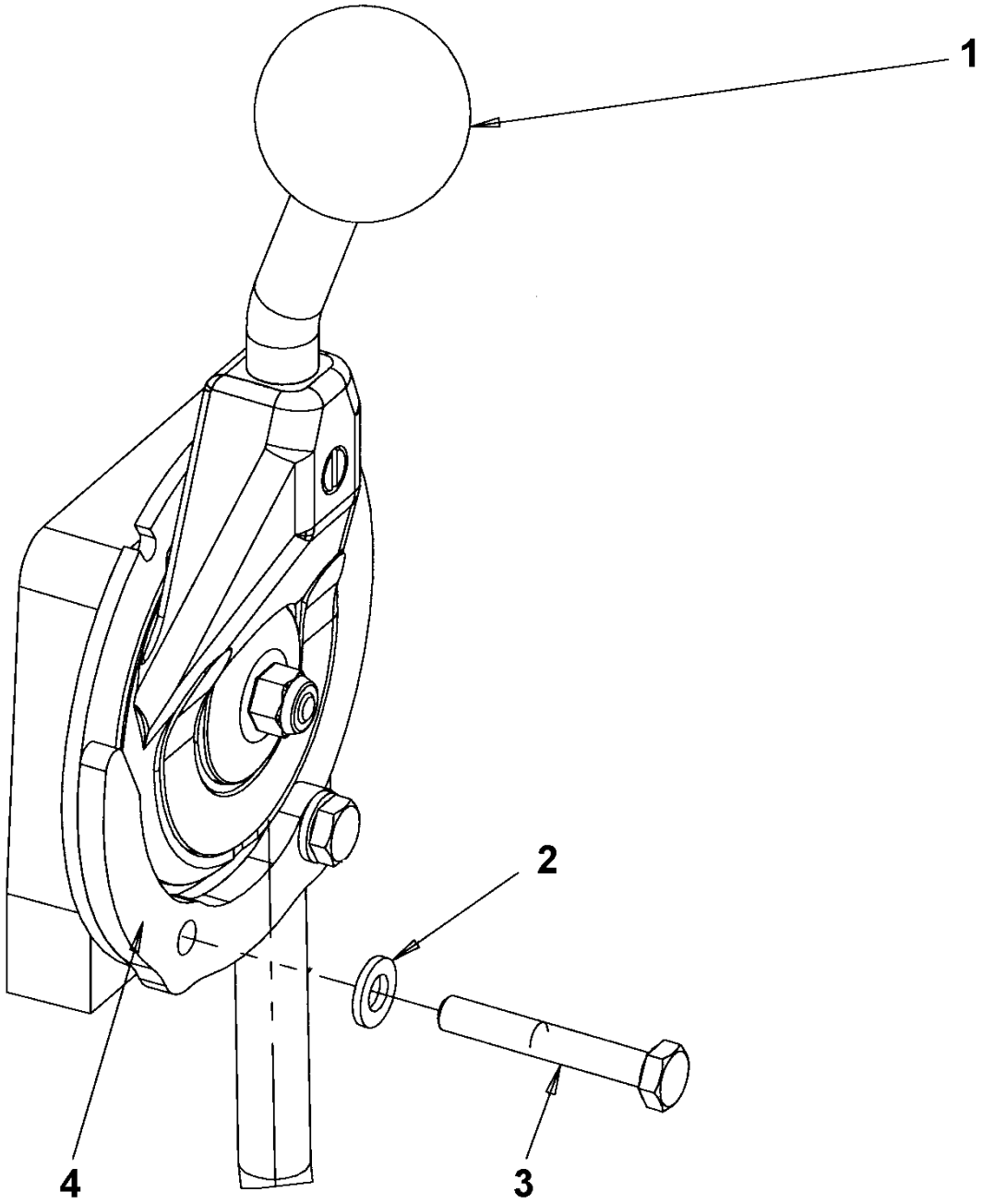

Item	Part No.	Name	Qty	L	SN INFO
1	4812113166	Throttle control	1		
1	4812113164	Cable	1	A	
1	4812113937	Snap plate	1		
1	4700382349	Bellows	1		
1	-	Connection	1		
1	4700396215	Control	1		
2	4700904228	Washer 6,4x12x1,5	2		
3	4700500088	Screw M6x40	2		
4	4812115865	Stop plate	1		

Comments for Page: Throttle control cpl, Dual frequency

(L)OCAL REMARKS

A | en_US | L = 2,23 m

Throttle control cpl - Dual frequency From 0A014940 Throttle control cpl, Dual frequency (option)

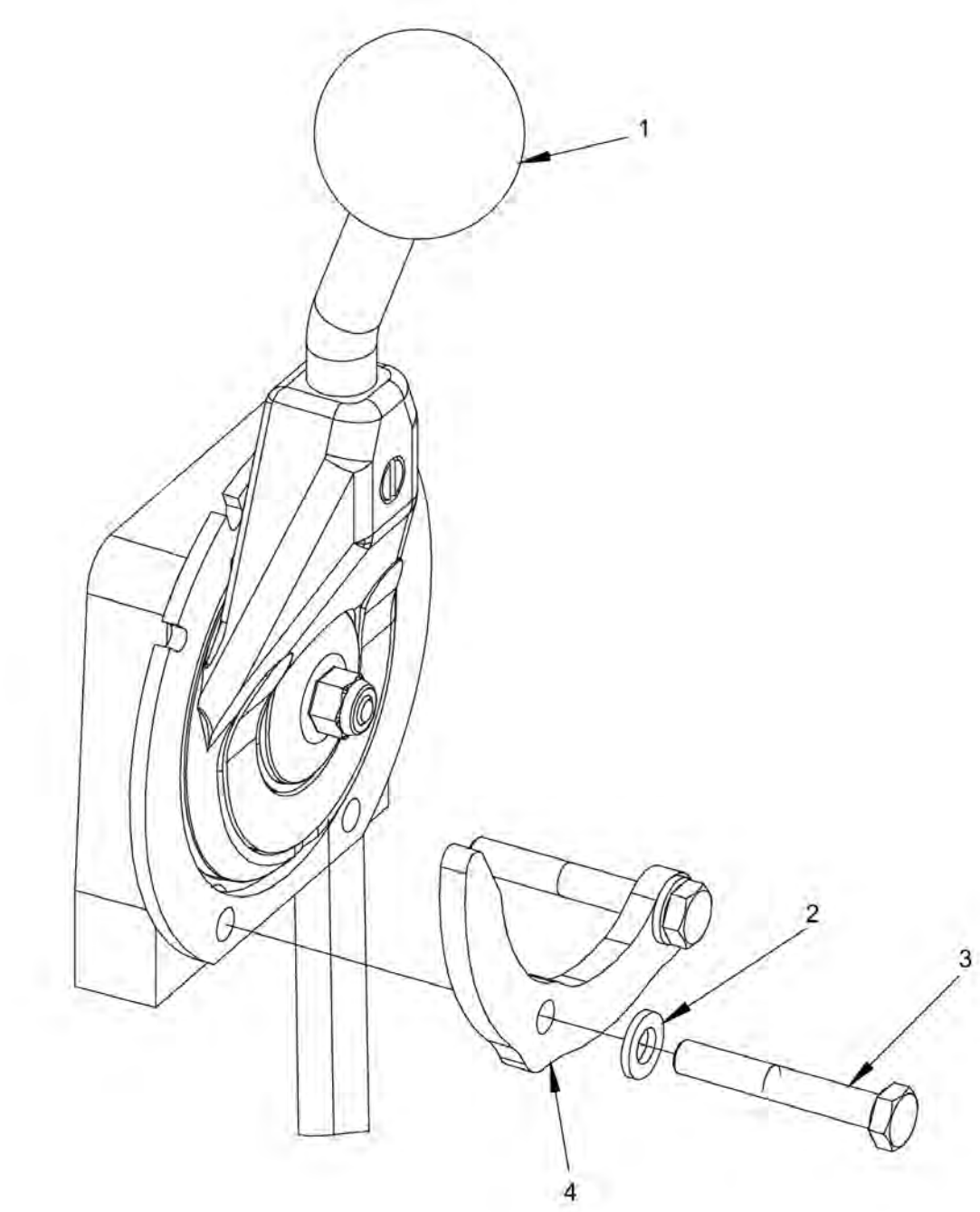

Item	Part No.	Name	Qty	L	SN INFO
1	4812121703	Throttle control	1		
1	4812113164	Cable	1	A	
1	4700389187	Snap plate	1		
1	4700382349	Bellows	1		
1	-	Connection	1		
1	4700396215	Control	1		
2	4700904228	Washer 6,4x12x1,5	2		
3	4700500088	Screw M6x40	2		
4	4812115865	Stop plate	1		

Comments for Page: Throttle control cpl, Dual frequency (option)

(L)OCAL REMARKS

A | en_US | L = 2,23 m

Drivers platform Seat laterally adjusting

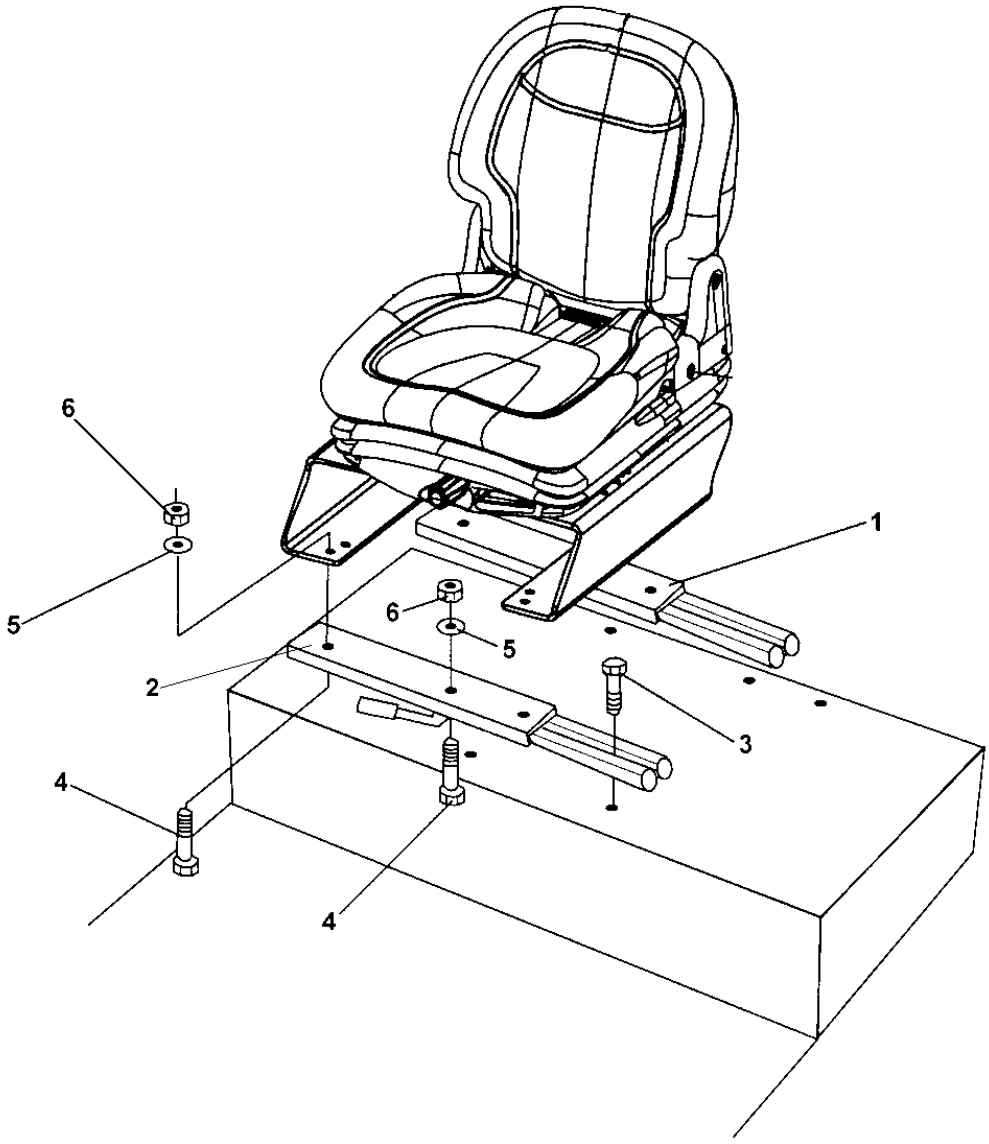

Item	Part No.	Name	Qty	L	SN INFO
1	4700909536	Sliding rail	1	A	
2	4700909535	Sliding rail with handle	1	B	
3	4700508092	Screw	10		
4	4700500020	Hex. screw	4		
5	4700904229	Washer, 8.4x 6x1.5 mm 300HV	6		
6	4700586003	Lock nut M8	4		

Comments for Page: Seat laterally adjusting

(L)OCAL REMARKS

A | en_US | Rear

B | en_US | Front

Drivers platform Driver's seat, without armrests

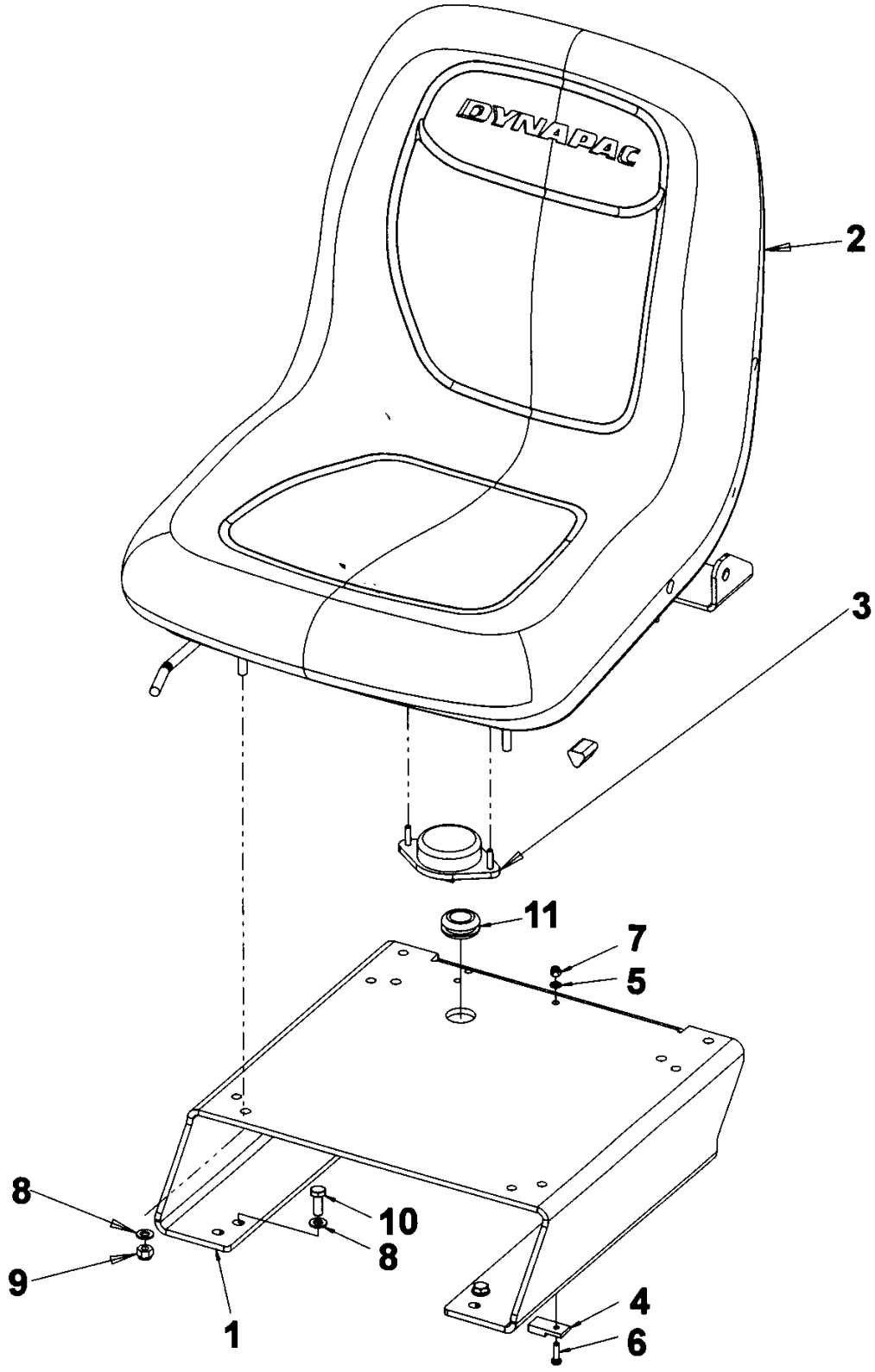

Item	Part No.	Name	Qty	L	SN INFO
1	4812112669	Seat frame	1		
2	4812114466	Drivers seat, cpl	1		
3	4700379636	Seat switch	1		
4	4700904218	Holder	1		
5	4700904281	Washer, 5,3x10x1 300HV	1		
6	4700533070	Screw	1		
7	4700586001	Lock nut	1		
8	4700904229	Washer, 8.4x 6x1.5 mm 300HV	8		
9	4700586003	Lock nut M8	4		
10	4700500020	Hex. screw	4		
11	4700903192	Grommet	1		

Drivers platform Seat belt module 3"

For seat 4700377518

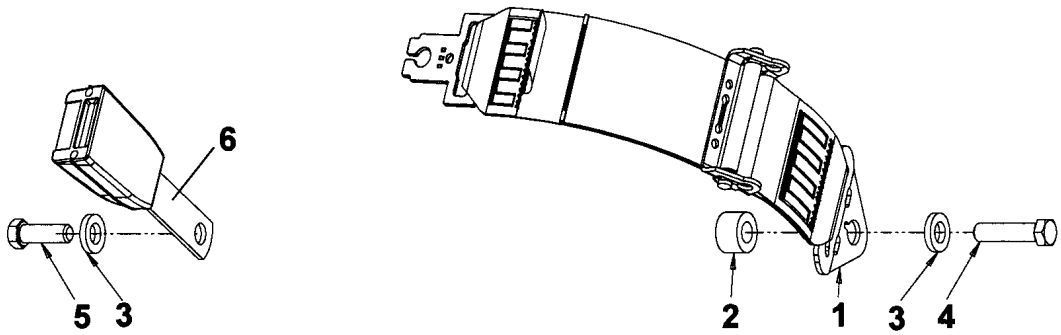

For seat 4812114466

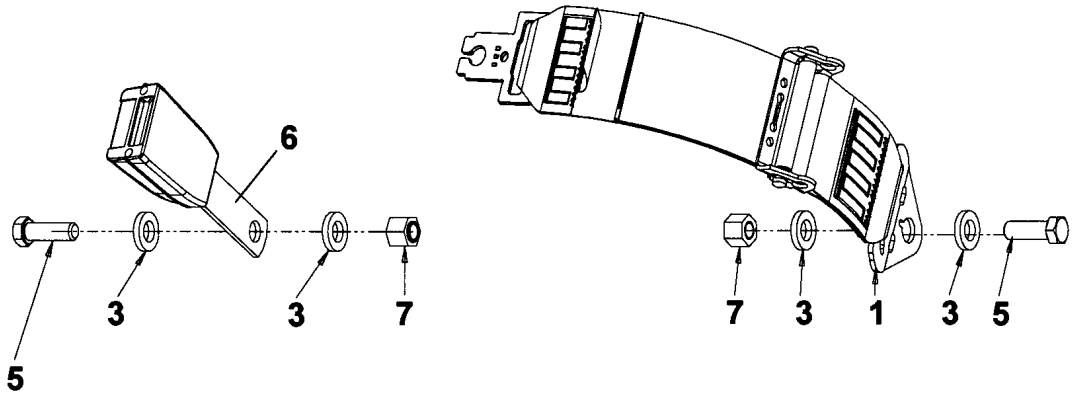

Item	Part No.	Name	Qty	L	SN INFO
1	4812117923	Seat belt	1		
2	4700791572	Spacer washer	1		
3	4700904703	Plain washer 13x24x4 mm	4		
4	4700792527	Screw	1	A	
5	4700928347	Hexagon screw	1	A, B	
6	4812117924	Buckle	1		
7	4700586020	Lock nut	2		

Comments for Page: Seat belt module 3"

(L)OCAL REMARKS

A | en_US | Used with seat 4700377518.

B | en_US | Used with seat 4812114466.

Drivers platform Seat belt module 2"

For seat 4700377518

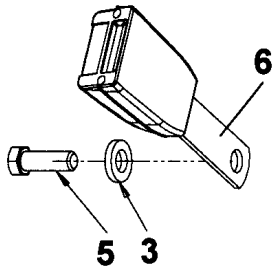

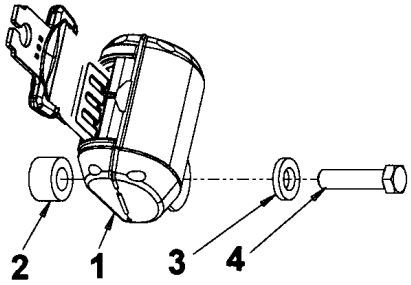

For seat 4812114466

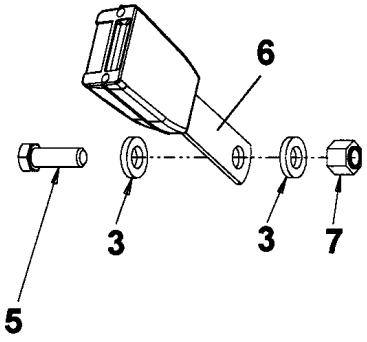

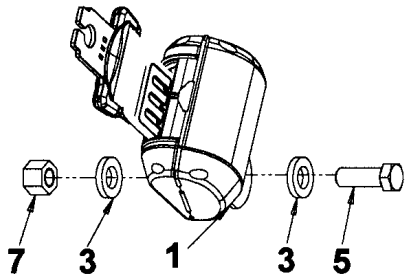

Item	Part No.	Name	Qty	L	SN INFO
1	4812117922	Seat belt 2"	1		
2	4700791572	Spacer washer	1		
3	4700904703	Plain washer 13x24x4 mm	4		
4	4700792527	Screw	1	A	
5	4700928347	Hexagon screw	1	A, B	
6	4812117924	Buckle	1		
7	4700586020	Lock nut	2		

Comments for Page: Seat belt module 2"

(L)OCAL REMARKS

A | en_US | Used with seat 4700377518

B | en_US | Used with seat 4812114466

Drivers platform Rops (option)

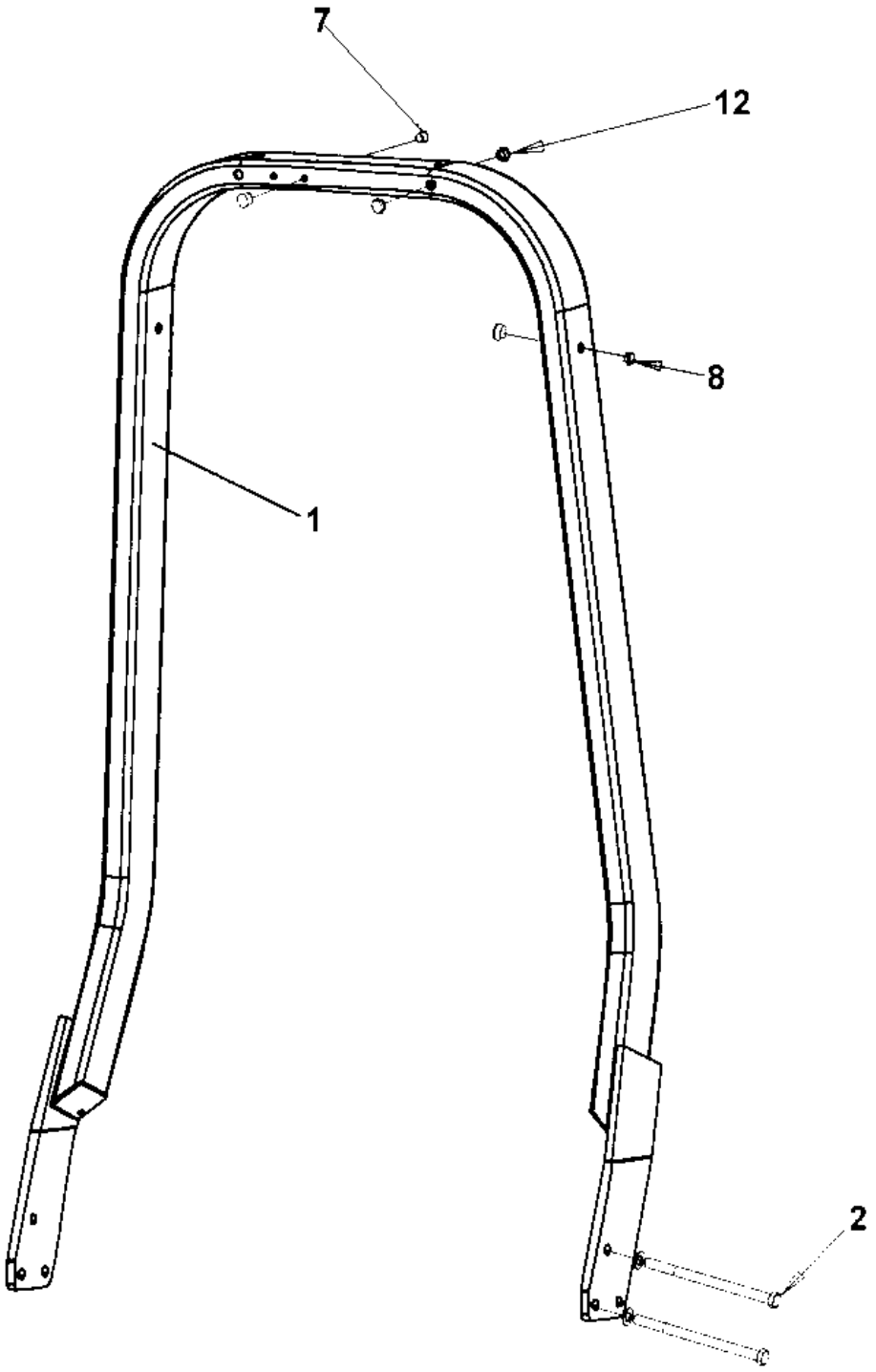

Item	Part No.	Name	Qty	L	SN INFO
1	-	ROPS	1	A, B	
2	4700903634	Screw	6		
7	4700900986	Plug	4		
8	4700902203	Plug	5		
12	4700791396	Protective plug	8		

Comments for Page: Rops (option)

(L)OCAL REMARKS

A | en_US | Not sold separately due to safety regulations

B | en_US | Only available as a complete ROPS kit; please check the machine SN.

Please contact your local OEM representative (Dealer / Customer Center / Product Company) for valid PN.

Drivers platform ROPS, foldable

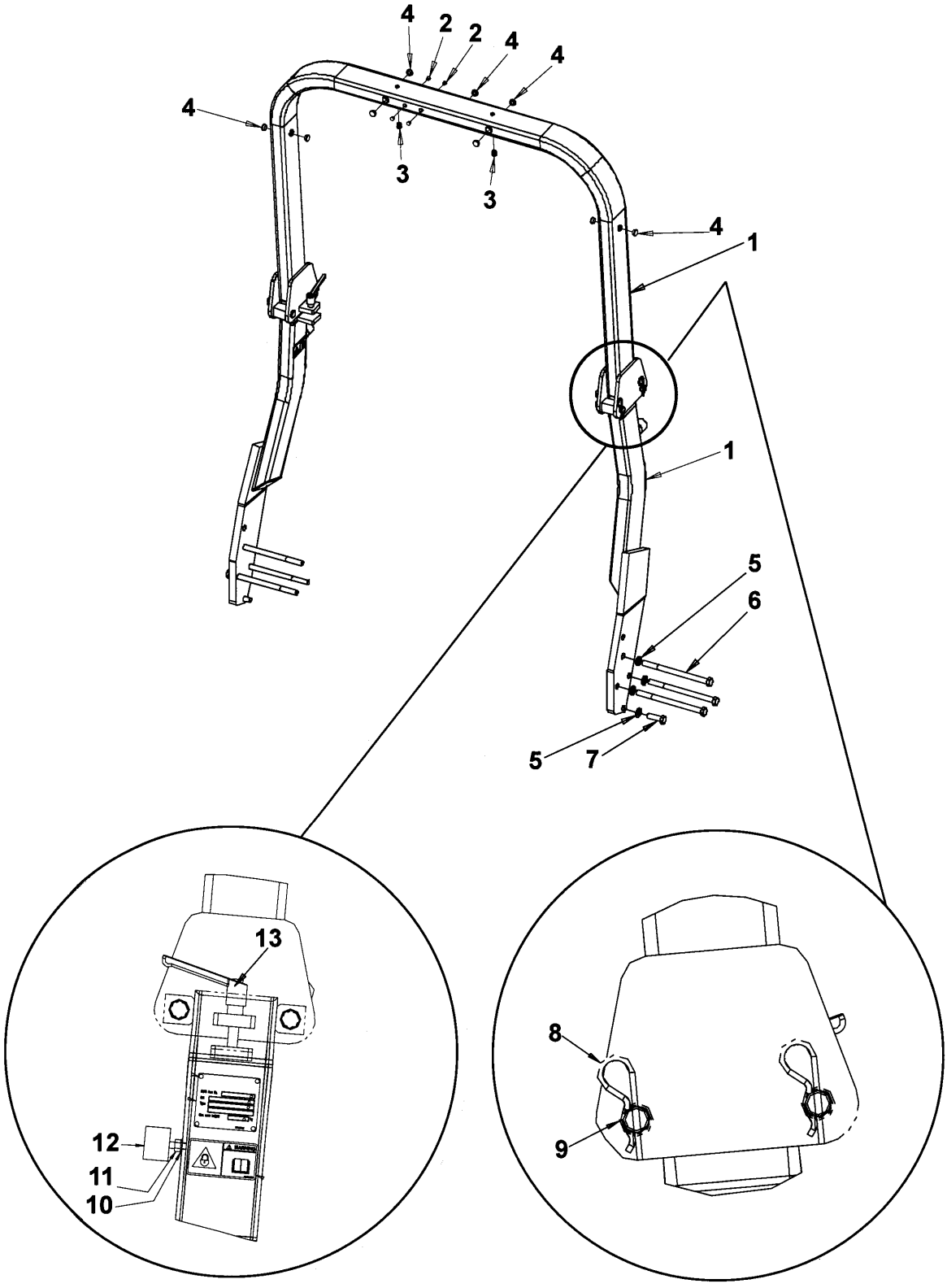

Item	Part No.	Name	Qty	L	SN INFO
1	-	Rops lower part	1	A, B	
1	-	Rops upper part	1	A, B	
2	4700900986	Plug	4		
3	4700902203	Plug	3		
4	4700791396	Protective plug	8		
5	-	n/a on this model	1		
6	4700903634	Screw	6		
7	-	n/a on this model	1		
8	4700635061	Hair clip	4		
9	4700374009	Shaft	4		
10	4700904229	Washer, 8.4x 6x1.5 mm 300HV	2		
11	4700570005	Hexagon nut	2		
12	4700288357	Shock absorber	2		
13	4700904429	Lock handle	2		

Comments for Page: ROPS, foldable

(L)OCAL REMARKS

A | en_US | Not sold separately due to safety regulations

B | en_US | Only available as a complete ROPS kit; please check the machine SN.

Please contact your local OEM representative (Dealer / Customer Center / Product Company) for valid PN.

Decals Decals

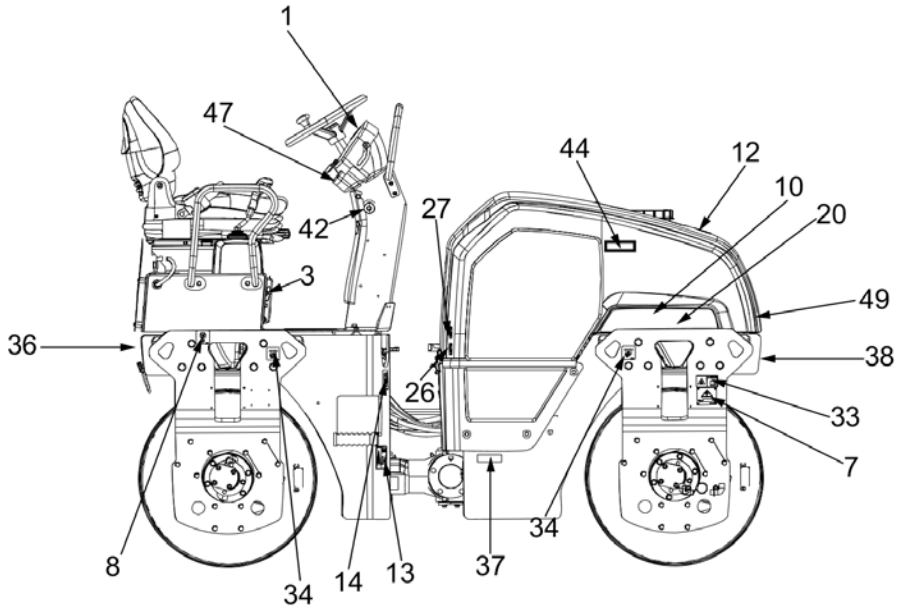

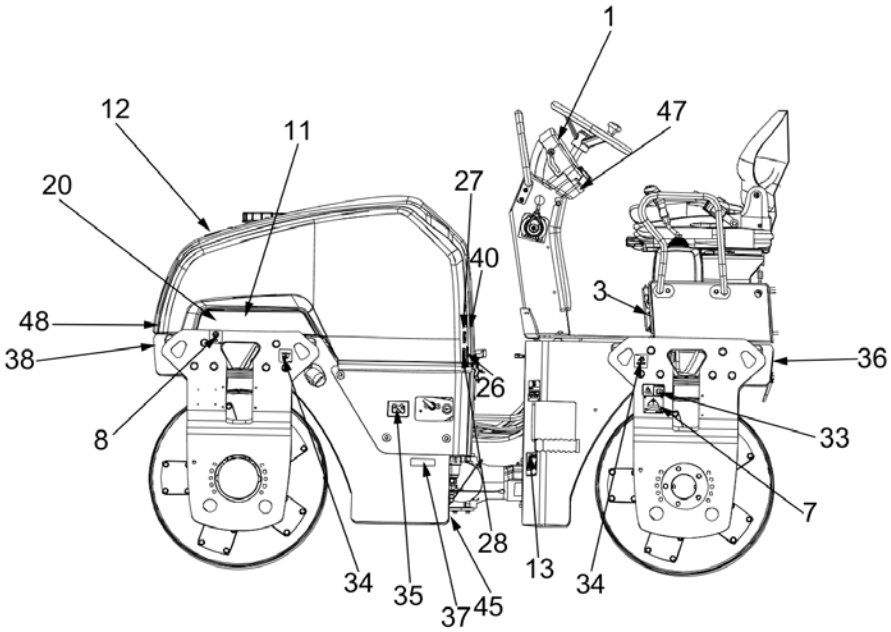

Item	Part No.	Name	Qty	L	SN INFO
1	4700903459	Decal "SAFETY"	1		
3	4700903425	Safety decal "READ SAFETY INSTRUCTIONS"	1		
7	4700904870	Lifting data plate	2		
8	4700357587	Label lifting point	2		
10	4812120127	Decal "COMPACTING ROCKS" Right side	1		
11	4812120313	Decal "COMPACTING ROCKS" Left side	1		
12	4700991657	Decal "WATER"	1		
13	4700903422	Safety decal "CRUSH AREA"	2		
14	4700991658	Decal "FUEL"	1		
20	4812120109	Decal "MODEL CODE" CC1200	2		
26	4700903423	Safety label, Rotating engine components	2		
27	4700903424	Safety label, hot surfaces	2		
28	4700272372	Decal "HYDRAULIC OIL"	1		
33	4700908229	Safety decal	2		
34	4700382751	Decal "SECURING POINT/TIE DOWN"	4		
35	4700904835	Decal "BATTERY POWER"	1		
36	4700377742	Reflector, red	2		
37	4700377744	Reflector, yellow	2		
38	4700377743	Reflector, white	2		
40	4700791274	Decal "Sound power level" 104 dB	1		
42	4811000128	Contrast plate, yellow	1		
45	4700272373	Label, hydraulic oil level	1		
47	4812115918	Decal "Starting instruction"	1		
48	4700904399	Decal "Risk location"	2		
49	4700904396	Decal "Risk location"	2		

Decals Plain Dynapac decals, kit

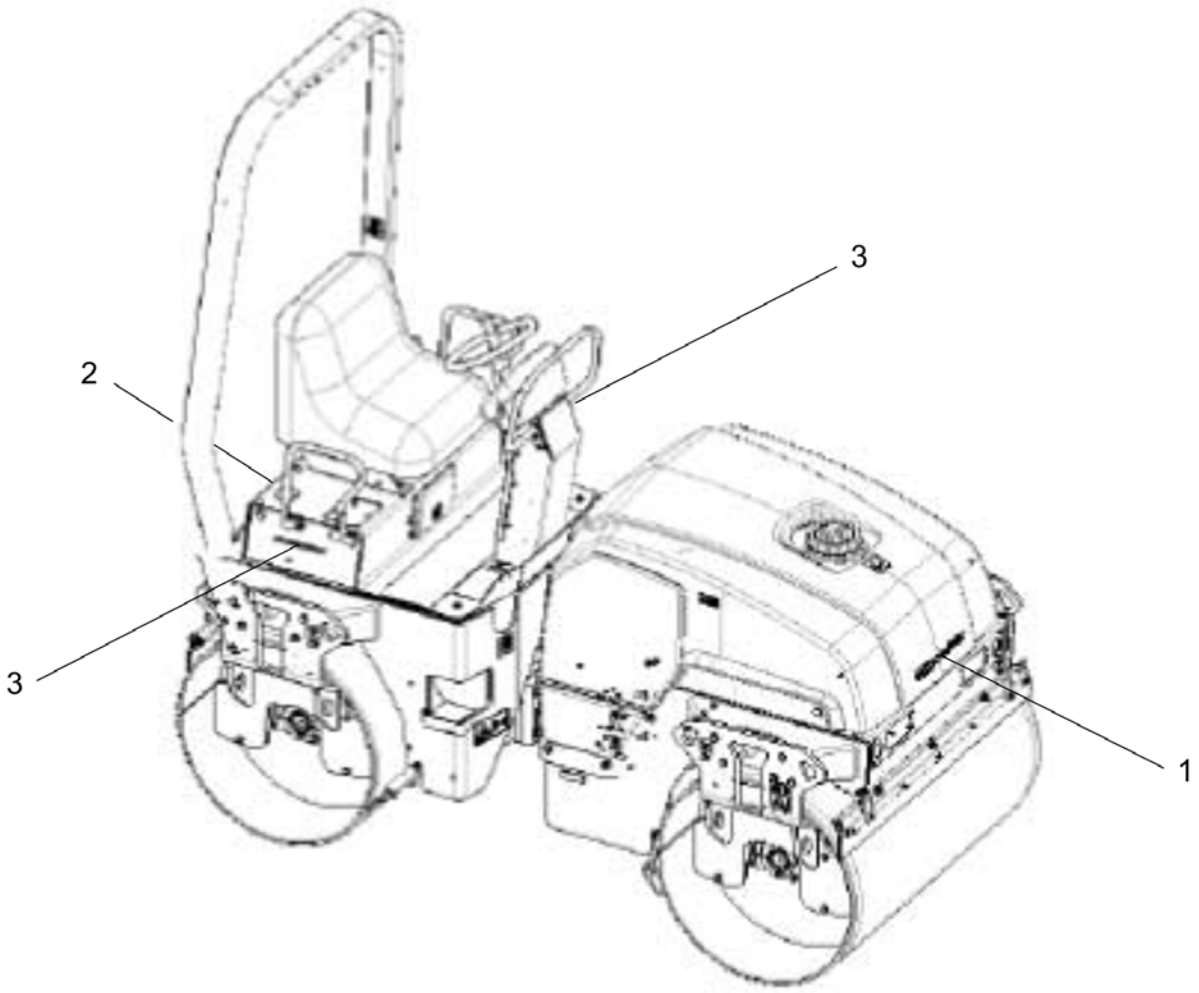

Item	Part No.	Name	Qty	L	SN INFO
0	4812127927	Plain Dynapac decals, kit			
1	4700904097	Decal "DYNAPAC" L=290 mm	1		
2	4812127820	Decal "DYNAPAC", black 420	1		
3	4812127923	Decal "DYNAPAC", black 420	2		
4	-	Drawing for instruction	1		

Optional equipment FleetLink module

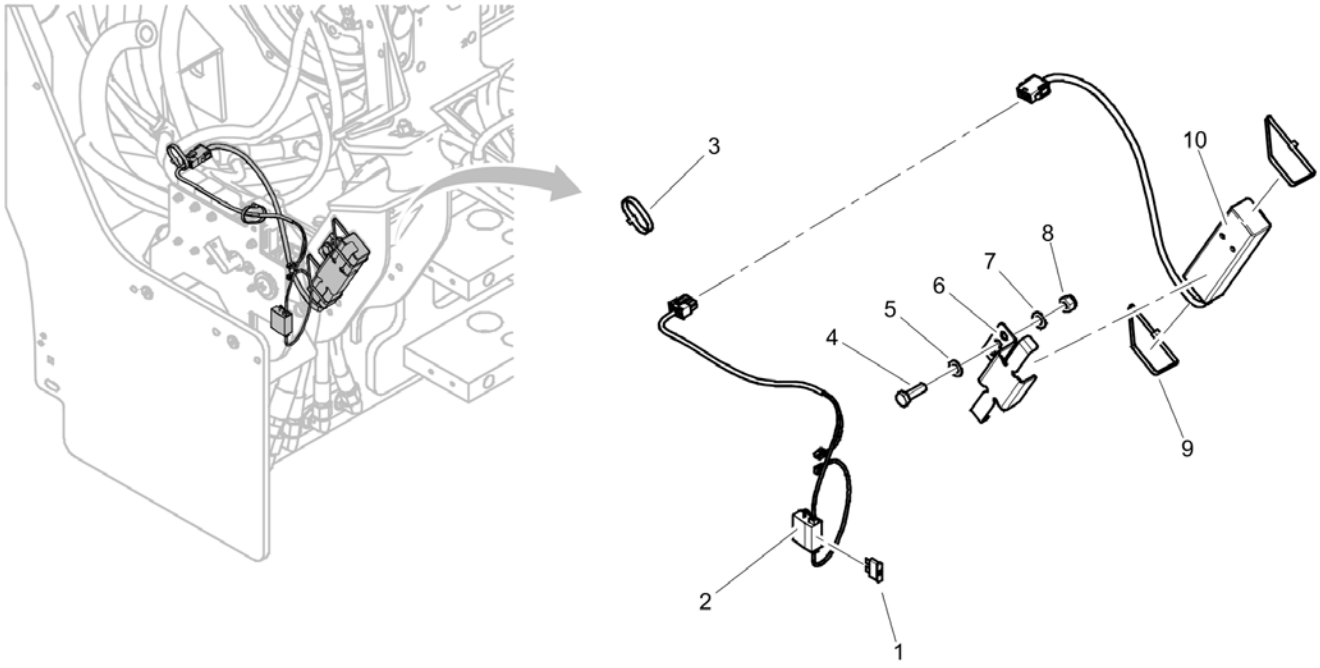

Item	Part No.	Name	Qty	L	SN INFO
1	4700901225	Fuse 5A Tan	1		
2	4812124961	4812124961	1		
3	4700313041	Cable ties, L=200 mm	2		
4	4700500021	Screw, M8x25 mm 8.8 A2K	1		
5	4700904229	Washer, 8.4x 6x1.5 mm 300HV	1		
6	4812124461	Bracket	1		
7	4700904229	Washer, 8.4x 6x1.5 mm 300HV	1		
8	4700586003	Lock nut M8	1		
9	4700792609	Cable ties	2		
10	4812013038	GPS module	1		

Optional equipment 4812013038 GPS module

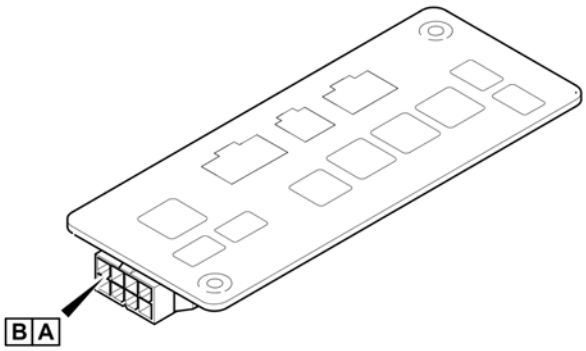

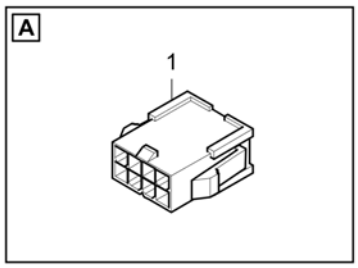

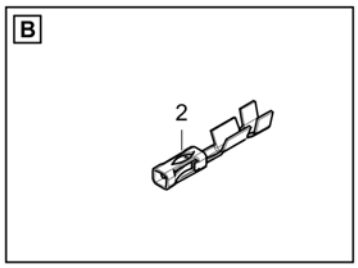

Item	Part No.	Name	Qty	L	SN INFO
1	4812013160	Socket shell	1		
2	4812013161	Male contact	3		

Appendix B:Parts Index

4700111018 . . . . . 24, 62
4700160016 . . . . . 118, 124
4700160031 . . . . . 118, 124
4700160112 28
4700160132 . . . . . 22, 24, 62
4700160219 48
4700160268 50
4700160313 50
4700162004 136
4700162006 124
4700162011 62
4700162017 62
4700163049 . . . . . 22, 24, 62
4700167044 . . . . . 28, 56, 58
4700232056 . . . . . 118, 124
4700232095 70
4700232122 . . . . . 118, 124
4700232143 62
4700233215 . . . . . 44, 50
4700238158 190
4700272372 232
4700272373 . . . . . 90, 232
4700287713 48
4700288129 . . . . . 68, 76
4700288357 230
4700313002 48
4700313004 92
4700313008 . . . . . 92, 118, 124
4700313010 94
4700313023 94
4700313041 . . . . . 152, 154, 168, 236
4700313075 96
4700313102 . . . . . 108, 120, 126, 128
4700313108 . . . . . 92, 96
4700330081 68
4700330333 68
4700332038 136
4700334116 138
4700334135 138
4700334165 138
4700334197 138
4700334235 136
4700343490 62
4700343744 62
4700345215 26
4700347153 . . . . . 28, 56, 58
4700347154 . . . . . 28, 56, 58
4700347155 . . . . . 28, 56, 58
4700348331 172
4700349202 62
4700349879 . . . . . 36, 40
4700349880 . . . . . 36, 40
4700350029 62
4700355869 . . . . . 96, 100, 108, 136, 188
4700355981 136
4700357031 . . . . . 56, 58
4700357038 . . . . . 56, 58
4700357039 . . . . . 56, 58
4700357055 62
4700357058 62
4700357060 62
4700357111 . . . . . 100, 108
4700357112 . . . . . 100, 108
4700357113 . . . . . 102, 108
4700357138 . . . . . 16, 18, 120, 126
4700357139 . . . . . 118, 124
4700357221 . . . . . 38, 40, 42
4700357222 . . . . . 26, 38, 40, 42
4700357395 48
4700357418 . . . . . 28, 56, 58
4700357459 . . . . . 38, 42
4700357466 98
4700357489 . . . . . 36, 40
4700357543 138
4700357562 . . . . . 150, 152, 154
4700357567 148
4700357587 232
4700357604 . . . . . 174, 178, 182
4700357605 . . . . . 174, 178, 182
4700357643 . . . . . 192, 194
4700357855 186
4700357934 138
4700358003 136
4700358232 . . . . . 174, 178, 182
4700358486 . . . . . 118, 124
4700358666 62
4700358689 62
4700358846 48
4700358881 . . . . . 32, 90, 186
4700358975 56
4700358976 . . . . . 56, 58
4700358978 56
4700359003 48
4700359043 46
4700370699 50
4700371313 . . . . . 100, 108, 118, 124
4700371314 . . . . . 100, 108, 118, 124
4700372964 188
4700373478 . . . . . 118, 124
4700374009 230
4700377061 . . . . . 84, 86, 88

4700377139 186
4700377742 232
4700377743 232
4700377744 232
4700379009 48
4700379179 . . . . . 36, 38, 40, 42, 62
4700379458 . . . . . 118, 124
4700379636 222
4700379637 172
4700379753 50
4700382349 . . . . . 214, 216, 218
4700382751 232
4700383705 . . . . . 192, 194
4700385599 190
4700386951 78
4700387226 . . . . . 174, 178, 182
4700387227 186
4700387545 186
4700387552 98
4700387683 190
4700387948 . . . . . 84, 86, 88
4700388447 192
4700388737 186
4700388846 . . . . . 84, 86, 88
4700388852 . . . . . 90, 90
4700389177 214
4700389187 218
4700389561 168
4700389577 168
4700389840 . . . . . 150, 152, 154
4700391115 . . . . . 148, 162
4700391784 186
4700391929 62
4700392011 50
4700392227 48
4700392229 48
4700392230 48
4700392232 48
4700392509 50
4700392510 50
4700393540 . . . . . 36, 38, 40, 42
4700393542 50
4700393697 50
4700395394 186
4700396215 . . . . . 214, 216, 218
4700396768 170
4700416034 . . . . . 110, 214
4700480124 . . . . . 118, 124
4700482208 136
4700482214 136
4700482773 136
4700482898 138
4700483585 138
4700483593 . . . . . 132, 132
4700483694 . . . . . 118, 126
4700483764 . . . . . 102, 102, 110
4700483765 128
4700484092 110
4700484186 132
4700484316 . . . . . 110, 110
4700499497 78
4700500006 . . . . . 150, 152, 154
4700500007 186
4700500012 170
4700500013 . . . . . 68, 84, 86, 88, 90, 98
4700500016 . . . . . 36, 40
4700500019 . . . . . 36, 40, 170, 174, 178, 182
4700500020 . . . . . 50, 144, 220, 222
4700500021 . . . . . 68, 76, 236
4700500022 . . . . . 96, 152, 154
4700500024 44
4700500028 . . . . . 48, 56, 58
4700500029 60
4700500030 . . . . . 62, 90, 90, 186
4700500031 188
4700500034 136
4700500037 108
4700500040 70
4700500044 62
4700500046 . . . . . 68, 100
4700500048 188
4700500053 . . . . . 48, 48, 68, 76, 76, 84, 86, 88, 94, 98, 196, 206, 212
4700500060 148
4700500067 . . . . . 44, 118, 124
4700500075 190
4700500078 . . . . . 118, 124
4700500088 . . . . . 214, 216, 218
4700500096 162
4700500100 . . . . . 36, 40, 80, 82
4700500105 44
4700500115 . . . . . 84, 86, 88
4700500117 . . . . . 174, 178
4700500143 168
4700500161 132
4700500190 48
4700500195 54
4700500196 182
4700500269 . . . . . 100, 108
4700500505 . . . . . 100, 110, 118, 124, 174, 176, 178, 180, 182, 184, 192, 194
4700500506 . . . . . 100, 110
4700508018 76
4700508019 78

4700508029 . . . . . 118, 124
4700508092 220
4700508096 . . . . . 74, 100, 108
4700513017 186
4700533016 136
4700533070 222
4700570004 190
4700570005 . . . . . 46, 230
4700573005 162
4700586001 . . . . . 148, 150, 152, 154, 222
4700586002 . . . . . 190, 194
4700586003 . 44, 44, 84, 86, 88, 144, 148, 152, 154, 168, 192, 204, 220, 222, 236
4700586018 . . . . . 36, 40, 60, 76, 100, 108, 160, 186
4700586019 . . . . . 54, 174, 178, 182
4700586020 . . . . . 224, 226
4700600002 136
4700600004 . . . . . 36, 40
4700600016 128
4700603018 . . . . . 118, 124
4700615076 . . . . . 36, 40
4700630019 128
4700635061 230
4700791185 190
4700791211 190
4700791226 . . . . . 192, 194
4700791274 232
4700791304 44
4700791333 . . . . . 176, 180, 184
4700791343 . . . . . 176, 180, 184
4700791396 . . . . . 228, 230
4700791397 . . . . . 118, 124
4700791398 . . . . . 100, 108, 118, 124, 128
4700791401 128
4700791405 128
4700791408 108
4700791409 . . . . . 132, 134
4700791410 . . . . . 102, 108
4700791414 . . . . . 100, 128, 132
4700791415 . . . . . 118, 126
4700791422 96
4700791476 186
4700791524 . . . . . 194, 196, 202, 206, 212
4700791546 . . . . . 100, 110
4700791568 48
4700791572 . . . . . 224, 226
4700791578 186
4700791579 186
4700791580 186
4700791585 168
4700791587 156
4700791588 186
4700791666 . . . . . 46, 84, 86, 88, 90, 90
4700791699 . . . . . 100, 118, 124
4700791723 . . . . . 150, 152, 154
4700791739 . . . . . 150, 152, 154
4700791745 . . . . . 100, 108, 118, 124
4700791754 158
4700791774 96
4700791775 192
4700791792 . . . . . 100, 124
4700791798 . . . . . 100, 108, 118, 124
4700791799 . . . . . 118, 124
4700791822 124
4700791828 . . . . . 102, 108
4700791833 100
4700791841 100
4700791843 . . . . . 120, 126
4700791846 132
4700791847 128
4700791938 44
4700791939 44
4700791949 48
4700791957 158
4700791959 48
4700791977 50
4700791980 168
4700791981 168
4700792072 . . . . . 44, 50
4700792083 186
4700792091 . . . . . 136, 190
4700792098 170
4700792119 68
4700792134 44
4700792177 132
4700792189 46
4700792219 124
4700792250 70
4700792320 186
4700792332 . . . . . 102, 108
4700792338 . . . . . 102, 108, 118, 124
4700792441 . . . . . 150, 152, 154
4700792527 . . . . . 224, 226
4700792600 . . . . . 48, 50
4700792601 . . . . . 36, 40
4700792609 236
4700792658 132
4700792779 48
4700813500 138
4700892179 . . . . . 28, 56, 58
4700900986 . . . . . 228, 230
4700901191 50

4700901224 34
4700901225 . . . . . 34, 136, 150, 190, 236
4700901226 34
4700901227 . . . . . 34, 150, 152, 154, 190
4700901228 . . . . . 34, 150, 152, 154, 190
4700901229 34
4700901230 . . . . . 34, 150, 152, 154
4700901369 158
4700901431 48
4700901432 48
4700901692 . . . . . 120, 126
4700901744 140
4700901750 140
4700901767 . . . . . 136, 190
4700901832 108
4700902041 108
4700902059 . . . . . 56, 58
4700902060 . . . . . 56, 58
4700902061 . . . . . 28, 56, 58
4700902062 . . . . . 28, 56, 58
4700902063 . . . . . 28, 56, 58
4700902100 . . . . . 36, 40, 56
4700902101 . . . . . 36, 38, 40, 42
4700902123 188
4700902166 . . . . . 84, 86, 88, 176, 180, 184
4700902171 . . . . . 36, 40
4700902172 . . . . . 36, 40
4700902189 . . . . . 198, 208
4700902203 . . . . . 228, 230
4700902227 158
4700902233 . . . . . 100, 108
4700902286 . . . . . 84, 86, 88, 100, 110, 118, 124
4700902287 . . . . . 44, 68, 118, 124
4700902295 . . . . . 92, 120, 126
4700902379 . . 100, 108, 120, 120, 120, 126, 126, 176, 180, 184
4700902520 . . . . . 36, 40, 148
4700902560 148
4700902569 88
4700902576 . . . . . 56, 58
4700902619 140
4700902620 140
4700902625 140
4700902641 140
4700902644 140
4700902654 142
4700902797 . . . . . 174, 178, 182
4700902890 . . . . . 84, 86, 88
4700902892 . . . . . 174, 178, 182
4700902919 . . . . . 174, 178, 182
4700903141 136
4700903142 136
4700903143 136
4700903144 136
4700903154 62
4700903192 . . . . . 174, 178, 182, 222
4700903287 62
4700903422 232
4700903423 232
4700903424 232
4700903425 . . . . . 192, 194, 232
4700903459 . . . . . 186, 232
4700903471 140
4700903478 48
4700903557 . . . . . 140, 140
4700903634 . . . . . 228, 230
4700903658 186
4700903714 . . . . . 80, 82
4700903732 148
4700903741 . . . . . 34, 150, 152, 154, 190
4700903956 . . . . . 150, 152, 154
4700904036 148
4700904037 34
4700904038 34
4700904039 . . . . . 34, 150, 152, 154
4700904040 34
4700904041 34
4700904042 34
4700904097 234
4700904175 136
4700904218 222
4700904225 . . . . . 174, 178, 182
4700904228 . 50, 62, 70, 84, 86, 88, 90, 90, 98, 170, 190, 194, 196, 202, 206, 212, 214, 216, 218
4700904229 . 36, 40, 44, 46, 48, 68, 74, 76, 84, 86, 88, 94, 96, 144, 152, 154, 158, 162, 164, 166, 168, 170, 174, 178, 182, 196, 204, 206, 212, 220, 222, 230, 236, 236
4700904230 . 36, 38, 40, 42, 60, 62, 76, 100, 110, 118, 124, 132, 136, 146, 160, 186, 188, 204
4700904231 . . . . . 68, 76, 100, 108, 174, 178, 182
4700904232 . . . . . 36, 38, 40, 42, 56
4700904258 . . . . . 22, 62
4700904281 . . . . . 88, 148, 150, 152, 154, 186, 222
4700904294 34
4700904367 54
4700904396 232
4700904399 232
4700904429 230
4700904475 74
4700904556 . . . . . 70, 76, 76, 78, 118, 124, 176, 180, 184, 192
4700904557 . . . . . 50, 68, 74
4700904637 . . . . . 100, 108
4700904640 . . . . . 44, 48, 80, 82, 98, 204

4700904698 . . . . . 90, 90
4700904703 . . . . . 54, 68, 100, 108, 174, 178, 182, 224, 226
4700904728 . . . . . 100, 108
4700904734 76
4700904735 68
4700904835 . . . . . 90, 232
4700904870 232
4700904956 . . . . . 158, 164, 166
4700904984 . . . . . 96, 96, 96, 96, 96
4700908229 232
4700908384 140
4700909514 140
4700909535 220
4700909536 220
4700921022 . . . . . 100, 108
4700921072 168
4700921099 . . . . . 100, 110
4700921104 70
4700921116 . . . . . 68, 96
4700921119 . . . . . 100, 108, 120, 126
4700921849 . . . . . 178, 182
4700923008 76
4700923247 . . . . . 36, 38, 40, 42
4700923405 . . . . . 108, 124, 128
4700923406 138
4700923407 136
4700923734 48
4700923735 48
4700923844 . . . . . 174, 178, 182
4700923951 . . . . . 22, 62
4700923976 . . . . . 84, 86, 88, 90, 90, 136
4700924544 50
4700925599 50
4700926214 . . . . . 28, 56, 58
4700926215 . . . . . 174, 178, 182
4700926911 48
4700927278 140
4700927396 . . . . . 38, 42, 56
4700928310 106
4700928347 . . . . . 224, 226
4700928381 . . . . . 84, 86, 88
4700928441 . . . . . 90, 90, 162
4700928830 188
4700935161 140
4700935162 140
4700935163 140
4700935164 140
4700935165 140
4700935166 140
4700935167 140
4700935170 . . . . . 140, 140
4700935171 140
4700935172 140
4700935176 140
4700935177 140
4700935178 140
4700935179 140
4700935181 140
4700935182 140
4700935183 140
4700935184 140
4700935186 142
4700935187 142
4700935188 142
4700935189 142
4700935190 142
4700935191 142
4700935613 188
4700935614 188
4700936691 140
4700936692 140
4700936693 140
4700936706 142
4700938534 28
4700938575 28
4700938885 26
4700938892 24
4700938908 22
4700939802 . . . . . 16, 18, 78
4700939803 . . . . . 16, 18, 78
4700939804 78
4700939805 78
4700939806 78
4700939807 78
4700940451 . . . . . 32, 190
4700960796 . . . . . 150, 152, 154
4700989151 . . . . . 118, 124
4700991657 232
4700991658 232
4700999027 144
4811000118 118
4811000128 . . . . . 150, 152, 154, 232
4811000166 132
4811000168 48
4811000285 70
4811000320 . . . . . 150, 152, 154
4811000321 . . . . . 150, 152, 154
4811000322 . . . . . 150, 152, 154
4811000323 . . . . . 150, 152, 154
4811000347 138
4811000389 74
4811000425 . . . . . 84, 86, 88

4811000426 . . . . . 90, 90
4811000428 128
4811000440 146
4811000456 . . . . . 100, 110, 204
4811000457 50
4811000484 54
4811000488 . . . . . 84, 86, 88, 90
4811000489 . . . . . 84, 86, 88, 90
4812008274 18
4812013038 236
4812013160 238
4812013161 238
4812030096 . . . . . 6, 14
4812106412 106
4812106413 106
4812106414 106
4812106417 106
4812106421 106
4812106422 106
4812106423 106
4812106424 106
4812106425 106
4812106426 106
4812106430 106
4812106435 106
4812106442 106
4812106443 106
4812106444 106
4812106445 106
4812106446 106
4812106448 106
4812106449 106
4812106452 106
4812110216 . . . . . 160, 162
4812110288 . . . . . 36, 38, 40, 42
4812110490 . . . . . 100, 108
4812110560 148
4812110620 62
4812110639 62
4812110673 62
4812110881 68
4812110901 190
4812111164 176
4812111325 48
4812111330 48
4812111331 50
4812111863 68
4812111865 68
4812111866 68
4812111867 68
4812111868 68
4812111877 94
4812111880 68
4812111883 68
4812111899 68
4812111900 68
4812111905 68
4812111950 164
4812111969 48
4812112019 74
4812112021 74
4812112029 76
4812112074 . . . . . 48, 48, 48, 50, 50, 50
4812112091 . . . . . 176, 180, 184
4812112109 128
4812112390 68
4812112391 68
4812112451 50
4812112470 136
4812112532 . . . . . 176, 180, 184
4812112566 136
4812112669 222
4812112831 50
4812112994 50
4812113018 . . . . . 36, 40
4812113022 68
4812113044 68
4812113066 48
4812113067 48
4812113077 168
4812113080 . . . . . 36, 40
4812113106 . . . . . 176, 180, 184
4812113107 . . . . . 176, 180, 184
4812113110 134
4812113164 . . . . . 214, 216, 218
4812113165 214
4812113166 216
4812113228 74
4812113233 68
4812113235 68
4812113326 136
4812113327 . . . . . 100, 102, 108
4812113328 . . . . . 4, 6, 16, 18, 102, 108
4812113468 68
4812113472 76
4812113531 158
4812113557 146
4812113598 . . . . . 84, 86, 88
4812113626 . . . . . 84, 86, 88
4812113627 . . . . . 84, 86, 88
4812113694 92
4812113697 92

4812113780 68
4812113781 50
4812113822 48
4812113924 36
4812113937 216
4812113980 68
4812114152 . . . . . 84, 86, 88
4812114153 . . . . . 84, 86, 88
4812114177 68
4812114386 192
4812114466 222
4812114557 146
4812114872 166
4812114962 90
4812115419 54
4812115560 90
4812115567 54
4812115865 . . . . . 214, 216, 218
4812115918 . . . . . 186, 232
4812115926 148
4812116681 . . . . . 36, 40
4812117591 60
4812117602 94
4812117746 50
4812117802 94
4812117864 190
4812117868 190
4812117922 226
4812117923 224
4812117924 . . . . . 224, 226
4812117990 . . . . . 196, 206, 212
4812118056 50
4812118125 98
4812118126 98
4812118133 98
4812118163 . . . . . 66, 84
4812118165 . . . . . 84, 86, 88
4812118172 . . . . . 120, 126
4812118203 . . . . . 90, 90
4812118375 94
4812118459 98
4812118517 76
4812118686 186
4812118692 62
4812118694 62
4812118697 186
4812118885 . . . . . 32, 98
4812119156 40
4812119157 40
4812119250 100
4812119251 118
4812119569 150
4812119704 132
4812119732 38
4812119733 36
4812119822 62
4812120017 44
4812120023 44
4812120024 . . . . . 30, 44
4812120026 46
4812120089 100
4812120091 108
4812120109 232
4812120127 232
4812120184 42
4812120313 232
4812120391 62
4812120392 138
4812120470 . . . . . 36, 38, 40, 42
4812120478 80
4812120558 . . . . . 108, 112
4812120571 . . . . . 84, 86, 88
4812120578 . . . . . 36, 38, 40, 42
4812120579 . . . . . 36, 38, 40, 42
4812120584 68
4812120586 58
4812120653 132
4812120683 100
4812120737 . . . . . 128, 130
4812120801 . . . . . 118, 124
4812120871 40
4812120874 58
4812120876 . . . . . 120, 126
4812120877 . . . . . 118, 124
4812120878 . . . . . 118, 126
4812120879 . . . . . 118, 124
4812120880 . . . . . 118, 126
4812120885 . . . . . 102, 110
4812120886 . . . . . 102, 110
4812120888 132
4812120889 100
4812120993 40
4812121186 76
4812121210 . . . . . 120, 126
4812121219 . . . . . 120, 126
4812121228 110
4812121236 134
4812121239 134
4812121272 168
4812121376 . . . . . 178, 182
4812121384 196
4812121386 . . . . . 196, 206, 212

4812121387 202
4812121463 110
4812121464 180
4812121607 62
4812121703 218
4812121710 126
4812121824 102
4812121825 102
4812121826 . . . . . 102, 110
4812121827 . . . . . 102, 110
4812121849 152
4812121856 44
4812121858 44
4812121922 124
4812122207 76
4812122208 76
4812122334 76
4812122477 40
4812122581 126
4812122610 168
4812122654 . . . . . 56, 58
4812122939 . . . . . 206, 212
4812123538 134
4812123608 . . . . . 86, 88
4812124272 82
4812124321 50
4812124323 50
4812124324 50
4812124325 50
4812124327 50
4812124345 88
4812124461 236
4812124835 50
4812124905 204
4812124906 204
4812124907 204
4812124933 204
4812124935 204
4812124961 236
4812125070 . . . . . 104, 204
4812125175 134
4812125191 204
4812125192 204
4812125363 90
4812125370 90
4812125677 194
4812125908 184
4812125927 . . . . . 36, 40
4812126131 154
4812126298 194
4812126431 50
4812126460 204
4812126907 50
4812127820 234
4812127923 234
4812127927 234
4812156164 106
4812156165 106
4812156170 26
4812156259 . . . . . 4, 6, 8, 10, 12, 14, 16, 18, 72
4812156260 . . . . . 12, 14, 16, 18, 72
4812156261 . . . . . 16, 18, 72
4812156263 . . . . . 4, 6, 12, 14, 16, 18, 68, 72
4812156264 . . . . . 4, 6, 12, 14, 16, 18, 72
4812156265 4
4812156266 12
4812156267 16
4812156288 8
4812156355 72
4812156356 72
4812156357 72
4812156358 72
4812156359 72
4812156360 72
4812156362 72
4812156363 72
4812156364 72
4812156389 72
4812156490 . . . . . 198, 208
4812156558 . . . . . 198, 200, 208, 210
4812156559 . . . . . 198, 200, 208, 210
4812156560 . . . . . 198, 200, 208, 210
4812156561 . . . . . 198, 200, 208, 210
4812156562 . . . . . 198, 198, 200, 208, 208, 210
4812156563 . . . . . 198, 208
4812156564 . . . . . 198, 208
4812156565 . . . . . 198, 208
4812156566 . . . . . 198, 208
4812156568 . . . . . 198, 208
4812156569 . . . . . 198, 208
4812156570 . . . . . 198, 208
4812156571 . . . . . 198, 208
4812156572 . . . . . 198, 208
4812156573 . . . . . 198, 208
4812156574 . . . . . 198, 208
4812156576 . . . . . 198, 200, 208, 210
4812156577 212
4812156877 102
4812156878 102
4812156879 102
4812156880 102
4812156881 102

4812156882 . . . . . 102, 108
4812157556 . . . . . 198, 208
4812157598 72
4812157680 72
4812157870 80
4812157871 . . . . . 80, 82
4812157872 . . . . . 80, 82
4812157873 . . . . . 80, 82
4812157874 . . . . . 80, 82
4812157875 . . . . . 80, 82
4812157876 . . . . . 80, 82
4812157877 . . . . . 80, 82
4812158258 . . . . . 198, 208
4812158259 . . . . . 198, 208
4812158260 . . . . . 198, 208
4812158267 . . . . . 200, 210
4812159197 . . . . . 198, 208
4812159198 . . . . . 198, 208
4812159199 . . . . . 198, 208
4812159251 . . . . . 198, 208
4812159290 . . . . . 198, 208
4812159291 . . . . . 198, 208
4812159563 . . . . . 6, 20
4812159564 . . . . . 10, 20
4812159565 . . . . . 14, 20
4812159566 18
4812159568 20
4812159571 20
4812159753 74
4812159961 30
4812160082 . . . . . 198, 208
4812160083 . . . . . 198, 208
4812160084 . . . . . 198, 208
4812160087 . . . . . 198, 208
4812160251 . . . . . 80, 82
4812160252 . . . . . 80, 82
4812160253 . . . . . 80, 82
4812160254 . . . . . 80, 82
4812160263 . . . . . 198, 208
4812160275 112
4812160379 . . . . . 198, 208
4812160380 . . . . . 198, 208
4812160381 . . . . . 198, 208
4812160389 102
4812160593 . . . . . 200, 210
4812160594 . . . . . 200, 210
4812160651 130
4812160656 130
4812160657 130
4812160665 128
4812160692 102
4812160855 104
4812160957 122
4812161058 . . . . . 104, 116
4812161079 82
4812161085 76
4812161199 128
4812161278 116
4812161282 116
4812161566 116
4812161797 . . . . . 108, 116
4812161990 116
4812162174 112
4812162175 112
4812162176 112
4812162177 112
4812162178 112
4812162179 112
4812162181 112
4812162182 112
4812162183 112
4812162184 112
4812162185 112
4812162186 112
4812162187 112
4812162188 112
4812162189 112
4812162190 112
4812162191 112
4812162192 112
4812162193 112
4812162194 112
4812162195 112
4812162196 114
4812162197 114
4812162198 114
4812162199 114
4812162251 114
4812162252 114
4812162253 114
4812162254 114
4812162255 114
5501178300 126
5580020624 . . . . . 6, 10, 18
9106230330 18

Dynapac Compaction Equipment AB
Box 504, SE 371 23 Karlskrona, Sweden

www.dynapac.com