RUTHZIL TRATOR COMERCIAL DE PEÇAS LTDA 11 97083-6812 ROLANDO CITRANGULO

DYNAPAC
CC222

SPARE PARTS CATALOGUE

SCC222-1EN3

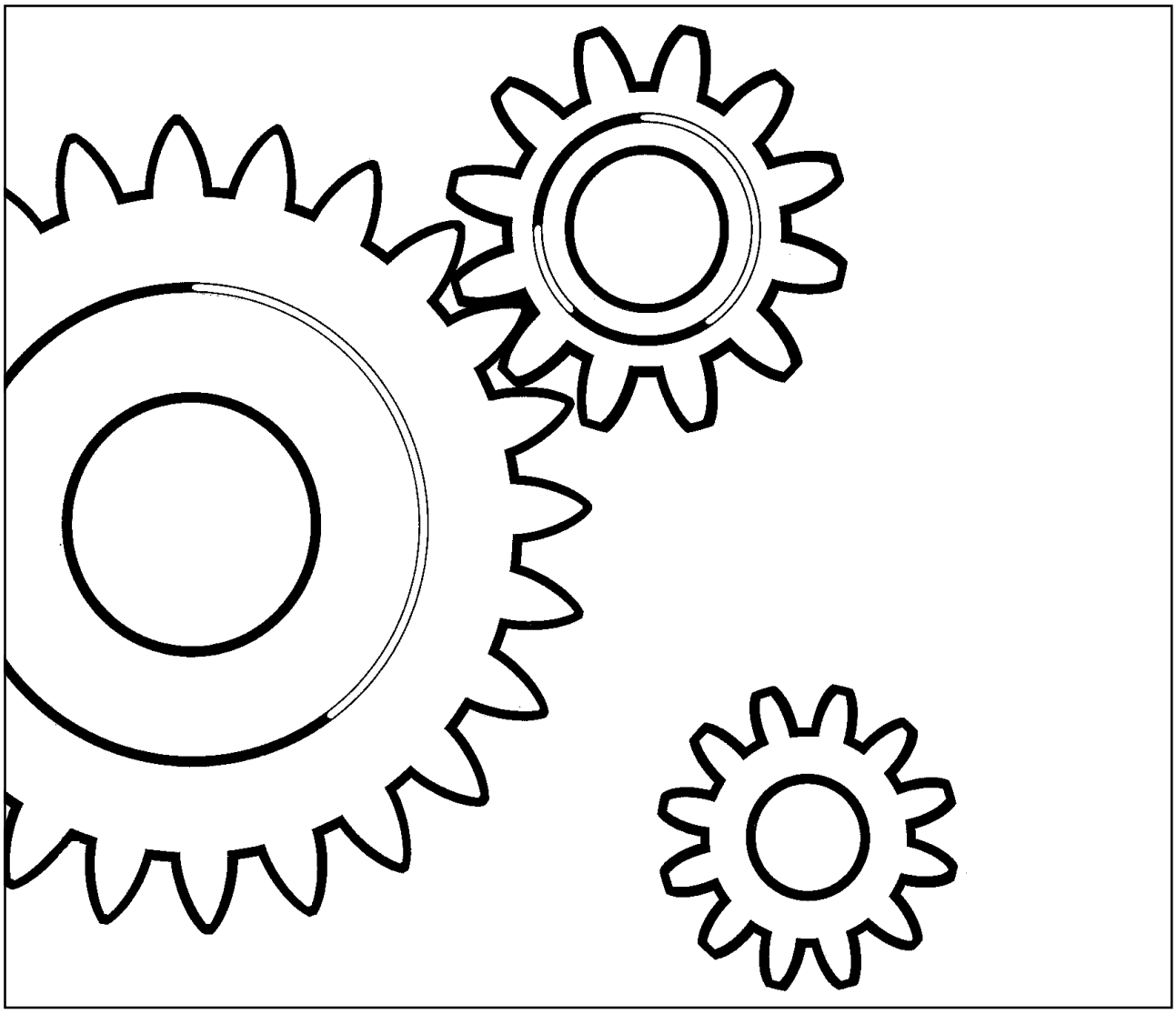

DYNAPAC

Box 504, SE-371 23 Karlskrona, Sweden
Phone: +46 455 30 60 00, Fax: +46 455 30 60 10
www.dynapac.com

DYNAPAC

Vibratory Tandem Roller
CC222

Spare Parts Catalogue
SCC222-1EN3

Valid from roller serial number:

61710222* - *61710900

Diesel engines:

DEUTZ BF4L 1011F

Published catalogue issues valid for these rollers:

Catalogue	*Issue date*	*Valid for serial numbers*
S222EN1	*1995-04*	*Replaced by S222EN2*
S222EN2	*1996-02*	*Replaced by S222EN3*
S222EN3	*1998-01*	*Replaced by SCC222-1EN1*
SCC222-1EN1	*2000-03*	*Replaced by SCC222-1EN2*
SCC222-1EN2	*2002-01*	*Replaced by SCC222-1EN3*
SCC222-1EN3	*2004-12*	*See above*



We reserve the right to change specifications without notice.
Printed in Sweden.

DYNAPAC

RESERVDELSBESTÄLLNING

Följande uppgifter ska lämnas vid beställning av reservdelar för att undvika leveransfel:

1. Maskintyp.
2. Vältens serienummer.
3. Antal av önskad reservdel.
4. Reserdelens artikelnummer.
5. Reservdelens benämning.
6. Måttuppgifter vid beställning av metervara.

ORDERING SPARE PARTS

To avoid errors in delivery, please give the following information when ordering spare parts:

1. Type of machine.
2. Roller serial number.
3. Quantity required.
4. Part number.
5. Parts denomination.
6. Dimensions when ordering per length.

ERSATZTEILBESTELLUNG

Zur Vermeidung von Fehllieferungen sind bei der Bestellung von Ersatzteilen folgende Angaben zu machen:

1. Maschinentyp.
2. Herstellungsnummer.
3. Bestellmenge. (Quantity)
4. Ersatzteilnummer. (Part Nº)
5. Ersatzteilbenennung. (Denomination)
6. Massangaben bei Bestellung von Meterware.

ORDINI DI RICAMBI

Per evitare errori nelle consegne di ricambi, Vi preghiamo di comunicarci le seguenti informazioni al momento dell 'ordinazione:

1. Tipo di macchina.
2. Numero di serie della macchina.
3. Quantità dei pezzi desiderati. (Quantity)
4. Numero di codice del pezzo. (Part Nº)
5. Descrizione del pezzo di ricambio. (Denomination)
6. Misura, in caso di ordine per metro.

PEDIDO DE RECAMBIOS

Para evitar errores en las entregas, deberán indicarse los siguientes datos al hacer un pedido de recambios:

1. Tipo de máquina.
2. Número de serie.
3. Cantidad de piezas deseadas. (Quantity)
4. Número de artículo de la pieza de recambio. (Part Nº)
5. Denominación de la pieza. (Denomination)
6. Indíquese la medida al solicitar un artículo que se expide por metros.

COMMANDE DE PIECES DE RECHANGE

Les indications suivantes doivent être fournies lors de la commande de piéces de rechange, afin d'éviter toute erreur de livraison:

1. Type de machine.
2. Numéro de série.
3. Quantité désirée de pièce de rechange. (Quantity)
4. Numéro de la piéce de rechange. (Part Nº)
5. Dénomination de la piéce de rechange. (Denomination)
6. Longueur en cas de commande au mètre.

YOUR AGENT/DEALER:

DYNAPAC

Text pages

The text pages is structured as the picture on the right.

1. This is the remarks for specific items and the descriptions of the remarks is at the bottom of the parts list.
2. Parts indicated by a dot and moved to the right are included when buying the assembled unit above.
3. Spare parts and service code for a specific part, mainly for internal use at Dynapac. "A" = Service part, "B" = Fast moving part, "C" = Suggested exchanged part and "D" = Regular spare part.

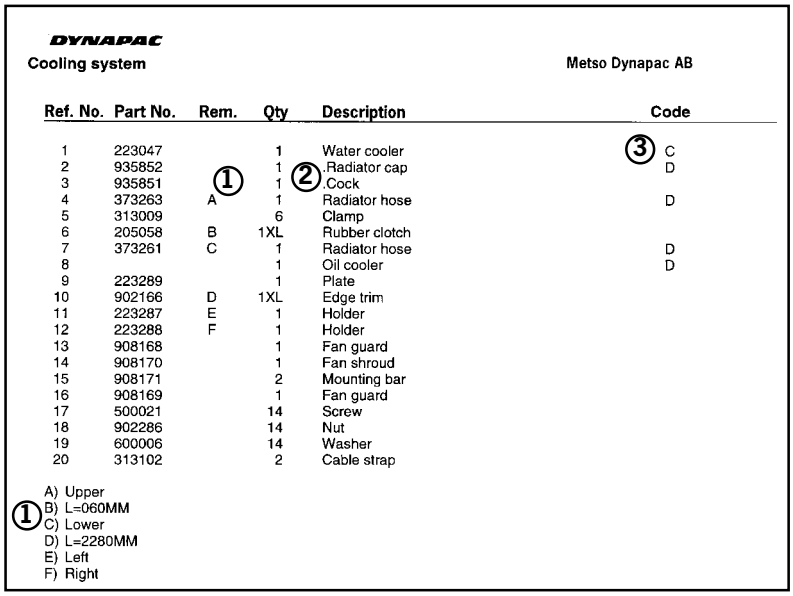

DYNAPAC

Cooling system — Metso Dynapac AB

Ref. No.	Part No.	Rem.	Qty	Description	Code
1	223047		1	Water cooler	③ C
2	935852		1	Radiator cap	D
3	935851	①	1	② Cock	
4	373263	A	1	Radiator hose	D
5	313009		6	Clamp	
6	205058	B	1XL	Rubber clotch	
7	373261	C	1	Radiator hose	D
8			1	Oil cooler	D
9	223289		1	Plate	
10	902166	D	1XL	Edge trim	
11	223287	E	1	Holder	
12	223288	F	1	Holder	
13	908168		1	Fan guard	
14	908170		1	Fan shroud	
15	908171		2	Mounting bar	
16	908169		1	Fan guard	
17	500021		14	Screw	
18	902286		14	Nut	
19	600006		14	Washer	
20	313102		2	Cable strap	

① A) Upper
B) L=060MM
C) Lower
D) L=2280MM
E) Left
F) Right

Changes

PARTS INFO	SERVICE INFO	GROUP	PAGE	NOTES

Notes

Notes

DYNAPAC

PÄRMETIKETT

För att undvika fel vid reservdelsbeställning finns här nedan två etiketter som passar i fickorna på pärmarnas ryggar. På dessa kan man se från vilket vältnummer av aktuell maskin reservdelskatalogen gäller. Gör så här:

1. Tag denna sida ur pärmen.
2. Klipp ut etiketten till **VÄNSTER** (1) och sätt in den i fickan på **DENNA** pärmens rygg.
3. Finns det en etikett till **HÖGER** (2), kan denna användas på pärmen för **FÖREGÅENDE** utgåva av denna katalog.
4. Kasta detta papper.

BINDER LABEL

To avoid errors when ordering spare parts use the labels below to identify the catalogues on the back of the binder. The label contain the serial number range for which the catalogue is valid. Do like this:

1. Remove this page from the binder.
2. Cut out the **LEFT** label (1) and put it on **THIS** binders back.
3. If there is a label to the **RIGHT** (2), it can be used on the binder for **PRECEDING** issue of this catalogue.
4. Throw away this paper.

KATALOG-BESCHRIFTUNG

Zur Vermeidung von Fehlen bei der Ersatzteilbestellung benutzen Sie bitte die unteren Beschriftungen, um die Kataloge auf der Rückseite zu kennzeichen. Auf der Beschriftung ist angegaben, für welche Maschinennummern der jeweilige Katalog gültig ist. Ablauf:

1. Nehmen Sie dieses Blatt aus dem Katalog.
2. Schneiden Sie die **LINKE** Beschriftung (1) aus. Schieben Sie die Beschriftung in die tasche auf **DEM** Katalogrücke.
3. Sollte die Beschriftung unten **RECHTS** (2) mitgeliefert werden, kennzeichen Sie damit bitte die **ÄLTERE** Ausführung dieses Kataloges.
4. Den Rest dieses Blattes bitte vernichten.

ETICHETTA POSTA SUL RACCOGLITORE

Per evitare errori quando ordinate pezzi di ricambio, usate le etichette in calce che servono ad identificare i cataloghi sul retro del raccoglitore. L'etichetta indica il numero di matricola delle maccine prese in considerazione nel catalogo.

1. Rimuovete questa pagina dal raccoglitore.
2. Ritagliate l'etichetta posta a **SINISTRA** (1) e ponetela sul retro **DEL** raccoglitore.
3. Se trovate anche un'etichetta sulla **DESTRA** (2), ritagliatela e ponetela sul raccoglitore relativo alla **PRECEDENTE** edizione del catalogo.
4. Distruggete questo foglio.

ETIQUETA PARA LA CARPETA

Para evitar errores al pedir repuestos utilicen las etiquetas abajo descritas para identificar los catálogos en la parte trasera de la carpeta. En la etiqueta se ven los números de referencia de la serie para la cual es válido el catálogo. Instrucciones:

1. Quitar esta página de la carpeta.
2. Corta la etiqueta **IZQUIERDA** (1) y ponerla est **ESTA** carpeta en la parte trasera.
3. Si hay una etiqueta en la parte **DERECHA** (2) se puede utilizar en la carpeta para el catálogo que **PRECEDE** a esta.
4. Tirar esta hoja.

ETIQUETAGE DU CATALOGUE

Afin d'éviter des erreurs lors de commandes de pièces de rechange, nous vous conseillons d'apposer les marquages ci-dessous à l'arrière du classeur, pour identifier les catalogues. Ce marquage indique les numéros de série pour lesquels le catalogue est adapté. Il convient de procéder de la façon suivante:

1. Retirez cette page du classeur.
2. Découpez l'étiquette de **GAUCHE** (1), et apposez-la à l'arrière de **CE** catalogue.
3. Si il y a une étiquette à **DROITE** (2), vous pourrez l'apposer sur le classeur de l'edition **PRECEDENTE** du catalogue.
4. Détruire cetta feuille.

1.



CC222

Catalogue **SCC222-1EN3**
Valid **from** serial number:
61710222* - *61710900

TABLE OF CONTENTS

Page

CC222 SN 61710222 - 61710900 2

Service kits 4

938548 Service kit 50h 6
938549 Service kit 500h 8
938550 Service kit 1000h 10

Repair kits 12

938899 Eccentric shaft kit Up to 61710702 14
938900 Eccentric shaft kit From 61710703 16
938916 Scraper kit CC222/232 18
938880 Shock absorber kit, drum 20
938558 Steering hitch kit 22

Frame 24

Frames 26
Covers, ladders 28
Scrapers Standard 32
Scrapers Spring loaded 34
Scrapers, spring loaded Foldable 36
Sprinkler mat Option 38
Articulated link 40
Structure "1" Up to 61710499 42
Structure "2" From 61710500 Up to 61710502 44
Structure "2" From 61710504 Up to 61710545 44
Structure "2" From 61710550 Up to 61710553 44
Structure "2" From 61710555 Up to 61710557 44
Structure "2" From 61710559 Up to 61710560 44
Structure "2" From 61710563 Up to 61710565 44
Structure "2" From 61710567 Up to 61710570 44
Structure "2" From 61710572 Up to 61700573 44
Structure "2" From 61710575 Up to 61710575 44
Structure "3" From 61710503 Up to 61710503 80
Structure "3" From 61710546 Up to 61710549 80
Structure "3" From 61710554 Up to 61710554 80
Structure "3" From 61710558 Up to 61710558 80
Structure "3" From 61710561 Up to 61710562 80
Structure "3" From 61710566 Up to 61710566 80
Structure "3" From 61710571 Up to 61710571 80
Structure "3" From 61710574 Up to 61710574 80
Structure "3" From 61710576 80
Noise suppression Left hood 116
Sprinkler system Tanks 118
Sprinkler system Front 122
Sprinkler system Rear 126
923690 Water pump 130

Drum 132

Drum 134

Engine 138

Diesel engine Deutz BF4L 1011F 140
Intake system 142
Fuel system 144
Exhaust system 146

Hydraulic system 148

Propulsion system Pump Up to 61710499 150
Propulsion system Pump From 61710500 Up to 61710828 152
Propulsion system Pump From 61710829 154
Propulsion system Motors Up to 61710499 158
Propulsion system Motors From 61710500 160
371089 Hydraulic pump Propulsion and vibration Up to 61710784 162
Hydraulic pump Propulsion pump 164
Valve block Middle part 168
Hydraulic pump Vibration pump 170
376374 Hydraulic pump Propulsion and vibration From 61710785 174
Hydraulic pump Propulsion pump 176
Valve block Middle part 180
Hydraulic pump Vibration pump 182
Hydraulic motors Propulsion 184
358999 Hydraulic motor Propulsion 186
359000 Hydraulic motor Propulsion 188
Shut-off valve For towing, option 190
Vibration system Pump Up to 61710499 192
Vibration system Pump From 61710500 Up to 61710784 194
Vibration system Pump From 61710785 198
Vibration system Motors Up to 61710499 200
Vibration system Motors From 61710500 202
359937 Hydraulic motor Vibration 204
359140 Valve Vibration 206
359004 Oil cooler cpl Up to 61710502 208
359004 Oil cooler cpl From 61710504 Up to 61710545 208
359004 Oil cooler cpl From 61710550 Up to 61710553 208
359004 Oil cooler cpl From 61710555 Up to 61710557 208
359004 Oil cooler cpl From 61710559 Up to 61710560 208
359004 Oil cooler cpl From 61710563 Up to 61710565 208
359004 Oil cooler cpl From 61710567 Up to 61710567 208
359004 Oil cooler cpl From 61710572 Up to 61710573 208
359004 Oil cooler cpl From 61710575 Up to 61710575 208
374494 Oil cooler cpl From 61710503 Up to 61710503 226
374494 Oil cooler cpl From 61710546 Up to 61710549 226
374494 Oil cooler cpl From 61710554 Up to 61710554 226
374494 Oil cooler cpl From 61710558 Up to 61710558 226
374494 Oil cooler cpl From 61710561 Up to 61710562 226
374494 Oil cooler cpl From 61710566 Up to 61710566 226
374494 Oil cooler cpl From 61710571 Up to 61710571 226
374494 Oil cooler cpl From 61710574 Up to 61710574 226
374494 Oil cooler cpl From 61710576 226
Steering system 244
358993 Hydraulic pump Steering Up to 61710837 248
374027 Hydraulic pump Steering From 61710838 250
359139 Pilot valve 252
370000 Steering cylinder Up to 61710377 254
373410 Hydraulic cylinder From 61710378 Up to 61710761 256
375031 Hydraulic cylinder From 61710762 258
Offset drum Option 260
Valve Offset drum 262
359304 Cylinder Offset drum 264
373403 Cylinder Offset drum 266
Brake system 268

Electrical equipment 270

Electrical equipment 272
Electrical equipment Additional for cab 276
Instrument box 278
Instrument panel Main 280
Speed and frequency Sensors 282
Instrument panel Upper left 284
Instrument panel Upper right 286
Instrument panel Lower left 288
Instrument panel Lower right 292
Instrument panel Relay, fuses 294
Emergency stop panel 296
Driving lights Direction & licenseplate light Up to 61710796 298
Driving lights Direction & licenseplate light From 61710798 Up to 61710825 298
Driving lights Direction & licenseplate light From 61710797 Up to 61710797 302
Driving lights Direction & licenseplate light From 61710826 302
Working lights with/without Rops Up to 61710796 306
Working lights with/without Rops From 61710798 Up to 61710825 306
Working lights with/without Rops From 61710797 Up to 61710797 310
Working lights with/without Rops From 61710826 310
Protection cover, Head light Option 314
Working lights, cab 316
Rotating beacon 318
Tachograph 320
Offset drum Electrical equipment 322

Drivers platform 324

Drivers platform 326
Drivers platform For cab 330
Drivers seat Turn-over 332
Drivers seat Turn-over in cab 334
359918 Steering column 336
Cross sliding Controls (version 1) 338
Cross sliding Controls 340
Cross sliding Carrier 342
Forward and reverse control Version 1 344
Forward and reverse control Version 2 346
Speed limiter Option 348
Engine controls 350
Rear mirror 352
Rops and fops With seat belt 354
Canopy 356
Cab Interior 358
Cab Inside panels 362
Cab Screens 364
Cab Wiper, front and rear 366
Cab Wipers, right side 368
Cab Water tank, wipers 370
Cab Door, left side 372
Cab Heater and fan system 374
Cab Roof mounted,electric switches 376
Interior rear mirror Sun curtain, first aid kit 378
Exterior rear mirrors 380
Radio and cassette player 382

Decals 384

Plates and decals 386

Standard equipment ---- **388**

Standard equipment ---- 390

Optional equipment ---- **392**

Eyelet ---- 394
Sign Slow moving vehicle ---- 396
Edge cutter cpl ---- 398
Edge cutter ---- 400
Edge cutter Hydraulics without offset ---- 402
Edge cutter Hydraulics with offset ---- 404
Edge cutter Sprinkler system ---- 406
Air conditioner assembly ---- 408
370889 Air conditioner unit ---- 410
Roof hatch ---- 414
Tool equipment ---- 416
Asphalt temperature meter ---- 418

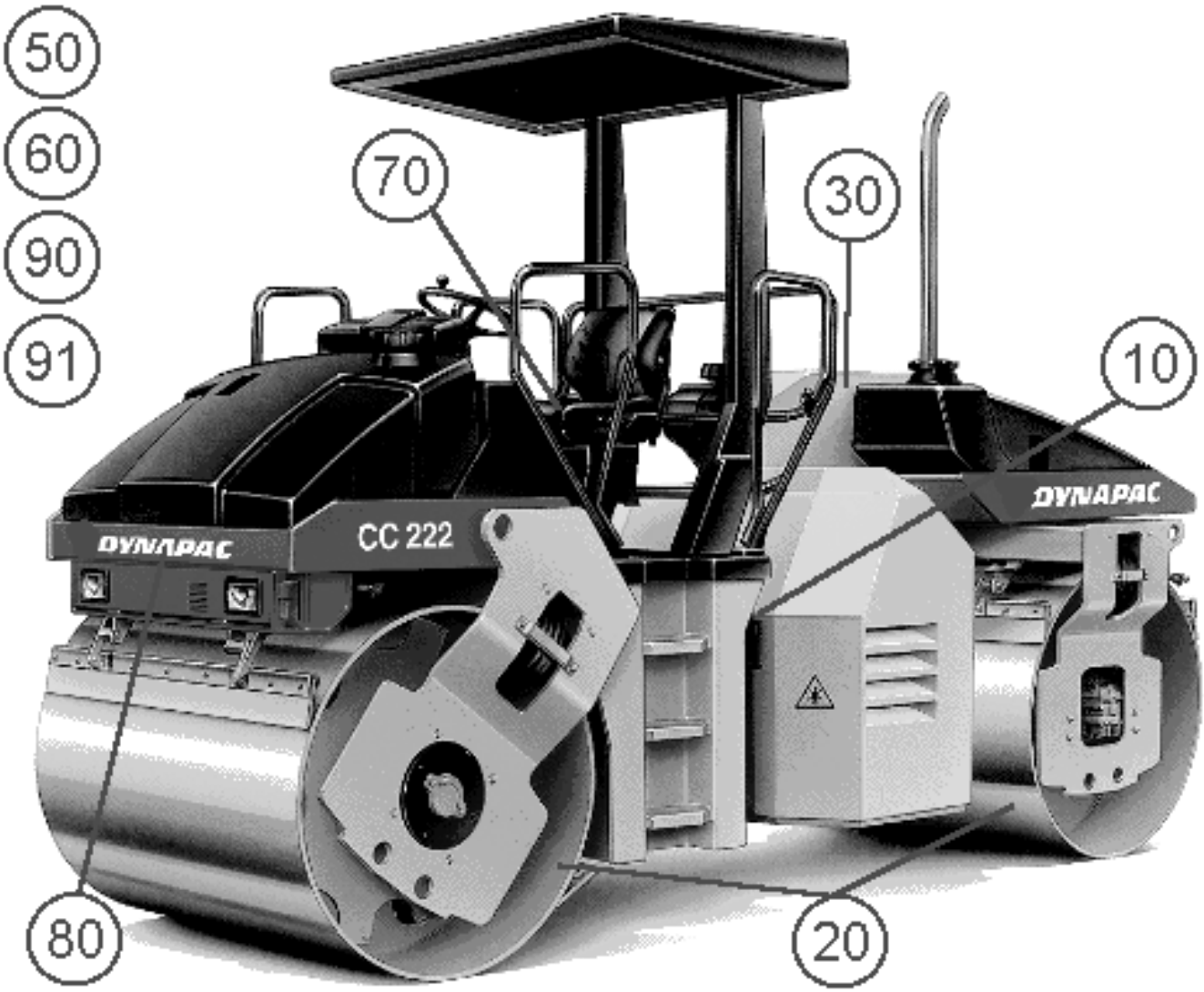
50
60
90
91
70
30
10
80
20
DYNAPAC
CC 222
DYNAPAC

Ref. No.	Part No.	Rem.	Qty	Description	Code
				Service kits (Page 4)	
				Repair kits (Page 12)	
10				Frame (Page 24)	
20				Drum (Page 132)	
30				Engine (Page 138)	
50				Hydraulic system (Page 148)	
60				Electrical equipment (Page 270)	
70				Drivers platform (Page 324)	
80				Decals (Page 384)	
90				Standard equipment (Page 388)	
91				Optional equipment (Page 392)	

Service kits

Ref. No.	Part No.	Rem.	Qty	Description	Code
1	938548			Service kit 50h (Page 6)	
2	938549			Service kit 500h (Page 8)	
3	938550			Service kit 1000h (Page 10)	

938548 Service kit 50h

17423

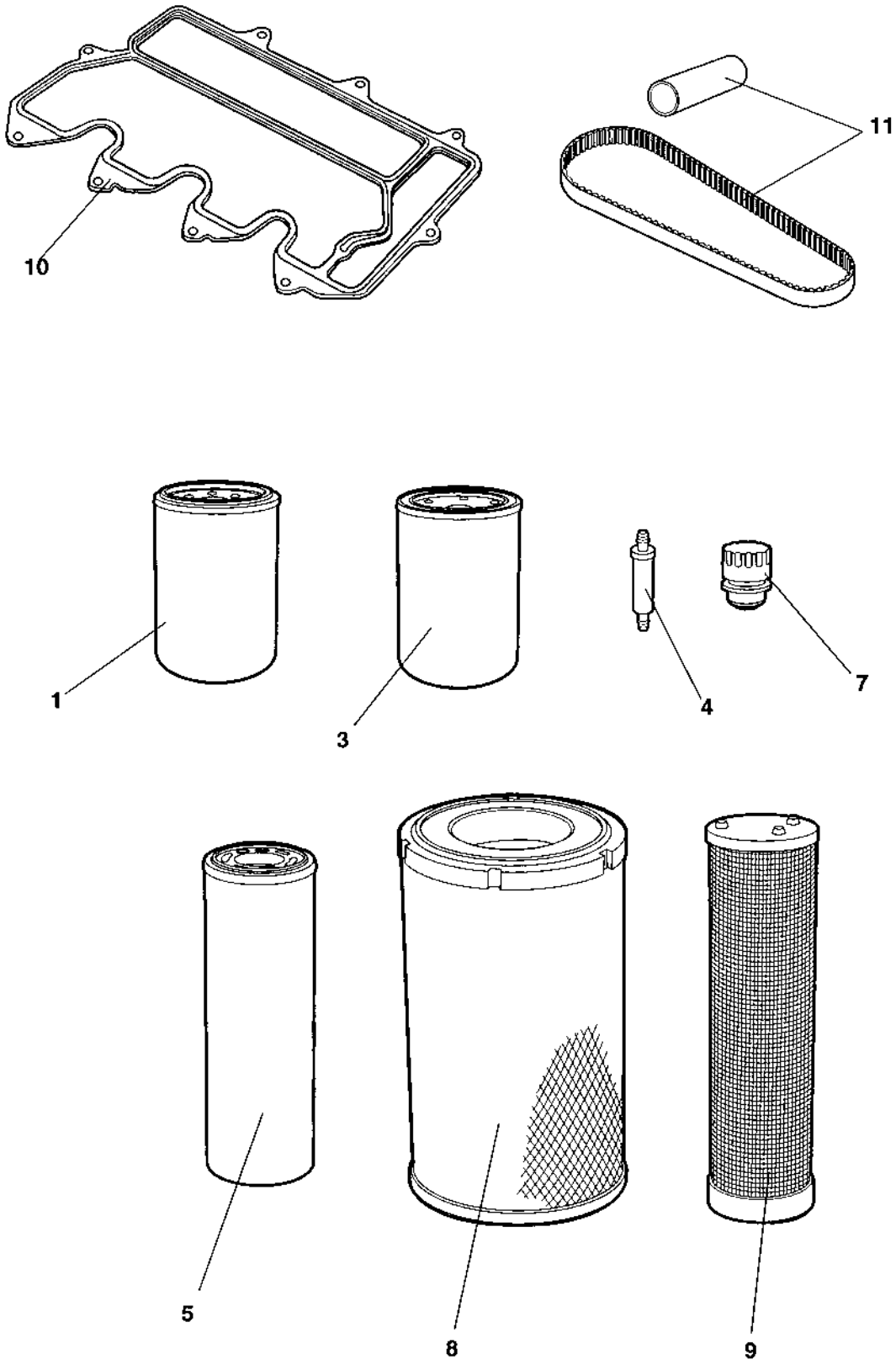

938548 Service kit 50h

Ref. No.	Part No.	Rem.	Qty	Description	Code
1	939516		1	Oil filter	A
3	903938		1	Fuel filter	A
4	929322		1	Fuel strainer	A
5	372229		1	Filter element Hydraulic	A

938549 Service kit 500h

17423

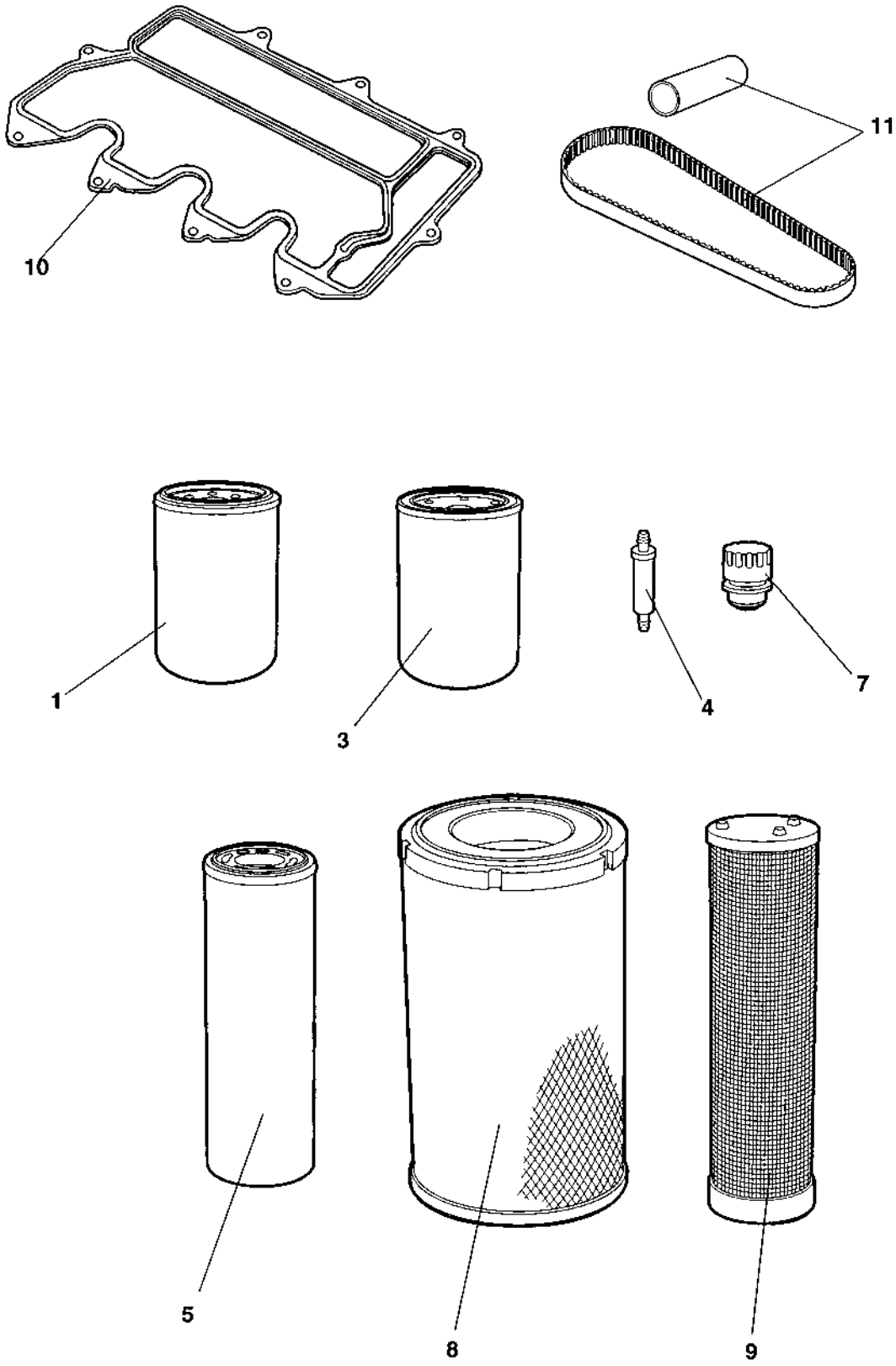

938549 Service kit 500h

Ref. No.	Part No.	Rem.	Qty	Description	Code
1	939516		1	Oil filter	A

938550 Service kit 1000h

17423

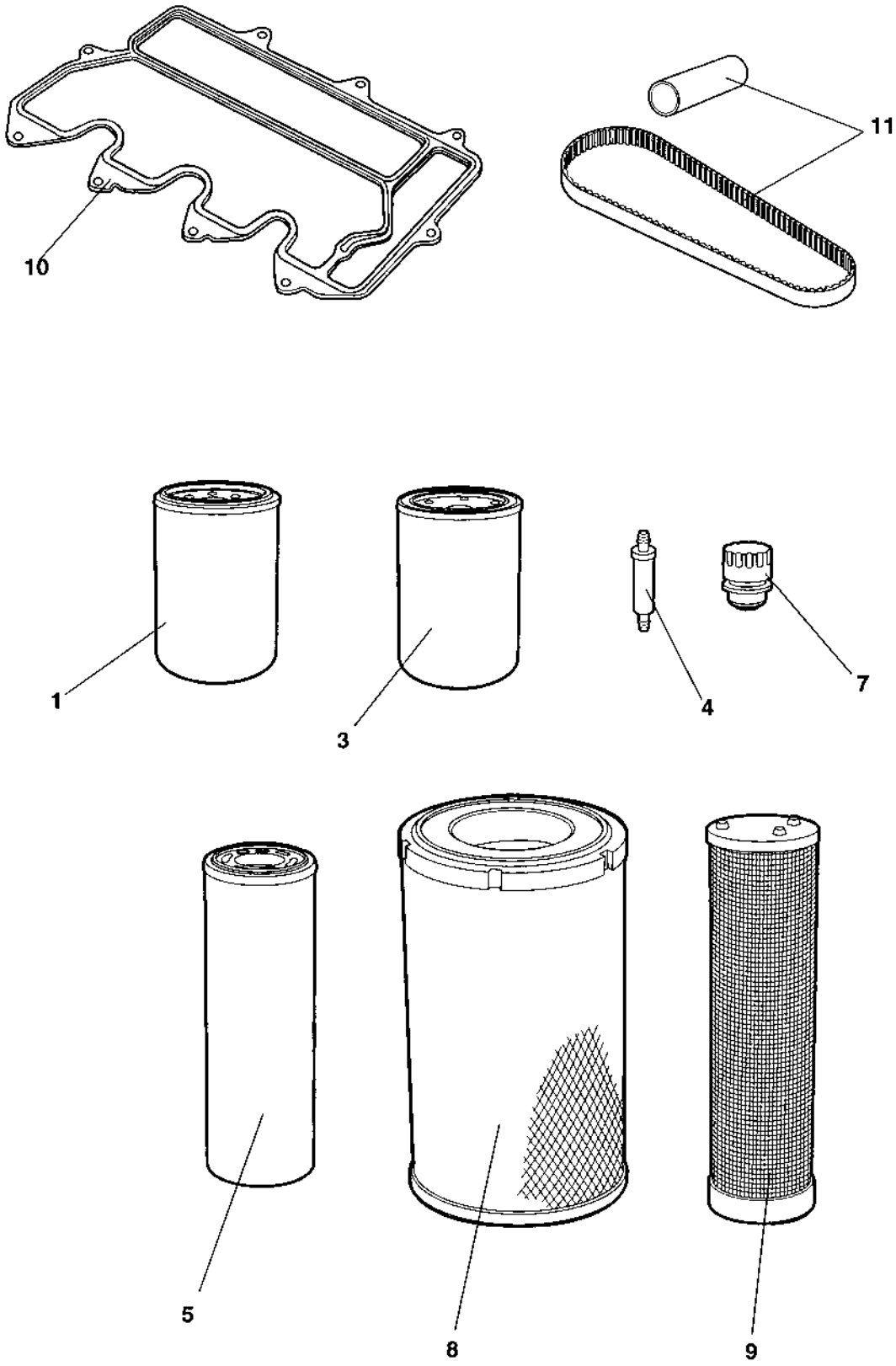

938550 Service kit 1000h

Ref. No.	Part No.	Rem.	Qty	Description	Code
1	939516		1	Oil filter	A
3	903938		1	Fuel filter	A
4	929322		1	Fuel strainer	A
5	372229		1	Filter element Hydraulic	A
7	357138		1	Ventilating filter	B
8	908400		1	Main filter	A
9	908401		1	Safety filter	A
10	938583		1	Valve cover gasket	
11	935339		1	Toothed belt kit	B

Repair kits

Ref. No.	Part No.	Rem.	Qty	Description	Code
1	938899		2	Eccentric shaft kit Up to 61710702 (Page 14)	
2	938900		2	Eccentric shaft kit From 61710703 (Page 16)	
3	938916			Scraper kit CC222/232 (Page 18)	
4	938880		2	Shock absorber kit, drum (Page 20)	
5	938558			Steering hitch kit (Page 22)	

938899 Eccentric shaft kit

938899

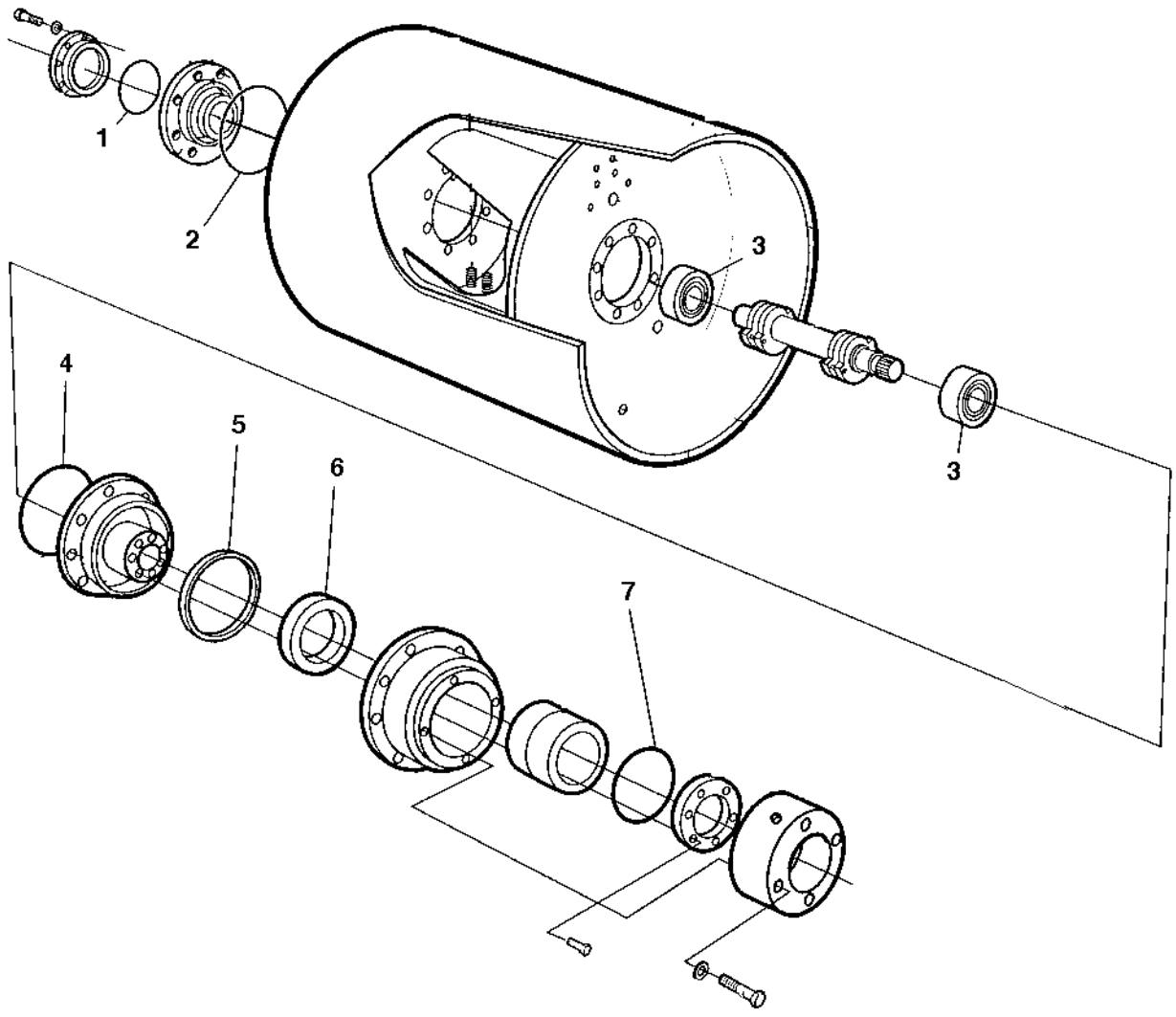

938899 Eccentric shaft kit

Ref. No.	Part No.	Rem.	Qty	Description	Code
1	160040		1	O-ring	D
2	160107		1	O-ring	D
3	114089		2	Spherical roller bearing	D
4	160120		1	O-ring	D
5	929447		1	V-ring	D
6	167023		1	Seal ring	D
7	160105		1	O-ring	D

938900 Eccentric shaft kit

938900

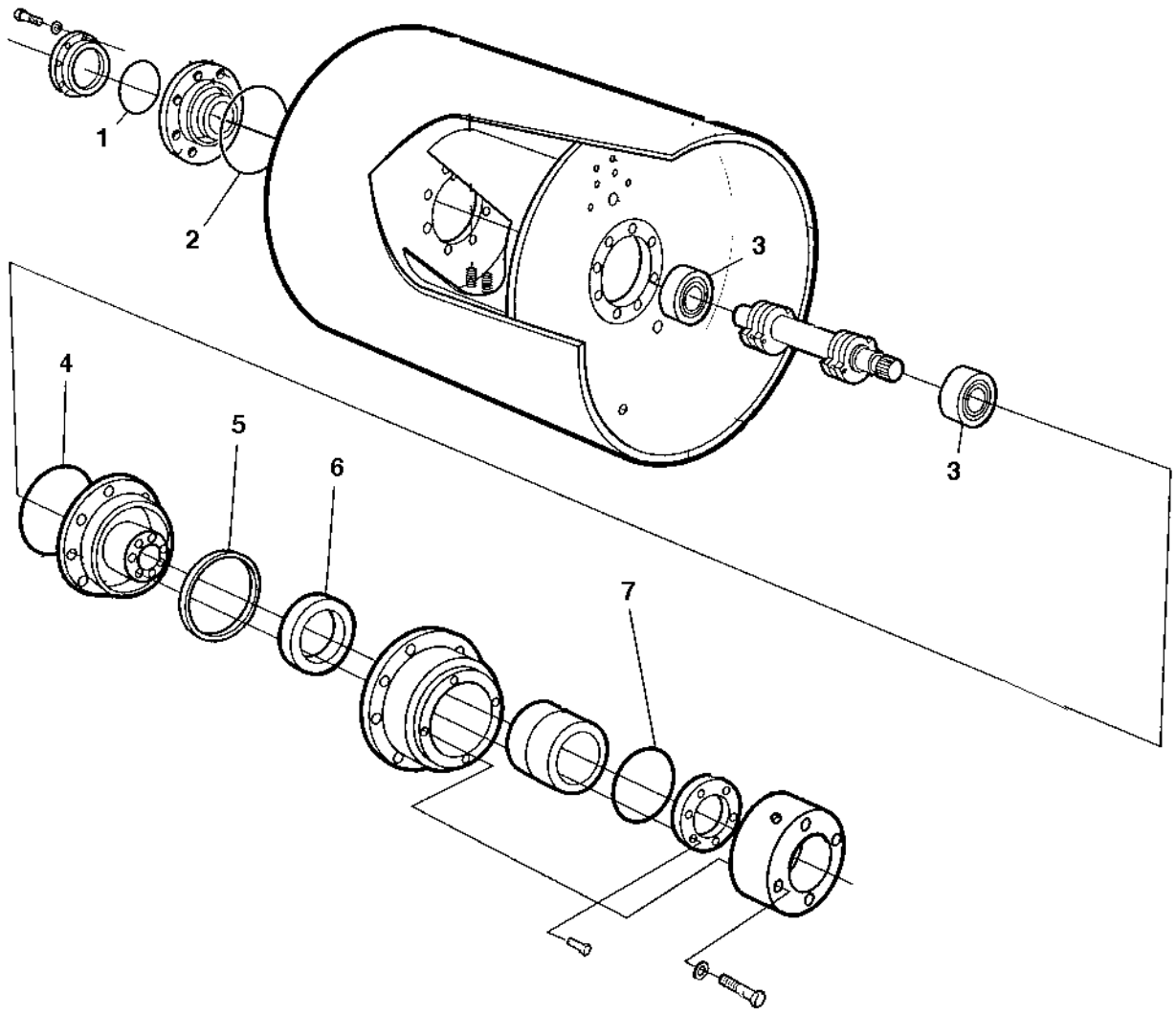

938900 Eccentric shaft kit

Ref. No.	Part No.	Rem.	Qty	Description	Code
1	160040		1	O-ring	D
2	160344		1	O-ring	D
3	114089		2	Spherical roller bearing	D
4	160093		1	O-ring	D
5	929447		1	V-ring	D
6	167023		1	Seal ring	D
7	160105		1	O-ring	D

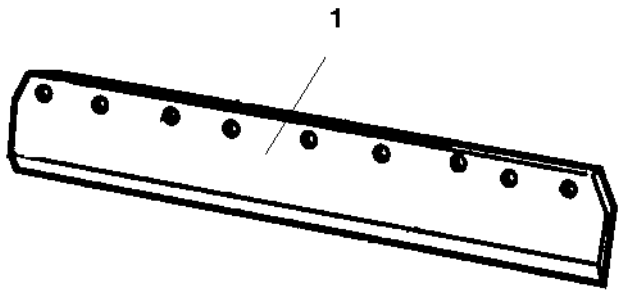
1

938916 Scraper kit CC222/232

Ref. No.	Part No.	Rem.	Qty	Description	Code
1	359351		4	Scraper	B

938880 Shock absorber kit, drum

SHOCK ABSORB.

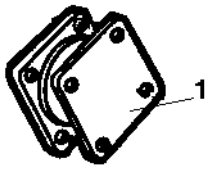

938880 Shock absorber kit, drum

Ref. No.	Part No.	Rem.	Qty	Description	Code
1	450122		10	Shock absorber	B

938558 Steering hitch kit

938558

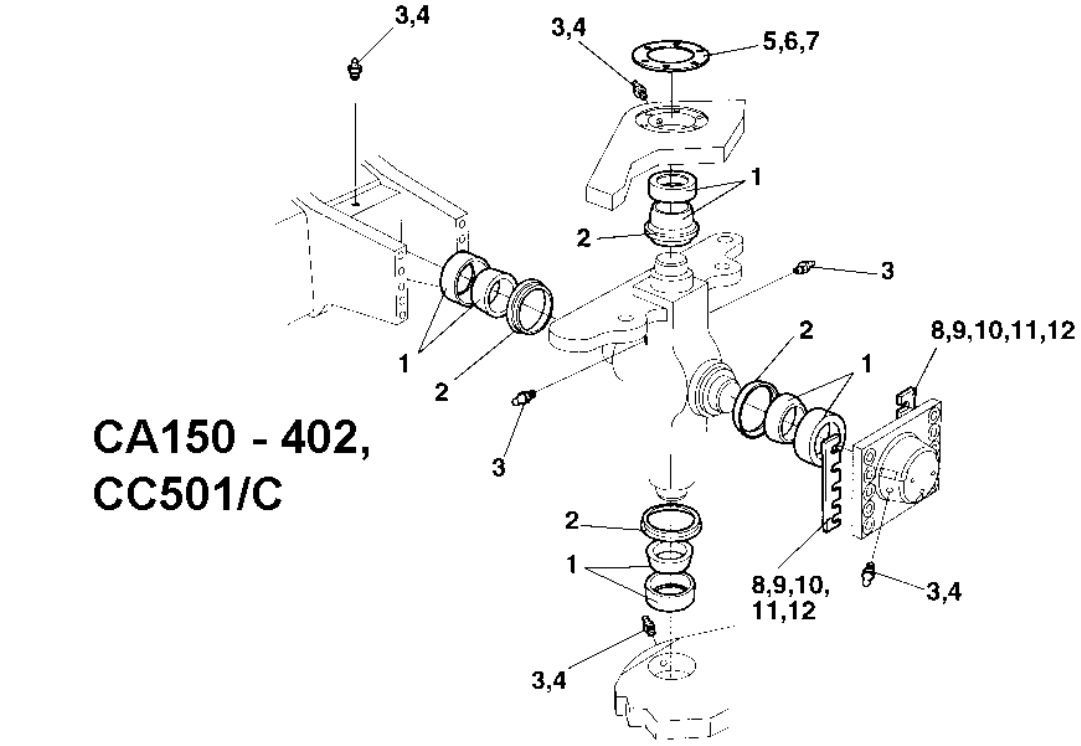

CA150 - 402,
CC501/C

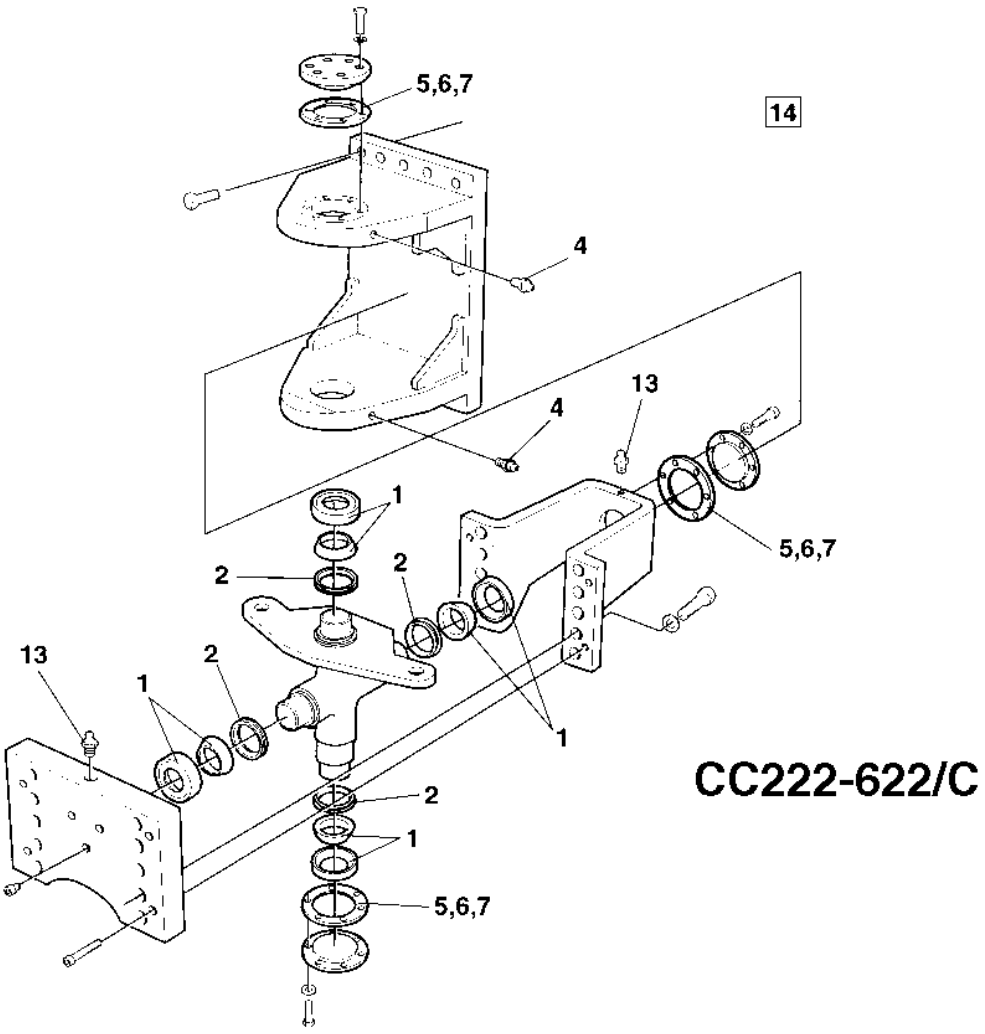

CC222-622/C

938558 Steering hitch kit

Ref. No.	Part No.	Rem.	Qty	Description	Code
1	100040		4	Axial ball bearing	D
2	167032		4	Lip-type oil seal	D
3	310008	2	3	Grease nipple	D
4	926214		2	Grease fitting	D
5	337045		3	Shim T=1,0 mm	D
6	345874		3	Shim T=0,35 mm	D
7	345875		3	Shim T=0,10 mm	D
8	345871	1	2	Shim T=1,0 mm	D
9	345872	1	2	Shim T=0,35 mm	D
10	345873	1	2	Shim T=0,10 mm	D
11	380993	1	2	Shim T = 2,0 mm	D
12	384498	1	2	Shim T = 0,15 mm	D
13	929863	3	1	Grease nipple	D
14	904663		1	Lube grease " DYNAPAC special approved "	
15			1	Instructions	

1) Valid for CA152-402 and CC501/C
2) Valid for CC501/C
3) Valid for CC222/232/322/422/432/522/622/C

Ref. No.	Part No.	Rem.	Qty	Description	Code
10				Frames (Page 26)	
15				Covers, ladders (Page 28)	
20				Scrapers Standard (Page 32)	
30				Scrapers Spring loaded (Page 34)	
32				Scrapers, spring loaded Foldable (Page 36)	
35				Sprinkler mat Option (Page 38)	
40				Articulated link (Page 40)	
50				Structure "1" Up to 61710499 (Page 42)	
55				Structure "2" From 61710500 Up to 61710502 (Page 44)	
				Structure "2" From 61710504 Up to 61710545 (Page 44)	
				Structure "2" From 61710550 Up to 61710553 (Page 44)	
				Structure "2" From 61710555 Up to 61710557 (Page 44)	
				Structure "2" From 61710559 Up to 61710560 (Page 44)	
				Structure "2" From 61710563 Up to 61710565 (Page 44)	
				Structure "2" From 61710567 Up to 61710570 (Page 44)	
				Structure "2" From 61710572 Up to 61700573 (Page 44)	
				Structure "2" From 61710575 Up to 61710575 (Page 44)	
56				Structure "3" From 61710503 Up to 61710503 (Page 80)	
				Structure "3" From 61710546 Up to 61710549 (Page 80)	
				Structure "3" From 61710554 Up to 61710554 (Page 80)	
				Structure "3" From 61710558 Up to 61710558 (Page 80)	
				Structure "3" From 61710561 Up to 61710562 (Page 80)	
				Structure "3" From 61710566 Up to 61710566 (Page 80)	
				Structure "3" From 61710571 Up to 61710571 (Page 80)	
				Structure "3" From 61710574 Up to 61710574 (Page 80)	
				Structure "3" From 61710576 (Page 80)	
58				Noise suppression Left hood (Page 116)	
60				Sprinkler system Tanks (Page 118)	
70				Sprinkler system Front (Page 122)	
80				Sprinkler system Rear (Page 126)	
90	923690		2	Water pump (Page 130)	C

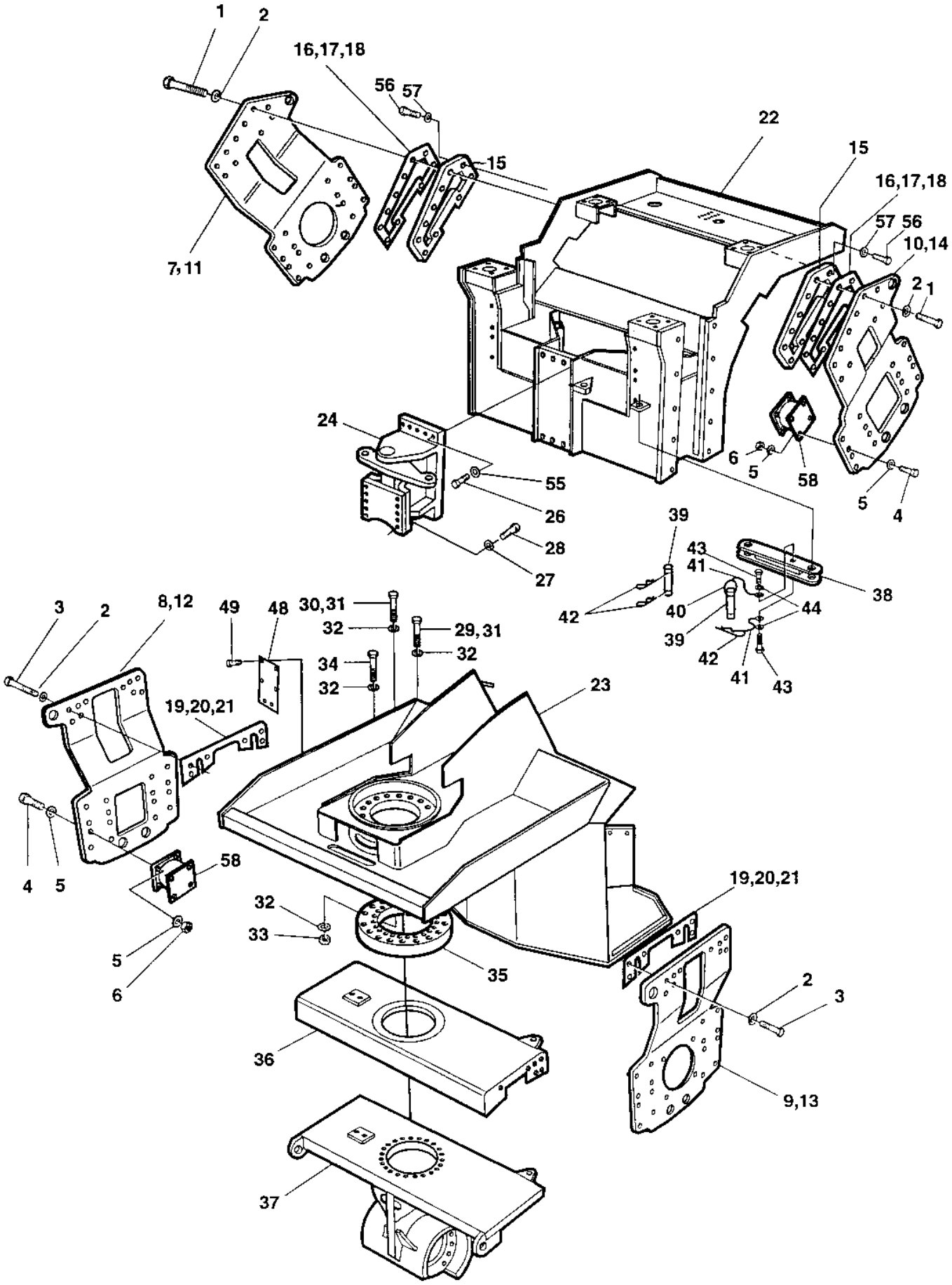
1
2
16,17,18
56
57
15
22
7,11
16,17,18
57 56
10,14
2
1
24
55
26
28
27
6
5
58
5
4
39
43
41
38
42
40
44
39
42
41
43
3
2
8,12
49
48
30,31
32
29,31
32
34
32
23
19,20,21
4
5
58
32
33
35
19,20,21
5
6
2
3
36
9,13
37

Ref. No.	Part No.	Rem.	Qty	Description	Code
1	500199		20	Screw	
2	904233		40	Washer 21x36x3	
3	500076		20	Screw M16x55	
	500134	A	20	Screw M16x60	
4	500111		32	Screw M12x55 8,8	
5	600019		64	Washer	
6	586019		32	Lock nut M12	
7	359509	B	1	Fork	
8	359507	C	1	Fork	
9	359508	D	1	Fork	
10	359510	E	1	Fork	
11				Not used on this model	
12				Not used on this model	
13				Not used on this model	
14				Not used on this model	
15	359511		2	Spacer block	
16	359512		N	Shim T=5 mm	
17	359513		N	Shim T=3 mm	
18	359514		N	Shim T=1mm	
19	359515		N	Shim T=5 mm	
20	359516		N	Shim T=3 mm	
21	359517		N	Shim T=1mm	
22	359232	G	1	Frame	
23	359255	H	1	Frame	
24			1	Articulated link (Page 40)	
26	925208		10	Screw	
27	904233		10	Washer 21x36x3	
28	928850		10	Screw M20-2,5x120 10,9	
29	947712		14	Screw	
30	903366		14	Screw M12x160 10,9	
31				Not used on this model	
32	904231		66	Washer 13x24x2	
33	570104		14	Nut M12	
34	500269		24	Screw M12-1,75x50 10,9	
35	359314		1	Spacer ring	
			1	Bearing, offset	
36	359306		1	Yoke Up to 61710399	
	373220		1	Yoke From 61710400	
37				Not used on this model	
38	359589		1	Safety rod	
39	347119		2	Shaft	D
40	357488		1	Spring	
41	343775		2	Wire	
42	635061		3	Hair clip	D
43	500191		2	Screw M10x14	
44	615061		2	Washer	
48	359588		1	Cover	
49	904357		6	Screw	
55	928466		10	Washer	
56	500109		4	Screw M10-1,5x65 8,8	
57	904230		4	Washer 10,5x22x2	
58			20	Shock absorber	

A) Used when more then 5mm shim
B) Front left hand
C) Rear left hand
D) Rear right hand
E) Front right hand
G) Front
H) Rear

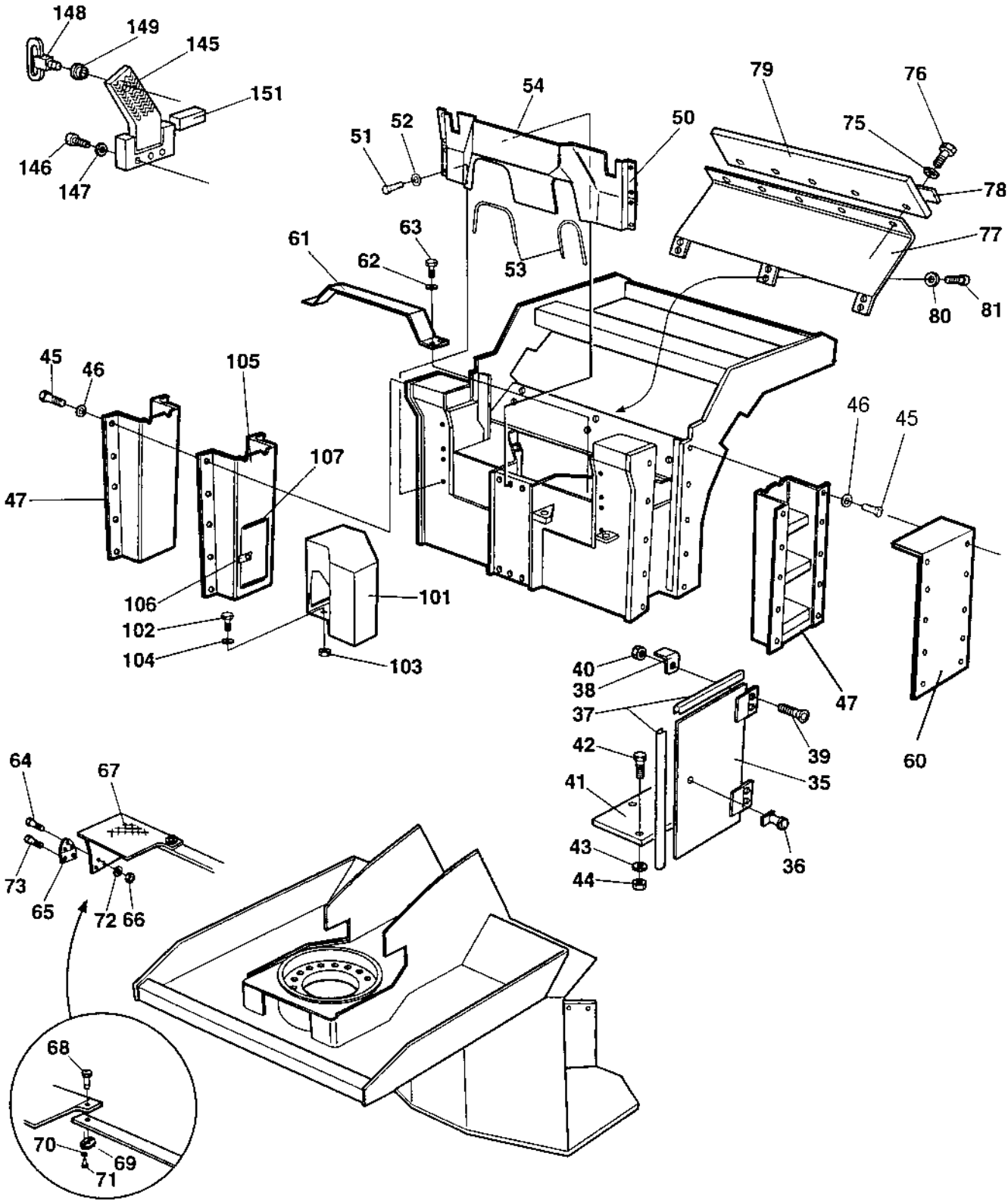
148
149
145
151
146
147
54
52
51
50
79
76
75
78
77
63
61
62
53
80
81
45
46
105
107
47
106
102
104
101
103
46
45
47
60
40
38
37
42
41
43
44
39
35
36
64
67
73
65
72
66
68
70
69
71

Ref. No.	Part No.	Rem.	Qty	Description	Code
35	372698		1	Door	
36	372658		1	Lock	
	902866		1	.Key Marked "455"	D
37	202028	B	1XL	Edge trim	
38	372699		2	Spacer	
39	513028		4	Screw	
40	586002		4	Lock nut M6	
41	372832		1	Cover	
42	500004		3	Screw M5 0,8x12 8,8	
43	600004		3	Washer	
44	570004		3	Nut M6	
45	500022		20	Screw M8-1,25x30 8,8	
	904357		12	Screw	
46	603019		20	Washer	
	603019		12	Washer	
47	359583		2	Ladder	
50	370067		1	Cover	
51	500040		8	Screw M6-1x20 8,8	
52	603010		8	Washer 6,4X12X3	
53	202028	C	2XL	Edge trim	
54	927991	C	1XL	Edge trim	
60	370661		1	Cover	
61	359565		1	Cover plate	
62	600008		4	Washer	
63	500043		4	Screw M10x16H 8,8	
64	513008		6	Screw	
65	928041		2	Hinge	D
66	570004		6	Nut M6	
67	372867		1	Step	
68	903733		1	Quick lock	
69	926985		1	Quick lock washer	
70	900569		2	Washer	
71	526007		2	Screw	
72	904228		6	Washer 6,4x12x1,5	
73	904608		4	Screw M6x10 Black	
75	603019		23	Washer	
76	500053		5	Screw M8-1,25x20 8,8	
77	373124		1	Cover From 61710400	
78	373130		1	Holder plate From 61710400	
79	373129		1	Rubber protection From 61710400	
80	603023		6	Washer M10	
81	500028		6	Screw M10-1,5x25 8,8	
101	370688		1	Tool box	
102	500075		3	Screw M6-1x25 8,8	
103	586002		3	Lock nut M6	
104	615076		3	Washer 7,0x25x1,5	
105	370689		1	Ladder Up to 61710499	
	373152		1	Ladder From 61710500	
106	371345		1	Lock Up to 61710499	
	372658		1	Lock From 61710500	
	902866		1	.Key Marked "455"	D
107	202028	F	1XL	Edge trim	
145	370686	G	1	Step	
146	500030		3	Screw M10-1,5x35H 8,8	
147	603023		3	Washer M10	
148	475064		1	Lock	
149	927233		1	Nut	

B) L=1,4m
C) Length as required
F) L=1,0m
G) Front left

Covers, ladders

15748-1

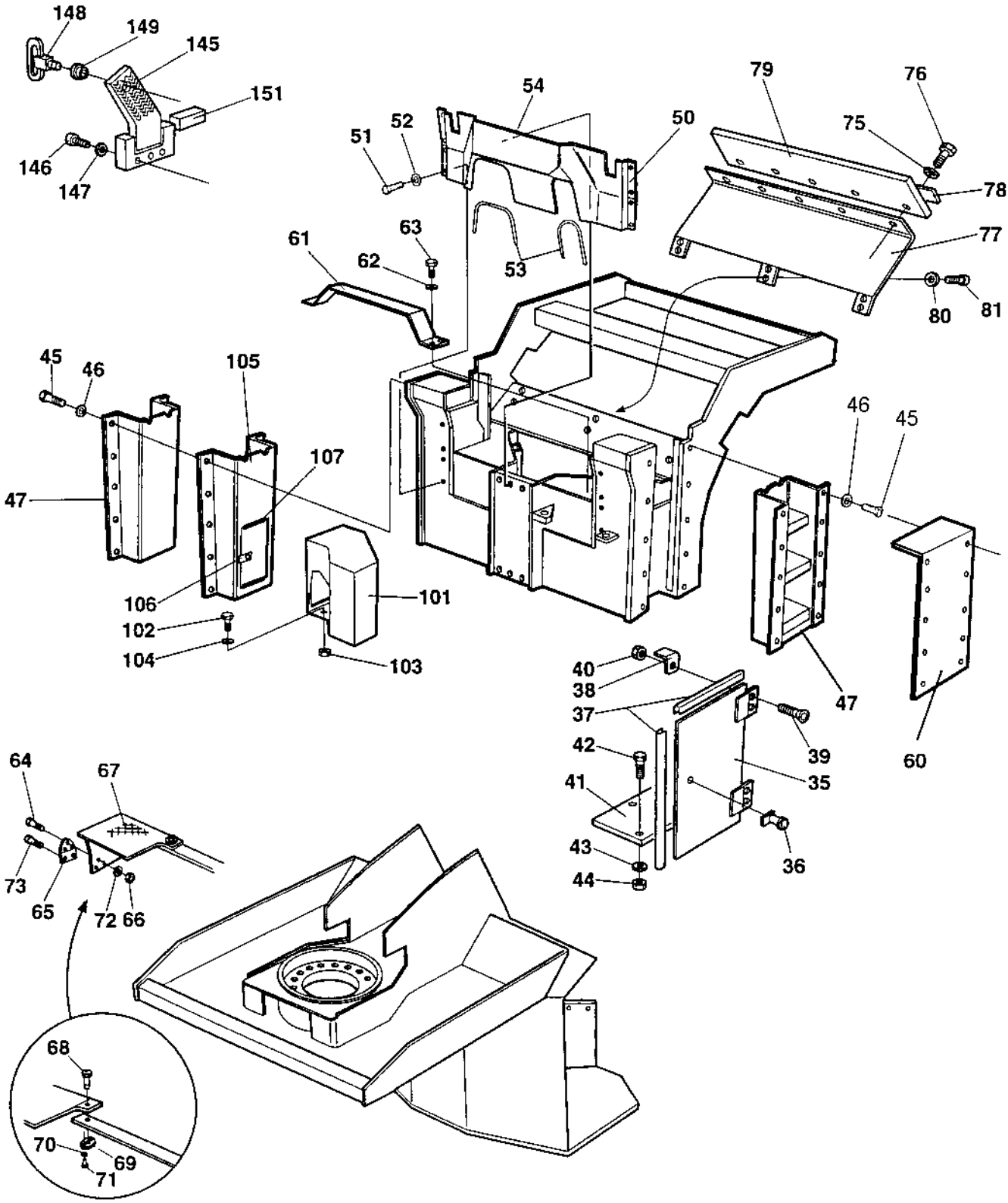

Ref. No.	Part No.	Rem.	Qty	Description	Code
151			1	Rubber part 100x25x10,50 shore	

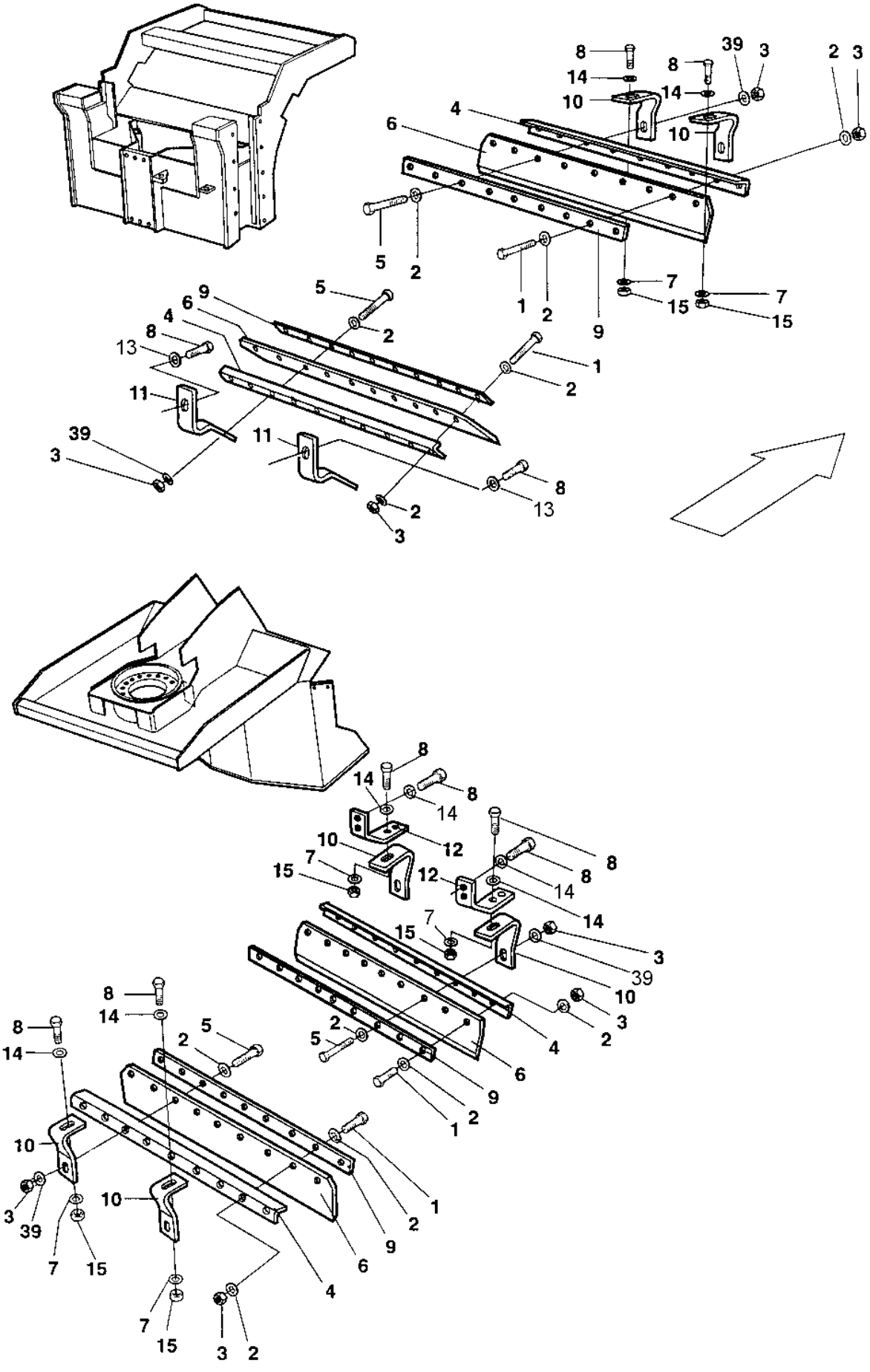
8
14
10
39
3
2
3
4
6
5
2
1
2
9
7
15
7
15
5
6
9
4
8
13
11
39
3
11
2
3
1
2
8
13
12
14
7
15
3
39
10
4
6
9
1
2
10
3
39
7
15
4
7
15
3
2

Ref. No.	Part No.	Rem.	Qty	Description	Code
1	500056		28	Screw M12x45 8,8	
2	904231		64	Washer 13x24x2	
3	586019		36	Lock nut M12	
4	376057		4	Scraper bracket	
5	500049		8	Screw M12-1,75x60 8.8	
6	359351		4	Scraper	B
7	904557		12	Washer 10,5x22x4	
8	500031		20	Screw M10-1,5x40 8,8	
9	376058		4	Scraper bracket	
10	359453		6	Scraper bracket	
11	359454		2	Scraper bracket	
12	359455		2	Scraper bracket	
13	359434		4	Spacer sleeve	
14	904230		16	Washer 10,5x22x2	
15	570006		12	Nut M10	
39	603012		8	Washer	

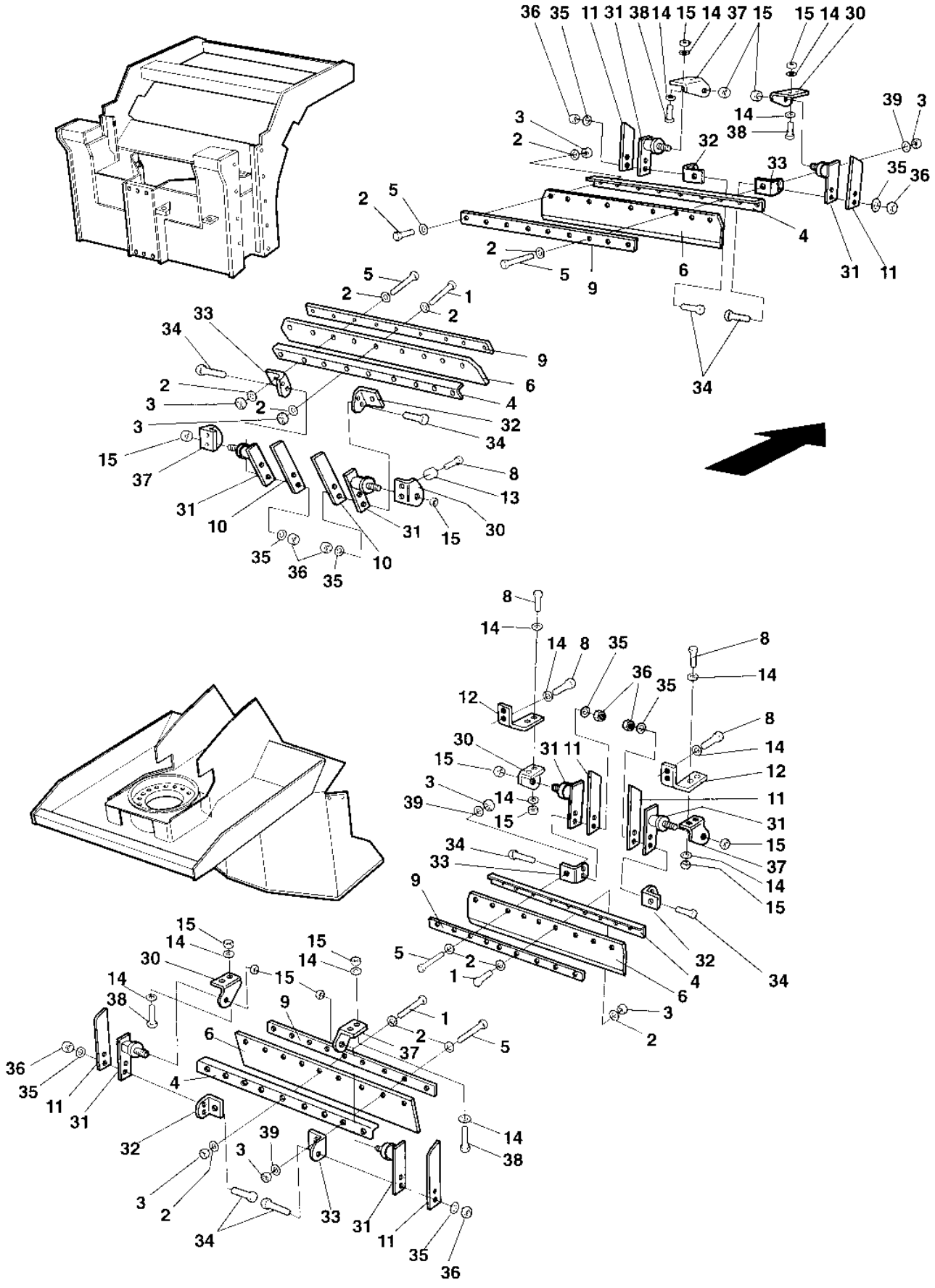
36 35 11 31 38 14 15 14 37 15 15 14 30
39 3
14
38
3
2
32
33
35 36
2 5
4
2
5
9
6
31 11
34
5
2
1
2
33
34
9
6
2
4
3
2
32
3
34
15
37
31
10
8
13
30
31
15
35
36
35
10
8
14
14 8 35
8
36
35
14
12
8
30
31 11
14
15
12
3
14
11
39
15
31
34
15
33
37
14
9
15
32
5
2
1
4
34
6
3
2
15
14
30
15
14
15
14
38
9
1
6
2
37
5
36
35
11
31
4
32
39
14
3
38
3
2
33
31
11
35
36
34

Ref. No.	Part No.	Rem.	Qty	Description	Code
1	500056		28	Screw M12x45 8,8	
2	904231		72	Washer 13x24x2	
3	586019		36	Lock nut M12	
4	376057		4	Scraper bracket	
5	500111		8	Screw M12x55 8,8	
6	359351		4	Scraper	B
8	500031		12	Screw M10-1,5x40 8,8	
9	376058		4	Scraper bracket	
10	359461		2	Stop	
11	359460		6	Stop	
12	359455		2	Scraper bracket	
13	359434		4	Spacer sleeve	
14	904230		28	Washer 10,5x22x2	
15	570006		12	Nut M10	
30	359463		4	Scraper bracket	
31	903522		8	Shock absorber	D
32	359465		4	Scraper bracket	
33	359466		4	Scraper bracket	
34	500047		16	Screw M8-1,25x35 8,8	
35	904229		16	Washer 8,4x16x1,5	
36	570005		16	Nut M8	
37	359464		4	Scraper bracket	
38	500030		8	Screw M10-1,5x35H 8,8	
39	603012		8	Washer	

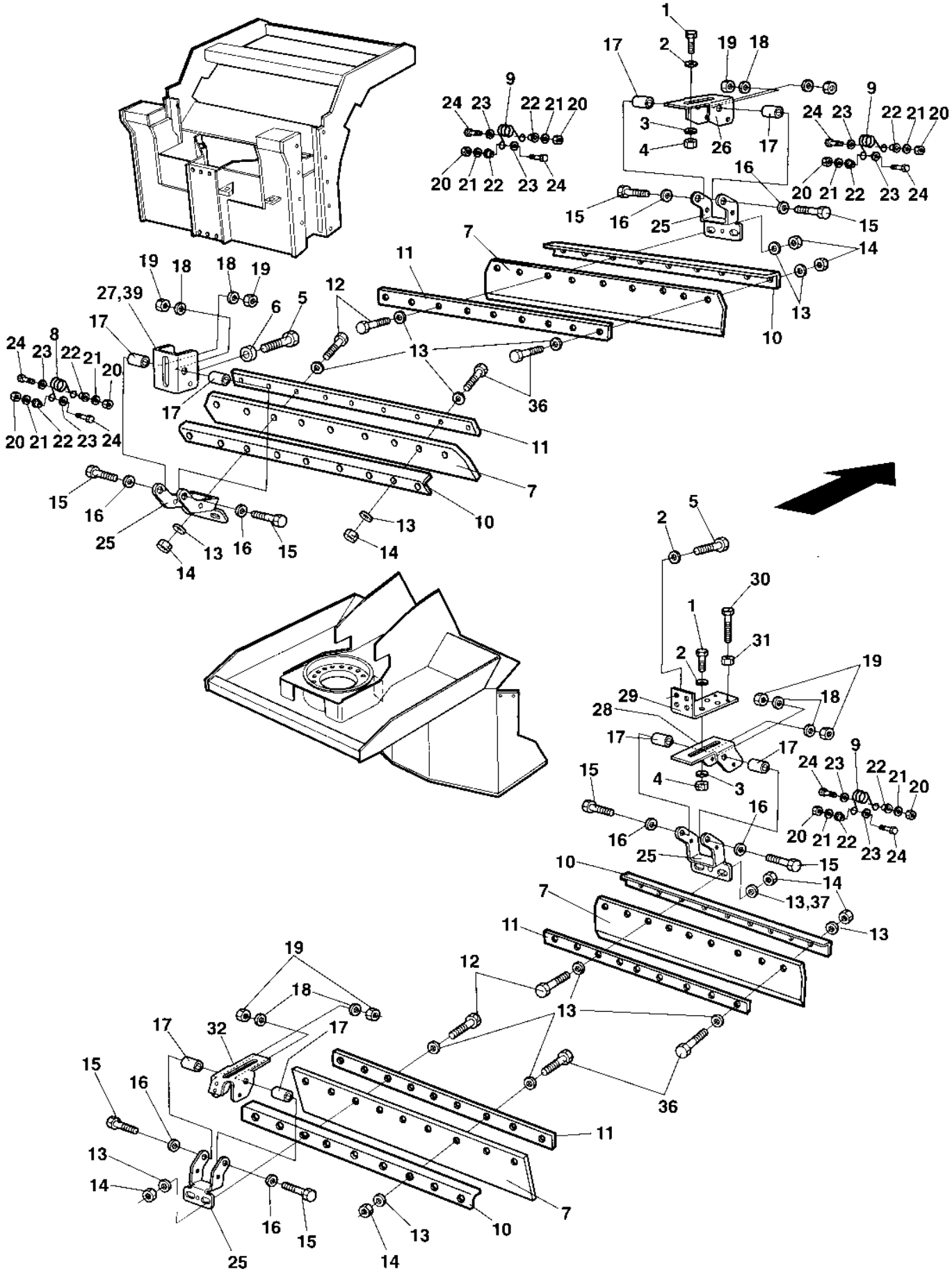
1
17
2
19
18
9
24 23
22 21 20
3
4
26
17
16
15
25
14
13
10
11
7
12
36
27,39
6
5
8
20 21 22 23 24
30
31
29
28
32

Ref. No.	Part No.	Rem.	Qty	Description	Code
1	500030		12	Screw M10-1,5x35H 8,8	
2	904230		16	Washer 10,5x22x2	
3	904557		12	Washer 10,5x22x4	
4	570006		12	Nut M10	
5	500031		8	Screw M10-1,5x40 8,8	
6	380812		4	Spacer sleeve	
7	359351		4	Scraper	B
8	371468		8	Spring	
9	371914		8	Spring	
10	359457		4	Scraper bracket	
11	359458		4	Scraper bracket	
12	500111		8	Screw M12x55 8,8	
13	904231		70	Washer 13x24x2	
14	586019		36	Lock nut M12	
15	500109		16	Screw M10-1,5x65 8,8	
16	904557		16	Washer 10,5x22x4	
17	380691		16	Shaft	
18	904230		16	Washer 10,5x22x2	
19	586018		16	Lock nut M10	
20	586002		32	Lock nut M6	
21	904228		32	Washer 6,4x12x1,5	
22	371469		32	Spacer ring	
23	928381		32	Washer 6,4x18x1,6	
24	500075		32	Screw M6-1x25 8,8	
25	380661		8	Scraper bracket	
26	371546		2	Bracket	
27	371466		2	Bracket	
28	376074		2	Bracket	
29	373819		2	Bracket	
30	500031		2	Screw M10-1,5x40 8,8	
31	570006		2	Nut M10	
32	376075		2	Bracket	
36	500195		28	Screw M12-1,75x50 8.8	
37	904703		2	Washer 13x24x4	
39	383408		N	Shim	

Sprinkler mat Option

15809

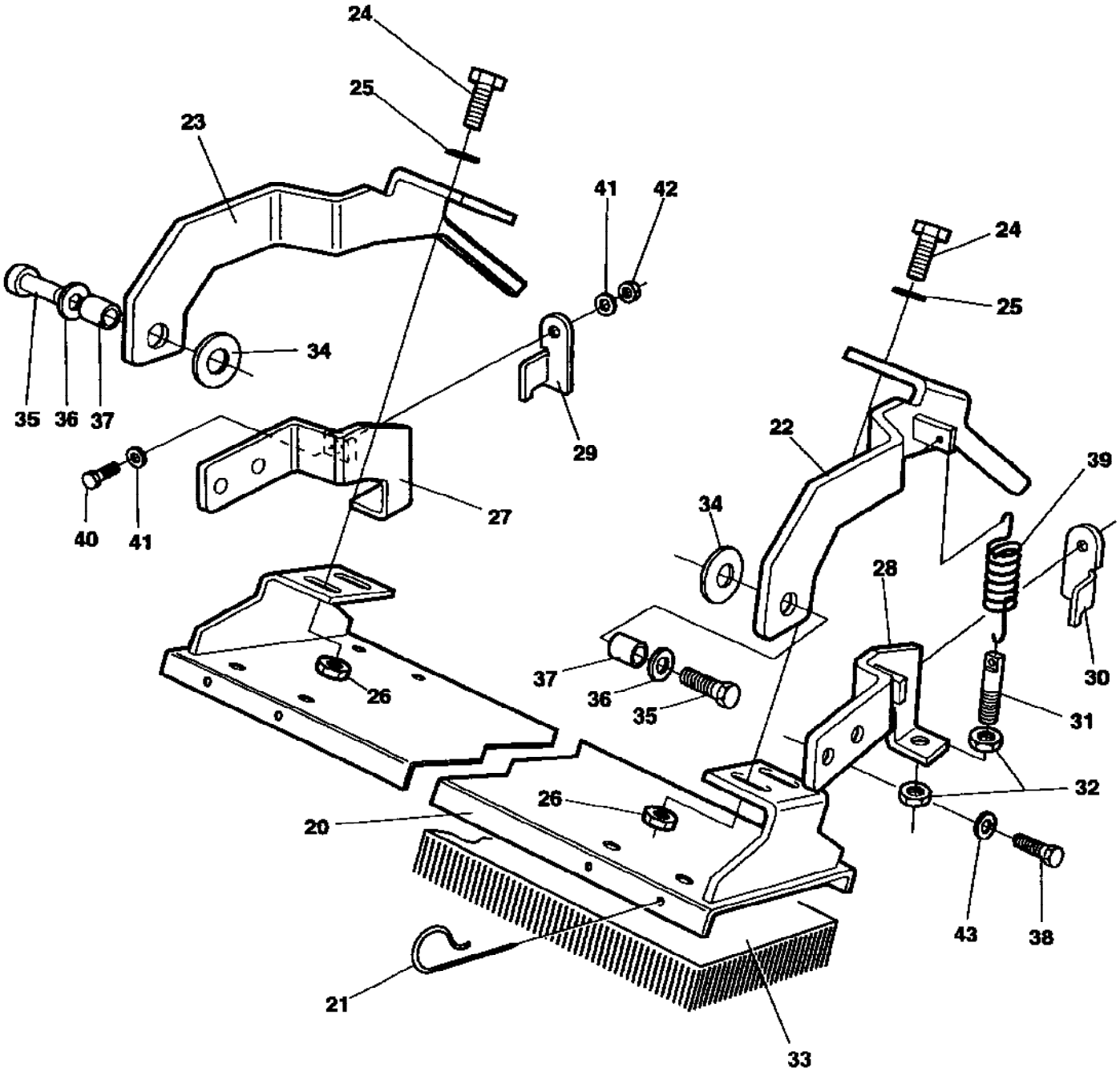

Sprinkler mat Option

Ref. No.	Part No.	Rem.	Qty	Description	Code
		1,2	1	Mat holder cpl	
20	371353		1	.Mat holder	
21	358825		20	.Pin	
22	371760		1	.Rod end	
23	371757		1	.Rod end	
24	500047		4	.Screw M8-1,25x35 8,8	
25	603019		8	.Washer	
26	570005		4	.Nut M8	
27	371762		1	.Holder, left	
28	371765		1	.Holder, right	
29	371768		1	.Stop	
30	371769		1	.Stop	
31	358684		2	.Spring collar	
32	573005		4	.Nut	
33	903185		1	.Mat	B
34	615061		2	.Washer	
35	500031		2	.Screw M10-1,5x40 8,8	
36	600008		2	.Washer	
37	371767		2	.Spacer	
38	500028	A	4	.Screw M10-1,5x25 8,8	
39	371770		2	.Spring	
40	500075		2	.Screw M6-1x25 8,8	
41	600004		4	.Washer	
42	586002		2	.Lock nut M6	
43	600008		4	.Washer	

1) Drilling in frame side is needed before S/N 61710260,61810222
2) The quantity is for 1 (one) drum.
A) To frame side

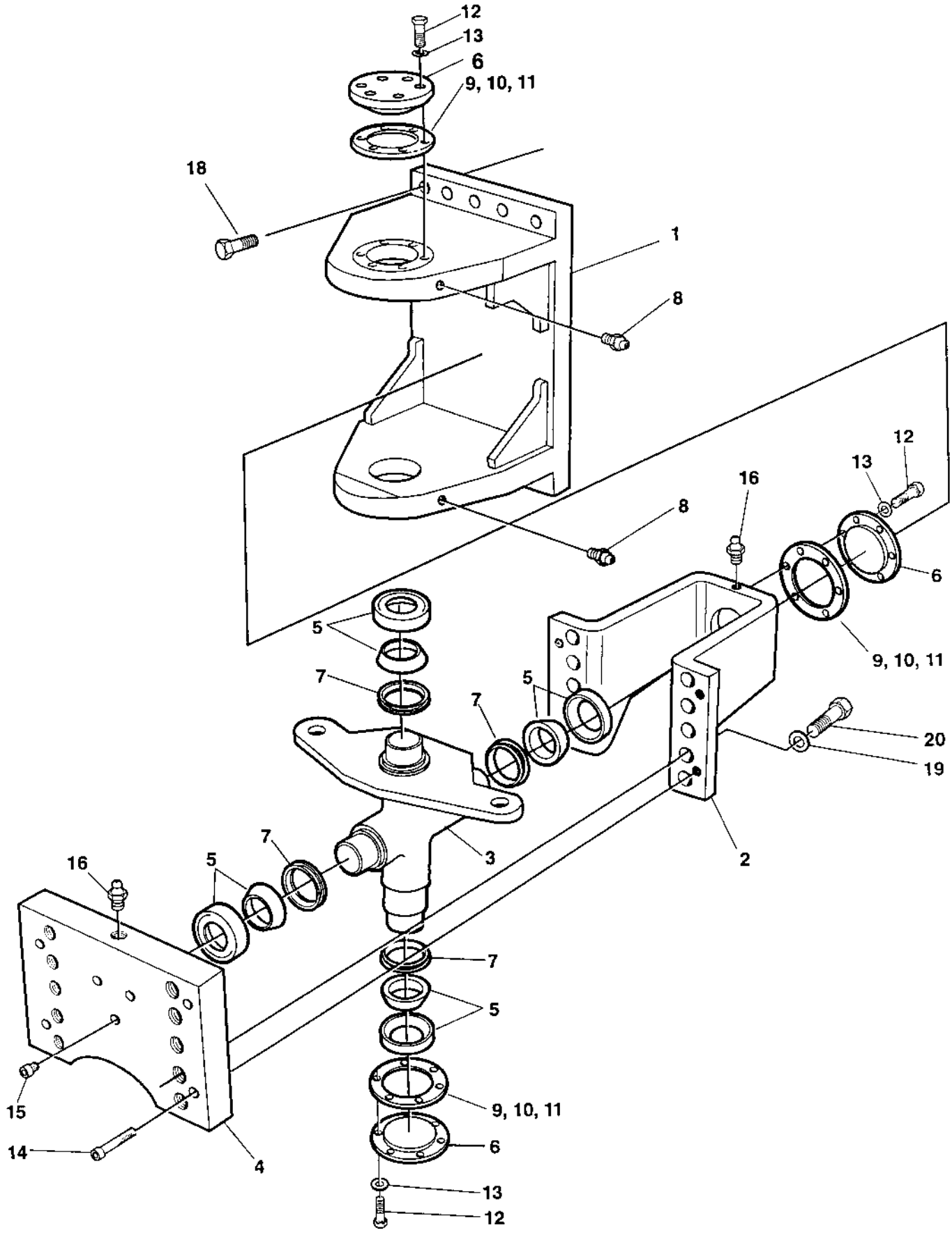
12
13
6
9, 10, 11
18
1
8
8
16
12
13
6
9, 10, 11
5
7
5
7
20
19
2
3
7
16
5
7
5
9, 10, 11
6
13
12
15
14
4

Articulated link

Ref. No.	Part No.	Rem.	Qty	Description	Code
1	375659		1	Hitch link	
2	359131		1	Hitch link	
3	359591		1	Hitch	
4	375661		1	Hitch bracket	
5	100040		4	Axial ball bearing	D
6	337042		3	Bearing cover	
7	167032		4	Lip-type oil seal	D
8	926214		2	Grease fitting	D
9	337045		N	Shim T=1,0 mm	D
10	345874		N	Shim T=0,35 mm	D
11	345875		N	Shim T=0,10 mm	D
12	500037		18	Screw M12-1,75x35 8,8	
13	904231		18	Washer 13x24x2	
14	508042		4	Screw	
15	910995		3	Stop screw	
16	929863		2	Grease nipple	D
18			10	Screw	D
19			10	Washer	D
20			10	Screw	D

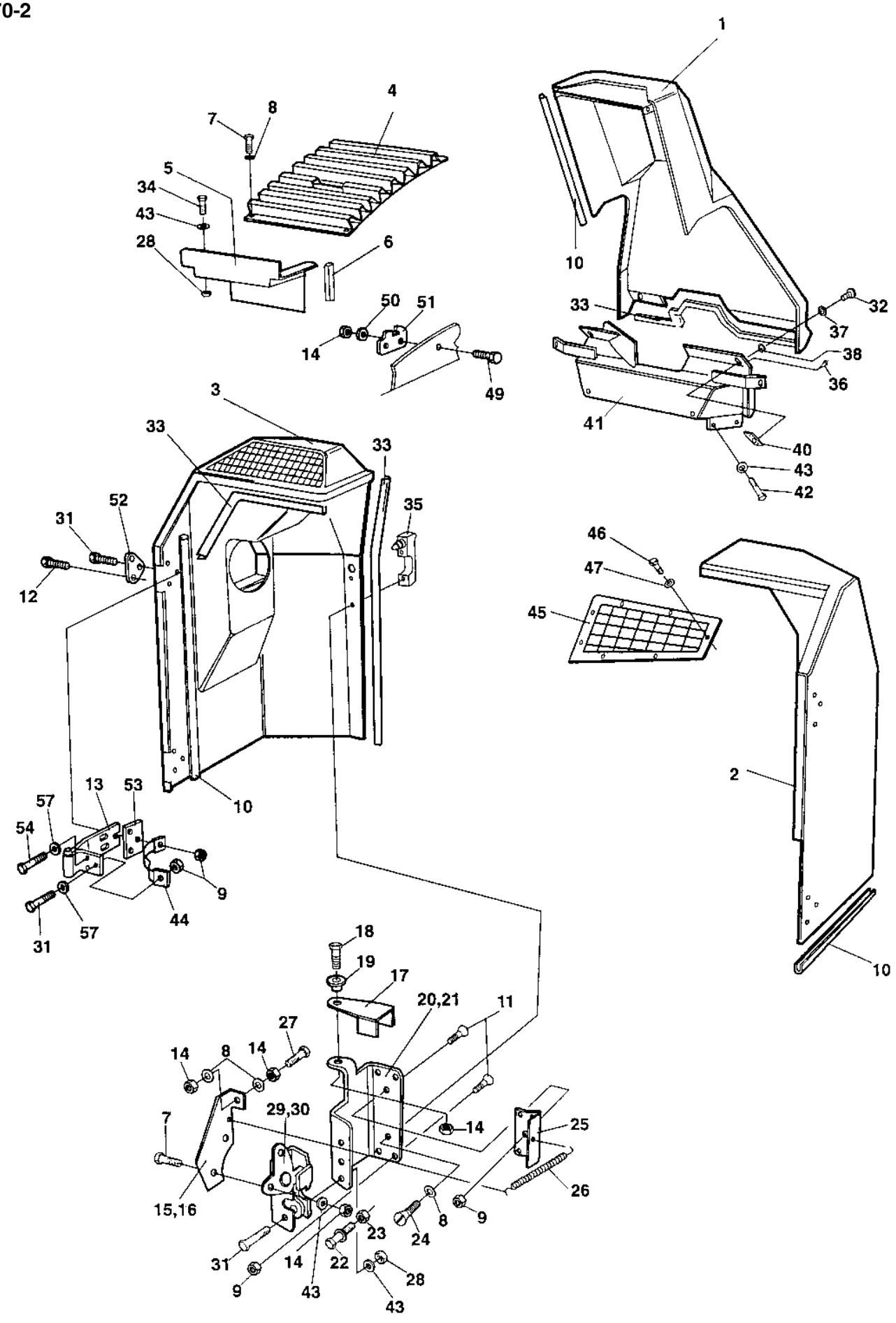
1
4
8
7
5
34
43
28
6
50
51
14
49
10
33
32
37
38
36
41
40
43
42
3
33
33
52
31
12
35
46
47
45
2
10
13
53
57
54
9
44
57
31
18
19
17
20,21
11
27
14
8
14
29,30
7
14
25
26
15,16
8
9
23
24
31
14
22
28
9
43
43

Ref. No.	Part No.	Rem.	Qty	Description	Code
1	359738		1	Hood	
2	359751	A	1	Hood	
3	359745	B	1	Hood	
4	359747		1	Grid	
5	359748		1	Cover plate	
6	902166	C	2XL	Edge trim	
7	500013		14	Screw M6-1x16 8,8	
8	904228		28	Washer 6,4x12x1,5	
9	586003		10	Lock nut M8	
10	902166	C	6XL	Edge trim	
11	902520		6	Screw	
12	500047		10	Screw M8-1,25x35 8,8	
13	359766		4	Hinge	
14	586002		12	Lock nut M6	
15	359764	B	1	Bracket	
16	359765	A	1	Bracket	
17	359752		2	Lever	
18	500040		2	Screw M6-1x20 8,8	
19	359753		2	Bushing	
20	359754	B	1	Bracket	
21	359755	A	1	Bracket	
22	903338		2	Lock pin	
23	571004		2	Nut UNC 7/16 - 14	
24	508012		4	Screw	
25	359756		2	Bracket	
26	359010		2	Extension spring	
27	500061		2	Screw M6-1X35 8,8	
28	570005		10	Nut M8	
29	903336	B	1	Lock	
30	903337	A	1	Lock	
31	500023		8	Screw M8-1,25x40 8,8	
32	903340		2	Trunnion	
33	202057	C	6XL	Edge trim	D
34	500019		4	Screw M8-1,25x16 8,8	
35	925493		2	Grab handle	
	928672		2	.Key Marked "1001"	
36	923253		4	Rivet	
37	903341		2	Washer	
38	903857		2	Washer	
40	903344		2	Lock	
41	359757		1	Cover plate Up to 61710226	
42	500021		6	Screw M8-1,25x25 8,8	
43	904229		22	Washer 8,4x16x1,5	
44	373422		2	Metal strapping	
45	359687		1	Grid Up to 61710226	
	370851		1	Grid From 61710227	
46	500004		12	Screw M5 0,8x12 8,8 Up to 61710226	
	904228		7	Washer 6,4x12x1,5 From 61710227	
47	904281		12	Washer 5,3x10x1 Up to 61710226	
	904281		7	Washer 5,3x10x1 From 61710227	
49	903856		4	Bolt M06x30	
50	603020		4	Washer	
51	372126		2	Cover holder From 61710258	
52	372675		4	Washer From 61710258	
53	372566		4	Bracket From 61710258	
54	500021		8	Screw M8-1,25x25 8,8	
57	603019		16	Washer	

A) Right
B) Left
C) Length as required

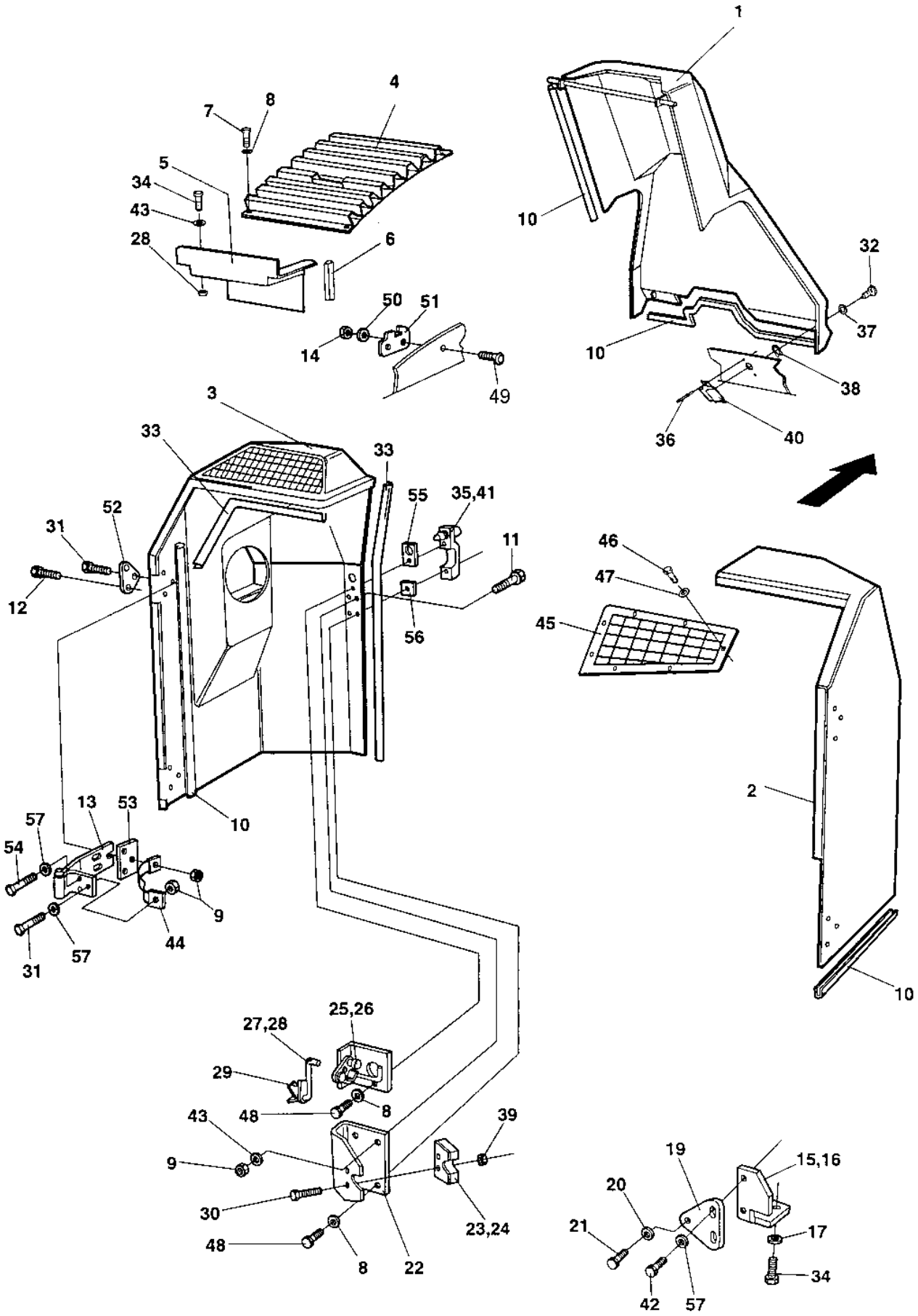
1
4
7
8
5
34
43
28
6
50
51
14
49
10
32
37
10
38
36
40
3
33
33
55
35,41
52
31
11
12
46
47
45
56
2
13
53
57
54
9
44
57
31
10
25,26
27,28
29
48
8
43
39
9
30
48
8
22
23,24
19
15,16
20
21
17
34
42
57

Ref. No.	Part No.	Rem.	Qty	Description	Code
1	372949		1	Cover	
2	372163	A	1	Engine hood	
3	372164	B	1	Engine hood	
4	359747		1	Grid	
5	359748		1	Cover plate	
6	902166	C	2XL	Edge trim	
7	500013		7	Screw M6-1x16 8,8	
8	904228		14	Washer 6,4x12x1,5	
9	586003		10	Lock nut M8	
10	902166	C	6XL	Edge trim	
11	902520		6	Screw	
12	500047		10	Screw M8-1,25x35 8,8	
13	359766		4	Hinge	
14	586002		4	Lock nut M6	
15	372898	A	1	Bracket	
16	372894	B	1	Bracket	
17	611003		4	Sleeve	
19	372893		2	Bracket	
20	371666		2	Locking pin	
21	904231		2	Washer 13x24x2	
22	371659		2	Bracket	
23	371380	E	1	Lock	
24	371381	F	1	Lock	D
25	371449	F	1	Lock device	
26	371450	E	1	Lock device	
27	371451	E	1	Coupling link	
28	371452	F	1	Coupling link	
29	371569		2	Lock device	
30	535053		4	Screw	
31	500023		4	Screw M8-1,25x40 8,8	
32	903340		2	Trunnion	
33	202057	C	6XL	Edge trim	D
34	500019		8	Screw M8-1,25x16 8,8	
35	371389	E	1	Grab handle	
	902866		1	.Key Marked "455"	D
36	923253		4	Rivet	
37	903341		2	Washer	
38	903857		2	Washer	
39	586001		4	Lock nut M5	
40	903344		2	Lock	
41	371390	F	1	Grab handle	
	902866		1	.Key Marked "455"	D
42	500053		4	Screw M8-1,25x20 8,8	
43	904229		12	Washer 8,4x16x1,5	
44	373422		2	Metal strapping	
45	370851		1	Grid	
46	500004		4	Screw M5 0,8x12 8,8	
47	904281		4	Washer 5,3x10x1	
48	500015		4	Screw M6-1x30 8,8	
49	903856		4	Bolt M06x30	
50	603020		4	Washer	
51	372126		2	Cover holder	
52	372675		4	Washer	
53	372566		4	Bracket	
54	500021		8	Screw M8-1,25x25 8,8	
55	903937		2	Rubber gasket	

A) Right
B) Left
C) Length as required
E) Right hood
F) Left hood

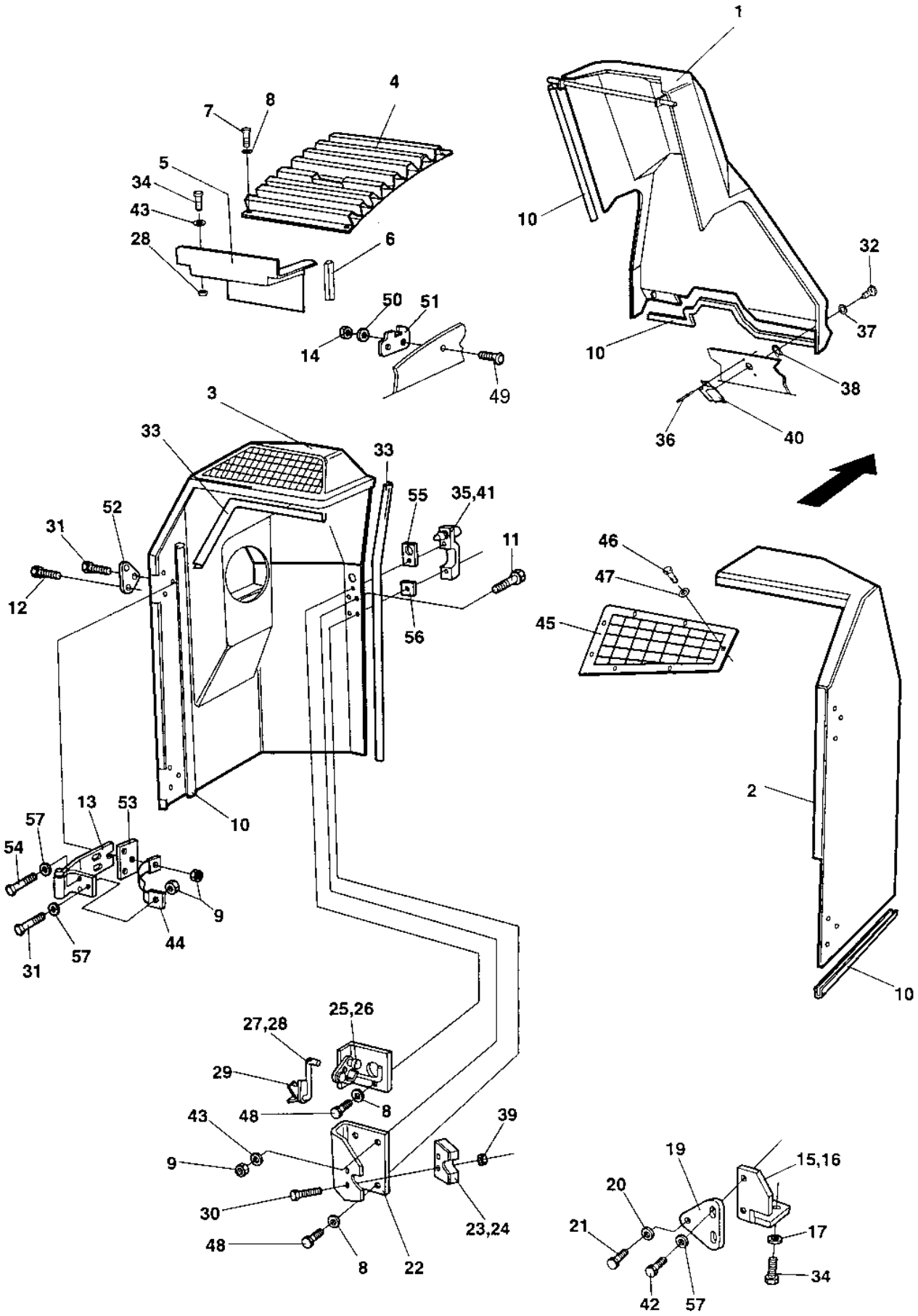
1
4
7
8
5
34
43
28
6
50
51
14
49
10
32
37
10
38
36
40
3
33
33
55
35,41
52
31
11
12
46
47
45
56
2
13
53
57
54
9
44
57
31
10
25,26
27,28
29
48
8
43
39
9
30
48
8
22
23,24
19
15,16
20
21
17
34
42
57

Ref. No.	Part No.	Rem.	Qty	Description	Code
56	903936		2	Rubber gasket	
57	603019		16	Washer	

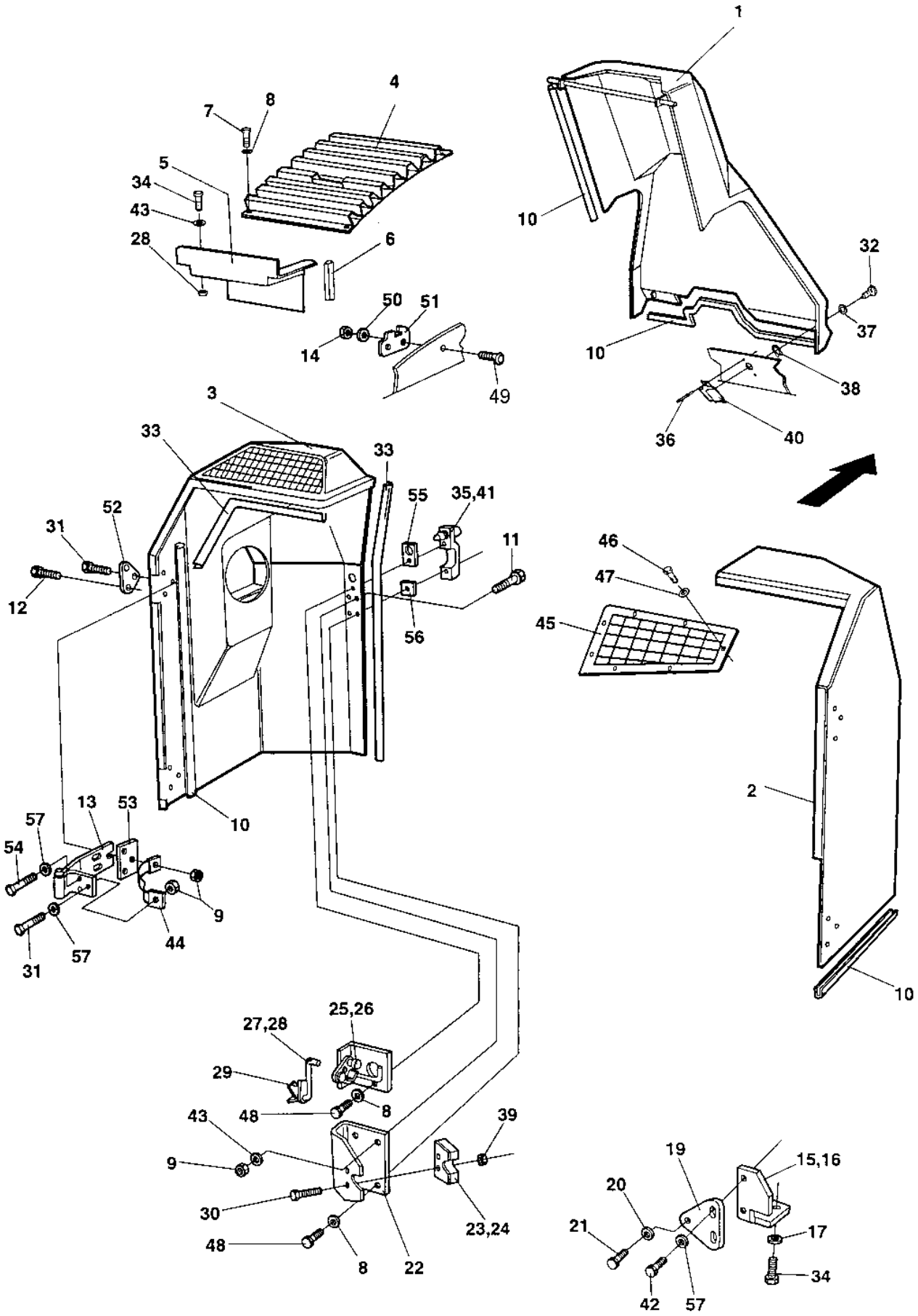
1
4
7
8
5
34
43
28
6
50
51
14
49
10
32
37
10
38
36
40
3
33
33
55
35,41
52
31
11
12
46
47
45
56
2
13
53
57
54
9
44
57
31
10
25,26
27,28
29
48
8
43
39
9
30
48
8
22
23,24
19
15,16
20
21
17
34
42
57

Ref. No.	Part No.	Rem.	Qty	Description	Code
1	372949		1	Cover	
2	372163	A	1	Engine hood	
3	372164	B	1	Engine hood	
4	359747		1	Grid	
5	359748		1	Cover plate	
6	902166	C	2XL	Edge trim	
7	500013		7	Screw M6-1x16 8,8	
8	904228		14	Washer 6,4x12x1,5	
9	586003		10	Lock nut M8	
10	902166	C	6XL	Edge trim	
11	902520		6	Screw	
12	500047		10	Screw M8-1,25x35 8,8	
13	359766		4	Hinge	
14	586002		4	Lock nut M6	
15	372898	A	1	Bracket	
16	372894	B	1	Bracket	
17	611003		4	Sleeve	
19	372893		2	Bracket	
20	371666		2	Locking pin	
21	904231		2	Washer 13x24x2	
22	371659		2	Bracket	
23	371380	E	1	Lock	
24	371381	F	1	Lock	D
25	371449	F	1	Lock device	
26	371450	E	1	Lock device	
27	371451	E	1	Coupling link	
28	371452	F	1	Coupling link	
29	371569		2	Lock device	
30	535053		4	Screw	
31	500023		4	Screw M8-1,25x40 8,8	
32	903340		2	Trunnion	
33	202057	C	6XL	Edge trim	D
34	500019		8	Screw M8-1,25x16 8,8	
35	371389	E	1	Grab handle	
	902866		1	.Key Marked "455"	D
36	923253		4	Rivet	
37	903341		2	Washer	
38	903857		2	Washer	
39	586001		4	Lock nut M5	
40	903344		2	Lock	
41	371390	F	1	Grab handle	
	902866		1	.Key Marked "455"	D
42	500053		4	Screw M8-1,25x20 8,8	
43	904229		12	Washer 8,4x16x1,5	
44	373422		2	Metal strapping	
45	370851		1	Grid	
46	500004		4	Screw M5 0,8x12 8,8	
47	904281		4	Washer 5,3x10x1	
48	500015		4	Screw M6-1x30 8,8	
49	903856		4	Bolt M06x30	
50	603020		4	Washer	
51	372126		2	Cover holder	
52	372675		4	Washer	
53	372566		4	Bracket	
54	500021		8	Screw M8-1,25x25 8,8	
55	903937		2	Rubber gasket	

A) Right
B) Left
C) Length as required
E) Right hood
F) Left hood

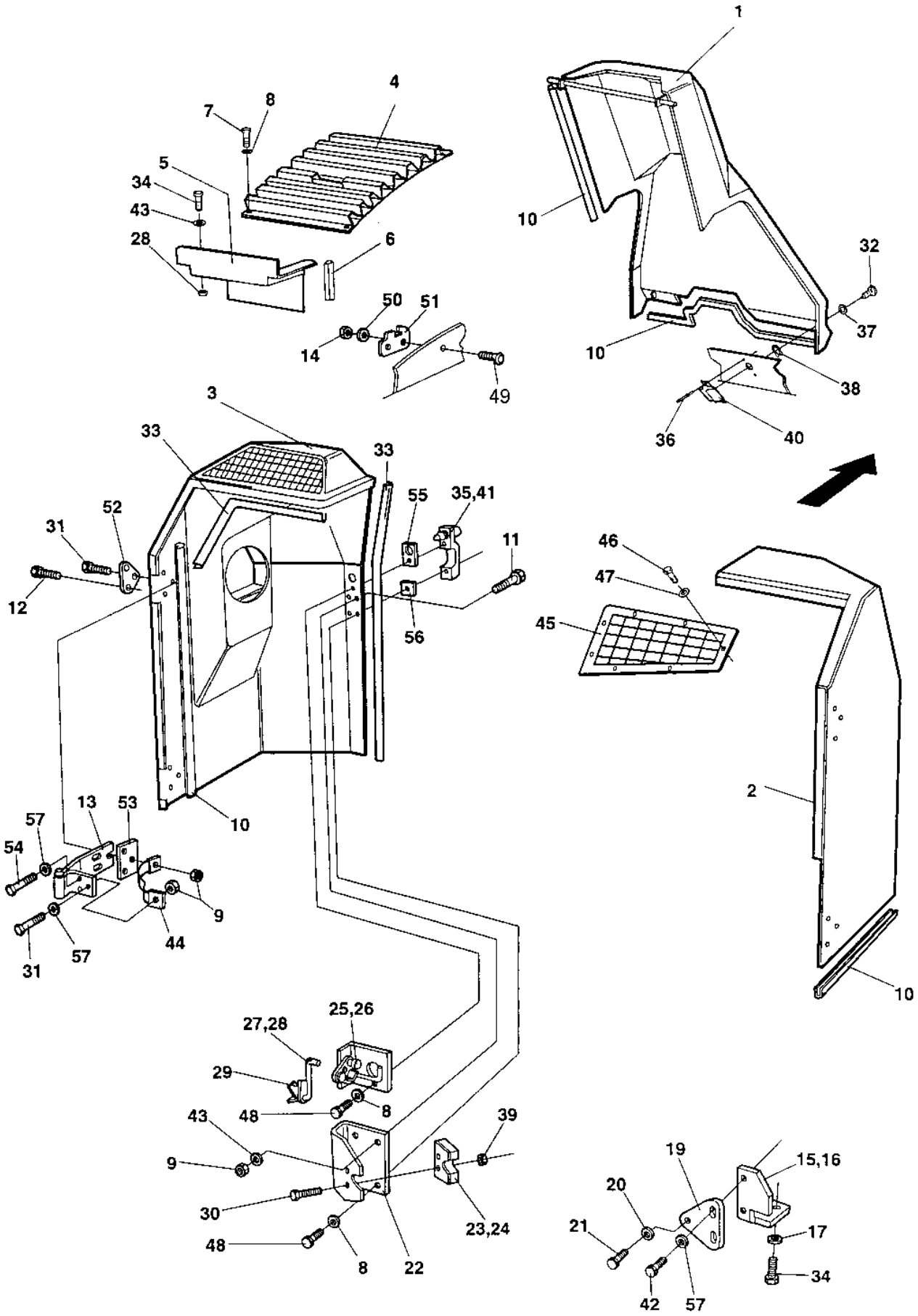
1
4
7
8
5
34
43
28
6
50
51
14
49
10
32
37
10
38
36
40
3
33
33
55
35,41
52
31
11
12
46
47
45
56
2
13
53
57
54
9
44
57
31
10
25,26
27,28
29
8
48
43
39
9
30
48
8
22
23,24
19
15,16
20
21
17
34
42
57

Ref. No.	Part No.	Rem.	Qty	Description	Code
56	903936		2	Rubber gasket	
57	603019		16	Washer	

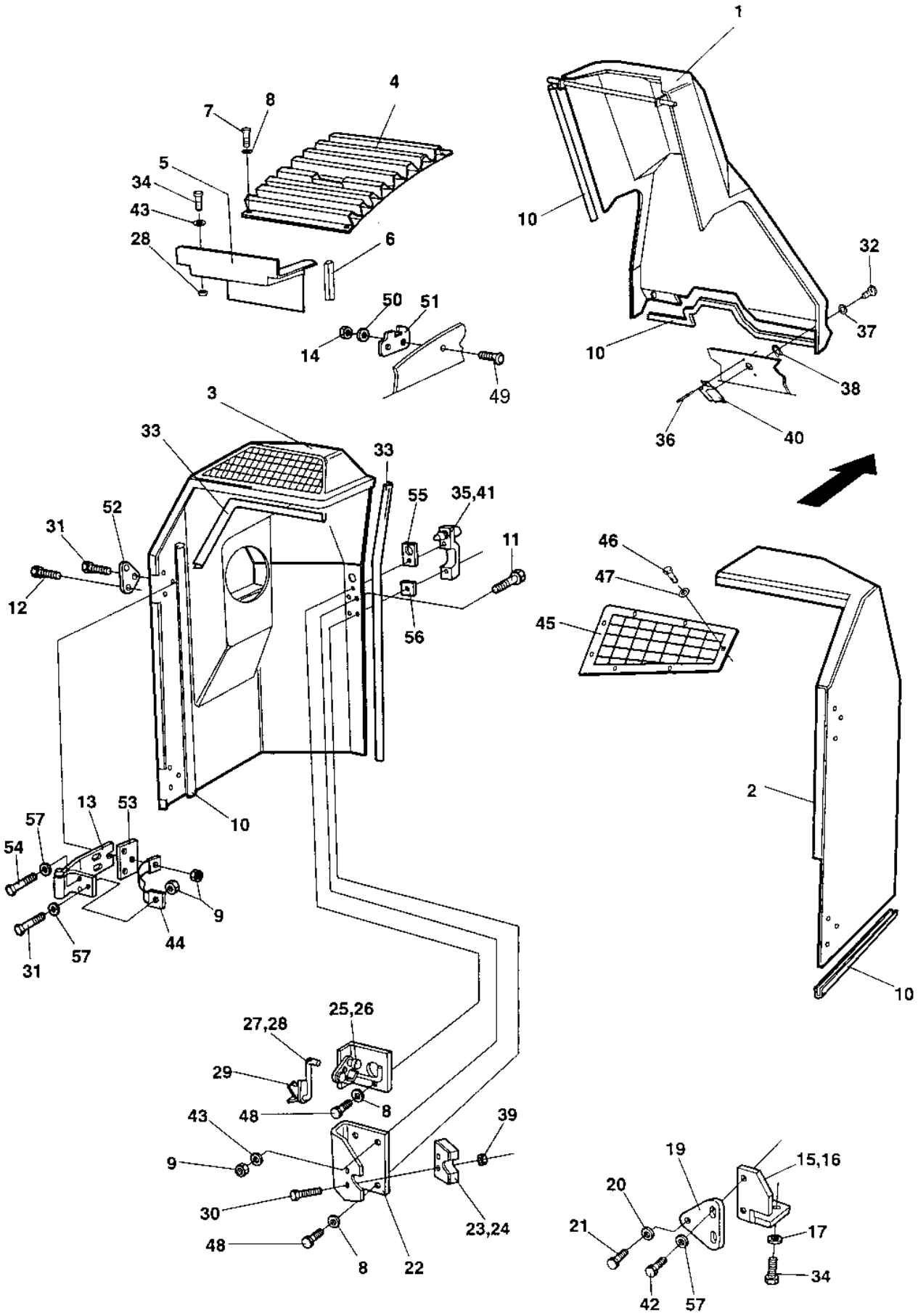
1
4
7
8
5
34
43
28
6
50
51
14
49
10
32
37
10
38
36
40
3
33
33
55
35,41
52
31
11
12
46
47
45
56
2
13
53
57
54
10
9
44
57
31
25,26
27,28
29
48
8
43
39
9
19
15,16
20
30
23,24
21
17
48
8
22
34
42
57

Ref. No.	Part No.	Rem.	Qty	Description	Code
1	372949		1	Cover	
2	372163	A	1	Engine hood	
3	372164	B	1	Engine hood	
4	359747		1	Grid	
5	359748		1	Cover plate	
6	902166	C	2XL	Edge trim	
7	500013		7	Screw M6-1x16 8,8	
8	904228		14	Washer 6,4x12x1,5	
9	586003		10	Lock nut M8	
10	902166	C	6XL	Edge trim	
11	902520		6	Screw	
12	500047		10	Screw M8-1,25x35 8,8	
13	359766		4	Hinge	
14	586002		4	Lock nut M6	
15	372898	A	1	Bracket	
16	372894	B	1	Bracket	
17	611003		4	Sleeve	
19	372893		2	Bracket	
20	371666		2	Locking pin	
21	904231		2	Washer 13x24x2	
22	371659		2	Bracket	
23	371380	E	1	Lock	
24	371381	F	1	Lock	D
25	371449	F	1	Lock device	
26	371450	E	1	Lock device	
27	371451	E	1	Coupling link	
28	371452	F	1	Coupling link	
29	371569		2	Lock device	
30	535053		4	Screw	
31	500023		4	Screw M8-1,25x40 8,8	
32	903340		2	Trunnion	
33	202057	C	6XL	Edge trim	D
34	500019		8	Screw M8-1,25x16 8,8	
35	371389	E	1	Grab handle	
	902866		1	.Key Marked "455"	D
36	923253		4	Rivet	
37	903341		2	Washer	
38	903857		2	Washer	
39	586001		4	Lock nut M5	
40	903344		2	Lock	
41	371390	F	1	Grab handle	
	902866		1	.Key Marked "455"	D
42	500053		4	Screw M8-1,25x20 8,8	
43	904229		12	Washer 8,4x16x1,5	
44	373422		2	Metal strapping	
45	370851		1	Grid	
46	500004		4	Screw M5 0,8x12 8,8	
47	904281		4	Washer 5,3x10x1	
48	500015		4	Screw M6-1x30 8,8	
49	903856		4	Bolt M06x30	
50	603020		4	Washer	
51	372126		2	Cover holder	
52	372675		4	Washer	
53	372566		4	Bracket	
54	500021		8	Screw M8-1,25x25 8,8	
55	903937		2	Rubber gasket	

A) Right
B) Left
C) Length as required
E) Right hood
F) Left hood

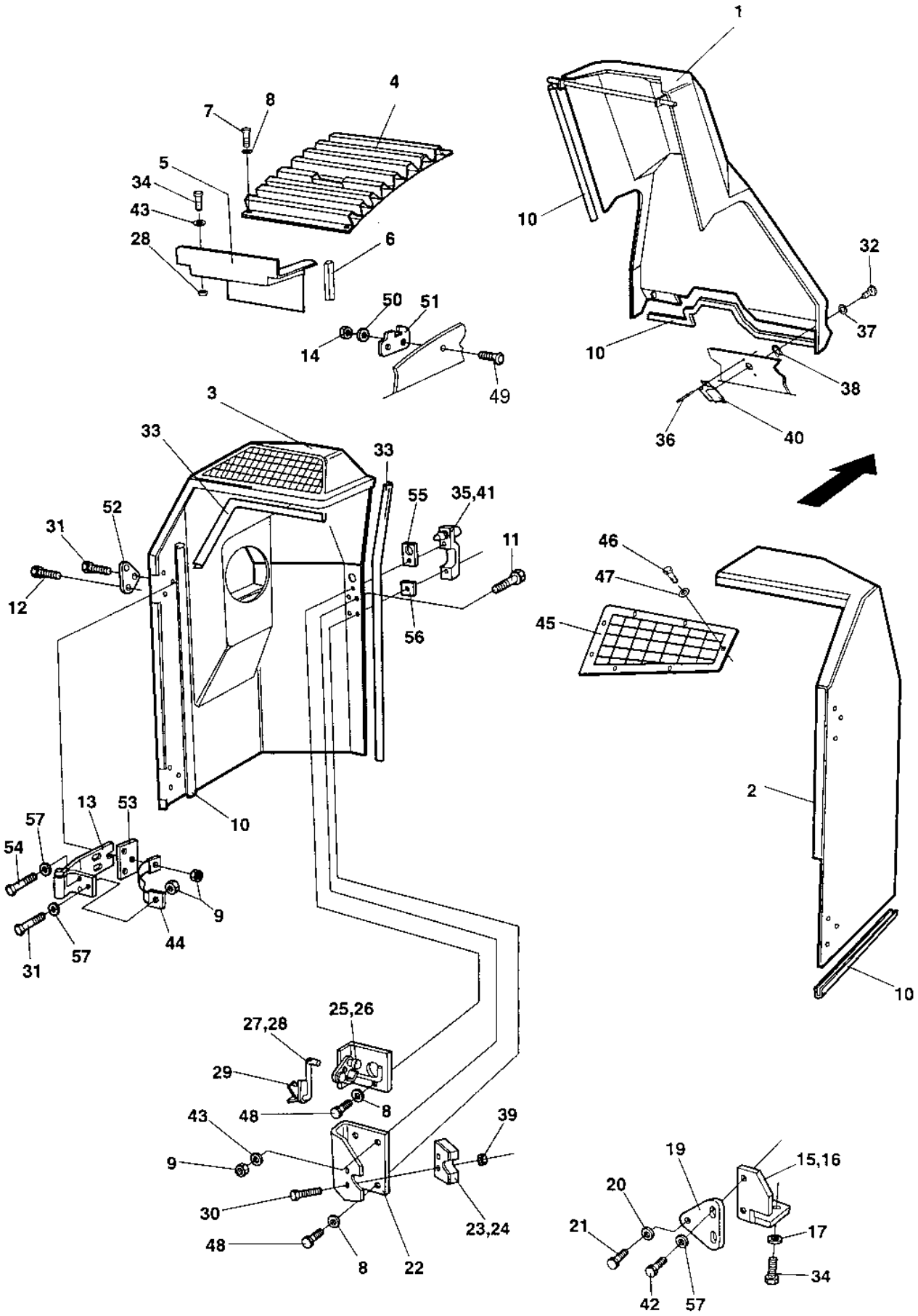
1
4
7
8
5
34
43
28
6
50
51
14
49
10
32
37
10
38
36
40
3
33
33
55
35,41
52
31
11
12
46
47
45
56
2
13
53
57
54
10
9
44
57
31
25,26
27,28
29
48
8
43
39
9
19
15,16
20
30
23,24
21
17
48
8
22
34
42
57

Ref. No.	Part No.	Rem.	Qty	Description	Code
56	903936		2	Rubber gasket	
57	603019		16	Washer	

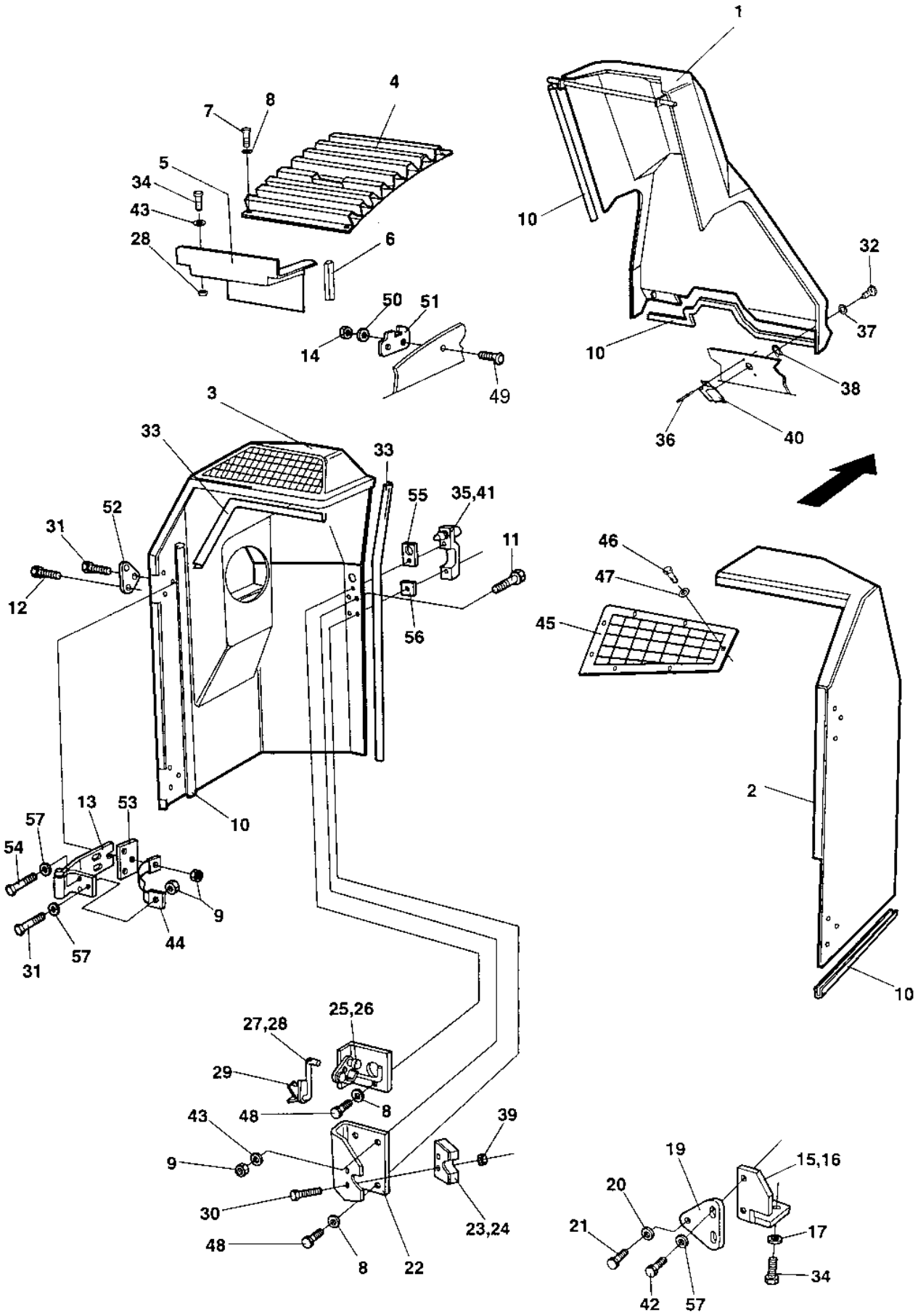
1
4
7
8
5
34
43
28
6
50
51
14
49
10
32
37
10
38
36
40
3
33
33
55
35,41
52
31
11
12
46
47
45
56
2
13
53
57
54
10
9
44
57
31
25,26
27,28
29
48
8
43
39
9
19
15,16
20
30
23,24
21
17
48
8
22
34
42
57

Ref. No.	Part No.	Rem.	Qty	Description	Code
1	372949		1	Cover	
2	372163	A	1	Engine hood	
3	372164	B	1	Engine hood	
4	359747		1	Grid	
5	359748		1	Cover plate	
6	902166	C	2XL	Edge trim	
7	500013		7	Screw M6-1x16 8,8	
8	904228		14	Washer 6,4x12x1,5	
9	586003		10	Lock nut M8	
10	902166	C	6XL	Edge trim	
11	902520		6	Screw	
12	500047		10	Screw M8-1,25x35 8,8	
13	359766		4	Hinge	
14	586002		4	Lock nut M6	
15	372898	A	1	Bracket	
16	372894	B	1	Bracket	
17	611003		4	Sleeve	
19	372893		2	Bracket	
20	371666		2	Locking pin	
21	904231		2	Washer 13x24x2	
22	371659		2	Bracket	
23	371380	E	1	Lock	
24	371381	F	1	Lock	D
25	371449	F	1	Lock device	
26	371450	E	1	Lock device	
27	371451	E	1	Coupling link	
28	371452	F	1	Coupling link	
29	371569		2	Lock device	
30	535053		4	Screw	
31	500023		4	Screw M8-1,25x40 8,8	
32	903340		2	Trunnion	
33	202057	C	6XL	Edge trim	D
34	500019		8	Screw M8-1,25x16 8,8	
35	371389	E	1	Grab handle	
	902866		1	.Key Marked "455"	D
36	923253		4	Rivet	
37	903341		2	Washer	
38	903857		2	Washer	
39	586001		4	Lock nut M5	
40	903344		2	Lock	
41	371390	F	1	Grab handle	
	902866		1	.Key Marked "455"	D
42	500053		4	Screw M8-1,25x20 8,8	
43	904229		12	Washer 8,4x16x1,5	
44	373422		2	Metal strapping	
45	370851		1	Grid	
46	500004		4	Screw M5 0,8x12 8,8	
47	904281		4	Washer 5,3x10x1	
48	500015		4	Screw M6-1x30 8,8	
49	903856		4	Bolt M06x30	
50	603020		4	Washer	
51	372126		2	Cover holder	
52	372675		4	Washer	
53	372566		4	Bracket	
54	500021		8	Screw M8-1,25x25 8,8	
55	903937		2	Rubber gasket	

A) Right
B) Left
C) Length as required
E) Right hood
F) Left hood

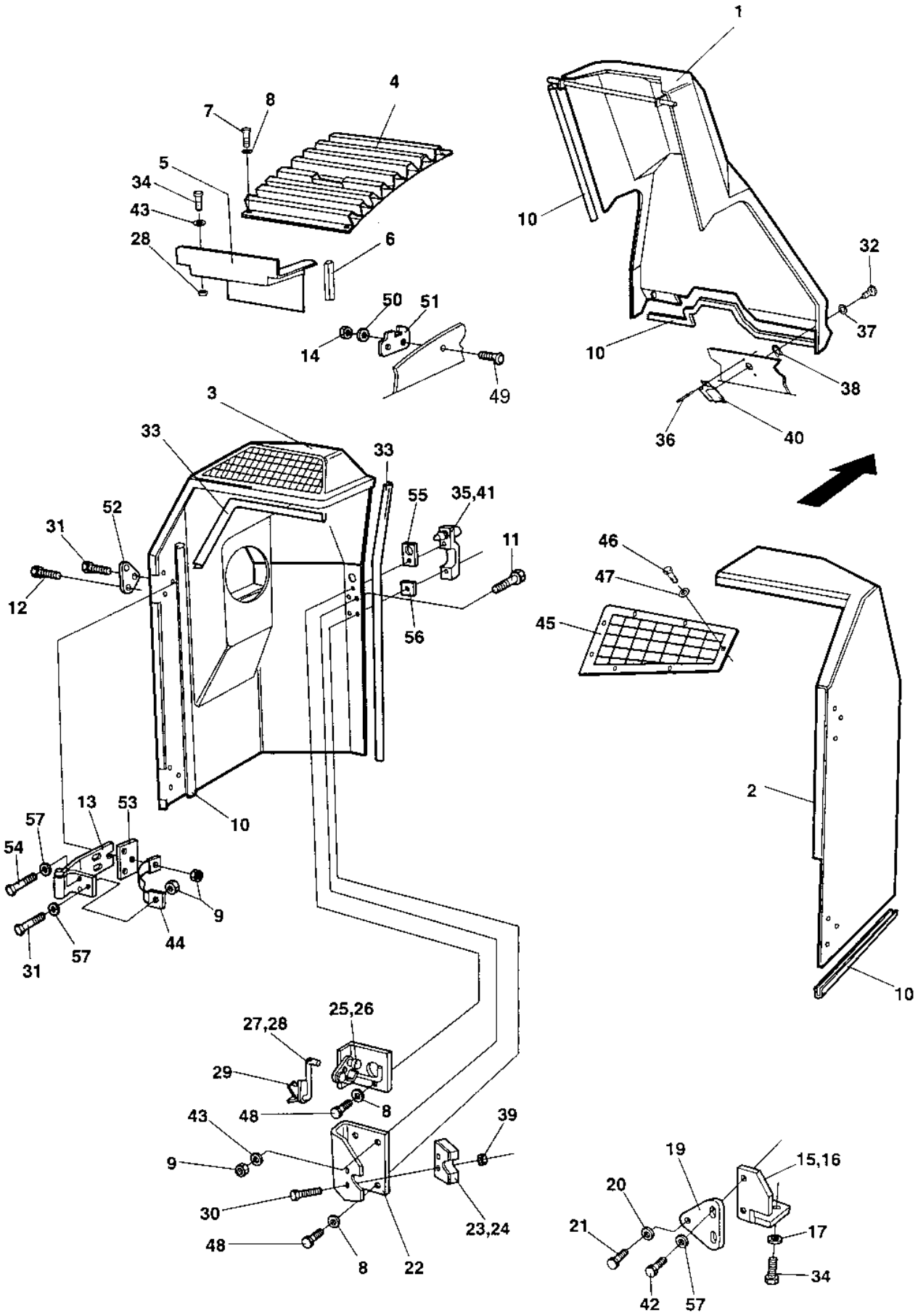
1
4
7
8
5
34
43
28
6
50
51
14
49
10
32
37
10
38
36
40
3
33
33
55
35,41
52
31
11
12
46
47
45
56
2
13
53
57
54
10
9
44
57
31
25,26
27,28
29
48
8
43
39
9
19
15,16
20
30
23,24
21
17
48
8
22
34
42
57

Ref. No.	Part No.	Rem.	Qty	Description	Code
56	903936		2	Rubber gasket	
57	603019		16	Washer	

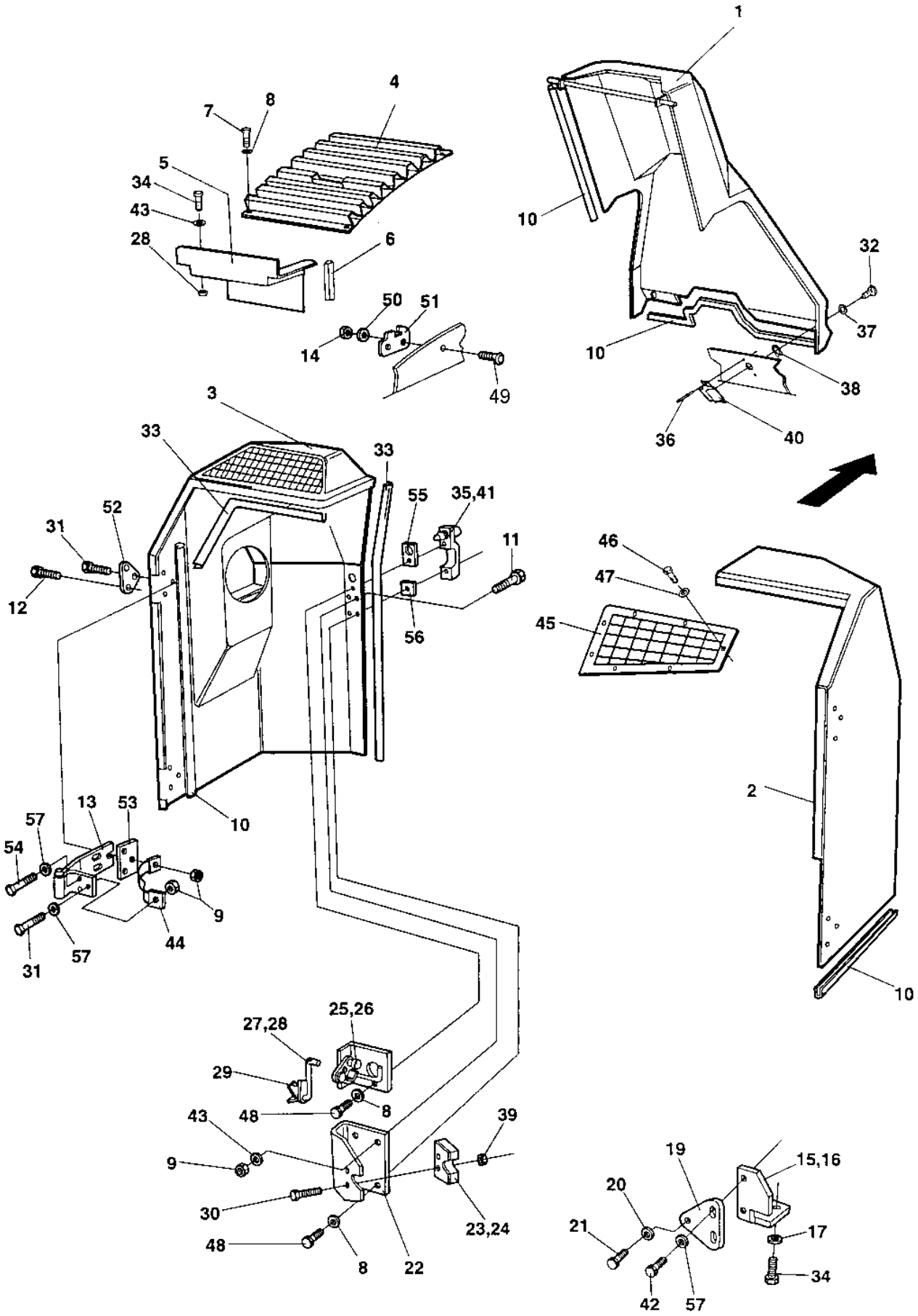
1
4
7
8
5
34
43
28
6
50
51
14
49
10
32
37
10
38
36
40
3
33
33
55
35,41
52
31
11
12
46
47
45
56
2
13
53
57
54
10
9
44
57
31
27,28
25,26
29
48
8
43
39
9
30
48
8
22
23,24
19
15,16
20
21
17
34
42
57

Ref. No.	Part No.	Rem.	Qty	Description	Code
1	372949		1	Cover	
2	372163	A	1	Engine hood	
3	372164	B	1	Engine hood	
4	359747		1	Grid	
5	359748		1	Cover plate	
6	902166	C	2XL	Edge trim	
7	500013		7	Screw M6-1x16 8,8	
8	904228		14	Washer 6,4x12x1,5	
9	586003		10	Lock nut M8	
10	902166	C	6XL	Edge trim	
11	902520		6	Screw	
12	500047		10	Screw M8-1,25x35 8,8	
13	359766		4	Hinge	
14	586002		4	Lock nut M6	
15	372898	A	1	Bracket	
16	372894	B	1	Bracket	
17	611003		4	Sleeve	
19	372893		2	Bracket	
20	371666		2	Locking pin	
21	904231		2	Washer 13x24x2	
22	371659		2	Bracket	
23	371380	E	1	Lock	
24	371381	F	1	Lock	D
25	371449	F	1	Lock device	
26	371450	E	1	Lock device	
27	371451	E	1	Coupling link	
28	371452	F	1	Coupling link	
29	371569		2	Lock device	
30	535053		4	Screw	
31	500023		4	Screw M8-1,25x40 8,8	
32	903340		2	Trunnion	
33	202057	C	6XL	Edge trim	D
34	500019		8	Screw M8-1,25x16 8,8	
35	371389	E	1	Grab handle	
	902866		1	.Key Marked "455"	D
36	923253		4	Rivet	
37	903341		2	Washer	
38	903857		2	Washer	
39	586001		4	Lock nut M5	
40	903344		2	Lock	
41	371390	F	1	Grab handle	
	902866		1	.Key Marked "455"	D
42	500053		4	Screw M8-1,25x20 8,8	
43	904229		12	Washer 8,4x16x1,5	
44	373422		2	Metal strapping	
45	370851		1	Grid	
46	500004		4	Screw M5 0,8x12 8,8	
47	904281		4	Washer 5,3x10x1	
48	500015		4	Screw M6-1x30 8,8	
49	903856		4	Bolt M06x30	
50	603020		4	Washer	
51	372126		2	Cover holder	
52	372675		4	Washer	
53	372566		4	Bracket	
54	500021		8	Screw M8-1,25x25 8,8	
55	903937		2	Rubber gasket	

A) Right
B) Left
C) Length as required
E) Right hood
F) Left hood

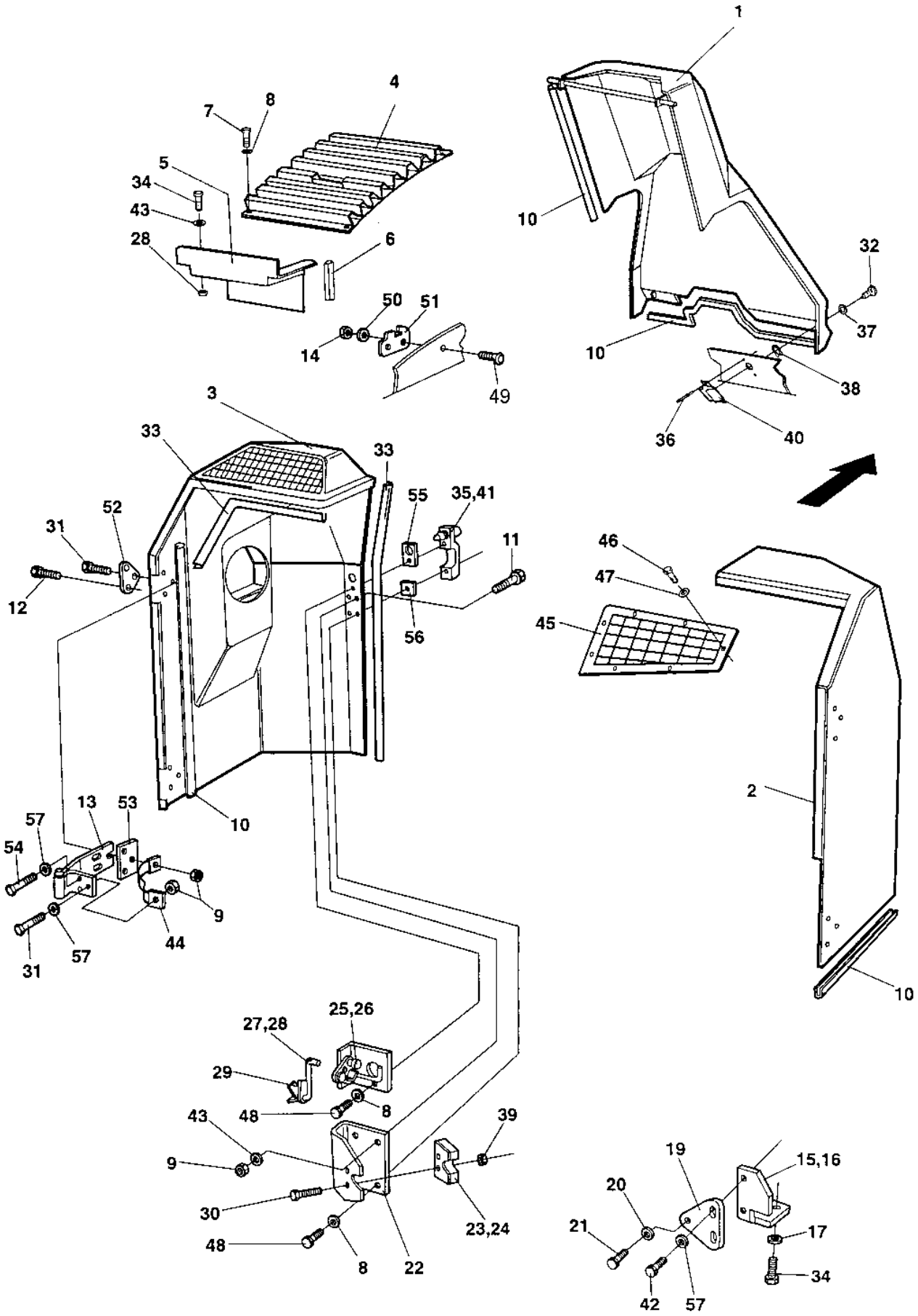
1
4
7
8
5
34
43
28
6
50
51
14
49
10
32
37
38
36
40
3
33
33
52
31
12
55
35,41
11
56
46
47
45
2
10
13
53
57
54
9
44
57
31
27,28
25,26
29
48
8
43
39
9
30
48
8
22
23,24
19
15,16
20
21
17
34
42
57

Ref. No.	Part No.	Rem.	Qty	Description	Code
56	903936		2	Rubber gasket	
57	603019		16	Washer	

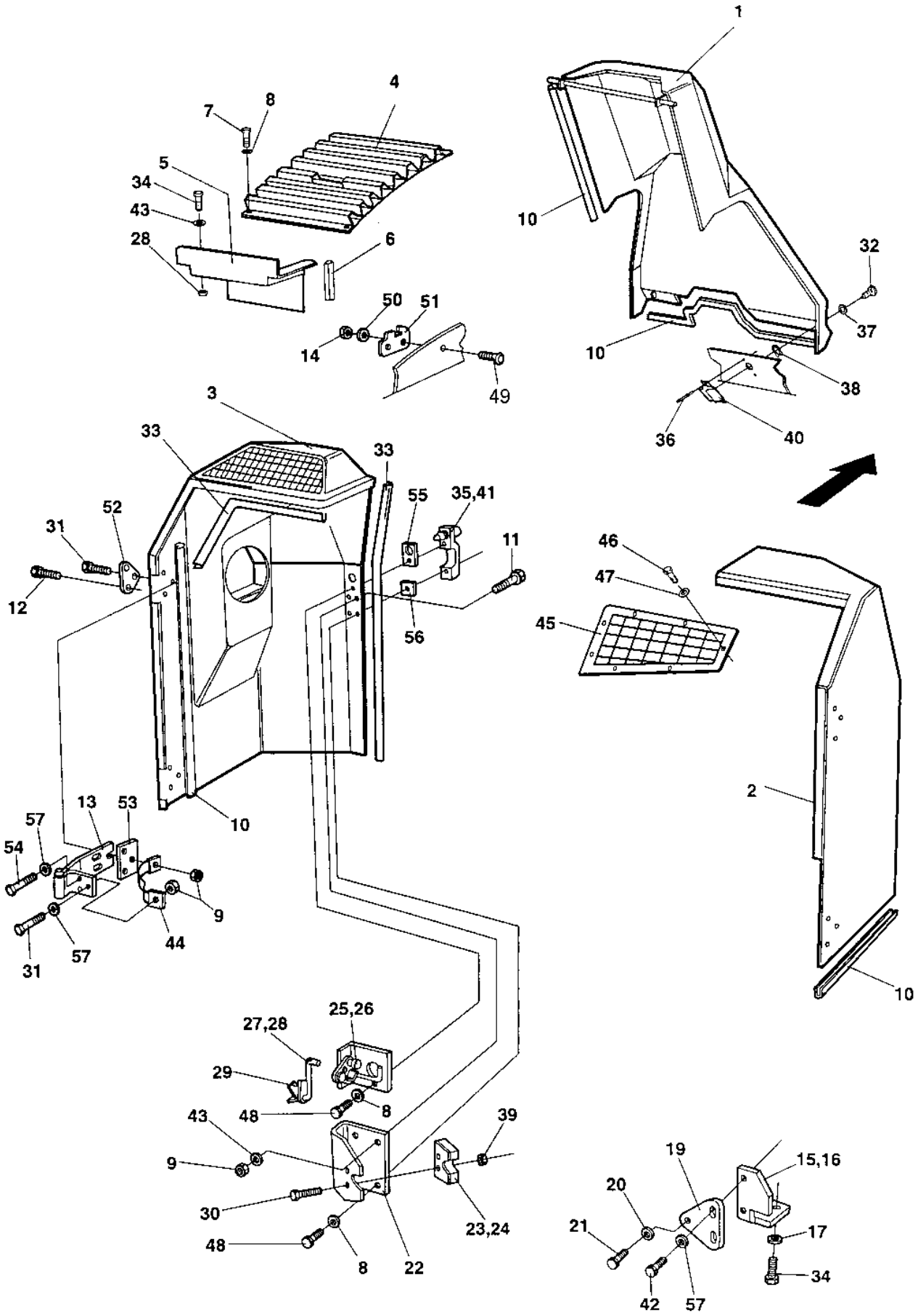
1
4
7
8
5
34
43
28
6
50
51
14
49
10
32
37
10
38
36
40
3
33
33
55
35,41
52
31
11
12
46
47
45
56
2
13
53
57
54
9
44
57
31
10
25,26
27,28
29
8
48
43
39
9
30
48
8
22
23,24
19
15,16
20
21
17
34
42
57

Ref. No.	Part No.	Rem.	Qty	Description	Code
1	372949		1	Cover	
2	372163	A	1	Engine hood	
3	372164	B	1	Engine hood	
4	359747		1	Grid	
5	359748		1	Cover plate	
6	902166	C	2XL	Edge trim	
7	500013		7	Screw M6-1x16 8,8	
8	904228		14	Washer 6,4x12x1,5	
9	586003		10	Lock nut M8	
10	902166	C	6XL	Edge trim	
11	902520		6	Screw	
12	500047		10	Screw M8-1,25x35 8,8	
13	359766		4	Hinge	
14	586002		4	Lock nut M6	
15	372898	A	1	Bracket	
16	372894	B	1	Bracket	
17	611003		4	Sleeve	
19	372893		2	Bracket	
20	371666		2	Locking pin	
21	904231		2	Washer 13x24x2	
22	371659		2	Bracket	
23	371380	E	1	Lock	
24	371381	F	1	Lock	D
25	371449	F	1	Lock device	
26	371450	E	1	Lock device	
27	371451	E	1	Coupling link	
28	371452	F	1	Coupling link	
29	371569		2	Lock device	
30	535053		4	Screw	
31	500023		4	Screw M8-1,25x40 8,8	
32	903340		2	Trunnion	
33	202057	C	6XL	Edge trim	D
34	500019		8	Screw M8-1,25x16 8,8	
35	371389	E	1	Grab handle	
	902866		1	.Key Marked "455"	D
36	923253		4	Rivet	
37	903341		2	Washer	
38	903857		2	Washer	
39	586001		4	Lock nut M5	
40	903344		2	Lock	
41	371390	F	1	Grab handle	
	902866		1	.Key Marked "455"	D
42	500053		4	Screw M8-1,25x20 8,8	
43	904229		12	Washer 8,4x16x1,5	
44	373422		2	Metal strapping	
45	370851		1	Grid	
46	500004		4	Screw M5 0,8x12 8,8	
47	904281		4	Washer 5,3x10x1	
48	500015		4	Screw M6-1x30 8,8	
49	903856		4	Bolt M06x30	
50	603020		4	Washer	
51	372126		2	Cover holder	
52	372675		4	Washer	
53	372566		4	Bracket	
54	500021		8	Screw M8-1,25x25 8,8	
55	903937		2	Rubber gasket	

A) Right
B) Left
C) Length as required
E) Right hood
F) Left hood

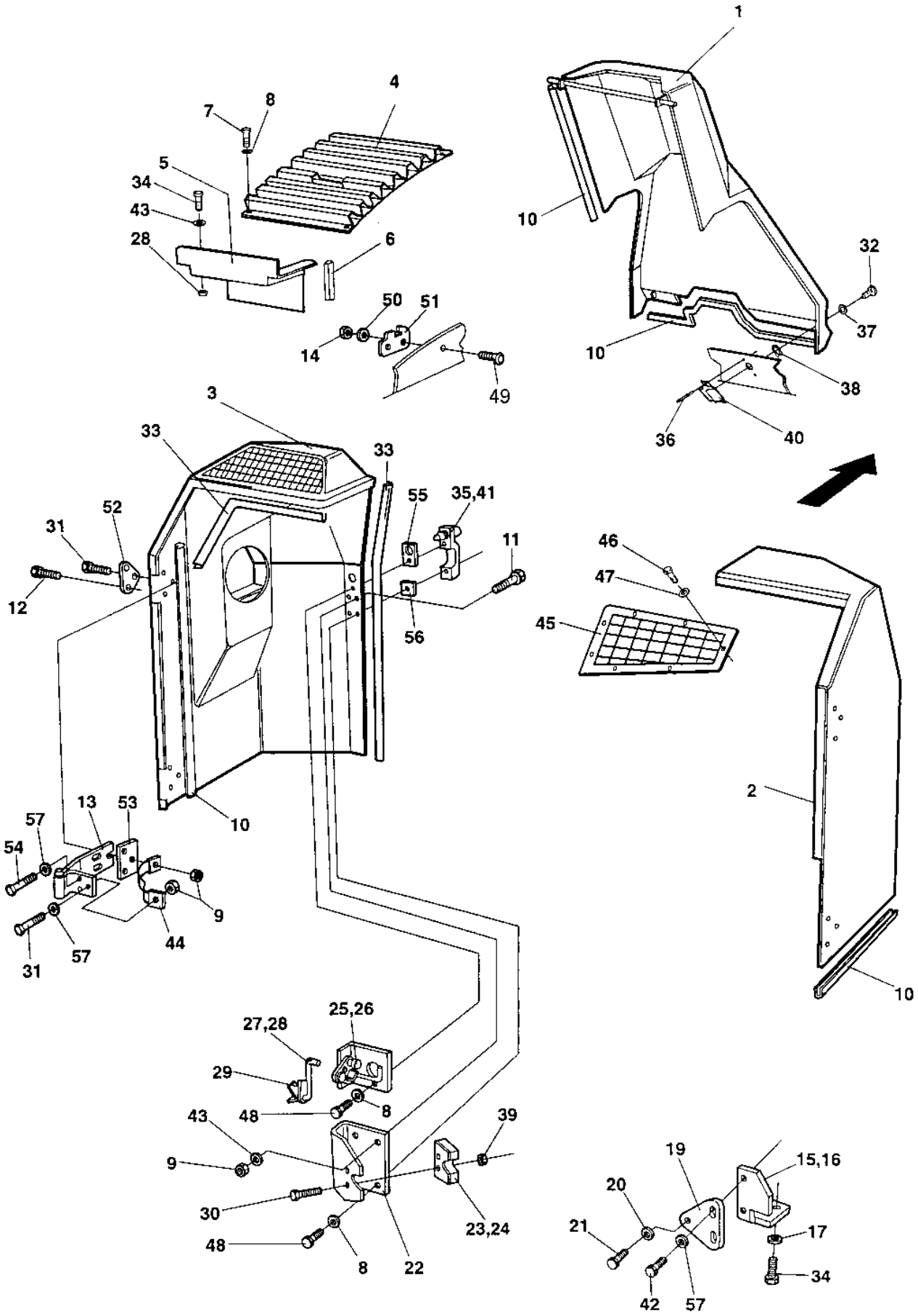
1
4
7
8
5
34
43
28
6
50
51
14
49
10
32
37
38
36
40
3
33
33
52
31
12
55
35,41
11
56
46
47
45
2
10
13
53
57
54
9
44
57
31
27,28
25,26
29
48
8
43
39
9
30
48
8
22
23,24
19
15,16
20
21
17
34
42
57

Ref. No.	Part No.	Rem.	Qty	Description	Code
56	903936		2	Rubber gasket	
57	603019		16	Washer	

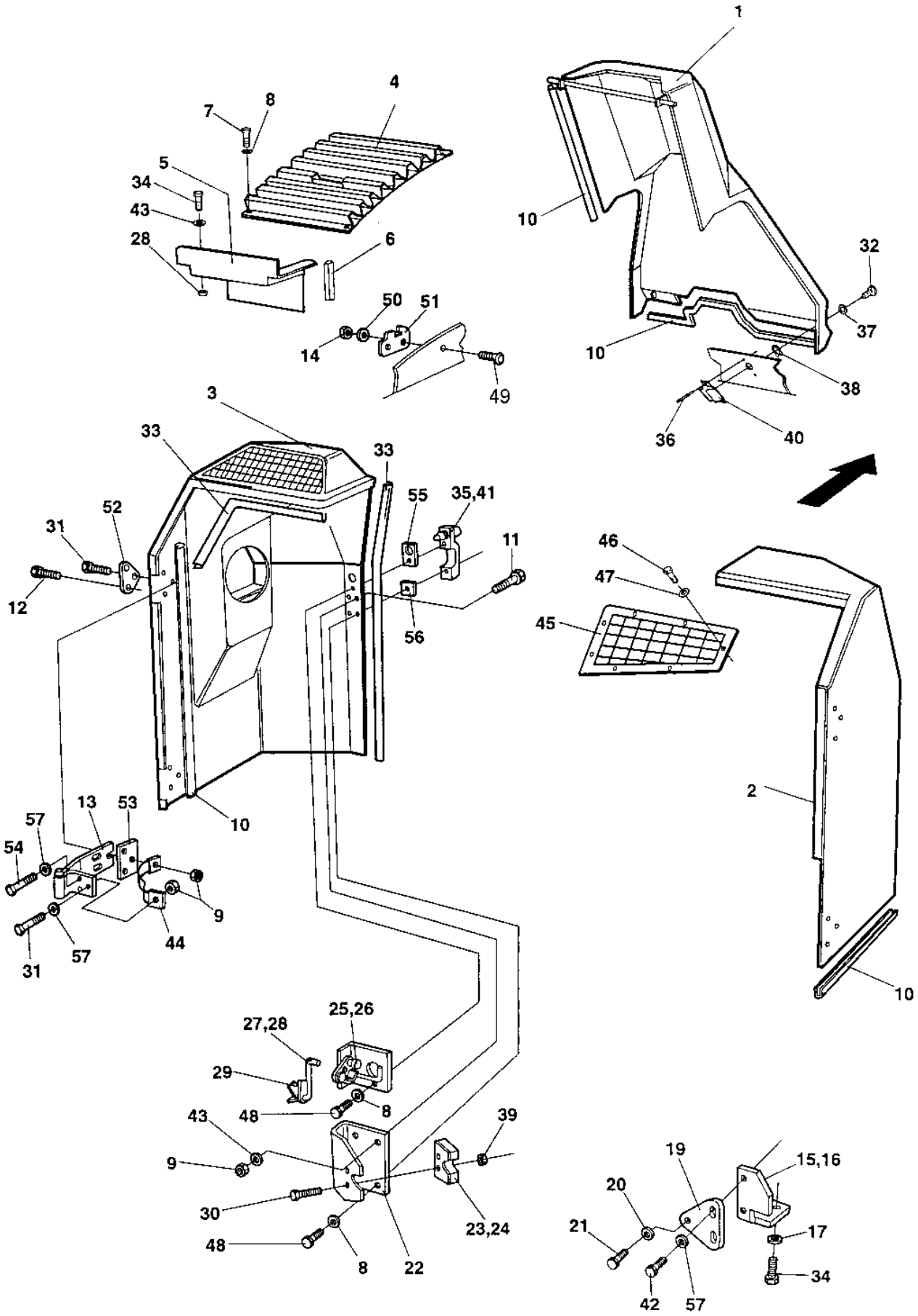
1
4
7
8
5
34
43
28
6
50
51
14
49
10
32
37
10
38
36
40
3
33
33
55
35,41
52
31
11
12
46
47
45
56
2
13
53
57
54
10
9
44
57
31
27,28
25,26
29
48
8
43
39
9
30
48
8
22
23,24
19
15,16
20
21
17
34
42
57

Ref. No.	Part No.	Rem.	Qty	Description	Code
1	372949		1	Cover	
2	372163	A	1	Engine hood	
3	372164	B	1	Engine hood	
4	359747		1	Grid	
5	359748		1	Cover plate	
6	902166	C	2XL	Edge trim	
7	500013		7	Screw M6-1x16 8,8	
8	904228		14	Washer 6,4x12x1,5	
9	586003		10	Lock nut M8	
10	902166	C	6XL	Edge trim	
11	902520		6	Screw	
12	500047		10	Screw M8-1,25x35 8,8	
13	359766		4	Hinge	
14	586002		4	Lock nut M6	
15	372898	A	1	Bracket	
16	372894	B	1	Bracket	
17	611003		4	Sleeve	
19	372893		2	Bracket	
20	371666		2	Locking pin	
21	904231		2	Washer 13x24x2	
22	371659		2	Bracket	
23	371380	E	1	Lock	
24	371381	F	1	Lock	D
25	371449	F	1	Lock device	
26	371450	E	1	Lock device	
27	371451	E	1	Coupling link	
28	371452	F	1	Coupling link	
29	371569		2	Lock device	
30	535053		4	Screw	
31	500023		4	Screw M8-1,25x40 8,8	
32	903340		2	Trunnion	
33	202057	C	6XL	Edge trim	D
34	500019		8	Screw M8-1,25x16 8,8	
35	371389	E	1	Grab handle	
	902866		1	.Key Marked "455"	D
36	923253		4	Rivet	
37	903341		2	Washer	
38	903857		2	Washer	
39	586001		4	Lock nut M5	
40	903344		2	Lock	
41	371390	F	1	Grab handle	
	902866		1	.Key Marked "455"	D
42	500053		4	Screw M8-1,25x20 8,8	
43	904229		12	Washer 8,4x16x1,5	
44	373422		2	Metal strapping	
45	370851		1	Grid	
46	500004		4	Screw M5 0,8x12 8,8	
47	904281		4	Washer 5,3x10x1	
48	500015		4	Screw M6-1x30 8,8	
49	903856		4	Bolt M06x30	
50	603020		4	Washer	
51	372126		2	Cover holder	
52	372675		4	Washer	
53	372566		4	Bracket	
54	500021		8	Screw M8-1,25x25 8,8	
55	903937		2	Rubber gasket	

A) Right
B) Left
C) Length as required
E) Right hood
F) Left hood

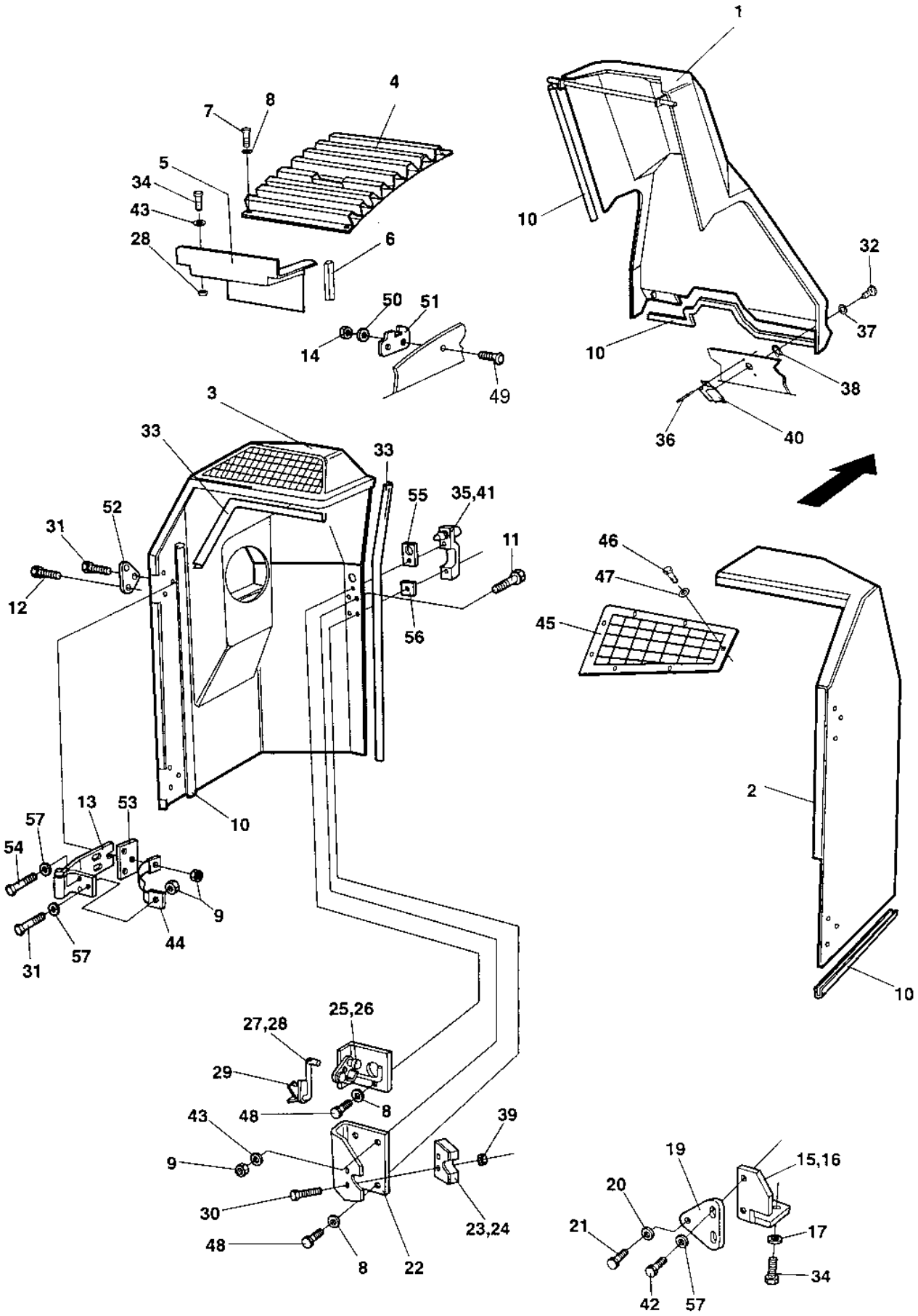
1
4
7
8
5
34
43
28
6
50
51
14
49
10
32
37
38
36
40
3
33
33
52
31
12
55
35,41
11
56
46
47
45
2
10
13
53
57
54
9
44
57
31
27,28
25,26
29
48
8
43
39
9
30
48
8
22
23,24
19
15,16
20
21
17
34
42
57

Ref. No.	Part No.	Rem.	Qty	Description	Code
56	903936		2	Rubber gasket	
57	603019		16	Washer	

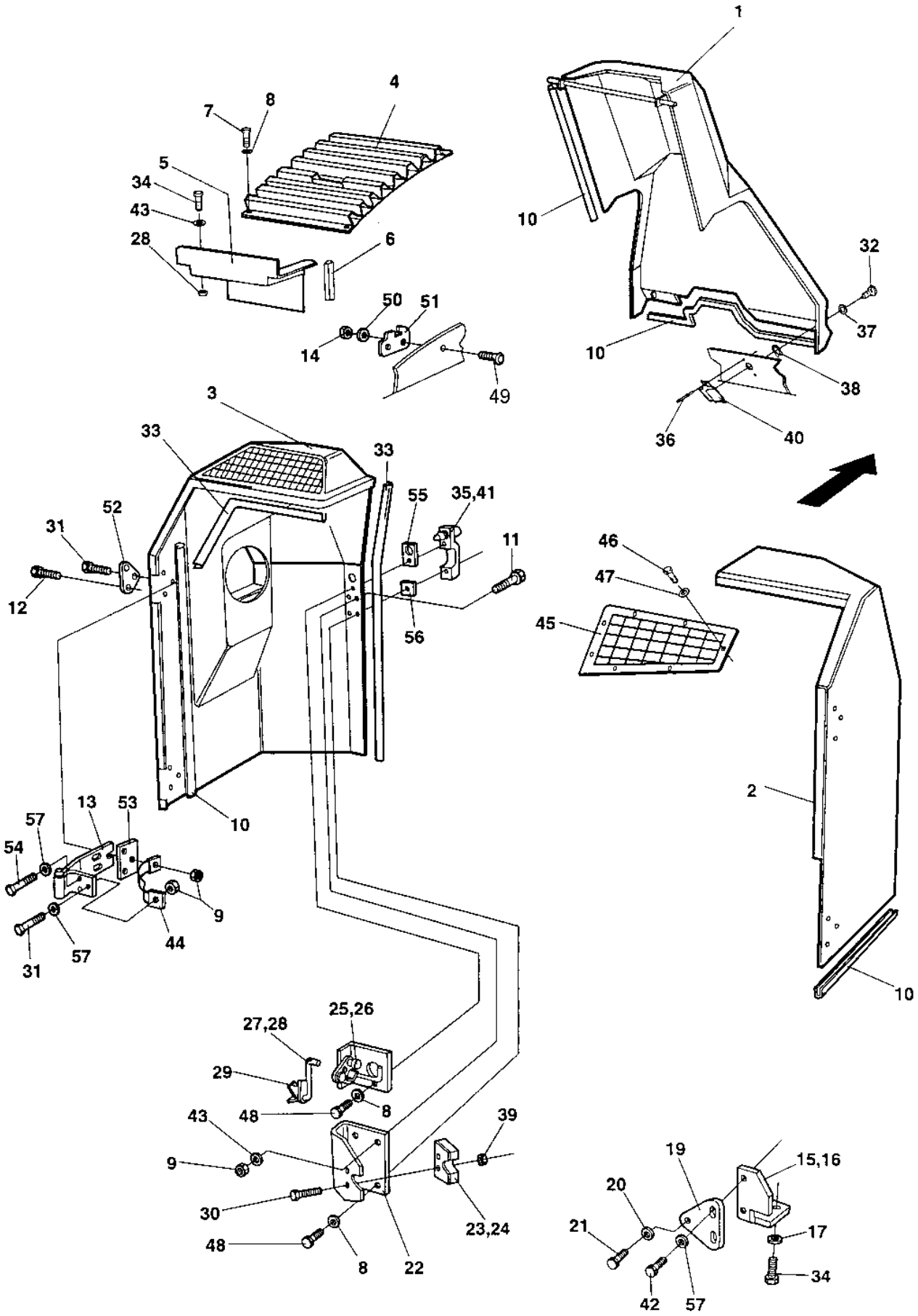
1
4
7
8
5
34
43
28
6
50
51
14
49
10
32
37
38
36
40
3
33
33
52
31
12
55
35,41
11
56
46
47
45
2
10
13
53
57
54
9
44
57
31
27,28
25,26
29
48
8
43
39
9
30
48
8
22
23,24
19
15,16
20
21
17
34
42
57

Ref. No.	Part No.	Rem.	Qty	Description	Code
1	372949		1	Cover	
2	372163	A	1	Engine hood	
3	372164	B	1	Engine hood	
4	359747		1	Grid	
5	359748		1	Cover plate	
6	902166	C	2XL	Edge trim	
7	500013		7	Screw M6-1x16 8,8	
8	904228		14	Washer 6,4x12x1,5	
9	586003		10	Lock nut M8	
10	902166	C	6XL	Edge trim	
11	902520		6	Screw	
12	500047		10	Screw M8-1,25x35 8,8	
13	359766		4	Hinge	
14	586002		4	Lock nut M6	
15	372898	A	1	Bracket	
16	372894	B	1	Bracket	
17	611003		4	Sleeve	
19	372893		2	Bracket	
20	371666		2	Locking pin	
21	904231		2	Washer 13x24x2	
22	371659		2	Bracket	
23	371380	E	1	Lock	
24	371381	F	1	Lock	D
25	371449	F	1	Lock device	
26	371450	E	1	Lock device	
27	371451	E	1	Coupling link	
28	371452	F	1	Coupling link	
29	371569		2	Lock device	
30	535053		4	Screw	
31	500023		4	Screw M8-1,25x40 8,8	
32	903340		2	Trunnion	
33	202057	C	6XL	Edge trim	D
34	500019		8	Screw M8-1,25x16 8,8	
35	371389	E	1	Grab handle	
	902866		1	.Key Marked "455"	D
36	923253		4	Rivet	
37	903341		2	Washer	
38	903857		2	Washer	
39	586001		4	Lock nut M5	
40	903344		2	Lock	
41	371390	F	1	Grab handle	
	902866		1	.Key Marked "455"	D
42	500053		4	Screw M8-1,25x20 8,8	
43	904229		12	Washer 8,4x16x1,5	
44	373422		2	Metal strapping	
45	370851		1	Grid	
46	500004		4	Screw M5 0,8x12 8,8	
47	904281		4	Washer 5,3x10x1	
48	500015		4	Screw M6-1x30 8,8	
49	903856		4	Bolt M06x30	
50	603020		4	Washer	
51	372126		2	Cover holder	
52	372675		4	Washer	
53	372566		4	Bracket	
54	500021		8	Screw M8-1,25x25 8,8	
55	903937		2	Rubber gasket	

A) Right
B) Left
C) Length as required
E) Right hood
F) Left hood

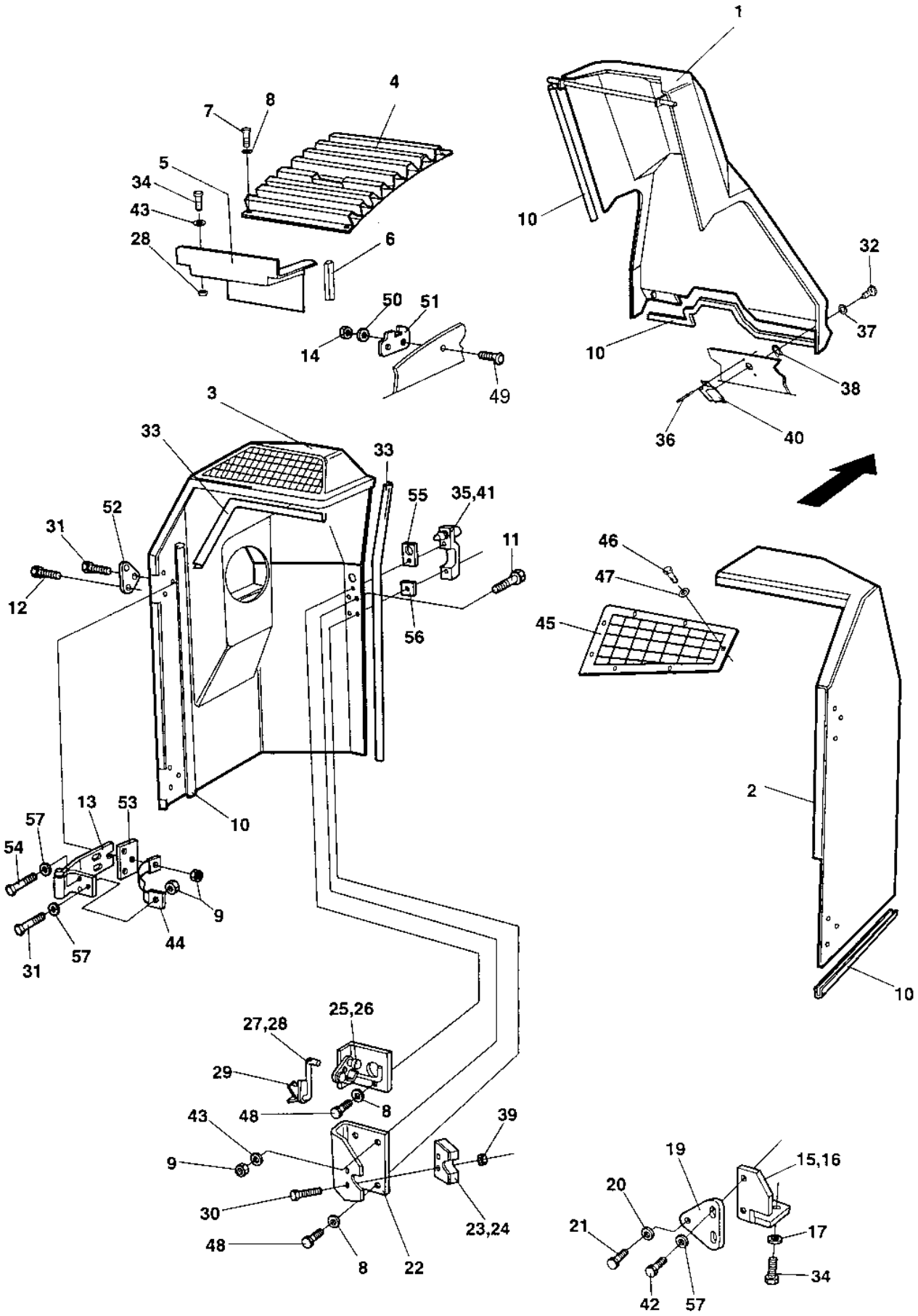
1
4
7
8
5
34
43
28
6
50
51
14
49
10
32
37
10
38
36
40
3
33
33
55
35,41
52
31
11
12
46
47
45
56
2
13
53
57
54
9
44
57
31
10
25,26
27,28
29
48
8
43
39
9
30
48
8
22
23,24
19
15,16
20
21
17
34
42
57

Ref. No.	Part No.	Rem.	Qty	Description	Code
56	903936		2	Rubber gasket	
57	603019		16	Washer	

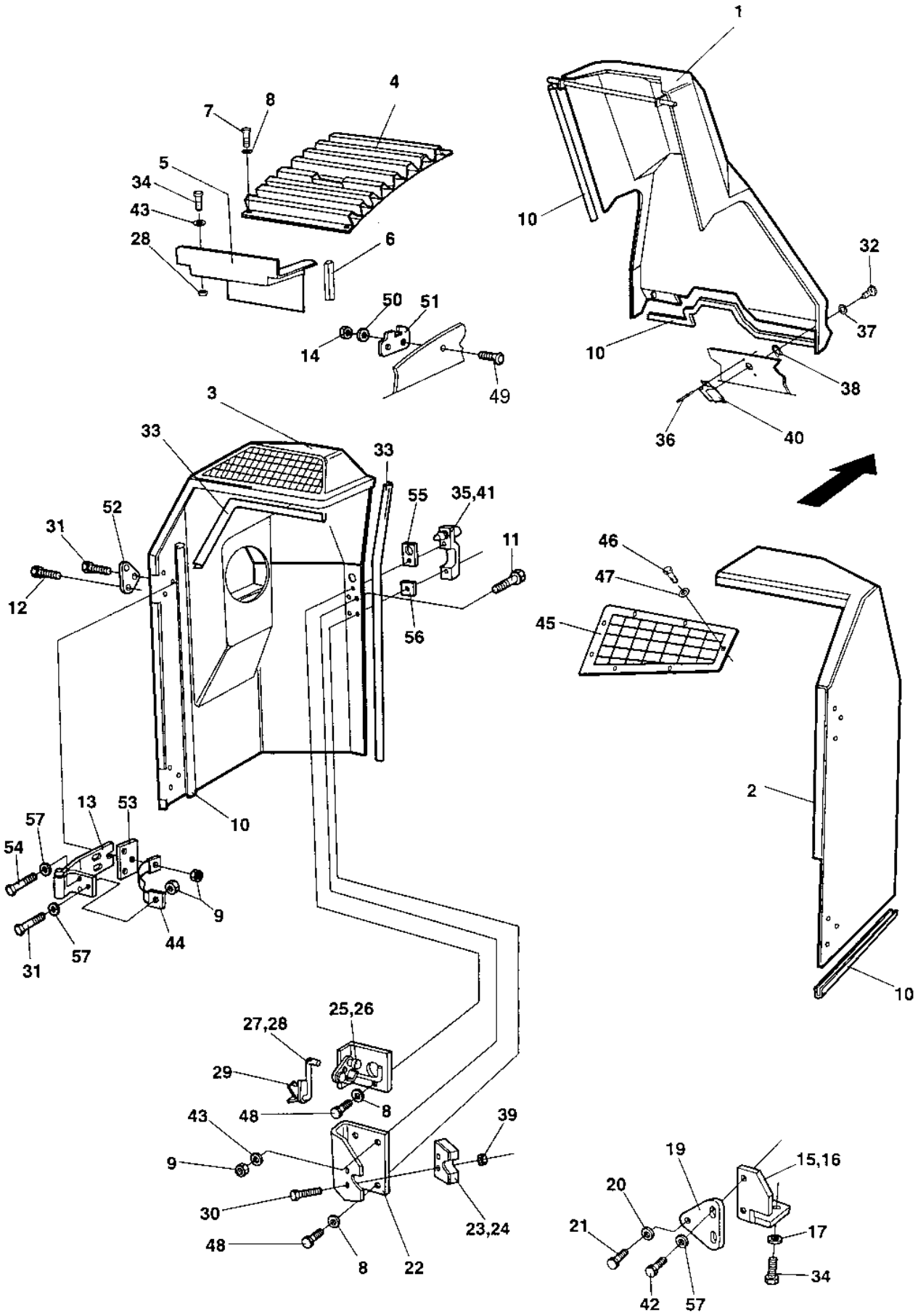
1
4
7
8
5
34
43
28
6
50
51
14
49
10
32
37
38
36
40
3
33
33
52
31
12
55
35,41
11
56
46
47
45
2
10
13
53
57
54
9
44
57
31
27,28
25,26
29
48
8
43
39
9
30
48
8
22
23,24
19
15,16
20
21
17
34
42
57

Ref. No.	Part No.	Rem.	Qty	Description	Code
1	372949		1	Cover	
2	372163	A	1	Engine hood	
3	372164	B	1	Engine hood	
4	359747		1	Grid	
5	359748		1	Cover plate	
6	902166	C	2XL	Edge trim	
7	500013		7	Screw M6-1x16 8,8	
8	904228		14	Washer 6,4x12x1,5	
9	586003		10	Lock nut M8	
10	902166	C	6XL	Edge trim	
11	902520		6	Screw	
12	500047		10	Screw M8-1,25x35 8,8	
13	359766		4	Hinge	
14	586002		4	Lock nut M6	
15	372898	A	1	Bracket	
16	372894	B	1	Bracket	
17	611003		4	Sleeve	
19	372893		2	Bracket	
20	371666		2	Locking pin	
21	904231		2	Washer 13x24x2	
22	371659		2	Bracket	
23	371380	E	1	Lock	
24	371381	F	1	Lock	D
25	371449	F	1	Lock device	
26	371450	E	1	Lock device	
27	371451	E	1	Coupling link	
28	371452	F	1	Coupling link	
29	371569		2	Lock device	
30	535053		4	Screw	
31	500023		4	Screw M8-1,25x40 8,8	
32	903340		2	Trunnion	
33	202057	C	6XL	Edge trim	D
34	500019		8	Screw M8-1,25x16 8,8	
35	371389	E	1	Grab handle	
	902866		1	.Key Marked "455"	D
36	923253		4	Rivet	
37	903341		2	Washer	
38	903857		2	Washer	
39	586001		4	Lock nut M5	
40	903344		2	Lock	
41	371390	F	1	Grab handle	
	902866		1	.Key Marked "455"	D
42	500053		4	Screw M8-1,25x20 8,8	
43	904229		12	Washer 8,4x16x1,5	
44	373422		2	Metal strapping	
45	370851		1	Grid	
46	500004		4	Screw M5 0,8x12 8,8	
47	904281		4	Washer 5,3x10x1	
48	500015		4	Screw M6-1x30 8,8	
49	903856		4	Bolt M06x30	
50	603020		4	Washer	
51	372126		2	Cover holder	
52	372675		4	Washer	
53	372566		4	Bracket	
54	500021		8	Screw M8-1,25x25 8,8	
55	903937		2	Rubber gasket	

A) Right
B) Left
C) Length as required
E) Right hood
F) Left hood

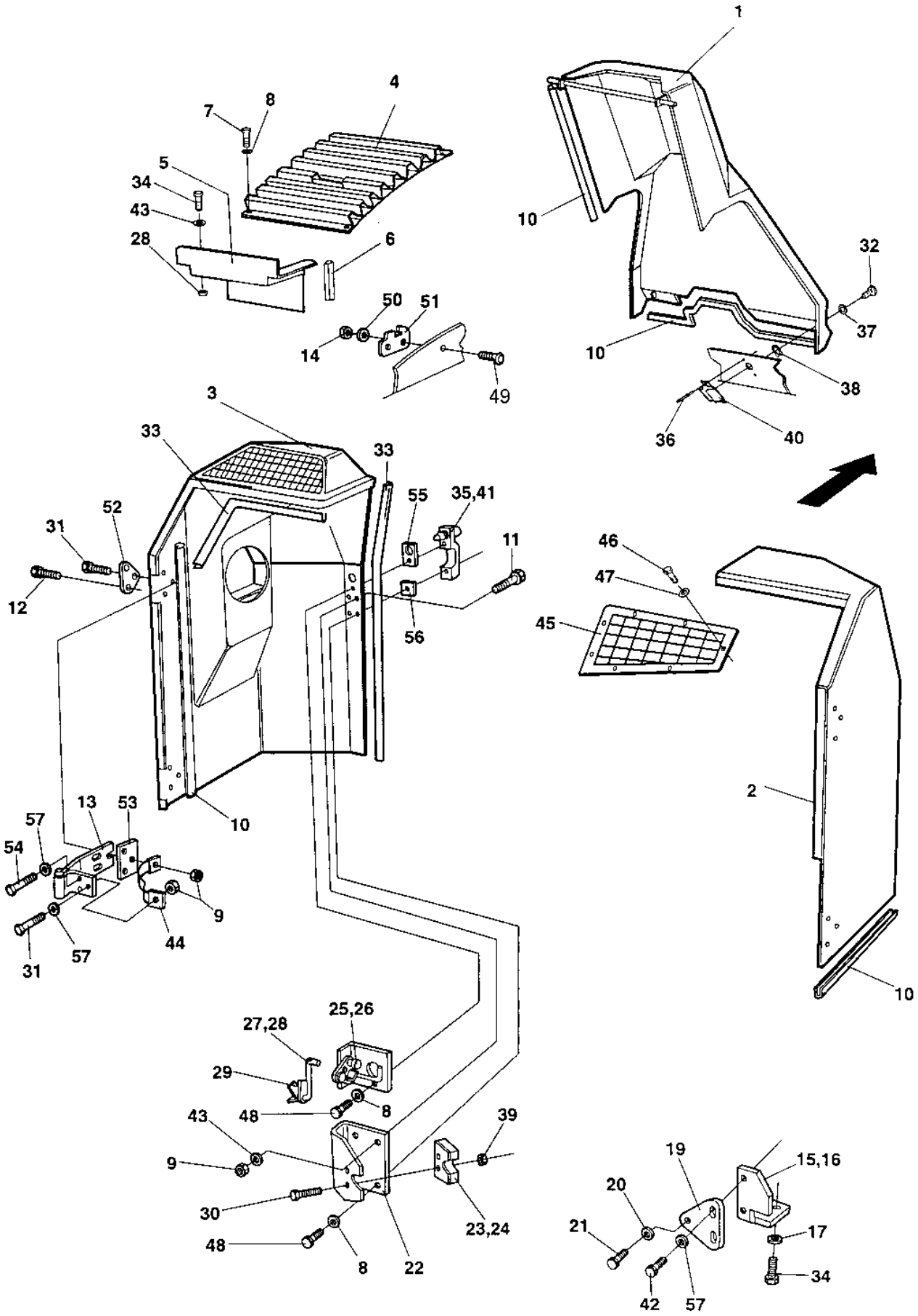
1
4
7
8
5
34
43
28
6
50
51
14
49
10
32
37
10
38
36
40
3
33
33
55
35,41
52
31
11
12
46
47
45
56
2
13
53
57
54
9
44
57
31
10
25,26
27,28
29
8
48
43
39
9
30
48
8
22
23,24
19
15,16
20
21
17
34
42
57

Ref. No.	Part No.	Rem.	Qty	Description	Code
56	903936		2	Rubber gasket	
57	603019		16	Washer	

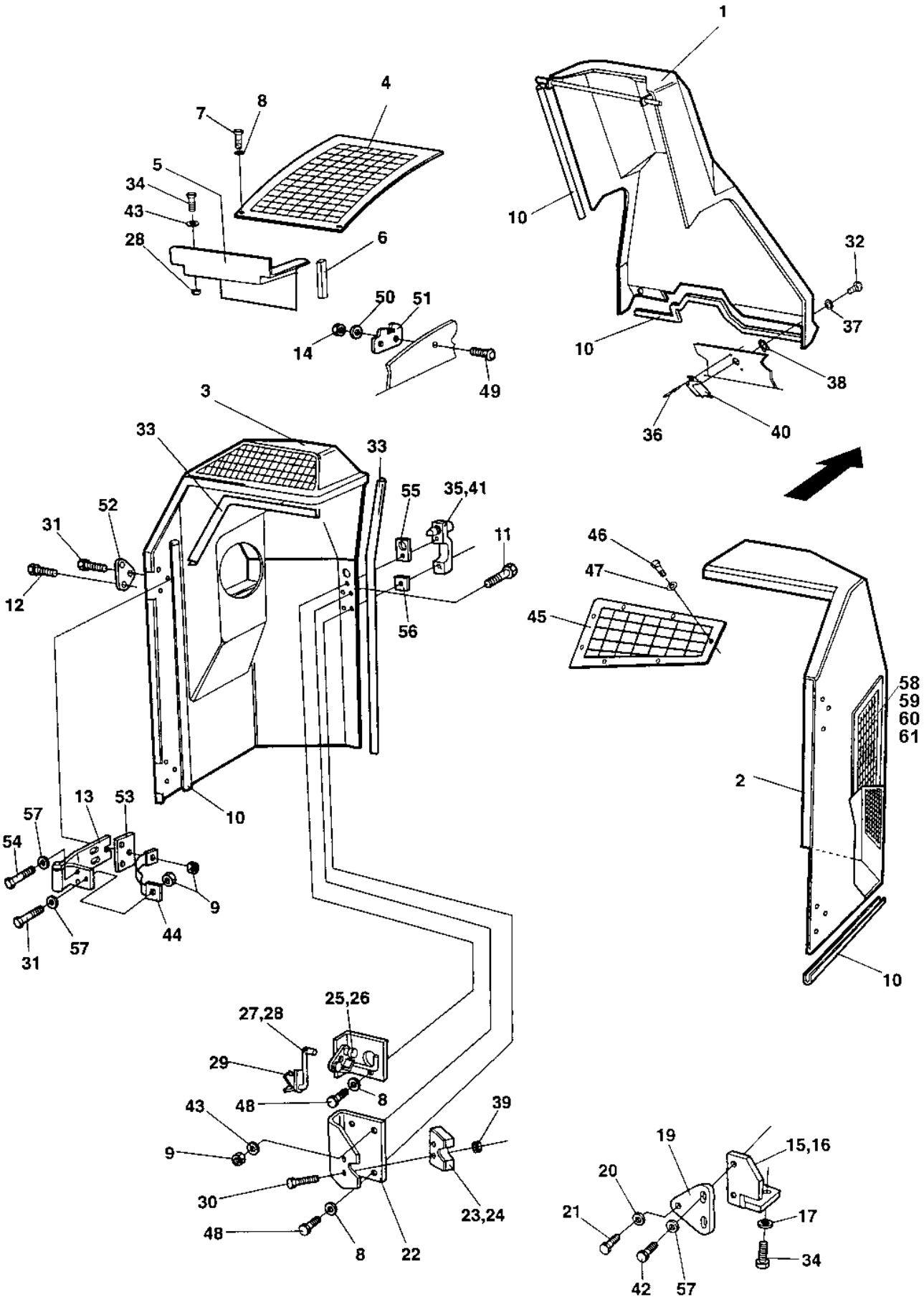
1
4
8
7
5
34
43
28
6
50
51
14
49
10
32
37
38
36
40
3
33
33
55
35,41
52
31
12
11
56
46
47
45
58
59
60
61
2
10
13
53
57
54
9
44
57
31
25,26
27,28
29
8
43
48
39
9
30
48
8
22
23,24
19
15,16
20
21
17
34
42
57

Ref. No.	Part No.	Rem.	Qty	Description	Code
1	372949		1	Cover	
2	374544	A	1	Engine hood	
3	374808	B	1	Engine hood	
4	374495		1	Grid	
5	359748		1	Cover plate	
6	902166	C	2XL	Edge trim	
7	500013		7	Screw M6-1x16 8,8	
8	904228		14	Washer 6,4x12x1,5	
9	586003		10	Lock nut M8	
10	902166	C	6XL	Edge trim	
11	902520		6	Screw	
12	500047		10	Screw M8-1,25x35 8,8	
13	359766		4	Hinge	
14	586002		4	Lock nut M6	
15	372898	A	1	Bracket	
16	372894	B	1	Bracket	
17	601003		4	Washer 8,4x25x2	
19	372893		2	Bracket	
20	371666		2	Locking pin	
21	904231		2	Washer 13x24x2	
22	371659		2	Bracket	
23	371380	E	1	Lock	
24	371381	F	1	Lock	D
25	371449	F	1	Lock device	
26	371450	E	1	Lock device	
27	371451	E	1	Coupling link	
28	371452	F	1	Coupling link	
29	371569		2	Lock device	
30	535053		4	Screw	
31	500023		4	Screw M8-1,25x40 8,8	
32	903340		2	Trunnion	
33	202057	C	6XL	Edge trim	D
34	500019		8	Screw M8-1,25x16 8,8	
35	371389	E	1	Grab handle	
	902866		1	.Key Marked "455"	D
36	923253		4	Rivet	
37	903341		2	Washer	
38	903857		2	Washer	
39	586001		4	Lock nut M5	
40	903344		2	Lock	
41	371390	F	1	Grab handle	
	902866		1	.Key Marked "455"	D
42	500053		4	Screw M8-1,25x20 8,8	
43	904229		12	Washer 8,4x16x1,5	
44	373422		2	Metal strapping	
45	374497		1	Grid	
46	500004		4	Screw M5 0,8x12 8,8	
47	904281		4	Washer 5,3x10x1	
48	500015		4	Screw M6-1x30 8,8	
49	903856		4	Bolt M06x30	
50	603020		4	Washer	
51	372126		2	Cover holder	
52	372675		4	Washer	
53	372566		4	Bracket	
54	500021		8	Screw M8-1,25x25 8,8	
55	903937		2	Rubber gasket	

A) Right
B) Left
C) Length as required
E) Right hood
F) Left hood

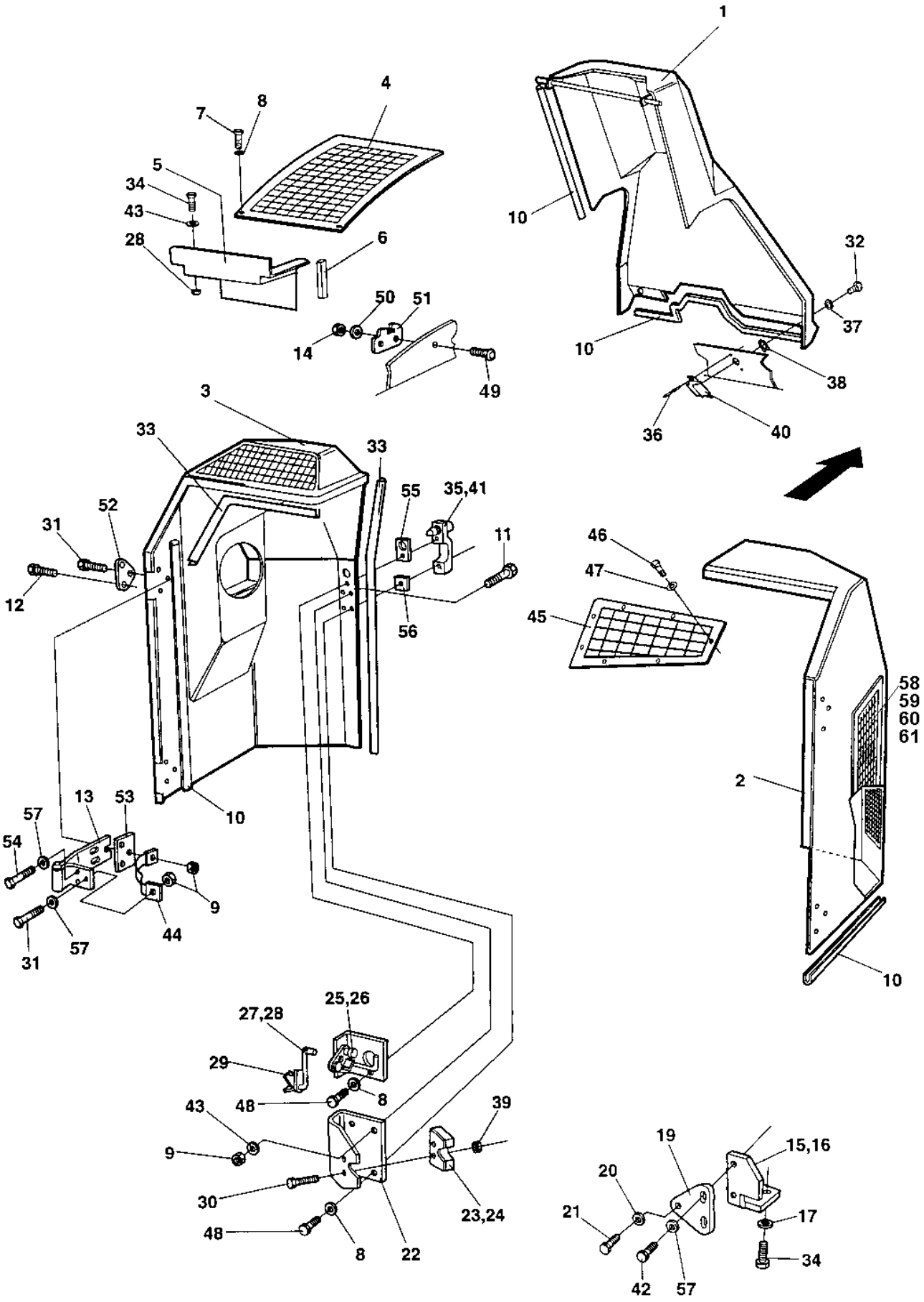
1
4
8
7
5
34
43
28
6
50
51
14
49
10
32
37
38
36
40
3
33
33
55
35,41
52
31
12
11
56
46
47
45
58
59
60
61
2
10
13
53
57
54
9
44
57
31
25,26
27,28
29
8
43
48
39
9
30
48
8
22
23,24
19
15,16
20
21
17
34
42
57

Ref. No.	Part No.	Rem.	Qty	Description	Code
56	903936		2	Rubber gasket	
57	603019		16	Washer	
58	374496		2	Grid	
59	904228		24	Washer 6,4x12x1,5	
60	500075		12	Screw M6-1x25 8,8	
61	586002		12	Lock nut M6	

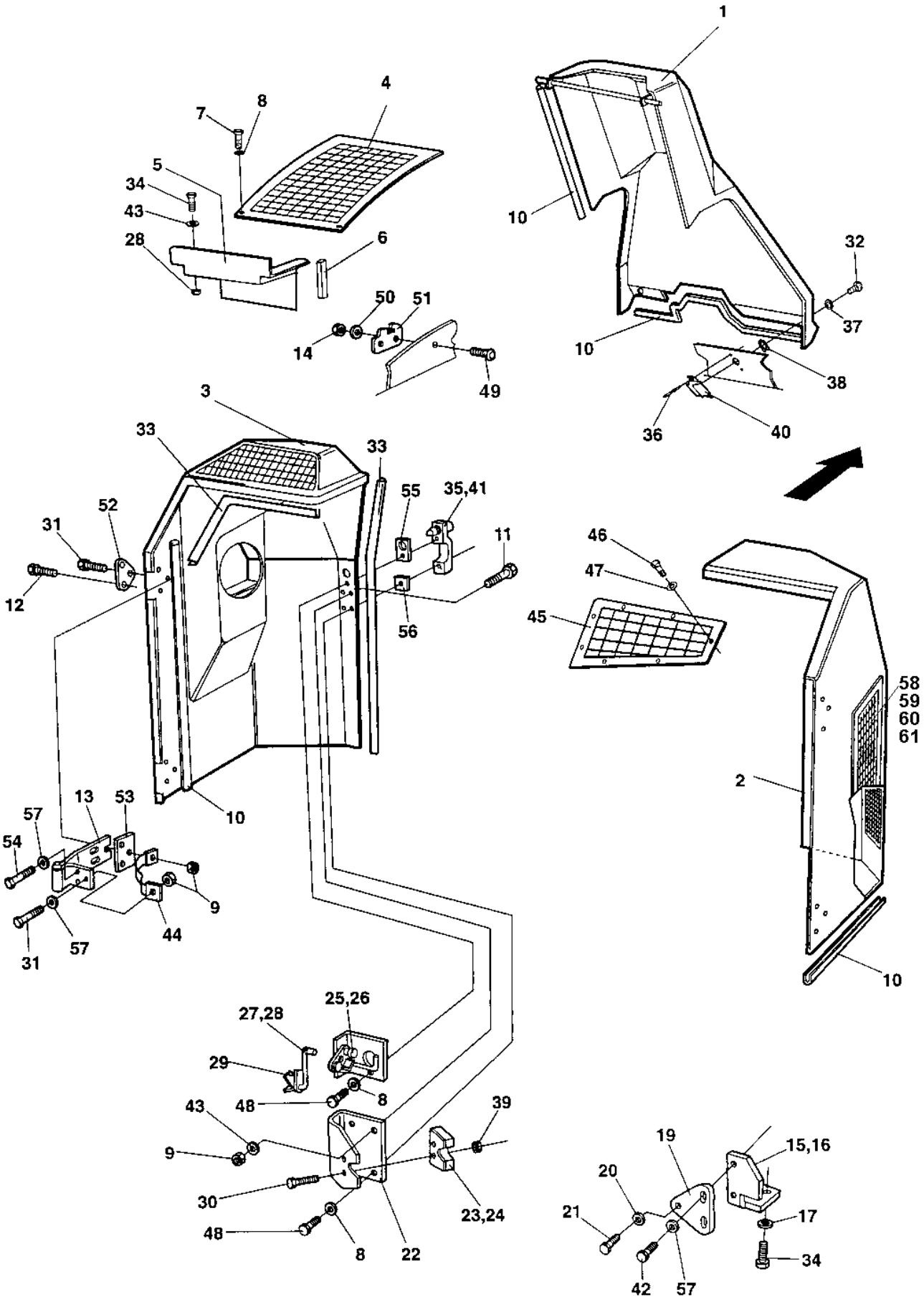
1
4
7
8
5
34
43
28
6
50
51
14
49
10
32
37
38
36
40
3
33
33
55
35,41
52
31
12
11
56
46
47
45
58
59
60
61
2
10
13
53
57
54
9
44
57
31
25,26
27,28
29
8
43
48
39
9
30
48
8
22
23,24
19
15,16
20
21
17
34
42
57

Ref. No.	Part No.	Rem.	Qty	Description	Code
1	372949		1	Cover	
2	374544	A	1	Engine hood	
3	374808	B	1	Engine hood	
4	374495		1	Grid	
5	359748		1	Cover plate	
6	902166	C	2XL	Edge trim	
7	500013		7	Screw M6-1x16 8,8	
8	904228		14	Washer 6,4x12x1,5	
9	586003		10	Lock nut M8	
10	902166	C	6XL	Edge trim	
11	902520		6	Screw	
12	500047		10	Screw M8-1,25x35 8,8	
13	359766		4	Hinge	
14	586002		4	Lock nut M6	
15	372898	A	1	Bracket	
16	372894	B	1	Bracket	
17	601003		4	Washer 8,4x25x2	
19	372893		2	Bracket	
20	371666		2	Locking pin	
21	904231		2	Washer 13x24x2	
22	371659		2	Bracket	
23	371380	E	1	Lock	
24	371381	F	1	Lock	D
25	371449	F	1	Lock device	
26	371450	E	1	Lock device	
27	371451	E	1	Coupling link	
28	371452	F	1	Coupling link	
29	371569		2	Lock device	
30	535053		4	Screw	
31	500023		4	Screw M8-1,25x40 8,8	
32	903340		2	Trunnion	
33	202057	C	6XL	Edge trim	D
34	500019		8	Screw M8-1,25x16 8,8	
35	371389	E	1	Grab handle	
	902866		1	.Key Marked "455"	D
36	923253		4	Rivet	
37	903341		2	Washer	
38	903857		2	Washer	
39	586001		4	Lock nut M5	
40	903344		2	Lock	
41	371390	F	1	Grab handle	
	902866		1	.Key Marked "455"	D
42	500053		4	Screw M8-1,25x20 8,8	
43	904229		12	Washer 8,4x16x1,5	
44	373422		2	Metal strapping	
45	374497		1	Grid	
46	500004		4	Screw M5 0,8x12 8,8	
47	904281		4	Washer 5,3x10x1	
48	500015		4	Screw M6-1x30 8,8	
49	903856		4	Bolt M06x30	
50	603020		4	Washer	
51	372126		2	Cover holder	
52	372675		4	Washer	
53	372566		4	Bracket	
54	500021		8	Screw M8-1,25x25 8,8	
55	903937		2	Rubber gasket	

A) Right
B) Left
C) Length as required
E) Right hood
F) Left hood

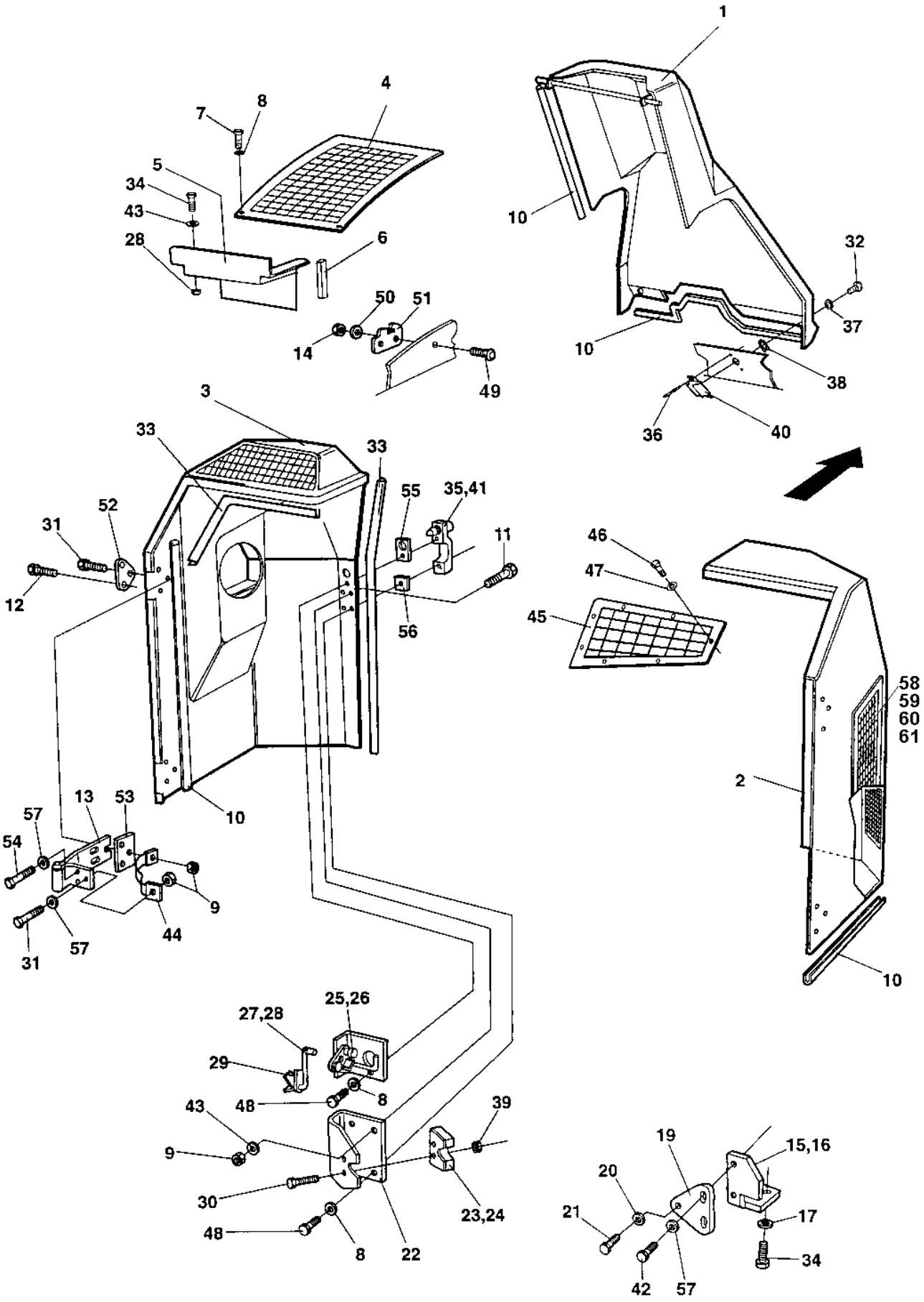
1
4
7
8
5
34
43
28
6
50
51
14
49
10
32
37
38
36
40
3
33
33
55
35,41
52
31
12
11
56
46
47
45
58
59
60
61
2
10
13
53
57
54
9
44
57
31
25,26
27,28
29
8
43
48
39
9
30
48
8
22
23,24
19
15,16
20
21
17
34
42
57

Ref. No.	Part No.	Rem.	Qty	Description	Code
56	903936		2	Rubber gasket	
57	603019		16	Washer	
58	374496		2	Grid	
59	904228		24	Washer 6,4x12x1,5	
60	500075		12	Screw M6-1x25 8,8	
61	586002		12	Lock nut M6	

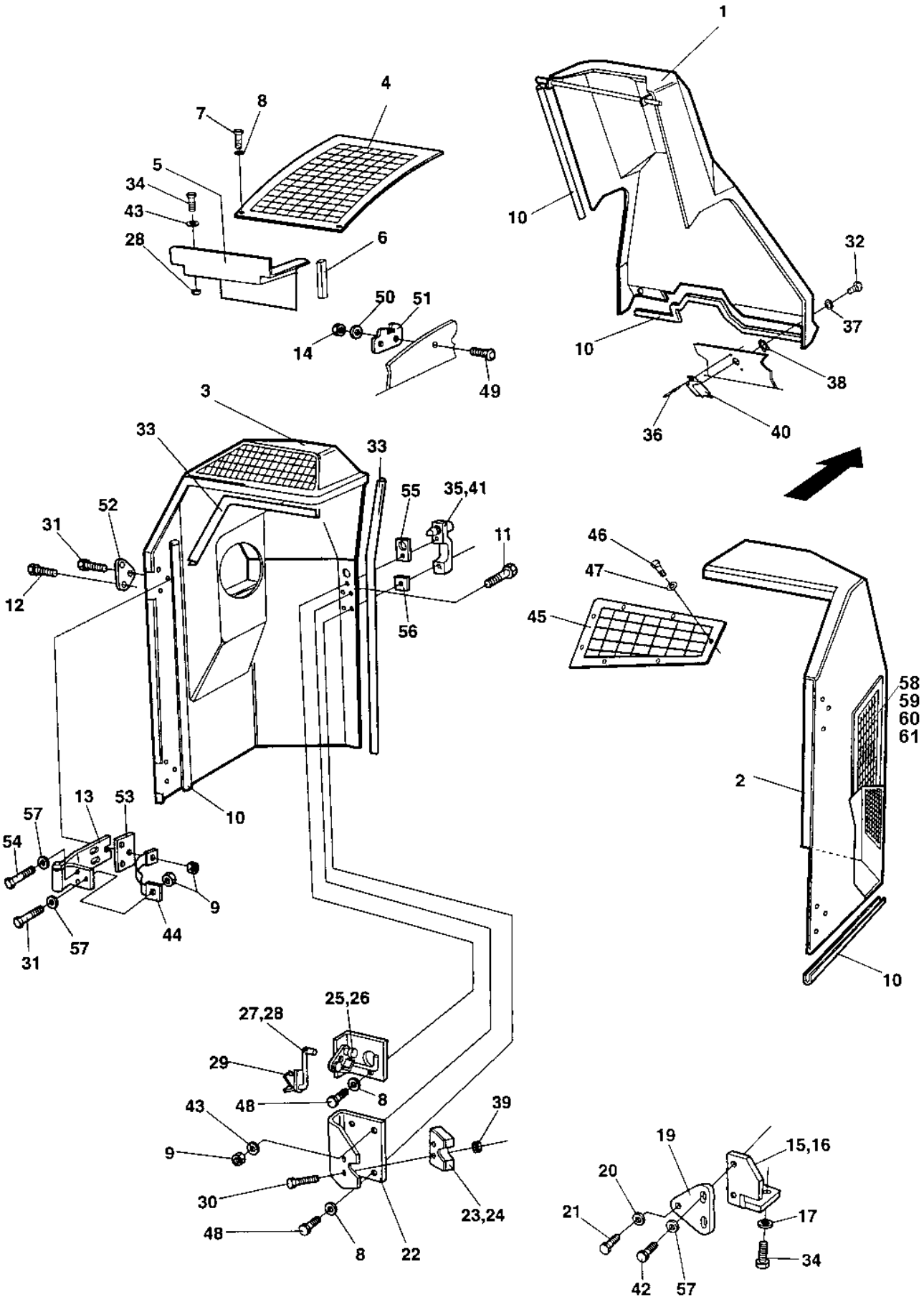
1
4
8
7
5
34
43
28
6
50
51
14
49
10
32
37
38
36
40
3
33
33
55
35,41
52
31
12
11
56
46
47
45
58
59
60
61
2
10
13
53
57
54
9
44
57
31
25,26
27,28
29
8
48
43
39
9
30
48
8
22
23,24
19
15,16
20
21
17
34
42
57

Ref. No.	Part No.	Rem.	Qty	Description	Code
1	372949		1	Cover	
2	374544	A	1	Engine hood	
3	374808	B	1	Engine hood	
4	374495		1	Grid	
5	359748		1	Cover plate	
6	902166	C	2XL	Edge trim	
7	500013		7	Screw M6-1x16 8,8	
8	904228		14	Washer 6,4x12x1,5	
9	586003		10	Lock nut M8	
10	902166	C	6XL	Edge trim	
11	902520		6	Screw	
12	500047		10	Screw M8-1,25x35 8,8	
13	359766		4	Hinge	
14	586002		4	Lock nut M6	
15	372898	A	1	Bracket	
16	372894	B	1	Bracket	
17	601003		4	Washer 8,4x25x2	
19	372893		2	Bracket	
20	371666		2	Locking pin	
21	904231		2	Washer 13x24x2	
22	371659		2	Bracket	
23	371380	E	1	Lock	
24	371381	F	1	Lock	D
25	371449	F	1	Lock device	
26	371450	E	1	Lock device	
27	371451	E	1	Coupling link	
28	371452	F	1	Coupling link	
29	371569		2	Lock device	
30	535053		4	Screw	
31	500023		4	Screw M8-1,25x40 8,8	
32	903340		2	Trunnion	
33	202057	C	6XL	Edge trim	D
34	500019		8	Screw M8-1,25x16 8,8	
35	371389	E	1	Grab handle	
	902866		1	.Key Marked "455"	D
36	923253		4	Rivet	
37	903341		2	Washer	
38	903857		2	Washer	
39	586001		4	Lock nut M5	
40	903344		2	Lock	
41	371390	F	1	Grab handle	
	902866		1	.Key Marked "455"	D
42	500053		4	Screw M8-1,25x20 8,8	
43	904229		12	Washer 8,4x16x1,5	
44	373422		2	Metal strapping	
45	374497		1	Grid	
46	500004		4	Screw M5 0,8x12 8,8	
47	904281		4	Washer 5,3x10x1	
48	500015		4	Screw M6-1x30 8,8	
49	903856		4	Bolt M06x30	
50	603020		4	Washer	
51	372126		2	Cover holder	
52	372675		4	Washer	
53	372566		4	Bracket	
54	500021		8	Screw M8-1,25x25 8,8	
55	903937		2	Rubber gasket	

A) Right
B) Left
C) Length as required
E) Right hood
F) Left hood

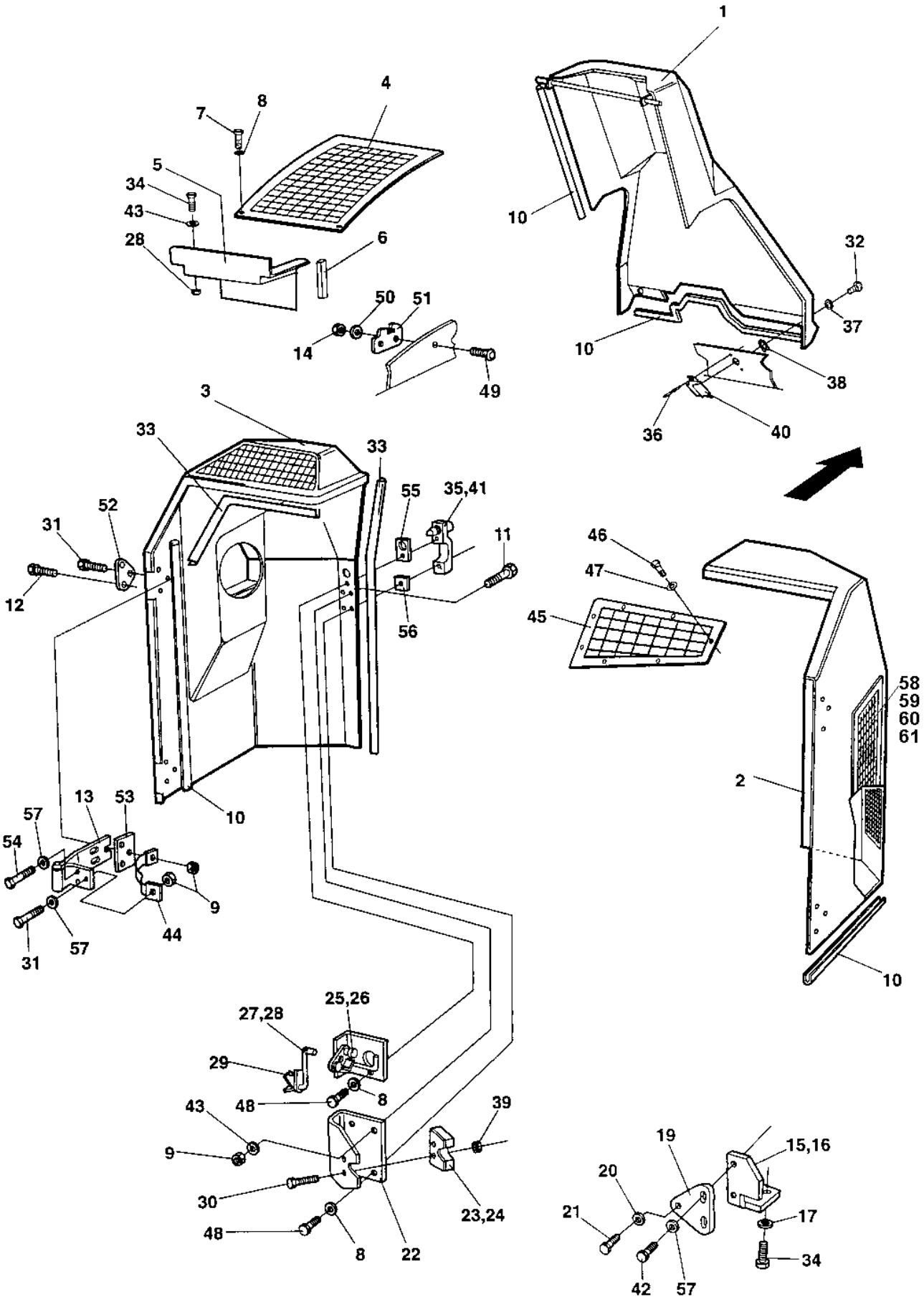
1
4
7
8
5
34
43
28
6
50
51
14
49
10
32
37
38
36
40
3
33
33
55
35,41
52
31
12
11
56
46
47
45
58
59
60
61
2
10
13
53
57
54
9
44
57
31
25,26
27,28
29
8
43
48
39
9
30
48
8
22
23,24
19
15,16
20
21
17
34
42
57

Ref. No.	Part No.	Rem.	Qty	Description	Code
56	903936		2	Rubber gasket	
57	603019		16	Washer	
58	374496		2	Grid	
59	904228		24	Washer 6,4x12x1,5	
60	500075		12	Screw M6-1x25 8,8	
61	586002		12	Lock nut M6	

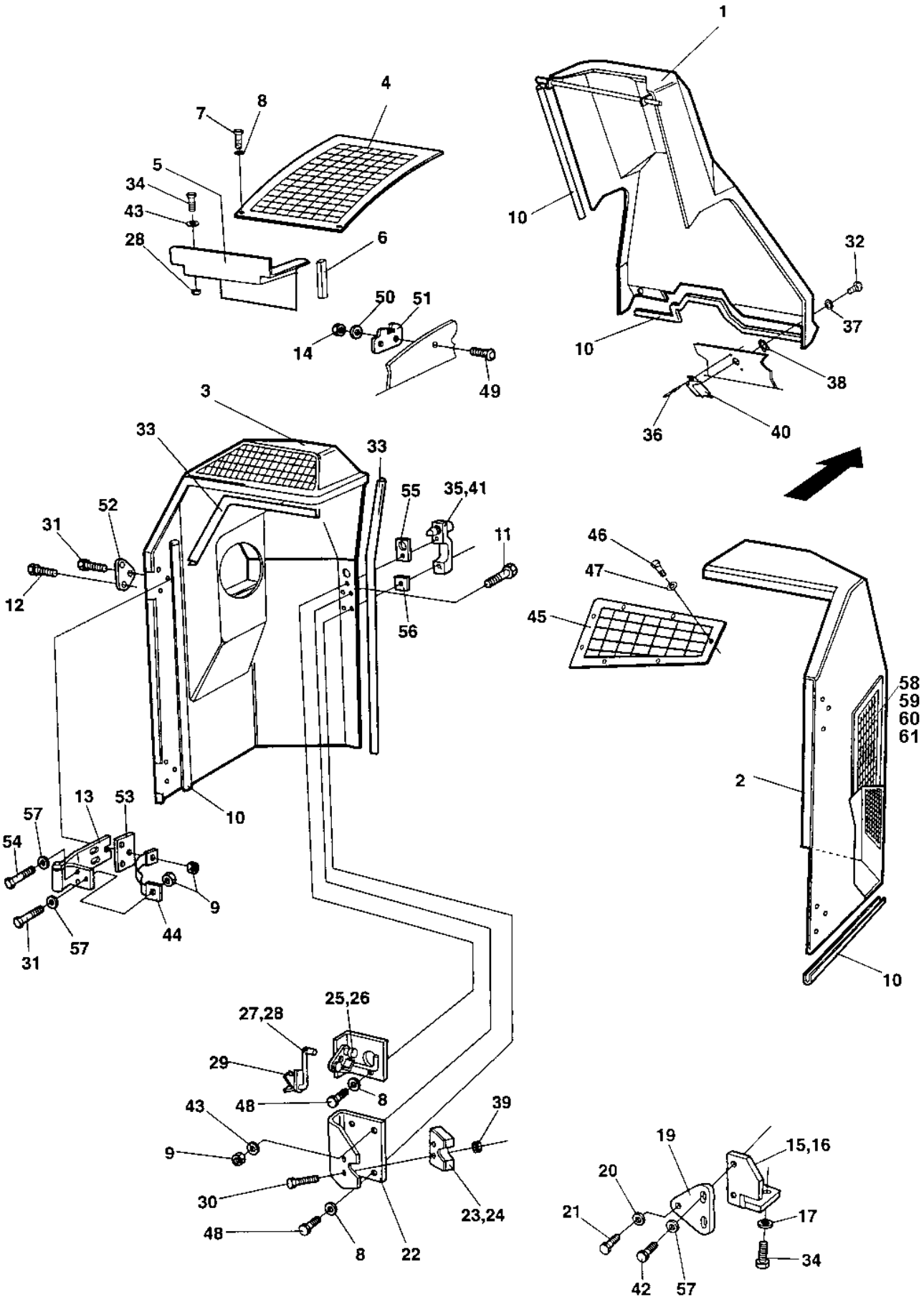
1
4
8
7
5
34
43
28
6
50
51
14
49
10
32
37
38
36
40
3
33
33
55
35,41
52
31
12
11
56
46
47
45
58
59
60
61
2
10
13
53
57
54
9
44
57
31
25,26
27,28
29
8
43
48
39
9
30
48
8
22
23,24
19
15,16
20
21
17
34
42
57

Ref. No.	Part No.	Rem.	Qty	Description	Code
1	372949		1	Cover	
2	374544	A	1	Engine hood	
3	374808	B	1	Engine hood	
4	374495		1	Grid	
5	359748		1	Cover plate	
6	902166	C	2XL	Edge trim	
7	500013		7	Screw M6-1x16 8,8	
8	904228		14	Washer 6,4x12x1,5	
9	586003		10	Lock nut M8	
10	902166	C	6XL	Edge trim	
11	902520		6	Screw	
12	500047		10	Screw M8-1,25x35 8,8	
13	359766		4	Hinge	
14	586002		4	Lock nut M6	
15	372898	A	1	Bracket	
16	372894	B	1	Bracket	
17	601003		4	Washer 8,4x25x2	
19	372893		2	Bracket	
20	371666		2	Locking pin	
21	904231		2	Washer 13x24x2	
22	371659		2	Bracket	
23	371380	E	1	Lock	
24	371381	F	1	Lock	D
25	371449	F	1	Lock device	
26	371450	E	1	Lock device	
27	371451	E	1	Coupling link	
28	371452	F	1	Coupling link	
29	371569		2	Lock device	
30	535053		4	Screw	
31	500023		4	Screw M8-1,25x40 8,8	
32	903340		2	Trunnion	
33	202057	C	6XL	Edge trim	D
34	500019		8	Screw M8-1,25x16 8,8	
35	371389	E	1	Grab handle	
	902866		1	.Key Marked "455"	D
36	923253		4	Rivet	
37	903341		2	Washer	
38	903857		2	Washer	
39	586001		4	Lock nut M5	
40	903344		2	Lock	
41	371390	F	1	Grab handle	
	902866		1	.Key Marked "455"	D
42	500053		4	Screw M8-1,25x20 8,8	
43	904229		12	Washer 8,4x16x1,5	
44	373422		2	Metal strapping	
45	374497		1	Grid	
46	500004		4	Screw M5 0,8x12 8,8	
47	904281		4	Washer 5,3x10x1	
48	500015		4	Screw M6-1x30 8,8	
49	903856		4	Bolt M06x30	
50	603020		4	Washer	
51	372126		2	Cover holder	
52	372675		4	Washer	
53	372566		4	Bracket	
54	500021		8	Screw M8-1,25x25 8,8	
55	903937		2	Rubber gasket	

A) Right
B) Left
C) Length as required
E) Right hood
F) Left hood

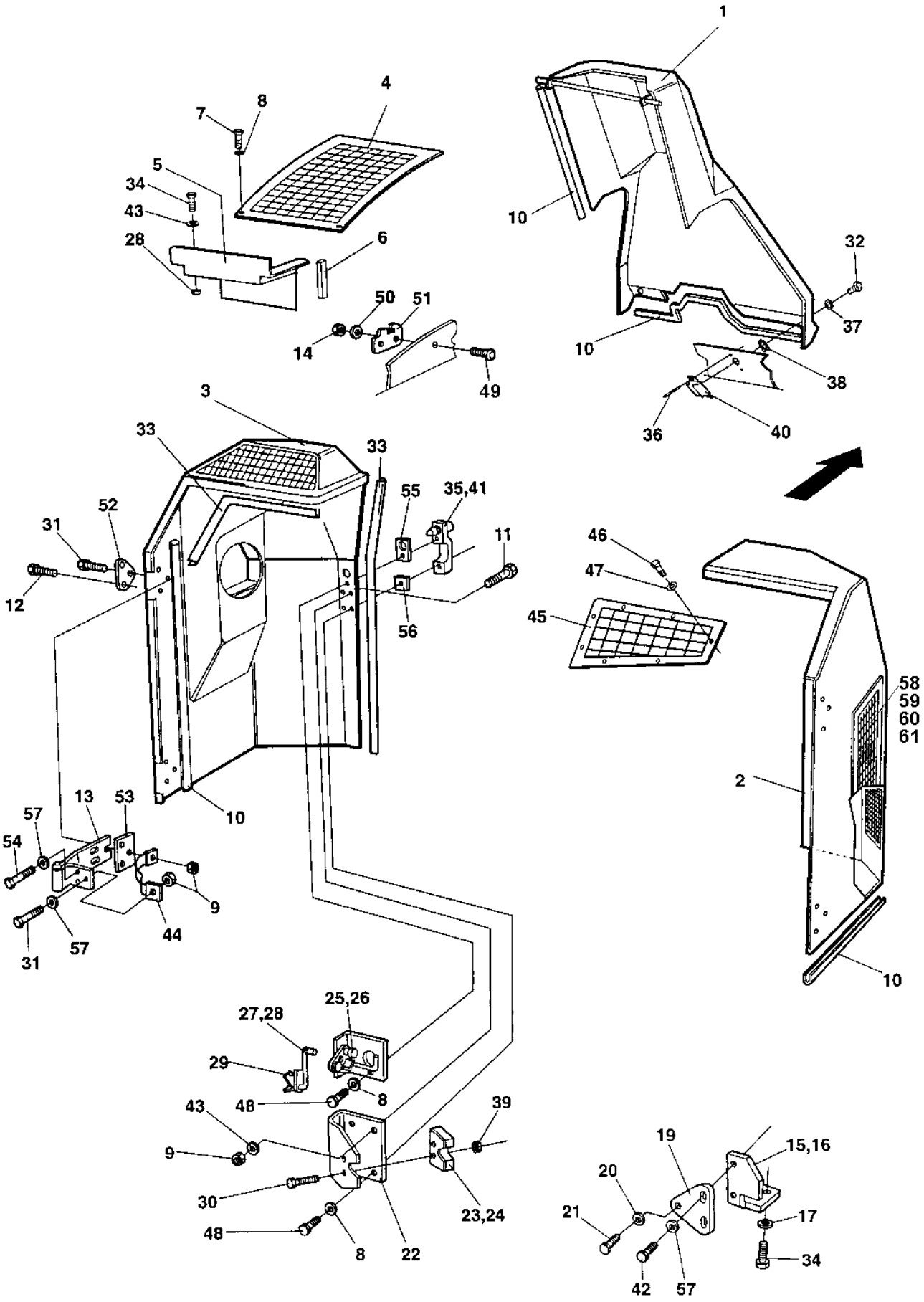
1
4
7
8
5
34
43
28
6
50
51
14
49
10
32
37
38
36
40
3
33
33
55
35,41
52
31
12
11
56
46
47
45
58
59
60
61
2
10
13
53
57
54
9
44
57
31
25,26
27,28
29
8
43
48
39
9
30
48
8
22
23,24
19
15,16
20
21
17
34
42
57

Ref. No.	Part No.	Rem.	Qty	Description	Code
56	903936		2	Rubber gasket	
57	603019		16	Washer	
58	374496		2	Grid	
59	904228		24	Washer 6,4x12x1,5	
60	500075		12	Screw M6-1x25 8,8	
61	586002		12	Lock nut M6	

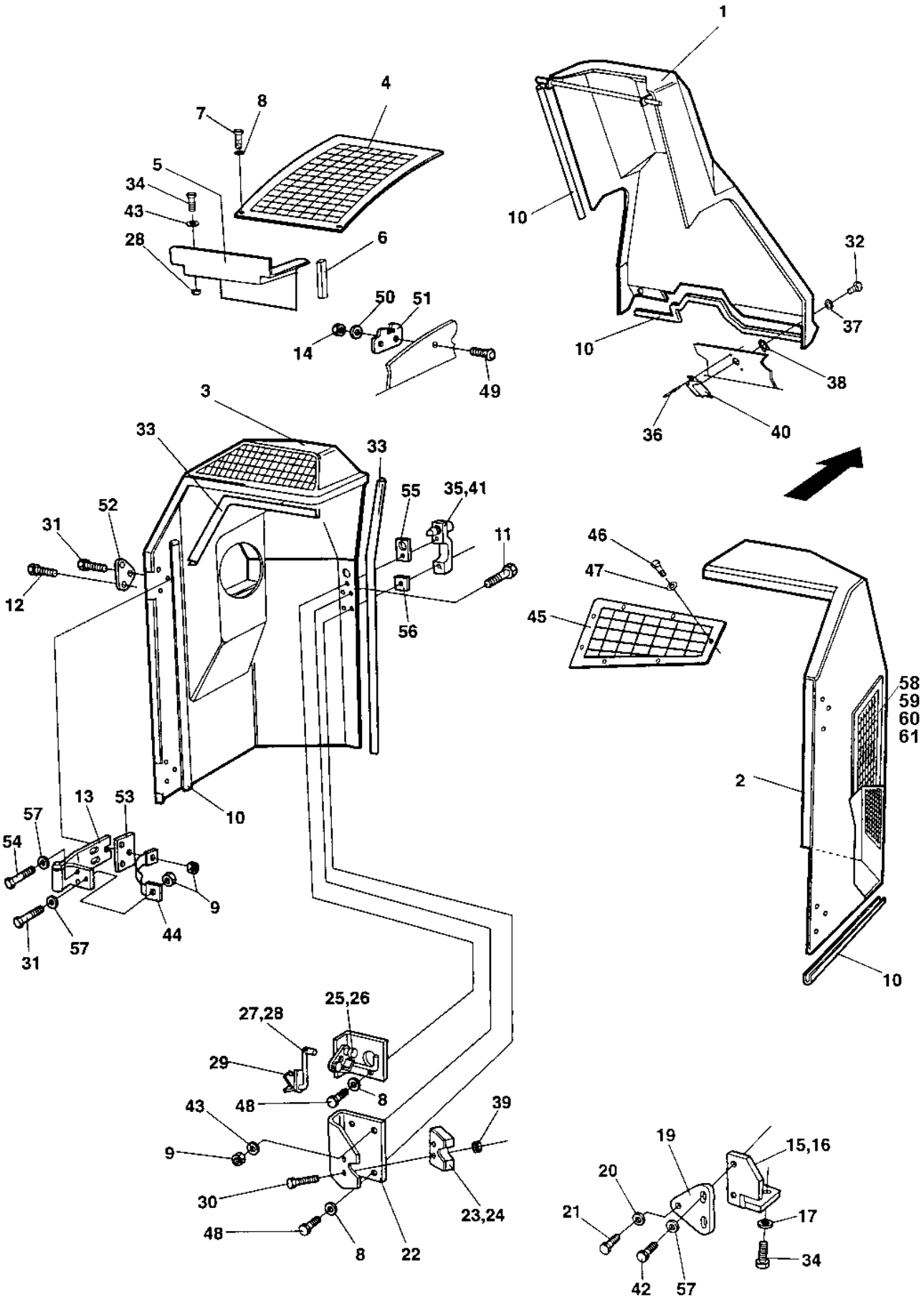
1
4
7
8
5
34
43
28
6
50
51
14
49
10
32
37
38
36
40
3
33
33
55
35,41
52
31
12
11
56
46
47
45
58
59
60
61
2
10
13
53
57
54
9
44
57
31
25,26
27,28
29
8
43
48
39
9
30
48
8
22
23,24
19
15,16
20
21
17
34
42
57

Ref. No.	Part No.	Rem.	Qty	Description	Code
1	372949		1	Cover	
2	374544	A	1	Engine hood	
3	374808	B	1	Engine hood	
4	374495		1	Grid	
5	359748		1	Cover plate	
6	902166	C	2XL	Edge trim	
7	500013		7	Screw M6-1x16 8,8	
8	904228		14	Washer 6,4x12x1,5	
9	586003		10	Lock nut M8	
10	902166	C	6XL	Edge trim	
11	902520		6	Screw	
12	500047		10	Screw M8-1,25x35 8,8	
13	359766		4	Hinge	
14	586002		4	Lock nut M6	
15	372898	A	1	Bracket	
16	372894	B	1	Bracket	
17	601003		4	Washer 8,4x25x2	
19	372893		2	Bracket	
20	371666		2	Locking pin	
21	904231		2	Washer 13x24x2	
22	371659		2	Bracket	
23	371380	E	1	Lock	
24	371381	F	1	Lock	D
25	371449	F	1	Lock device	
26	371450	E	1	Lock device	
27	371451	E	1	Coupling link	
28	371452	F	1	Coupling link	
29	371569		2	Lock device	
30	535053		4	Screw	
31	500023		4	Screw M8-1,25x40 8,8	
32	903340		2	Trunnion	
33	202057	C	6XL	Edge trim	D
34	500019		8	Screw M8-1,25x16 8,8	
35	371389	E	1	Grab handle	
	902866		1	.Key Marked "455"	D
36	923253		4	Rivet	
37	903341		2	Washer	
38	903857		2	Washer	
39	586001		4	Lock nut M5	
40	903344		2	Lock	
41	371390	F	1	Grab handle	
	902866		1	.Key Marked "455"	D
42	500053		4	Screw M8-1,25x20 8,8	
43	904229		12	Washer 8,4x16x1,5	
44	373422		2	Metal strapping	
45	374497		1	Grid	
46	500004		4	Screw M5 0,8x12 8,8	
47	904281		4	Washer 5,3x10x1	
48	500015		4	Screw M6-1x30 8,8	
49	903856		4	Bolt M06x30	
50	603020		4	Washer	
51	372126		2	Cover holder	
52	372675		4	Washer	
53	372566		4	Bracket	
54	500021		8	Screw M8-1,25x25 8,8	
55	903937		2	Rubber gasket	

A) Right
B) Left
C) Length as required
E) Right hood
F) Left hood

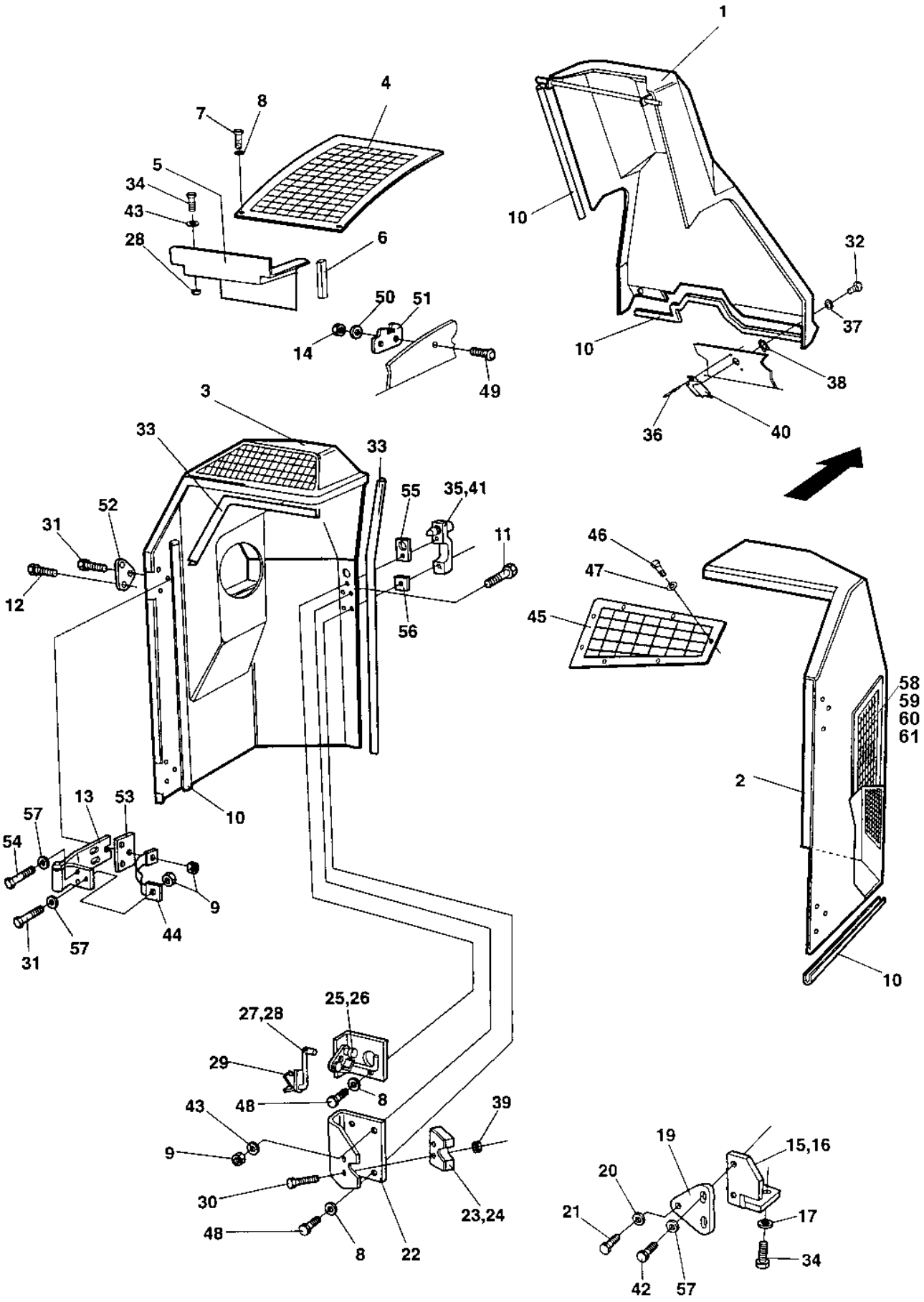
1
4
8
7
5
34
43
28
6
50
51
14
49
10
32
37
38
36
40
3
33
33
55
35,41
52
31
12
11
56
46
47
45
58
59
60
61
2
10
13
53
57
54
9
44
57
31
25,26
27,28
29
8
48
43
39
9
30
48
8
22
23,24
19
15,16
20
21
17
34
42
57

Ref. No.	Part No.	Rem.	Qty	Description	Code
56	903936		2	Rubber gasket	
57	603019		16	Washer	
58	374496		2	Grid	
59	904228		24	Washer 6,4x12x1,5	
60	500075		12	Screw M6-1x25 8,8	
61	586002		12	Lock nut M6	

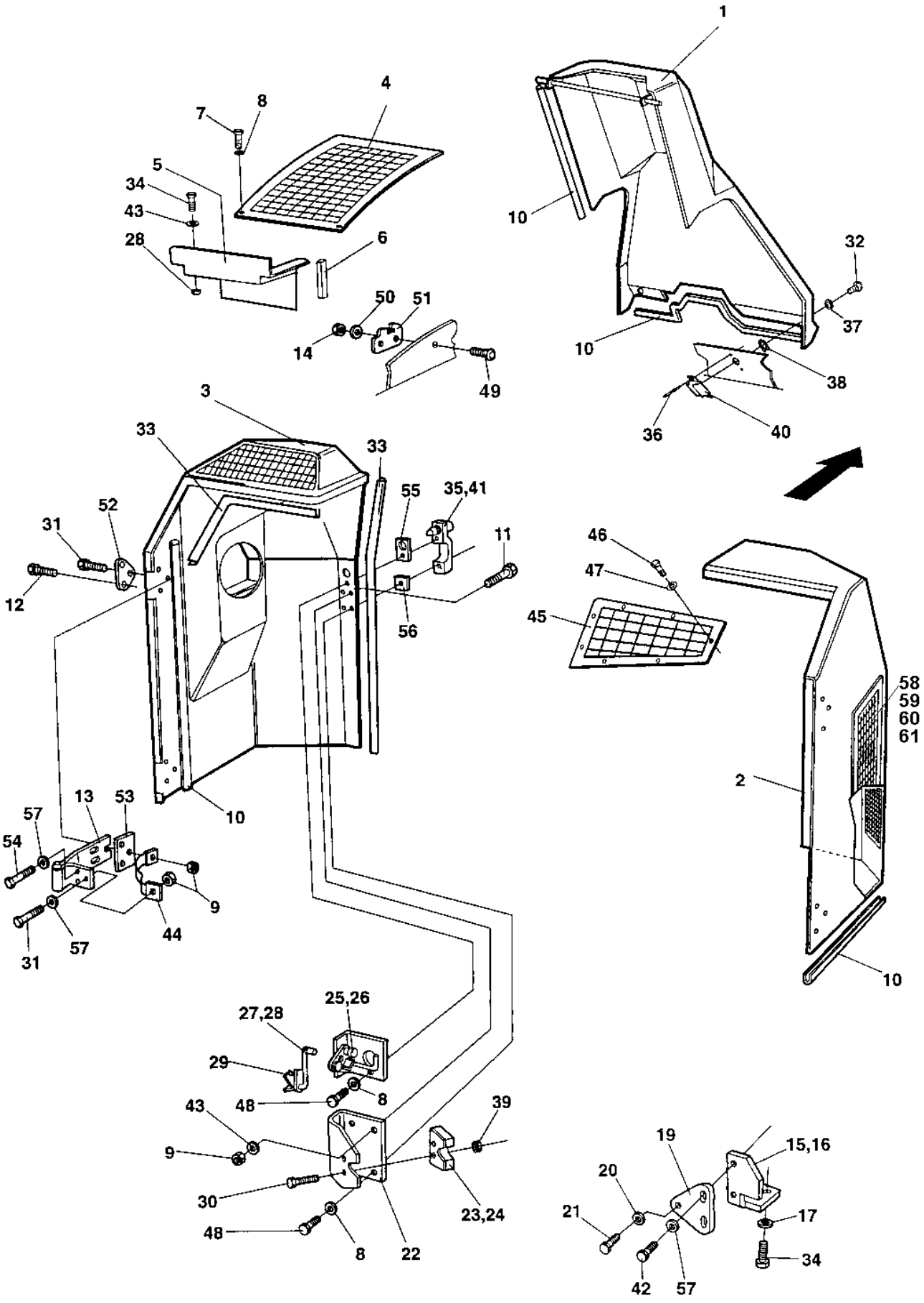
1
4
8
7
5
34
43
28
6
50
51
14
49
10
32
37
38
36
40
3
33
33
55
35,41
52
31
12
11
56
46
47
45
58
59
60
61
2
10
13
53
57
54
9
44
57
31
25,26
27,28
29
8
48
43
39
9
30
48
8
22
23,24
19
15,16
20
21
17
34
42
57

Ref. No.	Part No.	Rem.	Qty	Description	Code
1	372949		1	Cover	
2	374544	A	1	Engine hood	
3	374808	B	1	Engine hood	
4	374495		1	Grid	
5	359748		1	Cover plate	
6	902166	C	2XL	Edge trim	
7	500013		7	Screw M6-1x16 8,8	
8	904228		14	Washer 6,4x12x1,5	
9	586003		10	Lock nut M8	
10	902166	C	6XL	Edge trim	
11	902520		6	Screw	
12	500047		10	Screw M8-1,25x35 8,8	
13	359766		4	Hinge	
14	586002		4	Lock nut M6	
15	372898	A	1	Bracket	
16	372894	B	1	Bracket	
17	601003		4	Washer 8,4x25x2	
19	372893		2	Bracket	
20	371666		2	Locking pin	
21	904231		2	Washer 13x24x2	
22	371659		2	Bracket	
23	371380	E	1	Lock	
24	371381	F	1	Lock	D
25	371449	F	1	Lock device	
26	371450	E	1	Lock device	
27	371451	E	1	Coupling link	
28	371452	F	1	Coupling link	
29	371569		2	Lock device	
30	535053		4	Screw	
31	500023		4	Screw M8-1,25x40 8,8	
32	903340		2	Trunnion	
33	202057	C	6XL	Edge trim	D
34	500019		8	Screw M8-1,25x16 8,8	
35	371389	E	1	Grab handle	
	902866		1	.Key Marked "455"	D
36	923253		4	Rivet	
37	903341		2	Washer	
38	903857		2	Washer	
39	586001		4	Lock nut M5	
40	903344		2	Lock	
41	371390	F	1	Grab handle	
	902866		1	.Key Marked "455"	D
42	500053		4	Screw M8-1,25x20 8,8	
43	904229		12	Washer 8,4x16x1,5	
44	373422		2	Metal strapping	
45	374497		1	Grid	
46	500004		4	Screw M5 0,8x12 8,8	
47	904281		4	Washer 5,3x10x1	
48	500015		4	Screw M6-1x30 8,8	
49	903856		4	Bolt M06x30	
50	603020		4	Washer	
51	372126		2	Cover holder	
52	372675		4	Washer	
53	372566		4	Bracket	
54	500021		8	Screw M8-1,25x25 8,8	
55	903937		2	Rubber gasket	

A) Right
B) Left
C) Length as required
E) Right hood
F) Left hood

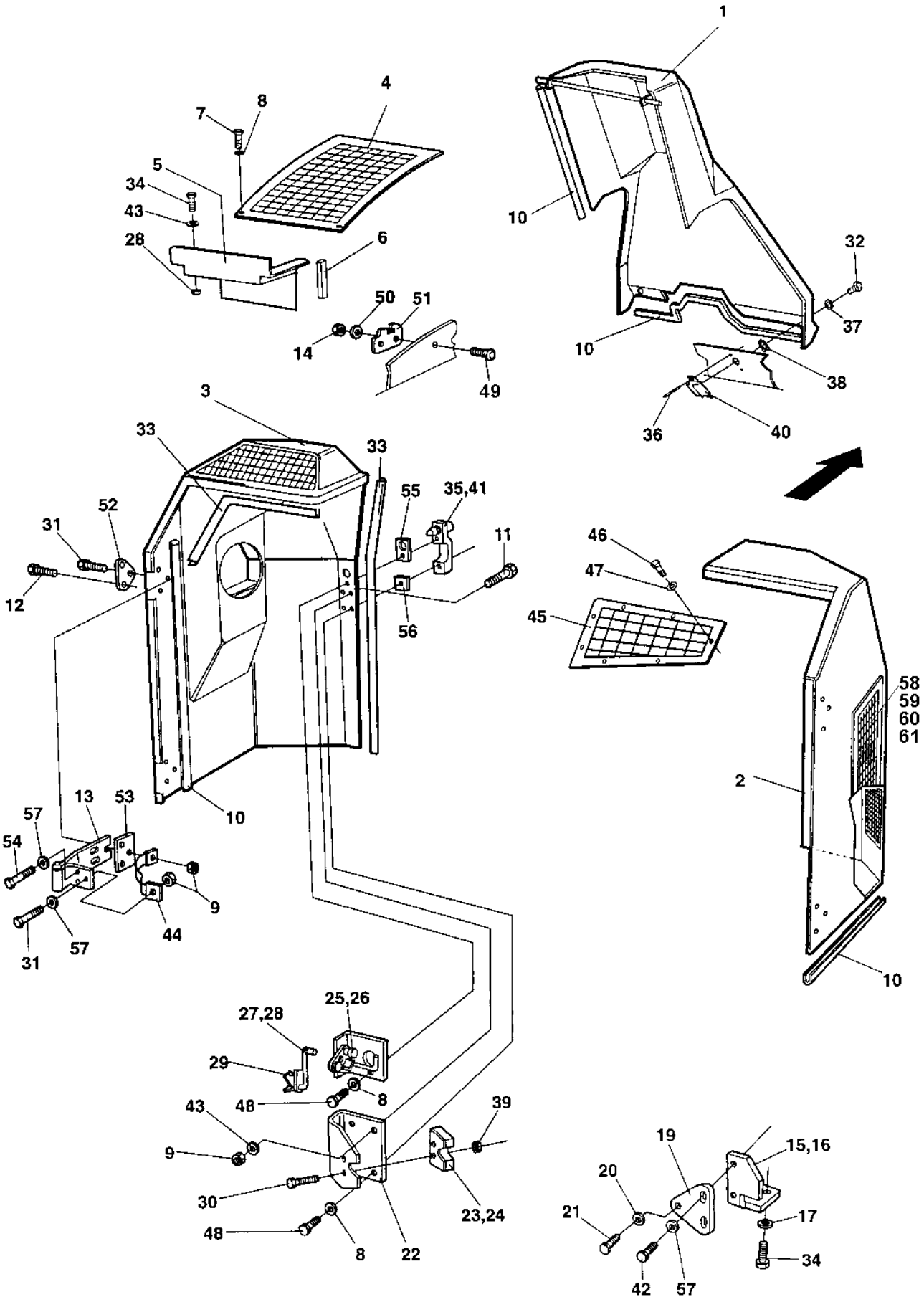
1
4
7
8
5
34
43
28
6
50
51
14
49
10
32
37
38
36
40
3
33
33
55
35,41
52
31
12
11
56
46
47
45
58
59
60
61
2
10
13
53
57
54
9
44
57
31
25,26
27,28
29
8
43
48
39
9
30
48
8
22
23,24
19
15,16
20
21
17
34
42
57

Ref. No.	Part No.	Rem.	Qty	Description	Code
56	903936		2	Rubber gasket	
57	603019		16	Washer	
58	374496		2	Grid	
59	904228		24	Washer 6,4x12x1,5	
60	500075		12	Screw M6-1x25 8,8	
61	586002		12	Lock nut M6	

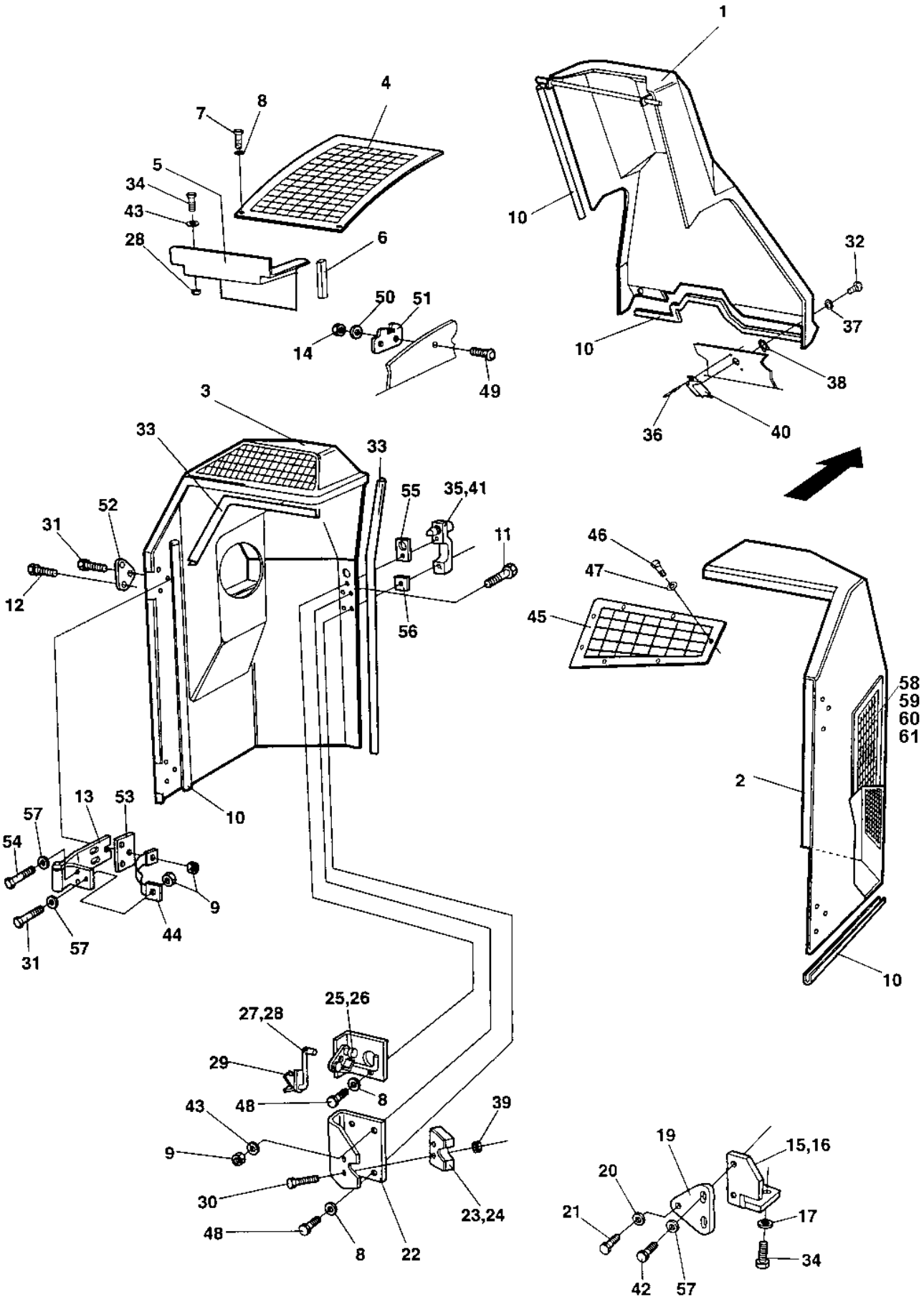
1
4
7
8
5
34
43
28
6
50
51
14
49
10
32
37
38
36
40
3
33
33
55
35,41
52
31
12
11
56
46
47
45
58
59
60
61
2
10
13
53
57
54
9
44
57
31
25,26
27,28
29
8
43
48
39
9
30
48
8
22
23,24
19
15,16
20
21
17
34
42
57

Ref. No.	Part No.	Rem.	Qty	Description	Code
1	372949		1	Cover	
2	374544	A	1	Engine hood	
3	374808	B	1	Engine hood	
4	374495		1	Grid	
5	359748		1	Cover plate	
6	902166	C	2XL	Edge trim	
7	500013		7	Screw M6-1x16 8,8	
8	904228		14	Washer 6,4x12x1,5	
9	586003		10	Lock nut M8	
10	902166	C	6XL	Edge trim	
11	902520		6	Screw	
12	500047		10	Screw M8-1,25x35 8,8	
13	359766		4	Hinge	
14	586002		4	Lock nut M6	
15	372898	A	1	Bracket	
16	372894	B	1	Bracket	
17	601003		4	Washer 8,4x25x2	
19	372893		2	Bracket	
20	371666		2	Locking pin	
21	904231		2	Washer 13x24x2	
22	371659		2	Bracket	
23	371380	E	1	Lock	
24	371381	F	1	Lock	D
25	371449	F	1	Lock device	
26	371450	E	1	Lock device	
27	371451	E	1	Coupling link	
28	371452	F	1	Coupling link	
29	371569		2	Lock device	
30	535053		4	Screw	
31	500023		4	Screw M8-1,25x40 8,8	
32	903340		2	Trunnion	
33	202057	C	6XL	Edge trim	D
34	500019		8	Screw M8-1,25x16 8,8	
35	371389	E	1	Grab handle	
	902866		1	.Key Marked "455"	D
36	923253		4	Rivet	
37	903341		2	Washer	
38	903857		2	Washer	
39	586001		4	Lock nut M5	
40	903344		2	Lock	
41	371390	F	1	Grab handle	
	902866		1	.Key Marked "455"	D
42	500053		4	Screw M8-1,25x20 8,8	
43	904229		12	Washer 8,4x16x1,5	
44	373422		2	Metal strapping	
45	374497		1	Grid	
46	500004		4	Screw M5 0,8x12 8,8	
47	904281		4	Washer 5,3x10x1	
48	500015		4	Screw M6-1x30 8,8	
49	903856		4	Bolt M06x30	
50	603020		4	Washer	
51	372126		2	Cover holder	
52	372675		4	Washer	
53	372566		4	Bracket	
54	500021		8	Screw M8-1,25x25 8,8	
55	903937		2	Rubber gasket	

A) Right
B) Left
C) Length as required
E) Right hood
F) Left hood

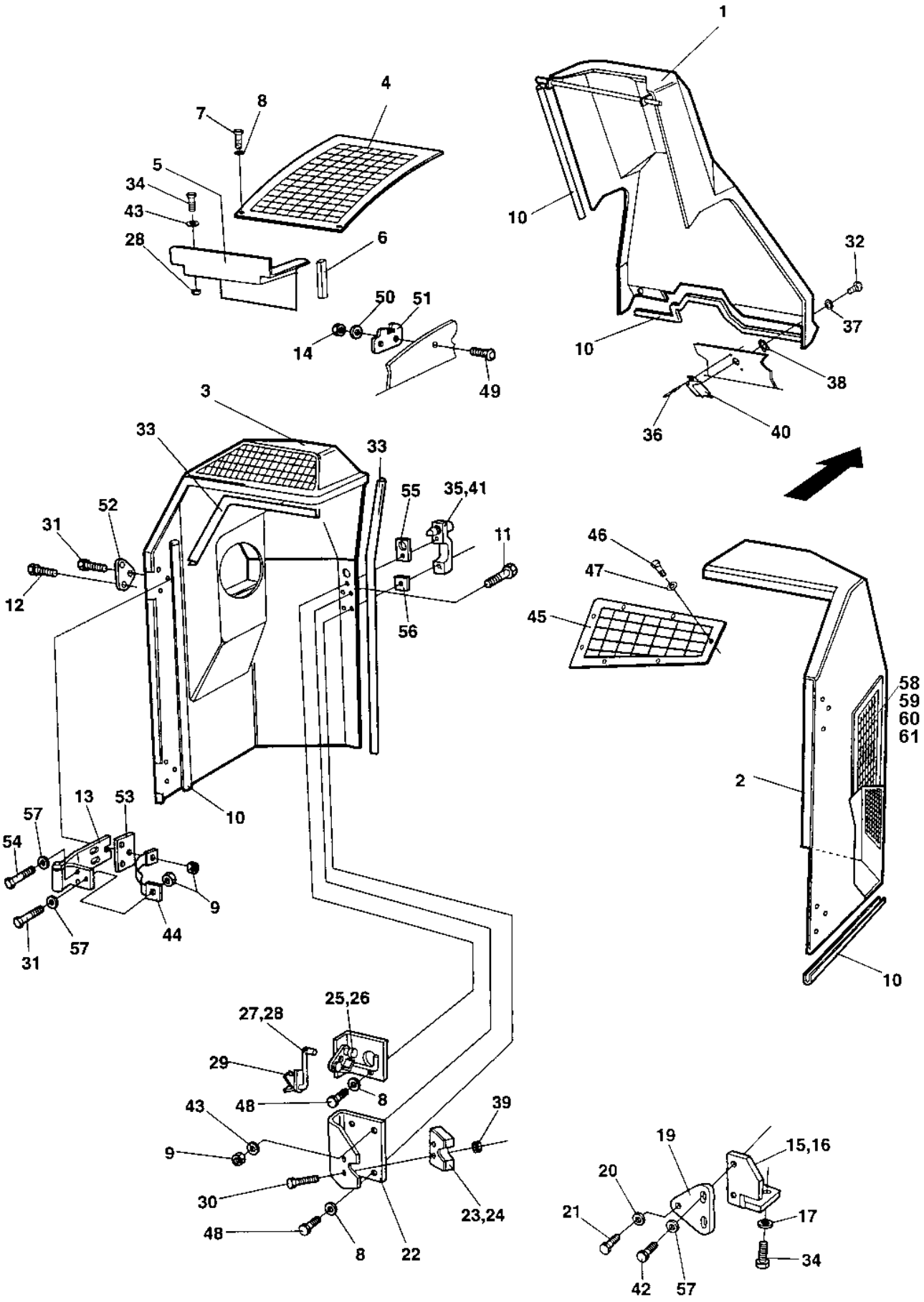
1
4
7
8
5
34
43
28
6
50
51
14
49
10
32
37
38
36
40
3
33
33
55
35,41
52
31
12
11
56
46
47
45
58
59
60
61
2
10
13
53
57
54
9
44
57
31
25,26
27,28
29
8
43
48
39
9
30
48
8
22
23,24
19
15,16
20
21
17
34
42
57

Ref. No.	Part No.	Rem.	Qty	Description	Code
56	903936		2	Rubber gasket	
57	603019		16	Washer	
58	374496		2	Grid	
59	904228		24	Washer 6,4x12x1,5	
60	500075		12	Screw M6-1x25 8,8	
61	586002		12	Lock nut M6	

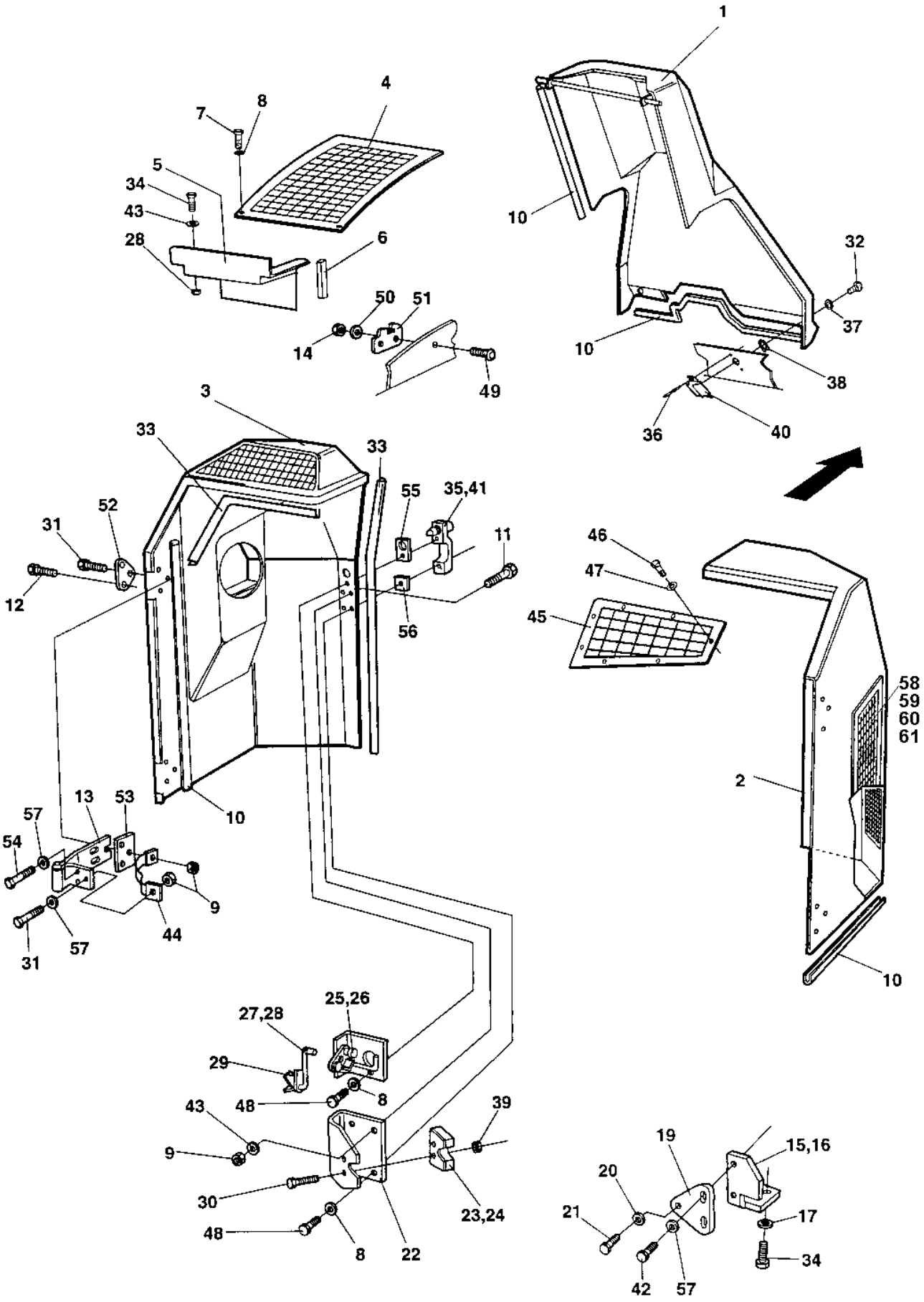
1
4
8
7
5
34
43
28
6
50
51
14
49
10
32
37
38
36
40
3
33
33
55
35,41
52
31
12
11
56
46
47
45
58
59
60
61
2
10
13
53
57
54
9
44
57
31
25,26
27,28
29
8
43
48
39
9
30
48
8
22
23,24
19
15,16
20
21
17
34
42
57

Ref. No.	Part No.	Rem.	Qty	Description	Code
1	372949		1	Cover	
2	374544	A	1	Engine hood	
3	374808	B	1	Engine hood	
4	374495		1	Grid	
5	359748		1	Cover plate	
6	902166	C	2XL	Edge trim	
7	500013		7	Screw M6-1x16 8,8	
8	904228		14	Washer 6,4x12x1,5	
9	586003		10	Lock nut M8	
10	902166	C	6XL	Edge trim	
11	902520		6	Screw	
12	500047		10	Screw M8-1,25x35 8,8	
13	359766		4	Hinge	
14	586002		4	Lock nut M6	
15	372898	A	1	Bracket	
16	372894	B	1	Bracket	
17	601003		4	Washer 8,4x25x2	
19	372893		2	Bracket	
20	371666		2	Locking pin	
21	904231		2	Washer 13x24x2	
22	371659		2	Bracket	
23	371380	E	1	Lock	
24	371381	F	1	Lock	D
25	371449	F	1	Lock device	
26	371450	E	1	Lock device	
27	371451	E	1	Coupling link	
28	371452	F	1	Coupling link	
29	371569		2	Lock device	
30	535053		4	Screw	
31	500023		4	Screw M8-1,25x40 8,8	
32	903340		2	Trunnion	
33	202057	C	6XL	Edge trim	D
34	500019		8	Screw M8-1,25x16 8,8	
35	371389	E	1	Grab handle	
	902866		1	.Key Marked "455"	D
36	923253		4	Rivet	
37	903341		2	Washer	
38	903857		2	Washer	
39	586001		4	Lock nut M5	
40	903344		2	Lock	
41	371390	F	1	Grab handle	
	902866		1	.Key Marked "455"	D
42	500053		4	Screw M8-1,25x20 8,8	
43	904229		12	Washer 8,4x16x1,5	
44	373422		2	Metal strapping	
45	374497		1	Grid	
46	500004		4	Screw M5 0,8x12 8,8	
47	904281		4	Washer 5,3x10x1	
48	500015		4	Screw M6-1x30 8,8	
49	903856		4	Bolt M06x30	
50	603020		4	Washer	
51	372126		2	Cover holder	
52	372675		4	Washer	
53	372566		4	Bracket	
54	500021		8	Screw M8-1,25x25 8,8	
55	903937		2	Rubber gasket	

A) Right
B) Left
C) Length as required
E) Right hood
F) Left hood

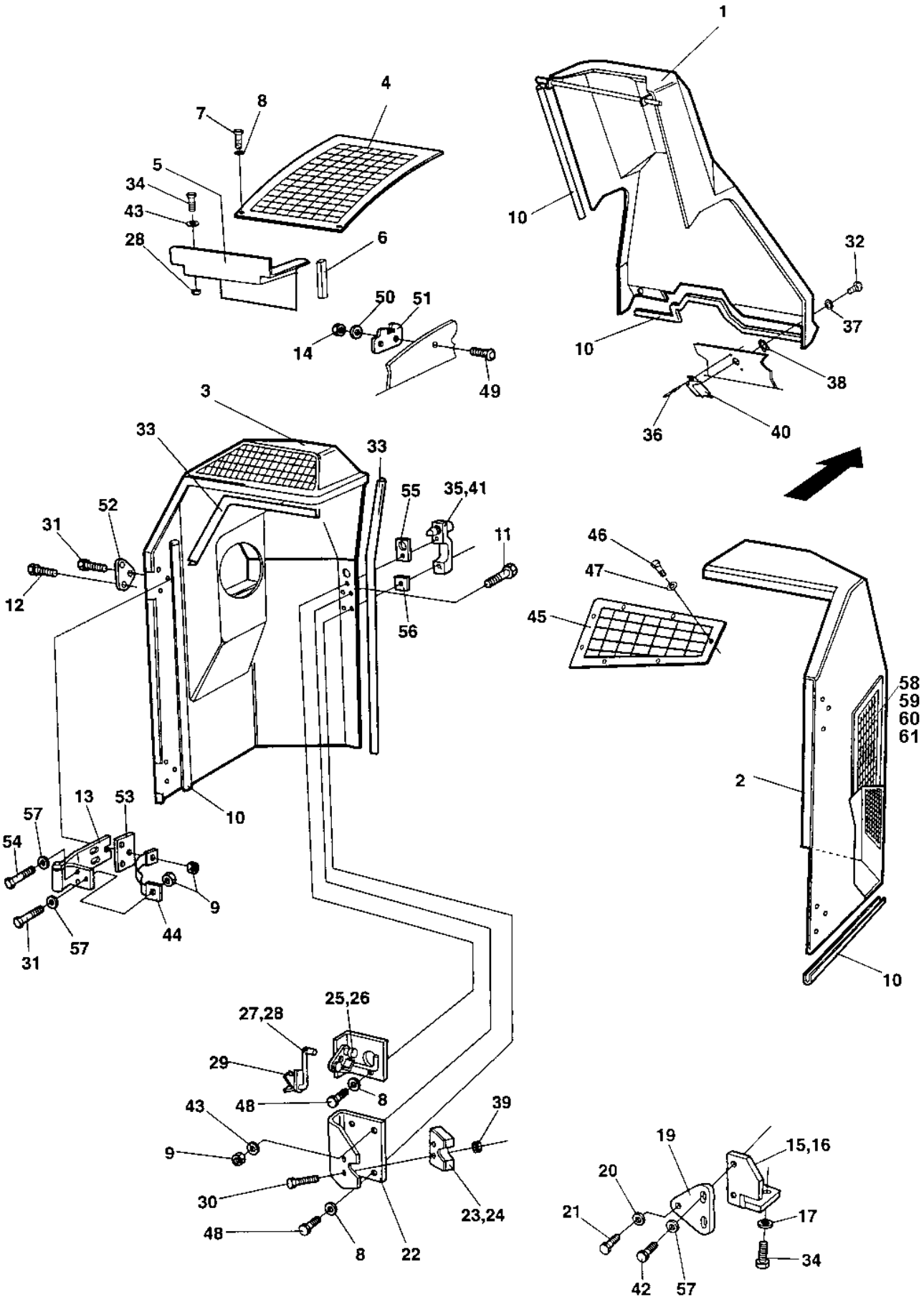
1
4
7
8
5
34
43
28
6
50
51
14
49
10
32
37
38
36
40
3
33
33
55
35,41
52
31
12
11
56
46
47
45
58
59
60
61
2
10
13
53
57
54
9
44
57
31
25,26
27,28
29
8
43
48
39
9
30
48
8
22
23,24
19
15,16
20
21
17
34
42
57

Ref. No.	Part No.	Rem.	Qty	Description	Code
56	903936		2	Rubber gasket	
57	603019		16	Washer	
58	374496		2	Grid	
59	904228		24	Washer 6,4x12x1,5	
60	500075		12	Screw M6-1x25 8,8	
61	586002		12	Lock nut M6	

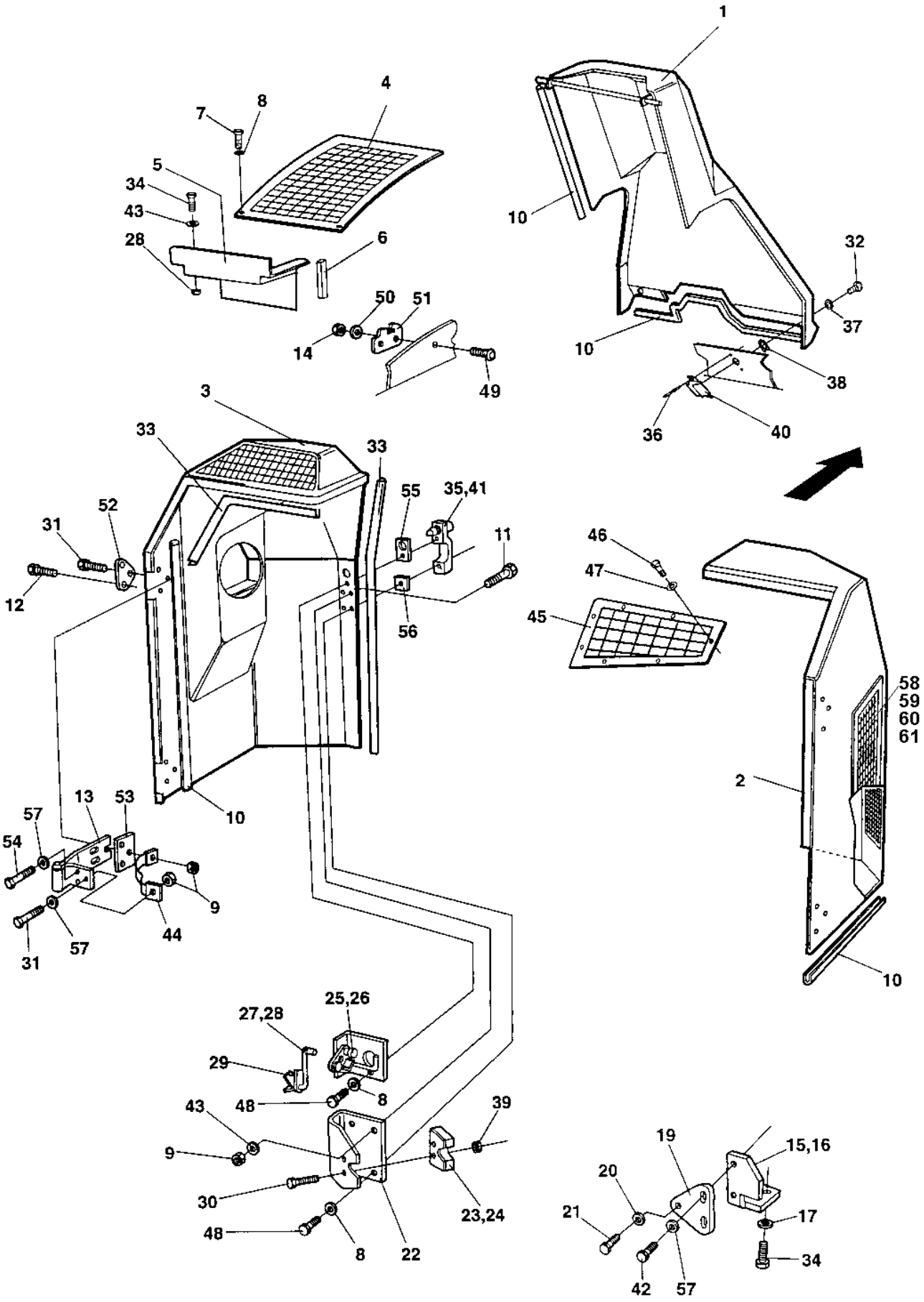
1
4
7
8
5
34
43
28
6
50
51
14
49
10
32
37
38
36
40
3
33
33
55
35,41
52
31
12
11
56
46
47
45
58
59
60
61
2
10
13
53
57
54
9
44
57
31
25,26
27,28
29
8
43
48
39
9
30
48
8
22
23,24
19
15,16
20
21
17
34
42
57

Ref. No.	Part No.	Rem.	Qty	Description	Code
1	372949		1	Cover	
2	374544	A	1	Engine hood	
3	374808	B	1	Engine hood	
4	374495		1	Grid	
5	359748		1	Cover plate	
6	902166	C	2XL	Edge trim	
7	500013		7	Screw M6-1x16 8,8	
8	904228		14	Washer 6,4x12x1,5	
9	586003		10	Lock nut M8	
10	902166	C	6XL	Edge trim	
11	902520		6	Screw	
12	500047		10	Screw M8-1,25x35 8,8	
13	359766		4	Hinge	
14	586002		4	Lock nut M6	
15	372898	A	1	Bracket	
16	372894	B	1	Bracket	
17	601003		4	Washer 8,4x25x2	
19	372893		2	Bracket	
20	371666		2	Locking pin	
21	904231		2	Washer 13x24x2	
22	371659		2	Bracket	
23	371380	E	1	Lock	
24	371381	F	1	Lock	D
25	371449	F	1	Lock device	
26	371450	E	1	Lock device	
27	371451	E	1	Coupling link	
28	371452	F	1	Coupling link	
29	371569		2	Lock device	
30	535053		4	Screw	
31	500023		4	Screw M8-1,25x40 8,8	
32	903340		2	Trunnion	
33	202057	C	6XL	Edge trim	D
34	500019		8	Screw M8-1,25x16 8,8	
35	371389	E	1	Grab handle	
	902866		1	.Key Marked "455"	D
36	923253		4	Rivet	
37	903341		2	Washer	
38	903857		2	Washer	
39	586001		4	Lock nut M5	
40	903344		2	Lock	
41	371390	F	1	Grab handle	
	902866		1	.Key Marked "455"	D
42	500053		4	Screw M8-1,25x20 8,8	
43	904229		12	Washer 8,4x16x1,5	
44	373422		2	Metal strapping	
45	374497		1	Grid	
46	500004		4	Screw M5 0,8x12 8,8	
47	904281		4	Washer 5,3x10x1	
48	500015		4	Screw M6-1x30 8,8	
49	903856		4	Bolt M06x30	
50	603020		4	Washer	
51	372126		2	Cover holder	
52	372675		4	Washer	
53	372566		4	Bracket	
54	500021		8	Screw M8-1,25x25 8,8	
55	903937		2	Rubber gasket	

A) Right
B) Left
C) Length as required
E) Right hood
F) Left hood

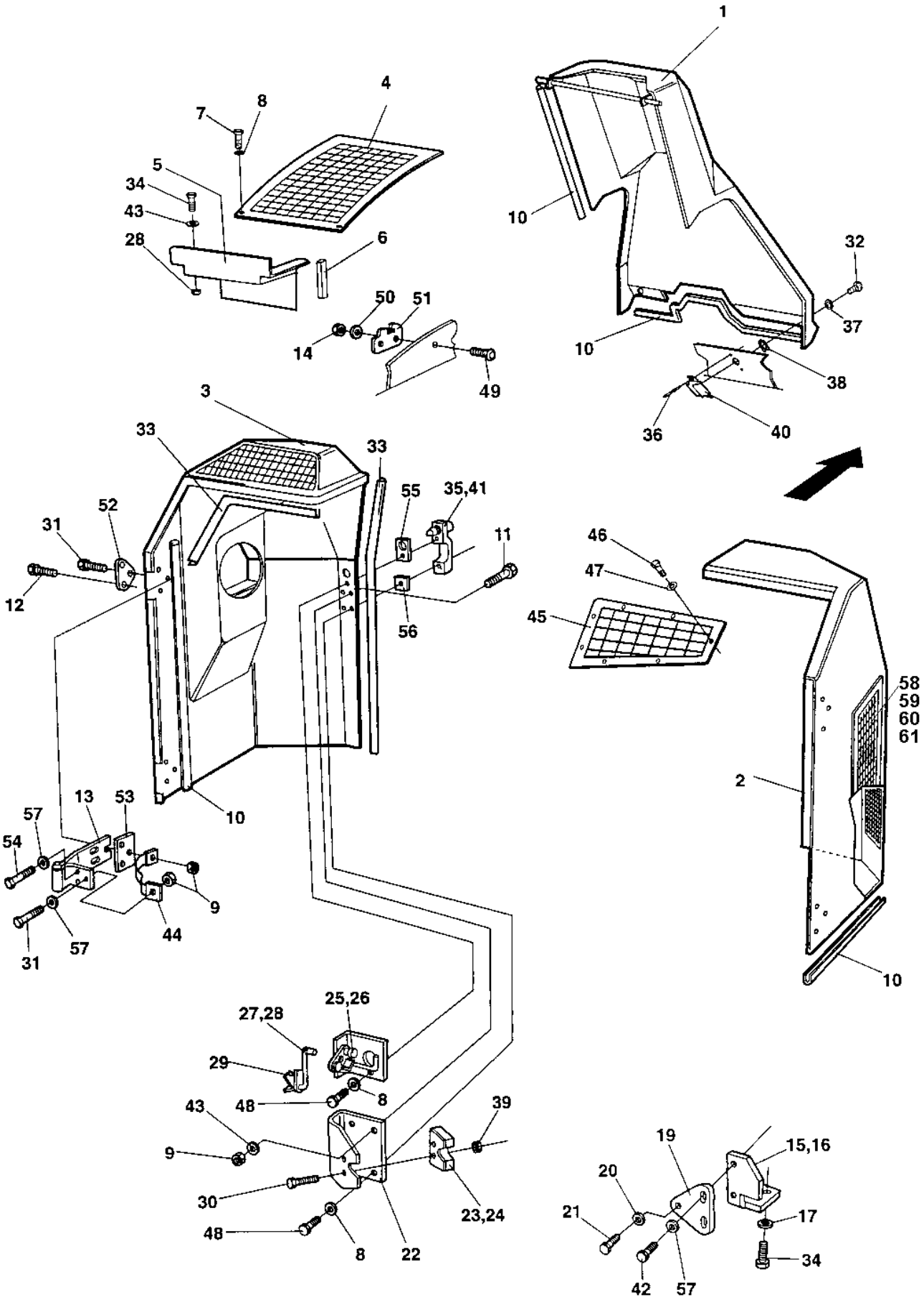
1
4
7
8
5
34
43
28
6
50
51
14
49
10
32
37
38
36
40
3
33
33
55
35,41
52
31
12
11
56
46
47
45
58
59
60
61
2
10
13
53
57
54
9
44
57
31
25,26
27,28
29
8
43
48
39
9
30
48
8
22
23,24
19
15,16
20
21
17
34
42
57

Ref. No.	Part No.	Rem.	Qty	Description	Code
56	903936		2	Rubber gasket	
57	603019		16	Washer	
58	374496		2	Grid	
59	904228		24	Washer 6,4x12x1,5	
60	500075		12	Screw M6-1x25 8,8	
61	586002		12	Lock nut M6	

Noise suppression Left hood

17260

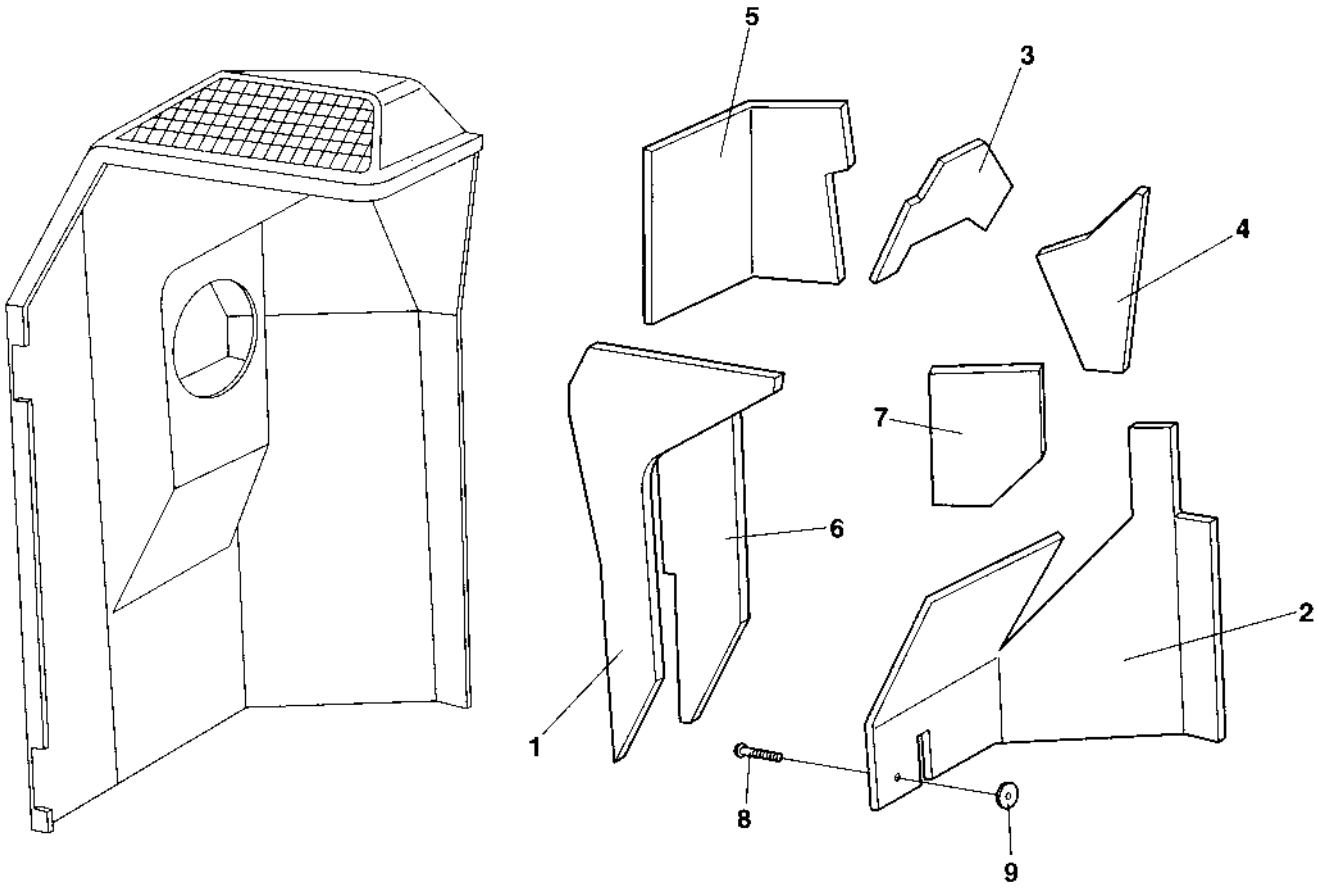

Noise suppression Left hood

Ref. No.	Part No.	Rem.	Qty	Description	Code
1	374787		1	c90	
2	374788		1	c90	
3	374789		1	c90	
4	374790		1	c90	
5	374978		1	c90	
6	374979		1	c90	
7	373187		1	c90	
8	904209		16	Screw	
9	373476		18	Washer	

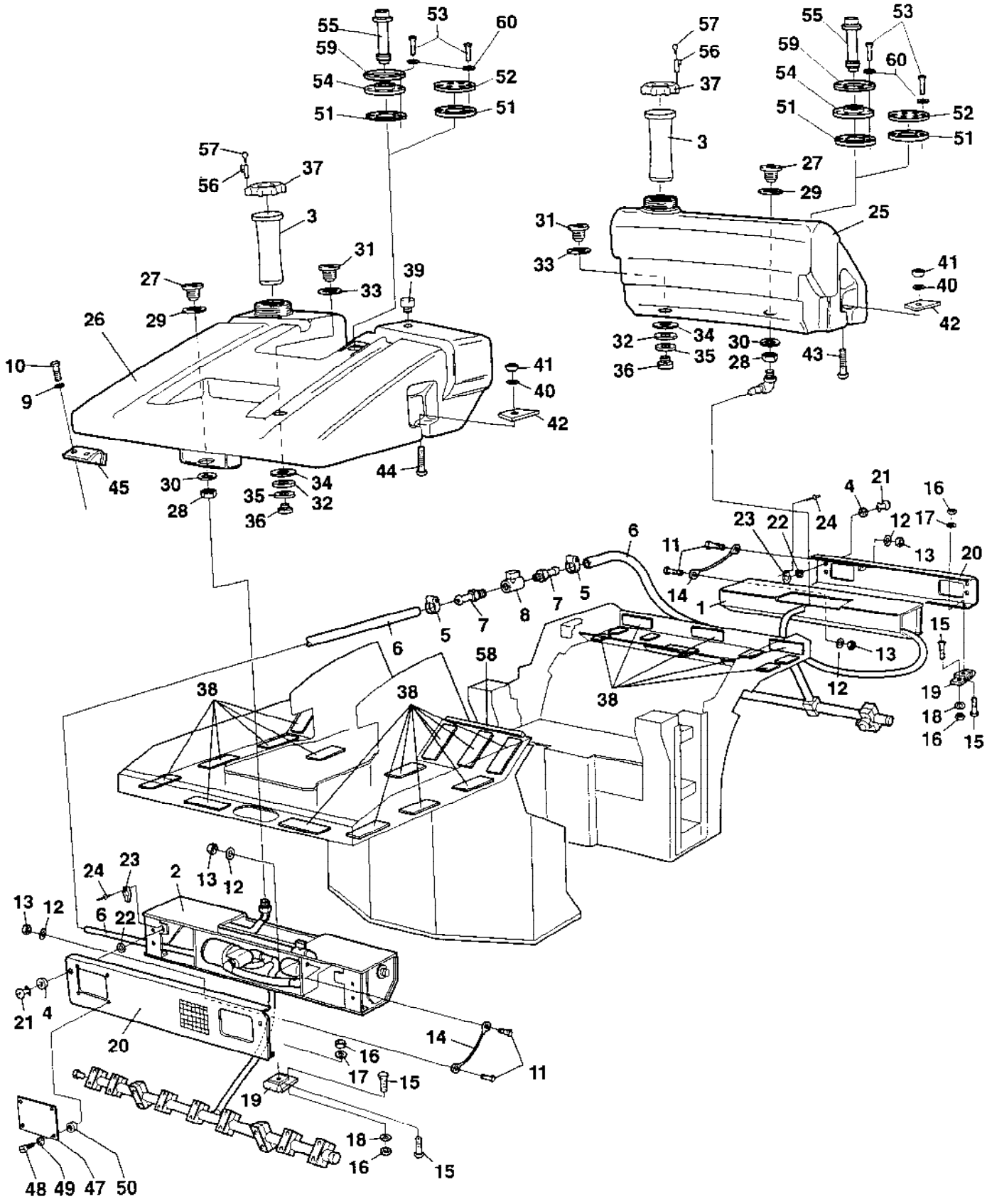
55
53
60
59
54
52
51
51
57
56
37
3
31
39
33
27
29
26
10
9
45
30
28
34
35
32
36
44
41
40
42
57
56
37
3
55
53
59
60
54
51
52
51
27
29
25
31
33
41
40
42
32
34
35
36
30
28
43
6
11
14
1
23
22
24
4
21
12
13
16
17
20
15
19
18
16
15
5
7
8
7
5
6
58
38
38
38
12
13
24
23
2
13
12
6
22
13
12
21
4
20
14
11
16
17
15
19
18
16
15
48
49
47
50

Sprinkler system Tanks

Ref. No.	Part No.	Rem.	Qty	Description	Code
1			1	Sprinkler system Front (Page 122)	
2			1	Sprinkler system Rear (Page 126)	
3	358846		2	Strainer	D
4	903341		4	Washer	
5	313002		2	Hose clamp	
6	244054	E	2XL	Hose reinforced 0,65 m	
7	924544	1	2	Hose connection	
8	925599	1	1	Valve	
9	904229		4	Washer 8,4x16x1,5	
10	500022		4	Screw M8-1,25x30 8,8	
11	500053		4	Screw M8-1,25x20 8,8	
12	904229		4	Washer 8,4x16x1,5	
13	586003		4	Lock nut M8	
14	343775		2	Wire	
15	513012		20	Screw	
16	586002		20	Lock nut M6	
17	928467		8	Washer	
18	904228		12	Washer 6,4x12x1,5	
19	928041		4	Hinge	D
20	359433		2	Cover Up to 61710670	
	374538		2	Cover From 61710671	
21	903345		4	Trunnion	
22	903342		4	Retaining ring	
23	903344		4	Lock	
24	923253		8	Rivet	
25	359001	A	1	Water tank	
26	359002	B	1	Water tank	
	902916	3	1	.Adapter kit	
27			1	..Connector	
28			1	..Nut	
29			1	..Sealing	
30			1	..Washer	
	902917	3	1	.Adapter kit	
31			1	..Connector	
32			1	..Nut	
33			1	..Sealing	
34			1	..Washer	
	902918	3	1	.Plug kit	
35			1	..Gasket	
36			1	..Plug	
37	359003	3	1	.Cap	D
38	357459		30	Rubber cloth	
39	357138		1	Ventilating filter	B
40	904232		4	Washer 17x30x3	
41	570008		4	Nut	
42	359444		4	Holder, cpl	
43	904405		2	Screw	
44	903523		2	Screw	
45	359446		2	Holder	
47	349830		4	Cover Up to 61710670	
	374545		4	Cover From 61710671	
48	904289		16	Screw Up to 61710670	
	902223		16	Screw From 61710671	

1) Item 7+8 changed together
3) Included in both sprinkling tanks, item 25 & 26
A) Front
B) Rear
E) Length as required

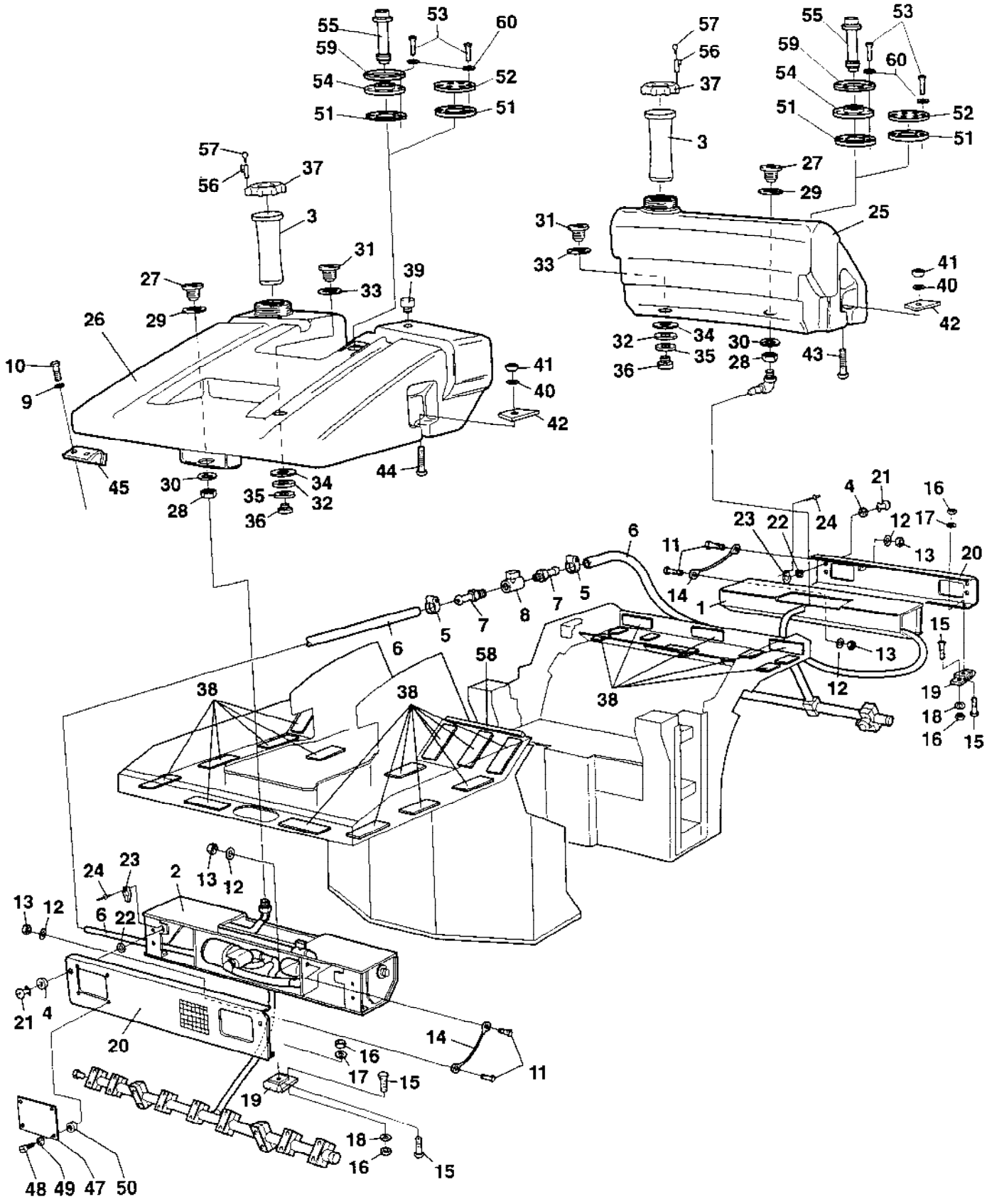
55
53
60
59
54
52
51
51
57
56
37
3
31
39
33
27
29
26
10
9
45
30
28
34
35
32
36
44
41
40
42
57
56
37
3
55
53
59
60
54
51
52
51
27
29
25
31
33
41
40
42
32
34
35
36
30
28
43
6
11
14
1
23
22
24
4
21
12
13
16
17
20
15
19
18
16
15
5
7
8
7
5
6
58
38
38
38
12
13
24
23
2
13
12
6
22
13
12
21
4
20
14
11
16
17
15
19
18
16
15
48
49
47
50

Ref. No.	Part No.	Rem.	Qty	Description	Code
49	904698		16	Washer 4,3x8x0,8 Up to 61710670	
50	923976		16	Nut Up to 61710670	
51	370746		2	Gasket	
52	370747		2	Cover	
53	904206		10	Screw	
54	370745	C	2	Flange	
55	374139	C	2	Level sender	
56	370699	C	2	Lock	
57		D	1	.Key	
58	202043	E	2XL	Rubber strip	
59	372718		2	Washer	
60	904228		10	Washer 6,4x12x1,5	

C) Option
D) 2 pcs incl. in 56
E) Length as required

Sprinkler system Front

15668-2

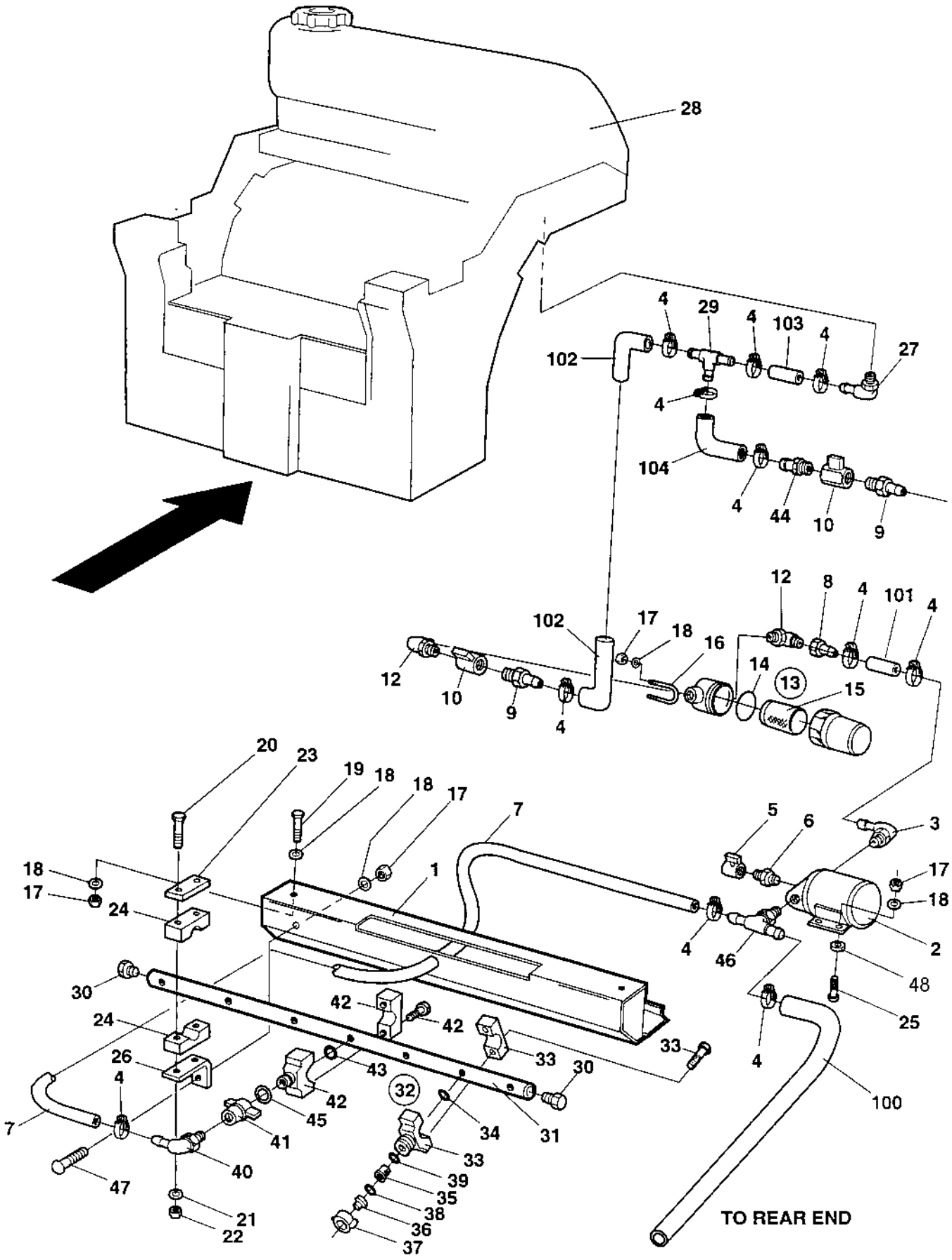

Sprinkler system Front

Ref. No.	Part No.	Rem.	Qty	Description	Code
1	359435		1	Sprinkler box Up to 61710796	
	376248		1	Sprinkler box From 61710797 Up to 61710797	
	359435		1	Sprinkler box From 61710798 Up to 61710825	
	376248		1	Sprinkler box From 61710826	
2	923690		1	Water pump (Page 130)	C
3	923734		1	Hose connection	
4	313002		11	Hose clamp	
5	901309		1	Valve	
6	901837		1	Connector	
7	244054	A	1XL	Hose reinforced 0,65 m	
8	901297		1	Hose connection	
9	924544	1	2	Hose connection	
10	925599	1	2	Valve	
12	901298		2	Connector	
13	920775		1	Strainer	
14	921423		1	.Gasket	D
15	901841		1	.Strainer	D
16	923984		2	Clamp	
17	570005		14	Nut M8	
18	904229		14	Washer 8,4x16x1,5	
19	500022		4	Screw M8-1,25x30 8,8	
20	500016		4	Screw M6-1,0x55 8,8	
21	904228		4	Washer 6,4x12x1,5	
22	586002		4	Lock nut M6	
23	923859		2	Cover plate	
24	923876		2	Clamp	
25	500053		4	Screw M8-1,25x20 8,8	
26	373518		2	Bracket	
27	924996		1	Hose connection	D
28			1	Sprinkler system Tanks (Page 118)	
29	923735		1	Hose connection	
30	923683		2	Plug	
31	359443		1	Sprinkler pipe	
32	903543		6	Sprinkler, cpl	D
33	923680		1	.Nozzle clamp	D
34	923962		1	..O-ring	D
35	903541		1	.Strainer with valve	D
36	903540		1	.Nozzle body Green	D
37	909267		1	.Coupling Green	D
38	923682		1	.Gasket	
39	903010		1	.Gasket	D
40	901431		1	Hose connection	
41	929419		1	Coupling	
42	923680		1	Nozzle clamp	D
43	923962		1	O-ring	D
44	924544		1	Hose connection	
45	923682		1	Gasket	
46	903626		1	Connector	
47	904107		2	Screw	
48	904556		4	Washer 8,4x16x3,0	
100	244054	D	1XL	Hose reinforced 0,65 m	
101	244054	E	1XL	Hose reinforced 0,65 m	
102	244054	F	1XL	Hose reinforced 0,65 m	
103	244054	G	1XL	Hose reinforced 0,65 m	

1) Item 9+10 changed together
A) Total length = 4,0 m
D) Length as required
E) L=0,380 m
F) L=0,280 m
G) L=0,370 m

Sprinkler system Front

15668-2

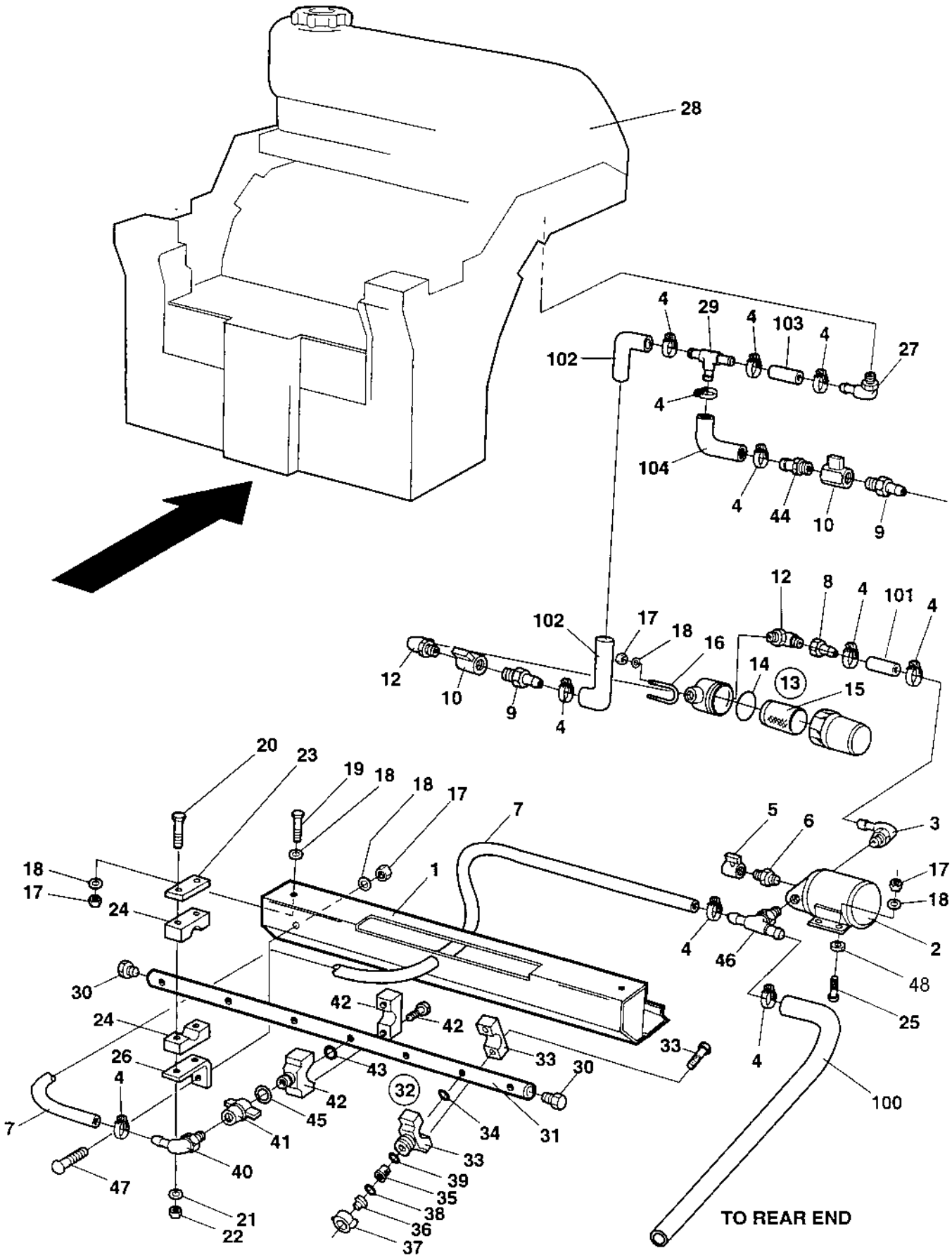

Sprinkler system Front

Ref. No.	Part No.	Rem.	Qty	Description	Code
104	244054	H	1XL	Hose reinforced 0,65 m	

H) L=0,430 m

Sprinkler system Rear

15669-3

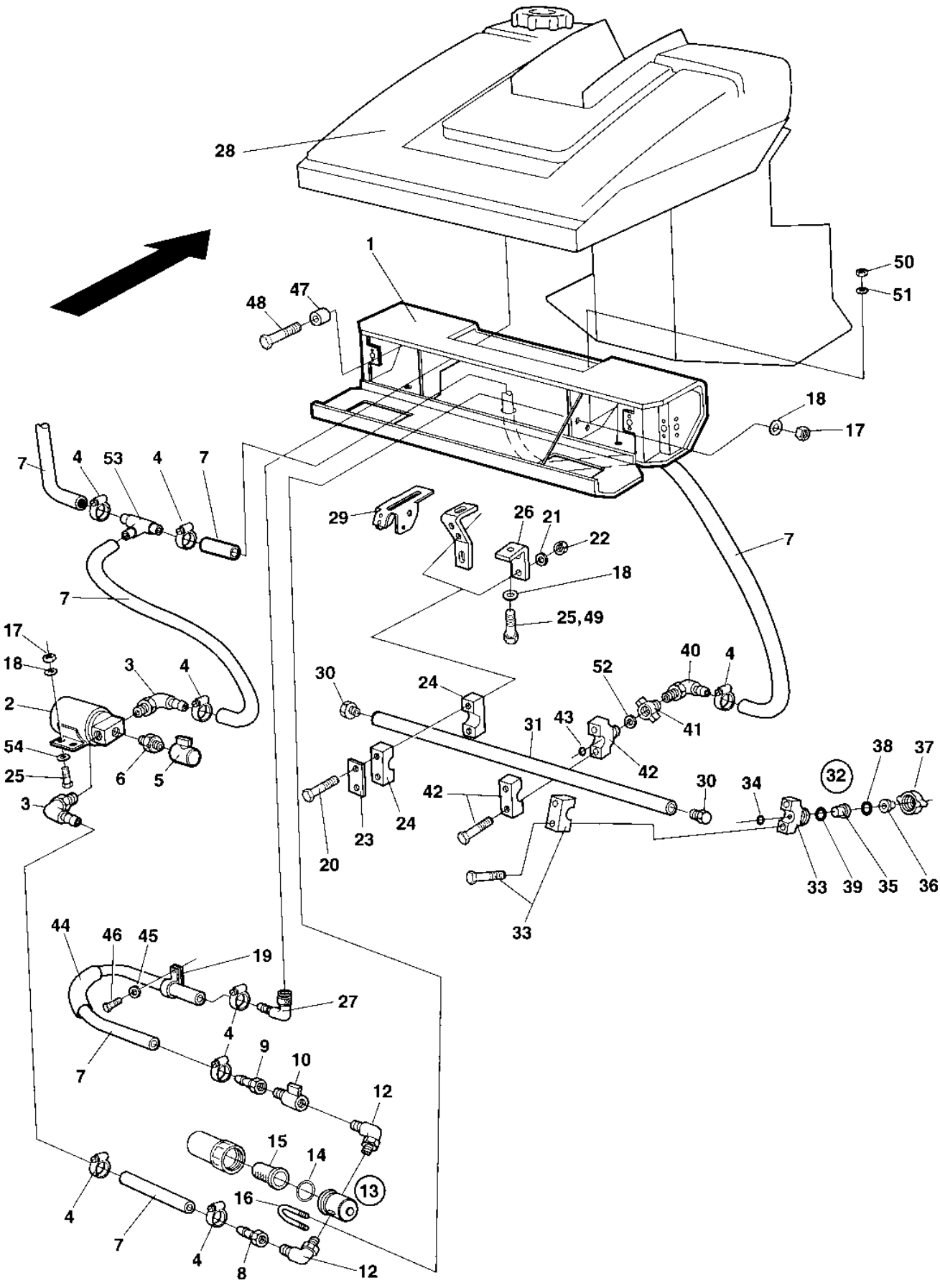

Sprinkler system Rear

Ref. No.	Part No.	Rem.	Qty	Description	Code
1	359435		1	Sprinkler box Up to 61710796	
	376248		1	Sprinkler box From 61710797 Up to 61710797	
	359435		1	Sprinkler box From 61710798 Up to 61710825	
	376248		1	Sprinkler box From 61710826	
2	923690		1	Water pump (Page 130)	C
3	923734		3	Hose connection	
4	313002		10	Hose clamp	
5	901309		1	Valve	
6	901837		1	Connector	
7	244054	A	1XL	Hose reinforced 0,65 m	
8	901297		1	Hose connection	
9	901300	B	1	Hose connection	
	924544	C	1	Hose connection	
10	924986	B	1	Valve	
	925599	C	1	Valve	
12	901298		2	Connector	
13	920775		1	Strainer	
14	921423		1	.Gasket	D
15	901841		1	.Strainer	D
16	923984		2	Clamp	
17	570005		8	Nut M8	
18	904229		8	Washer 8,4x16x1,5	
	904229	1	10	Washer 8,4x16x1,5	
19	921047		1	Clamp	
20	500187		4	Screw	
21	904228		4	Washer 6,4x12x1,5	
22	586002		4	Lock nut M6	
23	923859		2	Cover plate	
24	923876		2	Clamp	
25	500053		4	Screw M8-1,25x20 8,8	
	500053	1	6	Screw M8-1,25x20 8,8	
26	373518	1	2	Bracket	
27	924996	F	1	Hose connection	D
28			1	Sprinkler system Tanks (Page 118)	
29		2	2	Bracket	
30	923683		2	Plug	
31	359443		1	Sprinkler pipe	
32	903543		6	Sprinkler, cpl	D
33	923680		1	.Nozzle clamp	D
34	923962		1	..O-ring	D
35	903541		1	.Strainer with valve	D
36	903540		1	.Nozzle body Green	D
37	909267		1	.Coupling Green	D
38	923682		1	.Gasket	
39	903010		1	.Gasket	D
40	901431		1	Hose connection	
41	929419		1	Coupling	
42	923680		1	Nozzle clamp	D
43	923962		1	O-ring	D
44	901191	H	1XL	Protective hose	
45	904281		1	Washer 5,3x10x1	
46	500041		1	Screw	

1) Valid for rollers with spring loaded scrapers
2) Valid for rollers with spring loaded scrapers, Foldable
A) Total length = 4,5 m
B) Old
C) New
F) To tank
H) L=0,67 m

Sprinkler system Rear

15669-3

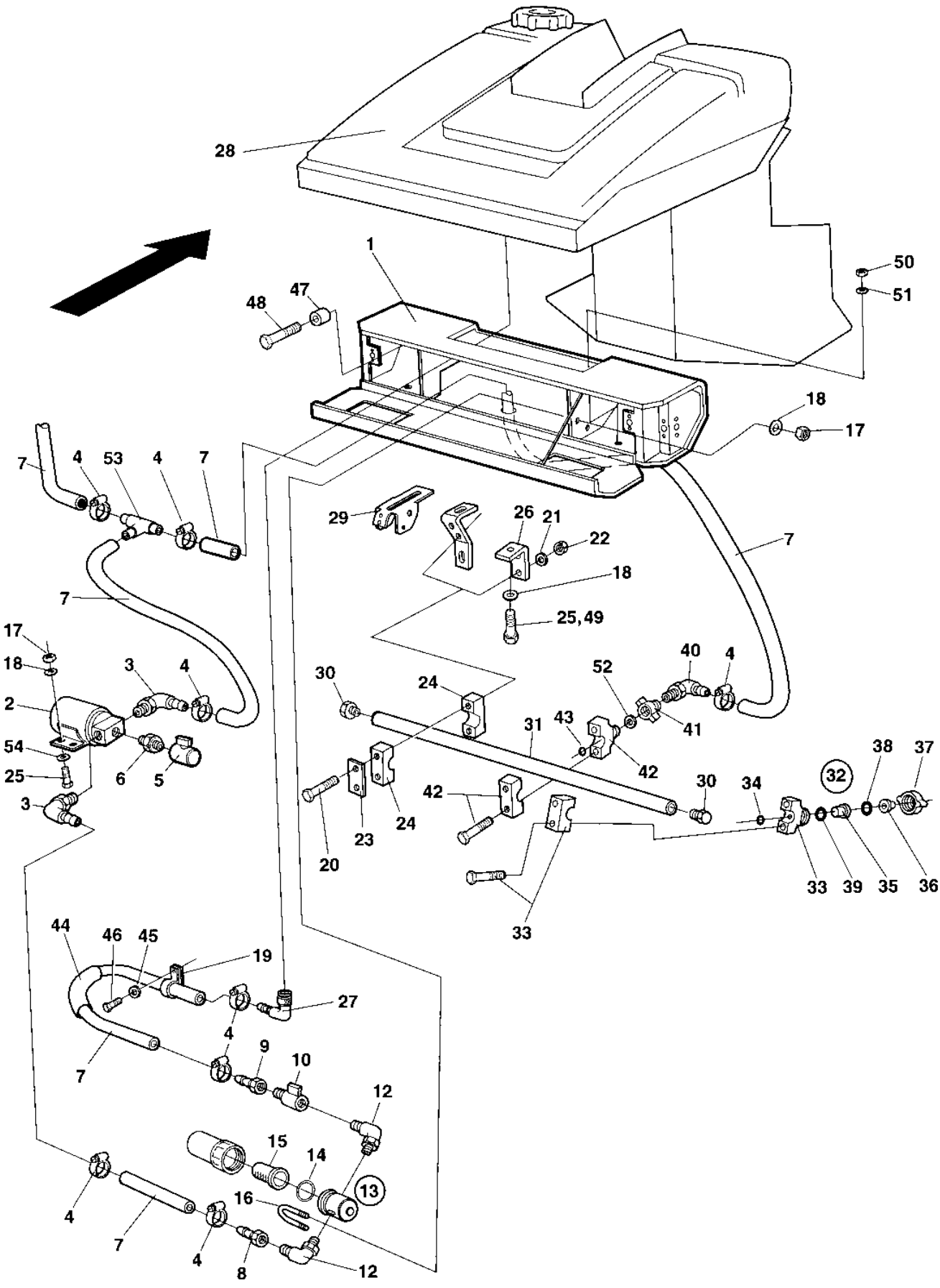

Sprinkler system Rear

Ref. No.	Part No.	Rem.	Qty	Description	Code
47	359434		8	Spacer sleeve	
48	500031		8	Screw M10-1,5x40 8,8	
49				Not used on this model	
50	570005		2	Nut M8	
51	904229		2	Washer 8,4x16x1,5	
52	923682		1	Gasket	
53	923735		1	Hose connection	
54	904556		4	Washer 8,4x16x3,0	

923690 Water pump

14373-1

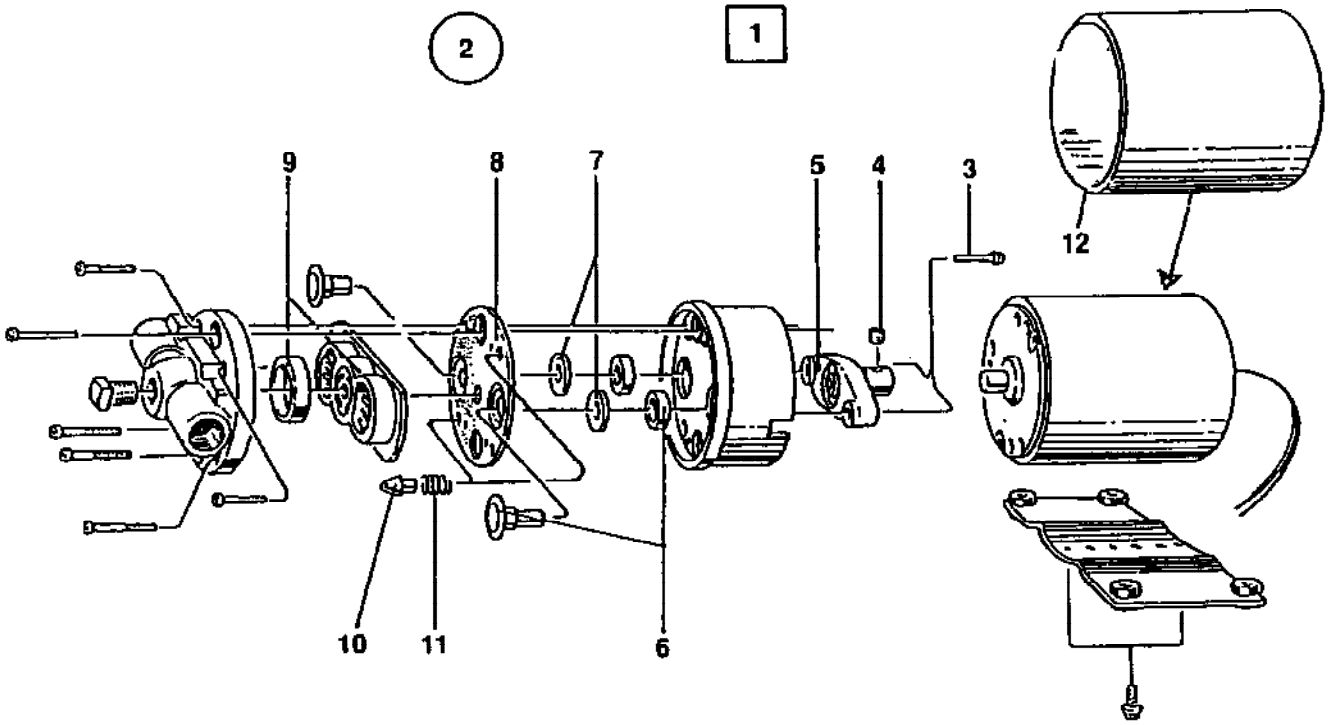

923690 Water pump

Ref. No.	Part No.	Rem.	Qty	Description	Code
2	902303		1	.Repair kit	D
3			1	..Screw, set	D
4			1	..Screw	D
5			1	..Rotor, cpl	D
6			1	..Piston, set	D
7			2	..Wear washer	D
8			1	..Diaphragm	D
9			1	..Check valve	D
10			2	..Poppet	D
11			2	..Spring	D
12	929881		1	.Protection	

Ref. No.	Part No.	Rem.	Qty	Description	Code
10			2	Drum (Page 134)	

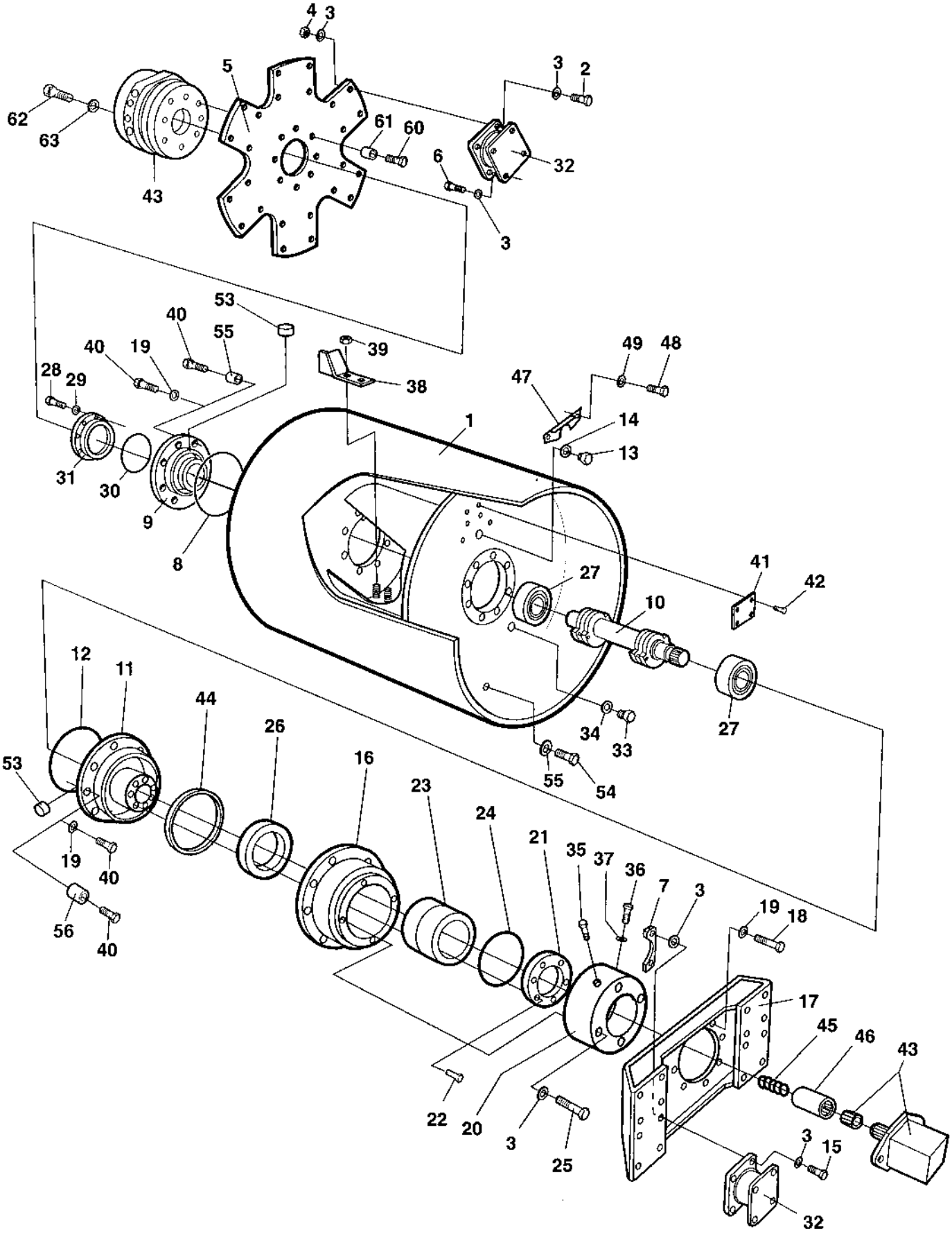
4
3
5
3
2
62
63
61
60
6
32
43
3
53
40
55
40
19
39
49
48
28
29
38
47
14
1
13
31
30
9
8
27
41
42
10
12
11
44
26
16
23
24
21
35
37
36
7
3
19
18
53
34
33
27
55
54
19
40
56
40
17
45
46
43
22
20
3
25
3
15
32

Ref. No.	Part No.	Rem.	Qty	Description	Code
				The quantity is valid for one (1) drum	
1	359331		1	Drum	
2	500194		24	Screw M12x40	
3	904231		104	Washer 13x24x2	
4	586019		24	Lock nut M12	
5	359332		1	Drive disc	
6	508084		24	Screw	
7	383436		8	Holder	
8	160107		1	O-ring Up to 61710702	D
	160344		1	O-ring From 61710703	D
9	343700		1	Bearing housing Up to 61710702	
	374565		1	Bearing housing From 61710703	
10	359333		1	Eccentric shaft	
11	343701		1	Bearing housing Up to 61710702	
	374566		1	Bearing housing From 61710703	
12	160120		1	O-ring Up to 61710702	D
	160093		1	O-ring From 61710703	D
13	343744		1	Magnetic plug M30	D
14	162017		1	Seal ring M30	D
15	508063		16	Screw	
16	343318		1	Bearing housing	D
17	372119		1	Holder plate	
18	500070		8	Screw M16x50	
19	904232		16	Washer 17x30x3 Up to 61710594	
	904232		16	Washer 17x30x3 From 61710703	
20	359339		1	Connector	
21	343462		1	Bearing cover	
22	508019		8	Screw M8x25	
23	116041		1	Taper roller bearing	D
24	160105		1	O-ring	D
25	500049		4	Screw M12-1,75x60 8.8	
26	167023		1	Seal ring	D
27	114089		2	Spherical roller bearing	D
28	500028		6	Screw M10-1,5x25 8,8	
29	904230		6	Washer 10,5x22x2	
30	160040		1	O-ring	D
31	821460		1	Bearing cover	
32	450122		10	Shock absorber	B
33	344196		1	Plug M12	D
34	162027		1	Sealing M12	D
35	926736		1	Breather M14	B
36	370231		1	Plug	
37	162018		1	Sealing	D
38	359203		6	Blade	
39	902286		12	Lock nut M8	
40	500093		16	Screw M16x40 Up to 61710594	
	500070		16	Screw M16x50 From 61710595	
41	343801		1	Sign plate	
42	527002		4	Drive screw	
43			N	Hydraulic details	
44	929447		1	V-ring	D
45	349715		1	Spring	
46	370365		1	Splined sleeve	
47	359955		1	Drop plate	
48	904229		2	Washer 8,4x16x1,5	
49	500019		2	Screw M8-1,25x16 8,8	
53	900775		6	Plug	
54	500163		1	Screw M12x16	
55	904231		1	Washer 13x24x2	
56	371727		16	Sleeve From 61710595 Up to 61710702	
60	903546		8	Screw	

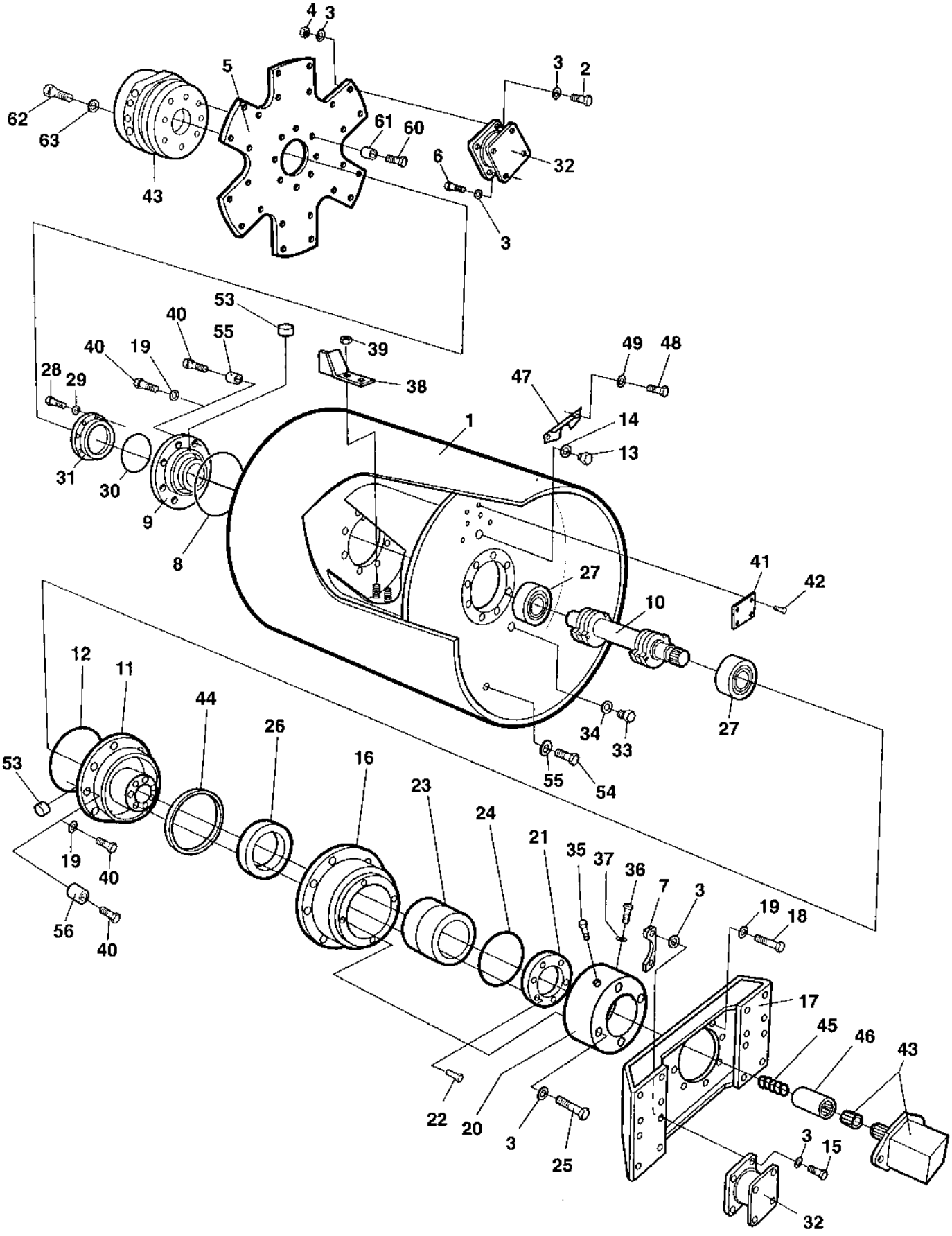
4
3
5
3
2
62
63
61
60
6
32
43
3
53
40
55
40
19
39
49
48
28
29
38
47
14
1
13
31
30
9
8
27
41
42
10
12
11
44
26
16
23
24
21
35
37
36
7
3
19
18
53
19
40
56
40
17
45
46
43
22
20
3
25
3
15
32
34
33
55
54
27

Ref. No.	Part No.	Rem.	Qty	Description	Code
61	359578		8	Spacer	
62	928445		4	Screw	
63	903290		4	Washer 21x36x6	

Ref. No.	Part No.	Rem.	Qty	Description	Code
10				Diesel engine Deutz BF4L 1011F (Page 140)	
20				Intake system (Page 142)	
30				Fuel system (Page 144)	
40				Exhaust system (Page 146)	

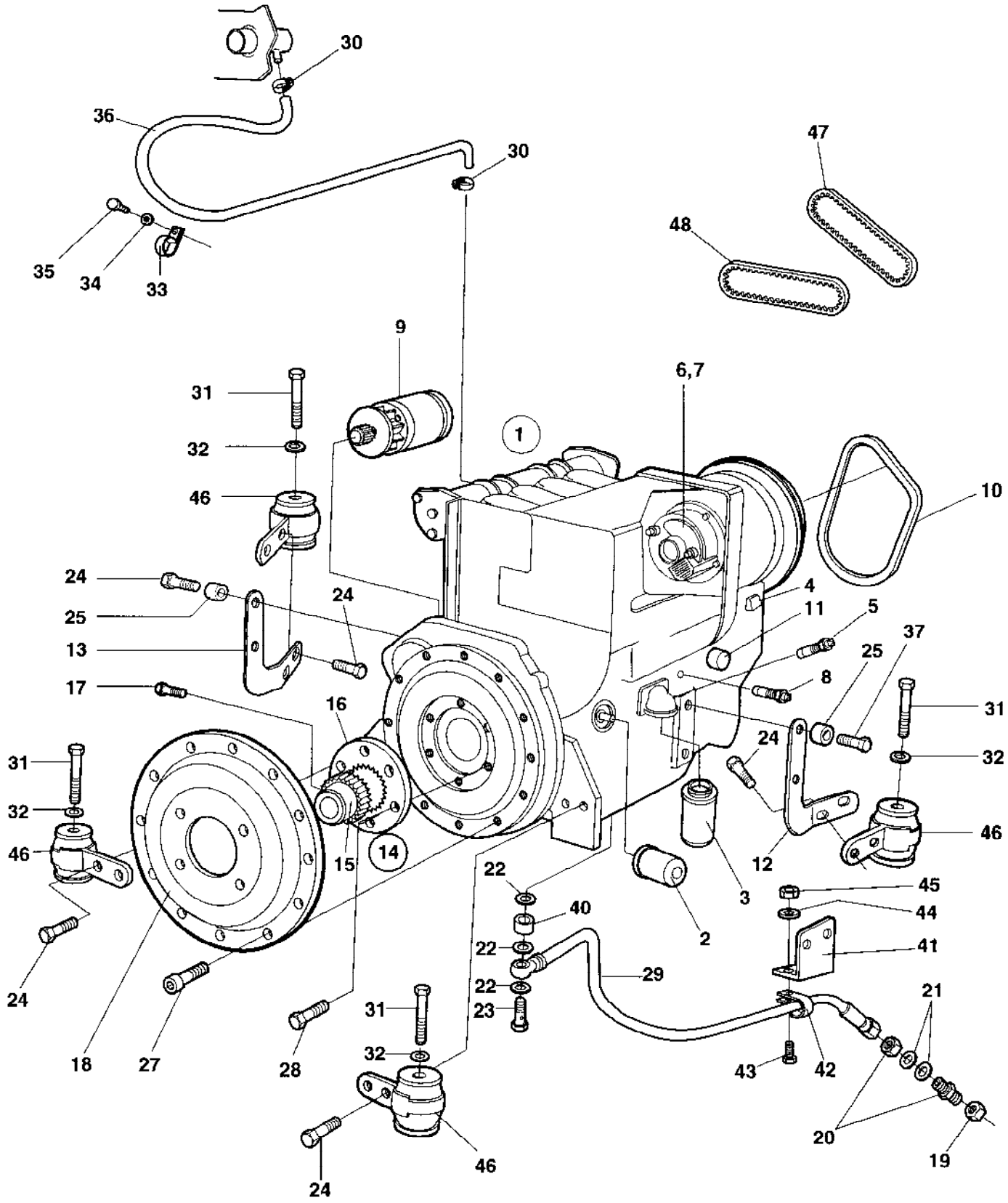
30
36
30
47
48
35
34
33
9
6,7
31
32
46
1
10
24
25
13
17
24
4
11
5
37
25
8
31
16
24
32
31
32
46
46
12
15
14
22
45
40
44
3
2
22
41
22
29
22
23
21
31
32
43
42
18
27
28
46
20
19
24

Ref. No.	Part No.	Rem.	Qty	Description	Code
1	359602		1	Diesel engine	
2	909368		1	.Oil filter	A
3	747487		1	.Fuel filter	A
4	909369		1	.Solenoid	D
5	908295		1	.Oil temp guard	D
6	935662		1	.Alternator	C
7	935663		1	..Charging regulator	D
8	909371		1	.Oil pressure sender	D
9	908299		1	.Starter	C
10	908300		1	.V-belt	A
11	936147	A	1	.Strainer	A
12	359479	B	1	Engine bracket Up to 61710326	
	372868	B	1	Engine bracket From 61710327	
13	359480	C	1	Engine bracket Up to 61710326	
	372869	C	1	Engine bracket From 61710327	
14			1	Coupling	
15	359414		1	.Hub	
16	902843		1	.Flange	D
17	508095		1	.Screw	
18	359403		1	Pump bracket	
19	330383		1	Cap hydraulic	
20	230515		1	Connector	
21	904233		2	Washer 21x36x3	
22	330331		3	Washer 18,2x23,9x1,5	
23	747691		1	Hollow screw	
24	500274		10	Screw	
25	357275		4	Steel tube part	
27	508096		9	Screw M10-1,5x25H 8,8	
28	500021		6	Screw M8-1,25x25 8,8	
29	372791	D	1	Hydraulic hose	
30	313004		2	Hose clamp	
31	500122		4	Screw	
32	904231		4	Washer 13x24x2	
33	921161		2	Clamp	
34	904229		2	Washer 8,4x16x1,5	
35	500019		2	Screw M8-1,25x16 8,8	
36	90407400		1	Hose	
37	500050		2	Screw	
38	313102		N	Cable ties	
39	925802		N	Cable ties L=142 mm	
40	372588		1	Spacer	
41	372792		1	Bracket From 61710327	
42	921063		1	Clamp	
43	500040		1	Screw M6-1x20 8,8	
44	570004		1	Nut M6	
45	904228		1	Washer 6,4x12x1,5	
46	903320	G	4	Shock absorber	D
47	935339	G,H	1	Toothed belt kit	B
48	902559	G	1	Toothed belt	B

A) Fuel lift pump
B) Front
C) Rear
D) Engine oil drain
G) Included in item 1
H) Belt and roller

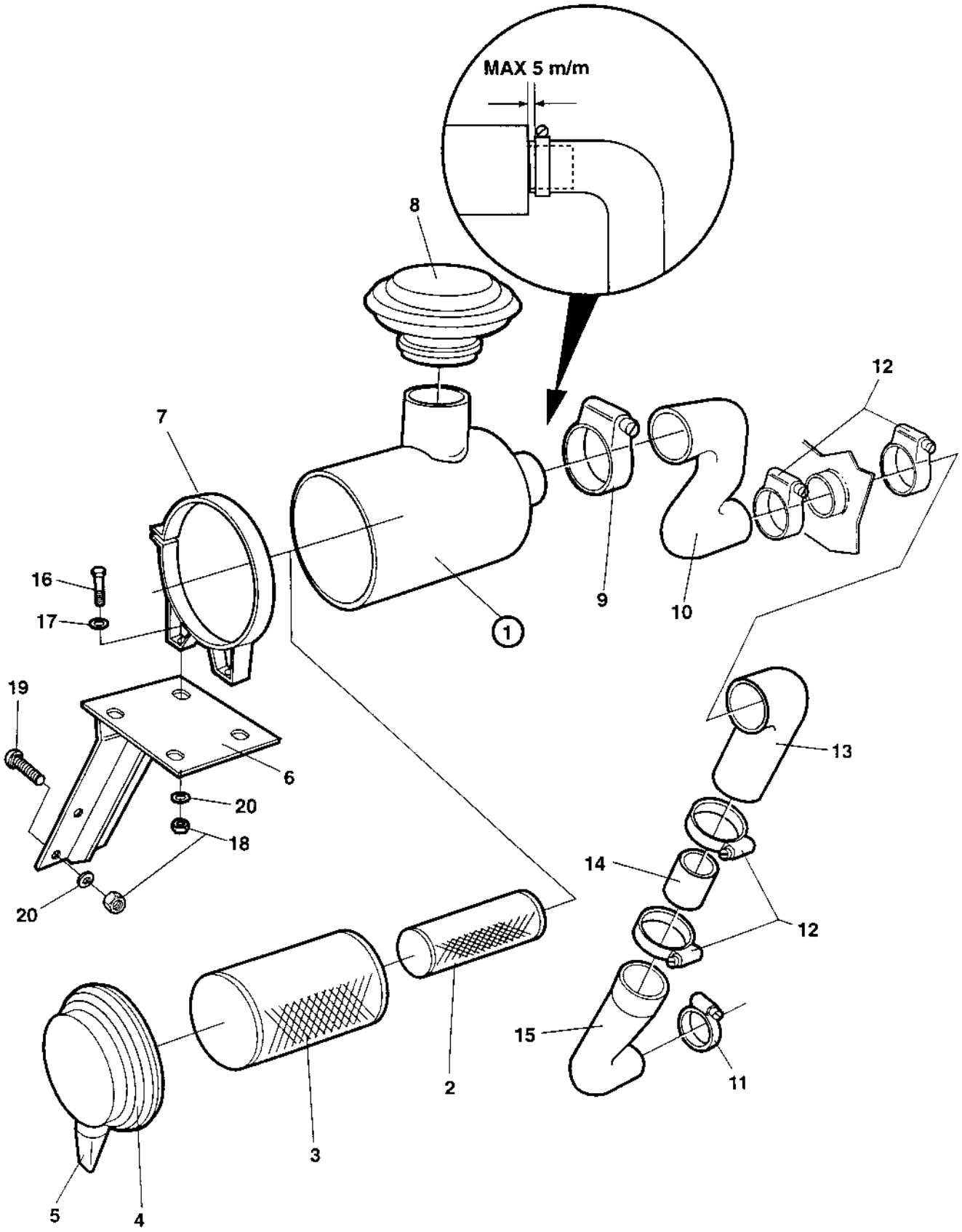
MAX 5 m/m
8
12
7
16
17
19
6
20
18
20
1
9
10
13
14
12
15
11
2
3
5
4

Intake system

Ref. No.	Part No.	Rem.	Qty	Description	Code
1	370878		1	Air cleaner	
2	908401		1	.Safety filter	A
3	908400		1	.Main filter	A
4	908452		1	.Cover	
5	908399		1	.Vacuator valve	D
6	373890		1	Bracket	
7	813791		2	Mounting band	
8	499266		1	Protection cover	
9	904060		1	Hose clamp	
10	373523		1	Hose	
11	904104		1	Clamp	
12	904059		4	Hose clamp	
13	359994		1	Rubber hose	
14	370002		1	Tube	
15	359502		1	Rubber hose	
16	500029		4	Screw M10-1,5x30 8,8	
17	600007		4	Washer	
18	586018		8	Lock nut M10	
19	903744		4	Screw	
20	904557		8	Washer 10,5x22x4	

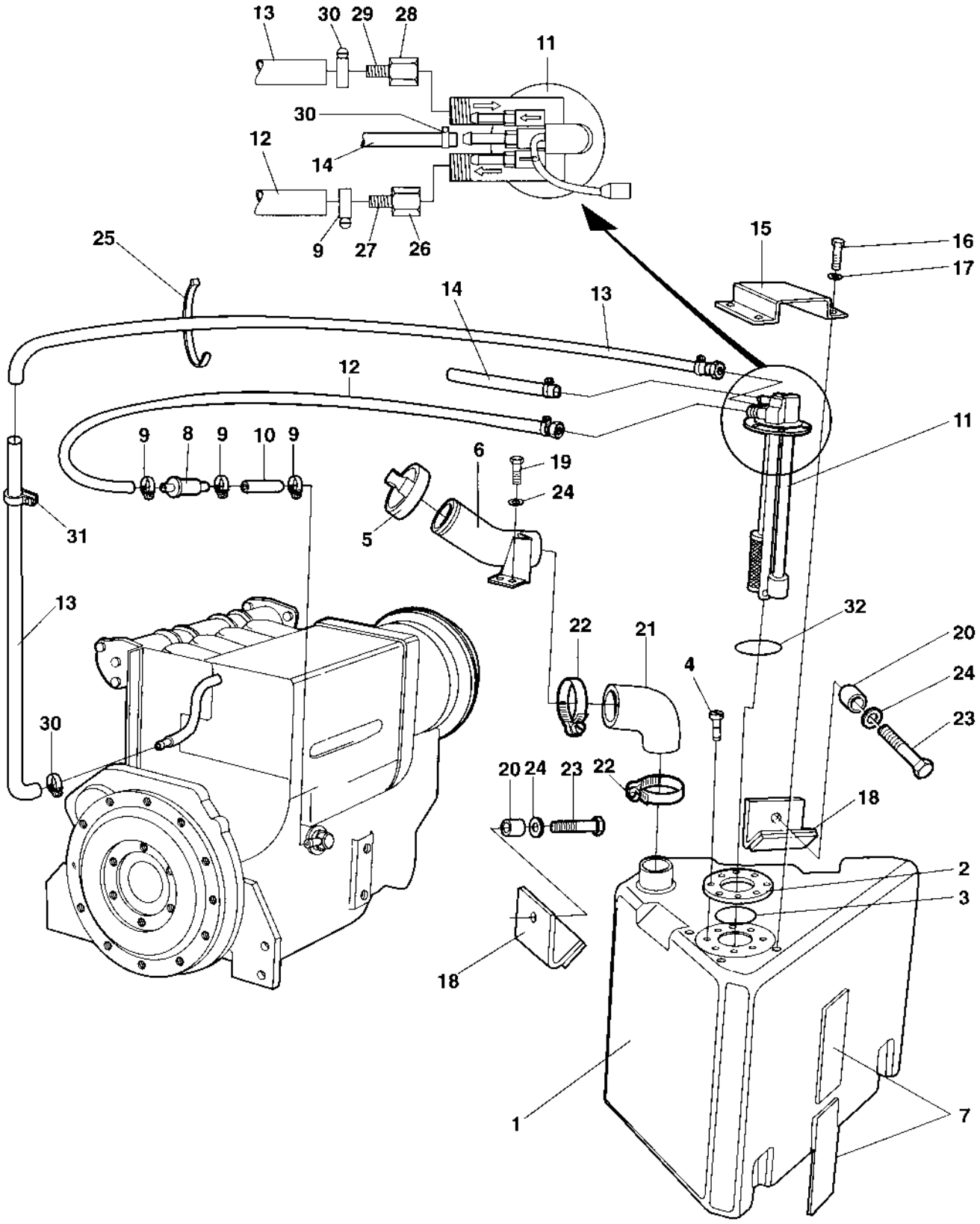
13
30
29
28
11
30
12
14
9
27
26
25
15
16
17
14
13
12
11
9
8
9
10
9
6
19
24
5
31
13
32
22
21
20
4
24
23
30
20
24
23
22
18
2
3
18
1
7

Ref. No.	Part No.	Rem.	Qty	Description	Code
1	359522		1	Fuel tank	
2	359621	1	1	Flange 3 mm Up to 61710860	
	380447		1	Flange 2 mm From 61710861	
3	160058		1	O-ring	D
4	533038		8	Screw	
5	499097		1	Filler cap Up to 61710499	D
	928922		1	.Key Marked "510" Up to 61710499	
	373304	A	1	Cap From 61710500	D
	902866		1	.Key Marked "455" From 61710500	D
6	359622	C	1	Filling pipe Up to 61710499	
	373302	D	1	Filling pipe From 61710500	
7	357459		11	Rubber cloth	
8	929322		1	Fuel strainer	A
9	313002		4	Hose clamp	
10	205009	E	1XL	Hose	D
11	359485		1	Level sender	D
12	205009	F	1XL	Hose	D
13	205006	G	1XL	Fuel hose	
14	371254	H	1	Plastic hose	
15	359620		1	Protection cover	
16	500012		4	Screw M6x12	
17	904228		4	Washer 6,4x12x1,5	
18	359618		2	Holder	
19	500048		2	Screw M10-1,5x20 8,8	
20	359434		2	Spacer sleeve	
21	359390		1	Rubber hose	
22	313038		2	Hose clamp	
23	500030		2	Screw M10-1,5x35H 8,8	
24	904230		4	Washer 10,5x22x2	
25	925802		N	Cable ties L=142 mm	
26	903685		1	Hose connection socket	
27	903683		1	Hose connection	
28	903684		1	Hose connection socket	
29	903682		1	Hose connection	
30	313008		3	Hose clamp	D
31	921080		1	Clamp	
32	903712	2	1	O-ring	D
	904707	3	1	O-ring	D

1) Included in Fuel tank up to S/N.
2) Used when the flange is 3 mm.
3) Used when the flange is 2 mm.
A) New cap on old high filling pipe will hit covers when turning tight.
C) High
D) Low
E) L=0,05 m
F) L=1,55 m, suction
G) L=1,70 m, return
H) L=450 mm, breather

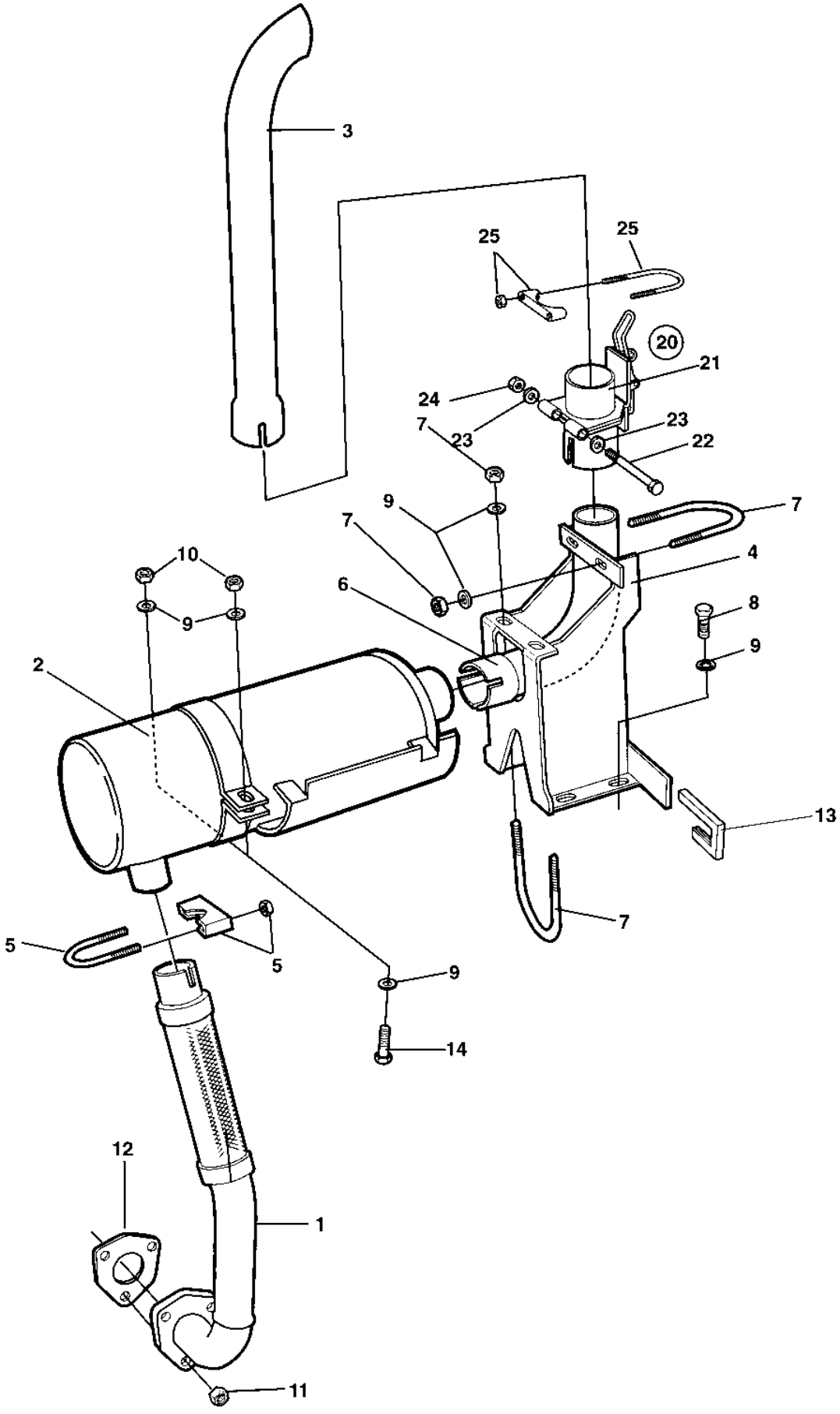
3
25
25
20
21
24
7
23
23
22
9
7
7
10
4
6
9
8
9
2
13
7
5
5
9
14
12
1
11

Exhaust system

Ref. No.	Part No.	Rem.	Qty	Description	Code
1	359497		1	Exhaust pipe	D
2	370765		1	Muffler	D
3	370491		1	Exhaust pipe	
4	359490		1	Bracket	
5	313036		1	Clamp	D
6	370618		1	Exhaust pipe	D
7	313094		2	Pipe clamp	
8	500053		4	Screw M8-1,25x20 8,8	
9	904556		12	Washer 8,4x16x3,0	
10	586003		2	Lock nut M8	
11	570005		3	Nut M8	
12	359500		1	Gasket	D
13	902166	A	1XL	Edge trim	
14	500022		2	Screw M8-1,25x30 8,8	
20	373694	B	1	Hinged exhaust pipe, cpl	
21			1	.Hinged exhaust pipe	
22	500267		1	.Screw	
23	904231		2	.Washer 13x24x2	
24	586019		1	.Lock nut M12	
25	313094		1	Pipe clamp	

A) L=750 mm
B) Option

Ref. No.	Part No.	Rem.	Qty	Description	Code
200				Propulsion system Pump Up to 61710499 (Page 150)	
201				Propulsion system Pump From 61710500 Up to 61710828 (Page 152)	
202				Propulsion system Pump From 61710829 (Page 154)	
205				Propulsion system Motors Up to 61710499 (Page 158)	
206				Propulsion system Motors From 61710500 (Page 160)	
241	371089			Hydraulic pump Propulsion and vibration Up to 61710784 (Page 162)	
	376374			Hydraulic pump Propulsion and vibration From 61710785 (Page 174)	C
249				Hydraulic motors Propulsion (Page 184)	
250	358999			Hydraulic motor Propulsion (Page 186)	C
	359000			Hydraulic motor Propulsion (Page 188)	C
280				Shut-off valve For towing, option (Page 190)	
400				Vibration system Pump Up to 61710499 (Page 192)	
401				Vibration system Pump From 61710500 Up to 61710784 (Page 194)	
402				Vibration system Pump From 61710785 (Page 198)	
405				Vibration system Motors Up to 61710499 (Page 200)	
406				Vibration system Motors From 61710500 (Page 202)	
452	359937			Hydraulic motor Vibration (Page 204)	C
460	359140			Valve Vibration (Page 206)	C
470	359004			Oil cooler cpl Up to 61710502 (Page 208)	
	359004			Oil cooler cpl From 61710504 Up to 61710545 (Page 208)	
	359004			Oil cooler cpl From 61710550 Up to 61710553 (Page 208)	
	359004			Oil cooler cpl From 61710555 Up to 61710557 (Page 208)	
	359004			Oil cooler cpl From 61710559 Up to 61710560 (Page 208)	
	359004			Oil cooler cpl From 61710563 Up to 61710565 (Page 208)	
	359004			Oil cooler cpl From 61710567 Up to 61710567 (Page 208)	
	359004			Oil cooler cpl From 61710572 Up to 61710573 (Page 208)	
	359004			Oil cooler cpl From 61710575 Up to 61710575 (Page 208)	
480	374494			Oil cooler cpl From 61710503 Up to 61710503 (Page 226)	C
	374494			Oil cooler cpl From 61710546 Up to 61710549 (Page 226)	C
	374494			Oil cooler cpl From 61710554 Up to 61710554 (Page 226)	C
	374494			Oil cooler cpl From 61710558 Up to 61710558 (Page 226)	C
	374494			Oil cooler cpl From 61710561 Up to 61710562 (Page 226)	C
	374494			Oil cooler cpl From 61710566 Up to 61710566 (Page 226)	C
	374494			Oil cooler cpl From 61710571 Up to 61710571 (Page 226)	C
	374494			Oil cooler cpl From 61710574 Up to 61710574 (Page 226)	C
	374494			Oil cooler cpl From 61710576 (Page 226)	C
600				Steering system (Page 244)	
630	358993			Hydraulic pump Steering Up to 61710837 (Page 248)	C
	374027			Hydraulic pump Steering From 61710838 (Page 250)	C
640	359139			Pilot valve (Page 252)	C
650	370000			Steering cylinder Up to 61710377 (Page 254)	C
	373410			Hydraulic cylinder From 61710378 Up to 61710761 (Page 256)	C
	375031			Hydraulic cylinder From 61710762 (Page 258)	C
670				Offset drum Option (Page 260)	
672				Valve Offset drum (Page 262)	
674	359304	1		Cylinder Offset drum (Page 264)	C
675	373403	2		Cylinder Offset drum (Page 266)	C
800				Brake system (Page 268)	

1) Used up to 1997. Please check P/N on the cylinder.
2) Used from 1998. Please check P/N on the cylinder.

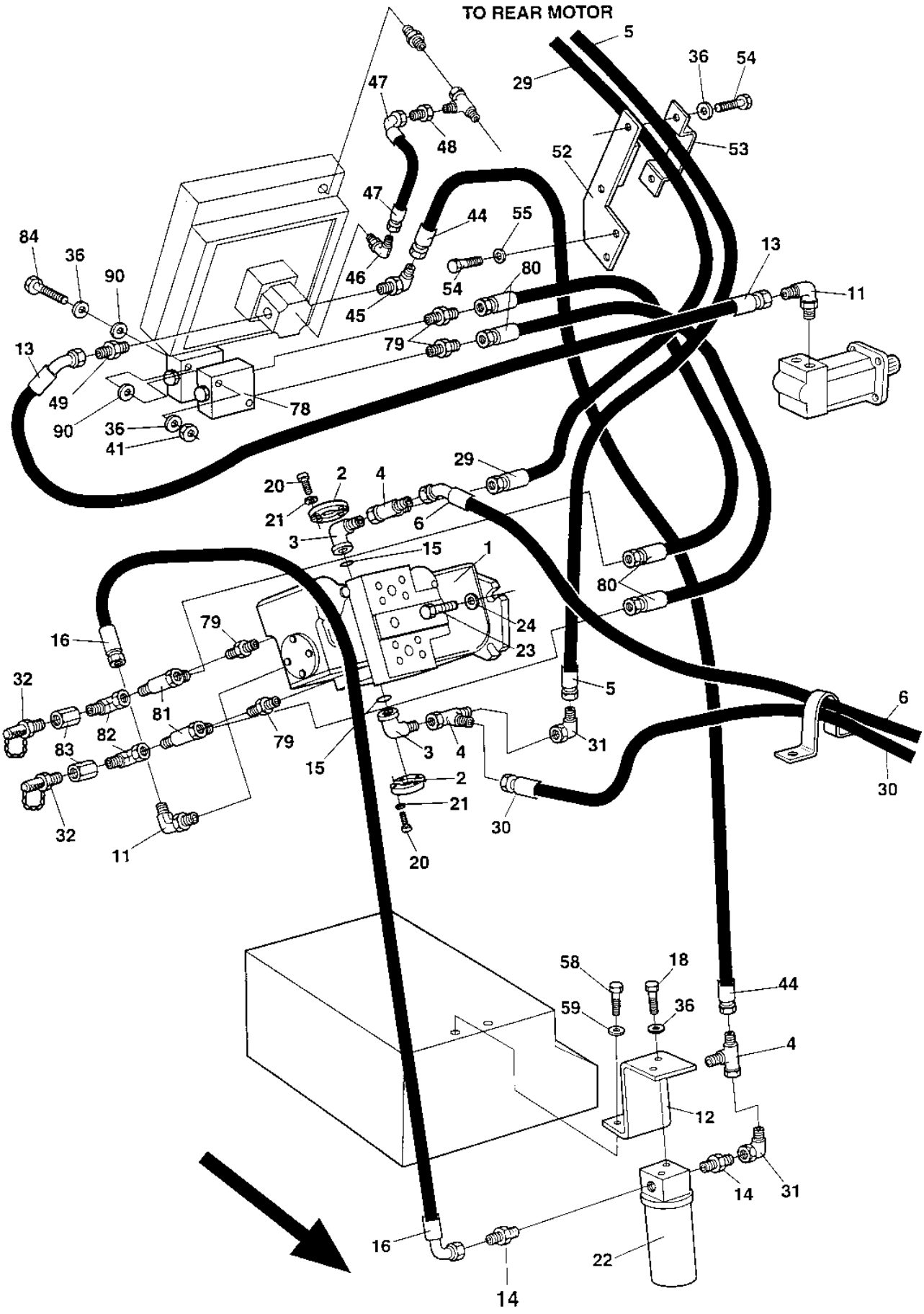
TO REAR MOTOR
5
29
36
54
47
48
52
53
47
44
55
84
36
90
46
54
80
13
11
45
79
13
49
78
90
36
41
29
20
2
4
21
6
3
15
1
80
16
79
24
23
32
5
6
81
82
83
79
3
4
31
15
2
30
21
30
32
11
20
58
18
44
59
36
4
12
14
31
16
22
14

Ref. No.	Part No.	Rem.	Qty	Description	Code
1	371089		1	Hydraulic pump Propulsion and vibration (Page 162)	
2	929226		4	Flange half	
3	900455		2	Flange adapter	
4	234243		3	T-connector	
5	482908		1	Hydraulic hose Up to 61710307	
	483055		1	Hydraulic hose From 61710308	
6	482909		1	Hydraulic hose Up to 61710307	
	483052		1	Hydraulic hose From 61710308	
11	334604		2	Connector	
12	359557		1	Holder plate	
13	482912		1	Hydraulic hose	
14	334468		2	Adapter	
15	904004		2	O-ring	D
16	482251		1	Hydraulic hose	
18	500028		4	Screw M10-1,5x25 8,8	
20	502037		8	Screw	
21	600007		8	Washer	
22			1	Hydraulic oil filter	
	359551		1	.Filter head	
	372229	A	1	.Filter element Hydraulic	A
	359552	B	1	Filter element Hydraulic, maximum 50 hours	
23	500194		4	Screw M12x40	
24	603012		4	Washer	
29	482913		1	Hydraulic hose Up to 61710307	
	483056		1	Hydraulic hose From 61710308	D
30	482914		1	Hydraulic hose Up to 61710307	D
	483051		1	Hydraulic hose From 61710308	D
31	334155		2	Connector	
32	910161		2	Measuring nipple	D
36	600008		18	Washer	
41	570006		6	Nut M10	
44	482955		1	Hydraulic hose	
45	334237		1	Adapter	
46	334563		1	Adapter	
47	381011706		1	Hydraulic hose	
48	929122		1	Reducing	
49	334156		1	Adapter	
52	359560		1	Hose clamp	
53	359561		1	Hose clamp	
54	500029		4	Screw M10-1,5x30 8,8	
55	603006		2	Washer	
58	500021		2	Screw M8-1,25x25 8,8	
59	603019		2	Washer	
78	370049		1	Flushing valve	
	160188	D	5	.O-ring	
79	234233		4	Adapter	
80	483060		2	Hydraulic hose	
81	334234		2	Tee-connector	
82	334524		2	Connector	
83	433830401		2	Connector	
84	500077		2	Screw	
90	603023		4	Washer M10	

A) Replacement
B) Cleaning
D) For plugs

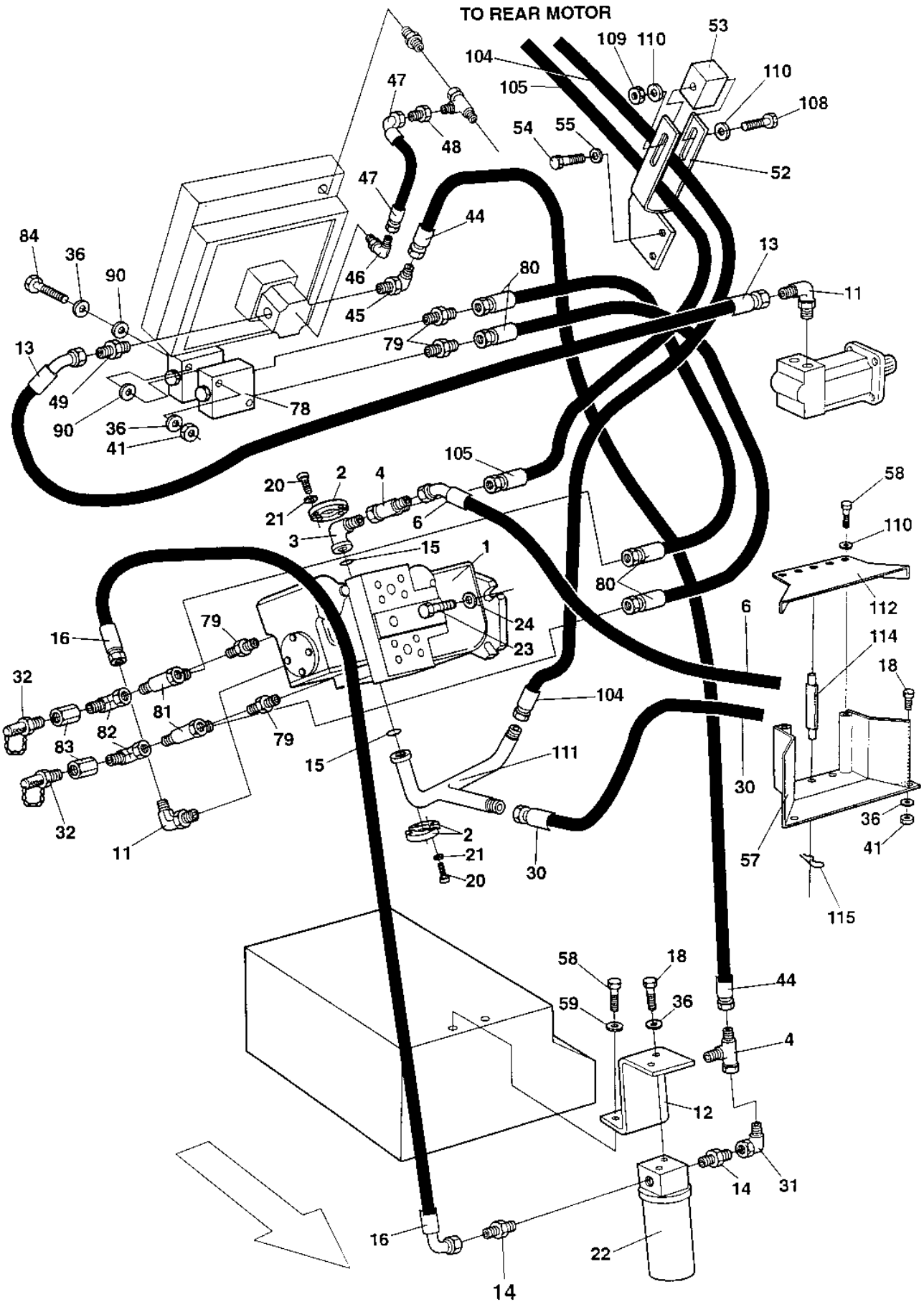
TO REAR MOTOR
53
109
110
104
105
110
108
47
48
54
55
52
47
44
46
80
45
79
84
36
90
13
11
49
78
90
36
41
105
20
2
4
21
6
3
15
1
58
110
80
112
16
79
24
23
6
114
18
32
104
81
82
83
79
15
111
30
32
11
2
21
20
30
57
36
41
115
58
18
44
59
36
4
12
14
31
16
22
14

Ref. No.	Part No.	Rem.	Qty	Description	Code
1	371089		1	Hydraulic pump Propulsion and vibration Up to 61710784 (Page 162)	
	376374		1	Hydraulic pump Propulsion and vibration From 61710785 (Page 174)	C
2	929226		4	Flange half	
3	900455		1	Flange adapter	
4	234243		2	T-connector	
6	482914		1	Hydraulic hose	D
11	334604		2	Connector	
12	359557		1	Holder plate	
13	483124		1	Hydraulic hose	
14	334468		2	Adapter	
15	904004		2	O-ring	D
16	483071		1	Hydraulic hose	
18	500028		4	Screw M10-1,5x25 8,8	
20	502037		8	Screw	
21	904637		8	Washer 10x18x2	
22			1	Hydraulic oil filter	
	359551		1	.Filter head	
	372229	A	1	.Filter element Hydraulic	A
	359552	B	1	Filter element Hydraulic, maximum 50 hours	
23	500194		4	Screw M12x40	
24	904213		4	Washer 13x30x4	
30	483051		1	Hydraulic hose	D
31	334155		1	Connector	
32	910161		2	Measuring nipple	D
36	904230		10	Washer 10,5x22x2	
41	570006		4	Nut M10	
44	482955		1	Hydraulic hose	
45	334237		1	Adapter	
46	334563		1	Adapter Up to 61710784	
47	381011706		1	Hydraulic hose Up to 61710784	
48	929122		1	Reducing Up to 61710784	
49	904110		1	Connector	
52	372911		1	Hose clamp	
53	372912		1	Hose clamp	
54	500029		4	Screw M10-1,5x30 8,8	
55	603006		2	Washer	
57	374163		1	Hose clamp	
58	500021		4	Screw M8-1,25x25 8,8	
59	603019		2	Washer	
78	370049		1	Flushing valve	
	160188	C	5	.O-ring	
79	234233		4	Adapter	
80	483060		2	Hydraulic hose	
81	334234		2	Tee-connector	
82	334524		2	Connector	
83	433830401		2	Connector	
84	500077		2	Screw	
90	603023		4	Washer M10	
104	483056		1	Hydraulic hose	D
105	483152		1	Hydraulic hose	D
108	903989		1	Bolt	
109	570005		1	Nut M8	
110	904229		4	Washer 8,4x16x1,5	
111	371964		1	Connector	
112	374165		1	Cover	
114	374200		3	Spacer	
115	924585		3	Cotter pin	

A) Replacement
B) Cleaning
C) For plugs

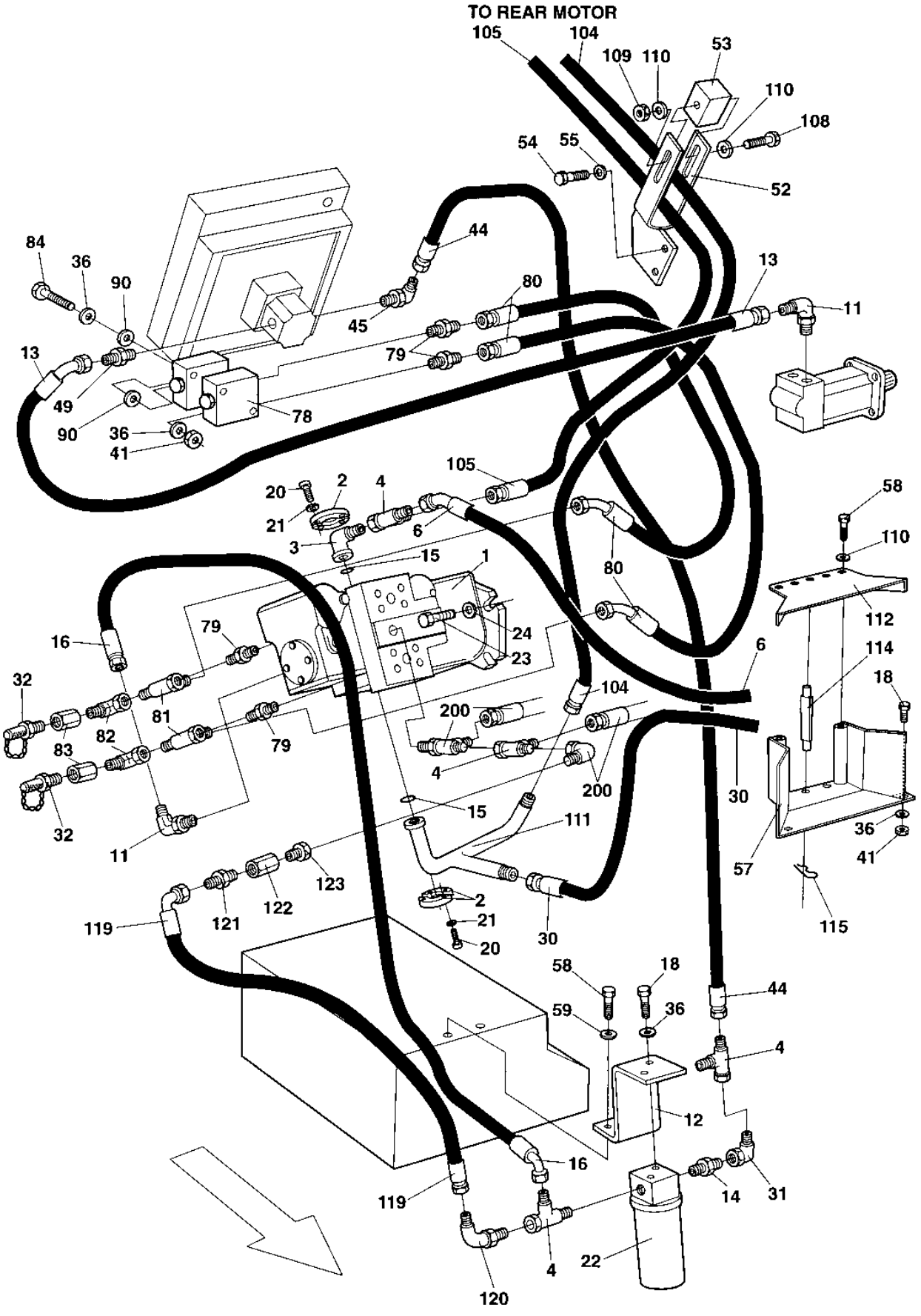
TO REAR MOTOR
105
104
109
110
53
110
108
54
55
52
84
36
90
44
80
45
13
11
13
79
49
78
90
36
41
105
20
2
4
21
6
3
15
1
58
110
80
112
16
79
24
23
6
114
32
81
104
18
82
200
83
79
4
200
30
32
15
111
11
36
41
123
57
2
122
121
21
119
20
115
30
58
18
44
59
36
4
12
16
14
31
119
4
22
120

Ref. No.	Part No.	Rem.	Qty	Description	Code
1	376374		1	Hydraulic pump Propulsion and vibration (Page 174)	C
2	929226		4	Flange half	
3	900455		1	Flange adapter	
4	234243		4	T-connector	
6	482914		1	Hydraulic hose	D
11	334604		2	Connector	
12	359557		1	Holder plate	
13	483124		1	Hydraulic hose	
14	334468		2	Adapter	
15	904004		2	O-ring	D
16	483071		1	Hydraulic hose	
18	500028		4	Screw M10-1,5x25 8,8	
20	502037		8	Screw	
21	904637		8	Washer 10x18x2	
22			1	Hydraulic oil filter	
	359551		1	.Filter head	
	372229	A	1	.Filter element Hydraulic	A
	359552	B	1	Filter element Hydraulic, maximum 50 hours	
23	500194		4	Screw M12x40	
24	904213		4	Washer 13x30x4	
30	483051		1	Hydraulic hose	D
31	334155		1	Connector	
32	910161		2	Measuring nipple	D
36	904230		10	Washer 10,5x22x2	
41	570006		6	Nut M10	
44	482955		1	Hydraulic hose	
45	334237		1	Adapter	
49	904110		1	Connector	
52	372911		1	Hose clamp	
53	372912		1	Hose clamp	
54	500029		4	Screw M10-1,5x30 8,8	
55	904557		2	Washer 10,5x22x4	
57	374163		1	Hose clamp	
58	500021		4	Screw M8-1,25x25 8,8	
59	904556		2	Washer 8,4x16x3,0	
78	370049		1	Flushing valve	
	160188	C	5	.O-ring	
79	234233		4	Adapter	
80	483060		2	Hydraulic hose	
81	334234		2	Tee-connector	
82	334524		2	Connector	
83	433830401		2	Connector	
84	500077		2	Screw	
90	904557		4	Washer 10,5x22x4	
104	483056		1	Hydraulic hose	D
105	483152		1	Hydraulic hose	D
108	903989		1	Bolt	
109	570005		1	Nut M8	
110	904229		4	Washer 8,4x16x1,5	
111	371964		1	Connector	
112	374165		1	Cover	
114	374200		3	Spacer	
115	924585		3	Cotter pin	
119	482182		1	Hydraulic hose	D
120	234810		1	Elbow 90, O-ring	
121	334156		1	Adapter	
122	903774		1	Check valve	
123	330438		1	Straight connector	

A) Replacement
B) Cleaning
C) For plugs

Propulsion system Pump

16973

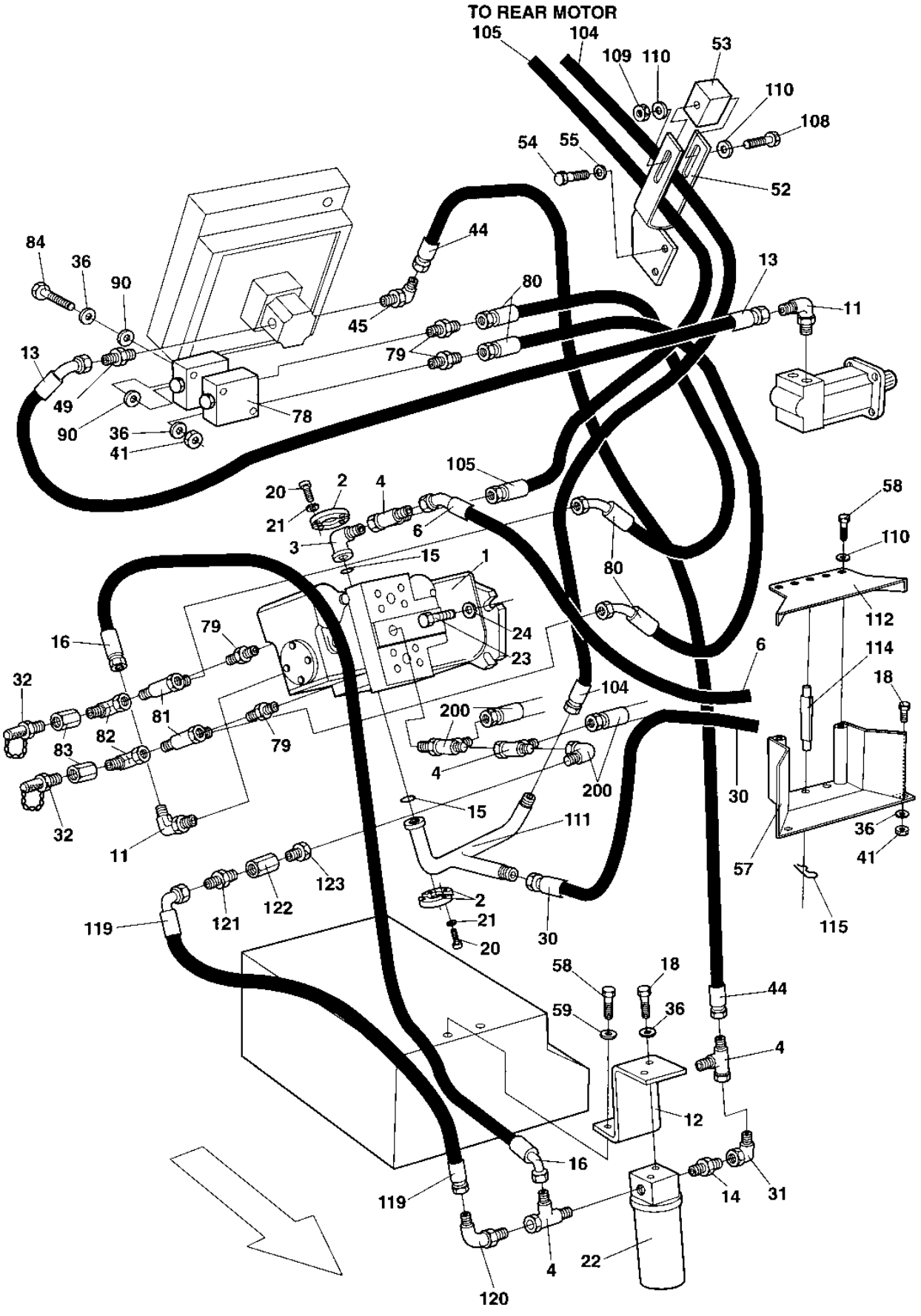

Ref. No.	Part No.	Rem.	Qty	Description	Code
200			0	Existing parts	

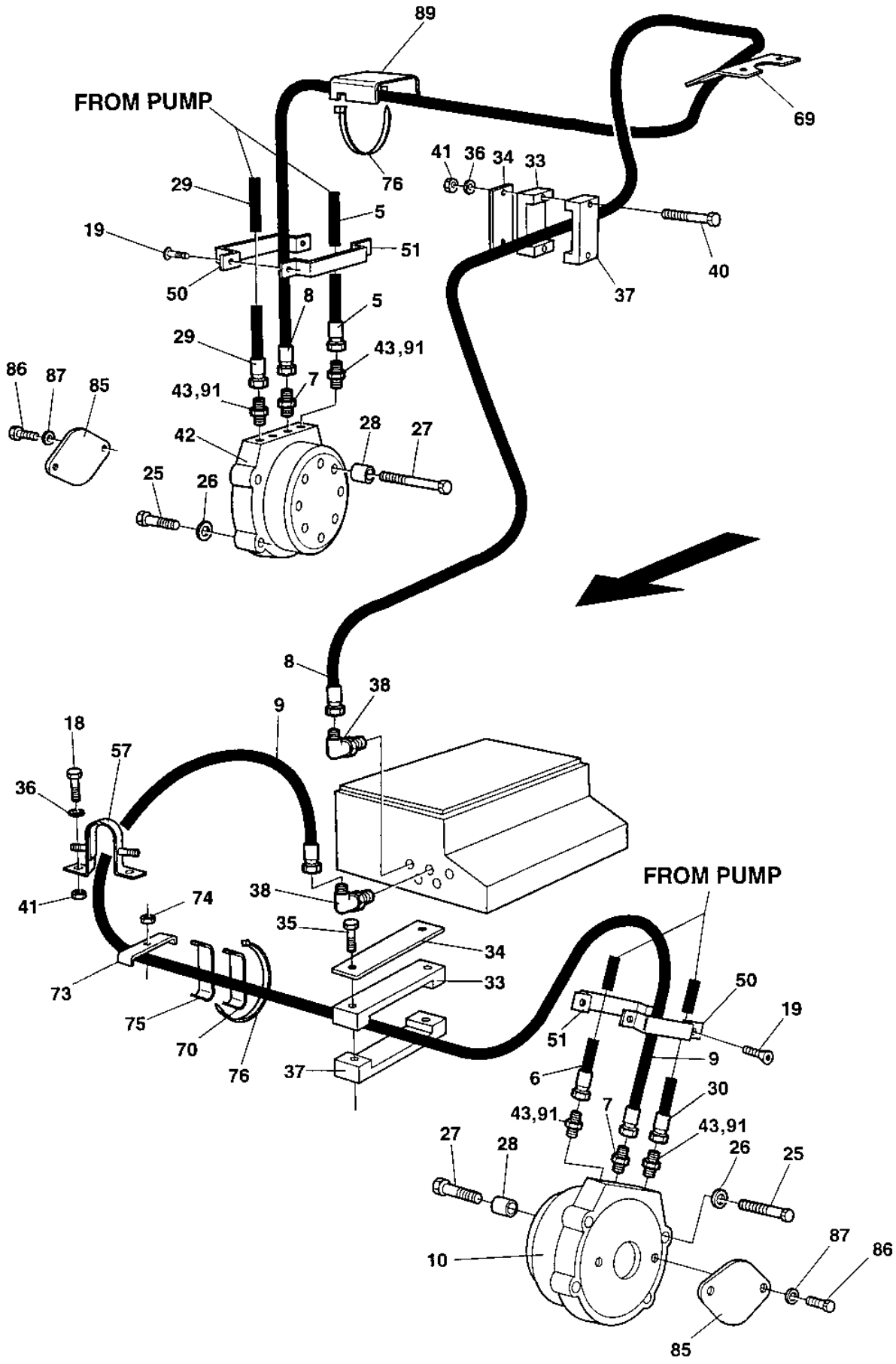
FROM PUMP
89
69
76
41
36
34
33
29
5
19
51
50
40
37
8
5
29
43,91
86
87
85
43,91
7
42
28
27
25
26
8
38
9
18
57
36
41
74
38
35
34
33
73
75
70
76
37
FROM PUMP
50
19
51
9
6
30
43,91
7
43,91
27
28
26
25
10
87
86
85

Ref. No.	Part No.	Rem.	Qty	Description	Code
5		1	1	Hydraulic hose	
6		1	1	Hydraulic hose	
7	901155		2	Connector	
8	482910		1	Hydraulic hose	
9	482911		1	Hydraulic hose	
10	358999		1	Hydraulic motor Propulsion (Page 186)	C
18	500028		2	Screw M10-1,5x25 8,8	
19	513014		4	Screw	
25		2		Screw	
26		2		Washer	
27		2		Screw	
28		2		Spacer	
29		1	1	Hydraulic hose	
30		1	1	Hydraulic hose	
33	343872		2	Hose clamp	D
34	335914		2	Cover plate	
35	500192		2	Screw M10x80	
36	600008		4	Washer	
37	343732		2	Hose clamp	
38	801198		2	Elbow 90	
40	903524		2	Bolt	
41	570006		4	Nut M10	
42	359000		1	Hydraulic motor Propulsion (Page 188)	C
43	901713		4	Connector Up to 61710307	
	903894		4	Connector From 61710308	
50	359558		2	Hose clamp	
51	359559		2	Hose clamp	
57	359562		1	Hose clamp	
69	359563		1	Hose shields	
70	359564	A	N	Hose clamp	
73	359566		1	Hose clamp	
74	902286		1	Lock nut M8	
75	359567	B	N	Hose clamp	
76	313102		N	Cable ties	
85	340334		2	Cover plate	
86	500163		4	Screw M12x16	
87	600009		4	Washer	
89	370641		1	Hose shields	
91	334248		4	Elbow 45 From 61710308	

1) See section " Propulsion system, pump "
2) See section " Drum "
A) 130x30 mm
B) 100x30 mm

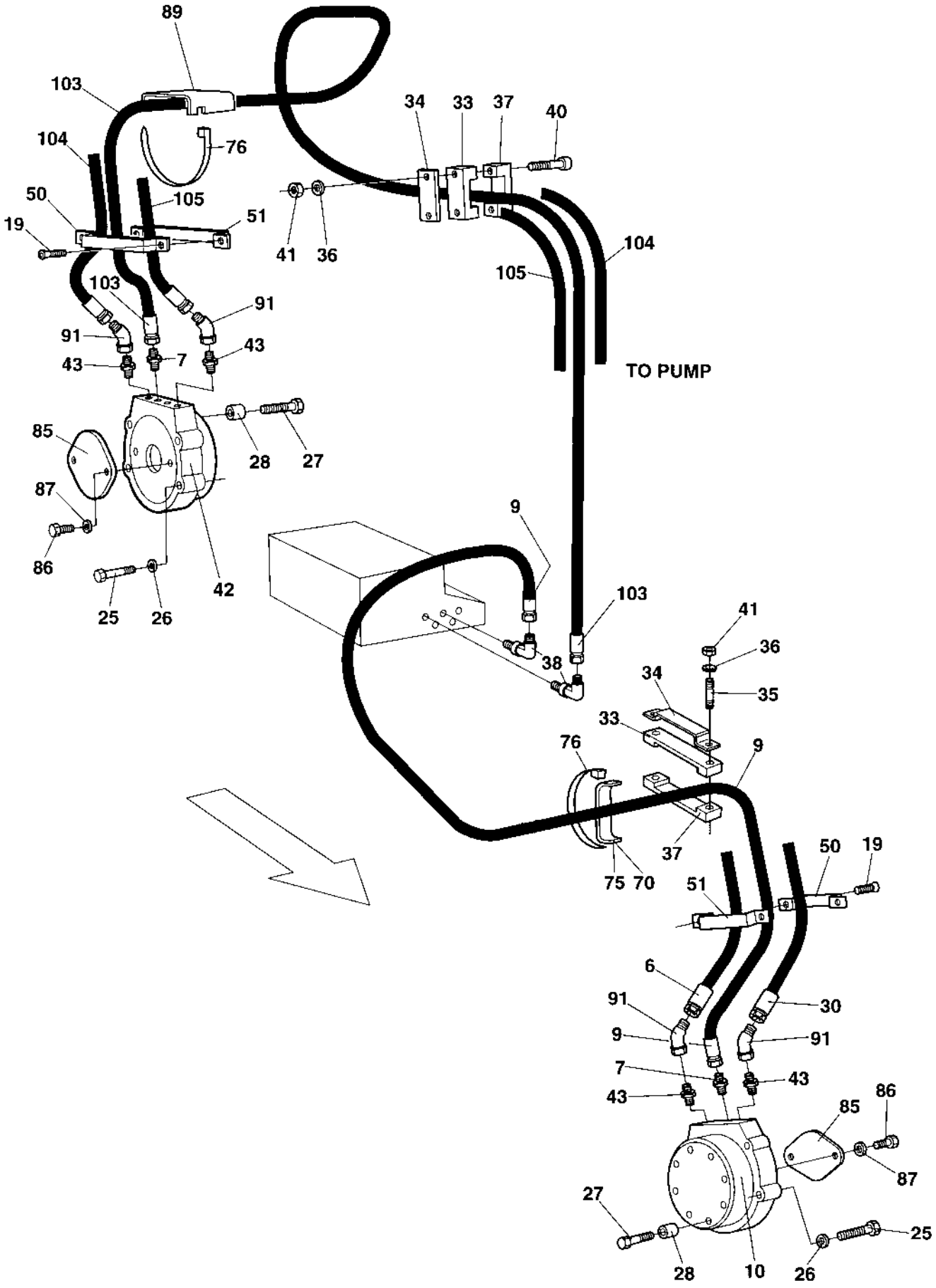
89
103
104
76
50
105
51
19
41
36
34
33
37
40
104
105
TO PUMP
103
91
91
43
7
43
85
28
27
87
86
25
26
42
9
103
38
41
36
34
35
33
76
9
37
75
70
50
19
51
6
91
30
9
91
7
43
43
86
85
87
27
28
10
26
25

Ref. No.	Part No.	Rem.	Qty	Description	Code
6		1	1	Hydraulic hose	
7	901155		2	Connector	
9	483154		1	Hydraulic hose	D
10	358999		1	Hydraulic motor Propulsion (Page 186)	C
19	513014		4	Screw	
25		2		Screw	
26		2		Washer	
27		2		Screw	
28		2		Spacer	
30		1	1	Hydraulic hose	
33	343872		2	Hose clamp	D
34	335914		2	Cover plate	
35	904056		2	Stud	
36	904230		4	Washer 10,5x22x2	
37	343732		2	Hose clamp	
38	801198		2	Elbow 90	
40	903524		2	Bolt	
41	570006		4	Nut M10	
42	359000		1	Hydraulic motor Propulsion (Page 188)	C
43	904049		4	Connector	
50	359558		2	Hose clamp	
51	359559		2	Hose clamp	
70	359564	A	N	Hose clamp	
75	359567	B	N	Hose clamp	
76	313102		N	Cable ties	
85	370434		2	Cover plate	
86	500163		4	Screw M12x16	
87	904231		4	Washer 13x24x2	
89	370641		2	Hose shields	
91	334248		4	Elbow 45	
103	483151		1	Hydraulic hose	D
104		1	1	Hydraulic hose	D
105		1	1	Hydraulic hose	D

1) See section " Propulsion system, pump "
2) See section " Drum "
A) 130x30 mm
B) 100x30 mm

371089 Hydraulic pump Propulsion and vibration

15785

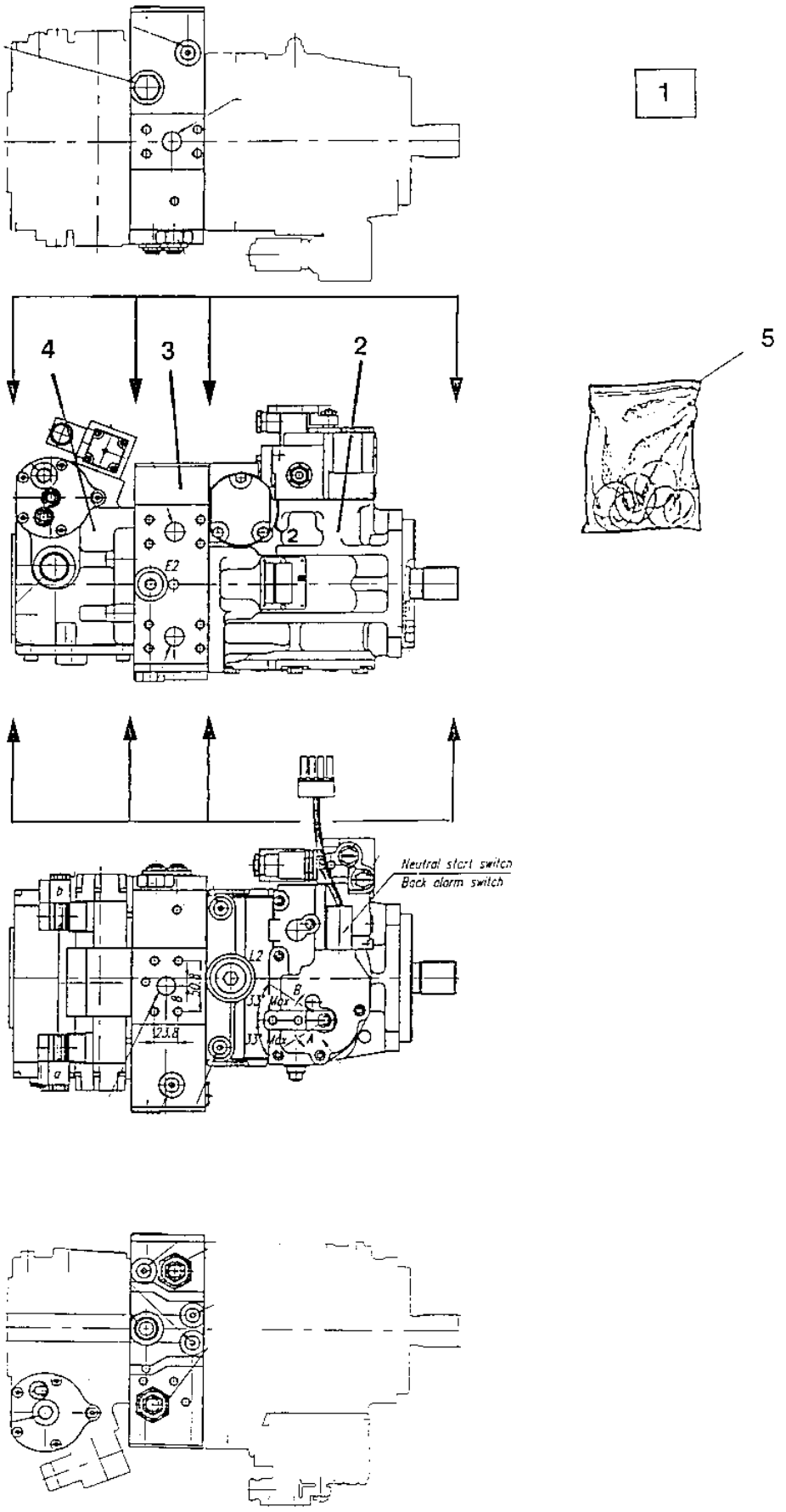

371089 Hydraulic pump Propulsion and vibration

Ref. No.	Part No.	Rem.	Qty	Description	Code
1			1	Hydraulic pump, Cpl Propulsion and Vibration	D
2			1	.Hydraulic pump Propulsion pump (Page 164)	
3			1	.Valve block Middle part (Page 168)	
4			1	.Hydraulic pump Vibration pump (Page 170)	
5	908454		1	.Gasket kit	D

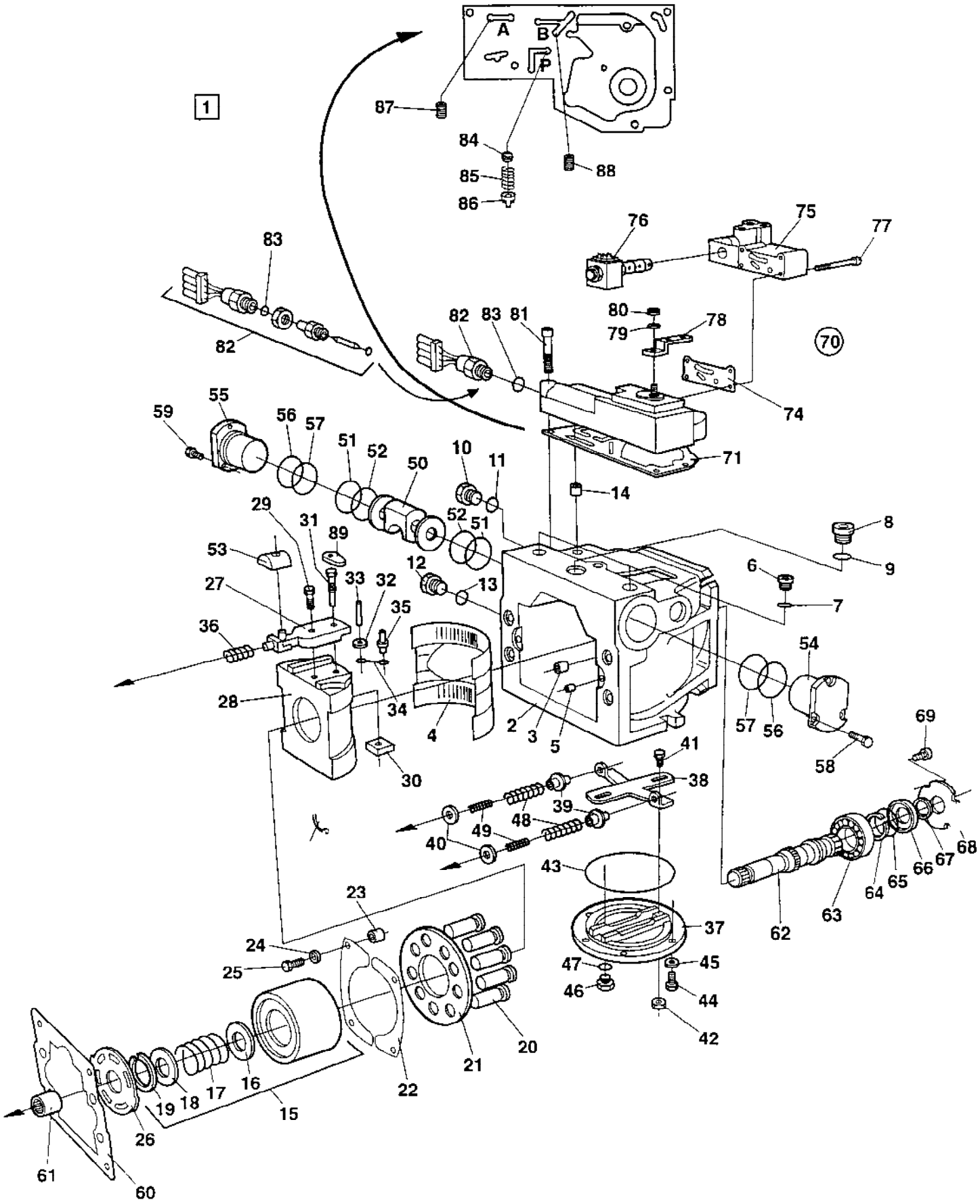
A
B
P
1
87
84
85
86
88
76
75
77
83
82
80
79
78
70
74
71
14
55
59
56
57
51
52
50
10
11
29
31
89
53
27
33
32
12
13
35
36
28
34
4
2
3
5
8
9
6
7
54
57
56
58
69
41
38
39
48
49
40
43
23
24
25
37
47
46
45
44
42
62
63
64
65
66
67
68
20
21
22
19
18
17
16
15
26
61
60

Hydraulic pump Propulsion pump

Ref. No.	Part No.	Rem.	Qty	Description	Code
1		1	1	Hydraulic pump	D
2	909373		1	.Housing	
3	909374		2	.Pin	
4	901718		1	.Bearing	D
5	481131		2	.Pin	
6	909375		2	.Plug, cpl	
7	909349	2	1	..O-ring	
8	902928		1	.Plug	
9	901453	2	1	..O-ring	
10	908432		1	.Plug	
11	923087	2	1	..O-ring	D
12	908432		1	.Plug	
13	923087	2	1	..O-ring	D
14	901454		1	.Filter element	D
15	212353		1	.Rotating group, cpl	D
16	909376		1	..Spacer	
17	909377		1	..Spring	
18	909378		1	..Spring retainer	
19	909379		1	..Retainer ring	
20	909239		9	.Piston, cpl	
21	901721		1	.Pressure plate	D
22	901722		2	.Retainer guide	D
23	909380		4	.Spacer	
24	909381		4	.Washer	
25	909382		4	.Screw	
26	909383		1	.Valve plate	
27	909384		1	.Servo arm, cpl	
28	909385		1	.Swash plate	
29	909386		1	.Screw	
30	909387		1	.Guide	
31	909388		1	.Screw	
32	909389		1	.Washer	
33	909390		1	.Pin	
34	909391		1	.Link	
35	909392		1	.Pin	
36	909393		1	.Spring	
37	909394		1	.Cover	
38	909395		1	.Lever	
39	909396		2	.Spring retainer	
40	908378		2	.Washer	
41	909397		2	.Guide post	
42	909398	2	2	.Seal lock nut	
43	909399	2	1	.O-ring	
44	909400		6	.Screw	
45	909401		6	.Washer	
46	902928		1	.Plug	
47	901453	2	1	..O-ring	
48	909402		2	.Spring	
49	909403		2	.Spring	
50	909404		1	.Piston	
51	909405	2	2	.O-ring	
52	909406	2	2	.Piston ring	
53	909407		1	.Guide	
54	909408		1	.Servo sleeve	
55	909408		1	.Servo sleeve	
56	909409	2	2	.O-ring	

1) This pump is an integrated part of pump PN 371089
2) Seals included in seal kit for cpl pump, PN 371089

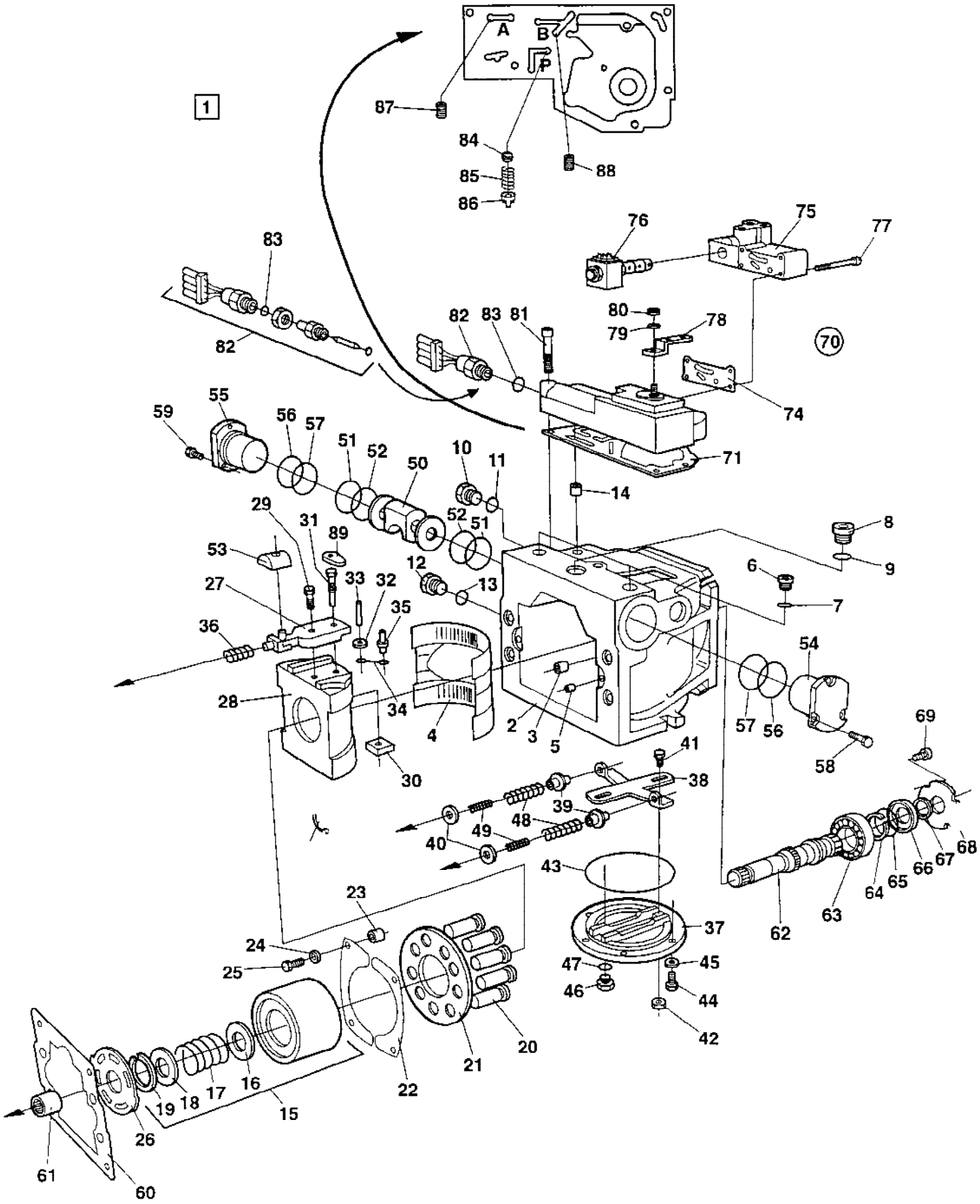
A
B
P
1
87
84
85
86
88
76
75
77
83
82
80
79
78
70
74
71
14
55
59
56
57
51
52
50
10
11
29
31
89
53
27
33
32
12
13
35
36
28
34
4
2
3
5
8
9
6
7
54
57
56
58
69
41
38
39
48
49
40
43
23
24
25
37
47
46
45
44
42
62
63
64
65
66
67
68
20
21
22
19
18
17
16
15
26
61
60

Ref. No.	Part No.	Rem.	Qty	Description	Code
57	909410	2	2	.O-ring	
58	909411		3	.Screw	
59	909411		3	.Screw	
60	909414	2	1	.Gasket	
61	909416		1	.Sleeve	
62	909422		1	.Shaft	
63	901725		1	.Bearing	D
64	901727		1	.Snap ring	D
65	909257	2	1	.O-ring	
66	909256		1	.Seal carrier	
67	212359	2	1	.Shaft seal	D
68	901728		1	.Carrier seal	D
69	909423		3	.Screw	
70	909424		1	.Control valve, cpl	
71	909425	2	1	..Gasket	
74	909430	2	1	...Gasket	
75	909652		1	...Valve	
76	909641		1	....Solenoid valve	D
	909642		1	....Solenoid	D
	909643		1	....Seal kit	
77	909431		2	...Screw	
78	909432		1	..Control lever	
79	909428		1	..Washer	
80	909429		1	..Nut	
81	909434		6	..Screw	
82	909367	A	1	..Neutral start switch	D
83	909433		1	...O-ring	
84	909435		1	..Orifice	
85	909436		1	..Spring	
86	908448		1	..Spring retainer	
87	908449		1	..Orifice	
88	908449		1	..Orifice	
89	909426		1	.Link	

2) Seals included in seal kit for cpl pump, PN 371089
A) And back-up alarm

Valve block Middle part

15822

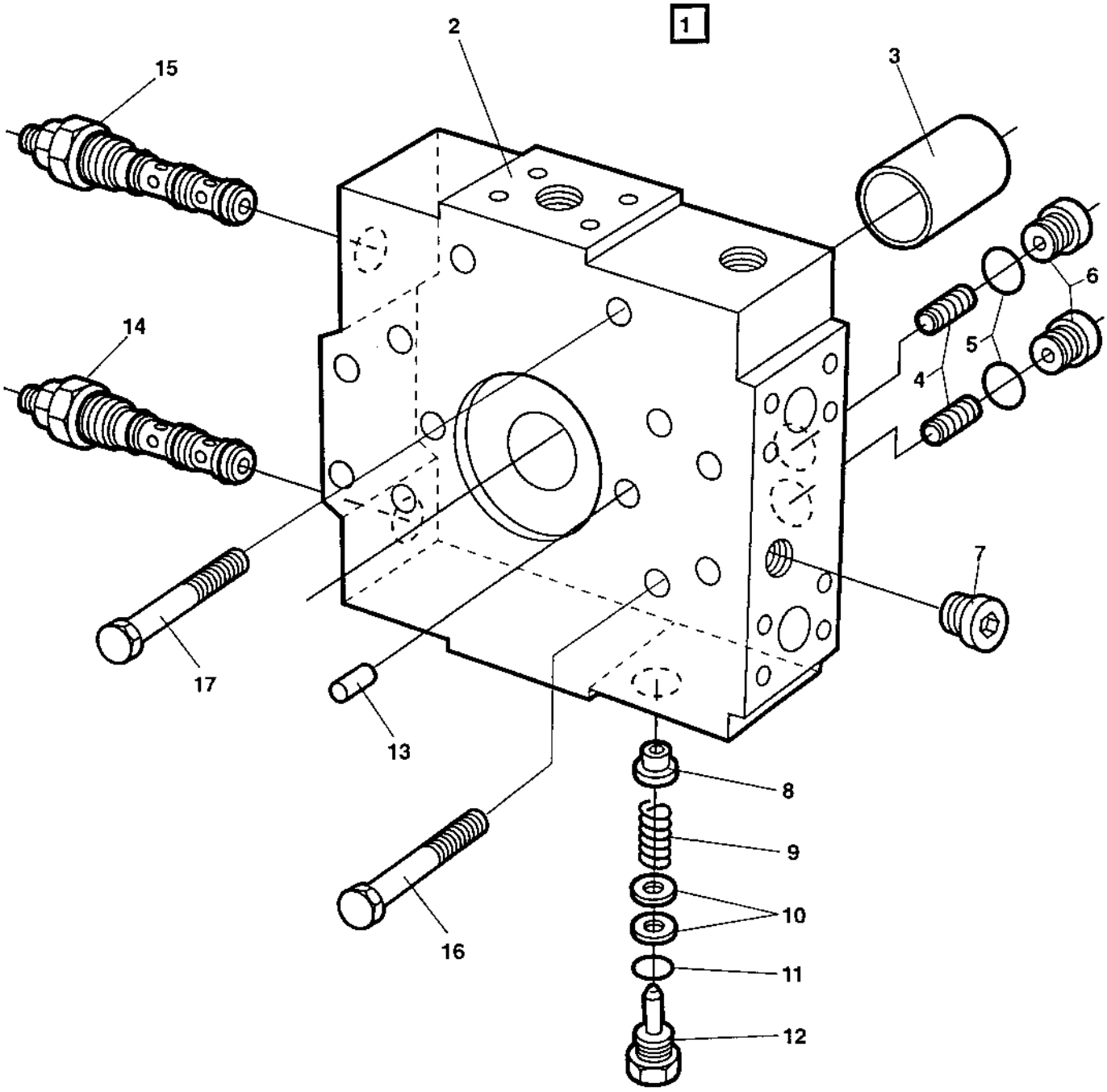

Valve block Middle part

Ref. No.	Part No.	Rem.	Qty	Description	Code
1		1	1	Valve block, cpl	
2	909412		1	.Valve block	
3	909413		1	.Bushing	
4	908455		2	.Relief valve	D
5	223467	2	2	.O-ring	
6	909437		2	.Plug	
7	909243		2	.Plug	
8	909421		1	.Valve cone	
9	909420		1	.Spring	
10	909419		1	.Shim kit	
11	926658	2	1	.O-ring	D
12	909418		1	.Plug	
13	813822		2	.Pin	
14	212339		1	.Valve	
15	212339		1	.Valve	
16	909417		4	Screw	
17	909415		2	Screw	

1) This valve block is an integrated part of pump Pn 371089
2) Seals included in seal kit for cpl pump PN 371089

Hydraulic pump Vibration pump

15823

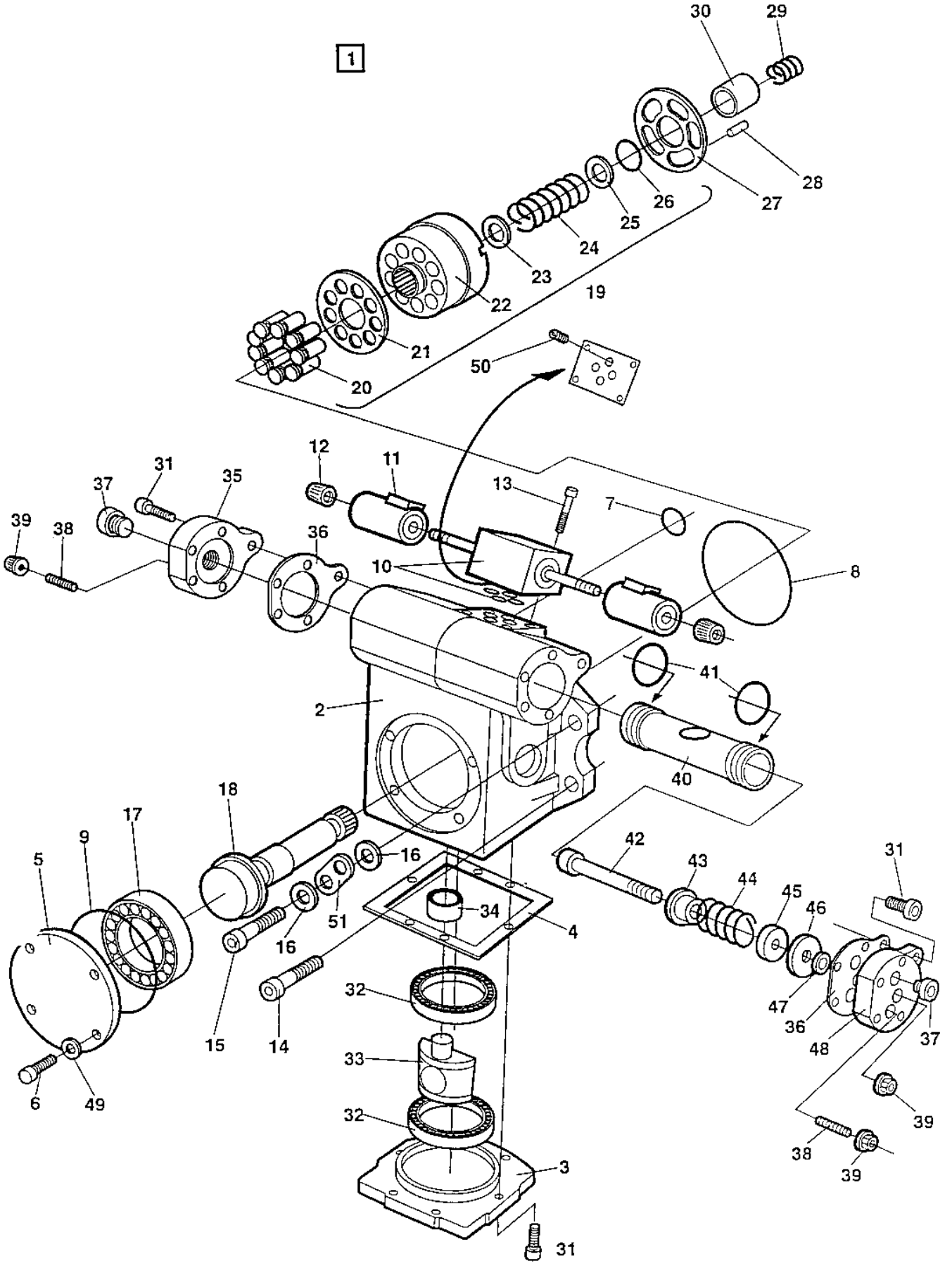

Hydraulic pump Vibration pump

Ref. No.	Part No.	Rem.	Qty	Description	Code
1		1	1	Hydraulic pump, vibration	
2	909438	3	1	.Housing	
		6	1	.Housing	
3	909439		1	.Cover	
4	909440	2	1	.Gasket	
5	909441		1	.Cover	
6	909442		4	.Screw	
7	910706	2	1	.O-ring	
8	909478	7	1	.O-ring	
	909485	2,6	1	.O-ring	
9	909444	2	1	.O-ring	
10	909215		1	.Solenoid valve	
	910706		4	..O-ring	
11	909638		2	..Solenoid	D
12	909644		2	..Nut	
13	927510		4	.Screw	
14	902940		3	.Screw	
15	902977		1	.Screw	
16	909445		2	.Washer	
17	909448		1	.Bearing	
18	909447		1	.Shaft	
19	909238		1	.Cylinder block, cpl	
20			9	..Piston	
21			1	..Slipper retaining plate	
22			1	..Cylinder block	
23			1	..Spacer	
24			1	..Spring	
25			1	..Spring retainer	
26			1	..Retainer ring	
27	909471		1	.Valve plate	
28	909450		1	.Pin	
29	909446		1	.Spring	
30	909344		1	.Needle roller bearing	
31	908773		16	.Screw	
32	909449		2	.Needle roller bearing	
33	909477		1	.Swash plate	
34	909472		1	.Needle roller bearing	
35	908771		1	.Cover	
36	908772	2	2	.Gasket	
37	908432		2	.Plug	
38	908775		2	.Screw	
39	908774	2	3	.Nut	
40	909473		1	.Piston, cpl	
41	909474	2	2	..Seal ring	
42			1	..Screw	
43			1	..Spring retainer	
44			1	..Spring	
45			1	..Spacer	
46			1	..Nut	
47			1	..Nut	
48	909476		1	.Cover	
49	909475	2	4	.Sealing ring	

1) This pump is an integrated part of pump PN 371089
2) Seals included in seal kit for cpl pump PN 371089
3) Used up to pump SN N9619XXXXX
6) Used from pump SN N9620XXXXX
7) Used as spare part for pumps up to pump N9619XXXXX,seals incl in kit PN371089

Hydraulic pump Vibration pump

15823

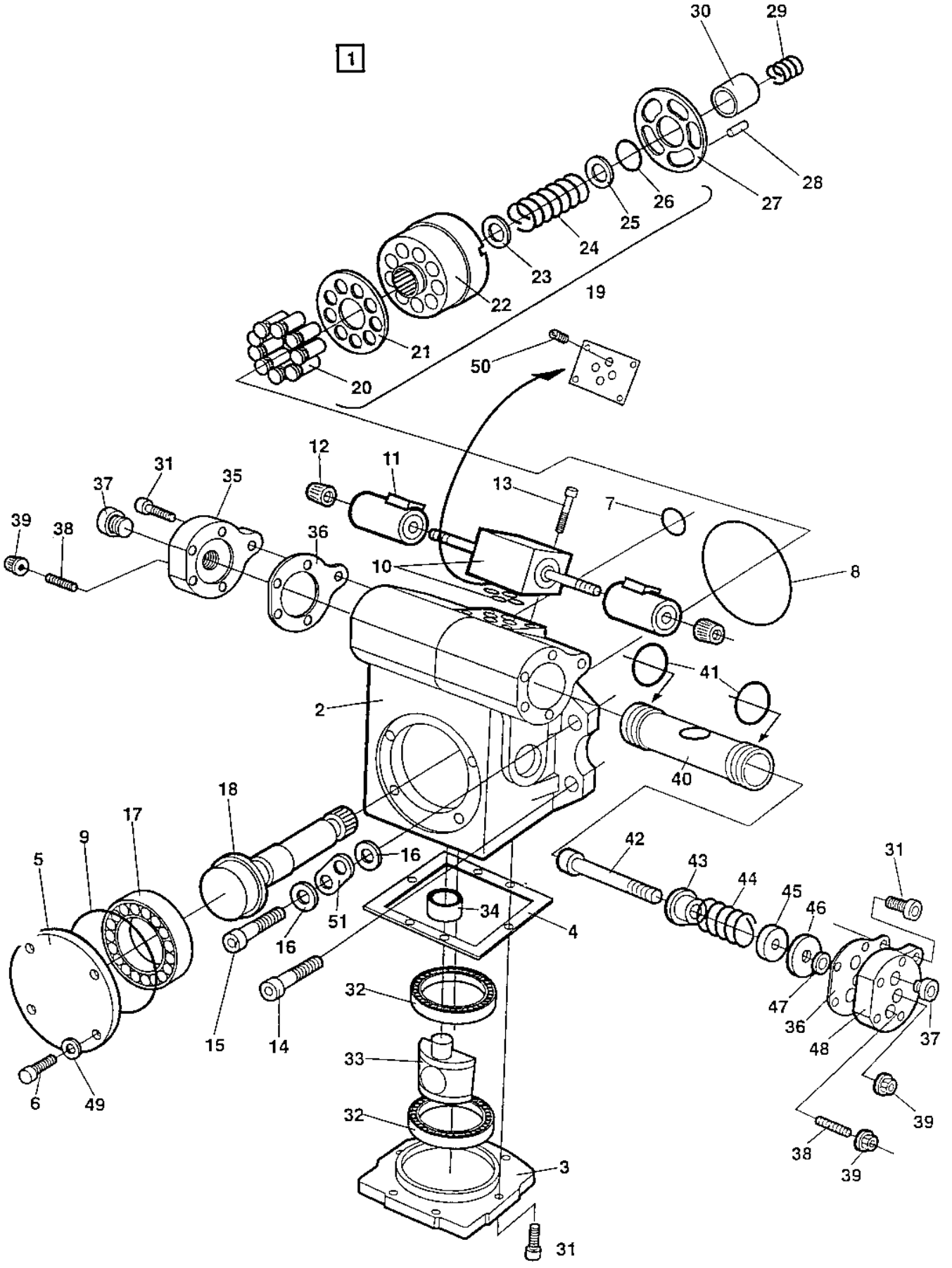

Ref. No.	Part No.	Rem.	Qty	Description	Code
50	908457		1	.Orifice 0.6	
51			1	.Lifting plug	

376374 Hydraulic pump Propulsion and vibration

15785

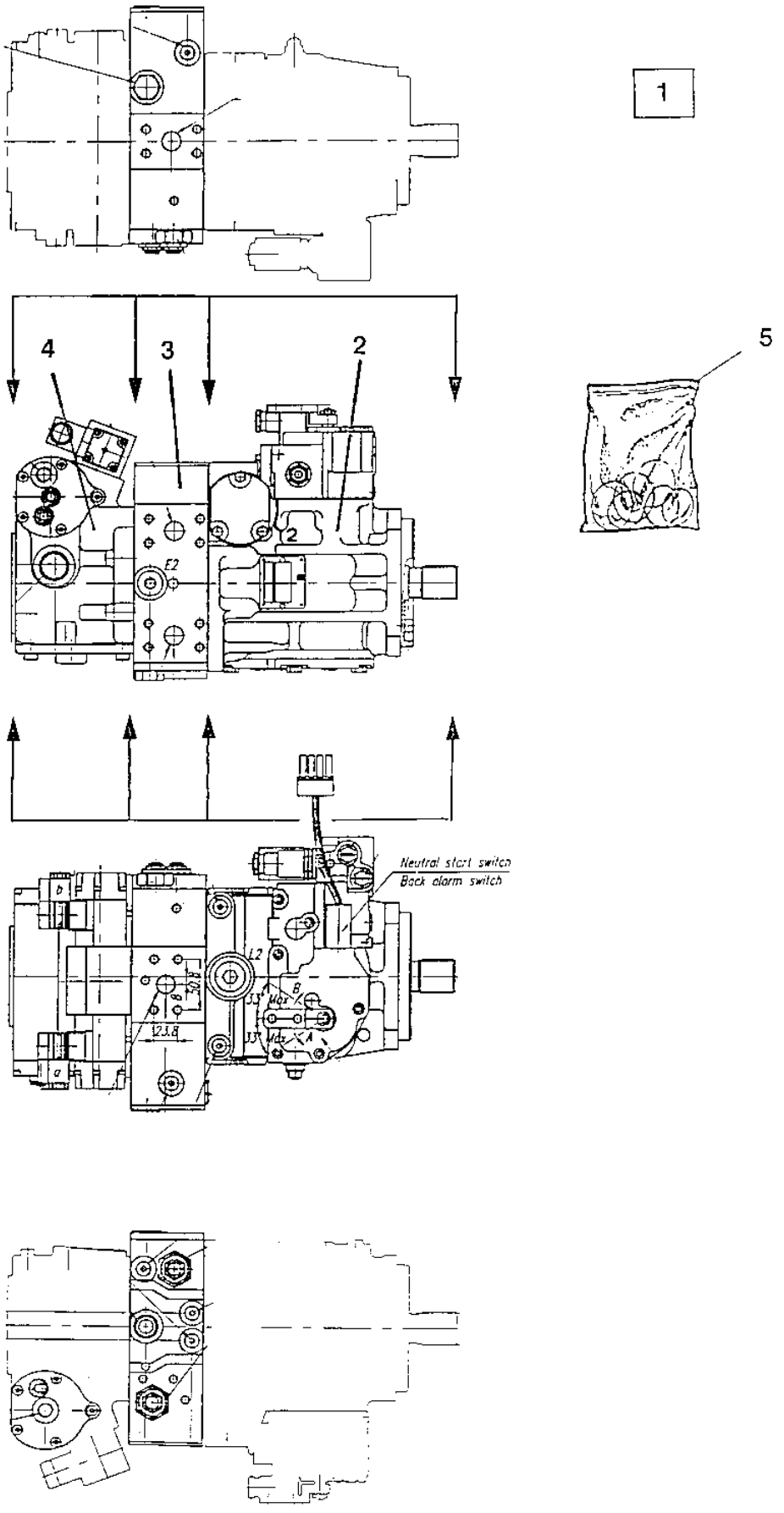

376374 Hydraulic pump Propulsion and vibration

Ref. No.	Part No.	Rem.	Qty	Description	Code
1			1	Hydraulic pump, Cpl Propulsion and Vibration	
2			1	.Hydraulic pump Propulsion pump (Page 176)	
3			1	.Valve block Middle part (Page 180)	
4			1	.Hydraulic pump Vibration pump (Page 182)	
5	908454		1	.Gasket kit	D

Hydraulic pump Propulsion pump

16942

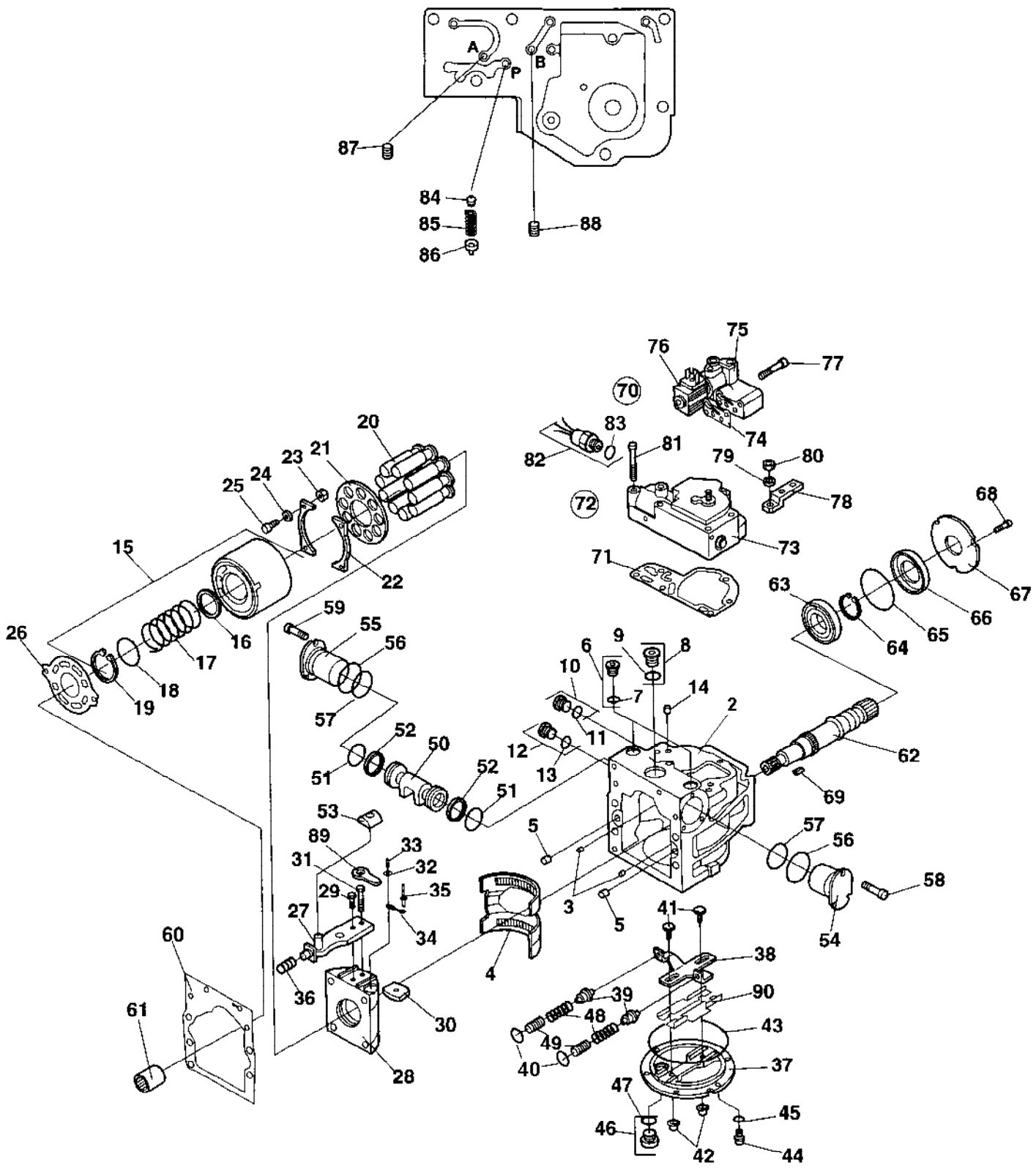

Hydraulic pump Propulsion pump

Ref. No.	Part No.	Rem.	Qty	Description	Code
1		1	1	Hydraulic pump	D
2	909373		1	.Housing	
3	909374		2	.Pin	
4	901718		1	.Bearing	D
5	481131		2	.Pin	
6	909375		2	.Plug, cpl	
7	909349	2	1	..O-ring	
8	902928		1	.Plug	
9	901453	2	1	..O-ring	
10	908432		1	.Plug	
11	923087	2	1	..O-ring	D
12	908432		1	.Plug	
13	923087	2	1	..O-ring	D
14	901454		1	.Filter element	D
15	212353		1	.Rotating group, cpl	D
16	909376		1	..Spacer	
17	909377		1	..Spring	
18	909378		1	..Spring retainer	
19	909379		1	..Retainer ring	
20	901720		9	.Piston	D
21	901721		1	.Pressure plate	D
22	901722		2	.Retainer guide	D
23	909380		4	.Spacer	
24	909381		4	.Washer	
25	909382		4	.Screw	
26	937136		1	.Valve plate	
27	909384		1	.Servo arm, cpl	
28	909385		1	.Swash plate	
29	909386		1	.Screw	
30	909387		1	.Guide	
31	909388		1	.Screw	
32	909389		1	.Washer	
33	909390		1	.Pin	
34	909391		1	.Link	
35			1	.Pin	
36	909393		1	.Spring	
37	937138		1	.Cover	
38	909395		1	.Lever	
39	909396		2	.Spring retainer	
40	908378		2	.Washer	
41	909397		2	.Guide post	
42	909398	2	2	.Seal lock nut	
43	909399	2	1	.O-ring	
44	936553		6	.Screw	
45	909401		6	.Washer	
46	902928		1	.Plug	
47	901453	2	1	..O-ring	
48	909402		2	.Spring	
49	909403		2	.Spring	
50	909404		1	.Piston	
51	909405	2	2	.O-ring	
52	909406	2	2	.Piston ring	
53			1	.Block slider	
54	909408		1	.Servo sleeve	
55	909408		1	.Servo sleeve	
56	909409	2	2	.O-ring	

1) This pump is an integrated part of pump PN 376374
2) Seals included in seal kit for cpl pump, PN 376374

Hydraulic pump Propulsion pump

16942

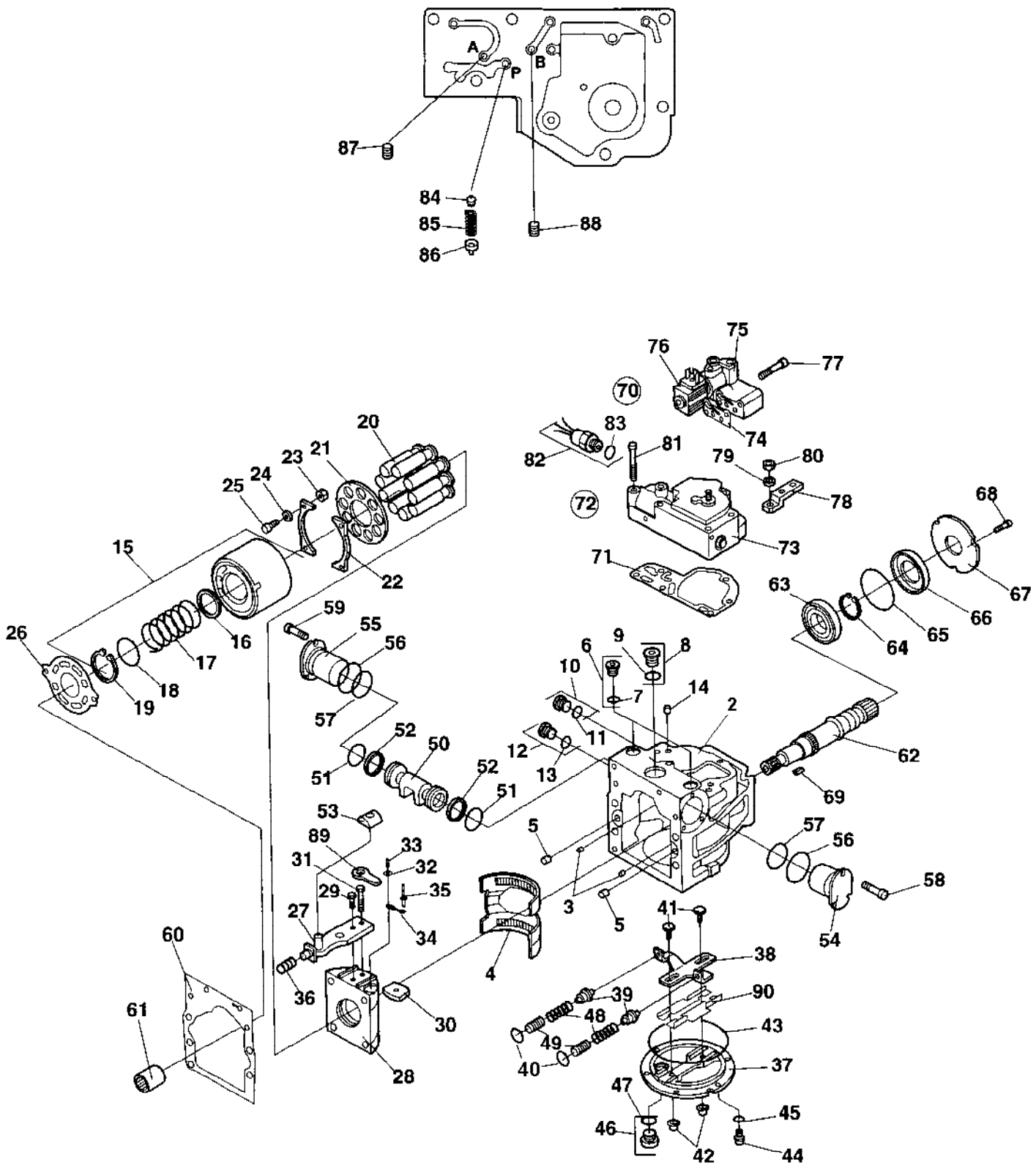

Ref. No.	Part No.	Rem.	Qty	Description	Code
57	909410	2	2	.O-ring	
58	909411		3	.Screw	
59	909411		3	.Screw	
60	909414	2	1	.Gasket	
61	909416		1	.Sleeve	
62	909422		1	.Shaft	
63	901725		1	.Bearing	D
64	901727		1	.Snap ring	D
65	909257	2	1	.O-ring	
66	909256		1	.Seal carrier	
67	901728		1	.Carrier seal	D
68	908773		3	.Screw	
69	909446		1	.Spring	
70	909424		1	.Control valve, cpl	
71	909425	2	1	..Gasket	
72	908445		1	..Control valve, assy	
73			1	...Valve	
74	909430	2	1	...Gasket	
75	909652		1	...Valve	
76	909641		1	....Solenoid valve	D
	909642		1	....Solenoid	D
	909643		1	....Seal kit	
77	909431		2	...Screw	
78	909432		1	..Control lever	
79	909428		1	..Washer	
80	909429		1	..Nut	
81	909434		6	..Screw	
82	909367	A	1	..Neutral start switch	D
83	909433		1	...O-ring	
84	909435		1	..Orifice	
85	909436		1	..Spring	
86	908448		1	..Spring retainer	
87	908449		1	..Orifice	
88	908449		1	..Orifice	
89	909426		1	.Link	
90	937139		1	.Guide assy.	

2) Seals included in seal kit for cpl pump, PN 376374
A) And back-up alarm

Valve block Middle part

17025

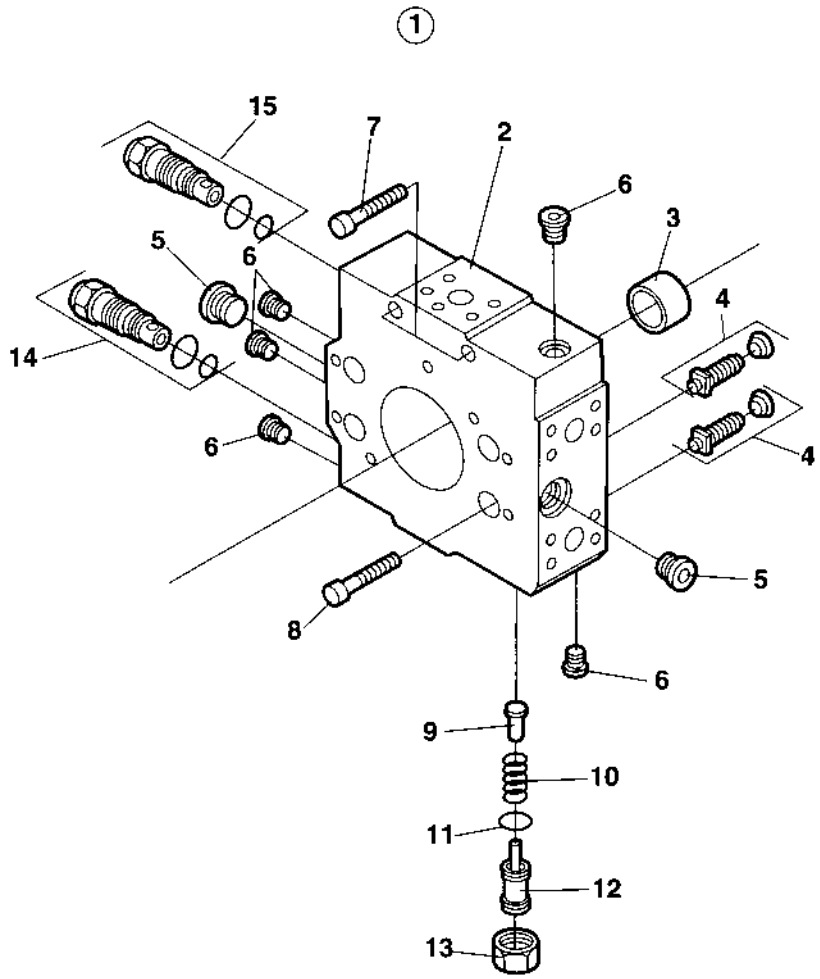

Valve block Middle part

Ref. No.	Part No.	Rem.	Qty	Description	Code
1		1	1	Valve block, cpl	
2	909412		1	.Valve block	
3	909413		1	.Bushing	
4	908455		2	.Relief valve	D
5	909243		2	.Plug	
6	908432		5	.Plug	
7	909415		2	.Screw	
8	909417		4	.Screw	
9			1	.Valve cone	
10	901463		1	.Spring	D
11	813618	2	1	.O-ring	D
12	908428		1	.Adjustable screw, cpl	
13	902959		1	.Nut	
14	212339		1	.Valve	
15	212339		1	.Valve	
16	909417		4	Screw	
17	909415		2	Screw	

1) This valve block is an integrated part of pump Pn 376374
2) Seals included in seal kit for cpl pump PN 376374

Hydraulic pump Vibration pump

17026

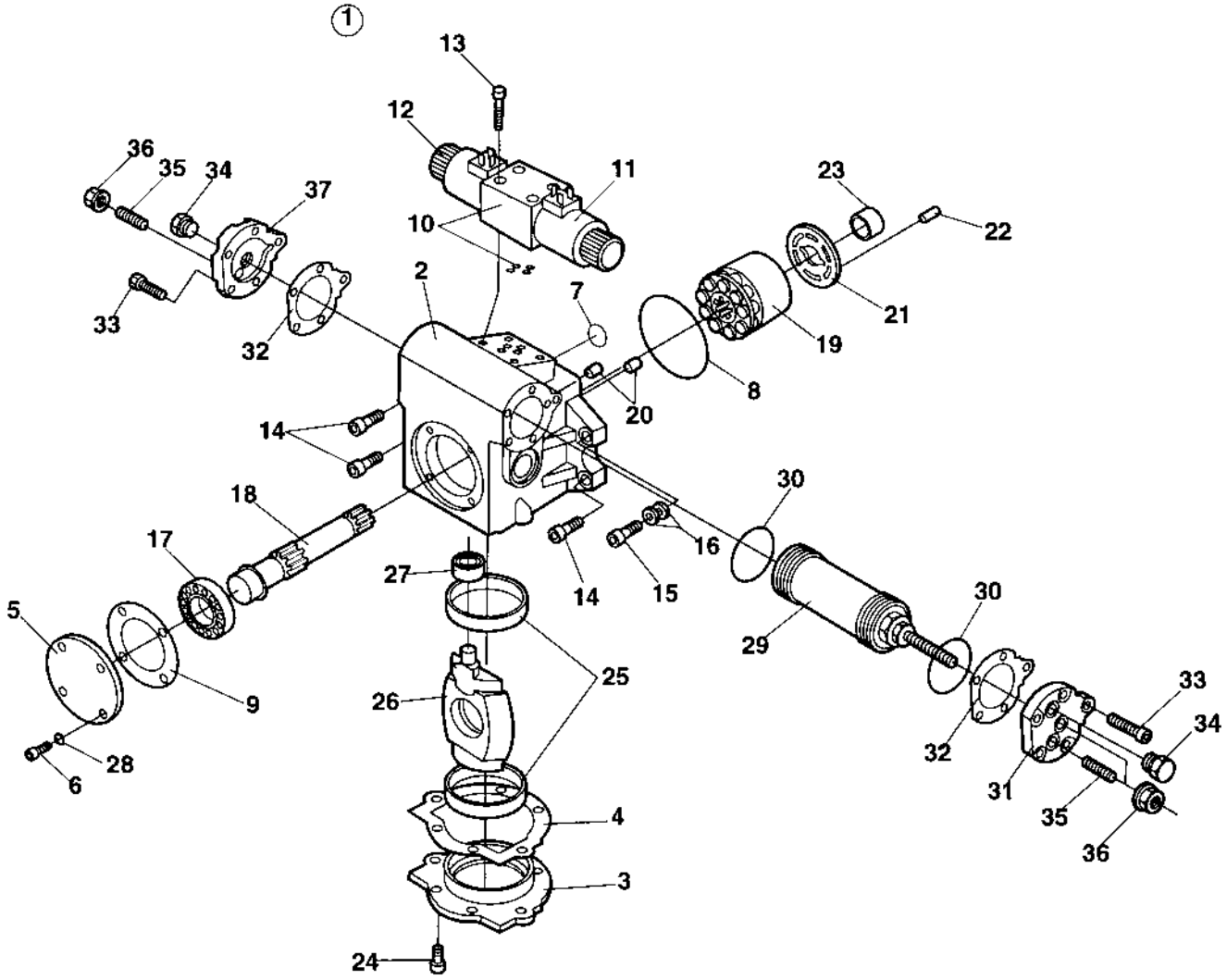

Ref. No.	Part No.	Rem.	Qty	Description	Code
1		1	1	Hydraulic pump, vibration	
2	909438		1	.Housing	
3	909439		1	.Cover	
4	909440	2	1	.Gasket	
5	909471		1	.Valve plate	
6	909442		4	.Screw	
7	910706	2	1	.O-ring	
8	909485	2	1	.O-ring	
9		2	1	.Gasket	
10	909215		1	.Solenoid valve	
	910706		4	..O-ring	
11	909638		2	..Solenoid	D
12	909644		2	..Nut	
13	927510		4	.Screw	
14	902940		3	.Screw	
15	902977		1	.Screw	
16	909445		2	.Washer	
17	909448		1	.Bearing	
18	909447		1	.Shaft	
19	909238		1	.Cylinder block, cpl	
20	481131		2	.Pin	
21	909471		1	.Valve plate	
22	909450		1	.Pin	
23	909344		1	.Needle roller bearing	
24	908773		6	.Screw	
25	909449		2	.Needle roller bearing	
26	909477		1	.Swash plate	
27	909472		1	.Needle roller bearing	
28	909475	2	1	.Sealing ring	
29	909473		1	.Piston, cpl	
30			2	.Seal ring	
31	909476		1	.Cover	
32	908772	2	2	.Gasket	
33	908773		10	.Screw	
34	908432		2	.Plug	
35			2	.Headless screw	
36	908774	2	2	.Nut	
37	908771		1	.Cover	
50	908457		1	.Orifice 0.6	

1) This pump is an integrated part of pump PN 376374
2) Seals included in seal kit for cpl pump PN 376374

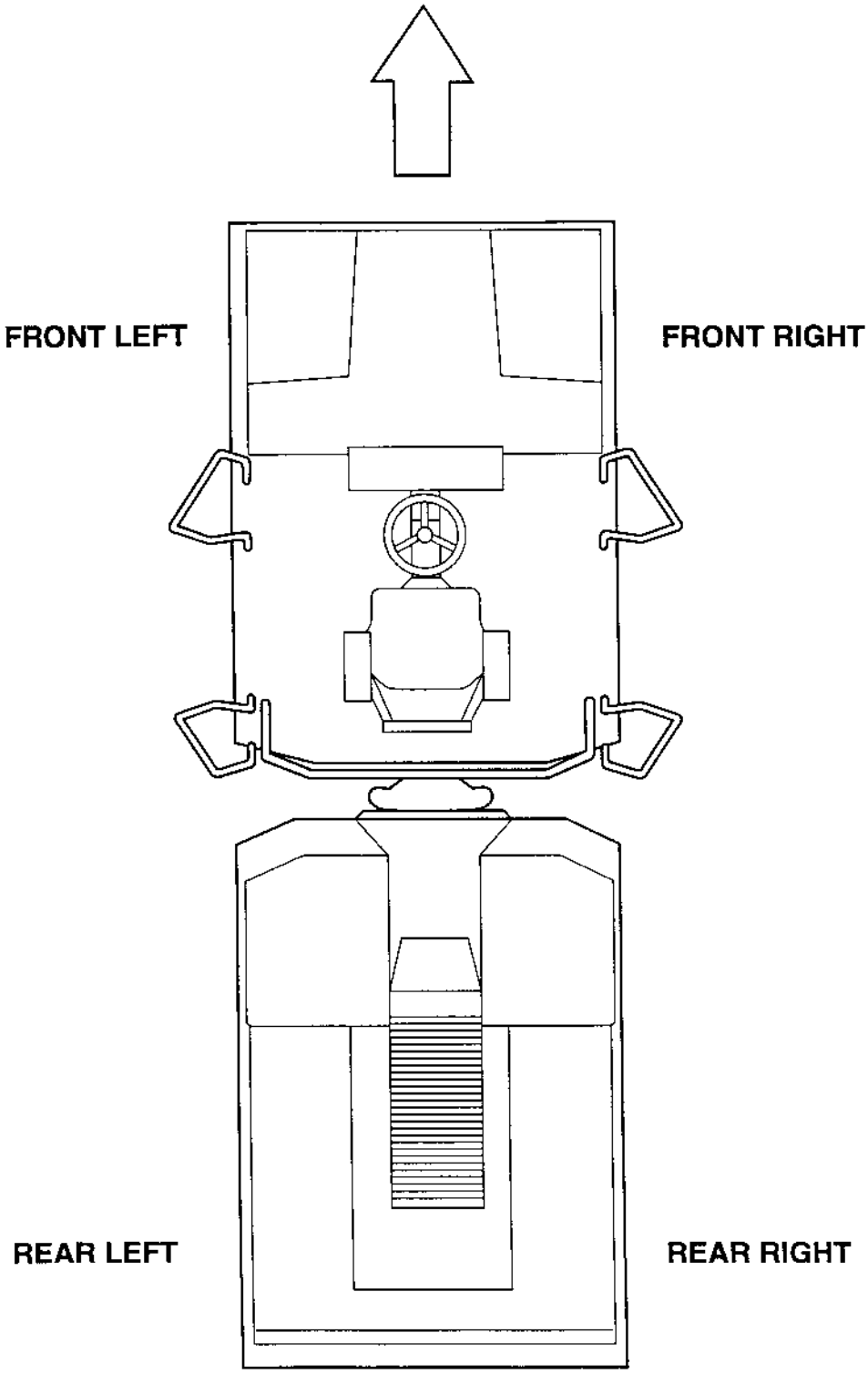
FRONT LEFT
FRONT RIGHT
REAR LEFT
REAR RIGHT

Ref. No.	Part No.	Rem.	Qty	Description	Code
	358999	A	1	Hydraulic motor Propulsion (Page 186)	C
	359000	B	1	Hydraulic motor Propulsion (Page 188)	C

A) Front left
B) Rear right

358999 Hydraulic motor Propulsion

15780

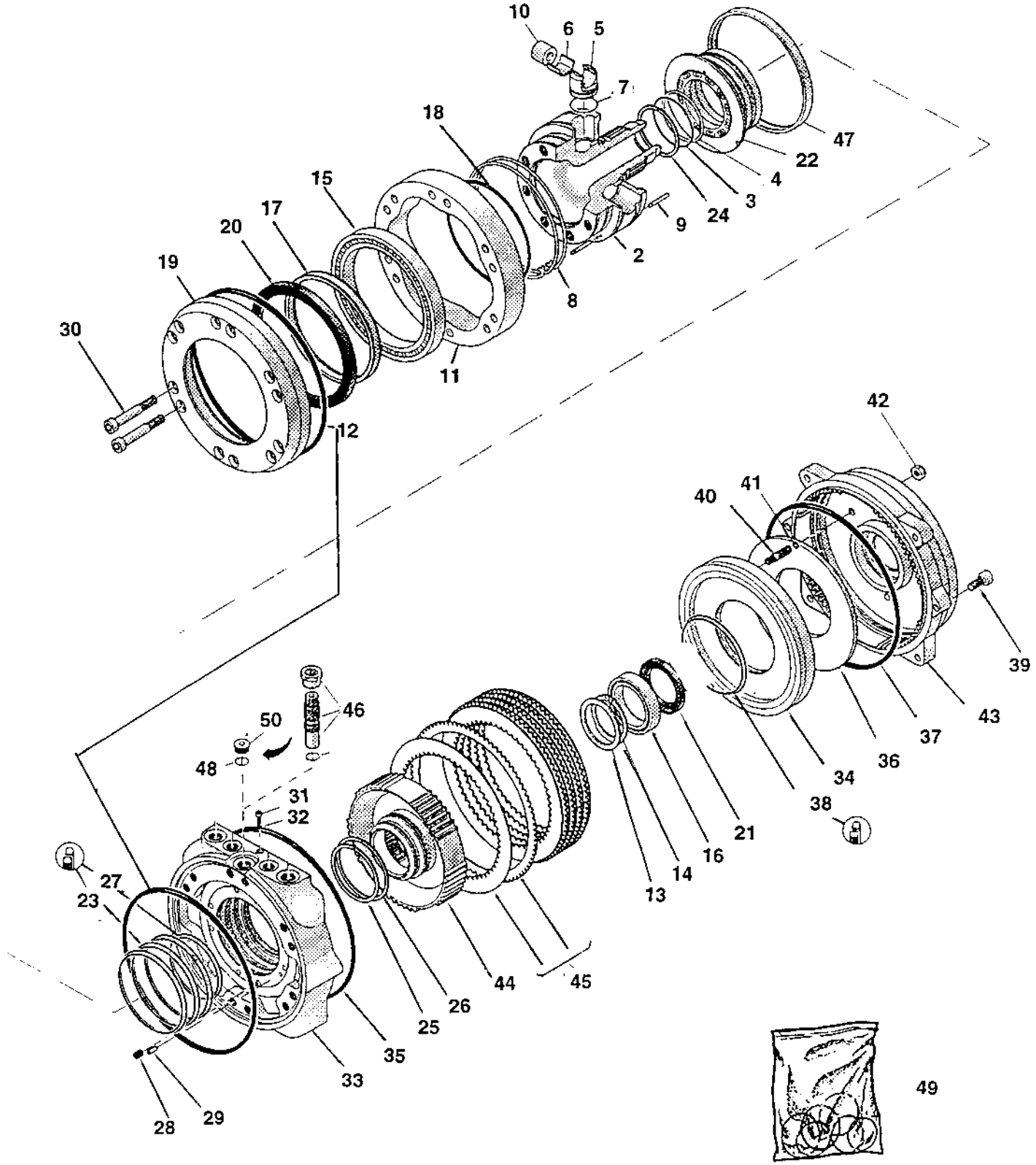

358999 Hydraulic motor Propulsion

Ref. No.	Part No.	Rem.	Qty	Description	Code
1			1	Hydraulic motor, propulsion	C
2	908805		1	.Cylinder block	
3		A	1	.O-ring	
4		A	1	.Back-up ring	
5	908808		8	.Piston	
6	908809		8	.Bearing bushing	
7	908810		8	.Piston ring	
8	908811		2	.Guide ring	
9	908812		4	.Pin	
10	908813		8	.Roller	
11	908814		1	.Cam ring	
12	908815	A	2	.O-ring	
13	908816		1	.Supporting plate	
14	908817		1	.Retainer ring	
15	908818		1	.Ball bearing	
16	908819		1	.Bearing	
17	937889		1	.Bushing	
18	908821	A	1	.O-ring	
19	908822		1	.Cover	
20	937888	A	1	.Shaft seal	
21	908824	A	1	.Shaft seal	
22	908825		1	.Distributor valve	
23		A	3	.Seal ring	
24		A	1	.Seal ring	
25		A	1	.Seal ring	
26		A	1	.Seal ring	
27		A	1	.Seal ring	
28	908831		8	.Spring	
29	908832		1	.Pin	
30	908833		12	.Screw	
31	908834		1	.Screw	
32		A	1	.Seal ring	
33	908836		1	.Distance housing	
34	908837		1	.Piston ring	
35		A	1	.O-ring	
36	908839		1	.Cup spring	
37	908840	A	1	.O-ring	
38	908841	A	1	.Seal ring	
39	908842		2	.Screw	
40	908843		3	.Screw	
41	908844	A	3	.O-ring	
42	908845		3	.Seal lock nut	
43	908846		1	.Brake housing	
44	908847		1	.Brake adapter	
45	908850		1	.Disc kit	D
			5	..Brake disc,outer	D
			6	..Brake disc, inner	D
46			1	.Speed sensor	D
47	908851		1	.Ring	
48		A	1	.O-ring	
49	908853	B	1	.Seal kit	D
50	908854		1	.Plug	

A) Incl. in item 49
B) Incl. marked items

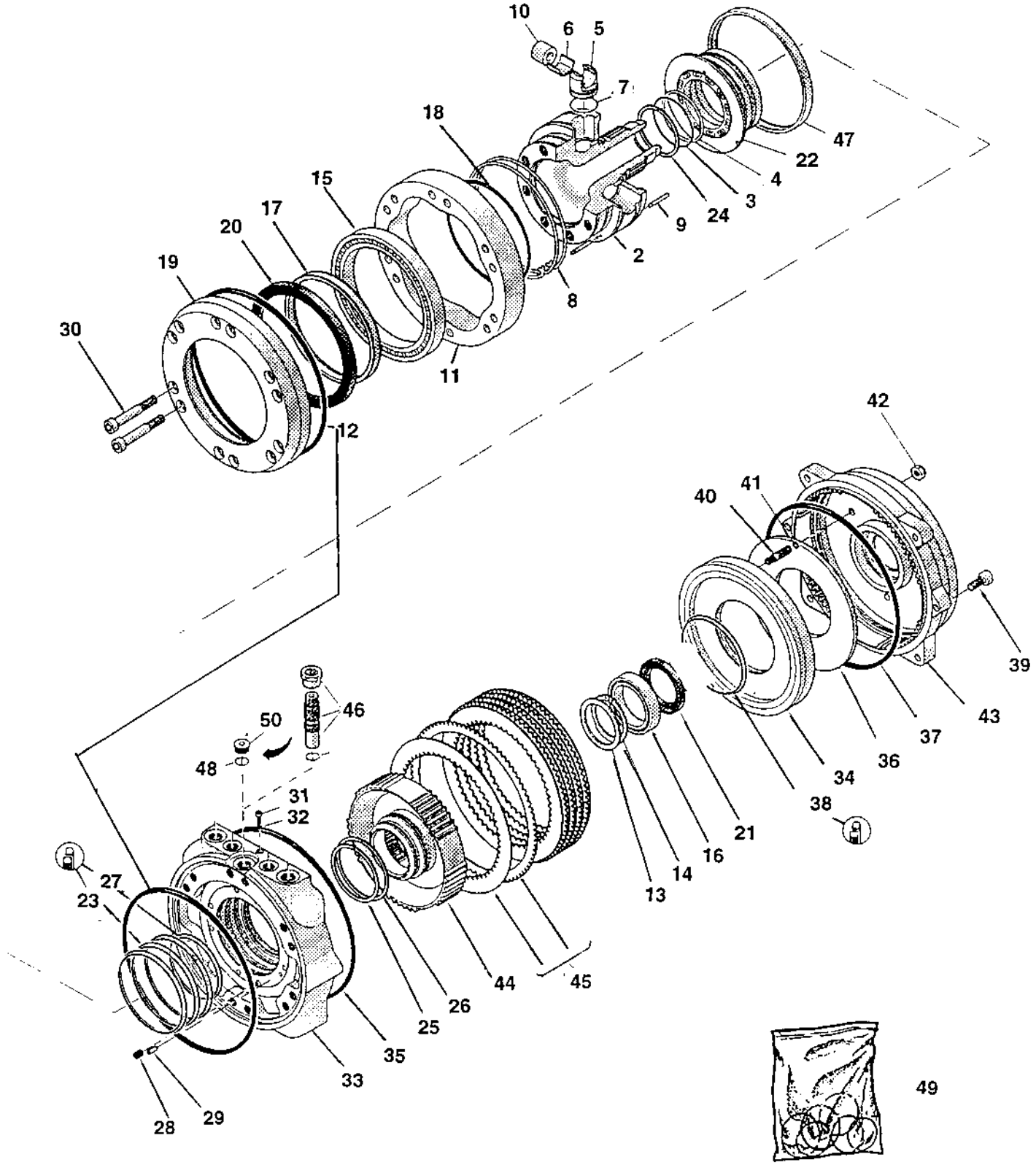
10
6
5
7
18
47
22
4
3
24
9
2
8
15
17
20
19
30
11
12
42
40
41
39
43
37
36
34
38
21
16
14
13
46
50
48
31
32
27
23
44
45
26
25
35
33
28
29
49

359000 Hydraulic motor Propulsion

Ref. No.	Part No.	Rem.	Qty	Description	Code
1			1	Hydraulic motor, propulsion	
2	908805		1	.Cylinder block	
3		A	1	.O-ring	
4		A	1	.Back-up ring	
5	908808		8	.Piston	
6	908809		8	.Bearing bushing	
7	908810		8	.Piston ring	
8	908811		2	.Guide ring	
9	908812		4	.Pin	
10	908813		8	.Roller	
11	908814		1	.Cam ring	
12	908815	A	2	.O-ring	
13	908816		1	.Supporting plate	
14	908817		1	.Retainer ring	
15	908818		1	.Ball bearing	
16	908819		1	.Bearing	
17	937889		1	.Bushing	
18	908821	A	1	.O-ring	
19	908822		1	.Cover	
20	937888	A	1	.Shaft seal	
21	908824	A	1	.Shaft seal	
22	908825		1	.Distributor valve	
23		A	3	.Seal ring	
24		A	1	.Seal ring	
25		A	1	.Seal ring	
26		A	1	.Seal ring	
27		A	1	.Seal ring	
28	908831		8	.Spring	
29	908832		1	.Pin	
30	908833		12	.Screw	
31	908834		1	.Screw	
32		A	1	.Seal ring	
33	908836		1	.Distance housing	
34	908837		1	.Piston ring	
35		A	1	.O-ring	
36	908839		1	.Cup spring	
37	908840	A	1	.O-ring	
38	908841	A	1	.Seal ring	
39	908842		2	.Screw	
40	908843		3	.Screw	
41	908844	A	3	.O-ring	
42	908845		3	.Seal lock nut	
43	908846		1	.Brake housing	
44	908847		1	.Brake adapter	
45	908850		1	.Disc kit	D
			5	..Brake disc,outer	D
			6	..Brake disc, inner	D
46			1	.Not used on this model	D
47			1	.Not used on this model	D
48		A	1	.O-ring	D
49	908853	B	1	.Seal kit	D
50	908854		1	.Plug	

A) Incl. in item 49
B) Incl. marked items

Shut-off valve For towing, option

16086

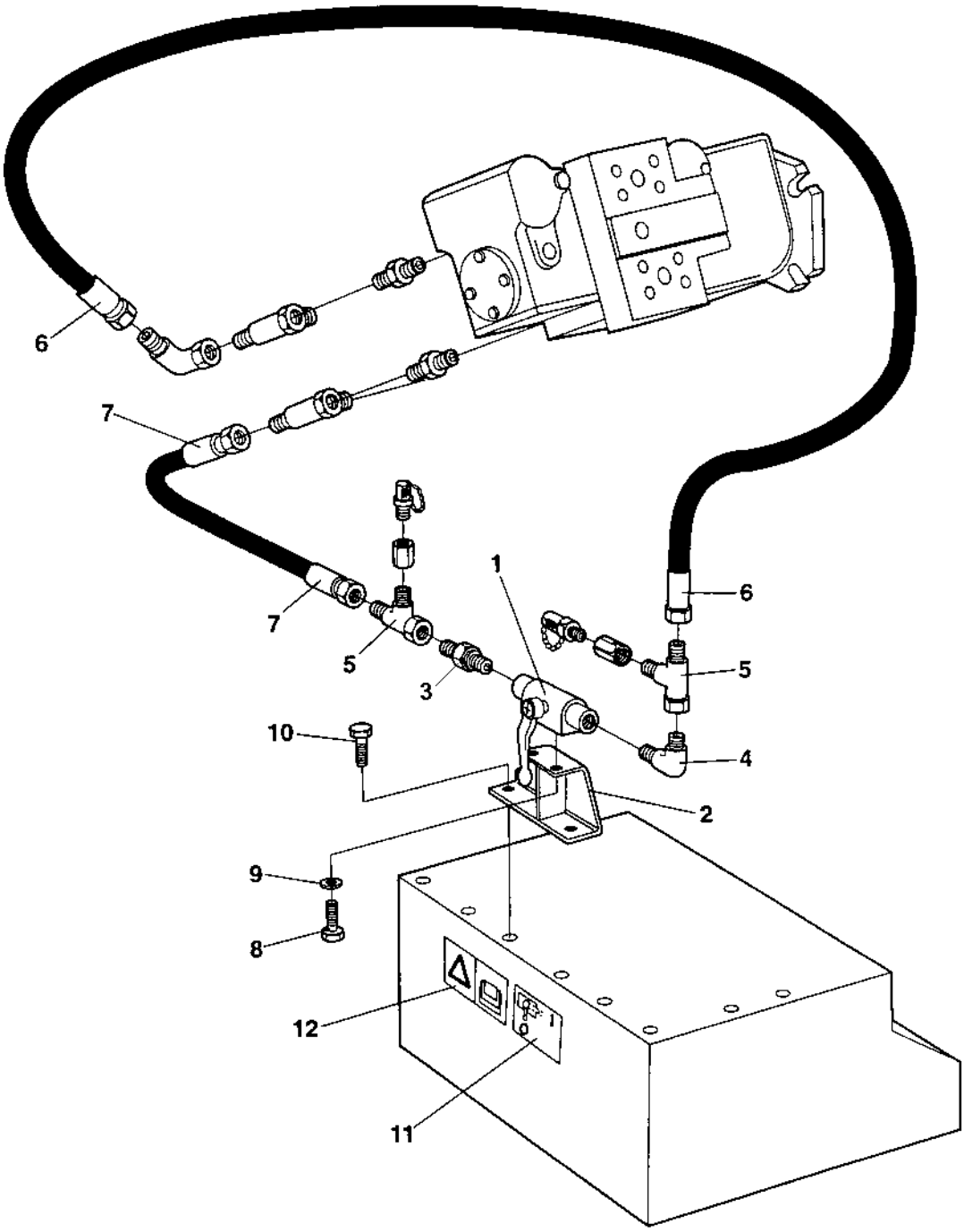

Shut-off valve For towing, option

Ref. No.	Part No.	Rem.	Qty	Description	Code
1	344138		1	Ball valve	
2	373920		1	Bracket	
3	234840		1	Connector	
4	234340		1	Elbow 90	
5	334234		2	Tee-connector	
6	483234		1	Hydraulic hose	
7	483235		1	Hydraulic hose	
8	500004		2	Screw M5 0,8x12 8,8	
9	904281		2	Washer 5,3x10x1	
10	500021		2	Screw M8-1,25x25 8,8	
11	374101		1	Decal "SHUT-OFF VALVE"	
12	903459		1	Decal "SAFETY"	

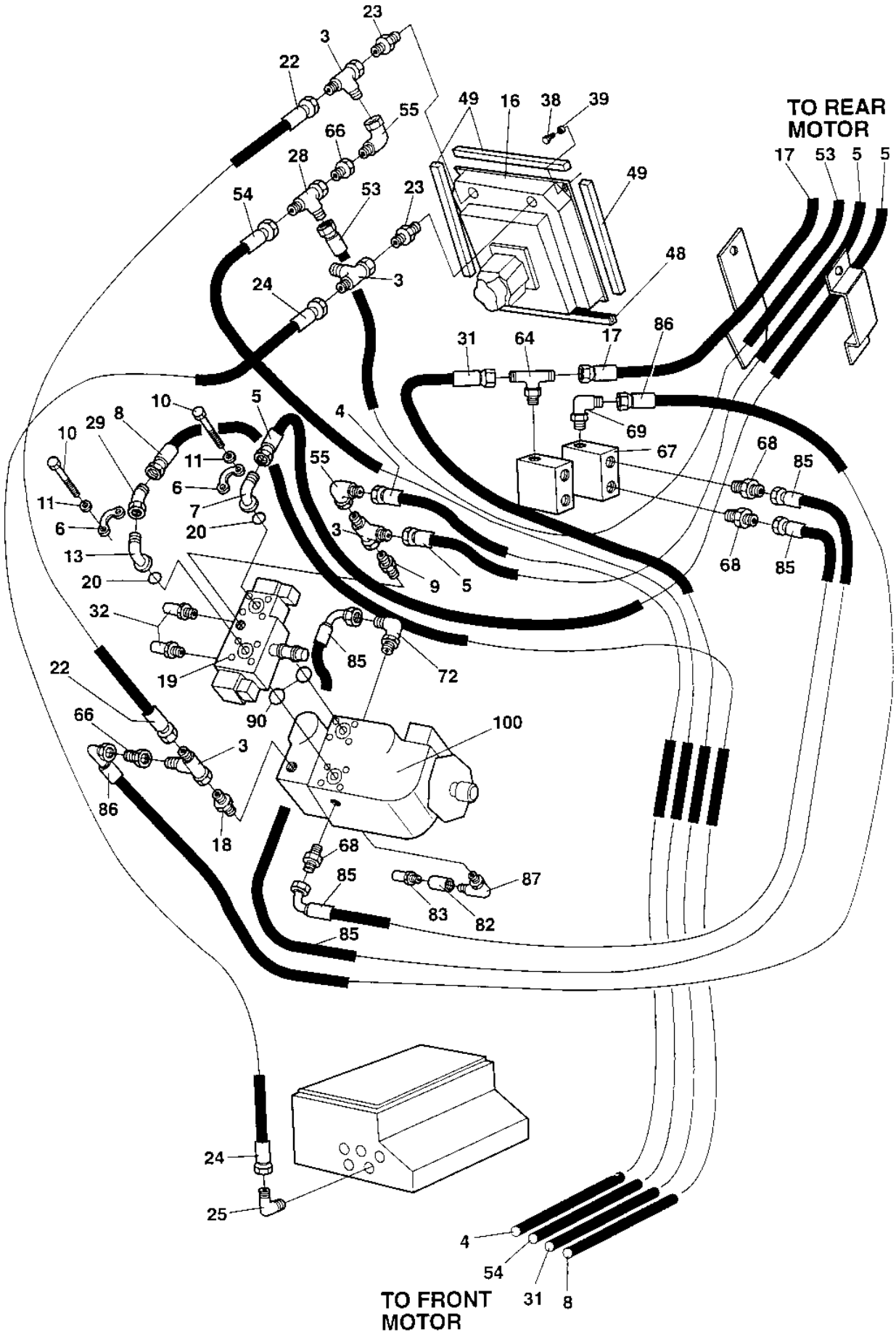
TO REAR MOTOR
TO FRONT MOTOR

Ref. No.	Part No.	Rem.	Qty	Description	Code
3	234243		4	T-connector	
4	482902		1	Hydraulic hose Up to 61710307	
	483057		1	Hydraulic hose From 61710308	D
5	482903		2	Hydraulic hose Up to 61710308	
	483058		2	Hydraulic hose From 61710308	
6	929226		4	Flange half	
7	900455		1	Flange adapter	
8	482904		1	Hydraulic hose Up to 61710307	
	483054		1	Hydraulic hose From 61710308	D
9	334158		1	Adapter	
10	502047		8	Screw	
11	600007		8	Washer	
13	903553		1	Connector	
16	359004		1	Oil cooler cpl (Page 208)	
17	482905		1	Hydraulic hose	
18	334138		1	Adapter	
19	359140		1	Valve Vibration (Page 206)	C
20	904004		2	O-ring	D
22	482045		1	Hydraulic hose	
23	334156		2	Adapter	
24	482045		1	Hydraulic hose	
25	334128		1	Adapter	
28	334234		1	Tee-connector	
29	334248		1	Elbow 45	
31	482357		1	Hydraulic hose	D
32	900229		2	Measuring nipple	D
38	500021		2	Screw M8-1,25x25 8,8	
39	615043		4	Washer 8,4x18x2	
48	902379	A	1XL	Edge trim	
49	297018	B	1XL	Rubber strip	
53	482906		1	Hydraulic hose	
54	482907		1	Hydraulic hose	
55	334155		2	Connector	
64	234869		1	T-connector	
	160188		1	.O-ring	
66	929122		2	Reducing	
67	370049		1	Flushing valve	
68	234233		4	Adapter	
69	334445		1	Connector	
72	234687		1	Adapter	
82	433830401		1	Connector	
83	910161		1	Measuring nipple	D
85	482968		1	Hydraulic hose	
86	482453		1	Hydraulic hose	D
87	334389		1	Connector	
90	909230		2	O-ring	
100		C	1	Pump	

A) L=0,37 m
B) L=1,5 m
C) Incl. in propulsion pump

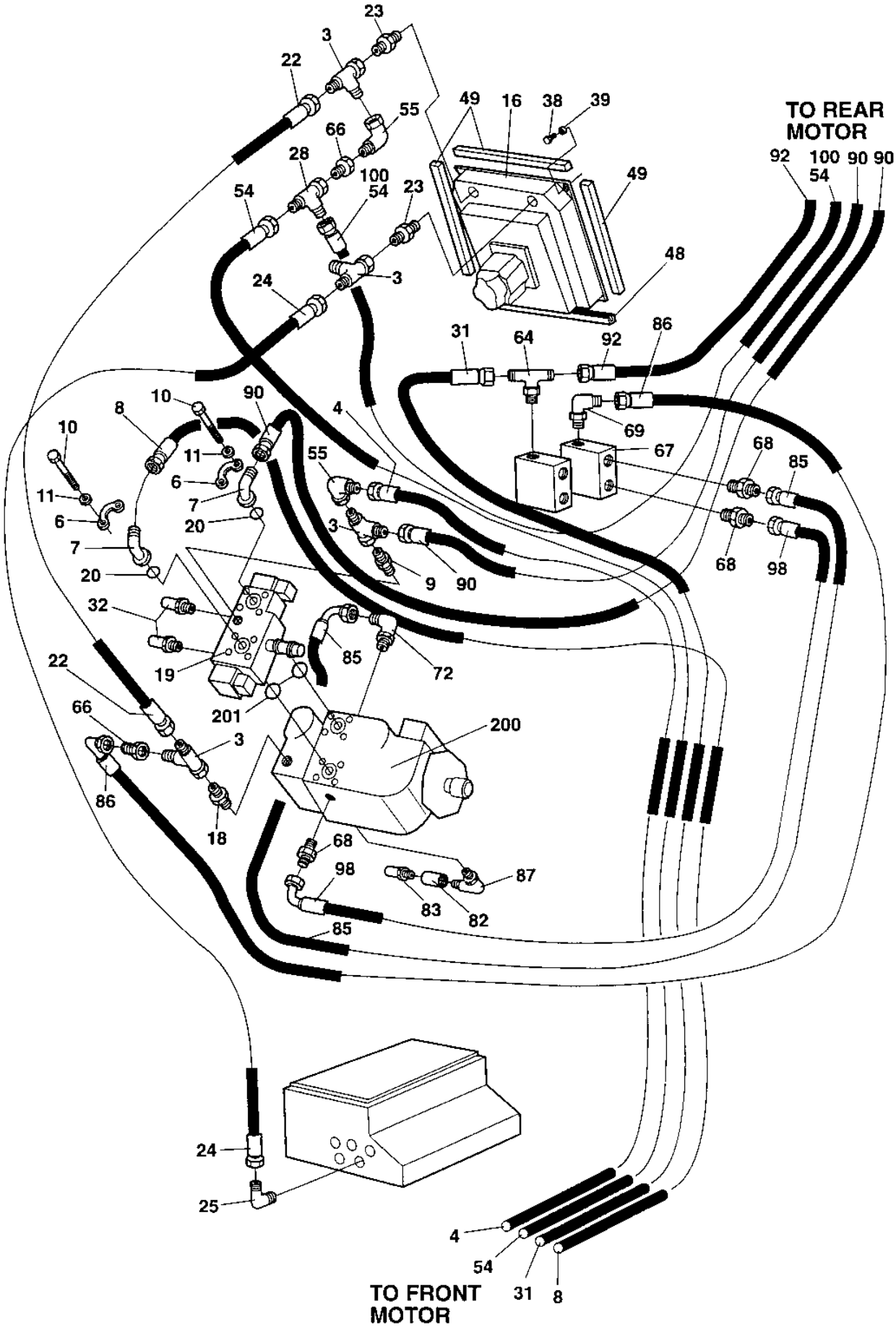
TO REAR MOTOR
TO FRONT MOTOR

Ref. No.	Part No.	Rem.	Qty	Description	Code
3	234243		4	T-connector	
4	483141		1	Hydraulic hose	D
6	929226		4	Flange half	
7	900455		2	Flange adapter	
8	483054		1	Hydraulic hose	D
9	334158		1	Adapter	
10	502047		8	Screw	
11	600007		8	Washer	
16	359004		1	Oil cooler cpl Up to 61710502 (Page 208)	
	359004		1	Oil cooler cpl From 61710504 Up to 61710545 (Page 208)	
	359004		1	Oil cooler cpl From 61710550 Up to 61710553 (Page 208)	
	359004		1	Oil cooler cpl From 61710555 Up to 61710557 (Page 208)	
	359004		1	Oil cooler cpl From 61710559 Up to 61710560 (Page 208)	
	359004		1	Oil cooler cpl From 61710563 Up to 61710565 (Page 208)	
	359004		1	Oil cooler cpl From 61710567 Up to 61710567 (Page 208)	
	359004		1	Oil cooler cpl From 61710572 Up to 61710573 (Page 208)	
	359004		1	Oil cooler cpl From 61710575 Up to 61710575 (Page 208)	
	374494		1	Oil cooler cpl From 61710503 Up to 61710503 (Page 226)	C
	374494		1	Oil cooler cpl From 61710546 Up to 61710549 (Page 226)	C
	374494		1	Oil cooler cpl From 61710554 Up to 61710554 (Page 226)	C
	374494		1	Oil cooler cpl From 61710558 Up to 61710558 (Page 226)	C
	374494		1	Oil cooler cpl From 61710561 Up to 61710562 (Page 226)	C
	374494		1	Oil cooler cpl From 61710566 Up to 61710566 (Page 226)	C
	374494		1	Oil cooler cpl From 61710571 Up to 61710571 (Page 226)	C
	374494		1	Oil cooler cpl From 61710574 Up to 61710574 (Page 226)	C
	374494		1	Oil cooler cpl From 61710576 (Page 226)	C
18	334138		1	Adapter	
19	359140		1	Valve Vibration (Page 206)	C
20	904004		2	O-ring	D
22	482318		1	Hydraulic hose	
23	334156		2	Adapter	
24	482045		1	Hydraulic hose	
25	334128		1	Adapter	
28	334234		1	Tee-connector	
31	483145		1	Hydraulic hose	D
32	900229		2	Measuring nipple	D
38	500021		2	Screw M8-1,25x25 8,8	
39	615043		4	Washer 8,4x18x2	
48	902379	A	1XL	Edge trim	
49	297018	B	1XL	Rubber strip	
54	483144	C	1	Hydraulic hose	D
	483144	D	1	Hydraulic hose Up to 61710544	D
55	334155		2	Connector	
64	234869		1	T-connector	
66	929122		2	Reducing	
67	370049		1	Flushing valve	
68	234233		4	Adapter	
69	334445		1	Connector	
72	234687		1	Adapter	
82	433830401		1	Connector	
83	910161		1	Measuring nipple	D
85	482968		1	Hydraulic hose	
86	482982		1	Hydraulic hose	
87	334389		1	Connector	
90	483191		2	Hydraulic hose	D
92	483153		1	Hydraulic hose	D

A) L=0,37 m
B) L=1,5 m
C) Front motor
D) Rear motor

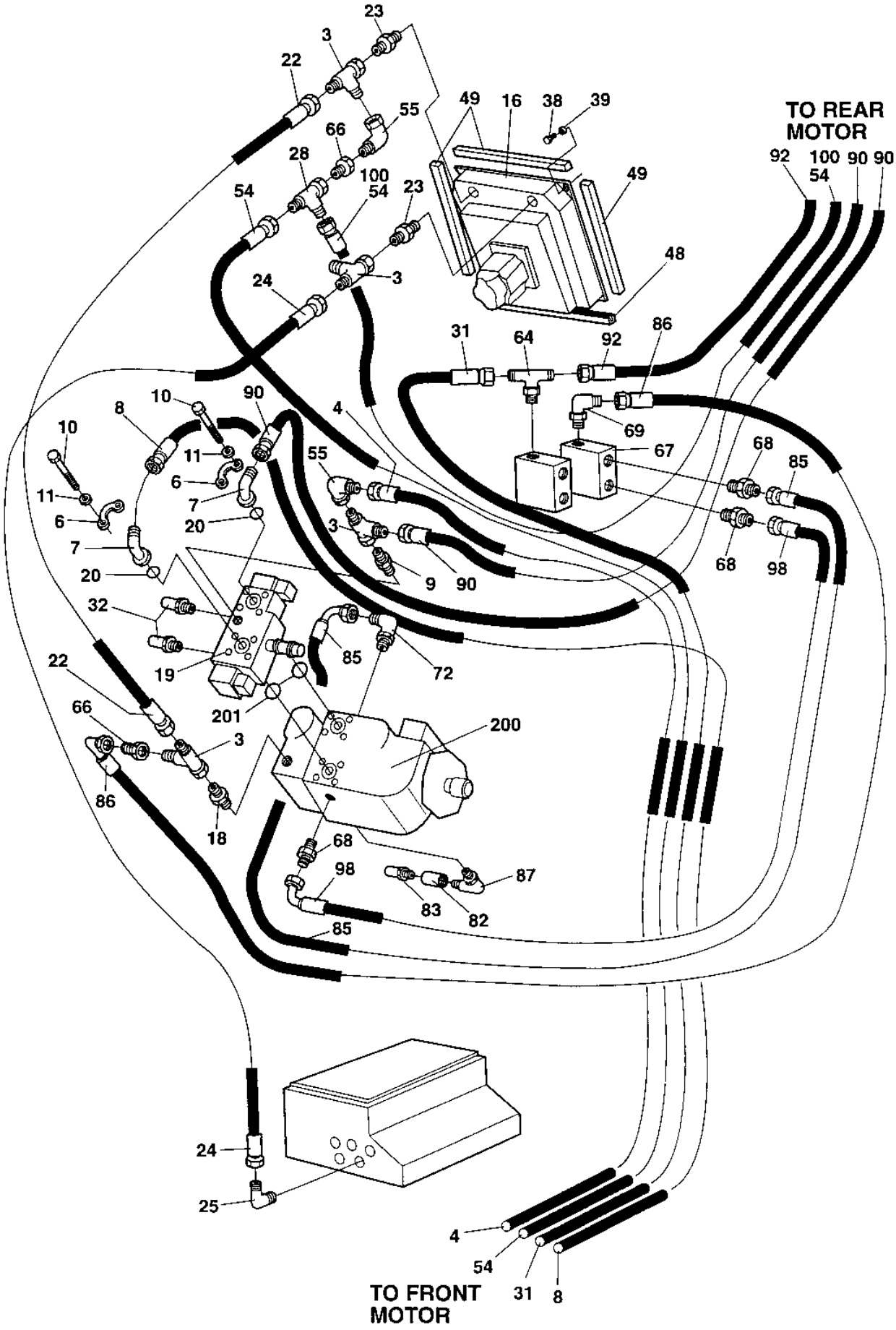
TO REAR MOTOR
TO FRONT MOTOR

Ref. No.	Part No.	Rem.	Qty	Description	Code
98	483140		1	Hydraulic hose	
100	483202	D	1	Hydraulic hose From 61710545	D
200		E	1	Pump	D
201	909230		2	O-ring	

D) Rear motor
E) Incl. in propulsion pump

Vibration system Pump

16969

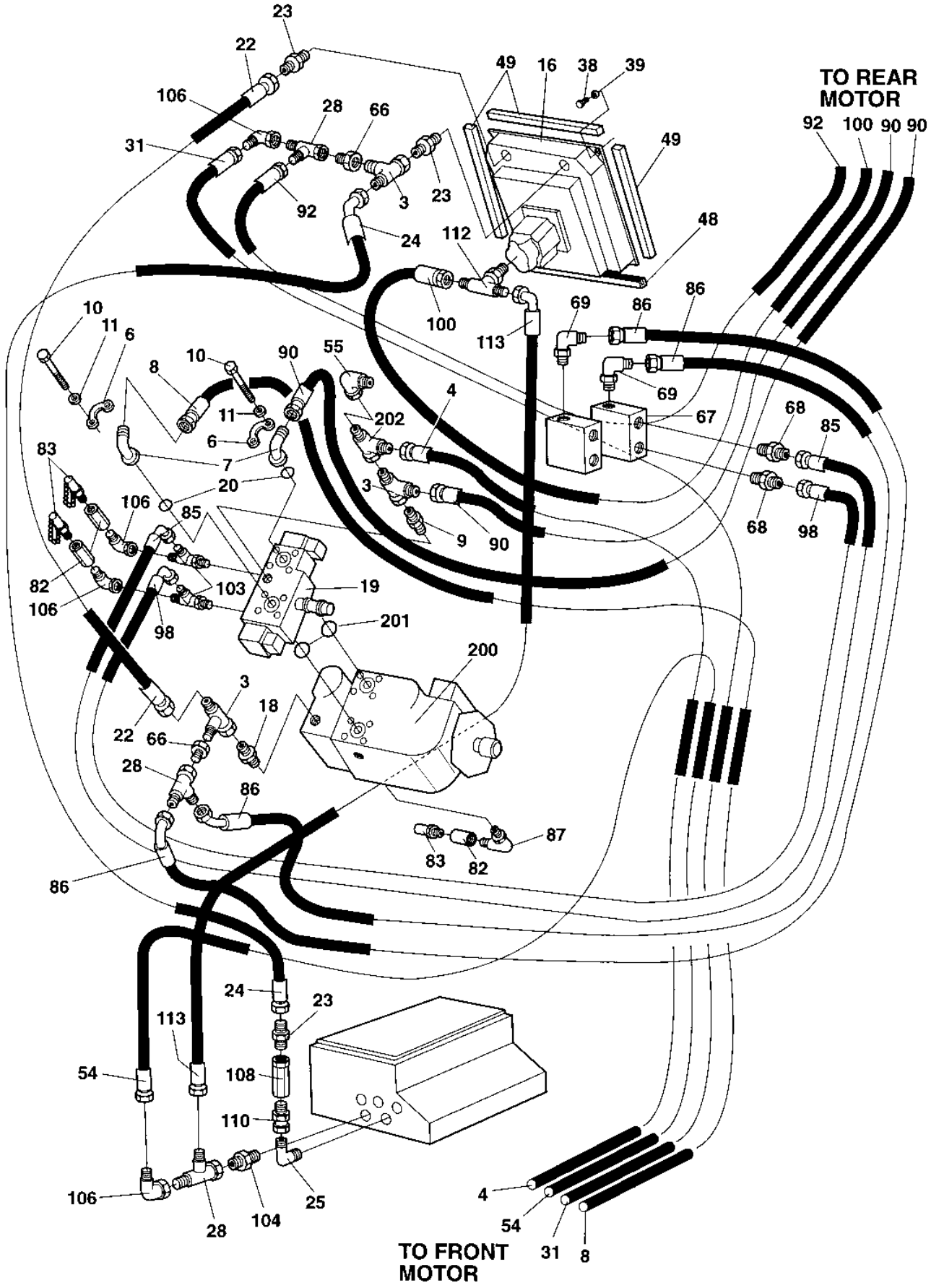

Ref. No.	Part No.	Rem.	Qty	Description	Code
3	234243		3	T-connector	
4	483141		1	Hydraulic hose	D
6	929226		4	Flange half	
7	900455		2	Flange adapter	
8	483054		1	Hydraulic hose	D
9	334158		1	Adapter	
10	502047		8	Screw	
11	600007		8	Washer	
16	374494		0	Oil cooler cpl (Page 226)	C
18	334138		1	Adapter	
19	359140		1	Valve Vibration (Page 206)	C
20	904004		2	O-ring	D
22	482318		1	Hydraulic hose	
23	334156		3	Adapter	
24	483107		1	Hydraulic hose	
25	334128		1	Adapter	
28	334234		3	Tee-connector	
31	483410		1	Hydraulic hose	D
38	500021		2	Screw M8-1,25x25 8,8	
39	615043		4	Washer 8,4x18x2	
48	902379	A	1XL	Edge trim	
49	297018	B	1XL	Rubber strip	
54	483144	C	1	Hydraulic hose	D
55	334155		1	Connector	
66	929122		2	Reducing	
67	370049		1	Flushing valve	
68	234233		2	Adapter	
69	334445		2	Connector	
82	433830401		3	Connector	
83	910161		3	Measuring nipple	D
85	482968		1	Hydraulic hose	
86	482982		2	Hydraulic hose	
87	334389		1	Connector	
90	483191		2	Hydraulic hose	D
92	483153		1	Hydraulic hose	D
98	483140		1	Hydraulic hose	
100	483202	D	1	Hydraulic hose	D
103	234746		2	Connector	
104	234349		1	Connector	
106	334524		4	Connector	
108	903774		1	Check valve	
110	330438		1	Straight connector	
112	334564		1	Connector	
113	483409		1	Hydraulic hose	
200		E	1	Pump	
201	909230		2	O-ring	
202			0	Existing	

A) L=0,37 m
B) L=1,5 m
C) Front motor
D) Rear motor
E) Incl. in propulsion pump

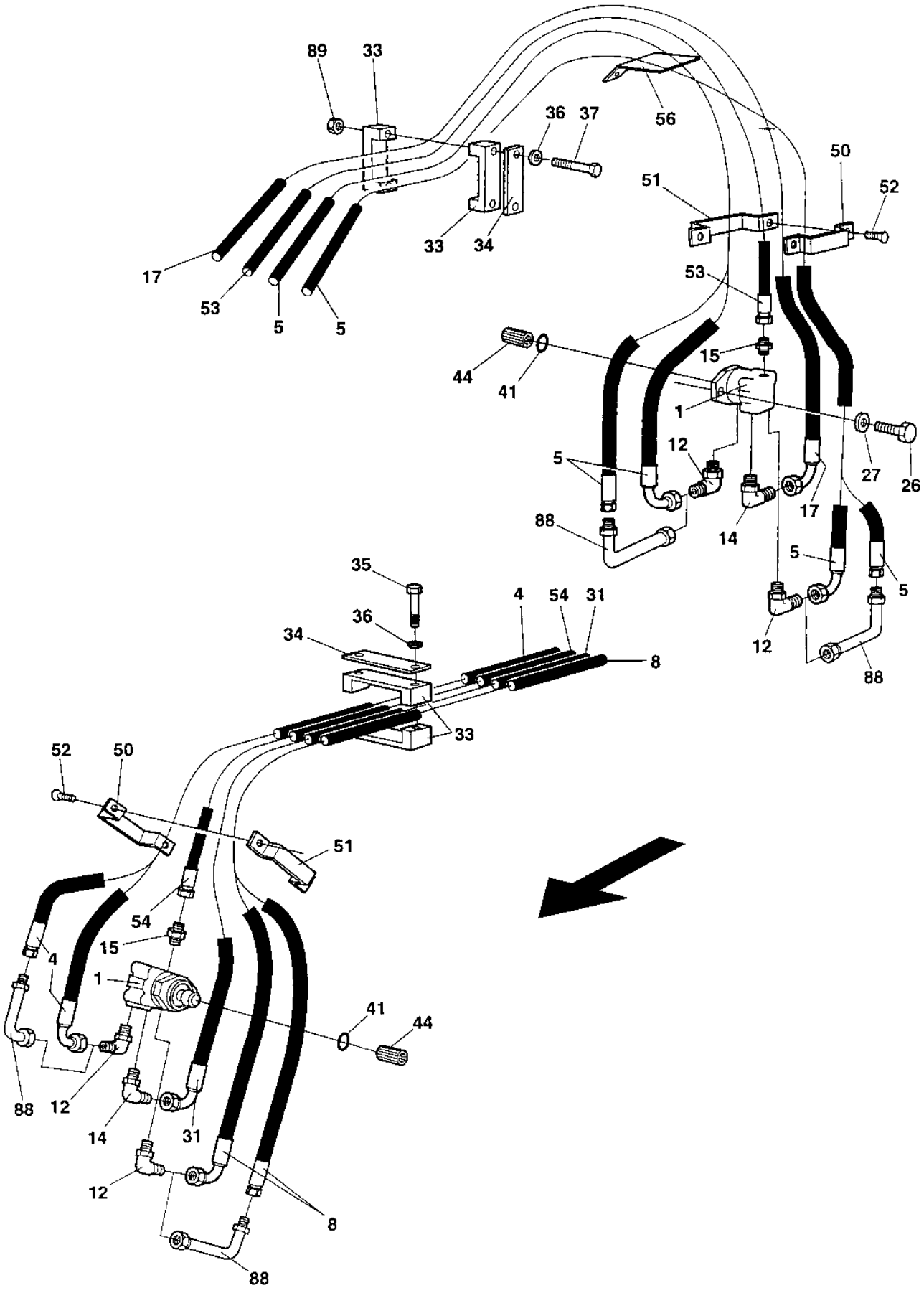
89
33
36
37
56
50
51
52
33
34
17
53
5
5
53
44
41
15
1
12
5
27
26
88
14
17
5
5
35
4
54
31
36
34
8
33
12
88
52
50
51
54
15
4
1
41
44
88
12
14
31
12
8
88

Ref. No.	Part No.	Rem.	Qty	Description	Code
1	359937		2	Hydraulic motor Vibration (Page 204)	C
4		1	1	Hydraulic hose	C
5		1	2	Hydraulic hose	C
8		1	1	Hydraulic hose	C
12	334118		4	Elbow adapter	
14	813444		2	Elbow 90, O-ring	
15	334121		2	Straight connector	
17		1	1	Hydraulic hose	
26	500046		4	Screw M12x30H 8,8 FZB	
27	904213		4	Washer 13x30x4	
31		1	1	Hydraulic hose	
33	343732		4	Hose clamp	
34	335914		2	Cover plate	
35	500192		2	Screw M10x80	
36	904230		4	Washer 10,5x22x2	
37	903524		2	Bolt	
41	160279		2	O-ring	
44	340862		2	Splined sleeve	
50	359627		2	Hose clamp	
51	359628		2	Hose clamp	
52	513014		4	Screw	
53		1	1	Hydraulic hose	
54		1	1	Hydraulic hose	
56	370641		1	Hose shields	
88	372682		4	Connector From 61710308	
89	570006		4	Nut M10	

1) See section " Vibration system, pump "

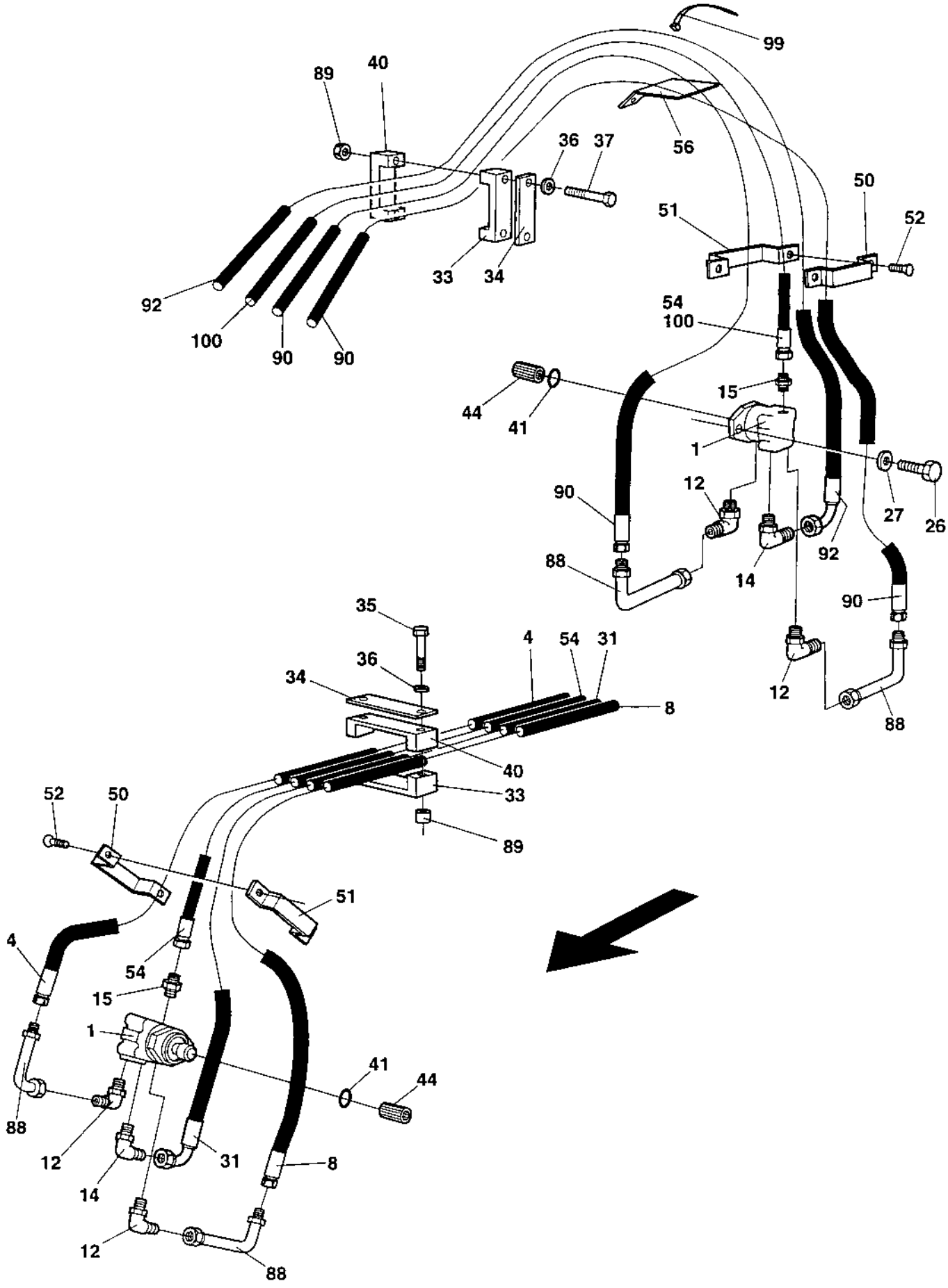
99
89
40
56
36
37
50
51
52
33
34
92
54
100
100
90
90
44
41
15
1
90
12
27
26
88
14
92
90
35
4
54
31
36
34
8
40
33
89
52
50
51
4
54
15
1
41
44
88
12
31
8
14
12
88

Ref. No.	Part No.	Rem.	Qty	Description	Code
1	359937		2	Hydraulic motor Vibration (Page 204)	C
4		1	1	Hydraulic hose	C
8		1	1	Hydraulic hose	C
12	334118		4	Elbow adapter	
14	813444		2	Elbow 90, O-ring	
15	334121		2	Straight connector	
26	500046		4	Screw M12x30H 8,8 FZB	
27	904213		4	Washer 13x30x4	
31		1	1	Hydraulic hose	
33	343732		2	Hose clamp	
34	335914		2	Cover plate	
35	904056		2	Stud	
36	904230		4	Washer 10,5x22x2	
37	903524		2	Bolt	
40	343872		2	Hose clamp	D
41	160279		2	O-ring	
44	340862		2	Splined sleeve	
50	359627		2	Hose clamp	
51	359628		2	Hose clamp	
52	513014		4	Screw	
54		1	1	Hydraulic hose	
56	370641		1	Hose shields	
88	372682		4	Connector	
89	570006		4	Nut M10	
90		1	2	Hydraulic hose	
92		1	1	Hydraulic hose	
99	313102		N	Cable ties	
100		1	1	Hydraulic hose	

1) See section " Vibration system, pump "

359937 Hydraulic motor Vibration

15817

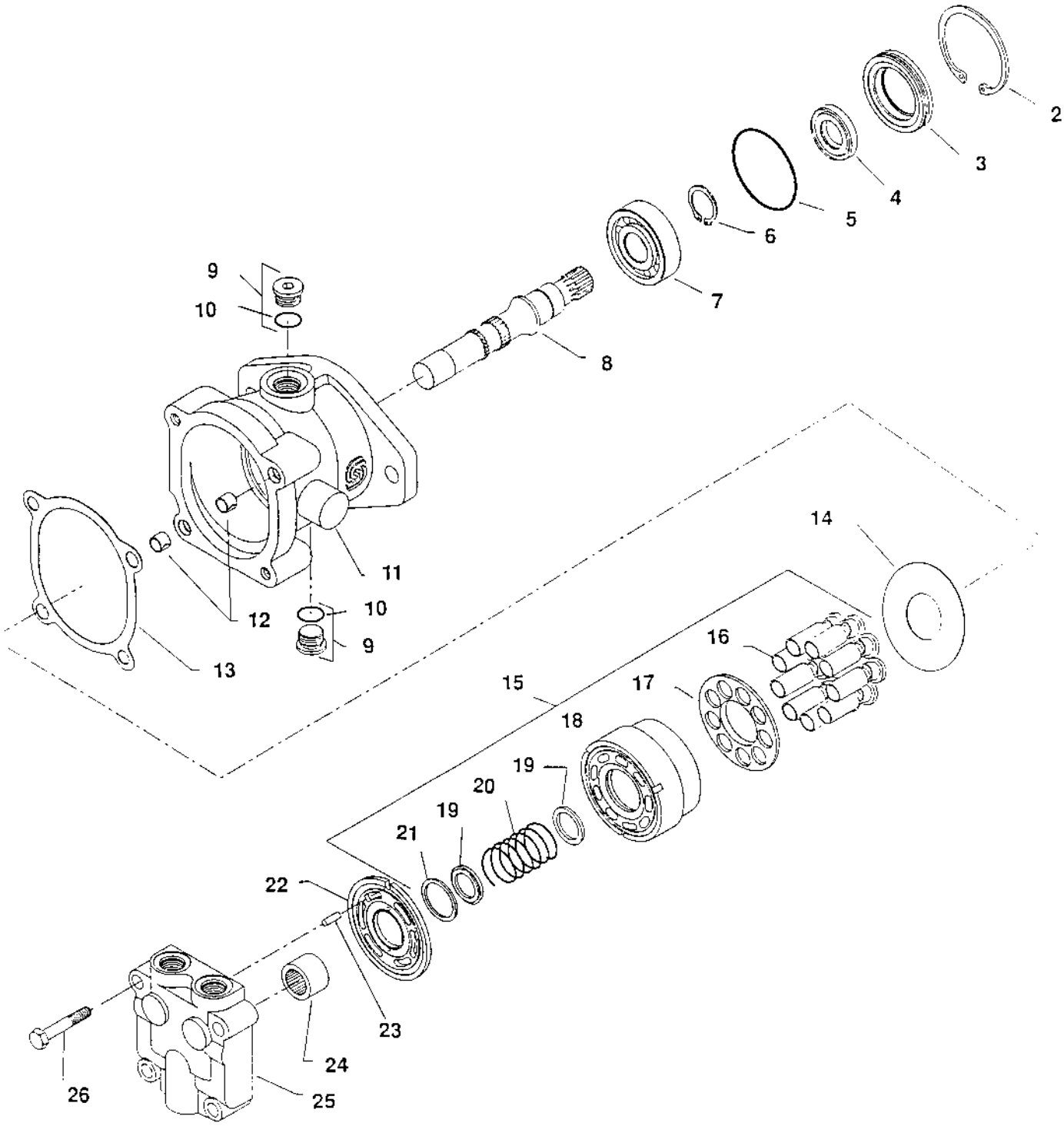

359937 Hydraulic motor Vibration

Ref. No.	Part No.	Rem.	Qty	Description	Code
1			1	Hydraulic motor, Cpl	
2	909356		1	.Retainer ring	D
3	909355		1	.Seal retainer	D
4	909335		1	.Seal	D
5	909354		1	.O-ring	D
6	909353		1	.Retainer ring	
7	909352		1	.Ball bearing	
8	909351		1	.Shaft	
9	909348		2	.Plug	
10	223467		1	..O-ring	
11	909358		1	.Housing	
12	909346		2	.Pin	
13	909343		1	.Gasket	
14	909336		1	.Thrust plate	
15	909337		1	.Cylinder block	
16			9	..Piston	
17			1	..Retainer	
18			1	..Cylinder block	
19	909338		2	..Washer	
20	909339		1	..Spring	
21	909340		1	..Retainer ring	
22	909350		1	.Valve plate	
23	909345		1	.Pin	
24	909344		1	.Needle roller bearing	
25	909357		1	.End cap	
26	909347		4	.Screw	

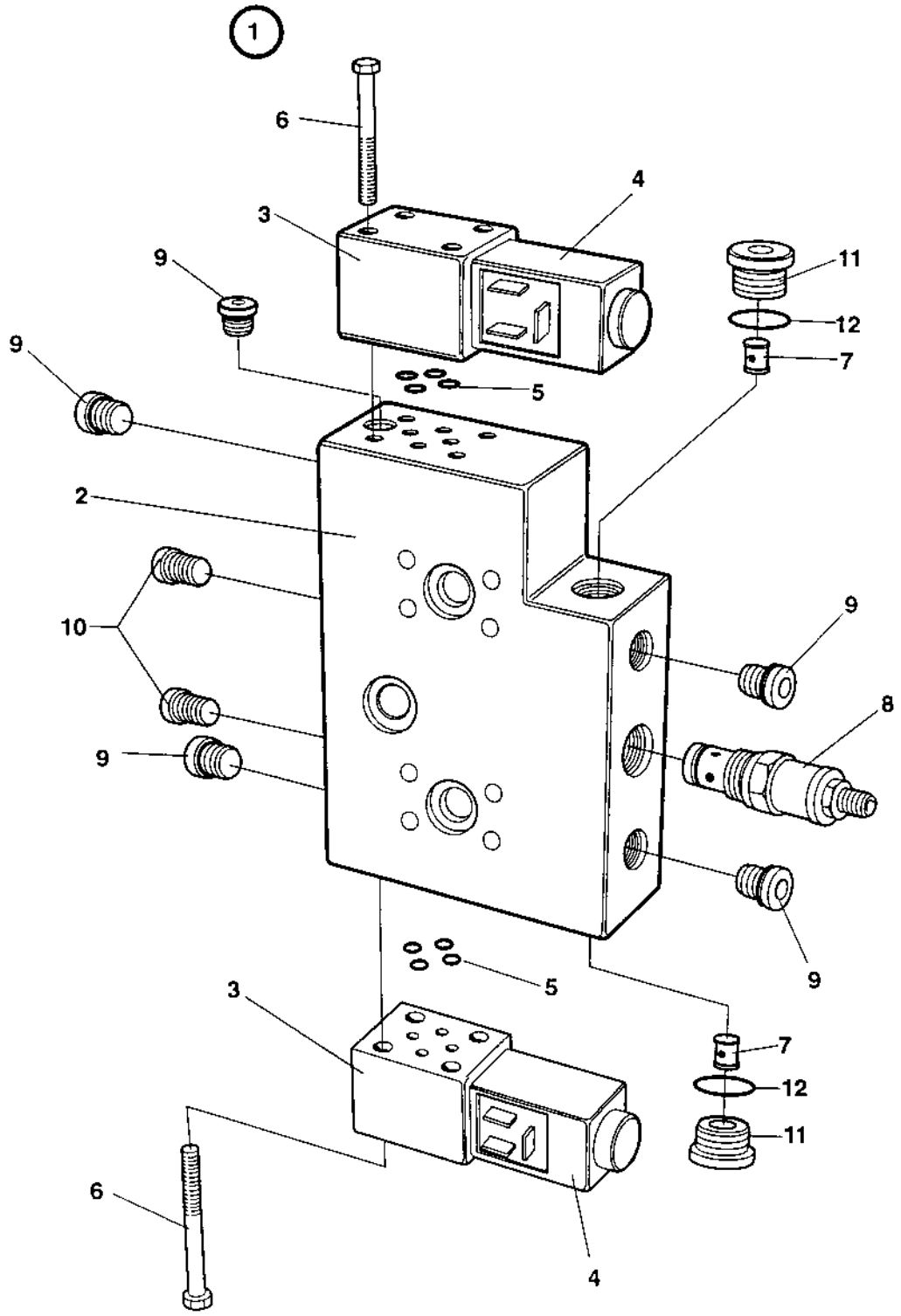
1
6
4
3
11
9
12
7
9
5
2
10
9
8
9
9
5
3
7
12
11
6
4

359140 Valve Vibration

Ref. No.	Part No.	Rem.	Qty	Description	Code
1			1	Valve, cpl Vibration	
2	909201		1	.Valve block	
3	909202		2	.Solenoid valve	
4	909203		1	..Solenoid	D
5	909208		8	.O-ring	D
6	909204		8	.Screw	
7	909205		2	.Check valve	D
8	909206		1	.Pressure relief valve	D
9	909207		5	.Plug with sealing	
10	902937		2	.Plug	
11	909217		2	.Plug	
12	909216		2	.O-ring	

359004 Oil cooler cpl

15713-1

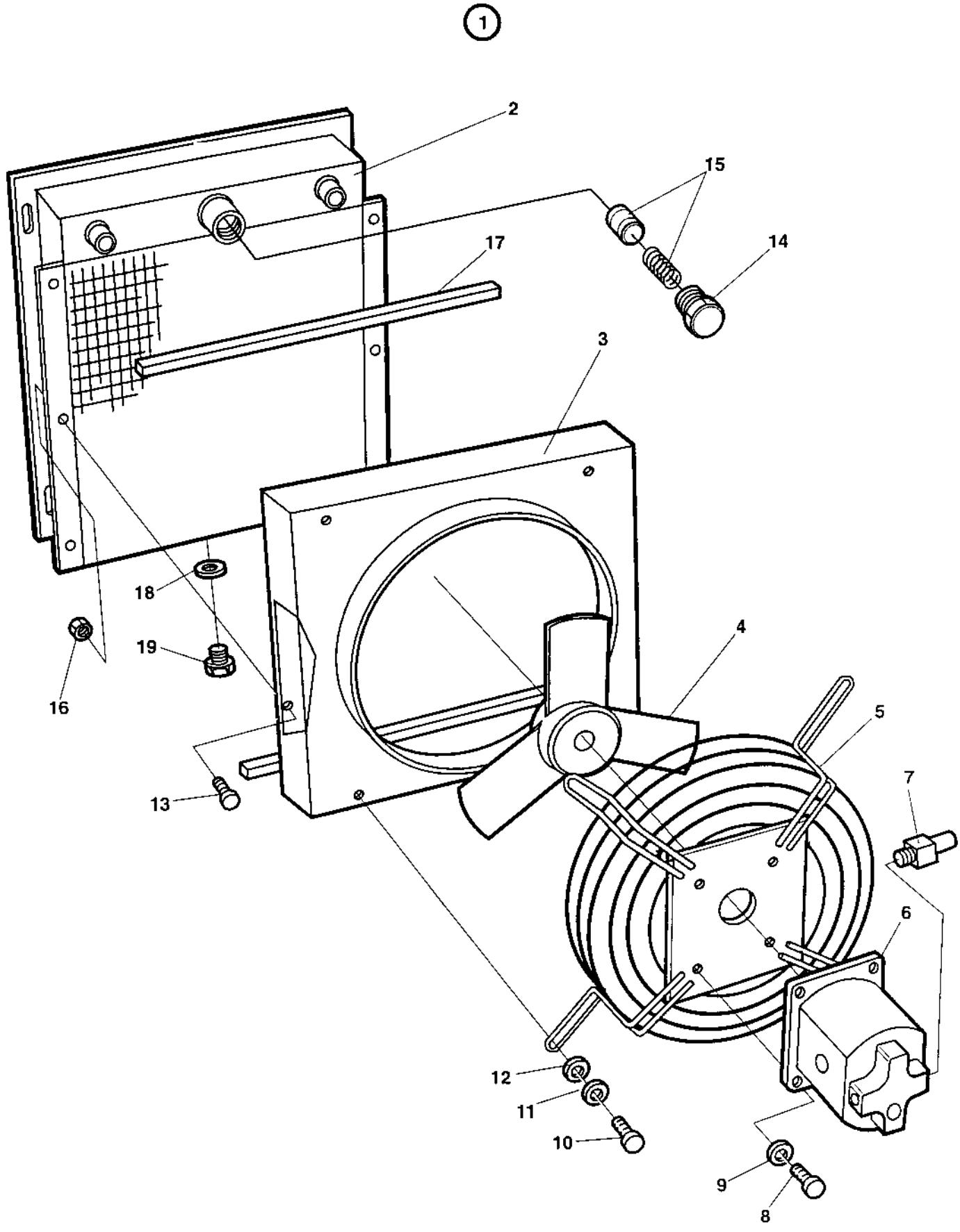

359004 Oil cooler cpl

Ref. No.	Part No.	Rem.	Qty	Description	Code
1			1	Oil cooler cpl	
2	359221		1	.Cooler	
3	359222		1	.Fan shroud	
4	359227		1	.Fan	
5	359223		1	.Grid	
6	359226		1	.Hydraulic motor	D
	902882		1	..Seal kit	D
	935783	A	1	..Key	D
7			1	..Valve	D
8			4	.Screw	D
9			4	.Washer	D
10			4	.Screw	D
11			4	.Washer	D
12			4	.Washer	D
13			6	.Screw	D
14	359225		1	.Plug	
15	359224	B	1	.Valve	
16			6	.Nut	
17			2	.Rubber seal	
18	162004		1	.Sealing	
19	332038		1	.Plug	

A) For fan to shaft
B) Incl. spring

359004 Oil cooler cpl

15713-1

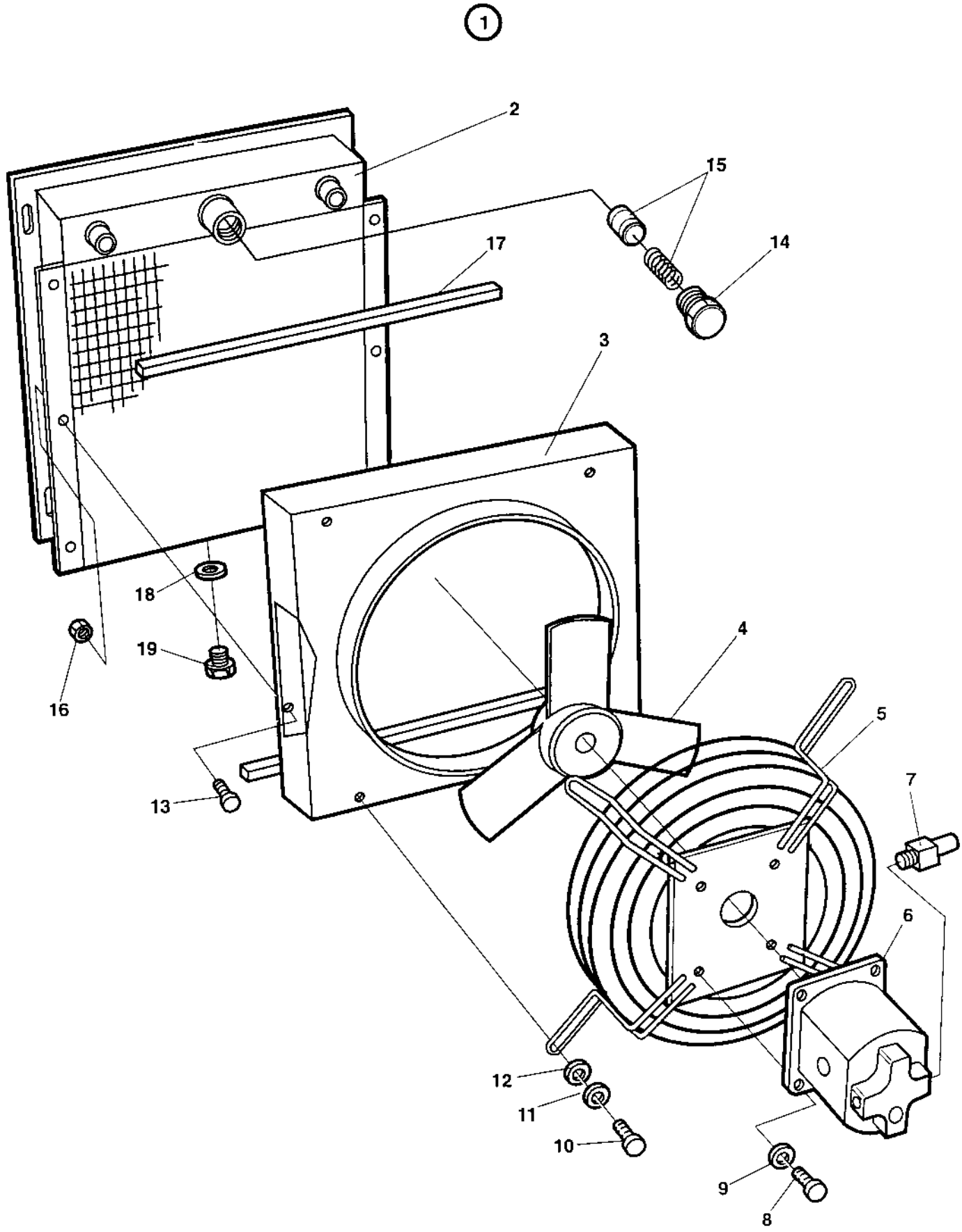

359004 Oil cooler cpl

Ref. No.	Part No.	Rem.	Qty	Description	Code
1			1	Oil cooler cpl	
2	359221		1	.Cooler	
3	359222		1	.Fan shroud	
4	359227		1	.Fan	
5	359223		1	.Grid	
6	359226		1	.Hydraulic motor	D
	902882		1	..Seal kit	D
	935783	A	1	..Key	D
7			1	..Valve	D
8			4	.Screw	D
9			4	.Washer	D
10			4	.Screw	D
11			4	.Washer	D
12			4	.Washer	D
13			6	.Screw	D
14	359225		1	.Plug	
15	359224	B	1	.Valve	
16			6	.Nut	
17			2	.Rubber seal	
18	162004		1	.Sealing	
19	332038		1	.Plug	

A) For fan to shaft
B) Incl. spring

359004 Oil cooler cpl

15713-1

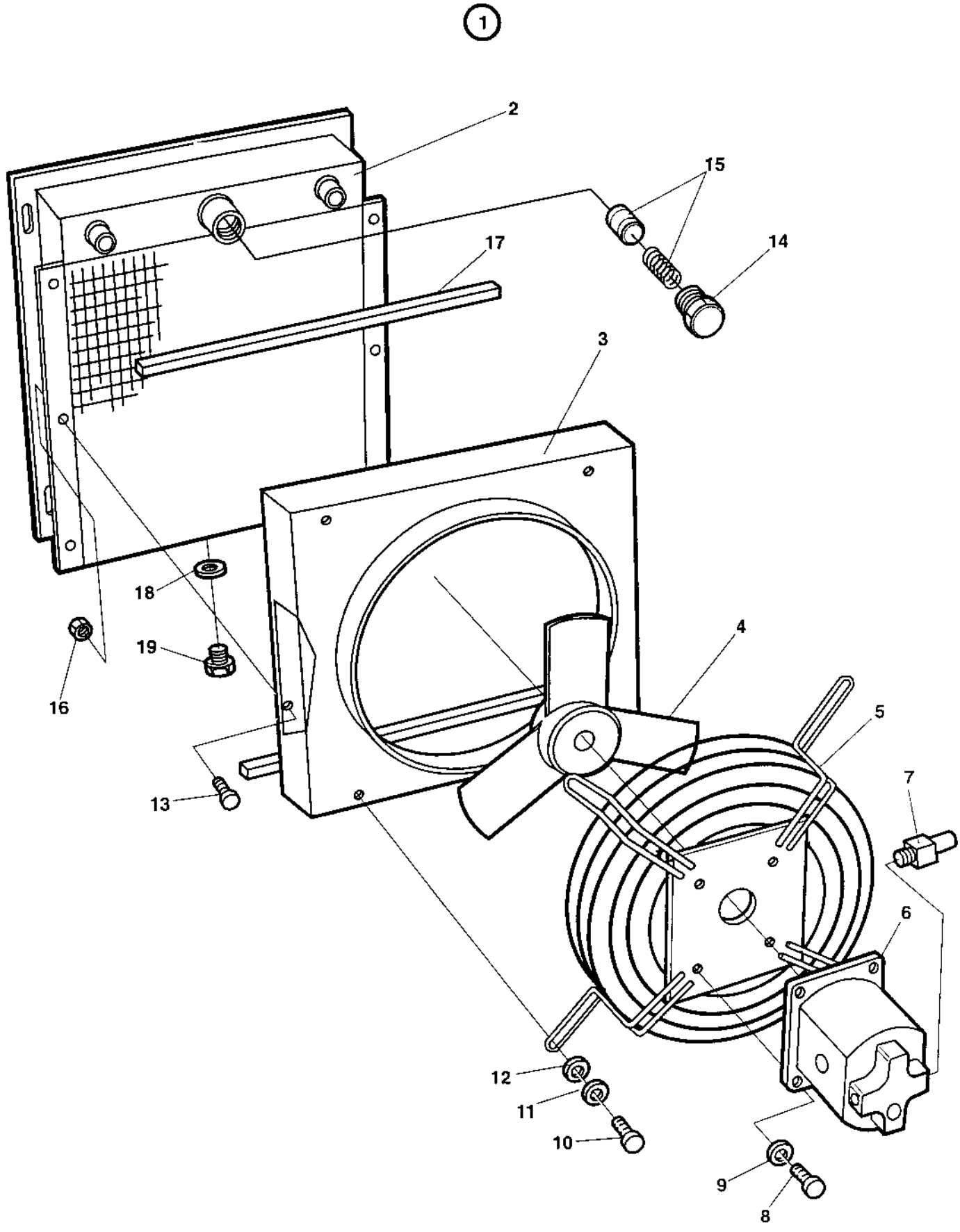

359004 Oil cooler cpl

Ref. No.	Part No.	Rem.	Qty	Description	Code
1			1	Oil cooler cpl	
2	359221		1	.Cooler	
3	359222		1	.Fan shroud	
4	359227		1	.Fan	
5	359223		1	.Grid	
6	359226		1	.Hydraulic motor	D
	902882		1	..Seal kit	D
	935783	A	1	..Key	D
7			1	..Valve	D
8			4	.Screw	D
9			4	.Washer	D
10			4	.Screw	D
11			4	.Washer	D
12			4	.Washer	D
13			6	.Screw	D
14	359225		1	.Plug	
15	359224	B	1	.Valve	
16			6	.Nut	
17			2	.Rubber seal	
18	162004		1	.Sealing	
19	332038		1	.Plug	

A) For fan to shaft
B) Incl. spring

359004 Oil cooler cpl

15713-1

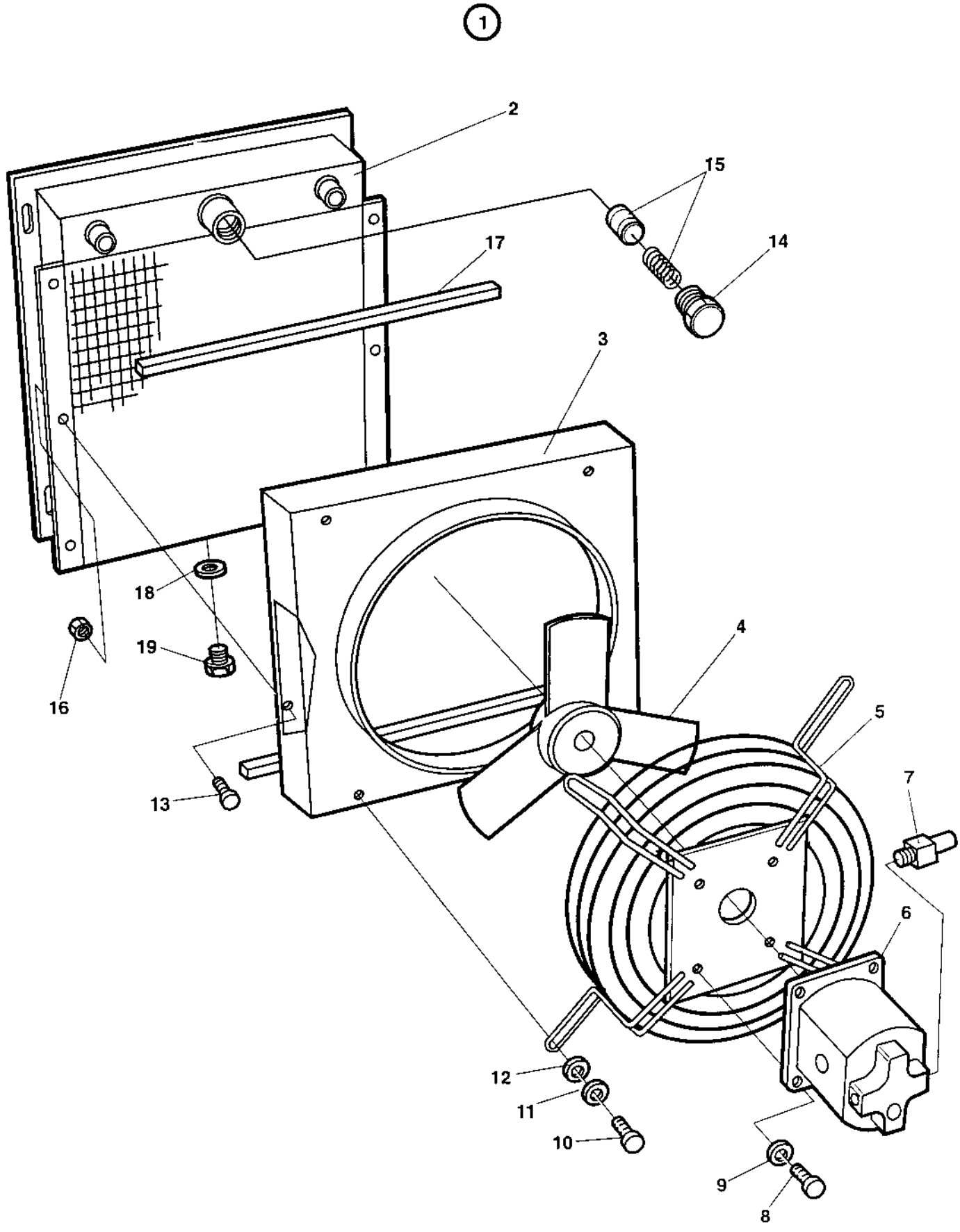

359004 Oil cooler cpl

Ref. No.	Part No.	Rem.	Qty	Description	Code
1			1	Oil cooler cpl	
2	359221		1	.Cooler	
3	359222		1	.Fan shroud	
4	359227		1	.Fan	
5	359223		1	.Grid	
6	359226		1	.Hydraulic motor	D
	902882		1	..Seal kit	D
	935783	A	1	..Key	D
7			1	..Valve	D
8			4	.Screw	D
9			4	.Washer	D
10			4	.Screw	D
11			4	.Washer	D
12			4	.Washer	D
13			6	.Screw	D
14	359225		1	.Plug	
15	359224	B	1	.Valve	
16			6	.Nut	
17			2	.Rubber seal	
18	162004		1	.Sealing	
19	332038		1	.Plug	

A) For fan to shaft
B) Incl. spring

359004 Oil cooler cpl

15713-1

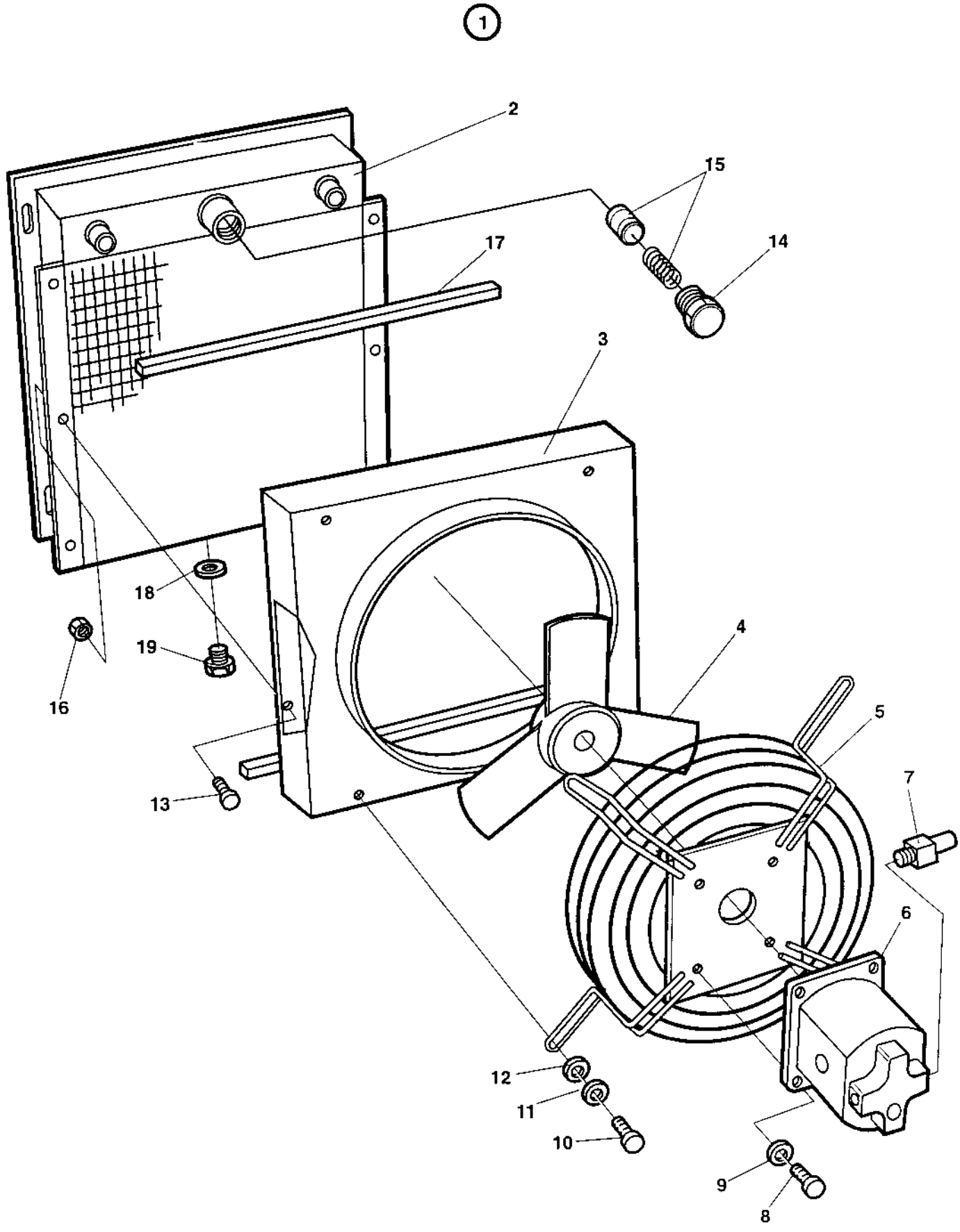

359004 Oil cooler cpl

Ref. No.	Part No.	Rem.	Qty	Description	Code
1			1	Oil cooler cpl	
2	359221		1	.Cooler	
3	359222		1	.Fan shroud	
4	359227		1	.Fan	
5	359223		1	.Grid	
6	359226		1	.Hydraulic motor	D
	902882		1	..Seal kit	D
	935783	A	1	..Key	D
7			1	..Valve	D
8			4	.Screw	D
9			4	.Washer	D
10			4	.Screw	D
11			4	.Washer	D
12			4	.Washer	D
13			6	.Screw	D
14	359225		1	.Plug	
15	359224	B	1	.Valve	
16			6	.Nut	
17			2	.Rubber seal	
18	162004		1	.Sealing	
19	332038		1	.Plug	

A) For fan to shaft
B) Incl. spring

359004 Oil cooler cpl

15713-1

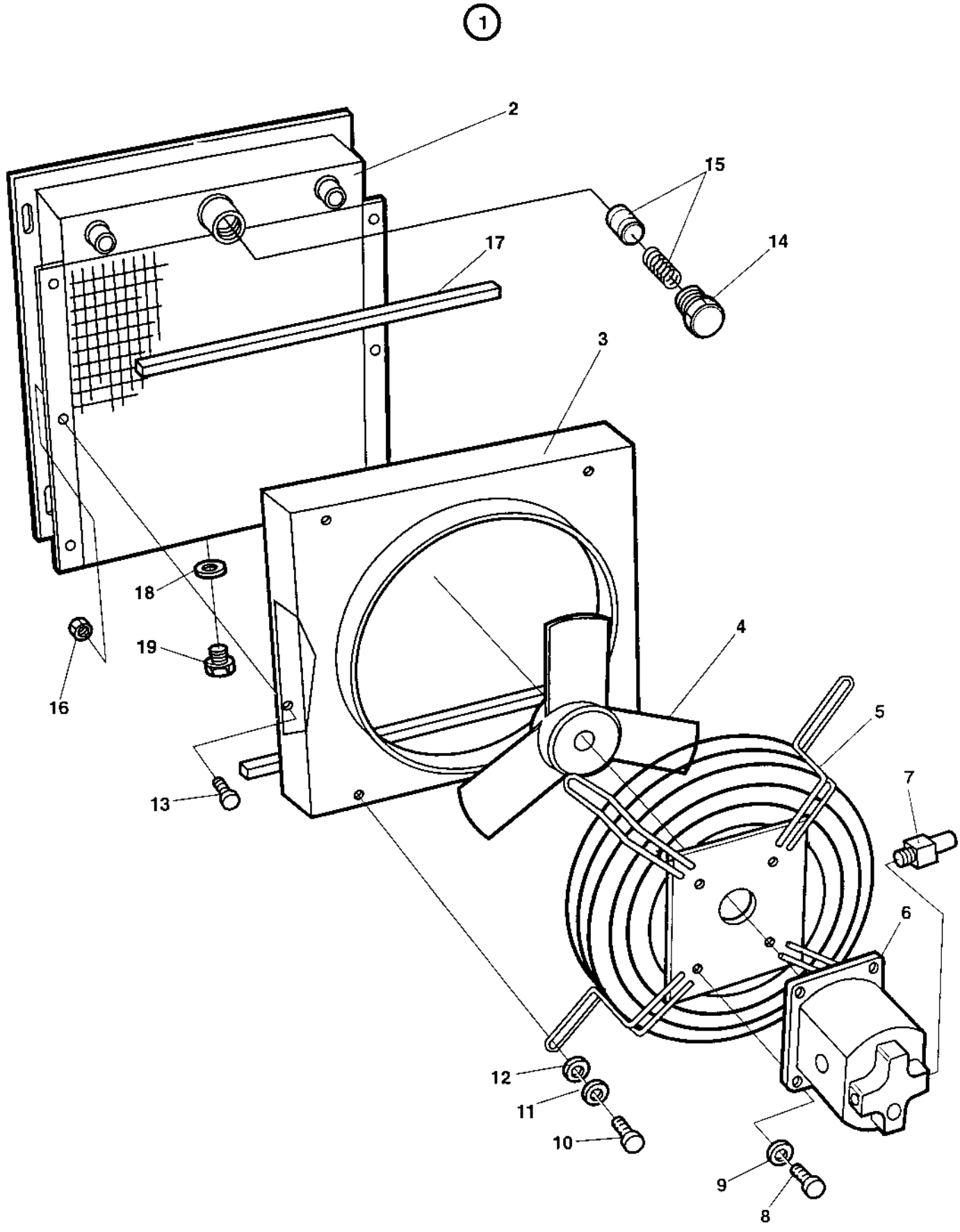

359004 Oil cooler cpl

Ref. No.	Part No.	Rem.	Qty	Description	Code
1			1	Oil cooler cpl	
2	359221		1	.Cooler	
3	359222		1	.Fan shroud	
4	359227		1	.Fan	
5	359223		1	.Grid	
6	359226		1	.Hydraulic motor	D
	902882		1	..Seal kit	D
	935783	A	1	..Key	D
7			1	..Valve	D
8			4	.Screw	D
9			4	.Washer	D
10			4	.Screw	D
11			4	.Washer	D
12			4	.Washer	D
13			6	.Screw	D
14	359225		1	.Plug	
15	359224	B	1	.Valve	
16			6	.Nut	
17			2	.Rubber seal	
18	162004		1	.Sealing	
19	332038		1	.Plug	

A) For fan to shaft
B) Incl. spring

359004 Oil cooler cpl

15713-1

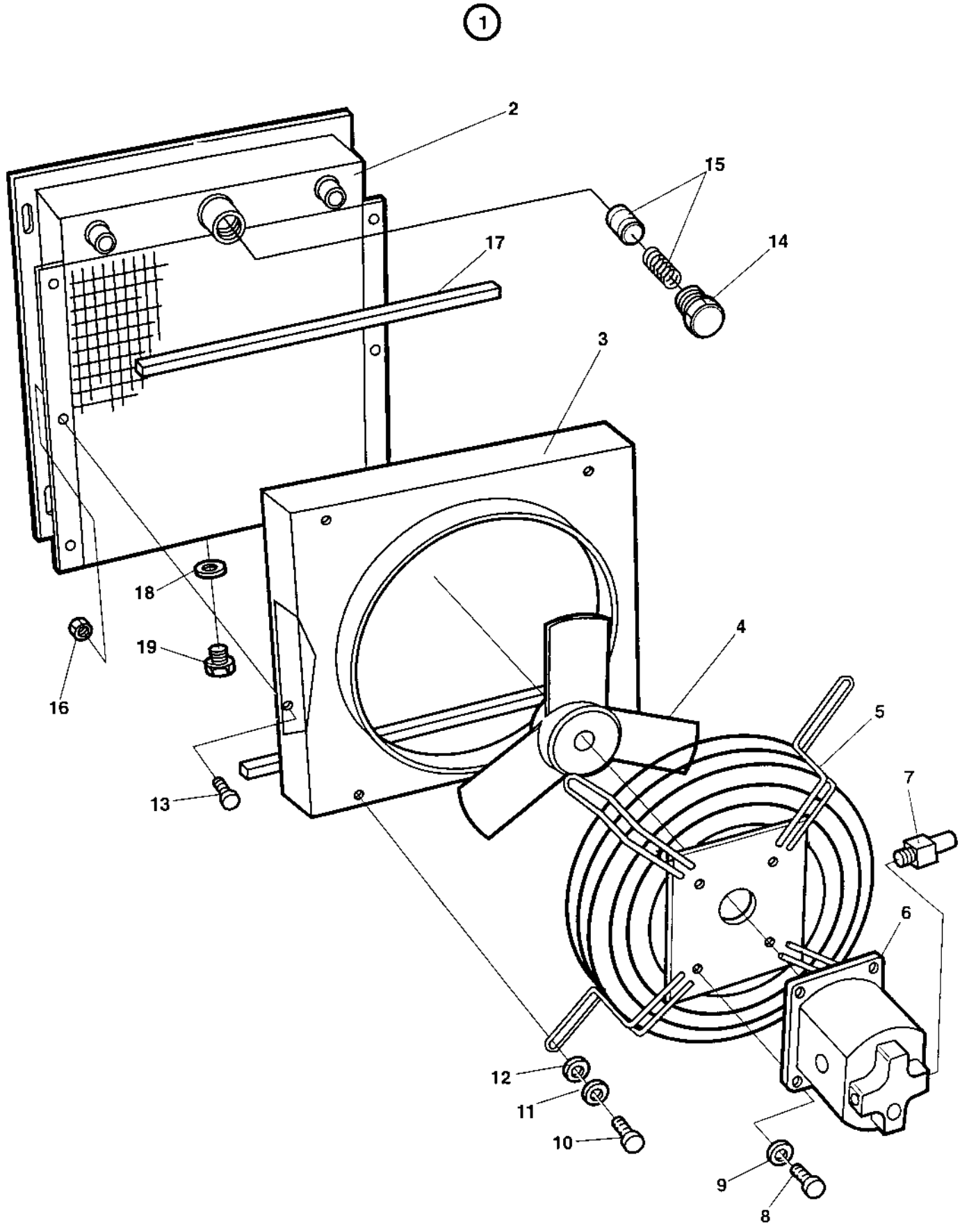

359004 Oil cooler cpl

Ref. No.	Part No.	Rem.	Qty	Description	Code
1			1	Oil cooler cpl	
2	359221		1	.Cooler	
3	359222		1	.Fan shroud	
4	359227		1	.Fan	
5	359223		1	.Grid	
6	359226		1	.Hydraulic motor	D
	902882		1	..Seal kit	D
	935783	A	1	..Key	D
7			1	..Valve	D
8			4	.Screw	D
9			4	.Washer	D
10			4	.Screw	D
11			4	.Washer	D
12			4	.Washer	D
13			6	.Screw	D
14	359225		1	.Plug	
15	359224	B	1	.Valve	
16			6	.Nut	
17			2	.Rubber seal	
18	162004		1	.Sealing	
19	332038		1	.Plug	

A) For fan to shaft
B) Incl. spring

359004 Oil cooler cpl

15713-1

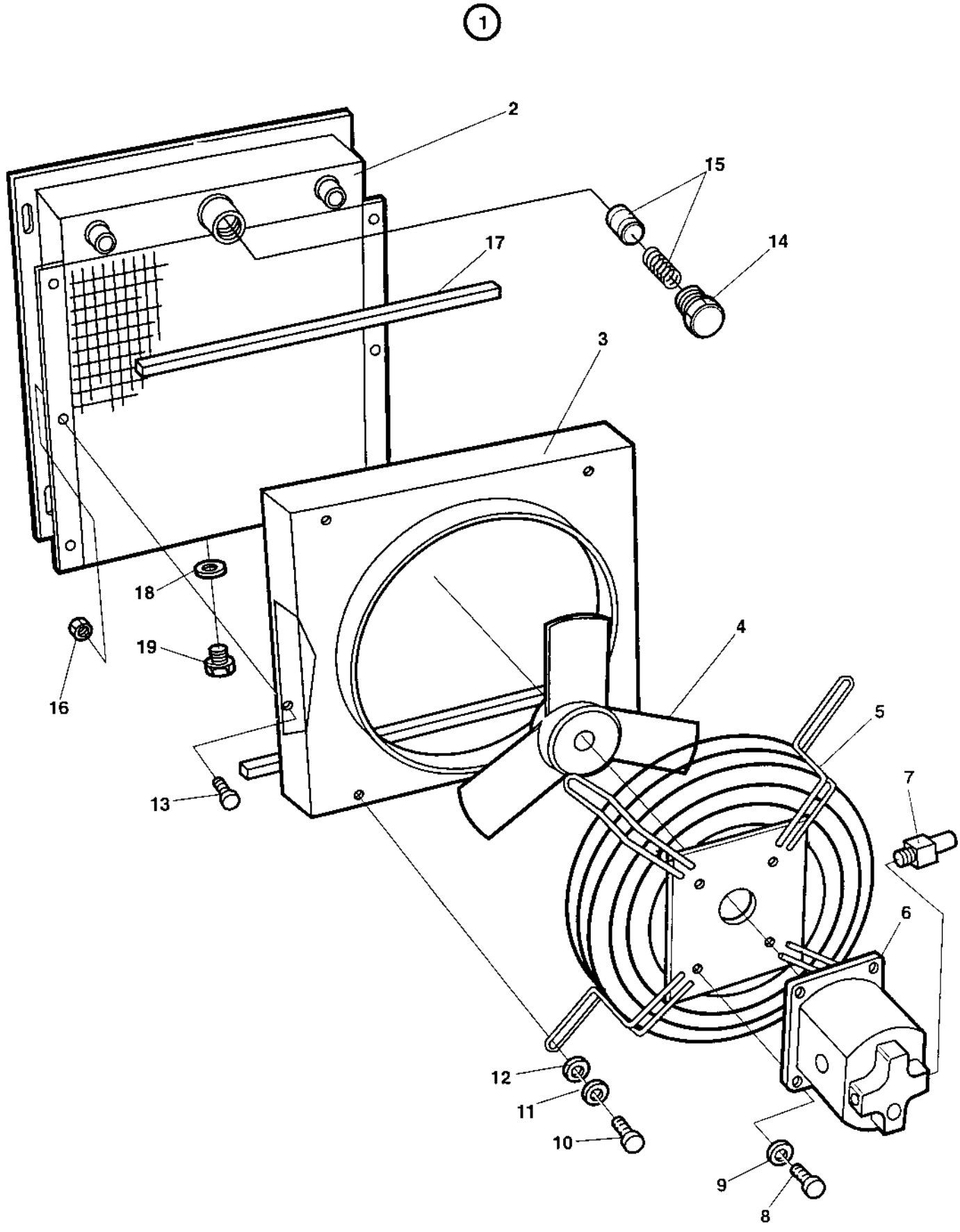

359004 Oil cooler cpl

Ref. No.	Part No.	Rem.	Qty	Description	Code
1			1	Oil cooler cpl	
2	359221		1	.Cooler	
3	359222		1	.Fan shroud	
4	359227		1	.Fan	
5	359223		1	.Grid	
6	359226		1	.Hydraulic motor	D
	902882		1	..Seal kit	D
	935783	A	1	..Key	D
7			1	..Valve	D
8			4	.Screw	D
9			4	.Washer	D
10			4	.Screw	D
11			4	.Washer	D
12			4	.Washer	D
13			6	.Screw	D
14	359225		1	.Plug	
15	359224	B	1	.Valve	
16			6	.Nut	
17			2	.Rubber seal	
18	162004		1	.Sealing	
19	332038		1	.Plug	

A) For fan to shaft
B) Incl. spring

359004 Oil cooler cpl

15713-1

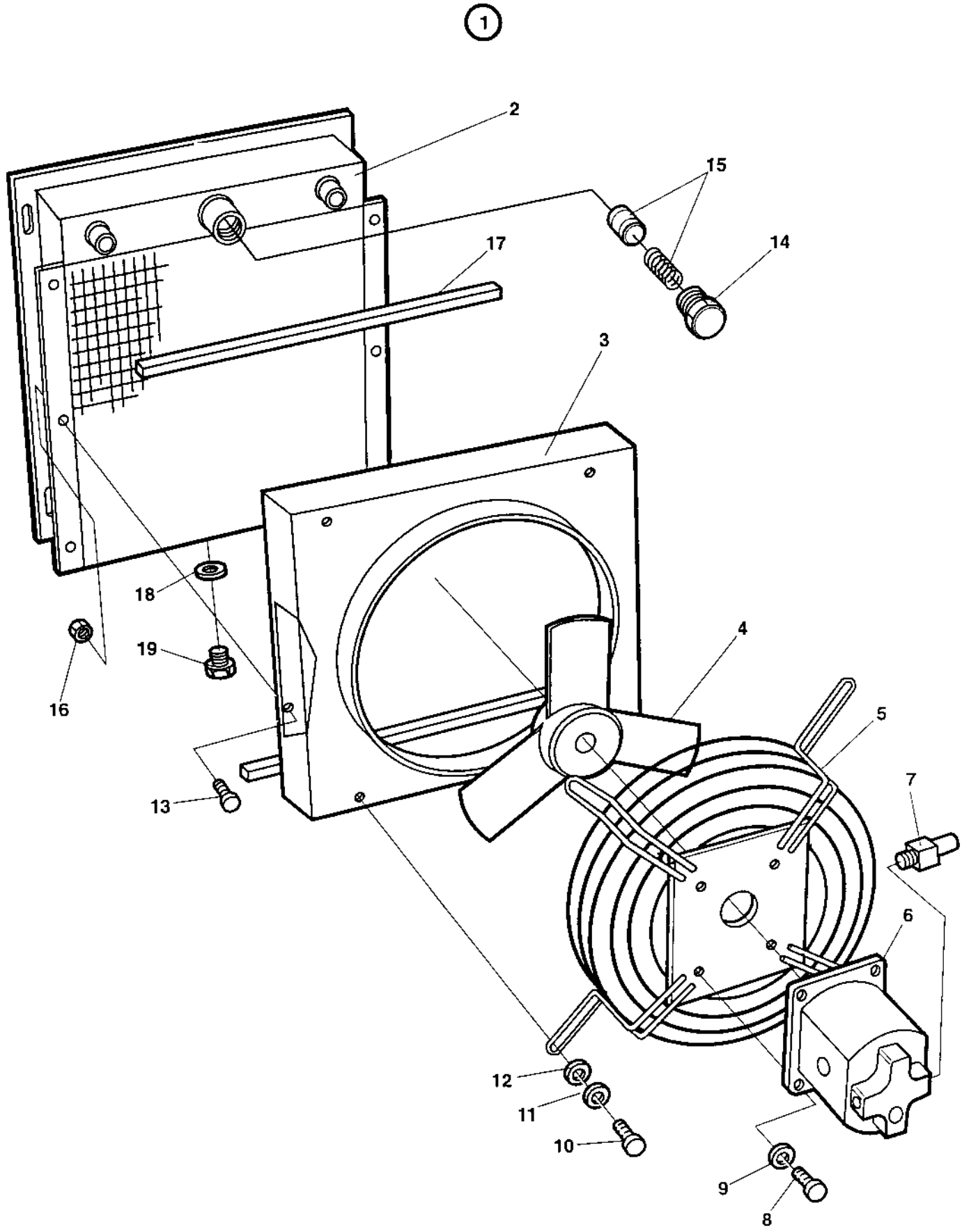

359004 Oil cooler cpl

Ref. No.	Part No.	Rem.	Qty	Description	Code
1			1	Oil cooler cpl	
2	359221		1	.Cooler	
3	359222		1	.Fan shroud	
4	359227		1	.Fan	
5	359223		1	.Grid	
6	359226		1	.Hydraulic motor	D
	902882		1	..Seal kit	D
	935783	A	1	..Key	D
7			1	..Valve	D
8			4	.Screw	D
9			4	.Washer	D
10			4	.Screw	D
11			4	.Washer	D
12			4	.Washer	D
13			6	.Screw	D
14	359225		1	.Plug	
15	359224	B	1	.Valve	
16			6	.Nut	
17			2	.Rubber seal	
18	162004		1	.Sealing	
19	332038		1	.Plug	

A) For fan to shaft
B) Incl. spring

374494 Oil cooler cpl

16055

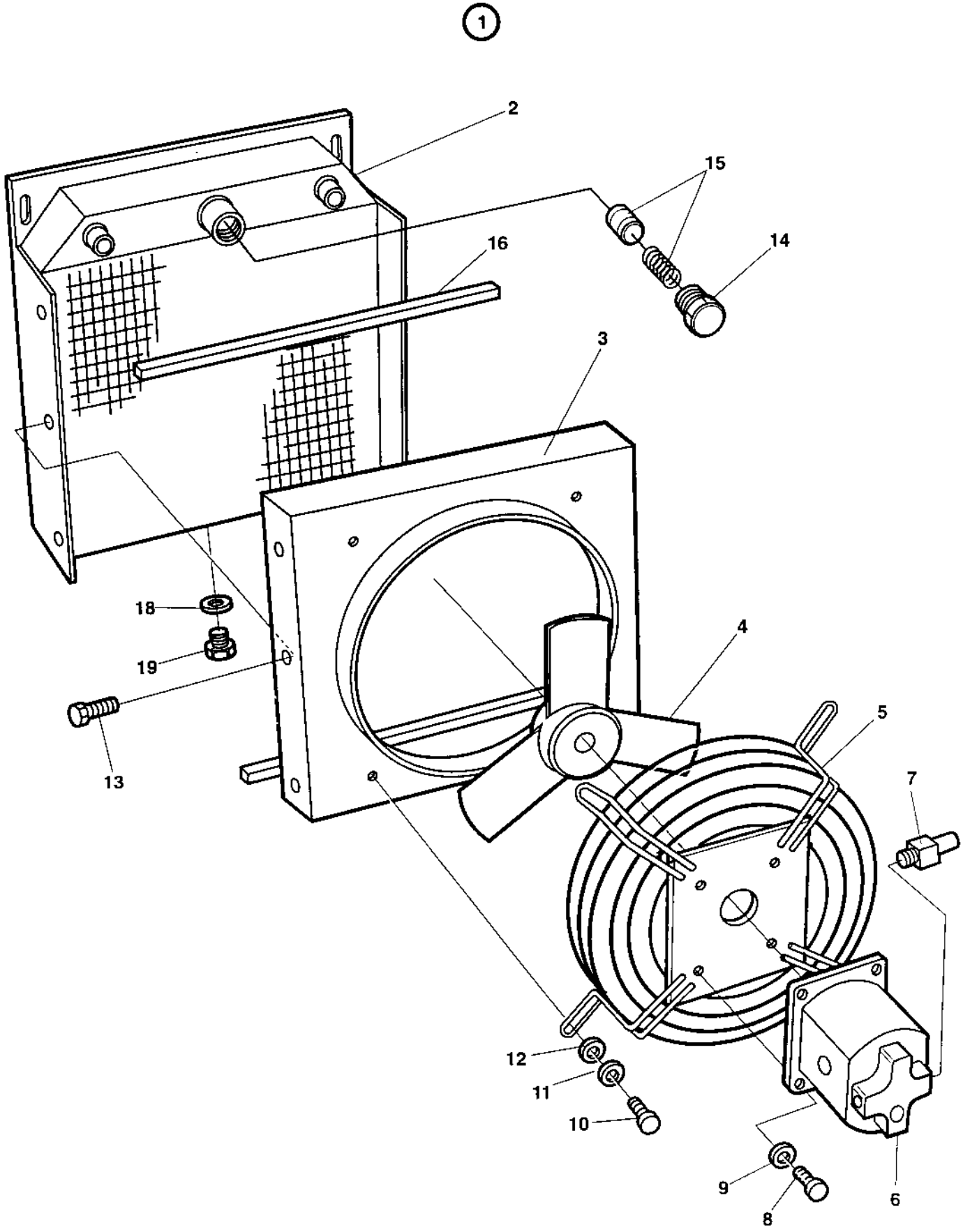

374494 Oil cooler cpl

Ref. No.	Part No.	Rem.	Qty	Description	Code
1			1	Oil cooler cpl	
2	935780		1	.Oil cooler	
3	935782		1	.Fan shroud	
4	935781		1	.Fan	
5	359223		1	.Grid	
6	359226		1	.Hydraulic motor	D
	902882		1	..Seal kit	D
	935783		1	..Key	D
7			1	..Valve	D
8			4	.Screw	D
9			4	.Washer	D
10			4	.Screw	D
11			4	.Washer	D
12			4	.Washer	D
13			6	.Screw	D
14	359225		1	.Plug	
15	359224		1	.Valve	
16			1	.Rubber seal	
18	160024		1	.O-ring	
19	332038		1	.Plug	

374494 Oil cooler cpl

16055

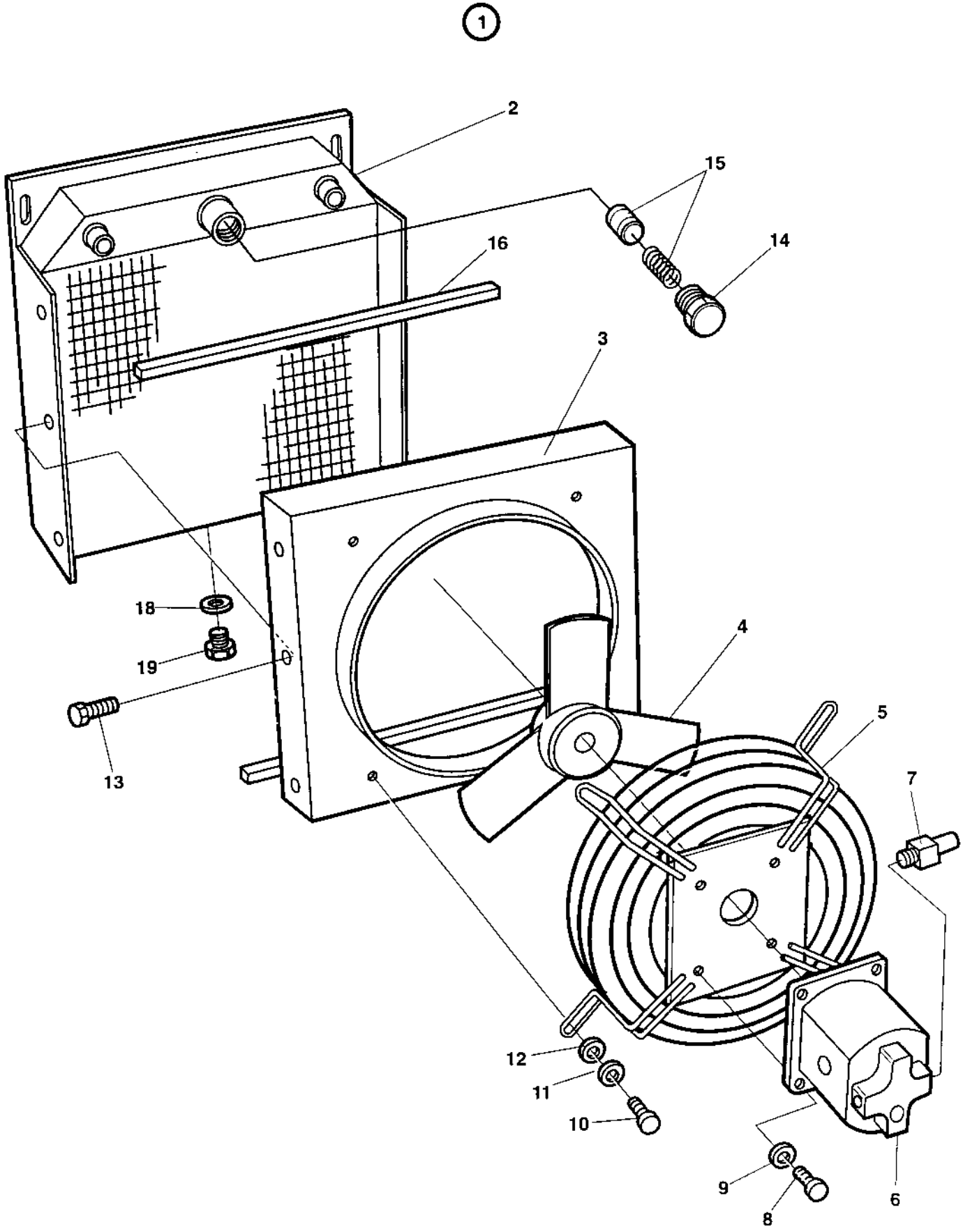

374494 Oil cooler cpl

Ref. No.	Part No.	Rem.	Qty	Description	Code
1			1	Oil cooler cpl	
2	935780		1	.Oil cooler	
3	935782		1	.Fan shroud	
4	935781		1	.Fan	
5	359223		1	.Grid	
6	359226		1	.Hydraulic motor	D
	902882		1	..Seal kit	D
	935783		1	..Key	D
7			1	..Valve	D
8			4	.Screw	D
9			4	.Washer	D
10			4	.Screw	D
11			4	.Washer	D
12			4	.Washer	D
13			6	.Screw	D
14	359225		1	.Plug	
15	359224		1	.Valve	
16			1	.Rubber seal	
18	160024		1	.O-ring	
19	332038		1	.Plug	

374494 Oil cooler cpl

16055

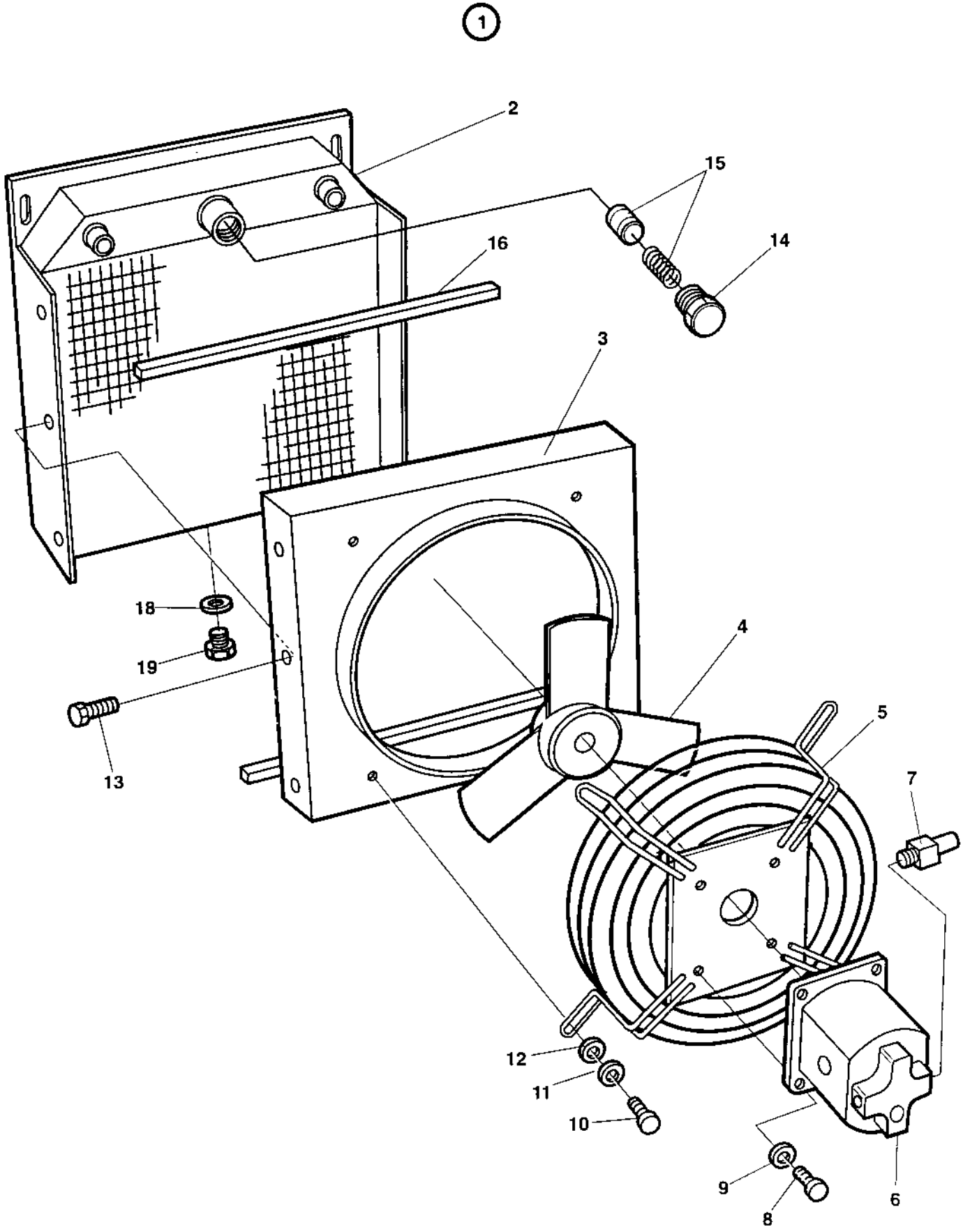

374494 Oil cooler cpl

Ref. No.	Part No.	Rem.	Qty	Description	Code
1			1	Oil cooler cpl	
2	935780		1	.Oil cooler	
3	935782		1	.Fan shroud	
4	935781		1	.Fan	
5	359223		1	.Grid	
6	359226		1	.Hydraulic motor	D
	902882		1	..Seal kit	D
	935783		1	..Key	D
7			1	..Valve	D
8			4	.Screw	D
9			4	.Washer	D
10			4	.Screw	D
11			4	.Washer	D
12			4	.Washer	D
13			6	.Screw	D
14	359225		1	.Plug	
15	359224		1	.Valve	
16			1	.Rubber seal	
18	160024		1	.O-ring	
19	332038		1	.Plug	

374494 Oil cooler cpl

16055

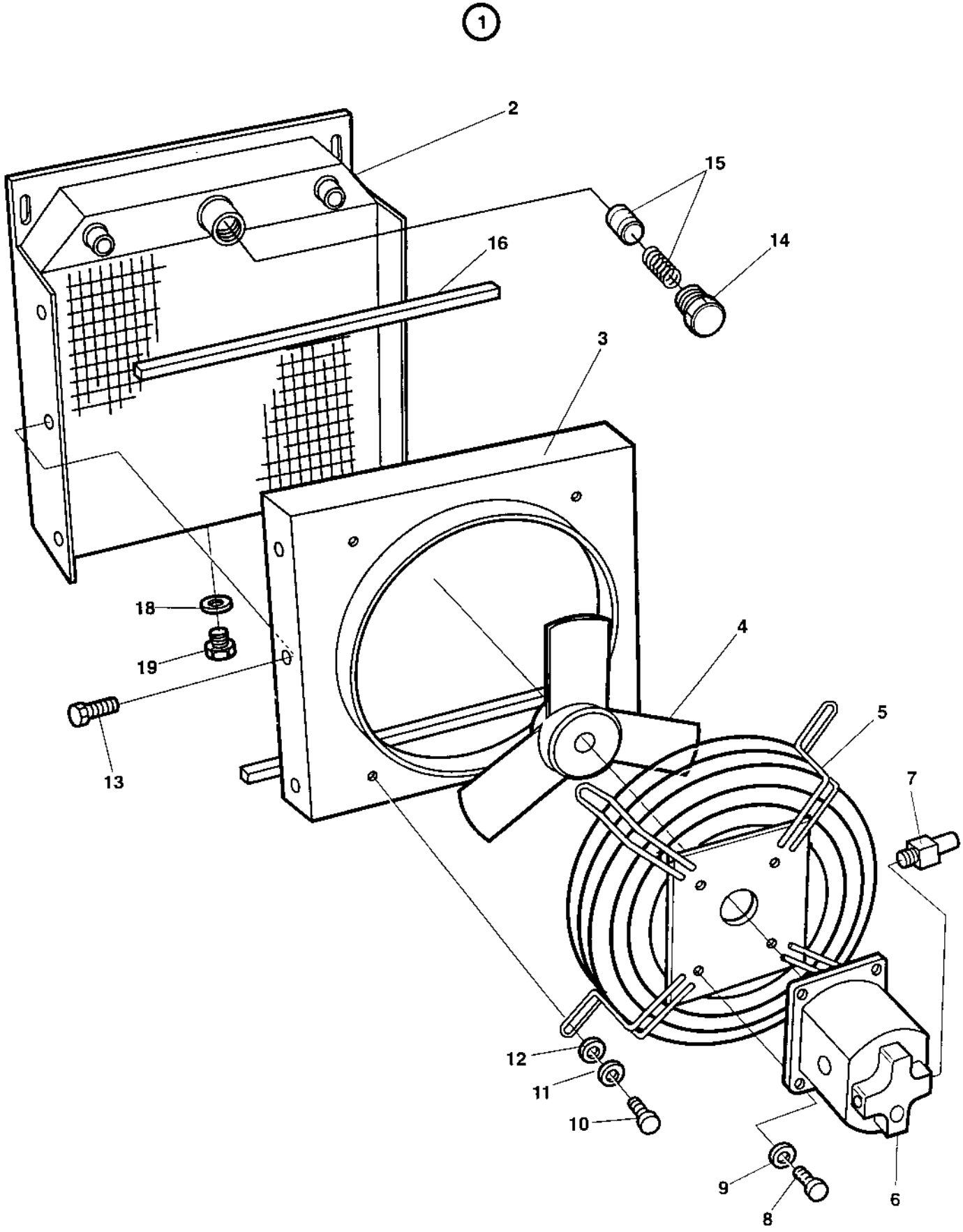

374494 Oil cooler cpl

Ref. No.	Part No.	Rem.	Qty	Description	Code
1			1	Oil cooler cpl	
2	935780		1	.Oil cooler	
3	935782		1	.Fan shroud	
4	935781		1	.Fan	
5	359223		1	.Grid	
6	359226		1	.Hydraulic motor	D
	902882		1	..Seal kit	D
	935783		1	..Key	D
7			1	..Valve	D
8			4	.Screw	D
9			4	.Washer	D
10			4	.Screw	D
11			4	.Washer	D
12			4	.Washer	D
13			6	.Screw	D
14	359225		1	.Plug	
15	359224		1	.Valve	
16			1	.Rubber seal	
18	160024		1	.O-ring	
19	332038		1	.Plug	

374494 Oil cooler cpl

16055

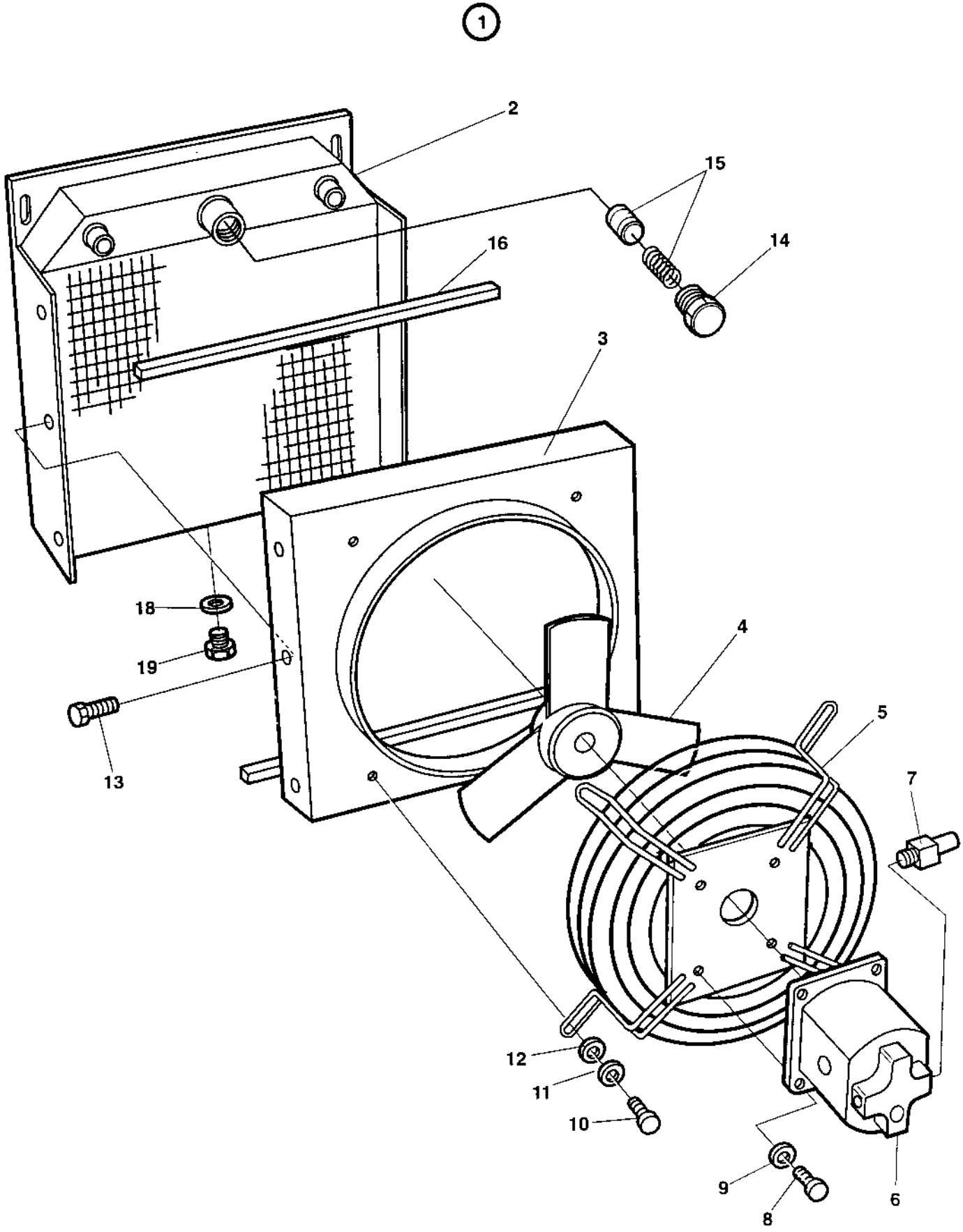

374494 Oil cooler cpl

Ref. No.	Part No.	Rem.	Qty	Description	Code
1			1	Oil cooler cpl	
2	935780		1	.Oil cooler	
3	935782		1	.Fan shroud	
4	935781		1	.Fan	
5	359223		1	.Grid	
6	359226		1	.Hydraulic motor	D
	902882		1	..Seal kit	D
	935783		1	..Key	D
7			1	..Valve	D
8			4	.Screw	D
9			4	.Washer	D
10			4	.Screw	D
11			4	.Washer	D
12			4	.Washer	D
13			6	.Screw	D
14	359225		1	.Plug	
15	359224		1	.Valve	
16			1	.Rubber seal	
18	160024		1	.O-ring	
19	332038		1	.Plug	

374494 Oil cooler cpl

16055

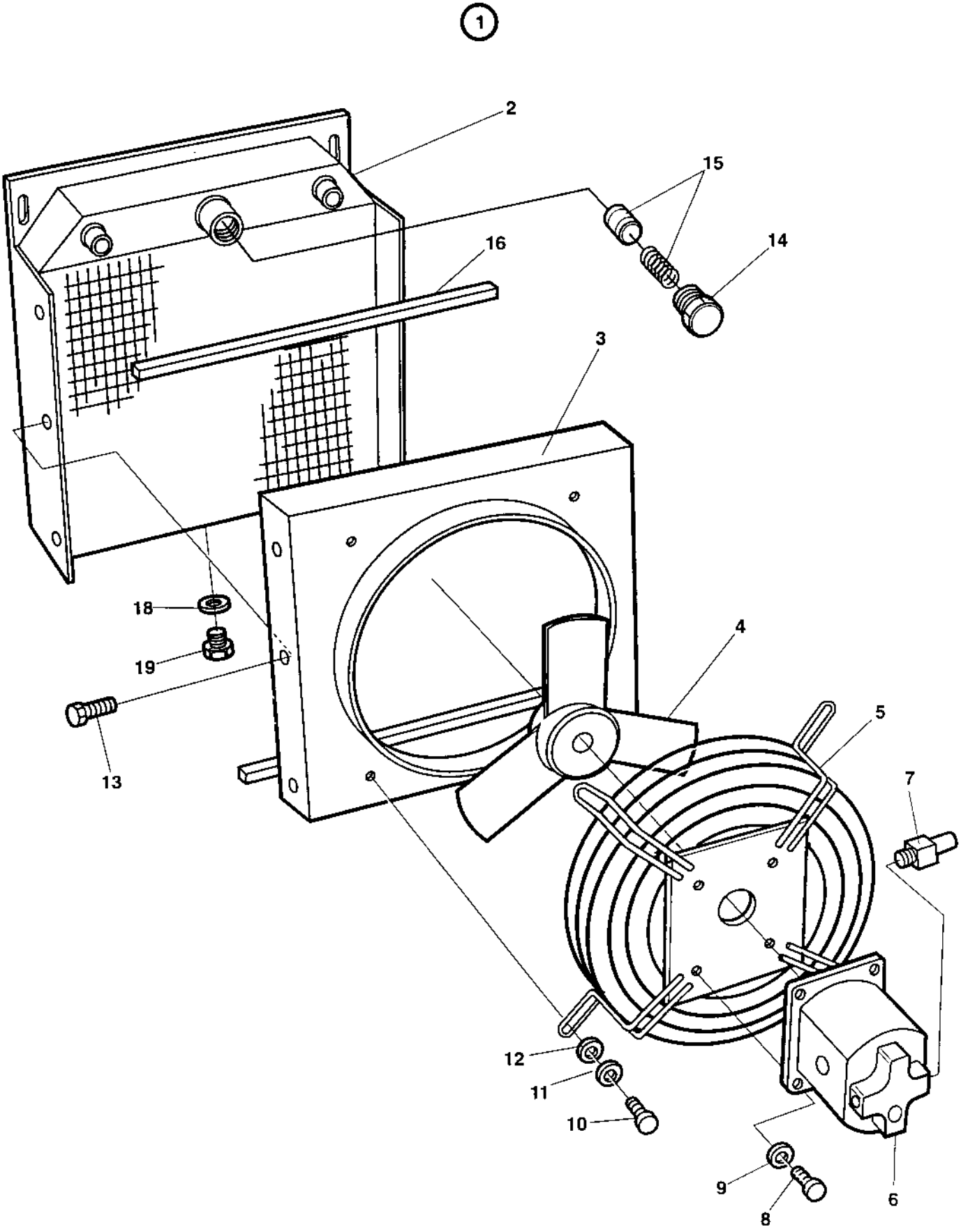

374494 Oil cooler cpl

Ref. No.	Part No.	Rem.	Qty	Description	Code
1			1	Oil cooler cpl	
2	935780		1	.Oil cooler	
3	935782		1	.Fan shroud	
4	935781		1	.Fan	
5	359223		1	.Grid	
6	359226		1	.Hydraulic motor	D
	902882		1	..Seal kit	D
	935783		1	..Key	D
7			1	..Valve	D
8			4	.Screw	D
9			4	.Washer	D
10			4	.Screw	D
11			4	.Washer	D
12			4	.Washer	D
13			6	.Screw	D
14	359225		1	.Plug	
15	359224		1	.Valve	
16			1	.Rubber seal	
18	160024		1	.O-ring	
19	332038		1	.Plug	

374494 Oil cooler cpl

16055

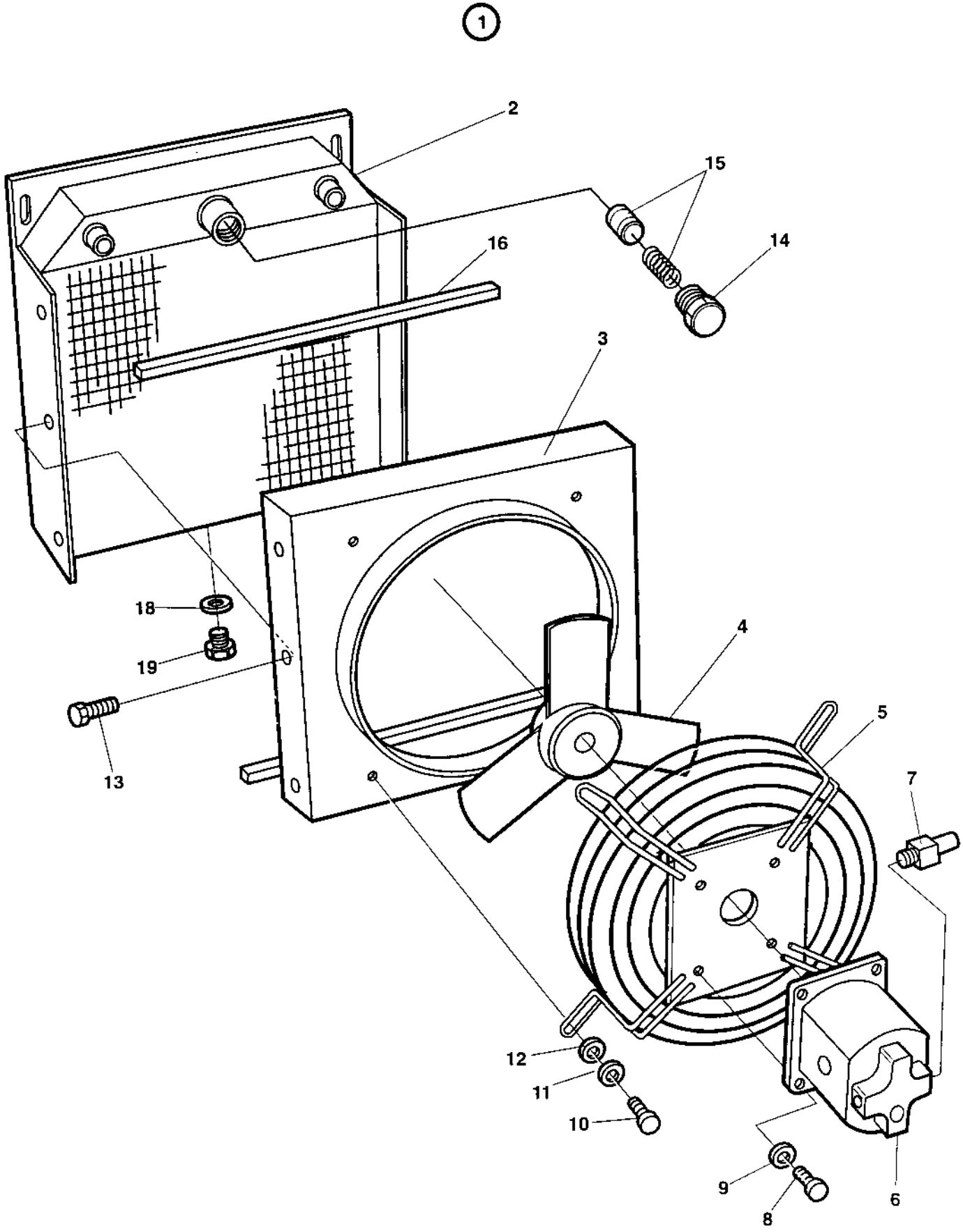

374494 Oil cooler cpl

Ref. No.	Part No.	Rem.	Qty	Description	Code
1			1	Oil cooler cpl	
2	935780		1	.Oil cooler	
3	935782		1	.Fan shroud	
4	935781		1	.Fan	
5	359223		1	.Grid	
6	359226		1	.Hydraulic motor	D
	902882		1	..Seal kit	D
	935783		1	..Key	D
7			1	..Valve	D
8			4	.Screw	D
9			4	.Washer	D
10			4	.Screw	D
11			4	.Washer	D
12			4	.Washer	D
13			6	.Screw	D
14	359225		1	.Plug	
15	359224		1	.Valve	
16			1	.Rubber seal	
18	160024		1	.O-ring	
19	332038		1	.Plug	

374494 Oil cooler cpl

16055

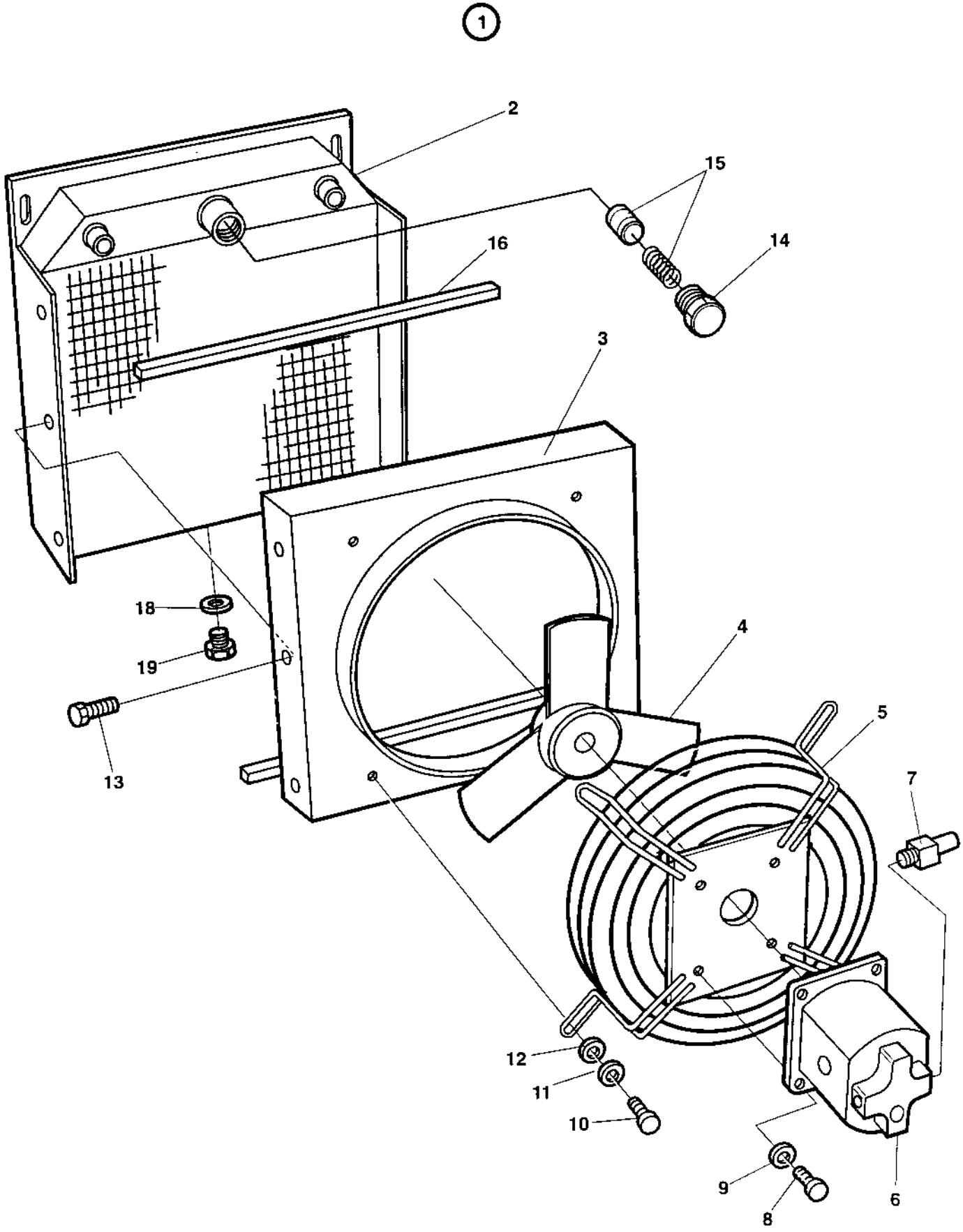

374494 Oil cooler cpl

Ref. No.	Part No.	Rem.	Qty	Description	Code
1			1	Oil cooler cpl	
2	935780		1	.Oil cooler	
3	935782		1	.Fan shroud	
4	935781		1	.Fan	
5	359223		1	.Grid	
6	359226		1	.Hydraulic motor	D
	902882		1	..Seal kit	D
	935783		1	..Key	D
7			1	..Valve	D
8			4	.Screw	D
9			4	.Washer	D
10			4	.Screw	D
11			4	.Washer	D
12			4	.Washer	D
13			6	.Screw	D
14	359225		1	.Plug	
15	359224		1	.Valve	
16			1	.Rubber seal	
18	160024		1	.O-ring	
19	332038		1	.Plug	

374494 Oil cooler cpl

16055

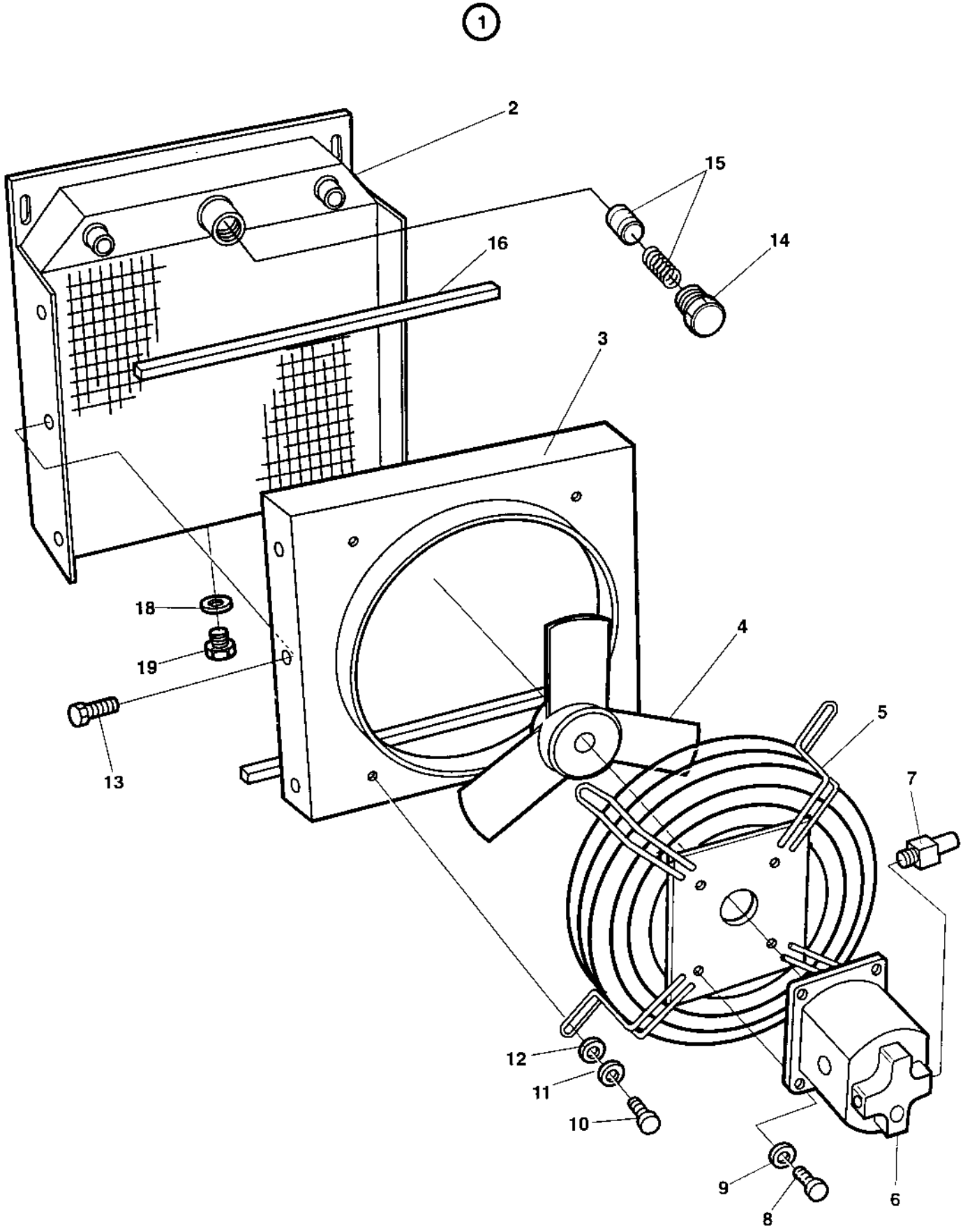

374494 Oil cooler cpl

Ref. No.	Part No.	Rem.	Qty	Description	Code
1			1	Oil cooler cpl	
2	935780		1	.Oil cooler	
3	935782		1	.Fan shroud	
4	935781		1	.Fan	
5	359223		1	.Grid	
6	359226		1	.Hydraulic motor	D
	902882		1	..Seal kit	D
	935783		1	..Key	D
7			1	..Valve	D
8			4	.Screw	D
9			4	.Washer	D
10			4	.Screw	D
11			4	.Washer	D
12			4	.Washer	D
13			6	.Screw	D
14	359225		1	.Plug	
15	359224		1	.Valve	
16			1	.Rubber seal	
18	160024		1	.O-ring	
19	332038		1	.Plug	

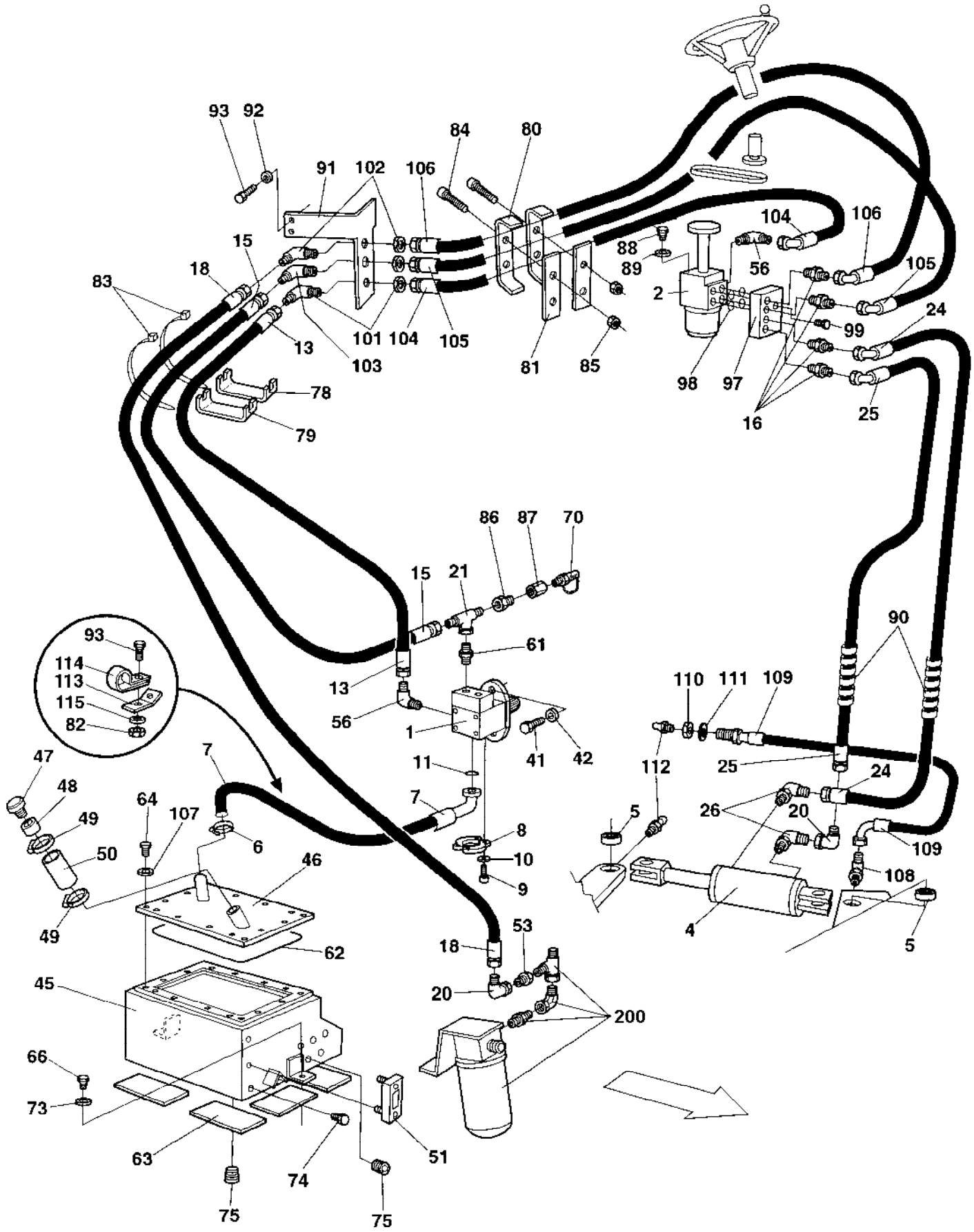
93
92
91
102
106
84
80
15
18
83
13
101
104
105
103
81
85
88
89
56
104
106
105
2
99
24
98
97
16
25
78
79
86
87
70
15
21
61
13
56
1
41
42
11
7
8
10
9
53
18
20
200
90
110
111
109
112
25
24
26
20
109
108
4
5
93
114
113
115
82
47
48
49
50
49
64
107
6
7
46
62
45
66
73
63
74
75
75
51

Ref. No.	Part No.	Rem.	Qty	Description	Code
1	358993		1	Hydraulic pump Steering Up to 61710837 (Page 248)	C
	374027		1	Hydraulic pump Steering From 61710838 (Page 250)	C
2	359139		1	Pilot valve (Page 252)	C
4	370000	1	1	Steering cylinder Up to 61710377 (Page 254)	C
	373410		1	Hydraulic cylinder From 61710378 Up to 61710761 (Page 256)	C
	375031		1	Hydraulic cylinder From 61710762 (Page 258)	C
5	813316		2	Ball bushing	D
6	923378		1	Hose clamp	
7	359631		1	Hydraulic hose Up to 61710837	
	376040		1	Hydraulic hose From 61710838	
8	232097		2	Flange half Up to 61710837	D
	232119		2	Split flange From 61710838	
9	500029		4	Screw M10-1,5x30 8,8	
10	904637		4	Washer 10x18x2	
11	813429		1	O-ring Up to 61710837	
	813443		1	O-ring From 61710838	D
13	482473		1	Hydraulic hose	
15	482990		1	Hydraulic hose	
16	924731		4	Connector	
18	482995		1	Hydraulic hose	
20	334524	A	1	Connector	
	334524	B	1	Connector Up to 61710499	
21	234953		1	Tee-connector	
24	482917		1	Hydraulic hose	D
25	482918		1	Hydraulic hose	D
26	334420		2	Elbow 90	
41	903460		2	Screw Up to 61710837	
	508096		2	Screw M10-1,5x25H 8,8 From 61710838	
42	904230		2	Washer 10,5x22x2 Up to 61710837	
	904637		2	Washer 10x18x2 From 61710838	
45	359632		1	Hydraulic oil tank	
46	359639		1	Cover	
47	357138		1	Ventilating filter	B
48	357139		1	Connector	
49	313008		2	Hose clamp	D
50	205067	C	1XL	Rubber hose	
51	989151		1	Oil level gauge	D
53	929122		1	Reducing	
56	334203		2	Elbow 90, O-ring	
61	334121		1	Straight connector	
62	357141		1	O-ring	
63	357459		6	Rubber cloth	
64	500053		14	Screw M8-1,25x20 8,8	
66	500028		2	Screw M10-1,5x25 8,8	
70	910161		1	Measuring nipple	D
73	603006		2	Washer	
74	232122		1	Plug 3/4NPTF	
75	892446		2	Plug	
78	359647	D	N	Hose clamp	
79	359648	E	N	Hose clamp	

1) Cylinders with Batch number up to 9625 are replaced by P/N 373410 acc. to MI 96015.

A) At filter
B) At cylinder
C) L=0,25 m
D) 106/30/18 mm
E) 90/30/20 mm

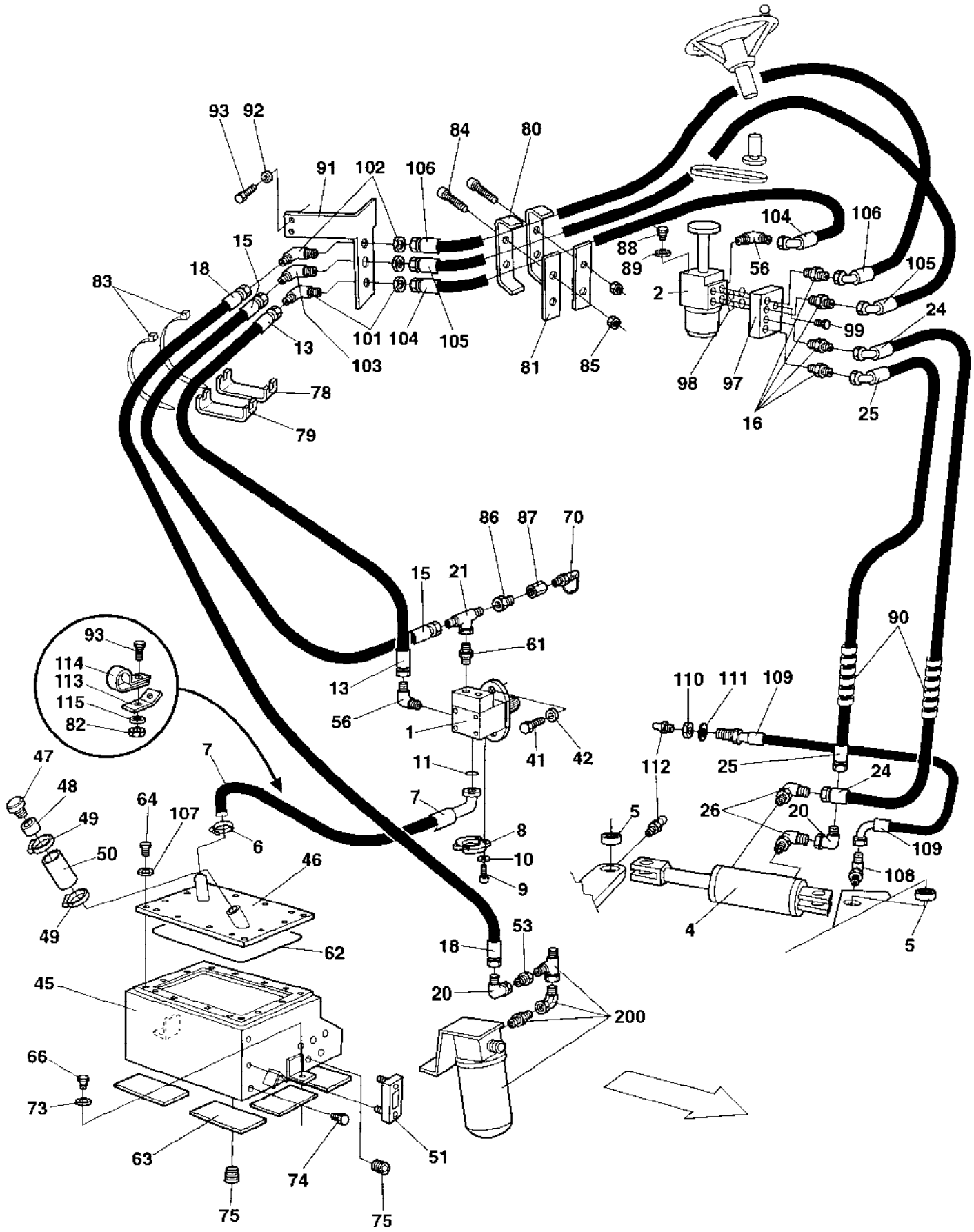
93
92
91
102
106
84
80
15
18
83
13
101
104
105
103
81
85
88
89
56
104
106
105
2
99
24
98
97
16
25
78
79
86
87
70
15
21
61
13
56
1
41
42
11
7
8
10
9
53
18
20
200
90
110
111
109
112
25
24
26
20
109
108
4
5
93
114
113
115
82
47
48
49
50
49
64
107
6
7
46
62
45
66
73
63
74
75
75
51

Ref. No.	Part No.	Rem.	Qty	Description	Code
80	359649		2	Hose clamp	
81	359650		2	Hose clamp	
82	902286		1	Lock nut M8	
83	313102		N	Cable ties	
84	500061		4	Screw M6-1X35 8,8	
85	902285		4	Lock nut M6	
86	334461		1	Reducing	
87	433830401		1	Connector	
88	502036		4	Screw	
89	603006		4	Washer	
90	903082	G	2XL	Hose shield	
91	371519		1	Holder plate	
92	603019		1	Washer	
93	500021		3	Screw M8-1,25x25 8,8	
97	370155		1	Valve block	
98	160287		4	O-ring	D
99	903773		2	Screw	
101	903793	H	1	Bulkhead elbow Up to 61710499	
	235002	I	1	Connector From 61710500	
102	235004	H	1	Bulkhead elbow Up to 61710499	
	904115	I	1	Bulkhead elbow From 61710500	D
103	903794	H	1	Bulkhead elbow Up to 61710499	
	234512	I	1	Bulkhead union From 61710500	
104	482257		1	Hydraulic hose	
105	482992		1	Hydraulic hose	
106	482993		1	Hydraulic hose	
107	603009		14	Washer	
108	371669		1	Straight connector	
109	903812		1	Hydraulic hose	
110	903831		1	Nut M12	
111	904231		1	Washer 13x24x2	
112	926214		2	Grease fitting	D
113	372680		1	Bracket From 61710500	
114	921022		1	Hose clamp	
115	904229		1	Washer 8,4x16x1,5	
200				Existing parts	

G) L=0,350 m
H) 45 degree
I) 90 degree

358993 Hydraulic pump Steering

15753

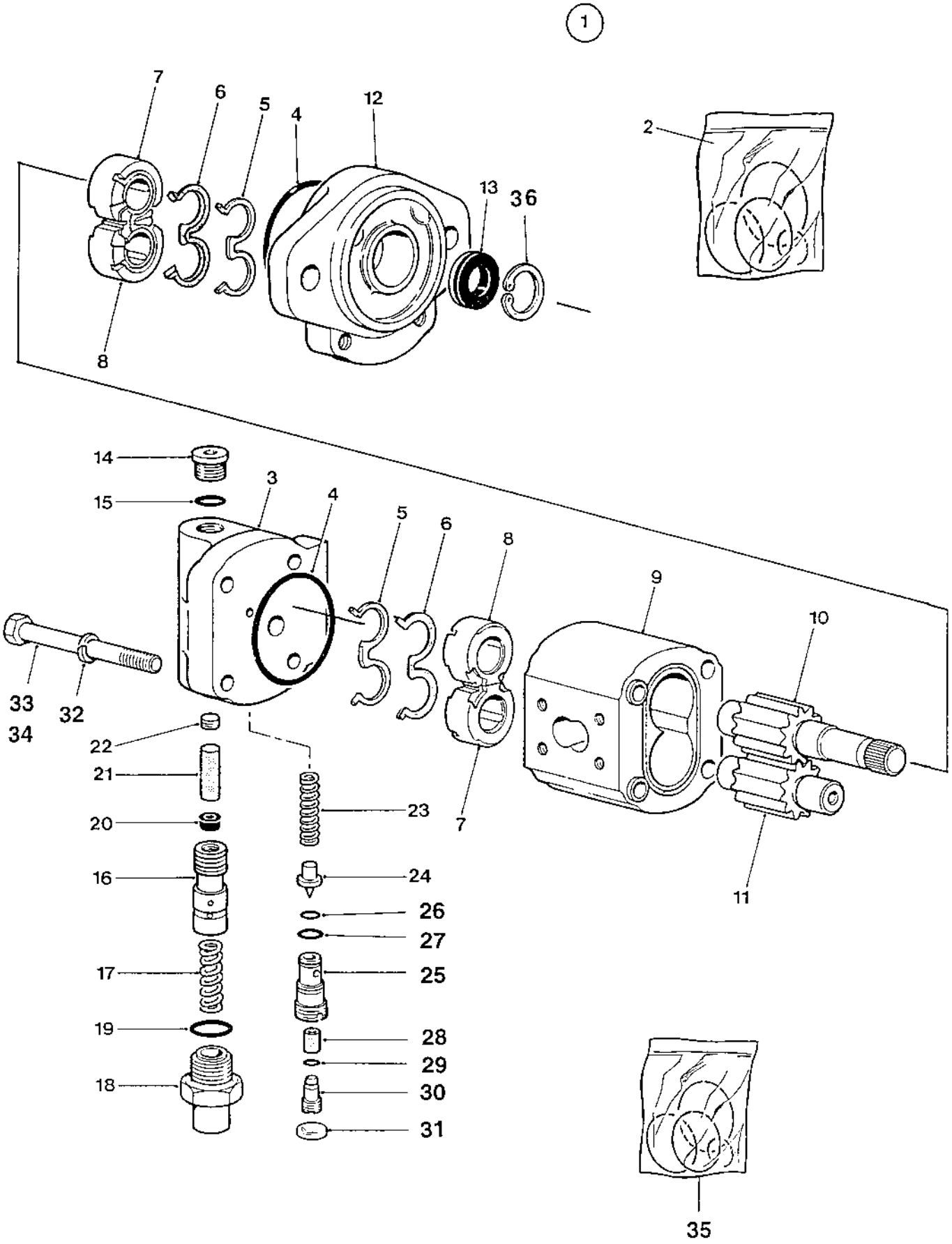

358993 Hydraulic pump Steering

Ref. No.	Part No.	Rem.	Qty	Description	Code
1			1	Hydraulic pump, Cpl	
2	936014		1	.Seal kit pump	D
3			1	.Cover	D
4		A	2	.O-ring	D
5		A	2	.Back-up ring	D
6		A	2	.Seal	D
7		A	2	.Bushing	D
8		A	2	.Bushing	D
9			1	.Housing	D
10			1	.Shaft and gear	D
11			1	.Gear	D
12			1	.Cover	D
13	908420	A	1	.Shaft seal	
14			1	.Plug and O-ring	
15			1	..O-ring	
16			1	.Spool	
17			1	.Spring with spacer	
18			1	.Spring seal	
19			1	.O-ring	
20			1	.Guide cap	
21	908997		1	.Filter	
22	908998		1	.Orifice	
23			1	.Spring	
24			1	.Valve	
25	908995		1	.Valve seat assy	
			1	..Valve housing	
26			1	..O-ring	
27			1	..O-ring	
28			1	..Filter	
29			1	..O-ring	
30			1	..Screw	
31	908996		1	.Core plug	
32			1	.Washer	
33			1	.Screw	
34			1	.Screw	
35			1	.Seal kit, valve	
36			1	.Retainer ring	

A) In kit item 2

374027 Hydraulic pump Steering

17022

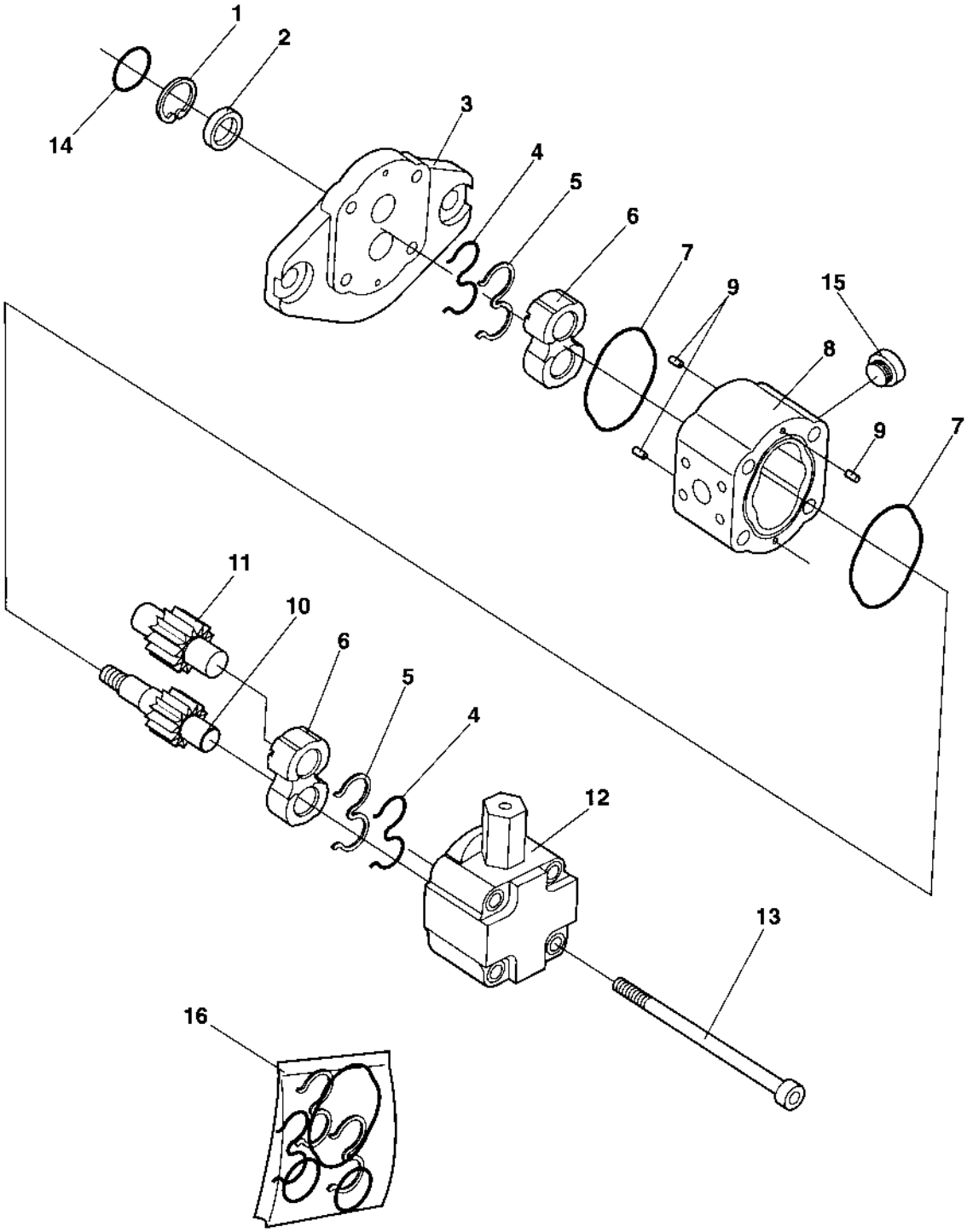

374027 Hydraulic pump Steering

Ref. No.	Part No.	Rem.	Qty	Description	Code
			1	Steering pump, cpl	
1			1	.Snap ring	
2		1	1	.Shaft seal	
3			1	.Flange	
4		1	2	.Back-up ring	
5		1	2	.Seal	
6			2	.Bushing	
7		1	2	.O-ring	
8			1	.Housing	
9			3	.Pin	
10			1	.Drive shaft	
11			1	.Gear	
12			1	.Cover	
13			4	.Screw	
14		1	1	.O-ring	
15			1	.Plug	
16	937813		1	Seal kit	

1) Included in seal kit item 16.

359139 Pilot valve

15710

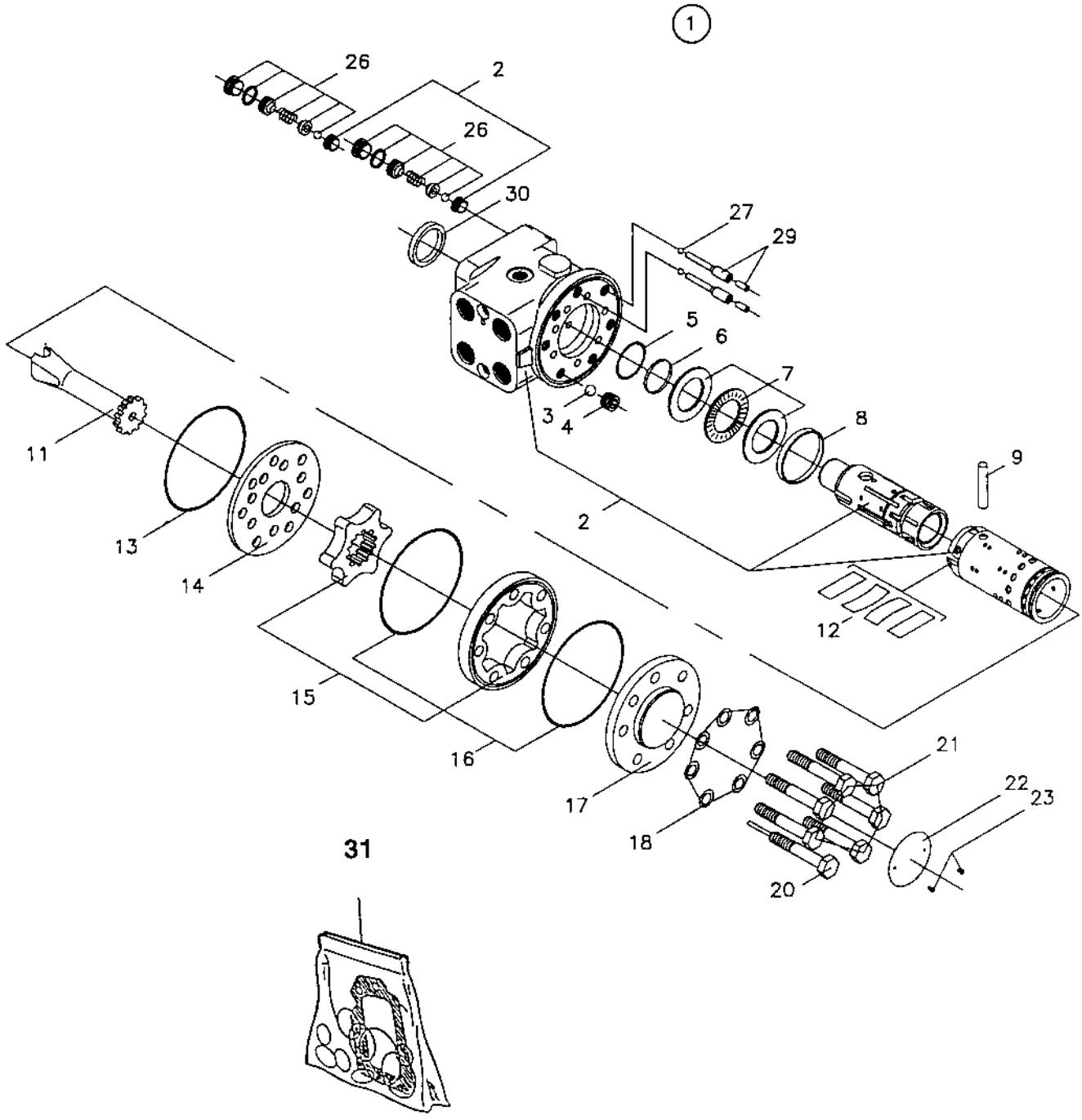

359139 Pilot valve

Ref. No.	Part No.	Rem.	Qty	Description	Code
1			1	Pilot valve, cpl	
2			1	.Housing, cpl	
3	480468		1	.Ball	
4	480446		1	.Threaded bushing	D
5		1	1	.O-ring	D
6		1	1	.Seal ring	D
7	911620		1	.Bearing	D
8	480449		1	.Ring	
9	480447		1	.Cross pin	
11	902861		1	.Cardan shaft	
12	909211		1	.Set of springs	
13		1	1	.O-ring	
14	902862		1	.Valve plate	
15	909212		1	.Gear wheel set	
16		1	2	.O-ring	
17	480450		1	.End cap	
18		1	7	.Washer	
20	909213		1	.Screw with pin	
21	909214		6	.Screw	
22			1	.Plate	
23			2	.Screw	
26	929012		2	.Shock valve 22,5-24,0 MPa	
27	929013		2	.Ball	
29	929014		2	.Rolled pin	
30		1	1	.Dust seal ring	
31	480457		1	.Spare parts kit	D

1) Includes in seal kit item 31.

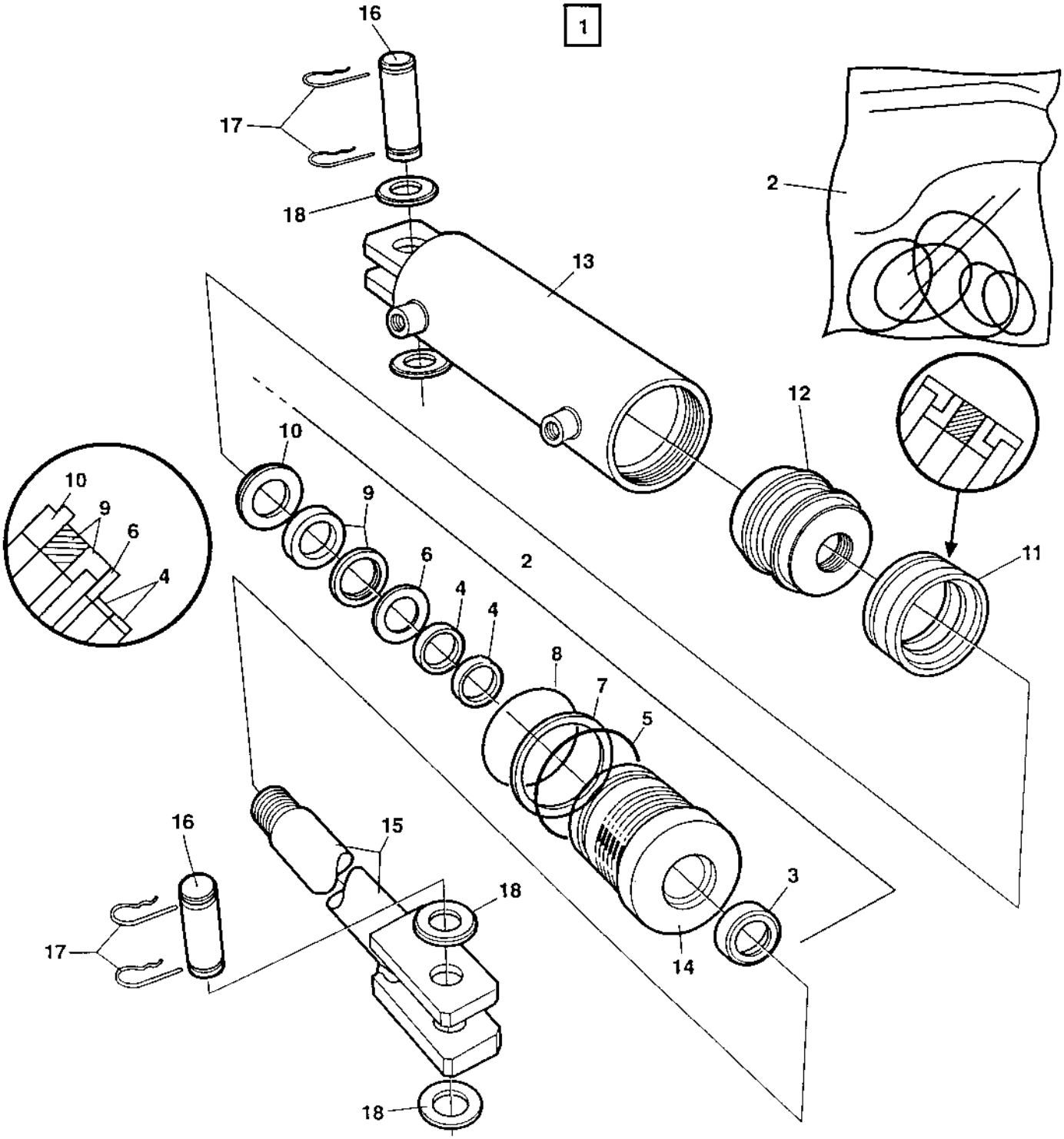
1
16
17
18
13
2
12
10
9
6
4
11
8
7
5
15
3
14

370000 Steering cylinder

Ref. No.	Part No.	Rem.	Qty	Description	Code
1		1	1	Hydraulic cylinder, cpl	D
2	903621	2	1	Seal kit	
	904145	3	1	.Seal kit	D
3			1	..Seal	D
4			2	..Seal	D
5			1	..O-ring	D
6			1	..Back-up ring	D
7			1	..Back-up ring	D
8			1	..O-ring	D
9			1	..Seal	D
10			1	..Retainer ring	D
11			1	..Seal	D
12	903617		1	.Piston block	
13	903618		1	.Cylinder tube	
14	903619		1	.Steering	
15	903620		1	.Piston rod	
16	347119		2	.Shaft	D
17	635061		4	.Hair clip	D
18	600016		4	.Washer 26x45x4	

1) Cylinders with Batch number up to 9625 are replaced by P/N 373410 acc. to MI 96015.
2) Replaced by sealkit P/N 904145 for cylinders with Batch number 9626 and higher. A special tool and instruction is needed to mount the piston.
3) From cylinder Batch number 9626.

373410 Hydraulic cylinder

15947

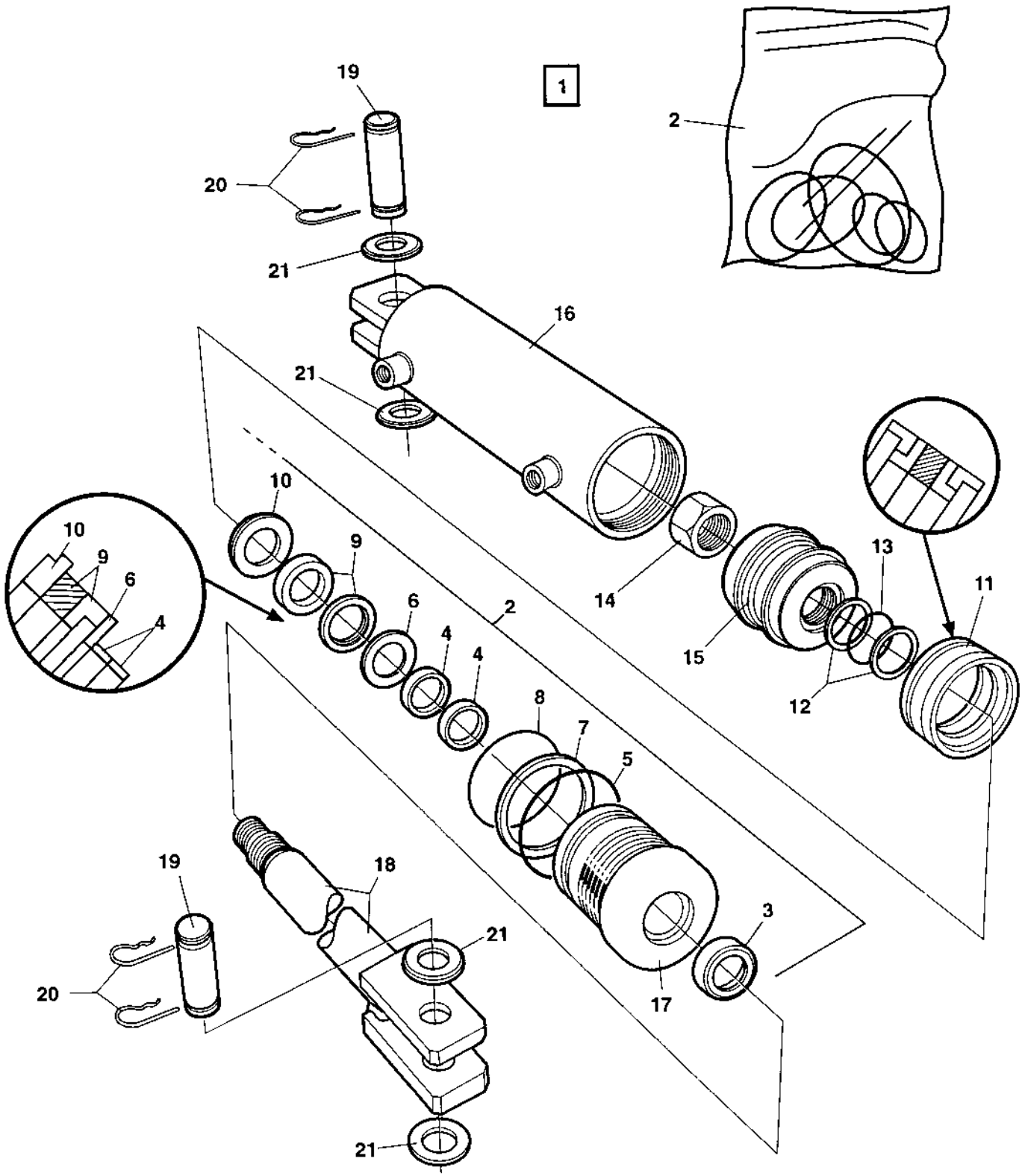

373410 Hydraulic cylinder

Ref. No.	Part No.	Rem.	Qty	Description	Code
1			1	Steering cylinder, cpl	
2	904145		1	.Seal kit	D
3			1	..Seal	D
4			2	..Seal	D
5			1	..O-ring	D
6			1	..Back-up ring	D
7			1	..Back-up ring	D
8			1	..O-ring	D
9			1	..Seal	D
10			1	..Retainer ring	D
11			1	..Seal	D
12			2	..Back-up ring	D
13			1	..O-ring	D
14			1	..Lock nut	D
15	904143		1	..Piston block	
16	903618		1	..Cylinder tube	
17	903619		1	..Steering	
18	904144		1	..Piston rod	
19	347119		2	..Shaft	D
20	635061		4	..Hair clip	D
21	600016		4	..Washer 26x45x4	

375031 Hydraulic cylinder

16490

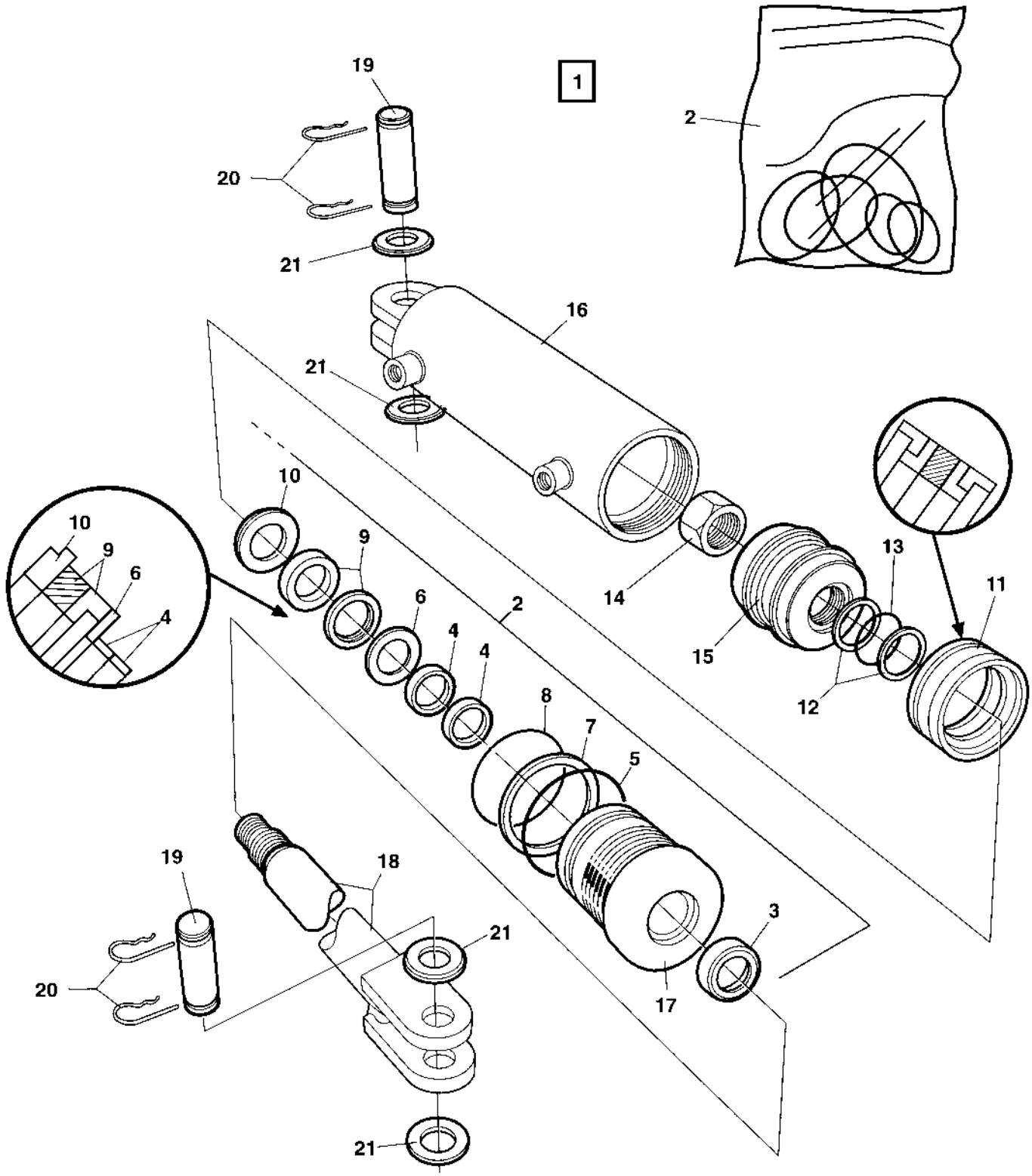

375031 Hydraulic cylinder

Ref. No.	Part No.	Rem.	Qty	Description	Code
1			1	Steering cylinder, cpl	
2	904145		1	.Seal kit	D
3			1	..Seal	D
4			2	..Seal	D
5			1	..O-ring	D
6			1	..Back-up ring	D
7			1	..Back-up ring	D
8			1	..O-ring	D
9			1	..Seal	D
10			1	..Retaining ring	D
11			1	..Seal	D
12			2	..Back-up ring	D
13			1	..O-ring	D
14			1	..Lock nut	D
15	904143		1	.Piston block	
16	936267		1	.Cylinder	
17	903619		1	.Steering	
18	936268		1	.Piston rod	
19	347119		2	.Shaft	D
20	635061		4	.Hair clip	D
21	600016		4	.Washer 26x45x4	

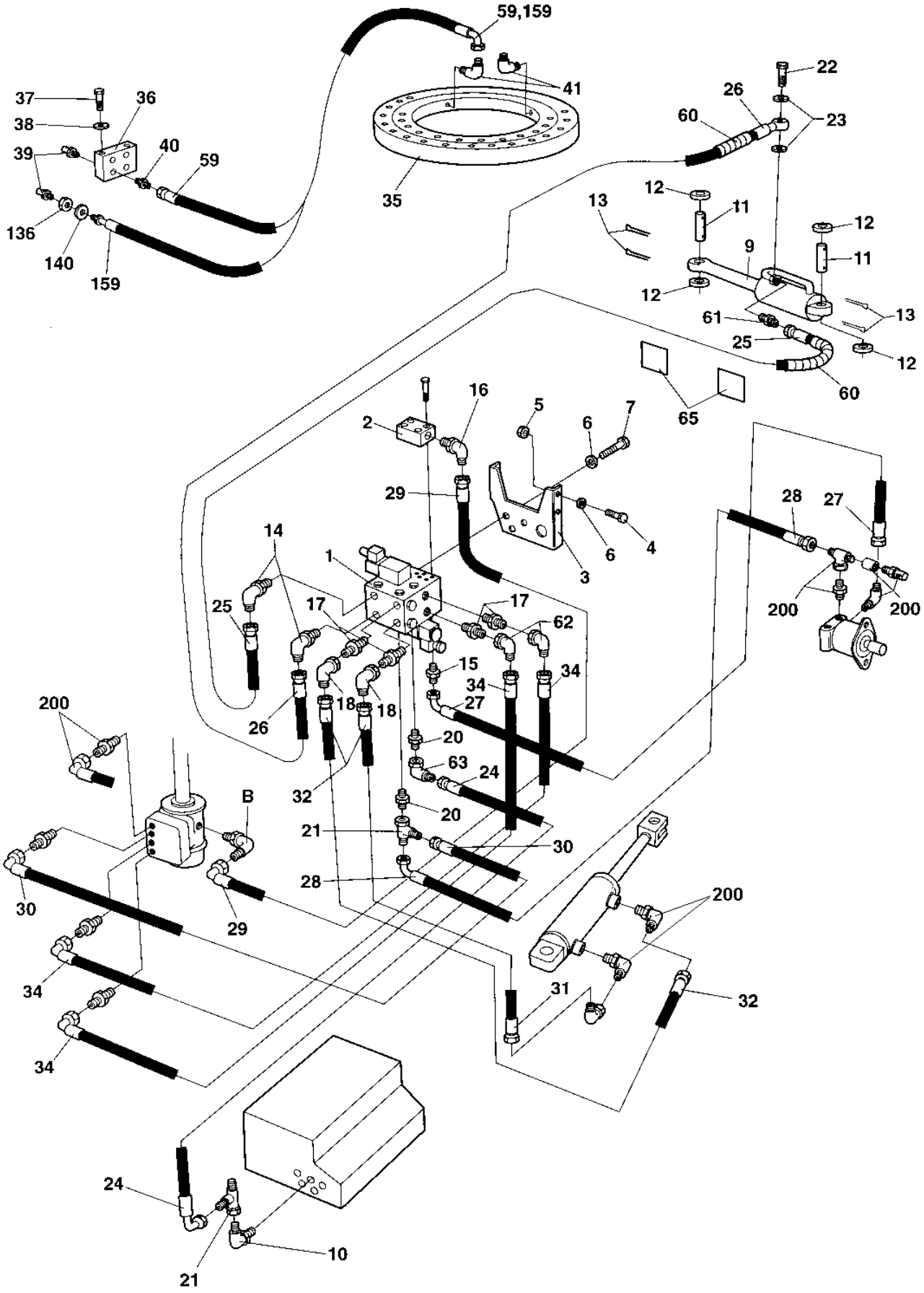
59,159
41
35
37
36
38
39
40
59
136
140
159
22
26
23
60
12
11
13
9
12
11
12
61
13
25
12
60
65
16
2
5
6
7
29
6
4
3
14
1
25
17
17
62
15
34
34
27
18
18
26
20
63
24
32
20
21
30
28
B
30
29
34
34
200
200
200
200
31
32
24
10
21
28
27

Offset drum Option

Ref. No.	Part No.	Rem.	Qty	Description	Code
1			1	Valve Offset drum (Page 262)	
2	359231		1	Cover plate	
	908418	A	1	.Screw, set	
	908417		6	.O-ring	
3	359767		1	Holder plate	
4	500021		4	Screw M8-1,25x25 8,8	
5	570005		4	Nut M8	
6	904229		7	Washer 8,4x16x1,5	
7	500053		3	Screw M8-1,25x20 8,8	
9	359304	1	1	Cylinder Offset drum (Page 264)	C
	373403	2	1	Cylinder Offset drum (Page 266)	C
10			1	Existing	C
11	357419		2	Shaft	D
12	600016		4	Washer 26x45x4	
13	630019		4	Split pin	D
14	334420		2	Elbow 90	
15	234388		1	Connector	
16	234850		1	Elbow 90, O-ring	
17	924731		4	Connector	
18	334524		2	Connector	
20	334121		2	Straight connector	
21	334135		2	T-connector	
22	330171		1	Hollow screw	
23	162024		2	Washer, sealing	
24	483411		1	Hydraulic hose	
25	482938		1	Hydraulic hose	D
26	359768		1	Hydraulic hose	D
27	980001		1	Hydraulic hose	
28	482939		1	Hydraulic hose	
29	482256		1	Hydraulic hose	
30	482997		1	Hydraulic hose	
31	483159		1	Hydraulic hose	D
32	482942		1	Hydraulic hose	D
34	482944		2	Hydraulic hose	
35	359192	B	1	Bearing	
36	359773		1	Nipple holder	
37	500075		2	Screw M6-1x25 8,8	
38	904228		2	Washer 6,4x12x1,5	
39	926214		4	Grease fitting	D
40	234358		4	Adapter Up to 61710499	
41	234342		4	Adapter Up to 61710499	
	373183		4	Elbow 90 From 61710500	
59	482104		1	Hydraulic hose Up to 61710499	
60	903082		2	Hose shield	
61	334236		1	Adapter	
62	801781		2	Connector	
63	334197		1	Elbow 90	
65	903422		2	Decal "SAFETY"	
136	903831		4	Nut M12 From 61710500	
140	904231		4	Washer 13x24x2 From 61710500	
159	903813		4	Hydraulic hose From 61710500	
200		E	1	Existing parts	

1) Used up to 1997. Please check P/N on the cylinder.
2) Used from 1998. Please check P/N on the cylinder.
A) Kit of 4 pcs
B) Yoke bearing
E) See section " Steering system "

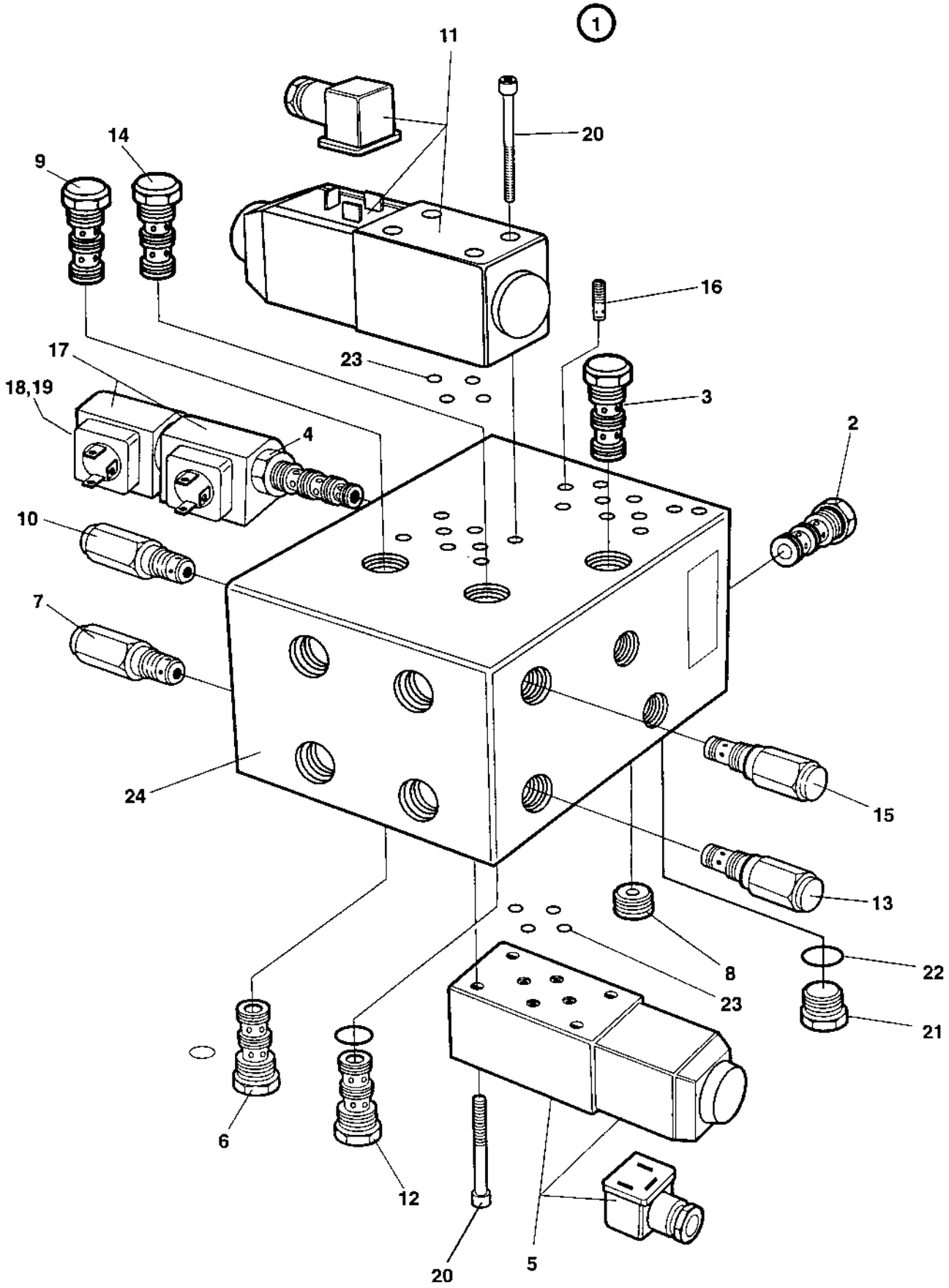
1
11
20
14
9
16
17
23
18,19
3
4
2
10
7
24
15
13
8
22
23
21
6
12
20
5

Ref. No.	Part No.	Rem.	Qty	Description	Code
1	359230		1	Valve	C
	375128		1	Valve	C
	380978		1	Valve	
2	908205		1	.Pressure sensing valve	
3	908205		1	.Pressure sensing valve	
4	908206	A	1	.Directional valve	
5	908207		1	.Directional valve, cpl	
	900991		1	..Solenoid	
	900992		1	..Seal kit	D
6	937659		1	.Check valve	
7	936145		1	.Pressure relief valve	
8	908209		1	.Orifice	
9	937659		1	.Check valve	
10	936145		1	.Pressure relief valve	
11	908207		1	.Directional valve, cpl	
	900991		1	..Solenoid	
	900992		1	..Seal kit	D
12	937659		1	.Check valve	
13	936145		1	.Pressure relief valve	
14	937659		1	.Check valve	
15	936145		1	.Pressure relief valve	
16	908210		1	.Orifice	
17	908707		2	.Coil	
18	908211		1	.Nut	
19	908212		1	.Washer	
20	927645	B	2	.Screw, set	
21	908213		2	.Plug	
22	908214		2	.O-ring	
23	908417		8	.O-ring	
24			1	.Valve block	

A) Without 17,18,19
B) 4 pcs in a set

359304 Cylinder Offset drum

15716

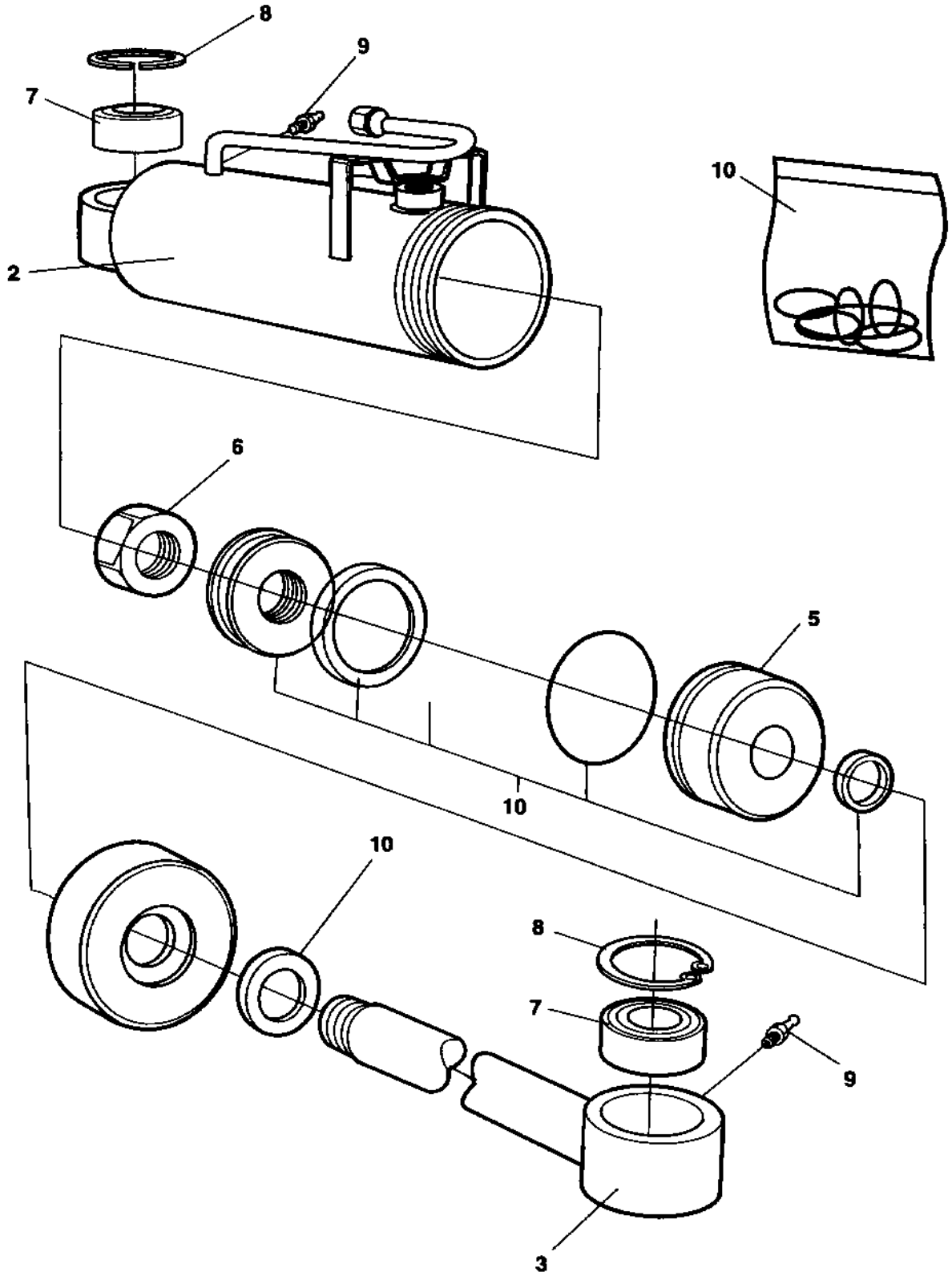

359304 Cylinder Offset drum

Ref. No.	Part No.	Rem.	Qty	Description	Code
1			1	Hydraulic cylinder, cpl	
2			1	.Cylinder	
3			1	.Piston rod	
5			1	.Gland	
6			1	.Cylinder nut	
7	238272		2	.Bearing	D
8	151012		2	.Retaining ring	
9	926214		2	.Grease fitting	D
10	370433		1	.Gasket kit	

373403 Cylinder Offset drum

16289

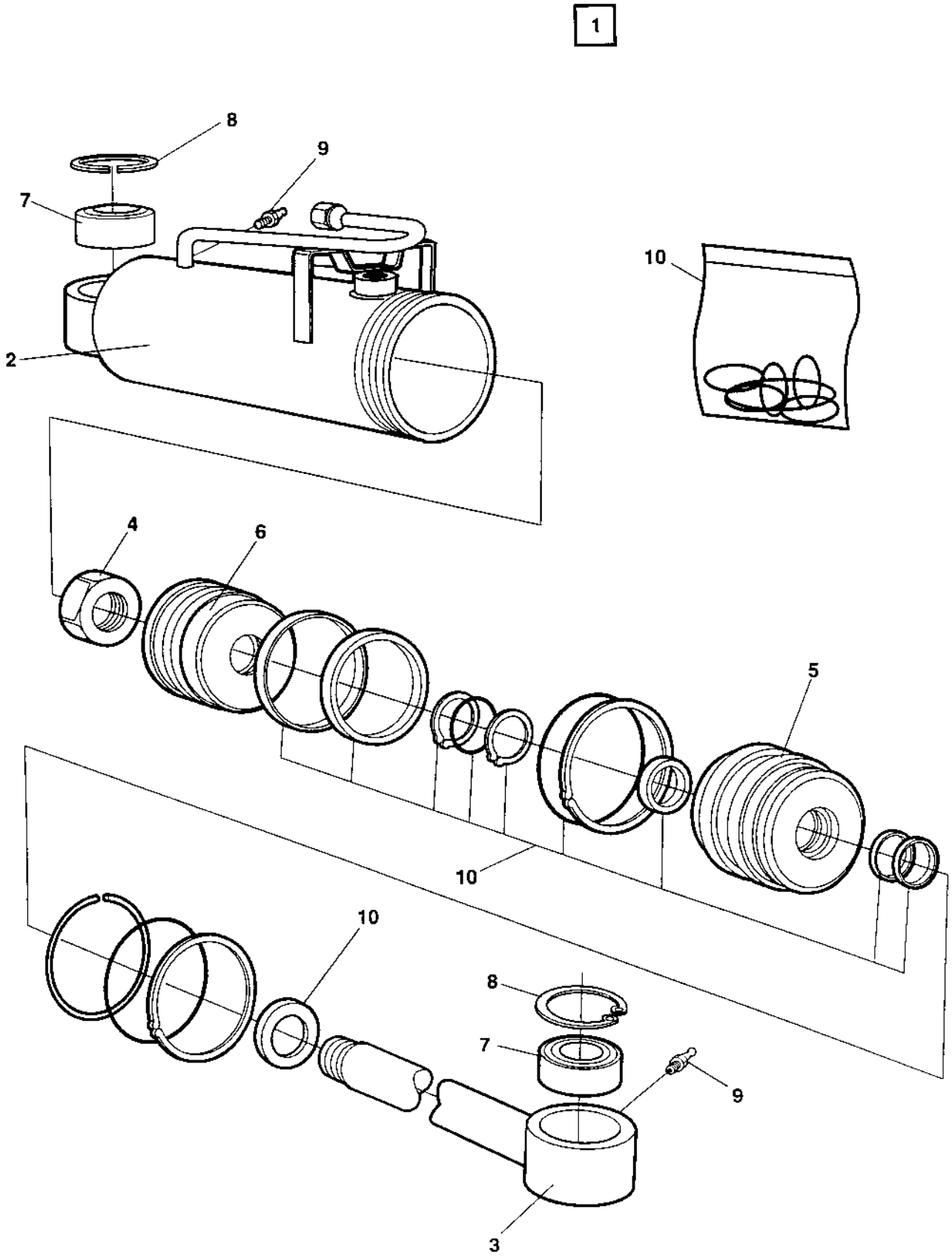

373403 Cylinder Offset drum

Ref. No.	Part No.	Rem.	Qty	Description	Code
1			1	Hydraulic cylinder, cpl	
2			1	.Cylinder	
3			1	.Piston rod	
4			1	.Cylinder nut	
5			1	.Gland	
6			1	.Piston	
7	238272		2	.Bearing	D
8	151012		2	.Retaining ring	
9	926214		2	.Grease fitting	D
10	904164		1	.Seal kit	D

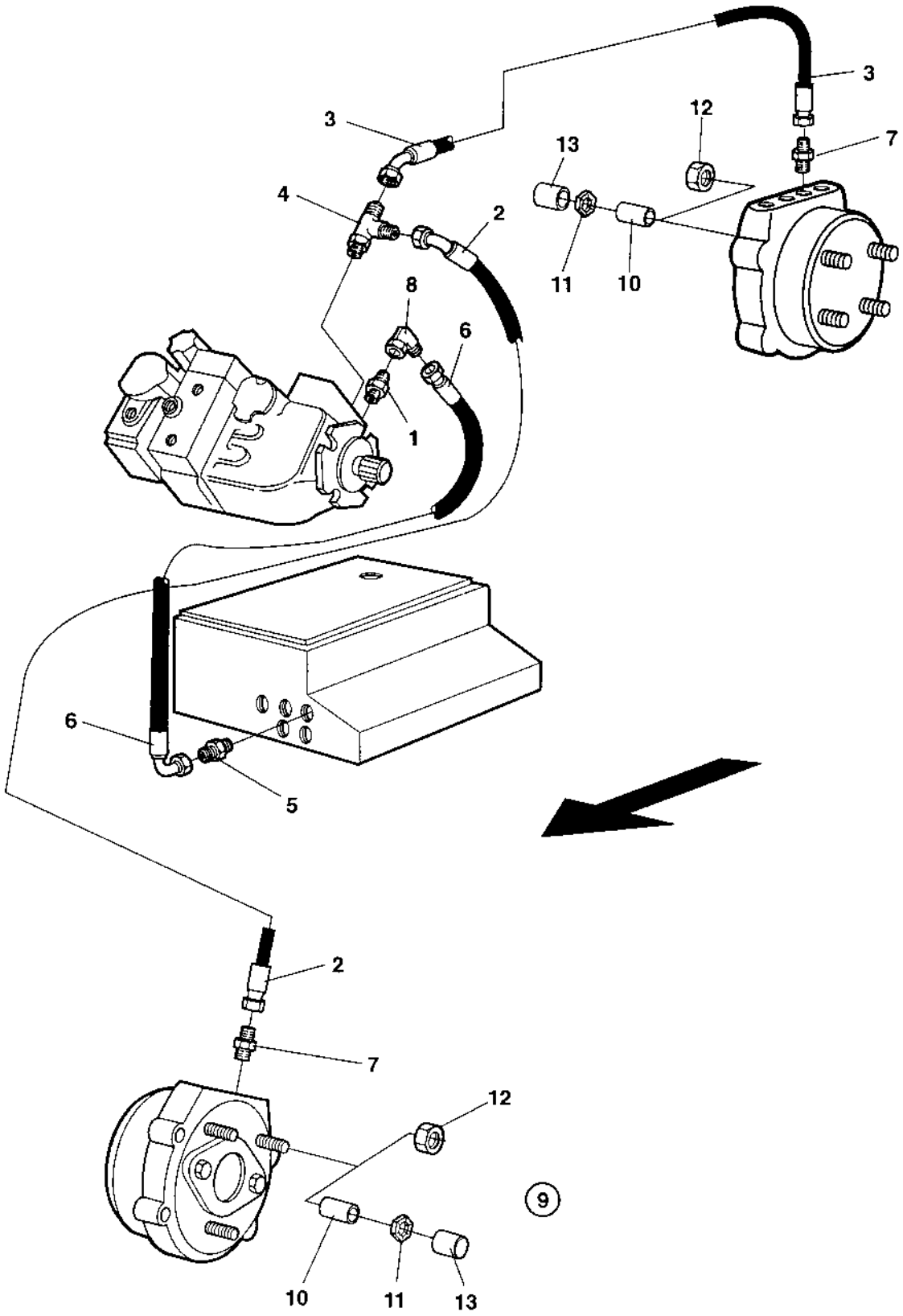
3
3
12
7
13
4
2
11
10
8
6
1
6
5
2
7
12
9
10
11
13

Ref. No.	Part No.	Rem.	Qty	Description	Code
1	234233		1	Adapter	
2	482919		1	Hydraulic hose	D
3	483192		1	Hydraulic hose	D
4	234746		1	Connector	
5	234349		1	Connector	
6	482782		1	Hydraulic hose	
7	925723		2	Connector	
8	334524		1	Connector	
9	372439	1	1	Brake release kit From 61710308	
10	372423		6	.Rubber sleeve	
11	904051		6	.Lock washer	
12	570007	A	6	.Lock nut M12	
13	904138		6	.Protection cap	

1) Mounted from 61710308, lower SN modified acc to MI96015
A) For brake release

Ref. No.	Part No.	Rem.	Qty	Description	Code
100				Electrical equipment (Page 272)	
150				Electrical equipment Additional for cab (Page 276)	
200				Instrument box (Page 278)	
300				Instrument panel Main (Page 280)	
305				Speed and frequency Sensors (Page 282)	
325				Instrument panel Upper left (Page 284)	
350				Instrument panel Upper right (Page 286)	
375				Instrument panel Lower left (Page 288)	
400				Instrument panel Lower right (Page 292)	
450				Instrument panel Relay, fuses (Page 294)	
500				Emergency stop panel (Page 296)	
600				Driving lights Direction & licenseplate light Up to 61710796 (Page 298)	
				Driving lights Direction & licenseplate light From 61710798 Up to 61710825 (Page 298)	
601				Driving lights Direction & licenseplate light From 61710797 Up to 61710797 (Page 302)	
				Driving lights Direction & licenseplate light From 61710826 (Page 302)	
603				Working lights with/without Rops Up to 61710796 (Page 306)	
				Working lights with/without Rops From 61710798 Up to 61710825 (Page 306)	
604				Working lights with/without Rops From 61710797 Up to 61710797 (Page 310)	
				Working lights with/without Rops From 61710826 (Page 310)	
605				Protection cover, Head light Option (Page 314)	
610				Working lights, cab (Page 316)	
620				Rotating beacon (Page 318)	
630				Tachograph (Page 320)	
800				Offset drum Electrical equipment (Page 322)	

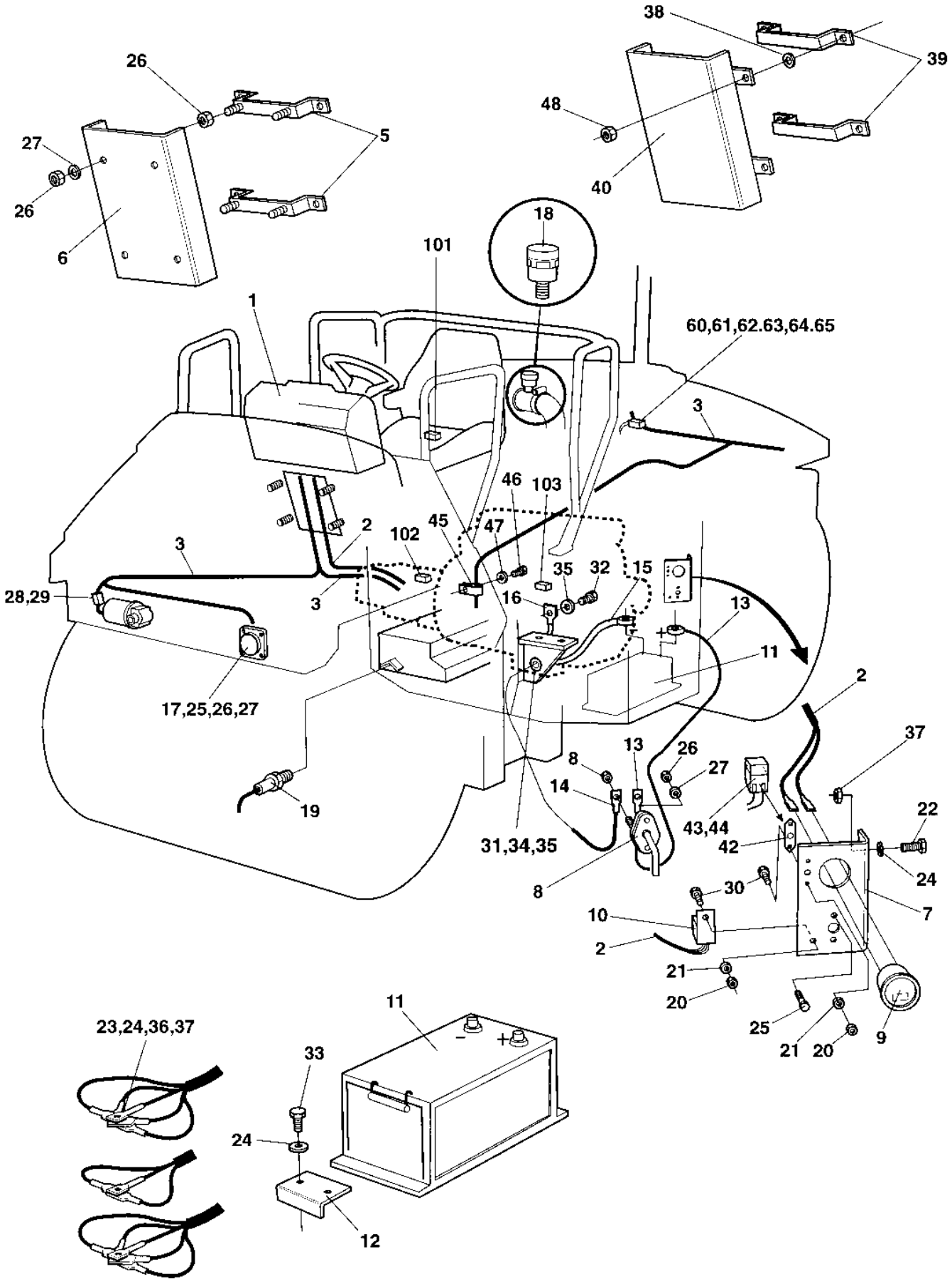
38
39
48
40
26
27
26
6
5
18
101
1
60,61,62.63,64.65
3
46
103
45
47
2
102
3
35
32
15
3
28,29
16
13
11
17,25,26,27
2
37
8
13
26
27
14
22
43,44
42
24
31,34,35
8
30
7
10
2
21
20
25
21
20
9
11
23,24,36,37
33
24
12

Ref. No.	Part No.	Rem.	Qty	Description	Code
1			1	Instrument panel	
2	370078		1	Cable harness Up to 61710499	
	372861		1	Cable harness From 61710500 Up to 61710796	
	376172		1	Cable harness From 61710797 Up to 61710797	
	372861		1	Cable harness From 61710798 Up to 61710825	
	376172		1	Cable harness From 61710826	
3	370070		1	Cable harness Up to 61710499	
	372916		1	Cable harness From 61710500 Up to 61710644	
	374617		1	Cable harness From 61710645 Up to 61710796	
	376173		1	Cable harness From 61710797 Up to 61710797	
	374617		1	Cable harness From 61710798 Up to 61710825	
	376173		1	Cable harness From 61710826	
5	370072		2	Cable holder Up to 61710342	
6	370073		1	Cable protection Up to 61710342	
7	370074		1	Holder plate Up to 61710342	
	372999		1	Holder plate From 61710343	
8	930150		1	Battery switch	D
	928021		1	.Key	D
9	801567		1	Hour meter	
10	287597	A	1	Relay	D
11	470021		1	Battery	
12	356500		1	Battery holder	
13	348136		1	Battery cable (+)	
14	370076		1	Cable	
15	348303		1	Battery cable (-)	
16	345728		1	Ground cable	
17	999027		2	Horn	D
18	929023	B	1	Indicator	D
19	903631	C	1	Temperature sensor Hydraulic oil	D
20	586001		3	Lock nut M5	
21	904281		3	Washer 5,3x10x1	
22	500021		2	Screw M8-1,25x25 8,8	
23	586003		3	Lock nut M8	
24	904229		7	Washer 8,4x16x1,5	
25	500040		4	Screw M6-1x20 8,8	
26	586002		12	Lock nut M6	
27	904228		12	Washer 6,4x12x1,5	
28	901766		2	Connector 2-POL	D
29	960273		4	Terminal	
30	500006		2	Screw M5x16	
31	500105		1	Hexagon screw	
32	500028		1	Screw M10-1,5x25 8,8	
33	500053		2	Screw M8-1,25x20 8,8	
34	586018		1	Lock nut M10	
35	904230		3	Washer 10,5x22x2	
36	500239		3	Screw M8-1.25x50	
37	570005		4	Nut M8	
38	904044		4	Washer	
39	372775		2	Cable holder From 61710343	
40	372774		1	Casing From 61710343	
42	904036		1	Fuse holder	
43	904032	D	1	Fuse holder	

A) Start
B) Air filter
C) Hydraulic oil
D) In cable harness

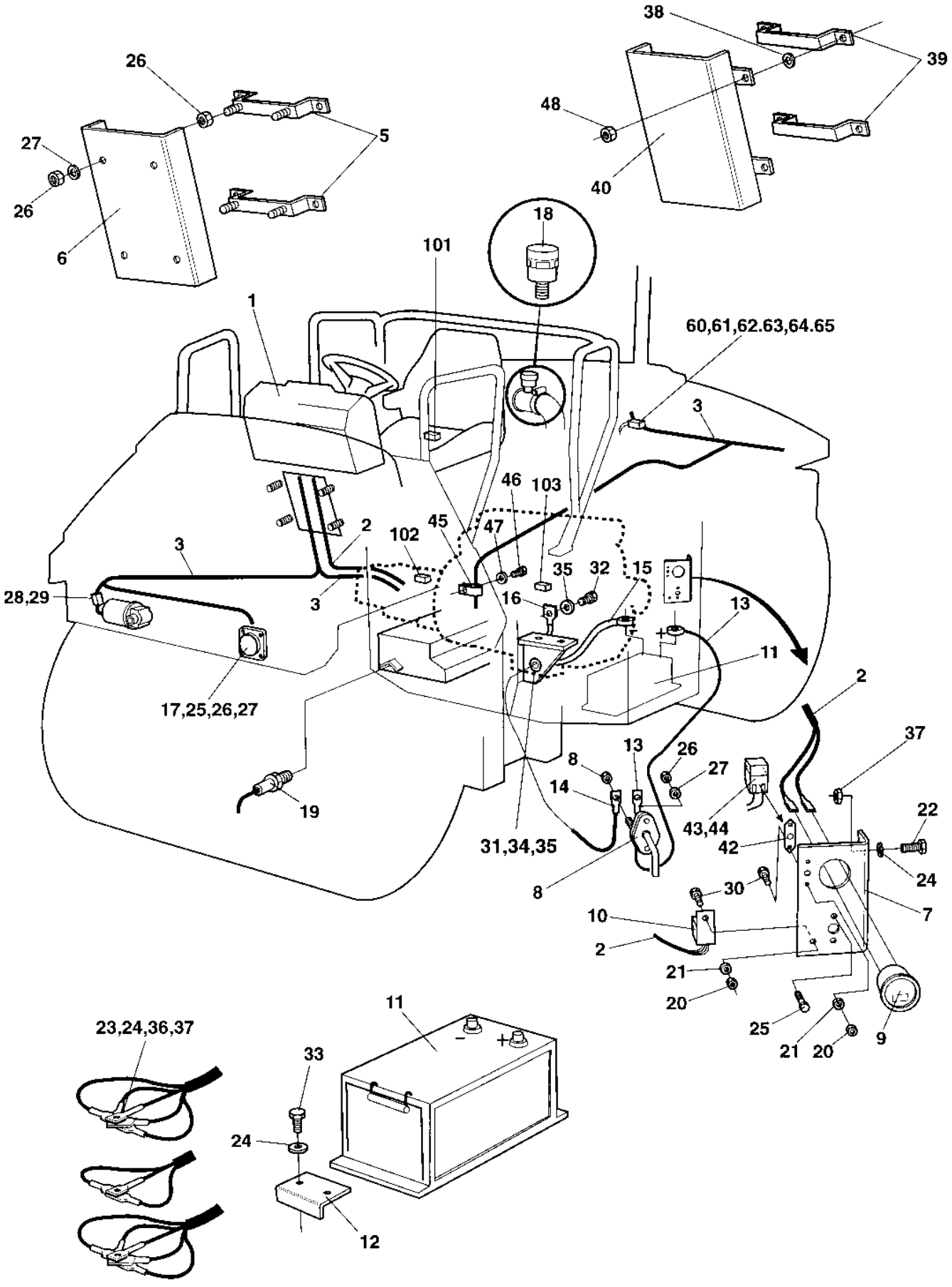
38
39
48
40
26
27
26
6
5
18
101
1
60,61,62.63,64.65
3
46
103
45
47
2
102
3
35
32
15
3
28,29
16
13
11
17,25,26,27
2
37
8
13
26
27
14
22
43,44
42
31,34,35
24
8
30
7
10
2
21
20
25
21
20
9
11
23,24,36,37
33
24
12

Ref. No.	Part No.	Rem.	Qty	Description	Code
44	904037		1	Fuse 30A	D
45	921104		1	Clamp	
46	500028		1	Screw M10-1,5x25 8,8	
47	904637		1	Washer 10x18x2	
48	902286		4	Lock nut M8	
60	900798	E	1	Back-up alarm	
	903241	E	1	Back-up alarm 97 dB	D
61	926611		2	Screw	
62	586001		2	Lock nut M5	
63	904281		2	Washer 5,3x10x1	
64	901766		1	Connector 2-POL	D
65	960273		2	Terminal	
	960275	G	2	Terminal	
101		1	1	Seat switch	
102		F	1	Neutral start switch	
103		2	1	Stop solenoid	

1) See section " Drivers platform "
2) See section " Engine "
E) Option
F) See propulsion pump
G) For 97dB Backalarm

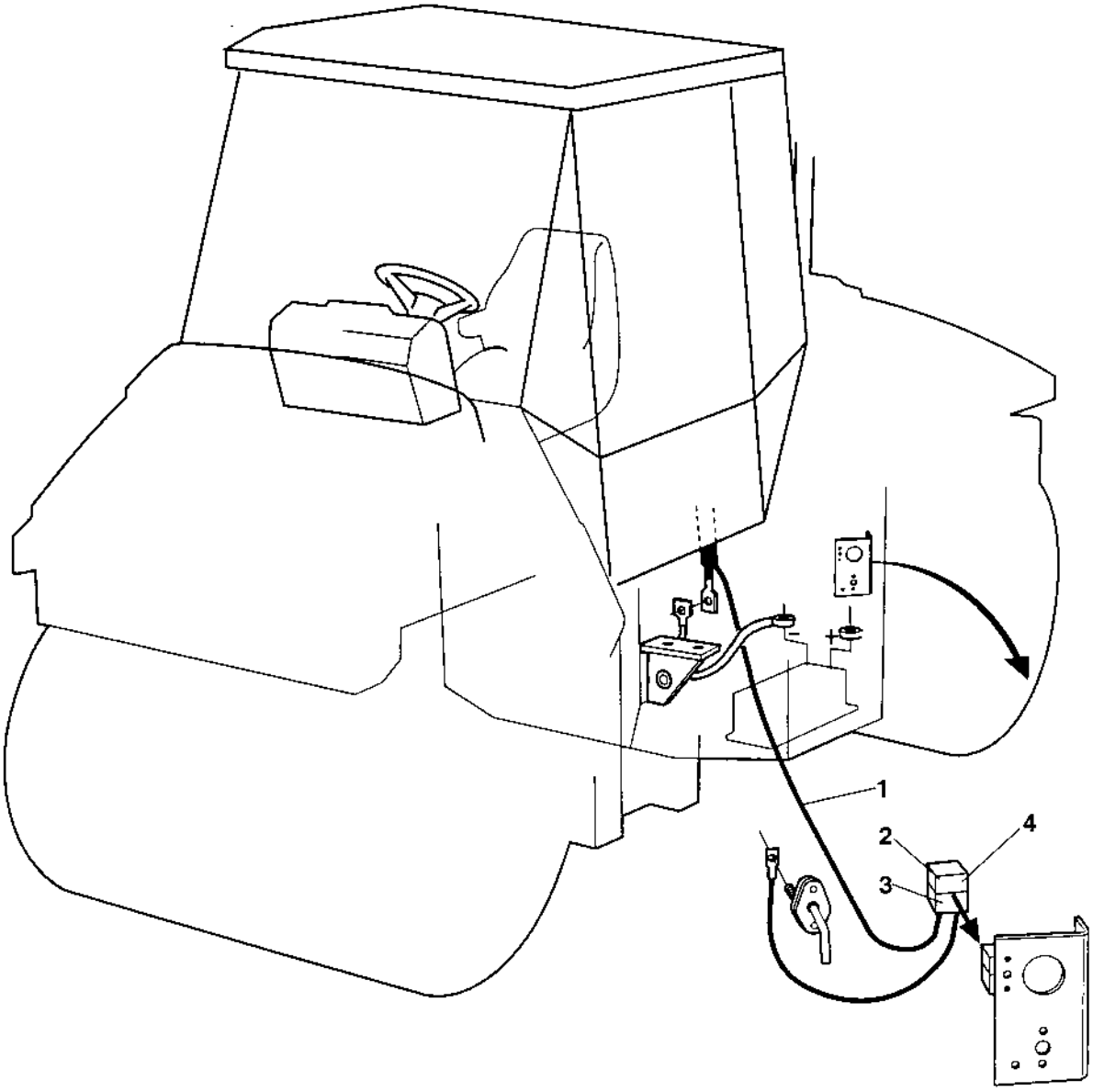
1
2
3
4

Electrical equipment Additional for cab

Ref. No.	Part No.	Rem.	Qty	Description	Code
1	370762	A	1	Cable harness Up to 61710796	
	376176	A	1	Cable harness From 61710797 Up to 61710797	
	370762	A	1	Cable harness From 61710798 Up to 61710825	
	376176	A	1	Cable harness From 61710826	
2	904032	B	1	.Fuse holder	
3	904031	B	2	.Terminal	
4	904041		1	Fuse 70A	

A) Cabin main support
B) Incl in item 1

Instrument box

15672-3

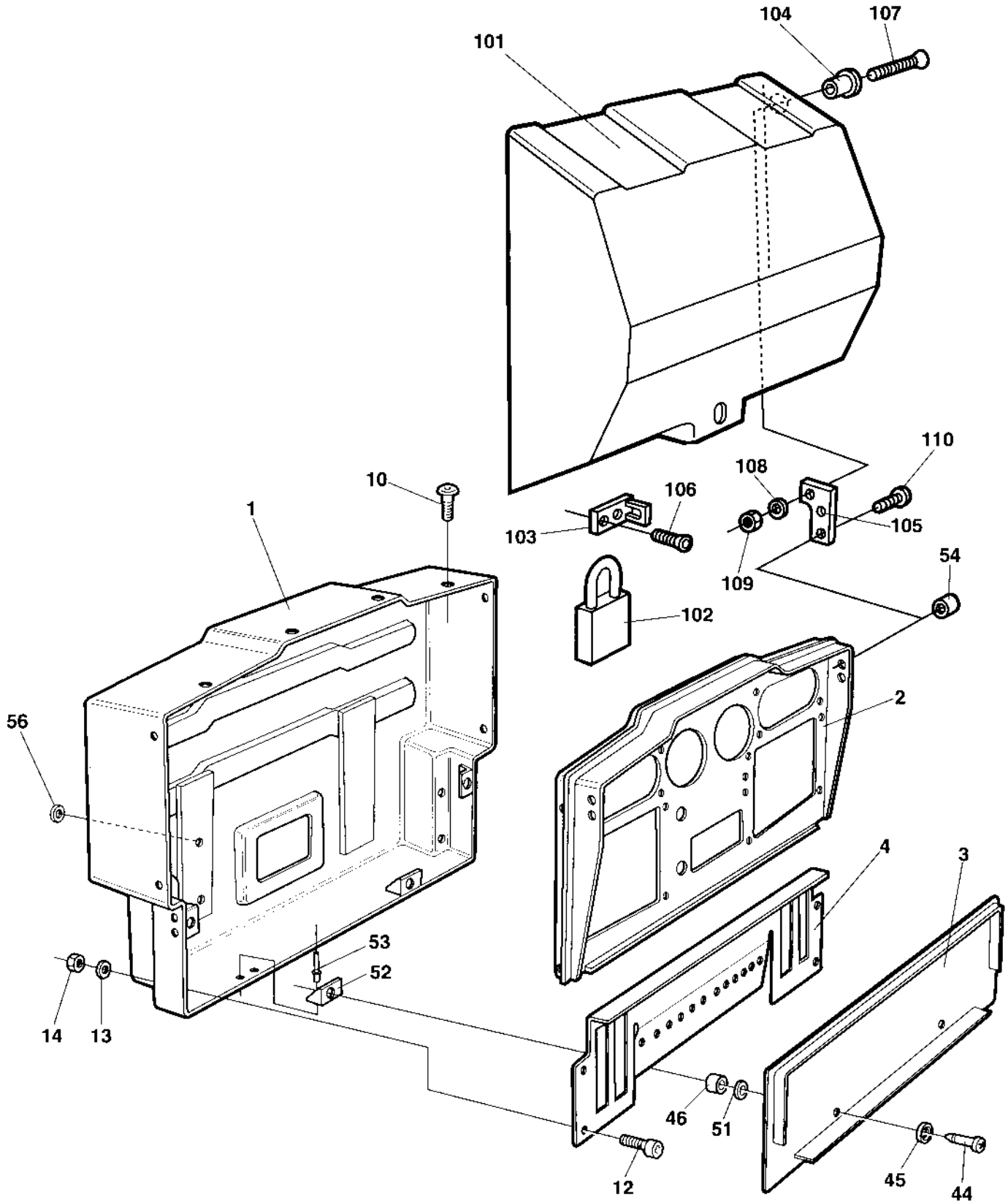

Instrument box

Ref. No.	Part No.	Rem.	Qty	Description	Code
1	359843		1	Instrument box Up to 61710592	
	374105		1	Instrument box From 61710593	
2	359844		1	Control panel Up to 61710592	
	374379		1	Control panel From 61710593	
3	359845		1	Cover	
4	370165		1	Relay bracket	
10	903658		8	Screw M5x10	
12	500040		4	Screw M6-1x20 8,8	
13	600004		4	Washer	
14	902285		4	Lock nut M6	
44	903599		4	Trunnion	
45	903600		4	Rubber washer	
46	903601		4	Washer	
51	903678		4	Rubber washer	
52	903602	1	4	Lock device	
53	903436	1	8	Blind rivet	
54	903653		4	Plug	
56	903961		4	Washer	
100			1	Control panel cover Option	
101	372103		1	.Cover	
102	358881		1	.Pad lock	
103	372104		1	.Eyelet	
104	357855		2	.Bushing	
105	372105		2	.Bracket	
106	904207		2	.Screw	
107	904208		2	.Screw	
108	904228		2	.Washer 6,4x12x1,5	
109	586002		2	.Lock nut M6	
110	903658		4	.Screw M5x10	

1) Included in cpl. Instrument box, item 1.

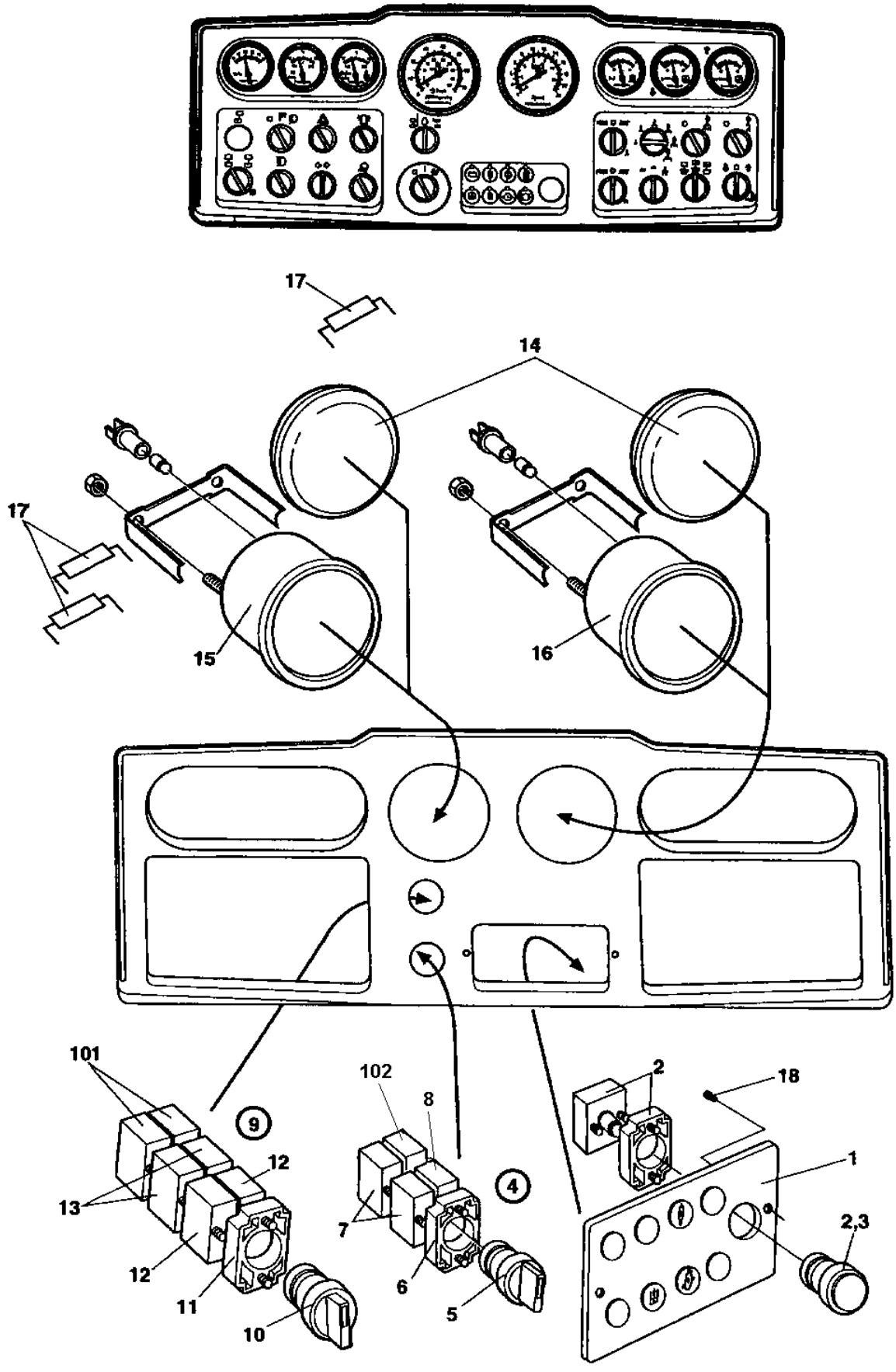
17
14
17
15
16
101
102
8
2
18
9
12
1
13
4
7
2,3
12
6
11
5
10

Instrument panel Main

Ref. No.	Part No.	Rem.	Qty	Description	Code
1	370170	1	1	Display	D
2	985146	A	1	Pilot lamp cpl Red	D
3	985012		1	Bulb	D
4		B	1	Switch, cpl	D
5	932050		1	.Switch	
6	903876		1	.Connector	
7	930154		2	.Contact piece	
8	930163		1	.Contact piece	D
9		C	1	Switch, cpl	D
10	932058		1	.Switch	D
11	903876		1	.Connector	
12	930163		2	.Contact piece	D
13	930154		2	.Contact piece	
14	345139		1	Hole plug	
15	371274		1	Tachometer and frequency meter	D
			1	Bulb	D
			1	Sensor	D
16	359347		1	Speedometer	
			1	Bulb	
			1	Sensor	
17	357526		3	Resistor	
18	903657		2	Screw	
101	930163	D	1	Contact piece	D
102				Not used on this model	D

1) Replaced as Spare Part by rebuilding kit PN 381693 (Display PN 380660 included).

A) Main warning

B) Start

C) Frequency/tachometer selector

D) Option tachograph

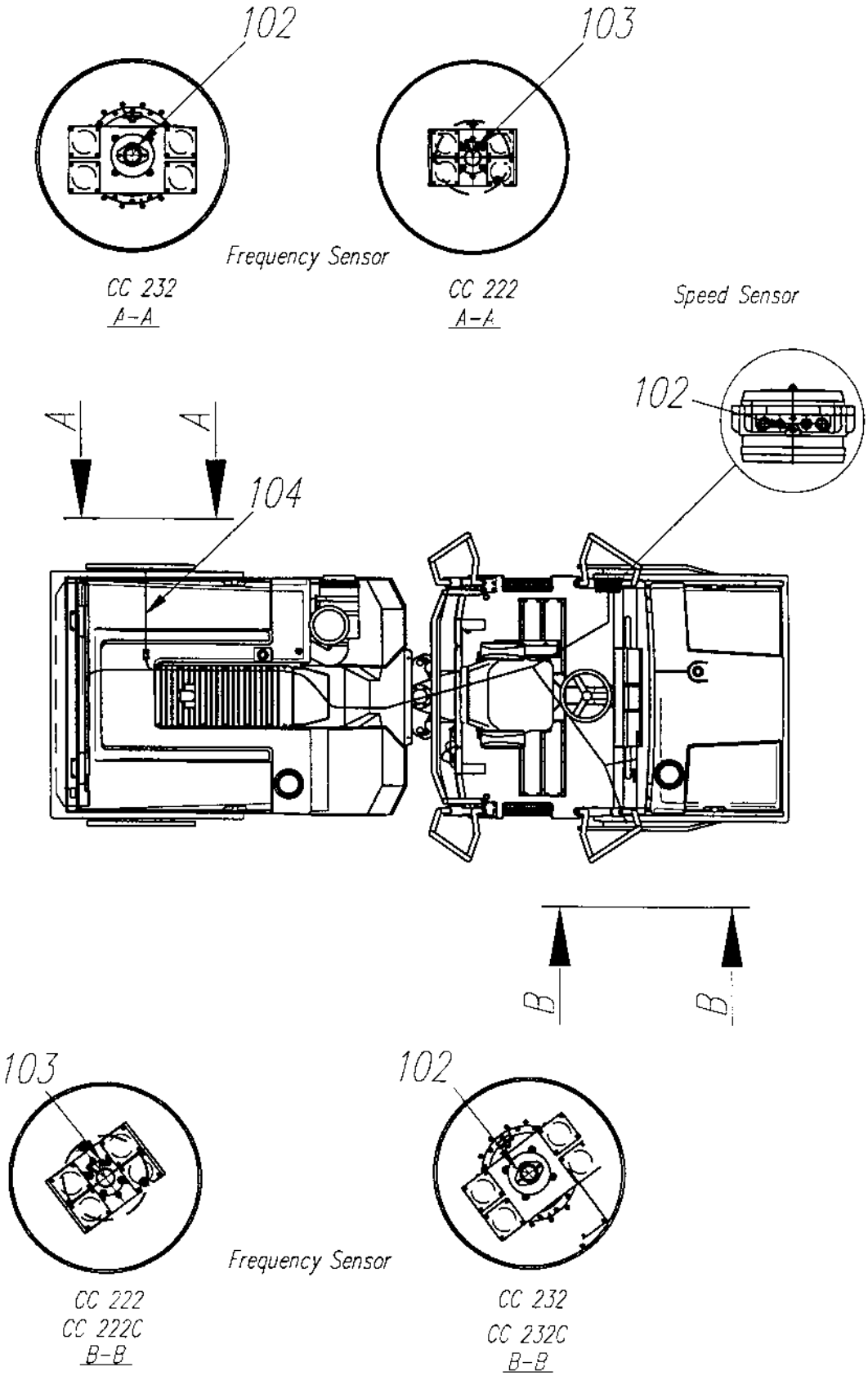
102
103
Frequency Sensor
CC 232
A-A
CC 222
A-A
Speed Sensor
A
A
104
102
B
B
103
102
Frequency Sensor
CC 222
CC 222C
B-B
CC 232
CC 232C
B-B

Speed and frequency Sensors

Ref. No.	Part No.	Rem.	Qty	Description	Code
102	372576	1	1	Sensor M12-1	
103	372618	1	2	Sensor 3/4-16	
104	372918		1	Cable harness Up to 61710796	
	376177		1	Cable harness From 61710797 Up to 61710797	
	372918		1	Cable harness From 61710798 Up to 61710825	
	376177		1	Cable harness From 61710826	

1) Please read your workshop manual for adjustment of the sensors

Instrument panel Upper left

15708-2

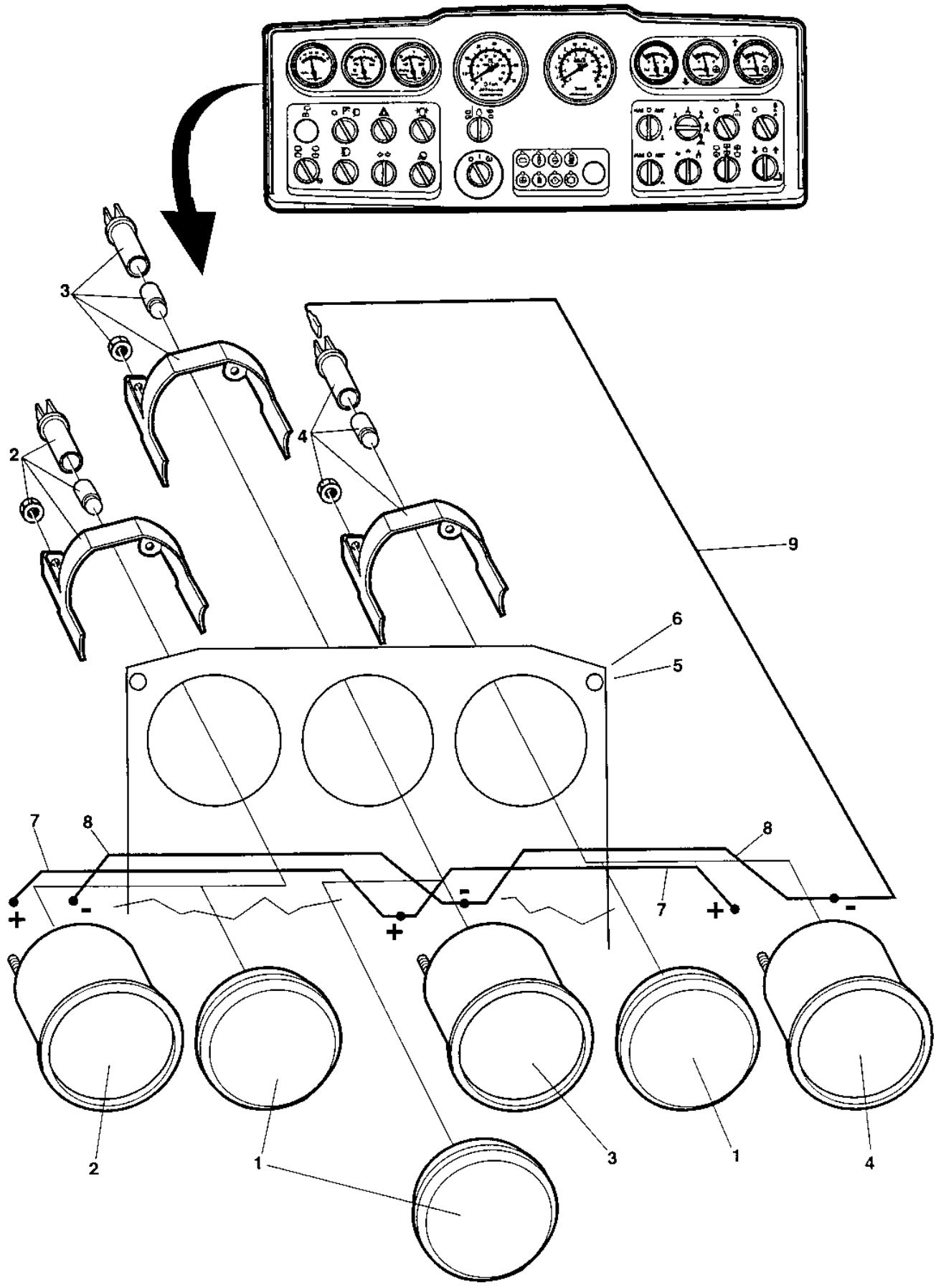

Instrument panel Upper left

Ref. No.	Part No.	Rem.	Qty	Description	Code
1	345870		3	Plug	
2	359340		1	Volt meter	D
	355258		1	.Lamp holder	
	985012		1	.Bulb	D
3	359341	A	1	Temperature meter hydraulic oil Option	D
	355258		1	.Lamp holder	
	985012		1	.Bulb	D
		1	1	Temperature sender	D
4	359342	B	1	Water temperature gauge	
	355258		1	.Lamp holder	
	985012		1	.Bulb	D
		2	1	Temperature sender	D
5		3	1	Control panel plate	D
6	903657		2	Screw	
7	343550		2	Connection cable	
8	903927		2	Cable	
9	904016		3	Cable	

1) See section " Electrical equipment "
2) See section " Engine "
3) See section " Instrument panel, lower left "
A) Hydraulic oil
B) Engine oil

Instrument panel Upper right

15709-2

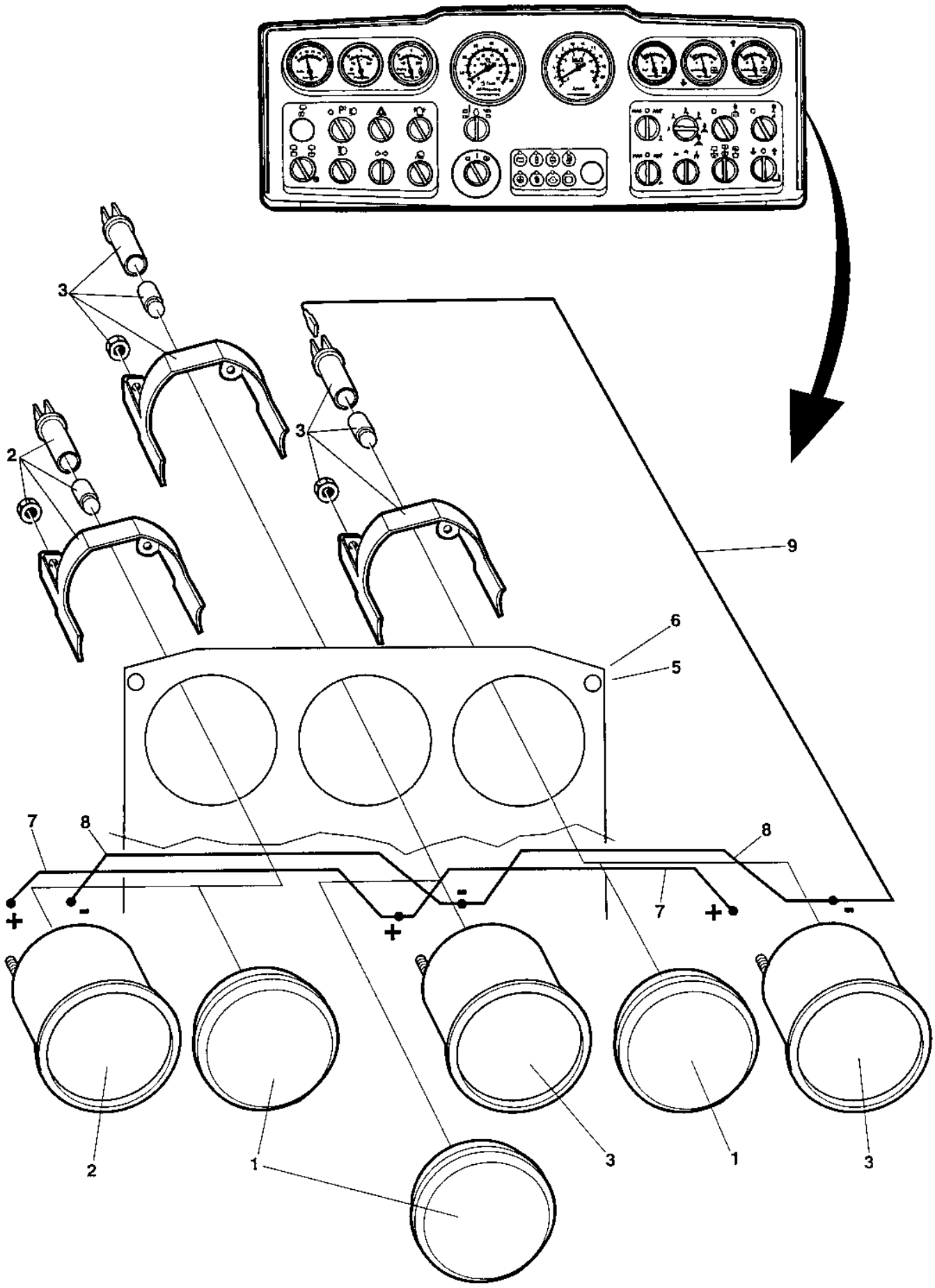

Instrument panel Upper right

Ref. No.	Part No.	Rem.	Qty	Description	Code
1	345870		1	Plug	
2	359343		1	Fuel gauge	D
	355258		1	.Lamp holder	
	985012		1	.Bulb	D
		1	1	Fuel level sender	D
3	359344	A	2	Water gauge	D
	355258		1	.Lamp holder	
	985012		1	.Bulb	D
		2	2	Water level sender	D
5		3	1	Control panel plate	D
6	903657		2	Screw	
7	343550		2	Connection cable	
8	903927		2	Cable	
9	904016		3	Cable	

1) See section " Fuel system "
2) See section " Sprinkler system, tanks "
3) See section " Instrument panel, lower right "
A) Sprinkler tanks

Instrument panel Lower left

15706-3

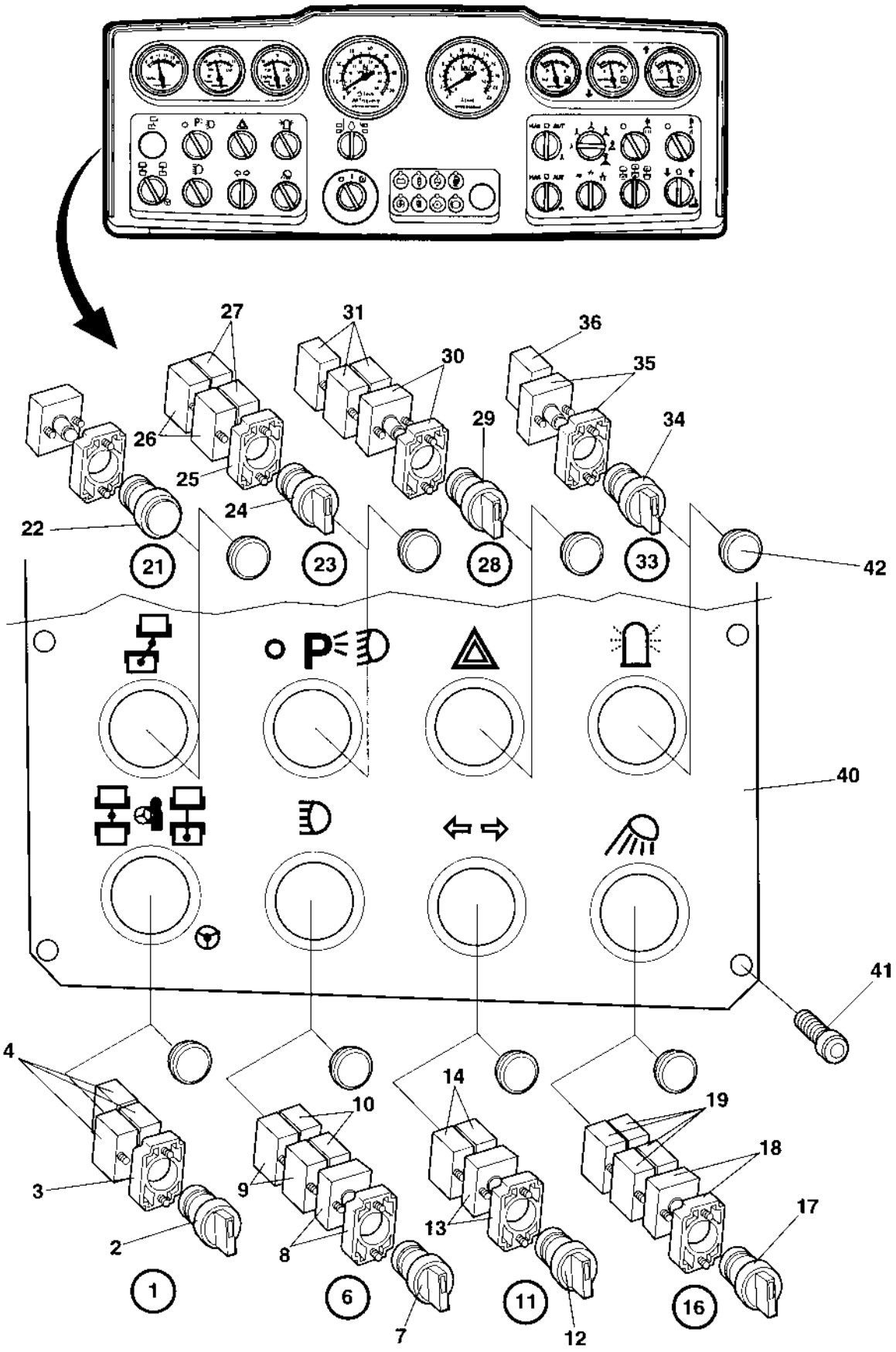

Instrument panel Lower left

Ref. No.	Part No.	Rem.	Qty	Description	Code
1		A	1	Switch, cpl	
2	930192	1	1	.Switch Up to 61710796	D
	932058	2	1	.Switch From 61710797 Up to 61710797	D
	930192	1	1	.Switch From 61710798 Up to 61710825	D
	932058	2	1	.Switch From 61710826	D
3	903876		1	.Connector	
4	930163		2	.Contact piece Up to 61710796	D
	930163		3	.Contact piece From 61710797 Up to 61710797	D
	930163		2	.Contact piece From 61710798 Up to 61710825	D
	930163		3	.Contact piece From 61710826	D
6		B	1	Switch, cpl	D
7	932057	C	1	Switch	
8	903875		1	.Flange with light	
	985012		1	Bulb	D
9	930154		2	.Contact piece	
10	930163		2	.Contact piece	D
11		D	1	Switch, cpl	D
12	930161	E	1	.Switch	D
13	903875		1	.Flange with light	
	985012		1	Bulb	D
14	930163		2	.Contact piece	D
16		F	1	Switch, cpl	D
17	930166	O	1	.Switch	D
18	903875		1	.Flange with light	
	985012		1	Bulb	D
19	930163		4	.Contact piece	D
21	932059	G	1	Pilot lamp cpl Yellow	
	985012		1	Bulb	D
22	903716		1	.Lamp glass Yellow	
23		H	1	Switch, cpl	
24	932058	I	1	.Switch	D
25	903876		1	.Connector	
26	930154		2	.Contact piece	
27	930163		2	.Contact piece	D
28		J	1	Switch, cpl	D
29	932056	K	1	.Switch	D
30	903875		1	.Flange with light	
	985012		1	Bulb	D
31	930163		3	.Contact piece	D
33		L	1	Switch, cpl	D
34	930166	O	1	.Switch	D
35	903875		1	.Flange with light	
	985012		1	Bulb	D
36	930163		1	.Contact piece	D
40	373581		1	Control panel plate	

1) Two fixed positions.
2) Three fixed positions.
A) Artic/pivot steering
B) Main beam
C) Blue
D) Direction indicator
E) Green
F) Working light
G) Drum position
H) Parking/dipped beam
I) Black
J) Hazard flasher
K) Red
L) Rotating beacon
O) Yellow

Instrument panel Lower left

15706-3

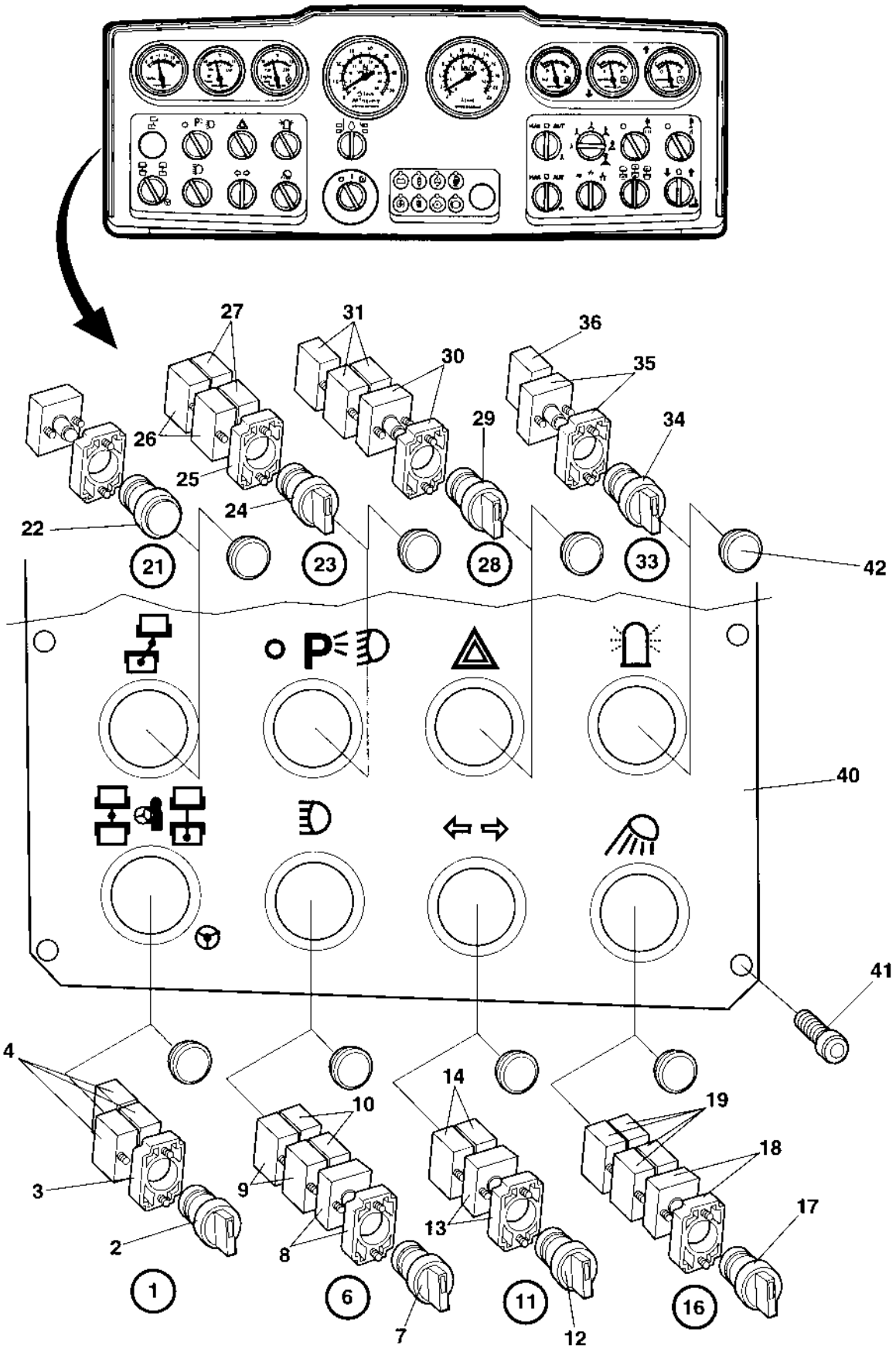

Instrument panel Lower left

Ref. No.	Part No.	Rem.	Qty	Description	Code
41	903657		4	Screw	
42	911456	N	N	Hole plug	

N) Quantity as required

Instrument panel Lower right

15707-1

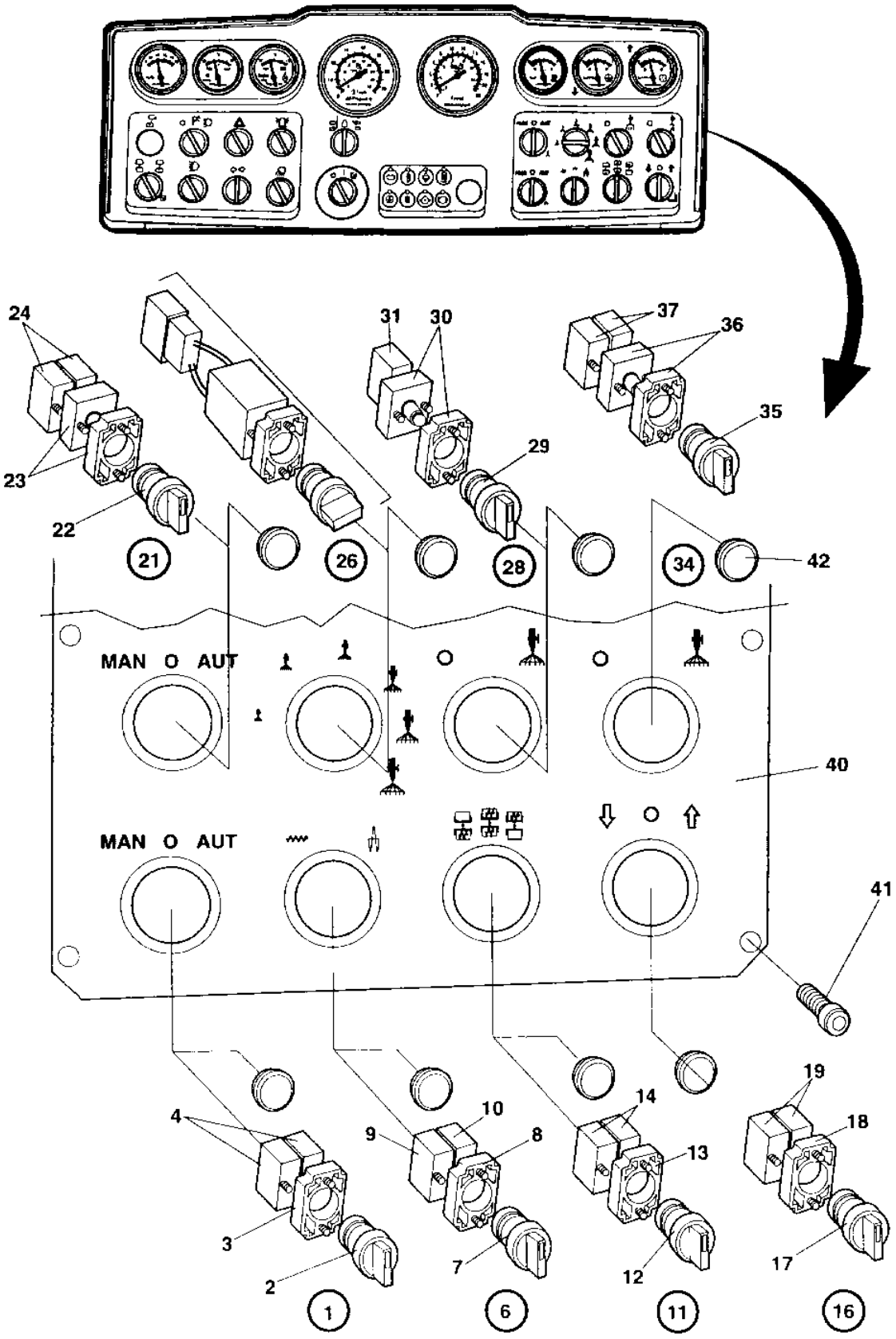

Instrument panel Lower right

Ref. No.	Part No.	Rem.	Qty	Description	Code
1		A	1	Switch, cpl	
2	932058	B	1	.Switch	D
3	903876		1	.Connector	
4	930163		2	.Contact piece	D
6		C	1	Switch, cpl	D
7	930192	B	1	.Switch	D
8	903876		1	.Connector	
9	930163		1	.Contact piece	D
10	930154		1	.Contact piece	
11		D	1	Switch, cpl	
12	932058	B	1	.Switch	D
13	903876		1	.Connector	
14	930163		2	.Contact piece	D
16		E	1	Switch, cpl	D
17	925713	B	1	.Knob	
18	903876		1	.Connector	
19	930163		2	.Contact piece	D
21		F	1	Switch, cpl	D
22	926989	G	1	.Switch	
23	903875		1	.Flange with light	
	985012		1	.Bulb	D
24	930163		2	.Contact piece	D
26	370644	H	1	Switch, cpl	
28		I	1	Switch, cpl	
29	932057	G	1	Switch	
30	903875		1	.Flange with light	
	985012		1	.Bulb	D
31	930163		1	.Contact piece	D
34		J	1	Switch, cpl	D
35	932057	G	1	.Switch	
36	903875		1	.Flange with light	
	985012		1	.Bulb	D
37	930163		2	.Contact piece	D
40	373582		1	Control panel plate	
41	903657		4	Screw	
42	911456		8	Hole plug	

A) Vibration manual/automatic
B) Black
C) Amplitude selector
D) Vibration selector
E) Edge cut. up/down
F) Sprinkler manual/automatic
G) Blue
H) Sprinkler timer, used together with relay PN374213
I) Sprinkler tyres
J) Sprinkler edge cut.

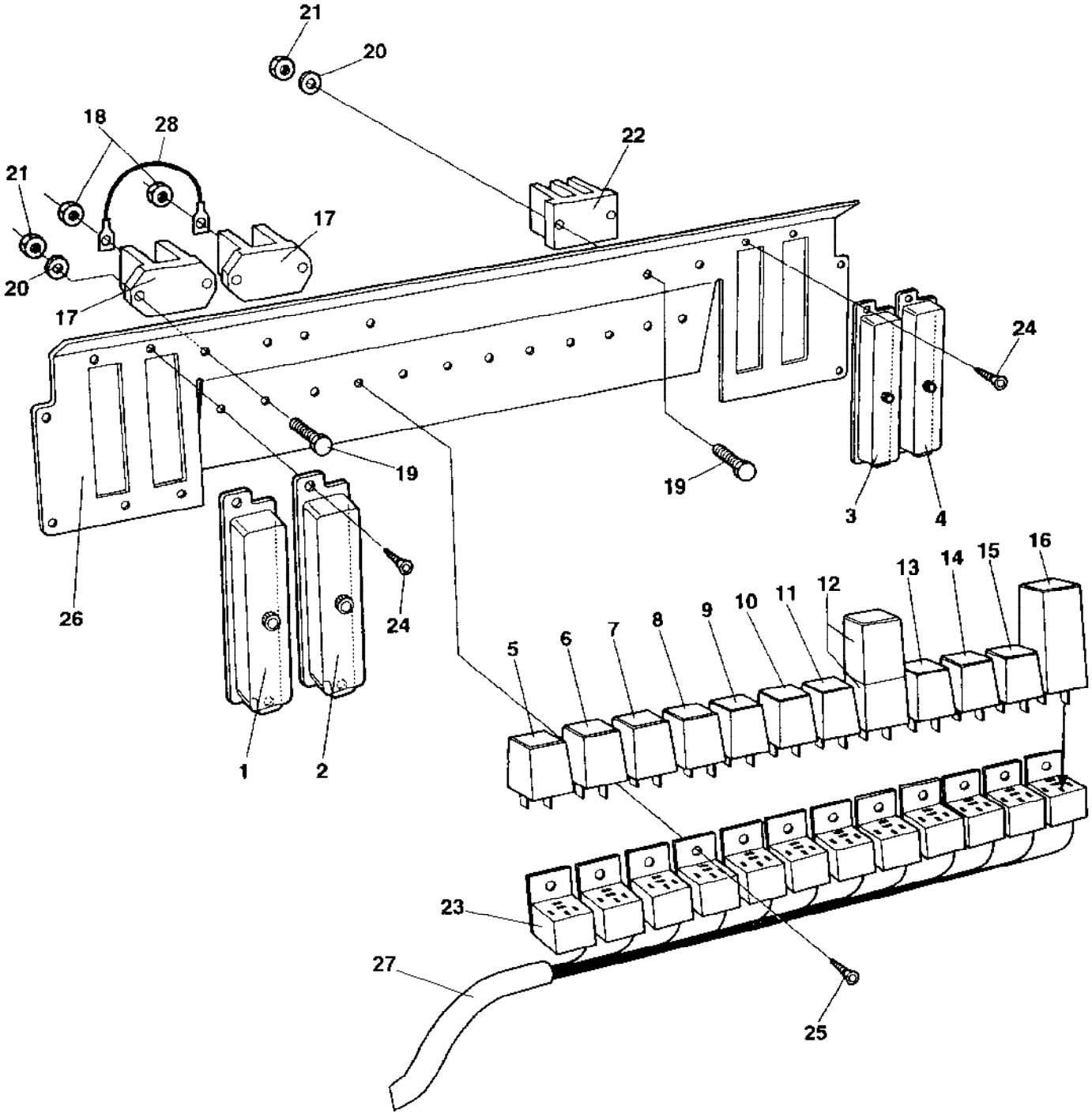
21
20
18
28
22
21
17
20
17
24
19
19
3
4
26
24
16
15
14
13
12
11
10
9
8
7
6
5
1
2
23
27
25

Instrument panel Relay, fuses

Ref. No.	Part No.	Rem.	Qty	Description	Code
1	901256	A	1	Fuse box	
	908110		1	.Cover	
	901225	B	N	Fuse 5A	D
	901226	B	N	Fuse 7.5A	D
	901227	B	N	Fuse 10A	D
	901228	B	N	Fuse 15A	B
	903741	B	N	Fuse 20A	D
	901229	B	N	Fuse 25A	B
2	901256		1	Fuse box	
	901240		1	Connector	
3	901256		1	Fuse box	
4	901256		1	Fuse box	
5	287597	C	1	Relay	D
6	904989	D	1	Flash relay Option	D
7	287597	E	1	Relay	D
8	287597	F	1	Relay	D
9	287597	G	1	Relay	D
10	287597	H	1	Relay	D
11	287598	I	1	Relay	D
12	287597	J	1	Relay	D
	374213	K	1	Time relay	D
13	287598	L	1	Relay	D
14	287597	M	1	Relay	D
15	287597	N	1	Relay	D
16	370233	2	1	Relay, VBS	D
17	903627		2	Junction block	
18	902285		2	Lock nut M6	
19	503016		6	Screw	
20	600002		6	Washer	
21	923976		6	Nut	
22	903625		1	Junction block	
23		P	12	Relay holder	
24	901767		8	Screw	
25	902223		12	Screw	
26		1	1	Plate	
27	370161		1	Cable harness Up to 61710644	
	374615		1	Cable harness From 61710645 Up to 61710796	
	376174		1	Cable harness From 61710797 Up to 61710797	
	374615		1	Cable harness From 61710798 Up to 61710825	
	376174		1	Cable harness From 61710826	
28	903970		1	Cable	

1) See section " Instrument box "
2) Replaced as Spare part by PN 382782.
A) Without fuses
B) As required
C) Main, lights
D) Direction indicator
E) Brake light
F) Reversing alarm
G) Fuel level
H) Hour meter
I) Horn
J) Sprinkler
K) Sprinkler, timer, used together with timer switch PN370644
L) Main
M) AVC
N) Neutral start
P) In cable harnesses

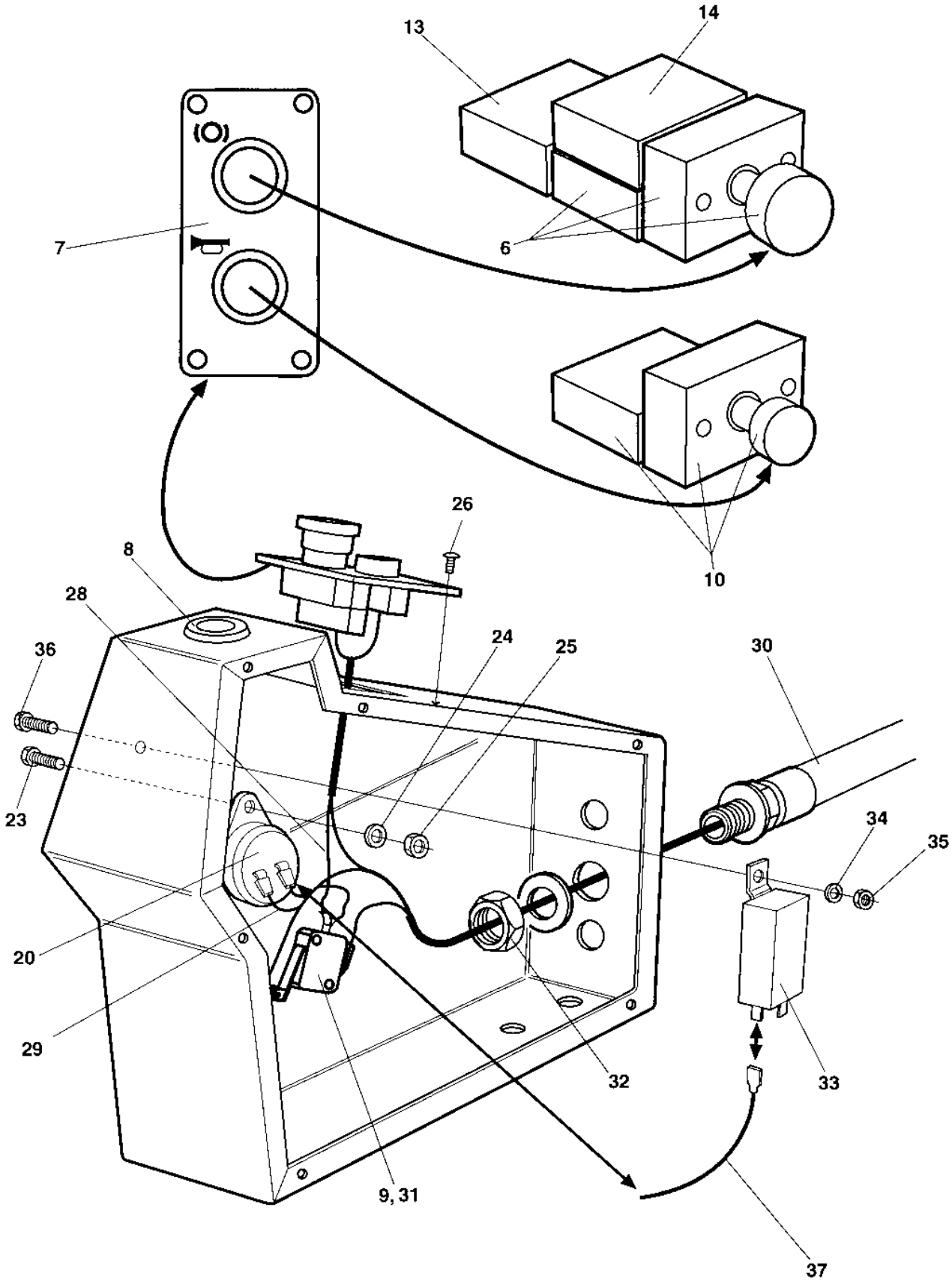
13
14
7
6
10
26
8
28
24
25
30
36
23
34
35
20
29
32
33
9, 31
37

Emergency stop panel

Ref. No.	Part No.	Rem.	Qty	Description	Code
6	930200		1	Emergency stop	D
	930154		1	.Contact piece	
7	359941		1	Control panel plate	
8	911456		1	Hole plug	
9	902528		1	Micro switch	
10	932032	A	1	Push button	D
	930163		1	.Contact piece	D
13	930154		1	Contact piece	
14	930163		1	Contact piece	D
20	355301		1	Buzzer	D
23	500086		1	Screw	
24	904698		1	Washer 4,3x8x0,8	
25	570002		1	Nut M4	
26	904206		4	Screw	
28	370118		1	Cable Up to 61710796	
	904597		1	Cable From 61710797 Up to 61710797	
	370118		1	Cable From 61710798 Up to 61710825	
	904597		1	Cable From 61710826	
29	960792		1	Cable	
30	370071		1	Cable harness Up to 61710796	
	376395		1	Cable harness From 61710797 Up to 61710797	
	370071		1	Cable harness From 61710798 Up to 61710825	
	376395		1	Cable harness From 61710826	
31	900528		2	Screw	
32	791253		1	Nut	
33	904704	B	1	Relay	
34	904228	B	1	Washer 6,4x12x1,5	
35	586002	B	1	Lock nut M6	
36	904650	B	1	Screw	
37	380708	B	1	Cable harness	

A) Horn
B) Interlock, Option

Driving lights Direction & licenseplate light

15858-1

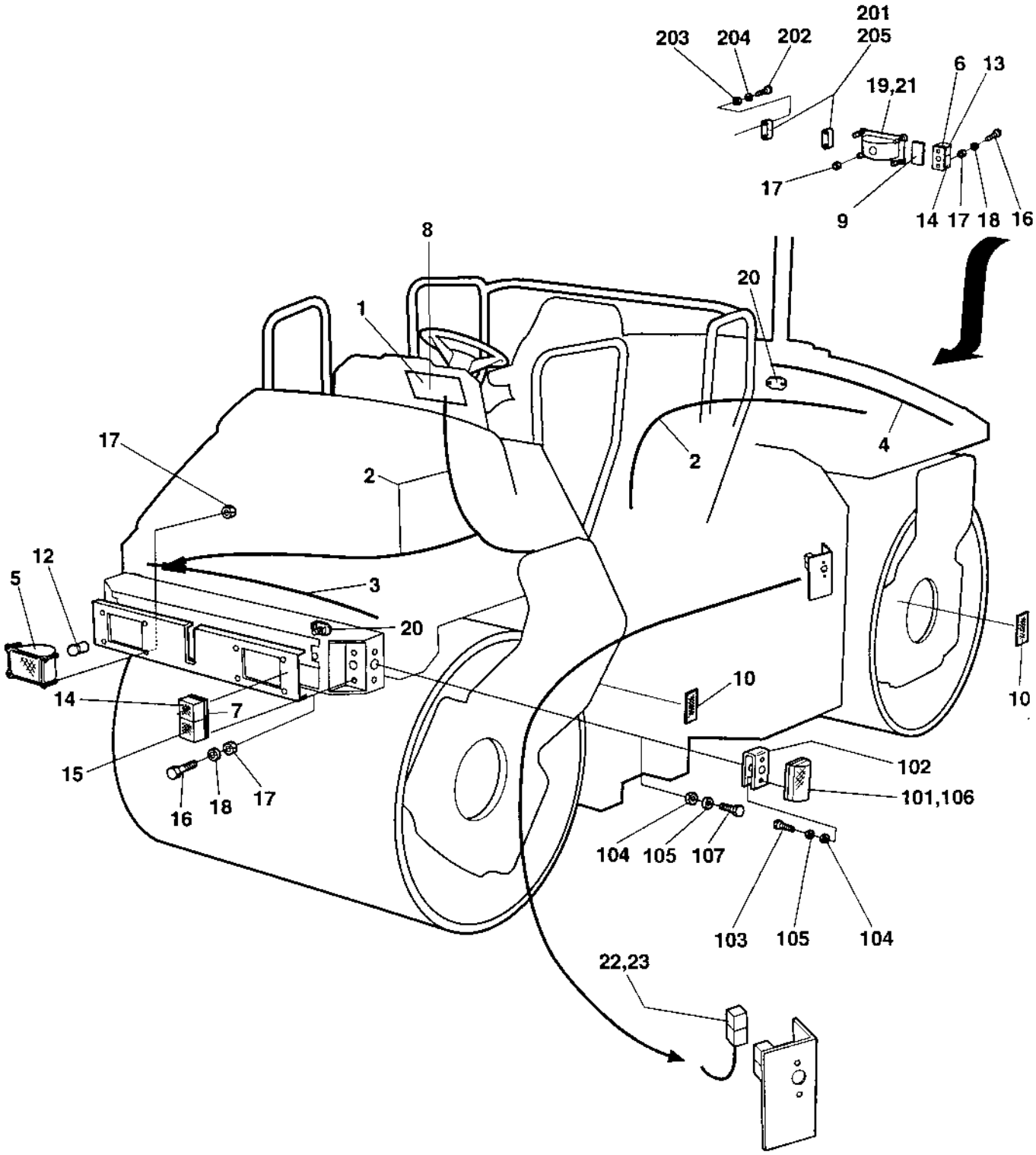

Driving lights Direction & licenseplate light

Ref. No.	Part No.	Rem.	Qty	Description	Code
			1	Driving lights	
1			1	Instrument panel Lower left (Page 288)	
2	370697		1	Cable harness Up to 61710499	
	372917		1	Cable harness From 61710500 Up to 61710644	
	374618		1	Cable harness From 61710645	
3	370695		1	Cable harness Up to 61710499	
	373193		1	Cable harness From 61710500	
4	370695		1	Cable harness Up to 61710499	
	372906		1	Cable harness From 61710500	
5	900792	A	2	Head light Up to 61710670	
	902066	A	2	Head light From 61710671	
	901994	B	2	Head light Up to 61710670	
	904313	B	2	Head light From 61710671	
6	900793	C	2	Tail light	
7	900794	D	2	Turn signals	
8	370744		1	Cable harness Up to 61710644	
	374616		1	Cable harness From 61710645	
9	901182		2	Reflector, red	B
10	901183		4	Reflector, yellow	B
12	900790		2	Bulb 60/55w H4	B
13	900791		2	Bulb	B
14	928502		4	Bulb 21w	B
15	985014		2	Bulb 5w	B
16	926611		8	Screw	
17	586001		16	Lock nut M5 Up to 61710670	
18	904281		8	Washer 5,3x10x1	
19	901993		2	Head light Up to 61710670	
	902227		2	Work light From 61710671	
20	903627		2	Junction block	
21	901369		2	Bulb 55w H3	B
22	904032	E	1	Fuse holder	
23	904039		1	Fuse 50A	D
101	902064		2	Direction lights	
102	371185		2	Bracket	
103	926611		4	Screw	
104	586001		8	Lock nut M5	
105	904281		8	Washer 5,3x10x1	
106	985013		2	Bulb 12V,5W	B
107	500006		4	Screw M5x16	
201	929455		2	Licence plate light	
202	533038		4	Screw	
203	586002		4	Lock nut M6	
204	904228		4	Washer 6,4x12x1,5	
205	985013		2	Bulb 12V,5W	B

A) Right asym
B) Left asym
C) Yellow/red
D) Yellow/white
E) Incl in item 2

Driving lights Direction & licenseplate light

15858-1

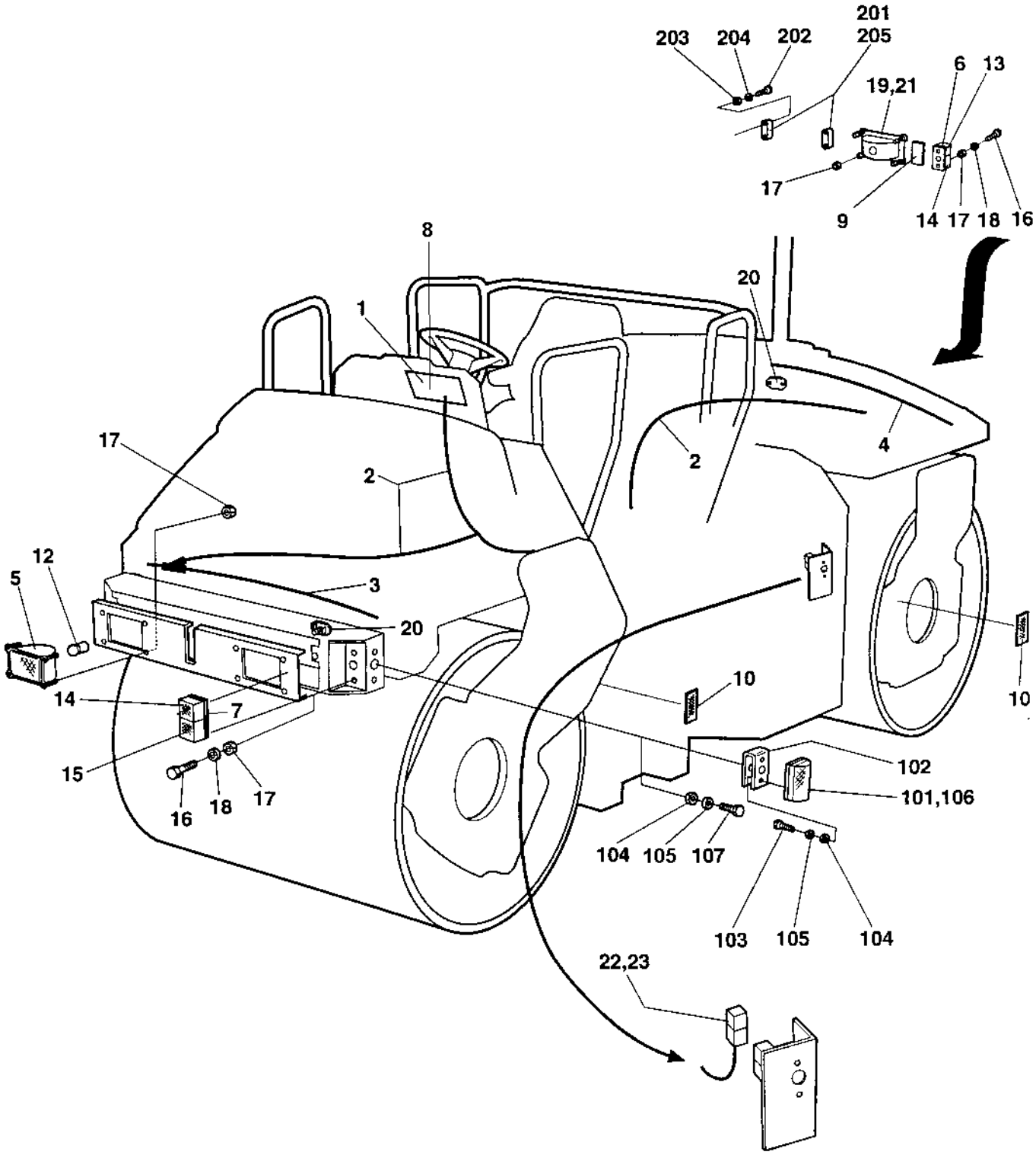

Driving lights Direction & licenseplate light

Ref. No.	Part No.	Rem.	Qty	Description	Code
			1	Driving lights	B
1			1	Instrument panel Lower left (Page 288)	
2	370697		1	Cable harness Up to 61710499	
	372917		1	Cable harness From 61710500 Up to 61710644	
	374618		1	Cable harness From 61710645	
3	370695		1	Cable harness Up to 61710499	
	373193		1	Cable harness From 61710500	
4	370695		1	Cable harness Up to 61710499	
	372906		1	Cable harness From 61710500	
5	900792	A	2	Head light Up to 61710670	
	902066	A	2	Head light From 61710671	
	901994	B	2	Head light Up to 61710670	
	904313	B	2	Head light From 61710671	
6	900793	C	2	Tail light	
7	900794	D	2	Turn signals	
8	370744		1	Cable harness Up to 61710644	
	374616		1	Cable harness From 61710645	
9	901182		2	Reflector, red	B
10	901183		4	Reflector, yellow	B
12	900790		2	Bulb 60/55w H4	B
13	900791		2	Bulb	B
14	928502		4	Bulb 21w	B
15	985014		2	Bulb 5w	B
16	926611		8	Screw	
17	586001		16	Lock nut M5 Up to 61710670	
18	904281		8	Washer 5,3x10x1	
19	901993		2	Head light Up to 61710670	
	902227		2	Work light From 61710671	
20	903627		2	Junction block	
21	901369		2	Bulb 55w H3	B
22	904032	E	1	Fuse holder	
23	904039		1	Fuse 50A	D
101	902064		2	Direction lights	
102	371185		2	Bracket	
103	926611		4	Screw	
104	586001		8	Lock nut M5	
105	904281		8	Washer 5,3x10x1	
106	985013		2	Bulb 12V,5W	B
107	500006		4	Screw M5x16	
201	929455		2	Licence plate light	
202	533038		4	Screw	
203	586002		4	Lock nut M6	
204	904228		4	Washer 6,4x12x1,5	
205	985013		2	Bulb 12V,5W	B

A) Right asym
B) Left asym
C) Yellow/red
D) Yellow/white
E) Incl in item 2

Driving lights Direction & licenseplate light

17044

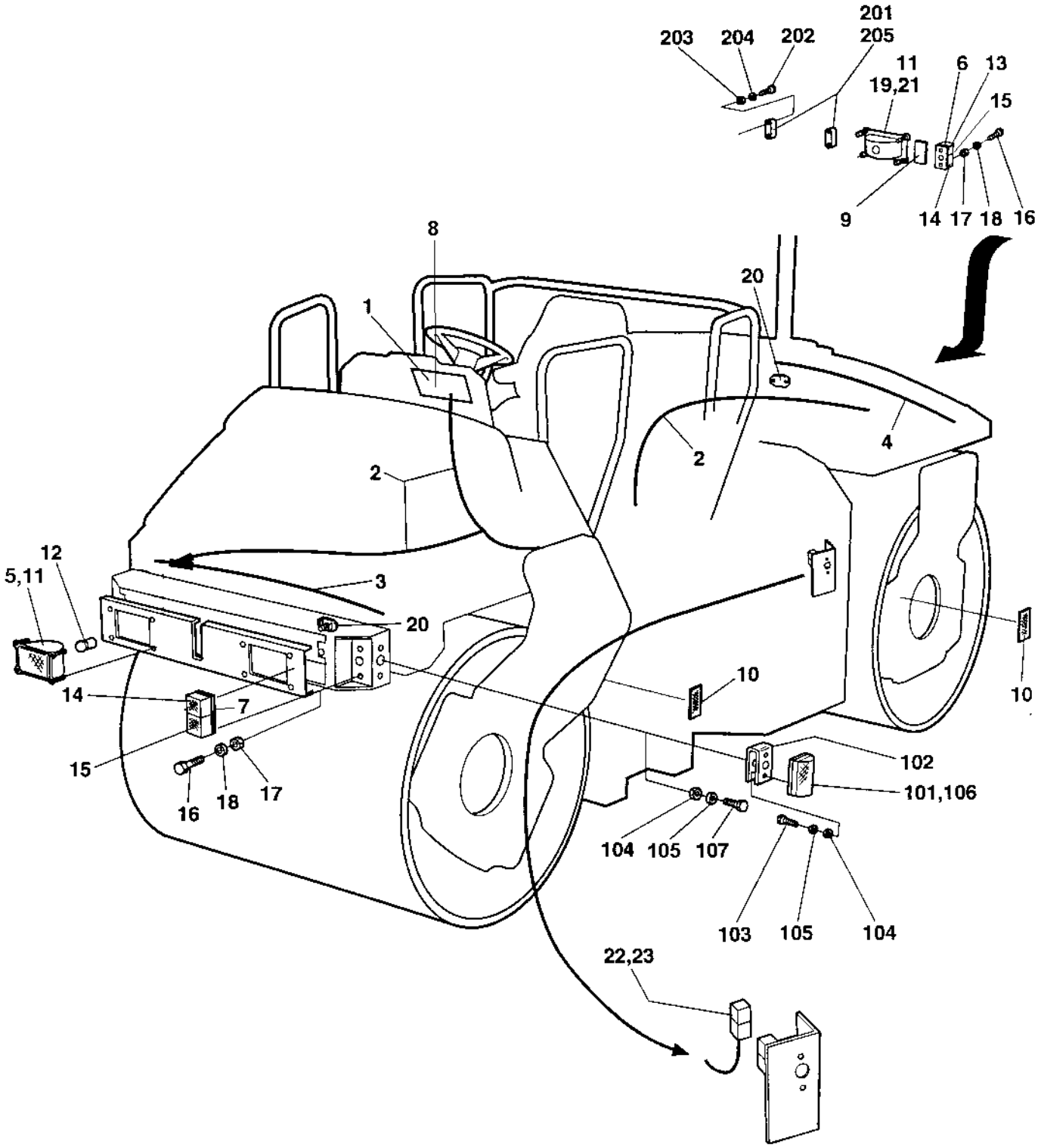

Driving lights Direction & licenseplate light

Ref. No.	Part No.	Rem.	Qty	Description	Code
			1	Driving lights	B
1			1	Instrument panel Lower left (Page 288)	
2	376178		1	Cable harness	
3	376179		1	Cable harness	
4	376180		1	Cable harness	
5	902066	A	2	Head light	
	904313	B	2	Head light	
6	904317	C,F	1	Direction lamp	
	937108		1	.Lamp glass	
	904318	C,G	1	Direction lamp	
	937109		1	.Lamp glass	
7	904315	D,H	1	Direction lamp	
	937106		1	.Lamp glass	
	904316	D,I	1	Direction lamp	
	937107		1	.Lamp glass	
8	376181		1	Cable harness	
9	901182		2	Reflector, red	B
10	901183		4	Reflector, yellow	B
11	791389		8	Drive screw	
12	900790		2	Bulb 60/55w H4	B
13	928502		2	Bulb 21w	B
14	928502		4	Bulb 21w	B
15	985014		4	Bulb 5w	B
16	533030		8	Screw	
17	586001		8	Lock nut M5	
18	601001		8	Washer	
19	902227		2	Work light	
20	903627		2	Junction block	
21	901369		2	Bulb 55w H3	B
22	904032	E	1	Fuse holder	
23	904039		1	Fuse 50A	D
101	902064		2	Direction lights	
102	371185		2	Bracket	
103	926611		4	Screw	
104	586001		8	Lock nut M5	
105	904281		8	Washer 5,3x10x1	
106	985013		2	Bulb 12V,5W	B
107	500006		4	Screw M5x16	
201	929455		2	Licence plate light	
202	533038		4	Screw	
203	586002		4	Lock nut M6	
204	904228		4	Washer 6,4x12x1,5	
205	985013		2	Bulb 12V,5W	B

A) Right asym
B) Left asym
C) Yellow/red
D) Yellow/white
E) Incl in item 2
F) Rear, left
G) Rear, right
H) Front, left
I) Front, right

Driving lights Direction & licenseplate light

17044

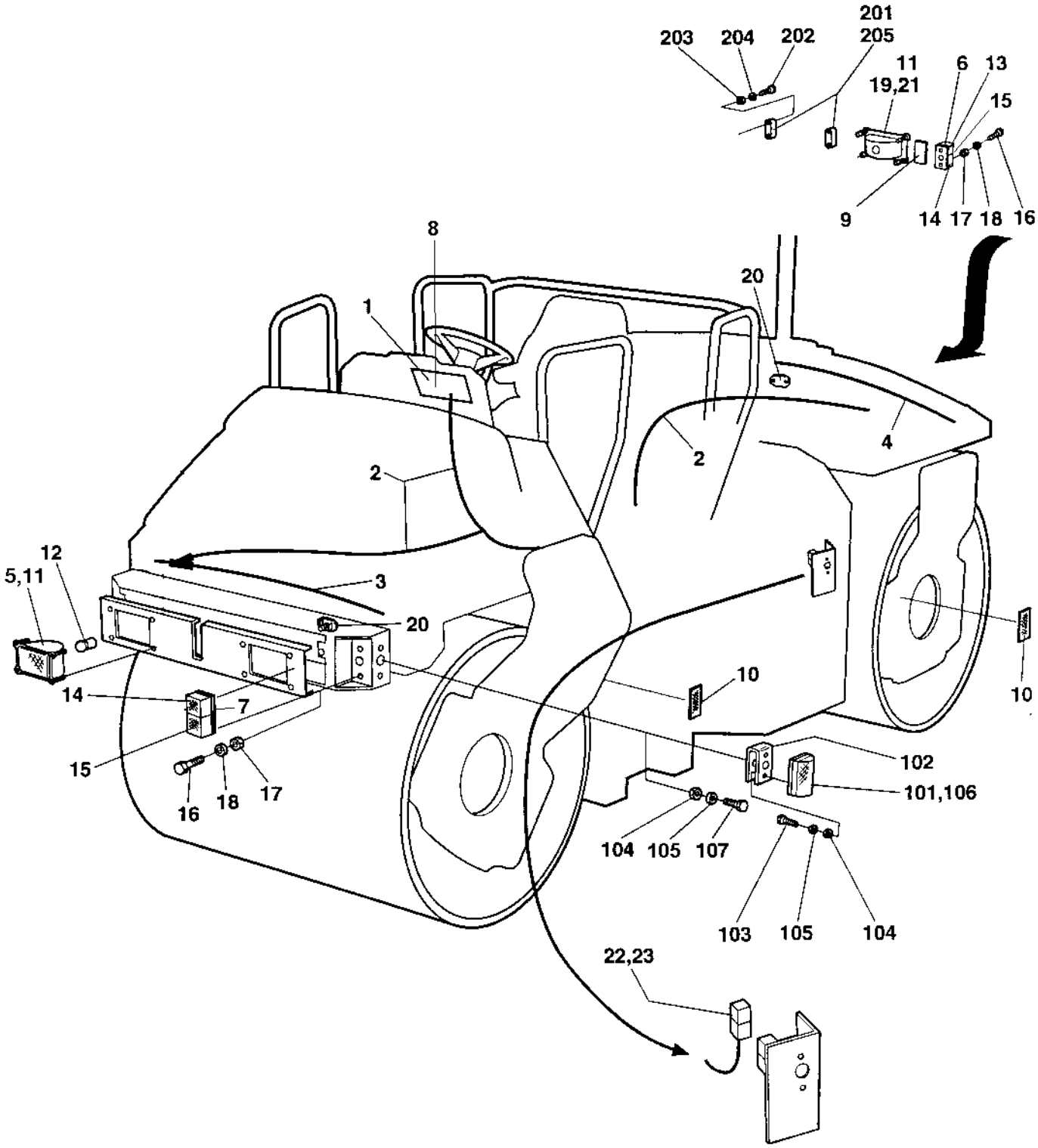

Driving lights Direction & licenseplate light

Ref. No.	Part No.	Rem.	Qty	Description	Code
			1	Driving lights	B
1			1	Instrument panel Lower left (Page 288)	
2	376178		1	Cable harness	
3	376179		1	Cable harness	
4	376180		1	Cable harness	
5	902066	A	2	Head light	
	904313	B	2	Head light	
6	904317	C,F	1	Direction lamp	
	937108		1	.Lamp glass	
	904318	C,G	1	Direction lamp	
	937109		1	.Lamp glass	
7	904315	D,H	1	Direction lamp	
	937106		1	.Lamp glass	
	904316	D,I	1	Direction lamp	
	937107		1	.Lamp glass	
8	376181		1	Cable harness	
9	901182		2	Reflector, red	B
10	901183		4	Reflector, yellow	B
11	791389		8	Drive screw	
12	900790		2	Bulb 60/55w H4	B
13	928502		2	Bulb 21w	B
14	928502		4	Bulb 21w	B
15	985014		4	Bulb 5w	B
16	533030		8	Screw	
17	586001		8	Lock nut M5	
18	601001		8	Washer	
19	902227		2	Work light	
20	903627		2	Junction block	
21	901369		2	Bulb 55w H3	B
22	904032	E	1	Fuse holder	
23	904039		1	Fuse 50A	D
101	902064		2	Direction lights	
102	371185		2	Bracket	
103	926611		4	Screw	
104	586001		8	Lock nut M5	
105	904281		8	Washer 5,3x10x1	
106	985013		2	Bulb 12V,5W	B
107	500006		4	Screw M5x16	
201	929455		2	Licence plate light	
202	533038		4	Screw	
203	586002		4	Lock nut M6	
204	904228		4	Washer 6,4x12x1,5	
205	985013		2	Bulb 12V,5W	B

A) Right asym
B) Left asym
C) Yellow/red
D) Yellow/white
E) Incl in item 2
F) Rear, left
G) Rear, right
H) Front, left
I) Front, right

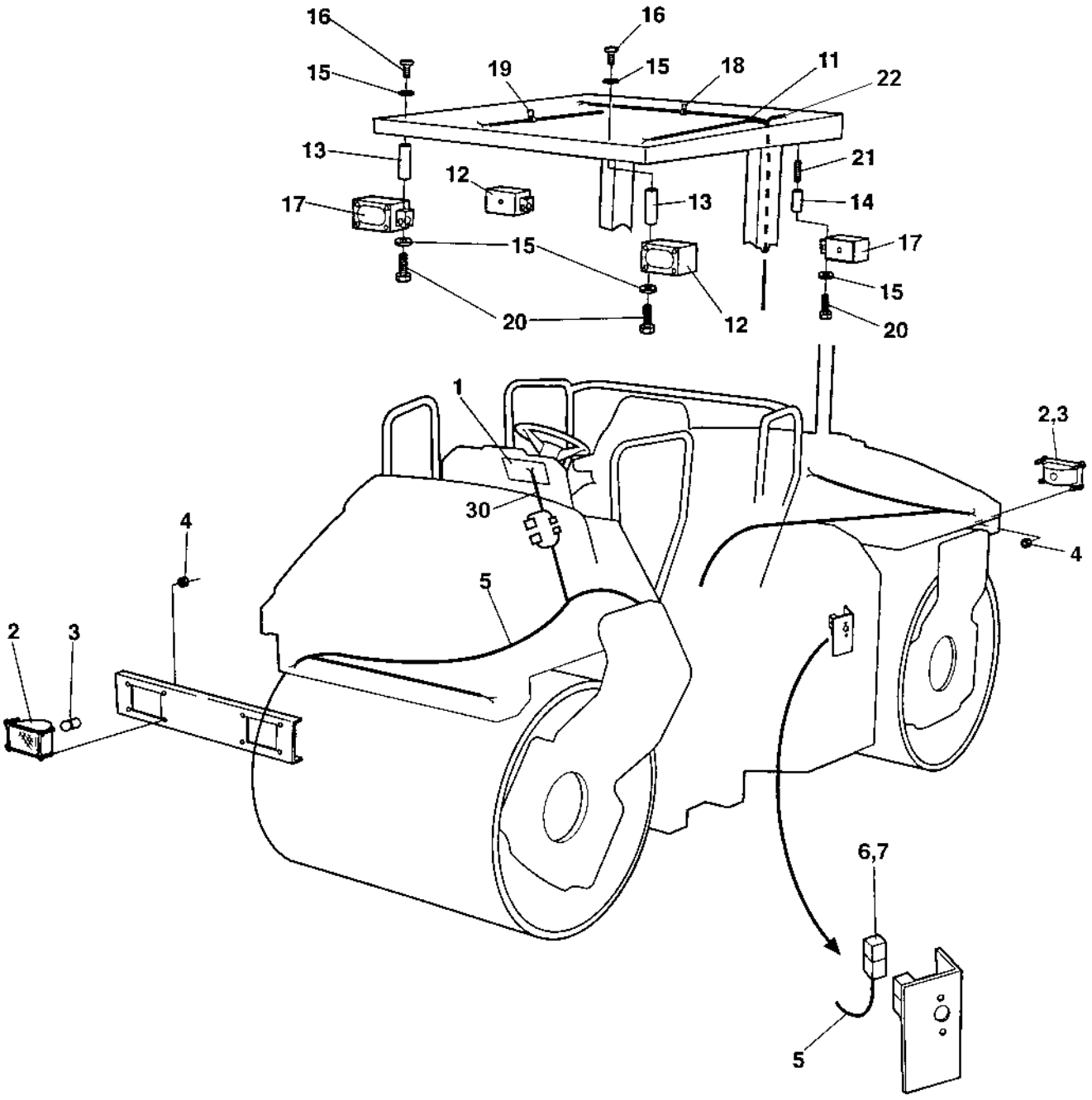
16
16
15
19
15
18
11
22
13
12
21
17
13
14
15
17
15
15
20
12
20
1
2,3
30
4
4
5
2
3
6,7
5

Working lights with/without Rops

Ref. No.	Part No.	Rem.	Qty	Description	Code
				Working light	B
1			1	.Control panel	B
2	901993	A	4	.Head light Up to 61710670	
	902227	A	4	.Work light From 61710671	
3	901369		4	.Bulb 55w H3	B
4	586001		16	.Lock nut M5 Up to 61710670	
5	371271		1	.Cable harness Up to 61710499	
	373137		1	.Cable harness From 61710500 Up to 61710644	
	374619		1	.Cable harness From 61710645	
6	904032		1	..Fuse holder	
7	904038		1	.Fuse 40A	D
				Working light, rops	D
11	370863		1	.Cable harness	
12	908266		2	.Working light	D
13	370993		2	.Spacer	
14	370994		2	.Spacer	
15	904229		6	.Washer 8,4x16x1,5	
16	500021		2	.Screw M8-1,25x25 8,8	
17	908267		2	.Working light	D
18	921031		5	.Clamp	
19	921039		6	.Pipe clamp	
20	500019		4	.Screw M8-1,25x16 8,8	
21	903768		2	.Threaded stud	
22				Not used on this model	
30	370744		1	Cable harness Up to 61710644	
	374616		1	Cable harness From 61710645	

A) Working light

Working lights with/without Rops

15859-1

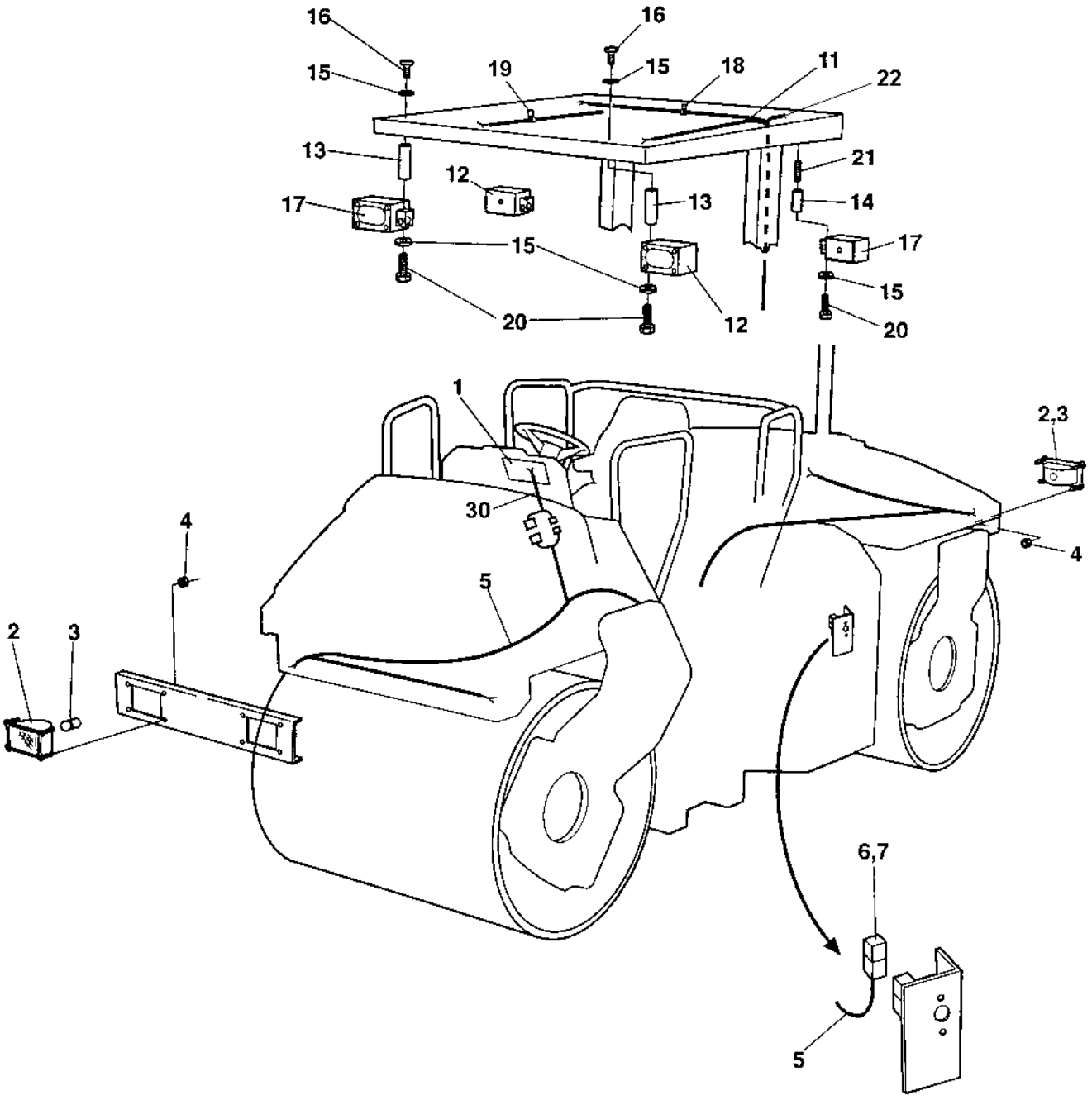

Working lights with/without Rops

Ref. No.	Part No.	Rem.	Qty	Description	Code
				Working light	
1			1	.Control panel	
2	901993	A	4	.Head light Up to 61710670	
	902227	A	4	.Work light From 61710671	
3	901369		4	.Bulb 55w H3	B
4	586001		16	.Lock nut M5 Up to 61710670	
5	371271		1	.Cable harness Up to 61710499	
	373137		1	.Cable harness From 61710500 Up to 61710644	
	374619		1	.Cable harness From 61710645	
6	904032		1	..Fuse holder	
7	904038		1	.Fuse 40A	D
				Working light, rops	D
11	370863		1	.Cable harness	
12	908266		2	.Working light	D
13	370993		2	.Spacer	
14	370994		2	.Spacer	
15	904229		6	.Washer 8,4x16x1,5	
16	500021		2	.Screw M8-1,25x25 8,8	
17	908267		2	.Working light	D
18	921031		5	.Clamp	
19	921039		6	.Pipe clamp	
20	500019		4	.Screw M8-1,25x16 8,8	
21	903768		2	.Threaded stud	
22				Not used on this model	
30	370744		1	Cable harness Up to 61710644	
	374616		1	Cable harness From 61710645	

A) Working light

Working lights with/without Rops

16970

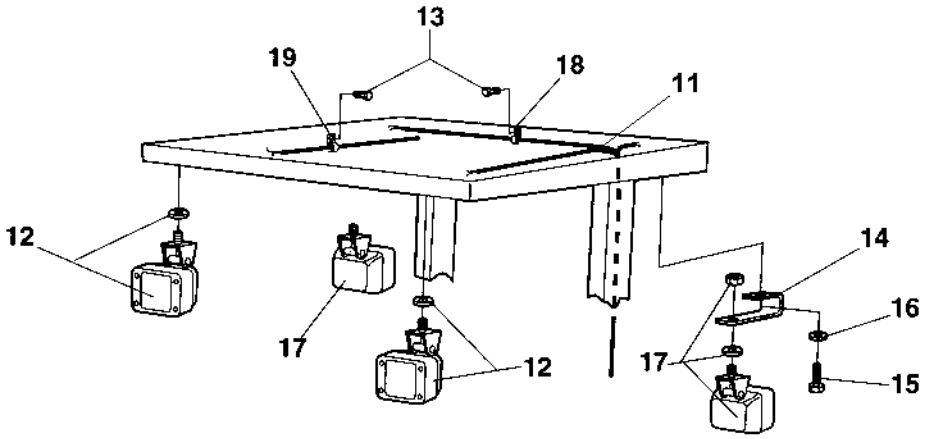

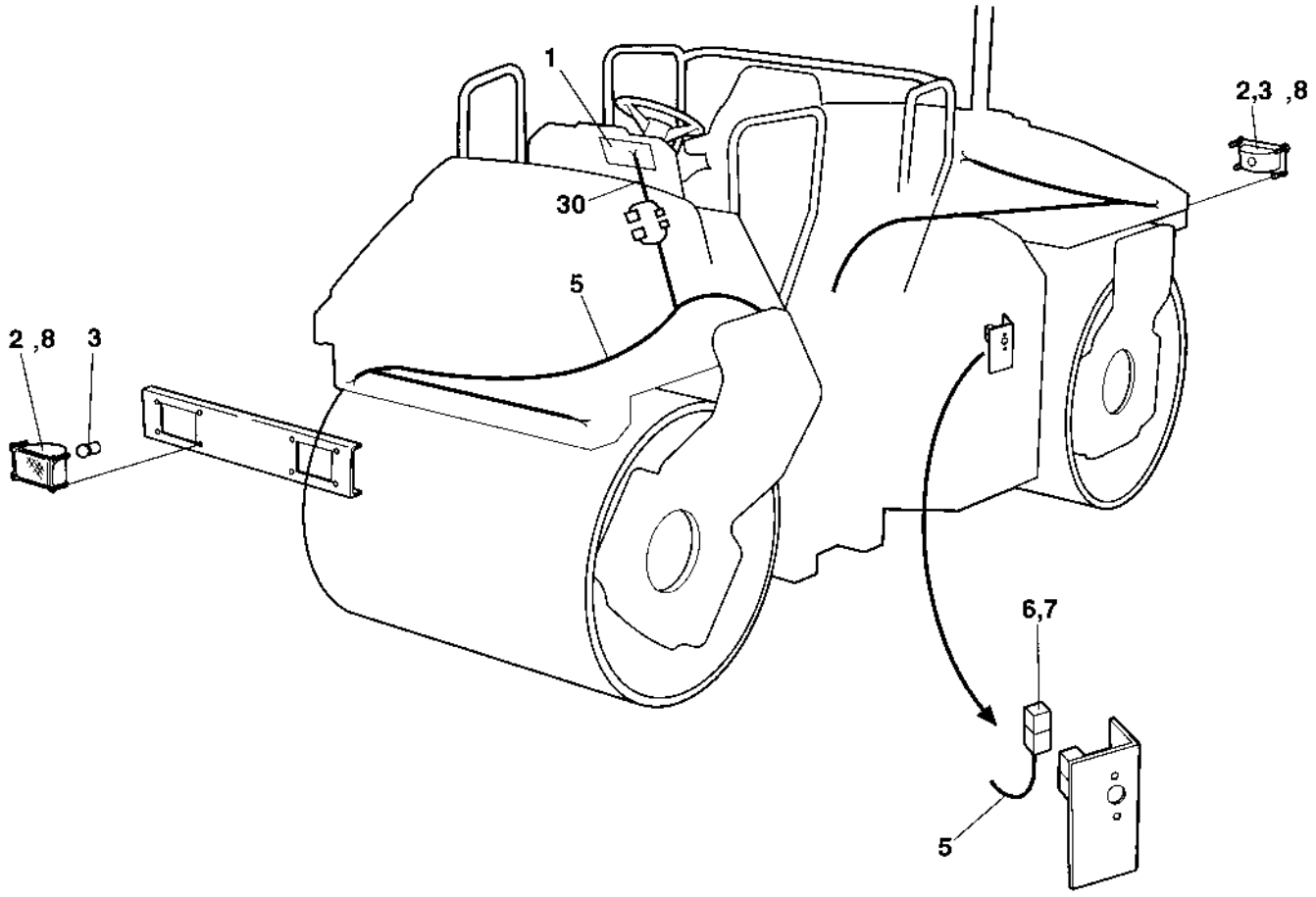

Working lights with/without Rops

Ref. No.	Part No.	Rem.	Qty	Description	Code
				Working light	
1			1	.Control panel	
2	902227		4	.Work light	
3	901369		4	.Bulb 55w H3	B
5	376182		1	.Cable harness	
6	904032		1	..Fuse holder	
7	904038		1	.Fuse 40A	D
8	791389		8	.Drive screw	
				Working light, rops	
11	376187		1	.Cable harness	
12	904314		2	.Work lamp	
13	541702		11	.Screw M6x12	
14	376466		2	.Bracket	
15	500021		2	.Screw M8-1,25x25 8,8	
16	904229		2	.Washer 8,4x16x1,5	
17	904314		2	.Work lamp	
18	921031		5	.Clamp	
19	921039		6	.Pipe clamp	
30	385264		1	Cable harness	

Working lights with/without Rops

16970

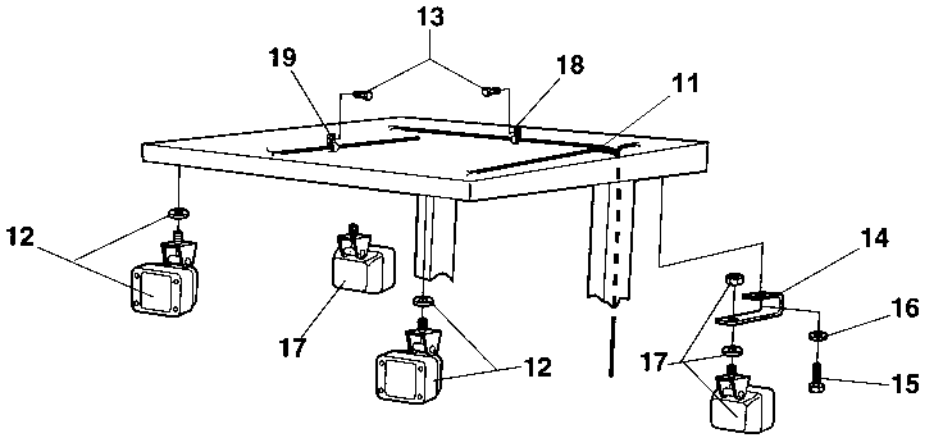

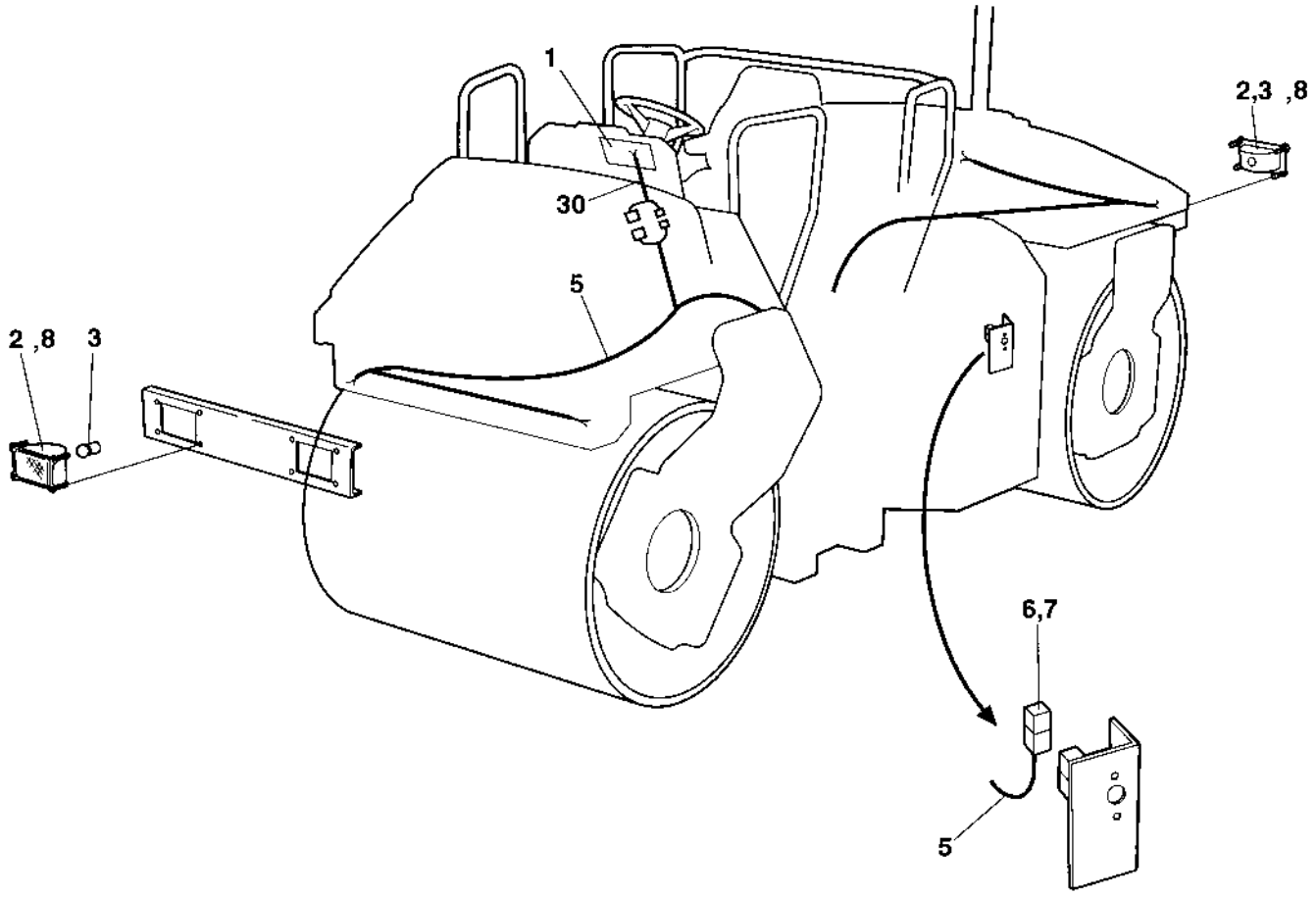

Working lights with/without Rops

Ref. No.	Part No.	Rem.	Qty	Description	Code
				Working light	
1			1	.Control panel	
2	902227		4	.Work light	
3	901369		4	.Bulb 55w H3	B
5	376182		1	.Cable harness	
6	904032		1	..Fuse holder	
7	904038		1	.Fuse 40A	D
8	791389		8	.Drive screw	
				Working light, rops	
11	376187		1	.Cable harness	
12	904314		2	.Work lamp	
13	541702		11	.Screw M6x12	
14	376466		2	.Bracket	
15	500021		2	.Screw M8-1,25x25 8,8	
16	904229		2	.Washer 8,4x16x1,5	
17	904314		2	.Work lamp	
18	921031		5	.Clamp	
19	921039		6	.Pipe clamp	
30	385264		1	Cable harness	

Protection cover, Head light Option

17080

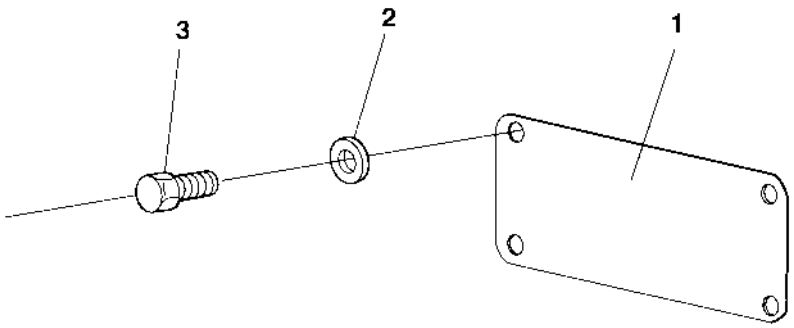

Protection cover, Head light Option

Ref. No.	Part No.	Rem.	Qty	Description	Code
1	374756		1	Protection cover	
2	904281		4	Washer 5,3x10x1	
3	791916		4	Screw	

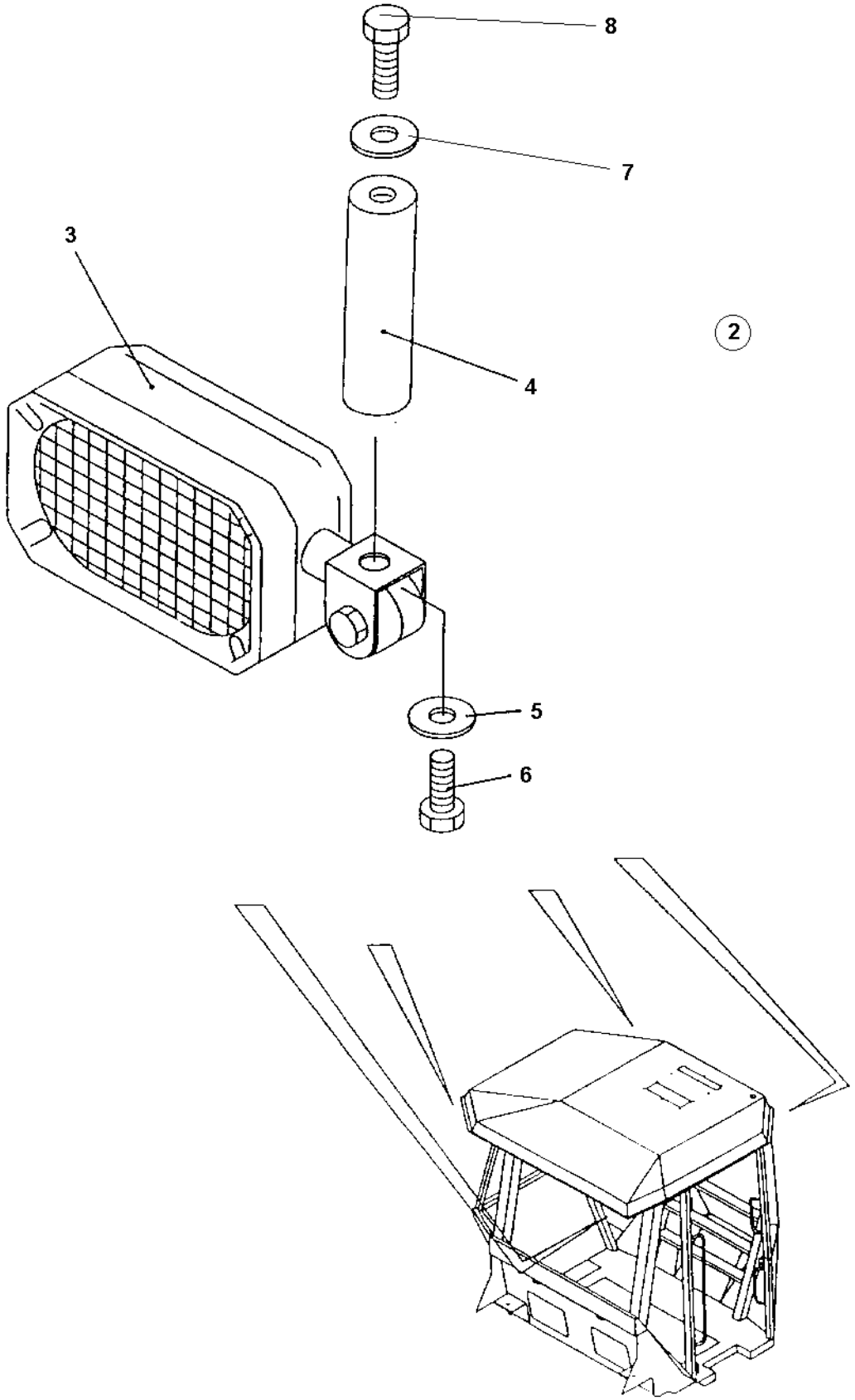
8
7
3
4
2
5
6

Working lights, cab

Ref. No.	Part No.	Rem.	Qty	Description	Code
1				Working lights, cab	
2	371750		4	.Head light cpl	
3	908267		1	..Working light	D
4	908359		1	..Distance	
5	600006		1	..Washer	
6	500019		1	..Screw M8-1,25x16 8,8	
7	600006		4	.Washer	
8	500019		4	.Screw M8-1,25x16 8,8	

Rotating beacon

15827

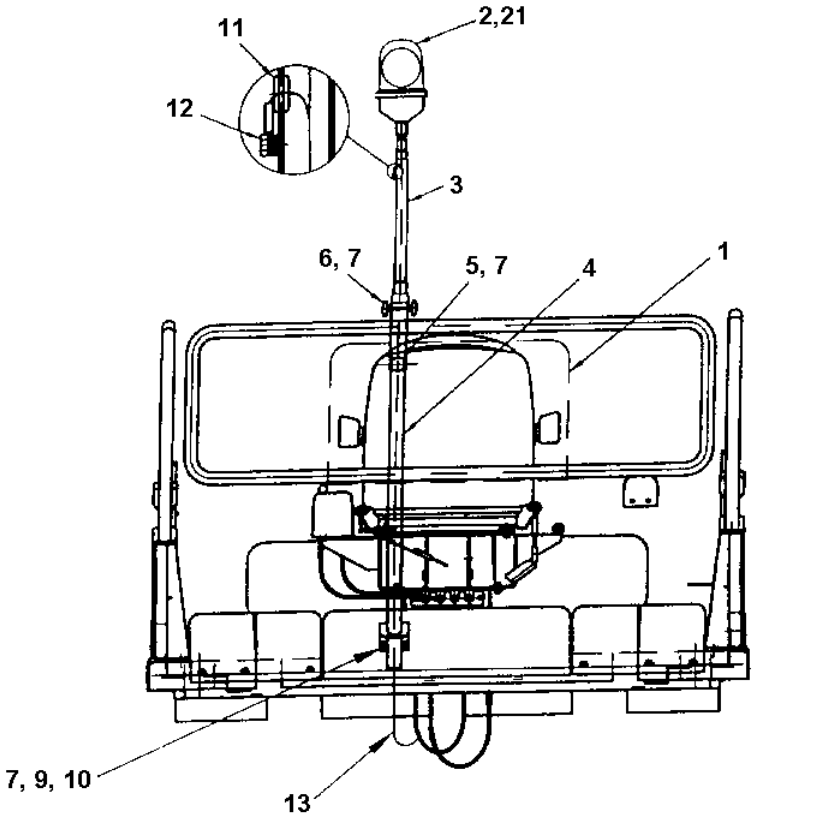

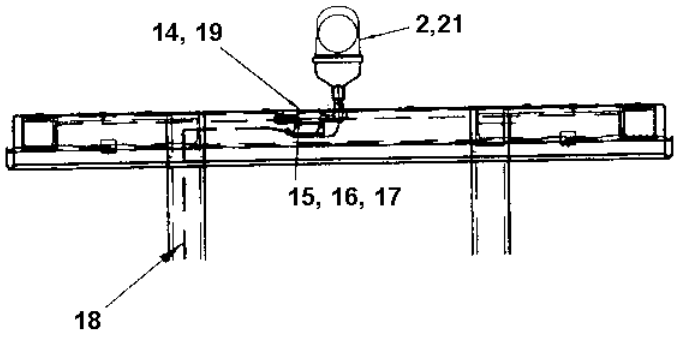

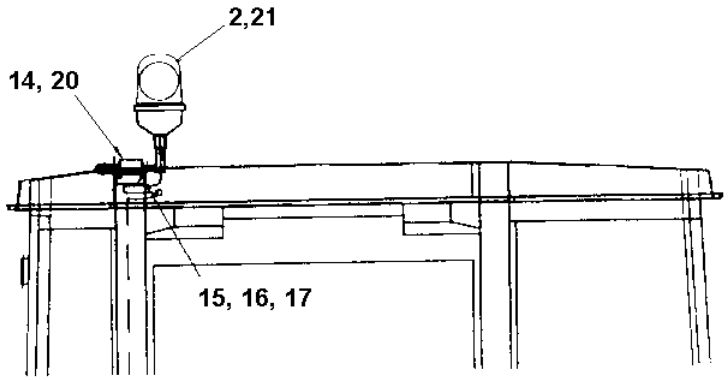

Ref. No.	Part No.	Rem.	Qty	Description	Code
				Std, rops, cab, cab with AC	
1			1	Instrument panel Lower left (Page 288)	
2	999011	4	1	Rotating beacon	D
	985126		1	.Bulb	B
	902803		1	.Lens Orange	B
3	371017	B	1	Lamp holder	
4	371016	C	1	Lamp holder	
5	371058		1	Nut	
6	371665		2	Hand knob	
7	904229		7	Washer 8,4x16x1,5	
	904229	1	2	Washer 8,4x16x1,5	
9	500021		4	Screw M8-1,25x25 8,8	
	500021	1	2	Screw M8-1,25x25 8,8	
10	570005		4	Nut M8	
11	909152		1	Rubber grommet	
12	500044		1	Screw M6x8	
13	371036		1	Cable harness Up to 61710796	
	376184		1	Cable harness From 61710797 Up to 61710797	
	371036		1	Cable harness From 61710798 Up to 61710825	
	376184		1	Cable harness From 61710826	
14	358452	2	1	Lamp holder	
15	500021	2	2	Screw M8-1,25x25 8,8	
16	586003	2	2	Lock nut M8	
17	904229	2	2	Washer 8,4x16x1,5	
18	371036	3	1	Cable harness Up to 61710796	
	376184	3	1	Cable harness From 61710797 Up to 61710797	
	371036	3	1	Cable harness From 61710798 Up to 61710825	
	376184	3	1	Cable harness From 61710826	
19	372674	3	1	Spacer	
20	371364	D	1	Lamp holder	
21	389577	5	1	Rotating beacon	D

1) For machines with Cab.
2) For machines with Rops or Cab.
3) For machines with Rops.
4) Replaced by PN 389577.
5) Replaces PN 999011.
B) Upper
C) Lower
D) Cab with AC

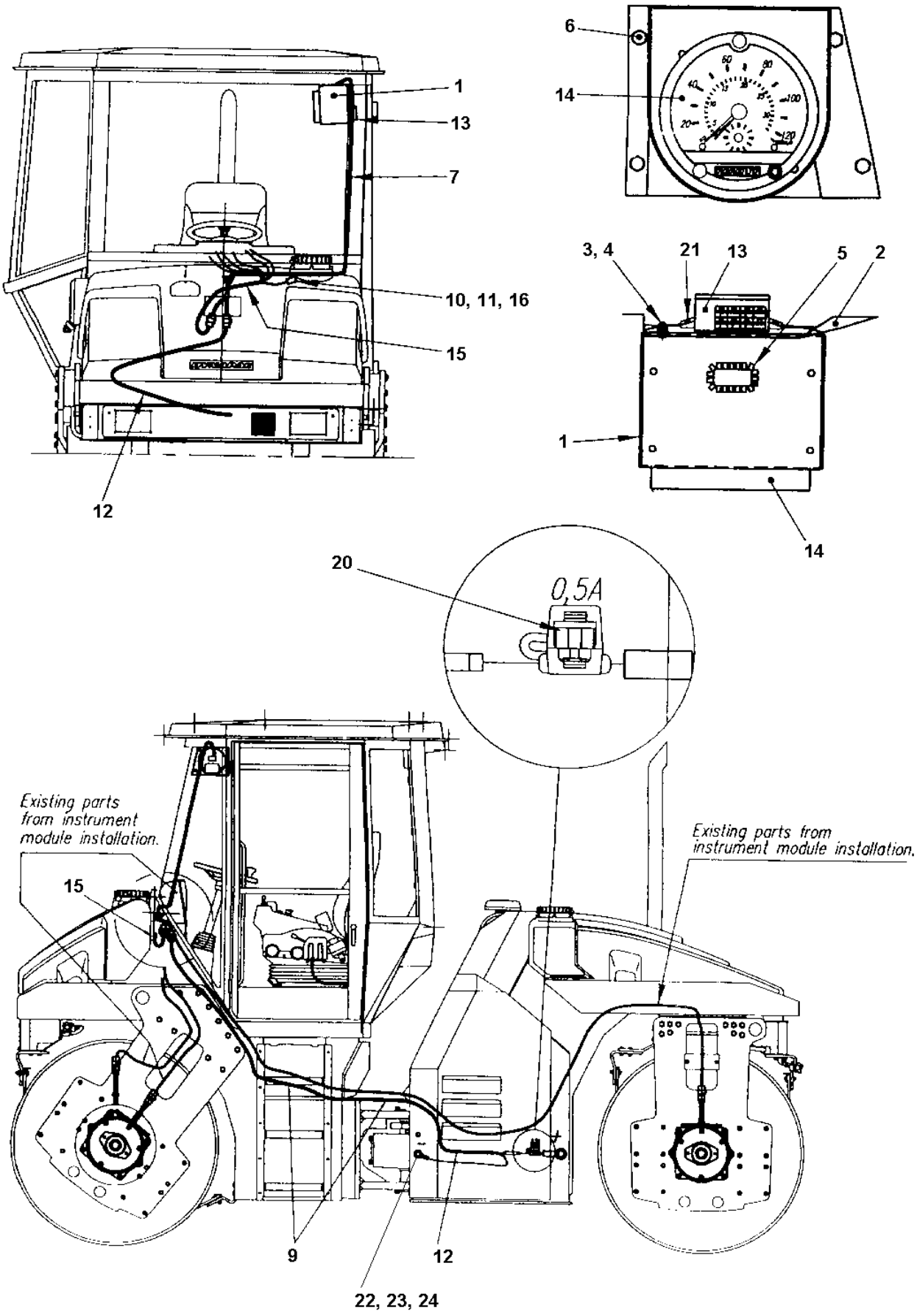
6
14
1
13
7
10, 11, 16
15
12
3, 4
21
13
5
2
1
14
20
0,5A
Existing parts from instrument module installation.
15
Existing parts from instrument module installation.
9
12
22, 23, 24

Ref. No.	Part No.	Rem.	Qty	Description	Code
1	371885		1	Instrument box	
2	370425		1	Support	
3	586002		2	Lock nut M6	
4	928381		2	Washer 6,4x18x1,6	
5	900904	A	1XL	Grommet	
6	541703		4	Screw M6x16	
7	373353		1	Cable harness Up to 61710796	
	376188		1	Cable harness From 61710797 Up to 61710797	
	373353		1	Cable harness From 61710798 Up to 61710825	
	376188		1	Cable harness From 61710826	
9	313041		N	Cable ties L=186 mm	
10	901765		1	Connector 2-POL	D
11	901766		1	Connector 2-POL	D
12	371415		1	Cable harness Up to 61710796	
	376190		1	Cable harness From 61710797 Up to 61710797	
	371415		1	Cable harness From 61710798 Up to 61710825	
	376190		1	Cable harness From 61710826	
13	371889		1	Frequency doubler	
14	901209		1	Tachograph	
15	371318		1	Cable harness Up to 61710796	
	376189		1	Cable harness From 61710797 Up to 61710797	
	371318		1	Cable harness From 61710798 Up to 61710825	
	376189		1	Cable harness From 61710826	
16	903824		1	Terminal	
20	904140	B	1	Fuse 0.5A	
21	500040		1	Screw M6-1x20 8,8	
22	903768		1	Threaded stud	
23	570005		2	Nut M8	
24	904229		1	Washer 8,4x16x1,5	

A) L=200 mm
B) Incl item 12

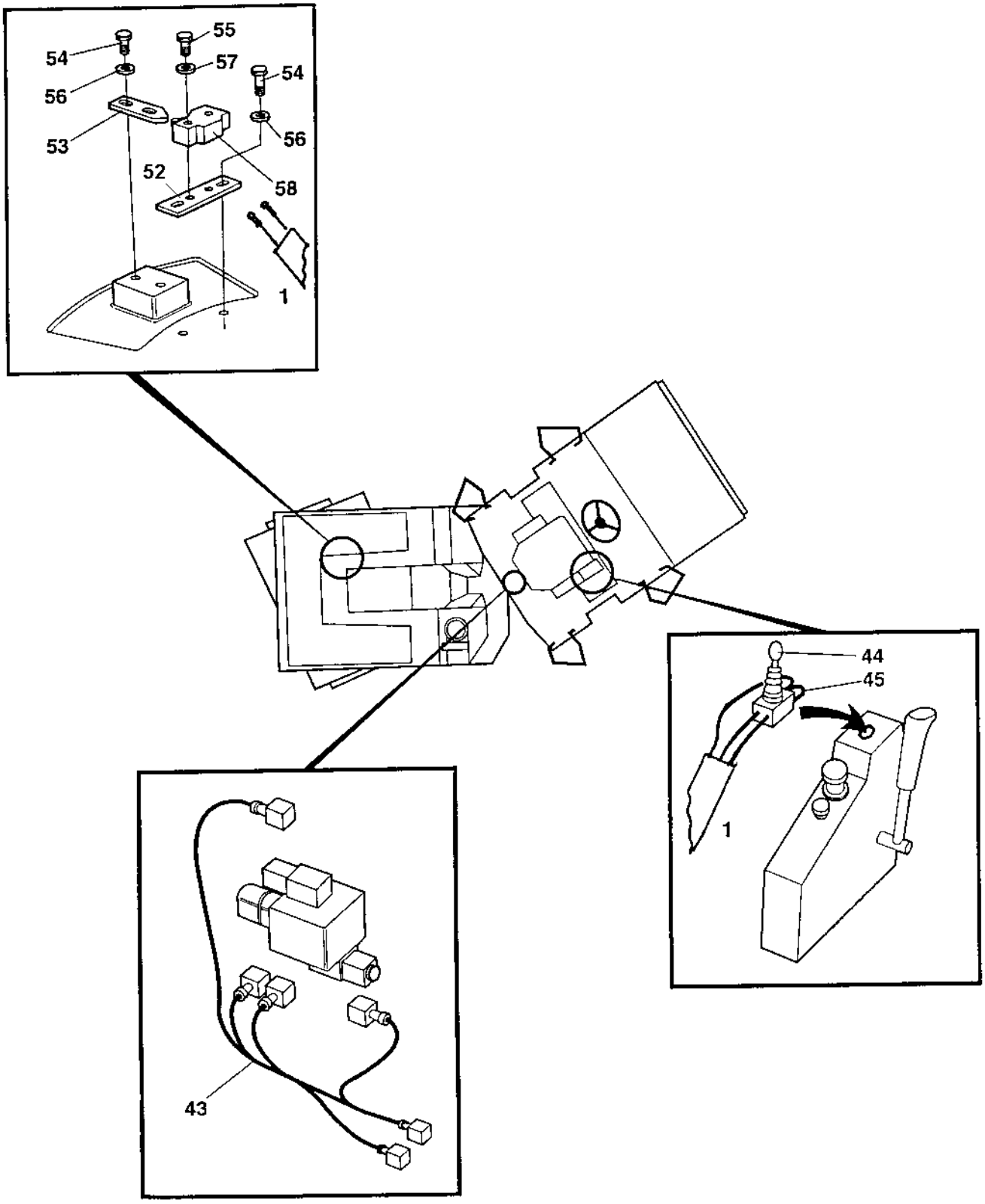
54
55
57
54
56
56
53
52
58
1
44
45
1
43

Ref. No.	Part No.	Rem.	Qty	Description	Code
1		A		Cable harness	
43	359774		1	Cable harness Up to 61710796	
	376183		1	Cable harness From 61710797 Up to 61710797	
	359774		1	Cable harness From 61710798 Up to 61710825	
	376183		1	Cable harness From 61710826	
44	903582		1	Switch	
45	343550		2	Connection cable	
52	359775		1	Holder plate	
53	359776		1	Cam	
54	500040		4	Screw M6-1x20 8,8	
55	533050		2	Screw	
56	904228		4	Washer 6,4x12x1,5	
57	904697		2	Washer 3,2x6x0,5	
58	930046		1	Micro switch	D

A) Existing

Ref. No.	Part No.	Rem.	Qty	Description	Code
10				Drivers platform (Page 326)	
15				Drivers platform For cab (Page 330)	
20				Drivers seat Turn-over (Page 332)	
25				Drivers seat Turn-over in cab (Page 334)	
27	359918			Steering column (Page 336)	C
30				Cross sliding Controls (version 1) (Page 338)	
35				Cross sliding Controls (Page 340)	
40				Cross sliding Carrier (Page 342)	
50				Forward and reverse control Version 1 (Page 344)	
51				Forward and reverse control Version 2 (Page 346)	
52				Speed limiter Option (Page 348)	
60				Engine controls (Page 350)	
80				Rear mirror (Page 352)	
90				Rops and fops With seat belt (Page 354)	
95				Canopy (Page 356)	
100				Cab Interior (Page 358)	
105				Cab Inside panels (Page 362)	
110				Cab Screens (Page 364)	
115				Cab Wiper, front and rear (Page 366)	
120				Cab Wipers, right side (Page 368)	
122				Cab Water tank, wipers (Page 370)	
125				Cab Door, left side (Page 372)	
130				Cab Heater and fan system (Page 374)	
135				Cab Roof mounted,electric switches (Page 376)	
140				Interior rear mirror Sun curtain, first aid kit (Page 378)	
160				Exterior rear mirrors (Page 380)	
170				Radio and cassette player (Page 382)	

Drivers platform

15676-1

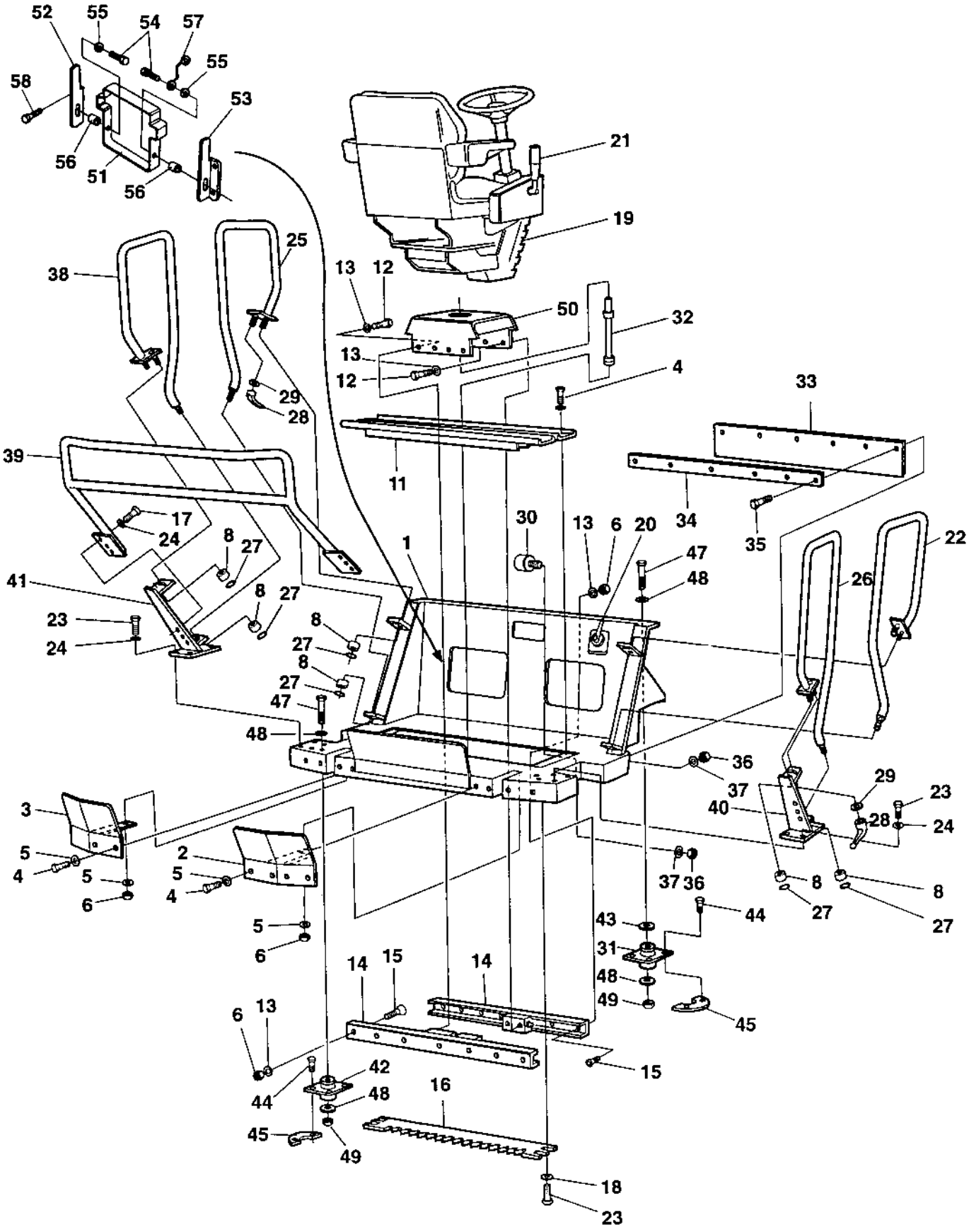

Ref. No.	Part No.	Rem.	Qty	Description	Code
1	370175		1	Platform	
2	370275	A	1	Operator protection	
3	370276	B	1	Operator protection	
4	500019		14	Screw M8-1,25x16 8,8	
5	600006		16	Washer	
6	570005		15	Nut M8	
7	370277		2	Screen Up to 61710399	
8	370375		8	Bushing	
9	586003		8	Lock nut M8 Up to 61710399	
10	903662		8	Washer Up to 61710399	
11	370278		2	Cover	
12	500021		6	Screw M8-1,25x25 8,8	
13	603019		19	Washer	
14	359418	C	1	Linear bearing	
15	513013		13	Screw	
16	359885		1	Locking rail	
17	500028		6	Screw M10-1,5x25 8,8	
18	603023		4	Washer M10	
19			1	Drivers seat Turn-over (Page 332)	
20			1	Engine controls (Page 350)	
21			1	Forward and reverse control Version 1 (Page 344)	
			1	Forward and reverse control Version 2 (Page 346)	
22	370279	D	1	Hand rail, right Up to 61710314	
	372091	D	1	Hand rail, right From 61710315	
23	500029		12	Screw M10-1,5x30 8,8	
24	600008		14	Washer	
25	370283	D	1	Hand rail, left Up to 61710314	
	372092	D	1	Hand rail, left From 61710315	
26	370284	F	1	Hand rail, right Up to 61710314	
	372093	F	1	Hand rail, right From 61710315	
27	150005		8	Snap ring Up to 61710314	
	603009		4	Washer From 61710315	
28	370160		4	Locking lever	
29	370286		4	Washer	
30	359887	H	2	Shock absorber	
31	370255	D	2	Shock absorber	D
32	370287		1	Shaft	
33	359890		1	Rubber protection Up to 61710399	
34	359891		1	Holder plate Up to 61710399	
35	500075		6	Screw M6-1x25 8,8	
36	570004		8	Nut M6	
37	600004		8	Washer	
38	370288	F	1	Hand rail, left Up to 67170314	
	372094	F	1	Hand rail, left From 61710315	
39	370289	F	1	Hand rail	
40	370294	A	1	Holder	
41	370298	B	1	Holder	
42	370254	F	2	Shock absorber	D
43	370258		2	Spacer washer	
44	500037		16	Screw M12-1,75x35 8,8	
45	372704		8	Holder	
47	500228		4	Screw M20-2,5x120 8,8	
48	600014		8	Washer	
49	586022		4	Lock nut M20-8	

A) Right
B) Left
C) One pair
D) Front
F) Rear
H) For carrier stop

Drivers platform

15676-1

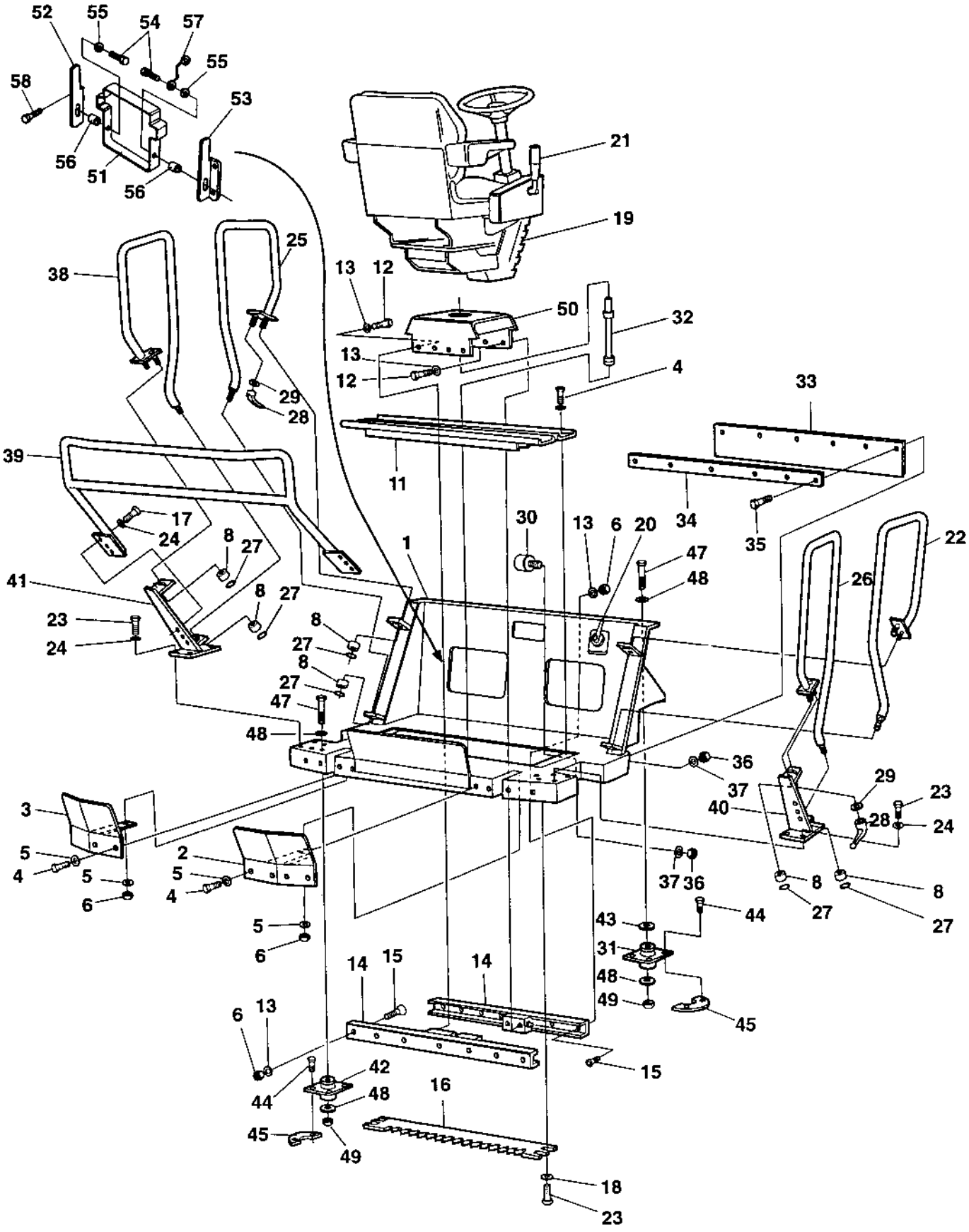

Ref. No.	Part No.	Rem.	Qty	Description	Code
50			1	Cross sliding Carrier (Page 342)	
51	357425	K	1	Instruction book holder	
52	357426	B	1	Cover holder	
53	357427	A	1	Cover holder	
54	902164		2	Screw	
55	600001		2	Washer	
56	902163		2	Parallel pin	
57	357643		1	Wire	
58	624021		4	Pop rivet	

A) Right
B) Left
K) For instruction

Drivers platform For cab

15715-1

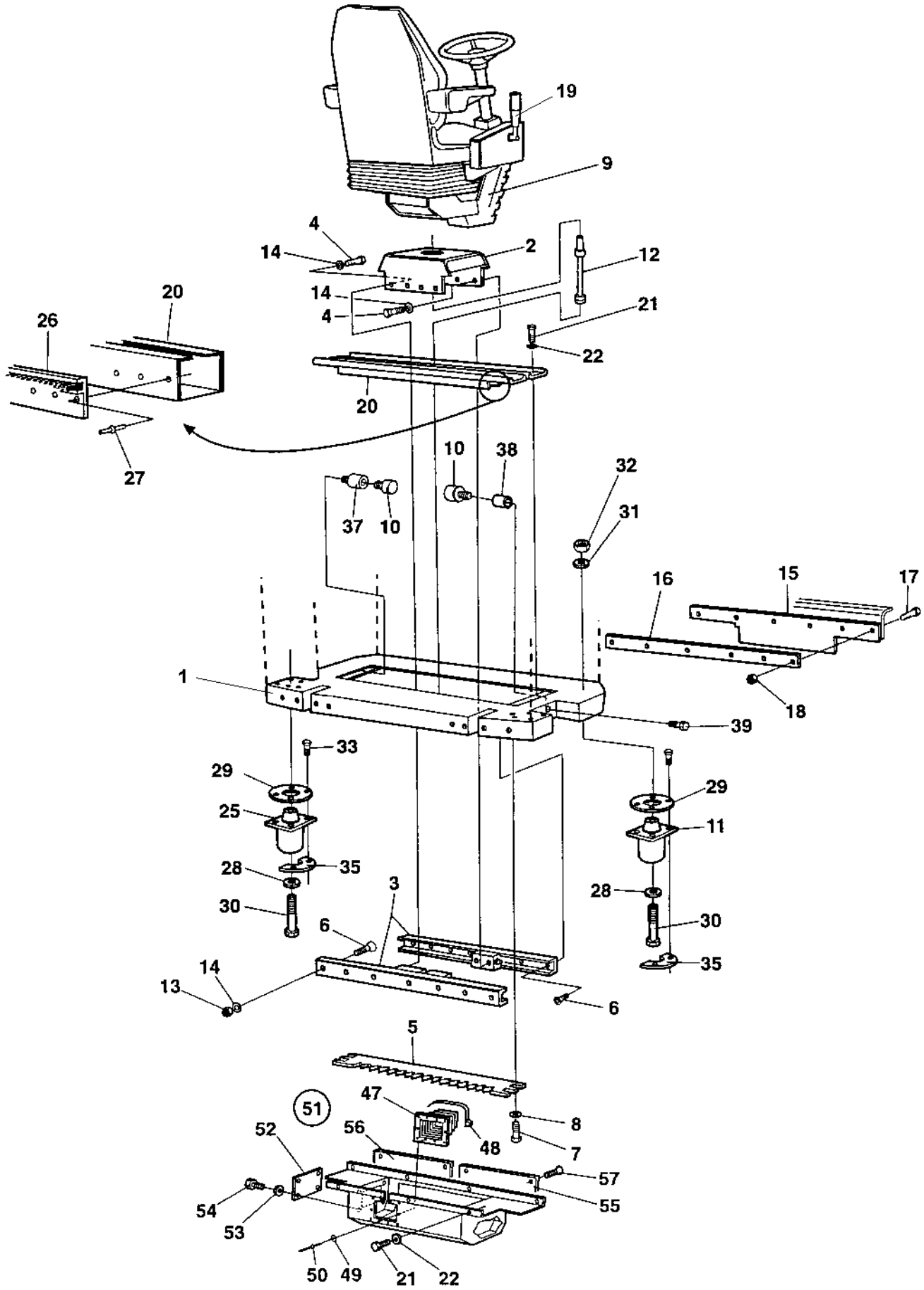

Ref. No.	Part No.	Rem.	Qty	Description	Code
1			1	Cab Interior (Page 358)	
2			1	Cross sliding Carrier (Page 342)	
3	359418		1	Linear bearing	
4	500021		6	Screw M8-1,25x25 8,8	
5	359885		1	Locking rail	
6	513013		13	Screw	
7	500029		4	Screw M10-1,5x30 8,8	
8	904557		7	Washer 10,5x22x4	
9			1	Drivers seat Turn-over in cab (Page 334)	
10	359887	A	2	Shock absorber	
11	359888		2	Shock absorber	D
12	359889		1	Shaft	
13	570005		13	Nut M8	
14	904556		19	Washer 8,4x16x3,0	
15	359890		1	Rubber protection Up to 61710399	
16	359891		1	Holder plate Up to 61710399	
17	500075		10	Screw M6-1x25 8,8	
18	902285		6	Lock nut M6	
19			1	Forward and reverse control Version 1 (Page 344)	
			1	Forward and reverse control Version 2 (Page 346)	
20	359892		2	Cover	
21	500019		22	Screw M8-1,25x16 8,8	
22	904229		22	Washer 8,4x16x1,5	
25	359894		2	Shock absorber	D
26	359895		6	Brush profile	
27	903731		40	Blind rivet	
28	903290		4	Washer 21x36x6	
29	359998		4	Back-up ring	
30	924823		4	Screw M20-2.5X160	
31	904233		4	Washer 21x36x3	
32	586022		4	Lock nut M20-8	
33	500194		16	Screw M12x40	
35	372704		8	Holder	
37	370662		1	Spacer	
38	373227		1	Spacer From 61710400	
39	500013		1	Screw M6-1x16 8,8 From 61710400	
47	371621		1	Bellows From 61710400	
48	313041		4	Cable ties L=186 mm	
49	600020		11	Washer	
50	624004		11	Pop rivet	
51	371129		1	Noise suppression box, cpl From 61710400	
52	371395		1	.Cover	
53	600004		6	.Washer	
54	500012		6	.Screw M6x12	
55	371396		1	.Cover	
56	371599		1	.Cover	
57	513008		11	.Screw	

A) For carrier stop

Drivers seat Turn-over

15674-1

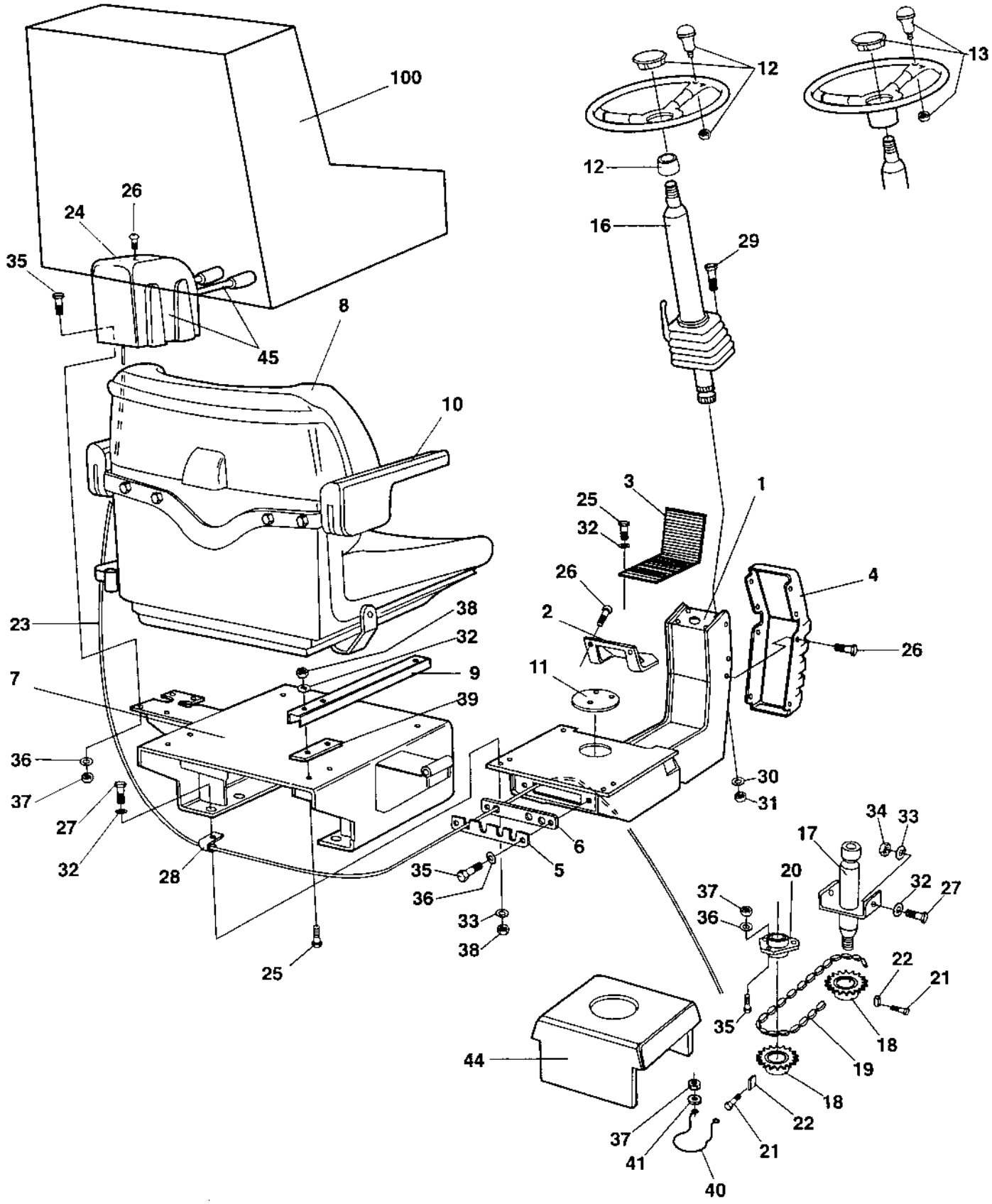

Drivers seat Turn-over

Ref. No.	Part No.	Rem.	Qty	Description	Code
1	359900		1	Seat frame	
2	359908		1	Bearing cover	
3	359911		1	Rubber mat	
4	359574		1	Cover	
5	359914		1	Cover	
6	359915		1	Grommet	
7	370211		1	Seat frame	
8	370234		1	Drivers seat	
	936283		1	.Seat switch	D
9	909535	A,C	1	.Sliding rail	D
	909536	D	1	.Sliding rail	D
10	372696	C	1	.Arm rest	
	372697	D	1	.Arm rest	
11	359920		1	Plug	
12			1	Steering wheel, cpl Up to 61710514	
	902183		1	.Steering wheel	
	902184		1	.Turning knob	D
	902185		1	.Insert adapter	
	902186		1	.Cover plate	
13	372964		1	Steering wheel, cpl From 61710515	
	935615		1	.Steering wheel knob	
	935614		1	..Turning knob	D
	935613		1	.Cover	
16	359918		1	Steering column (Page 336)	C
17	359919		1	Shaft	
18	359916		2	Chain wheel	D
19	359921		1	Chain	D
20	903917		1	Bearing outer	
	903918		1	Bearing inner	
21	516051		2	Set screw	
22	350009		2	Flat key	D
23			1	Cross sliding Controls (version 1) (Page 338)	
			1	Cross sliding Controls (Page 340)	
24	359419		1	Control cover	
25	500053		6	Screw M8-1,25x20 8,8	
26	903458		14	Screw	
27	500021		8	Screw M8-1,25x25 8,8	
28	921104		2	Clamp	
29	500028		3	Screw M10-1,5x25 8,8	
30	603023		3	Washer M10	
31	570006		3	Nut M10	
32	603019		8	Washer	
33	600006		14	Washer	
34	586003		2	Lock nut M8	
35	500040		6	Screw M6-1x20 8,8	
36	600004		7	Washer	
37	586002		7	Lock nut M6	
38	570005		10	Nut M8	
39	370235		2	Holder plate	
40	372672		1	Chain guard	
41	603001		2	Washer	
44			1	Cross sliding Carrier (Page 342)	
45			1	Cross sliding Controls (version 1) (Page 338)	
			1	Cross sliding Controls (Page 340)	
100	348331	B	1	Seat cover	D

A) With handle.
B) Option
C) Left
D) Right

Drivers seat Turn-over in cab

15830-1

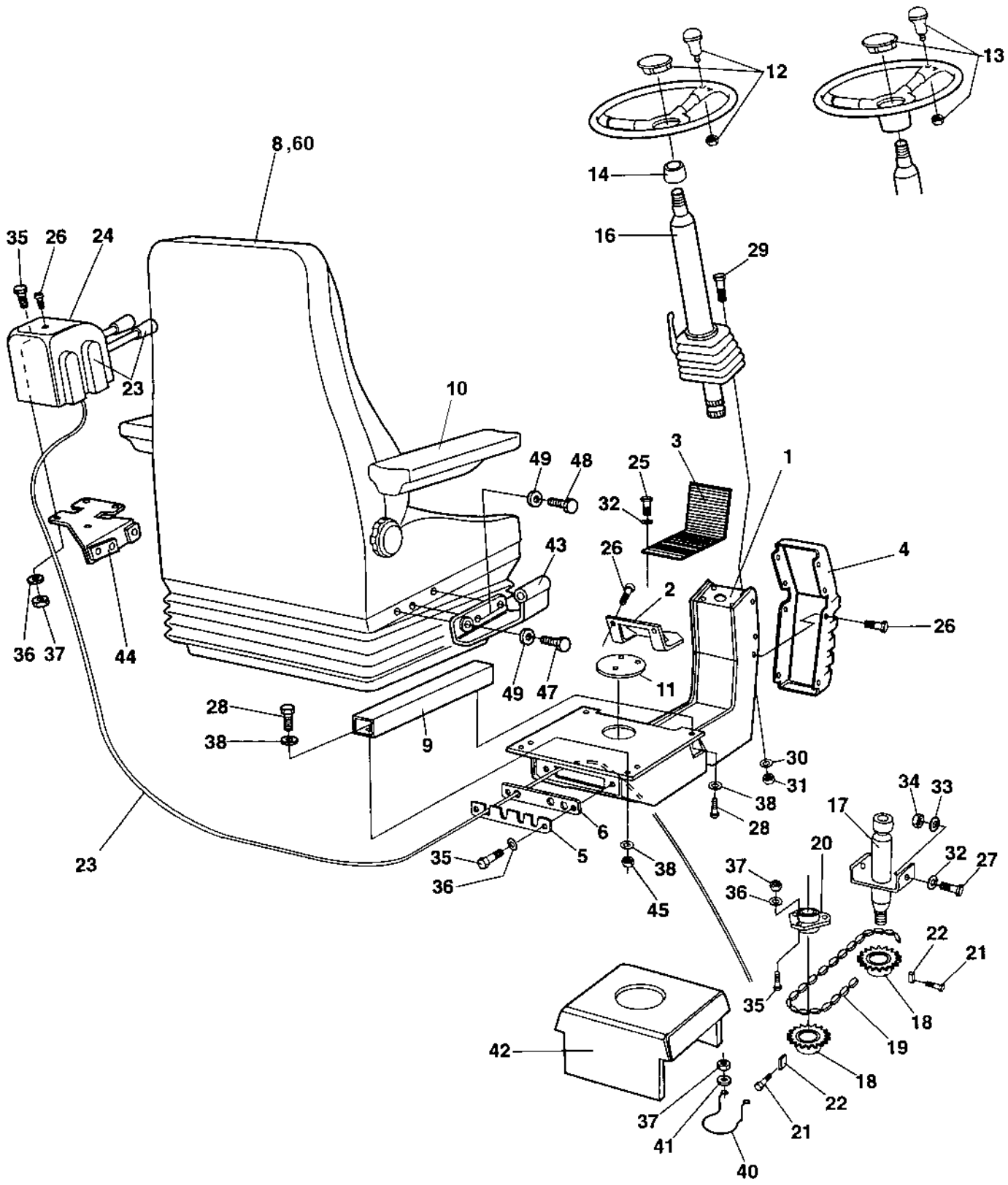

Drivers seat Turn-over in cab

Ref. No.	Part No.	Rem.	Qty	Description	Code
1	359900		1	Seat frame	
2	359908		1	Bearing cover	
3	359911		1	Rubber mat	
4	359574		1	Cover	
5	359914		1	Cover	
6	359915		1	Grommet	
8	359917	A	1	Drivers seat	
	937892		1	.Seat switch	
9		B	1	.Slide rail	
10	937620		1	.Arm rest, right	
	937621		1	.Arm rest, left	
11	359920		1	Plug	
12			1	Steering wheel, cpl Up to 61710514	
	902183		1	.Steering wheel	
	902184		1	.Turning knob	D
	902185		1	.Insert adapter	
	902186		1	.Cover plate	
13	372964		1	Steering wheel, cpl From 61710515	
	935615		1	.Steering wheel knob	
	935614		1	..Turning knob	D
	935613		1	.Cover	
14	902185		1	.Insert adapter	
16	359918		1	Steering column (Page 336)	C
17	359919		1	Shaft	
18	359916		2	Chain wheel	D
19	359921		1	Chain	D
20	903917		1	Bearing outer	
	903918		1	Bearing inner	
21	516051		2	Set screw	
22	350009		2	Flat key	D
23			1	Cross sliding Controls (version 1) (Page 338)	
			1	Cross sliding Controls (Page 340)	
24	359419		1	Control cover	
25	500053		6	Screw M8-1,25x20 8,8	
26	903458		14	Screw	
27	500021		8	Screw M8-1,25x25 8,8	
28	921104		1	Clamp	
29	500028		3	Screw M10-1,5x25 8,8	
30	603023		3	Washer M10	
31	570006		3	Nut M10	
32	603019		6	Washer	
33	600006		14	Washer	
34	586003		2	Lock nut M8	
35	500040		6	Screw M6-1x20 8,8	
36	600004		7	Washer	
37	586002		7	Lock nut M6	
38	570005		10	Nut M8	
40	372672		1	Chain guard	
41	603001		2	Washer	
42			1	Cross sliding Carrier (Page 342)	
43	359971		1	Control cable holder	
44	359972		1	Control cable holder	
45	570005		4	Nut M8	
46	603009		2	Washer	
47	903914		2	Screw	
48	500031		4	Screw M10-1,5x40 8,8	
49	600008		6	Washer	
60	383200	C	1	Safety belt 3"	

A) With seat belt
B) One pair
C) Option, 3"

359918 Steering column

15944

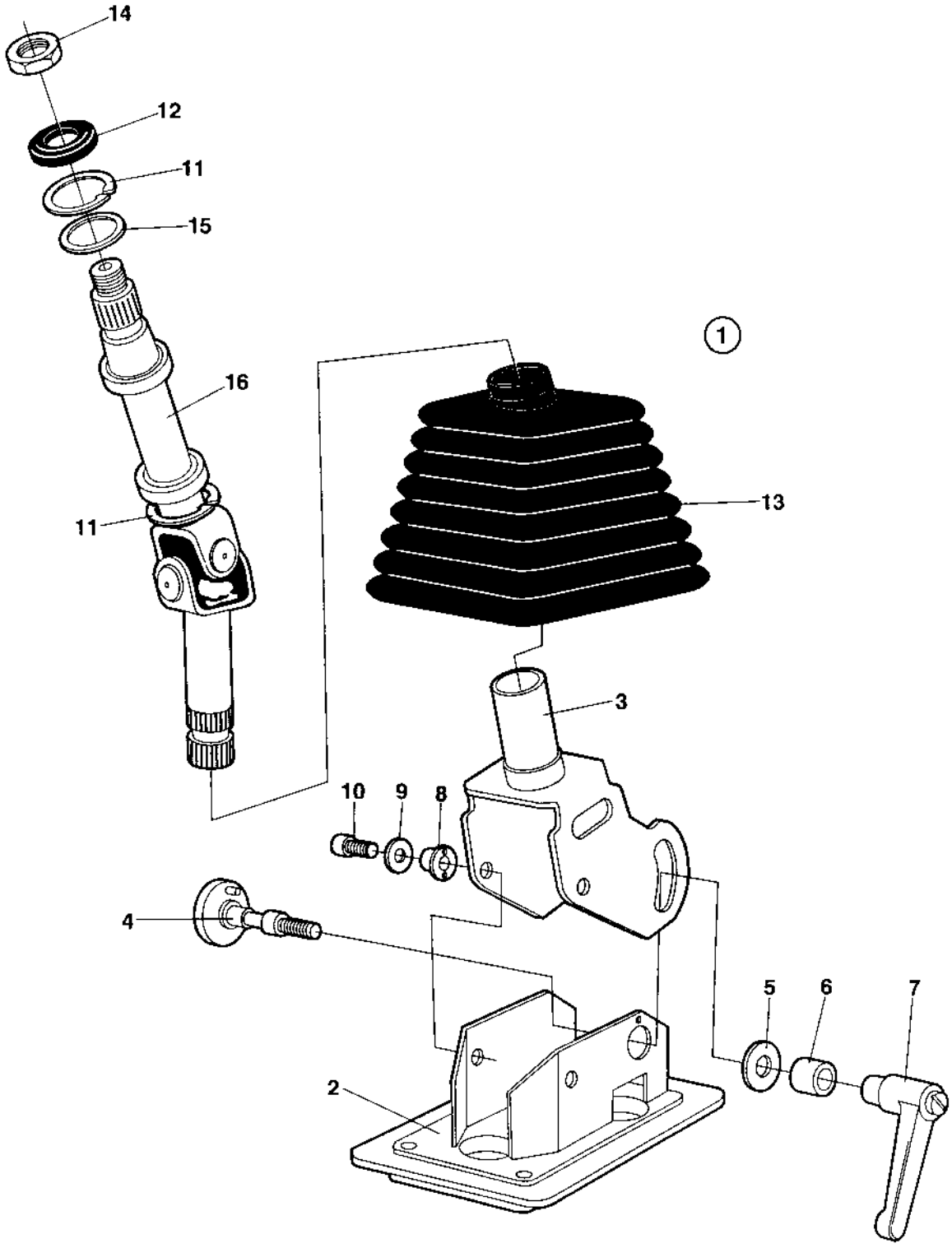

359918 Steering column

Ref. No.	Part No.	Rem.	Qty	Description	Code
1			1	Steering column, cpl	
2	935229	A	1	.Frame	
3	935230	B	1	.Frame	
4	935231		1	.Screw	
5	935232		1	.Washer	
6	935233		1	.Sleeve	
7	935234		1	.Lever	
8	935235		2	.Washer	
9	935236		2	.Washer	
10	935237		2	.Screw	
11	935238		2	.Retainer ring	
12	935239		1	.Seal	
13	935240		1	.Bellows	
14	935241		1	.Nut	
15	935242		1	.Washer	
16	935243		1	.Cardan shaft	

A) Lower
B) Upper

Cross sliding Controls (version 1)

15677-1

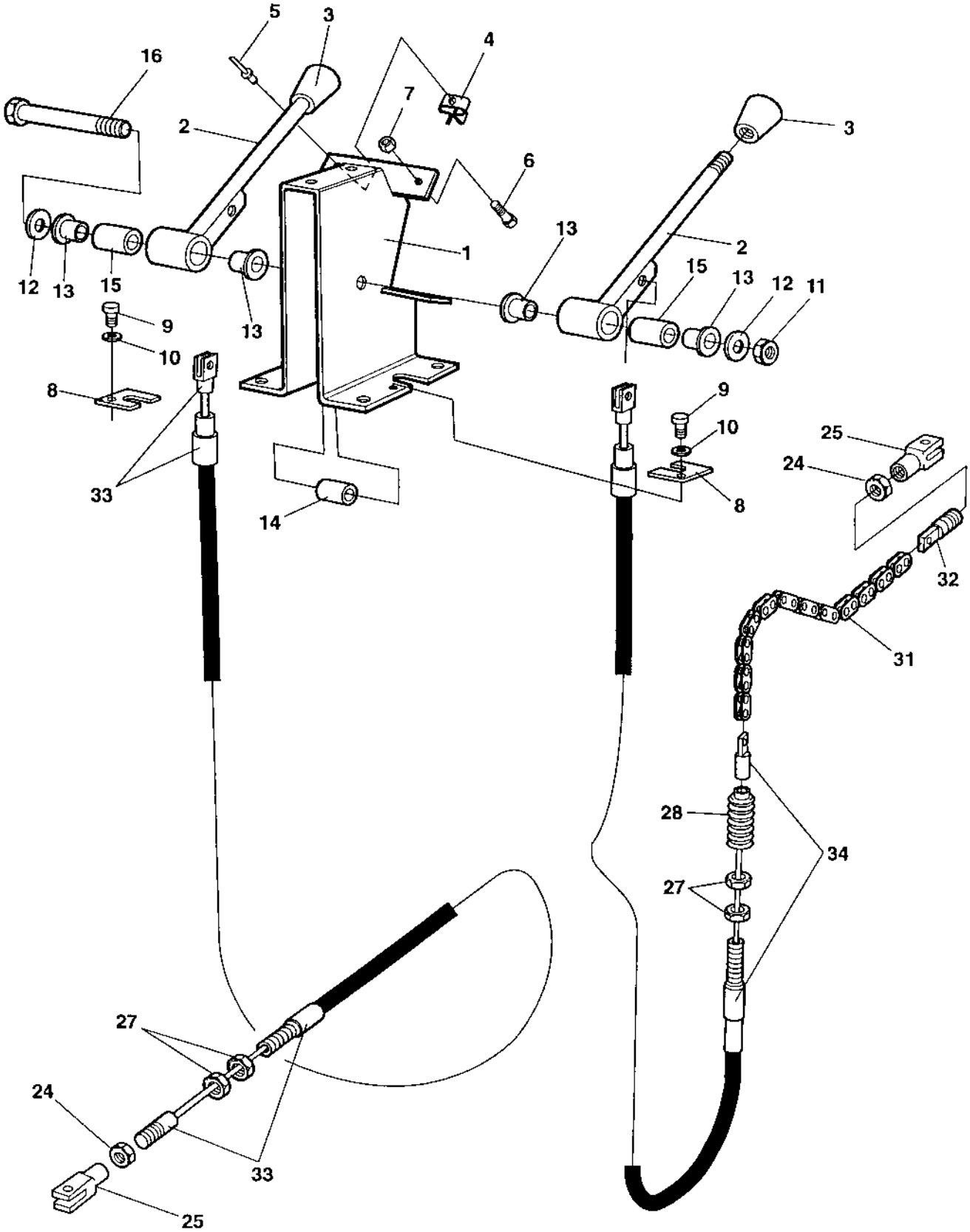

Cross sliding Controls (version 1)

Ref. No.	Part No.	Rem.	Qty	Description	Code
1	908192		1	Chassis	
2	908191		2	Lever	
3	908190		2	Ball knob	
4	908189		1	Lever lock	
5	624016		1	Blind rivet	
6	522007		1	Screw	
7	923976		1	Nut	
8	908188		2	Cable holder	
9	533024		2	Screw	
10	615041		2	Washer 5,3x11	
11	586002		1	Lock nut M6	
12	928381		2	Washer 6,4x18x1,6	
13	908187		4	Plain bearing	
14	908186	A	1	Spacer sleeve	
15	908185	B	2	Spacer sleeve	
16	500169		1	Screw	
24	570004		2	Nut M6	
25	416004		2	Fork	
27	927233	C	4	Nut	
28	908184	D	1	Protection bellow	
31	359924		1	Chain with links	
32	359822		1	Spring holder	
33	908480	E	1	Cable, cpl	D
34	909504	F	1	Cable, cpl	D

A) Inner
B) Outer
C) Incl in item 33,34
D) Incl in item 34
E) Sliding
F) Turning

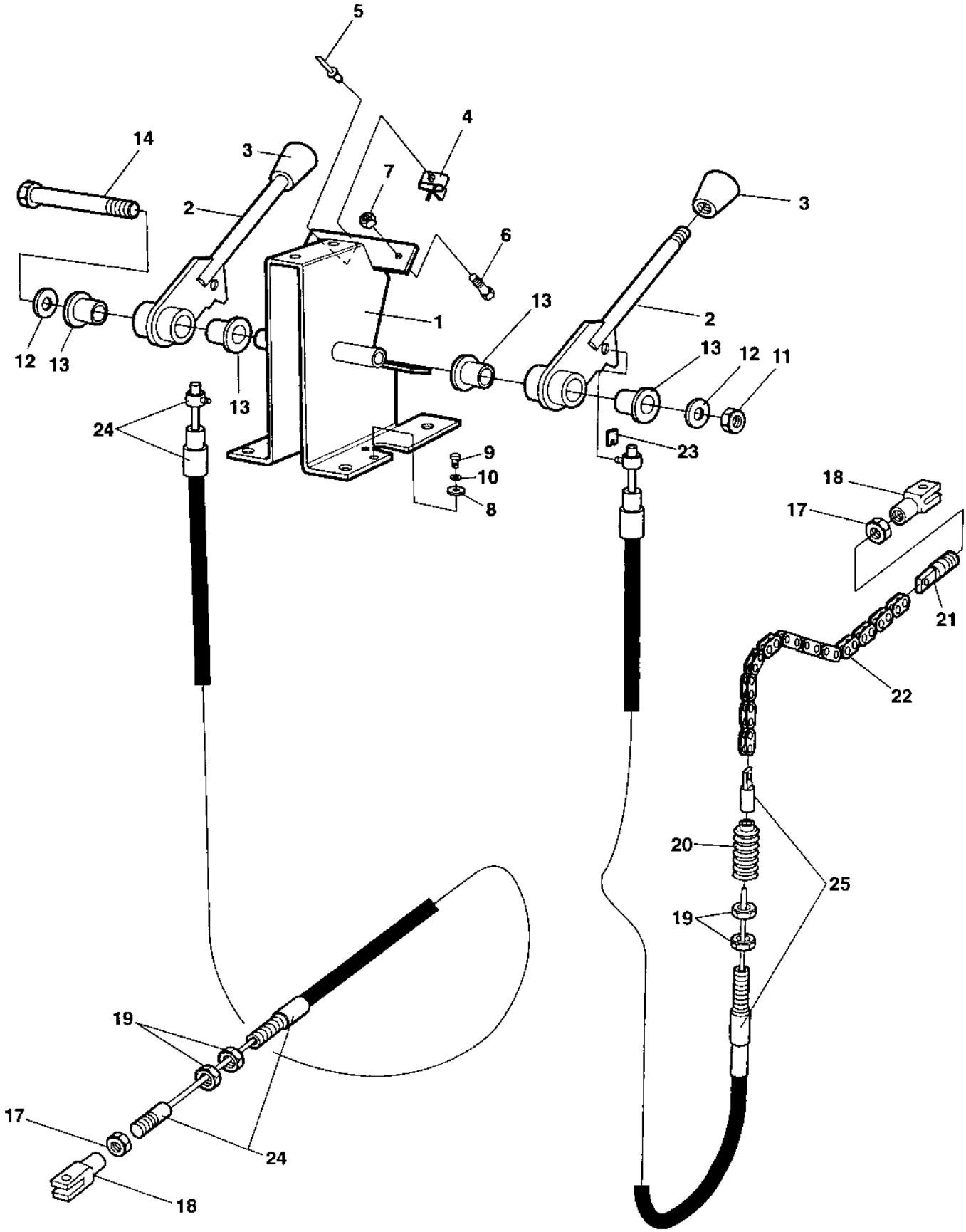
5
4
14
3
7
2
6
3
1
13
2
12
13
13
12
11
13
24
9
10
8
23
18
17
21
22
20
25
19
19
17
24
18

Ref. No.	Part No.	Rem.	Qty	Description	Code
1	935771		1	Framing	
2	909745		2	Lever	
3	908190		2	Ball knob	
4	908189		1	Lever lock	
5			1	Rivet	
6	500001		1	Screw	
7	923976		1	Nut	
8	909746		2	Washer	
9	533024		2	Screw	
10	615041		2	Washer 5,3x11	
11	586002		1	Lock nut M6	
12	928381		2	Washer 6,4x18x1,6	
13	908187		4	Plain bearing	
14	500169		1	Screw	
17	570004	A	2	Nut M6	
18	416004	A	2	Fork	
19	927233	B	4	Nut	
20	908184	C	1	Protection bellow	
21	359822		1	Spring holder	
22	359924		1	Chain with links	
23	937958	B	1	Clips	
24	935773	D	1	Cable, cpl	
25	935772	E	1	Cable, cpl	

A) Incl in item 24
B) Incl in item 24,25
C) Incl in item 25
D) Sliding
E) Turning

Cross sliding Carrier

15675-2

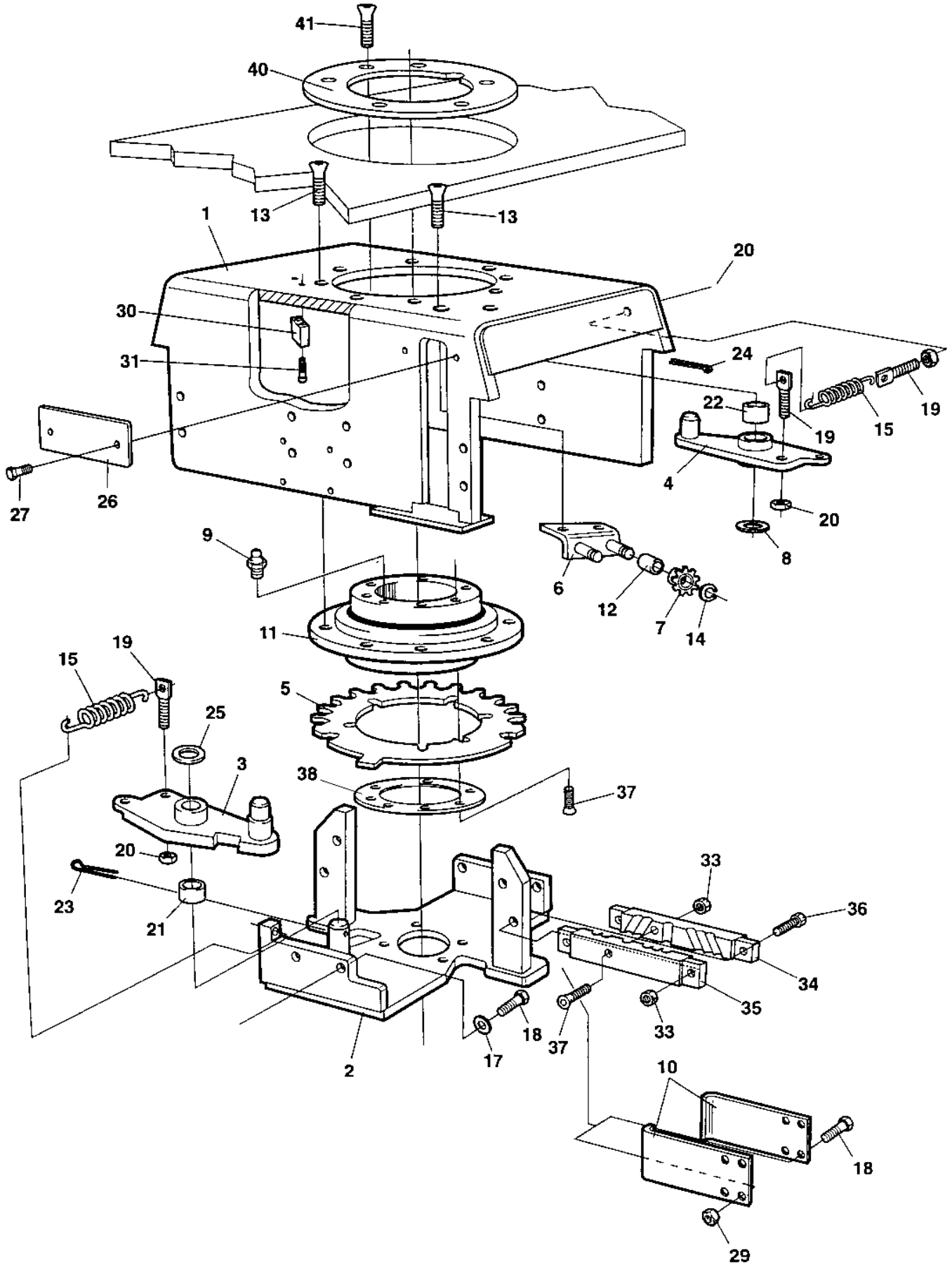

Cross sliding Carrier

Ref. No.	Part No.	Rem.	Qty	Description	Code
1	359788		1	Carrier	
2	359733		1	Bracket	
3	371101	A	1	Coupling link	
4	374417	B	1	Coupling link	
5	370955		1	Locking disc	
6	359810		1	Control bracket	
7	359813		2	Chain wheel	
8	600009		1	Washer	
9	926214		1	Grease fitting	D
10	359814		2	Clamp Up to 61710499	
11	359125		1	Ball bearing	
12	359816		2	Bushing	
13	513003		10	Screw	
14	359817		2	Retaining ring	
15	359043		2	Spring	D
17	603019		10	Washer	
18	500021		4	Screw M8-1,25x25 8,8	
19	359818		3	Spring collar	
20	573008		3	Nut M8	
21	359819		1	Bushing	
22	359820		1	Bushing	
23	630008	A	1	Pin	D
24	630035	B	1	Split pin	D
25	600011		1	Washer	
26	359815		1	Cover	
27	926220		2	Screw	
29	903586		4	Nut	
30	359893	C	1	Stop	
31	508056	C	2	Screw M8x40	
33	570005		5	Nut M8	
34	372960		1	Clamp From 61710500	
35	372959		1	Clamp From 61710500	
36	500022		4	Screw M8-1,25x30 8,8	
37	902520		7	Screw	
38	372966		1	Lock ring	
40	372965		1	Lock ring	
41	902520		6	Screw	

A) For sliding
B) For turning
C) Only cab

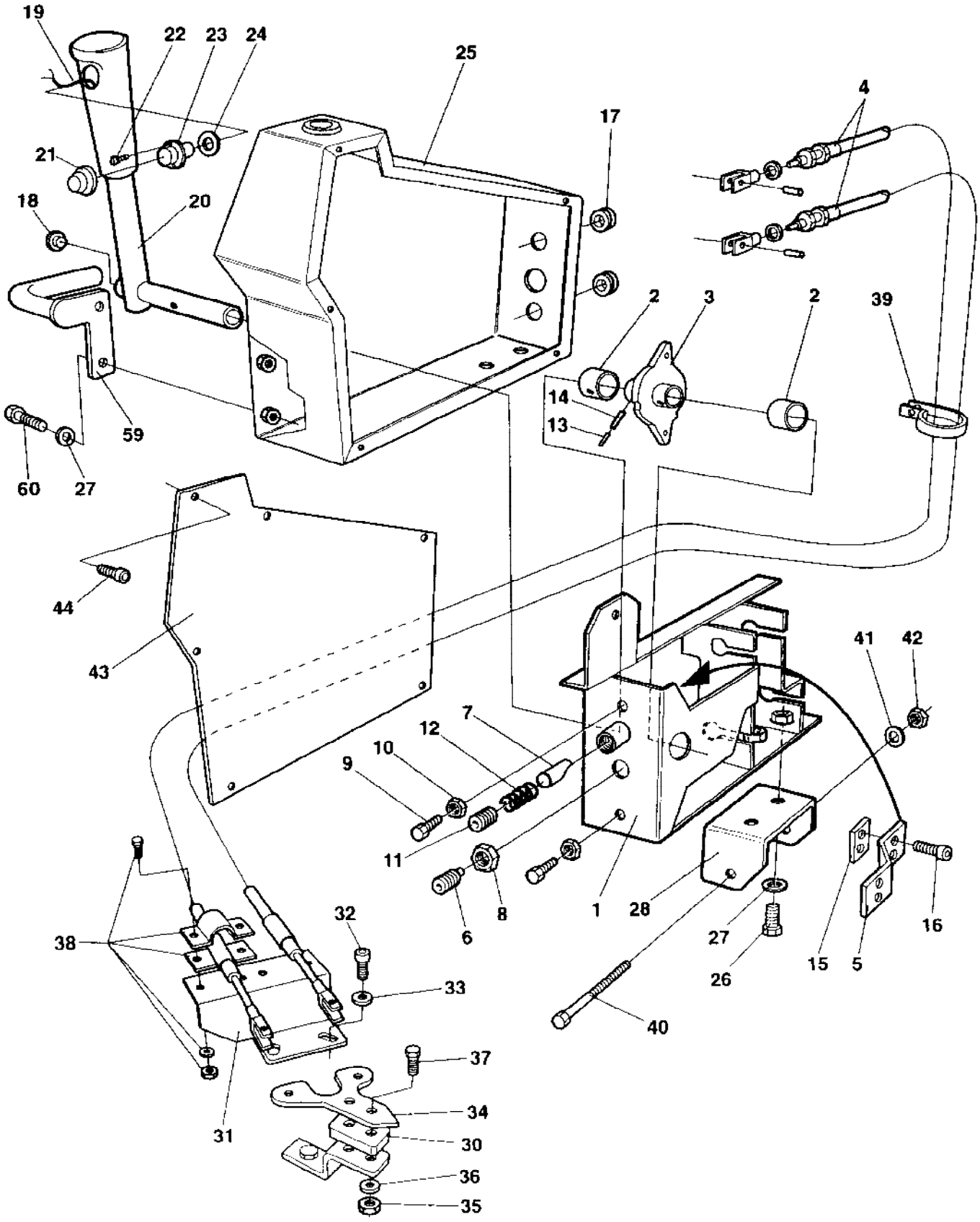
19
22
23
24
25
4
17
21
20
18
2
3
2
39
14
13
59
60
27
44
43
41
42
7
12
10
9
11
6
8
1
28
27
26
15
5
16
38
32
33
40
37
34
30
36
35
31

Forward and reverse control Version 1

Ref. No.	Part No.	Rem.	Qty	Description	Code
1	908201		1	Framing	
2	908200		2	Bearing	
3	908199		1	Cam disc	
4	908198	A	2	Cable	D
	570004		1	.Nut M6	
	908193		1	.Fork	
5	908197		1	Bracket	
6	922325		1	Spring ball plunger	D
7	908196		1	Brake piston	
8	573004		1	Nut	
9	533038		2	Screw	
10	570004		2	Nut M6	
11	901828		1	Set screw	
12	908202		1	Spring	
13	903395	B	1	Spirol pin	
14	629016		1	Expanding	
15	908195		1	Bracket	
16	522007		2	Screw	
17	909122		2	Grommet	
18	902203		1	Plug	
19	370117		1	Cable harness	
20	359575		1	Control lever	
21	348481		1	Cover	D
22	371009		2	Screw	
23	928497		1	Push button	D
24	359940		1	Washer	
25	359928		1	Control cover	
26	500053		2	Screw M8-1,25x20 8,8	
27	600006		4	Washer	
28	359930		1	Bracket	
30	371507		1	Spacer	
31	359932		1	Control bracket	
32	903799		3	Screw M6 x 70	
33	600004		3	Washer	
34	359931		1	Control bracket	
35	586003		2	Lock nut M8	
36	600006		2	Washer	
37	500023		2	Screw M8-1,25x40 8,8	
38	465013		2	Clamp	D
39	921104		1	Clamp	
40	500198		1	Screw	
41	600009		1	Washer	
42	586019		1	Lock nut M12	
43	359929		1	Cover	
44	902223		6	Screw	
59	373177	2	1	Yoke From 61710332	
60	570019	2	2	Screw From 61710332	

2) Not for cab
A) Forward and reverse
B) Inside item 14

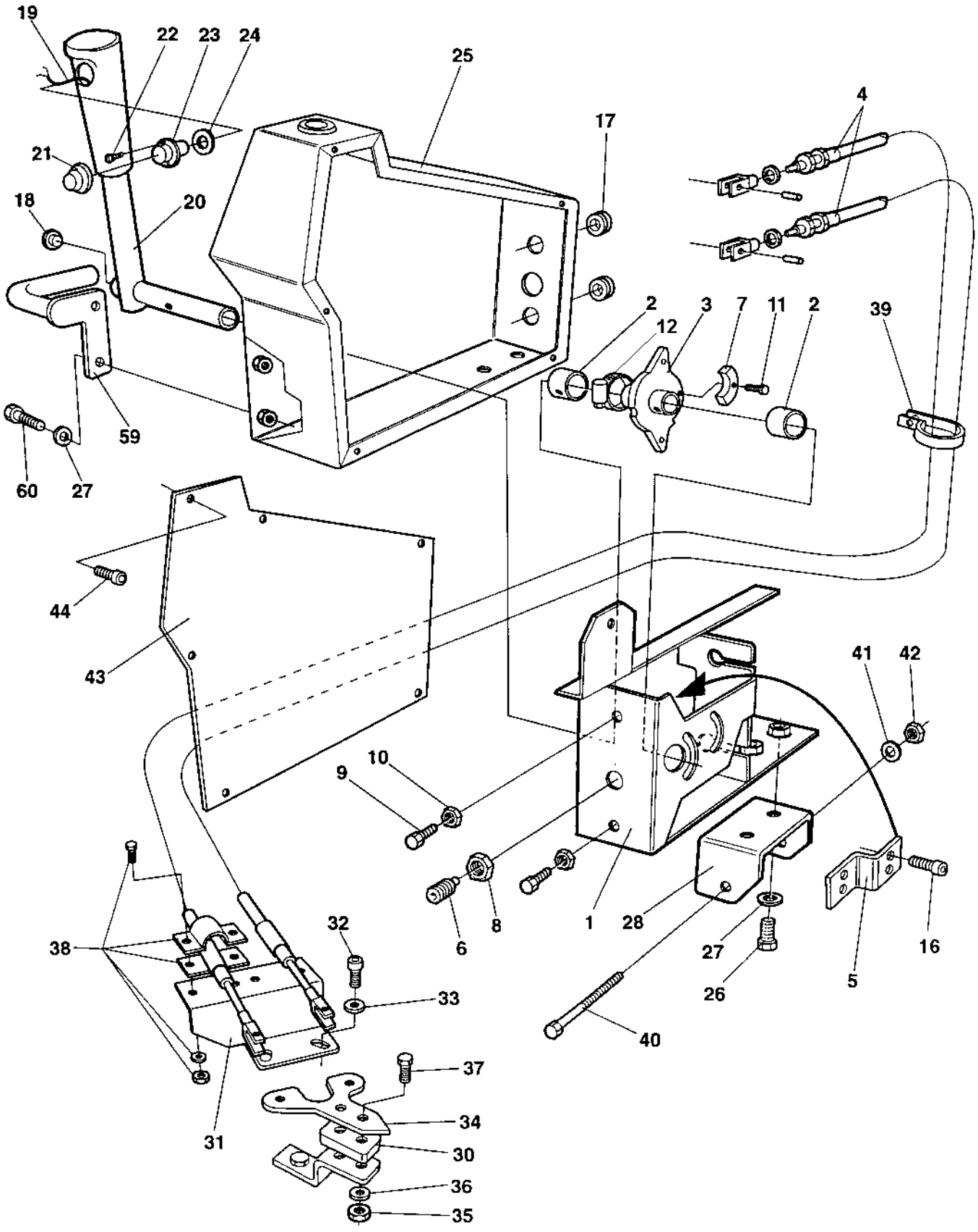
19
22
23
24
25
4
17
21
20
18
2
3
7
11
2
39
12
59
60
27
44
43
41
42
10
9
8
6
1
28
27
26
16
5
38
32
33
31
37
34
30
36
35
40

Ref. No.	Part No.	Rem.	Qty	Description	Code
1	909747		1	Framing	
2	908200		2	Bearing	
3	909748		1	Cam disc	
4	909749	A	2	Cable	
	570004		1	.Nut M6	
	908193		1	.Fork	
5	909751		1	Bracket	
6	922325		1	Spring ball plunger	D
7	909750		1	Cam	
8	573004		1	Nut	
9	533038		2	Screw	
10	573004		2	Nut	
11	503010		1	Screw	
12	313147		1	Hose clip	
16	522007		2	Screw	
17	909122		2	Grommet	
18	902203		1	Plug	
19	370117		1	Cable harness Up to 61710796	
	376396		1	Cable harness From 61710797 Up to 61710797	
	370117		1	Cable harness From 61710798 Up to 61710825	
	376396		1	Cable harness From 61710826	
20	359575		1	Control lever	
21	348481		1	Cover	D
22	371009		2	Screw	
23	928497		1	Push button	D
24	359940		1	Washer	
25	359928		1	Control cover	
26	500053		2	Screw M8-1,25x20 8,8	
27	904229		4	Washer 8,4x16x1,5	
28	359930		1	Bracket	
30	371507		1	Spacer	
31	359932		1	Control bracket	
32	903799		3	Screw M6 x 70	
33	904228		3	Washer 6,4x12x1,5	
34	359931		1	Control bracket	
35	586003		2	Lock nut M8	
36	904229		2	Washer 8,4x16x1,5	
37	500023		2	Screw M8-1,25x40 8,8	
38	465013		2	Clamp	D
39	921104		1	Clamp	
40	500198		1	Screw	
41	904231		1	Washer 13x24x2	
42	586019		1	Lock nut M12	
43	359929		1	Cover	
44	903658		6	Screw M5x10	
59	373177	B	1	Yoke	
60	570019	B	2	Screw	

A) Forward and reverse
B) Not for cab

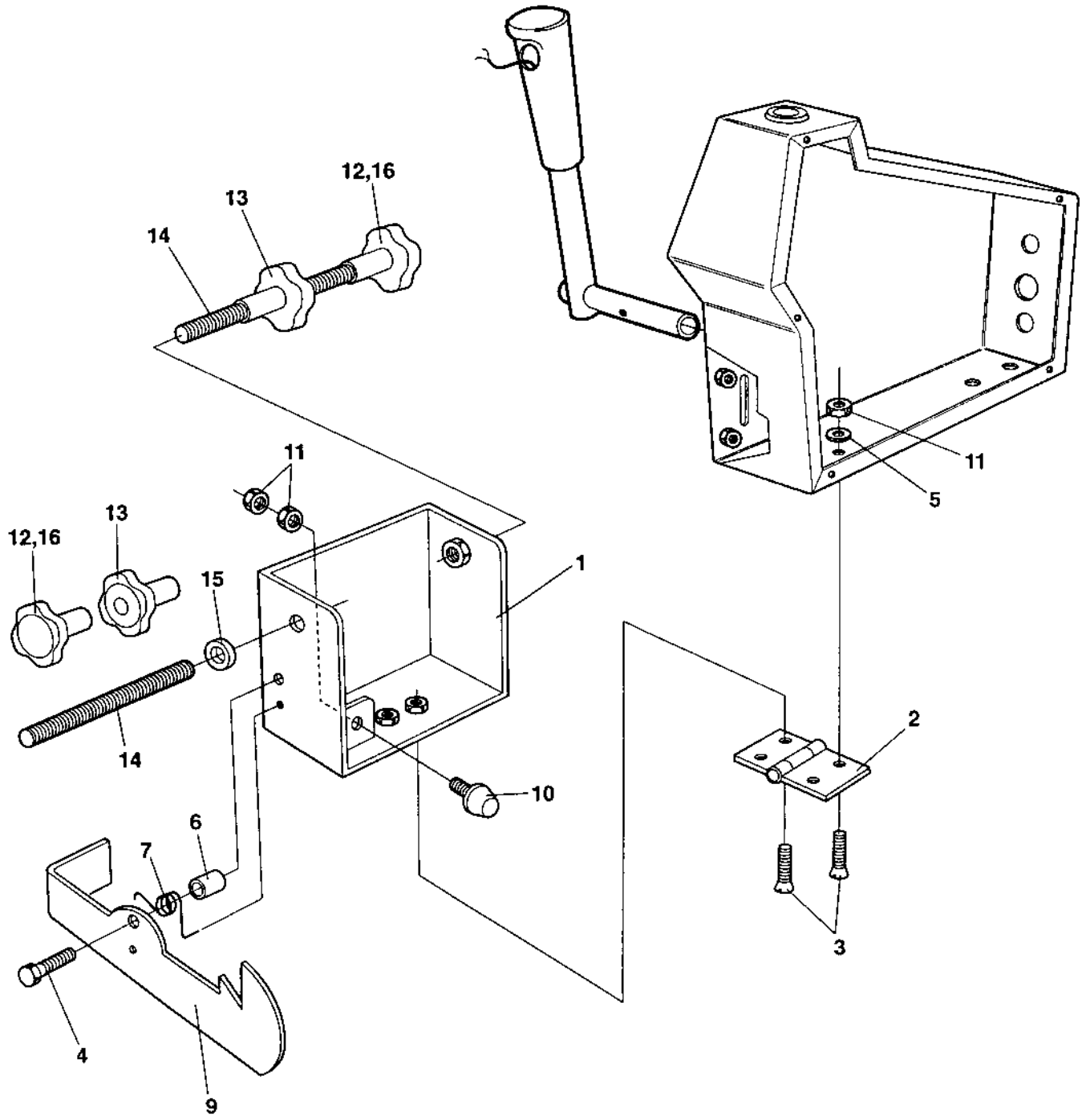
12,16
13
14
11
12,16
13
15
1
14
10
6
7
4
9
2
3
5
11

Speed limiter Option

Ref. No.	Part No.	Rem.	Qty	Description	Code
1	373928		1	Holder	
2	903907		1	Hinge	
3	513012		4	Screw	
4	500015		1	Screw M6-1x30 8,8	
5	904228		4	Washer 6,4x12x1,5	
6	373934		1	Spacer	
7	373930		1	Spring	
8	586002		1	Lock nut M6	
9	373929		1	Hook	
10	359887		1	Shock absorber	
11	570004		3	Nut M6	
12	904339		2	Knob	
13	904338		2	Knob	
14	904332		2	Threaded stud	
15	904567		1	Washer 10,5x28x6	
16	901128	A	1	Lock fluid	

A) Loctite 270

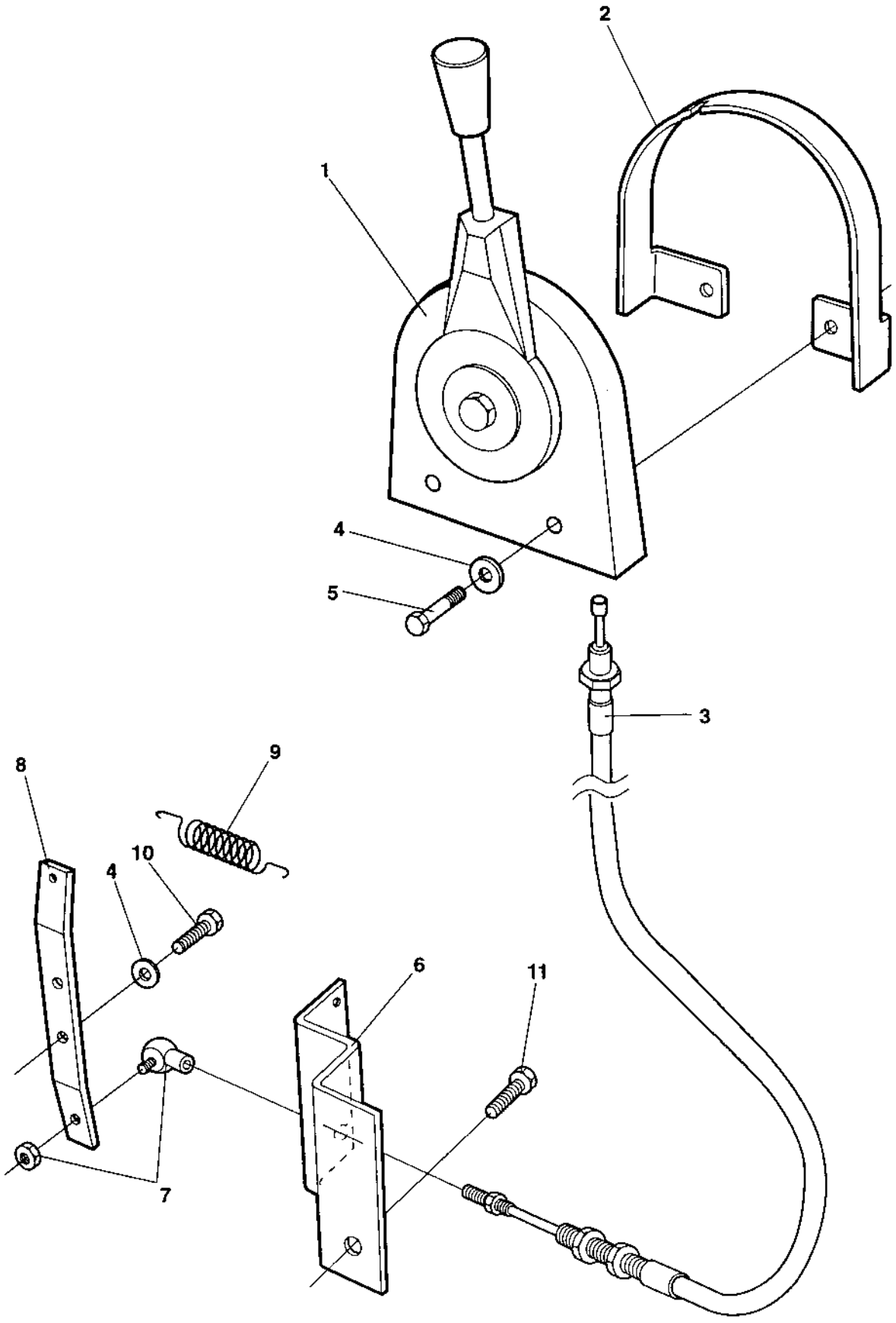
2
1
4
5
3
8
9
10
4
6
11
7

Ref. No.	Part No.	Rem.	Qty	Description	Code
1	902192		1	Control	D
2	902194		1	Yoke	
3	370096		1	Cable	D
4	904228		4	Washer 6,4x12x1,5	
5	500015		2	Screw M6-1x30 8,8	
6	359936		1	Control bracket	
7	416034		1	Ball joint	D
8	357498		1	Control lever	
9	357500		1	Spring	
10	500013		2	Screw M6-1x16 8,8	
11		A	2	Screw	

A) For engine bracket

Rear mirror

15889

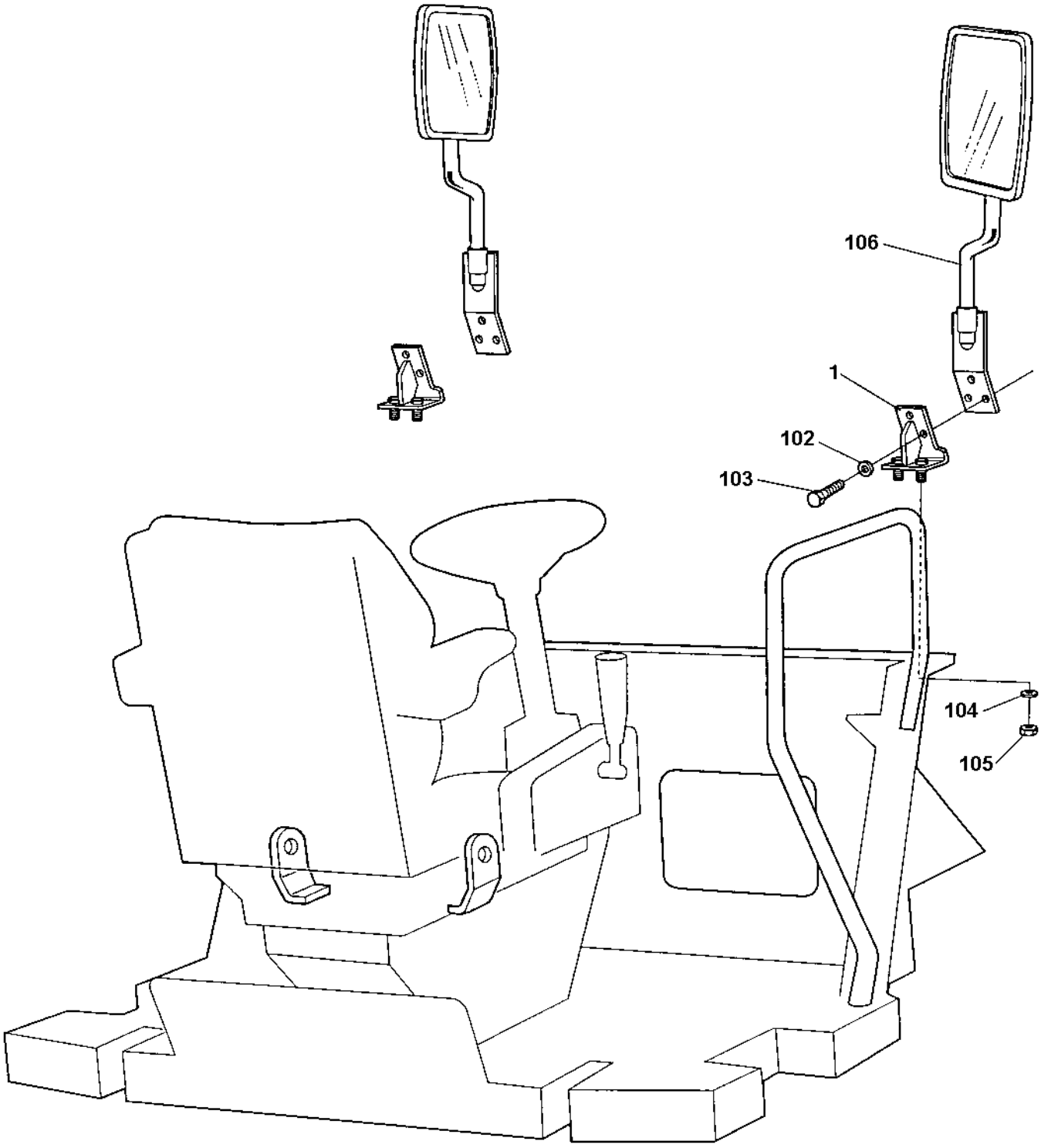

Rear mirror

Ref. No.	Part No.	Rem.	Qty	Description	Code
			1	Rear mirror Option	
1	371819		2	.Bracket	
102	600006		6	.Washer	
103	500053		6	.Screw M8-1,25x20 8,8	
104	600008		4	.Washer	
105	586018		4	.Lock nut M10	
106			2	.Exterior rear mirrors (Page 380)	

Rops and fops With seat belt

15855-2

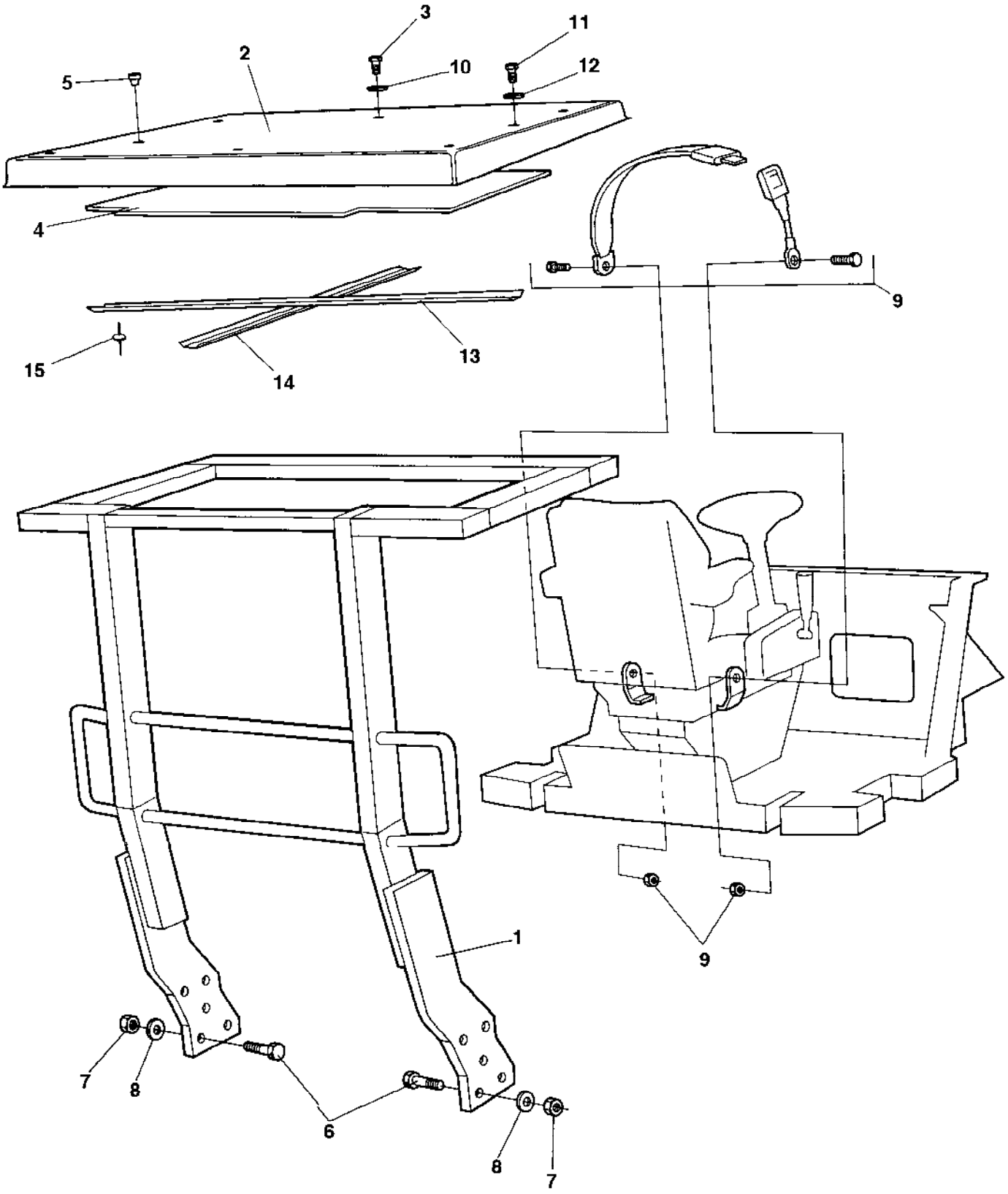

Rops and fops With seat belt

Ref. No.	Part No.	Rem.	Qty	Description	Code
1	370329		1	Rops	
2	370343		1	Rops roof	
	370349		1	Fops roof	
3	903990		3	Screw	
4	372631		1	Insulating material	
5	904180	A	2	Plug	
6	903792		10	Screw	
7	903736		10	Nut	
8	904234		10	Washer 25x45x4	
9	370766		1	Safety belt	
	383200	B	1	Safety belt 3"	
10	904735		3	Washer	
11	500030		10	Screw M10-1,5x35H 8,8	
12	904567		10	Washer 10,5x28x6	
13	380176		1	Absorbent holder	
14	376488		1	Absorbent holder	
15	904619		12	Blind rivet	

A) For lifting holes
B) Option, 3"

Canopy

16116

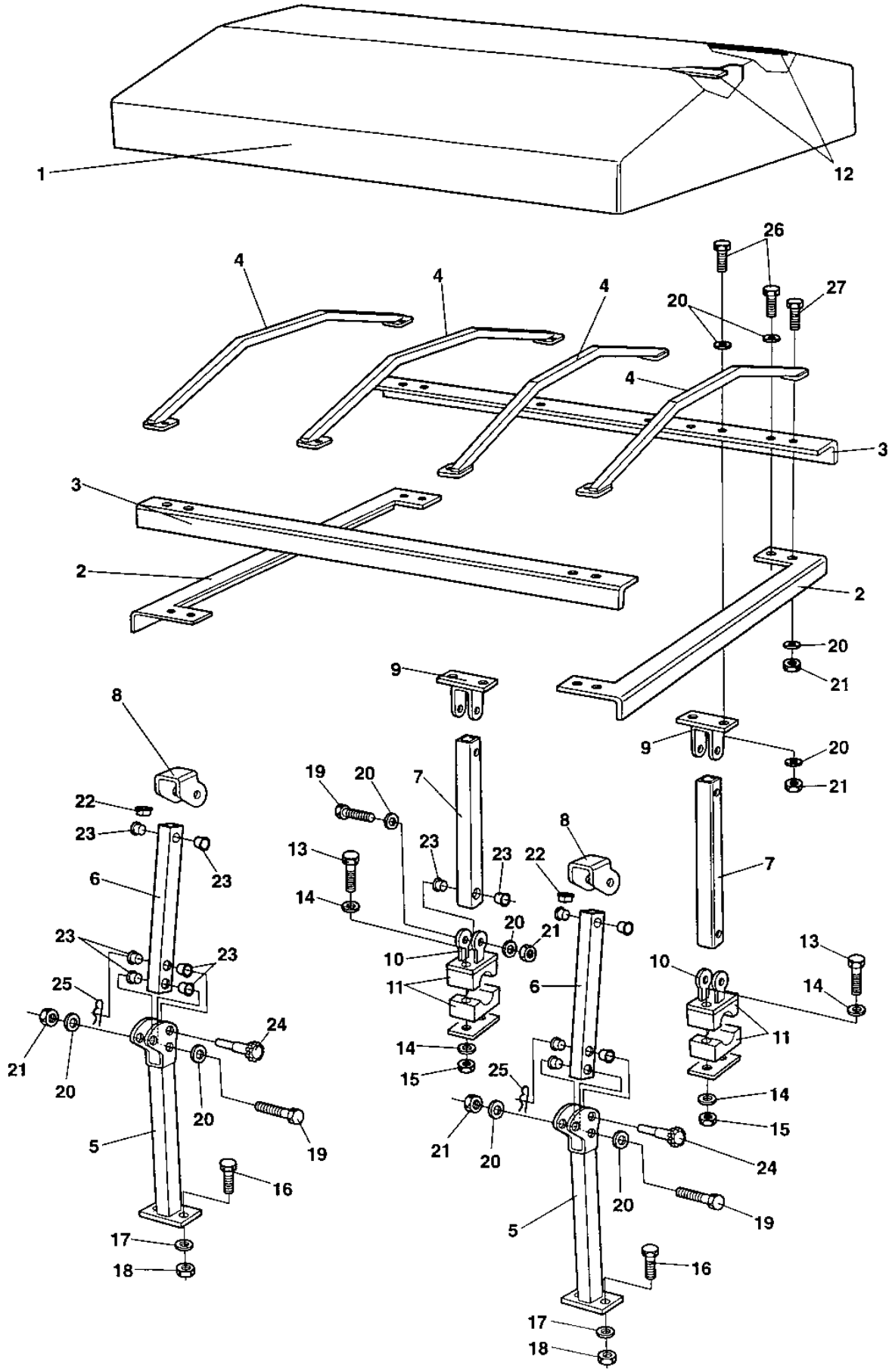

Canopy

Ref. No.	Part No.	Rem.	Qty	Description	Code
1	373906		1	Roof	
2	373747		2	Canopy profile	
3	374024		2	Canopy profile	
4	373749		4	Canopy rib	
5	373968		2	Support, lower front	
6	373986		2	Support, upper front	
7	373987		2	Support, rear	
8	374002		2	Link, upper front	
9	374003		2	Link, upper rear	
10	374004		2	Link, lower rear	
11	371034		2	Clamp	
12	373907		2	Lath	
13	500153		4	Screw	
14	600004		8	Washer	
15	586002		4	Lock nut M6	
16	500030		4	Screw M10-1,5x35H 8,8	
17	600008		4	Washer	
18	902287		4	Nut	
19	500189		8	Screw	
20	600006		56	Washer	
21	586003		28	Lock nut M8	
22	904288		8	Plug	
23	904287		20	Plastic bushing	
24	374066		2	Handle	
25	924585		2	Cotter pin	
26	500021		16	Screw M8-1,25x25 8,8	
27	500022		4	Screw M8-1,25x30 8,8	

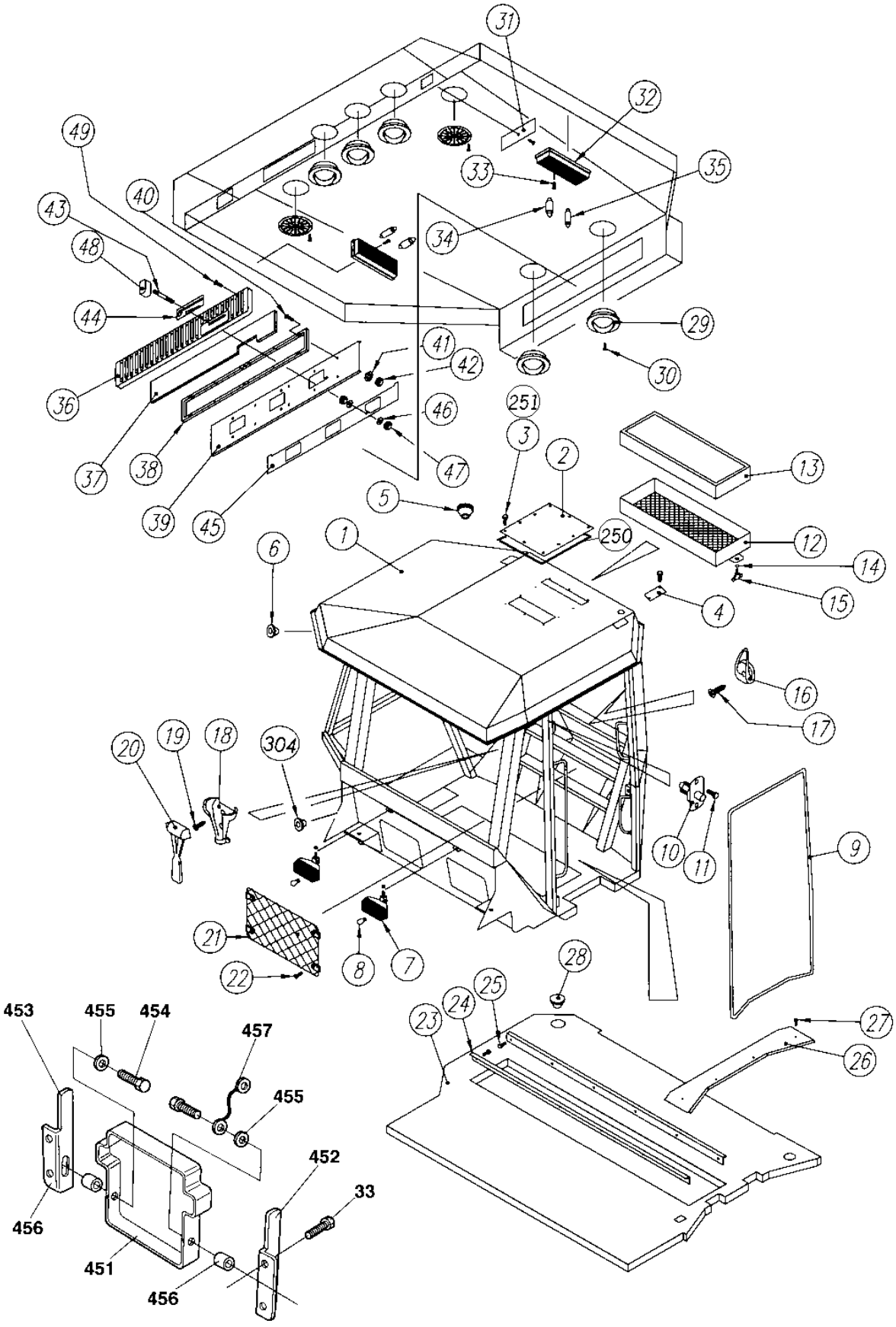
31
32
49
33
35
40
43
34
48
44
29
41
42
30
36
46
251
3
2
13
37
38
47
5
39
45
250
12
1
6
14
4
15
16
17
20
19
18
304
10
11
9
21
8
7
22
28
25
24
23
27
26
453
455
454
457
455
452
33
456
451
456

Ref. No.	Part No.	Rem.	Qty	Description	Code
1	359899		1	Cab, cpl	
2	908494		1	.Cover plate	
3	500012		14	.Screw M6x12	
4	908495		2	.Cover plate	
5	908496		1	.Grommet	
6	908497		12	.Grommet	
7	908268		2	.Work light	
8	908498		2	..Bulb	
9	908499	A	1XL	.Rubber list	
10	908500		1	.Door switch	
11	901315		2	.Screw	
12	908501		1	.Filter frame	
13	908502		1	.Filter	A
14	908503		2	.O-ring	
15	908504		2	.Handle	
16	908505		1	.Hook	
17	903803		2	.Screw	
18	908506	B	1	.Holder	
19	903806		2	.Screw	
20	908507		1	.Emergency hammer	
21	908508		1	.Document holder	
22	903806		4	.Screw	
23	908509		1	.Floor carpet	
24	908510		2	.List	
25	535005		12	.Screw M5x12	
26	908511		1	.List left	
27	903808		4	.Screw	
28	908512		1	.Cover	
29	908513	C	5	.Nozzle	
30	904523		20	.Screw	
31	908514		1	.Cover plate	
32	908515		2	.Inner light	
33	903809		4	.Screw	
34	985117		2	.Bulb	
35	985051		2	.Bulb 12V,10W	B
36	908516		1	.Ventilating grid	
37	908517		1	.Recirculation filter	
38	908518		1	.Ventilating frame	
39	908519		1	.Grid support	
40	541535		6	.Screw	
41	908520		12	.Sleeve	
42	570002		12	.Nut M4	
43	908521		1	.Bar	
44	908522		1	.Tape	
45	908523		1	.Screen	
46	600004		1	.Washer	
47	570005		2	.Nut M8	
48	908524		1	.Knob	
49	903807		12	.Screw	
250				Not used on this model	
251				Not used on this model	
304	909510		1	.Grommet	
451	357425		1	Instruction book holder	
452	357426	E	1	Cover holder	
453	357427	F	1	Cover holder	
454	902164		2	Screw	

A) L=5,0 m
B) For item 20
C) Option for AC
E) Left
F) Right

Cab Interior

15731-2

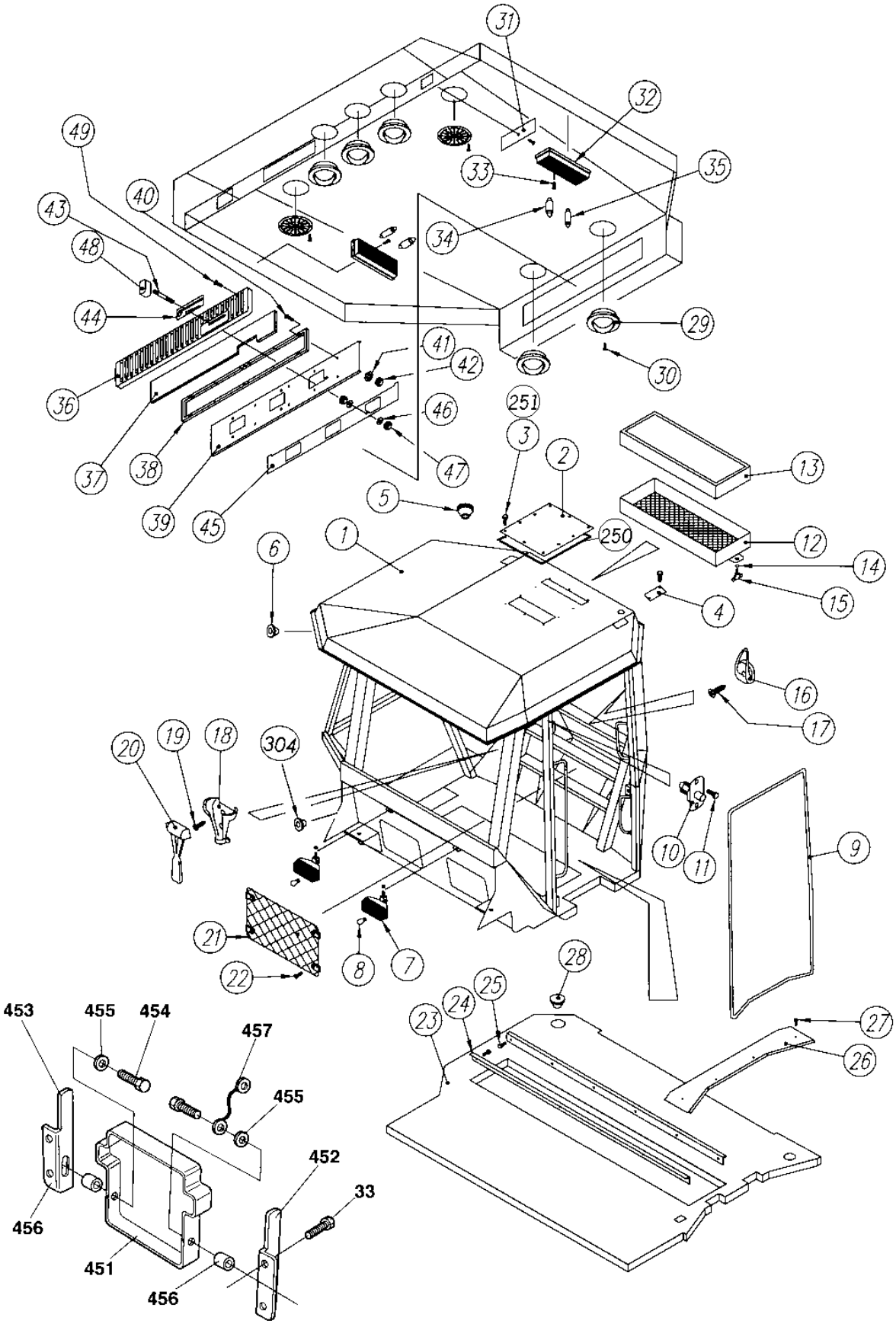

Ref. No.	Part No.	Rem.	Qty	Description	Code
455	600001		2	Washer	
456	902163		2	Parallel pin	
457	357643		1	Wire	
458	624021		4	Pop rivet	

Cab Inside panels

15732-1

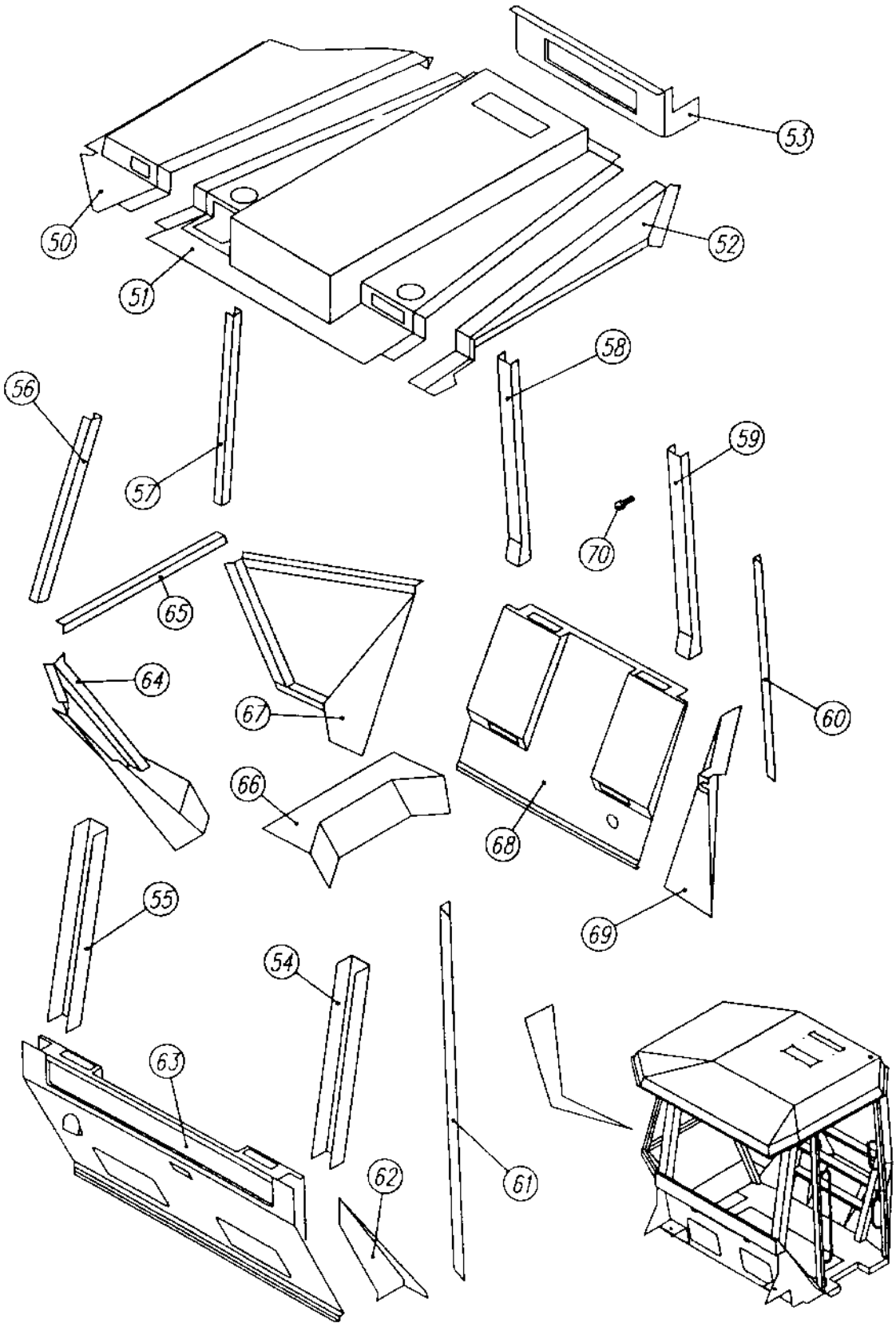

Cab Inside panels

Ref. No.	Part No.	Rem.	Qty	Description	Code
				Cab, cpl	
50	908525		1	.Panel	
51	908526		1	.Panel	
52	908527		1	.Panel	
53	908528		1	.Panel	
54	908529		1	.Panel	
55	908530		1	.Panel	
56	908531		1	.Panel	
57	908532		1	.Panel	
58	908533		1	.Panel	
59	908534		1	.Panel	
60	908535		1	.Panel	
61	908536		1	.Panel	
62	908537		1	.Panel	
63	908538		1	.Panel	
64	908539		1	.Panel	
65	908540		1	.Panel	
66	908541		1	.Panel	
67	908542		1	.Panel	
68	908543		1	.Panel	
69	908544		1	.Panel	
70	903782		30	.Screw	

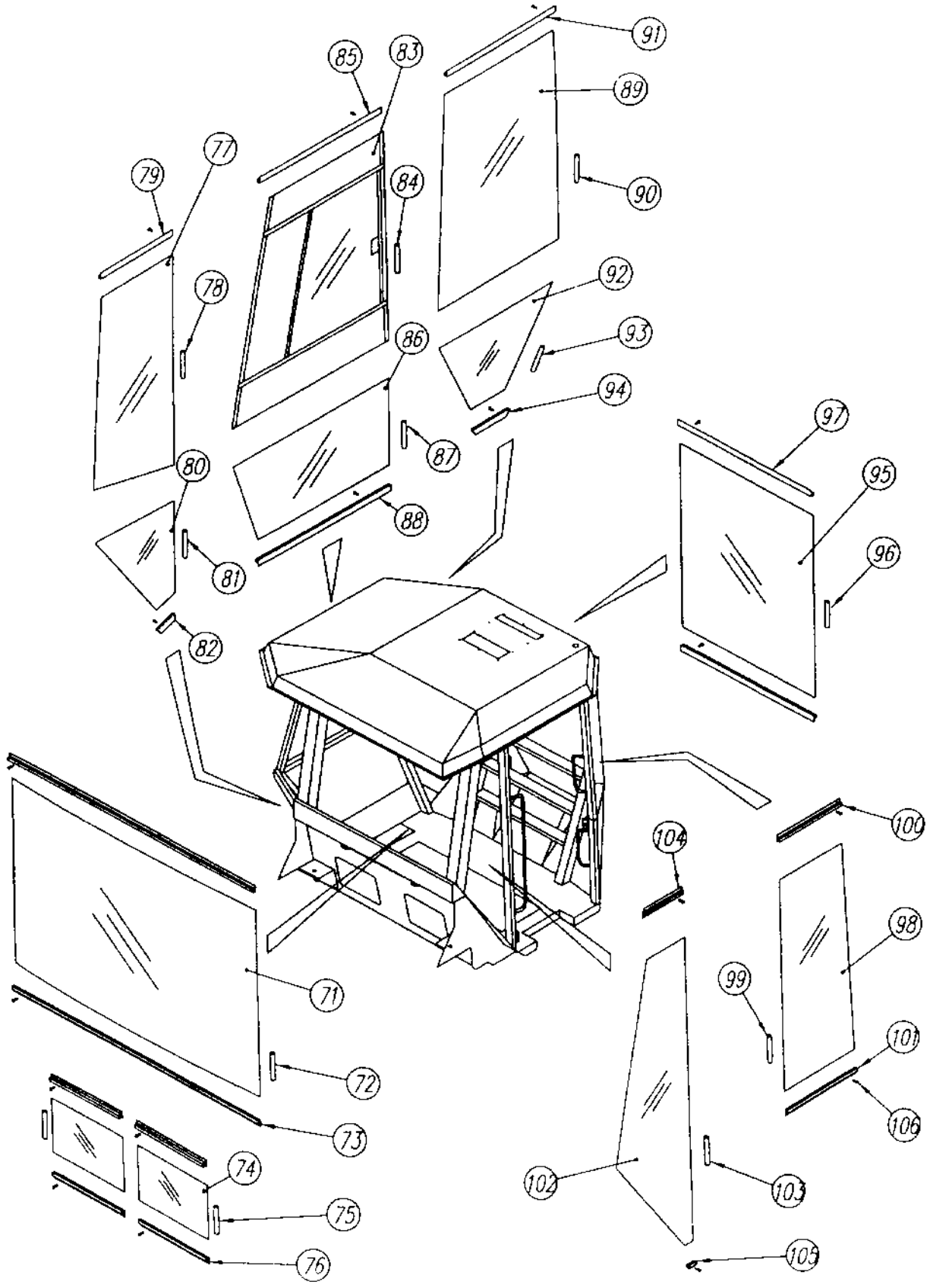
91
89
85
83
90
79
77
84
78
92
93
86
94
87
97
80
95
88
96
81
82
100
104
98
71
99
101
72
106
73
74
102
103
75
76
105

Ref. No.	Part No.	Rem.	Qty	Description	Code
				Cab, cpl	
71	908257		1	.Front screen Bronze	
	937395		1	.Front screen Green	
72	908545	A	1XL	.Seal list	
73	908546		2	.List	
74	908258		2	.Screen Bronze	
	937396		2	.Screen Green	
75	908545	B	1XL	.Seal list	
76	908547		4	.List	
77	908253		1	.Screen Bronze	
	937397		1	.Screen Green	
78	908545	C	1XL	.Seal list	
79	908548		1	.List	
80	908256		1	.Screen Bronze	
	937398		1	.Screen Green	
81	908545	D	1XL	.Seal list	
82	908549		1	.List	
83	908353		1	.Screen sliding Bronze	
	937399		1	.Screen sliding Green	
84	908545	E	1XL	.Seal list	
85	908550		1	.List	
86	908255		1	.Screen Bronze	
	937400		1	.Screen Green	
87	908545	A	1XL	.Seal list	
88	908551		1	.List	
89	908249		1	.Screen Bronze	
	937401		1	.Screen Green	
90	908545	A	1XL	.Seal list	
91	908552		1	.List	
92	908254		1	.Screen Bronze	
	937402		1	.Screen Green	
93	908545	D	1XL	.Seal list	
94	908553		1	.List	
95	908264		1	.Screen Bronze	
	937403		1	.Screen Green	
96	908545	A	1XL	.Seal list	
97	908554		2	.List	
98	908262		1	.Screen Bronze	
	937404		1	.Screen Green	
99	908545	F	1XL	.Seal list	
100	908555		1	.List	
101	908556		1	.List	
102	908259		1	.Screen Bronze	
	937405		1	.Screen Green	
103	908545	G	1XL	.Seal list	
104	908557		1	.List	
105	908993		1	.List	
106	903782		90	.Screw	

A) L=1,8 m
B) L=0,6 m
C) L=2,4 m
D) L=1,6 m
E) L=2,9 m
F) L=2,1 m
G) L=3,0 m

Cab Wiper, front and rear

15734-1

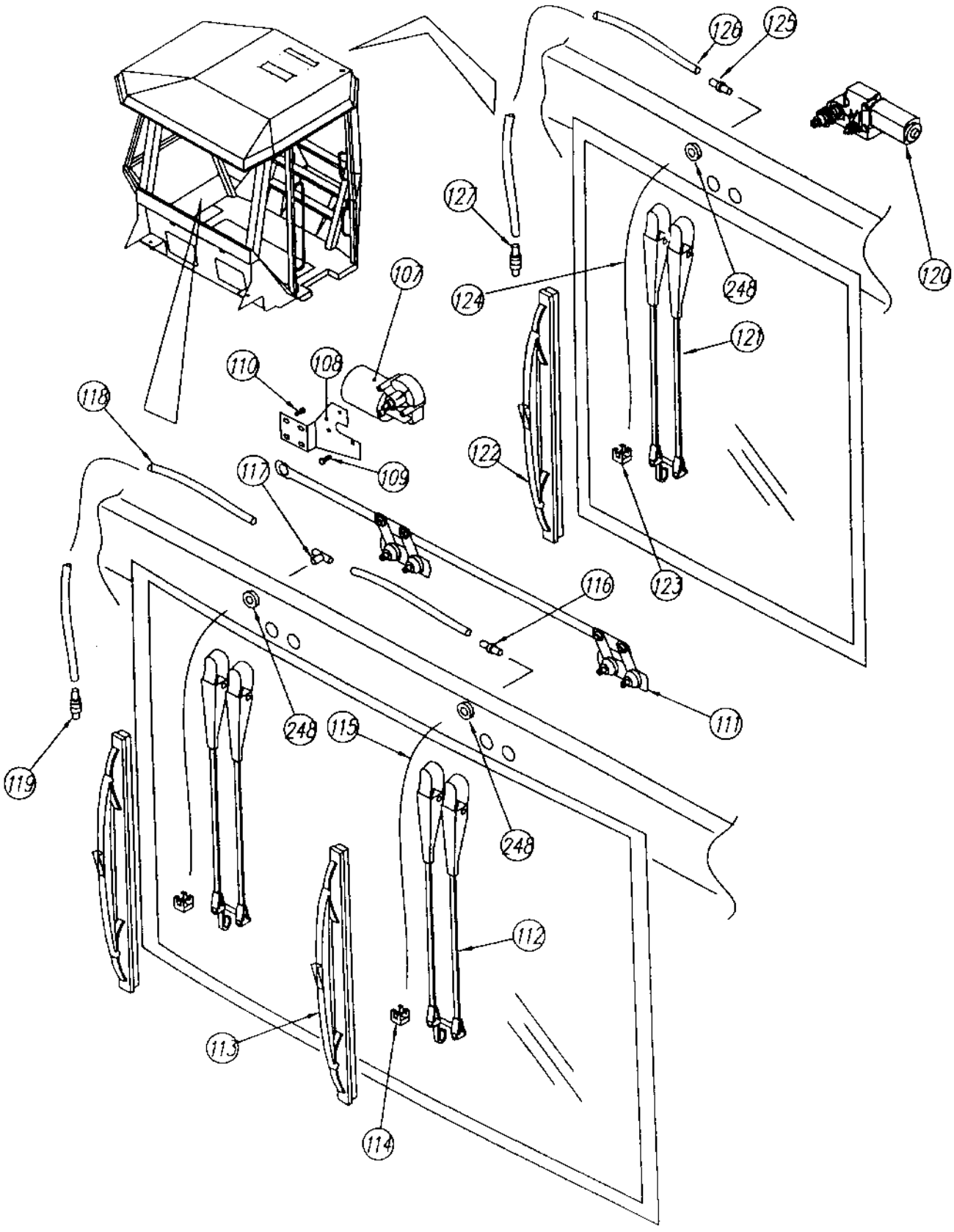

Cab Wiper, front and rear

Ref. No.	Part No.	Rem.	Qty	Description	Code
				Cab, cpl	
107	908272		1	.Wiper motor	
108	908558		1	.Bracket	
109	500012		3	.Screw M6x12	
110	541702		4	.Screw M6x12	
111	908362		1	.Transmission	
112	908273		2	.Wiper arm	
113	908271		2	.Wiper blade	
114	908559		2	.Nozzle	
115	908560	A	2XL	.Rubber hose	
116	908561		1	.Grommet	
117	908562		1	.T-connection	
118	908563	B	1XL	.Plastic hose	
119	908564	C	1	.Check valve	
120	908278		1	.Wiper motor	
121	908279		1	.Wiper arm	
122	908280		1	.Wiper blade	
123	908559		1	.Nozzle	
124	908560	A	1XL	.Rubber hose	
125	908561		1	.Grommet	
126	908563	B	1XL	.Plastic hose	
127	908564		1	.Check valve	
248	908496		3	Grommet	

A) L=1,0 m
B) L=6,0 m
C) 100 mm from pump

Cab Wipers, right side

15735-1

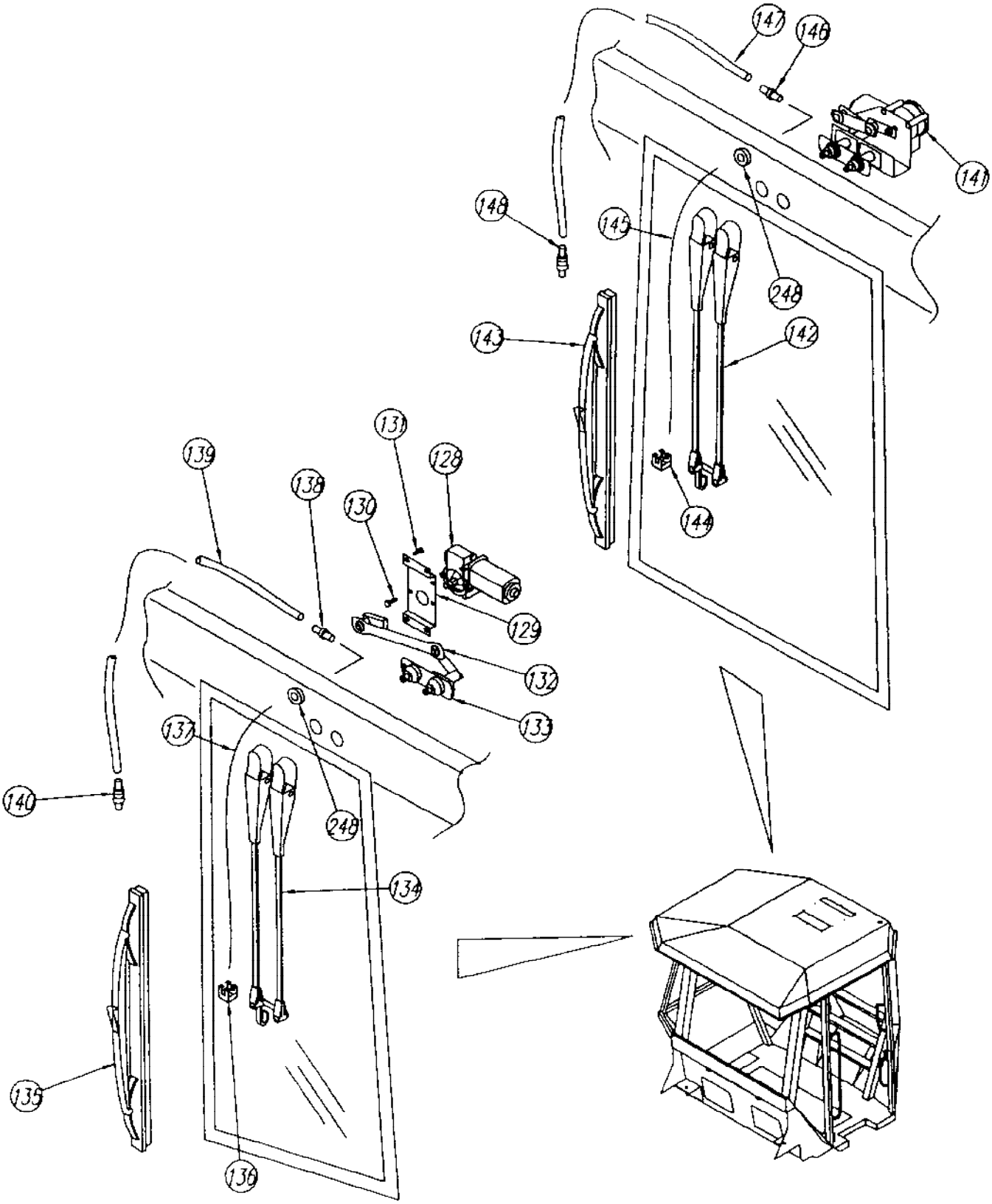

Cab Wipers, right side

Ref. No.	Part No.	Rem.	Qty	Description	Code
				Cab, cpl	
128	908269		1	.Wiper motor	
129	908565		1	.Bracket	
130	500012		3	.Screw M6x12	
131	541702		4	.Screw M6x12	
132	908363		1	.Transmission	
133	908364		1	.Intermediate shaft	
134	908270		1	.Wiper arm	
135	908271		1	.Wiper blade	
136	908559		1	.Nozzle	
137	908560	A	1XL	.Rubber hose	
138	908561		1	.Grommet	
139	908563		1XL	.Plastic hose	
140	908564	B	1	.Check valve	
141	908281		1	.Wiper motor	
142	908282		1	.Wiper arm	
143	908271		1	.Wiper blade	
144	908559		1	.Nozzle	
145	908560		1XL	.Rubber hose	
146	908561		1	.Grommet	
147	908563	C	1XL	.Plastic hose	
148	908564		1	.Check valve	
248	908496		2	Grommet	

A) L=1,0 m
B) 100 mm from pump
C) L=6,0 m

Cab Water tank, wipers

15870

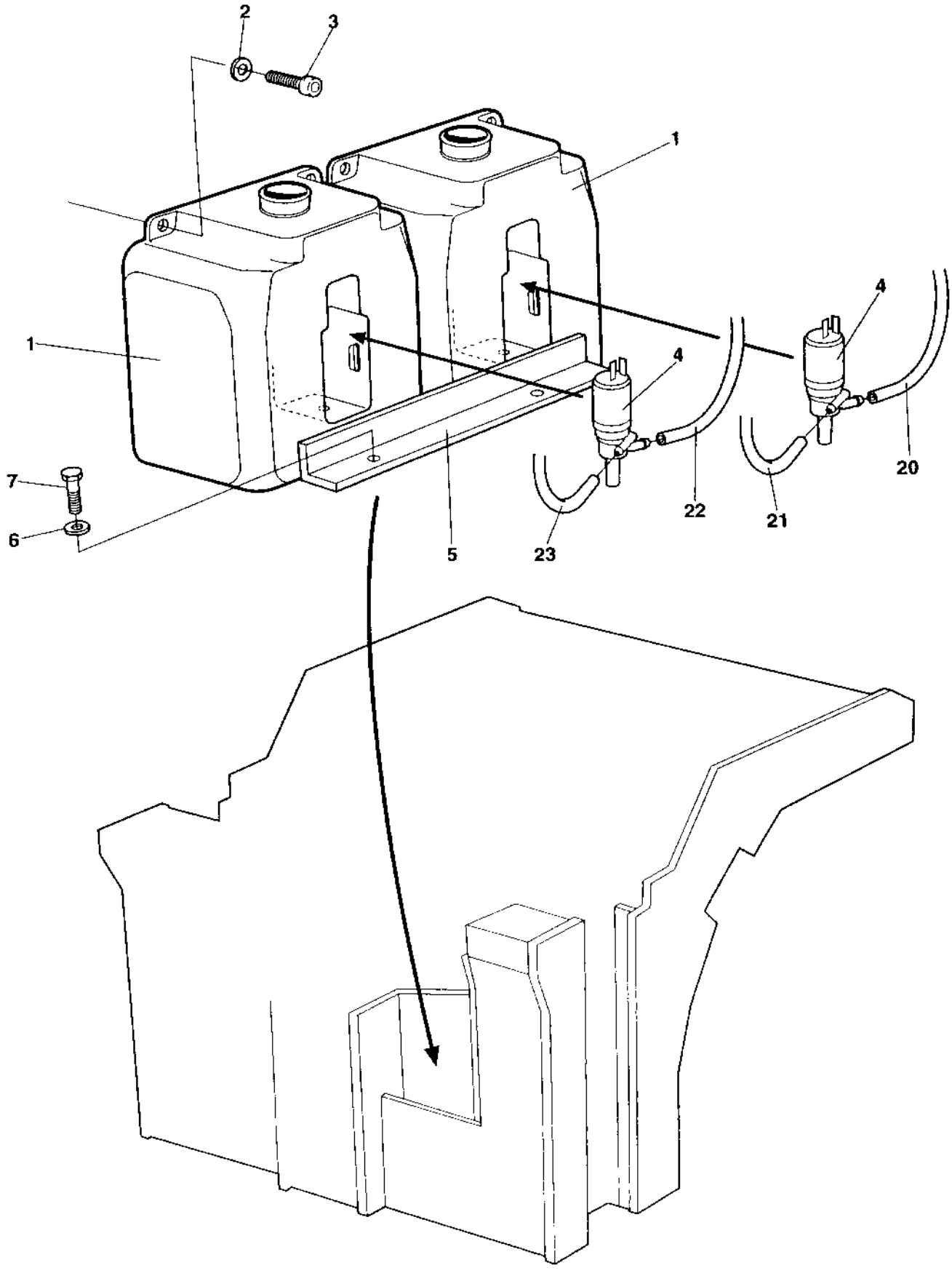

Cab Water tank, wipers

Ref. No.	Part No.	Rem.	Qty	Description	Code
1	900998	A	2	Water reservoir	
2	904228		4	Washer 6,4x12x1,5	
3	500075		4	Screw M6-1x25 8,8	
4	900999		2	Pump	
5	371960		1	Bracket	
6	904228		2	Washer 6,4x12x1,5	
7	500013		2	Screw M6-1x16 8,8	
20		B	1	Hose	
21		C	1	Hose	
22		D	1	Hose	
23		E	1	Hose	

A) Windshield washer
B) Forward center
C) Rear center
D) Forward right
E) Rear right

Cab Door, left side

15736-1

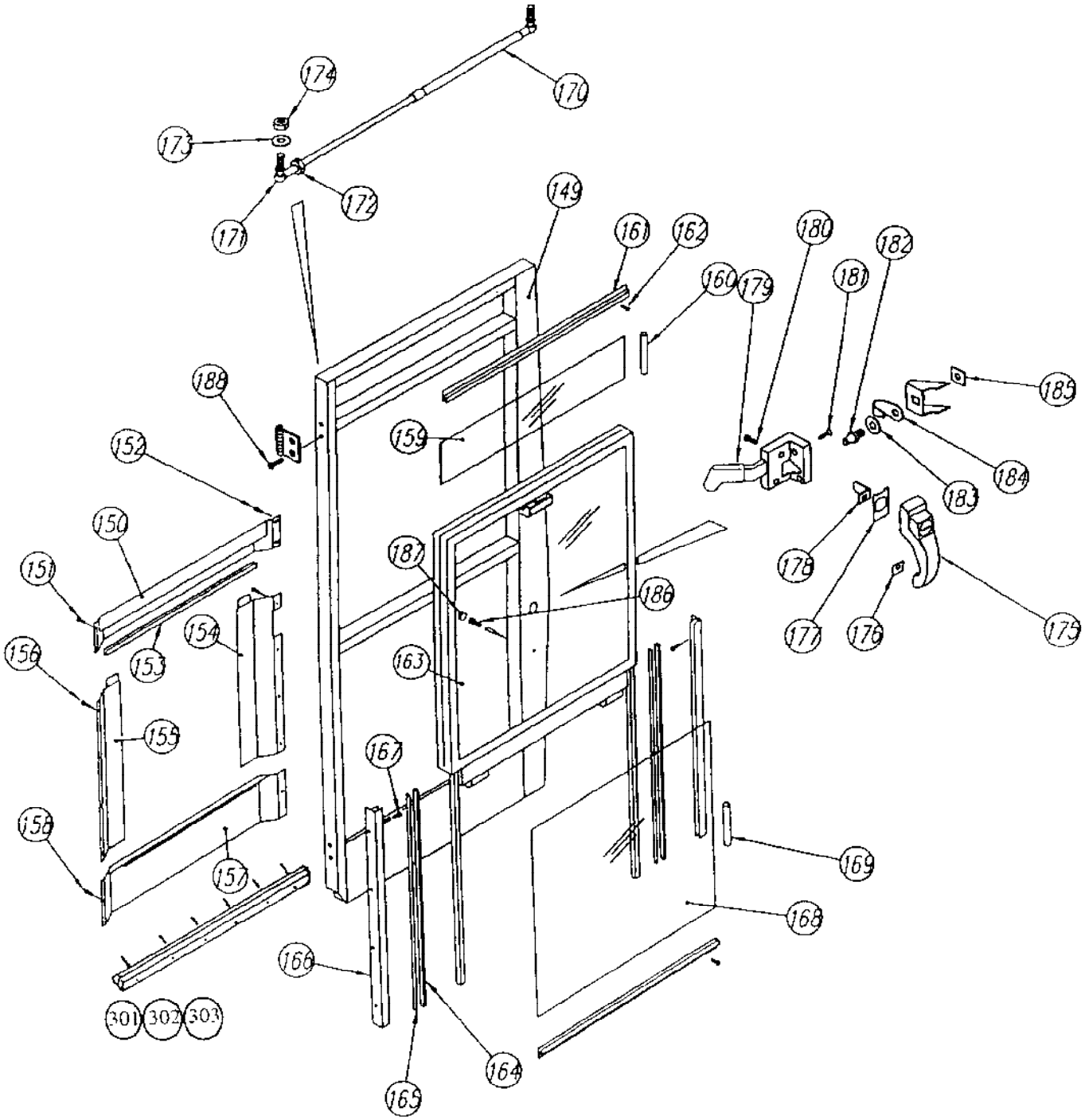

Cab Door, left side

Ref. No.	Part No.	Rem.	Qty	Description	Code
				Cab, cpl	
149	908566		1	.Door frame, left	
150	908567		1	.Cover	
151	541702		2	.Screw M6x12	
152	500012		2	.Screw M6x12	
153	908568	A	1XL	.Edge trim	
154	908569		1	.Cover	
155	908570		1	.Cover	
156	901315		8	.Screw	
157	908571		1	.Cover	
158	903805		6	.Screw	
159	908260		1	.Screen Bronze	
	937406		1	.Screen Green	
160	908545	B	1XL	.Seal list	
161	908572		1	.List	
162	903782		10	.Screw	
163	908261	C	1	.Screen Bronze	
	937407		1	.Screen Green	
164	908573	D	1XL	.Sealing	
165	908574	D	1XL	.Sealing	
166	908575		2	.Slide bar	
167	901315		8	.Screw	
168	908263		1	.Screen Bronze	
	937408		1	.Screen Green	
169	908545		1XL	.Seal list	
170	908284		1	.Gas spring	
	908354		1	.Mounting kit	
171			1	..Joint	
172			1	..Nut	
173			2	..Washer	
174			2	..Nut	
175	372260	E	1	.Handle, cpl	
	908285		1	..Handle w lock	
	908286		1	...Key	
	935244	1	1	.Door handle with key	
	902866		1	..Key Marked "455"	D
176	908577		1	..Washer	
177	908578		1	..Washer	
178	908579		1	.Leader	
179	908287		1	.Lock	
180	903805		2	.Screw	
181	903802		2	.Screw	
182	908580		1	.Lock pin	
183	908581		1	.Washer	
184	908582		1	.Cover	
185	908583		1	.Bracket	
186	508001	F	1	.Screw	
187	908584		1	.Rubber seal	
188	513025		4	.Screw	
301	908986		1	.List	
302			6	.Rivet	
303	908987	G	1XL	.Seal	

1) Mounted from march/april 1996.
A) L=0,70 m
B) L=1,0 m
C) Up-down
D) L=1,4 m
E) With lock and key
F) Incl in item 175
G) L=0,75 m

Cab Heater and fan system

15737-1

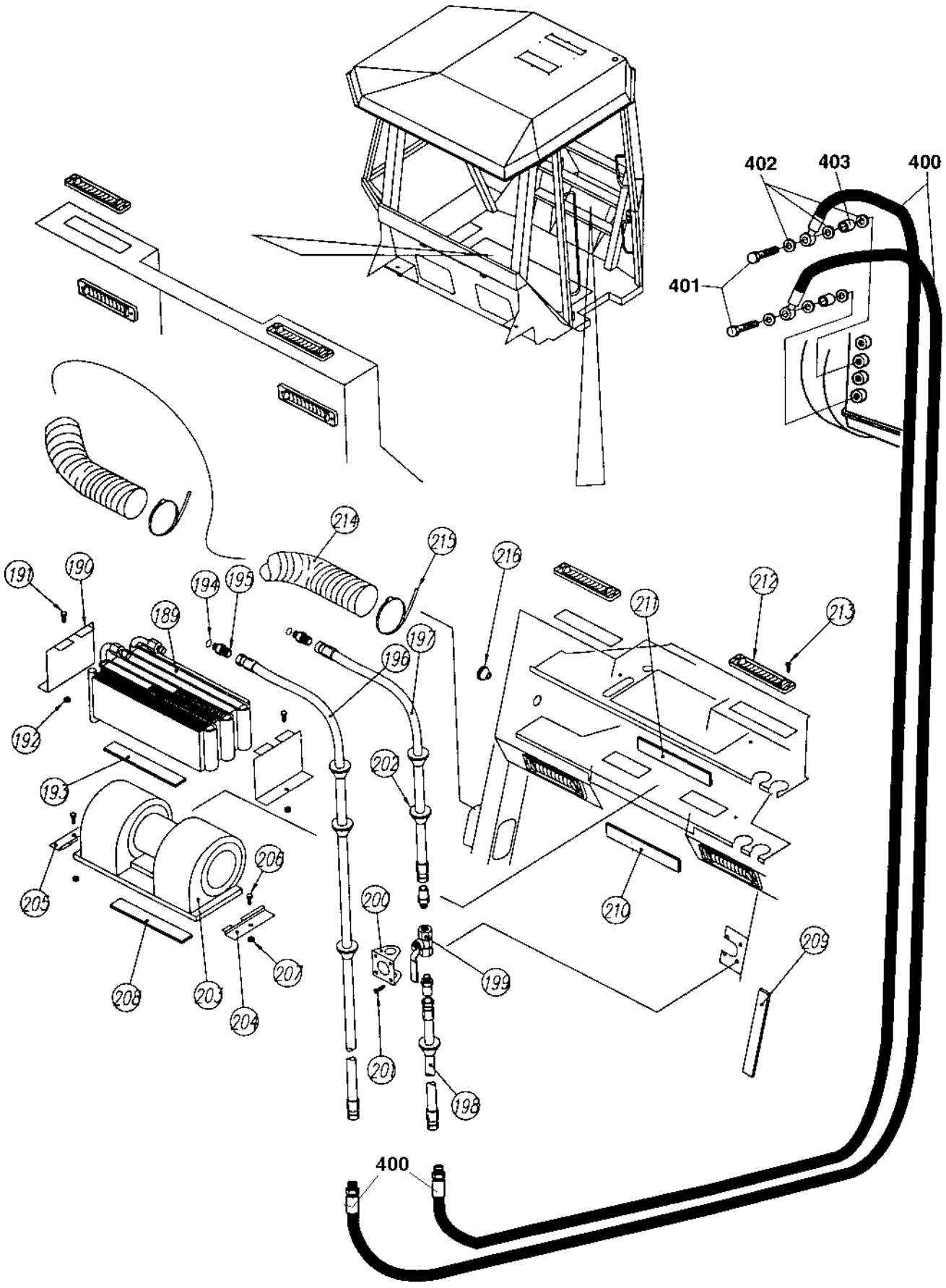

Ref. No.	Part No.	Rem.	Qty	Description	Code
				Cab, cpl	
189	908585		1	.Radiator	
190	908586		2	.Bracket	
191	500040		2	.Screw M6-1x20 8,8	
192	570004		2	.Nut M6	
193	908587	A	1XL	.Edge trim	
194	908588		2	.O-ring	
195	908589		2	.Connector	
196	908590		1	.Hose	
197	908591		1	.Hose	
198	908592		1	.Hose	
199	908593		1	.Valve	
200	908594		1	.Bracket	
201	903804		4	.Screw	
202	908496		6	.Grommet	
203	908595		1	.Fan, cpl	
204	908596	B	1	.Bracket	
205	908597	C	1	.Bracket	
206	500040		2	.Screw M6-1x20 8,8	
207	570004		2	.Nut M6	
208	908587	A	1XL	.Edge trim	
209	908587	A	2XL	.Edge trim	
210	908587	D	1XL	.Edge trim	
211	908587	D	1XL	.Edge trim	
212	908598		8	.Nozzle	
213	903806		16	.Screw	
214	908599	D	1XL	.Hose	
215	908600		2	.Clamp	
216	908601		1	.Grommet	
400	370761	E	2	Hose	
401	747691		2	Hollow screw	
402	900700		6	Copper washer	
403	371727		2	Sleeve	

A) L=1,0 m
B) Left
C) Right
D) L=1,5 m
E) Oil for heater

Cab Roof mounted,electric switches

15738-1

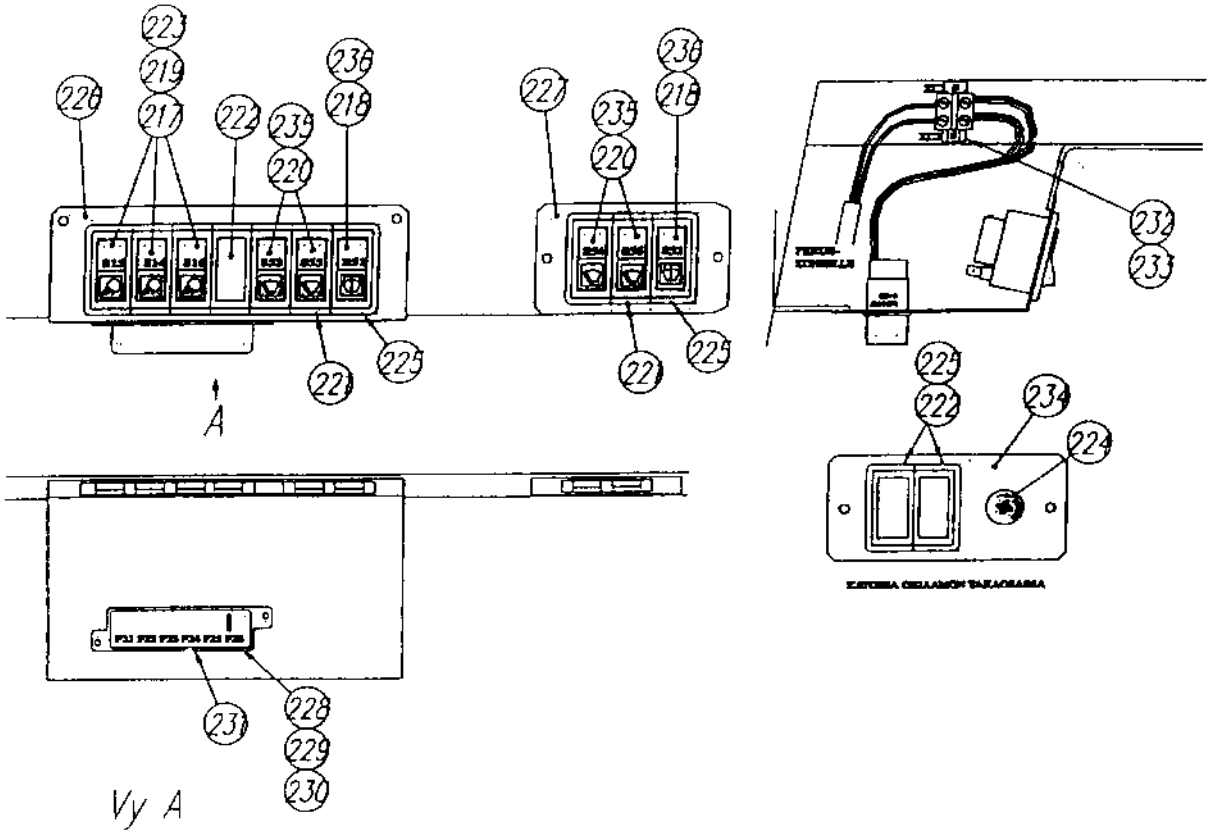

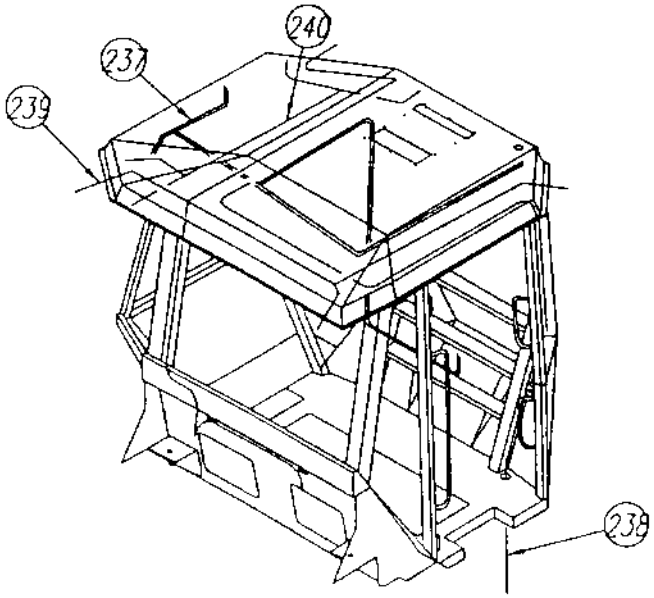

Cab Roof mounted,electric switches

Ref. No.	Part No.	Rem.	Qty	Description	Code
				Cab, cpl	
217	908602		3	.Switch	
218	908603		2	.Switch	
219	908604		3	.Symbol work lights	
220	908605		4	.Symbol wiper	
221	908606		6	.Modular panel	
222	908607		3	.Cover	
223	908608		3	.Socket with bulb	
224	908609		1	.Switch	
225	908610		1	.Modular panel	
226	908611		1	.Bracket	
227	908612		1	.Bracket	
228	908613		1	.Fuse box	
229	901240		4	.Connector	
230	901228		5	.Fuse 15A	B
231	901229		1	.Fuse 25A	B
232	908614		1	.Terminal block	
233	908615		1	.Mounting rail	
234	908616		1	.Bracket	
235	908617		4	.Switch	
236	908618		2	.Symbol washer	
237	908619		1	.Cable harness	
238	908620	A	1	.Cable harness	
239	908621	B	1	.Cable harness	
240	908622	C	1	.Cable harness	

A) Main supply
B) Working lights
C) Wipers

Interior rear mirror Sun curtain, first aid kit

15739-1

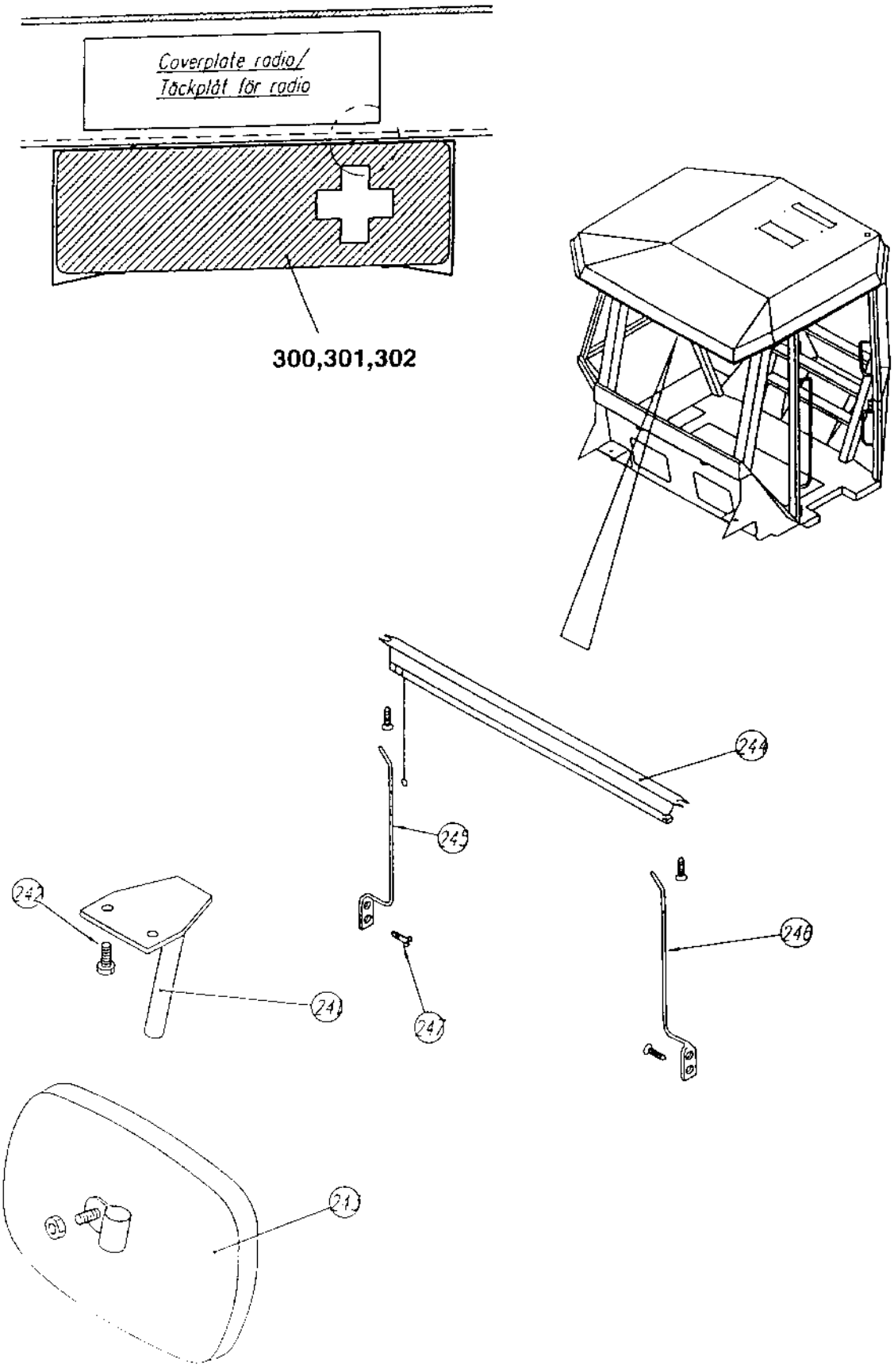

Interior rear mirror Sun curtain, first aid kit

Ref. No.	Part No.	Rem.	Qty	Description	Code
				Cab, cpl	
241	908623		1	.Bracket	
242	908624	A	1	.Rear mirror	
243	513008		2	.Screw	
244	908356		1	.Sun curtain	
245	908358	B	1	.Bar	
246	908357	C	1	.Bar	
247	903803		4	.Screw	
300	902508	D	1	First aid kit	
301	371837	D	1	Holder	
302	624015	D	4	Blind rivet 4,0x8,5	
	903969	D	4	Screw ST4,8x19 Black	

A) Interior
B) Right
C) Left
D) Option

Exterior rear mirrors

15777

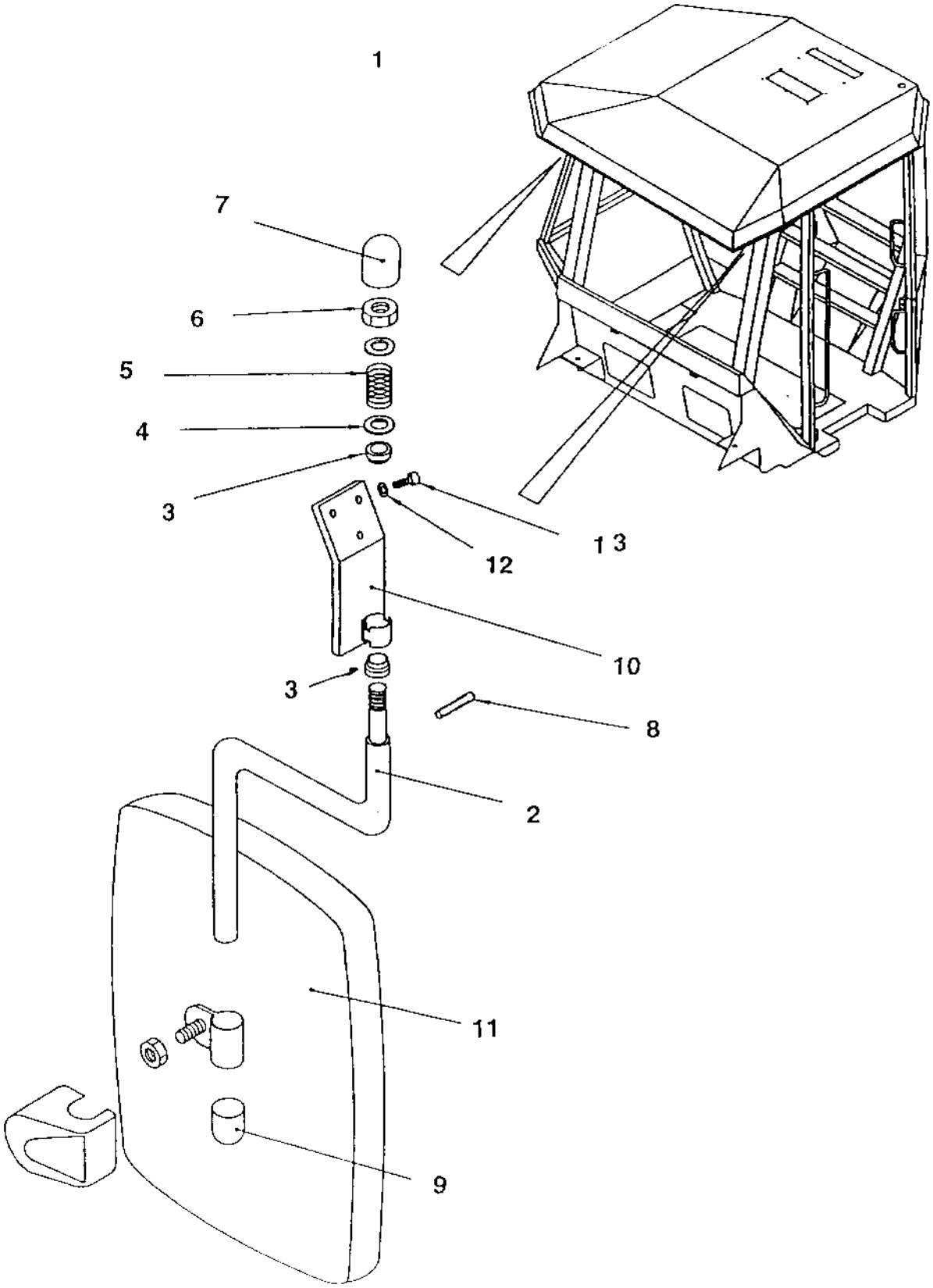

Exterior rear mirrors

Ref. No.	Part No.	Rem.	Qty	Description	Code
1	371730	A	1	Rear mirror	
2	908355		1	.Arm	
3	908625		2	.Sleeve	
4	904232		2	.Washer 17x30x3	
5	908626		1	.Spring	
6	586021		1	.Nut M16	
7	908627		1	.Cap	
8	629066		1	.Spirol pin	
9	908623		1	.Bracket	
10	908361		1	.Bracket	
11	908265		1	.Rear mirror	
12	904229		6	Washer 8,4x16x1,5	
13	500019		6	Screw M8-1,25x16 8,8	

A) Option

Radio and cassette player

15883-1

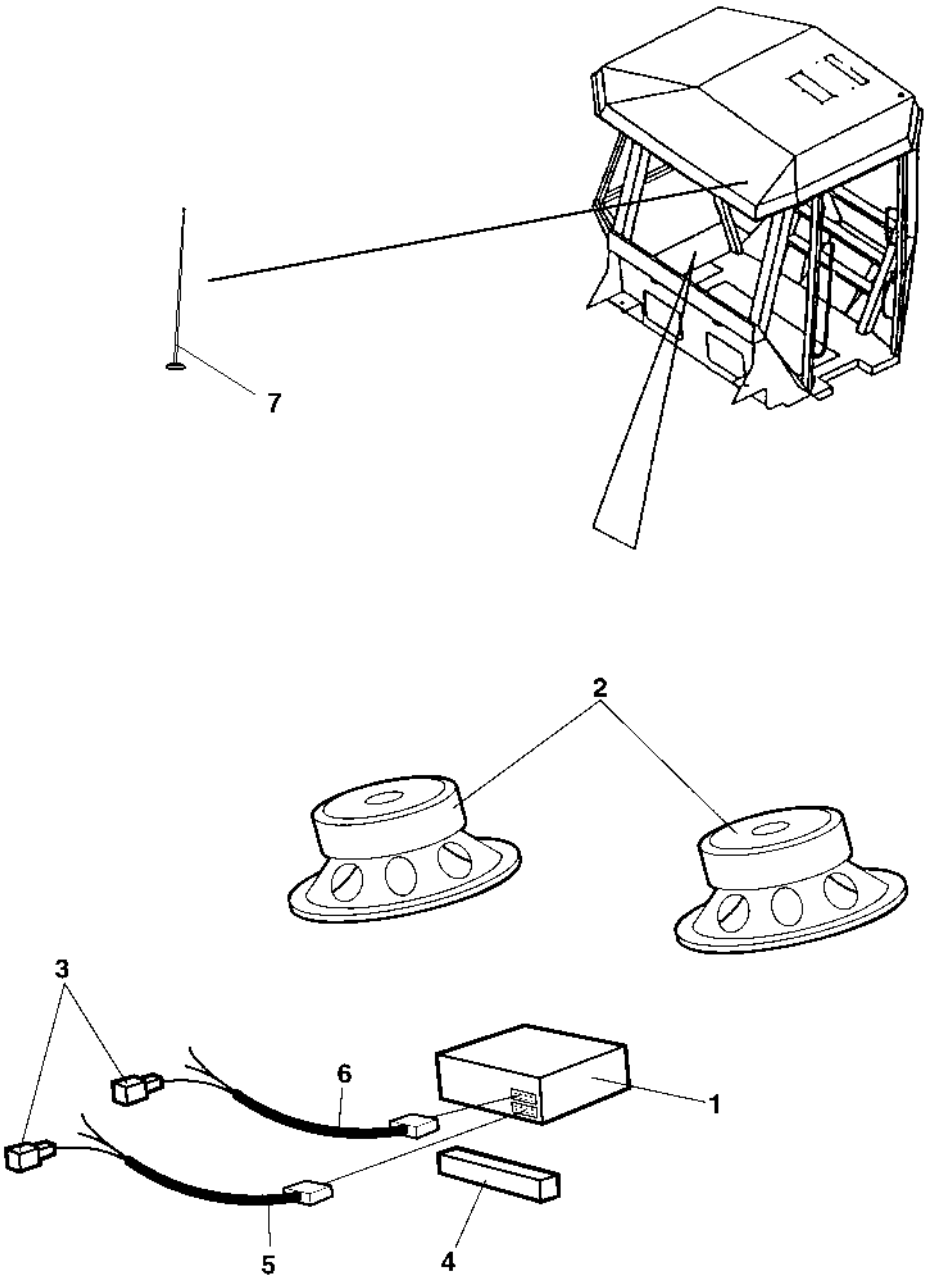

Radio and cassette player

Ref. No.	Part No.	Rem.	Qty	Description	Code
1	904939		1	Radio and cassette player	
2	904940	A	1	Loud speaker	
3	927403	B	7	Terminal	
4	202043	C	1XL	Rubber strip	
5	904969		1	Power connection	
6	904970		1	Speaker connection	
7	937165	1	1	Antenna	

1) Included in cab.
A) 2 pcs
B) Female
C) L=0,2 m

Ref. No.	Part No.	Rem.	Qty	Description	Code
10				Plates and decals (Page 386)	

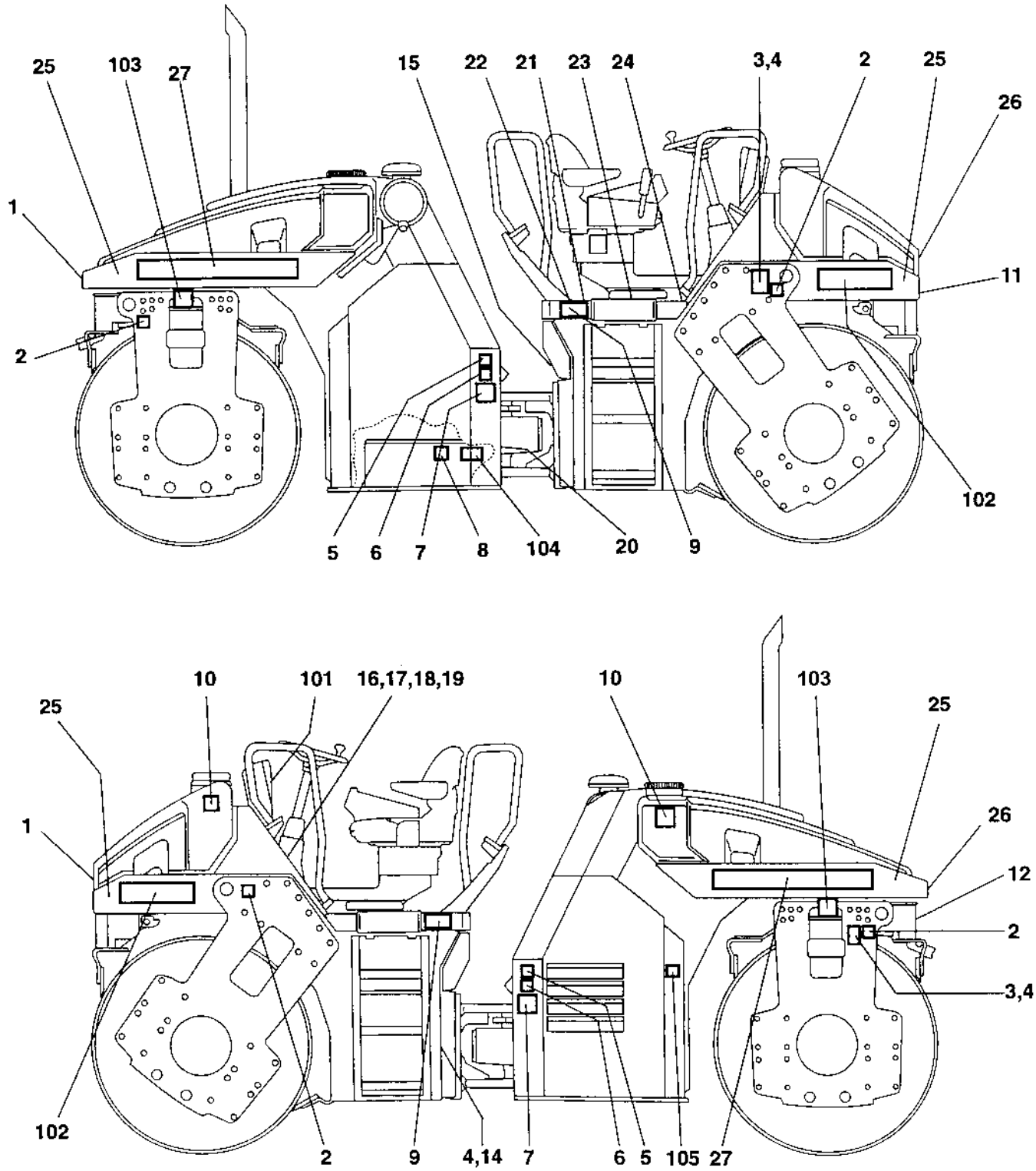
25
103
27
15
22
21
23
24
3,4
2
25
26
1
11
2
102
5
6
7
8
104
20
9
10
101
16,17,18,19
10
103
25
25
1
26
12
2
3,4
102
2
9
4,14
7
6
5
105
27

Ref. No.	Part No.	Rem.	Qty	Description	Code
1	904092		2	Decal "DYNAPAC" L=590 mm	
2	357587		4	Decal "LIFT POINT"	
3	343017		2	Lifting sign	
4	624016		12	Blind rivet	
5	903424	B	2	Decal "HOT SURFACE"	
6	903423	C	2	Decal "SAFETY"	
7	903422	D	2	Decal "SAFETY"	
8	272372		1	Decal "HYDRAULIC OIL"	
9	903459	E	2	Decal "SAFETY"	
10	991657		2	Decal "WATER"	
11	901187		2	Reflector, white	B
12	901182		2	Reflector, red	B
14	358090		1	Product plate ce	
15	991658		1	Decal "FUEL"	
16	903425		1	Decal "SAFETY MANUAL"	
17	357643		1	Wire	
18	904697		1	Washer 3,2x6x0,5	
19	358254		1	Key-ring	
20	272373		1	Decal "HYDRAULIC OIL"	
21	370058	I	6	Protection	
22	370057	J	1	Slip protection	
23	370059	K	2	Slip protection	
24	370056	L	1	Slip protection	
25	370085	M	4XL	Decal "RED" W=200 mm	
26	370084	M	2XL	Decal "RED" W=140 mm	
27	904069		1	Decal "DYNAPAC"	
101	349248		1	Decal "WARNING" Swedish	
	349249		1	Decal "WARNING" English	
	349250		1	Decal "WARNING" German	
	349251		1	Decal "WARNING" Italian	
	349252		1	Decal "WARNING" Spanish	
	349253		1	Decal "WARNING" French	
102	903607		2	Decal "MODEL CODE" CC222	
103				Not used on this model	
104	843317	V	1	Decal "HAND PUMP" English	
	357899	V	1	Decal "HAND PUMP" Swedish	
	357900	V	1	Decal "HAND PUMP" German	
	357901	V	1	Decal "HAND PUMP" Italian	
	357902	V	1	Decal "HAND PUMP" Spanish	
	359703	V	1	Decal "HAND PUMP" French	
105	903422	D,W	1	Decal "SAFETY"	

B) Hot surface
C) Engine fan
D) Hazard area
E) Read instruction manual
I) Small
J) Rear
K) Middle
L) Front
M) Length as required
V) Engine wheel brake rel.
W) With offset drum

Ref. No.	Part No.	Rem.	Qty	Description	Code
10				Standard equipment (Page 390)	

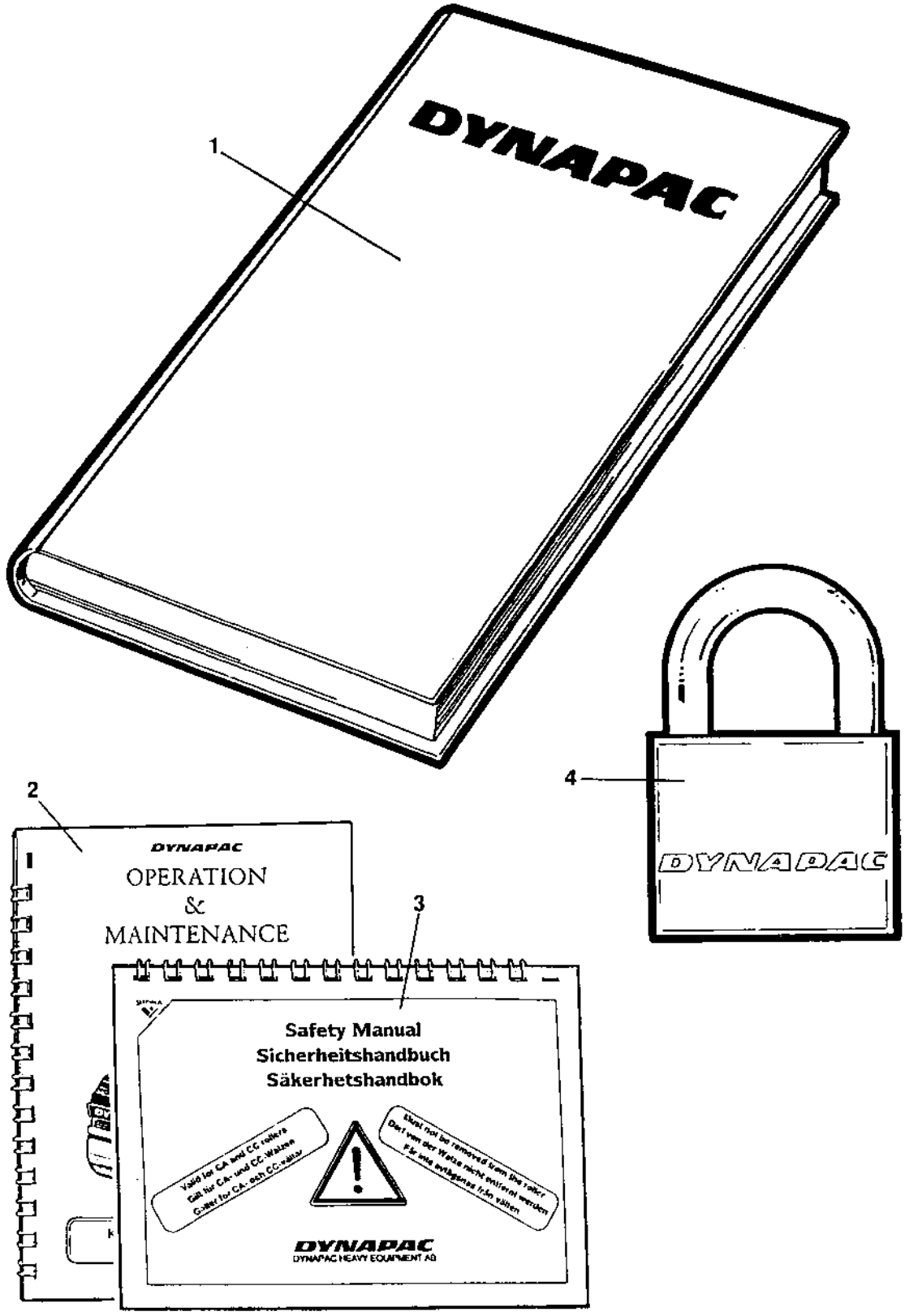
1
DYNAPAC
2
DYNAPAC
OPERATION
&
MAINTENANCE
3
Safety Manual
Sicherheitshandbuch
Säkerhetshandbok
DYNAPAC
DYNAPAC HEAVY EQUIPMENT AB
4
DYNAPAC

Standard equipment

Ref. No.	Part No.	Rem.	Qty	Description	Code
1			1	Documentation OMS222	
			1	.Warranty registration card	
			1	.Operating instruction O222	
			1	.Maintenance instruction M222	
			1	.Spare parts catalogue SCC222	
			1	.Instruction manual Deutz BF4L 1011F	
			1	.Spare parts catalogue Deutz BF4L 1011F	
2			1	.Operating / maintenance instruction OM222	
3			1	.Safety manual RSAFE	
4	358881		1	Pad lock	

Ref. No.	Part No.	Rem.	Qty	Description	Code
10				Eyelet (Page 394)	
15				Sign Slow moving vehicle (Page 396)	
20				Edge cutter cpl (Page 398)	
50				Air conditioner assembly (Page 408)	
110				Roof hatch (Page 414)	
120				Tool equipment (Page 416)	
300				Asphalt temperature meter (Page 418)	

Eyelet

15714-1

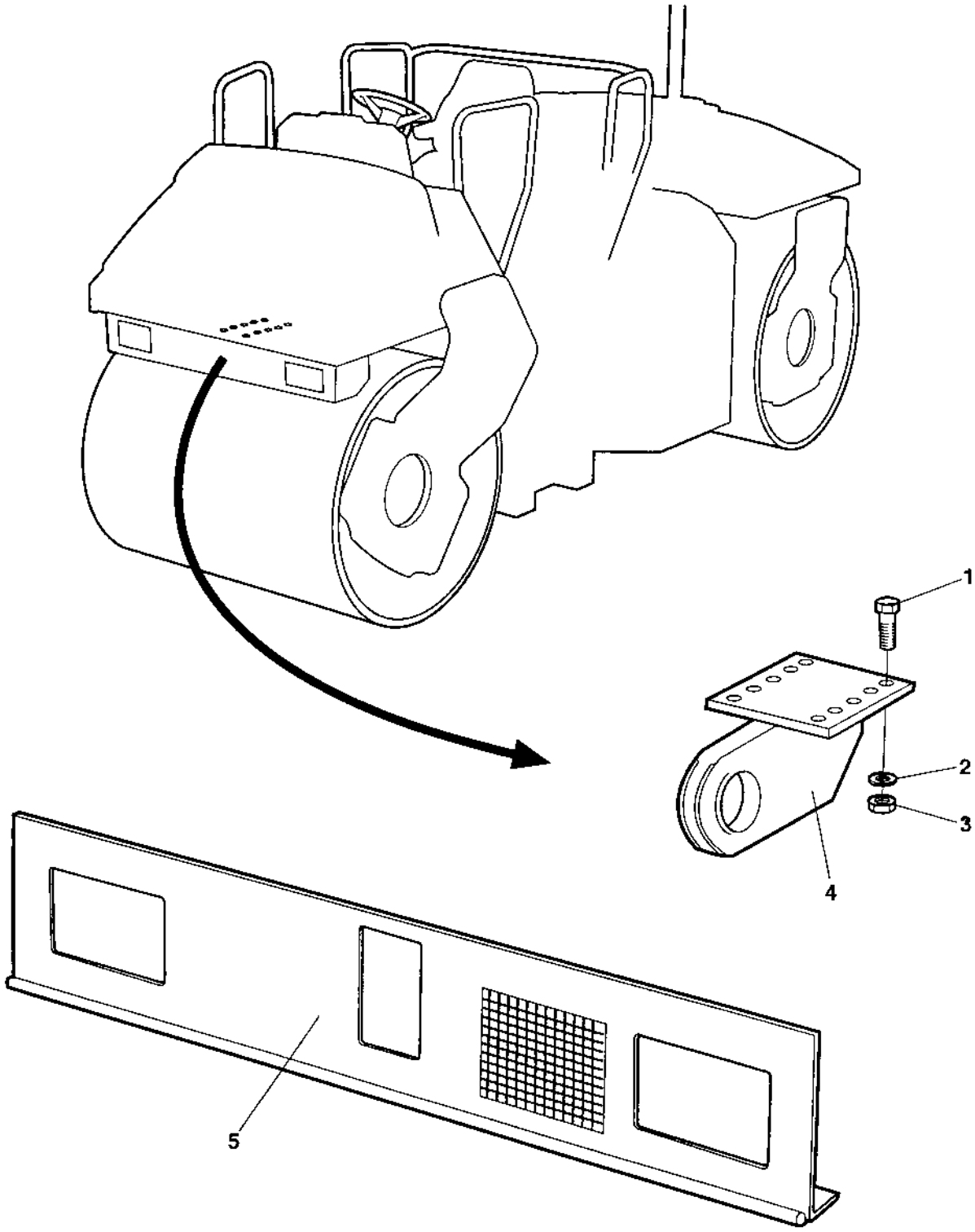

Eyelet

Ref. No.	Part No.	Rem.	Qty	Description	Code
1	947689		10	Screw	
2	904231		10	Washer 13x24x2	
3	928849		10	Nut	
4	371221	A	1	Eyelet	
	373936	B	1	Eyelet	
5	359448		1	Cover Up to 61710670	
	374540		1	Cover From 61710671	

A) Standard, L=241 mm
B) Option, L=305 mm

Sign Slow moving vehicle

15872

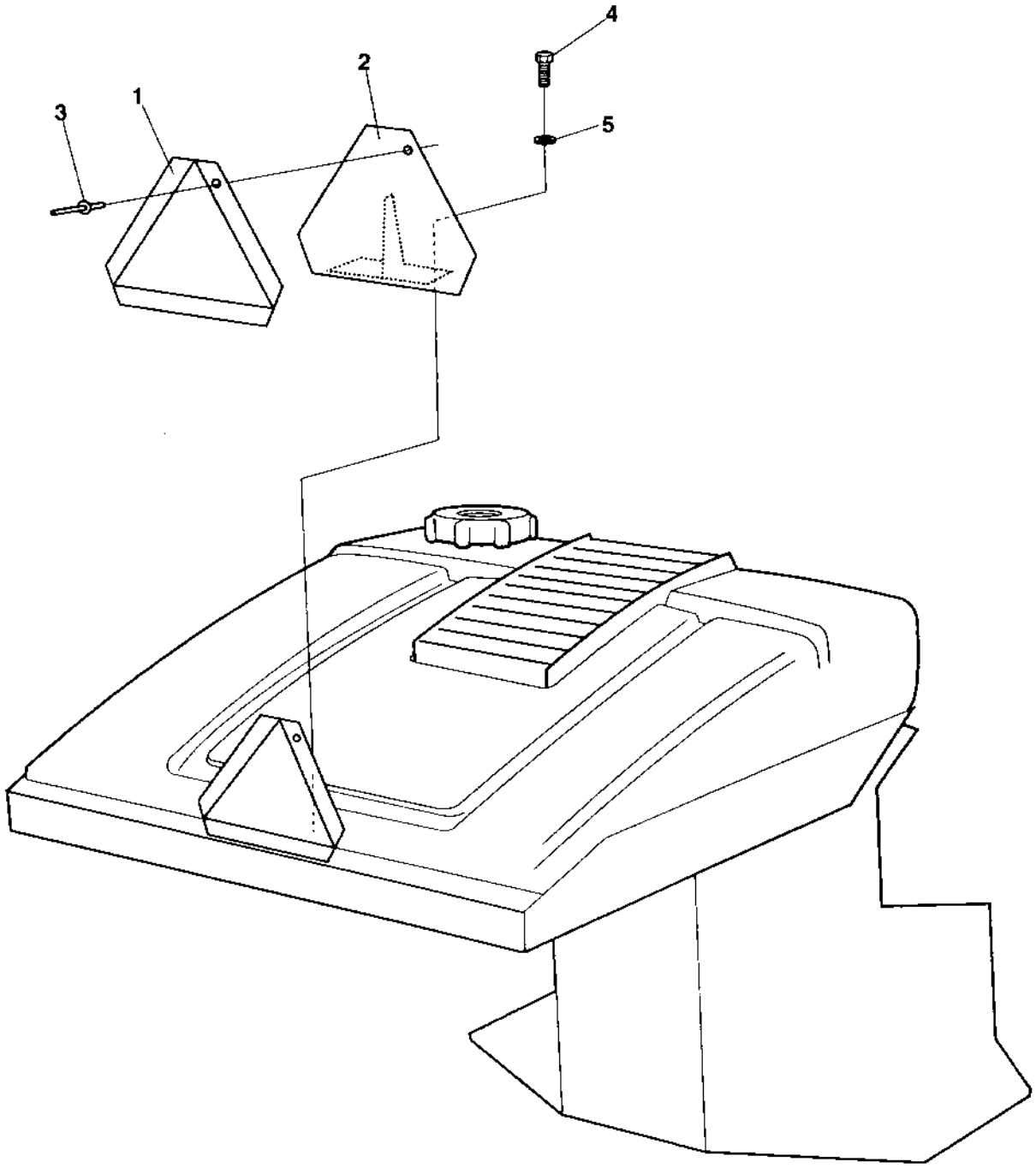

Sign Slow moving vehicle

Ref. No.	Part No.	Rem.	Qty	Description	Code
1	476019		1	SMV sign	D
2	370835		1	Sign holder	
3	624011		6	Pop rivet	
4	500019		2	Screw M8-1,25x16 8,8	
5	904229		2	Washer 8,4x16x1,5	

Edge cutter cpl

15810

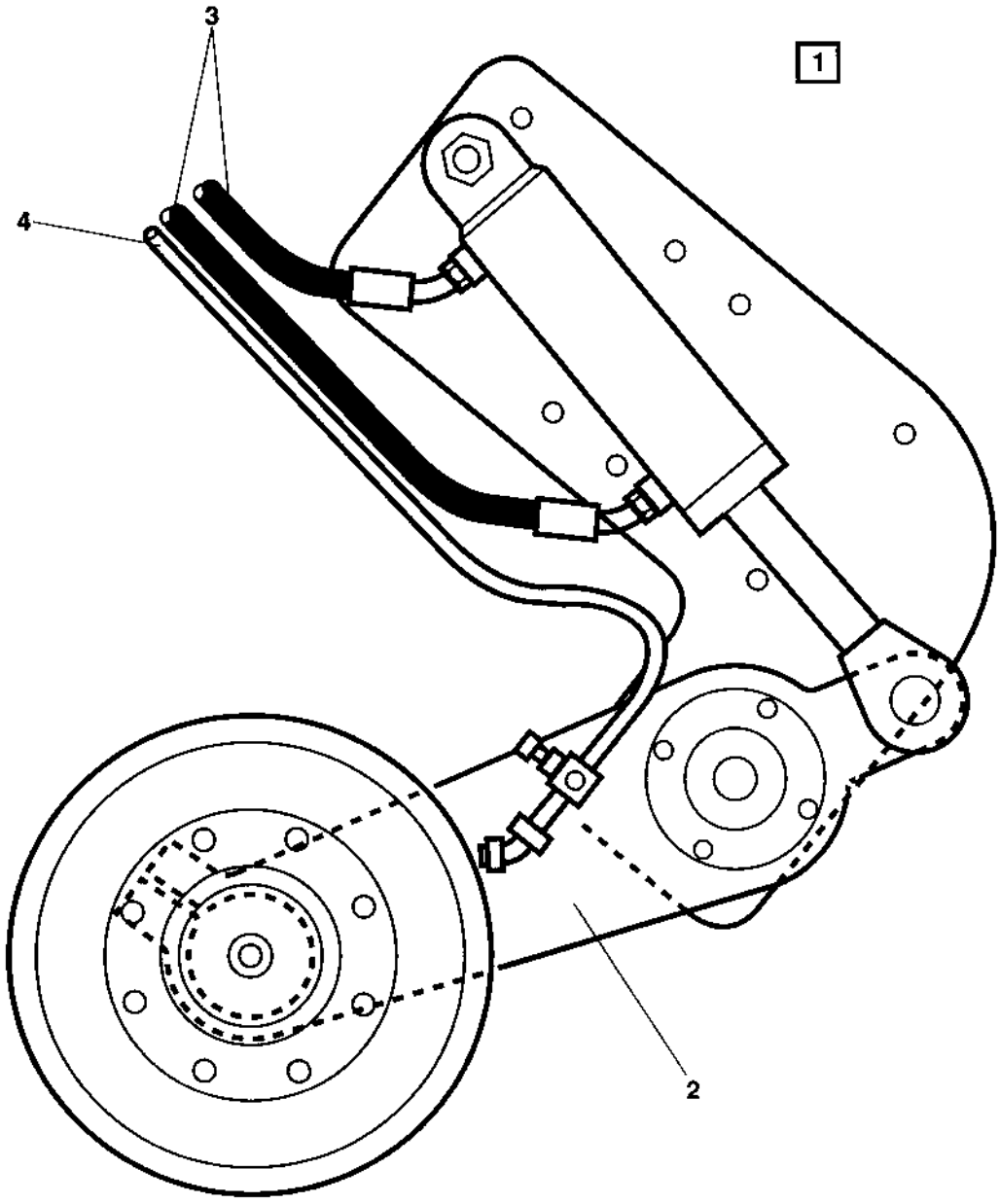

Edge cutter cpl

Ref. No.	Part No.	Rem.	Qty	Description	Code
1			1	Edge cutter cpl	
2			1	Edge cutter (Page 400)	
3			1	Edge cutter Hydraulics without offset (Page 402)	
			1	Edge cutter Hydraulics with offset (Page 404)	
4			1	Edge cutter Sprinkler system (Page 406)	

Edge cutter

15847-1

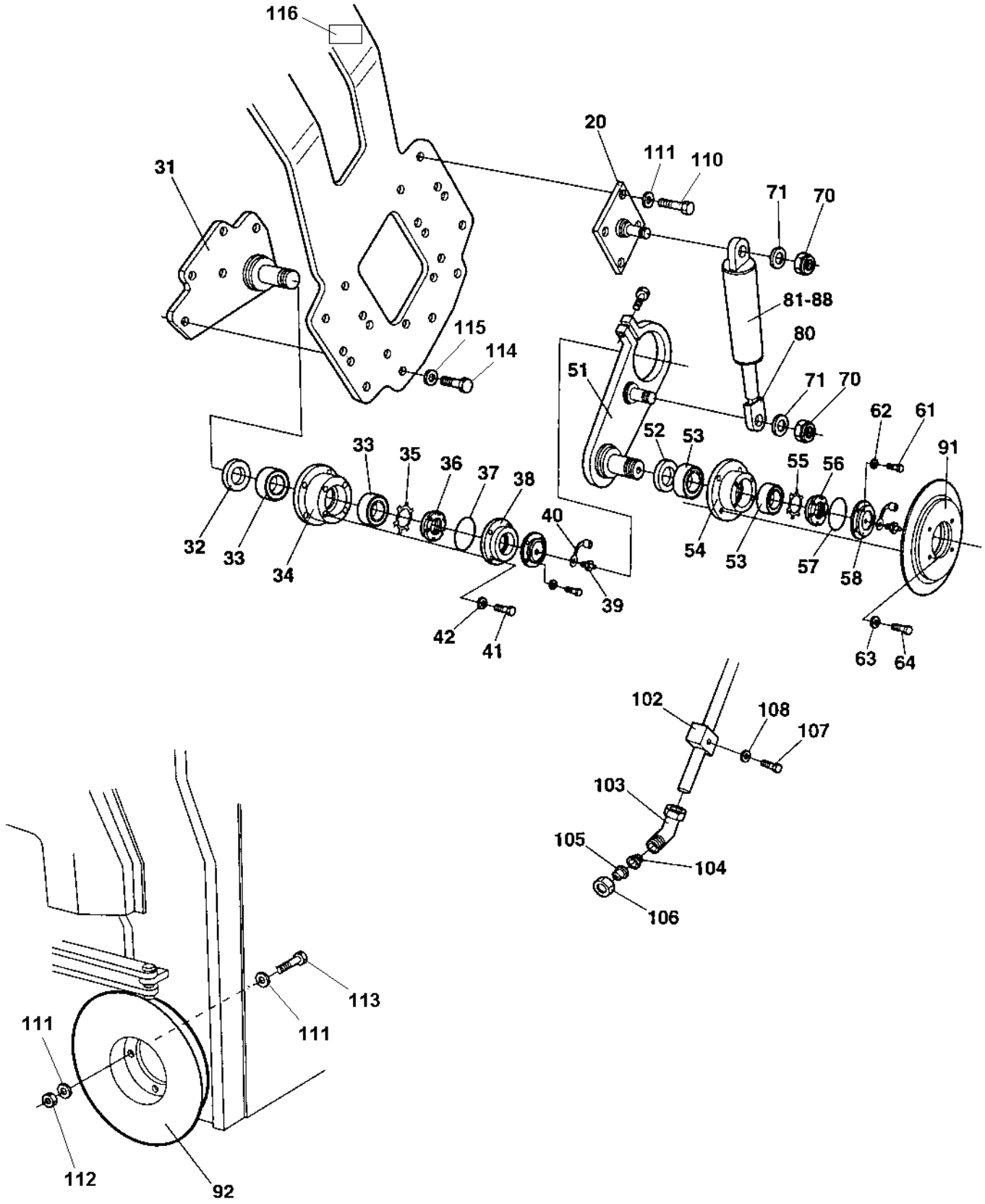

Edge cutter

Ref. No.	Part No.	Rem.	Qty	Description	Code
1	372378		1	Edge cutter cpl	
20	909467	B	1	.Holder plate	
31	909465	A	1	.Holder plate	
32	909301		1	.Seal	
33	909302		2	.Bearing	
34	936004		1	.Housing	
35	909304		1	.Washer	
36	909305		1	.Nut	
37	909306		1	.O-ring	
38	936005		1	.Cover	
39	909308		1	.Grease nipple	
40	909309		1	.Protection	
41	936006		4	.Screw	
42	909311		4	.Retainer washer	
51	909466		1	.Lever	
52	909301		1	.Seal	
53	909302		2	.Bearing	
54	909303		1	.Tool holder	
55	909304		1	.Washer	
56	909305		1	.Nut	
57	909306		1	.O-ring	
58	909307		1	.Cover	
59	909308		1	.Grease nipple	
60	909309		1	.Protection	
61	909310		4	.Screw	
62	909311		4	.Retainer washer	
63	909312		4	.Retainer ring	
64	909313		4	.Screw	
70	909288		2	.Nut	
71	909289		2	.Washer	
80	909291		1	.Cylinder end	
81	909290		1	.Cylinder	
82	909292		2	..Bearing	
83	909293		4	..Retainer ring	
84	909294		2	..Screw	
86	909299		1	..Seal kit	
88	909298		2	..Grease nipple	
91	908787		1	.Cutting disc 8 cm	
	938263		1	.Cutting disc 12 cm	
92	909237		1	.Edge roller	
101	909274		1	.Sprinkler pipe	
102	909275		1	.Bracket	
103	909276		1	.Connector	
104	909277		1	.Strainer	
105	909278		1	.Nozzle	
106	909279		1	.Nut	
107	909280		1	.Screw	
108	909281		1	.Nut	
110	500197	C	4	Screw 12x90 8.8	
	500196	D	4	Screw M12-1,75x80 8.8	
111	904231		8	Washer 13x24x2	
112	586019		6	Lock nut M12	
113	500117		2	Screw M12x80H 8,8	
114	500134		5	Screw M16x60	
115	904232		5	Washer 17x30x3	
116	904083		1	Safety decal, Edge cutter	

A) Lower
B) Upper
C) Without offset
D) With offset

Edge cutter Hydraulics without offset

15840-1

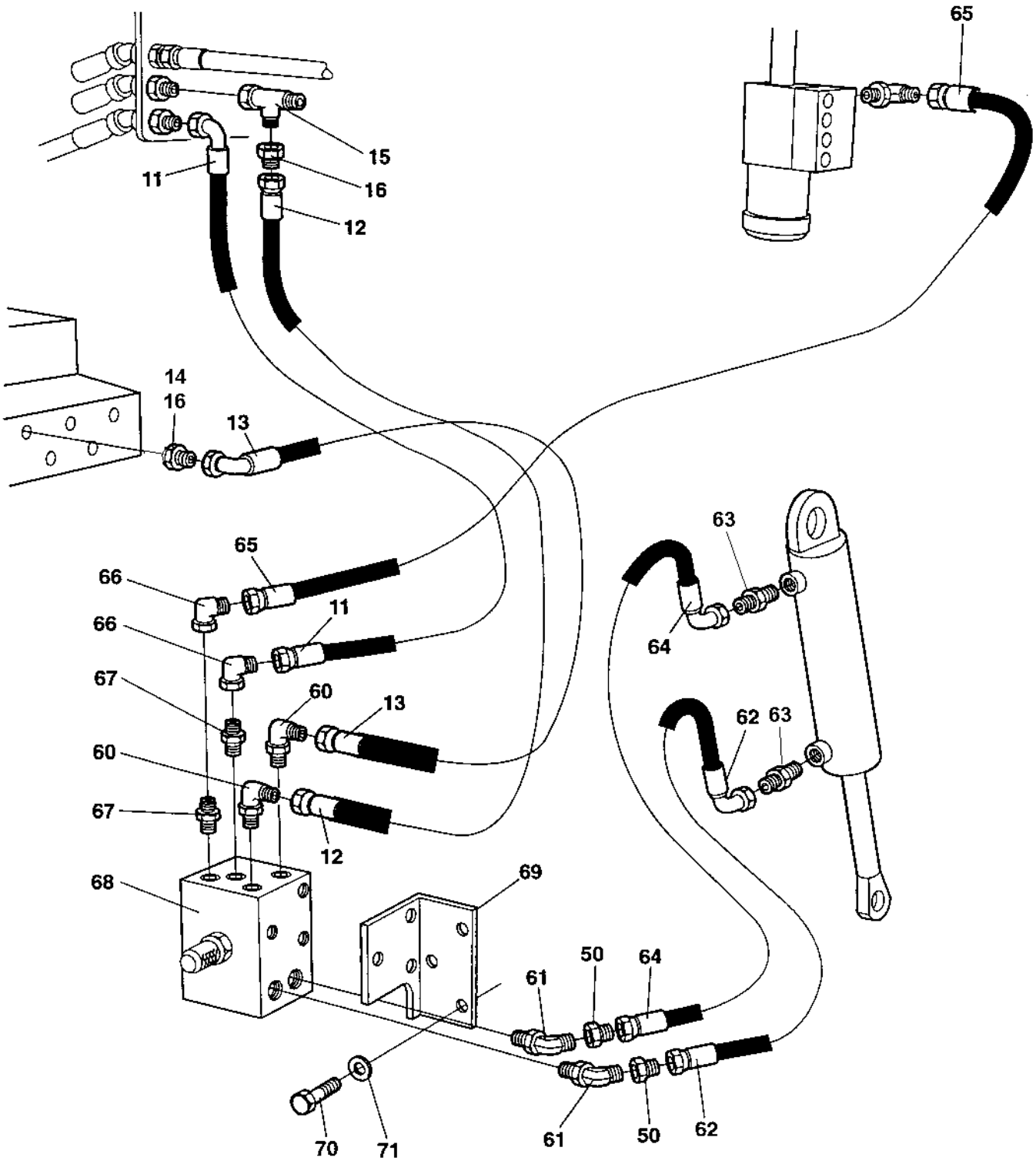

Edge cutter Hydraulics without offset

Ref. No.	Part No.	Rem.	Qty	Description	Code
11	483046		1	Hydraulic hose	
12	483047		1	Hydraulic hose	
13	482511		1	Hydraulic hose	
14	334461		1	Reducing	
15	334135		1	T-connector	
16	334461		1	Reducing	
50	334264		2	Reducing	
60	334420		2	Elbow 90	
61	813500		2	Elbow 45, O-ring	
62	483048		1	Hydraulic hose	
63	334199		2	Straight o-ring connector	
64	483048		1	Hydraulic hose	
65	483020		1	Hydraulic hose	
66	334196		2	Elbow 90	
67	234388		2	Connector	
68	372266		1	Valve	
69	372268		1	Bracket	
70	500019		6	Screw M8-1,25x16 8,8	
71	904229		6	Washer 8,4x16x1,5	

Edge cutter Hydraulics with offset

15841

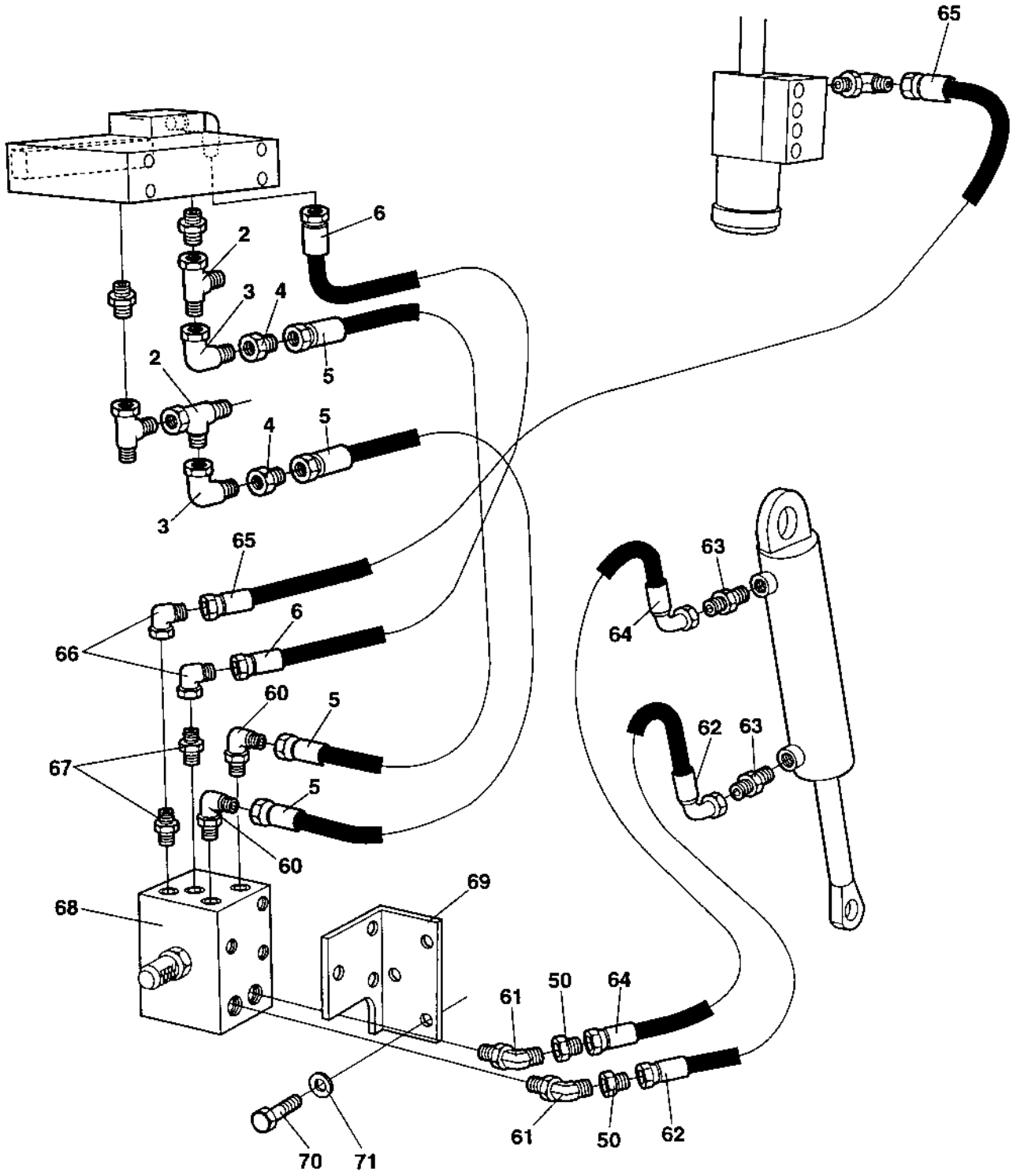

Ref. No.	Part No.	Rem.	Qty	Description	Code
2	334135		2	T-connector	
3	334197		2	Elbow 90	
4	334264		2	Reducing	
5	483013		2	Hydraulic hose	
6	483015		2	Hydraulic hose	
50	334264		2	Reducing	
60	334420		2	Elbow 90	
61	813500		2	Elbow 45, O-ring	
62	483048		1	Hydraulic hose	
63	334199		2	Straight o-ring connector	
64	483048		1	Hydraulic hose	
65	483020		1	Hydraulic hose	
66	334196		2	Elbow 90	
67	234388		2	Connector	
68	372266		1	Valve	
69	372268		1	Bracket	
70	500019		6	Screw M8-1,25x16 8,8	
71	904229		6	Washer 8,4x16x1,5	

Edge cutter Sprinkler system

15842

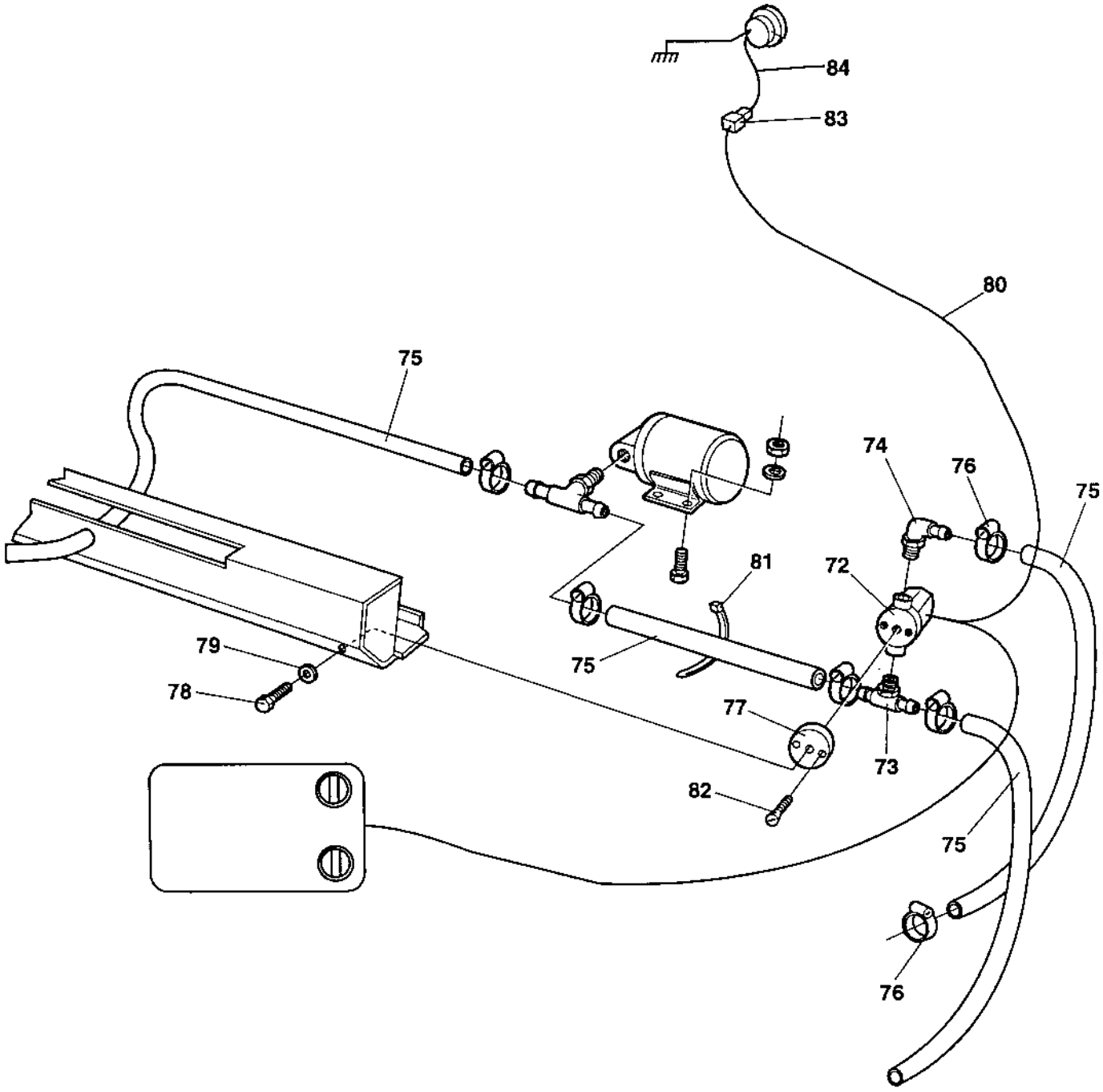

Ref. No.	Part No.	Rem.	Qty	Description	Code
72	287713		1	Solenoid valve	
73	903879		1	Connector	
74	901431		1	Hose connection	
75	244054	A	1XL	Hose reinforced 0,65 m	
76	313002		4	Hose clamp	
77	372315		1	Bracket	
78	500013		1	Screw M6-1x16 8,8	
79	904228		1	Washer 6,4x12x1,5	
80	372364		1	Cable harness Up to 61710825	
	376191		1	Ground cable From 61710826	
81	313041		15	Cable ties L=186 mm	
82	535003		2	Screw	
83	925958		1	Connection	
84	372365		1	Cable Up to 61710825	
	904588		1	Cable harness From 61710826	

A) L=2,5 m

Air conditioner assembly

17244

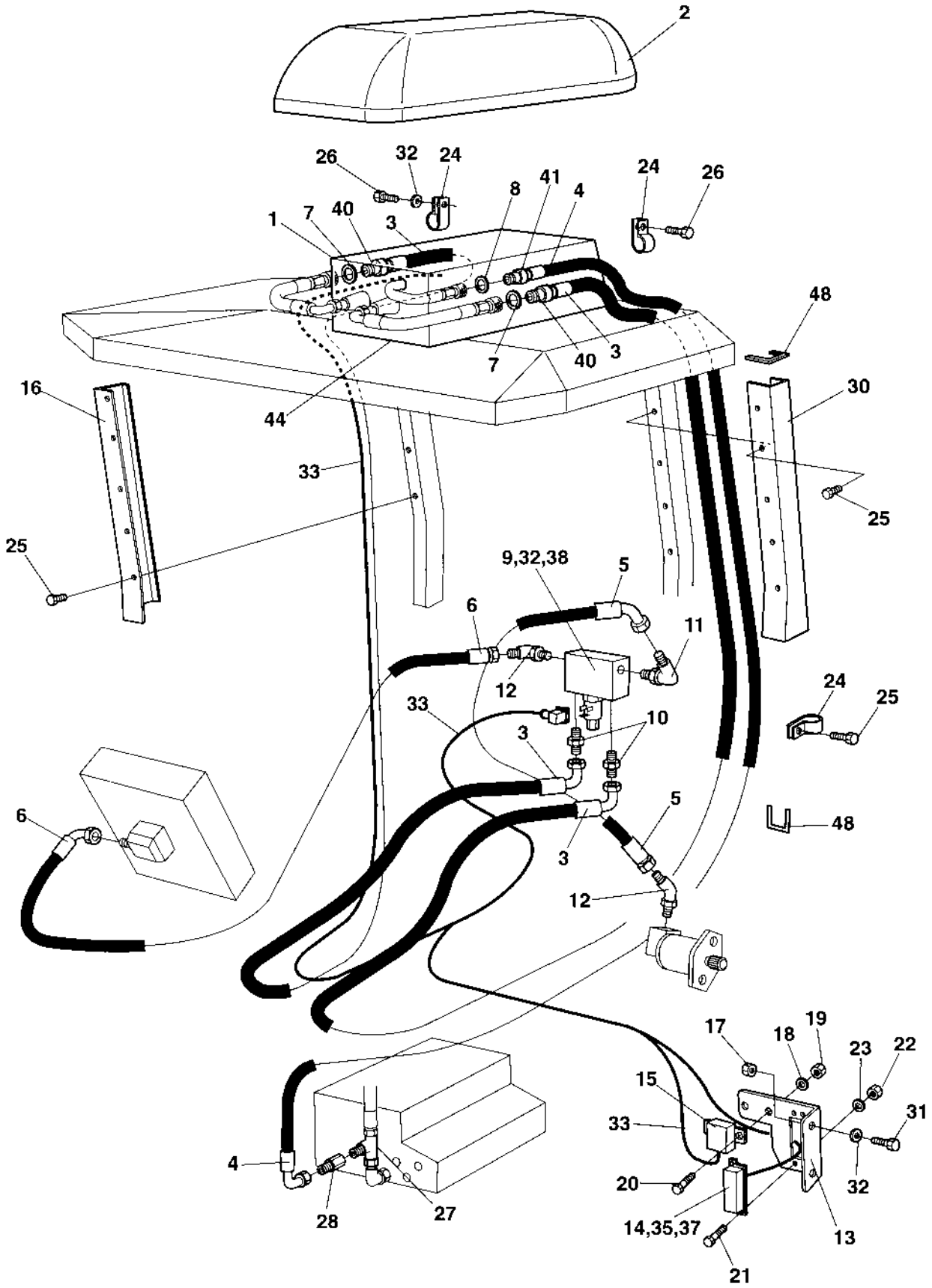

Air conditioner assembly

Ref. No.	Part No.	Rem.	Qty	Description	Code
1	370889		1	Air conditioner unit (Page 410)	
2	370758		1	Air cover	
3	370890		2	Hydraulic hose	
4	370922		1	Hydraulic hose	
5	482470		1	Hydraulic hose	
6	482980		1	Hydraulic hose	
7	162006		2	Seal ring	
8	162004		1	Sealing	
9	370720		1	Direction control valve	
10	334158		2	Adapter	
11	334604		1	Connector	
12	234131		2	Elbow 45, O-ring	
13	370891		1	Bracket	
14	901256		1	Fuse box	
	908110		1	.Cover	
15	904448		1	Relay	D
16	370921		1	Hose guard	
17	586003		2	Lock nut M8	
18	904228		6	Washer 6,4x12x1,5	
19	570004		2	Nut M6	
20	533038		2	Screw	
21	533010		2	Screw	
22	570002		2	Nut M4	
23	904698		2	Washer 4,3x8x0,8	
24	921044		8	Clamp	
25	541703		14	Screw M6x16	
26	500018		2	Screw M8-1,25x12 8,8	
27	334135		1	T-connector	
28	334461		1	Reducing	
30	370892		1	Hose guard	
31	500053		2	Screw M8-1,25x20 8,8	
32	904229		2	Washer 8,4x16x1,5	
33	370837		1	Cable harness Up to 61710796	
	376185		1	Cable harness From 61710797 Up to 61710797	
	370837		1	Cable harness From 61710798 Up to 61710825	
	376185		1	Cable harness From 61710826	
35	901240		2	Connector	
37	903741		3	Fuse 20A	D
38	500019		2	Screw M8-1,25x16 8,8	
40	903743		1	Coupling	
41	903742		2	Coupling	
44	370918		1	Gasket	
48	202028	A	6XL	Edge trim	

A) Length as required

370889 Air conditioner unit

17083

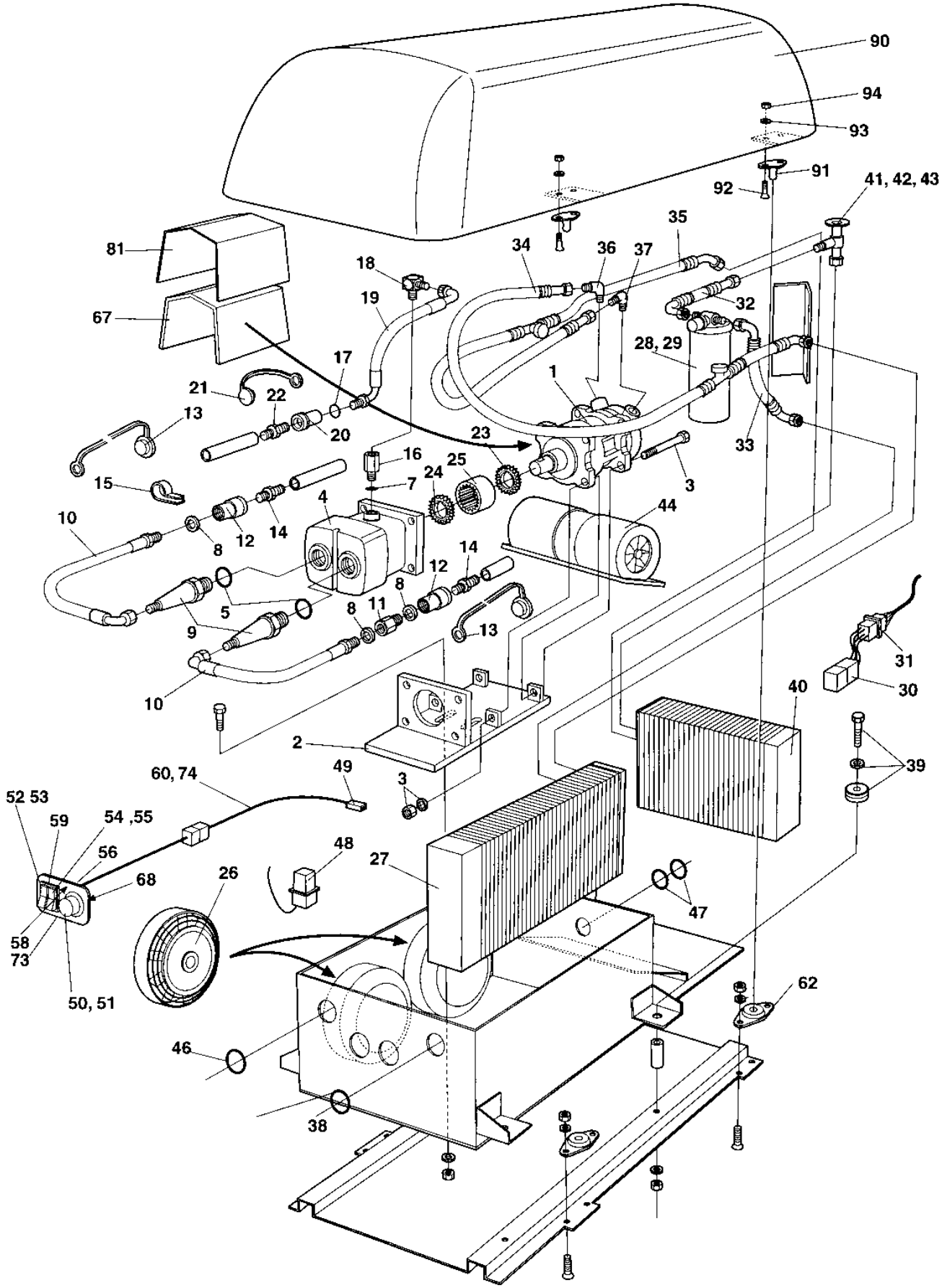

370889 Air conditioner unit

Ref. No.	Part No.	Rem.	Qty	Description	Code
1	935045		1	Compressor	
	938311		1	.Hose connection Vertical	
2	935046		2	Bracket	
3	935047		1	Screw, set	
4	935048		1	Hydraulic motor	
5	935049		2	O-ring	
6	935050		2	Connector	
7	935051		2	Connector	
8	935052		5	Sealing	
9	935053		2	Adapter	
10	935054		2	Hydraulic hose	
11	935055		1	Adapter	
12	935056		2	Connection	
13	935057		2	Dust cover	
14	935058		2	Connection	
15	935059		2	Rubber clamp	
16	935060		1	Connection	
17	935061		2	Sealing	
18	935062		1	Adapter	
19	935063		1	Hydraulic hose	
20	935064		1	Connection	
21	935065		1	Dust cover	
22	935066		1	Connection	
23	935067		1	Flange	
24	935068		1	Flange	
25	908676		1	Sleeve	
26	935069		2	Condensor fan	
27	908677		1	Condensor	
28	908678		1	Drying filter	
29	908679		1	Clamp	
30	908680		2	Relay	
31	908681		2	Relay socket	
32	908682		1	Hose	
33	908683		1	Hose	
34	908684		1	Hose	
35	908685		1	Hose	
36	935070		1	Connection	
37	935071		1	Connection	
38	908686		5	Grommet	
39	908687		4	Flange	
40	908688		1	Evaporator	
41	908689		1	Expansion valve	
42	908690		1	Clamp	
43	908691		1	O-ring	
44	908692		1	Evaporator fan	
45	908705		1	Connector	
46	935072		1	Grommet	
47	908664		2	Grommet	
48	935073		2	Electric connection	
49	908694		1	Connection	
50	936711		1	Potentiometer	
51	908696		1	Switch	
52	908697		1	Switch fan	
53	908698		1	Symbol cool-fan	
54	908699		1	Switch fan	
55	908700		1	Symbol fan	
56	908701		2	Isolator	
57	908702		1	Grommet	
58	908703		1	Decal	
59	908704		2	Switch panel	

370889 Air conditioner unit

17083

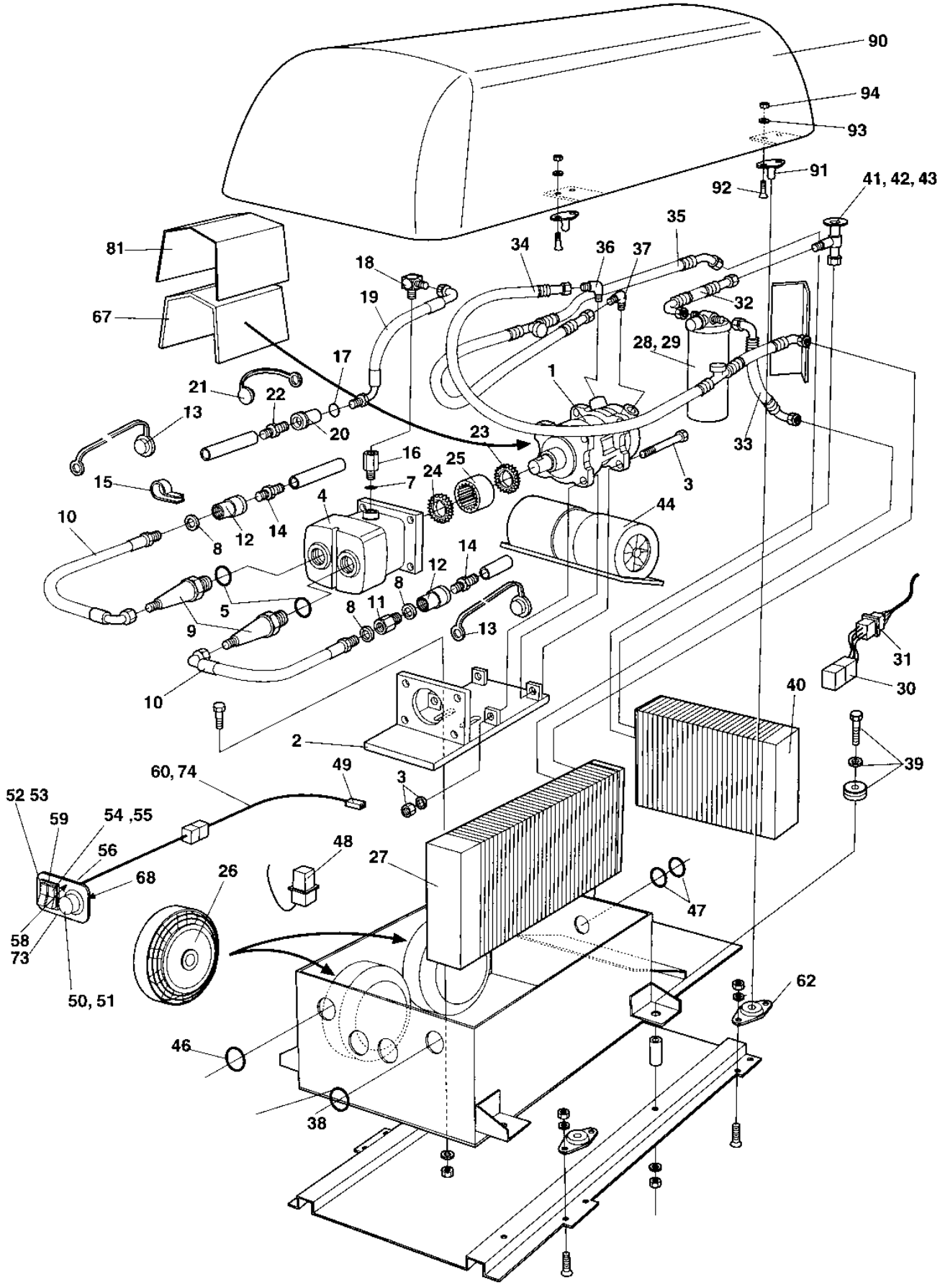

370889 Air conditioner unit

Ref. No.	Part No.	Rem.	Qty	Description	Code
60	935074	A	N	Protecting hose	
61	935075		1	Gasket	
62	935076		4	Quick fastener	
63	935077		4	Bracket	
64	908706		1	Rubber clamp	
65	908663		1	Rubber plug	
66	935078		1	Adapter	
67	935079		1	Cover	
68	935080		1	Diode	
69	935081		1	Switch panel	
70	935082		1	Decal "WARNING"	
71	935083		1	Decal "INSTRUCTIONS"	
72	935084		1	Decal, 12V	
73	903969		2	Screw ST4,8x19 Black	
74	370917		1	Cable harness	
90	370758		1	Air cover	
91	450067		4	.Door bumper	D
92	535008		4	.Screw	
93	904281		4	.Washer 5,3x10x1	
94	586001		4	.Lock nut M5	

A) L=1200 mm

Roof hatch

17374

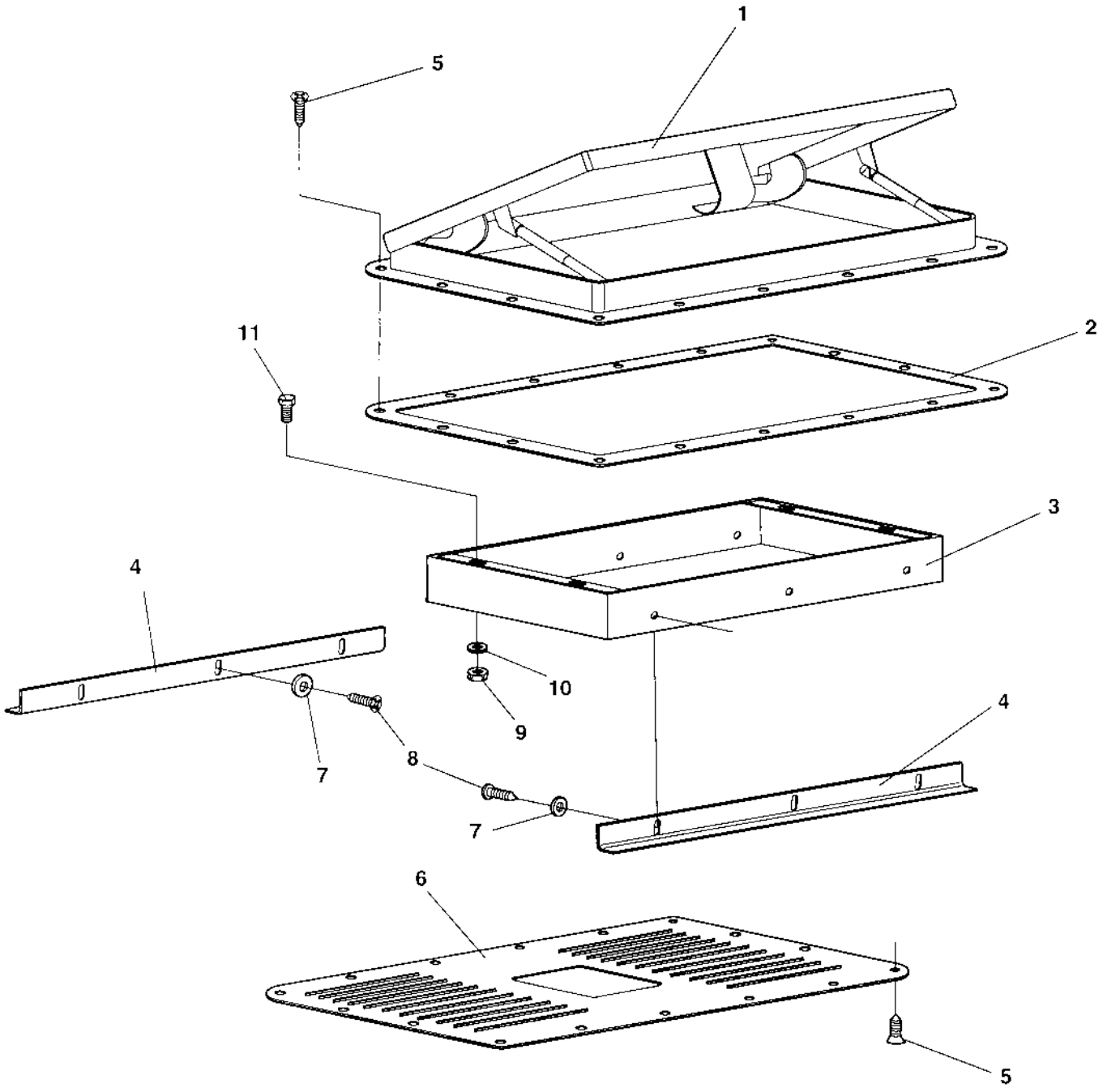

Roof hatch

Ref. No.	Part No.	Rem.	Qty	Description	Code
1	382702		1	Roof hatch	
2	382701		1	Gasket	
3	382699		1	Inner roof insert	
4	383002		2	Inner roof holder	
5	904906		32	Screw	
6	382700		1	Inner cover	
7	601001		6	Washer	
8	903852		6	Screw ST4,2x13	
9	570004		4	Nut M6	
10	904228		4	Washer 6,4x12x1,5	
11	500040		4	Screw M6-1x20 8,8	

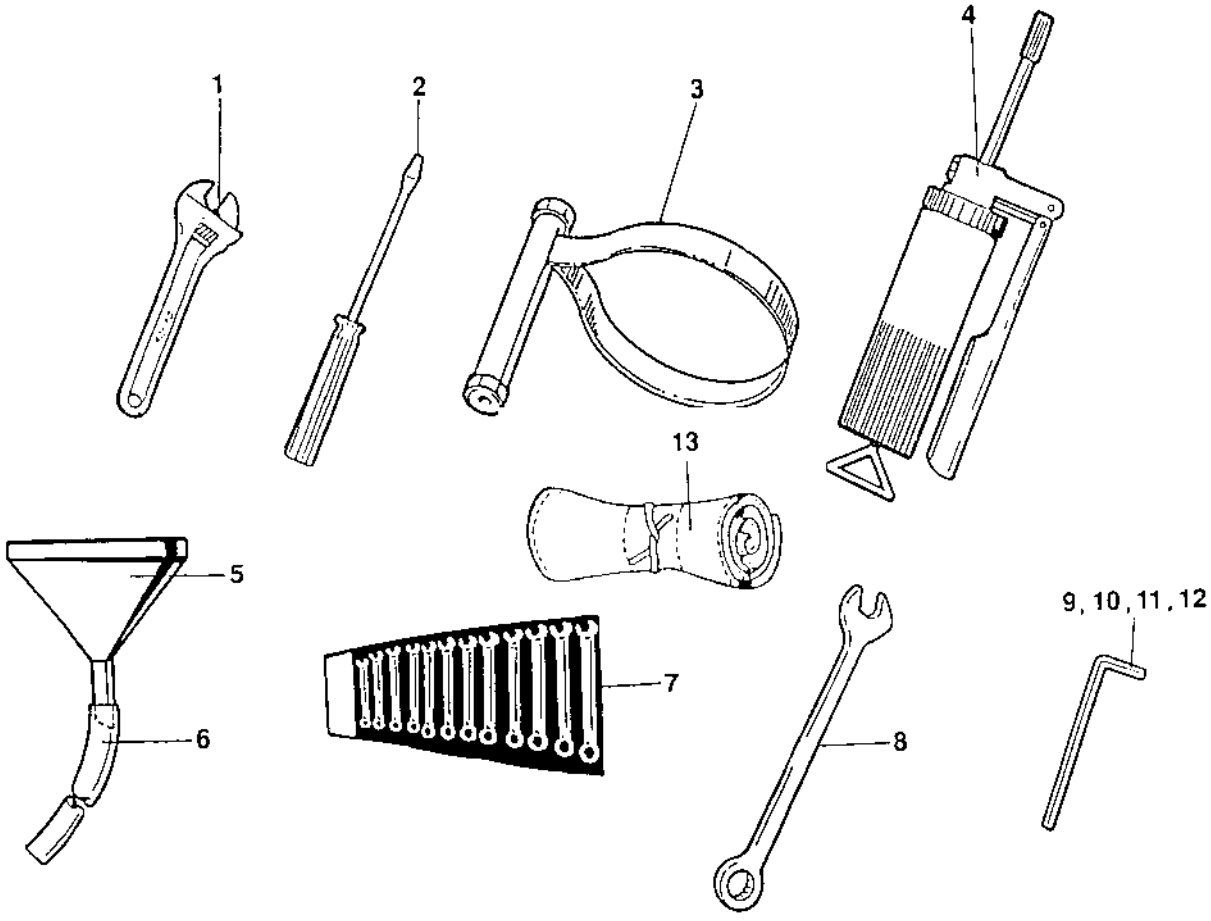
1
2
3
4
13
5
6
7
8
9, 10, 11, 12

Tool equipment

Ref. No.	Part No.	Rem.	Qty	Description	Code
1	485011		1	Adjustable wrench	
2	485019		1	Screw driver	
3	902610		1	Belt pliers	
4	311016		1	Grease gun	
5	485040		1	Filling funnel	
6	244026	A	1XL	Plastic hose	
7	901212	B	1	Open end spanner	
8	902578		1	Open end spanner 22 mm	
	901213		1	Open end spanner 24 mm	
9	485005		1	Allen wrench 1/4"	
10	485037		1	Allen wrench 3/8"	
11	485388		1	Allen wrench 6 mm	
12	485006		1	Allen wrench 8 mm	
13	277992		1	Tool bag	

A) L=0,4 m
B) Kit

Asphalt temperature meter

17869

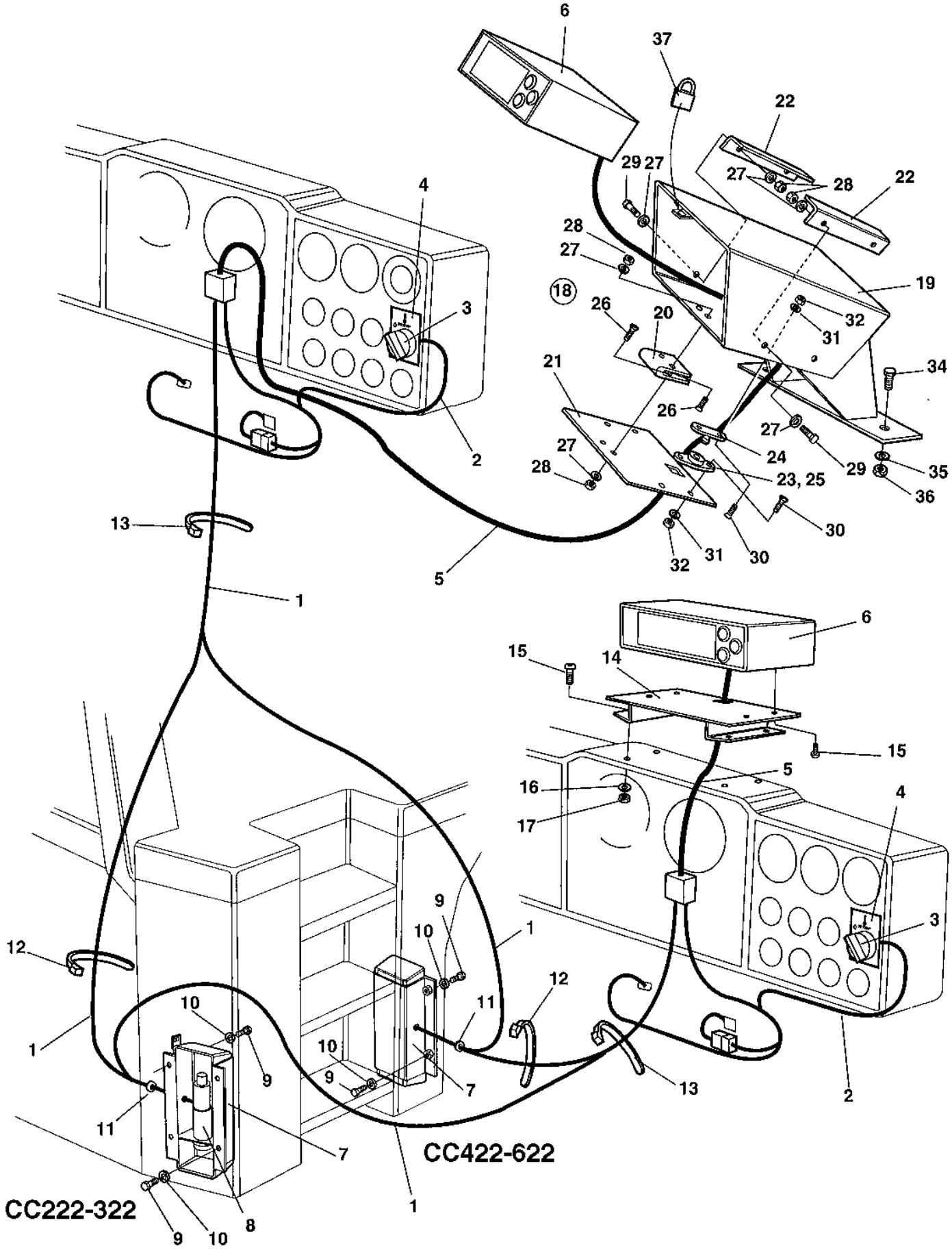

Asphalt temperature meter

Ref. No.	Part No.	Rem.	Qty	Description	Code
1	388522		1	Cable harness	
2	388523		1	Cable harness	
3	930151		1	Switch	D
4	388561		1	Sign	
5	388524		1	Cable harness	
6	388775		1	Temperature meter	
7	387981		1	Box	
8	387982		1	Temperature sender	
9	500053		4	Screw M8-1,25x20 8,8	
10	904229		4	Washer 8,4x16x1,5	
11	791594		1	Grommet	
12	925802		N	Cable ties L=142 mm	
13	313068		N	Cable ties L=92 mm	
14	387988	1	1	Bracket	
15	904653	1	8	Screw	
16	904281	1	4	Washer 5,3x10x1	
17	586001	1	4	Lock nut M5	
18	389004	2	1	Temperature meter box, cpl	
19	389109	2	1	.Box	
20	928041	2	1	.Hinge	D
21	389110	2	1	.Cover	
22	389111	2	1	.Holder	
23	904909	2	2	.Door bumper	
24	904907	2	2	.Door bumper	
25	904908	2	2	.Rubber part	
26	513008	2	5	.Screw	
27	904228	2	13	.Washer 6,4x12x1,5	
28	904563	2	9	.Lock nut	
29	500013	2	4	.Screw M6-1x16 8,8	
30	513027	2	8	.Screw	
31	904698	2	8	.Washer 4,3x8x0,8	
32	923976	2	8	.Nut	
33	902566	A,2	4XL	.Rubber strip	
34	500022	2	2	Screw M8-1,25x30 8,8	
35	570005	2	2	Nut M8	
36	904229	2	2	Washer 8,4x16x1,5	
37	358881	2	1	Pad lock	

1) Valid for machines with cab.
2) Valid for platform machines.
A) L= 0,1 m

NUMERICAL INDEX

Part Number	Page
100040	23,41
114089	15,17
	135
116041	135
150005	327
151012	265,267
160024	227,229
	231,233
	235,237
	239,241
	243
160040	15
160058	145
160093	17
160105	15
160107	15
160120	15
160188	151,153
	155,193
160279	201,203
160287	247
160344	17
162004	209,211
	213,215
	217,219
	221,223
	225,409
162006	409
162017	135
162018	135
162024	261
162027	135
167023	15
167032	23
202028	29
202043	121,383
202057	43,45
	49,53
	57,61
	65,69
	73,77
	81,85
	89,93
	97,101
	105,109
	113
205006	145
205009	145
205067	245
212339	169,181
212353	165,177
212359	167
223467	169,205
230515	141
232097	245
232119	245
232122	245
234131	409
234233	151,195
	199,269
234243	151
234340	191
234342	261
234349	199
234358	261
234388	261,403
	405
234512	247
234687	193
234746	199
234810	155
234840	191
234850	261
234869	193
234953	245
235002	247
235004	247
238272	265
244026	417
244054	119,123
	125,127
	407
272372	387
272373	387
277992	417
287597	273,295
287598	295
287713	407
297018	193
310008	23
311016	417
313002	119
313004	141
313008	145
313036	147
313038	145
313041	321,331
313068	419
313094	147
313102	141,159
	161
313147	347
330171	261
330331	141
330383	141
330438	155
332038	209
334118	201
334121	201
334128	193
334135	261
334138	193
334155	151
334156	151
334158	193
334196	403
334197	261
334199	403
334203	245
334234	151
334236	261
334237	151
334248	159
334264	403
334389	193
334420	245
334445	193
334461	247
334468	151
334524	151
334563	151
334564	199
334604	151
335914	159
337042	41
337045	23
340334	159
340862	201
343017	387
343318	135
343462	135
343550	285,287
343700	323
343701	135
343732	135
343744	159
343775	135
343801	27
343872	135
344138	159
344196	191
345139	135
345728	281
345870	273
345871	285
345872	23
345873	23
345874	23
345875	23
347119	27,255
	257,259
348136	273
348303	273
348331	333
348481	345
349248	387
349249	387
349250	387
349251	387
349252	387
349253	387
349715	135
349830	119
350009	333,335
355258	285
355301	297
356500	273
357138	11
357139	245
357141	245
357275	141
357419	261
357425	329,359
357426	329
357427	329
357459	119
357488	27
357498	351
357500	351
357526	281
357587	387
357643	329,361
357855	279
357899	387
357900	387
357901	387
357902	387
358090	387
358254	387
358452	319
358684	39
358825	39
358846	119
358881	279,391
358993	149,249
358999	149,185
	187
359000	149,189
359001	119
359002	119
359003	119
359004	149
359010	43
359043	343
359125	343
359131	41
359139	149,253
359140	149,207
359192	261
359203	135
359221	209
359222	209
359223	209
359224	209
359225	209
359226	209
359227	209

NUMERICAL INDEX

Part Number	Page	Part Number	Page	Part Number	Page
359230	263	359583	29	359924	339
359231	261	359588	27	359928	345
359232	27	359589	27	359929	345
359255	27	359591	41	359930	345
359304	149	359602	141	359931	345
359306	27	359618	145	359932	345
359314	27	359620	145	359936	351
359331	135	359621	145	359937	149
359332	135	359622	145	359940	345
359333	135	359627	201	359941	297
359339	135	359628	201	359955	135
359340	285	359631	245	359971	335
359341	285	359632	245	359972	335
359342	285	359639	245	359994	143
359343	287	359647	245	359998	331
359344	287	359648	245	370000	149
359347	281	359649	245	370002	143
359351	19,33	359650	247	370049	151
	35,37	359687	43	370056	387
359390	145	359703	387	370057	387
359403	141	359733	343	370058	387
359414	141	359738	43	370059	387
359418	327	359745	43	370067	29
359419	333	359747	43	370070	273
359433	119	359748	43	370071	297
359434	33	359751	43	370072	273
359435	123	359752	43	370073	273
359443	123	359753	43	370074	273
359444	119	359754	43	370076	273
359446	119	359755	43	370078	273
359448	395	359756	43	370084	387
359453	33	359757	43	370085	387
359454	33	359764	43	370096	351
359455	33	359765	43	370117	345
359457	37	359766	43	370118	297
359458	37	359767	261	370155	247
359460	35	359768	261	370160	327
359461	35	359773	261	370161	295
359463	35	359774	323	370165	279
359464	35	359775	323	370170	281
359465	35	359776	323	370175	327
359466	35	359788	343	370211	333
359479	141	359810	343	370231	135
359480	141	359813	343	370233	295
359485	145	359814	343	370234	333
359490	147	359815	343	370235	333
359497	147	359816	343	370254	327
359500	147	359817	343	370255	327
359502	143	359818	343	370258	327
359507	27	359819	343	370275	327
359508	27	359820	343	370276	327
359509	27	359822	339,341	370277	327
359510	27	359843	279	370278	327
359511	27	359844	279	370279	327
359512	27	359845	279	370283	327
359513	27	359885	327	370284	327
359514	27	359887	327,349	370286	327
359515	27	359888	331	370287	327
359516	27	359889	331	370288	327
359517	27	359890	327	370289	327
359522	145	359891	327	370294	327
359551	151	359892	331	370298	327
359552	151	359893	343	370329	355
359557	151	359894	331	370343	355
359558	159	359895	331	370349	355
359559	159	359899	359	370365	135
359560	151	359900	333	370375	327
359561	151	359908	333	370425	321
359562	159	359911	333	370433	265
359563	159	359914	333	370434	161
359564	159	359915	333	370491	147
359565	29	359916	333	370618	147
359566	159	359917	335	370641	159
359567	159	359918	325,337	370644	293
359574	333	359919	333	370661	29
359575	345	359920	333	370662	331
359578	135	359921	333	370686	29

NUMERICAL INDEX

Part Number	Page
370688	29
370689	29
370695	299,301
370697	299
370699	121
370720	409
370744	299,307
	309
370745	121
370746	121
370747	121
370758	409,413
370761	375
370762	277
370765	147
370766	355
370835	397
370837	409
370851	43
370863	307
370878	143
370889	409,411
370890	409
370891	409
370892	409
370917	413
370918	409
370921	409
370922	409
370955	343
370993	307
370994	307
371009	345
371016	319
371017	319
371034	357
371036	319
371058	319
371089	149,163
371101	343
371129	331
371185	299,303
	305
371221	395
371254	145
371271	307
371274	281
371318	321
371345	29
371353	39
371364	319
371380	45
371381	45
371389	45
371390	45
371395	331
371396	331
371415	321
371449	45
371450	45
371451	45
371452	45
371466	37
371468	37
371469	37
371507	345
371519	247
371546	37
371569	45
371599	331
371621	331
371659	45
371665	319
371666	45
371669	247
371727	135
371730	381
371750	317
371757	39
371760	39
371762	39
371765	39
371767	39
371768	39
371769	39
371770	39
371819	353
371837	379
371885	321
371889	321
371914	37
371960	371
371964	153
372091	327
372092	327
372093	327
372094	327
372103	279
372104	279
372105	279
372119	135
372126	43
372163	45
372164	45
372229	7
372260	373
372266	403
372268	403
372315	407
372364	407
372365	407
372378	401
372423	269
372439	269
372566	43
372576	283
372588	141
372618	283
372631	355
372658	29
372672	333
372674	319
372675	43
372680	247
372682	201
372696	333
372697	333
372698	29
372699	29
372704	327
372718	121
372774	273
372775	273
372791	141
372792	141
372832	29
372861	273
372867	29
372868	141
372869	141
372893	45
372894	45
372898	45
372906	299
372911	153
372912	153
372916	273
372917	299
372918	283
372949	45
372959	343
372960	343
372964	333
372965	343
372966	343
372999	273
373124	29
373129	29
373130	29
373137	307
373152	29
373177	345
373183	261
373187	117
373193	299
373220	27
373227	331
373302	145
373304	145
373353	321
373403	149
373410	149
373422	43
373476	117
373518	123
373523	143
373581	289
373582	293
373694	147
373747	357
373749	357
373819	37
373890	143
373906	357
373907	357
373920	191
373928	349
373929	349
373930	349
373934	349
373936	395
373968	357
373986	357
373987	357
374002	357
374003	357
374004	357
374024	357
374027	149,251
374066	357
374101	191
374105	279
374139	121
374163	153
374165	153
374200	153
374213	295
374379	279
374417	343
374494	149
374495	81
374496	83,87
	91,95
	99,103
	107,111
	115
374497	81
374538	119
374540	395
374544	81
374545	119
374565	135
374566	135
374615	295
374616	299
374617	273
374618	299
374619	307
374756	315
374787	117

NUMERICAL INDEX

Part Number	Page	Part Number	Page	Part Number	Page
374788	117	470021	273	483159	261
374789	117	475064	29	483191	195
374790	117	476019	397	483192	269
374808	81	480446	253	483202	197
374978	117	480447	253	483234	191
374979	117	480449	253	483235	191
375031	149	480450	253	483409	199
375128	263	480457	253	483410	199
375659	41	480468	253	483411	261
375661	41	481131	165,183	485005	417
376040	245	482045	193	485006	417
376057	33	482104	261	485011	417
376058	33	482182	155	485019	417
376074	37	482251	151	485037	417
376075	37	482256	261	485040	417
376172	273	482257	247	485388	417
376173	273	482318	195	499097	145
376174	295	482357	193	499266	143
376176	277	482453	193	500001	341
376177	283	482470	409	500004	29
376178	303	482473	245	500006	273
376179	303	482511	403	500012	145,367
376180	303	482782	269		369
376181	303	482902	193	500013	43
376182	311,313	482903	193	500015	45
376183	323	482904	193	500016	123
376184	319	482905	193	500018	409
376185	409	482906	193	500019	43
376187	311	482907	193	500021	43
376188	321	482908	151	500022	29
376189	321	482909	151	500023	43
376190	321	482910	159	500028	29,275
376191	407	482911	159		
376248	123	482912	151	500029	143
376374	149,175	482913	151	500030	29
376395	297	482914	151	500031	33,129
376396	347	482917	245		
376466	311	482918	245	500037	41
376488	355	482919	269	500040	29
380176	355	482938	261	500041	127
380447	145	482939	261	500043	29
380661	37	482942	261	500044	319
380691	37	482944	261	500046	201
380708	297	482955	151	500047	35
380812	37	482968	193	500048	145
380978	263	482980	409	500049	33
380993	23	482982	195	500050	141
381011706	151	482990	245	500053	29
382699	415	482992	247	500056	33
382700	415	482993	247	500061	43
382701	415	482995	245	500070	135
382702	415	482997	261	500075	29
383002	415	483013	405	500076	27
383200	335	483015	405	500077	151
383408	37	483020	403	500086	297
383436	135	483046	403	500093	135
384498	23	483047	403	500105	273
385264	311	483048	403	500109	27
387981	419	483051	151	500111	27
387982	419	483052	151	500117	401
387988	419	483054	193	500122	141
388522	419	483055	151	500134	27
388523	419	483056	151	500153	357
388524	419	483057	193	500163	135
388561	419	483058	193	500169	339
388775	419	483060	151	500187	127
389004	419	483071	153	500189	357
389109	419	483107	199	500191	27
389110	419	483124	153	500192	159
389111	419	483140	195	500194	135
389577	319	483141	195	500195	37
416004	339	483144	195	500196	401
416034	351	483145	195	500197	401
433830401	151	483151	161	500198	345
450067	413	483152	153	500199	27
450122	21	483153	195	500228	327
465013	345	483154	161	500239	273

NUMERICAL INDEX

Part Number	Page	Part Number	Page	Part Number	Page
500267	147	603010	29	901240	295
500269	27	603012	33	901256	295
500274	141	603019	29,47	901297	123
502036	247		51,55	901298	123
502037	151		59,63	901300	127
502047	193		67,71	901309	123
503010	347		75,79	901315	359
503016	295			901369	299
508001	373	603020	43	901431	123
508012	43	603023	29	901453	165
508019	135	611003	45	901454	165
508042	41	615041	339	901463	181
508056	343	615043	193	901713	159
508063	135	615061	27	901718	165
508084	135	615076	29	901720	177
508095	141	624004	331	901721	165
508096	141	624011	397	901722	165
513003	343	624015	379	901725	167,179
513008	29	624016	339	901727	167
513012	119	624021	329	901728	167
513013	327	629016	345	901765	321
513014	159	629066	381	901766	273
513025	373	630008	343	901767	295
513027	419	630019	261	901828	345
513028	29	630035	343	901837	123
516051	333	635061	27	901841	123
522007	339	747487	141	901993	299
526007	29	747691	141	901994	299
527002	135	791253	297	902064	299
533010	409	791389	303	902066	299
533024	339	791594	419	902163	329
533030	303	791916	315	902164	329
533038	145	801198	159	902166	43
533050	323	801567	273	902183	333
535003	407	801781	261	902184	333
535005	359	813316	245	902185	333
535008	413	813429	245	902186	333
535053	45	813443	245	902192	351
541535	359	813444	201	902194	351
541702	311	813500	403	902203	345
541703	321	813618	181	902223	119
570002	297	813791	143	902227	299
570004	29	813822	169	902285	247
570005	35	821460	135	902286	135
570006	33	843317	387	902287	357
570007	269	892446	245	902303	131
570008	119	900229	193	902379	193
570019	345	900455	151	902508	379
570104	27	900528	297	902520	43
571004	43	900569	29	902528	297
573004	345	900700	375	902559	141
573005	39	900775	135	902566	419
573008	343	900790	299	902578	417
586001	45	900791	299	902610	417
586002	29	900792	299	902803	319
586003	43	900793	299	902843	141
586018	37	900794	299	902861	253
586019	27	900798	275	902862	253
586021	381	900904	321	902866	29
586022	327	900991	263	902882	209
600001	329	900992	263	902916	119
600002	295	900998	371	902917	119
600004	29	900999	371	902918	119
600006	317	901128	349	902928	165
600007	143	901155	159	902937	207
600008	29	901182	299	902940	171
600009	159	901183	299	902959	181
600011	343	901187	387	902977	171
600014	327	901191	127	903010	123
600016	255	901209	321	903082	247
600019	27	901212	417	903185	39
600020	331	901213	417	903241	275
601001	303	901225	295	903290	137
601003	81	901226	295	903320	141
603001	333	901227	295	903336	43
603006	151	901228	295,377	903337	43
603009	247	901229	295	903338	43

NUMERICAL INDEX

Part Number	Page	Part Number	Page	Part Number	Page
903340	43	903831	247	904405	119
903341	43	903852	415	904448	409
903342	119	903856	43	904523	359
903344	43	903857	43	904556	123
903345	119	903875	289	904557	33
903366	27	903876	281	904563	419
903395	345	903879	407	904567	349
903422	261	903894	159	904588	407
903423	387	903907	349	904597	297
903424	387	903914	335	904608	29
903425	387	903917	333	904619	355
903436	279	903918	333	904637	153
903458	333	903927	285	904650	297
903459	191	903936	45	904653	419
903460	245	903937	45	904663	23
903522	35	903938	7	904697	323
903523	119	903961	279	904698	119
903524	159	903969	379	904703	37
903540	123	903970	295	904704	297
903541	123	903989	153	904707	145
903543	123	903990	355	904735	355
903546	135	904004	151	904906	415
903553	193	904016	285	904907	419
903582	323	904031	277	904908	419
903586	343	904032	273	904909	419
903599	279	904036	273	904939	383
903600	279	904037	273	904940	383
903601	279	904038	307	904969	383
903602	279	904039	299	904970	383
903607	387	904041	277	904989	295
903617	255	904044	273	908110	295
903618	255	904049	161	908184	339
903619	255	904051	269	908185	339
903620	255	904056	161	908186	339
903621	255	904059	143	908187	339
903625	295	904060	143	908188	339
903626	123	904069	387	908189	339
903627	295	90407400	141	908190	339
903631	273	904083	401	908191	339
903653	279	904092	387	908192	339
903657	281	904104	143	908193	345
903658	279	904107	123	908195	345
903662	327	904110	153	908196	345
903678	279	904115	247	908197	345
903682	145	904138	269	908198	345
903683	145	904140	321	908199	345
903684	145	904143	257	908200	345
903685	145	904144	257	908201	345
903712	145	904145	255	908202	345
903716	289	904164	267	908205	263
903731	331	904180	355	908206	263
903733	29	904206	121	908207	263
903736	355	904207	279	908209	263
903741	295	904208	279	908210	263
903742	409	904209	117	908211	263
903743	409	904213	153	908212	263
903744	143	904228	29	908213	263
903768	307	904229	35	908214	263
903773	247	904230	27	908249	365
903774	155	904231	27	908253	365
903782	363,365	904232	119	908254	365
		904233	27	908255	365
903792	355	904234	355	908256	365
903793	247	904281	43	908257	365
903794	247	904287	357	908258	365
903799	345	904288	357	908259	365
903802	373	904289	119	908260	373
903803	359	904313	299	908261	373
903804	375	904314	311	908262	365
903805	373	904315	303	908263	373
903806	359	904316	303	908264	365
903807	359	904317	303	908265	381
903808	359	904318	303	908266	307
903809	359	904332	349	908267	307
903812	247	904338	349	908268	359
903813	261	904339	349	908269	369
903824	321	904357	27	908270	369

NUMERICAL INDEX

Part Number	Page	Part Number	Page	Part Number	Page
908271	367	908528	363	908606	377
908272	367	908529	363	908607	377
908273	367	908530	363	908608	377
908278	367	908531	363	908609	377
908279	367	908532	363	908610	377
908280	367	908533	363	908611	377
908281	369	908534	363	908612	377
908282	369	908535	363	908613	377
908284	373	908536	363	908614	377
908285	373	908537	363	908615	377
908286	373	908538	363	908616	377
908287	373	908539	363	908617	377
908295	141	908540	363	908618	377
908299	141	908541	363	908619	377
908300	141	908542	363	908620	377
908353	365	908543	363	908621	377
908354	373	908544	363	908622	377
908355	381	908545	365	908623	379
908356	379	908546	365	908624	379
908357	379	908547	365	908625	381
908358	379	908548	365	908626	381
908359	317	908549	365	908627	381
908361	381	908550	365	908663	413
908362	367	908551	365	908664	411
908363	369	908552	365	908676	411
908364	369	908553	365	908677	411
908378	165	908554	365	908678	411
908399	143	908555	365	908679	411
908400	11	908556	365	908680	411
908401	11	908557	365	908681	411
908417	261	908558	367	908682	411
908418	261	908559	367	908683	411
908420	249	908560	367	908684	411
908428	181	908561	367	908685	411
908432	165	908562	367	908686	411
908445	179	908563	367	908687	411
908448	167	908564	367	908688	411
908449	167	908565	369	908689	411
908452	143	908566	373	908690	411
908454	163	908567	373	908691	411
908455	169	908568	373	908692	411
908457	171	908569	373	908694	411
908480	339	908570	373	908696	411
908494	359	908571	373	908697	411
908495	359	908572	373	908698	411
908496	359	908573	373	908699	411
908497	359	908574	373	908700	411
908498	359	908575	373	908701	411
908499	359	908577	373	908702	411
908500	359	908578	373	908703	411
908501	359	908579	373	908704	411
908502	359	908580	373	908705	411
908503	359	908581	373	908706	413
908504	359	908582	373	908707	263
908505	359	908583	373	908771	171
908506	359	908584	373	908772	171
908507	359	908585	375	908773	171
908508	359	908586	375	908774	171
908509	359	908587	375	908775	171
908510	359	908588	375	908787	401
908511	359	908589	375	908805	187
908512	359	908590	375	908808	187
908513	359	908591	375	908809	187
908514	359	908592	375	908810	187
908515	359	908593	375	908811	187
908516	359	908594	375	908812	187
908517	359	908595	375	908813	187
908518	359	908596	375	908814	187
908519	359	908597	375	908815	187
908520	359	908598	375	908816	187
908521	359	908599	375	908817	187
908522	359	908600	375	908818	187
908523	359	908601	375	908819	187
908524	359	908602	377	908821	187
908525	363	908603	377	908822	187
908526	363	908604	377	908824	187
908527	363	908605	377	908825	187

NUMERICAL INDEX

Part Number	Page	Part Number	Page	Part Number	Page
908831	187	909310	401	909420	169
908832	187	909311	401	909421	169
908833	187	909312	401	909422	167
908834	187	909313	401	909423	167
908836	187	909335	205	909424	167
908837	187	909336	205	909425	167
908839	187	909337	205	909426	167
908840	187	909338	205	909428	167
908841	187	909339	205	909429	167
908842	187	909340	205	909430	167
908843	187	909343	205	909431	167
908844	187	909344	171	909432	167
908845	187	909345	205	909433	167
908846	187	909346	205	909434	167
908847	187	909347	205	909435	167
908850	187	909348	205	909436	167
908851	187	909349	165	909437	169
908853	187	909350	205	909438	171
908854	187	909351	205	909439	171
908986	373	909352	205	909440	171
908987	373	909353	205	909441	171
908993	365	909354	205	909442	171
908995	249	909355	205	909444	171
908996	249	909356	205	909445	171
908997	249	909357	205	909446	171
908998	249	909358	205	909447	171
909122	345	909367	167	909448	171
909152	319	909368	141	909449	171
909201	207	909369	141	909450	171
909202	207	909371	141	909465	401
909203	207	909373	165	909466	401
909204	207	909374	165	909467	401
909205	207	909375	165	909471	171
909206	207	909376	165	909472	171
909207	207	909377	165	909473	171
909208	207	909378	165	909474	171
909211	253	909379	165	909475	171
909212	253	909380	165	909476	171
909213	253	909381	165	909477	171
909214	253	909382	165	909478	171
909215	171	909383	165	909485	171
909216	207	909384	165	909504	339
909217	207	909385	165	909510	359
909230	193	909386	165	909535	333
909237	401	909387	165	909536	333
909238	171	909388	165	909638	171
909239	165	909389	165	909641	167
909243	169	909390	165	909642	167
909256	167	909391	165	909643	167
909257	167	909392	165	909644	171
909267	123	909393	165	909652	167
909274	401	909394	165	909745	341
909275	401	909395	165	909746	341
909276	401	909396	165	909747	347
909277	401	909397	165	909748	347
909278	401	909398	165	909749	347
909279	401	909399	165	909750	347
909280	401	909400	165	909751	347
909281	401	909401	165	910161	151
909288	401	909402	165	910706	171
909289	401	909403	165	910995	41
909290	401	909404	165	911456	291
909291	401	909405	165	911620	253
909292	401	909406	165	920775	123
909293	401	909407	165	921022	247
909294	401	909408	165	921031	307
909298	401	909409	165	921039	307
909299	401	909410	165	921044	409
909301	401	909411	167	921047	127
909302	401	909412	169	921063	141
909303	401	909413	169	921080	145
909304	401	909414	167	921104	275
909305	401	909415	169	921161	141
909306	401	909416	167	921423	123
909307	401	909417	169	922325	345
909308	401	909418	169	923087	165
909309	401	909419	169	923253	43

NUMERICAL INDEX

Part Number	Page	Part Number	Page	Part Number	Page
923378	245	935046	411	936553	177
923680	123	935047	411	936711	411
923682	123	935048	411	937106	303
923683	123	935049	411	937107	303
923690	25	935050	411	937108	303
923734	123	935051	411	937109	303
923735	123	935052	411	937136	177
923859	123	935053	411	937138	177
923876	123	935054	411	937139	179
923962	123	935055	411	937165	383
923976	121	935056	411	937395	365
923984	123	935057	411	937396	365
924544	119	935058	411	937397	365
924585	153	935059	411	937398	365
924731	245	935060	411	937399	365
924823	331	935061	411	937400	365
924986	127	935062	411	937401	365
924996	123	935063	411	937402	365
925208	27	935064	411	937403	365
925493	43	935065	411	937404	365
925599	119	935066	411	937405	365
925713	293	935067	411	937406	373
925723	269	935068	411	937407	373
925802	141	935069	411	937408	373
925958	407	935070	411	937620	335
926214	23	935071	411	937621	335
926220	343	935072	411	937659	263
926611	275	935073	411	937813	251
926658	169	935074	411	937888	187
926736	135	935075	413	937889	187
926985	29	935076	413	937892	335
926989	293	935077	413	937958	341
927233	29	935078	413	938263	401
927403	383	935079	413	938311	411
927510	171	935080	413	938548	5
927645	263	935081	413	938549	5,9
927991	29	935082	413	938550	5
928021	273	935083	413	938558	13
928041	29	935084	413	938583	11
928381	37	935229	337	938880	13
928445	137	935230	337	938899	13
928466	27	935231	337	938900	13
928467	119	935232	337	938916	13
928497	345	935233	337	939516	7
928502	299	935234	337	947689	395
928672	43	935235	337	947712	27
928849	395	935236	337	960273	273
928850	27	935237	337	960275	275
928922	145	935238	337	960792	297
929012	253	935239	337	980001	261
929013	253	935240	337	985012	281
929014	253	935241	337	985013	299
929023	273	935242	337	985014	299
929122	151	935243	337	985051	359
929226	151	935244	373	985117	359
929322	7	935339	11	985126	319
929419	123	935613	333	985146	281
929447	15	935614	333	989151	245
929455	299	935615	333	991657	387
929863	23	935662	141	991658	387
929881	131	935663	141	999011	319
930046	323	935771	341	999027	273
930150	273	935772	341		
930151	419	935773	341		
930154	281	935780	227		
930161	289	935781	227		
930163	281	935782	227		
930166	289	935783	209		
930192	289	936004	401		
930200	297	936005	401		
932032	297	936006	401		
932050	281	936014	249		
932056	289	936145	263		
932057	289	936147	141		
932058	281	936267	259		
932059	289	936268	259		
935045	411	936283	333		