RUTHZIL TRATOR COMERCIAL DE PEÇAS LTDA 11 97083-6812 ROLANDO CITRANGULO

DYNAPAC CC324HF

SPARE PARTS CATALOGUE

SCC324HF-1EN3

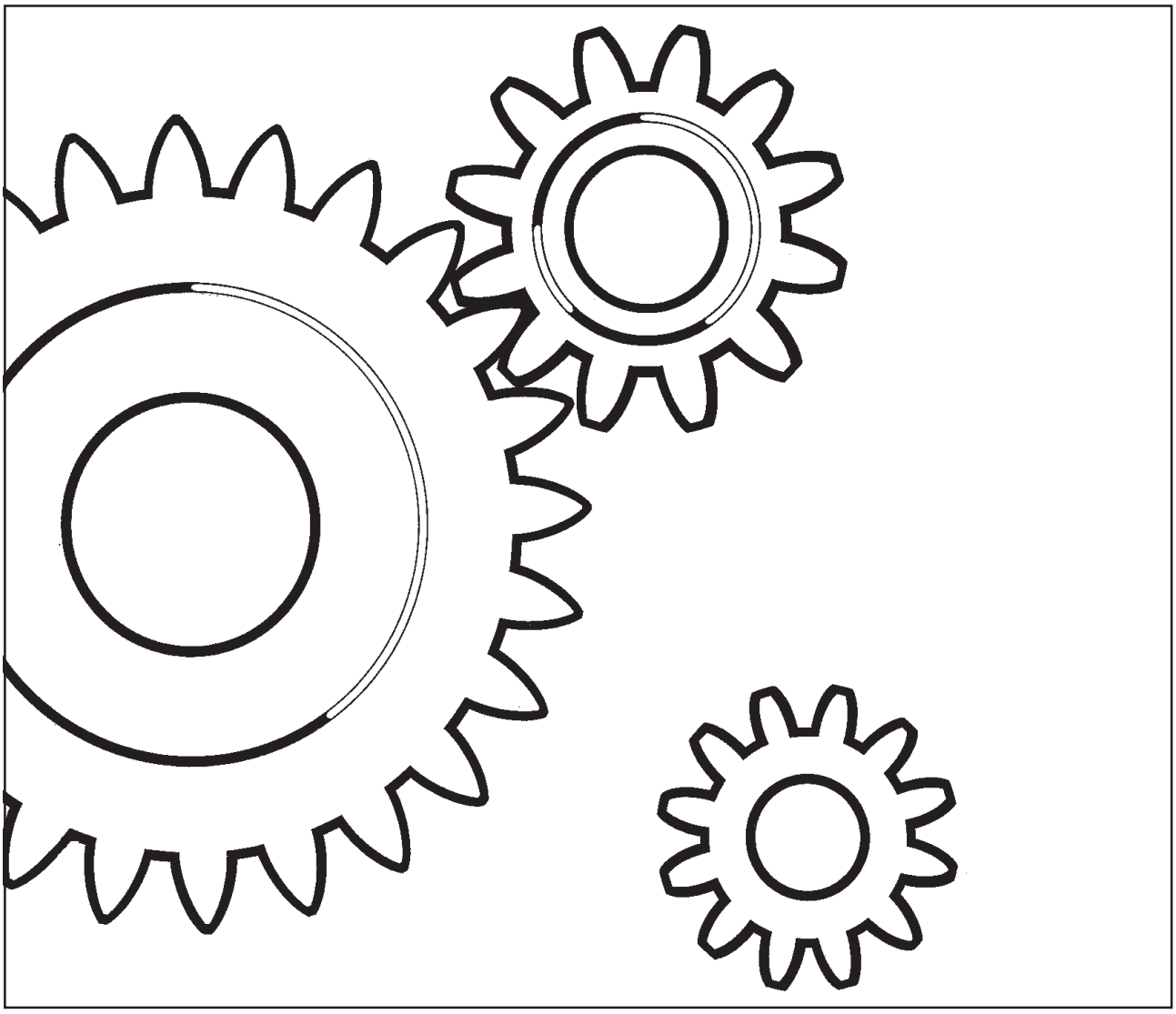

DYNAPAC
Part of the Atlas Copco Group

Box 504, SE-371 23 Karlskrona, Sweden
Phone: +46 455 30 60 00, Fax: +46 455 30 60 10
www.dynapac.com

DYNAPAC
Part of the Atlas Copco Group

Vibratory Roller
CC324HF

Spare Parts Catalogue
SCC324HF-1EN3

Valid from roller serial number:

**284S00006* -*

Diesel engines:

Cummins QSB 3.3

Published catalogue issues valid for these rollers:

Catalogue	Issue date	Valid for serial numbers
SCC324HF-1EN1	2008 - 11	Replaced by SCC324HF-1EN2
SCC324HF-1EN2	2009 - 02	Replaced by SCC324HF-1EN3
SCC324HF-1EN3	2009 - 04	*284S00006* -



We reserve the right to change specifications without notice.
Printed in Sweden.

DYNAPAC
Part of the Atlas Copco Group

RESERVDELSBESTÄLLNING

Följande uppgifter ska lämnas vid beställning av reservdelar för att undvika leveransfel:

1. Maskintyp.
2. Vältens serienummer.
3. Antal av önskad reservdel.
4. Reserdelens artikelnummer.
5. Reservdelens benämning.
6. Måttuppgifter vid beställning av metervara.

ORDERING SPARE PARTS

To avoid errors in delivery, please give the following information when ordering spare parts:

1. Type of machine.
2. Roller serial number.
3. Quantity required.
4. Part number.
5. Parts denomination.
6. Dimensions when ordering per length.

ERSATZTEILBESTELLUNG

Zur Vermeidung von Fehllieferungen sind bei der Bestellung von Ersatzteilen folgende Angaben zu machen:

1. Maschinentyp.
2. Herstellungsnummer.
3. Bestellmenge. (Quantity)
4. Ersatzteilnummer. (Part Nº)
5. Ersatzteilbenennung. (Denomination)
6. Massangaben bei Bestellung von Meterware.

ORDINI DI RICAMBI

Per evitare errori nelle consegne di ricambi, Vi preghiamo di comunicarci le seguenti informazioni al momento dell 'ordinazione:

1. Tipo di macchina.
2. Numero di serie della macchina.
3. Quantità dei pezzi desiderati. (Quantity)
4. Numero di codice del pezzo. (Part Nº)
5. Descrizione del pezzo di ricambio. (Denomination)
6. Misura, in caso di ordine per metro.

PEDIDO DE RECAMBIOS

Para evitar errores en las entregas, deberán indicarse los siguientes datos al hacer un pedido de recambios:

1. Tipo de máquina.
2. Número de serie.
3. Cantidad de piezas deseadas. (Quantity)
4. Número de artículo de la pieza de recambio. (Part Nº)
5. Denominación de la pieza. (Denomination)
6. Indíquese la medida al solicitar un artículo que se expide por metros.

COMMANDE DE PIECES DE RECHANGE

Les indications suivantes doivent être fournies lors de la commande de piéces de rechange, afin d'éviter toute erreur de livraison:

1. Type de machine.
2. Numéro de série.
3. Quantité désirée de pièce de rechange. (Quantity)
4. Numéro de la piéce de rechange. (Part Nº)
5. Dénomination de la piéce de rechange. (Denomination)
6. Longueur en cas de commande au mètre.

YOUR AGENT/DEALER:

Text pages

The text pages is structured as the picture on the right.

1. This is the remarks for specific items and the descriptions of the remarks is at the bottom of the parts list.

2. Parts indicated by a dot and moved to the right are included when buying the assembled unit above.

3. Spare parts and service code for a specific part, mainly for internal use at Dynapac. "A" = Service part, "B" = Fast moving part, "C" = Suggested exchanged part and "D" = Regular spare part.

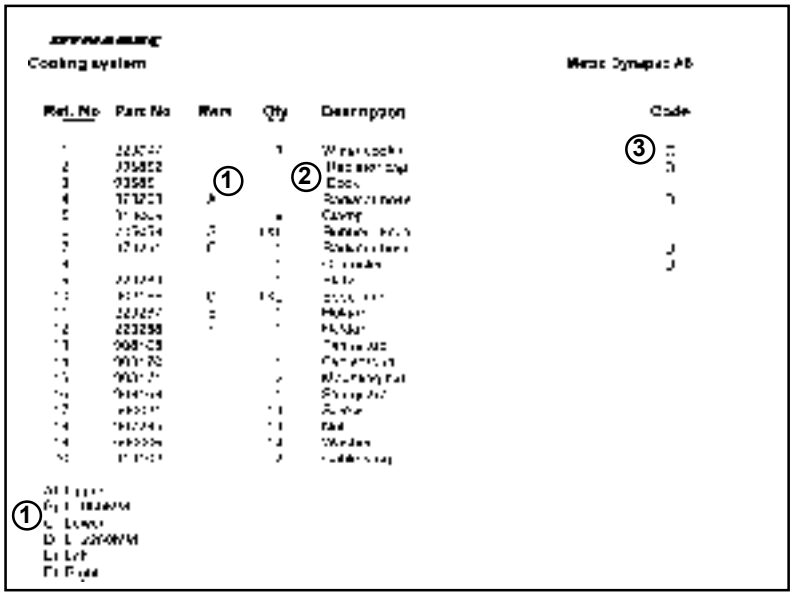

Changes

PARTS INFO	SERVICE INFO	GROUP	PAGE	NOTES

Notes

Notes

PÄRMETIKETT

För att undvika fel vid reservdelsbeställning finns här nedan två etiketter som passar i fickorna på pärmarnas ryggar. På dessa kan man se från vilket vältnummer av aktuell maskin reservdelskatalogen gäller. Gör så här:

1. Tag denna sida ur pärmen.
2. Klipp ut etiketten till **VÄNSTER** (1) och sätt in den i fickan på **DENNA** pärmens rygg.
3. Finns det en etikett till **HÖGER** (2), kan denna användas på pärmen för **FÖREGÅENDE** utgåva av denna katalog.
4. Kasta detta papper.

BINDER LABEL

To avoid errors when ordering spare parts use the labels below to identify the catalogues on the back of the binder. The label contain the serial number range for which the catalogue is valid. Do like this:

1. Remove this page from the binder.
2. Cut out the **LEFT** label (1) and put it on **THIS** binders back.
3. If there is a label to the **RIGHT** (2), it can be used on the binder for **PRECEDING** issue of this catalogue.
4. Throw away this paper.

KATALOG-BESCHRIFTUNG

Zur Vermeidung von Fehlen bei der Ersatzteilbestellung benutzen Sie bitte die unteren Beschriftungen, um die Kataloge auf der Rückseite zu kennzeichen. Auf der Beschriftung ist angegaben, für welche Maschinennummern der jeweilige Katalog gültig ist. Ablauf:

1. Nehmen Sie dieses Blatt aus dem Katalog.
2. Schneiden Sie die **LINKE** Beschriftung (1) aus. Schieben Sie die Beschriftung in die tasche auf **DEM** Katalogrücke.
3. Sollte die Beschriftung unten **RECHTS** (2) mitgeliefert werden, kennzeichen Sie damit bitte die **ÄLTERE** Ausführung dieses Kataloges.
4. Den Rest dieses Blattes bitte vernichten.

ETICHETTA POSTA SUL RACCOGLITORE

Per evitare errori quando ordinate pezzi di ricambio, usate le etichette in calce che servono ad identificare i cataloghi sul retro del raccoglitore. L'etichetta indica il numero di matricola delle maccine prese in considerazione nel catalogo.

1. Rimuovete questa pagina dal raccoglitore.
2. Ritagliate l'etichetta posta a **SINISTRA** (1) e ponetela sul retro **DEL** raccoglitore.
3. Se trovate anche un'etichetta sulla **DESTRA** (2), ritagliatela e ponetela sul raccoglitore relativo alla **PRECEDENTE** edizione del catalogo.
4. Distruggete questo foglio.

ETIQUETA PARA LA CARPETA

Para evitar errores al pedir repuestos utilicen las etiquetas abajo descritas para identificar los catálogos en la parte trasera de la carpeta. En la etiqueta se ven los números de referencia de la serie para la cual es válido el catálogo. Instrucciones:

1. Quitar esta página de la carpeta.
2. Corta la etiqueta **IZQUIERDA** (1) y ponerla est **ESTA** carpeta en la parte trasera.
3. Si hay una etiqueta en la parte **DERECHA** (2) se puede utilizar en la carpeta para el catálogo que **PRECEDE** a esta.
4. Tirar esta hoja.

ETIQUETAGE DU CATALOGUE

Afin d'éviter des erreurs lors de commandes de pièces de rechange, nous vous conseillons d'apposer les marquages ci-dessous à l'arrière du classeur, pour identifier les catalogues. Ce marquage indique les numéros de série pour lesquels le catalogue est adapté. Il convient de procéder de la façon suivante:

1. Retirez cette page du classeur.
2. Découpez l'étiquette de **GAUCHE** (1), et apposez-la à l'arrière de **CE** catalogue.
3. Si il y a une étiquette à **DROITE** (2), vous pourrez l'apposer sur le classeur de l'edition **PRECEDENTE** du catalogue.
4. Détruire cetta feuille.

1.



CC324HF

Catalogue **SCC324HF-1EN3**
Valid **from** serial number:
***284S00006* -**

TABLE OF CONTENTS

Page

CC324HF SN 284S00006 - 2

Service kits 4

4700950174 Service kit 50h, Cummins QSB 3.3 6
4700939076 Service kit 250 / 750 h 8
4700950175 Service kit 500h, Cummins QSB 3.3 10
4700950176 Service kit 1000h, Cummins QSB 3.3 12

Repair kits 14

4812155158 Shock absorber kit, drum CC224HF/324HF/384HF 16

Frame 18

Front frame 20
Front frame module 22
4700391023 Steering cylinder 24
Steering hitch lock 26
Tank structure module 28
Sprinkler tank structure mount 30
4700391307 Cover 32
Hitch module 34
Hitch link 36
Grab handle module 38
Rear frame 40
Rear frame 42
Cover 44
Engine structure, module 46
Engine structure 48
Engine cover, left 50
Engine cover, right 52
Oil cooler 54
Radiator assembly 56
Fan 58
Fan assembly 60
Noise suppression plates 62
Noise suppression, covers 64
Stabilizer module 66
Sprinkler system 68
Sprinkler pump module 70
Sprinkler pump 72
Sprinkler pump, backup 74
Sprinkler pump, additonal sprinkler 76
Sprinkler pump mount 78
Filling pipe module 80
Filling pipe 82
Locking device module 84
Water hoses 86
End frame, front 88
End frame, front 90
Frame assy 92
Fork, vibration side 94
Fork, propulsion side 96
Cover plate 98
Hose clamp, propulsion side 100
Hose clamp, vibration side 102
Step, vibration side 104
Step 106
Scraper module, without nozzles 108
Scraper assy 110

TABLE OF CONTENTS

Page

Scraper module, with nozzles 112
Scraper assy with nozzles 114
4700394340 Scraper bracket, cpl 116
Grab handle, release 118
Grab handle, lift 120
Eyelet module 122
End frame, rear 124
End frame, rear 126
Frame assy 92
End frame, rear offset 128
Frame 130
Connection block 132
Micro switch 134
Fork, vibration side 94
Fork, propulsion side 96
Step, vibration side 104
Step 106
Hose clamp, propulsion side 100
Hose clamp, vibration side 102
4700394340 Scraper bracket, cpl 116
Scraper module, without nozzles 108
Scraper assy 110
Cover plate 98
Eyelet module 122
SMV-sign module 136
SMV-sign 138
Grab handle, lift 120
Grab handle, lift offset 140

Drum 142

Drum 144
Drum bearing module 146
Drum bearing 148
Propulsion motor module 150
Drive unit 152
4700392453 Drum gear 154
Vibration motor module 156
Vibrating unit 158

Engine 160

Engine room 162
Engine 164
Engine module 166
Air cooler hoses 168
Water cooler hoses 170
Air cleaner module 172
Air cleaner hose module 174
Muffler 176
Exhaust pipe module 178
Fuel hose module 180
Charge air cooler 182
Water cooler 184
Radiator, cpl 186
Expansion tank assembly 188
Coolant hoses 190

Hydraulic system 192

Hydraulic system, front drum 194
Hydraulic system, rear drum std 196
Hydraulic system, frame 198

TABLE OF CONTENTS

Page

Hydraulic system, engine room 200
Hydraulic valve module 202
Hydraulic valve 204
4700391016 Hydraulic valve 206
Hydraulic pump module 208
Hydraulic pump 210
Hydraulic system, steering Std 212
Hose bracket 214
Hydraulic steering, sliding seat Std 216
Steering, slideable 218
Hydraulic valve module, offset 220
Hydraulic valve 222
4700391017 Hydraulic valve 224

Electrical equipment 226

Electric cables, power supply 228
Battery disconnector 230
Battery disconnector 232
Electric cables, power supply cab 234
Electric cables, engine - ECU 236
Standard ECU module 238
Standard ECU assembly 240
Electric cables, sensors/ horn/ back-up alarm 242
Horn module 244
Horn 246
Back-up alarm module 248
Back-up alarm 250
Tachograph 252
Tachograph holder module 254
Cable harness kit 256
Power supply module 258
Driving & side direction lights 260
Accessories ECU module 262
Driving lights, front RH 264
Driving lights, front LH 266
Turn signals 268
Driving lights, rear 270
Steering column switch module 272
Cable harness and switch module 274
Registration plate light module 276
Registration plate light 278
Rotating beacon, working light 280
Rotating beacon module 282
Working light module H3 284
Working light module Xenon 286

Drivers platform 288

Platform, no cab 290
Platform with 4-post ROPS 292
Rear covers 294
Platform no ROPS 296
Rear covers 294
Hand rail, left 298
Hand rail 300
Hand rail, right 302
Hand rail 304
Hand rail 306
Lunch box module 308
Canopy optional 310
Canopy assy 312

TABLE OF CONTENTS

Page

Bracket 314
Cab, asymmetric 316
4700390865 Cab, cpl 318
Cab frame, right side 320
General parts 322
Windshield wiper, front 324
Windshield wiper, rear 326
Windshield washer reservoir 328
Electric equipment 330
Door frame 332
4700395806 Door 334
Rear covers 294
Air channel 336
Heater unit 338
Heater 340
Heater controls 342
Manual box 344
Cab heater system 346
Heater hoses 348
Cab noise cover 350
Radio and cd player 352
Radio and cd player module 354
Rear view mirror module 356
Drivers seat 358
Seat frame structure 360
Seat frame 362
4700391163 Steering column 364
Seat CE 366
Seat with suspension 368
Controls, slidable and turning 370
Cross sliding 372
Carrier 374
Drive control, cpl 376
Drive control 378
Control panel cover 380
Display unit 382
Display 384

Decals 386

Decals 388

Optional equipment 390

Air conditioning 392
Compressor module 394
Compressor complete 396
Condensor module 398
Condensor 400
Evaporator module 402
4700393584 Evaporator unit 404
Hose kit AC 406
Hose kit AC 408
Hose kit Compressor 410
Hose kit AC 412
ACC module 414
ACC controls 416
Belt guard module 418


DYNAPAC

Item	Part No	Rem	Qty	Description	Code
				Service kits (Page 4)	
				Repair kits (Page 14)	
1				Frame (Page 18)	
2				Drum (Page 142)	
3				Engine (Page 160)	
5				Hydraulic system (Page 192)	
6				Electrical equipment (Page 226)	
7				Drivers platform (Page 288)	
8				Decals (Page 386)	
10				Optional equipment (Page 390)	

Service kits

Item	Part No	Rem	Qty	Description	Code
1	4700950174			Service kit (Page 6) 50h, Cummins QSB 3.3	
2	4700939076			Service kit (Page 8) 250 / 750 h	
3	4700950175			Service kit (Page 10) 500h, Cummins QSB 3.3	
4	4700950176			Service kit (Page 12) 1000h, Cummins QSB 3.3	

4700950174 Service kit 50h, Cummins QSB 3.3

18818

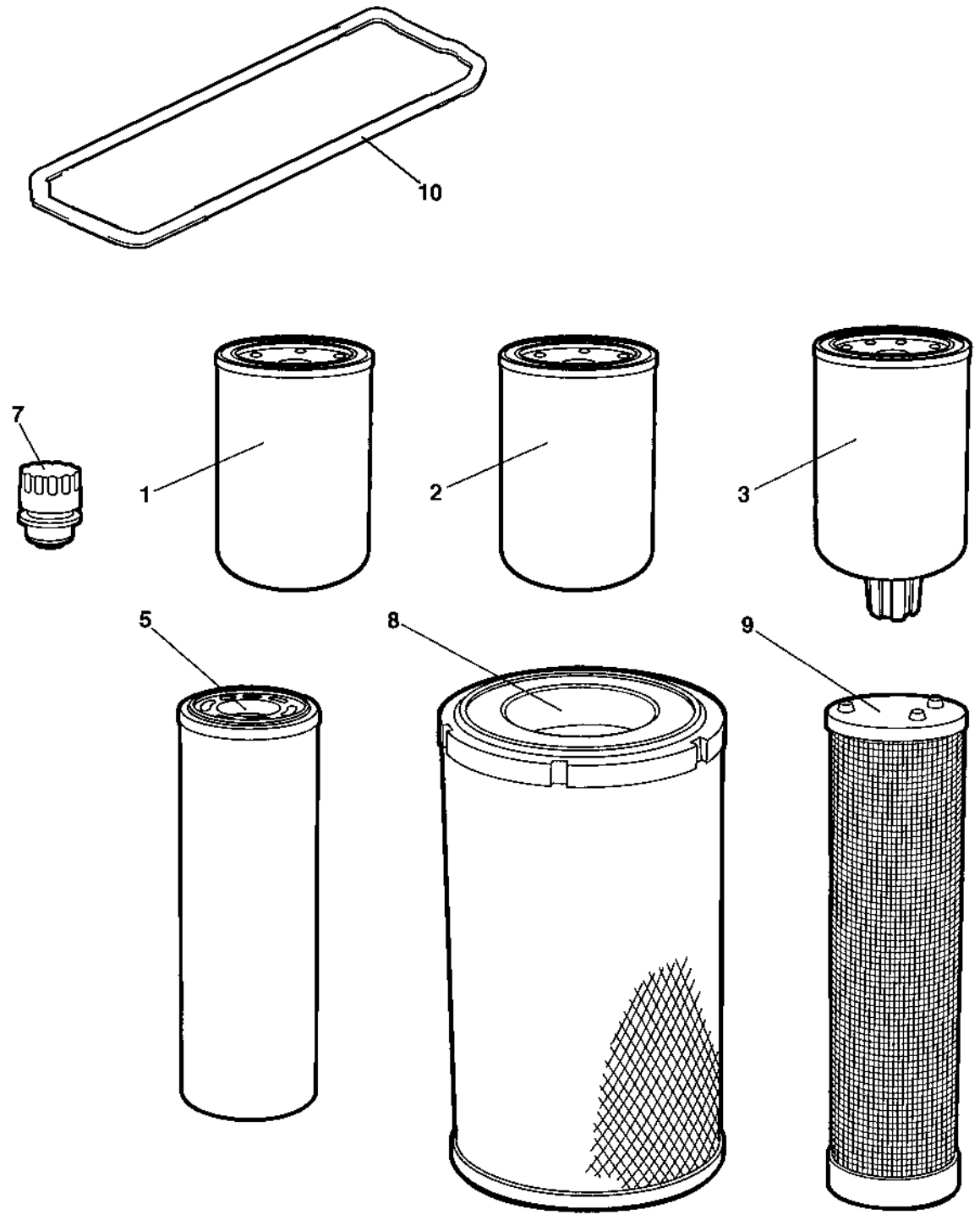

4700950174 Service kit 50h, Cummins QSB 3.3

Item	Part No	Rem	Qty	Description		Code
	4700950174			Service kit (Page 6)	50h, Cummins QSB 3.3	
1	4700939068		1	Oil filter element		A
2	4700950302		1	Fuel filter element		A
3	4700950301		1	Pre-fuel filter element		A
5	4700391433		1	Filter element		A

4700939076 Service kit 250 / 750 h

17517

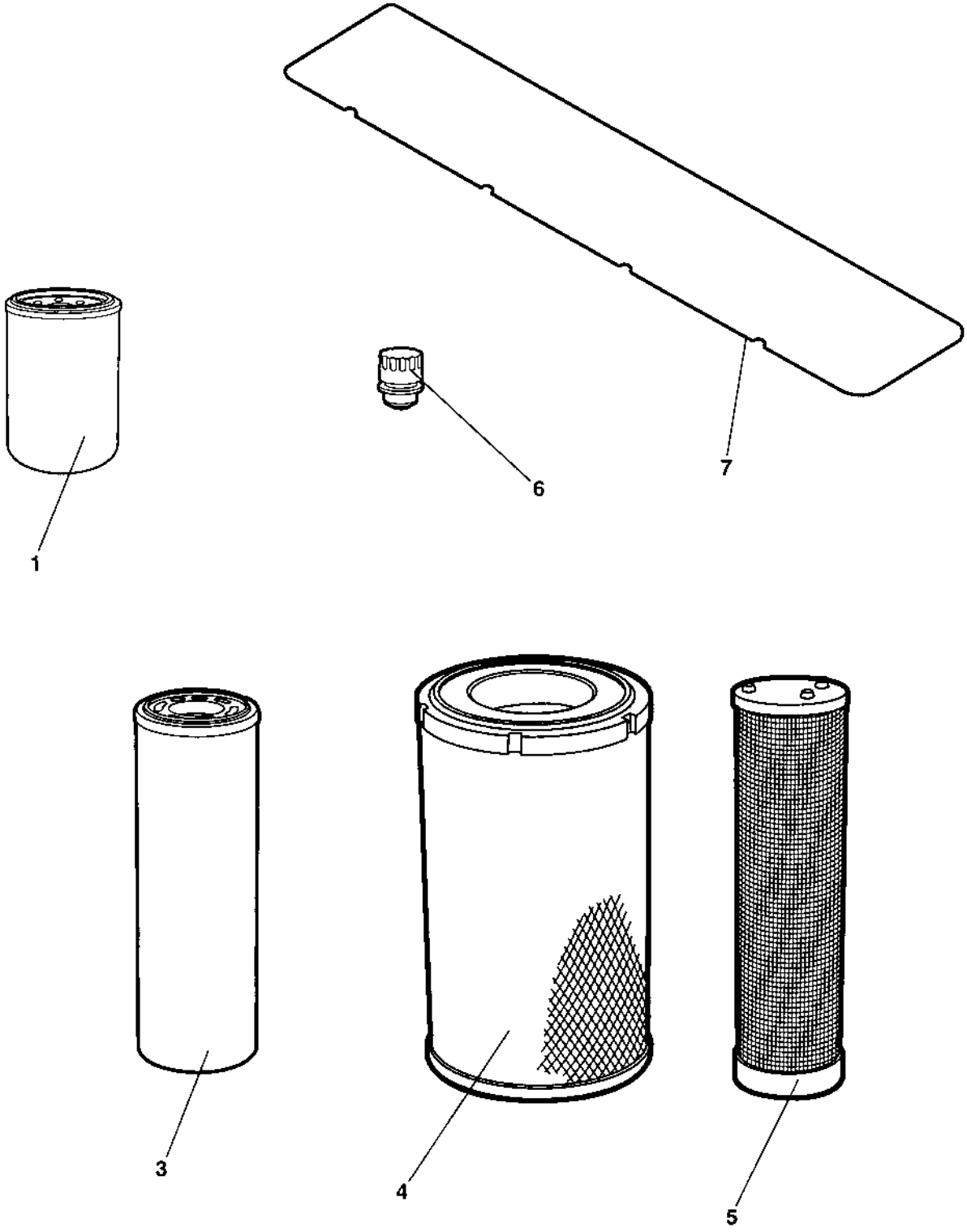

4700939076 Service kit 250 / 750 h

Item	Part No	Rem	Qty	Description		Code
	4700939076			Service kit (Page 8)	250 / 750 h	
1	4700939068		1	Oil filter element		A

4700950175 Service kit 500h, Cummins QSB 3.3

18818

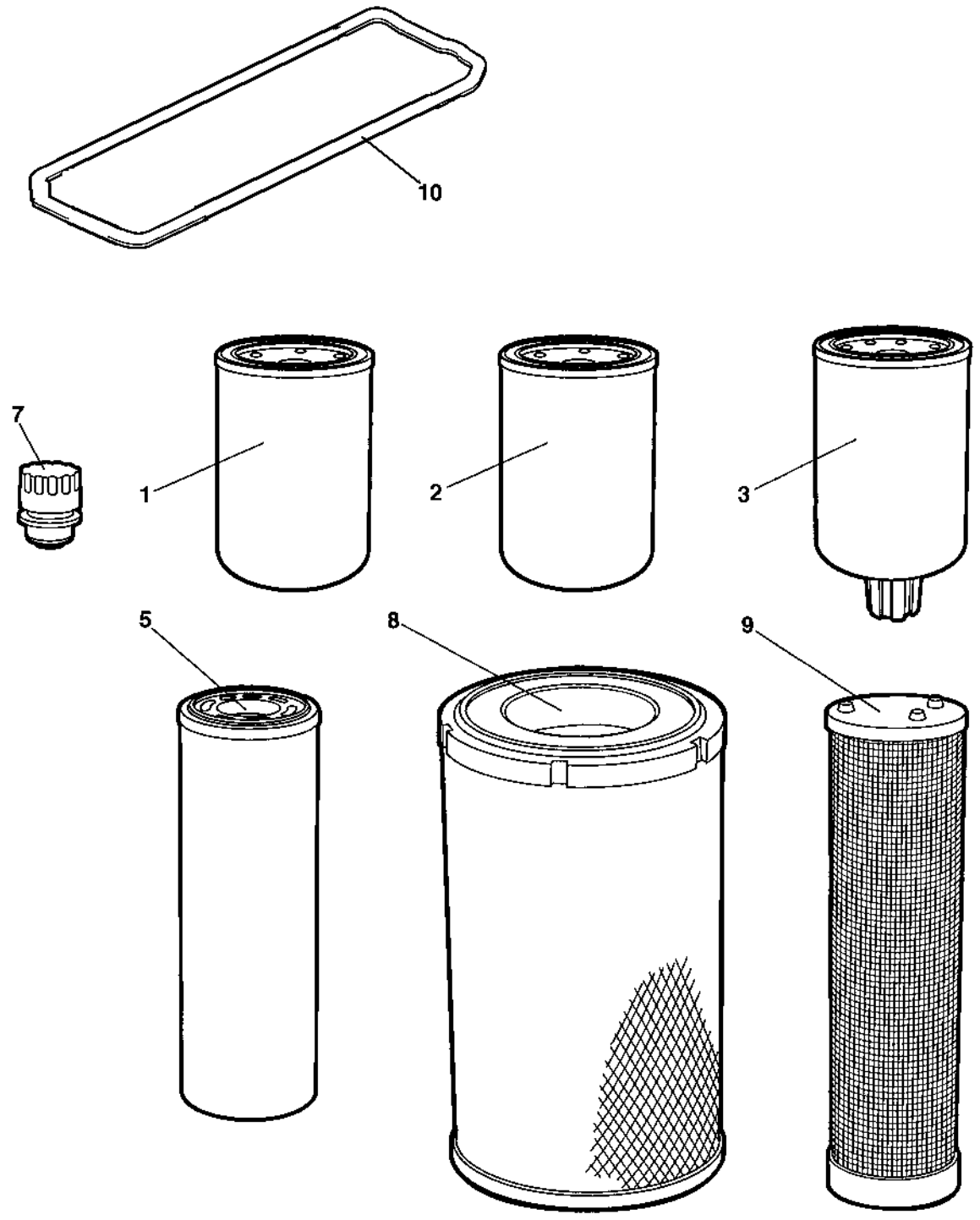

4700950175 Service kit 500h, Cummins QSB 3.3

Item	Part No	Rem	Qty	Description		Code
	4700950175			Service kit (Page 10)	500h, Cummins QSB 3.3	
1	4700939068		1	Oil filter element		A
2	4700950302		1	Fuel filter element		A
3	4700950301		1	Pre-fuel filter element		A

4700950176 Service kit 1000h, Cummins QSB 3.3

18818

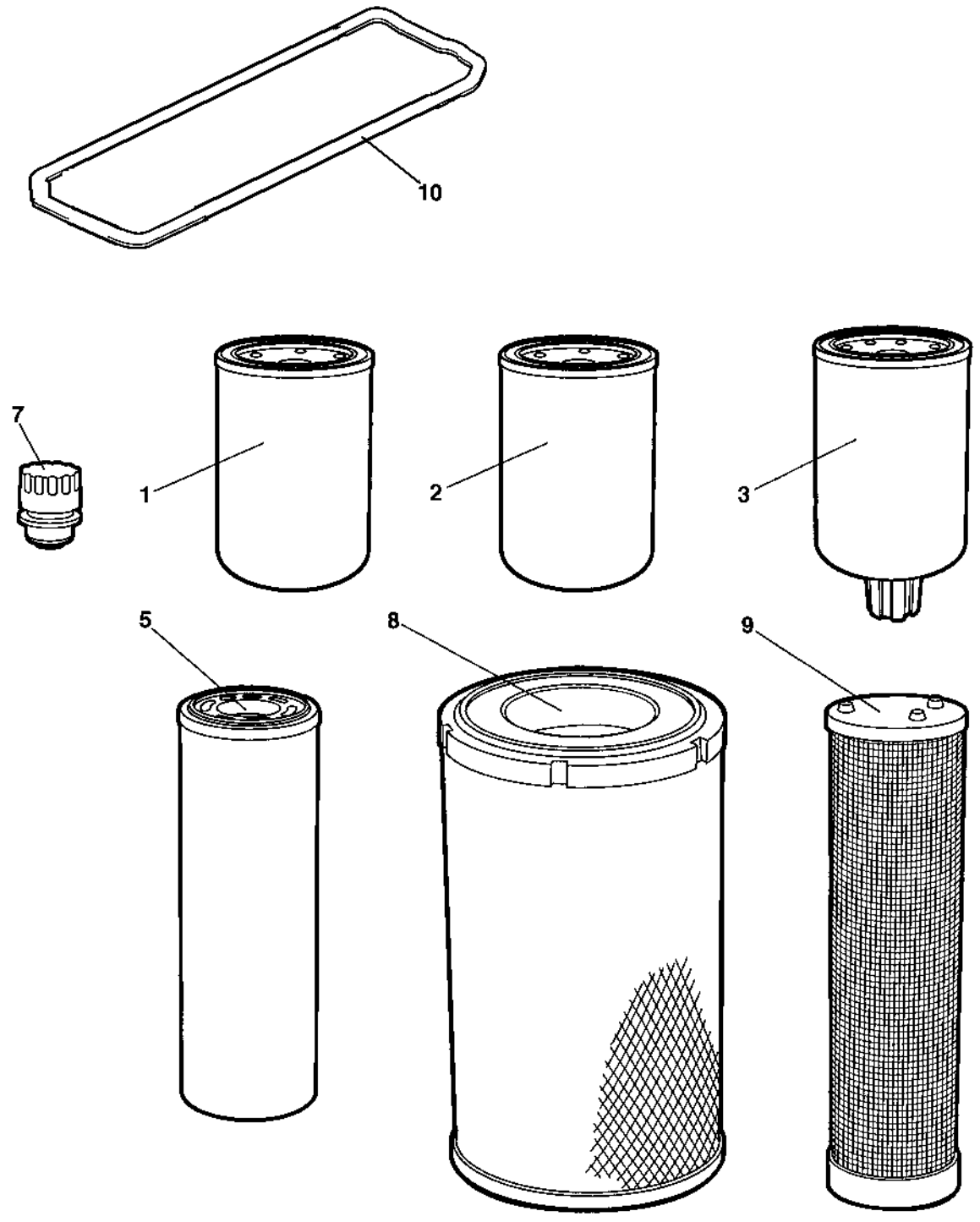

4700950176 Service kit 1000h, Cummins QSB 3.3

Item	Part No	Rem	Qty	Description		Code
	4700950176			Service kit (Page 12)	1000h, Cummins QSB 3.3	
1	4700939068		1	Oil filter element		A
2	4700950302		1	Fuel filter element		A
3	4700950301		1	Pre-fuel filter element		A
5	4700391433		1	Filter element		A
7	4700391026		1	Ventilating filter		A
8	4700392088		1	Main filter element		A
9	4700392089		1	Safety filter element		A
10	4700939070		1	Gasket, valve cover		B

Repair kits

Item	Part No	Rem	Qty	Description		Code
4	4812155158		2	Shock absorber kit, drum (Page 16)	CC224HF/324HF/384HF	

4812155158 Shock absorber kit, drum CC224HF/324HF/384HF

945717

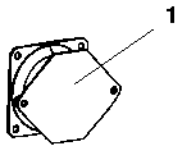

4812155158 Shock absorber kit, drum CC224HF/324HF/384HF

Item	Part No	Rem	Qty	Description		Code
	4812155158			Shock absorber kit, drum (Page 16)	CC224HF/324HF/384HF	
1	4700394250	A	6	Shock absorber		B
2	4700394251	B	4	Shock absorber		

A) Propulsion side
B) Vibration side

Frame

Frame

Item	Part No	Rem	Qty	Description	Code
1				Front frame (Page 20)	
2				Rear frame (Page 40)	
3				Sprinkler system (Page 68)	
4				End frame, front (Page 88)	
5				End frame, rear (Page 124)	

Front frame

Front frame

Item	Part No	Rem	Qty	Description	Code
1			1	Front frame module (Page 22)	
2			1	Tank structure module (Page 28)	
3			1	Hitch module (Page 34)	
9			1	Grab handle module (Page 38)	

Front frame module

379861

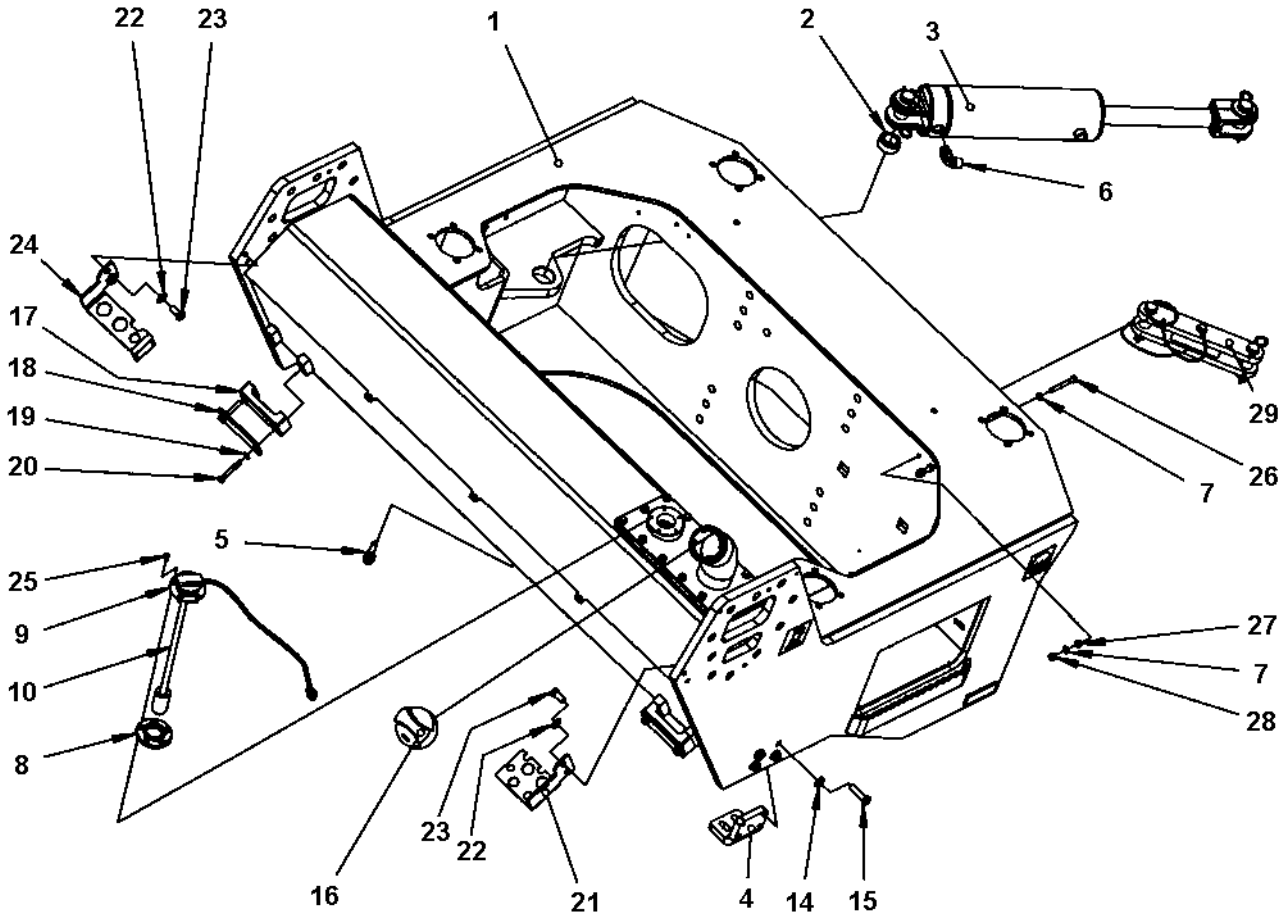

Front frame module

Item	Part No	Rem	Qty	Description		Code
1	4700379862		1	Front frame		
			1	.Fuel tank cover		
	4700389821		1	.O-ring		
2	4700792554		1	Radial spherical plain bearing		D
3	4700391023		1	Steering cylinder (Page 24)		
4	4700394400		2	Bracket		
5	4700792605		2	Quick connect coupling		
6	4700792151		1	Elbow adapter 90		
7	4700904229		4	Washer	8,4x16x1,5	
8	4700370745		1	Flange, cpl		
9	4700372718		1	Lid		
10	4700389917		1	Level sender		
11	4700359887		1	Shock absorber		
12	4700573003		1	Nut	M6	
14	4700904703		8	Washer		
15	4700903906		8	Screw		
16	4700373304		1	Cap		D
17	4700343872		2	Hose clamp		D
18	4700335914		2	Cover plate		
19	4700904230		4	Washer		
20	4700500032		4	Screw	M10 x 55	
21	4700397253		1	Hose holder		
22	4700904231		4	Washer	13x24x2 300 HV	
23	4700500051		4	Screw	M12x25H 8.8 A3K	
24	4700391443		1	Hose clamp		
25	4700904206		5	Screw		
26	4700925750		2	Screw		
27	4700570005		2	Nut	M8	
28	4700586003		2	Lock nut	M8	
29			1	Steering hitch lock (Page 26)		

4700391023 Steering cylinder

18811

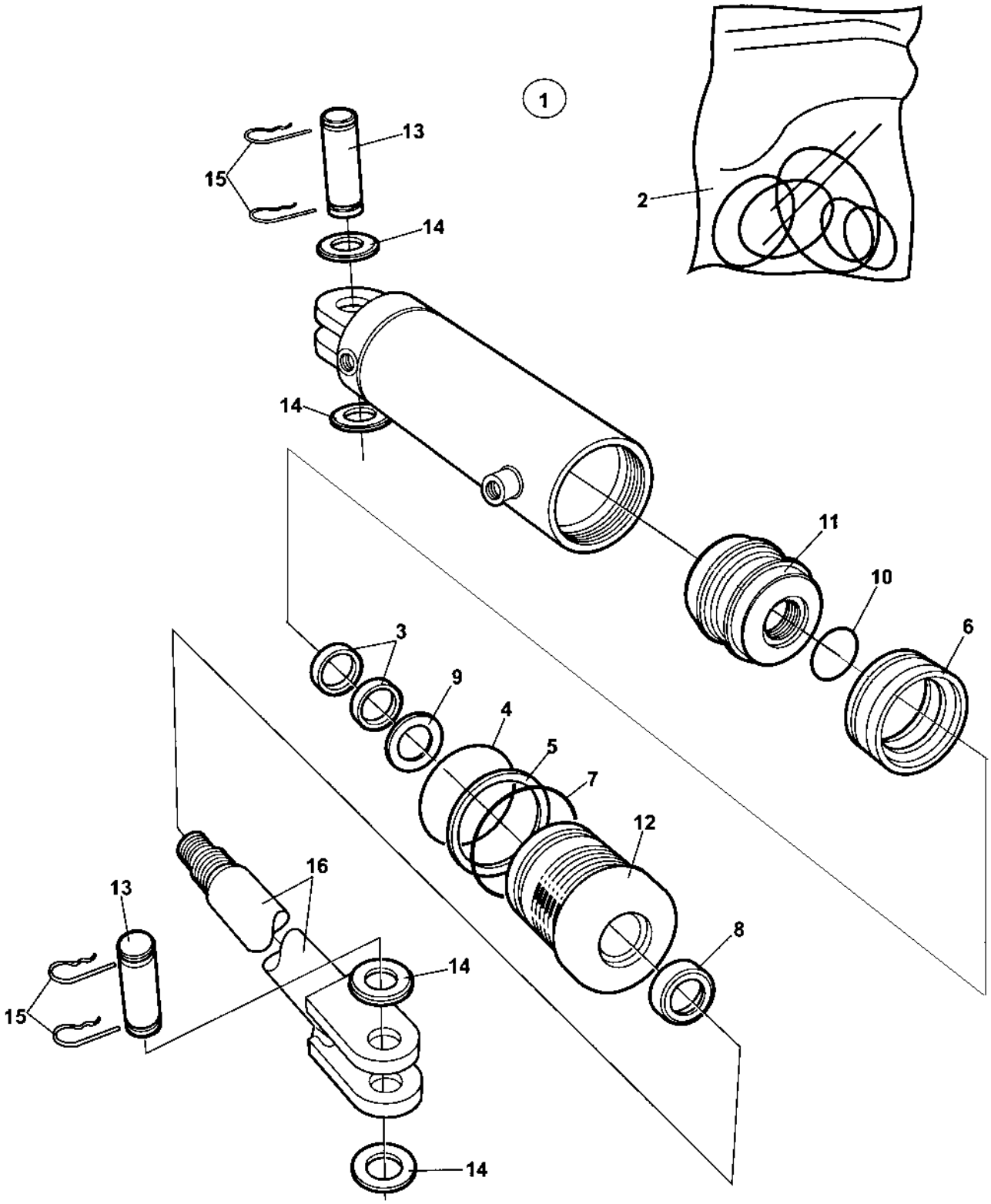

4700391023 Steering cylinder

Item	Part No	Rem	Qty	Description	Code
1	4700391023		1	Steering cylinder (Page 24)	
2	4700950417		1	.Seal kit	
3			2	..Seal	
4			1	..O-ring	
5			1	..Back-up ring	
6			1	..Seal	
7			1	..O-ring	
8			1	..Seal	
9			1	..Seal	
10			1	..O-ring	
11			1	.Piston block	
12			1	.Steering	
13	4700950222		2	.Shaft	
14			4	.Washer	
15	4700635061		4	.Hair clip	D
16			1	.Piston rod	D
17			1	.Cylinder	D

Steering hitch lock

393520

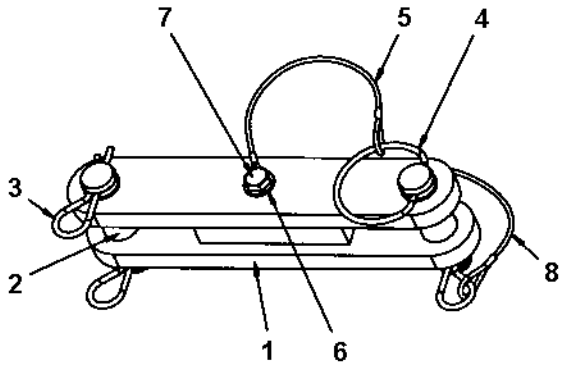

Steering hitch lock

Item	Part No	Rem	Qty	Description		Code
1	4700392624		1	Steering hitch lock		
2	4700347119		2	Shaft		D
3	4700635061		3	Hair clip		D
4	4700357488		1	Spring		
5	4700343775		1	Wire		
6	4700904230		2	Washer		
7	4700500043		2	Screw	M10x16H 8,8	
8	4700343775		1	Wire		

Tank structure module

396738

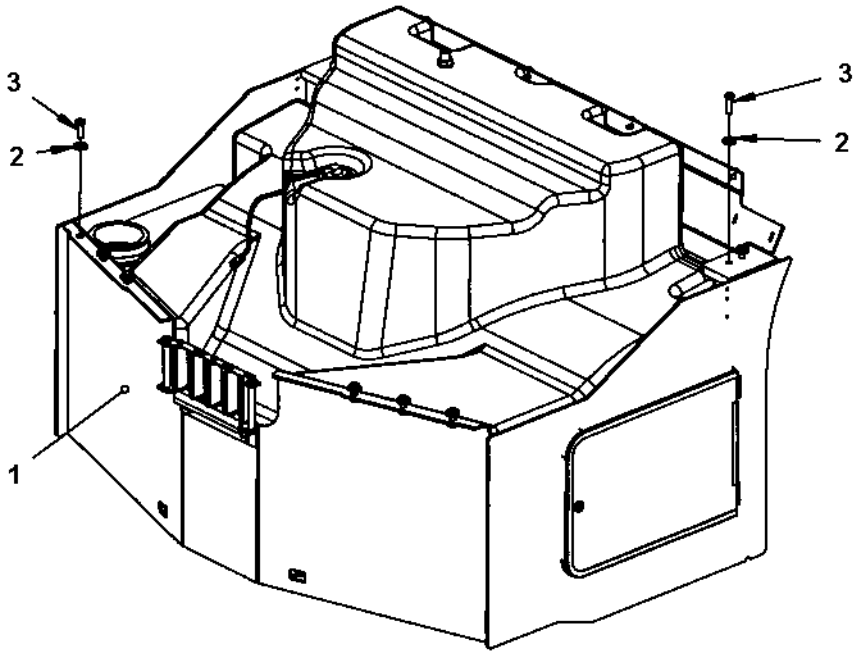

Tank structure module

Item	Part No	Rem	Qty	Description	Code
1			1	Sprinkler tank structure mount (Page 30)	
2	4700904213		10	Washer	
3	4700500194		10	Screw	

Sprinkler tank structure mount

392880E

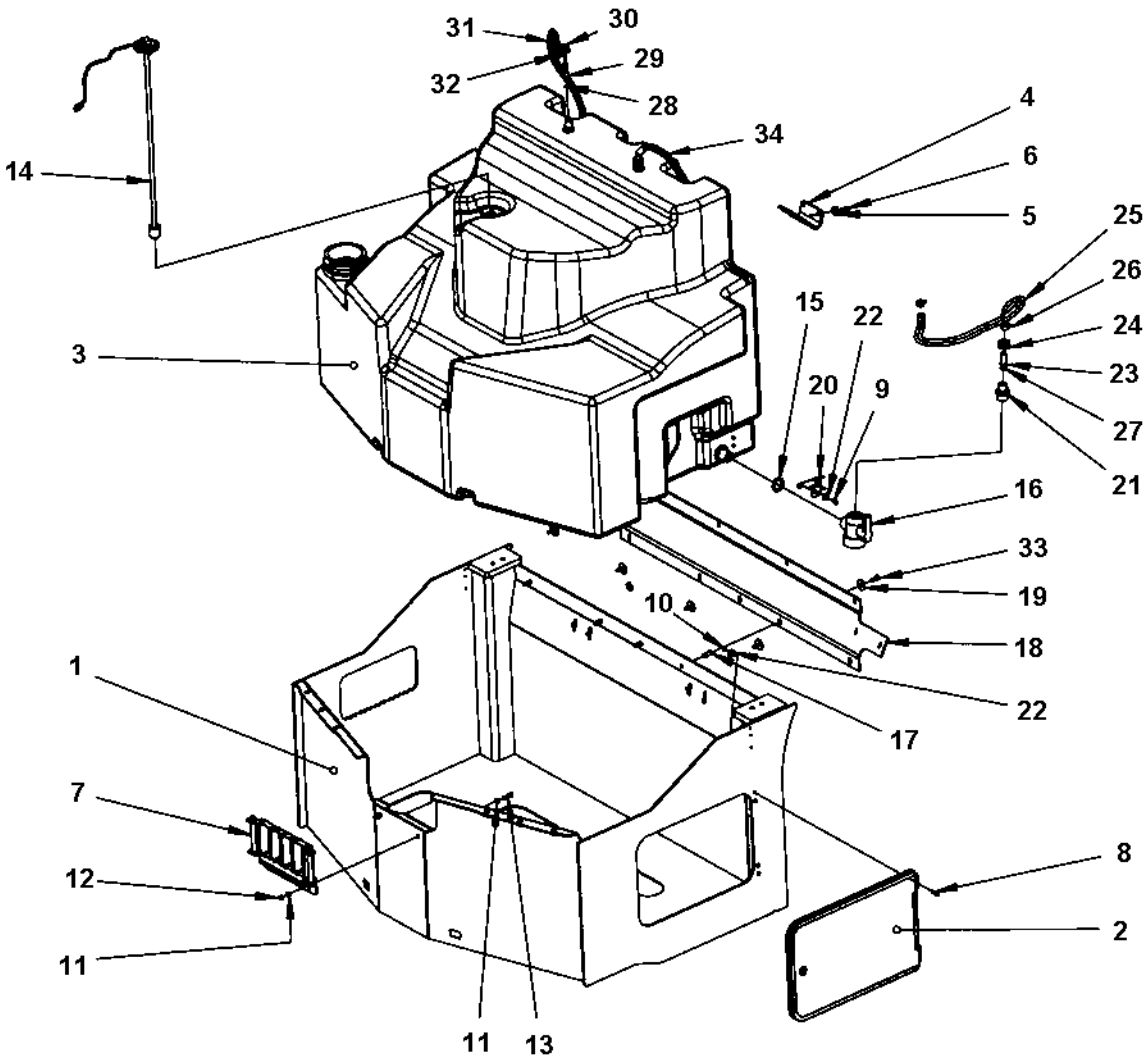

Sprinkler tank structure mount

Item	Part No	Rem	Qty	Description		Code
1	4700392848		1	Tank structure		
2	4700391307		1	Cover (Page 32)		
3	4700392867		1	Water tank, cpl		
	4700392235	A	1	.Gasket		
	4700313105	A	1	.Hose clamp		
	4700392223	B	1	.Plane gasket		
	4700392222	B	1	.Grommet		
	4700392224	B	1	.Lock nut		
	4700392231	C	2	.Plane gasket		
	4700392230	C	2	.Grommet		
	4700392232	C	2	.Nut		
4	4700391624		2	Bracket		
5	4700904734		4	Washer	8,4x26x4	
6	4700500053		4	Screw	M8x20H 8.8	
7	4700394022		1	Hose support		
8	4700928784		4	Screw		
9	4700500013		2	Screw	M6-1x16 8,8	
10	4700586002		4	Lock nut		
11	4700904229		4	Washer	8,4x16x1,5	
12	4700570005		2	Nut	M8	
13	4700500022		2	Screw	M8x30H 8.8 A2K	
14	4700391353		1	Level sender		
	4700372718		1	Lid		
	4700370745		1	Flange, cpl		
	4700904206		5	Screw		
15	4700392223		2	Plane gasket		
16	4700792782		1	Ball valve		
17	4700900672		5	Blind insert nut		
18	4700393413		1	Rubber cloth		
19	4700615050		9	Washer		
20	4700396739		1	Bracket		
21	4700792781		1	Reducer nipple		
22	4700904735		6	Washer		
23	4700792780		1	Hose connection swivel		
24	4700792779		1	Swivel nut		
25	4700792073		0	Hose reinforced		D
26	4700313003		2	Hose clamp		D
27	4700480852		1	O-ring 70		
28	4700792600		2	O-ring	70	
29	4700393542		2	Hose connection swivel		
30	4700392227		2	Swivel nut		
31	4700904878		1XL	Hose reinforced		
32	4700313001		1	Hose clamp		
33	4700500021		9	Screw	M8-1,25x25 8.8	
34	4700904878		1XL	Hose reinforced		

A) Water fill
B) Drain
C) Hose connection

4700391307 Cover

391307

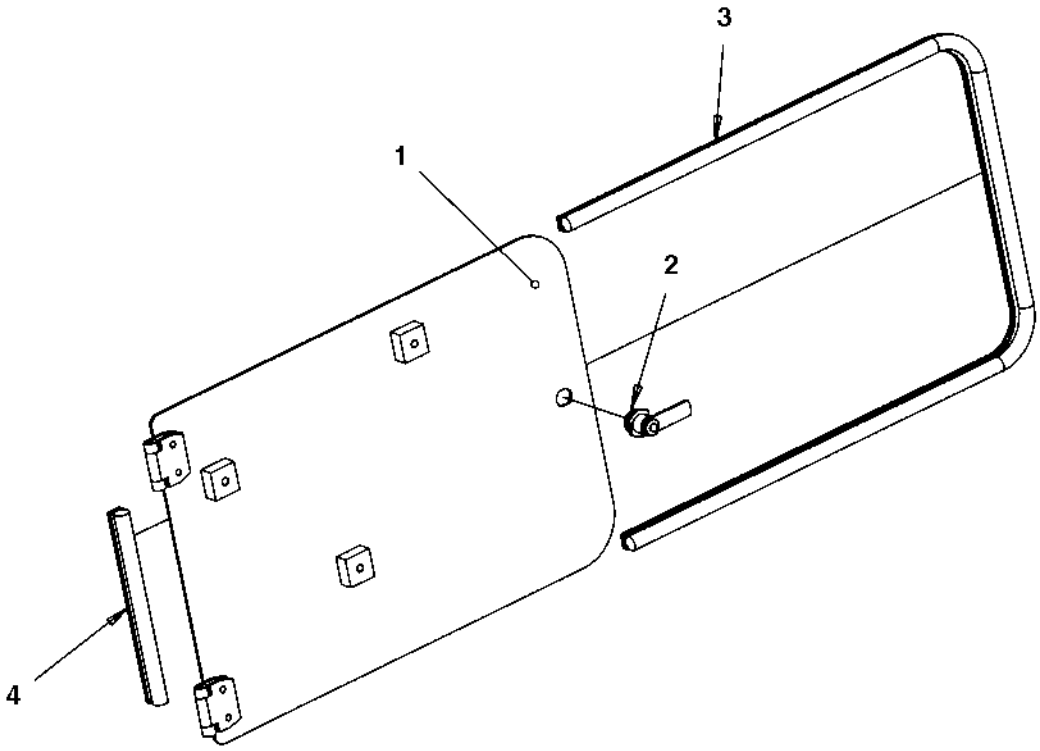

4700391307 Cover

Item	Part No	Rem	Qty	Description		Code
1			1	Cover		
2	4700383626		1	Lock	Ø19	
	4700397348		1	Lock	Ø22	
	4700902866		1	.Key	Marked "455"	D
3	4700202057	A	1XL	Edge trim		D
4	4700202057	B	1XL	Edge trim		D

A) L=1.33 m
B) L=0.21 m

Hitch module

391615

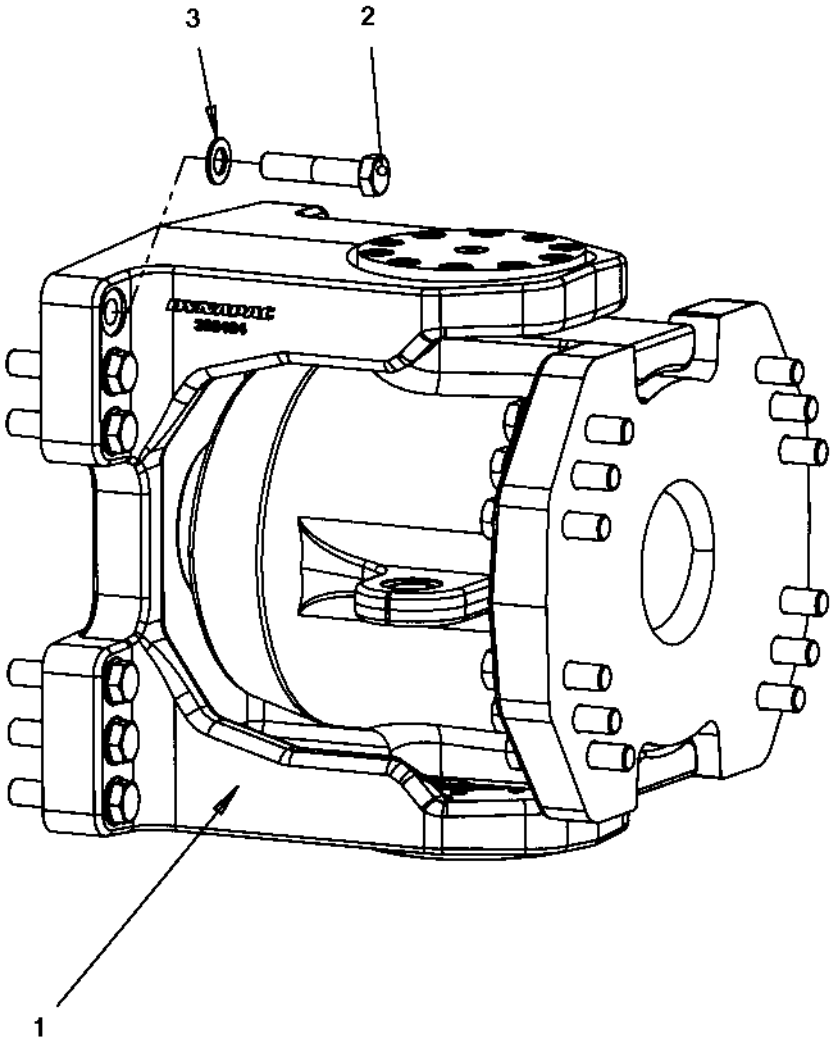

Hitch module

Item	Part No	Rem	Qty	Description		Code
1			1	Hitch link (Page 36)		
2	4700500287		24	Screw	M20x80 10,9	
3	4700904233		24	Washer	21x36x3	

Hitch link

390532

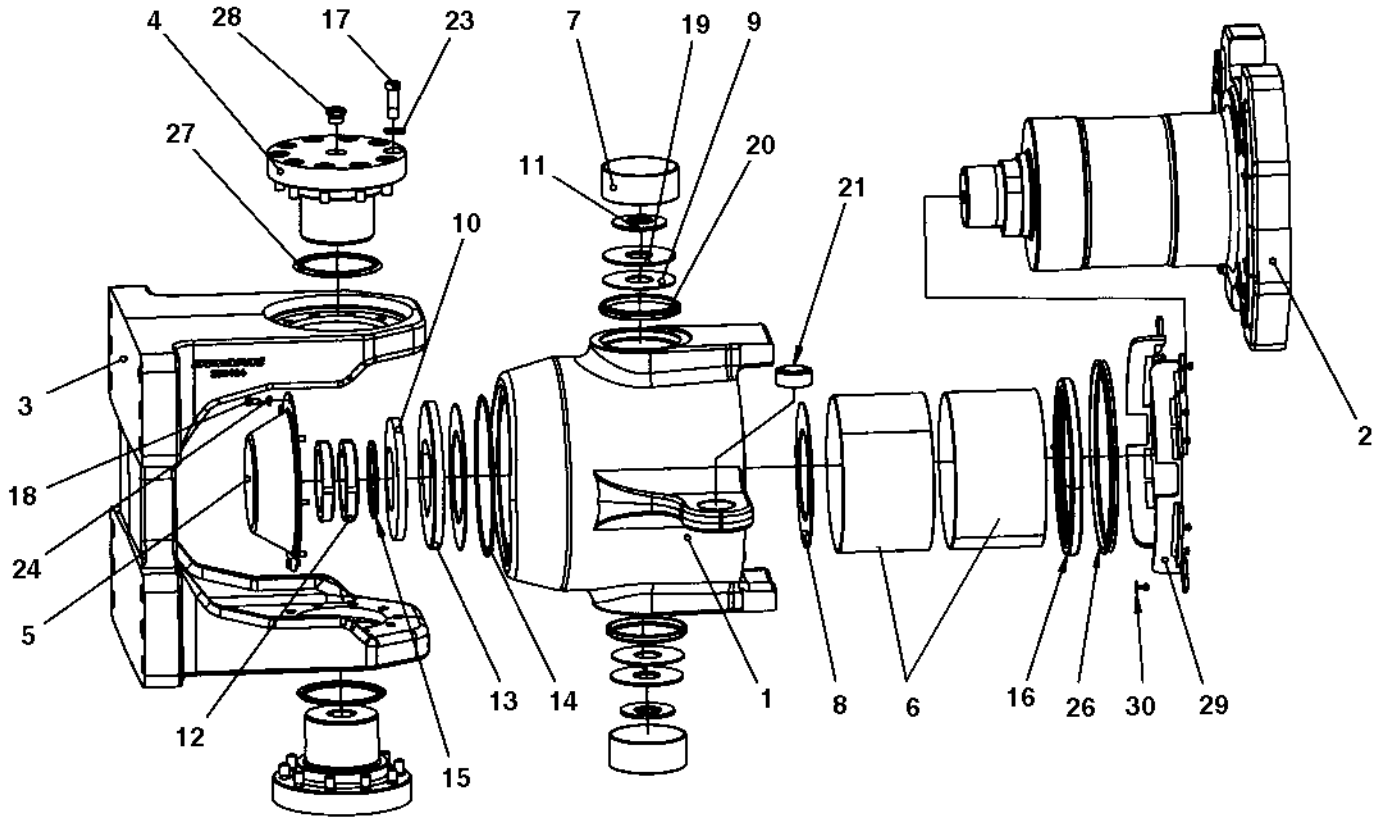

Hitch link

Item	Part No	Rem	Qty	Description		Code
1	4700390533		1	Hitch yoke		
	4700396584		1	Hitch yoke		
2	4700390534		1	Shaft		
	4700396585		1	Shaft		
3	4700393464		1	Hitch holder		
4	4700393465		2	Shaft		
5	4700392550		1	Cover		
6	4700390538	1	2	Sleeve bearing		
	4700396588	2	2	Sleeve bearing		
7	4700390539		2	Sleeve bearing		
8	4700393523		2	Slide washer		
9	4700390541		2	Slide washer		
10	4700390542		1	Disc spring		
11	4700390543		2	Disc spring		
12	4700135015		2	Shaft nut		
13	4700393115		1	Thrust washer		
14	4700160277		1	O-ring		
15	4700393218		1	Back-up ring		
16	4700391031		1	Radial lip-type seal		
17	4700792394		20	Screw		
18	4700500012		8	Screw	M6x12	
19	4700391566		2	Washer		
20	4700792517		2	Shear wiper		
21	4700792554		2	Radial spherical plain bearing		D
23	4700904231		20	Washer	13x24x2 300 HV	
24	4700904228		8	Washer		
26	4700792515		1	Sealing, v-ring		
27	4700792518		2	Radial lip-type seal		
28	4700792295		2	Steel plug		
29	4700394207	1	2	Flush cover		
30	4700792325	1	12	Blind rivet		

1) Used together with PN 4700390533 and 4700390534.
2) Used together with PN 4700396584 and 4700396585.

Grab handle module

394913A

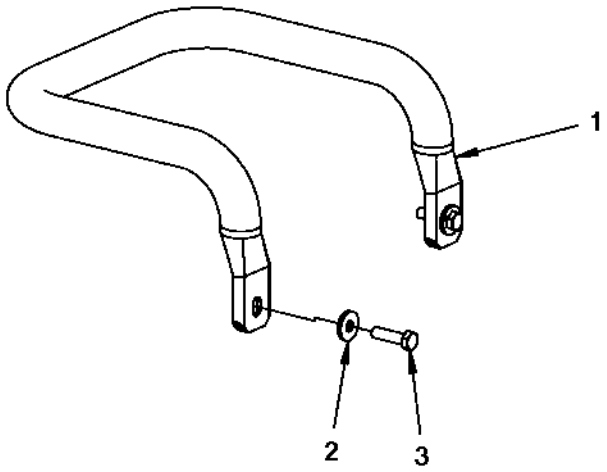

Grab handle module

Item	Part No	Rem	Qty	Description		Code
1	4700394911		1	Grab handle		
2	4700904640		2	Washer	8,4x22x3	
3	4700500022		2	Screw	M8x30H 8.8 A2K	

Rear frame

AR0031

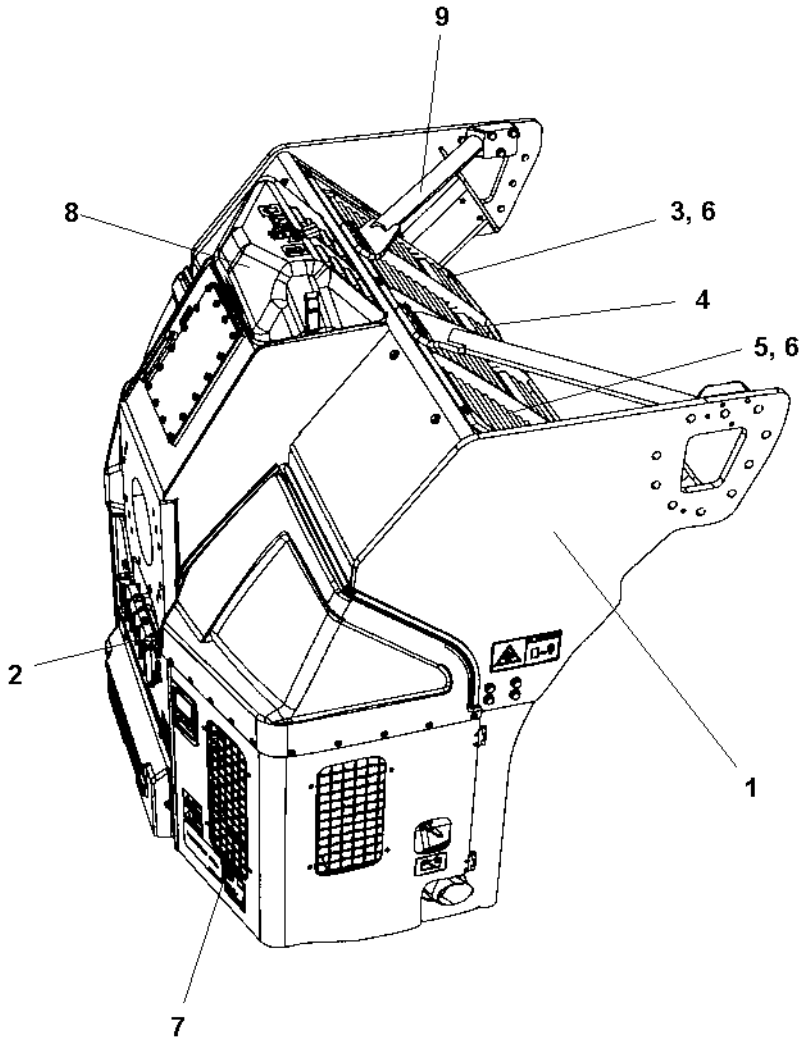

Rear frame

Item	Part No	Rem	Qty	Description	Code
1			1	Rear frame (Page 42)	
2			1	Engine structure, module (Page 46)	
3			1	Water cooler (Page 184)	
4			1	Charge air cooler (Page 182)	
5			1	Oil cooler (Page 54)	
6			2	Fan (Page 58)	
7			1	Noise suppression plates (Page 62)	
8			1	Noise suppression, covers (Page 64)	
9			1	Expansion tank assembly (Page 188)	
10		1	1	Stabilizer module (Page 66)	

1) Only for CC224/324 with offset drum.

Rear frame

379863D

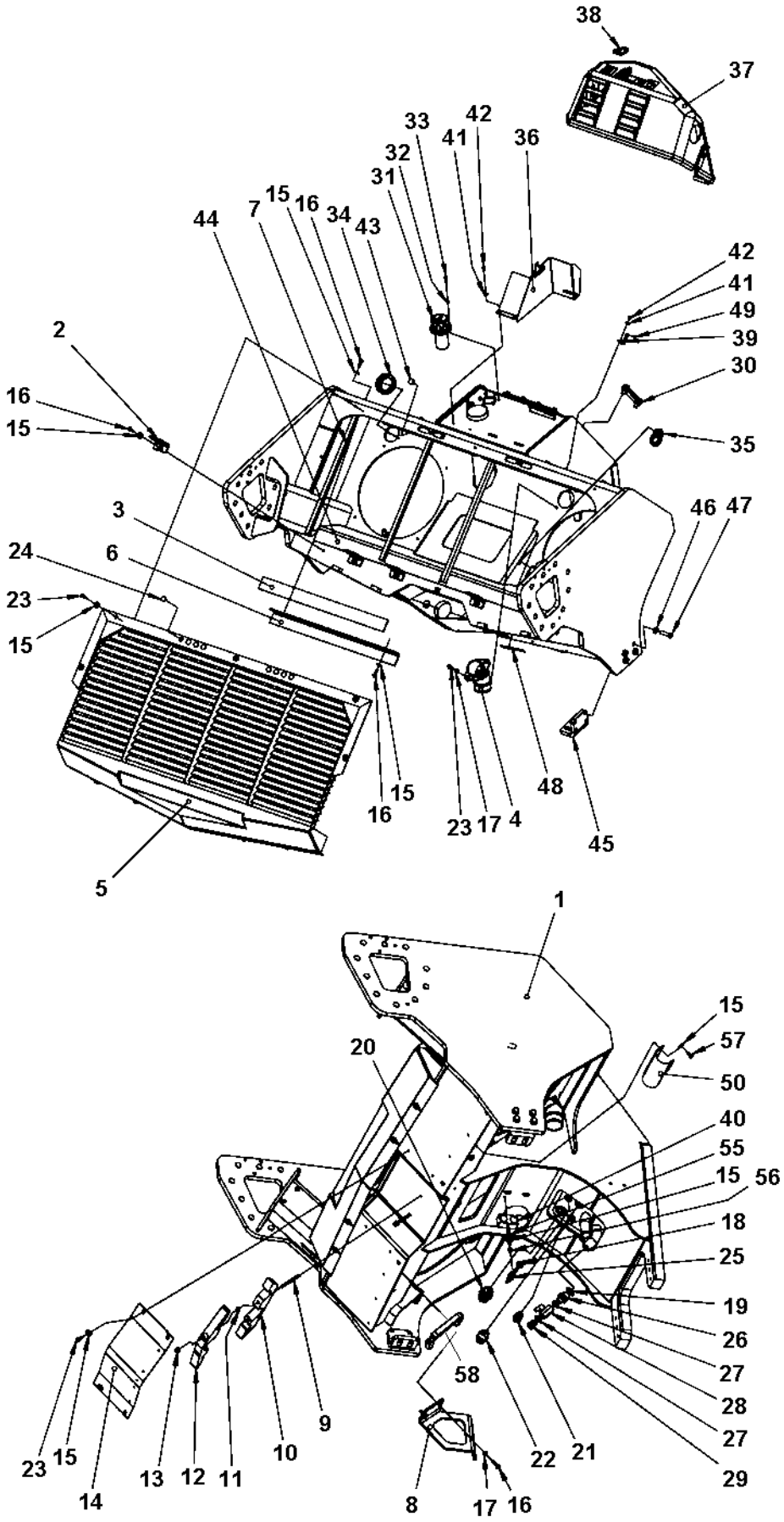

Rear frame

Item	Part No	Rem	Qty	Description		Code
1	4700379864		1	Rear frame		
2	4700391296		5	Bracket		
3	4700392078		2	Rubber cloth		
4	4700393998		1	Bulkhead union		
5	4812110212		1	Cooler cover		
6	4700392075		2	Bracket		
7	4700391299		2	Rubber strip		
8	4700393468		1	Bracket		
9	4700791849		2	Stud m		
10	4700392148		1	Hose support		
11	4700904044		1	Washer		
12	4700392149		1	Hose support		
13	4700902286		2	Lock nut	M8	
14	4700392164		1	Cover		
15	4700904640		25	Washer	8,4x22x3	
16	4700500021		13	Screw	M8-1,25x25 8.8	
17	4700904229		4	Washer	8,4x16x1,5	
18	4700162015		1	Seal ring		D
19	4700791120		1	Sealing washer		
20	4700792338		1	Straight connector		
21	4700791405		1	Straight o-ring connector		
22	4700904728		1	Adapter		
23	4700500053		13	Screw	M8x20H 8.8	
24	4700184111		8	Plug		
25	4700792276		1	Temperature sensor		D
26	4700792421		1	Straight connector		
27	4700162006		2	Seal ring		
28	4700925599		1	Valve		
29	4700232056		1	Plug		
30	4700792492		1	Level gauge		D
31	4700391026		1	Ventilating filter		A
32	4700904281		6	Washer		
33	4700508020		6	Screw		
34	4700393001		2	Grommet		
35	4700393149		2	Grommet		
36	4700393308		1	Bracket		
37			1	Cover (Page 44)		
38	4700358881		1	Pad lock		
39	4700394297		2	Bracket		
40	4700287295		1	Clamp		
41	4700603001		7	Washer		
42	4700500059		7	Screw		
43	4700792607		6	Shock absorber		
44	4700394655		2	Rubber cloth		
45	4700394400		2	Bracket		
46	4700904703		8	Washer		
47	4700903906		8	Screw		
48	4700394513		2	Rubber cloth		
49	4700624021		4	Pop rivet		
50	4700394820		1	Bracket		
55	4700792500		1	Stud		
56	4700586003		1	Lock nut	M8	
57	4700500019		2	Screw	M8x16H 8.8 A2K	
58	4700792051	A	1XL	Edge trim		

A) L= 0.25 m

Cover

394364

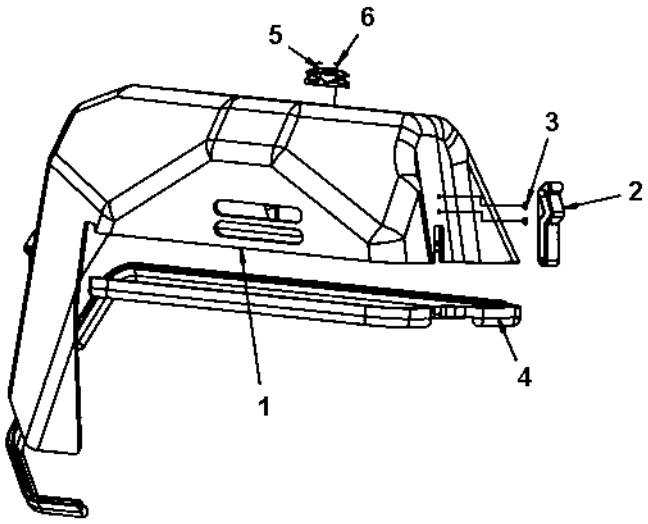

Cover

Item	Part No	Rem	Qty	Description	Code
1	4700393324		1	Cover	
2	4700388846		2	Latch	
3	4700624021		4	Pop rivet	
4	4700902166		1	Edge trim	
5	4700394536		1	Wiring clip	
6	4700624018		2	Blind rivet	

Engine structure, module

392800

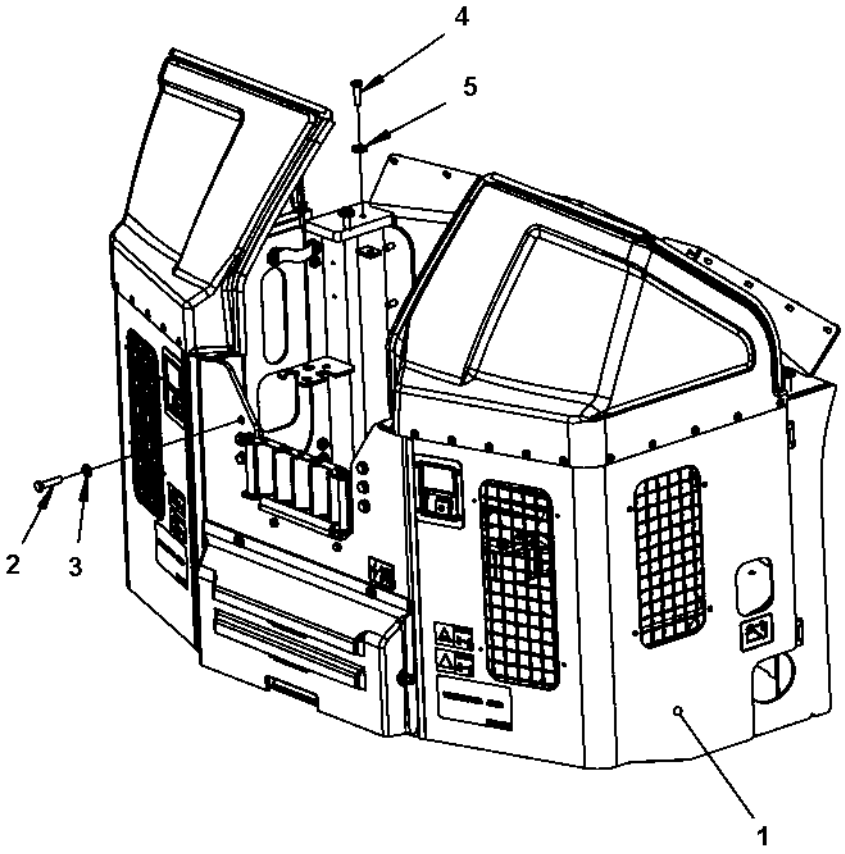

Engine structure, module

Item	Part No	Rem	Qty	Description		Code
1			1	Engine structure (Page 48)		
2	4700500195		6	Screw		
3	4700904231		6	Washer	13x24x2 300 HV	
4	4700500194		4	Screw		
5	4700904213		4	Washer		

Engine structure

390315F

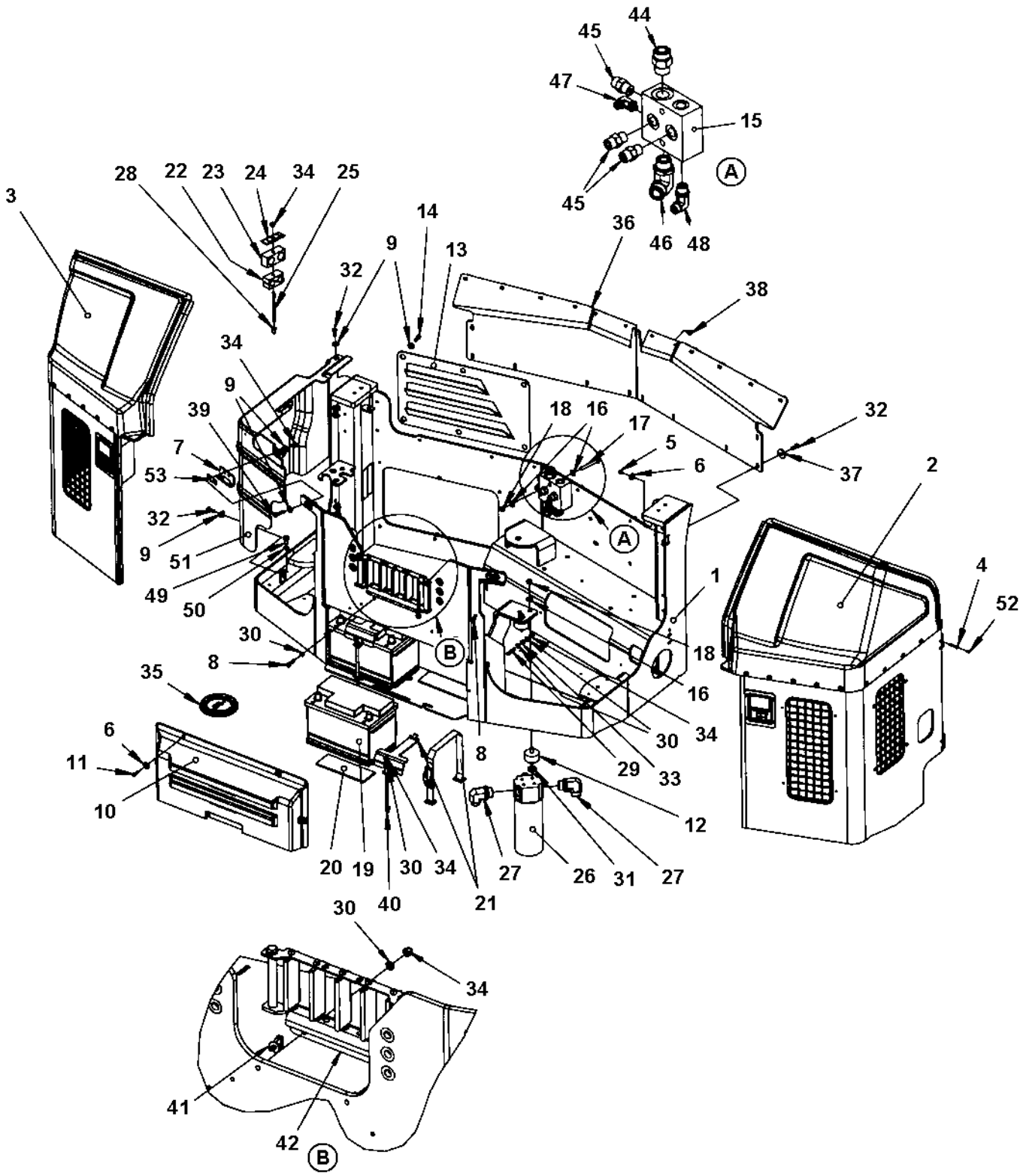

Engine structure

Item	Part No	Rem	Qty	Description		Code
1	4700390220		1	Engine structure		
2			1	Engine cover, left (Page 50)		
3			1	Engine cover, right (Page 52)		
4	4700513017		8	Screw	M6x30H 10,9	
5	4700586002		8	Lock nut		
6	4700904735		12	Washer		
7	4700378310		2	Lock bracket Up to 284S00015		
	4700396542		2	Lock bracket From 284S00016		
8	4700500022		5	Screw	M8x30H 8.8 A2K	
9	4700904640		13	Washer	8,4x22x3	
10	4700390884		1	Cover		
11	4700500040		4	Screw	M6-1x20 8,8	
12	4700281431		2	Shock absorber		B
13	4700392799		1	Grid		
14	4700500021		6	Screw	M8-1,25x25 8.8	
15	4700391157		1	Connection block		
16	4700904230		6	Washer		
17	4700500092		2	Screw		
18	4700570006		4	Nut		
19	4700792311		2	Battery		
20	4700357459		4	Rubber cloth		
21	4700391441		2	Strap Up to 284S000xx		
	4700396634		2	Battery holder From 284S000xx		
22	4700903456		1	Pipe clamp		
23	4700791711		1	Pipe clamp		
24	4700791712		1	Cover plate		
25	4700792326		1	Stud		
26	4700391025		1	Hydraulic oil filter		
27	4700791844		2	Elbow adapter 90		
28	4700792825		1	Blind insert nut		
29	4700903768		3	Threaded stud		
30	4700904229		15	Washer	8,4x16x1,5	
31	4700904567		2	Washer	10,5x28x6 HB305	
32	4700500053		20	Screw	M8x20H 8.8	
33	4700570005		3	Nut	M8	
34	4700586003		12	Lock nut	M8	
35	4700379992		1	Plug		
36	4700390229		1	Rubber cloth		
37	4700615050		18	Washer		
38	4700792325		5	Blind rivet		
39	4700500047		1	Screw		
40	4700396635		2	Battery screw From 284S000xx		
41	4700792441		2	Cable tie with holder		
42	4700394022		1	Hose support		
44	4700791823		1	Straight connector orfs		
45	4700791799		3	Straight connector orfs		
46	4700791231		1	Elbow 90		D
47	4700792334		1	Elbow 90 orfs		
48	4700791840		1	Elbow adapter 90, O-ring with swivel		
49	4700500048		1	Screw	M10-1,5x20 8,8	
50	4700904637		1	Washer		
51	4700394149		1	Belt guard		
52	4700926215		8	Protective plug		
53	4700389859		2	Shims		

Engine cover, left

392647

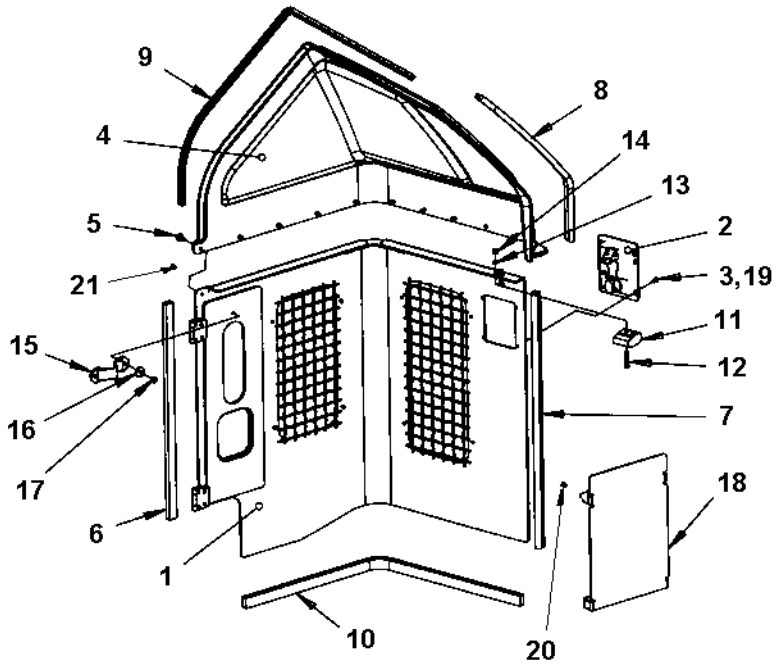

Engine cover, left

Item	Part No	Rem	Qty	Description		Code
			1	Engine cover, cpl Up to 284S00015		
	4700396715	1	1	Engine cover, cpl From 284S00016		
1			1	.Cover		
2	4700378309		1	.Lock Up to 284S00015		
	4700396607		1	.Lock From 284S00016		
	4700902866		1	..Key	Marked "455"	D
3	4700792669		4	.Blind rivet Up to 284S00015		
4	4700392649		1	.Cover		
5	4700792325		10	.Blind rivet		
6	4700792718		1XL	.Rubber strip Up to 284S00015		
7	4700202057		1XL	.Edge trim		D
8	4700902166		1XL	.Edge trim		
9	4700202057		1XL	.Edge trim		D
10	4700792718		1XL	.Rubber strip Up to 284S00015		
11	4700390365		1	.Spacer		
12	4700924875		2	.Screw		
13	4700904228		2	.Washer		
14	4700586002		2	.Lock nut		
15	4700390545		1	.Strap		
16	4700904735		1	.Washer		
17	4700500059		1	.Screw		
18	4700390546		1	.Noise suppression plate		
19	4700624020		4	.Blind rivet From 284S00016		
20	4700904653		4	.Screw	M5x16 A2-70	
21	4700792446		4	.Blind insert nut		

1) Can be fitted on earlier machines together with new Lock bracket PN 4700396542.

Engine cover, right

392650

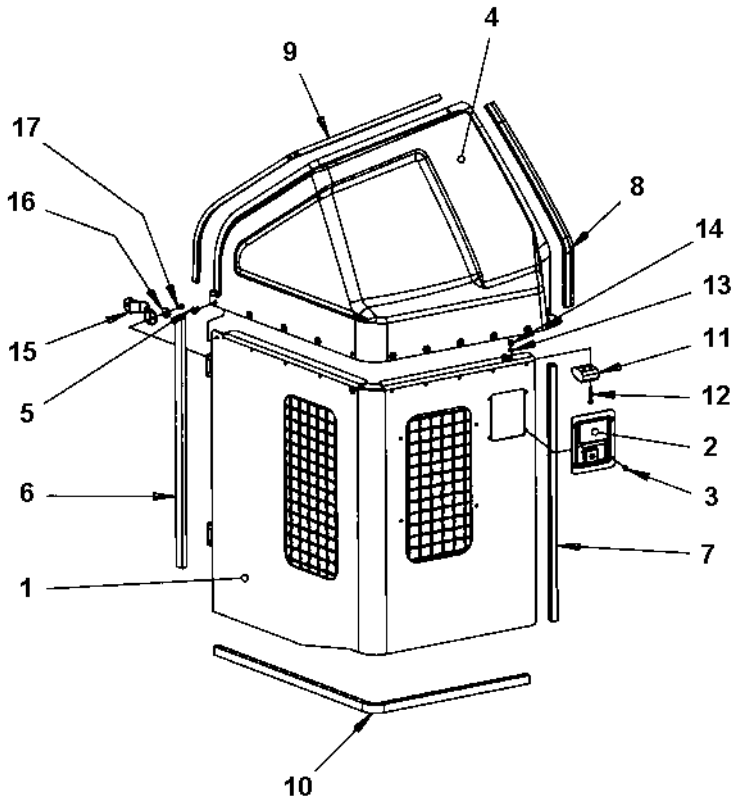

Engine cover, right

Item	Part No	Rem	Qty	Description		Code
			1	Engine cover, cpl Up to 284S00015		
	4700396716	1	1	Engine cover, cpl From 284S00016		
1			1	.Cover		
2	4700378309		1	.Lock Up to 284S00015		
	4700396607		1	.Lock From 284S00016		
	4700902866		1	..Key	Marked "455"	D
3	4700792669		4	.Blind rivet		
4	4700392652		1	.Cover		
5	4700792325		10	.Blind rivet		
6	4700792718		1XL	.Rubber strip Up to 284S00015		
7	4700202057		1XL	.Edge trim		D
8	4700902166		1XL	.Edge trim		
9	4700202057		1XL	.Edge trim		D
10	4700792718		1XL	.Rubber strip Up to 284S00015		
11	4700390365		1	.Spacer		
12	4700924875		2	.Screw		
13	4700904228		2	.Washer		
14	4700586002		2	.Lock nut		
15	4700390545		1	.Strap		
16	4700904735		1	.Washer		
17	4700500059		1	.Screw		

1) Can be fitted on earlier machines together with new Lock bracket PN 4700396542.

Oil cooler

392388

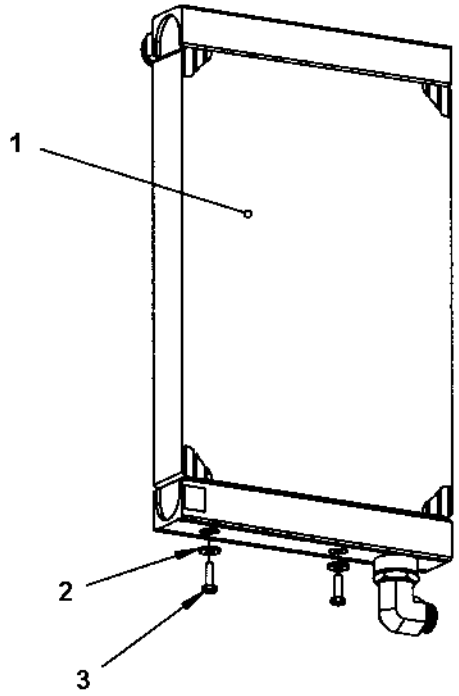

Oil cooler

Item	Part No	Rem	Qty	Description		Code
1			1	Radiator assembly (Page 56)		
2	4700904640		2	Washer	8,4x22x3	
3	4700500021		2	Screw	M8-1,25x25 8.8	

Radiator assembly

391885

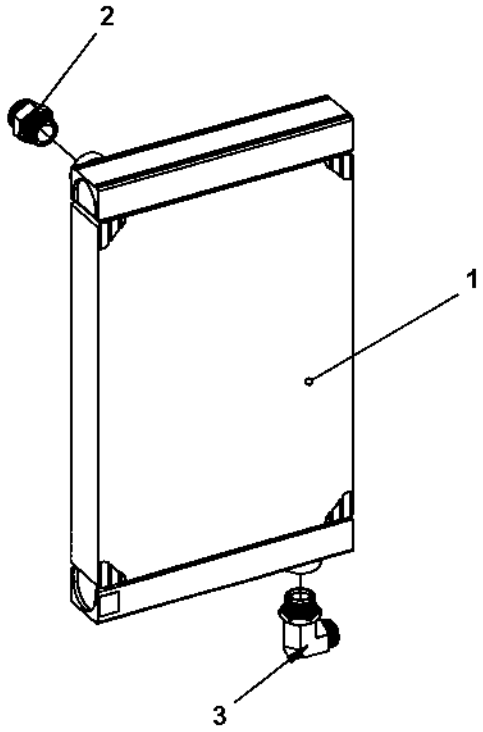

Radiator assembly

Item	Part No	Rem	Qty	Description	Code
1	4700391886		1	Oil cooler	
2	4700792339		1	Straight connector orfs	
3	4700791321		1	Elbow adapter 90	

Fan

391938A

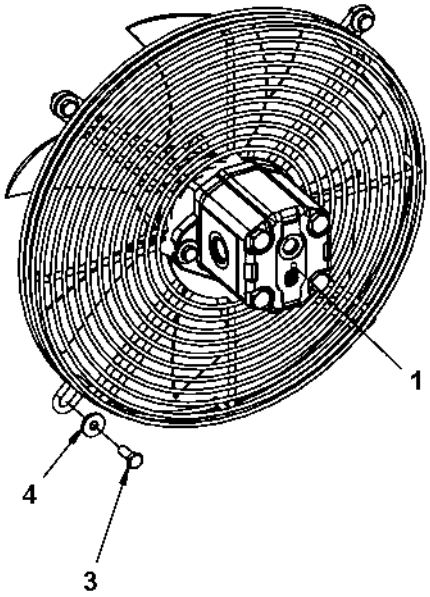

Fan

Item	Part No	Rem	Qty	Description		Code
1			1	Fan assembly (Page 60)		
3	4700500053		4	Screw	M8x20H 8.8	
4	4700904640		4	Washer	8,4x22x3	

Fan assembly

391939

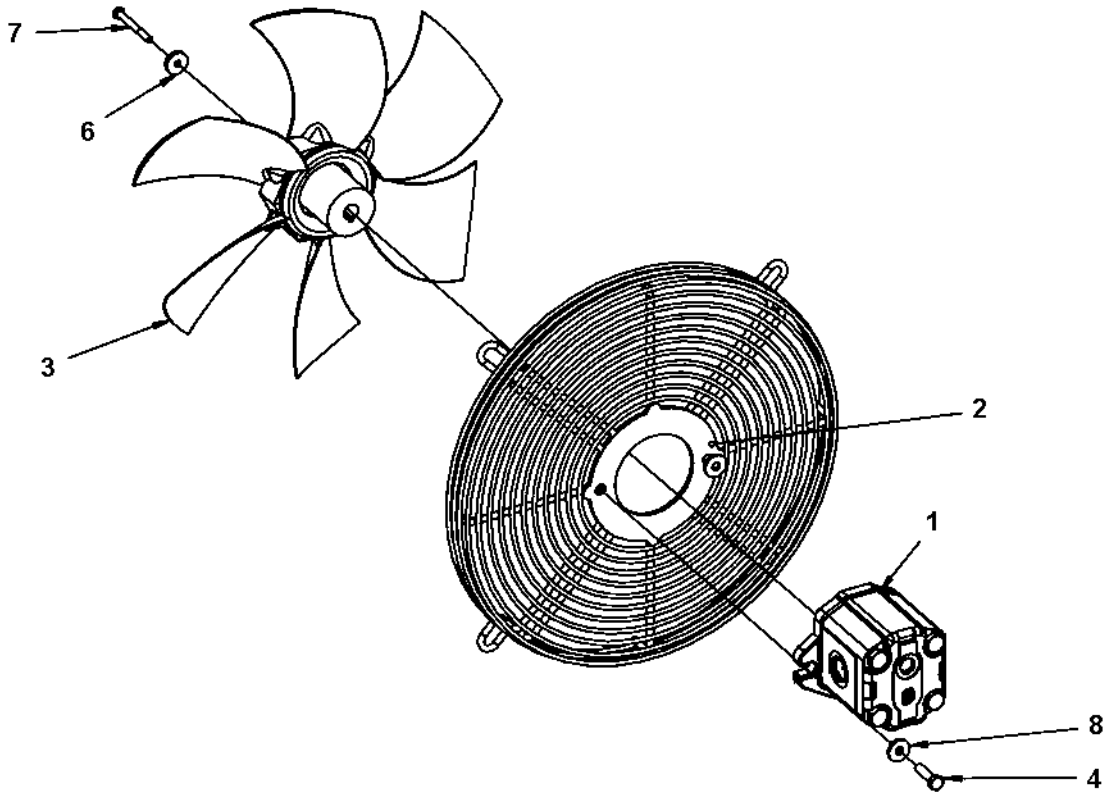

Fan assembly

Item	Part No	Rem	Qty	Description		Code
1	4700390609		1	Hydraulic motor		D
2	4700391941		1	Fan guard		
3	4700391940		1	Fan		
4	4700500022		2	Screw	M8x30H 8.8 A2K	
6	4700904735		1	Washer		
7	4700500016		1	Screw	M6x55 8.8 A2K	
8	4700904640		2	Washer	8,4x22x3	

Noise suppression plates

392801A

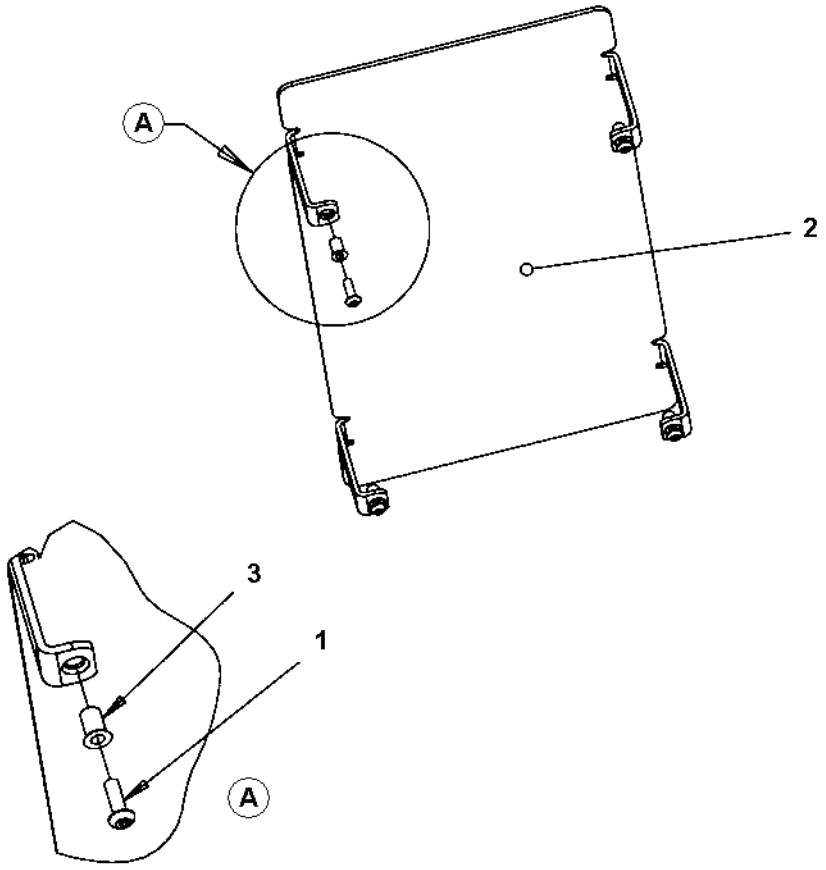

Noise suppression plates

Item	Part No	Rem	Qty	Description		Code
1	4700904653		4	Screw	M5x16 A2-70	
2	4700392803		1	Noise suppression plate		
3	4700792446		4	Blind insert nut		

Noise suppression, covers

396638

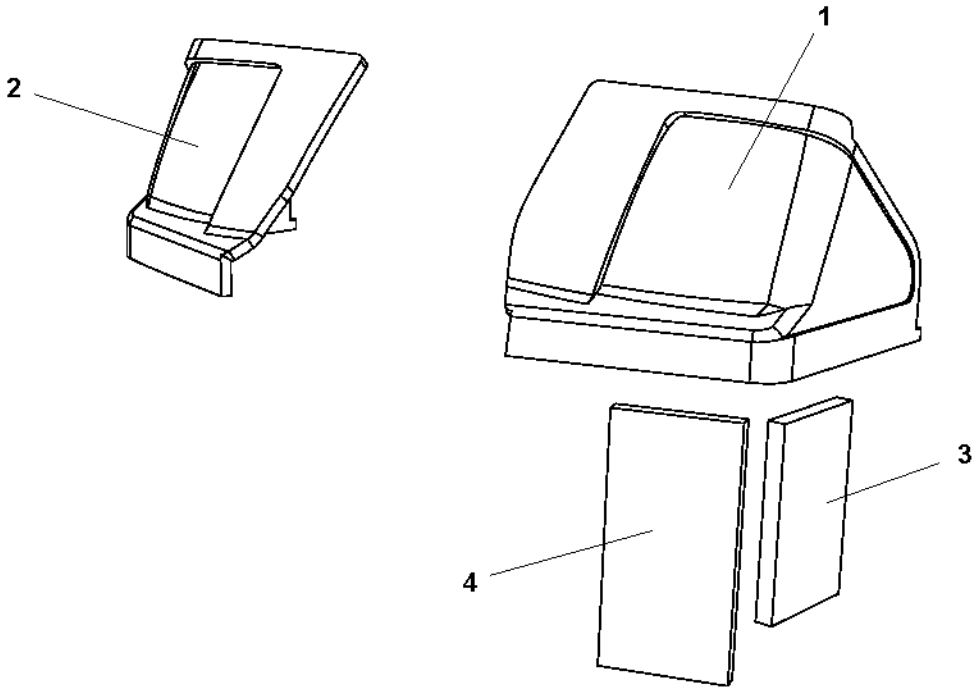

Noise suppression, covers

Item	Part No	Rem	Qty	Description	Code
1	4700394420		1	Sound absorbent	
2	4700396639		1	Sound absorbent	
3	4700396647		1	Sound absorbent	
4	4700396648		1	Sound absorbent	

Stabilizer module

397138A

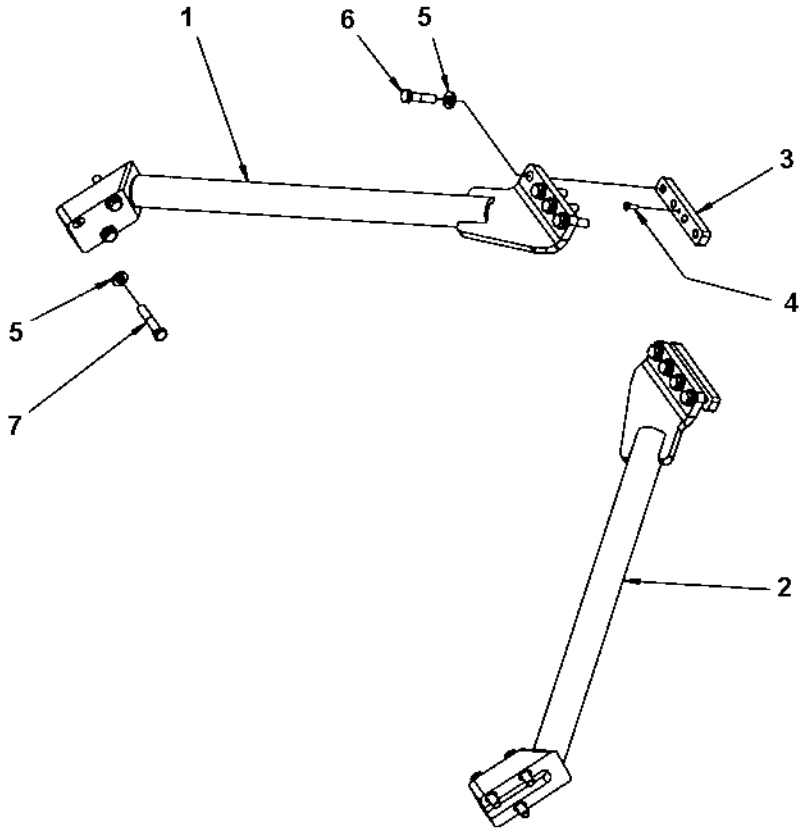

Stabilizer module

Item	Part No	Rem	Qty	Description		Code
1	4700396678		1	Support		
2	4700396679		1	Support		
3	4700396750		2	Bracket		
4	4700513012		2	Screw	M6x20 10,9	
5	4700904703		14	Washer		
6	4700500195		8	Screw		
7	4700500049		6	Screw		

Sprinkler system

18645

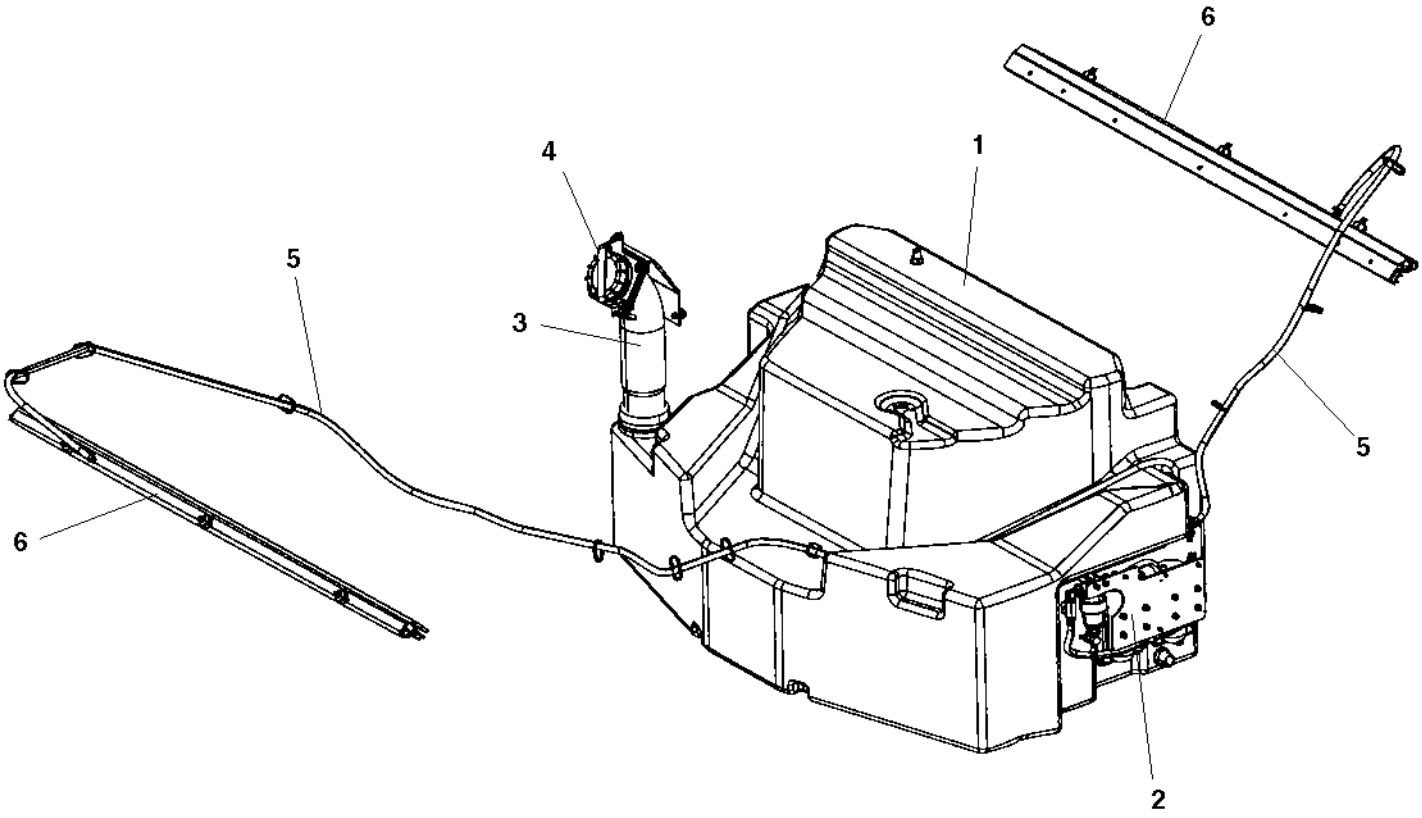

Sprinkler system

Item	Part No	Rem	Qty	Description	Code
1			1	Tank structure module (Page 28)	
2			1	Sprinkler pump module (Page 70)	
			1	Sprinkler pump, backup (Page 74)	
			1	Sprinkler pump, additonal sprinkler (Page 76)	
3			1	Filling pipe module (Page 80)	
4			1	Locking device module (Page 84)	
5			1	Water hoses (Page 86)	
6			2	Scraper module, with nozzles (Page 112)	

Sprinkler pump module

396722

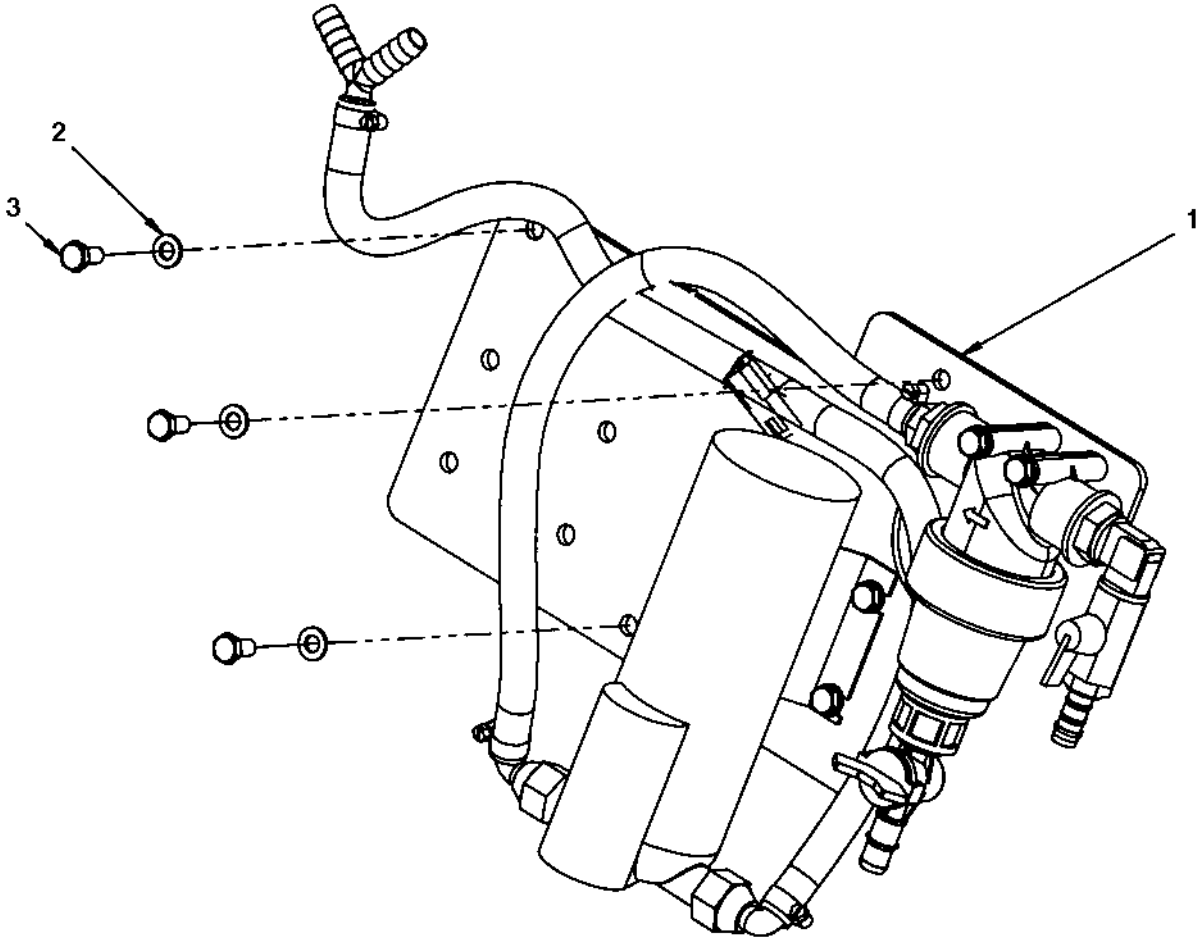

Sprinkler pump module

Item	Part No	Rem	Qty	Description		Code
1			1	Sprinkler pump (Page 72)		
2	4700904229		3	Washer	8,4x16x1,5	
3	4700500019		3	Screw	M8x16H 8.8 A2K	

Sprinkler pump

391971D

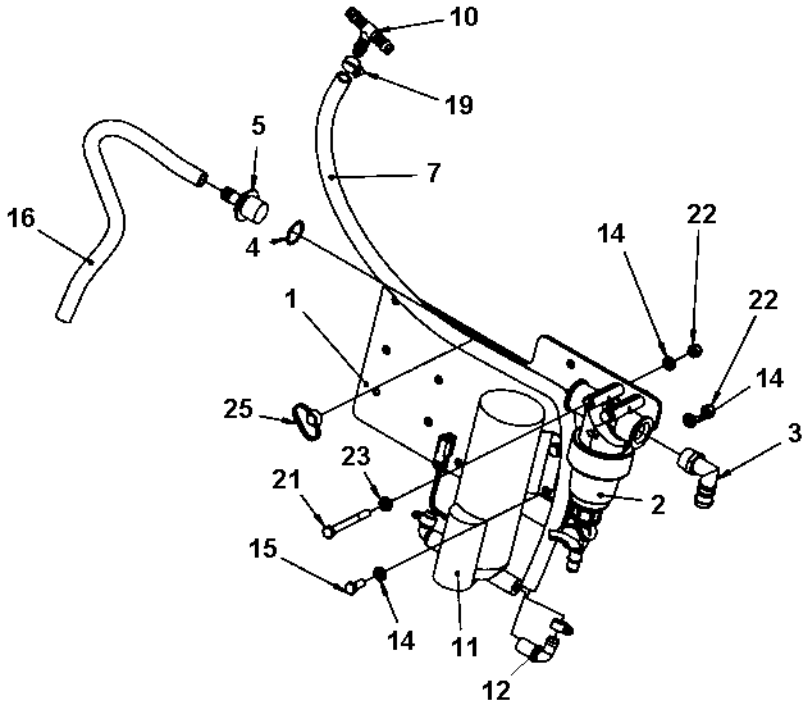

Sprinkler pump

Item	Part No	Rem	Qty	Description		Code
1	4700390400		1	Sprinkler plate		
2	4700791950		1	Water strainer, cpl		
	4700791959		1	.O-ring		
	4700791949		1	.Filter element		B
	4700791568		1	.Gasket		
	4700379009		1	.Valve		
3	4700792777		1	Hose connection		
4	4700160313		1	O-ring		
5	4700396672		1	Hose connection, plastic		
7	4700904878	B	1XL	Hose reinforced		
10	4700923735		1	Hose connection		
11	4700391495		1	Sprinkler pump		
	4812110358		1	Sprinkler pump		
12	4700393765		2	.Hose connection		
14	4700904229		10	Washer	8,4x16x1,5	
15	4700500053		4	Screw	M8x20H 8.8	
16	4700904878	A	1XL	Hose reinforced		
19	4700313001		4	Hose clamp		
21	4700500090		2	Screw		
22	4700586003		6	Lock nut	M8	
23	4700904556		2	Washer	8,4x16x3,0	
25	4700792441		1	Cable tie with holder		

A) L=0.70 m
B) L=0.92 m

Sprinkler pump, backup

391617B

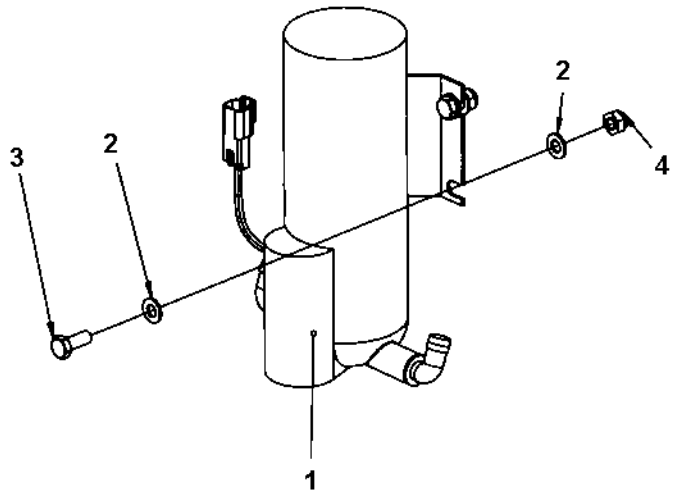

Sprinkler pump, backup

Item	Part No	Rem	Qty	Description		Code
1	4700391495		1	Sprinkler pump		
	4812110358		1	Sprinkler pump		
2	4700904229		8	Washer	8,4x16x1,5	
3	4700500053		4	Screw	M8x20H 8.8	
4	4700791182		4	Lock nut	M8	

Sprinkler pump, additonal sprinkler

396663

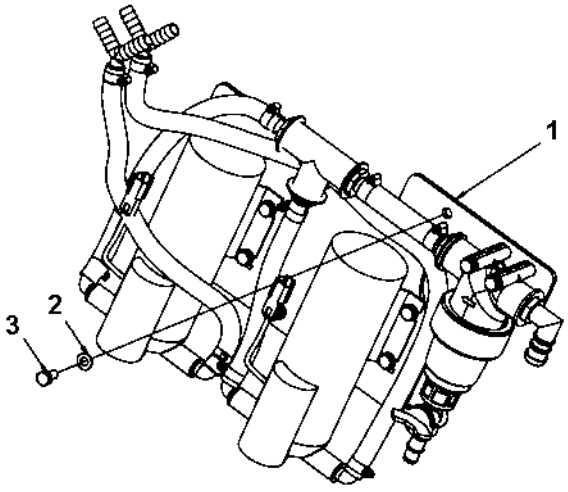

Sprinkler pump, additonal sprinkler

Item	Part No	Rem	Qty	Description		Code
1			1	Sprinkler pump mount (Page 78)		
2	4700904229		3	Washer	8,4x16x1,5	
3	4700500019		3	Screw	M8x16H 8.8 A2K	

Sprinkler pump mount

396664A

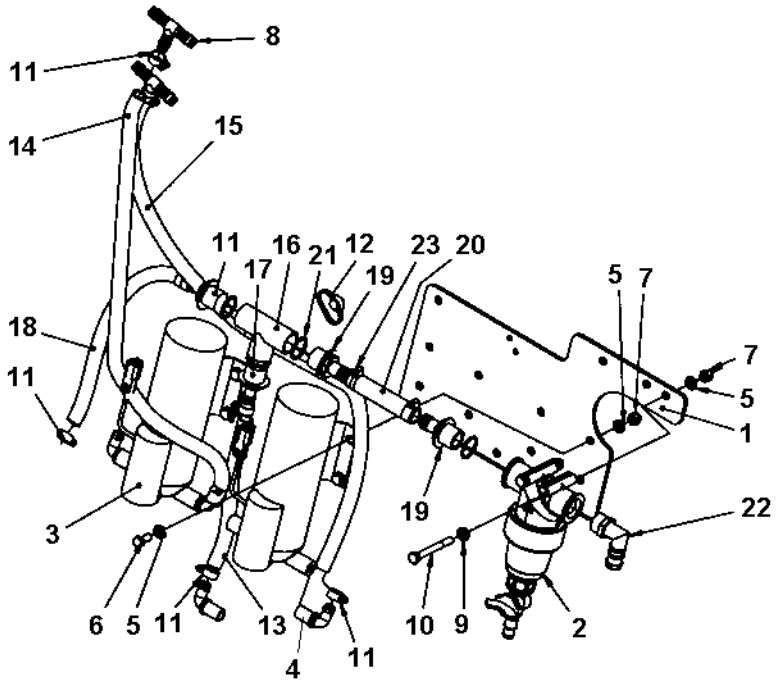

Sprinkler pump mount

Item	Part No	Rem	Qty	Description		Code
1	4700390400		1	Sprinkler plate		
2	4700791950		1	Water strainer, cpl		
	4700791959		1	.O-ring		
	4700791949		1	.Filter element		B
	4700791568		1	.Gasket		
	4700379009		1	.Valve		
3	4700391495		2	Sprinkler pump		
	4812110358		2	Sprinkler pump		
4	4700393765		4	.Hose connection		
5	4700904229		18	Washer	8,4x16x1,5	
6	4700500053		8	Screw	M8x20H 8.8	
7	4700586003		10	Lock nut	M8	
8	4700923735		2	Hose connection		
9	4700904556		2	Washer	8,4x16x3,0	
10	4700500090		2	Screw		
11	4700313001		8	Hose clamp		
12	4700792441		N	Cable tie with holder		
13	4700904878	A	1XL	Hose reinforced		
14	4700904878	B	1XL	Hose reinforced		
15	4700904878	C	1XL	Hose reinforced		
16	4700792778		1	Tee-connector		
17	4700396672		2	Hose connection, plastic		
18	4700904878	D	1XL	Hose reinforced		
19	4700396673		2	Hose connection		
20	4700792073	E	1XL	Hose reinforced		D
21	4700160313		4	O-ring		
22	4700792777		4	Hose connection		
23	4700313003		2	Hose clamp		D

A) L=0.20 m
B) L=0.73 m
C) L=0.96 m
D) L=0.31 m
E) L=0.10 m

Filling pipe module

391627

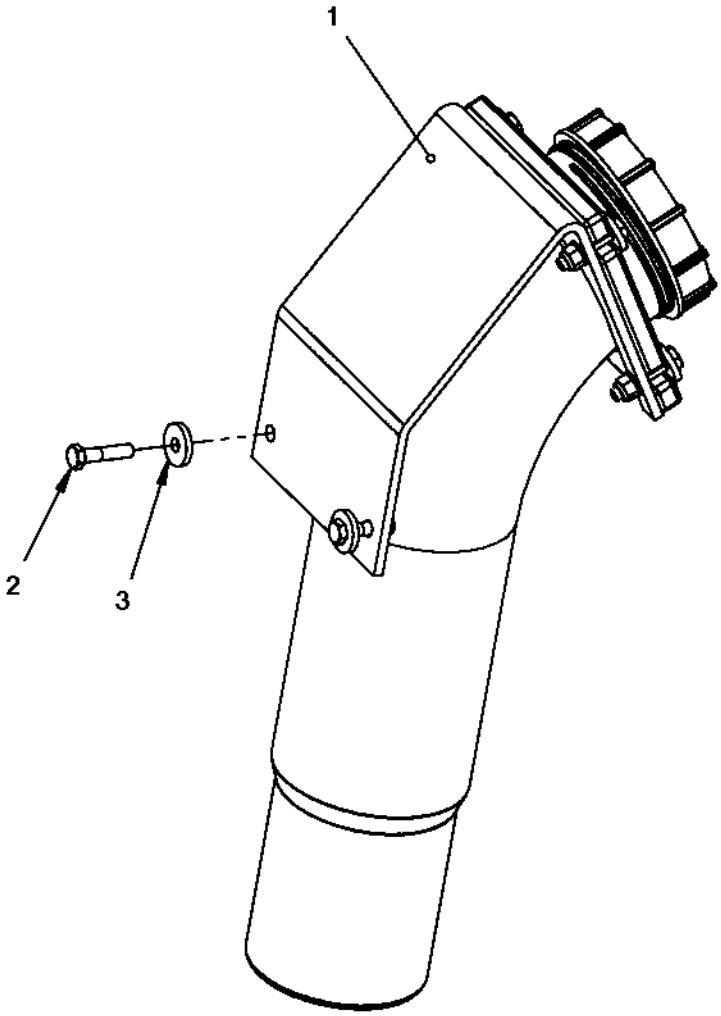

Filling pipe module

Item	Part No	Rem	Qty	Description		Code
1			1	Filling pipe (Page 82)		
2	4700500047		2	Screw		
3	4700904734		2	Washer	8,4x26x4	

Filling pipe

392098A

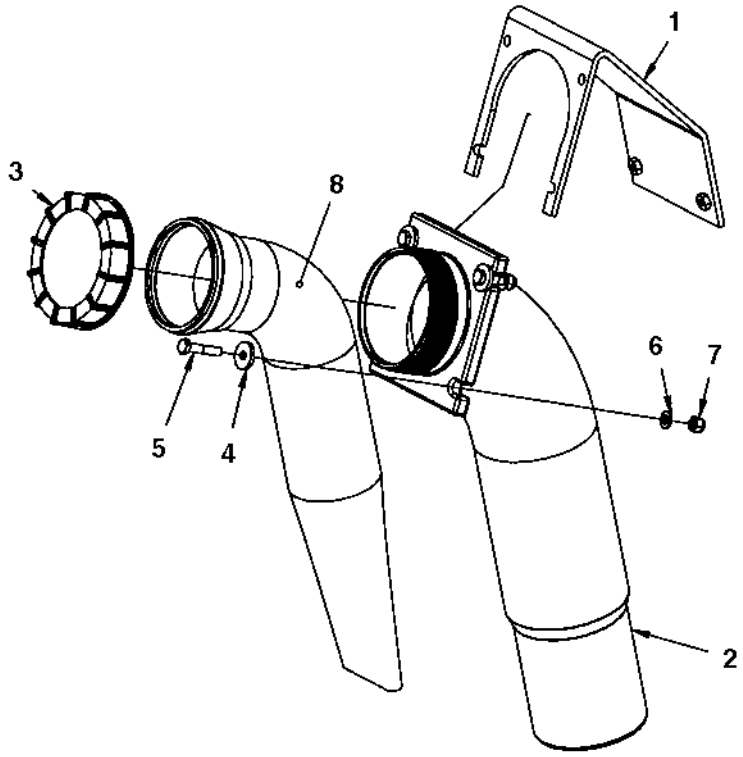

Filling pipe

Item	Part No	Rem	Qty	Description		Code
1	4700391626		1	Bracket		
2	4700390613		1	Filling pipe		
3	4700920819		1	Filler cap		D
4	4700904734		4	Washer	8,4x26x4	
5	4700500023		4	Screw	M8-1,25x40 8,8	
6	4700904229		4	Washer	8,4x16x1,5	
7	4700586003		4	Lock nut	M8	
8	4700391444		1	Strainer		

Locking device module

394928A

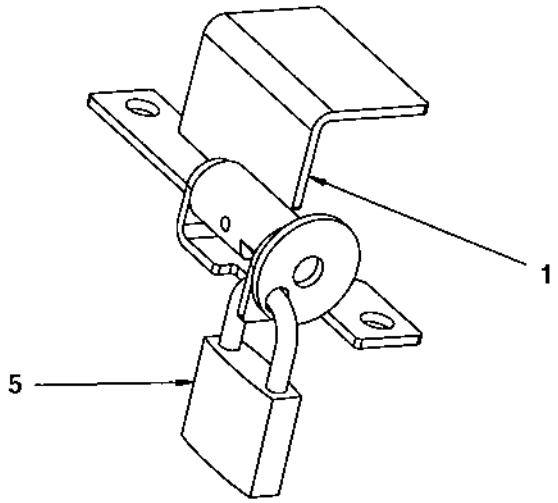

Locking device module

Item	Part No	Rem	Qty	Description	Code
1			1	Locking device	
	4700394587		1	.Bracket	
	4700394591		1	.Shaft	
	4700394590		1	.Lock bracket	
	4700629008		1	.Spring pin	
5	4700358881		1	Pad lock	

Water hoses

396541_1

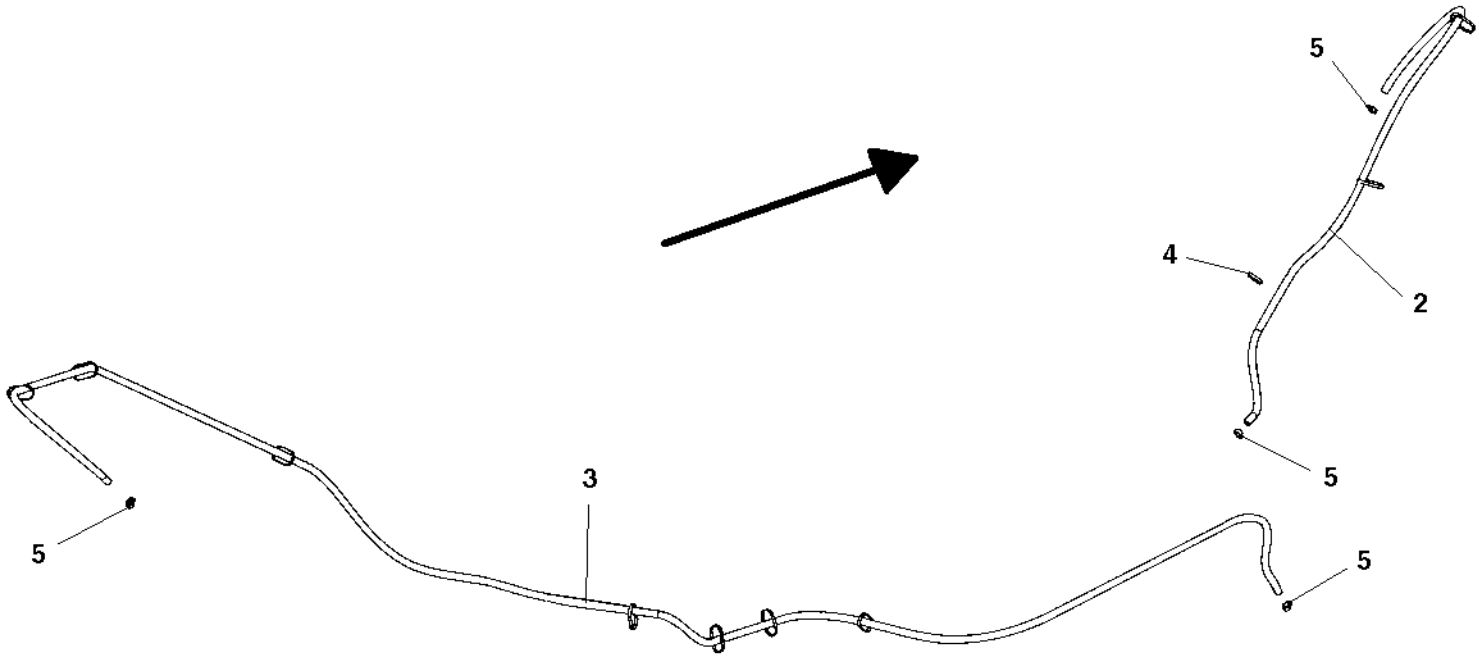

Water hoses

Item	Part No	Rem	Qty	Description	Code
2	4700904878	B	1XL	Hose reinforced	
3	4700904878	C	1XL	Hose reinforced	
4	4700313102		N	Cable ties	
5	4700313001		6	Hose clamp	

B) L=1.7 m
C) L=4.3 m, machine with offset L=4.0 m

End frame, front

CC224100100010

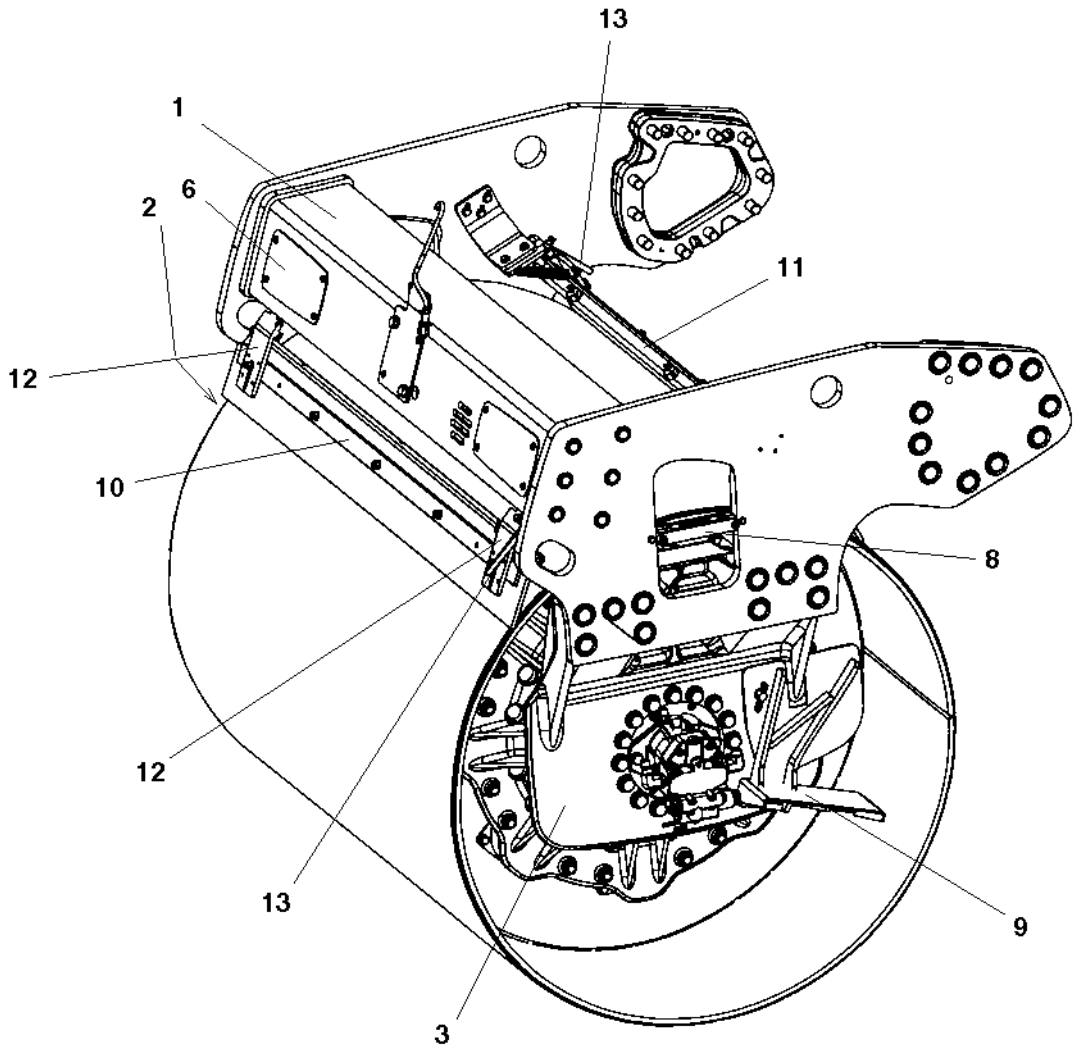

End frame, front

Item	Part No	Rem	Qty	Description	Code
1			1	End frame, front (Page 90)	
2			1	Fork, vibration side (Page 94)	
3			1	Fork, propulsion side (Page 96)	
6			2	Cover plate (Page 98)	
8			1	Hose clamp, propulsion side (Page 100)	
			1	Hose clamp, vibration side (Page 102)	
9			1	Step, vibration side (Page 104)	
10			1	Scraper module, without nozzles (Page 108)	
11			1	Scraper module, with nozzles (Page 112)	
12	4700394340		2	Scraper bracket, cpl (Page 116)	
13			2	Grab handle, release (Page 118)	
14			1	Grab handle, lift (Page 120)	
15			1	Eyelet module (Page 122)	

End frame, front

393105A

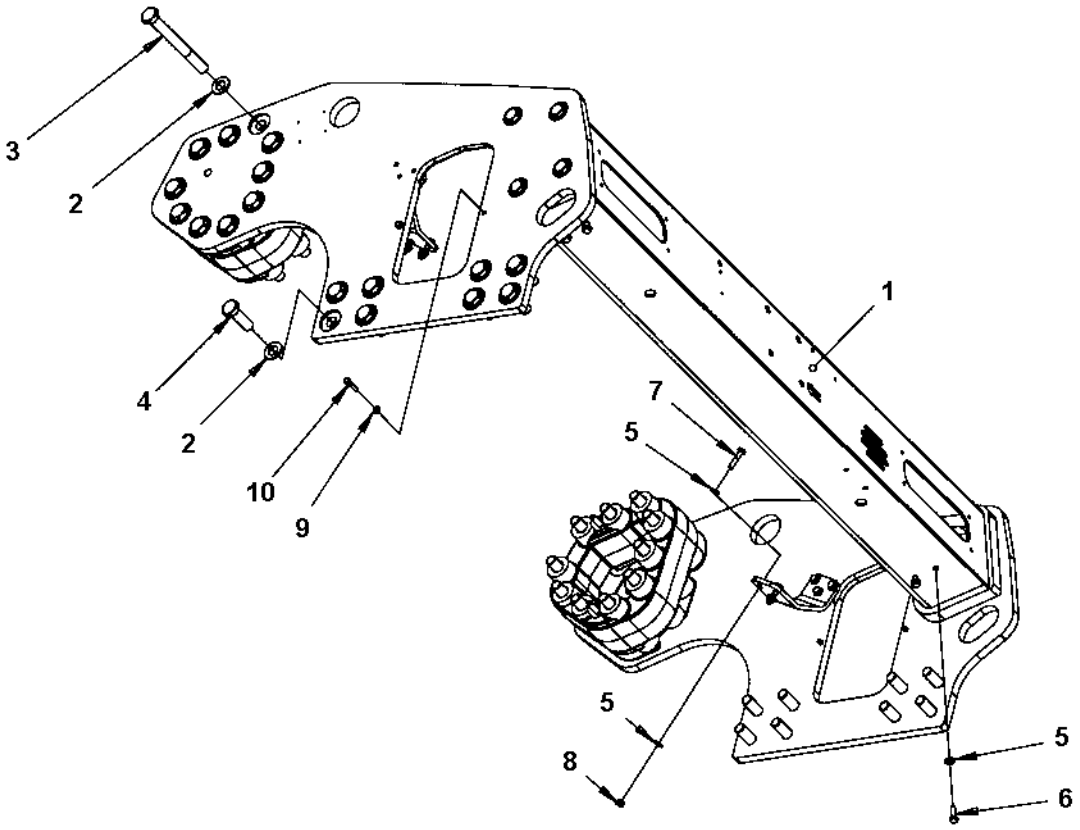

End frame, front

Item	Part No	Rem	Qty	Description		Code
1			1	Frame assy (Page 92)		
2	4700904234		36	Washer	25x45x4	
3	4700792546		20	Hexagon head screw m		
4	4700500289		16	Screw		
5	4700904230		12	Washer		
6	4700500030		4	Screw		
7	4700500161		4	Screw		
8	4700791172		4	Lock nut		
9	4700904556		4	Washer	8,4x16x3,0	
10	4700500047		4	Screw		

Frame assy

393103A

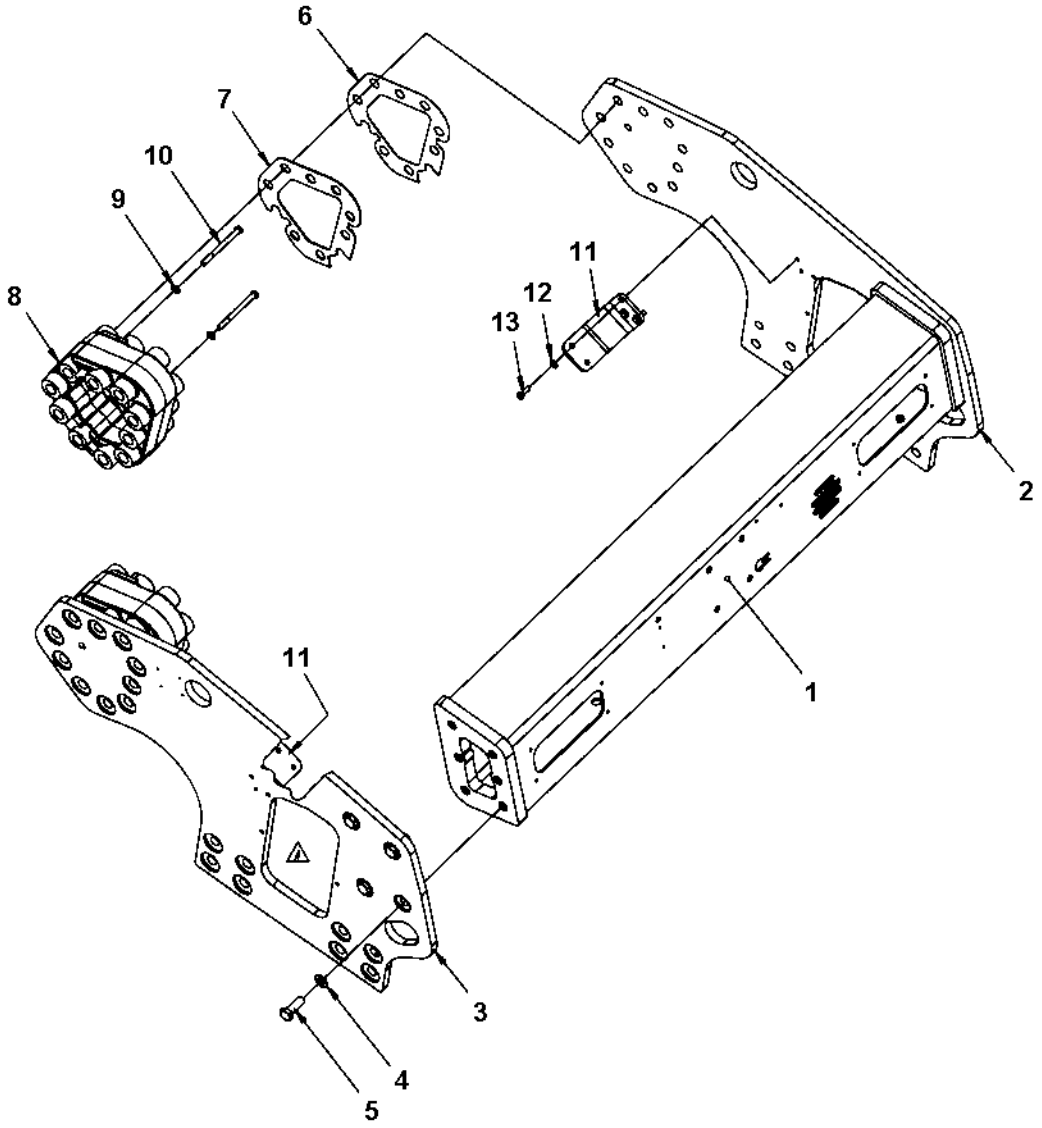

Frame assy

Item	Part No	Rem	Qty	Description		Code
1	4700390060		1	Cross beam		
2	4700393100		1	Side plate		
3	4700393101		1	Side plate		
4	4700904233		8	Washer	21x36x3	
5	4700500265		8	Screw		
6	4700392916		0	Shim		
7	4700392917		0	Shim		
8	4700392877		2	Spacer		
9	4700904231		4	Washer	13x24x2 300 HV	
10	4700500225		4	Hexagon head screw m		
11	4700394787		2	Holder		
12	4700904230		6	Washer		
13	4700500029		6	Screw		

Fork, vibration side

390112

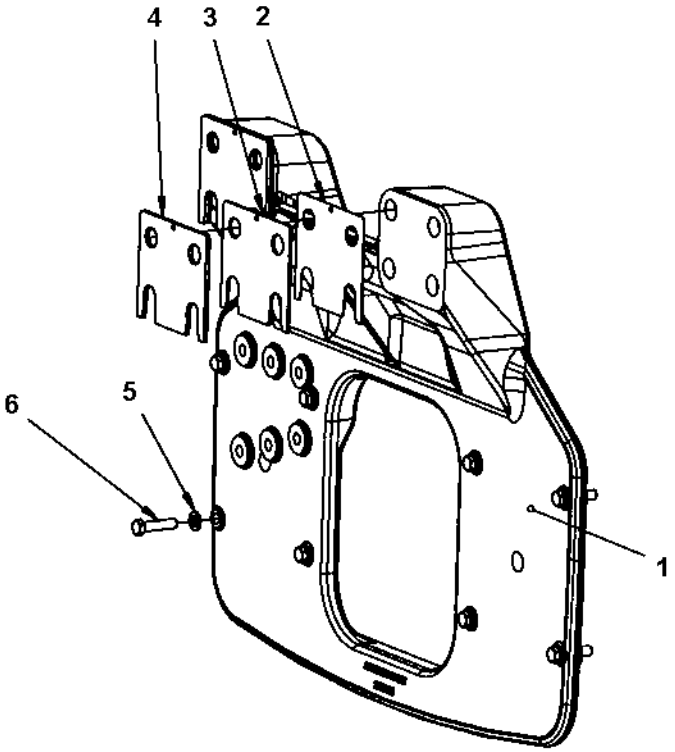

Fork, vibration side

Item	Part No	Rem	Qty	Description	Code
1	4700393195		1	Fork	
2	4700393628		0	Shim	
3	4700393629		0	Shim	
4	4700393630		0	Shim	
5	4700904231		8	Washer	13x24x2 300 HV
6	4700500269		8	Screw	

Fork, propulsion side

390111

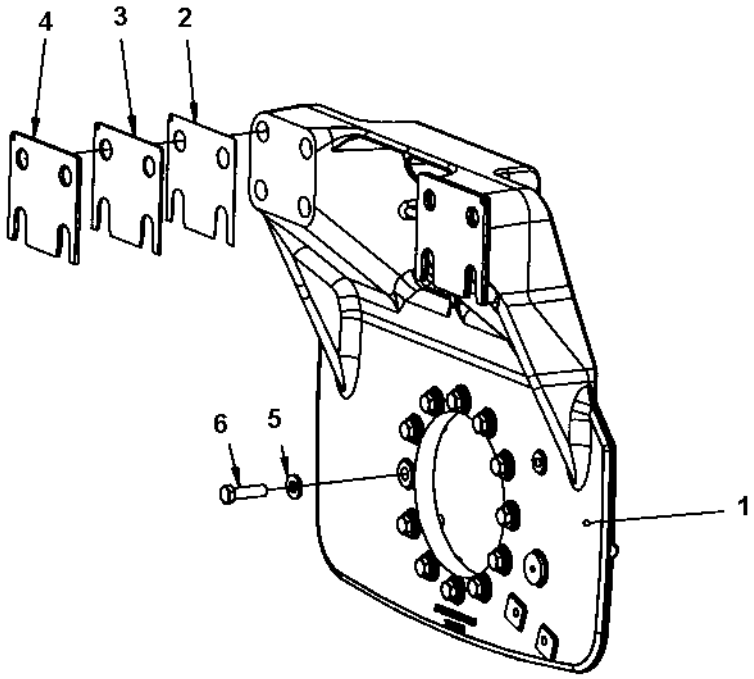

Fork, propulsion side

Item	Part No	Rem	Qty	Description	Code
1	4700393193		1	Fork	
2	4700393628		0	Shim	
3	4700393629		0	Shim	
4	4700393630		0	Shim	
5	4700904214		12	Washer	
6	4700928371		12	Screw	

Cover plate

391642

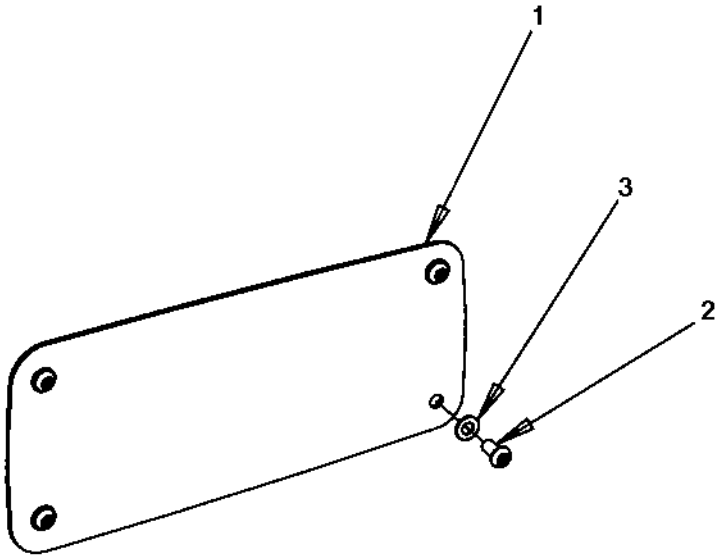

Cover plate

Item	Part No	Rem	Qty	Description	Code
1	4700390919		1	Cover plate	
2	4700904956		4	Screw	
3	4700904229		4	Washer 8,4x16x1,5	

Hose clamp, propulsion side

395424B

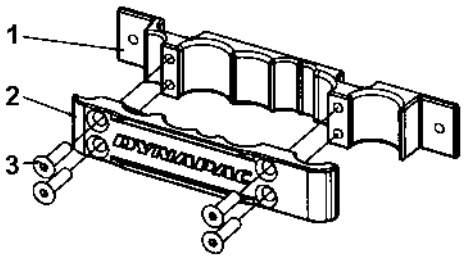

Hose clamp, propulsion side

Item	Part No	Rem	Qty	Description	Code
1	4700395428		1	Hose clamp	
2	4700395429		1	Cover	
3	4700792726		4	Hexagon socket countersunk screw	

Hose clamp, vibration side

395424B

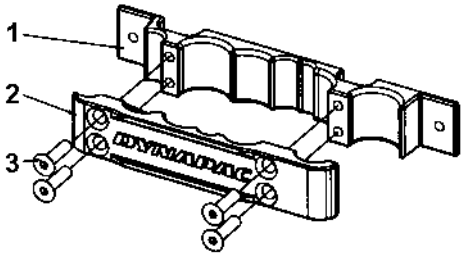

Hose clamp, vibration side

Item	Part No	Rem	Qty	Description	Code
1	4700395428		1	Hose clamp	
2	4700395430		1	Cover	
3	4700792726		4	Hexagon socket countersunk screw	

Step, vibration side

394352

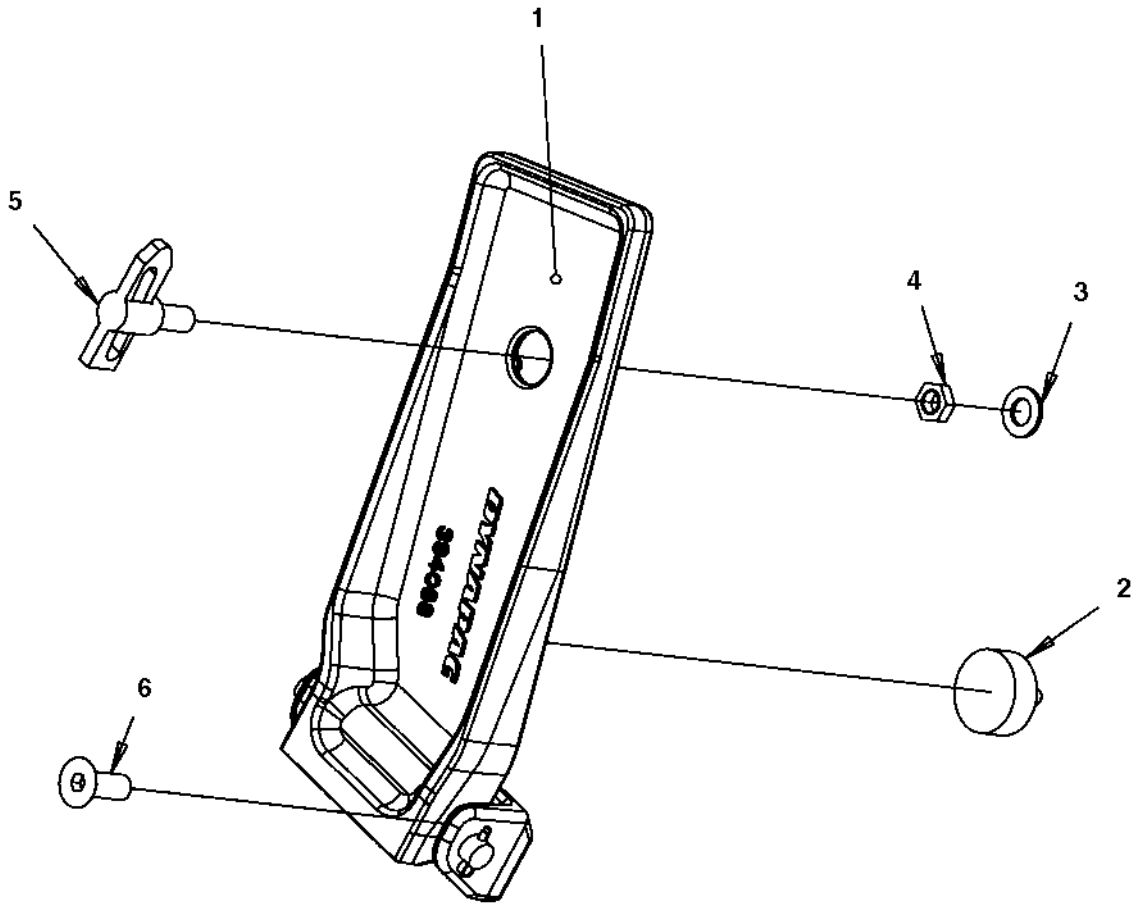

Step, vibration side

Item	Part No	Rem	Qty	Description		Code
1			1	Step (Page 106)		
2	4700792601		1	Shock absorber		
3	4700904231		1	Washer	13x24x2 300 HV	
4	4700927233		1	Nut		
5	4700475064		1	Lock		
6	4700513011		2	Hexagon socket head cap screw		

Step

394353

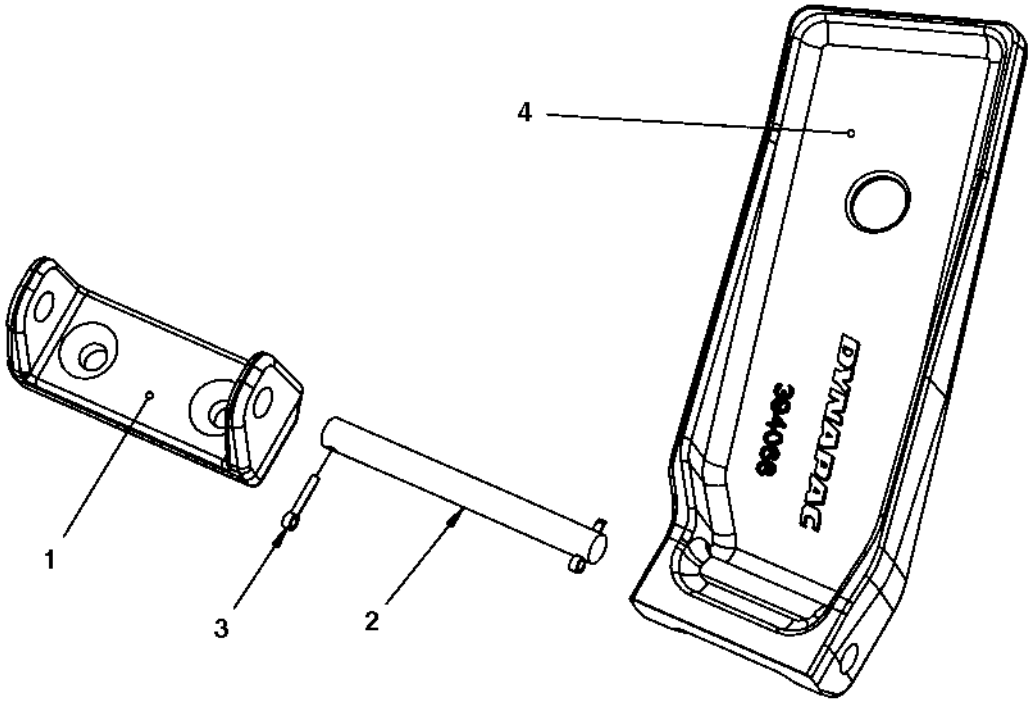

Step

Item	Part No	Rem	Qty	Description	Code
1	4700394070		1	Bracket	
2	4700394351		1	Shaft	
3	4700630012		2	Cotter pin	
4	4700394068		1	Step	

Scraper module, without nozzles

391226B

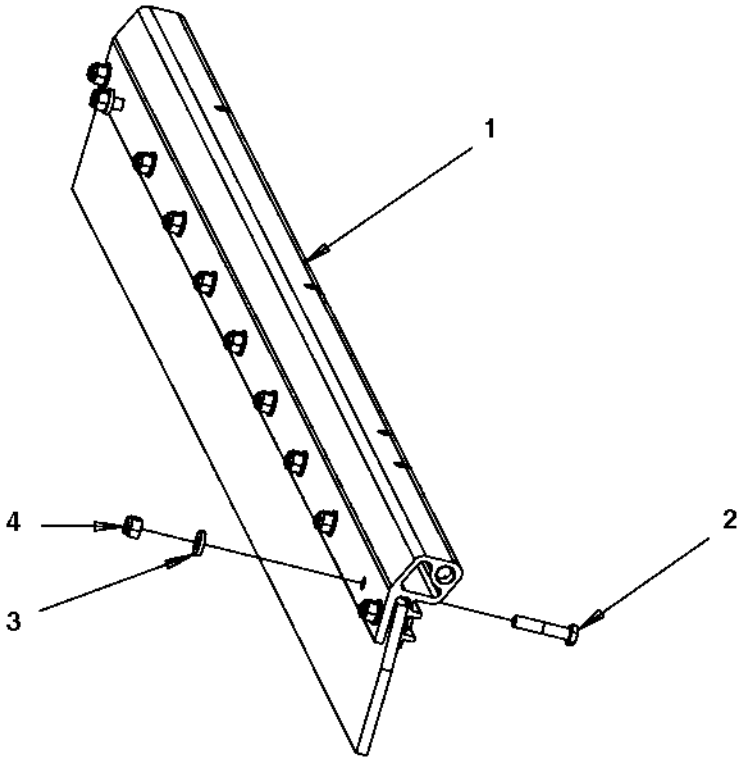

Scraper module, without nozzles

Item	Part No	Rem	Qty	Description	Code
1			1	Scraper assy (Page 110)	
2	4700500091		2	Screw	
3	4700904557		2	Washer	
4	4700586018		2	Lock nut	

Scraper assy

395249A

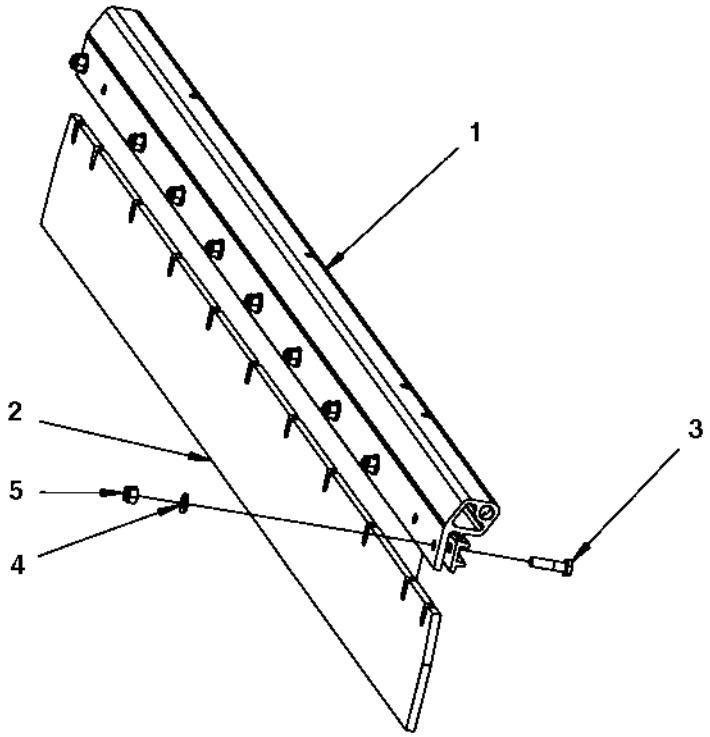

Scraper assy

Item	Part No	Rem	Qty	Description	Code
1	4700395111		1	Sprinkler pipe	
2	4700395112		1	Scraper blade	
3	4700500031		9	Screw	
4	4700904230		9	Washer	
5	4700586018		9	Lock nut	

Scraper module, with nozzles

391227D

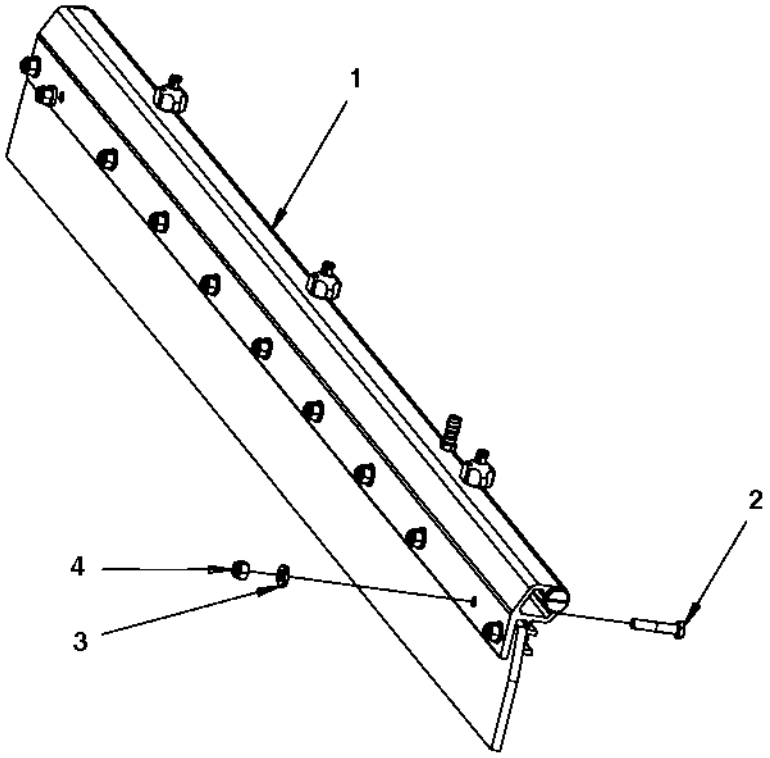

Scraper module, with nozzles

Item	Part No	Rem	Qty	Description	Code
1			1	Scraper assy with nozzles (Page 114)	
2	4700500091		2	Screw	
3	4700904557		2	Washer	
4	4700586018		2	Lock nut	

Scraper assy with nozzles

395250A

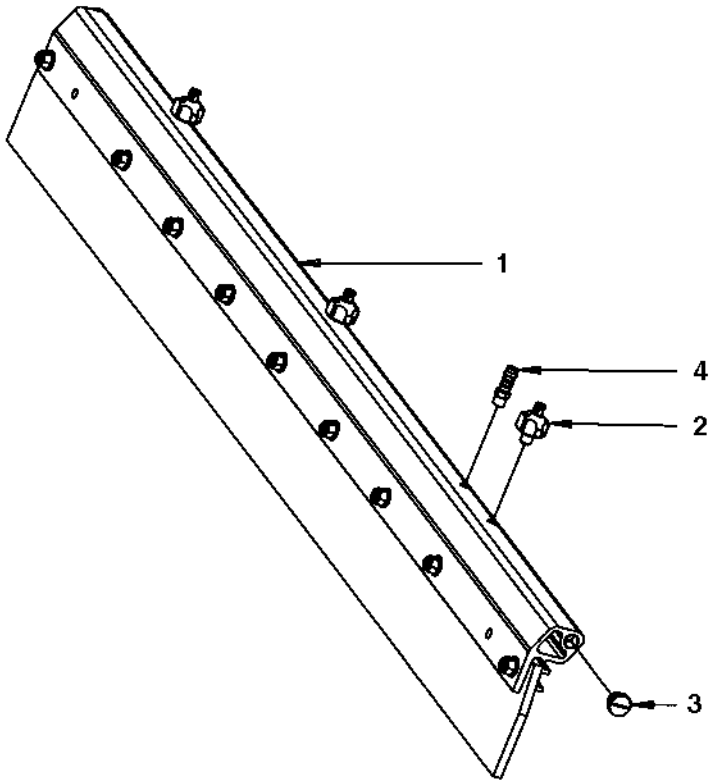

Scraper assy with nozzles

Item	Part No	Rem	Qty	Description	Code
1			1	Scraper assy (Page 110)	
2	4700392011		3	Spraying nozzle, cpl	
	4700392509		1	.Retainer, nozzle, strainer, yellow	0.8
	4700393697		1	..Nozzle and strainer, yellow	0.8
	4700390615	A	1	..Nozzle and strainer, blue	1.0
	4700390616	A	1	..Nozzle and strainer, red	1.2
	4700390619	A	1	..Nozzle and strainer, brown	1.3
3	4700792072		2	End plug	
4	4700791977		1	Hose connection	

A) Option

4700394340 Scraper bracket, cpl

394340

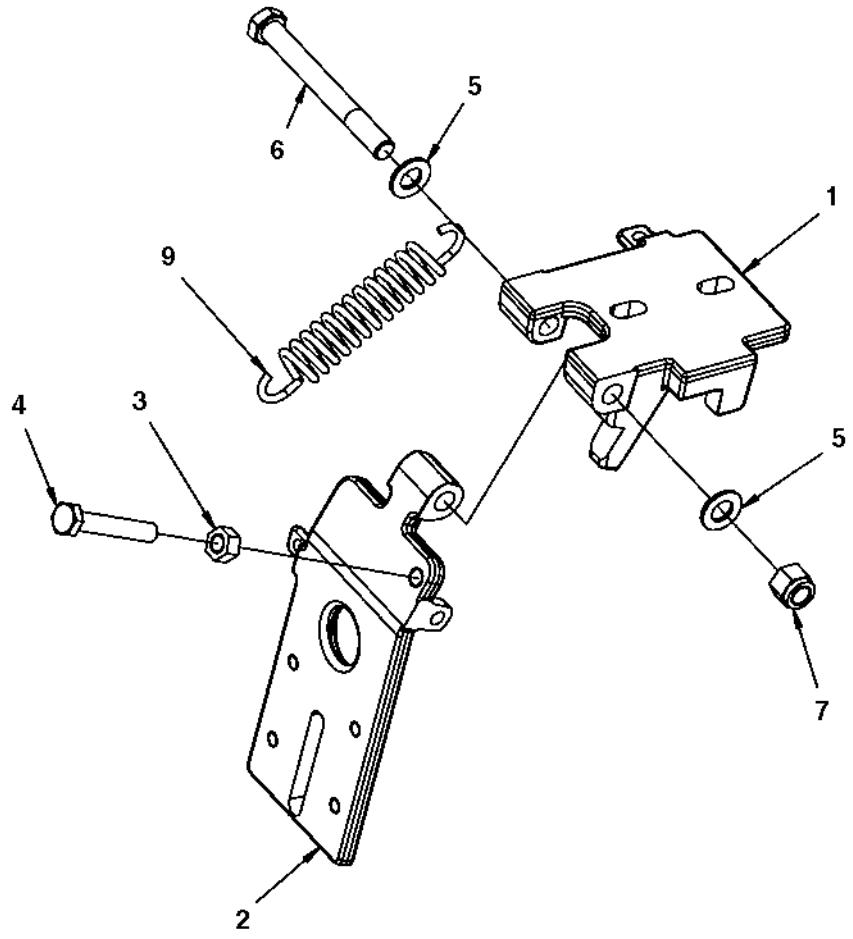

4700394340 Scraper bracket, cpl

Item	Part No	Rem	Qty	Description		Code
1			1	Scraper bracket		
2			1	Scraper bracket		
3	4700570006		1	Nut		
4	4700500105		1	Hexagon screw		
5	4700904231		2	Washer	13x24x2 300 HV	
6	4700500198		1	Screw		
7	4700586019		1	Lock nut		
9	4700394806		1	Extension spring		

Grab handle, release

393551

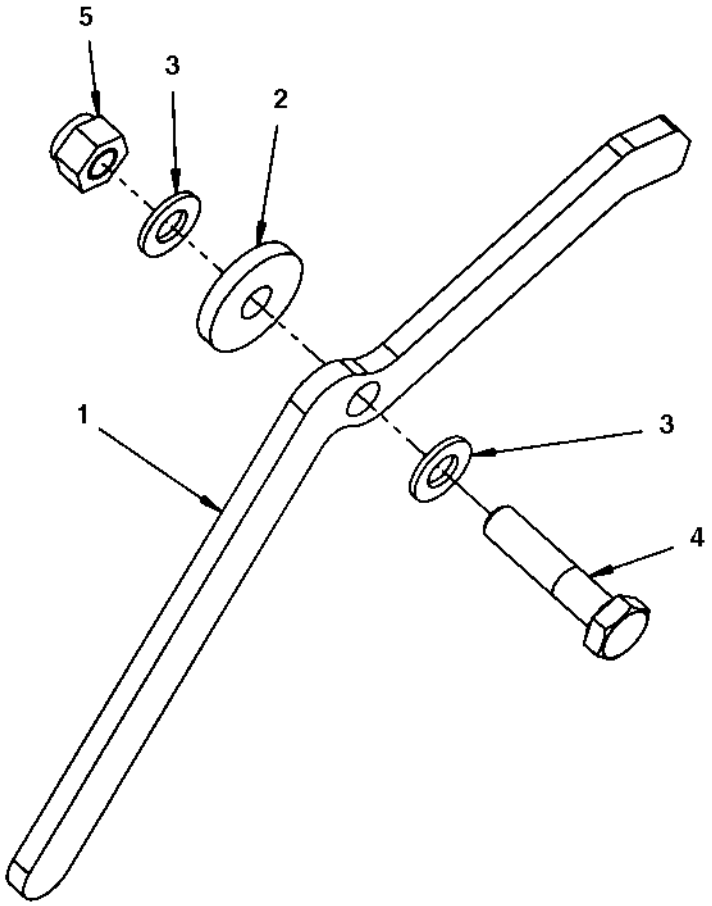

Grab handle, release

Item	Part No	Rem	Qty	Description		Code
1	4700393550		1	Grab handle		
2	4700904734		1	Washer	8,4x26x4	
3	4700904229		2	Washer	8,4x16x1,5	
4	4700500047		1	Screw		
5	4700586003		1	Lock nut	M8	

Grab handle, lift

393486

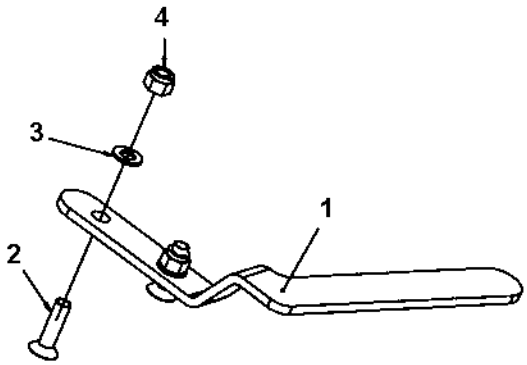

Grab handle, lift

Item	Part No	Rem	Qty	Description		Code
1	4700395390		1	Grab handle		
2	4700792540		2	Screw		
3	4700904229		2	Washer	8,4x16x1,5	
4	4700586003		2	Lock nut	M8	

Eyelet module

392464

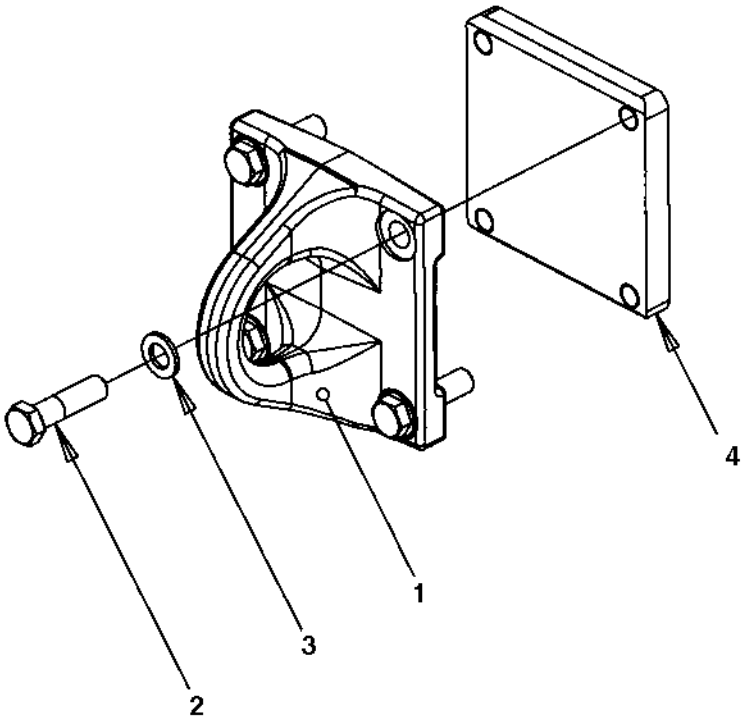

Eyelet module

Item	Part No	Rem	Qty	Description	Code
1	4700390080		1	Eyelet	
2	4700500134		4	Screw	
3	4700904232		4	Washer	
4	4700390072		1	Holder plate	

End frame, rear

CC224100100020

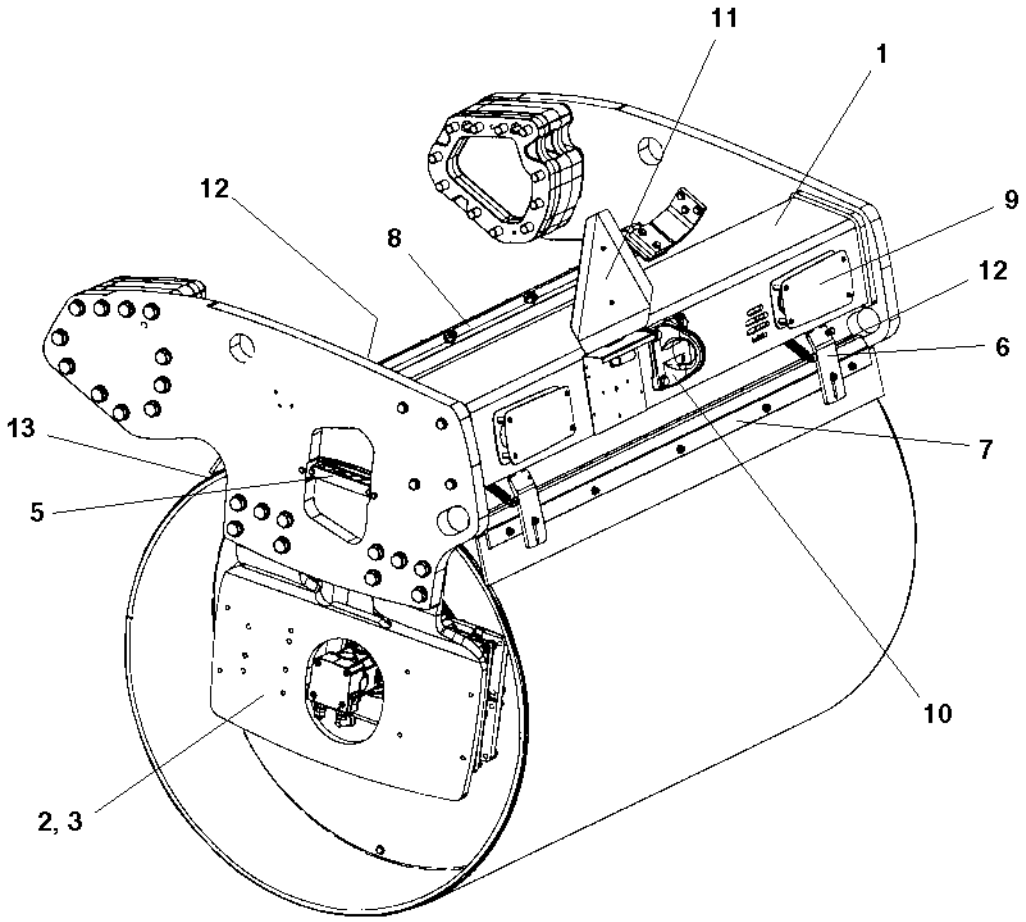

End frame, rear

Item	Part No	Rem	Qty	Description	Code
1			1	End frame, rear (Page 126)	
			1	End frame, rear offset (Page 128)	
2			1	Fork, vibration side (Page 94)	
3			1	Fork, propulsion side (Page 96)	
4			1	Step, vibration side (Page 104)	
5			1	Hose clamp, propulsion side (Page 100)	
			1	Hose clamp, vibration side (Page 102)	
6	4700394340		2	Scraper bracket, cpl (Page 116)	
7			1	Scraper module, without nozzles (Page 108)	
8			1	Scraper module, with nozzles (Page 112)	
9			2	Cover plate (Page 98)	
10			1	Eyelet module (Page 122)	
11			1	SMV-sign module (Page 136)	
12			2	Grab handle, release (Page 118)	
13			1	Grab handle, lift (Page 120)	
			1	Grab handle, lift offset (Page 140)	

End frame, rear

393105A

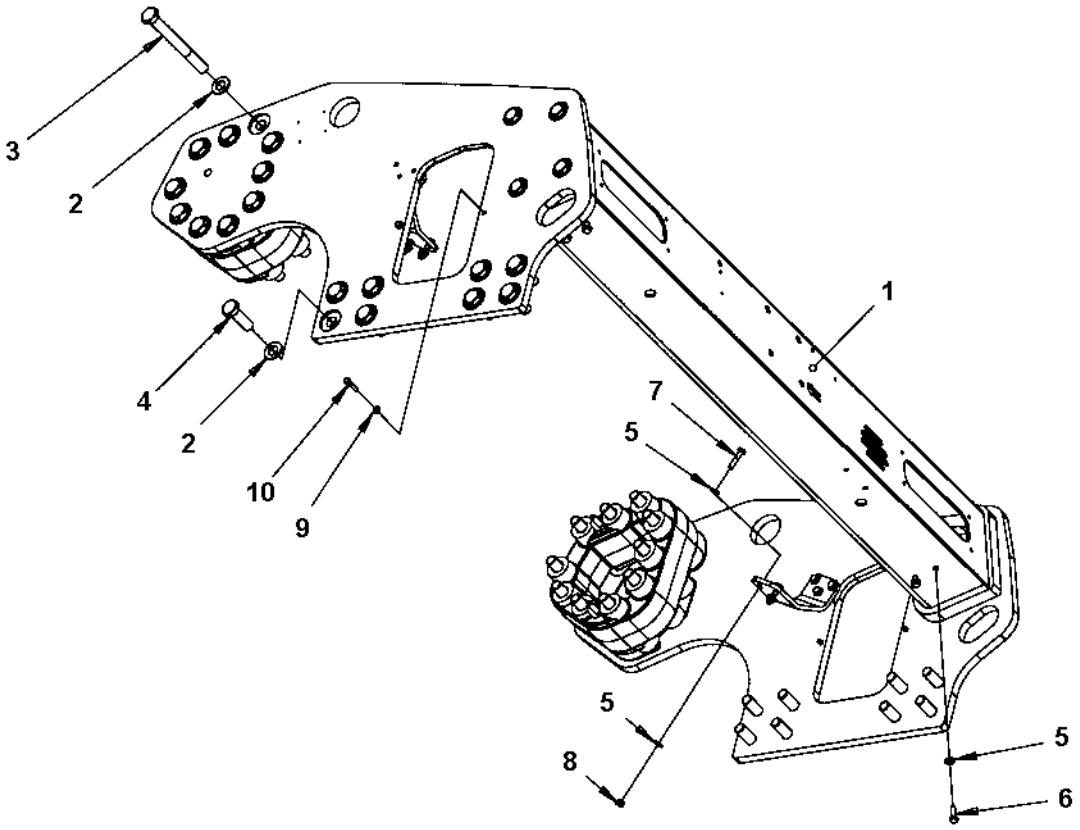

End frame, rear

Item	Part No	Rem	Qty	Description		Code
1			1	Frame assy (Page 92)		
2	4700904234		36	Washer	25x45x4	
3	4700792546		20	Hexagon head screw m		
4	4700500289		16	Screw		
5	4700904230		12	Washer		
6	4700500030		4	Screw		
7	4700500161		4	Screw		
8	4700791172		4	Lock nut		
9	4700904556		4	Washer	8,4x16x3,0	
10	4700500047		4	Screw		

End frame, rear offset

393131A

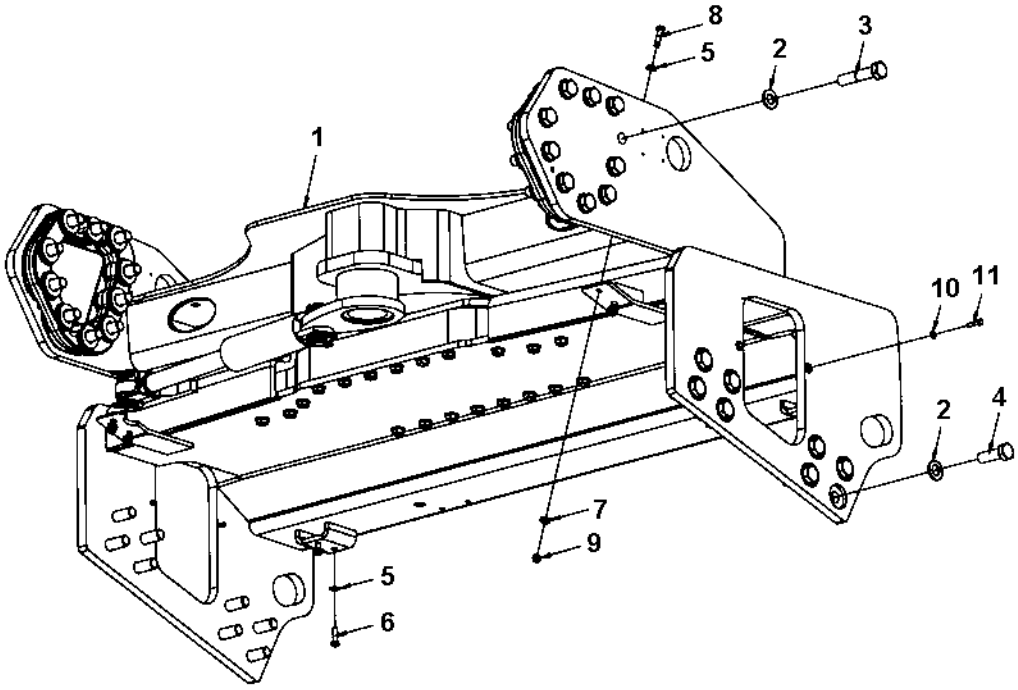

End frame, rear offset

Item	Part No	Rem	Qty	Description		Code
1			1	Frame (Page 130)		
2	4700904234		36	Washer	25x45x4	
3	4700500146		20	Screw	M24x110 8,8	
4	4700500289		16	Screw		
5	4700904230		8	Washer		
6	4700500030		4	Screw		
7	4700904557		4	Washer		
8	4700500161		4	Screw		
9	4700791172		4	Lock nut		
10	4700904556		4	Washer	8,4x16x3,0	
11	4700500047		4	Screw		

Frame

393288B

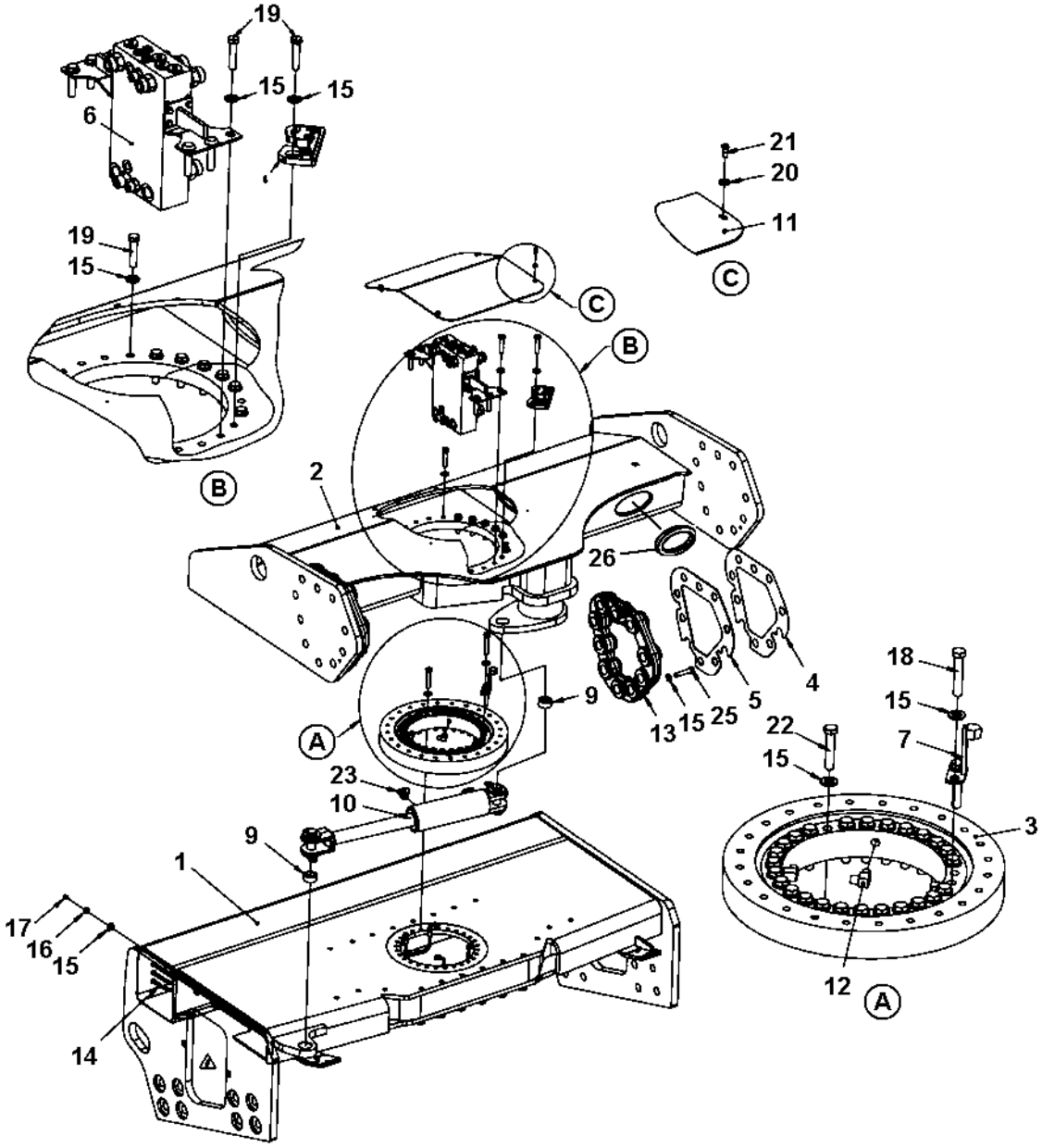

Frame

Item	Part No	Rem	Qty	Description		Code
1	4700393141		1	Yoke		
2	4700393132		1	Frame		
3	4700359192		1	Bearing		
4	4700392916		0	Shim		
5	4700392917		0	Shim		
6			1	Connection block (Page 132)		
7	4700395694		1	Cam		
8			1	Micro switch (Page 134)		
9	4700379630		2	Radial spherical plain bearing		
10	4700392531		1	Hydraulic cylinder		
11	4700379987		1	Cover		
12	4700373183		4	Elbow 90		
13	4700392843		2	Spacer		
14	4700393360		4	Hydraulic hose		
15	4700904231		60	Washer	13x24x2 300 HV	
16	4700903831		4	Nut		
17	4700926214		4	Grease fitting		D
18	4700947712		2	Screw		
19	4700925519		24	Screw	M12x55 10.9 GEOMET	
20	4700603001		4	Washer		
21	4700904206		4	Screw		
22	4700500175		26	Screw		
23	4700791398		2	Elbow 90, O-ring		
25	4700500049		4	Screw		
26	4700792051	A	2XL	Edge trim		

A) L= 0.35 m

Connection block

393269A

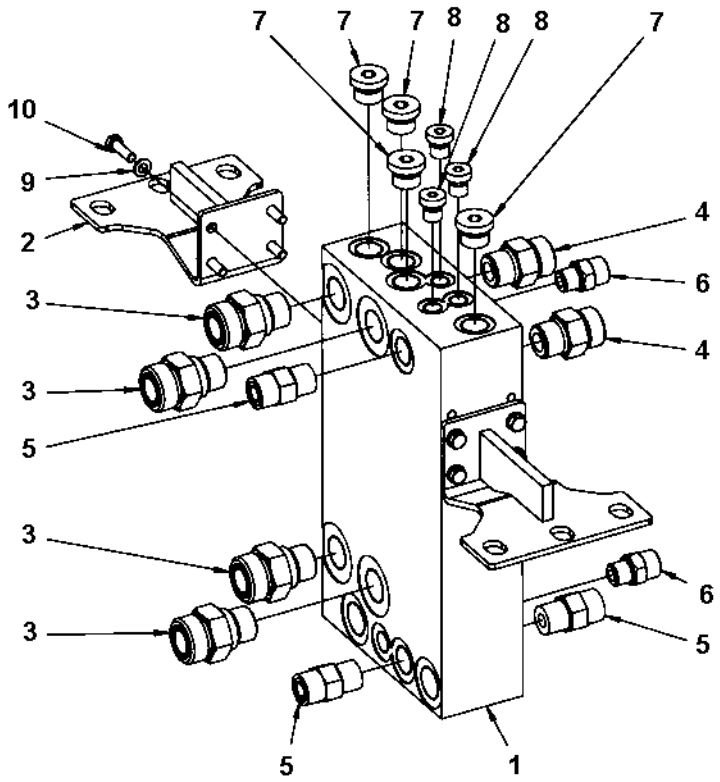

Connection block

Item	Part No	Rem	Qty	Description		Code
1	4700390463		1	Connection block		
2	4700391889		2	Bracket		
3	4700791539		4	Straight connector		
4	4700791743		2	Straight connector orfs		
5	4700791799		3	Straight connector orfs		
6	4700791409		2	Straight connector orfs		
7	4700792295		4	Steel plug		
8	4700904951		3	Plug		
9	4700904228		8	Washer		
10	4700500040		8	Screw	M6-1x20 8,8	

Micro switch

395695

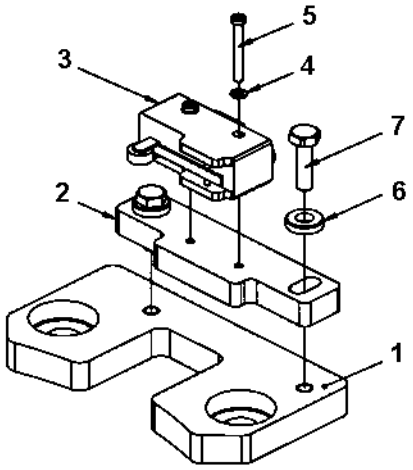

Micro switch

Item	Part No	Rem	Qty	Description		Code
1	4700396179		1	Bracket		
2	4700395696		1	Holder plate		
3	4700930046		1	Micro switch		D
4	4700904697		2	Washer	3,2x6x0,5	
5	4700533050		2	Screw		
6	4700603001		2	Washer		
7	4700500040		2	Screw	M6-1x20 8,8	

SMV-sign module

392289

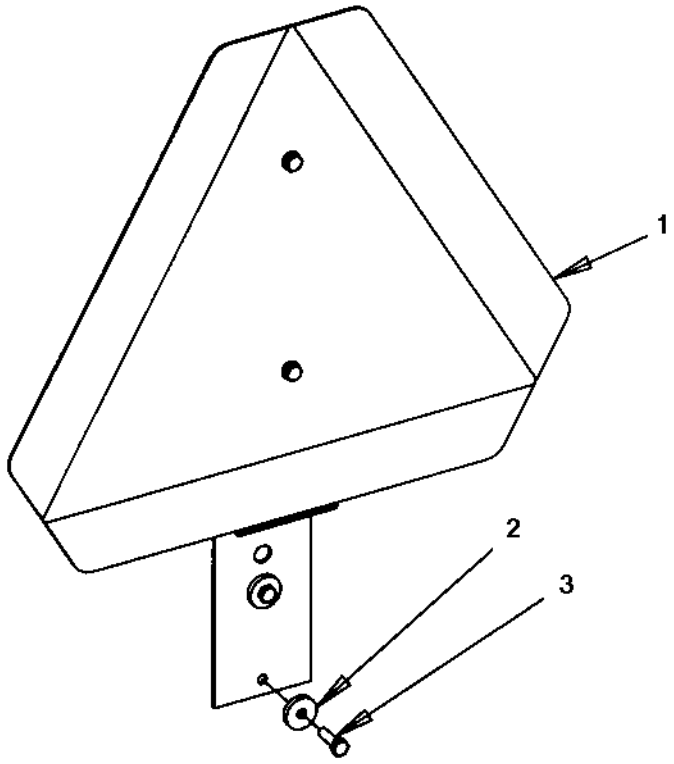

SMV-sign module

Item	Part No	Rem	Qty	Description	Code
1			1	SMV-sign (Page 138)	
2	4700904735		2	Washer	
3	4700500040		2	Screw M6-1x20 8,8	

SMV-sign

392290

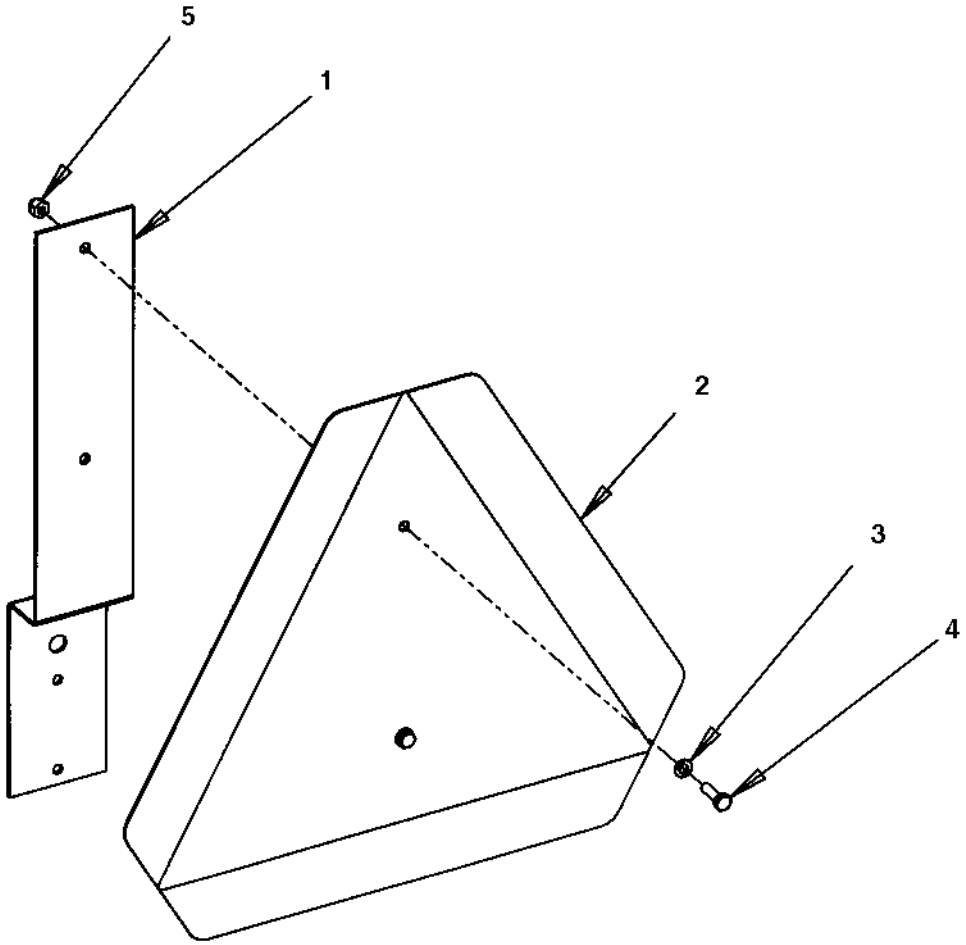

SMV-sign

Item	Part No	Rem	Qty	Description		Code
1	4700392291		1	Holder		
2	4700476019		1	SMV-sign		D
3	4700904228		2	Washer		
4	4700500040		2	Screw	M6-1x20 8,8	
5	4700586002		2	Lock nut		

Grab handle, lift offset

396052A

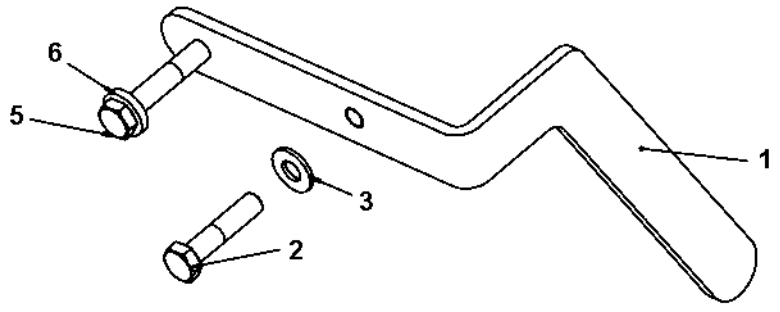

Grab handle, lift offset

Item	Part No	Rem	Qty	Description		Code
1	4700395412		1	Grab handle		
2	4700500161		1	Screw		
3	4700904230		1	Washer		
5	4700500033		1	Screw	M10-1,5x60 8,8	
6	4700904557		1	Washer		

Drum

Item	Part No	Rem	Qty	Description	Code
1			2	Drum (Page 144)	

Drum

18784

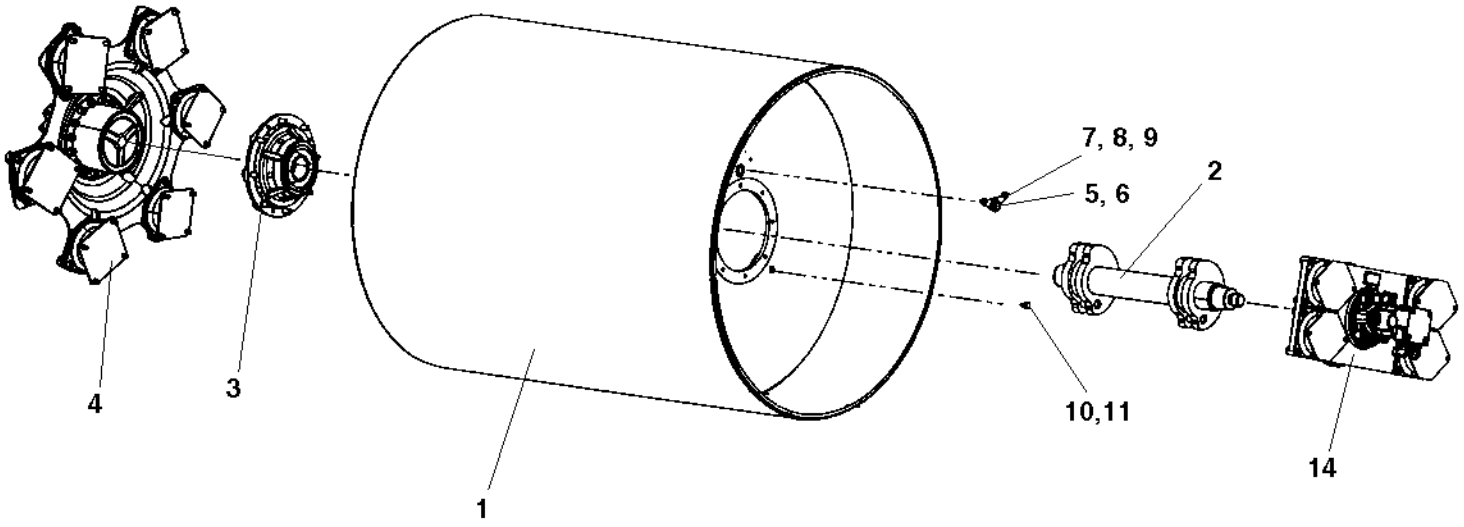

Drum

Item	Part No	Rem	Qty	Description		Code
1	4700392365		1	Drum		
2	4700392371		1	Eccentric shaft		
	4700392440		1	Eccentric shaft	CE	
3			1	Drum bearing module (Page 146)		
4			1	Propulsion motor module (Page 150)		
5	4700343744		1	Magnetic plug		D
6	4700162017		1	Seal ring		D
7	4700359955		1	Drop plate		
8	4700904229		2	Washer	8,4x16x1,5	
9	4700500019		2	Screw	M8x16H 8.8 A2K	
10	4700344196		1	Plug	M12	D
11	4700162027		1	Sealing		D
14			1	Vibration motor module (Page 156)		

Drum bearing module

391279

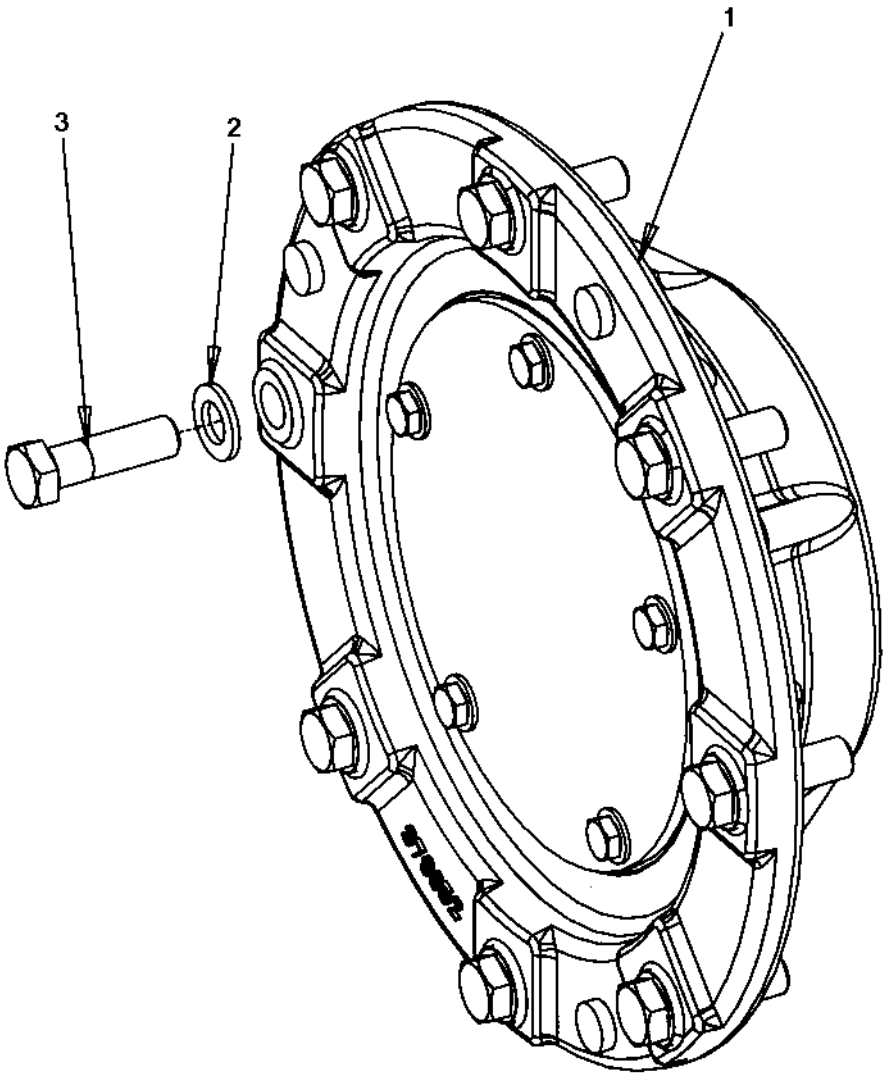

Drum bearing module

Item	Part No	Rem	Qty	Description		Code
1			1	Drum bearing (Page 148)		
2	4700904232		8	Washer		
3	4700500070		8	Screw	M16x50	

Drum bearing

392465

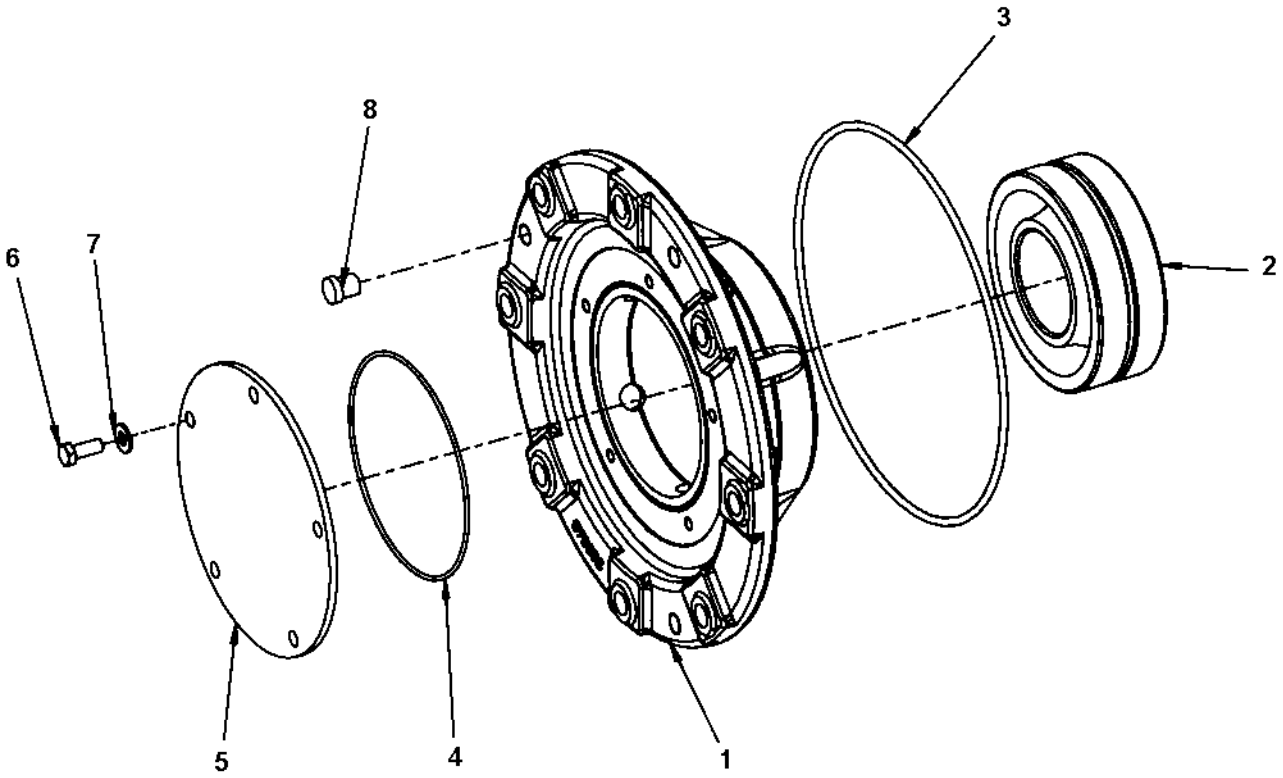

Drum bearing

Item	Part No	Rem	Qty	Description	Code
1	4700391280		1	Bearing housing	
2	4700114060		1	Spherical roller bearing	D
3	4700160344		1	O-ring 70	D
4	4700160045		1	O-ring 70	
5	4700391029		1	Cover	
6	4700500028		5	Screw	
7	4700904230		5	Washer	
8	4700900775		3	Plug	

Propulsion motor module

392455

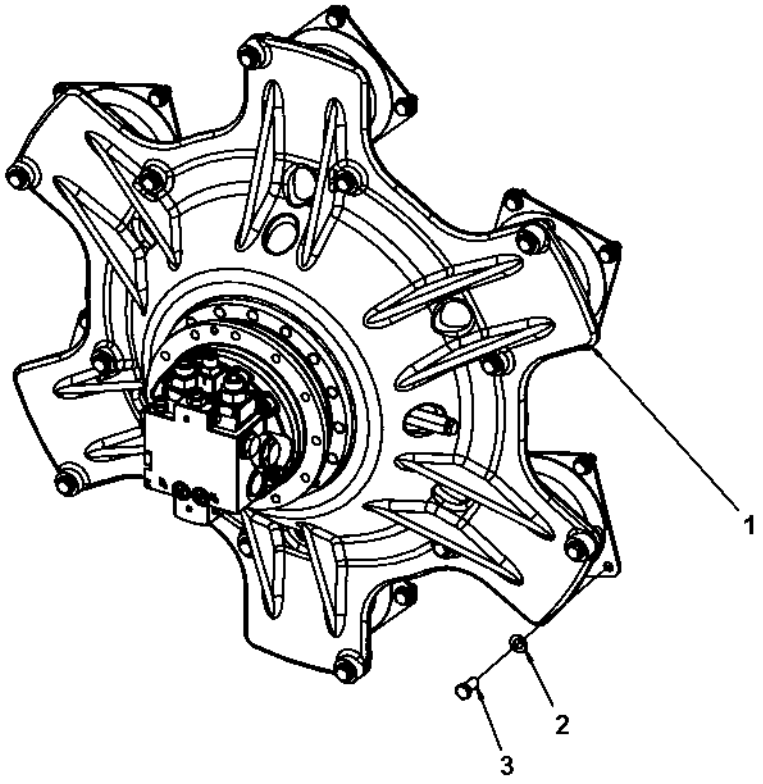

Propulsion motor module

Item	Part No	Rem	Qty	Description		Code
1			1	Drive unit (Page 152)		
2	4700904231		24	Washer	13x24x2 300 HV	
3	4700500051		24	Screw	M12x25H 8.8 A3K	

Drive unit

392454

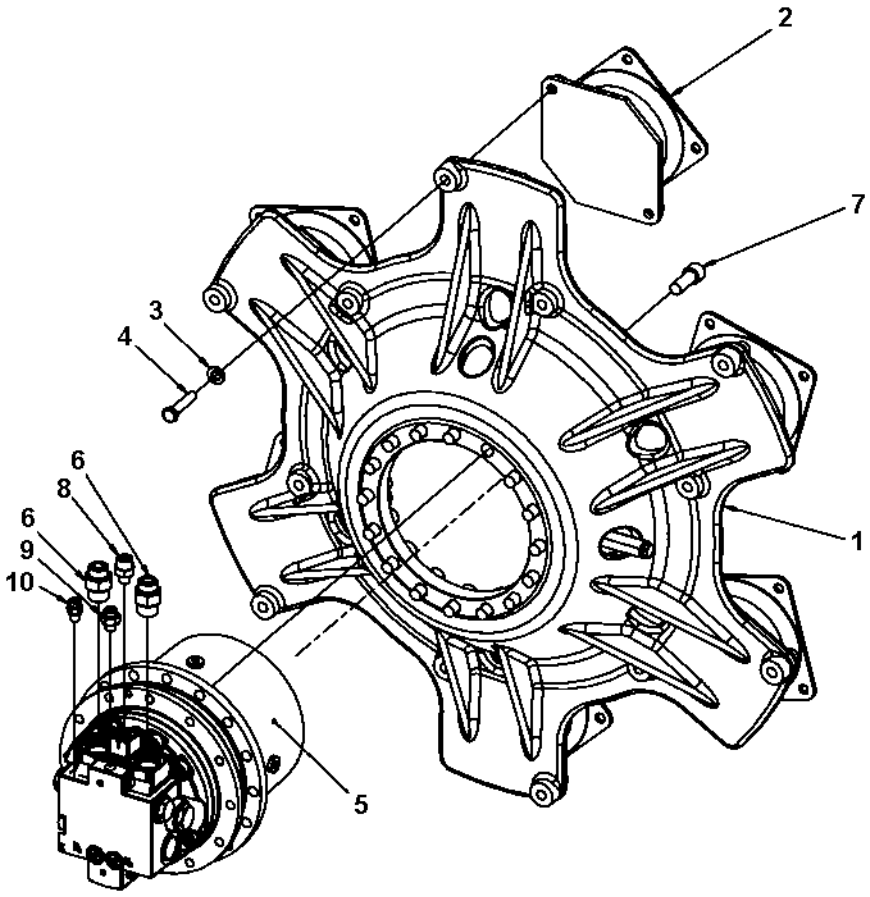

Drive unit

Item	Part No	Rem	Qty	Description		Code
1	4700391286		1	Drive disc		
2	4700394250		6	Shock absorber		B
3	4700904231		12	Washer	13x24x2 300 HV	
4	4700925519		12	Screw	M12x55 10.9 GEOMET	
5	4700392453		1	Drum gear (Page 154)		
6	4700792670		2	Straight connector orfs		
7	4700508090		16	Hexagon socket head cap screw		
8	4700792671		1	Straight connector orfs		D
9	4700792673		1	Straight connector orfs		
10	4700792672		1	Straight connector orfs		

4700392453 Drum gear

392453_1

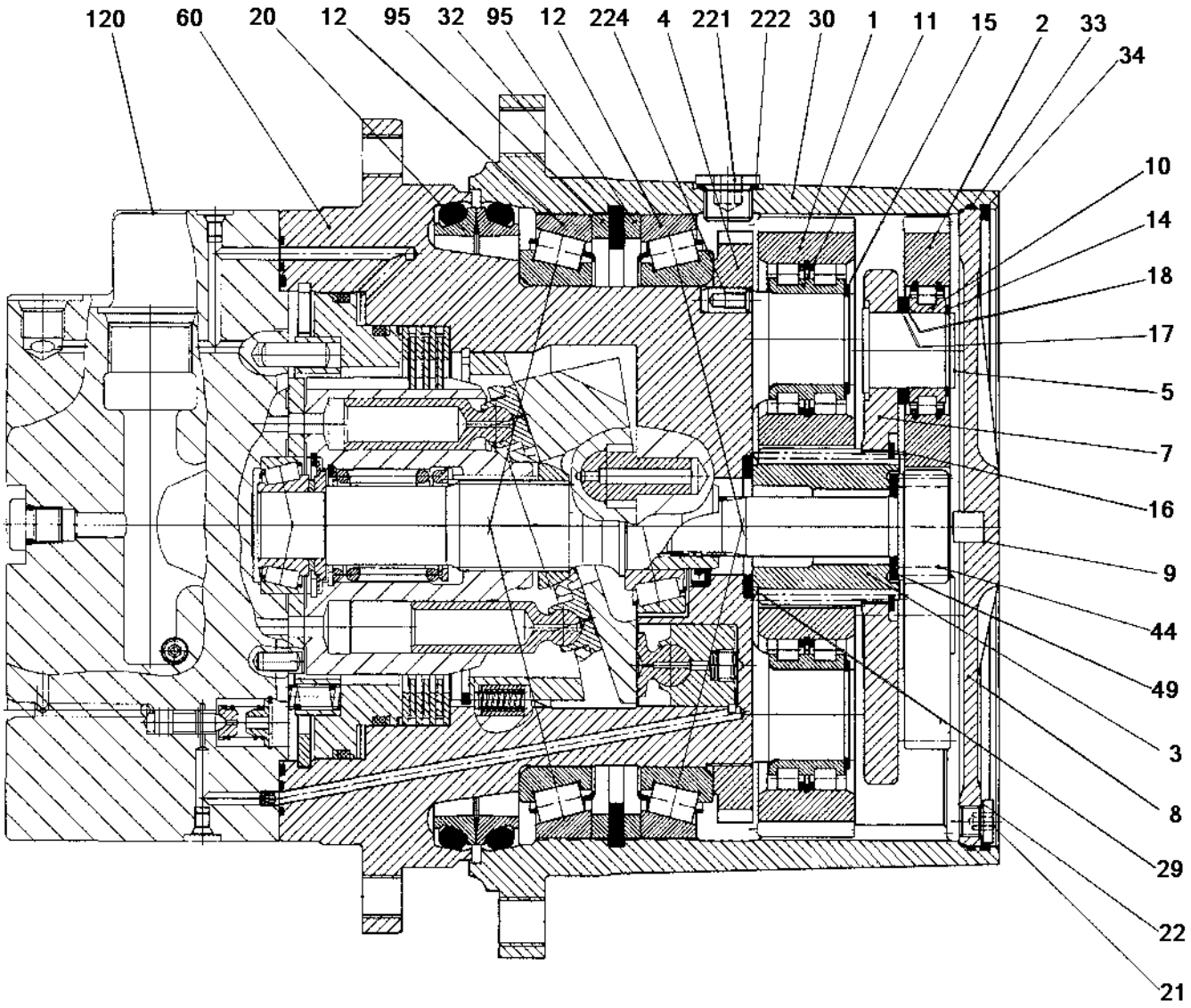

4700392453 Drum gear

Item	Part No	Rem	Qty	Description	Code
	4700392453		1	Drum gear (Page 154)	
1			4	.Planet gear	
2			3	.Planet gear	
3			1	.Sun gear	
4			1	.Shaft nut	
5			3	.Planet bolt	
7			7	.Planet carrier	
8			8	.Cover	
9			1	.Cylindrical roller	
10	4700950498		3	.Bearing	
11	4700950483		4	.Roller bearing	
12	4700950500		2	.Tapered roller bearing	
14			3	.Snap ring	
15			4	.Snap ring	
16			1	.Snap ring	
17			3	.Support disc	
18			3	.Shim	
20	4700950501		1	.Seal	
21	4700950502		2	.Plug	
22	4700950503		2	.Seal ring	
29			1	.Washer	
30			1	.Ring gear	
32			1	.Snap ring	
33	4700950353		1	.O-ring	
34			1	.Snap ring	
44			1	.Sun gear shaft	
49			1	.Thrust washer	
60			1	.Spindle	
95			2	.Spacer ring	
120			1	.Hydraulic motor	
221	4700212210		2	.Screw	
222	4700950513		2	.Seal ring	
224			2	.Cylindrical dowel pin	

Vibration motor module

392380

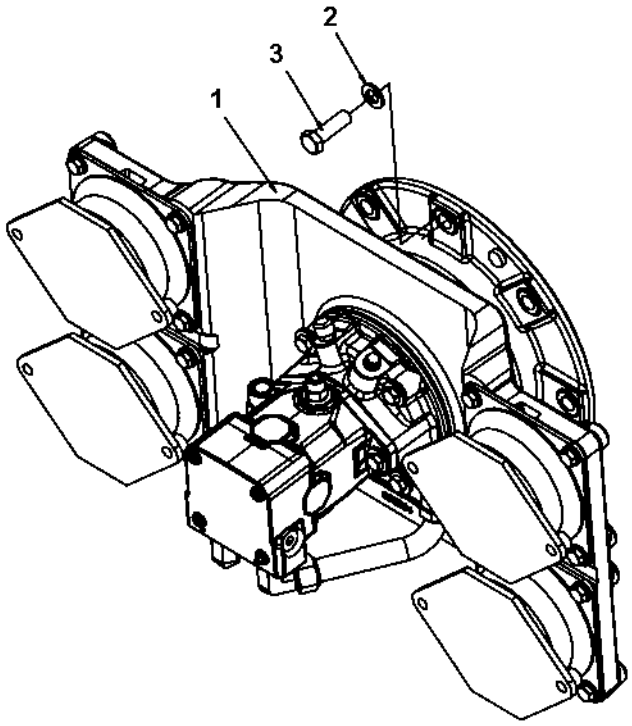

Vibration motor module

Item	Part No	Rem	Qty	Description		Code
1			1	Vibrating unit (Page 158)		
2	4700904232		8	Washer		
3	4700500070		8	Screw	M16x50	

Vibrating unit

392379

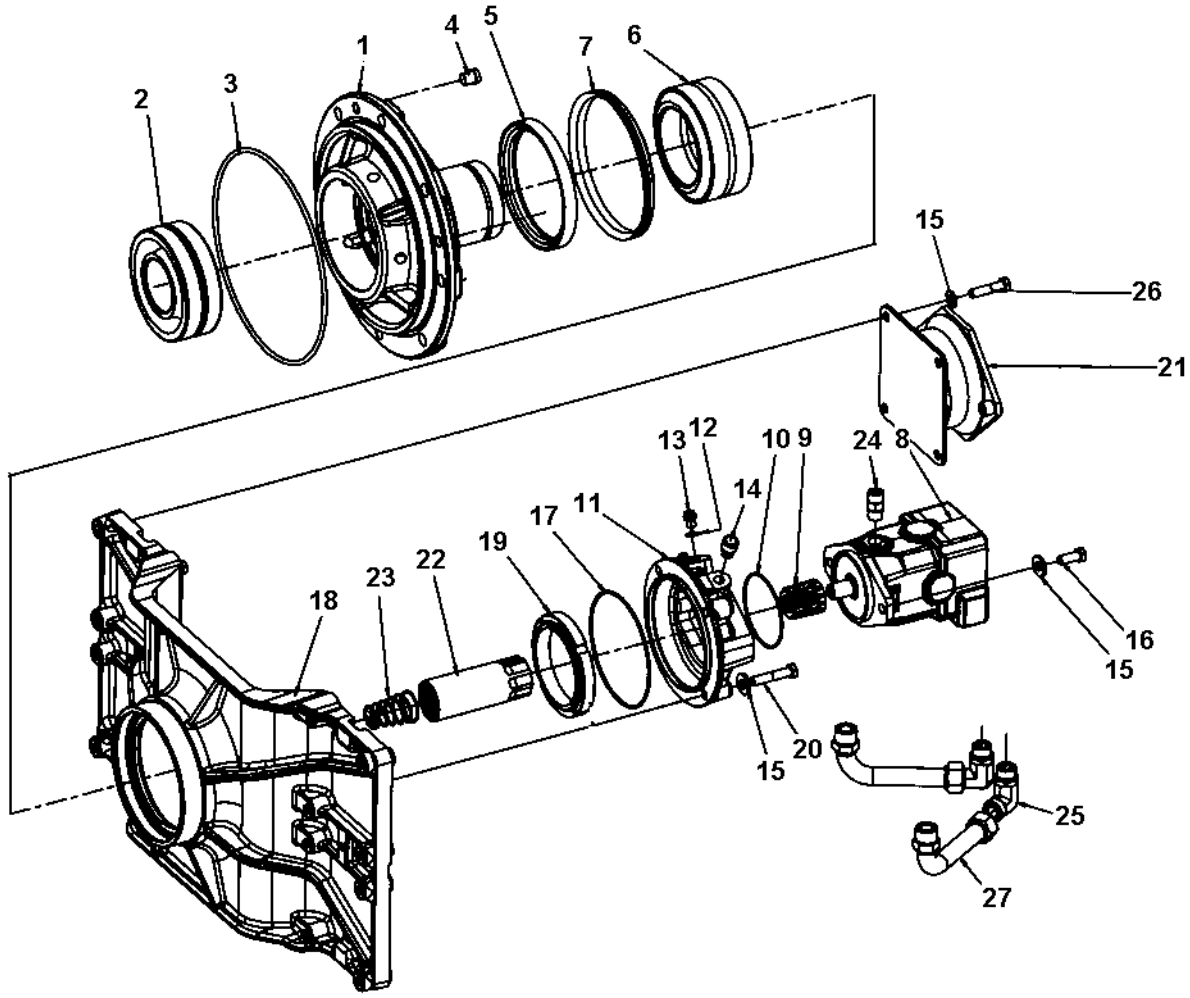

Vibrating unit

Item	Part No	Rem	Qty	Description		Code
1	4700391277		1	Bearing housing		
2	4700114060		1	Spherical roller bearing		D
3	4700160344		1	O-ring 70		D
4	4700900775		3	Plug		
5	4700386272		1	Sealing		D
6	4700116041		1	Taper roller bearing		D
7	4700929447		1	V-ring		D
8	4700390605		1	Hydraulic motor		C
9	4700340862		1	Splined sleeve		
10	4700160279		1	O-ring		D
11	4700390160		1	Motor adapter		
12	4700162027		1	Sealing		D
13	4700903726		1	Steel plug threaded		
14	4700926736		1	Breather		B
15	4700904231		20	Washer	13x24x2 300 HV	
16	4700500046		2	Screw		
17	4700160105		1	O-ring 70		D
18	4700392364		1	Holder plate		
19	4700390897		1	Shaft nut		
20	4700500049		4	Screw		
21	4700394251		4	Shock absorber		
22	4700381027		1	Splined sleeve		
23	4700349715		1	Spring		
24	4700791799		1	Straight connector orfs		
25	4700792330		2	Elbow 90 orfs		
26	4700500195		16	Screw		
27	4700392748		2	Connector		

Engine

Item	Part No	Rem	Qty	Description	Code
1				Engine room (Page 162)	

Engine room

CC224100300010

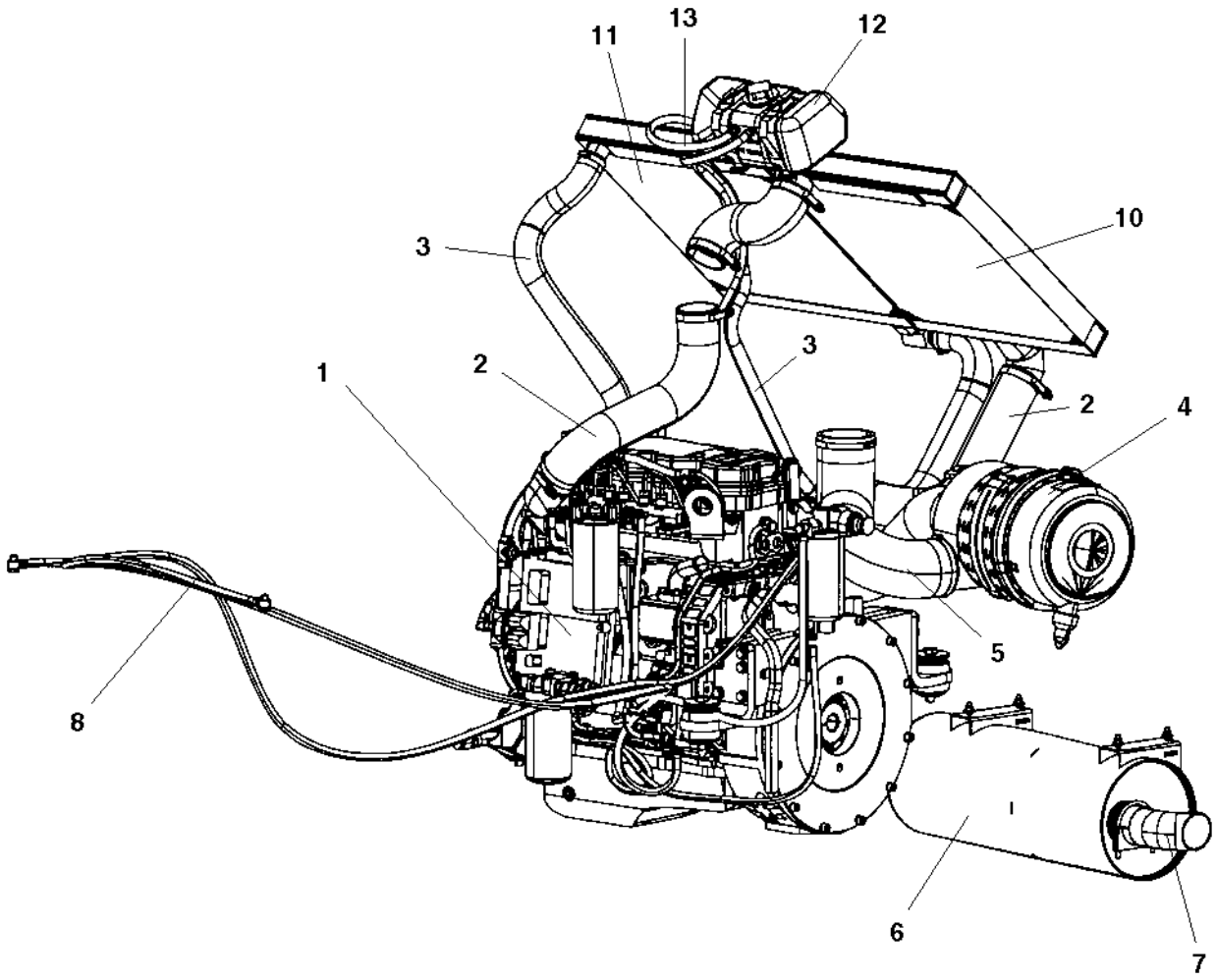

Engine room

Item	Part No	Rem	Qty	Description	Code
1				Engine (Page 164)	
2				Air cooler hoses (Page 168)	
3				Water cooler hoses (Page 170)	
4				Air cleaner module (Page 172)	
5				Air cleaner hose module (Page 174)	
6				Muffler (Page 176)	
7				Exhaust pipe module (Page 178)	
8				Fuel hose module (Page 180)	
10				Charge air cooler (Page 182)	
11				Water cooler (Page 184)	
12				Expansion tank assembly (Page 188)	
13				Coolant hoses (Page 190)	

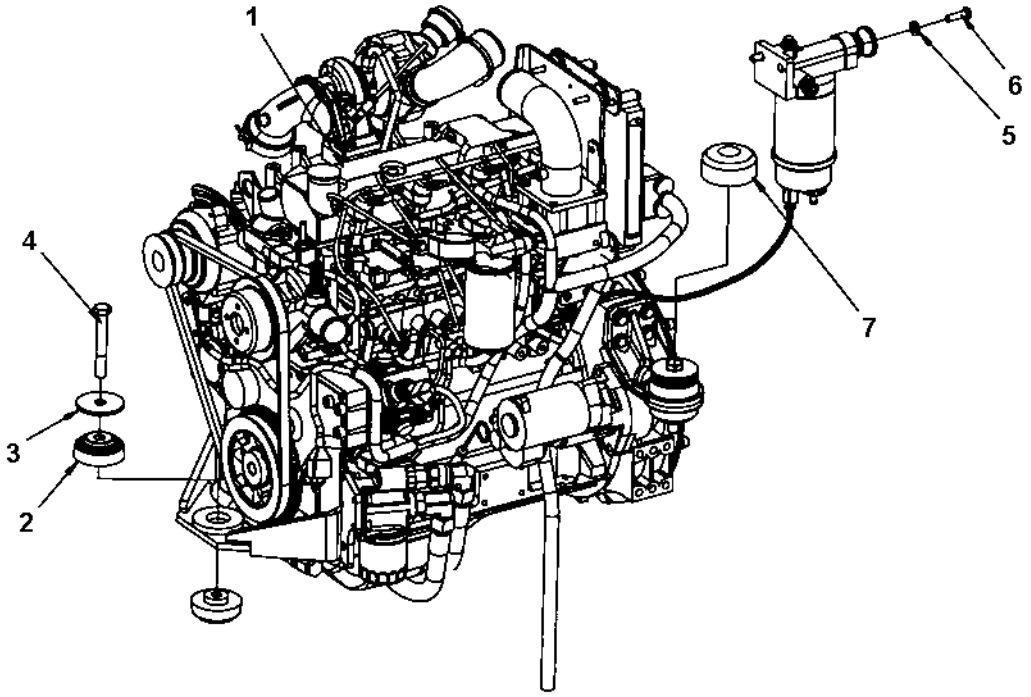
1
2
3
4
5
6
7

Engine

Item	Part No	Rem	Qty	Description	Code
1			1	Engine module (Page 166)	
2	4700393794		6	Shock absorber	
3	4700345666		3	Steel spacer	
4	4700500199		3	Screw M16-2x110 8,8	
5	4700904557		2	Washer	
6	4700500030		2	Screw	
7	4700397539		1	Protector	

Engine module

392392A

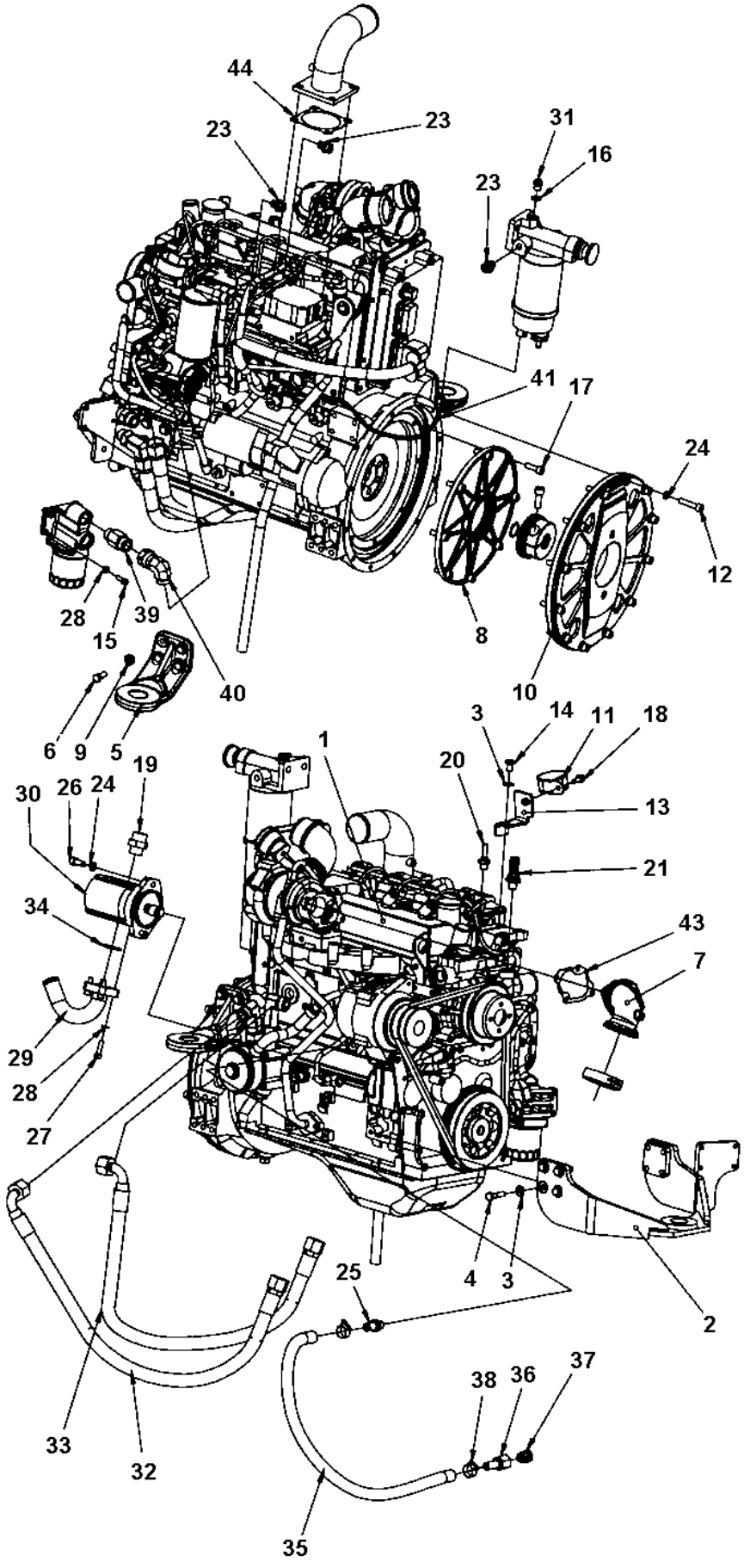

Engine module

Item	Part No	Rem	Qty	Description		Code
1	4700392390		1	Diesel engine	60 kW	
	4700392391		1	Diesel engine	74 kW	
	4700950636		1	.Starter		
	4700950640		1	.Alternator		
	4700939068		1	.Oil filter element		A
	4700950301		1	.Pre-fuel filter element		A
	4700950302		1	.Fuel filter element		A
	4700950315		1	.V-belt		B
	4700939070		1	.Gasket, valve cover		B
	4700950637		1	.Sensor, Water temp		
	4700950638		1	.Oil pressure switch		
2	4700392501		1	Engine bracket		
3	4700904230		9	Washer		
4	4700500212		9	Screw		
5	4700392504		2	Engine bracket		
6	4700947683		8	Screw		
7	4700391962		1	Exhaust pipe		
8	4700394818		1	Coupling		
9	4700904557		8	Washer		
10	4700395135		1	Pump bracket		
11	4700904352		1	Clamp		
12	4700508030		12	Screw		
13	4700393414		1	Bracket		
14	4700500043		1	Screw	M10x16H 8,8	
15	4700508092		4	Screw		
16	4700747282		1	Copper washer		
17	4700508029		8	Screw	M10-1,5x30H 8,8	
18	4700500505		1	Screw	M8x20 8.8	
19	4700904728		1	Adapter		
20	4700792544		1	Connector		
21	4700792545		1	Hose connection		
23	4700792604		4	Quick connect coupling		
24	4700904637		14	Washer		
25	4700379607		1	Hose connection		
26	4700508096		2	Screw		
27	4700508048		4	Screw		
28	4700904229		8	Washer	8,4x16x1,5	
29	4700392532		1	Suction pipe		
30	4700392528		1	Hydraulic pump		
31	4700903190		1	Steel plug		
32	4700394014		1	Hydraulic hose		
33	4700394676		1	Hydraulic hose		
34	4700813429		1	O-ring		
35	4700205112	A	1XL	Coolant hose		
36	4700792502		1	Hose connection		
37	4700232231		1	Plug		
38	4700313004		2	Hose clamp		
39	4700395944		1	Connector		
40	4700904584		1	Elbow connector 90		
41	4700396885		1	Cable harness		
43	4700395108		1	Gasket		
44	4812110232		1	Gasket		

A) L= 0.710 m

Air cooler hoses

391915

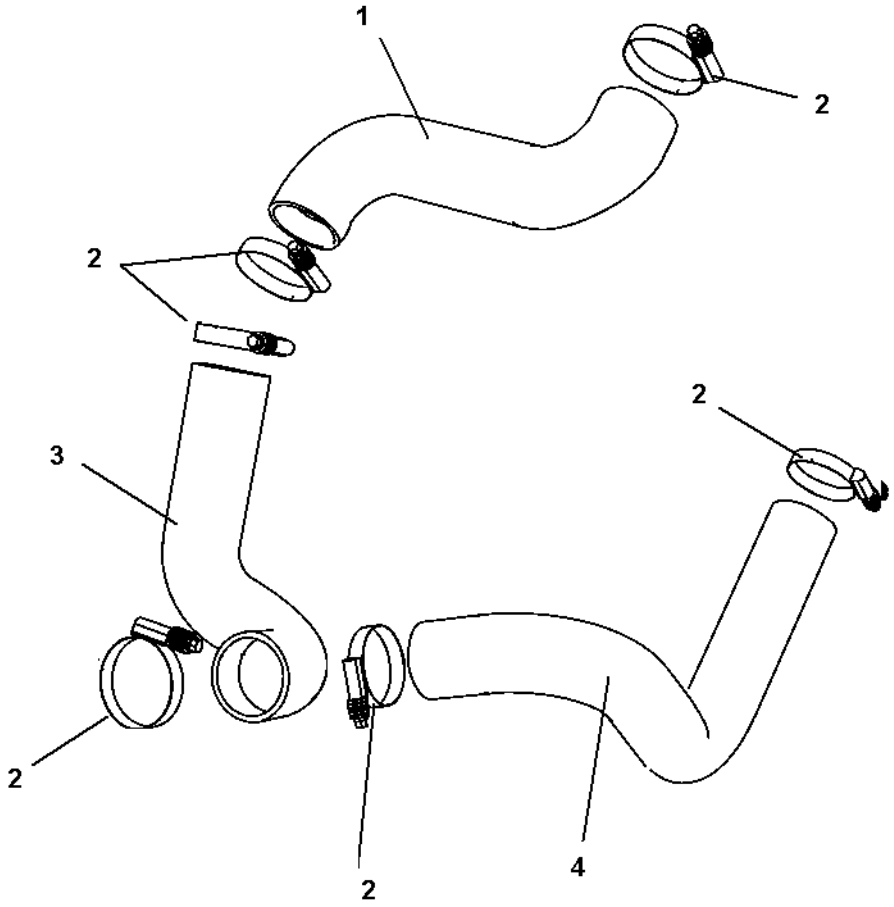

Air cooler hoses

Item	Part No	Rem	Qty	Description		Code
1	4700391918		1	Charge air hose		
2	4700386966		6	Hose clamp	2.3/4"-3.5/8"	
3	4700397134		1	Charge air hose		
4	4700395126		1	Charge air hose		

Water cooler hoses

395868

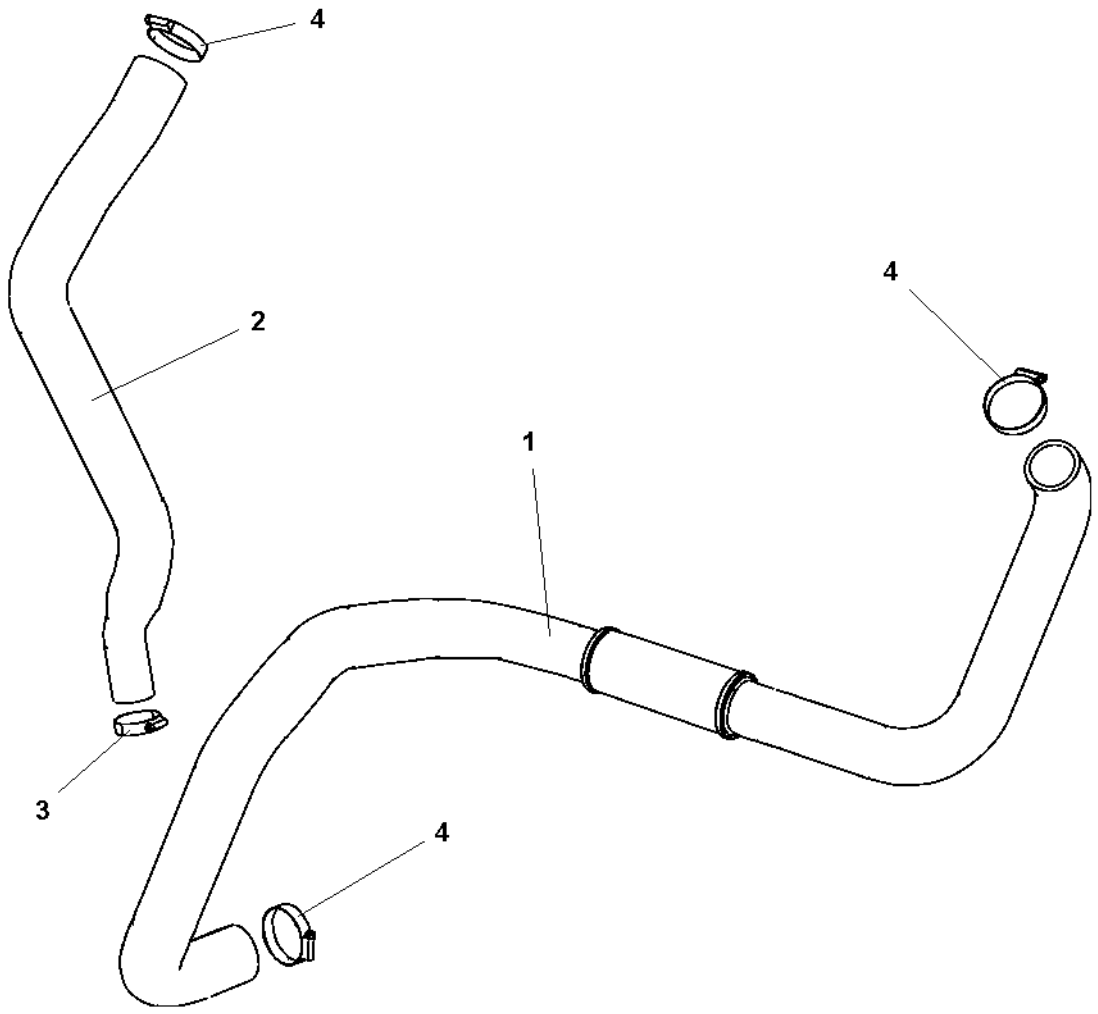

Water cooler hoses

Item	Part No	Rem	Qty	Description	Code
1	4700396961		1	Coolant hose	
2	4700395423		1	Coolant hose	
3	4700313008		1	Hose clamp	D
4	4700313010		3	Hose clamp	

Air cleaner module

392677

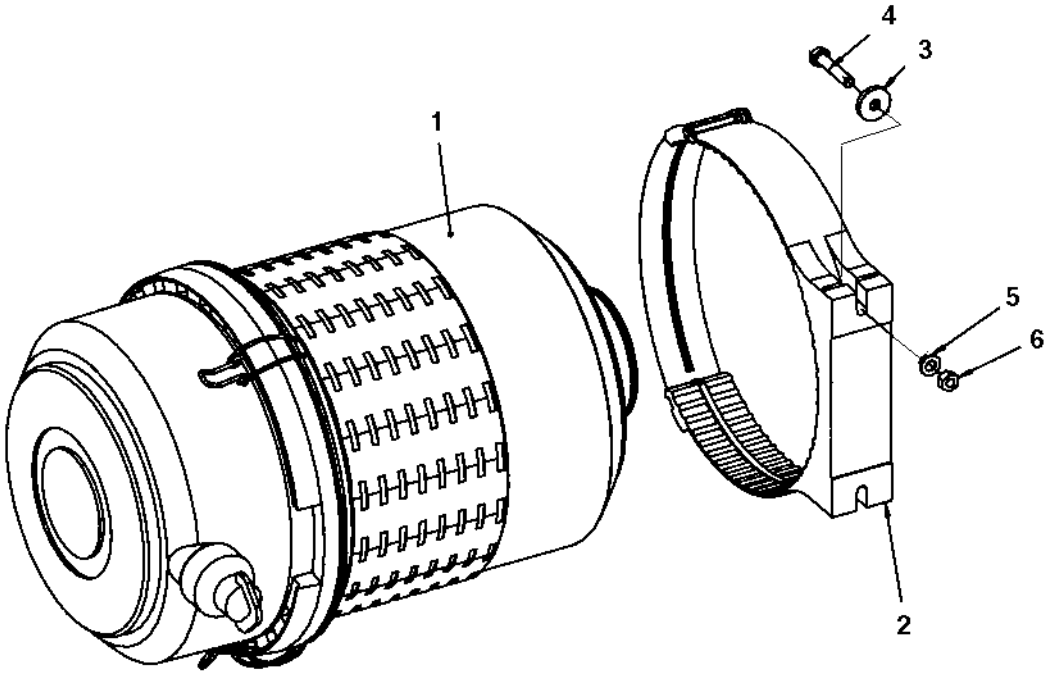

Air cleaner module

Item	Part No	Rem	Qty	Description		Code
1	4700392087		1	Air cleaner		
	4700392088		1	.Main filter element		A
	4700392089		1	.Safety filter element		A
2	4700392091		1	Bracket		
3	4700904734		2	Washer	8,4x26x4	
4	4700500023		2	Screw	M8-1,25x40 8,8	
5	4700904556		2	Washer	8,4x16x3,0	
6	4700570005		2	Nut	M8	

Air cleaner hose module

391911

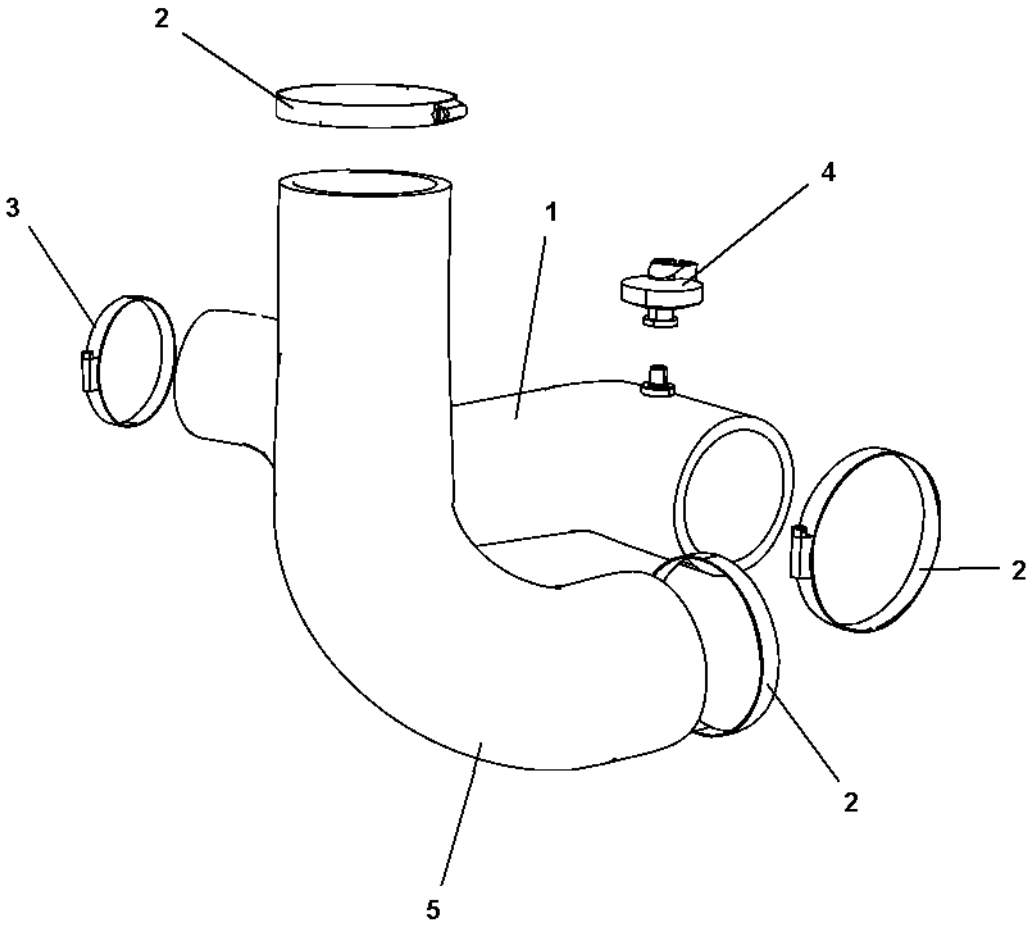

Air cleaner hose module

Item	Part No	Rem	Qty	Description	Code
1	4700397153		1	Hose	
2	4700313033		3	Hose clamp	D
3	4700313038		1	Hose clamp	
4	4700390830		1	Indicator	
5	4700397151		1	Hose	

Muffler

393167

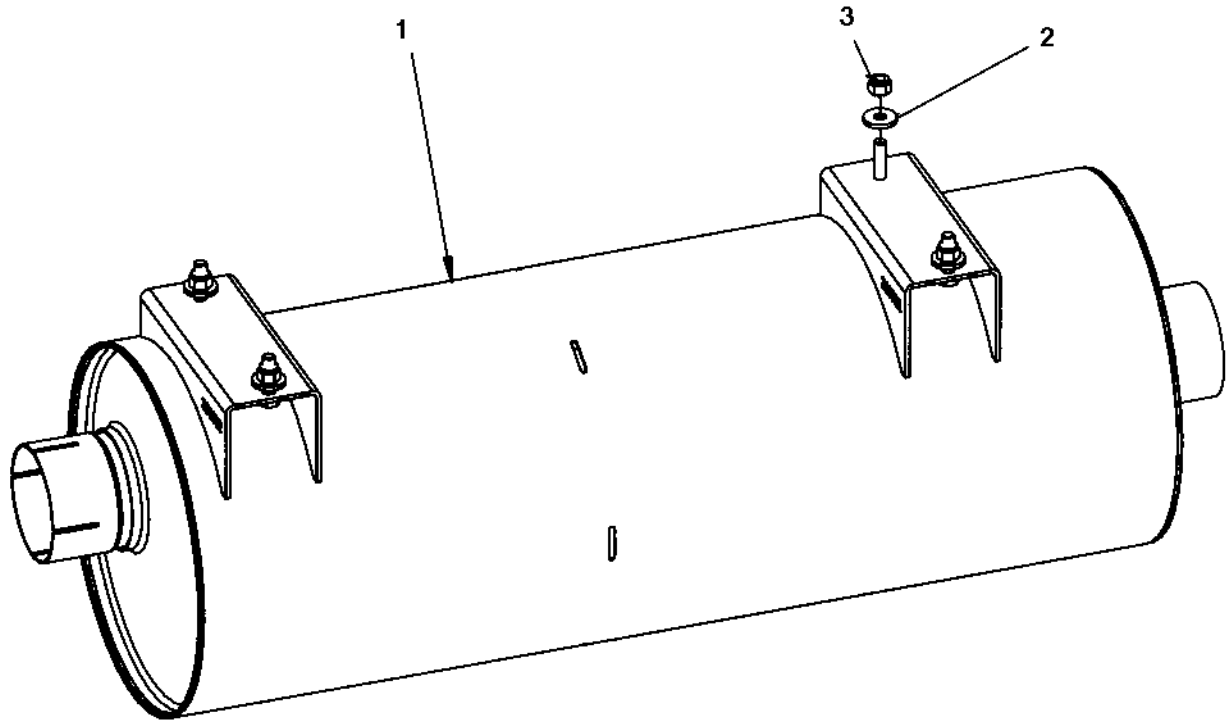

Muffler

Item	Part No	Rem	Qty	Description		Code
1	4700392079		1	Muffler		
2	4700904640		4	Washer	8,4x22x3	
3	4700791182		4	Lock nut	M8	

Exhaust pipe module

392080

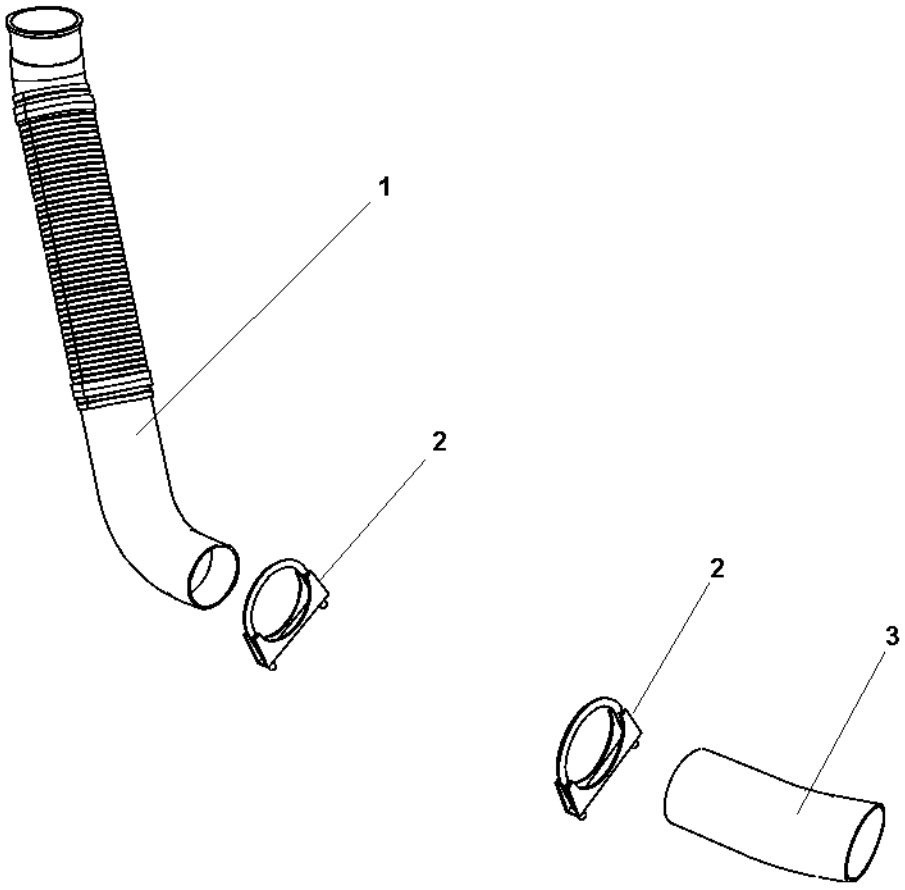

Exhaust pipe module

Item	Part No	Rem	Qty	Description	Code
1	4700393046		1	Exhaust pipe	
2	4700313094		2	Pipe clamp	
3	4700390903		1	Exhaust pipe	

Fuel hose module

392694

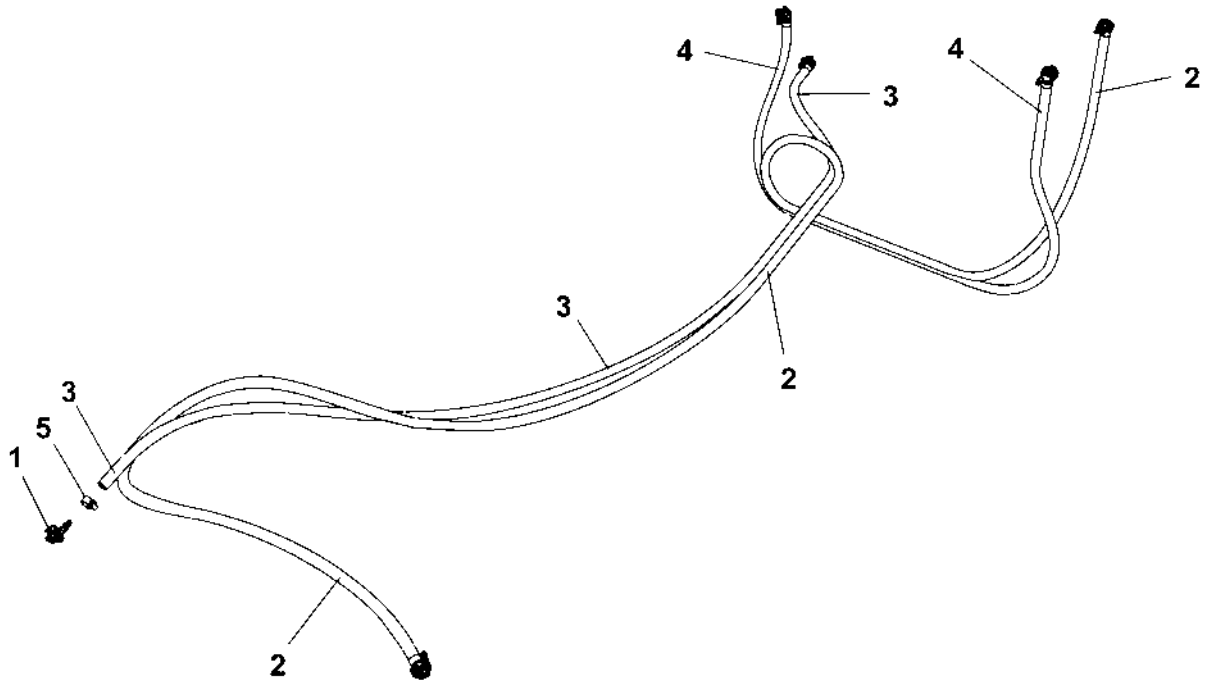

Fuel hose module

Item	Part No	Rem	Qty	Description	Code
1	4700792526		6	Quick connect coupling	
2	4700904984	A	1XL	Fuel hose	D
3	4700904984	B	1XL	Fuel hose	D
4	4700904984	C	1XL	Fuel hose	D
5	4700313075		6	Hose clamp	

A) L=3.35 m
B) L=1.83 m
C) L=1.35 m

Charge air cooler

392389

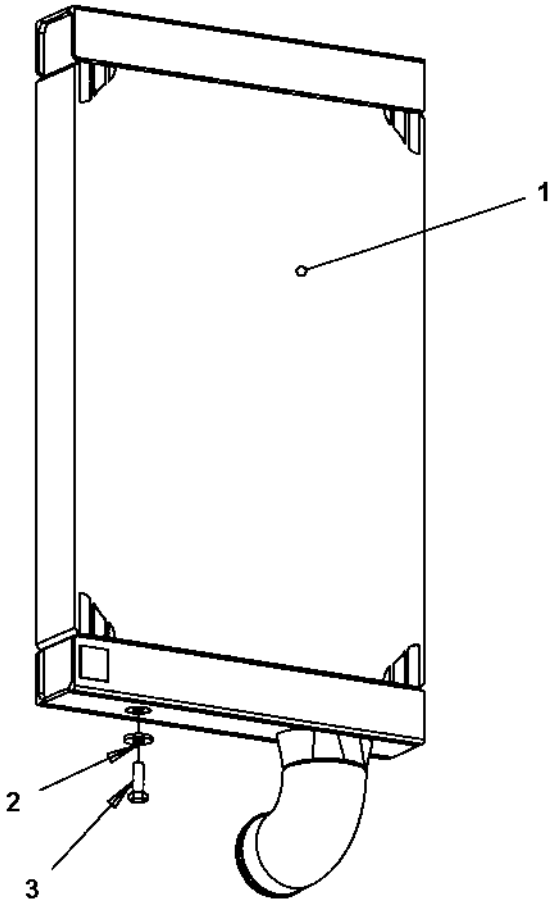

Charge air cooler

Item	Part No	Rem	Qty	Description		Code
1	4700391888		1	Charge air cooler		
2	4700904640		1	Washer	8,4x22x3	
3	4700500021		1	Screw	M8-1,25x25 8.8	

Water cooler

392387

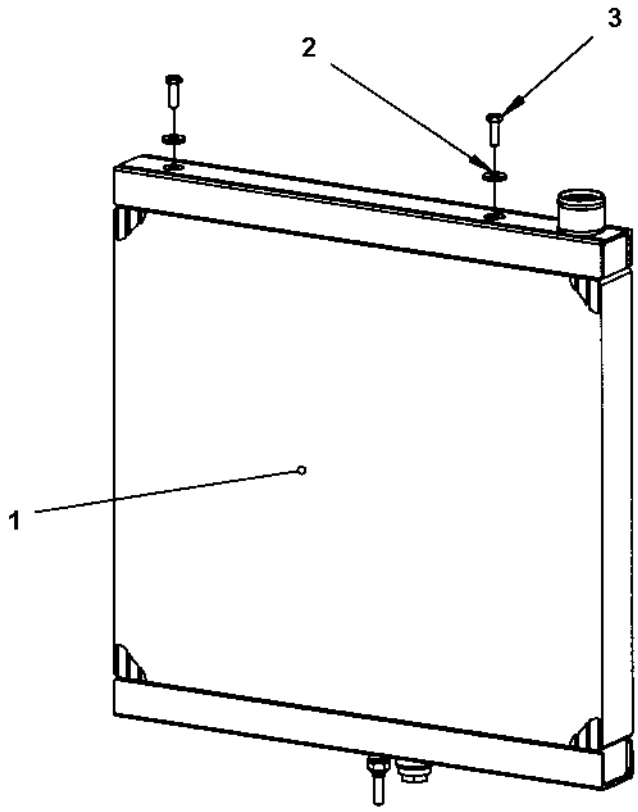

Water cooler

Item	Part No	Rem	Qty	Description		Code
1			1	Radiator, cpl (Page 186)		
2	4700904640		2	Washer	8,4x22x3	
3	4700500021		2	Screw	M8-1,25x25 8.8	

Radiator, cpl

391883

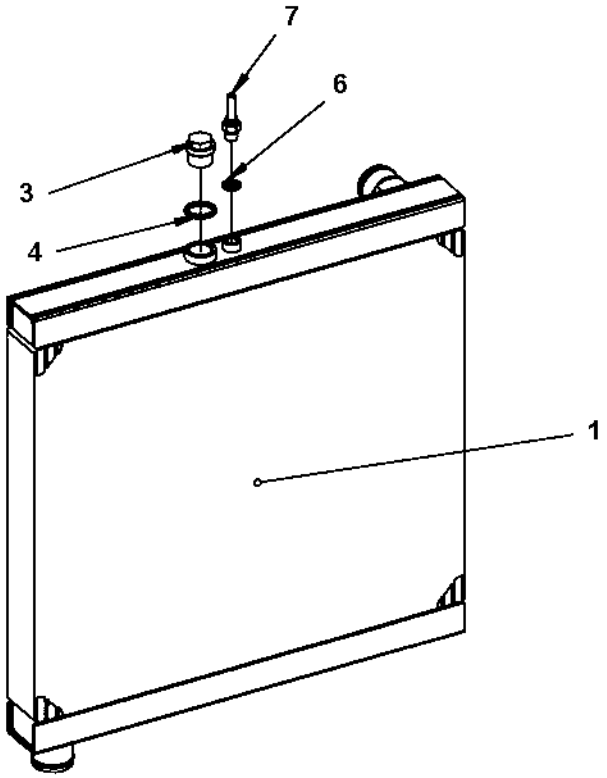

Radiator, cpl

Item	Part No	Rem	Qty	Description		Code
1	4700391884		1	Water cooler		C
3	4700232039		1	Plug	G3/4	
4	4700791120		1	Sealing washer		
6	4700162004		1	Sealing		
7	4700792322		1	Hose connection		

Expansion tank assembly

394156

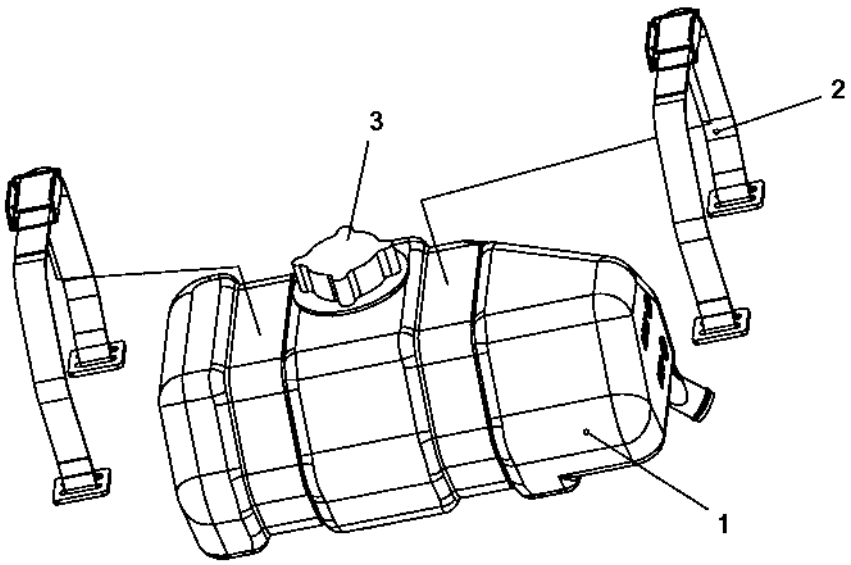

Expansion tank assembly

Item	Part No	Rem	Qty	Description	Code
1	4700393029		1	Expansion tank	
2	4700393235		2	Strap	
3	4700903714		1	Cap	

Coolant hoses

395508

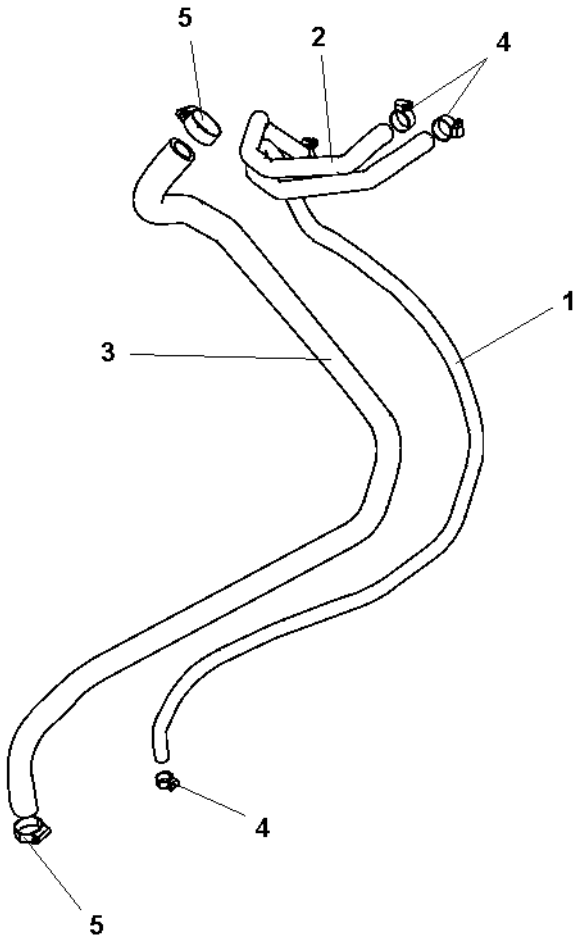

Coolant hoses

Item	Part No	Rem	Qty	Description	Code
1	4700395505		1	Hose	
2	4700395506		1	Hose	
3	4700395507		1	Hose	
4	4700313001		4	Hose clamp	
5	4700313004		2	Hose clamp	

Hydraulic system

Item	Part No	Rem	Qty	Description	Code
1				Hydraulic system, front drum (Page 194)	
2				Hydraulic system, rear drum std (Page 196)	
3				Hydraulic system, frame (Page 198)	
4				Hydraulic system, engine room (Page 200)	
5				Hydraulic system, steering (Page 212)	Std
6				Hydraulic steering, sliding seat (Page 216)	Std
9				Hydraulic valve module, offset (Page 220)	

Hydraulic system, front drum

393719

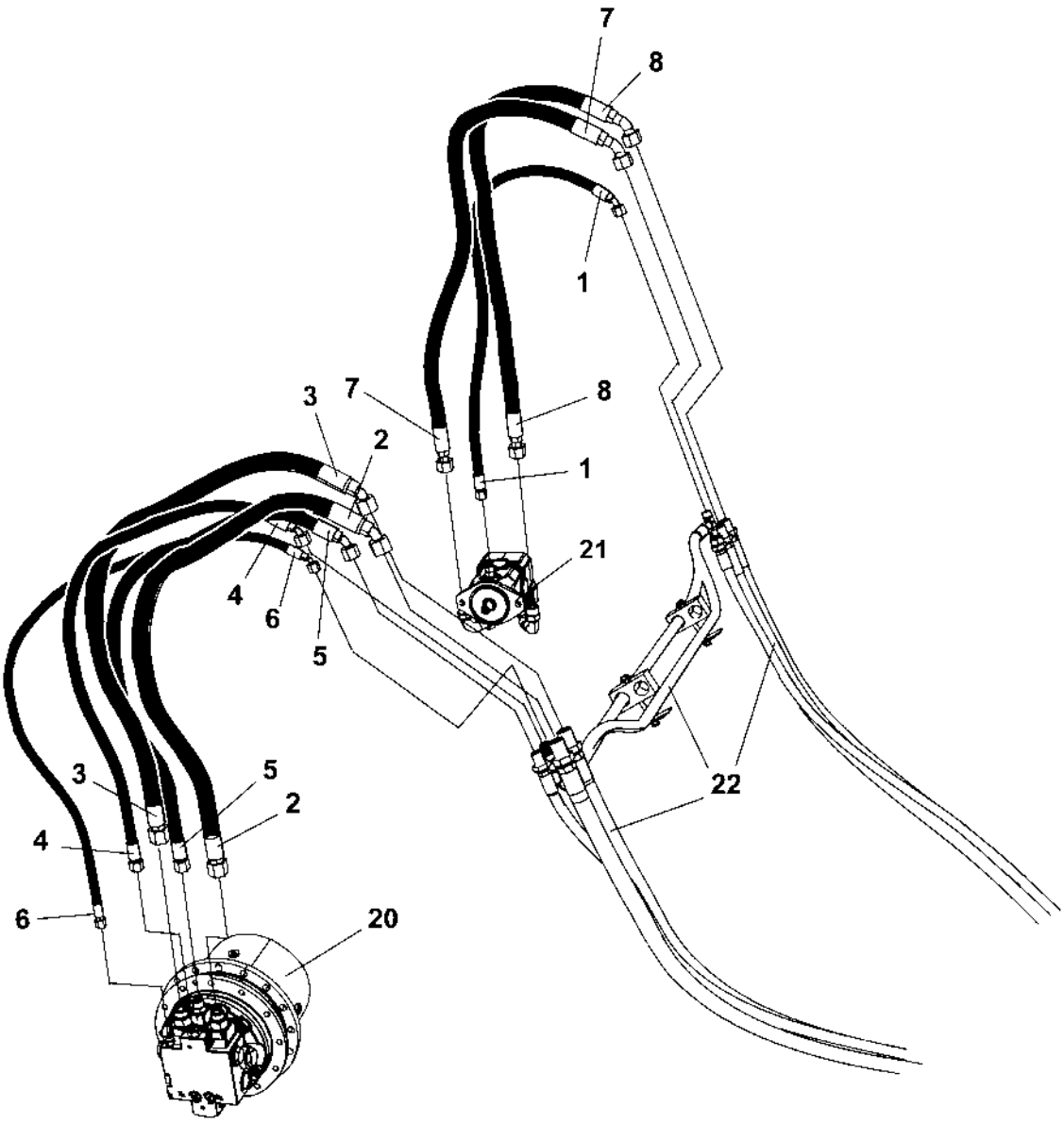

Hydraulic system, front drum

Item	Part No	Rem	Qty	Description	Code
1	4700484183		1	Hydraulic hose	
2	4700484175		1	Hydraulic hose	
3	4700484180		1	Hydraulic hose	
4	4700484038		1	Hydraulic hose	
5	4700484181		1	Hydraulic hose	
6	4700484182		1	Hydraulic hose	
7	4700484196		1	Hydraulic hose	
8	4700484197		1	Hydraulic hose	
20			1	Drive unit (Page 152)	
21			1	Vibrating unit (Page 158)	
22				Hydraulic hoses, frame	

Hydraulic system, rear drum std

393723

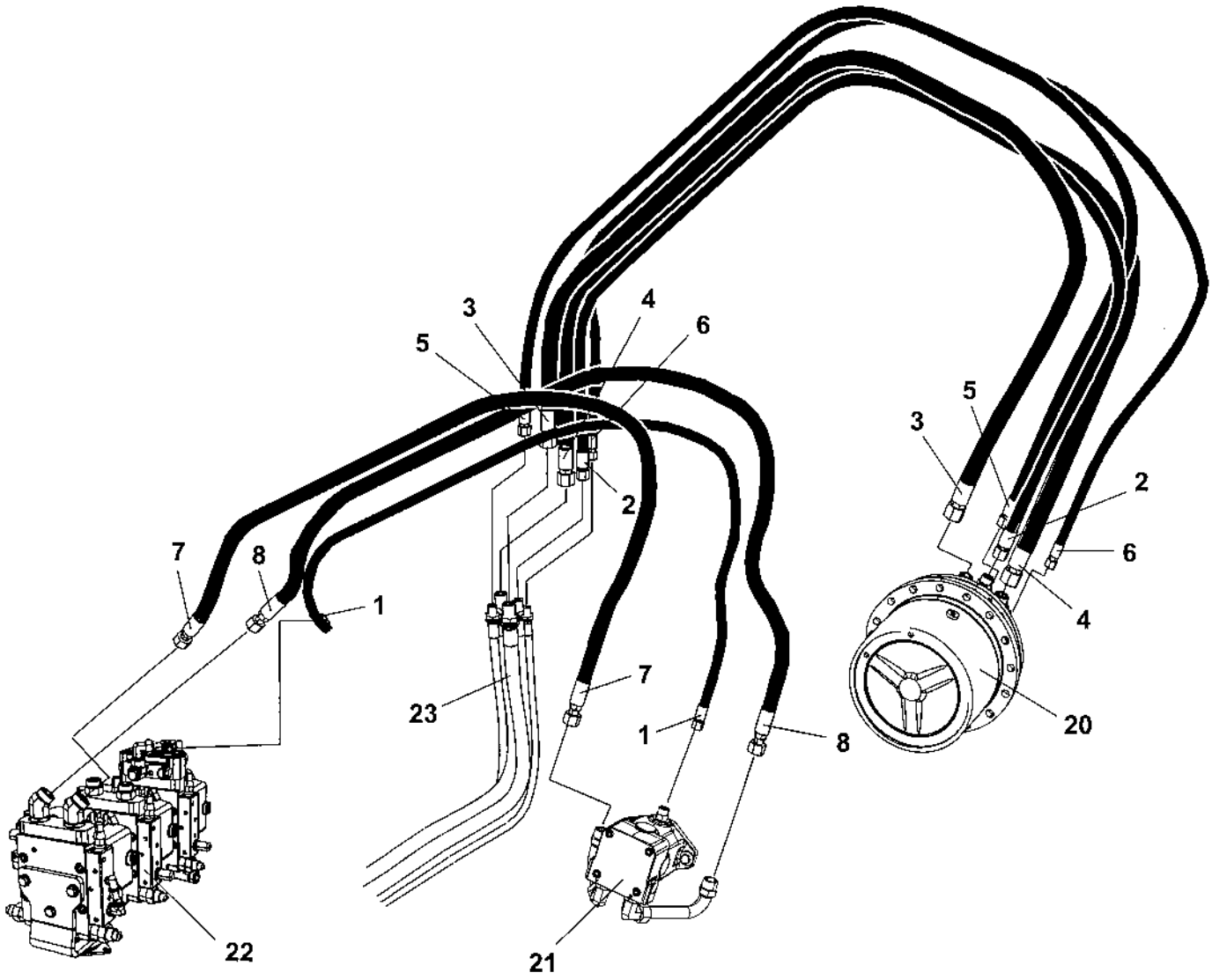

Hydraulic system, rear drum std

Item	Part No	Rem	Qty	Description	Code
1	4700484259		1	Hydraulic hose	
2	4700484255		1	Hydraulic hose	
3	4700484253		1	Hydraulic hose	
4	4700484252		1	Hydraulic hose	
5	4700484254		1	Hydraulic hose	
6	4700484256		1	Hydraulic hose	
7	4700484250		1	Hydraulic hose	
8	4700484203		1	Hydraulic hose	
20			1	Drive unit (Page 152)	
21			1	Vibrating unit (Page 158)	
22			1	Hydraulic pump (Page 210)	
23			1	Hydraulic hoses, frame	

Hydraulic system, frame

Item	Part No	Rem	Qty	Description		Code
1	4700792454		2	Nut		
2	4700792453		4	Nut		
3	4700792452		1	Nut		
4	4700792451		2	Nut		
5	4700792344		1	Bulkhead union		
6	4700791798		1	T-connector		
7	4700392048		1	Connector		
8	4700904009		4	O-ring		D
9	4700792632		2	O-ring		
10	4700904010		2	O-ring		
11	4700606009		1	Lock washer		
12	4700792720		2	Serrated lock washer		
13	4700484147		1	Hydraulic hose		
14	4700484146		1	Hydraulic hose		
15	4700484148		1	Hydraulic hose		
16	4700484140		1	Hydraulic hose		
17	4700484141		1	Hydraulic hose		
18	4700484142		1	Hydraulic hose		
19	4700484143		1	Hydraulic hose		
20	4700484144		1	Hydraulic hose		
21	4700484145		1	Hydraulic hose		
22	4700792696		5	Hose guard		
23	4700484150		1	Hydraulic hose		
24	4700791711		2	Pipe clamp		
25	4700791712		2	Cover plate		
26	4700586003		2	Lock nut	M8	
27	4700904570		2	Straight connector orfs		
28	4700500248		2	Hexagon head screw m		
29	4700484045		1	Hydraulic hose		
30	4700791841		1	Elbow 90 orfs		
31	4700792452		1	Nut		
32	4700606021		1	Serrated lock washer		
33	4700792331		2	Elbow 90 orfs		
34	4700792512	A	1	Steel plug threaded		
35	4700484165		1	Hydraulic hose		
36	4700484166		1	Hydraulic hose		
37	4700792450		2	Nut		
38	4700791744		2	Straight connector		

A) Used on machine with offset drum.

Hydraulic system, engine room

393714_2

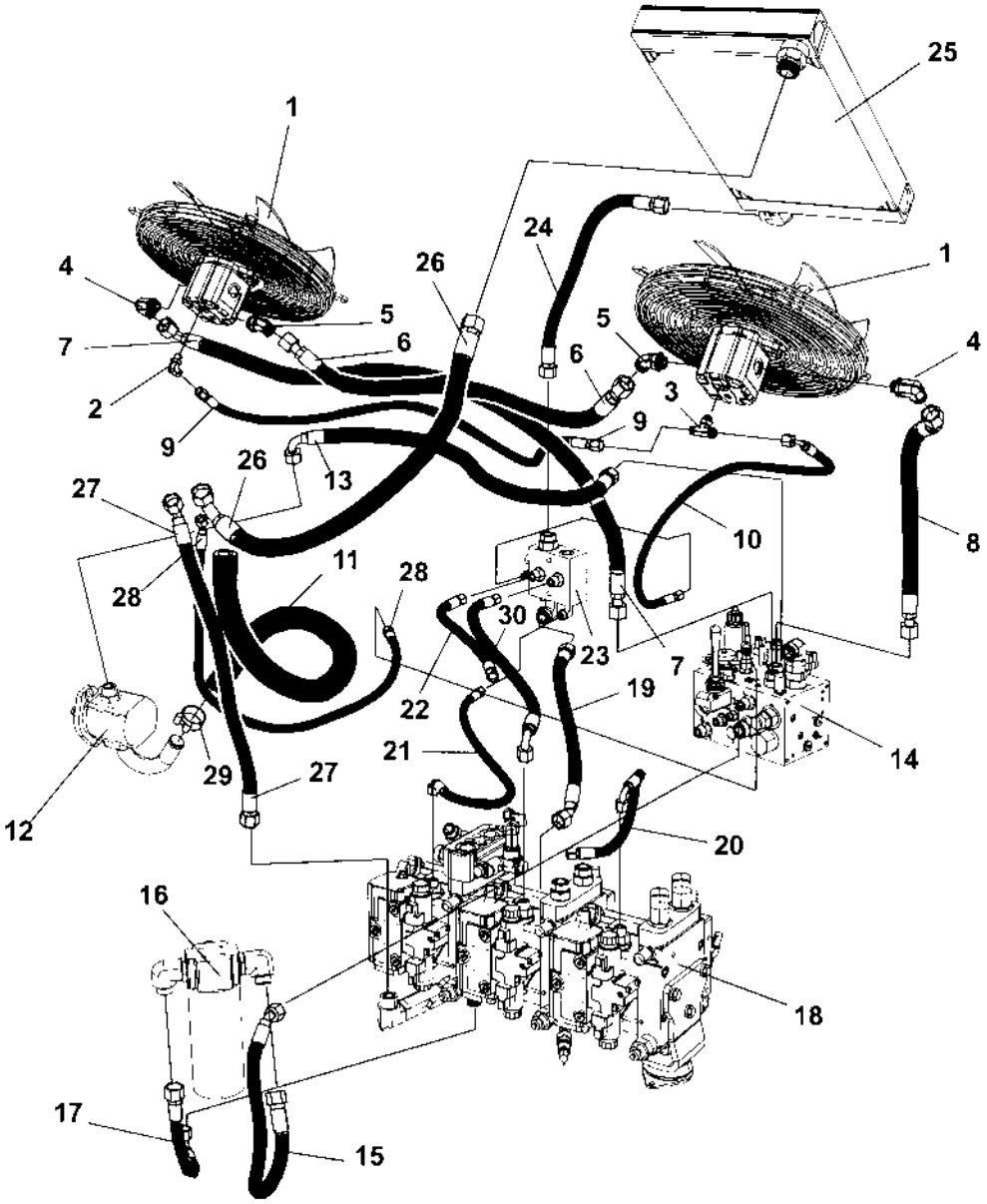

Hydraulic system, engine room

Item	Part No	Rem	Qty	Description	Code
1			2	Fan (Page 58)	
2	4700791397		1	Elbow 90, O-ring	
3	4700792340		1	Tee-connector orfs	
4	4700792332		2	Elbow 90 orfs	
5	4700792809		2	Elbow 90 orfs	
6	4700484152		1	Hydraulic hose	
7	4700484151		1	Hydraulic hose	
8	4700484153		1	Hydraulic hose	
9	4700484154		1	Hydraulic hose	
10	4700484032		1	Hydraulic hose	
11	4700792712		1	Hydraulic hose	
12			1	Steering pump	
13	4700484149		1	Hydraulic hose	
14			1	Hydraulic valve module (Page 202)	
15	4700484159		1	Hydraulic hose	
16	4700391025		1	Hydraulic oil filter	
17	4700484037		1	Hydraulic hose	
18			1	Hydraulic pump module (Page 208)	
19	4700483642		1	Hydraulic hose	
20	4700484036		1	Hydraulic hose	
21	4700484043		1	Hydraulic hose	
22	4700484161		1	Hydraulic hose	
23			1	Connection block	
24	4700484162		1	Hydraulic hose	
25			1	Radiator assembly (Page 56)	
26	4700484163		1	Hydraulic hose	
27	4700484159		1	Hydraulic hose	
28	4700484158		1	Hydraulic hose	
29	4700902295		2	Clamp	
30	4700483726		1	Hydraulic hose	

Hydraulic valve module

391564

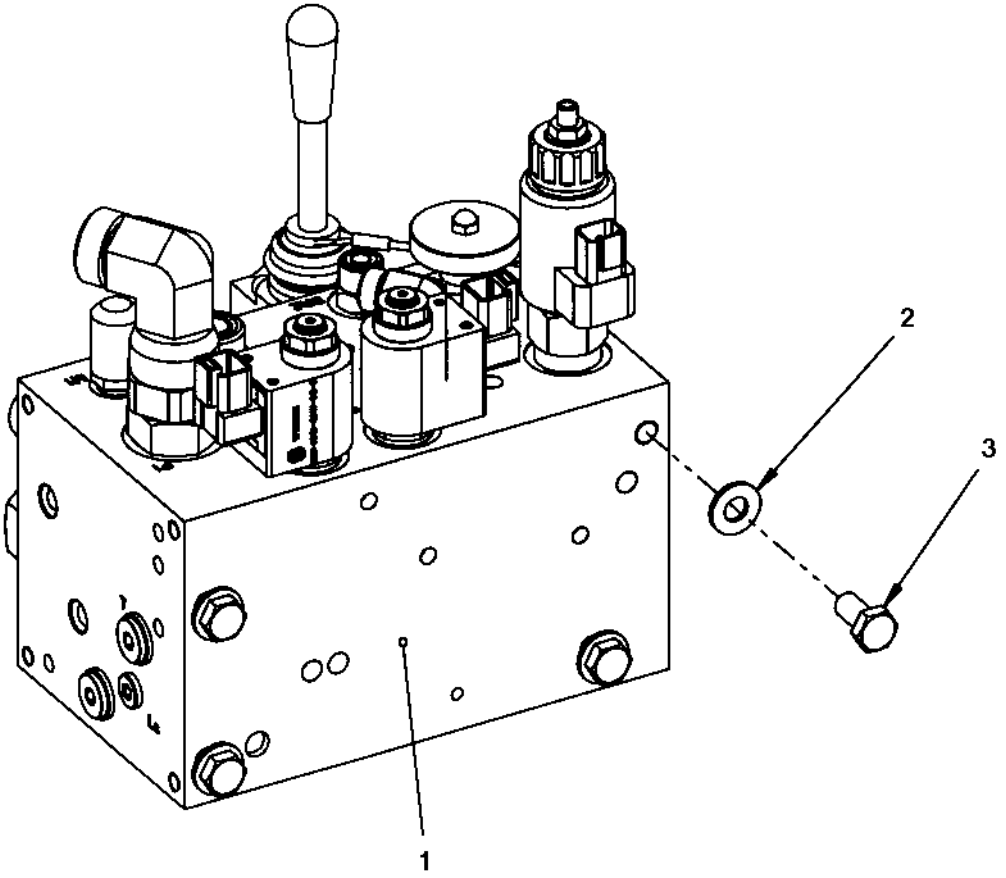

Hydraulic valve module

Item	Part No	Rem	Qty	Description	Code
1			1	Hydraulic valve (Page 204)	
2	4700904230		4	Washer	
3	4700500048		4	Screw M10-1,5x20 8,8	

Hydraulic valve

391563

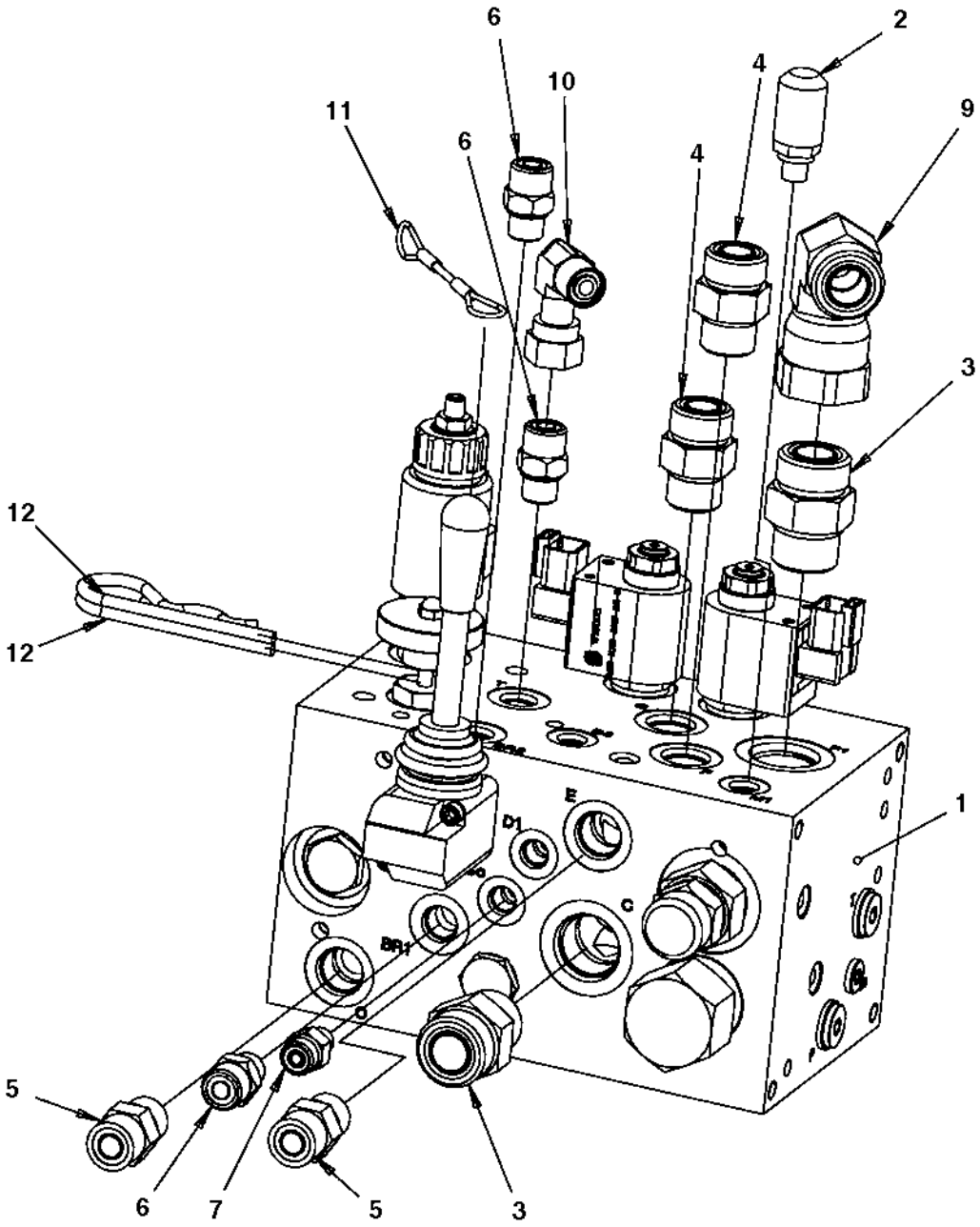

Hydraulic valve

Item	Part No	Rem	Qty	Description	Code
1	4700391016		1	Hydraulic valve (Page 206)	C
2	4700910162		1	Measuring nipple	D
3	4700791823		2	Straight connector orfs	
4	4700791743		2	Straight connector orfs	
5	4700791799		2	Straight connector orfs	
6	4700791409		3	Straight connector orfs	
7	4700791744		1	Straight connector	
9	4700904584		1	Elbow connector 90	
10	4700791401		1	Elbow 90, O-ring with swivel	
11	4700358732		1	Wire	
12	4700635057		2	Hair pin	

4700391016 Hydraulic valve

18872

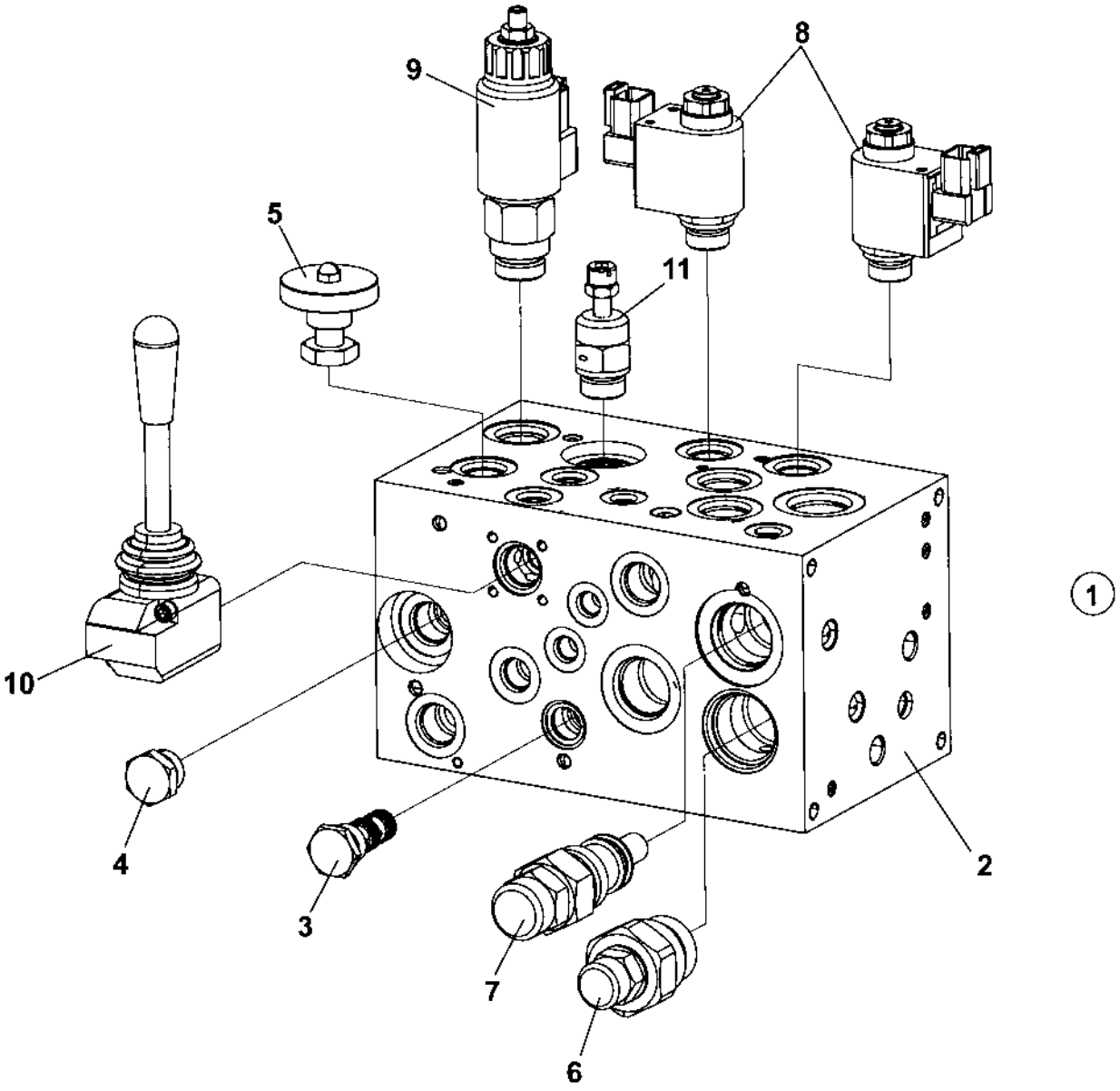

4700391016 Hydraulic valve

Item	Part No	Rem	Qty	Description	Code
1			1	Hydraulic valve	
2			1	.Valve block	
3	4700940572		1	.Shuttle valve	
4			1	.Check valve	
5			1	.Brake release valve	
6	4700950571		1	.Priority valve	
7	4700950572		1	.Pressure relief valve	
8	4700950570		2	.Solenoid valve	
9	4700950569		1	.Fan proportional valve	
10			1	.Brake release pump	
11			1	.Brake pressure relief valve	

Hydraulic pump module

392988

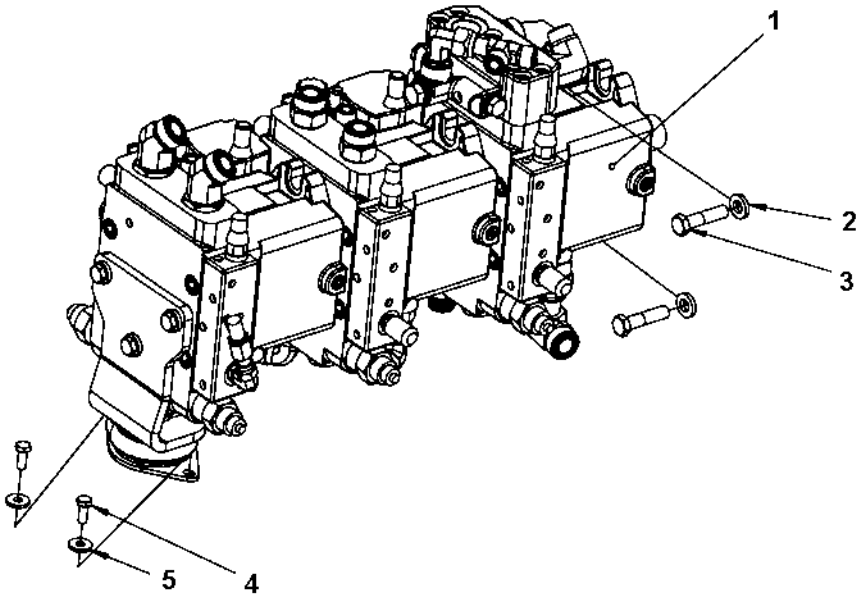

Hydraulic pump module

Item	Part No	Rem	Qty	Description	Code
1			1	Hydraulic pump (Page 210)	
2	4700904703		2	Washer	
3	4700500269		2	Screw	
4	4700500019		2	Screw M8x16H 8.8 A2K	
5	4700904640		2	Washer 8,4x22x3	

Hydraulic pump

392987A

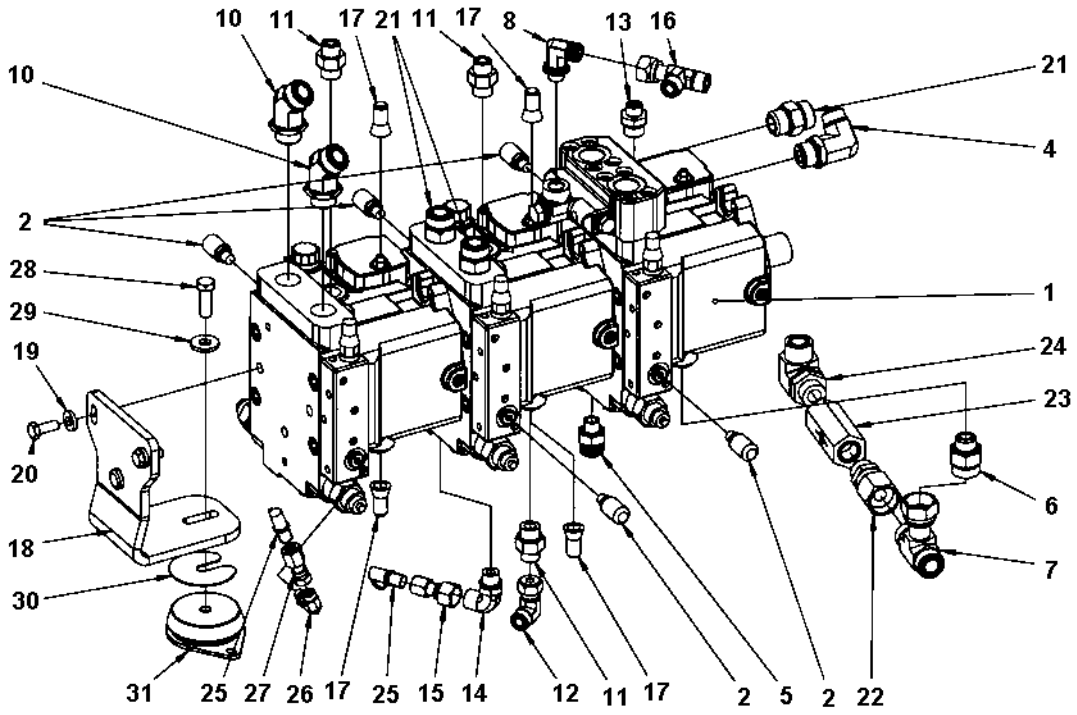

Hydraulic pump

Item	Part No	Rem	Qty	Description	Code
1	4700392521		1	Hydraulic pump	
2	4700901157		5	Measuring nipple	D
4	4700792331		1	Elbow 90 orfs	
5	4700792465		1	Straight connector orfs	
6	4700792336		1	Straight connector orfs	
7	4700791831		1	Tee-connector	
8	4700792333		1	Elbow 90 orfs	
10	4700792157		2	Elbow adapter 45	
11	4700791635		3	Straight connector	
12	4700791745		1	Elbow 90, O-ring with swivel	
13	4700791634		1	Adapter	
14	4700792151		1	Elbow adapter 90	
15	4700792219		1	Straight connector	
16	4700791798		1	T-connector	
17	4700392534		4	Sealing	
18	4700395387		1	Engine bracket Up to 284S00015	
	4700397214		1	Engine bracket From 284S00016	
19	4700904557		3	Washer	
20	4700500028		3	Screw	
21	4700791853		3	Straight connector orfs	
22	4700791824		1	Straight connector	
23	4700376922		1	Check valve	
24	4700791698		1	Elbow 90, O-ring with swivel	
25	4700923405		2	Measuring nipple	D
26	4700792094		1	Elbow 90	
27	4700792649		1	Straight connector orfs	
28	4700500037		1	Screw	
29	4700904213		1	Washer	
30	4700395391		1	Spacer	
31	4700395393		1	Shock absorber	

Hydraulic system, steering Std

393714_1

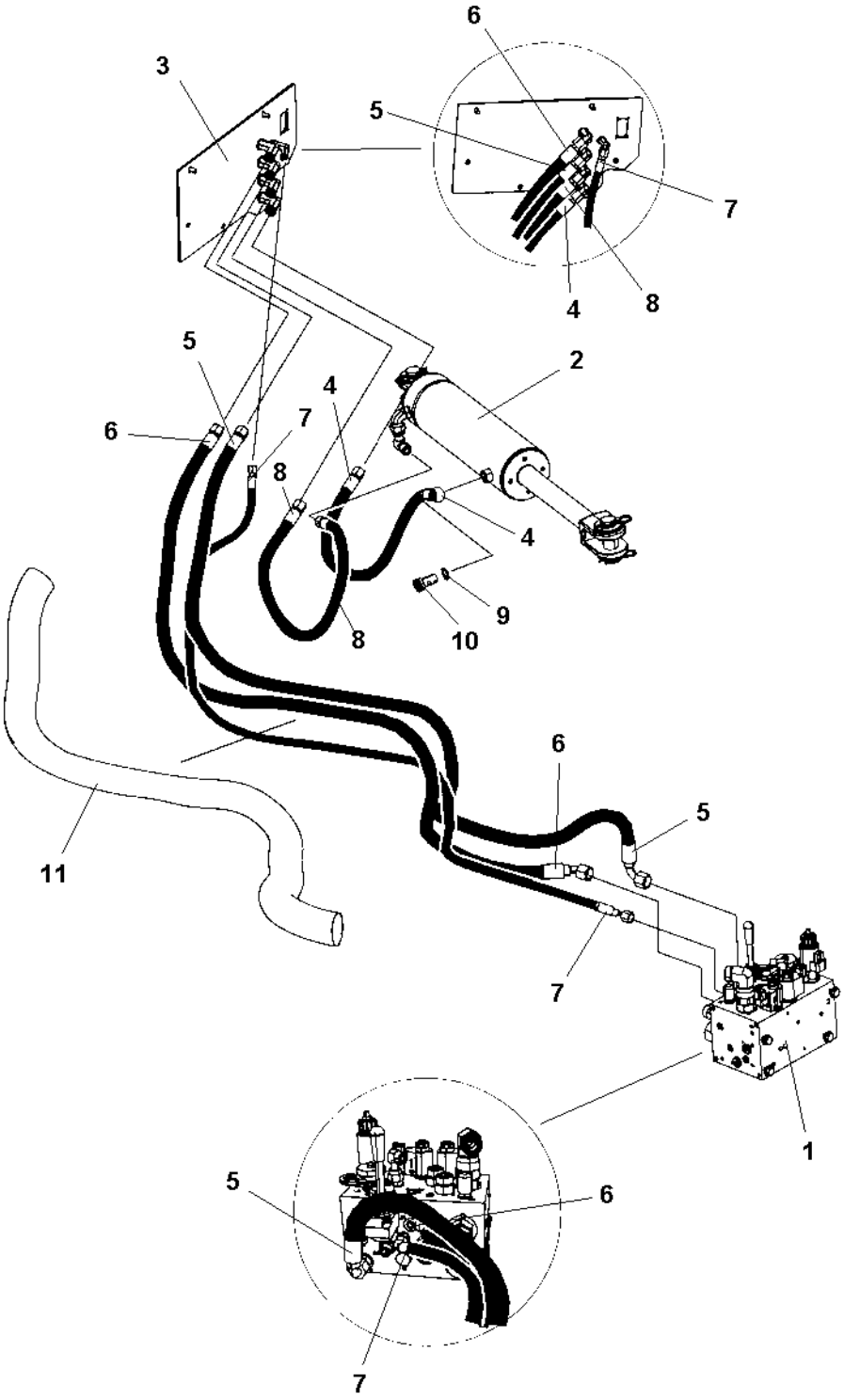

Hydraulic system, steering Std

Item	Part No	Rem	Qty	Description	Code
1			1	Hydraulic valve module (Page 202)	
2			1	Steering cylinder	
3			1	Hose bracket (Page 214)	
4	4700394319		1	Hydraulic hose	
5	4700484157		1	Hydraulic hose	
6	4700484155		1	Hydraulic hose	
7	4700484156		1	Hydraulic hose	
8	4700484160		1	Hydraulic hose	
9	4700162015		2	Seal ring	D
10	4700904292		1	Hollow screw	
11	4700792697		1	Hose guard	

Hose bracket

391096B

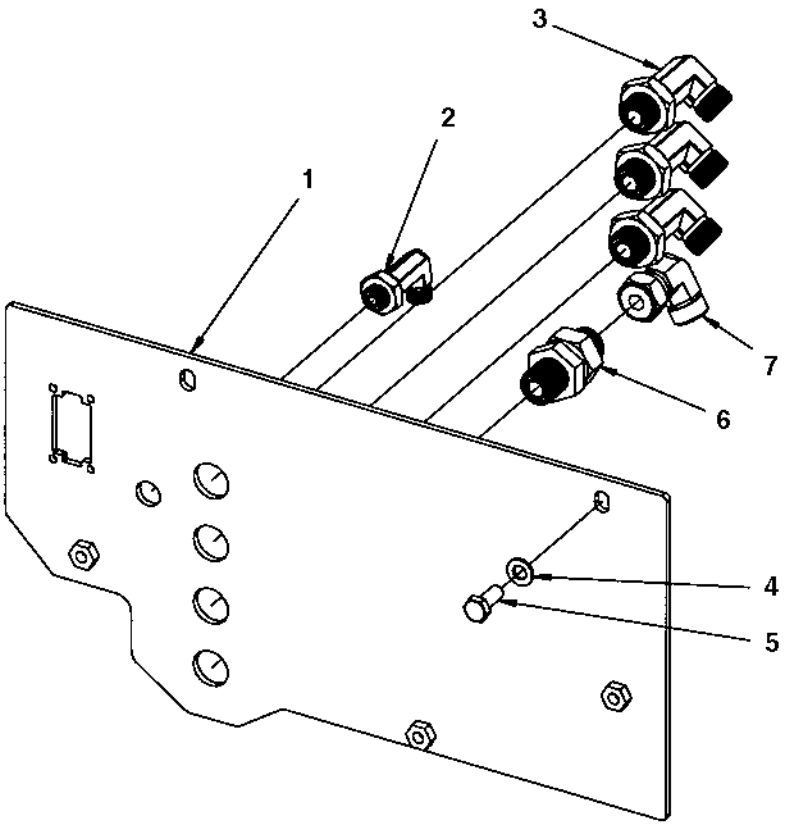

Hose bracket

Item	Part No	Rem	Qty	Description		Code
1	4700391192		1	Hose bracket		
2	4700792343		1	Bulkhead elbow		
3	4700792342		4	Bulkhead elbow		
4	4700904229		2	Washer	8,4x16x1,5	
5	4700500053		2	Screw	M8x20H 8.8	

Hydraulic steering, sliding seat Std

18649

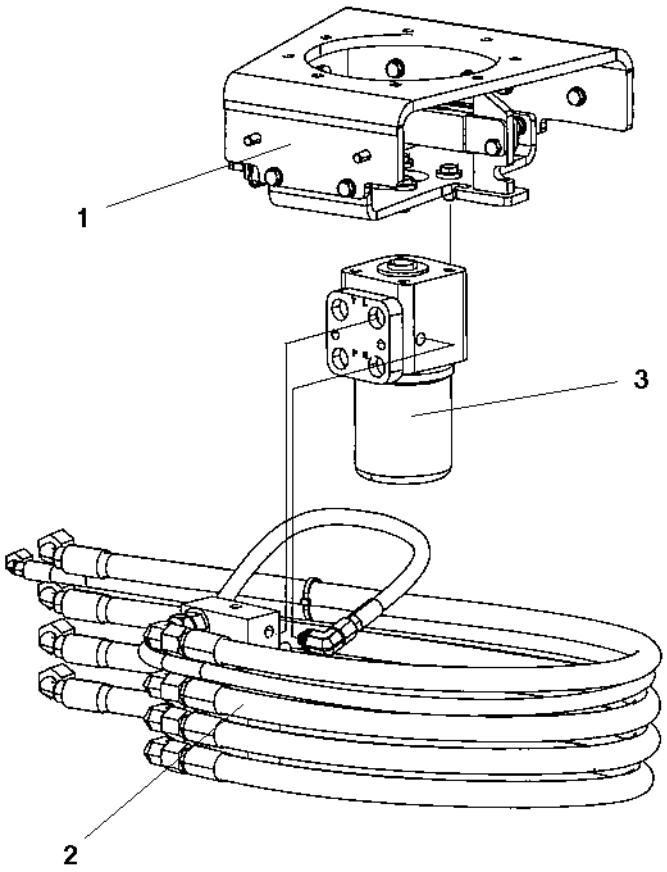

Hydraulic steering, sliding seat Std

Item	Part No	Rem	Qty	Description	Code
1			1	Carrier (Page 374)	
2			1	Steering, slideable (Page 218)	
3	4700394318		1	Pilot valve, steering	C
	4700392758		1	Pilot valve, emergency steering	

Steering, slideable

392708

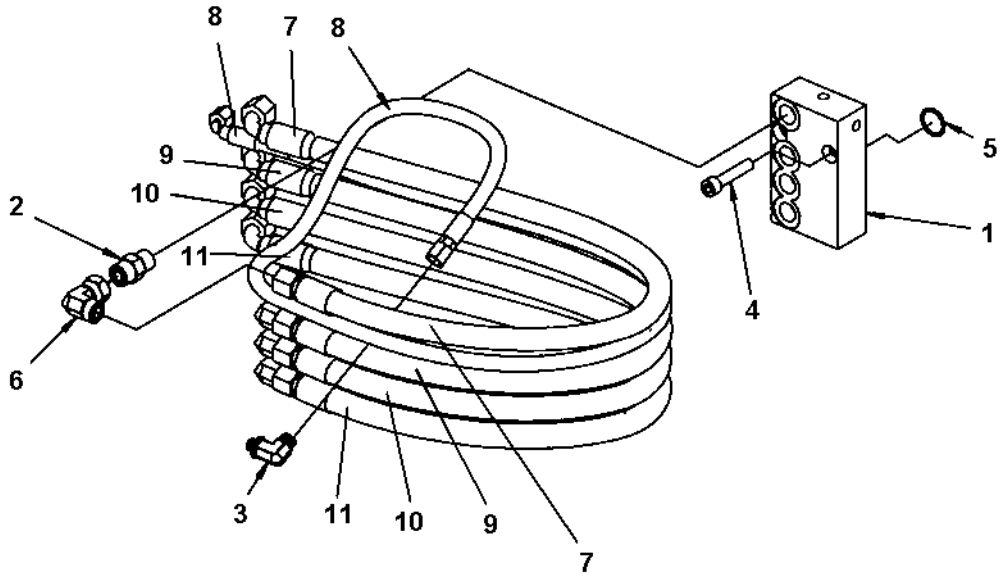

Steering, slideable

Item	Part No	Rem	Qty	Description		Code
1	4700370155		1	Valve block		
2	4700791799		4	Straight connector orfs		
3	4700792334		1	Elbow 90 orfs		
4	4700903773		2	Screw	M10x1x50 8,8	
5	4700160287		4	O-ring		D
6	4700791745		4	Elbow 90, O-ring with swivel		
7	4700484230		1	Hydraulic hose		
8	4700484231		1	Hydraulic hose		
9	4700484230		1	Hydraulic hose		
10	4700484230		1	Hydraulic hose		
11	4700484230		1	Hydraulic hose		

Hydraulic valve module, offset

391575

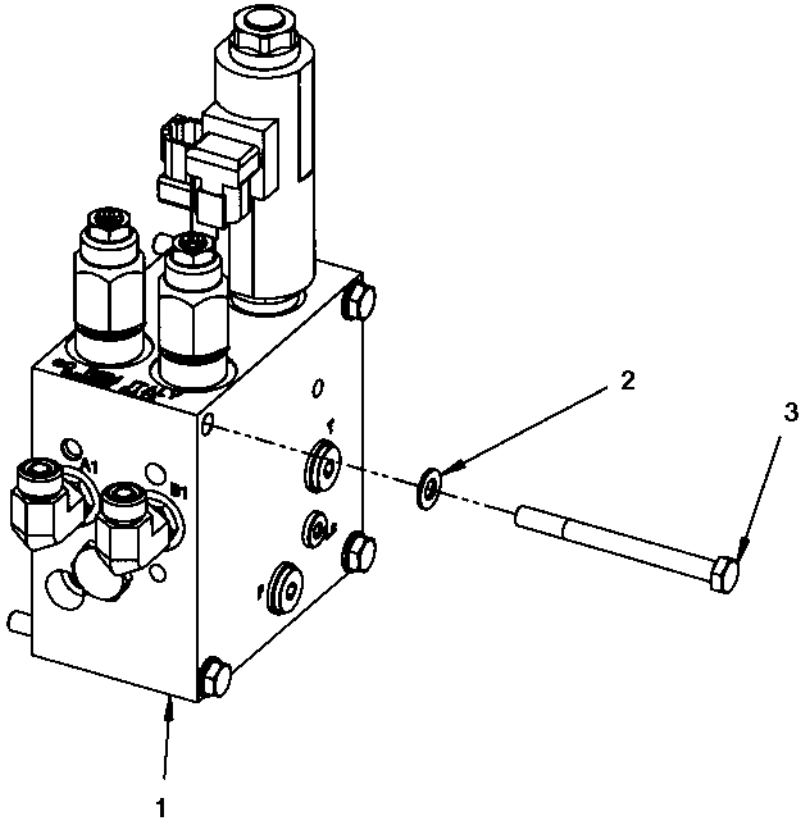

Hydraulic valve module, offset

Item	Part No	Rem	Qty	Description		Code
1			1	Hydraulic valve (Page 222)		
2	4700904229		4	Washer	8,4x16x1,5	
3	4700500115		4	Screw	M8-1,25x90 8.8	

Hydraulic valve

391574

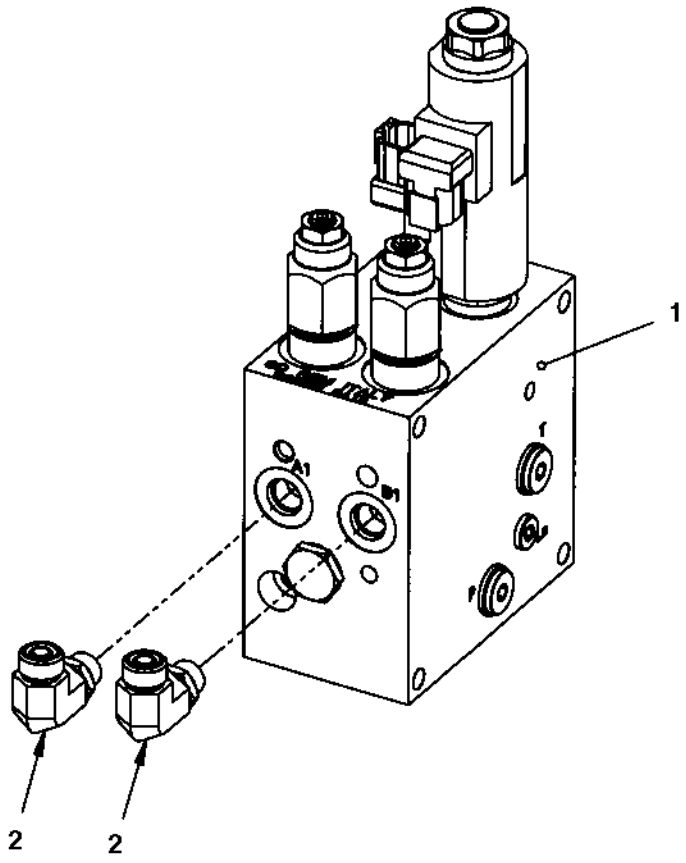

Hydraulic valve

Item	Part No	Rem	Qty	Description	Code
1	4700391017		1	Hydraulic valve (Page 224)	C
2	4700791846		2	Elbow 90, O-ring with swivel	

4700391017 Hydraulic valve

391017_1

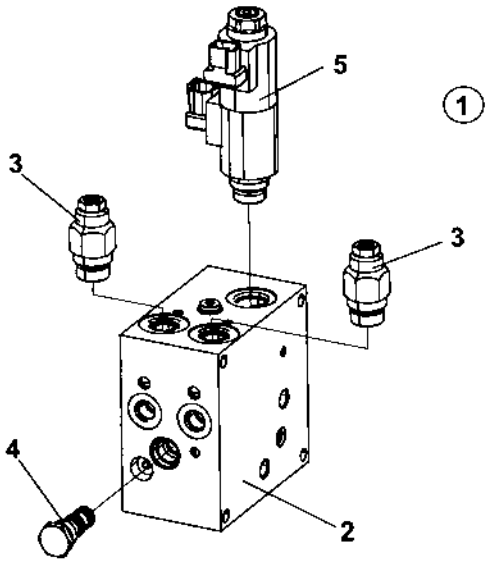

4700391017 Hydraulic valve

Item	Part No	Rem	Qty	Description	Code
1			1	Hydraulic valve	
2			1	.Valve block	
3			2	.Pressure relief valve	
4	4700940572		1	.Shuttle valve	
5			1	.Proportional valve	

Electrical equipment

Item	Part No	Rem	Qty	Description	Code
1				Electric cables, power supply (Page 228)	
2				Electric cables, power supply cab (Page 234)	
3				Electric cables, engine - ECU (Page 236)	
4				Electric cables, sensors/ horn/ back-up alarm (Page 242)	
6				Tachograph (Page 252)	
8				Driving & side direction lights (Page 260)	
9				Rotating beacon, working light (Page 280)	

Electric cables, power supply

393753_1

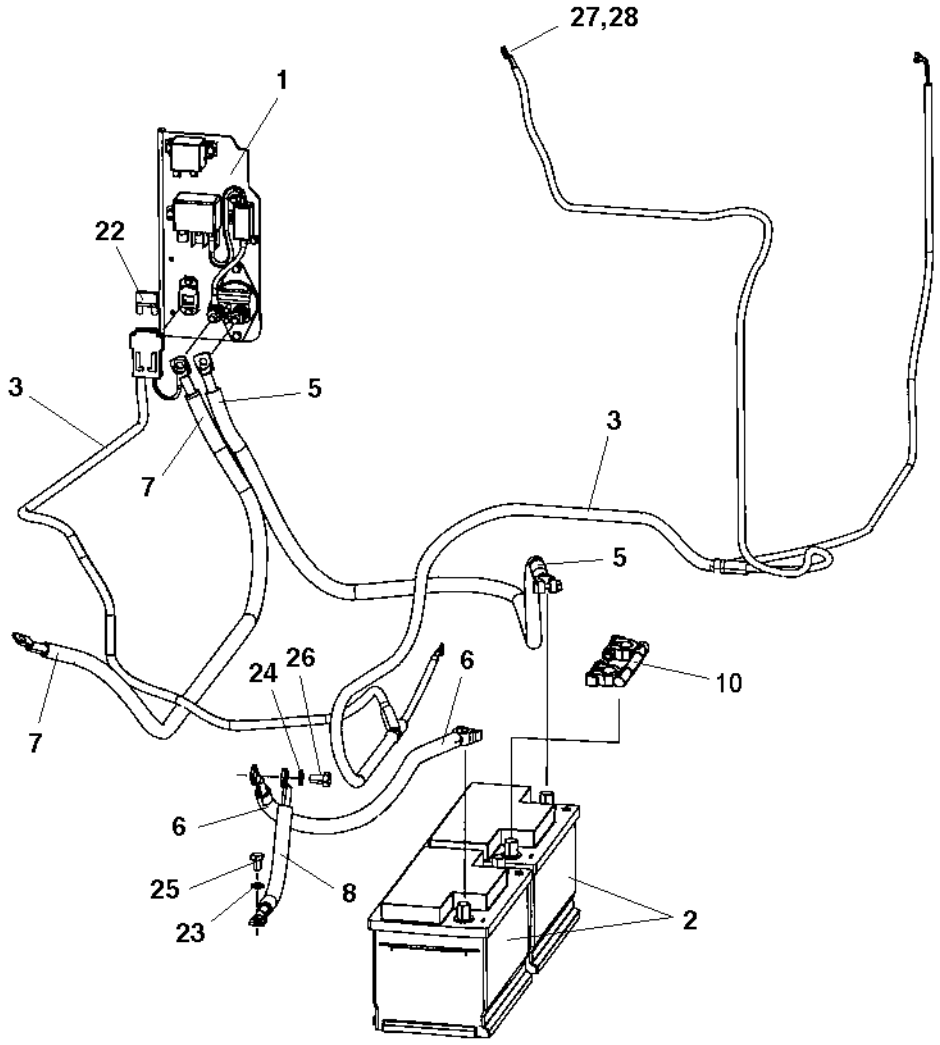

Electric cables, power supply

Item	Part No	Rem	Qty	Description		Code
1			1	Battery disconnector (Page 230)		
2		A		Batteries		
3	4700394821		1	Cable harness, power supply		
5	4700392610		1	Battery cable	+	
6	4700792328		1	Battery cable	-	
7	4700792606		1	Connection cable, coarse		
8	4700335607		1	Connection cable, coarse		
10	4700792684		1	Battery union cable		
22	4700904039		1	Fuse	50A Red High	D
23	4700904637		1	Washer		
24	4700904638		1	Washer	12x22x2	
25	4700500043		1	Screw	M10x16H 8,8	
26	4700500035		1	Screw	M12x020H	
27	4700904229		1	Washer	8,4x16x1,5	
28	4700570005		1	Nut	M8	

A) See section " Rear frame - Engine structure "

Battery disconnector

391634

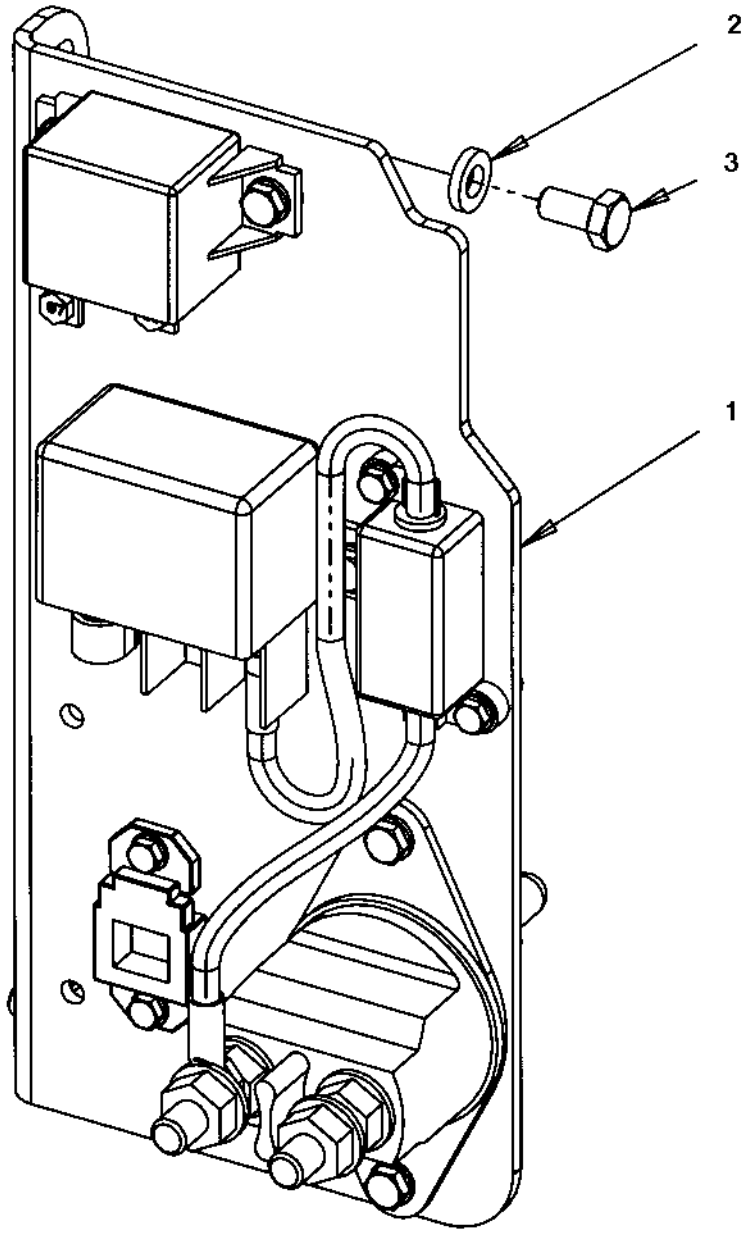

Battery disconnector

Item	Part No	Rem	Qty	Description		Code
1			1	Battery disconnector (Page 232)		
2	4700904556		3	Washer	8,4x16x3,0	
3	4700500019		3	Screw	M8x16H 8.8 A2K	

Battery disconnector

391635

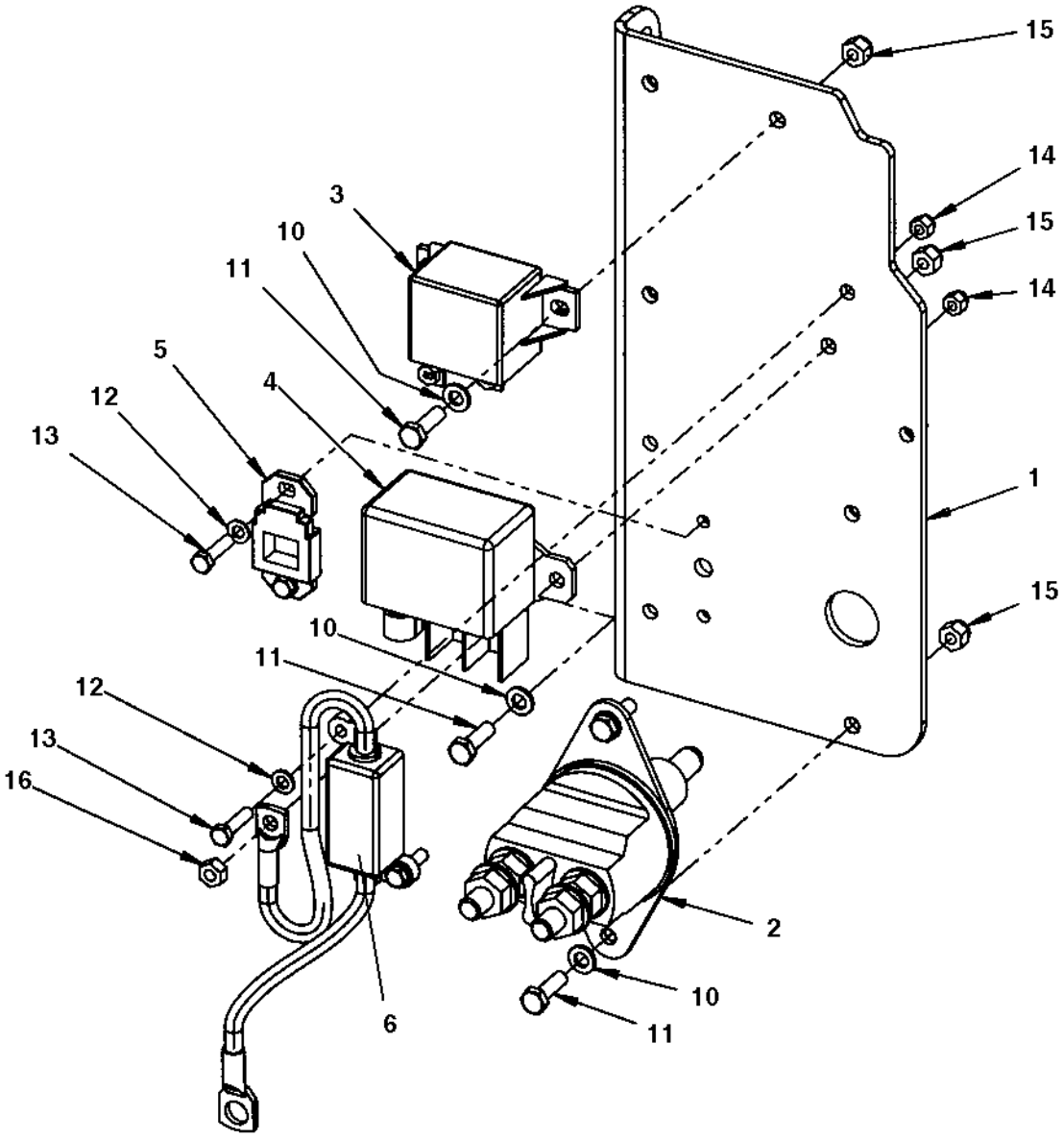

Battery disconnector

Item	Part No	Rem	Qty	Description		Code
1	4700391269		1	Holder		
2	4700903640		1	Battery switch		D
	4700903641		1	.Key		D
3	4700792309		1	Relay		D
4	4700792310		1	Relay		
5	4700904036		1	Fuse holder		
6	4700391585	A	1	Cable harness		
	4700791479		1	.Fuse, Orange	125A	
10	4700904228		6	Washer		
11	4700500040		6	Screw	M6-1x20 8,8	
12	4700904281		4	Washer		
13	4700500060		4	Screw	M5-0,8x20 8.8	
14	4700586001		4	Lock nut		
15	4700586002		6	Lock nut		
16	4700570004		1	Nut	M6X1,00 -8 A2K	

A) Pre-heater

Electric cables, power supply cab

392792

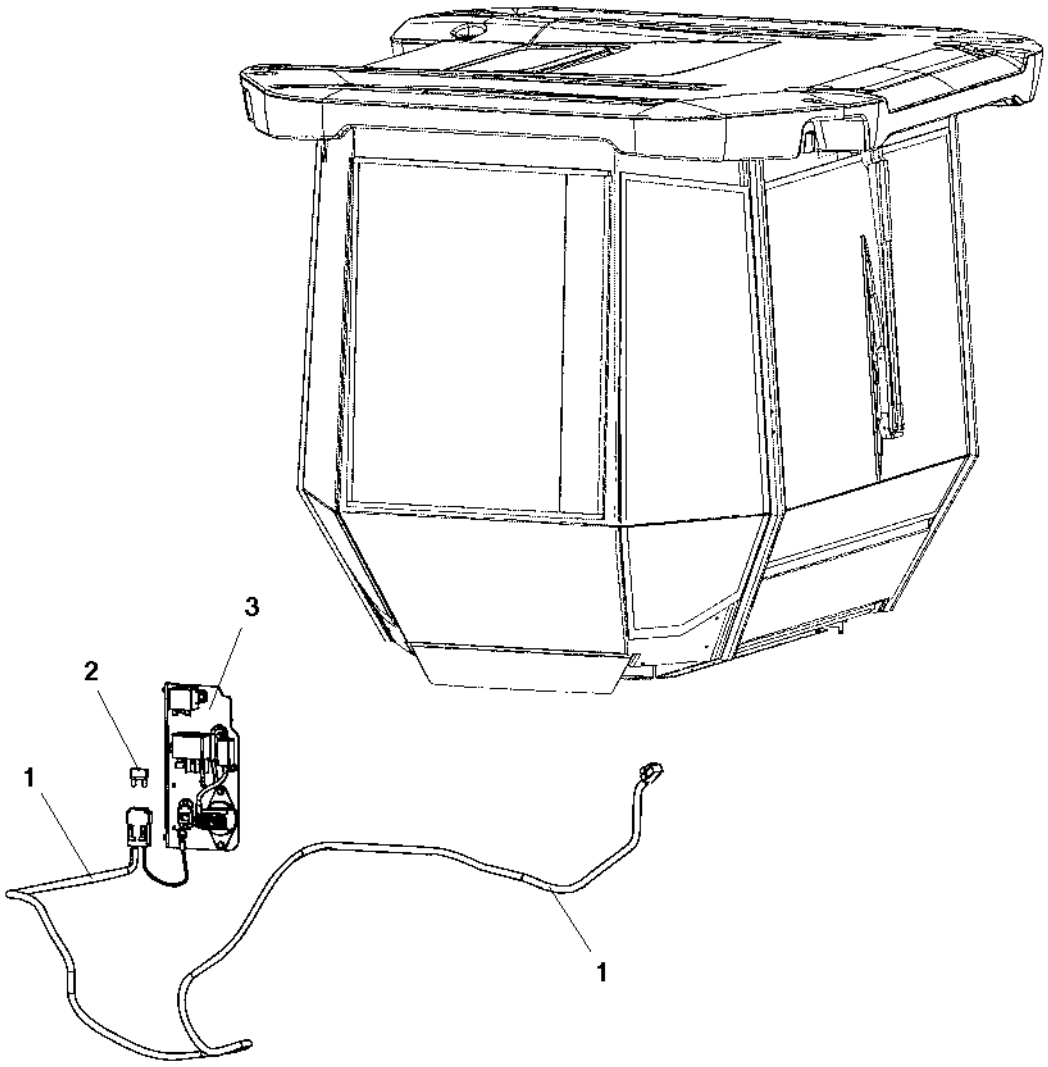

Electric cables, power supply cab

Item	Part No	Rem	Qty	Description		Code
1	4700392156		1	Cable harness, power supply	Cab	
2	4700904039		1	Fuse	50A Red High	D
3			1	Battery disconnector (Page 230)		

Electric cables, engine - ECU

393753_2

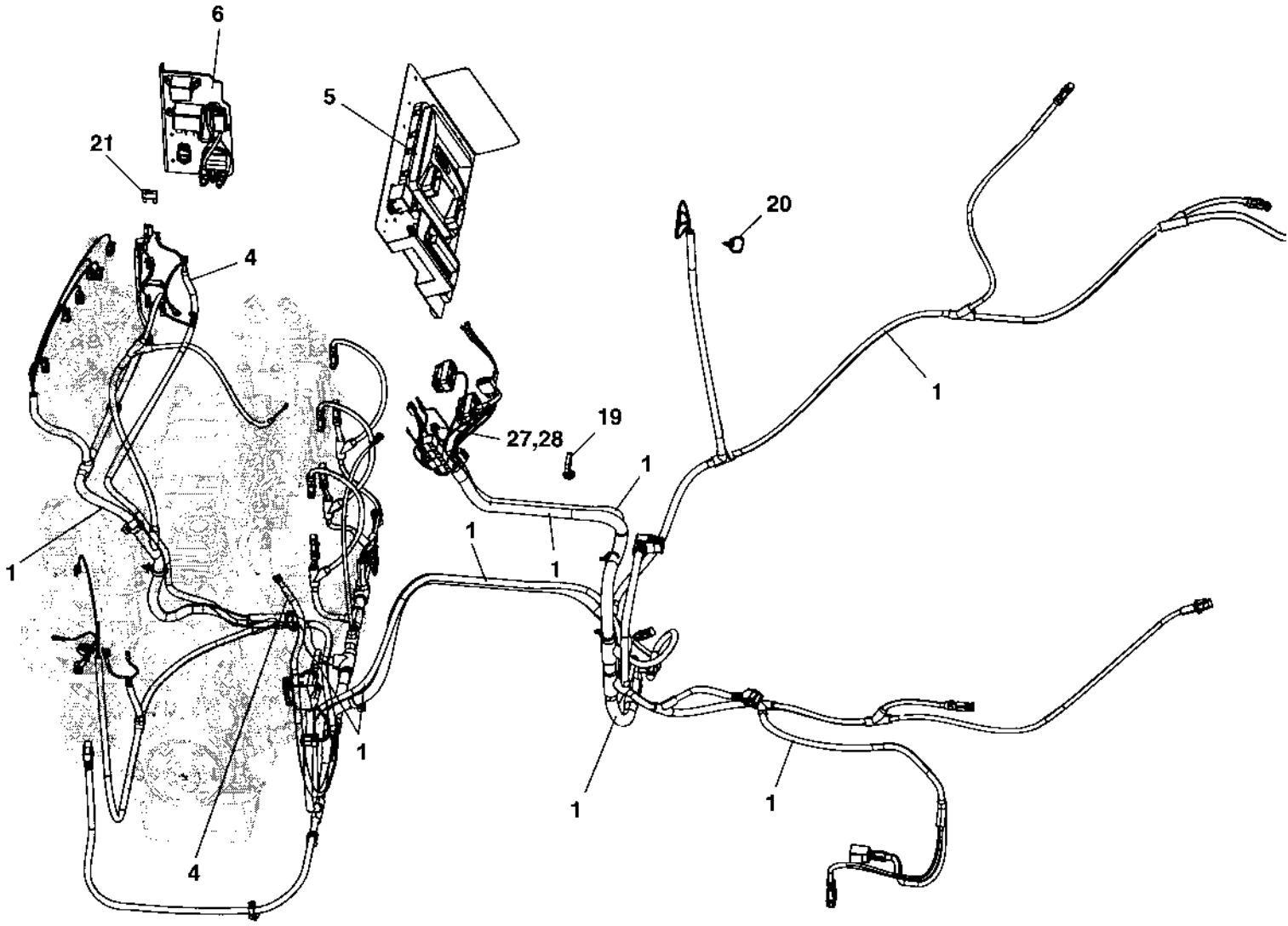

Electric cables, engine - ECU

Item	Part No	Rem	Qty	Description		Code
1	4700397099		1	Cable harness, ECU/CanBus		
4	4700792627		1	Connection cable, coarse		
5			1	Standard ECU module (Page 238)		
6			1	Battery disconnector (Page 232)		
19	4700792442		1	Cable tie with holder		
20	4700792441		21	Cable tie with holder		
21	4700904037		1	Fuse	30A	D
27	4700904229		1	Washer	8,4x16x1,5	
28	4700570005		1	Nut	M8	

Standard ECU module

391632

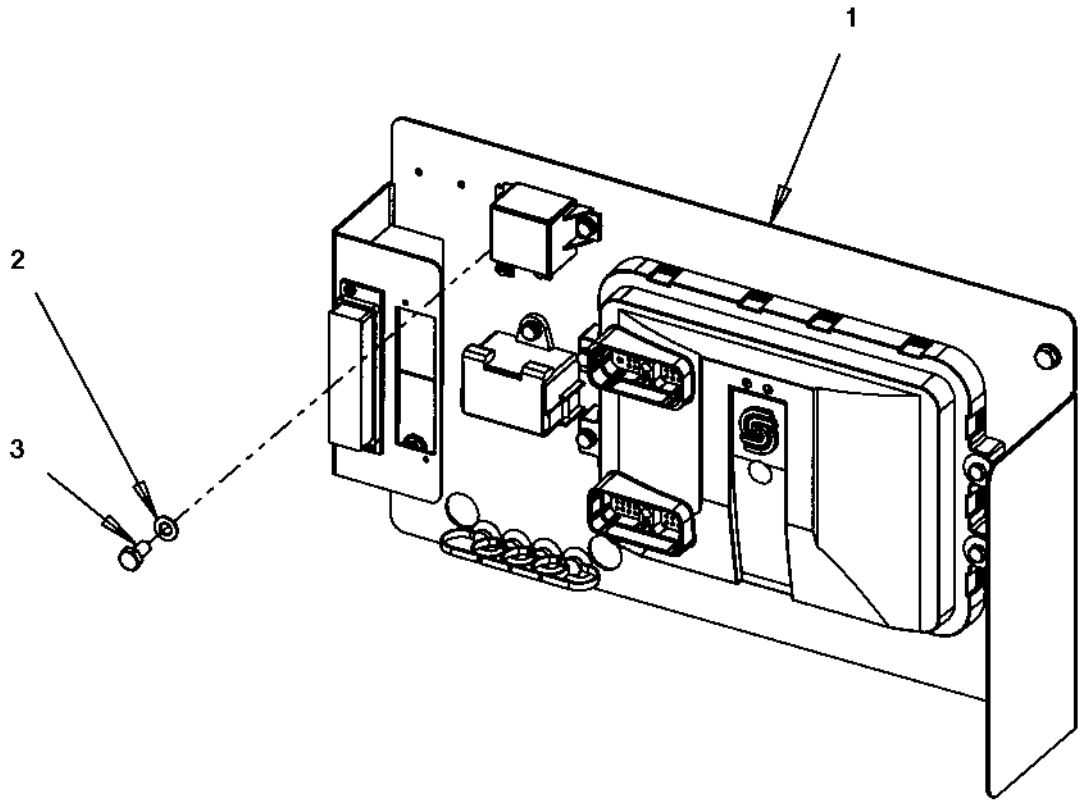

Standard ECU module

Item	Part No	Rem	Qty	Description		Code
1			1	Standard ECU assembly (Page 240)		
2	4700904229		4	Washer	8,4x16x1,5	
3	4700500019		4	Screw	M8x16H 8.8 A2K	

Standard ECU assembly

391633

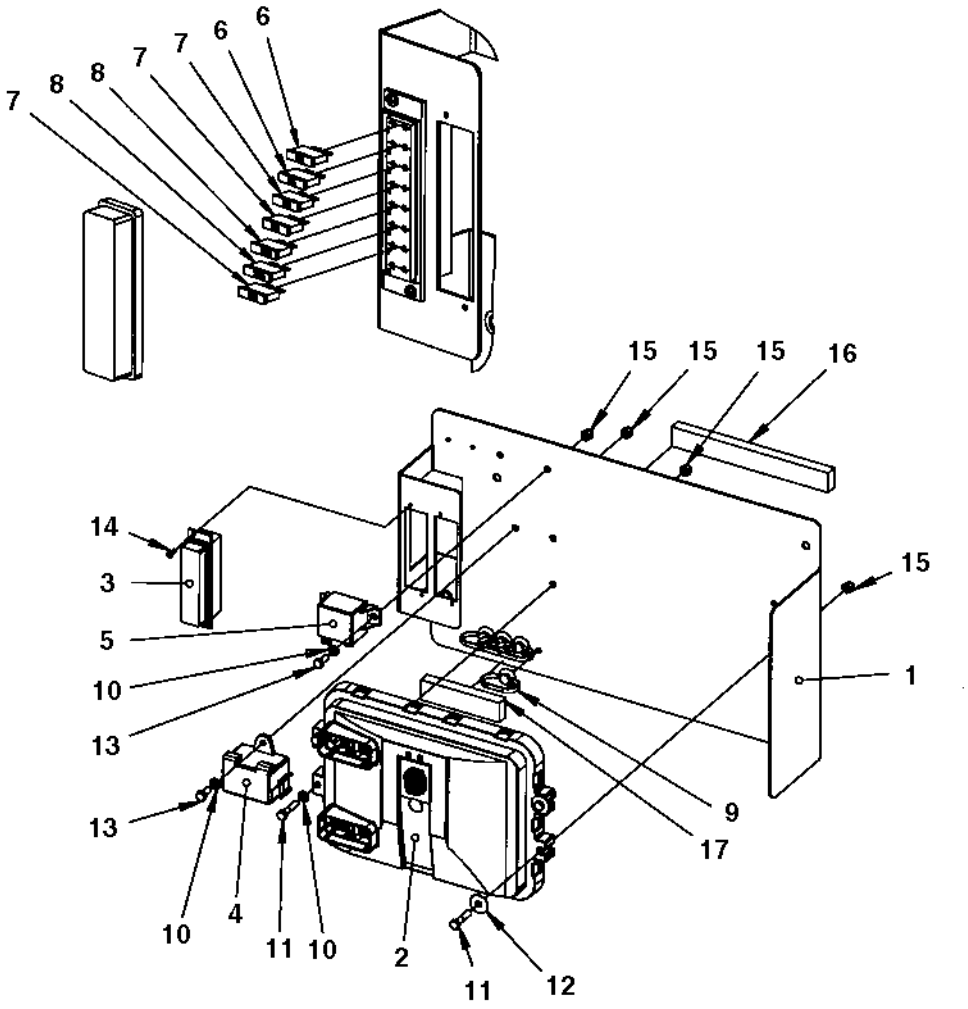

Standard ECU assembly

Item	Part No	Rem	Qty	Description		Code
1	4700391213		1	Mounting plate		
2	4700390860		1	Control unit		
3	4700791185		2	Fuse box		
4	4700791551		1	Junction block		
5	4700792309		1	Relay		D
6	4700901225		2	Fuse	5A	B
7	4700901227		3	Fuse	10A	B
8	4700903741		2	Fuse	20A Yellow Medium	B
9	4700792441		4	Cable tie with holder		
10	4700904228		5	Washer		
11	4700500015		4	Screw	M6-1x30 8,8	
12	4700928467		2	Washer		
13	4700500013		3	Screw	M6-1x16 8,8	
14	4700901767		4	Screw	ST3,5x9,5 Black	
15	4700586002		7	Lock nut		
16	4700791597	A	1XL	Rubber strip		
17	4700791597	B	1XL	Rubber strip		

A) L= 0,2 m
B) L= 0,1 m

Electric cables, sensors/ horn/ back-up alarm

18992

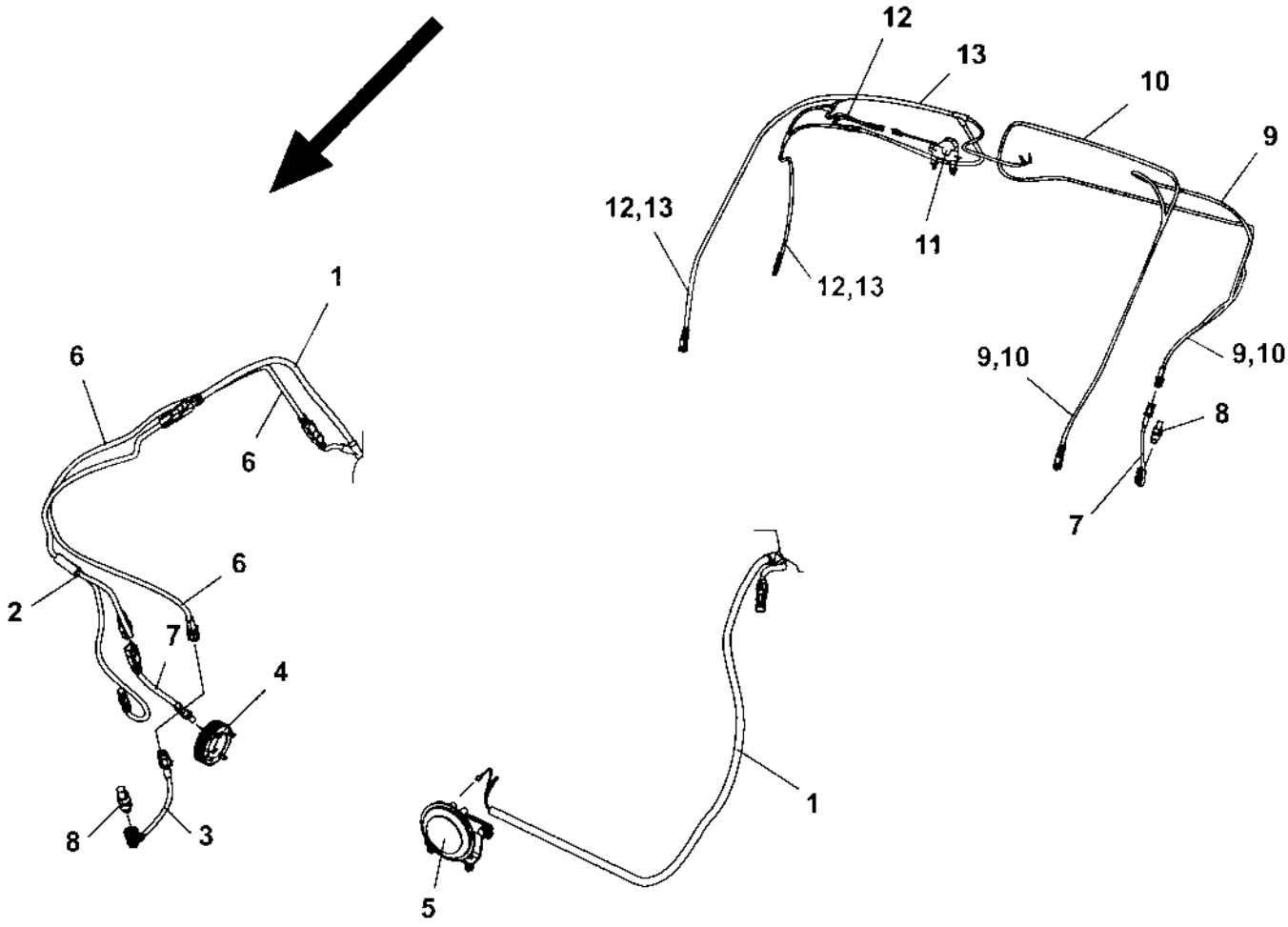

Electric cables, sensors/ horn/ back-up alarm

Item	Part No	Rem	Qty	Description	Code
1		1	1	Cable harness	
2	4700397207	A,C	1	Cable harness	
3	4700393762	A,C	1	Cable harness	
4	4700391292		1	Gear wheel	
	4700508048		4	Screw	
5			1	Horn module (Page 244)	
6	4700396259	A,D	1	Cable harness	
7	4700396304	D	2	Cable harness	
8	4700390717		2	Frequency sensor	
9	4700396260	B,D	1	Cable harness	
10	4700396261	E,D	1	Cable harness	
11			1	Back-up alarm module (Page 248)	
12	4700391209	B	1	Cable harness	
13	4700397210	E	1	Cable harness	

1) Main harness, see section " Electric cables, power supply"
A) Front drum
B) Rear drum, Std
C) Speed
D) Frequency
E) Rear drum, offset

Horn module

396836

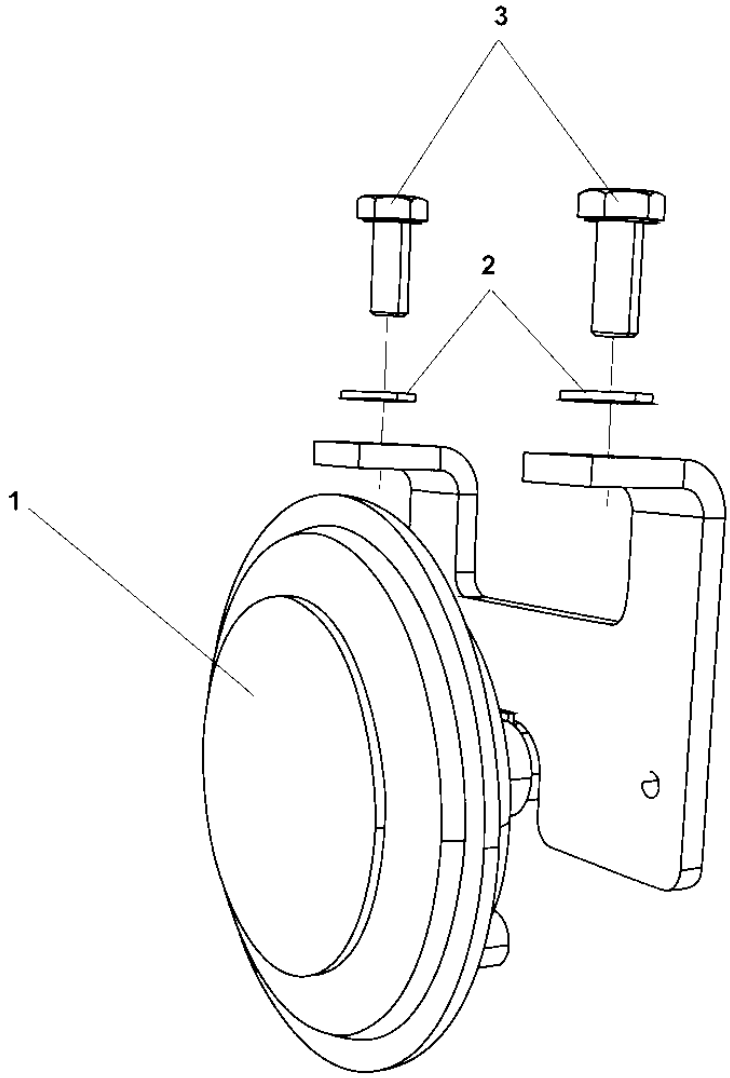

Horn module

Item	Part No	Rem	Qty	Description		Code
1			1	Horn (Page 246)		
2	4700904229		2	Washer	8,4x16x1,5	
3	4700500053		2	Screw	M8x20H 8.8	

Horn

396837

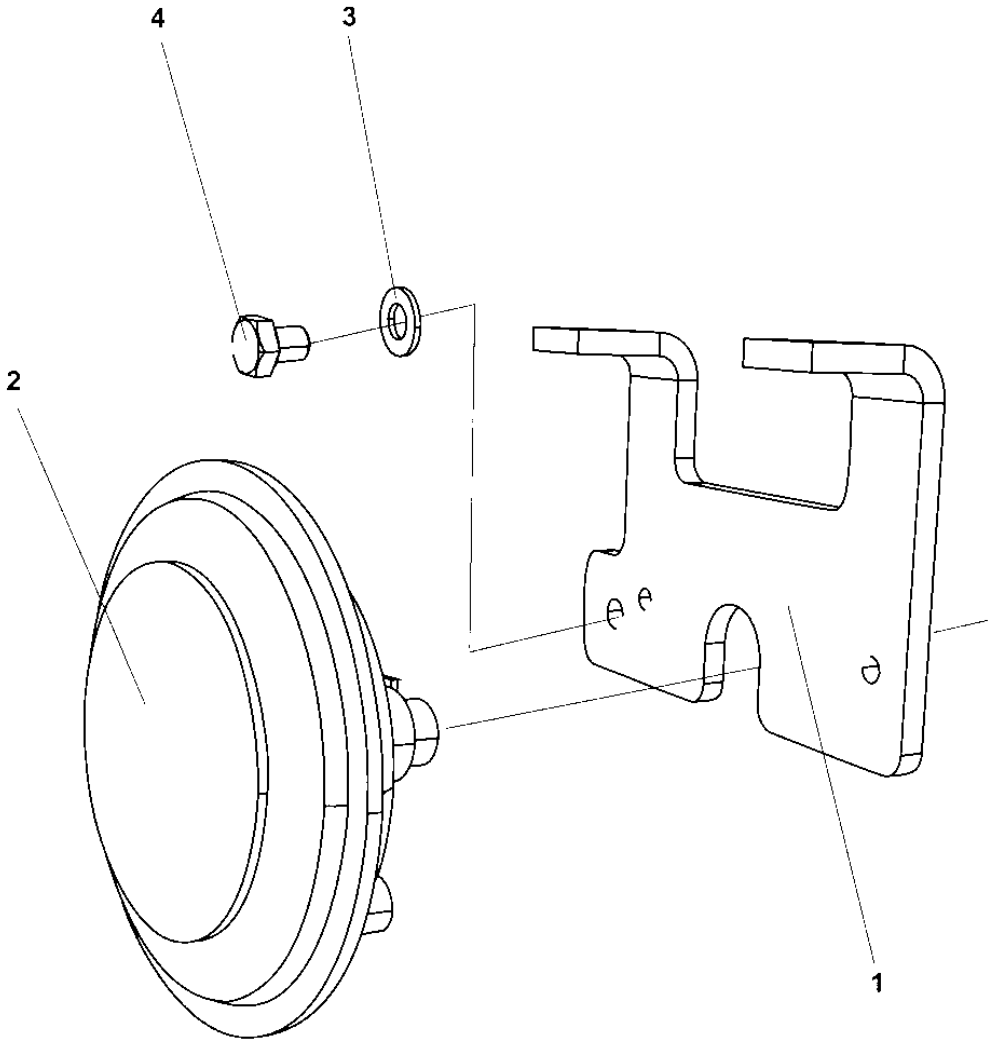

Horn

Item	Part No	Rem	Qty	Description	Code
1	4700396768		1	Bracket	
2	4700999014		1	Horn	
3	4700904229		1	Washer 8,4x16x1,5	
4	4700500042		1	Screw	

Back-up alarm module

396834

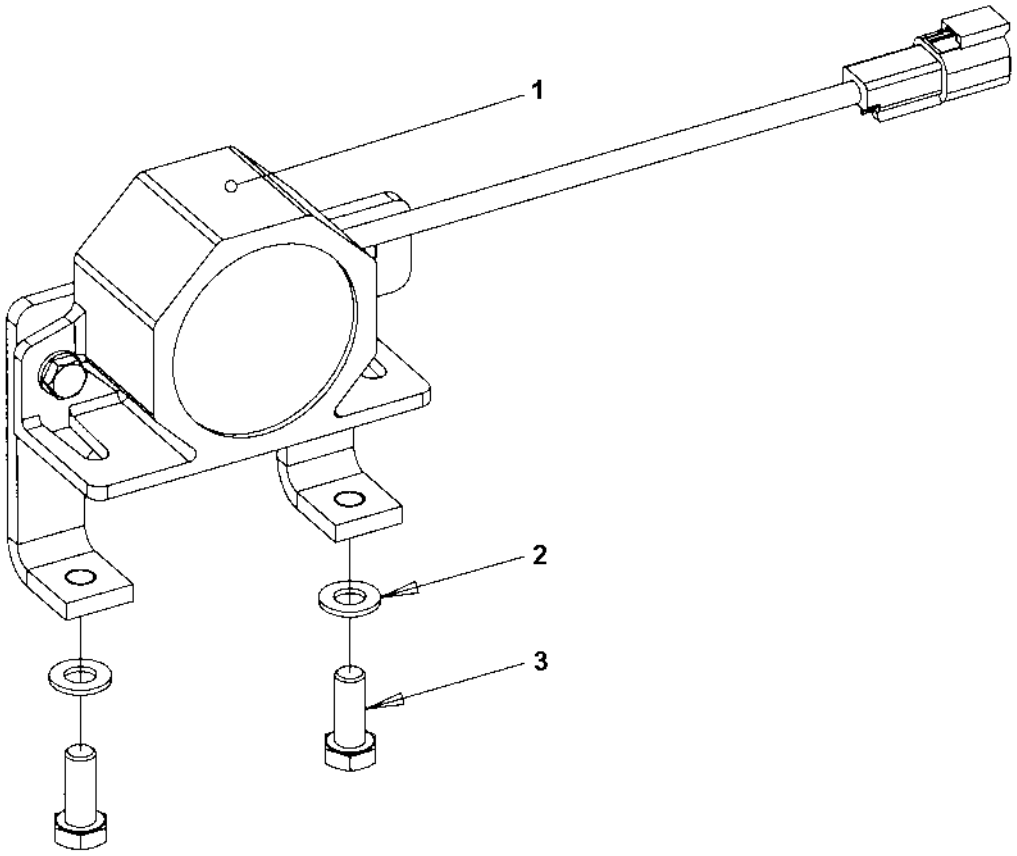

Back-up alarm module

Item	Part No	Rem	Qty	Description		Code
1			1	Back-up alarm (Page 250)		
2	4700904229		2	Washer	8,4x16x1,5	
3	4700500053		2	Screw	M8x20H 8.8	

Back-up alarm

396835

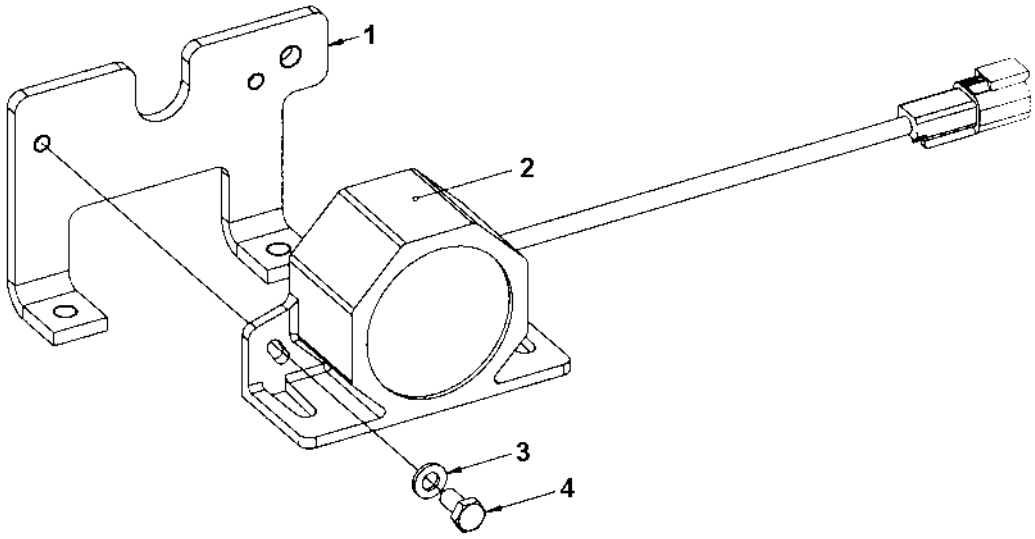

Back-up alarm

Item	Part No	Rem	Qty	Description		Code
1	4700396768		1	Bracket		
2	4700904911		1	Back-up alarm		
3	4700904228		2	Washer		
4	4700500012		2	Screw	M6x12	

Tachograph

18687

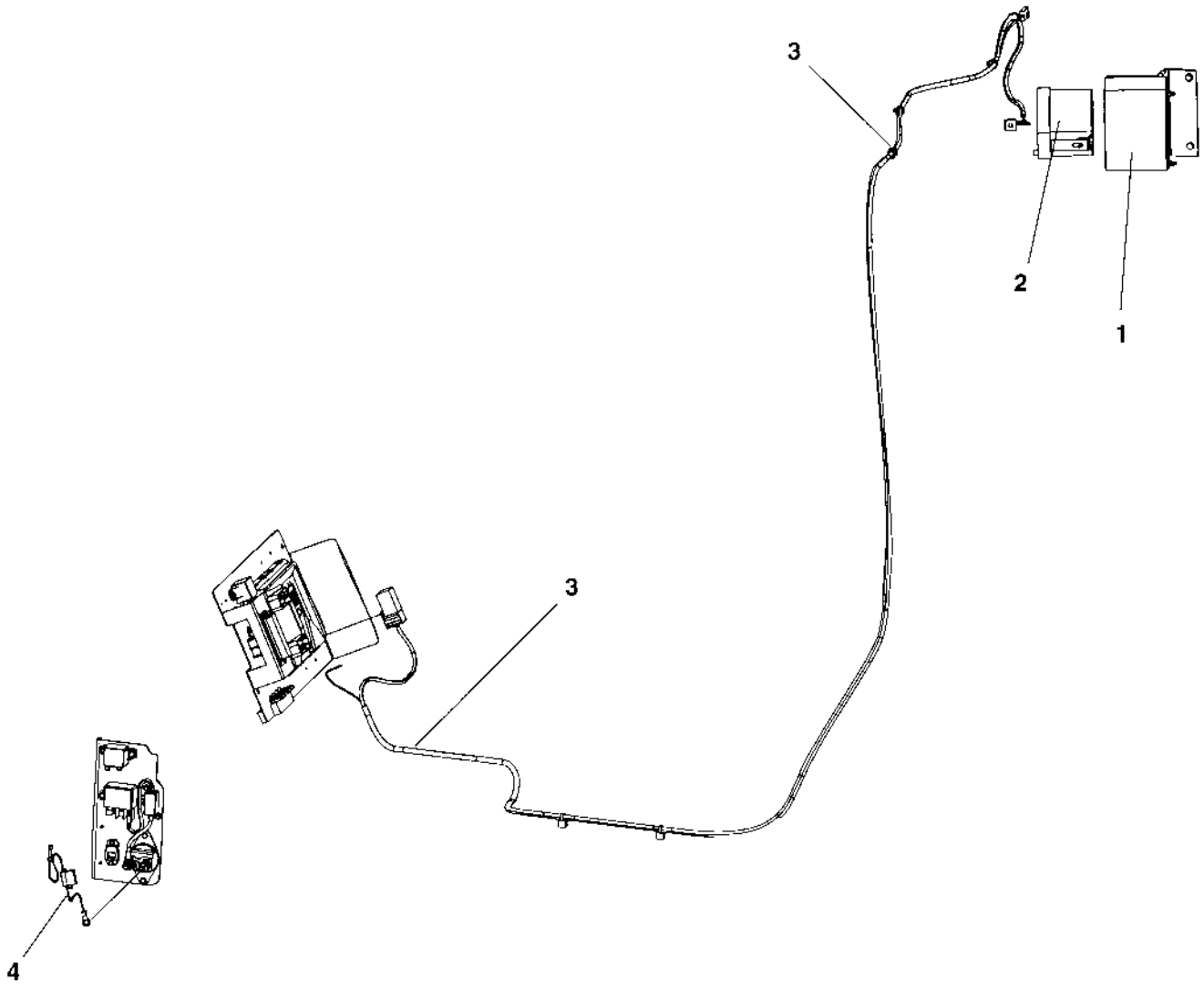

Tachograph

Item	Part No	Rem	Qty	Description	Code
1			1	Tachograph holder module (Page 254)	
2	4700395226		1	Tachograph	
3			1	Cable harness kit (Page 256)	
4			1	Power supply module (Page 258)	

Tachograph holder module

393812

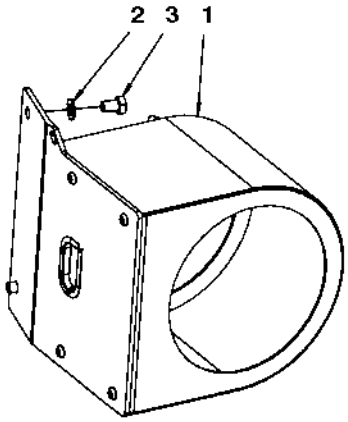

Tachograph holder module

Item	Part No	Rem	Qty	Description		Code
1	4700393776		1	Tachograph holder		
2	4700904229		2	Washer	8,4x16x1,5	
3	4700500018		2	Screw	M8-1,25x12 8,8	

Cable harness kit

394930

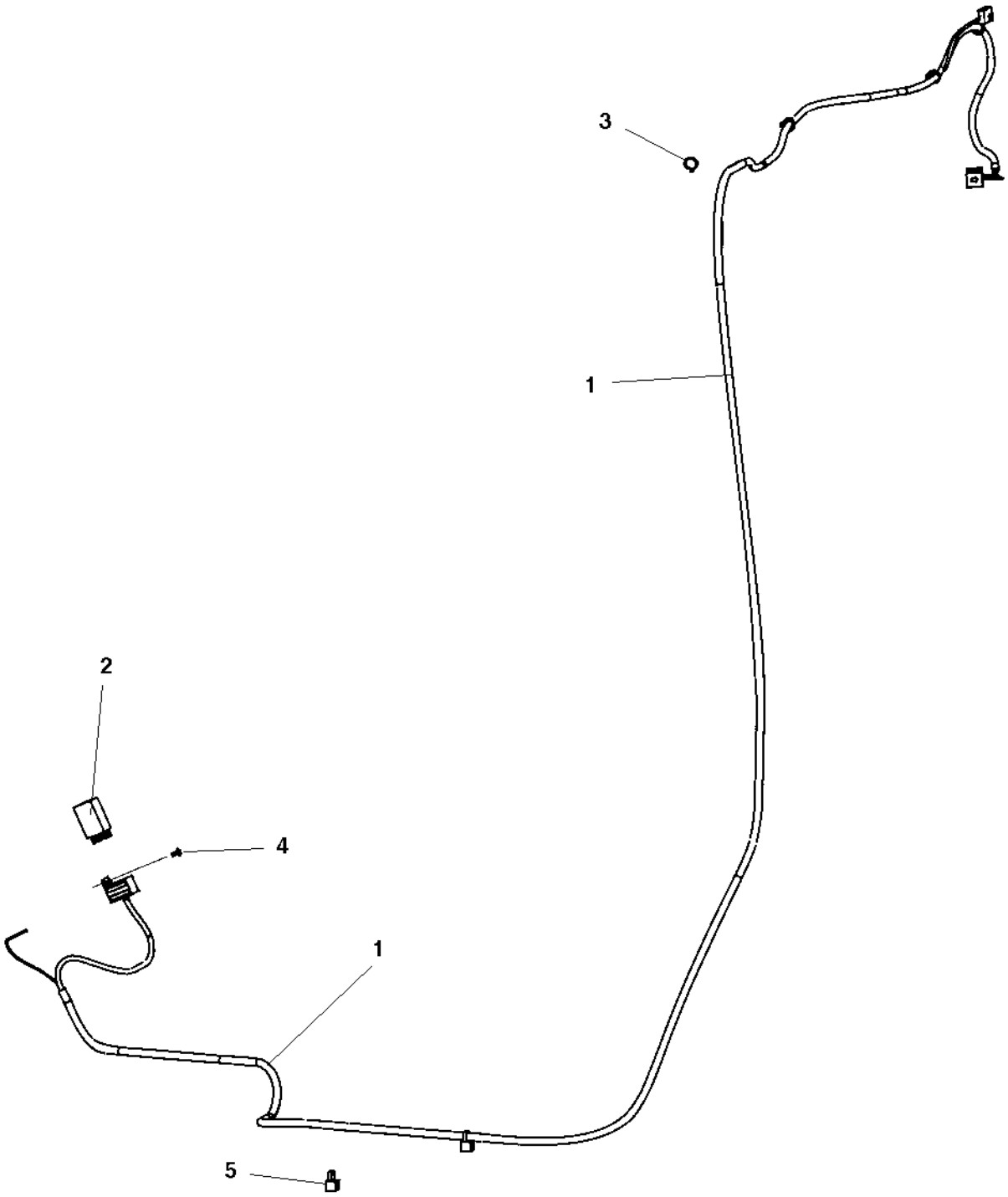

Cable harness kit

Item	Part No	Rem	Qty	Description	Code
1	4700394931		1	Cable harness	
2	4700395023		1	Frequency converter	
3	4700313041		8	Cable ties	
4	4700792210		1	Screw torx	
5	4700792667		2	Cable tie with holder	

Power supply module

394698

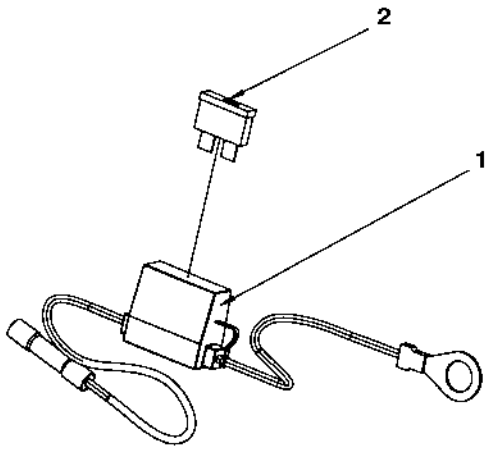

Power supply module

Item	Part No	Rem	Qty	Description		Code
1	4700394696		1	Power supply cable		
2	4700901227		1	Fuse	10A	B

Driving & side direction lights

18646

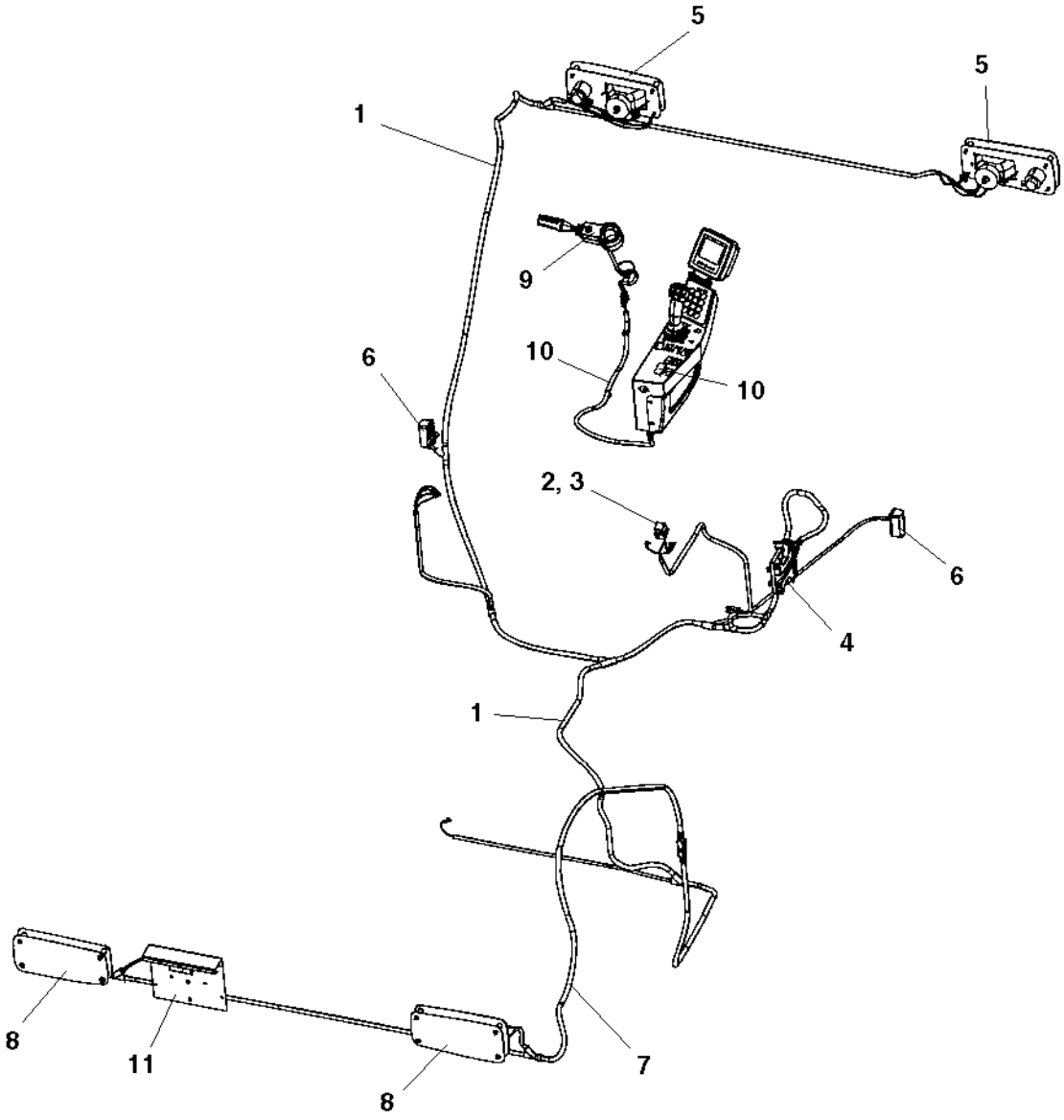

Driving & side direction lights

Item	Part No	Rem	Qty	Description	Code
1	4700392152		1	Cable harness	
2	4700792422		1	Relay	
3	4700792210		1	Screw torx	
4			1	Accessories ECU module (Page 262)	
5			2	Driving lights, front (Page 264)	RH
			2	Driving lights, front (Page 266)	LH
6			2	Turn signals (Page 268)	
7	4700392154		1	Cable harness	Std
	4700392155		1	Cable harness	Off-set
8			2	Driving lights, rear (Page 270)	
9			1	Steering column switch module (Page 272)	
10			1	Cable harness and switch module (Page 274)	
11			1	Registration plate light module (Page 276)	

Accessories ECU module

391643

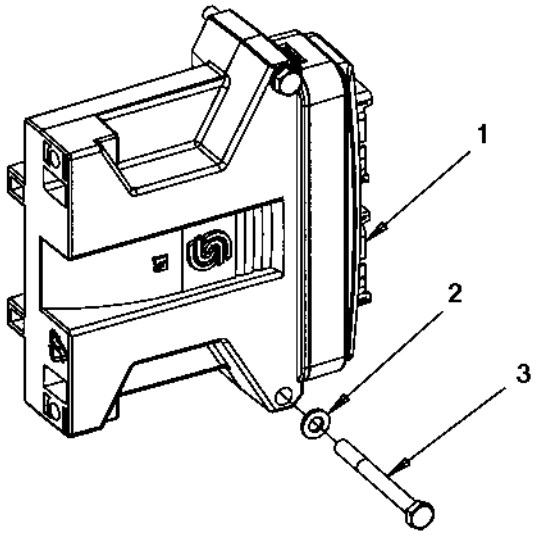

Accessories ECU module

Item	Part No	Rem	Qty	Description		Code
1	4700390862		1	Control unit without software		
2	4700904228		2	Washer		
3	4700500187		2	Screw	M6x60	

Driving lights, front RH

391644

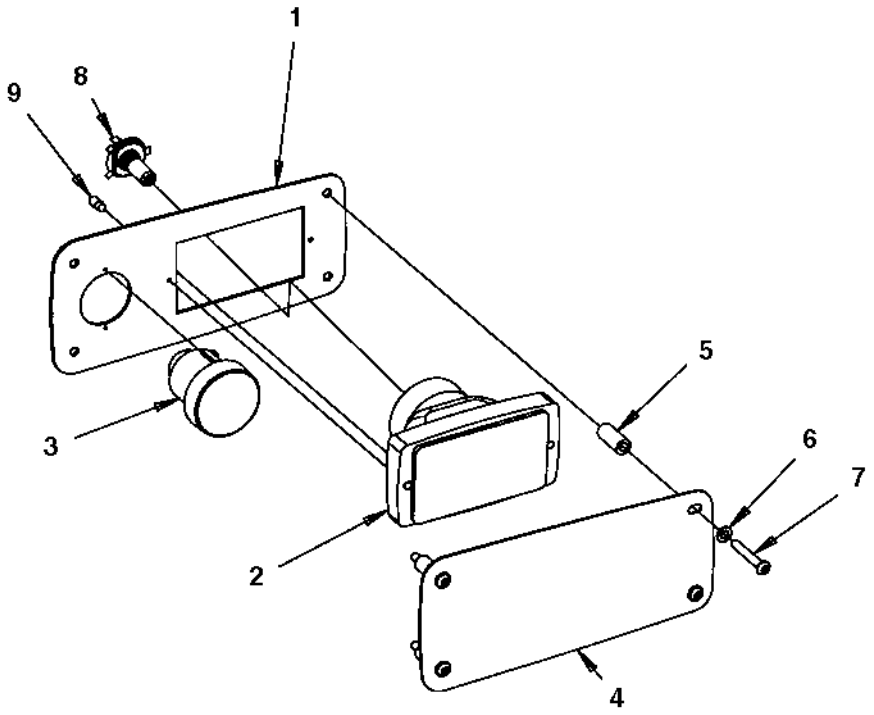

Driving lights, front RH

Item	Part No	Rem	Qty	Description		Code
1	4700390434		1	Lights bracket		
2	4700791951		1	Headlight		
3	4700792521		1	Direction indicator		
4	4700390436		1	Protecting cover		
5	4700391115		4	Spacer sleeve		
6	4700904229		4	Washer	8,4x16x1,5	
7	4700792361		4	Hexagon socket head cap screw		
8	4700792353		1	Bulb	24V 75/70W H4	
9	4700792350		1	Bulb	24V 2W	

Driving lights, front LH

391645

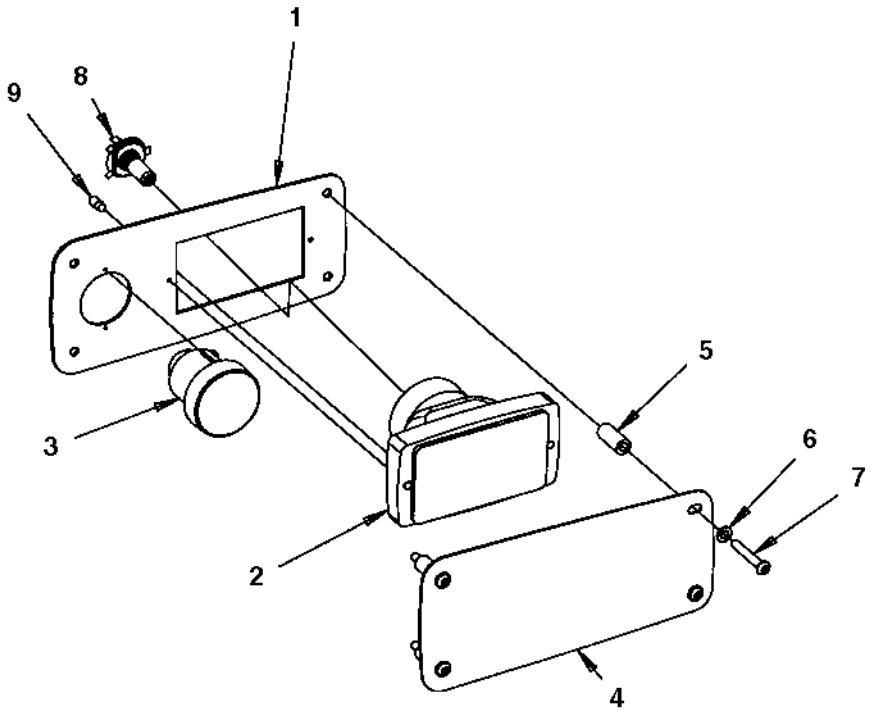

Driving lights, front LH

Item	Part No	Rem	Qty	Description	Code
1	4700390434		1	Lights bracket	
2	4700792059		1	Headlight	
3	4700792521		1	Direction indicator	
4	4700390436		1	Protecting cover	
5	4700391115		4	Spacer sleeve	
6	4700904229		4	Washer	8,4x16x1,5
7	4700792361		4	Hexagon socket head cap screw	
8	4700792353		1	Bulb	24V 75/70W H4
9	4700792350		1	Bulb	24V 2W

Turn signals

392278

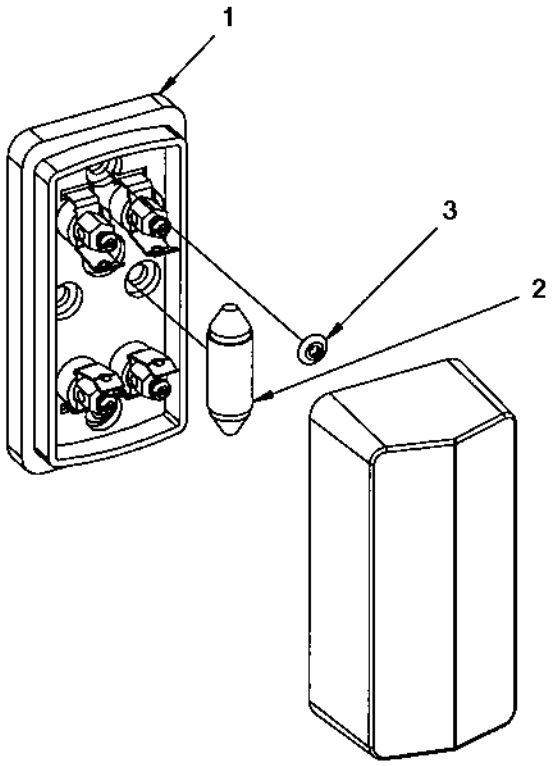

Turn signals

Item	Part No	Rem	Qty	Description		Code
1	4700902064		1	Direction lights		
2	4700792354		1	Bulb	24V 5W	
3	4700923253		2	Rivet		

Driving lights, rear

391652

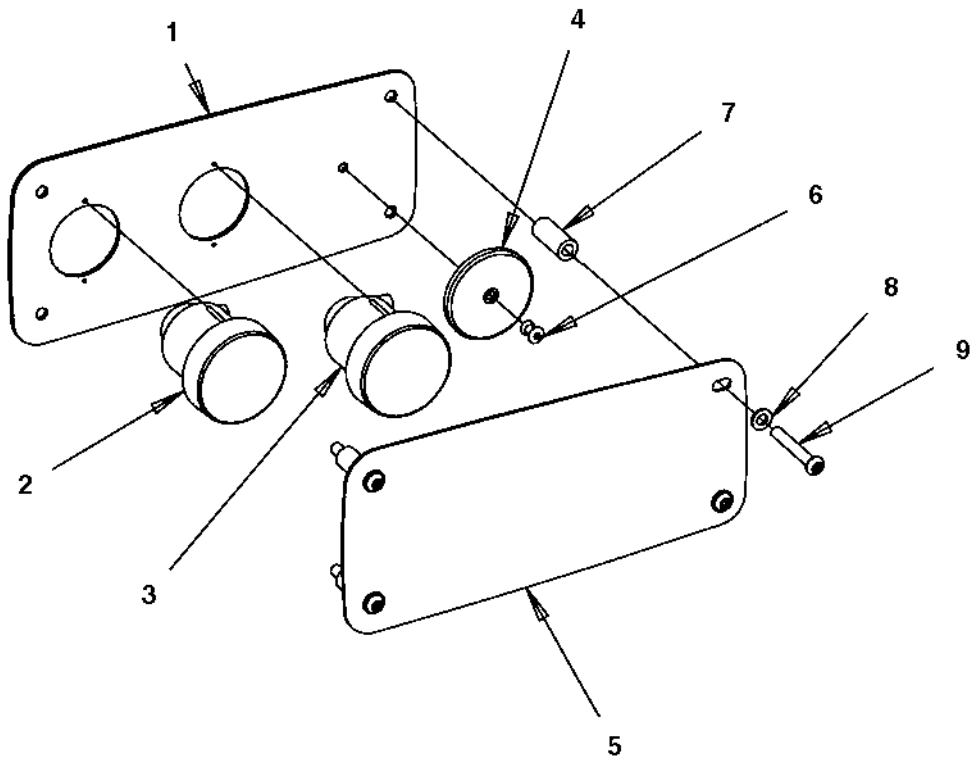

Driving lights, rear

Item	Part No	Rem	Qty	Description	Code
1	4700390435		1	Lights bracket	
2	4700792520		1	Direction indicator	
	4700792349		1	.Bulb	24V 21W
3	4700792519		1	Brake/position light	
	4700792351		1	.Bulb	24V 21/5W
4	4700791956		1	Reflector, red	
5	4700390436		1	Protecting cover	
6	4700791754		1	Blind rivet	
7	4700391115		4	Spacer sleeve	
8	4700904229		4	Washer	8,4x16x1,5
9	4700792361		4	Hexagon socket head cap screw	

Steering column switch module

392449

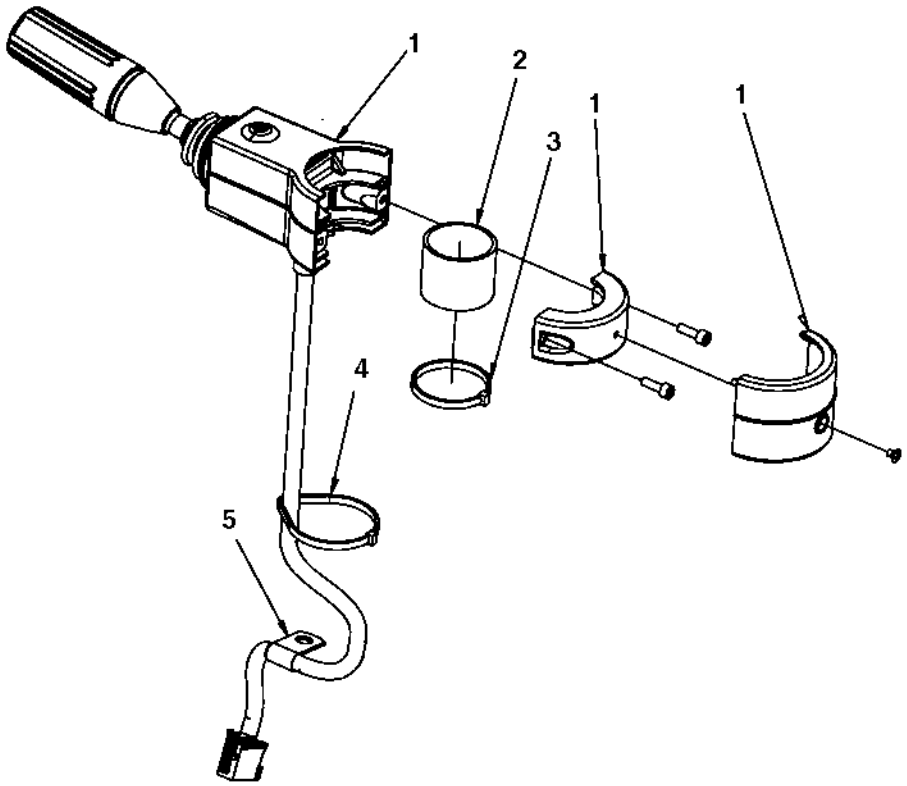

Steering column switch module

Item	Part No	Rem	Qty	Description	Code
1	4700392450		1	Steering column switch	
2	4700392451		1	Rubber cloth	
3	4700313041		1	Cable ties	
4	4700792609		1	Cable ties	
5	4700921077		1	Clamp	

Cable harness and switch module

392279

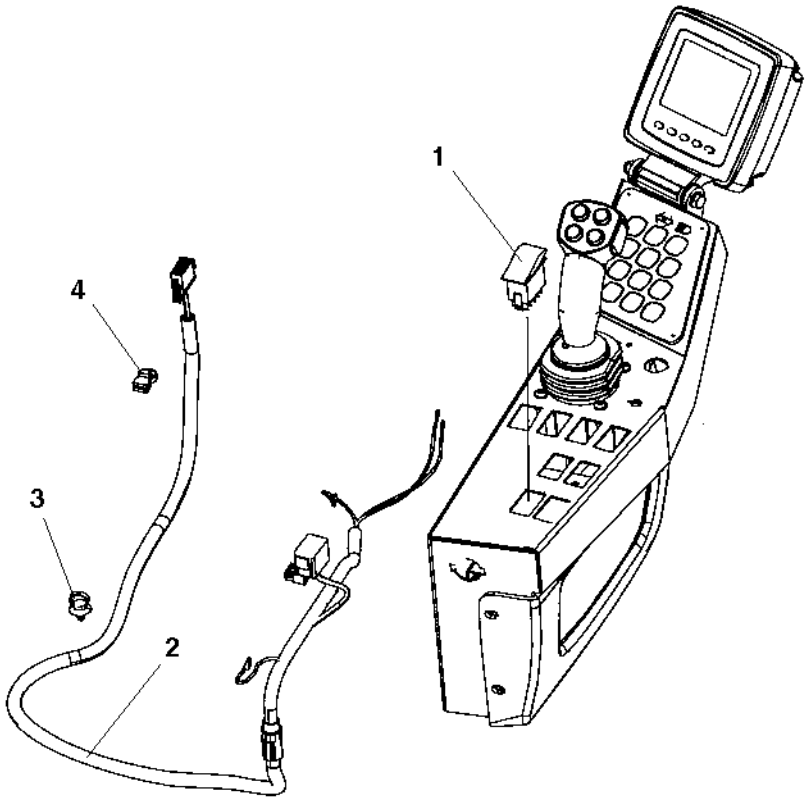

Cable harness and switch module

Item	Part No	Rem	Qty	Description	Code
1	4700792398		1	Switch	
2	4700392153		1	Cable harness	
3	4700792441		1	Cable tie with holder	
4	4700792537		1	Cable tie with holder	

Registration plate light module

392375

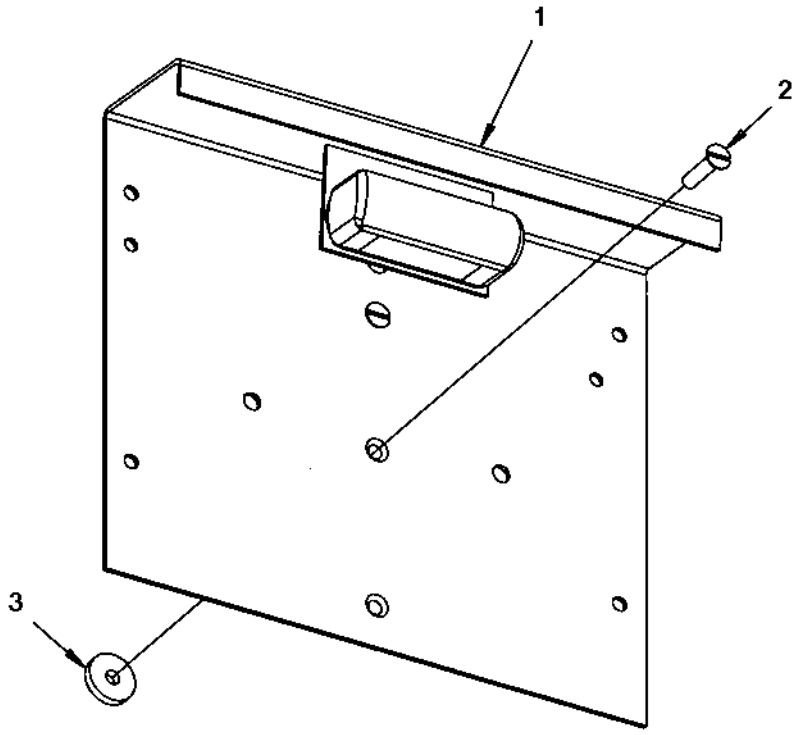

Registration plate light module

Item	Part No	Rem	Qty	Description	Code
1			1	Registration plate light (Page 278)	
2	4700535017		2	Screw	
3	4700904735		2	Washer	

Registration plate light

392376

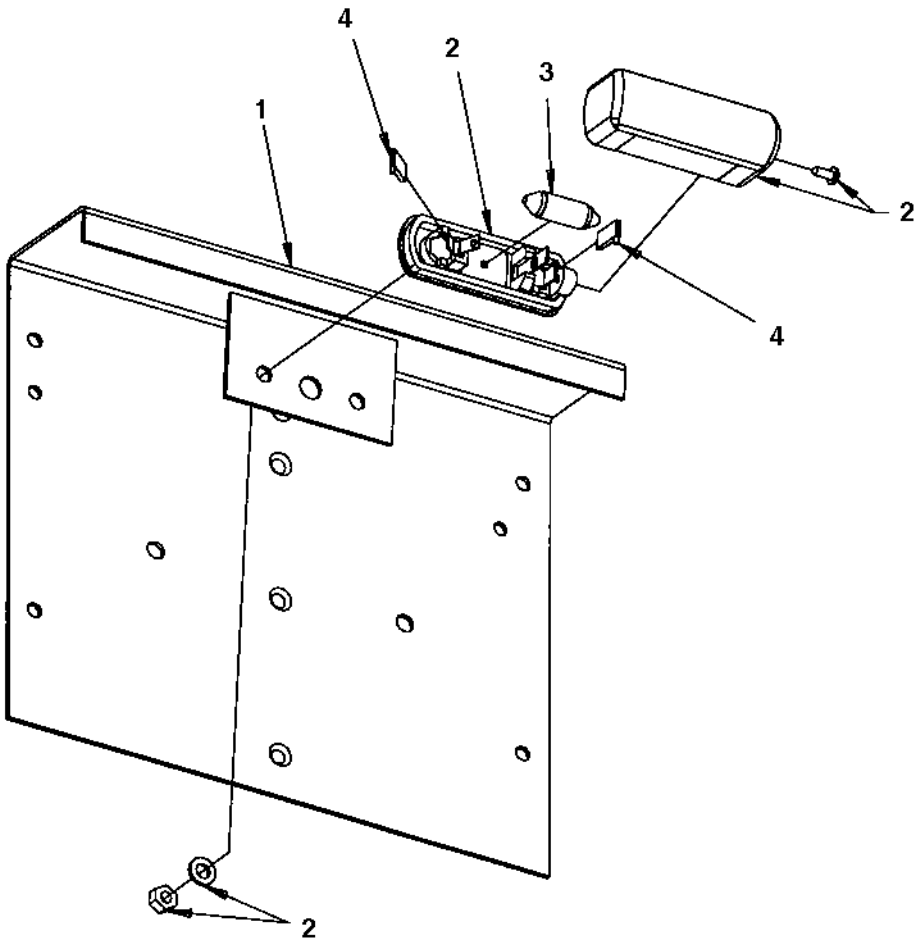

Registration plate light

Item	Part No	Rem	Qty	Description		Code
1	4700355797		1	Licence plate holder		
2	4700929455		1	Licence plate light		
3	4700792354		1	Bulb	24V 5W	
4	4700792035		2	Push-on terminal		

Rotating beacon, working light

18647

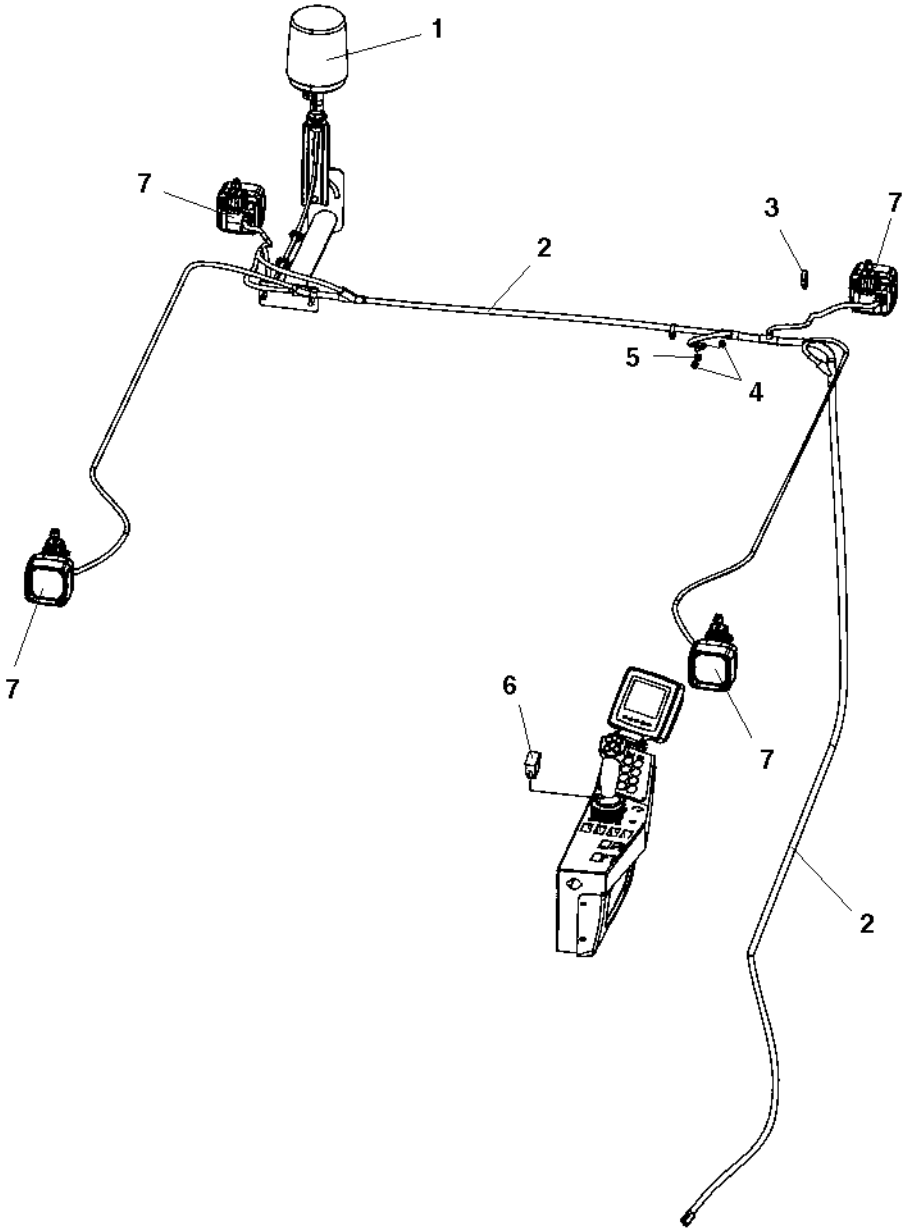

Rotating beacon, working light

Item	Part No	Rem	Qty	Description		Code
1			1	Rotating beacon module (Page 282)		
2	4700391957		1	Cable harness		
3	4700313102		N	Cable ties		
4	4700570005		2	Nut	M8	
5	4700904229		1	Washer	8,4x16x1,5	
6	4700792397		1	Switch		
7			4	Working light module (Page 284)	H3	
			4	Working light module (Page 286)	Xenon	

Rotating beacon module

392356

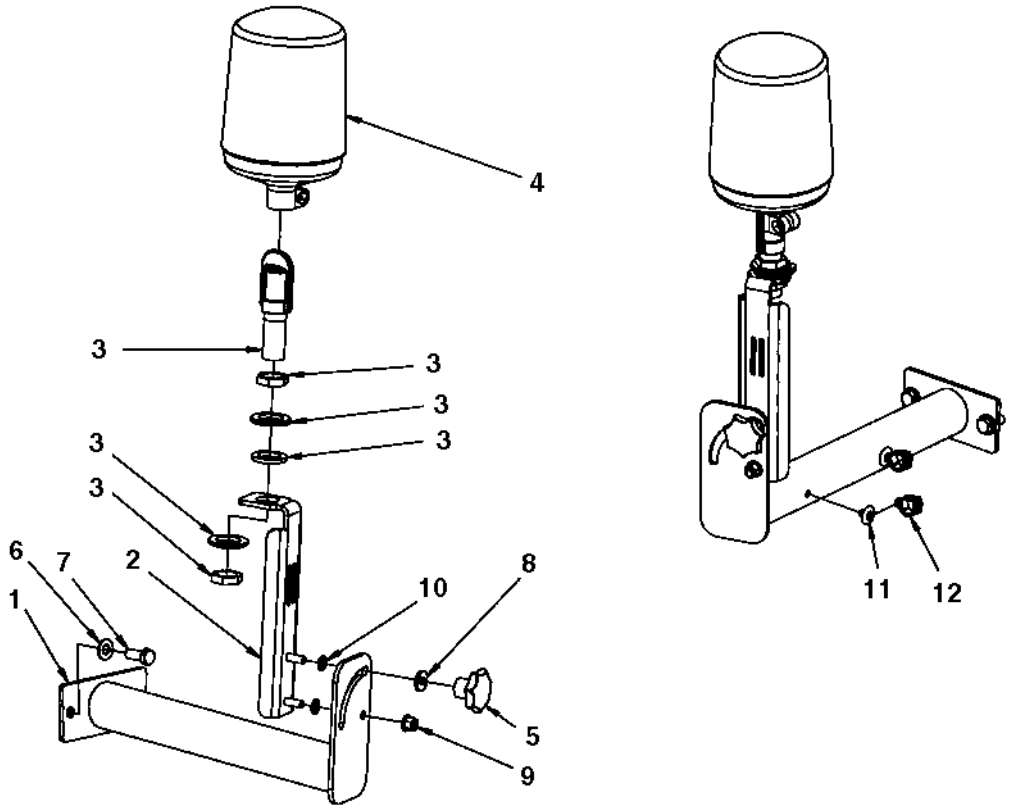

Rotating beacon module

Item	Part No	Rem	Qty	Description		Code
1	4700393590		1	Bracket		
2	4700392158		1	Bracket		
3	4700392321		1	Bracket		
4	4700393681		1	Rotating beacon		
5	4700792410		1	Hand knob		
6	4700904230		2	Washer		
7	4700500028		2	Screw		
8	4700904640		1	Washer	8,4x22x3	
9	4700902286		1	Lock nut	M8	
10	4700904229		2	Washer	8,4x16x1,5	
11	4700792419		2	T-stud		
12	4700792417		2	Wiring clip		

Working light module H3

392036

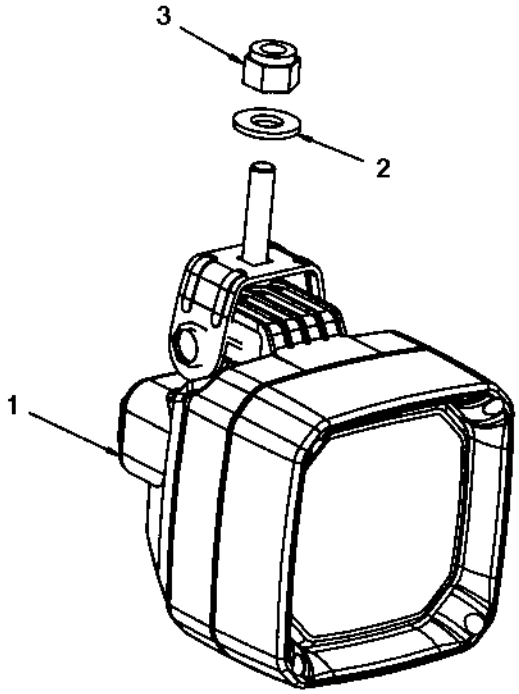

Working light module H3

Item	Part No	Rem	Qty	Description	Code
1	4700392033		1	Working light	
	4700792352		1	.Bulb	
2	4700904230		1	Washer	
3	4700586018		1	Lock nut	

Working light module Xenon

393539

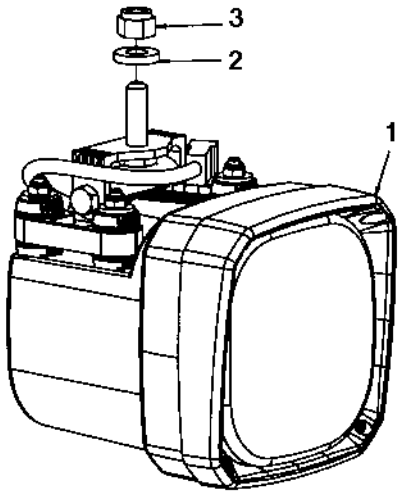

Working light module Xenon

Item	Part No	Rem	Qty	Description	Code
1	4700393538		1	Xenon lamp	
2	4700904557		1	Washer	
3	4700586018		1	Lock nut	

Drivers platform

Item	Part No	Rem	Qty	Description		Code
1				Platform, no cab (Page 290)		
2				Canopy (Page 310)	optional	
3				Cab, asymmetric (Page 316)		
4				Cab heater system (Page 346)		
5				Cab noise cover (Page 350)		
6				Radio and cd player (Page 352)		
7			2	Rear view mirror module (Page 356)		
8				Drivers seat (Page 358)		

Platform, no cab

AR0070

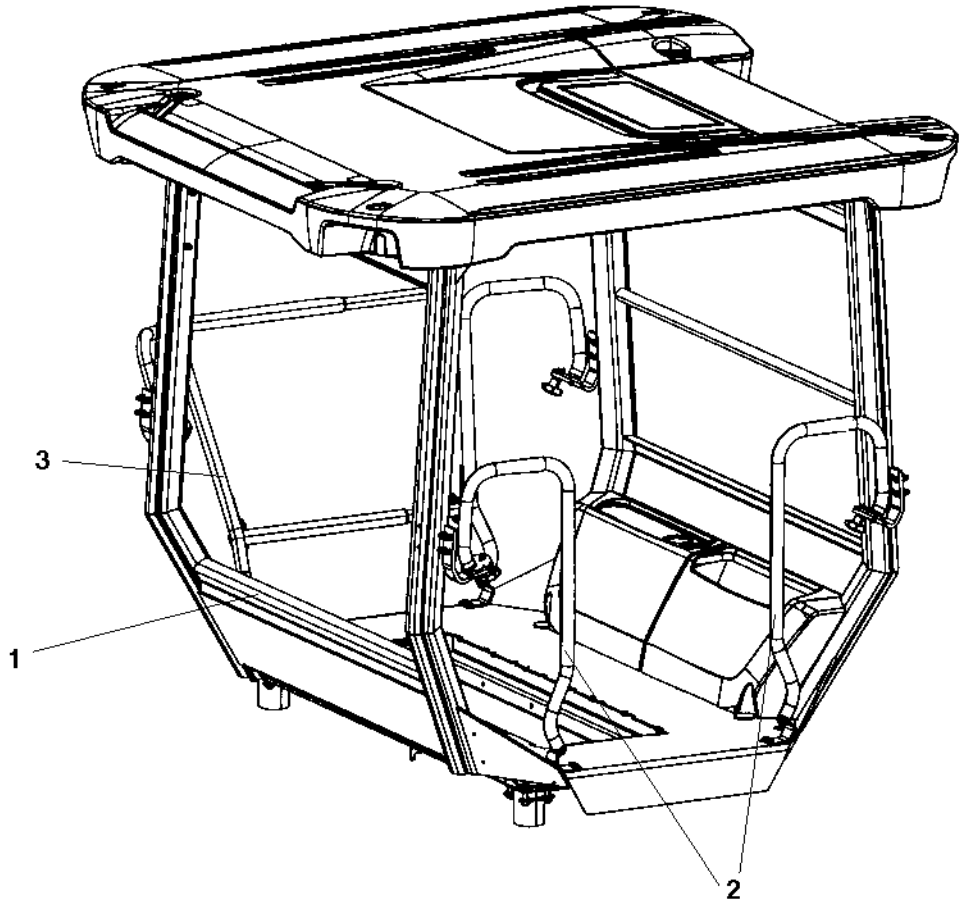

Platform, no cab

Item	Part No	Rem	Qty	Description	Code
1			1	Platform with 4-post ROPS (Page 292)	
			1	Platform no ROPS (Page 296)	
2			1	Hand rail, left (Page 298)	
3			1	Hand rail, right (Page 302)	
8			1	Lunch box module (Page 308)	

Platform with 4-post ROPS

391064

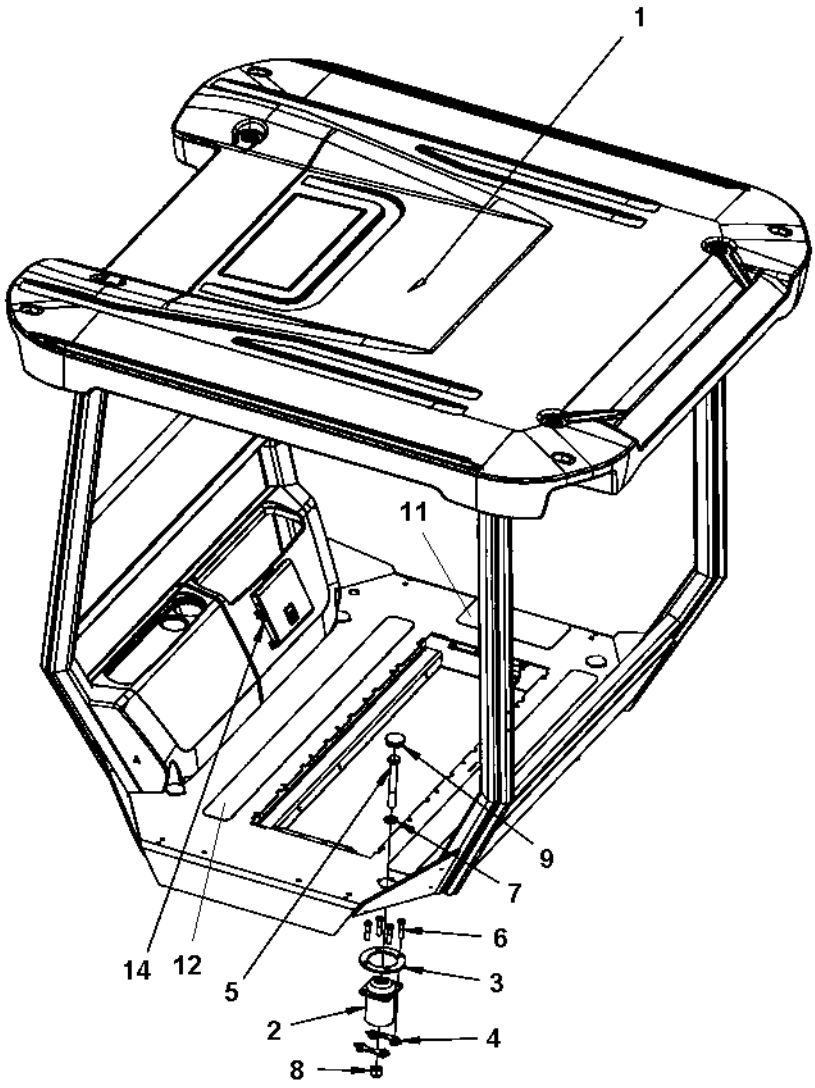

Platform with 4-post ROPS

Item	Part No	Rem	Qty	Description		Code
1	4700395760		1	Platform with 4-post ROPS		
			1	.Rear covers (Page 294)		
2	4700384855		4	Shock absorber		
3	4700359998		4	Back-up ring		
4	4700393525		8	Holder		
5	4700903633		4	Screw	M20x150 10,9	
6	4700500195		16	Screw		
7	4700904233		4	Washer	21x36x3	
8	4700901145		4	Lock nut	M20-10	
9	4700904131		4	Plug		
11	4700373363		1	Slip protection		
12	4700370059		2	Slip protection		
13			1	Manual box (Page 344)		

Rear covers

395848

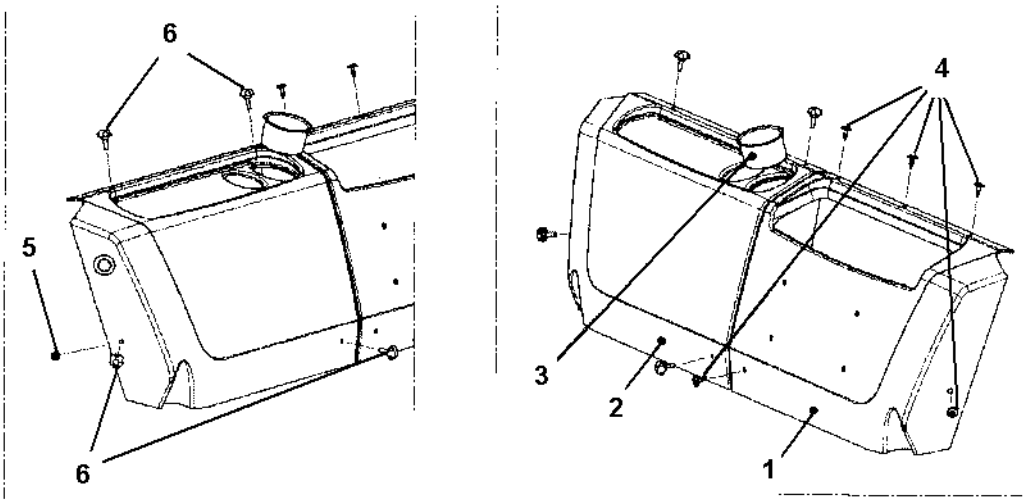

Rear covers

Item	Part No	Rem	Qty	Description	Code
1	4700395782		1	Rear cover, left	
2	4700395783		1	Rear cover, right	
3	4700395784		1	Mug holder	
4	4700395785		4	Screw	
5			1	Nut	
6	4700395786		4	Knob	

Platform no ROPS

393042

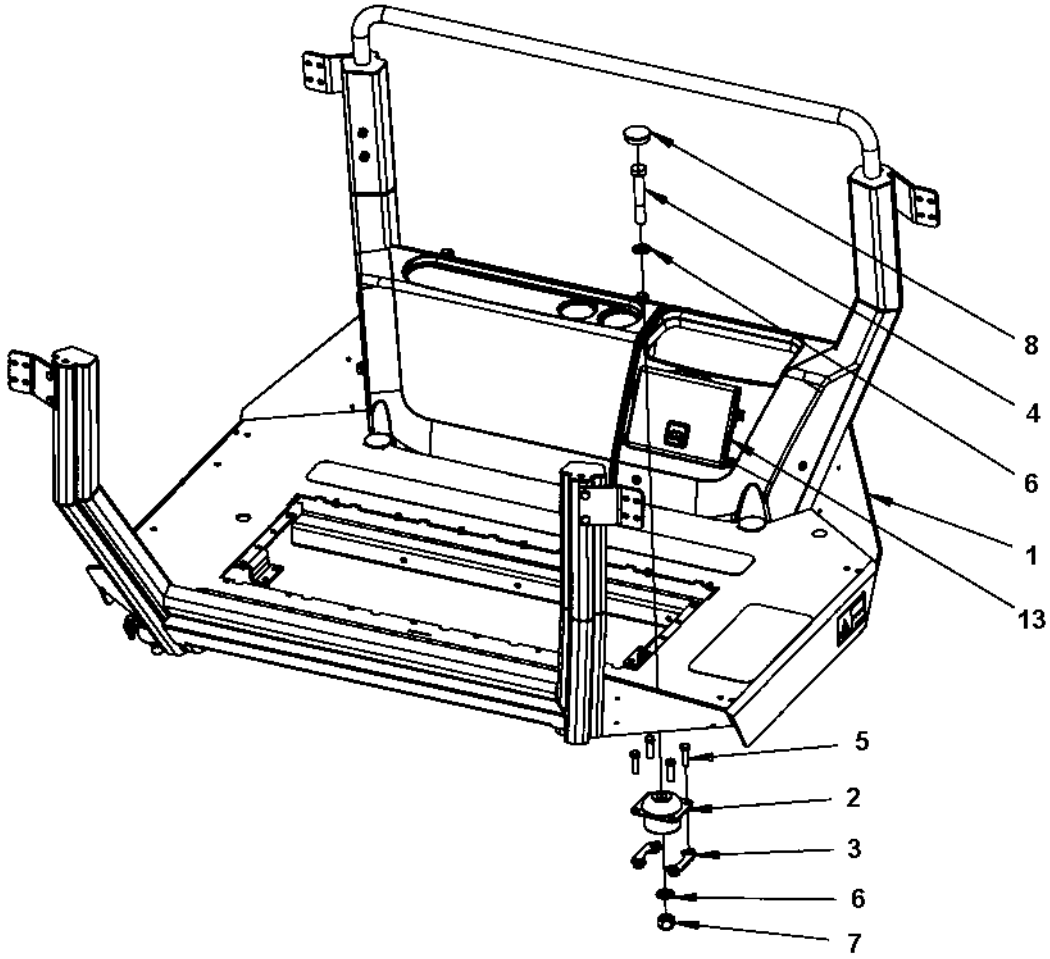

Platform no ROPS

Item	Part No	Rem	Qty	Description		Code
1	4700390867		1	Platform		
			1	.Rear covers (Page 294)		
2	4700373399		4	Shock absorber		D
3	4700393525		8	Holder		
4	4700500228		4	Screw	M20-2,5x120 8,8	
5	4700500194		16	Screw		
6	4700904233		8	Washer	21x36x3	
7	4700901145		4	Lock nut	M20-10	
8	4700904131		4	Plug		
10	4700373363		1	Slip protection		
11	4700370059		2	Slip protection		
13			1	Manual box (Page 344)		

Hand rail, left

391569

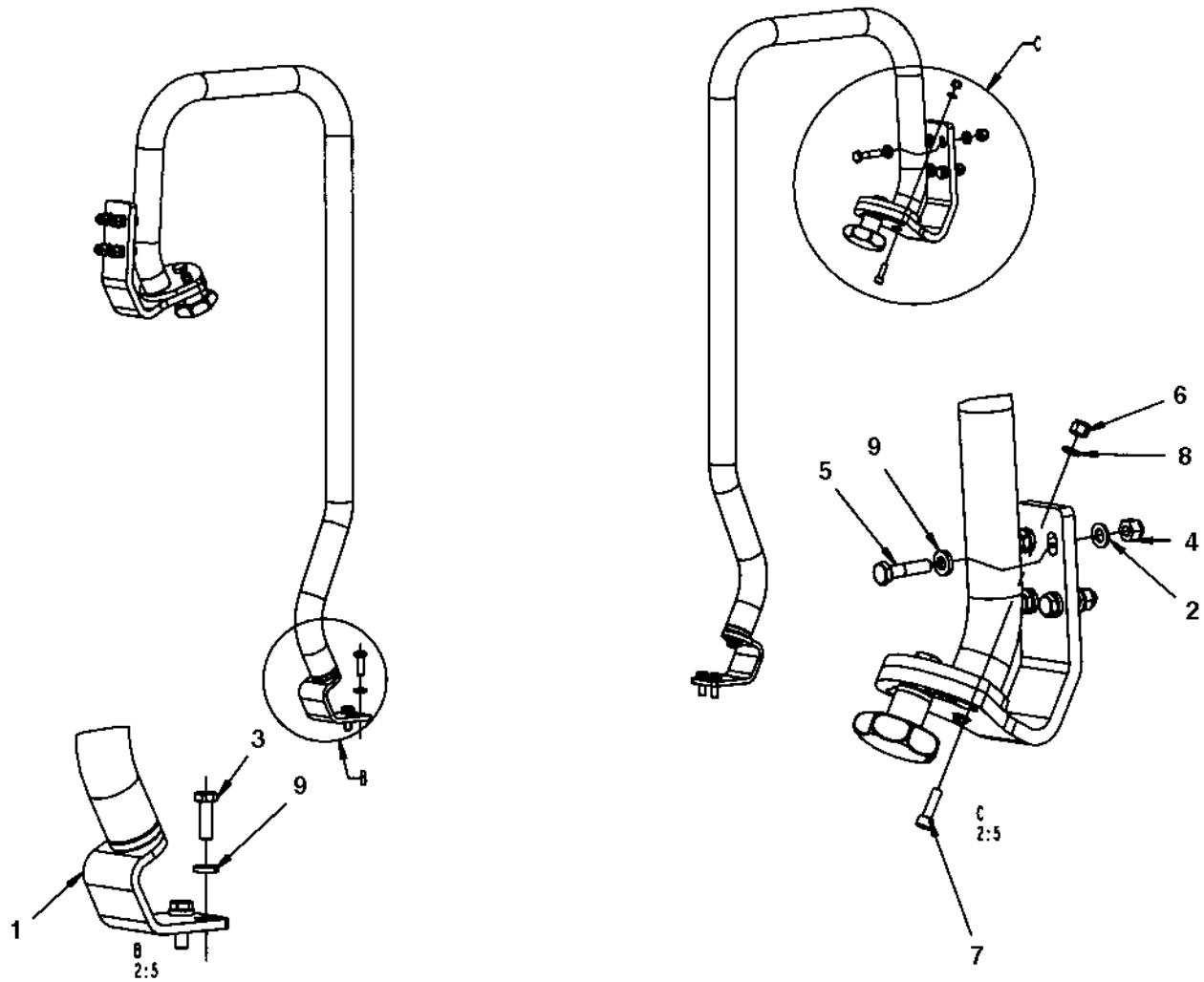

Hand rail, left

Item	Part No	Rem	Qty	Description		Code
1			2	Hand rail (Page 300)		
2	4700904229		8	Washer	8,4x16x1,5	
3	4700500021		4	Screw	M8-1,25x25 8.8	
4	4700586003		8	Lock nut	M8	
5	4700500047		8	Screw		
6	4700586002		2	Lock nut		
7	4700508025		2	Screw	M6x20	
8	4700904228		2	Washer		
9	4700904556		12	Washer	8,4x16x3,0	

Hand rail

392999

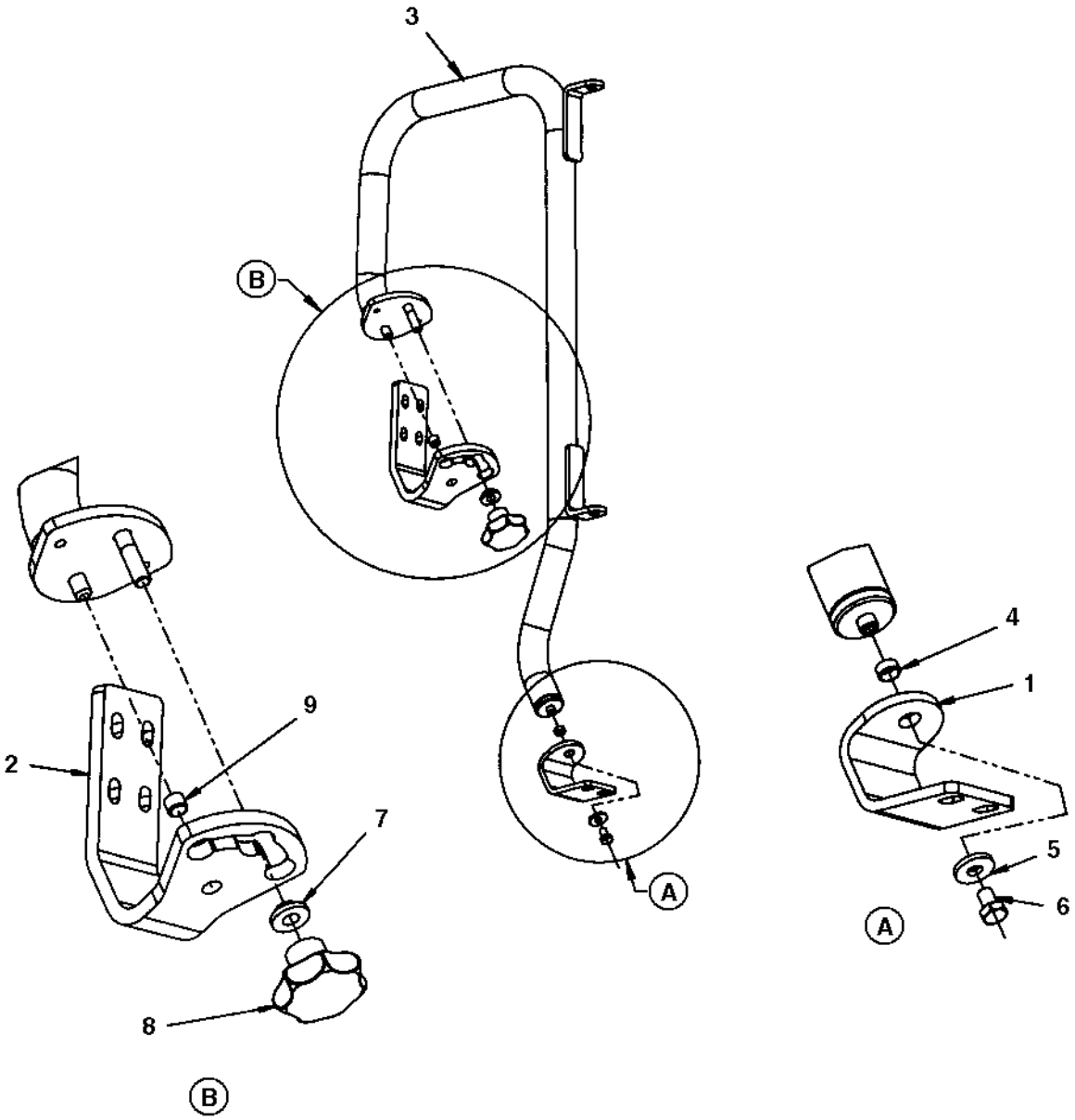

Hand rail

Item	Part No	Rem	Qty	Description		Code
1	4700381936		1	Bracket		
2	4700381935		1	Bracket		
3	4700390155		1	Hand rail		
4	4700792448		1	Plastic bushing		
5	4700904640		1	Washer	8,4x22x3	
6	4700500018		1	Screw	M8-1,25x12 8,8	
7	4700370286		1	Washer		
8	4700499174		1	Knob		
9	4700792447		1	Plastic bushing		

Hand rail, right

391568

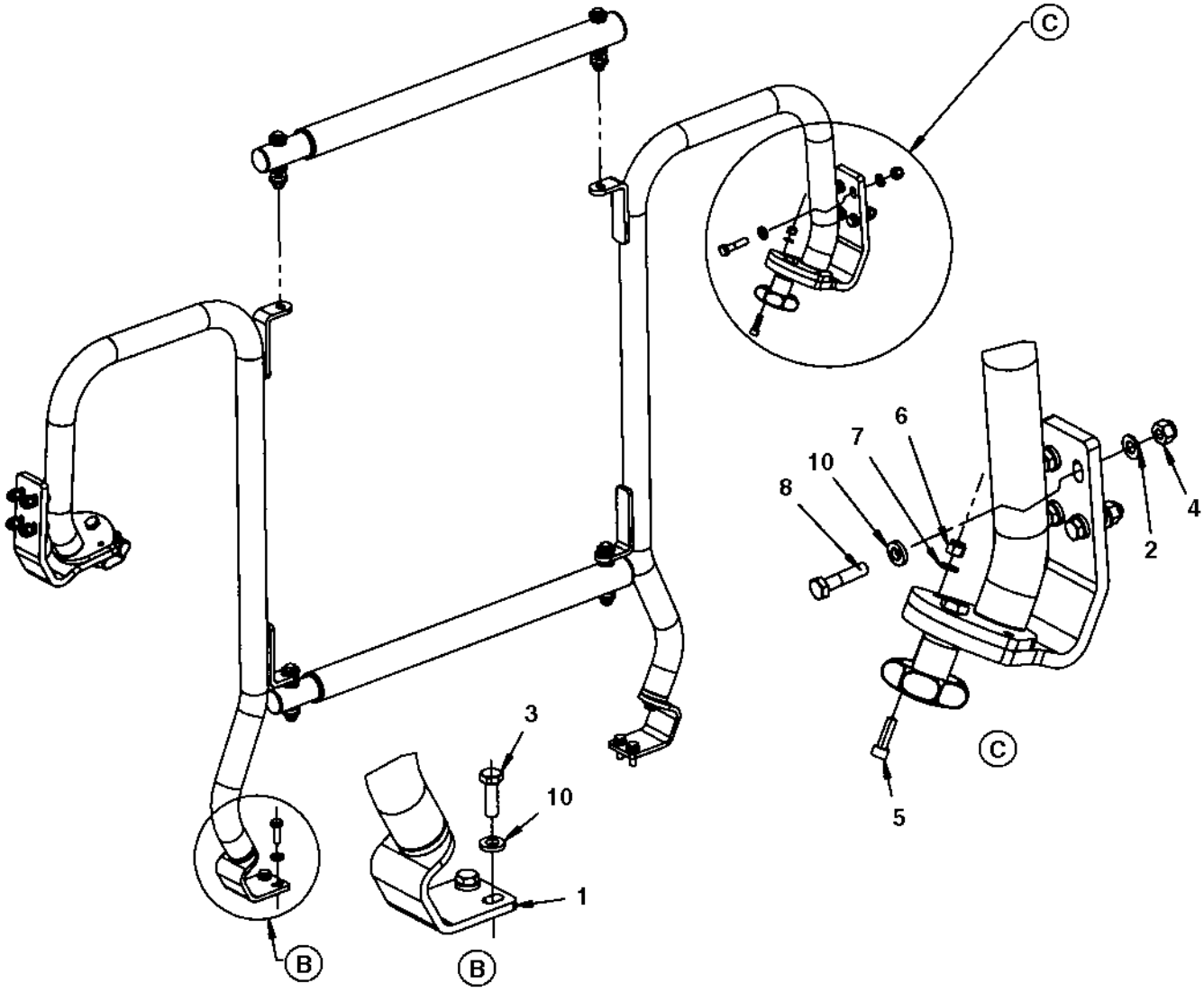

Hand rail, right

Item	Part No	Rem	Qty	Description		Code
1			1	Hand rail (Page 304)		
2	4700904229		8	Washer	8,4x16x1,5	
3	4700500021		4	Screw	M8-1,25x25 8.8	
4	4700586003		8	Lock nut	M8	
5	4700508025		2	Screw	M6x20	
6	4700586002		2	Lock nut		
7	4700904228		2	Washer		
8	4700500047		8	Screw		
9			2	Hand rail (Page 306)		
10	4700904556		12	Washer	8,4x16x3,0	

Hand rail

391557

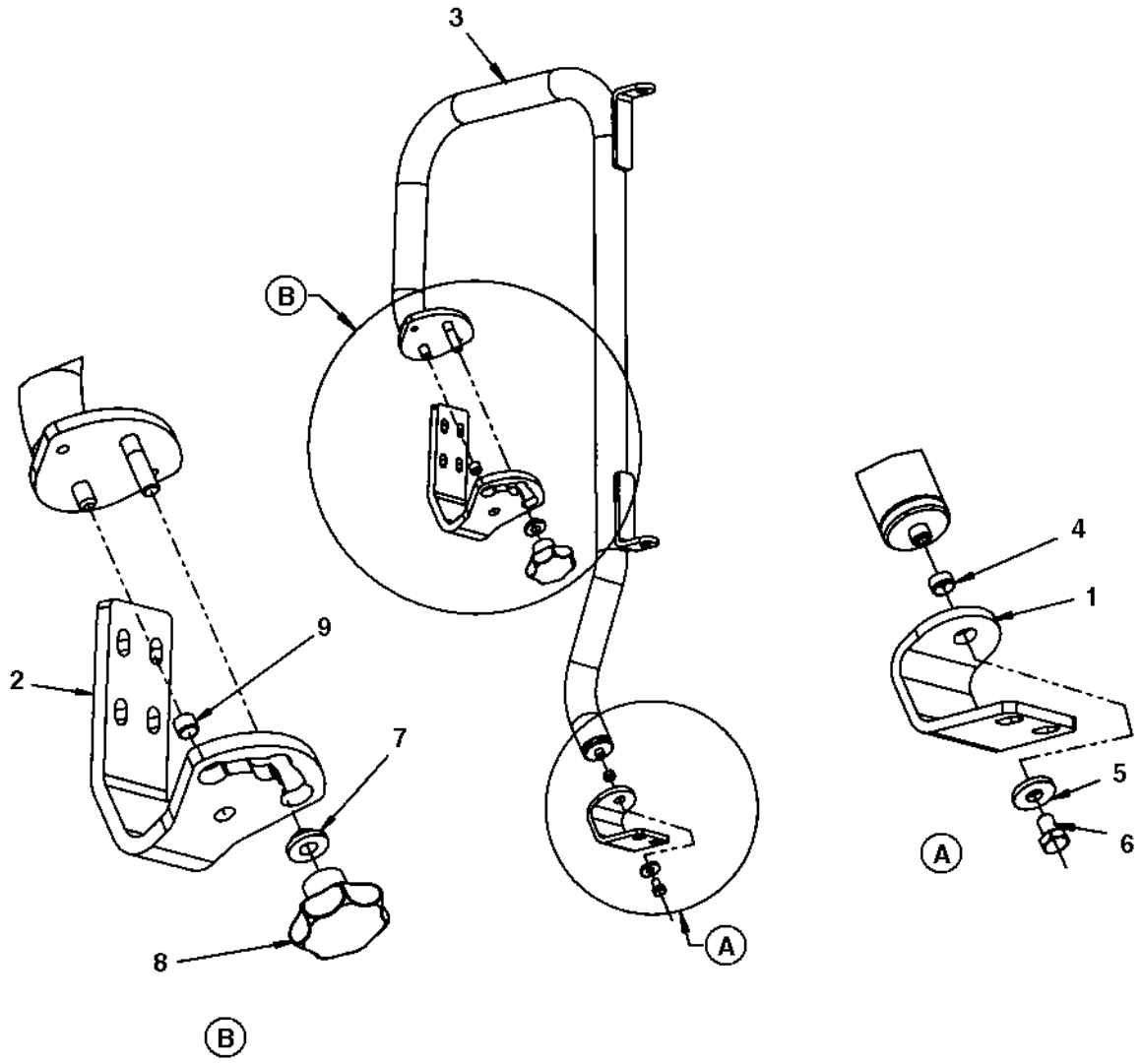

Hand rail

Item	Part No	Rem	Qty	Description		Code
1	4700381936		1	Bracket		
2	4700381935		1	Bracket		
3	4700381934		1	Hand rail		
4	4700792448		1	Plastic bushing		
5	4700904640		1	Washer	8,4x22x3	
6	4700500018		1	Screw	M8-1,25x12 8,8	
7	4700370286		1	Washer		
8	4700499174		1	Knob		
9	4700792447		1	Plastic bushing		

Hand rail

392426

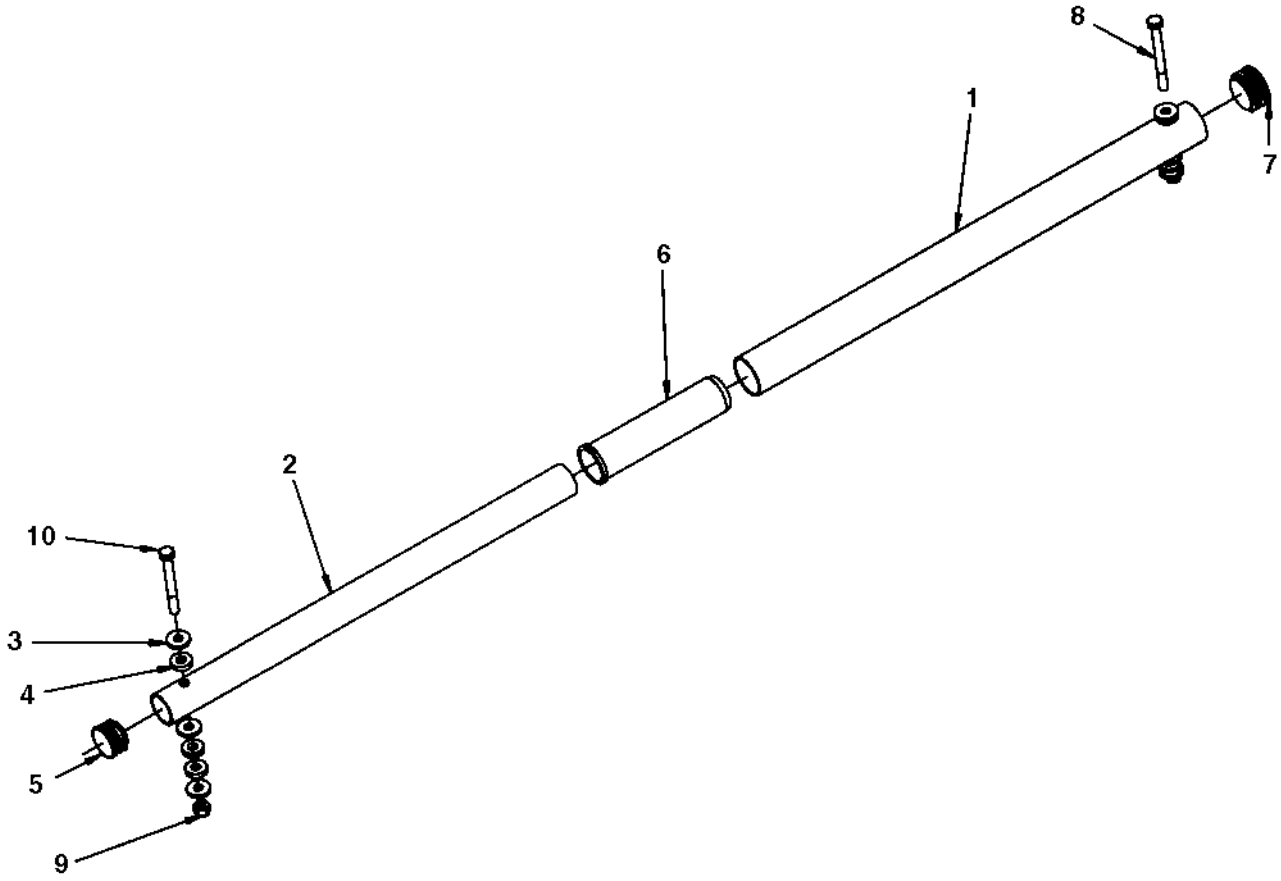

Hand rail

Item	Part No	Rem	Qty	Description		Code
1	4700391675		1	Steel tube		
2	4700391676		1	Steel tube		
3	4700904640		6	Washer	8,4x22x3	
4	4700391674		6	Rubber washer		
5	4700926216		1	Protective plug		
6	4700391678		1	Bushing		
7	4700792449		1	Protective plug		
8	4700500190		1	Screw		
9	4700586003		2	Lock nut	M8	
10	4700500189		1	Screw		

Lunch box module

394307

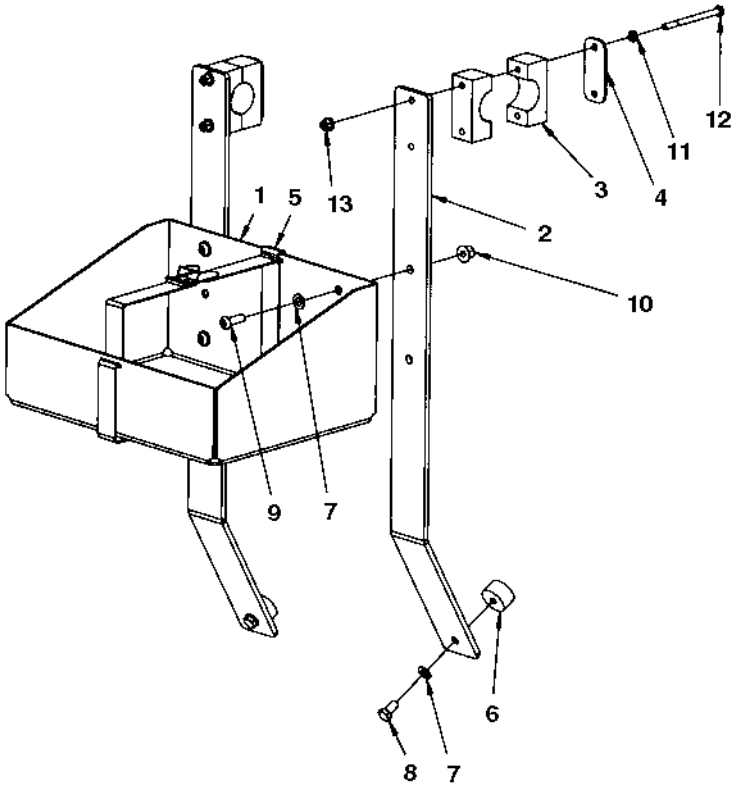

Lunch box module

Item	Part No	Rem	Qty	Description		Code
1	4700377913		1	Box		
2	4700394859		2	Bracket		
3	4700904340		2	Pipe clamp		
4	4700924791		2	Cover plate		
5	4700287643		1	Metal strapping		D
6	4700450163		2	Shock absorber		D
7	4700904229		6	Washer	8,4x16x1,5	
8	4700500019		2	Screw	M8x16H 8.8 A2K	
9	4700904654		4	Screw		
10	4700902286		4	Lock nut	M8	
11	4700904228		4	Washer		
12	4700500153		4	Screw		
13	4700902285		4	Lock nut	M6	

Canopy optional

18868

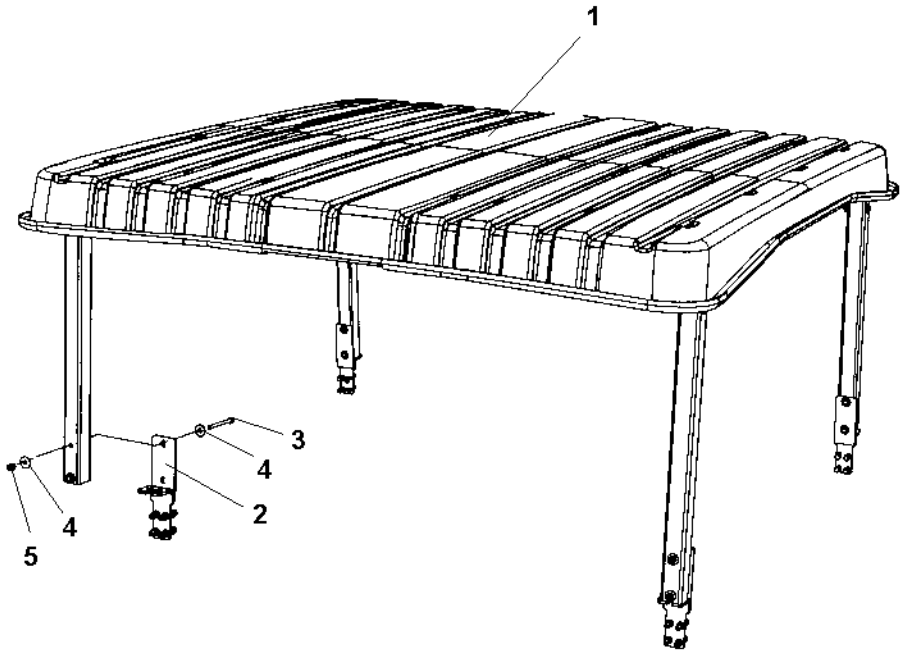

Canopy optional

Item	Part No	Rem	Qty	Description		Code
1			1	Canopy assy (Page 312)		
2			4	Bracket (Page 314)		
3	4700500190		8	Screw		
4	4700601003		16	Washer	8,4x25x2	
5	4700586003		8	Lock nut	M8	

Canopy assy

397081

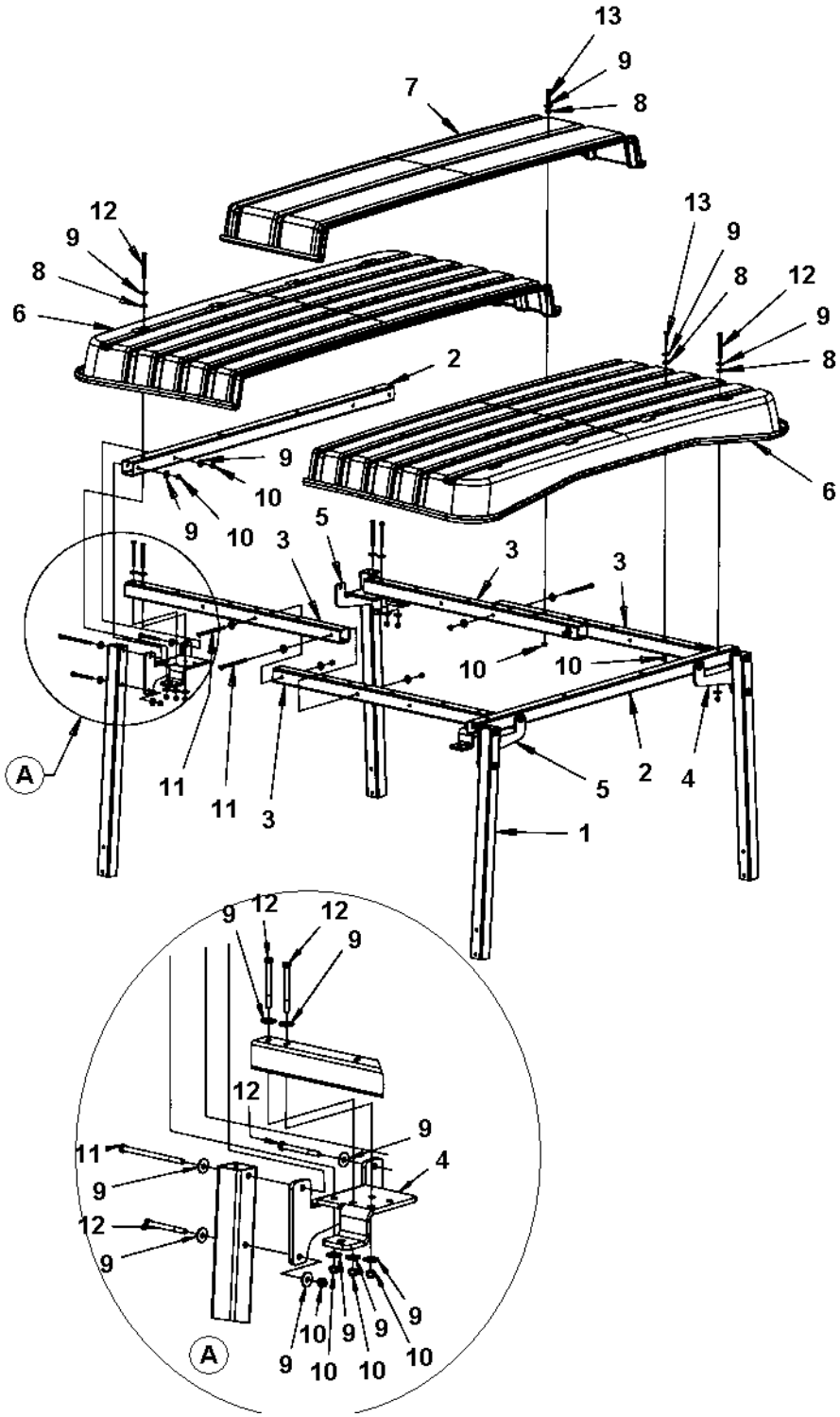

Canopy assy

Item	Part No	Rem	Qty	Description		Code
1	4700393640		4	Pillar		
2	4700393641		2	Roof beam		
3	4700393642		4	Cross beam		
4	4700393645		2	Bracket		
5	4700393646		2	Bracket		
6	4700394139		2	Plastic roof		
7	4700394140		1	Plastic roof		
8	4700391674		22	Rubber washer		
9	4700601003		74	Washer	8,4x25x2	
10	4700586003		46	Lock nut	M8	
11	4700500143		8	Screw		
12	4700500190		20	Screw		
13	4700904241		18	Screw		

Bracket

397082

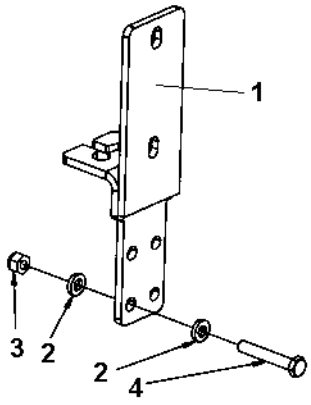

Bracket

Item	Part No	Rem	Qty	Description		Code
1	4700393639		1	Bracket		
2	4700904556		8	Washer	8,4x16x3,0	
3	4700586003		4	Lock nut	M8	
4	4700500239		4	Screw		

Cab, asymmetric

391068

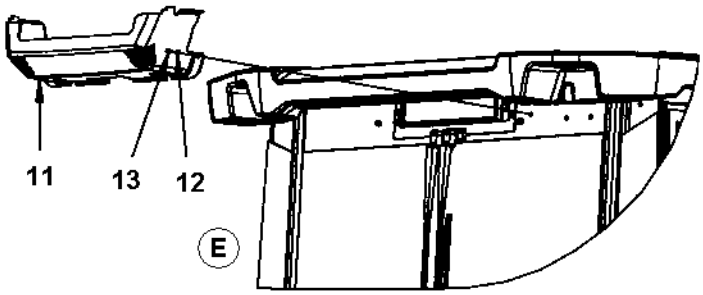

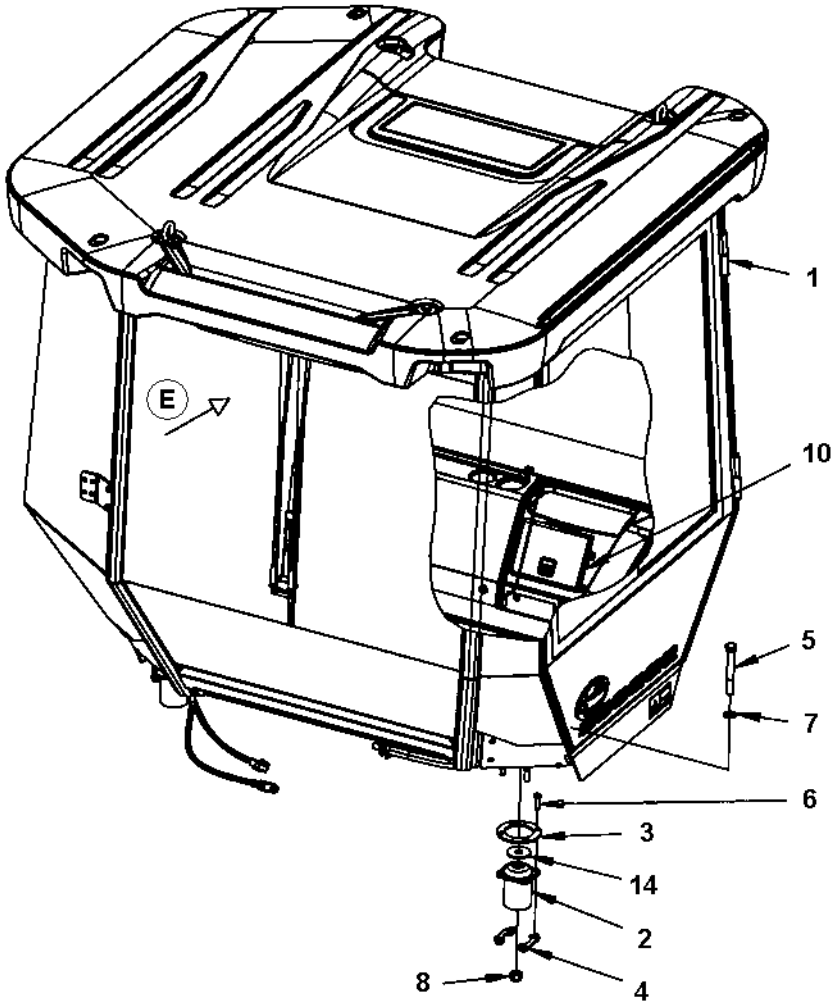

Cab, asymmetric

Item	Part No	Rem	Qty	Description		Code
1	4700390865		1	Cab, cpl (Page 318)		
2	4700384855		4	Shock absorber		
3	4700359998		4	Back-up ring		
4	4700393525		8	Holder		
5	4700903633		4	Screw	M20x150 10,9	
6	4700500195		16	Screw		
7	4700904233		4	Washer	21x36x3	
8	4700901145		4	Lock nut	M20-10	
10			1	Manual box (Page 344)		
11	4700393582		1	Cover		
12	4700904229		2	Washer	8,4x16x1,5	
13	4700500018		2	Screw	M8-1,25x12 8,8	
14	4700347512		4	Washer		

4700390865 Cab, cpl

390865

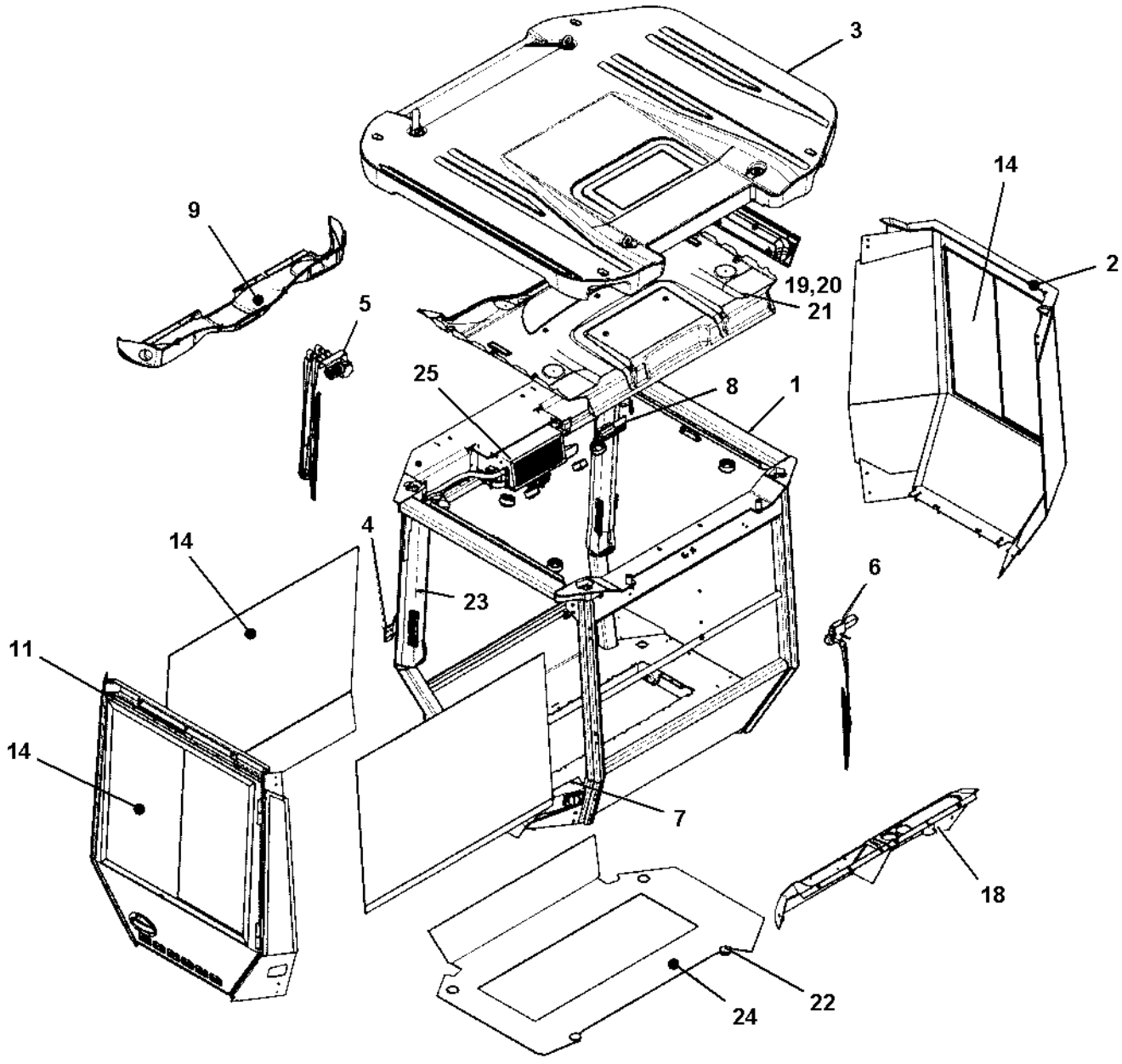

4700390865 Cab, cpl

Item	Part No	Rem	Qty	Description	Code
	4700390865			Cab, cpl (Page 318)	
1			1	Cab frame	
2			1	Cab frame, right side (Page 320)	
4			1	General parts (Page 322)	
5			1	Windshield wiper, front (Page 324)	
6			1	Windshield wiper, rear (Page 326)	
7			1	Windshield washer reservoir (Page 328)	
8			1	Electric equipment (Page 330)	
11			1	Door frame (Page 332)	
18			1	Rear covers (Page 294)	
19	4700395829		5	Screw	
20	4700395830		5	Screw	
22	4700395840		4	Plug	
23			2	Air channel (Page 336)	
25			1	Heater unit (Page 338)	

Cab frame, right side

395736

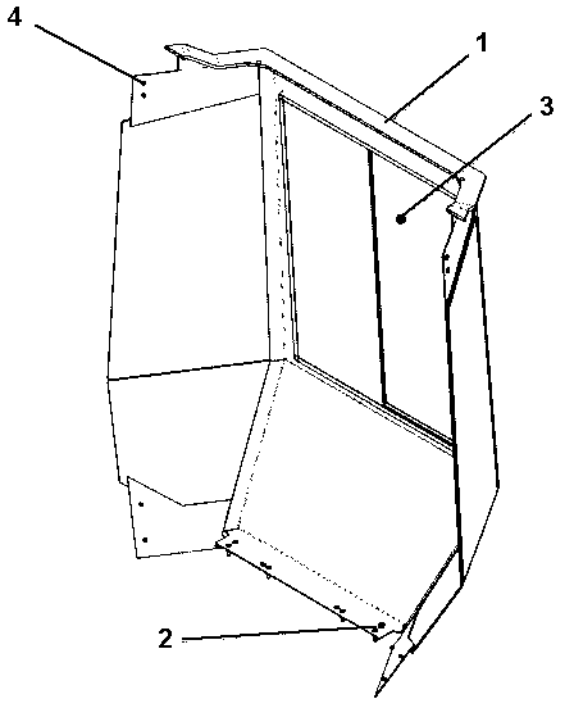

Cab frame, right side

Item	Part No	Rem	Qty	Description		Code
1			1	Frame		
2	4700927637		6	Screw	M8x35	
3		1		Screens		
4	4700500018		10	Screw	M8-1,25x12 8,8	

1) See section for Cab screens.

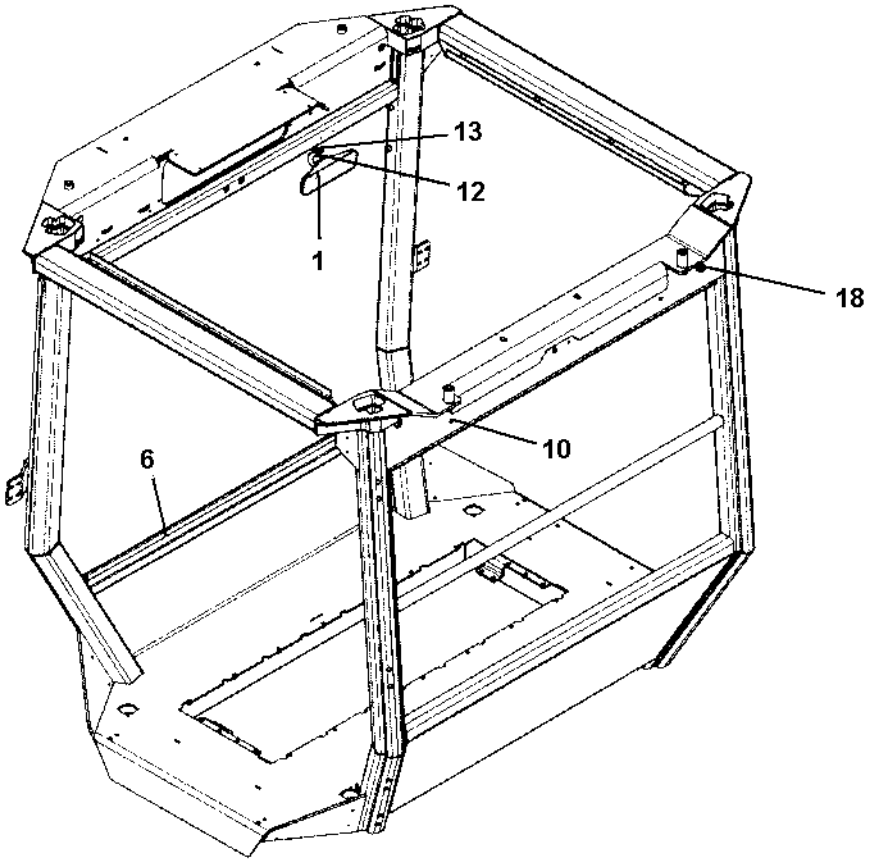
13
12
1
18
10
6

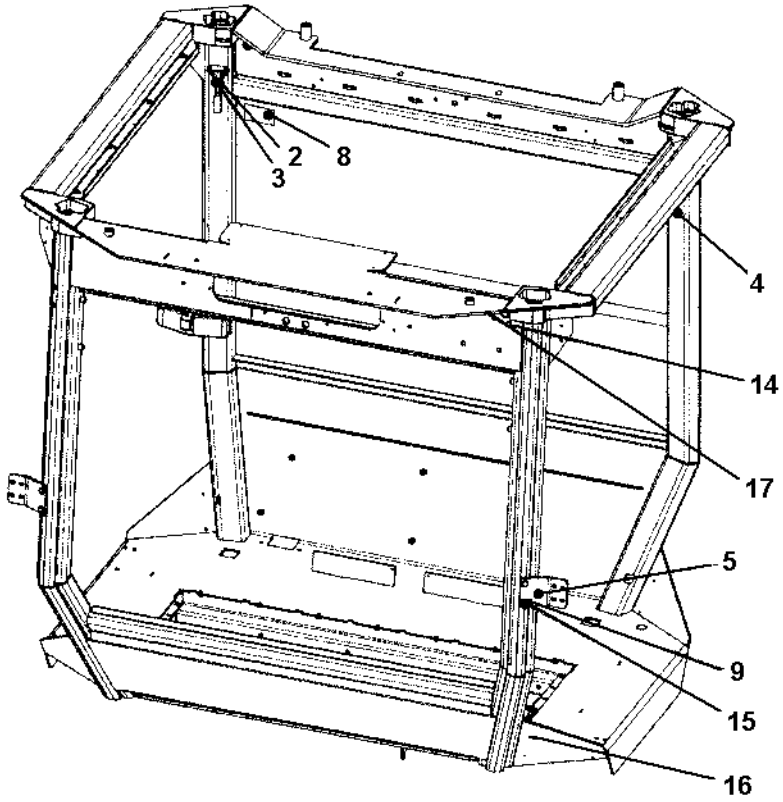
2
8
3
4
14
17
5
9
15
16

General parts

Item	Part No	Rem	Qty	Description	Code
1	4700395792		1	Rear view mirror	
2	4700908507		1	Emergency hammer	
3	4700908506		1	Holder	
4	4700908505		1	Hook	
5	4700395787		2	Holder plate	
6			1XL	Edge trim	
8	4700903590		1	Decal	Emergency exit
9	4700500048		4	Screw	M10-1,5x20 8,8
10			6	Plug	
12			1	Screw	
13			1	Nut cap	
14			20	Plug	
15			8	Nut cap	
16			10	Screw cap	
17			1	Plug	
18			1	Plug	

Windshield wiper, front

395739

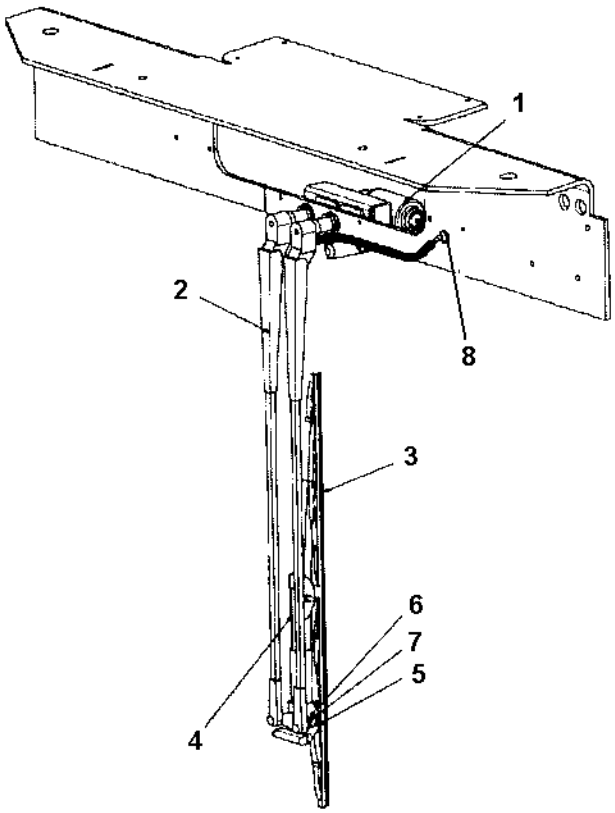

Windshield wiper, front

Item	Part No	Rem	Qty	Description		Code
1	4700395810		1	Wiper motor		
2	4700395811		1	Wiper arm		
3	4700905306		1	Wiper blade		
4	4700395796		1	Mounting plate		
5	4700508021		1	Screw		
6	4700904229		1	Washer	8,4x16x1,5	
7	4700586003		1	Lock nut	M8	
8	4700908561		1	Grommet		

Windshield wiper, rear

395740

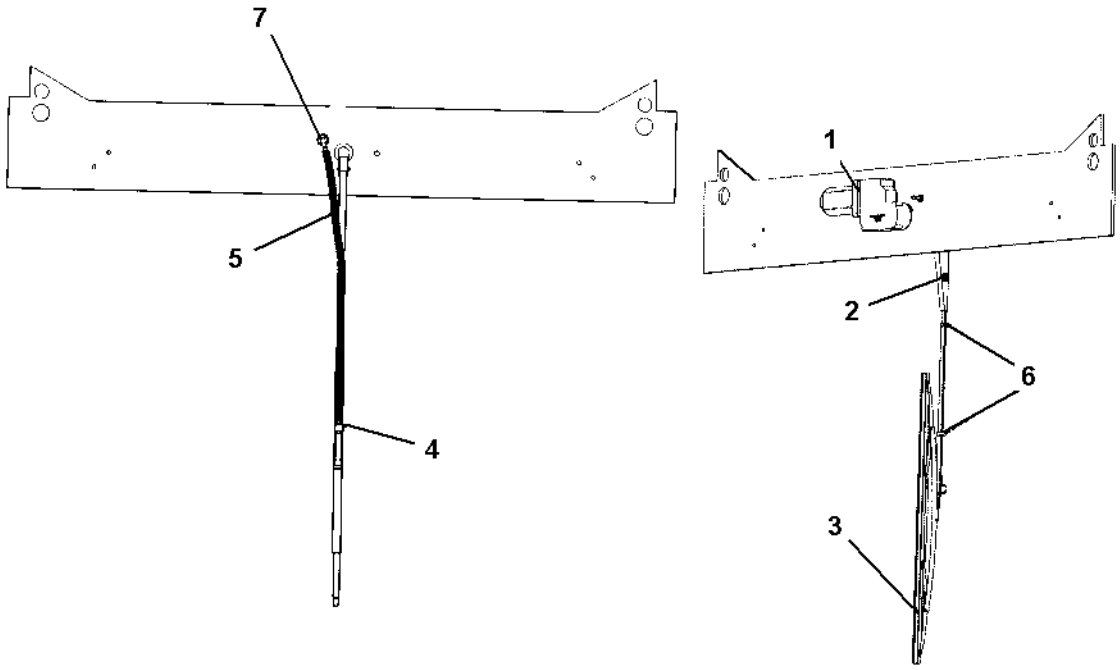

Windshield wiper, rear

Item	Part No	Rem	Qty	Description	Code
1	4700945897		1	Wiper motor	
2	4700395813		1	Wiper arm	
3	4700395814		1	Wiper blade	
4	4700938256		1	Nozzle	
5			1XL	Rubber hose	
6			2	Hose fastener	
7	4700908561		1	Grommet	

Windshield washer reservoir

395741

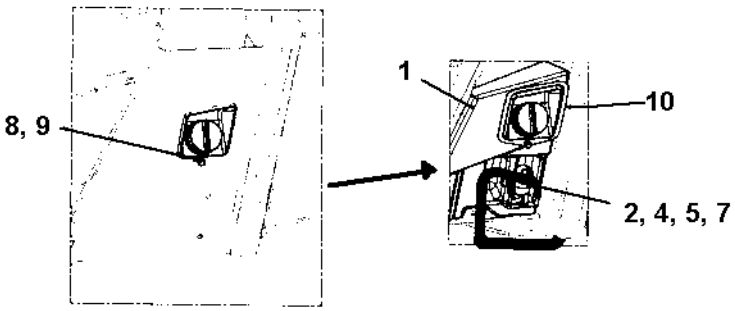

Windshield washer reservoir

Item	Part No	Rem	Qty	Description		Code
1	4700395793		1	Water reservoir		
2	4700395794		1	Electric motor		
4	4700908564		2	Check valve		
5	4700908563		1XL	Plastic hose		
7	4700395815		1	Seal ring		
8	4700904228		1	Washer		
9	4700500013		1	Screw	M6-1x16 8,8	
10	4700395795		1	Gasket		

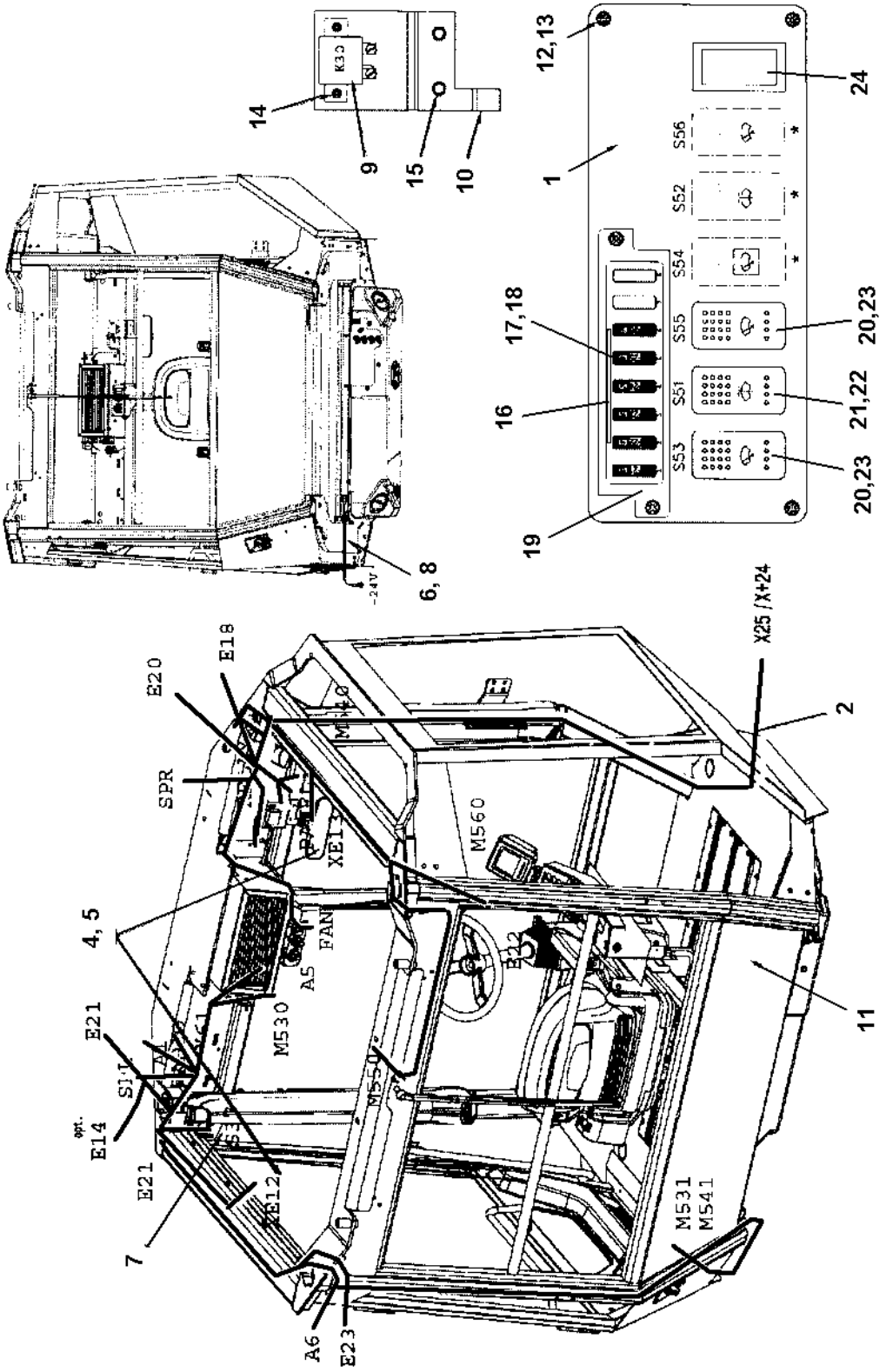
14
9
15
10
12,13
24
1
S56
S52
S54
S55
S51
S53
17,18
16
19
20,23
21,22
20,23
6, 8
X25 /X+24
2
E20
E18
SPR
M560
4, 5
E21
M530
A5
FAN
M559
M531
M541
opt.
E14
E21
7
A6
E23
11

Electric equipment

Item	Part No	Rem	Qty	Description		Code
1			1	Control panel plate		
2	4700395798		1	Cable harness		
4	4700395800		2	Interior light		
5	4700792715		4	Bulb		
6			1	Screw		
7	4700908500		1	Door switch		
8	4700395799		1	Ground cable		
9	4700792309		1	Relay		D
10			1	Mounting plate		D
11	4700395816		1	Plug socket	24V	
12			5	Rubber nut		
13			5	Screw		
14			2	Screw		
15			2	Screw		
16	4700791211		4	Contact bridge		
17	4700901227		4	Fuse	10A	B
18	4700901228		2	Fuse	15A	
19	4700791185		1	Fuse box		
20			2	Button		
21			1	Button		
22	4700792505	A	1	Switch		
23	4700792504	B	2	Switch		
24	4700791588		4	Panel plug		

A) Windshield washer.
B) Windshield viper.

Door frame

395744

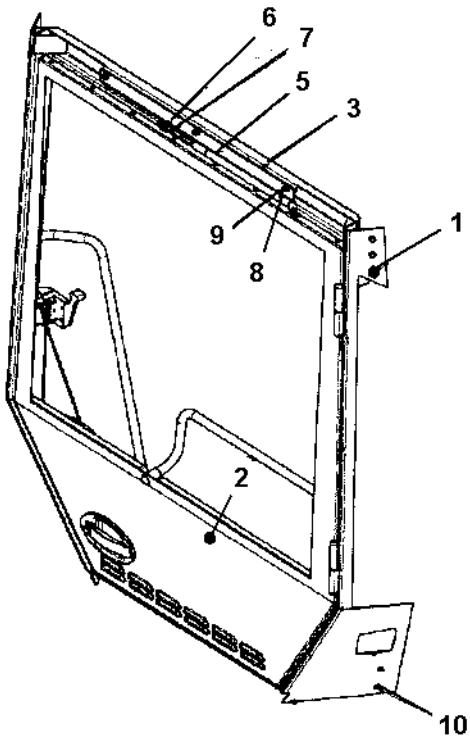

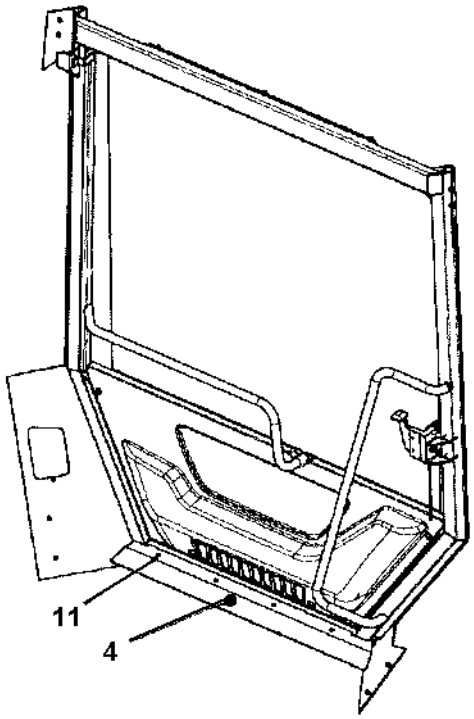

Door frame

Item	Part No	Rem	Qty	Description	Code
1			1	Frame mount	
2	4700395806		1	Door (Page 334)	
3			1	Cover plate	
4			1	Plate	
5	4700908284		1	Gas spring	
6	4700395817		1	Ball joint	
7	4700570005		1	Nut M8	
8	4700586003		3	Lock nut M8	
9	4700936277		3	Washer	
10	4700500018		10	Screw M8-1,25x12 8,8	
11			4	Screw	

4700395806 Door

395806

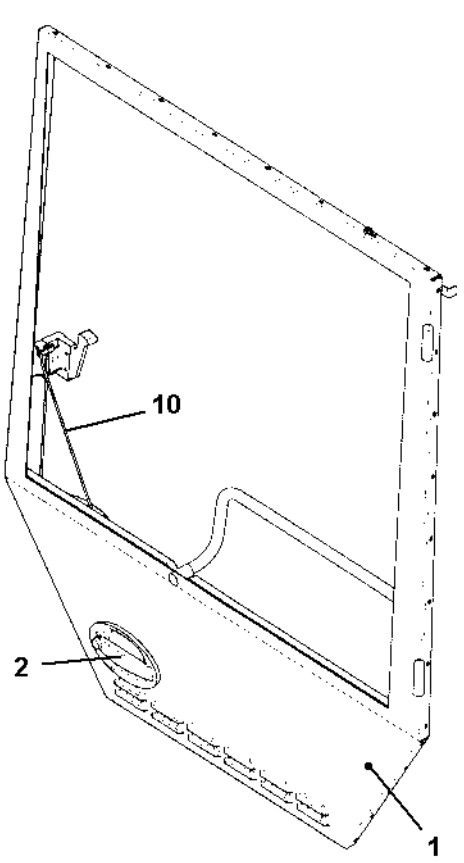

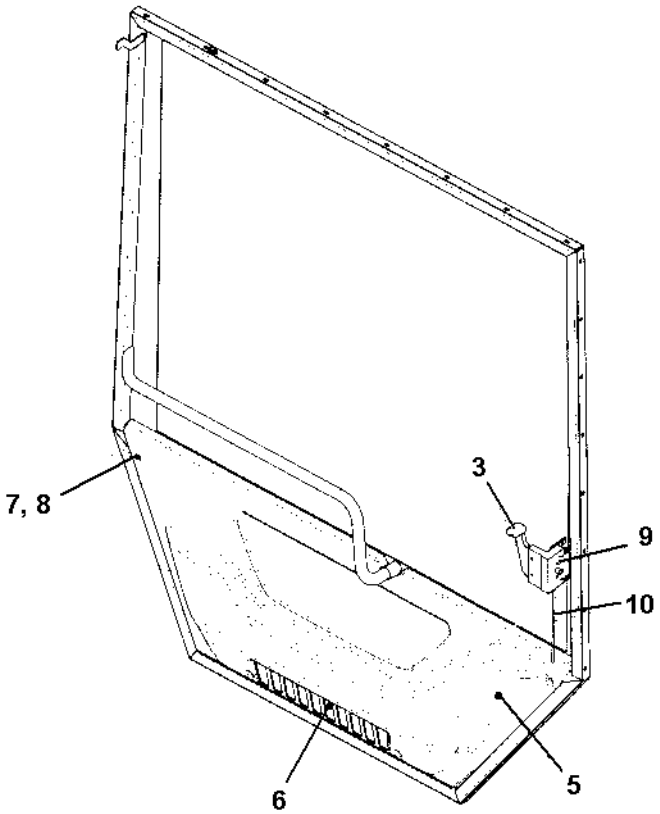

4700395806 Door

Item	Part No	Rem	Qty	Description		Code
1			1	Door welded		
2	4700395833		1	Handle, outer		
	4700902866		1	.Key	Marked "455"	D
3	4700395834		1	Handle, inner		
5	4700395835		1	Plastic panel		
6	4700395836		1	Filter		
7	4700395837		4	Nut		
8	4700395838		4	Screw		
9			3	Screw		
10	4700395839		1	Rod		

Air channel

395752

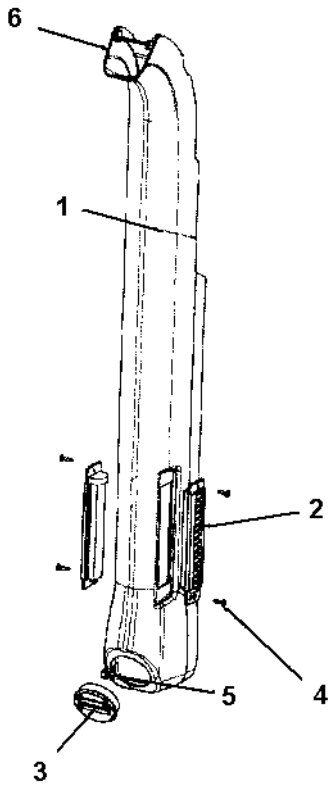

Air channel

Item	Part No	Rem	Qty	Description	Code
1			1	Cover	
2	4700395831		2	Air nozzle	
3	4700395832		1	Air nozzle	
4	4700395829		4	Screw	
5			1	Screw	
6			1XL	Edge trim	

Heater unit

395754

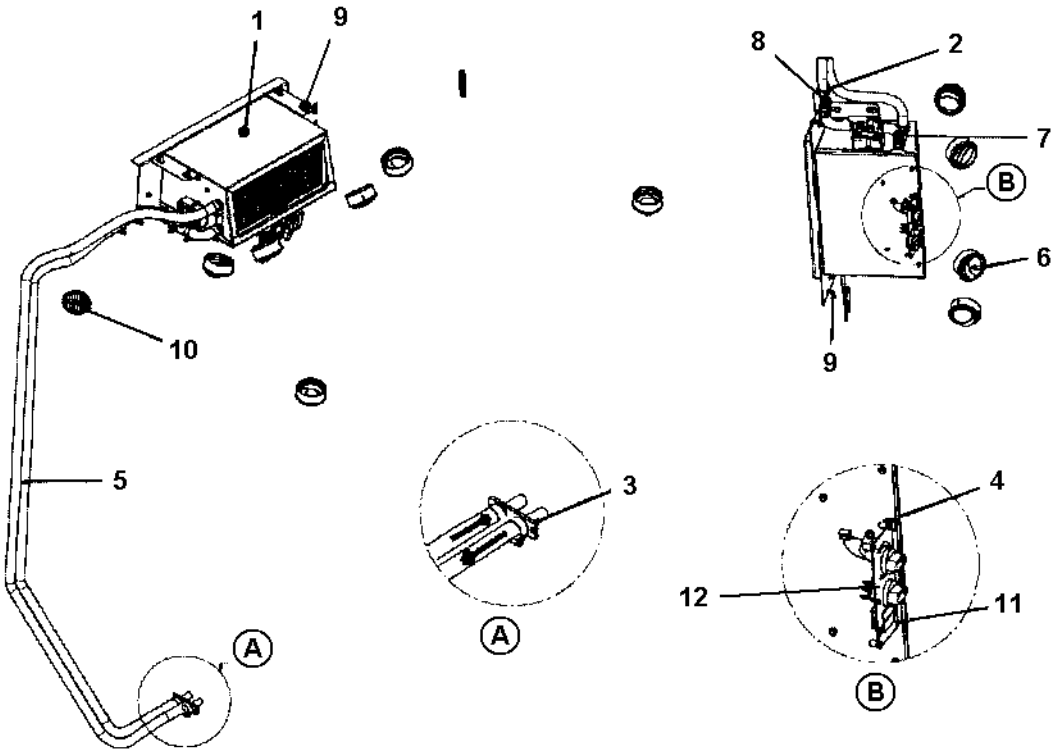

Heater unit

Item	Part No	Rem	Qty	Description	Code
1			1	Heater (Page 340)	
2	4700938874		8	Clamp	
3			1	Inlet plate	
4			4	Rubber nut	
5	4700395756		1XL	Hose	
6	4700395757		6	Air nozzle	
7	4700395758		2	Hose	
8			1	Connector pipe	
9	4700500053		6	Screw	M8x20H 8.8
10	4700395759		2	Air nozzle	
11			4	Screw	
12			1	Heater controls (Page 342)	

Heater

393617

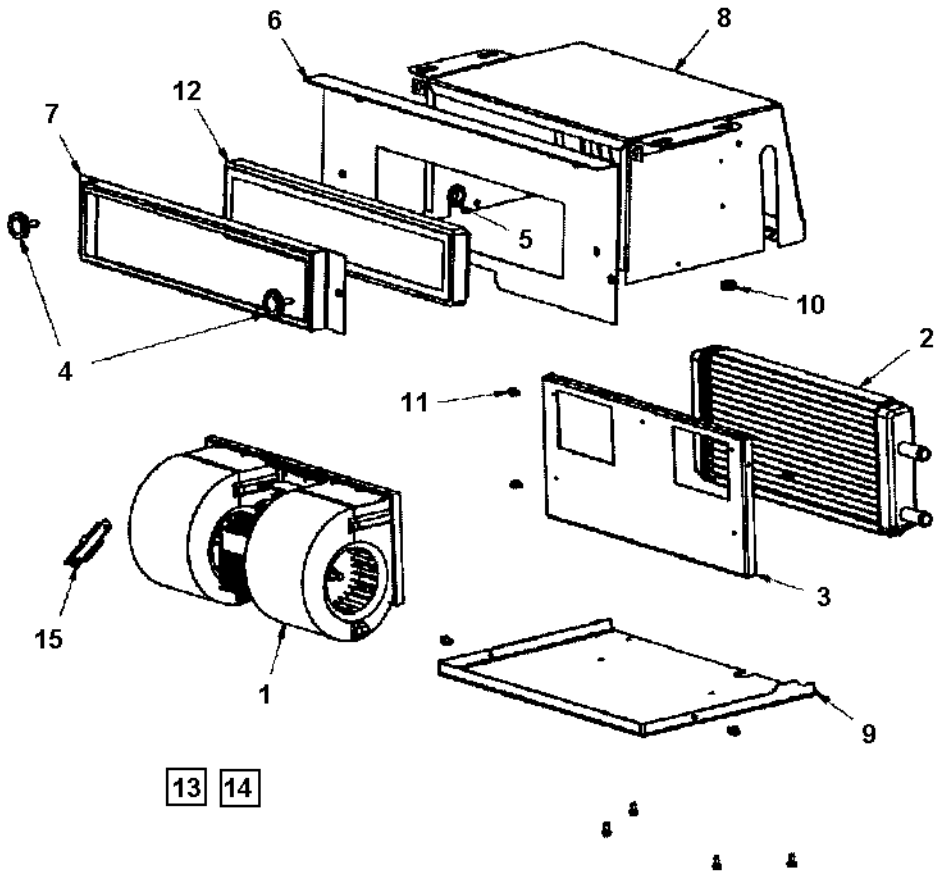

Heater

Item	Part No	Rem	Qty	Description	Code
1	4700395761		1	Blower	
2	4700395762		1	Heater coil	
3			1	Blower bracket	
4	4700395774		2	Knob	
5	4700938609		1	Grommet	
6			1	Front plate	
7	4700395775		1	Filter bracket	
8			1	Casing	
9			1	Cover plate	
10			1	Grommet	
11			11	Screw	M5x10
12	4700395818		1	Filter	
13	4700395819		1	Cable harness	
14	4700395828		1	Panel cable	
15	4700395820		1	Resistor	

Heater controls

393617_2

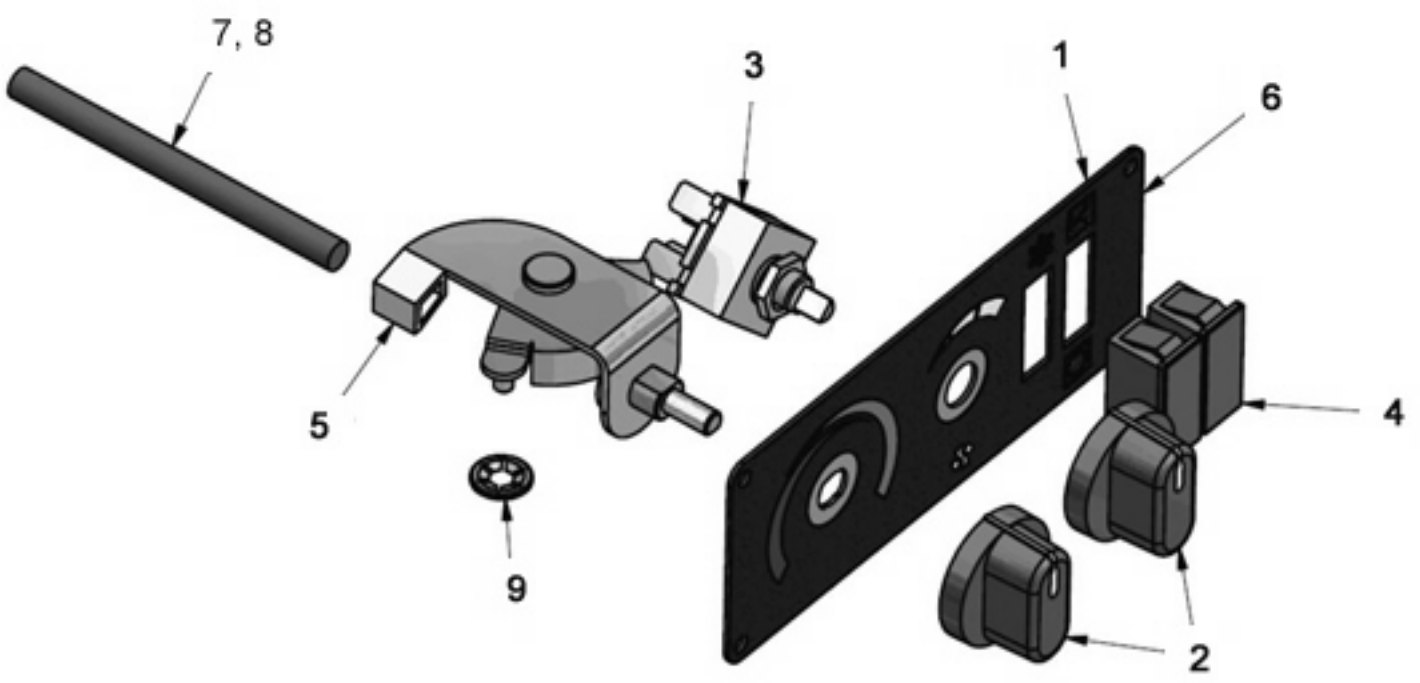

Heater controls

Item	Part No	Rem	Qty	Description	Code
1			1	Panel plate	
2	4700377508		2	Knob	
3	4700938622		1	Switch	
4			2	Cover	
5	4700377507		1	Rotary control	
6			1	Overlay	
7	4700395841		1	Wire clips	
8	4700395842		1	Wire	
9	4700395853		2	Lock washer	

Manual box

394119

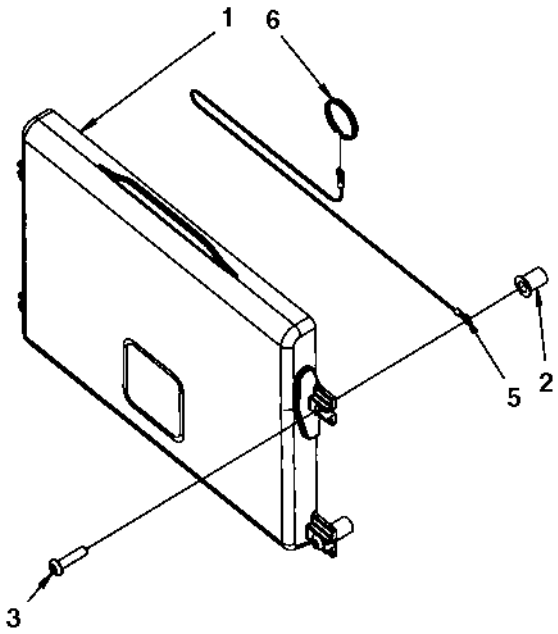

Manual box

Item	Part No	Rem	Qty	Description	Code
1	4700383705		1	Instruction book holder	
2	4700792536		4	Rubber nut	
3	4700792589		4	Screw	
5	4700384584		1	Wire	
6	4700358254		1	Key-ring	

Cab heater system

18848

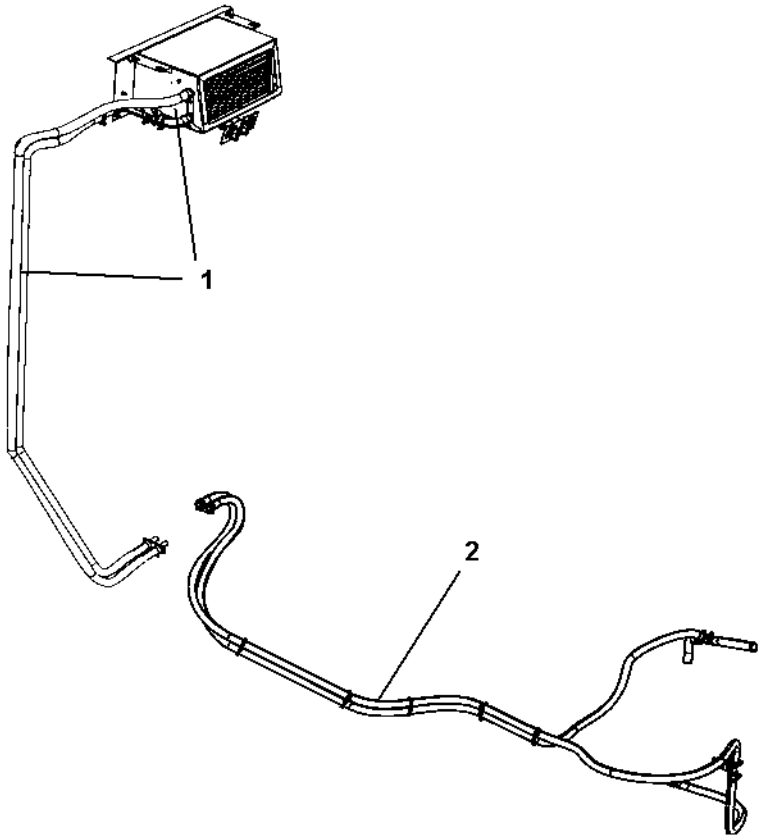

Cab heater system

Item	Part No	Rem	Qty	Description	Code
1			1	Heater unit (Page 338)	
2			1	Heater hoses (Page 348)	

Heater hoses

394138

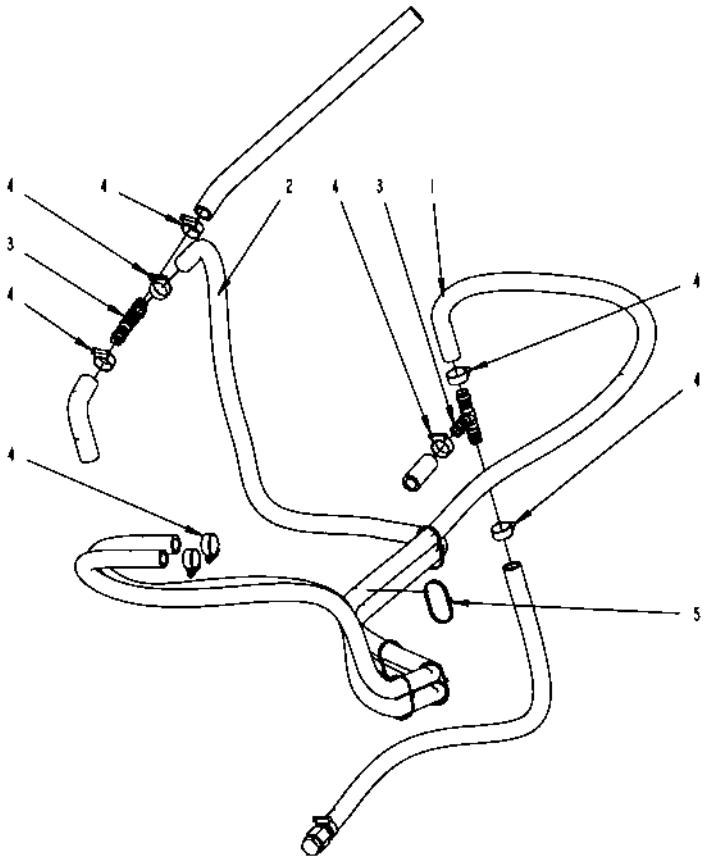

Heater hoses

Item	Part No	Rem	Qty	Description	Code
1	4700205112	A	1XL	Coolant hose	
2	4700205112	B	1XL	Coolant hose	
3	4700792065		2	Hose connection	
4	4700313004		8	Hose clamp	
5	4700313041		N	Cable ties	

A) L= 3.4 m
B) L= 2.8 m

Cab noise cover

393148

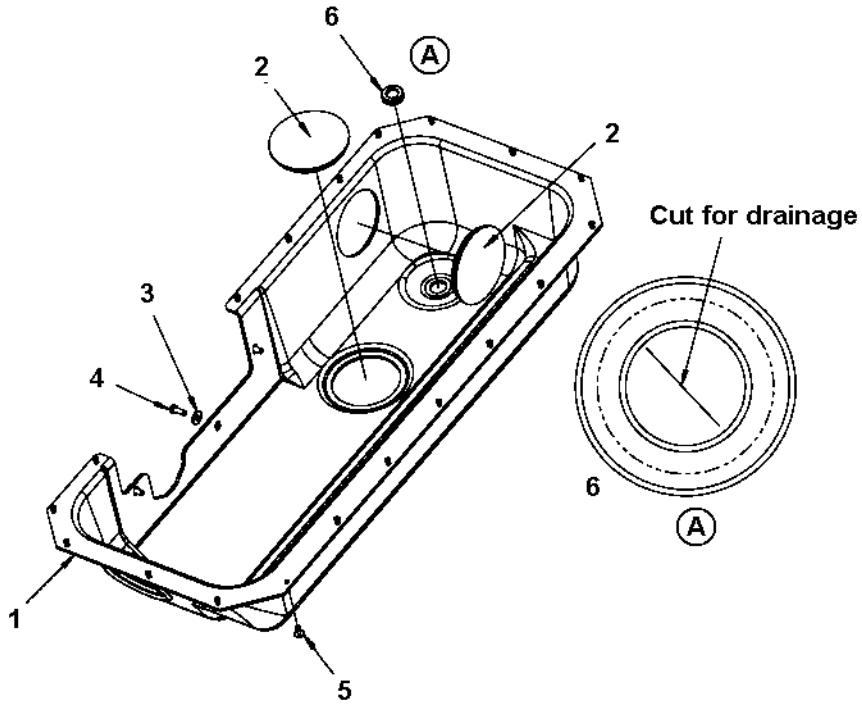

Cab noise cover

Item	Part No	Rem	Qty	Description		Code
1	4700381938		1	Noise cover		
2	4700379992		3	Plug		
3	4700904640		3	Washer	8,4x22x3	
4	4700500053		3	Screw	M8x20H 8.8	
5	4700792325		19	Blind rivet		
6	4700792392		1	Grommet with membrane		

Radio and cd player

18686

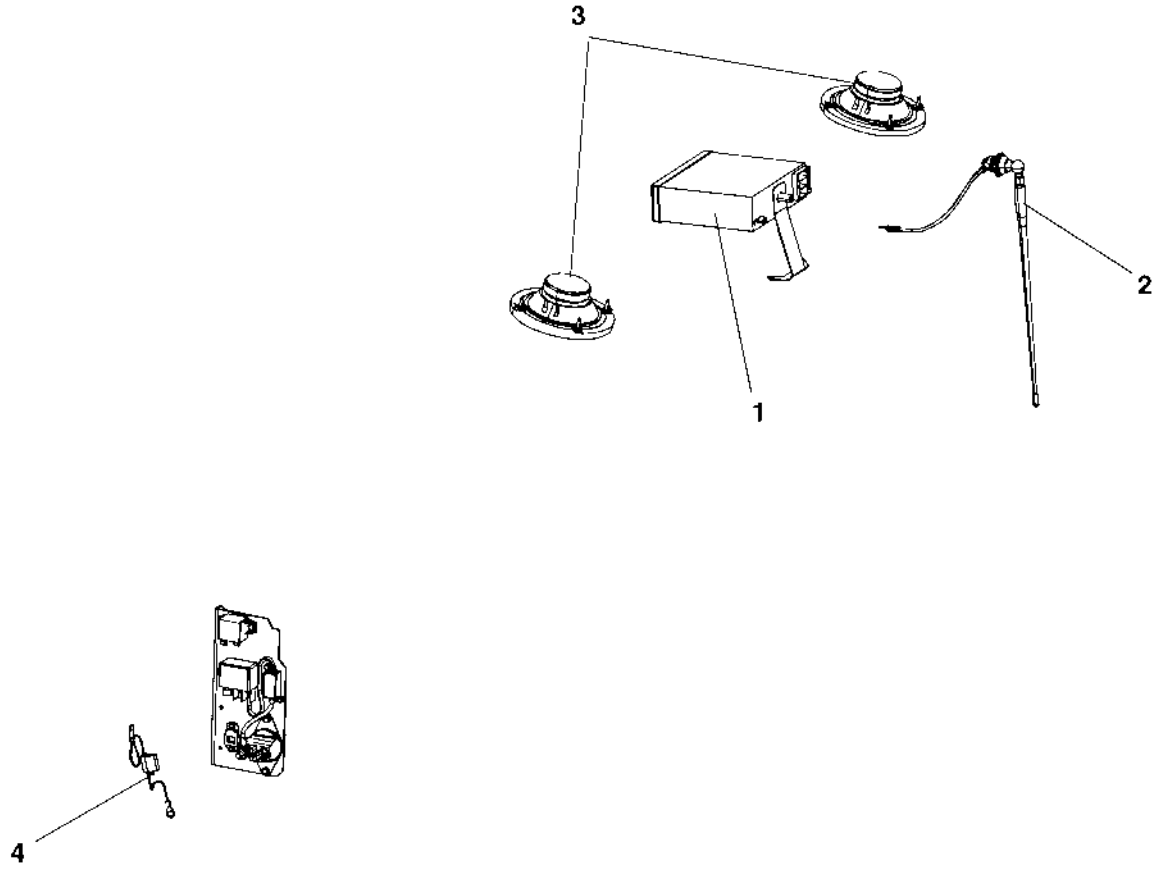

Radio and cd player

Item	Part No	Rem	Qty	Description	Code
1			1	Radio and cd player module (Page 354)	
2	4700937165		1	Antenna	
3	4700791968		2	Loud speakers	
4			1	Power supply module (Page 258)	

Radio and cd player module

394098

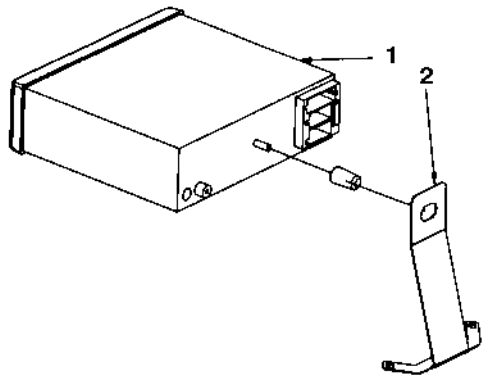

Radio and cd player module

Item	Part No	Rem	Qty	Description	Code
1	4700792583		1	Car stereo	
2	4700394654		1	Bracket	

Rear view mirror module

392330

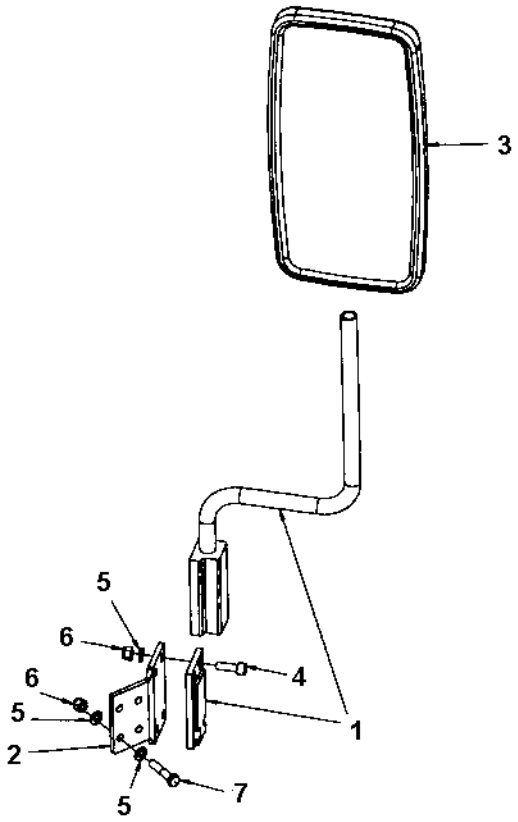

Rear view mirror module

Item	Part No	Rem	Qty	Description		Code
1	4700381944		1	Bracket		
2	4700392316		1	Bracket		
3	4700381943		1	Mirror		
4	4700508019		4	Screw	M8x25	
5	4700904229		12	Washer	8,4x16x1,5	
6	4700586003		8	Lock nut	M8	
7	4700500023		4	Screw	M8-1,25x40 8,8	

Drivers seat

AR0075

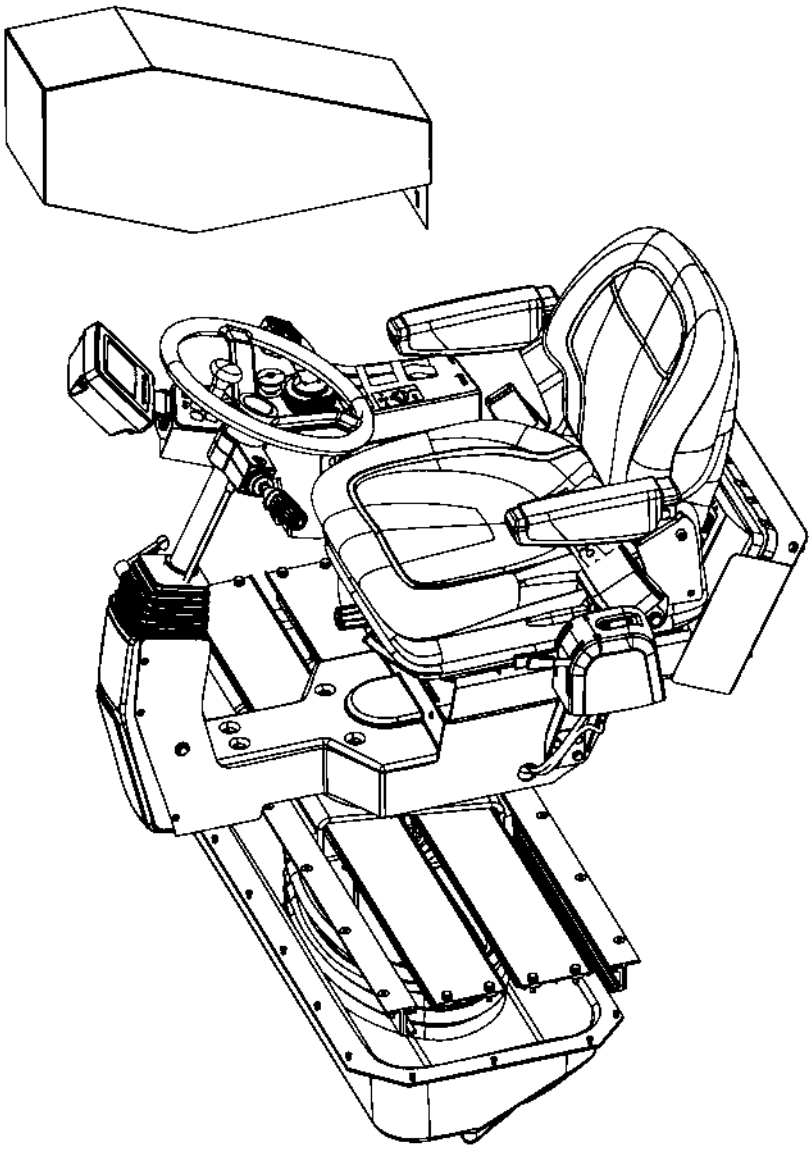

Drivers seat

Item	Part No	Rem	Qty	Description		Code
5				Seat frame structure (Page 360)		
6				Seat CE (Page 366)		
7				Seat with suspension (Page 368)		
10				Controls, slidable and turning (Page 370)		
14				Cross sliding (Page 372)		
15				Drive control, cpl (Page 376)		
16			1	Control panel cover (Page 380)		
20				Display unit (Page 382)		
21				Steering column switch module (Page 272)		
22	4700377677		1	Seat belt	2"	
	4700379637		1	Seat belt	3"	

Seat frame structure

391062

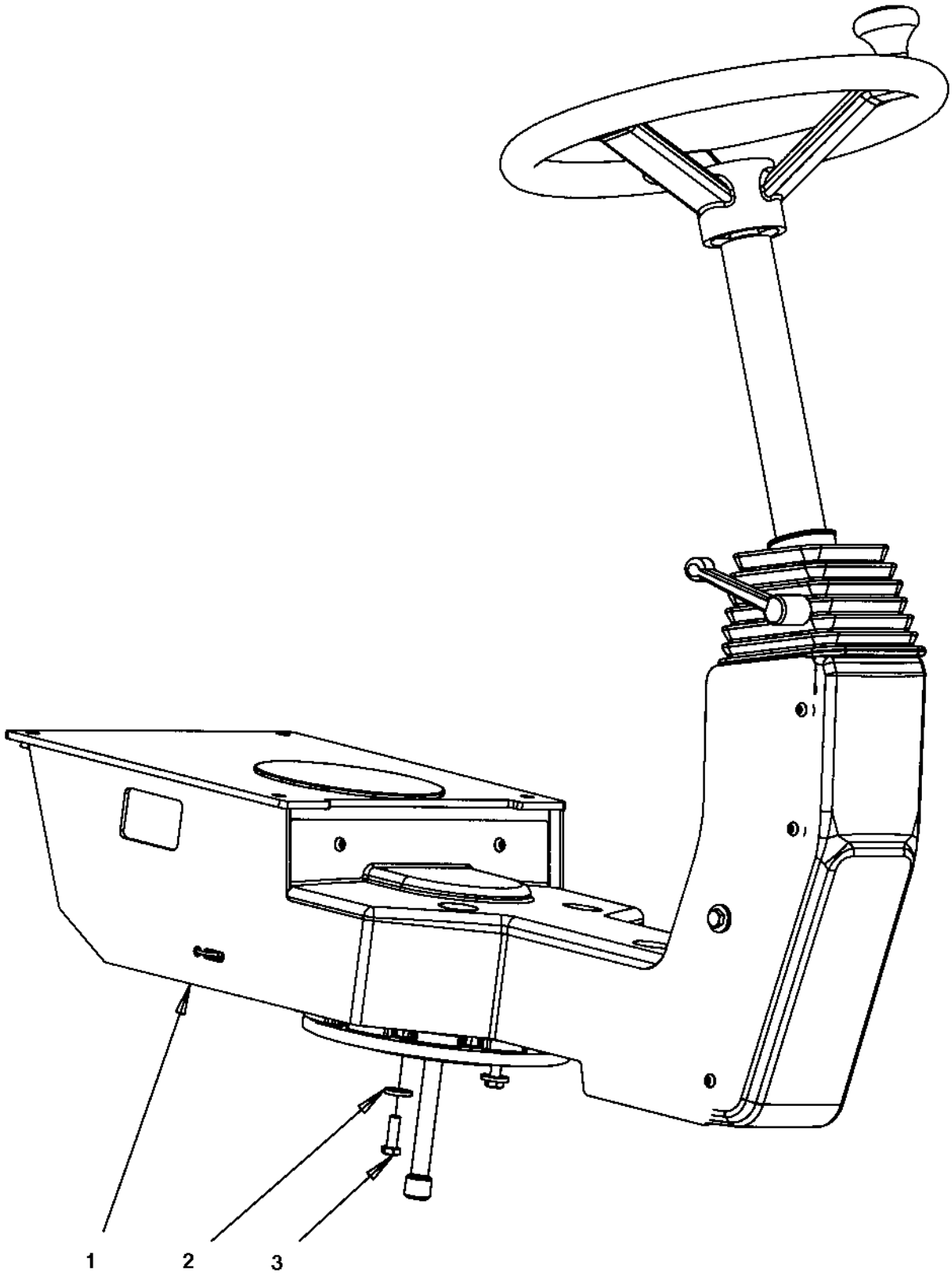

Seat frame structure

Item	Part No	Rem	Qty	Description		Code
1			1	Seat frame (Page 362)		
2	4700904229		8	Washer	8,4x16x1,5	
3	4700947679		4	Screw		

Seat frame

379731

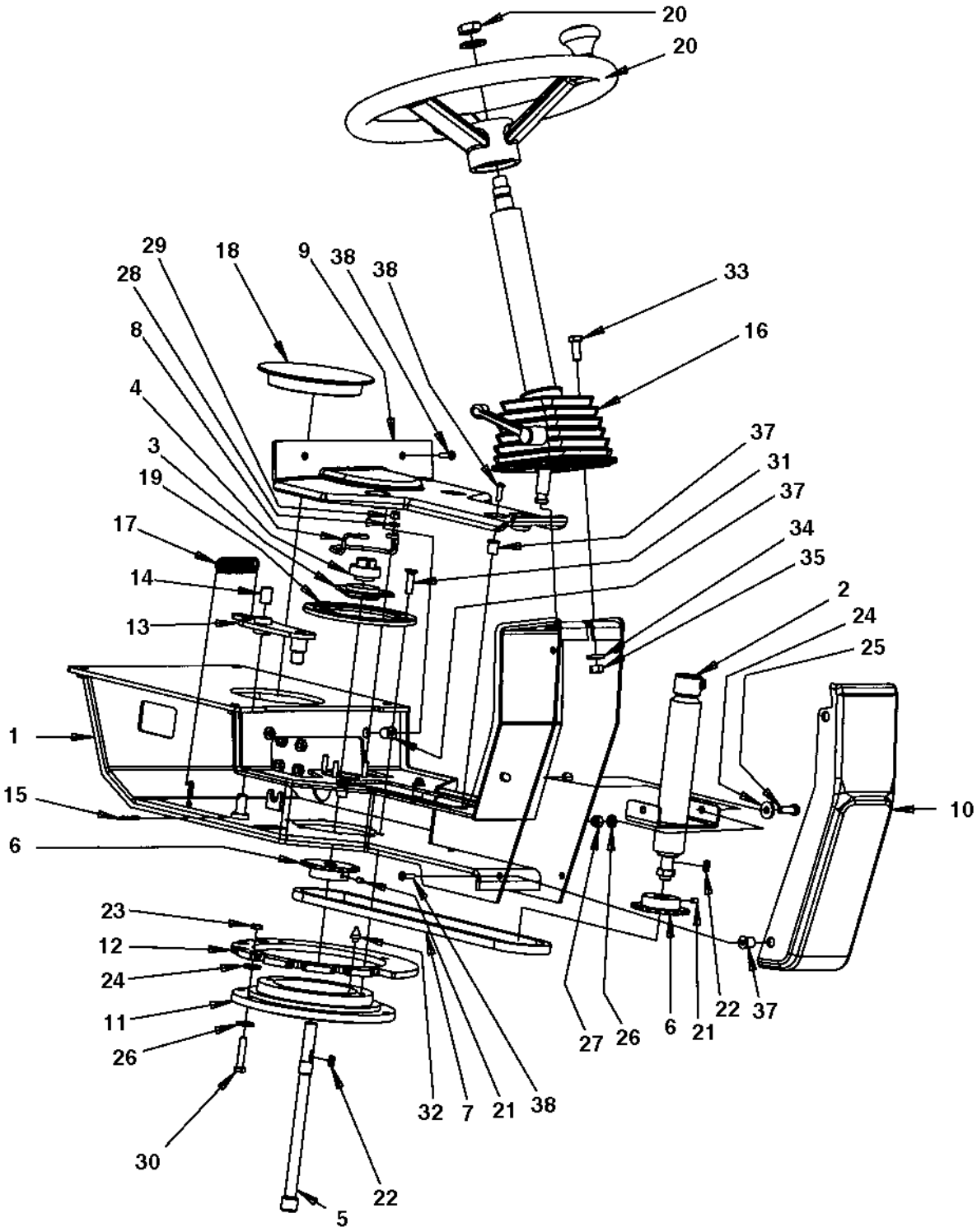

Seat frame

Item	Part No	Rem	Qty	Description		Code
1	4700395447		1	Seat frame		
2	4700359919		1	Shaft		
3	4700903917		1	Bearing outer		
4	4700903918		1	Bearing inner		
5	4700391770		1	Shaft		
6	4700359916		2	Chain wheel		D
7	4700379718		1	Chain and connecting link		
8	4700372672		1	Chain guard		
9	4700392839		1	Cover		
10	4700392840		1	Cover		
11	4700359125		1	Ball bearing		
12	4700379728		1	Locking disc		
13	4700395383		1	Coupling link		
14	4700359819		1	Bushing		
15	4700630008		1	Pin		D
16	4700391163		1	Steering column (Page 364)		C
17	4700359043		1	Spring		D
18	4700359920		1	Plug		
19	4700372965		1	Lock ring		
20	4700372964		1	Steering wheel, cpl		
21	4700516051		2	Set screw		
22	4700350009		2	Flat key		D
23	4700573008		4	Nut	M8	
24	4700904640		6	Washer	8,4x22x3	
25	4700500021		2	Screw	M8-1,25x25 8.8	
26	4700904229		6	Washer	8,4x16x1,5	
27	4700586003		2	Lock nut	M8	
28	4700603001		3	Washer		
29	4700586002		3	Lock nut		
30	4700792678		4	Screw		
31	4700902520		6	Screw		
32	4700926214		1	Grease fitting		D
33	4700500029		3	Screw		
34	4700904557		3	Washer		
35	4700570006		3	Nut		
37	4700792539		10	Rubber nut		
38	4700791524		10	Screw		

4700391163 Steering column

18412

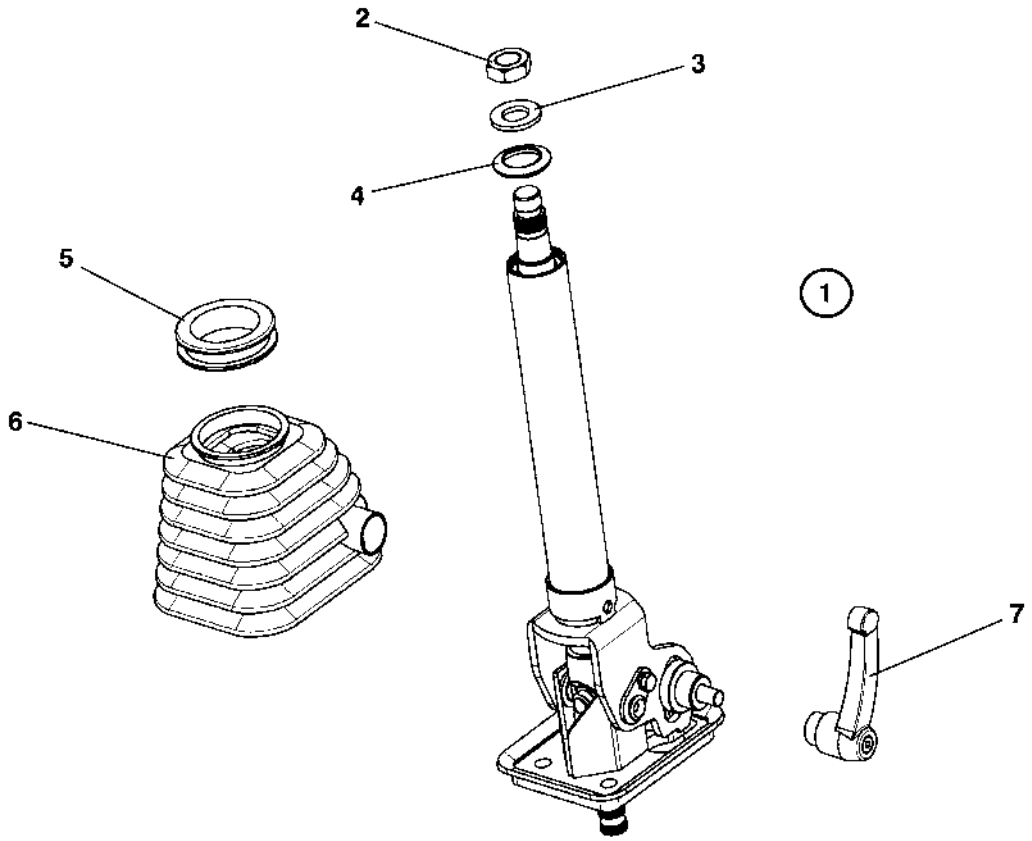

4700391163 Steering column

Item	Part No	Rem	Qty	Description	Code
1	4700391163			Steering column (Page 364)	C
2	4700945632		1	.Nut	
3	4700945633		1	.Washer	
4	4700945634		1	.Rubber cap	
5	4700945635		1	.Bellows ring	
6	4700945636		1	.Bellows	
7	4700945637		1	.Locking handle	

Seat CE

391081

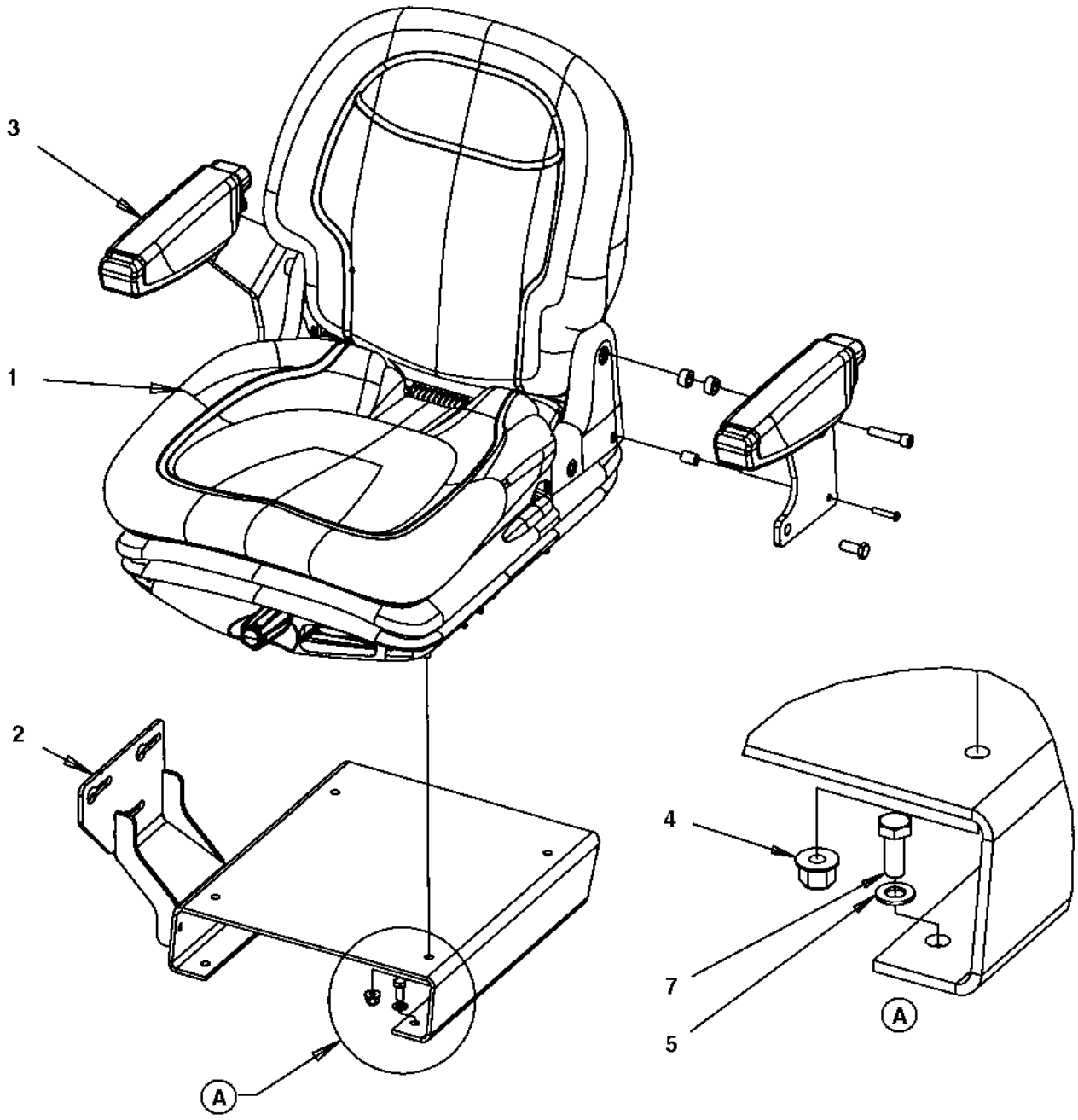

Seat CE

Item	Part No	Rem	Qty	Description		Code
1	4700377518		1	Drivers seat, cpl		
	4700945622		1	.Seat switch		
	4700945661	A	1	.Adjuster kit		D
2	4700390561		1	Seat frame		
3	4700390963		1	Arm rest kit		
4	4700902286		4	Lock nut	M8	
5	4700904229		4	Washer	8,4x16x1,5	
7	4700500053		4	Screw	M8x20H 8.8	

A) Left & right sliding rail

Seat with suspension

391090A

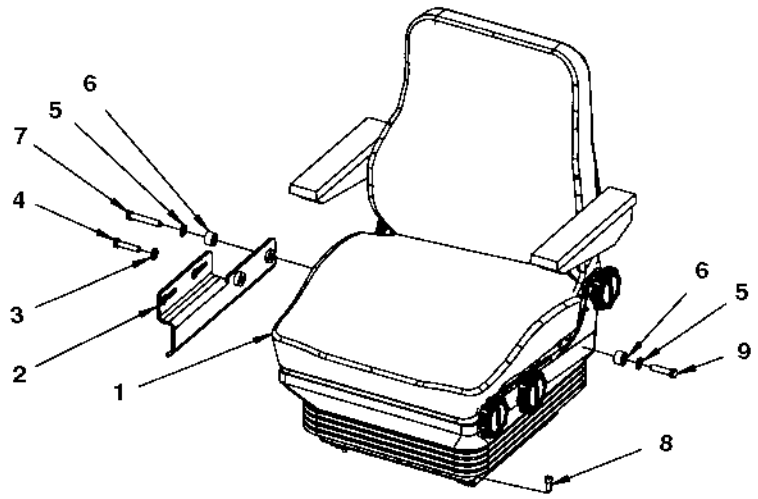

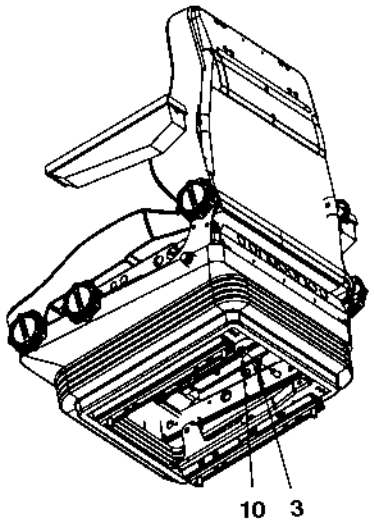

Seat with suspension

Item	Part No	Rem	Qty	Description	Code
1	4700390013	A	1	Seat	
	4700937892		1	.Seat switch	
	4700937620		1	.Arm rest, right	
	4700937621		1	.Arm rest, left	
2	4700390169		1	Bracket	
3	4700904230		2	Washer	
4	4700500161		1	Screw	
5	4700904638		2	Washer	12x22x2
6	4700791572		2	Spacer washer	
7	4700792501		1	Screw	
8	4700508092		4	Screw	
9	4700792527		1	Screw	
10	4700586018		1	Lock nut	

A) Without seat belt

Controls, slidable and turning

391065

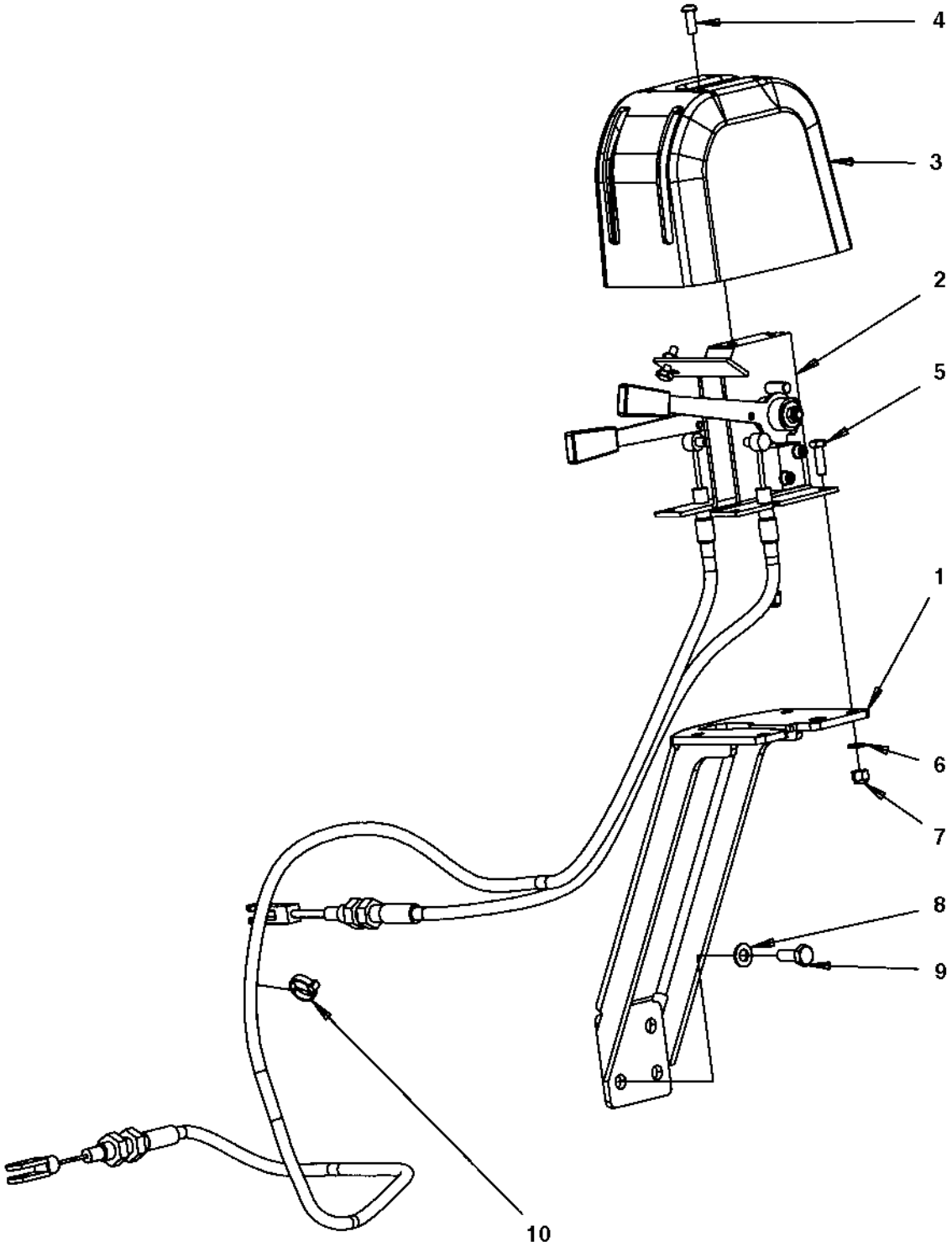

Controls, slidable and turning

Item	Part No	Rem	Qty	Description	Code
1	4700391241		1	Bracket	
2	4700390239		1	Control	
	4700393496		1	.Cable 675	
	4700393497		1	.Cable 1300	
3	4700392965		1	Control cover	
4	4700904206		2	Screw	
5	4700500040		4	Screw M6-1x20 8,8	
6	4700904228		4	Washer	
7	4700586002		4	Lock nut	
8	4700904229		4	Washer 8,4x16x1,5	
9	4700500053		4	Screw M8x20H 8.8	
10	4700313041		N	Cable ties	

Cross sliding

392707

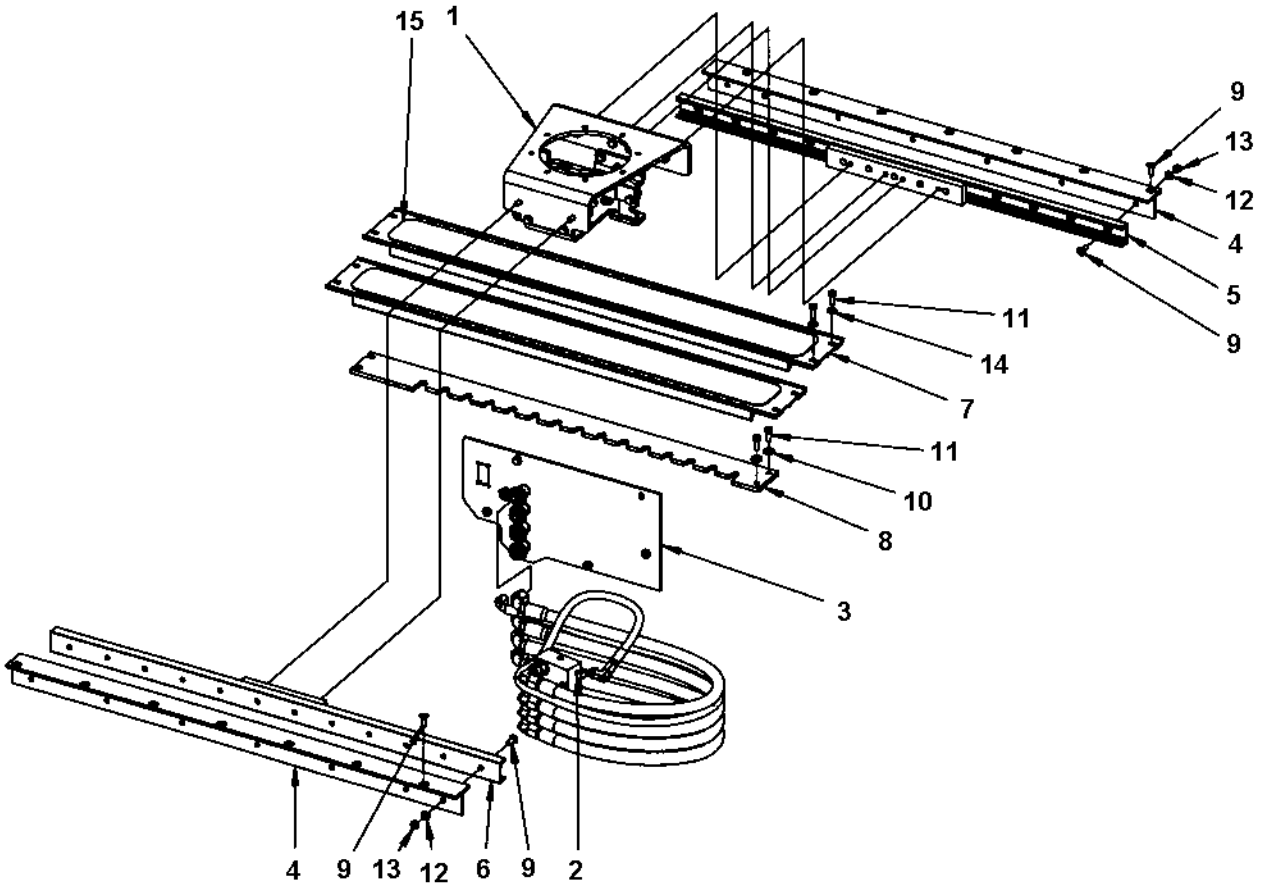

Cross sliding

Item	Part No	Rem	Qty	Description		Code
1			1	Carrier (Page 374)		
2			1	Steering, slideable (Page 218)		
3			1	Hose bracket (Page 214)		
4	4700392704		2	Rail holder		
5	4700392705		1	Linear bearing		
6	4700392706		1	Linear bearing		
7	4700393427		2	Cover		
8	4700379730		1	Locking rail		
9	4700513003		28	Screw		
10	4700791304		4	Washer		
11	4700500020		12	Screw	M8-1,25x22 8,8	
12	4700904229		14	Washer	8,4x16x1,5	
13	4700570005		14	Nut	M8	
14	4700904556		8	Washer	8,4x16x3,0	
15	4700393977		2	Slip protection		

Carrier

379727C

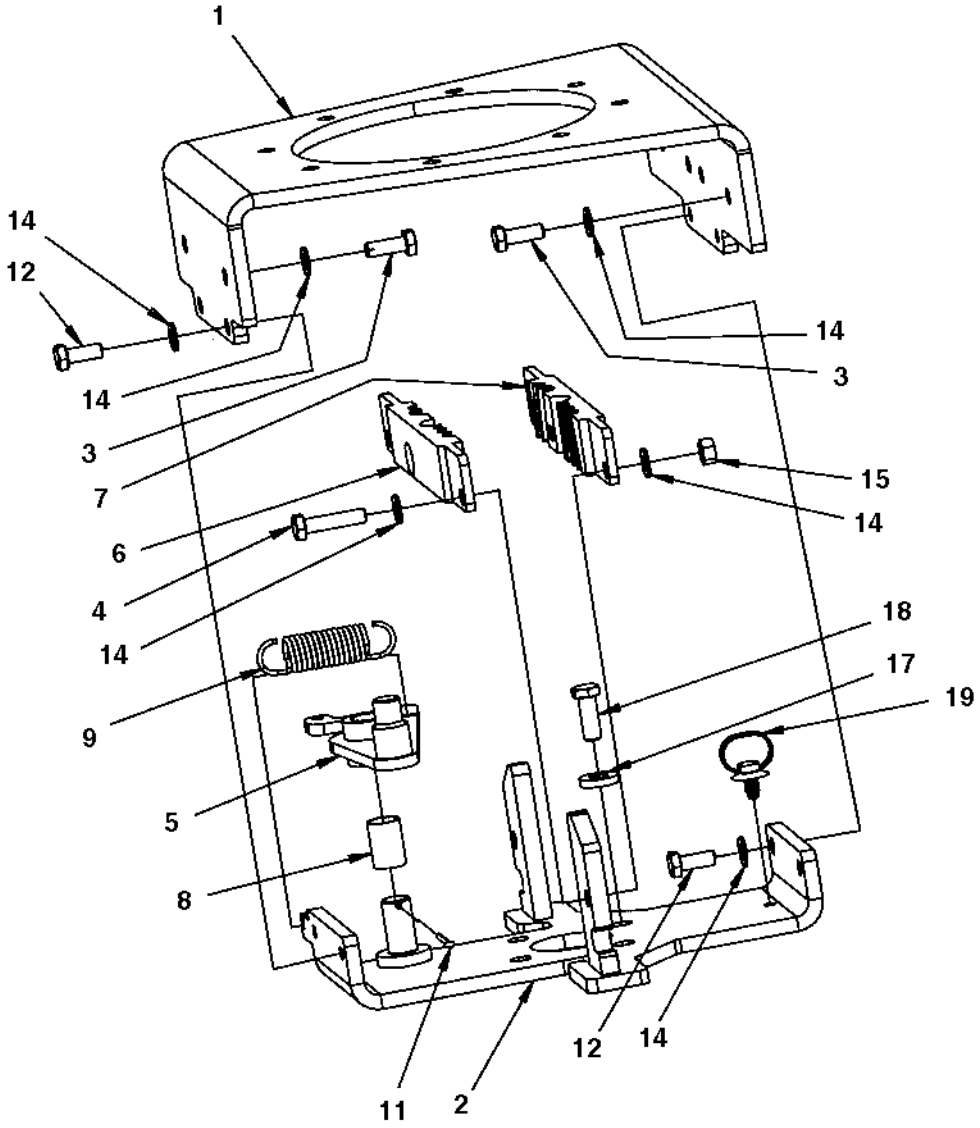

Carrier

Item	Part No	Rem	Qty	Description		Code
1	4700379715		1	Carrier		
2	4700391478		1	Steering valve bracket		
3	4700500020		6	Screw	M8-1,25x22 8,8	
4	4700500047		2	Screw		
5	4700393347		1	Coupling link		
6	4700372959		1	Clamp		
7	4700372960		1	Clamp		
8	4700359819		1	Bushing		
9	4700359043		1	Spring		D
11	4700630008		1	Pin		D
12	4700500053		4	Screw	M8x20H 8.8	
14	4700904229		14	Washer	8,4x16x1,5	
15	4700570005		2	Nut	M8	
17	4700904557		4	Washer		
18	4700502035		4	Screw	3/8"-16UNCx1 8.8	
19	4700792441		1	Cable tie with holder		

Drive control, cpl

391102

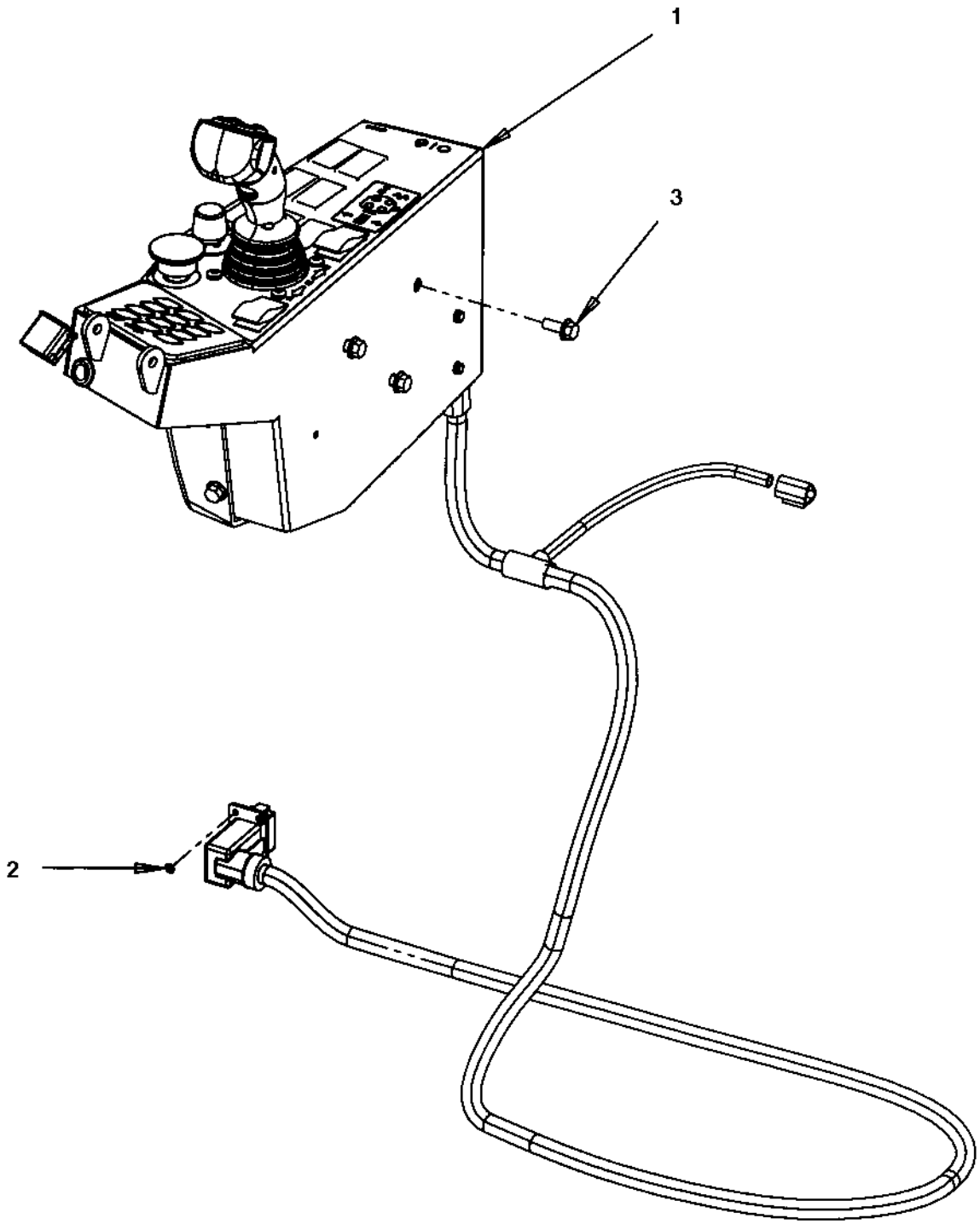

Drive control, cpl

Item	Part No	Rem	Qty	Description	Code
1			1	Drive control (Page 378)	
2	4700791709		4	Pop rivet	
3	4700500505		3	Screw M8x20 8.8	

Drive control

391100D

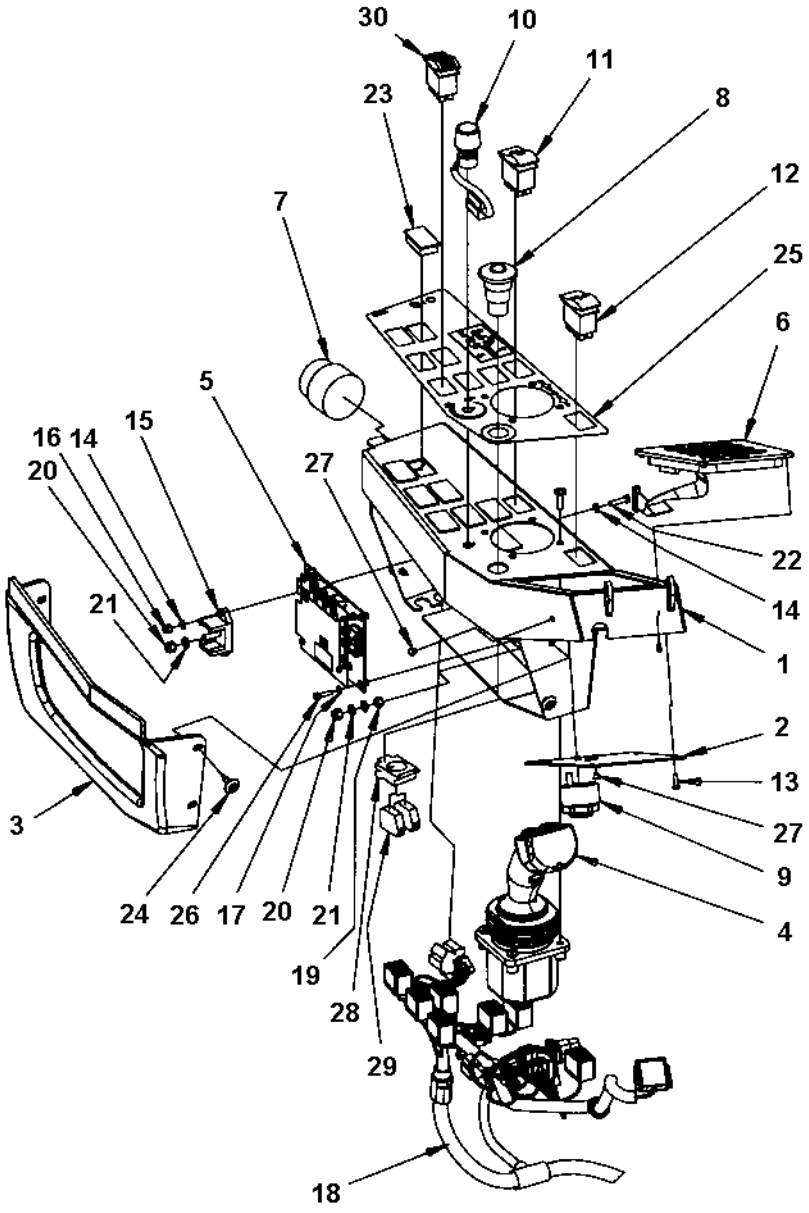

Drive control

Item	Part No	Rem	Qty	Description		Code
1	4700391306		1	Control box Up to 284S00010		
	4700396661		1	Control box From 284S00011		
2	4700391396		1	Cover		
3	4700396662		1	Cover		
4	4700391420		1	Control handle		
5	4700390861		1	Control unit		
6	4700391421		1	Membrane switch panel		
7	4700238158		1	Ignition switch		
	4700940451		1	.Key		
8	4700791739		1	Emergency stop		
9	4700385599		1	Buzzer		
10	4700388737		1	Potentiometer		
11	4700791582		1	Switch, parking brake		
12	4700792414		1	Switch, RPM		
13	4700526010		4	Thread rolling screw		
14	4700904281		4	Washer		
15	4700392930		1	Junction box		
16	4700586001		2	Lock nut		
17	4700541527		4	Thread rolling screw		
18	4700391579		1	Cable harness Up to 284S00017		
	4700397338		1	Cable harness From 284S00018		
19	4700570004		1	Nut	M6X1,00 -8 A2K	
20	4700586002		2	Lock nut		
21	4700904228		3	Washer		
22	4700500060		2	Screw	M5-0,8x20 8.8	
23	4700791588		7	Panel plug		
24	4700500505		4	Screw Up to 284S00010	M8x20 8.8	
	4700395785		4	Screw From 284S00011		
25	4700393031		1	Decal		
26	4700508022		4	Screw	M4x16	
27	4700902804		1	Plug		
28	4700791733		1	Fixing collar		
29	4700791723		2	Connector		
30	4700792812		1	Switch, deplacement shift From 284S00018		

Control panel cover

391085

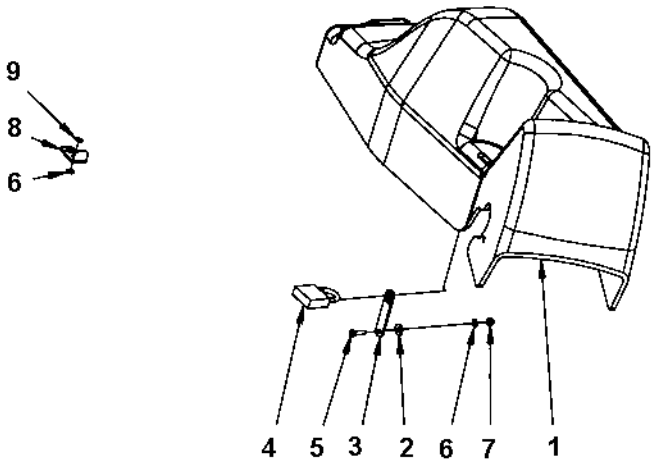

Control panel cover

Item	Part No	Rem	Qty	Description	Code
1	4700395947		1	Instrument panel cover	
2	4700900497		1	Plastic washer	
3	4700387545		1	Latch	
4	4700358881		1	Pad lock	
5	4700792589		1	Screw	
6	4700904281		3	Washer	
7	4700586001		1	Lock nut	
8	4700396670		1	Bracket	
9	4700904619		2	Blind rivet	

Display unit

391103

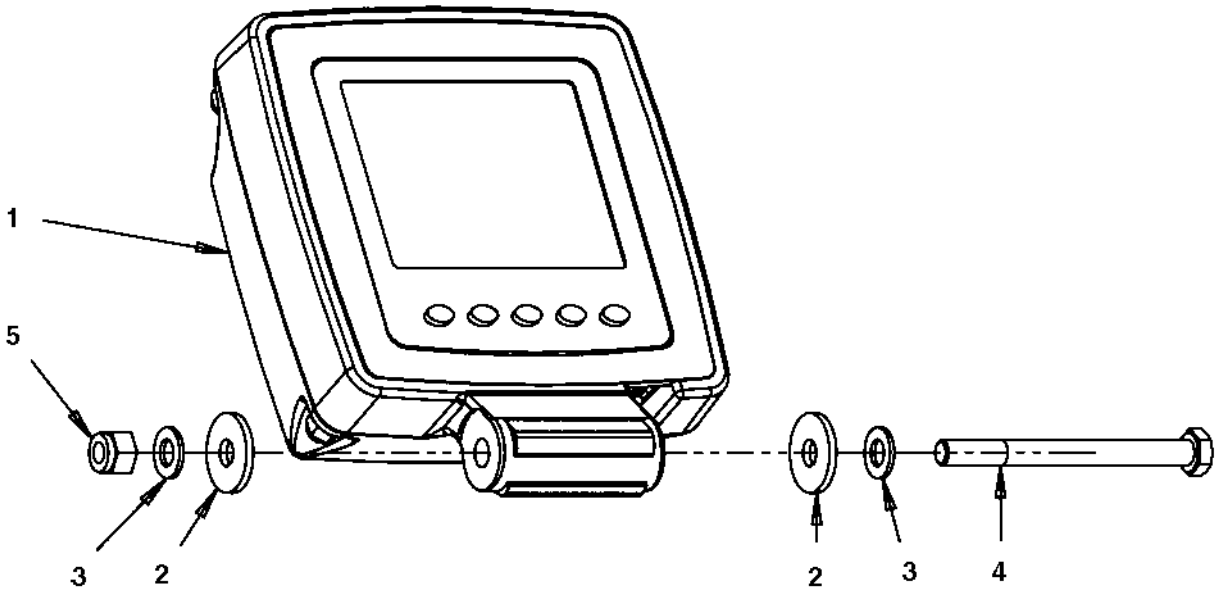

Display unit

Item	Part No	Rem	Qty	Description		Code
1			1	Display (Page 384)		
2	4700903662		2	Washer		
3	4700904229		2	Washer	8,4x16x1,5	
4	4700500115		1	Screw	M8-1,25x90 8.8	
5	4700586003		1	Lock nut	M8	

Display

391101

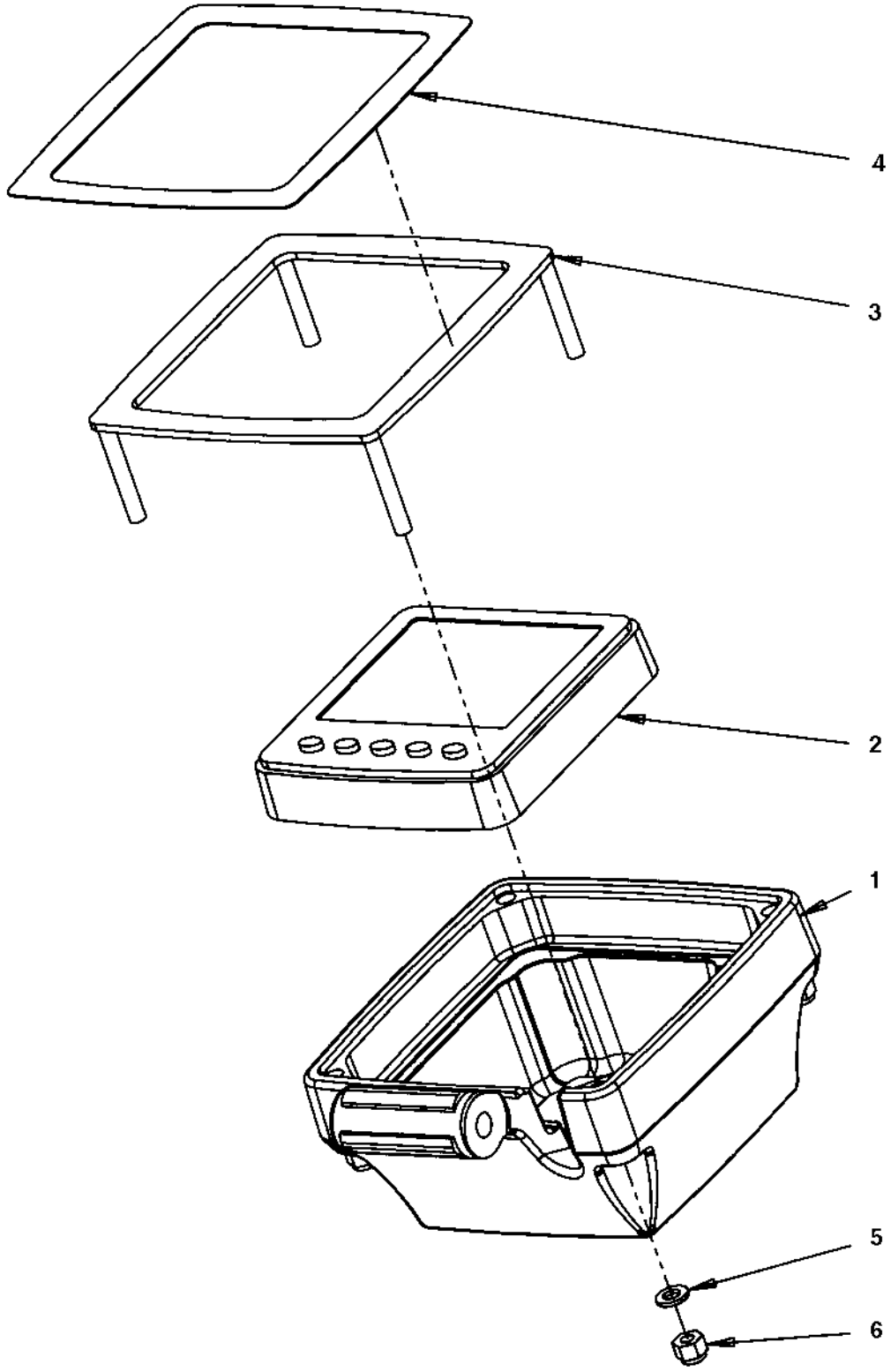

Display

Item	Part No	Rem	Qty	Description	Code
1	4700392717		1	Display holder	
2	4700391240		1	Display unit	
3	4700392719		1	Cover	
4	4700393094		1	Decal	
5	4700904228		4	Washer	
6	4700586002		4	Lock nut	

Decals

Item	Part No	Rem	Qty	Description	Code
1				Decals (Page 388)	

Decals

18638

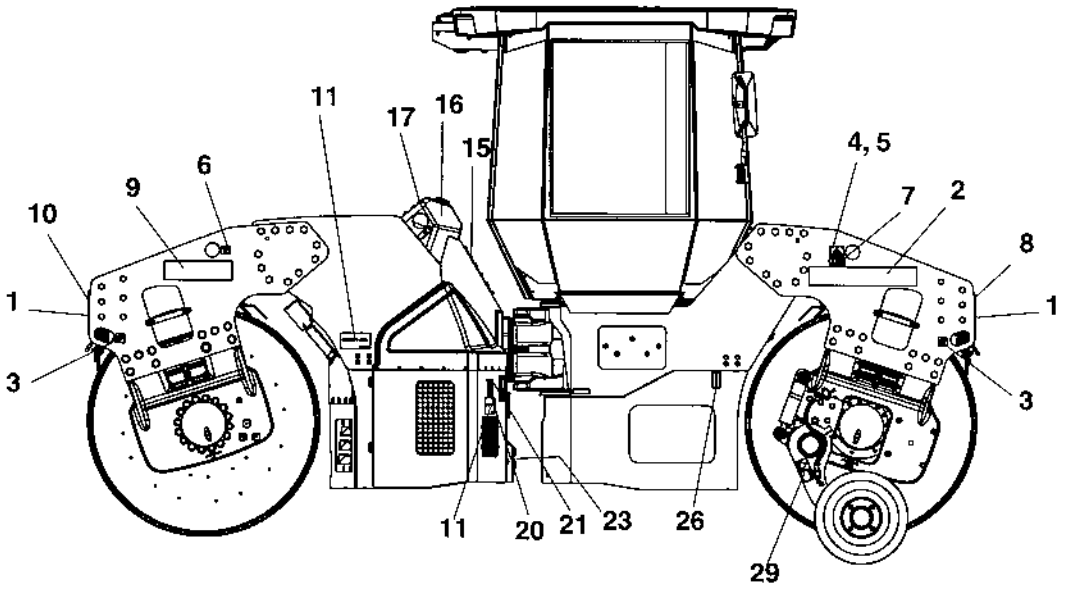

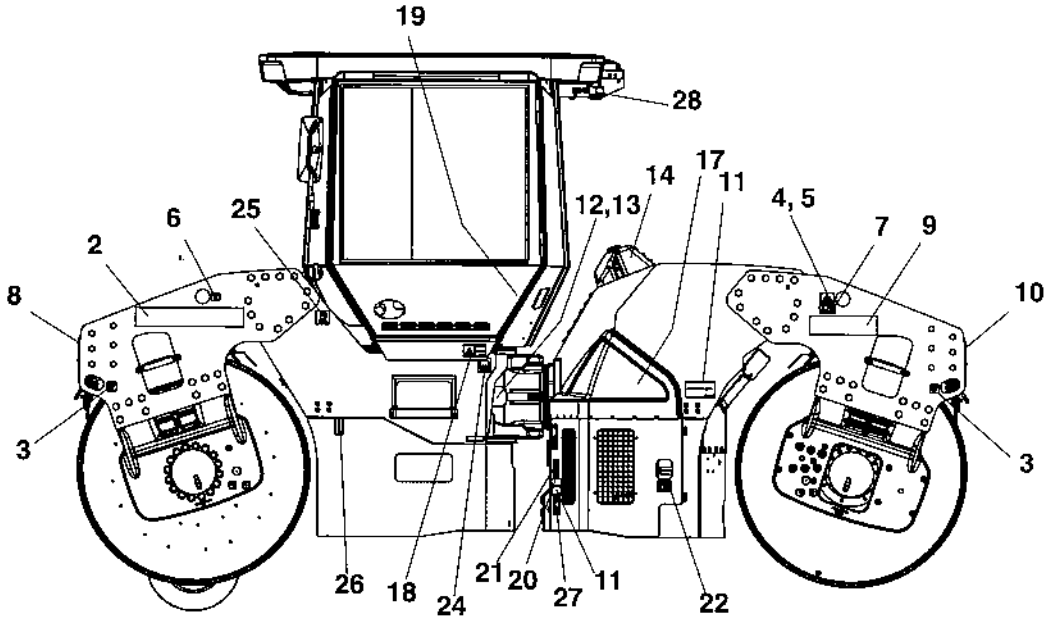

Decals

Item	Part No	Rem	Qty	Description		Code
1	4700904094		2	Decal "DYNAPAC"	L=670 mm	
2	4700904092		2	Decal "DYNAPAC"	L=590 mm	
3	4700382751		4	Decal "TIE DOWN POINT"		
4	4700904870		2	Lifting sign		
5	4700624005		8	Blind rivet	3,2x6,1	
6	4700357587		2	Decal "LIFT POINT"		
7	4700908229		2	Safety decal		
8	4700377743		2	Reflector, white		B
9	4700792571		2	Decal "MODEL CODE"	CC324HF	
10	4700377742		2	Reflector, red		B
11	4700903422		4	Decal "SAFETY"		
12			1	Product identification plate		
13	4700624005		4	Blind rivet	3,2x6,1	
14	4700272372		1	Decal "HYDRAULIC OIL"		
	4700904601		1	Decal "BIO HYDRAULIC OIL"		
	4700792772		1	Decal "BIO HYDRAULIC OIL"	PANOLIN	
15	4700272373		1	Decal "HYDRAULIC OIL"		
16	4700388449		1	Decal "Engine coolant fill"		
17	4700791642		2	Decal "WARNING"	Use of starting fluid prohib.	
18	4700903459		1	Decal "SAFETY"		
19	4700903425		2	Decal "SAFETY MANUAL"		
20	4700903423		2	Decal "SAFETY"		
21	4700903424		2	Decal "HOT SURFACE"		
22	4700904835		1	Decal "BATTERY POWER"		
23	4700393959		1	Decal "24V"		
24	4700991657		1	Decal "WATER"		
25	4700991658		1	Decal "FUEL"		
26	4700377744		2	Reflector, yellow		B
27	4700791276		1	Decal "Sound power level"	106dB	
	4700791277		1	Decal "Sound power level"	107dB	
28	4700904165		1	Safety decal	Toxic gases	
29	4700904083		1	Safety decal		

Optional equipment

Item	Part No	Rem	Qty	Description	Code
1				Air conditioning (Page 392)	

Air conditioning

18856

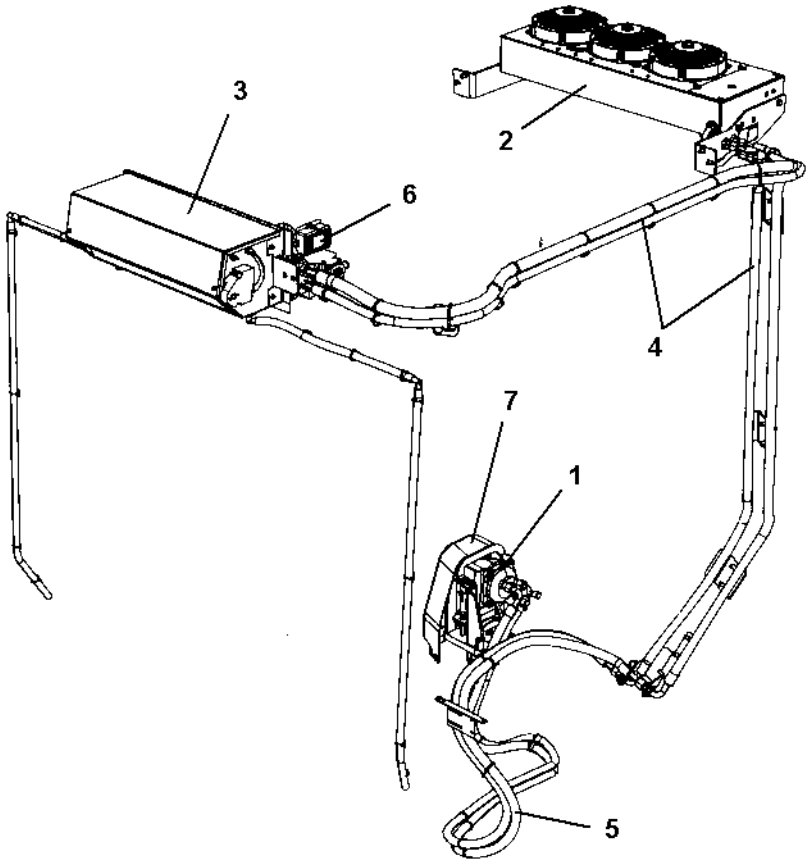

Air conditioning

Item	Part No	Rem	Qty	Description	Code
1			1	Compressor module (Page 394)	
2			1	Condensor module (Page 398)	
3			1	Evaporator module (Page 402)	
4			1	Hose kit AC (Page 406)	
5			1	Hose kit Compressor (Page 410)	
6			1	ACC module (Page 414)	
7			1	Belt guard module (Page 418)	

Compressor module

395733B

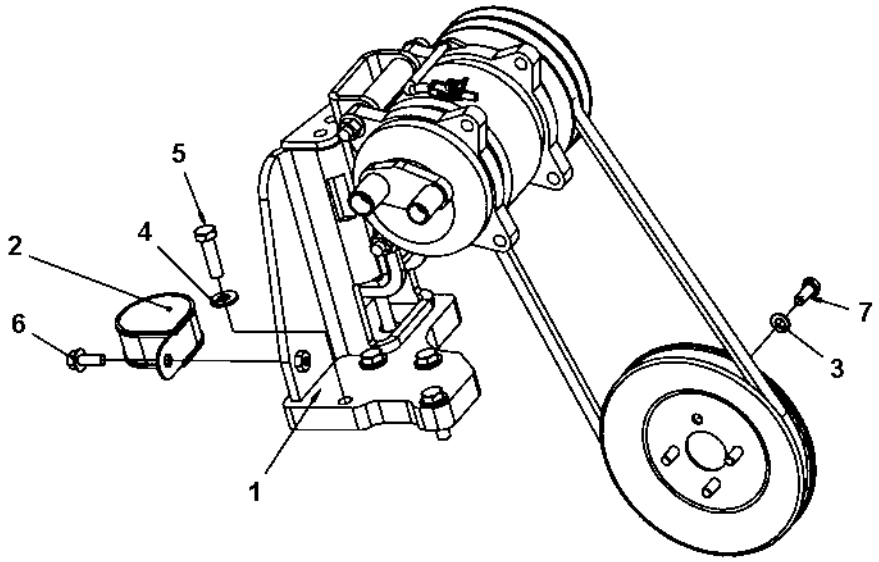

Compressor module

Item	Part No	Rem	Qty	Description		Code
1			1	Compressor complete (Page 396)		
2	4700904352		1	Clamp		
3	4700904229		4	Washer	8,4x16x1,5	
4	4700904230		4	Washer		
5	4700500030		4	Screw		
6	4700500505		1	Screw	M8x20 8.8	
7	4700500053		4	Screw	M8x20H 8.8	

Compressor complete

393343A

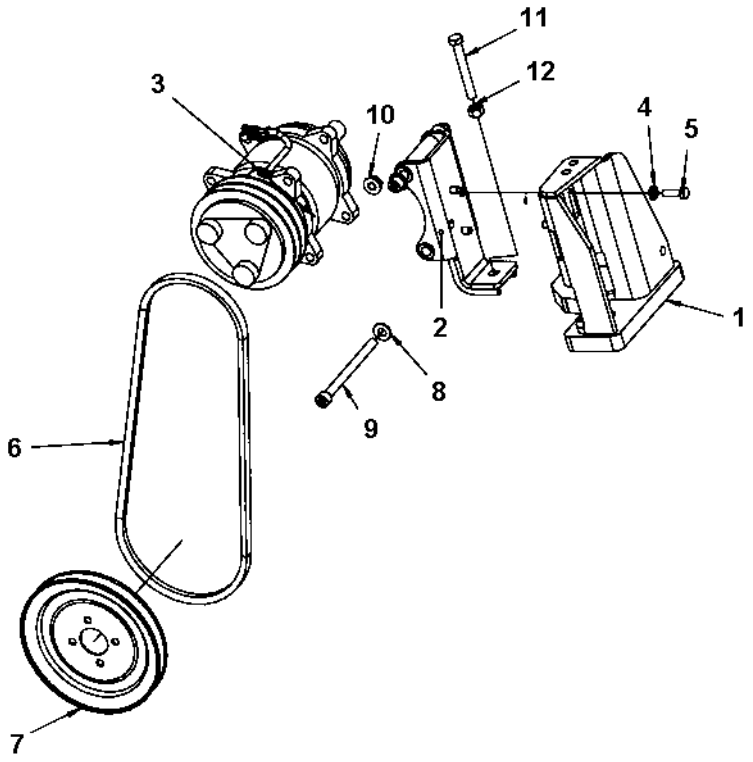

Compressor complete

Item	Part No	Rem	Qty	Description		Code
1	4700394861		1	Compressor bracket		
2	4700394860		1	Compressor bracket		
3	4700396036		1	Compressor		
4	4700904556		2	Washer	8,4x16x3,0	
5	4700500021		2	Screw	M8-1,25x25 8.8	
6	4700410012		1	V-belt		
7	4700395192		1	V-belt pulley		
8	4700904230		2	Washer		
9	4700792797		2	Hexagon socket head cap screw m		
10	4700570103		2	Nut	M10	
11	4700500241		1	Screw		
12	4700570006		1	Nut		

Condensor module

393528

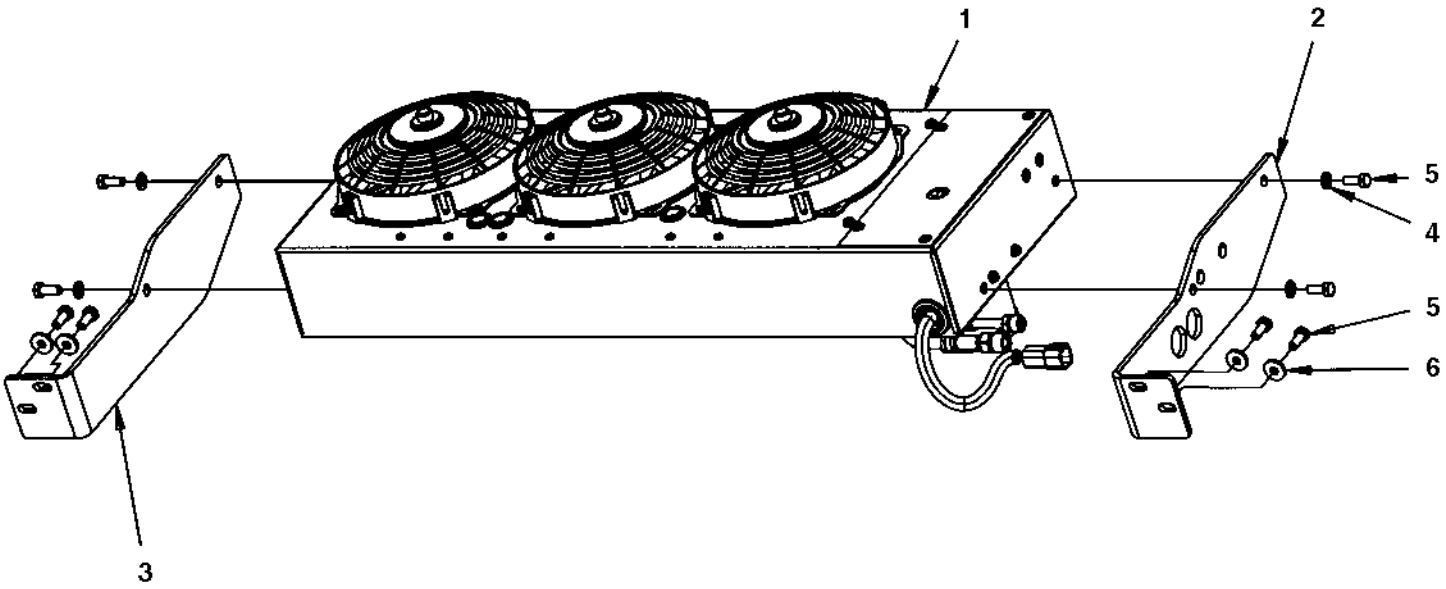

Condensor module

Item	Part No	Rem	Qty	Description		Code
1			1	Condensor (Page 400)		
2	4700393222		1	Bracket		
3	4700393223		1	Bracket		
4	4700904229		4	Washer	8,4x16x1,5	
5	4700500053		8	Screw	M8x20H 8.8	
6	4700904640		4	Washer	8,4x22x3	

Condensor

393529

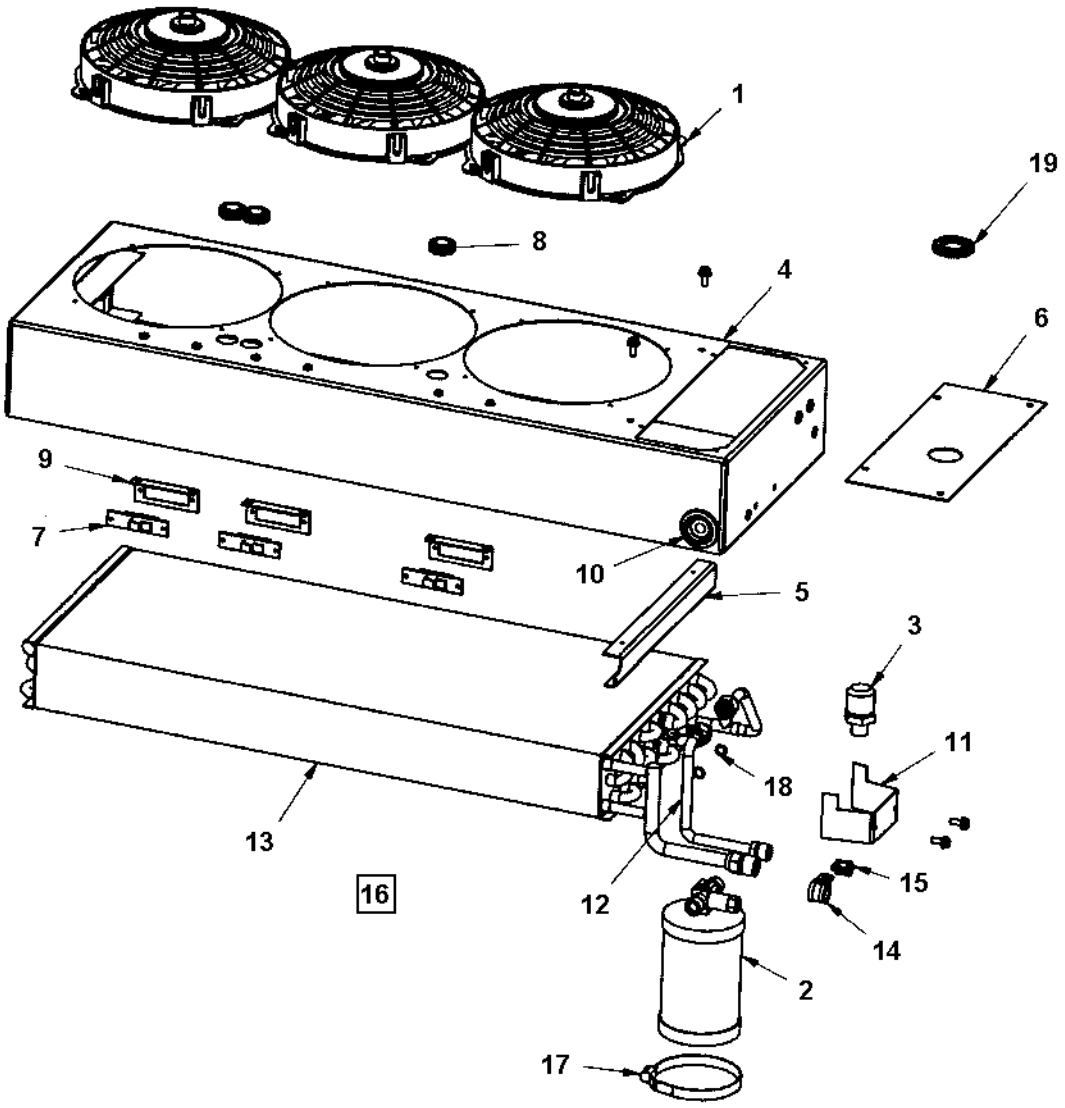

Condensor

Item	Part No	Rem	Qty	Description	Code
1	4700950372		3	Fan	
2	4700950373		1	Dryer	
3	4700938605		1	Pressure switch	
4			1	Casing	
5			1	Bracket	
6			1	Cover	
7	4700938606		3	Resistor	
8	4700938609		3	Grommet	
9			3	Resistor bracket	
10			1	Grommet	
11			1	Bracket	
12			1	Copper tube	
13	4700950374		1	Condensor Coil	
14			1	Clamp	
15			1	Clamp	
16	4700950375		1	Cable harness	
17	4700938789		1	Clamp	
18			2	O-ring	
19			1	Grommet	

Evaporator module

393583B

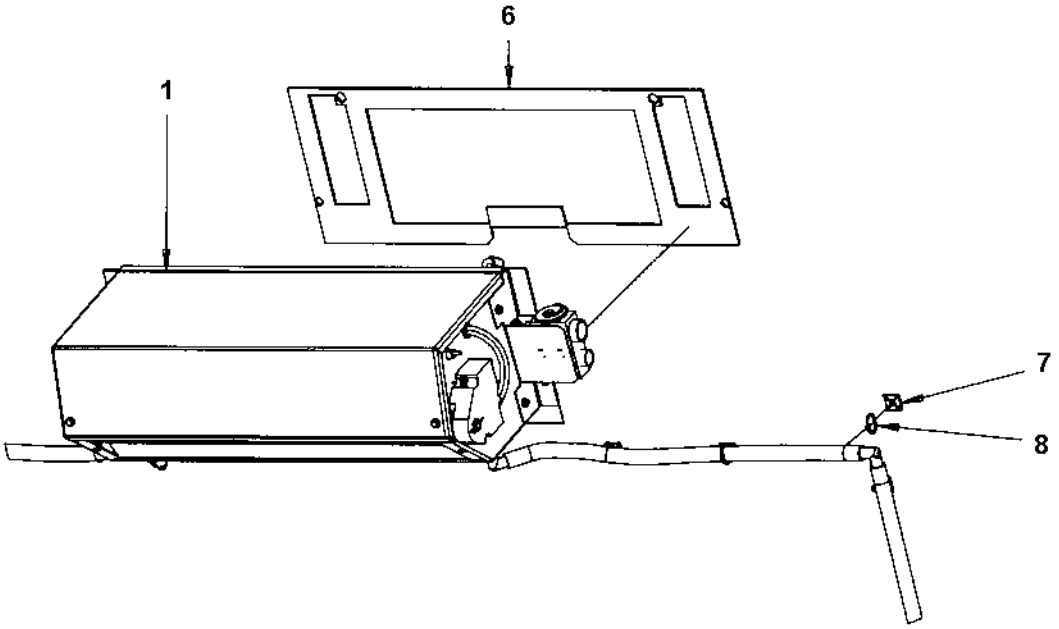

Evaporator module

Item	Part No	Rem	Qty	Description	Code
1	4700393584		1	Evaporator unit (Page 404)	
6	4700297018	A	1XL	Rubber strip	
7	4700395352		14	Cable tie holder	
8	4700313068		14	Cable ties L=92 mm	

A) L= 1,6 m

4700393584 Evaporator unit

393584

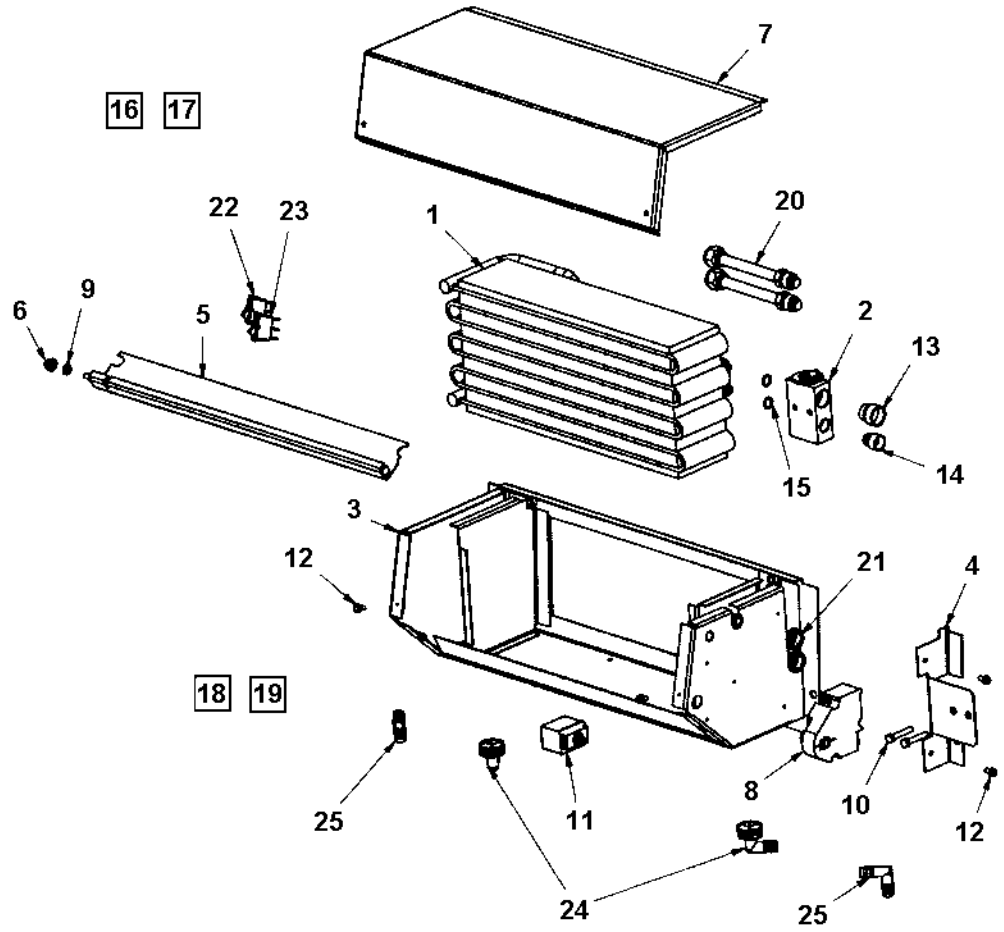

4700393584 Evaporator unit

Item	Part No	Rem	Qty	Description		Code
1	4700950310		1	Evaporator coil		
2	4700950342		1	Block valve		
3			1	Casing		
4			1	Bracket		
5			1	Recirculation cover		
6			1	Bushing		
7			1	Cover		
8	4700950343		1	Actuator motor		
9			1	Washer		
10			2	Screw	M6x35	
11	4700950344		1	Thermostat		
12			4	Screw	M5x10	
13			1	Plug		
14			1	Plug		
15	4700950345		2	O-ring		
16	4700950346		1	Cable harness, recirc.		
17	4700950347		1	Cable harness, panel		
18			1	Drain hose		
19			1	Drain hose		
20			2	Connect tube		
21			2	Insulation tape		
22	4700950348		1	Switch, air condition		
23	4700950349		1	Switch, recirculation		
24	4700950350		2	Drain valve		
25	4700950380		2	Drain elbow		

Hose kit AC

394017

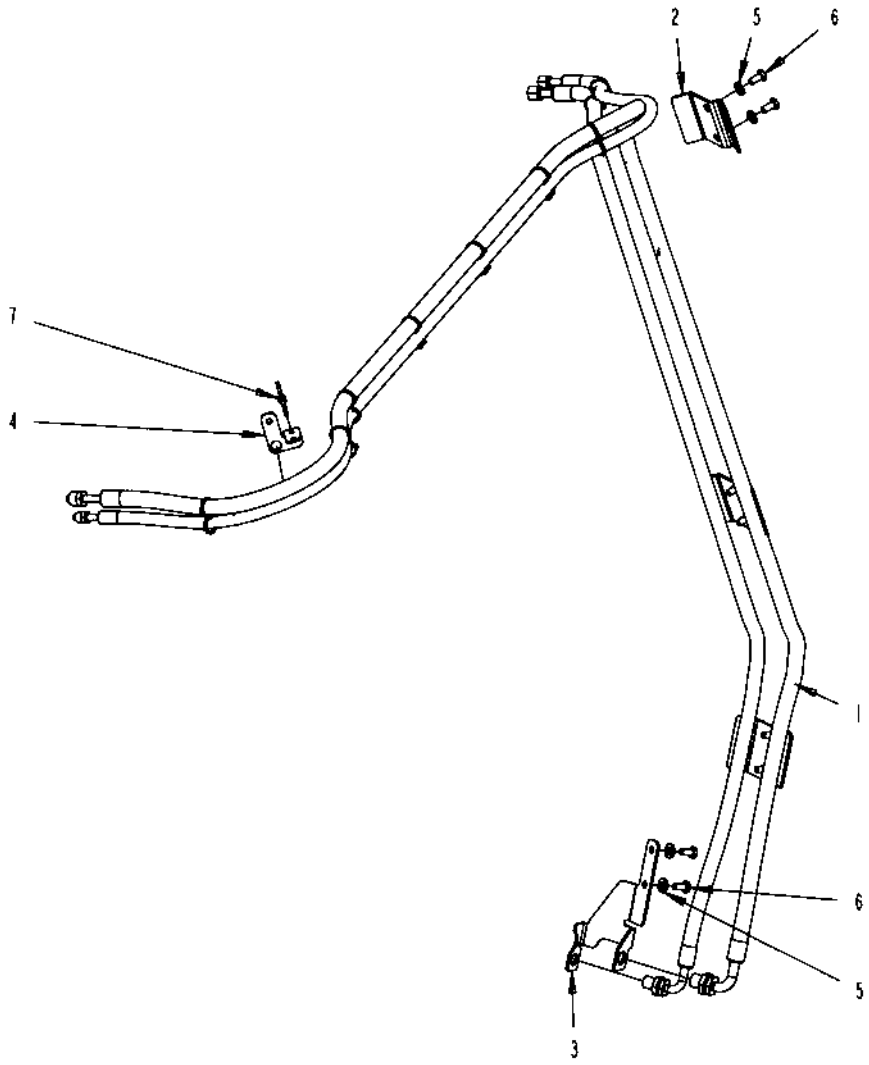

Hose kit AC

Item	Part No	Rem	Qty	Description		Code
1			1	Hose kit AC (Page 408)		
2	4700393418		3	Bracket		
3	4700394920		1	Bracket		
4	4700395156		1	Bracket		
5	4700904557		8	Washer		
6	4700500048		8	Screw	M10-1,5x20 8,8	
7	4700792686		9	Cable tie with holder		

Hose kit AC

394018

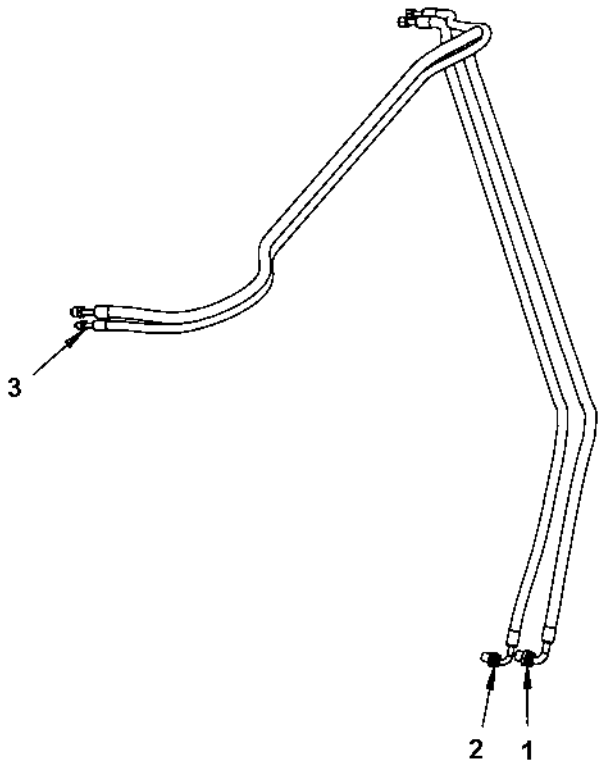

Hose kit AC

Item	Part No	Rem	Qty	Description	Code
1	4700395096		1	Refrigerant hose	
2	4700395095		1	Refrigerant hose	
3	4700395093		1	Refrigerant hose	

Hose kit Compressor

394019

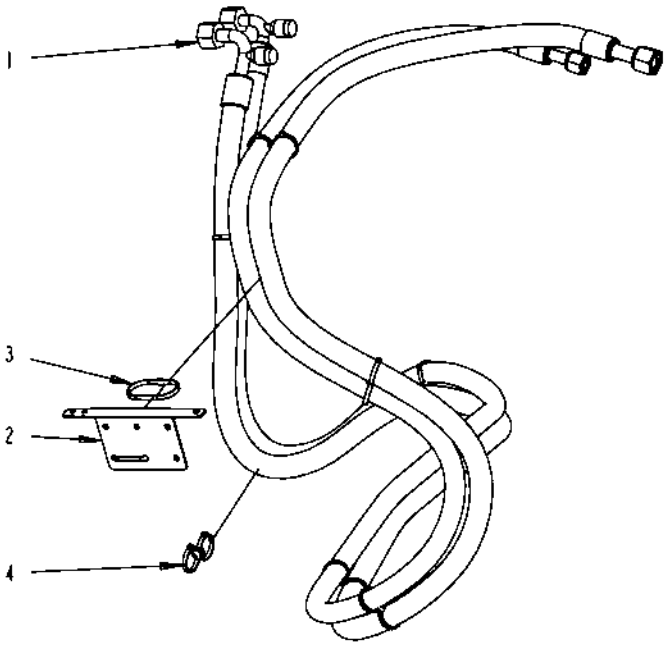

Hose kit Compressor

Item	Part No	Rem	Qty	Description	Code
1			1	Hose kit AC (Page 412)	
2	4700394707		1	Bracket	
3	4700313041		N	Cable ties	
4	4700792686		10	Cable tie with holder	

Hose kit AC

394020

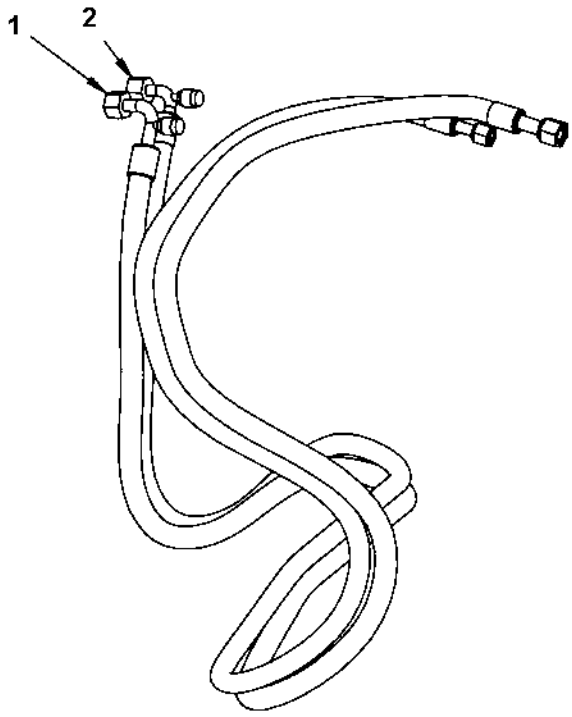

Hose kit AC

Item	Part No	Rem	Qty	Description	Code
1	4700395097		1	Refrigerant hose	
2	4700395094		1	Refrigerant hose	

ACC module

393631

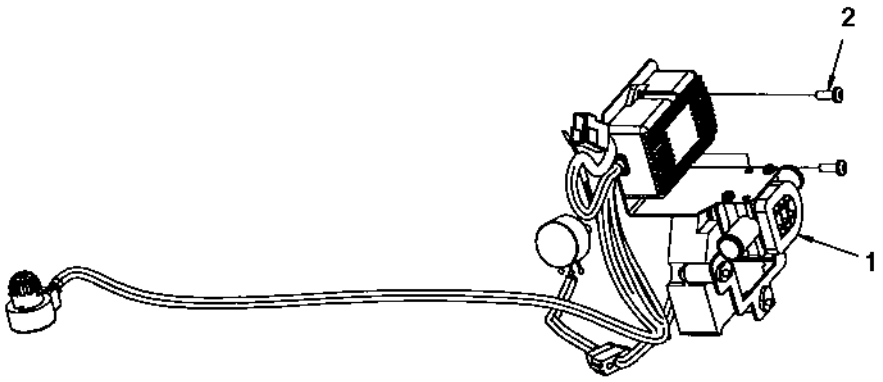

ACC module

Item	Part No	Rem	Qty	Description		Code
1			1	ACC controls (Page 416)		
2	4700792187		2	Screw	M5x14	

ACC controls

393795

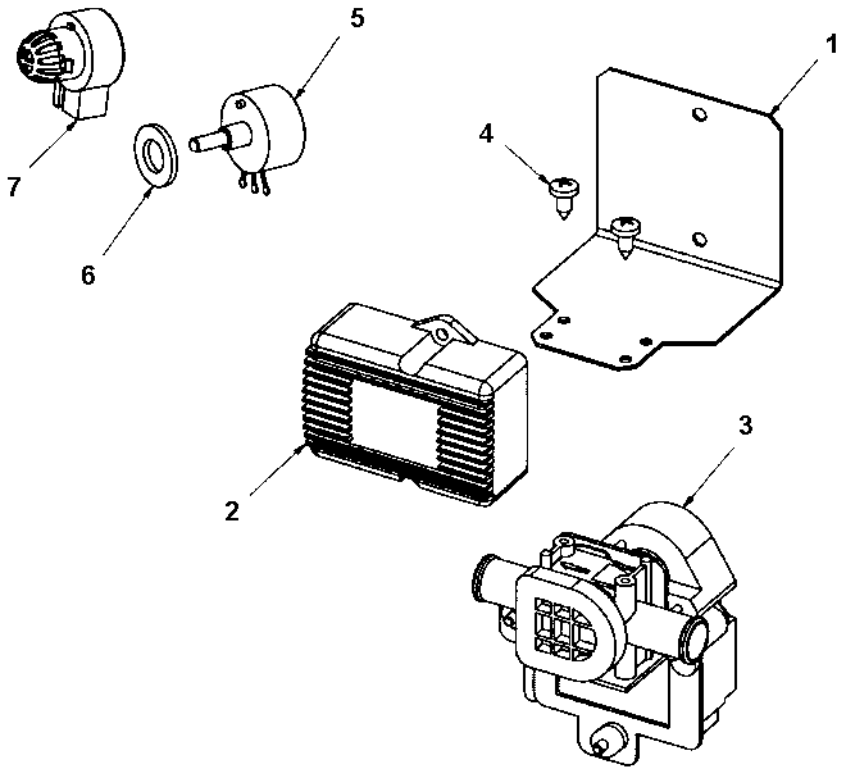

ACC controls

Item	Part No	Rem	Qty	Description	Code
1			1	Bracket	
2	4700950369		1	ATM unit	
3	4700950370		1	Heater valve	
4			2	Screw	
5	4700950371		1	Potentiometer	
6			1	Washer	
7	4700938624		1	Sensor	

Belt guard module

396000

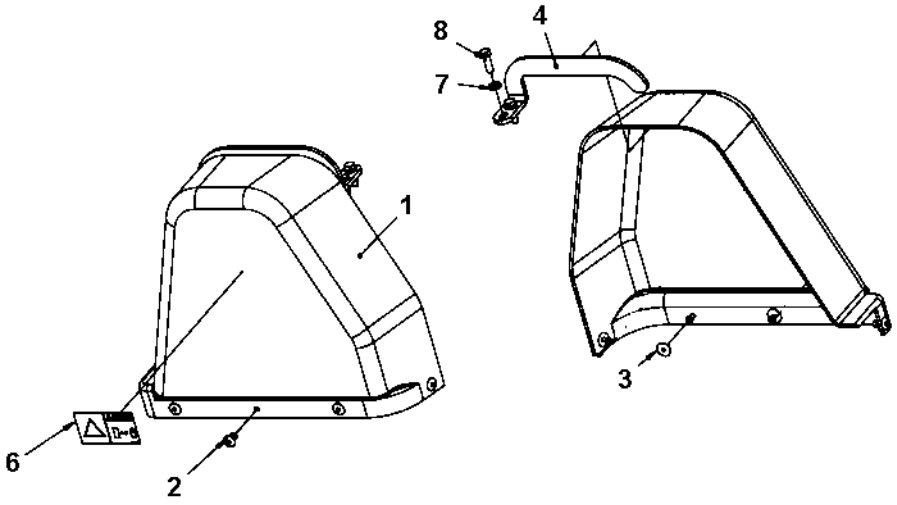

Belt guard module

Item	Part No	Rem	Qty	Description		Code
1	4700394148		1	Belt guard		
2	4700792325		5	Blind rivet		
3	4700927974		5	Washer		
4	4700396003		1	Bracket		
6	4700903423		1	Decal "SAFETY"		
7	4700904556		2	Washer	8,4x16x3,0	
8	4700500021		2	Screw	M8-1,25x25 8.8	

NUMERICAL INDEX

Part Number	Page	Part Number	Page	Part Number	Page
4700114060	149,159	4700359043	363,375	4700387545	381
4700116041	159	4700359125	363	4700388449	389
4700135015	37	4700359192	131	4700388737	379
4700160045	149	4700359819	363,375	4700388846	45
4700160105	159	4700359887	23	4700389821	23
4700160277	37	4700359916	363	4700389859	49
4700160279	159	4700359919	363	4700389917	23
4700160287	219	4700359920	363	4700390013	369
4700160313	73,79	4700359955	145	4700390060	93
4700160344	149,159	4700359998	293,317	4700390072	123
4700162004	187	4700370059	293,297	4700390080	123
4700162006	43	4700370155	219	4700390155	301
4700162015	43,213	4700370286	301,305	4700390160	159
4700162017	145	4700370745	23,31	4700390169	369
4700162027	145,159	4700372672	363	4700390220	49
4700184111	43	4700372718	23,31	4700390229	49
4700202057	33,51,53	4700372959	375	4700390239	371
4700205112	167,349	4700372960	375	4700390365	51,53
4700212210	155	4700372964	363	4700390400	73,79
4700232039	187	4700372965	363	4700390434	265,267
4700232056	43	4700373183	131	4700390435	271
4700232231	167	4700373304	23	4700390436	265,267,271
4700238158	379	4700373363	293,297	4700390463	133
4700272372	389	4700373399	297	4700390533	37
4700272373	389	4700376922	211	4700390534	37
4700281431	49	4700377507	343	4700390538	37
4700287295	43	4700377508	343	4700390539	37
4700287643	309	4700377518	367	4700390541	37
4700297018	403	4700377677	359	4700390542	37
4700313001	31,73,79,87,191	4700377742	389	4700390543	37
4700313003	31,79	4700377743	389	4700390545	51,53
4700313004	167,191,349	4700377744	389	4700390546	51
4700313008	171	4700377913	309	4700390561	367
4700313010	171	4700378309	51,53	4700390605	159
4700313033	175	4700378310	49	4700390609	61
4700313038	175	4700379009	73,79	4700390613	83
4700313041	257,273,349,371	4700379607	167	4700390615	115
	411	4700379630	131	4700390616	115
4700313068	403	4700379637	359	4700390619	115
4700313075	181	4700379715	375	4700390717	243
4700313094	179	4700379718	363	4700390830	175
4700313102	87,281	4700379728	363	4700390860	241
4700313105	31	4700379730	373	4700390861	379
4700335607	229	4700379862	23	4700390862	263
4700335914	23	4700379864	43	4700390865	317,319
4700340862	159	4700379987	131	4700390867	297
4700343744	145	4700379992	49,351	4700390884	49
4700343775	27	4700381027	159	4700390897	159
4700343872	23	4700381934	305	4700390903	179
4700344196	145	4700381935	301,305	4700390919	99
4700345666	165	4700381936	301,305	4700390963	367
4700347119	27	4700381938	351	4700391016	205,207
4700347512	317	4700381943	357	4700391017	223,225
4700349715	159	4700381944	357	4700391023	23,25
4700350009	363	4700382751	389	4700391025	49,201
4700355797	279	4700383626	33	4700391026	13,43
4700357459	49	4700383705	345	4700391029	149
4700357488	27	4700384584	345	4700391031	37
4700357587	389	4700384855	293,317	4700391115	265,267,271
4700358254	345	4700385599	379	4700391157	49
4700358732	205	4700386272	159	4700391163	363,365
4700358881	43,85,381	4700386966	169	4700391192	215

NUMERICAL INDEX

Part Number	Page	Part Number	Page	Part Number	Page
4700391209	243	4700392223	31	4700393193	97
4700391213	241	4700392224	31	4700393195	95
4700391240	385	4700392227	31	4700393218	37
4700391241	371	4700392230	31	4700393222	399
4700391269	233	4700392231	31	4700393223	399
4700391277	159	4700392232	31	4700393235	189
4700391280	149	4700392235	31	4700393308	43
4700391286	153	4700392291	139	4700393324	45
4700391292	243	4700392316	357	4700393347	375
4700391296	43	4700392321	283	4700393360	131
4700391299	43	4700392364	159	4700393413	31
4700391306	379	4700392365	145	4700393414	167
4700391307	31,33	4700392371	145	4700393418	407
4700391353	31	4700392390	167	4700393427	373
4700391396	379	4700392391	167	4700393464	37
4700391420	379	4700392440	145	4700393465	37
4700391421	379	4700392450	273	4700393468	43
4700391433	7,13	4700392451	273	4700393496	371
4700391441	49	4700392453	153,155	4700393497	371
4700391443	23	4700392501	167	4700393523	37
4700391444	83	4700392504	167	4700393525	293,297,317
4700391478	375	4700392509	115	4700393538	287
4700391495	73,75,79	4700392521	211	4700393542	31
4700391566	37	4700392528	167	4700393550	119
4700391579	379	4700392531	131	4700393582	317
4700391585	233	4700392532	167	4700393584	403,405
4700391624	31	4700392534	211	4700393590	283
4700391626	83	4700392550	37	4700393628	95,97
4700391674	307,313	4700392610	229	4700393629	95,97
4700391675	307	4700392624	27	4700393630	95,97
4700391676	307	4700392649	51	4700393639	315
4700391678	307	4700392652	53	4700393640	313
4700391770	363	4700392704	373	4700393641	313
4700391884	187	4700392705	373	4700393642	313
4700391886	57	4700392706	373	4700393645	313
4700391888	183	4700392717	385	4700393646	313
4700391889	133	4700392719	385	4700393681	283
4700391918	169	4700392748	159	4700393697	115
4700391940	61	4700392758	217	4700393762	243
4700391941	61	4700392799	49	4700393765	73,79
4700391957	281	4700392803	63	4700393776	255
4700391962	167	4700392839	363	4700393794	165
4700392011	115	4700392840	363	4700393959	389
4700392033	285	4700392843	131	4700393977	373
4700392048	199	4700392848	31	4700393998	43
4700392075	43	4700392867	31	4700394014	167
4700392078	43	4700392877	93	4700394022	31,49
4700392079	177	4700392916	93,131	4700394068	107
4700392087	173	4700392917	93,131	4700394070	107
4700392088	13,173	4700392930	379	4700394139	313
4700392089	13,173	4700392965	371	4700394140	313
4700392091	173	4700393001	43	4700394148	419
4700392148	43	4700393029	189	4700394149	49
4700392149	43	4700393031	379	4700394207	37
4700392152	261	4700393046	179	4700394250	17,153
4700392153	275	4700393094	385	4700394251	17,159
4700392154	261	4700393100	93	4700394297	43
4700392155	261	4700393101	93	4700394318	217
4700392156	235	4700393115	37	4700394319	213
4700392158	283	4700393132	131	4700394340	89,117,125
4700392164	43	4700393141	131	4700394351	107
4700392222	31	4700393149	43	4700394400	23,43

NUMERICAL INDEX

Part Number	Page	Part Number	Page	Part Number	Page
4700394420	65	4700395782	295	4700396670	381
4700394513	43	4700395783	295	4700396672	73,79
4700394536	45	4700395784	295	4700396673	79
4700394587	85	4700395785	295,379	4700396678	67
4700394590	85	4700395786	295	4700396679	67
4700394591	85	4700395787	323	4700396715	51
4700394654	355	4700395792	323	4700396716	53
4700394655	43	4700395793	329	4700396739	31
4700394676	167	4700395794	329	4700396750	67
4700394696	259	4700395795	329	4700396768	247,251
4700394707	411	4700395796	325	4700396885	167
4700394787	93	4700395798	331	4700396961	171
4700394806	117	4700395799	331	4700397099	237
4700394818	167	4700395800	331	4700397134	169
4700394820	43	4700395806	333,335	4700397151	175
4700394821	229	4700395810	325	4700397153	175
4700394859	309	4700395811	325	4700397207	243
4700394860	397	4700395813	327	4700397210	243
4700394861	397	4700395814	327	4700397214	211
4700394911	39	4700395815	329	4700397253	23
4700394920	407	4700395816	331	4700397338	379
4700394931	257	4700395817	333	4700397348	33
4700395023	257	4700395818	341	4700397539	165
4700395093	409	4700395819	341	4700410012	397
4700395094	413	4700395820	341	4700450163	309
4700395095	409	4700395828	341	4700475064	105
4700395096	409	4700395829	319,337	4700476019	139
4700395097	413	4700395830	319	4700480852	31
4700395108	167	4700395831	337	4700483642	201
4700395111	111	4700395832	337	4700483726	201
4700395112	111	4700395833	335	4700484032	201
4700395126	169	4700395834	335	4700484036	201
4700395135	167	4700395835	335	4700484037	201
4700395156	407	4700395836	335	4700484038	195
4700395192	397	4700395837	335	4700484043	201
4700395226	253	4700395838	335	4700484045	199
4700395352	403	4700395839	335	4700484140	199
4700395383	363	4700395840	319	4700484141	199
4700395387	211	4700395841	343	4700484142	199
4700395390	121	4700395842	343	4700484143	199
4700395391	211	4700395853	343	4700484144	199
4700395393	211	4700395944	167	4700484145	199
4700395412	141	4700395947	381	4700484146	199
4700395423	171	4700396003	419	4700484147	199
4700395428	101,103	4700396036	397	4700484148	199
4700395429	101	4700396179	135	4700484149	201
4700395430	103	4700396259	243	4700484150	199
4700395447	363	4700396260	243	4700484151	201
4700395505	191	4700396261	243	4700484152	201
4700395506	191	4700396304	243	4700484153	201
4700395507	191	4700396542	49	4700484154	201
4700395694	131	4700396584	37	4700484155	213
4700395696	135	4700396585	37	4700484156	213
4700395756	339	4700396588	37	4700484157	213
4700395757	339	4700396607	51,53	4700484158	201
4700395758	339	4700396634	49	4700484159	201
4700395759	339	4700396635	49	4700484160	213
4700395760	293	4700396639	65	4700484161	201
4700395761	341	4700396647	65	4700484162	201
4700395762	341	4700396648	65	4700484163	201
4700395774	341	4700396661	379	4700484165	199
4700395775	341	4700396662	379	4700484166	199

NUMERICAL INDEX

Part Number	Page	Part Number	Page	Part Number	Page
4700484175	195	4700500115	221,383	4700586003	299,303,307,311
4700484180	195	4700500134	123		313,315,325,333
4700484181	195	4700500143	313		357,363,383
4700484182	195	4700500146	129	4700586018	109,111,113,285
4700484183	195	4700500153	309		287,369
4700484196	195	4700500161	91,127,129,141	4700586019	117
4700484197	195		369	4700601003	311,313
4700484203	197	4700500175	131	4700603001	43,131,135,363
4700484230	219	4700500187	263	4700606009	199
4700484231	219	4700500189	307	4700606021	199
4700484250	197	4700500190	307,311,313	4700615050	31,49
4700484252	197	4700500194	29,47,297	4700624005	389
4700484253	197	4700500195	47,67,159,293	4700624018	45
4700484254	197		317	4700624020	51
4700484255	197	4700500198	117	4700624021	43,45
4700484256	197	4700500199	165	4700629008	85
4700484259	197	4700500212	167	4700630008	363,375
4700499174	301,305	4700500225	93	4700630012	107
4700500012	37,251	4700500228	297	4700635057	205
4700500013	31,241,329	4700500239	315	4700635061	25,27
4700500015	241	4700500241	397	4700747282	167
4700500016	61	4700500248	199	4700791120	43,187
4700500018	255,301,305,317	4700500265	93	4700791172	91,127,129
	321,333	4700500269	95,209	4700791182	75,177
4700500019	43,71,77,145,209	4700500287	35	4700791185	241,331
	231,239,309	4700500289	91,127,129	4700791211	331
4700500020	373,375	4700500505	167,377,379,395	4700791231	49
4700500021	31,43,49,55,183	4700502035	375	4700791276	389
	185,299,303,363	4700508019	357	4700791277	389
	397,419	4700508020	43	4700791304	373
4700500022	31,39,49,61	4700508021	325	4700791321	57
4700500023	83,173,357	4700508022	379	4700791397	201
4700500028	149,211,283	4700508025	299,303	4700791398	131
4700500029	93,363	4700508029	167	4700791401	205
4700500030	91,127,129,165	4700508030	167	4700791405	43
	395	4700508048	167,243	4700791409	133,205
4700500031	111	4700508090	153	4700791479	233
4700500032	23	4700508092	167,369	4700791524	363
4700500033	141	4700508096	167	4700791539	133
4700500035	229	4700513003	373	4700791551	241
4700500037	211	4700513011	105	4700791568	73,79
4700500040	49,133,135,137	4700513012	67	4700791572	369
	139,233,371	4700513017	49	4700791582	379
4700500042	247	4700516051	363	4700791588	331,379
4700500043	27,167,229	4700526010	379	4700791597	241
4700500046	159	4700533050	135	4700791634	211
4700500047	49,81,91,119,127	4700535017	277	4700791635	211
	129,299,303,375	4700541527	379	4700791642	389
4700500048	49,203,323,407	4700570004	233,379	4700791698	211
4700500049	67,131,159	4700570005	23,31,49,173,229	4700791709	377
4700500051	23,151		237,281,333,373	4700791711	49,199
4700500053	31,43,49,59,73		375	4700791712	49,199
	75,79,215,245	4700570006	49,117,363,397	4700791723	379
	249,339,351,367	4700570103	397	4700791733	379
	371,375,395,399	4700573003	23	4700791739	379
4700500059	43,51,53	4700573008	363	4700791743	133,205
4700500060	233,379	4700586001	233,379,381	4700791744	199,205
4700500070	147,157	4700586002	31,49,51,53,139	4700791745	211,219
4700500090	73,79		233,241,299,303	4700791754	271
4700500091	109,113		363,371,379,385	4700791798	199,211
4700500092	49	4700586003	23,43,49,73,79	4700791799	49,133,159,205
4700500105	117		83,119,121,199		219

NUMERICAL INDEX

Part Number	Page	Part Number	Page	Part Number	Page
4700791823	49,205	4700792414	379	4700792686	407,411
4700791824	211	4700792417	283	4700792696	199
4700791831	211	4700792419	283	4700792697	213
4700791840	49	4700792421	43	4700792712	201
4700791841	199	4700792422	261	4700792715	331
4700791844	49	4700792441	49,73,79,237,241	4700792718	51,53
4700791846	223		275,375	4700792720	199
4700791849	43	4700792442	237	4700792726	101,103
4700791853	211	4700792446	51,63	4700792772	389
4700791949	73,79	4700792447	301,305	4700792777	73,79
4700791950	73,79	4700792448	301,305	4700792778	79
4700791951	265	4700792449	307	4700792779	31
4700791956	271	4700792450	199	4700792780	31
4700791959	73,79	4700792451	199	4700792781	31
4700791968	353	4700792452	199	4700792782	31
4700791977	115	4700792453	199	4700792797	397
4700792035	279	4700792454	199	4700792809	201
4700792051	43,131	4700792465	211	4700792812	379
4700792059	267	4700792492	43	4700792825	49
4700792065	349	4700792500	43	4700813429	167
4700792072	115	4700792501	369	4700900497	381
4700792073	31,79	4700792502	167	4700900672	31
4700792094	211	4700792504	331	4700900775	149,159
4700792151	23,211	4700792505	331	4700901145	293,297,317
4700792157	211	4700792512	199	4700901157	211
4700792187	415	4700792515	37	4700901225	241
4700792210	257,261	4700792517	37	4700901227	241,259,331
4700792219	211	4700792518	37	4700901228	331
4700792276	43	4700792519	271	4700901767	241
4700792295	37,133	4700792520	271	4700902064	269
4700792309	233,241,331	4700792521	265,267	4700902166	45,51,53
4700792310	233	4700792526	181	4700902285	309
4700792311	49	4700792527	369	4700902286	43,283,309,367
4700792322	187	4700792536	345	4700902295	201
4700792325	37,49,51,53,351	4700792537	275	4700902520	363
	419	4700792539	363	4700902804	379
4700792326	49	4700792540	121	4700902866	33,51,53,335
4700792328	229	4700792544	167	4700903190	167
4700792330	159	4700792545	167	4700903422	389
4700792331	199,211	4700792546	91,127	4700903423	389,419
4700792332	201	4700792554	23,37	4700903424	389
4700792333	211	4700792571	389	4700903425	389
4700792334	49,219	4700792583	355	4700903456	49
4700792336	211	4700792589	345,381	4700903459	389
4700792338	43	4700792600	31	4700903590	323
4700792339	57	4700792601	105	4700903633	293,317
4700792340	201	4700792604	167	4700903640	233
4700792342	215	4700792605	23	4700903641	233
4700792343	215	4700792606	229	4700903662	383
4700792344	199	4700792607	43	4700903714	189
4700792349	271	4700792609	273	4700903726	159
4700792350	265,267	4700792627	237	4700903741	241
4700792351	271	4700792632	199	4700903768	49
4700792352	285	4700792649	211	4700903773	219
4700792353	265,267	4700792667	257	4700903831	131
4700792354	269,279	4700792669	51,53	4700903906	23,43
4700792361	265,267,271	4700792670	153	4700903917	363
4700792392	351	4700792671	153	4700903918	363
4700792394	37	4700792672	153	4700904009	199
4700792397	281	4700792673	153	4700904010	199
4700792398	275	4700792678	363	4700904036	233
4700792410	283	4700792684	229	4700904037	237

NUMERICAL INDEX

Part Number	Page	Part Number	Page	Part Number	Page
4700904039	229,235	4700904728	43,167	4700940572	207,225
4700904044	43	4700904734	31,81,83,119,173	4700945622	367
4700904083	389	4700904735	31,49,51,53,61	4700945632	365
4700904092	389		137,277	4700945633	365
4700904094	389	4700904835	389	4700945634	365
4700904131	293,297	4700904870	389	4700945635	365
4700904165	389	4700904878	31,73,79,87	4700945636	365
4700904206	23,31,131,371	4700904911	251	4700945637	365
4700904213	29,47,211	4700904951	133	4700945661	367
4700904214	97	4700904956	99	4700945897	327
4700904228	37,51,53,133,139	4700904984	181	4700947679	361
	233,241,251,263	4700905306	325	4700947683	167
	299,303,309,329	4700908229	389	4700947712	131
	371,379,385	4700908284	333	4700950174	5,7
4700904229	23,31,43,49,71	4700908500	331	4700950175	5,11
	73,75,77,79,83	4700908505	323	4700950176	5,13
	99,119,121,145	4700908506	323	4700950222	25
	167,215,221,229	4700908507	323	4700950301	7,11,13,167
	237,239,245,247	4700908561	325,327	4700950302	7,11,13,167
	249,255,265,267	4700908563	329	4700950310	405
	271,281,283,299	4700908564	329	4700950315	167
	303,309,317,325	4700910162	205	4700950342	405
	357,361,363,367	4700920819	83	4700950343	405
	371,373,375,383	4700921077	273	4700950344	405
	395,399	4700923253	269	4700950345	405
4700904230	23,27,49,91,93	4700923405	211	4700950346	405
	111,127,129,141	4700923735	73,79	4700950347	405
	149,167,203,283	4700924791	309	4700950348	405
	285,369,395,397	4700924875	51,53	4700950349	405
4700904231	23,37,47,93,95	4700925519	131,153	4700950350	405
	105,117,131,151	4700925599	43	4700950353	155
	153,159	4700925750	23	4700950369	417
4700904232	123,147,157	4700926214	131,363	4700950370	417
4700904233	35,93,293,297	4700926215	49	4700950371	417
	317	4700926216	307	4700950372	401
4700904234	91,127,129	4700926736	159	4700950373	401
4700904241	313	4700927233	105	4700950374	401
4700904281	43,233,379,381	4700927637	321	4700950375	401
4700904292	213	4700927974	419	4700950380	405
4700904340	309	4700928371	97	4700950417	25
4700904352	167,395	4700928467	241	4700950483	155
4700904556	73,79,91,127,129	4700928784	31	4700950498	155
	173,231,299,303	4700929447	159	4700950500	155
	315,373,397,419	4700929455	279	4700950501	155
4700904557	109,113,129,141	4700930046	135	4700950502	155
	165,167,211,287	4700936277	333	4700950503	155
	363,375,407	4700937165	353	4700950513	155
4700904567	49	4700937620	369	4700950569	207
4700904570	199	4700937621	369	4700950570	207
4700904584	167,205	4700937892	369	4700950571	207
4700904601	389	4700938256	327	4700950572	207
4700904619	381	4700938605	401	4700950636	167
4700904637	49,167,229	4700938606	401	4700950637	167
4700904638	229,369	4700938609	341,401	4700950638	167
4700904640	39,43,49,55,59	4700938622	343	4700950640	167
	61,177,183,185	4700938624	417	4700991657	389
	209,283,301,305	4700938789	401	4700991658	389
	307,351,363,399	4700938874	339	4700999014	247
4700904653	51,63	4700939068	7,9,11,13,167	4812110212	43
4700904654	309	4700939070	13,167	4812110232	167
4700904697	135	4700939076	5,9	4812110358	73,75,79
4700904703	23,43,67,209	4700940451	379	4812155158	15,17