CC4200

ATLAS COPCO - DYNAPAC

Spare parts list

Vibratory roller

CC4200 s/n 10000320xxA012714 -
Engine: Cummins QSB 4.5 IIIA/T3

RUTHZIL TRATOR COMERCIAL DE PEÇAS LTDA 11 97083-6812 ROLANDO CITRANGULO



© 2016 Dynapac Compaction Equipment AB | No. 4812159895_B| 2016-12

General information

Use only authorized parts. Any damage or malfunction caused by the use of unauthorized parts is not covered by Warranty or Product Liability.
Any unauthorized use or copying of the contents or any part thereof is prohibited. This applies in particular to trademarks, model denominations, part numbers, and drawings.

Instructions for use
This spare parts list contains no safety regulations and is merely intended to assist in the ordering of spare parts.
For information about operating, servicing, or repairing, the relevant Safety and operating instructions must be consulted at all costs.
Please observe the safety instructions listed in the relevant Safety and operating instructions!

Contents

CC4200 (IIIA/T3) SN 10000320xxA012714 - . . . 1

Service kits, To SN A012958

4700945805 Service kit 50 h, Cummins QSB 4.5 T3 . . . 3
4700945806 Service kit 500 h, Cummins QSB 4.5 T3 . . . 5
4700945807 Service kit 1000 h, Cummins QSB 4.5 T3 . . . 7

Service kits, From SN A012959

4812159352 Service kit, 50h Plus . . . 9
4700945806 Service kit 500 h, Cummins QSB 4.5 T3 . . . See page 5
4812160269 Service kit 1000 h, Cummins QSB 4.5 T3 . . . 11

Repair kits

4700945903 Eccentric shaft kit . . . 13
4700938891 Drum rotation kit . . . 15
4700945908 Scraper kit . . . 17
4700945904 Shock absorber kit, drum . . . 19

General - Keys and others

Keys . . . 21
Fuses . . . 23

Frame

Front frame

Front frame . . . 25
Front frame . . . 27
4700391023 Steering cylinder . . . 29
Tank structure module . . . 31
Tank structure module . . . 33
4700391307 Cover . . . 37
Hose support . . . 39

Hitch module To A016642

Hitch module . . . 41
4812117737 Articulated joint . . . 43

Hitch module From A016643

Hitch module . . . 45
4812119139 Steering hitch . . . 47
Filling pipe . . . 49
Locking device module . . . 51
Grab handle module . . . 53

Rear frame

Rear frame . . . 55

Rear frame, Up to SN A012958

Rear frame . . . 57
Cover, cpl . . . 61

Rear frame, From SN A012959

Frame, rear . . . 63
Cover, cpl . . . See page 61

Engine structure, module, Up to SN A012958

Engine structure, module . . . 67
Engine structure . . . 69
Engine cover, left . . . 73
Engine cover, right . . . 75
Hose support . . . See page 39

Engine structure, module, From SN A012959

Engine structure, module . . . 77
Engine structure . . . 79
4812121583 Cover right, cpl . . . 83
4812121586 Cover left, cpl . . . 85
Hose support . . . See page 39
Noise suppression plates . . . 87
Noise suppression, covers . . . 89
Grab handle module . . . See page 53

Sprinkler system
Sprinkler system . . . 91

Sprinkler pump module, To SN A013069
Sprinkler pump module . . . 93
Sprinkler pump . . . 95

Sprinkler pump module, From SN A013070
Sprinkler pump module . . . 97
Sprinkler pump . . . 99
Filling pipe . . . See page 49
Locking device module . . . See page 51
Water hoses . . . 101

Sprinkler pump, additonal sprinkler/cocoa mat, To SN A013069
Sprinkler pump, additonal sprinkler/cocoa mat . . . 103
Sprinkler pumps . . . 105

Sprinkler pump, additonal sprinkler/cocoa mat, From SN A013070
Sprinkler pump module (2 pumps) . . . 109
Sprinkler pump mounted (2 pumps) . . . 111

Sprinkler pump, backup, To SN A013069
Sprinkler pump, backup . . . 115

Sprinkler pump, backup, From SN A013070
Sprinkler pump, backup . . . 117

End frame, front
End frame, front . . . 119
End frame, front . . . 121
Frame . . . 123
Fork, vibration side . . . 125
Fork, propulsion side . . . 127
Cover plate . . . 129
Hose clamp, propulsion side . . . 131
Hose clamp, vibration side . . . 133
Step, vibration side . . . 135
Step, propulsion side . . . 137
Scraper module, without nozzles . . . 139
Scraper assy . . . 141
Scraper module, with nozzles . . . 143
Scraper assy with nozzles . . . 145
Scraper assy . . . 147
4700394340 Scraper bracket, cpl . . . 149
Grab handle, release . . . 151
Grab handle, release . . . 153
Grab handle, lift . . . 155
Grab handle, lift offset/cocoa mat . . . 157

Cocoa mat
Cocoa mat module . . . 159
Cocoa mat assembly . . . 161
Cocoa mat bracket module . . . 163
Cocoa mat bracket . . . 165

Process mirrors
Process mirrors . . . 167

End frame, rear
End frame, rear . . . 169

End frame, rear
End frame, rear . . . 171
Frame . . . See page 123

End frame, rear offset
End frame, rear offset . . . 173
Frame . . . 175
Connection block . . . 177
Micro switch . . . 179
4700391024 Steering cylinder . . . 181
Fork, vibration side . . . See page 125
Fork, propulsion side . . . See page 127
Step, vibration side . . . See page 135
Step, propulsion side . . . See page 137
Hose clamp, propulsion side . . . See page 131
Hose clamp, vibration side . . . See page 133
4700394340 Scraper bracket, cpl . . . See page 149
Scraper module, without nozzles . . . See page 139
Scraper assy . . . See page 141
Scraper module, with nozzles . . . See page 143
Scraper assy with nozzles . . . See page 145
Scraper assy . . . See page 147
Cover plate . . . See page 129
Eyelet module . . . 183
SMV-sign . . . 185
Grab handle, release . . . See page 151
Grab handle, release . . . See page 153
Grab handle, lift . . . See page 155
Grab handle, lift offset/cocoa mat . . . See page 157

Cocoa mat
Cocoa mat module . . . See page 159
Cocoa mat assembly . . . See page 161
Cocoa mat bracket module . . . See page 163
Cocoa mat bracket . . . See page 165

Drum
Drum . . . 187
Drum bearing . . . 189

Drive unit, To A014206
Drive unit . . . 191
4700390604 Drum gear . . . 193

4700390603 Hydraulic motor
4700390603 Hydraulic motor . . . 197
Engine hydraulic part . . . 199
End plate . . . 201

Drive unit, From A014207
Drive unit . . . 203
4812269526 Gear . . . 205

4812120567 Hydraulic motor
4812120567 Hydraulic motor . . . 209
Housing, cpl . . . 211
Rotary group . . . 213

Connection plate, cpl . . . 215
Sensor . . . 217

4812120568 Hydraulic motor
4812120568 Hydraulic motor . . . 219
Housing, cpl . . . 221
Rotary group . . . 223
Connection plate, cpl . . . 225
Vibrating unit Sauer . . . 227
4700395915 Hydraulic motor Vibration . . . 229

Engine
Engine room . . . 233
Engine . . . 235
Engine module . . . 237
Diesel engine Cummins QSB4.5 T3 - 93kW . . . 239
Air cooler hoses . . . 241
Air cleaner module . . . 243
Air cleaner hose module . . . 245
Muffler . . . 247
Exhaust pipe module . . . 249
Fuel hose module . . . 251
Charge air cooler . . . 253

Water cooler, To A014202
Water cooler . . . 255
Water cooler hoses . . . 257

Water cooler, From A014203
Water cooler . . . 259
Water cooler hoses . . . 261
Expansion tank assembly . . . 263
Coolant hoses . . . 265

Hydraulic system

Hydraulic system, front drum
Hydraulic system, front drum . . . 267

Hydraulic system, rear drum std
Hydraulic system, rear drum std . . . 269

Hydraulic system, rear drum offset
Hydraulic system, rear drum offset . . . 271
Connection block . . . See page 177
4700391024 Steering cylinder . . . See page 181
Hydraulic valve module, offset/combi . . . 273
Hydraulic valve . . . 275
4700391017 Hydraulic valve . . . 277

Hydraulic hoses, frame
Hydraulic hoses, frame . . . 279

Hydraulic hoses, engine room, To SN A012958
Hydraulic hoses, engine room . . . 282
Fan . . . 285
Oil cooler . . . 287
Hydraulic valve module . . . 289
Hydraulic valve . . . 291
4700395924 Hydraulic valve . . . 293
Hydraulic pump module . . . 295
Hydraulic pump . . . 297

4700390602 Hydraulic pump

4700390602 Hydraulic pump . . . 299

4812155785 Hydraulic pump

4812155785 Hydraulic pump . . . 301
Rotating group, cpl . . . 304
Valve block, cpl . . . 307
Control module . . . 309
Flushing valve . . . 311

4812155786 Hydraulic pump

4812155786 Hydraulic pump . . . 313
Rotary group, cpl . . . 317
Valve block, cpl . . . 319

4812155787 Hydraulic pump

4812155787 Hydraulic pump . . . 321
Rotary group, cpl . . . 325
Valve block, cpl . . . 327

Hydraulic hoses, engine room, From SN A012959

Hydraulic hoses, engine room . . . 329
Fan module . . . 333
Hydraulic pump module . . . 335
Oil cooler . . . See page 287
Hydraulic valve module . . . See page 289
Hydraulic valve . . . See page 291
4700395924 Hydraulic valve . . . See page 293
Hydraulic pump module . . . See page 295
Hydraulic pump . . . See page 297

4700390602 Hydraulic pump

4700390602 Hydraulic pump . . . See page 299

4812155785 Hydraulic pump

4812155785 Hydraulic pump . . . See page 301
Rotating group, cpl . . . See page 304
Valve block, cpl . . . See page 307
Control module . . . See page 309
Flushing valve . . . See page 311

4812155786 Hydraulic pump

4812155786 Hydraulic pump . . . See page 313
Rotary group, cpl . . . See page 317
Valve block, cpl . . . See page 319

4812155787 Hydraulic pump

4812155787 Hydraulic pump . . . See page 321
Rotary group, cpl . . . See page 325
Valve block, cpl . . . See page 327

Hydraulic system, steering Std

Hydraulic system, steering Std . . . 337
Hydraulic valve module . . . See page 289
Hydraulic valve . . . See page 291
4700395924 Hydraulic valve . . . See page 293
Hose bracket . . . 339

Hydraulic steering, sliding seat

Hydraulic steering, sliding seat . . . 341
Carrier . . . 343
Steering, slideable . . . 345
4700372424 Pilot valve, steering . . . 347

Electrical equipment

Electric cables, power supply
Electric cables, power supply . . . 349
Battery disconnector . . . 351
Battery disconnector . . . 353

Electric cables, power supply cab
Electric cables, power supply cab . . . 355

Electric cables, engine - ECU - Version 1
Electric cables, engine - ECU . . . 357
Standard ECU module . . . 359
Standard ECU assembly . . . 361

Electric cables, engine - ECU - Version 2
Electric cables, engine - ECU . . . 363
Standard ECU module . . . 365
Standard ECU assembly . . . 367

Electric cables, sensors/ horn/ back-up alarm
Electric cables, sensors/ horn/ back-up alarm . . . 369
Back-up alarm module . . . 371
Back-up alarm . . . 373
Horn module . . . 375
Horn . . . 377

Driving & side direction lights
Driving & side direction lights . . . 379
Driving lights, front . . . 381
Steering column switch module . . . 383
Cable harness and switch module . . . 385
Registration plate light module . . . 387
Registration plate light . . . 389
Driving lights, rear . . . 391
Turn signals . . . 393

Rotating beacon, working light
Rotating beacon, working light . . . 395
Rotating beacon module . . . 397
Working light module H3 . . . 399

Drum edge lights
Drum edge lights . . . 401
Bracket . . . 403
Working light module H3 . . . See page 399
Bracket . . . 405

GPS/DCA, Asphalt temp
GPS/DCA, Asphalt temp meter . . . 407
Cable harness kit, GPS . . . 409
Cable and Gateway . . . 411
GPS/DCA equipment assy . . . 413
Temp sensor module . . . 415
Temp sensor module . . . 417
Computer with holder . . . 419

Drivers platform

Platform, no cab
Platform, no cab . . . 421
Platform with 4-post ROPS . . . 423

4812119369 Platform with 4-post ROPS
4812119369 Platform with 4-post ROPS . . . 425

Roof . . . 427
ROPS interior . . . 429
Decals basic kit . . . 431
Manual box . . . 433
Hand rail, left . . . 435
Hand rail . . . 437
Hand rail, right . . . 439
Hand rail . . . 441
Hand rail . . . 443
Lunch box module . . . 445

Cab, asymmetric

Cab, asymmetric . . . 447

4812119361 Cab, cpl

4812119361 Cab, cpl . . . 449
Screens front/rear and ceiling . . . 451
Corner screens left and AC hood . . . 453
24V socket and air nozzels . . . 455
Wipers front/rear and front ceiling . . . 457
Cab frame harness . . . 461
Heating installation . . . 463
Heater cover plate . . . 466
AC-kit . . . 469
Switch kit . . . 471
Door sliding screens . . . 473
Door complete . . . 475
Screens asymmetric right . . . 477
Lower screens front/rear and rear cover . . . 479
Lower screen and water system, left . . . 481
Lower screens and water system, right . . . 483

4812119360 Cab comfort, cpl

4812119360 Cab comfort, cpl . . . 485
Screens front/rear and ceiling . . . See page 451
Corner screens left and AC hood . . . See page 453
24V socket and air nozzels . . . See page 455
Wipers front/rear and front ceiling . . . See page 457
Cab frame harness . . . See page 461
Interior Cab . . . 487
Heating installation . . . See page 463
Evaporator kit . . . 489
4812113623 Evaporator, cpl . . . 491
ACC kit . . . 493
4812113624 ACC kit . . . 495
Door sliding screens . . . See page 473
Door complete . . . See page 475
Screens asymmetric right . . . See page 477
Lower screens front/rear and rear cover . . . See page 479
Lower screen and water system, left . . . See page 481
Lower screens and water system, right . . . See page 483
Manual box . . . See page 433
Decals basic kit . . . 497
Cab noise cover . . . 499
Rear view mirror . . . 501

Drivers seat

Drivers seat . . . 503
Seat frame structure . . . 505
4700391163 Steering column . . . 507
Seat, galon suspensioned . . . 509
Seat, fabric suspensioned . . . 511

Seat belts

Seat belt 2" . . . 513
Seat belt 2" with reminder . . . 515
Seat belt 3" . . . 517
Seat belt 3" with reminder . . . 519
Controls, slidable and turning . . . 521
Cross sliding . . . 523
Carrier . . . See page 343
Steering, slideable . . . See page 345
Hose bracket . . . See page 339

Drive control To A015623
Drive control, cpl . . . 525
Drive control . . . 527

Drive control From A015624
Drive control module . . . 529
Drive control . . . 531
Control handle . . . 533
Display unit . . . 535
Control panel cover . . . 537
Steering column switch module . . . See page 383
Seat frame adapter module, rotating . . . 539

Decals
Decals . . . 541

Optional equipment

Air conditioning
Air conditioning . . . 545
Compressor module . . . 547
Condensor module . . . 549
Condensor . . . 551
Evaporator kit . . . See page 489
ACC kit . . . See page 493
Hose kit Compressor . . . 553
Hose kit AC . . . 555

Radio and cd player
Radio and cd player . . . 557
Radio and cd player module . . . 559
Power supply module . . . 561

Tachograph, Version 1
Tachograph . . . 563
Tachograph holder module . . . 565
Tachograph holder . . . 567
Cable harness kit . . . 569
Power supply module . . . See page 561

Tachograph, Car stereo, Version 2
Tachograph, Car stereo . . . 571
Tachograph with holder . . . 573
Car stereo module 12V . . . 575

Edge cutter
Edge cutter . . . 577
Edge cutter, module . . . 579

4700390998 Edge cutter, cpl
4700390998 Edge cutter, cpl . . . 581
4700390999 Holder . . . 583
4700391009 Bearing unit . . . 585
4700387275 Hydraulic cylinder . . . 587

Cutting disc module . . . 589
Pressing roller, module . . . 591
Disc/Roller holder . . . 593
Hydraulic valve . . . 595
Hydraulic valve module . . . 597
4700391018 Hydraulic valve . . . 599

Fire extinguisher/First Aid Cushion

Fire extinguisher/First Aid Cushion . . . 601
Fire extinguisher assembly . . . 603

Asphalt temperature meter

Asphalt temperature meter . . . 605
Dyn@lyzer . . . 607
FleetLink module . . . 609
DCM Compaction meter with Evib . . . 611
Appendix B:Parts Index . . . 613

CC4200 (IIIA/T3) SN 10000320xxA012714 -

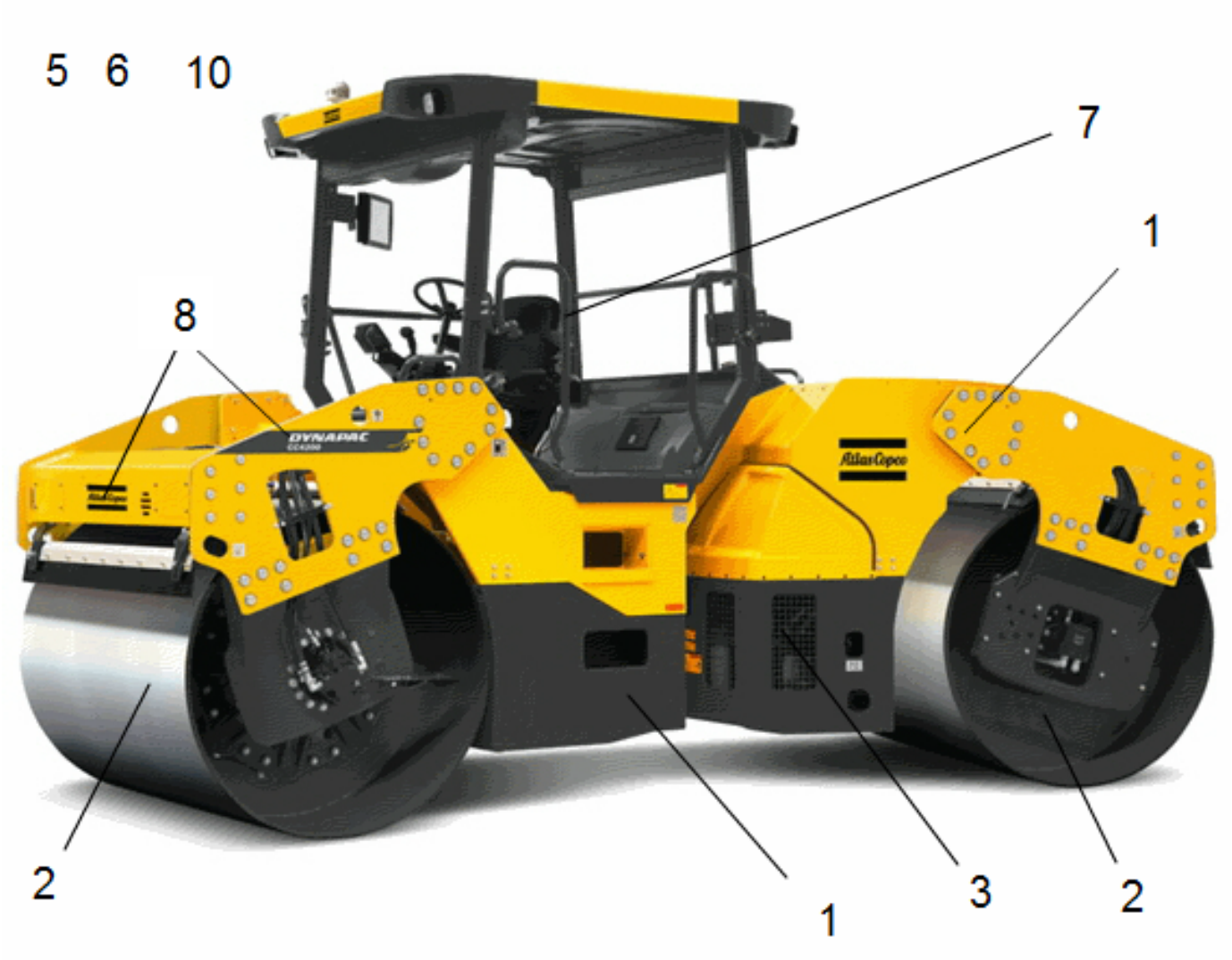

Item	Part No.	Name	Qty	L	SN INFO
0	-	Service kits			
0	-	Repair kits			
1	-	Frame			
2	-	Drum			
3	-	Engine			
5	-	Hydraulic system			
6	-	Electric equipment			
7	-	Drivers platform			
8	-	Decals			
10	-	Optional equipment			

Service kits, To SN A012958 4700945805 Service kit 50 h, Cummins QSB 4.5 T3

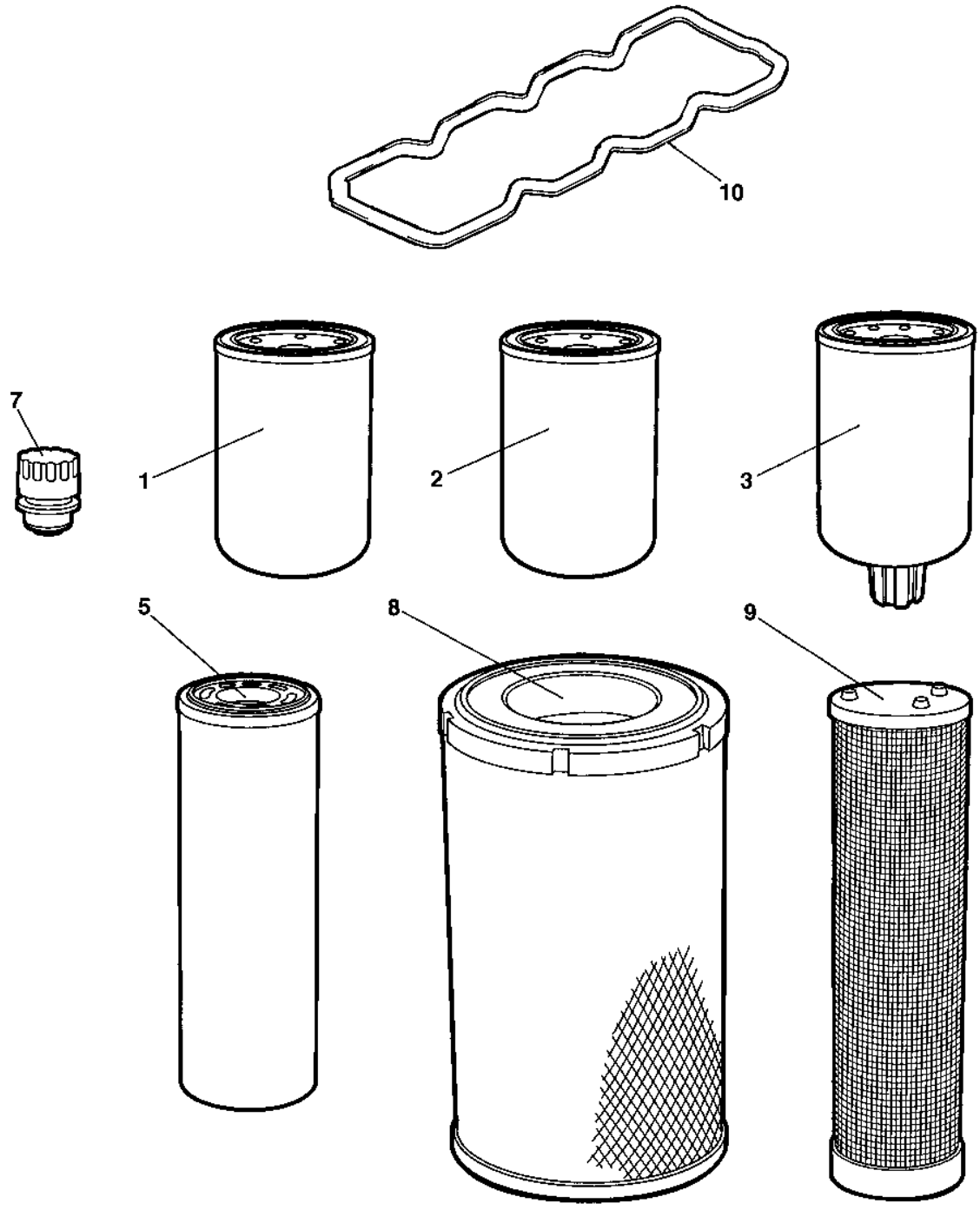

Item	Part No.	Name	Qty	L	SN INFO
0	4700945805	Service kit 50 h, Cummins QSB 4.5 T3			
1	4700945145	Oil filter element	1		
2	4700945624	Fuel filter	1		
3	4700945147	Fuel prefilter	1		
5	4700391433	Hydraulic oil filter element	1		

Service kits, To SN A012958 4700945806 Service kit 500 h, Cummins QSB 4.5 T3

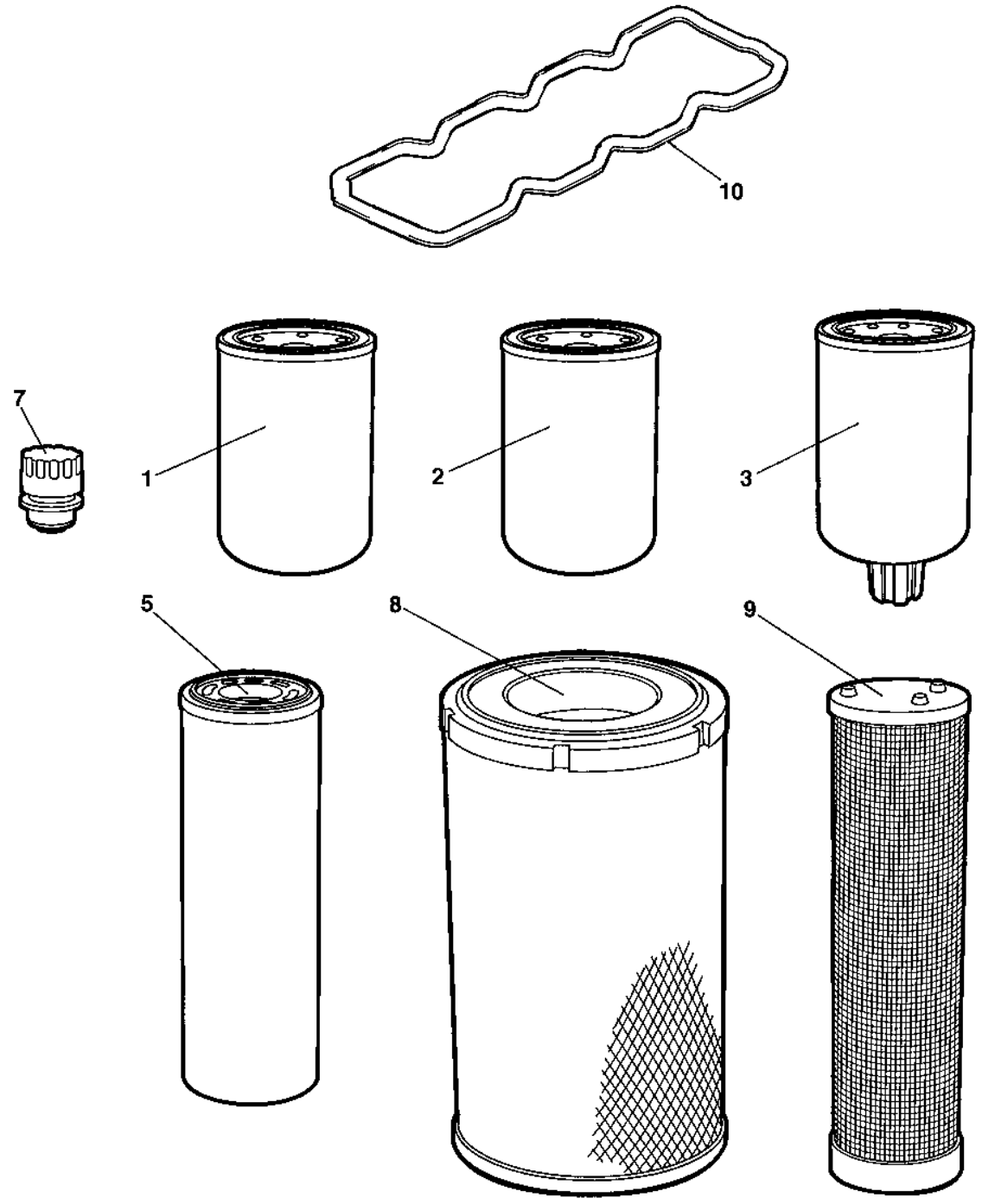

Item	Part No.	Name	Qty	L	SN INFO
0	4700945806	Service kit 500 h, Cummins QSB 4.5 T3			
1	4700945145	Oil filter element	1		
2	4700945624	Fuel filter	1		
3	4700945147	Fuel prefilter	1		

Service kits, To SN A012958 4700945807 Service kit 1000 h, Cummins QSB 4.5 T3

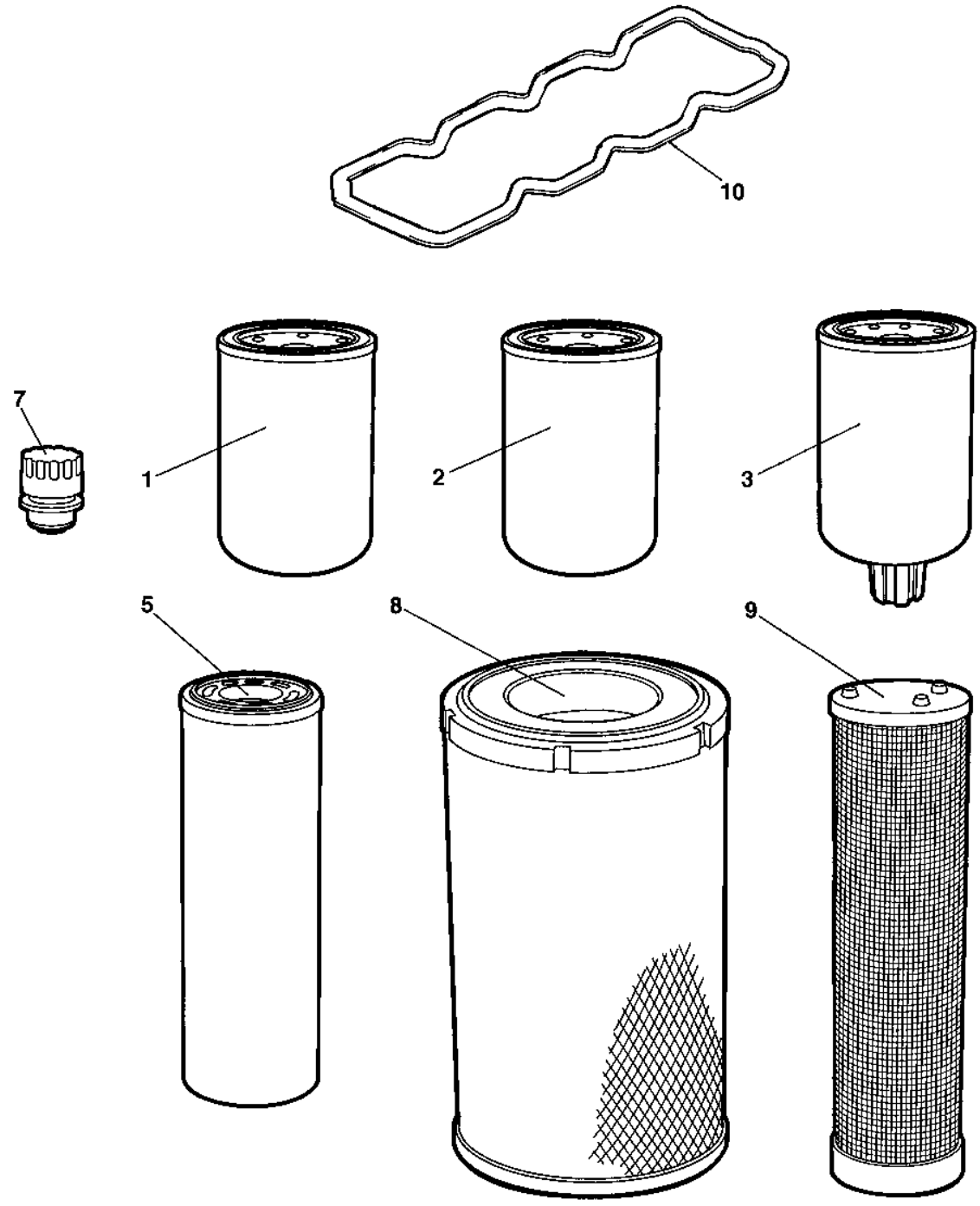

Item	Part No.	Name	Qty	L	SN INFO
0	4700945807	Service kit 1000 h, Cummins QSB 4.5 T3			
1	4700945145	Oil filter element	1		
2	4700945624	Fuel filter	1		
3	4700945147	Fuel prefilter	1		
5	4700391433	Hydraulic oil filter element	1		
7	4700391026	Ventilating filter	1	B	
8	4700390995	Air filter element, outside	1		
9	4700390994	Air filter element, inside	1		
10	4700945760	Gasket, valve cover	1		

Comments for Page: 4700945807 Service kit 1000 h, Cummins QSB 4.5 T3

(L)OCAL REMARKS

B | en_US | Ventilated oil filler cap for the hydraulic oil tank

Service kits, From SN A012959 4812159352 Service kit, 50h Plus

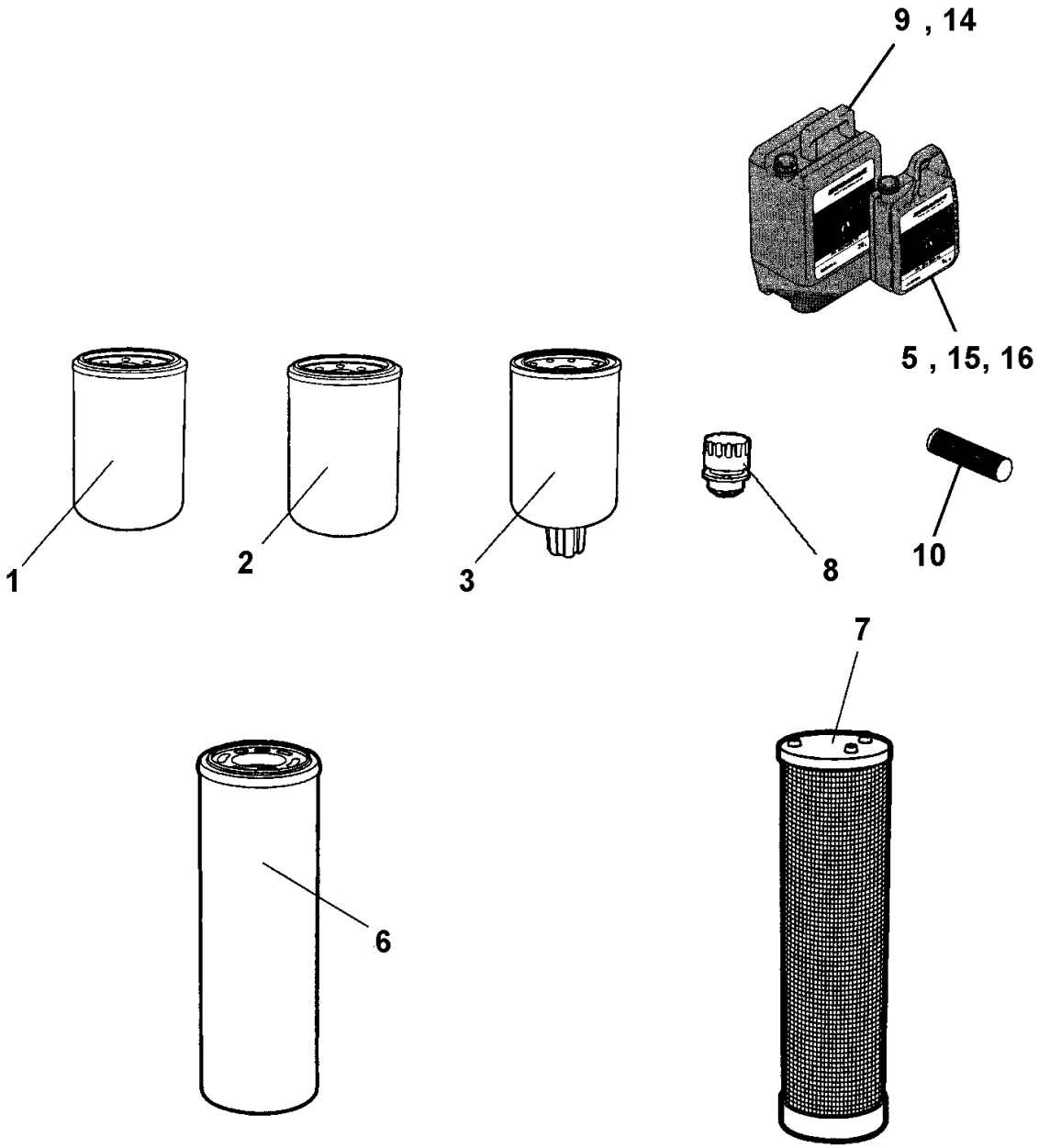

Item	Part No.	Name	Qty	L	SN INFO
-	4812159352	Service kit, 50h Plus			
6	4812112262	Hydraulic oil filter element	1		
16	4812008274	AC Fluid Gearbox 100 / 5 ltr.	1		

Service kits, From SN A012959 4812160269 Service kit 1000 h, Cummins QSB 4.5 T3

Item	Part No.	Name	Qty	L	SN INFO
0	4812160269	Service kit 1000 h, Cummins QSB 4.5 T3			
1	4700945145	Oil filter element	1		
2	4700945624	Fuel filter	1		
3	4700945147	Fuel prefilter	1		
5	4812112262	Hydraulic oil filter element	1		
7	4700391026	Ventilating filter	1		
8	4700390995	Air filter element, outside	1		
9	4700390994	Air filter element, inside	1		
10	4700945760	Gasket, valve cover	1		

Repair kits 4700945903 Eccentric shaft kit

Item	Part No.	Name	Qty	L	SN INFO
0	4700945903	Eccentric shaft kit			
1	4700160344	O-ring 70	2		
2	4700792270	Spherical roller bearing	2		
3	4700160045	O-ring 70	1		

Repair kits 4700938891 Drum rotation kit

Item	Part No.	Name	Qty	L	SN INFO
0	4700938891	Drum rotation kit			
1	4700160105	O-ring 70	1		
2	4700929447	V-ring	1		
3	4700116041	Taper roller bearing	1		
4	4700386272	Sealing	1		

Repair kits 4700945908 Scraper kit

Item	Part No.	Name	Qty	L	SN INFO
0	4700945908	Scraper kit			
1	4700395112	Scraper blade	4		

Repair kits 4700945904 Shock absorber kit, drum

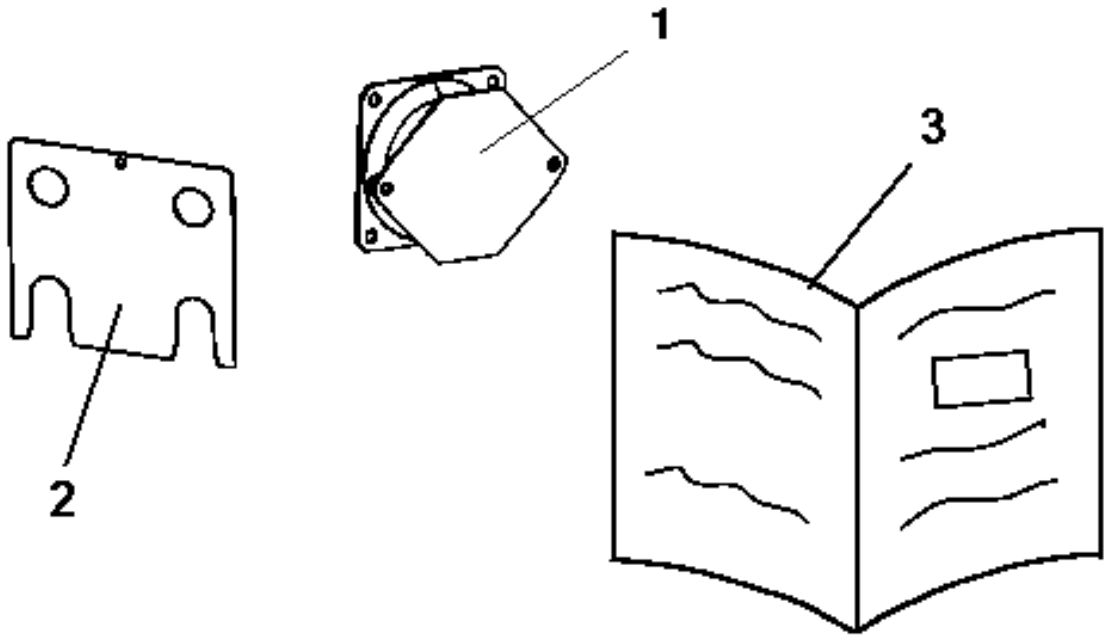

Item	Part No.	Name	Qty	L	SN INFO
0	4700945904	Shock absorber kit, drum			
1	4700394250	Shock absorber	8	A	
1	4700394251	Shock absorber	4	B	
2	4700391754	Shim	4		
3	4812156170	Instructions	1		

Comments for Page: 4700945904 Shock absorber kit, drum

(L)OCAL REMARKS

A | en_US | Propulsion side

B | en_US | Vibration side

General - Keys and others Keys

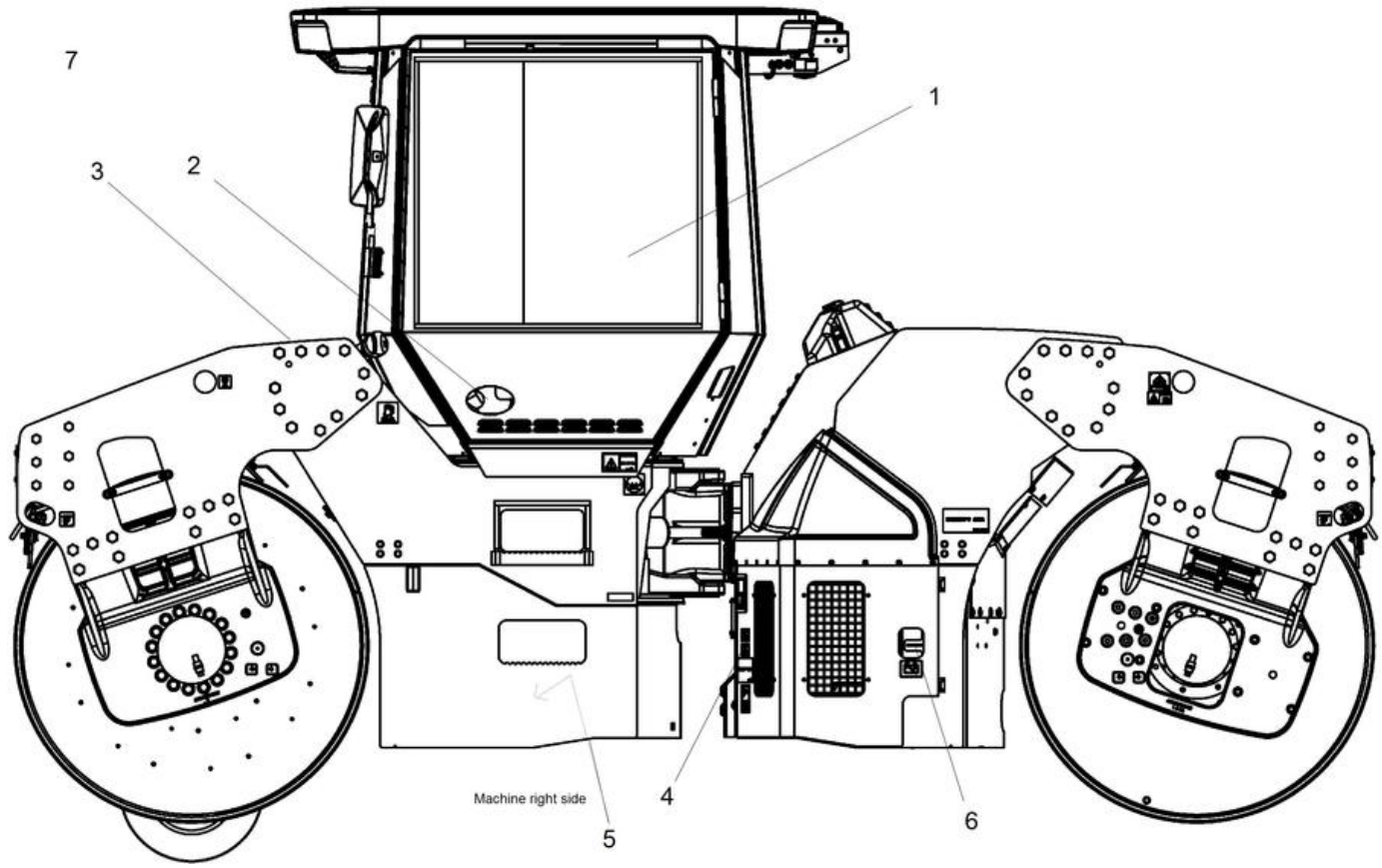

Item	Part No.	Name	Qty	L	SN INFO
1	-	Ignition switch			
1	4700940451	Ignition key			
2	-	Cab Door			
2	4812159558	Key (2pcs)			
3	-	Fuel Cap			
3	4700902866	Key Marked "455"			
4	-	Engine room door			
4	4700902866	Key Marked "455"			
5	-	Sprinkler pump cover			
5	4812113949	T-Key			
6	-	Battery switch			
6	4700903641	Battery key			
7	4700358881	Pad lock			
7	4812161396	Key			

General - Keys and others Fuses

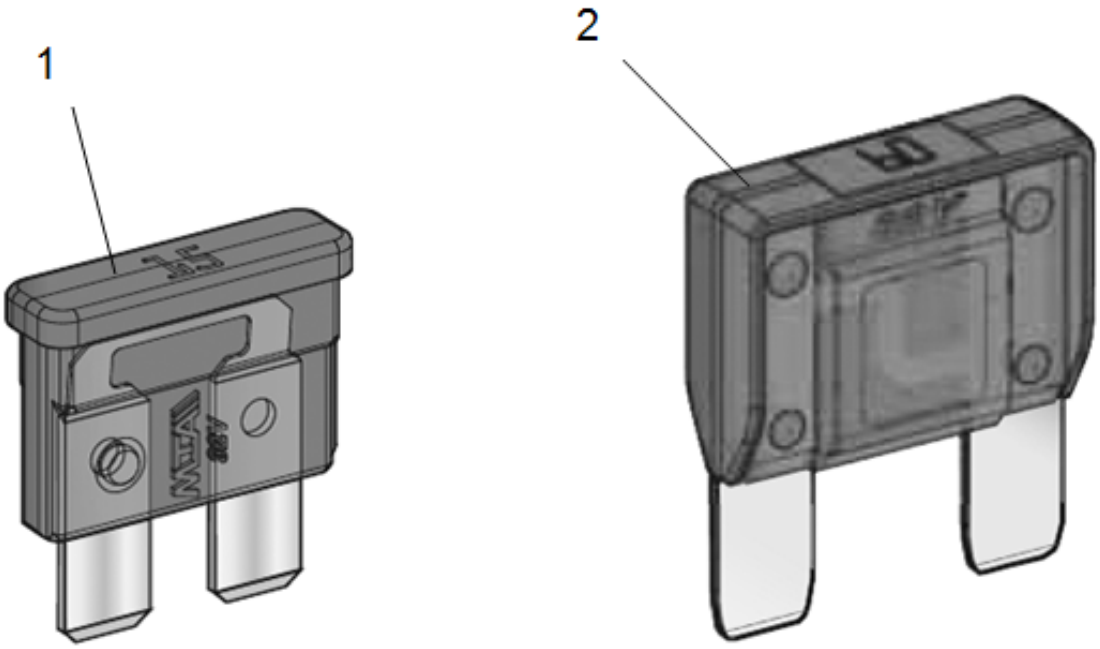

Item	Part No.	Name	Qty	L	SN INFO
1	-	Fuse, blade type Medium			
1	4700901224	Fuse, 3A Violet			
1	4700901225	Fuse 5A Tan			
1	4700901226	Fuse 7.5A Brown			
1	4700901227	Fuse 10A Red			
1	4700901228	Fuse, 15A Blue			
1	4700903741	Fuse 20A Yellow			
1	4700901229	Fuse, 25A Natural			
1	4700901230	Fuse, 30A Green			
2	-	Fuse, blade typ High			
2	4700904294	Fuse 20A Yellow			
2	4700904037	Fuse 30A Green			
2	4700904038	Fuse 40A Orange			
2	4700904039	Fuse 50A Red			
2	4700904040	Fuse 60A Blue			
2	4700904041	Fuse 70A Tan			
2	4700904042	Fuse 80A Natural (White)			

Front frame Front frame

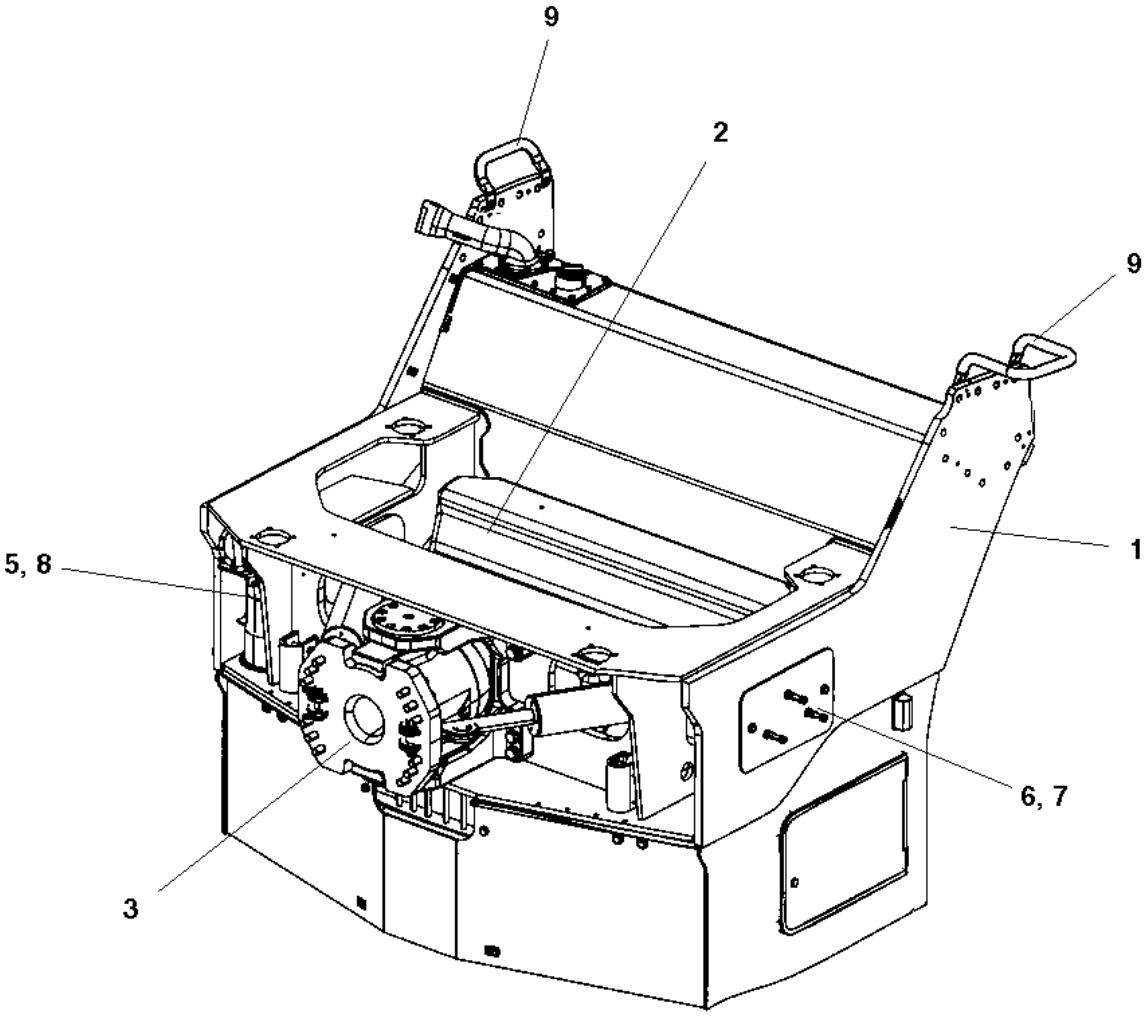

Item	Part No.	Name	Qty	L	SN INFO
1	-	Front Frame	1		
2	-	Tank structure module	1		
3	-	Hitch module	1		
5	-	Filling pipe	2		
8	-	Locking device module	1		
9	-	Grab handle module	2		

Front frame Front frame

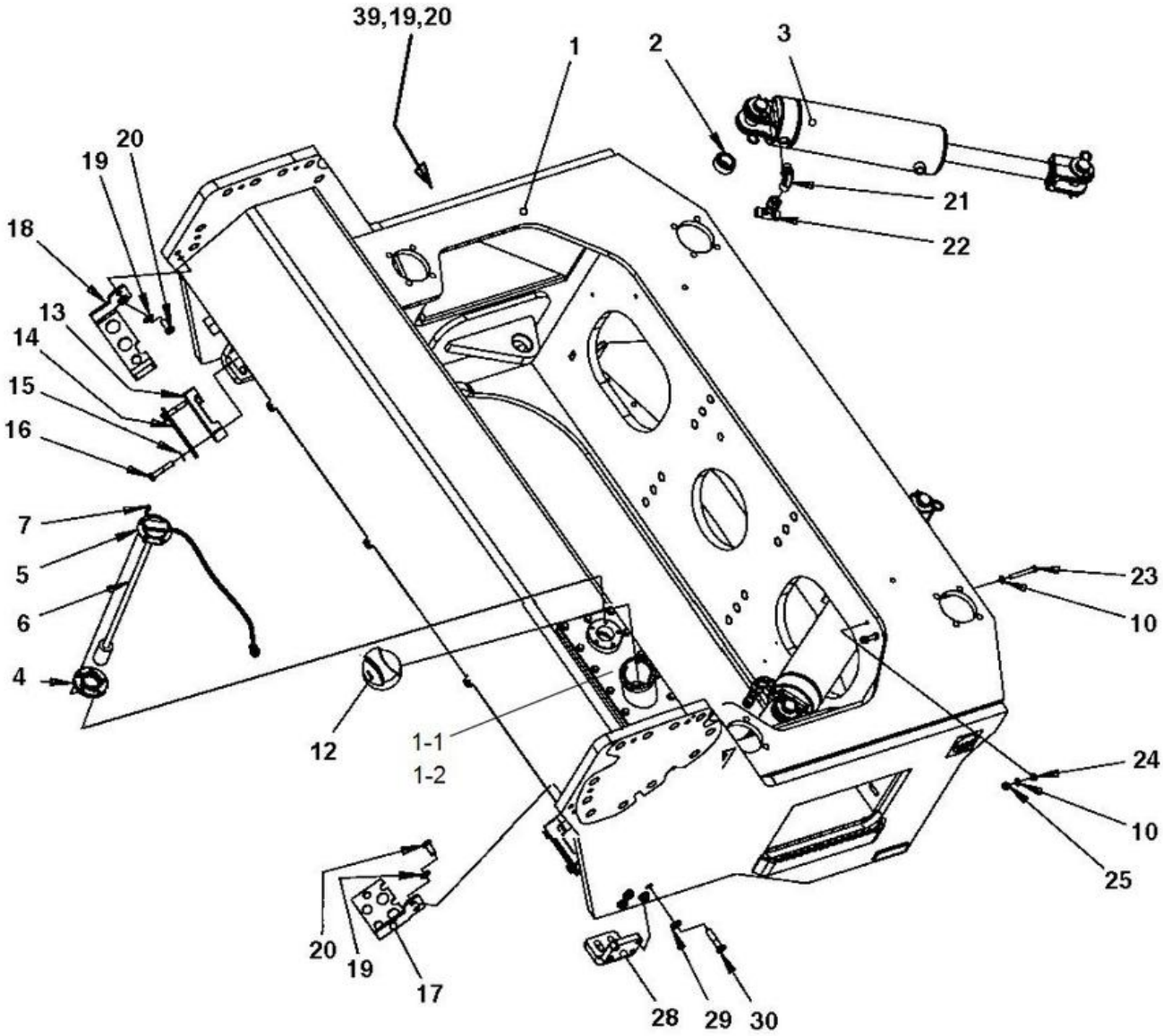

Item	Part No.	Name	Qty	L	SN INFO
1	4700395128	Front frame	1		
Comments for Part Num. 4700395128 "Please contact Customer Support for Price & Availability"					
1-1	4700396498	Fuel tank cover with filler neck	1		
1-2	4700389821	O-ring	1		
2	4700792554	Radial spherical plain bearing	2		
3	4700391023	Steering cylinder	2		
4	4700370745	Flange, cpl	1		
5	4700372718	Lid	1		
6	4700390934	Level sender	1		
7	4700904206	Screw, M6x16 mm	5		
10	4700904229	Washer, 8.4x 6x1.5 mm 300HV	4		
12	4700380435	Cap	1		
12	4700902866	Key Marked "455"	1		
13	4700343872	Hose clamp	2		
14	4700335914	Cover plate	2		
15	4700904230	Plain washer 10.5x22x2 mm	4		
16	4700500032	Screw M10 x 55	4		
17	4700391442	Hose clamp	1		
18	4700391443	Hose clamp	1		
19	4700904231	Washer, 13x24x2 mm 300 HV	6		
20	4700500051	Hex. screw	6		
21	4700792151	Elbow adapter 90	2		
22	4700791797	Tee-connector orfs	2		
23	4700925750	Screw	2		
24	4700570005	Hexagon nut	2		
25	4700586003	Lock nut M8	2		
28	4700394400	Bracket	2		
29	4700904703	Plain washer 13x24x4 mm	8		
30	4700500269	Screw	8		
39	4700396071	Cover	1		

Front frame 4700391023 Steering cylinder

Item	Part No.	Name	Qty	L	SN INFO
1	4700391023	Steering cylinder	1		
2	4700950417	Seal kit	1		
3	---	Seal	2		
4	---	O-ring	1		
5	---	Back-up ring	1		
6	---	Seal	1		
7	---	O-ring	1		
8	---	Seal	1		
9	---	Seal	1		
10	---	O-ring	1		
11	--	Piston block	1		
12	--	Steering	1		
13	4700950222	Shaft	2		
14	--	Washer	4		
15	4700635061	Hair clip	4		
16	--	Rod seal	1		
17	--	Cylinder	1		

Front frame Tank structure module

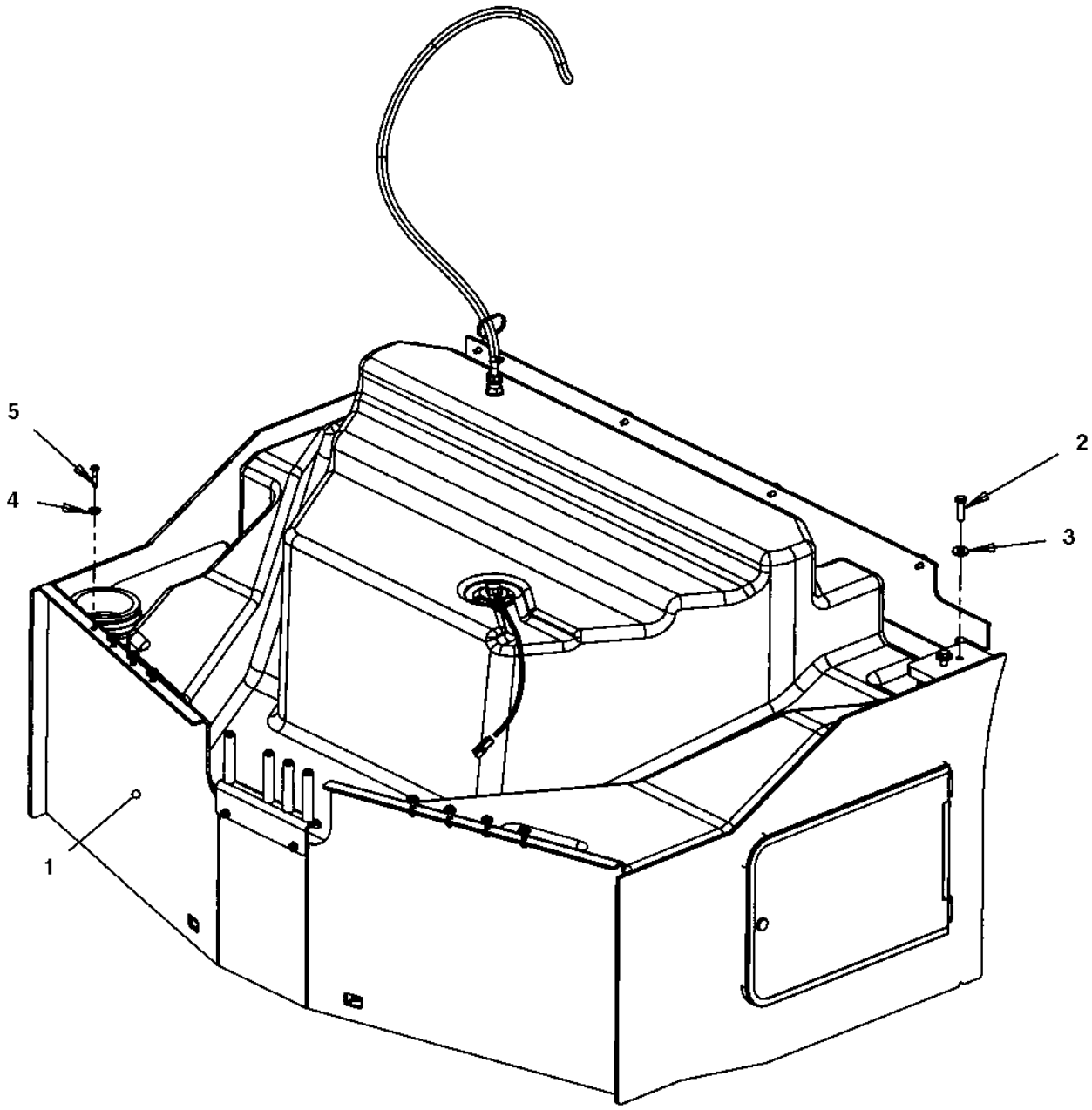

Item	Part No.	Name	Qty	L	SN INFO
1	-	Tank structure module	1		
2	4700947690	Screw	4		
3	4700904213	Steel Plain Washer	4		
4	4700904213	Steel Plain Washer	6		
5	4700947690	Screw	6		

Front frame Tank structure module

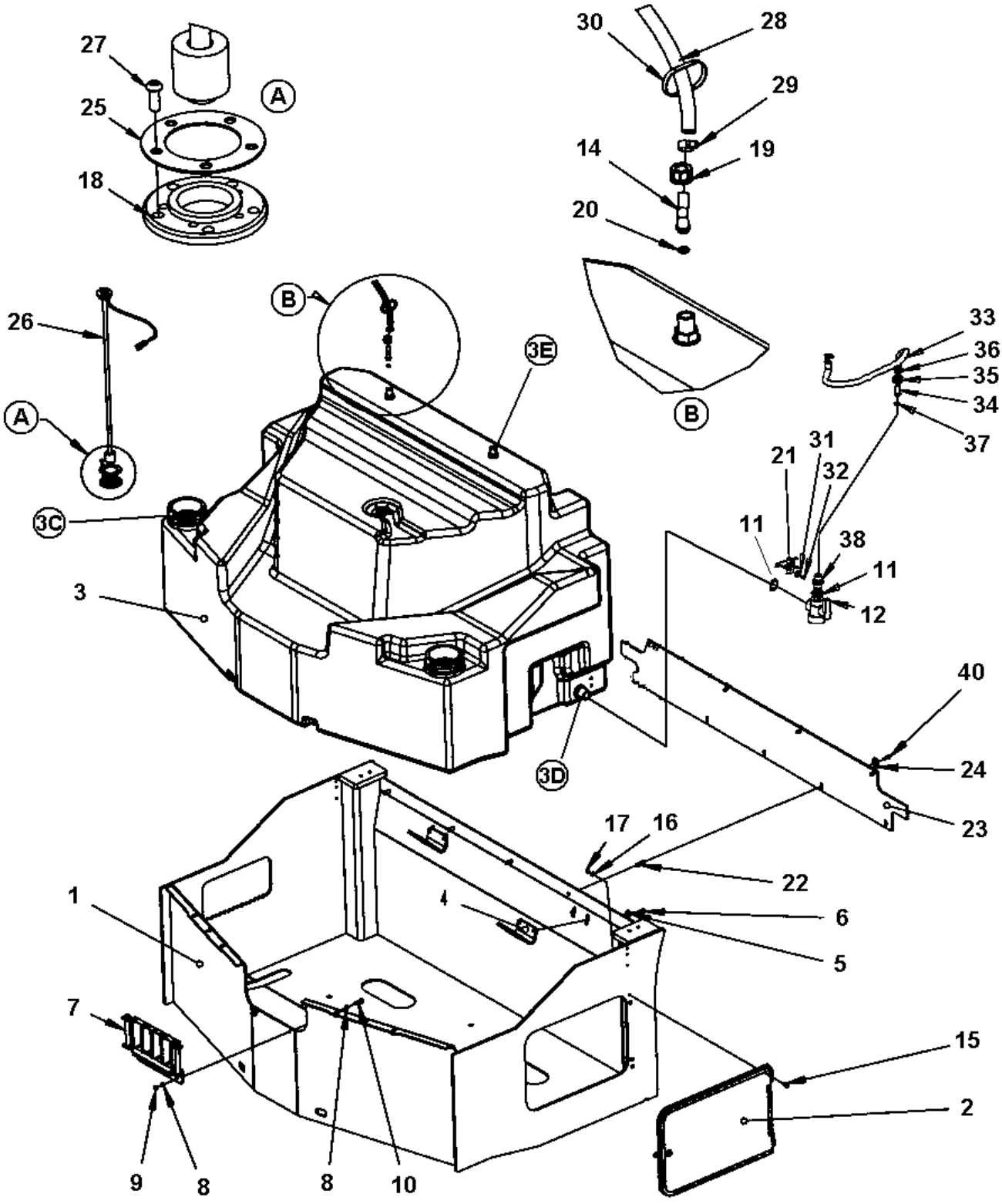

Item	Part No.	Name	Qty	L	SN INFO
1	4700395131	Tank structure	1		
2	4700391307	Cover	1		
3	4812110982	Water tank, cpl	1		
3	4700392235	Gasket	1	C	
3	4700313105	Hose clamp	1	C	
3	4700392223	Plane gasket	1	D	
3	4700392222	Grommet	1	D	
3	4700392224	Lock nut	1	D	
3	4700392231	Plane gasket	3	E	
3	4700392230	Grommet	3	E	
3	4700392232	Nut	3	E	
4	4700391624	Bracket	2		
5	4700904640	Washer, 8.4x22x3 mm 300HV	4		
6	4700500053	Screw, M8x20 mm 8.8 A2K	4		
7	-	Hose support	1		
8	4700904229	Washer, 8.4x 6x1.5 mm 300HV	4		
9	4700570005	Hexagon nut	2		
10	4700500022	Screw	2		
11	4700392223	Plane gasket	2		
12	4812120706	Ball valve	1		
14	4700393542	Hose connection	2		
15	4700928784	Screw	4		
16	4700603001	Washer	4		
17	4700586002	Lock nut M6 -8	4		
18	4700370745	Flange, cpl	1		
19	4700392227	Swivel nut	2		
20	4700792600	O-ring 70	2		
21	4700396739	Bracket	1		
22	4700900672	Blind insert nut	5		
23	4700393412	Rubber cloth	1		
24	4700615050	Washer	9		
25	4700372718	Lid	1		
26	4700391353	Level sender	1		
27	4700904206	Screw, M6x16 mm	5		
28	4812112074	Plastic hose (x m)	2XL	A	
29	4700313002	Hose clamp	2		
30	4700313102	Cable ties	N		

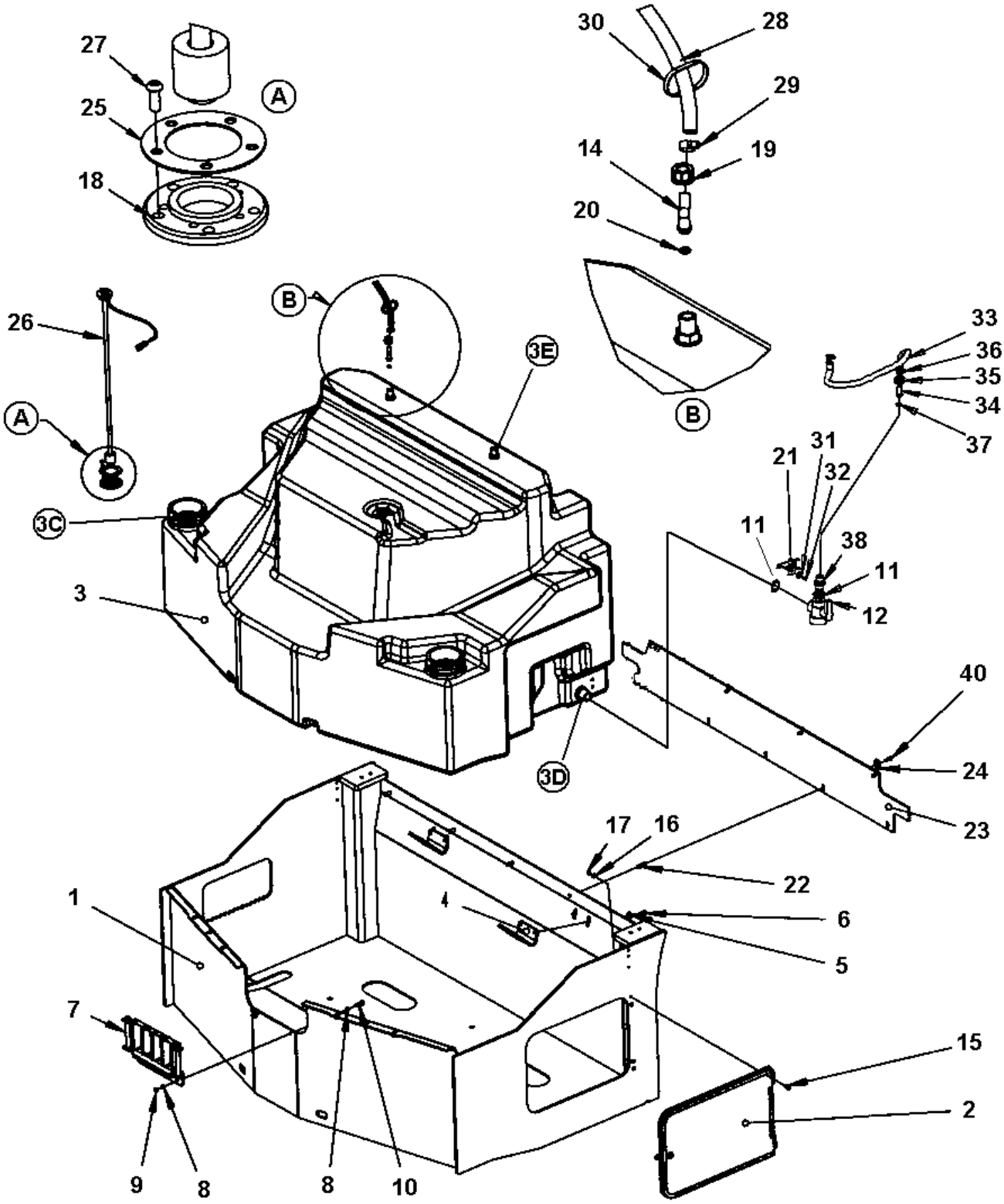
27
25
18
A
30
28
29
14
19
20
B
26
A
B
3E
33
36
35
34
37
21
31
32
11
38
11
12
3C
3
3D
40
24
23
17
16
22
6
5
1
7
15
2
9
8
8
10

Item	Part No.	Name	Qty	L	SN INFO
31	4700904735	Steel plain washer	2		
32	4700500013	Screw, M6x16 mm 8.8 A2K	2		
33	4700792073	Hose reinforced	1XL	B	
34	4700792780	Hose connection swivel	1		
35	4700792779	Swivel nut	1		
36	4700313003	Hose clamp	2		
37	4700480852	O-ring 70	1		
38	4700792781	Reducer nipple	1		
40	4700500021	Screw, M8x25 mm 8.8 A2K	9		

Comments for Page: Tank structure module

(L)OCAL REMARKS

A | en_US | Length as required

B | en_US | L= 0.77 m

C | en_US | Water fill

D | en_US | Drain

E | en_US | Hose connection

Front frame 4700391307 Cover

Item	Part No.	Name	Qty	L	SN INFO
1		Cover	1		
2	4700383626	Lock	1		
2	4700397348	Lock	1	1	
2	4700902866	Key Marked "455"	1		
2	4812113949	T-Key	1		
3	4700202057	Rubber edge trim	1XL	A	
4	4700202057	Rubber edge trim	1XL	B	

Comments for Page: 4700391307 Cover

(L)OCAL REMARKS

A | en_US | L=1.33 m

B | en_US | L=0.21 m

1 | en_US | Lock P/N 4700397348 replaced as spare part by P/N 4812113939.

Front frame Hose support

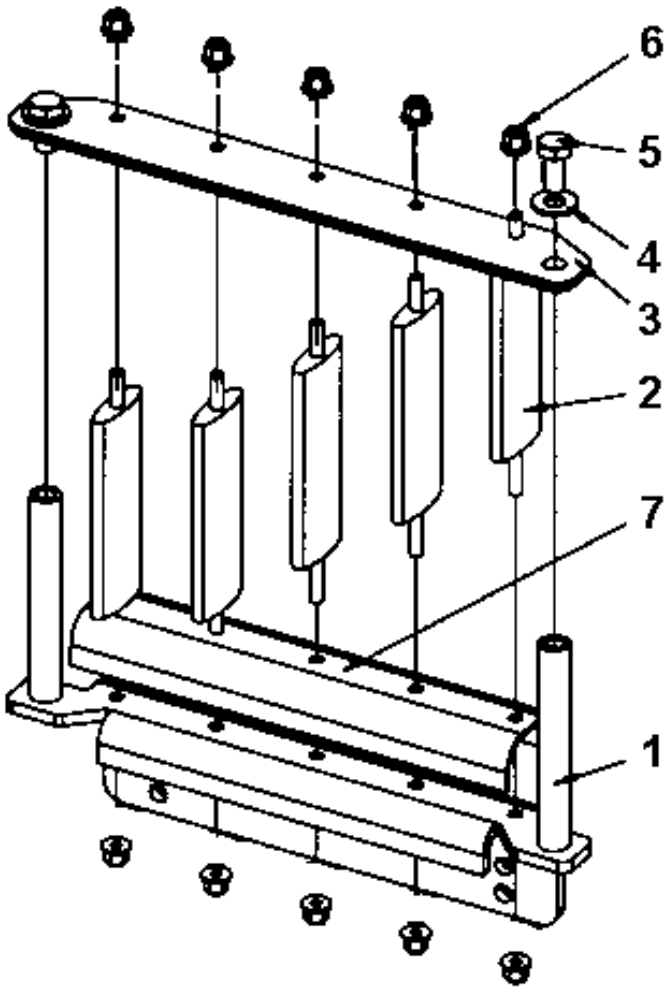

Item	Part No.	Name	Qty	L	SN INFO
1	4700394023	Bracket	1		
2	4700397039	Spacer	5		
3	4700397318	Cap	1		
4	4700904230	Plain washer 10.5x22x2 mm	2		
5	4700500048	Screw, M10x20 mm 8.8 A3K	2		
6	4700902285	Nut	10		
7	4812110277	Hose guard	1		

Hitch module To A016642 Hitch module

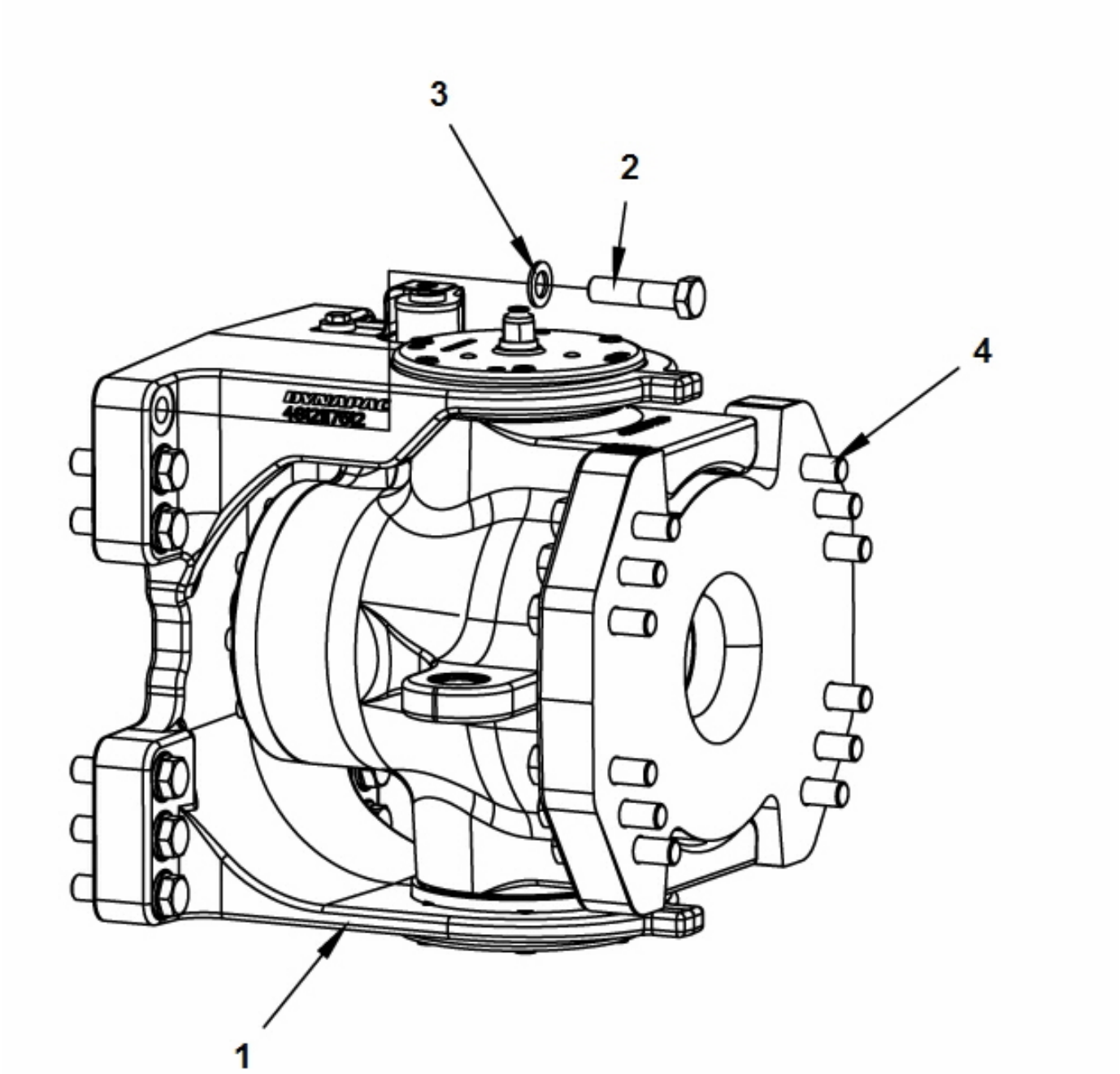

Item	Part No.	Name	Qty	L	SN INFO
1	4812117737	Steering hitch	1		
2	4700500287	Screw M20x80 10,9	12		
3	4700904233	Steel plain washer 21x36x3	24		
4	4700925208	Screw M20x90	12		

Hitch module To A016642 4812117737 Articulated joint

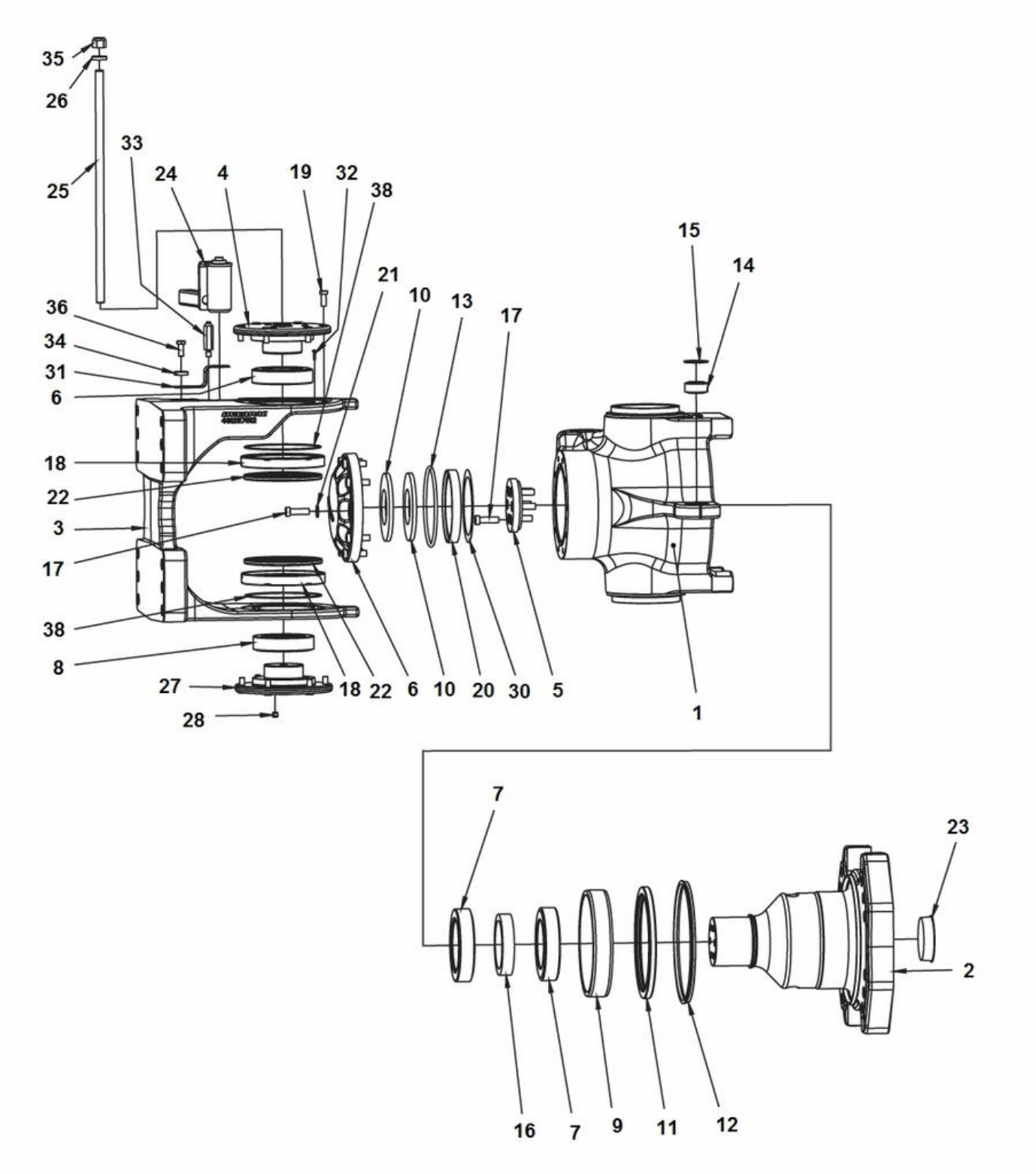

Item	Part No.	Name	Qty	L	SN INFO
1	4812117738	Yoke	1		
2	4812115392	Shaft	1		
3	4812117512	Holder	1		
4	4812121396	Shaft	1		
5	4812115949	Cover cup	1		
6	4812115950	Cover cap	1		
7	4812116334	Spherical plain bearing	2		
8	4812115467	Spherical plain bearing	2		
9	4812115398	Bushing	1		
10	4812116333	Disc spring	2		
11	4700391031	Radial lip-type seal	1		
12	4700792515	Sealing, v-ring	1		
13	4700160296	O-ring 70	1		
14	4700792554	Radial spherical plain bearing	2		
15	4700151015	Snap ring	2		
16	4812116340	Spacer washer	1		
17	4700792394	Screw	16		
18	4812121398	Radial seal	2		
19	4812120414	Hexagon socket head cap screw w Tuflok	12		
20	4812115947	Washer	1		
21	4700904231	Washer, 13x24x2 mm 300 HV	10		
22	4812120615	Radial lip-type seal	2		
23	4812116702	Protective plug	1		
24	4812119809	Locking pin cpl	1		
25	4812120618	Threaded stud	1		
26	4700904558	Washer, 17x30x6 mm 300 HV	1		
27	4812121397	Shaft	1		
28	4700792083	Plug	6		
30	4812117530	Shim washer	1		
31	4812121665	Stop plate	1		
32	4812121282	Thread forming screw m	8		
33	4812119807	Holder	1		
34	4700904567	Washer, 10.5x28x6 mm	1		
35	291112842	Prev torq hex nut m	1		
36	4700500028	Screw, M10 x 25 mm 8.8 A3K	1		
37	4700902541	Lock fluid Loctite 243, 50 ml	0		
38	4812121111	O-ring	2		

Hitch module From A016643 Hitch module

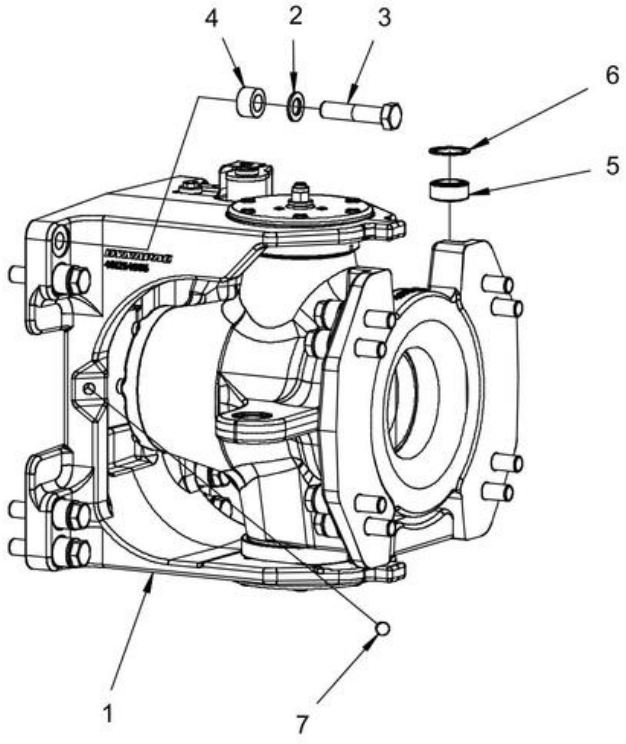

Item	Part No.	Name	Qty	L	SN INFO
1	4812119139	Steering hitch	1		
2	4700904233	Steel plain washer 21x36x3	16		
3	4700500287	Screw M20x80 10,9	16		
4	4812110366	Spacer	16		
5	4700792554	Radial spherical plain bearing	2		
6	4700151015	Snap ring	2		
7	4700900519	Plug	1		

Hitch module From A016643 4812119139 Steering hitch

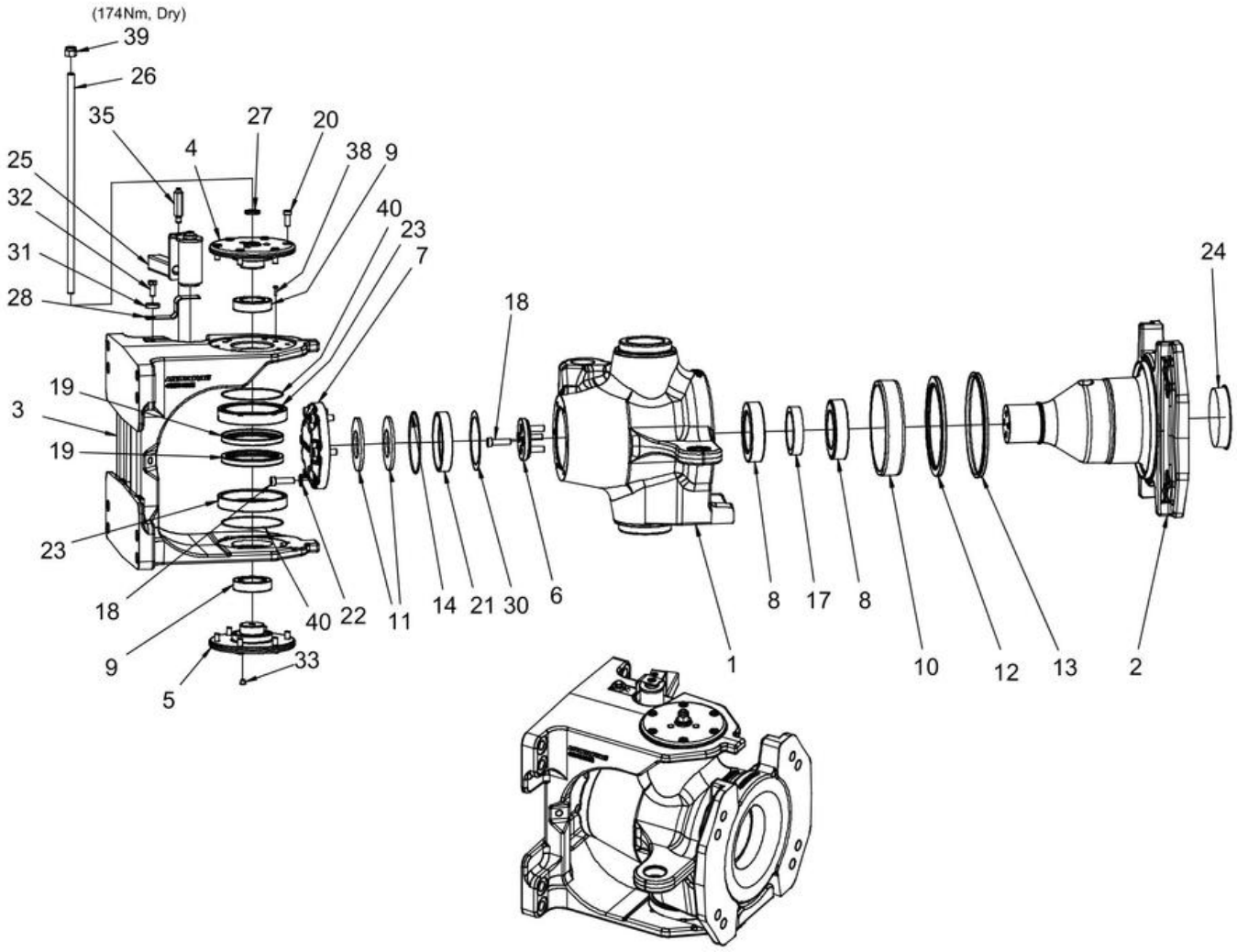

Item	Part No.	Name	Qty	L	SN INFO
1	4812119140	Hitch yoke	1		
2	4812114993	Shaft	1		
3	4812114995	Hitch holder	1		
4	4812114997	Shaft	1		
5	4812117867	Shaft	1		
6	4812115424	Cover cap	1		
7	4812115425	Cover cap	1		
8	4812115467	Spherical plain bearing	2		
9	4812115468	Angular contact spherical	2		
10	4812114999	Bushing	1		
11	4812115422	Disc spring	2		
12	4812115427	Radial lip-type seal	1		
13	4700792516	Sealing, V-ring	1		
14	4700160132	O-ring 70	1		
17	4812115000	Spacer washer	1		
18	4700792394	Screw	10		
19	4812120707	Radial lip-type seal	2		
20	4812120414	Hexagon socket head cap screw w Tuflok	12		
21	4812115423	Spacer washer	1		
22	4700904231	Washer, 13x24x2 mm 300 HV	6		
23	4812120681	Back-up ring	2		
24	0686901038	Protective plug	1		
25	4812119809	Locking pin cpl	1		
26	4812124006	Threaded stud	1		
27	4700904214	Washer 15x30x4 300 HV	1		
28	4812121665	Stop plate	1		
30	4812116680	Shim washer	1		
31	4700904567	Washer, 10.5x28x6 mm	1		
32	4700500028	Screw, M10 x 25 mm 8.8 A3K	1		
33	4700902919	Plug	6		
35	4812119807	Holder	1		
38	4812121282	Thread forming screw m	8		
39	4812124012	Lock nut M	1		
40	4700160372	O-ring 70	2		

Front frame Filling pipe

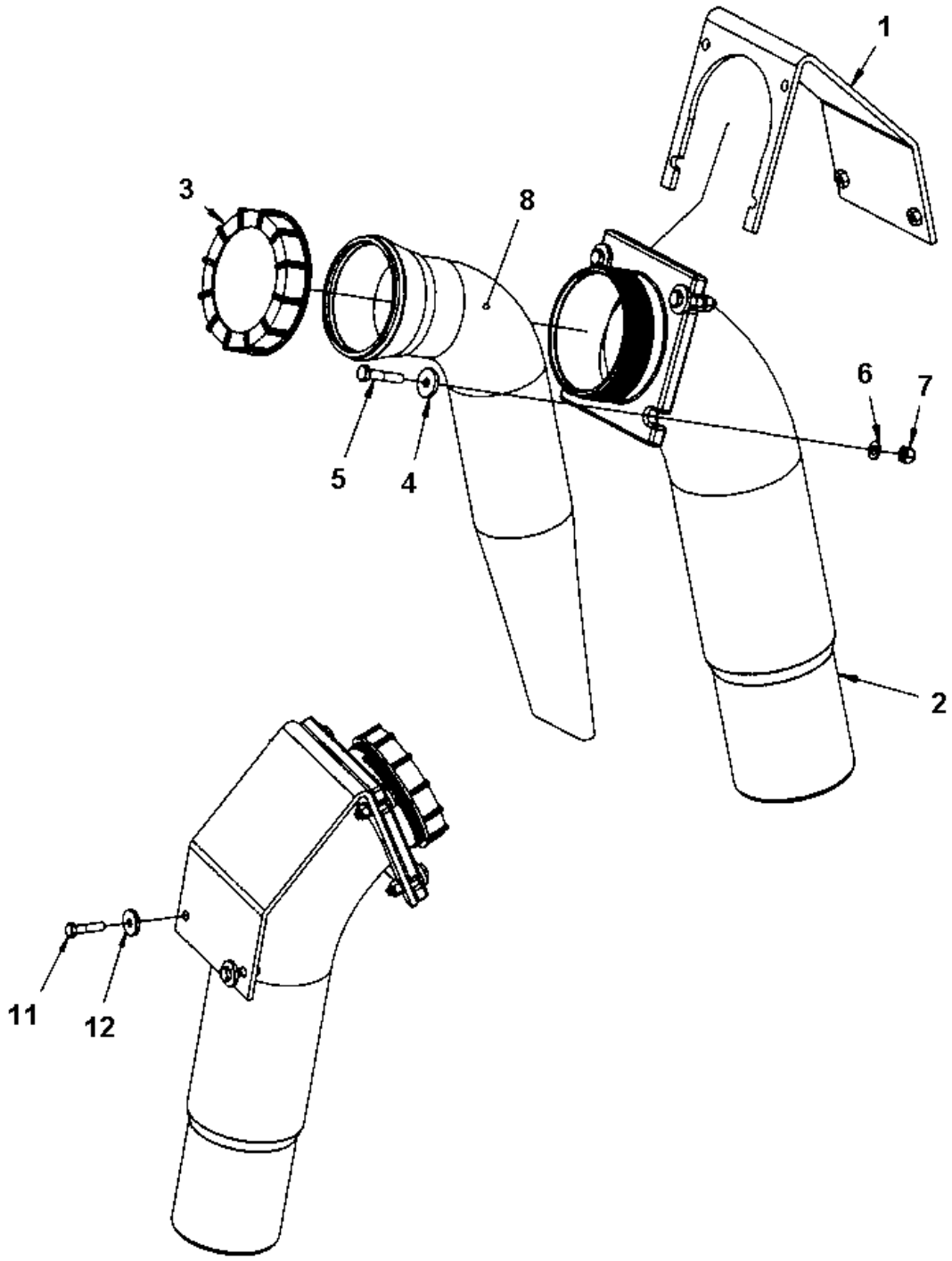

Item	Part No.	Name	Qty	L	SN INFO
1	4700391626	Bracket	1		
2	4700390613	Filling pipe	1		
3	4700920819	Filler cap	1		
4	4700904734	Washer, 8.4x26x4 mm 300 HV	4		
5	4700500023	Screw, M8x40 mm 8.8 A2K	4		
6	4700904229	Washer, 8.4x 6x1.5 mm 300HV	4	1	
7	4700586003	Lock nut M8	4		
8	4700391444	Strainer	1		
11	4700500047	Hexagon head screw	2		
12	4700904734	Washer, 8.4x26x4 mm 300 HV	2		

Comments for Page: Filling pipe

(L)OCAL REMARKS

1 | en_US | 2pcs used on upper side (instead of 2pcs item 4), when machine equipped with lockable cap.

Front frame Locking device module

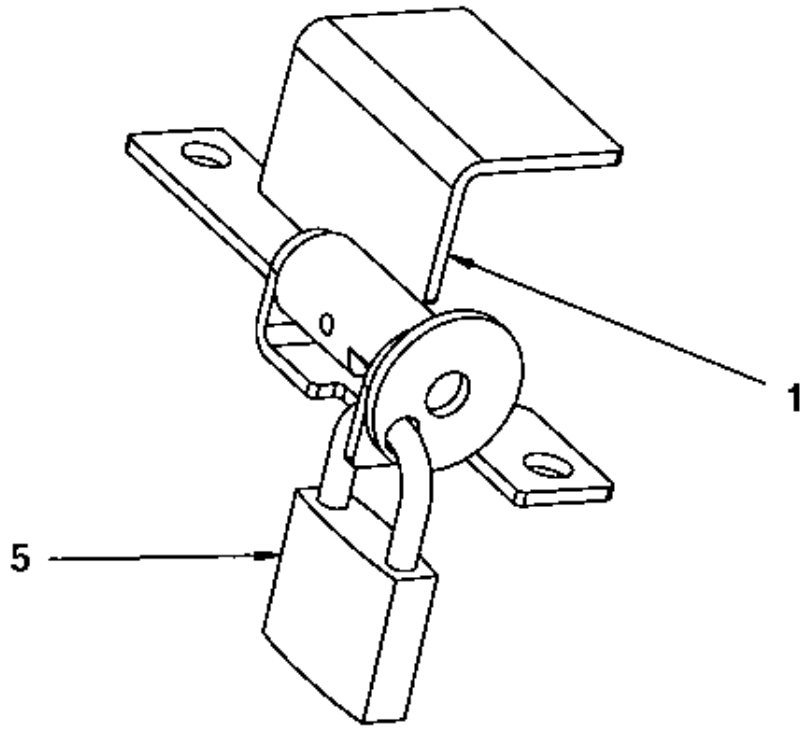

Item	Part No.	Name	Qty	L	SN INFO
1	-	Locking device	1		
1	4700394587	Bracket	1		
1	4700394591	Shaft	1		
1	4700394590	Lock bracket	1		
1	4700629008	Dowel pin	1		
5	4700358881	Pad lock	1		

Front frame Grab handle module

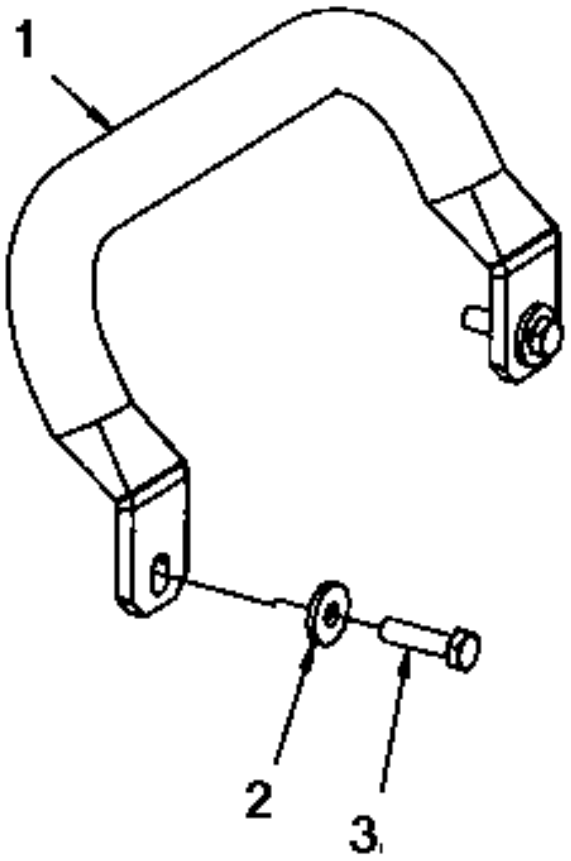

Item	Part No.	Name	Qty	L	SN INFO
1	4700394545	Grab handle	1		
2	4700904640	Washer, 8.4x22x3 mm 300HV	2		
3	4700500022	Screw	2		

Rear frame Rear frame

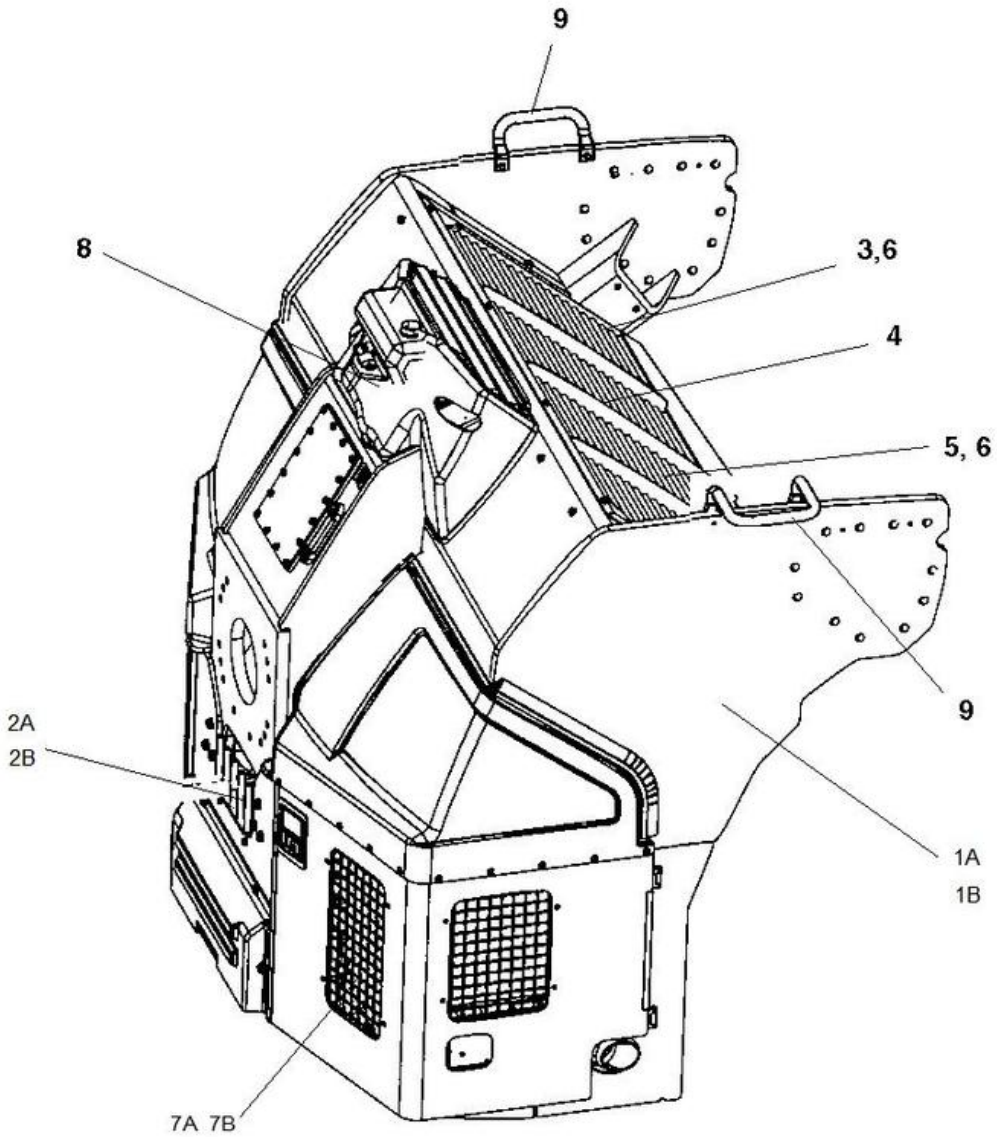

Item	Part No.	Name	Qty	L	SN INFO
1A	-	Rear Frame	1		Up to SN A012958
1B	-	Rear Frame	1		From SN A012959
2A	-	Engine structure, module	1		Up to SN A012958
2B	-	Engine structure, module	1		From SN A012959
3	-	Water cooler	1		
4	-	Charge air cooler	1		
5	-	Oil cooler	1		
6	-	Fan	2		
7A	-	Noise suppression plates	1		
7B	-	Noise suppression, covers	1		
8	-	Expansion tank assembly	1		
9	-	Grab handle module	2		

Rear frame, Up to SN A012958 Rear frame

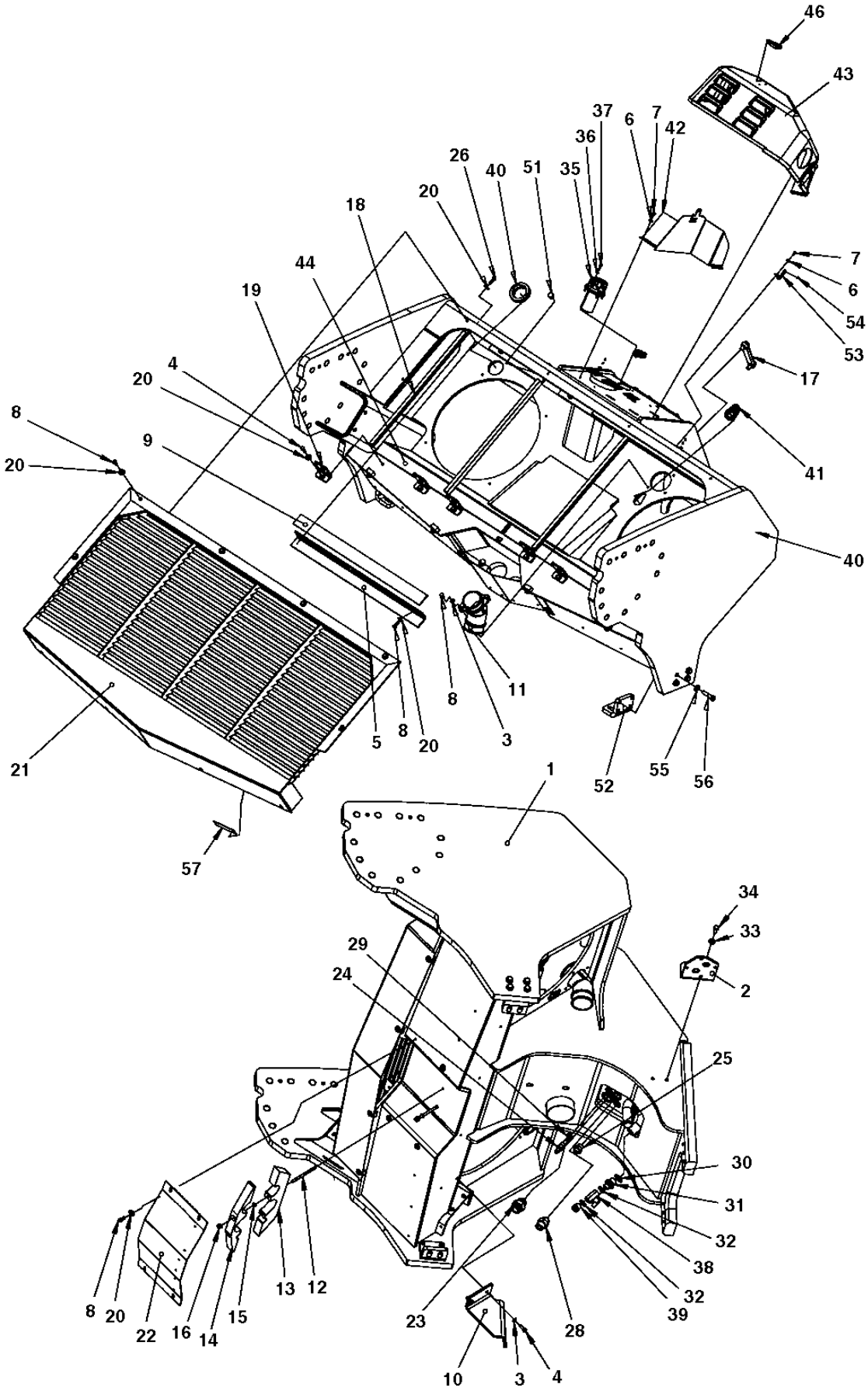

Item	Part No.	Name	Qty	L	SN INFO
1	4700394529	Rear frame	1		
1	4700390925	Hydraulic tank cover	1		
1	4700390926	O-ring	1		
2	4700397296	Bracket	1		
3	4700904229	Washer, 8.4x 6x1.5 mm 300HV	4		
4	4700500021	Screw, M8x25 mm 8.8 A2K	8		
5	4700392075	Bracket	2		
6	4700603001	Washer	8		
7	4700500059	Hex. screw	8		
8	4700500053	Screw, M8x20 mm 8.8 A2K	18		
9	4700392078	Rubber cloth	2		
10	4700396210	Bracket	1		
11	4700394000	Bulkhead elbow	1		
12	4700792326	Stud	2		
13	4700391375	Hose support	1		
14	4700391376	Hose support	1		
15	4700904044	Lock washer	2		
16	4700902286	Lock nut, M8x1.25 mm A2K	2		
17	4700792492	Level gauge	1		
18	4700391299	Rubber strip	1XL	A	
19	4700391296	Bracket	6		
20	4700904640	Washer, 8.4x22x3 mm 300HV	26		
21	4700395522	Cover	1		
22	4700391434	Cover	1		
23	4700792338	Adapter	1		
24	4700792276	Temperature sensor	1		
25	4700791405	Straight o-ring connector	1		
26	4700500022	Screw	4		
28	4700904728	Straight connector ORFS	1		
29	4700162015	Seal ring	1		
30	4700791120	Washer sealing	1		
31	4700792421	Straight connector	1		
32	4700162006	Seal ring	2		
33	4700904230	Plain washer 10.5x22x2 mm	2		
34	4700500028	Screw, M10 x 25 mm 8.8 A3K	2		
35	4700391026	Ventilating filter	1		
36	4700904281	Washer, 5,3x10x1 300HV	6		

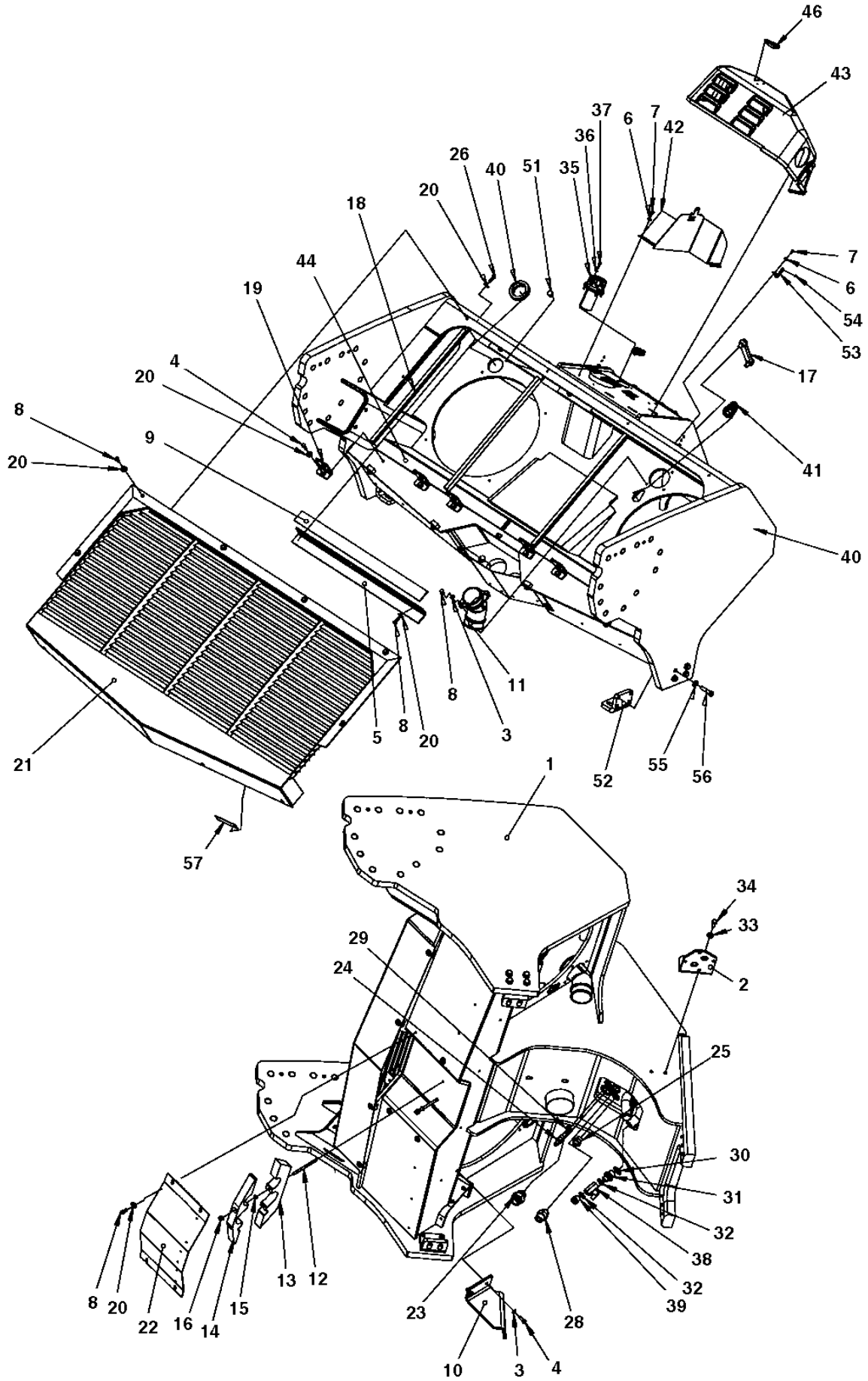
46
43
37
6
7
42
36
26
40
51
35
20
18
44
19
4
20
8
20
9
7
6
54
53
17
41
40
21
5
8
20
8
3
11
52
55
56
57
1
34
33
29
24
2
25
30
31
32
38
32
39
8
20
22
16
14
15
13
12
23
28
10
3
4

Item	Part No.	Name	Qty	L	SN INFO
37	4700508020	Screw	6		
38	4700925599	Ball valve	1		
39	4700232056	Steel plug threaded	1		
40	4700393001	Grommet	2		
41	4700393149	Grommet	2		
42	4700393281	Bracket	1		
43	-	Cover, cpl	1		
44	4700394459	Rubber cloth	2		
46	4700358881	Pad lock	1		
51	4700792607	Shock absorber	6		
52	4700394400	Bracket	2		
53	4700394297	Bracket	2		
54	4700624021	Pop rivet	4		
55	4700904703	Plain washer 13x24x4 mm	8		
56	4700500269	Screw	8		
57	4700394513	Rubber cloth	2		

Comments for Page: Rear frame

(L)OCAL REMARKS

A | en_US | L= 2,34 m

Rear frame, Up to SN A012958 Cover, cpl

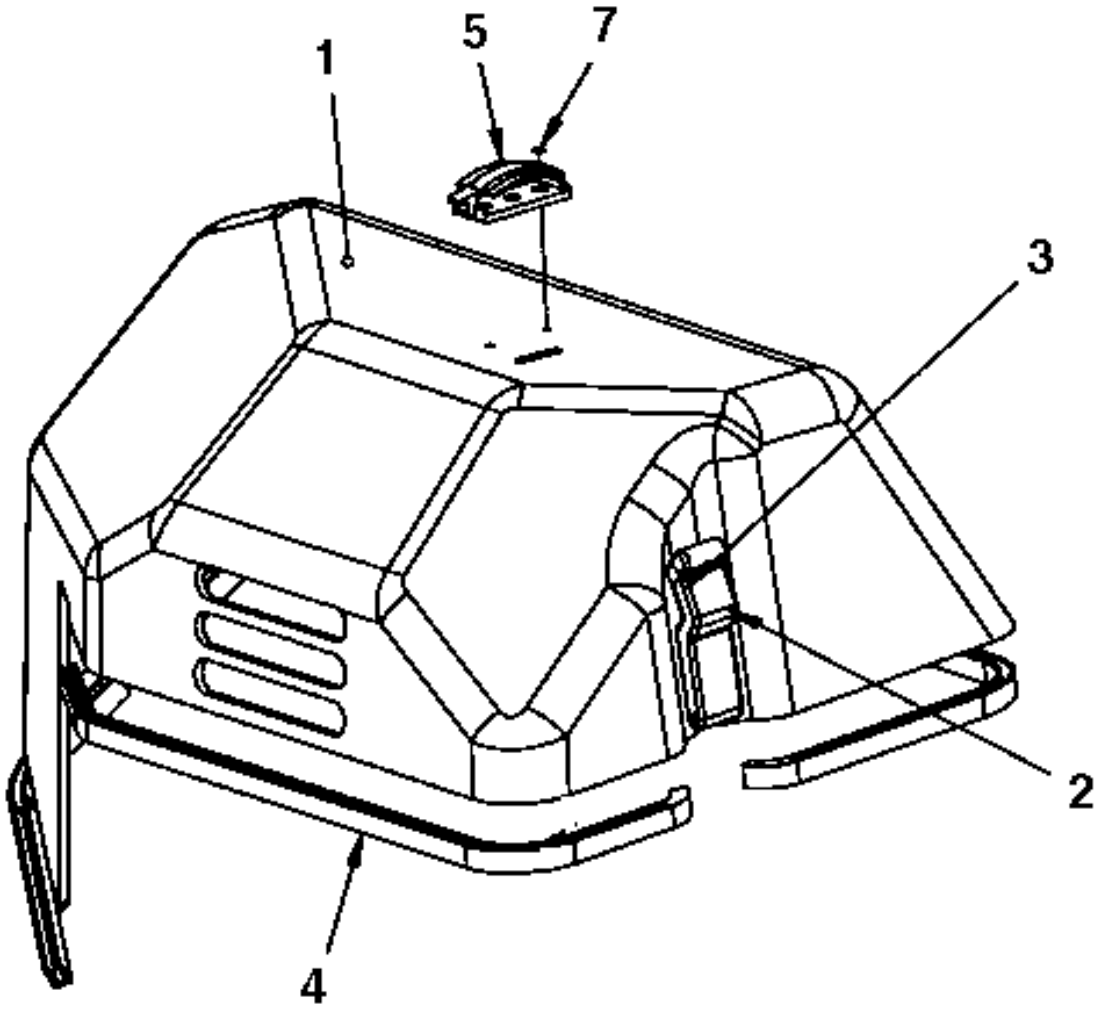

Item	Part No.	Name	Qty	L	SN INFO
1	4700391750	Cover	1		
2	4700388846	Latch, complete	2		
3	4700624021	Pop rivet	4		
4	4700902166	Edge trim	1XL	A	
5	4700394536	Wiring clip	1		
7	4700624018	Blind rivet	2		

Comments for Page: Cover, cpl

(L)OCAL REMARKS

A | en_US | L=1.59 m

Rear frame, From SN A012959 Frame, rear

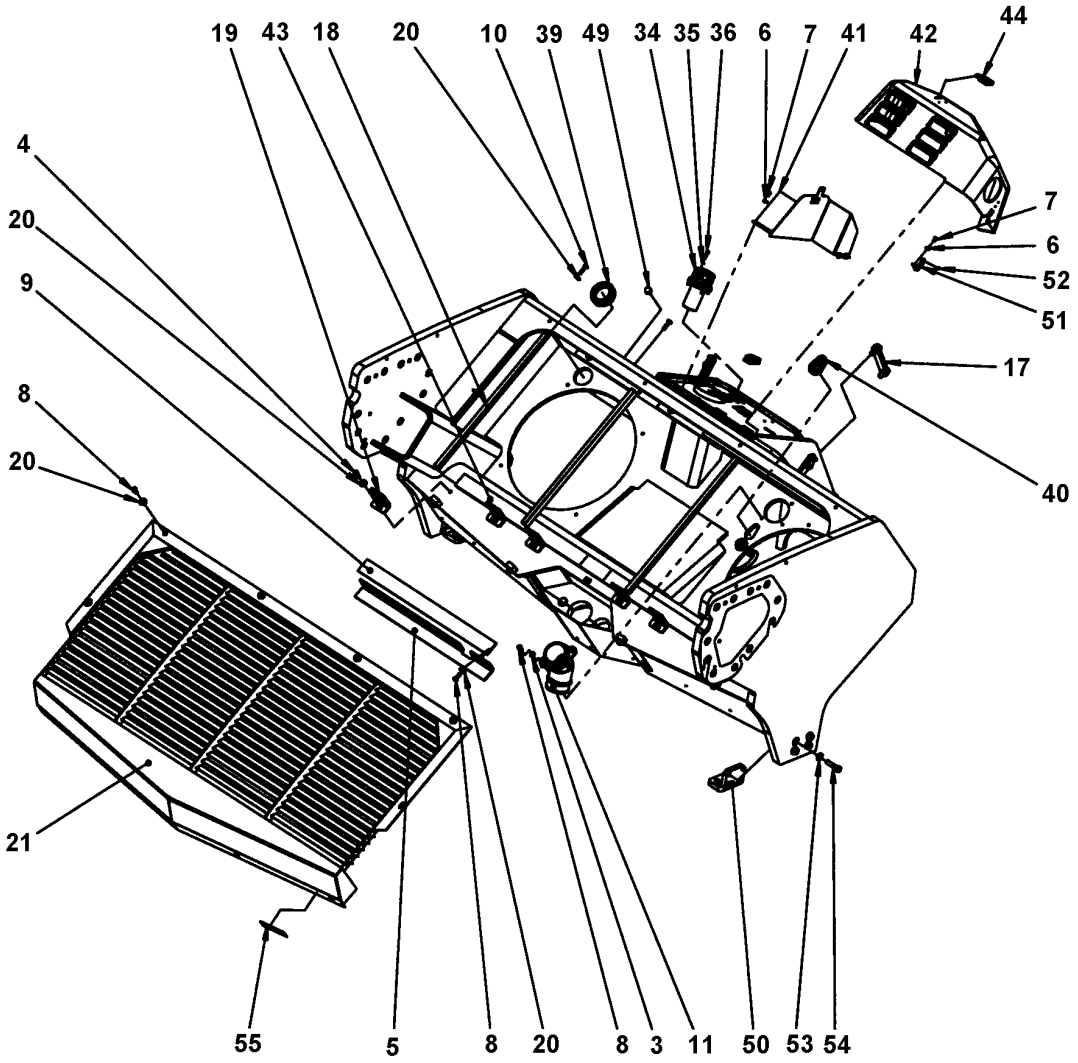

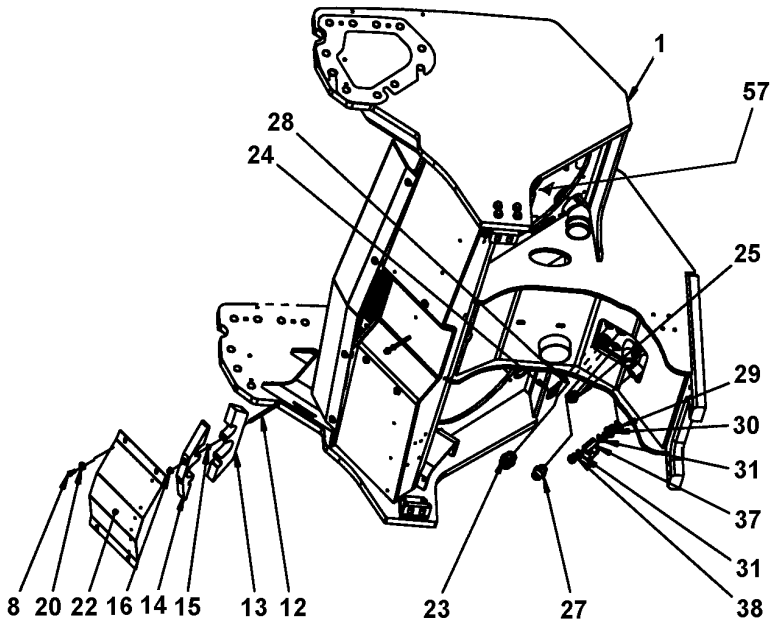

Item	Part No.	Name	Qty	L	SN INFO
1	4812114408	Rear frame	1		
3	4700904229	Washer, 8.4x 6x1.5 mm 300HV	2		
4	4700500021	Screw, M8x25 mm 8.8 A2K	6		
5	4700392075	Bracket	2		
6	4700603001	Washer	8		
7	4700500059	Hex. screw	8		
8	4700500053	Screw, M8x20 mm 8.8 A2K	18		
9	4700392078	Rubber cloth	2		
10	4700500022	Screw	4		
11	4700394000	Bulkhead elbow	1		
12	4700792326	Stud	2		
13	4700391375	Hose support	1		
14	4700391376	Hose support	1		
15	4700904044	Lock washer	2		
16	4700902286	Lock nut, M8x1.25 mm A2K	2		
17	4700792492	Level gauge	1		
18	4700391299	Rubber strip	1XL	A	
19	4700391296	Bracket	6		
20	4700904640	Washer, 8.4x22x3 mm 300HV	26		
21	4700395522	Cover	1		
22	4700391434	Cover	1		
23	4700792338	Adapter	1		
24	4700792276	Temperature sensor	1		
25	4700791405	Straight o-ring connector	1		
26	4812115411	Grommet	2		
27	4700904728	Straight connector ORFS	1		
28	4700162015	Seal ring	1		
29	4700791120	Washer sealing	1		
30	4700792421	Straight connector	1		
31	4700162006	Seal ring	2		
34	4700391026	Ventilating filter	1		
35	4700904281	Washer, 5,3x10x1 300HV	6		
36	4700508020	Screw	6		
37	4700925599	Ball valve	1		
38	4700232056	Steel plug threaded	1		
39	4700393001	Grommet	2		
40	4700393149	Grommet	2		

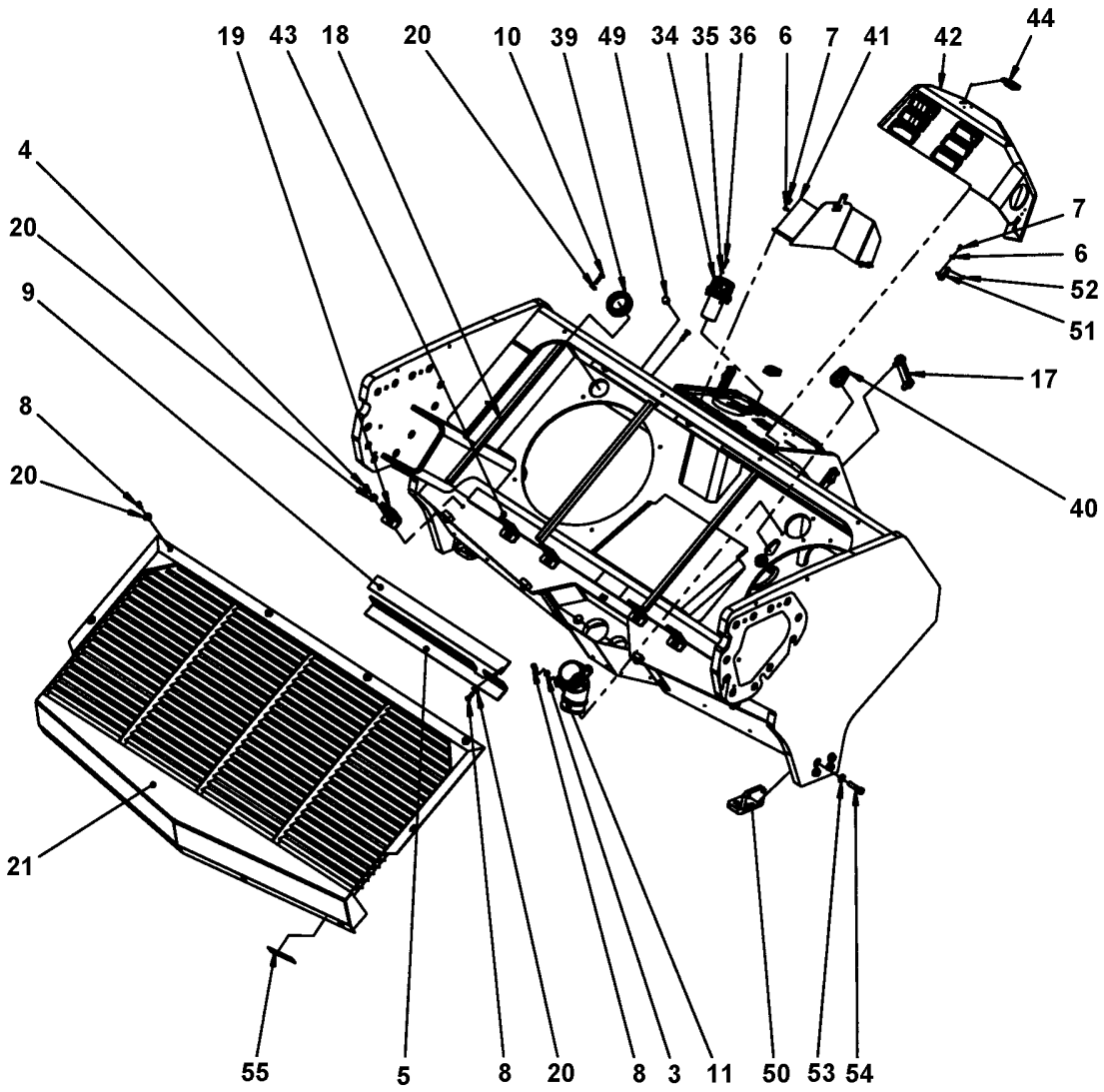
19 43 18 20 10 39 49 34 35 36 6 7 41 42 44
4
20
9
8
20
21
55
5
8
20
8
3
11
50
53
54
7
6
52
51
17
40

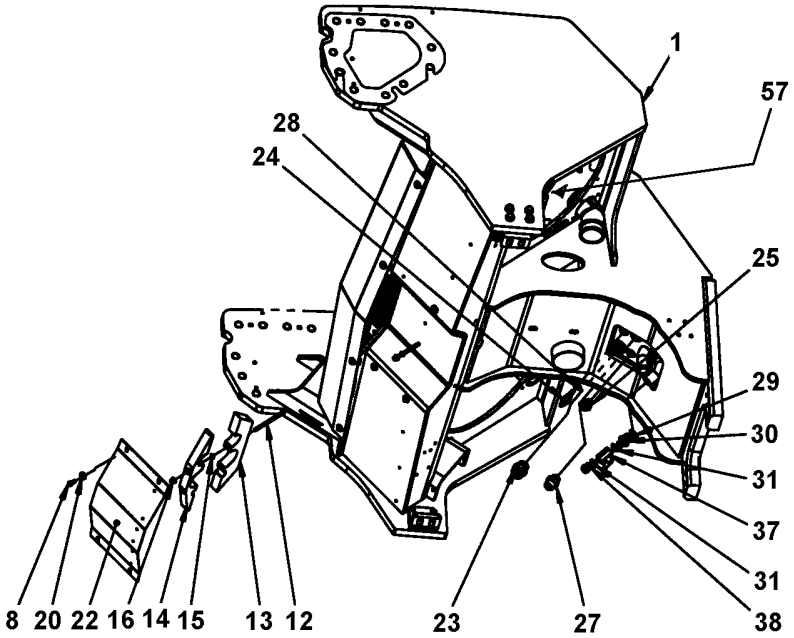
1
57
28
24
25
29
30
31
37
31
38
8 20 22 16 14 15 13 12
23
27

Item	Part No.	Name	Qty	L	SN INFO
41	4700393281	Bracket	1		
42		Cover, cpl	1		
43	4700394459	Rubber cloth	2		
44	4700358881	Pad lock	1		
49	4700792607	Shock absorber	6		
50	4700394400	Bracket	2		
51	4700394297	Bracket	2		
52	4700624021	Pop rivet	4		
53	4700904703	Plain washer 13x24x4 mm	8		
54	4700500269	Screw	8		
55	4700394513	Rubber cloth	2		
57	4812117018	Grommet	1		

Comments for Page: Frame, rear

(L)OCAL REMARKS

A | en_US | L= 2.34 m

Engine structure, module, Up to SN A012958 Engine structure, module

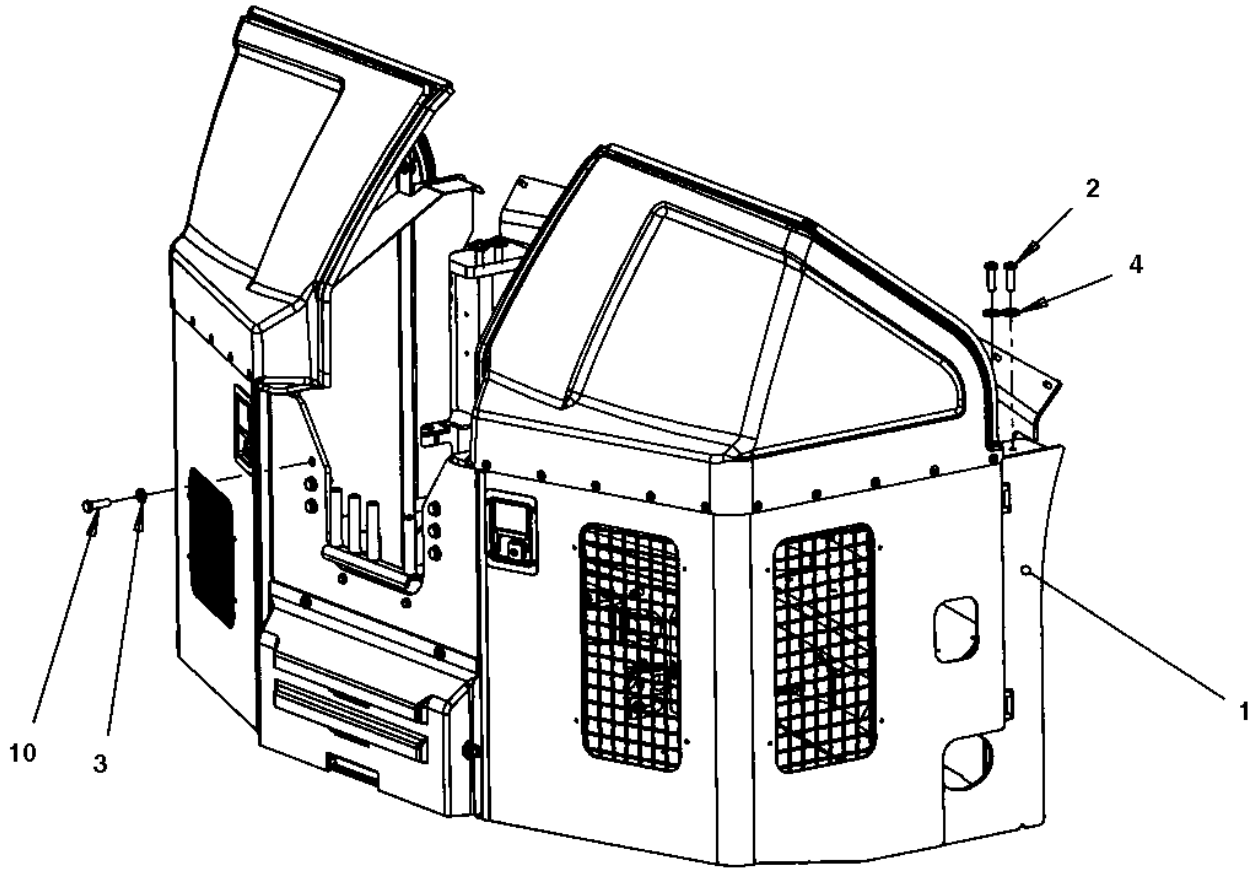

Item	Part No.	Name	Qty	L	SN INFO
1	-	Engine structure	1		
2	4700947689	Hex. head screw M12	4		
3	4700904231	Washer, 13x24x2 mm 300 HV	6		
4	4700904213	Steel Plain Washer	4		
10	4700500269	Screw	6		

Engine structure, module, Up to SN A012958 Engine structure

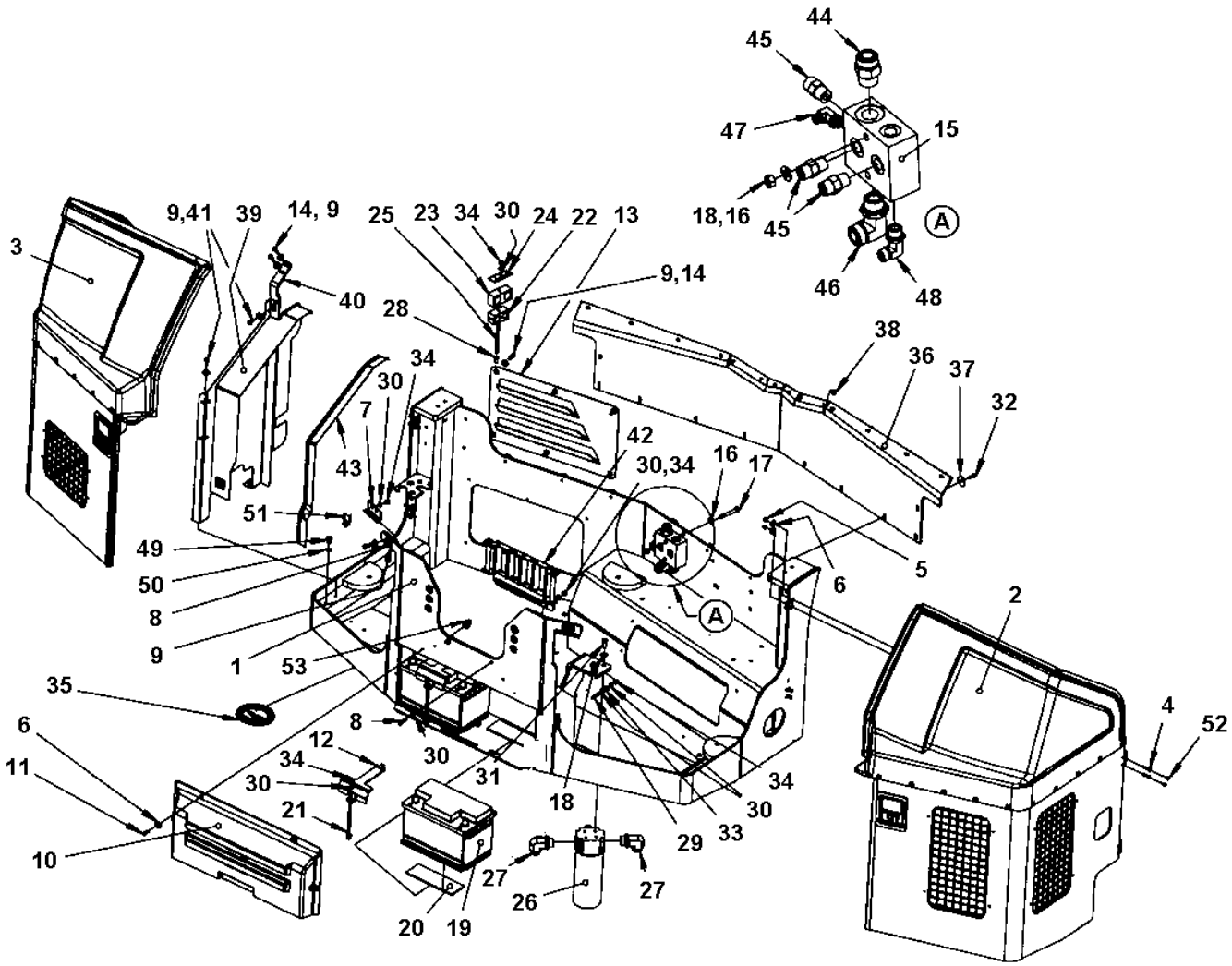

Item	Part No.	Name	Qty	L	SN INFO
1	4700394514	Engine structure	1		
2	-	Engine cover, left	1		
3	-	Engine cover, right	1		
4	4700513017	Screw	8		
5	4700586002	Lock nut M6 -8	8		
6	4700904735	Steel plain washer	12		
7	4700396542	Lock bracket	2		
8	4700500022	Screw	6		
9	4700904640	Washer, 8.4x22x3 mm 300HV	15		
10	4700390884	Cover	1		
11	4700500040	Screw, M6x20 mm 8.8 A2K	4		
12	4700396634	Battery holder	2		
13	4700392799	Grid	1		
14	4700500021	Screw, M8x25 mm 8.8 A2K	8		
15	4700391157	Connection block	1		
16	4700904230	Plain washer 10.5x22x2 mm	7		
17	4700500092	Screw	2		
18	4700570006	Hex. nut	2		
19		Battery, 12V 74Ah (278x175x190mm)	2		
20	4700357459	Rubber cloth	4		
21	4700396635	Battery screw	2		
22	4700903456	Pipe clamp	1		
23	4700791711	Pipe clamp	1		
24	4700791712	Cover plate	1		
25	4700792326	Stud	1		
26	4812110667	Hydraulic oil filter	1		
26	4700391433	Hydraulic oil filter element	1		
26	4812158269	Filter switch	1		
26	4700391432	Cleaning filter element	1		
27	4700791844	Elbow adapter 90	2		
28	4700792825	Blind insert nut	1		
29	4700903768	Threaded stud	3		
30	4700904229	Washer, 8.4x 6x1.5 mm 300HV	17		
31	4700500028	Screw, M10 x 25 mm 8.8 A3K	3		
32	4700500053	Screw, M8x20 mm 8.8 A2K	18		
33	4700570005	Hexagon nut	3		
34	4700586003	Lock nut M8	12		

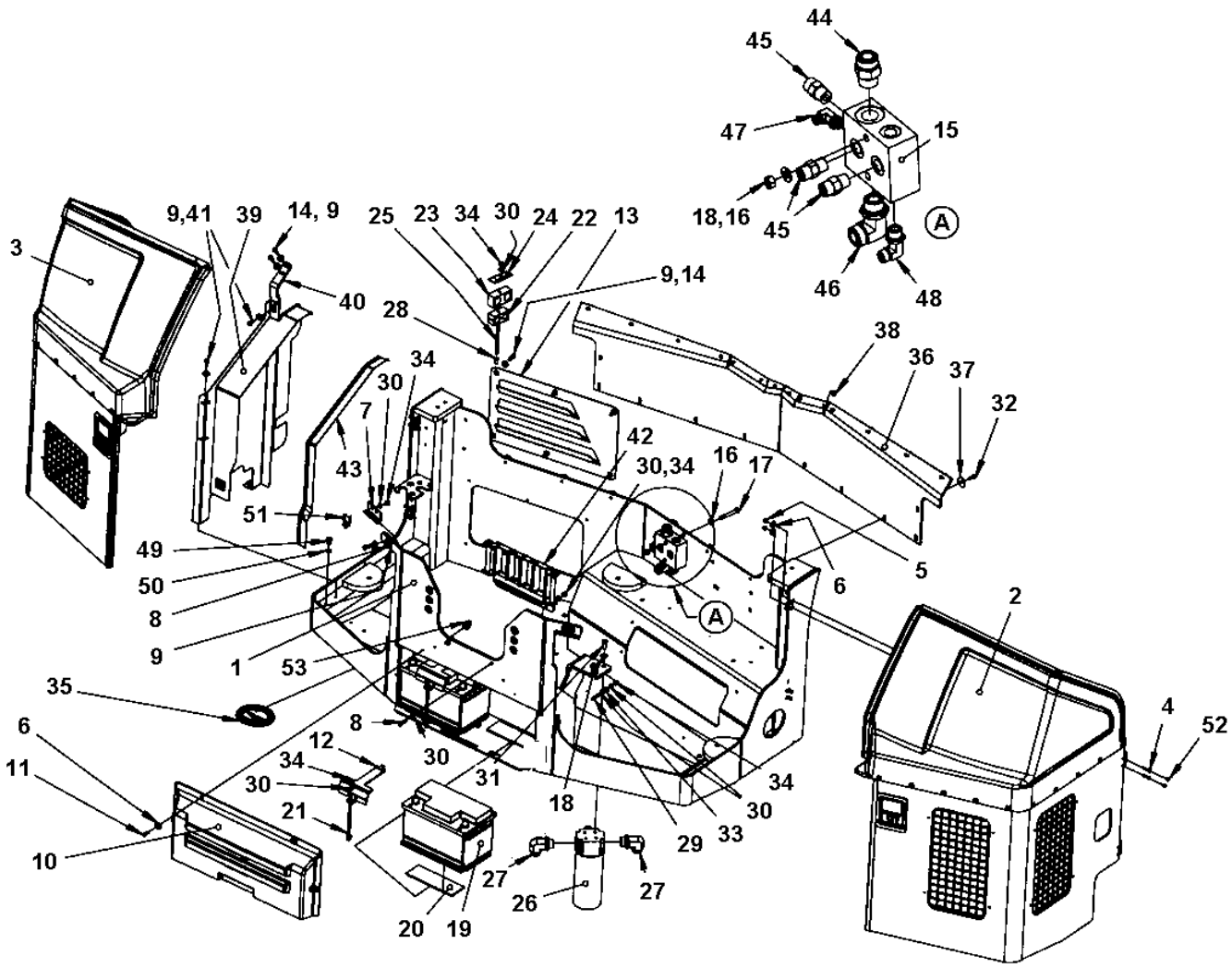
44
45
47
15
18,16
45
A
46
48
9,41
39
14, 9
25
23
34
30
24
22
13
3
40
9,14
28
38
36
37
32
34
30
7
42
30,34
16
17
43
51
49
50
8
9
1
53
5
6
A
2
35
4
52
6
11
12
34
30
21
8
30
31
18
34
30
33
29
10
27
26
27
20
19

Item	Part No.	Name	Qty	L	SN INFO
35	4700379992	Plug	1		
36	4700379974	Rubber cloth	1		
37	4700615050	Washer	18		
38	4700792325	Blind rivet	6		
39	4700391769	Belt guard	1		
40	4700391768	Bracket	1		
41	4700500019	Hexagon screw	3		
42	-	Hose support	1		
43	4700792258	Edge trim	1XL	A	
44	4700791823	Adapter	1		
45	4700791799	Straight connector orfs	3		
46	4700791231	Adapter	1		
47	4700792334	Elbow 90 orfs	1		
48	4700791840	Adapter	1		
49	4700500043	Screw M10x16	1		
50	4700904637	Washer	1		
51	4700394701	Wiring clip	N		
52	4700926215	Protective plug	8		
53	4700792441	Cable tie with holder	2		

Comments for Page: Engine structure

(L)OCAL REMARKS

A | en_US | L=0.87 m

Engine structure, module, Up to SN A012958 Engine cover, left

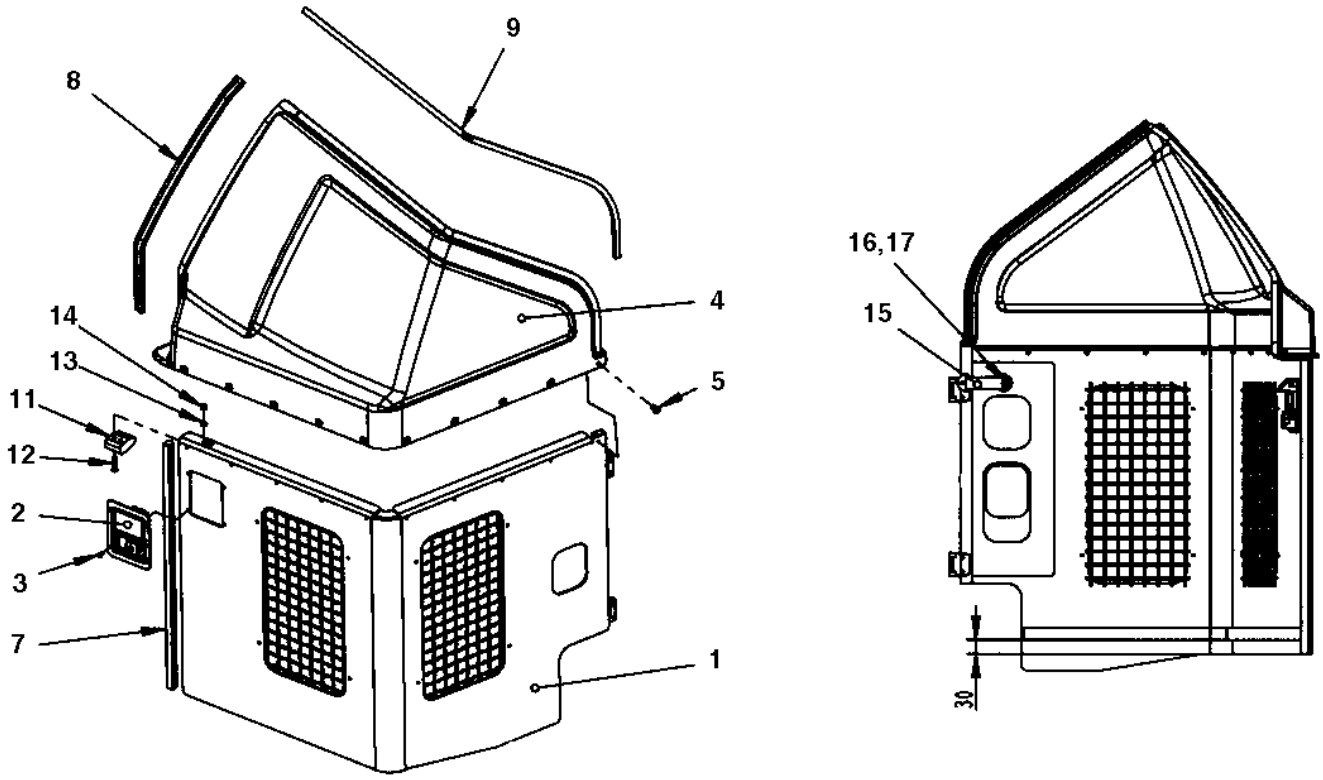

Item	Part No.	Name	Qty	L	SN INFO
0	4700396684	Engine cover, cpl	1		
1	-	Injector part	1		
1	4700903907	Hinge	2		
2	4700396607	Lock	1		
2	4700902866	Key Marked "455"	1		
3	4700624020	Blind rivet	4		
4	4700379976	Cover	1		
5	4700792325	Blind rivet	10		
7	4700202057	Rubber edge trim	1XL	B	
8	4700902166	Edge trim	1XL	C	
9	4700903953	Edge trim	1XL	D	
11	4700390365	Spacer	1		
12	4700924875	Screw	2		
13	4700904228	Washer DIN125	2		
14	4700586002	Lock nut M6 -8	2		
15	4812114393	Hood latch	1		
16	4700904735	Steel plain washer	1		
17	4700500059	Hex. screw	1		

Comments for Page: Engine cover, left

(L)OCAL REMARKS

B | en_US | L=0.625m

C | en_US | L=0.6m

D | en_US | L=1.2m

Engine structure, module, Up to SN A012958 Engine cover, right

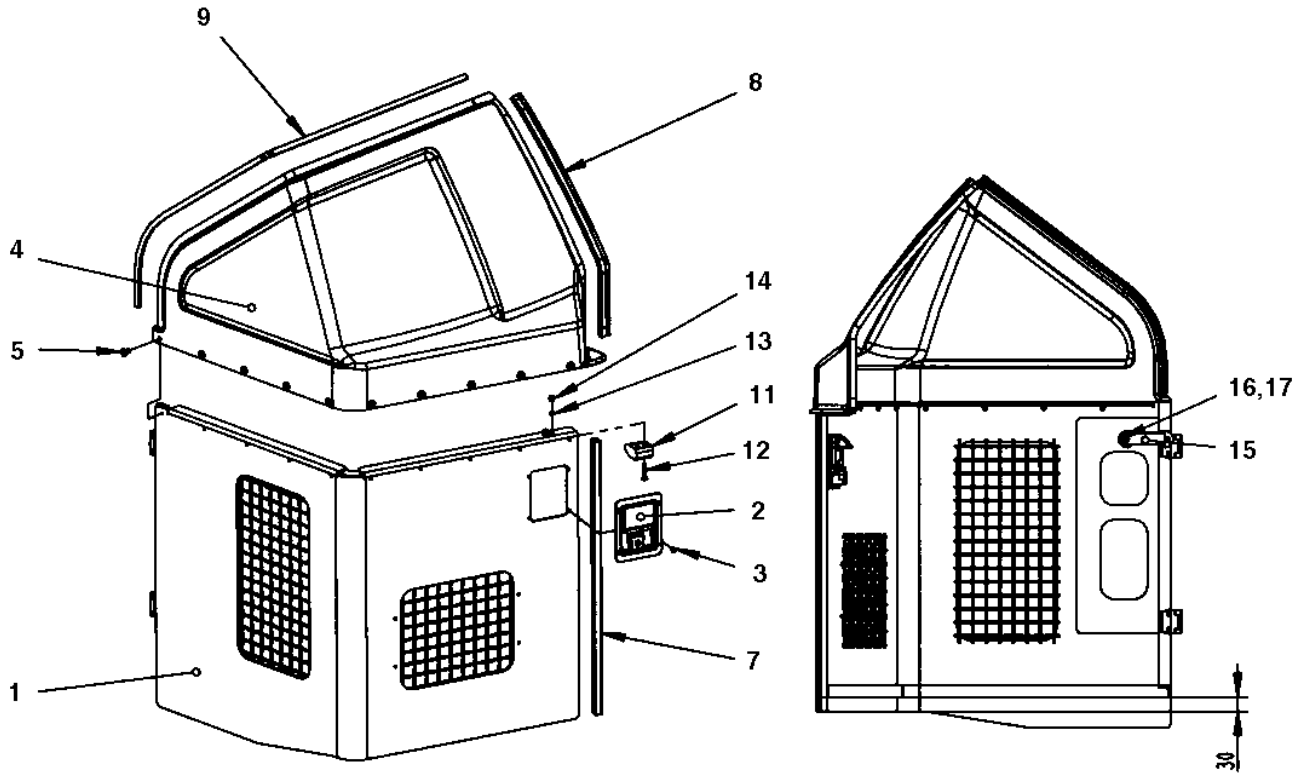

Item	Part No.	Name	Qty	L	SN INFO
0	4700396685	Engine cover, cpl	1		
1	-	Injector part	1		
1	4700903907	Hinge	2		
2	4700396607	Lock	1		
2	4700902866	Key Marked "455"	1		
3	4700624020	Blind rivet	4		
4	4700379977	Cover	1		
5	4700792325	Blind rivet	10		
7	4700202057	Rubber edge trim	1XL	B	
8	4700902166	Edge trim	1XL	C	
9	4700903953	Edge trim	1XL	D	
11	4700390365	Spacer	1		
12	4700924875	Screw	2		
13	4700904228	Washer DIN125	2		
14	4700586002	Lock nut M6 -8	2		
15		Hood latch	2		
16	4700904735	Steel plain washer	2		
17	4700500059	Hex. screw	2		

Comments for Page: Engine cover, right

(L)OCAL REMARKS

B | en_US | L=0.625m

C | en_US | L=0.6m

D | en_US | L=1.2m

Engine structure, module, From SN A012959 Engine structure, module

Item	Part No.	Name	Qty	L	SN INFO
1	-	Engine structure	1		
2	4700947689	Hex. head screw M12	4		
3	4700904231	Washer, 13x24x2 mm 300 HV	6		
4	4700904213	Steel Plain Washer	4		
10	4700500269	Screw	6		

Engine structure, module, From SN A012959 Engine structure

Item	Part No.	Name	Qty	L	SN INFO
1	4812115569	Engine structure	1		
2	4812121586	Cover left, cpl	1		
3	4812121583	Cover right, cpl	1		
4	4700513017	Screw	8		
5	4700904735	Steel plain washer	12		
6	4700586002	Lock nut M6 -8	8		
7	4700926215	Protective plug	8		
8	4700396542	Lock bracket	2		
9	4700904640	Washer, 8.4x22x3 mm 300HV	10		
10	4700500022	Screw	6		
11	4700904229	Washer, 8.4x 6x1.5 mm 300HV	15		
12	4700586003	Lock nut M8	10		
13	4700390884	Cover	1		
14	4700500040	Screw, M6x20 mm 8.8 A2K	4		
15	4700392799	Grid	1		
16	4700500021	Screw, M8x25 mm 8.8 A2K	6		
17	4700379974	Rubber cloth	1		
18	4700615050	Washer	18		
19	4700500053	Screw, M8x20 mm 8.8 A2K	18		
20	4700792325	Blind rivet	6		
21	4700379992	Plug	1		
22	4700391157	Connection block	1		
23	4700904230	Plain washer 10.5x22x2 mm	4		
24	4700500092	Screw	2		
25	4700570006	Hex. nut	2		
26	4700792326	Stud	1		
27	4700357459	Rubber cloth	4		
28	4700792825	Blind insert nut	1		
29	4700903456	Pipe clamp	1		
30	4700791711	Pipe clamp	1		
31	4700791712	Cover plate	1		
35	4700903768	Threaded stud	3		
36	4700570005	Hexagon nut	3		
37	-	Hose support	1		
38	4700791823	Adapter	1		
39	4700791799	Straight connector orfs	3		
40	4700791231	Adapter	1		

Item	Part No.	Name	Qty	L	SN INFO
41	4700792334	Elbow 90 orfs	1		
42	4700791840	Adapter	1		
43	4700394701	Wiring clip	1		
44	4700792441	Cable tie with holder	2		

Engine structure, module, From SN A012959 4812121583 Cover right, cpl

Item	Part No.	Name	Qty	L	SN INFO
1	4812121584	Engine cover	1		
2	4700396607	Lock	1		
3	4700904012	Rivet	4		
4	4812121585	Cover	1		
5	4700792325	Blind rivet	10		
6	4700202057	Rubber edge trim	N		
7	4700902166	Edge trim	N		
8	4700903953	Edge trim	N		
9	4700390365	Spacer	1		
10	4700924875	Screw	2		
11	4700904228	Washer DIN125	2		
12	4700586002	Lock nut M6 -8	2		
13	4812114393	Hood latch	2		
14	4700904735	Steel plain washer	2		
15	4700500059	Hex. screw	2		

Engine structure, module, From SN A012959 4812121586 Cover left, cpl

Item	Part No.	Name	Qty	L	SN INFO
1	4812121587	Engine cover	1		
2	4700396607	Lock	1		
3	4700624020	Blind rivet	4		
4	4812121588	Cover	1		
5	4700792325	Blind rivet	10		
6	4700202057	Rubber edge trim	N		
7	4700902166	Edge trim	N		
8	4700903953	Edge trim	N		
9	4700390365	Spacer	1		
10	4700924875	Screw	2		
11	4700904228	Washer DIN125	2		
12	4700586002	Lock nut M6 -8	2		
13	4812114393	Hood latch	2		
14	4700904735	Steel plain washer	2		
15	4700500059	Hex. screw	2		

Rear frame Noise suppression plates

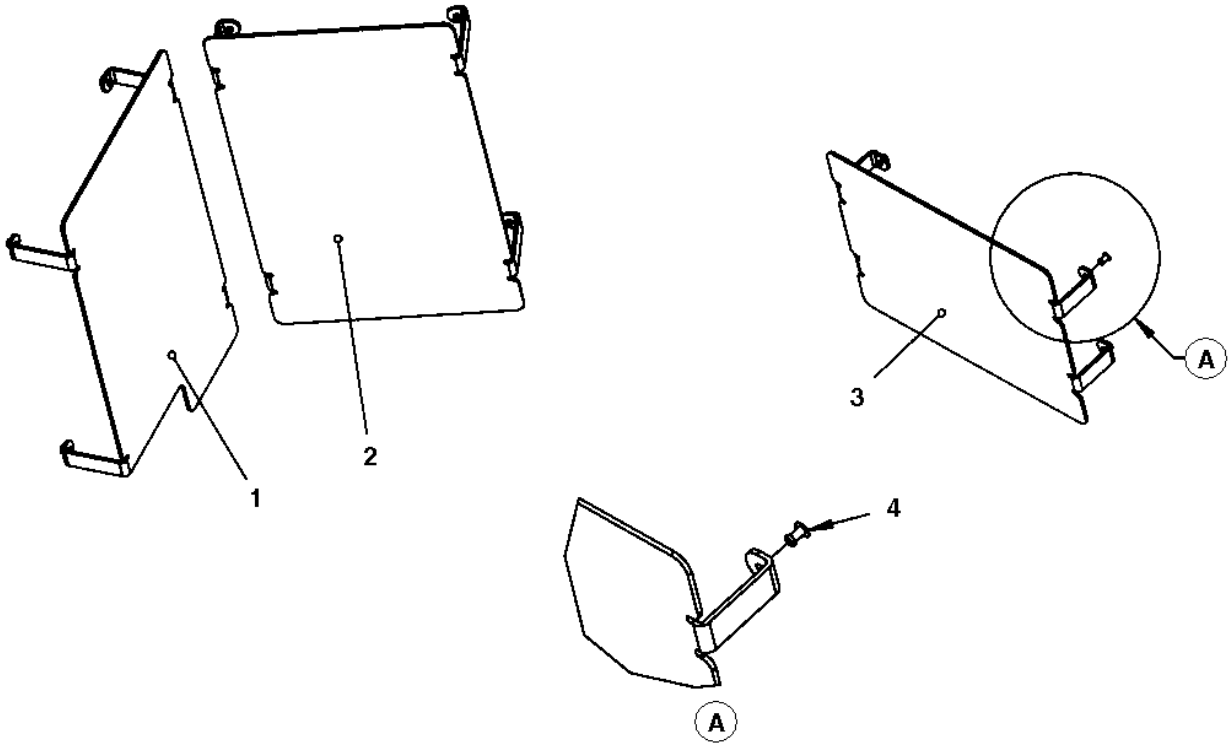

Item	Part No.	Name	Qty	L	SN INFO
1	4700391369	Noise suppression plate	1		
2	4700391370	Noise suppression plate	1		
3	4700391371	Noise suppression plate	1		
4	4700792669	Blind rivet	12		

Rear frame Noise suppression, covers

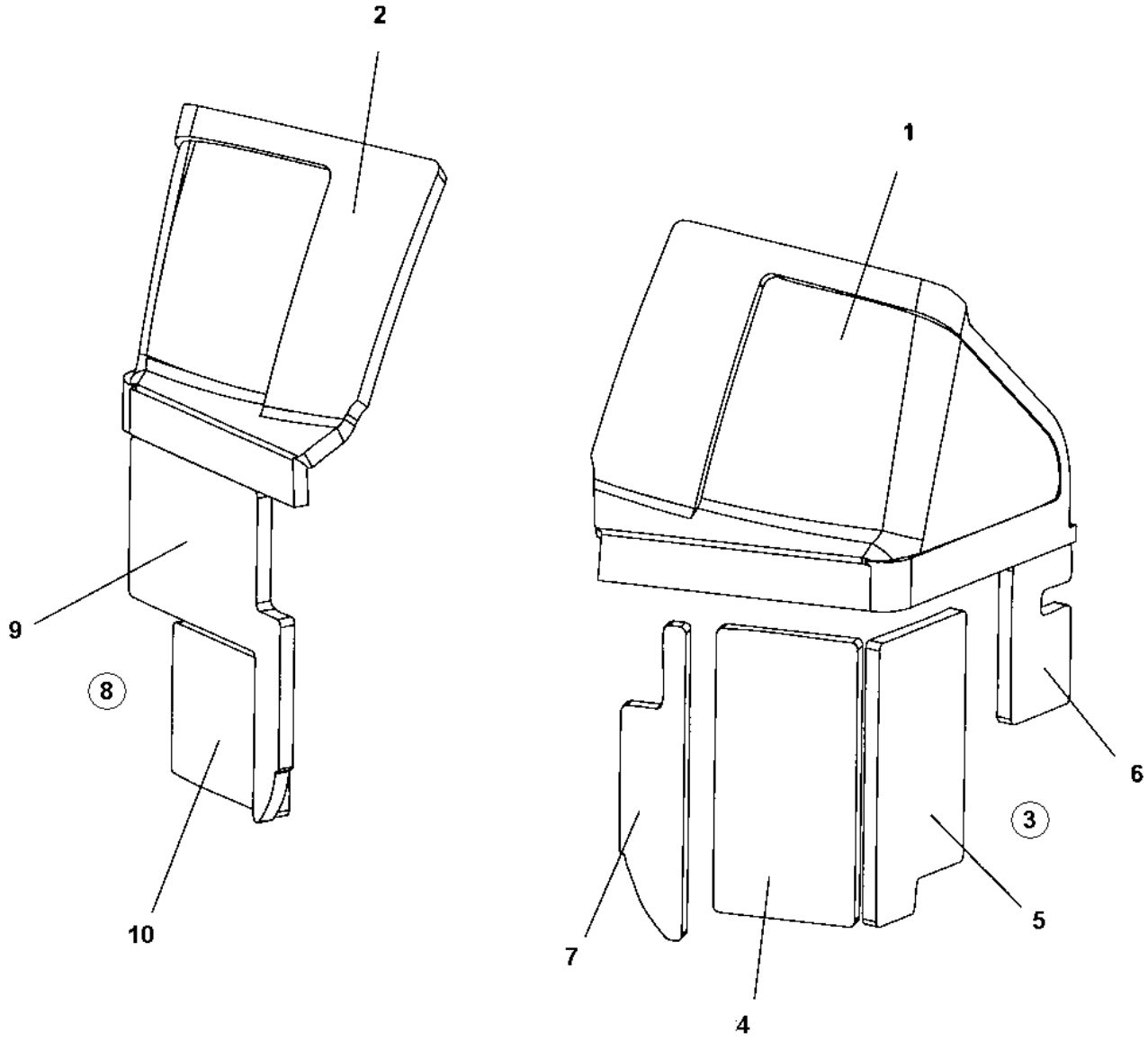

Item	Part No.	Name	Qty	L	SN INFO
1	4700394567	Sound absorbent	1		
2	4700394568	Sound absorbent	1		
3	4812158294	Sound absorbent kit, lower left cover	1		
4	-	Sound absorbent	1	1	
5	-	Sound absorbent	1	1	
6	-	Sound absorbent	1	1	
7	-	Sound absorbent	1	1	
8	4812158295	Sound absorbent kit, lower right cover	1		
9	-	Sound absorbent	1	1	
10	-	Sound absorbent	1	1	

Comments for Page: Noise suppression, covers

(L)OCAL REMARKS

1 | en_US | Not sold separately.

Sprinkler system Sprinkler system

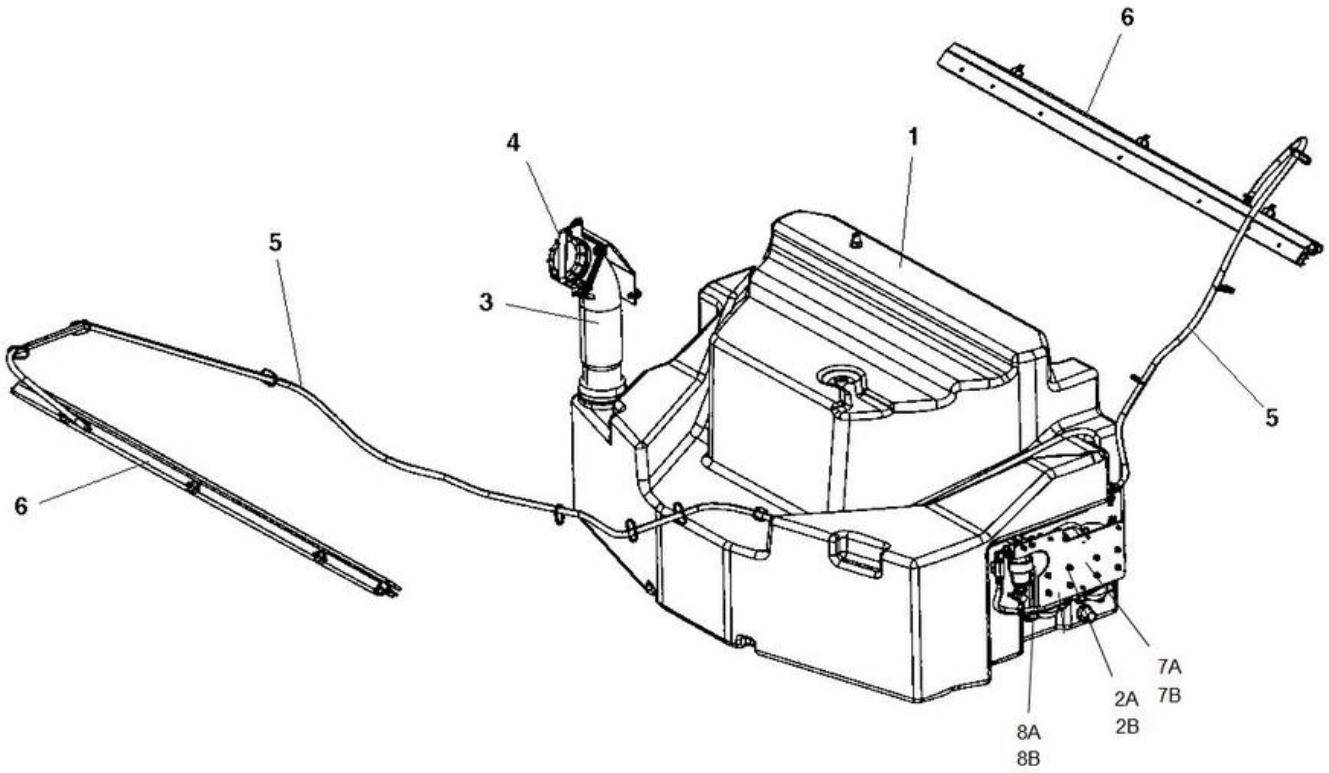

Item	Part No.	Name	Qty	L	SN INFO
1	-	Tank structure module	1		
2A	-	Sprinkler pump module	1		Up to SN A013069
2B	-	Sprinkler pump module	1		From SN A013070
3	-	Filling pipe	2		
4	-	Locking device module	1		
5	-	Water hoses	1		
6	-	Scraper assy with nozzles	2		
7A	-	Sprinkler pump, additonal sprinkler/cocoa mat	1		Up to SN A013069
7B	-	Sprinkler pump, additonal sprinkler/cocoa mat	1		From SN A013070
8A	-	Sprinkler pump, backup	1		Up to SN A013069
8B	-	Sprinkler pump, backup	1		From SN A013070

Sprinkler pump module, To SN A013069 Sprinkler pump module

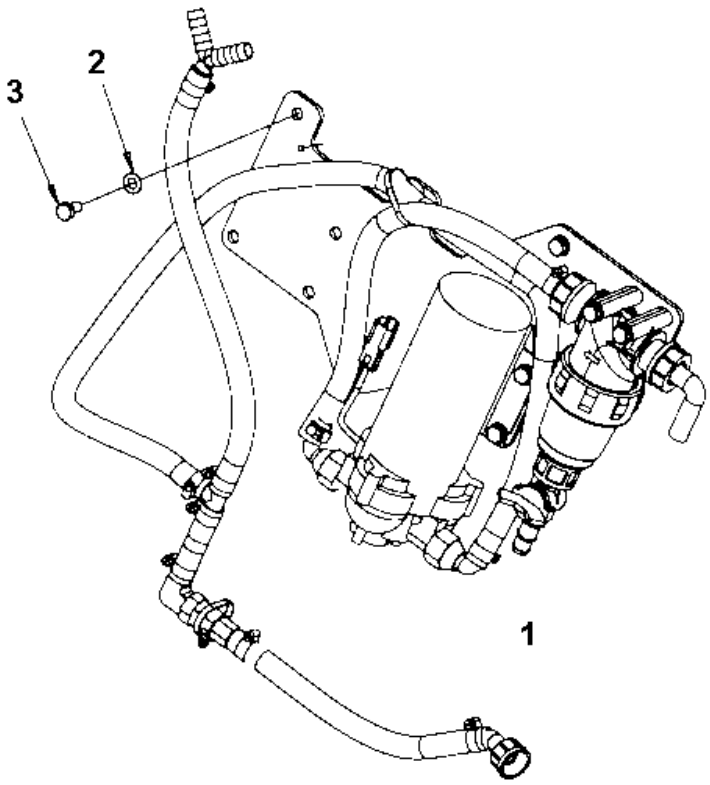

Item	Part No.	Name	Qty	L	SN INFO
1	-	Sprinkler pump	1	2	
2	4700904229	Washer, 8.4x 6x1.5 mm 300HV	3		
3	4700500019	Hexagon screw	3		

Comments for Page: Sprinkler pump module

(L)OCAL REMARKS

2 | en_US | Installation with Water pump with external threads.

Sprinkler pump module, To SN A013069 Sprinkler pump

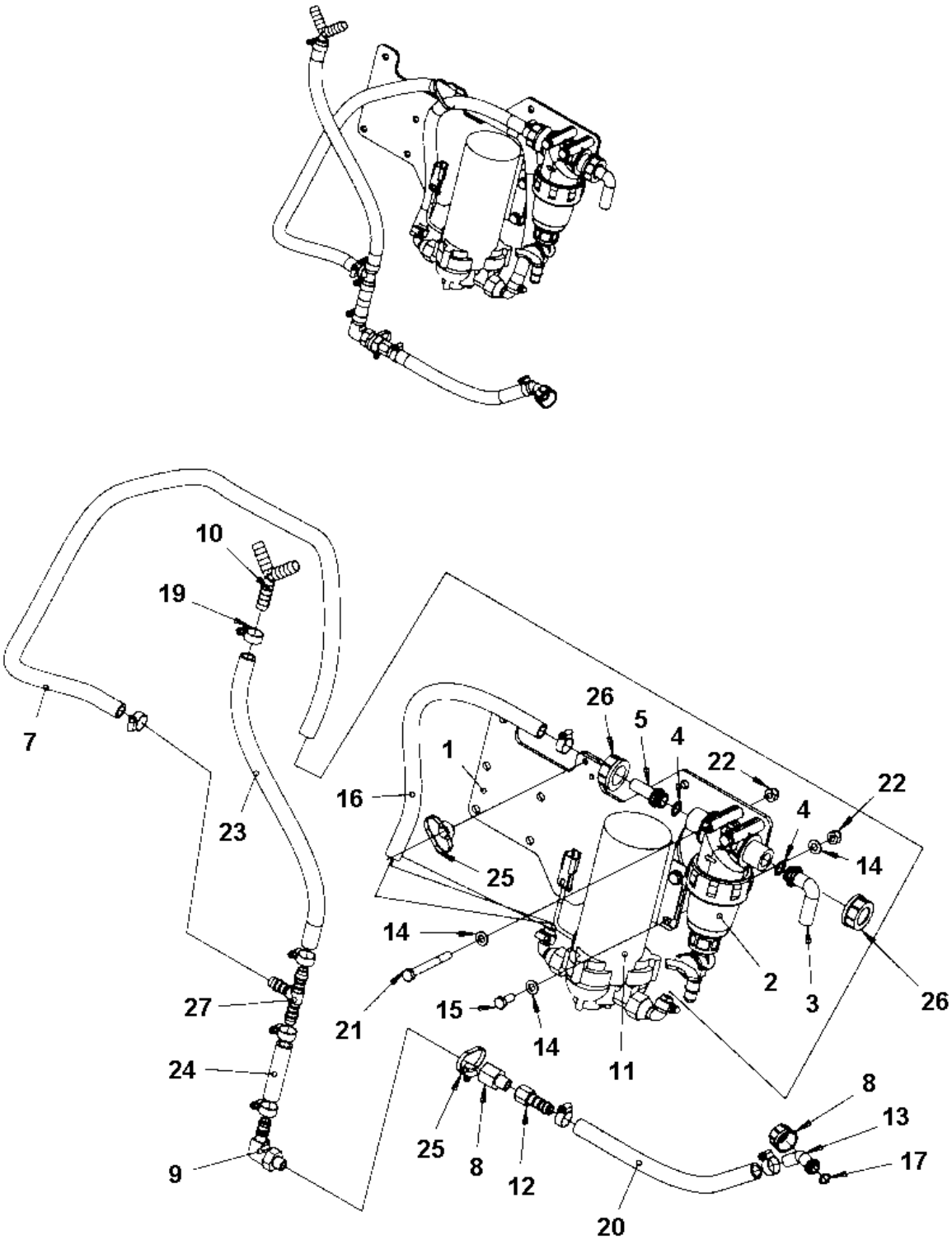

Item	Part No.	Name	Qty	L	SN INFO
1	4812110491	Sprinkler plate	1		
2	4812111325	Water filter	1		
3	4812111332	Hose connection swivel	1		
4	4700480852	O-ring 70	2		
5	4812111329	Hose connebtion swivel	1		
7	4812112074	Plastic hose (x m)	1XL	A	
8	4700792813	Bypass valve	1		
9	4700901431	Hose connection	1		
10	4811000107	Hose connection	1		
11	4812110394	Sprinkler pump	1		
12	4811000085	Hose connection	1		
13	4700393542	Hose connection	1		
14	4700904229	Washer, 8.4x 6x1.5 mm 300HV	10		
15	4700500053	Screw, M8x20 mm 8.8 A2K	4		
16	4812112074	Plastic hose (x m)	1XL	B	
17	4700792600	O-ring 70	1		
18	4700392227	Swivel nut	1		
19	4700313002	Hose clamp	10		
20	4812112074	Plastic hose (x m)	1XL	C	
21	4700500090	Screw	2		
22	4700586003	Lock nut M8	6		
23	4812112074	Plastic hose (x m)	1XL	D	
24	4812112074	Plastic hose (x m)	1XL	E	
25	4700792441	Cable tie with holder	N		
26	4700792779	Swivel nut	2		
27	4700923735	Hose connection	1		

Comments for Page: Sprinkler pump

(L)OCAL REMARKS

A | en_US | L= 1.24 m

B | en_US | L= 0.54 m (when only one pump mounted L= 0.35 m)

C | en_US | L= 0.20 m

D | en_US | L= 0.38 m

E | en_US | L= 0.07

Sprinkler pump module, From SN A013070 Sprinkler pump module

Item	Part No.	Name	Qty	L	SN INFO
1	-	Sprinkler pump	1	2	
2	4700904229	Washer, 8.4x 6x1.5 mm 300HV	3		
3	4700500019	Hexagon screw	3		

Comments for Page: Sprinkler pump module

(L)OCAL REMARKS

2 | en_US | Installation with Water pump with external threads.

Sprinkler pump module, From SN A013070 Sprinkler pump

Item	Part No.	Name	Qty	L	SN INFO
1	4812121292	Sprinkler plate	1		
2	4812111325	Water filter	1		
2	4700791959	O-ring	1		
2	4700791949	Filter element	1		
2	4700791568	Gasket	1		
2	4700379009	Valve	1		
3	4812111332	Hose connection swivel	1		
4	4700480852	O-ring 70	2		
5	4812111329	Hose connebtion swivel	1		
7	4812112074	Plastic hose (x m)	1.24		
8	4700792813	Bypass valve	1		
9	4700901431	Hose connection	1		
10	4811000107	Hose connection	1		
11	4812121289	Sprinkler pump	1		
12	4811000085	Hose connection	1		
13	4700393542	Hose connection	1		
14	4700904229	Washer, 8.4x 6x1.5 mm 300HV	2		
15	4700500013	Screw, M6x16 mm 8.8 A2K	4		
15	4700500012	Hex. screw	4		
16	4812112074	Plastic hose (x m)	0.54	B	
17	4700792600	O-ring 70	1		
18	4700392227	Swivel nut	1		
19	4700313002	Hose clamp	10		
20	4812112074	Plastic hose (x m)	0.2		
21	4700500090	Screw	2		
21	4700500189	Screw	2		
22	4700904228	Washer DIN125	4		
23	4812112074	Plastic hose (x m)	0.38		
24	4812112074	Plastic hose (x m)	0.07		
25	4700792441	Cable tie with holder	2		
26	4700792779	Swivel nut	2		
27	4700923735	Hose connection	1		

Comments for Page: Sprinkler pump

(L)OCAL REMARKS

B | en_US | L= 0.54 m (when only one pump mounted L= 0.35 m)

Sprinkler system Water hoses

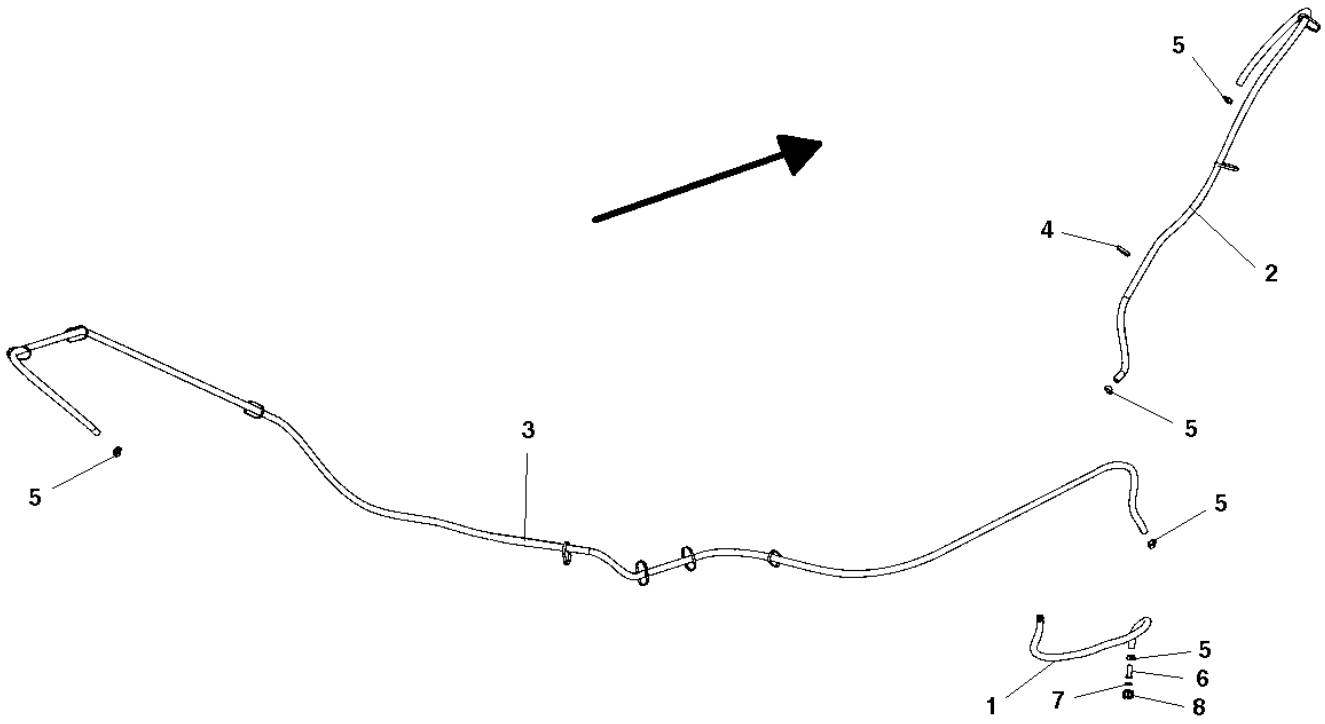

Item	Part No.	Name	Qty	L	SN INFO
1	4812112074	Plastic hose (x m)	1XL	A	
2	4812112074	Plastic hose (x m)	1XL	B	
3	4812112074	Plastic hose (x m)	1XL	C	
4	4700313102	Cable ties	N		
5	4700313002	Hose clamp	6		
6	4700392228	Hose connection swivel	1		
7	4700392229	Plane gasket	1		
8	4700392227	Swivel nut	1		

Comments for Page: Water hoses

(L)OCAL REMARKS

A | en_US | L=0.70 m

B | en_US | L=1.73 m, machine with offset L=1.74 m

C | en_US | L=4.57 m, machine with offset L=4.40 m

Sprinkler pump, additonal sprinkler/cocoa mat, To SN A013069 Sprinkler pump, additonal sprinkler/cocoa mat

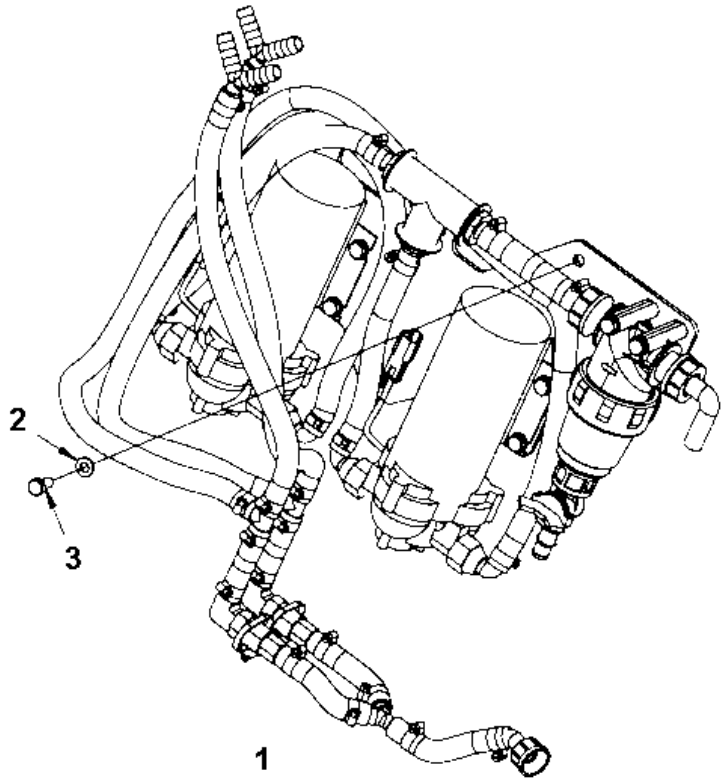

Item	Part No.	Name	Qty	L	SN INFO
1	-	Sprinkler pumps	1		
2	4700904229	Washer, 8.4x 6x1.5 mm 300HV	3		
3	4700500019	Hexagon screw	3		

Sprinkler pump, additonal sprinkler/cocoa mat, To SN A013069 Sprinkler pumps

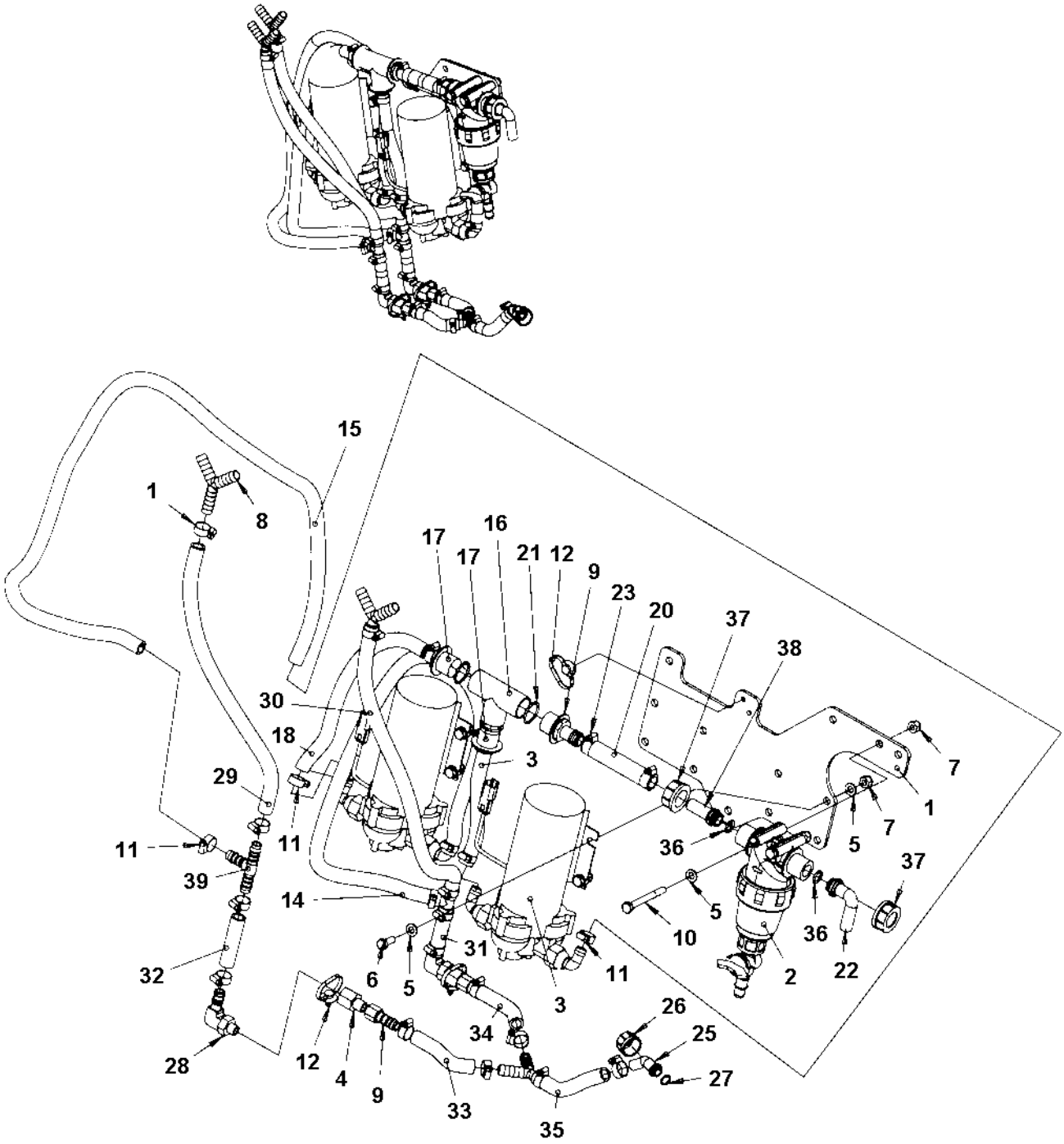

Item	Part No.	Name	Qty	L	SN INFO
1	4812110491	Sprinkler plate	1		
2	4812111325	Water filter	1		
3	4812110394	Sprinkler pump	2		
4	4700792813	Bypass valve	2		
5	4700904229	Washer, 8.4x 6x1.5 mm 300HV	18		
6	4700500053	Screw, M8x20 mm 8.8 A2K	8		
7	4700586003	Lock nut M8	10		
8	4811000107	Hose connection	3		
9	4811000085	Hose connection	2		
10	4700500090	Screw	2		
11	4700313002	Hose clamp	22		
12	4700792441	Cable tie with holder	0		
13	4812112074	Plastic hose (x m)	1XL	A	
14	4812112074	Plastic hose (x m)	1XL	B	
15	4812112074	Plastic hose (x m)	1XL	C	
16	4700792778	Tee-connector	1		
17	4700396672	Hose connection, plastic	2		
18	4812112074	Plastic hose (x m)	1XL	D	
19	4700396673	Hose connection	1		
20	4700792073	Hose reinforced	1XL	E	
21	4700160313	O-ring 70	3		
22	4812111332	Hose connection swivel	1		
23	4700313003	Hose clamp	2		
25	4700393542	Hose connection	1		
26	4700392227	Swivel nut	1		
27	4700792600	O-ring 70	1		
28	4700901431	Hose connection	2		
29	4812112074	Plastic hose (x m)	1XL	F	
30	4812112074	Plastic hose (x m)	1XL	F	
31	4812112074	Plastic hose (x m)	1XL	G	
32	4812112074	Plastic hose (x m)	1XL	G	
33	4812112074	Plastic hose (x m)	1XL	H	
34	4812112074	Plastic hose (x m)	1XL	H	
35	4812112074	Plastic hose (x m)	1XL	I	
36	4700480852	O-ring 70	2		
37	4700792779	Swivel nut	2		
38	4700792780	Hose connection swivel	1		

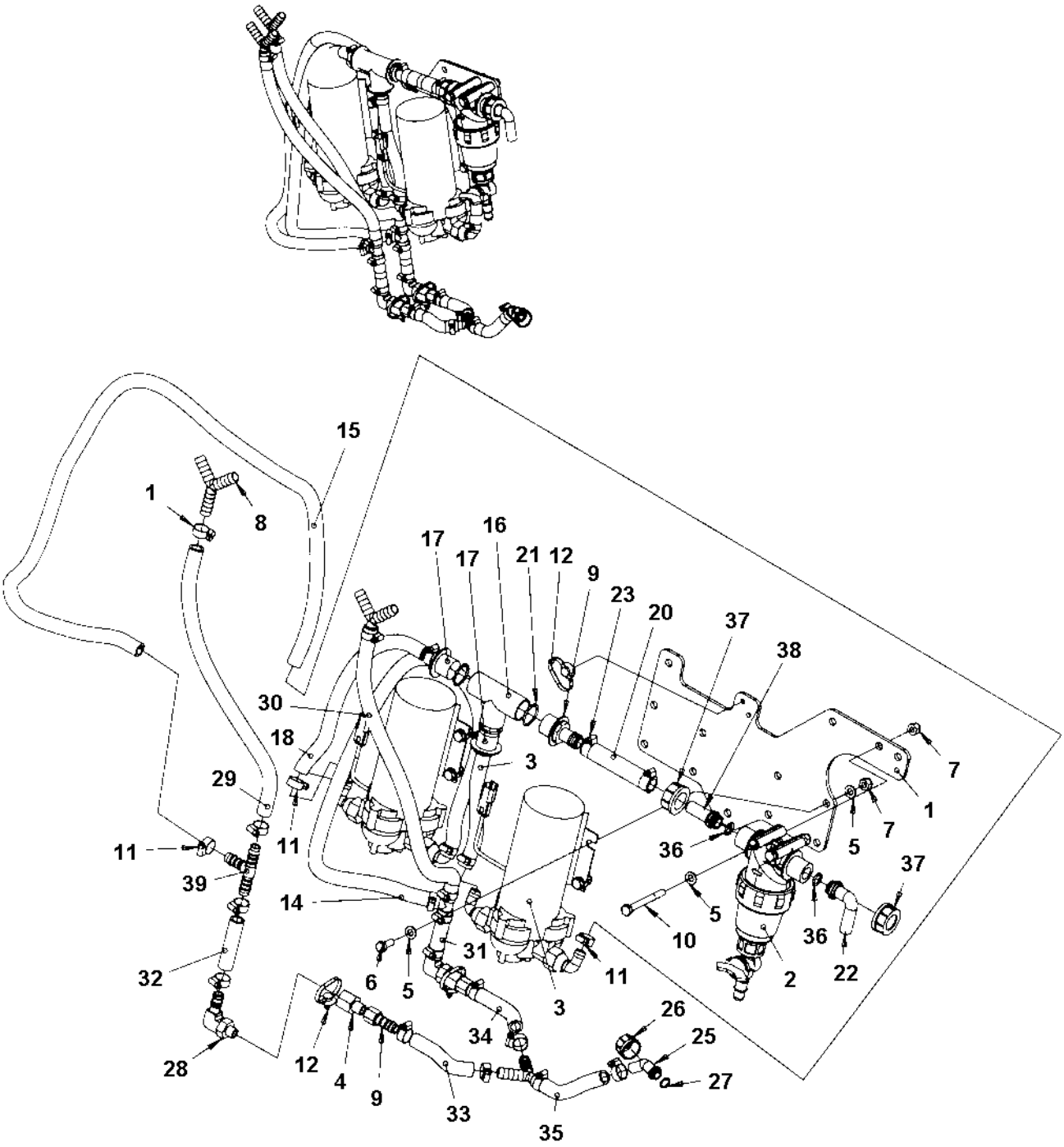
15
1
8
17
16
17
21
12
9
23
20
37
38
30
18
3
29
7
1
11
11
36
5
7
39
37
14
5
10
36
31
6
5
11
3
2
22
32
26
34
25
28
12
4
9
33
27
35

Item	Part No.	Name	Qty	L	SN INFO
39	4700923735	Hose connection	2		

Comments for Page: Sprinkler pumps

(L)OCAL REMARKS

A | en_US | L=0.20 m

B | en_US | L= 0.98 m

C | en_US | L= 1.24 m

D | en_US | L= 0.31 m

E | en_US | L= 0.11 m

F | en_US | L= 0.38 m

G | en_US | L= 0.07 m

H | en_US | L= 0.12 m

I | en_US | L= 0.09 m

Sprinkler pump, additonal sprinkler/cocoa mat, From SN A013070 Sprinkler pump module (2 pumps)

Item	Part No.	Name	Qty	L	SN INFO
1	-	Sprinkler pumps	1		
2	4700904229	Washer, 8.4x 6x1.5 mm 300HV	3		
3	4700500019	Hexagon screw	3		

Sprinkler pump, additonal sprinkler/cocoa mat, From SN A013070 Sprinkler pump mounted (2 pumps)

Item	Part No.	Name	Qty	L	SN INFO
1	4812121292	Sprinkler plate	1		
2	4812111325	Water filter	1		
2	4700791959	O-ring	1		
2	4700791949	Filter element	1		
2	4700791568	Gasket	1		
2	4700379009	Valve	1		
3	4812121289	Sprinkler pump	2		
4	4700792813	Bypass valve	2		
5	4700904229	Washer, 8.4x 6x1.5 mm 300HV	2		
6	4700500013	Screw, M6x16 mm 8.8 A2K	8		
6	4700500012	Hex. screw	8		
7	4700904228	Washer DIN125	8		
8	4811000107	Hose connection	3		
9	4811000085	Hose connection	2		
10	4700500090	Screw	2		
10	4700500189	Screw	2		
11	4700313002	Hose clamp	22		
12	4700792441	Cable tie with holder	3		
13	4812112074	Plastic hose (x m)	0.2		
14	4812112074	Plastic hose (x m)	0.98		
15	4812112074	Plastic hose (x m)	1.24		
16	4700792778	Tee-connector	1		
17	4700396672	Hose connection, plastic	2		
18	4812112074	Plastic hose (x m)	0.31		
19	4700396673	Hose connection	1		
20	4700792073	Hose reinforced	0.11		
21	4700160313	O-ring 70	3		
22	4812111332	Hose connection swivel	1		
23	4700313003	Hose clamp	2		
25	4700393542	Hose connection	1		
26	4700392227	Swivel nut	1		
27	4700792600	O-ring 70	1		
28	4700901431	Hose connection	2		
29	4812112074	Plastic hose (x m)	0.38		
30	4812112074	Plastic hose (x m)	0.38		
31	4812112074	Plastic hose (x m)	0.07		
32	4812112074	Plastic hose (x m)	0.07		

Item	Part No.	Name	Qty	L	SN INFO
33	4812112074	Plastic hose (x m)	0.12		
34	4812112074	Plastic hose (x m)	0.12		
35	4812112074	Plastic hose (x m)	0.09		
36	4700480852	O-ring 70	2		
37	4700792779	Swivel nut	2		
38	4700792780	Hose connection swivel	1		
39	4700923735	Hose connection	2		

Sprinkler pump, backup, To SN A013069 Sprinkler pump, backup

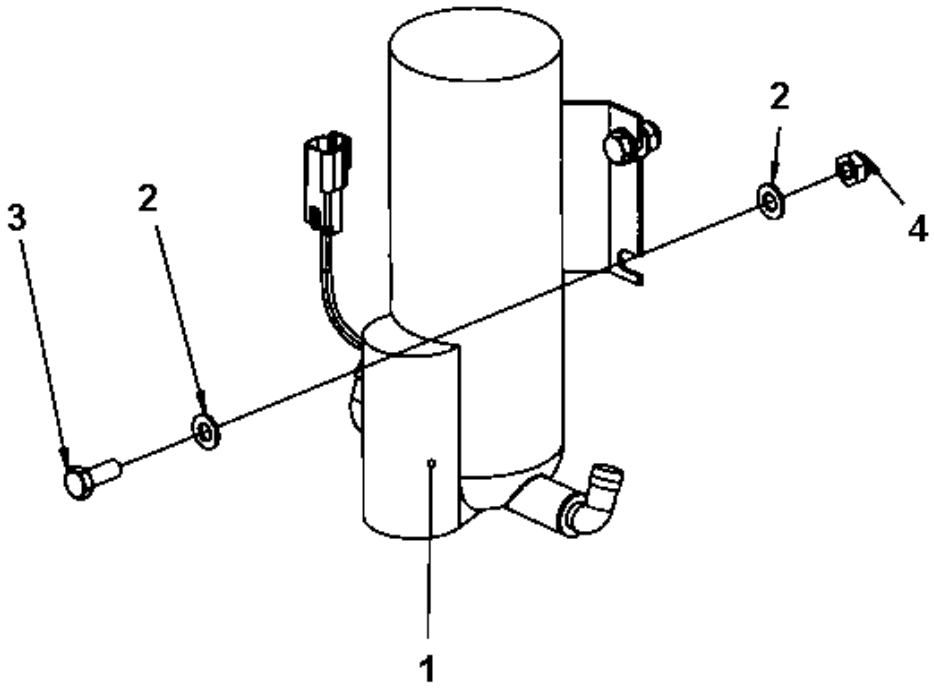

Item	Part No.	Name	Qty	L	SN INFO
1	4700391495	Sprinkler pump	1	1	
1	4812110358	Sprinkler pump	1	A	
1	4812110394	Sprinkler pump	1	A, 2	
2	4700904229	Washer, 8.4x 6x1.5 mm 300HV	8		
3	4700500053	Screw, M8x20 mm 8.8 A2K	4		
4	4700791182	Nut, M8 -8 DIN985	4		

Comments for Page: Sprinkler pump, backup

(L)OCAL REMARKS

A | en_US | Connectors included.

1 | en_US | Replaced as Spare Part by PN 4812110394.

2 | en_US | Replaces PN 4700391495 and 4812110358.

Sprinkler pump, backup, From SN A013070 Sprinkler pump, backup

Item	Part No.	Name	Qty	L	SN INFO
1	4812121289	Sprinkler pump	1		
2	4700904228	Washer DIN125	8		
3	4700500013	Screw, M6x16 mm 8.8 A2K	4		

End frame, front End frame, front

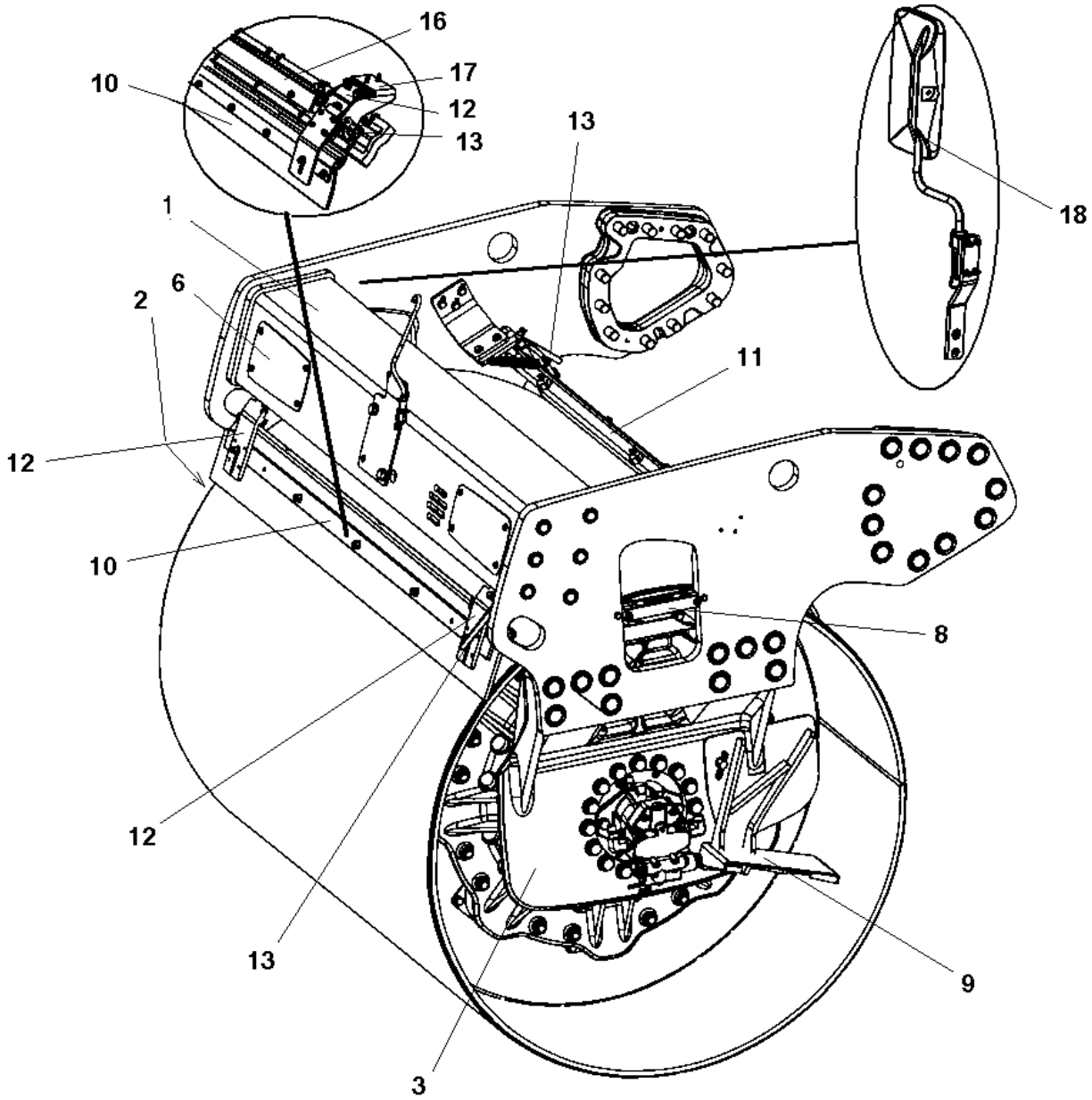

Item	Part No.	Name	Qty	L	SN INFO
1	-	End frame, front	1		
2	-	Fork, vibration side	1		
3	-	Fork, propulsion side	1		
6	-	Cover plate	2		
8	-	Hose clamp, propulsion side	1		
8	-	Hose clamp, vibration side	1		
9	-	Step, vibration side	1		
9	-	Step, propulsion side	1		
10	-	Scraper module, without nozzles	1		
11	-	Scraper module, with nozzles	1		
12	4700394340	Scraper bracket, cpl	4		
13	-	Grab handle, release	2	1	
13	-	Grab handle, release	1	2	
14	-	Grab handle, lift	1		
14	-	Grab handle, lift offset/cocoa mat	1		
16	-	Cocoa mat module	1		
17	-	Cocoa mat bracket module	2		
18	-	Process mirrors	1		

Comments for Page: End frame, front

(L)OCAL REMARKS

1 | en_US | Qty 1 when cocoa mat mounted.

2 | en_US | For cocoa mat

End frame, front End frame, front

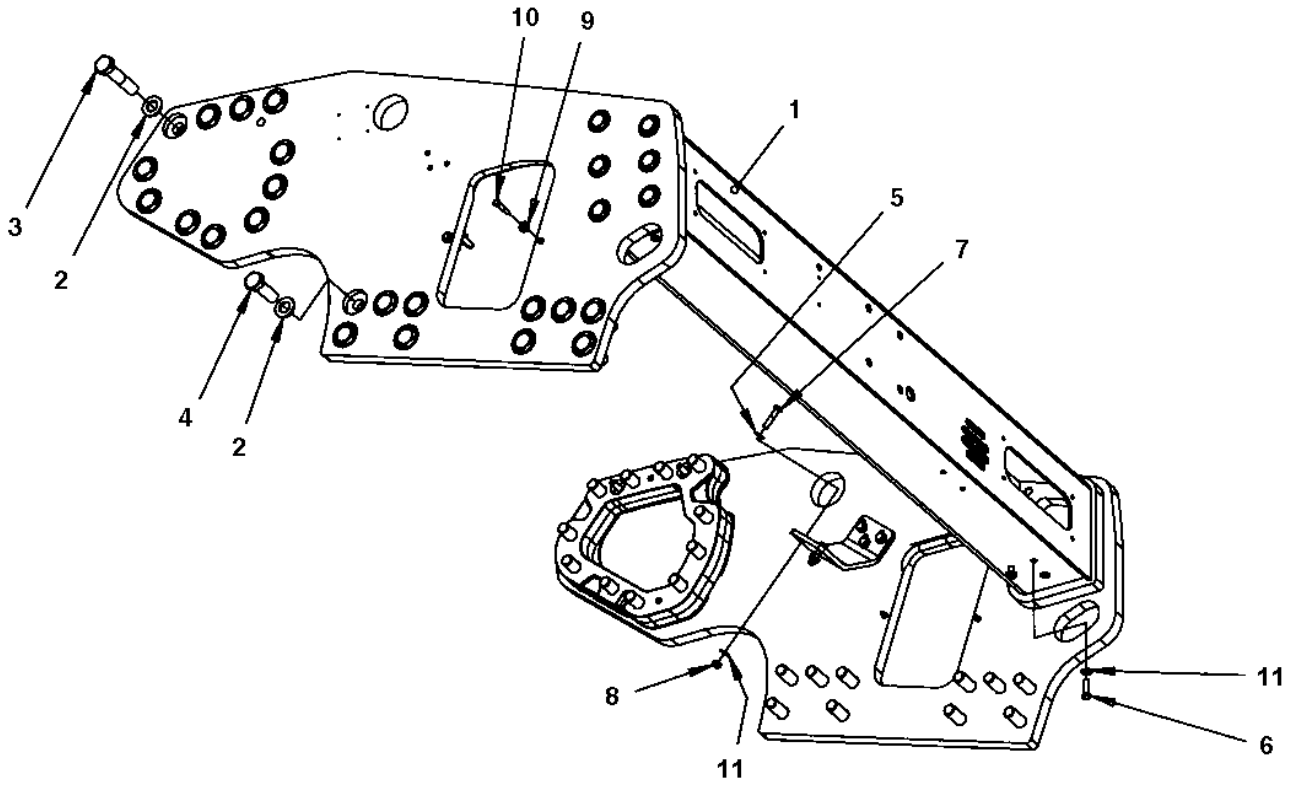

Item	Part No.	Name	Qty	L	SN INFO
1	-	Frame	1		
2	4700904234	Steel plain washer	42		
3	4700500146	Hex. screw	22		
4	4700500289	Hex. screw	20		
5	4700904230	Plain washer 10.5x22x2 mm	4		
6	4700500030	Screw hexagon	4		
7	4700500161	Screw	4		
8	4700791172	Lock nut M10 DIN985	4		
9	4700904556	Steel plain washer 8,4x16x3,0	4		
10	4700500047	Hexagon head screw	4		
11	4700904557	Washer, 10.5x22x4 mm 300 HV	8		

End frame, front Frame

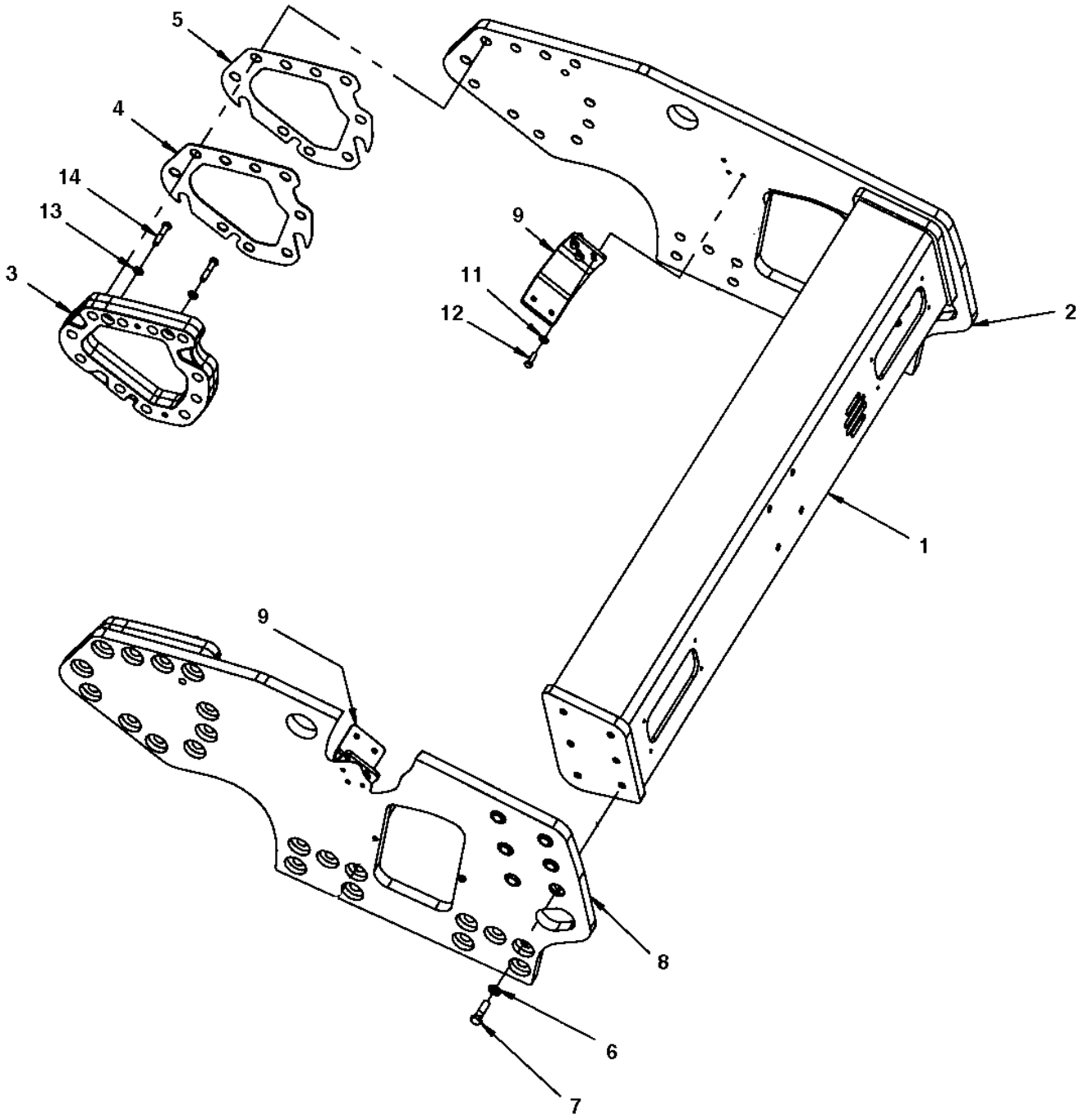

Item	Part No.	Name	Qty	L	SN INFO
1	4700390060	Crossbeam	1		
2	4700391407	Side plate T30	1		
3	4700390074	Spacer	2		
4	4700390470	Shim	N		
5	4700390469	Shim	N		
6	4700904233	Steel plain washer 21x36x3	12		
7	4700500265	Screw	12		
8	4700393356	Side plate T30	1		
9	4700394787	Holder	2		
11	4700904557	Washer, 10.5x22x4 mm 300 HV	6		
12	4700500029	Screw M10x30	6		
13	4700904231	Washer, 13x24x2 mm 300 HV	4		
14	4700500049	Screw, M12x60 mm 8.8 A3K	4		

End frame, front Fork, vibration side

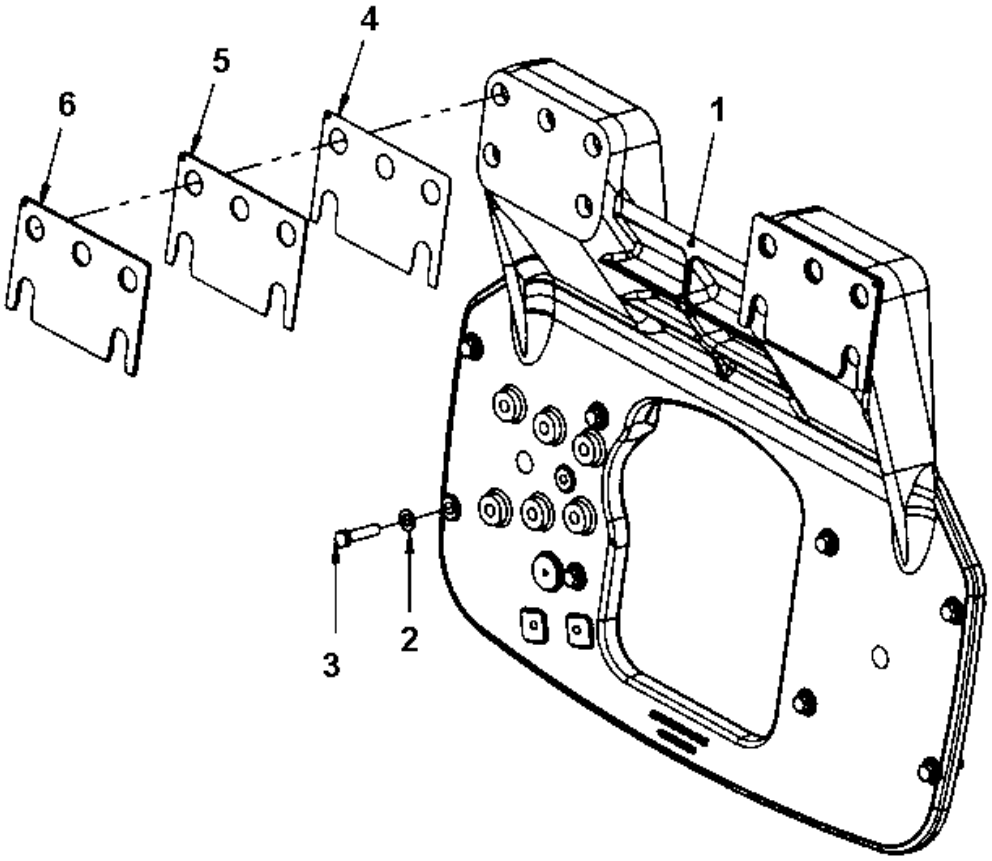

Item	Part No.	Name	Qty	L	SN INFO
1	4812113724	Fork	1		
2	4700904231	Washer, 13x24x2 mm 300 HV	8		
3	4812110644	Hexagon screw w Tuflok M12x50 10.9 GEOMET	8		
4	4700391754	Shim	N		
5	4700393009	Shim	N		
6	4700393010	Shim	N		

End frame, front Fork, propulsion side

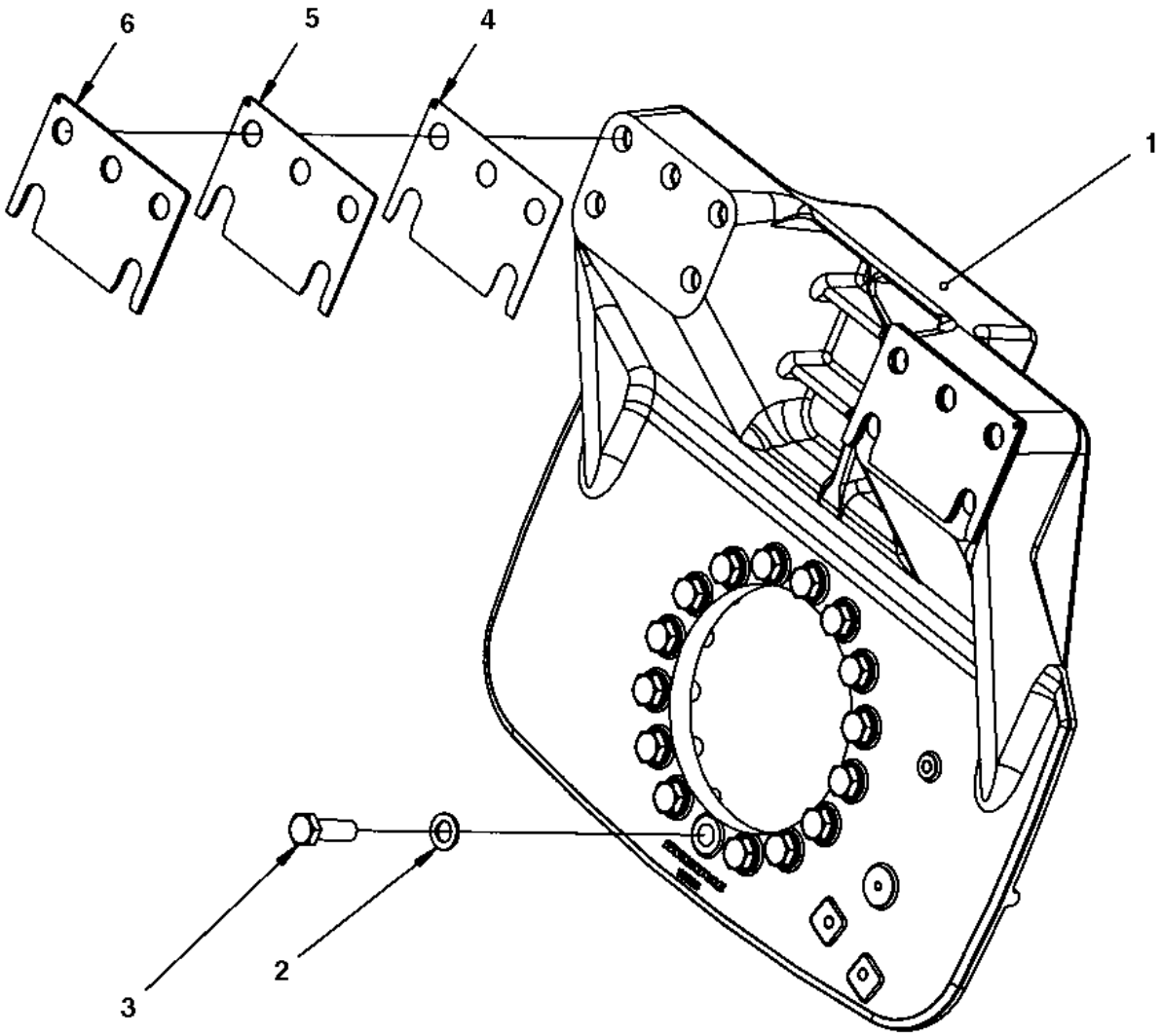

Item	Part No.	Name	Qty	L	SN INFO
1	4700391198	Fork	1		
2	4700904233	Steel plain washer 21x36x3	16		
3	4700500206	Hexagon screw M20x60	16		
4	4700391754	Shim	N		
5	4700393009	Shim	N		
6	4700393010	Shim	N		

End frame, front Cover plate

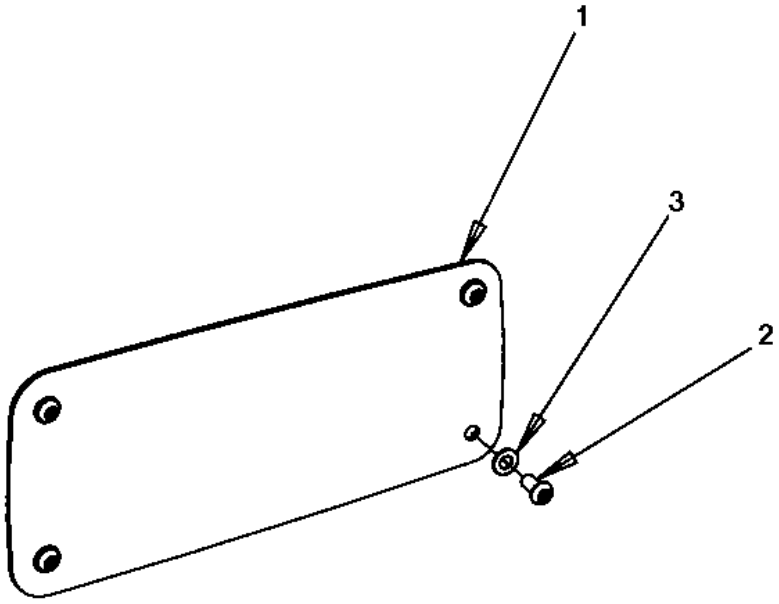

Item	Part No.	Name	Qty	L	SN INFO
1	4700390919	Cover plate	1		
2	4700904956	Screw	4		
3	4700904229	Washer, 8.4x 6x1.5 mm 300HV	4		

End frame, front Hose clamp, propulsion side

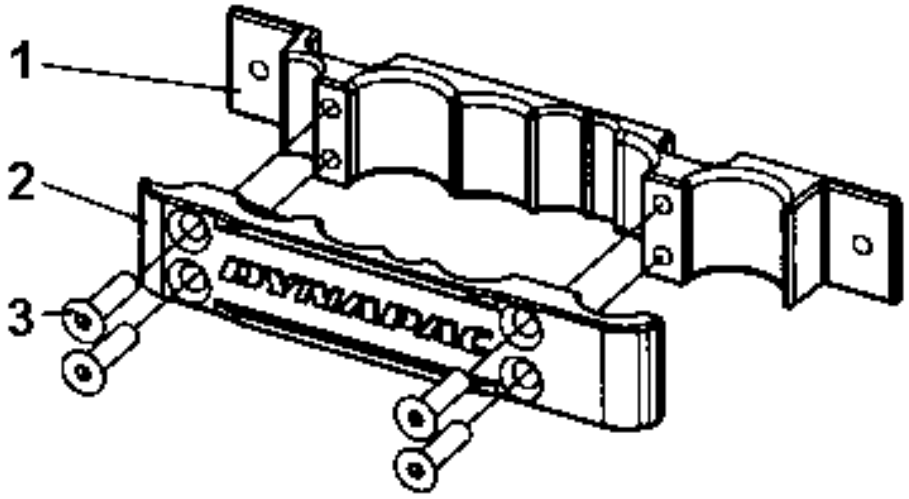

Item	Part No.	Name	Qty	L	SN INFO
1	4700395428	Hose clamp	1		
2	4700395429	Cover	1		
3	4700792726	Hexagon socket countersunk screw	4		

End frame, front Hose clamp, vibration side

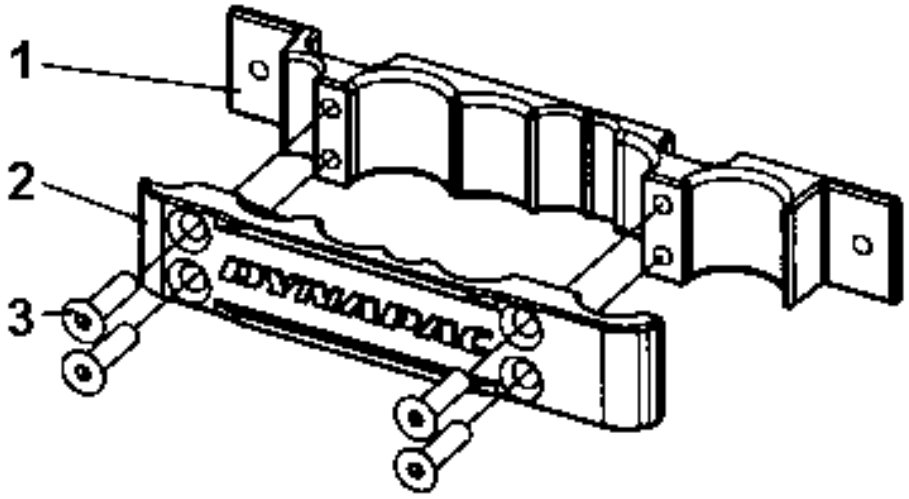

Item	Part No.	Name	Qty	L	SN INFO
1	4700395428	Hose clamp	1		
2	4700395430	Cover	1		
3	4700792726	Hexagon socket countersunk screw	4		

End frame, front Step, vibration side

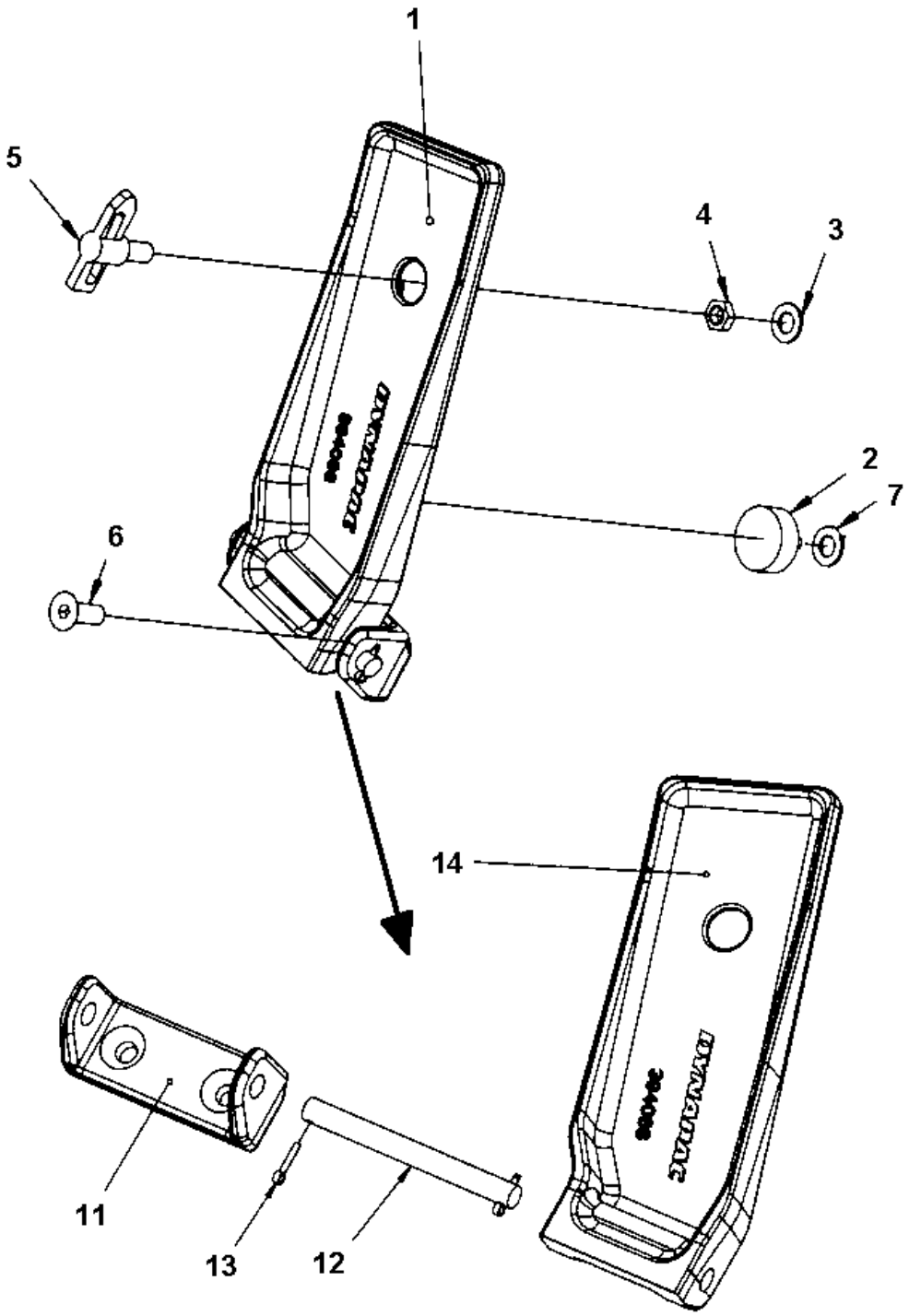

Item	Part No.	Name	Qty	L	SN INFO
1	-	Step, mounted	1		
2	4700792601	Shock absorber	1		
3	4700904231	Washer, 13x24x2 mm 300 HV	1		
4	4700927233	Nut	1		
5	4700475064	Lock	1		
6	4700513011	Hexagon socket head cap screw	2		
7	4700904229	Washer, 8.4x 6x1.5 mm 300HV	1		
11	4700394070	Bracket	1		
12	4700394351	Shaft	1		
13	4700630012	Cotter pin	2		
14	4700394068	Step	1		

End frame, front Step, propulsion side

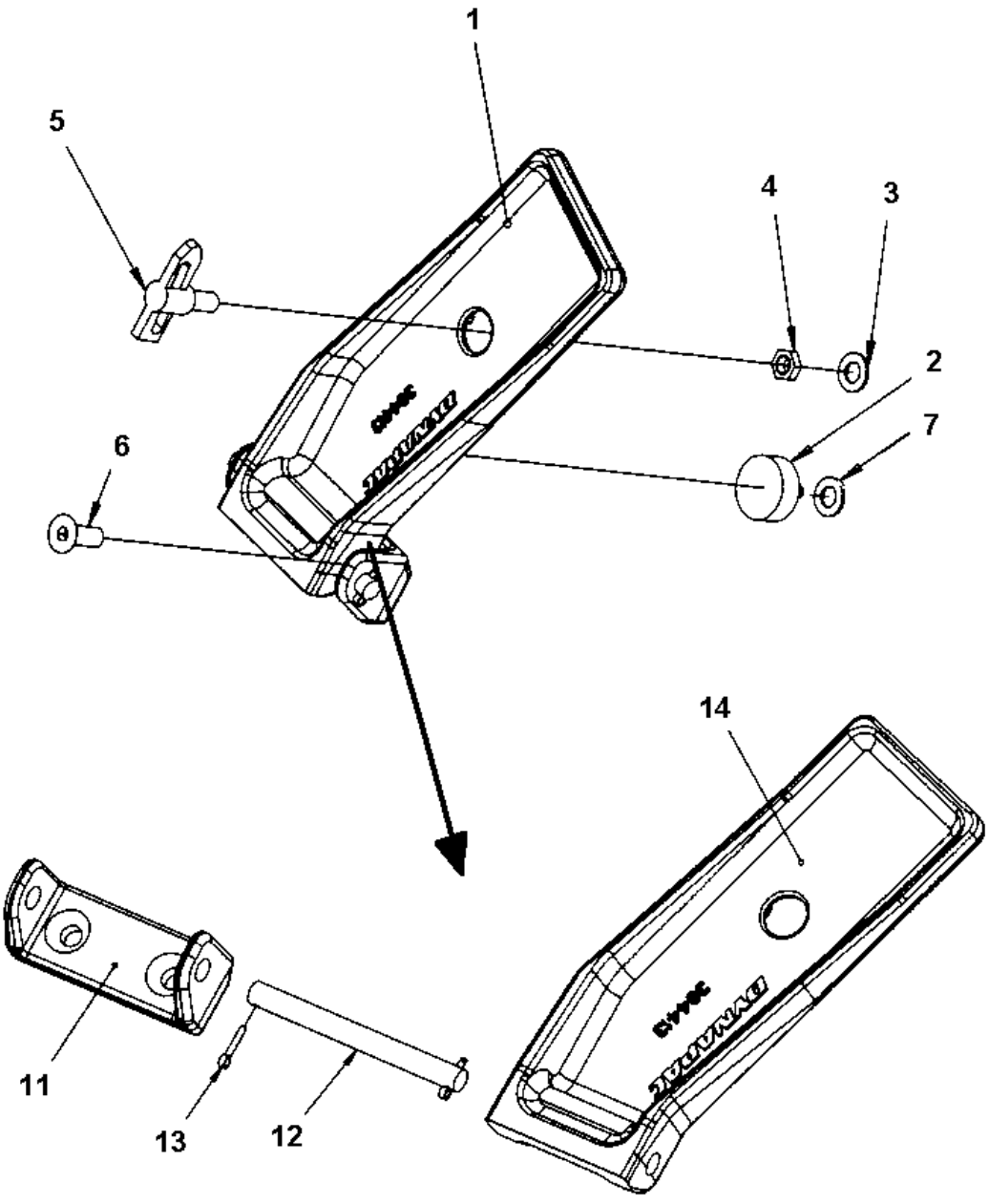

Item	Part No.	Name	Qty	L	SN INFO
1	-	Step, mounted	1		
2	4700792601	Shock absorber	1		
3	4700904231	Washer, 13x24x2 mm 300 HV	1		
4	4700927233	Nut	1		
5	4700475064	Lock	1		
6	4700513011	Hexagon socket head cap screw	2		
7	4700904229	Washer, 8.4x 6x1.5 mm 300HV	1		
11	4700394070	Bracket	1		
12	4700394351	Shaft	1		
13	4700630012	Cotter pin	2		
14	4700394413	Step	1		

End frame, front Scraper module, without nozzles

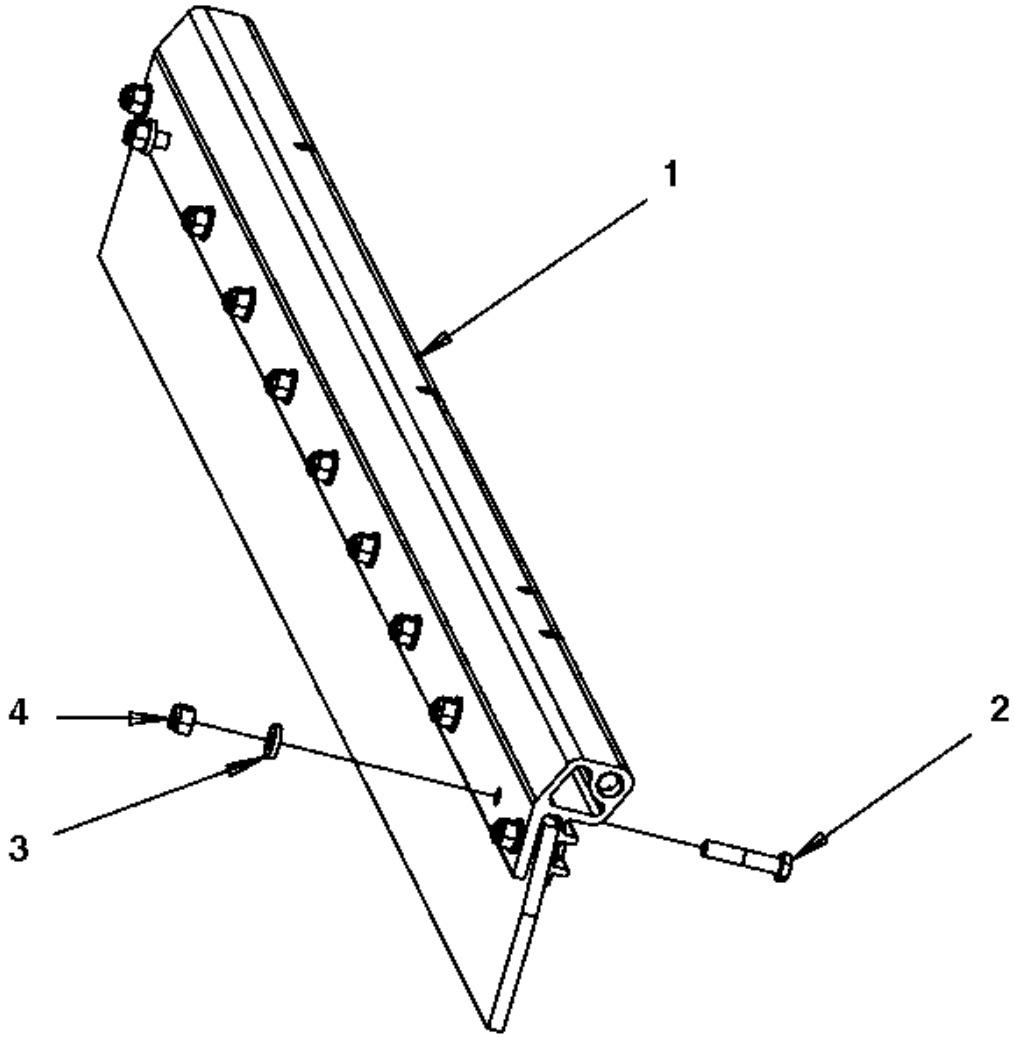

Item	Part No.	Name	Qty	L	SN INFO
1	-	Scraper assy	1		
2	4700500032	Screw M10 x 55	2		
3	4700904557	Washer, 10.5x22x4 mm 300 HV	2		
4	4700586018	Lock nut M10	2		

End frame, front Scraper assy

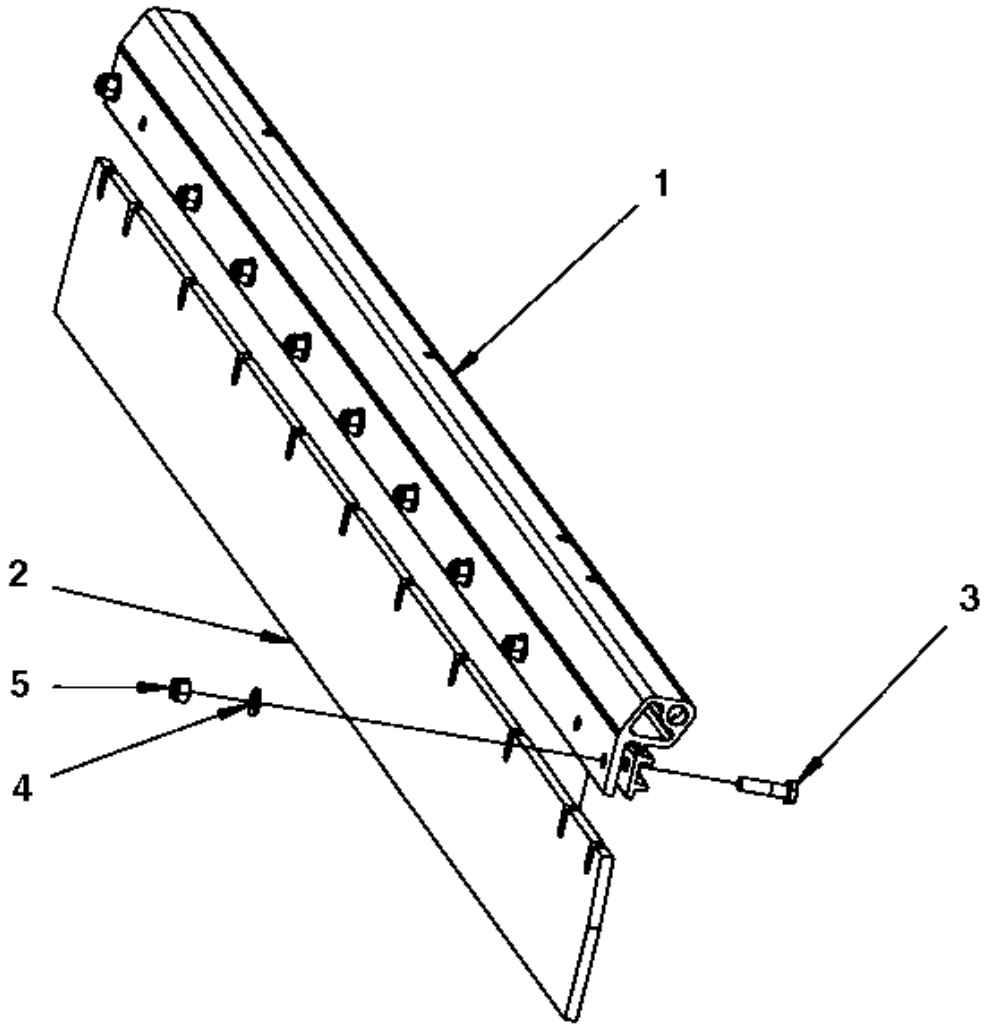

Item	Part No.	Name	Qty	L	SN INFO
1	4700395111	Sprinkler pipe	1		
2	4700395112	Scraper blade	1		
3	4700500031	Screw M10x40	9		
4	4700904230	Plain washer 10.5x22x2 mm	9		
5	4700586018	Lock nut M10	9		

End frame, front Scraper module, with nozzles

Item	Part No.	Name	Qty	L	SN INFO
1	-	Scraper assy with nozzles	1		
2	4700500032	Screw M10 x 55	2		
3	4700904557	Washer, 10.5x22x4 mm 300 HV	2		
4	4700586018	Lock nut M10	2		

End frame, front Scraper assy with nozzles

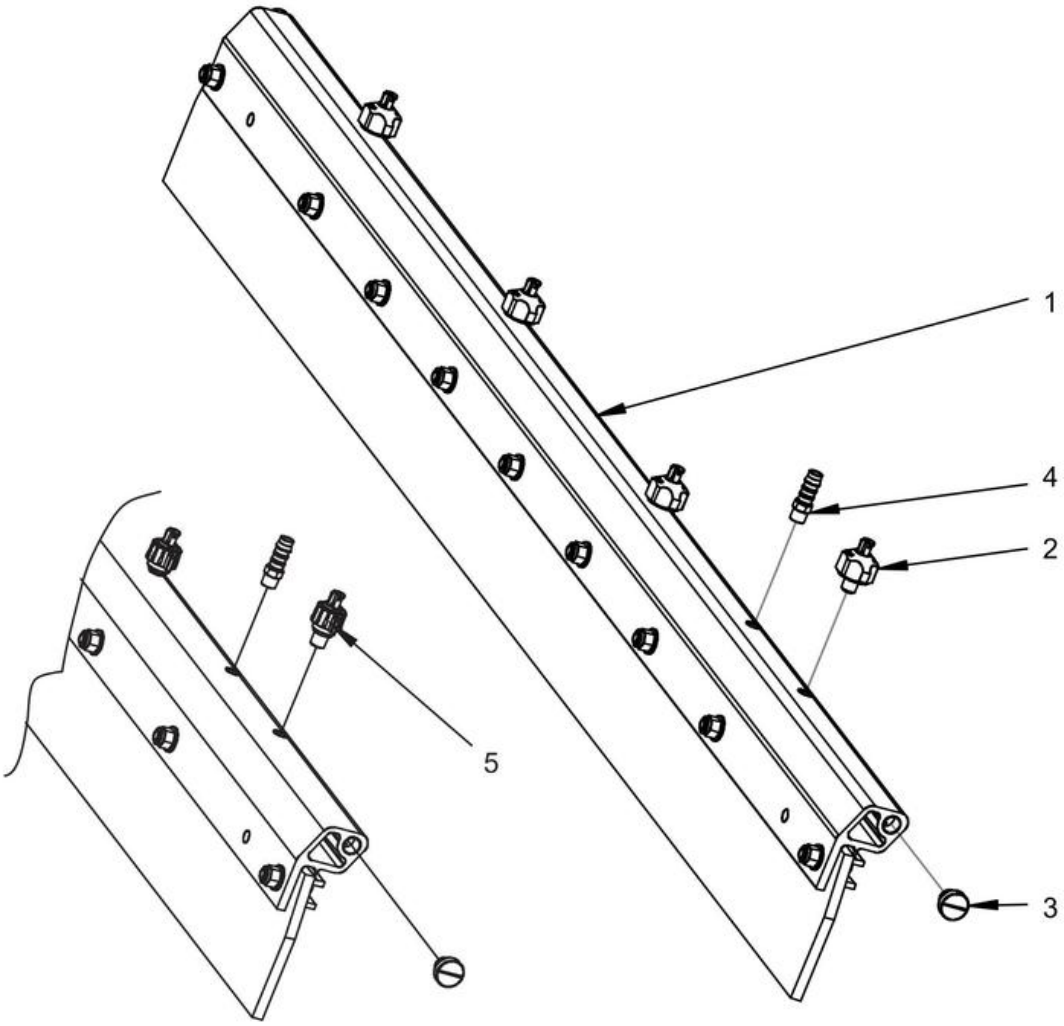

Item	Part No.	Name	Qty	L	SN INFO
1	-	Scraper assy	1		
2	4700392011	Spraying nozzle, cpl	4		
-	4700392509	Retainer, nozzle, strainer, yellow	1		
--	4700392510	Gasket	1		
--	4700393697	Nozzle and strainer, yellow 0.8	1		
2	4700390615	Nozzle, blue 1.0	1	A	
2	4700390616	Nozzle, red 1.2	1	A	
2	4700390619	Nozzle, brown 1.3	1	A	
3	4700792072	End plug	2		
4	4700791977	Hose connection	1		
5	4812124321	Spraying nozzle, cpl	4		
-	4812124323	Cap, blue	1		
-	4812124324	Strainer	1		
-	4812124325	Gasket	1		
-	4700160268	O-ring	1		
-	4812124327	Nozzle, yellow 0.8	1		
5	4812124328	Nozzle, blue 1.0	1		
5	4812124329	Nozzle, red 1.2	1		
5	4812124330	Nozzle, brown 1.3	1		

Comments for Page: Scraper assy with nozzles

(L)OCAL REMARKS

A | en_US | Option

End frame, front Scraper assy

Item	Part No.	Name	Qty	L	SN INFO
1	4812120720	Sprinkler pipe	1		
2	4700395112	Scraper blade	1		
3	4700500031	Screw M10x40	9		
4	4700904230	Plain washer 10.5x22x2 mm	9		
5	4700586018	Lock nut M10	9		

End frame, front 4700394340 Scraper bracket, cpl

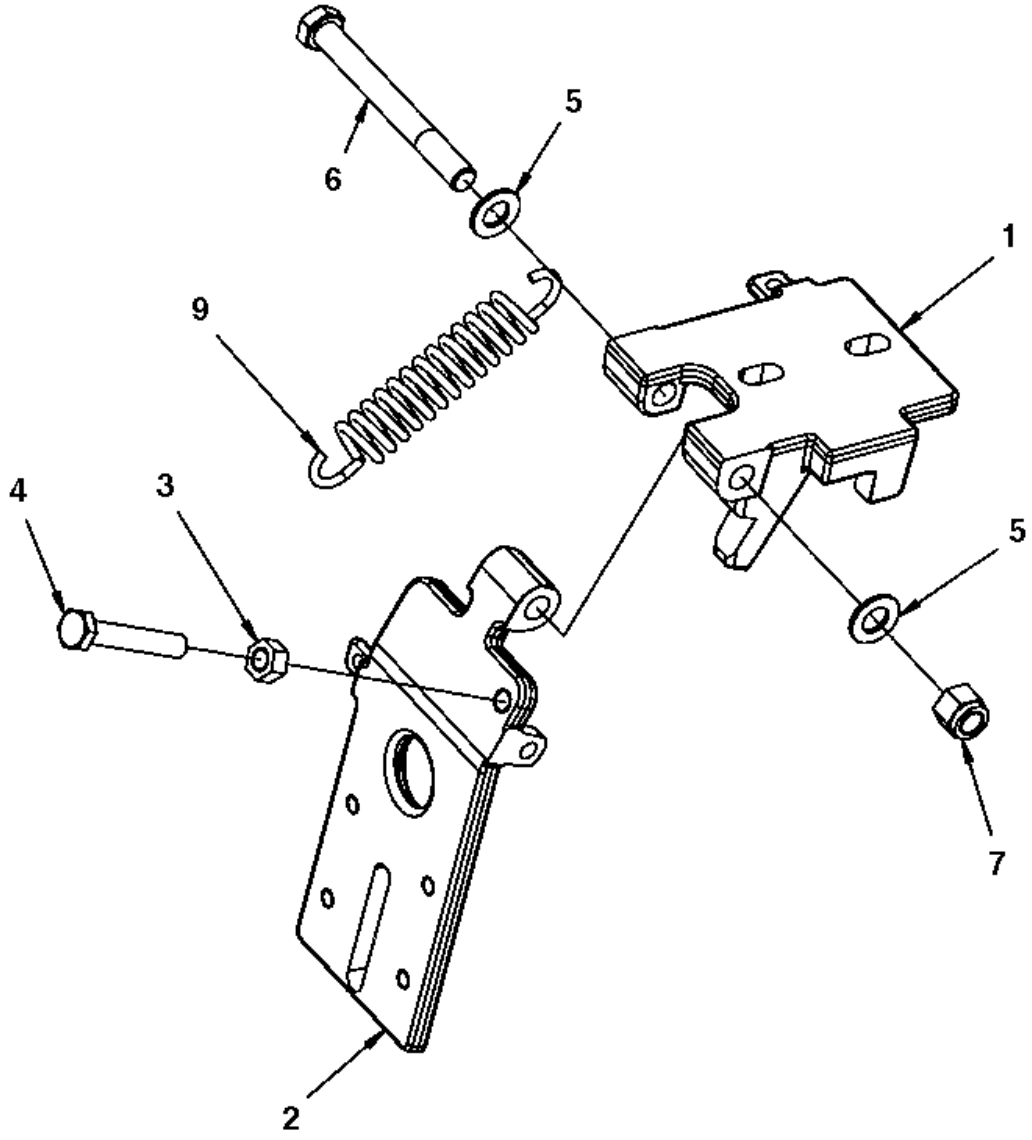

Item	Part No.	Name	Qty	L	SN INFO
1	-	Scraper bracket	1		
2	-	Scraper bracket	1		
3	4700570006	Hex. nut	1		
4	4700500105	Hex. screw	1		
4	4700791082	Screw	1	1	
5	4700904231	Washer, 13x24x2 mm 300 HV	2		
6	4700500198	Wheel bolt	1		
7	4700586019	Lock nut, M12	1		
9	4700394806	Extension spring	1		

Comments for Page: 4700394340 Scraper bracket, cpl

(L)OCAL REMARKS

1 | en_US | Longer screw on outer scraper when cocoa mat is mounted.

End frame, front Grab handle, release

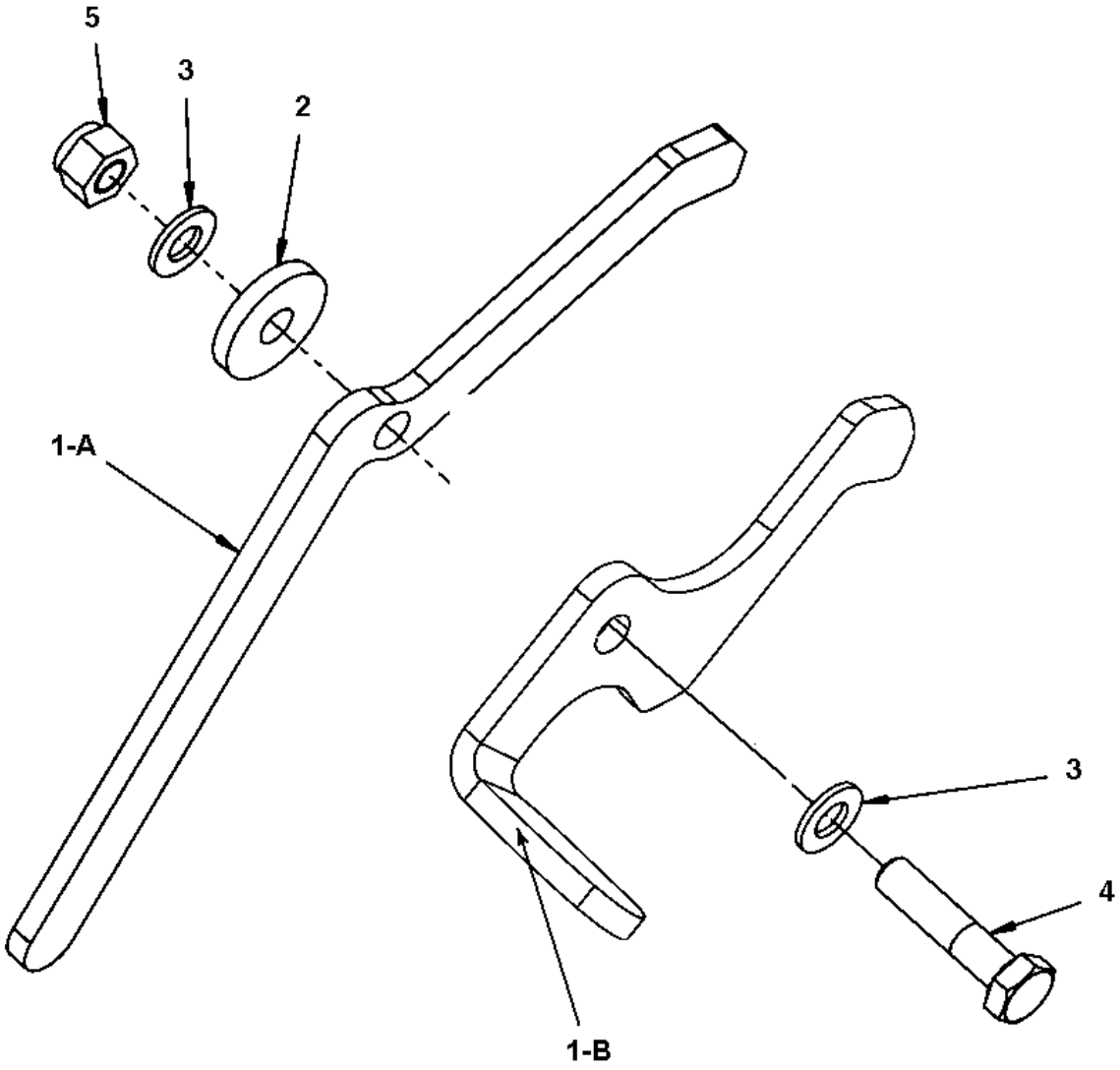

Item	Part No.	Name	Qty	L	SN INFO
1-A	4700393550	Grab handle	1		
1-B	4812110671	Grab handle	1	1	
2	4700904734	Washer, 8.4x26x4 mm 300 HV	1		
3	4700904229	Washer, 8.4x 6x1.5 mm 300HV	2		
4	4700500047	Hexagon head screw	1		
5	4700586003	Lock nut M8	1		

Comments for Page: Grab handle, release

(L)OCAL REMARKS

1 | en_US | Can replace PN 4700393550 as spare part. This part can be mounted together with Grab handle, lift PN 4812110672.

End frame, front Grab handle, release

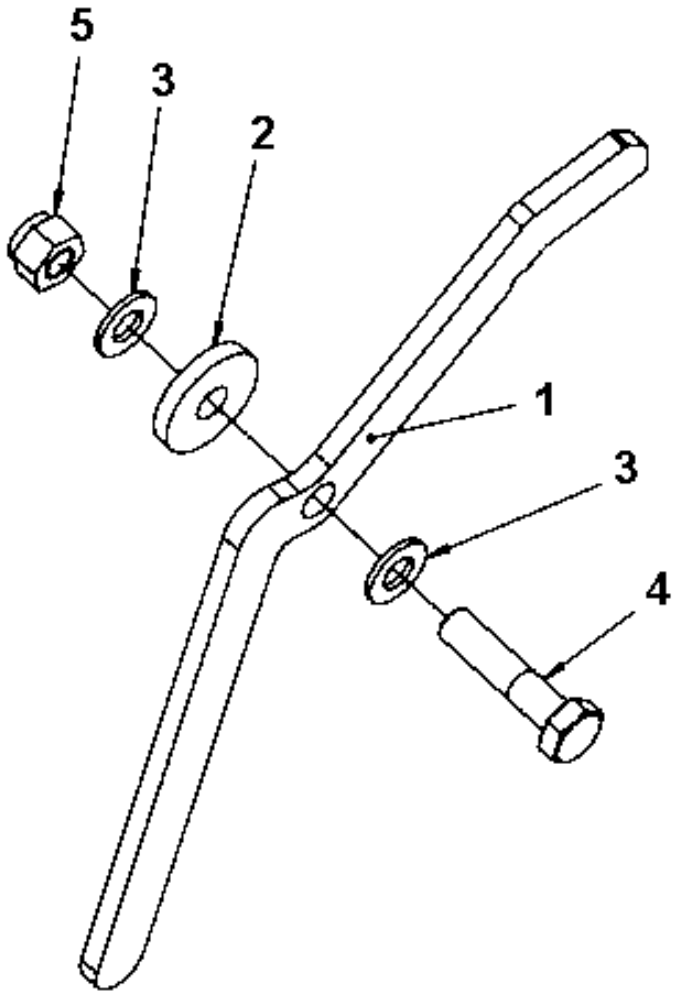

Item	Part No.	Name	Qty	L	SN INFO
1	4700396154	Grab handle	1		
2	4700904734	Washer, 8.4x26x4 mm 300 HV	1		
3	4700904229	Washer, 8.4x 6x1.5 mm 300HV	2		
4	4700500047	Hexagon head screw	1		
5	4700586003	Lock nut M8	1		

End frame, front Grab handle, lift

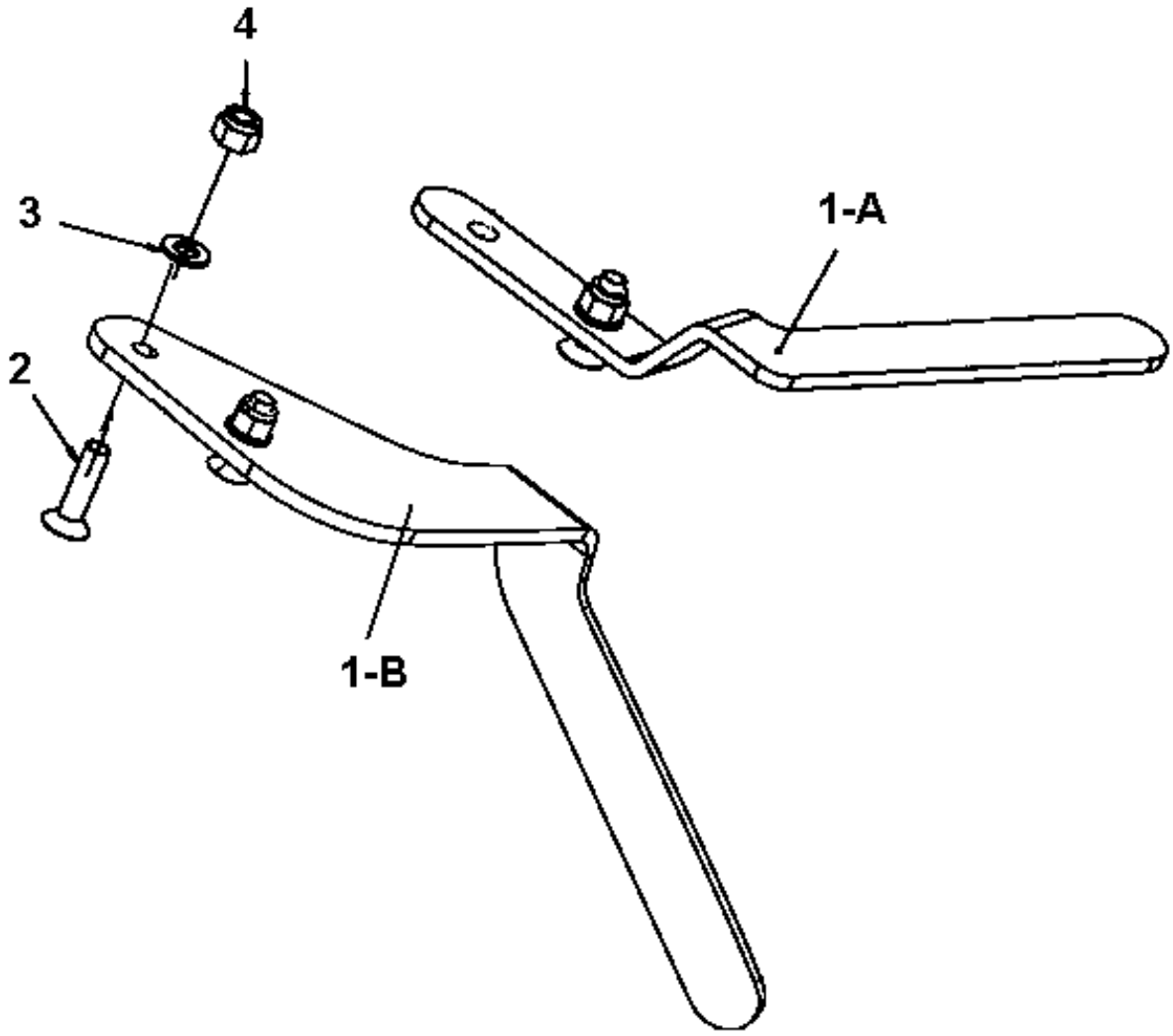

Item	Part No.	Name	Qty	L	SN INFO
1-A	4700395390	Grab handle	1		
1-B	4812110672	Grab handle	1	1	
2	4700792540	Screw	2		
3	4700904229	Washer, 8.4x 6x1.5 mm 300HV	2		
4	4700586003	Lock nut M8	2		

Comments for Page: Grab handle, lift

(L)OCAL REMARKS

1 | en_US | Can together with Grab handle, release PN 4812110671 be used as replacement for PN 4700395390.

End frame, front Grab handle, lift offset/cocoa mat

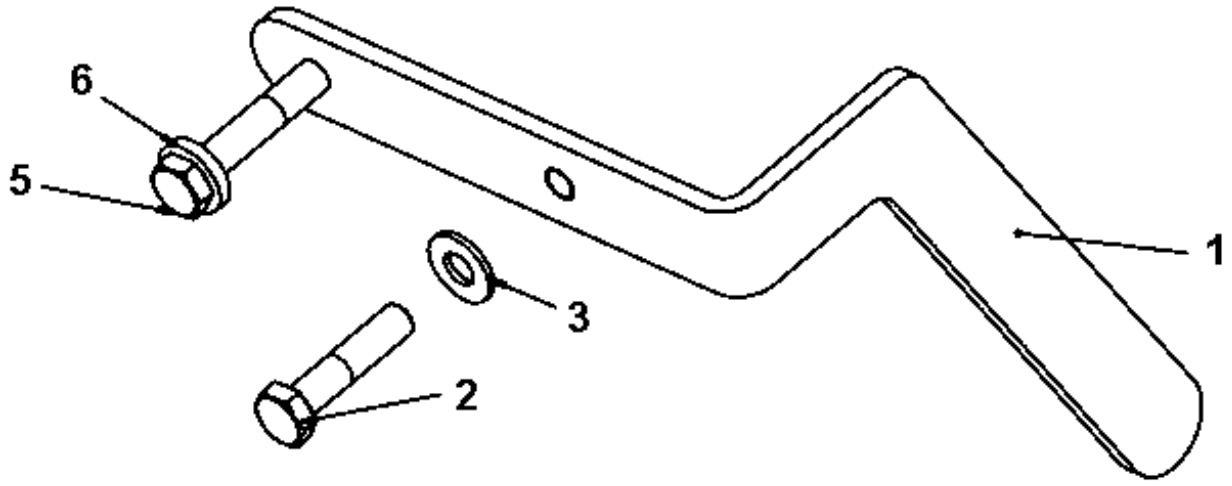

Item	Part No.	Name	Qty	L	SN INFO
1	4700395412	Grab handle	1		
2	4700500161	Screw	1		
3	4700904230	Plain washer 10.5x22x2 mm	1		
5	4700500033	Screw M10-1,5x60 8,8	1		
6	4700904557	Washer, 10.5x22x4 mm 300 HV	1		

Cocoa mat Cocoa mat module

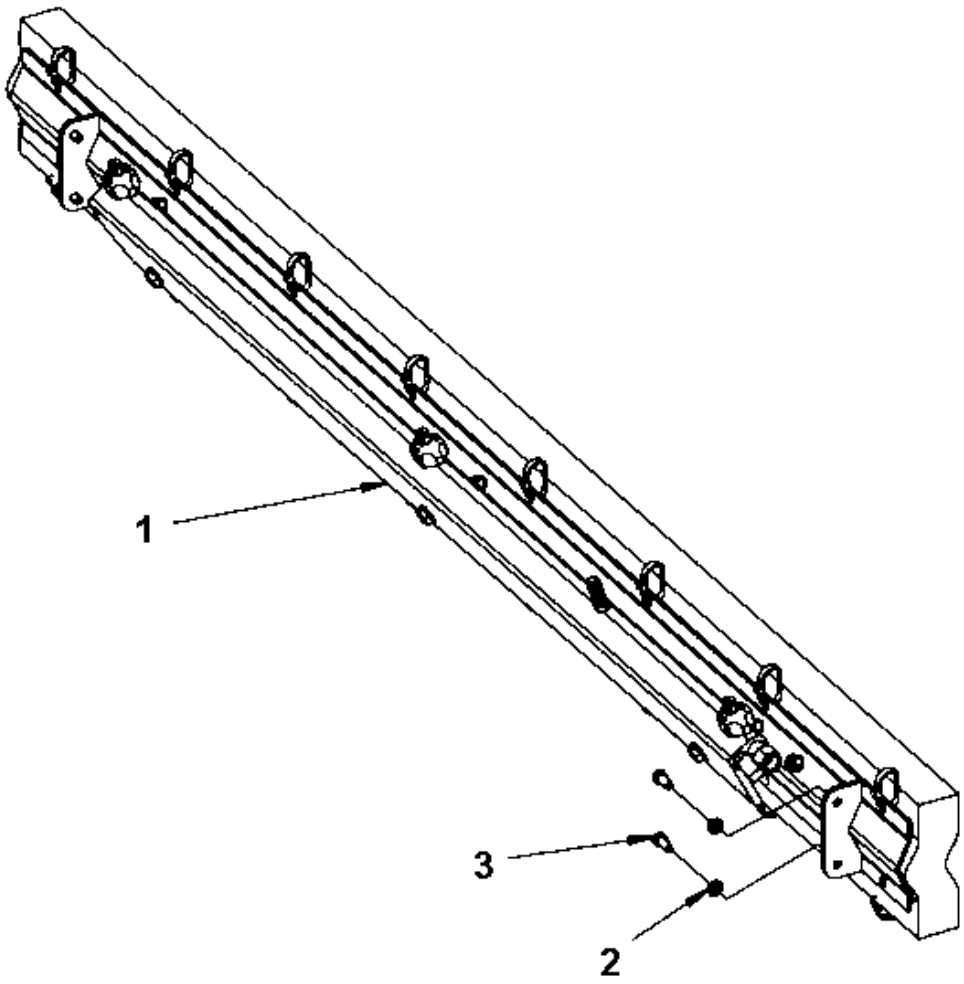

Item	Part No.	Name	Qty	L	SN INFO
1	-	Cocoa mat assembly	1		
2	4700904229	Washer, 8.4x 6x1.5 mm 300HV	4		
3	4700500019	Hexagon screw	4		

Cocoa mat Cocoa mat assembly

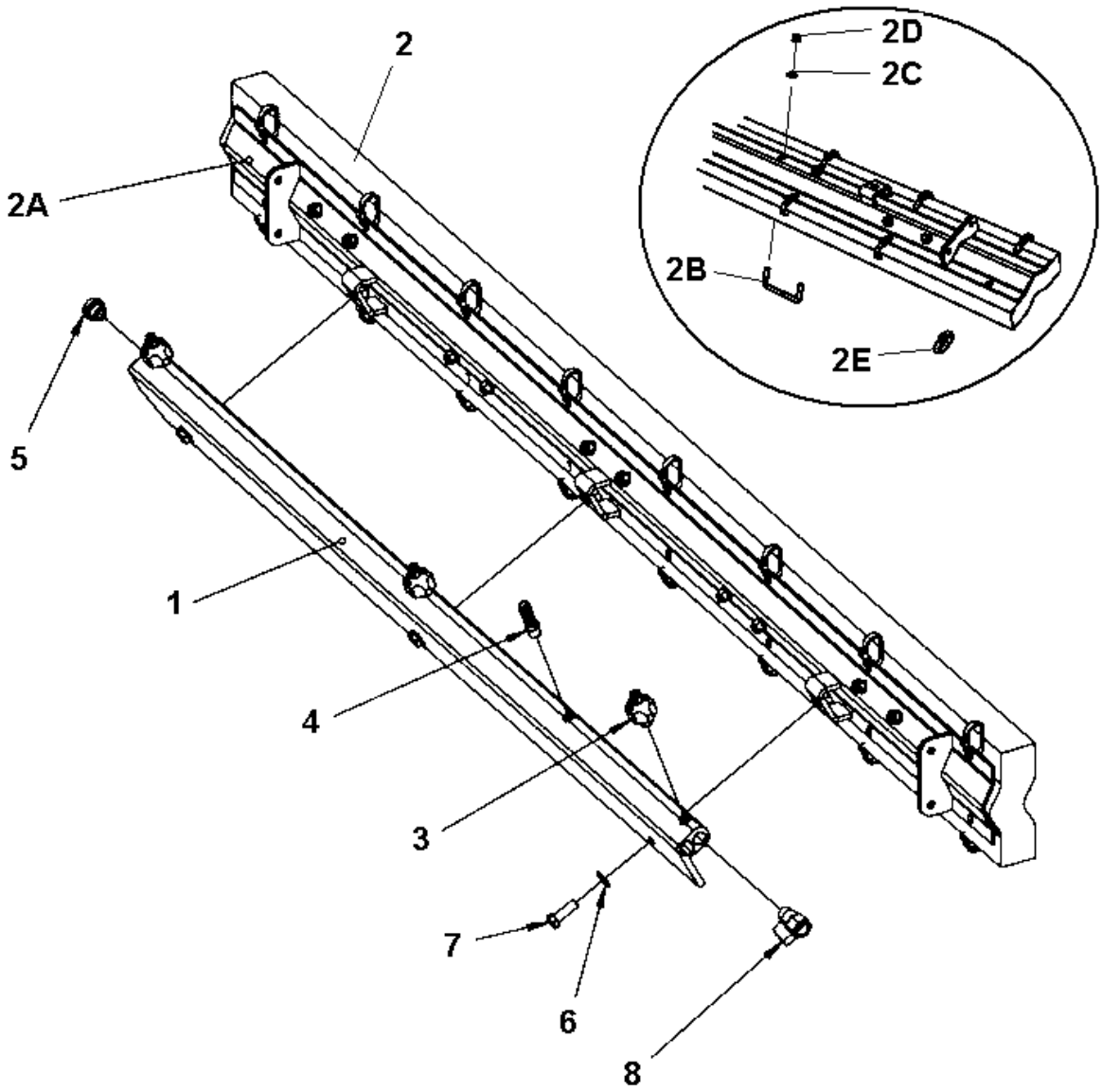

Item	Part No.	Name	Qty	L	SN INFO
1	4700396270	Sprinkler pipe	1		
2	4700792433	Sprinkler mat	1		
2-A	4700396268	Holder	1		
2-B	4700384911	Clamp	5		
2-C	4700904229	Washer, 8.4x 6x1.5 mm 300HV	10		
2-D	4700586003	Lock nut M8	10		
2-E	4700313102	Cable ties	N		
3	4700392011	Spraying nozzle, cpl	3		
4	4700791977	Hose connection	1		
5	4700792072	End plug	1		
6	4700904557	Washer, 10.5x22x4 mm 300 HV	3		
7	4700500029	Screw M10x30	3		
8	4700233215	Ball valve	1		

Cocoa mat Cocoa mat bracket module

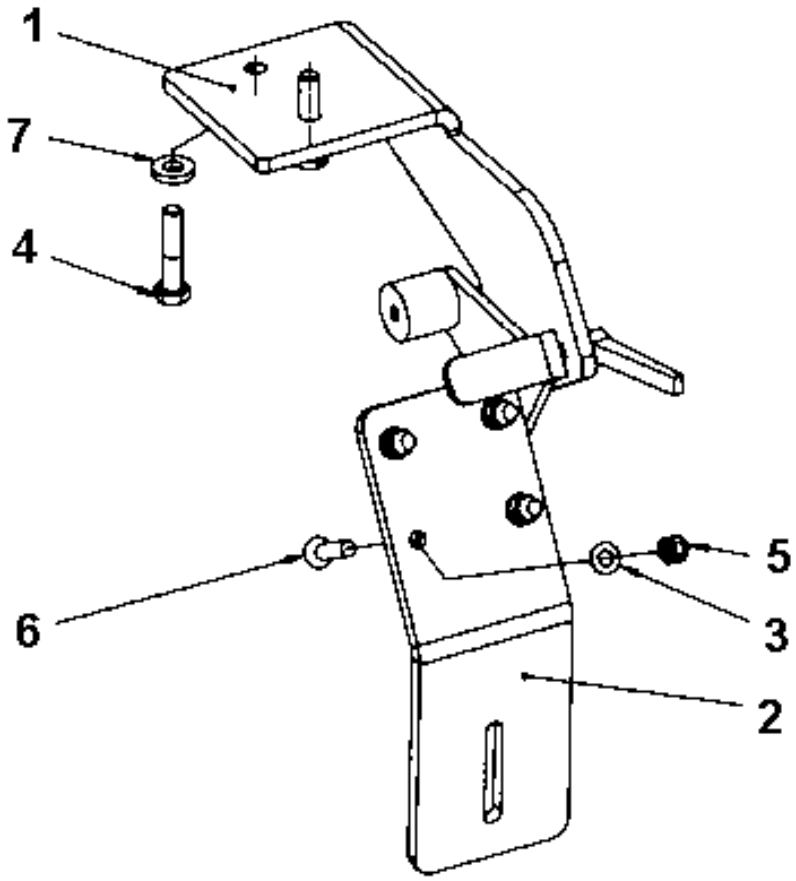

Item	Part No.	Name	Qty	L	SN INFO
1	-	Cocoa mat bracket	1		
2	4700396936	Bracket	1		
3	4700904229	Washer, 8.4x 6x1.5 mm 300HV	4		
4	4700500161	Screw	2		
5	4700586003	Lock nut M8	4		
6	4700927637	Hexagon socket countersunk screw	4		
7	4700904557	Washer, 10.5x22x4 mm 300 HV	2		

Cocoa mat Cocoa mat bracket

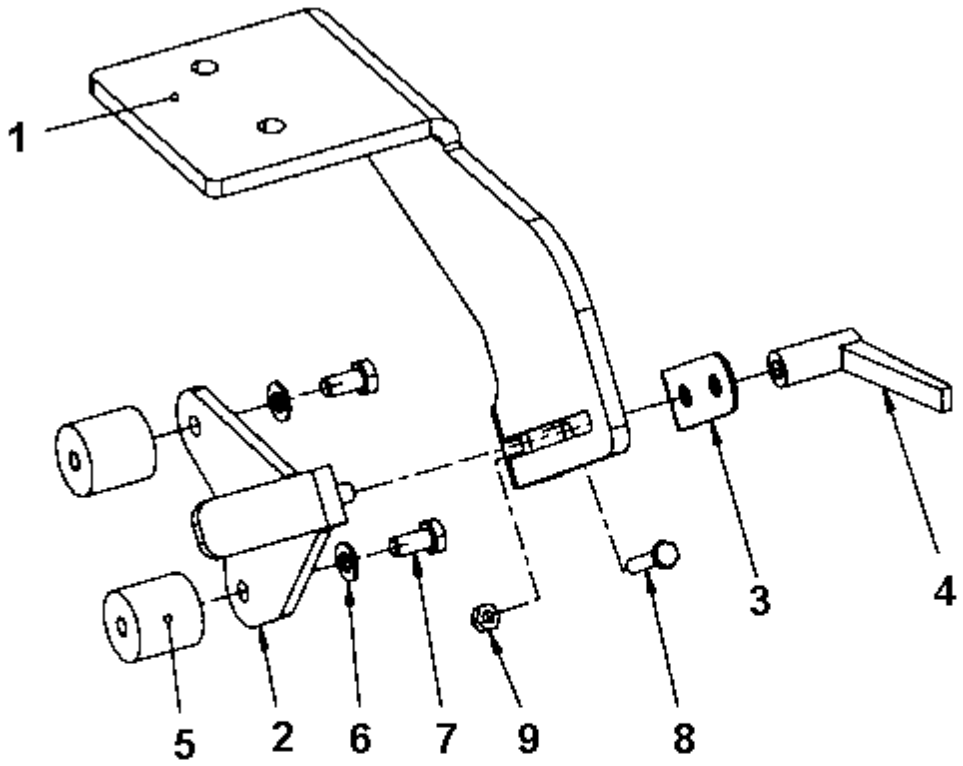

Item	Part No.	Name	Qty	L	SN INFO
1	4700396183	Bracket	1		
2	4700396893	Bracket	1		
3	4700396754	Cover plate	1		
4	4700396975	Lock handle	1		
5	4700396976	Shock absorber	2		
6	4700904229	Washer, 8.4x 6x1.5 mm 300HV	2		
7	4700500019	Hexagon screw	2		
8	4700900485	Hexagon head screw	1		
9	4700570004	Hexagon nut M6	1		

Process mirrors Process mirrors

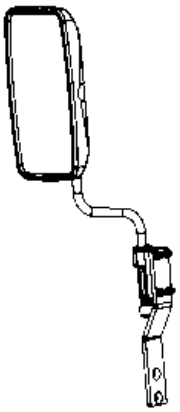

FRONT LEFT

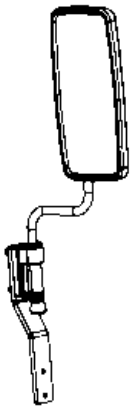

FRONT RIGHT

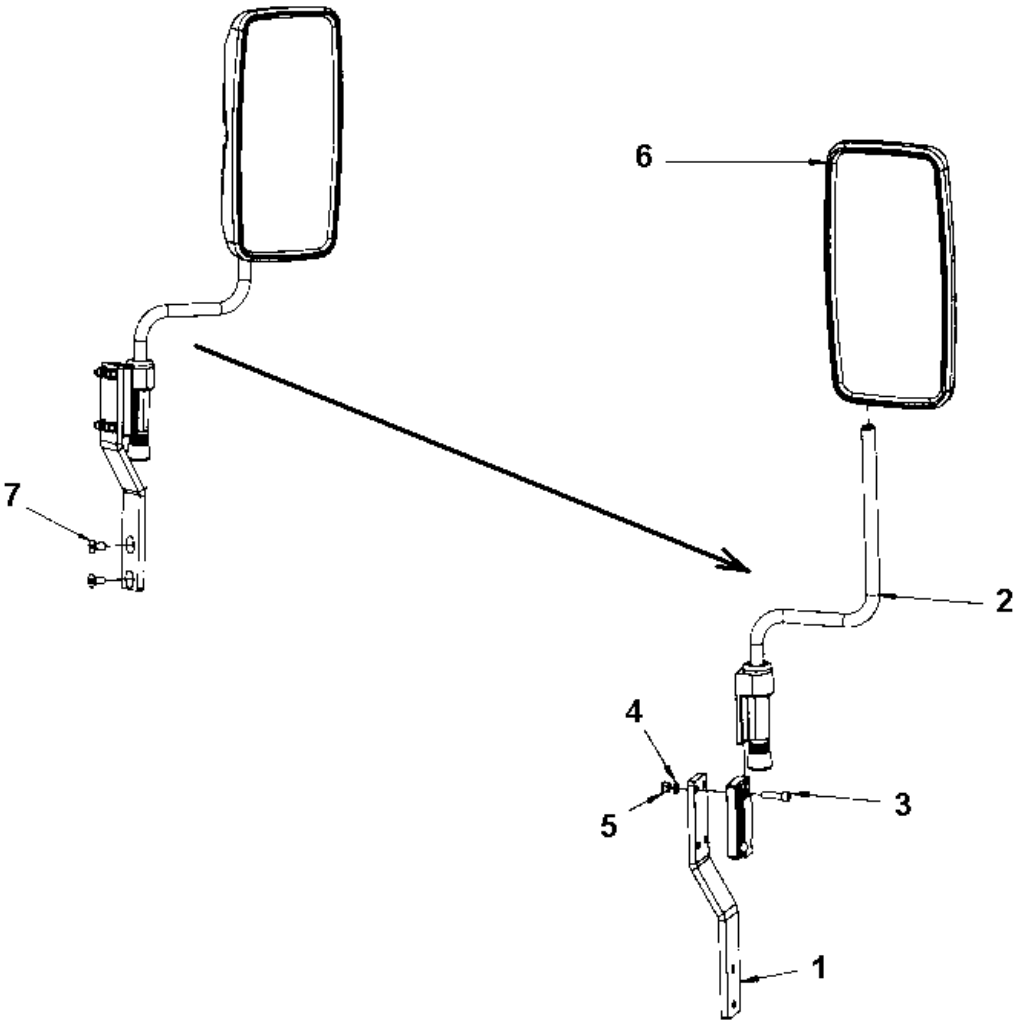

Item	Part No.	Name	Qty	L	SN INFO
0	-	Mirror assy	2		
1	4812110334	Bracket	1		
2	4700381944	Holder	1		
3	4700508048	Hexagon socket head cap screw M	4		
4	4700904229	Washer, 8.4x 6x1.5 mm 300HV	4		
5	4700586003	Lock nut M8	4		
6	4700381943	Mirror	1		
6	4812161276	Mirror glass	1		
7	4811000096	Hex. socket countersunk screw M10x020H, 10.9	2		

End frame, rear End frame, rear

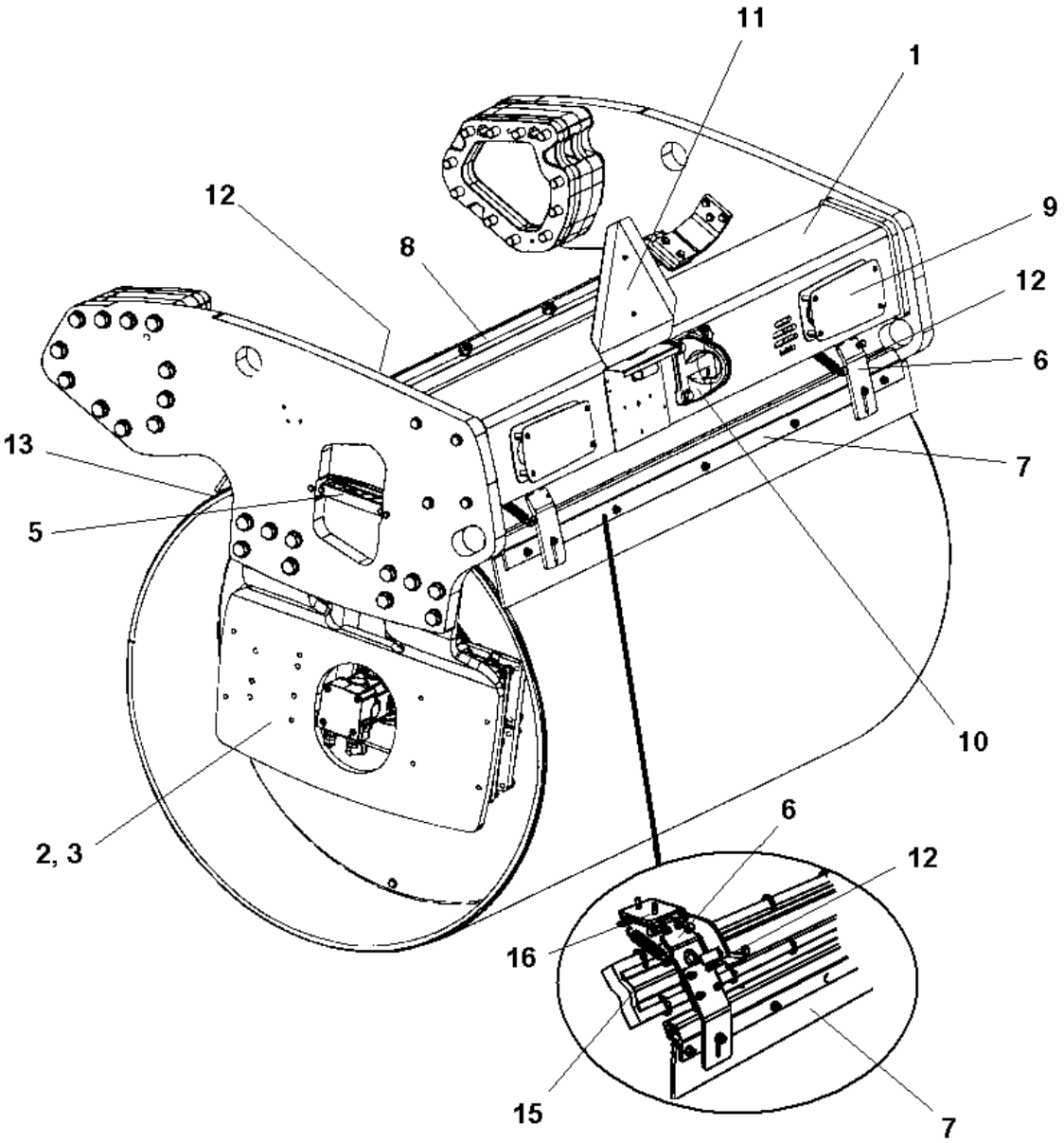

Item	Part No.	Name	Qty	L	SN INFO
1	-	End frame, rear	1		
1	-	End frame, rear offset	1		
2	-	Fork, vibration side	1		
3	-	Fork, propulsion side	1		
4	-	Step, vibration side	1		
4	-	Step, propulsion side	1		
5	-	Hose clamp, propulsion side	1		
5	-	Hose clamp, vibration side	1		
6	4700394340	Scraper bracket, cpl	4		
7	-	Scraper module, without nozzles	1		
8	-	Scraper module, with nozzles	1		
9	-	Cover plate	2		
10	-	Eyelet module	1		
11	-	SMV-sign	1		
12	-	Grab handle, release	2	1	
12	-	Grab handle, release	1	2	
13	-	Grab handle, lift	1		
13	-	Grab handle, lift offset/cocoa mat	1		
15	-	Cocoa mat module	1		
16	-	Cocoa mat bracket module	2		

Comments for Page: End frame, rear

(L)OCAL REMARKS

1 | en_US | Qty 1 when cocoa mat mounted.

2 | en_US | For cocoa mat.

End frame, rear End frame, rear

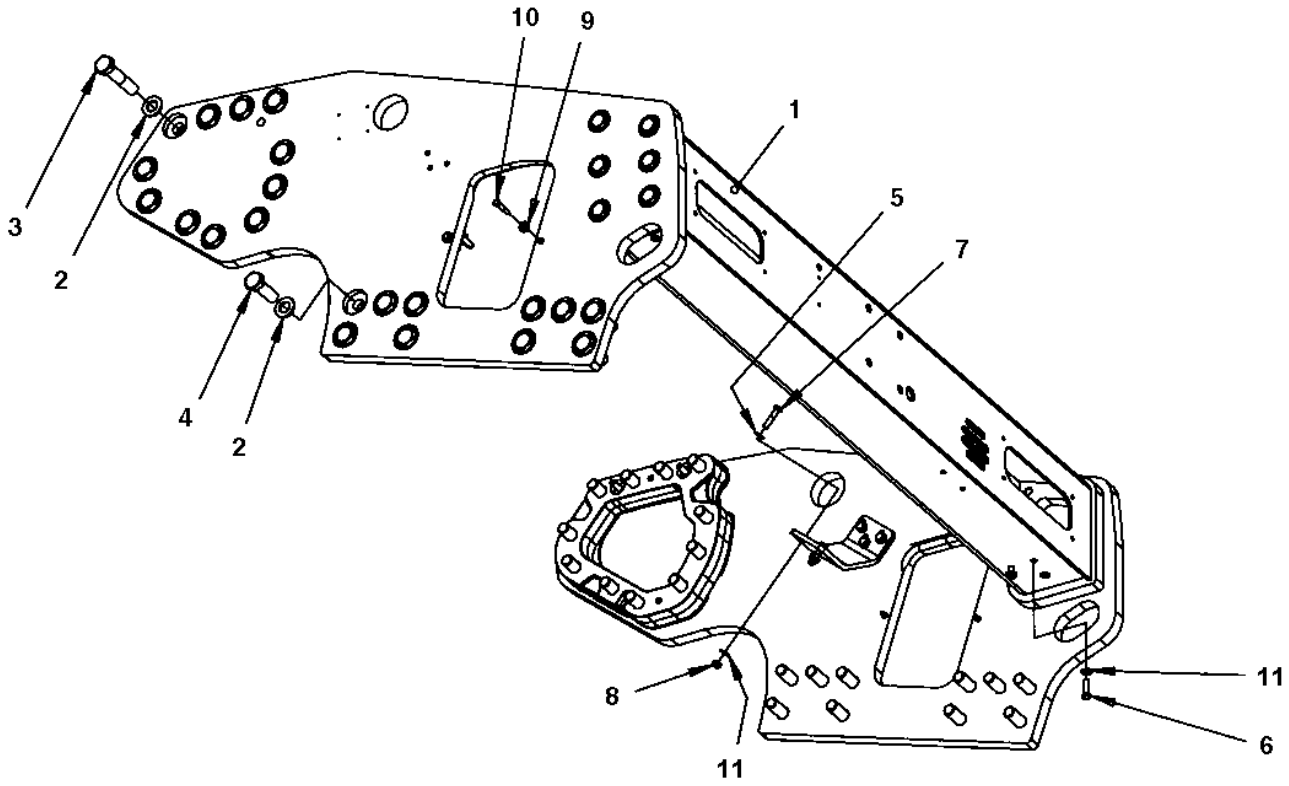

Item	Part No.	Name	Qty	L	SN INFO
1	-	Frame	1		
2	4700904234	Steel plain washer	42		
3	4700500146	Hex. screw	22		
4	4700500289	Hex. screw	20		
5	4700904230	Plain washer 10.5x22x2 mm	4		
6	4700500030	Screw hexagon	4		
7	4700500161	Screw	4		
8	4700791172	Lock nut M10 DIN985	4		
9	4700904556	Steel plain washer 8,4x16x3,0	4		
10	4700500047	Hexagon head screw	4		
11	4700904557	Washer, 10.5x22x4 mm 300 HV	8		

End frame, rear offset End frame, rear offset

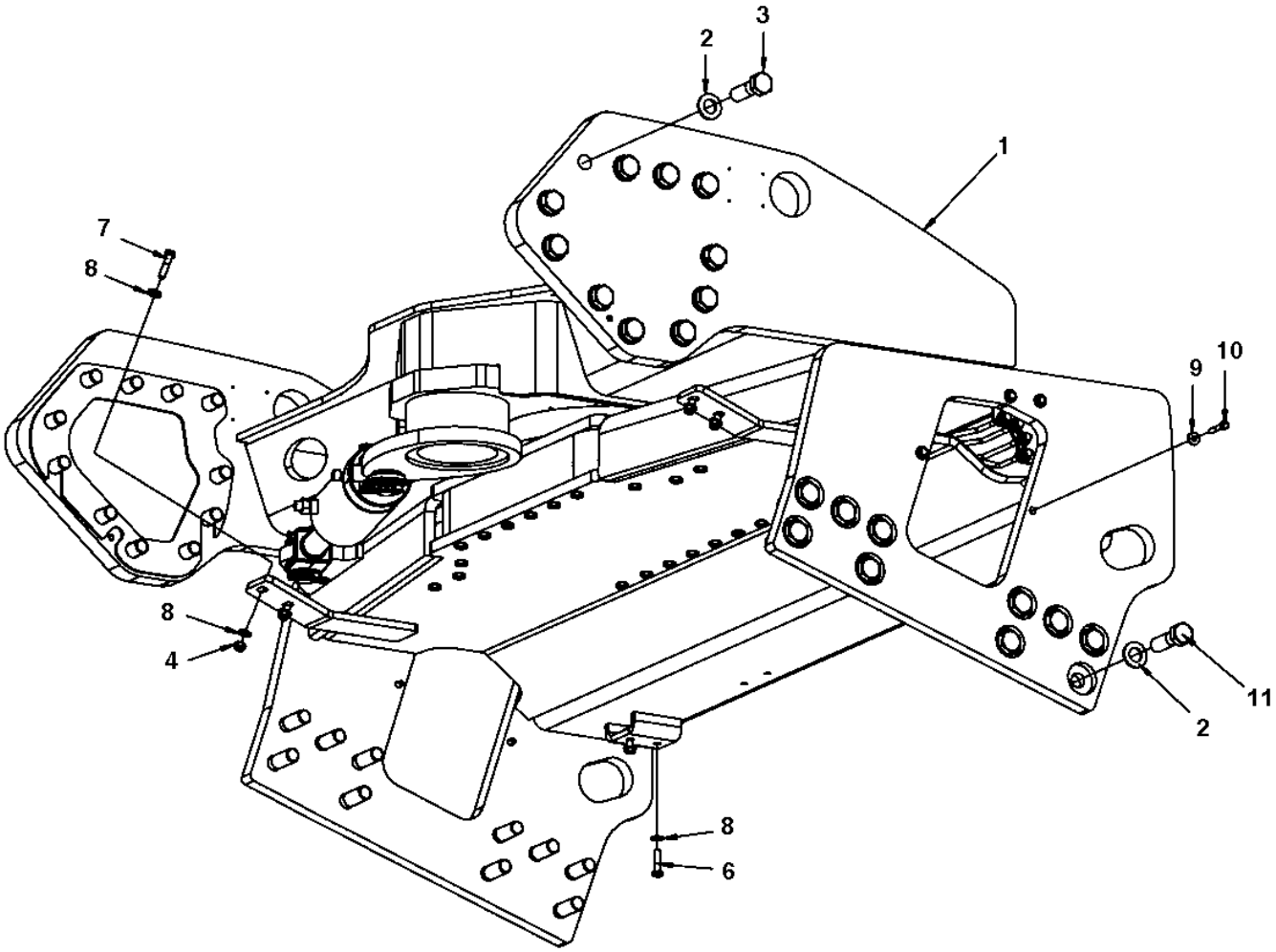

Item	Part No.	Name	Qty	L	SN INFO
1	-	Frame	1		
2	4700904234	Steel plain washer	42		
3	4700500297	Screw	22		
4	4700791172	Lock nut M10 DIN985	4		
5	4700904557	Washer, 10.5x22x4 mm 300 HV	8		
6	4700500031	Screw M10x40	4		
7	4700500161	Screw	4		
8	4700904557	Washer, 10.5x22x4 mm 300 HV	4		
9	4700904556	Steel plain washer 8,4x16x3,0	4		
10	4700500047	Hexagon head screw	4		
11	4700500289	Hex. screw	20		

End frame, rear offset Frame

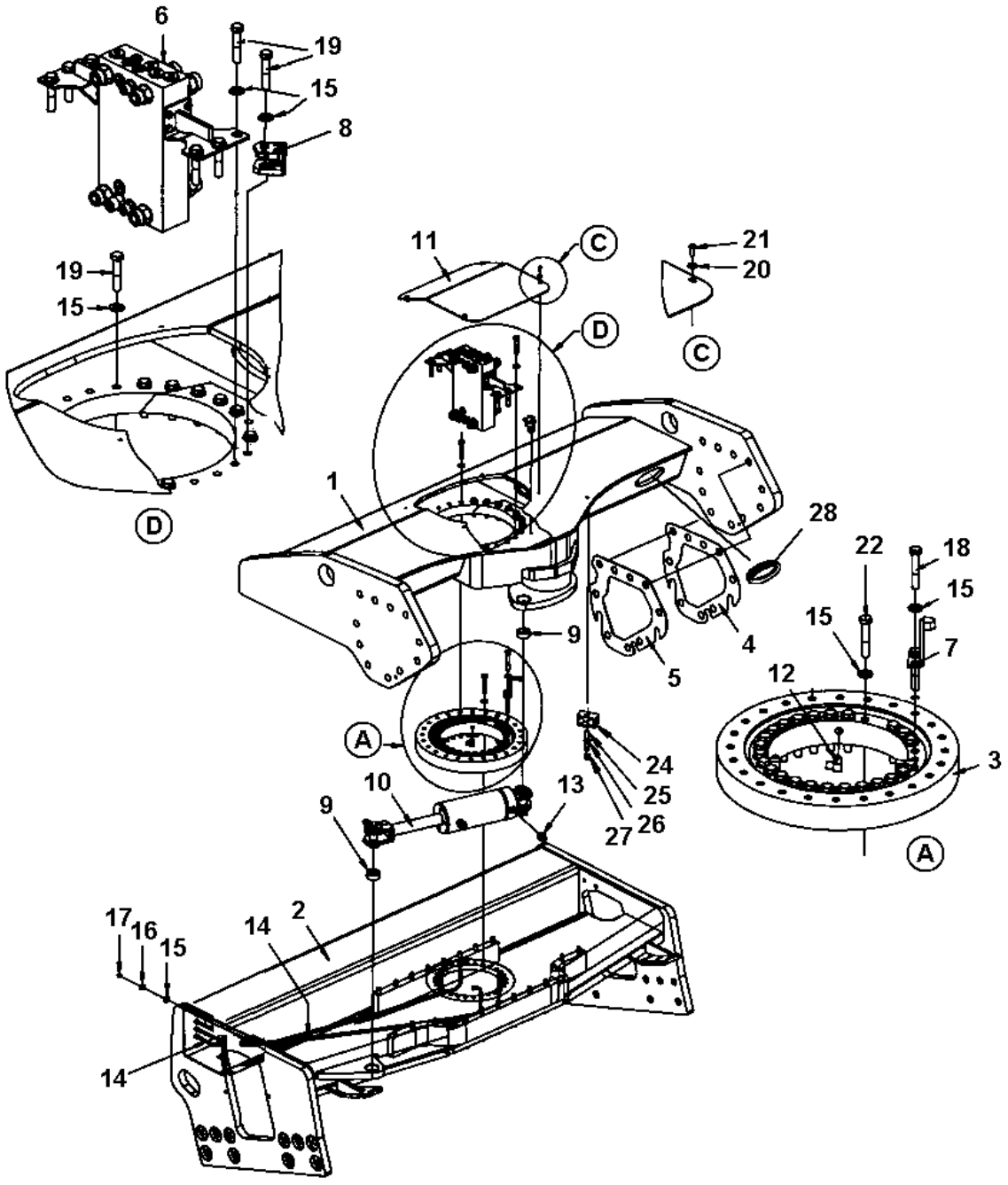

Item	Part No.	Name	Qty	L	SN INFO
1	4700391481	Frame	1		
2	4700391975	Yoke	1		
3	4700359192	Bearing	1		
4	4700390469	Shim	N		
5	4700390470	Shim	N		
6	-	Connection block	1		
7	4700395694	Cam	1		
8	-	Micro switch	1		
9	4700391430	Bearing	2		
10	4700391024	Steering cylinder	1		
11	4700379987	Cover	1		
12	4700373183	Elbow 90°	4		
13	4700792337	Straight connector orfs	2		
14	4700393360	Hydraulic hose	4		
15	4700904231	Washer, 13x24x2 mm 300 HV	55		
16	4700903831	Hexagon nut	4		
17	4700926214	Grease fitting	4		
18	4700903735	Screw, M12 x 70 mm 10.9 GEOMET®	2		
19	4700500175	Hex. screw	24		
20	4700603001	Washer	4		
21	4700904206	Screw, M6x16 mm	4		
22	4700947712	Hexagon head screw m	25		
24	4700904085	Pipe clamp	1		
25	4700791858	Stud	1		
26	4700904229	Washer, 8.4x 6x1.5 mm 300HV	1		
27	4700586003	Lock nut M8	1		
28	4700395653	Hose guard	2		

End frame, rear offset Connection block

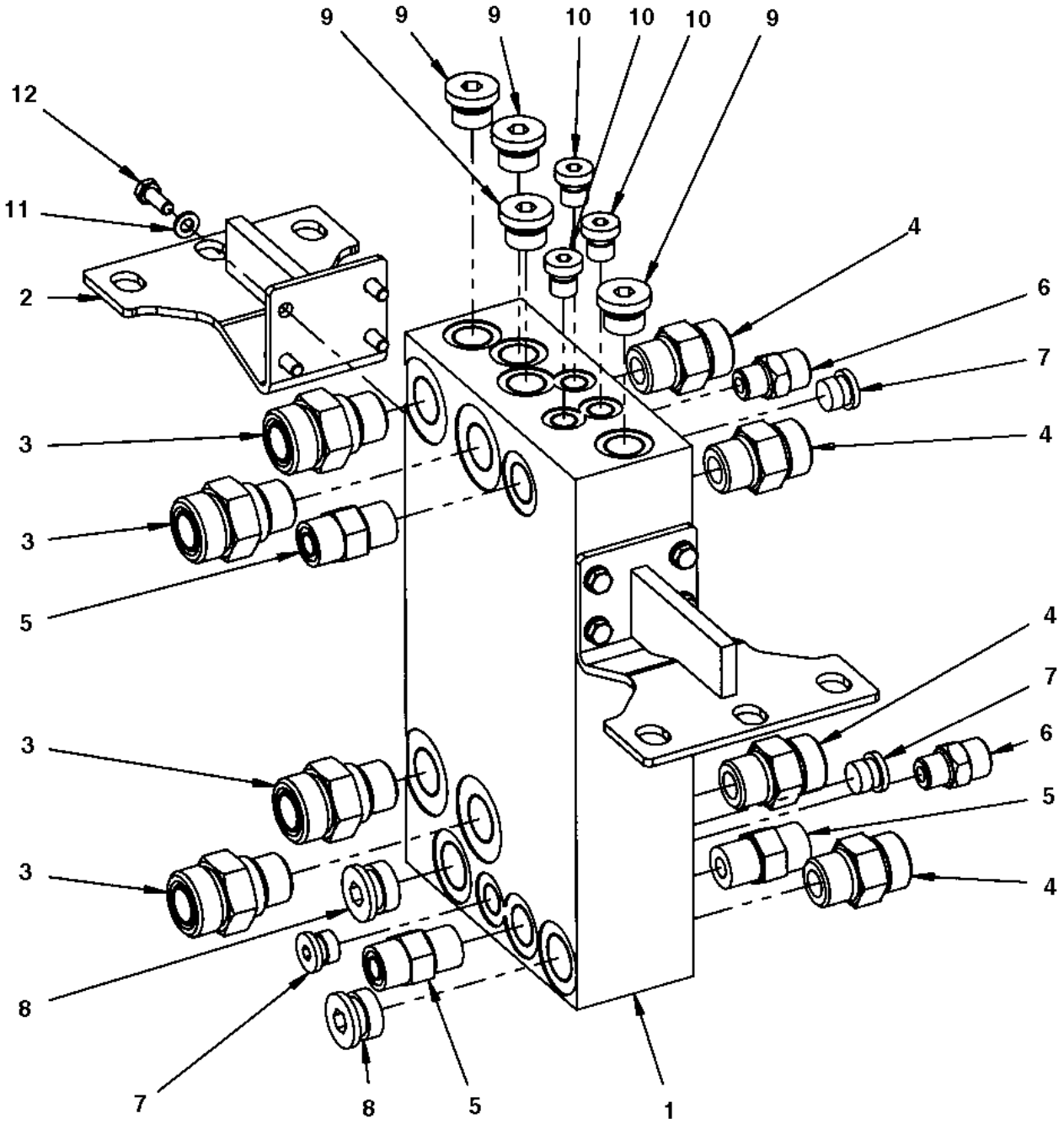

Item	Part No.	Name	Qty	L	SN INFO
1	4700390463	Connection block	1		
2	4700391889	Bracket	2		
3	4700791539	Adapter	4		
4	4700791743	Straight connector orfs	4		
5	4700791799	Straight connector orfs	3		
6	4700791409	Straight connector orfs	2		
7	4700792362	Steel plug	3		
8	4700792296	Steel plug	2		
9	4700792295	Steel plug	4		
10	4700904951	Plug	3		
11	4700904228	Washer DIN125	8		
12	4700500013	Screw, M6x16 mm 8.8 A2K	8		

End frame, rear offset Micro switch

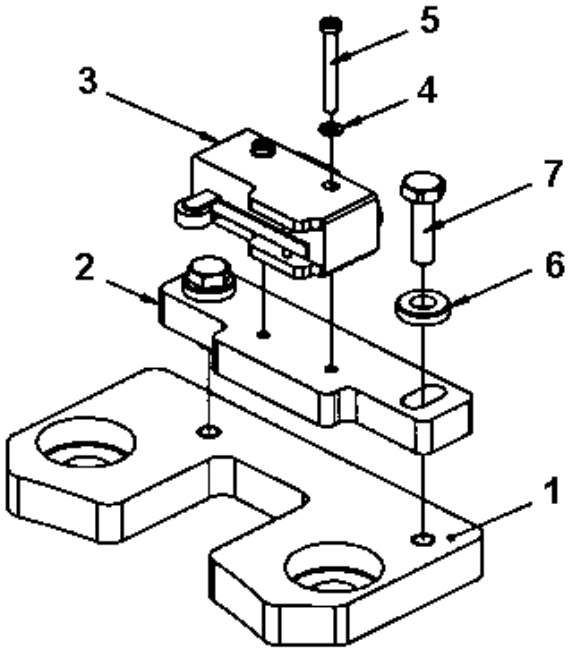

Item	Part No.	Name	Qty	L	SN INFO
1	4700396179	Bracket	1		
2	4700395696	Holder plate	1		
3	4700930046	Micro switch	1		
4	4700904697	Washer 3,2x6x0,5	2		
5	4700533050	Screw	2		
6	4700603001	Washer	2		
7	4700500040	Screw, M6x20 mm 8.8 A2K	2		

End frame, rear offset 4700391024 Steering cylinder

Item	Part No.	Name	Qty	L	SN INFO
1	4700391024	Steering cylinder	1		
2	4700950417	Seal kit	1		
3	---	Seal	2		
4	---	O-ring	1		
5	---	Back-up ring	1		
6	---	Seal	1		
7	---	O-ring	1		
8	---	Seal	1		
9	---	Seal	1		
10	---	O-ring	1		
11	--	Piston block	1		
12	--	Steering	1		
13	4700950222	Shaft	2		
14	--	Gasket	4		
15	4700635061	Hair clip	4		
16	--	Rod seal	1		
17	--	Cylinder	1		

End frame, rear Eyelet module

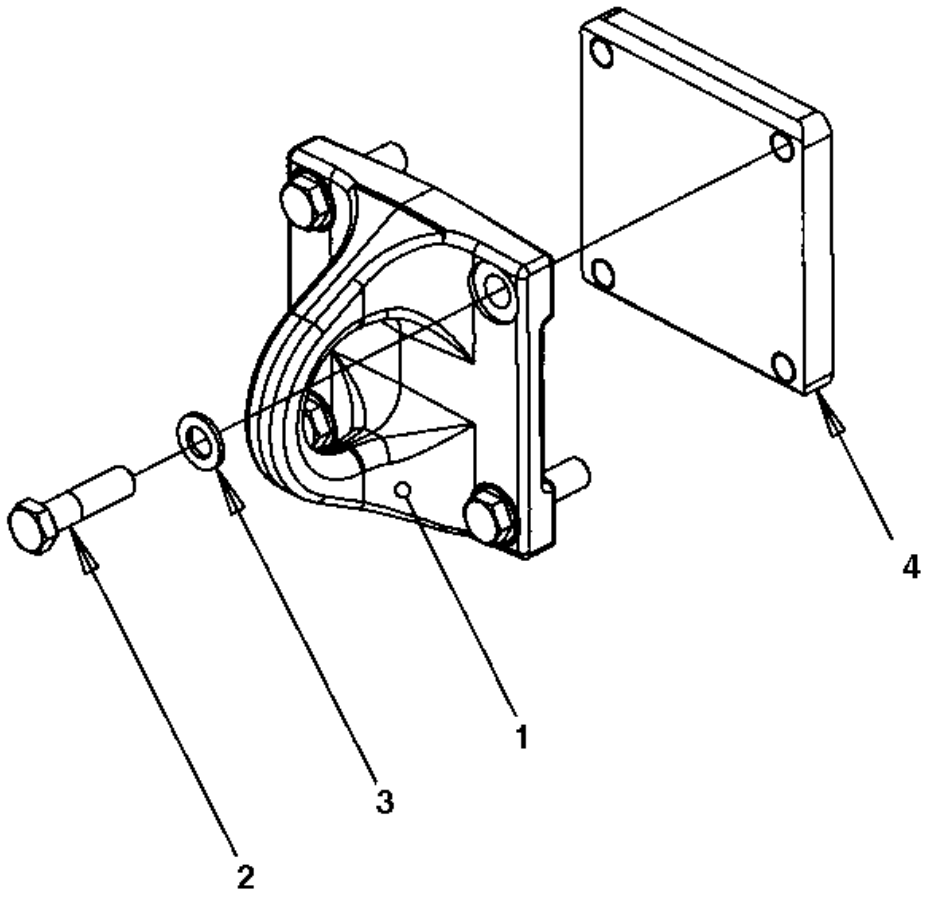

Item	Part No.	Name	Qty	L	SN INFO
1	4700390080	Eyelet	1		
2	4700500134	Hex. screw	4		
3	4700904232	Steel plain washer	4		
4	4700390072	Holder plate	1		

End frame, rear SMV-sign

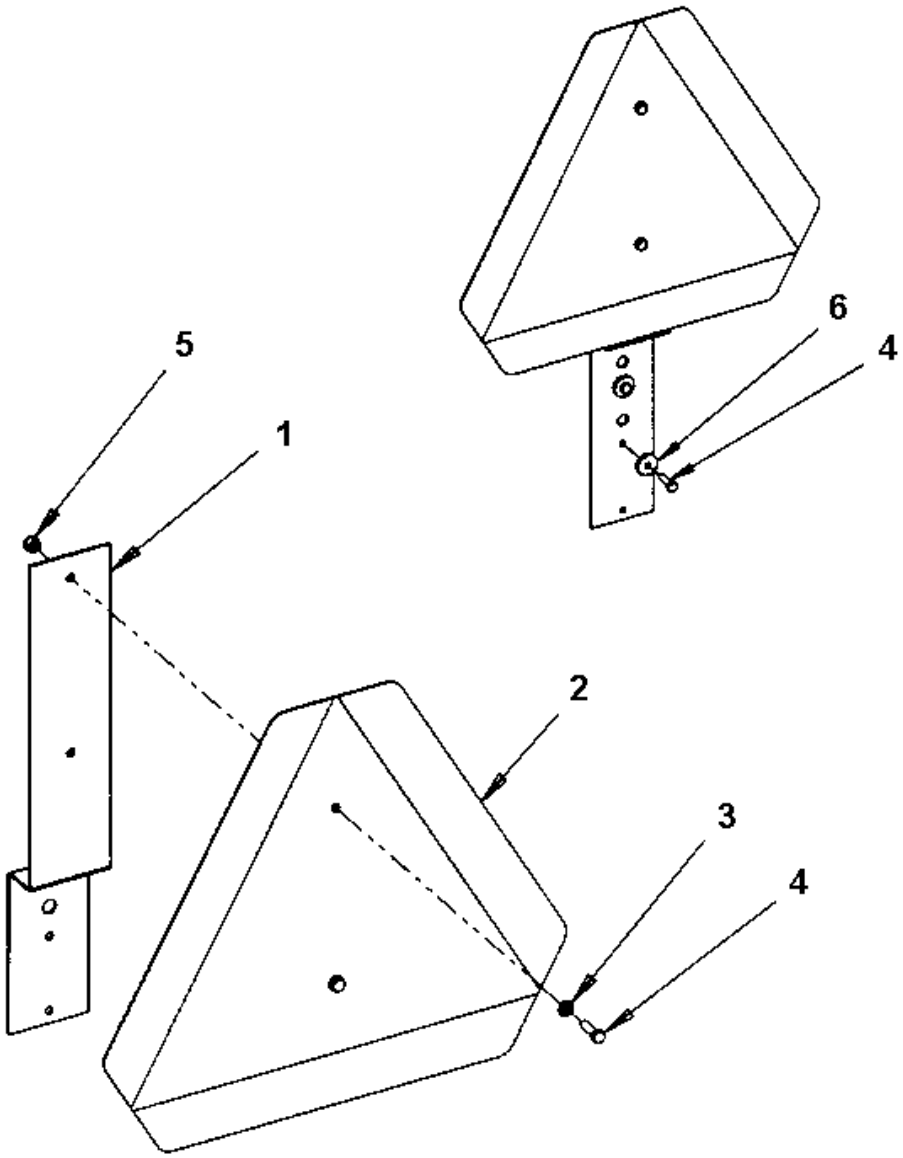

Item	Part No.	Name	Qty	L	SN INFO
1	4700392291	Holder	1		
2	4700476019	SMV-sign	1		
3	4700904228	Washer DIN125	2		
4	4700500040	Screw, M6x20 mm 8.8 A2K	4		
5	4700586002	Lock nut M6 -8	2		
6	4700904735	Steel plain washer	2		

Drum Drum

Item	Part No.	Name	Qty	L	SN INFO
1	4700379748	Drum	1		
2	4700391107	Eccentric shaft	1		
2	4700391110	Eccentric shaft CE	1		
3	-	Drum bearing	1		
4	-	Drive unit	1		To A014206
4	-	Drive unit	1		From A014207
5	4700343744	Magnetic plug	1		
6	4700162017	Seal ring	1		
7	4700359955	Drop plate	1		
8	4700904229	Washer, 8.4x 6x1.5 mm 300HV	2		
9	4700500019	Hexagon screw	2		
10	4700344196	Plug M12	1		
11	4700162027	Sealing	1		
14	-	Vibrating unit Sauer	1		
15	4700500070	Hex. screw	16		
16	4700904232	Steel plain washer	16		
17	4812110444	Hexagon head screw w Tuflok M12x40H 8.8 A3K	32		
18	4700904231	Washer, 13x24x2 mm 300 HV	32		
19	4812110346	Spacer	32		

Drum Drum bearing

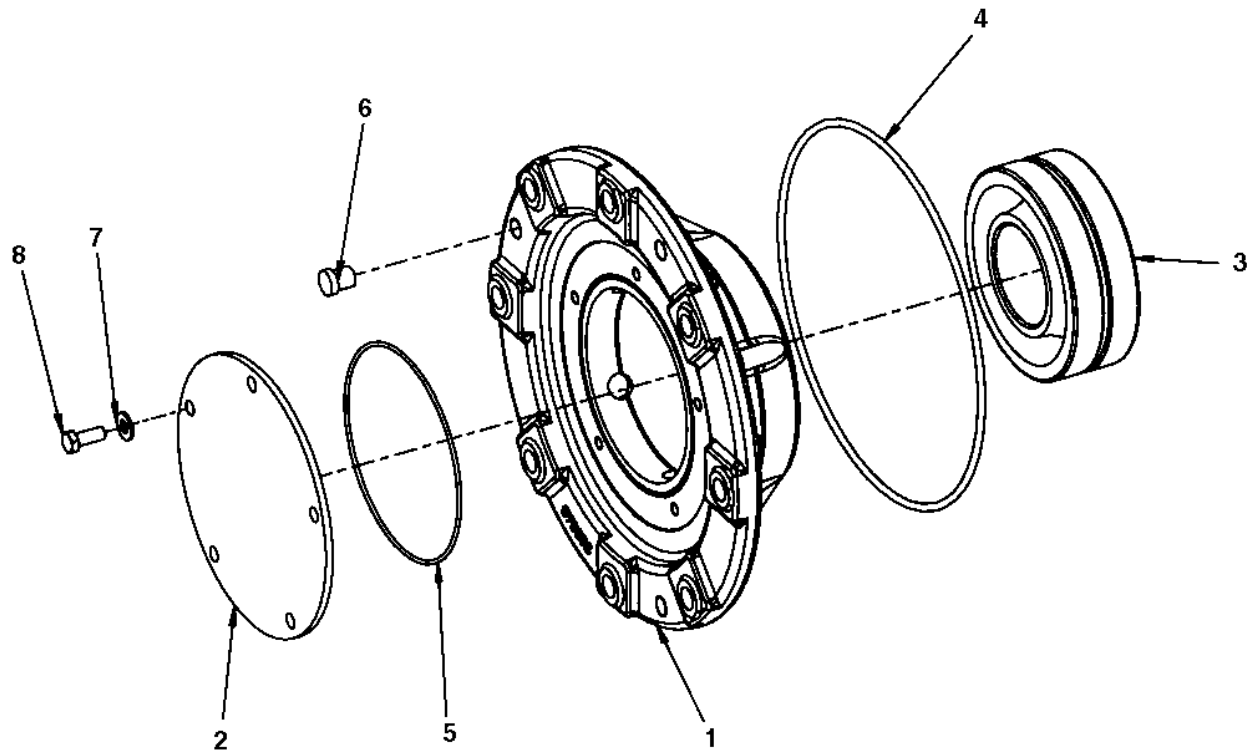

Item	Part No.	Name	Qty	L	SN INFO
1	4700379652	Bearing housing	1		
2	4700391029	Cover	1		
3	4700792270	Spherical roller bearing	1		
4	4700160344	O-ring 70	1		
5	4700160045	O-ring 70	1		
6	4700900775	Plug	3		
7	4700904230	Plain washer 10.5x22x2 mm	5		
8	4700500028	Screw, M10 x 25 mm 8.8 A3K	5		

Drive unit, To A014206 Drive unit

Item	Part No.	Name	Qty	L	SN INFO
1	4700390604	Drum gear	1		
2	4700390603	Hydraulic motor	1		
2	4812155170	Solenoid valve	1		
3	4700792151	Elbow adapter 90	1		
4	4700904232	Steel plain washer	2		
5	4700500057	Screw	2		
8	4700160227	O-ring	1		
10	4700792331	Elbow 90 orfs	2		
11	4700391724	Drive disc	1		
12	4700928022	Screw	16		
13	4700394250	Shock absorber	8		
14	4700904231	Washer, 13x24x2 mm 300 HV	16		
15	4812110641	Hexagon screw w Tuflok M12x55 10.9 GEOMET	16		
16	4700791401	Elbow 90, O-ring with swivel	1		
17	4700792507	Straight connector orfs	1		

Drive unit, To A014206 4700390604 Drum gear

Item	Part No.	Name	Qty	L	SN INFO
-	4700390604	Drum gear	1		
1	4812158763	Planet gear	4		
2	--	Planet gear	3		
3	4812158764	Sun gear	1		
4	4812160391	Shaft nut	1		
7	--	Planet carrier	1		
8	--	Cover	1		
9	--	Cylindrical roller	1		
10	4700950520	Cylindrical roller bearing	3		
11	4700950521	Cylindrical roller bearing	4		
12	4700950522	Ball bearing	1		
13	--	Screw	12		
14	--	Snap ring	3		
15	--	Snap ring	4		
16	--	Snap ring	1		
18	--	Snap ring	6		
19	4700950523	O-ring	1		
20	4700950524	Seal	1		
21	4700950491	Plug	2		
22	4700950492	Seal ring	2		
23	--	Screw	2		
30	4812158765	Ring gear	1		
33	4700950526	O-ring	1		
44	4812161168	Sun gear shaft	1		
49	4812161169	Drum flange	1		
60	--	Spindle	1		
61	4812161164	Piston	1		
62	--	Coupler	1		
63	--	Spacer	1		
65	--	Disc	1		
67	--	Snap ring	1		
71	4700950495	Plug	1		
72	4700950527	Inner disc	4		
73	4700950480	Outer disc	5		
74	--	Pressure spring	28		
75	4700950529	Supporting ring	2		
76	4700950530	Piston seal	1		

Item	Part No.	Name	Qty	L	SN INFO
77	4700950531	Supporting ring	2		
78	4700950532	Piston seal	1		
99	--	Plug	1		
123	4700950493	Plug	3		
124	4700950494	Seal ring	3		
224	4812161198	Spring dowel sleeve	2		
300	4812156060	Seal kit, drive gear	1		
300_19	4700950523	O-ring	1		
300_20	4700950524	Seal	1		
300_33	4700950526	O-ring	1		
301	4812156061	Seal kit, brake	1		
301_75	4700950529	Supporting ring	2		
301_76	4700950530	Piston seal	1		
301_77	4700950531	Supporting ring	2		
301_78	4700950532	Piston seal	1		
302	4812156062	Disc kit	1		
302_72	4700950527	Inner disc	4		
302_73	4700950480	Outer disc	5		
302_74	--	Pressure spring	28		

4700390603 Hydraulic motor 4700390603 Hydraulic motor

Item	Part No.	Name	Qty	L	SN INFO
0	4700390603	Hydraulic motor	1		
1	--	Engine	1		
2	--	Adjustment	1		
3	--	Housing	1		
4	--	Circlip	1		
5	4812160262	Shaft sealing ring	1		
6	--	Supporting disc	1		
7	4812157165	O-ring	1		
8	--	Set screw	2		
9	--	Seal lock collar nut	2		
20	--	Engine hydraulic part	1		
30	--	End plate	1		
40	4812157395	Seal kit	1		

4700390603 Hydraulic motor Engine hydraulic part

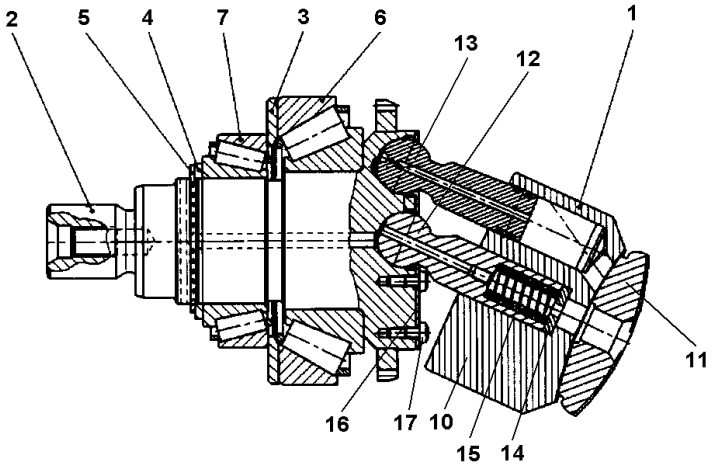

.

Item	Part No.	Name	Qty	L	SN INFO
1	4812157166	Engine hydraulic part	1		
2	-	Drive shaft with tooth ring	1		
3	-	Shim	1		
4	-	Supporting disc	1		
5	-	Circlip	1		
6	4812157167	Tapered roller bearing	1		
7	4812157168	Tapered roller bearing	1		
10	-	Cylinder	1		
11	-	Control lens	1		
12	-	Center pin	1		
13	-	Piston with piston rings	7		
14	-	Shim	1		
15	-	Pressure spring	1		
16	-	Retaining plate	1		
17	-	Lens screw with internal screw torx	14		

4700390603 Hydraulic motor End plate

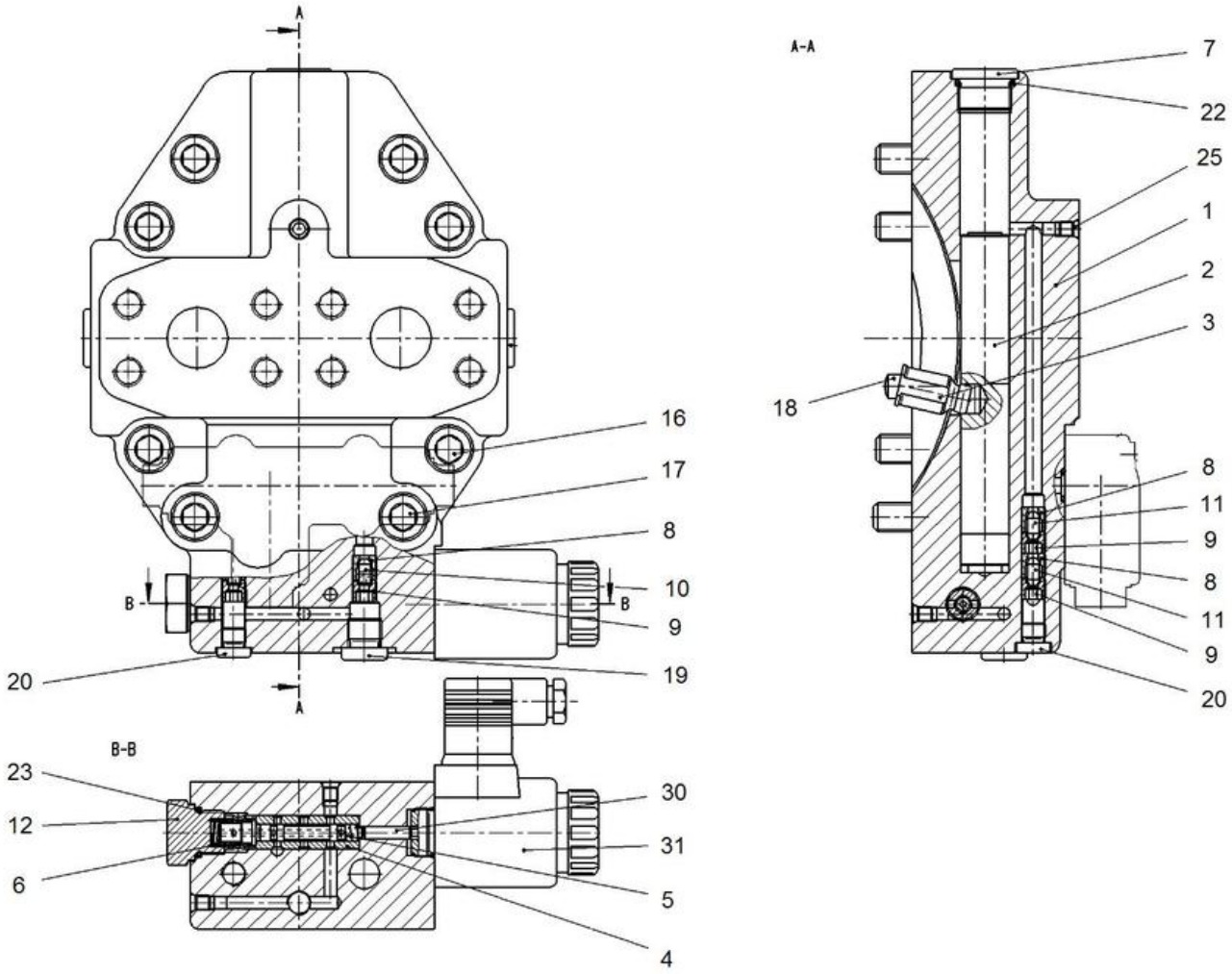

Item	Part No.	Name	Qty	L	SN INFO
1	-	End plate	1		
2	-	Control piston	1		
3	-	Adjustment pin	1		
4	-	Bushing	1		
5	-	Spool	1		
6	-	Pressure spring	1		
7	-	Screw	1		
8	4812161092	Throttle screw	3		
9	4812161093	Throttle screw	3		
10	4812161094	Valve pin	2		
11	-	Throttle pin	1		
12	-	Screw	1		
16	-	Cap screw	6		
17	-	Cap screw	2		
18	-	Dowel	2		
19	4812161095	Locking screw with o-ring	1		
20	4812160294	Locking screw with o-ring	2		
22	4812157169	O-ring	1		
23	4812157170	O-ring	1		
25	-	Double break-off pin	4		
30	4812157171	Needle roller	1		
31	4812155170	Solenoid valve	1		

Drive unit, From A014207 Drive unit

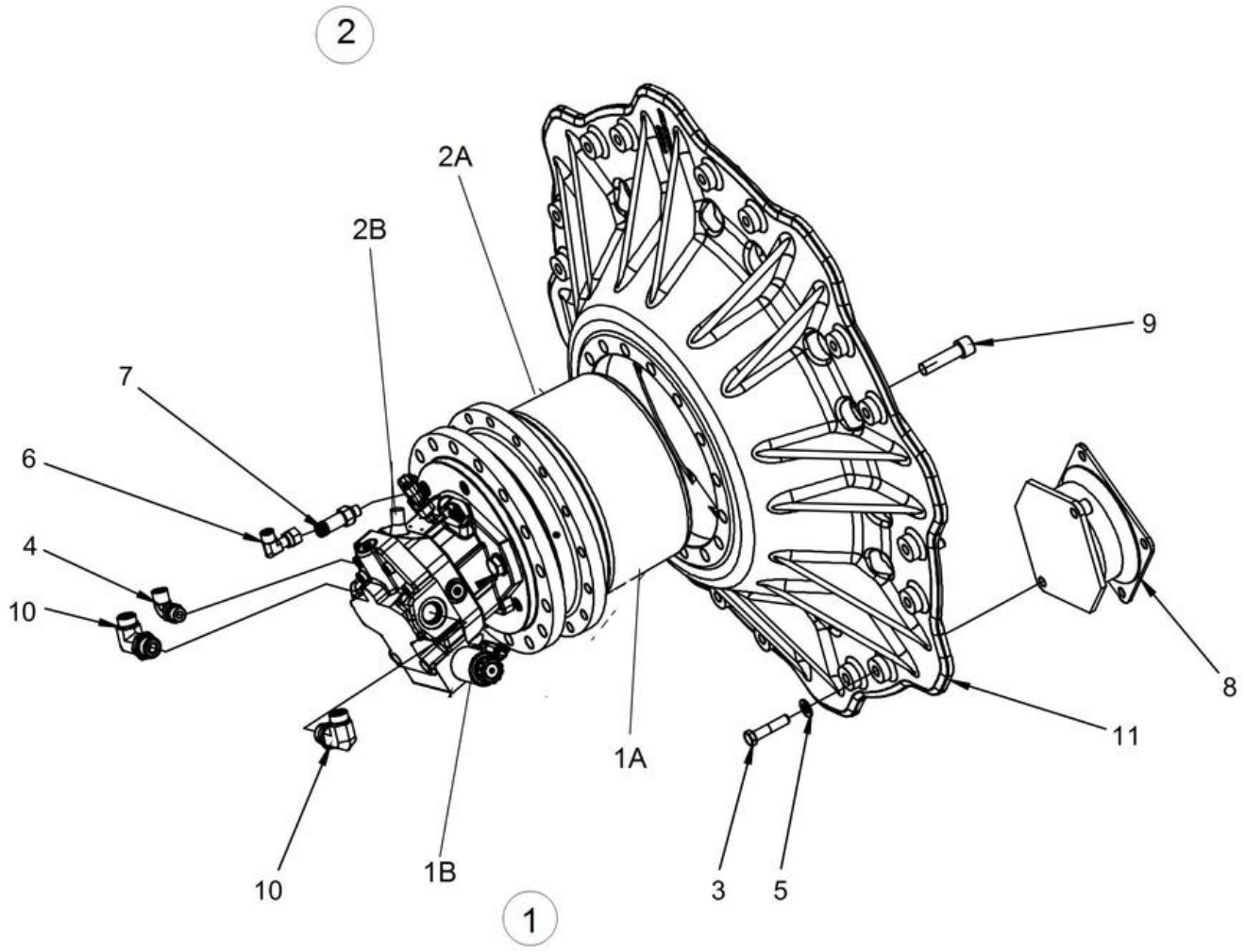

Item	Part No.	Name	Qty	L	SN INFO
1	4812120565	Drive unit	1		
1A	4812269526	Drum gear	1		
1B	4812120567	Hydraulic motor	1		
2	4812120566	Drive unit	1		
2A	4812269526	Drum gear	1		
2B	4812120568	Hydraulic motor	1		
3	4812110641	Hexagon screw w Tuflok M12x55 10.9 GEOMET	16		
4	4700792151	Elbow adapter 90	1		
5	4700904231	Washer, 13x24x2 mm 300 HV	16		
6	4700791401	Elbow 90, O-ring with swivel	1		
7	4700792507	Straight connector orfs	1		
8	4700394250	Shock absorber	8		
9	4700928022	Screw	16		
10	4700792331	Elbow 90 orfs	2		
11	4700391724	Drive disc	1		

Drive unit, From A014207 4812269526 Gear

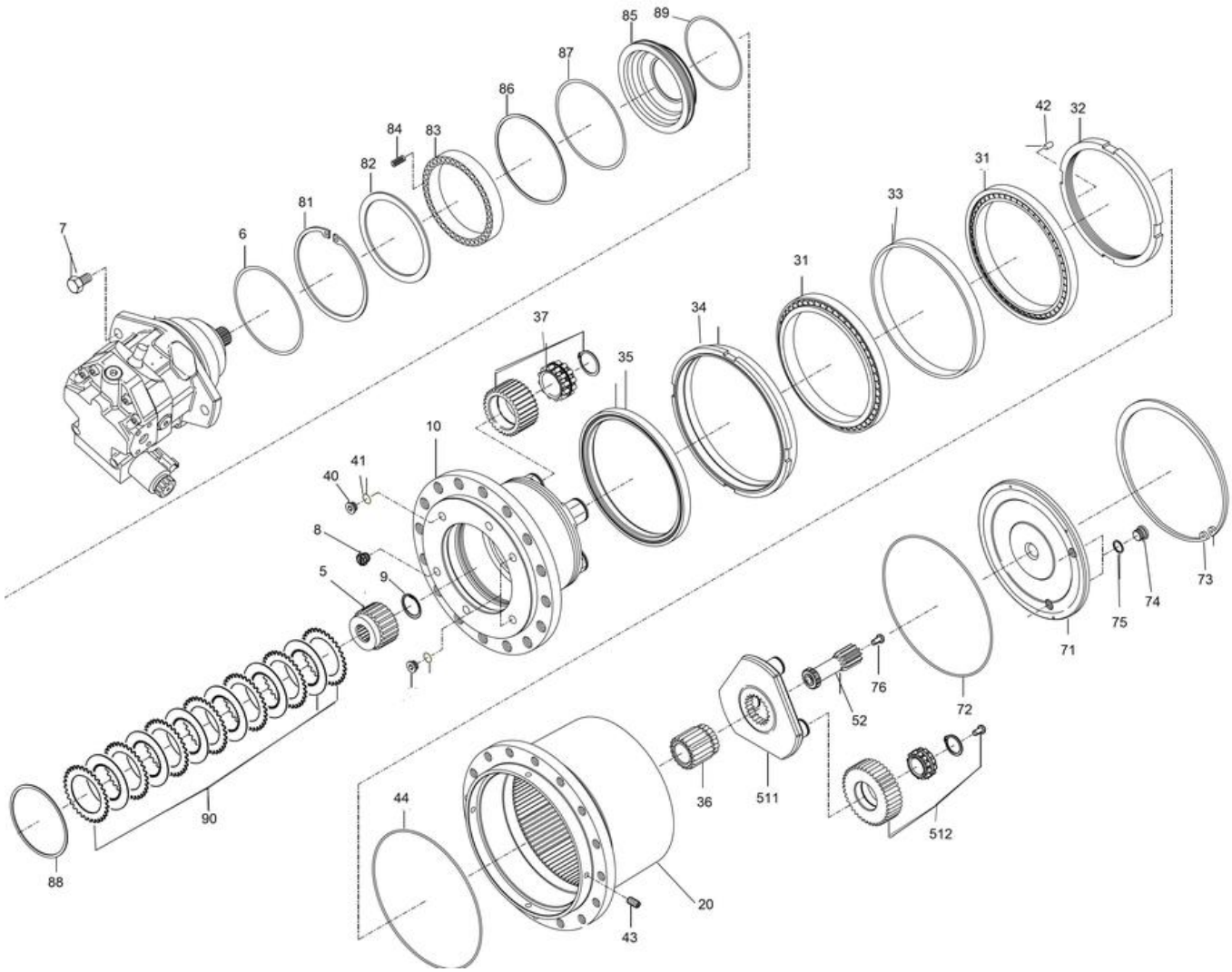

Item	Part No.	Name	Qty	L	SN INFO
5	-	Carrier	1		
6	4812160487	O-ring	1		
7	-	Hexagon screw	2		
8	4700950495	Plug	1		
9	-	Retaining ring	1		
10	-	Spindle	1		
20	-	Ring gear	1		
31	-	Tapered roller bearing	2		
32	-	Shaft nut	1		
33	-	Intermediate ring	1		
34	-	Threaded ring	1		
35	-	Cassette seal	1		
36	-	Sun gear	1		
37	-	Planet gear	4		
40	4700950493	Plug	3		
41	4700950494	Seal ring	3		
42	-	Straight pin	2		
43	-	Setscrew	3		
44	-	O-ring	1		
52	-	Sun gear shaft	1		
71	-	Injector part	1		
72	4812160488	O-ring	1		
73	-	Retaining ring	1		
74	4700950491	Plug	2		
75	4700950492	Seal ring	2		
76	-	Grooved nail	1		
81	-	Retaining ring	1		
82	-	Washer	1		
83	-	Intermediate ring	1		
84	-	Compressor spring	30		
85	-	Piston	1		
86	4700950531	Supporting ring	1		
87	-	O-ring	1		
88	-	Thrust ring	1		
89	-	O-ring	1		
90	-	Brake disc kit	1		
511	-	Planet carrier	1		

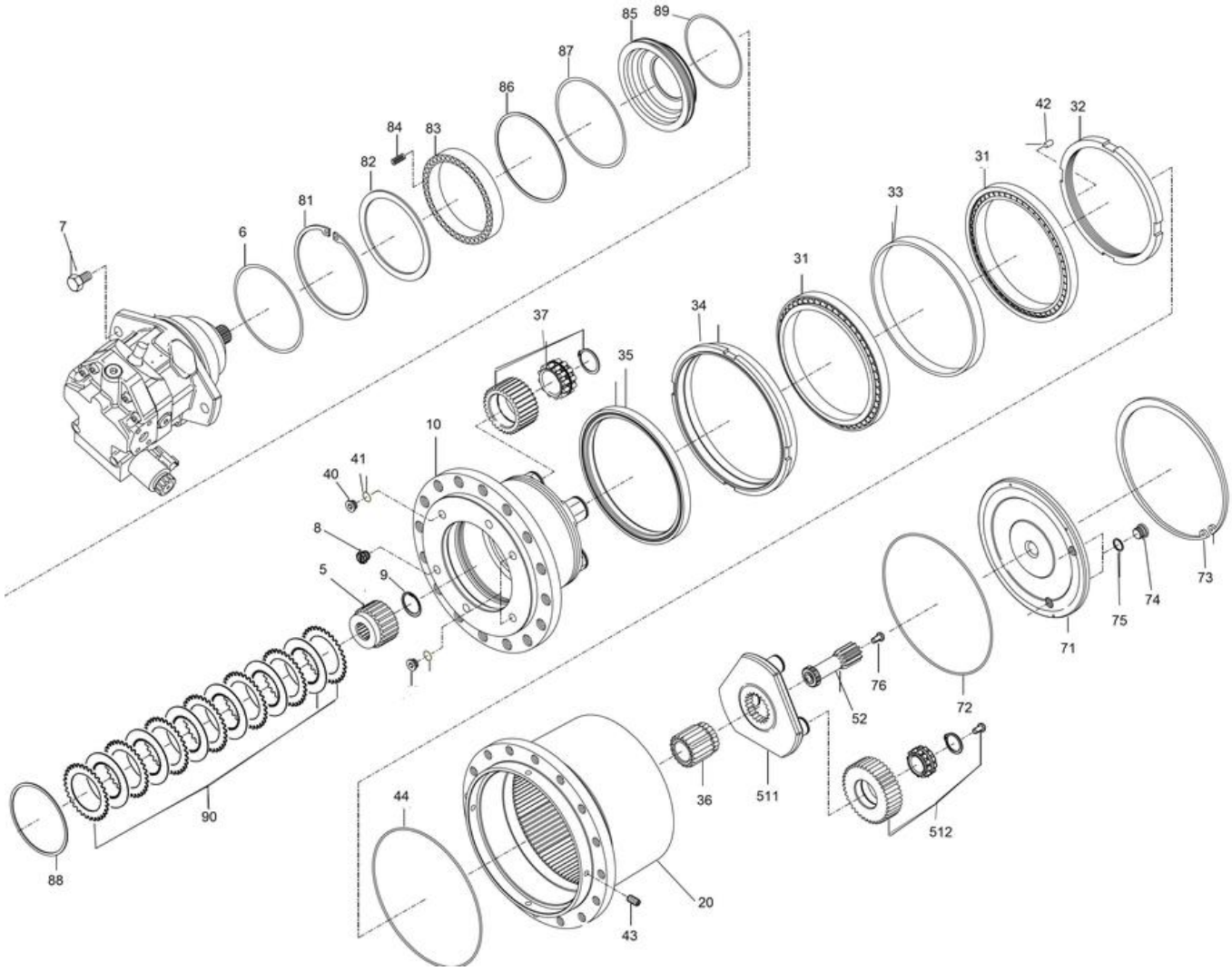
85
89
87
86
84
83
82
81
7
6
42
32
31
33
31
37
34
35
10
41
40
8
5
9
73
74
75
71
76
72
52
36
511
512
44
20
43
90
88

Item	Part No.	Name	Qty	L	SN INFO
512	-	Planet gear	1		

4812120567 Hydraulic motor 4812120567 Hydraulic motor

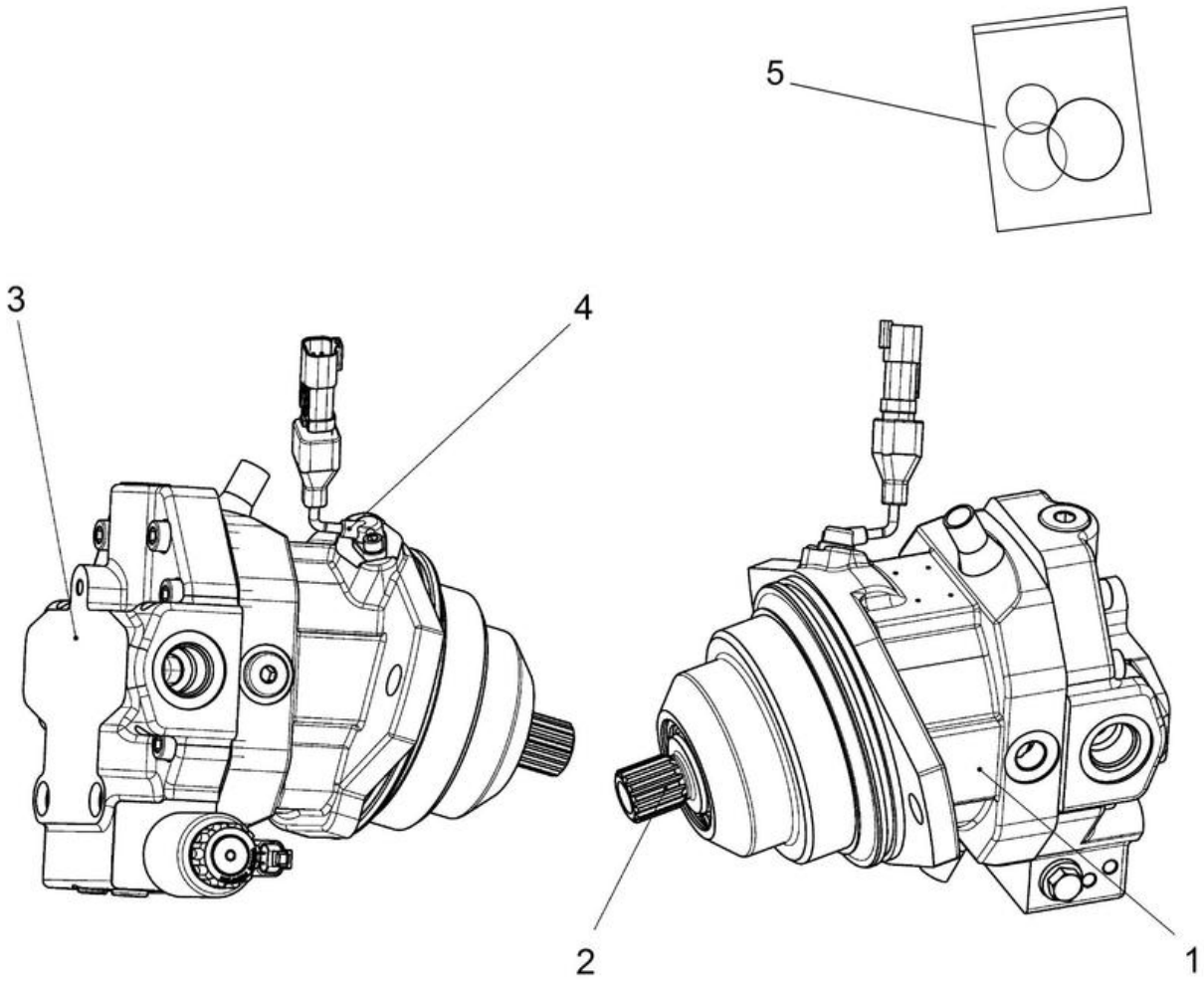

Item	Part No.	Name	Qty	L	SN INFO
1	-	Housing, cpl	1		
2	-	Rotary group	1		
3	-	Connection plate, cpl	1		
4	-	Sensor	1		
5	4812157395	Seal kit	1		

4812120567 Hydraulic motor Housing, cpl

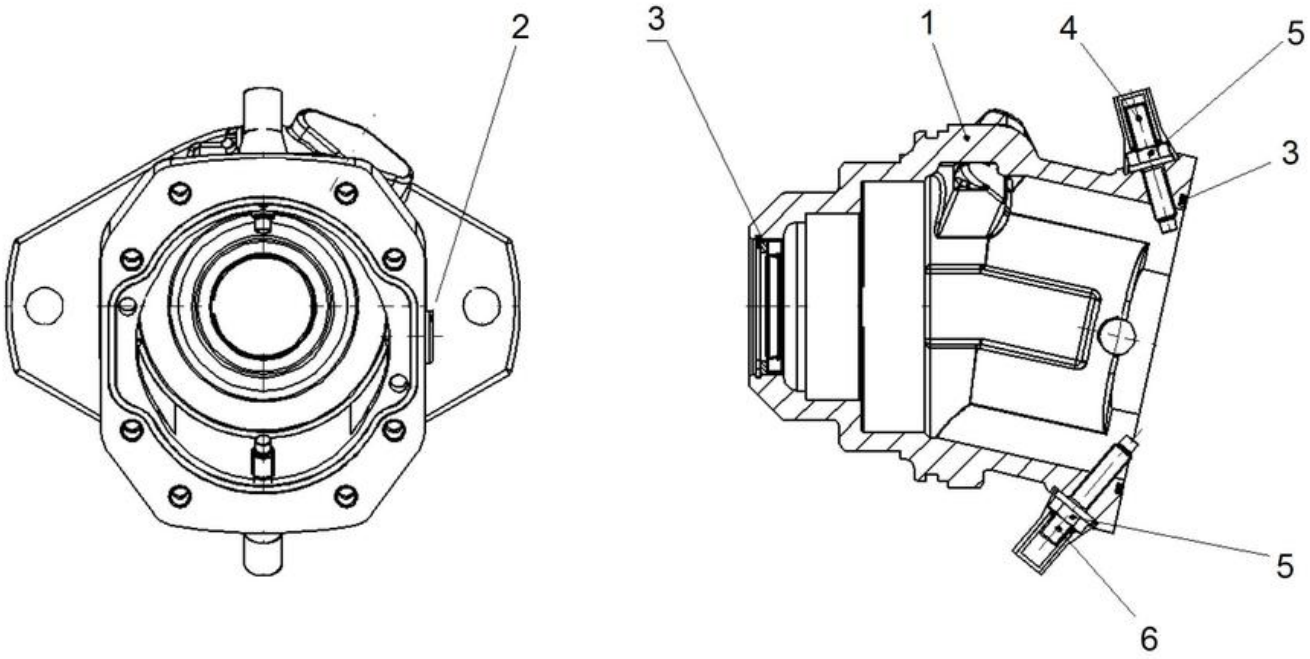

Item	Part No.	Name	Qty	L	SN INFO
1	-	Housing	1		
2	-	Lock screw	1		
3	-	Seal kit rotary group	1		
4	-	Threaded pin	1		
5	-	Sealing nut	2		
6	-	Threaded pin	1		

4812120567 Hydraulic motor Rotary group

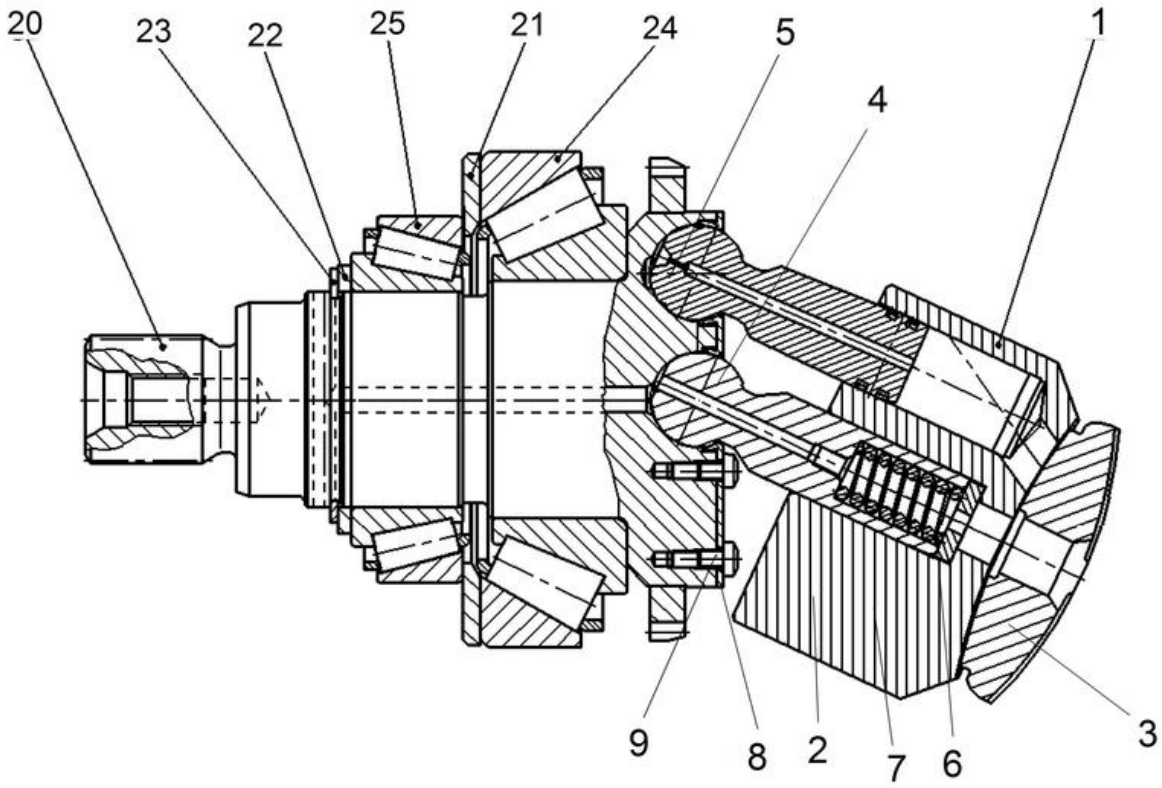

Item	Part No.	Name	Qty	L	SN INFO
1	4812157166	Engine hydraulic part	1		
2	-	Cylinder	1		
3	-	Control lens	1		
4	-	Center pin	1		
5	-	Piston with rings	7		
6	-	Adjustment shim	1		
7	-	Pressure spring	1		
8	-	Retaining plate	1		
9	-	Pan-head screw	14		
20	-	Drive shaft	1		
21	-	Shim	1		
22	-	Back-up plate	1		
22	-	Back-up plate	1		
22	-	Back-up plate	1		
22	-	Back-up plate	1		
22	-	Back-up plate	1		
22	-	Back-up plate	1		
22	-	Back-up plate	1		
22	-	Back-up plate	1		
22	-	Back-up plate	1		
23	-	Retaining ring	1		
24	4812157167	Tapered roller bearing	1		
25	4812157168	Tapered roller bearing	1		

4812120567 Hydraulic motor Connection plate, cpl

Item	Part No.	Name	Qty	L	SN INFO
1	-	Connection plate with break-off plugs	1		
2	-	Positioning piston	1		
3	-	Positioning trunnion	1		
4	-	Control bush	1		
5	-	Control piston	1		
6	-	Pressure spring	1		
7	-	Locking screw	1		
8	4812161092	Throttle screw	3		
9	4812161093	Throttle screw	3		
10	4812161094	Valve pin	2		
11	-	Throttle pin	1		
12	-	Locking screw	1		
16	-	Socket-head screw	6		
17	-	Socket head screw	2		
18	-	Cylinder pin	2		
19	4812161095	Locking screw with o-ring	1		
20	4812160294	Locking screw with o-ring	2		
22	4812157169	O-ring	1		
23	4812157170	O-ring	1		
30	4812157171	Needle roller	1		
31	-	Control solenoid	1		

4812120567 Hydraulic motor Sensor

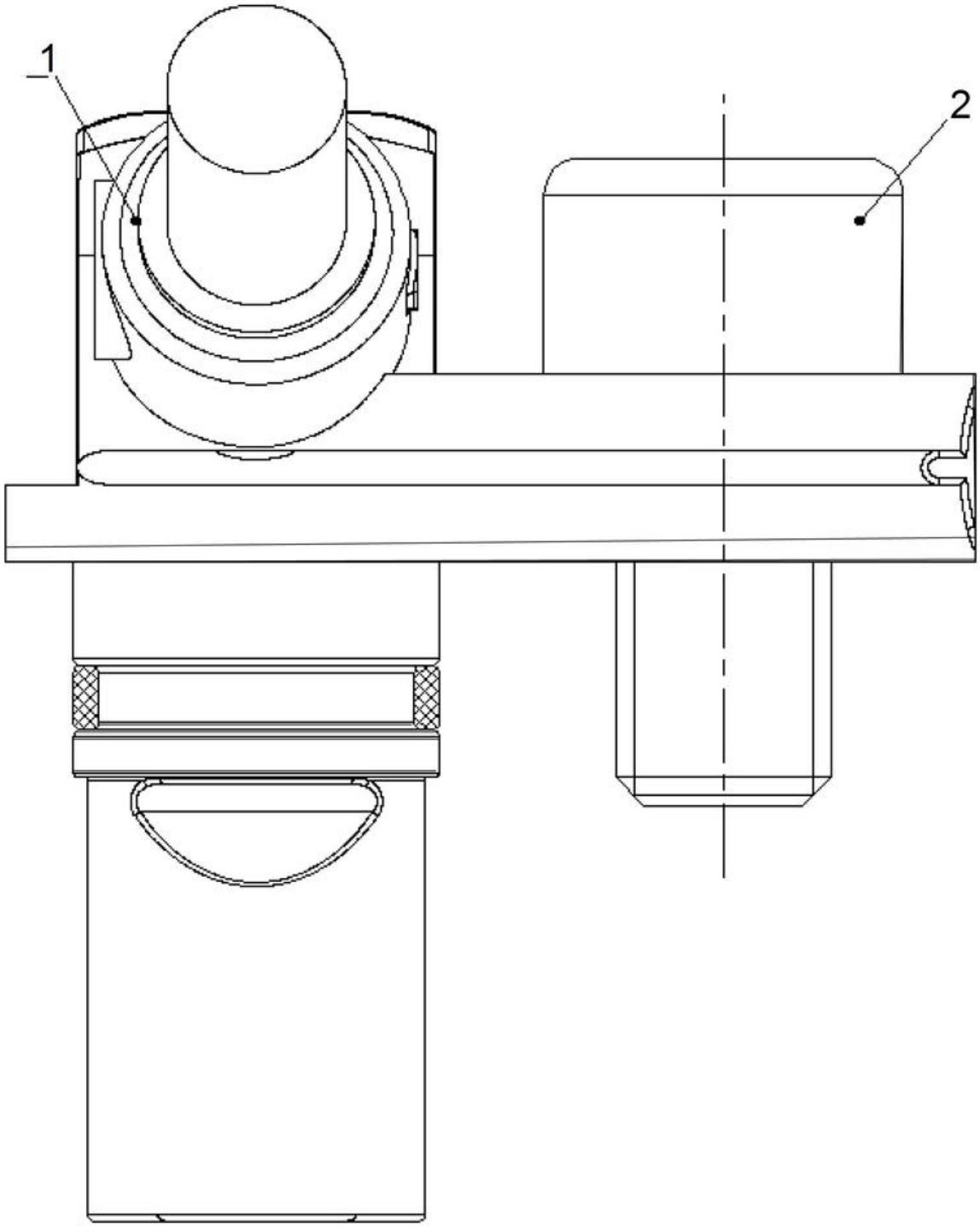

Item	Part No.	Name	Qty	L	SN INFO
1	4812034481	Revolution sensor	1		
2	-	Socket-head screw	1		

4812120568 Hydraulic motor 4812120568 Hydraulic motor

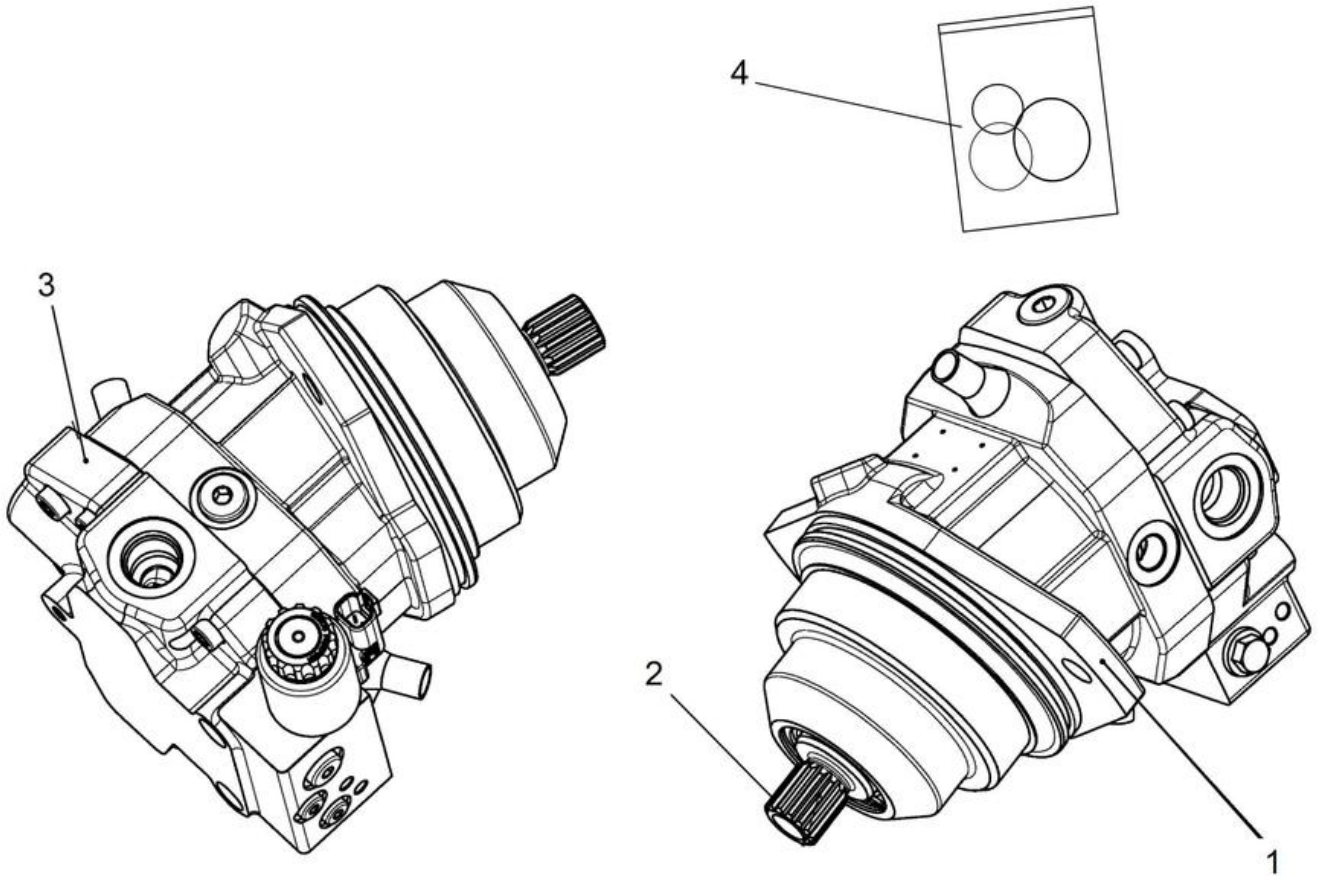

Item	Part No.	Name	Qty	L	SN INFO
1	-	Housing, cpl	1		
2	-	Rotary group	1		
3	-	Connection plate, cpl	1		
4	4812157395	Seal kit	1		

4812120568 Hydraulic motor Housing, cpl

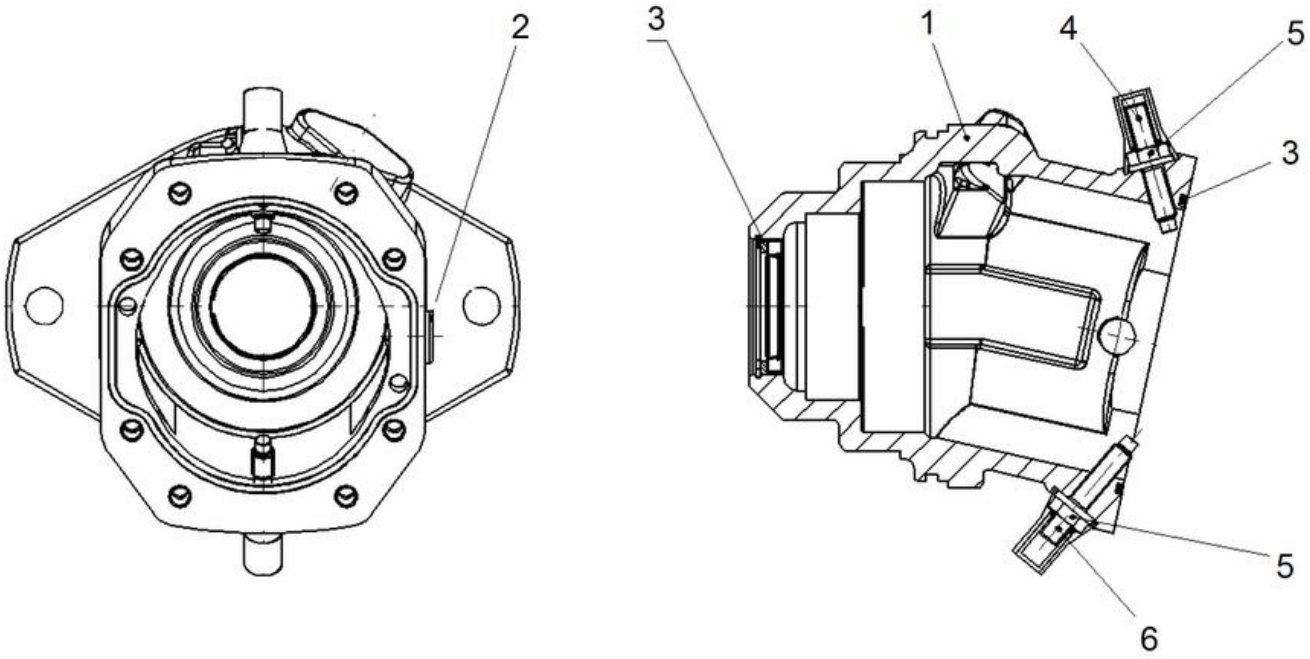

Item	Part No.	Name	Qty	L	SN INFO
1	-	Housing	1		
2	-	Lock screw	1		
3	-	Seal kit rotary group	1		
4	-	Threaded pin	1		
5	-	Sealing nut	2		
6	-	Threaded pin	1		

4812120568 Hydraulic motor Rotary group

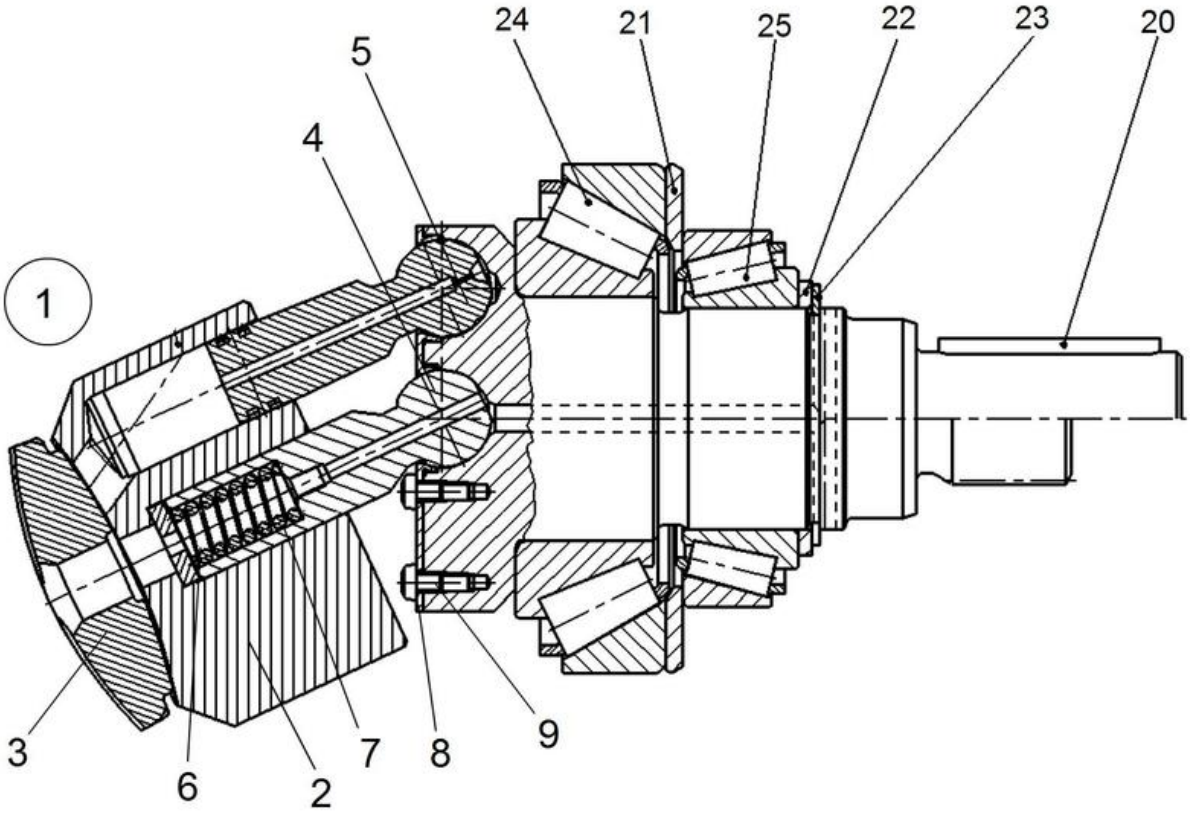

Item	Part No.	Name	Qty	L	SN INFO
1	4812157166	Engine hydraulic part	1		
2	-	Cylinder	1		
3	-	Control lens	1		
4	-	Center pin	1		
5	-	Piston with rings	7		
6	-	Adjustment shim	1		
7	-	Pressure spring	1		
8	-	Retaining plate	1		
9	-	Pan-head screw	14		
20	-	Drive shaft	1		
21	-	Shim	1		
22	-	Back-up plate	1		
22	-	Back-up plate	1		
22	-	Back-up plate	1		
22	-	Back-up plate	1		
22	-	Back-up plate	1		
22	-	Back-up plate	1		
22	-	Back-up plate	1		
22	-	Back-up plate	1		
23	-	Retaining ring	1		
24	4812157167	Tapered roller bearing	1		
25	4812157168	Tapered roller bearing	1		

4812120568 Hydraulic motor Connection plate, cpl

Item	Part No.	Name	Qty	L	SN INFO
1	-	Port plate with break-off plugs	1		
2	-	Positioning piston	1		
3	-	Positioning trunnion	1		
4	-	Control bush	1		
5	-	Control piston	1		
6	-	Pressure spring	1		
7	-	Locking screw	1		
8	4812161092	Throttle screw	3		
9	4812161093	Throttle screw	3		
10	4812161094	Valve pin	2		
11	-	Throttle pin	1		
12	-	Locking screw	1		
16	-	Socket-head screw	6		
17	-	Socket head screw	2		
18	-	Cylinder pin	2		
19	4812161095	Locking screw with o-ring	1		
20	4812160294	Locking screw with o-ring	2		
22	4812157169	O-ring	1		
23	4812157170	O-ring	1		
30	4812157171	Needle roller	1		
31	-	Control solenoid	1		

Drum Vibrating unit Sauer

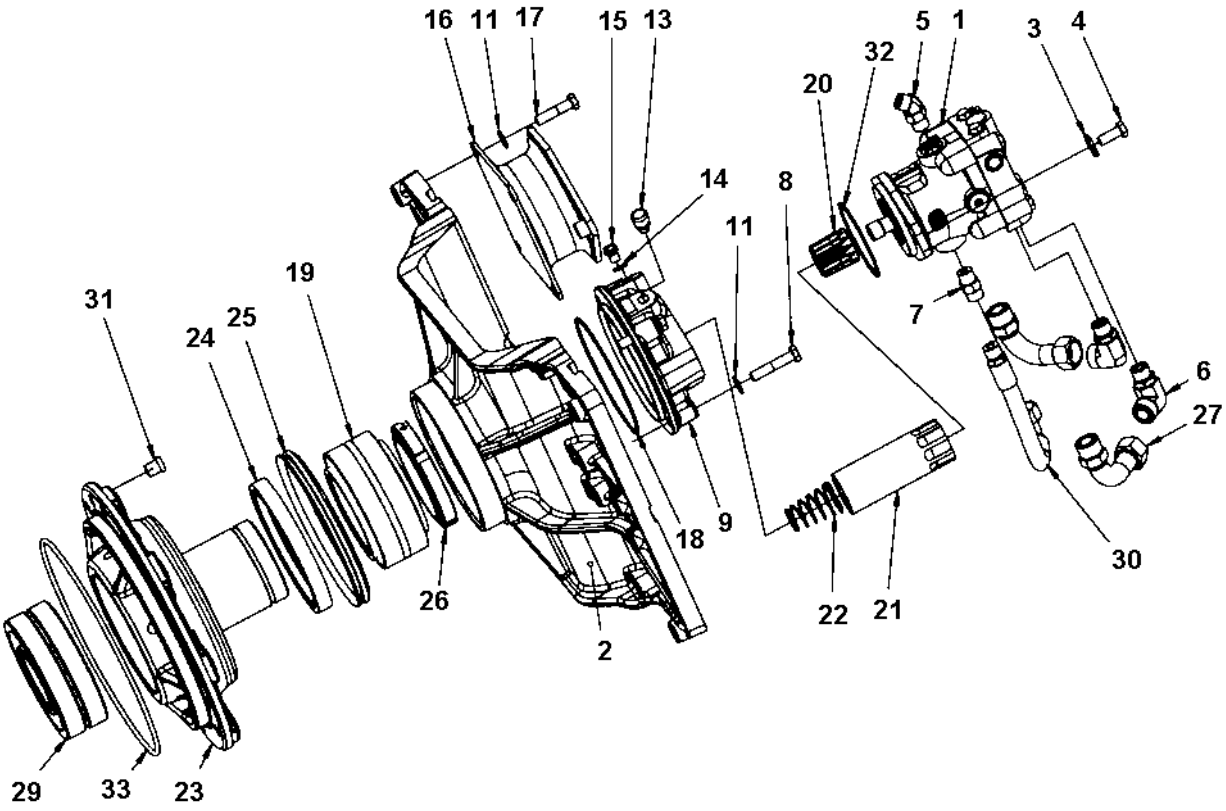

Item	Part No.	Name	Qty	L	SN INFO
1	4700395915	Hydraulic motor Vibration	1		
2	4700392364	Holder plate	1		
3	4700904213	Steel Plain Washer	2		
4	4700500046	Hex. head screw M12x030H	2		
5	4700791796	Elbow 45, O-ring with swivel	1	1	
6	4700792746	Connector elbow 90 orfs	2		
7	4700791799	Straight connector orfs	1	2	
8	4700500049	Screw, M12x60 mm 8.8 A3K	4		
9	4700390160	Motor adapter	1		
11	4700904231	Washer, 13x24x2 mm 300 HV	20		
13	4700926736	Breather	1		
14	4700162027	Sealing	1		
15	4700903726	Steel plug threaded	1		
16	4700394251	Shock absorber	4		
17	4812110643	Hexagon screw w Tuflok M12x50 8.8 A3K	16		
18	4700160105	O-ring 70	1		
19	4700116041	Taper roller bearing	1		
20	4700340862	Splined sleeve	1		
21	4700381027	Splined sleeve	1		
22	4700349715	Spring	1		
23	4700379650	Drum bearing housing	1		
24	4700386272	Sealing	1		
25	4700929447	V-ring	1		
26	4812112413	Shaft nut	1		
27	4700392748	Connector	2		
29	4700792270	Spherical roller bearing	1		
30	4700484271	Hydraulic hose	1	2	
31	4700900775	Plug	3		
32	4700160279	O-ring 70	1		
33	4700160344	O-ring 70	1		

Comments for Page: Vibrating unit Sauer

(L)OCAL REMARKS

1 | en_US | For use of upper leak port.

2 | en_US | For use of lower leak port.

Drum 4700395915 Hydraulic motor Vibration

Item	Part No.	Name	Qty	L	SN INFO
1	4700395915	Hydraulic motor Vibration	1		
2	4700909356	Retaining ring	1		
3	--	Seal carrier	1		
4	4700909354	O-ring	1	A	
5	4700909335	Seal	1	A	
6	--	Retaining ring	1		
7	4700909352	Ball bearing	1		
8	4700909351	Shaft	1		
9	4700939333	Plug, cpl	2		
10	4700923090	O-ring	1	A	
11	4700909358	Housing	1		
12	4700909346	Pin	2		
13	4700909343	Gasket	1	A	
14	4700909336	Thrust plate	1		
15	4700950593	Cylinder block kit	1		
16	---	Piston	9		
17	4700909342	Retainer	1		
18	---	Cylinder block	1		
19	4700909338	Washer	2		
20	4700909339	Spring	1		
21	4700909340	Retaining ring	1		
22	4700909350	Valve plate	1		
23	--	Pin	1		
24	4700909344	Needle roller bearing	1		
25	--	End cap	1		
26	--	Screw	4		
27	4700909243	Plug	1		
28	4700813618	O-ring	1	A	
29	4700480354	Plug and O-ring	2		
30	4700813617	O-ring	1	A	
31	--	Plug, cpl	1		
32	4700910713	O-ring	1	A	
33	--	Spring	1		
34	--	Poppet	1		
35	4812156199	Adapter plug	1		
36	4700923087	O-ring	1	A	
37	---	O-ring	1	A	

Item	Part No.	Name	Qty	L	SN INFO
38	--	Plug, cpl	2		
39	4700923087	O-ring	1	A	
40	--	Spring	1		
41	--	Shuttle spool	1		
42	--	Spring	1		
43	4700950297	Seal kit	1		

Comments for Page: 4700395915 Hydraulic motor Vibration

(L)OCAL REMARKS

A | en_US | Included in seal kit, item 43.

Engine Engine room

Item	Part No.	Name	Qty	L	SN INFO
1	-	Engine			
2	-	Air cooler hoses			
3	-	Water cooler hoses			
4	-	Air cleaner module			
5	-	Air cleaner hose module			
6	-	Muffler			
7	-	Exhaust pipe module			
8	-	Fuel hose module			
10	-	Charge air cooler			
11	-	Water cooler			
12	-	Expansion tank assembly			
13	-	Coolant hoses			

Engine Engine

Item	Part No.	Name	Qty	L	SN INFO
1	-	Engine Module	1		
2	4700391165	Shock absorber	6		
3	4700500107	Screw M16x100 8.8	3		
4	4700345666	Spacer	3		
5	4700904557	Washer, 10.5x22x4 mm 300 HV	2	1	
6	4700500030	Screw hexagon	2		
6	4700500028	Screw, M10 x 25 mm 8.8 A3K	2	1	
7	4700397539	Protector	1		
8	4812113161	Bracket	1		
9	4700500031	Screw M10x40	1	1	

Comments for Page: Engine

(L)OCAL REMARKS

1 | en_US | Item to be used when bracket, item 8 is mounted.

Engine Engine module

Item	Part No.	Name	Qty	L	SN INFO
1	-	Diesel engine Cummins QSB4.5 T3 - 93kW	1		
2	4812113496	Hydraulic pump, steering	1		
3	4700394169	Pump bracket	1		
4	4700390618	Exhaust connection	1		
5	4700397259	Engine bracket	2		
6	4700393592	Engine bracket	1		
7	4700390018	Suction pipe	1		
8	4700792603	Quick connect coupling	2		
9	4700500049	Screw, M12x60 mm 8.8 A3K	2		
10	4700162011	Washer, 16.7x24x1.5 mm Type A M16	1		
11	4700500056	Screw, M12x45 mm 8.8 A3K	8		
12	4700791698	Connector elbow 90 ORFS	1		
13	4700391358	Coupling	1		
14	4700500021	Screw, M8x25 mm 8.8 A2K	8		
15	4700508048	Hexagon socket head cap screw M	4		
16	4812115511	Gasket	1		
17	4700508096	Hexagon socket head cap screw	2		
18	4700508080	Screw	12		
19	4700205112	Coolant hose	0.60		
20	4700500035	Hexagon screw, M12x20H	1		
21	4700500197	Hex. screw	2		
23	4700509025	Screw 3/8-16UNCx32 8,8	8		
24	4700904229	Washer, 8.4x 6x1.5 mm 300HV	12		
25	4700904637	Washer	14		
26	4700232231	Plug	1		
27	4700904231	Washer, 13x24x2 mm 300 HV	5		
28	4700904703	Plain washer 13x24x4 mm	8		
30	4700813429	O-ring 70	1		
32	4700335607	Connection cable, coarse	1		
34	4700391303	Hose connection	1		
35	4700792418	Wiring clip	2		
36	4700313004	Hose clamp 19-29mm	2		
37	4700792502	Hose connection	1		
38	4700394322	Gasket	1		

Engine Diesel engine Cummins QSB4.5 T3 - 93kW

Item	Part No.	Name	Qty	L	SN INFO
1	4700390831	Diesel engine Cummins QSB4.5 T3 - 93kW	1		
Comments for Part Num. 4700390831 "Please contact Customer Support for Price & Availability"					
1	4812116435	Diesel engine Cummins QSB4.5 T3 - 93kW	1	A	
1	4812116436	Diesel engine Cummins QSB4.5 T3 - 93kW	1	B	
1	4812116437	Diesel engine Cummins QSB4.5 T3 - 93kW	1	C	
2	4700945767	Starter	1		To A014973 incl. A015081
2	4812160573	Starter	1		From A014974 excl. A015081
3	-	Alternator	1		
3-1	4812160762	Alternator field kit CC	1		
3-2	4812160764	Alternator	1		
4	4812159165	Turbo charger, cpl	1		
5	4700945145	Oil filter element	1		
6	4700945760	Gasket, valve cover	1		
7	4700945769	Piston ring set	1		
8	4700945626	Injector	1		
9	4700945538	Fuel filter head with hand pump	1		
9	4700945147	Fuel prefilter	1		
10	4700945624	Fuel filter	1		
10	4812155278	Gasket	1		
11	4700945770	Oil dipstick	1		
12	4700945771	Oil cap	1		
13	4700945772	V-belt	1		
14	4700945773	V- belt pulley	1		
15	4700945774	Belt tensioner	1		
16	4700945887	Sensor water temperature	1		
17	4812156073	Fan, alternator	1		
18	4812156074	Pulley, alternator	1		
19	4812157769	Actuator, Fuel control	1		

Comments for Page: Diesel engine Cummins QSB4.5 T3 - 93kW

(L)OCAL REMARKS

A | en_US | Non certified

B | en_US | EU flex.

C | en_US | US flex.

Engine Air cooler hoses

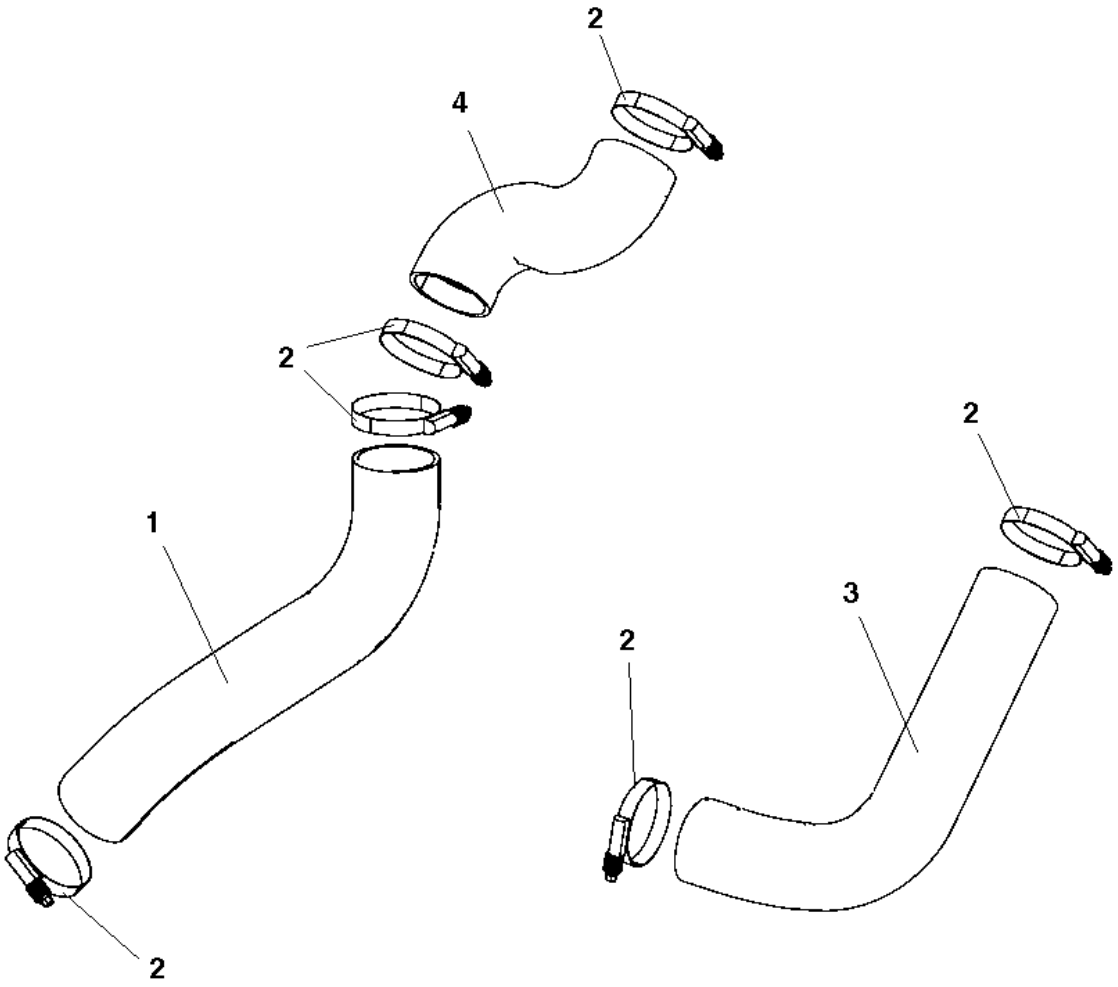

Item	Part No.	Name	Qty	L	SN INFO
1	4700390020	Charge air hose	1		
2	4700386966	Hose clamp 2.3/4"-3.5/8"	6		
3	4700390019	Charge air hose	1		
4	4700391263	Charge air hose	1		

Engine Air cleaner module

Item	Part No.	Name	Qty	L	SN INFO
1	4700390820	Air cleaner	1		
1	4700390995	Air filter element, outside	1		
1	4700390994	Air filter element, inside	1		
1	4700390992	Cover	1		
1	4700390993	Vacuator valve	1		
2	4700390811	Bracket	1		
3	4700904734	Washer, 8.4x26x4 mm 300 HV	2		
4	4700500023	Screw, M8x40 mm 8.8 A2K	2		
5	4700904229	Washer, 8.4x 6x1.5 mm 300HV	2		
6	4700570005	Hexagon nut	2		
7	4700791642	Decal "WARNING" Use of starting fluid prohib.	1		
8	4812115733	Bracket	1		
9	4700500022	Screw	2		

Engine Air cleaner hose module

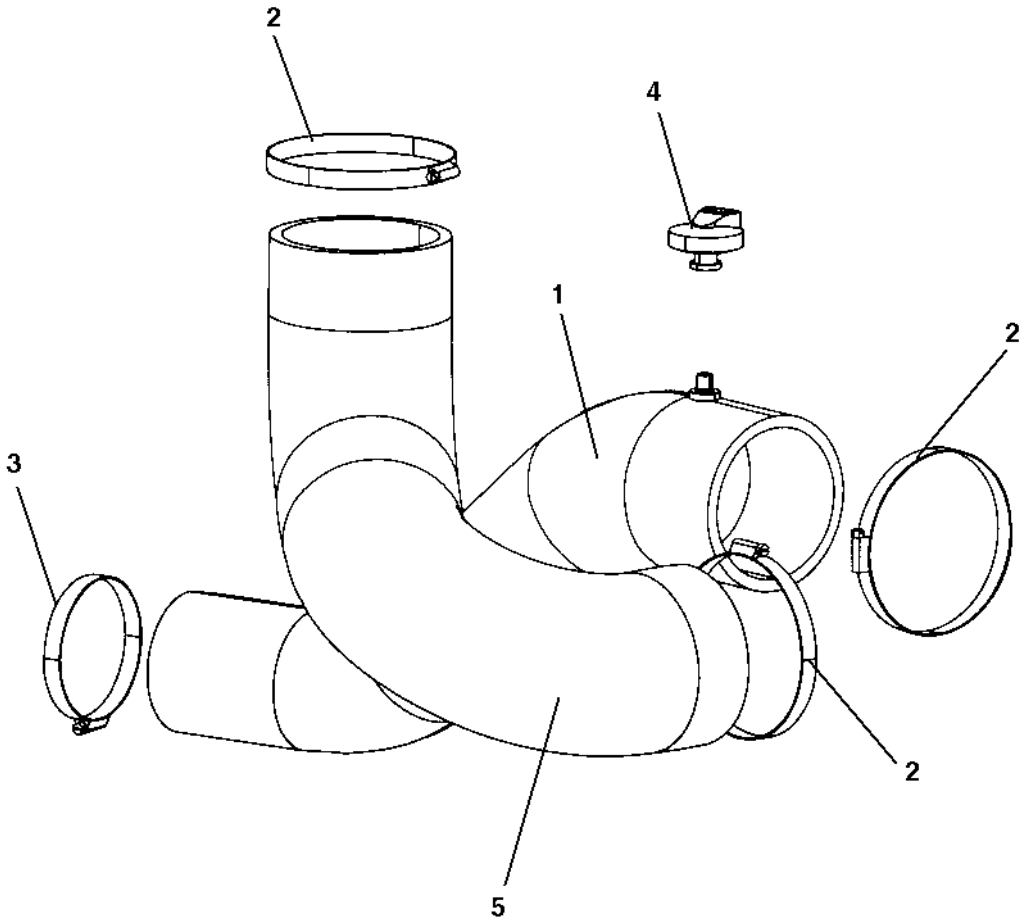

Item	Part No.	Name	Qty	L	SN INFO
1	4700396220	Hose	1		
2	4700313105	Hose clamp	3		
3	4700313033	Hose clamp	1		
4	4700390830	Service indicator	1		
5	4700396218	Hose	1		

Engine Muffler

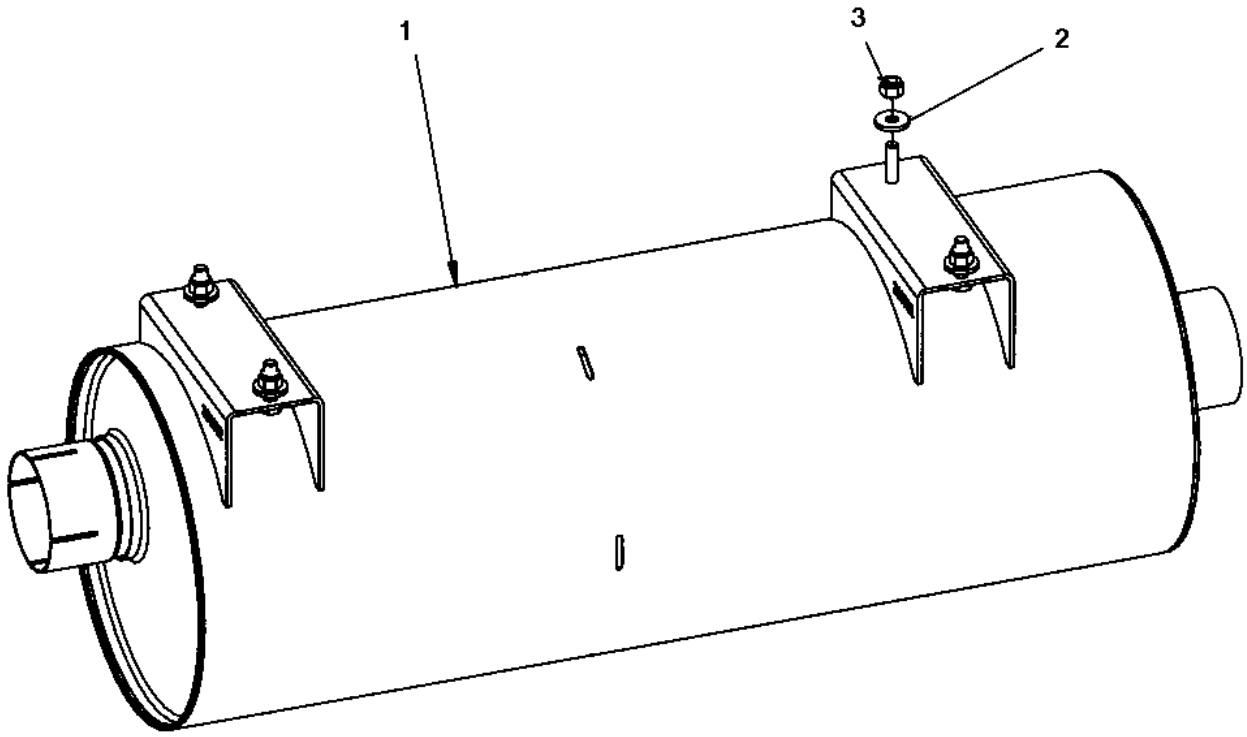

Item	Part No.	Name	Qty	L	SN INFO
1	4700390332	Muffler	1		
2	4700904640	Washer, 8.4x22x3 mm 300HV	4		
3	4700586003	Lock nut M8	4		

Engine Exhaust pipe module

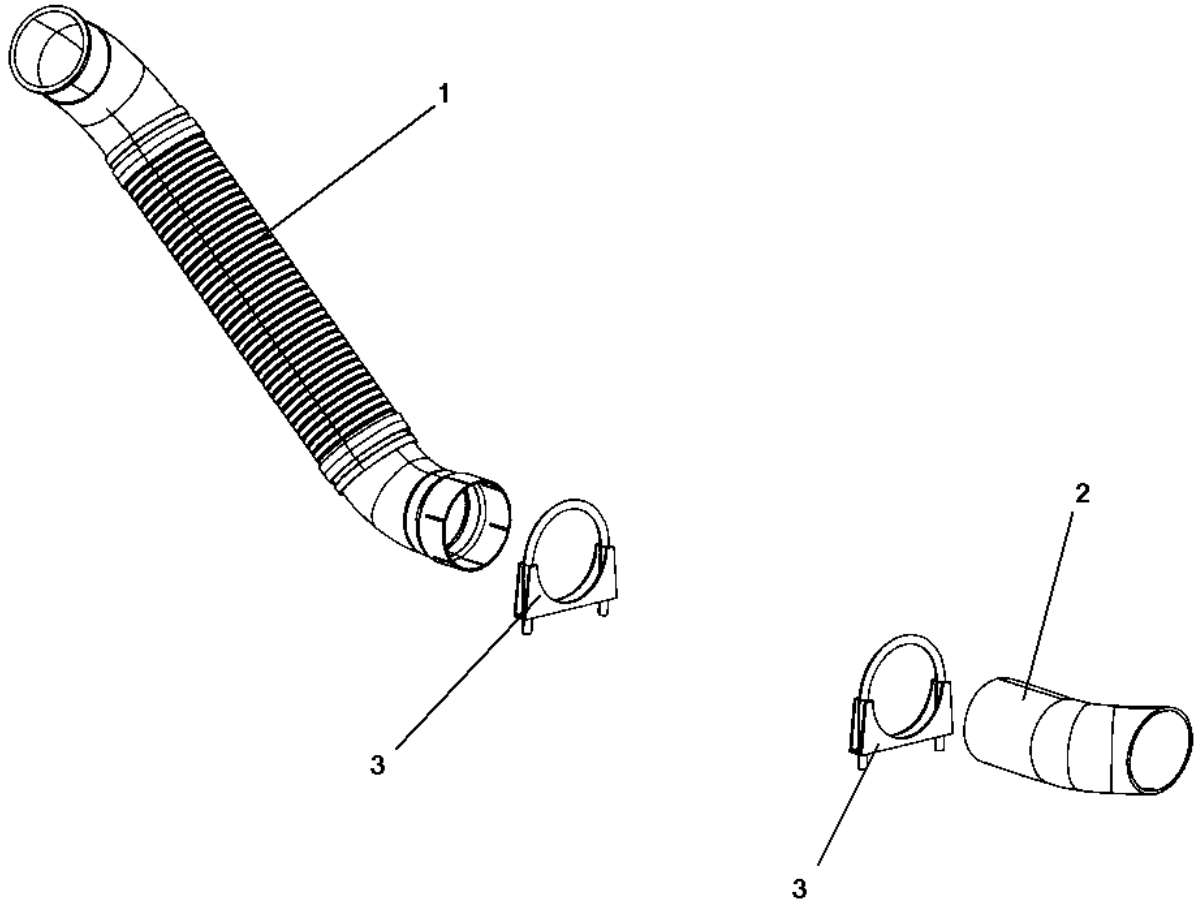

Item	Part No.	Name	Qty	L	SN INFO
1	4700390902	Exhaust pipe	1		
2	4700390903	Exhaust pipe	1		
3	4700313094	Pipe clamp	2		

Engine Fuel hose module

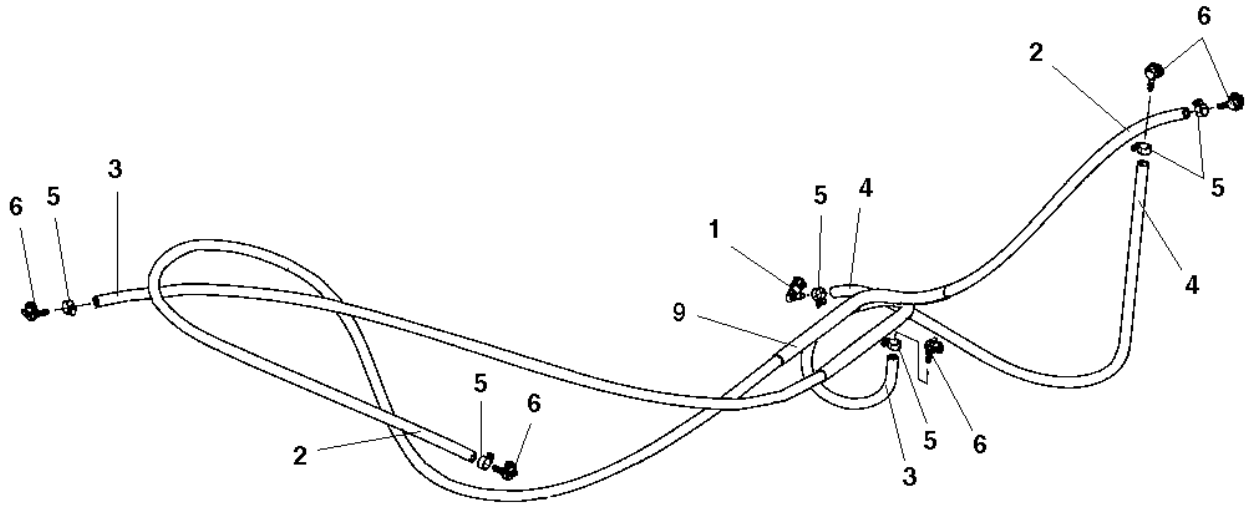

Item	Part No.	Name	Qty	L	SN INFO
1	4700792522	Quick connect system for fuel	1		
2	4700904984	Fuel hose	1XL	A	
3	4700904984	Fuel hose	1XL	B	
4	4700904984	Fuel hose	1XL	C	
5	4700313001	Hose clamp	6		
6	4700792526	Quick connect system for fuel	5		
9	4700792695	Hose guard	1XL	D	

Comments for Page: Fuel hose module

(L)OCAL REMARKS

A | en_US | L=3.72 m

B | en_US | L=2.38 m

C | en_US | L=1.29 m

D | en_US | L= 0,5 m

Engine Charge air cooler

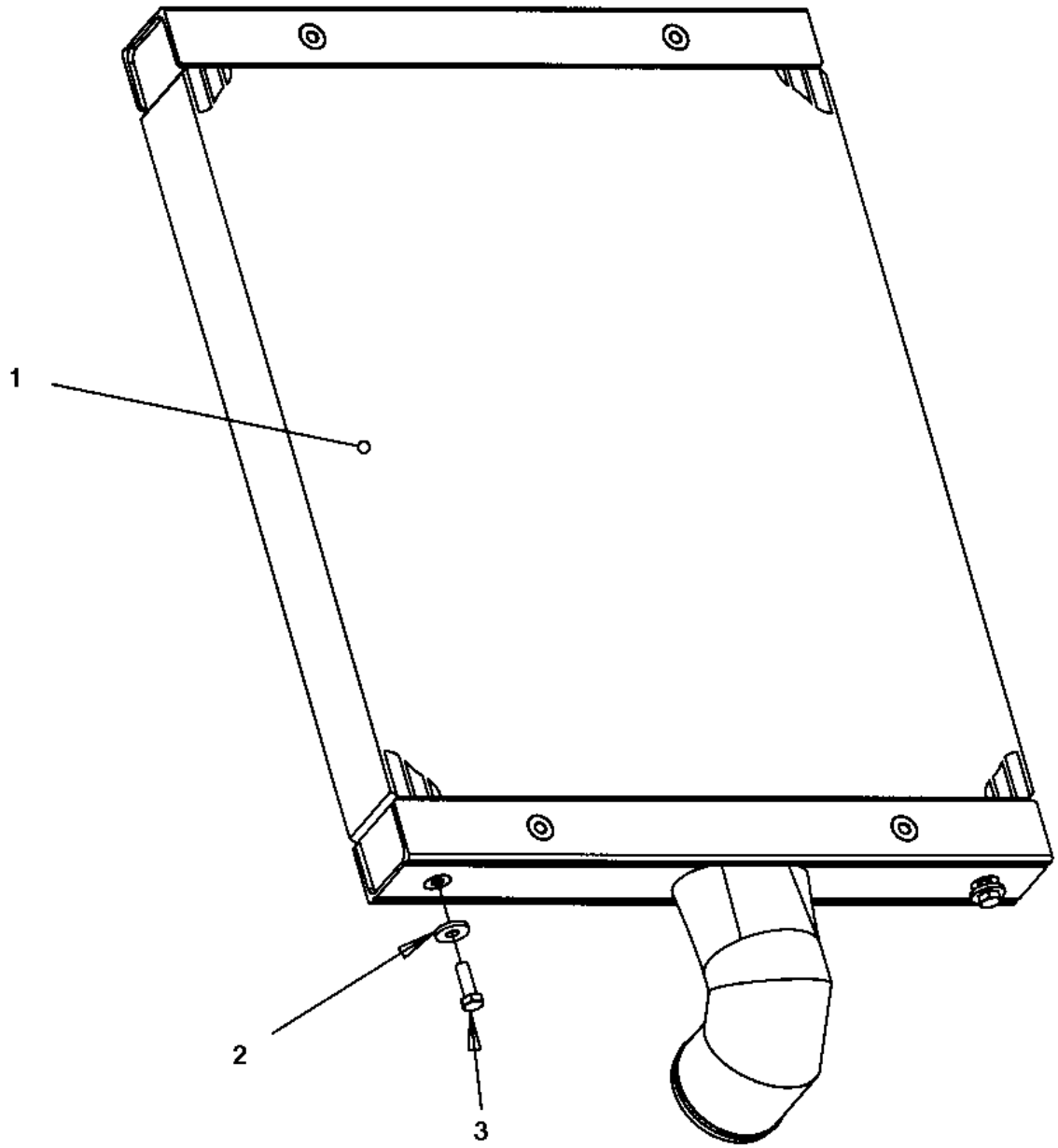

Item	Part No.	Name	Qty	L	SN INFO
1	4812123421	Charge air cooler	1		
2	4700904640	Washer, 8.4x22x3 mm 300HV	2		
3	4700500021	Screw, M8x25 mm 8.8 A2K	2		

Water cooler, To A014202 Water cooler

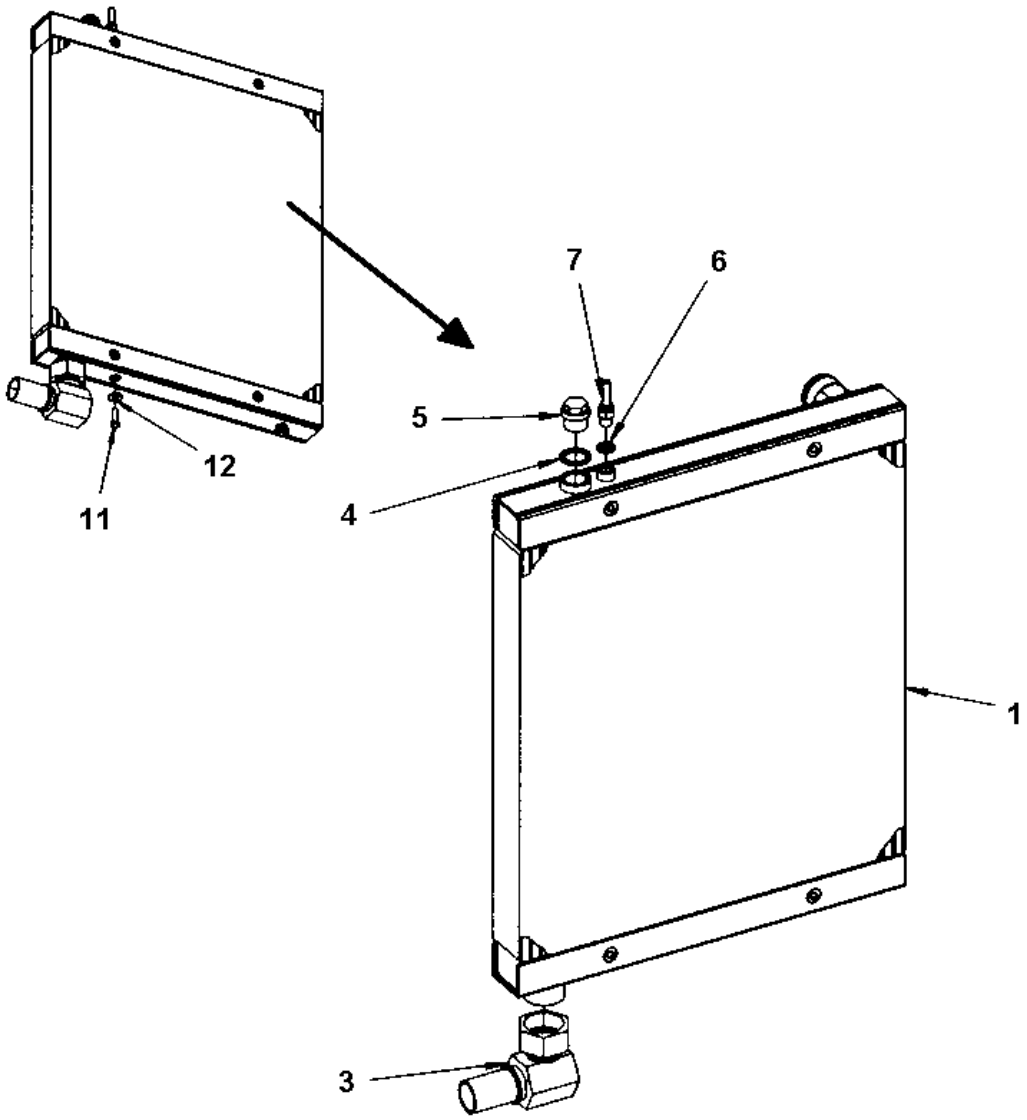

Item	Part No.	Name	Qty	L	SN INFO
1	4700390627	Water cooler	1		
3	4700792323	Hose connection	1		
4	4700791120	Washer sealing	1		
5	4700232039	Steel plug threaded	1		
6	4700162004	Sealing	1		
7	4700792322	Hose connection	1		
11	4700500021	Screw, M8x25 mm 8.8 A2K	2		
12	4700904640	Washer, 8.4x22x3 mm 300HV	2		

Water cooler, To A014202 Water cooler hoses

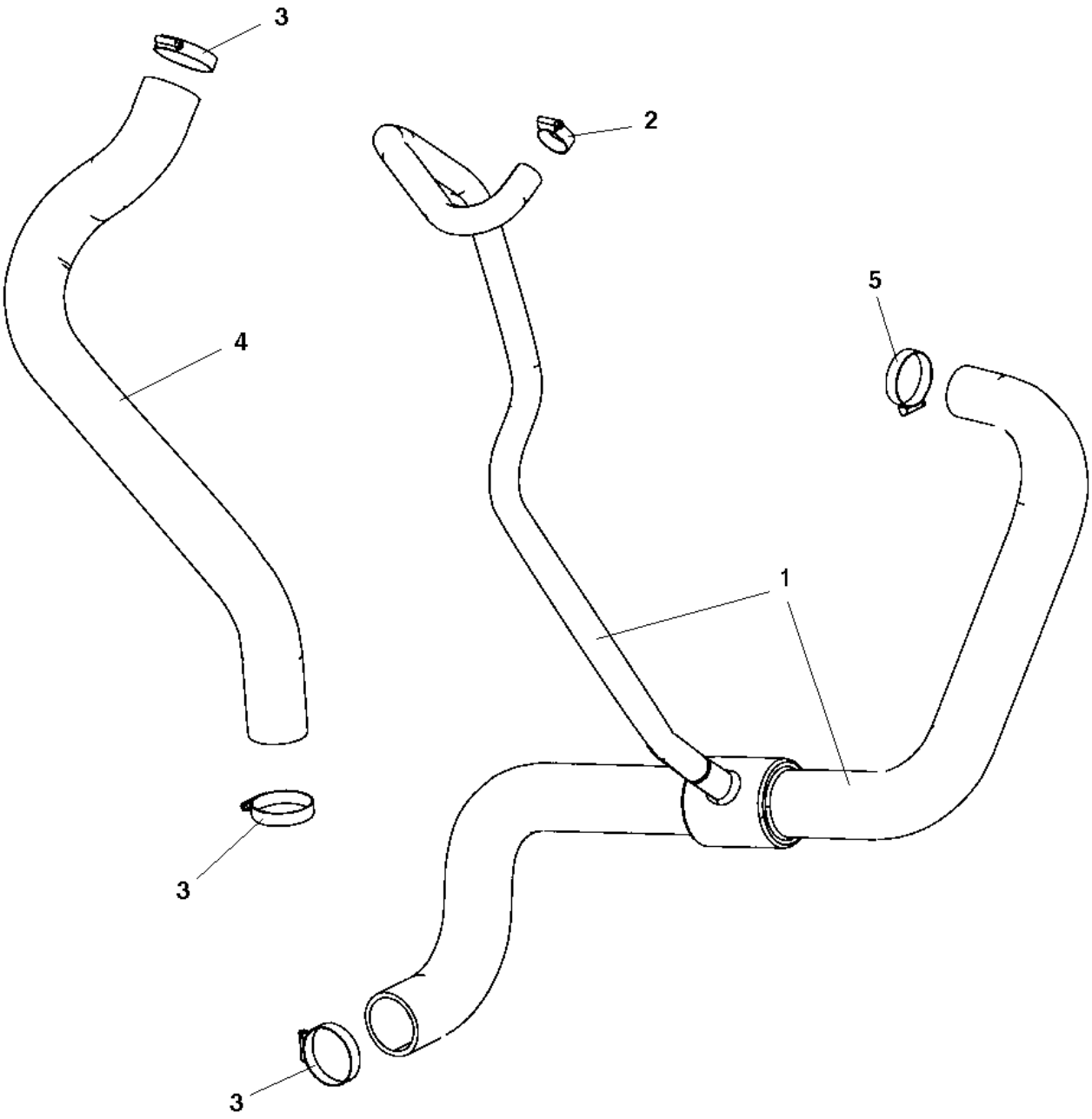

Item	Part No.	Name	Qty	L	SN INFO
1	4700394267	Coolant hose	1		
2	4700313004	Hose clamp 19-29mm	1		
3	4700313010	Hose clamp	3		
4	4700390024	Coolant hose	1		
5	4700313009	Hose clamp	1		

Water cooler, From A014203 Water cooler

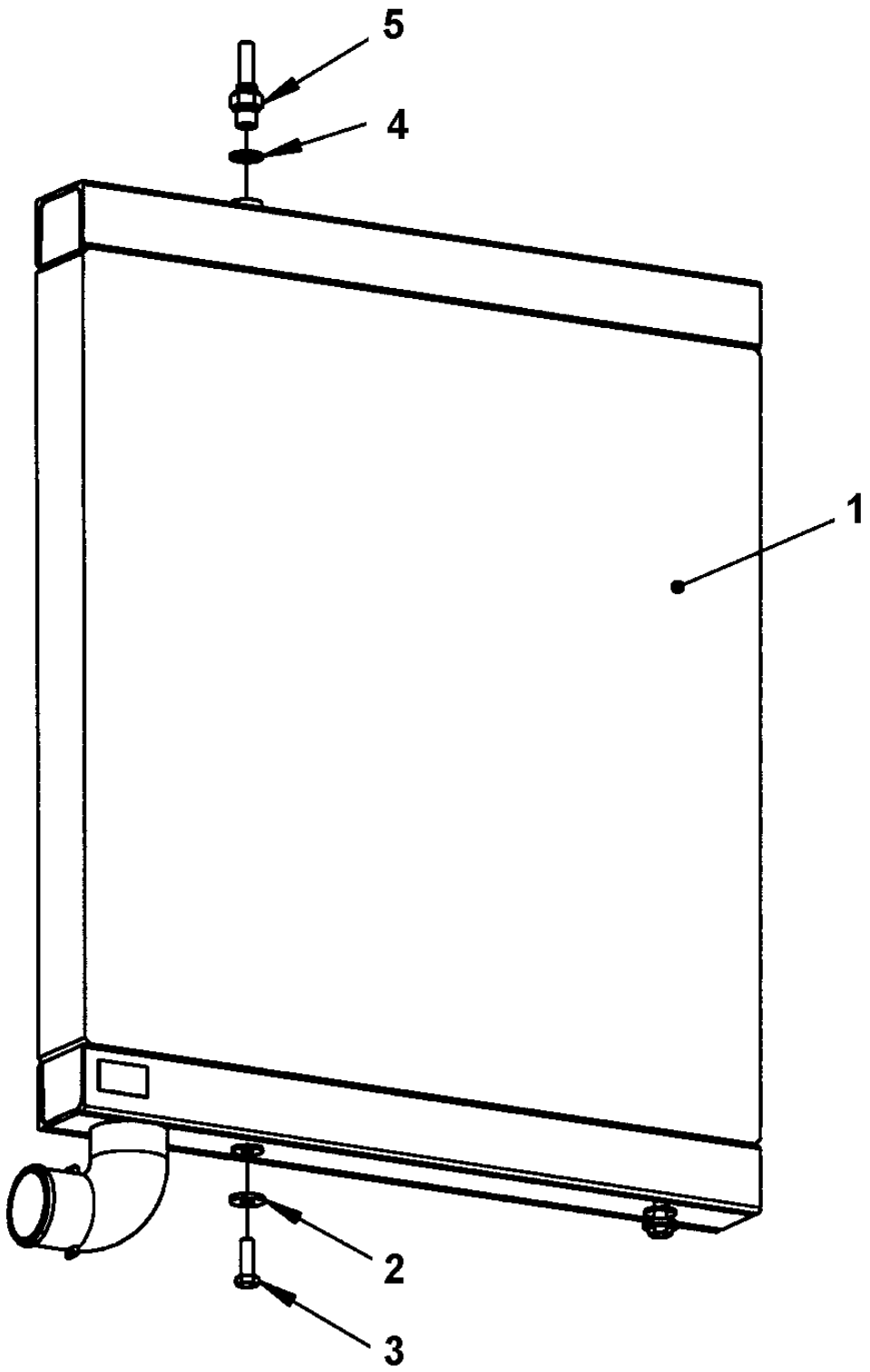

Item	Part No.	Name	Qty	L	SN INFO
1	4812123419	Water cooler	1		
2	4700904640	Washer, 8.4x22x3 mm 300HV	2		
3	4700500021	Screw, M8x25 mm 8.8 A2K	2		
4	4700162004	Sealing	1		
5	4700792322	Hose connection	1		

Water cooler, From A014203 Water cooler hoses

Item	Part No.	Name	Qty	L	SN INFO
1	4812119581	Coolant hose	1		
2	4700313004	Hose clamp 19-29mm	1		
3	4700313010	Hose clamp	4		
4	4700390024	Coolant hose	1		

Engine Expansion tank assembly

Item	Part No.	Name	Qty	L	SN INFO
1	4700393029	Expansion tank	1		
2	4700393235	Strap	2		
3	4700903714	Cooler cap	1		
4	4700394229	Rubber strip	2		

Engine Coolant hoses

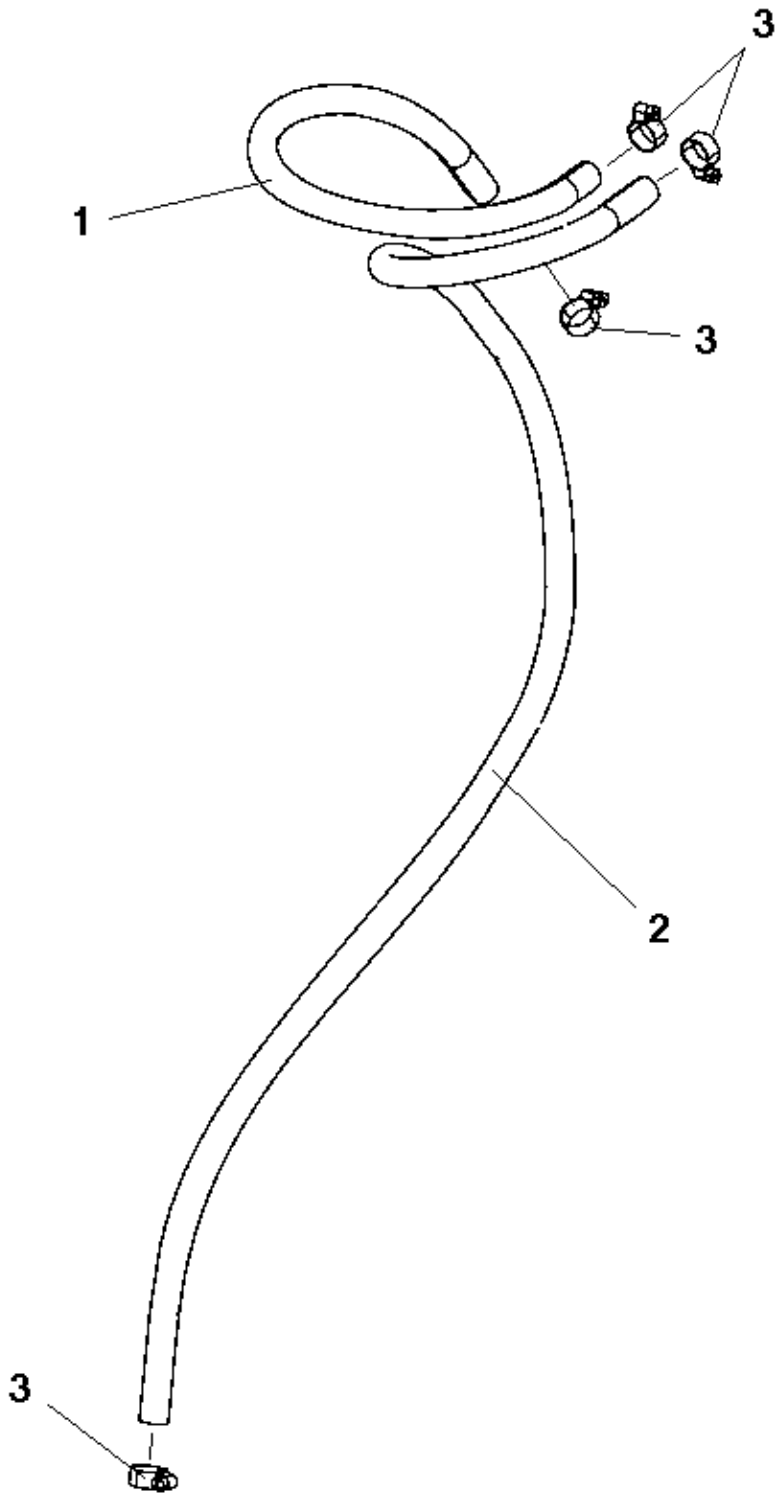

Item	Part No.	Name	Qty	L	SN INFO
1	4700246069	Rubber hose	1XL	A	
2	4700246069	Rubber hose	1XL	B	
3	4700313001	Hose clamp	4		

Comments for Page: Coolant hoses

(L)OCAL REMARKS

A | en_US | L= 0,54 m

B | en_US | L= 1,19 m

Hydraulic system, front drum Hydraulic system, front drum

Item	Part No.	Name	Qty	L	SN INFO
1	4700484075	Hydraulic hose	1		
2	4700484076	Hydraulic hose	1		
3	4700484077	Hydraulic hose	1		
4	4700484078	Hydraulic hose	1		
5	4700484079	Hydraulic hose	1		
6	4700484080	Hydraulic hose	1		
7	4700484081	Hydraulic hose	1		
20	-	Drive unit			To A014206 incl. A014212
20	-	Drive unit			From A014207 excl. A014212
21	-	Vibrating unit Sauer			
22	-	Hydraulic hoses, frame			

Hydraulic system, rear drum std Hydraulic system, rear drum std

Item	Part No.	Name	Qty	L	SN INFO
1	4700483748	Hydraulic hose	1		
2	4700483960	Hydraulic hose	1		
3	4700484084	Hydraulic hose	1		
4	4700484064	Hydraulic hose	1		
5	4700484236	Hydraulic hose	1		
6	4700484066	Hydraulic hose	1		
7	4700484067	Hydraulic hose	1		
8	4700903082	Hose shield	N		
12	4700904629	Stud	4		
13	4700349210	Rubber plate	2		
14	4700343872	Hose clamp	3		
15	4700343732	Hose clamp	1		
16	4700335914	Cover plate	2		
17	4700570103	Nut, M10 x 1.5 mm GEOMET®	4		
20	-	Drive unit			To A014206
20	-	Drive unit			From A014207
21	-	Vibrating unit Sauer			
22	-	Hydraulic hoses, frame			
23	-	Hydraulic pump			

Hydraulic system, rear drum offset Hydraulic system, rear drum offset

Item	Part No.	Name	Qty	L	SN INFO
1	4700484046	Hydraulic hose	1		
2	4700484047	Hydraulic hose	1		
3	4700484048	Hydraulic hose	1		
4	4700484049	Hydraulic hose	1		
5	4700484050	Hydraulic hose	1		
6	4700484051	Hydraulic hose	1		
7	4700484052	Hydraulic hose	1		
8	4700484053	Hydraulic hose	1		
9	4700903082	Hose shield	0		
10	4700484054	Hydraulic hose	1		
11	4700484055	Hydraulic hose	1		
12	4700484056	Hydraulic hose	1		
13	4700484057	Hydraulic hose	1		
14	4700484058	Hydraulic hose	1		
15	4700484059	Hydraulic hose	1		
16	4700484059	Hydraulic hose	1		
17	-	Connection block	1		
18	-	Drive unit	1		To A014206
18	-	Drive unit	1		From A014207
19	-	Vibrating unit Sauer	1		
20	4700391024	Steering cylinder	1		
21	-	Hydraulic valve module, offset/combi	1		
22	4700891374	O-ring	4	1	
23	-	Hydraulic pump	1		
24	-	Hydraulic hoses, frame	1		

Comments for Page: Hydraulic system, rear drum offset

(L)OCAL REMARKS

1 | en_US | Fitted between PN 4700391575 and standard valve PN 4700391574.

Hydraulic system, rear drum offset Hydraulic valve module, offset/combi

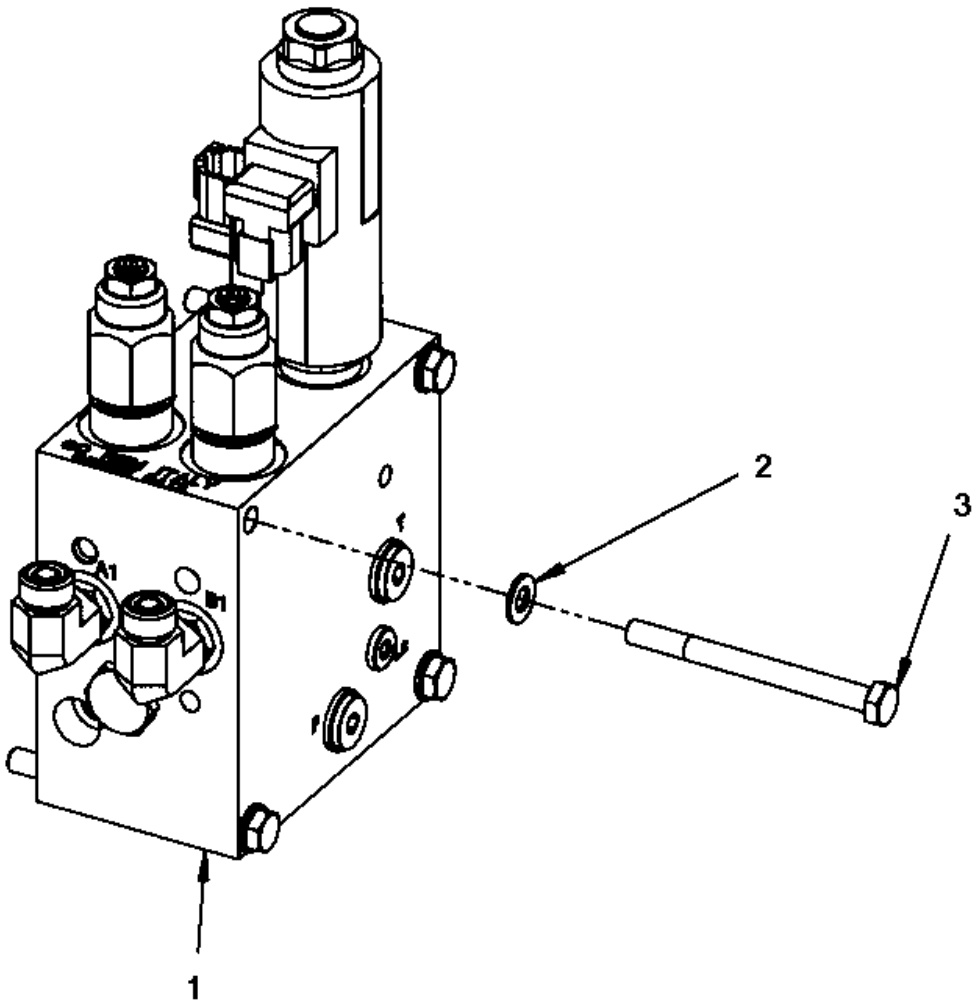

Item	Part No.	Name	Qty	L	SN INFO
1	-	Hydraulic valve	1		
2	4700904229	Washer, 8.4x 6x1.5 mm 300HV	4		
3	4700500115	Screw	4		

Hydraulic system, rear drum offset Hydraulic valve

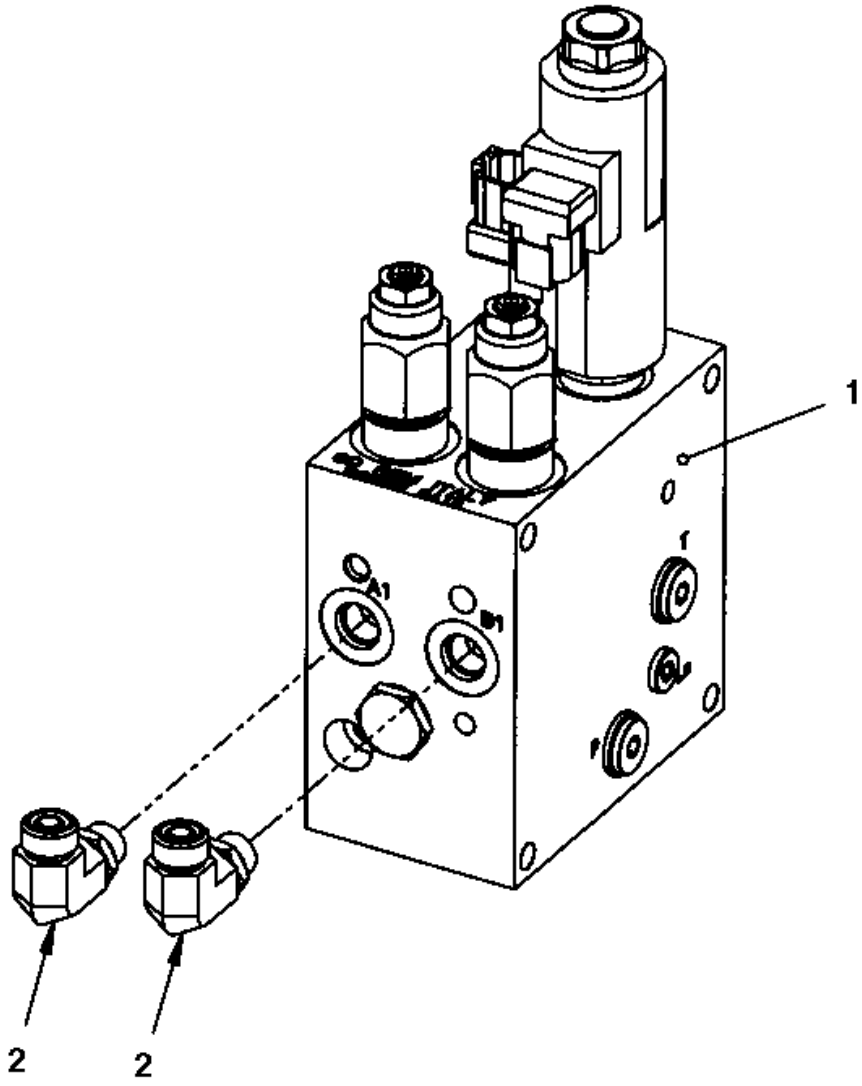

Item	Part No.	Name	Qty	L	SN INFO
1	4700391017	Hydraulic valve	1		
2	4700791846	Adapter	2		

Hydraulic system, rear drum offset 4700391017 Hydraulic valve

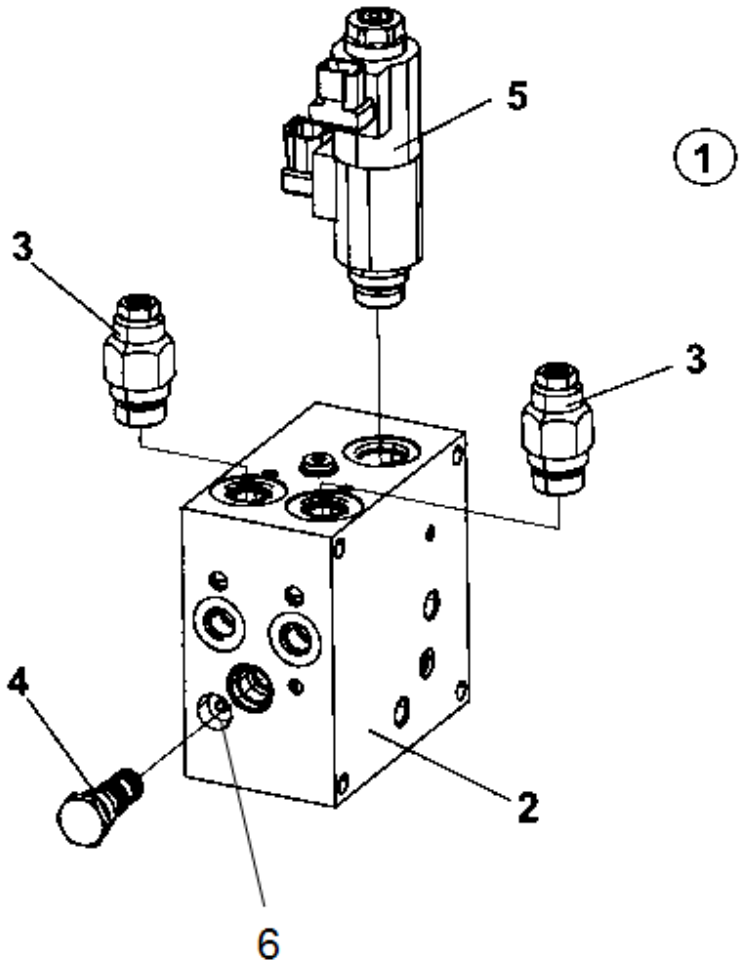

Item	Part No.	Name	Qty	L	SN INFO
1	4700391017	Hydraulic valve	1		
2	-	Valve block	1		
3	4812155790	Pressure relief valve	2		
4	4700940572	Shuttle valve	1		
5	4812156159	Proportional valve	1		
6	4812160775	Check valve	1		

Hydraulic hoses, frame Hydraulic hoses, frame

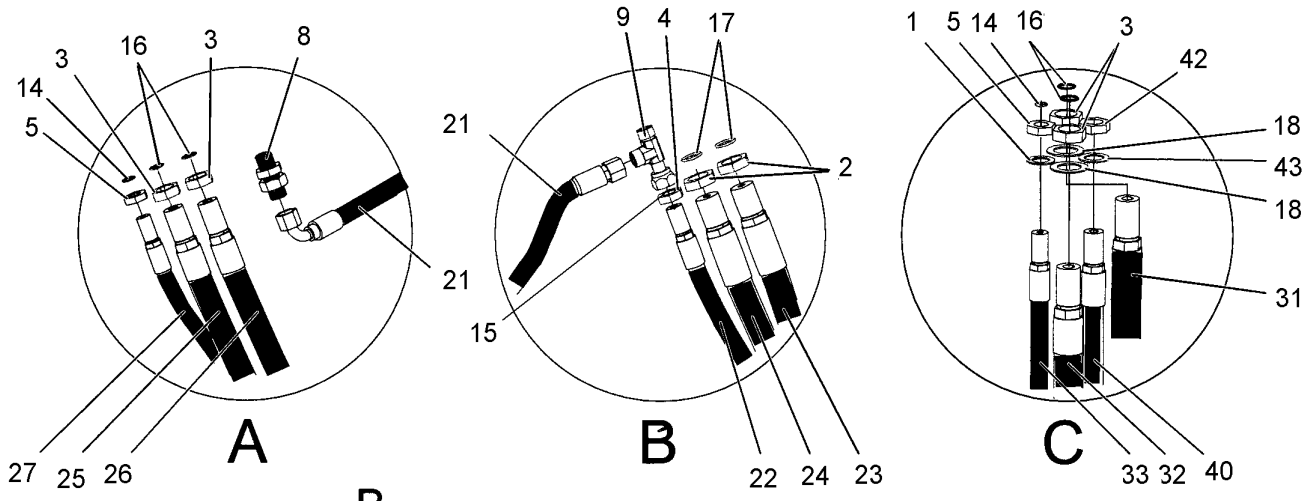

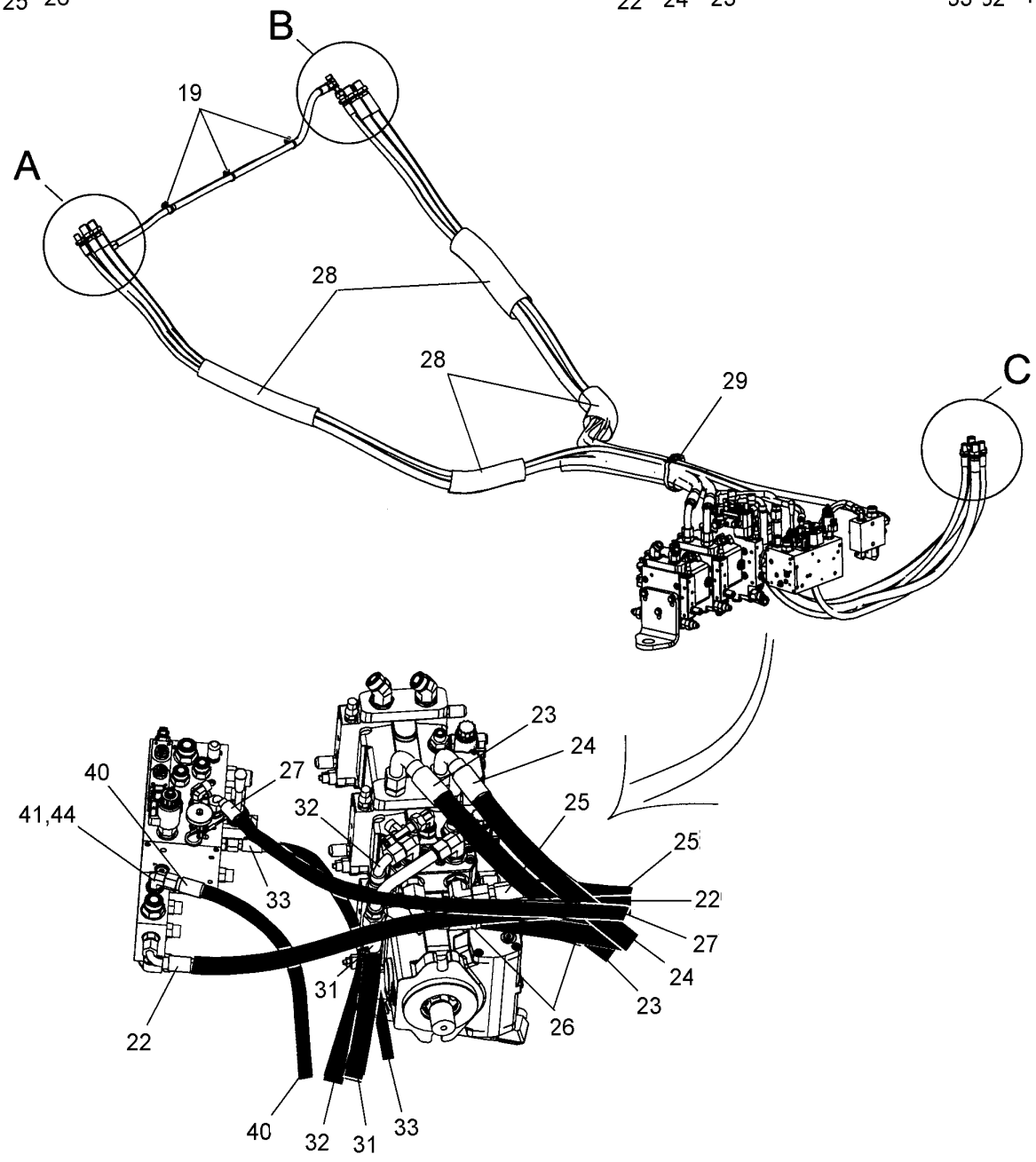

Item	Part No.	Name	Qty	L	SN INFO
1	4700606009	Lock washer	1		
2	4700792454	Nut	2		
3	4700792453	Nut	4		
4	4700792452	Nut	1		
5	4700792451	Nut	2		
8	4700792344	Bulkhead union	1	A	
9	4700791798	Adapter	1	A	
14	4700792632	O-ring	2		
15	4700904008	O-ring	1		
16	4700904009	O-ring	4		
17	4700904010	O-ring	2		
18	4700792720	Serrated lock washer	2		
19	4700792442	Cable tie	3		
21	4700484014	Hydraulic hose	1		
22	4700484015	Hydraulic hose	1	A, C	
23	4700484016	Hydraulic hose	1	A, D	
24	4700484017	Hydraulic hose	1	A, D	
25	4700484018	Hydraulic hose	1	A, E	
26	4700484019	Hydraulic hose	1	A, E	
27	4700484020	Hydraulic hose	1	A, F	
28	4700792700	Hose guard	4		
29	4812110293	Strap	1		
31	4700484021	Hydraulic hose	1	B,G	
32	4700484022	Hydraulic hose	1	B,G	
33	4700484023	Hydraulic hose	1	B,G	
40	4700484045	Hydraulic hose	1	2	
41	4700791841	Elbow 90 orfs	1	2	
42	4700792452	Nut	1	2	
43	4700606021	Serrated lock washer	1	2	
44	4700792512	Steel plug threaded	1	1	

Comments for Page: Hydraulic hoses, frame

(L)OCAL REMARKS

A | en_US | Front

B | en_US | Rear

C | en_US | Vibration motor to valve

D | en_US | Vibration motor to pump

E | en_US | Propulsion motor to pump

F | en_US | Propulsion motor to valve

G | en_US | Propulsion

1 | en_US | Used on machine with offset drum or combi rear.

2 | en_US | Not used on a machine with offset drum or combi rear.

This page intentionally left blank

Hydraulic hoses, engine room, To SN A012958 Hydraulic hoses, engine room

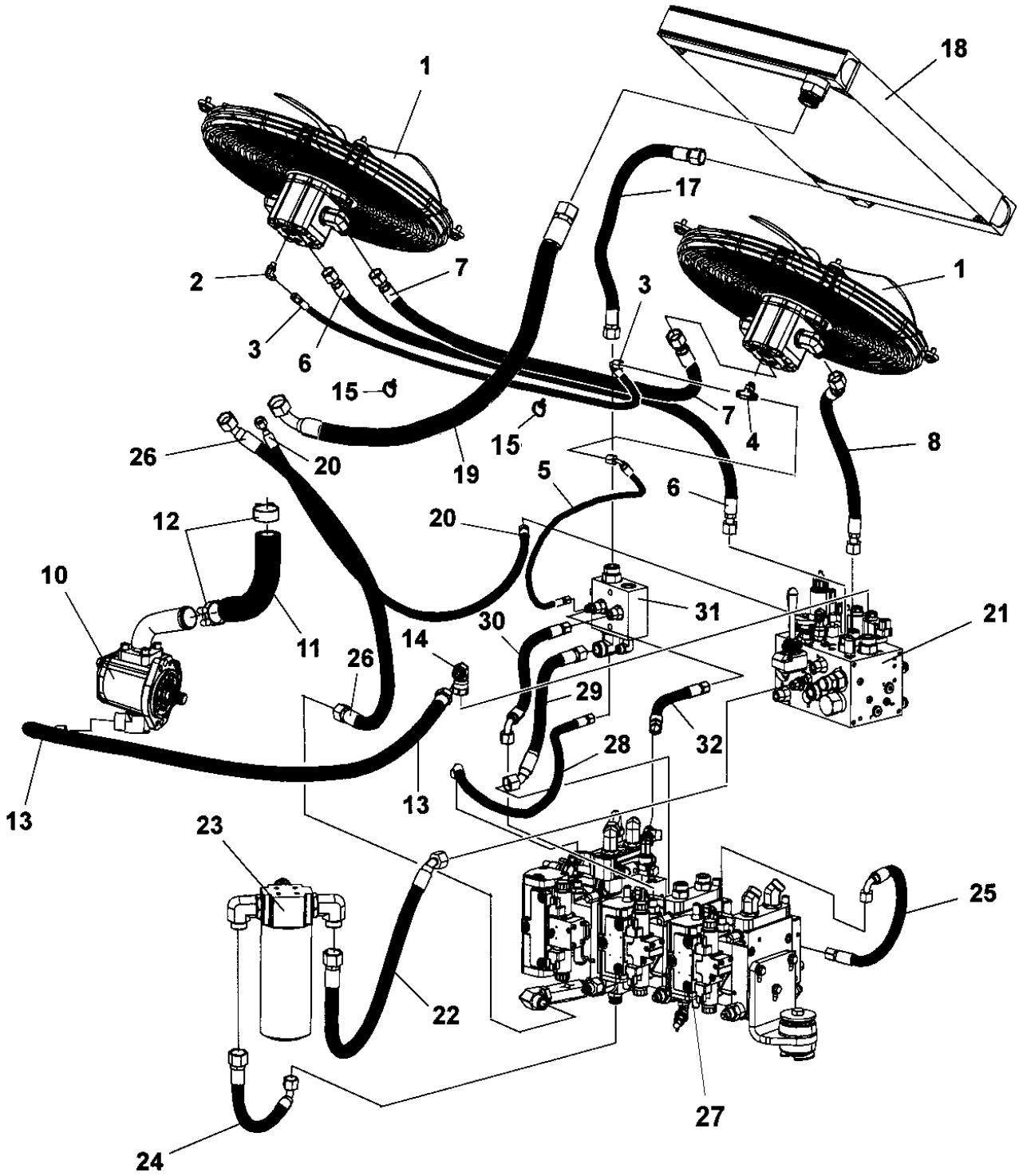

Item	Part No.	Name	Qty	L	SN INFO
1	-	Fan	2		
2	4700791397	Elbow 90, O-ring	1		
3	4700484031	Hydraulic hose	1		
4	4700792340	Tee-connector orfs	1		
5	4700484032	Hydraulic hose	1		
6	4812115903	Hydraulic hose	1		
7	4700484028	Hydraulic hose	1		
8	4700484030	Hydraulic hose	1		
10	-	Steering pump	1	1	
11	4700792533	Hydraulic hose	1		
12	4812114312	Clamp	2		
13	4700484033	Hydraulic hose	1		
14	4700904584	Connector elbow 90 ORFS	1		
15	4700792441	Cable tie with holder	3		
17	4700484034	Hydraulic hose	1		
18	-	Oil cooler	1		
19	4700484035	Hydraulic hose	1		
20	4700484038	Hydraulic hose	1		
21	-	Hydraulic valve module	1		
22	4700484039	Hydraulic hose	1		
23	4812110667	Hydraulic oil filter	1		
23	4700391433	Hydraulic oil filter element	1		
23	4812158269	Filter switch	1		
23	4700391432	Cleaning filter element	1		
24	4700484037	Hydraulic hose	1		
25	4700484036	Hydraulic hose	1		
26	4700484040	Hydraulic hose	1		
27	-	Hydraulic pump module	1		
28	4700484043	Hydraulic hose	1		
29	4700483729	Hydraulic hose	1		
30	4700483726	Hydraulic hose	1		
31	-	Connection block	1		
32	4700484161	Hydraulic hose	1		

Comments for Page: Hydraulic hoses, engine room

(L)OCAL REMARKS

1 | en_US | Is a part of the engine module, see seperate section.

Hydraulic hoses, engine room, To SN A012958 Fan

Item	Part No.	Name	Qty	L	SN INFO
1	4700390609	Hydraulic motor	1		
1	4700902882	Seal kit	1		
2	4700390608	Fan guard	1		
3	4700390607	Fan	1		
4	4700500022	Screw	2		
5	4700792332	Elbow 90 orfs	2		
6	4700904735	Steel plain washer	2		
7	4700500016	Screw M6x55 8.8 A2K	1		
8	4700904640	Washer, 8.4x22x3 mm 300HV	2		
11	4700500053	Screw, M8x20 mm 8.8 A2K	4		
12	4700904640	Washer, 8.4x22x3 mm 300HV	4		

Hydraulic hoses, engine room, To SN A012958 Oil cooler

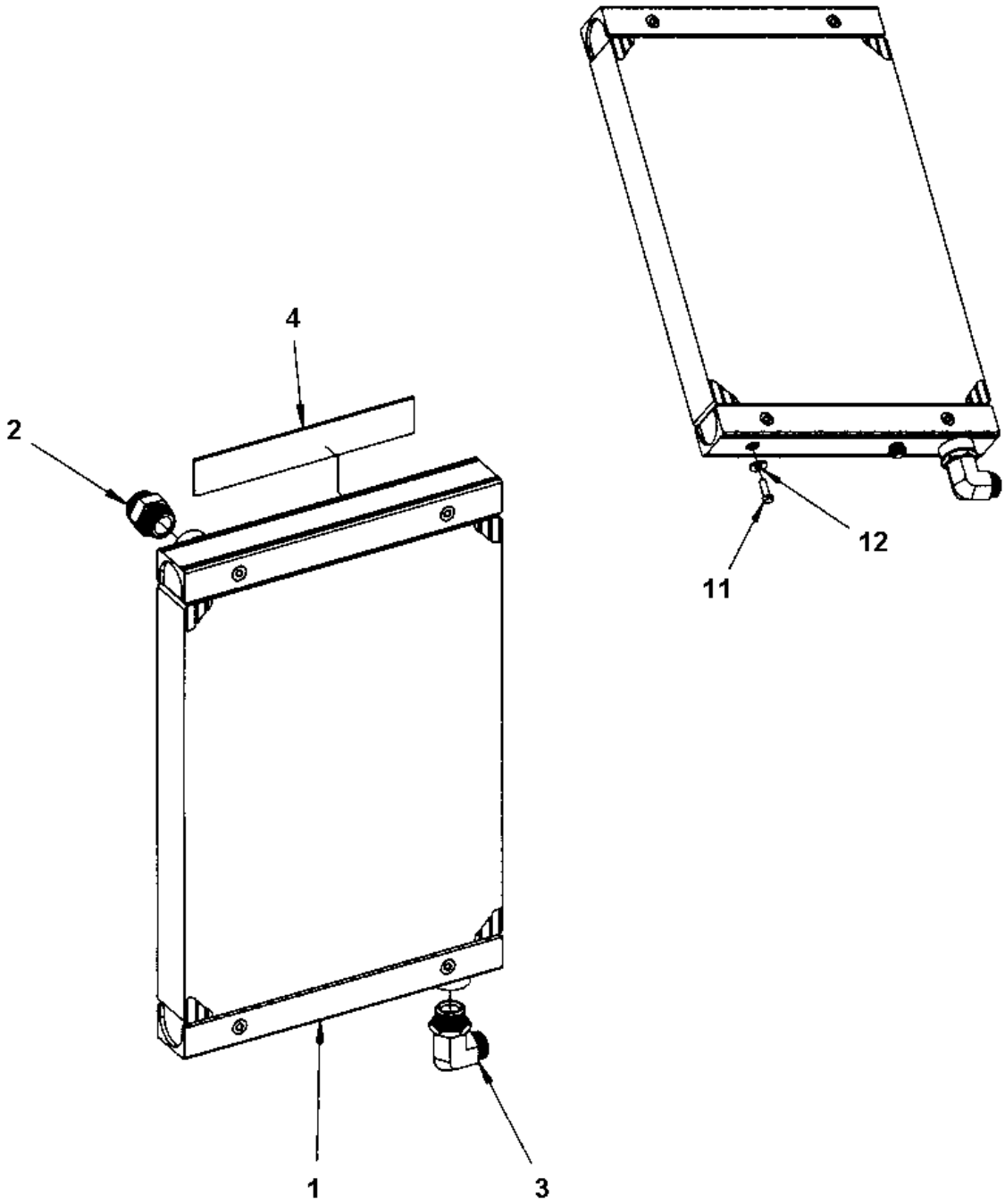

Item	Part No.	Name	Qty	L	SN INFO
1	4812123420	Oil cooler	1		
2	4700792339	Adapter	1		
3	4700791321	Elbow adapter 90	1		
4	4700391297	Rubber cloth	1		
11	4700500021	Screw, M8x25 mm 8.8 A2K	2		
12	4700904640	Washer, 8.4x22x3 mm 300HV	2		

Hydraulic hoses, engine room, To SN A012958 Hydraulic valve module

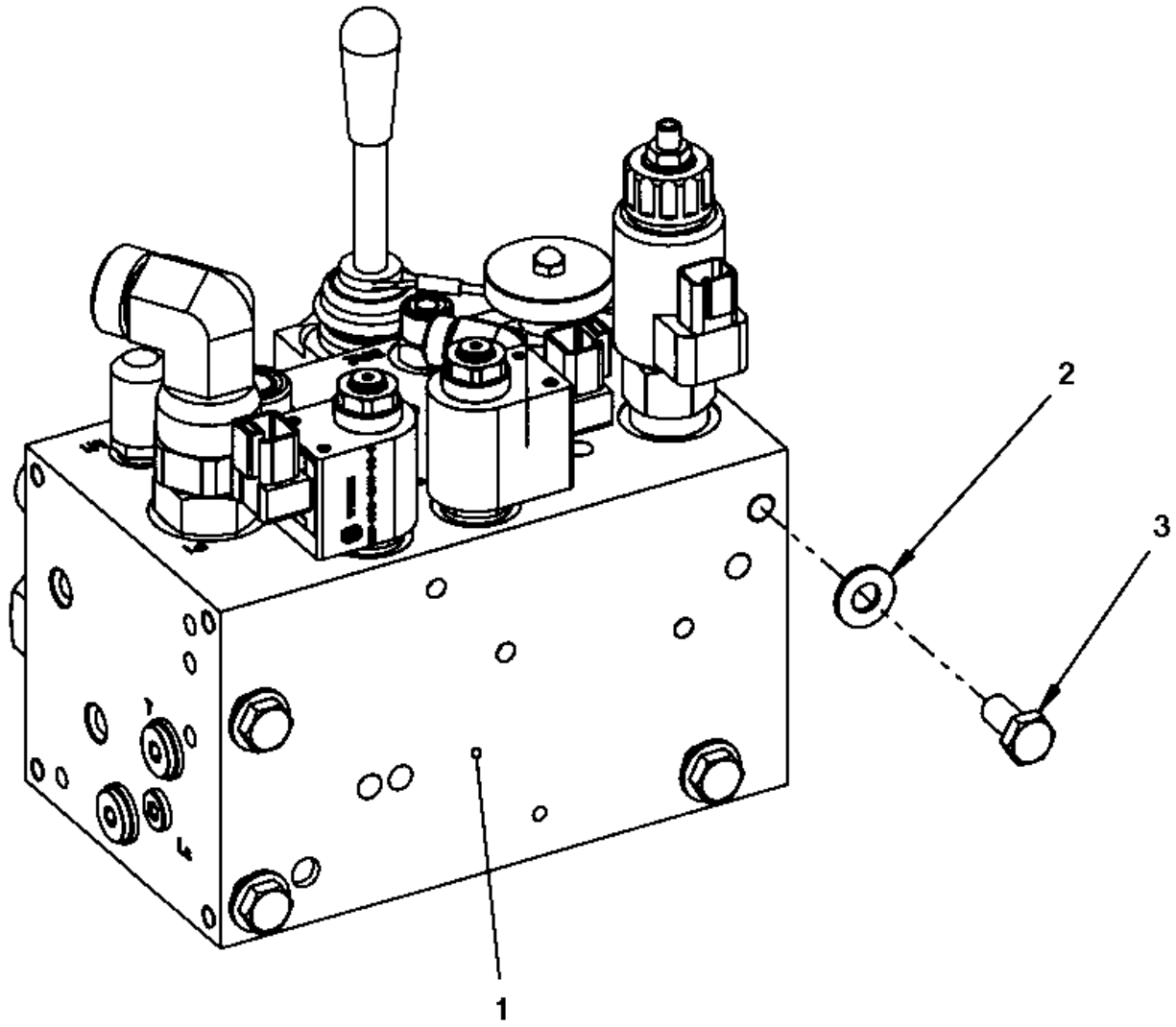

Item	Part No.	Name	Qty	L	SN INFO
1	-	Hydraulic valve	1		
2	4700904230	Plain washer 10.5x22x2 mm	4		
3	4700500028	Screw, M10 x 25 mm 8.8 A3K	4		

Hydraulic hoses, engine room, To SN A012958 Hydraulic valve

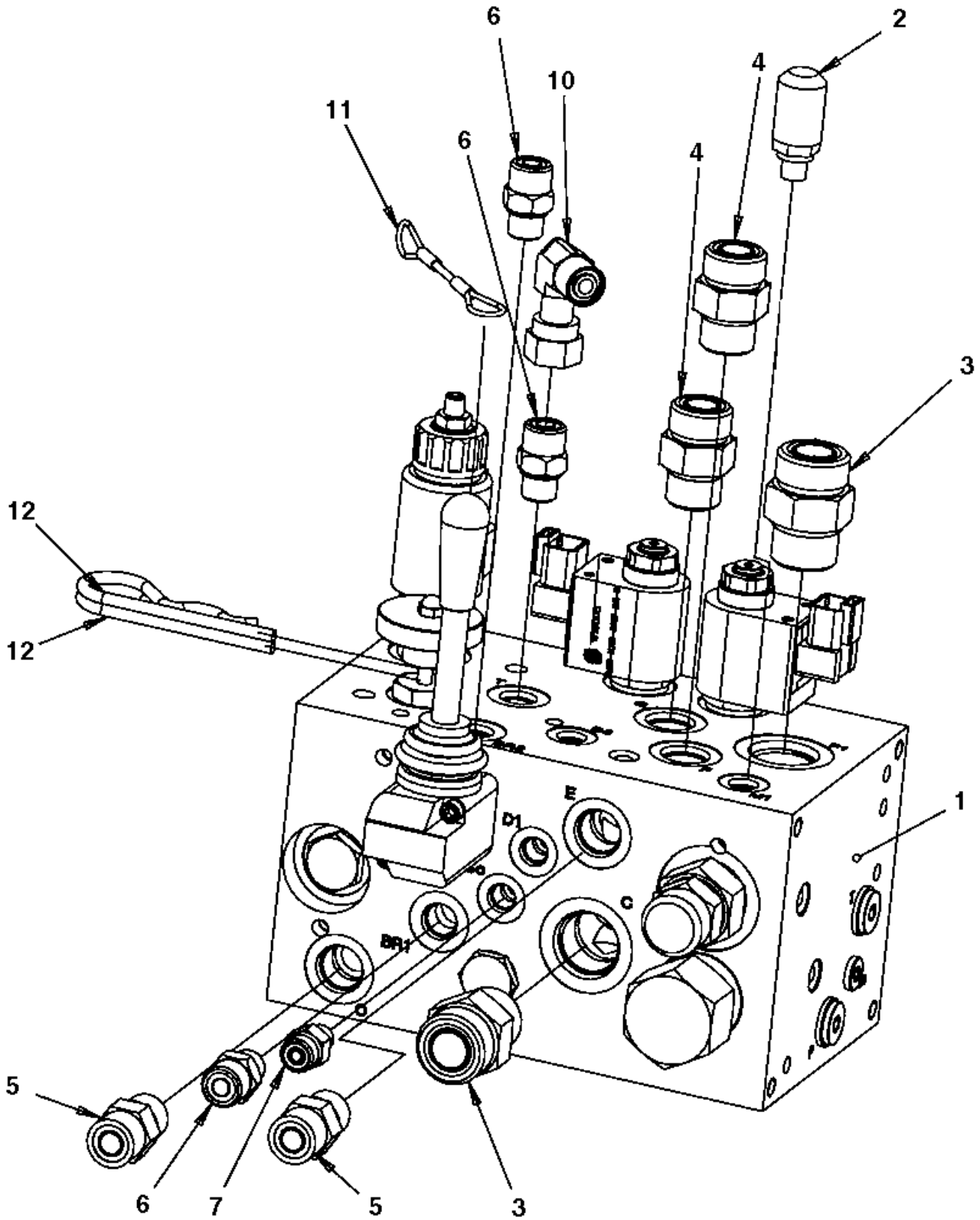

Item	Part No.	Name	Qty	L	SN INFO
1	4700395924	Hydraulic valve	1		
2	4700910162	Measuring nipple	1		
3	4700791823	Adapter	2		
4	4700791743	Straight connector orfs	2		
5	4700791799	Straight connector orfs	2		
6	4700791409	Straight connector orfs	3		
7	4700791744	Adapter	1		
10	4700791401	Elbow 90, O-ring with swivel	1		
11	4700358732	Wire	1		
12	4700635061	Hair clip	2		

Hydraulic hoses, engine room, To SN A012958 4700395924 Hydraulic valve

Item	Part No.	Name	Qty	L	SN INFO
1	4700395924	Hydraulic valve	1		
2	--	Valve block	1		
3	4700940572	Shuttle valve	1		
4	4812159770	Check valve	1		
5	4812160491	Brake release valve	1		
6	4700950571	Priority valve	1		
7	4700950572	Pressure relief valve	1		
8	4700950570	Solenoid valve	2		
8	4812156662	Coil	1		
9	4812156787	Fan proportional valve	1		
10	--	Brake release pump	1		
11	4812160160	Brake pressure relief valve	1		
12	4812157585	Orifice with wire 0.5 mm	1		
13	4812159762	Orifice 0.75 mm	1		

Hydraulic hoses, engine room, To SN A012958 Hydraulic pump module

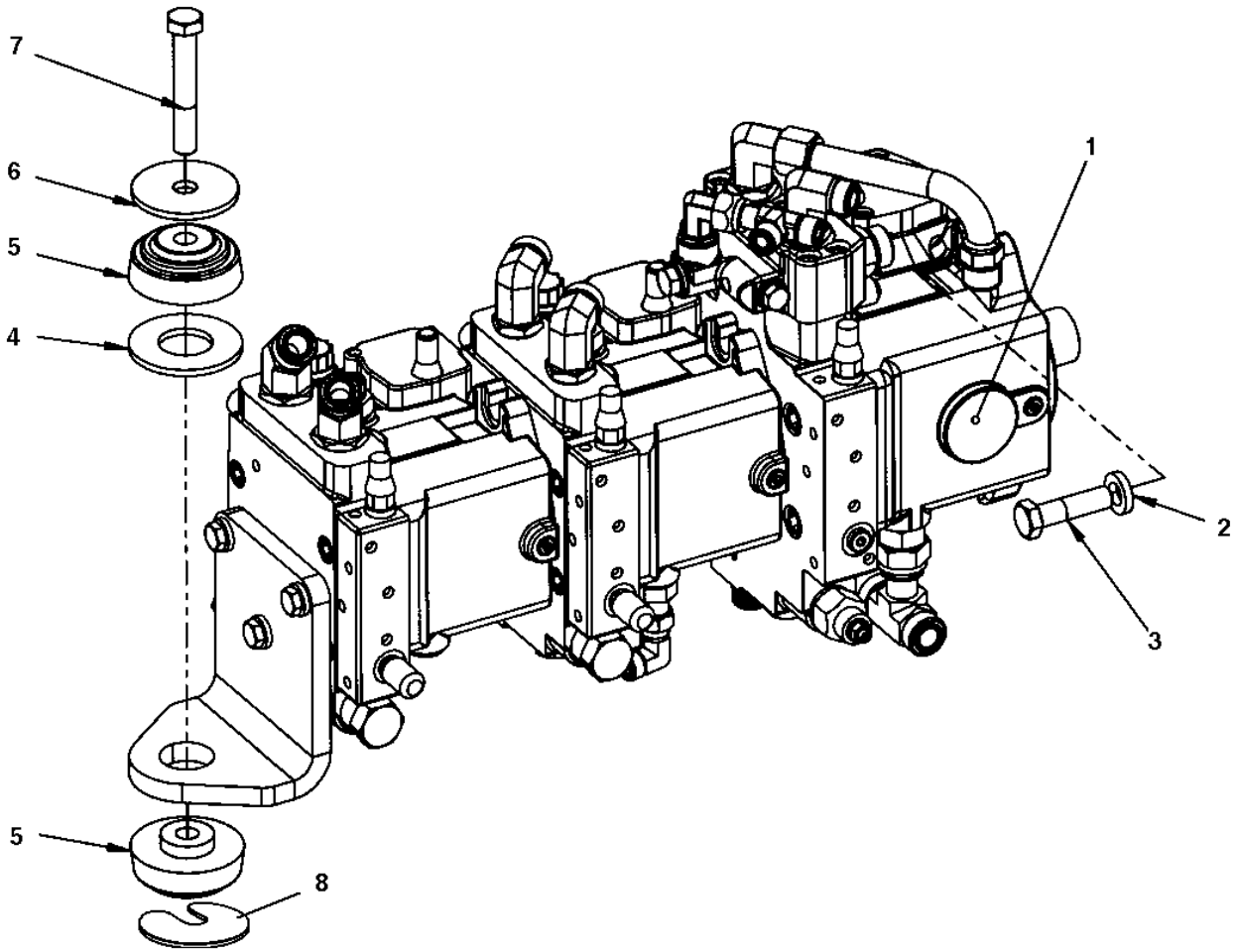

Item	Part No.	Name	Qty	L	SN INFO
1	-	Hydraulic pump	1		
2	4700904558	Washer, 17x30x6 mm 300 HV	2		
3	4700500270	Screw M16x60 10,9	2		
4	4700393625	Spacer washer	1		
5	4700391165	Shock absorber	2		
6	4700345666	Spacer	1		
7	4700500107	Screw M16x100 8.8	1		
8	4700397270	Steel spacer	1		

Hydraulic hoses, engine room, To SN A012958 Hydraulic pump

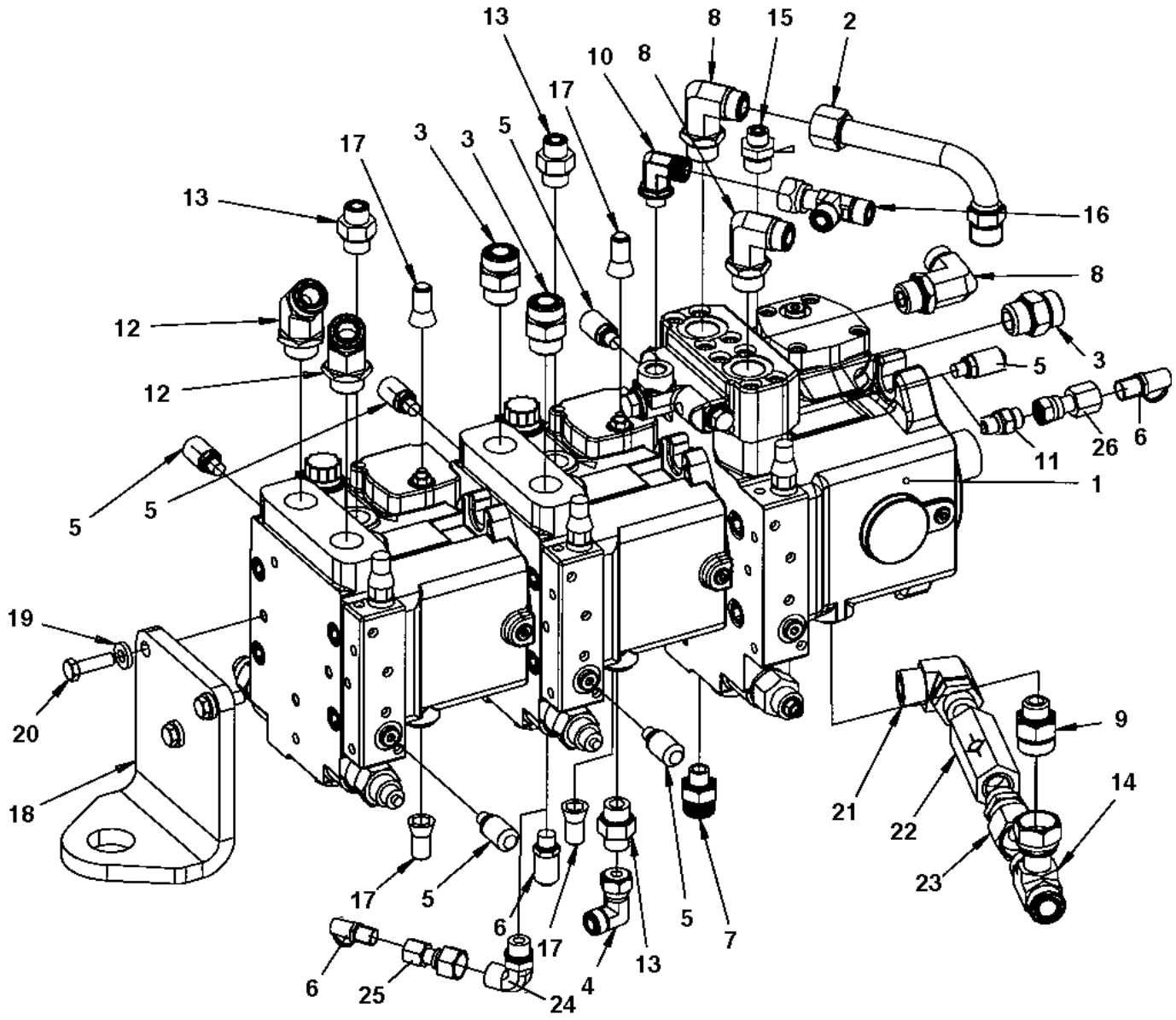

Item	Part No.	Name	Qty	L	SN INFO
1	4700390602	Hydraulic pump	1		
2	4700392048	Connector	1		
3	4700791853	Straight connector orfs	3		
4	4700791745	Elbow 90, O-ring with swivel	1		
5	4700901157	Measuring nipple	5		
6	4700923405	Measuring nipple	2		
7	4700792465	Straight connector orfs	1		
8	4700792331	Elbow 90 orfs	3		
9	4700792336	Straight connector orfs	1		
10	4700792333	Elbow 90 orfs	1		
11	4700791538	Straight connector	1		
12	4700792157	Elbow adapter 45	2		
13	4700791635	Straight connector	3		
14	4700791831	Tee-connector	1		
15	4700791634	Adapter	1		
16	4700791798	Adapter	1		
17	4700392534	Sealing	4		
18	4700393624	Engine bracket	1		
19	4700904557	Washer, 10.5x22x4 mm 300 HV	3		
20	4700500030	Screw hexagon	3		
21	4700791698	Connector elbow 90 ORFS	1		
22	4700376922	Check valve	1		
23	4700791824	Straight connector	1		
24	4700792151	Elbow adapter 90	1		
25	4700792219	Straight connector	1		
26	4700792649	Straight connector orfs	1		

4700390602 Hydraulic pump 4700390602 Hydraulic pump

Item	Part No.	Name	Qty	L	SN INFO
1	4700390602	Hydraulic pump	1		
2	4812155785	Hydraulic pump	1		
3	4812155786	Hydraulic pump	1		
4	4812155787	Hydraulic pump, vibration	1		
5	4812159094	O-ring	4		
6	--	Socket pipe	2		
7	--	Washer	4		
8	--	Screw	4		

4812155785 Hydraulic pump 4812155785 Hydraulic pump

Item	Part No.	Name	Qty	L	SN INFO
1	4812155785	Hydraulic pump	1		
1	4700940676	Seal kit	1		
2	--	Rotating group, cpl	1		
3	--	Valve block, cpl	1		
4	--	Housing	1		
5	4700936612	Pin	1		
6	4700935219	Plug	1	1	
7	4700902724	Plug	2	1	
8	4700902625	Plug	3	1	
9	4700909514	Double break-off pin	2		
10	4700936308	Orifice	2		
11	4700902624	Screw	1	1	
12	4700902687	Pin	1		
13	4700902695	Nut	1	1	
15	--	Control module	1		
26	4812156151	Proportional solenoid	2		
30	--	Hydraulic control, cpl	1		
31	---	Cover	1		
32	---	Cover	1		
33	---	Guide Ring	2		
34	4700936642	Pin	2		
35	4700902638	Nut	1		
36	4700902752	Screw	8		
38	---	Seal ring	2	1	
39	4700936644	Nut	2	1	
40	---	Piston	1		
41	4700936646	Rod	1		
42	---	Ring	2		
43	4700938014	Sleeve	2		
44	4700936647	Spring collar	2		
45	4700936648	Spacer ring	2		
46	4700936654	Spring	2		
47	4700936655	Spring collar	2		
48	4700936656	Retaining ring	2		
49	4700936643	O-ring	2	1	
50	4700909469	O-ring	1		
53	--	Flushing valve	1		

Comments for Page: 4812155785 Hydraulic pump

(L)OCAL REMARKS

1 | en_US | Included in seal kit

This page intentionally left blank

4812155785 Hydraulic pump Rotating group, cpl

Item	Part No.	Name	Qty	L	SN INFO
1	-	Rotating group, cpl	1		
2	4700936615	Cylinder with control plate	1		
3	4700936616	Piston	9		
4	4700936617	Cup spring stack	1		
5	4700936618	Cradle	1		
6	4700936619	Slide ring	1		
7	--	Shaft	1		
8	4700936621	Wire	1		
9	4700935164	Pin	1		
10	4700936622	Wire	1		
11	4700936623	Shim	1		
11	4700936624	Shim	1		
11	4700936625	Shim	1		
11	4700936626	Shim	1		
12	4700936627	Retaining plate	1		
13	4700936628	Retaining ball	1		
14	4700936629	Bearing liner, 1 pair	1		
15	4700936630	Washer	2		
16	4700936631	Pressure spring	1		
17	4700936632	Bearing	1		
18	4700936633	Cradle bearing assembly, 1 set	1		
19	4700927303	Lock ring	1		
20	4700936634	Retaining ring	1		
21	4700936635	Seal ring	1	1	
22	4700936636	Retaining ring	1		
23	4700936637	Retaining ring	1		
24	4700902792	Pin	2		

Comments for Page: Rotating group, cpl

(L)OCAL REMARKS

1 | en_US | Includes in seal kit

4812155785 Hydraulic pump Valve block, cpl

Item	Part No.	Name	Qty	L	SN INFO
1	-	Valve block, cpl	1		
2	4812161086	Pressure relief valve, cpl	2		
3	4812156154	Pressure relief valve	1		
4	4812157095	Pressure overide valve	1		
5	--	Housing	1		
6	--	Screw	4		
7	4700936664	Pin	2		
8	4700936665	O-ring	1		
9	4700909514	Double break-off pin	7		
10	4700936855	Locking screw	1		
11	4700909469	O-ring	1		
12	4700902625	Plug	2		
13	--	Bush	1		
14	4700936662	Bearing bush	1		
15	4700936673	Back-up ring	2		
16	4700927278	O-ring	2		
17	4812157851	O-ring	1		
18	4700902783	O-ring	1		
19	4700936394	O-ring	1		
20	4700936313	Orifice	1		
21	4700935192	O-ring	1		

4812155785 Hydraulic pump Control module

Item	Part No.	Name	Qty	L	SN INFO
1	-	Housing	1		
3	-	Control piston	1		
4	-	Lever pair	1		
6	-	Pin	1		
8	-	Shim	1		
9	-	Feedback lever	1		
10	4812156599	Gasket	1		
11	-	Cover with filter	1		
12	-	Spring	1		
13	-	Flat gasket	1		
14	-	Plug	2		
15	4700935210	Screw	4		
16	4700936869	Cylindrical pin	2		
21	4700936689	Screw	1		
23	-	Shim	N		
27	4700945311	O-ring	1		
28	-	Screw	1		

4812155785 Hydraulic pump Flushing valve

Item	Part No.	Name	Qty	L	SN INFO
0	4812161090	Flushing valve, cpl	1		
1	--	Valve plate	1		
2	--	Piston	1		
3	--	Locking screw	2		
4	--	Washer	2		
5	--	Pressure spring	2		
6	--	Valve piston	1		
7	--	Locking screw	1		
8	--	Pressure spring	1		
13	--	Socket head screw	8		
14	--	Pin	1		
15	4812157170	O-ring	2		
16	--	O-ring	2		
17	--	O-ring	1		
18	--	Retaining ring	1		
19	--	Shim	1		
30	-	Orifice	1		

4812155786 Hydraulic pump 4812155786 Hydraulic pump

Item	Part No.	Name	Qty	L	SN INFO
1	4812155786	Hydraulic pump	1		
1	4700950461	Seal kit	1		
2	--	Rotary group, cpl	1		
3	--	Valve block, cpl	1		
4	--	Housing	1		
5	4700935158	Pin	1		
6	4700936869	Cylindrical pin	1		
7	4700935219	Plug	1	1	
8	4700902724	Plug	1	1	
9	4700902625	Plug	3	1	
10	4700902624	Screw	1	1	
11	4700909514	Double break-off pin	1		
12	4700936308	Orifice	2		
13	4700902792	Pin	2		
14	4700937206	O-ring	1	1	
15	4812002474	Control unit	1		
16	---	Housing	1		
17	---	Piston	1		
18	4700945776	Spring collar	2		
19	4700936686	Spring	2		
20	---	Gasket	1	1	
21	---	Pin	2		
23	4700909514	Double break-off pin	1		
24	4700927358	Screw	3		
25	4700908383	Screw	2		
26	---	O-ring	1	1	
27	4812156152	Solenoid	2		
31	--	Hydraulic control, cpl	1		
32	---	Piston	1		
33	---	Rod	1		
34	---	Cover	1		
35	---	Guide Ring	1		
36	---	Ring	1		
37	---	Spring collar	1		
38	---	Bush	1		
39	---	Spring	1		
40	4700937195	Pin	1		

Item	Part No.	Name	Qty	L	SN INFO
41	---	Spring collar	1		
43	4700937236	Nut	1		
44	4700937195	Pin	1		
45	---	O-ring	1	1	
46	4700902811	Plug	1		
47	---	Retaining ring	1		
48	4700902688	Screw	4		
49	4700936394	O-ring	1	1	
50	4700936393	Seal lock nut	1	1	
51	4700936393	Seal lock nut	1	1	
55	---	O-ring	2		

Comments for Page: 4812155786 Hydraulic pump

(L)OCAL REMARKS

1 | en_US | Included in seal kit, see item 1.

4812155786 Hydraulic pump Rotary group, cpl

Item	Part No.	Name	Qty	L	SN INFO
1	-	Rotating group	1		
2	--	Cradle	1		
3	4700937174	Slide ring	1		
4	--	Shaft	1		
5	4700936621	Wire	1		
6	4700935164	Pin	1		
7	4700937175	Wire	1		
8	--	Bearing liner	1		
9	--	Cylinder with pistons, cpl	1		
10	4700937185	Bearing	1		
11	4700937186	Cradle bearing assembly, 1 set	1		
12	4700937187	Retaining ring	1		
13	4700937188	V-ring	1		

4812155786 Hydraulic pump Valve block, cpl

Item	Part No.	Name	Qty	L	SN INFO
1	-	Valve block, cpl	1		
2	--	Pressure relief valve, cpl	2		
3	--	Locking set, cpl	1		
4	--	Pressure override valve, cpl	1		
5	--	Housing	1		
6	--	Screw	4		
7	4700937987	Cylindric pin	2		
8	4700909514	Double break-off pin	6		
9	4700936855	Locking screw	1		
10	4700909469	O-ring	1		
11	4700902625	Plug	2		
12	--	Roller bearing	1		
13	4700936673	Back-up ring	2		
14	4700927278	O-ring	2		
15	4700936392	O-ring	1		
16	--	Sealing ring	1		
17	--	O-ring	1		
18	4700936313	Orifice	1		
19	--	O-ring	1		

4812155787 Hydraulic pump 4812155787 Hydraulic pump

Item	Part No.	Name	Qty	L	SN INFO
1	4812155787	Hydraulic pump, vibration	1		
1	4700950461	Seal kit	1		
2	--	Rotary group, cpl	1		
3	--	Valve block, cpl	1		
4	--	Housing	1		
5	4700935158	Pin	1		
6	4700936869	Cylindrical pin	1		
7	4700935219	Plug	1	1	
8	4700902724	Plug	1	1	
9	4700902625	Plug	3	1	
10	4700902624	Screw	1	1	
11	4700909514	Double break-off pin	1		
12	4700936308	Orifice	2		
13	4700902792	Pin	2		
14	4700937206	O-ring	1	1	
15	4812160394	Control valve, cpl	1		
16	---	Housing	1		
17	---	Piston	1		
18	4700945776	Spring collar	2		
19	4700936686	Spring	2		
20	---	Gasket	1	1	
21	---	Pin	2		
23	4700909514	Double break-off pin	1		
24	4700927358	Screw	3		
25	4700908383	Screw	2		
26	---	O-ring	1	1	
27	4812156152	Solenoid	2		
31	--	Hydraulic control, cpl	1		
32	---	Piston	1		
33	---	Rod	1		
34	---	Cover	1		
35	---	Guide Ring	1		
36	---	Ring	1		
37	---	Spring collar	1		
38	---	Bush	1		
39	---	Spring	1		
40	4700937195	Pin	1		

Item	Part No.	Name	Qty	L	SN INFO
41	---	Spring collar	1		
43	4700937236	Nut	1		
44	4700937195	Pin	1		
45	---	O-ring	1	1	
46	4700902811	Plug	1		
47	---	Retaining ring	1		
48	4700902688	Screw	4		
49	4700936394	O-ring	1	1	
50	4700936393	Seal lock nut	1	1	
51	4700936393	Seal lock nut	1	1	
55	---	O-ring	2		

Comments for Page: 4812155787 Hydraulic pump

(L)OCAL REMARKS

1 | en_US | Included in seal kit, see item 1.

4812155787 Hydraulic pump Rotary group, cpl

Item	Part No.	Name	Qty	L	SN INFO
1	-	Rotating group	1		
2	--	Cradle	1		
3	4700937174	Slide ring	1		
4	--	Shaft	1		
5	4700936621	Wire	1		
6	4700935164	Pin	1		
7	4700937175	Wire	1		
8	--	Bearing liner	1		
9	--	Cylinder with pistons, cpl	1		
10	4700937185	Bearing	1		
11	4700937186	Cradle bearing assembly, 1 set	1		
12	4700937187	Retaining ring	1		
13	4700937188	V-ring	1		

4812155787 Hydraulic pump Valve block, cpl

Item	Part No.	Name	Qty	L	SN INFO
1	-	Valve block, cpl	1		
2	--	Pressure relief valve, cpl	2		
3	--	Locking set, cpl	1		
4	--	Pressure override valve, cpl	1		
5	--	Housing	1		
6	--	Screw	4		
7	4700937987	Cylindric pin	2		
8	4700909514	Double break-off pin	6		
9	4700936855	Locking screw	1		
10	4700909469	O-ring	1		
11	4700902625	Plug	2		
12	--	Roller bearing	1		
13	4700936673	Back-up ring	2		
14	4700927278	O-ring	2		
15	4700936392	O-ring	1		
16	--	Sealing ring	1		
17	--	O-ring	1		
18	4700936313	Orifice	1		
19	--	Not valid for this model	1		

Hydraulic hoses, engine room, From SN A012959 Hydraulic hoses, engine room

Item	Part No.	Name	Qty	L	SN INFO
1	-	Fan module	2		
2	4700791397	Elbow 90, O-ring	1		
3	4700484243	Hydraulic hose	1		
4	4700792340	Tee-connector orfs	1		
5	4700484032	Hydraulic hose	1		
6	4812115966	Hydraulic hose	1		
7	4812115967	Hydraulic hose	1		
8	4700484153	Hydraulic hose	1		
10	-	Hydraulic pump module	1		
11	4700792533	Hydraulic hose	1		
12	4812114312	Clamp	2		
13	4812118397	Hydraulic hose	1		
14	4700904584	Connector elbow 90 ORFS	1		
15	4700395653	Hose guard	2		
17	4700484034	Hydraulic hose	1		
18	-	Oil cooler	1		
19	4700484035	Hydraulic hose	1		
20	4700484038	Hydraulic hose	1		
21	-	Hydraulic valve module	1		
22	4700484039	Hydraulic hose	1		
23	4812112260	Hydraulic oil filter	1		
23	4812112262	Hydraulic oil filter element	1		
23	4812160664	Fiction ring, filter head	1		
23	4700936898	Sensor Red (RW)	1		
24	4700484037	Hydraulic hose	1		
25	4700484036	Hydraulic hose	1		
26	4700484040	Hydraulic hose	1		
27	-	Hydraulic pump module	1		
28	4700484043	Hydraulic hose	1		
29	4700483729	Hydraulic hose	1		
30	4700483726	Hydraulic hose	1		
31	-	Connection block	1		
32	4700484161	Hydraulic hose	1		
33	4700390018	Suction pipe	1		
34	4700904229	Washer, 8.4x 6x1.5 mm 300HV	4		
35	4700508084	Screw	4		
36	4700791698	Connector elbow 90 ORFS	1		

Item	Part No.	Name	Qty	L	SN INFO
37	4700791321	Elbow adapter 90	2		
38	4700792074	Straight connector	2		
39	4700792332	Elbow 90 orfs	2		
40	4700904230	Plain washer 10.5x22x2 mm	4		
41	4700500048	Screw, M10x20 mm 8.8 A3K	4		

Hydraulic hoses, engine room, From SN A012959 Fan module

Item	Part No.	Name	Qty	L	SN INFO
1	4700390609	Hydraulic motor	1		
1	4700902882	Seal kit	1		
2	4700390608	Fan guard	1		
3	4700390607	Fan	1		
4	4700500022	Screw	2		
6	4700904735	Steel plain washer	1		
7	4700500016	Screw M6x55 8.8 A2K	1		
8	4700904640	Washer, 8.4x22x3 mm 300HV	6		
9	4700500053	Screw, M8x20 mm 8.8 A2K	4		

Hydraulic hoses, engine room, From SN A012959 Hydraulic pump module

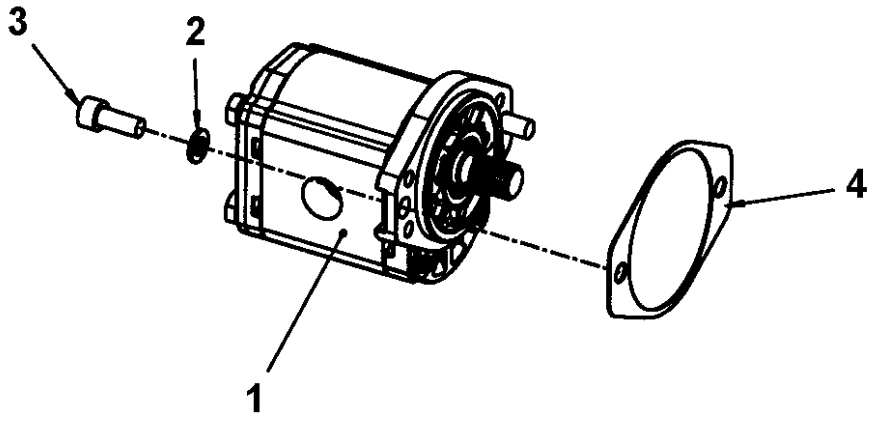

Item	Part No.	Name	Qty	L	SN INFO
1	4812113496	Hydraulic pump, steering	1		
2	4700904637	Washer	2		
3	4700508096	Hexagon socket head cap screw	2		
4	4812115511	Gasket	1		

Hydraulic system, steering Std Hydraulic system, steering Std

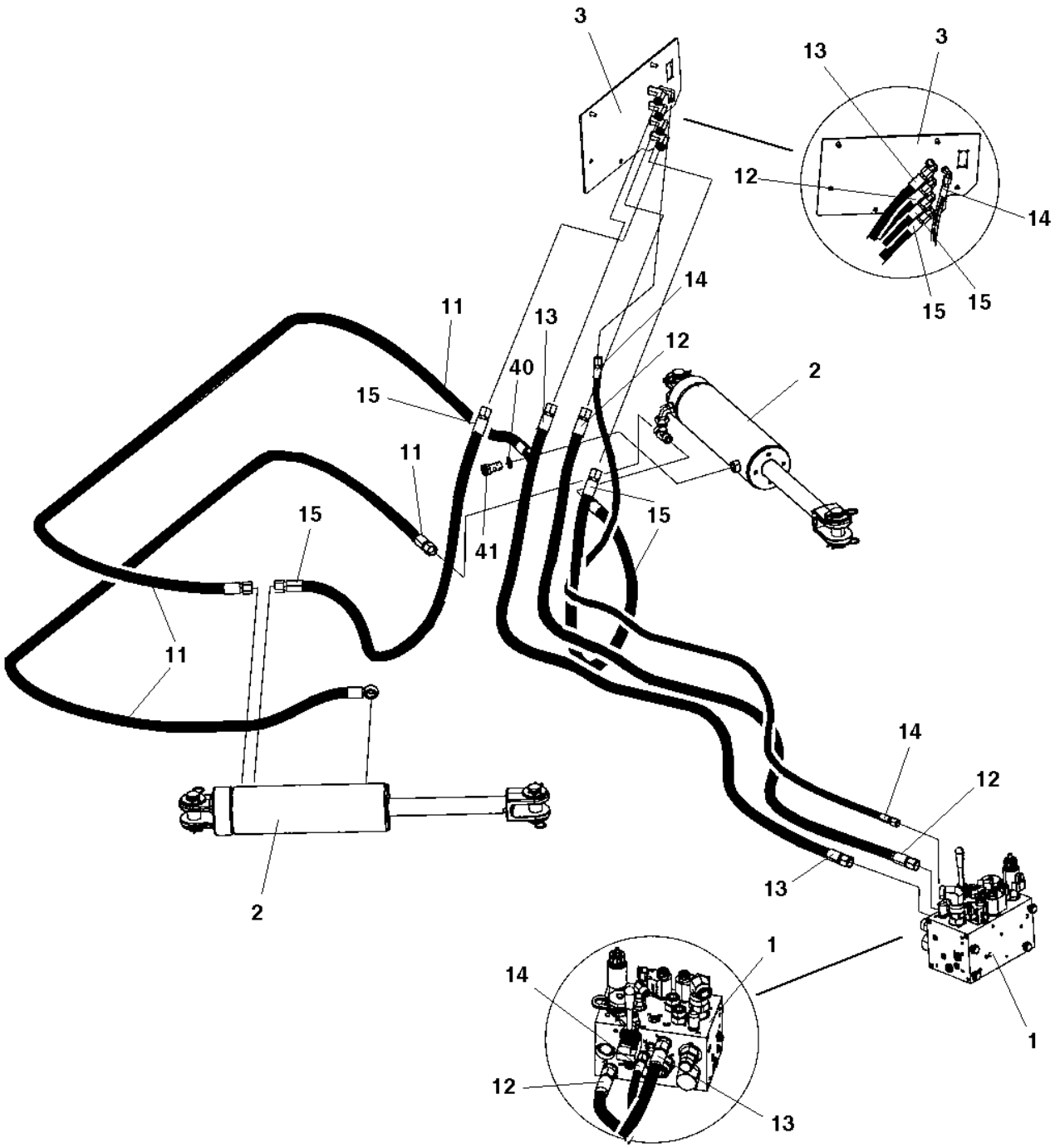

Item	Part No.	Name	Qty	L	SN INFO
1	-	Hydraulic valve module	1		
2	-	Steering cylinder	2	A	
3	-	Hose bracket	1		
11	4700393364	Hydraulic hose	2		
12	4700484024	Hydraulic hose	1		
13	4700484025	Hydraulic hose	1		
14	4700484026	Hydraulic hose	1		
15	4700484027	Hydraulic hose	2		
40	4700162015	Seal ring	4		
41	4700904292	Hollow screw	2		

Comments for Page: Hydraulic system, steering Std

(L)OCAL REMARKS

A | en_US | See section "Front frame"

Hydraulic system, steering Std Hose bracket

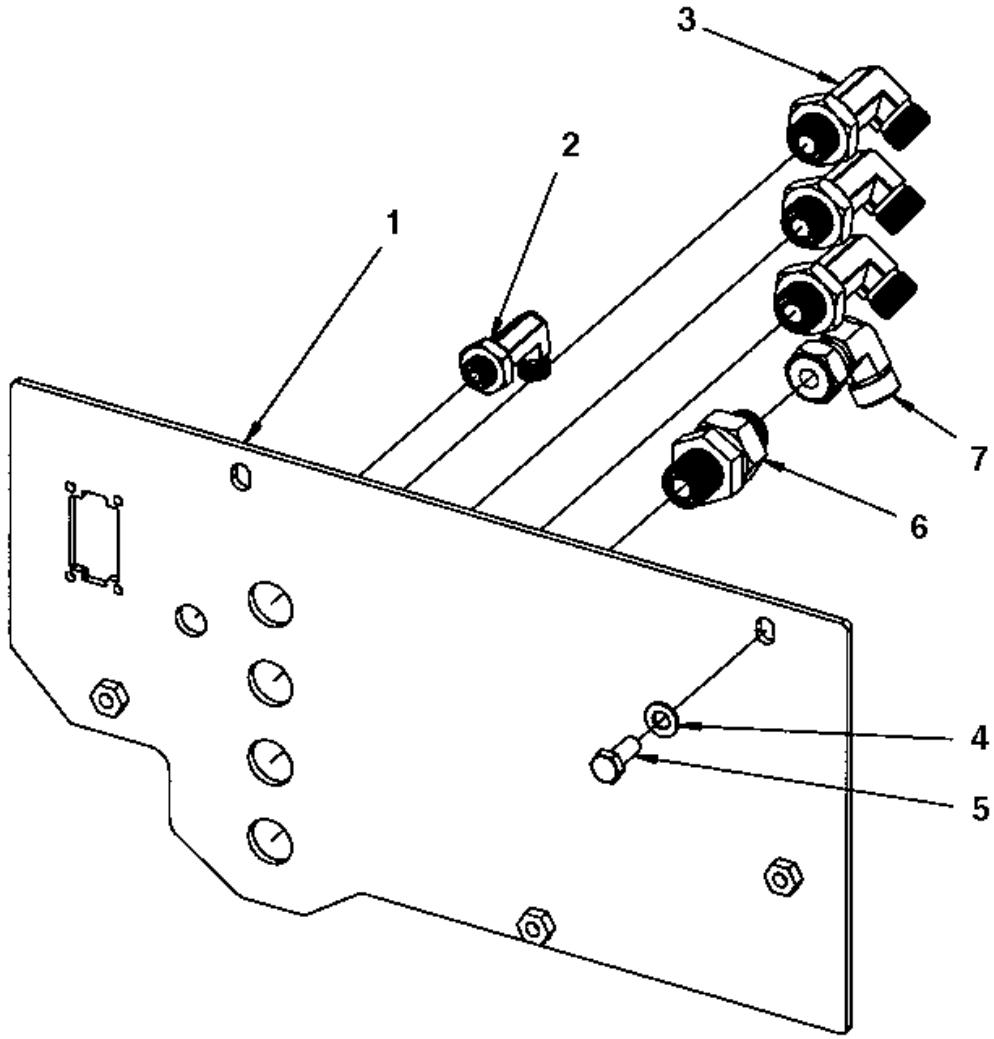

Item	Part No.	Name	Qty	L	SN INFO
1	4700391192	Hose bracket	1		
2	4700792343	Adapter	1		
3	4700792342	Bulkhead elbow	4		
4	4700904229	Washer, 8.4x 6x1.5 mm 300HV	2		
5	4700500053	Screw, M8x20 mm 8.8 A2K	2		

Hydraulic steering, sliding seat Hydraulic steering, sliding seat

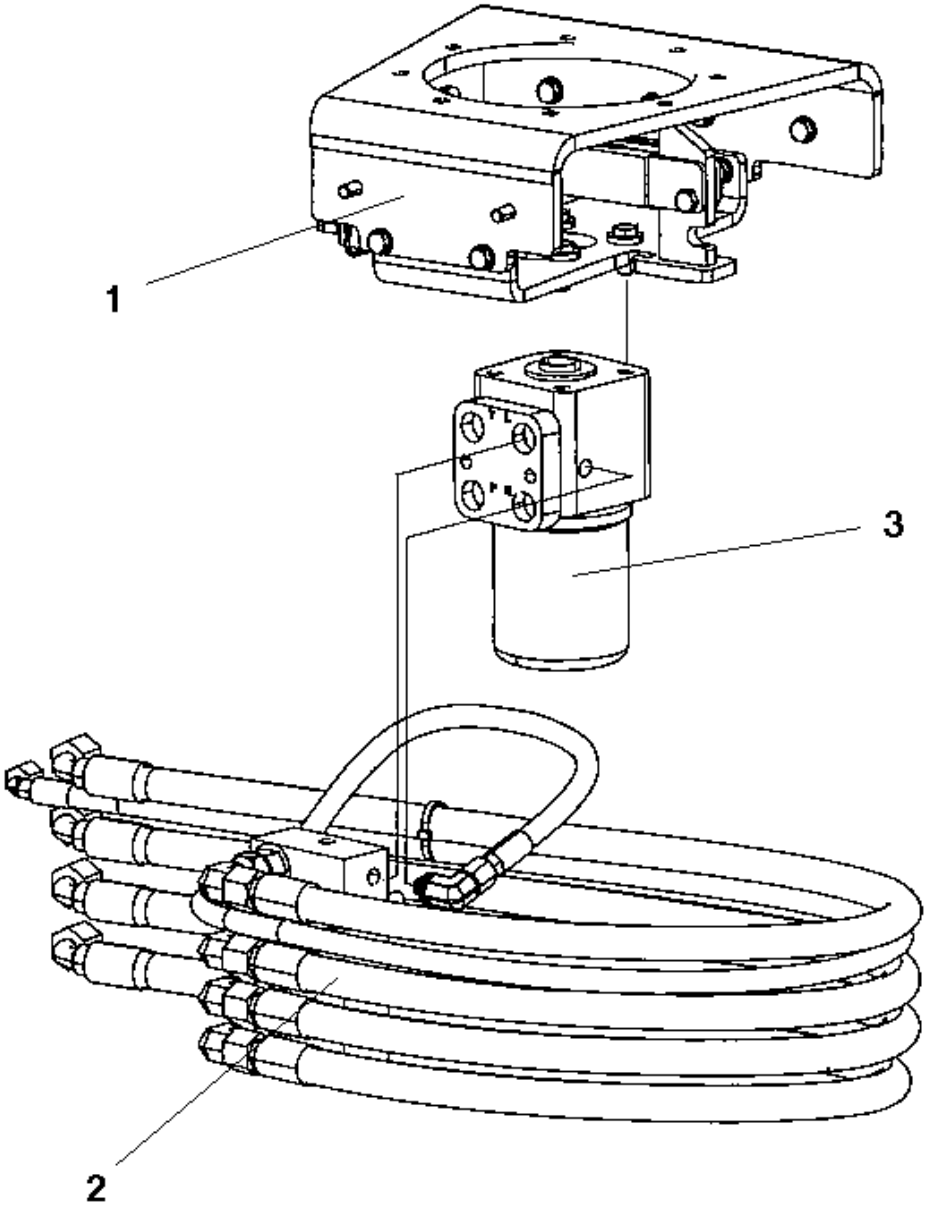

Item	Part No.	Name	Qty	L	SN INFO
1	-	Carrier	1		
2	-	Steering, slideable	1		
3	4700372424	Pilot valve, steering	1		
3	4812120733	Pilot valve, emergency steering	1		

Hydraulic steering, sliding seat Carrier

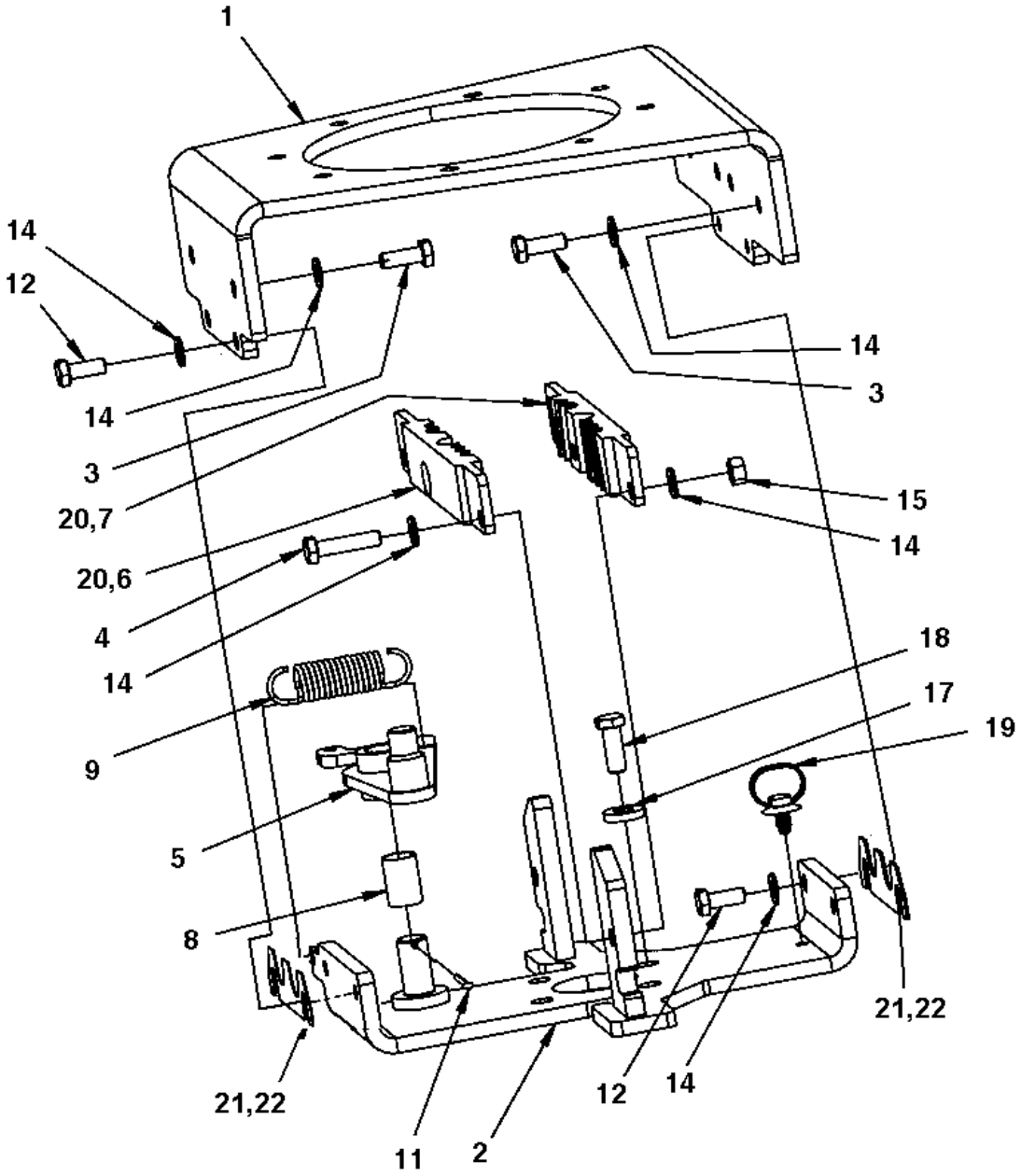

Item	Part No.	Name	Qty	L	SN INFO
1	4700379715	Carrier	1		
2	4700391478	Steering valve bracket	1		
3	4700500020	Hex. screw	6		
4	4700500047	Hexagon head screw	2		
5	4812120035	Coupling link	1		
6	4700372959	Clamp	1	2	
7	4700372960	Clamp	1	2	
8	4700359819	Bushing	1		
9	4700359043	Spring	1		
11	4700630008	Pin	1		
12	4700500053	Screw, M8x20 mm 8.8 A2K	4		
14	4700904229	Washer, 8.4x 6x1.5 mm 300HV	14		
15	4700570005	Hexagon nut	2		
17	4700904557	Washer, 10.5x22x4 mm 300 HV	4		
18	4700502035	Screw 3/8"-16UNCx1 8.8	4		
19	4700792441	Cable tie with holder	1		
20	4812110896	Clamp	2	1	
21	4812115060	Shim	N		
22	4812115061	Shim	N		

Comments for Page: Carrier

(L)OCAL REMARKS

1 | en_US | 2pcs together can replace item 6 and 7.

2 | en_US | Item 6 and 7 can be replaced by 2pcs of item 20.

Hydraulic steering, sliding seat Steering, slideable

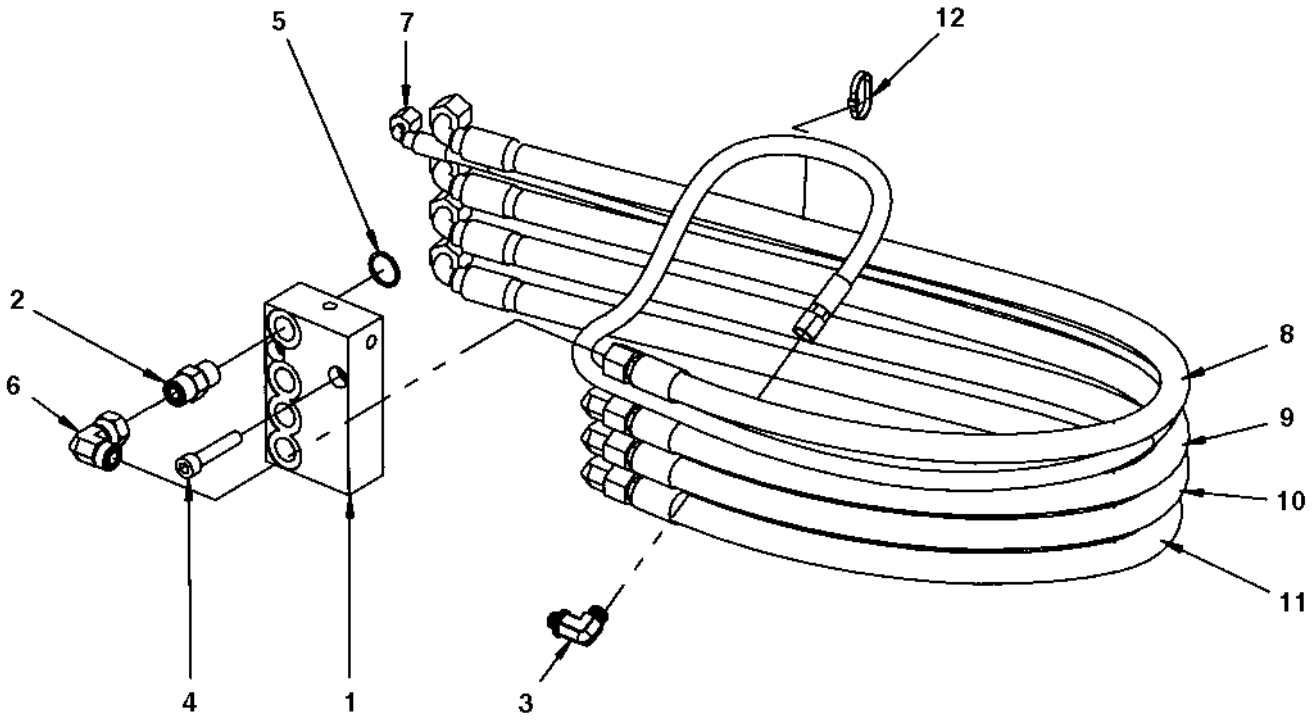

Item	Part No.	Name	Qty	L	SN INFO
1	4700370155	Valve block	1		
2	4700791799	Straight connector orfs	4		
3	4700792334	Elbow 90 orfs	1		
4	4700903773	Screw M10x1x50 8,8	2		
5	4700160287	O-ring	4		
6	4700791745	Elbow 90, O-ring with swivel	4		
7	4700484006	Hydraulic hose	1		
8	4700484007	Hydraulic hose	1		
9	4700484007	Hydraulic hose	1		
10	4700484007	Hydraulic hose	1		
11	4700484007	Hydraulic hose	1		
12	4700313041	Cable ties, L=200 mm	N		

Hydraulic steering, sliding seat 4700372424 Pilot valve, steering

Item	Part No.	Name	Qty	L	SN INFO
1	4700372424	Pilot valve, steering	1		
2	--	Housing , spool and sleeve , cpl	1		
3	4700480468	Ball	1		
4	4700480446	Threaded bushing	1		
5	--	O-ring	1	1	
7	4700911620	Bearing	1		
8	4700480449	Ring	1		
9	4700480447	Cross pin	1		
11	4700902861	Cardan shaft	1		
12	4700909211	Set of springs	1		
13	--	O-ring	1	1	
14	4700902862	Valve plate	1		
15	4700903457	Gear wheel set	1		
16	--	O-ring	2	1	
17	4700480450	End cap	1		
18	--	Washer	7	1	
20	4700480456	Screw with hole	1		
21	4700935428	Screw	6		
22	--	Name plate	1		
23	--	Screw	2		
26	4700929012	Shock valve 22,5-24,0 MPa	2		
27	4700929013	Ball	2		
28	--	Seal ring	1	1	
29	4700929014	Rolled pin	2		
30	4700935429	Seal kit	1		

Comments for Page: 4700372424 Pilot valve, steering

(L)OCAL REMARKS

1 | en_US | Included in seal kit item 30

Electric cables, power supply Electric cables, power supply

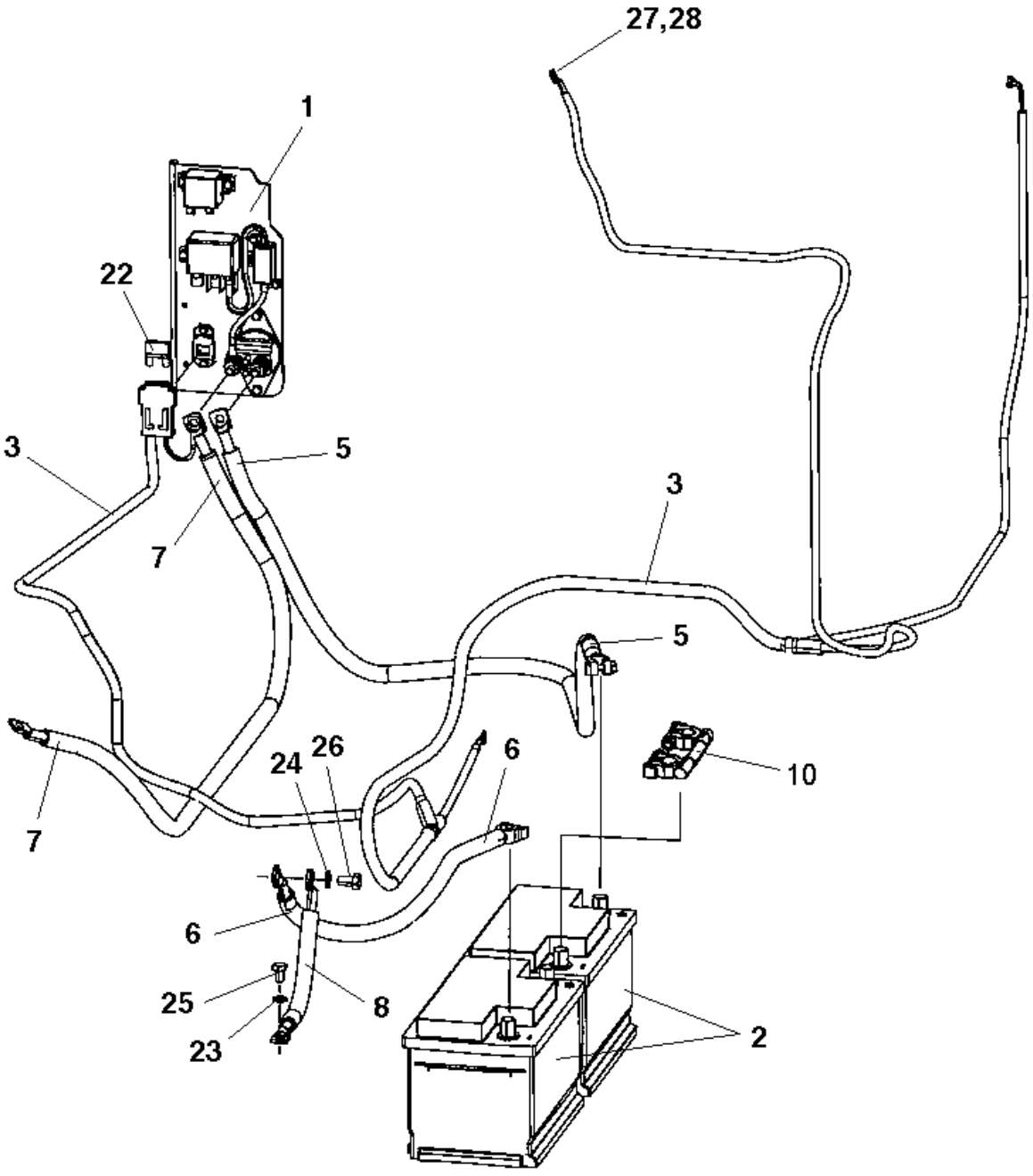

Item	Part No.	Name	Qty	L	SN INFO
1	-	Battery disconnector	1		
2	-	Battery 12V 74Ah	2	A	
3	4700391584	Cable harness, power supply	1		
5	4700792364	Battery cable +	1		
6	4700792328	Battery cable -	1		
7	4812118387	Connection cable	1		
8	4700335607	Connection cable, coarse	1		
10	4700792684	Battery union cable	1		
22	4700904039	Fuse 50A Red	1		
23	4700904637	Washer	1		
24	4700904638	Washer 12x22x2	1		
25	4700500043	Screw M10x16	1		
26	4700500035	Hexagon screw, M12x20H	1		
27	4700904229	Washer, 8.4x 6x1.5 mm 300HV	1		
28	4700570005	Hexagon nut	1		

Comments for Page: Electric cables, power supply

(L)OCAL REMARKS

A | en_US | See section " Rear frame - Engine structure "

Electric cables, power supply Battery disconnector

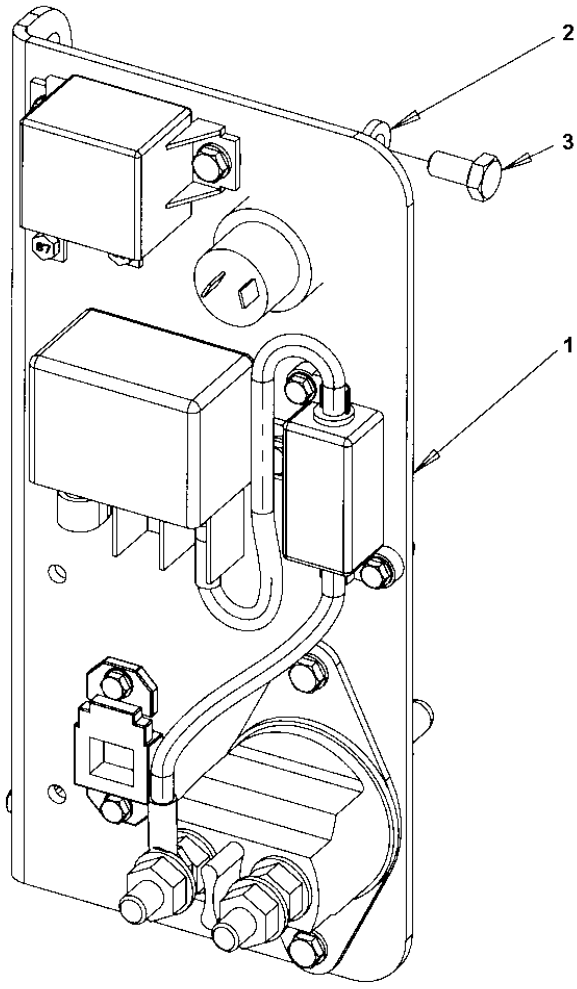

Item	Part No.	Name	Qty	L	SN INFO
1	-	Battery disconnector	1		
2	4700904556	Steel plain washer 8,4x16x3,0	3		
3	4700500019	Hexagon screw	3		

Electric cables, power supply Battery disconnector

Item	Part No.	Name	Qty	L	SN INFO
1	4812104713	Holder	1		
2	4700903640	Battery switch	1		
2	4700903641	Battery key	1		
3	4700792309	Relay	1		
4	4700792310	Relay 120A	1		
5	4700904036	Bracket	1		
6	4700391585	Cable harness	1	A	
6	4700791479	Fuse, Orange 125A	1		
7	4700395816	Plug socket 24V	1		
10	4700904228	Washer DIN125	6		
11	4700500040	Screw, M6x20 mm 8.8 A2K	6		
12	4700904281	Washer, 5,3x10x1 300HV	4		
13	4700500060	Screw M5-0,8x20 8.8	4		
14	4700586001	Lock nut	4		
15	4700586002	Lock nut M6 -8	6		
16	4700570004	Hexagon nut M6	1		

Comments for Page: Battery disconnector

(L)OCAL REMARKS

A | en_US | Pre-heater

Electric cables, power supply cab Electric cables, power supply cab

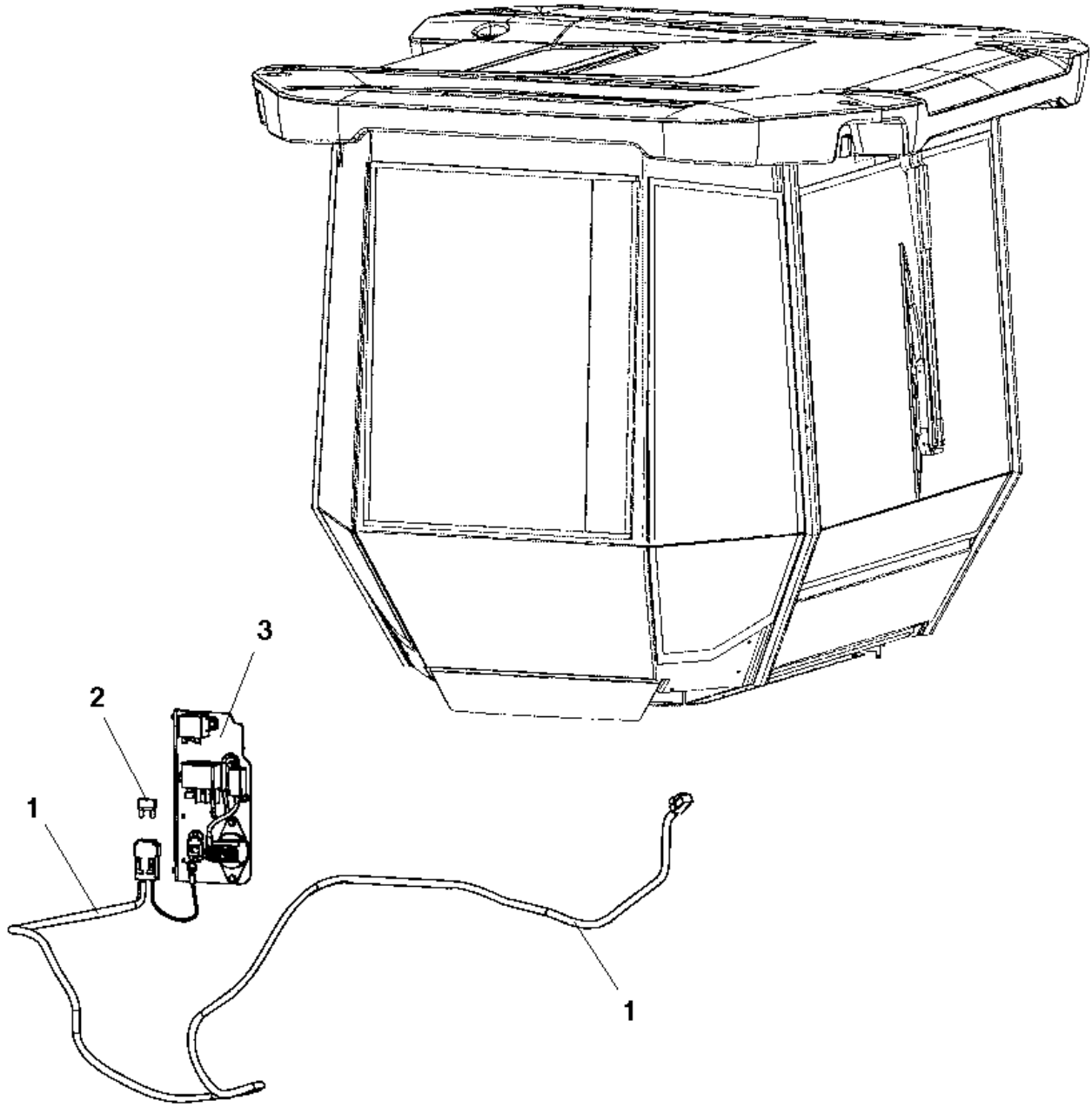

Item	Part No.	Name	Qty	L	SN INFO
1	4700392156	Cable harness, power supply Cab	1		
2	4700904039	Fuse 50A Red	1		
3	-	Battery disconnector	1		

Electric cables, engine - ECU - Version 1 Electric cables, engine - ECU

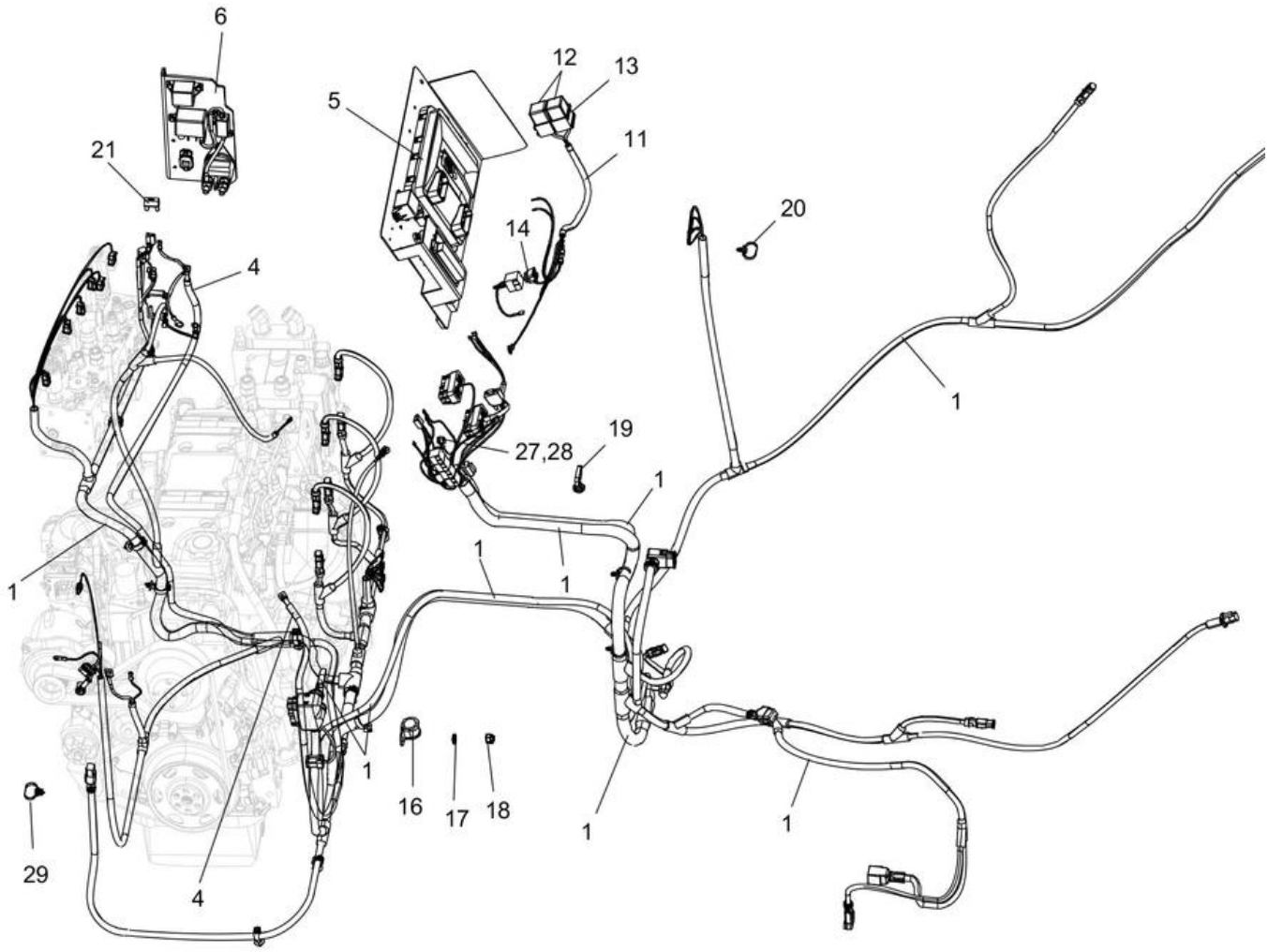

Item	Part No.	Name	Qty	L	SN INFO
1	4812110652	Cable harness, ECU/CanBus	1		
4	4700792363	Connection cable coarse	1		
5	-	Standard ECU module	1		
6	-	Battery disconnector	1		
11	4812118553	Cable harness	1		
12	4700792422	Relay 24V 20A	2		
13	4700792210	Screw torx	2		
14	4700901226	Fuse 7.5A Brown	2		
16	4700921031	Clamp	1		
17	4700904228	Washer DIN125	1		
18	4700586002	Lock nut M6 -8	1		
19	4700792442	Cable tie	1		
20	4700792441	Cable tie with holder	22		
21	4700904037	Fuse 30A Green	1		
27	4700904229	Washer, 8.4x 6x1.5 mm 300HV	2		
28	4700570005	Hexagon nut	2		
29	4700792602	Cable tie with holder	1		

Electric cables, engine - ECU - Version 1 Standard ECU module

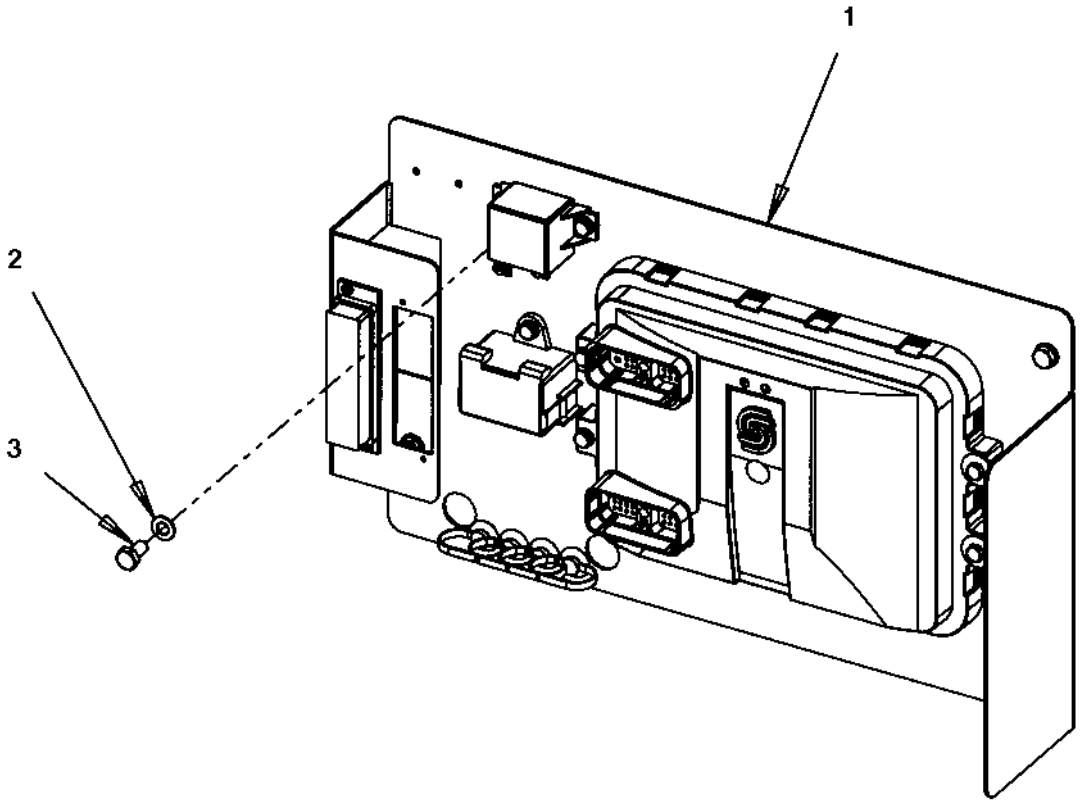

Item	Part No.	Name	Qty	L	SN INFO
1	-	Standard ECU assembly	1		
2	4700904229	Washer, 8.4x 6x1.5 mm 300HV	4		
3	4700500019	Hexagon screw	4		

Electric cables, engine - ECU - Version 1 Standard ECU assembly

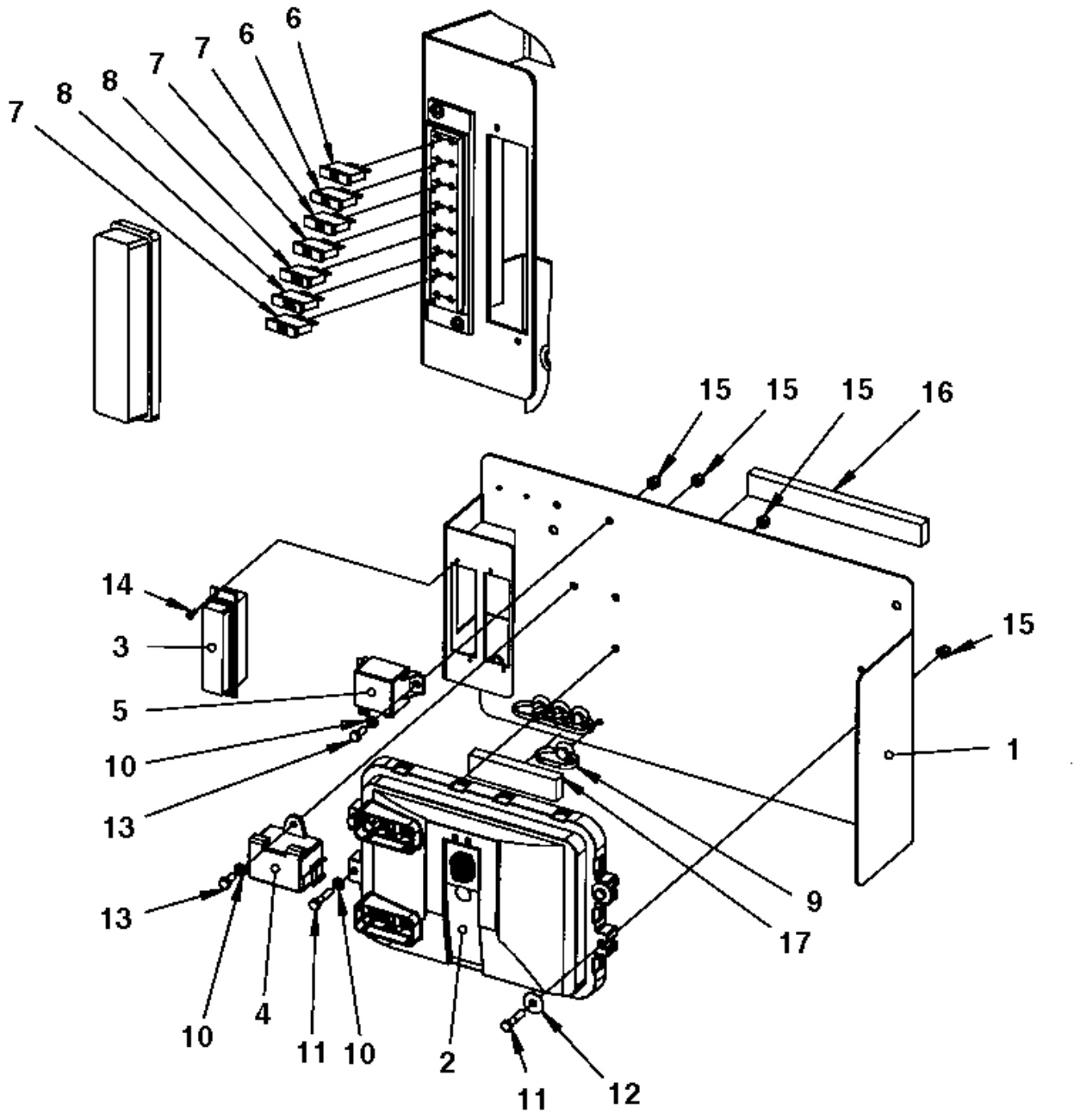

Item	Part No.	Name	Qty	L	SN INFO
1	4812104284	Mounting plate	1		
2	4700390860	Control unit	1		
3	4700791185	Fuse box	2		
4	4700791551	Junction block	1		
5	4700792309	Relay	1		
6	4700901225	Fuse 5A Tan	2		
7	4700901227	Fuse 10A Red	3		
8	4700903741	Fuse 20A Yellow	2		
9	4700792441	Cable tie with holder	4		
10	4700904228	Washer DIN125	5		
11	4700500015	Hex. screw	4		
12	4700928467	Washer	2		
13	4700500013	Screw, M6x16 mm 8.8 A2K	3		
14	4700901767	Screw	4		
15	4700586002	Lock nut M6 -8	7		
16	4700791597	Rubber strip	1XL	A	
17	4700791597	Rubber strip	1XL	B	

Comments for Page: Standard ECU assembly

(L)OCAL REMARKS

A | en_US | L= 0,2 m

B | en_US | L= 0,1 m

Electric cables, engine - ECU - Version 2 Electric cables, engine - ECU

Item	Part No.	Name	Qty	L	SN INFO
1	4812115970	Cable harness, ECU/CanBus	1		
4	4700792363	Connection cable coarse	1		
5		Standard ECU module	1		
6		Battery disconnector	1		
12	4700792422	Relay 24V 20A	2		
13	4700792210	Screw torx	2		
16	4700921031	Clamp	1		
17	4700904228	Washer DIN125	1		
18	4700586002	Lock nut M6 -8	1		
19	4700792442	Cable tie	1		
20	4700792441	Cable tie with holder	18		
21	4700904037	Fuse 30A Green	1		
27	4700904229	Washer, 8.4x 6x1.5 mm 300HV	2		
28	4700570005	Hexagon nut	2		
29	4700792602	Cable tie with holder	1		
31	4700791597	Rubber strip	0,2		
32	4700791597	Rubber strip	0,1		
33	4700792441	Cable tie with holder	4		

Electric cables, engine - ECU - Version 2 Standard ECU module

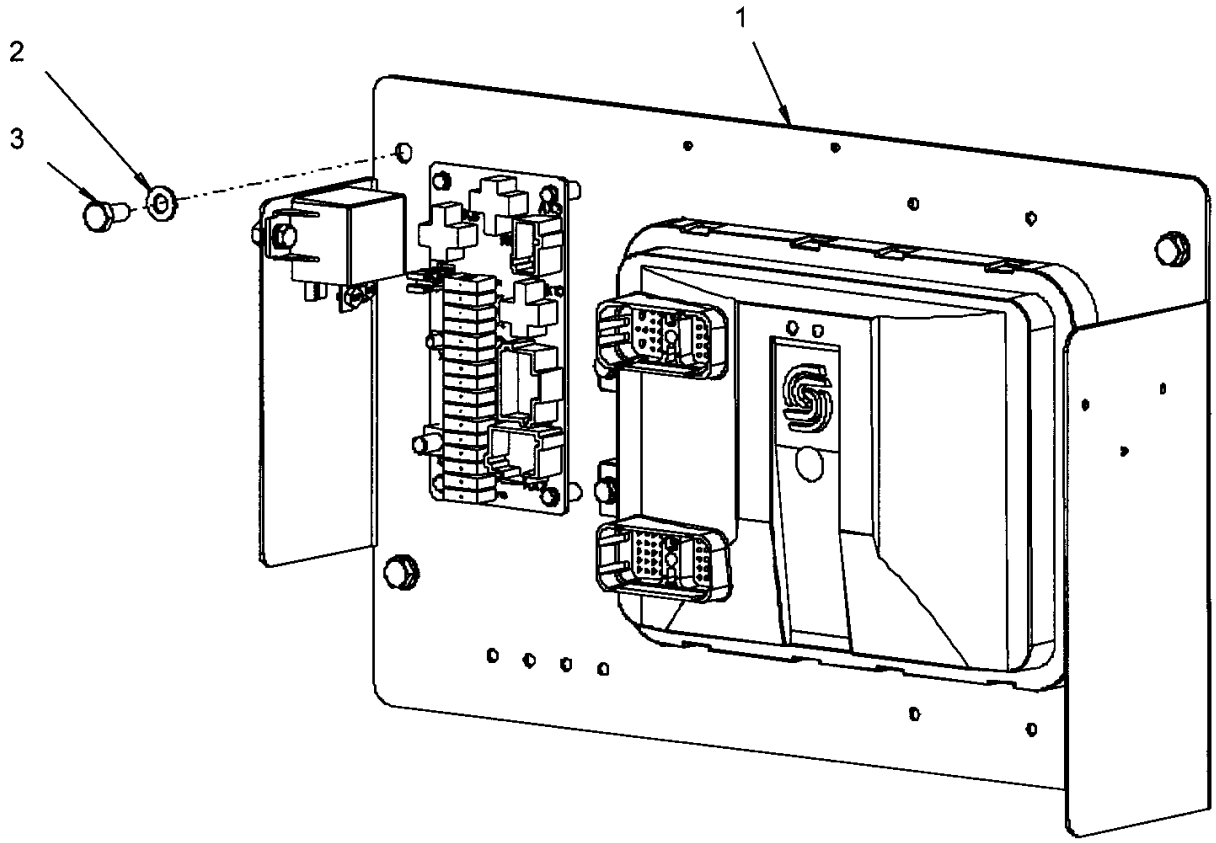

Item	Part No.	Name	Qty	L	SN INFO
1	-	Standard ECU assembly	1		
2	4700904229	Washer, 8.4x 6x1.5 mm 300HV	4		
3	4700500019	Hexagon screw	4		

Electric cables, engine - ECU - Version 2 Standard ECU assembly

Item	Part No.	Name	Qty	L	SN INFO
1	4812114619	Mounting plate	1		
2	4700390860	Control unit	1		
3	4700792309	Relay	1	A	
4	4700904228	Washer DIN125	4		
5	4700928467	Washer	2		
6	4700500015	Hex. screw	4		
7	4700500013	Screw, M6x16 mm 8.8 A2K	2		
8	4812114655	Circuit board	1		
9	4700904698	Plain washer	4		
10	4700904312	Screw	4		
11	4700792441	Cable tie with holder	2		
15	4700901227	Fuse 10A Red	7		
16	4700903741	Fuse 20A Yellow	2		
17	4700901225	Fuse 5A Tan	1		

Comments for Page: Standard ECU assembly

(L)OCAL REMARKS

A | en_US | Main.

Electric cables, sensors/ horn/ back-up alarm Electric cables, sensors/ horn/ back-up alarm

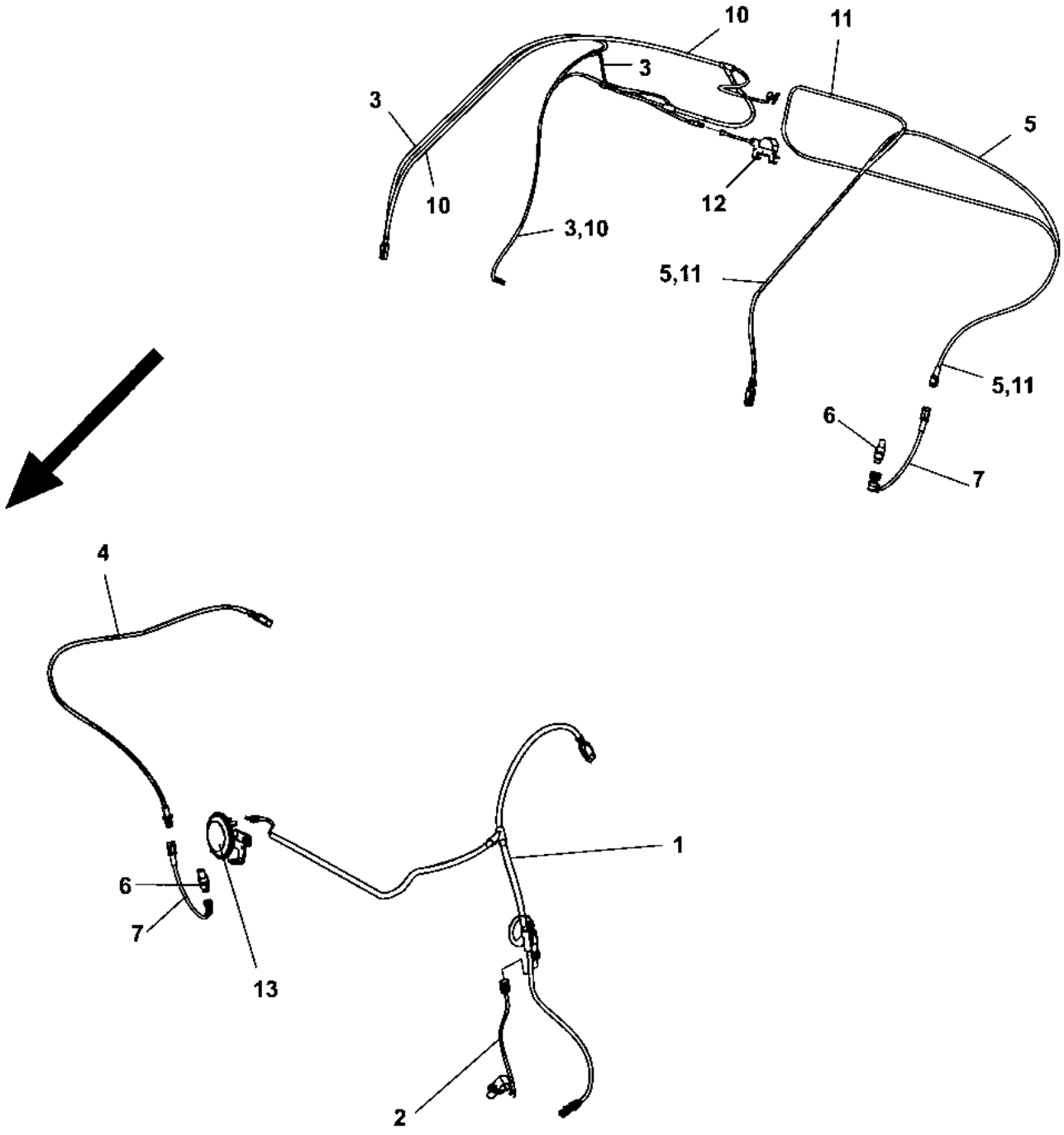

Item	Part No.	Name	Qty	L	SN INFO
1	4700391580	Cable harness	1	A, C	
2	4700390716	Speed sensor	1		
3	4700391583	Cable harness	1	B	
4	4700396259	Cable harness	1	A, D	
5	4700396260	Cable harness	1	B, D	
6	4700792731	Frequency sensor	2		
7	4700392221	Mount kit for sensor	2		
10	4700391955	Cable harness	1	E	
11	4700396261	Cable harness	1	D, E	
12	-	Back-up alarm module	1		
13	-	Horn module	1		

Comments for Page: Electric cables, sensors/ horn/ back-up alarm

(L)OCAL REMARKS

A | en_US | Front drum

B | en_US | Rear drum, Std

C | en_US | Speed

D | en_US | Frequency

E | en_US | Rear drum, offset

Electric cables, sensors/ horn/ back-up alarm Back-up alarm module

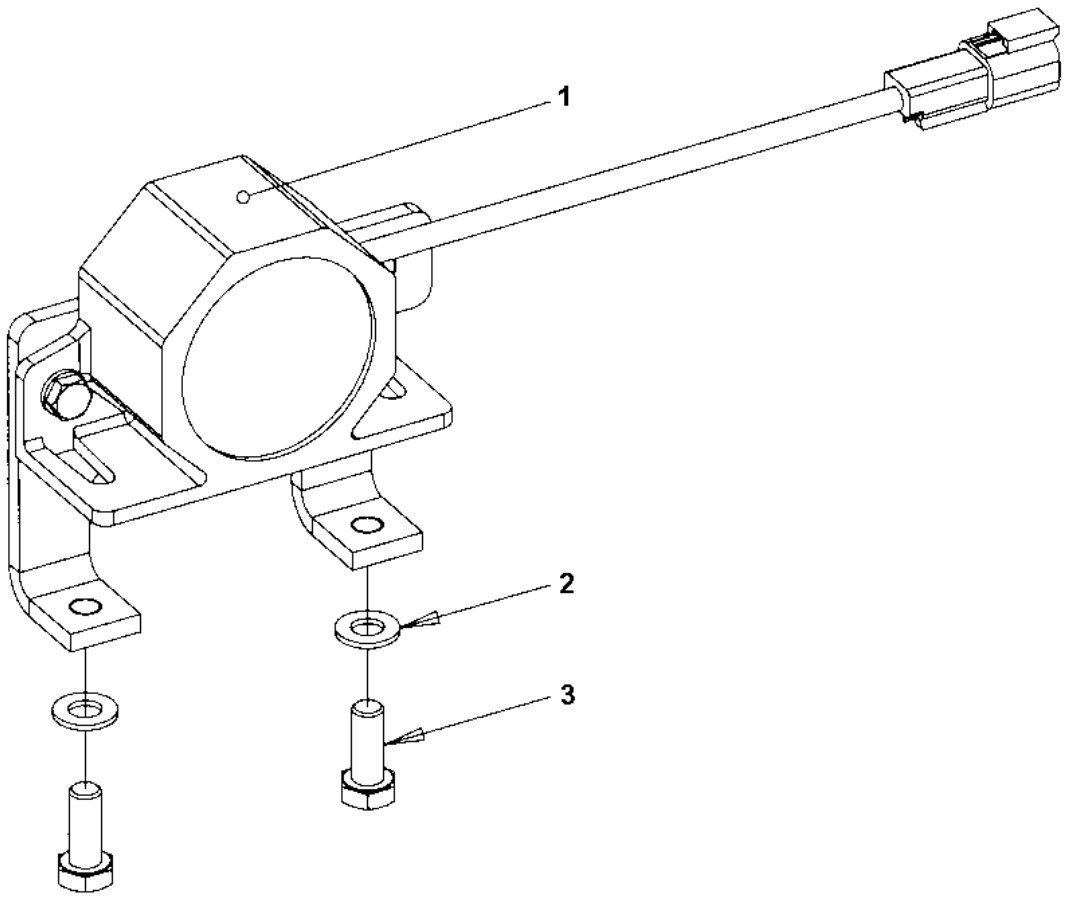

Item	Part No.	Name	Qty	L	SN INFO
1	-	Back-up alarm	1		
2	4700904229	Washer, 8.4x 6x1.5 mm 300HV	2		
3	4700500053	Screw, M8x20 mm 8.8 A2K	2		

Electric cables, sensors/ horn/ back-up alarm Back-up alarm

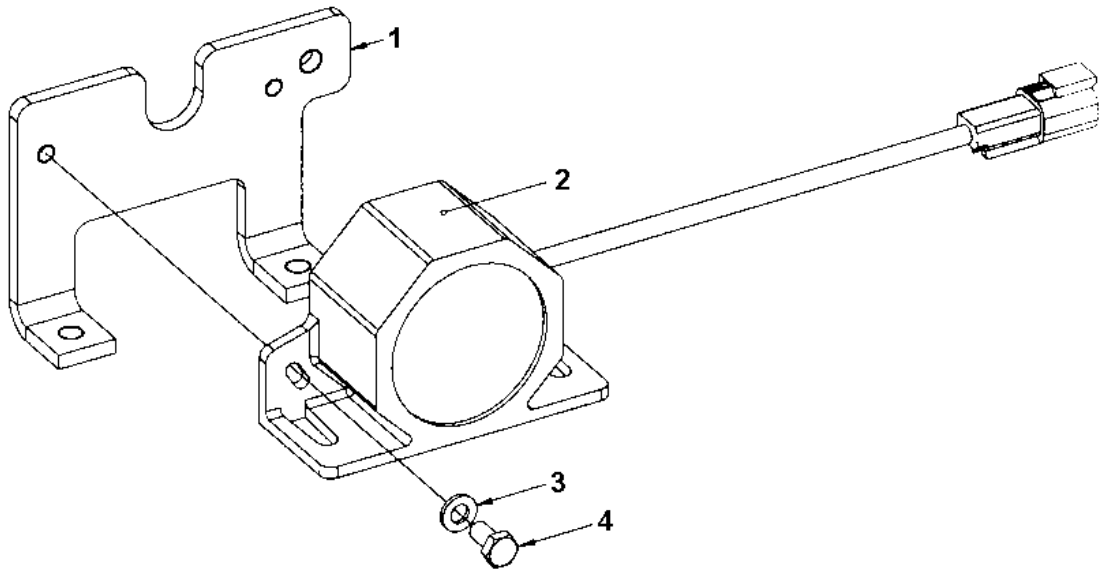

Item	Part No.	Name	Qty	L	SN INFO
1	4700396768	Bracket	1		
2	4700904911	Back-up alarm	1		
3	4700904228	Washer DIN125	2		
4	4700500012	Hex. screw	2		

Electric cables, sensors/ horn/ back-up alarm Horn module

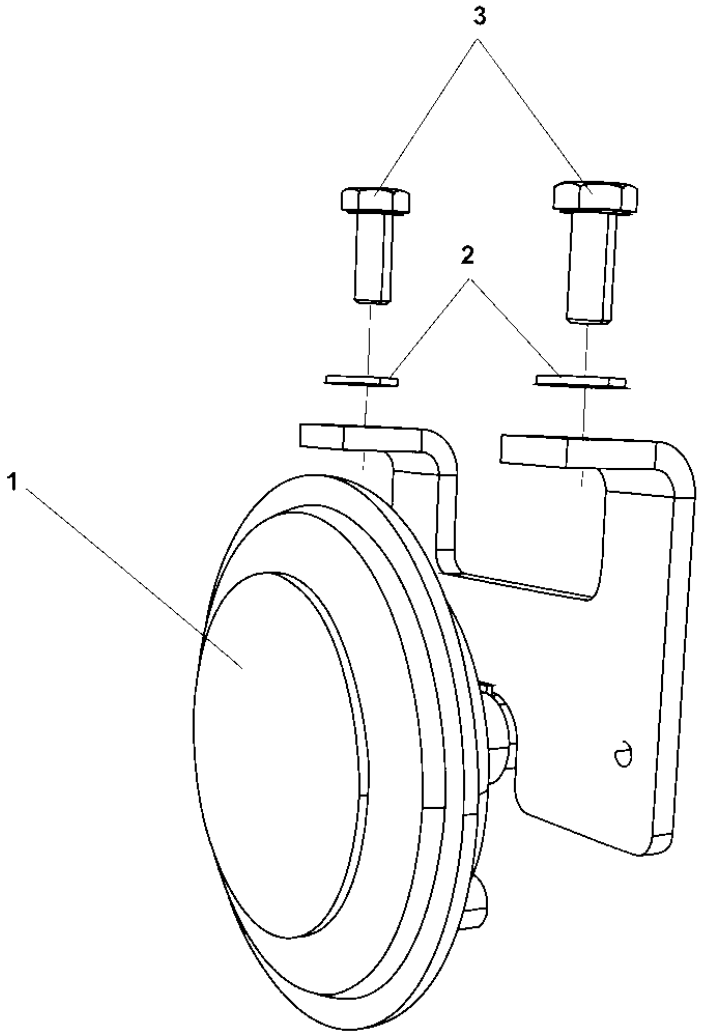

Item	Part No.	Name	Qty	L	SN INFO
1	-	Horn	1		
2	4700904229	Washer, 8.4x 6x1.5 mm 300HV	2		
3	4700500053	Screw, M8x20 mm 8.8 A2K	2		

Electric cables, sensors/ horn/ back-up alarm Horn

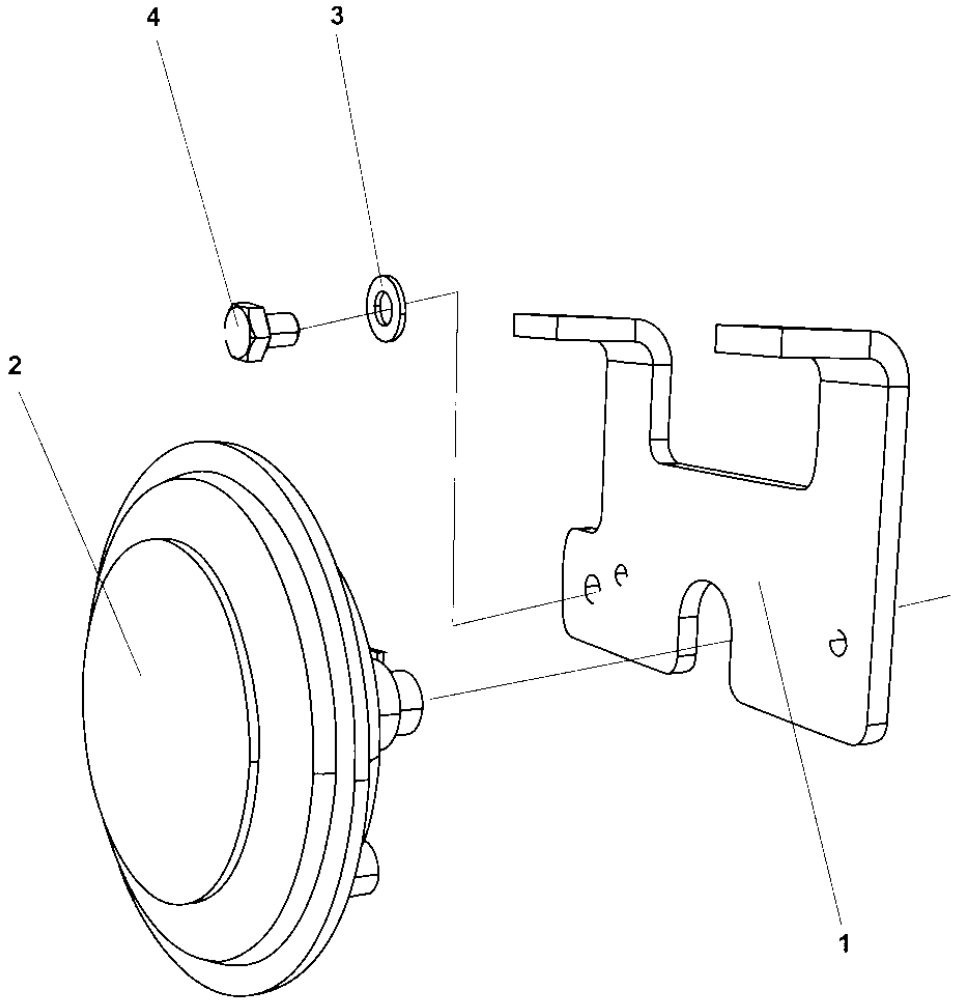

Item	Part No.	Name	Qty	L	SN INFO
1	4700396768	Bracket	1		
2	4700999014	Horn	1		
3	4700904229	Washer, 8.4x 6x1.5 mm 300HV	1		
4	4700500042	Hex. head screw M8	1		

Driving & side direction lights Driving & side direction lights

Item	Part No.	Name	Qty	L	SN INFO
1	4812110899	Cable harness	1	B	
1	4812115291	Cable harness	1	C	
2	4700792422	Relay 24V 20A	1		
3	4700792210	Screw torx	2		
4	4812110902	Cable harness	1	A	
5	4700901227	Fuse 10A Red	1		
6	4811000163	Flash relay	1		
7	4700901226	Fuse 7.5A Brown	1		
8	-	Driving lights, front	2		
9	-	Steering column switch module	1		
10	-	Cable harness and switch module	1		
11	-	Registration plate light module	1		
12	-	Driving lights, rear	2		
13	4812110903	Cable harness Std	1		
13	4812110904	Cable harness Off-set	1		
14	-	Turn signals	2		

Comments for Page: Driving & side direction lights

(L)OCAL REMARKS

A | en_US | Front

B | en_US | On machines with regular fuse box at the standard ECU.

C | en_US | On machines with circuit board at the standard ECU.

Driving & side direction lights Driving lights, front

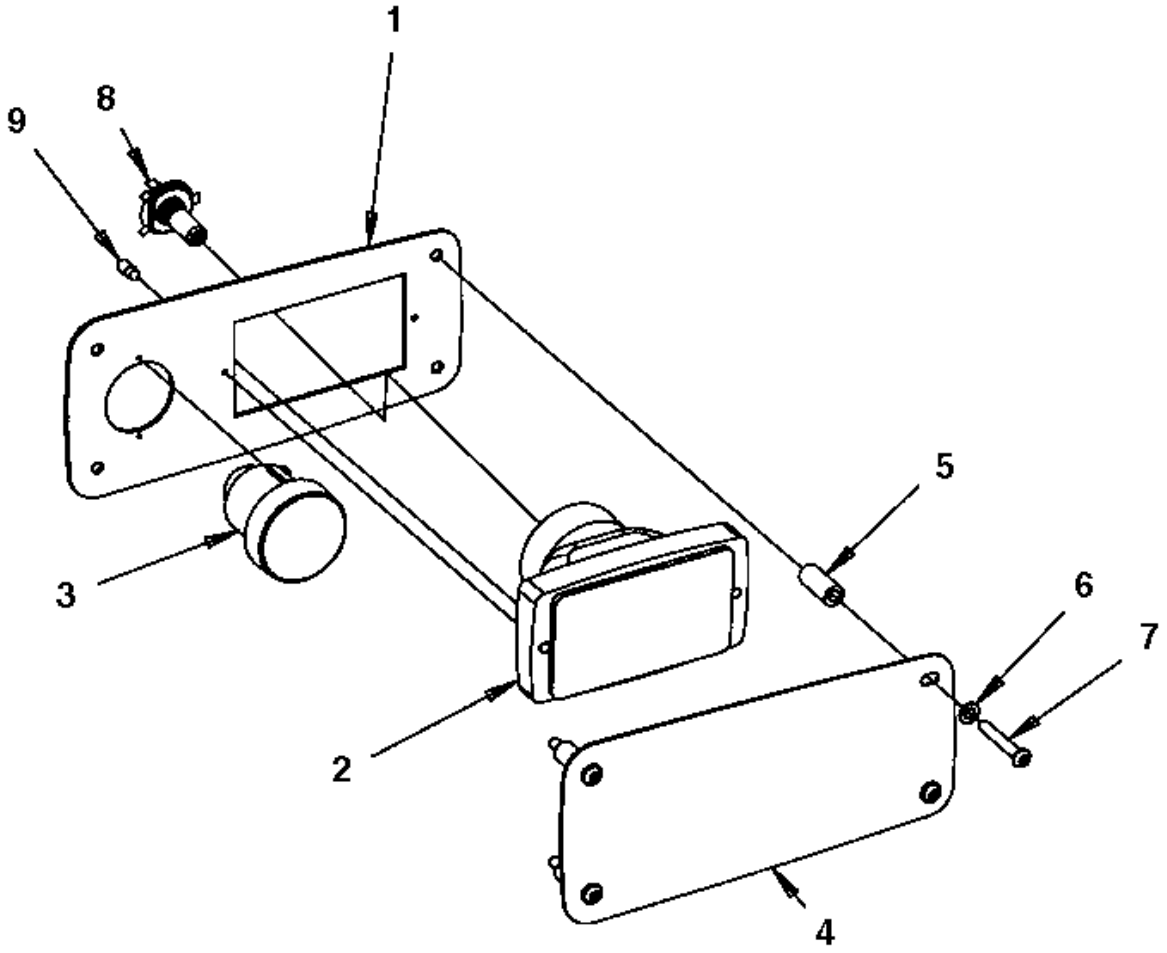

Item	Part No.	Name	Qty	L	SN INFO
1	4700390434	Lights bracket	1		
2	4700791951	Headlight right hand asym. with parking light	1		
2	4700792059	Headlight left hand asym. with parking light	1		
3	4700792521	Direction indicator	1		
4	4700390436	Protecting cover	1		
5	4700391115	Spacer sleeve	4		
6	4700904229	Washer, 8.4x 6x1.5 mm 300HV	4		
7	4700792361	Hexagon socket head cap screw	4		
8	4700792353	Bulb 24V 75/70W H4	1		
9	4700792350	Bulb 24V 2W	1		

Driving & side direction lights Steering column switch module

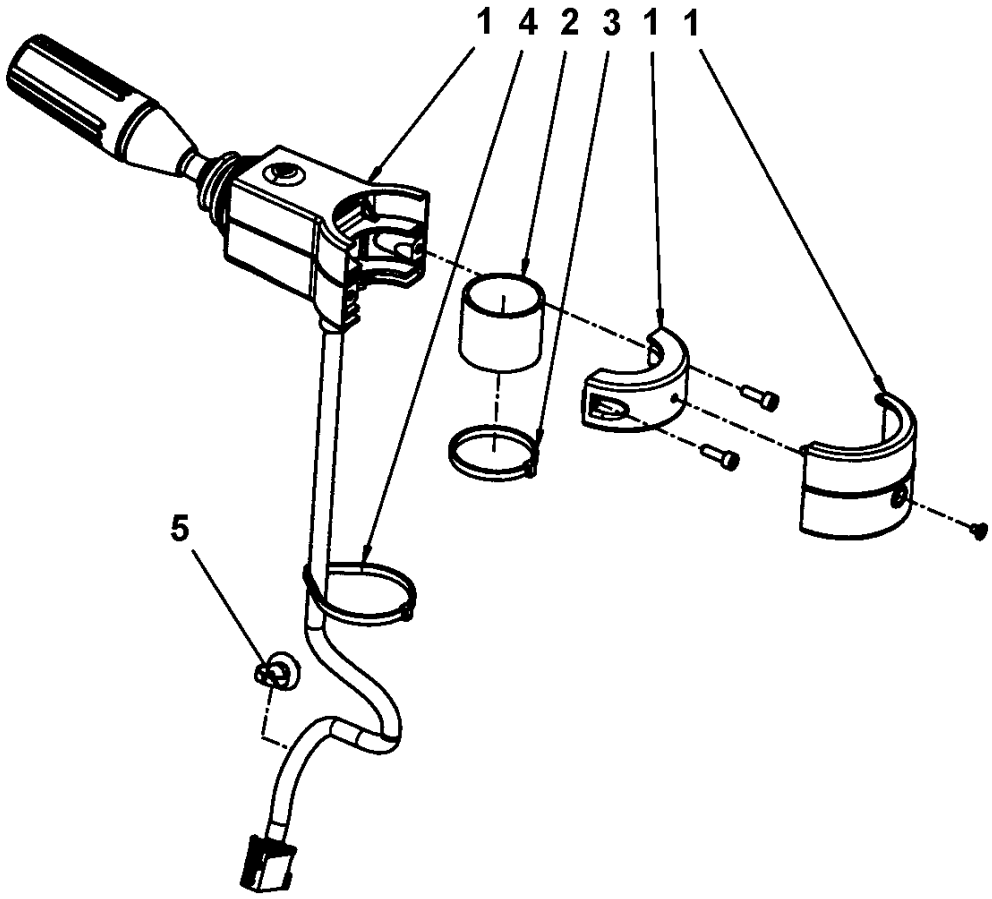

Item	Part No.	Name	Qty	L	SN INFO
1	4700392450	Steering column switch	1		
2	4700392451	Rubber cloth	1		
3	4700313041	Cable ties, L=200 mm	1		
4	4700792609	Cable ties	1		
5	4700921080	Clamp	1		

Driving & side direction lights Cable harness and switch module

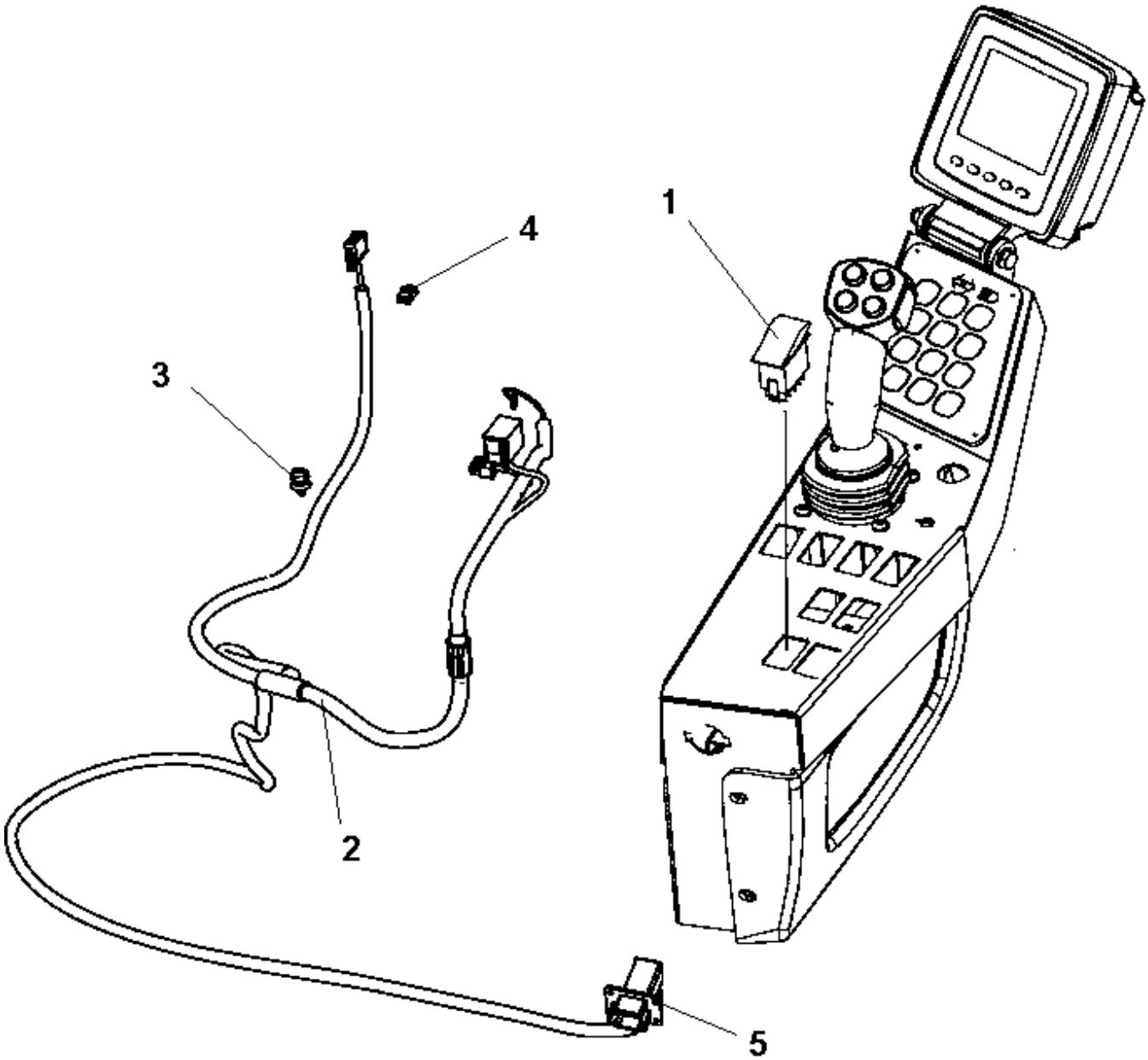

Item	Part No.	Name	Qty	L	SN INFO
1	4700792398	Switch	1		
2	4812115522	Wiring Harness	1		
3	4700792441	Cable tie with holder	1		
4	4700792537	Cable tie with holder	1		
5	4700791709	Blind rivet	4		

Driving & side direction lights Registration plate light module

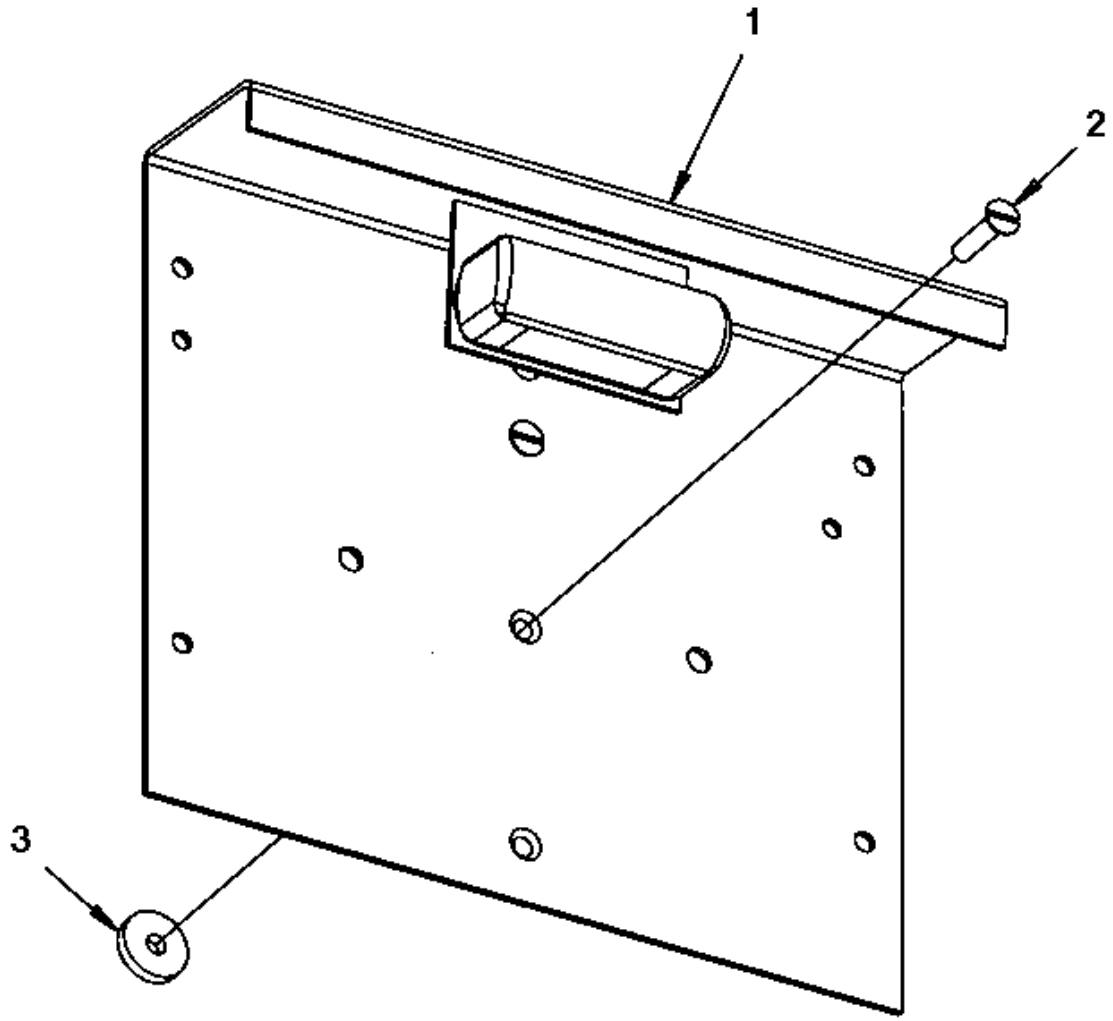

Item	Part No.	Name	Qty	L	SN INFO
1	-	Registration plate light	1		
2	4700928784	Screw	2		
3	4700904735	Steel plain washer	2		

Driving & side direction lights Registration plate light

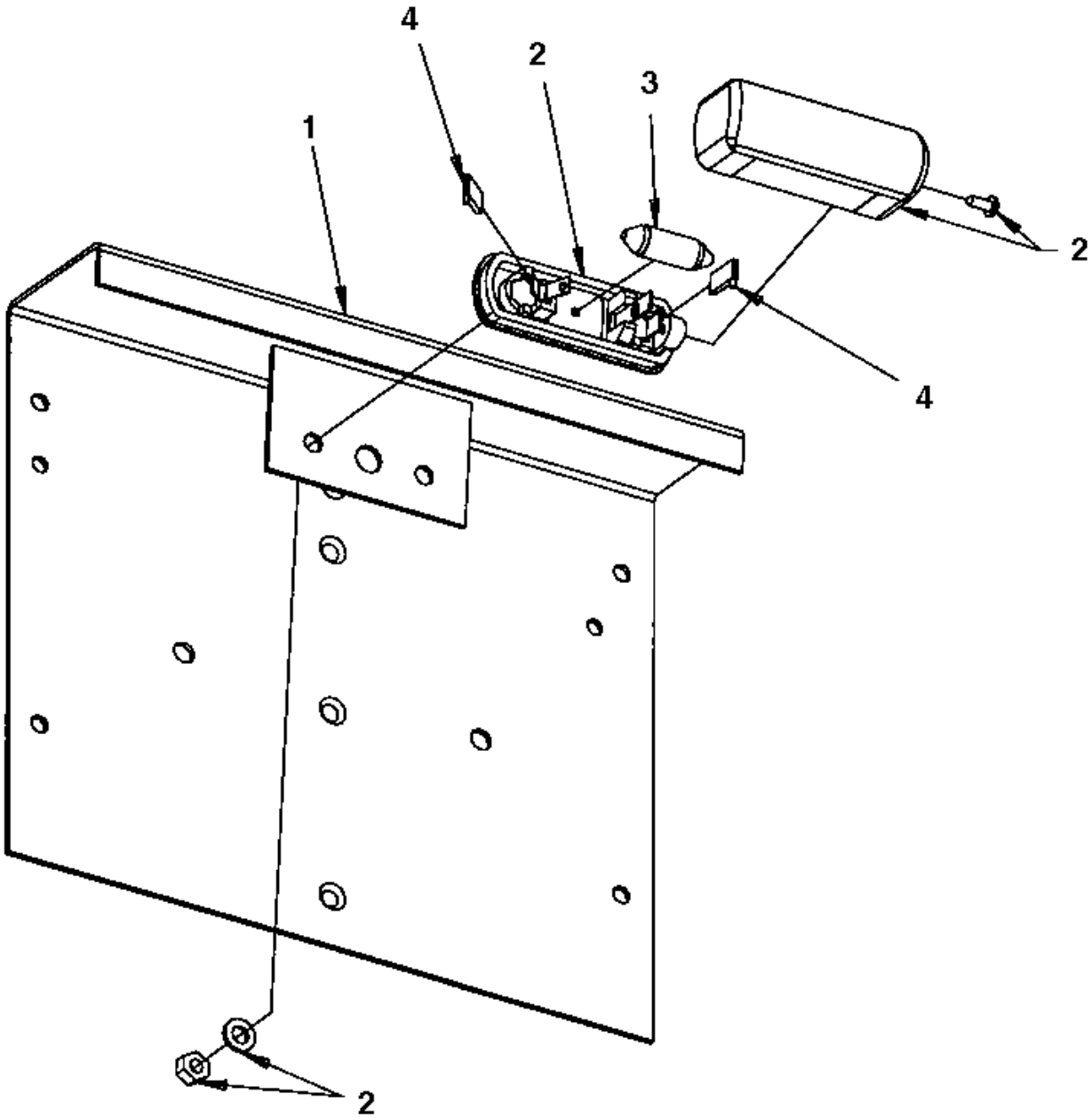

Item	Part No.	Name	Qty	L	SN INFO
1	4700355797	Licence plate holder	1		
2	4700929455	Licence plate light	1		
3	4700792354	Bulb 24V 5W	1		
4	4700792035	Push-on terminal	2		

Driving & side direction lights Driving lights, rear

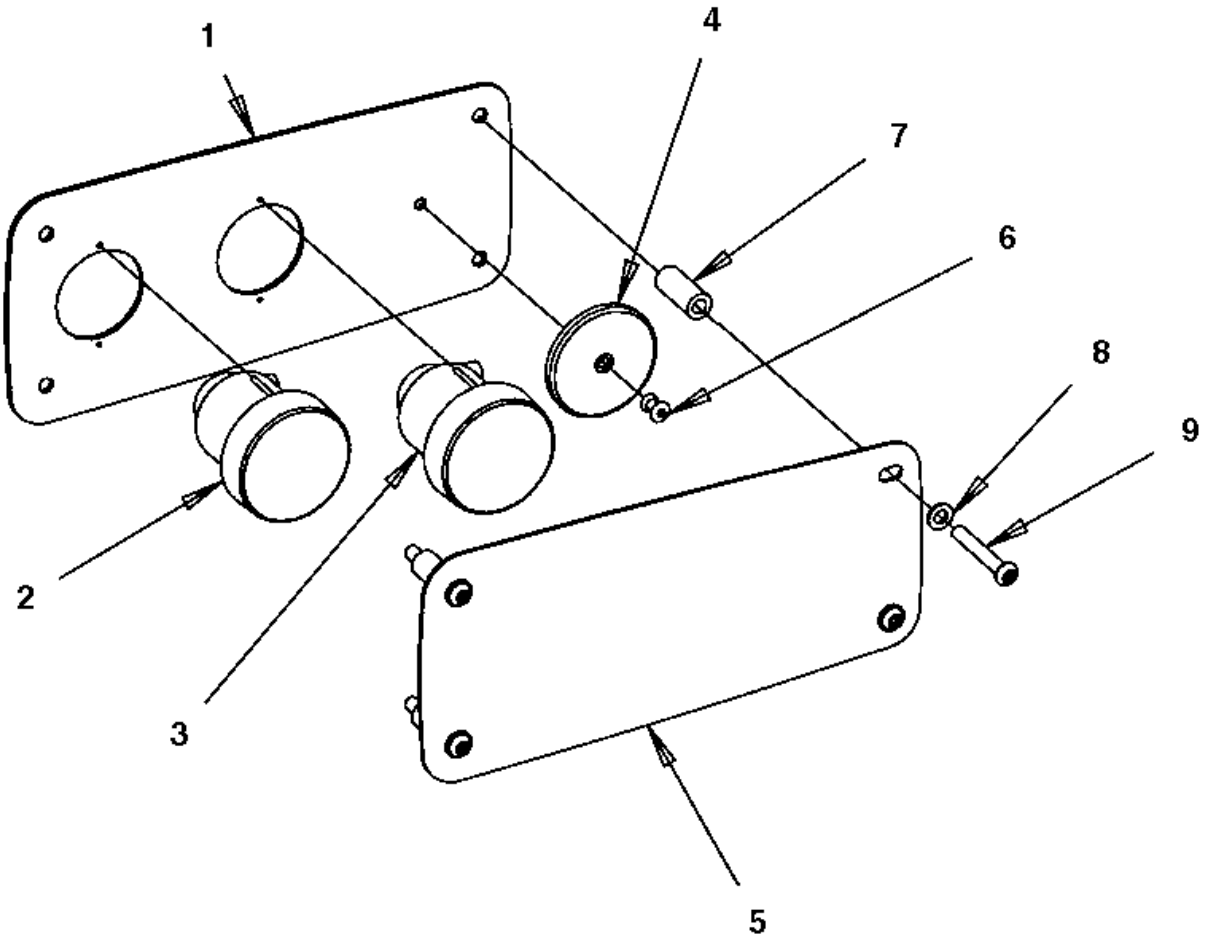

Item	Part No.	Name	Qty	L	SN INFO
1	4700390435	Lights bracket	1		
2	4700792520	Direction indicator	1		
2	4700792349	Bulb 24V 21W	1		
3	4700792519	Brake/position light	1		
3	4700792351	Bulb 24V 21/5W	1		
4	4700791956	Reflector, red	1		
5	4700390436	Protecting cover	1		
6	4700791754	Blind rivet	1		
7	4700391115	Spacer sleeve	4		
8	4700904229	Washer, 8.4x 6x1.5 mm 300HV	4		
9	4700792361	Hexagon socket head cap screw	4		

Driving & side direction lights Turn signals

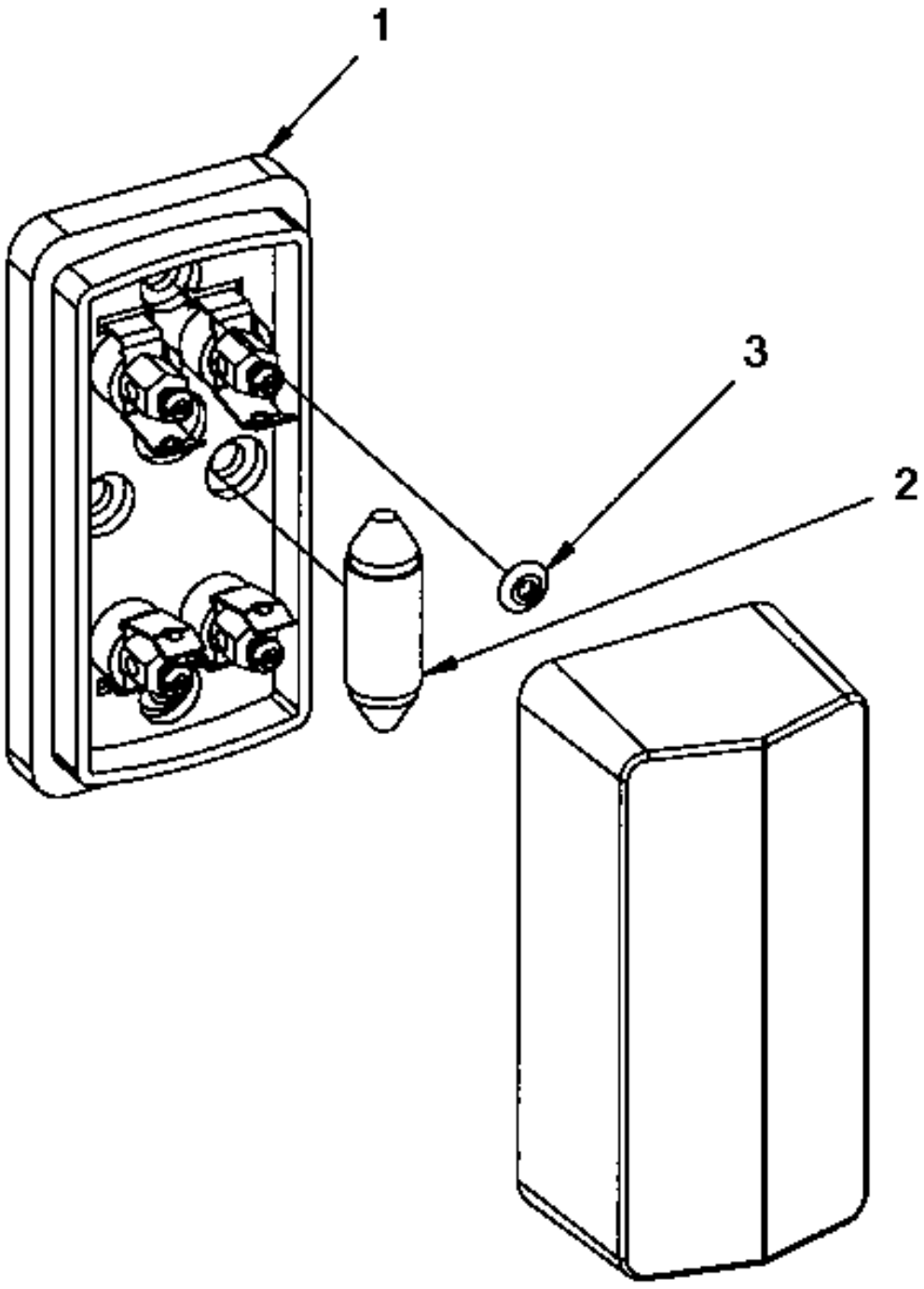

Item	Part No.	Name	Qty	L	SN INFO
1	4700902064	Direction lights	1		
2	4700792354	Bulb 24V 5W	1		
3	4700923253	Rivet	2		

Rotating beacon, working light Rotating beacon, working light

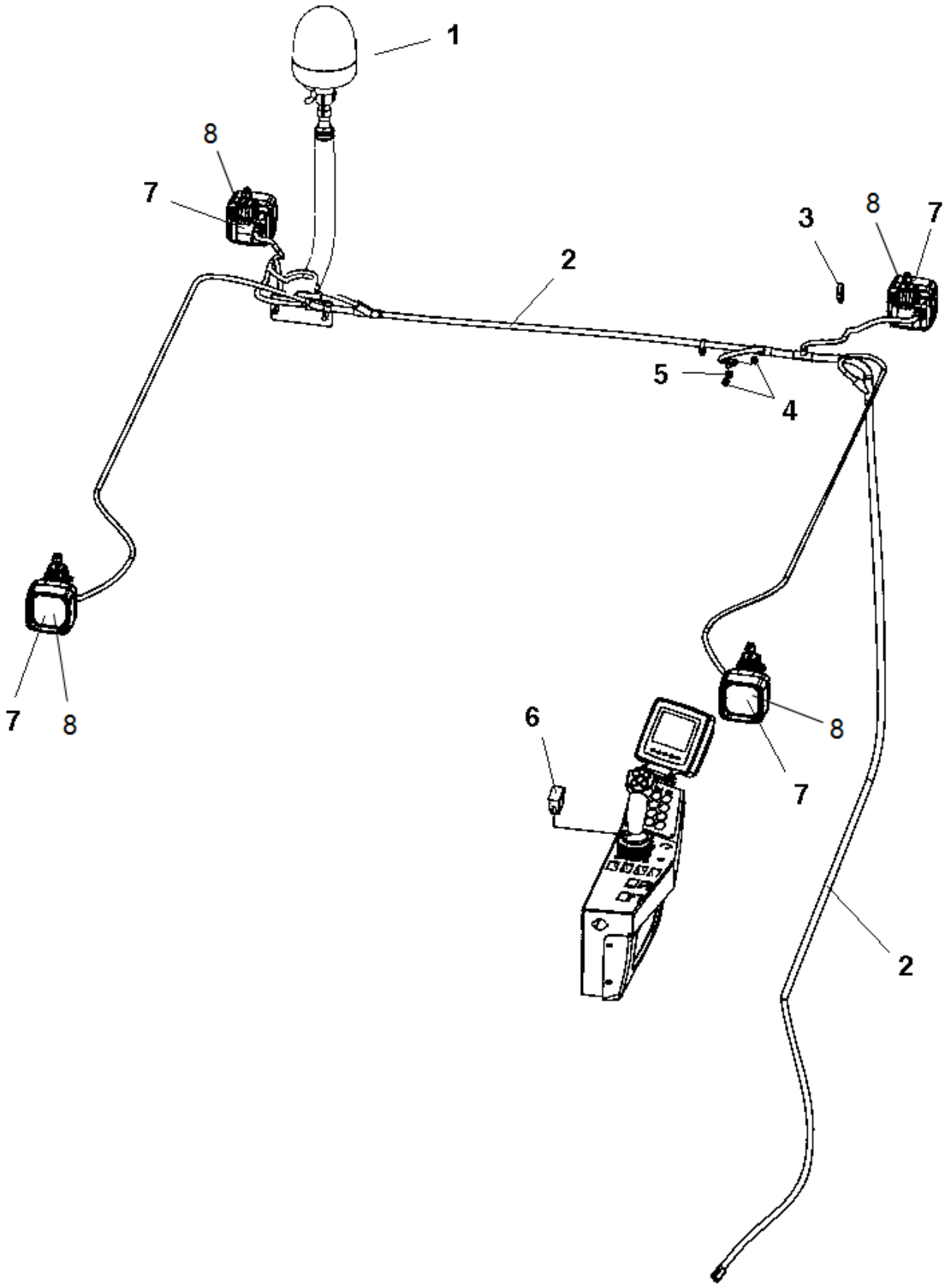

Item	Part No.	Name	Qty	L	SN INFO
1	-	Rotating beacon module	1		
2	4812119163	Wiring harness	1		
3	4700313102	Cable ties	N		
4	4700570005	Hexagon nut	2		
5	4700904229	Washer, 8.4x 6x1.5 mm 300HV	1		
6	4700792397	Switch	1		
7	-	Working light module H3	4		
8	4812121468	Working light, LED	4		

Rotating beacon, working light Rotating beacon module

Item	Part No.	Name	Qty	L	SN INFO
1	4700397516	Bracket	1		
2	4812120467	Lever	1		
3	4812120469	Bracket	1		
4	4812122611	Rotating beacon	1		
5	4700792410	Hand knob nut	1		
6	4700904640	Washer, 8.4x22x3 mm 300HV	1		
7	4700902286	Lock nut, M8x1.25 mm A2K	1		
8	4700904229	Washer, 8.4x 6x1.5 mm 300HV	2		
9	4700792441	Cable tie with holder	1		
10	4700500028	Screw, M10 x 25 mm 8.8 A3K	2		
11	4700904230	Plain washer 10.5x22x2 mm	2		
12	4812121848	Rotating beacon, LED	1		

Rotating beacon, working light Working light module H3

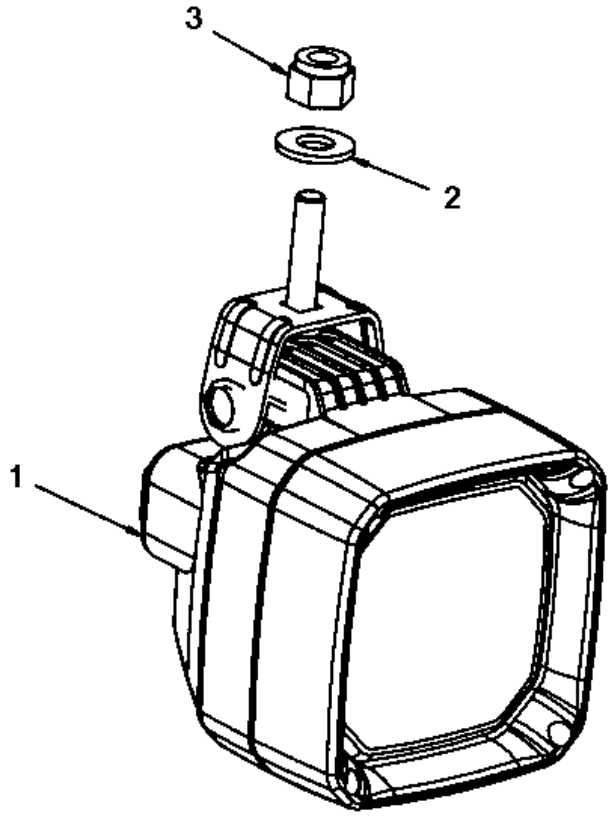

Item	Part No.	Name	Qty	L	SN INFO
1	4700392033	Working light	1		
1	4700792352	Bulb	1		
2	4700904230	Plain washer 10.5x22x2 mm	1		
3	4700586018	Lock nut M10	1		

Drum edge lights Drum edge lights

Item	Part No.	Name	Qty	L	SN INFO
1	-	Bracket	4		
2	-	Working light module H3	4		
3	-	Bracket	4		
5	4700792794	Switch	1		
6	4700397564	Cable harness	1	1	
6	4812115290	Wiring harness	1	2	
7	4700792422	Relay 24V 20A	1		
8	4700792210	Screw torx	1		
9	4700395352	Cable tie holder	12		
10	4700313068	Cable ties, L=92 mm	12		
11	4700313041	Cable ties, L=200 mm	8		
12	4700901228	Fuse, 15A Blue	1		
13	4700792667	Cable tie holder	7		

Comments for Page: Drum edge lights

(L)OCAL REMARKS

1| en | Used when CC2200-3800 is mounted with Cable harness, ECU/Canbus P/N 4812110653, and for CC4200-6200 when mounted with Cable harness, ECU/Canbus P/N 4812110652.

2| en | Used when CC2200-3800 is mounted with Cable harness, ECU/Canbus P/N 4812118651, and for CC4200-6200 when mounted with Cable harness, ECU/Canbus P/N 4812115970.

Drum edge lights Bracket

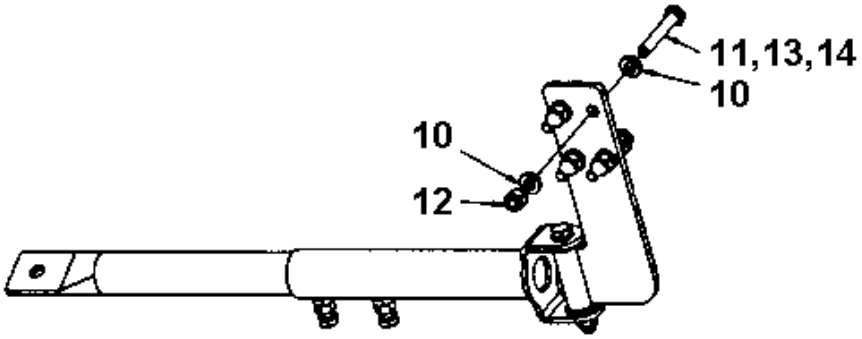

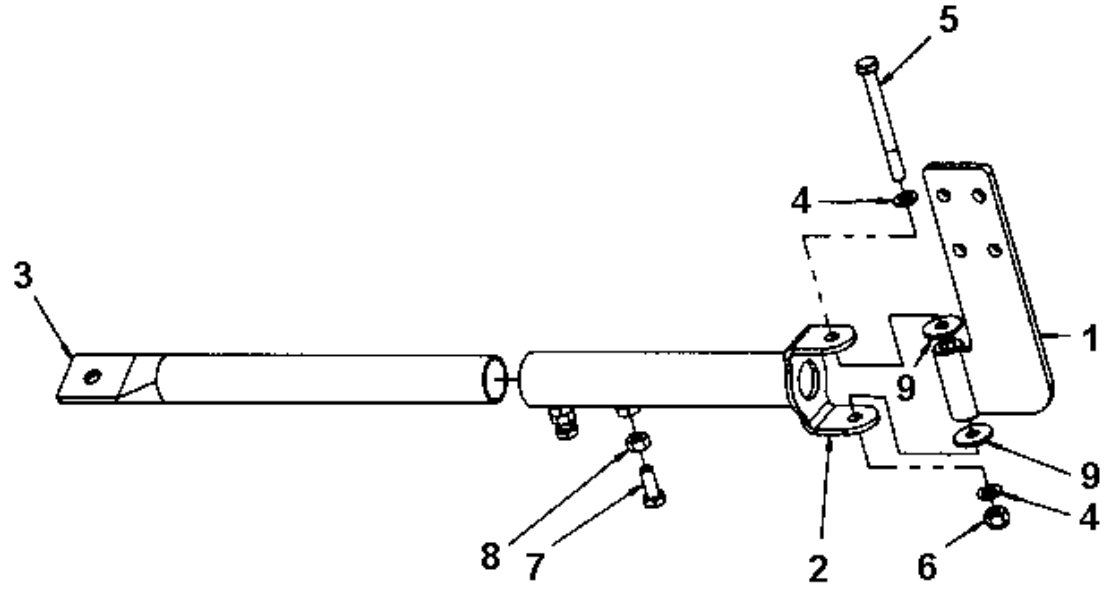

Item	Part No.	Name	Qty	L	SN INFO
1	4700397028	Bracket	1		
2	4700397029	Bracket	1		
3	4700397045	Bracket	1		
4	4700904229	Washer, 8.4x 6x1.5 mm 300HV	2		
5	4700500190	Screw	1		
6	4700586003	Lock nut M8	1		
7	4700500053	Screw, M8x20 mm 8.8 A2K	2		
8	4700570005	Hexagon nut	2		
9	4700903662	Washer	2		
10	4700904556	Steel plain washer 8,4x16x3,0	8		
11	4700500047	Hexagon head screw	4	A	
12	4700586003	Lock nut M8	4		
13	4700500024	Screw M8x45	4	B	
14	4700500025	Screw, M8x50 mm 8.8 A2K	4	C	

Comments for Page: Bracket

(L)OCAL REMARKS

A | en_US | Used on machines with Cab.

B | en_US | Used on machines with Handrails.

C | en_US | Used on machines with Handrails and Canopy.

Drum edge lights Bracket

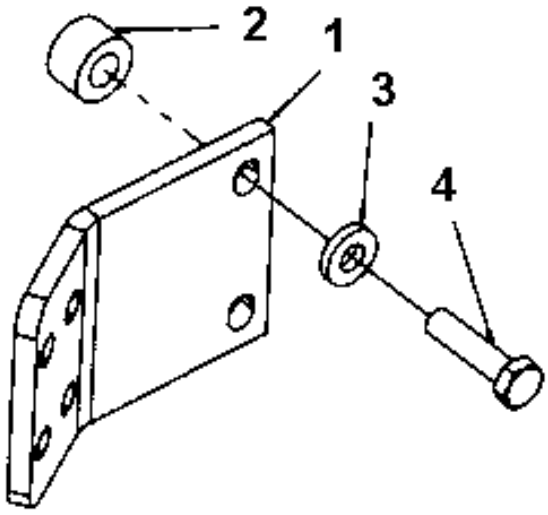

Item	Part No.	Name	Qty	L	SN INFO
1	4700395787	Holder plate	1		
2	4700397500	Spacer sleeve	2	1	
3	4700904557	Washer, 10.5x22x4 mm 300 HV	2		
4	4700500091	Screw	2		

Comments for Page: Bracket

(L)OCAL REMARKS

1 | en_US | Used on machines with Air condition

GPS/DCA, Asphalt temp GPS/DCA, Asphalt temp meter

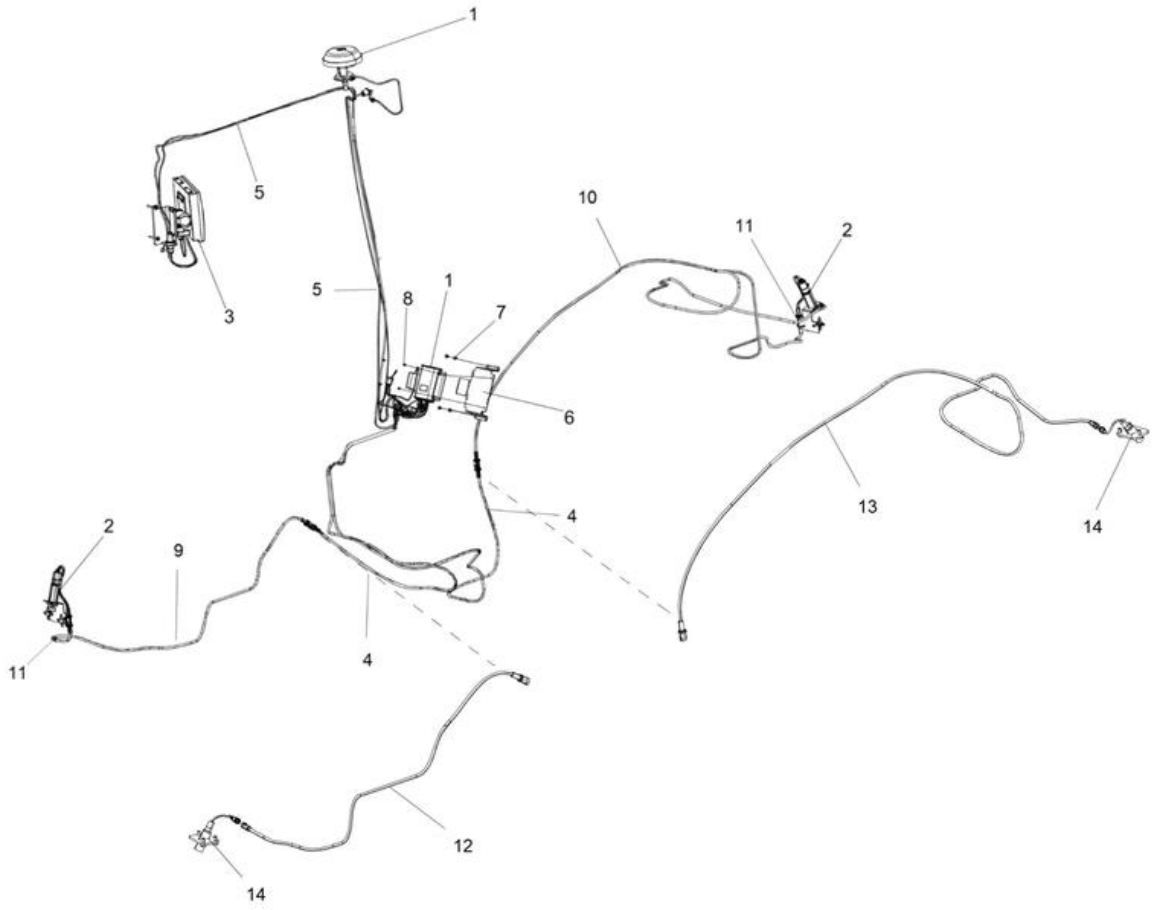

Item	Part No.	Name	Qty	L	SN INFO
1	-	GPS equipment assy	1		
2	-	Temp sensor module	2		To A016813
3	-	Computer with holder	1		
4	4700393947	Wiring harness	2		
5		Cable harness kit, GPS	1		
6	4700394276	Bracket	1		
7	4700541702	Screw M6x12	4		
8	4700792210	Screw torx	4		
9	4700396205	Cable harness	1		To A016813
10	4700393968	Cable harness	1		To A016813
11	4700313041	Cable ties, L=200 mm	2		
12	4812120716	Wiring harness	1		From A016814
13	4812120717	Wiring harness	1		From A016814
14		Temp sensor module	2		From A016814

GPS/DCA, Asphalt temp Cable harness kit, GPS

Item	Part No.	Name	Qty	L	SN INFO
1	4812121597	Cable harness	1		
2	4700313041	Cable ties, L=200 mm	6		
3		Cable harness and Gateway	1		
4	4700901227	Fuse 10A Red	1		
5	4812113158	Antenna lead	1		
6	4700792704	Grommet	1		
7	4812121608	Cable harness	1		
8	4700901224	Fuse, 3A Violet	1		

GPS/DCA, Asphalt temp Cable and Gateway

Item	Part No.	Name	Qty	L	SN INFO
1	4700792660	Gateway CAN/BUS	1		
2	4812115093	Cable harness	1		
3	4700313068	Cable ties, L=92 mm	1		

GPS/DCA, Asphalt temp GPS/DCA equipment assy

Item	Part No.	Name	Qty	L	SN INFO
1	4811000431	GPS antenna	1		
2	4811000432	Antenna bracket	1		
3	4812113160	Bracket	1		
4	4812121818	Bracket	1		
5	4700513016	Hexagon socket countersunk screw M16	1		
6	4812121485	GPS reciever	1		

GPS/DCA, Asphalt temp Temp sensor module

Item	Part No.	Name	Qty	L	SN INFO
1	4700394004	Bracket	1		
2	4700387982	Temperature sender	1		
3	4700393951	Cable harness	1		
4	4700313041	Cable ties, L=200 mm	1		
5	4700904218	Holder	1		
6	4700792669	Blind rivet	1		
7	4700904596	Hand knob	2		

GPS/DCA, Asphalt temp Temp sensor module

Item	Part No.	Name	Qty	L	SN INFO
1	4812119599	Holder	1		
2	4812119520	Temperature sensor	1		
3	4700904229	Washer, 8.4x 6x1.5 mm 300HV	3		
4	4700500053	Screw, M8x20 mm 8.8 A2K	3		

GPS/DCA, Asphalt temp Computer with holder

Item	Part No.	Name	Qty	L	SN INFO
1	4700396119	Computer, cpl.	1		
2	-	Screw-kit, computer	1		
3	4700395888	Bracket	1		
4	4700394542	Ball joint	1		
5	4700904228	Washer DIN125	4		
6	4700500040	Screw, M6x20 mm 8.8 A2K	4		
7	4700904229	Washer, 8.4x 6x1.5 mm 300HV	2		
8	4700500019	Hexagon screw	2		
9	4700500026	Screw M8-1,25x60 mm 8.8	2		

Platform, no cab Platform, no cab

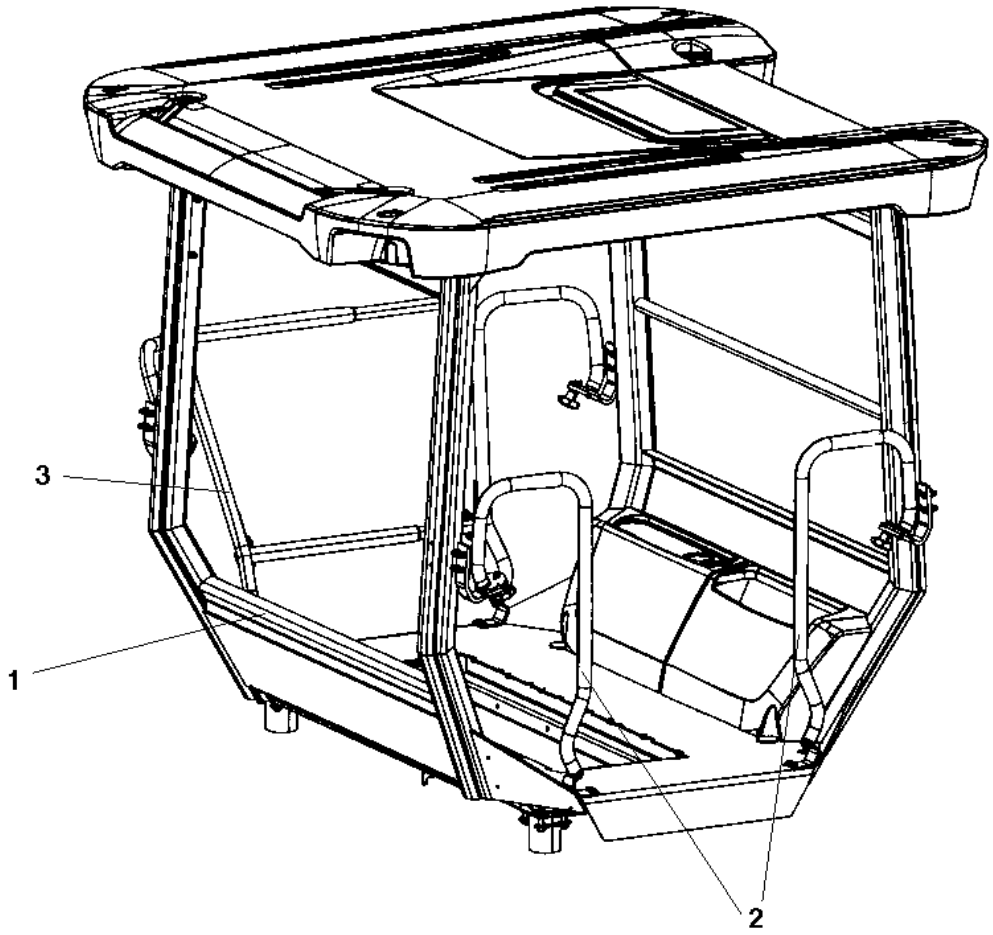

Item	Part No.	Name	Qty	L	SN INFO
1	-	Platform with 4-post ROPS	1		
2	-	Hand rail, left	1		
3	-	Hand rail, right	1		
8	-	Lunch box module	1		

Platform, no cab Platform with 4-post ROPS

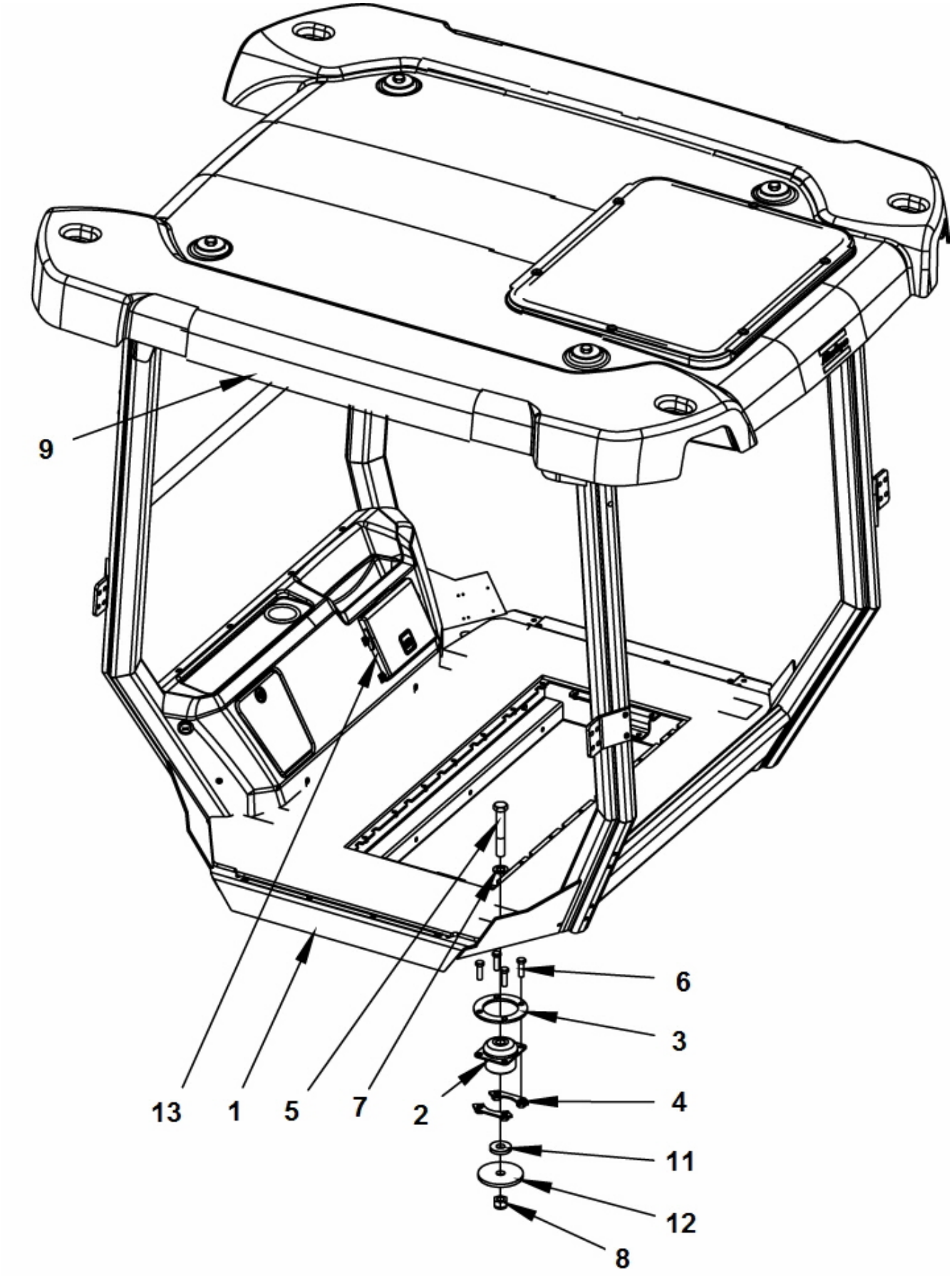

Item	Part No.	Name	Qty	L	SN INFO
1	4812119369	Platform with 4-post ROPS	1		
2	4812116884	Shock absorber	4		
3	4700904233	Steel plain washer 21x36x3	4		
4	4700902282	Screw	4		
5	4700901145	Lock nut M20-10	4		
6	4700393525	Holder	8		
7	4700359998	Back-up ring	4		
8	4700500195	Screw	16		
9	-	Decals basic kit	1		
11	4700927410	Washer	4		
12	4812116867	Spacer	4		
13	-	Manual box	1		

4812119369 Platform with 4-post ROPS 4812119369 Platform with 4-post ROPS

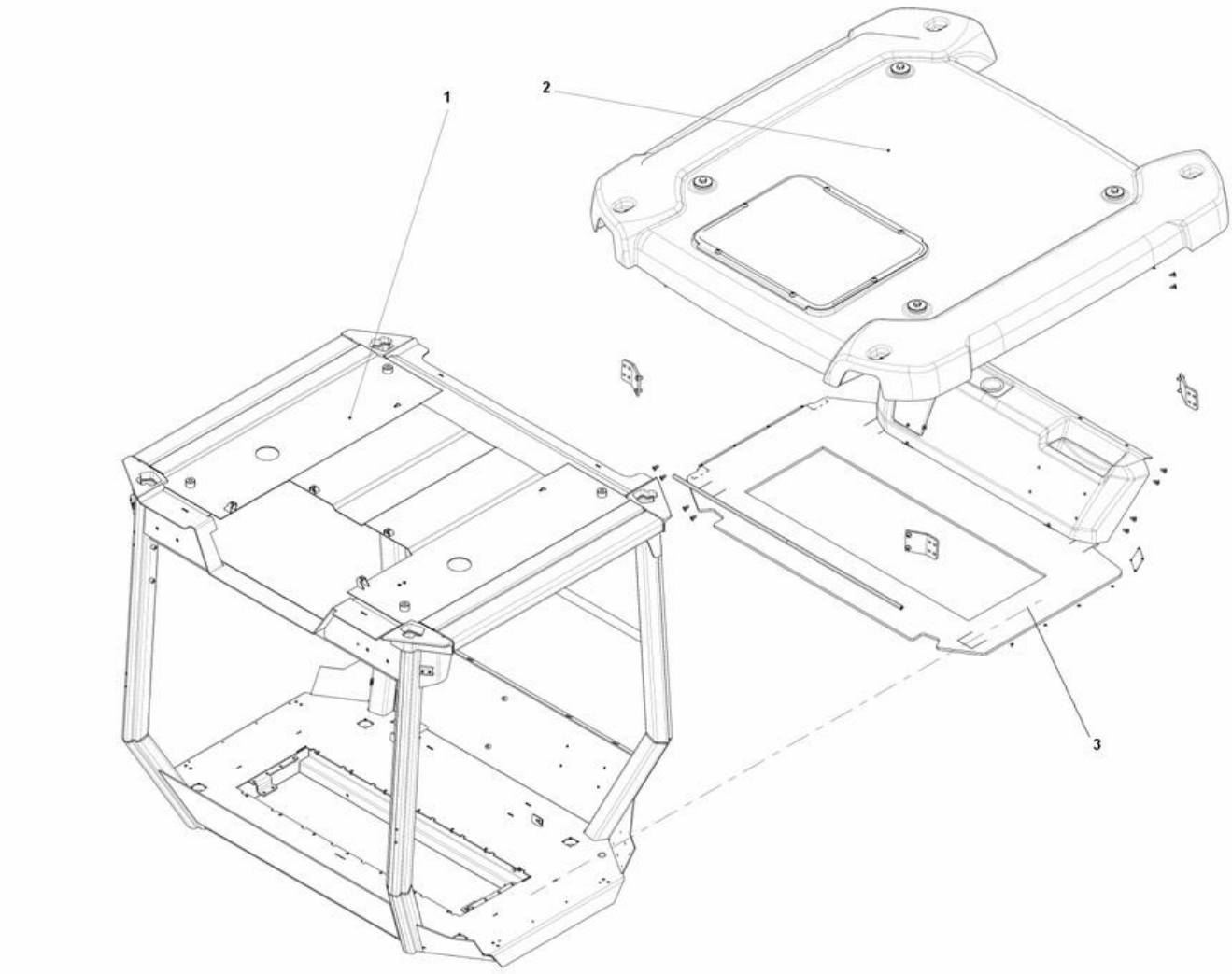

Item	Part No.	Name	Qty	L	SN INFO
1	4812119388	Frame ROPS	1		
2	-	Roof	1		
3	-	ROPS interior	1		

4812119369 Platform with 4-post ROPS Roof

Item	Part No.	Name	Qty	L	SN INFO
1	4812119427	Roof ROPS	1		
2	4812115164	Rubber strip	1XL	A	
3	4812119417	Plate	1		
4	-	Profile	1XL	B	
5	4812120255	Seal washer	6		
6	-	Screw	6		
7	4812120296	Washer	4		
8	4812115171	Washer	4		
9	-	Screw	4		
10	-	Grommet	2		
11	4700791475	Grommet	5		
25	-	Plug	5		
29	-	Plug	4		
30	-	Plug	8		
31	-	Plug	1		
32	-	Plug	2		
33	-	Plug	1		
34	-	Plug	1		
35	-	Plug	4		
37	-	Plug	2		

Comments for Page: Roof

(L)OCAL REMARKS

A | en_US | L=6.030 m

B | en_US | L=2.500 m

4812119369 Platform with 4-post ROPS ROPS interior

Item	Part No.	Name	Qty	L	SN INFO
12	4812120770	Floor mat	1		
13	-	Plate	1		
14	-	Plate	1		
15	-	Screw	8		
16	4812120283	Rear cover	1		
17	4700395816	Plug socket 24V	1		
18	4812119423	Cover	1		
19	4812114566	Turn fastener	1		
20	4812120294	Speed fastener metric	4		
21	4812114567	Speed nut	3		
22	-	Scew	7		
23	-	Typ plate	1		
24	-	Rivet	4		
25	-	Plug	14		
26	4700902379	Edge trim	1XL	A	
27	-	Plate	4		
28	-	Screw	8		

Comments for Page: ROPS interior

(L)OCAL REMARKS

A | en_US | L=1.225 m

Platform, no cab Decals basic kit

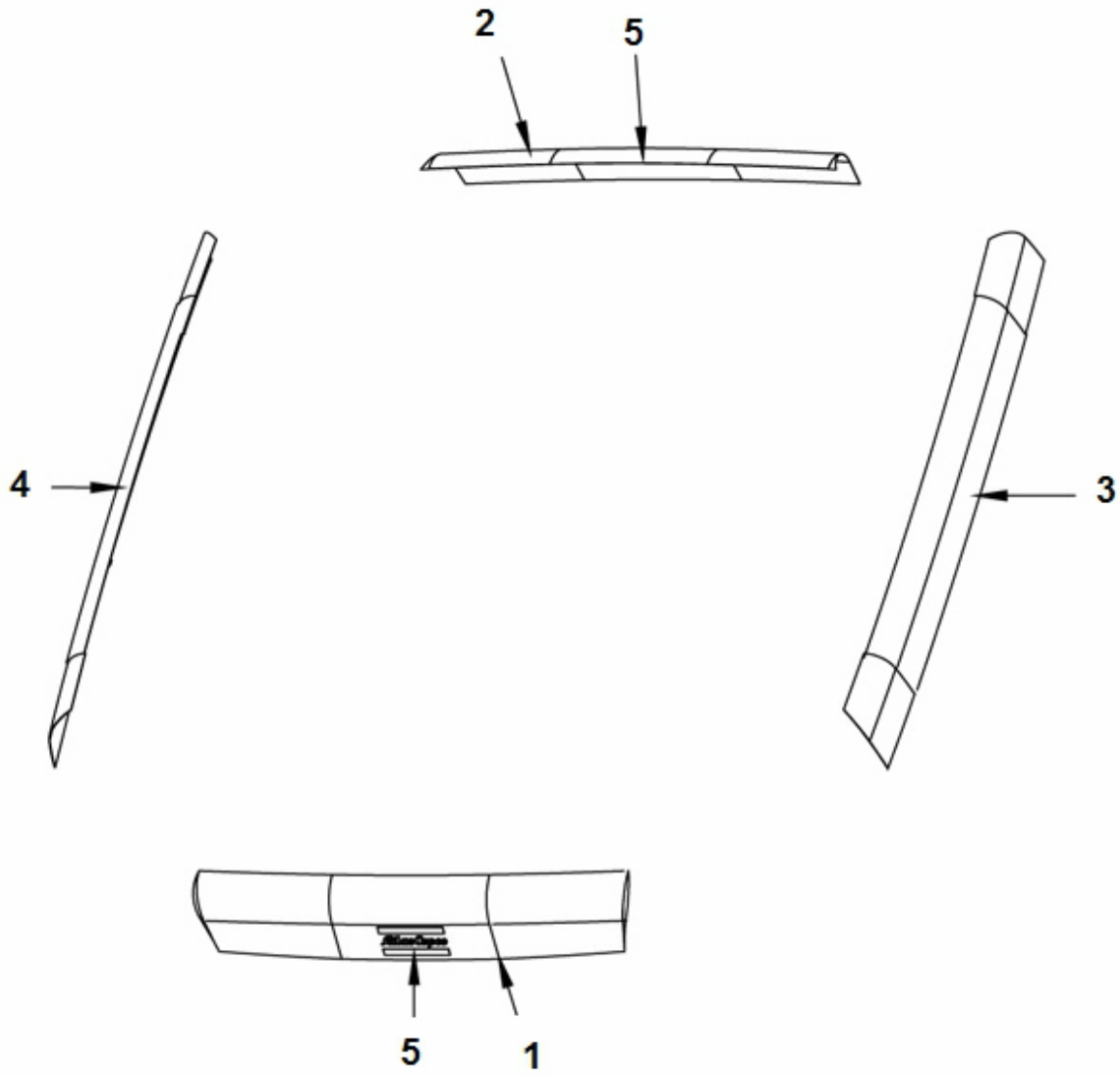

Item	Part No.	Name	Qty	L	SN INFO
1	4812120084	Decal cosmetic Yellow	1		
2	4812120085	Decal cosmetic Yellow	1		
3	4812120081	Decal cosmetic Yellow	1		
4	4812120083	Decal cosmetic Yellow	1		
5	4812120117	Decal AC - logotype	2		

Platform, no cab Manual box

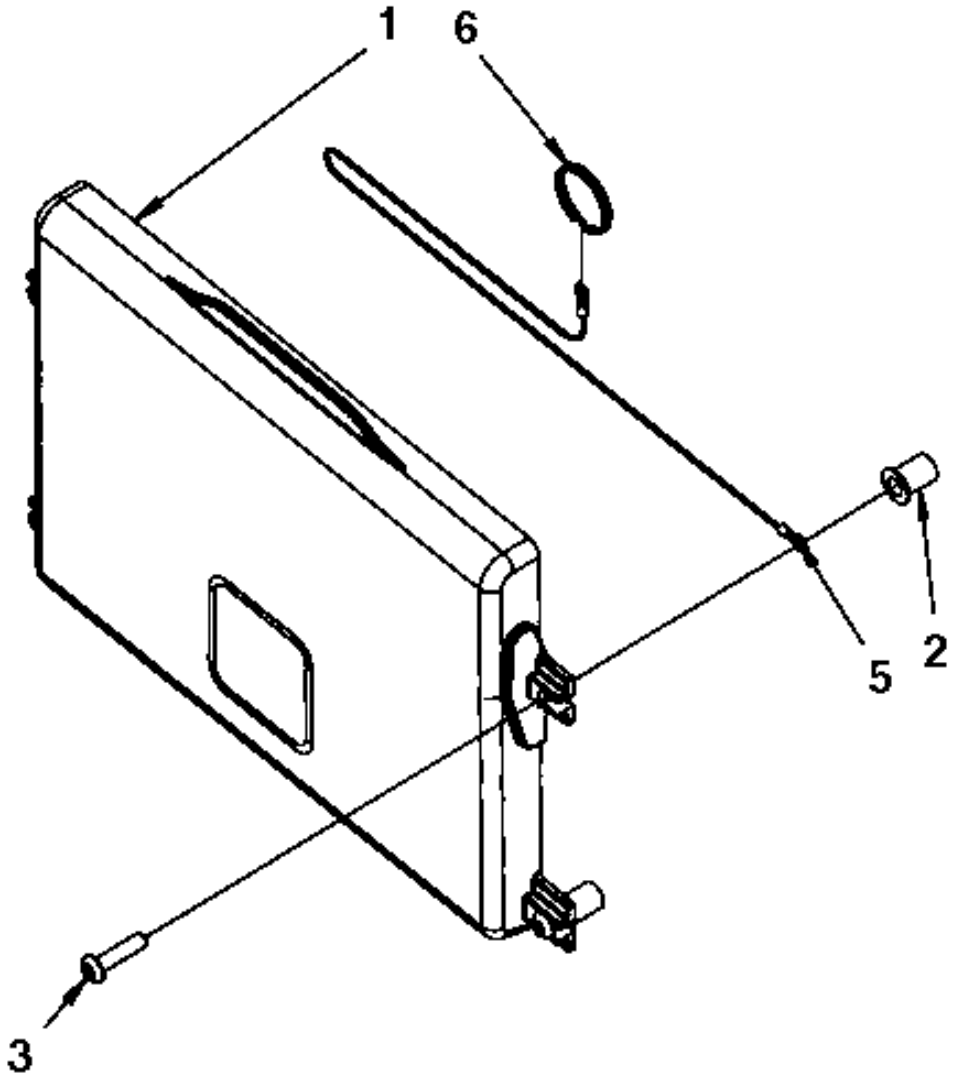

Item	Part No.	Name	Qty	L	SN INFO
1	4700383705	Instruction manual box	1		
2	4700792536	Rubber nut	4		
3	4700792589	Screw	4		
5	4700384584	Wire	1		
6	4700358254	Key-ring	1		

Platform, no cab Hand rail, left

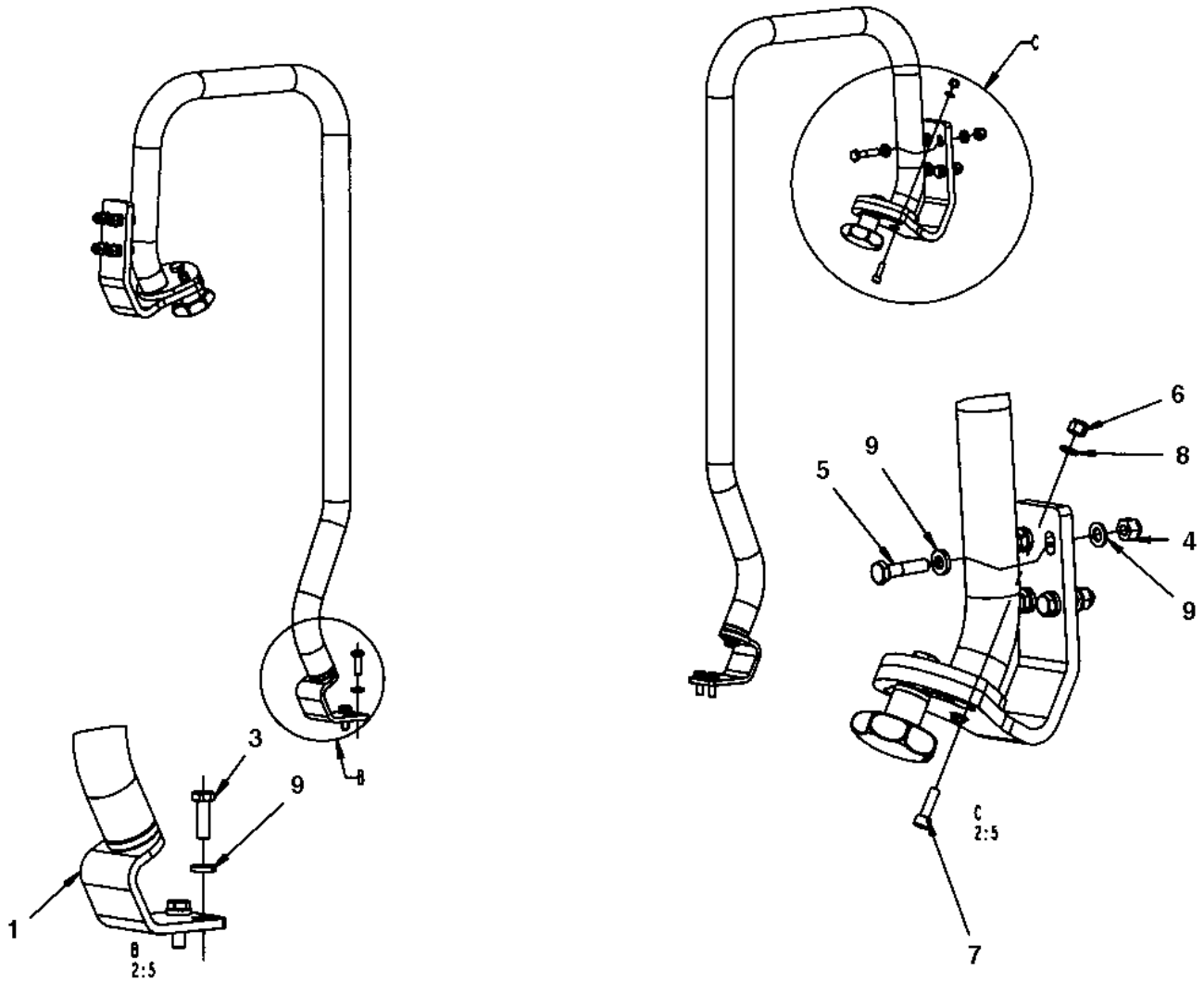

Item	Part No.	Name	Qty	L	SN INFO
1	-	Hand rail	2		
3	4700500021	Screw, M8x25 mm 8.8 A2K	4		
4	4700586003	Lock nut M8	8		
5	4700500023	Screw, M8x40 mm 8.8 A2K	8		
6	4700586002	Lock nut M6 -8	2		
7	4700508025	Screw, M6x20 mm 8.8 A2K	2		
8	4700904228	Washer DIN125	2		
9	4700904556	Steel plain washer 8,4x16x3,0	20		

Platform, no cab Hand rail

Item	Part No.	Name	Qty	L	SN INFO
1	4700381936	Bracket	1		
2	4700381935	Bracket	1		
3	4700390155	Hand rail	1		
4	4700792448	Plastic bushing	1		
5	4700904640	Washer, 8.4x22x3 mm 300HV	1		
6	4700500018	Hex. screw	1		
7	4700370286	Washer	1		
8	4700499174	Knob	1		
9	4700792447	Plastic bushing	1		

Platform, no cab Hand rail, right

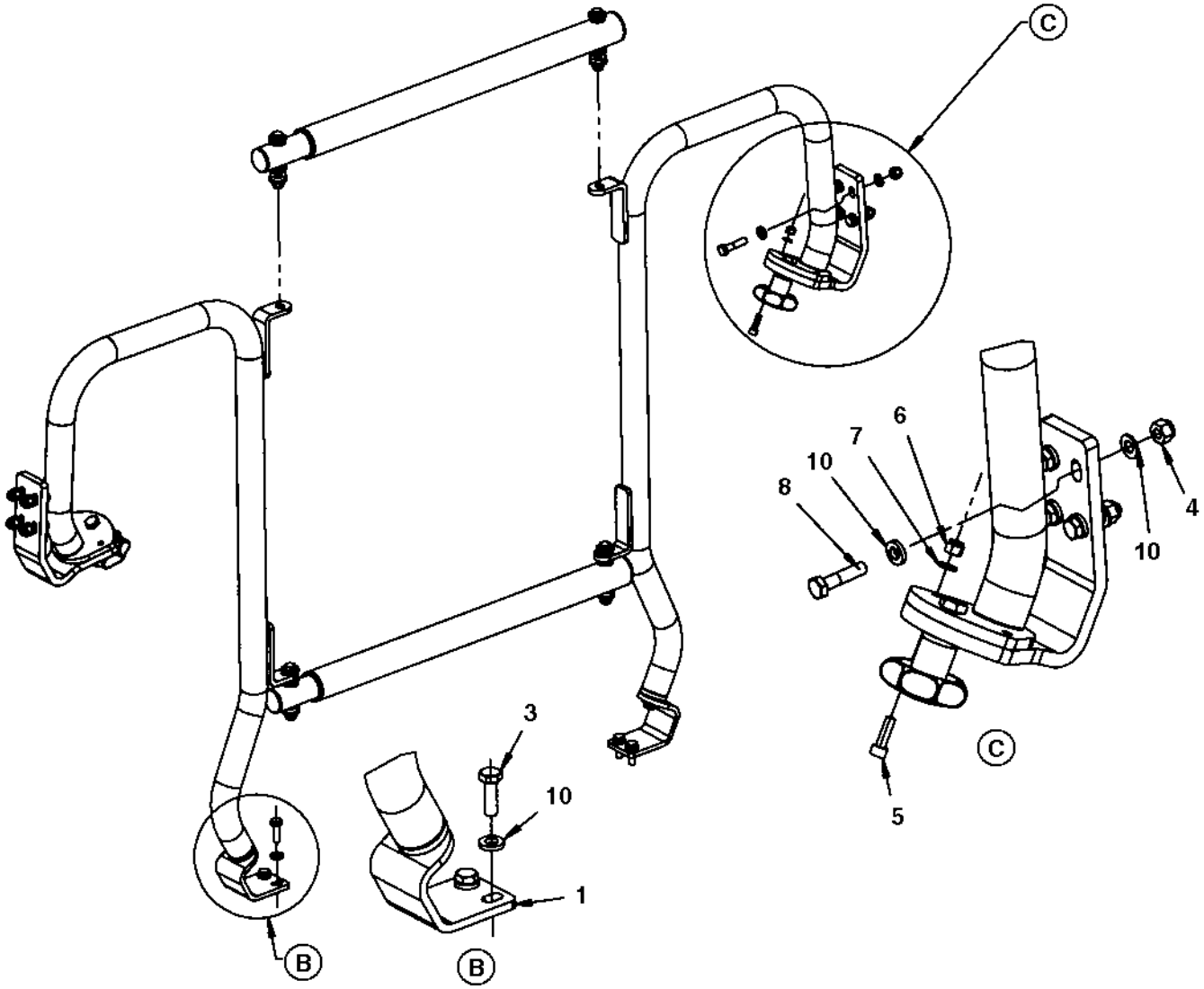

Item	Part No.	Name	Qty	L	SN INFO
1	-	Hand rail	1		
3	4700500021	Screw, M8x25 mm 8.8 A2K	4		
4	4700586003	Lock nut M8	8		
5	4700508025	Screw, M6x20 mm 8.8 A2K	2		
6	4700586002	Lock nut M6 -8	2		
7	4700904228	Washer DIN125	2		
8	4700500023	Screw, M8x40 mm 8.8 A2K	8		
9	-	Hand rail	2		
10	4700904556	Steel plain washer 8,4x16x3,0	20		

Platform, no cab Hand rail

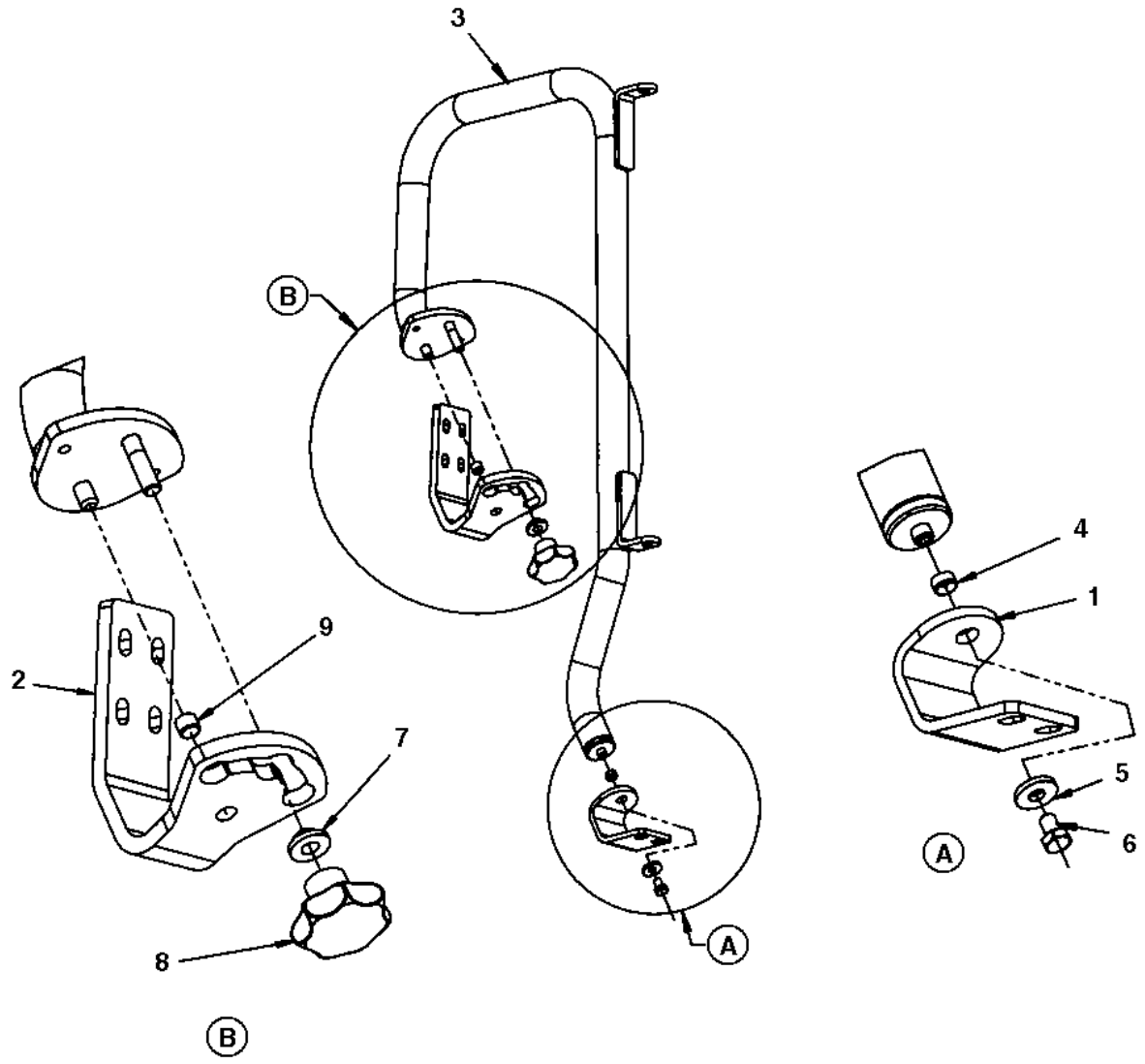

Item	Part No.	Name	Qty	L	SN INFO
1	4700381936	Bracket	1		
2	4700381935	Bracket	1		
3	4700381934	Hand rail	1		
4	4700792448	Plastic bushing	1		
5	4700904640	Washer, 8.4x22x3 mm 300HV	1		
6	4700500018	Hex. screw	1		
7	4700370286	Washer	1		
8	4700499174	Knob	1		
9	4700792447	Plastic bushing	1		

Platform, no cab Hand rail

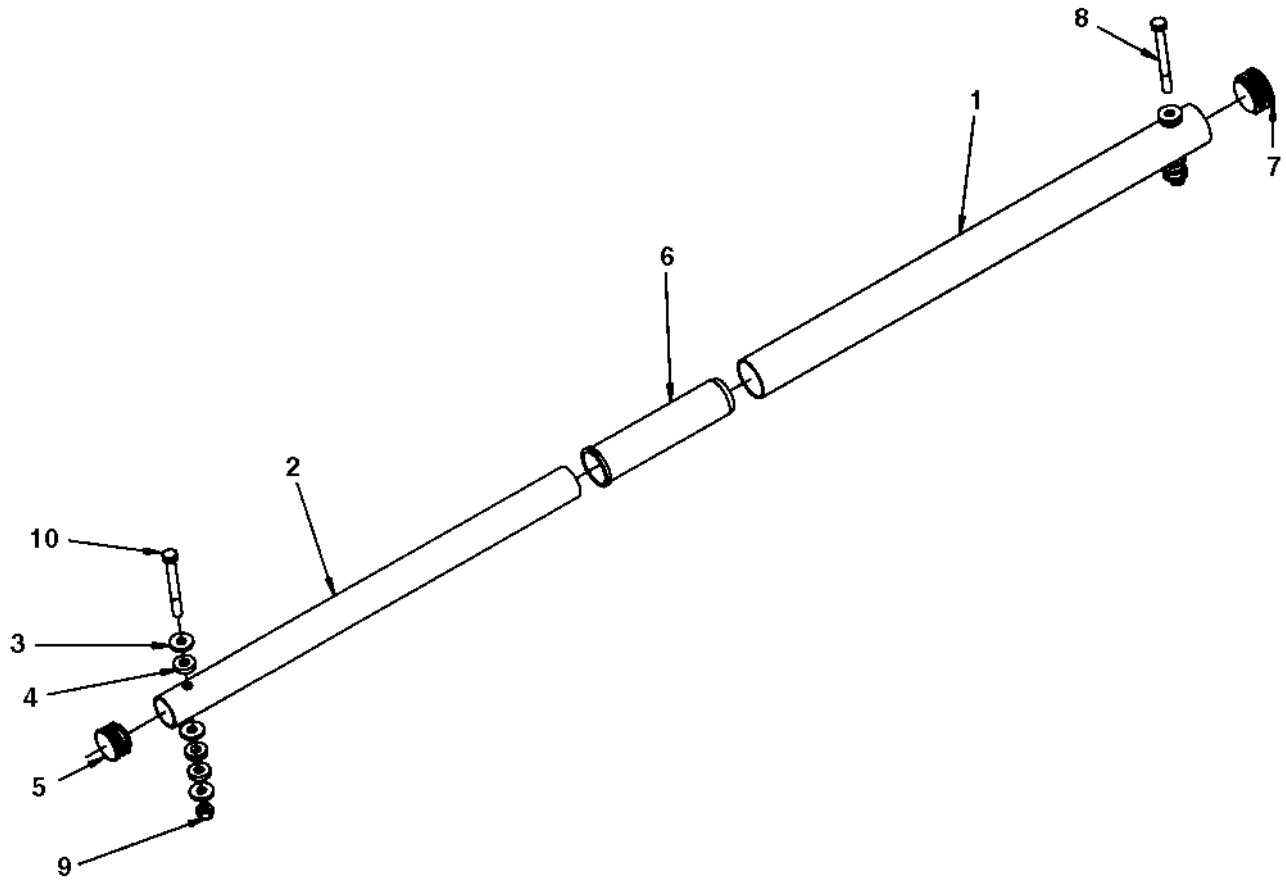

Item	Part No.	Name	Qty	L	SN INFO
1	4700391675	Steel tube	1		
2	4700391676	Steel tube	1		
3	4700904640	Washer, 8.4x22x3 mm 300HV	6		
4	4700391674	Rubber washer	6		
5	4700926216	Protective plug	1		
6	4700391678	Bushing	1		
7	4700792449	Protective plug	1		
8	4700500190	Screw	1		
9	4700586003	Lock nut M8	2		
10	4700500189	Screw	1		

Platform, no cab Lunch box module

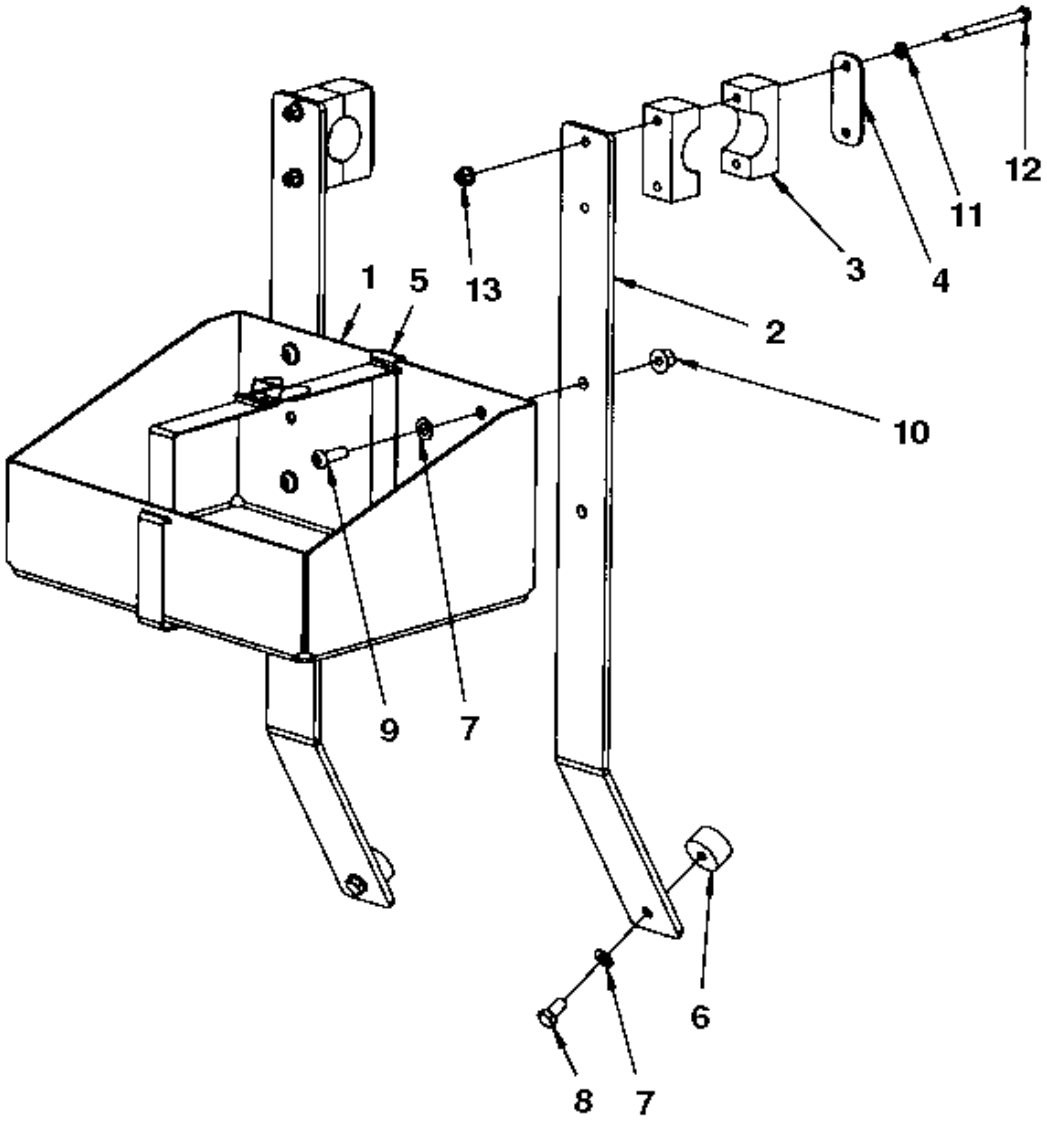

Item	Part No.	Name	Qty	L	SN INFO
1	4700377913	Box	1		
2	4700394859	Bracket	2		
3	4700904340	Pipe clamp	2		
4	4700924791	Cover plate	2		
5	4700287643	Metal strapping	1		
6	4700450163	Shock absorber	2		
7	4700904229	Washer, 8.4x 6x1.5 mm 300HV	6		
8	4700500019	Hexagon screw	2		
9	4700904654	Screw	4		
10	4700902286	Lock nut, M8x1.25 mm A2K	4		
11	4700904228	Washer DIN125	4		
12	4700500153	Screw	4		
13	4700902285	Nut	4		

Cab, asymmetric Cab, asymmetric

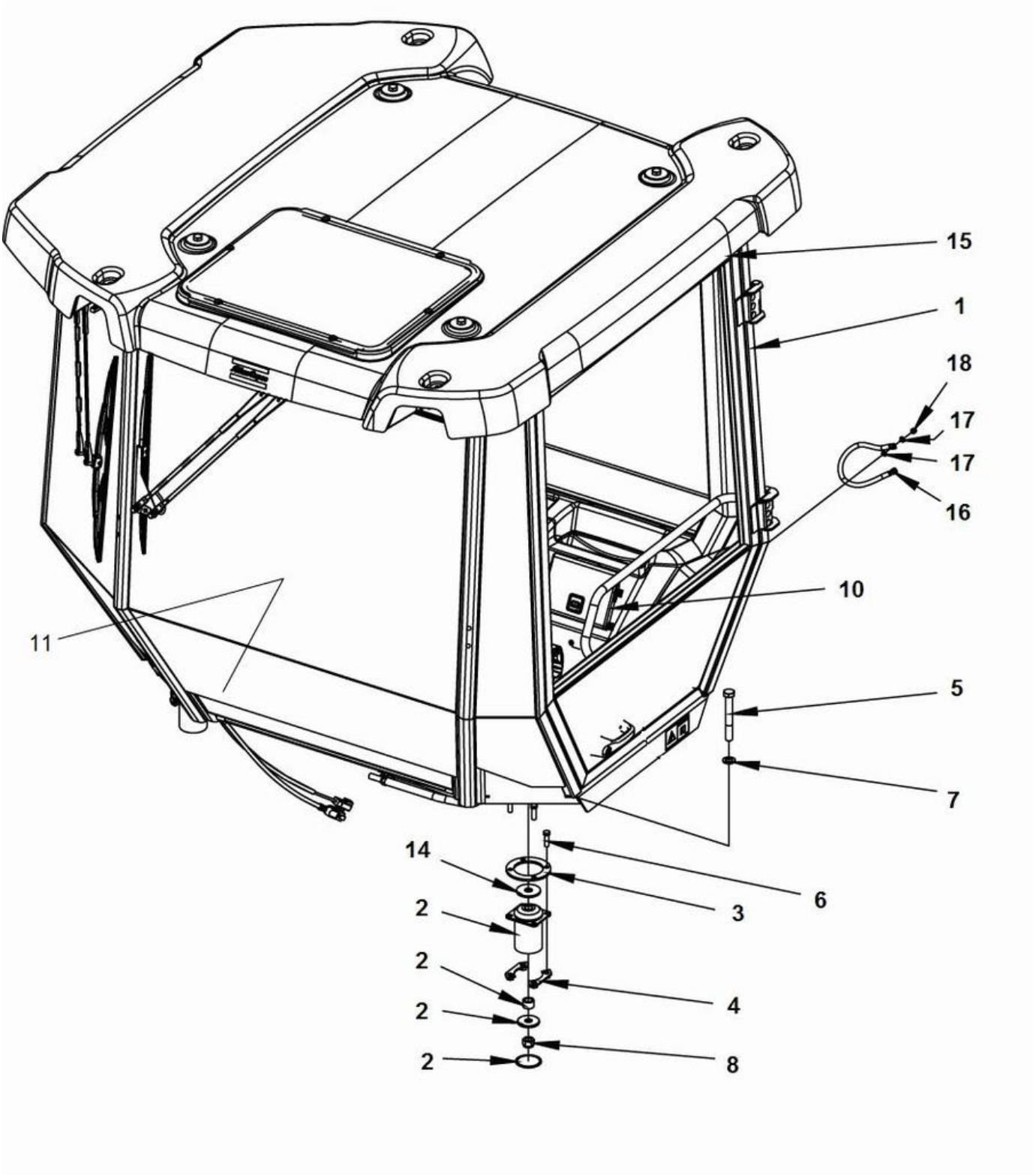

Item	Part No.	Name	Qty	L	SN INFO
1	4812119361	Cab, cpl	1		
1	4812119360	Cab comfort, cpl	1		
2	4812121000	Shock absorber Green	4		
3	4700359998	Back-up ring	4		
4	4700393525	Holder	8		
5	4700904233	Steel plain washer 21x36x3	4		
6	4700903633	Screw M20x150 10,9	4		
7	4700500195	Screw	16		
8	4700901145	Lock nut M20-10	4		
10	-	Manual box	1		
11	4700393978	Slip protection	1		
14	4700347512	Washer	4		
15	-	Decals basic kit	1		
16	4812120736	Connection cable, coarse	1		
17	4700904229	Washer, 8.4x 6x1.5 mm 300HV	2		
18	4700586003	Lock nut M8	1		

4812119361 Cab, cpl 4812119361 Cab, cpl

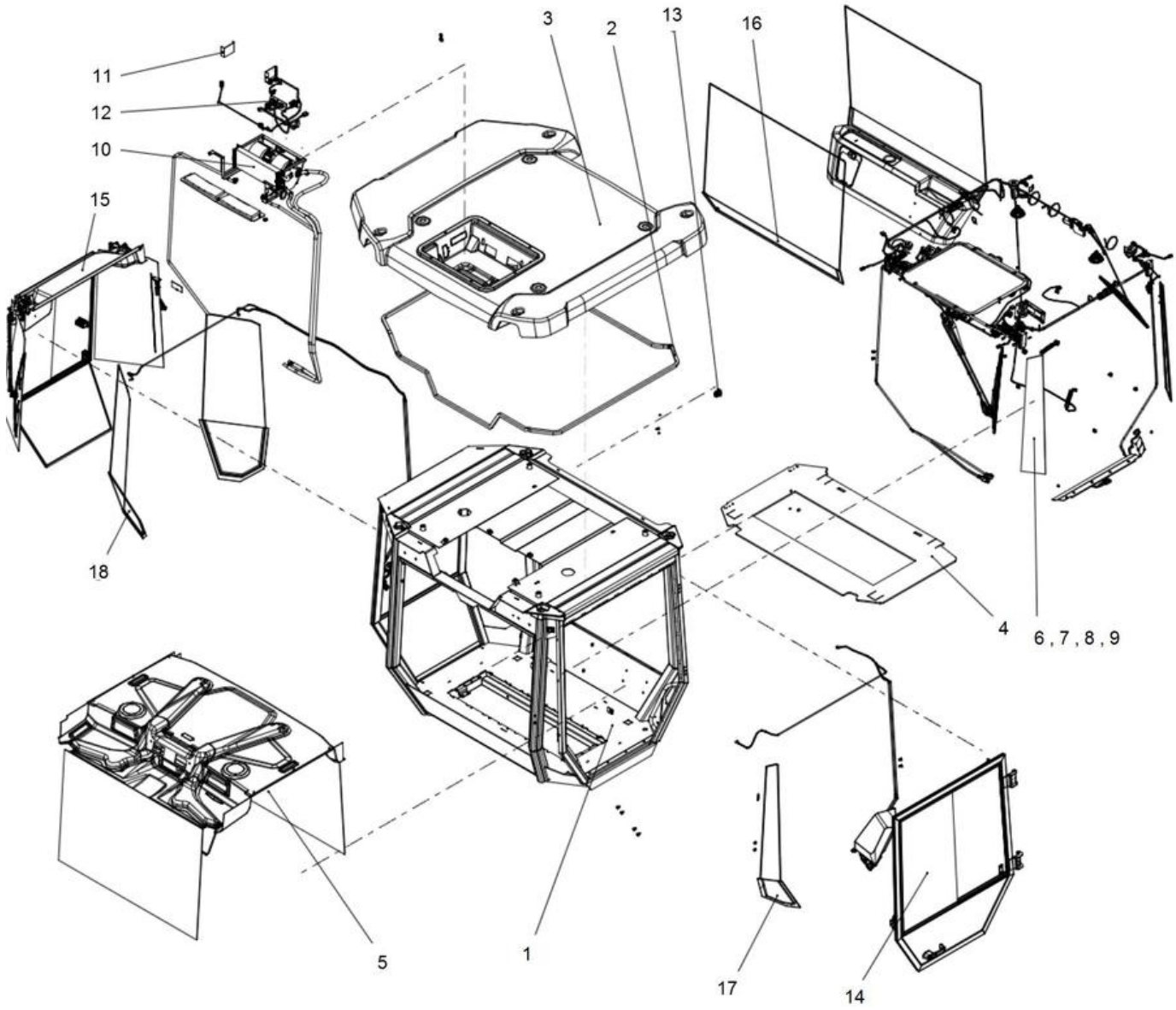

Item	Part No.	Name	Qty	L	SN INFO
1		Frame	1		
2	4812115164	Rubber strip	1XL	A	
3	4812120299	Roof	1		
4	4812120770	Floor mat	1		
5		Screens front and rear	1		
6		Corner screens left and AC hood	1		
7		24V socket and air nozzels	1		
8		Wipers front/rear and front ceiling	1		
9		Cab frame harness	1		
10		Heating installation	1		
11		Heater cover plate	1		
12		AC-kit	1		
13		Switch kit	1		
14		Door sliding screens	1		
15		Screens asymmetric right	1		
16		Lower screens front/rear and rear covers			
17		Lower screen and water system, left			
18		Lower screens and water system, right			

Comments for Page: 4812119361 Cab, cpl

(L)OCAL REMARKS

A | en_US | L=6.310 mm

4812119361 Cab, cpl Screens front/rear and ceiling

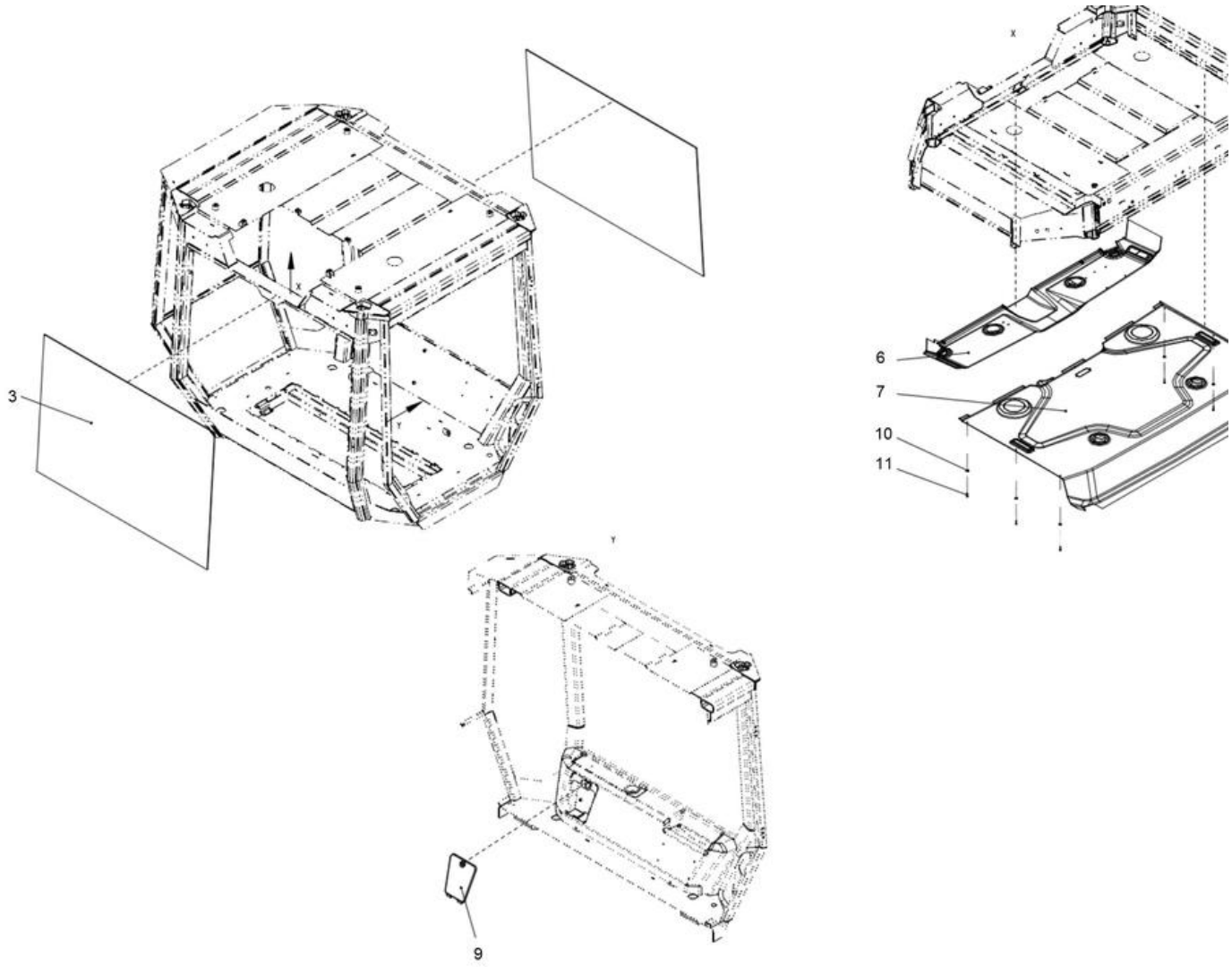

Item	Part No.	Name	Qty	L	SN INFO
3	4812119403	Screen	2		
6	4812120281	Headliner	1		
7	4812120282	Headliner	1		
9	4812119423	Cover	1		
10	4700904228	Washer DIN125	6		
11	-	Screw	6		

Comments for Page: Screens front/rear and ceiling

(L)OCAL REMARKS

A | en_US | L=4.705 m

B | en_US | L=4.760 m

4812119361 Cab, cpl Corner screens left and AC hood

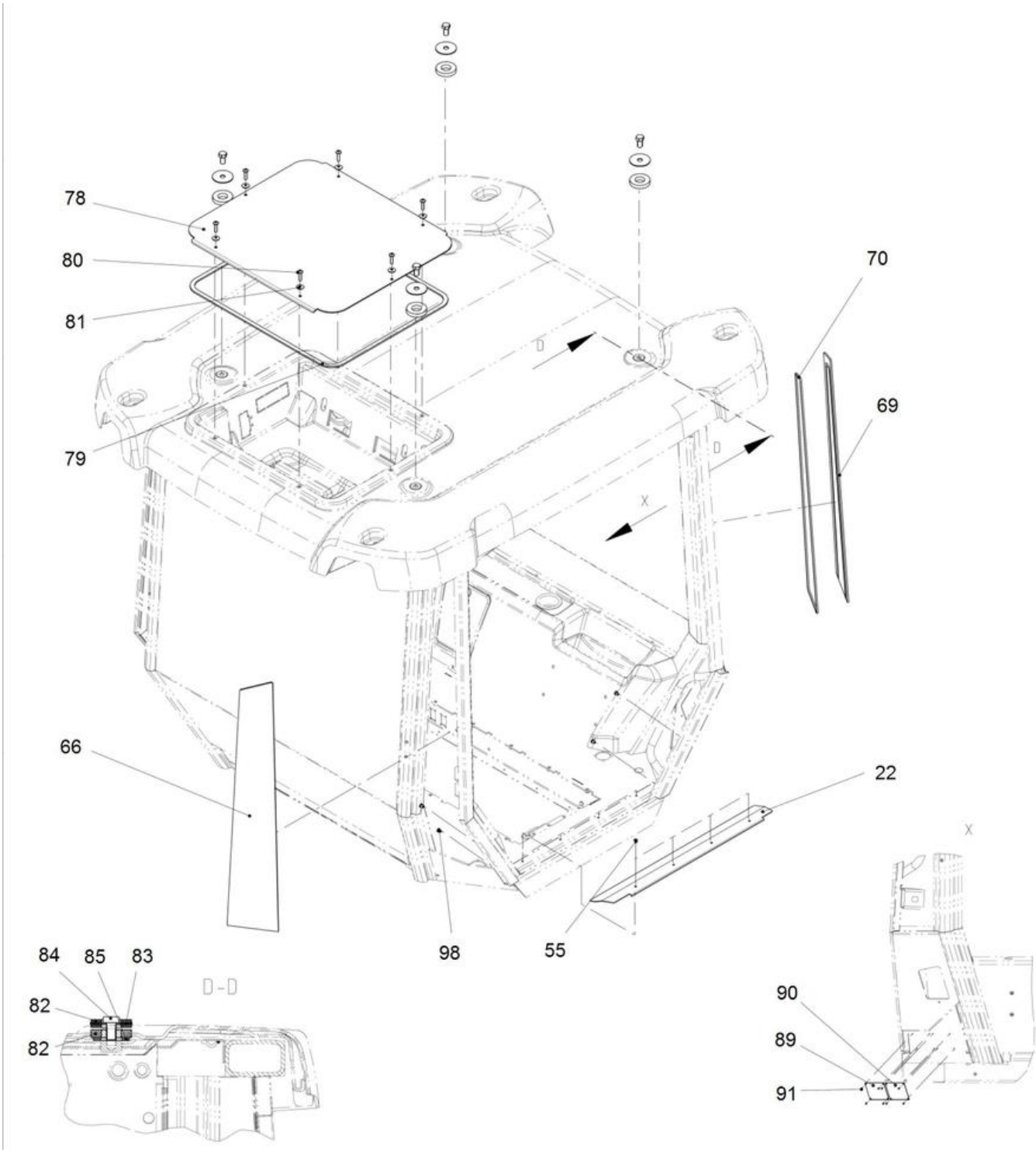

Item	Part No.	Name	Qty	L	SN INFO
22	4812120254	Entrance plate	1		
55	-	Screw	4		
66	4812119392	Front screen top lh	1		
69	4812119393	Rear screen rh top	1		
70	-	Foam rubber	1XL	B	
78	4812119418	Roof cover cab	1		
79	4812161165	Foam strip (Xm)	1XL	C	
80	-	Screw	6		
81	4812120255	Seal washer	6		
82	4812120296	Washer	8		
83	4812115171	Washer	4		
84	-	Screw	4		
85	-	Washer	4		
89	-	Type plate	1		
90	-	Type plate	1		
91	-	Tapping screw	8		
98	-	Blind plug	4		

Comments for Page: Corner screens left and AC hood

(L)OCAL REMARKS

B | L=2.090 m

C | L=2.500 m

4812119361 Cab, cpl 24V socket and air nozzels

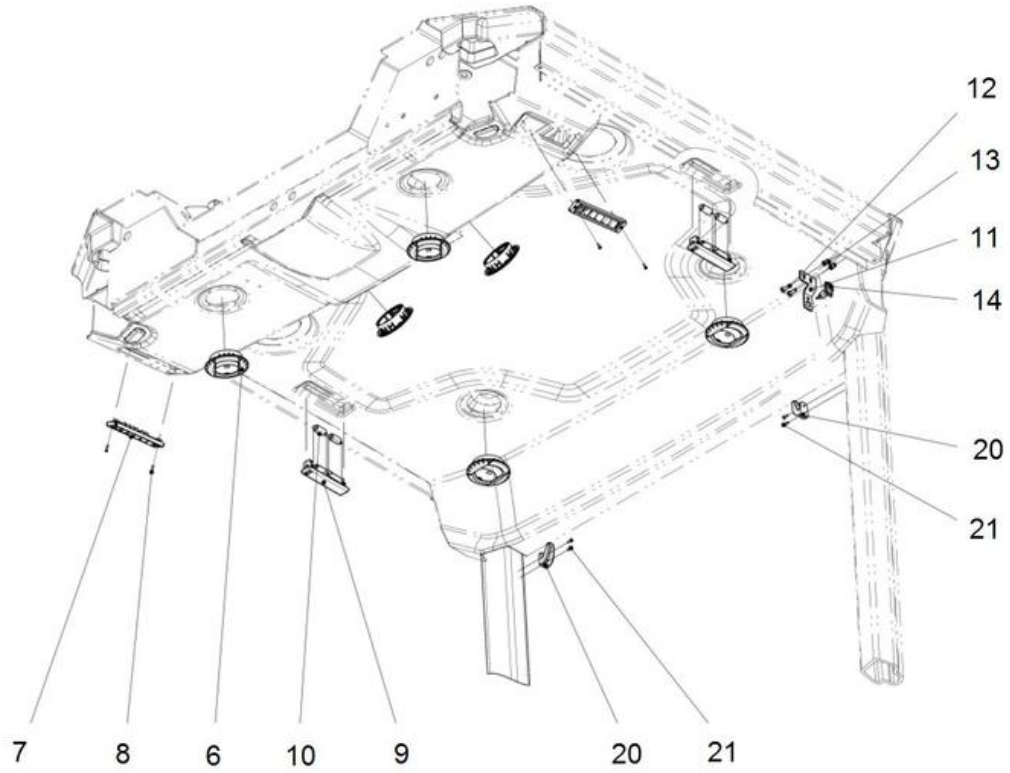

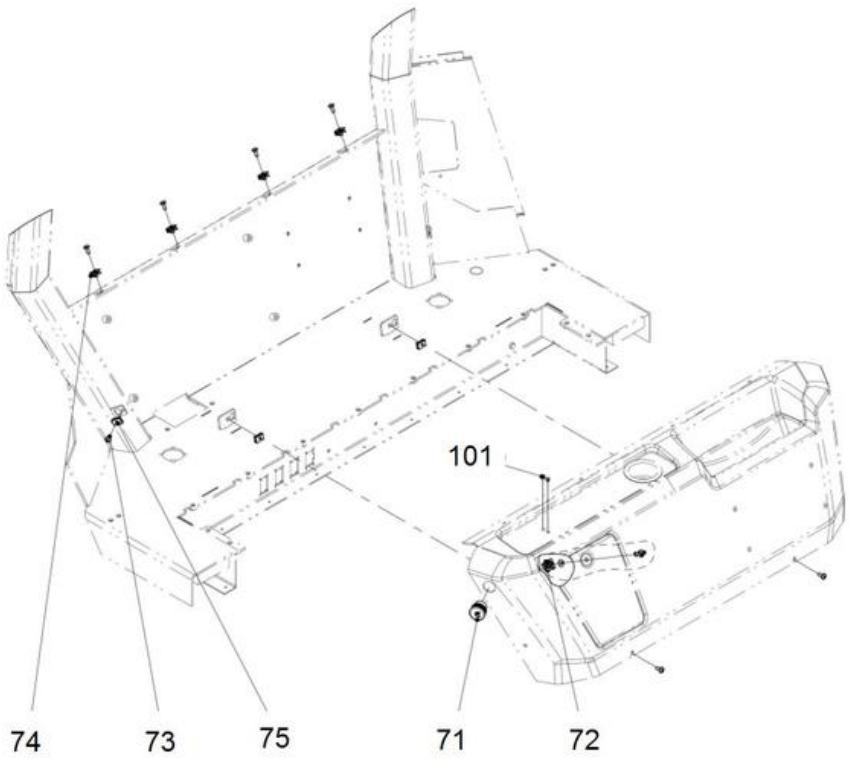

Item	Part No.	Name	Qty	L	SN INFO
6	4812115180	Air nozzle	6		
7	4812120256	Air nozzle	2		
8	-	Screw	4		
9	4812120257	Inner light	2		
10	4700792715	Bulb, 10W	4		
11	4812120258	Bracket	1		
12	-	Screw	2		
13	-	Blind rivet	2		
14	4812115183	Door switch	1		
20	-	Coat hanger	2		
21	-	Screw	4		
71	4700395816	Plug socket 24V	1		
72	4812114566	Turn fastener	1		
73	-	Screw	7		
74	-	Speed nut	4		
75	4812114567	Speed nut	3		
101	-	Plug	2		

4812119361 Cab, cpl Wipers front/rear and front ceiling

Item	Part No.	Name	Qty	L	SN INFO
1	4812120259	Radio support	1		
2	-	Washer	2		
3	-	Screw	2		
4	4812120260	Radio plate	1		
5	4811000458	Speed nut	4		
6	-	Screw	4		
21	4812120261	Wiper motor 24V	1		
22	4812120262	Wiper arm	1		
23	4812120263	Wiper blade	1		
24	4812120264	Wiper motor 24V	1		
25	4812120265	Wiper arm	1		
26	4812120266	Wiper blade	1		
27	4812120267	Switches support	1		
28	-	Screw	1		
29	4700792505	Switch, Windshield washers	1		
30	4812115187	Switch, Windshield wiper, rear	1		
31	4700791588	Panel plug	3		
32	4700921723	Plug	1		
33	4812120268	Bracket	1		
34	4700904504	Screw M5 x 18	2		
35	4700791185	Fuse box	1		
36	4700792309	Relay	1		
37	4700791966	Head screw M4 x 12	2		
38	-	Screw	4		
39	4700901227	Fuse 10A Red	4		
40	4700901228	Fuse, 15A Blue	2		
41	4812114567	Speed nut	2		
42	4812120269	Sealing washer	2		
43	4700792783	Washer, 6.4x18x1.6 mm A2T	2		
44	4700908505	Hook	2		
45	4812120269	Sealing washer	2		
46	4700792783	Washer, 6.4x18x1.6 mm A2T	2		
47	4700792119	Screw, M6x16 mm 8.8 A2K	2		
52	4700908561	Grommet	2		
53	4812115177	Mirror	1		
54	-	Speed nut	2		
55	-	Screw	2		

Item	Part No.	Name	Qty	L	SN INFO
56	-	Radio cover	1		
72	-	Grommet	5		
73	-	Grommet	2		
82	-	Seal	1XL	A	
83	-	Profile	1XL	B	
84	-	Profile	1XL	B	
96	-	Dot red self-adhesive	1		

Comments for Page: Wipers front/rear and front ceiling

(L)OCAL REMARKS

A | en_US | L=0.815 m

B | en_US | L=0.400 m

4812119361 Cab, cpl Cab frame harness

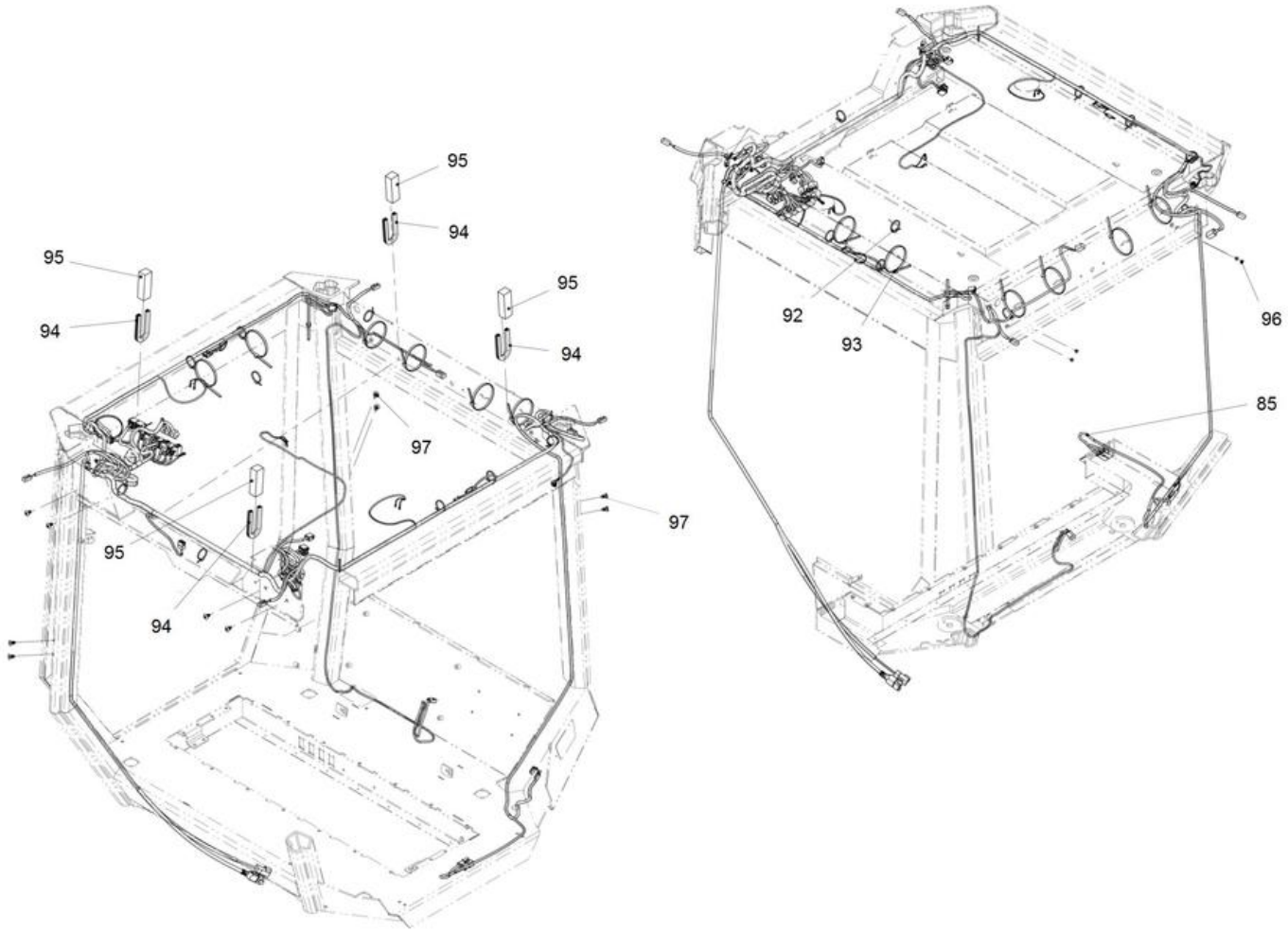

Item	Part No.	Name	Qty	L	SN INFO
85	4812120270	Wiring Harness	1		
92	4700313041	Cable ties, L=200 mm	13		
93	-	Cable tie	8		
94	4700902379	Edge trim	4XL	D	
95	-	Profile	4XL	E	
96	-	Blind plug	4		
97	-	Plug	10		

Comments for Page: Cab frame harness

(L)OCAL REMARKS

D | L=0.232 m

E | L=0.108 m

4812119361 Cab, cpl Heating installation

Item	Part No.	Name	Qty	L	SN INFO
1	4812120240	ACC support	1		
2	4812120269	Sealing washer	2		
3	4700792783	Washer, 6.4x18x1.6 mm A2T	2		
4	4700792119	Screw, M6x16 mm 8.8 A2K	2		
5	4700791666	Blind rivet	2		
6	4700791475	Grommet	1		
7	4700929587	Grommet	1		
8	-	Grommet	1		
9	4700904347	Grommet	2		
10	4812115186	Cover	2		
11	4700395761	Blower 24V	1		
12	4812115230	Bracket	1		
13	4812116192	Bracket	2		
14	4700904299	Washer	4		
15	4700500002	Screw M4-0,7x12H 8.8	4		
16	4700792441	Cable tie with holder	2		
17	4812115164	Rubber strip	1XL	A	
18	4812116193	Heater coil	1		
19	4812116194	Clip	5		
20	4700372174	Spacer	1		
21	4700903670	Clamp	1		
22	-	Hexagon screw	1		
23	4812120241	Floor hose support	1		
24	4700904229	Washer, 8.4x 6x1.5 mm 300HV	1		
25	4700500013	Screw, M6x16 mm 8.8 A2K	1		
26	4700205112	Coolant hose	1XL	B	
27	-	Hose	1XL	C	
28	-	Hose	1XL	D	
29	-	Clamp	4		
30	4812115167	Connector	2		
31	4812115168	Drain hose	1XL	E	
32	4812116197	Air filter	2		
33	4812120242	Air filter cover	1		
34	-	Screw	3		
35	4812120243	Climate control support	1		
36	-	Screw	4		

Comments for Page: Heating installation

(L)OCAL REMARKS

A | en_US | L=0.404 m

B | en_US | L=0.150 m

C | en_US | L=2.900 m

D | en_US | L=2.465 m

E | en_US | L=4.050 m

This page intentionally left blank

4812119361 Cab, cpl Heater cover plate

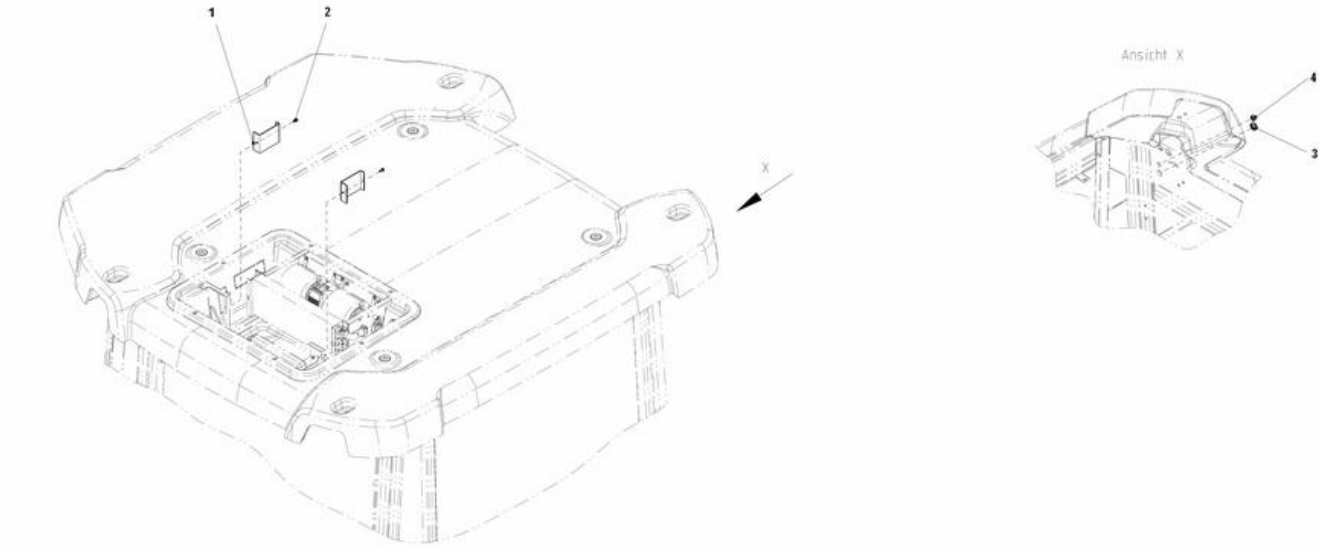

Item	Part No.	Name	Qty	L	SN INFO
1	4812116195	Bracket	2		
2	4700500012	Hex. screw	2		
3	4700791475	Grommet	1		
4	-	Grommet	1		

4812119361 Cab, cpl AC-kit

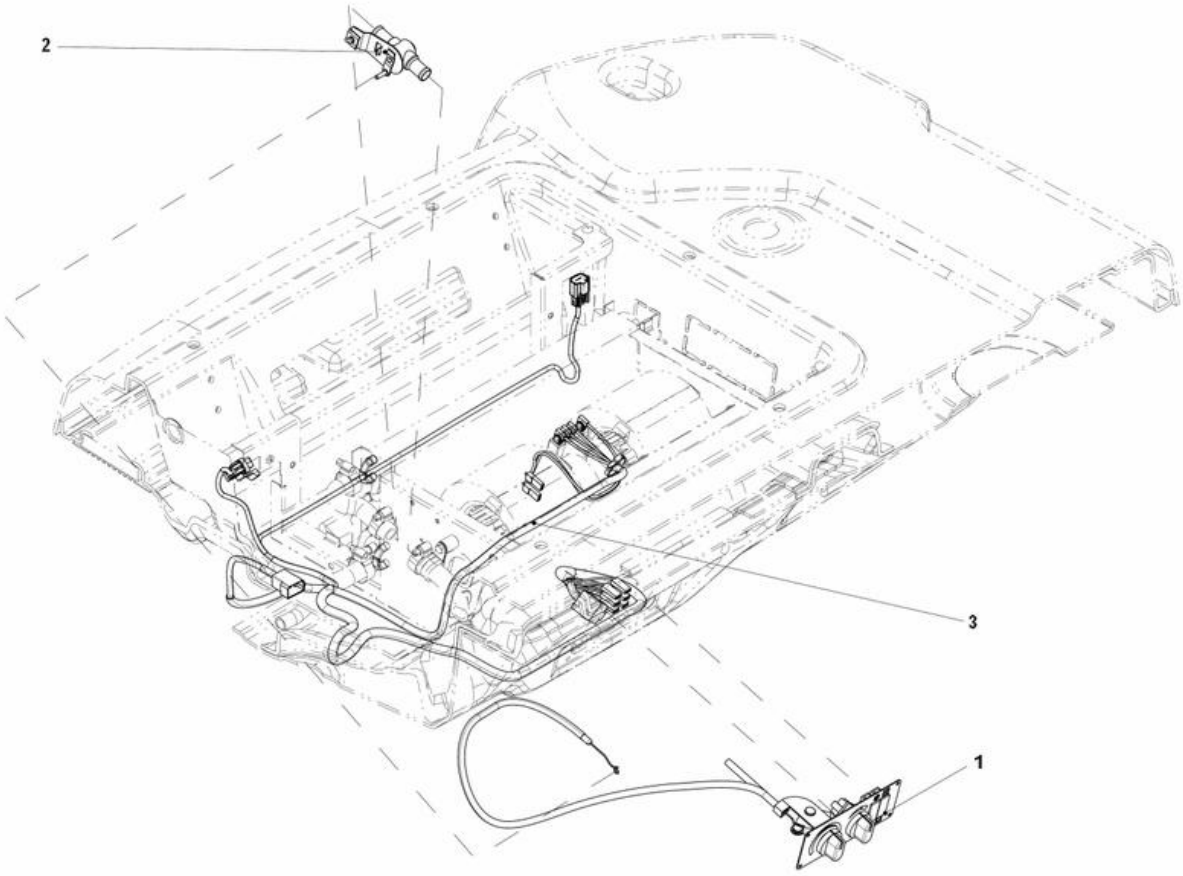

Item	Part No.	Name	Qty	L	SN INFO
1	4812120274	Heater	1		
2	4700939693	Heater control valve	1		
3	-	Harness AC	1		

4812119361 Cab, cpl Switch kit

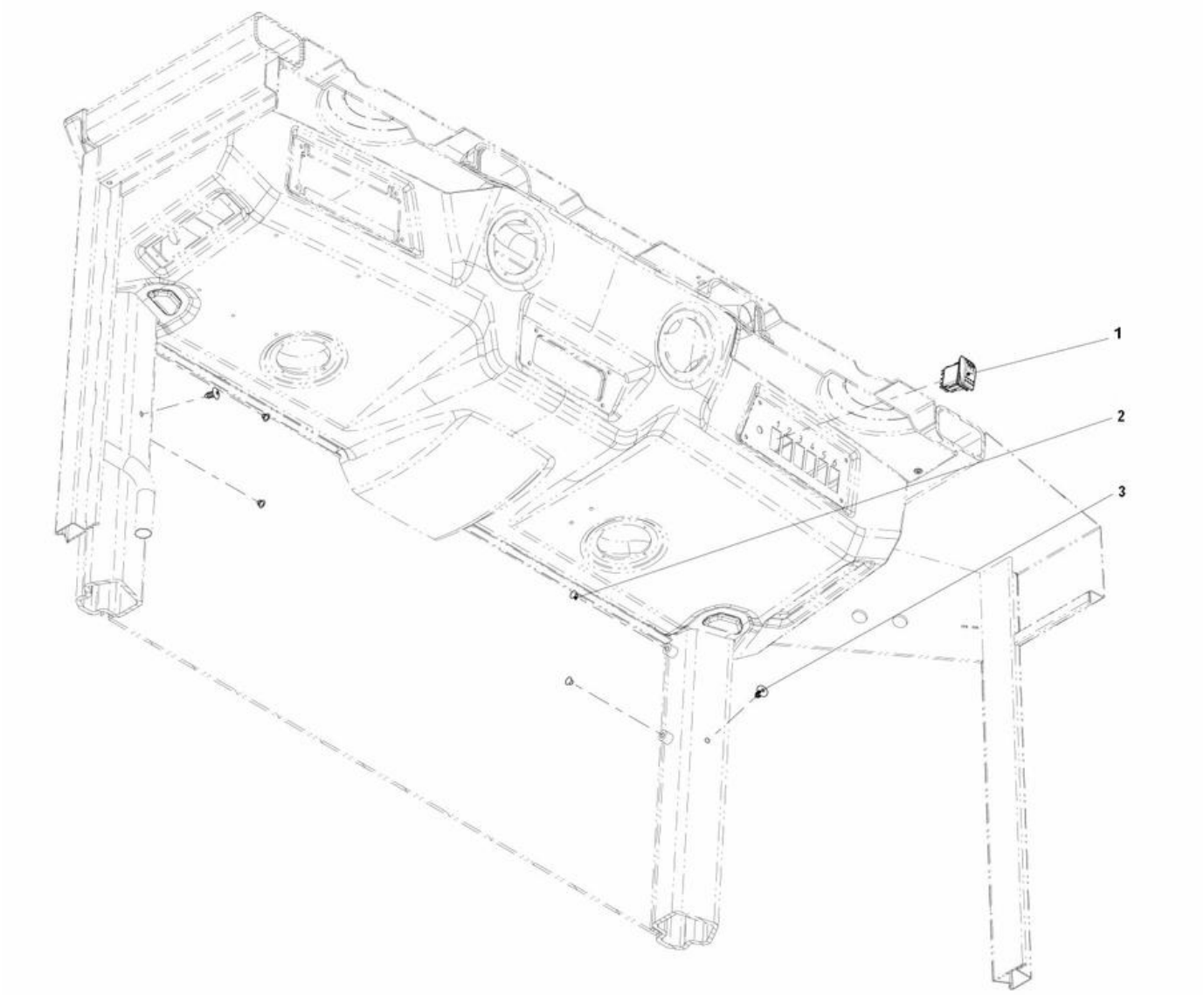

Item	Part No.	Name	Qty	L	SN INFO
1	4812115192	Switch	1		
2	4700902919	Plug	4		
3	-	Plug	2		

4812119361 Cab, cpl Door sliding screens

Item	Part No.	Name	Qty	L	SN INFO
1	-	Door complete	1		
2	4812115215	Ball stud	2		
3	4812120272	Gas spring	1		
4	4812119447	Hinge plate wall	1		
5	4812119448	Hinge plate wall	1		
6	-	Oval-head screw	6		
7	-	Sealing plug	6		
8	-	Washer	4		
9	-	Shim rings	2		
10	4812119449	Pin	2		
11	-	Hexagon nut	2		
12	4812119429	Thread base plate	1		
13	4812114599	Clamp	1		
14	4812114598	Bolt	1		

4812119361 Cab, cpl Door complete

Item	Part No.	Name	Qty	L	SN INFO
1	4812119376	Door	1		
2	4812119377	Sliding screen	1		
3	-	Sealing profile	1XL	A	
4	4812119406	Screen	1		
5	4812119435	Support	1		
6	4812119436	Support	1		
7	4812119437	Support plate	1		
8	4812115203	Handle	1		
8	4812159558	Key (2pcs)	1		
9	4812119438	Support	1		
10	-	Bracket	1		
11	4812119439	Push button	1		
12	4700792783	Washer, 6.4x18x1.6 mm A2T	1		
13	4700500075	Screw, M6-1,0x25 mm 8.8	1		
14	4812119440	Operating locker	1		
15	4700927637	Hexagon socket countersunk screw	2		
16	4812119441	Bowden cable 440mm	1		
17	4700570002	Nut M4	2		
18	4811000458	Speed nut	3		
19	4812120273	Door cover	1		
20	-	Oval-head screw	5		
21	4812119443	Locker cover	1		
22	-	Screw	1		
23	-	Sealing profile	1XL	B	
24	-	Sealing plug	2		

Comments for Page: Door complete

(L)OCAL REMARKS

A | en_US | L=2.400 m

B | en_US | L=4.653 m

4812119361 Cab, cpl Screens asymmetric right

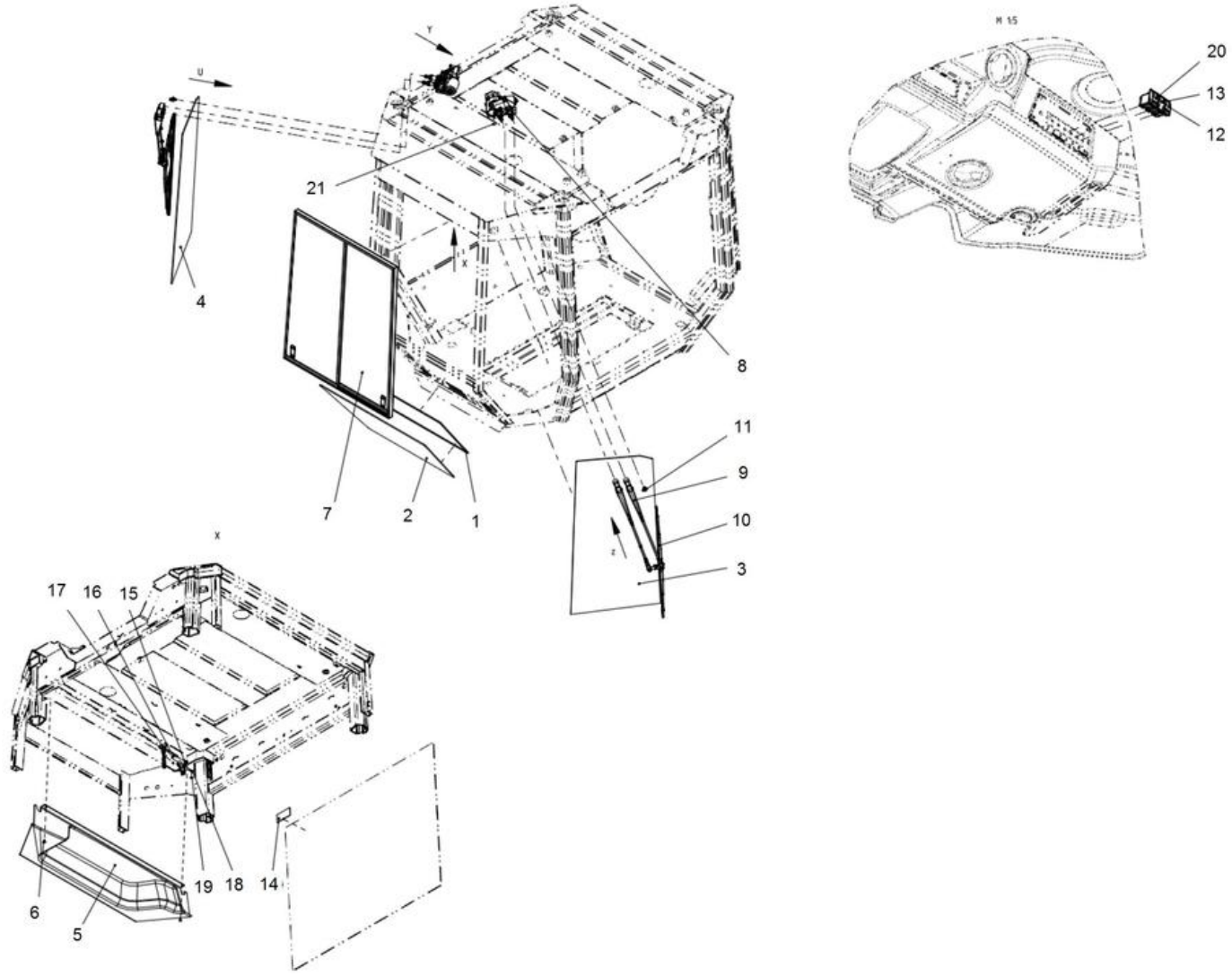

Item	Part No.	Name	Qty	L	SN INFO
1	-	Foam rubber	1XL	A	
2	4812119402	Screen	1		
3	4812119398	Screen	1		
4	4812119399	Screen	1		
5	4812120275	Headliner extension	1		
6	-	Screw	2		
7	4812120276	Sliding screen	1		
8	4812120277	Wiper motor 24V	2		
9	4812120278	Wiper arm	2		
10	4812120263	Wiper blade	2		
11	4700908561	Grommet	2		
12	4812115187	Switch, Windshield wiper, rear	1		
13	4700792505	Switch, Windshield washers	1		
14	4700903590	Decal emergency exit	1		
15	4700908507	Emergency hammer	1		
16	-	Screw	2		
17	4700908506	Emergency hammer hook	1		
18	-	Screw	1		
19	-	Washer	1		
20	4812115187	Switch, Windshield wiper, rear	1		
21	-	Dot red self-adhesive	1		

Comments for Page: Screens asymmetric right

(L)OCAL REMARKS

A | L=2.383 m

4812119361 Cab, cpl Lower screens front/rear and rear cover

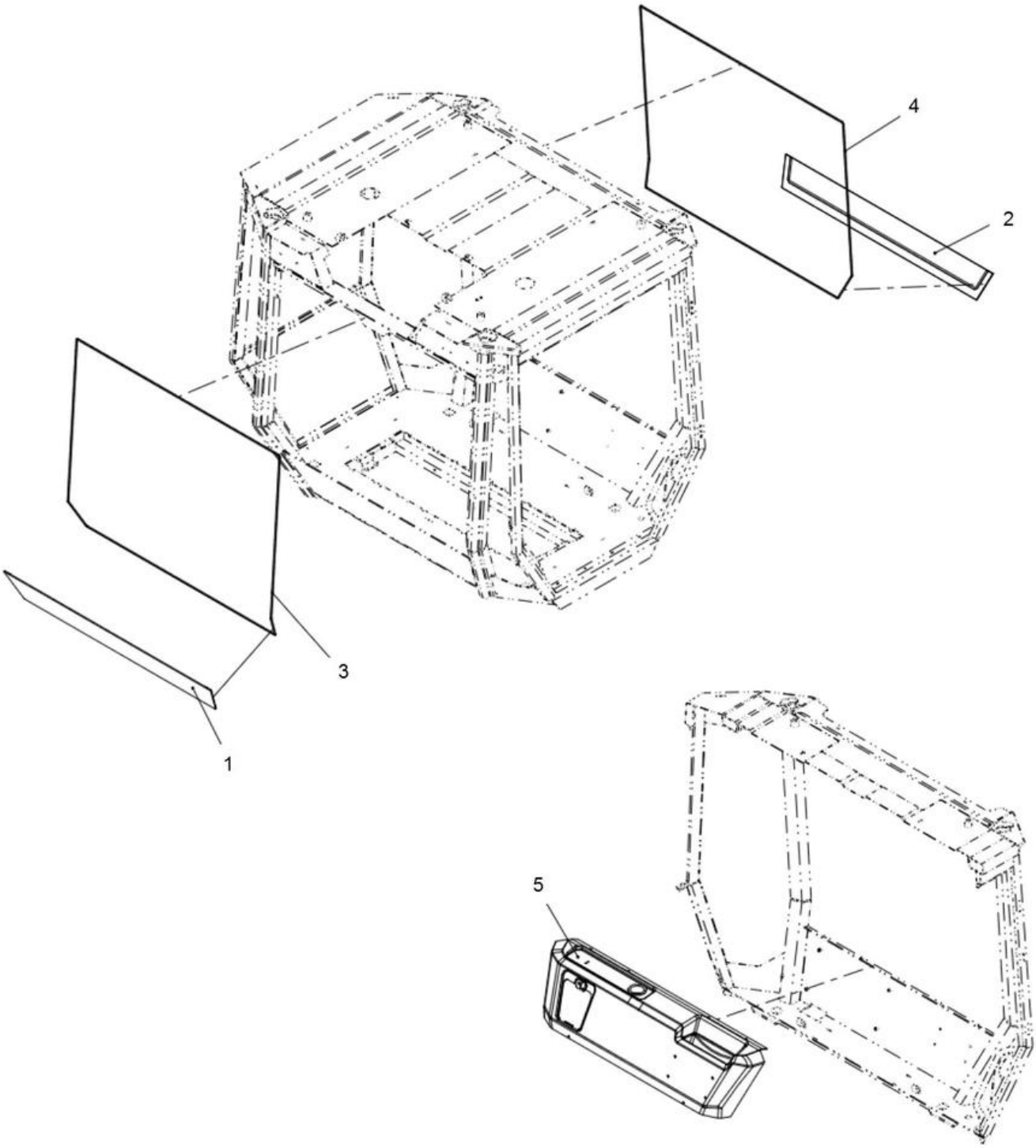

Item	Part No.	Name	Qty	L	SN INFO
1	4812119404	Screen	1		
2	4812119405	Screen	1		
3	4812159184	Rubber list	1XL	A	
4	4812159184	Rubber list	1XL	B	
5	4812119423	Cover	1		

Comments for Page: Lower screens front/rear and rear cover

(L)OCAL REMARKS

A | L=4.760 m

B| L=4.705 m

4812119361 Cab, cpl Lower screen and water system, left

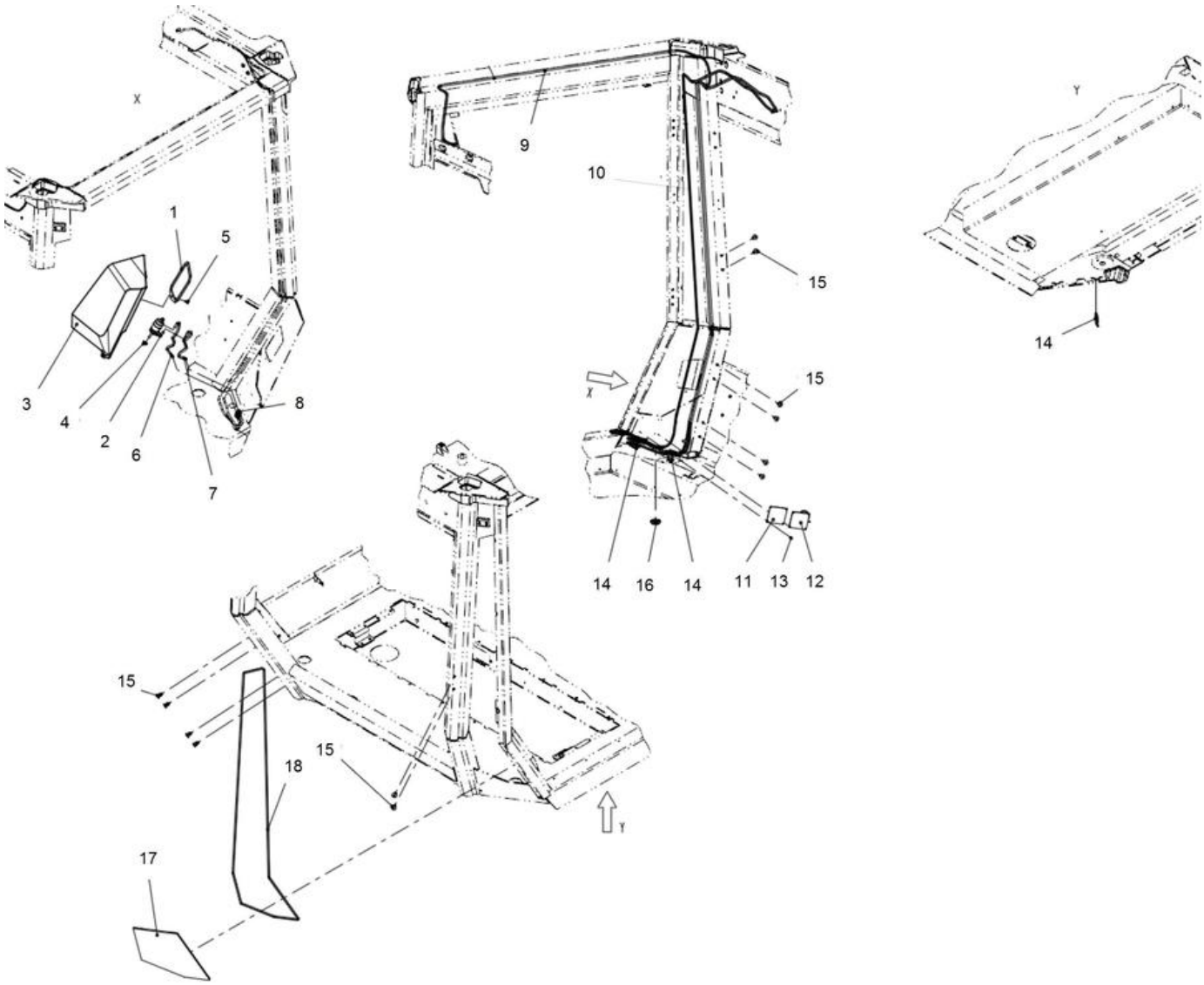

Item	Part No.	Name	Qty	L	SN INFO
1	4700395795	Gasket	1		
2	4700395794	Electric washer pump 24V	1		
3	4700395793	Water reservoir	1		
4	4700395815	Seal ring	1		
5	-	Screw	1		
6	-	Tube	1XL	A	
7	-	Tube	1XL	A	
8	4700908564	Check valve	2		
9	-	Tube	1XL	B	
10	-	Tube	1XL	C	
11	-	Type plate	1		
12	-	Type plate	1		
13	-	Tapping screw	8		
14	4700313041	Cable ties, L=200 mm	3		
15	-	Plug	12		
16	-	Grommet	1		
17	4812119394	Front screen bottom lh	1		
18	-	Foam rubber	1XL	D	

Comments for Page: Lower screen and water system, left

(L)OCAL REMARKS

A | L=0.250 m

B| L=3.753 m

C| L=2.500 m

D| L=2.880 m

4812119361 Cab, cpl Lower screens and water system, right

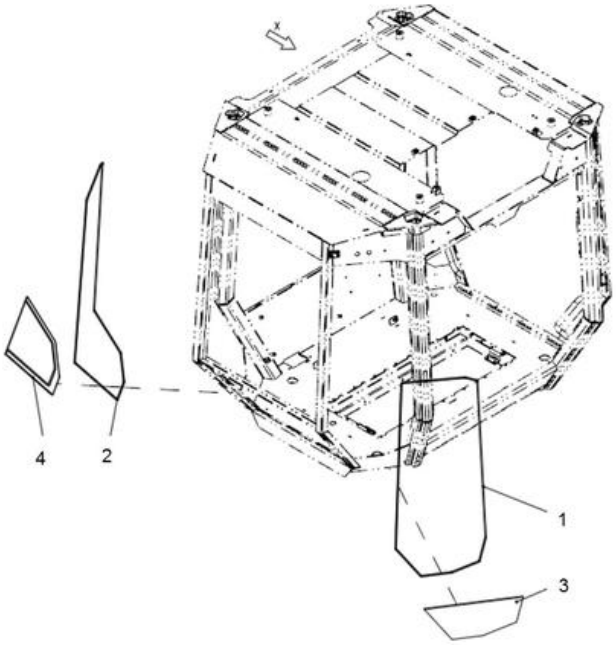

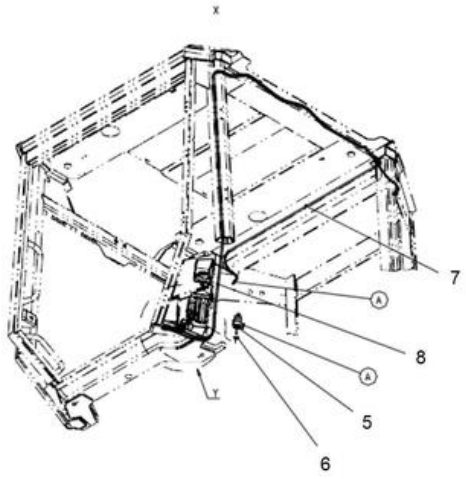

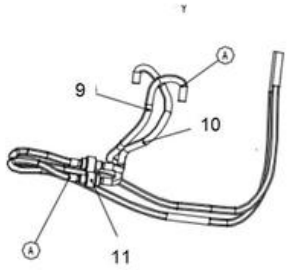

Item	Part No.	Name	Qty	L	SN INFO
1	-	Foam rubber	1XL	A	
2	-	Foam rubber	1XL	A	
3	4812119400	Screen	1		
4	4812119401	Screen	1		
5	4700395794	Electric washer pump 24V	1		
6	4700395815	Seal ring	1		
7	-	Tube	1XL	B	
8	-	Tube	1XL	C	
9	-	Tube	1XL	D	
10	-	Tube	1XL	D	
11	4700908564	Check valve	2		

Comments for Page: Lower screens and water system, right

(L)OCAL REMARKS

A | L=3.255 m

B| L=4.77 m

C| L=3.7 m

D| L=0.25 m

4812119360 Cab comfort, cpl 4812119360 Cab comfort, cpl

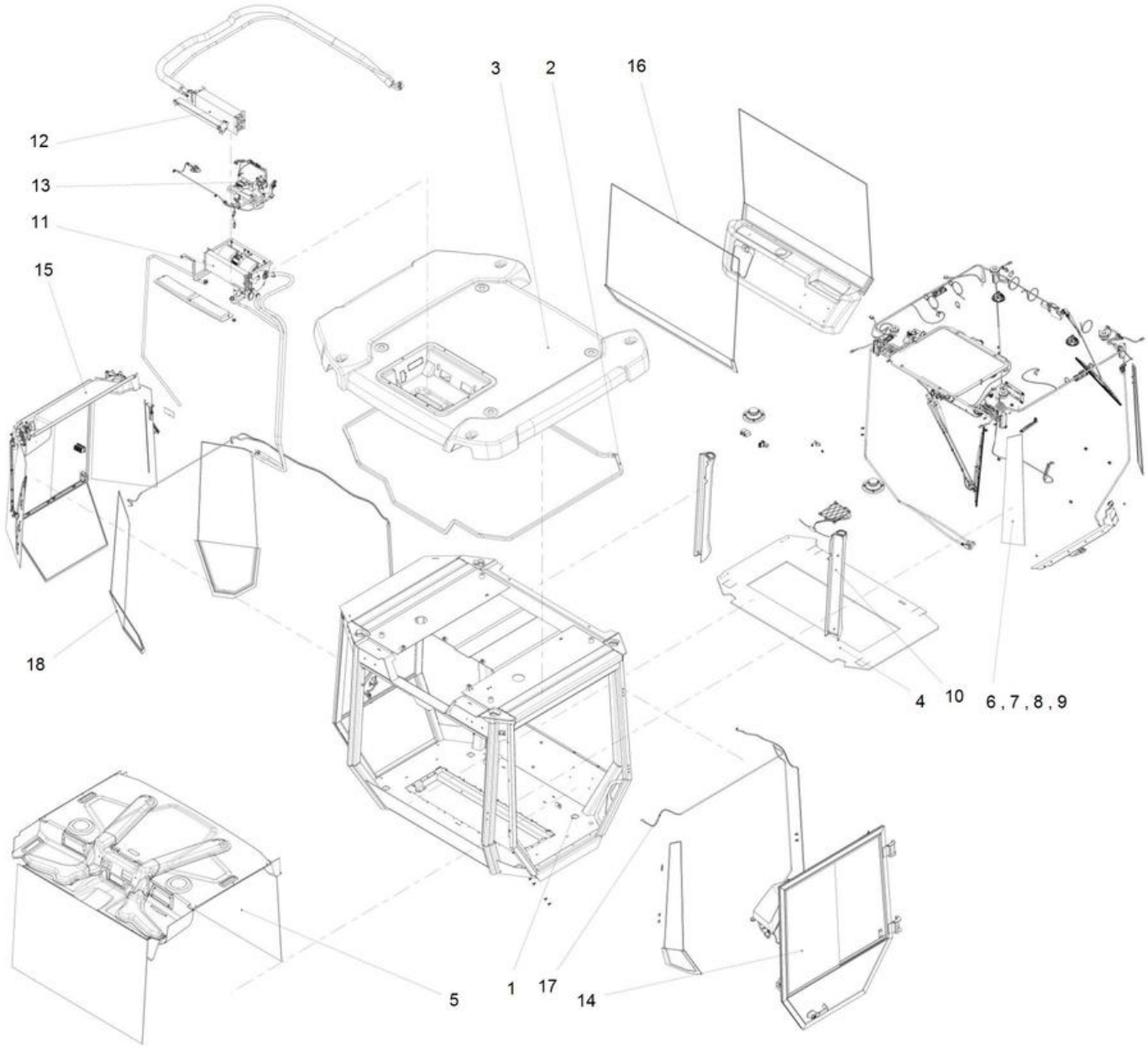

Item	Part No.	Name	Qty	L	SN INFO
1		Frame	1		
2	4812115164	Rubber strip	1XL	A	
3	4812120299	Roof	1		
4	4812120770	Floor mat	1		
5		Screens front and rear	1		
6		Corner screens left and AC hood	1		
7		24V socket and air nozzels	1		
8		Wipers front/rear and front ceiling	1		
9		Cab frame harness	1		
10		Interior Cab	1		
11		Heating installation	1		
12		Evaporator kit	1		
13		ACC kit	1		
14		Door sliding screens	1		
15		Screens asymmetric right	1		
16		Lower screens front/rear and rear covers			
17		Lower screen and water system, left			
18		Lower screens and water system, right			

Comments for Page: 4812119360 Cab comfort, cpl

(L)OCAL REMARKS

A | en_US | L=6.31 m

4812119360 Cab comfort, cpl Interior Cab

Item	Part No.	Name	Qty	L	SN INFO
1	4812120248	Wiper arm	1		
2	4812120249	Cover	1		
3	-	Screw	2		
4	-	Screw	2		
5	-	Foam rubber	1XL	A	
6	-	Foam rubber	1XL	A	
7	4812120250	Air nozzle	2		
8	4812114585	Inner light	1		
9	-	Speed fastener metric	2		
10	-	Screw	2		
11	4812115191	Time control unit	1		
12	4812115190	Wiper Interval Relay	1		
13	4812115189	Potentiometer	1		
14	4812116205	Wiper potentiom. Label	1		
15	4812120251	Knob	1		
16	4812115188	Switch, front wiper	1		
17	-	Net	1		
18	-	Screw	5		
19	4812112767	Radio antenna	1		
20	4811000268	Loud speaker	2		
21	4811000269	Loud speaker cover	2		

Comments for Page: Interior Cab

(L)OCAL REMARKS

A | en_US | L= 0.205 m

4812119360 Cab comfort, cpl Evaporator kit

Item	Part No.	Name	Qty	L	SN INFO
1	4812115013	Air intake	1		
2	4700404229	Washer	4		
3	4700500053	Screw, M8x20 mm 8.8 A2K	4		
4	4700792718	Foam rubber	1XL	A	
5	4812113623	Evaporator, cpl	1		
6	4812120284	Hose	1		
7	4812120285	Hose	1		
8	4812116194	Clip	3		
9	-	Bracket	1		
10	-	Washer	4		
11	4700500040	Screw, M6x20 mm 8.8 A2K	2		
12	-	Hexagon screw	1		
13	-	Hexagon nut	1		
14	-	Speed fastener metric	2		
15	-	Presstite	1XL	B	
16	-	Presstite	1XL	B	

Comments for Page: Evaporator kit

(L)OCAL REMARKS

A | en_US | L= 0.241 m

B | en_US | L= 0.5 m

4812119360 Cab comfort, cpl 4812113623 Evaporator, cpl

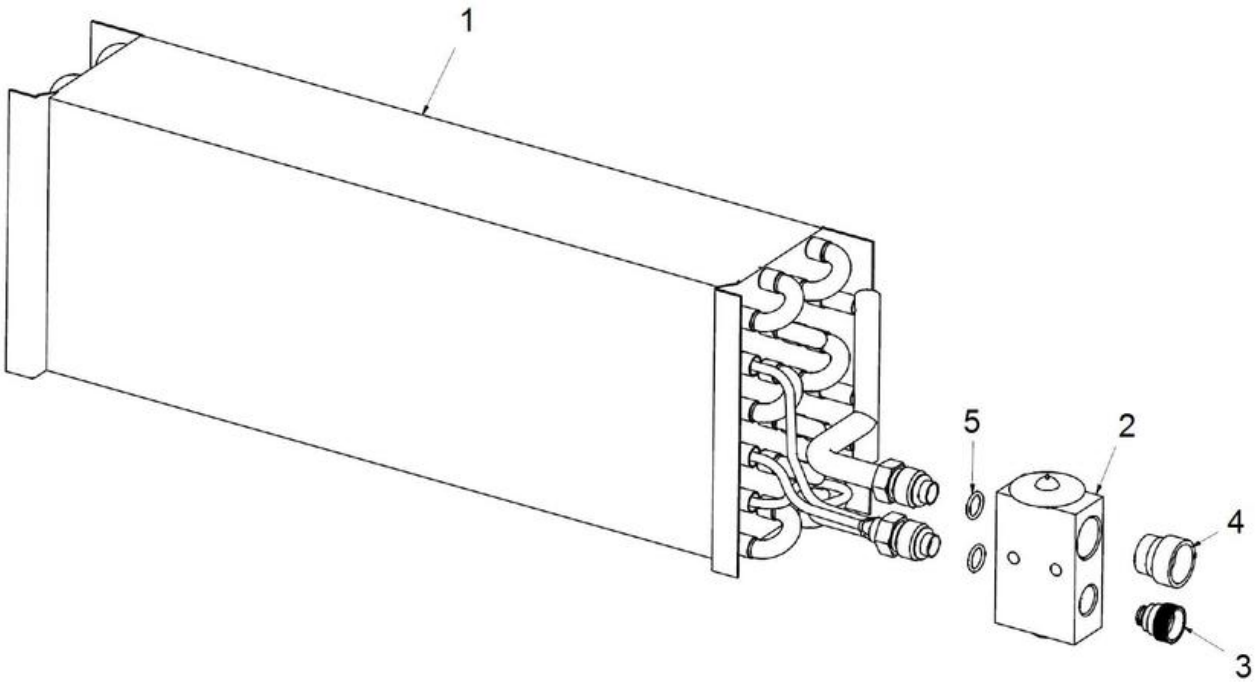

Item	Part No.	Name	Qty	L	SN INFO
1	4812160598	Evaporator coil	1		
2	4700384176	Expansion valve	1		
3	-	Connector plug	1		
4	-	Connector plug	1		
5	4700384878	O-ring Size 8	2		

4812119360 Cab comfort, cpl ACC kit

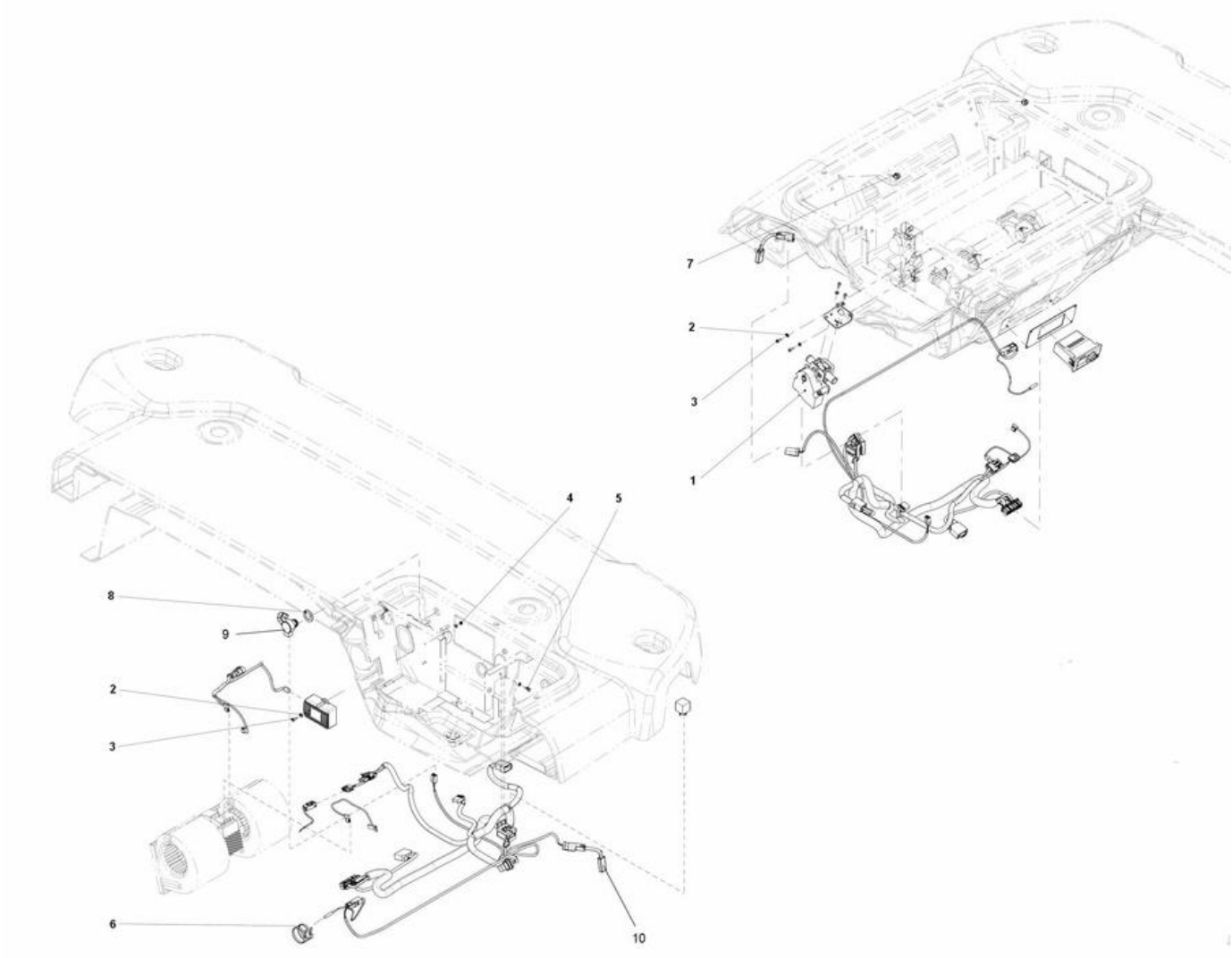

Item	Part No.	Name	Qty	L	SN INFO
1	4812113624	ACC kit	1		
2	4700904698	Plain washer	7		
3	-	Screw	5		
4	4700570002	Nut M4	1		
5	4700500002	Screw M4-0,7x12H 8.8	1		
6	4700313041	Cable ties, L=200 mm	2		
7	4700792441	Cable tie with holder	2		
8	-	Foam rubber	1XL	A	
9	4700938624	Sensor, inner temp	1		
10	4812161298	Sensor, outer temp	1		

Comments for Page: ACC kit

(L)OCAL REMARKS

A | en_US | L= 0.04 m

4812119360 Cab comfort, cpl 4812113624 ACC kit

Item	Part No.	Name	Qty	L	SN INFO
1	4812158289	Micro ECC	1		
1	4812160767	Knob	1		
2	4700383425	Electronic valve	1		
3	-	Bracket	1		
4	-	Panel	1		
5	4812158290	Blower control	1		
6	-	Clip	4		
7	4812158291	Cable harness	1		
8	4812158292	Deicing sensor	1		
9	-	Screw	2		

Cab, asymmetric Decals basic kit

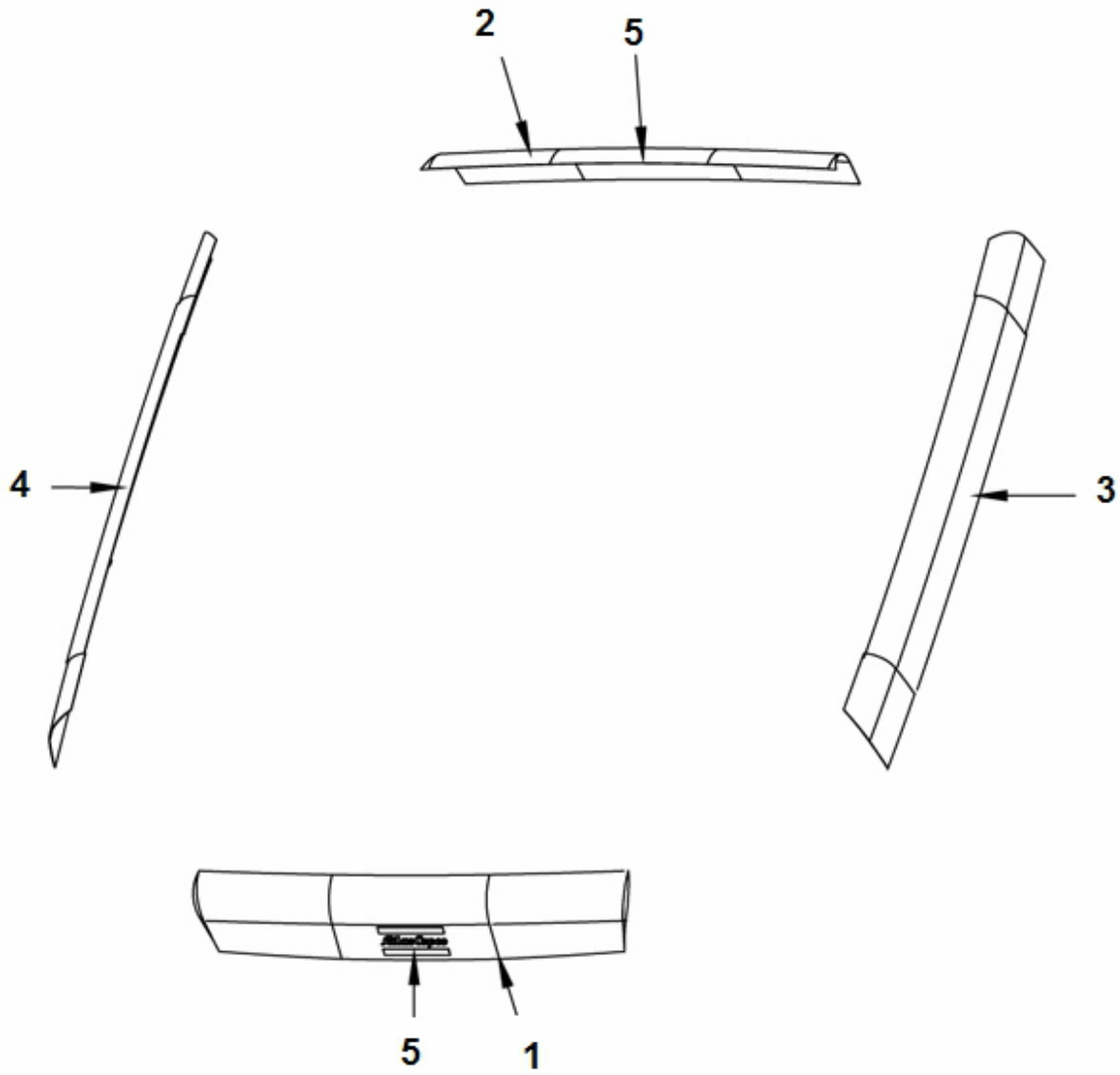

Item	Part No.	Name	Qty	L	SN INFO
1	4812120084	Decal cosmetic Yellow	1		
2	4812120085	Decal cosmetic Yellow	1		
3	4812120081	Decal cosmetic Yellow	1		
4	4812120083	Decal cosmetic Yellow	1		
5	4812120117	Decal AC - logotype	2		

Drivers platform Cab noise cover

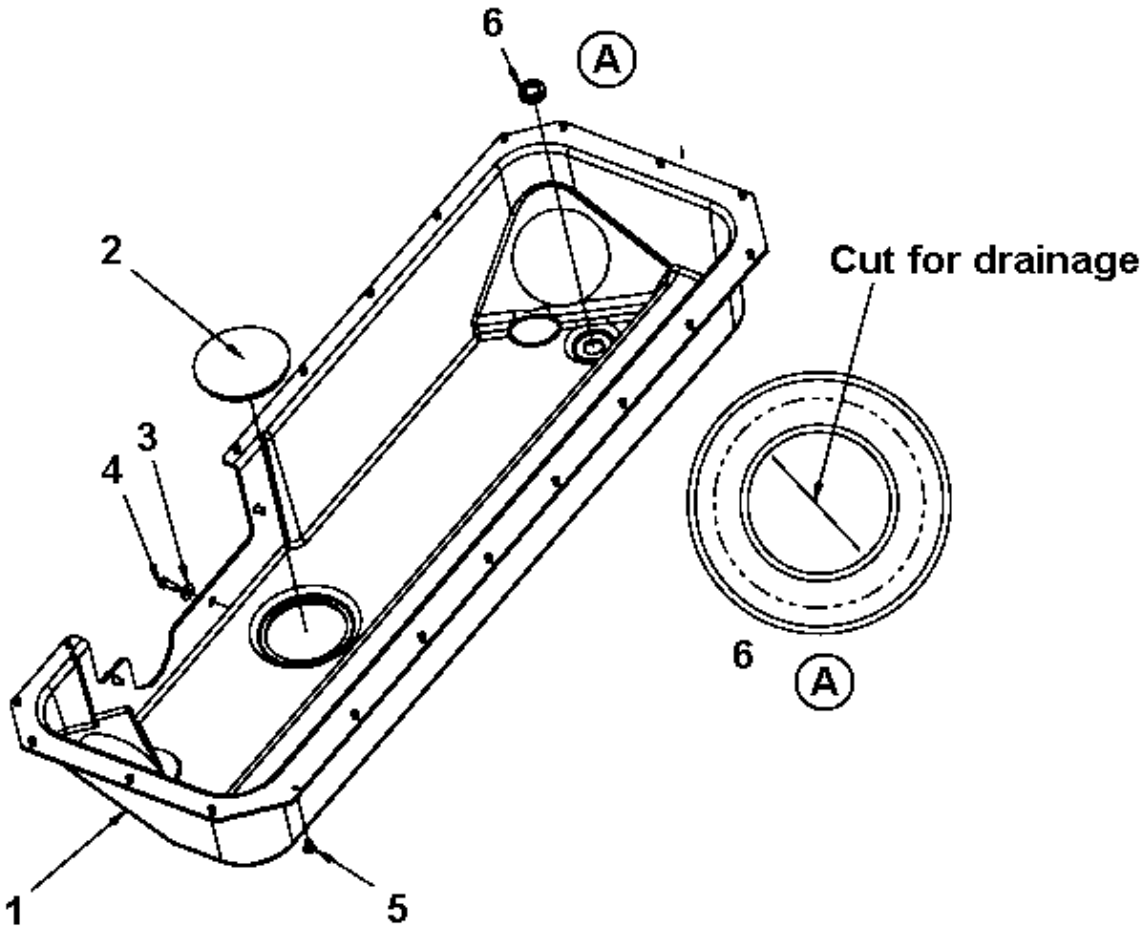

Item	Part No.	Name	Qty	L	SN INFO
1	4700391919	Noise reducing hood	1		
2	4700379992	Plug	3		
3	4700904640	Washer, 8.4x22x3 mm 300HV	3		
4	4700500053	Screw, M8x20 mm 8.8 A2K	3		
5	4700792325	Blind rivet	21		
6	4700792392	Grommet with membrane	1		

Drivers platform Rear view mirror

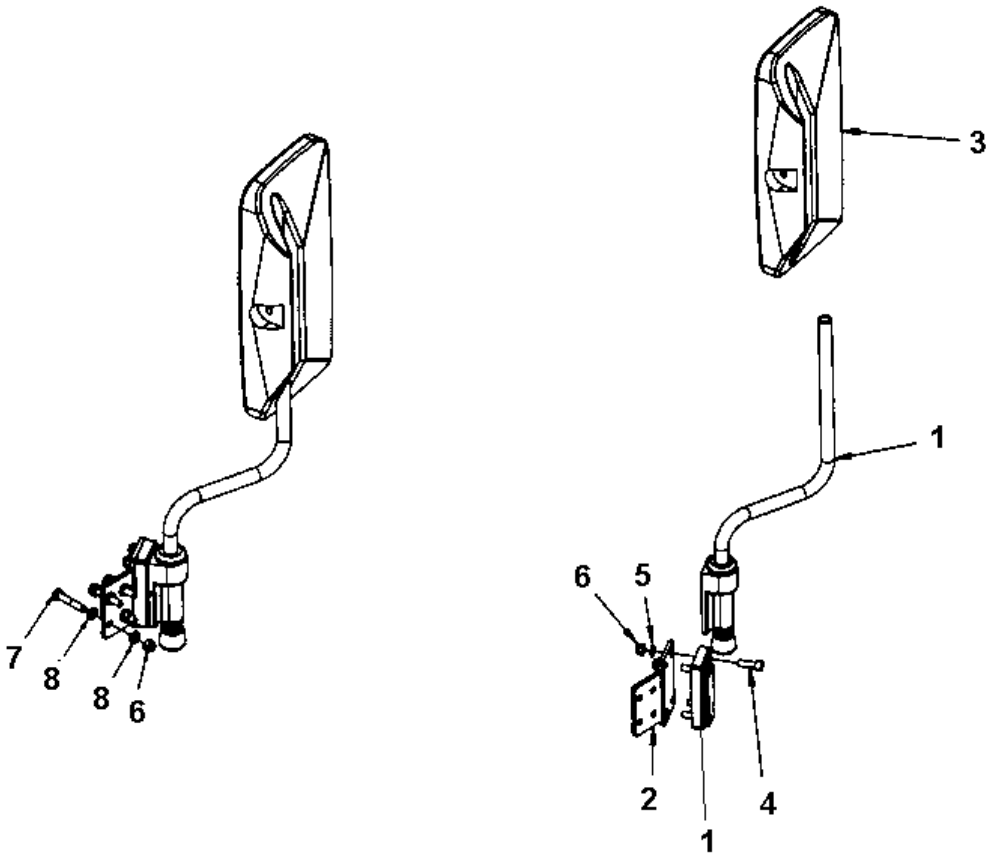

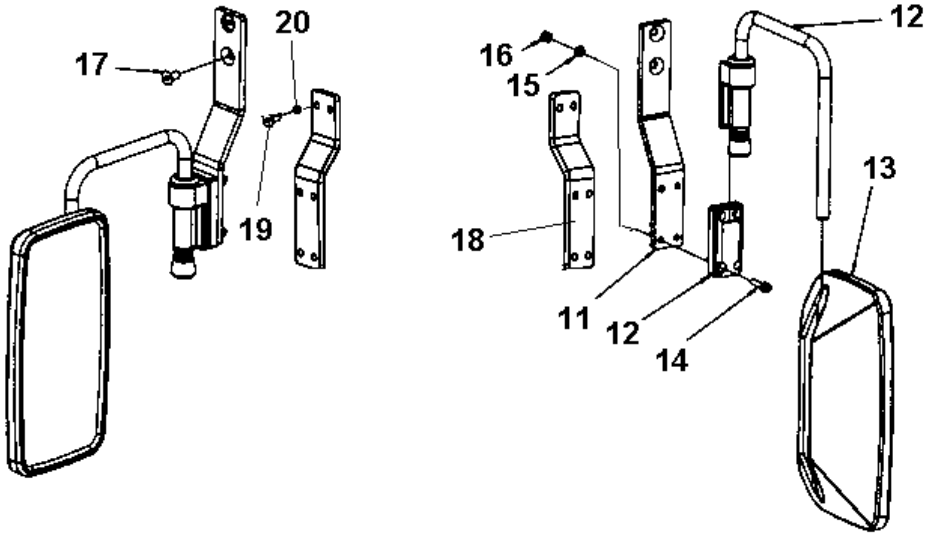

Item	Part No.	Name	Qty	L	SN INFO
1	4700381944	Holder	1		
2	4700392316	Bracket	1		
3	4700381943	Mirror	1		
3	4812161276	Mirror glass	1		
4	4700508019	Cylinder screw	4		
5	4700904229	Washer, 8.4x 6x1.5 mm 300HV	4		
6	4700586003	Lock nut M8	8		
7	4700500024	Screw M8x45	4		
8	4700904556	Steel plain washer 8,4x16x3,0	8		
11	4812110334	Bracket	1		
12	4812110367	Bracket	1		
13	4700381943	Mirror	1		
13	4812161276	Mirror glass	1		
14	4700508019	Cylinder screw	4		
15	4700904229	Washer, 8.4x 6x1.5 mm 300HV	4		
16	4700586003	Lock nut M8	4		
17	4811000096	Hex. socket countersunk screw M10x020H, 10.9	2		
18	4812115053	Bracket	1		
19	4700500053	Screw, M8x20 mm 8.8 A2K	2		
20	4700904229	Washer, 8.4x 6x1.5 mm 300HV	2		

Drivers seat Drivers seat

Item	Part No.	Name	Qty	L	SN INFO
1	-	Seat frame structure	1		
2	-	Seat, galon suspensioned	1		
3	-	Seat, fabric suspensioned	1		
4	-	Seat belt 2"	1		
4	-	Seat belt 2" with reminder	1		
4	-	Seat belt 3"	1		
4	-	Seat belt 3" with reminder	1		
5	-	Controls, slidable and turning	1		
6	-	Cross sliding	1		
7	-	Drive control, cpl	1		
8	-	Display unit	1		
9	-	Control panel cover	1		
10	-	Steering column switch module	1		
11	-	Seat frame adapter module, rotating	1		

Drivers seat Seat frame structure

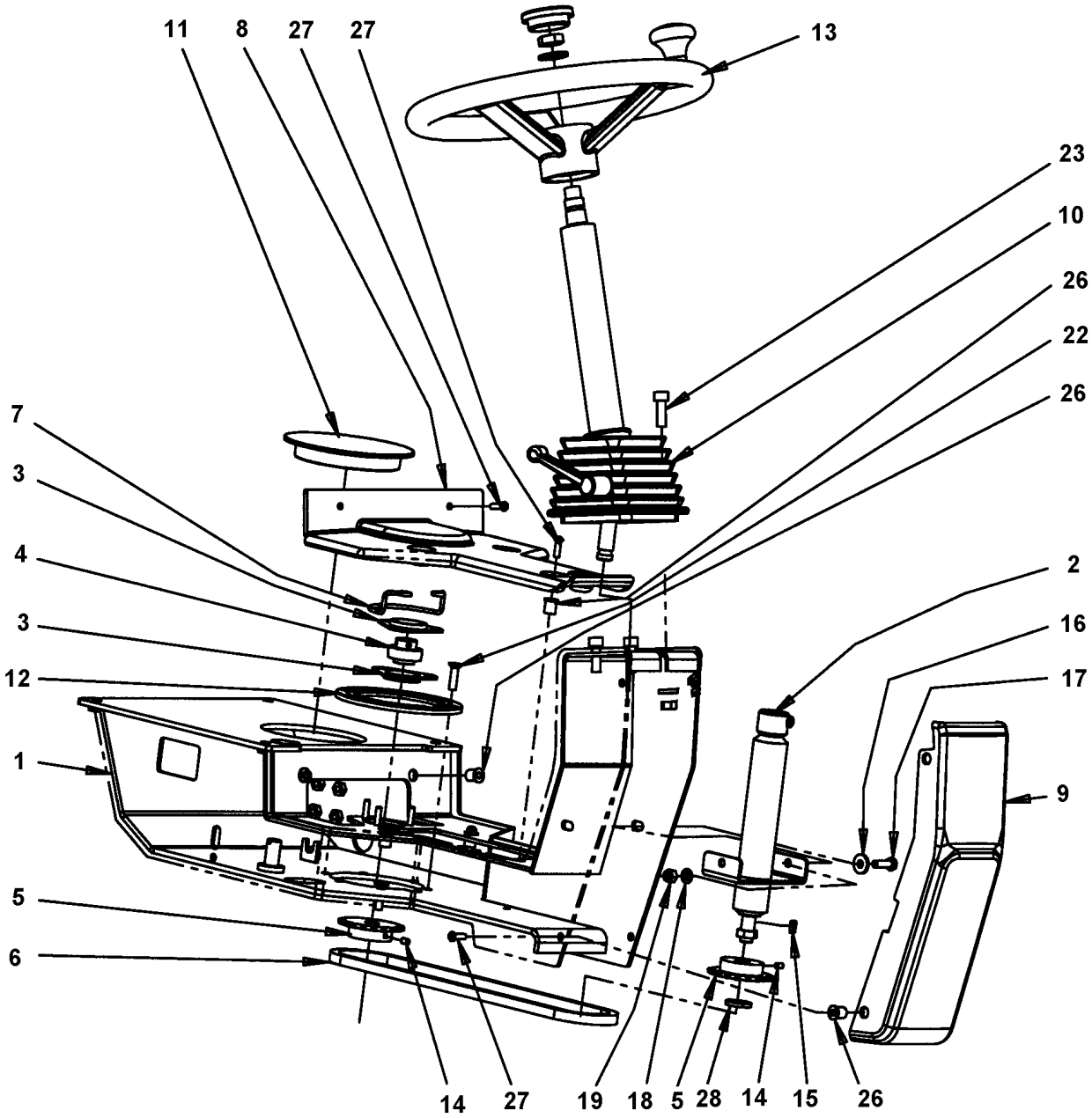

Item	Part No.	Name	Qty	L	SN INFO
1	4700395447	Seat frame	1		
2	4700359919	Shaft	1		
3	4700903917	Bearing outer	2		
4	4700903918	Bearing inner	1		
5	4700359916	Chain wheel	2		
6	4700379718	Chain and connecting link	1		
7	4700372672	Chain guard	1		
8	4700392839	Cover	1		
9	4700392840	Cover	1		
10	4700391163	Steering column	1		
11	4700359920	Plug	1		
12	4700372965	Lock ring	1		
13	4700372964	Steering wheel	1		
14	4700516040	Threaded pin	2		
15	4700350009	Flat key	1		
16	4700904640	Washer, 8.4x22x3 mm 300HV	2		
17	4700500021	Screw, M8x25 mm 8.8 A2K	2		
18	4700904229	Washer, 8.4x 6x1.5 mm 300HV	2		
19	4700586003	Lock nut M8	2		
22	4700902520	Screw	6		
23	4700508029	Cylinder screw	3		
26	4700792539	Rubber nut	10		
27	4700791524	Screw, M6 x 20 mm A2-70	10		
28	4700904214	Washer 15x30x4 300 HV	1		

Drivers seat 4700391163 Steering column

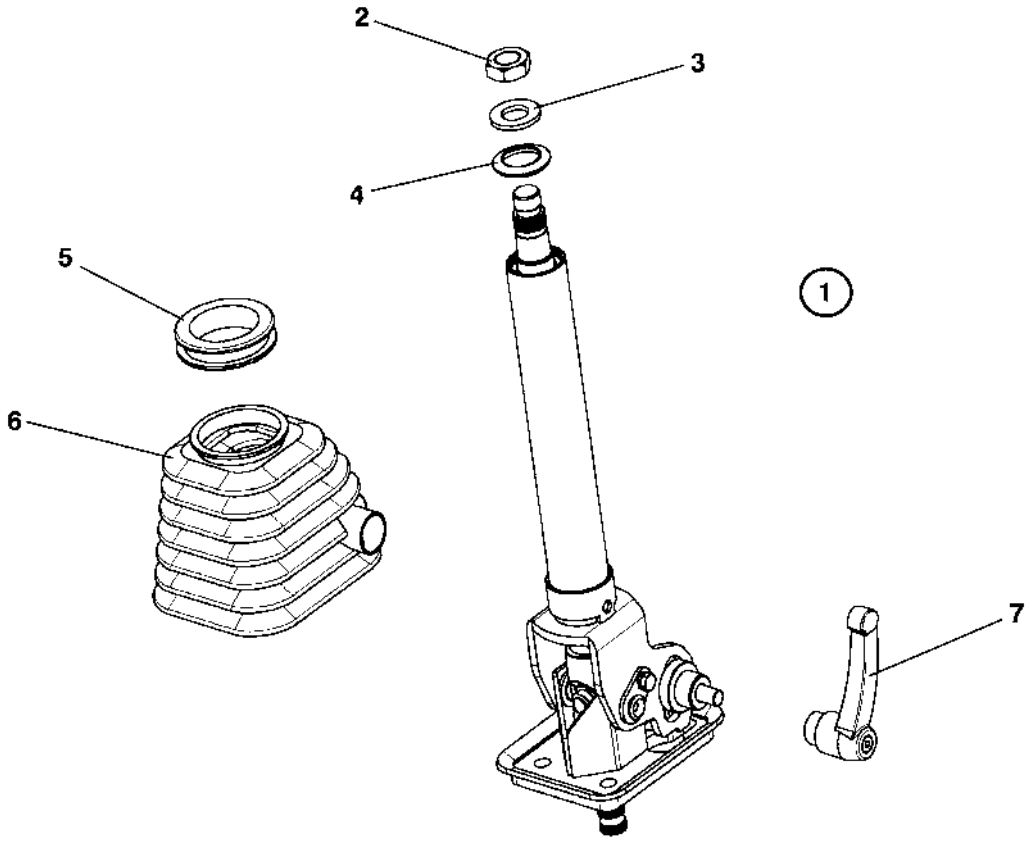

Item	Part No.	Name	Qty	L	SN INFO
1	4700391163	Steering column			
2	4700945632	Nut	1		
3	4700945633	Washer	1		
4	4700945634	Rubber cap	1		
5	4700945635	Bellows ring	1		
6	4700945636	Bellows	1		
7	4700945637	Locking handle	1		

Drivers seat Seat, galon suspensioned

Item	Part No.	Name	Qty	L	SN INFO
1	4700377518	Seat, galon suspensioned	1		
1	4700945622	Seat switch	1		
1	4700945660	Seat cushion	1		
1	4700945661	Adjuster kit	1	A	
2	4700390561	Seat frame	1		
3	4700390963	Arm rest kit	1		
4	4700902286	Lock nut, M8x1.25 mm A2K	4		
5	4700904229	Washer, 8.4x 6x1.5 mm 300HV	4		
7	4700500053	Screw, M8x20 mm 8.8 A2K	4		

Comments for Page: Seat, galon suspensioned

(L)OCAL REMARKS

A | en_US | Left & right sliding rail

Drivers seat Seat, fabric suspensioned

Item	Part No.	Name	Qty	L	SN INFO
1	4812116357	Seat, fabric suspensioned	1	A	
1	4700937892	Seat switch	1		
1	4700937620	Arm rest, right	1		
1	4812158367	Arm rest wide, right	1		
1	4700937621	Arm rest, left	1		
2	4812119295	Control bracket	1		
3	4700904230	Plain washer 10.5x22x2 mm	2		
4	4700500028	Screw, M10 x 25 mm 8.8 A3K	1		
5	4700792527	Screw	3		
8	4700508092	Screw	4		

Comments for Page: Seat, fabric suspensioned

(L)OCAL REMARKS

A | en_US | Without seat belt.

Seat belts Seat belt 2"

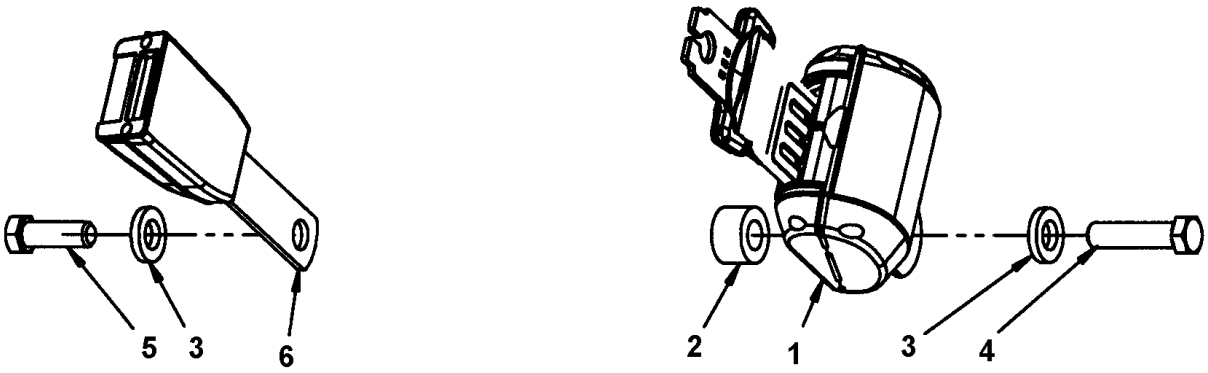

Item	Part No.	Name	Qty	L	SN INFO
1	4812117922	Seat belt 2"	1		
2	4700791572	Spacer washer	1		
3	4700904703	Plain washer 13x24x4 mm	4		
4	4700792527	Screw	1	A	
5	4700928347	Hexagon screw	2	A	
6	4812117924	Buckle	1		

Comments for Page: Seat belt 2"

(L)OCAL REMARKS

A | en_US | Used with seat 4700377518.

Seat belts Seat belt 2" with reminder

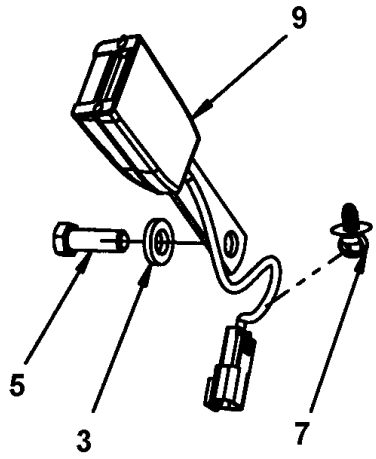

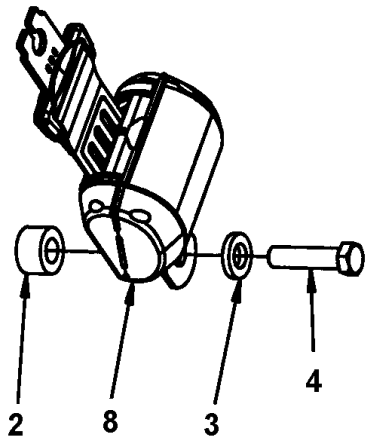

Item	Part No.	Name	Qty	L	SN INFO
2	4700791572	Spacer washer	1		
3	4700904703	Plain washer 13x24x4 mm	4		
4	4700792527	Screw	1		
5	4700928347	Hexagon screw	2		
7	4700792441	Cable tie with holder	1		
8	4812117922	Seat belt 2"	1		
9	4812117925	Buckle with reminder	1		

Seat belts Seat belt 3"

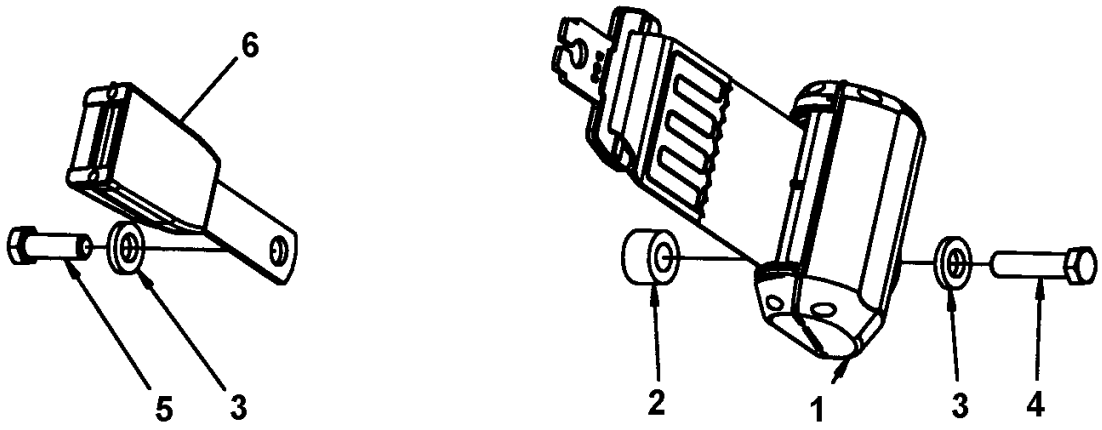

Item	Part No.	Name	Qty	L	SN INFO
1	4812118816	Seat belt 3"	1		
2	4700791572	Spacer washer	1		
3	4700904703	Plain washer 13x24x4 mm	4		
4	4700792527	Screw	1		
5	4700928347	Hexagon screw	2		
6	4812117924	Buckle	1		

Seat belts Seat belt 3" with reminder

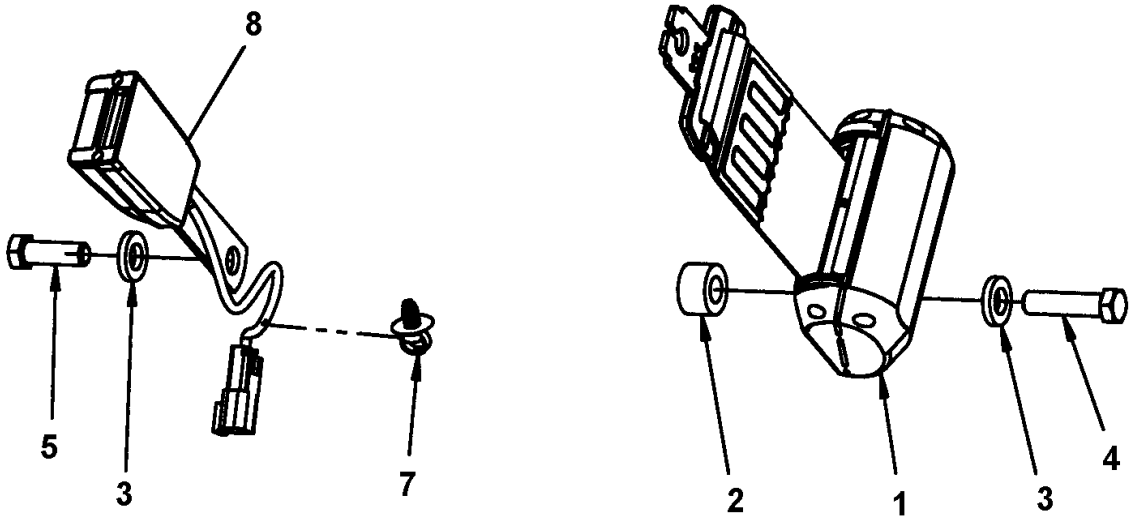

Item	Part No.	Name	Qty	L	SN INFO
1	4812118816	Seat belt 3"	1		
2	4700791572	Spacer washer	1		
3	4700904703	Plain washer 13x24x4 mm	4		
4	4700792527	Screw	1		
5	4700928347	Hexagon screw	2		
7	4700792441	Cable tie with holder	1		
8	4812117925	Buckle with reminder	1		

Drivers seat Controls, slidable and turning

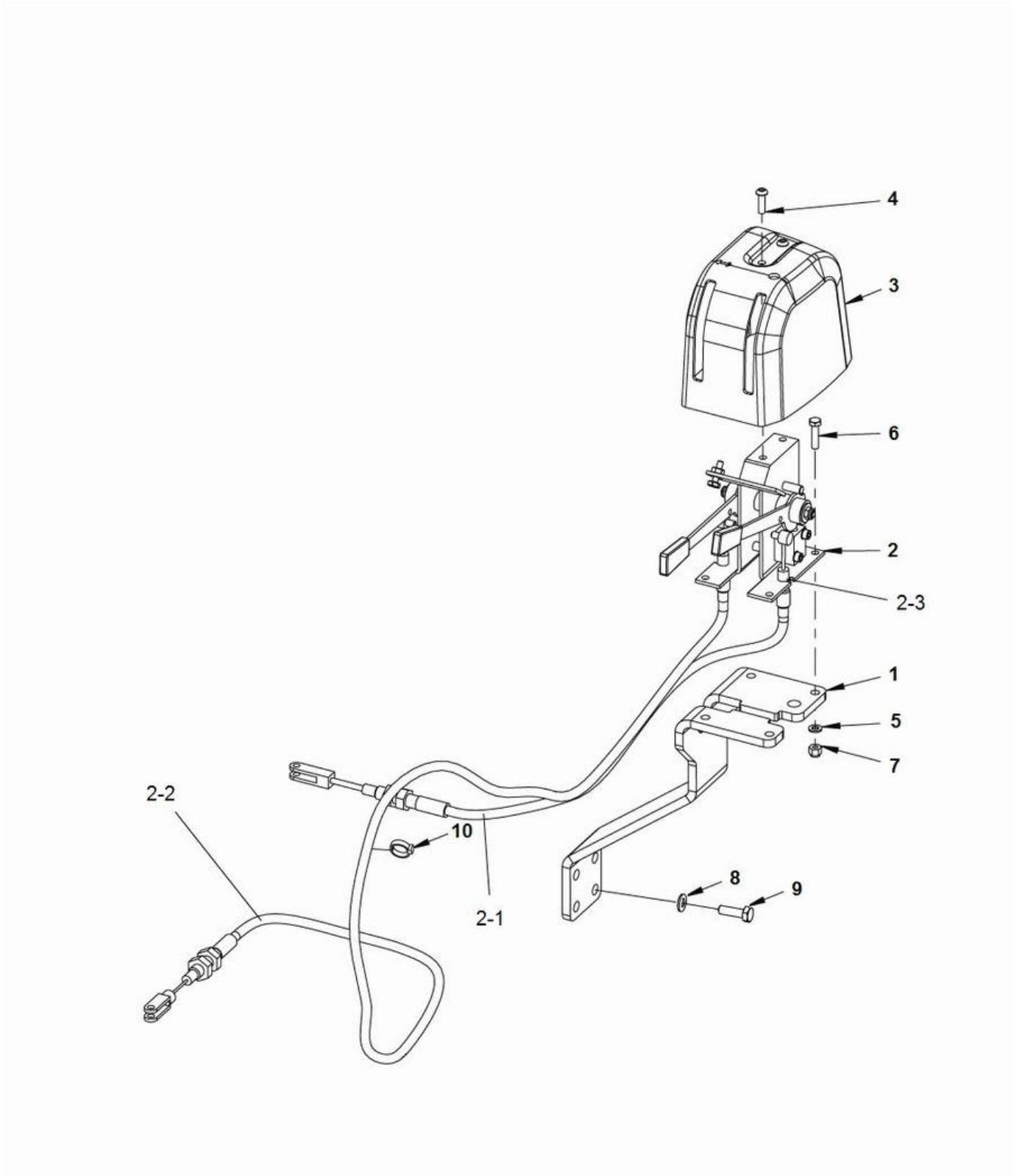

Item	Part No.	Name	Qty	L	SN INFO
1	4812118312	Bracket	1		
2	4812121328	Control	1		
2-1	4812121331	Cable	1		
2-2	4812121330	Cable, sliding	1		
2-3	4700393508	Locking clips	2		
3	4700392965	Control cover	1		
4	4700791524	Screw, M6 x 20 mm A2-70	2		
5	4700904228	Washer DIN125	4		
6	4700500075	Screw, M6-1,0x25 mm 8.8	4		
7	4700586002	Lock nut M6 -8	4		
8	4700904229	Washer, 8.4x 6x1.5 mm 300HV	4		
9	4700500021	Screw, M8x25 mm 8.8 A2K	4		
10	4700313041	Cable ties, L=200 mm	N		

Drivers seat Cross sliding

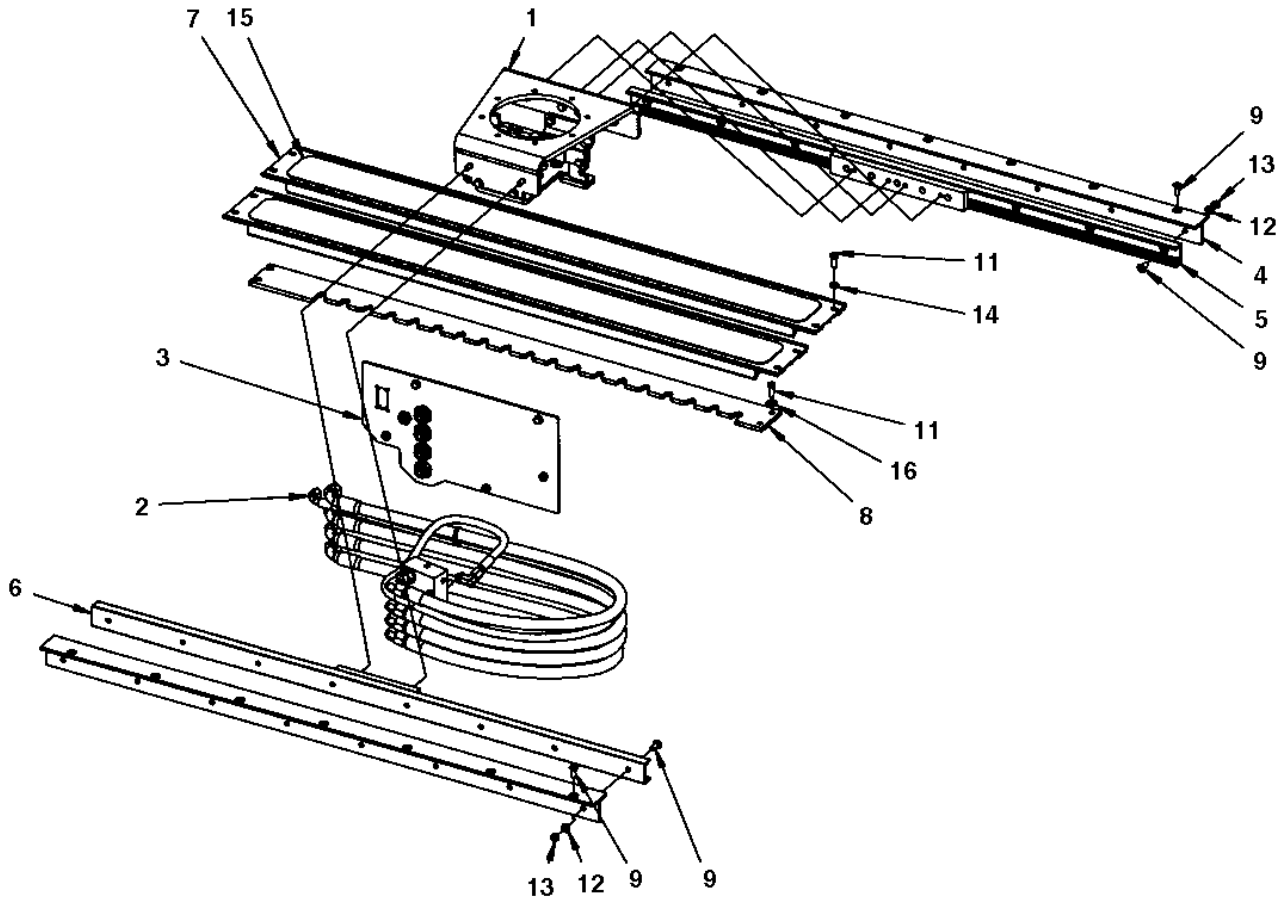

Item	Part No.	Name	Qty	L	SN INFO
1	-	Carrier	1		
2	-	Steering, slideable	1		
3	-	Hose bracket	1		
4	4700390428	Rail holder	2		
5	4700391082	Linear bearing	1		
6	4700391083	Linear bearing	1		
7	4700393191	Cover	2		
8	4700379729	Locking rail	1		
9	4700513003	Screw	30		
11	4700500020	Hex. screw	12		
12	4700904229	Washer, 8.4x 6x1.5 mm 300HV	16		
13	4700570005	Hexagon nut	16		
14	4700904556	Steel plain washer 8,4x16x3,0	8		
15	4700393978	Slip protection	2		
16	4700791304	Steel plain washer	4		

Drive control To A015623 Drive control, cpl

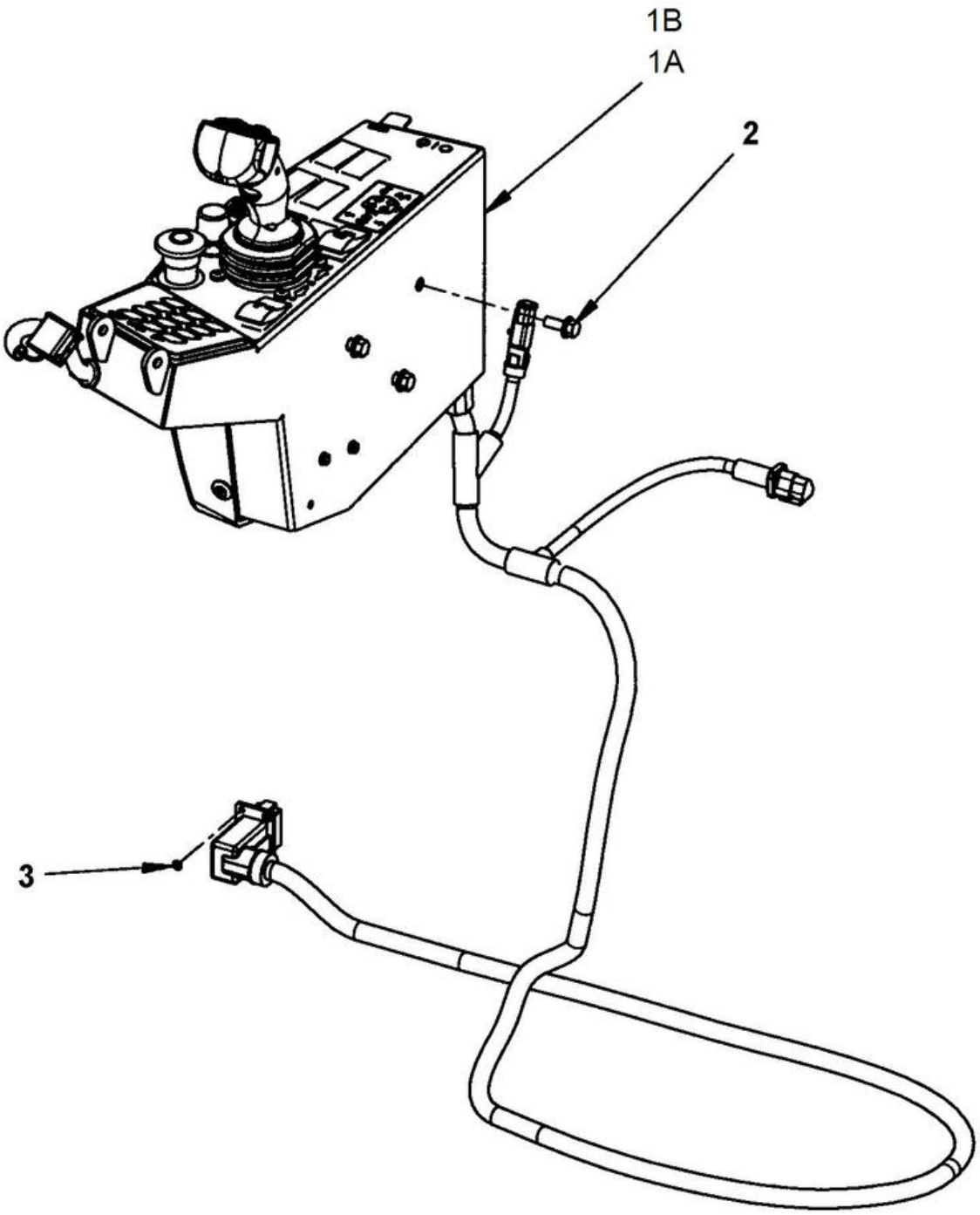

Item	Part No.	Name	Qty	L	SN INFO
1A		Drive control	1		
1B		Drive control	1		
2	4700500505	Screw, M8x20 mm 8.8 A2K	3		
3	4700791709	Blind rivet	4		

Drive control To A015623 Drive control

Item	Part No.	Name	Qty	L	SN INFO
1	4812110886	Control box	1		
2	4700391396	Cover	1		
3	4700396662	Cover	1		
4	4700391420	Control handle, 4 switches	1		
5	4812113875	Control unit	1		
6	4812110901	Ignition switch	1		
7	4700391421	Membrane switch panel	1		To A014338 excl. A013267, A013270
7	4812121044	Membrane switch panel	1		From A014339 incl. A013267, A013270
8	4700385599	Buzzer	1		
9	4700388737	Potentiometer	1		
10	4812118697	Switch, parking brake	1		
12	4812115292	Cable harness	1		
13	4700392930	Junction box	1		
14	4700393031	Decal	1		
15	4812119227	Thread rolling screw	4		
16	4700904698	Plain washer	8		
17	4700904281	Washer, 5,3x10x1 300HV	4		
18	4700586001	Lock nut	2		
19	4700500060	Screw M5-0,8x20 8.8	2		
20	4700904228	Washer DIN125	3		
21	4700586002	Lock nut M6 -8	2		
22	4700508017	Cylinder screw	4		
23	4700791588	Panel plug	7		
24	4700395785	Expansion rivet	4		
25	4700570004	Hexagon nut M6	1		
26	4700902804	Plug	5		
27	4700791739	Emergency stop	1		
28	4700791733	Fixing collar	1		
29	4700791723	Connector N/C	2		
30	4812115810	Switch, displacement shift	1		
31	4812114214	Cover	1		
32	4812114213	Lock screw	2		
33	4812119317	Holder	1		

Drive control From A015624 Drive control module

Item	Part No.	Name	Qty	L	SN INFO
1		Drive control	1		
2	4700500505	Screw, M8x20 mm 8.8 A2K	3		
3	4700791709	Blind rivet	4		

Drive control From A015624 Drive control

Item	Part No.	Name	Qty	L	SN INFO
1	4812120077	Control box	1		
2	4700391396	Cover	1		
3	4700396662	Cover	1		
5	4812113875	Control unit	1		
6	4812110901	Ignition switch	1		
7	4812121044	Membrane switch panel	1		
8	4700385599	Buzzer	1		
9	4700388737	Potentiometer	1		
9	4700939826	Knob	1		
10	4812118697	Switch, parking brake	1		
11	4700792414	Switch, RPM	1		
11	4812117490	Switch, green ECO	1		
12	4812121851	Cable harness	1		
13	4700392930	Junction box	1		
14	4812121348	Decal, Information	1		
15	4812119227	Thread rolling screw	4		
16	4700904698	Plain washer	8		
17	4700904281	Washer, 5,3x10x1 300HV	4		
18	4700586001	Lock nut	2		
19	4700500060	Screw M5-0,8x20 8.8	2		
20	4700904228	Washer DIN125	3		
21	4700586002	Lock nut M6 -8	2		
22	4700508017	Cylinder screw	4		
23	4700791588	Panel plug	6		
24	4700395785	Expansion rivet	4		
25	4700570004	Hexagon nut M6	1		
26	4700902804	Plug	5		
27	4700791739	Emergency stop	1		
28	4700791733	Fixing collar	1		
29	4700791723	Connector N/C	2		
30	4812115810	Switch, displacement shift	1		
31	4812114214	Cover	1		
32	4812114213	Lock screw	2		
33	4812119317	Holder	1		
34	4700792441	Cable tie with holder	1		

Drive control From A015624 Control handle

Item	Part No.	Name	Qty	L	SN INFO
1	4700391420	Control handle, 4 switches	1		
2	4812121347	Control handle, 6 switches	1		

Drivers seat Display unit

Item	Part No.	Name	Qty	L	SN INFO
1	4700392717	Display holder	1		
2	4812113786	Display unit	1		
3	4700392719	Cover	1		
4	4700393094	Decal	1		
5	4700904228	Washer DIN125	4		
6	4700586002	Lock nut M6 -8	4		
11	4700903662	Washer	2		
12	4700606004	Plastic washer	2		
13	4700500115	Screw	1		
14	4700586003	Lock nut M8	1		

Drivers seat Control panel cover

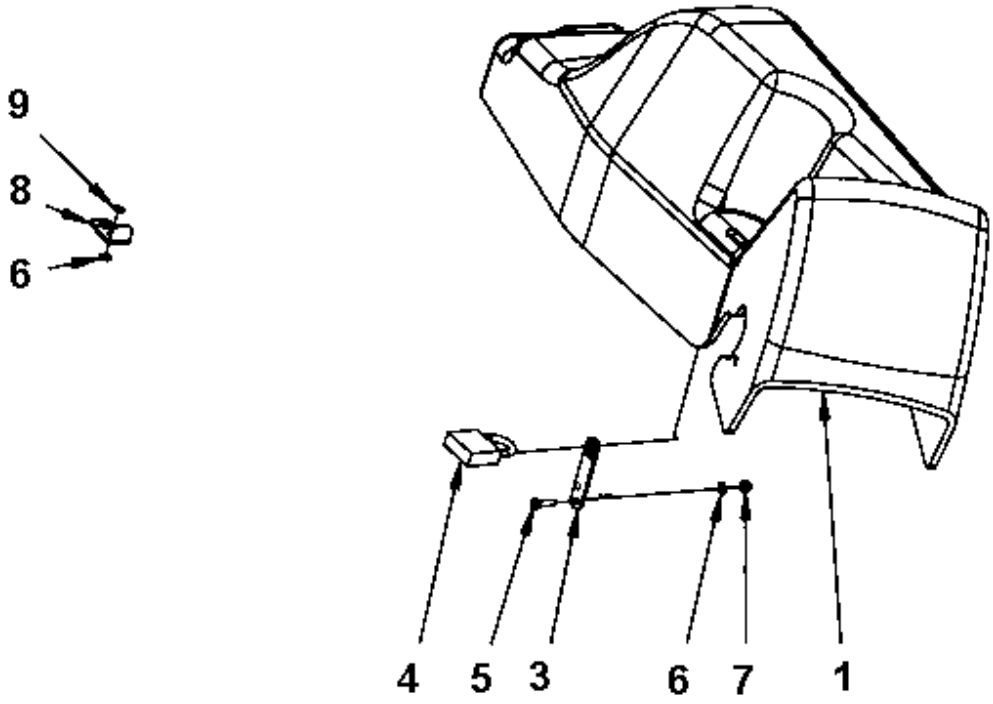

Item	Part No.	Name	Qty	L	SN INFO
1	4700395947	Instrument panel cover	1		
3	4700387545	Latch	1		
4	4700358881	Pad lock	1		
5	4700904653	Screw M5x16 A2-70	2		
6	4700904281	Washer, 5,3x10x1 300HV	4		
7	4700586001	Lock nut	2		
8	4700396670	Bracket	1		
9	4700904619	Blind rivet	2		

Drivers seat Seat frame adapter module, rotating

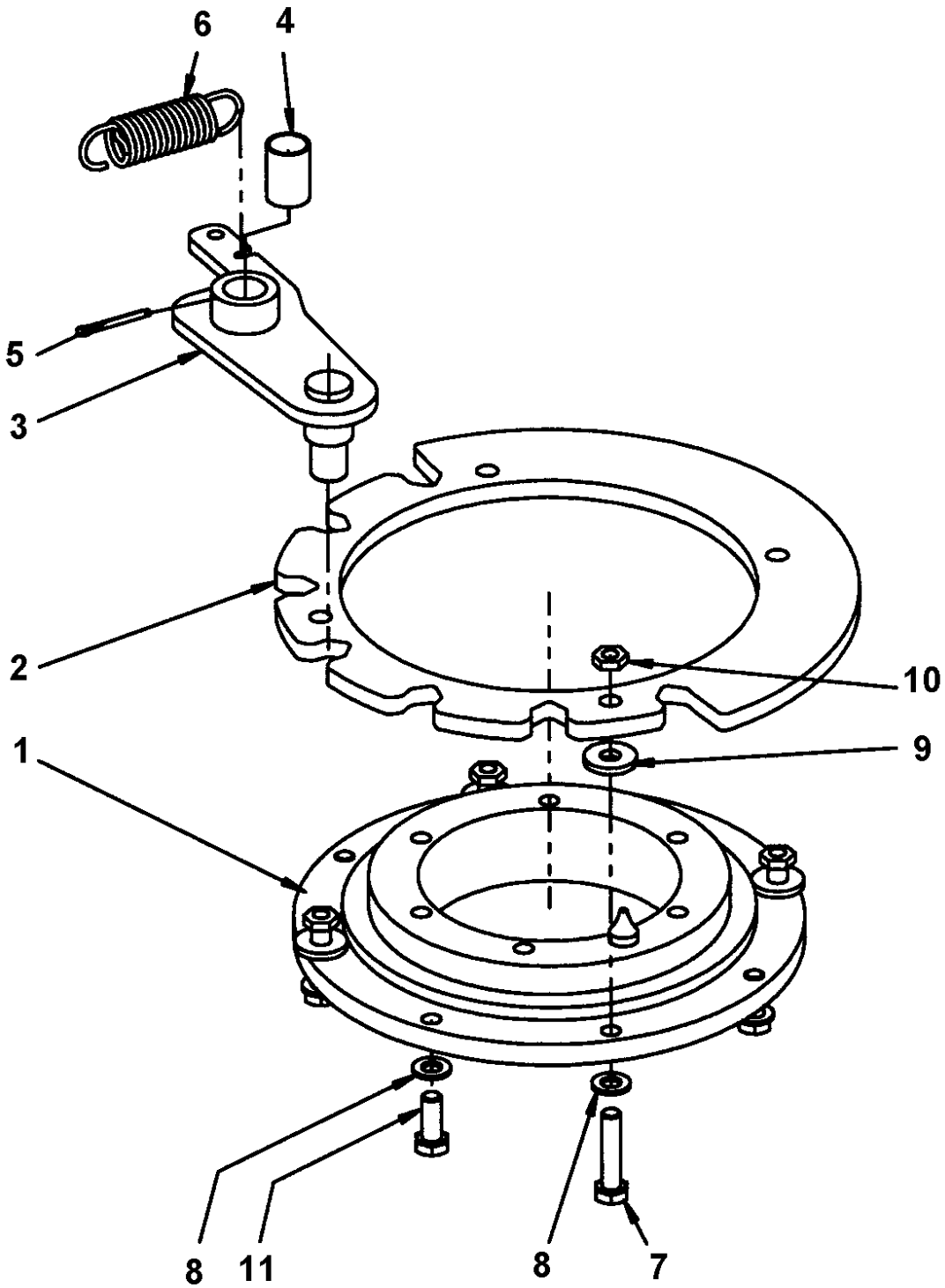

Item	Part No.	Name	Qty	L	SN INFO
1	4700359125	Ball bearing	1		
2	4700379728	Locking disc	1		
3	4812119788	Coupling link	1		
4	4700359819	Bushing	1		
5	4700630008	Pin	1		
6	4700359043	Spring	1		
7	4700792678	Screw	4		
8	4700904229	Washer, 8.4x 6x1.5 mm 300HV	8		
9	4700904640	Washer, 8.4x22x3 mm 300HV	4		
10	4700573008	Nut M8	4		
11	4700947679	Hexagon head screw	4		

Decals Decals

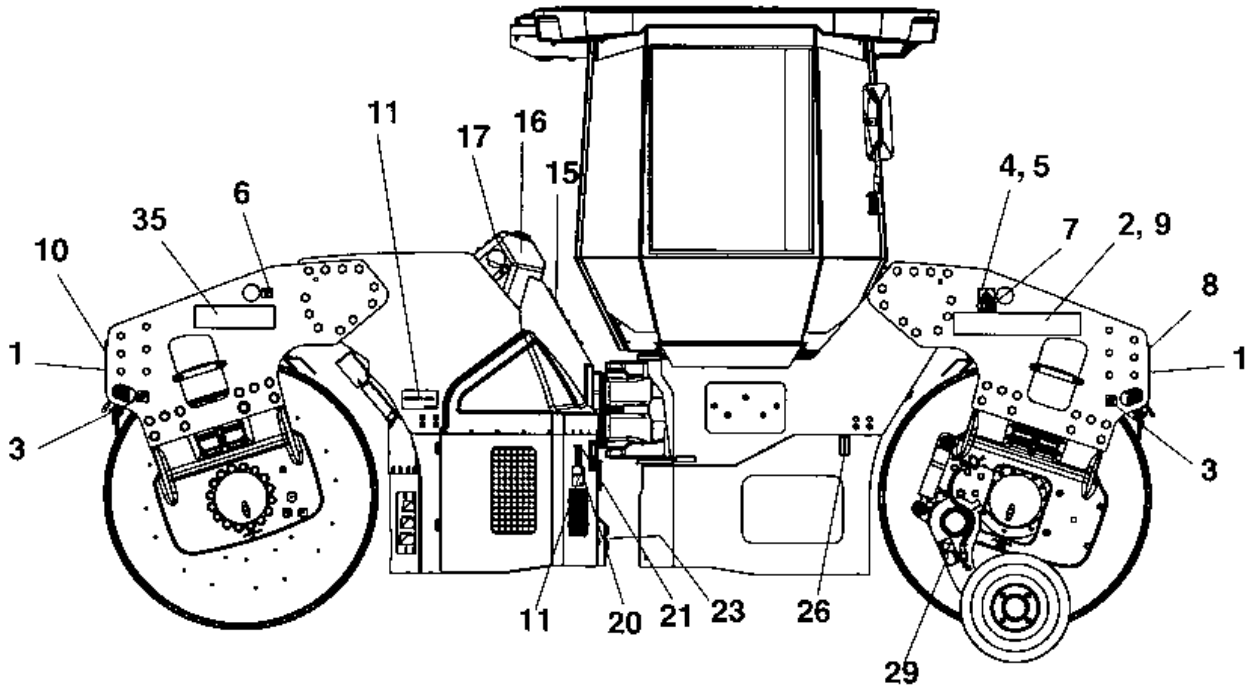

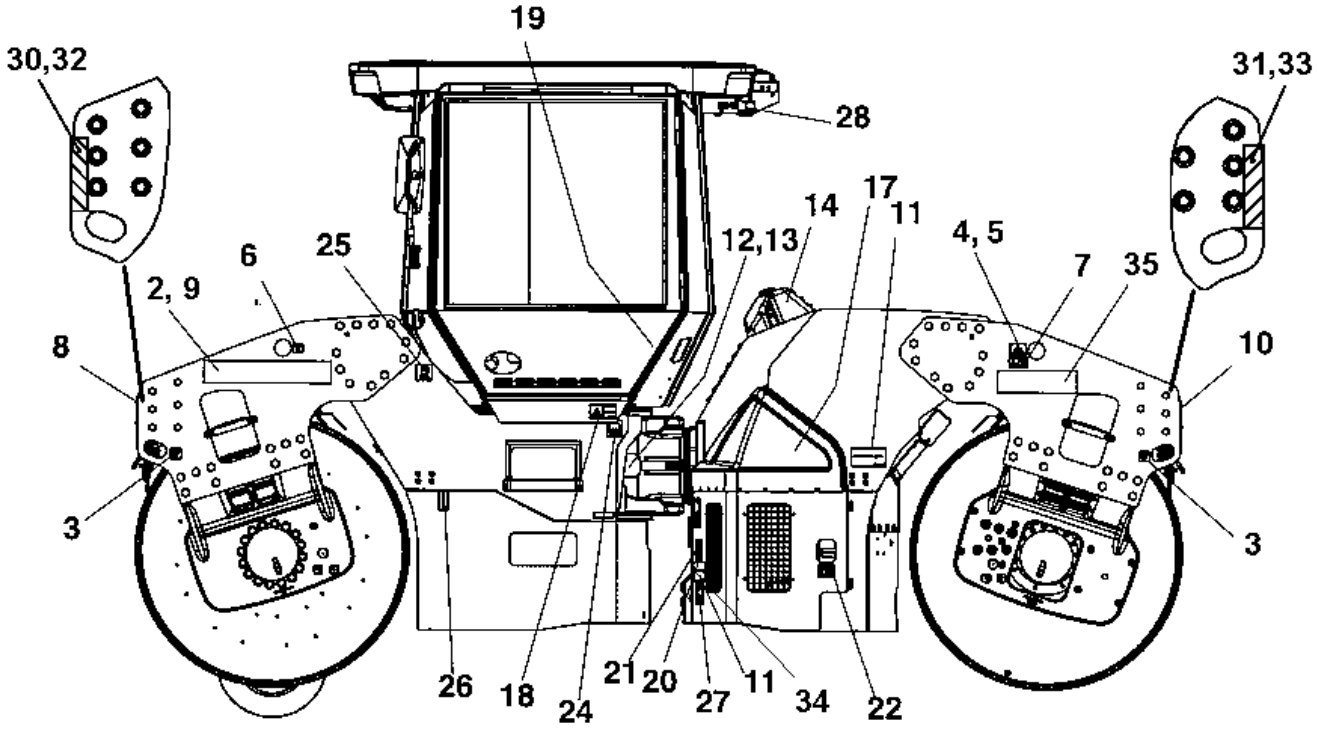

Item	Part No.	Name	Qty	L	SN INFO
1	4812120123	Decal "Atlas Copco" Black, H=118	2		
2	4812120318	Decal "COMPACTING ROCKS" Left	1		
2	4812120319	Decal "COMPACTING ROCKS" Right	1		
3	4700382751	Decal "SECURING POINT/TIE DOWN"	4		
4	4700904870	Lifting data plate	2		
5	4700624005	Blind rivet 3,2x6,1	8		
6	4700357587	Label lifting point	2		
7	4700908229	Safety decal	2		
8	4700377743	Reflector, white	2		
9	4812120429	Decal model code	2		
10	4700377742	Reflector, red	2		
11	4700903422	Safety decal "CRUSH AREA"	4		
12	-	Product identification plate	1		
13	4700624005	Blind rivet 3,2x6,1	4		
14	4700272372	Decal "HYDRAULIC OIL"	1		
14	4700904601	Decal biodegradable hydraulic oil	1		
14	4700792772	Decal "BIO HYDRAULIC OIL" PANOLIN	1		
15	4700272373	Label, hydraulic oil level	1		
16	4700388449	Decal "ENGINE COOLANT FILL"	1		
17	4700791642	Decal "WARNING" Use of starting fluid prohib.	2		
18	4700903459	Decal "SAFETY"	1		
19	4700903425	Safety decal "READ SAFETY INSTRUCTIONS"	2		
20	4700903423	Safety label, Rotating engine components	2		
21	4700903424	Safety label, hot surfaces	2		
22	4700904835	Decal "BATTERY POWER"	1		
23	4700393959	Decal "Battery voltage 24V"	1		
24	4700991657	Decal "WATER"	1		
25	4700991658	Decal "FUEL"	1		
26	4700377744	Reflector, yellow	2		
27	4700791277	Decal "Sound power level" 107dB	1		
27	4700791278	Decal "Sound power level" 108dB	1		
28	4700904165	Safety decal "Toxic gases"	1		
29	4700904083	Safety decal	1		
30	4700394596	Decal "Risk location"	2		
31	4700394594	Decal "Risk location"	2		
32	4700394593	Decal "Risk location"	2		
33	4700394595	Decal "Risk location"	2		

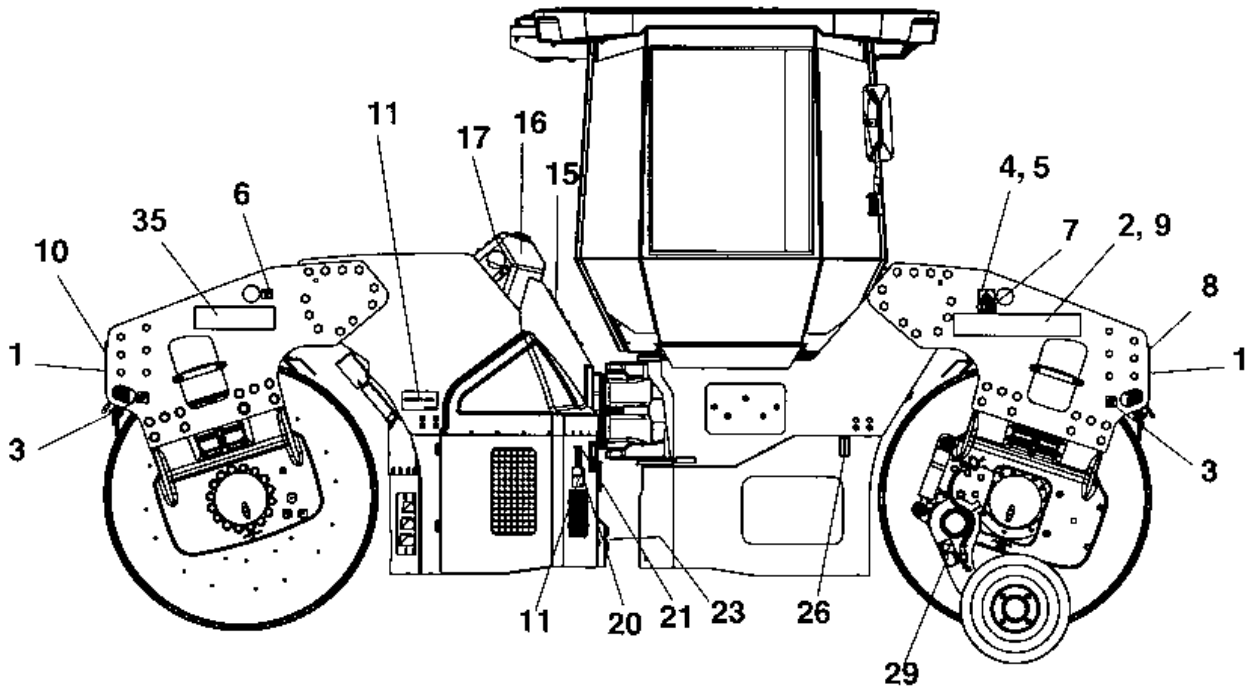
11
17
16
15
6
35
10
1
3
4, 5
7
2, 9
8
1
3
11
20
21
23
26
29

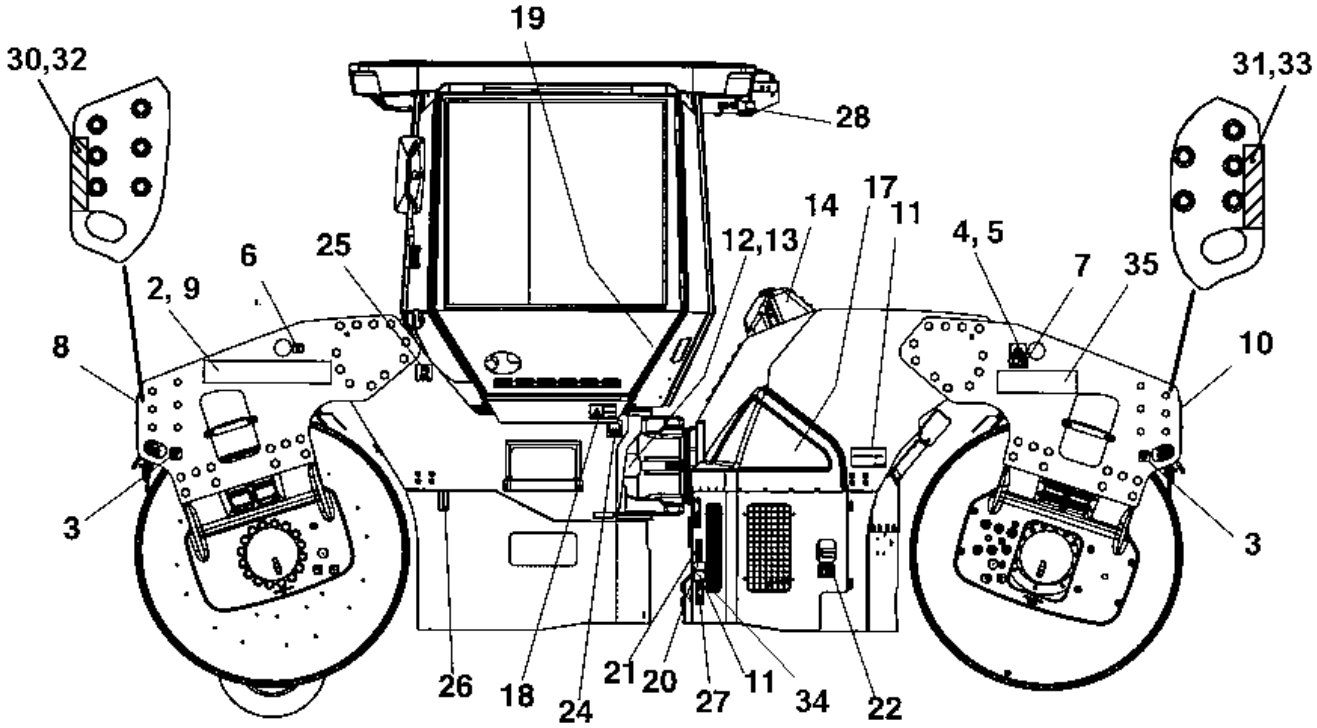
19
30,32
31,33
28
14
17
11
12,13
4, 5
6
25
2, 9
7
35
8
10
3
3
26
18
24
21
20
27
11
34
22

Item	Part No.	Name	Qty	L	SN INFO
34	4700904895	Safety decal "Brake release"	1		
35	4812120121	Decal "Atlas Copco" Black, H=143	2		

Air conditioning Air conditioning

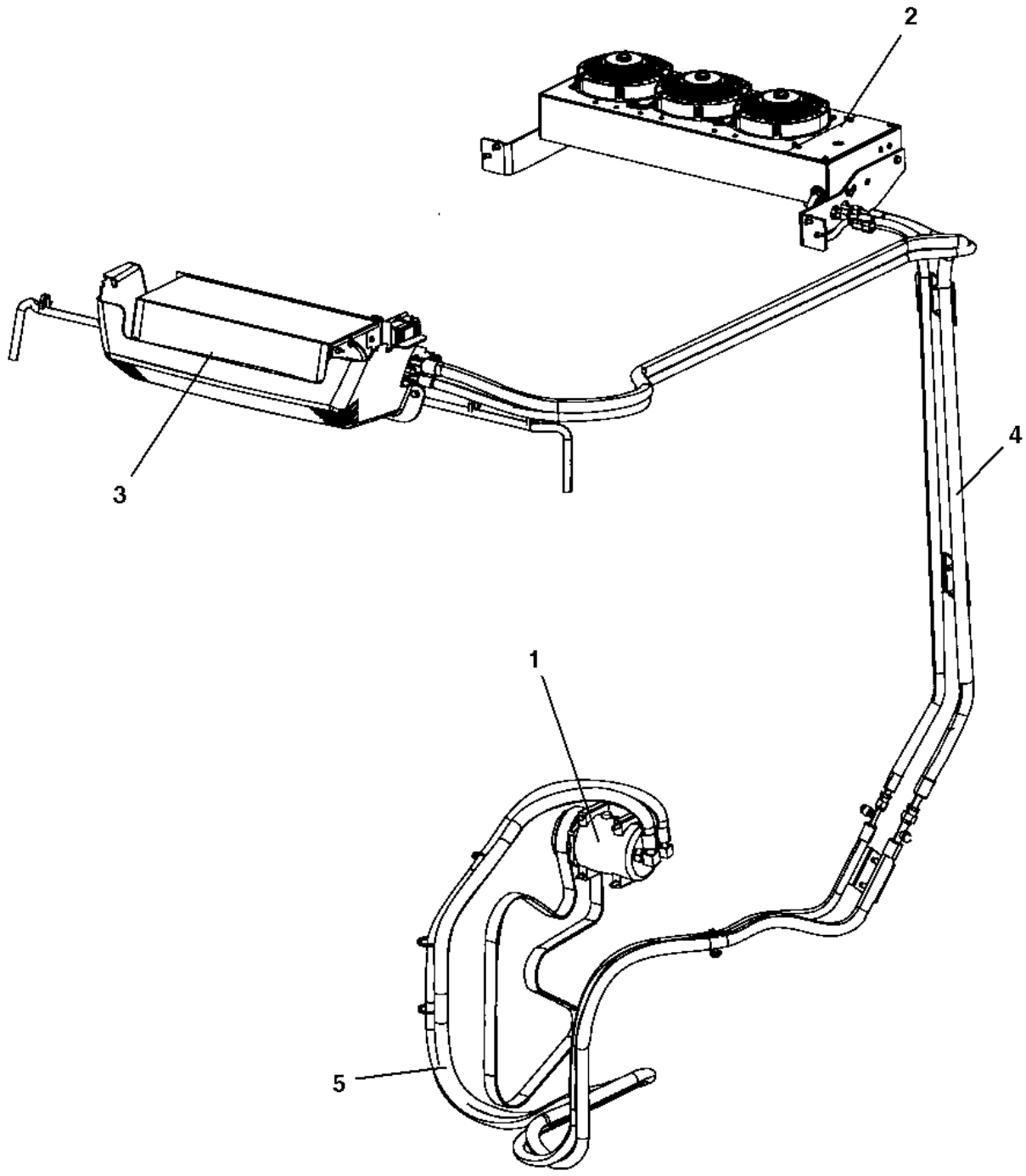

Item	Part No.	Name	Qty	L	SN INFO
1	-	Compressor module	1		
2	-	Condensor module	1		
3	-	Evaporator kit	1		
4	-	ACC kit	1		
5	-	Hose kit Compressor	1		

Air conditioning Compressor module

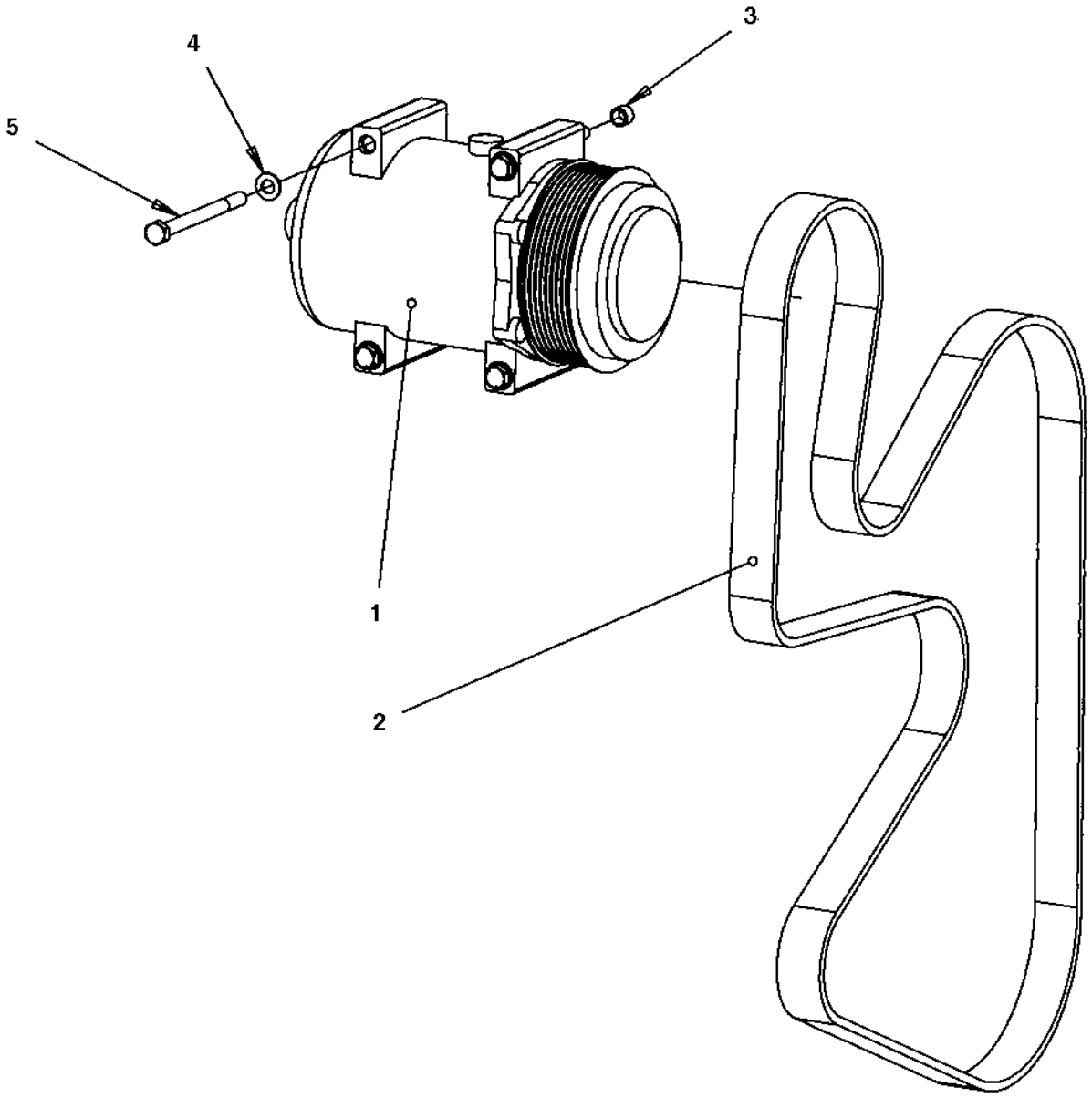

Item	Part No.	Name	Qty	L	SN INFO
1	4700391621	Compressor	1		
2	4700391622	Belt	1		
3	4700945314	Guide ring	2		
4	4700904229	Washer, 8.4x 6x1.5 mm 300HV	4		
5	4700500096	Screw	4		

Air conditioning Condensor module

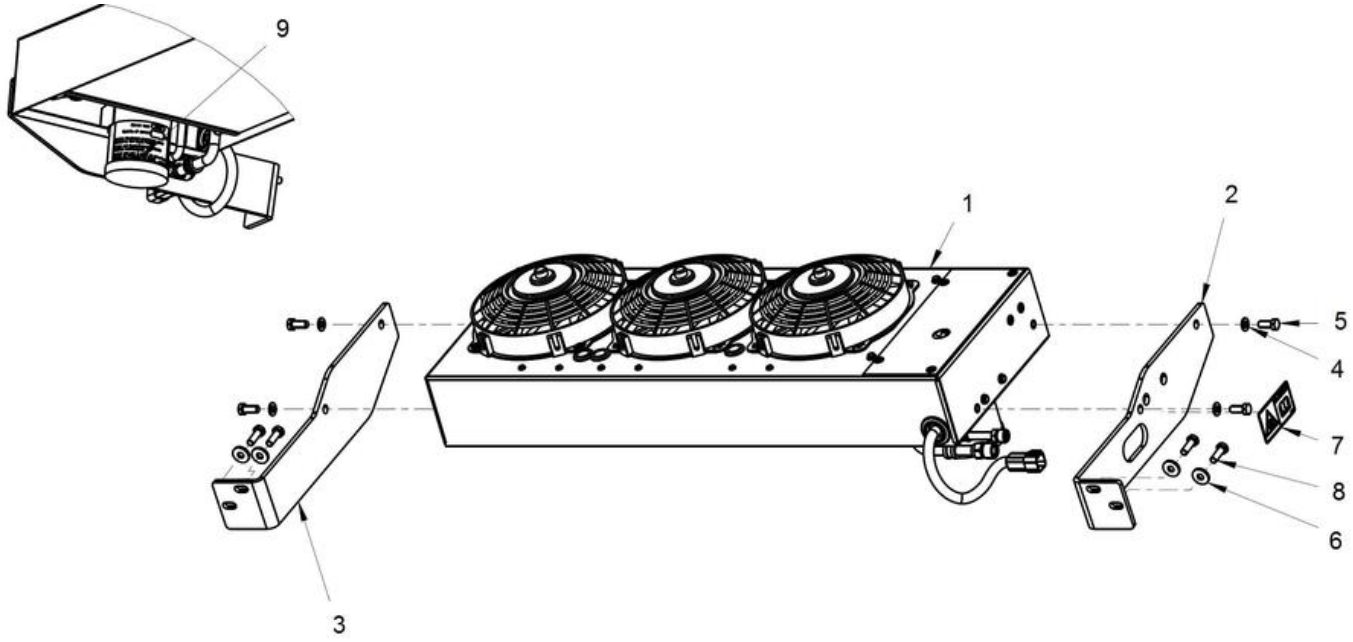

Item	Part No.	Name	Qty	L	SN INFO
1	-	Condensor	1		
2	4700393222	Bracket	1		
3	4700393223	Bracket	1		
4	4700904229	Washer, 8.4x 6x1.5 mm 300HV	4		
5	4700500053	Screw, M8x20 mm 8.8 A2K	4		
6	4700904640	Washer, 8.4x22x3 mm 300HV	4		
7	4700904165	Safety decal "Toxic gases"	1		
8	4700500021	Screw, M8x25 mm 8.8 A2K	4		
9	4812121417	Decal, Flourinated gas	1		

Air conditioning Condensor

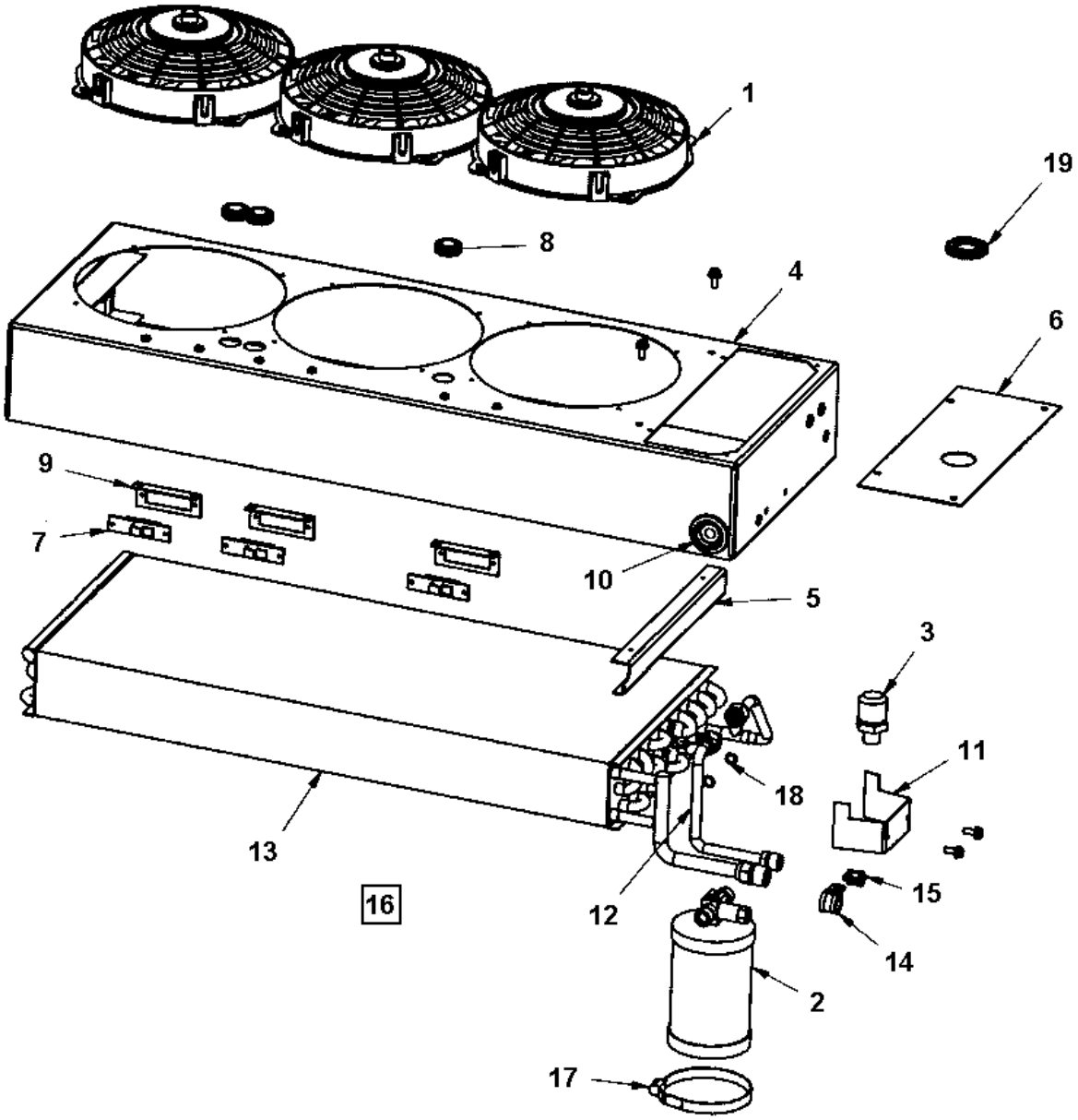

Item	Part No.	Name	Qty	L	SN INFO
1	4700950372	Fan	3		
2	4700950373	Dryer	1		
3	4700938605	Pressure switch	1		
4	-	Casing	1		
5	-	Bracket	1		
6	-	Injector part	1		
7	4700938606	Resistor	3		
8	4700938609	Grommet	3		
9	4812155658	Resistor bracket	3		
10	-	Grommet	1		
11	-	Bracket	1		
12	-	Copper tube	1		
13	4700950374	Condensor Coil	1		
14	-	Clamp	1		
15	-	Clamp	1		
16	4700950375	Cable harness	1		
17	4700938789	Clamp	1		
18	-	O-ring	2		
19	-	Grommet	1		

Air conditioning Hose kit Compressor

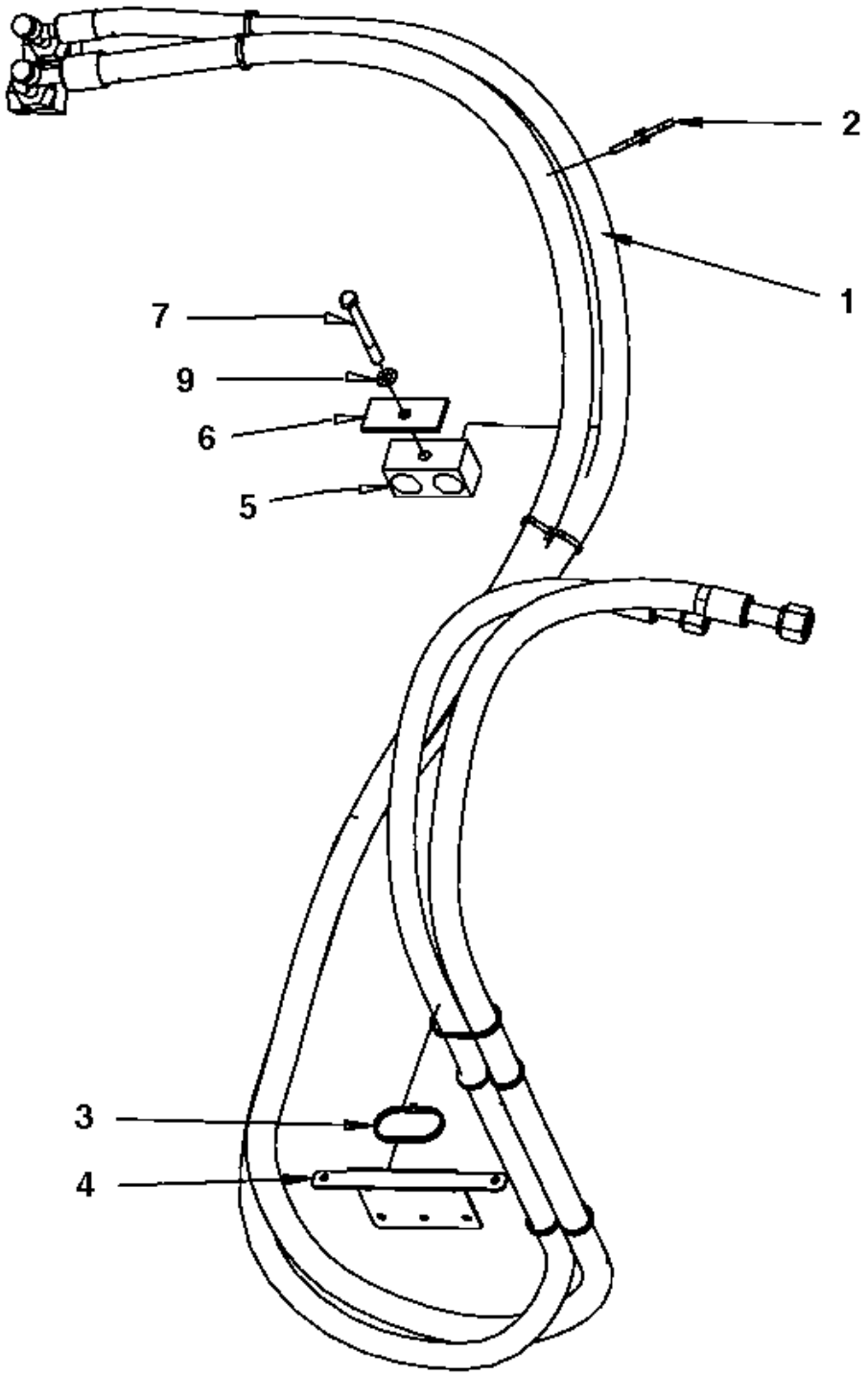

Item	Part No.	Name	Qty	L	SN INFO
1	-	Hose kit AC	1		
2	4700792686	Cable tie with holder	15		
3	4700313041	Cable ties, L=200 mm	N		
4	4700394707	Bracket	1		
5	4700287295	Clamp	1		
6	4700287294	Cover plate	1		
7	4700500090	Screw	1		
9	4700904229	Washer, 8.4x 6x1.5 mm 300HV	1		

Air conditioning Hose kit AC

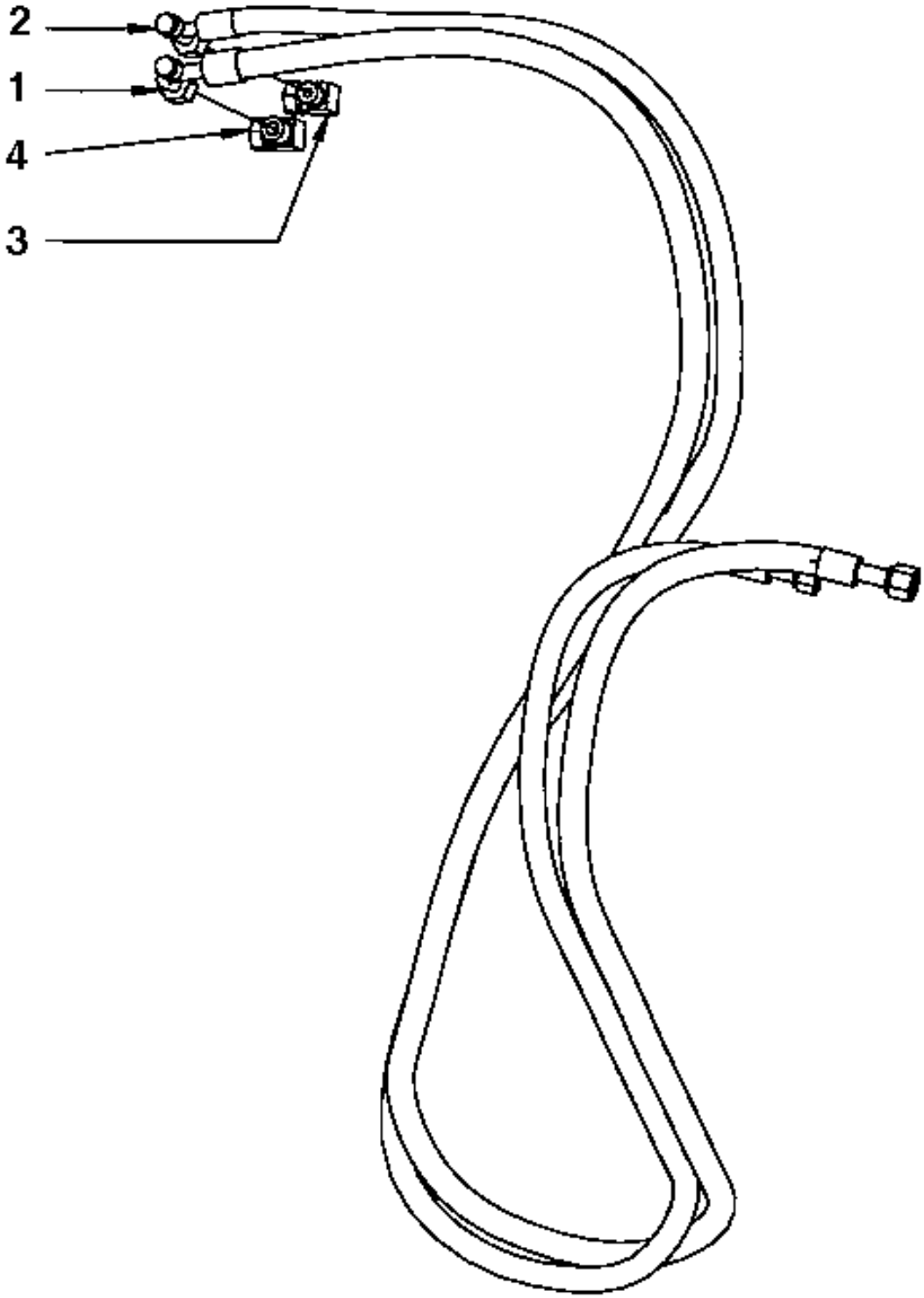

Item	Part No.	Name	Qty	L	SN INFO
1	4700393598	Refrigerant hose	1		
2	4700393595	Refrigerant hose	1		
3	4700394705	Refrigerant fitting	1		
4	4700394706	Refrigerant fitting	1		

Radio and cd player Radio and cd player

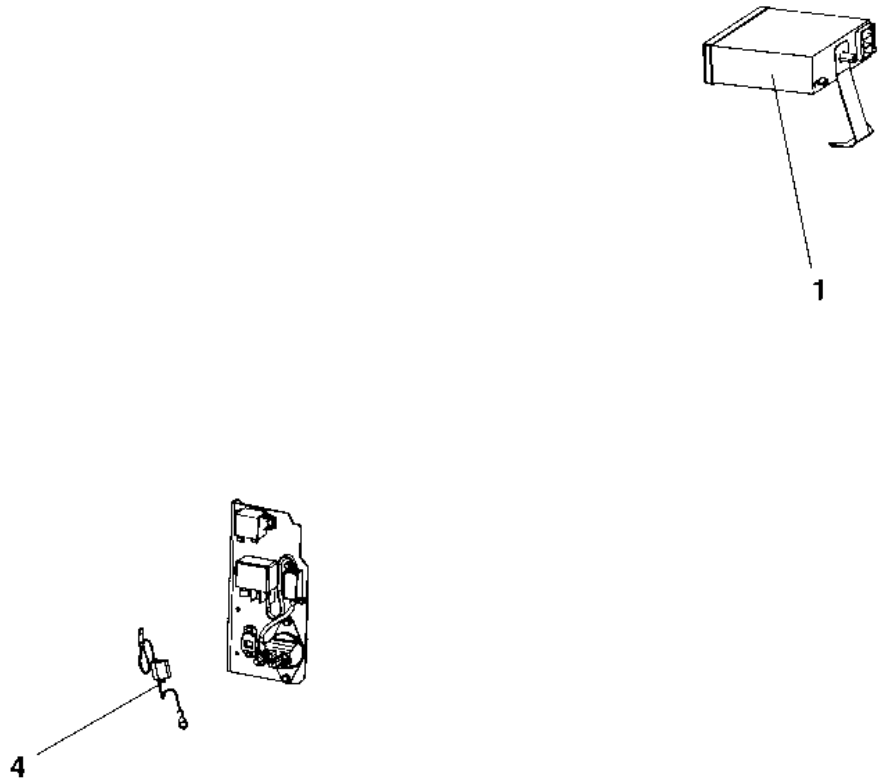

Item	Part No.	Name	Qty	L	SN INFO
1	-	Radio and cd player module	1		
4	-	Power supply module	1		

Radio and cd player Radio and cd player module

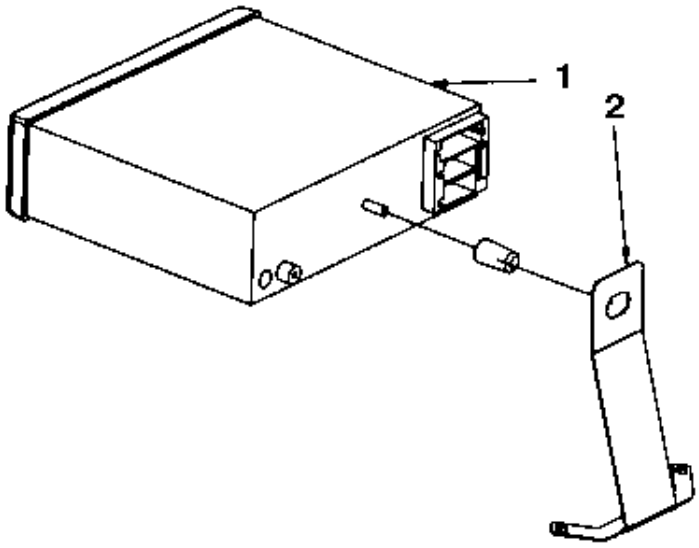

Item	Part No.	Name	Qty	L	SN INFO
1	4700792583	Car stereo	1		
2	4700394654	Bracket	1		

Radio and cd player Power supply module

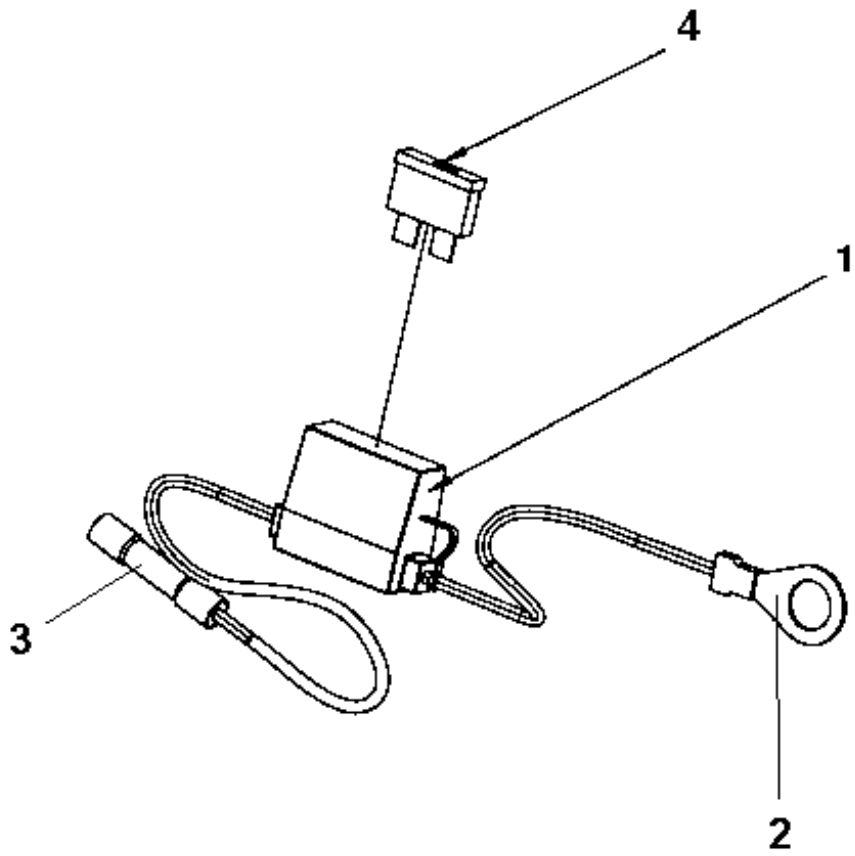

Item	Part No.	Name	Qty	L	SN INFO
1	4700904015	Fuse holder	1		
2	4700960067	Cable clip	1		
3	4700904024	Splicing sleeve	1		
4	4700901227	Fuse 10A Red	1		

Tachograph, Version 1 Tachograph

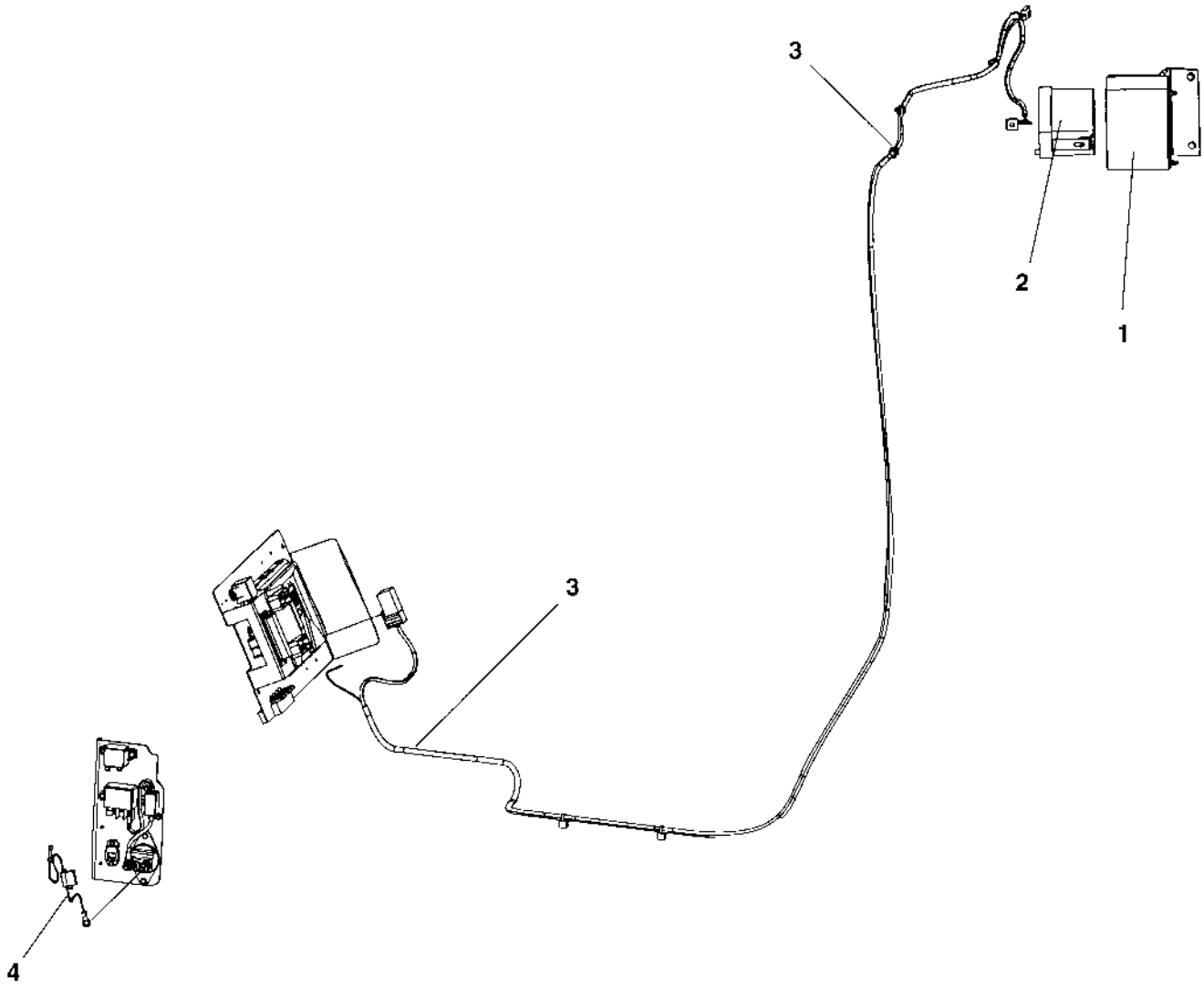

Item	Part No.	Name	Qty	L	SN INFO
1	-	Tachograph holder module	1		
2	4700395226	Tachograph	1		
3	-	Cable harness kit	1		
4	-	Power supply module	1		

Tachograph, Version 1 Tachograph holder module

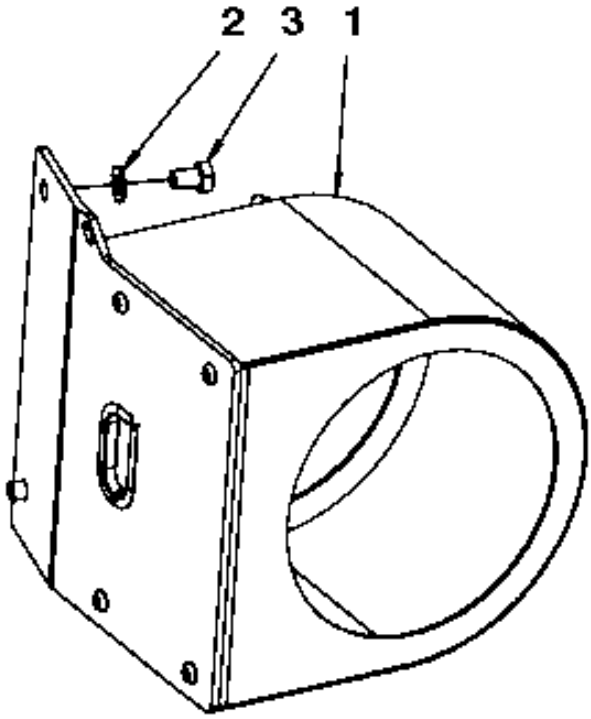

Item	Part No.	Name	Qty	L	SN INFO
1	-	Tachograph holder	1		
2	4700904229	Washer, 8.4x 6x1.5 mm 300HV	2		
3	4700500018	Hex. screw	2		

Tachograph, Version 1 Tachograph holder

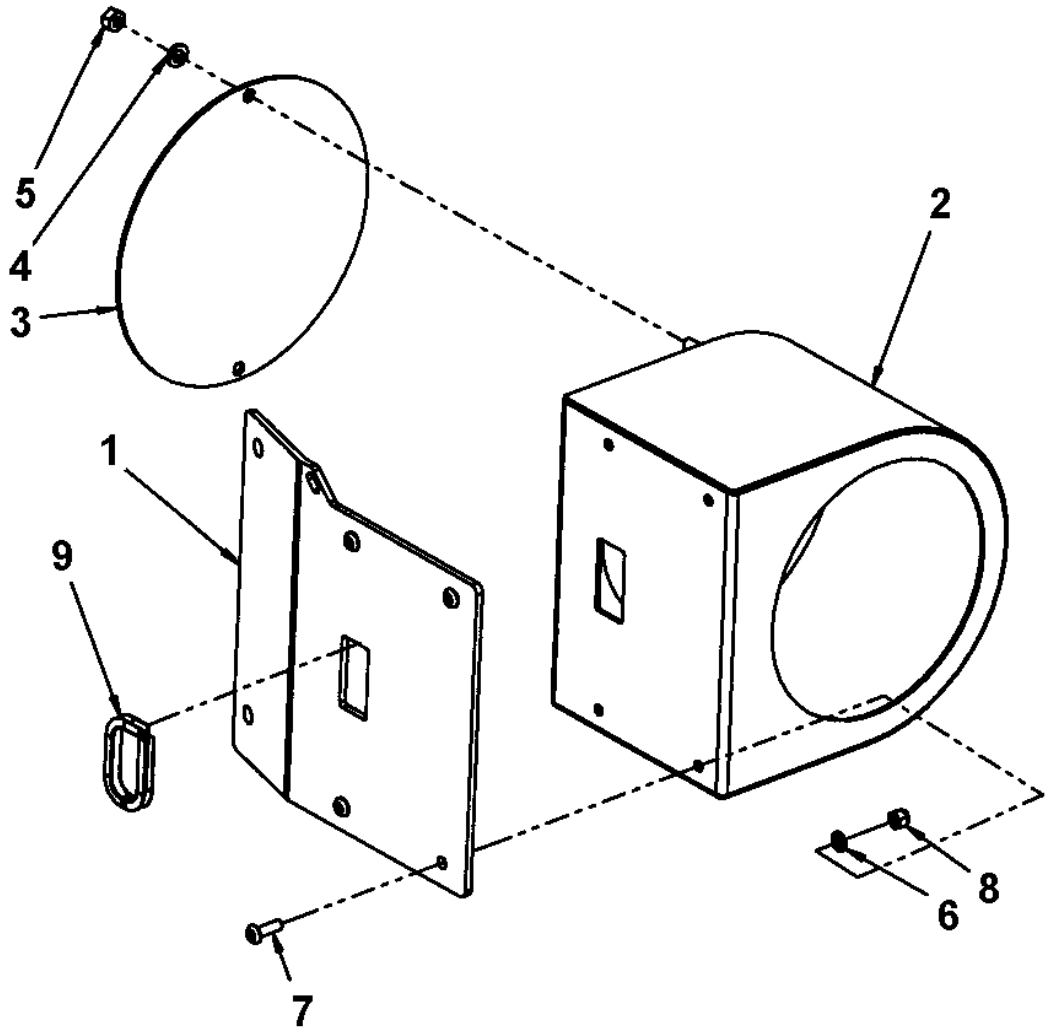

Item	Part No.	Name	Qty	L	SN INFO
1	4700393775	Bracket	1		
2	4700355132	Tachograph box	1		
3	4700355135	Tachograph cover	1		
4	4700904228	Washer DIN125	2		
5	4700570004	Hexagon nut M6	2		
6	4700904281	Washer, 5,3x10x1 300HV	4		
7	4700904653	Screw M5x16 A2-70	4		
8	4700586001	Lock nut	4		
9	4700909085	Grommet	1XL	A	

Comments for Page: Tachograph holder

(L)OCAL REMARKS

A | en_US | L= 0.11 m

Tachograph, Version 1 Cable harness kit

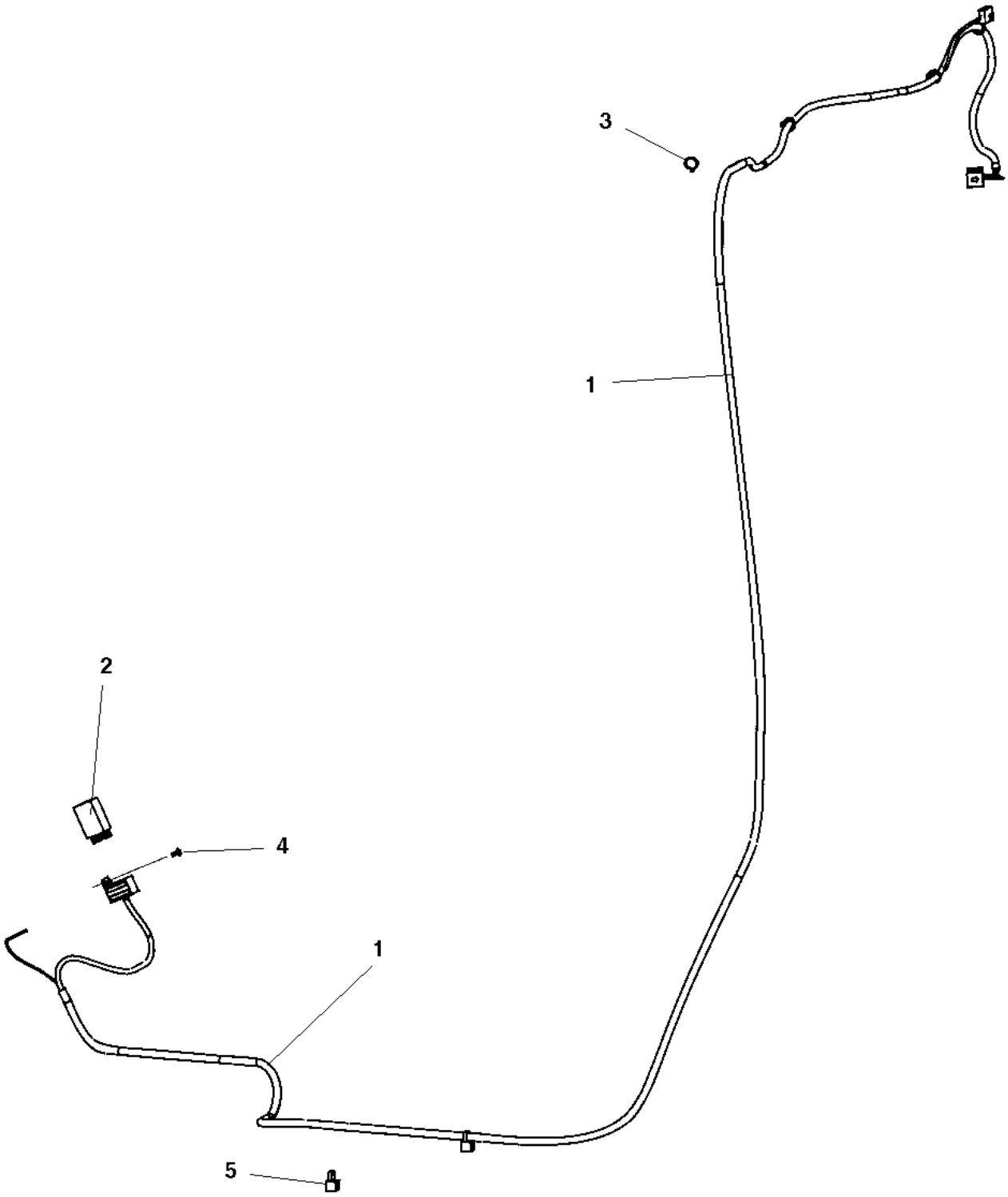

Item	Part No.	Name	Qty	L	SN INFO
1	4700394931	Cable harness	1		
2	4700395023	Frequency converter	1		
3	4700313041	Cable ties, L=200 mm	8		
4	4700792210	Screw torx	1		
5	4700792667	Cable tie holder	2		

Tachograph, Car stereo, Version 2 Tachograph, Car stereo

Item	Part No.	Name	Qty	L	SN INFO
1	-	Tachograph with holder	1		
2	-	Car stereo module	1		
3	4812115288	Wiring harness	1		
4	4700395023	Frequency converter	1		
5	4700313041	Cable ties, L=200 mm	8		
6	4700792210	Screw torx	1		
7	4700792667	Cable tie holder	2		
8	4700904015	Fuse holder	1		
9	4700960067	Cable clip	1		
10	4700904024	Splicing sleeve	1		
11	4700901227	Fuse 10A Red	1		

Tachograph, Car stereo, Version 2 Tachograph with holder

Item	Part No.	Name	Qty	L	SN INFO
1	4811000292	Tachograph	1		
2	4812118625	Seal kit	1		
3	4812118641	Holder	1		
4	4812112837	Holder	1		
5	4812112838	Cover	1		
6	4700904735	Steel plain washer	3		
7	4700500013	Screw, M6x16 mm 8.8 A2K	3		
8	4700904698	Plain washer	4		
9	4700500002	Screw M4-0,7x12H 8.8	4		
10	4812118624	Mounting frame	1		
11	4700904229	Washer, 8.4x 6x1.5 mm 300HV	2		
12	4700500019	Hexagon screw	2		
13	4700500026	Screw M8-1,25x60 mm 8.8	2		

Tachograph, Car stereo, Version 2 Car stereo module 12V

Item	Part No.	Name	Qty	L	SN INFO
1	4811000265	Car stereo	1		
2	4812116986	Spacer frame	1		
3	4812119306	Antenna adapter	1		

Edge cutter Edge cutter

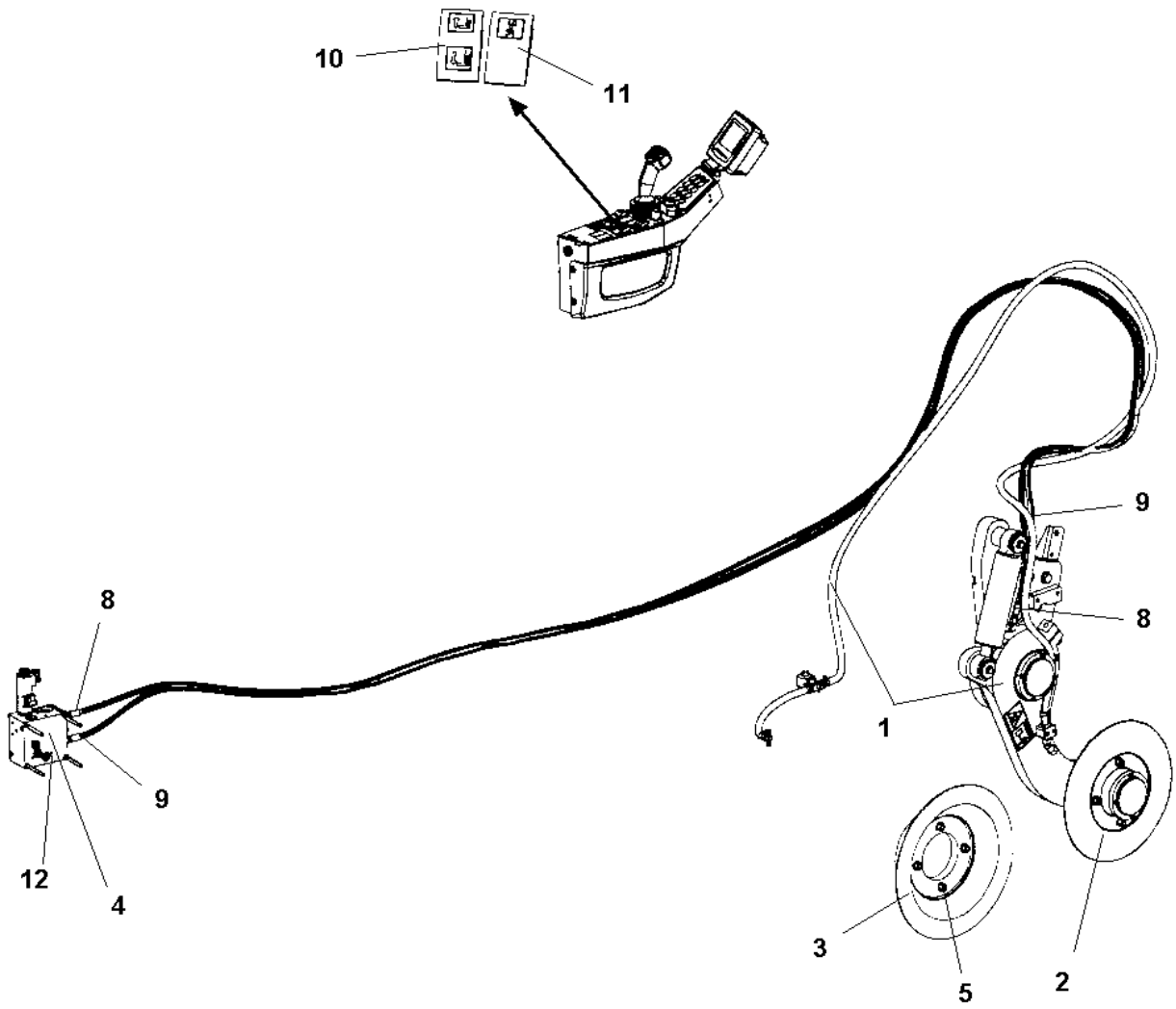

Item	Part No.	Name	Qty	L	SN INFO
1	-	Edge cutter, module	1		
2	-	Cutting disc module	1		
3	-	Pressing roller, module	1		
4	-	Hydraulic valve module	1		
5	-	Disc/Roller holder	1		
8	4700484103	Hydraulic hose	1		
9	4700484104	Hydraulic hose	1		
10	4700792395	Switch	1		
11	4700792396	Switch	1		
12	4700891374	O-ring	4	1	

Comments for Page: Edge cutter

(L)OCAL REMARKS

1 | en_US | Fitted between mounted valves.

Edge cutter Edge cutter, module

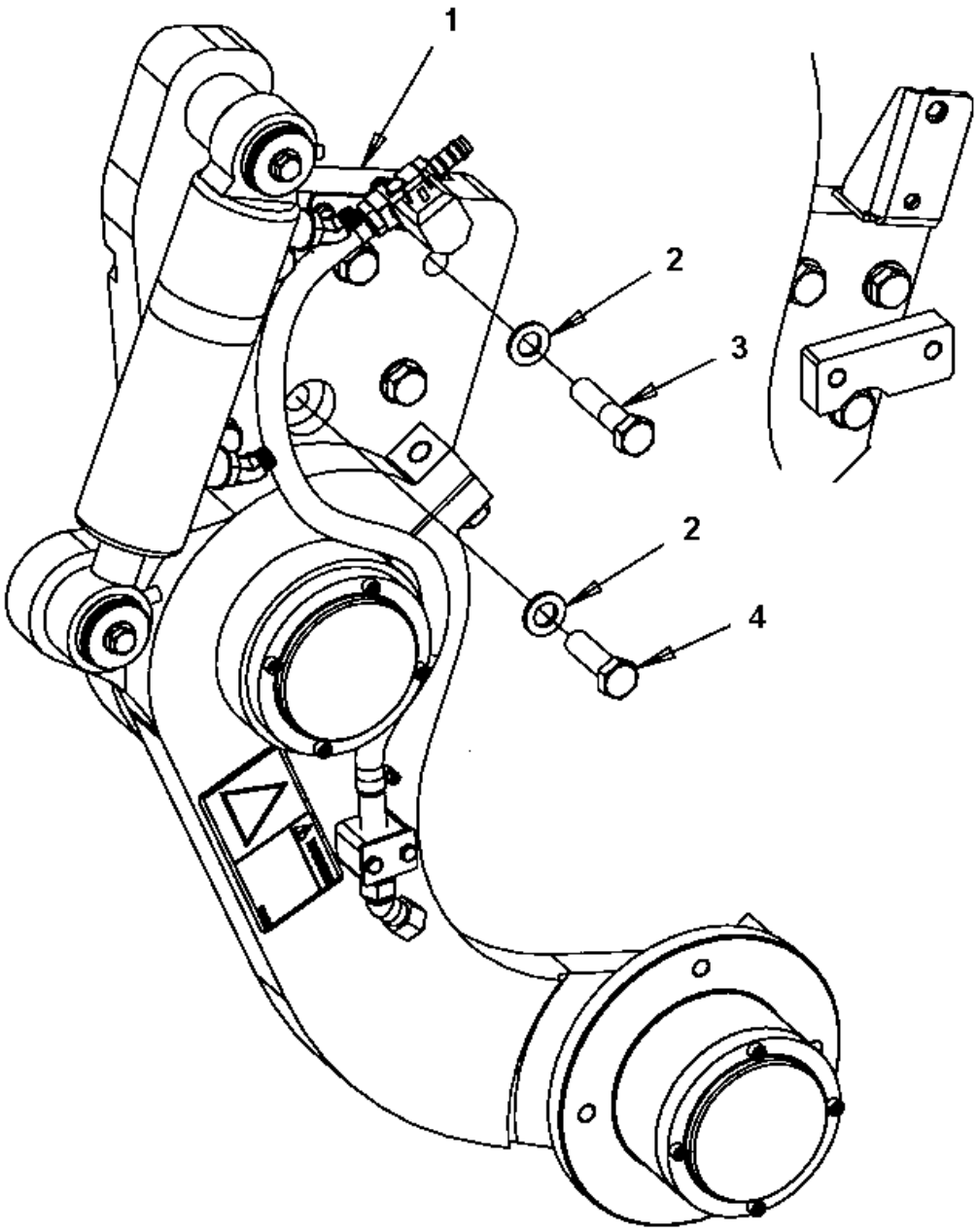

Item	Part No.	Name	Qty	L	SN INFO
1	4700390998	Edge cutter, cpl	1		
2	4700904232	Steel plain washer	6		
3	4700500058	Screw M16-2,0x65 8,8	5		
4	4700500070	Hex. screw	1		

4700390998 Edge cutter, cpl 4700390998 Edge cutter, cpl

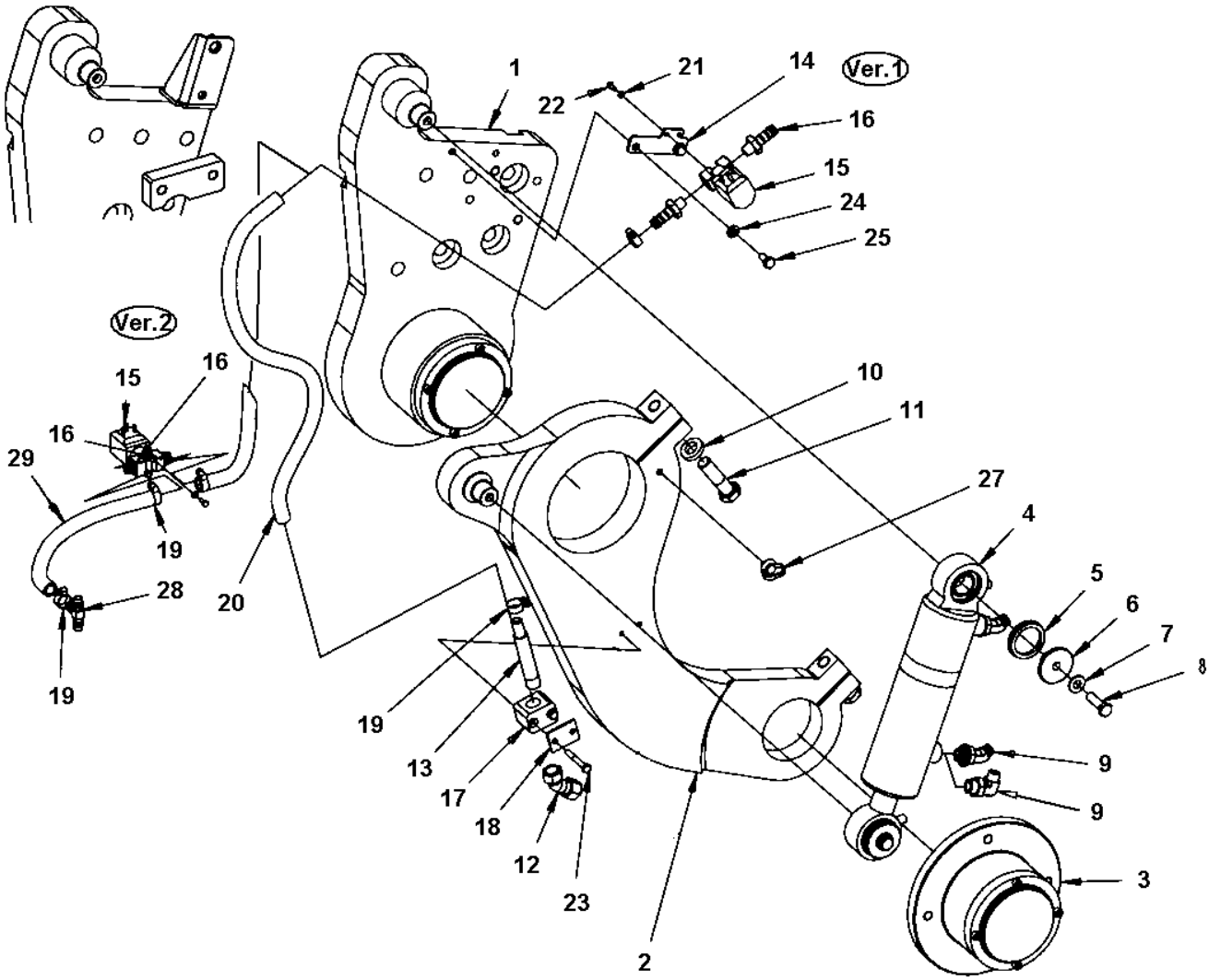

Item	Part No.	Name	Qty	L	SN INFO
-	4700390998	Edge cutter, cpl			
1	4700390999	Holder	1		
2	4700391000	Lever	1		
3	4700391009	Bearing unit	1		
4	4700387275	Hydraulic cylinder	1		
4	4700945526	Bearing	2		
5	4700791565	Sealing	2		
6	4700376861	Washer	2		
7	4700904230	Plain washer 10.5x22x2 mm	2		
8	4700947684	Screw	2		
9	4700792389	Elbow 45 orfs	2		
9	4700792676	Elbow 90 orfs	1		
10	4700904558	Washer, 17x30x6 mm 300 HV	2		
11	4700500134	Hex. screw	2		
12	4700392123	Nozzle body	1		
13	4700392058	Pipe	1		
14	4700392059	Bracket	1		
15	4700391438	Solenoid valve	1		
16	4700901432	Hose connection	2		
17	4700791453	Pipe clamp block	1		
18	4700791454	Cover plate	1		
19	4700313002	Hose clamp	4		
20	4812112074	Plastic hose (x m)	1XL	A	
21	4700904698	Plain washer	2		
22	4700925784	Screw	2		
23	4700500186	Screw	2		
24	4700904229	Washer, 8.4x 6x1.5 mm 300HV	2		
25	4700500019	Hexagon screw	2		
27	4700792441	Cable tie with holder	1		
28	4700791362	T-adapter	1		
29	4812112074	Plastic hose (x m)	1XL	B	

Comments for Page: 4700390998 Edge cutter, cpl

(L)OCAL REMARKS

A | en_US | Length as required.

B | en_US | L= 0.3 m

4700390998 Edge cutter, cpl 4700390999 Holder

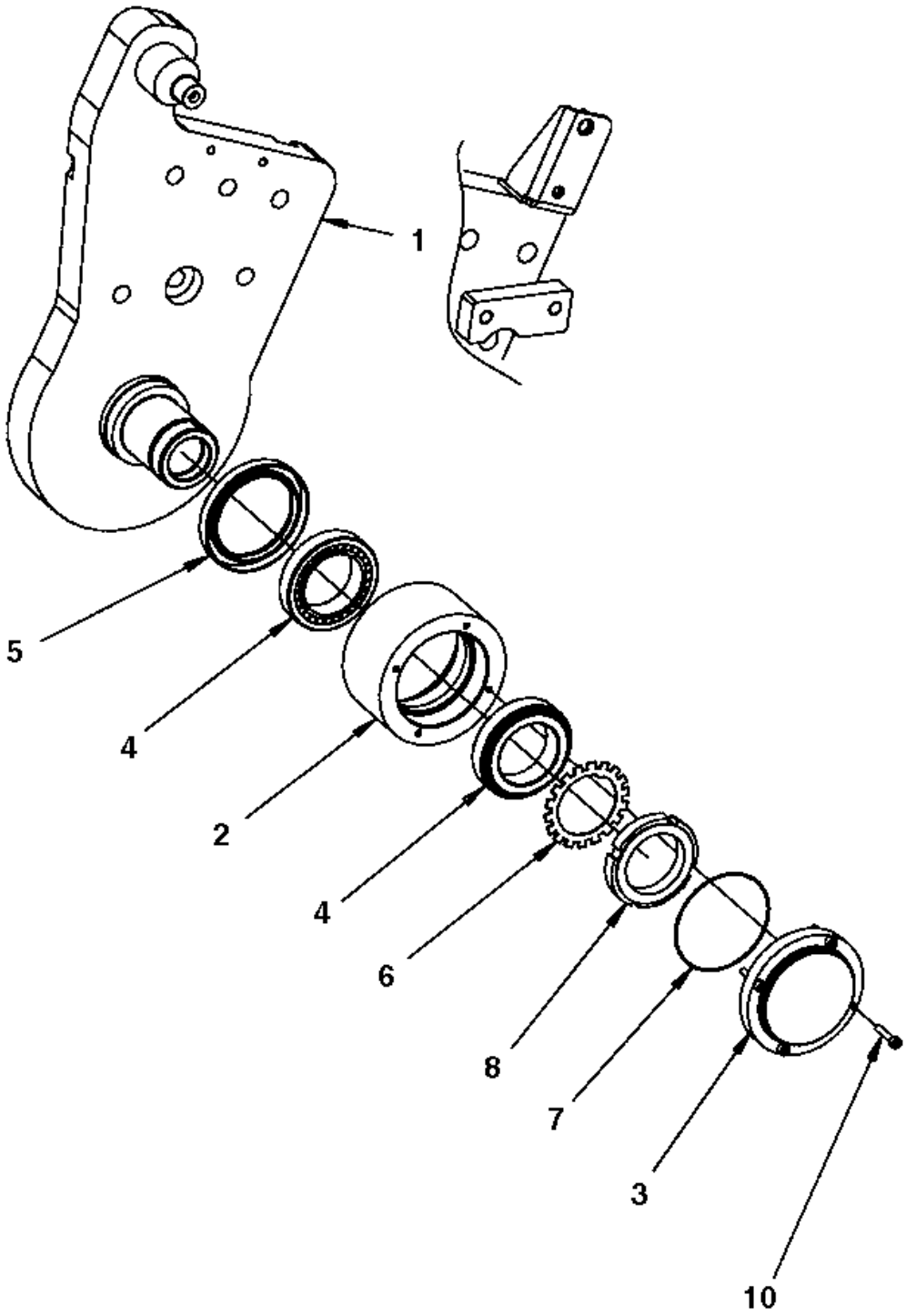

Item	Part No.	Name	Qty	L	SN INFO
1	4700391001	Holder	1		
2	4700391008	Bearing housing	1		
3	4700391010	Bearing cover	1		
4	4700792385	Taper roller bearing	2		
5	4700792384	Radial lip-type seal	1		
6	4700136012	Lock washer	1		
7	4700900512	O-ring	1		
8	4700135012	Shaft nut	1		
10	4700508018	Screw	4		

4700390998 Edge cutter, cpl 4700391009 Bearing unit

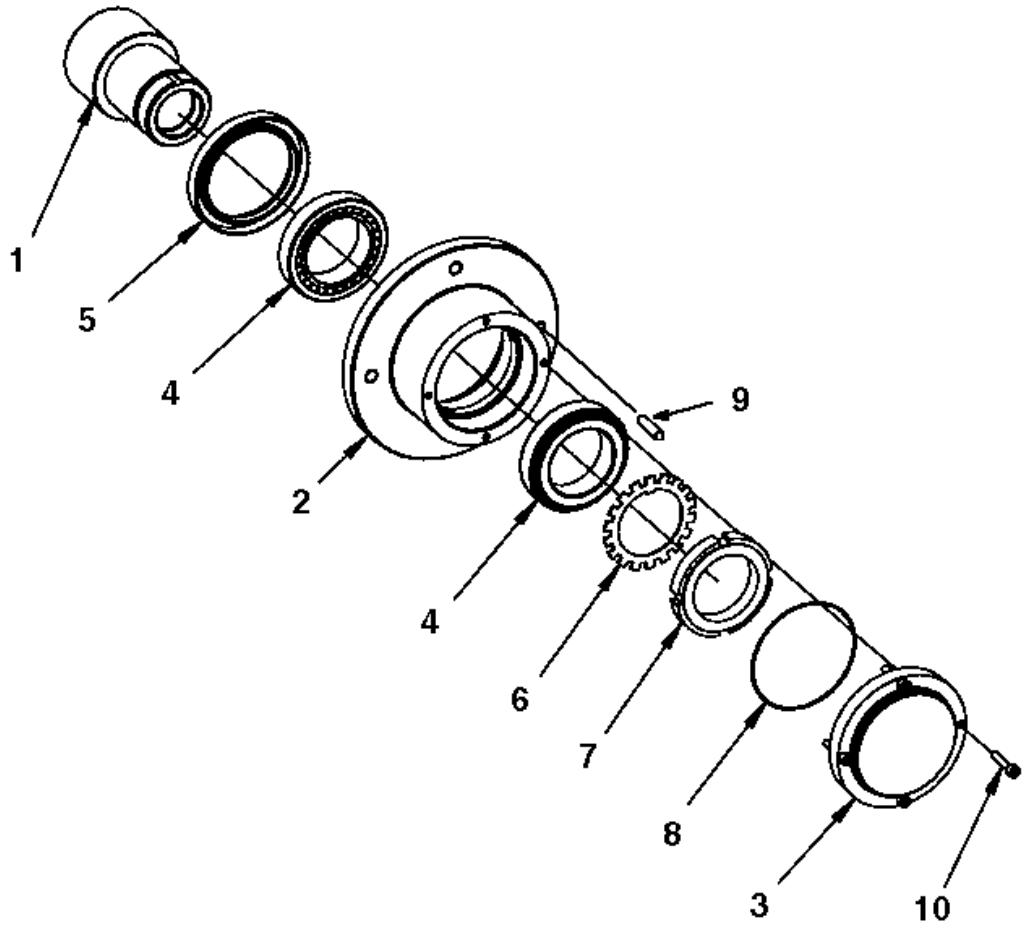

Item	Part No.	Name	Qty	L	SN INFO
-	4700391009	Bearing unit			
1	4700391011	Shaft	1		
2	4700391012	Bearing housing	1		
3	4700391010	Bearing cover	1		
4	4700792385	Taper roller bearing	2		
5	4700792384	Radial lip-type seal	1		
6	4700136012	Lock washer	1		
7	4700135012	Shaft nut	1		
8	4700900512	O-ring	1		
9	4700903891	Stud	4		
10	4700508018	Screw	4		

4700390998 Edge cutter, cpl 4700387275 Hydraulic cylinder

Item	Part No.	Name	Qty	L	SN INFO
1	4700387275	Hydraulic cylinder	1		
2	4700945668	Seal kit	1		
3	---	Seal	1		
4	---	Seal	2		
5	---	Back-up ring	1		
6	---	O-ring	2		
7	---	Seal	1		
8	---	O-ring	1		
9	---	Seal	1		
10	---	Seal	1		
11	--	Retaining ring	1		
12	--	Steering	1		
13	--	Retaining ring	1		
14	--	Rod seal	1		
15	--	Cylinder	1		
16	--	Piston block	1		
17	--	Cylinder nut	1		
18	4700945526	Bearing	1		
19	4812159771	Retaining ring	1		
20	--	Spacer	1	A	

Comments for Page: 4700387275 Hydraulic cylinder

(L)OCAL REMARKS

A | en_US | Not valid for this model

Edge cutter Cutting disc module

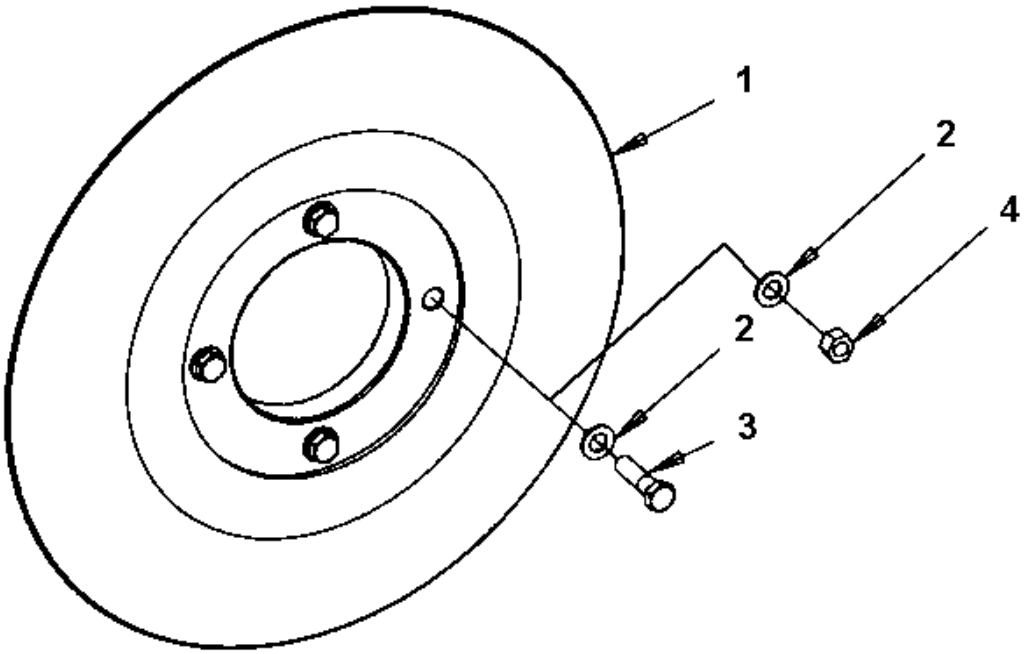

Item	Part No.	Name	Qty	L	SN INFO
1	4700390805	Cutting disc 80mm	1		
1	4700390806	Cutting disc 120mm	1		
1	4700390807	Cutting disc 150mm	1		
2	4700904231	Washer, 13x24x2 mm 300 HV	4		
3	4700500056	Screw, M12x45 mm 8.8 A3K	4		
4	4700570007	Nut	4		

Edge cutter Pressing roller, module

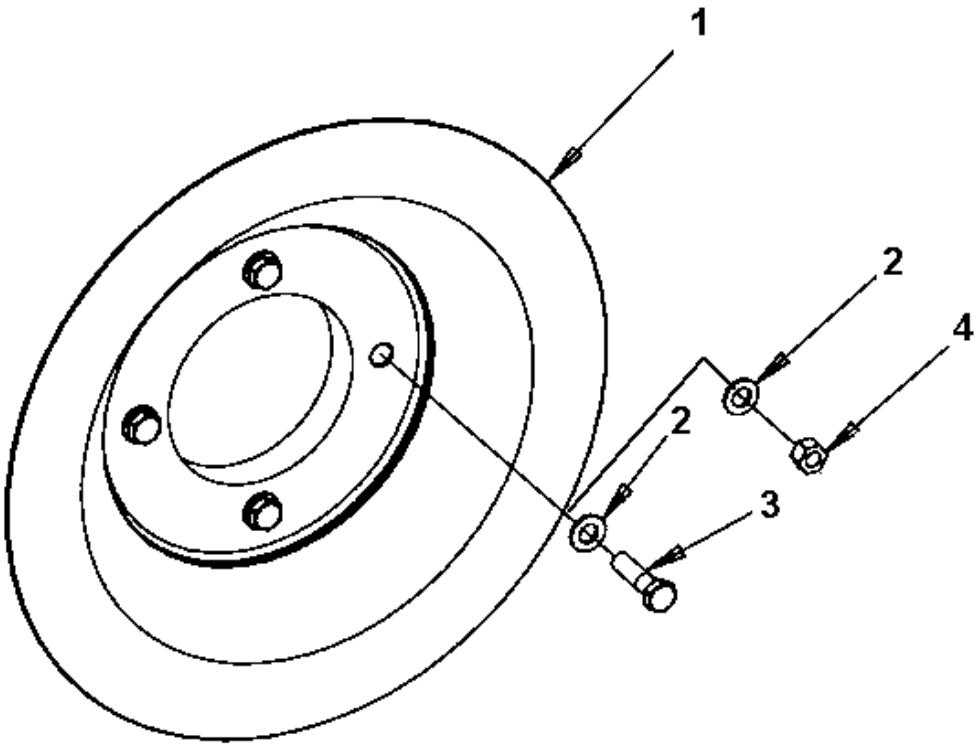

Item	Part No.	Name	Qty	L	SN INFO
1	4700390808	Pressing roller	1		
2	4700904231	Washer, 13x24x2 mm 300 HV	4		
3	4700500056	Screw, M12x45 mm 8.8 A3K	4		
4	4700570007	Nut	4		

Edge cutter Disc/Roller holder

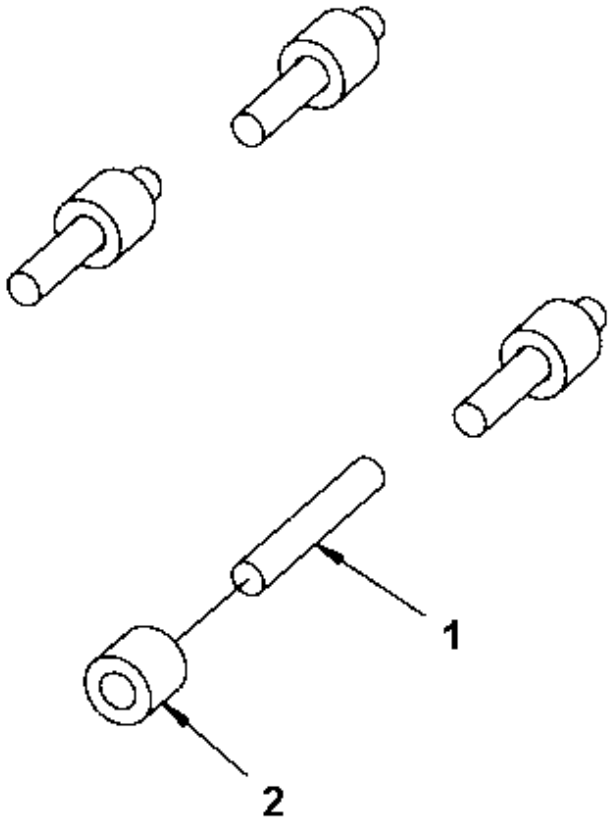

Item	Part No.	Name	Qty	L	SN INFO
1	4700792245	Stud	4		
2	4700383024	Spacer sleeve	4		

Edge cutter Hydraulic valve

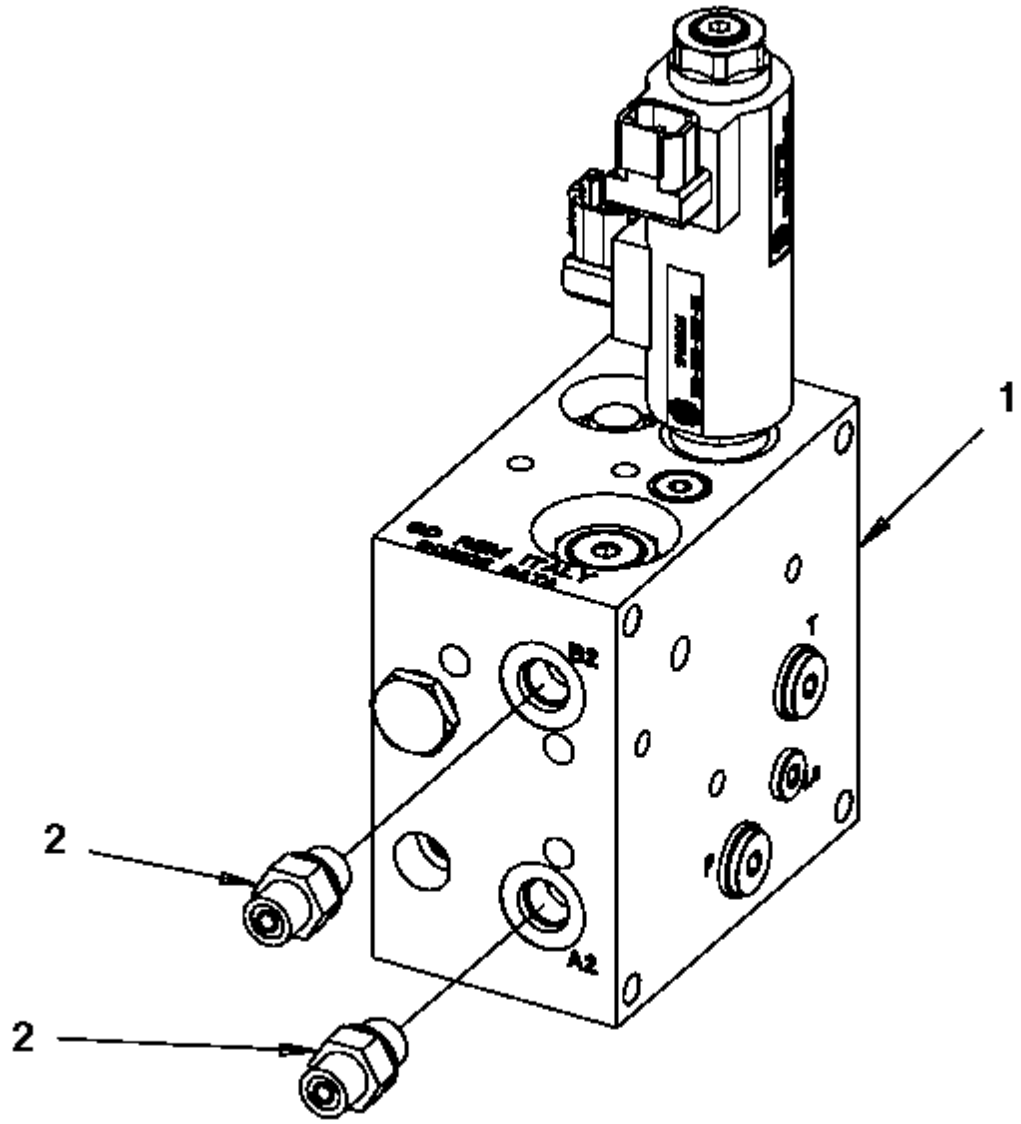

Item	Part No.	Name	Qty	L	SN INFO
1	4700391018	Hydraulic valve	1		
2	4700791914	Adapter	2		

Edge cutter Hydraulic valve module

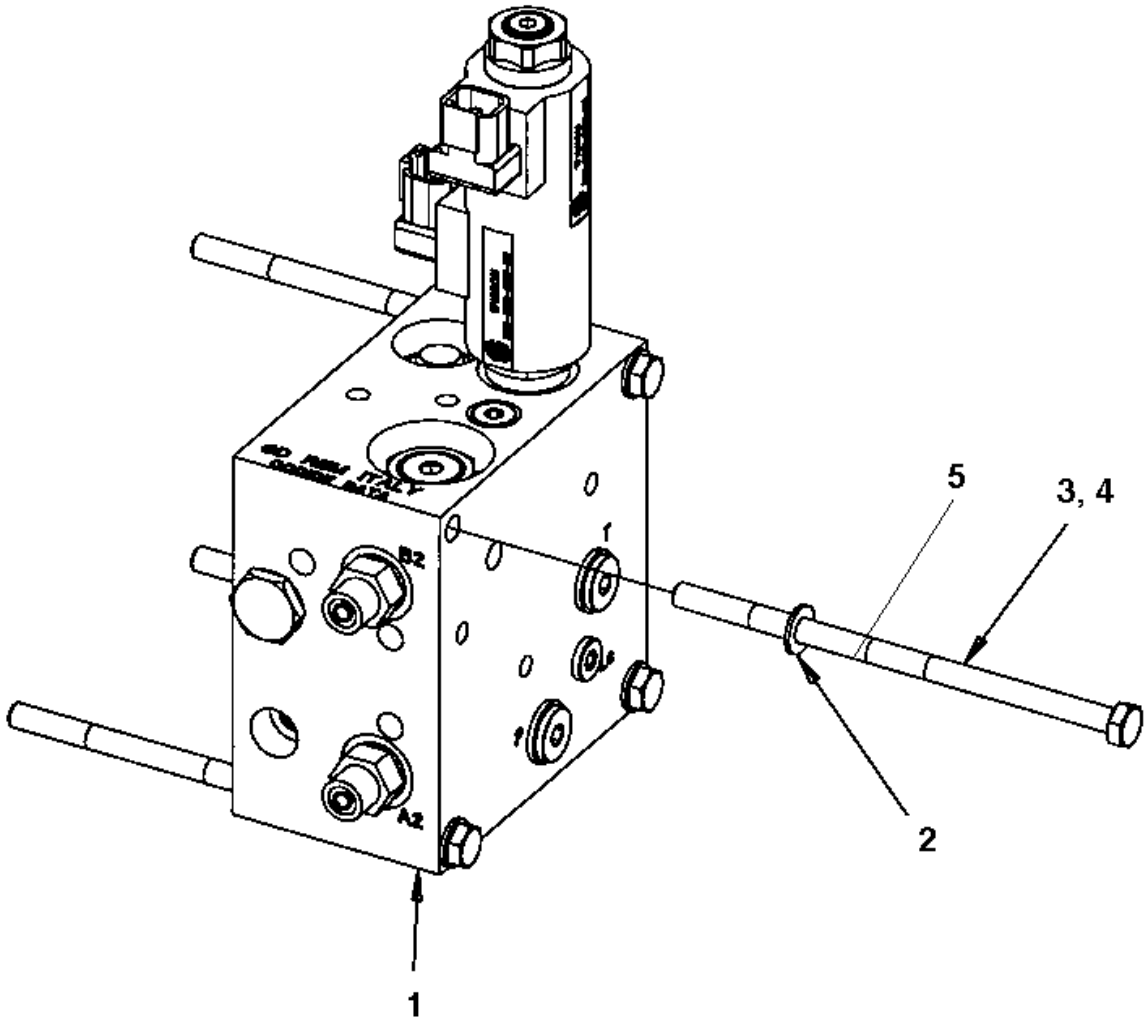

Item	Part No.	Name	Qty	L	SN INFO
1	-	Hydraulic valve	1		
2	4700904229	Washer, 8.4x 6x1.5 mm 300HV	4		
3	4812118090	Hexagon head screw M8x165 8.8	4	1	
4	4700500115	Screw	4	2	
5	4700500170	Screw M8x140 8.8	4		

Comments for Page: Hydraulic valve module

(L)OCAL REMARKS

1 | en_US | Used when option valve is mounted.

2 | en_US | Used when mounted on base valve.

Edge cutter 4700391018 Hydraulic valve

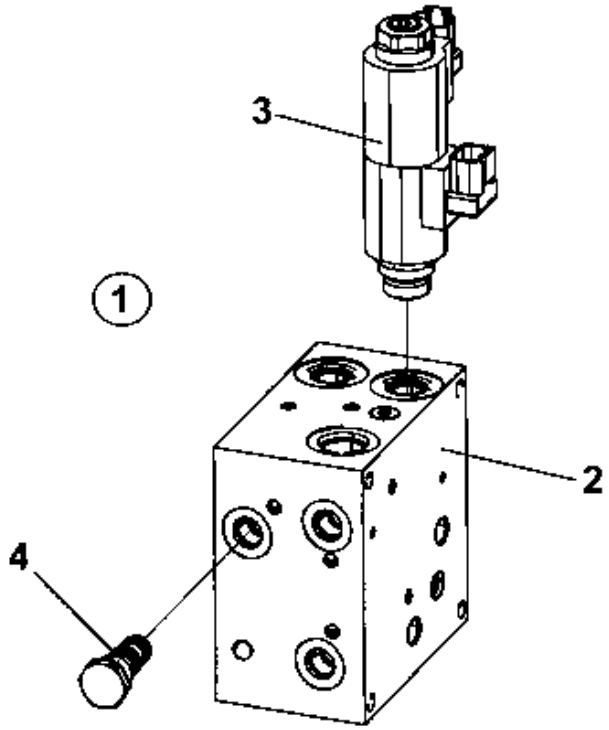

Item	Part No.	Name	Qty	L	SN INFO
1	-	Hydraulic valve	1		
2	-	Valve block	1		
3	4700950587	Proportional valve	1		
4	4700940572	Shuttle valve	1		

Fire extinguisher/First Aid Cushion Fire extinguisher/First Aid Cushion

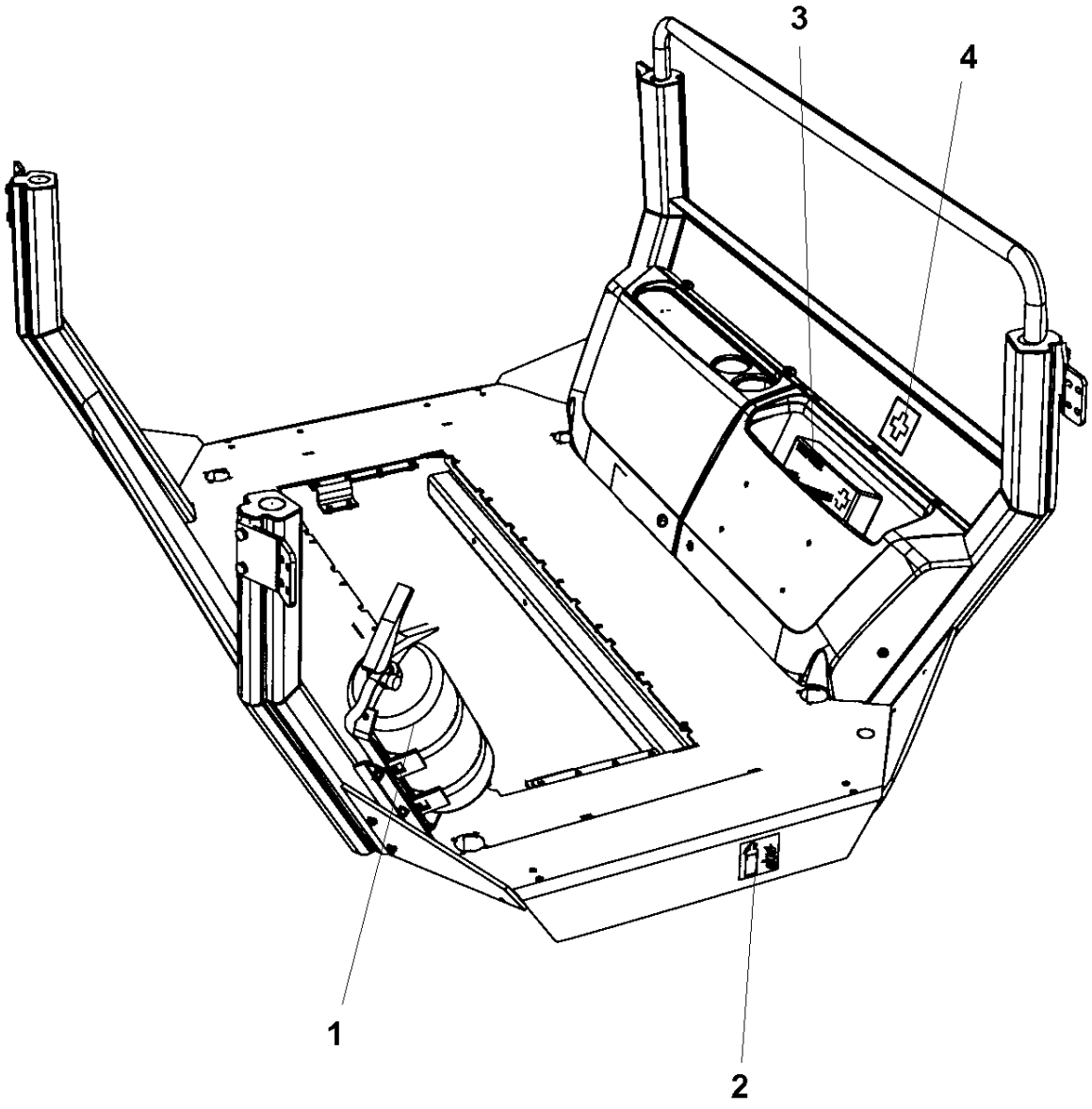

Item	Part No.	Name	Qty	L	SN INFO
1	-	Fire extinguisher assembly	1		
2	4700792634	Decal fire extinguisher	1		
3	4700394395	First aid cushion	1		
4	4700902509	Decal	1		

Fire extinguisher/First Aid Cushion Fire extinguisher assembly

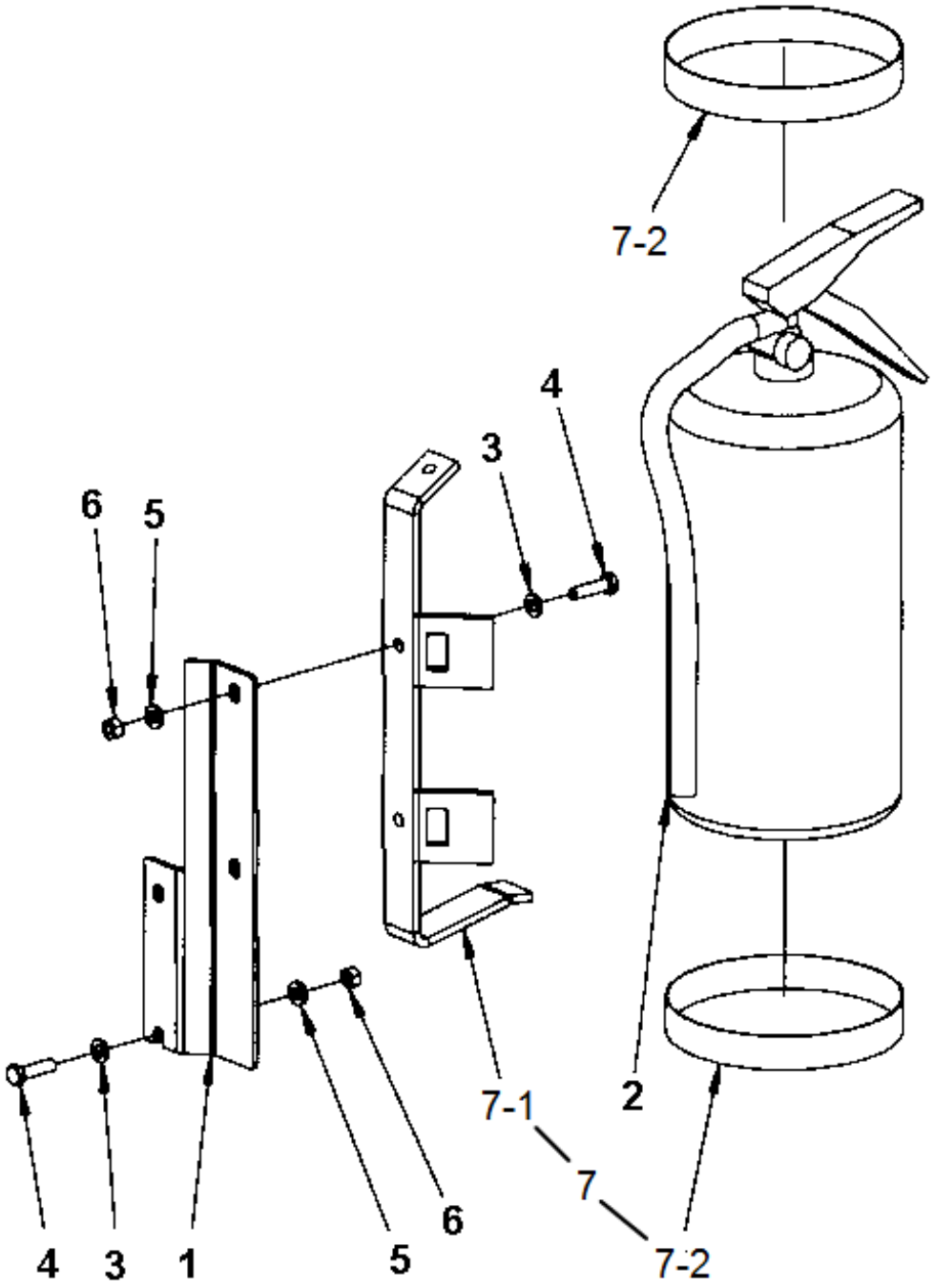

Item	Part No.	Name	Qty	L	SN INFO
1	4700393862	Bracket	1		
2	-	Fire extinguisher	1		
3	4700904229	Washer, 8.4x 6x1.5 mm 300HV	4		
4	4700500022	Screw	4		
5	4700904556	Steel plain washer 8,4x16x3,0	4		
6	4700570005	Hexagon nut	4		
7	4812161496	Holder kit	1		
7-1		Holder	1		
7-2		Strap	2		

Asphalt temperature meter Asphalt temperature meter

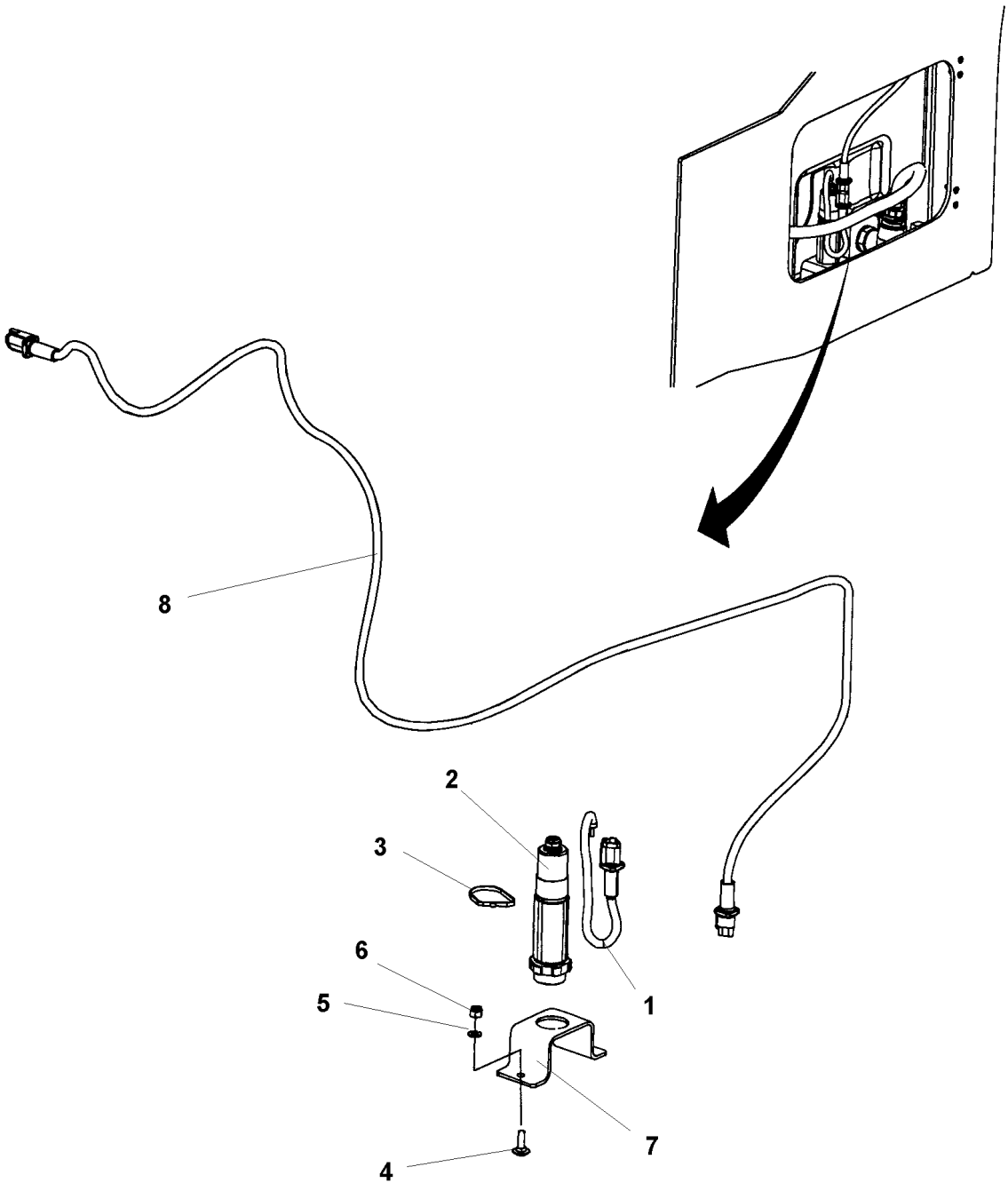

Item	Part No.	Name	Qty	L	SN INFO
1	4700393951	Cable harness	1		
2	4700387982	Temperature sender	1		
3	4700313041	Cable ties, L=200 mm	1		
4	4700929191	Cup square neck bolt	2		
5	4700904229	Washer, 8.4x 6x1.5 mm 300HV	2		
6	4700586003	Lock nut M8	2		
7	4700377422	Bracket	1		
8	4700396205	Cable harness	1		

Optional equipment Dyn@lyzer

Item	Part No.	Name	Qty	L	SN INFO
1	4812123488	Computer	1		
2	4812123489	Holder	1		
3	4812123728	Arm	1		
4	4812123727	Ball joint	1		
5	4812123747	Bracket	1		
6	4700904229	Washer, 8.4x 6x1.5 mm 300HV	2		
7	4700500026	Screw M8-1,25x60 mm 8.8	2		
8	4700500019	Hexagon screw	2		
9	4812123524	Wiring harness	1		
10	4700901226	Fuse 7.5A Brown	1		
11	4700792154	Tapping screw ST	4		
12	4812123490	Gateway	1		
13	4700541702	Screw M6x12	4		
14	4812123471	Bracket	1		
15	4812124090	Carrying case	1		
16	4812124091	Rubber insert	1		
17	4812123523	Wiring harness	1		
18	4812123681	Ground cable	1		
19	4812123533	Wiring harness	1		
20	4812123525	Wiring harness	1		
21	4812121818	Bracket	1		
22	4700513016	Hexagon socket countersunk screw M16	1		
23	4812123534	Thread insert	1		
24	4812113160	Bracket	1		
25	4812123491	Antenna	1		
26	4812123699	Wiring harness	1		
27	4700901226	Fuse 7.5A Brown	1		

Optional equipment FleetLink module

Item	Part No.	Name	Qty	L	SN INFO
1		FleetLink Advanced			
2	4700901225	Fuse 5A Tan	1		
3	4812124256	Wiring harness	1		
4	4700792609	Cable ties	2		
5	4812013040	GPS module	1		
6	4700792210	Screw torx	2		
7	4812124199	Bracket	1		
8		FleetLink			
9	4700901225	Fuse 5A Tan	1		
10	4812124256	Wiring harness	1		
11	4700792609	Cable ties	2		
12	4812013038	GPS module	1		
13	4700792210	Screw torx	2		
14	4812124199	Bracket	1		

Optional equipment DCM Compaction meter with Evib

Item	Part No.	Name	Qty	L	SN INFO
1	4812122777	DCM unit	1		
2	4812116367	Cable entry frame and inserts	1		
3	4700606003	Washer	4		
4	4812123171	Hexagon socket head cap screw	4		
5	4700500079	Screw M6-1x50 8,8	2		
6	4700904228	Washer DIN125	4		
7	4700923859	Cover plate	1		
8	4700923876	Clamp	1		
9	4812122583	Backet	1		
10	4700904230	Plain washer 10.5x22x2 mm	2		
11	4700508096	Hexagon socket head cap screw	2		
12	4700313102	Cable ties	17		
13	4700792441	Cable tie with holder	2		
14	4700792210	Screw torx	2		
15	4812122780	Bracket	1		
16	4700928200	Hexagon socket countersunk screw	4		
17	4812122778	Power supply	1		
18	4700923976	Lock nut	4		
19	4812122726	Position sensor	1		
20	4700508025	Screw, M6x20 mm 8.8 A2K	1		
21	4700904228	Washer DIN125	1		
22	4700160303	O-ring	1		

Appendix B:Parts Index

0686901038 48
291112842 44
391635 364
4700116041 . . . . . 16, 228
4700135012 . . . . . 584, 586
4700136012 . . . . . 584, 586
4700151015 . . . . . 44, 46
4700160045 . . . . . 14, 190
4700160105 . . . . . 16, 228
4700160132 48
4700160227 192
4700160268 146
4700160279 228
4700160287 346
4700160296 44
4700160303 612
4700160313 . . . . . 106, 112
4700160344 . . . . . 14, 190, 228
4700160372 48
4700162004 . . . . . 256, 260
4700162006 . . . . . 58, 64
4700162011 238
4700162015 . . . . . 58, 64, 338
4700162017 188
4700162027 . . . . . 188, 228
4700202057 . . . . . 38, 38, 74, 76, 84, 86
4700205112 . . . . . 238, 464
4700232039 256
4700232056 . . . . . 60, 64
4700232231 238
4700233215 162
4700246069 . . . . . 266, 266
4700272372 542
4700272373 542
4700287294 554
4700287295 554
4700287643 446
4700313001 . . . . . 252, 266
4700313002 . . . . . 34, 96, 100, 102, 106, 112, 582
4700313003 . . . . . 36, 106, 112
4700313004 . . . . . 238, 258, 262
4700313009 258
4700313010 . . . . . 258, 262
4700313033 246
4700313041 . . 346, 384, 402, 408, 410, 416, 462, 482, 494, 522, 554, 570, 572, 606
4700313068 . . . . . 402, 412
4700313094 250
4700313102 . . . . . 34, 102, 162, 396, 612
4700313105 . . . . . 34, 246
4700335607 . . . . . 238, 350
4700335914 . . . . . 28, 270
4700340862 228
4700343732 270
4700343744 188
4700343872 . . . . . 28, 270
4700344196 188
4700345666 . . . . . 236, 296
4700347512 448
4700349210 270
4700349715 228
4700350009 506
4700355132 568
4700355135 568
4700355797 390
4700357459 . . . . . 70, 80
4700357587 542
4700358254 434
4700358732 292
4700358881 . . . . . 22, 52, 60, 66, 538
4700359043 . . . . . 344, 540
4700359125 540
4700359192 176
4700359819 . . . . . 344, 540
4700359916 506
4700359919 506
4700359920 506
4700359955 188
4700359998 . . . . . 424, 448
4700370155 346
4700370286 . . . . . 438, 442
4700370745 . . . . . 28, 34
4700372174 464
4700372424 . . . . . 342, 348
4700372672 506
4700372718 . . . . . 28, 34
4700372959 344
4700372960 344
4700372964 506
4700372965 506
4700373183 176
4700376861 582
4700376922 298
4700377422 606
4700377518 510
4700377742 542
4700377743 542
4700377744 542
4700377913 446
4700378860 604
4700378861 604

4700379009 . . . . . 100, 112
4700379650 228
4700379652 190
4700379715 344
4700379718 506
4700379728 540
4700379729 524
4700379748 188
4700379974 . . . . . 72, 80
4700379976 74
4700379977 76
4700379987 176
4700379992 . . . . . 72, 80, 500
4700380435 28
4700381027 228
4700381934 442
4700381935 . . . . . 438, 442
4700381936 . . . . . 438, 442
4700381943 . . . . . 168, 502, 502
4700381944 . . . . . 168, 502
4700382751 542
4700383024 594
4700383425 496
4700383626 38
4700383705 434
4700384176 492
4700384584 434
4700384878 492
4700384911 162
4700385599 . . . . . 528, 532
4700386272 . . . . . 16, 228
4700386966 242
4700387275 . . . . . 582, 588
4700387545 538
4700387982 . . . . . 416, 606
4700388449 542
4700388737 . . . . . 528, 532
4700388846 62
4700389821 28
4700390018 . . . . . 238, 330
4700390019 242
4700390020 242
4700390024 . . . . . 258, 262
4700390060 124
4700390072 184
4700390074 124
4700390080 184
4700390155 438
4700390160 228
4700390332 248
4700390365 . . . . . 74, 76, 84, 86
4700390428 524
4700390434 382
4700390435 392
4700390436 . . . . . 382, 392
4700390463 178
4700390469 . . . . . 124, 176
4700390470 . . . . . 124, 176
4700390561 510
4700390602 . . . . . 298, 300
4700390603 . . . . . 192, 198
4700390604 . . . . . 192, 194
4700390607 . . . . . 286, 334
4700390608 . . . . . 286, 334
4700390609 . . . . . 286, 334
4700390613 50
4700390615 146
4700390616 146
4700390618 238
4700390619 146
4700390627 256
4700390716 370
4700390805 590
4700390806 590
4700390807 590
4700390808 592
4700390811 244
4700390820 244
4700390830 246
4700390831 240
4700390860 . . . . . 362, 368
4700390884 . . . . . 70, 80
4700390902 250
4700390903 250
4700390919 130
4700390925 58
4700390926 58
4700390934 28
4700390963 510
4700390992 244
4700390993 244
4700390994 . . . . . 8, 12, 244
4700390995 . . . . . 8, 12, 244
4700390998 . . . . . 580, 582
4700390999 582
4700391000 582
4700391001 584
4700391008 584
4700391009 . . . . . 582, 586
4700391010 . . . . . 584, 586
4700391011 586
4700391012 586

4700391017 . . . . . 276, 278
4700391018 596
4700391023 . . . . . 28, 30
4700391024 . . . . . 176, 182, 272
4700391026 . . . . . 8, 12, 58, 64
4700391029 190
4700391031 44
4700391082 524
4700391083 524
4700391107 188
4700391110 188
4700391115 . . . . . 382, 392
4700391157 . . . . . 70, 80
4700391163 . . . . . 506, 508
4700391165 . . . . . 236, 296
4700391192 340
4700391198 128
4700391263 242
4700391296 . . . . . 58, 64
4700391297 288
4700391299 . . . . . 58, 64
4700391303 238
4700391307 34
4700391308 38
4700391353 34
4700391358 238
4700391369 88
4700391370 88
4700391371 88
4700391375 . . . . . 58, 64
4700391376 . . . . . 58, 64
4700391396 . . . . . 528, 532
4700391407 124
4700391420 . . . . . 528, 534
4700391421 528
4700391430 176
4700391432 . . . . . 70, 284
4700391433 . . . . . 4, 8, 70, 284
4700391434 . . . . . 58, 64
4700391438 582
4700391442 28
4700391443 28
4700391444 50
4700391478 344
4700391481 176
4700391495 116
4700391580 370
4700391583 370
4700391584 350
4700391585 354
4700391621 548
4700391622 548
4700391624 34
4700391626 50
4700391674 444
4700391675 444
4700391676 444
4700391678 444
4700391724 . . . . . 192, 204
4700391750 62
4700391754 . . . . . 20, 126, 128
4700391768 72
4700391769 72
4700391889 178
4700391919 500
4700391955 370
4700391975 176
4700392011 . . . . . 146, 162
4700392033 400
4700392048 298
4700392058 582
4700392059 582
4700392075 . . . . . 58, 64
4700392078 . . . . . 58, 64
4700392123 582
4700392156 356
4700392221 370
4700392222 34
4700392223 . . . . . 34, 34
4700392224 34
4700392227 . . . . . 34, 96, 100, 102, 106, 112
4700392228 102
4700392229 102
4700392230 34
4700392231 34
4700392232 34
4700392235 34
4700392291 186
4700392316 502
4700392364 228
4700392450 384
4700392451 384
4700392509 146
4700392510 146
4700392534 298
4700392717 536
4700392719 536
4700392748 228
4700392799 . . . . . 70, 80
4700392839 506
4700392840 506
4700392930 . . . . . 528, 532

4700392965 522
4700393001 . . . . . 60, 64
4700393009 . . . . . 126, 128
4700393010 . . . . . 126, 128
4700393029 264
4700393031 528
4700393094 536
4700393149 . . . . . 60, 64
4700393191 524
4700393222 550
4700393223 550
4700393235 264
4700393281 . . . . . 60, 66
4700393356 124
4700393360 176
4700393364 338
4700393412 34
4700393508 522
4700393525 . . . . . 424, 448
4700393542 . . . . . 34, 96, 100, 106, 112
4700393550 152
4700393592 238
4700393595 556
4700393598 556
4700393624 298
4700393625 296
4700393697 146
4700393775 568
4700393862 604
4700393947 408
4700393951 . . . . . 416, 606
4700393959 542
4700393968 408
4700393978 . . . . . 448, 524
4700394000 . . . . . 58, 64
4700394004 416
4700394023 40
4700394068 136
4700394070 . . . . . 136, 138
4700394169 238
4700394229 264
4700394250 . . . . . 20, 192, 204
4700394251 . . . . . 20, 228
4700394267 258
4700394276 408
4700394297 . . . . . 60, 66
4700394298 66
4700394322 238
4700394340 . . . . . 120, 170
4700394351 . . . . . 136, 138
4700394395 602
4700394400 . . . . . 28, 60, 66
4700394413 138
4700394459 . . . . . 60, 66
4700394513 . . . . . 60, 66
4700394514 70
4700394529 58
4700394536 62
4700394542 420
4700394545 54
4700394567 90
4700394568 90
4700394587 52
4700394590 52
4700394591 52
4700394593 542
4700394594 542
4700394595 542
4700394596 542
4700394654 560
4700394701 . . . . . 72, 82
4700394705 556
4700394706 556
4700394707 554
4700394787 124
4700394806 150
4700394859 446
4700394931 570
4700395023 . . . . . 570, 572
4700395111 142
4700395112 . . . . . 18, 142, 148
4700395128 28
4700395131 34
4700395226 564
4700395352 402
4700395390 156
4700395412 158
4700395428 . . . . . 132, 134
4700395429 132
4700395430 134
4700395447 506
4700395522 . . . . . 58, 64
4700395653 . . . . . 176, 330
4700395694 176
4700395696 180
4700395761 464
4700395785 . . . . . 528, 532
4700395787 406
4700395793 482
4700395794 . . . . . 482, 484
4700395795 482
4700395815 . . . . . 482, 484

4700395816 . . . . . 354, 430, 456
4700395888 420
4700395915 . . . . . 228, 230
4700395924 . . . . . 292, 294
4700395947 538
4700396071 28
4700396119 420
4700396154 154
4700396179 180
4700396183 166
4700396205 . . . . . 408, 606
4700396210 58
4700396218 246
4700396220 246
4700396259 370
4700396260 370
4700396261 370
4700396268 162
4700396270 162
4700396498 28
4700396542 . . . . . 70, 80
4700396607 . . . . . 74, 76, 84, 86
4700396634 70
4700396635 70
4700396662 . . . . . 528, 532
4700396670 538
4700396672 . . . . . 106, 112
4700396673 . . . . . 106, 112
4700396684 74
4700396685 76
4700396739 34
4700396754 166
4700396768 . . . . . 374, 378
4700396893 166
4700396936 164
4700396975 166
4700396976 166
4700397028 404
4700397029 404
4700397039 40
4700397045 404
4700397259 238
4700397270 296
4700397296 58
4700397318 40
4700397348 38
4700397500 406
4700397516 398
4700397539 236
4700397564 402
4700404229 490
4700450163 446
4700475064 . . . . . 136, 138
4700476019 186
4700480354 230
4700480446 348
4700480447 348
4700480449 348
4700480450 348
4700480456 348
4700480468 348
4700480852 . . . . . 36, 96, 100, 106, 114
4700483726 . . . . . 284, 330
4700483729 . . . . . 284, 330
4700483748 270
4700483960 270
4700484006 346
4700484007 . . . . . 346, 346, 346, 346
4700484014 280
4700484015 280
4700484016 280
4700484017 280
4700484018 280
4700484019 280
4700484020 280
4700484021 280
4700484022 280
4700484023 280
4700484024 338
4700484025 338
4700484026 338
4700484027 338
4700484028 284
4700484030 284
4700484031 284
4700484032 . . . . . 284, 330
4700484033 284
4700484034 . . . . . 284, 330
4700484035 . . . . . 284, 330
4700484036 . . . . . 284, 330
4700484037 . . . . . 284, 330
4700484038 . . . . . 284, 330
4700484039 . . . . . 284, 330
4700484040 . . . . . 284, 330
4700484043 . . . . . 284, 330
4700484045 280
4700484046 272
4700484047 272
4700484048 272
4700484049 272
4700484050 272
4700484051 272

4700484052 272
4700484053 272
4700484054 272
4700484055 272
4700484056 272
4700484057 272
4700484058 272
4700484059 . . . . . 272, 272
4700484064 270
4700484066 270
4700484067 270
4700484075 268
4700484076 268
4700484077 268
4700484078 268
4700484079 268
4700484080 268
4700484081 268
4700484084 270
4700484103 578
4700484104 578
4700484153 330
4700484161 . . . . . 284, 330
4700484236 270
4700484243 330
4700484271 228
4700499174 . . . . . 438, 442
4700500002 . . . . . 464, 494, 574
4700500012 . . . . . 100, 112, 374, 468
4700500013 . . . . . 36, 100, 112, 118, 178, 362, 368, 464, 574
4700500015 . . . . . 362, 368
4700500016 . . . . . 286, 334
4700500018 . . . . . 438, 442, 566
4700500019 . 72, 94, 98, 104, 110, 160, 166, 188, 352, 360, 366, 420, 446, 574, 582, 608
4700500020 . . . . . 344, 524
4700500021 . . . 36, 58, 64, 70, 80, 238, 254, 256, 260, 288, 436, 440, 506, 522, 550
4700500022 . . . . . 34, 54, 58, 64, 70, 80, 244, 286, 334, 604
4700500023 . . . . . 50, 244, 436, 440
4700500024 . . . . . 404, 502
4700500025 404
4700500026 . . . . . 420, 574, 608
4700500028 . . . . . 44, 48, 58, 70, 190, 236, 290, 398, 512
4700500029 . . . . . 124, 162
4700500030 . . . . . 122, 172, 236, 298
4700500031 . . . . . 142, 148, 174, 236
4700500032 . . . . . 28, 140, 144
4700500033 158
4700500035 . . . . . 238, 350
4700500040 . . . . . 70, 80, 180, 186, 354, 420, 490
4700500042 378
4700500043 . . . . . 72, 350
4700500046 228
4700500047 . . . . . 50, 122, 152, 154, 172, 174, 344, 404
4700500048 . . . . . 40, 332
4700500049 . . . . . 124, 228, 238
4700500051 28
4700500053 34, 58, 64, 70, 80, 96, 106, 116, 286, 334, 340, 344, 372, 376, 404, 418, 490, 500, 502, 510, 550
4700500056 . . . . . 238, 590, 592
4700500057 192
4700500058 580
4700500059 . . . . . 58, 64, 74, 76, 84, 86
4700500060 . . . . . 354, 528, 532
4700500070 . . . . . 188, 580
4700500075 . . . . . 476, 522
4700500079 612
4700500090 . . . . . 96, 100, 106, 112, 554
4700500091 406
4700500092 . . . . . 70, 80
4700500096 548
4700500105 150
4700500107 . . . . . 236, 296
4700500115 . . . . . 274, 536, 598
4700500134 . . . . . 184, 582
4700500146 . . . . . 122, 172
4700500153 446
4700500161 . . . . . 122, 158, 164, 172, 174
4700500170 598
4700500175 176
4700500186 582
4700500189 . . . . . 100, 112, 444
4700500190 . . . . . 404, 444
4700500195 . . . . . 424, 448
4700500197 238
4700500198 150
4700500206 128
4700500265 124
4700500269 . . . . . 28, 60, 66, 68, 78
4700500270 296
4700500287 . . . . . 42, 46
4700500289 . . . . . 122, 172, 174
4700500297 174
4700500505 . . . . . 526, 530
4700502035 344
4700508017 . . . . . 528, 532
4700508018 . . . . . 584, 586
4700508019 . . . . . 502, 502
4700508020 . . . . . 60, 64
4700508025 . . . . . 436, 440, 612
4700508029 506

4700508048 . . . . . 168, 238
4700508080 238
4700508084 330
4700508092 512
4700508096 . . . . . 238, 336, 612
4700509025 238
4700513003 524
4700513011 . . . . . 136, 138
4700513016 . . . . . 414, 608
4700513017 . . . . . 70, 80
4700516040 506
4700533050 180
4700541702 . . . . . 408, 608
4700570002 . . . . . 476, 494
4700570004 . . . . . 166, 354, 528, 532, 568
4700570005 . . 28, 34, 70, 80, 244, 344, 350, 358, 364, 396, 404, 524, 604
4700570006 . . . . . 70, 80, 150
4700570007 . . . . . 590, 592
4700570103 270
4700573008 540
4700586001 . . . . . 354, 528, 532, 538, 568
4700586002 . 34, 70, 74, 76, 80, 84, 86, 186, 354, 358, 362, 364, 436, 440, 522, 528, 532, 536
4700586003 . . . 28, 50, 70, 80, 96, 106, 152, 154, 156, 162, 164, 168, 176, 248, 404, 404, 436, 440, 444, 448, 502, 502, 506, 536, 606
4700586018 . . . . . 140, 142, 144, 148, 400
4700586019 150
4700603001 . . . . . 34, 58, 64, 176, 180
4700606003 612
4700606004 536
4700606009 280
4700606021 280
4700615050 . . . . . 34, 72, 80
4700624005 . . . . . 542, 542
4700624018 62
4700624020 . . . . . 74, 76, 86
4700624021 . . . . . 60, 62, 66
4700629008 52
4700630008 . . . . . 344, 540
4700630012 . . . . . 136, 138
4700635061 . . . . . 30, 182, 292
4700791082 150
4700791120 . . . . . 58, 64, 256
4700791172 . . . . . 122, 172, 174
4700791182 116
4700791185 . . . . . 362, 458
4700791231 . . . . . 72, 80
4700791277 542
4700791278 542
4700791304 524
4700791321 . . . . . 288, 332
4700791362 582
4700791397 . . . . . 284, 330
4700791401 . . . . . 192, 204, 292
4700791405 . . . . . 58, 64
4700791409 . . . . . 178, 292
4700791453 582
4700791454 582
4700791475 . . . . . 428, 464, 468
4700791479 354
4700791524 . . . . . 506, 522
4700791538 298
4700791539 178
4700791551 362
4700791565 582
4700791568 . . . . . 100, 112
4700791572 . . . . . 514, 516, 518, 520
4700791588 . . . . . 458, 528, 532
4700791597 . . . . . 362, 362, 364, 364
4700791634 298
4700791635 298
4700791642 . . . . . 244, 542
4700791666 464
4700791698 . . . . . 238, 298, 330
4700791709 . . . . . 386, 526, 530
4700791711 . . . . . 70, 80
4700791712 . . . . . 70, 80
4700791723 . . . . . 528, 532
4700791733 . . . . . 528, 532
4700791739 . . . . . 528, 532
4700791743 . . . . . 178, 292
4700791744 292
4700791745 . . . . . 298, 346
4700791754 392
4700791796 228
4700791797 28
4700791798 . . . . . 280, 298
4700791799 . . . . . 72, 80, 178, 228, 292, 346
4700791823 . . . . . 72, 80, 292
4700791824 298
4700791831 298
4700791840 . . . . . 72, 82
4700791841 280
4700791844 70
4700791846 276
4700791853 298
4700791858 176
4700791914 596
4700791949 . . . . . 100, 112
4700791951 382

4700791956 392
4700791959 . . . . . 100, 112
4700791966 458
4700791977 . . . . . 146, 162
4700792035 390
4700792059 382
4700792072 . . . . . 146, 162
4700792073 . . . . . 36, 106, 112
4700792074 332
4700792083 44
4700792119 . . . . . 458, 464
4700792151 . . . . . 28, 192, 204, 298
4700792154 608
4700792157 298
4700792210 . . 358, 364, 380, 402, 408, 570, 572, 610, 610, 612
4700792219 298
4700792245 594
4700792258 72
4700792270 . . . . . 14, 190, 228
4700792276 . . . . . 58, 64
4700792295 178
4700792296 178
4700792309 . . . . . 354, 362, 368, 458
4700792310 354
4700792311 70
4700792322 . . . . . 256, 260
4700792323 256
4700792325 . . . . . 72, 74, 76, 80, 84, 86, 500
4700792326 . . . . . 58, 64, 70, 80
4700792328 350
4700792331 . . . . . 192, 204, 298
4700792332 . . . . . 286, 332
4700792333 298
4700792334 . . . . . 72, 82, 346
4700792336 298
4700792337 176
4700792338 . . . . . 58, 64
4700792339 288
4700792340 . . . . . 284, 330
4700792342 340
4700792343 340
4700792344 280
4700792349 392
4700792350 382
4700792351 392
4700792352 400
4700792353 382
4700792354 . . . . . 390, 394
4700792361 . . . . . 382, 392
4700792362 178
4700792363 . . . . . 358, 364
4700792364 350
4700792384 . . . . . 584, 586
4700792385 . . . . . 584, 586
4700792389 582
4700792392 500
4700792394 . . . . . 44, 48
4700792395 578
4700792396 578
4700792397 396
4700792398 386
4700792410 398
4700792414 532
4700792418 238
4700792421 . . . . . 58, 64
4700792422 . . . . . 358, 364, 380, 402
4700792433 162
4700792441 . 72, 82, 96, 100, 106, 112, 284, 344, 358, 362, 364, 364, 368, 386, 398, 464, 494, 516, 520, 532, 582, 612
4700792442 . . . . . 280, 358, 364
4700792447 . . . . . 438, 442
4700792448 . . . . . 438, 442
4700792449 444
4700792451 280
4700792452 . . . . . 280, 280
4700792453 280
4700792454 280
4700792465 298
4700792492 . . . . . 58, 64
4700792502 238
4700792505 . . . . . 458, 478
4700792507 . . . . . 192, 204
4700792512 280
4700792515 44
4700792516 48
4700792519 392
4700792520 392
4700792521 382
4700792522 252
4700792526 252
4700792527 . . . . . 512, 514, 516, 518, 520
4700792533 . . . . . 284, 330
4700792536 434
4700792537 386
4700792539 506
4700792540 156
4700792554 . . . . . 28, 44, 46
4700792583 560
4700792589 434
4700792600 . . . . . 34, 96, 100, 106, 112
4700792601 . . . . . 136, 138
4700792602 . . . . . 358, 364

4700792603 238
4700792607 . . . . . 60, 66
4700792609 . . . . . 384, 610, 610
4700792632 280
4700792634 602
4700792649 298
4700792660 412
4700792667 . . . . . 402, 570, 572
4700792669 . . . . . 88, 416
4700792676 582
4700792678 540
4700792684 350
4700792686 554
4700792695 252
4700792700 280
4700792704 410
4700792715 456
4700792718 490
4700792720 280
4700792726 . . . . . 132, 134
4700792731 370
4700792746 228
4700792772 542
4700792778 . . . . . 106, 112
4700792779 . . . . . 36, 96, 100, 106, 114
4700792780 . . . . . 36, 106, 114
4700792781 36
4700792783 . . . . . 458, 458, 464, 476
4700792794 402
4700792813 . . . . . 96, 100, 106, 112
4700792825 . . . . . 70, 80
4700813429 238
4700813617 230
4700813618 230
4700891374 . . . . . 272, 578
4700900485 166
4700900512 . . . . . 584, 586
4700900519 46
4700900672 34
4700900775 . . . . . 190, 228
4700901145 . . . . . 424, 448
4700901157 298
4700901224 . . . . . 24, 410
4700901225 . . . . . 24, 362, 368, 610, 610
4700901226 . . . . . 24, 358, 380, 608, 608
4700901227 . . . . . 24, 362, 368, 380, 410, 458, 562, 572
4700901228 . . . . . 24, 402, 458
4700901229 24
4700901230 24
4700901431 . . . . . 96, 100, 106, 112
4700901432 582
4700901767 362
4700902064 394
4700902166 . . . . . 62, 74, 76, 84, 86
4700902282 424
4700902285 . . . . . 40, 446
4700902286 . . . . . 58, 64, 398, 446, 510
4700902379 . . . . . 430, 462
4700902509 602
4700902520 506
4700902541 44
4700902624 . . . . . 302, 314, 322
4700902625 . . . . . 302, 308, 314, 320, 322, 328
4700902638 302
4700902687 302
4700902688 . . . . . 316, 324
4700902695 302
4700902724 . . . . . 302, 314, 322
4700902752 302
4700902783 308
4700902792 . . . . . 306, 314, 322
4700902804 . . . . . 528, 532
4700902811 . . . . . 316, 324
4700902861 348
4700902862 348
4700902866 . . . . . 22, 22, 28, 38, 74, 76
4700902882 . . . . . 286, 334
4700902919 . . . . . 48, 472
4700903082 . . . . . 270, 272
4700903422 542
4700903423 542
4700903424 542
4700903425 542
4700903456 . . . . . 70, 80
4700903457 348
4700903459 542
4700903590 478
4700903633 448
4700903640 354
4700903641 . . . . . 22, 354
4700903662 . . . . . 404, 536
4700903670 464
4700903714 264
4700903726 228
4700903735 176
4700903741 . . . . . 24, 362, 368
4700903768 . . . . . 70, 80
4700903773 346
4700903831 176
4700903891 586
4700903907 . . . . . 74, 76
4700903917 506

4700903918 506
4700903953 . . . . . .74, 76, 84, 86
4700904008 280
4700904009 280
4700904010 280
4700904012 84
4700904015 . . . . . 562, 572
4700904024 . . . . . 562, 572
4700904036 354
4700904037 . . . . . 24, 358, 364
4700904038 24
4700904039 . . . . . 24, 350, 356
4700904040 24
4700904041 24
4700904042 24
4700904044 . . . . . .58, 64
4700904083 542
4700904085 176
4700904165 . . . . . 542, 550
4700904206 . . . . . 28, 34, 176
4700904213 . . . . . 32, 32, 68, 78, 228
4700904214 . . . . . 48, 506
4700904218 416
4700904228 . . 74, 76, 84, 86, 100, 112, 118, 178, 186, 354, 358, 362, 364, 368, 374, 420, 436, 440, 446, 452, 522, 528, 532, 536, 568, 612, 612
4700904229 . . . 28, 34, 50, 58, 64, 70, 80, 94, 96, 98, 100, 104, 106, 110, 112, 116, 130, 136, 138, 152, 154, 156, 160, 162, 164, 166, 168, 176, 188, 238, 244, 274, 330, 340, 344, 350, 358, 360, 364, 366, 372, 376, 378, 382, 392, 396, 398, 404, 418, 420, 446, 448, 464, 502, 502, 502, 506, 510, 522, 524, 540, 548, 550, 554, 566, 574, 582, 598, 604, 606, 608
4700904230 . . . 28, 40, 58, 70, 80, 122, 142, 148, 158, 172, 190, 290, 332, 398, 400, 512, 582, 612
4700904231 . . . 28, 44, 48, 68, 78, 124, 126, 136, 138, 150, 176, 188, 192, 204, 228, 238, 590, 592
4700904232 . . . . . 184, 188, 192, 580
4700904233 . . . . . 42, 46, 124, 128, 424, 448
4700904234 . . . . . .122, 172, 174
4700904281 . . . . . 58, 64, 354, 528, 532, 538, 568
4700904292 338
4700904294 24
4700904299 464
4700904312 368
4700904340 446
4700904347 464
4700904504 458
4700904556 . . 122, 172, 174, 352, 404, 436, 440, 502, 524, 604
4700904557 . . 122, 124, 140, 144, 158, 162, 164, 172, 174, 174, 236, 298, 344, 406
4700904558 . . . . . 44, 296, 582
4700904567 . . . . . 44, 48
4700904584 . . . . . 284, 330
4700904596 416
4700904601 542
4700904619 538
4700904629 270
4700904637 . . . . . 72, 238, 336, 350
4700904638 350
4700904640 34, 54, 58, 64, 70, 80, 248, 254, 256, 260, 286, 286, 288, 334, 398, 438, 442, 444, 500, 506, 540, 550
4700904653 . . . . . 538, 568
4700904654 446
4700904697 180
4700904698 . . . . . 368, 494, 528, 532, 574, 582
4700904703 . . . . . 28, 60, 66, 238, 514, 516, 518, 520
4700904728 . . . . . 58, 64
4700904734 . . . . . 50, 50, 152, 154, 244
4700904735 . . . . . 36, 70, 74, 76, 80, 84, 86, 186, 286, 334, 388, 574
4700904835 542
4700904870 542
4700904895 544
4700904911 374
4700904951 178
4700904956 130
4700904984 . . . . . .252, 252, 252
4700908229 542
4700908383 . . . . . 314, 322
4700908505 458
4700908506 478
4700908507 478
4700908561 . . . . . 458, 478
4700908564 . . . . . 482, 484
4700909085 568
4700909211 348
4700909243 230
4700909335 230
4700909336 230
4700909338 230
4700909339 230
4700909340 230
4700909342 230
4700909343 230
4700909344 230
4700909346 230
4700909350 230
4700909351 230
4700909352 230
4700909354 230
4700909356 230
4700909358 230
4700909469 . . . . . 302, 308, 320, 328

4700909514 . . . . . 302, 308, 314, 314, 320, 322, 322, 328
4700910162 292
4700910713 230
4700911620 348
4700920819 50
4700921031 . . . . . 358, 364
4700921080 384
4700921723 458
4700923087 . . . . . 230, 232
4700923090 230
4700923253 394
4700923405 298
4700923735 . . . . . 96, 100, 108, 114
4700923859 612
4700923876 612
4700923976 612
4700924791 446
4700924875 . . . . . 74, 76, 84, 86
4700925208 42
4700925599 . . . . . 60, 64
4700925750 28
4700925784 582
4700926214 176
4700926215 . . . . . 72, 80
4700926216 444
4700926736 228
4700927233 . . . . . 136, 138
4700927278 . . . . . 308, 320, 328
4700927303 306
4700927358 . . . . . 314, 322
4700927410 424
4700927637 . . . . . 164, 476
4700928022 . . . . . 192, 204
4700928200 612
4700928347 . . . . . 514, 516, 518, 520
4700928467 . . . . . 362, 368
4700928784 . . . . . 34, 388
4700929012 348
4700929013 348
4700929014 348
4700929191 606
4700929447 . . . . . 16, 228
4700929455 390
4700929587 464
4700930046 180
4700935158 . . . . . 314, 322
4700935164 . . . . . 306, 318, 326
4700935192 308
4700935210 310
4700935219 . . . . . 302, 314, 322
4700935428 348
4700935429 348
4700936308 . . . . . 302, 314, 322
4700936313 . . . . . 308, 320, 328
4700936392 . . . . . 320, 328
4700936393 . . . . . 316, 316, 324, 324
4700936394 . . . . . 308, 316, 324
4700936612 302
4700936615 306
4700936616 306
4700936617 306
4700936618 306
4700936619 306
4700936621 . . . . . 306, 318, 326
4700936622 306
4700936623 306
4700936624 306
4700936625 306
4700936626 306
4700936627 306
4700936628 306
4700936629 306
4700936630 306
4700936631 306
4700936632 306
4700936633 306
4700936634 306
4700936635 306
4700936636 306
4700936637 306
4700936642 302
4700936643 302
4700936644 302
4700936646 302
4700936647 302
4700936648 302
4700936654 302
4700936655 302
4700936656 302
4700936662 308
4700936664 308
4700936665 308
4700936673 . . . . . 308, 320, 328
4700936686 . . . . . 314, 322
4700936689 310
4700936855 . . . . . 308, 320, 328
4700936869 . . . . . 310, 314, 322
4700936898 330
4700937174 . . . . . 318, 326
4700937175 . . . . . 318, 326
4700937185 . . . . . 318, 326
4700937186 . . . . . 318, 326

4700937187 . . . . . 318, 326
4700937188 . . . . . 318, 326
4700937195 . . . . . 314, 316, 322, 324
4700937206 . . . . . 314, 322
4700937236 . . . . . 316, 324
4700937620 512
4700937621 512
4700937892 512
4700937987 . . . . . 320, 328
4700938014 302
4700938605 552
4700938606 552
4700938609 552
4700938624 494
4700938789 552
4700938891 16
4700939333 230
4700939693 470
4700939826 532
4700940451 22
4700940572 . . . . . 278, 294, 600
4700940676 302
4700945145 . . . . . 4, 6, 8, 12, 240
4700945147 . . . . . 4, 6, 8, 12, 240
4700945311 310
4700945314 548
4700945526 . . . . . 582, 588
4700945538 240
4700945622 510
4700945624 . . . . . 4, 6, 8, 12, 240
4700945626 240
4700945632 508
4700945633 508
4700945634 508
4700945635 508
4700945636 508
4700945637 508
4700945660 510
4700945661 510
4700945668 588
4700945760 . . . . . 8, 12, 240
4700945767 240
4700945769 240
4700945770 240
4700945771 240
4700945772 240
4700945773 240
4700945774 240
4700945776 . . . . . 314, 322
4700945805 4
4700945806 6
4700945807 8
4700945887 240
4700945903 14
4700945904 20
4700945908 18
4700947679 540
4700947684 582
4700947689 . . . . . 68, 78
4700947690 . . . . . 32, 32
4700947712 176
4700950222 . . . . . 30, 182
4700950297 232
4700950372 552
4700950373 552
4700950374 552
4700950375 552
4700950417 . . . . . 30, 182
4700950461 . . . . . 314, 322
4700950480 . . . . . 194, 196
4700950491 . . . . . 194, 206
4700950492 . . . . . 194, 206
4700950493 . . . . . 196, 206
4700950494 . . . . . 196, 206
4700950495 . . . . . 194, 206
4700950520 194
4700950521 194
4700950522 194
4700950523 . . . . . 194, 196
4700950524 . . . . . 194, 196
4700950526 . . . . . 194, 196
4700950527 . . . . . 194, 196
4700950529 . . . . . 194, 196
4700950530 . . . . . 194, 196
4700950531 . . . . . 196, 196, 206
4700950532 . . . . . 196, 196
4700950570 294
4700950571 294
4700950572 294
4700950587 600
4700950593 230
4700960067 . . . . . 562, 572
4700991657 542
4700991658 542
4700999014 378
4811000085 . . . . . 96, 100, 106, 112
4811000096 . . . . . 168, 502
4811000107 . . . . . 96, 100, 106, 112
4811000163 380
4811000265 576
4811000268 488
4811000269 488

4811000292 574
4811000431 414
4811000432 414
4811000458 . . . . . 458, 476
4812002474 314
4812008274 10
4812013038 610
4812013040 610
4812034481 218
4812104284 362
4812104713 354
4812110277 40
4812110293 280
4812110334 . . . . . 168, 502
4812110346 188
4812110358 116
4812110366 46
4812110367 502
4812110394 . . . . . 96, 106, 116
4812110444 188
4812110491 . . . . . 96, 106
4812110641 . . . . . 192, 204
4812110643 228
4812110644 126
4812110652 358
4812110667 . . . . . 70, 284
4812110671 152
4812110672 156
4812110886 528
4812110896 344
4812110899 380
4812110901 . . . . . 528, 532
4812110902 380
4812110903 380
4812110904 380
4812110982 34
4812111325 . . . . . 96, 100, 106, 112
4812111329 . . . . . 96, 100
4812111332 . . . . . 96, 100, 106, 112
4812112074 . . . 34, 96, 96, 96, 96, 96, 100, 100, 100, 100, 100, 102, 102, 102, 106, 106, 106, 106, 106, 106, 106, 106, 106, 106, 106, 112, 112, 112, 112, 112, 112, 112, 112, 114, 114, 114, 582, 582
4812112260 330
4812112262 . . . . . 10, 12, 330
4812112413 228
4812112428 408
4812112767 488
4812112837 574
4812112838 574
4812113158 410
4812113160 . . . . . 414, 608
4812113161 236
4812113496 . . . . . 238, 336
4812113623 490
4812113624 494
4812113724 126
4812113786 536
4812113875 . . . . . 528, 532
4812113949 . . . . . 22, 38
4812114213 . . . . . 528, 532
4812114214 . . . . . 528, 532
4812114312 . . . . . 284, 330
4812114393 . . . . . 74, 76, 84, 86
4812114408 64
4812114566 . . . . . 430, 456
4812114567 . . . . . 430, 456, 458
4812114585 488
4812114598 474
4812114599 474
4812114617 364
4812114619 368
4812114655 368
4812114805 410
4812114993 48
4812114995 48
4812114997 48
4812114999 48
4812115000 48
4812115013 490
4812115053 502
4812115060 344
4812115061 344
4812115093 412
4812115164 . . . . . 428, 450, 464, 486
4812115167 464
4812115168 464
4812115171 . . . . . 428, 454
4812115177 458
4812115180 456
4812115183 456
4812115186 464
4812115187 . . . . . 458, 478, 478
4812115188 488
4812115189 488
4812115190 488
4812115191 488
4812115192 472
4812115203 476
4812115215 474
4812115230 464
4812115288 572

4812115290 402
4812115291 380
4812115292 528
4812115392 44
4812115398 44
4812115411 64
4812115422 48
4812115423 48
4812115424 48
4812115425 48
4812115427 48
4812115467 . . . . . 44, 48
4812115468 48
4812115499 530
4812115511 . . . . . 238, 336
4812115522 386
4812115569 80
4812115733 244
4812115810 . . . . . 528, 532
4812115903 284
4812115947 44
4812115949 44
4812115950 44
4812115966 330
4812115967 330
4812115970 364
4812116192 464
4812116193 464
4812116194 . . . . . 464, 490
4812116195 468
4812116197 464
4812116205 488
4812116333 44
4812116334 44
4812116340 44
4812116357 512
4812116367 612
4812116435 240
4812116436 240
4812116437 240
4812116680 48
4812116702 44
4812116867 424
4812116884 424
4812116986 576
4812117018 66
4812117490 532
4812117512 44
4812117530 44
4812117737 42
4812117738 44
4812117867 48
4812117922 . . . . . 514, 516
4812117924 . . . . . 514, 518
4812117925 . . . . . 516, 520
4812118090 598
4812118312 522
4812118387 350
4812118397 330
4812118553 358
4812118624 574
4812118625 574
4812118641 574
4812118697 . . . . . 528, 532
4812118816 . . . . . 518, 520
4812119139 46
4812119140 48
4812119163 396
4812119227 . . . . . 528, 532
4812119295 512
4812119306 576
4812119317 . . . . . 528, 532
4812119360 448
4812119361 448
4812119369 424
4812119373 . . . . . 450, 486
4812119374 . . . . . 450, 486
4812119376 476
4812119377 476
4812119378 450
4812119379 450
4812119380 450
4812119381 . . . . . 450, 486
4812119383 . . . . . 450, 486
4812119384 486
4812119388 426
4812119392 454
4812119393 454
4812119394 482
4812119398 478
4812119399 478
4812119400 484
4812119401 484
4812119402 478
4812119403 452
4812119404 480
4812119405 480
4812119406 476
4812119417 428
4812119418 454
4812119423 . . . . . 430, 452, 480
4812119427 428

4812119429 474
4812119435 476
4812119436 476
4812119437 476
4812119438 476
4812119439 476
4812119440 476
4812119441 476
4812119443 476
4812119447 474
4812119448 474
4812119449 474
4812119520 418
4812119581 262
4812119599 418
4812119737 408
4812119788 540
4812119807 . . . . . 44, 48
4812119809 . . . . . 44, 48
4812120035 344
4812120077 532
4812120081 . . . . . 432, 498
4812120083 . . . . . 432, 498
4812120084 . . . . . 432, 498
4812120085 . . . . . 432, 498
4812120117 . . . . . 432, 498
4812120121 544
4812120123 542
4812120239 . . . . . 450, 486
4812120240 464
4812120241 464
4812120242 464
4812120243 464
4812120247 486
4812120248 488
4812120249 488
4812120250 488
4812120251 488
4812120253 486
4812120254 454
4812120255 . . . . . 428, 454
4812120256 456
4812120257 456
4812120258 456
4812120259 458
4812120260 458
4812120261 458
4812120262 458
4812120263 . . . . . 458, 478
4812120264 458
4812120265 458
4812120266 458
4812120267 458
4812120268 458
4812120269 . . . . . 458, 458, 464
4812120270 462
4812120271-1 . . . . . 450, 486
4812120271-2 . . . . . 450, 486
4812120271-3 . . . . . 450, 486
4812120271-4 . . . . . 450, 486
4812120272 474
4812120273 476
4812120274 470
4812120275 478
4812120276 478
4812120277 478
4812120278 478
4812120281 452
4812120282 452
4812120283 430
4812120284 490
4812120285 490
4812120294 430
4812120296 . . . . . 428, 454
4812120299 . . . . . 450, 486
4812120318 542
4812120319 542
4812120414 . . . . . 44, 48
4812120429 542
4812120467 398
4812120469 398
4812120565 204
4812120566 204
4812120567 204
4812120568 204
4812120615 44
4812120618 44
4812120681 48
4812120706 34
4812120707 48
4812120716 408
4812120717 408
4812120720 148
4812120733 342
4812120736 448
4812120770 . . . . . 430, 450, 486
4812120782 . . . . . 450, 486
4812120783 . . . . . 450, 486
4812120784 . . . . . 450, 486
4812121000 448
4812121044 . . . . . 528, 532
4812121111 44

4812121282 . . . . . 44, 48
4812121289 . . . . . 100, 112, 118
4812121292 . . . . . 100, 112
4812121328 522
4812121330 522
4812121331 522
4812121347 534
4812121348 532
4812121396 44
4812121397 44
4812121398 44
4812121417 550
4812121468 396
4812121485 414
4812121583 80
4812121584 84
4812121585 84
4812121586 80
4812121587 86
4812121588 86
4812121597 410
4812121608 410
4812121665 . . . . . 44, 48
4812121818 . . . . . 414, 608
4812121848 398
4812121851 532
4812122583 612
4812122611 398
4812122726 612
4812122777 612
4812122778 612
4812122780 612
4812123171 612
4812123419 260
4812123420 288
4812123421 254
4812123471 608
4812123488 608
4812123489 608
4812123490 608
4812123491 608
4812123523 608
4812123524 608
4812123525 608
4812123533 608
4812123534 608
4812123681 608
4812123699 608
4812123727 608
4812123728 608
4812123747 608
4812124006 48
4812124012 48
4812124090 608
4812124091 608
4812124199 . . . . . 610, 610
4812124256 . . . . . 610, 610
4812124321 146
4812124323 146
4812124324 146
4812124325 146
4812124327 146
4812124328 146
4812124329 146
4812124330 146
4812142385 610
4812142386 610
4812155170 . . . . . 192, 202
4812155278 240
4812155658 552
4812155785 . . . . . 300, 302
4812155786 . . . . . 300, 314
4812155787 . . . . . 300, 322
4812155790 278
4812156060 196
4812156061 196
4812156062 196
4812156073 240
4812156074 240
4812156151 302
4812156152 . . . . . 314, 322
4812156154 308
4812156159 278
4812156170 20
4812156199 230
4812156599 310
4812156662 294
4812156787 294
4812157095 308
4812157165 198
4812157166 . . . . . 200, 214, 224
4812157167 . . . . . 200, 214, 224
4812157168 . . . . . 200, 214, 224
4812157169 . . . . . 202, 216, 226
4812157170 . . . . . 202, 216, 226, 312
4812157171 . . . . . 202, 216, 226
4812157395 . . . . . 198, 210, 220
4812157585 294
4812157769 240
4812157851 308
4812158269 . . . . . 70, 284
4812158289 496

4812158290 496
4812158291 496
4812158292 496
4812158294 90
4812158295 90
4812158367 512
4812158763 194
4812158764 194
4812158765 194
4812159094 300
4812159165 240
4812159184 . . . . . 480, 480
4812159352 10
4812159558 . . . . . 22, 476
4812159762 294
4812159770 294
4812159771 588
4812160160 294
4812160262 198
4812160269 12
4812160294 . . . . . .202, 216, 226
4812160391 194
4812160394 322
4812160487 206
4812160488 206
4812160491 294
4812160573 240
4812160598 492
4812160664 330
4812160762 240
4812160764 240
4812160767 496
4812160775 278
4812161086 308
4812161090 312
4812161092 . . . . . .202, 216, 226
4812161093 . . . . . .202, 216, 226
4812161094 . . . . . .202, 216, 226
4812161095 . . . . . .202, 216, 226
4812161164 194
4812161165 454
4812161168 194
4812161169 194
4812161198 196
4812161276 . . . . . .168, 502, 502
4812161298 494
4812161396 22
4812161496 604
4812269526 . . . . . 204, 204

Any unauthorized use or copying of the contents or any part thereof is prohibited. This applies in particular to trademarks, model denominations, part numbers, and drawings.