RUTHZIL TRATOR COMERCIAL DE PEÇAS LTDA 11 97083-6812 ROLANDO CITRANGULO

Vibratory Roller
CC424CHF

Spare Parts Catalogue
SCC424CHF-1EN3

Valid from roller serial number:

384S00340* - *384S00500

Diesel engines:

Cummins QSB 4,5

Published catalogue issues valid for these rollers:

Catalogue	Issue date	Valid for serial numbers
SCC424CHF-1EN1	2009 - 04	Replaced by SCC424CHF-1EN2
SCC424CHF-1EN2	2009 - 12	Replaced by SCC424CHF-1EN3
SCC424CHF-1EN3	2012 - 12	*384S00340* - *384S00500*



We reserve the right to change specifications without notice.
Printed in Sweden.

DYNAPAC
Part of the Atlas Copco Group

RESERVDELSBESTÄLLNING

Följande uppgifter ska lämnas vid beställning av reservdelar för att undvika leveransfel:

1. Maskintyp.
2. Vältens serienummer.
3. Antal av önskad reservdel.
4. Reserdelens artikelnummer.
5. Reservdelens benämning.
6. Måttuppgifter vid beställning av metervara.

ORDERING SPARE PARTS

To avoid errors in delivery, please give the following information when ordering spare parts:

1. Type of machine.
2. Roller serial number.
3. Quantity required.
4. Part number.
5. Parts denomination.
6. Dimensions when ordering per length.

ERSATZTEILBESTELLUNG

Zur Vermeidung von Fehllieferungen sind bei der Bestellung von Ersatzteilen folgende Angaben zu machen:

1. Maschinentyp.
2. Herstellungsnummer.
3. Bestellmenge. (Quantity)
4. Ersatzteilnummer. (Part Nº)
5. Ersatzteilbenennung. (Denomination)
6. Massangaben bei Bestellung von Meterware.

ORDINI DI RICAMBI

Per evitare errori nelle consegne di ricambi, Vi preghiamo di comunicarci le seguenti informazioni al momento dell 'ordinazione:

1. Tipo di macchina.
2. Numero di serie della macchina.
3. Quantità dei pezzi desiderati. (Quantity)
4. Numero di codice del pezzo. (Part Nº)
5. Descrizione del pezzo di ricambio. (Denomination)
6. Misura, in caso di ordine per metro.

PEDIDO DE RECAMBIOS

Para evitar errores en las entregas, deberán indicarse los siguientes datos al hacer un pedido de recambios:

1. Tipo de máquina.
2. Número de serie.
3. Cantidad de piezas deseadas. (Quantity)
4. Número de artículo de la pieza de recambio. (Part Nº)
5. Denominación de la pieza. (Denomination)
6. Indíquese la medida al solicitar un artículo que se expide por metros.

COMMANDE DE PIECES DE RECHANGE

Les indications suivantes doivent être fournies lors de la commande de piéces de rechange, afin d'éviter toute erreur de livraison:

1. Type de machine.
2. Numéro de série.
3. Quantité désirée de pièce de rechange. (Quantity)
4. Numéro de la piéce de rechange. (Part Nº)
5. Dénomination de la piéce de rechange. (Denomination)
6. Longueur en cas de commande au mètre.

YOUR AGENT/DEALER:

Text pages

The text pages is structured as the picture on the right.

1. This is the remarks for specific items and the descriptions of the remarks is at the bottom of the parts list.

2. Parts indicated by a dot and moved to the right are included when buying the assembled unit above.

3. Spare parts Class code for a specific part.
"A" = 3 or more units/year,
"B" = 2 or more units/year,
"C" = 1 or more units/year,
"D" = at least 1 unit/year.

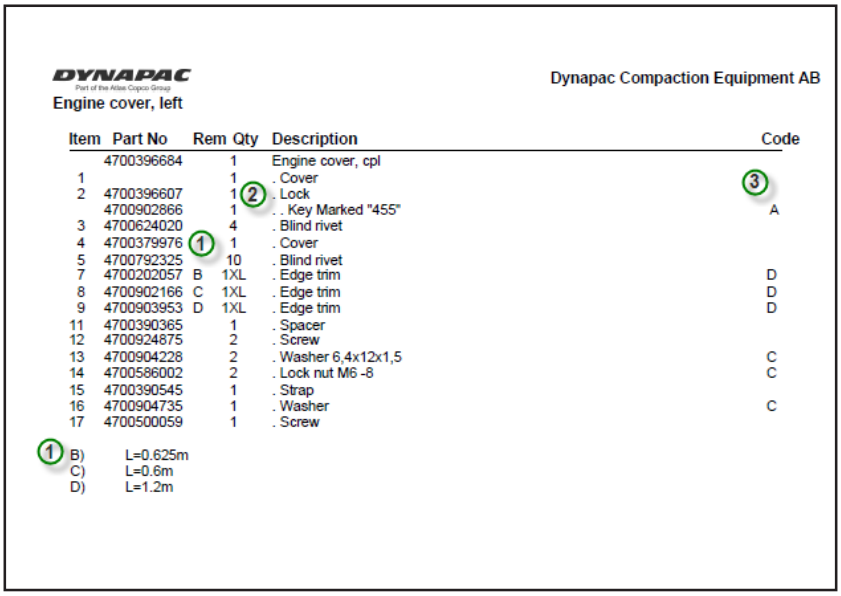

DYNAPAC
Part of the Atlas Copco Group

Dynapac Compaction Equipment AB

Engine cover, left

Item	Part No	Rem	Qty	Description	Code
	4700396684		1	Engine cover, cpl	
1			1	. Cover	3
2	4700396607		1	. Lock	
	4700902866		1	. . Key Marked "455"	A
3	4700624020		4	. Blind rivet	
4	4700379976		1	. Cover	
5	4700792325		10	. Blind rivet	
7	4700202057	B	1XL	. Edge trim	D
8	4700902166	C	1XL	. Edge trim	D
9	4700903953	D	1XL	. Edge trim	D
11	4700390365		1	. Spacer	
12	4700924875		2	. Screw	
13	4700904228		2	. Washer 6,4x12x1,5	C
14	4700586002		2	. Lock nut M6 -8	C
15	4700390545		1	. Strap	
16	4700904735		1	. Washer	C
17	4700500059		1	. Screw	

1 B) L=0.625m
C) L=0.6m
D) L=1.2m

Changes

PARTS INFO	SERVICE INFO	GROUP	PAGE	NOTES

Notes

Notes

DYNAPAC

PÄRMETIKETT

För att undvika fel vid reservdelsbeställning finns här nedan två etiketter som passar i fickorna på pärmarnas ryggar. På dessa kan man se från vilket vältnummer av aktuell maskin reservdelskatalogen gäller. Gör så här:

1. Tag denna sida ur pärmen.
2. Klipp ut etiketten till **VÄNSTER** (1) och sätt in den i fickan på **DENNA** pärmens rygg.
3. Finns det en etikett till **HÖGER** (2), kan denna användas på pärmen för **FÖREGÅENDE** utgåva av denna katalog.
4. Kasta detta papper.

BINDER LABEL

To avoid errors when ordering spare parts use the labels below to identify the catalogues on the back of the binder. The label contain the serial number range for which the catalogue is valid. Do like this:

1. Remove this page from the binder.
2. Cut out the **LEFT** label (1) and put it on **THIS** binders back.
3. If there is a label to the **RIGHT** (2), it can be used on the binder for **PRECEDING** issue of this catalogue.
4. Throw away this paper.

KATALOG-BESCHRIFTUNG

Zur Vermeidung von Fehlen bei der Ersatzteilbestellung benutzen Sie bitte die unteren Beschriftungen, um die Kataloge auf der Rückseite zu kennzeichen. Auf der Beschriftung ist angegaben, für welche Maschinennummern der jeweilige Katalog gültig ist. Ablauf:

1. Nehmen Sie dieses Blatt aus dem Katalog.
2. Schneiden Sie die **LINKE** Beschriftung (1) aus. Schieben Sie die Beschriftung in die tasche auf **DEM** Katalogrücke.
3. Sollte die Beschriftung unten **RECHTS** (2) mitgeliefert werden, kennzeichen Sie damit bitte die **ÄLTERE** Ausführung dieses Kataloges.
4. Den Rest dieses Blattes bitte vernichten.

ETICHETTA POSTA SUL RACCOGLITORE

Per evitare errori quando ordinate pezzi di ricambio, usate le etichette in calce che servono ad identificare i cataloghi sul retro del raccoglitore. L'etichetta indica il numero di matricola delle maccine prese in considerazione nel catalogo.

1. Rimuovete questa pagina dal raccoglitore.
2. Ritagliate l'etichetta posta a **SINISTRA** (1) e ponetela sul retro **DEL** raccoglitore.
3. Se trovate anche un'etichetta sulla **DESTRA** (2), ritagliatela e ponetela sul raccoglitore relativo alla **PRECEDENTE** edizione del catalogo.
4. Distruggete questo foglio.

ETIQUETA PARA LA CARPETA

Para evitar errores al pedir repuestos utilicen las etiquetas abajo descritas para identificar los catálogos en la parte trasera de la carpeta. En la etiqueta se ven los números de referencia de la serie para la cual es válido el catálogo. Instrucciones:

1. Quitar esta página de la carpeta.
2. Corta la etiqueta **IZQUIERDA** (1) y ponerla est **ESTA** carpeta en la parte trasera.
3. Si hay una etiqueta en la parte **DERECHA** (2) se puede utilizar en la carpeta para el catálogo que **PRECEDE** a esta.
4. Tirar esta hoja.

ETIQUETAGE DU CATALOGUE

Afin d'éviter des erreurs lors de commandes de pièces de rechange, nous vous conseillons d'apposer les marquages ci-dessous à l'arrière du classeur, pour identifier les catalogues. Ce marquage indique les numéros de série pour lesquels le catalogue est adapté. Il convient de procéder de la façon suivante:

1. Retirez cette page du classeur.
2. Découpez l'étiquette de **GAUCHE** (1), et apposez-la à l'arrière de **CE** catalogue.
3. Si il y a une étiquette à **DROITE** (2), vous pourrez l'apposer sur le classeur de l'edition **PRECEDENTE** du catalogue.
4. Détruire cetta feuille.

1.



CC424CHF

Catalogue **SCC424CHF-1EN3**

Valid **from** serial number:

384S00340*-*384S00500

TABLE OF CONTENTS

Page

CC424CHF SN 384S00340 - 00500 ..... **2**

Service kits **4**

4700945805 Service kit 50 h, Cummins QSB 4.5 T3 6
4700945806 Service kit 500 h, Cummins QSB 4.5 T3 8
4700945807 Service kit 1000 h, Cummins QSB 4.5 T3 10

Repair kits **12**

4700945903 Eccentric shaft kit CC424HF/524HF/624HF 14
4700938891 Drum rotation kit 16
4700945904 Shock absorber kit, drum CC424HF/524HF/624HF 18
Steering hitch kits 20

Frame **22**

Front frame 24
Front frame 26
4700391023 Steering cylinder 28
Tank structure module 30
Tank structure module 32
4700391307 Cover 36
Hose support 38
Hitch module 40
Steering hitch 42
Filling pipe 44
Cover module 46
Disc/Roller holder 48
Disc/Roller holder 50
Grab handle module 52

Rear frame 54
Rear frame 56
Cover, cpl 58
Engine structure, module 60
Engine structure 62
Engine cover, left 64
Engine cover, right 66
Hose support 38
Oil cooler 68
Fan 70
Noise suppression plates 72
Noise suppression, covers 74
Grab handle module 52

Sprinkler system 76
Sprinkler pump module 78
Sprinkler pump 80
Sprinkler pump 82
Sprinkler pump, backup 84
Filling pipe 44
Filling pipe 44
Cover lock module 86

TABLE OF CONTENTS

Page

Lock bracket ... 88
Locking device module ... 90
Water hoses ... 92
Emulsion tank module ... 94
Emulsion tank mount ... 96
Sprinkler pump module, emulsion ... 98
Sprinkler pump mounted ... 100
Sprinkler box cpl ... 102
Sprinkler pipe module, wheel ... 104
Sprinkler pipe ... 106

End frame, front ... 108
End frame, front ... 110
Frame ... 112
Fork, vibration side ... 114
Fork, propulsion side ... 116
Cover plate ... 118
Hose clamp, propulsion side ... 120
Hose clamp, vibration side ... 122
Step, vibration side ... 124
Step, propulsion side ... 126
Scraper module, without nozzles ... 128
Scraper assy ... 130
4700394340 Scraper bracket, cpl ... 132
Grab handle, release ... 134
Grab handle, release ... 136
Grab handle, lift ... 138
Grab handle, lift offset/cocoa mat ... 140
Cocoa mat module ... 142
Cocoa mat assembly ... 144
Cocoa mat bracket module ... 146
Cocoa mat bracket ... 148
Process mirrors ... 150

End frame, rear ... 152
End frame, rear ... 154
Frame assy ... 156
Combi unit, additional kit ... 158
Combi unit, basic kit ... 160
4700394922 Gear ... 162
Hydraulic motor ... 164
Connection block ... 166
Micro switch ... 168
4700391024 Steering cylinder ... 170
Wheel module ... 172
Wheel ... 174
Wheel spacer module ... 176
Scraper bracket ... 178
Scraper module ... 180
Scraper assy ... 182
Step assy ... 184
Cover plate ... 118
SMV-sign ... 186
Protecting covers ... 188

TABLE OF CONTENTS

Page

Drum **190**

Drum 192
Drum bearing 194
Drive unit 196
4700390604 Drum gear 198
4700390603 Hydraulic motor 200
Engine hydraulic part 202
End plate 204
Vibrating unit Rexroth Up to 348S00199 206
4700390605 Hydraulic motor 208
4700390605A Motor 210
Vibrating unit Sauer From 384S00200 Up to 384S00386 212
4700395915 Hydraulic motor Vibration 214
Vibrating unit Rexroth From 384S00387 Up to 384S00391 206
4700390605 Hydraulic motor 208
4700390605A Motor 210
Vibrating unit Sauer From 384S00392 212
4700395915 Hydraulic motor Vibration 214

Engine **216**

Engine room 218
Engine 220
Engine module 222
Diesel engine Cummins QSB4.5 T3 - 82kW 224
Diesel engine Cummins QSB4.5 T3 - 93kW 226
Air cooler hoses 228
Water cooler hoses 230
Air cleaner module 232
Air cleaner hose module 234
Muffler 236
Exhaust pipe module 238
Fuel hose module 240
Charge air cooler 242
Water cooler 244
Expansion tank assembly 246
Coolant hoses 248

Hydraulic system **250**

Hydraulic system, front drum 252
Hydraulic hoses, rear wheels std 254
Hose kit 256
Hydraulic hoses, frame 258
hydraulic hoses, rear wheels offset 260
Hose kit 262
Hydraulic system, steering Std 264
Hydraulic valve module 266
Hydraulic valve 268
4700391016 Hydraulic valve 270
4700395924 Hydraulic valve 272
Hose bracket 274

TABLE OF CONTENTS

Page

Hydraulic steering, sliding seat ... 276
Steering, slideable ... 278
4700372424 Pilot valve, steering ... 280
Hydraulic hoses, engine room ... 282
Fan ... 70
Oil cooler ... 68
Hydraulic valve module ... 284
Hydraulic valve ... 286
4700395924 Hydraulic valve ... 272
Hydraulic pump module ... 288
Hydraulic pump ... 290
Hydraulic valve module, offset/combi ... 292
Hydraulic valve ... 294
4700391017 Hydraulic valve ... 296

Electrical equipment ... 298

Electric cables, power supply ... 300
Battery disconnector ... 302
Battery disconnector ... 304
Electric cables, power supply cab ... 306
Electric cables, engine - ECU ... 308
Standard ECU module ... 310
Standard ECU assembly ... 312
Electric cables, sensors/ horn/ back-up alarm ... 314
Back-up alarm module ... 316
Back-up alarm ... 318
Horn module ... 320
Horn ... 322
Tachograph ... 324
Tachograph holder module ... 326
Tachograph holder ... 328
Cable harness kit ... 330
Power supply module ... 332
Driving & side direction lights Up to 384S00478 ... 334
Accessories ECU module ... 336
Driving lights, front RH ... 338
Driving lights, front LH ... 340
Turn signals ... 342
Driving lights, rear ... 344
Steering column switch module ... 346
Cable harness and switch module ... 348
Registration plate light module ... 350
Registration plate light ... 352
Driving & side direction lights From 384S00479 ... 354
Driving lights, front RH ... 338
Driving lights, front LH ... 340
Steering column switch module ... 346
Cable harness and switch module ... 356
Registration plate light module ... 350
Registration plate light ... 352

TABLE OF CONTENTS

Page

Driving lights, rear 344
Turn signals 342
Rotating beacon, working light 358
Rotating beacon module 360
Rotating beacon module 362
Rotating beacon module 364
Working light module H3 366
Working light module Xenon 368
Drum edge lights 370
Bracket 372
Working light module H3 366
Bracket 374
Reading light 376

Drivers platform 378

Platform, no cab 380
Platform with 4-post ROPS 382
Rear covers 384
Platform no ROPS 386
Cover module 388
Manual box 390
Hand rail, left 392
Hand rail 394
Hand rail, right 396
Hand rail 398
Hand rail 400
Lunch box module 402
Canopy option 404
Canopy assy 406
Bracket 408
Cab, asymmetric 410
4700390864 Cab, cpl 412
Cab frame, right side 414
Roof 416
General parts 418
Windshield wiper, front 420
Windshield wiper, rear 422
Windshield washer reservoir 424
Electric equipment 426
Front panel 428
Door frame 430
4700395806 Door, cpl 432
Cab screens 434
Rear covers 384
Air channel 436
Heater unit 438
Heater 440
Heater controls 442
Manual box 390
Cab, symmetric 444
4700395898 Cab, cpl 446

TABLE OF CONTENTS

Page

Cab frame, right side 448
Roof 450
General parts 418
Windshield wiper, front 420
Windshield wiper, rear 422
Windshield washer reservoir 424
Electric equipment 426
Front panel 428
Door frame 430
4700395806 Door, cpl 432
Cab screens 452
Rear covers 384
Air channel 436
Heater unit 438
Heater 440
Heater controls 442
Manual box 390
Cab heater system 454
Heater hoses 456
Cab noise cover 458
Radio and cd player 460
Radio and cd player module 462
Rear view mirror module 464
Drivers seat 466
Seat frame structure 468
Seat frame 470
4700391163 Steering column 472
Seat, galon suspensioned 474
Seat, fabric suspensioned (option) 476
Controls, slidable and turning 478
Cross sliding 480
Carrier 482
Drive control, cpl 484
Drive control Up to 384S00478 486
Drive control From 384S00479 486
Display unit 488
Control panel cover 490

Decals 492

Decals 494

Optional equipment 496

Air conditioning 498
Compressor module 500
Condensor module 502
Condensor 504
Evaporator module 506
4700393584 Evaporator unit 508
Hose kit AC 510
Hose kit 512
Hose kit Compressor 514

TABLE OF CONTENTS

Page

Hose kit AC 516
ACC module 518
4700393795 ACC controls 520
Edge cutter 522
Edge cutter, module 524
4700390998 Edge cutter, cpl 526
4700390999 Holder 528
4700391009 Bearing unit 530
4700387275 Hydraulic cylinder 532
Cutting disc module 534
Pressing roller, module 536
Hydraulic valve module 538
Hydraulic valve 540
4700391018 Hydraulic valve 542
Disc/Roller holder 50
Fire extinguisher/First Aid Cushion 544
Fire extinguisher assembly 546
Asphalt temperature meter 548


CC424HF
DYNAPAC
DYNAPAC

CC424CHF SN 384S00340 - 00500

Item	Part No	Rem	Qty	Description	Code
				Service kits (Page 4)	
				Repair kits (Page 12)	
1				**Frame (Page 22)**	
2				**Drum (Page 190)**	
3				**Engine (Page 216)**	
5				**Hydraulic system (Page 250)**	
6				**Electrical equipment (Page 298)**	
7				**Drivers platform (Page 378)**	
8				**Decals (Page 492)**	
9				**Optional equipment (Page 496)**	

Service kits

Service kits

Item	Part No	Rem	Qty	Description	Code
1	4700945805		1	**Service kit 50 h, Cummins QSB 4.5 T3 (Page 6)**	
2	4700945806		1	**Service kit 500 h, Cummins QSB 4.5 T3 (Page 8)**	
3	4700945807		1	**Service kit 1000 h, Cummins QSB 4.5 T3 (Page 10)**	

4700945805 Service kit 50 h, Cummins QSB 4.5 T3

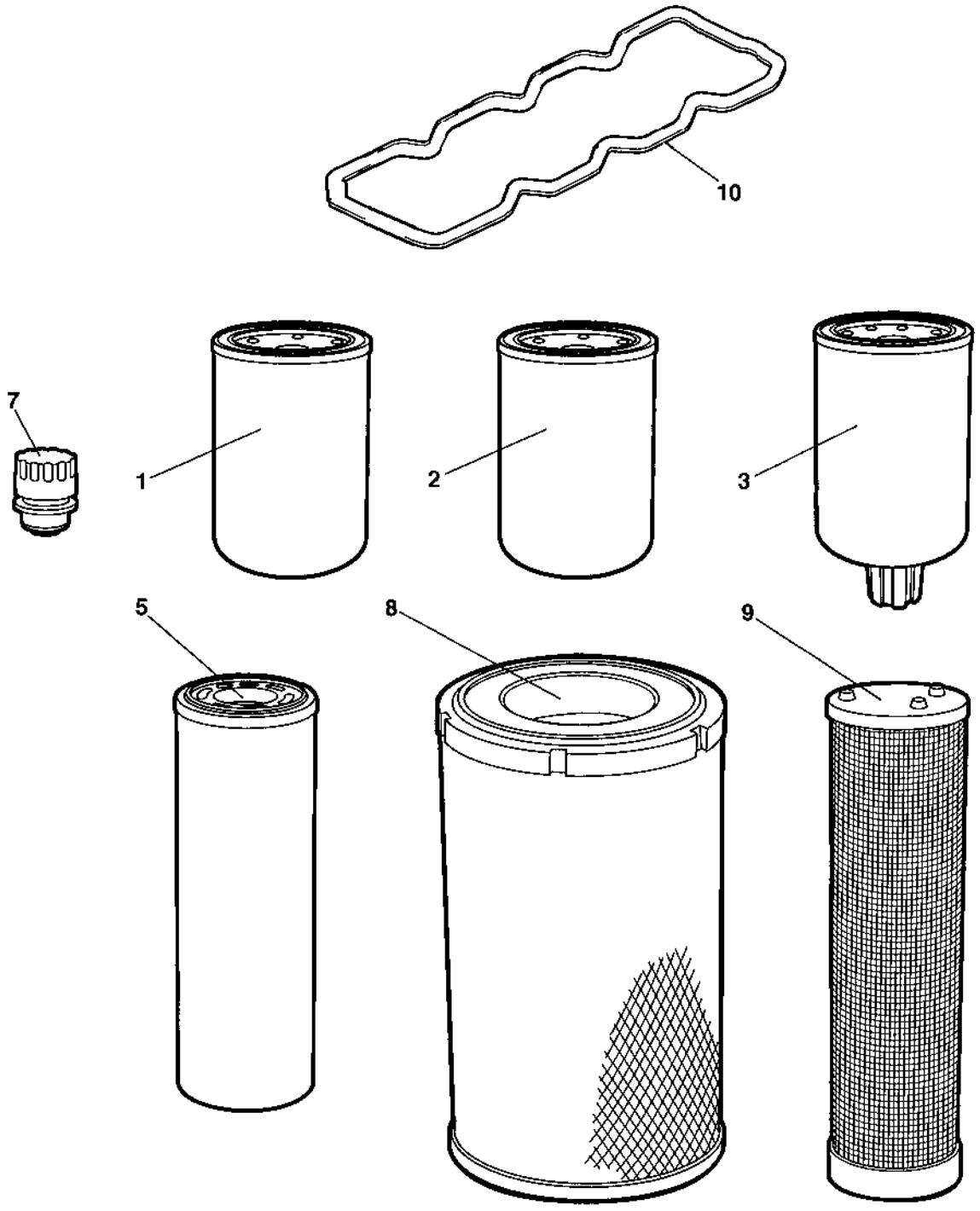

4700945805 Service kit 50 h, Cummins QSB 4.5 T3

Item	Part No	Rem	Qty	Description	Code
	4700945805			**Service kit 50 h, Cummins QSB 4.5 T3 (Page 6)**	
1	4700945145		1	Oil filter element	A
2	4700945624		1	Fuel filter element	
3	4700945147		1	Pre-fuel filter element	
5	4700391433		1	Hydraulic oil filter element	A

4700945806 Service kit 500 h, Cummins QSB 4.5 T3

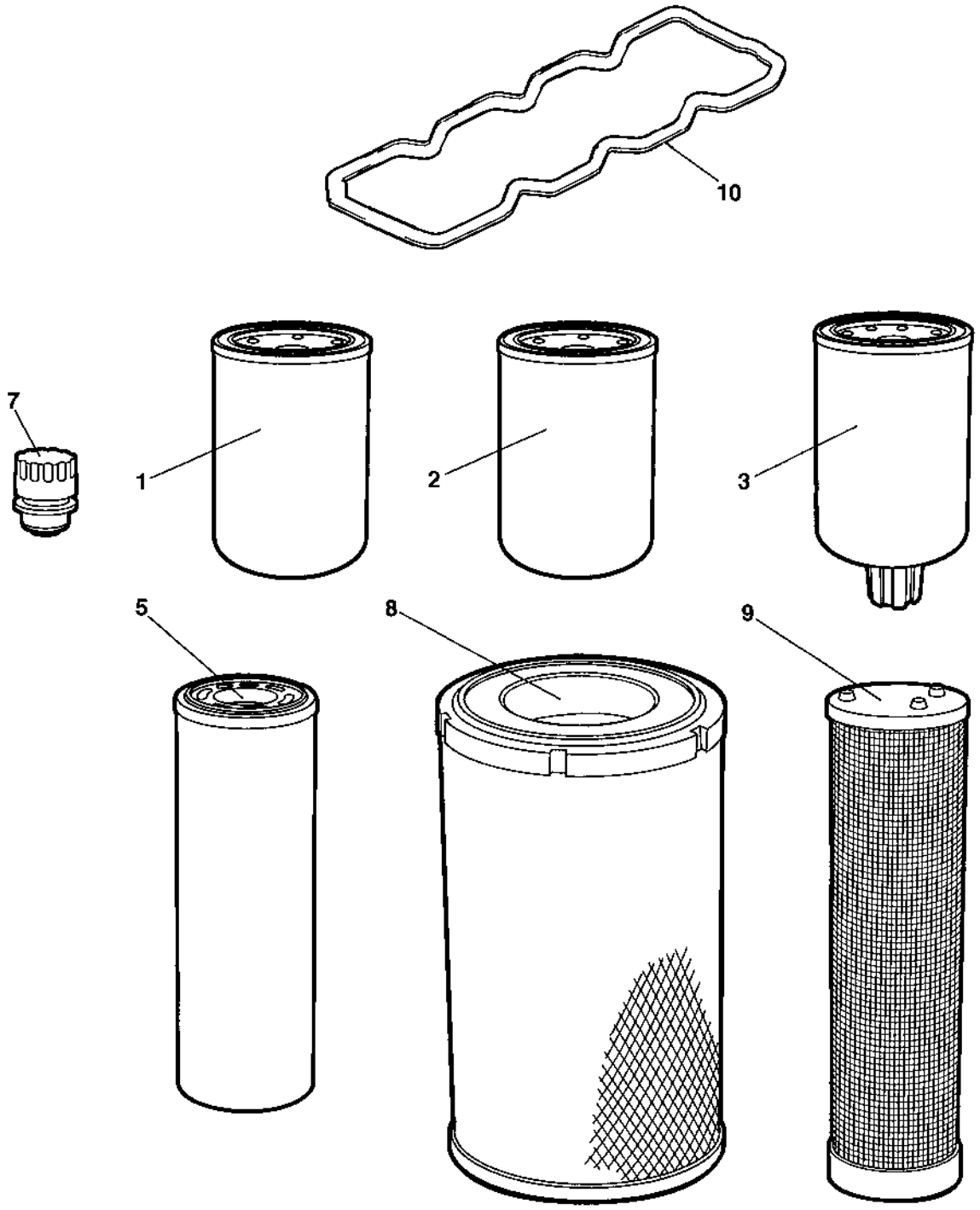

4700945806 Service kit 500 h, Cummins QSB 4.5 T3

Item	Part No	Rem	Qty	Description	Code
	4700945806		0	**Service kit 500 h, Cummins QSB 4.5 T3 (Page 8)**	
1	4700945145		1	Oil filter element	A
2	4700945624		1	Fuel filter element	
3	4700945147		1	Pre-fuel filter element	

4700945807 Service kit 1000 h, Cummins QSB 4.5 T3

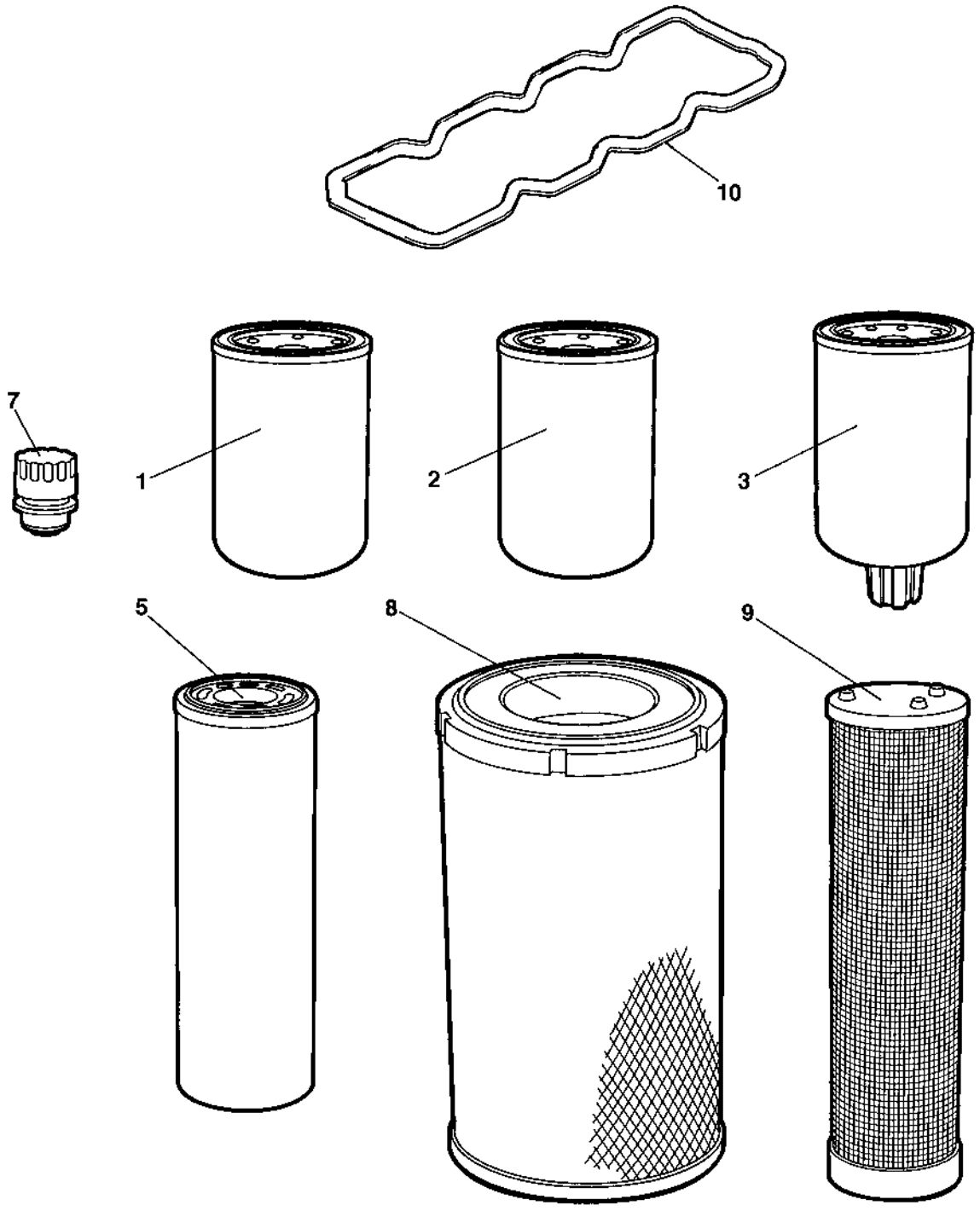

4700945807 Service kit 1000 h, Cummins QSB 4.5 T3

Item	Part No	Rem	Qty	Description	Code
	4700945807			**Service kit 1000 h, Cummins QSB 4.5 T3 (Page 10)**	
1	4700945145		1	Oil filter element	A
2	4700945624		1	Fuel filter element	
3	4700945147		1	Pre-fuel filter element	
5	4700391433		1	Hydraulic oil filter element	A
7	4700391026	B	1	Ventilating filter	A
8	4700390995		1	Main filter element	A
9	4700390994		1	Safety filter element	A
10	4700945760		1	Valve cover gasket	

B) Ventilated oil filler cap for the hydraulic oil tank

Repair kits

Repair kits

Item	Part No	Rem	Qty	Description	Code
1	4700945903		1	**Eccentric shaft kit CC424HF/524HF/624HF (Page 14)**	
2	4700938891		1	**Drum rotation kit (Page 16)**	A
4	4700945904		1	**Shock absorber kit, drum CC424HF/524HF/624HF (Page 18)**	
5			1	**Steering hitch kits (Page 20)**	

4700945903 Eccentric shaft kit CC424HF/524HF/624HF

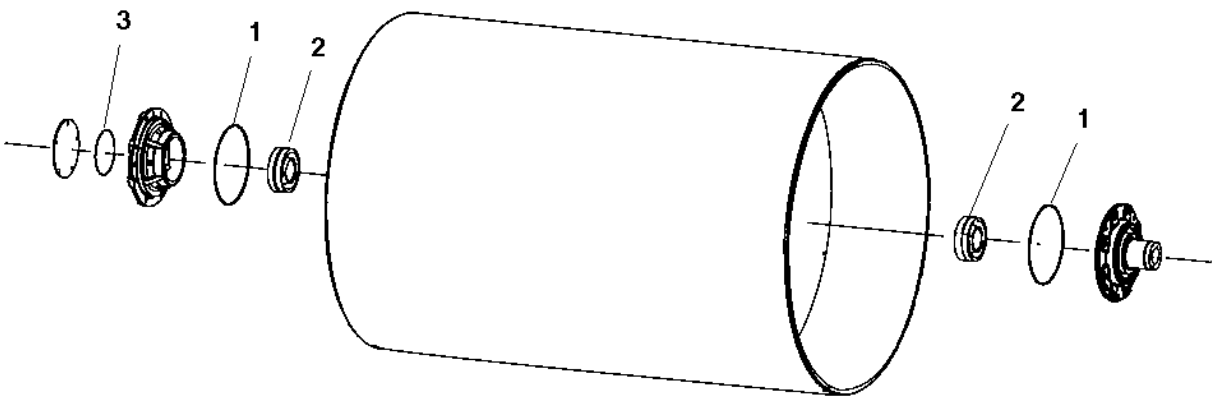

4700945903 Eccentric shaft kit CC424HF/524HF/624HF

Item	Part No	Rem	Qty	Description	Code
	4700945903			**Eccentric shaft kit CC424HF/524HF/624HF (Page 14)**	
1	4700160344		2	O-ring 70	C
2	4700792270		2	Spherical roller bearing	B
3	4700160045		1	O-ring 70	C

4700938891 Drum rotation kit

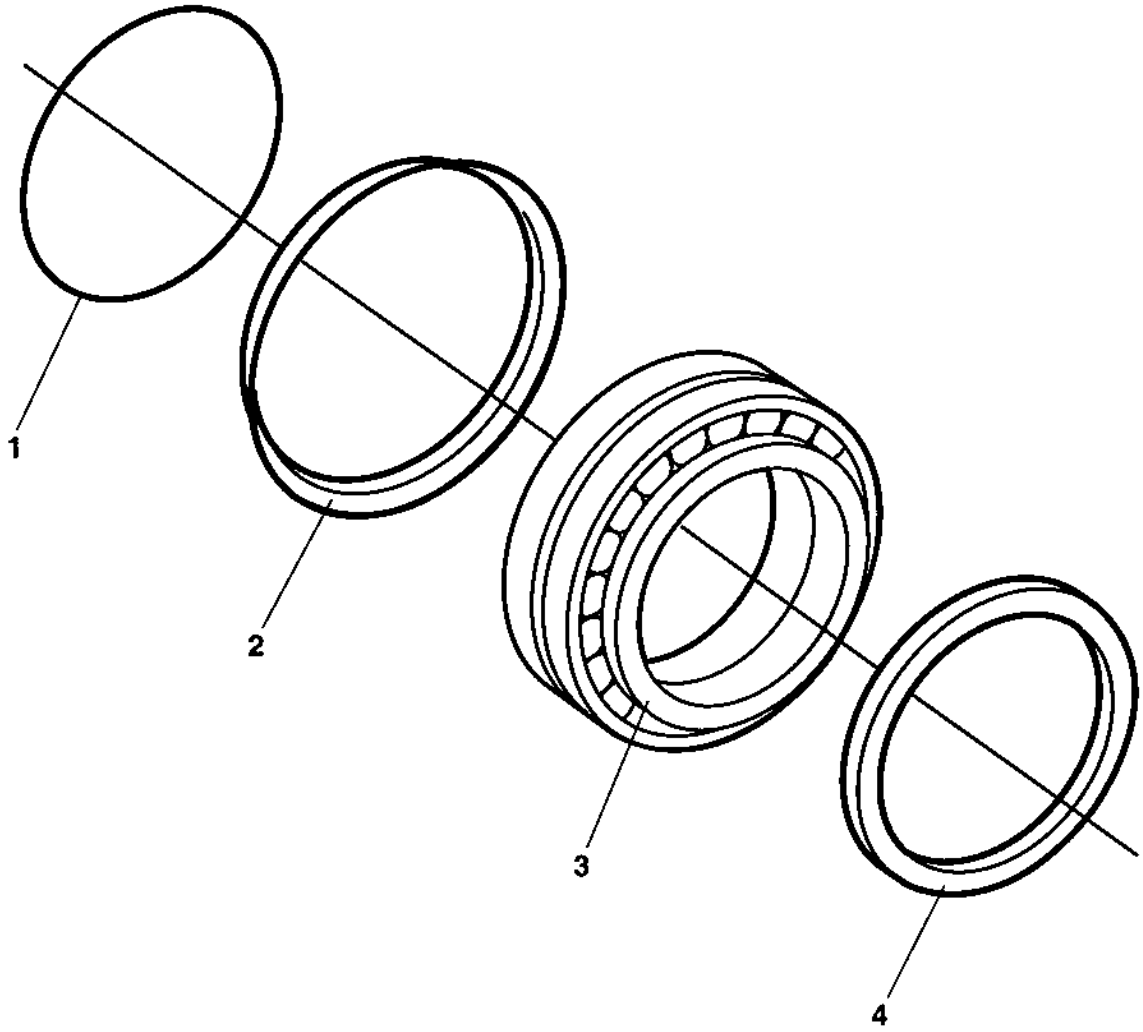

4700938891 Drum rotation kit

Item	Part No	Rem	Qty	Description	Code
	4700938891			**Drum rotation kit (Page 16)**	A
1	4700160105		1	O-ring 70	C
2	4700929447		1	V-ring	B
3	4700116041		1	Taper roller bearing	B
4	4700386272		1	Sealing	B

4700945904 Shock absorber kit, drum CC424HF/524HF/624HF

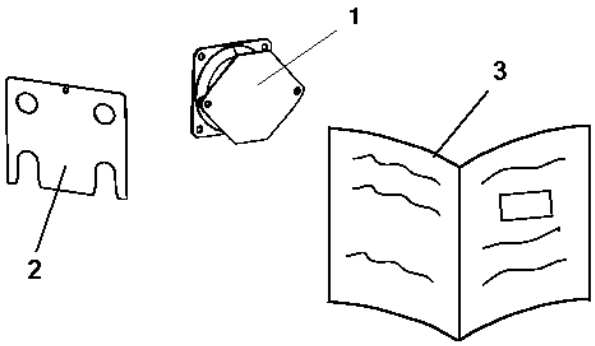

4700945904 Shock absorber kit, drum CC424HF/524HF/624HF

Item	Part No	Rem	Qty	Description	Code
	4700945904			**Shock absorber kit, drum CC424HF/524HF/624HF (Page 18)**	
1	4700394250	A	8	Shock absorber	A
	4700394251	B	4	Shock absorber	A
2	4700391754		4	Shim	D
3	4812156170		1	Instructions	

A) Propulsion side
B) Vibration side

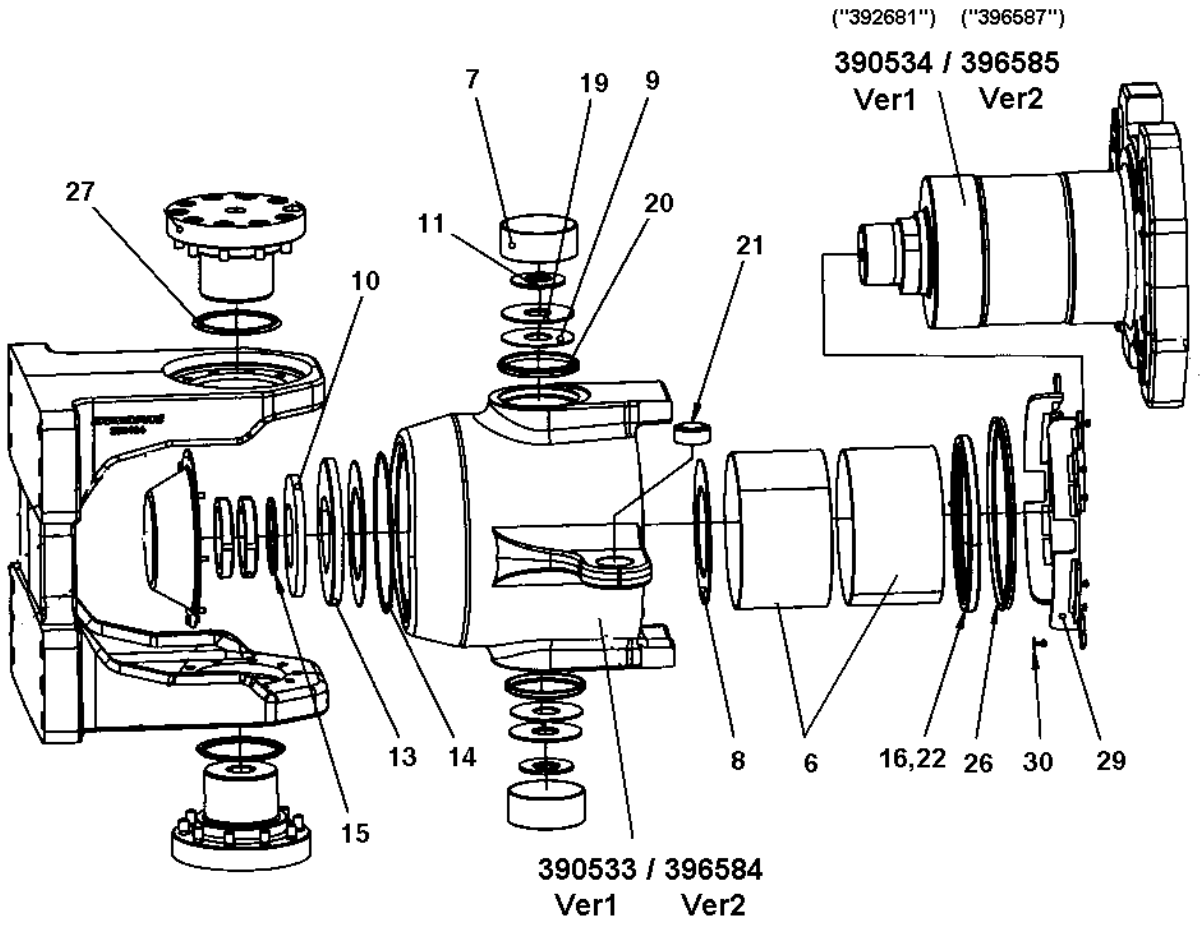
("392681") ("396587")
390534 / 396585
Ver1 Ver2
7
19
9
20
21
11
27
10
13
14
15
8
6
16,22
26
30
29
390533 / 396584
Ver1 Ver2

Steering hitch kits

Item	Part No	Rem	Qty	Description	Code
	4812156095		1	Steering hitch kit, tilt (390533 & 390534 ("392681"))	
	4700390538		2	_Sleeve bearing	D
	4700393523		2	_Slide washer	D
_10	4700390542		1	_Disc spring	D
_13	4700393115		1	_Thrust washer	D
_14	4700160277		1	_O-ring	D
_15	4700393218		1	_Back-up ring	C
_16	4700391031		1	_Radial lip-type seal	D
_22	4812030096		1	_Dynapac Roller Grease	A
_26	4700792515		1	_Sealing, v-ring	D
_29	4700394207		2	_Flush cover	D
_30	4700792325		12	_Blind rivet	
	4812156096		1	Steering hitch kit, tilt (396584 & 396585)	
	4700396588		2	_Sleeve bearing	B
	4700393523		2	_Slide washer	D
_10	4700390542		1	_Disc spring	D
_13	4700393115		1	_Thrust washer	D
_14	4700160277		1	_O-ring	D
_15	4700393218		1	_Back-up ring	C
_16	4700391031		1	_Radial lip-type seal	D
_22	4812030096		1	_Dynapac Roller Grease	A
	4812156097		1	Steering hitch kit, turn	
	4700390539		2	_Sleeve bearing	B
	4700390541		2	_Slide washer	D
_11	4700390543		2	_Disc spring	D
_19	4700391566		2	_Washer	D
_20	4700792517		2	_Shear wiper	D
_21	4700792554		4	_Radial spherical plain bearing	D
_22	4812030096		1	_Dynapac Roller Grease	A
_27	4700792518		2	_Radial lip-type seal	D

Frame

Frame

Item	Part No	Rem	Qty	Description	Code
1			1	**Front frame (Page 24)**	
3			1	**Rear frame (Page 54)**	
4			1	**Sprinkler system (Page 76)**	
6			1	**End frame, front (Page 108)**	
7			1	**End frame, rear (Page 152)**	

Front frame

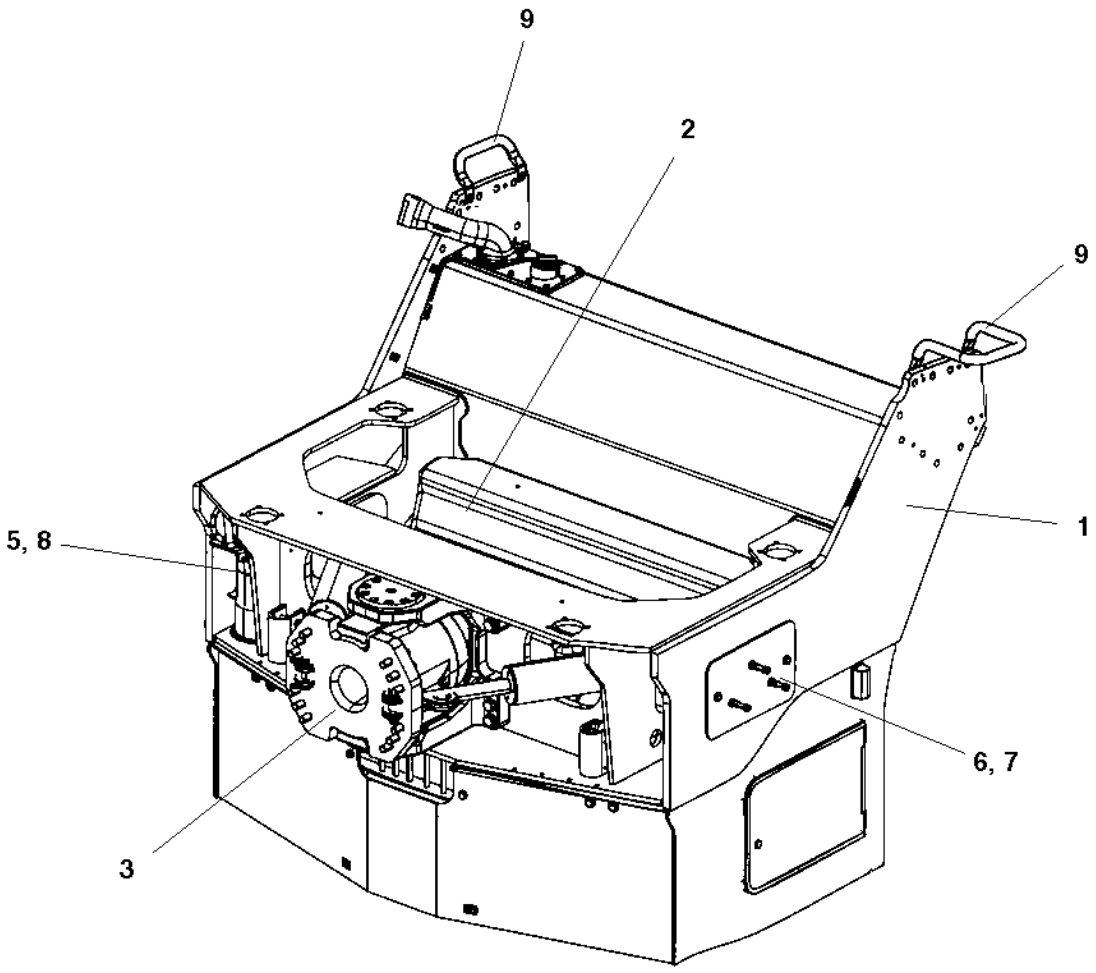

Front frame

Item	Part No	Rem	Qty	Description	Code
1			1	**Front frame (Page 26)**	
2			1	**Tank structure module (Page 30)**	
3			1	**Hitch module (Page 40)**	
5			1	**Filling pipe (Page 44)**	
		1	2	**Filling pipe (Page 44)**	
6			1	**Cover module (Page 46)**	
7			1	**Disc/Roller holder (Page 48)**	
			1	**Disc/Roller holder (Page 50)**	
8			1	**Cover lock module (Page 86)**	
9			2	**Grab handle module (Page 52)**	

1) Two pieces when use of tank with dual filling holes.

Front frame

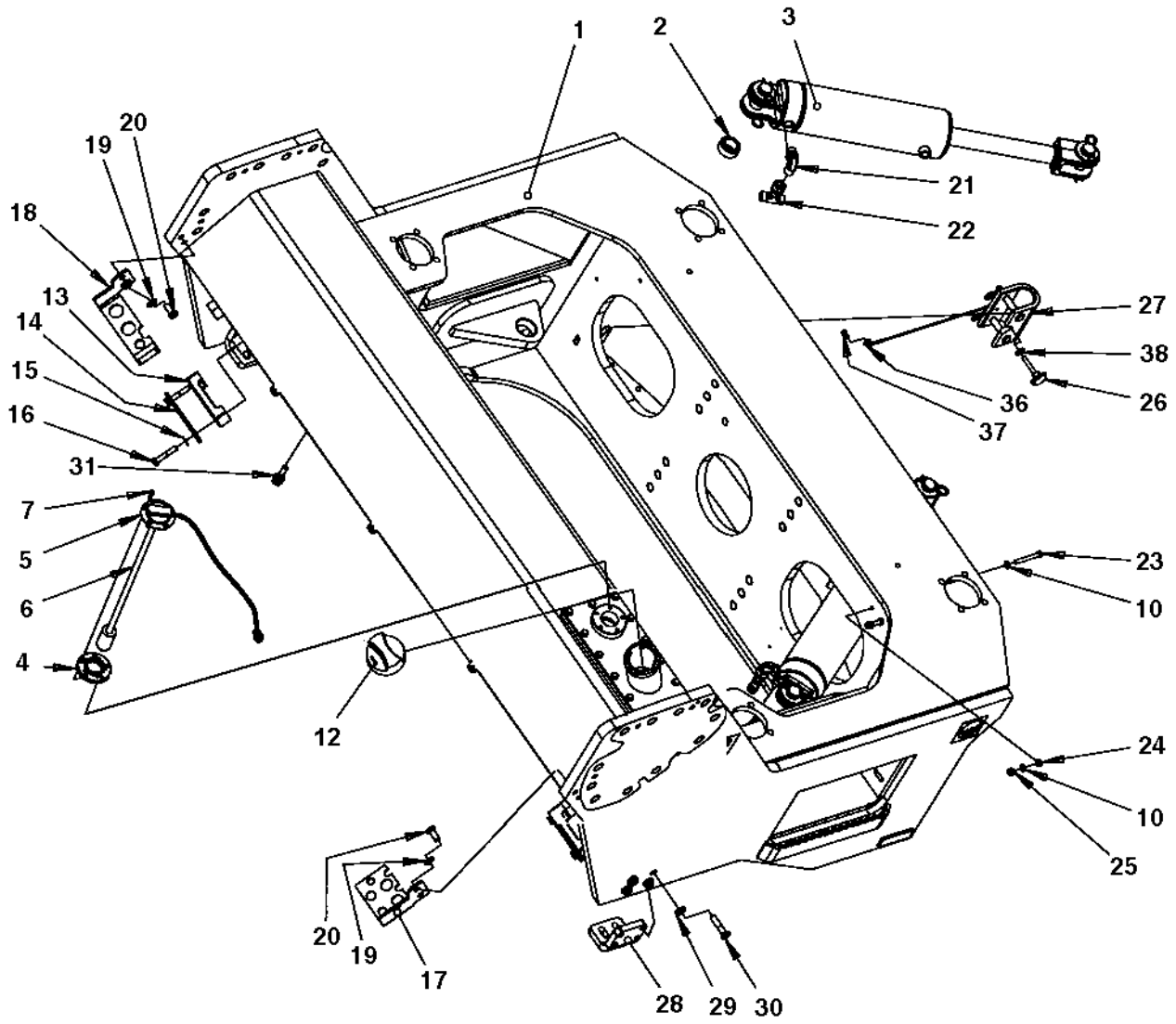
1
2
3
20
19
18
13
14
15
16
31
7
5
6
4
12
21
22
27
38
26
36
37
23
10
24
10
25
20
19
17
28
29
30

Front frame

Item	Part No	Rem	Qty	Description	Code
1	4700394527		1	Front frame Up to 384S00077	D
	4700395128		1	Front frame From 384S00078	D
	4700396498		1	. Fuel tank cover	D
	4700389821		1	. O-ring	D
2	4700391430		2	Bearing Up to 384S00077	D
	4700792554		2	Radial spherical plain bearing From 384S00078	D
3	4700391023		2	**Steering cylinder (Page 28)**	
4	4700370745		1	Flange, cpl	C
5	4700372718		1	Lid	D
6	4700390934		1	Level sender	B
7	4700904206		5	Screw	C
12	4700380435		1	Cap	D
	4700902866		1	. Key Marked "455"	
13	4700343872		2	Hose clamp	D
14	4700335914		2	Cover plate	D
15	4700904230		4	Steel plain washer	C
16	4700500032		4	Screw M10 x 55	D
17	4700391442		1	Hose clamp	D
18	4700391443		1	Hose clamp	D
19	4700904231		4	Washer 13x24x2 300 HV	C
20	4700500051		4	Screw M12x25H 8.8 A3K	C
21	4700792151		2	Elbow adapter 90	
22	4700791797		2	Tee-connector orfs	D
23	4700925750		2	Screw	D
24	4700570005		2	Nut M8	C
25	4700586003		2	Lock nut M8	C
26	4700791314		2	Handle knob	D
27	4700392701		2	Steering hitch lock	D
	4700924999		2	. Clevis pin	D
	4700901178		2	. Hair pin	D
	4700928381		1	. Washer 6,4x18x1,6	C
	4700394715		1	. Wire	D
	4700903795		1	. Screw	C
28	4700394400		2	Bracket	D
29	4700904703		8	Washer	B
30	4700500195		8	Screw	C
31	4700792605		2	Quick connect coupling	D
36	4700928381		2	Washer 6,4x18x1,6	C
37	4700903795		2	Screw	C
38	4700904640		2	Washer 8,4x22x3	C

4700391023 Steering cylinder

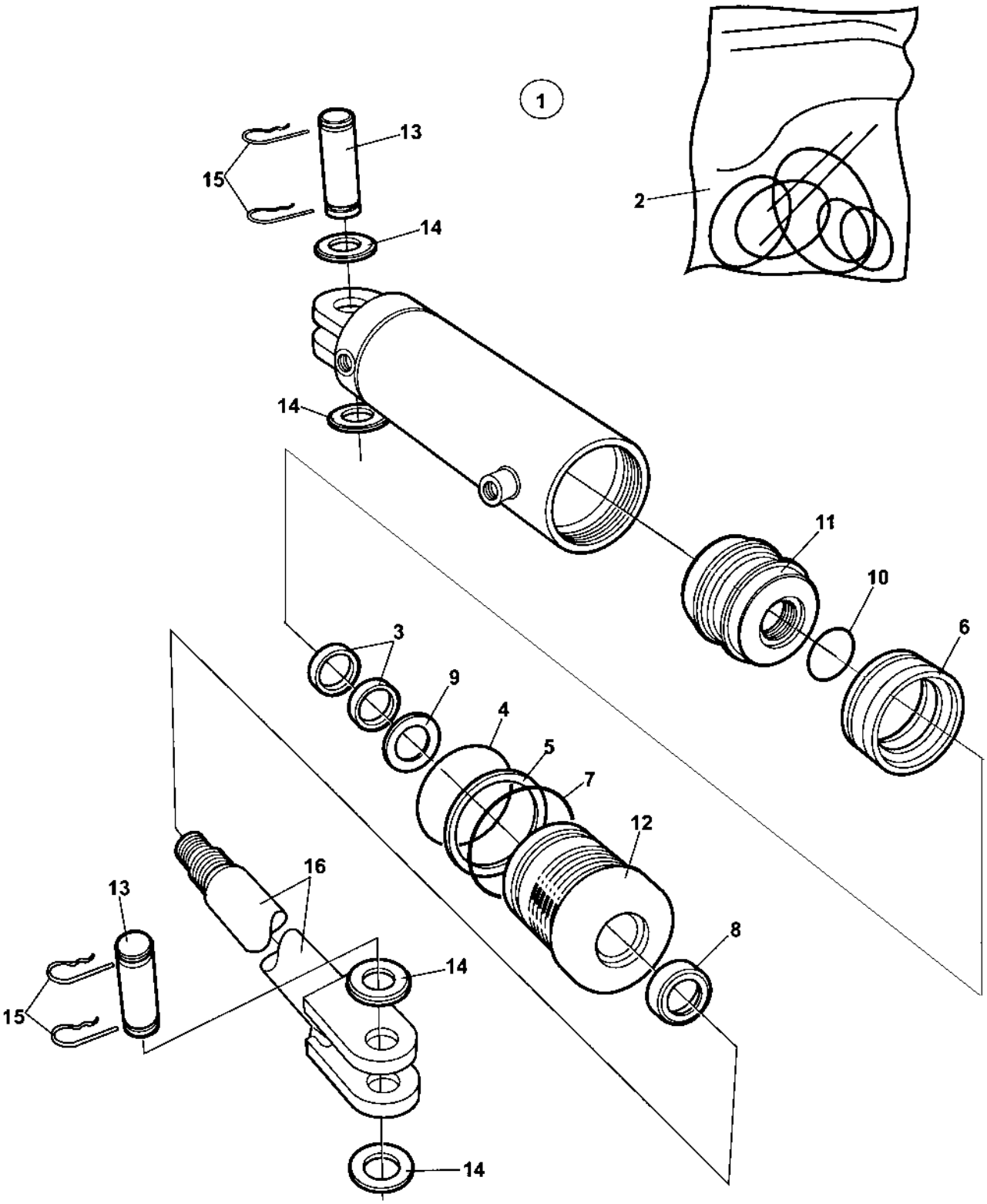

4700391023 Steering cylinder

Item	Part No	Rem	Qty	Description	Code
1	4700391023		1	**Steering cylinder (Page 28)**	
2	4700950417		1	. Seal kit	C
3			2	. . Seal	
4			1	. . O-ring	
5			1	. . Back-up ring	
6			1	. . Seal	
7			1	. . O-ring	
8			1	. . Seal	
9			1	. . Seal	
10			1	. . O-ring	
11			1	. Piston block	
12			1	. Steering	
13	4700950222		2	. Shaft	D
14			4	. Washer	
15	4700635061		4	. Hair clip	B
16			1	. Piston rod	
17			1	. Cylinder	

Tank structure module

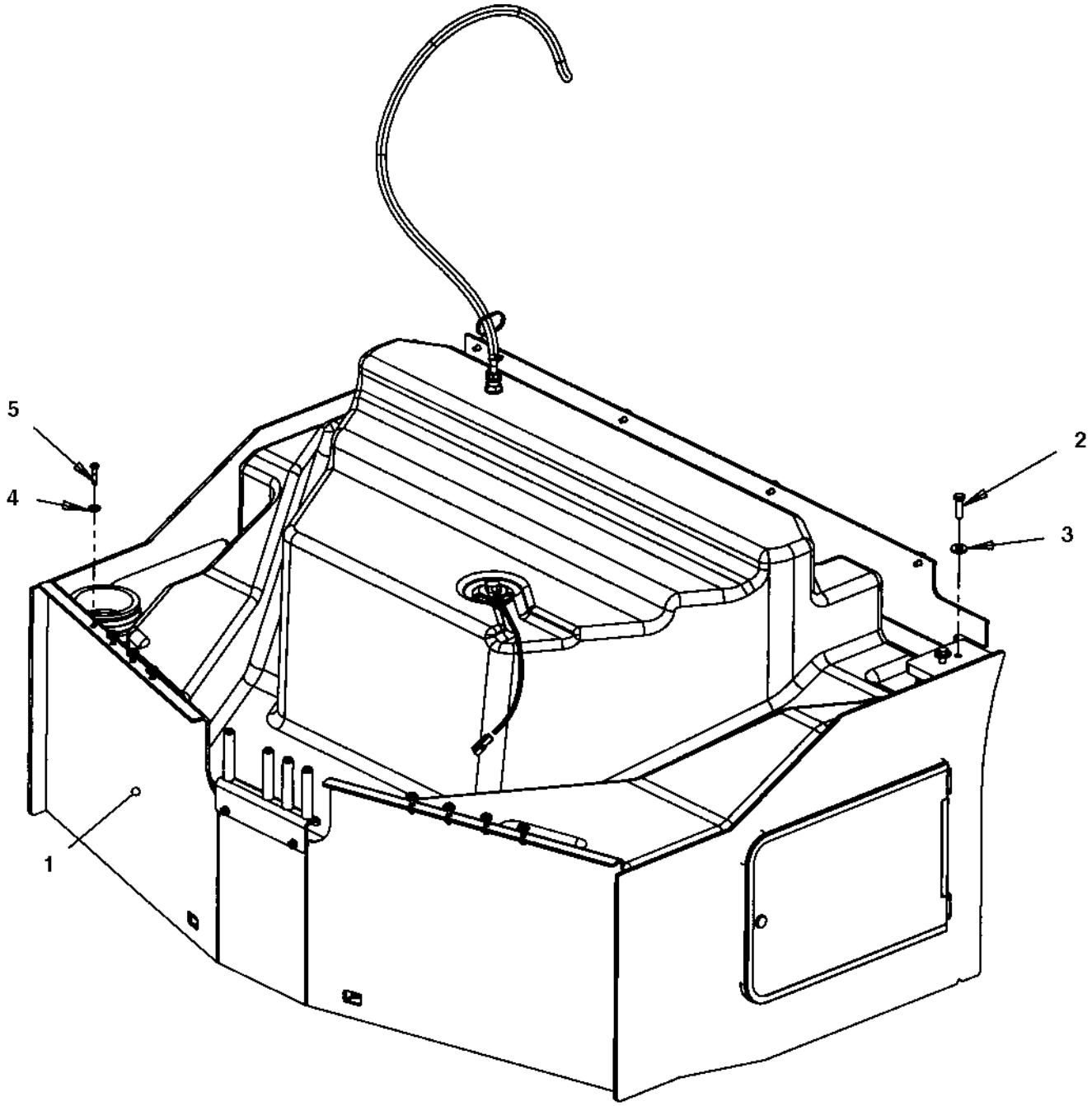

Tank structure module

Item	Part No	Rem	Qty	Description	Code
1			1	**Tank structure module (Page 32)**	
2	4700947689		4	Screw	D
3	4700904213		4	Washer	C
4	4700904640		8	Washer 8,4x22x3 Up to 384S00077	C
	4700904213		6	Washer From 384S00078	C
5	4700500047		8	Hexagon head screw Up to 384S00077	C
	4700947689		6	Screw From 384S00078	D

Tank structure module

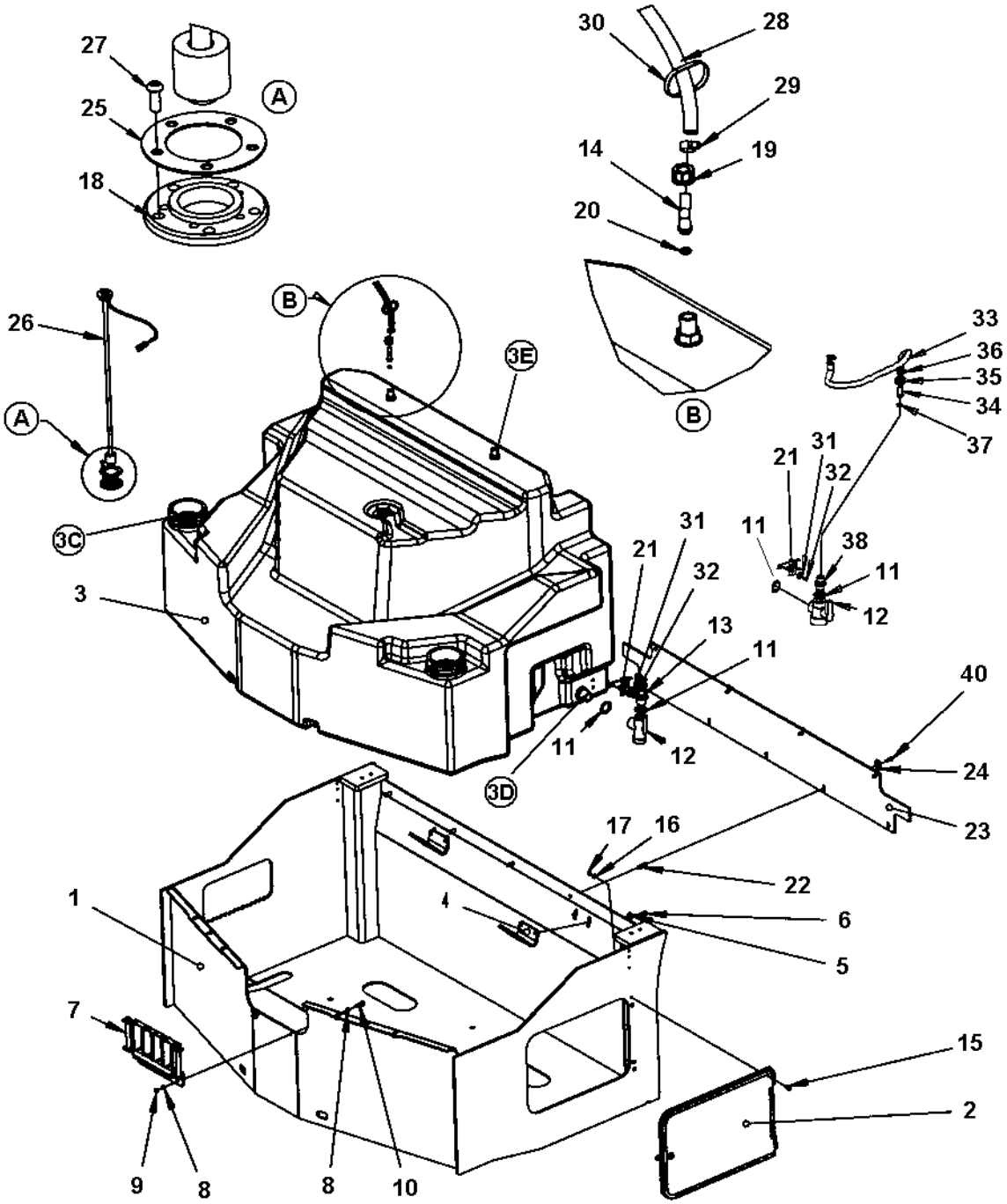

Tank structure module

Item	Part No	Rem	Qty	Description	Code
1	4700394522		1	Tank structure Up to 384S00077	D
	4700395131		1	Tank structure From 384S00078	D
2	4700391307		1	**Cover (Page 36)**	
3	4700393287	2	1	Water tank, cpl Up to 384S00222	D
	4700396496	1,3	1	Water tank, cpl From 384S00223 Up to 384S00449	D
	4812110982	4	1	Water tank, cpl From 384S00450	
	4700392235	C	1	. Gasket	D
	4700313105	C	1	. Hose clamp	
	4700392223	D	1	. Plane gasket	
	4700392222	D	1	. Grommet	
	4700392224	D	1	. Lock nut	
	4700392231	E	3	. Plane gasket	
	4700392230	E	3	. Grommet	
	4700392232	E	3	. Nut	
4	4700391624		2	Bracket	D
5	4700904640		4	Washer 8,4x22x3	C
6	4700500053		4	Screw M8x20H 8.8	C
7			1	**Hose support (Page 38)**	
8	4700904229		4	Steel plain washer 8,4x16x1,5	C
9	4700570005		2	Nut M8	C
10	4700500022		2	Screw M8x30H 8.8	C
11	4700392223		2	Plane gasket	
12	4700392225		1	Ball valve Up to 384S00244	C
	4700792782		1	Ball valve From 384S00245	
13	4700392226		1	Reducer nipple Up to 384S00244	
14	4700393542		2	Hose connection swivel	C
15	4700928784		4	Screw	
16	4700603001		4	Washer	C
17	4700586002		4	Lock nut M6 -8	C
18	4700370745		1	Flange, cpl	C
19	4700392227		2	Swivel nut	
20	4700792600		2	O-ring 70	
21	4700396176		1	Bracket Up to 384S00244	
	4700396739		1	Bracket From 384S00245	D
22	4700900672		5	Blind insert nut	
23	4700393412		1	Rubber cloth	D
24	4700615050		9	Washer	C
25	4700372718		1	Lid	D
26	4700391353		1	Level sender	
27	4700904206		5	Screw	C
28	4812112074	A	1XL	Plastic hose	
29	4700313002		2	Hose clamp 13-20 mm	
30	4700313102		N	Cable ties L=380 mm	
31	4700904228		2	Washer 6,4x12x1,5	C
32	4700500012		2	Screw M6x12	C
33	4700792073	B	1XL	Hose reinforced From 384S00245	D

1) Tank with two filling holes.
2) Can be replaced as spare part by Water tank kit PN 4812155891 together with Cap PN 4812110537.
3) Replaced as spare part by Water tank kit PN 4812155891.
4) Is included in Water tank kit PN 4812155891 together with PN 4700379753 and PN 4811000168.

A) Length as required
B) L= 0.7 m
C) Water fill
D) Drain
E) Hose connection

Tank structure module

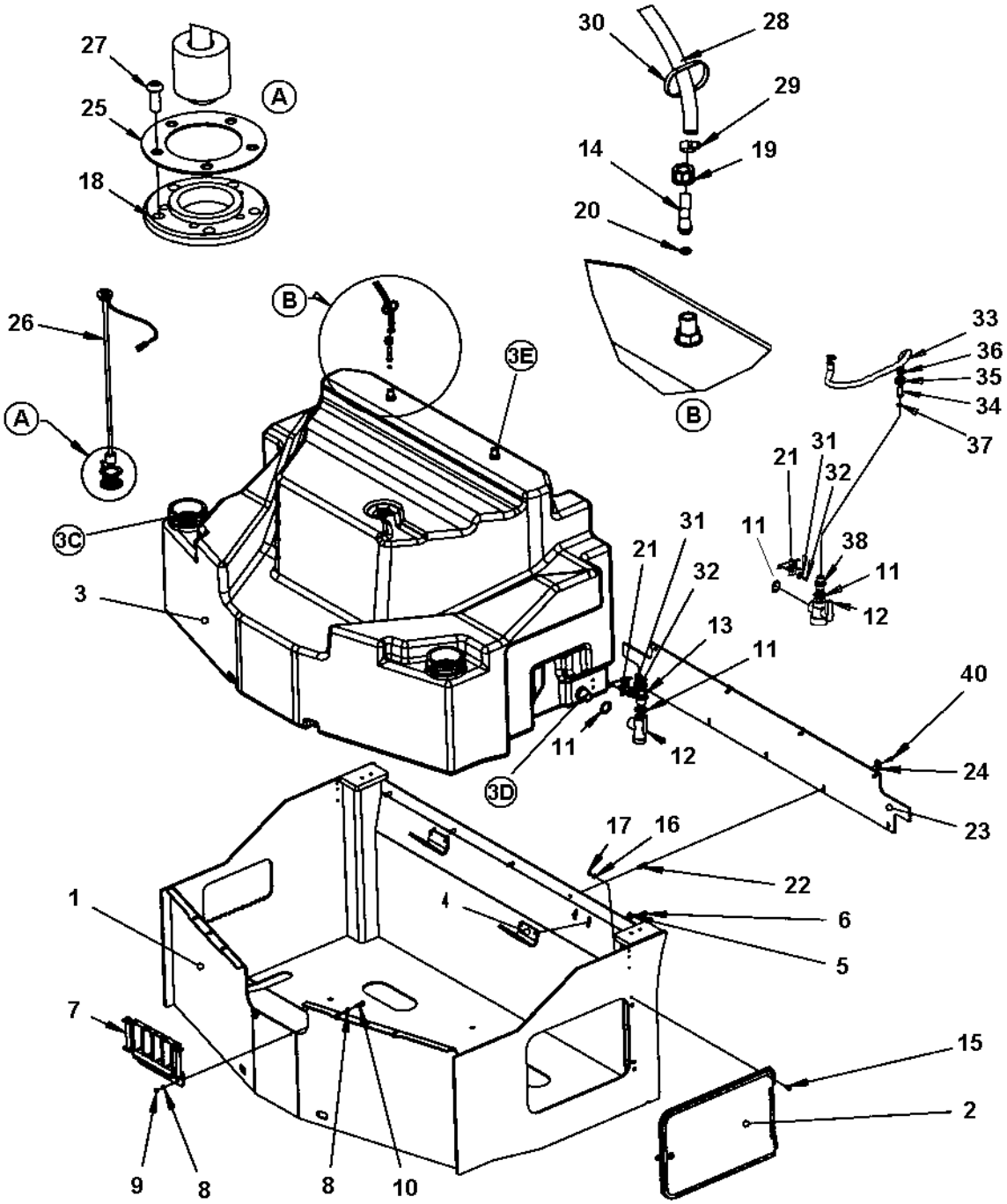

Tank structure module

Item	Part No	Rem	Qty	Description	Code
34	4700792780		1	Hose connection swivel From 384S00245	
35	4700792779		1	Swivel nut From 384S00245	
36	4700313003		2	Hose clamp 15-25mm From 384S00245	D
37	4700480852		1	O-ring 70 From 384S00245	
38	4700792781		1	Reducer nipple From 384S00245	
40	4700500021		9	Screw M8-1,25x25 8.8	C

4700391307 Cover

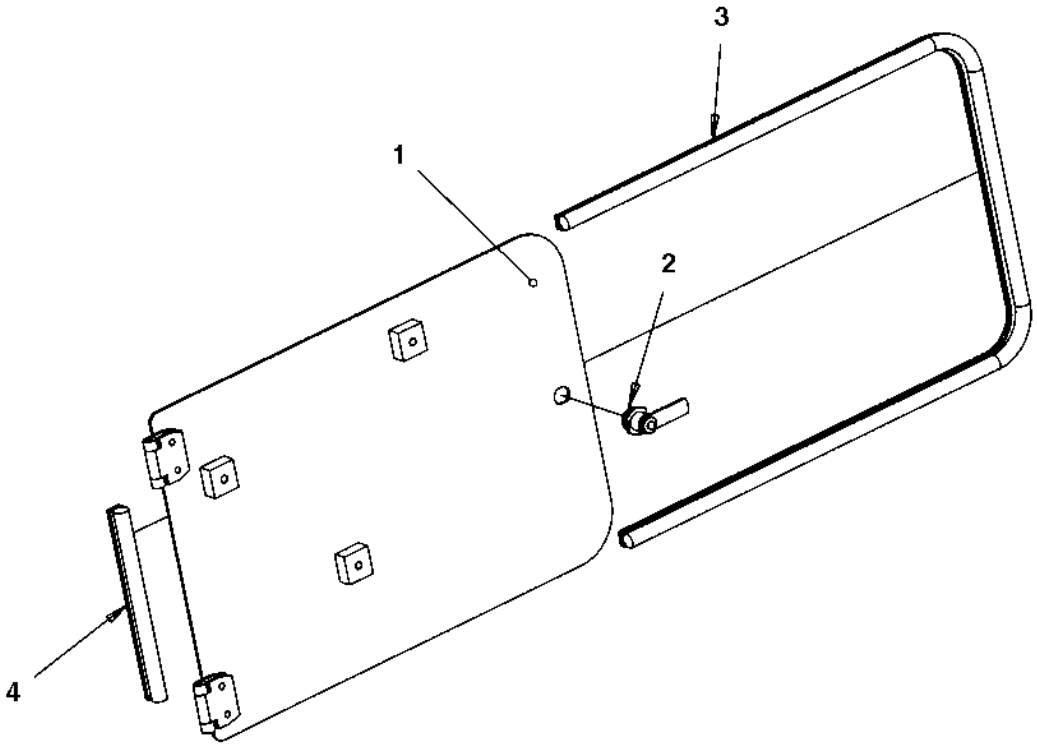

4700391307 Cover

Item	Part No	Rem	Qty	Description	Code
1			1	Cover	
2	4700383626		1	Lock Ø19	D
	4700397348	1	1	Lock Ø22	
	4700902866		1	. Key Marked "455"	
	4812113939		1	Lock Ø22 (T-Key)	
	4812113949		1	. T-Key	A
3	4700202057	A	1XL	Edge trim	D
4	4700202057	B	1XL	Edge trim	D

1) Lock P/N 4700397348 replaced as spare part by P/N 4812113939.
A) L=1.33 m
B) L=0.21 m

Hose support

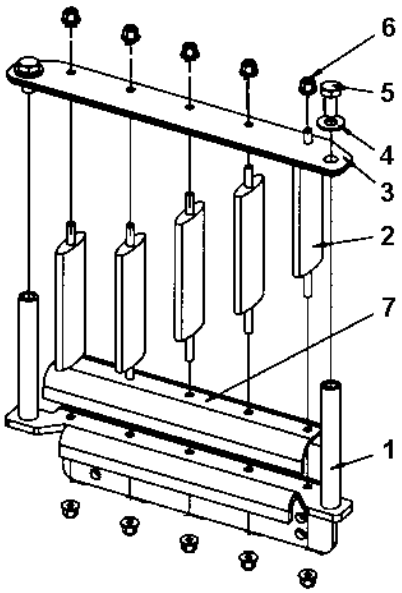

Hose support

Item	Part No	Rem	Qty	Description	Code
1	4700394023		1	Bracket	D
2	4700397039		5	Spacer	D
3	4700397318		1	Cap	
4	4700904230		2	Steel plain washer	C
5	4700500048		2	Screw M10-1,5x20 8,8	C
6	4700902285		10	Hexagon lock nut with flange	C
7	4812110277		1	Hose guard	D

Hitch module

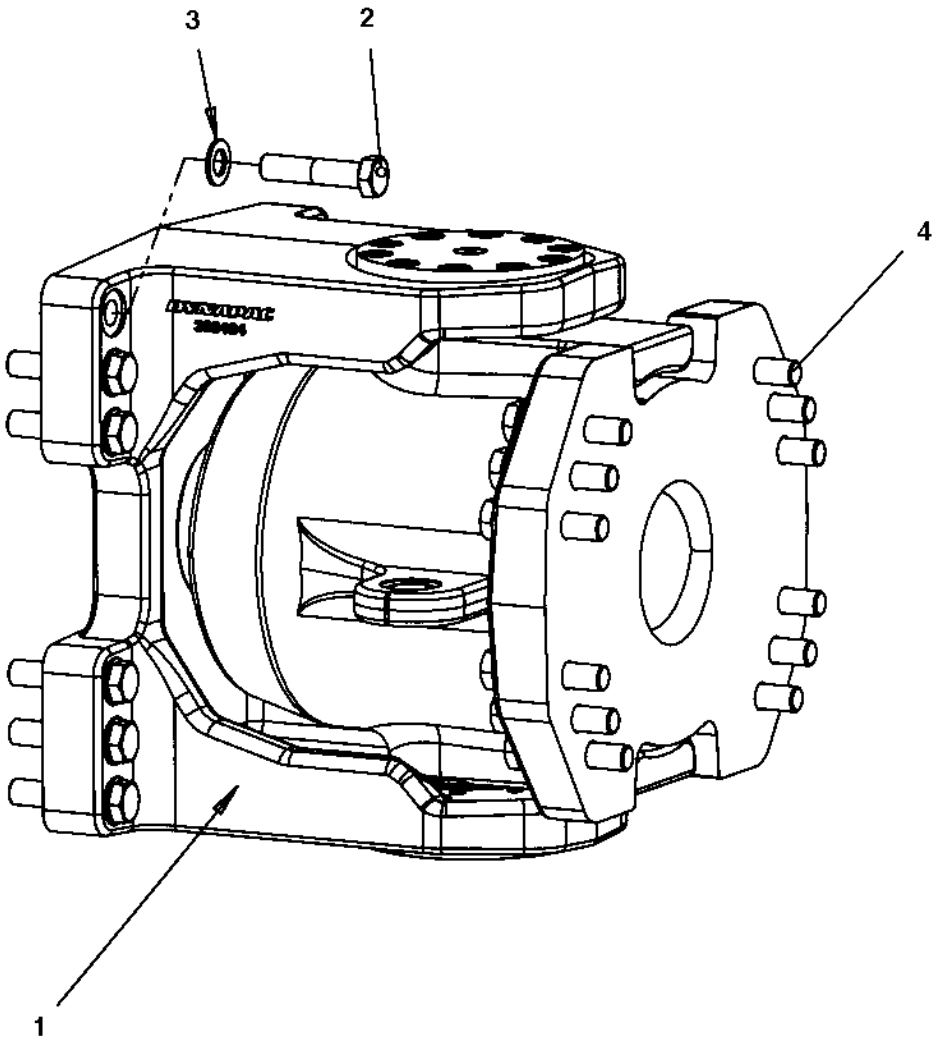

Hitch module

Item	Part No	Rem	Qty	Description	Code
1			1	**Steering hitch (Page 42)**	
2	4700500287		12	Screw M20x80 10,9	C
3	4700904233		24	Washer 21x36x3	C
4	4700925208		12	Screw M20x90	D

Steering hitch

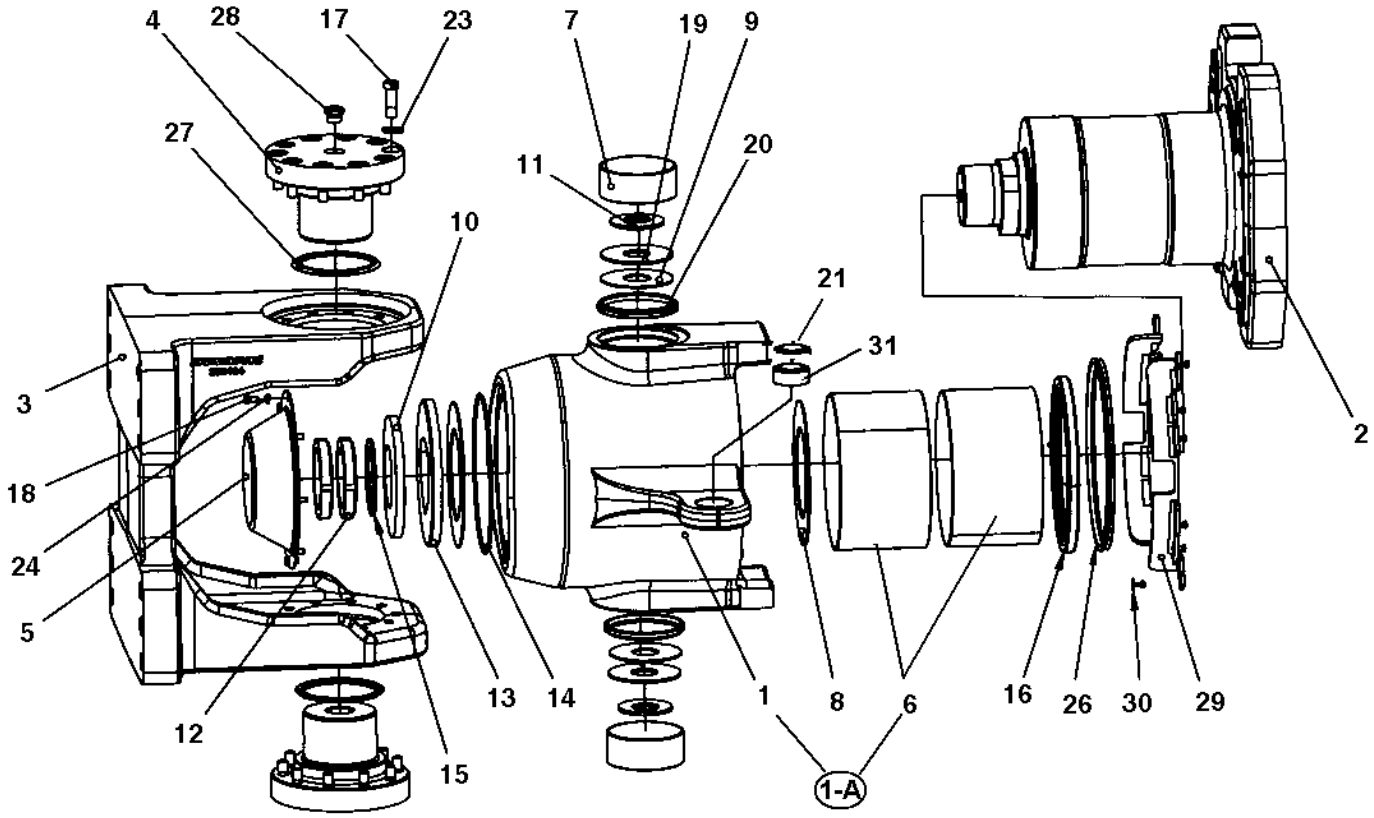

Steering hitch

Item	Part No	Rem	Qty	Description	Code
	4700396583	7	1	Steering hitch, cpl	
1	4700390533	3,6	1	Hitch yoke	D
	4700396584	4	1	Hitch yoke	D
1-A	4812156376	5	1	Hitch yoke, kit	
2	4700390534	3	1	Shaft	D
	4700396585	4	1	Shaft	C
3	4700393464		1	Hitch holder	D
4	4700393465		2	Shaft	C
5	4700392550		1	Cover	D
6	4700390538	1	2	Sleeve bearing	D
	4700396588	2	2	Sleeve bearing	B
7	4700390539		2	Sleeve bearing	B
8	4700393523		2	Slide washer	D
9	4700390541		2	Slide washer	D
10	4700390542		1	Disc spring	D
11	4700390543		2	Disc spring	D
12	4700135015		2	Shaft nut	D
13	4700393115		1	Thrust washer	D
14	4700160277		1	O-ring	D
15	4700393218		1	Back-up ring	C
16	4700391031		1	Radial lip-type seal	D
17	4700792394		20	Screw	D
18	4700500012		8	Screw M6x12	C
19	4700391566		2	Washer	D
20	4700792517		2	Shear wiper	D
21	4700792554		2	Radial spherical plain bearing	D
23	4700904231		20	Washer 13x24x2 300 HV	C
24	4700904228		8	Washer 6,4x12x1,5	C
26	4700792515		1	Sealing, v-ring	D
27	4700792518		2	Radial lip-type seal	D
28	4700792295		2	Steel plug	D
29	4700394207	1	2	Flush cover	D
30	4700792325	1	12	Blind rivet	
31	4700151015		2	Snap ring	D

1) Used together with PN 4700390533 and 4700390534.
2) Used together with PN 4700396584 and 4700396585.
3) PN 4700390533 and 4700390534 should be fitted together. (PN is stamped on part.)
4) PN 4700396584 and 4700396585 should be fitted together. (PN is stamped on part.)
5) Kit contains of P/N 4700396584 x1 and 4700396588 x2. Replaces P/N 4700390533 as spare part.
6) Replaced as Spare part by P/N 4812156376 (item 1-A)
7) Replaced by P/N 4812113153 as Spare part.

Filling pipe

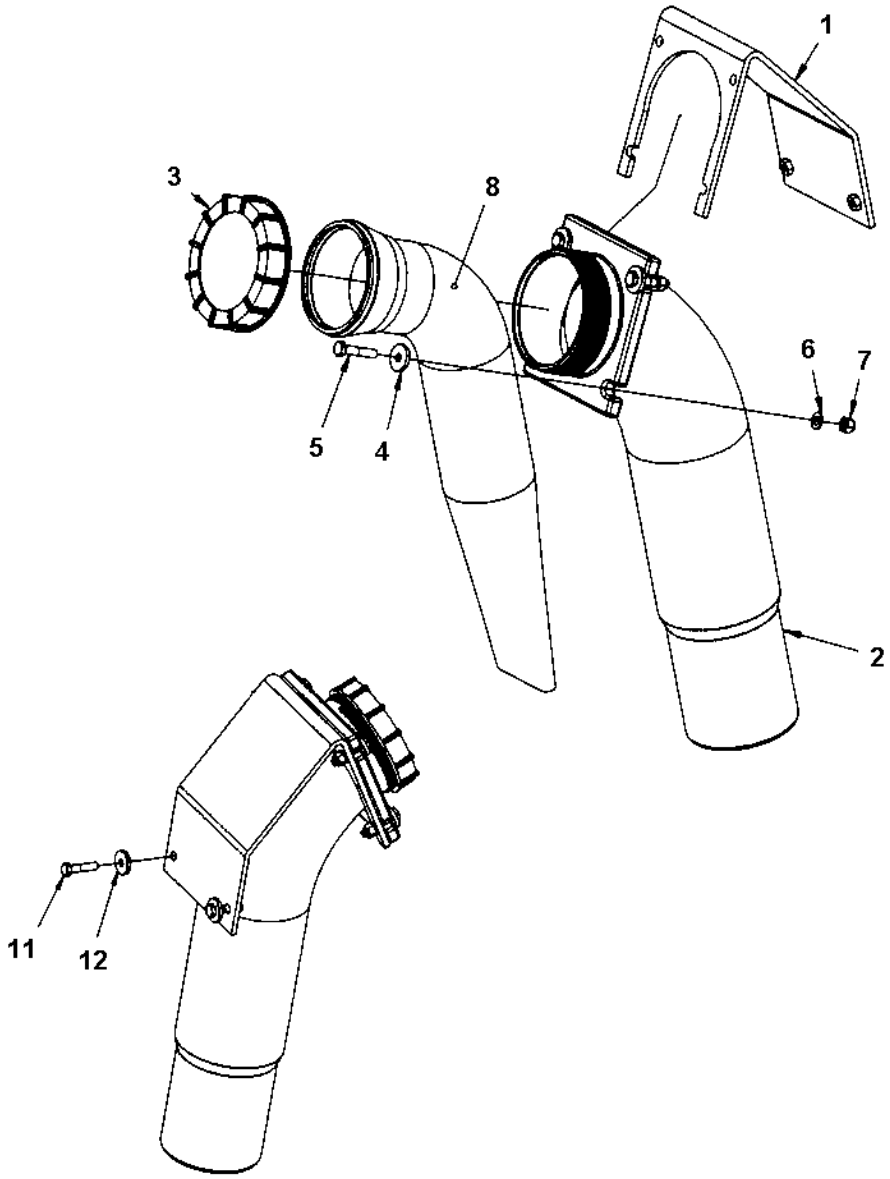

Filling pipe

Item	Part No	Rem	Qty	Description	Code
1	4700391626		1	Bracket	D
2	4700390613		1	Filling pipe	D
3	4700920819		1	Filler cap	D
4	4700904734		4	Washer 8,4x26x4	
5	4700500023		4	Screw M8-1,25x40 8,8	C
6	4700904229		4	Steel plain washer 8,4x16x1,5	C
	4700904229	1	6	Steel plain washer 8,4x16x1,5	C
7	4700586003		4	Lock nut M8	C
8	4700391444		1	Strainer	D
11	4700500047		2	Hexagon head screw	C
12	4700904734		2	Washer 8,4x26x4	

1) 2pcs used on upper side (instead of 2pcs item 4), when machine equipped with lockable cap.

Cover module

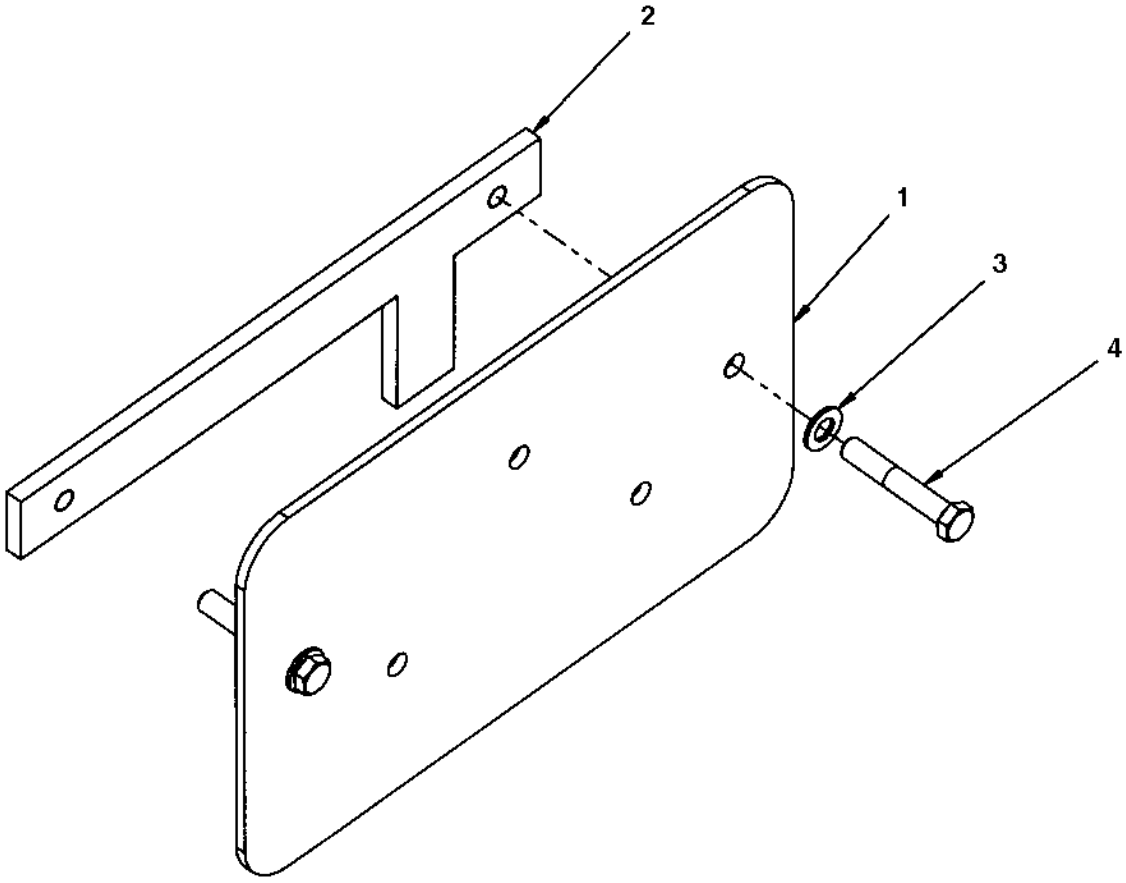

Cover module

Item	Part No	Rem	Qty	Description	Code
1	4700391647		1	Cover Up to 384S00163	D
	4700396071		1	Cover From 384S00164	D
2	4700391648		1	Bracket Up to 384S00163	D
3	4700904231		2	Washer 13x24x2 300 HV	C
4	4700500133		2	Screw Up to 384S00163	C
	4700500051		2	Screw M12x25H 8.8 A3K From 384S00164	C

Disc/Roller holder

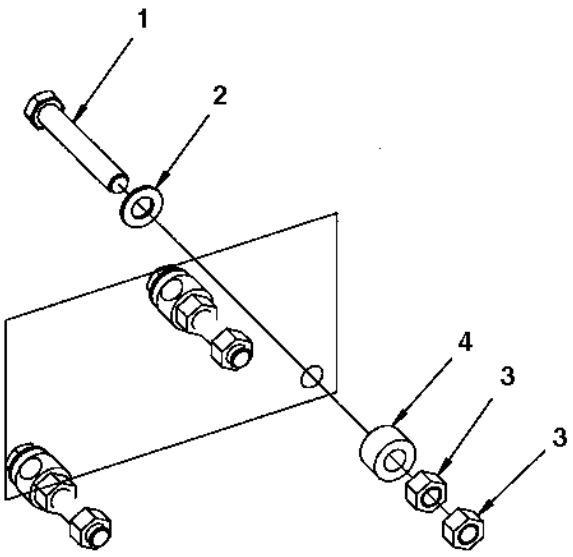

Disc/Roller holder

Item	Part No	Rem	Qty	Description	Code
1	4700903898		3	Screw	
2	4700904231		3	Washer 13x24x2 300 HV	C
3	4700570007		6	Hexagon nut M12	C
4	4700791572		3	Spacer washer	C

Disc/Roller holder

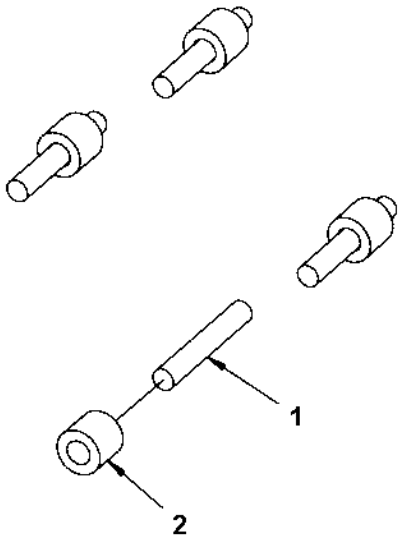

Disc/Roller holder

Item	Part No	Rem	Qty	Description	Code
1	4700792245		4	Stud	D
2	4700383024		4	Spacer sleeve	C

Grab handle module

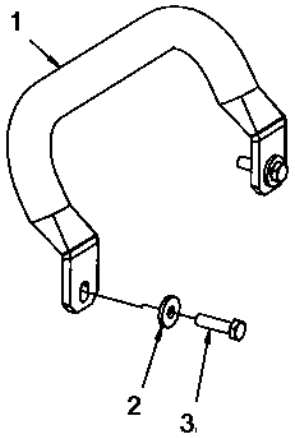

Grab handle module

Item	Part No	Rem	Qty	Description	Code
1	4700394545		1	Grab handle	
2	4700904640		2	Washer 8,4x22x3	C
3	4700500022		2	Screw M8x30H 8.8	C

Rear frame

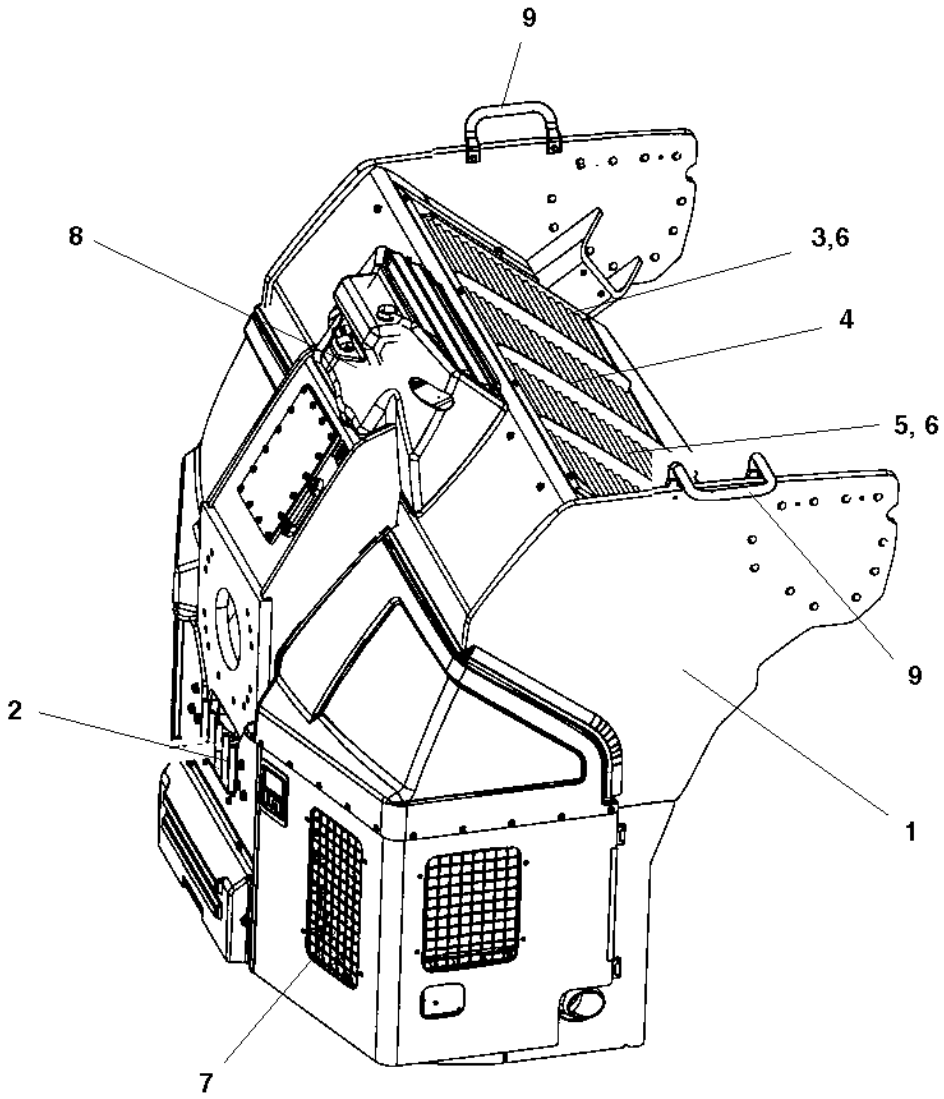

Rear frame

Item	Part No	Rem	Qty	Description	Code
1			1	**Rear frame (Page 56)**	
2			1	**Engine structure, module (Page 60)**	
3			1	**Water cooler (Page 244)**	
4			1	**Charge air cooler (Page 242)**	
5			1	**Oil cooler (Page 68)**	
6			2	**Fan (Page 70)**	
7			1	**Noise suppression plates (Page 72)**	
			1	**Noise suppression, covers (Page 74)**	
8			1	**Expansion tank assembly (Page 246)**	
9			2	**Grab handle module (Page 52)**	

Rear frame

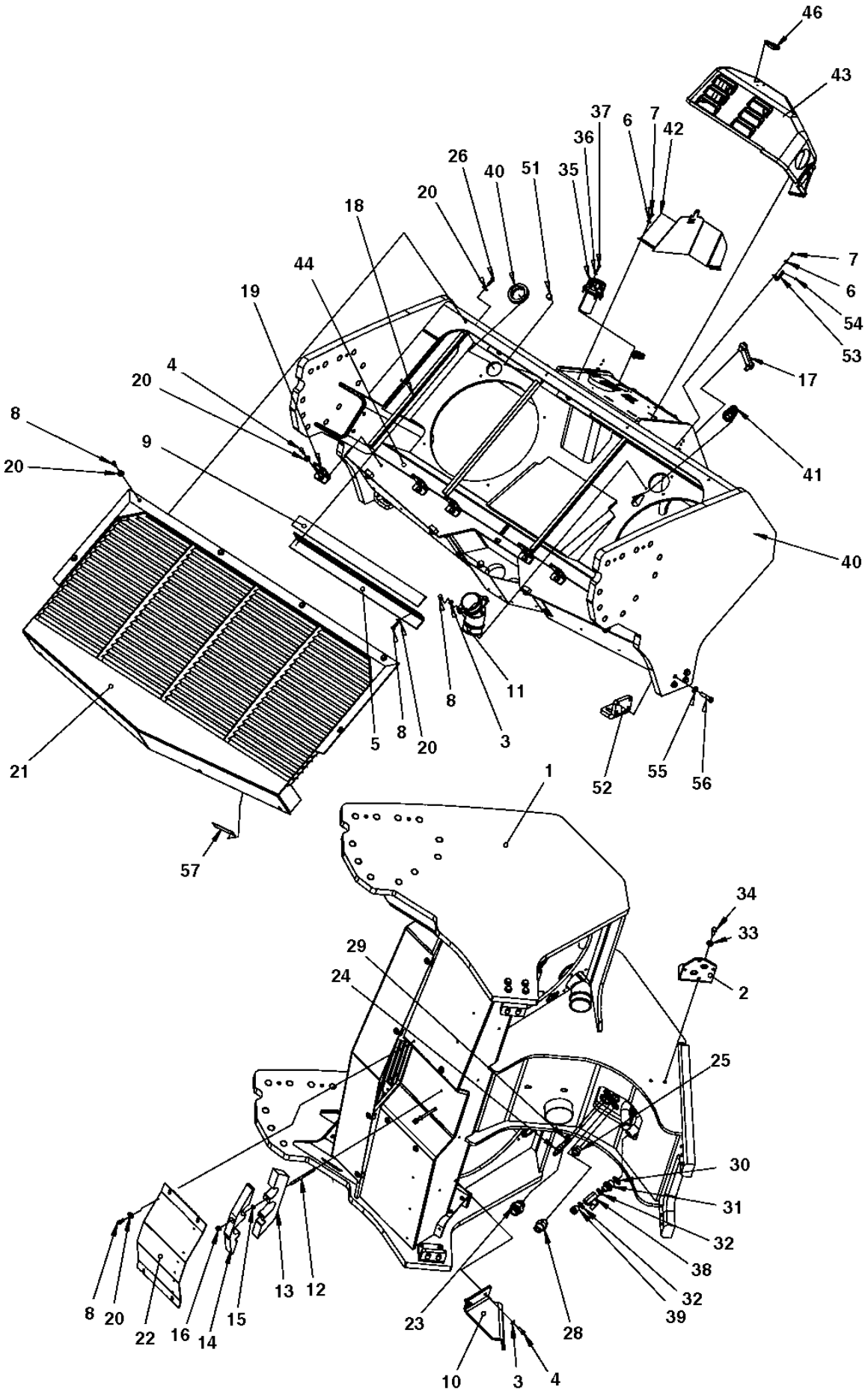
46
43
37
6
7
42
36
26
40
51
35
20
18
44
19
7
6
54
53
17
4
20
8
9
20
41
40
11
8
5
8
20
3
21
52
55
56
57
1
34
33
29
24
2
25
30
31
32
38
32
39
28
23
13
12
8
20
22
16
14
15
10
3
4

Rear frame

Item	Part No	Rem	Qty	Description	Code
1	4700394529		1	Rear frame	D
	4700390925		1	. Hydraulic tank cover	
	4700390926		1	. O-ring	D
2	4700397296		1	Bracket	D
3	4700904229		4	Steel plain washer 8,4x16x1,5	C
4	4700500021		16	Screw M8-1,25x25 8.8 Up to 384S00310	C
	4700500021		8	Screw M8-1,25x25 8.8 From 384S00311	C
5	4700390780		2	Bracket Up to 384S00310	D
	4700392075		2	Bracket From 384S00311	D
6	4700603001		8	Washer	C
7	4700500059		8	Screw	D
8	4700500053		18	Screw M8x20H 8.8	C
9	4700391298		2	Rubber cloth Up to 384S00310	D
	4700392078		2	Rubber cloth From 384S00311	D
10	4700391300		1	Bracket Up to 384S00326	D
	4700396210		1	Bracket From 384S00327	D
11	4700394000		1	Bulkhead elbow	D
12	4700792326		2	Stud	D
13	4700391375		1	Hose support	D
14	4700391376		1	Hose support	D
15	4700904044		2	Lock washer	C
16	4700902286		2	Hexagon lock nut with flange	C
17	4700792492		1	Level gauge	C
18	4700391299	A	1XL	Rubber strip	D
19	4700391296		6	Bracket	D
20	4700904640		28	Washer 8,4x22x3 Up to 384S00310	C
	4700904640		26	Washer 8,4x22x3 From 384S00311	C
21	4700395522		1	Cover	D
22	4700391434		1	Cover	D
23	4700792338		1	Straight connector	D
24	4700792276		1	Temperature sensor	D
25	4700791405		1	Straight o-ring connector	C
26	4700500022		4	Screw M8x30H 8.8	C
28	4700904728		1	Adapter	
29	4700162015		1	Seal ring	D
30	4700791120		1	Sealing washer	
31	4700792421		1	Straight connector	D
32	4700162006		2	Seal ring	D
33	4700904230		2	Steel plain washer	C
34	4700500028		2	Screw	C
35	4700391026		1	Ventilating filter	A
36	4700904281		6	Washer 5,3x10x1 300HV	C
37	4700508020		6	Screw	D
38	4700925599		1	Ball valve	C
39	4700232056		1	Plug	
40	4700393001		2	Grommet	D
41	4700393149		2	Grommet	D
42	4700393281		1	Bracket	D
43			1	**Cover, cpl (Page 58)**	
44	4700394459		2	Rubber cloth	D
46	4700358881		1	Pad lock	D
51	4700792607		6	Shock absorber	D
52	4700394400		2	Bracket	D
53	4700394297		2	Bracket	D
54	4700624021		4	Pop rivet	D
55	4700904703		8	Washer	B
56	4700500269		8	Screw	C
57	4700394513		2	Rubber cloth	D

A) L= 2,34 m

Cover, cpl

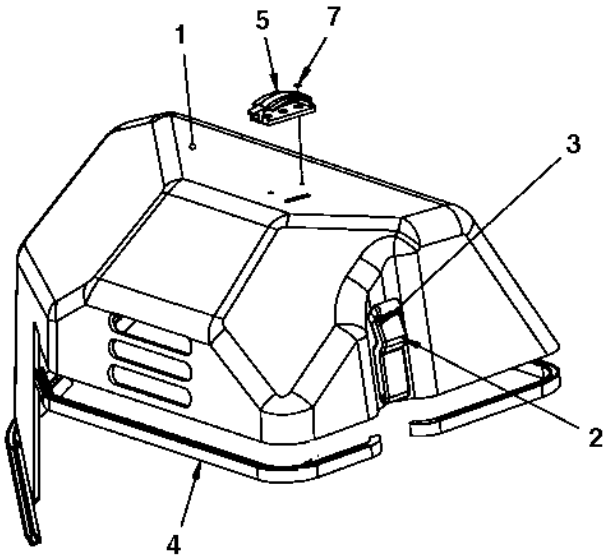

Cover, cpl

Item	Part No	Rem	Qty	Description	Code
1	4700391750		1	Cover	D
2	4700388846		2	Latch	D
3	4700624021		4	Pop rivet	D
4	4700902166	A	1XL	Edge trim	D
5	4700394536		1	Wiring clip	D
7	4700624018		2	Blind rivet	D

A) L=1.59 m

Engine structure, module

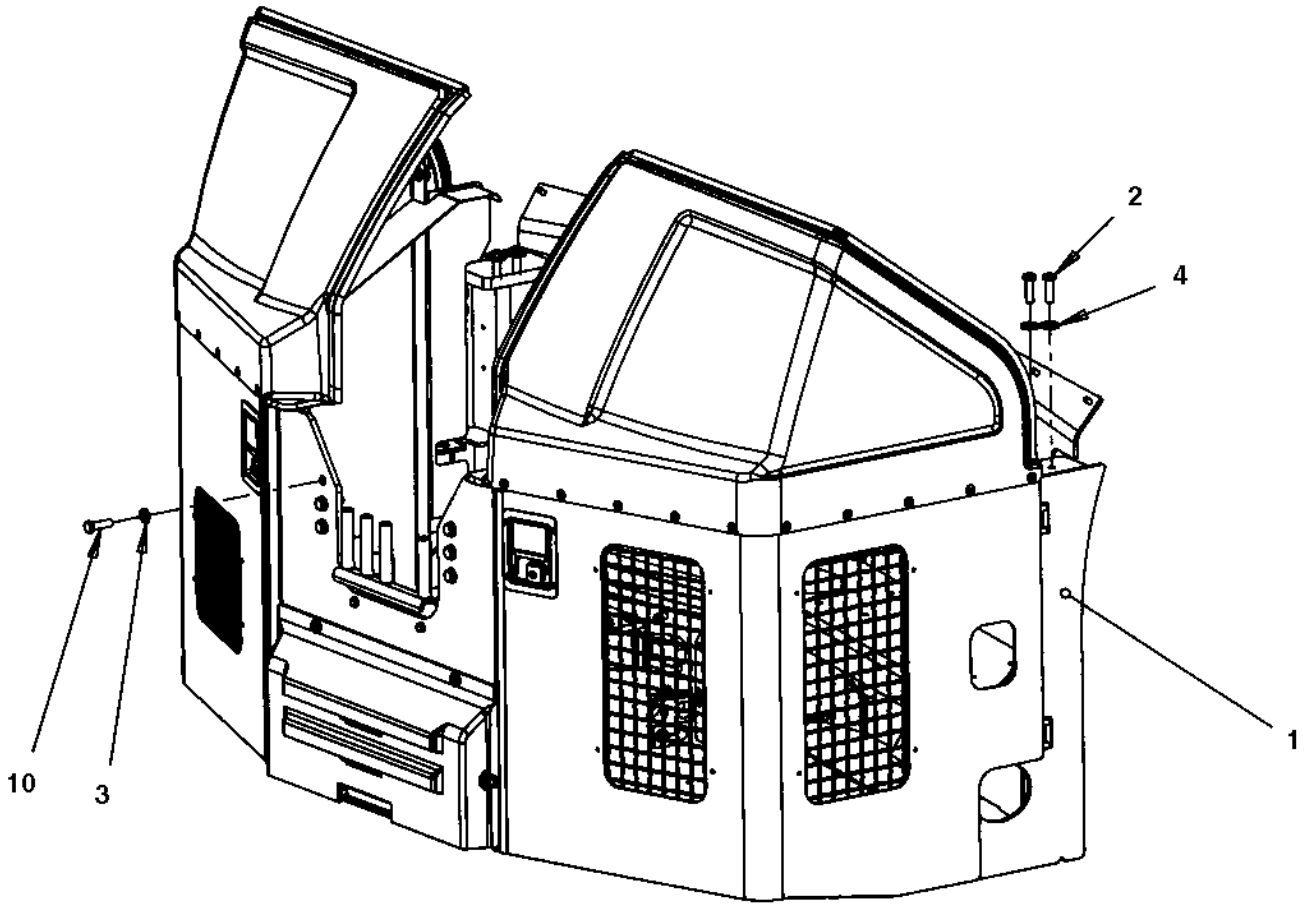

Engine structure, module

Item	Part No	Rem	Qty	Description	Code
1			1	**Engine structure (Page 62)**	
2	4700947689		4	Screw	D
3	4700904231		6	Washer 13x24x2 300 HV	C
4	4700904213		4	Washer	C
10	4700500269		6	Screw	C

Engine structure

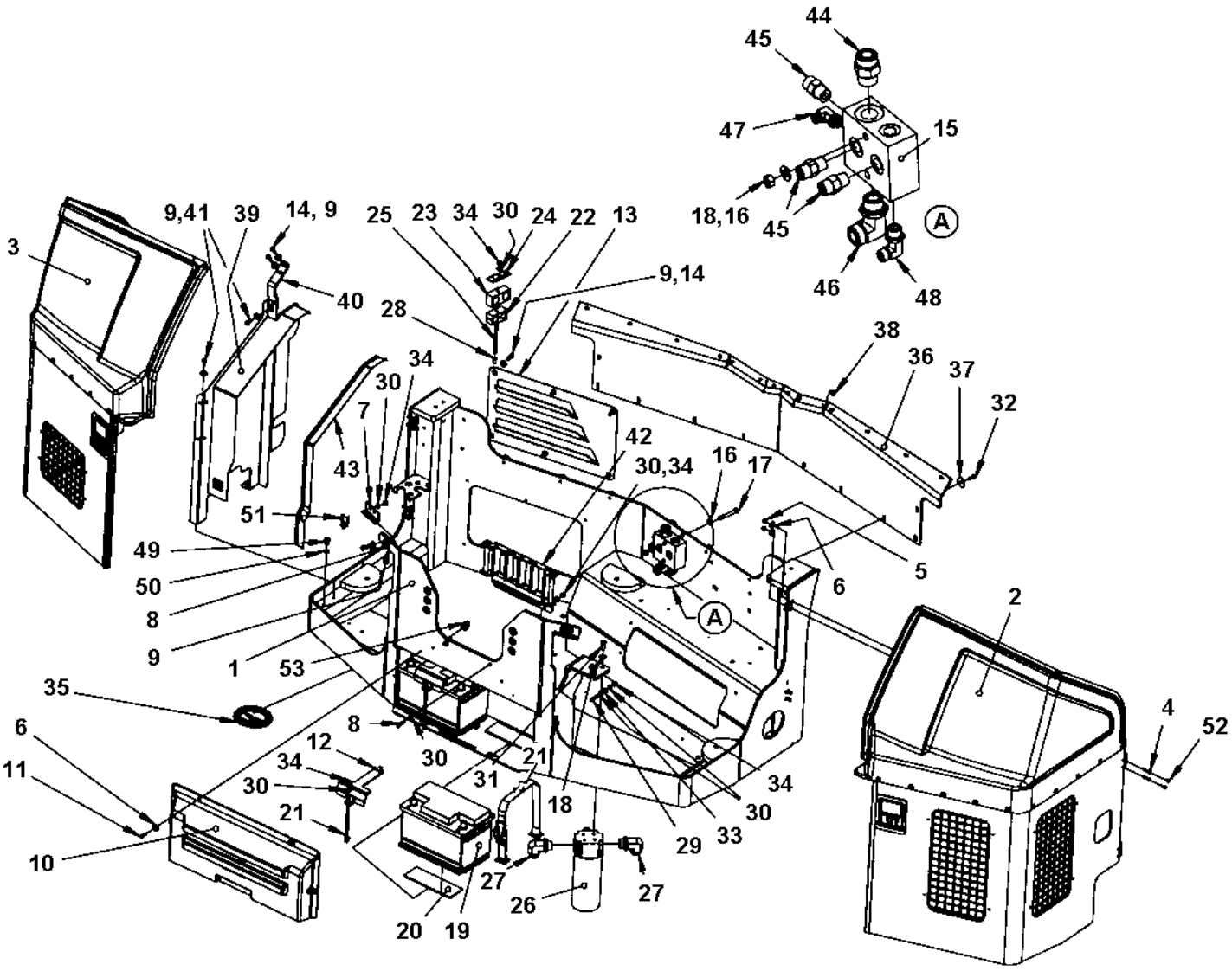

Engine structure

Item	Part No	Rem	Qty	Description	Code
1	4700394514		1	Engine structure	D
2			1	**Engine cover, left (Page 64)**	
3			1	**Engine cover, right (Page 66)**	
4	4700513017		8	Screw M6x30H 10,9	C
5	4700586002		8	Lock nut M6 -8	C
6	4700904735		12	Washer	C
7	4700378310		2	Lock bracket Up to 384S00309	D
	4700396542		2	Lock bracket From 384S00310	D
8	4700500022		6	Screw M8x30H 8.8	C
9	4700904640		15	Washer 8,4x22x3	C
10	4700390884		1	Cover	D
11	4700500040		4	Screw M6-1x20 8,8	C
12	4700396634		2	Battery holder From 384S00338	D
13	4700392799		1	Grid	D
14	4700500021		8	Screw M8-1,25x25 8.8	C
15	4700391157		1	Connection block	D
16	4700904230		7	Steel plain washer	C
17	4700500092		2	Screw	D
18	4700570006		2	Nut	B
19	4700792311		2	Battery	
20	4700357459		4	Rubber cloth	D
21	4700391441		2	Strap Up to 384S00337	D
	4700396635		2	Battery screw From 384S00338	D
22	4700903456		1	Pipe clamp	D
23	4700791711		1	Pipe clamp	D
24	4700791712		1	Cover plate	D
25	4700792326		1	Stud	D
26	4700391025		1	Hydraulic oil filter, cpl Up to 384S00362	
	4812110667		1	Hydraulic oil filter From 384S00363	A
	4700391433		1	. Hydraulic oil filter element	A
	4812158269		1	. Filter switch	
	4700391432		1	Cleaning filter element	
27	4700791844		2	Elbow adapter 90	D
28	4700792825		1	Blind insert nut	D
29	4700903768		3	Threaded stud	C
30	4700904229		17	Steel plain washer 8,4x16x1,5	C
31	4700500028		3	Screw	C
32	4700500053		18	Screw M8x20H 8.8	C
33	4700570005		3	Nut M8	C
34	4700586003		12	Lock nut M8	C
35	4700379992		1	Plug	
36	4700379974		1	Rubber cloth	D
37	4700615050		18	Washer	C
38	4700792325		6	Blind rivet	
39	4700391769		1	Belt guard	D
40	4700391768		1	Bracket	D
41	4700500019		3	Hexagon head screw M8x16H 8,8	C
42			1	**Hose support (Page 38)**	
43	4700792258	A	1XL	Edge trim	D
44	4700791823		1	Straight connector orfs	
45	4700791799		3	Straight connector orfs	D
46	4700791231		1	Elbow 90°	D
47	4700792334		1	Elbow 90 orfs	
48	4700791840		1	Elbow adapter 90, O-ring with swivel	D
49	4700500043		1	Screw M10x16H 8,8	D
50	4700904637		1	Washer	C
51	4700394701		N	Wiring clip	D
52	4700926215		8	Protective plug	
53	4700792441		2	Cable tie with holder	C

A) L=0.87 m

Engine cover, left

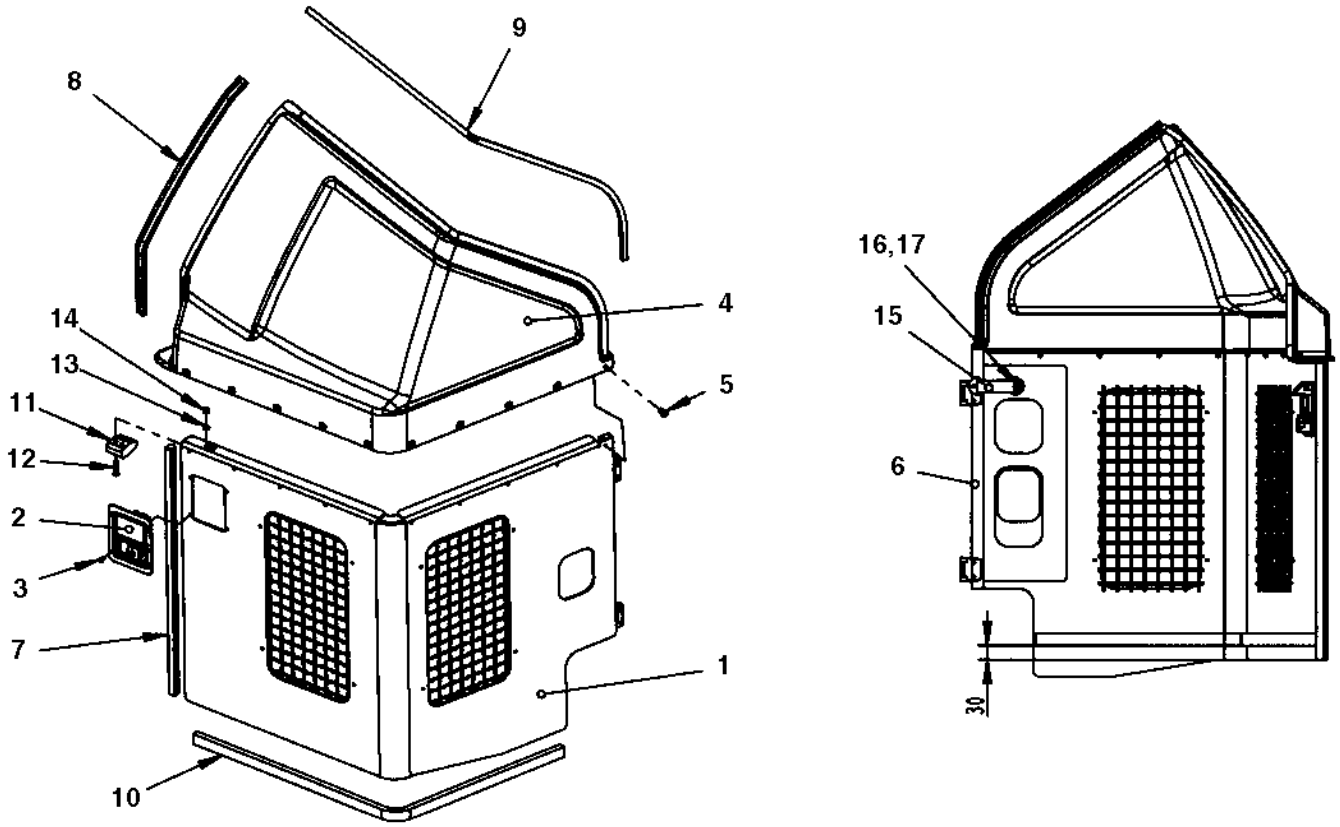

Engine cover, left

Item	Part No	Rem	Qty	Description	Code
			1	Engine cover, cpl Up to 384S00309	
	4700396684	1	1	Engine cover, cpl From 384S00310	D
1			1	. Cover	
	4700903907		2	. . Hinge	C
2	4700378309		1	. Lock Up to 384S00309	D
	4700396607		1	. Lock From 384S00310	D
	4700902866		1	. . Key Marked "455"	
3	4700792669		4	. Blind rivet Up to 384S00309	
	4700624020		4	. Blind rivet From 384S00310	D
4	4700379976		1	. Cover	D
5	4700792325		10	. Blind rivet	
6	4700792718	A	1XL	. Rubber strip Up to 384S00309	D
7	4700202057	B	1XL	. Edge trim	D
8	4700902166	C	1XL	. Edge trim	D
9	4700903953	D	1XL	. Edge trim	D
10	4700792718	E	1XL	. Rubber strip Up to 384S00309	D
11	4700390365		1	. Spacer	D
12	4700924875		2	. Screw	D
13	4700904228		2	. Washer 6,4x12x1,5	C
14	4700586002		2	. Lock nut M6 -8	C
15	4812114393		1	. Hood latch	
16	4700904735		1	. Washer	C
17	4700500059		1	. Screw	D

1) Can be fitted on earlier machines together with new Lock bracket PN 4700396542.
A) L=0.5m
B) L=0.625m
C) L=0.6m
D) L=1.2m
E) L=1.3m

Engine cover, right

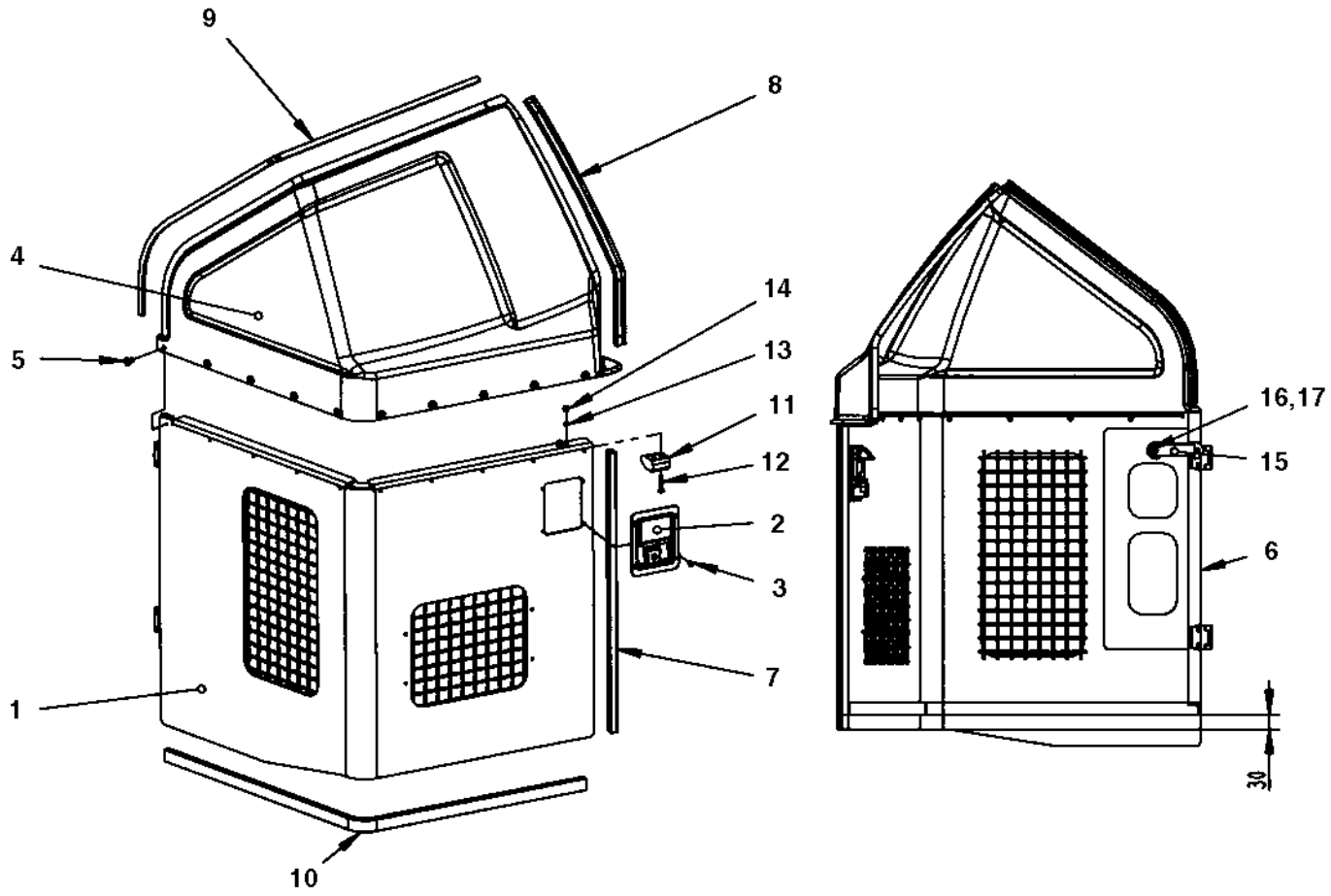

Engine cover, right

Item	Part No	Rem	Qty	Description	Code
			1	Engine cover, cpl Up to 384S00309	
	4700396685	1	1	Engine cover, cpl From 384S00310	D
1			1	. Cover	
	4700903907		2	. . Hinge	C
2	4700378309		1	. Lock Up to 384S00309	D
	4700396607		1	. Lock From 384S00310	D
	4700902866		1	. . Key Marked "455"	
3	4700792669		4	. Blind rivet Up to 384S00309	
	4700624020		4	. Blind rivet From 384S00310	D
4	4700379977		1	. Cover	D
5	4700792325		10	. Blind rivet	
6	4700792718	A	1XL	. Rubber strip Up to 384S00309	D
7	4700202057	B	1XL	. Edge trim	D
8	4700902166	C	1XL	. Edge trim	D
9	4700903953	D	1XL	. Edge trim	D
10	4700792718	E	1XL	. Rubber strip Up to 384S00309	D
11	4700390365		1	. Spacer	D
12	4700924875		2	. Screw	D
13	4700904228		2	. Washer 6,4x12x1,5	C
14	4700586002		2	. Lock nut M6 -8	C
15	4812114393		1	. Hood latch	
16	4700904735		1	. Washer	C
17	4700500059		1	. Screw	D

1) Can be fitted on earlier machines together with new Lock bracket PN 4700396542.
A) L=0.6m
B) L=0.625m
C) L=0.6m
D) L=1.2m
E) L=1.45m

Oil cooler

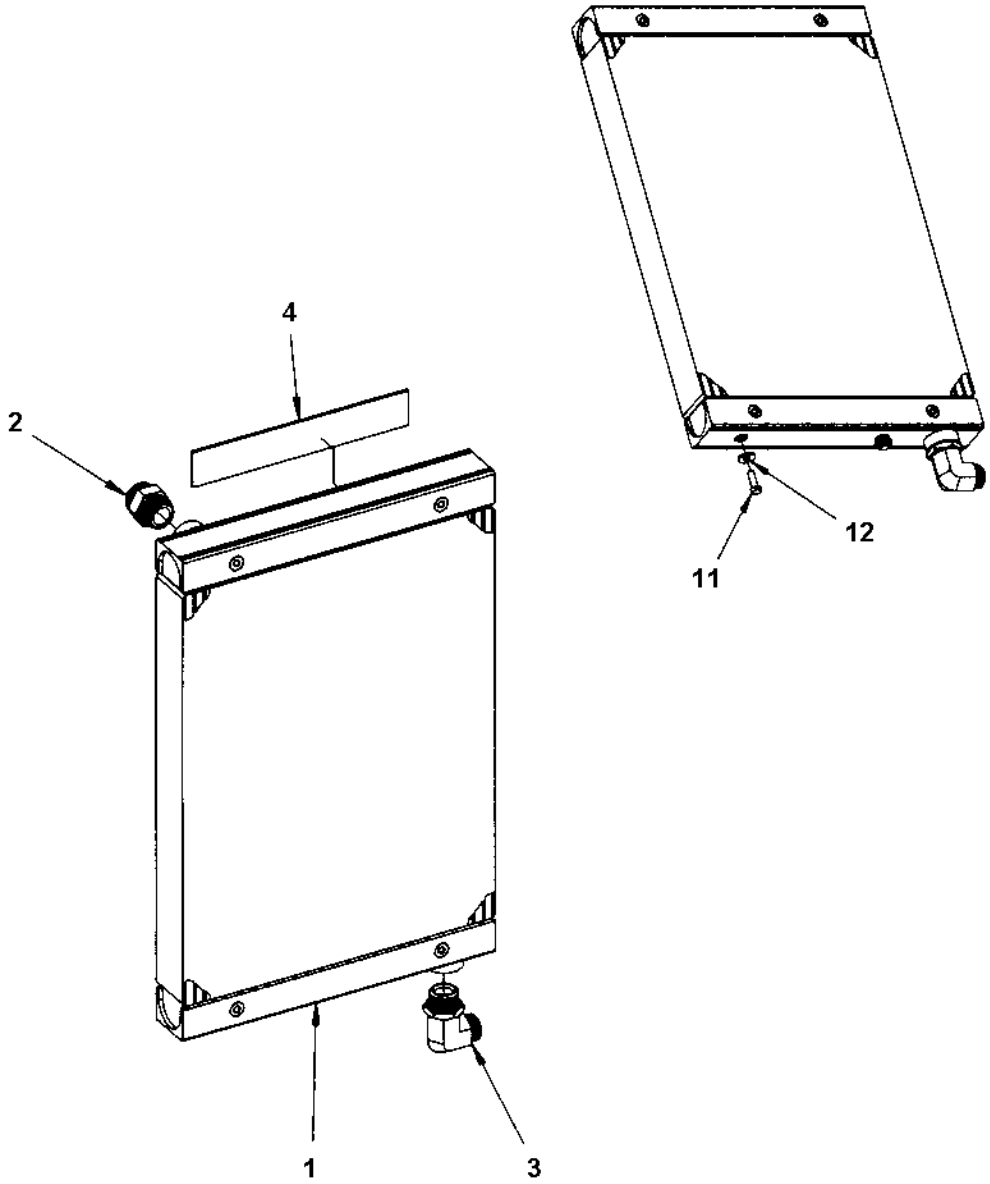

Oil cooler

Item	Part No	Rem	Qty	Description	Code
1	4700390629		1	Oil cooler	D
2	4700792339		1	Straight connector orfs	D
3	4700791321		1	Elbow adapter 90	D
4	4700391297		1	Rubber cloth	D
11	4700500021		2	Screw M8-1,25x25 8.8	C
12	4700904640		2	Washer 8,4x22x3	C

Fan

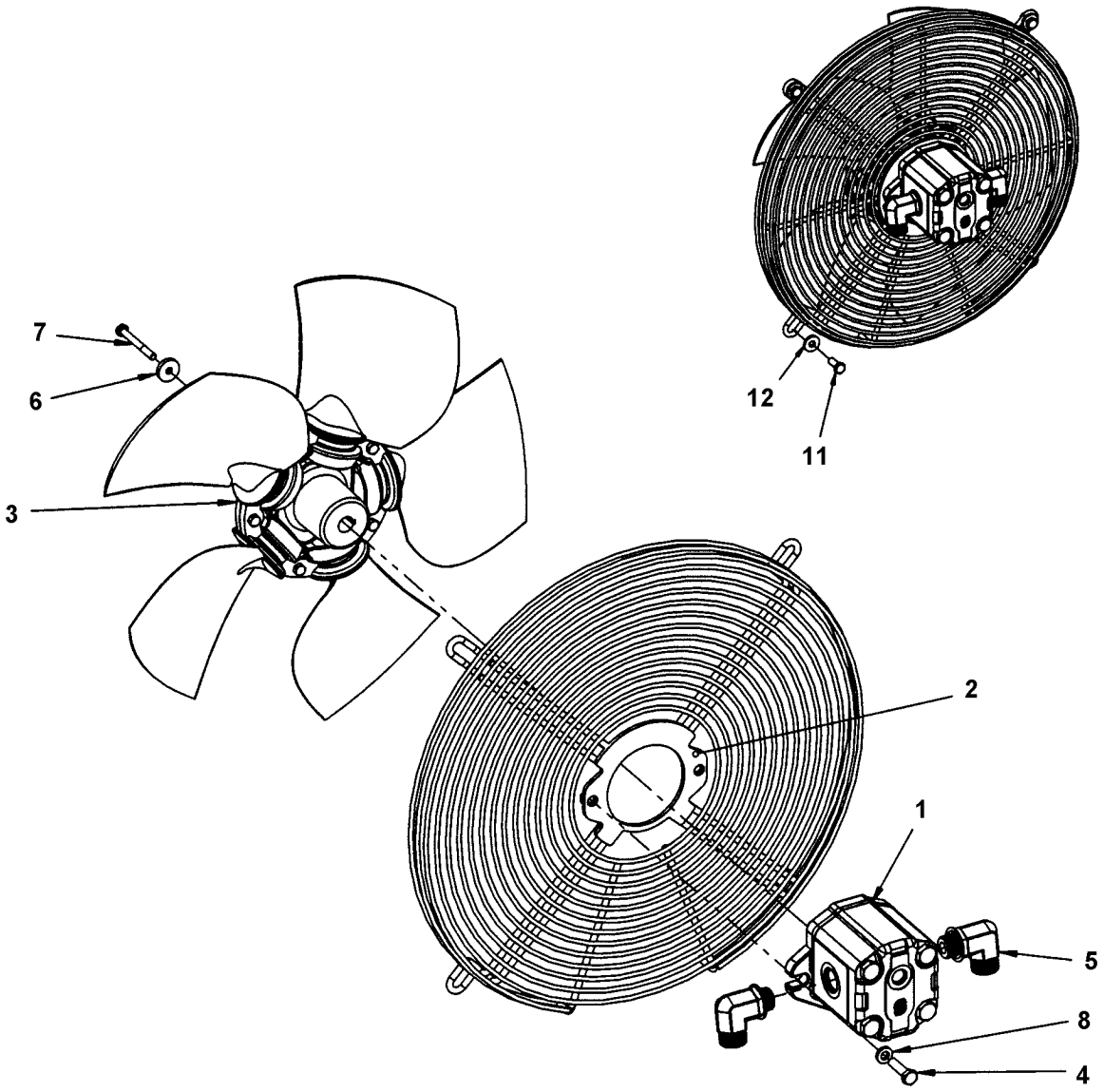

Fan

Item	Part No	Rem	Qty	Description	Code
1	4700390609		1	Hydraulic motor	D
2	4700390608		1	Fan guard	
3	4700390607		1	Fan	D
4	4700500022		2	Screw M8x30H 8.8	C
5	4700792332		2	Elbow 90 orfs	
6	4700904735		2	Washer	C
7	4700500016		1	Screw M6x55 8.8 A2K	C
8	4700904640		2	Washer 8,4x22x3	C
11	4700500053		4	Screw M8x20H 8.8	C
12	4700904640		4	Washer 8,4x22x3	C

Noise suppression plates

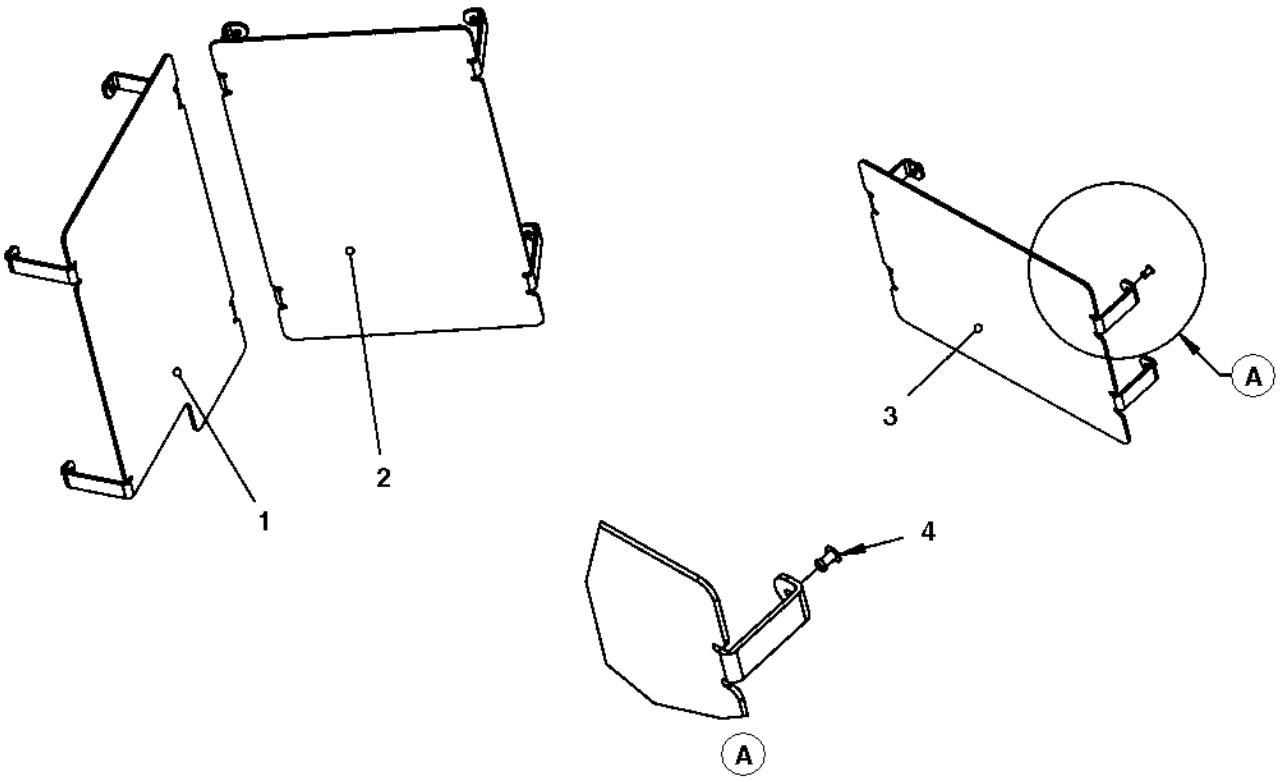

Noise suppression plates

Item	Part No	Rem	Qty	Description	Code
1	4700391369		1	Noise suppression plate	D
2	4700391370		1	Noise suppression plate	D
3	4700391371		1	Noise suppression plate	D
4	4700792669		12	Blind rivet	

Noise suppression, covers

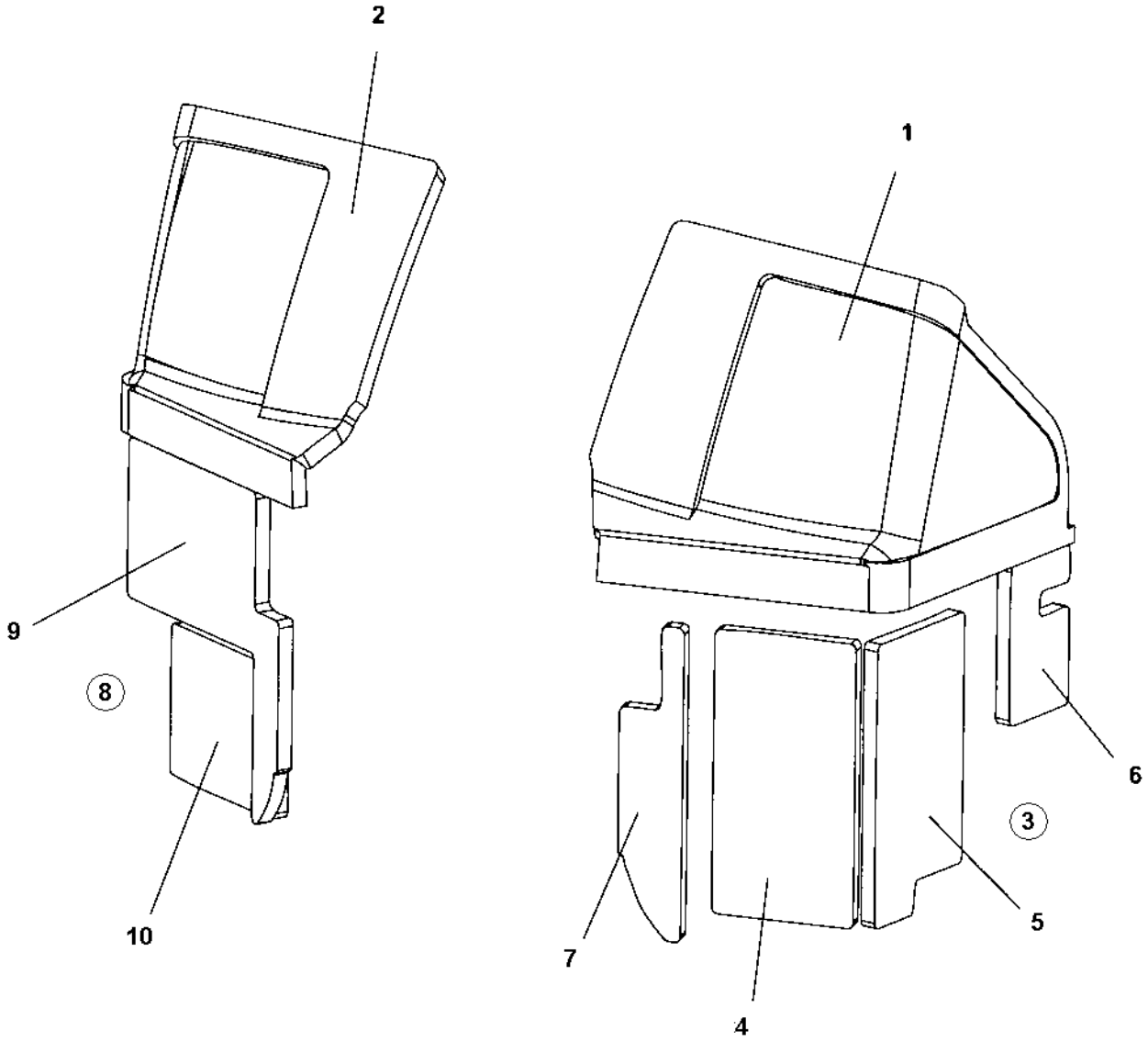

Noise suppression, covers

Item	Part No	Rem	Qty	Description	Code
1	4700394567		1	Sound absorbent	D
2	4700394568		1	Sound absorbent	D
3	4812158294		1	Sound absorbent kit, lower left cover	
4		1	1	. Sound absorbent	
5		1	1	. Sound absorbent	
6		1	1	. Sound absorbent	
7		1	1	. Sound absorbent	
8	4812158295		1	Sound absorbent kit, lower right cover	
9		1	1	. Sound absorbent	
10		1	1	. Sound absorbent	

1) Not sold seperately.

Sprinkler system

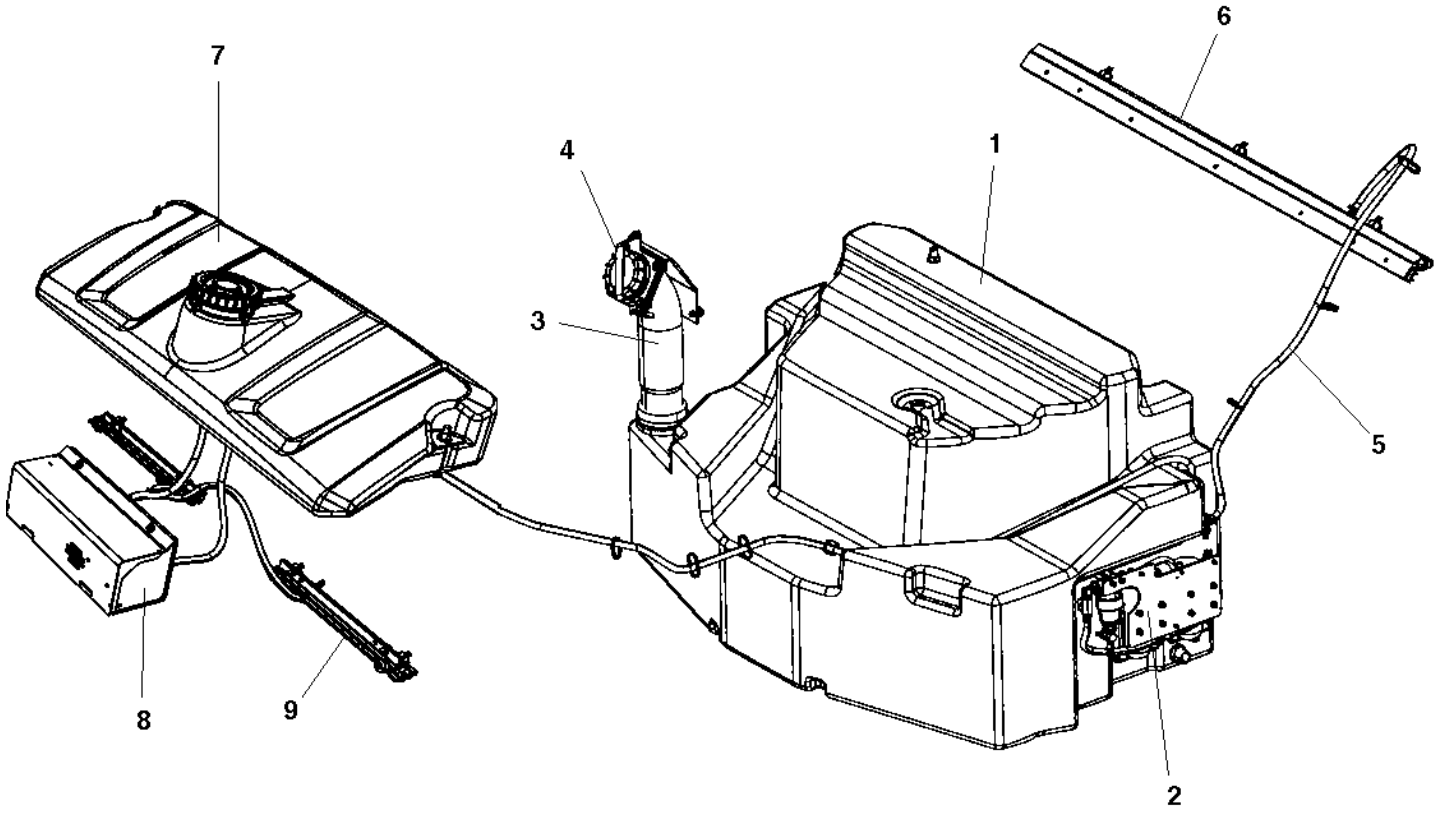

Sprinkler system

Item	Part No	Rem	Qty	Description	Code
1			1	**Tank structure module (Page 30)**	
2			1	**Sprinkler pump module (Page 78)**	
			1	**Sprinkler pump, backup (Page 84)**	
3			1	**Filling pipe (Page 44)**	
		1	2	**Filling pipe (Page 44)**	
4			1	**Cover lock module (Page 86)**	
			1	**Locking device module (Page 90)**	
5			1	**Water hoses (Page 92)**	
6			1	**Scraper assy with nozzles**	
7			1	**Emulsion tank module (Page 94)**	
8			1	**Sprinkler pump module, emulsion (Page 98)**	
9			4	**Sprinkler pipe module, wheel (Page 104)**	

1) Two pieces when use of tank with dual filling holes.

Sprinkler pump module

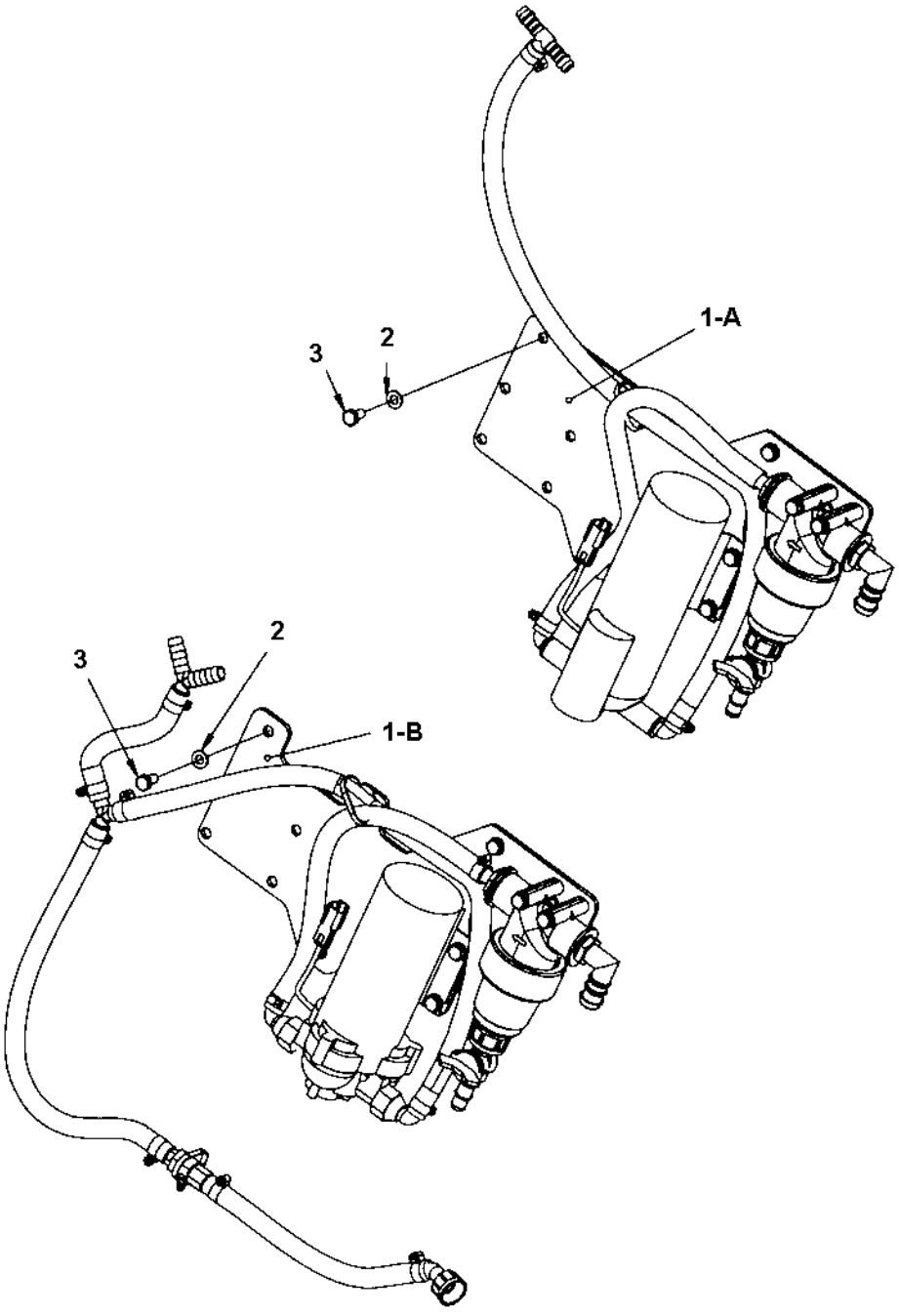

Sprinkler pump module

Item	Part No	Rem	Qty	Description	Code
1-A			1	**Sprinkler pump (Page 80)**	
1-B			1	**Sprinkler pump (Page 82)**	
2	4700904229		3	Steel plain washer 8,4x16x1,5	C
3	4700500019		3	Hexagon head screw M8x16H 8,8	C

Sprinkler pump

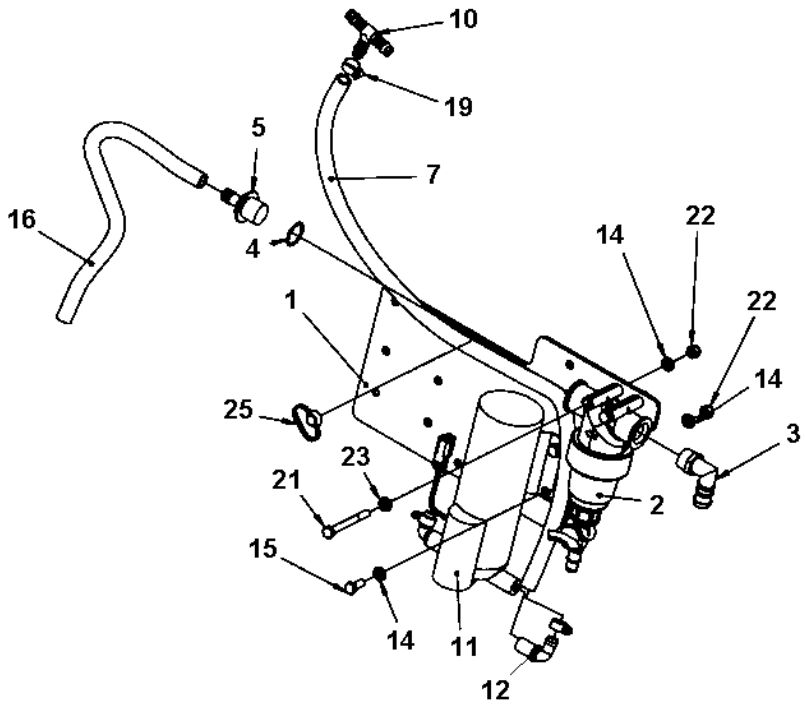

Sprinkler pump

Item	Part No	Rem	Qty	Description	Code
1	4812110491		1	Sprinkler plate	
2	4700791950		1	Water strainer, cpl	
	4700791959		1	. O-ring	C
	4700791949		1	. Filter element	A
	4700791568		1	. Gasket	
	4700379009		1	. Valve	
3	4700792777		1	Hose connection	D
4	4700160313		1	O-ring 70	
5	4700396672		1	Hose connection, plastic	
7	4812112074	B	1XL	Plastic hose	
10	4700923735		1	Hose connection	C
11	4700391495	1	1	Sprinkler pump	C
	4812110358	1	1	Sprinkler pump	D
12	4700393765		2	. Hose connection	C
14	4700904229		10	Steel plain washer 8,4x16x1,5	C
15	4700500053		4	Screw M8x20H 8.8	C
16	4812112074	A	1XL	Plastic hose	
19	4700313002		4	Hose clamp 13-20 mm	
21	4700500090		2	Screw	C
22	4700586003		6	Lock nut M8	C
23	4700904556		2	Washer 8,4x16x3,0	C
25	4700792441		1	Cable tie with holder	C

1) Replaced as Spare Part by PN 4812110394.
A) L=0.70 m
B) L=0.92 m

Sprinkler pump

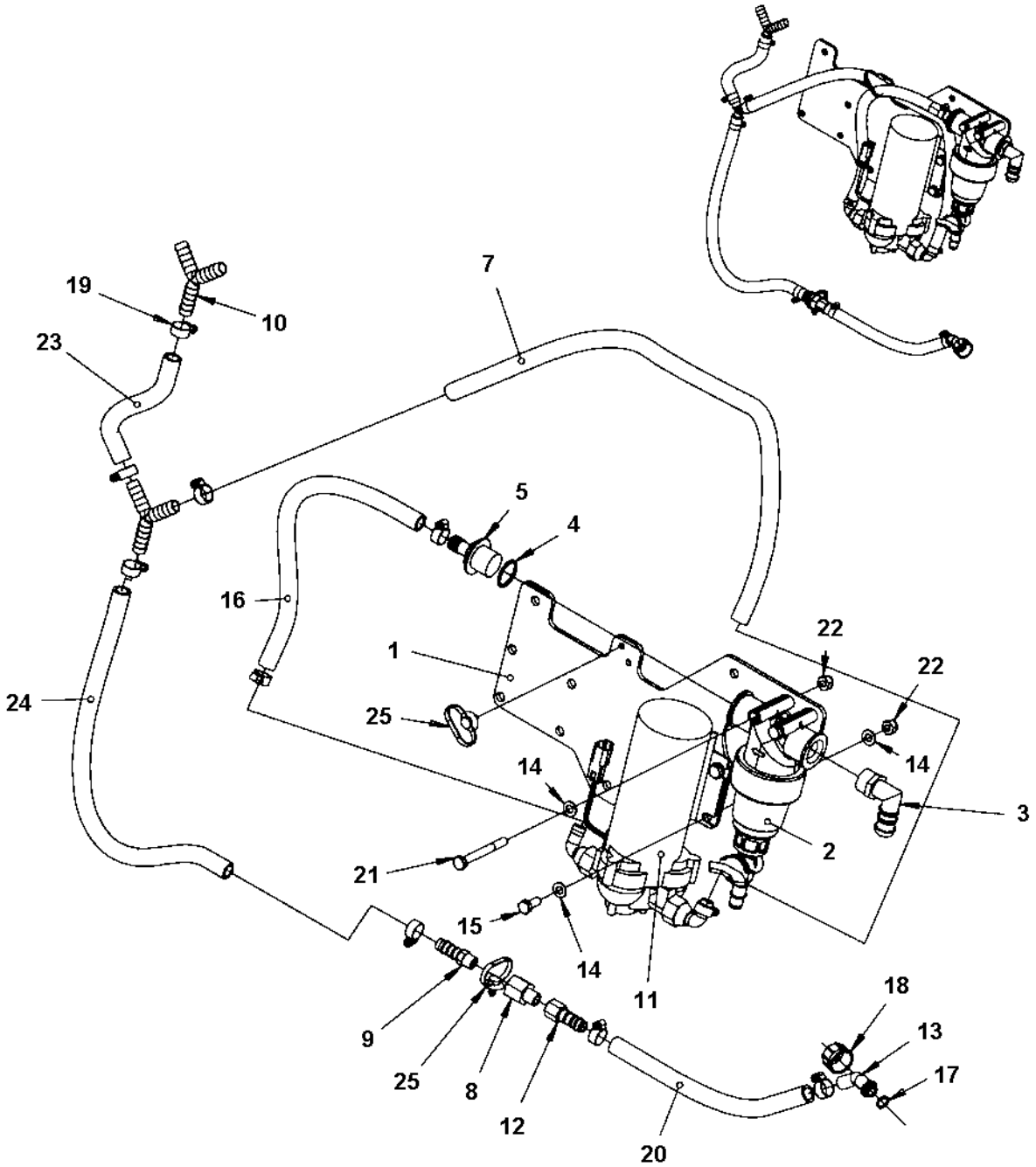

Sprinkler pump

Item	Part No	Rem	Qty	Description	Code
1	4812110491		1	Sprinkler plate	
2	4700791950		1	Water strainer, cpl	
3	4700792777		1	Hose connection	D
4	4700160313		1	O-ring 70	
5	4700396672		1	Hose connection, plastic	
7	4812112074	A	1XL	Plastic hose	
8	4700792813		1	By-pass valve	
9	4700791977		1	Hose connection	B
10	4811000107		2	Hose connection	C
11	4812110394		1	Sprinkler pump	
12	4811000085		1	Hose connection	
13	4700393542		1	Hose connection swivel	C
14	4700904229		10	Steel plain washer 8,4x16x1,5	C
15	4700500053		4	Screw M8x20H 8.8	C
16	4812112074	B	1XL	Plastic hose	
17	4700792600		1	O-ring 70	
18	4700392227		1	Swivel nut	
19	4700313002		10	Hose clamp 13-20 mm	
20	4812112074	C	1XL	Plastic hose	
21	4700500090		2	Screw	C
22	4700586003		6	Lock nut M8	C
23	4812112074	C	1XL	Plastic hose	
24	4812112074	C	1XL	Plastic hose	
25	4700792441		N	Cable tie with holder	C

A) L= 0.82 m
B) L= 0.70 m
C) Length as required. (order in meter)

Sprinkler pump, backup

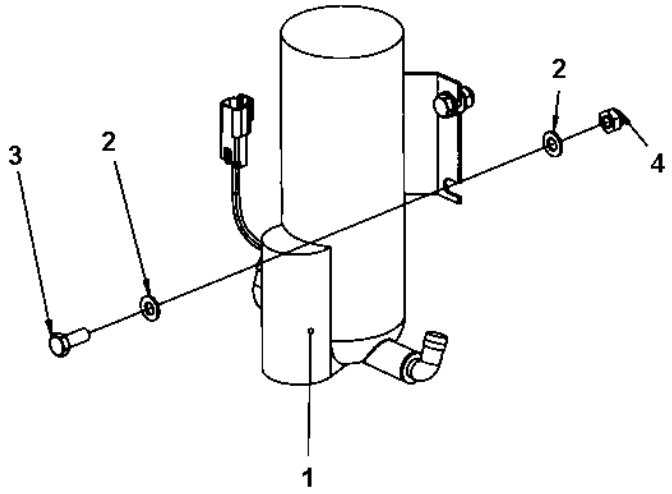

Sprinkler pump, backup

Item	Part No	Rem	Qty	Description	Code
1	4700391495	1	1	Sprinkler pump	C
	4812110358	A	1	Sprinkler pump	D
	4812110394	2,A	1	Sprinkler pump	
2	4700904229		8	Steel plain washer 8,4x16x1,5	C
3	4700500053		4	Screw M8x20H 8.8	C
4	4700791182		4	Lock nut M8	

1) Replaced as Spare Part by PN 4812110394.
2) Replaces PN 4700391495 and 4812110358.
A) Connectors included.

Cover lock module

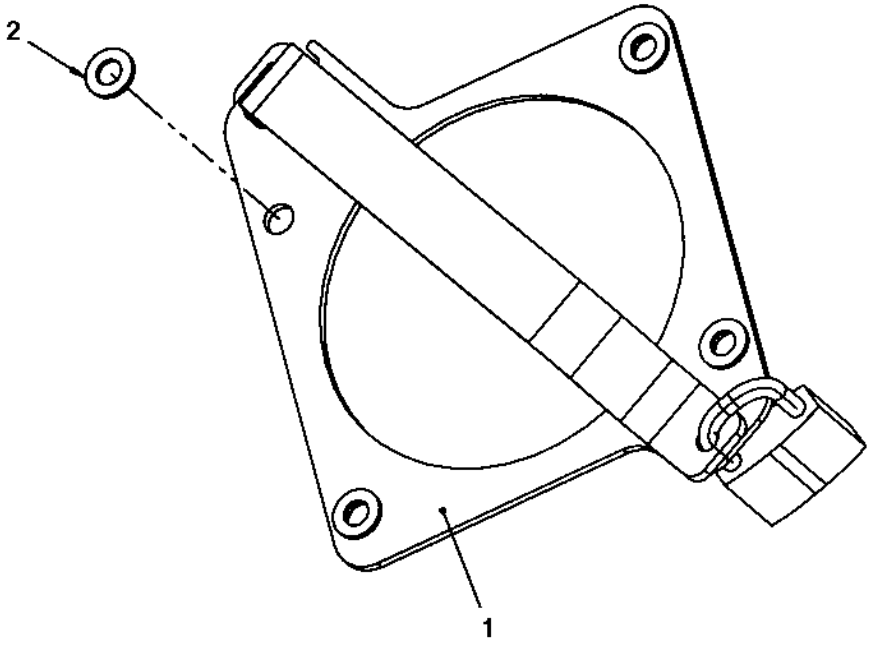

Cover lock module

Item	Part No	Rem	Qty	Description	Code
1			1	**Lock bracket (Page 88)**	
2	4700904229		4	Steel plain washer 8,4x16x1,5	C

Lock bracket

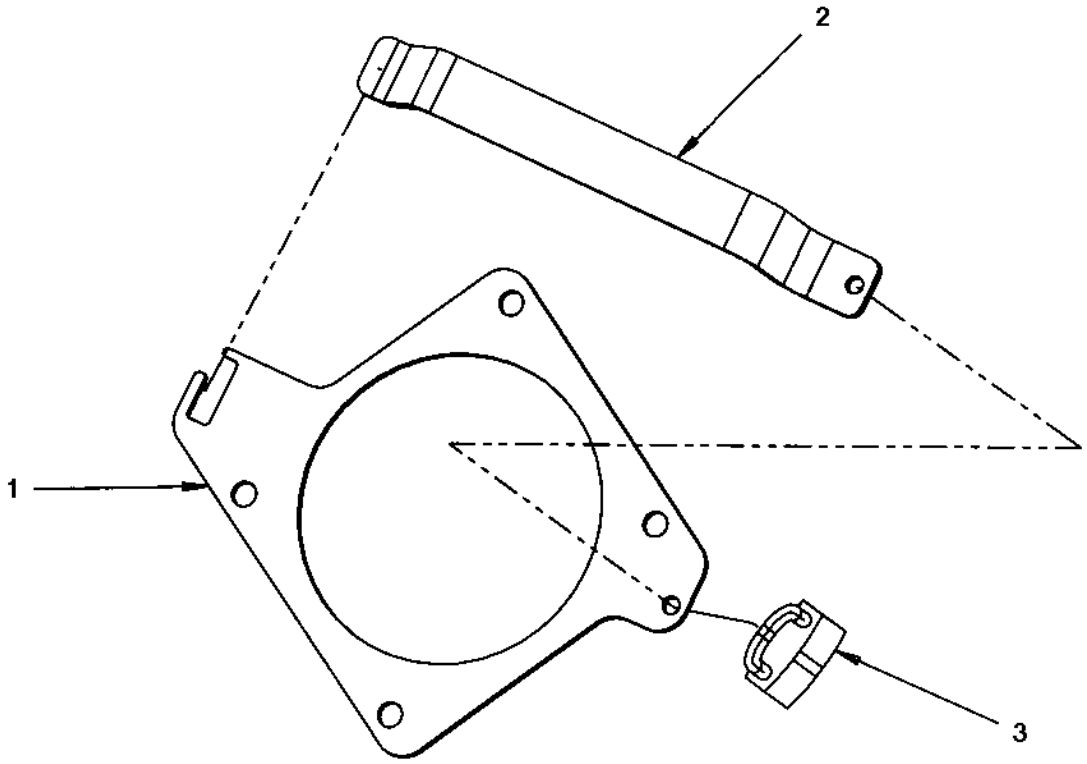

Lock bracket

Item	Part No	Rem	Qty	Description	Code
1	4700391857		1	Bracket	D
2	4700391858		1	Bracket	D
3	4700358881		1	Pad lock	D

Locking device module

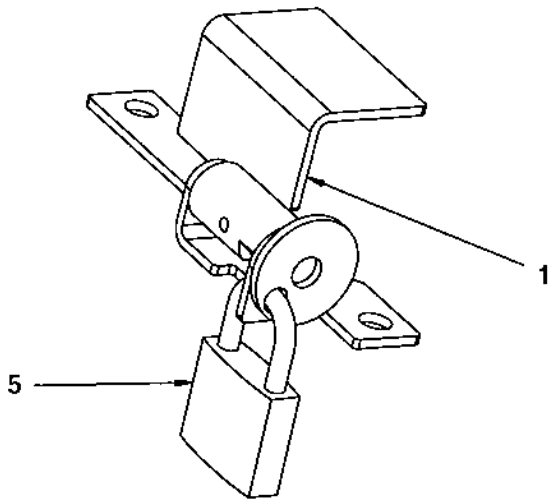

Locking device module

Item	Part No	Rem	Qty	Description	Code
1			1	Locking device	
	4700394587		1	. Bracket	D
	4700394591		1	. Shaft	D
	4700394590		1	. Lock bracket	D
	4700629008		1	. Spring pin	D
5	4700358881		1	Pad lock	D

Water hoses

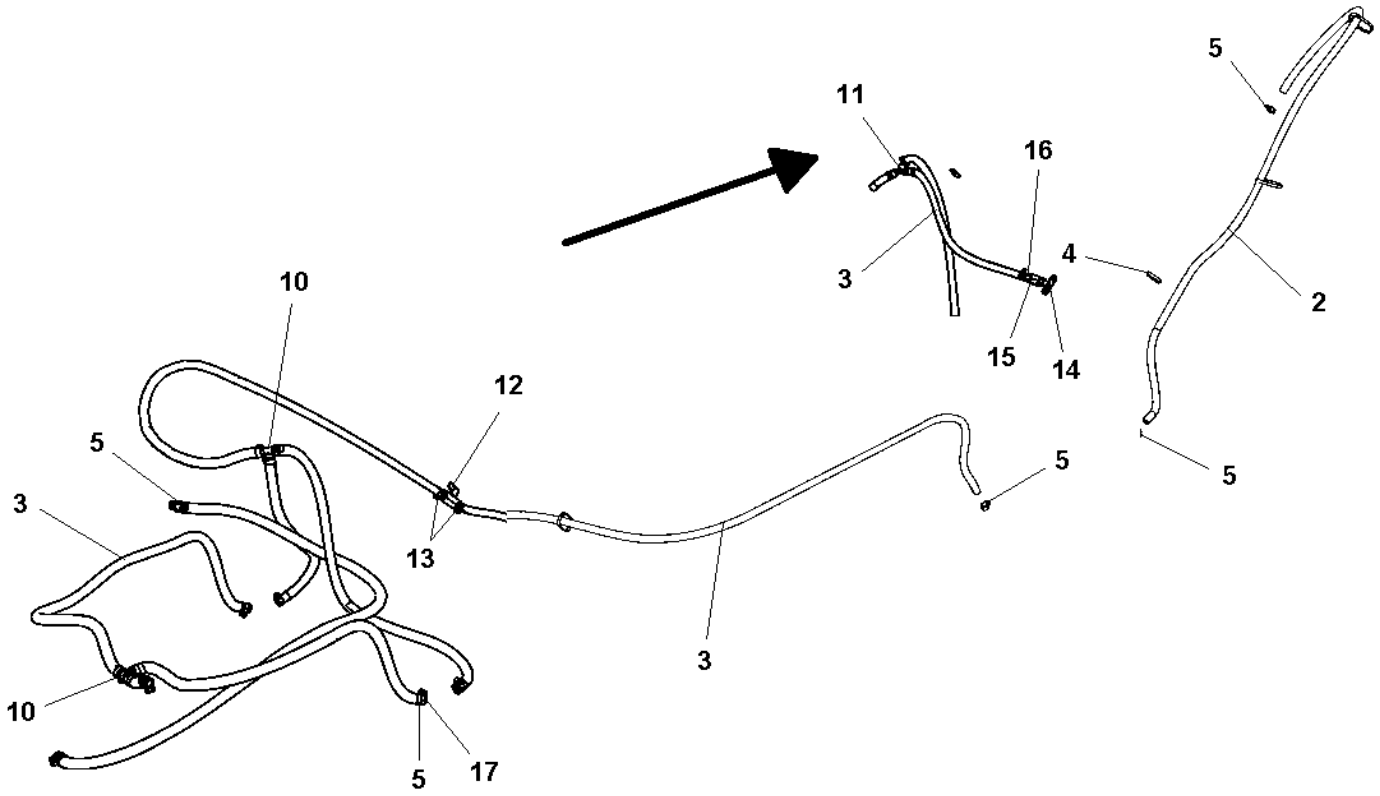

Water hoses

Item	Part No	Rem	Qty	Description	Code
1	4812112074	A	1XL	Plastic hose	
2	4812112074	B	1XL	Plastic hose	
3	4812112074	C	10XL	Plastic hose	
4	4700313102		N	Cable ties L=380 mm	
5	4700313001		23	Hose clamp	C
10	4700923735		2	Hose connection	C
11	4700792386	1	1	Hose connection, plastic	C
12	4700925599		1	Ball valve	C
13	4700924544		2	Hose connection	C
14	4700903879	1	1	Connector	C
15	4700792813	1	1	By-pass valve	
16	4811000085	1	1	Hose connection	
17	4700379753		4	Gasket	

1) Only mounted for old versions of Sprinkler pump mounted.
A) L= 0.70 m
B) L= 1.7 m (1.65-1.75)
C) Length as required. (order in meter)

Emulsion tank module

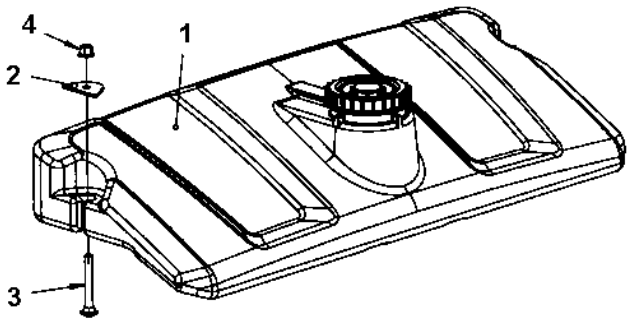

Emulsion tank module

Item	Part No	Rem	Qty	Description	Code
1			1	**Emulsion tank mount (Page 96)**	
2	4700392003		2	Holder	D
3	4700904405		2	Screw	C
4	4700902289		2	Nut	D

Emulsion tank mount

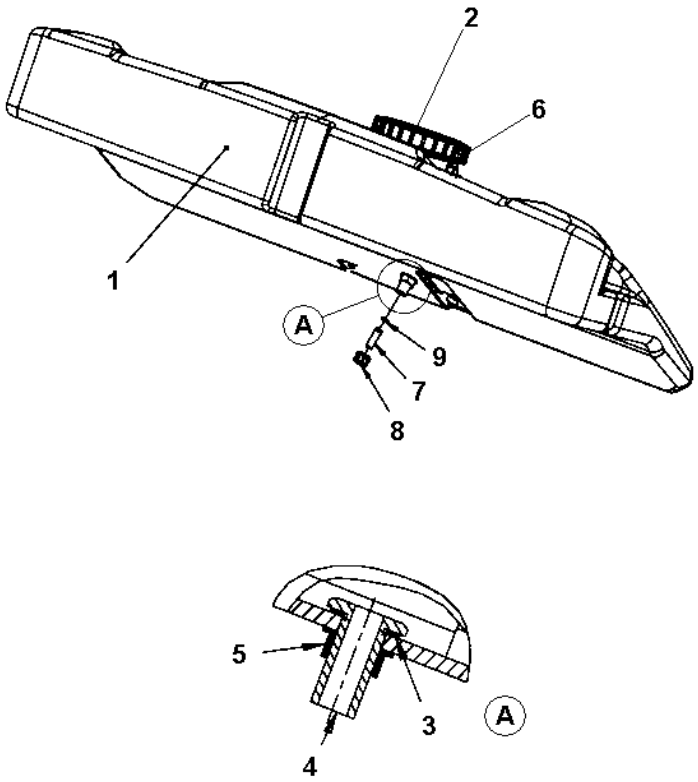

Emulsion tank mount

Item	Part No	Rem	Qty	Description	Code
1	4700396576		1	Water tank, cpl	D
2	4700359003		1	. Cap	C
3	4700392231		1	. Plane gasket	
4	4700392230		1	. Grommet	
5	4700392232		1	. Nut	
6	4700358846		1	. Strainer	A
7	4700393542		1	Hose connection swivel	C
8	4700392227		1	Swivel nut	
9	4700792600		1	O-ring 70	

Sprinkler pump module, emulsion

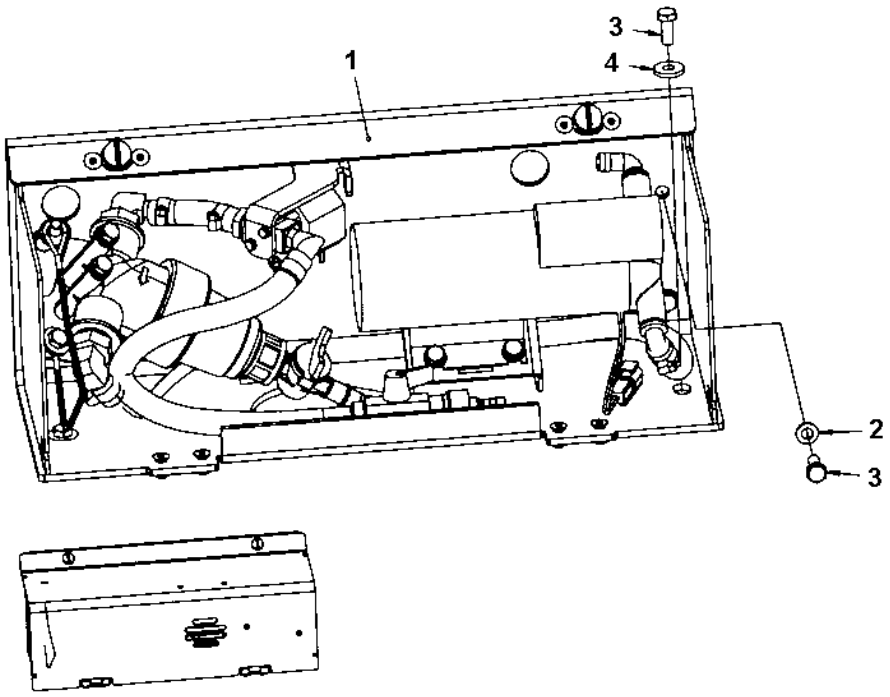

Sprinkler pump module, emulsion

Item	Part No	Rem	Qty	Description	Code
1			1	**Sprinkler pump mounted (Page 100)**	
2	4700904229		4	Steel plain washer 8,4x16x1,5	C
3	4700500053		6	Screw M8x20H 8.8	C
4	4700904640		2	Washer 8,4x22x3	C

Sprinkler pump mounted

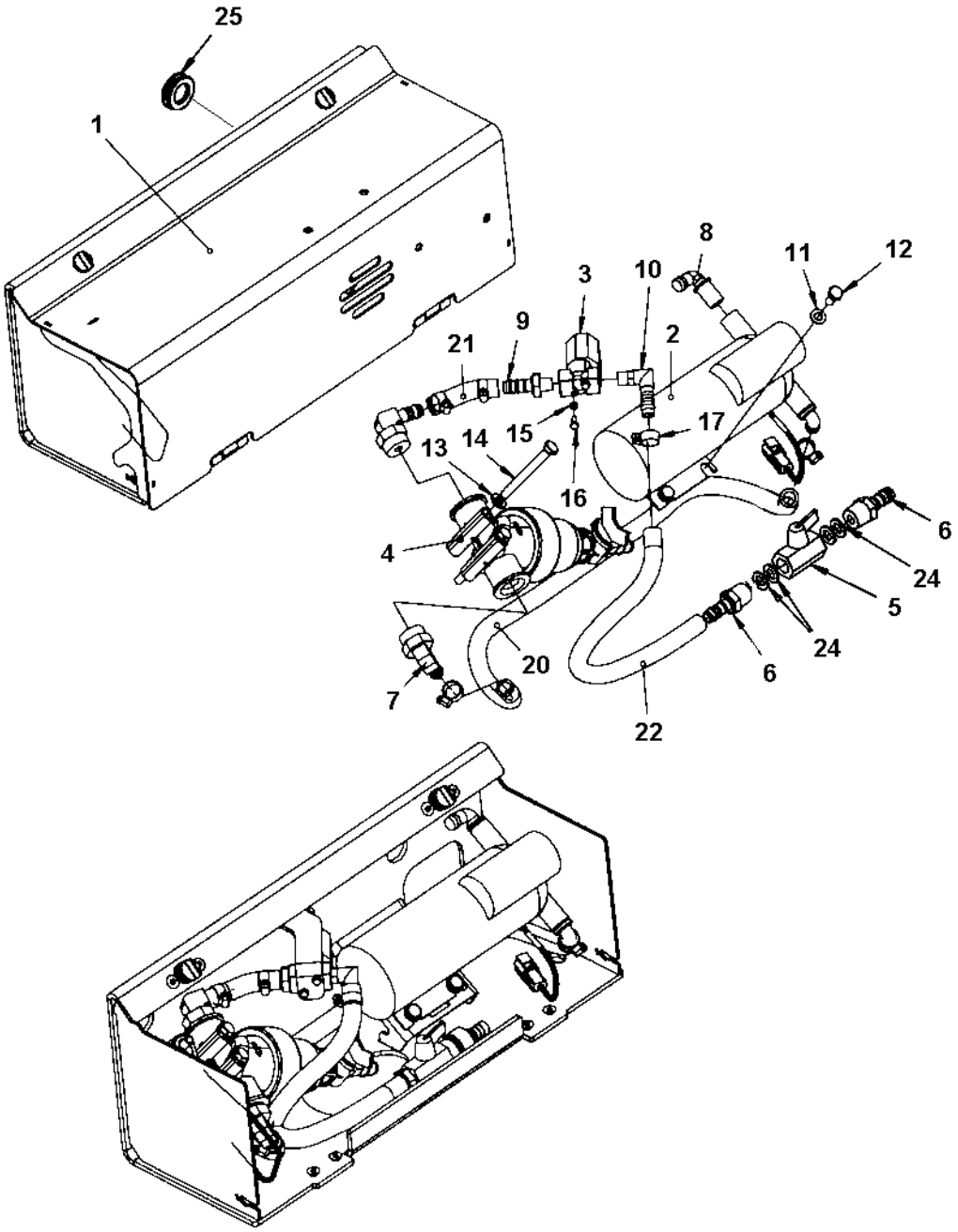

Sprinkler pump mounted

Item	Part No	Rem	Qty	Description	Code
1			1	**Sprinkler box cpl (Page 102)**	
2	4700391495	2	1	Sprinkler pump	C
	4812110358	2,D	1	Sprinkler pump	D
	4812110394	D	1	Sprinkler pump	
3	4700391438		1	Solenoid valve	
4	4700791950		1	Water strainer, cpl	
	4700791959		1	. O-ring	C
	4700791949		1	. Filter element	A
	4700791568		1	. Gasket	
	4700379009		1	. Valve	
5	4700925599		1	Ball valve	C
6	4700924544		1	Hose connection	C
7	4700904926		2	Connector	D
8	4700393765	1	2	Hose connection	C
9	4700901432		1	Hose connection	
10	4700791776		1	Connector	D
11	4700904229		4	Steel plain washer 8,4x16x1,5	C
12	4700500019		4	Hexagon head screw M8x16H 8,8	C
13	4700904556		2	Washer 8,4x16x3,0	C
14	4700500090		2	Screw	C
15	4700904698		2	Washer 4,3x8x0,8	C
16	4700500002		2	Screw M4-0,7x12H 8.8	D
17	4700313002		5	Hose clamp 13-20 mm	
18	4700791125		1	Quick coupling	C
19	4700791127		1	Quick coupling	C
20	4812112074	A	1XL	Plastic hose	
21	4812112074	B	1XL	Plastic hose	
22	4812112074	C	1XL	Plastic hose	
24	4700379753		4	Gasket	
25	4700792392		2	Grommet with membrane	

1) Part of Sprinkler pump, item 2.
2) Replaced as Spare Part by PN 4812110394.
A) L= 0.65 m
B) L= 0.08 m
C) L= 0.35 m
D) Connectors included.

Sprinkler box cpl

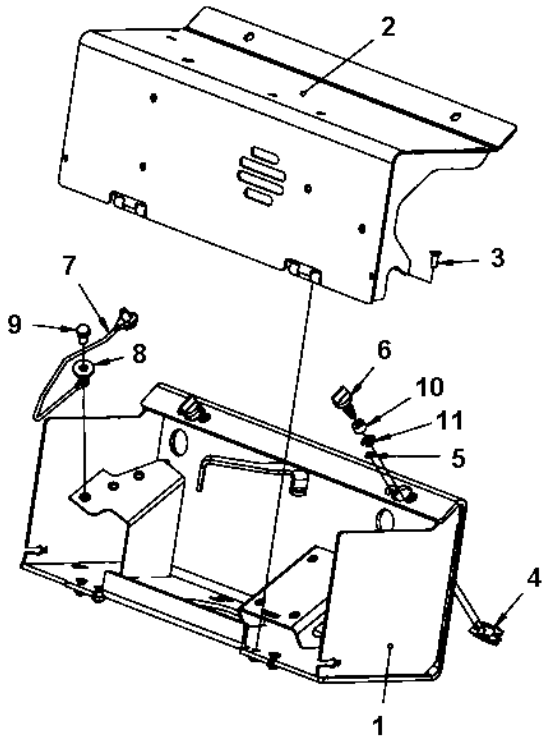

Sprinkler box cpl

Item	Part No	Rem	Qty	Description	Code
1	4700397534		1	Sprinkler box	D
2	4700397535		1	Sprinkler box	D
3	4700513008		4	Screw	C
4	4700903344		2	Lock	D
5	4700923253		8	Rivet	C
6	4700904914		2	Tap	C
7	4700343775		1	Steel wire insulated	D
8	4700904640		2	Washer 8,4x22x3	C
9	4700500019		2	Hexagon head screw M8x16H 8,8	C
10	4700904913		2	Washer Neopren	C
11	4700903342		2	Retaining ring	C

Sprinkler pipe module, wheel

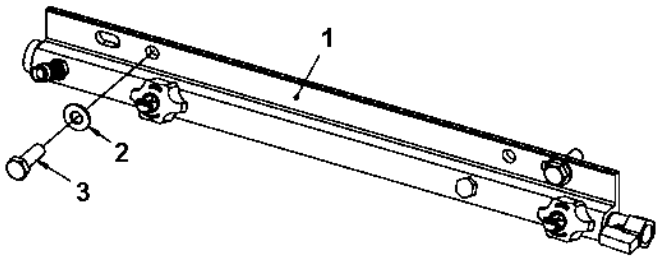

Sprinkler pipe module, wheel

Item	Part No	Rem	Qty	Description	Code
1			1	**Sprinkler pipe (Page 106)**	
2	4700904557		2	Steel plain washer	C
3	4700500029		2	Hexagon head screw	C

Sprinkler pipe

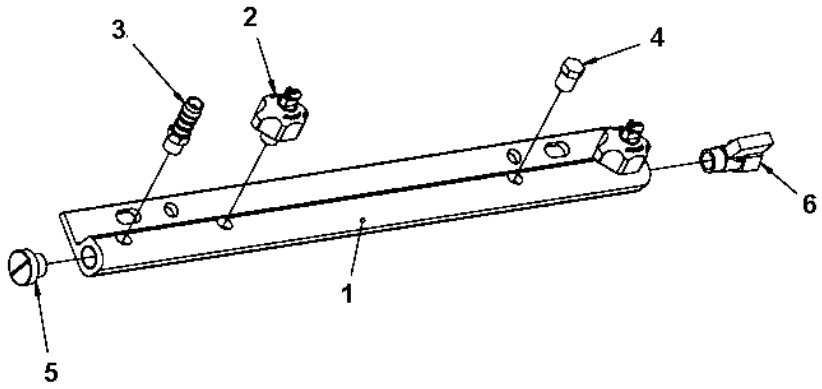

Sprinkler pipe

Item	Part No	Rem	Qty	Description	Code
1	4700396441		1	Sprinkler pipe	D
2	4700392011		2	Spraying nozzle, cpl	A
3	4700791977		1	Hose connection	B
4	4700791975		1	Plastic plug threaded	D
5	4700792072		1	End plug	
6	4700233215		1	Ball valve	

End frame, front

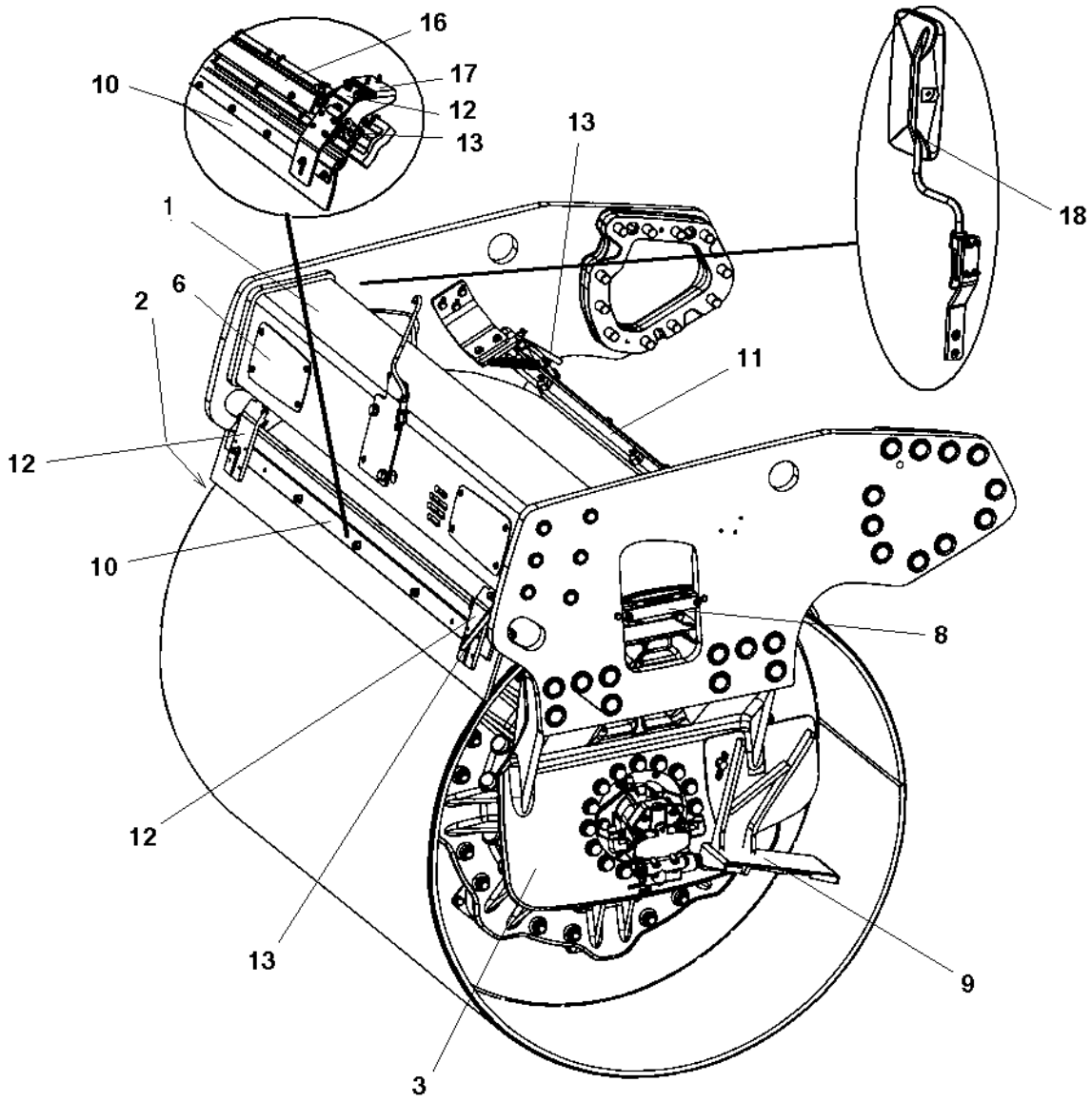

End frame, front

Item	Part No	Rem	Qty	Description	Code
1			1	**End frame, front (Page 110)**	
2			1	**Fork, vibration side (Page 114)**	
3			1	**Fork, propulsion side (Page 116)**	
6			2	**Cover plate (Page 118)**	
8			1	**Hose clamp, propulsion side (Page 120)**	
			1	**Hose clamp, vibration side (Page 122)**	
9			1	**Step, vibration side (Page 124)**	
			1	**Step, propulsion side (Page 126)**	
10			1	**Scraper module, without nozzles (Page 128)**	
11			1	**Scraper module, with nozzles**	
12	4700394340		4	**Scraper bracket, cpl (Page 132)**	
13		1	2	**Grab handle, release (Page 134)**	
		2	1	**Grab handle, release (Page 136)**	
14			1	**Grab handle, lift (Page 138)**	
			1	**Grab handle, lift offset/cocoa mat (Page 140)**	
16			1	**Cocoa mat module (Page 142)**	
17			2	**Cocoa mat bracket module (Page 146)**	
18			1	**Process mirrors (Page 150)**	

1) Qty 1 when cocoa mat mounted.
2) For cocoa mat

End frame, front

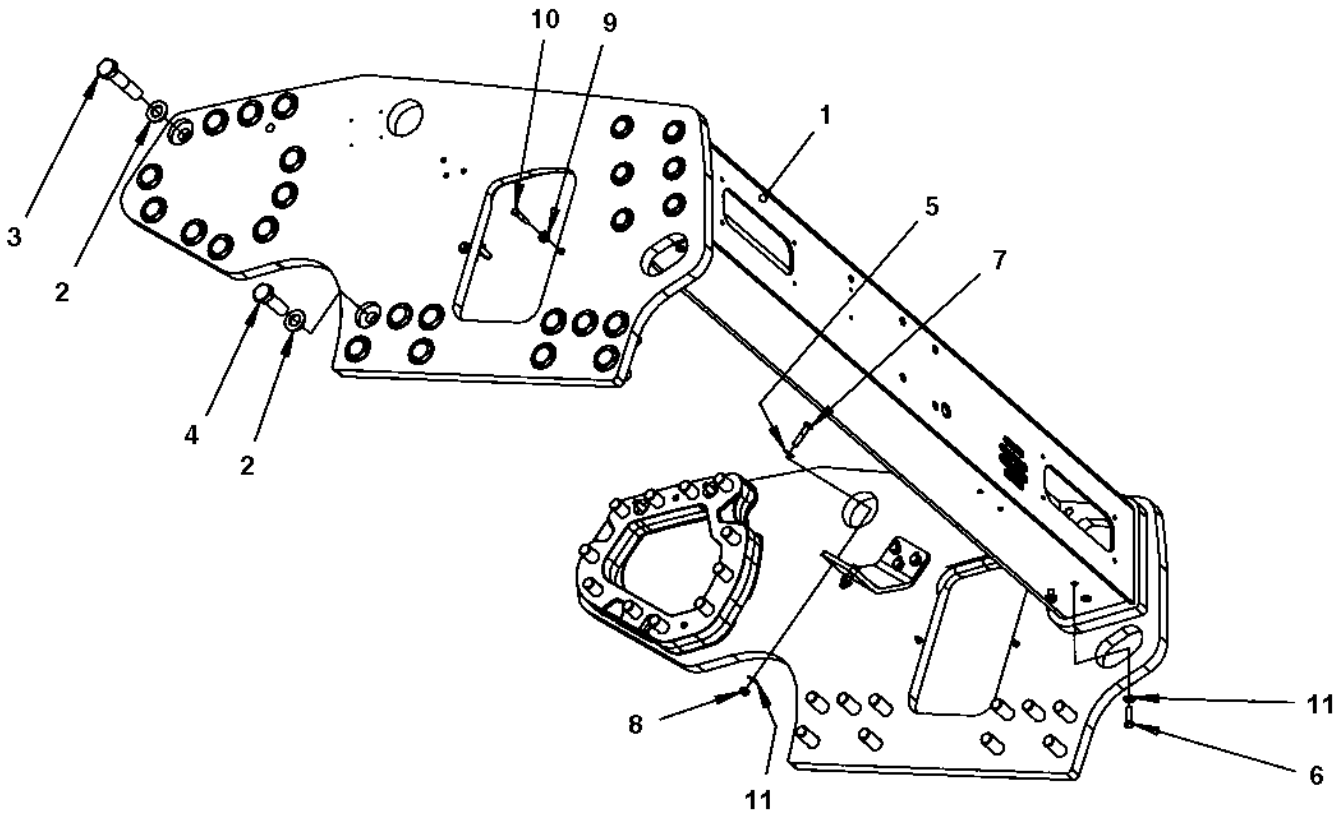

End frame, front

Item	Part No	Rem	Qty	Description	Code
1			1	**Frame (Page 112)**	
2	4700904234		42	Steel plain washer	C
3	4700500146		22	Screw M24x110 8,8	D
4	4700500289		20	Screw M24x70H	D
5	4700904230		4	Steel plain washer	C
6	4700500030		4	Screw M10x035H 8.8 A3K	C
7	4700500161		4	Hexagon head screw	C
8	4700791172		4	Hexagon lock nut	D
9	4700904556		4	Washer 8,4x16x3,0	C
10	4700500047		4	Hexagon head screw	C
11	4700904557		8	Steel plain washer	C

Frame

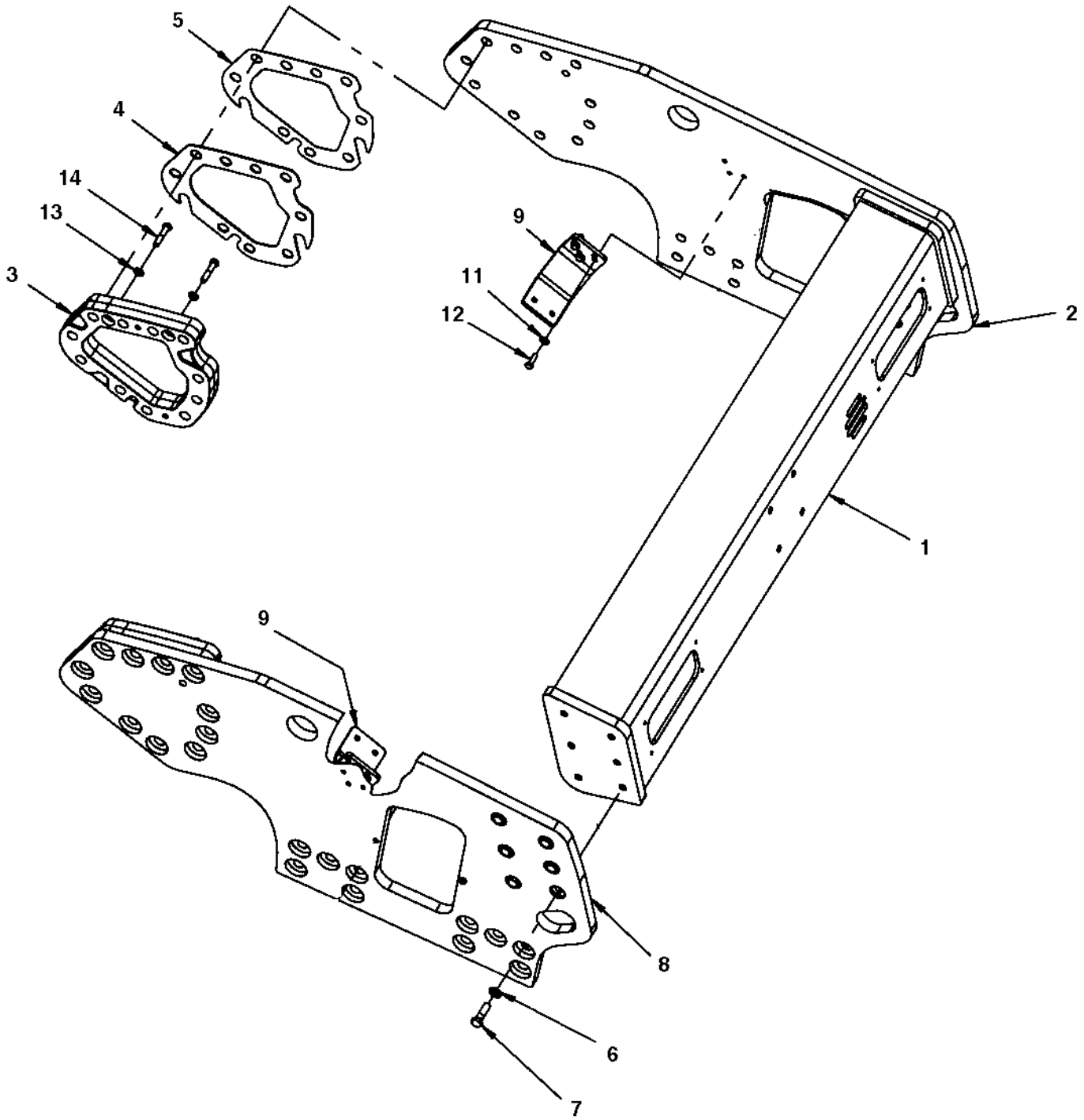

Frame

Item	Part No	Rem	Qty	Description		Code
1	4700390060		1	Crossbeam		D
2	4700391407		1	Side plate	T30	D
3	4700390074		2	Spacer		D
4	4700390470		N	Shim		D
5	4700390469		N	Shim		D
6	4700904233		12	Washer 21x36x3		C
7	4700500265		12	Screw		C
8	4700393356		1	Side plate	T30	D
9	4700394787		2	Holder		D
11	4700904557		6	Steel plain washer		C
12	4700500029		6	Hexagon head screw		C
13	4700904231		4	Washer 13x24x2 300 HV		C
14	4700500049		4	Screw		C

Fork, vibration side

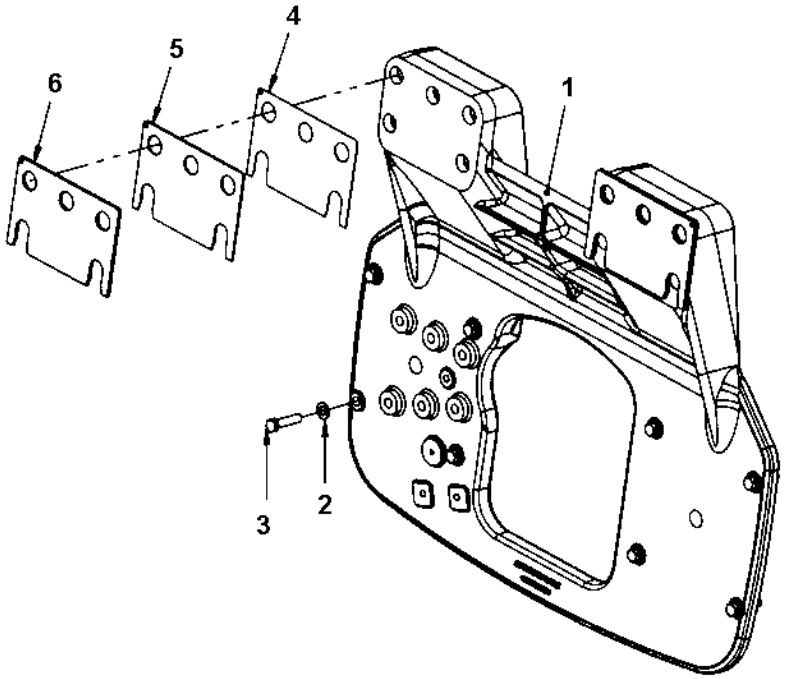

Fork, vibration side

Item	Part No	Rem	Qty	Description	Code
1	4812113724		1	Fork	
2	4700904231		8	Washer 13x24x2 300 HV	C
3	4812110644		8	Hexagon screw w Tuflok M12x50 10.9 GEOMET	C
4	4700391754		N	Shim	D
5	4700393009		N	Shim	D
6	4700393010		N	Shim	D

Fork, propulsion side

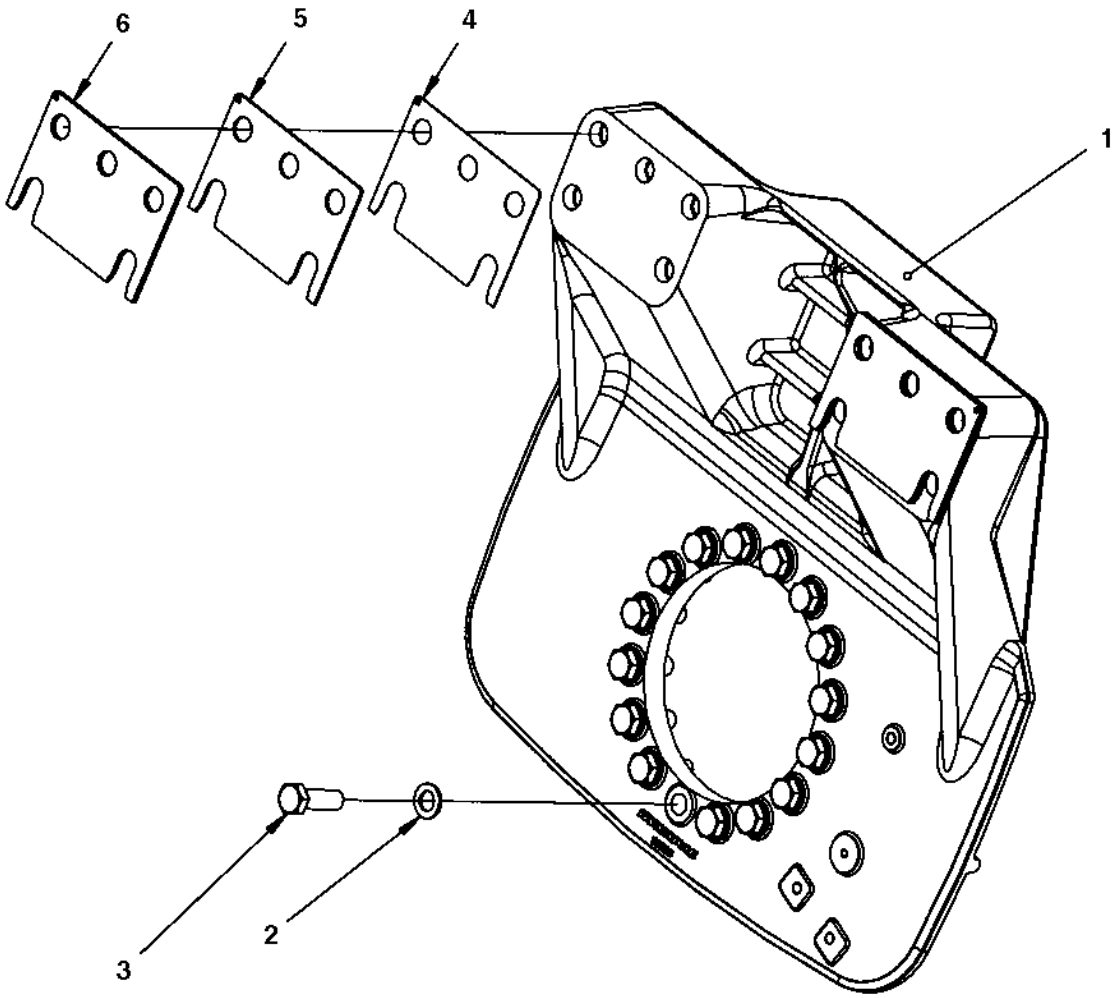

Fork, propulsion side

Item	Part No	Rem	Qty	Description	Code
1	4700391198		1	Fork	D
2	4700904233		16	Washer 21x36x3	C
3	4700500206		16	Screw M20X60	C
4	4700391754		N	Shim	D
5	4700393009		N	Shim	D
6	4700393010		N	Shim	D

Cover plate

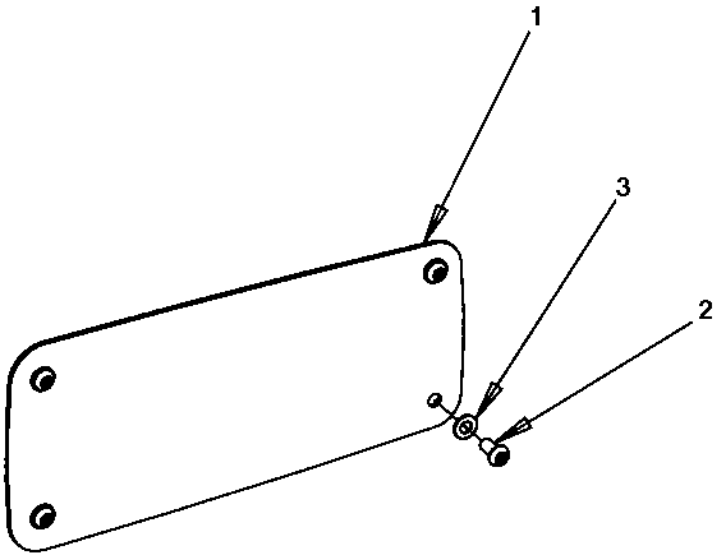

Cover plate

Item	Part No	Rem	Qty	Description	Code
1	4700390919		1	Cover plate	
2	4700904956		4	Screw	
3	4700904229		4	Steel plain washer 8,4x16x1,5	C

Hose clamp, propulsion side

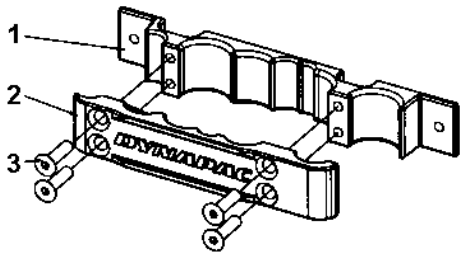

Hose clamp, propulsion side

Item	Part No	Rem	Qty	Description	Code
1	4700395428		1	Hose clamp	D
2	4700395429		1	Cover	D
3	4700792726		4	Hexagon socket countersunk screw	C

Hose clamp, vibration side

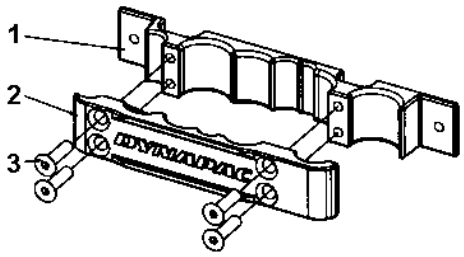

Hose clamp, vibration side

Item	Part No	Rem	Qty	Description	Code
1	4700395428		1	Hose clamp	D
2	4700395430		1	Cover	D
3	4700792726		4	Hexagon socket countersunk screw	C

Step, vibration side

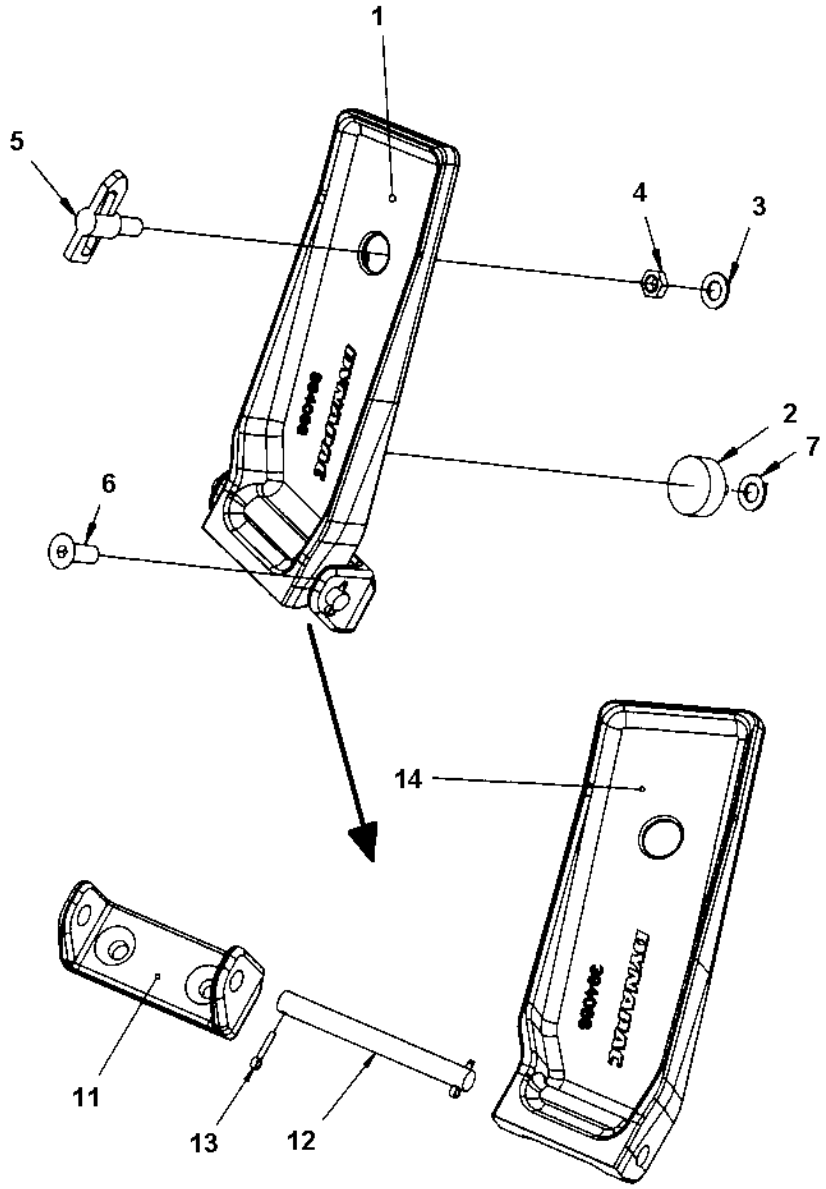

Step, vibration side

Item	Part No	Rem	Qty	Description	Code
1			1	Step, mounted	
2	4700792601		1	Shock absorber	D
3	4700904231		1	Washer 13x24x2 300 HV	C
4	4700927233		1	Nut	C
5	4700475064		1	Lock	D
6	4700513011		2	Hexagon socket head cap screw	D
7	4700904229		1	Steel plain washer 8,4x16x1,5	C
11	4700394070		1	Bracket	D
12	4700394351		1	Shaft	C
13	4700630012		2	Cotter pin	D
14	4700394068		1	Step	D

Step, propulsion side

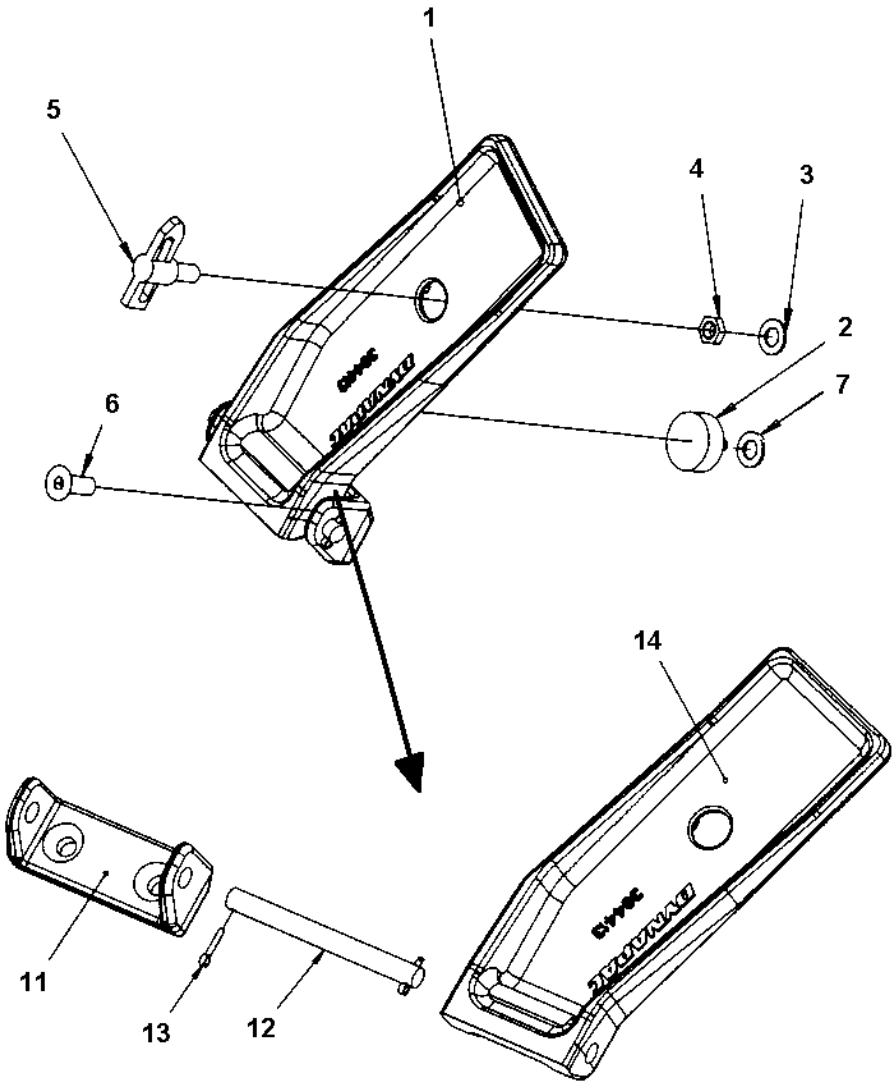

Step, propulsion side

Item	Part No	Rem	Qty	Description	Code
1			1	Step, mounted	
2	4700792601		1	Shock absorber	D
3	4700904231		1	Washer 13x24x2 300 HV	C
4	4700927233		1	Nut	C
5	4700475064		1	Lock	D
6	4700513011		2	Hexagon socket head cap screw	D
7	4700904229		1	Steel plain washer 8,4x16x1,5	C
11	4700394070		1	Bracket	D
12	4700394351		1	Shaft	C
13	4700630012		2	Cotter pin	D
14	4700394413		1	Step	D

Scraper module, without nozzles

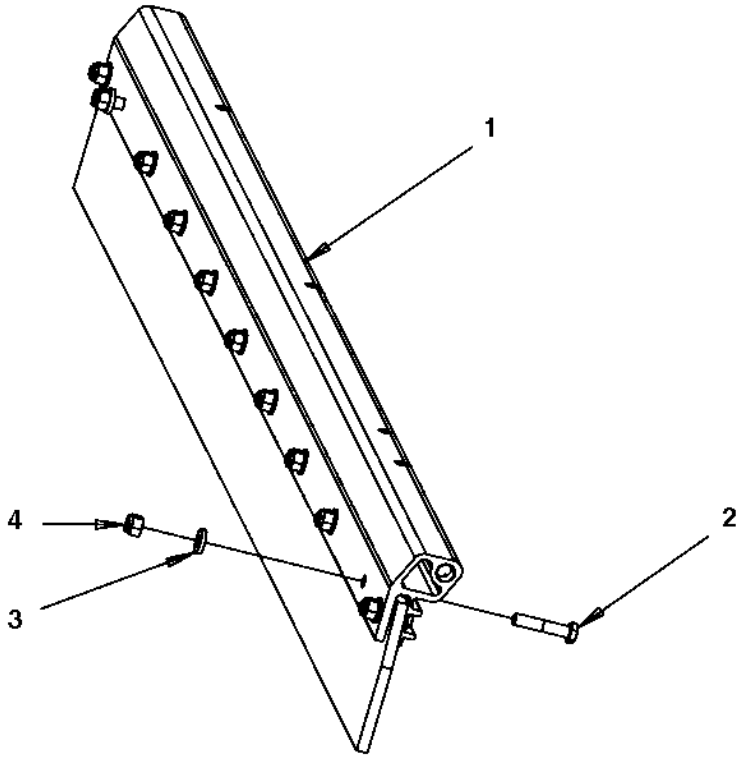

Scraper module, without nozzles

Item	Part No	Rem	Qty	Description	Code
1			1	**Scraper assy (Page 130)**	
2	4700500032		2	Screw M10 x 55	D
3	4700904557		2	Steel plain washer	C
4	4700586018		2	Hexagon lock nut M10	C

Scraper assy

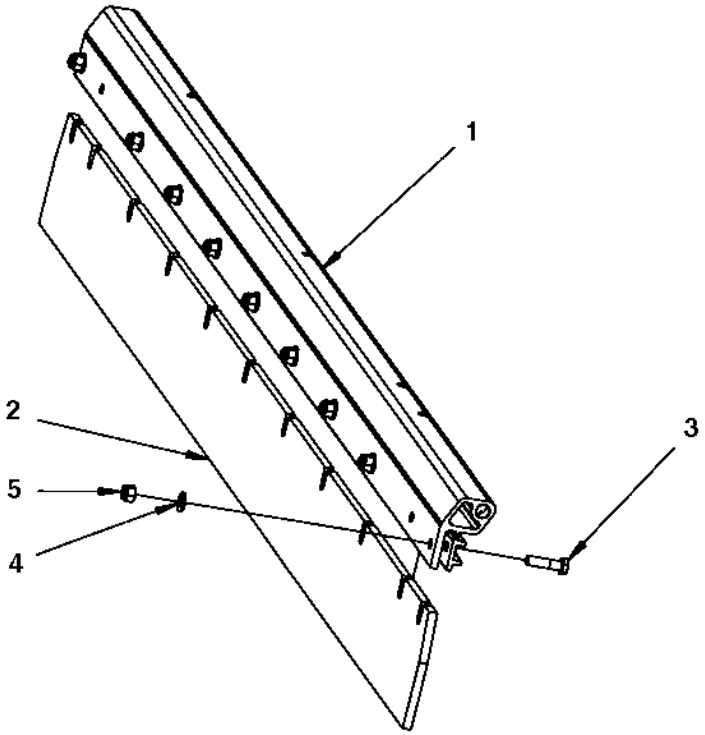

Scraper assy

Item	Part No	Rem	Qty	Description	Code
1	4700395111		1	Sprinkler pipe	C
2	4700395112		1	Scraper blade	A
3	4700500031		9	Screw M10x040 8.8	C
4	4700904230		9	Steel plain washer	C
5	4700586018		9	Hexagon lock nut M10	C

4700394340 Scraper bracket, cpl

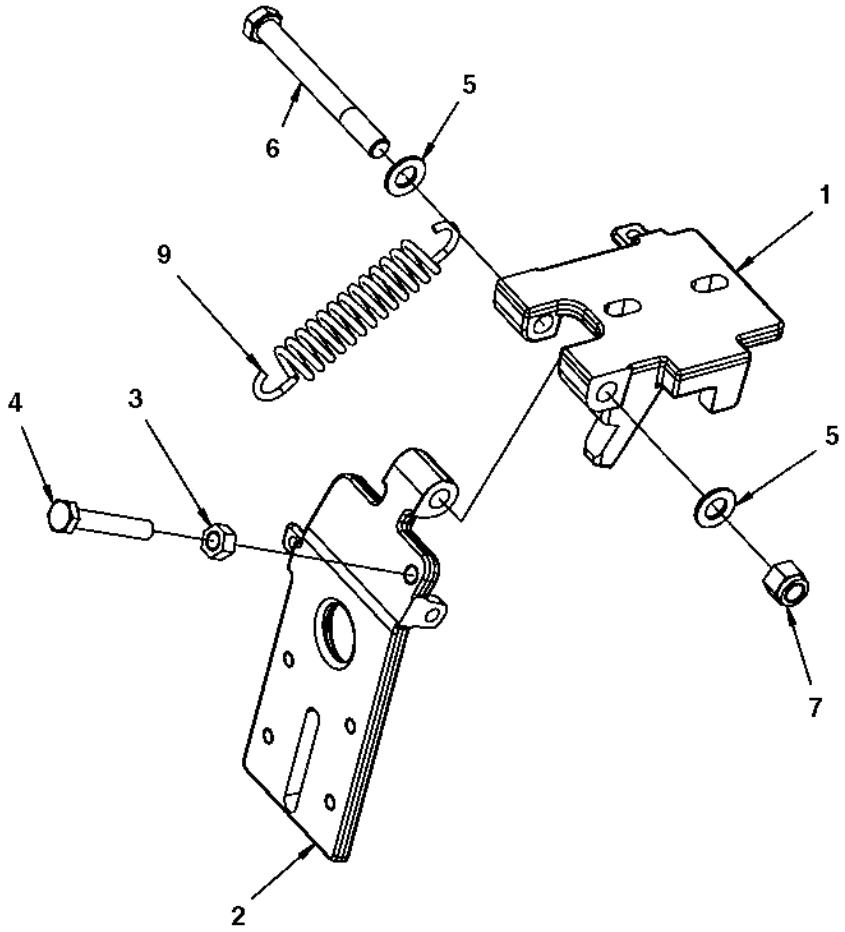

4700394340 Scraper bracket, cpl

Item	Part No	Rem	Qty	Description	Code
1			1	Scraper bracket	
2			1	Scraper bracket	
3	4700570006		1	Nut	B
4	4700500105		1	Hexagon screw M10x50	D
	4700791082	1	1	Hexagon screw M10x60	C
5	4700904231		2	Washer 13x24x2 300 HV	C
6	4700500198		1	Screw	D
7	4700586019		1	Lock nut	C
9	4700394806		1	Extension spring	D

1) Longer screw on outer scraper when cocoa mat is mounted.

Grab handle, release

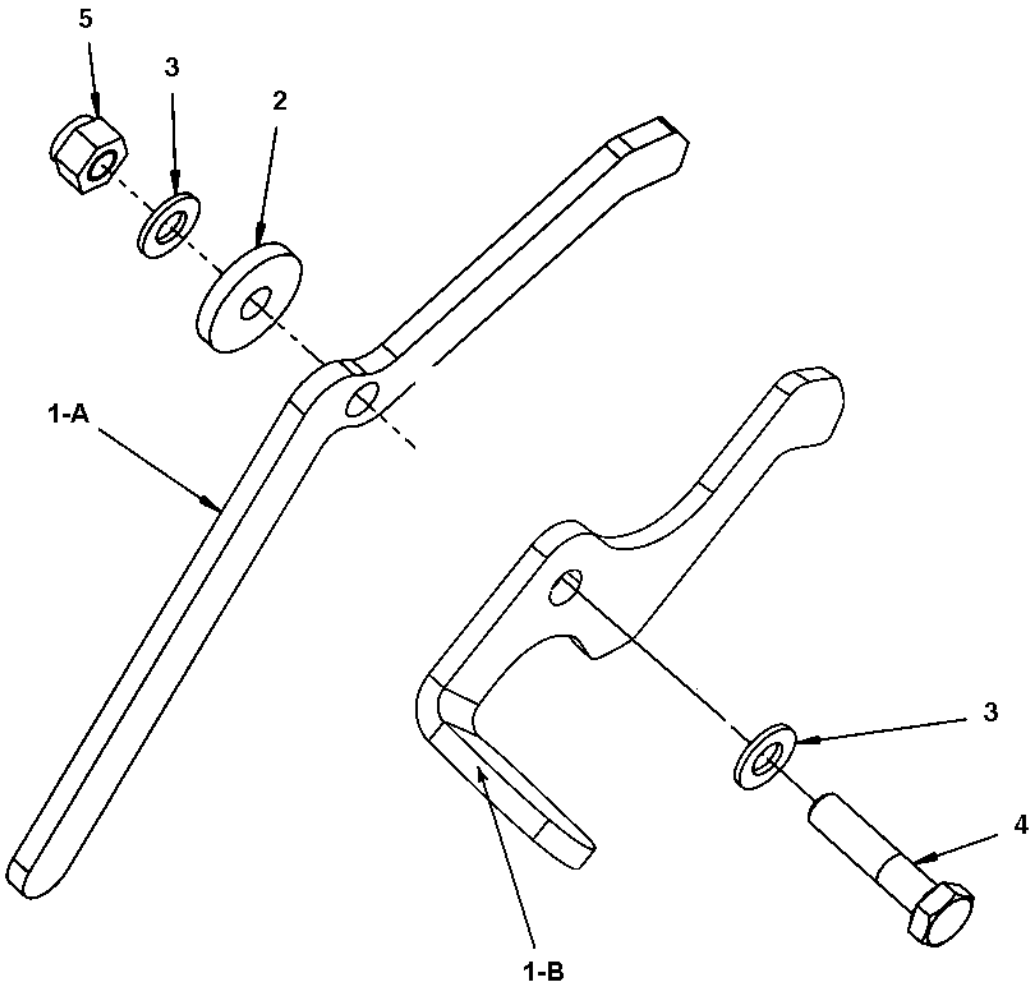

Grab handle, release

Item	Part No	Rem	Qty	Description	Code
1-A	4700393550		1	Grab handle	D
1-B	4812110671	1	1	Grab handle	D
2	4700904734		1	Washer 8,4x26x4	
3	4700904229		2	Steel plain washer 8,4x16x1,5	C
4	4700500047		1	Hexagon head screw	C
5	4700586003		1	Lock nut M8	C

1) Can replace PN 4700393550 as spare part. This part can be mounted together with Grab handle, lift PN 4812110672.

Grab handle, release

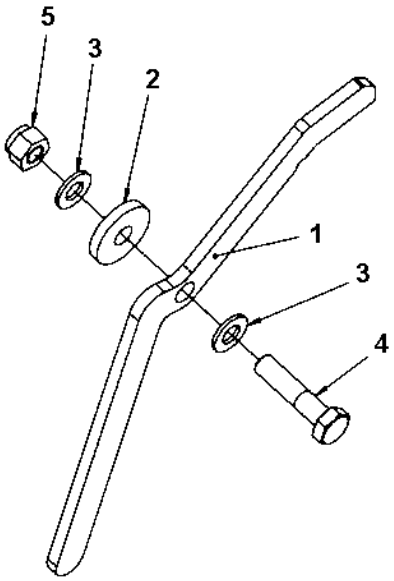

Grab handle, release

Item	Part No	Rem	Qty	Description	Code
1	4700396154		1	Grab handle	D
2	4700904734		1	Washer 8,4x26x4	
3	4700904229		2	Steel plain washer 8,4x16x1,5	C
4	4700500047		1	Hexagon head screw	C
5	4700586003		1	Lock nut M8	C

Grab handle, lift

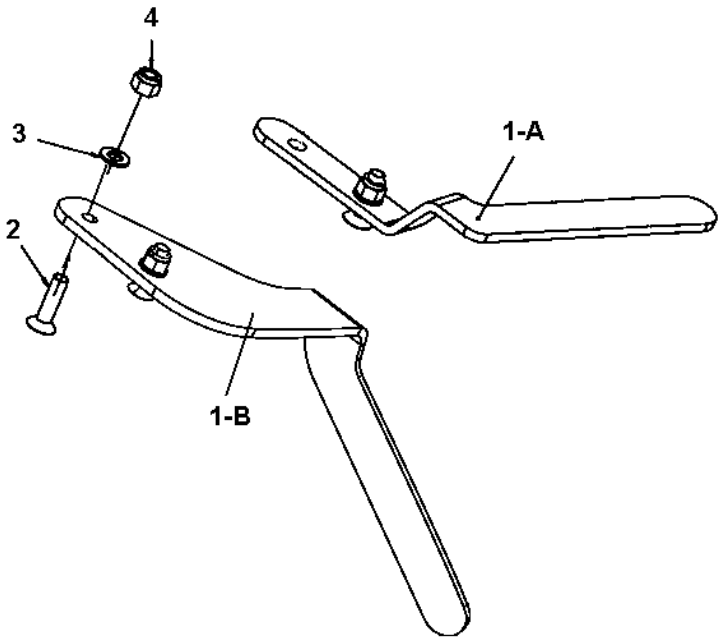

Grab handle, lift

Item	Part No	Rem	Qty	Description	Code
1-A	4700395390		1	Grab handle	D
1-B	4812110672	1	1	Grab handle	D
2	4700792540		2	Screw	D
3	4700904229		2	Steel plain washer 8,4x16x1,5	C
4	4700586003		2	Lock nut M8	C

1) Can together with Grab handle, release PN 4812110671 be used as replacement for PN 4700395390.

Grab handle, lift offset/cocoa mat

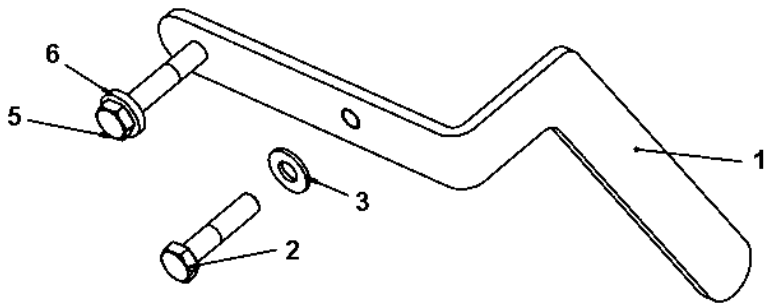

Grab handle, lift offset/cocoa mat

Item	Part No	Rem	Qty	Description	Code
1	4700395412		1	Grab handle	D
2	4700500161		1	Hexagon head screw	C
3	4700904230		1	Steel plain washer	C
5	4700500033		1	Screw M10-1,5x60 8,8	D
6	4700904557		1	Steel plain washer	C

Cocoa mat module

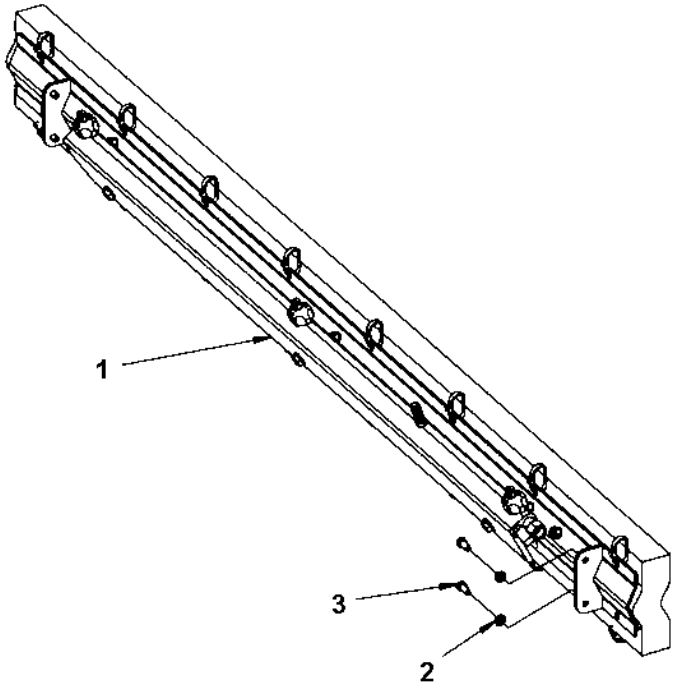

Cocoa mat module

Item	Part No	Rem	Qty	Description	Code
1			1	**Cocoa mat assembly (Page 144)**	
2	4700904229		4	Steel plain washer 8,4x16x1,5	C
3	4700500019		4	Hexagon head screw M8x16H 8,8	C

Cocoa mat assembly

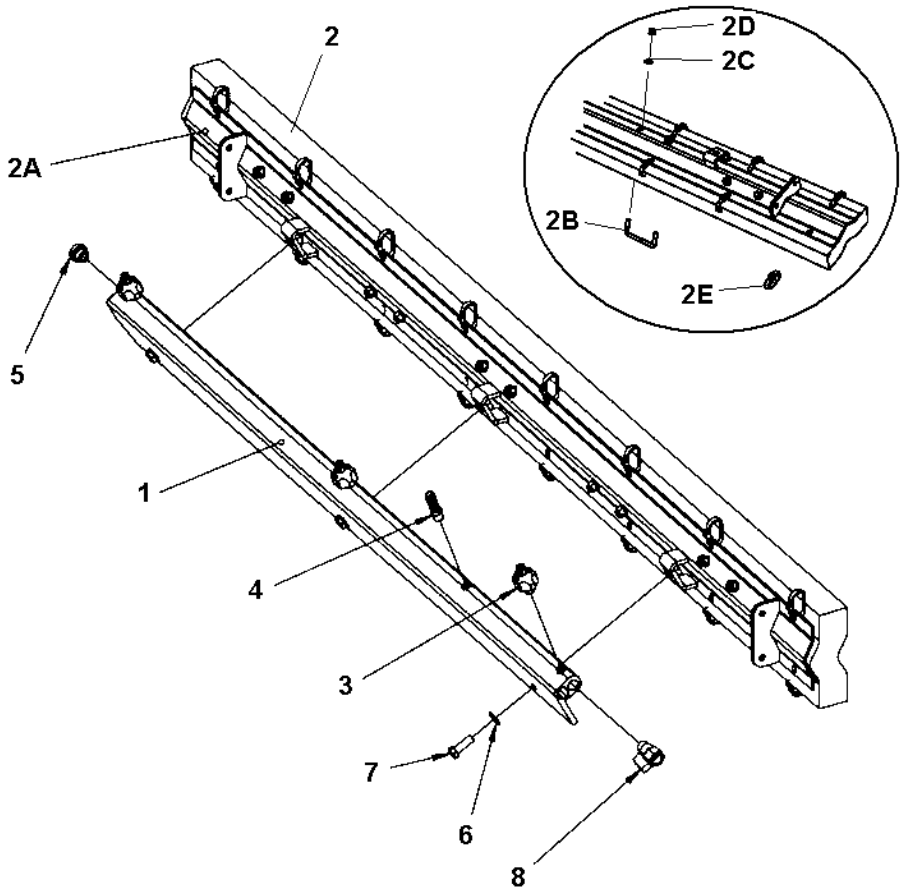

Cocoa mat assembly

Item	Part No	Rem	Qty	Description	Code
1	4700396270		1	Sprinkler pipe	D
2	4700792433		1	Sprinkler mat	D
2-A	4700396268		1	Holder	D
2-B	4700384911		5	Clamp	D
2-C	4700904229		10	Steel plain washer 8,4x16x1,5	C
2-D	4700586003		10	Lock nut M8	C
2-E	4700313102		N	Cable ties L=380 mm	
3	4700392011		3	Spraying nozzle, cpl	A
4	4700791977		1	Hose connection	B
5	4700792072		1	End plug	
6	4700904557		3	Steel plain washer	C
7	4700500029		3	Hexagon head screw	C
8	4700233215		1	Ball valve	

Cocoa mat bracket module

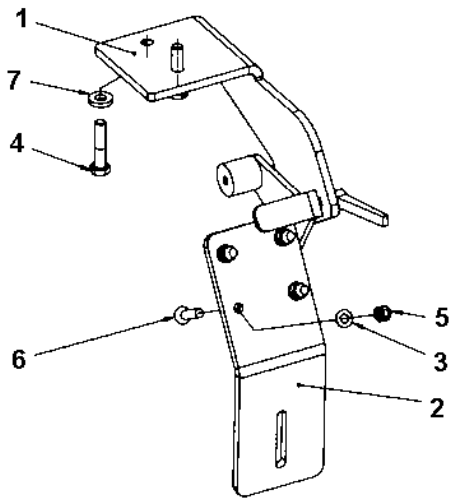

Cocoa mat bracket module

Item	Part No	Rem	Qty	Description	Code
1			1	**Cocoa mat bracket** **(Page 148)**	
2	4700396936		1	Bracket	D
3	4700904229		4	Steel plain washer 8,4x16x1,5	C
4	4700500161		2	Hexagon head screw	C
5	4700586003		4	Lock nut M8	C
6	4700927637		4	Hexagon socket countersunk screw	D
7	4700904557		2	Steel plain washer	C

Cocoa mat bracket

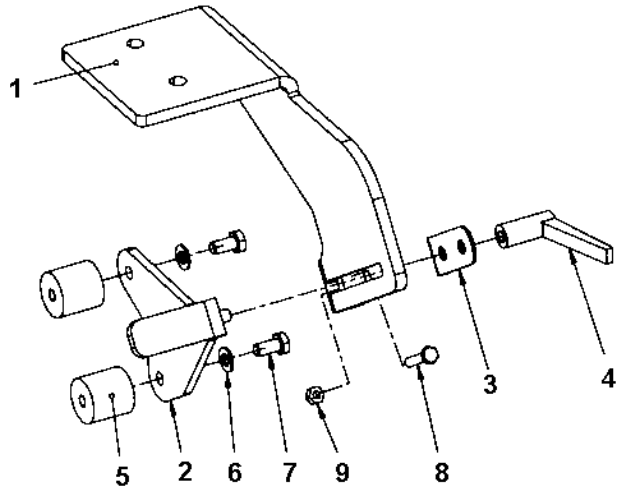

Cocoa mat bracket

Item	Part No	Rem	Qty	Description	Code
1	4700396183		1	Bracket	D
2	4700396893		1	Bracket	D
3	4700396754		1	Cover plate	D
4	4700396975		1	Lock handle	D
5	4700396976		2	Shock absorber	D
6	4700904229		2	Steel plain washer 8,4x16x1,5	C
7	4700500019		2	Hexagon head screw M8x16H 8,8	C
8	4700900485		1	Hexagon head screw	C
9	4700570004		1	Nut M6X1,00 -8 A2K	C

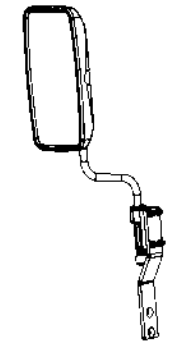

FRONT LEFT

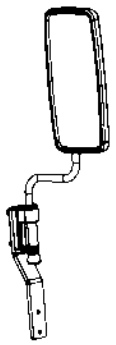

FRONT RIGHT

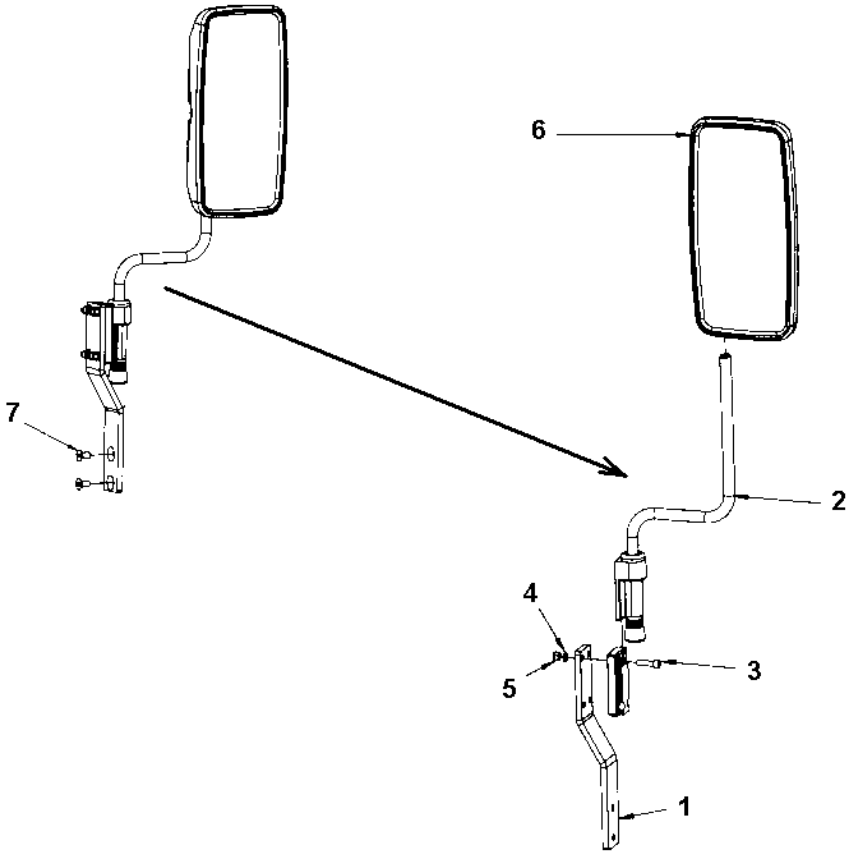

Process mirrors

Item	Part No	Rem	Qty	Description	Code
			2	Mirror assy	
1	4812110334		1	. Bracket	D
2	4700381944		1	. Mirror bracket	
3	4700508048		4	. Hexagon socket head cap screw	C
4	4700904229		4	. Steel plain washer 8,4x16x1,5	C
5	4700586003		4	. Lock nut M8	C
6	4700381943		1	. Mirror	
7	4811000096		2	Hexagon socket countersunk screw	D

End frame, rear

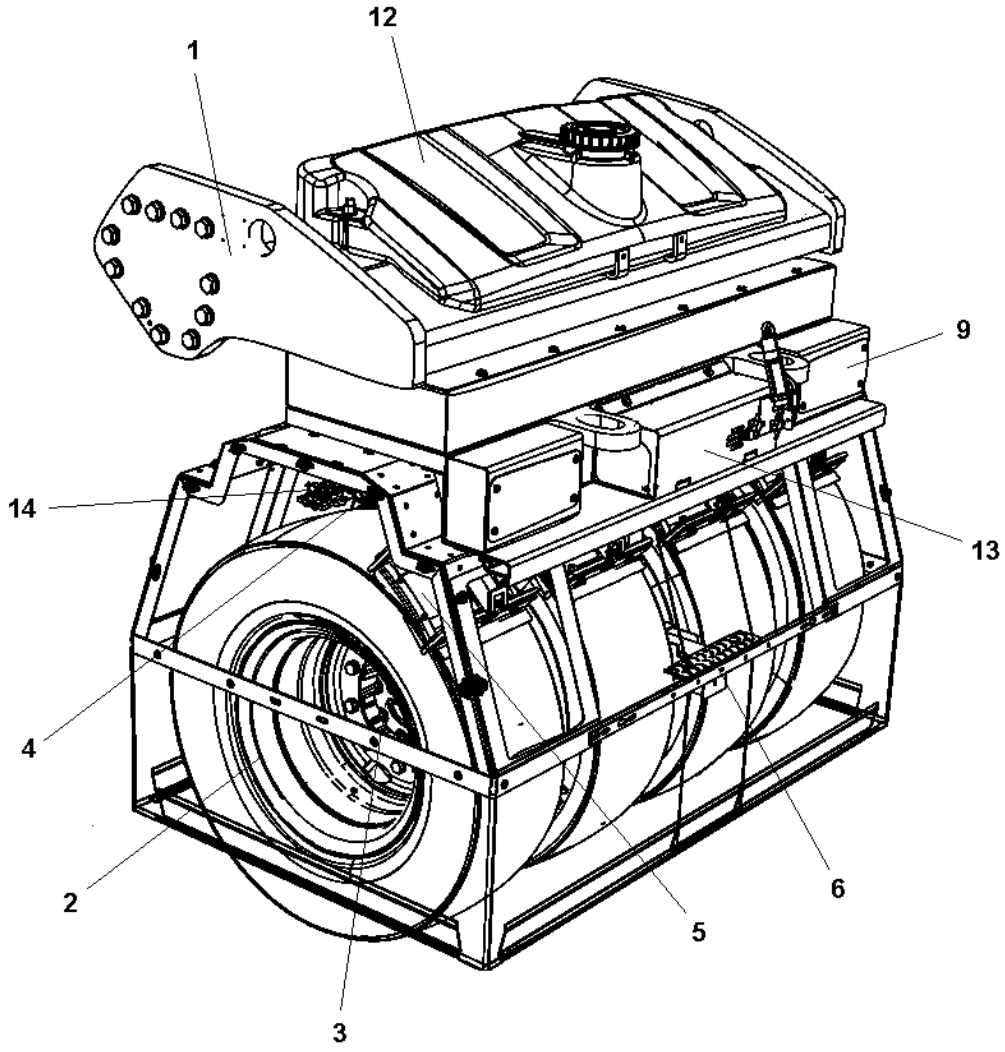

End frame, rear

Item	Part No	Rem	Qty	Description	Code
1			1	End frame, rear (Page 154)	
2			4	Wheel module (Page 172)	
3			2	Wheel spacer module (Page 176)	
4			2	Scraper bracket (Page 178)	
5			4	Scraper module (Page 180)	
6			1	Step assy (Page 184)	
9			2	Cover plate (Page 118)	
11			1	SMV-sign (Page 186)	
12			1	Emulsion tank module (Page 94)	
13			1	Sprinkler pump module, emulsion (Page 98)	
14			4	Sprinkler pipe module, wheel (Page 104)	
15			1	Protecting covers (Page 188)	

End frame, rear

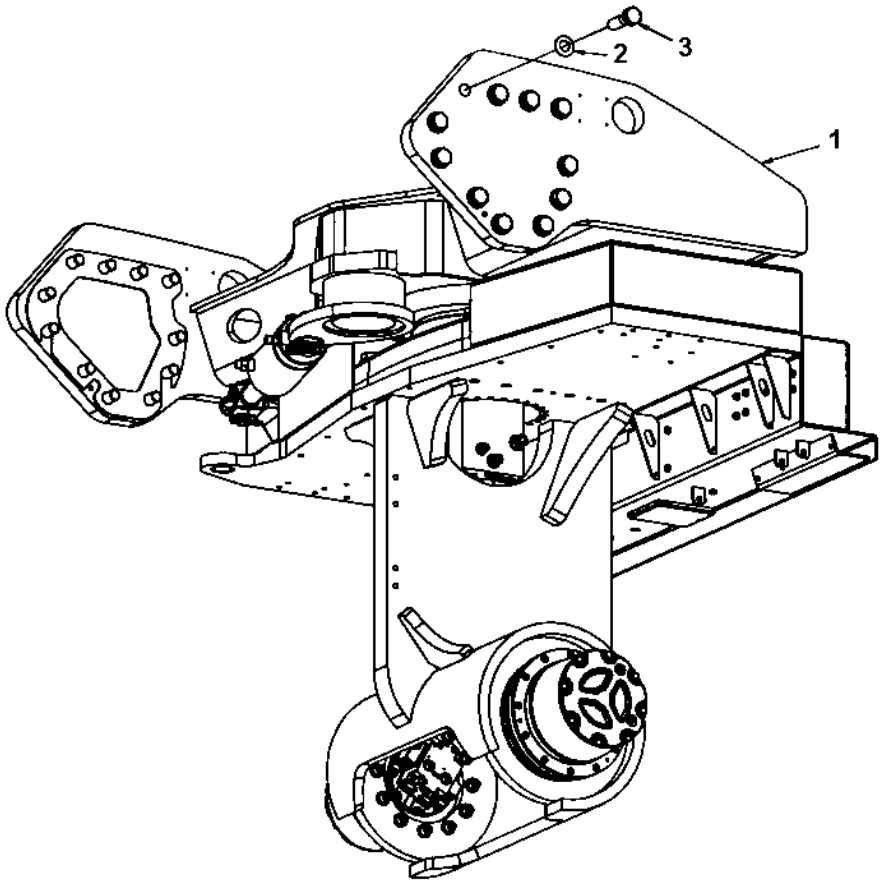

End frame, rear

Item	Part No	Rem	Qty	Description	Code
1			1	**Frame assy (Page 156)**	
2	4700904234		22	Steel plain washer	C
3	4700500297		22	Hexagon head screw M24x80	C

Frame assy

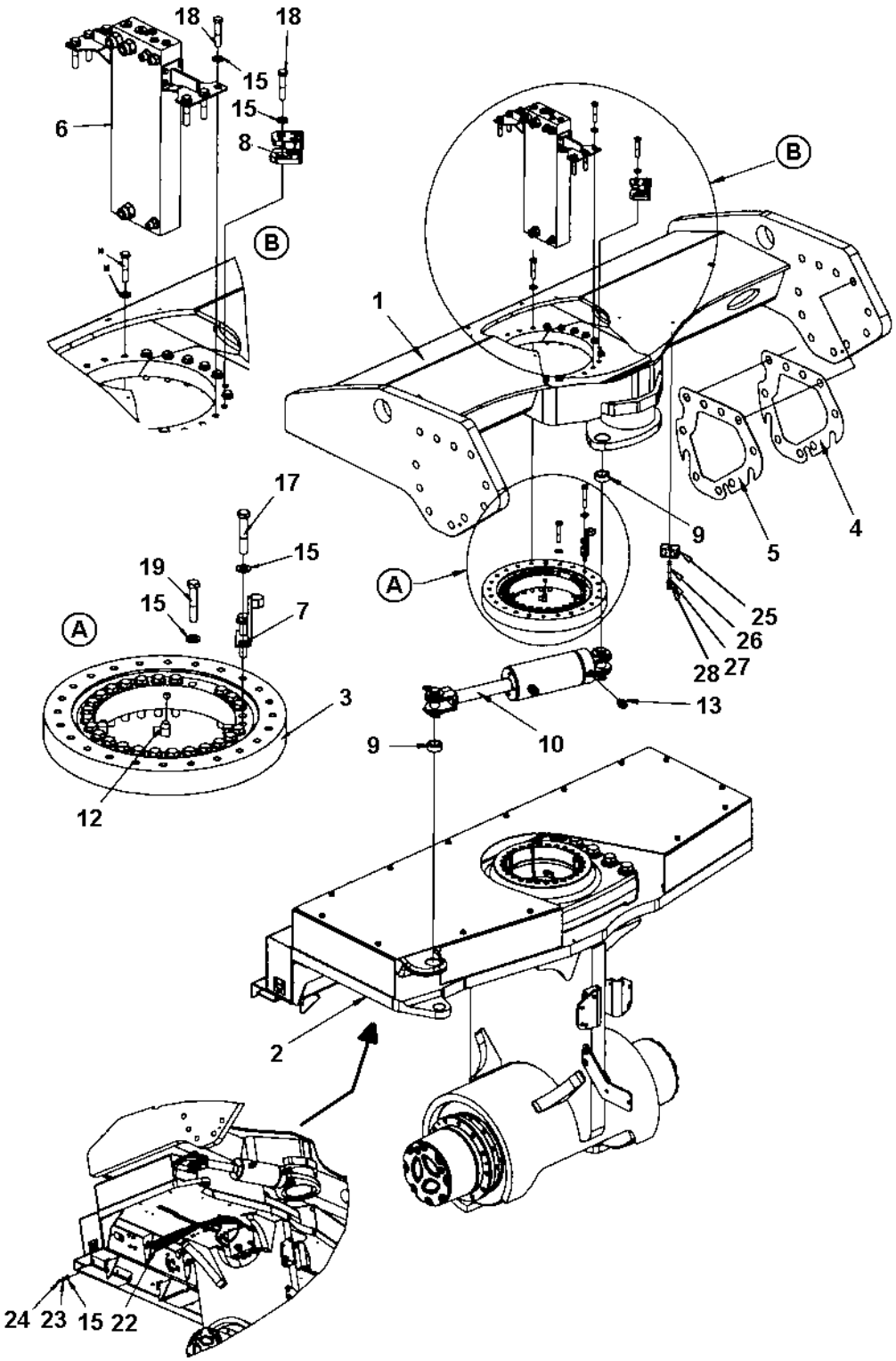
18
18
15
15
6
8
B
B
1
17
15
19
15
7
A
A
3
12
9
10
13
28
27
26
25
5
4
9
2
24
23
15
22

Frame assy

Item	Part No	Rem	Qty	Description	Code
1	4700391481		1	Frame	D
2			1	**Combi unit, additional kit (Page 158)**	
3	4700359192		1	Bearing	B
4	4700390469		N	Shim	D
5	4700390470		N	Shim	D
6			1	**Connection block (Page 166)**	
7	4700395694		1	Cam	D
8			1	**Micro switch (Page 168)**	
9	4700391430		2	Bearing	D
10	4700391024		1	**Steering cylinder (Page 170)**	
12	4700373183		4	Elbow 90°	D
13	4700792337		2	Straight connector orfs	D
14	4700904230		4	Steel plain washer	C
15	4700904231		55	Washer 13x24x2 300 HV	C
17	4700903735		2	Screw	
18	4700500175		24	Screw	D
19	4700947712		25	Screw	C
22	4700393360		4	Hydraulic hose	D
23	4700903831		4	Nut	C
24	4700926214		4	Grease fitting	C
25	4700904085		1	Pipe clamp	
26	4700791858		1	Stud	D
27	4700904229		1	Steel plain washer 8,4x16x1,5	C
28	4700586003		1	Lock nut M8	C

Combi unit, additional kit

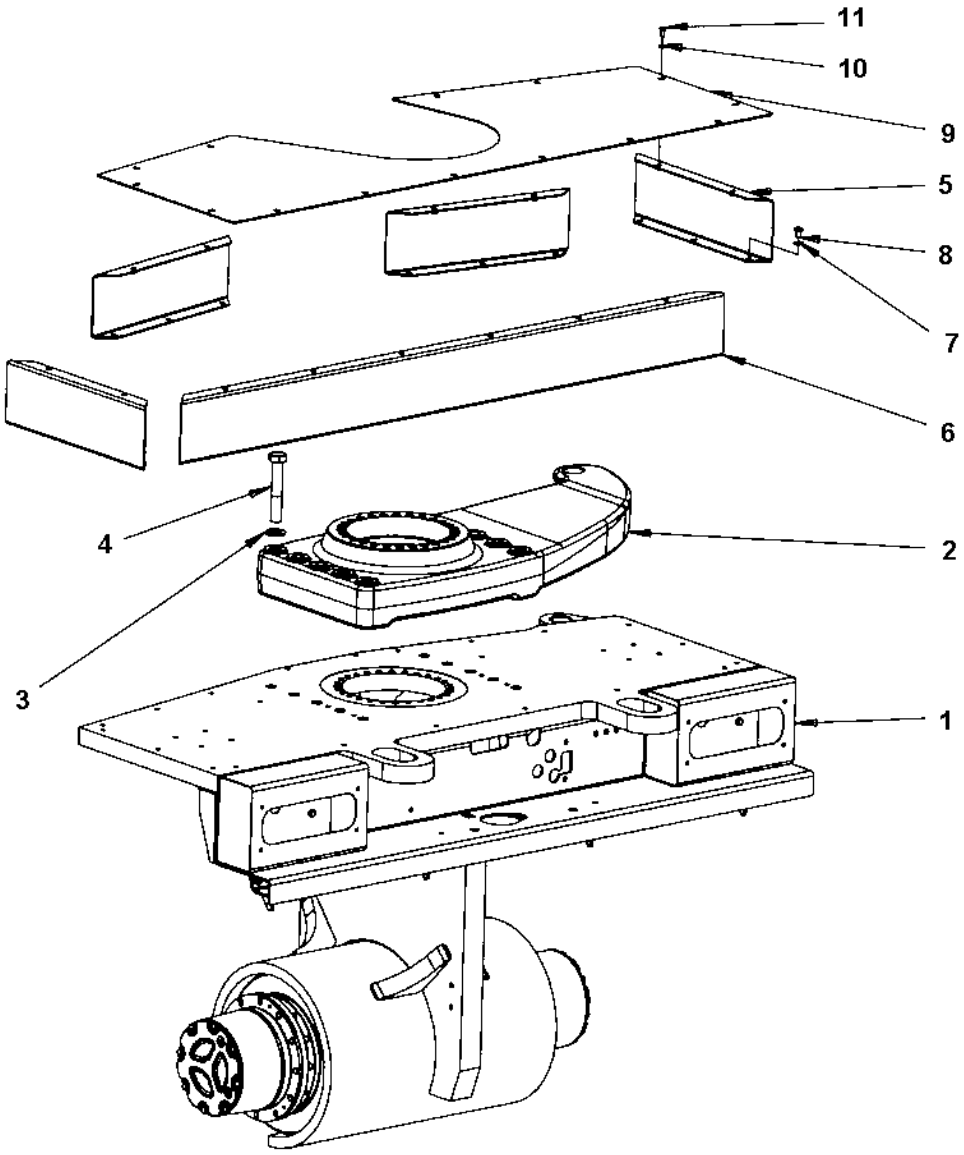

Combi unit, additional kit

Item	Part No	Rem	Qty	Description	Code
1			1	**Combi unit, basic kit (Page 160)**	
2	4700395457		1	Spacer	D
3	4700904234		10	Steel plain washer	C
4	4700792543		10	Hexagon head screw	D
5	4700395612		4	Bracket	D
6	4700395611		1	Bracket	D
7	4700904230		31	Steel plain washer	C
8	4700500043		31	Screw M10x16H 8,8	D
9	4700397440		1	Cover plate	D
10	4700904556		14	Washer 8,4x16x3,0	C
11	4700500019		14	Hexagon head screw M8x16H 8,8	C

Combi unit, basic kit

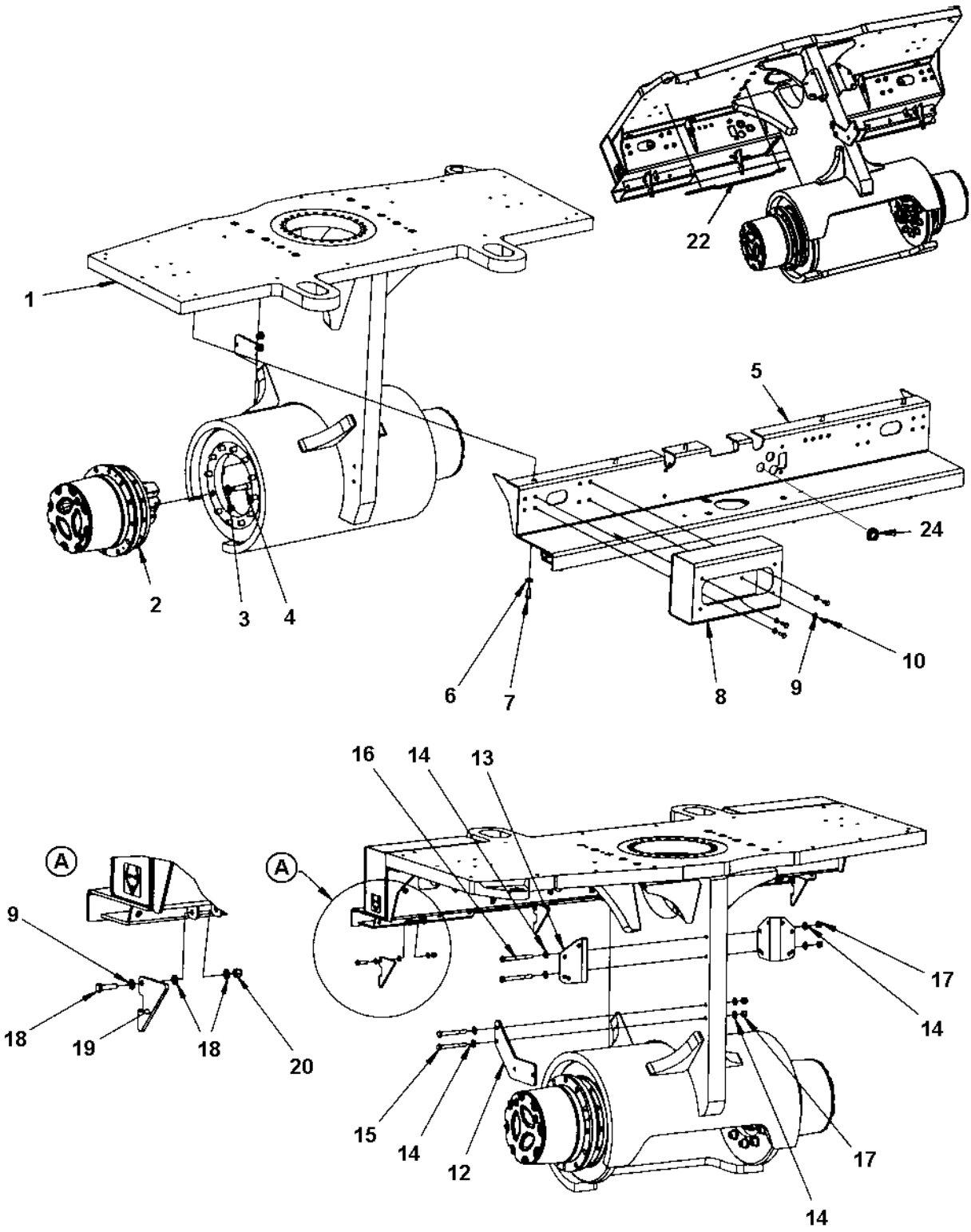

Combi unit, basic kit

Item	Part No	Rem	Qty	Description	Code
1	4700397438		1	Yoke	D
2	4700394922		2	**Gear (Page 162)**	D
3	4700904214		24	Washer 15x30x4 300 HV	C
4	4700508052		24	Hexagon socket head cap screw m	D
5	4700397441		1	Bracket	D
6	4700904557		5	Steel plain washer	C
7	4700500028		5	Screw	C
8	4700397439		2	Light box	D
9	4700904229		20	Steel plain washer 8,4x16x1,5	C
10	4700500053		8	Screw M8x20H 8.8	C
12	4700396118		1	Bracket	D
13	4700396110		2	Bracket	D
14	4700904230		8	Steel plain washer	C
15	4700500077		2	Screw	C
16	4700500034		2	Screw M10-1,5x100 8,8	
17	4700586018		4	Hexagon lock nut M10	C
18	4700500022		4	Screw M8x30H 8.8	C
19	4812112232		4	Hook	D
20	4700586003		4	Lock nut M8	C
22	4700397268		1	Bracket	D
24	4700792392		2	Grommet with membrane	

4700394922 Gear

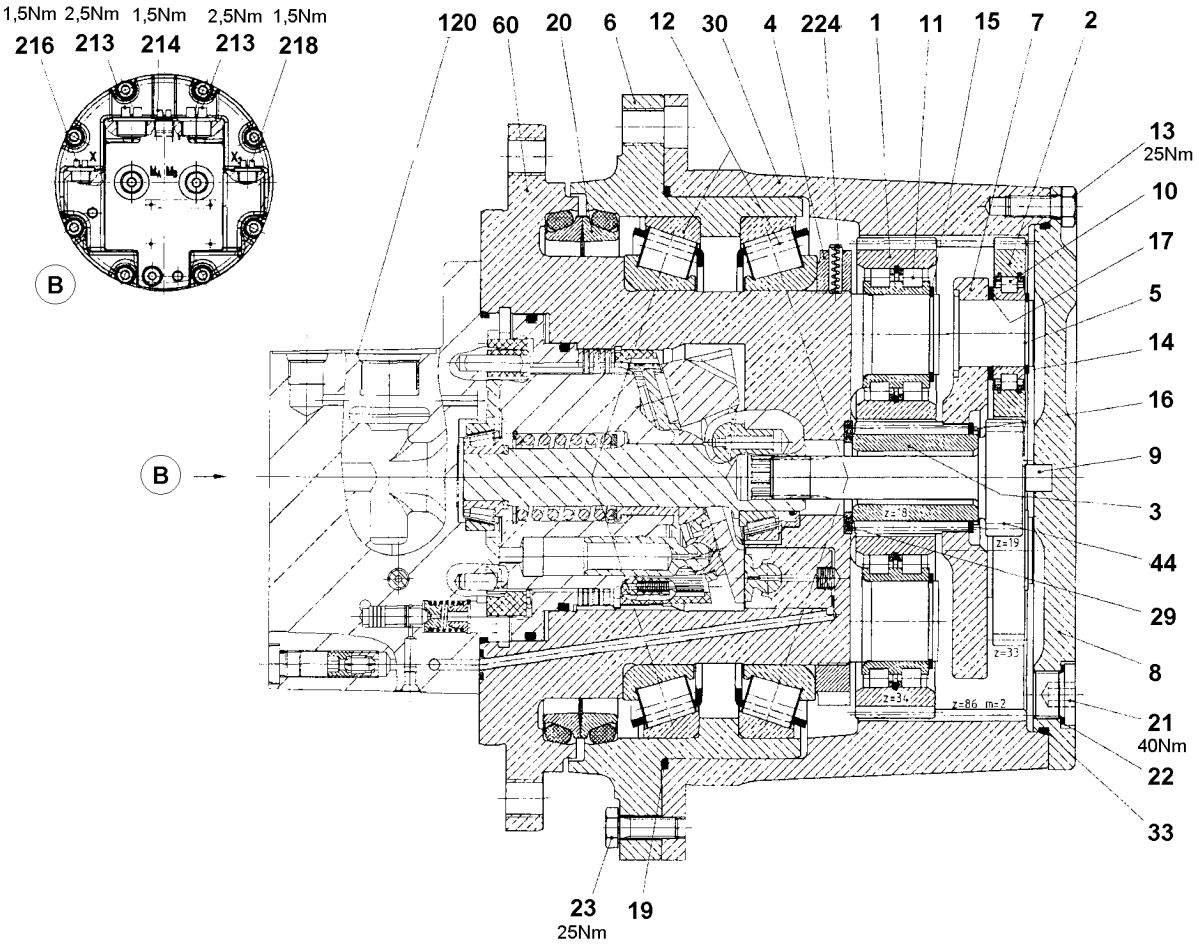

4700394922 Gear

Item	Part No	Rem	Qty	Description	Code
	4700394922		1	**Gear (Page 162)**	D
-A	4812156651		1	Seal kit	
1			4	. Planet gear	
2			3	. Planet gear	
3			1	. Sun gear	
4		1	1	. Shaft nut M140x1,5	
5			3	. Planet bolt	
6		1	1	. Supporting ring	
7			1	. Planet carrier	
8			1	. Cover	
9			1	. Cylindrical roller	
10	4700950498		3	. Cylinder roller bearing	B
11	4700950483		4	. Cylinder roller bearing	B
12	4700950481	1	2	. Tapered roller bearing	
13			8	. Hexagon head screw M8x20	
14			3	. Snap ring 25x1,2	
15		1	4	. Snap ring 30x1,5	
16			1	. Snap ring 35x1,5	
17			3	. Support disc	
19		1	1	. O-ring 203x3	
20		1	1	. Face seal	
21		1	2	. Plug threaded M18x1,5	
22	4700950492	1	2	. Seal ring	
23			3	. Hexagon head screw M8x22	
29			1	. Housing washer	
30			1	. Ring gear	
33		1	1	. O-ring 185x3	
44			1	. Sun gear shaft	
60			1	. Spindle	
120			1	**. Hydraulic motor (Page 164)**	
213			2	. Seal screw M22x1,5	
214			1	. Seal screw M14x1,5	
216			1	. Seal screw M14x1,5	
218			1	. Seal screw M14x1,5	
224		1	2	. Spring dowel sleeve	

1) Included in seal kit, P/N 4812156651.

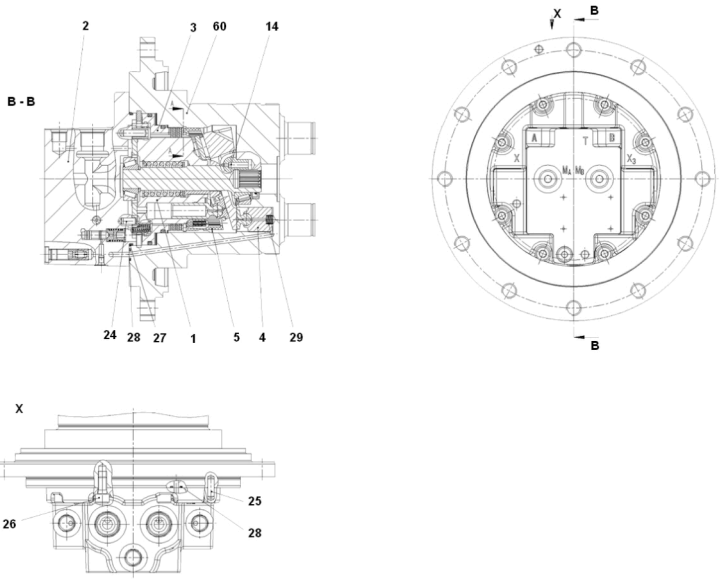
2
3
60
14
B - B
24
28
27
1
5
4
29
X
B
A
T
B
X
X3
MA
MB
B
X
25
26
28

Hydraulic motor

Item	Part No	Rem	Qty	Description	Code
			1	Hydraulic motor	
1			1	. Rotary group	
2			1	. Port plate with valves	
3			1	. Pressure ring	
4			1	. Control piston	
5			1	. Cradle stop	
14			2	. Swivel ball	
24			1	. Cylinder pin	
25			1	. Cylinder pin	
26			8	. Socket head cap screw	
27			1	. O-ring	
28			2	. Seal ring	
29			1	. Pressure ring	
60			1	Spindle	

Connection block

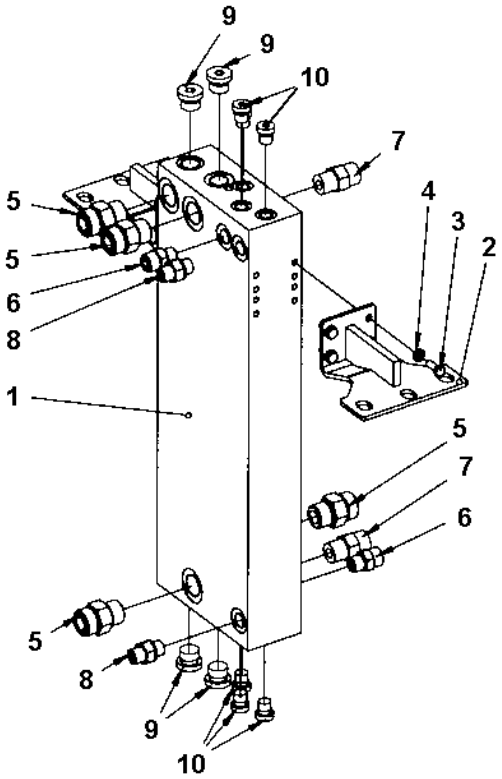

Connection block

Item	Part No	Rem	Qty	Description	Code
1	4700396136		1	Connection block	D
2	4700391889		2	Bracket	D
3	4700500013		8	Screw M6-1x16 8,8	C
4	4700904228		8	Washer 6,4x12x1,5	C
5	4700791743		4	Straight connector orfs	D
6	4700791409		2	Straight connector orfs	C
7	4700791799		2	Straight connector orfs	D
8	4700791914		2	Straight connector orfs	D
9	4700792295		4	Steel plug	D
10	4700904951		6	Plug	C

Micro switch

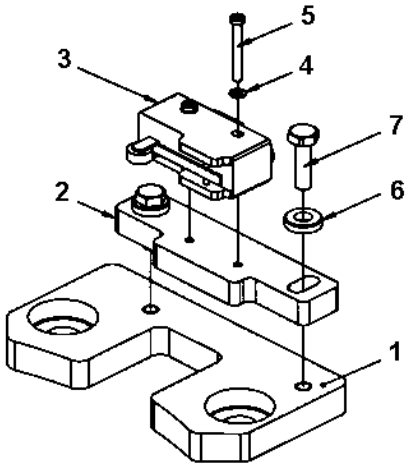

Micro switch

Item	Part No	Rem	Qty	Description	Code
1	4700396179		1	Bracket	D
2	4700395696		1	Holder plate	D
3	4700930046		1	Micro switch	B
4	4700904697		2	Washer 3,2x6x0,5	C
5	4700533050		2	Screw	D
6	4700603001		2	Washer	C
7	4700500040		2	Screw M6-1x20 8,8	C

4700391024 Steering cylinder

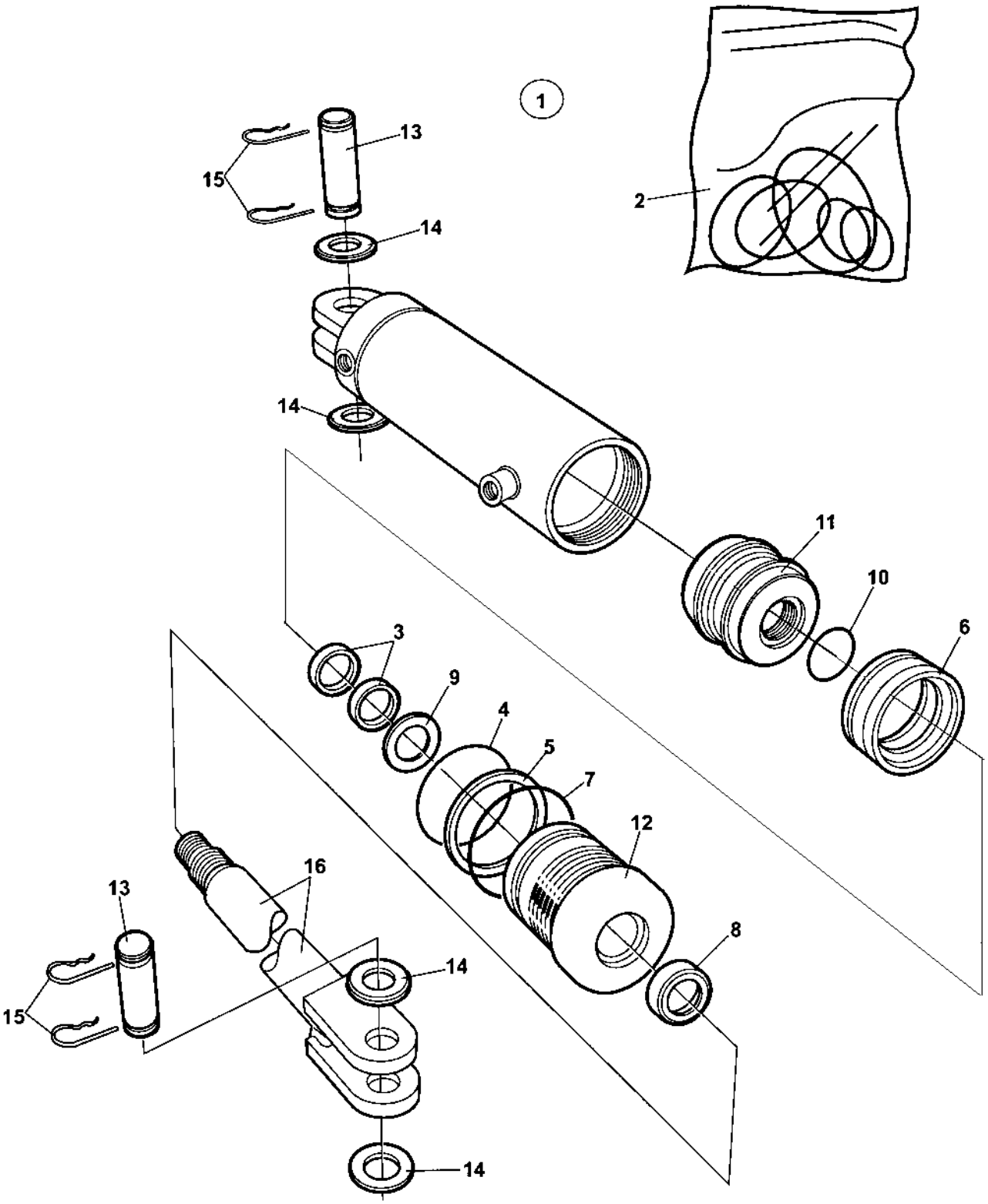

4700391024 Steering cylinder

Item	Part No	Rem	Qty	Description	Code
1	4700391024		1	**Steering cylinder (Page 170)**	
2	4700950417		1	. Seal kit	C
3			2	. . Seal	
4			1	. . O-ring	
5			1	. . Back-up ring	
6			1	. . Seal	
7			1	. . O-ring	
8			1	. . Seal	
9			1	. . Seal	
10			1	. . O-ring	
11			1	. Piston block	
12			1	. Steering	
13	4700950222		2	. Shaft	D
14			4	. Washer	
15	4700635061		4	. Hair clip	B
16			1	. Piston rod	
17			1	. Cylinder	

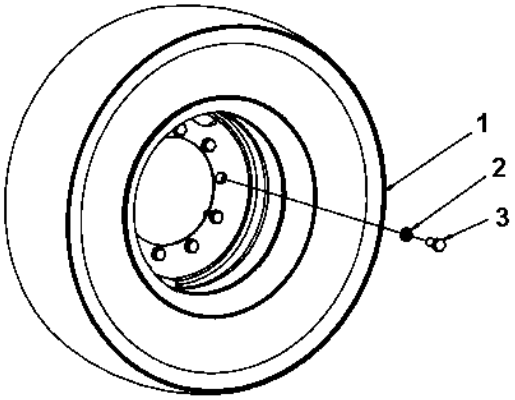
1
2
3

Wheel module

Item	Part No	Rem	Qty	Description	Code
1			1	**Wheel (Page 174)**	
2	4700902252		10	Washer	C
3	4700500205		10	Screw	

Wheel

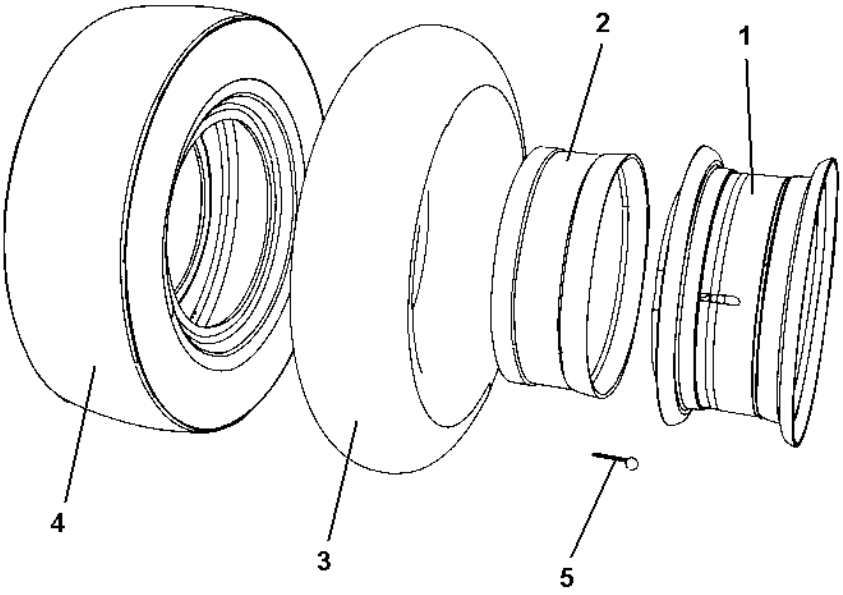

Wheel

Item	Part No	Rem	Qty	Description	Code
			1	Wheel Michelin	
			1	Wheel Bridgestone	
			1	Wheel Dunlop	
1	4700380507		1	. Rim	D
2	4700901332	A	1	. Rim liner	D
	4700901331	B	1	. Rim liner	D
3	4700901334	A	1	. Tyre tube	D
	4700901333	B	1	. Tyre tube	D
4	4700901317		1	. Tyre, smooth Michelin	D
	4700904763		1	. Tyre, smooth Bridgestone	D
	4700170671		1	. Tyre, smooth Dunlop	D
5	4700395655		1	. Air charging valve	

A) Michelin
B) Bridgestone, Dunlop

Wheel spacer module

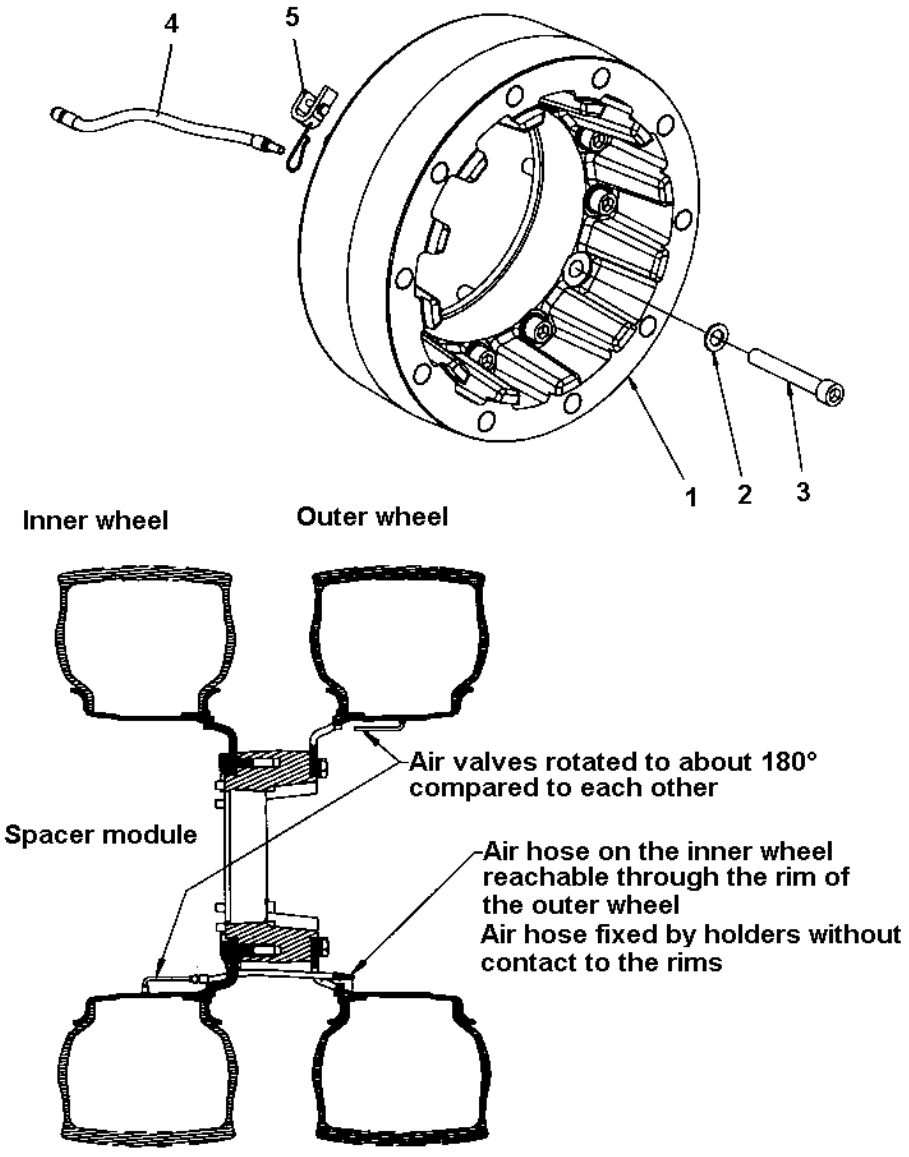

Wheel spacer module

Item	Part No	Rem	Qty	Description	Code
1	4700394601		1	Spacer	D
2	4700792716		12	Steel plain washer	D
3	4700792803		12	Hexagon socket head cap screw m	D
4	4700902228		1	Air hose	D
5	4700901998		1	Valve holder	

Scraper bracket

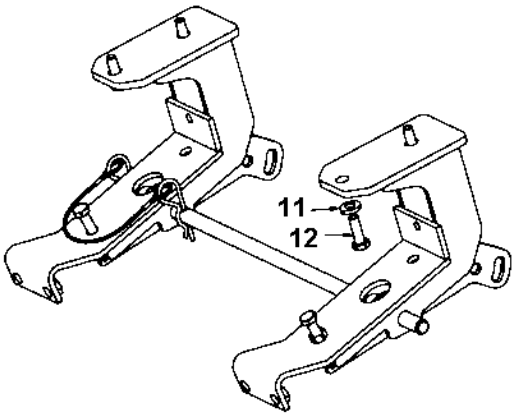

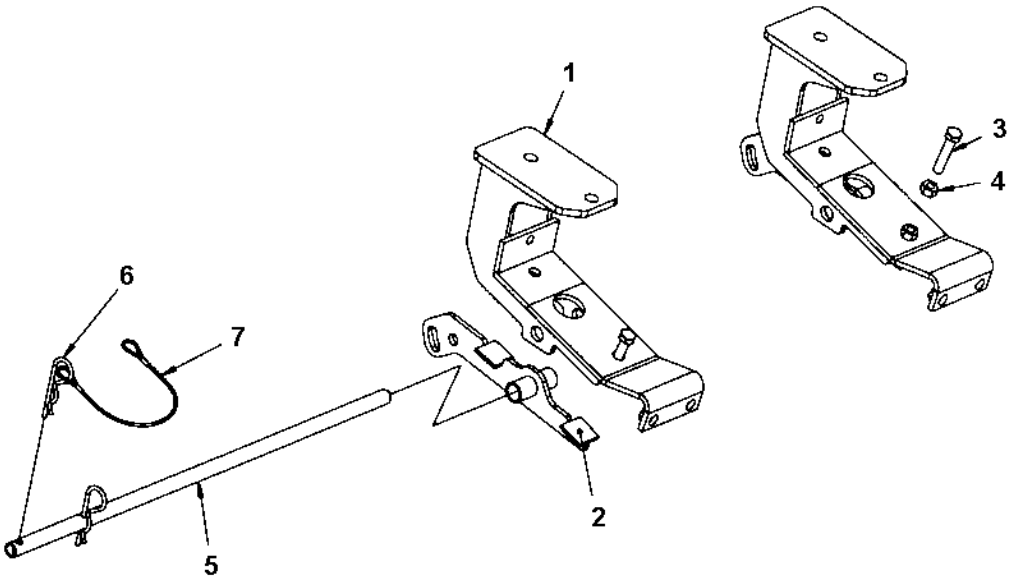

Scraper bracket

Item	Part No	Rem	Qty	Description	Code
1	4812112233		2	Bracket	D
2	4700383261		2	Rod end	D
3	4700500105		2	Hexagon screw M10x50	D
4	4700570006		2	Nut	B
5	4700380506		1	Shaft	D
6	4700635061		2	Hair clip	B
7	4700343775		N	Steel wire insulated	D
11	4700904557		4	Steel plain washer	C
12	4700500029		4	Hexagon head screw	C

Scraper module

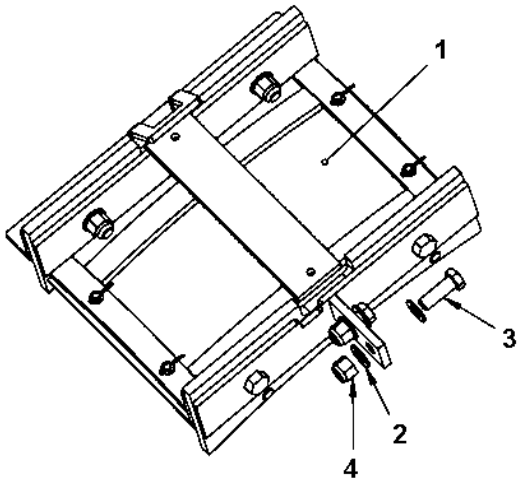

Scraper module

Item	Part No	Rem	Qty	Description	Code
1			1	**Scraper assy (Page 182)**	
2	4700904231		4	Washer 13x24x2 300 HV	C
3	4700500037		2	Hexagon screw	C
4	4700586019		2	Lock nut	C

Scraper assy

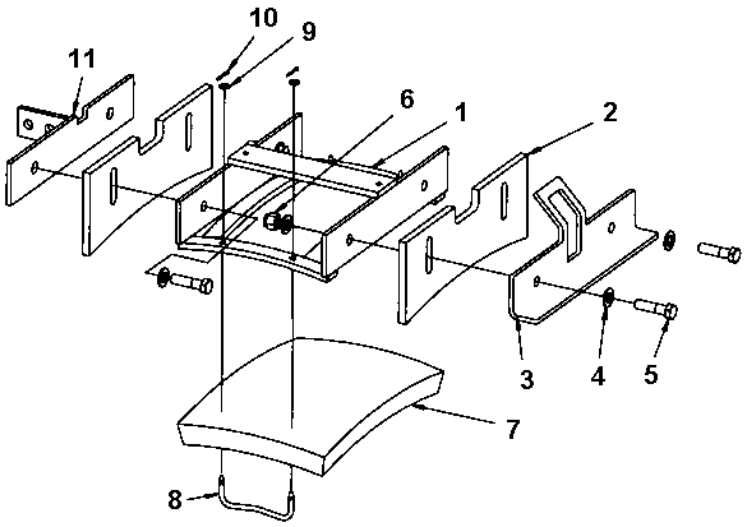

Scraper assy

Item	Part No	Rem	Qty	Description	Code
1	4700395067		1	Scraper holder	
2	4700383390		2	Scraper	A
3	4700383263		1	Bracket	
4	4700904231		6	Washer 13x24x2 300 HV	C
5	4700500056		4	Screw	
6	4700586019		2	Lock nut	C
7	4700263772		1	Mat	D
8	4700267791		2	Mat holder	D
9	4700904228		4	Washer 6,4x12x1,5	C
10	4700630035		4	Split pin	C
11	4700396546		1	Bracket	

Step assy

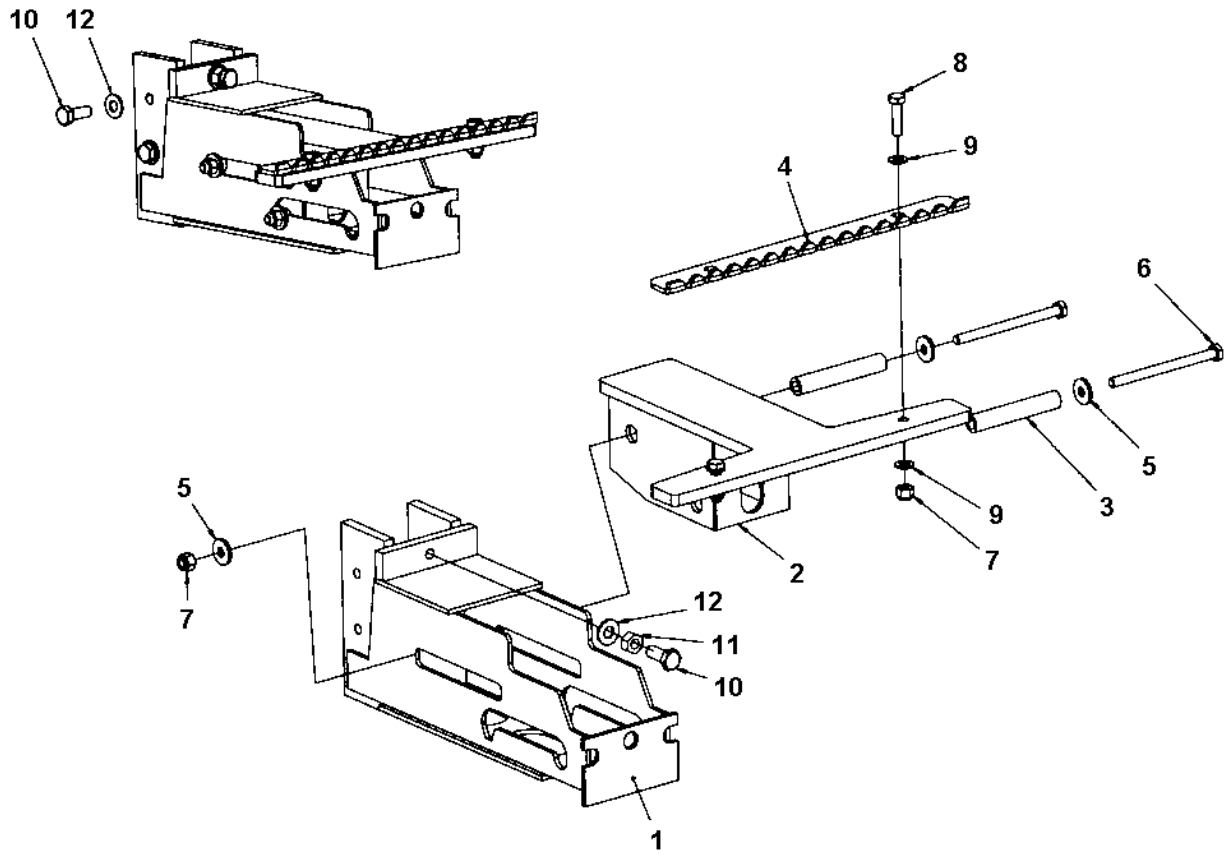

Step assy

Item	Part No	Rem	Qty	Description	Code
1	4812112256		1	Bracket	D
2	4812112099		1	Bracket	D
3	4700396844		2	Spacer sleeve	D
4	4812112100		1	Step	D
5	4700904734		4	Washer 8,4x26x4	
6	4700500180		2	Screw	C
7	4700586003		4	Lock nut M8	C
8	4700500022		2	Screw M8x30H 8.8	C
9	4700904229		4	Steel plain washer 8,4x16x1,5	C
10	4700500028		5	Screw	C
11	4700570006		1	Nut	B
12	4700904230		5	Steel plain washer	C

SMV-sign

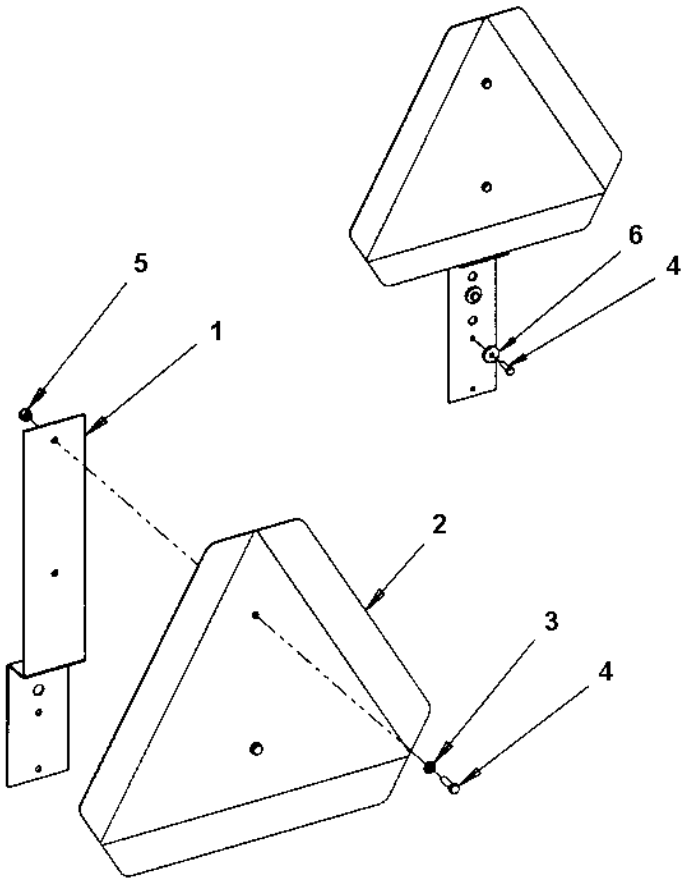

SMV-sign

Item	Part No	Rem	Qty	Description	Code
1	4700392291		1	Holder	D
2	4700476019		1	SMV-sign	D
3	4700904228		2	Washer 6,4x12x1,5	C
4	4700500040		4	Screw M6-1x20 8,8	C
5	4700586002		2	Lock nut M6 -8	C
6	4700904735		2	Washer	C

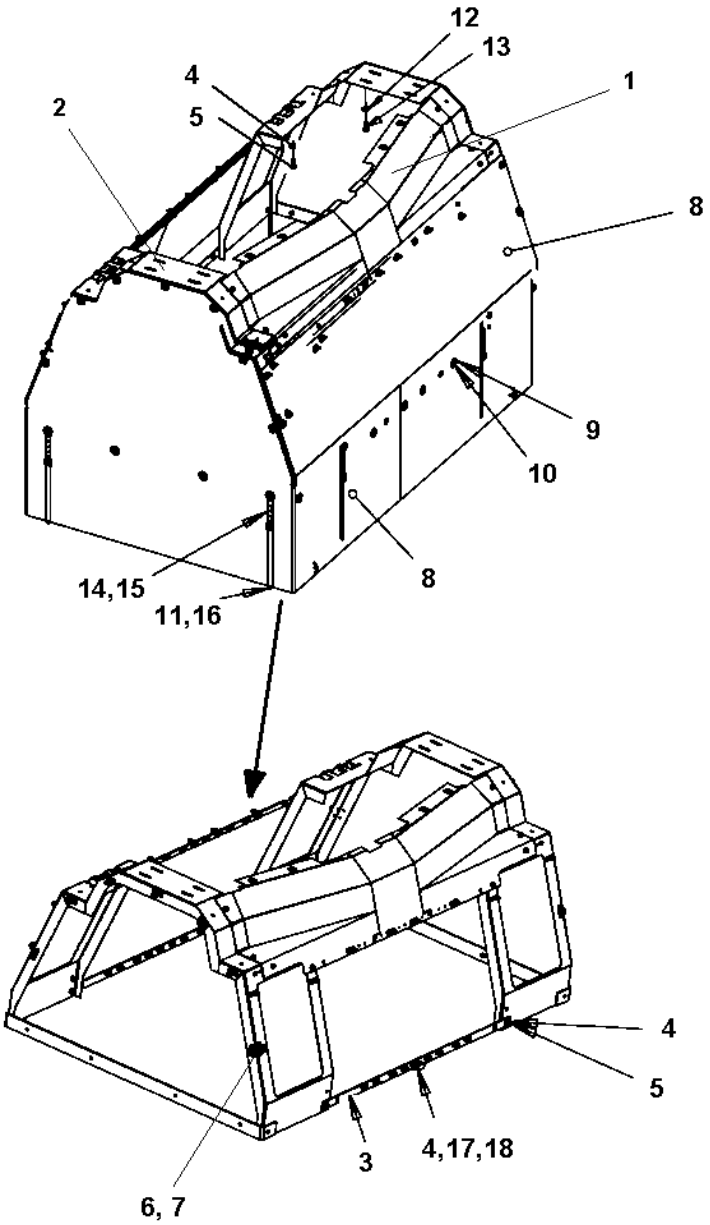
12
13
4
5
2
1
8
9
10
8
14,15
11,16
4
5
3
4,17,18
6, 7

Protecting covers

Item	Part No	Rem	Qty	Description	Code
1	4700397606		2	Protective cover bracket	D
2	4700397607		1	Protective cover bracket	D
3	4812110210		3	Protective cover bracket	D
4	4700904640		21	Washer 8,4x22x3	C
5	4700500053		18	Screw M8x20H 8.8	C
6	4700792801		34	Turn fastener	
7	4700923253		68	Rivet	C
8	4812110211		2	Protective cover	D
9	4700615050		24	Washer	C
10	4700500053		24	Screw M8x20H 8.8	C
11	4700397399		6	Rod	
12	4700904557		8	Steel plain washer	C
13	4700500048		8	Screw M10-1,5x20 8,8	C
14	4811000112		8	Strap	
15	4811000113		8	Strap	
16	4700313041		4	Cable ties L=200 mm	B
17	4700500021		1	Screw M8-1,25x25 8.8	C
18	4700570005		1	Nut M8	C

Drum

Item	Part No	Rem	Qty	Description	Code
1			1	**Drum (Page 192)**	

Drum

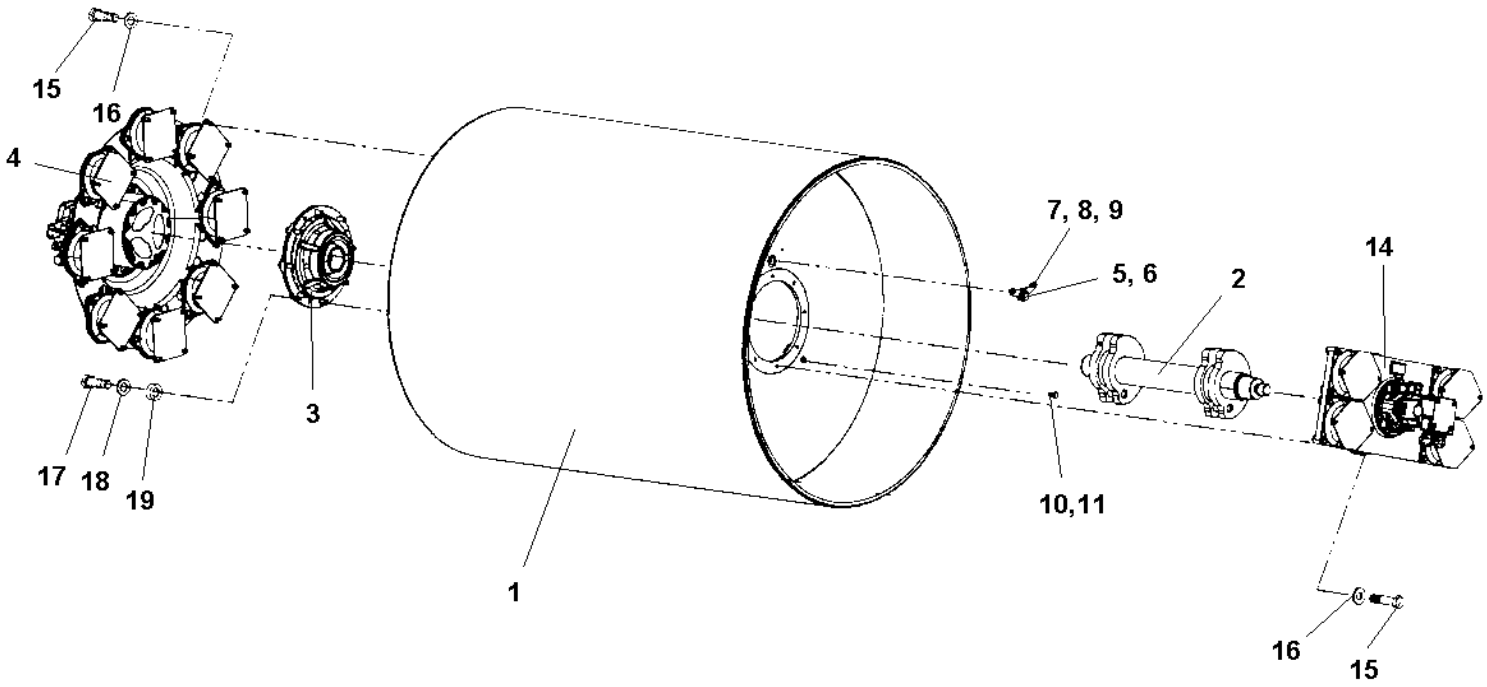

Drum

Item	Part No	Rem	Qty	Description	Code
1	4700379748		1	Drum	D
2	4700391107		1	Eccentric shaft	D
	4700391110		1	Eccentric shaft CE	D
3			1	**Drum bearing (Page 194)**	
4			1	**Drive unit (Page 196)**	
5	4700343744		1	Magnetic plug	C
6	4700162017		1	Seal ring	B
7	4700359955		1	Drop plate	D
8	4700904229		2	Steel plain washer 8,4x16x1,5	C
9	4700500019		2	Hexagon head screw M8x16H 8,8	C
10	4700344196		1	Plug M12	D
11	4700162027		1	Sealing	B
14			1	**Vibrating unit Rexroth Up to 348S00199 (Page 206)**	
			1	**Vibrating unit Sauer From 384S00200 Up to 384S00386 (Page 212)**	
			1	**Vibrating unit Rexroth From 384S00387 Up to 384S00391 (Page 206)**	
			1	**Vibrating unit Sauer From 384S00392 (Page 212)**	
15	4700500070		16	Screw M16x50	C
16	4700904232		16	Washer	C
17	4812110444		32	Hexagon head screw w Tuflok M12x40H 8.8 A3K	C
18	4700904231		32	Washer 13x24x2 300 HV	C
19	4812110346		32	Spacer	C

Drum bearing

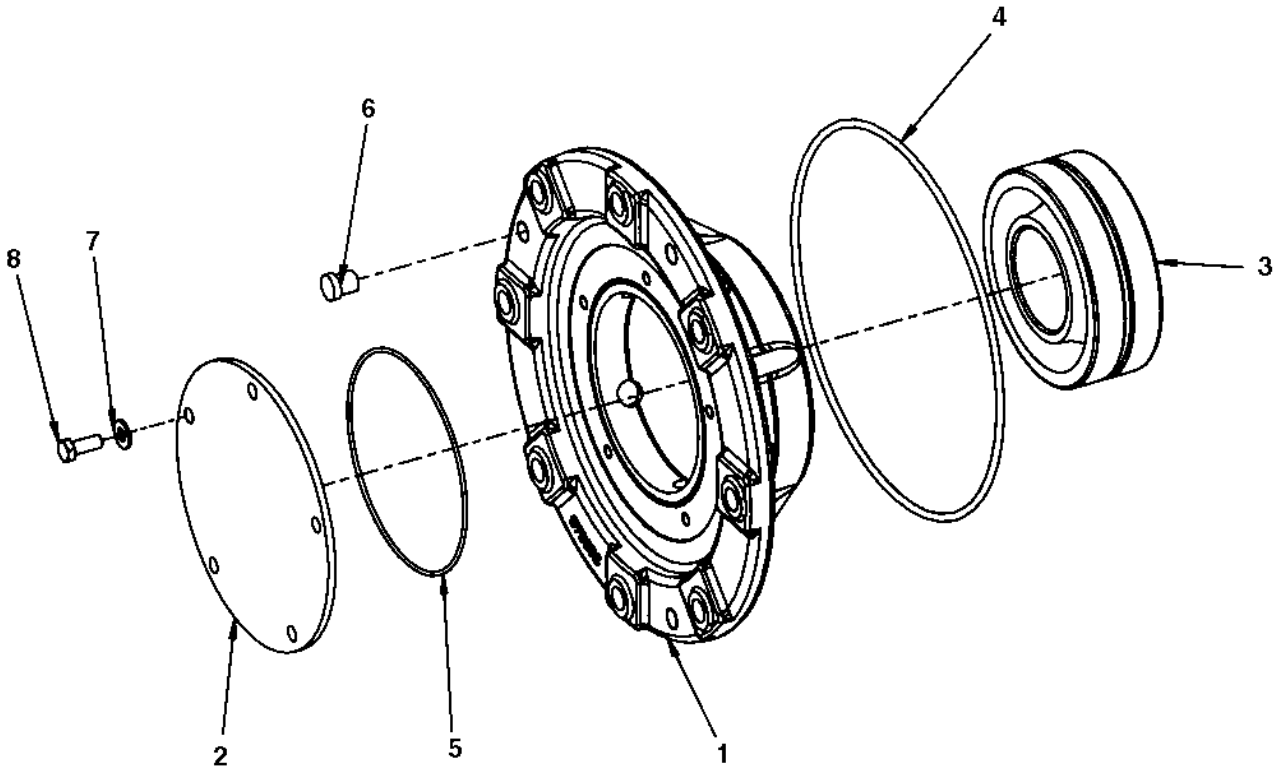

Drum bearing

Item	Part No	Rem	Qty	Description	Code
1	4700379652		1	Bearing housing	D
2	4700391029		1	Cover	D
3	4700792270		1	Spherical roller bearing	B
4	4700160344		1	O-ring 70	C
5	4700160045		1	O-ring 70	C
6	4700900775		3	Plug	C
7	4700904230		5	Steel plain washer	C
8	4700500028		5	Screw	C

Drive unit

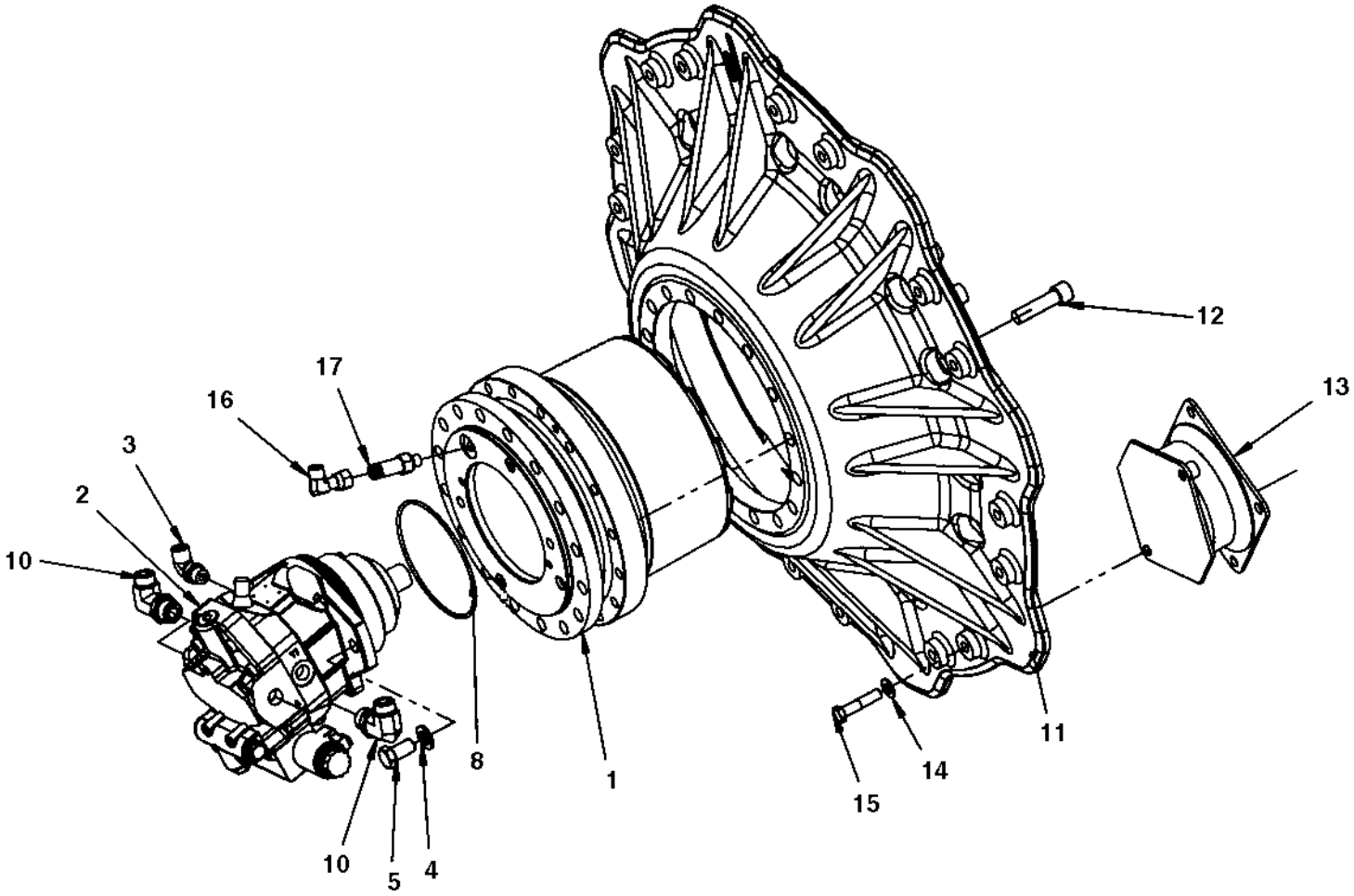

Drive unit

Item	Part No	Rem	Qty	Description	Code
1	4700390604		1	**Drum gear (Page 198)**	C
2	4700390603		1	**Hydraulic motor (Page 200)**	
	4812155170		1	. Solenoid valve	
3	4700792151		1	Elbow adapter 90	
4	4700904232		2	Washer	C
5	4700500057		2	Screw M16-2x30 8,8	D
8	4700160227		1	O-ring	D
10	4700792331		2	Elbow 90 orfs	C
11	4700391724		1	Drive disc	D
12	4700792506		16	Screw	D
13	4700394250		8	Shock absorber	A
14	4700904231		16	Washer 13x24x2 300 HV	C
15	4812110641		16	Hexagon screw w Tuflok M12x55 10.9 GEOMET	D
16	4700791401		1	Elbow 90, O-ring with swivel	C
17	4700792507		1	Straight connector orfs	D

4700390604 Drum gear

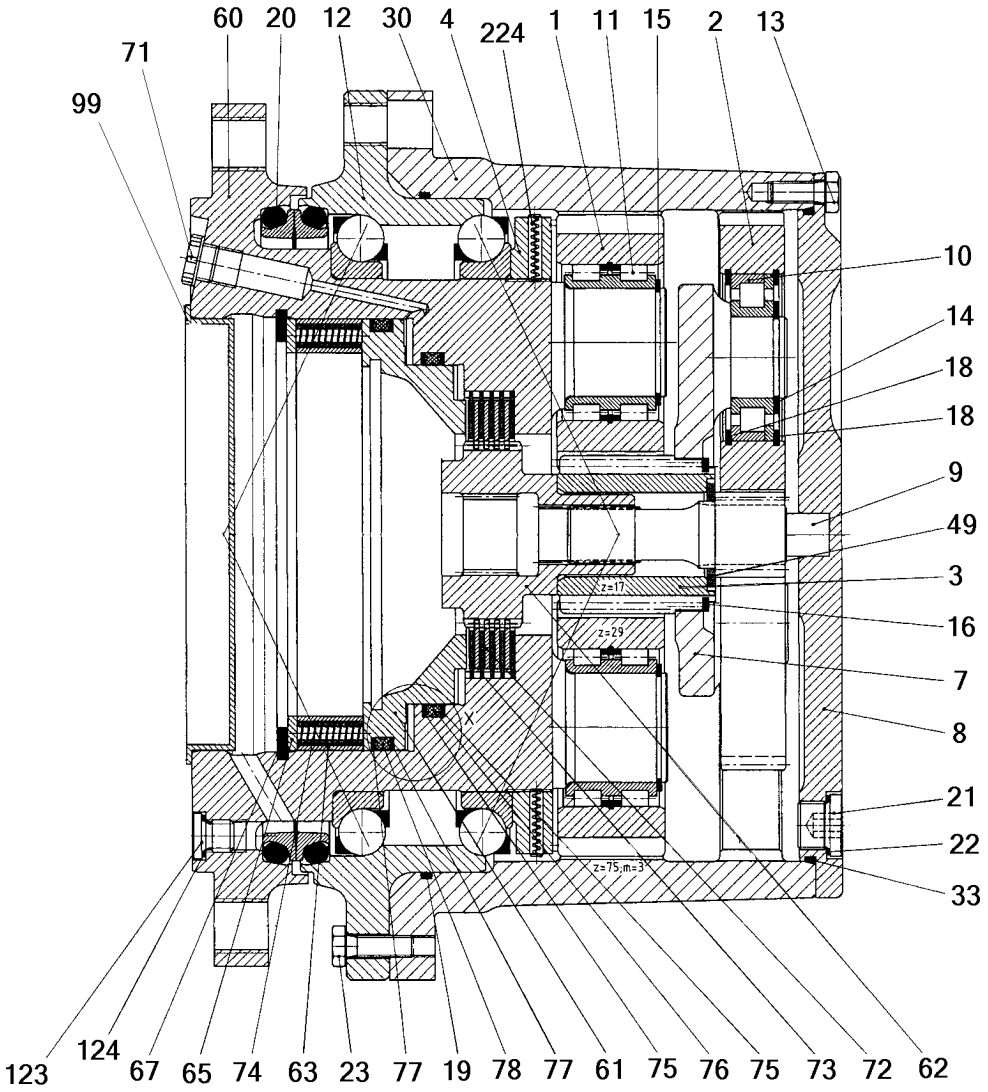

4700390604 Drum gear

Item	Part No	Rem	Qty	Description	Code
	4700390604		1	**Drum gear (Page 198)**	C
1	4812158763		4	. Planet gear	
2			3	. Planet gear	
3	4812158764		1	. Sun gear	
4			1	. Shaft nut	
7			1	. Planet carrier	
8			1	. Cover	
9			1	. Cylindrical roller	
10	4700950520		3	. Cylindrical roller bearing	
11	4700950521		4	. Cylindrical roller bearing	
12	4700950522		1	. Ball bearing	
13			12	. Screw	
14			3	. Snap ring	
15			4	. Snap ring	
16			1	. Snap ring	
18			6	. Snap ring	
19	4700950523		1	. O-ring	
20	4700950524		1	. Seal	
21	4700950491		2	. Plug	
22	4700950492		2	. Seal ring	
23			2	. Screw	
30	4812158765		1	. Ring gear	
33	4700950526		1	. O-ring	
44			1	. Sun gear shaft	
49			1	. Drum flange	
60			1	. Spindle	
61			1	. Piston	
62			1	. Coupler	
63			1	. Spacer	
65			1	. Disc	
67			1	. Snap ring	
71	4700950495		1	. Plug	
72	4700950527		4	. Inner disc	
73	4700950480		5	. Outer disc	
74			28	. Pressure spring	
75	4700950529		2	. Supporting ring	
76	4700950530		1	. Piston seal	
77	4700950531		2	. Supporting ring	
78	4700950532		1	. Piston seal	
99			1	. Plug	
123	4700950493		3	. Plug	
124	4700950494		3	. Seal ring	
224			2	. Spring dowel sleeve	
	4812156060		1	Seal kit, drive gear	D
_19	4700950523		1	_O-ring	
_20	4700950524		1	_Seal	
_33	4700950526		1	_O-ring	
	4812156061		1	Seal kit, brake	D
_75	4700950529		2	_Supporting ring	
_76	4700950530		1	_Piston seal	
_77	4700950531		2	_Supporting ring	
_78	4700950532		1	_Piston seal	
	4812156062		1	Disc kit	D
_72	4700950527		4	_Inner disc	
_73	4700950480		5	_Outer disc	
_74			28	_Pressure spring	

4700390603 Hydraulic motor

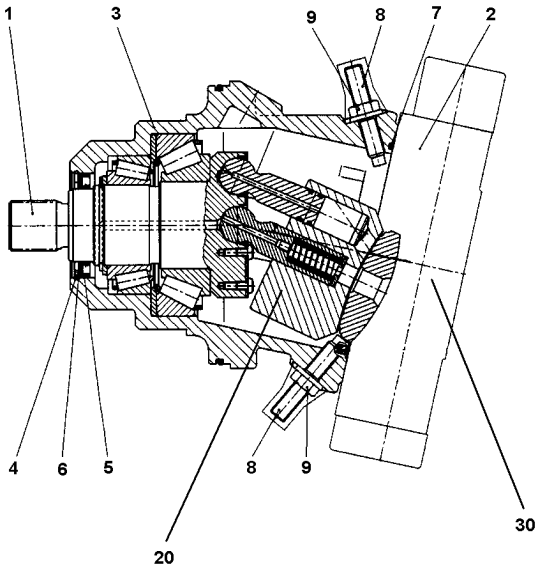

4700390603 Hydraulic motor

Item	Part No	Rem	Qty	Description	Code
1			1	. Engine	
2			1	. Adjustment	
3			1	. Housing	
4			1	. Circlip	
5			1	. Shaft sealing ring	
6			1	. Supporting disc	
7	4812157165		1	. O-ring	
8			2	. Set screw	
9			2	. Seal lock collar nut	
20			1	**Engine hydraulic part (Page 202)**	
30			1	**End plate (Page 204)**	

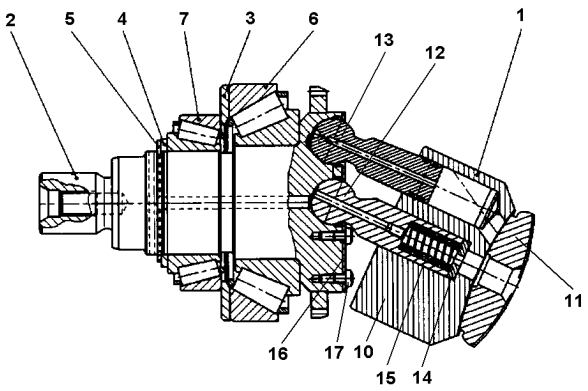
2
5
4
7
3
6
13
12
1
11
16
17
10
15
14

.

Engine hydraulic part

Item	Part No	Rem	Qty	Description	Code
1	4812157166		1	. Engine hydraulic part	
2			1	. Drive shaft with tooth ring	
3			1	. Shim	
4			1	. Supporting disc	
5			1	. Circlip	
6	4812157167		1	. Tapered roller bearing	
7	4812157168		1	. Tapered roller bearing	
10			1	. Cylinder	
11			1	. Control lens	
12			1	. Center pin	
13			7	. Piston with piston rings	
14			1	. Shim	
15			1	. Pressure spring	
16			1	. Retaining plate	
17			14	. Lens screw with internal screw torx	

End plate

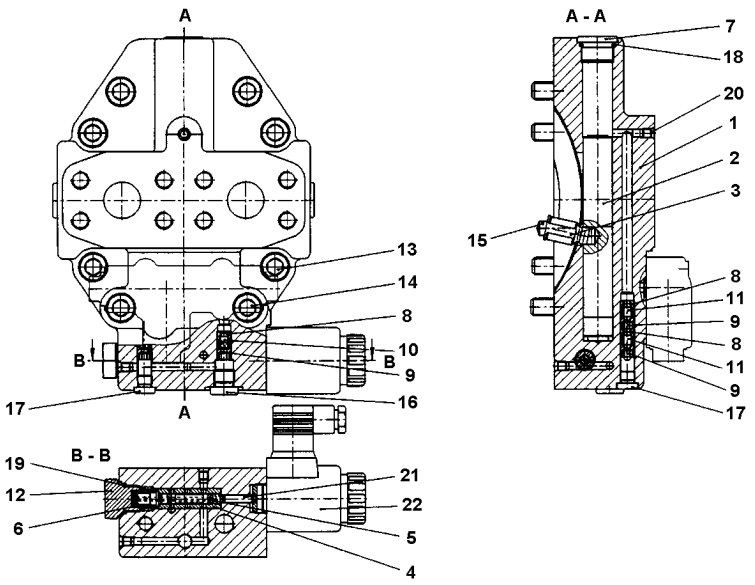
A
A - A
B - B
B
B
7
18
20
1
2
3
15
13
14
8
10
9
17
16
8
11
9
8
11
9
17
19
12
6
21
22
5
4

End plate

Item	Part No	Rem	Qty	Description	Code
1			1	. End plate	
2			1	. Control piston	
3			1	. Adjustment pin	
4			1	. Bushing	
5			1	. Spool	
6			1	. Pressure spring	
7			1	. Screw	
8			3	. Restrictor screw	
9			3	. Restrictor screw	
10			2	. Valve pin	
11			1	. Throttle pin	
12			1	. Screw	
13			6	. Cap screw	
14			2	. Cap screw	
15			2	. Dowel	
16			1	. Screw	
17			2	. Screw	
18	4812157169		1	. O-ring	
19	4812157170		1	. O-ring	
20			4	. Double break-off pin	
21	4812157171		1	. Needle roller	
22	4812155170		1	. Solenoid valve	

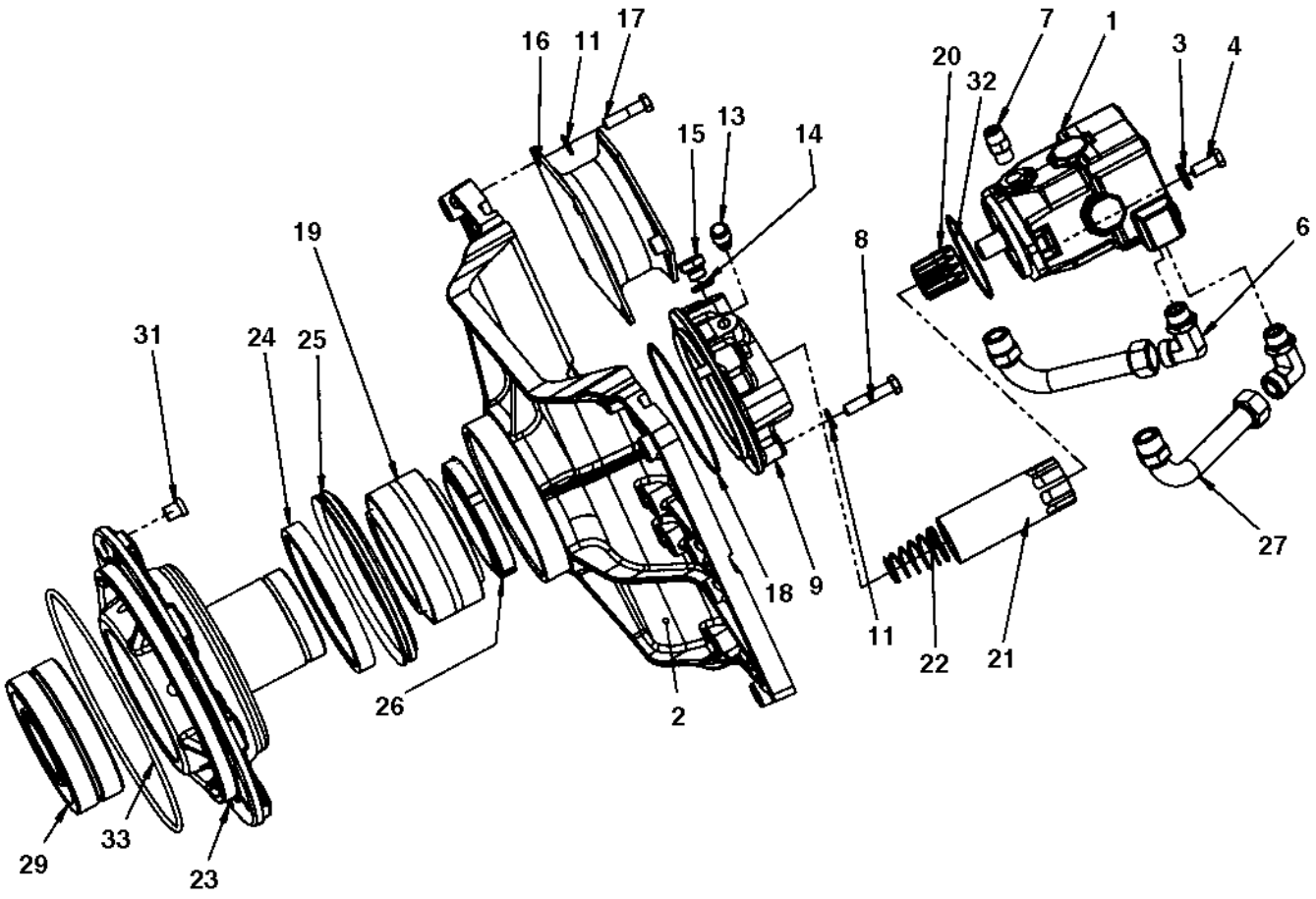
16
11
17
15
13
14
19
31
24
25
26
2
18
9
8
11
22
21
20
32
7
1
3
4
6
27
29
33
23

Vibrating unit Rexroth

Item	Part No	Rem	Qty	Description	Code
1	4700390605		1	**Hydraulic motor (Page 208)**	
2	4700392364		1	Holder plate	D
3	4700904213		2	Washer	C
4	4700500046		2	Screw M12x025H	C
6	4700792330		2	Elbow 90 orfs	C
7	4700791799		1	Straight connector orfs	D
8	4700500049		4	Screw	C
9	4700390160		1	Motor adapter	C
11	4700904231		20	Washer 13x24x2 300 HV	C
13	4700926736		1	Breather	C
14	4700162027		1	Sealing	B
15	4700903726		1	Steel plug threaded	C
16	4700394251		4	Shock absorber	A
17	4812110643		16	Hexagon screw w Tuflok M12x50 8.8 A3K	D
18	4700160105		1	O-ring 70	C
19	4700116041		1	Taper roller bearing	B
20	4700340862		1	Splined sleeve	D
21	4700381027		1	Splined sleeve	D
22	4700349715		1	Spring	D
23	4700379650		1	Drum bearing housing	D
24	4700386272		1	Sealing	B
25	4700929447		1	V-ring	B
26	4812112413		1	Shaft nut	C
27	4700392748		2	Connector	C
29	4700792270		1	Spherical roller bearing	B
31	4700900775		3	Plug	C
32	4700160279		1	O-ring 101,27x2,62	C
33	4700160344		1	O-ring 70	C

4700390605 Hydraulic motor

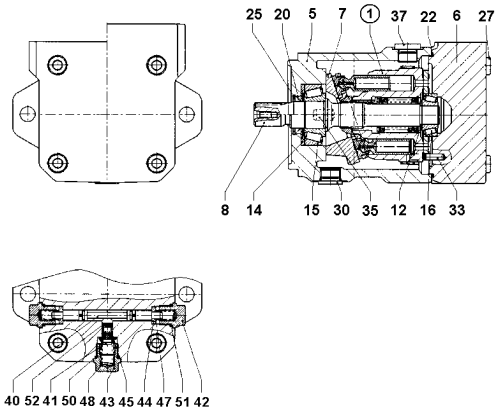

4700390605 Hydraulic motor

Item	Part No	Rem	Qty	Description	Code
1	4700390605A		1	**. Motor (Page 210)**	
5			1	. Motor housing	
6			1	. Port plate	
7			1	. Cam plate	
8			1	. Drive shaft	
12			1	. Adjustment shim	
14	4812157490		1	. Stop ring	
15	4812157491		1	. Bearing	
16	4812157492		1	. Bearing	
20	4812157493		1	. Shaft sealing ring	
22	4812157494		1	. O-ring	
25	4812157495		1	. Retaining ring	
27			4	. Socket head screw	
30			1	. Locking screw	
33			1	. Cylinder pin	
35			2	. Cylinder pin	
37			1	. Locking screw	
40			1	. Piston	
41			1	. Valve piston	
42			2	. Locking screw	
43			1	. Locking screw	
44			2	. Washer	
45			1	. Orifice	
47			2	. Pressure spring	
48			1	. Pressure spring	
50	4812157496		1	. O-ring	
51	4812157497		2	. O-ring	
52			1	. Retaining ring	

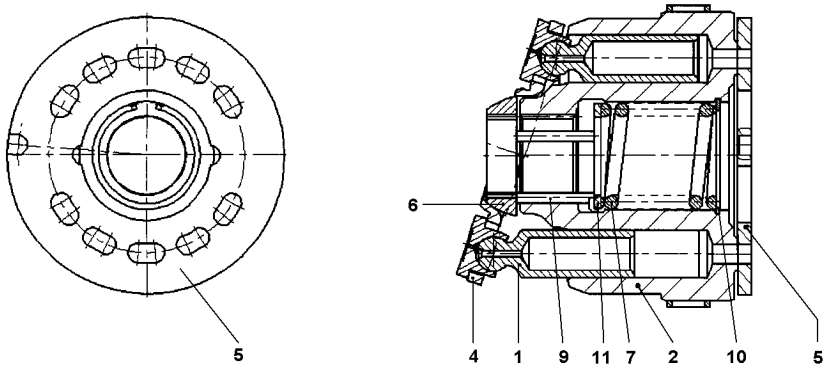
5
6
4
1
9
11
7
2
10
5

4700390605A Motor

Item	Part No	Rem	Qty	Description	Code
1			9	. Piston	
2			1	. Cylinder with counting ring	
4	4812157499		1	. Retaining plate	
5	4812157498		1	. Control plate	
6	4812157551		1	. Retaining ball	
7			1	. Spring	
9			3	. Pressure pin	
10	4812157552		1	. Seeger v-ring	
11			1	. Back-up plate	

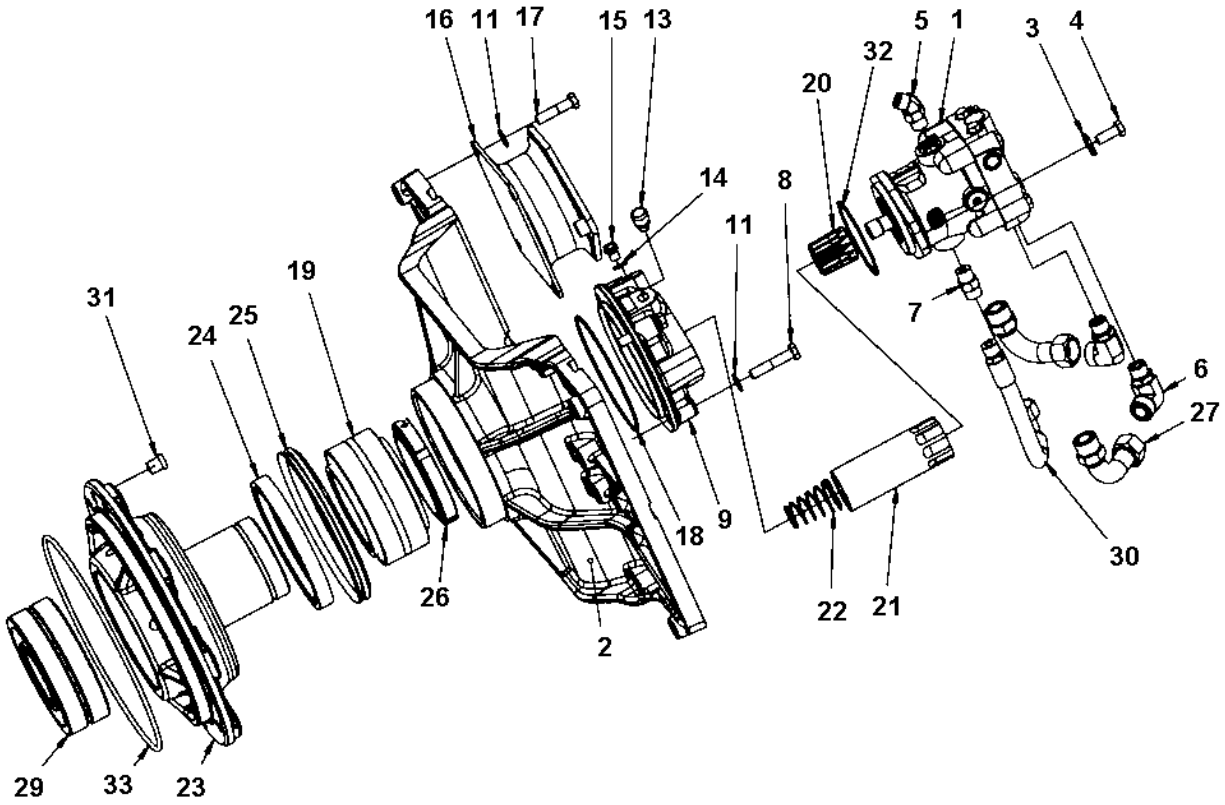
16
11
17
15
13
5
1
3
4
32
20
14
8
11
19
31
24
25
7
6
27
18
9
30
26
22
21
2
29
33
23

Vibrating unit Sauer

Item	Part No	Rem	Qty	Description	Code
1	4700395915		1	**Hydraulic motor Vibration (Page 214)**	C
2	4700392364		1	Holder plate	D
3	4700904213		2	Washer	C
4	4700500046		2	Screw M12x025H	C
5	4700791796	1	1	Elbow 45, O-ring with swivel	D
6	4700792746		2	Connector elbow 90 orfs	C
7	4700791799	2	1	Straight connector orfs	D
8	4700500049		4	Screw	C
9	4700390160		1	Motor adapter	C
11	4700904231		20	Washer 13x24x2 300 HV	C
13	4700926736		1	Breather	C
14	4700162027		1	Sealing	B
15	4700903726		1	Steel plug threaded	C
16	4700394251		4	Shock absorber	A
17	4812110643		16	Hexagon screw w Tuflok M12x50 8.8 A3K	D
18	4700160105		1	O-ring 70	C
19	4700116041		1	Taper roller bearing	B
20	4700340862		1	Splined sleeve	D
21	4700381027		1	Splined sleeve	D
22	4700349715		1	Spring	D
23	4700379650		1	Drum bearing housing	D
24	4700386272		1	Sealing	B
25	4700929447		1	V-ring	B
26	4812112413		1	Shaft nut	C
27	4700392748		2	Connector	C
29	4700792270		1	Spherical roller bearing	B
30	4700484271	2	1	Hydraulic hose	D
31	4700900775		3	Plug	C
32	4700160279		1	O-ring 101,27x2,62	C
33	4700160344		1	O-ring 70	C

1) For use of upper leak port.
2) For use of lower leak port.

4700395915 Hydraulic motor Vibration

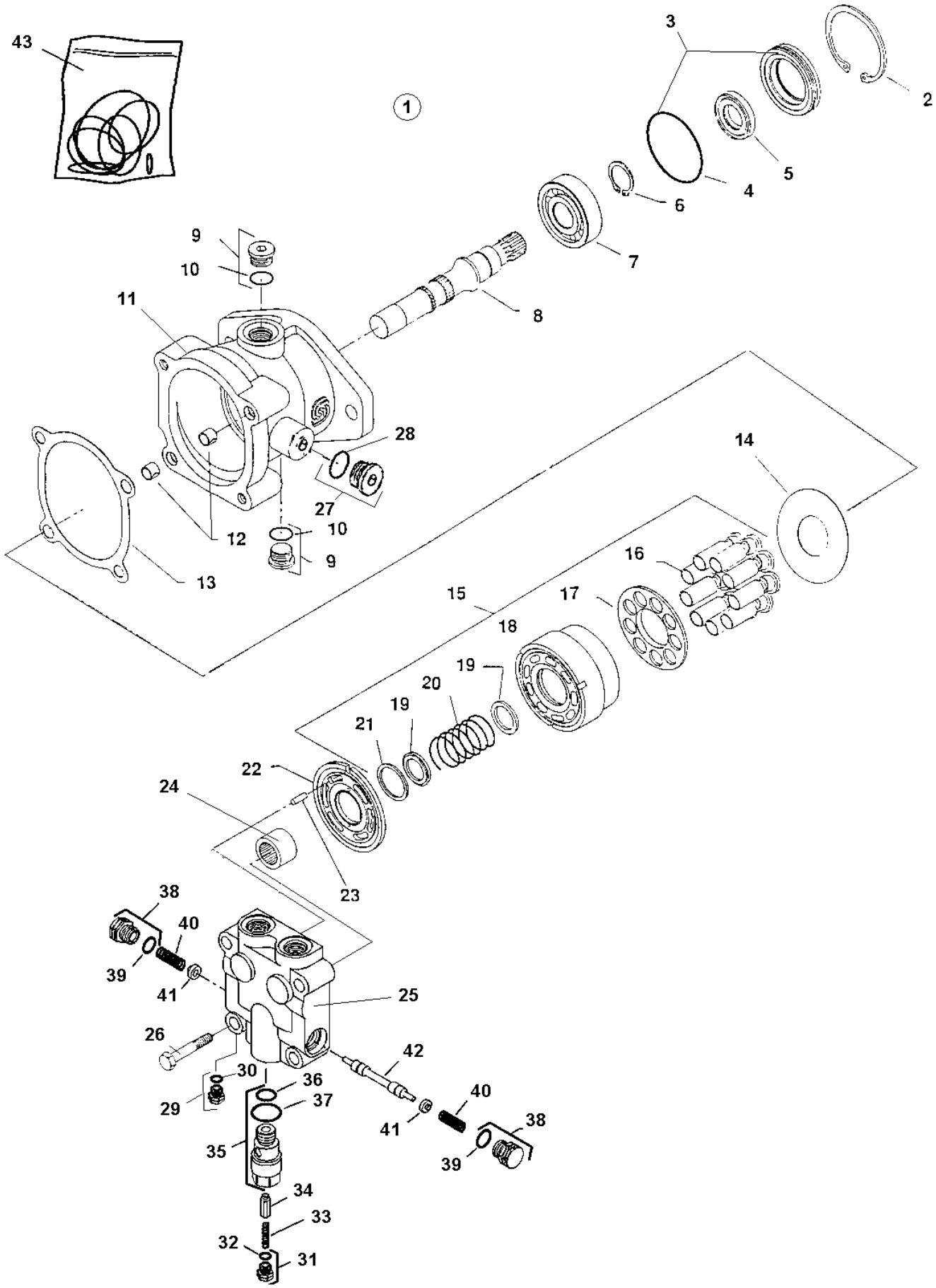

4700395915 Hydraulic motor Vibration

Item	Part No	Rem	Qty	Description	Code
1			1	Hydraulic motor, Cpl	
2	4700909356		1	. Retaining ring	C
3			1	. Seal carrier	
4	4700909354	A	1	. . O-ring	C
5	4700909335	A	1	. Seal	B
6			1	. Retaining ring	
7	4700909352		1	. Ball bearing	B
8	4700909351		1	. Shaft	C
9	4700939333		2	. Plug, cpl	C
10	4700923090	A	1	. . O-ring	
11	4700909358		1	. Housing	D
12	4700909346		2	. Pin	C
13	4700909343	A	1	. Gasket	B
14	4700909336		1	. Thrust plate	D
15	4700950593		1	. Cylinder block kit	C
16			9	. . Piston	
17	4700909342		1	. . Retainer	
18			1	. . Cylinder block	
19	4700909338		2	. . Washer	
20	4700909339		1	. . Spring	C
21	4700909340		1	. . Retaining ring	C
22	4700909350		1	. Valve plate	C
23			1	. Pin	
24	4700909344		1	. Needle roller bearing	B
25			1	. End cap	
26			4	. Screw	
27	4700909243		1	. Plug	C
28	4700813618	A	1	. . O-ring	C
29	4700480354		2	. Plug and O-ring	D
30	4700813617	A	1	. . O-ring	D
31			1	. Plug, cpl	
32	4700910713	A	1	. . O-ring	
33			1	. Spring	
34			1	. Poppet	
35	4812156199		1	. Adapter plug	
36	4700923087	A	1	. . O-ring	C
37		A	1	. . O-ring	
38			2	. Plug, cpl	
39	4700923087	A	1	. . O-ring	C
40			1	. Spring	
41			1	. Shuttle spool	
42			1	. Spring	
43	4700950297		1	Seal kit	D

A) Included in seal kit, item 29.

Engine

Item	Part No	Rem	Qty	Description	Code
8				**Engine room (Page 218)**	

Engine room

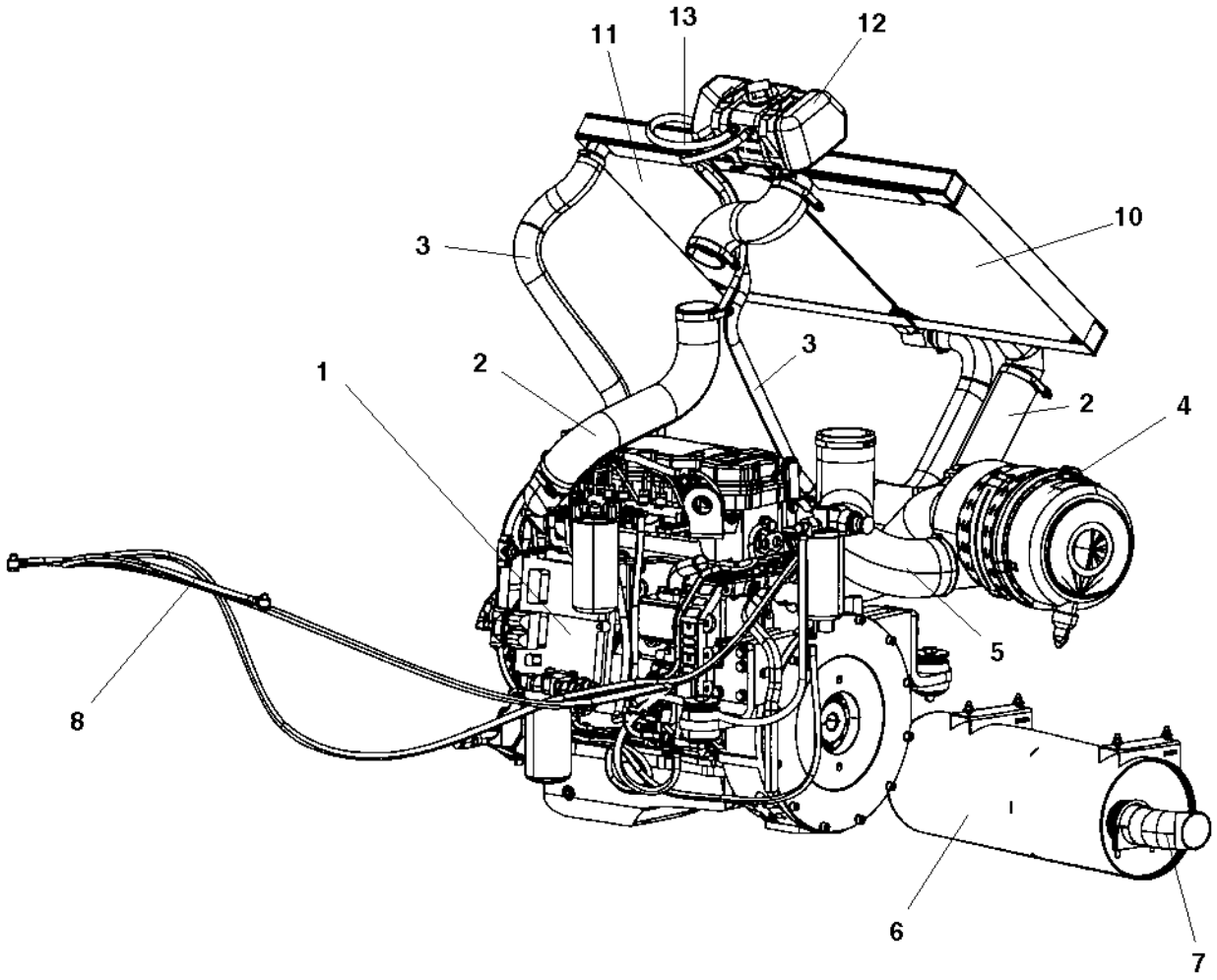

Engine room

Item	Part No	Rem	Qty	Description	Code
1				Engine (Page 220)	
2				Air cooler hoses (Page 228)	
3				Water cooler hoses (Page 230)	
4				Air cleaner module (Page 232)	
5				Air cleaner hose module (Page 234)	
6				Muffler (Page 236)	
7				Exhaust pipe module (Page 238)	
8				Fuel hose module (Page 240)	
10				Charge air cooler (Page 242)	
11				Water cooler (Page 244)	
12				Expansion tank assembly (Page 246)	
13				Coolant hoses (Page 248)	

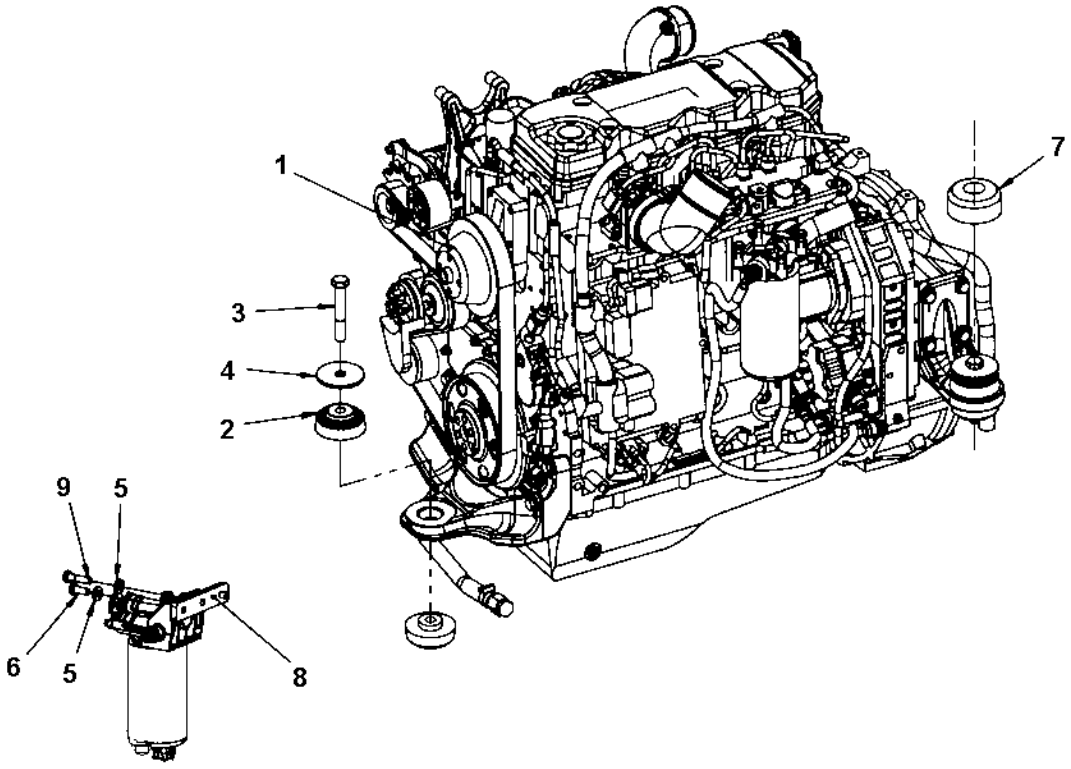
1
7
3
4
2
9
5
6
5
8

Engine

Item	Part No	Rem	Qty	Description	Code
1			1	**Engine module (Page 222)**	
2	4700391165		6	Shock absorber	D
3	4700500107		3	Screw M16x100	D
4	4700345666		3	Steel spacer	D
5	4700904557		2	Steel plain washer	C
	4700904557	1	4	Steel plain washer	C
6	4700500030		2	Screw M10x035H 8.8 A3K	C
	4700500028	1	2	Screw	C
7	4700397539		1	Protector	D
8	4812113161		1	Bracket	
9	4700500031	1	1	Screw M10x040 8.8	C

1) Item to be used when bracket, item 8 is mounted.

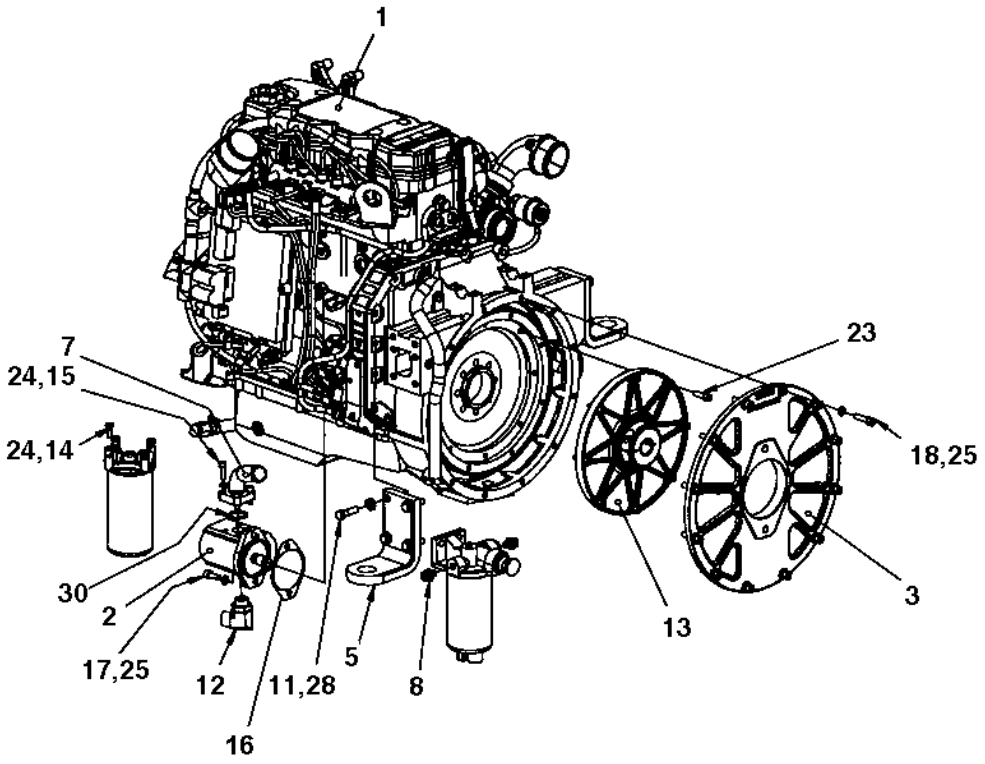
1
7
24,15
24,14
30
2
17,25
12
16
11,28
5
8
13
23
18,25
3

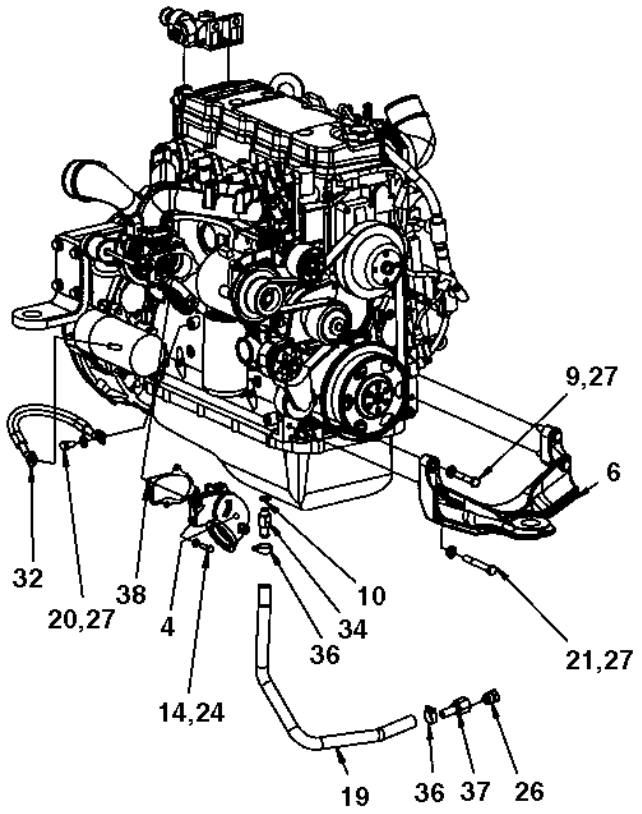
9,27
6
32
20,27
38
4
10
34
36
14,24
21,27
19
36
37
26

Engine module

Item	Part No	Rem	Qty	Description	Code
1			1	**Diesel engine Cummins QSB4.5 T3 - 82kW (Page 224)**	
			1	**Diesel engine Cummins QSB4.5 T3 - 93kW (Page 226)**	
2	4812113496		1	Hydraulic pump, steering	
3	4700394169		1	Pump bracket	D
4	4700390618		1	Exhaust connection	
5	4700397259		2	Engine bracket	D
6	4700393592		1	Engine bracket	D
7	4700390018		1	Suction pipe	D
8	4700792603		2	Quick connect coupling	
9	4700500049		2	Screw	C
10	4700330330		1	Copper washer	
11	4700500056		8	Screw	
12	4700791698		1	Elbow 90, O-ring with swivel	D
13	4700391358		1	Coupling	D
14	4700500021		8	Screw M8-1,25x25 8.8	C
15	4700508048		4	Hexagon socket head cap screw	C
16	4812115511		1	Gasket	
17	4700508096		2	Screw	C
18	4700508080		12	Screw	
19	4700205112	A	1XL	Coolant hose	D
20	4700500035		1	Screw M12x020H	
21	4700500197		2	Screw 12x90	C
23	4700509025		8	Screw 3/8-16UNCx32 8,8	
24	4700904229		12	Steel plain washer 8,4x16x1,5	C
25	4700904637		14	Washer	C
26	4700232231		1	Plug	
27	4700904231		5	Washer 13x24x2 300 HV	C
28	4700904703		8	Washer	B
30	4700813429		1	O-ring	C
32	4700335607		1	Connection cable, coarse	B
34	4700391303		1	Hose connection	
36	4700313004		2	Hose clamp 19-29mm	D
37	4700792502		1	Hose connection	D
38	4700394322		1	Gasket	

A) L=0,6 m

Diesel engine Cummins QSB4.5 T3 - 82kW

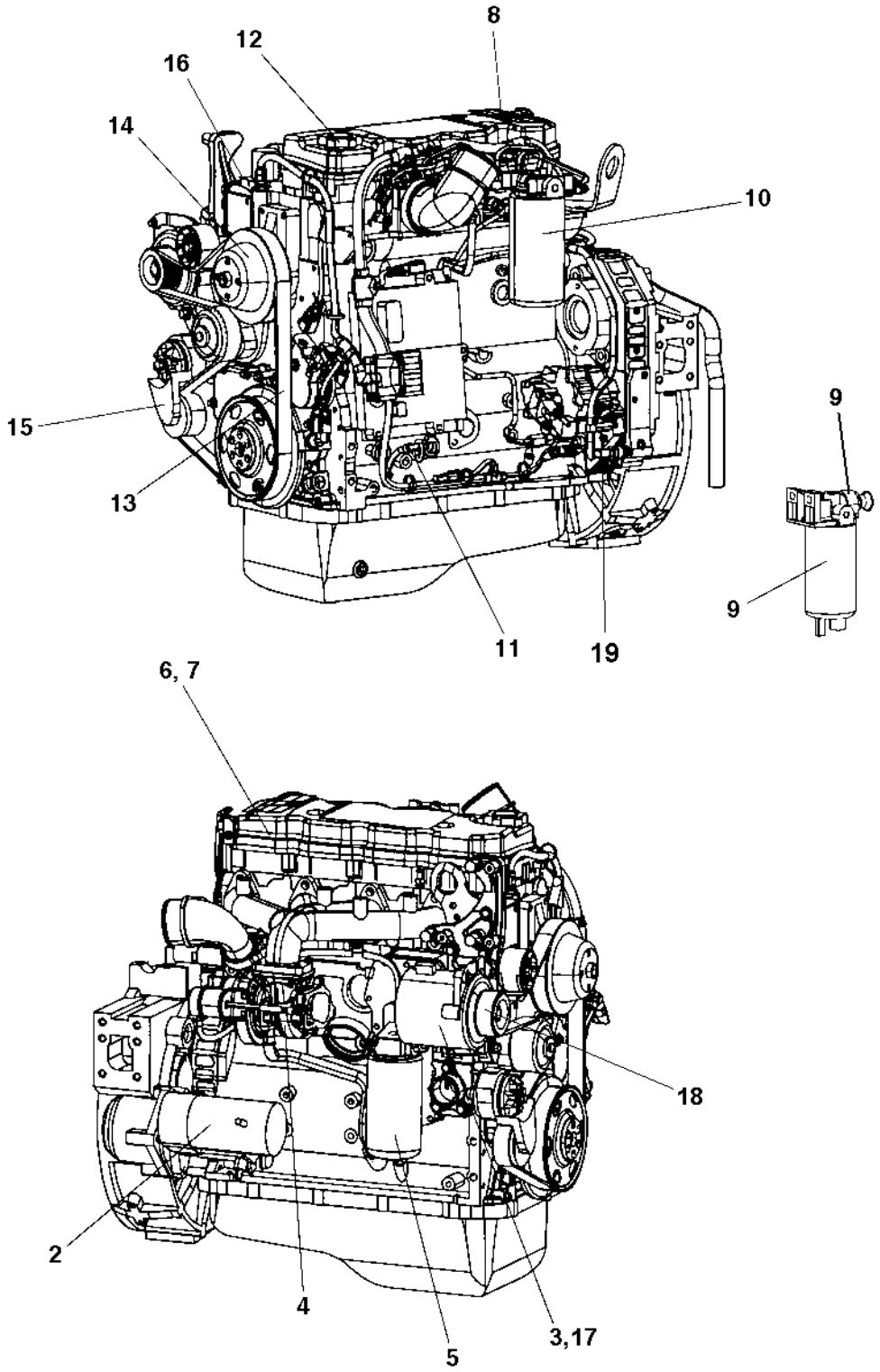

Diesel engine Cummins QSB4.5 T3 - 82kW

Item	Part No	Rem	Qty	Description	Code
1	4700390832		1	Diesel engine Cummins QSB4.5 IIIA - 82kW	
	4812116432	A	1	Diesel engine Cummins QSB4.5 IIIA - 82kW	
2	4700945767		1	. Starter	C
3	4700945768		1	. Alternator	C
4			1	. Turbo charger cpl	
5	4700945145		1	. Oil filter element	A
6	4700945760		1	. Valve cover gasket	
7	4700945769		1	. Piston ring set	D
8	4700945626		1	. Injector	D
9	4700945538		1	. Fuel filter head with hand pump	A
	4700945147		1	. Pre-fuel filter element	
10	4700945624		1	. Fuel filter element	
	4812155278		1	. Gasket	
11	4700945770		1	. Oil dipstick	
12	4700945771		1	. Oil cap	
13	4700945772		1	. V-belt	B
14	4700945773		1	. V- belt pulley	
15	4700945774		1	. Belt tightener	
16	4700945887		1	. Sensor, Water temp	C
17	4812156073		1	. Fan, alternator	C
18	4812156074		1	. Pulley, alternator	C
19	4812157769		1	. Actuator, Fuel control	

A) Non certified.

Diesel engine Cummins QSB4.5 T3 - 93kW

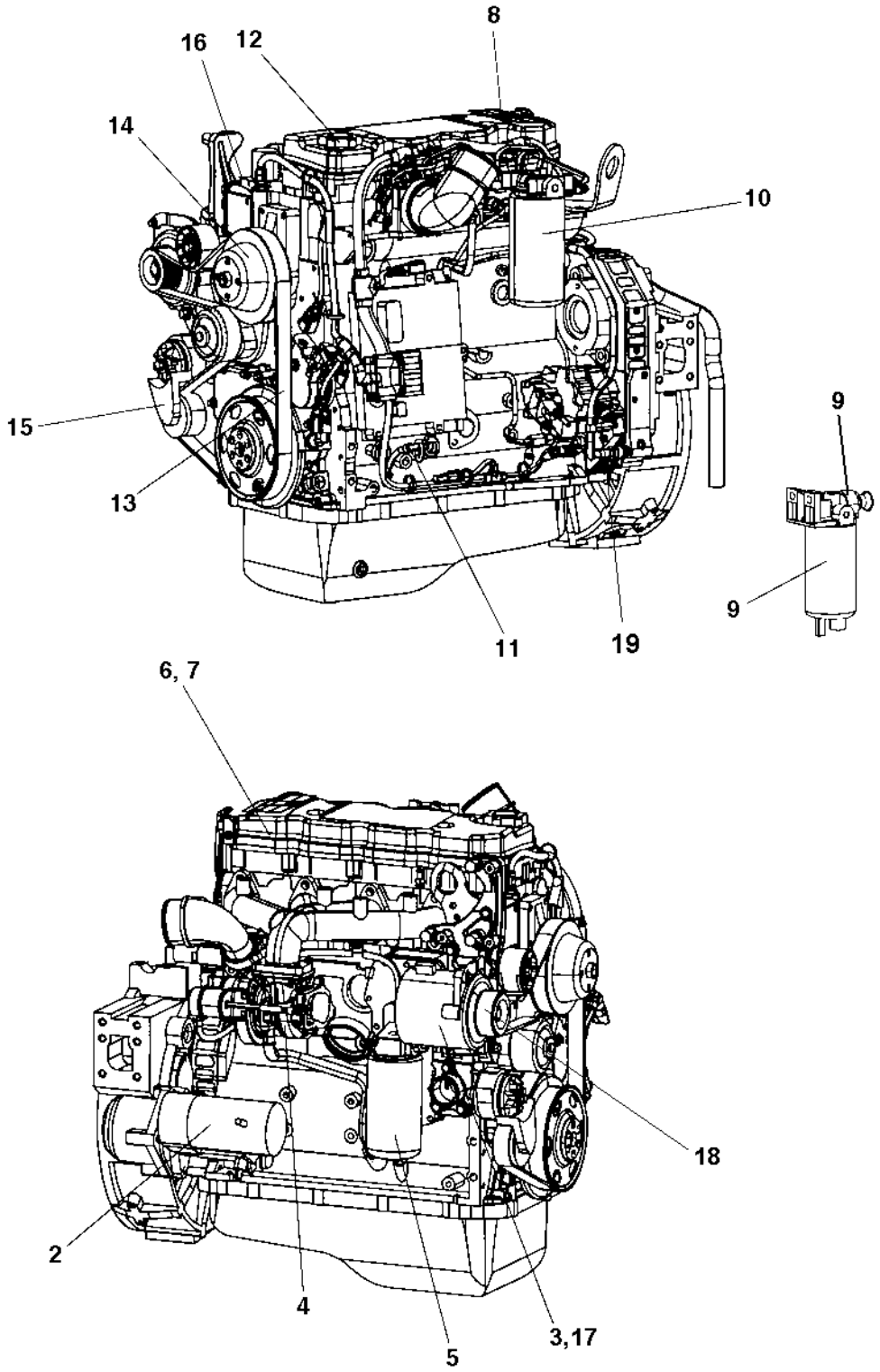

Diesel engine Cummins QSB4.5 T3 - 93kW

Item	Part No	Rem	Qty	Description	Code
1	4700390831		1	Diesel engine Cummins QSB4.5 IIIA - 93kW	
	4812116435	A	1	Diesel engine Cummins QSB4.5 IIIA - 93kW	
	4812116436	B	1	Diesel engine Cummins QSB4.5 IIIA - 93kW	
	4812116437	C	1	Diesel engine Cummins QSB4.5 IIIA - 93kW	
2	4700945767		1	. Starter	C
3	4700945768		1	. Alternator	C
4			1	. Turbo charger cpl	
5	4700945145		1	. Oil filter element	A
6	4700945760		1	. Valve cover gasket	
7	4700945769		1	. Piston ring set	D
8	4700945626		1	. Injector	D
9	4700945538		1	. Fuel filter head with hand pump	A
	4700945147		1	. Pre-fuel filter element	
10	4700945624		1	. Fuel filter element	
	4812155278		1	. Gasket	
11	4700945770		1	. Oil dipstick	
12	4700945771		1	. Oil cap	
13	4700945772		1	. V-belt	B
14	4700945773		1	. V- belt pulley	
15	4700945774		1	. Belt tightener	
16	4700945887		1	. Sensor, Water temp	C
17	4812156073		1	. Fan, alternator	C
18	4812156074		1	. Pulley, alternator	C
19	4812157769		1	. Actuator, Fuel control	

A) Non certified
B) EU flex.
C) US flex.

Air cooler hoses

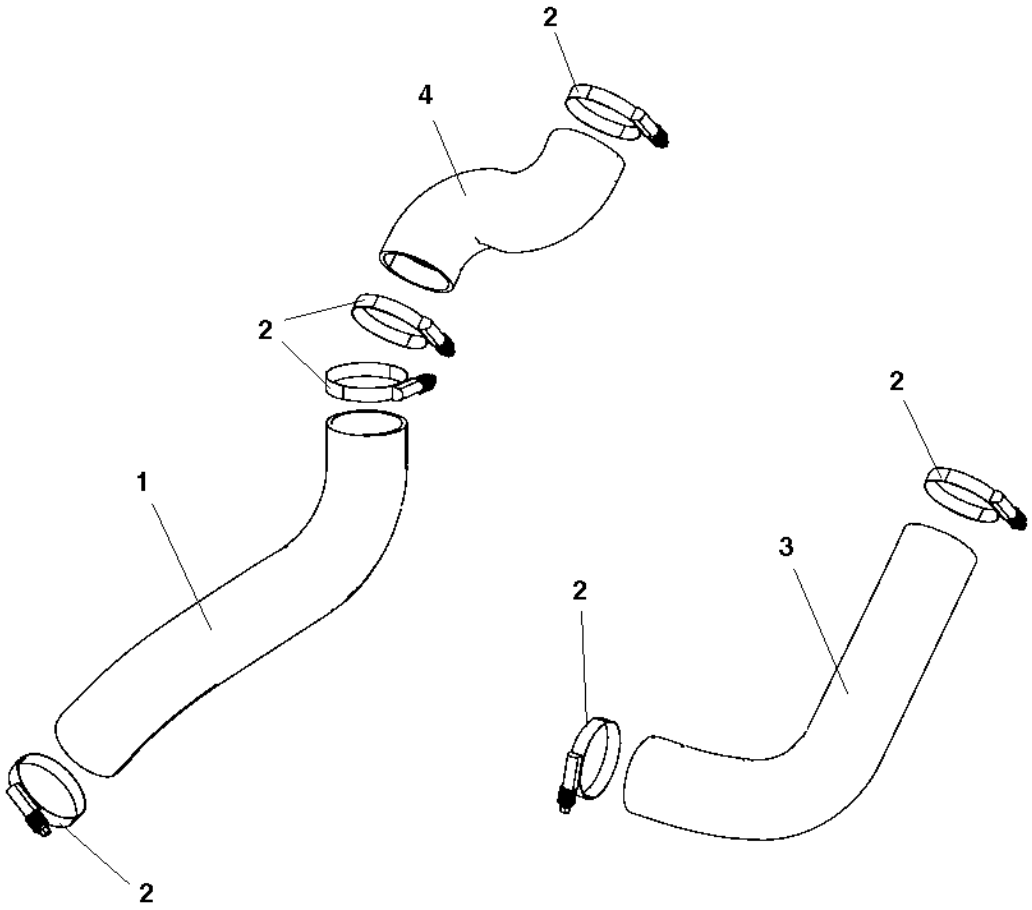

Air cooler hoses

Item	Part No	Rem	Qty	Description	Code
1	4700390020		1	Charge air hose	D
2	4700386966		6	Hose clamp 2.3/4"-3.5/8"	B
3	4700390019		1	Charge air hose	D
4	4700391263		1	Charge air hose	D

Water cooler hoses

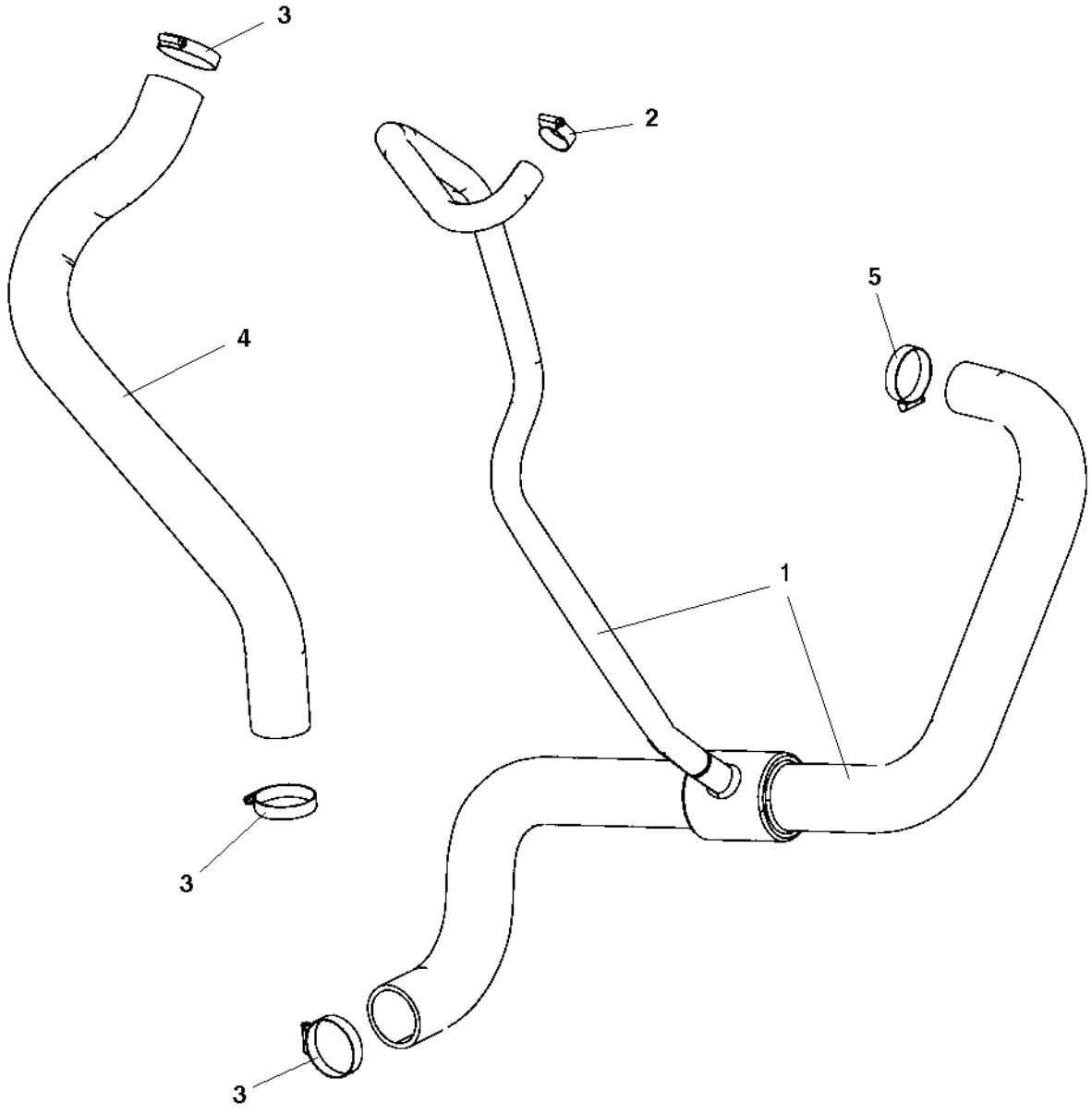

Water cooler hoses

Item	Part No	Rem	Qty	Description	Code
1	4700394267		1	Coolant hose	D
2	4700313004		1	Hose clamp 19-29mm	D
3	4700313010		3	Hose clamp	C
4	4700390024		1	Coolant hose	D
5	4700313009		1	Hose clamp	D

Air cleaner module

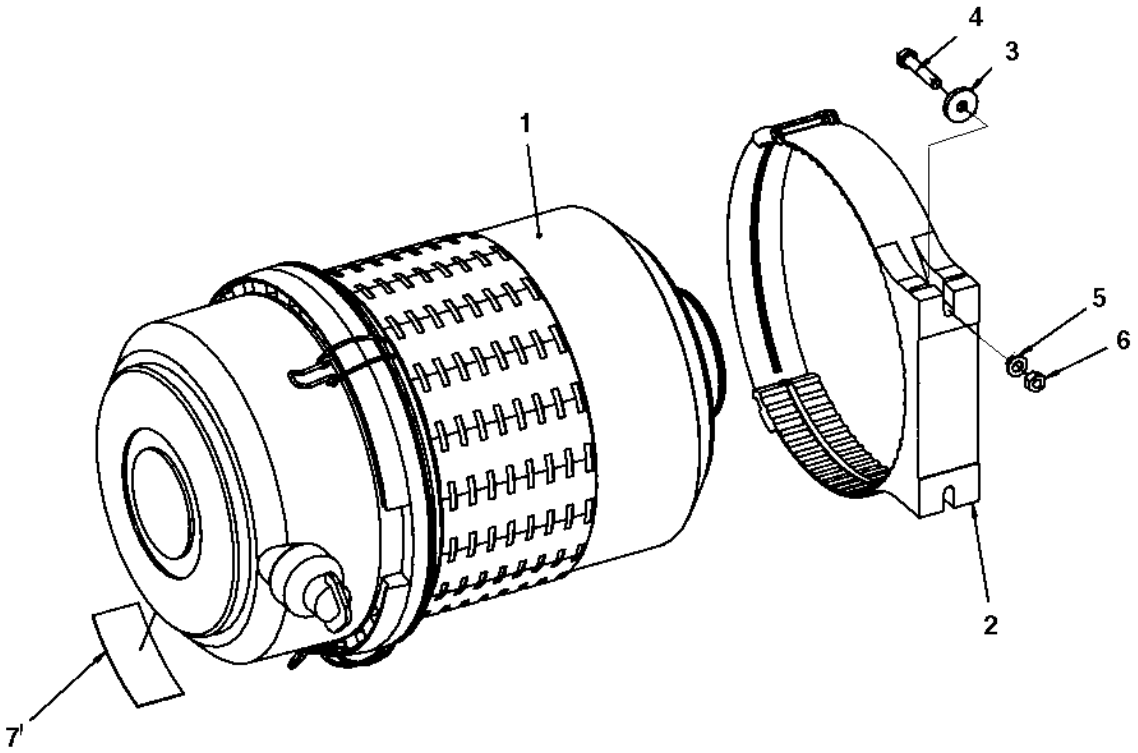

Air cleaner module

Item	Part No	Rem	Qty	Description	Code
1	4700390820		1	Air cleaner	
	4700390995		1	. Main filter element	A
	4700390994		1	. Safety filter element	A
2	4700390811		1	Bracket	
3	4700904734		2	Washer 8,4x26x4	
4	4700500023		2	Screw M8-1,25x40 8,8	C
5	4700904229		2	Steel plain washer 8,4x16x1,5	C
6	4700570005		2	Nut M8	C
7	4700791642		1	Decal "WARNING" Use of starting fluid prohib.	D

Air cleaner hose module

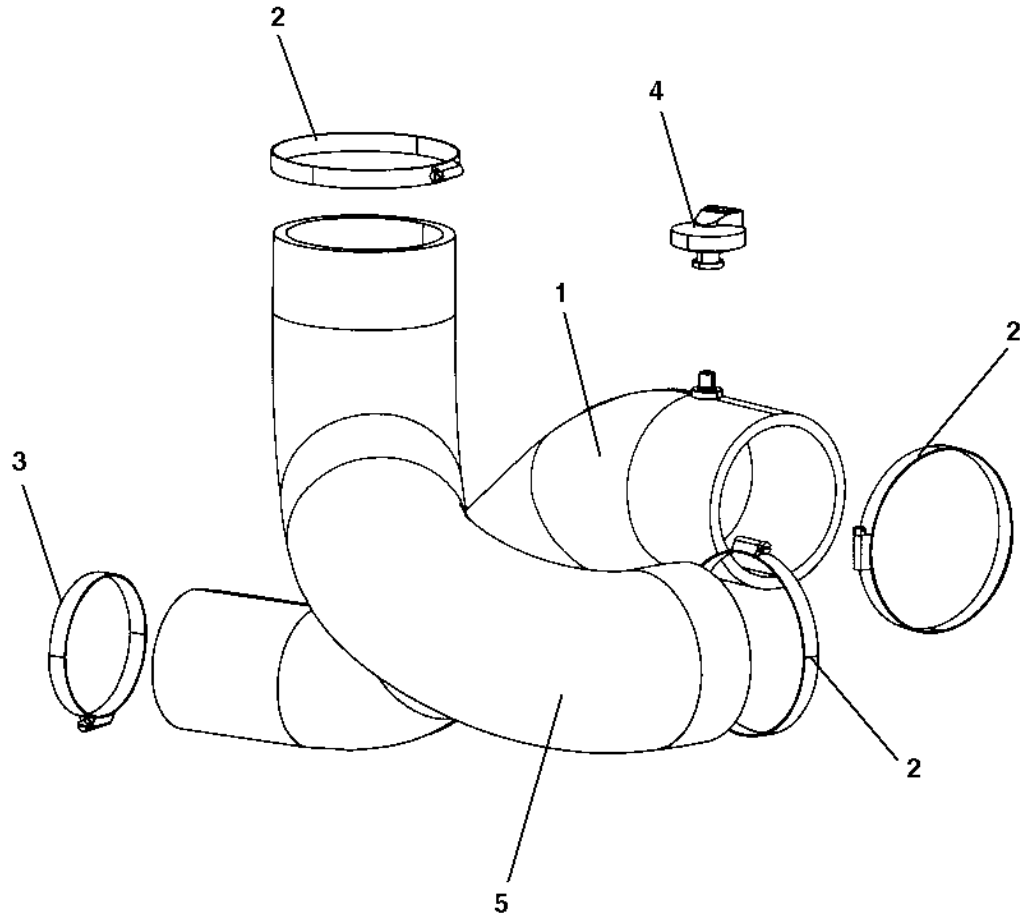

Air cleaner hose module

Item	Part No	Rem	Qty	Description	Code
1	4700390021		1	Hose Up to 384S00326	D
	4700396220		1	Hose From 384S00327	D
2	4700313105		3	Hose clamp	
3	4700313033		1	Hose clamp	D
4	4700390830		1	Indicator	
5	4700390022		1	Hose Up to 384S00326	D
	4700396218		1	Hose From 384S00327	D

Muffler

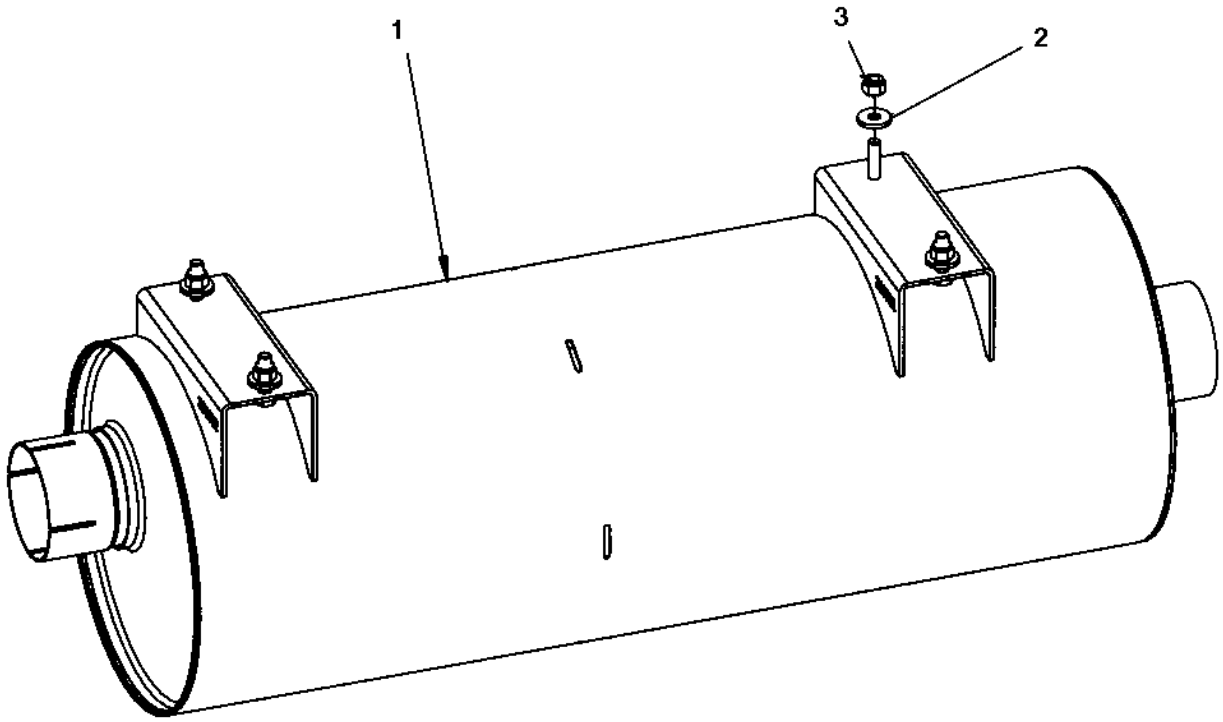

Muffler

Item	Part No	Rem	Qty	Description	Code
1	4700390332		1	Muffler	D
2	4700904640		4	Washer 8,4x22x3	C
3	4700586003		4	Lock nut M8	C

Exhaust pipe module

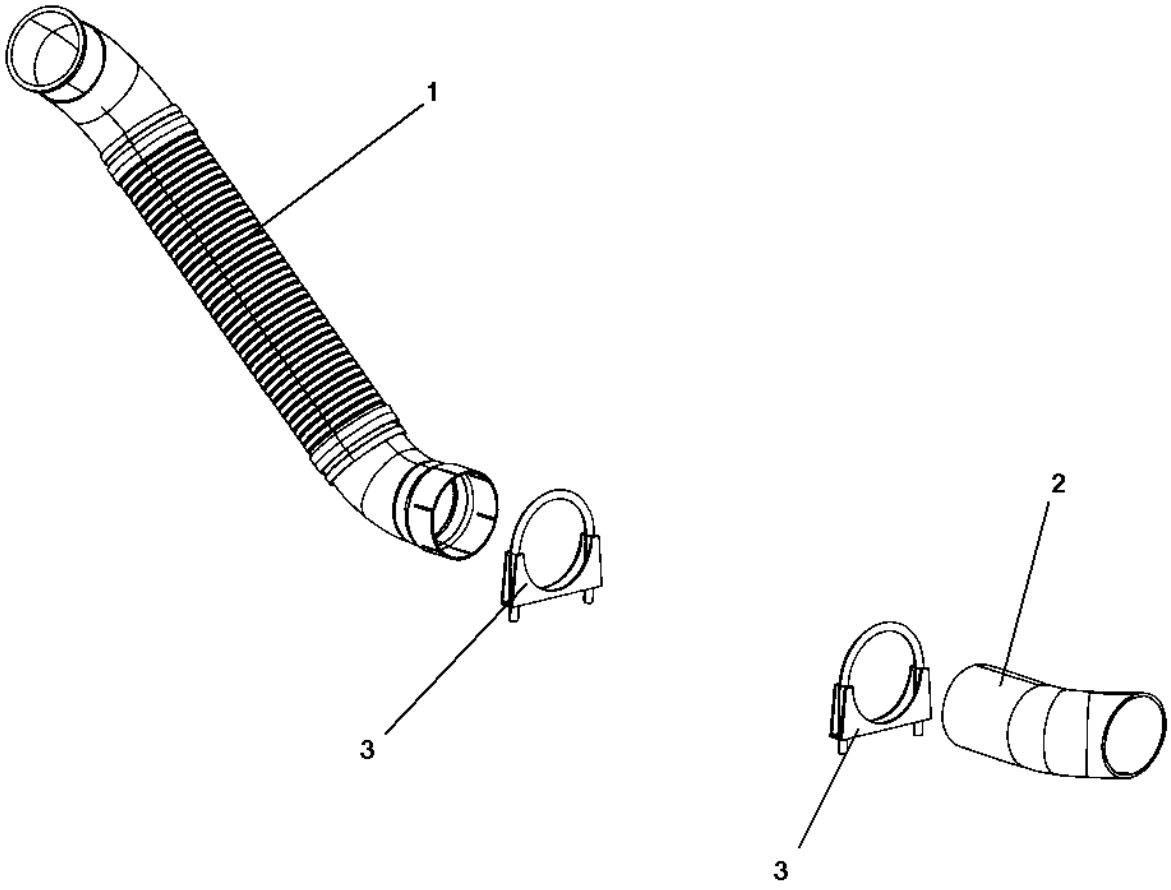

Exhaust pipe module

Item	Part No	Rem	Qty	Description	Code
1	4700390902		1	Exhaust pipe	D
2	4700390903		1	Exhaust pipe	D
3	4700313094		2	Pipe clamp	C

Fuel hose module

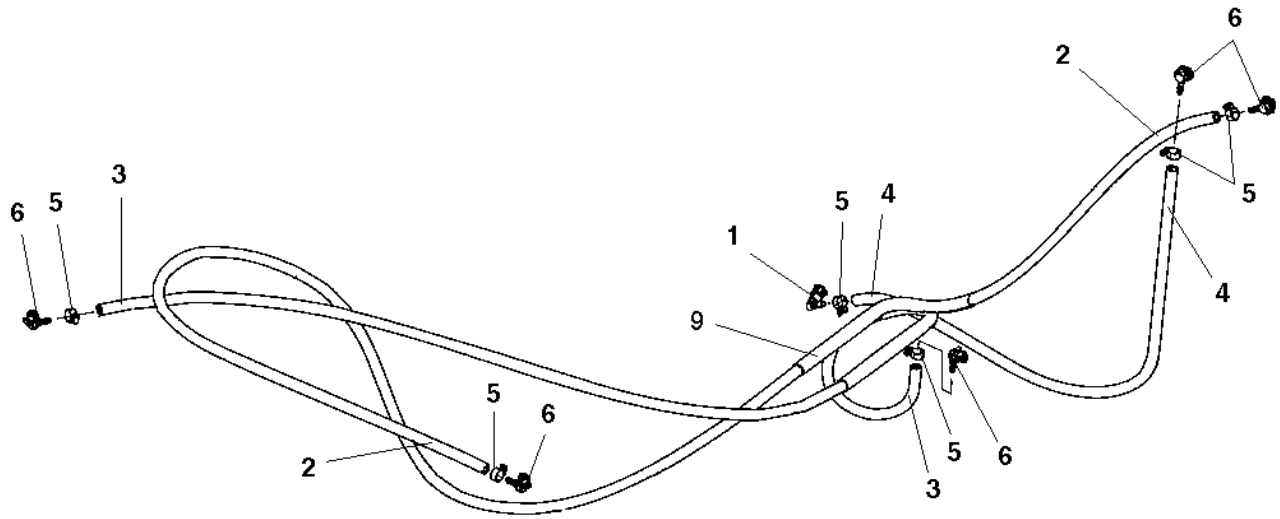

Fuel hose module

Item	Part No	Rem	Qty	Description	Code
1	4700792522		1	Quick connect coupling	
2	4700904984	A	1XL	Fuel hose	C
3	4700904984	B	1XL	Fuel hose	C
4	4700904984	C	1XL	Fuel hose	C
5	4700313001		6	Hose clamp	C
6	4700792526		5	Quick connect coupling	
9	4700792695	D	1XL	Hose guard	D

A) L=3.72 m
B) L=2.38 m
C) L=1.29 m
D) L= 0,5 m

Charge air cooler

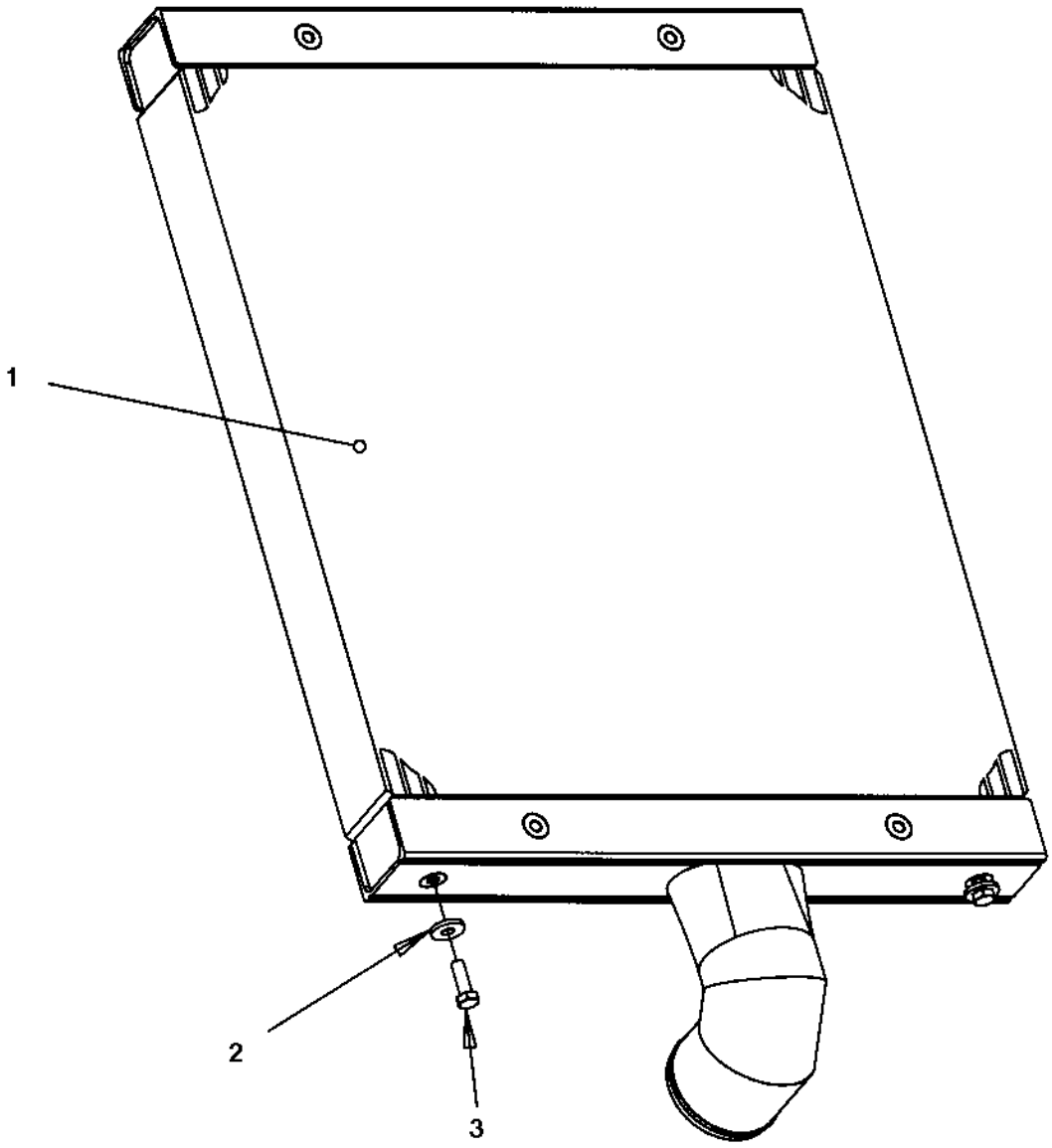

Charge air cooler

Item	Part No	Rem	Qty	Description	Code
1	4700390630		1	Charge air cooler	D
2	4700904640		2	Washer 8,4x22x3	C
3	4700500021		2	Screw M8-1,25x25 8.8	C

Water cooler

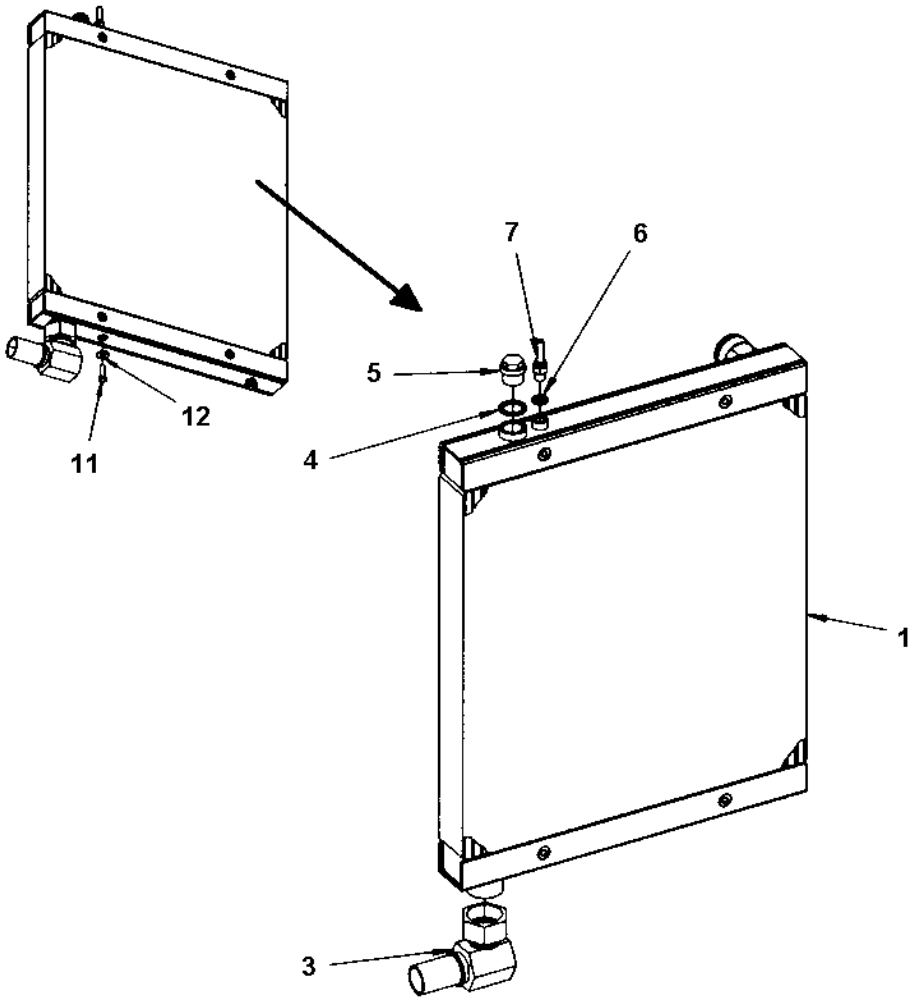

Water cooler

Item	Part No	Rem	Qty	Description	Code
1	4700390627		1	Water cooler	D
3	4700792323		1	Hose connection	D
4	4700791120		1	Sealing washer	
5	4700232039		1	Plug G3/4	C
6	4700162004		1	Sealing	B
7	4700792322		1	Hose connection	C
11	4700500021		2	Screw M8-1,25x25 8.8	C
12	4700904640		2	Washer 8,4x22x3	C

Expansion tank assembly

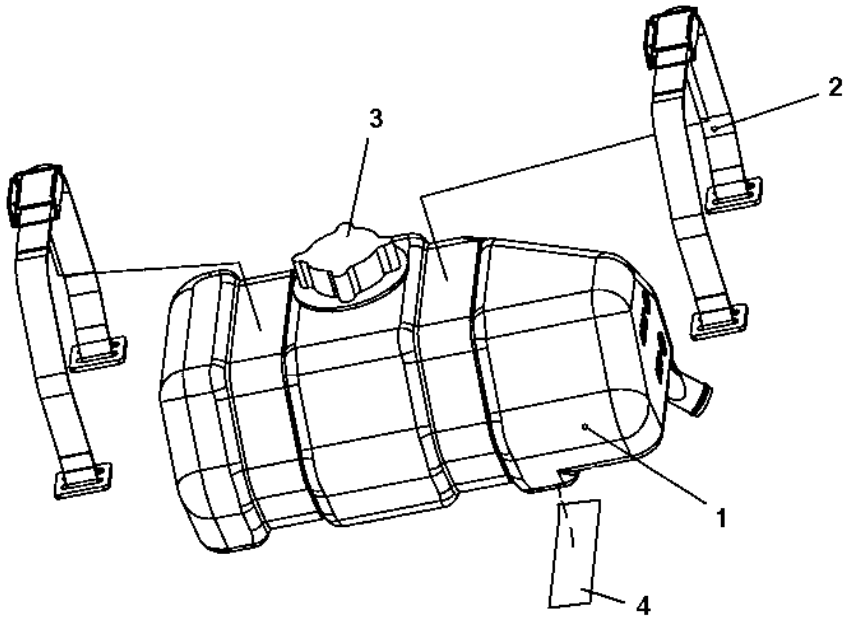

Expansion tank assembly

Item	Part No	Rem	Qty	Description	Code
1	4700393029		1	Expansion tank	D
2	4700393235		2	Strap	D
3	4700903714		1	Cap	
4	4700394229		2	Rubber strip	

Coolant hoses

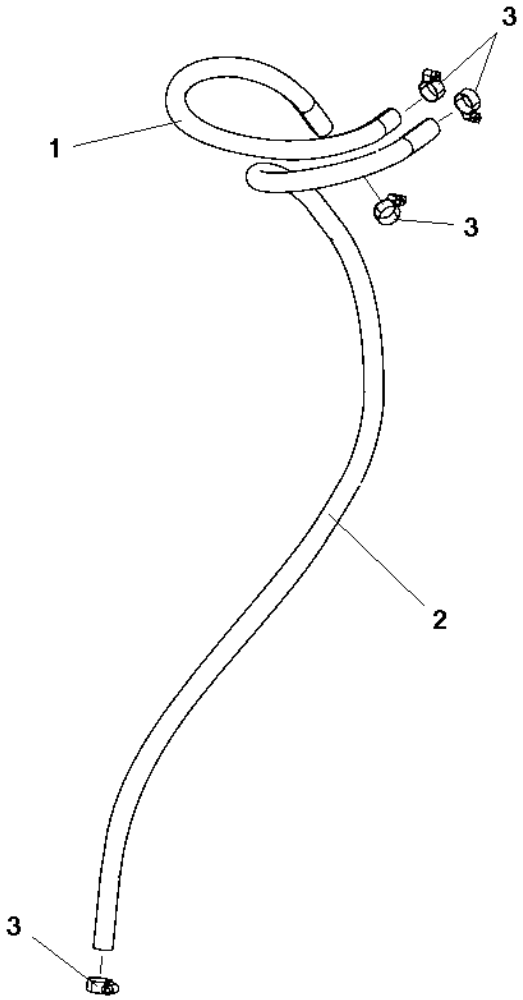

Coolant hoses

Item	Part No	Rem	Qty	Description	Code
1	4700246069	A	1XL	Fuel hose 3/8"	C
2	4700246069	B	1XL	Fuel hose 3/8"	C
3	4700313001		4	Hose clamp	C

A) L= 0,54 m
B) L= 1,19 m

Hydraulic system

Item	Part No	Rem	Qty	Description	Code
1			1	Hydraulic system, front drum (Page 252)	
2			1	Hydraulic hoses, rear wheels std (Page 254)	
3			1	Hydraulic hoses, frame (Page 258)	
			1	hydraulic hoses, rear wheels offset (Page 260)	
4			1	Hydraulic system, steering Std (Page 264)	
5			1	Hydraulic steering, sliding seat (Page 276)	
7			1	Hydraulic hoses, engine room (Page 282)	
10			1	Hydraulic valve module, offset/combi (Page 292)	

Hydraulic system, front drum

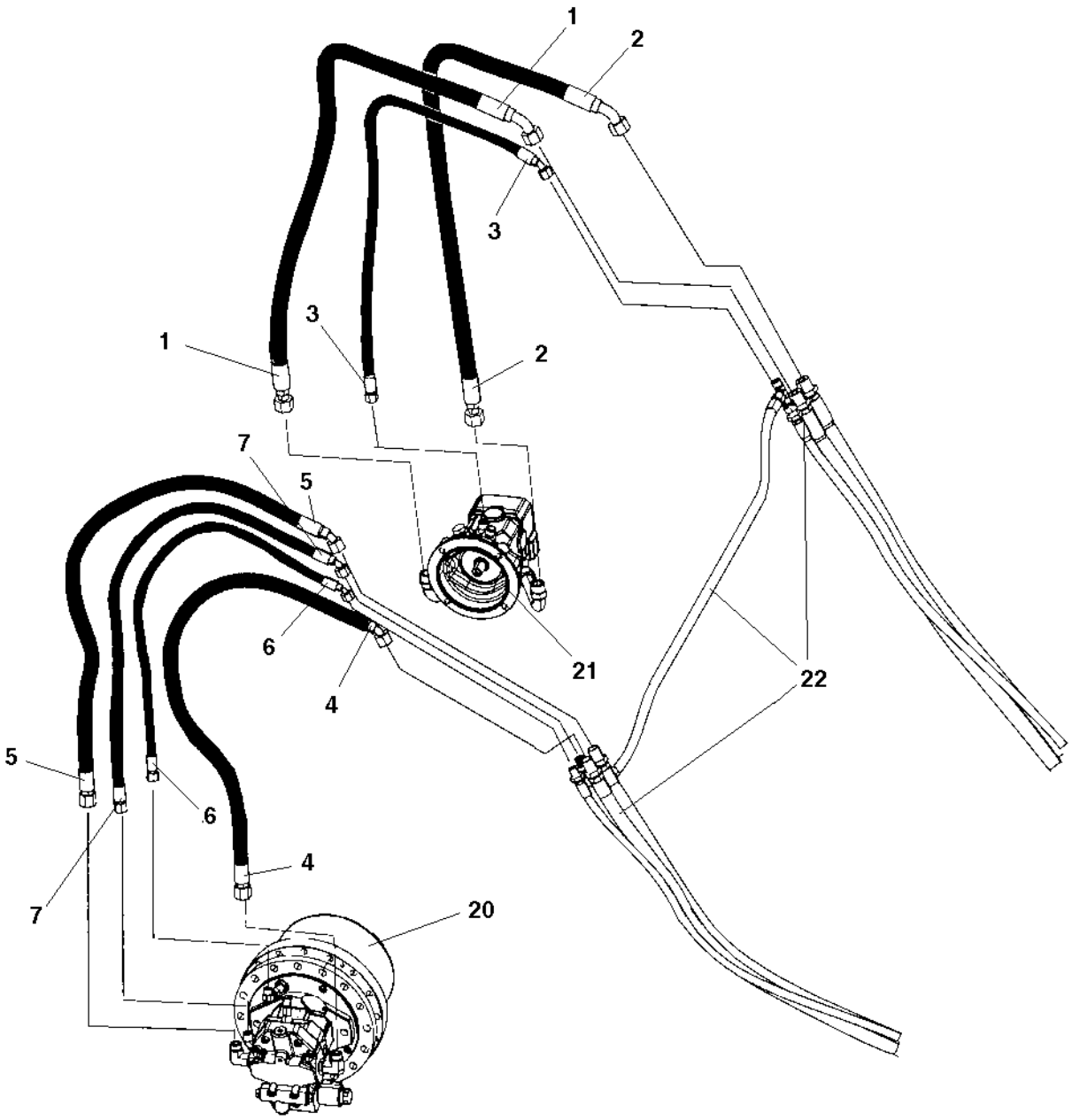

Hydraulic system, front drum

Item	Part No	Rem	Qty	Description	Code
1	4700484075		1	Hydraulic hose	D
2	4700484076		1	Hydraulic hose	D
3	4700484077		1	Hydraulic hose	D
4	4700484078		1	Hydraulic hose	D
5	4700484079		1	Hydraulic hose	D
6	4700484080		1	Hydraulic hose	D
7	4700484081		1	Hydraulic hose	D
20				**Drive unit (Page 196)**	
21				**Vibrating unit Rexroth (Page 206)** **Vibrating unit Sauer (Page 212)**	
22				Hydraulic hoses, frame	

Hydraulic hoses, rear wheels std

Hydraulic hoses, rear wheels std

Item	Part No	Rem	Qty	Description	Code
1			1	**Hose kit (Page 256)**	
2	4700791163		1	Steel plug threaded	D
3	4700791744		1	Straight connector	
4	4700792695		1	Hose guard	D
5	4700792698		1	Hose guard	D

Hose kit

Hose kit

Item	Part No	Rem	Qty	Description	Code
1	4700484048		1	Hydraulic hose	D
2	4700484049		1	Hydraulic hose	D
3	4700484351		1	Hydraulic hose	D
4	4700484350		1	Hydraulic hose	D
5	4700484050		1	Hydraulic hose	D
6	4700484053		1	Hydraulic hose	D
7	4700484046		1	Hydraulic hose	D
8	4700484047		1	Hydraulic hose	D

Hydraulic hoses, frame

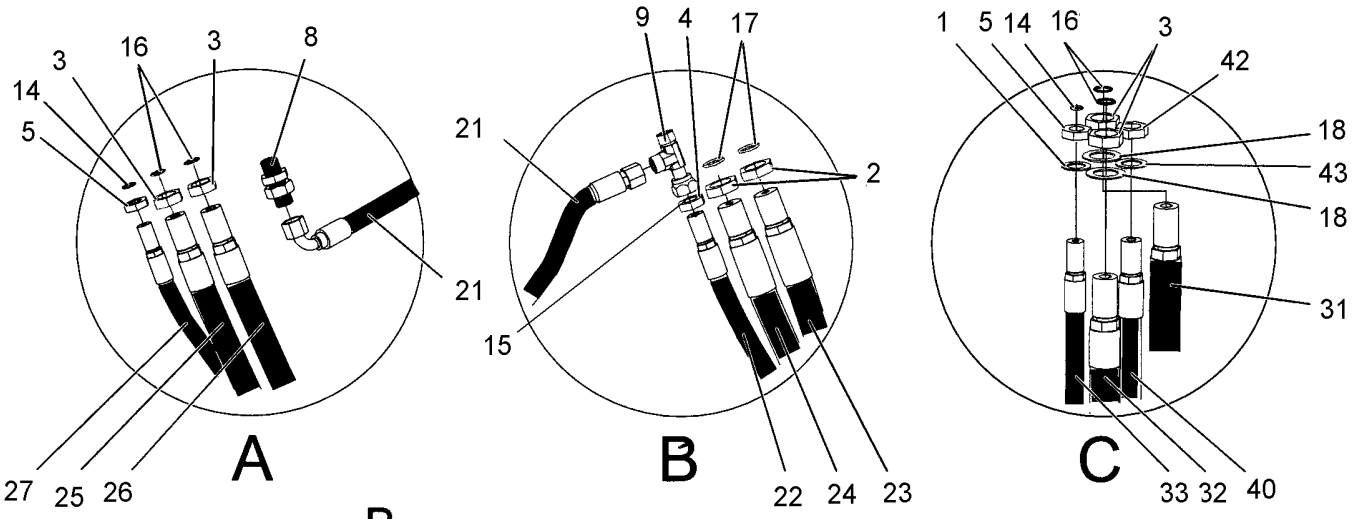

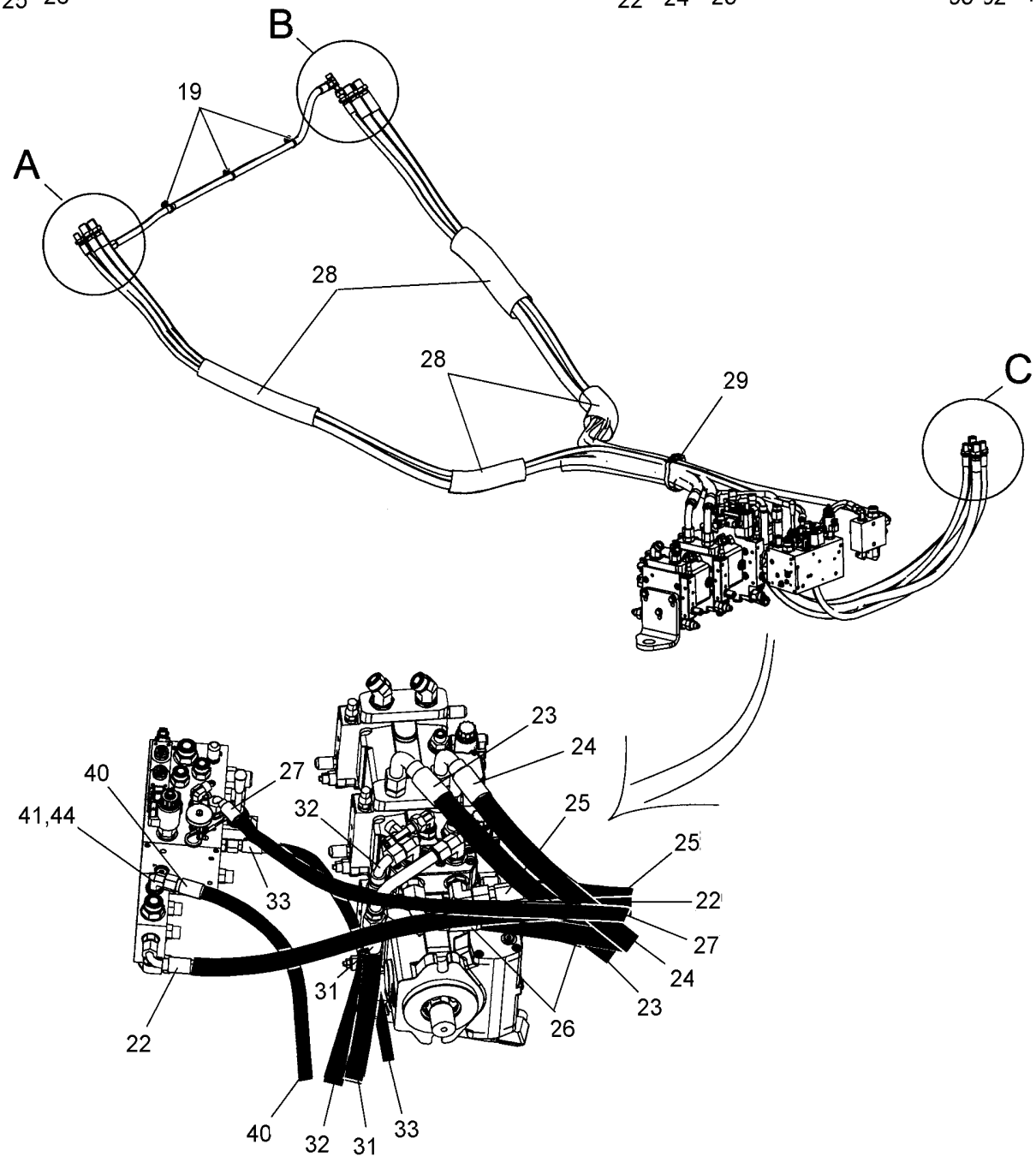

Hydraulic hoses, frame

Item	Part No	Rem	Qty	Description	Code
1	4700606009		1	Lock washer	D
2	4700792454		2	Nut	D
3	4700792453		4	Nut	D
4	4700792452		1	Nut	D
5	4700792451		2	Nut	D
8	4700792344	A	1	Bulkhead union	D
9	4700791798	A	1	T-connector	D
14	4700792632		2	O-ring	D
15	4700904008		1	O-ring	
16	4700904009		4	O-ring	D
17	4700904010		2	O-ring	C
18	4700792720		2	Serrated lock washer	D
19	4700792442		3	Cable tie with holder	D
21	4700484014		1	Hydraulic hose	D
22	4700484015	A,C	1	Hydraulic hose	D
23	4700484016	A,D	1	Hydraulic hose	D
24	4700484017	A,D	1	Hydraulic hose	D
25	4700484018	A,E	1	Hydraulic hose	D
26	4700484019	A,E	1	Hydraulic hose	D
27	4700484020	A,F	1	Hydraulic hose	D
28	4700792700		4	Hose guard	
29	4812110293		1	Strap	D
31	4700484021	B,G	1	Hydraulic hose	D
32	4700484022	B,G	1	Hydraulic hose	D
33	4700484023	B,G	1	Hydraulic hose	D
40	4700484045	2	1	Hydraulic hose	D
41	4700791841	2	1	Elbow 90 orfs	
42	4700792452	2	1	Nut	D
43	4700606021	2	1	Serrated lock washer	D
44	4700792512	1	1	Steel plug threaded	D

1) Used on machine with offset drum or combi rear.
2) Not used on a machine with offset drum or combi rear.
A) Front
B) Rear
C) Vibration motor to valve
D) Vibration motor to pump
E) Propulsion motor to pump
F) Propulsion motor to valve
G) Propulsion

hydraulic hoses, rear wheels offset

hydraulic hoses, rear wheels offset

Item	Part No	Rem	Qty	Description	Code
1			1	**Hose kit (Page 262)**	
2	4700396118		1	Bracket	D
3	4700335914		3	Cover plate	D
4	4700343872		4	Hose clamp	D
5	4700343732		2	Hose clamp	
6	4700904641		4	Straight connector orfs	
7	4700792115		2	Straight connector orfs	
8	4700791536		4	Straight connector	D
9	4700396110		2	Bracket	D
10	4700791630		2	T-connector ORFS	
11	4700791414		2	T-connection, O-ring with swivel	C
12	4700791798		1	T-connector	D
13	4700791401		2	Elbow 90, O-ring with swivel	C
14	4700396655		1	Hose clamp	
15	4700396656		1	Hose clamp	
16	4700396657		1	Hose clamp	

Hose kit

Hose kit

Item	Part No	Rem	Qty	Description	Code
1	4700484352		1	Hydraulic hose	
2	4700484353		4	Hydraulic hose	D
3	4700484354		1	Hydraulic hose	
4	4700484355		1	Hydraulic hose	
5	4700484356		1	Hydraulic hose	
6	4700484357		1	Hydraulic hose	
7	4700484358		1	Hydraulic hose	D
9	4700484359		2	Hydraulic hose	D

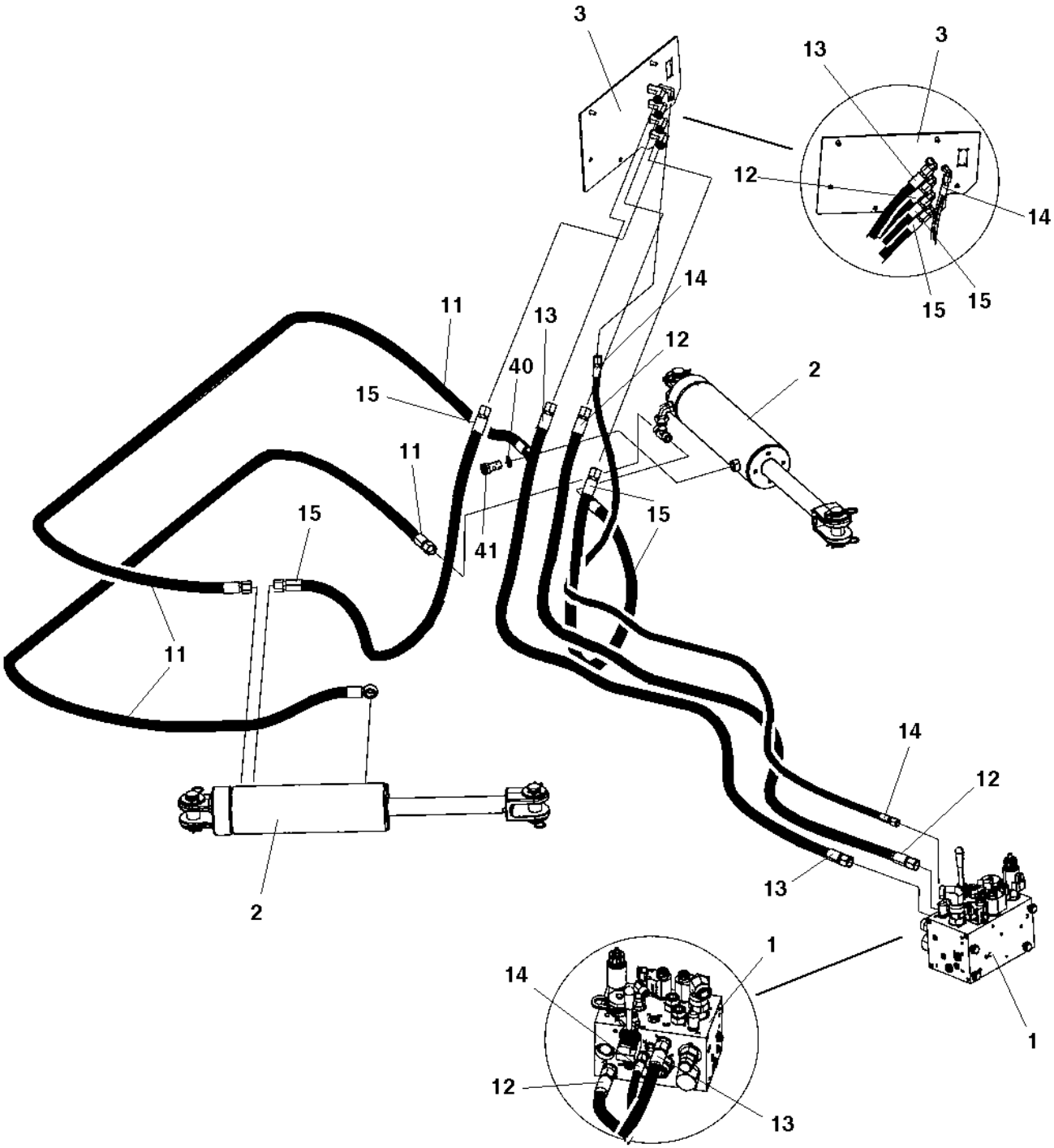
3
13
3
12
14
15
15
14
11
13
12
40
2
15
11
15
15
41
11
2
14
12
13
1
14
12
13
1

Hydraulic system, steering Std

Item	Part No	Rem	Qty	Description	Code
1			1	**Hydraulic valve module (Page 266)**	
2		A	2	Steering cylinder	
3			1	**Hose bracket (Page 274)**	
11	4700393364		2	Hydraulic hose	D
12	4700484024		1	Hydraulic hose	D
13	4700484025		1	Hydraulic hose	D
14	4700484026		1	Hydraulic hose	D
15	4700484027		2	Hydraulic hose	D
40	4700162015		4	Seal ring	D
41	4700904292		2	Hollow screw	

A) See section "Front frame"

Hydraulic valve module

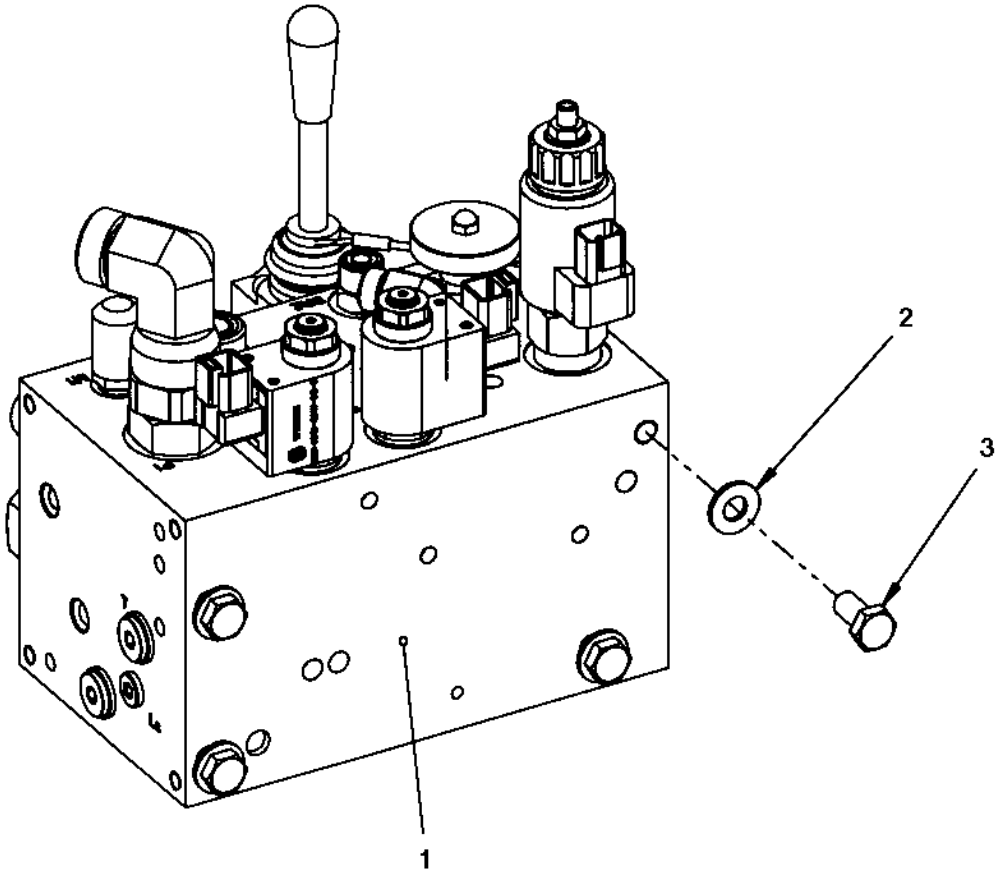

Hydraulic valve module

Item	Part No	Rem	Qty	Description	Code
1			1	**Hydraulic valve (Page 268)**	
2	4700904230		4	Steel plain washer	C
3	4700500028		4	Screw	C

Hydraulic valve

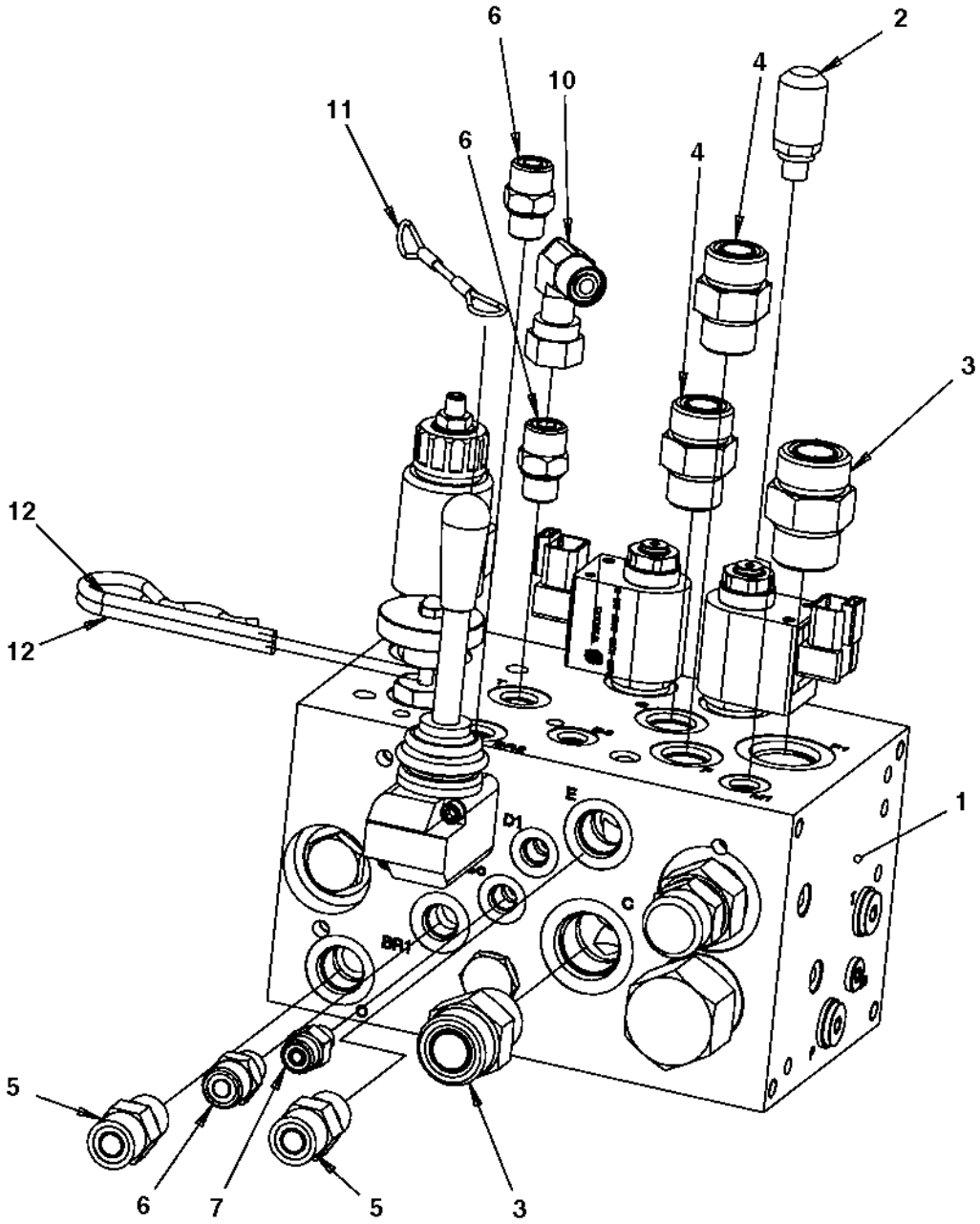

Hydraulic valve

Item	Part No	Rem	Qty	Description	Code
1	4700391016	1	1	**Hydraulic valve (Page 270)**	C
	4700395924		1	**Hydraulic valve (Page 272)**	C
2	4700910162		1	Measuring nipple	D
3	4700791823		2	Straight connector orfs	
4	4700791743		2	Straight connector orfs	D
5	4700791799		2	Straight connector orfs	D
6	4700791409		3	Straight connector orfs	C
7	4700791744		1	Straight connector	
10	4700791401		1	Elbow 90, O-ring with swivel	C
11	4700358732		1	Wire	D
12	4700635061		2	Hair clip	B

1) PN 4700395924 can replace PN 4700391016

4700391016 Hydraulic valve

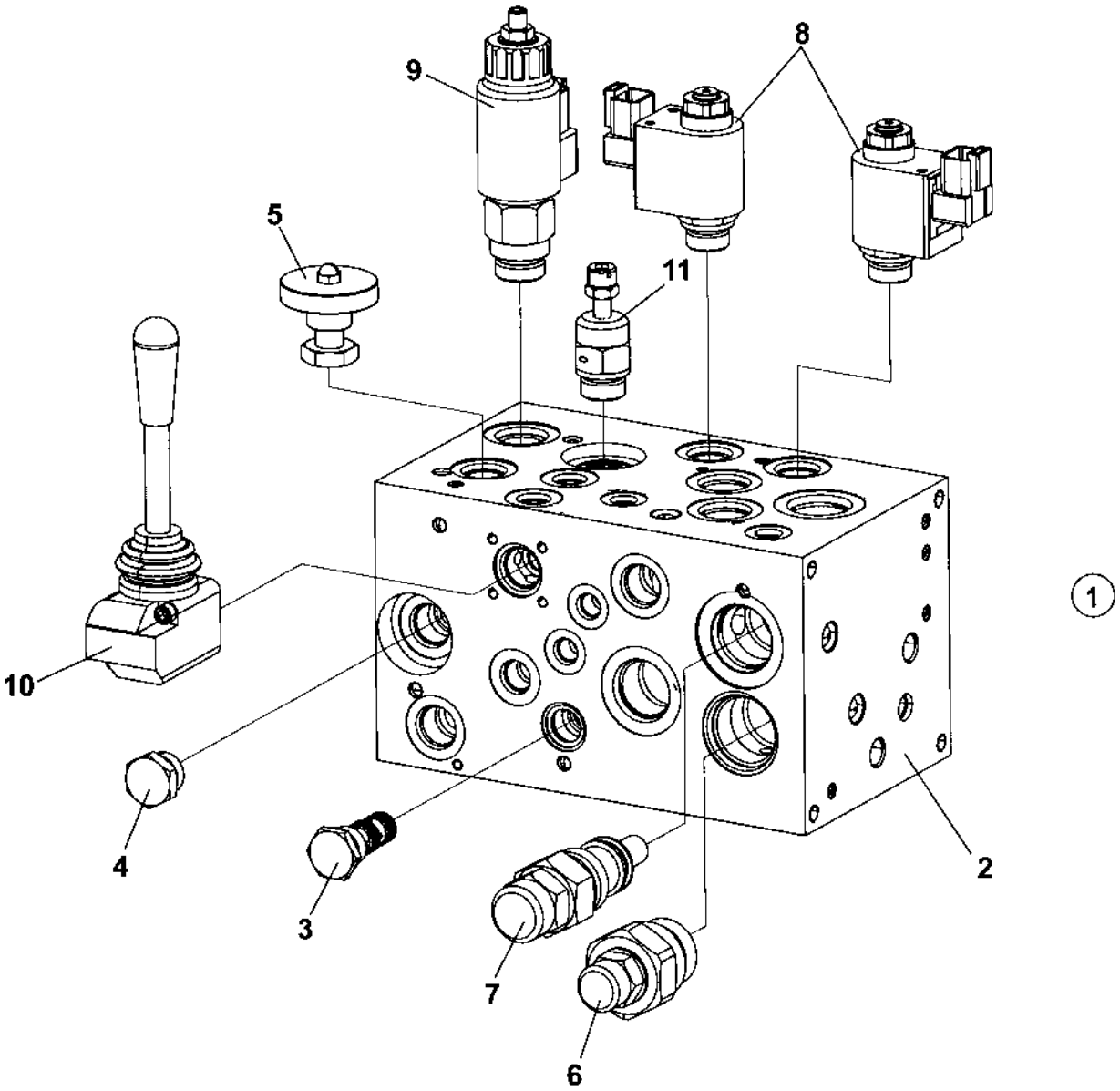

4700391016 Hydraulic valve

Item	Part No	Rem	Qty	Description	Code
1			1	Hydraulic valve	
2			1	. Valve block	
3	4700940572		1	. Shuttle valve	D
4			1	. Check valve	
5			1	. Brake release valve	
6	4700950571		1	. Priority valve	
7	4700950572		1	. Pressure relief valve	
8	4700950570		2	. Solenoid valve	
9	4700950569		1	. Fan proportional valve	
10			1	. Brake release pump	
11			1	. Brake pressure relief valve	

4700395924 Hydraulic valve

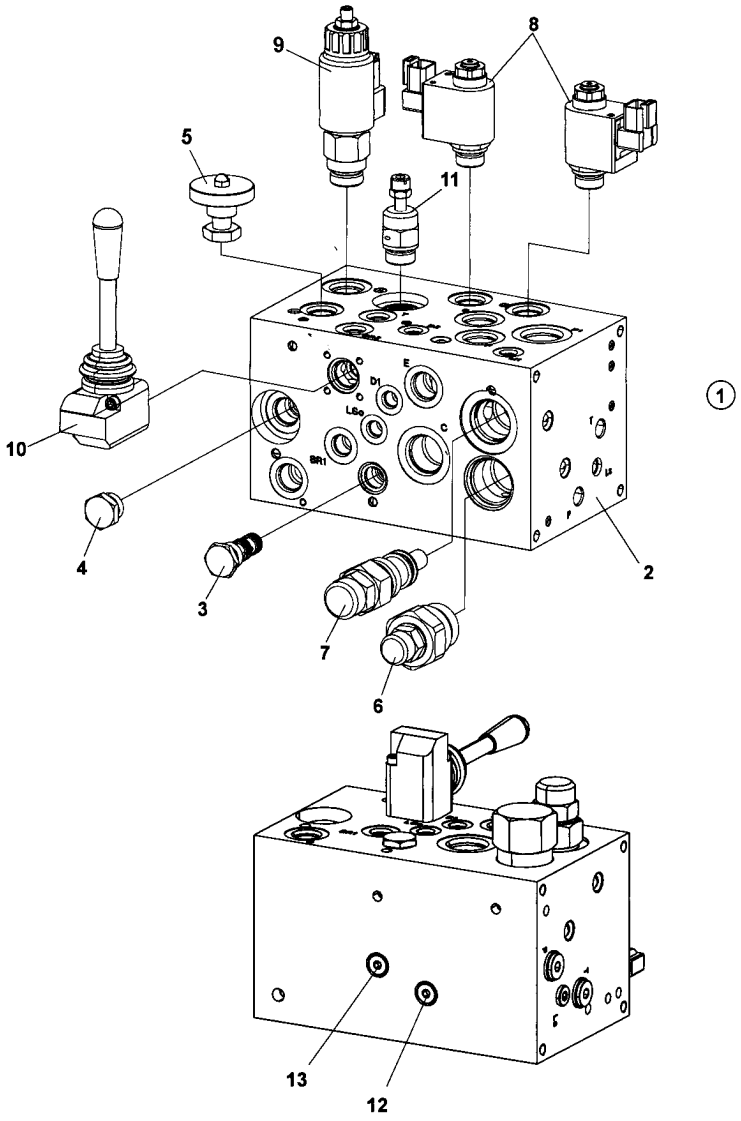

4700395924 Hydraulic valve

Item	Part No	Rem	Qty	Description	Code
1			1	Hydraulic valve	
2			1	. Valve block	
3	4700940572		1	. Shuttle valve	D
4			1	. Check valve	
5			1	. Brake release valve	
6	4700950571		1	. Priority valve	
7	4700950572		1	. Pressure relief valve	
8	4700950570		2	. Solenoid valve	
9	4812156787		1	. Fan proportional valve	
10			1	. Brake release pump	
11			1	. Brake pressure relief valve	
12	4812157585		1	. Orifice with wire 0.5 mm	
13			1	. Orifice 0.75 mm	

Hose bracket

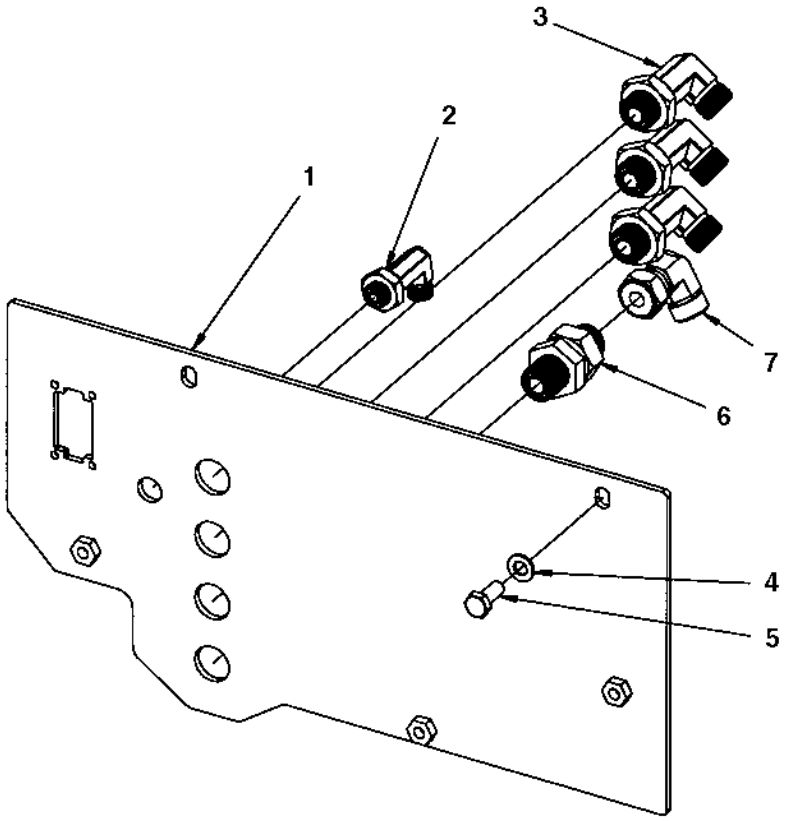

Hose bracket

Item	Part No	Rem	Qty	Description	Code
1	4700391192		1	Hose bracket	D
2	4700792343		1	Bulkhead elbow	
3	4700792342		4	Bulkhead elbow	
4	4700904229		2	Steel plain washer 8,4x16x1,5	C
5	4700500053		2	Screw M8x20H 8.8	C

Hydraulic steering, sliding seat

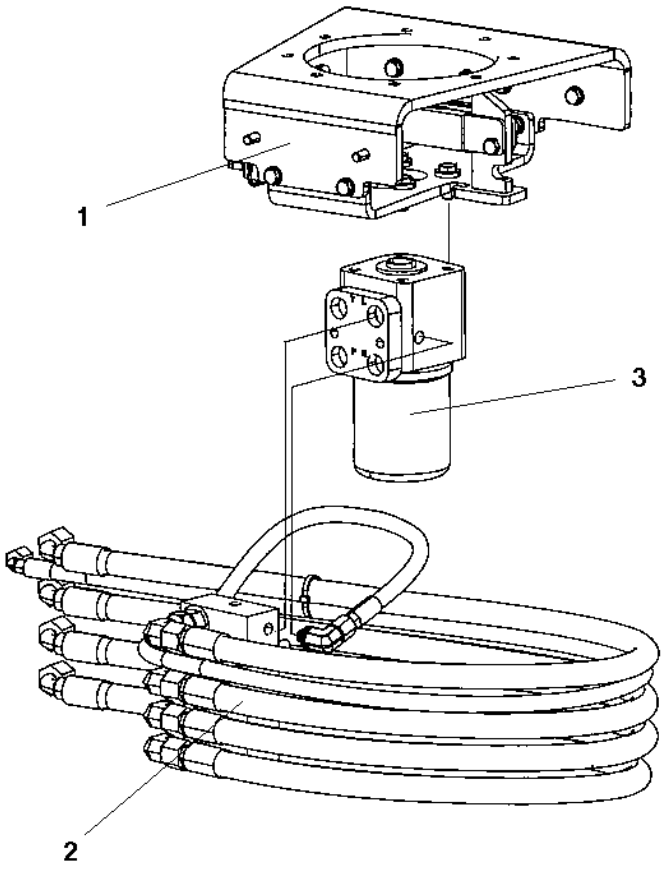

Hydraulic steering, sliding seat

Item	Part No	Rem	Qty	Description	Code
1			1	**Carrier (Page 482)**	
2			1	**Steering, slideable (Page 278)**	
3	4700372424		1	**Pilot valve, steering (Page 280)**	C
	4700392758		1	Pilot valve, emergency steering	

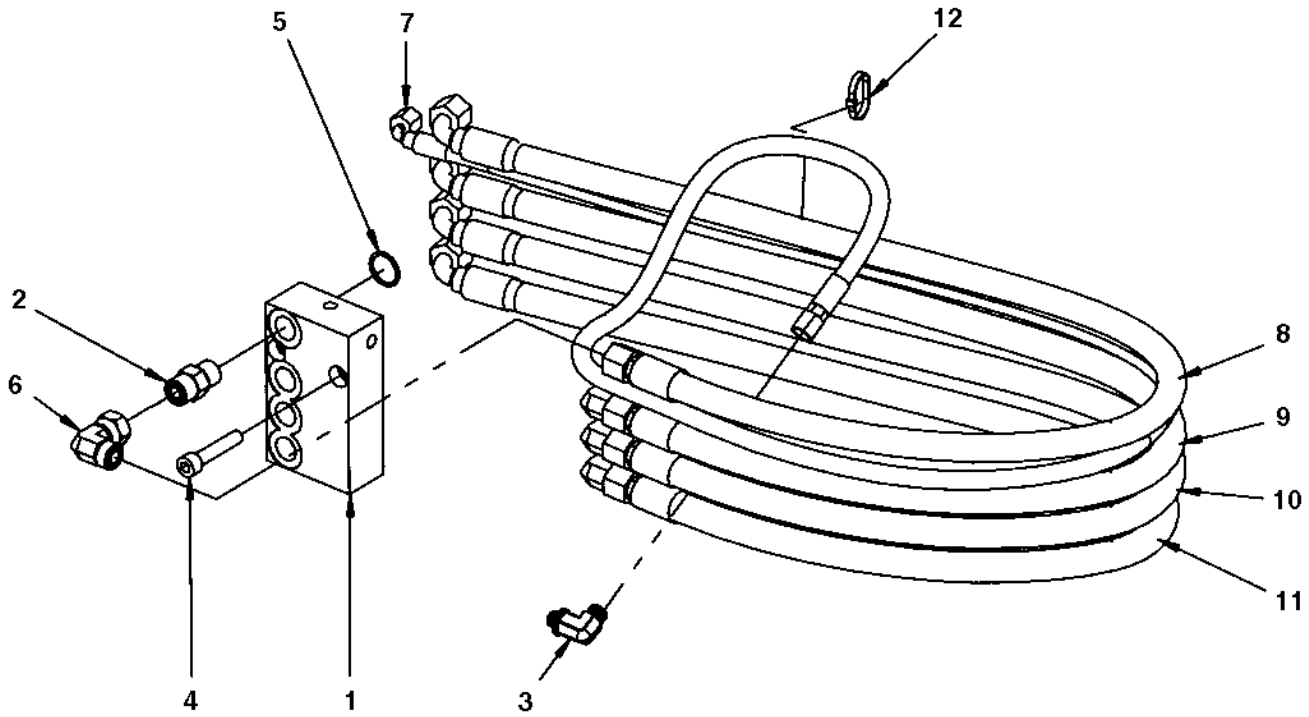
5
7
12
2
6
8
9
10
11
4
1
3

Steering, slideable

Item	Part No	Rem	Qty	Description	Code
1	4700370155		1	Valve block	C
2	4700791799		4	Straight connector orfs	D
3	4700792334		1	Elbow 90 orfs	
4	4700903773		2	Screw M10x1x50 8,8	C
5	4700160287		4	O-ring	C
6	4700791745		4	Elbow 90, O-ring with swivel	D
7	4700484006		1	Hydraulic hose	
8	4700484007		1	Hydraulic hose	
9	4700484007		1	Hydraulic hose	
10	4700484007		1	Hydraulic hose	
11	4700484007		1	Hydraulic hose	
12	4700313041		N	Cable ties L=200 mm	B

4700372424 Pilot valve, steering

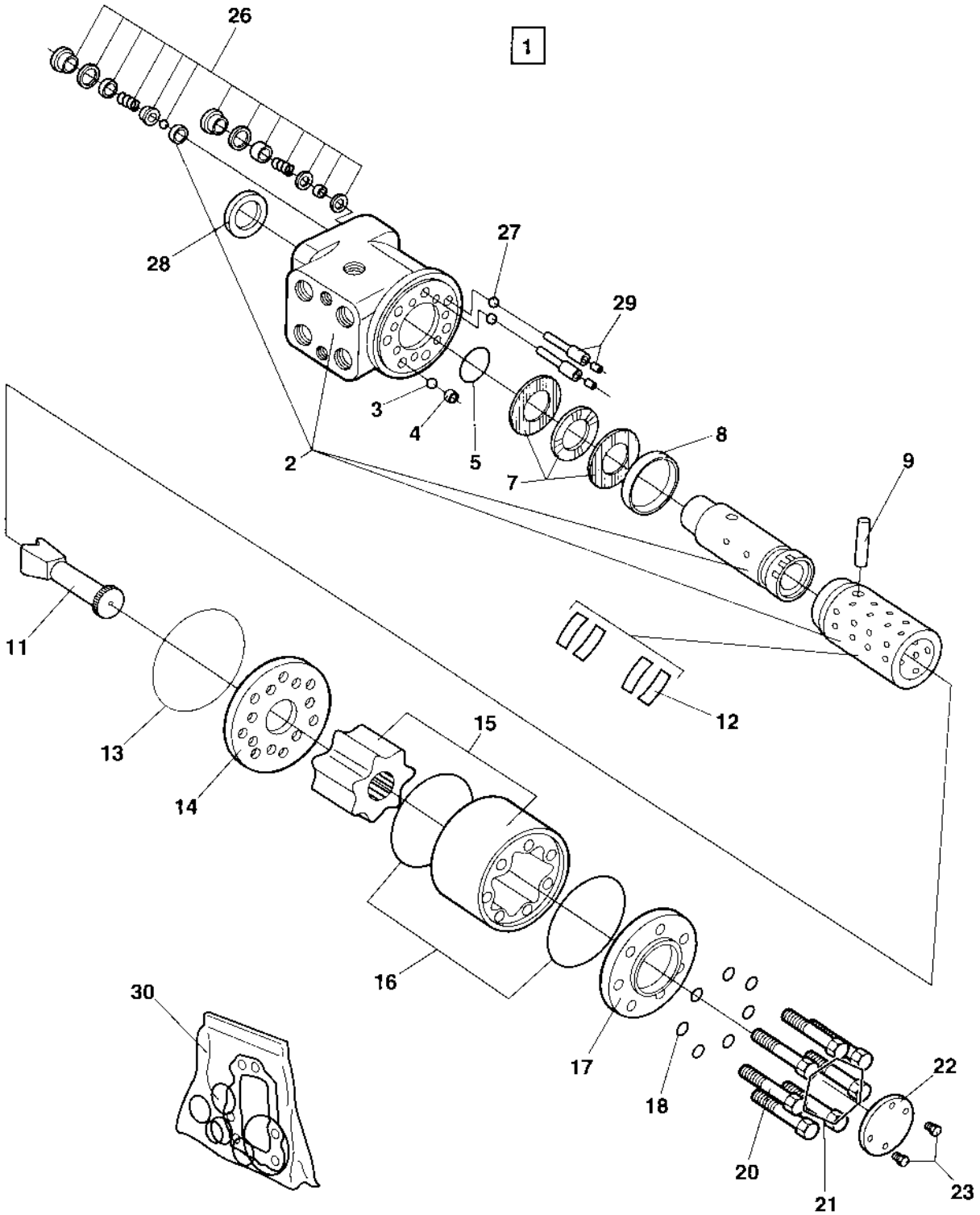

4700372424 Pilot valve, steering

Item	Part No	Rem	Qty	Description	Code
1	4700372424		1	**Pilot valve, steering (Page 280)**	C
2			1	. Housing , spool and sleeve , cpl	
3	4700480468		1	. Ball	D
4	4700480446		1	. Threaded bushing	D
5		1	1	. O-ring	
7	4700911620		1	. Bearing	B
8	4700480449		1	. Ring	D
9	4700480447		1	. Cross pin	C
11	4700902861		1	. Cardan shaft	C
12	4700909211		1	. Set of springs	C
13		1	1	. O-ring	
14	4700902862		1	. Valve plate	C
15	4700903457		1	. Gear wheel set	D
16		1	2	. O-ring	
17	4700480450		1	. End cap	D
18		1	7	. Washer	
20	4700480456		1	. Screw with hole	D
21	4700935428		6	. Screw	
22			1	. Name plate	
23			2	. Screw	
26	4700929012		2	. Shock valve 22,5-24,0 MPa	C
27	4700929013		2	. Ball	D
28		1	1	. Seal ring	
29	4700929014		2	. Rolled pin	D
30	4700935429		1	. Seal kit	

1) Included in seal kit item 30

Hydraulic hoses, engine room

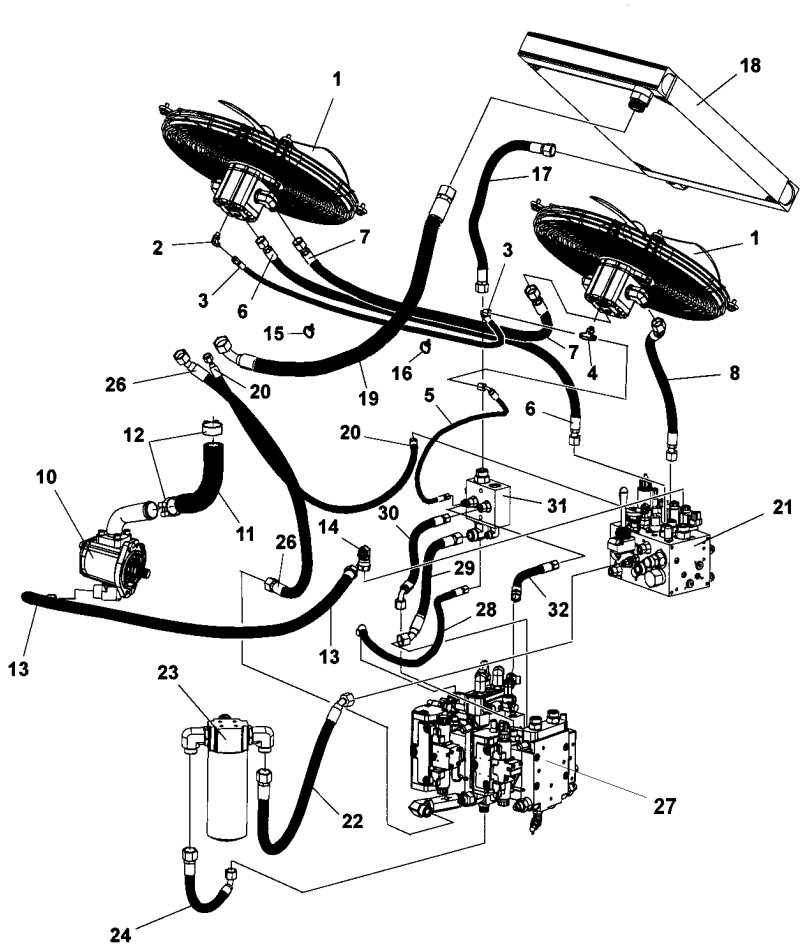

Hydraulic hoses, engine room

Item	Part No	Rem	Qty	Description	Code
1			2	**Fan (Page 70)**	
2	4700791397		1	Elbow 90°, O-ring	D
3	4700484031		1	Hydraulic hose	D
4	4700792340		1	Tee-connector orfs	D
5	4700484032		1	Hydraulic hose	D
6	4812115903		1	Hydraulic hose	D
7	4700484028		1	Hydraulic hose	D
8	4700484030		1	Hydraulic hose	D
10			1	Steering pump	
11	4700792533		1	Hydraulic hose	D
12	4812114312		2	Clamp	
13	4700484033		1	Hydraulic hose	D
14	4700904584		1	Elbow connector 90°	C
15	4700792441		3	Cable tie with holder	C
16	4700792442		3	Cable tie with holder	D
17	4700484034		1	Hydraulic hose	D
18			1	**Oil cooler (Page 68)**	
19	4700484035		1	Hydraulic hose	D
20	4700484038		1	Hydraulic hose	D
21			1	**Hydraulic valve module (Page 284)**	
22	4700484039		1	Hydraulic hose	D
23	4812110667		1	Hydraulic oil filter	A
	4700391433		1	. Hydraulic oil filter element	A
	4812158269		1	. Filter switch	
	4700391432		1	Cleaning filter element	
24	4700484037		1	Hydraulic hose	D
26	4700484040		1	Hydraulic hose	D
27			1	**Hydraulic pump module (Page 288)**	
28	4700484043		1	Hydraulic hose	D
29	4700483729		1	Hydraulic hose	D
30	4700483726		1	Hydraulic hose	D
31			1	Connection block	
32	4700484161		1	Hydraulic hose	D

Hydraulic valve module

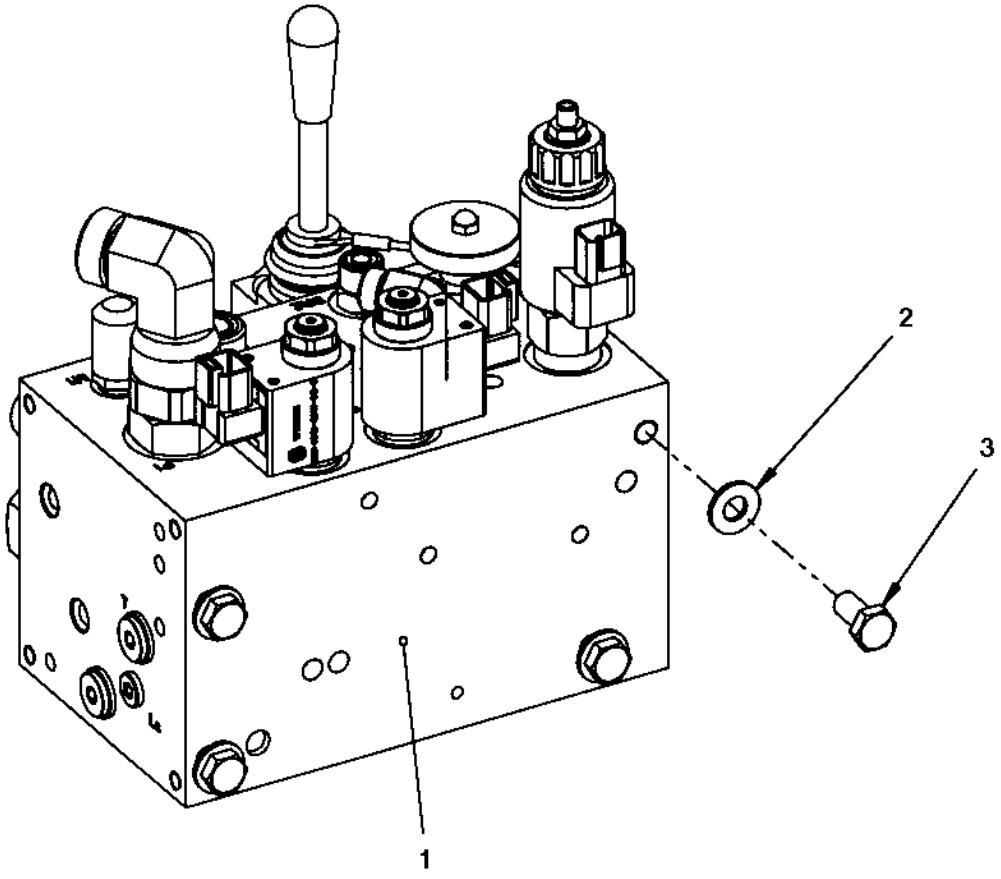

Hydraulic valve module

Item	Part No	Rem	Qty	Description	Code
1			1	**Hydraulic valve (Page 286)**	
2	4700904230		4	Steel plain washer	C
3	4700500028		4	Screw	C

Hydraulic valve

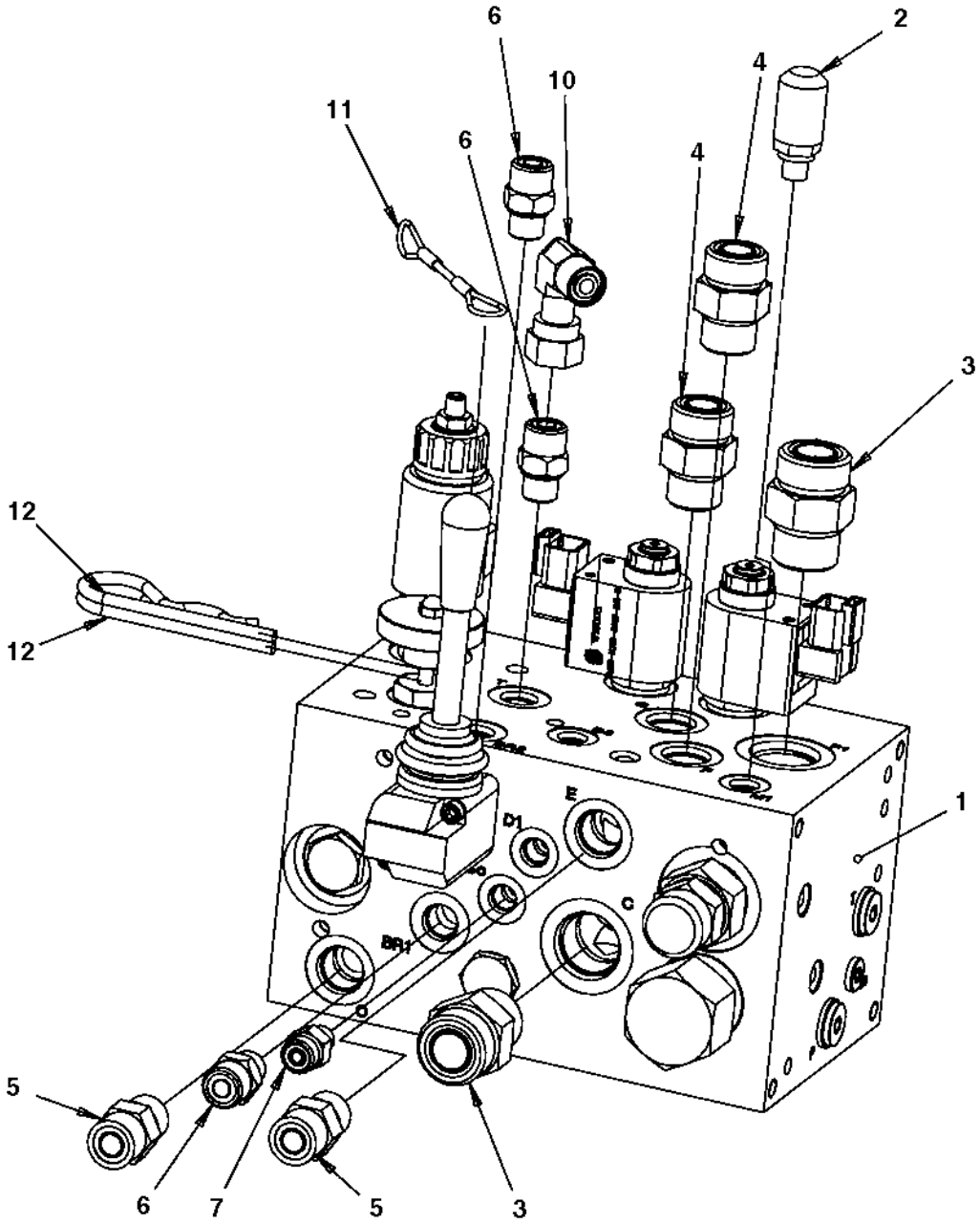

Hydraulic valve

Item	Part No	Rem	Qty	Description	Code
1	4700395924		1	**Hydraulic valve (Page 272)**	C
2	4700910162		1	Measuring nipple	D
3	4700791823		2	Straight connector orfs	
4	4700791743		2	Straight connector orfs	D
5	4700791799		2	Straight connector orfs	D
6	4700791409		3	Straight connector orfs	C
7	4700791744		1	Straight connector	
10	4700791401		1	Elbow 90, O-ring with swivel	C
11	4700358732		1	Wire	D
12	4700635061		2	Hair clip	B

Hydraulic pump module

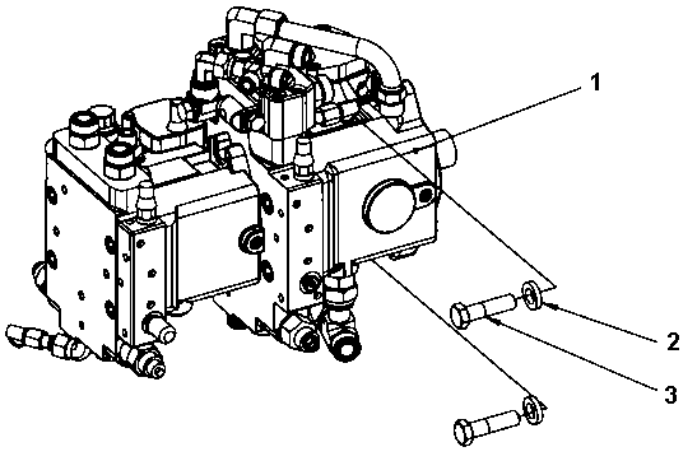

Hydraulic pump module

Item	Part No	Rem	Qty	Description	Code
1			1	**Hydraulic pump (Page 290)**	
2	4700904558		2	Washer 17X30X6 300HV	C
3	4700500270		2	Screw M16x60 10,9	D

Hydraulic pump

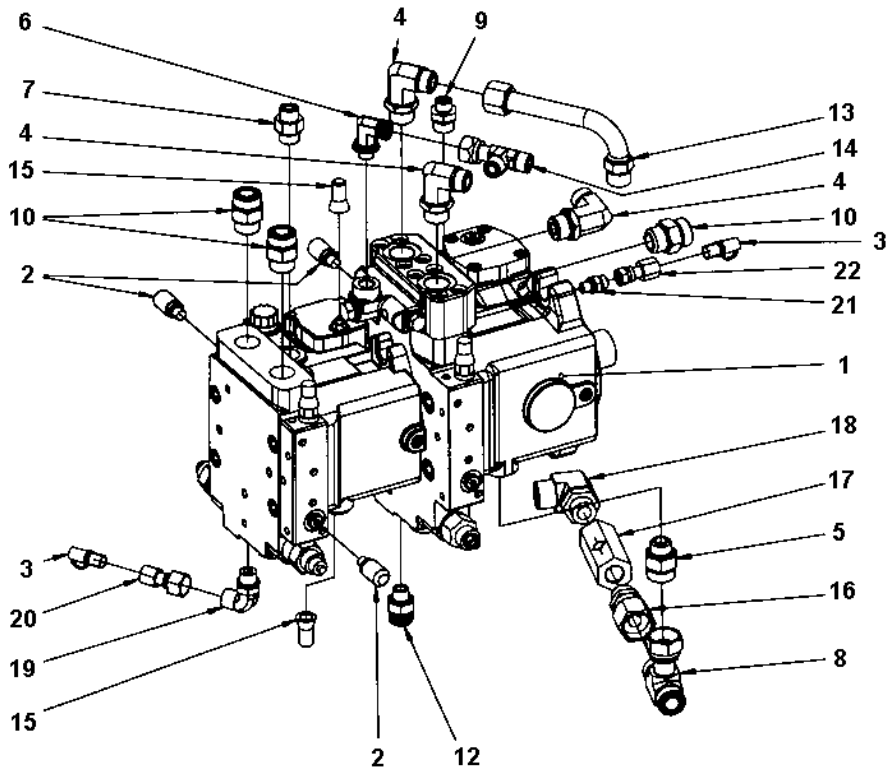

Hydraulic pump

Item	Part No	Rem	Qty	Description	Code
1	4700395138		1	Hydraulic pump	D
2	4700901157		3	Measuring nipple	C
3	4700923405		2	Measuring nipple	C
4	4700792331		3	Elbow 90 orfs	C
5	4700792336		1	Straight connector orfs	D
6	4700792333		1	Elbow 90 orfs	D
7	4700791635		1	Straight connector	D
8	4700791831		1	Tee-connector	D
9	4700791634		1	Adapter	D
10	4700791853		3	Straight connector orfs	D
12	4700792465		1	Straight connector orfs	D
13	4700392048		1	Connector	D
14	4700791798		1	T-connector	D
15	4700392534		2	Sealing	
16	4700791824		1	Straight connector	D
17	4700376922		1	Check valve	D
18	4700791698		1	Elbow 90, O-ring with swivel	D
19	4700792151		1	Elbow adapter 90	
20	4700792219		1	Straight connector	D
21	4700791538		1	Straight connector	C
22	4700792649		1	Straight connector orfs	D

Hydraulic valve module, offset/combi

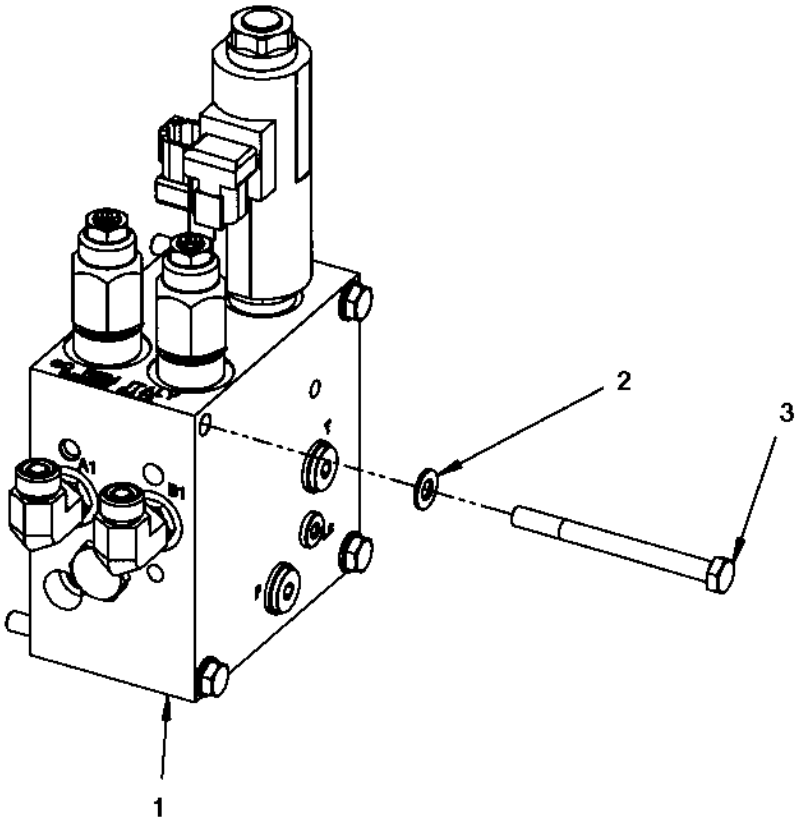

Hydraulic valve module, offset/combi

Item	Part No	Rem	Qty	Description	Code
1			1	**Hydraulic valve (Page 294)**	
2	4700904229		4	Steel plain washer 8,4x16x1,5	C
3	4700500115		4	Hexagon head screw M8x90 8.8	C

Hydraulic valve

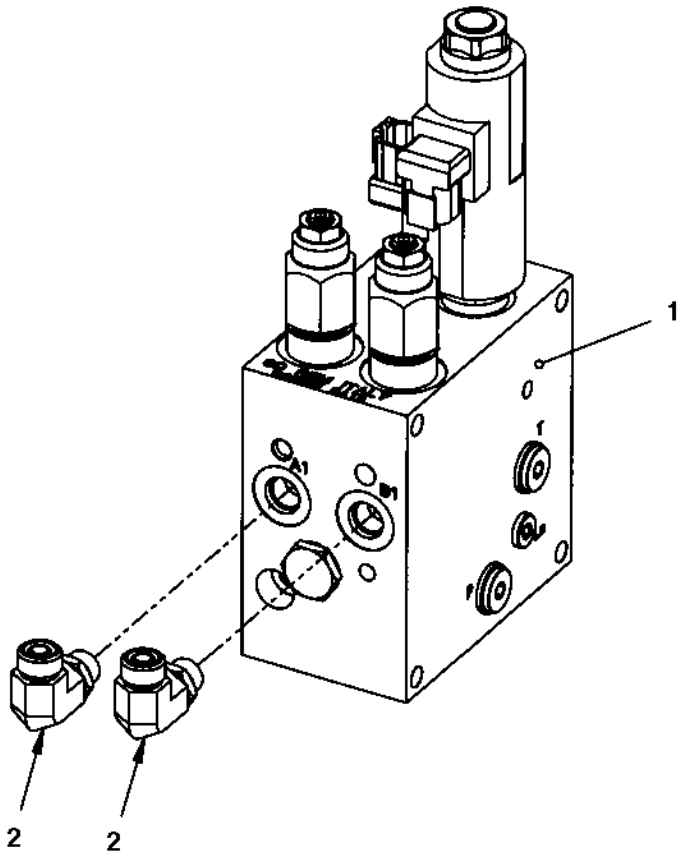

Hydraulic valve

Item	Part No	Rem	Qty	Description	Code
1	4700391017		1	**Hydraulic valve (Page 296)**	C
2	4700791846		2	Elbow 90, O-ring with swivel	C

4700391017 Hydraulic valve

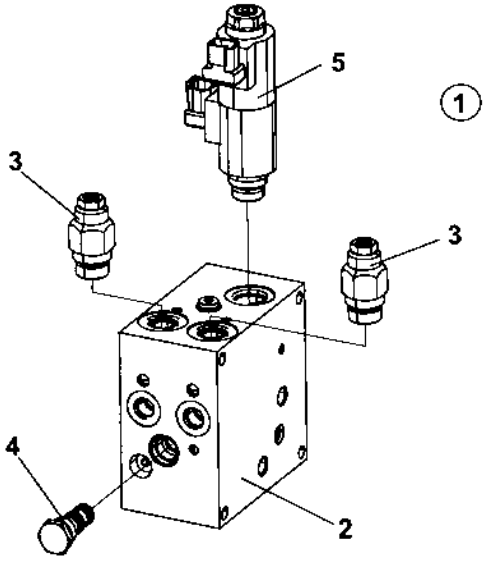

4700391017 Hydraulic valve

Item	Part No	Rem	Qty	Description	Code
1			1	Hydraulic valve	
2			1	. Valve block	
3	4812155790		2	. Pressure relief valve	C
4	4700940572		1	. Shuttle valve	D
5	4812156159		1	. Proportional valve	

Electrical equipment

Item	Part No	Rem	Qty	Description	Code
1			1	**Electric cables, power supply (Page 300)**	
2			1	**Electric cables, power supply cab (Page 306)**	
3			1	**Electric cables, engine - ECU (Page 308)**	
4			1	**Electric cables, sensors/ horn/ back-up alarm (Page 314)**	
6			1	**Tachograph (Page 324)**	
8			1	**Driving & side direction lights Up to 384S00478 (Page 334)**	
			1	**Driving & side direction lights From 384S00479 (Page 354)**	
9			1	**Rotating beacon, working light (Page 358)**	
10			1	**Drum edge lights (Page 370)**	

Electric cables, power supply

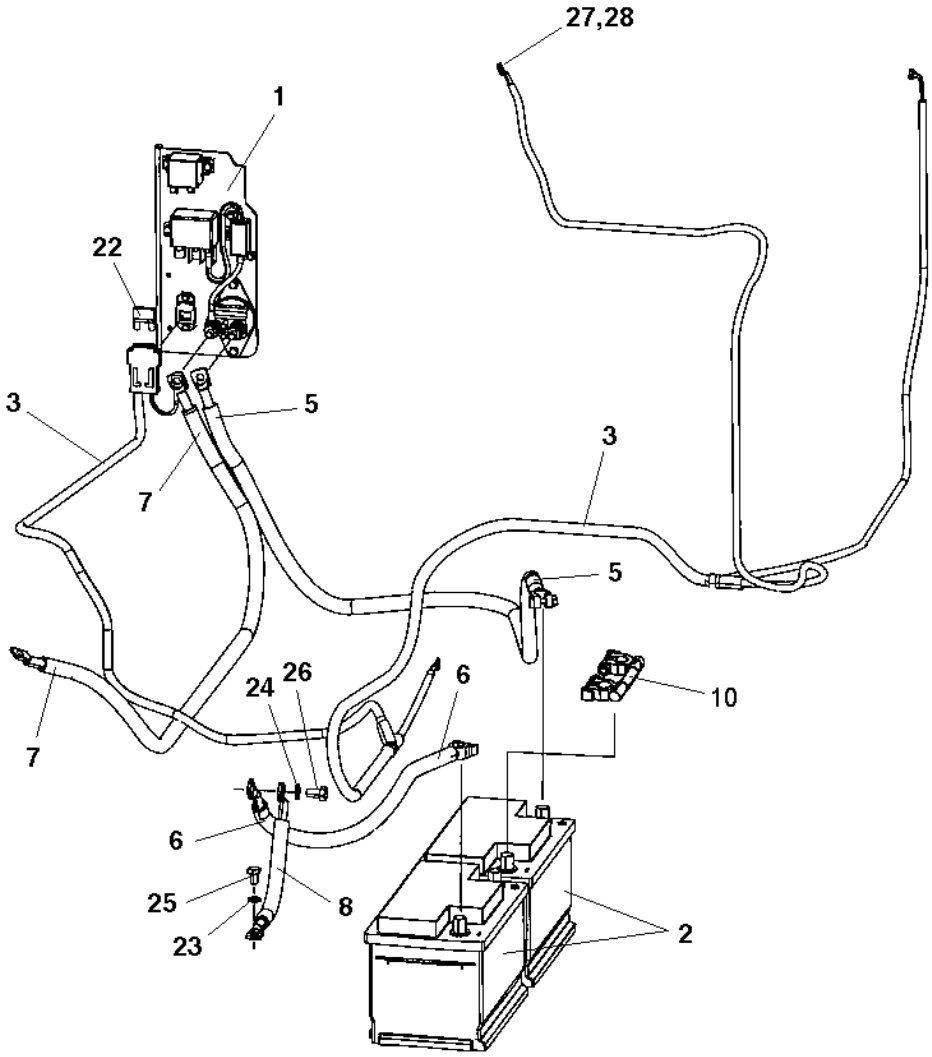

Electric cables, power supply

Item	Part No	Rem	Qty	Description	Code
1			1	**Battery disconnector (Page 302)**	
2		A		Batteries	
3	4700391584		1	Cable harness, power supply	D
5	4700792364		1	Battery cable +	D
6	4700792328		1	Battery cable -	D
7	4700792327		1	Connection cable coarse	D
8	4700335607		1	Connection cable, coarse	B
10	4700792684		1	Battery union cable	D
22	4700904039		1	Fuse 50A Red High	A
23	4700904637		1	Washer	C
24	4700904638		1	Washer 12x22x2	C
25	4700500043		1	Screw M10x16H 8,8	D
26	4700500035		1	Screw M12x020H	
27	4700904229		1	Steel plain washer 8,4x16x1,5	C
28	4700570005		1	Nut M8	C

A) See section " Rear frame - Engine structure "

Battery disconnector

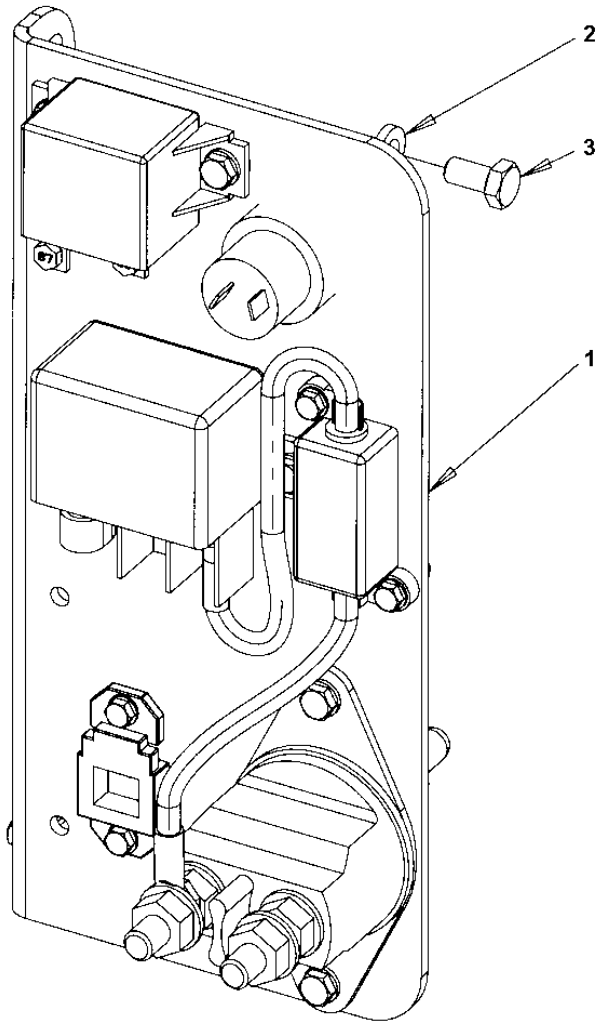

Battery disconnector

Item	Part No	Rem	Qty	Description	Code
1			1	**Battery disconnector (Page 304)**	
2	4700904556		3	Washer 8,4x16x3,0	C
3	4700500019		3	Hexagon head screw M8x16H 8,8	C

Battery disconnector

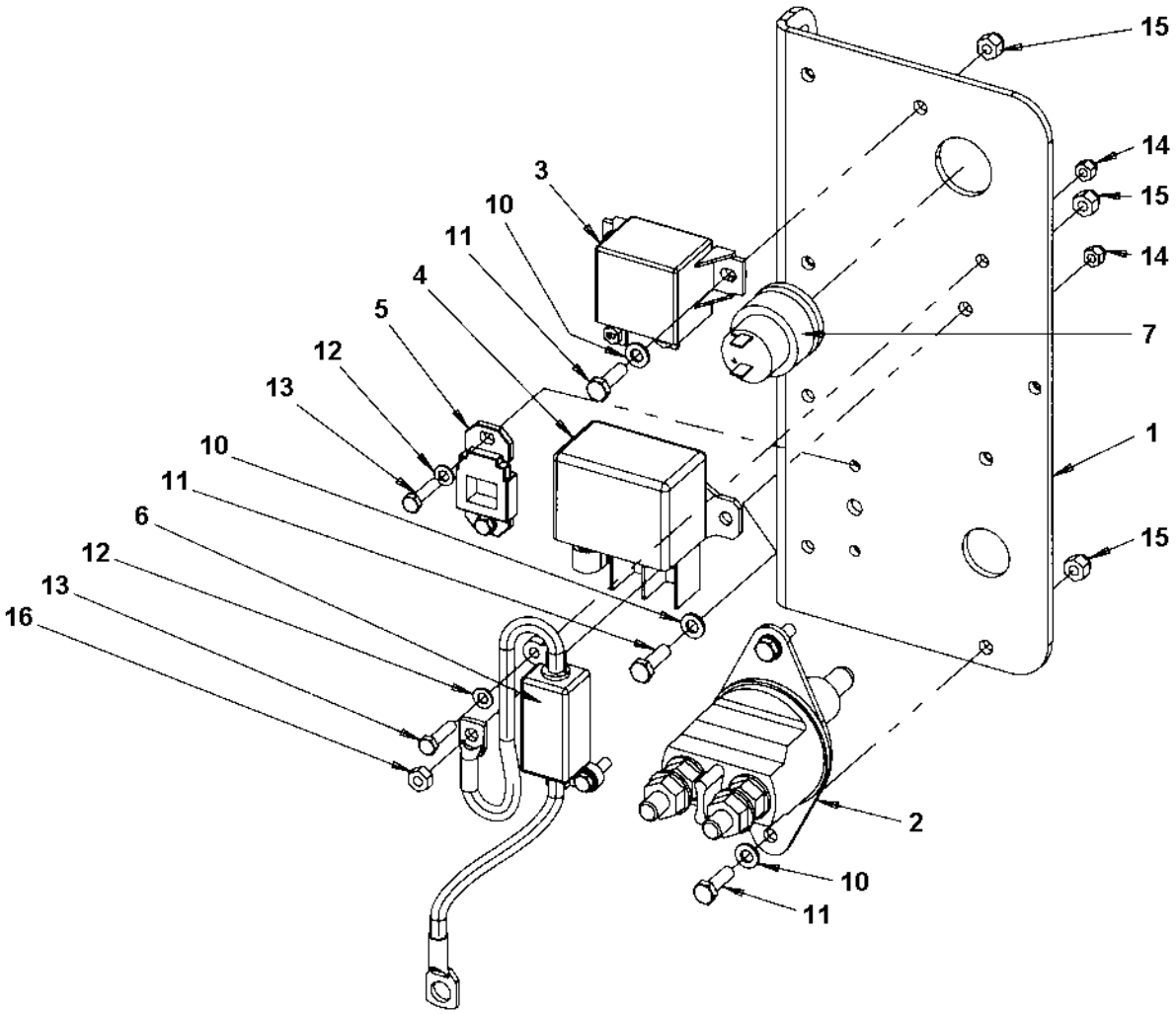

Battery disconnector

Item	Part No	Rem	Qty	Description	Code
1	4700391269		1	Holder	
2	4700903640		1	Battery switch	D
	4700903641		1	. Key	D
3	4700792309		1	Relay 50A	D
4	4700792310		1	Relay 120A	
5	4700904036		1	Fuse holder	D
6	4700391585	A	1	Cable harness	
	4700791479		1	. Fuse, Orange 125A	
7	4700395816		1	Plug socket 24V	
10	4700904228		6	Washer 6,4x12x1,5	C
11	4700500040		6	Screw M6-1x20 8,8	C
12	4700904281		4	Washer 5,3x10x1 300HV	C
13	4700500060		4	Screw M5-0,8x20 8.8	C
14	4700586001		4	Lock nut	C
15	4700586002		6	Lock nut M6 -8	C
16	4700570004		1	Nut M6X1,00 -8 A2K	C

A) Pre-heater

Electric cables, power supply cab

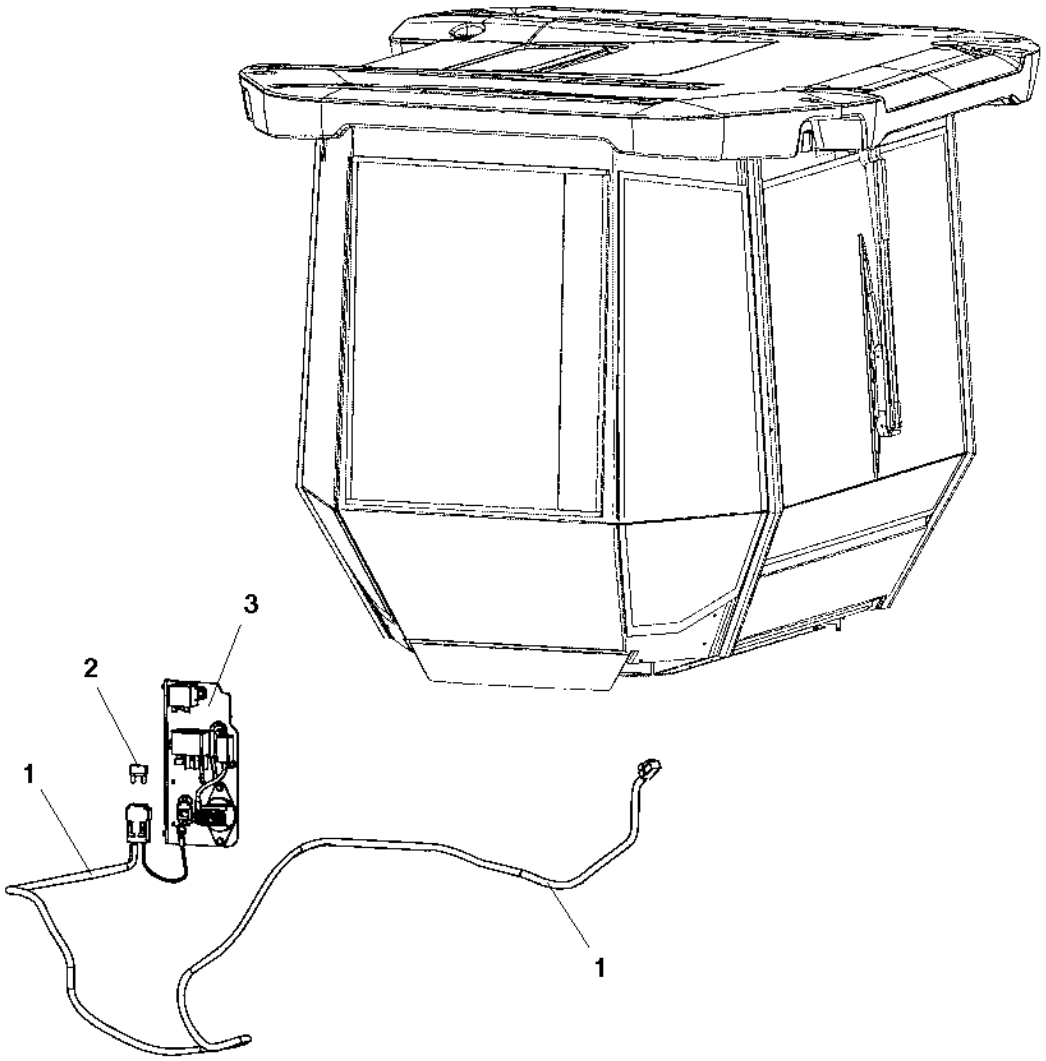

Electric cables, power supply cab

Item	Part No	Rem	Qty	Description	Code
1	4700392156		1	Cable harness, power supply Cab	D
2	4700904039		1	Fuse 50A Red High	A
3			1	**Battery disconnector (Page 302)**	

Electric cables, engine - ECU

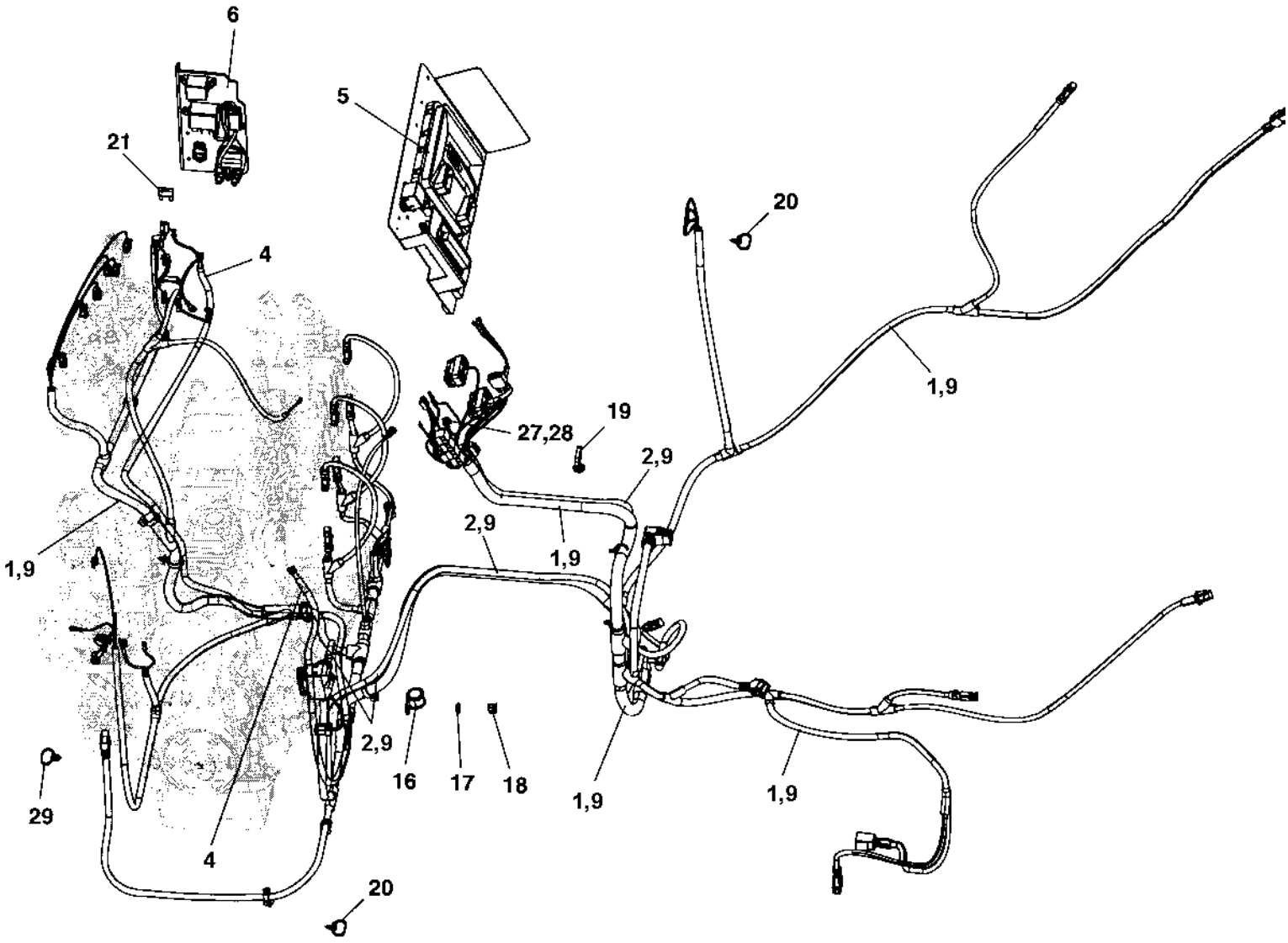

Electric cables, engine - ECU

Item	Part No	Rem	Qty	Description	Code
1	4700395240		1	Cable harness, ECU Up to 384S00199	D
2	4700391958		1	Cable harness, CanBus Up to 384S00199	D
4	4700792363		1	Connection cable coarse	D
5			1	**Standard ECU module (Page 310)**	
6			1	**Battery disconnector (Page 304)**	
9	4700397398		1	Cable harness, ECU/CanBus From 384S00200 Up to 384S00362	D
	4812110652		1	Cable harness, ECU/CanBus From 394S00363	D
16	4700921031		1	Clamp	C
17	4700904228		1	Washer 6,4x12x1,5	C
18	4700586002		1	Lock nut M6 -8	C
19	4700792442		1	Cable tie with holder	D
20	4700792441		20	Cable tie with holder	C
21	4700904037		1	Fuse 30A	A
27	4700904229		2	Steel plain washer 8,4x16x1,5	C
28	4700570005		2	Nut M8	C
29	4700792602		1	Cable tie with holder	

Standard ECU module

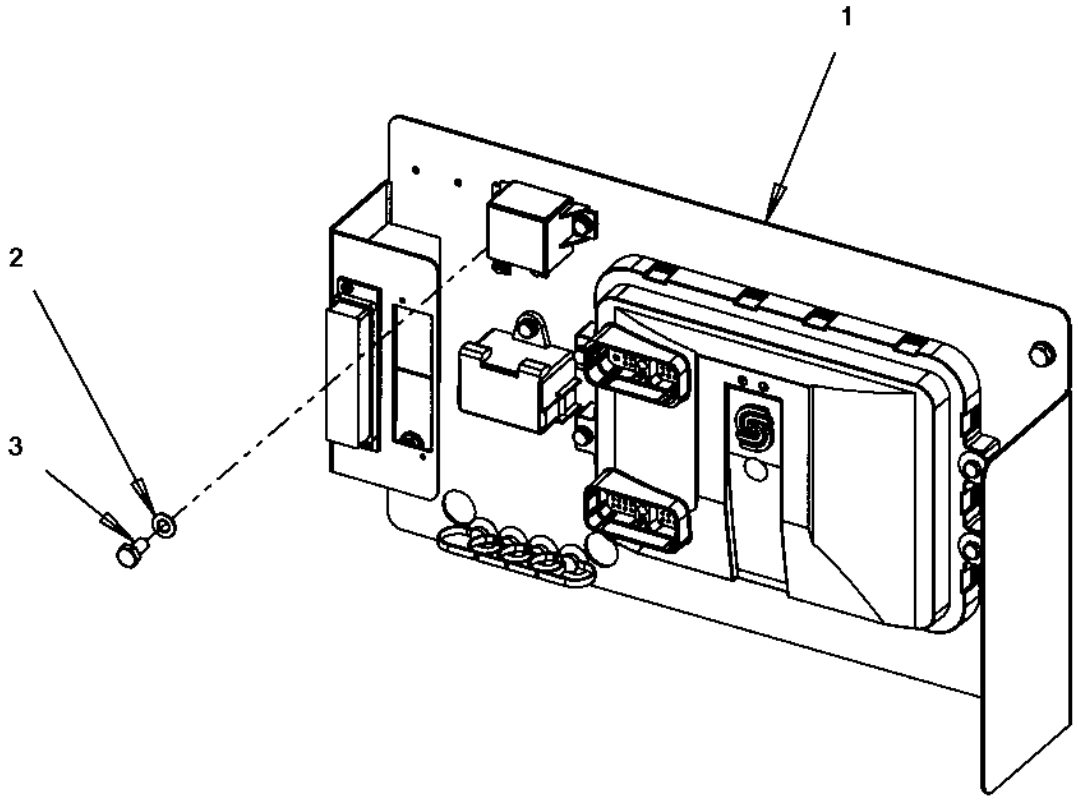

Standard ECU module

Item	Part No	Rem	Qty	Description	Code
1			1	**Standard ECU assembly (Page 312)**	
2	4700904229		4	Steel plain washer 8,4x16x1,5	C
3	4700500019		4	Hexagon head screw M8x16H 8,8	C

Standard ECU assembly

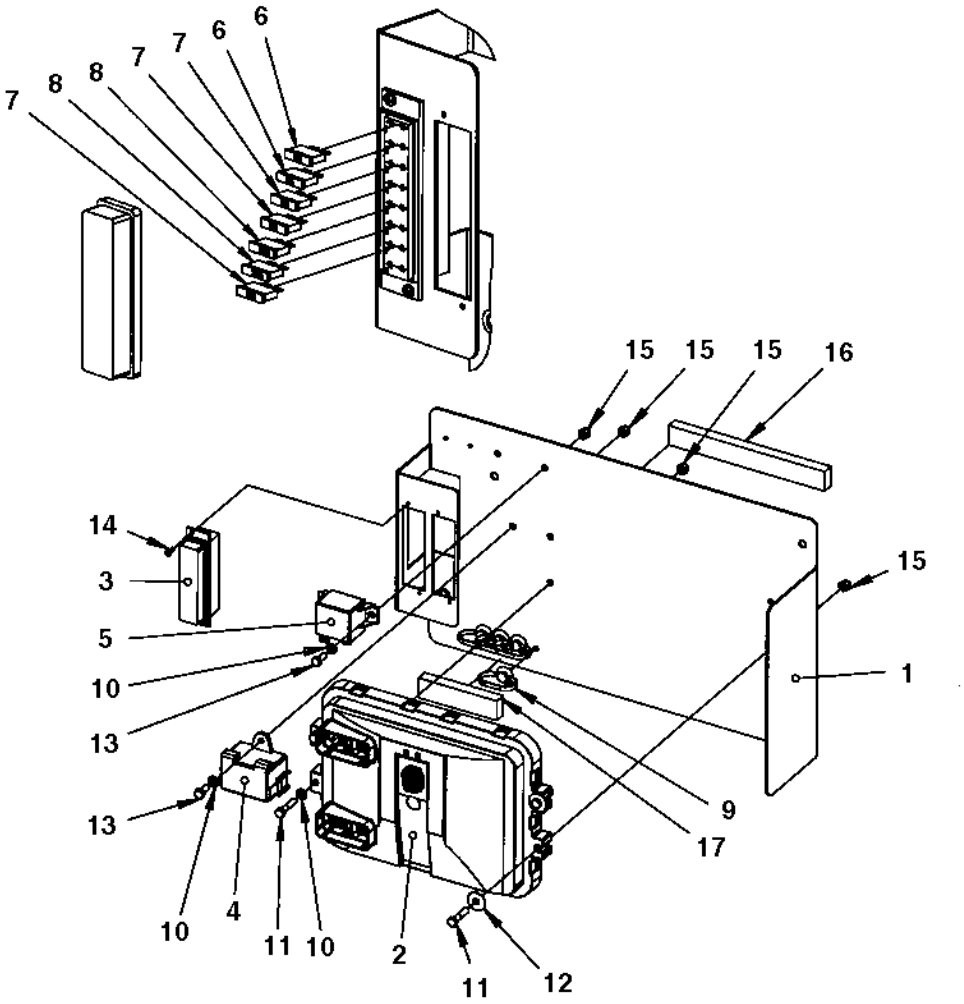

Standard ECU assembly

Item	Part No	Rem	Qty	Description	Code
1	4700391213		1	Mounting plate	
2	4700390860		1	Control unit	
3	4700791185		2	Fuse box	
4	4700791551		1	Junction block	
5	4700792309		1	Relay 50A	D
6	4700901225		2	Fuse 5A	A
7	4700901227		3	Fuse 10A	A
8	4700903741		2	Fuse 20A Yellow Medium	A
9	4700792441		4	Cable tie with holder	C
10	4700904228		5	Washer 6,4x12x1,5	C
11	4700500015		4	Screw M6X30 8.8	C
12	4700928467		2	Washer	C
13	4700500013		3	Screw M6-1x16 8,8	C
14	4700901767		4	Screw ST3,5x9,5 Black	
15	4700586002		7	Lock nut M6 -8	C
16	4700791597	A	1XL	Rubber strip	
17	4700791597	B	1XL	Rubber strip	

A) L= 0,2 m
B) L= 0,1 m

Electric cables, sensors/ horn/ back-up alarm

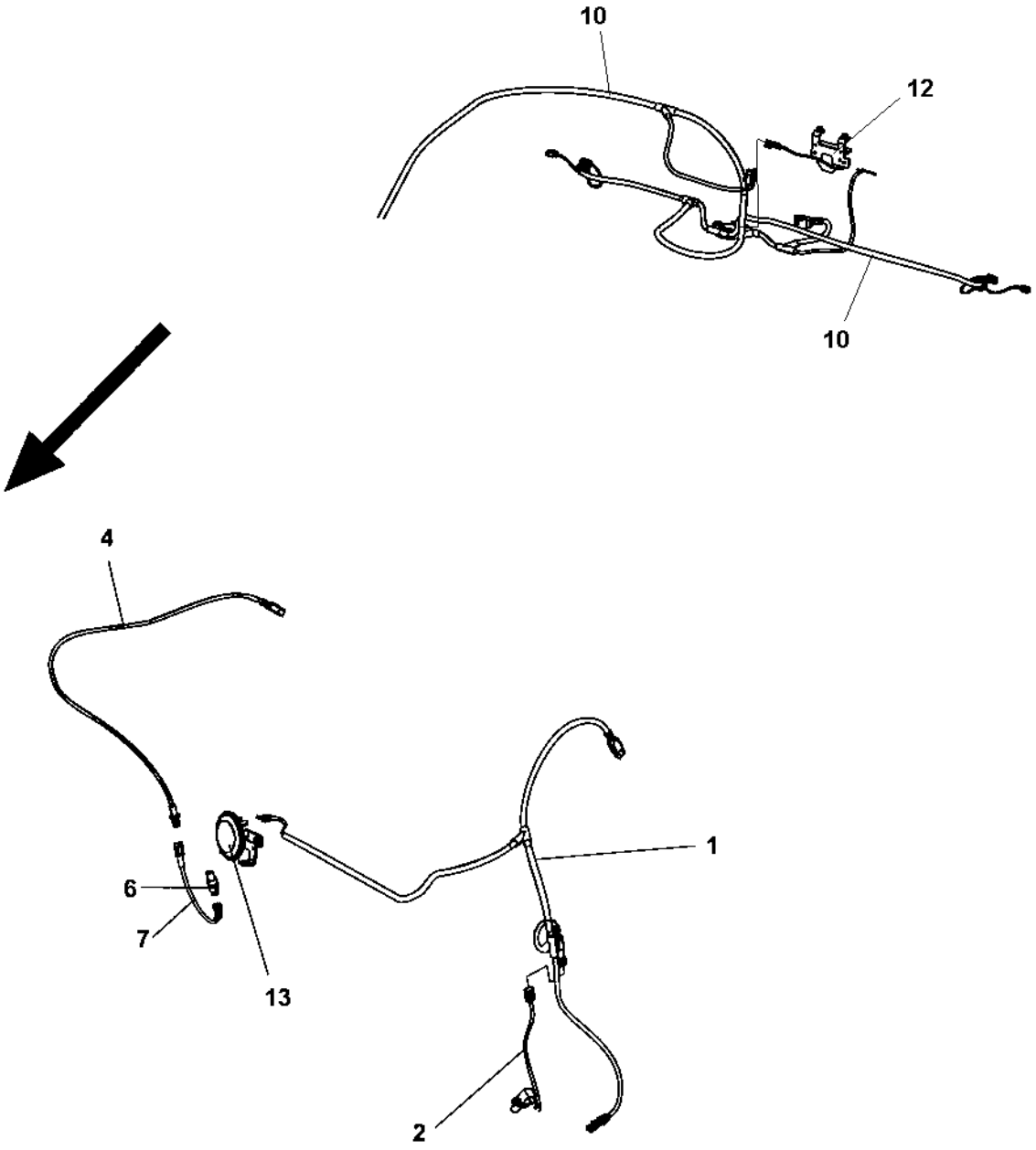

Electric cables, sensors/ horn/ back-up alarm

Item	Part No	Rem	Qty	Description	Code
1	4700391580	A,C	1	Cable harness	D
2	4700390716		1	Speed sensor	B
4	4700396259	A,D	1	Cable harness	D
6	4700792731		1	Frequency sensor From 0A005562	D
7	4700392221		1	Mount kit for sensor From 0A005562	C
10		1		Existing cable	
12			1	**Back-up alarm module (Page 316)**	
13			1	**Horn module (Page 320)**	

1) See section "Driving & side direction lights"
A) Front drum
C) Speed
D) Frequency

Back-up alarm module

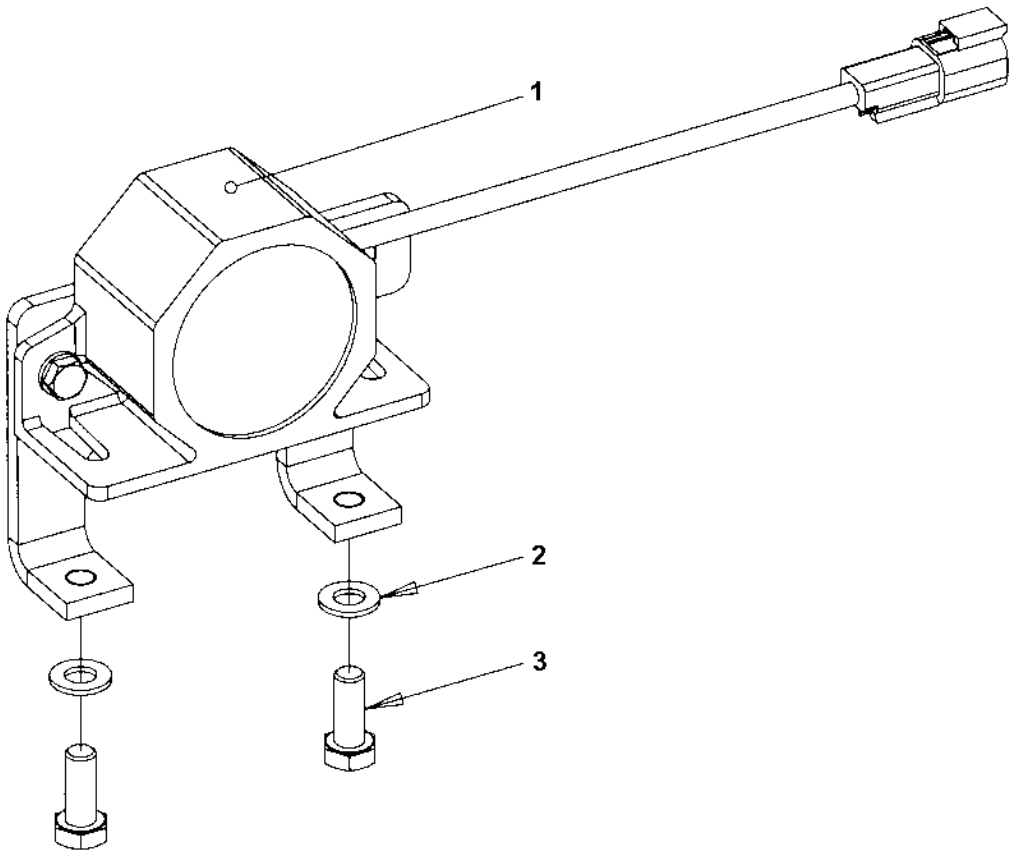

Back-up alarm module

Item	Part No	Rem	Qty	Description	Code
1			1	**Back-up alarm (Page 318)**	
2	4700904229		2	Steel plain washer 8,4x16x1,5	C
3	4700500053		2	Screw M8x20H 8.8	C

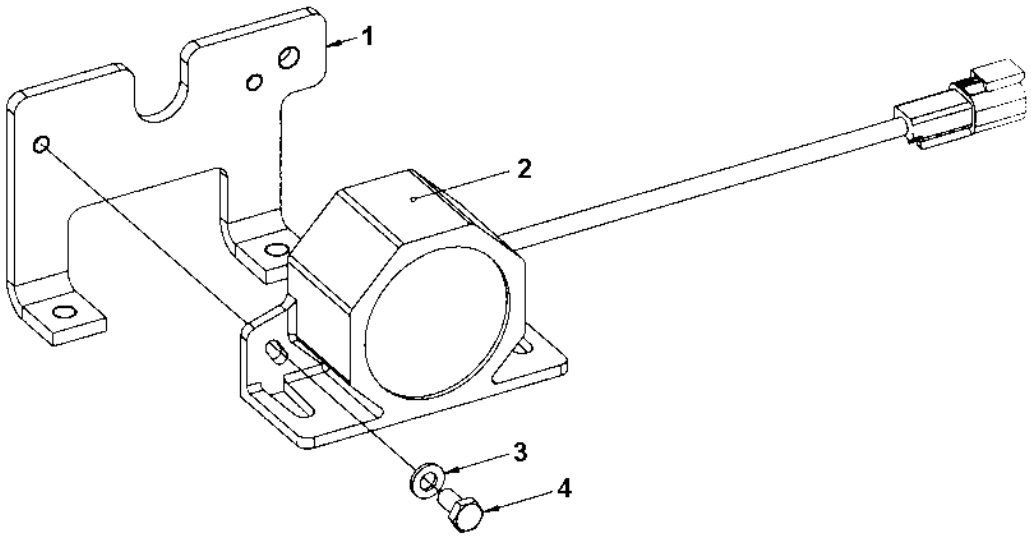
1
2
3
4

Back-up alarm

Item	Part No	Rem	Qty	Description	Code
1	4700396768		1	Bracket	
2	4700904911		1	Back-up alarm 97 dB	
3	4700904228		2	Washer 6,4x12x1,5	C
4	4700500012		2	Screw M6x12	C

Horn module

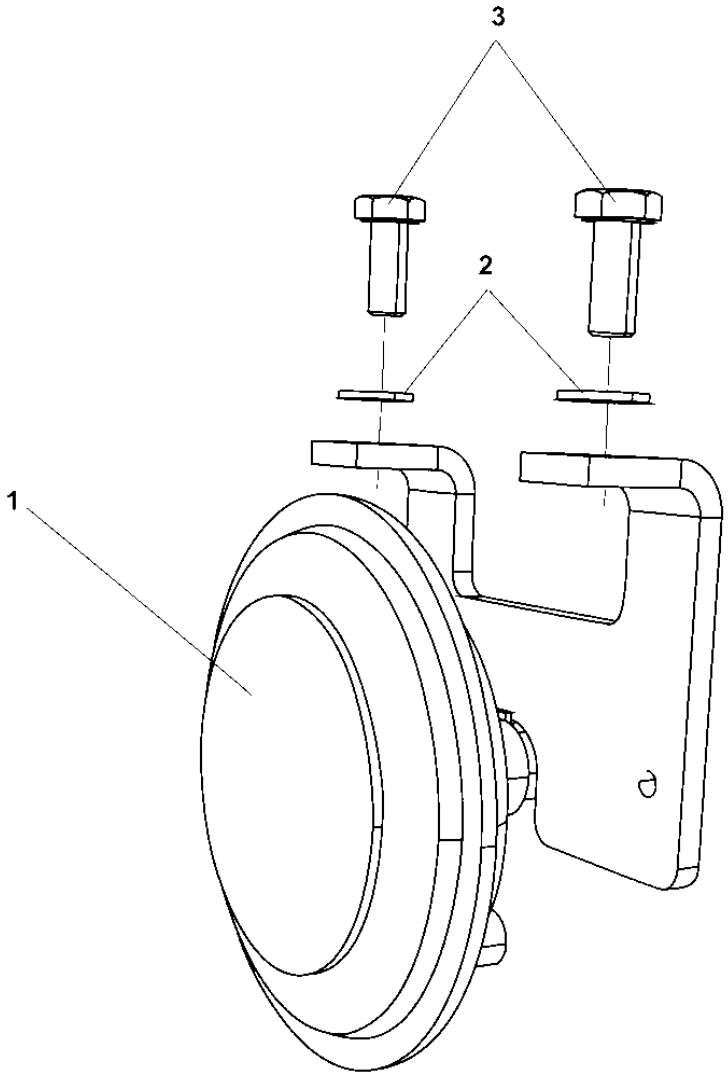

Horn module

Item	Part No	Rem	Qty	Description	Code
1			1	**Horn (Page 322)**	
2	4700904229		2	Steel plain washer 8,4x16x1,5	C
3	4700500053		2	Screw M8x20H 8.8	C

Horn

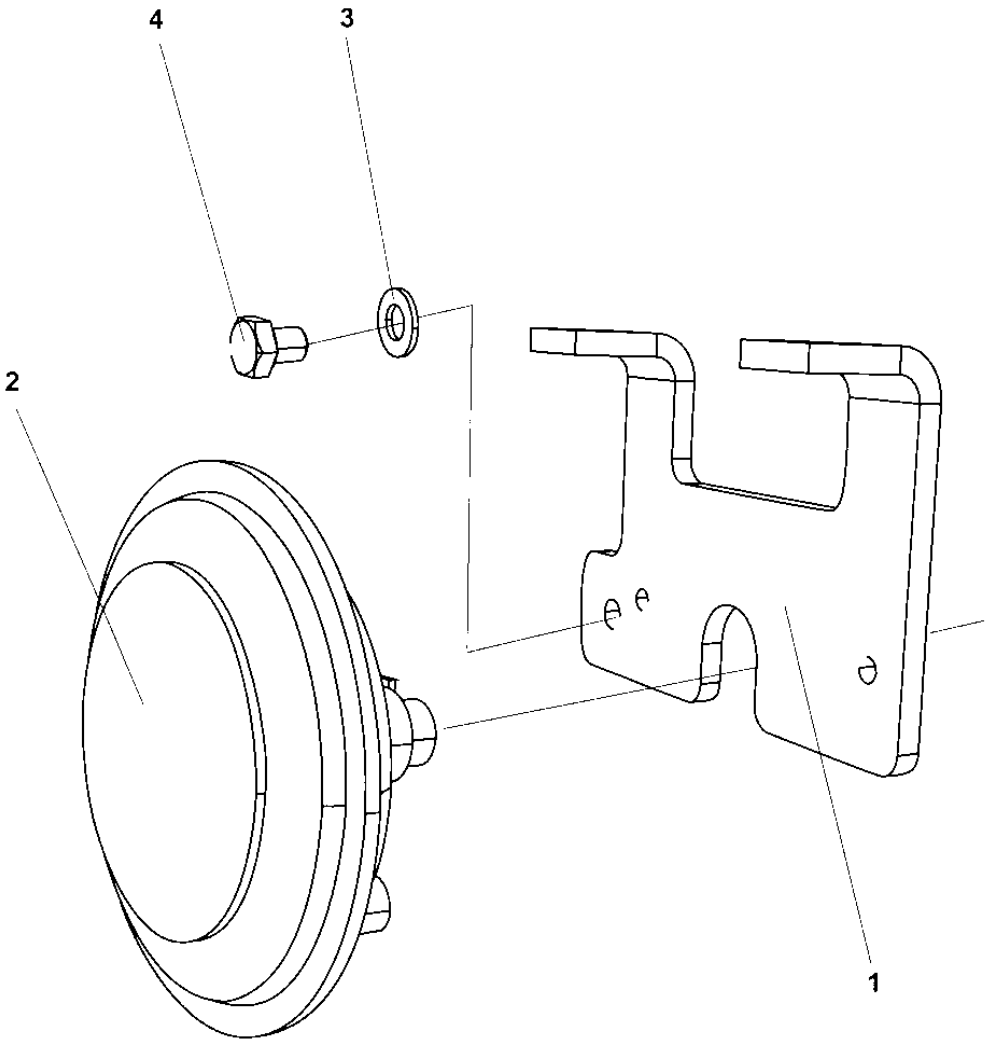

Horn

Item	Part No	Rem	Qty	Description	Code
1	4700396768		1	Bracket	
2	4700999014		1	Horn	
3	4700904229		1	Steel plain washer 8,4x16x1,5	C
4	4700500042		1	Screw	

Tachograph

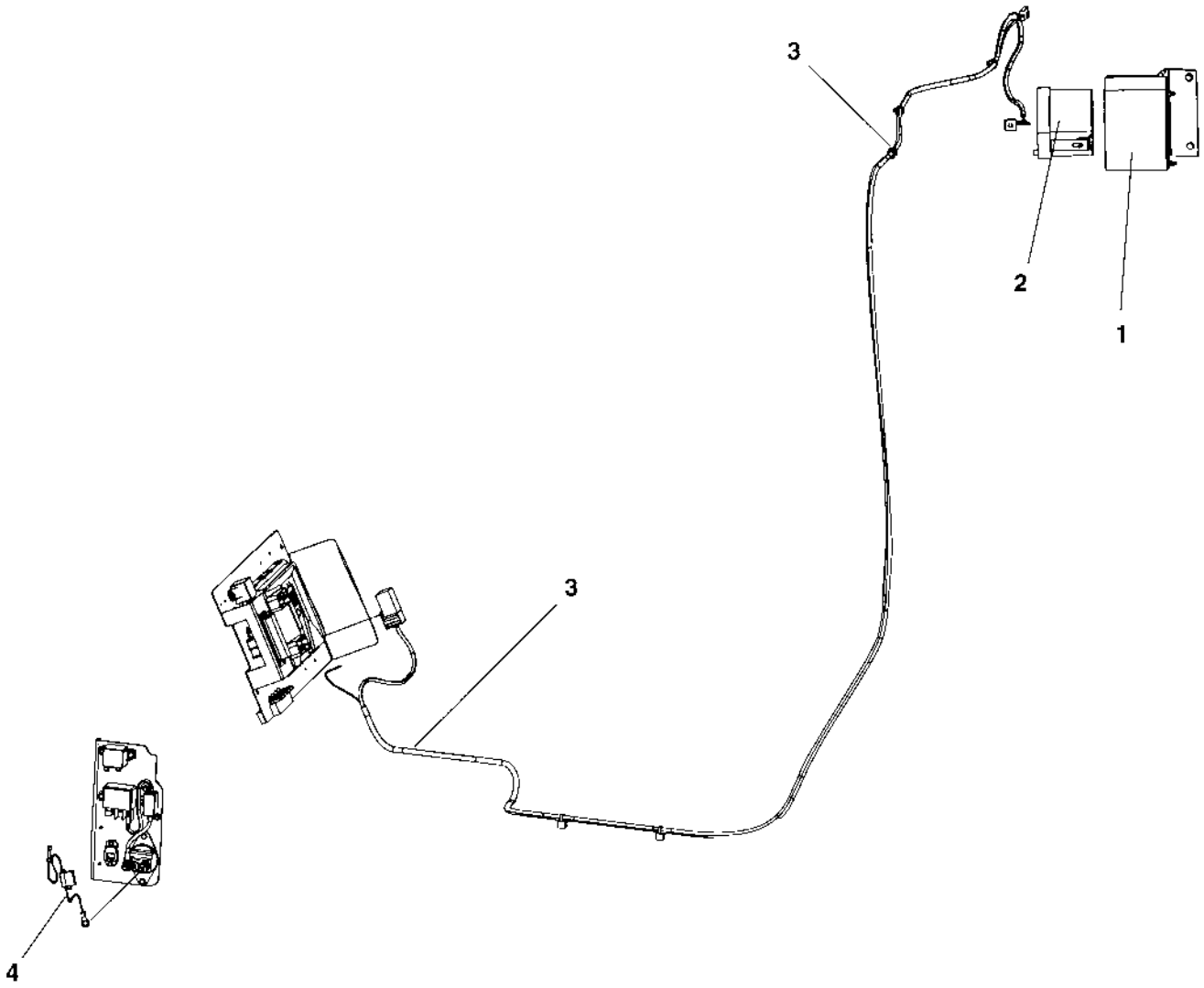

Tachograph

Item	Part No	Rem	Qty	Description	Code
1			1	**Tachograph holder module (Page 326)**	
2	4700395226		1	Tachograph	
3			1	**Cable harness kit (Page 330)**	
4			1	**Power supply module (Page 332)**	

Tachograph holder module

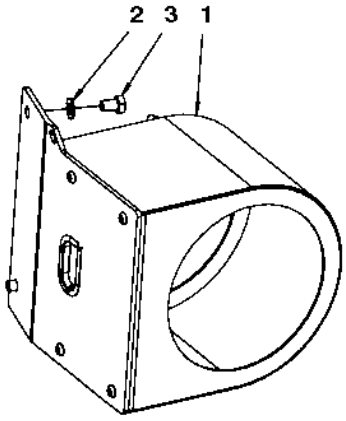

Tachograph holder module

Item	Part No	Rem	Qty	Description	Code
1			1	**Tachograph holder (Page 328)**	
2	4700904229		2	Steel plain washer 8,4x16x1,5	C
3	4700500018		2	Screw M8-1,25x12 8,8	C

Tachograph holder

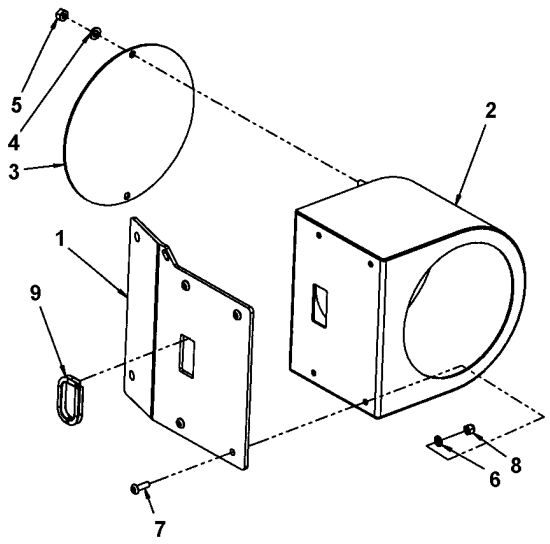

Tachograph holder

Item	Part No	Rem	Qty	Description	Code
1	4700393775		1	Bracket	
2	4700355132		1	Tachograph box	D
3	4700355135		1	Tachograph cover	D
4	4700904228		2	Washer 6,4x12x1,5	C
5	4700570004		2	Nut M6X1,00 -8 A2K	C
6	4700904281		4	Washer 5,3x10x1 300HV	C
7	4700904653		4	Screw M5x16 A2-70	C
8	4700586001		4	Lock nut	C
9	4700909085	A	1XL	Grommet	

A) L= 0.11 m

Cable harness kit

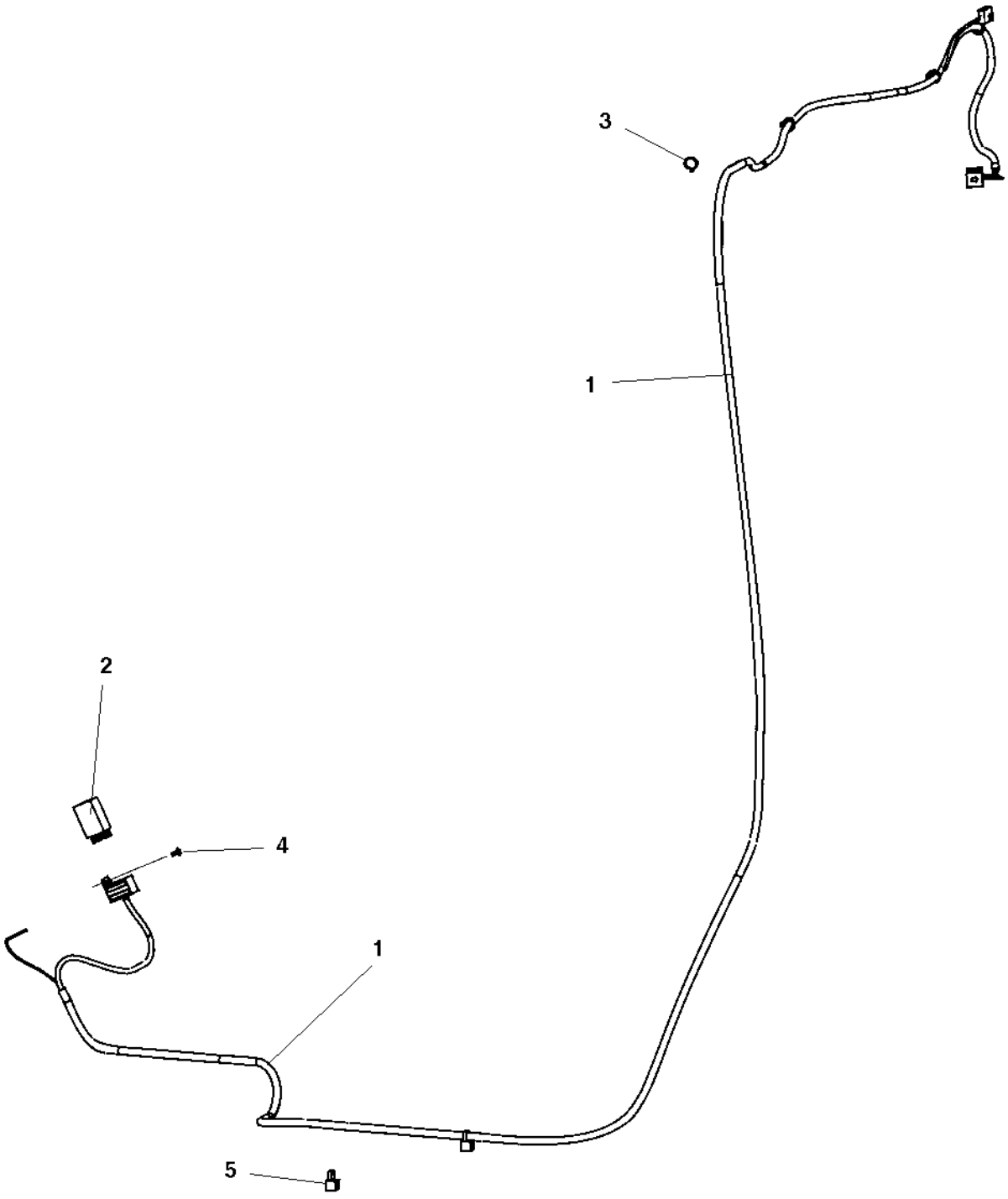

Cable harness kit

Item	Part No	Rem	Qty	Description	Code
1	4700394931		1	Cable harness	
2	4700395023		1	Frequency converter	
3	4700313041		8	Cable ties L=200 mm	B
4	4700792210		1	Screw torx	
5	4700792667		2	Cable tie with holder	

Power supply module

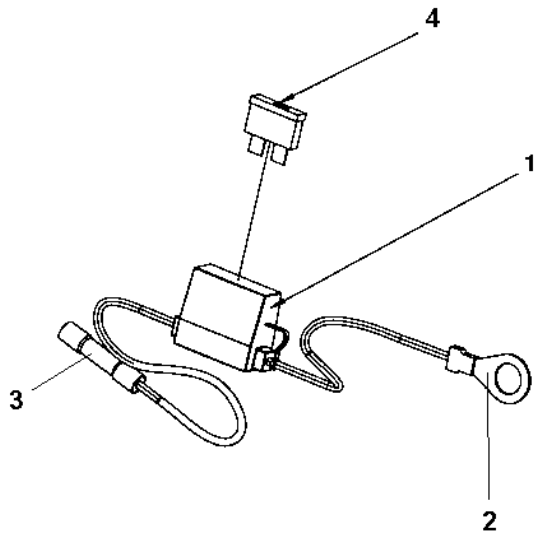

Power supply module

Item	Part No	Rem	Qty	Description	Code
1	4700904015		1	Fuse holder	D
2	4700960067		1	Cable clip	
3	4700904024		1	Splicing sleeve	
4	4700901227		1	Fuse 10A	A

Driving & side direction lights

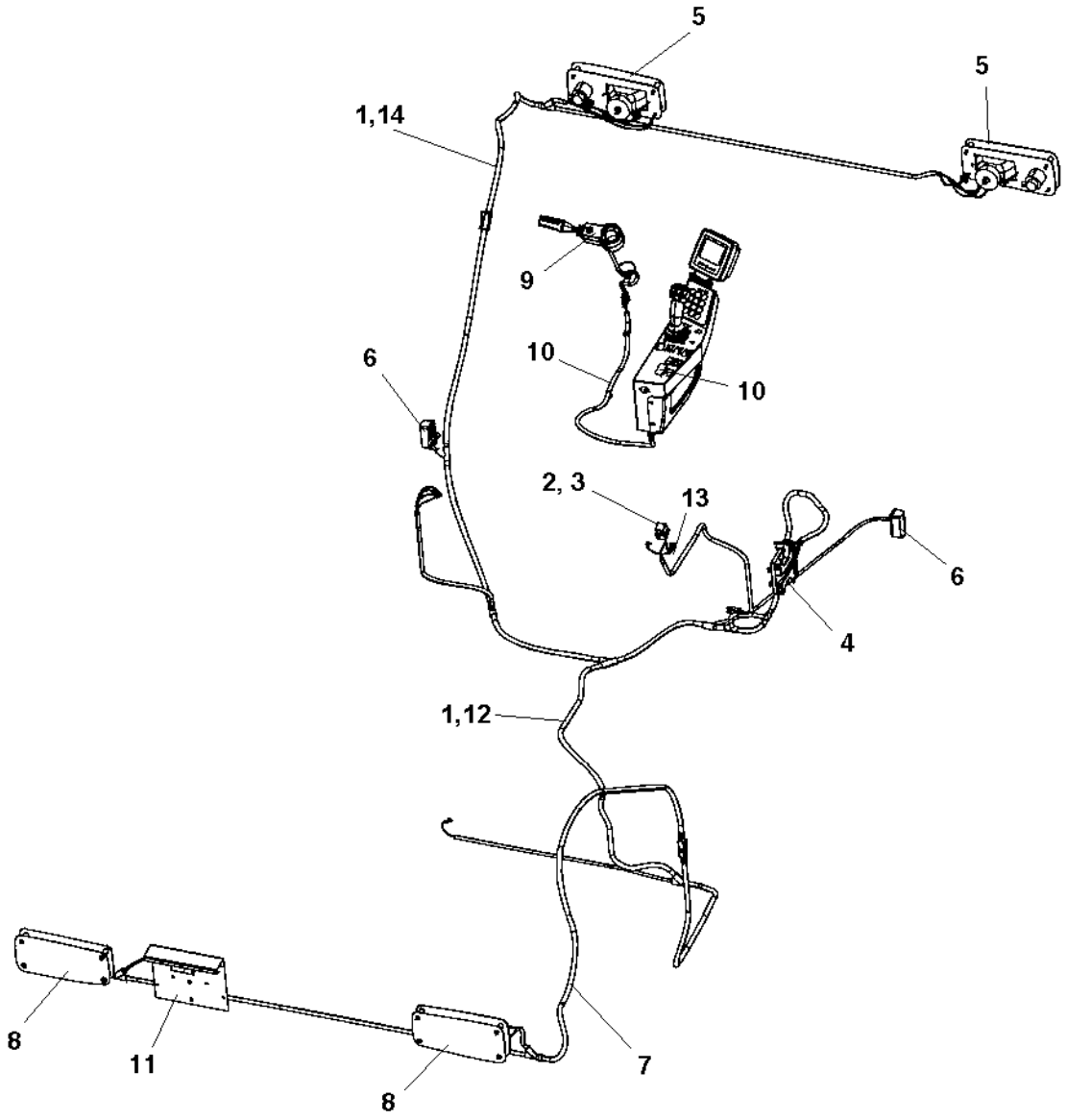

Driving & side direction lights

Item	Part No	Rem	Qty	Description	Code
1	4700392152	1	1	Cable harness Up to 284S00094	D
2	4700792422		1	Relay 20A	
3	4700792210		1	Screw torx	
4			1	**Accessories ECU module (Page 336)**	
5			2	**Driving lights, front RH (Page 338)**	
			2	**Driving lights, front LH (Page 340)**	
6			2	**Turn signals (Page 342)**	
7	4700396054		1	Cable harness	D
8			2	**Driving lights, rear (Page 344)**	
9			1	**Steering column switch module (Page 346)**	
10			1	**Cable harness and switch module (Page 348)**	
11			1	**Registration plate light module (Page 350)**	
12	4700396861		1	Cable harness From 284S00095	D
13	4700903741		1	Fuse 20A Yellow Medium	A
14	4700396862	A	1	Cable harness From 284S00095	D

1) Can be replaced by PN 4700396861 (item12) and PN 4700396862 (item14).
A) Front

Accessories ECU module

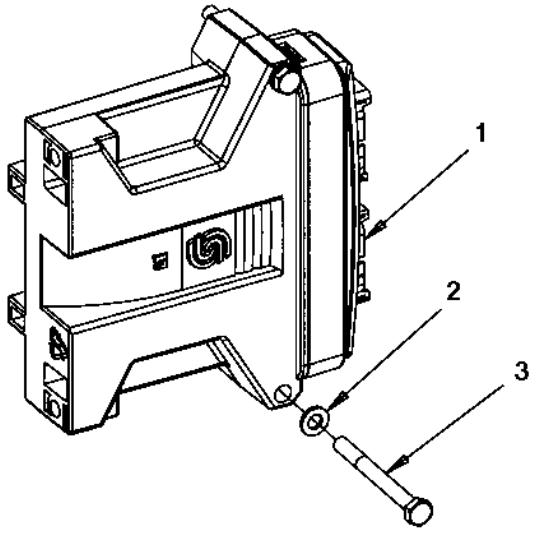

Accessories ECU module

Item	Part No	Rem	Qty	Description	Code
1	4700390862		1	Control unit without software	
2	4700904228		2	Washer 6,4x12x1,5	C
3	4700500187		2	Screw M6x60	C

Driving lights, front RH

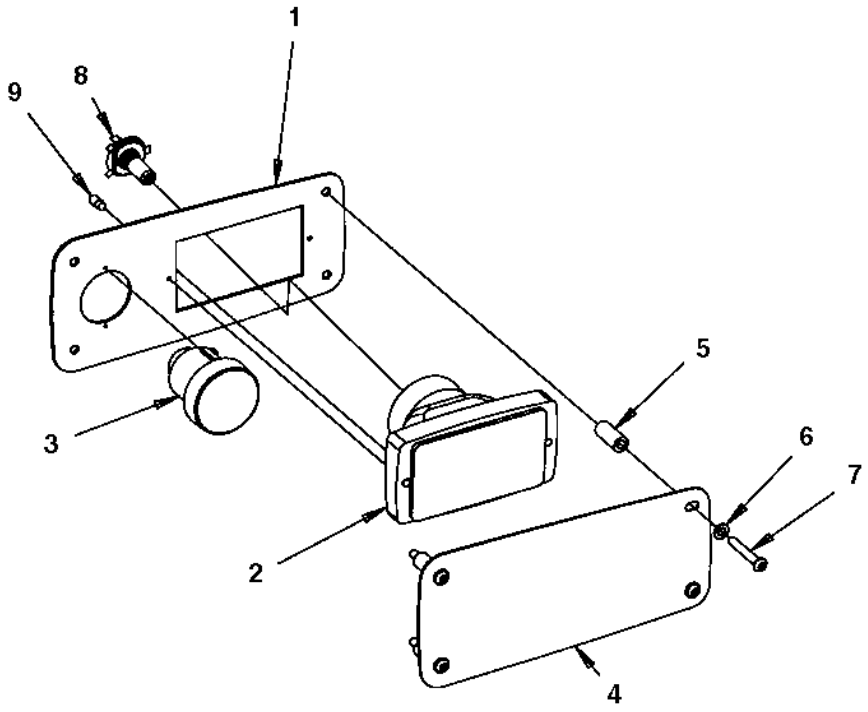

Driving lights, front RH

Item	Part No	Rem	Qty	Description	Code
1	4700390434		1	Lights bracket	
2	4700791951		1	Headlight	
3	4700792521		1	Direction indicator	
4	4700390436		1	Protecting cover	
5	4700391115		4	Spacer sleeve	
6	4700904229		4	Steel plain washer 8,4x16x1,5	C
7	4700792361		4	Hexagon socket head cap screw	
8	4700792353		1	Bulb 24V 75/70W H4	
9	4700792350		1	Bulb 24V 2W	

Driving lights, front LH

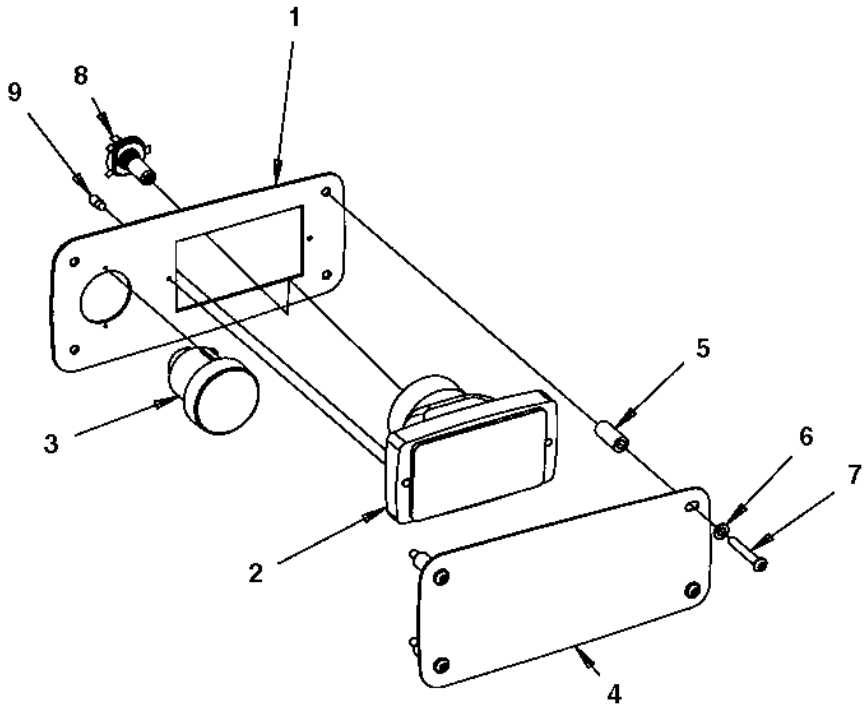

Driving lights, front LH

Item	Part No	Rem	Qty	Description	Code
1	4700390434		1	Lights bracket	
2	4700792059		1	Headlight	
3	4700792521		1	Direction indicator	
4	4700390436		1	Protecting cover	
5	4700391115		4	Spacer sleeve	
6	4700904229		4	Steel plain washer 8,4x16x1,5	C
7	4700792361		4	Hexagon socket head cap screw	
8	4700792353		1	Bulb 24V 75/70W H4	
9	4700792350		1	Bulb 24V 2W	

Turn signals

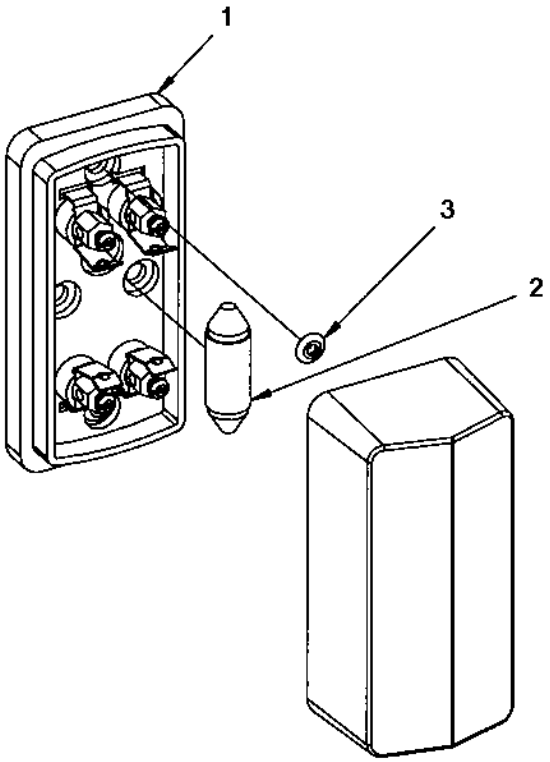

Turn signals

Item	Part No	Rem	Qty	Description	Code
1	4700902064		1	Direction lights	B
2	4700792354		1	Bulb 24V 5W	
3	4700923253		2	Rivet	C

Driving lights, rear

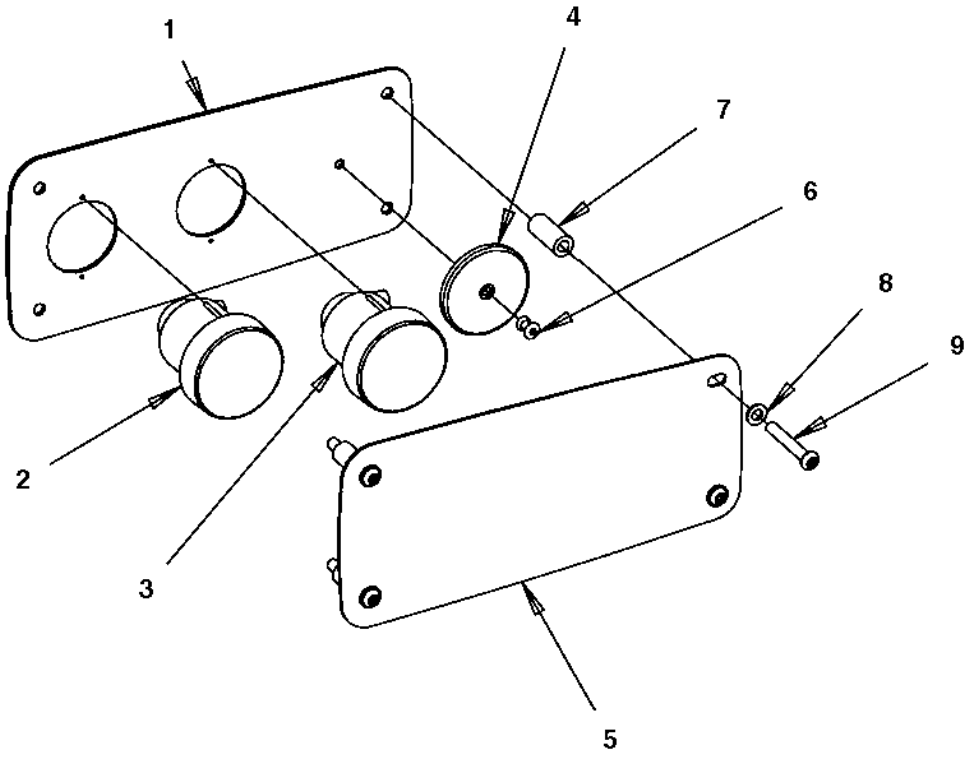

Driving lights, rear

Item	Part No	Rem	Qty	Description	Code
1	4700390435		1	Lights bracket	
2	4700792520		1	Direction indicator	
	4700792349		1	. Bulb 24V 21W	
3	4700792519		1	Brake/position light	
	4700792351		1	. Bulb 24V 21/5W	
4	4700791956		1	Reflector, red	
5	4700390436		1	Protecting cover	
6	4700791754		1	Blind rivet	
7	4700391115		4	Spacer sleeve	
8	4700904229		4	Steel plain washer 8,4x16x1,5	C
9	4700792361		4	Hexagon socket head cap screw	

Steering column switch module

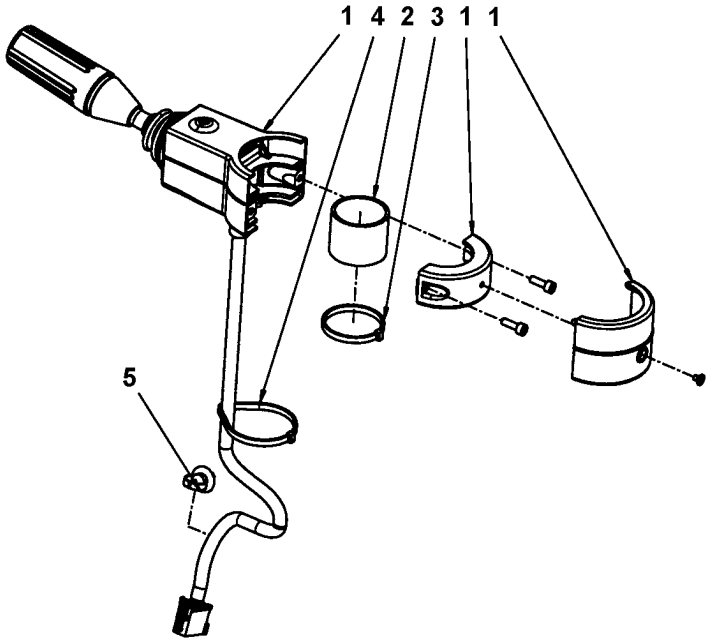

Steering column switch module

Item	Part No	Rem	Qty	Description	Code
1	4700392450		1	Steering column switch	
2	4700392451		1	Rubber cloth	
3	4700313041		1	Cable ties L=200 mm	B
4	4700792609		1	Cable ties	
5	4700921080		1	Clamp	C

Cable harness and switch module

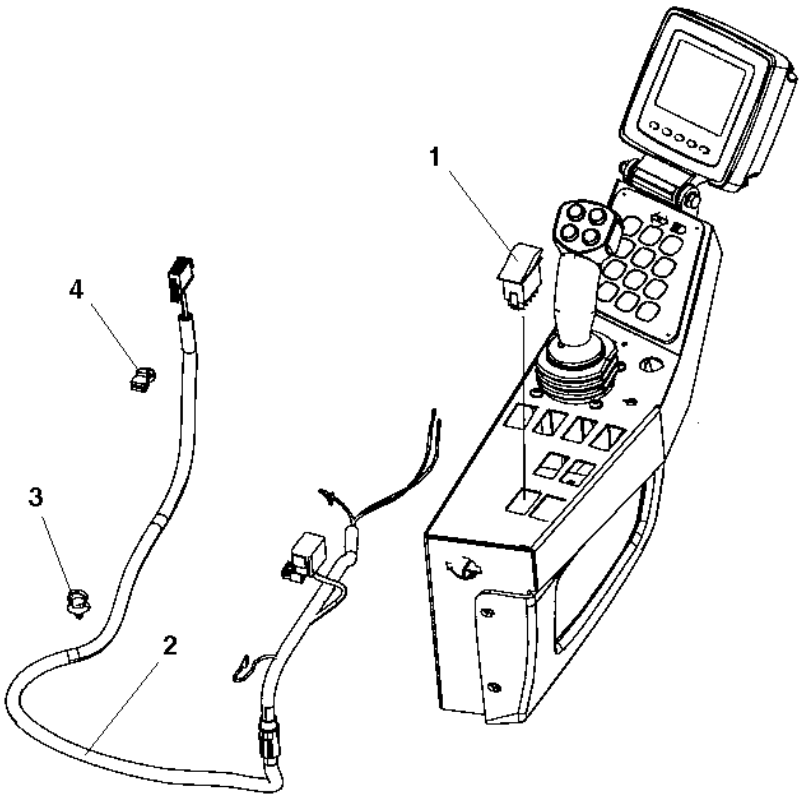

Cable harness and switch module

Item	Part No	Rem	Qty	Description	Code
1	4700792398		1	Switch	
2	4700392153		1	Cable harness	D
3	4700792441		1	Cable tie with holder	C
4	4700792537		1	Cable tie with holder	

Registration plate light module

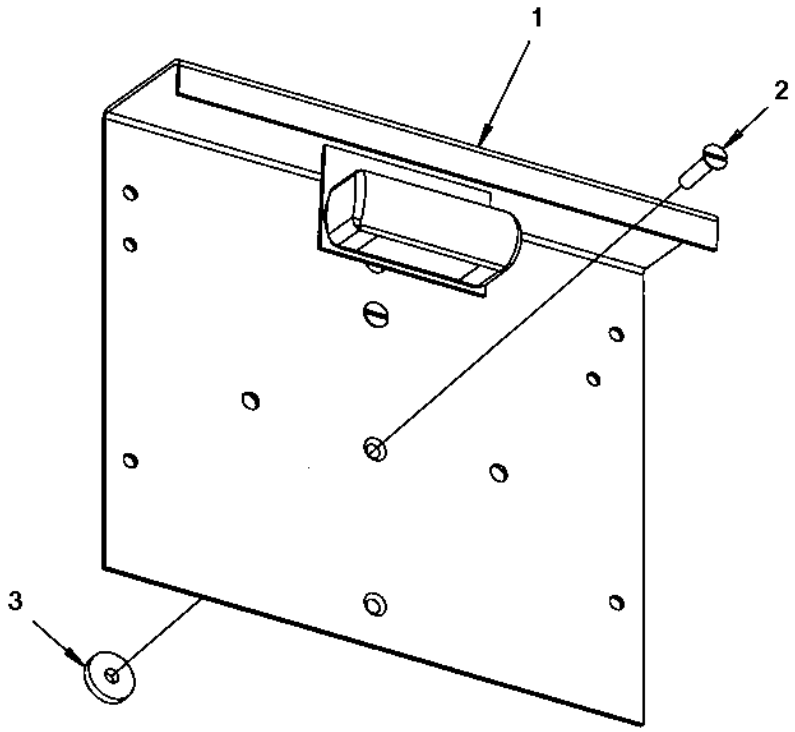

Registration plate light module

Item	Part No	Rem	Qty	Description	Code
1			1	**Registration plate light (Page 352)**	
2	4700928784		2	Screw	
3	4700904735		2	Washer	C

Registration plate light

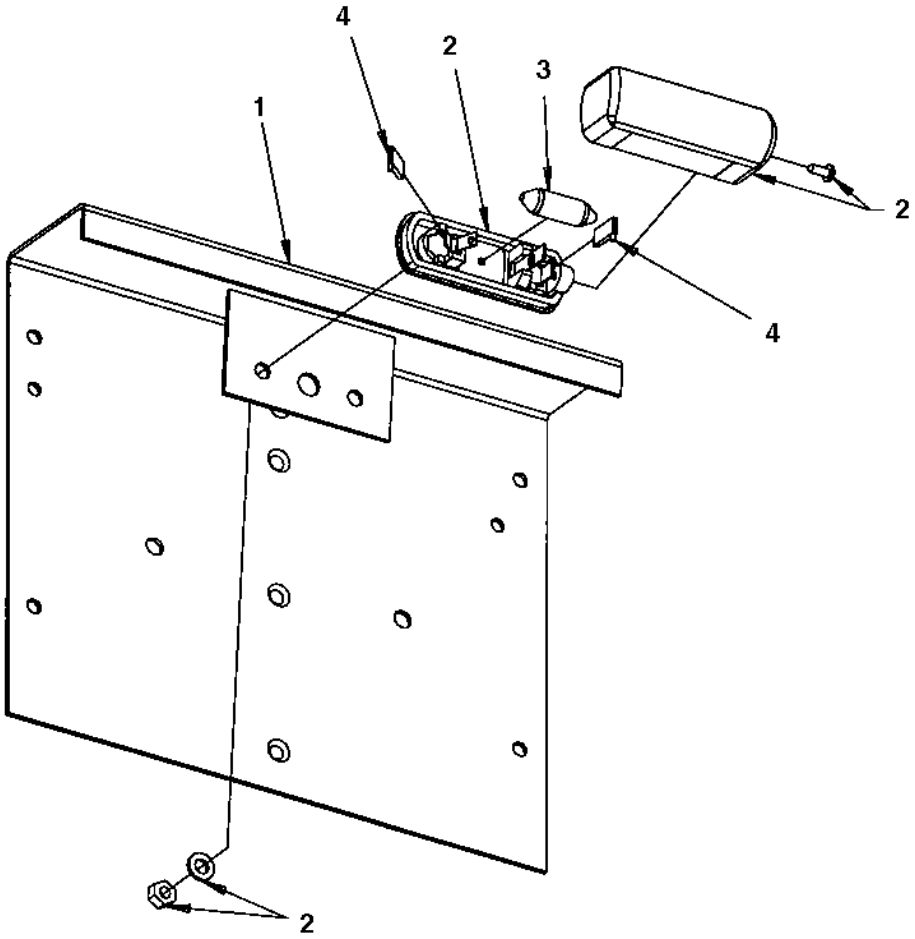

Registration plate light

Item	Part No	Rem	Qty	Description	Code
1	4700355797		1	Licence plate holder	
2	4700929455		1	Licence plate light	D
3	4700792354		1	Bulb 24V 5W	
4	4700792035		2	Push-on terminal	

Driving & side direction lights

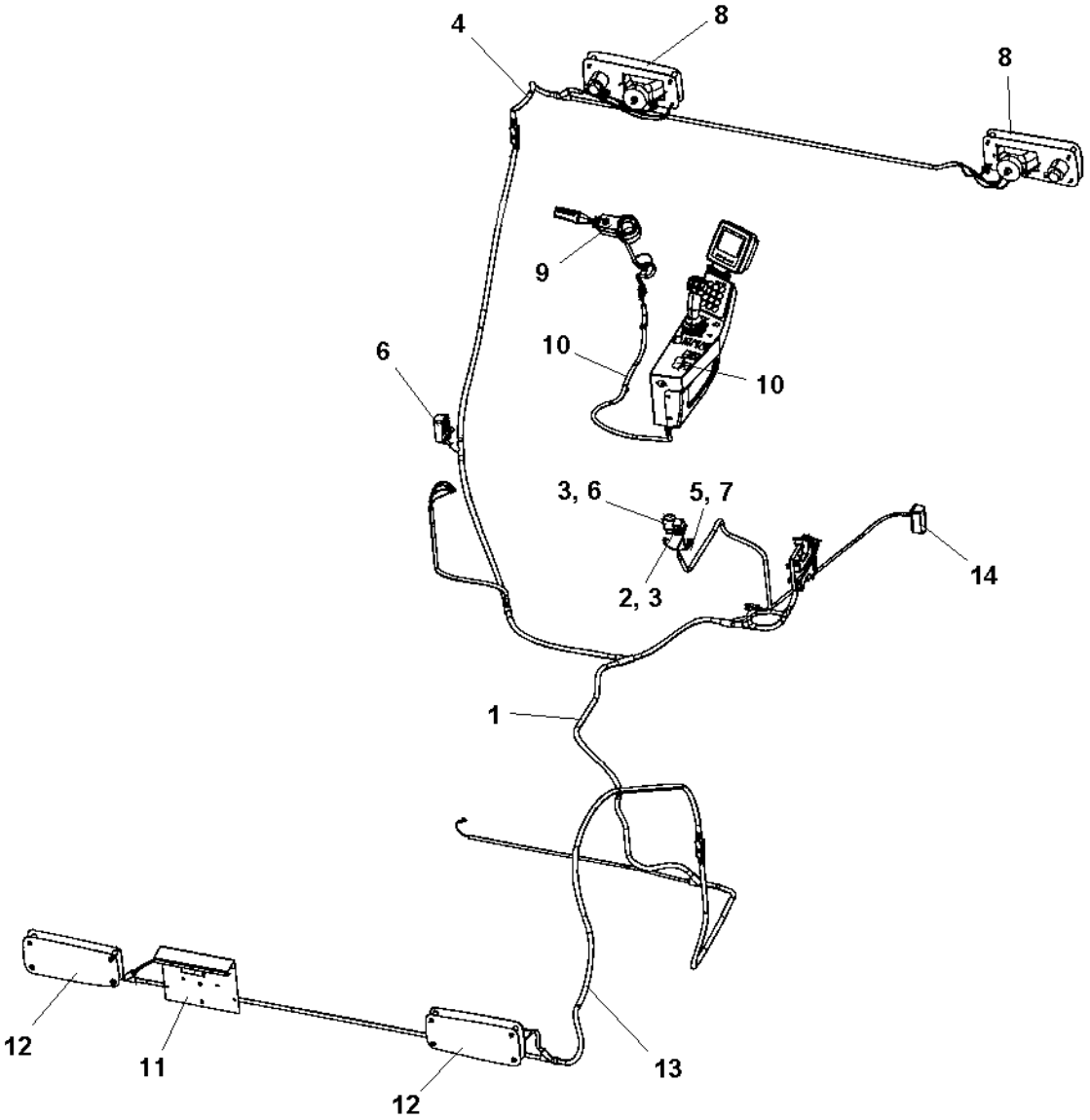

Driving & side direction lights

Item	Part No	Rem	Qty	Description	Code
1	4812110899		1	Cable harness	
2	4700792422		1	Relay 20A	
3	4700792210		2	Screw torx	
4	4812110902	A	1	Cable harness	
5	4700901227		1	Fuse 10A	A
6	4811000163		1	Flash relay	
7	4700901226		1	Fuse 7.5A	
8			2	**Driving lights, front RH (Page 338)**	
			2	**Driving lights, front LH (Page 340)**	
9			1	**Steering column switch module (Page 346)**	
10			1	**Cable harness and switch module (Page 356)**	
11			1	**Registration plate light module (Page 350)**	
12			2	**Driving lights, rear (Page 344)**	
13	4812110943		1	Cable harness	
14			2	**Turn signals (Page 342)**	

A) Front

Cable harness and switch module

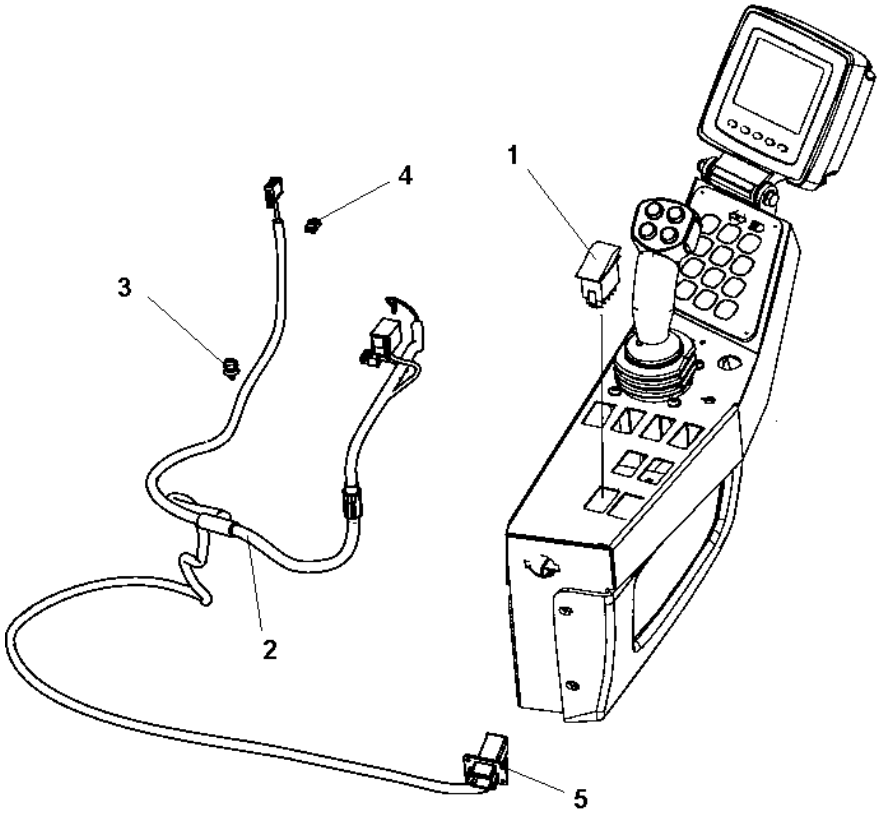

Cable harness and switch module

Item	Part No	Rem	Qty	Description	Code
1	4700792398		1	Switch	
2	4812110898		1	Cable harness	
3	4700792441		1	Cable tie with holder	C
4	4700792537		1	Cable tie with holder	
5	4700791709		4	Pop rivet	C

Rotating beacon, working light

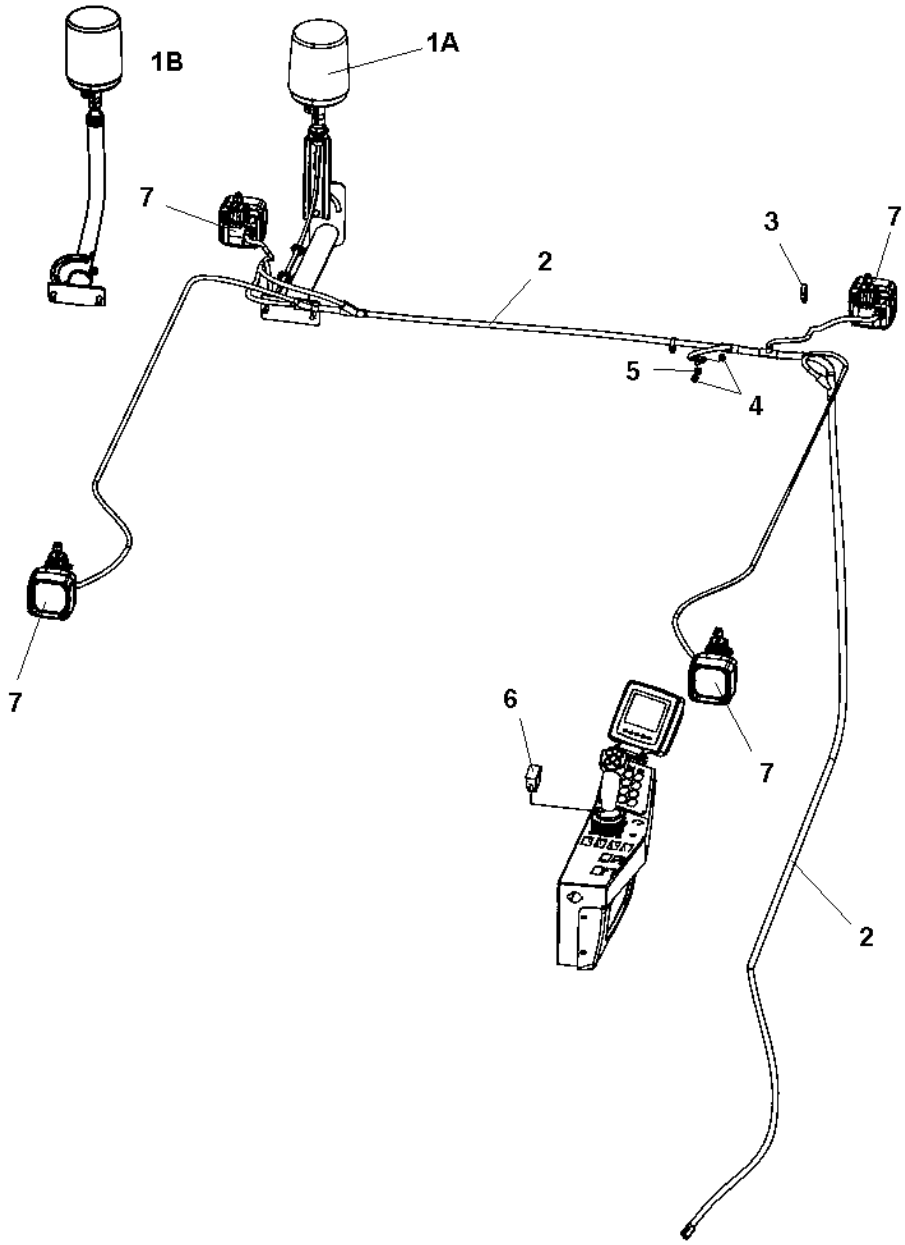

Rotating beacon, working light

Item	Part No	Rem	Qty	Description	Code
1-A			1	**Rotating beacon module (Page 360)**	
1-B			1	**Rotating beacon module (Page 362)**	
2	4700391957		1	Cable harness	D
3	4700313102		N	Cable ties L=380 mm	
4	4700570005		2	Nut M8	C
5	4700904229		1	Steel plain washer 8,4x16x1,5	C
6	4700792397		1	Switch	
7			4	**Working light module H3 (Page 366)**	
			4	**Working light module Xenon (Page 368)**	

Rotating beacon module

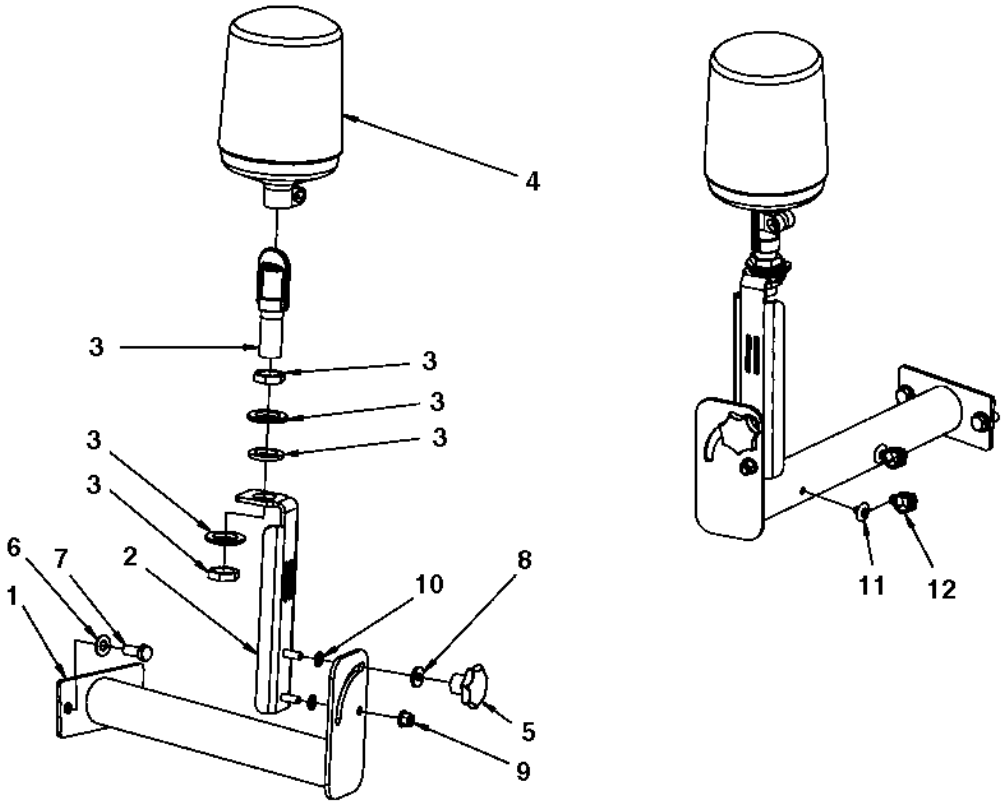

Rotating beacon module

Item	Part No	Rem	Qty	Description	Code
1	4700393590		1	Bracket	
2	4700392158		1	Bracket	
3	4700392321		1	Bracket	
4	4700393681		1	Rotating beacon	
5	4700792410		1	Star knob M8-50	
6	4700904230		2	Steel plain washer	C
7	4700500028		2	Screw	C
8	4700904640		1	Washer 8,4x22x3	C
9	4700902286		1	Hexagon lock nut with flange	C
10	4700904229		2	Steel plain washer 8,4x16x1,5	C
11	4700792419		2	T-stud	
12	4700792417		2	Wiring clip	

Rotating beacon module

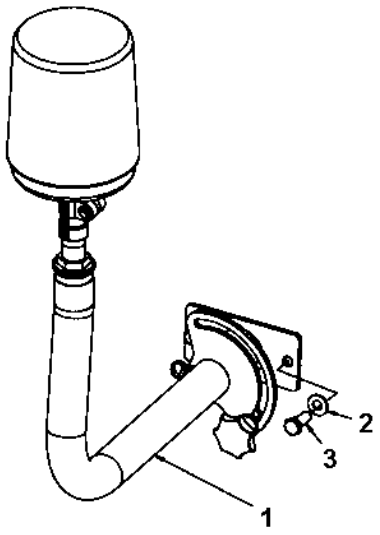

Rotating beacon module

Item	Part No	Rem	Qty	Description	Code
1			1	**Rotating beacon module (Page 364)**	
2	4700904230		2	Steel plain washer	C
3	4700500028		2	Screw	C

Rotating beacon module

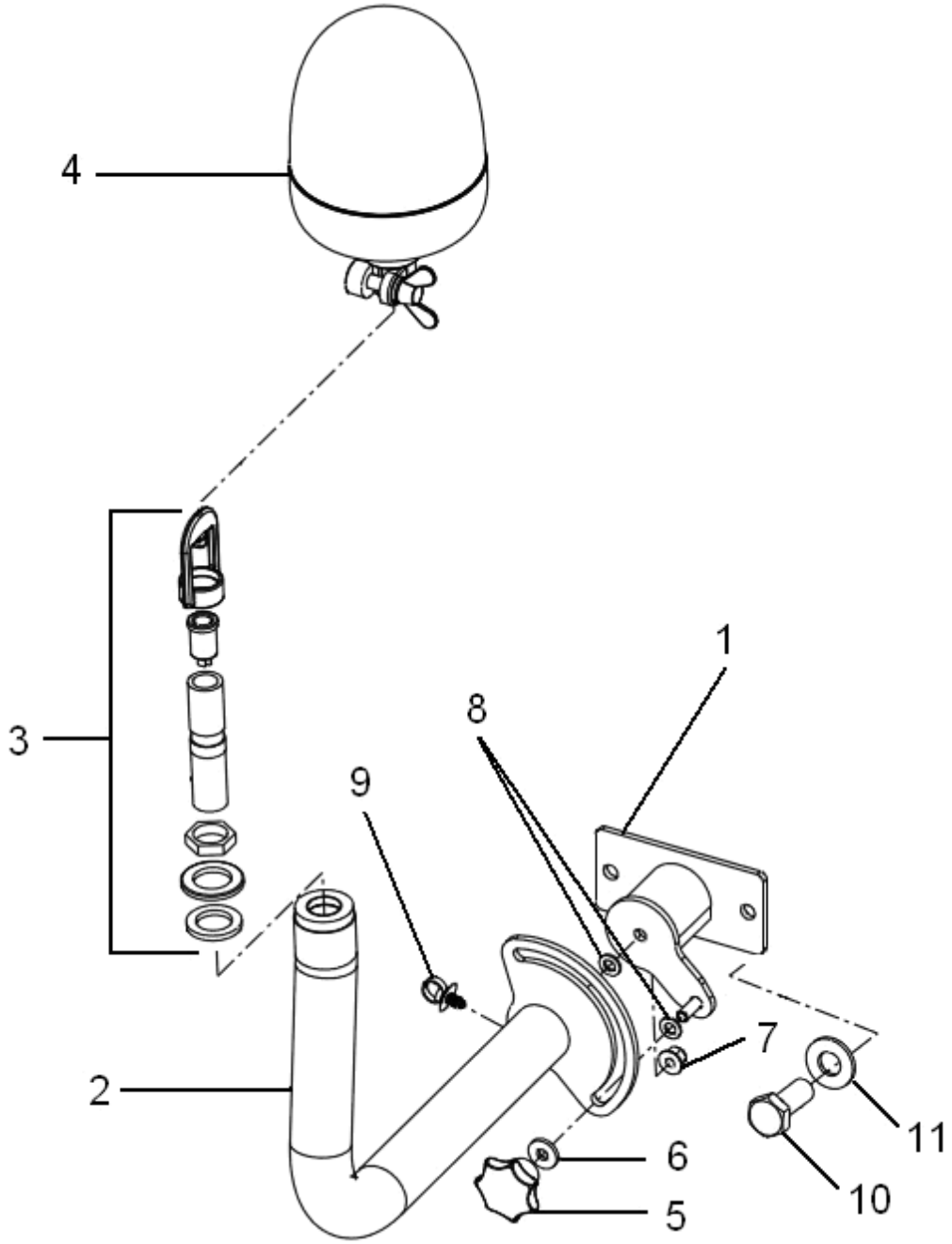

Rotating beacon module

Item	Part No	Rem	Qty	Description	Code
1	4700397516		1	Bracket	
2	4700397517		1	Lever	
3	4700392321		1	Bracket	
4	4812111326		1	Rotating beacon	
	4812156777		1	. Bulb H1 24V	
5	4700792410		1	Star knob M8-50	
6	4700904640		1	Washer 8,4x22x3	C
7	4700902286		1	Hexagon lock nut with flange	C
8	4700904229		2	Steel plain washer 8,4x16x1,5	C
9	4700792441		1	Cable tie with holder	C
10	4700500028		2	Screw	C
11	4700904230		2	Steel plain washer	C

Working light module H3

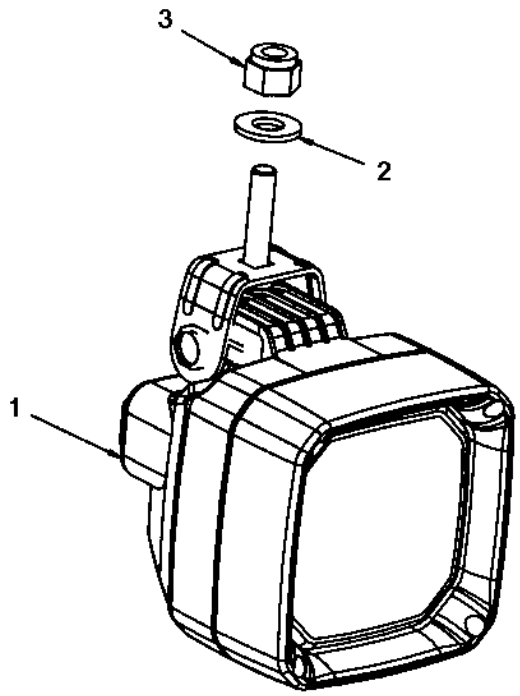

Working light module H3

Item	Part No	Rem	Qty	Description	Code
1	4700392033		1	Working light	
	4700792352		1	. Bulb	
2	4700904230		1	Steel plain washer	C
3	4700586018		1	Hexagon lock nut M10	C

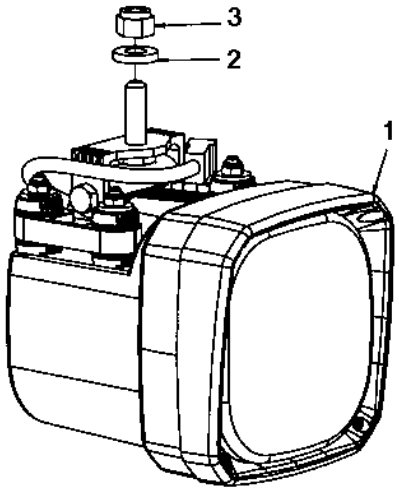
3
2
1

Working light module Xenon

Item	Part No	Rem	Qty	Description	Code
1	4700393538		1	Xenon lamp	
2	4700904557		1	Steel plain washer	C
3	4700586018		1	Hexagon lock nut M10	C

Drum edge lights

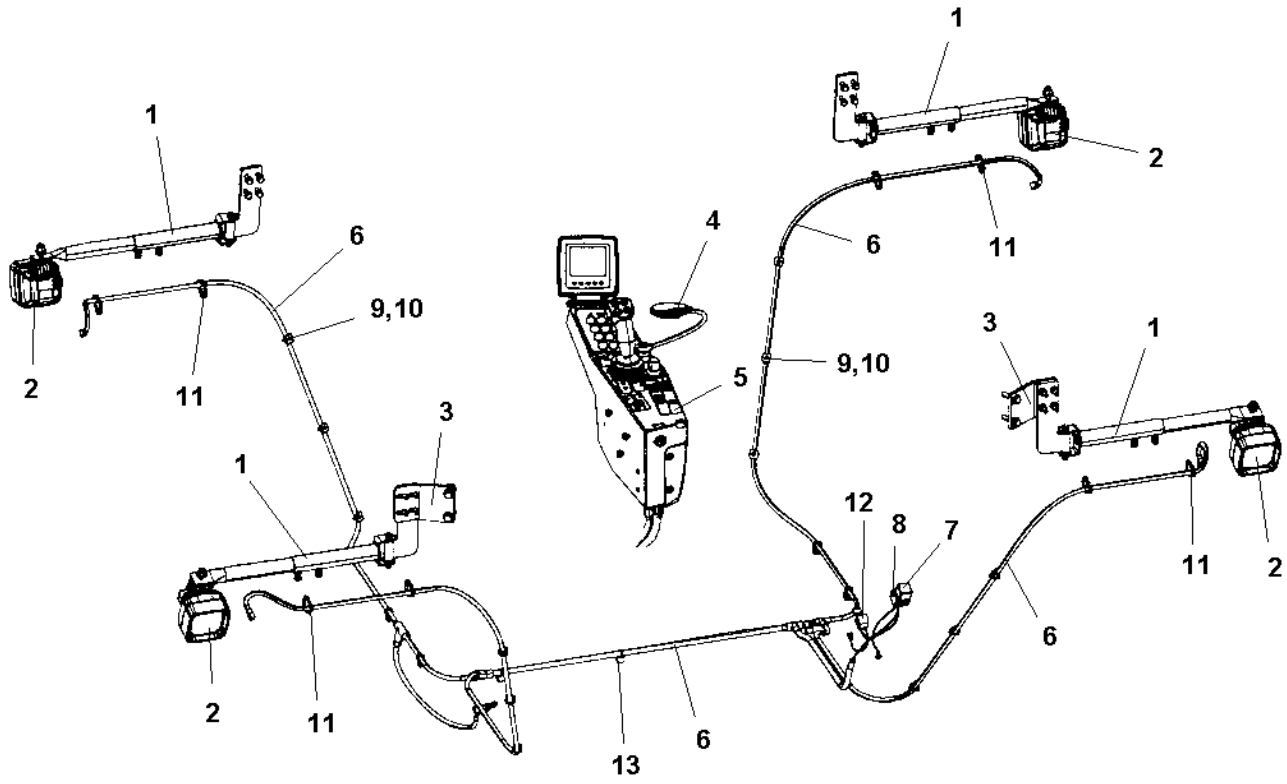

Drum edge lights

Item	Part No	Rem	Qty	Description	Code
1			4	**Bracket (Page 372)**	
2			4	**Working light module H3 (Page 366)**	
3			2	**Bracket (Page 374)**	
4			1	**Reading light (Page 376)**	
5	4700792794		1	Switch	
6	4700397564		1	Cable harness	
7	4700792422		1	Relay 20A	
8	4700792210		1	Screw torx	
9	4700395352		12	Cable tie holder	
10	4700313068		12	Cable ties L=100 mm	
11	4700313041		8	Cable ties L=200 mm	B
12	4700901228		1	Fuse 15A	A
13	4700792667		7	Cable tie with holder	

Bracket

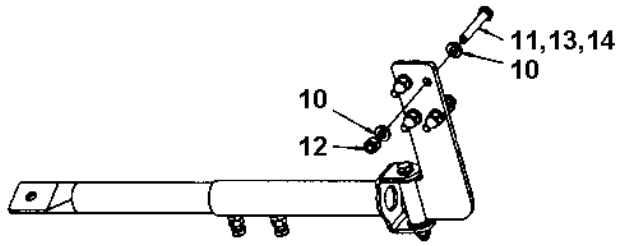

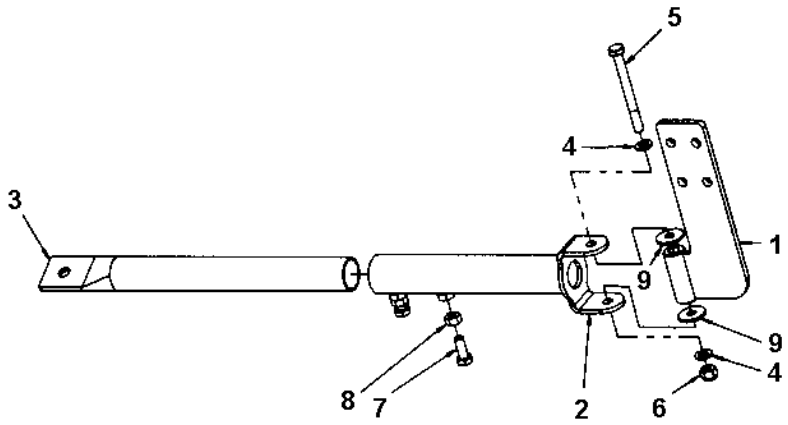

Bracket

Item	Part No	Rem	Qty	Description	Code
1	4700397028		1	Bracket	
2	4700397029		1	Bracket	
3	4700397045		1	Bracket	
4	4700904229		2	Steel plain washer 8,4x16x1,5	C
5	4700500190		1	Screw	
6	4700586003		1	Lock nut M8	C
7	4700500053		2	Screw M8x20H 8.8	C
8	4700570005		2	Nut M8	C
9	4700903662		2	Washer	C
10	4700904556		8	Washer 8,4x16x3,0	C
11	4700500047	A	4	Hexagon head screw	C
12	4700586003		4	Lock nut M8	C
13	4700500024	B	4	Screw M8x45	D
14	4700500025	C	4	Screw M8-1,25x50 8.8	

A) Used on machines with Cab.
B) Used on machines with Handrails.
C) Used on machines with Handrails and Canopy.

Bracket

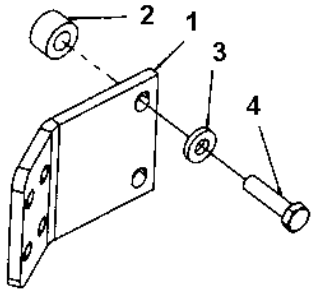

Bracket

Item	Part No	Rem	Qty	Description	Code
1	4700395787		1	Holder plate	D
2	4700397500	1	2	Spacer sleeve	D
3	4700904557		2	Steel plain washer	C
4	4700500091		2	Screw	C

1) Used on machines with Air condition

Reading light

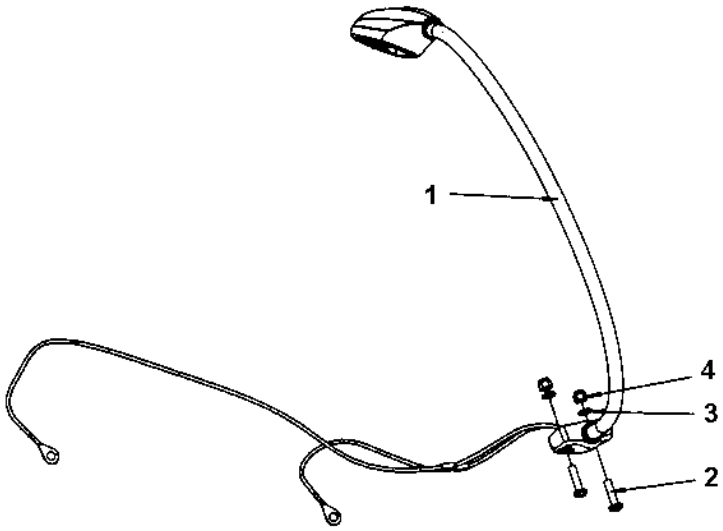

Reading light

Item	Part No	Rem	Qty	Description	Code
1	4700397604		1	Reading lamp	
2	4700791421		2	Machine screw	
3	4700904281		2	Washer 5,3x10x1 300HV	C
4	4700586001		2	Lock nut	C

Drivers platform

Item	Part No	Rem	Qty	Description	Code
1				Platform, no cab (Page 380)	
2				Canopy option (Page 404)	
3				Cab, asymmetric (Page 410)	
				Cab, symmetric (Page 444)	
4				Cab heater system (Page 454)	
5			1	Cab noise cover (Page 458)	
6				Radio and cd player (Page 460)	
7			2	Rear view mirror module (Page 464)	
8				Drivers seat (Page 466)	

Platform, no cab

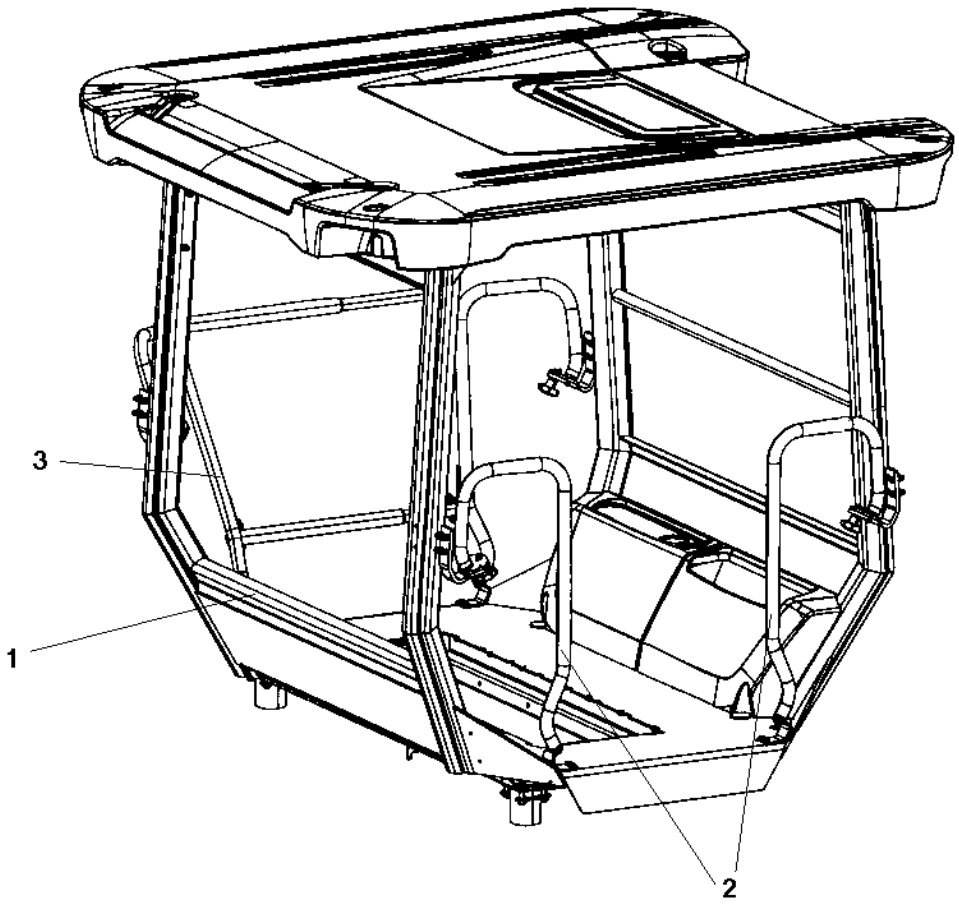

Platform, no cab

Item	Part No	Rem	Qty	Description	Code
1			1	**Platform with 4-post ROPS (Page 382)**	
			1	**Platform no ROPS (Page 386)**	
2			1	**Hand rail, left (Page 392)**	
3			1	**Hand rail, right (Page 396)**	
8			1	**Lunch box module (Page 402)**	

Platform with 4-post ROPS

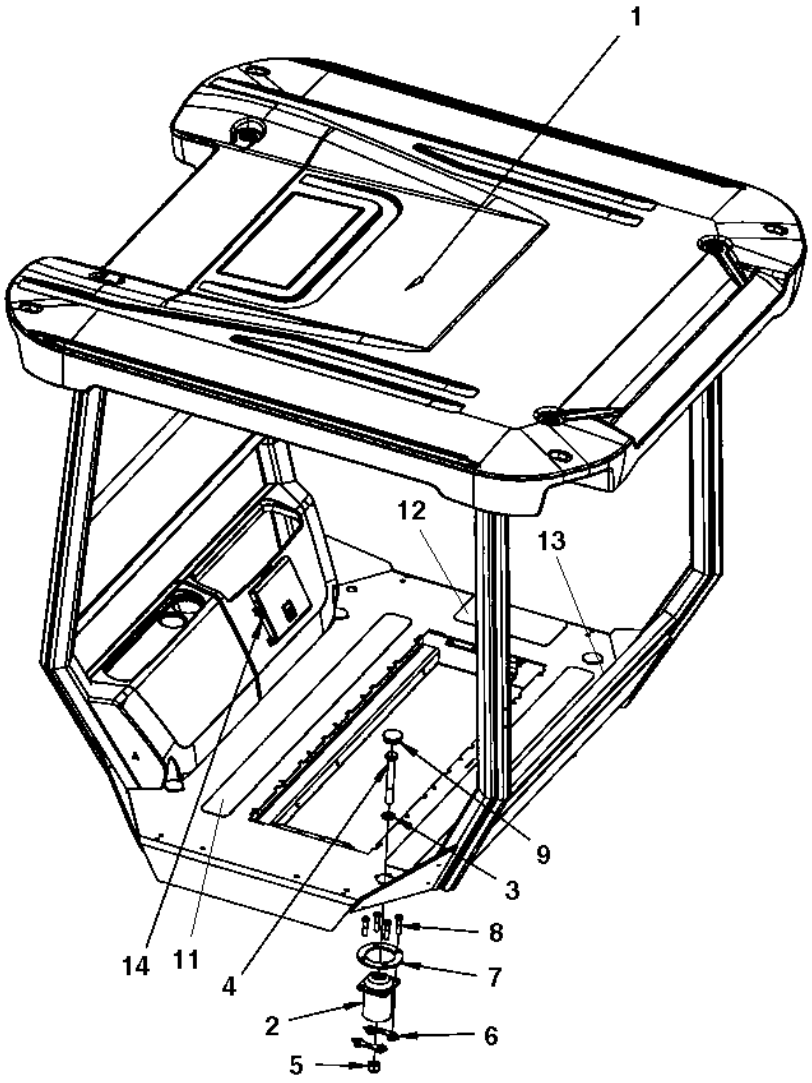

Platform with 4-post ROPS

Item	Part No	Rem	Qty	Description	Code
1	4700395750		1	Platform with 4-post ROPS	
	4812113426		1	Platform with 4-post ROPS	
	4812115760		1	Platform with 4-post ROPS	
	4700395860		1	. Roof	D
			1	**. Rear covers (Page 384)**	
2	4700384855		4	Shock absorber	D
3	4700904233		4	Washer 21x36x3	C
4	4700903633		4	Screw M20x150 10,9	
5	4700901145		4	Lock nut M20-10	
6	4700393525		8	Holder	
7	4700359998		4	Back-up ring	C
8	4700500195		16	Screw	C
9	4700904131		4	Plug	
11	4700372121		2	Protection	
12	4700373363		1	Slip protection	
13	4700393978		1	Slip protection	
14			1	**Manual box (Page 390)**	

Rear covers

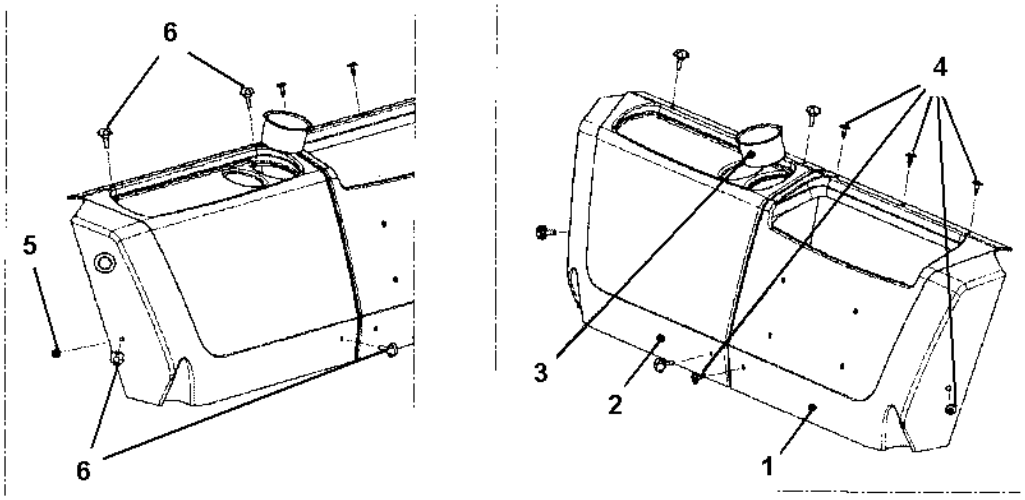

Rear covers

Item	Part No	Rem	Qty	Description	Code
1	4700395857		1	Rear cover, left	D
2	4700395783		1	Rear cover, right	D
3	4700395784		1	Mug holder	D
4	4700395785		5	Expansion rivet	D
5			1	Nut	
6	4700395786		4	Knob	

Platform no ROPS

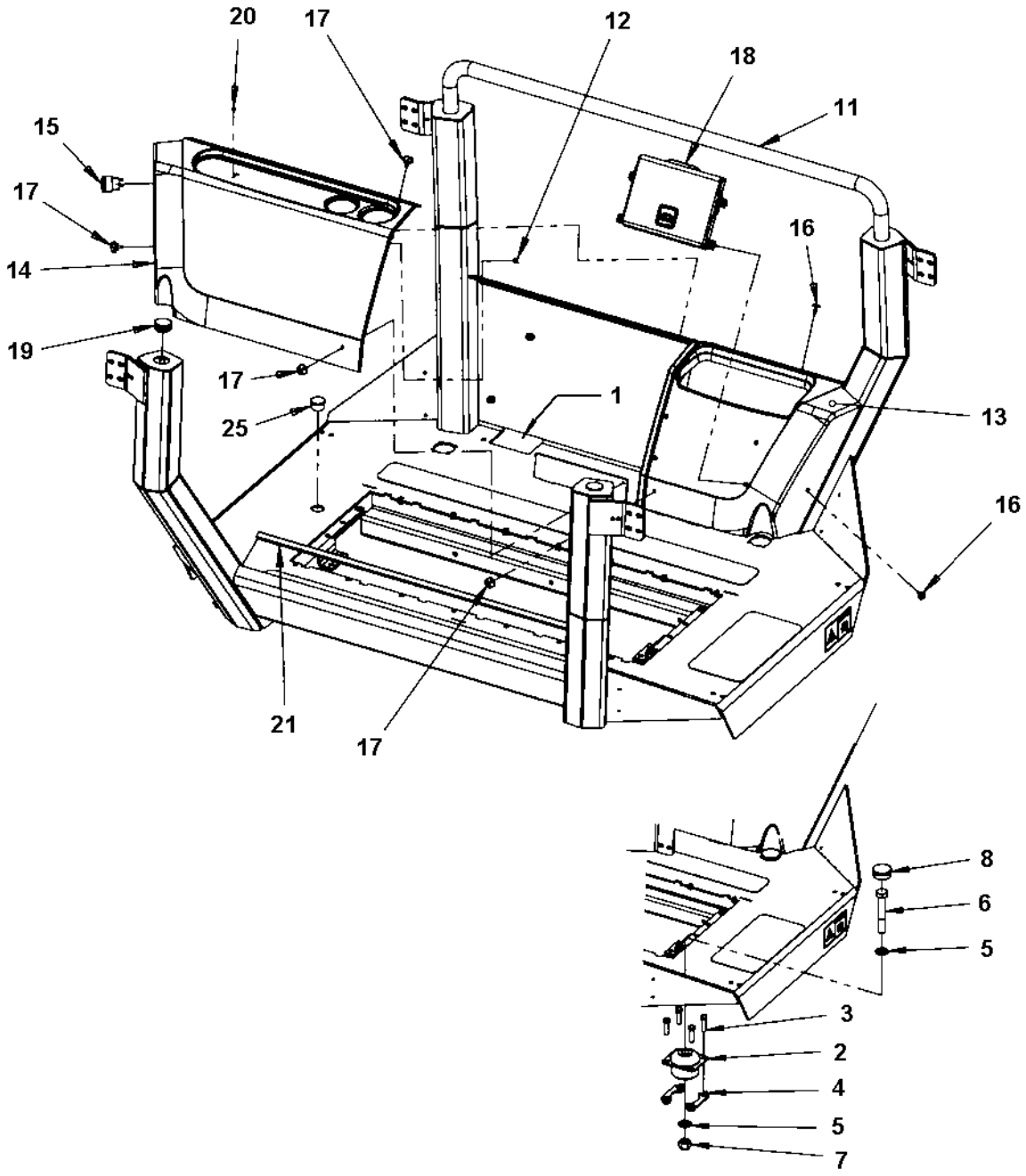

Platform no ROPS

Item	Part No	Rem	Qty	Description	Code
1			1	**Cover module (Page 388)**	
2	4700373399		4	Shock absorber	D
3	4700500056		16	Screw	
4	4700393525		8	Holder	
5	4700904233		8	Washer 21x36x3	C
6	4700500228		4	Screw M20-2,5x120 8,8	C
7	4700901145		4	Lock nut M20-10	
8	4700395840		4	Plug	
11	4812110827		1	Platform cpl	
12	4812110586		1	. Cage nut	
13	4700395857		1	. Rear cover, left	D
14	4700395783		1	. Rear cover, right	D
15	4700395816		1	. Plug socket 24V	
16	4700395785		3	. Expansion rivet	D
17	4700395786		5	. Knob	
18			1	**. Manual box (Page 390)**	
19	4700792449		2	. Protective plug	
20	4700902804		2	. Plug	C
21	4700902379		1XL	. Edge trim	
22	4700373363		1	. Slip protection	
23	4700372121		2	. Protection	
25	4700901446		1	. Plug	

Cover module

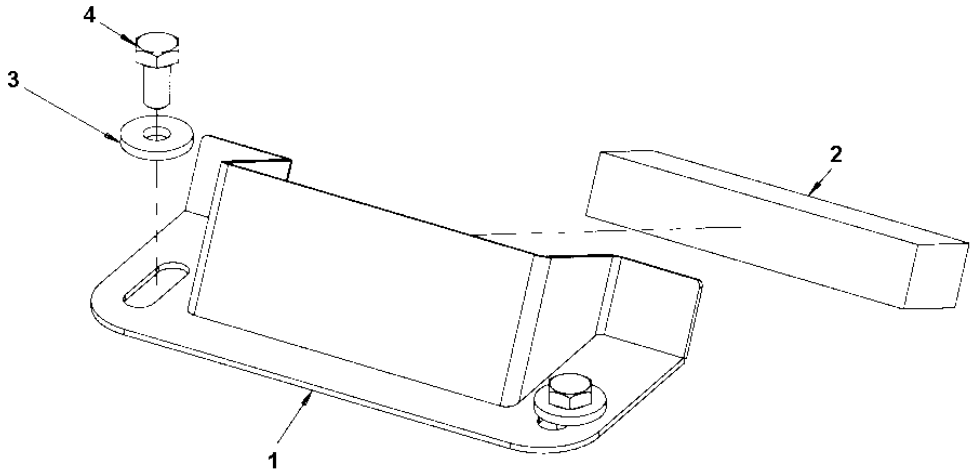

Cover module

Item	Part No	Rem	Qty	Description	Code
1	4700396923		1	Cover plate	D
2	4700792796	A	1	Rubber strip 25x20	D
3	4700904640		2	Washer 8,4x22x3	C
4	4700500019		2	Hexagon head screw M8x16H 8,8	C

A) L = 0,112 m

Manual box

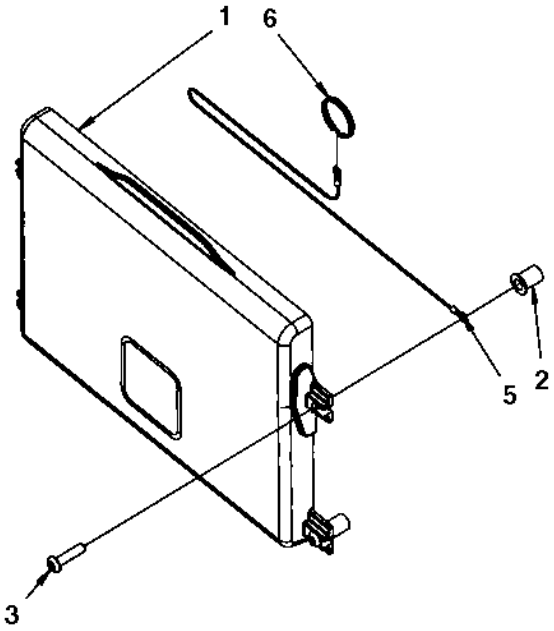

Manual box

Item	Part No	Rem	Qty	Description	Code
1	4700383705		1	Instruction book holder	D
2	4700792536		4	Rubber nut	
3	4700792589		4	Screw	
5	4700384584		1	Wire	
6	4700358254		1	Key-ring	

Hand rail, left

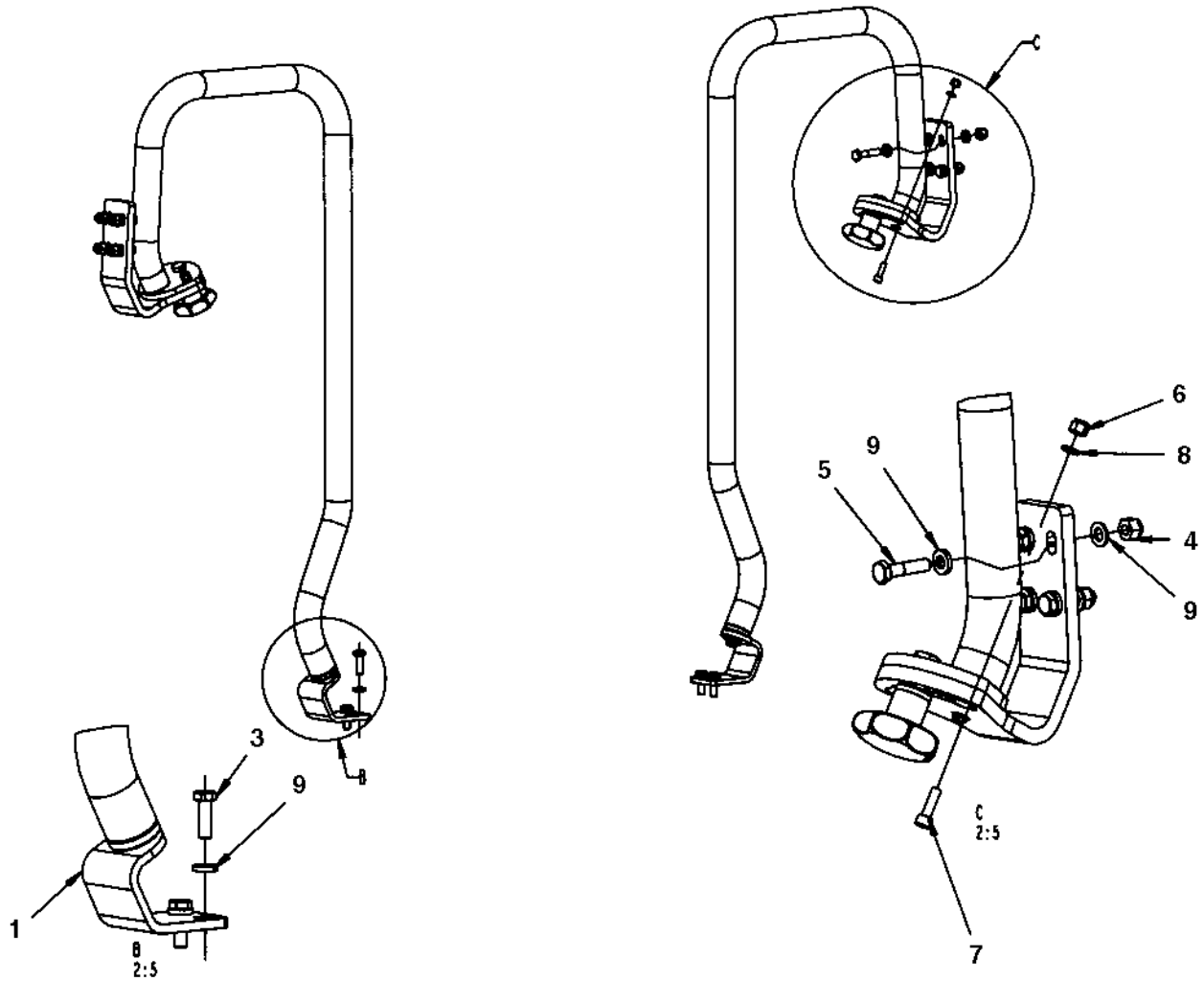

Hand rail, left

Item	Part No	Rem	Qty	Description	Code
1			2	**Hand rail (Page 394)**	
3	4700500021		4	Screw M8-1,25x25 8.8	C
4	4700586003		8	Lock nut M8	C
5	4700500023		8	Screw M8-1,25x40 8,8	C
6	4700586002		2	Lock nut M6 -8	C
7	4700508025		2	Screw M6x20	
8	4700904228		2	Washer 6,4x12x1,5	C
9	4700904556		20	Washer 8,4x16x3,0	C

Hand rail

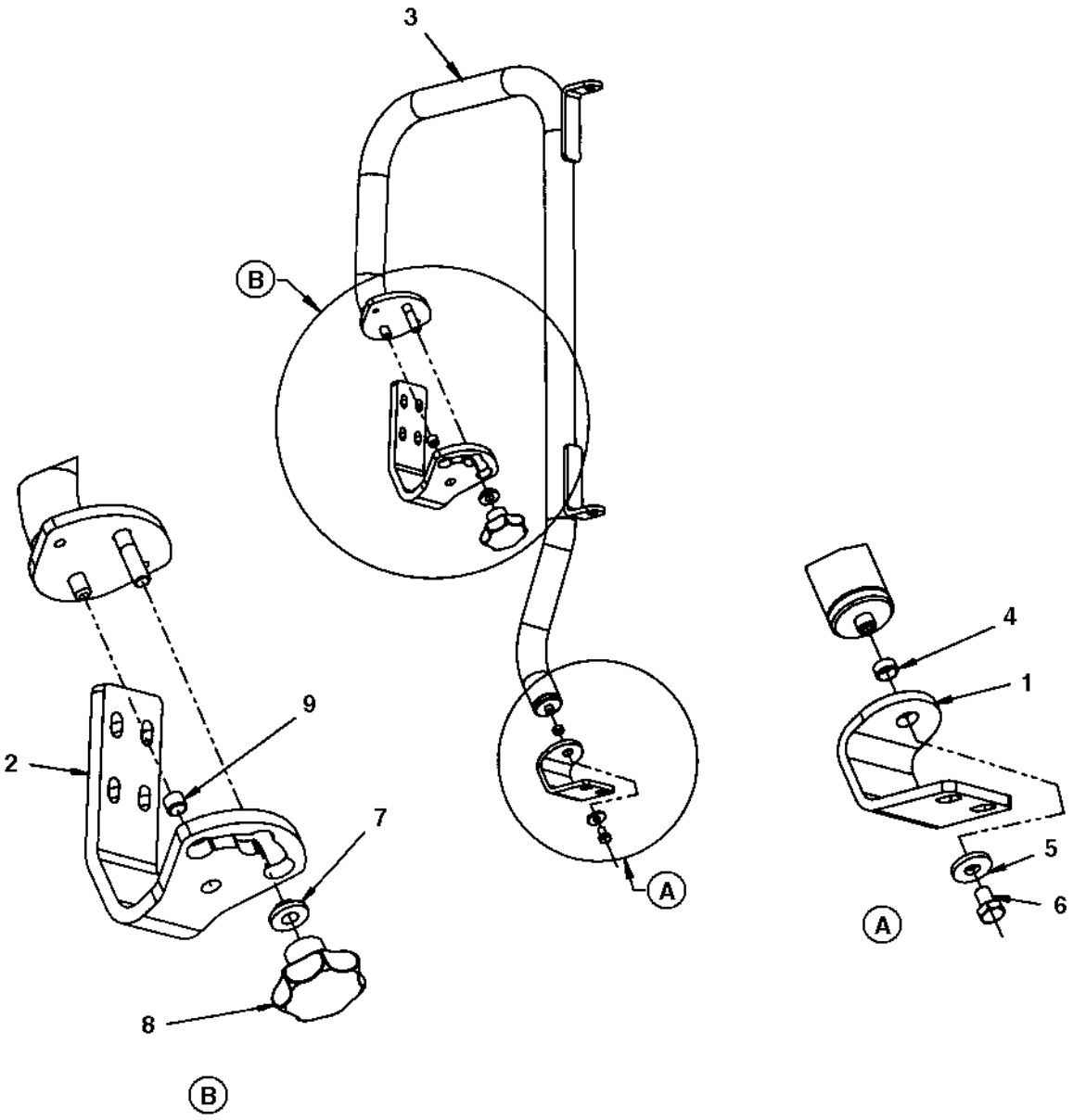

Hand rail

Item	Part No	Rem	Qty	Description	Code
1	4700381936		1	Bracket	
2	4700381935		1	Bracket	
3	4700390155		1	Hand rail	
4	4700792448		1	Plastic bushing	
5	4700904640		1	Washer 8,4x22x3	C
6	4700500018		1	Screw M8-1,25x12 8,8	C
7	4700370286		1	Washer	C
8	4700499174		1	Knob	
9	4700792447		1	Plastic bushing	

Hand rail, right

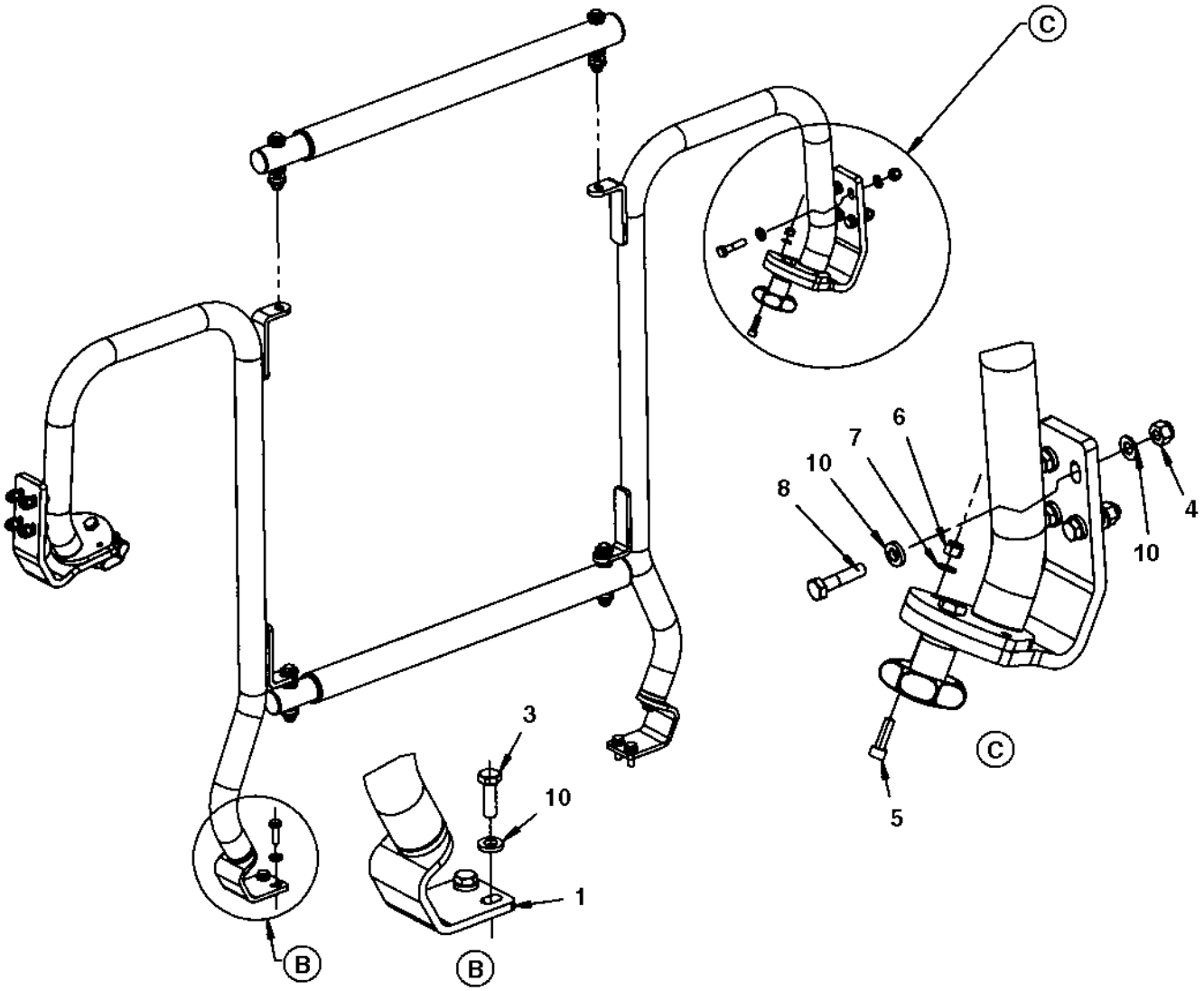

Hand rail, right

Item	Part No	Rem	Qty	Description	Code
1			1	**Hand rail (Page 398)**	
3	4700500021		4	Screw M8-1,25x25 8.8	C
4	4700586003		8	Lock nut M8	C
5	4700508025		2	Screw M6x20	
6	4700586002		2	Lock nut M6 -8	C
7	4700904228		2	Washer 6,4x12x1,5	C
8	4700500023		8	Screw M8-1,25x40 8,8	C
9			2	**Hand rail (Page 400)**	
10	4700904556		20	Washer 8,4x16x3,0	C

Hand rail

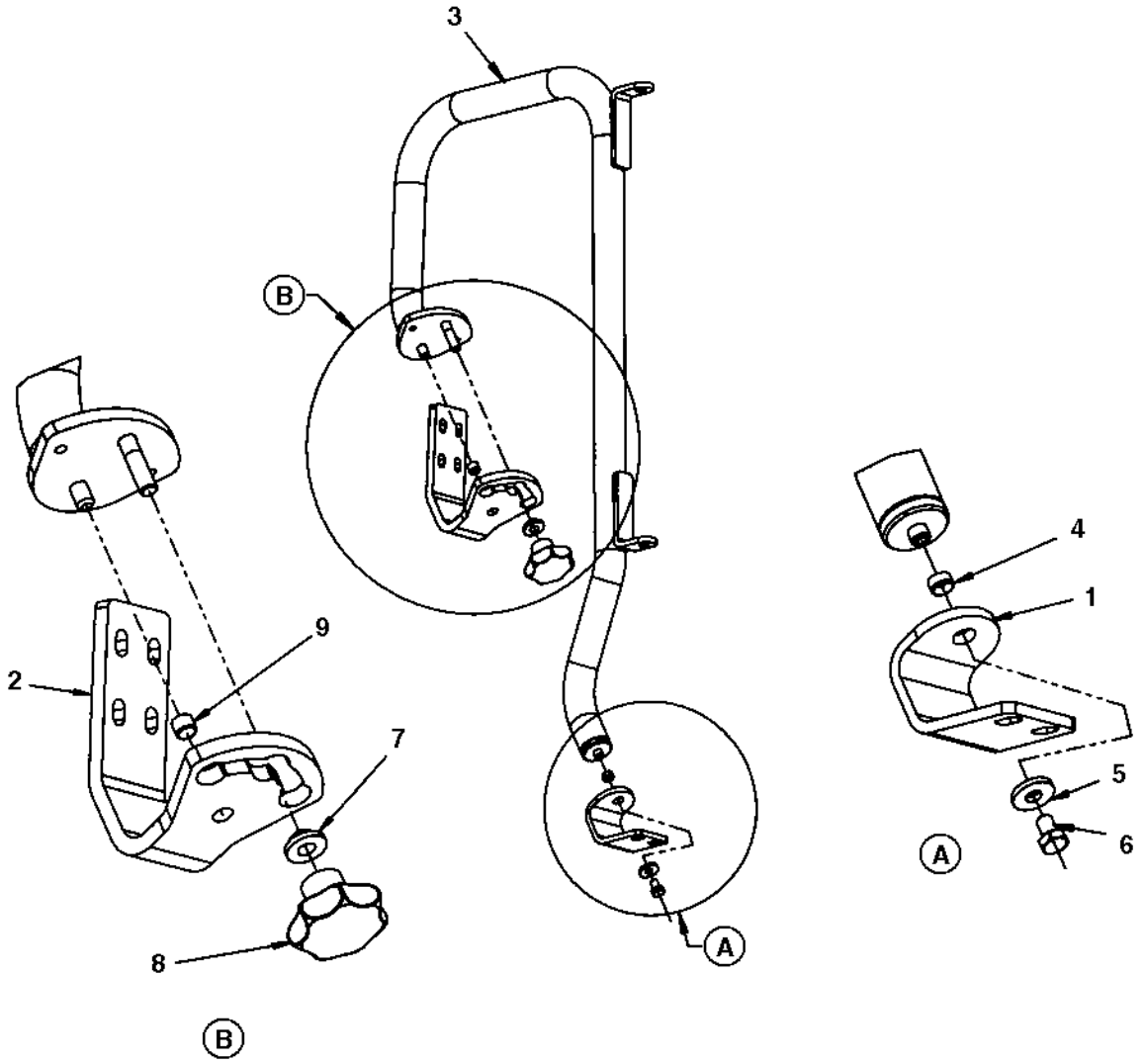

Hand rail

Item	Part No	Rem	Qty	Description	Code
1	4700381936		1	Bracket	
2	4700381935		1	Bracket	
3	4700381934		1	Hand rail	
4	4700792448		1	Plastic bushing	
5	4700904640		1	Washer 8,4x22x3	C
6	4700500018		1	Screw M8-1,25x12 8,8	C
7	4700370286		1	Washer	C
8	4700499174		1	Knob	
9	4700792447		1	Plastic bushing	

Hand rail

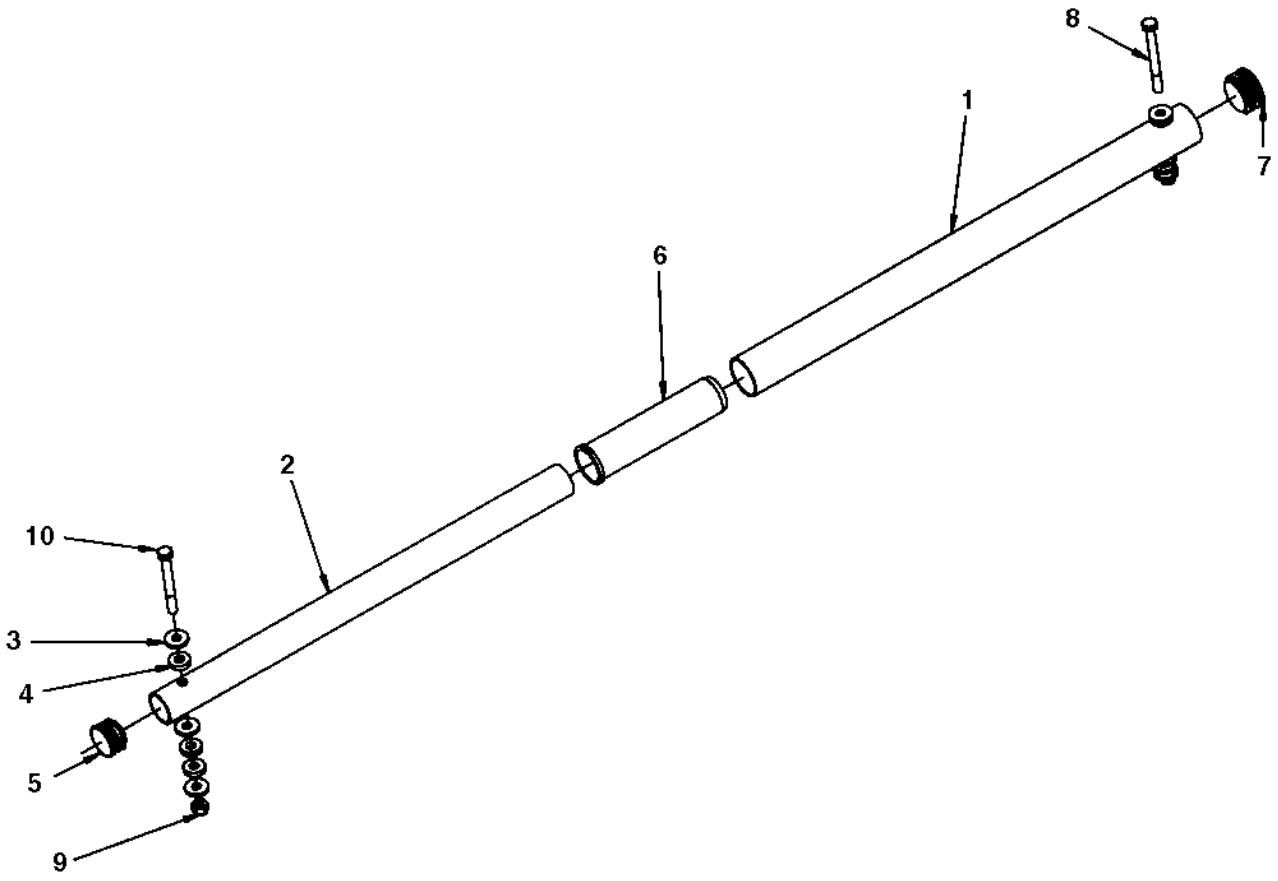

Hand rail

Item	Part No	Rem	Qty	Description	Code
1	4700391675		1	Steel tube	
2	4700391676		1	Steel tube	
3	4700904640		6	Washer 8,4x22x3	C
4	4700391674		6	Rubber washer	
5	4700926216		1	Protective plug	
6	4700391678		1	Bushing	
7	4700792449		1	Protective plug	
8	4700500190		1	Screw	
9	4700586003		2	Lock nut M8	C
10	4700500189		1	Screw	C

Lunch box module

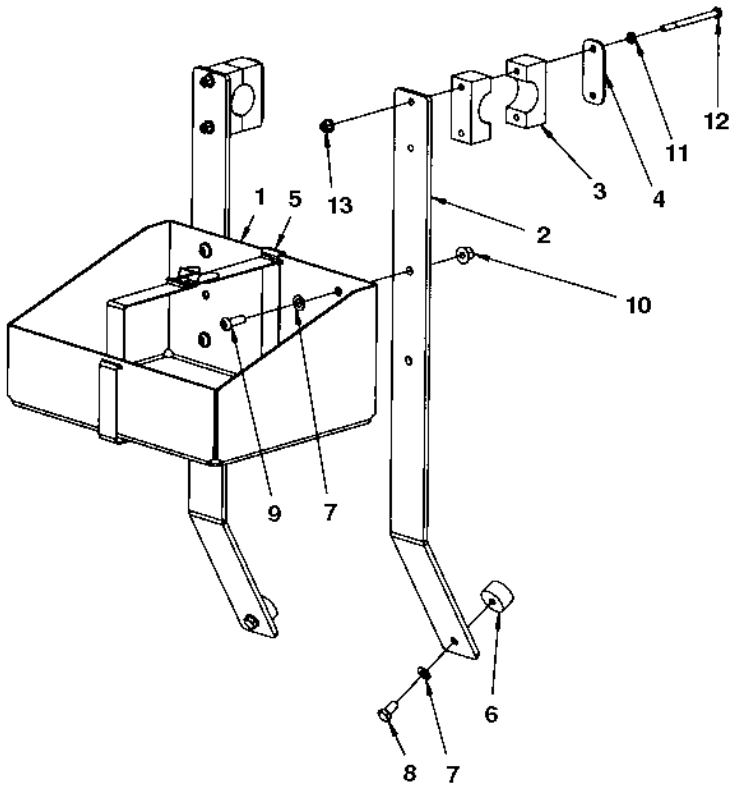

Lunch box module

Item	Part No	Rem	Qty	Description	Code
1	4700377913		1	Box	
2	4700394859		2	Bracket	
3	4700904340		2	Pipe clamp	
4	4700924791		2	Cover plate	
5	4700287643		1	Metal strapping	D
6	4700450163		2	Shock absorber	D
7	4700904229		6	Steel plain washer 8,4x16x1,5	C
8	4700500019		2	Hexagon head screw M8x16H 8,8	C
9	4700904654		4	Screw	
10	4700902286		4	Hexagon lock nut with flange	C
11	4700904228		4	Washer 6,4x12x1,5	C
12	4700500153		4	Screw	C
13	4700902285		4	Hexagon lock nut with flange	C

Canopy option

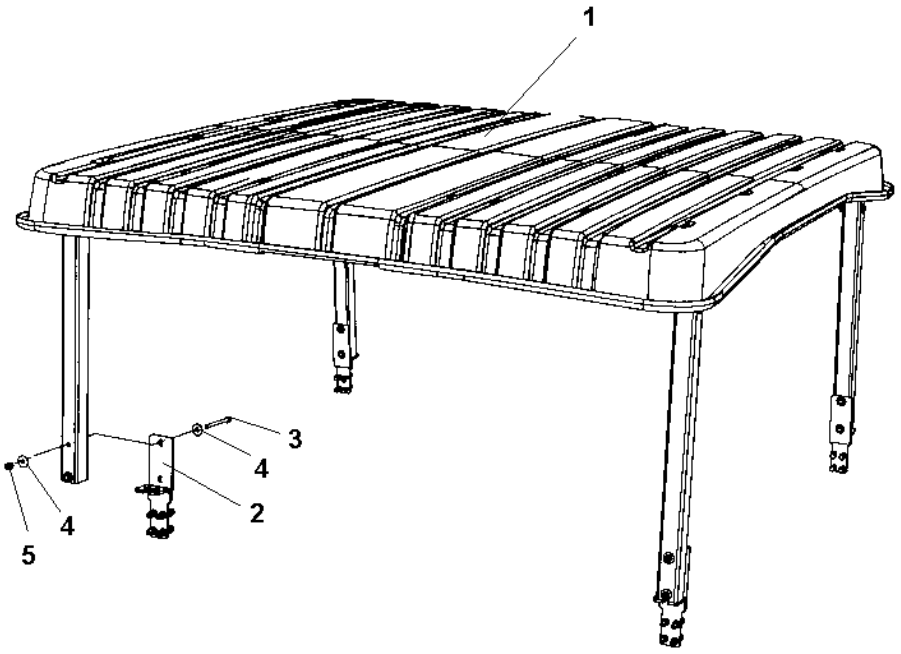

Canopy option

Item	Part No	Rem	Qty	Description	Code
1			1	**Canopy assy (Page 406)**	
2			4	**Bracket (Page 408)**	
3	4700500190		8	Screw	
4	4700601003		16	Washer 8,4x25x2	C
5	4700586003		8	Lock nut M8	C

Canopy assy

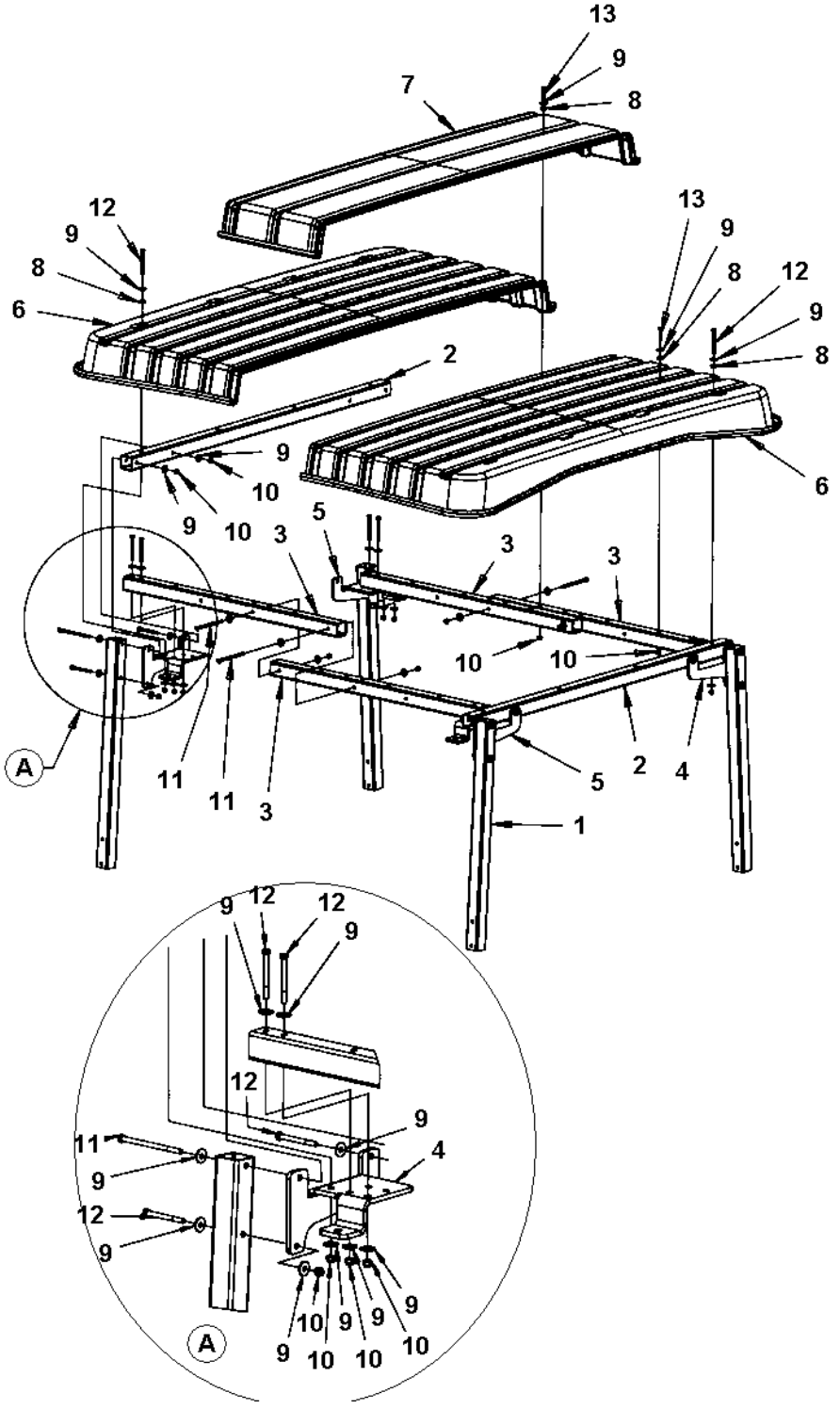
13
9
8
7
12
9
8
6
13
9
8
12
9
8
6
2
9
10
9
10
3
5
3
3
3
10
10
A
11
11
3
5
2
4
1
9
12
12
9
12
9
4
11
9
12
9
A
10
9
9
9
9
10
10
10

Canopy assy

Item	Part No	Rem	Qty	Description	Code
1	4700393640		4	Pillar	
2	4700393641		2	Roof beam	
3	4700393642		4	Crossbeam	
4	4700393645		2	Bracket	
5	4700393646		2	Bracket	
6	4700394139		2	Plastic roof	
7	4700394140		1	Plastic roof	
8	4700391674		22	Rubber washer	
9	4700601003		74	Washer 8,4x25x2	C
10	4700586003		46	Lock nut M8	C
11	4700500143		8	Screw	
12	4700500190		20	Screw	
13	4700904241		18	Screw	C

Bracket

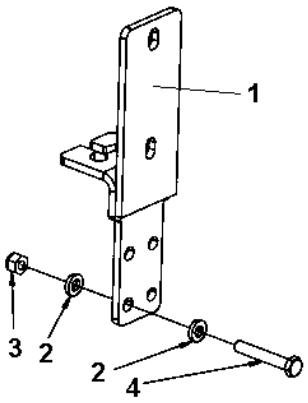

Bracket

Item	Part No	Rem	Qty	Description	Code
1	4700393639		1	Bracket	
2	4700904556		8	Washer 8,4x16x3,0	C
3	4700586003		4	Lock nut M8	C
4	4700500023		4	Screw M8-1,25x40 8,8	C

Cab, asymmetric

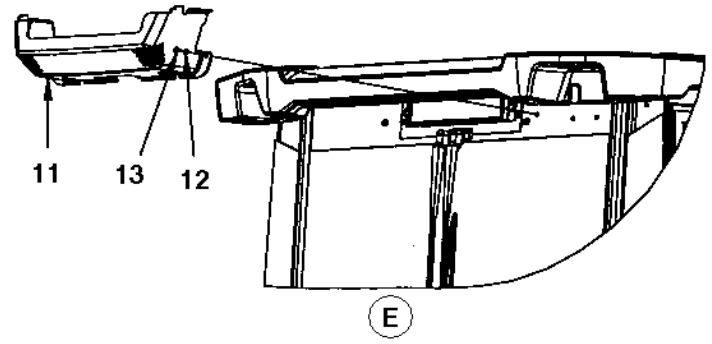

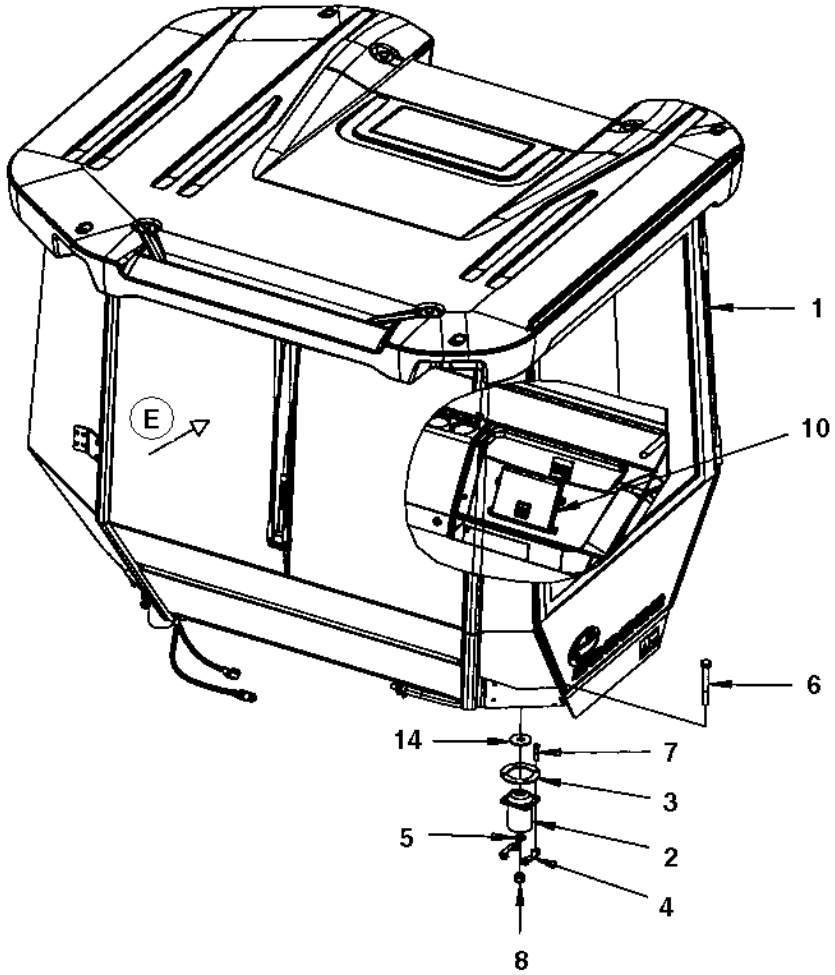

Cab, asymmetric

Item	Part No	Rem	Qty	Description	Code
1	4700390864		1	**Cab, cpl (Page 412)**	
2	4700384855		4	Shock absorber	D
3	4700359998		4	Back-up ring	C
4	4700393525		8	Holder	
5	4700904233		4	Washer 21x36x3	C
6	4700903633		4	Screw M20x150 10,9	
7	4700500195		16	Screw	C
8	4700901145		4	Lock nut M20-10	
10			1	**Manual box (Page 390)**	
11	4700393582		1	Cover	
12	4700904556		2	Washer 8,4x16x3,0	C
13	4700500018		2	Screw M8-1,25x12 8,8	C
14	4700347512		4	Washer	D

4700390864 Cab, cpl

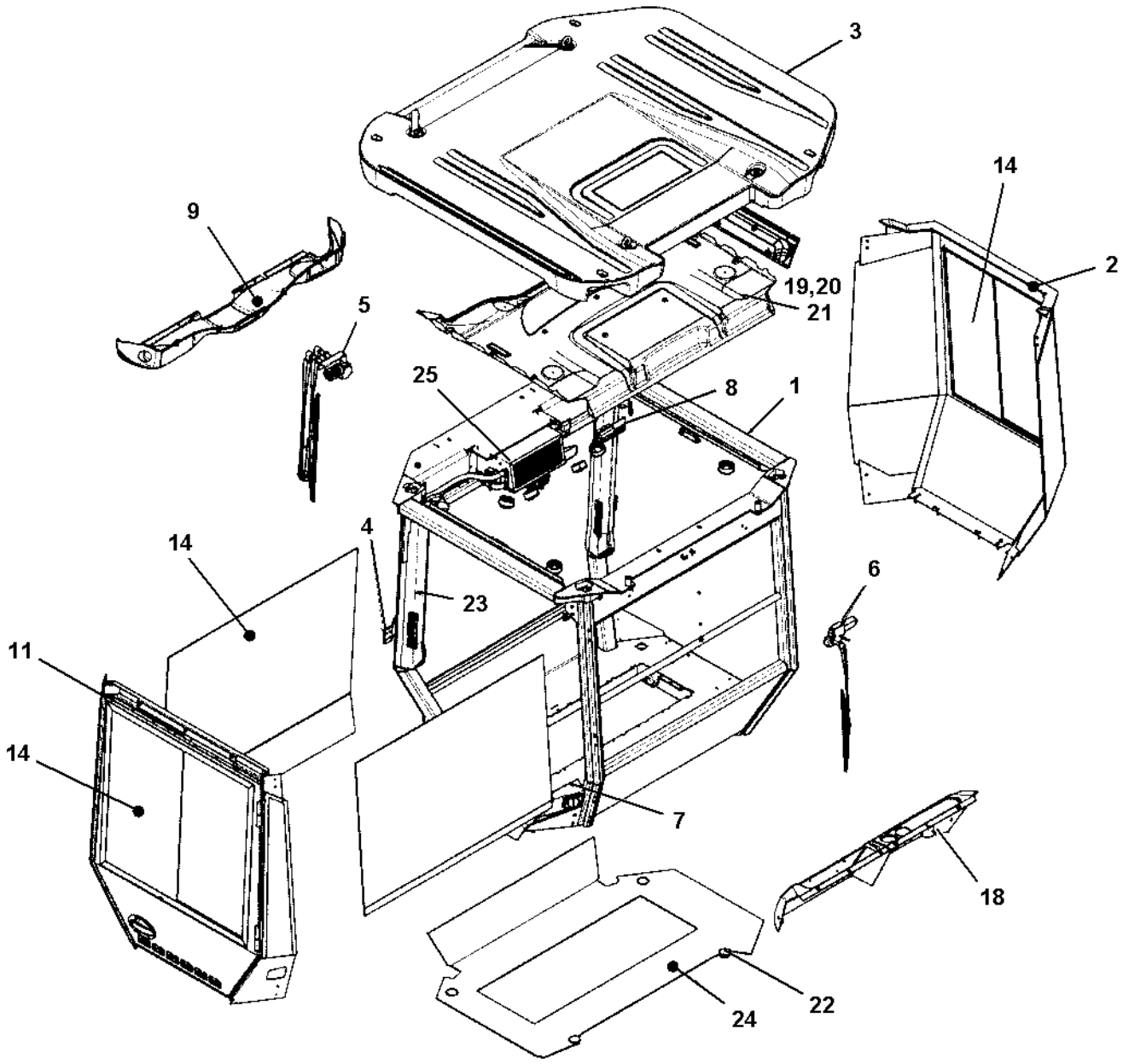

4700390864 Cab, cpl

Item	Part No	Rem	Qty	Description	Code
1			1	Cab frame	
2			1	**Cab frame, right side (Page 414)**	
3			1	**Roof (Page 416)**	
4			1	**General parts (Page 418)**	
5			1	**Windshield wiper, front (Page 420)**	
6			1	**Windshield wiper, rear (Page 422)**	
7			1	**Windshield washer reservoir (Page 424)**	
8			1	**Electric equipment (Page 426)**	
9			1	**Front panel (Page 428)**	
11			1	**Door frame (Page 430)**	
14			1	**Cab screens (Page 434)**	
18			1	**Rear covers (Page 384)**	
19	4700395829		5	Screw	
20	4700395830		5	Screw	
21	4700395858		1	Ceiling	D
22	4700395840		4	Plug	
23			2	**Air channel (Page 436)**	
24	4700395859		1	Floor mat	D
25			1	**Heater unit (Page 438)**	

Cab frame, right side

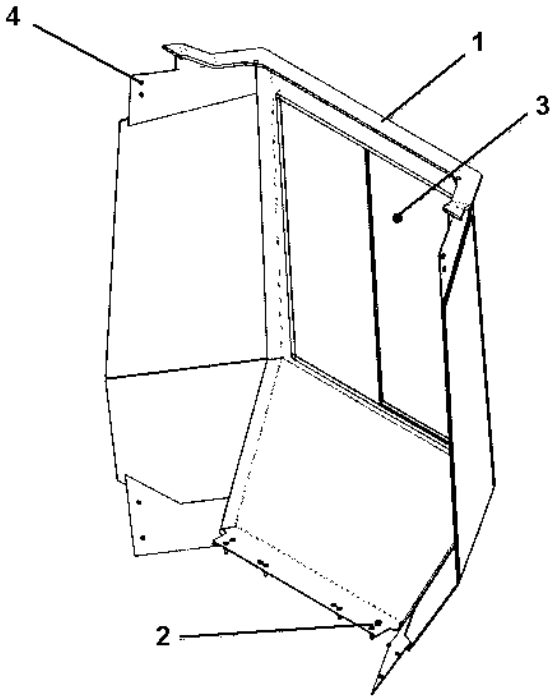

Cab frame, right side

Item	Part No	Rem	Qty	Description	Code
1			1	Frame	
2	4700927637		6	Hexagon socket countersunk screw	D
3		1		Screens	
4	4700500018		10	Screw M8-1,25x12 8,8	C

1) See section for Cab screens.

Roof

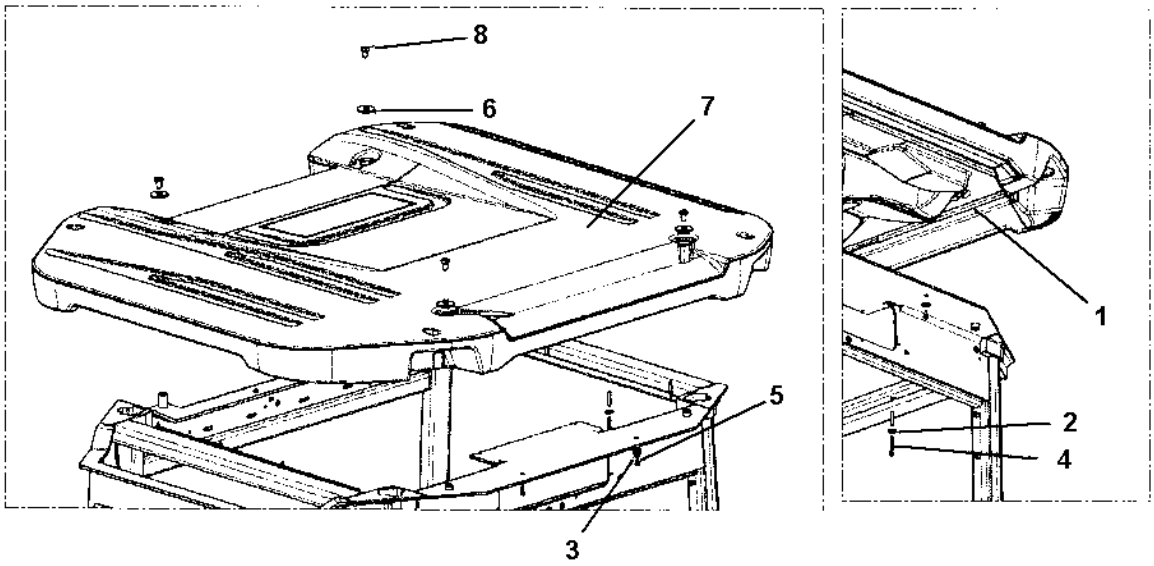

Roof

Item	Part No	Rem	Qty	Description	Code
1			1XL	Sealing strip	
2			8	Washer	
3	4700603009		6	Washer	
4			8	Stud bult	
5	4700500021		4	Screw M8-1,25x25 8.8	C
6			4	Washer	
7	4700395855		1	Roof	D
8	4700500154		4	Screw M16-2,0x25 8,8	

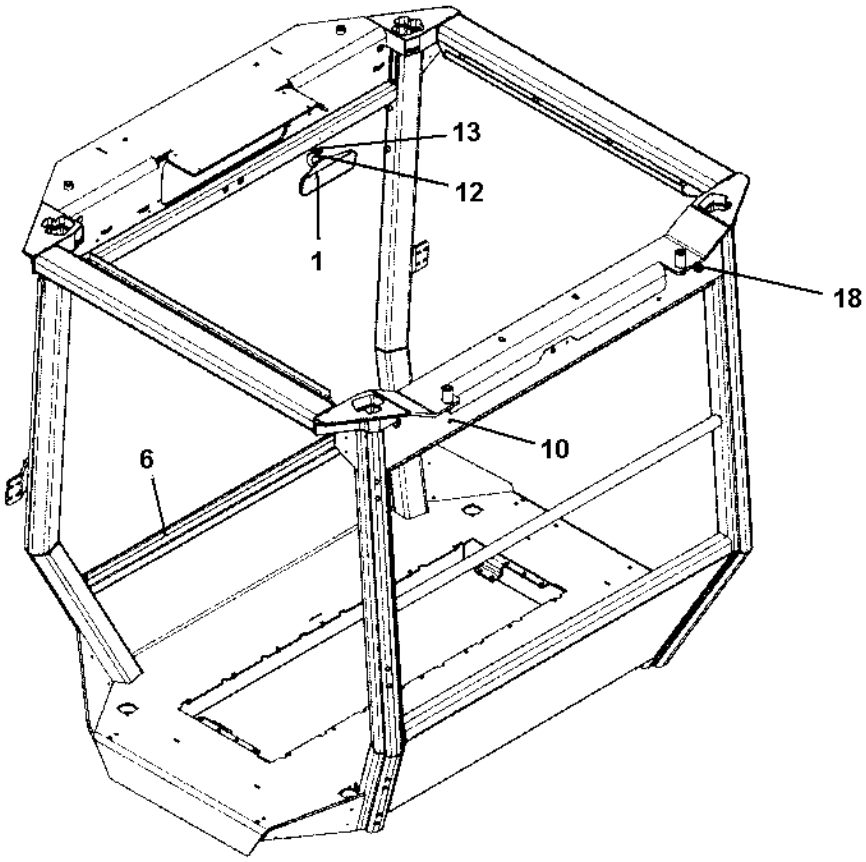
13
12
1
18
10
6

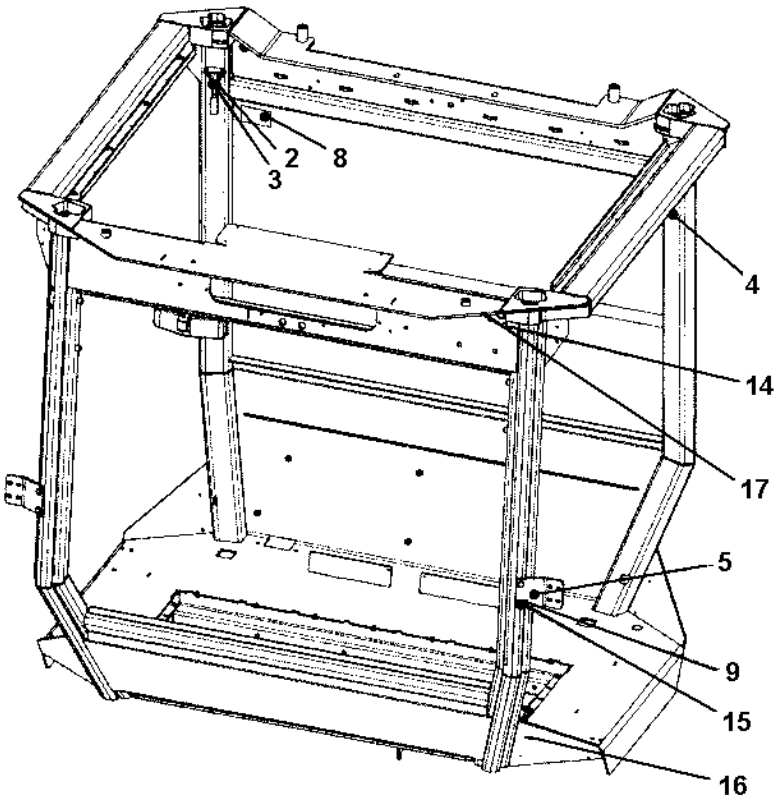
2
8
3
4
14
17
5
9
15
16

General parts

Item	Part No	Rem	Qty	Description	Code
1	4700395792		1	Rear view mirror	
2	4700908507		1	Emergency hammer, hook	D
3	4700908506		1	Emergency hammer	D
4	4700908505		1	Hook	D
5	4700395787		2	Holder plate	D
6			1XL	Edge trim	
8	4700903590		1	Decal "EMERGENCY EXIT"	
9	4700500048		4	Screw M10-1,5x20 8,8	C
10			6	Plug	
12			1	Screw	
13			1	Nut cap	
14			20	Plug	
15			8	Nut cap	
16			10	Screw cap	
17			1	Plug	
18			1	Plug	

Windshield wiper, front

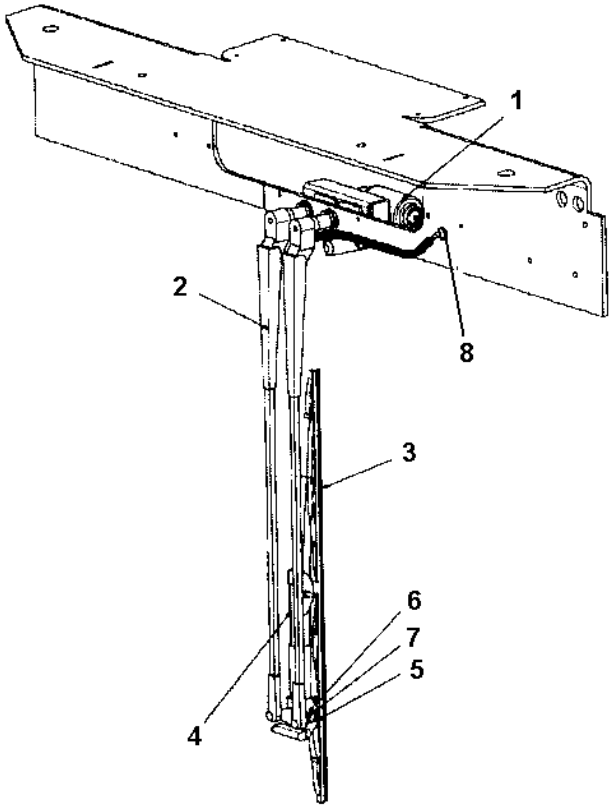

Windshield wiper, front

Item	Part No	Rem	Qty	Description	Code
1	4700395810		1	Wiper motor	C
2	4700395811		1	Wiper arm	C
3	4700905306		1	Wiper blade	
4	4700395796		1	Mounting plate	D
5	4700508021		1	Screw	D
6	4700904229		1	Steel plain washer 8,4x16x1,5	C
7	4700586003		1	Lock nut M8	C
8	4700908561		1	Grommet	D

Windshield wiper, rear

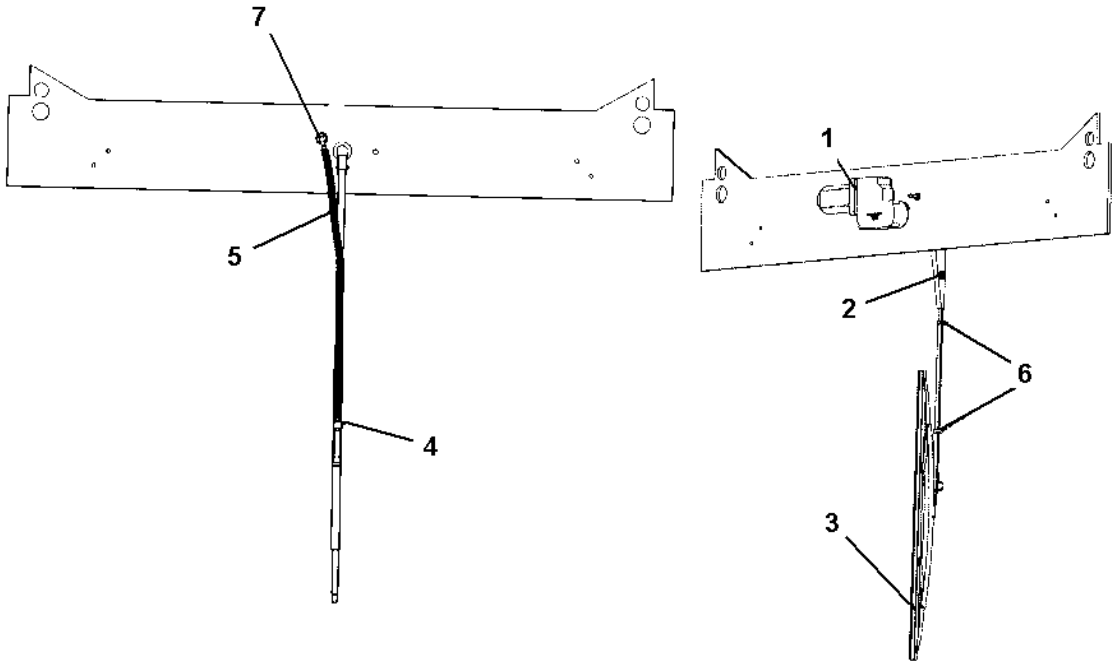

Windshield wiper, rear

Item	Part No	Rem	Qty	Description	Code
1	4700945897		1	Wiper motor	C
2	4700395813		1	Wiper arm	D
3	4700395814		1	Wiper blade	B
4	4700938256		1	Nozzle	
5			1XL	Rubber hose	
6			2	Hose fastener	
7	4700908561		1	Grommet	D

Windshield washer reservoir

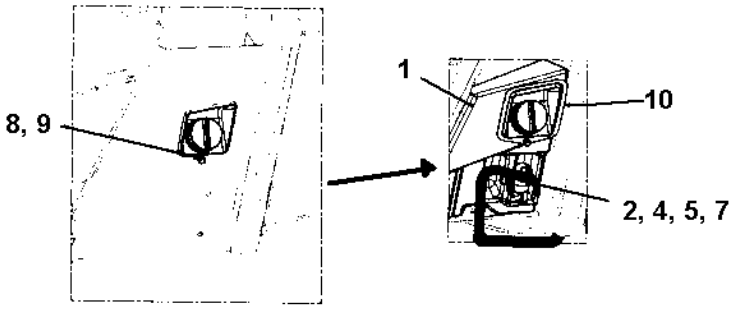

Windshield washer reservoir

Item	Part No	Rem	Qty	Description	Code
1	4700395793		1	Water reservoir	D
2	4700395794		1	Electric motor	
4	4700908564		2	Check valve	C
5	4700908563		1XL	Plastic hose	D
7	4700395815		1	Seal ring	
8	4700904228		1	Washer 6,4x12x1,5	C
9	4700500013		1	Screw M6-1x16 8,8	C
10	4700395795		1	Gasket	D

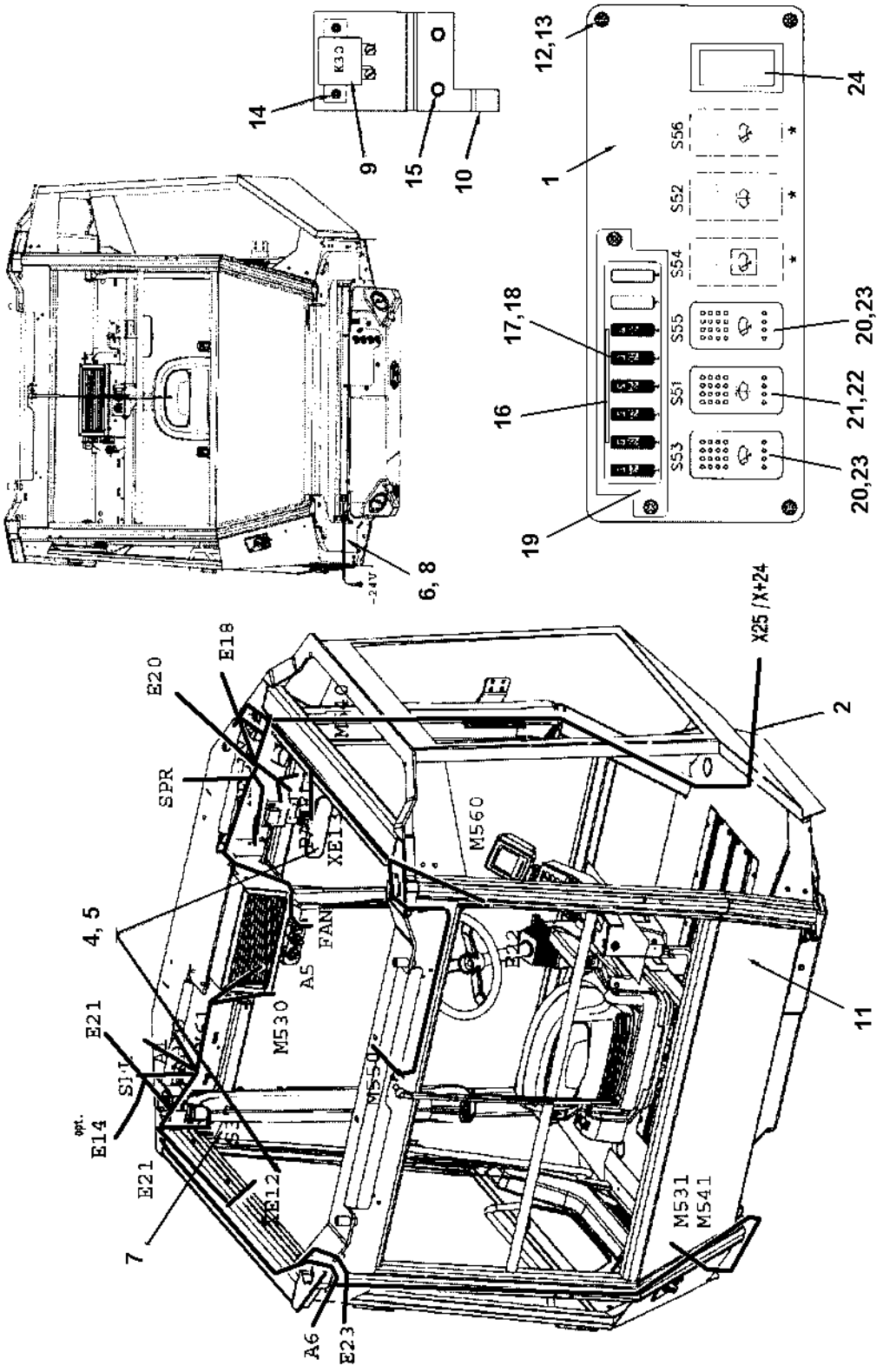
14
9
15
10
12,13
24
1
S56
S52
S54
S55
S51
S53
17,18
16
19
20,23
21,22
20,23
6, 8
X25 /X+24
2
E20
E18
SPR
M560
XE1
4, 5
FAN
A5
M530
E21
E14
opt.
E12
M550
11
M531
M541
7
A6
E23

Electric equipment

Item	Part No	Rem	Qty	Description	Code
1			1	Control panel plate	
2	4700395798		1	Cable harness	D
4	4700395800		2	Interior light	D
5	4700792715		4	Bulb	
6			1	Screw	
7	4700908500		1	Door switch	B
8	4700395799		1	Cable harness	D
9	4700792309		1	Relay 50A	D
10			1	Mounting plate	
11	4700395816		1	Plug socket 24V	
12	4812157188		5	Rubber nut	
13	4812157189		5	Screw	
14			2	Screw	
15			2	Screw	
16	4700791211		4	Contact bridge	C
17	4700901227		4	Fuse 10A	A
18	4700901228		2	Fuse 15A	A
19	4700791185		1	Fuse box	
20			2	Button	
21			1	Button	
22	4700792505	A	1	Switch	D
23	4700792504	B	2	Switch	D
24	4700791588		4	Panel plug	C

A) Windshield washer.
B) Windshield viper.

Front panel

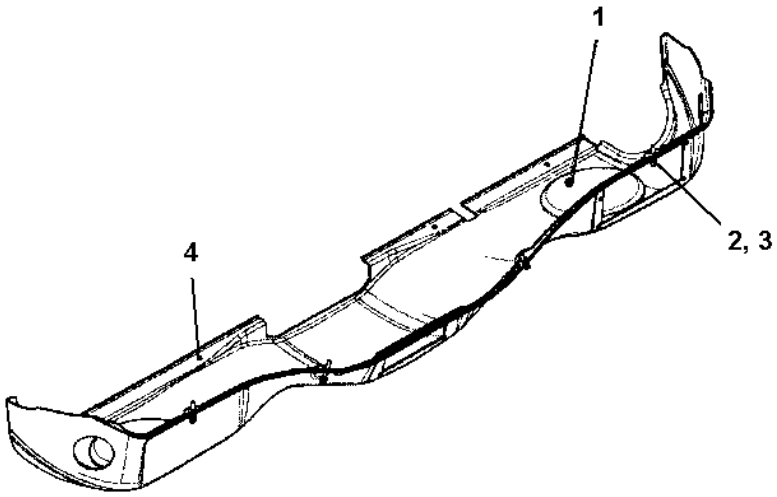

Front panel

Item	Part No	Rem	Qty	Description	Code
1	4700395856		1	Front panel	D
2	4812157762		4	Clamp screw	
3	4812157763		4	Nut cap	
4	4812157764		4	Collar screw M6x16 8.8	

Door frame

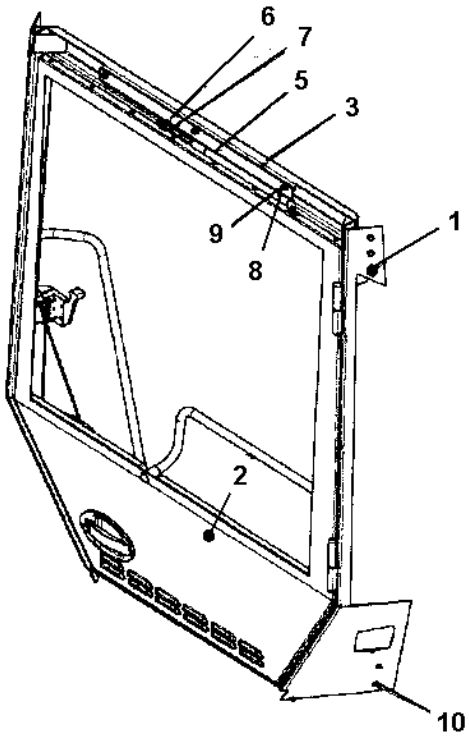

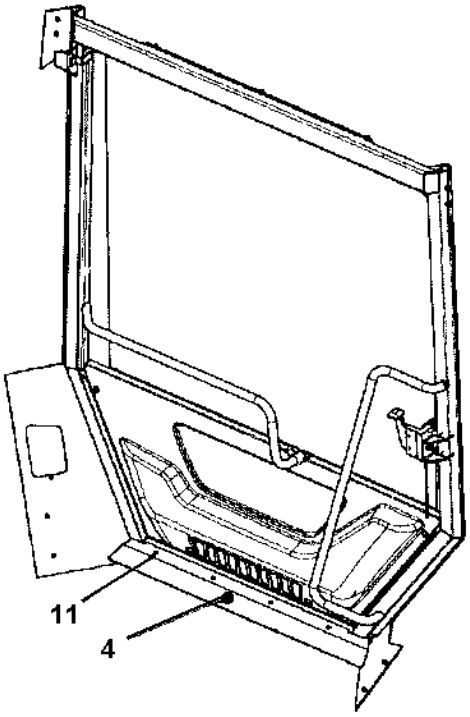

Door frame

Item	Part No	Rem	Qty	Description	Code
1	4700395805		1	Frame mount	
2	4700395806		1	**Door, cpl (Page 432)**	
3			1	Cover plate	
4			1	Plate	
5	4700908284		1	Gas spring	B
6	4700395817		1	Ball joint	C
7	4700570005		1	Nut M8	C
8	4700586003		3	Lock nut M8	C
9	4700936277		3	Washer	C
10	4700500018		10	Screw M8-1,25x12 8,8	C
11			4	Screw	

4700395806 Door, cpl

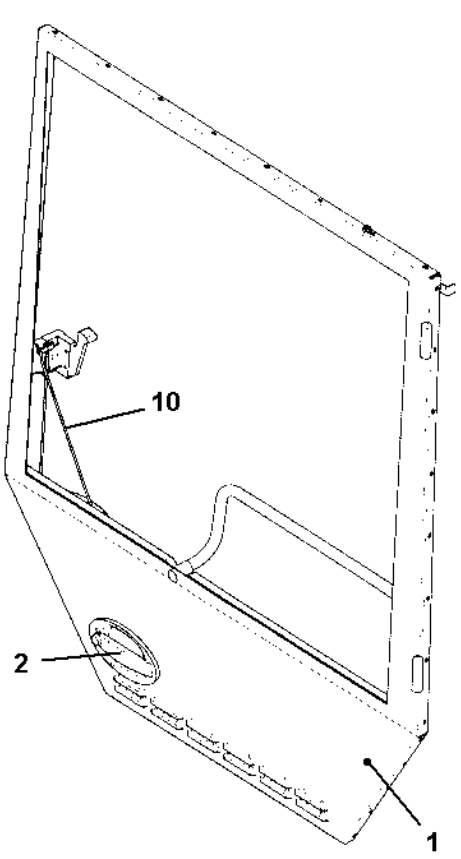

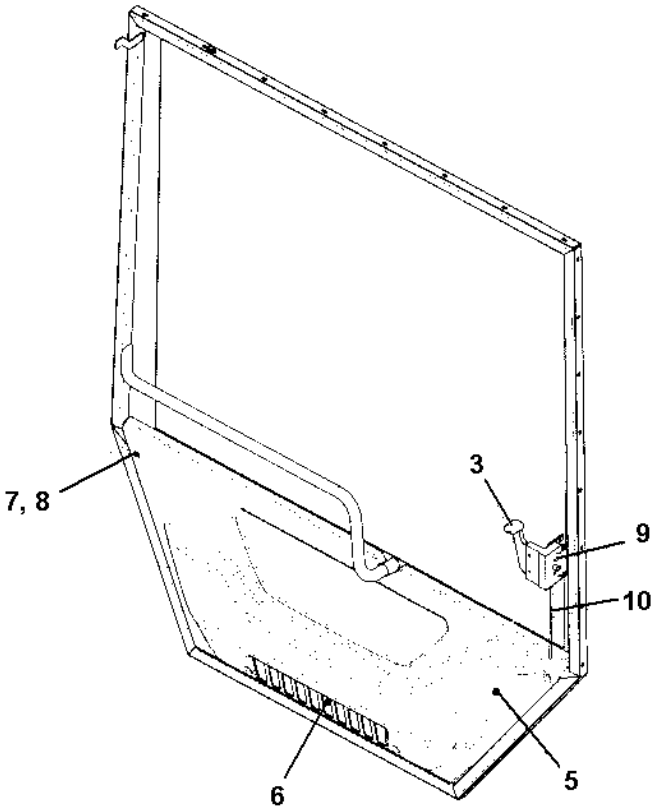

4700395806 Door, cpl

Item	Part No	Rem	Qty	Description	Code
1			1	Door welded	
2	4700395833		1	Handle, outer	D
	4700902866		1	. Key Marked "455"	
3	4700395834		1	Handle, inner	D
5	4700395835		1	Plastic panel	D
6	4700395836		1	Filter	A
7	4700395837		4	Nut	D
8	4700395838		4	Screw	D
9			3	Screw	
10	4700395839		1	Rod	D

Cab screens

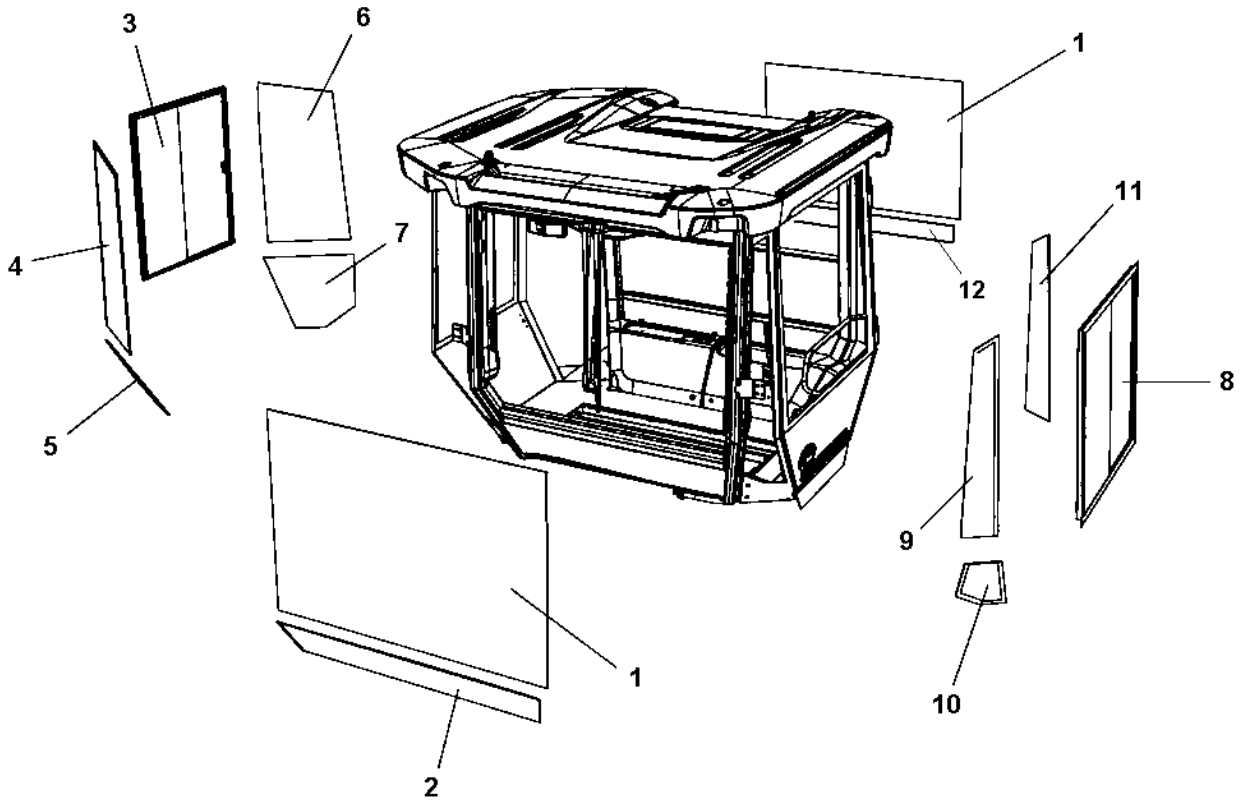

Cab screens

Item	Part No	Rem	Qty	Description	Code
1	4700393250		2	Windscreen	D
2	4700393251	A	1	Screen	D
3	4700395790	B	1	Sliding screen	D
4	4700393634	B,C	1	Screen	D
5	4700393637	B,A	1	Screen	D
6	4700393635	B,D	1	Screen	D
7	4700393636	B,E	1	Screen	D
8	4700395803	F	1	Sliding screen	D
9	4700393252	G,C	1	Screen	D
10	4700393254	G,A	1	Screen	D
11	4700393253	G,D	1	Screen	D

A) Front lower
B) Right side
C) Front upper
D) Rear upper
E) Rear lower
F) Door
G) Left side

Air channel

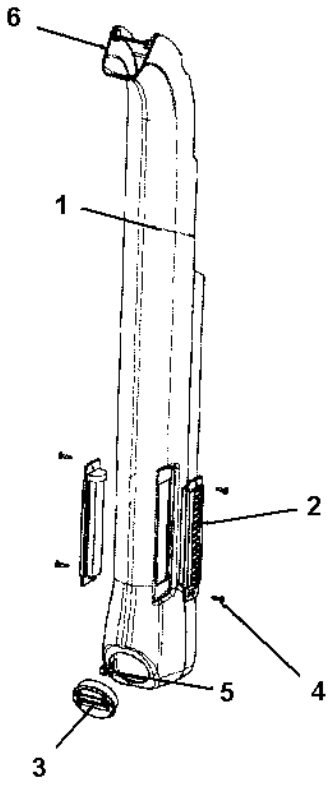

Air channel

Item	Part No	Rem	Qty	Description	Code
1			1	Cover	
2	4700395831		2	Air nozzle	
3	4700395832		1	Air nozzle	
4	4700395829		4	Screw	
5			1	Screw	
6			1XL	Edge trim	

Heater unit

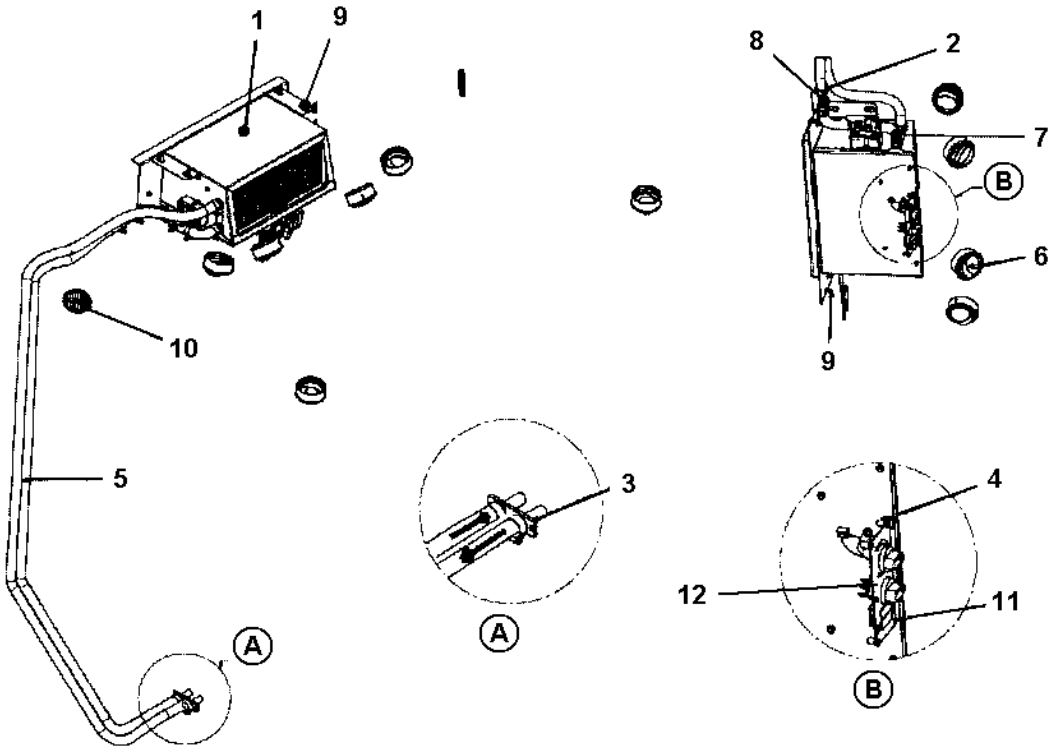

Heater unit

Item	Part No	Rem	Qty	Description	Code
1			1	**Heater (Page 440)**	
2	4700938874		8	Clamp	C
3			1	Inlet plate	
4			4	Rubber nut	
5	4700395756		1XL	Hose	C
6	4700395757		6	Air nozzle	
7	4700395758		2	Hose	C
8			1	Connector pipe	
9	4700500053		6	Screw M8x20H 8.8	C
10	4700395759		2	Air nozzle	
11			4	Screw	
12			1	**Heater controls (Page 442)**	

Heater

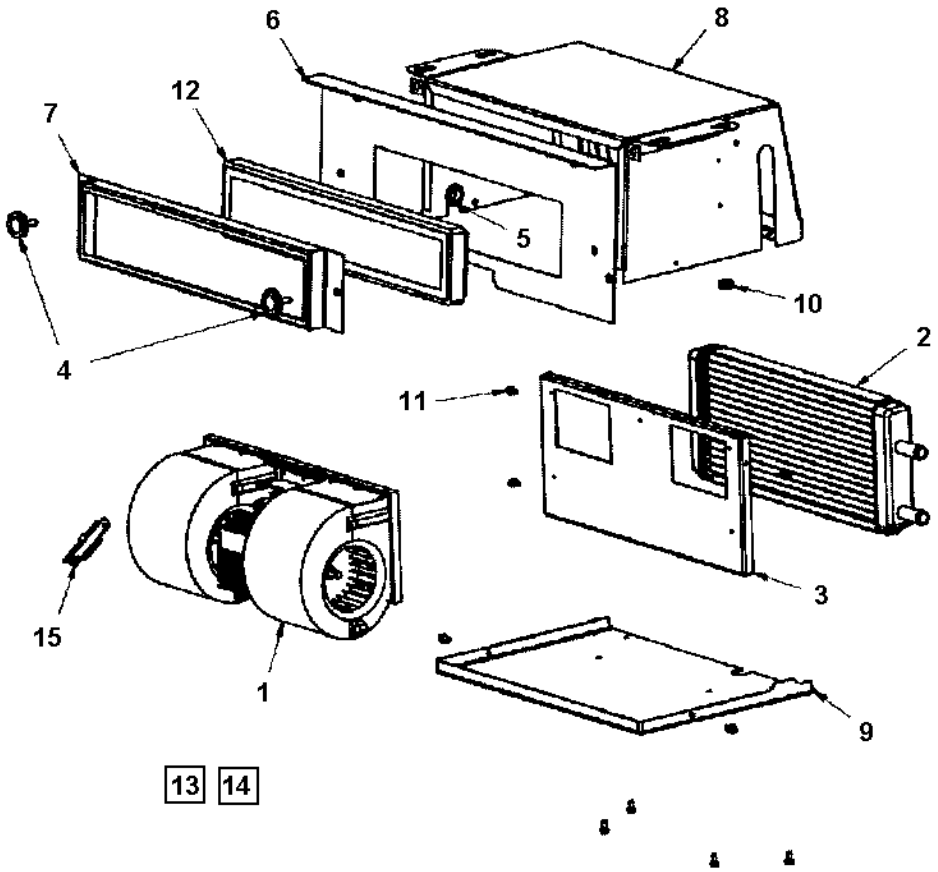

Heater

Item	Part No	Rem	Qty	Description	Code
1	4700395761		1	Blower	D
2	4700395762		1	Heater coil	C
3			1	Blower bracket	
4	4700395774		2	Knob	D
5	4700938609		1	Grommet	
6			1	Front plate	
7	4700395775		1	Filter bracket	D
8			1	Casing	
9			1	Cover plate	
10			1	Grommet	
11			11	Screw M5x10	
12	4700395818		1	Filter	A
13	4700395819		1	Cable harness	D
14	4700395828		1	Panel cable	D
15	4700395820		1	Resistor assy	D

Heater controls

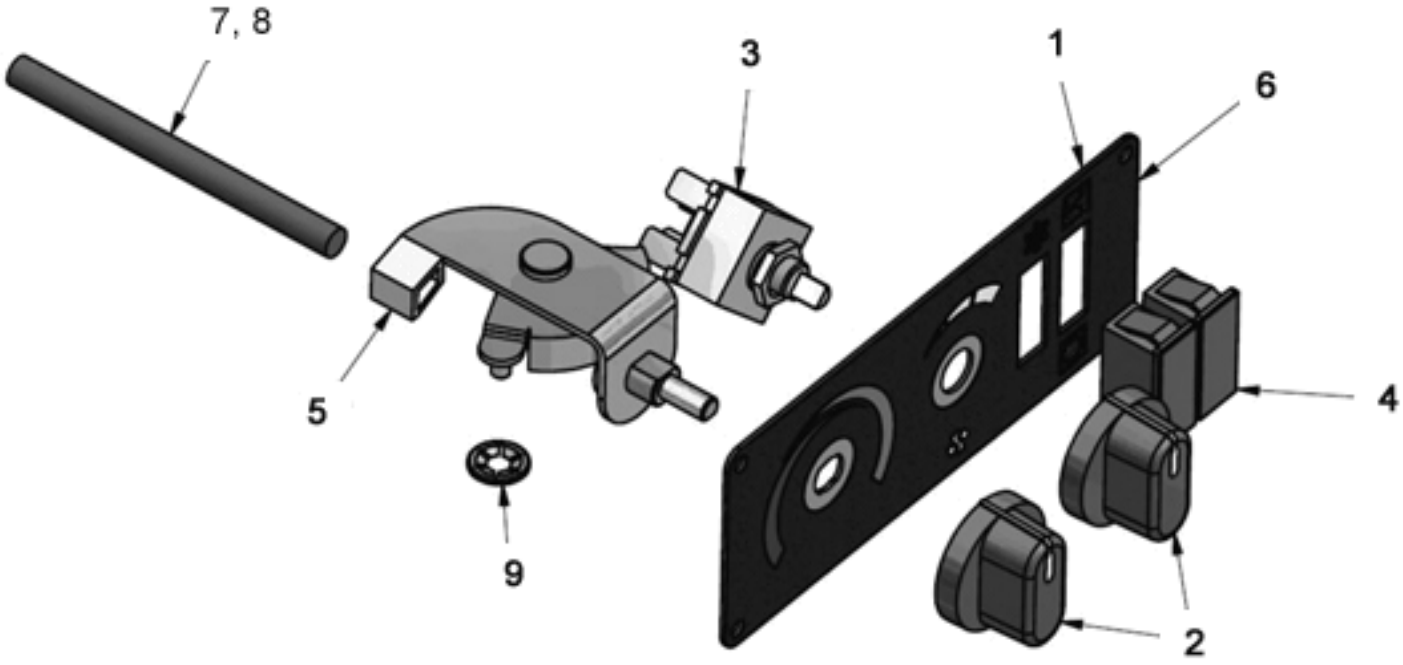

Heater controls

Item	Part No	Rem	Qty	Description	Code
1			1	Panel plate	
2	4700377508		2	Knob	D
3	4700938622		1	Switch	B
4			2	Cover	
5	4700377507		1	Rotary control	D
6			1	Overlay	
7	4700395841		1	Wire clips	D
8	4700395842		1	Wire	D
9	4700395853		2	Lock washer	D

Cab, symmetric

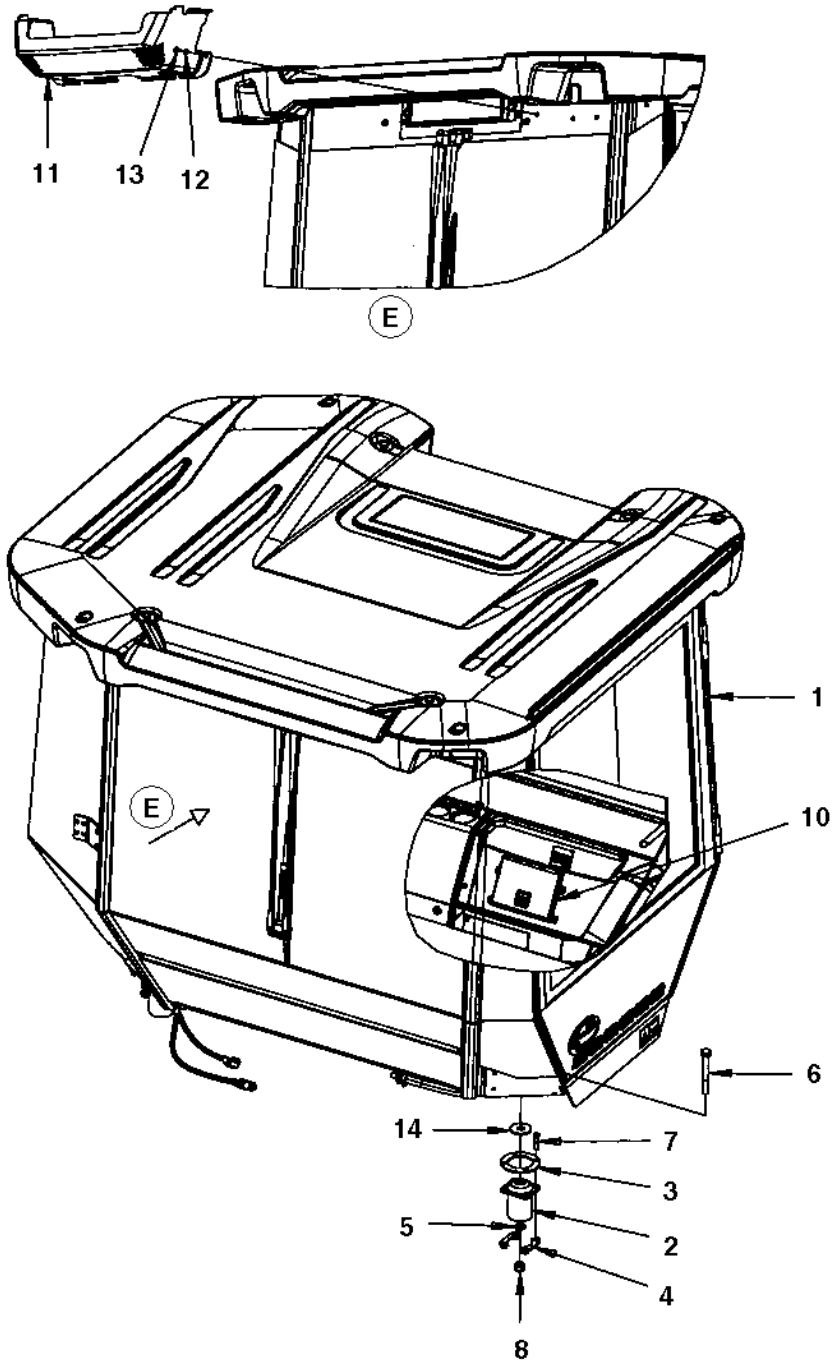

Cab, symmetric

Item	Part No	Rem	Qty	Description	Code
1	4700395898		1	**Cab, cpl (Page 446)**	
2	4700384855		4	Shock absorber	D
3	4700359998		4	Back-up ring	C
4	4700393525		8	Holder	
5	4700904233		4	Washer 21x36x3	C
6	4700903633		4	Screw M20x150 10,9	
7	4700500195		16	Screw	C
8	4700901145		4	Lock nut M20-10	
10			1	**Manual box (Page 390)**	
11	4700393582		1	Cover	
12	4700904556		2	Washer 8,4x16x3,0	C
13	4700500018		2	Screw M8-1,25x12 8,8	C
14	4700347512		4	Washer	D

4700395898 Cab, cpl

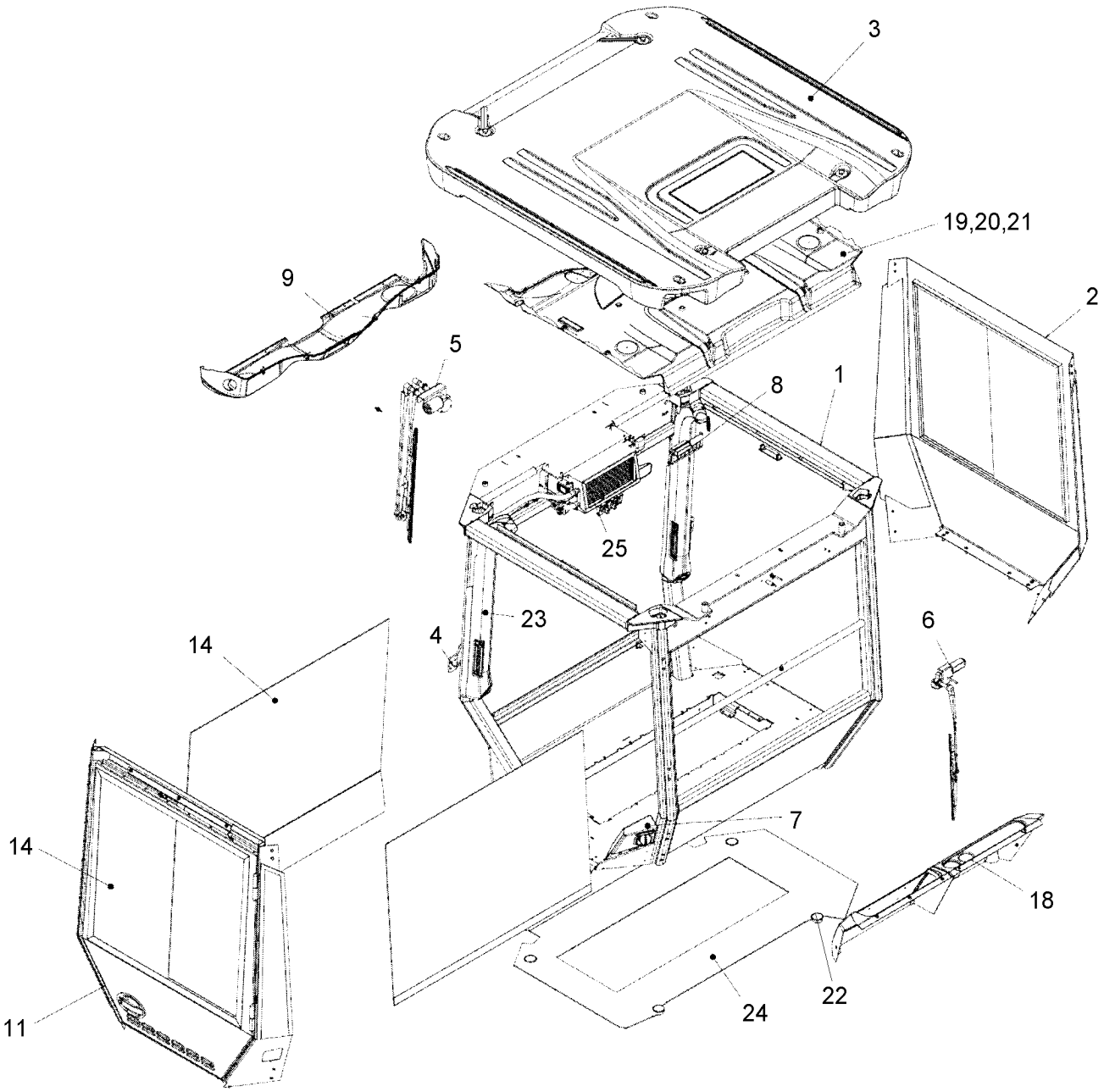

4700395898 Cab, cpl

Item	Part No	Rem	Qty	Description	Code
1			1	Cab frame	
2			1	**Cab frame, right side (Page 448)**	
3			1	**Roof (Page 450)**	
4			1	**General parts (Page 418)**	
5			1	**Windshield wiper, front (Page 420)**	
6			1	**Windshield wiper, rear (Page 422)**	
7			1	**Windshield washer reservoir (Page 424)**	
8			1	**Electric equipment (Page 426)**	
9			1	**Front panel (Page 428)**	
11			1	**Door frame (Page 430)**	
14			1	**Cab screens (Page 452)**	
18			1	**Rear covers (Page 384)**	
19	4700395829		5	Screw	
20	4700395830		5	Screw	
21	4700395858		1	Ceiling	D
22	4700395840		4	Plug	
23			2	**Air channel (Page 436)**	
24	4700395859		1	Floor mat	D
25			1	**Heater unit (Page 438)**	

Cab frame, right side

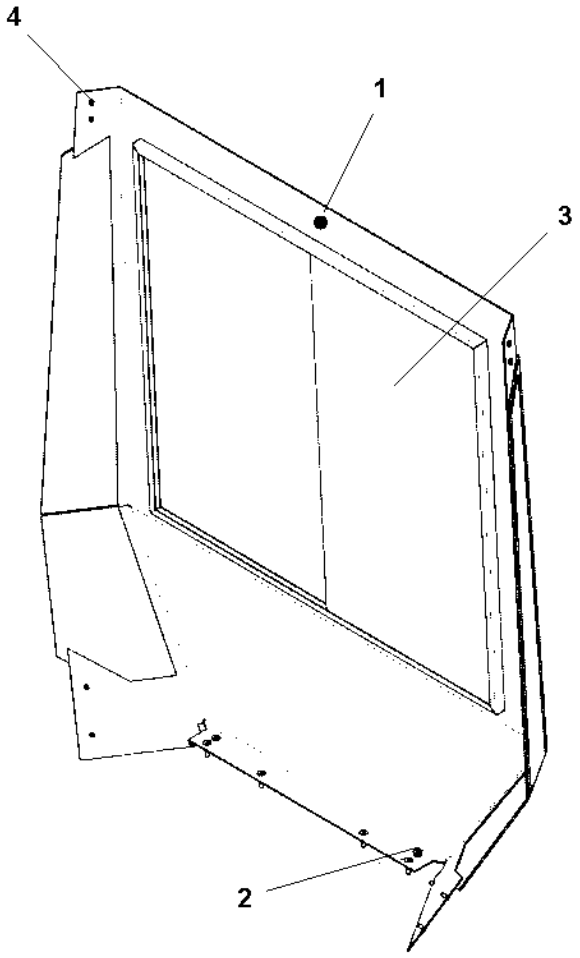

Cab frame, right side

Item	Part No	Rem	Qty	Description	Code
1			1	Frame	
2	4700927637		6	Hexagon socket countersunk screw	D
3		1		Screens	
4	4700500018		10	Screw M8-1,25x12 8,8	C

1) See section for Cab screens.

Roof

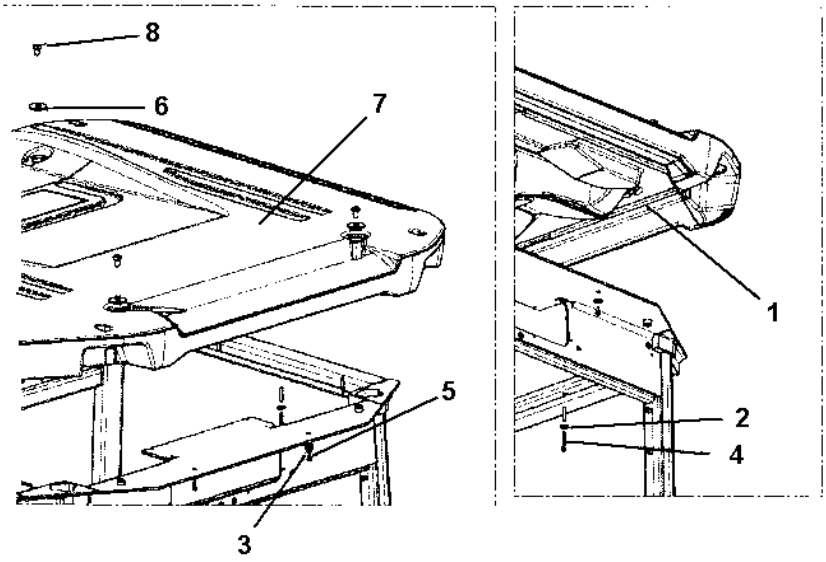

Roof

Item	Part No	Rem	Qty	Description	Code
1			1XL	Sealing strip	
2			8	Washer	
3	4700603009		6	Washer	
4			8	Stud bult	
5	4700500021		4	Screw M8-1,25x25 8.8	C
6			4	Washer	
7	4700395860		1	Roof	D
8	4700500154		4	Screw M16-2,0x25 8,8	

Cab screens

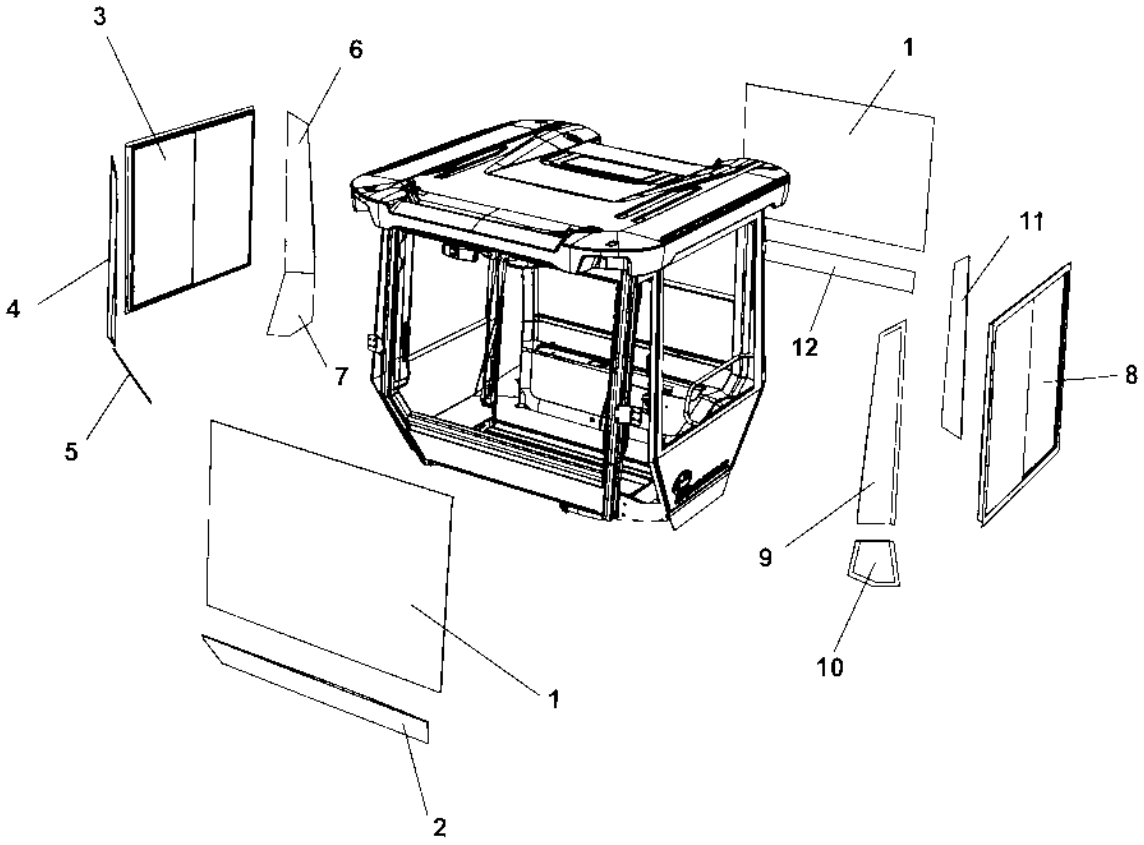

Cab screens

Item	Part No	Rem	Qty	Description	Code
1	4700393250		2	Windscreen	D
2	4700393251	A	1	Screen	D
3	4700395803	B	1	Sliding screen	D
4	4700393253	B,C	1	Screen	D
5	4700393261	B,A	1	Screen	D
6	4700393252	B,D	1	Screen	D
7	4700393254	B,E	1	Screen	D
8	4700395803	F	1	Sliding screen	D
9	4700393252	G,C	1	Screen	D
10	4700393254	G,A	1	Screen	D
11	4700393253	G,D	1	Screen	D

A) Front lower
B) Right side
C) Front upper
D) Rear upper
E) Rear lower
F) Door
G) Left side

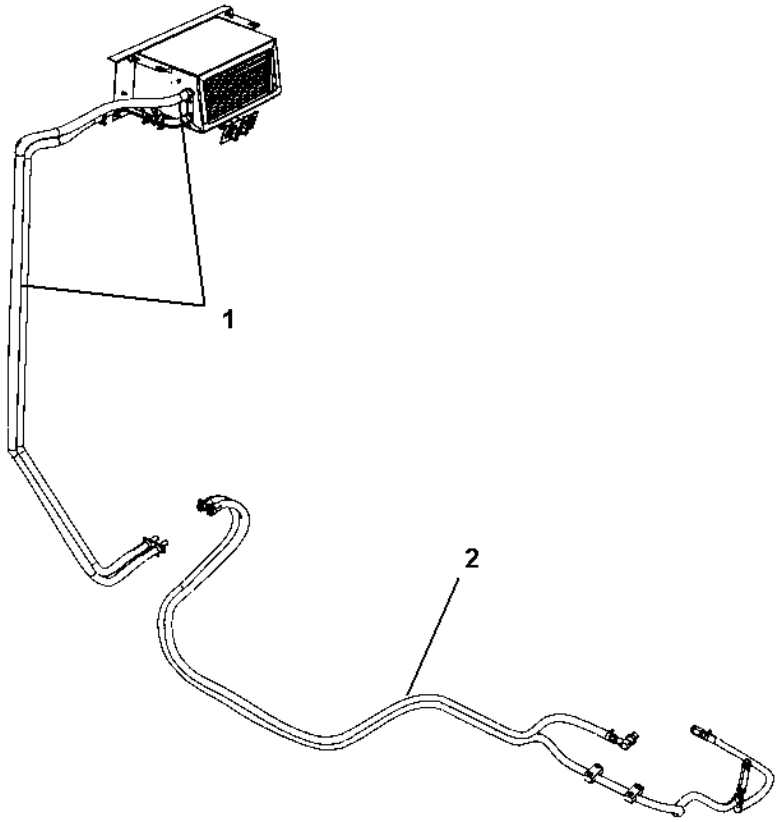
1
2

Cab heater system

Item	Part No	Rem	Qty	Description	Code
1			1	**Heater unit (Page 438)**	
2			1	**Heater hoses (Page 456)**	

Heater hoses

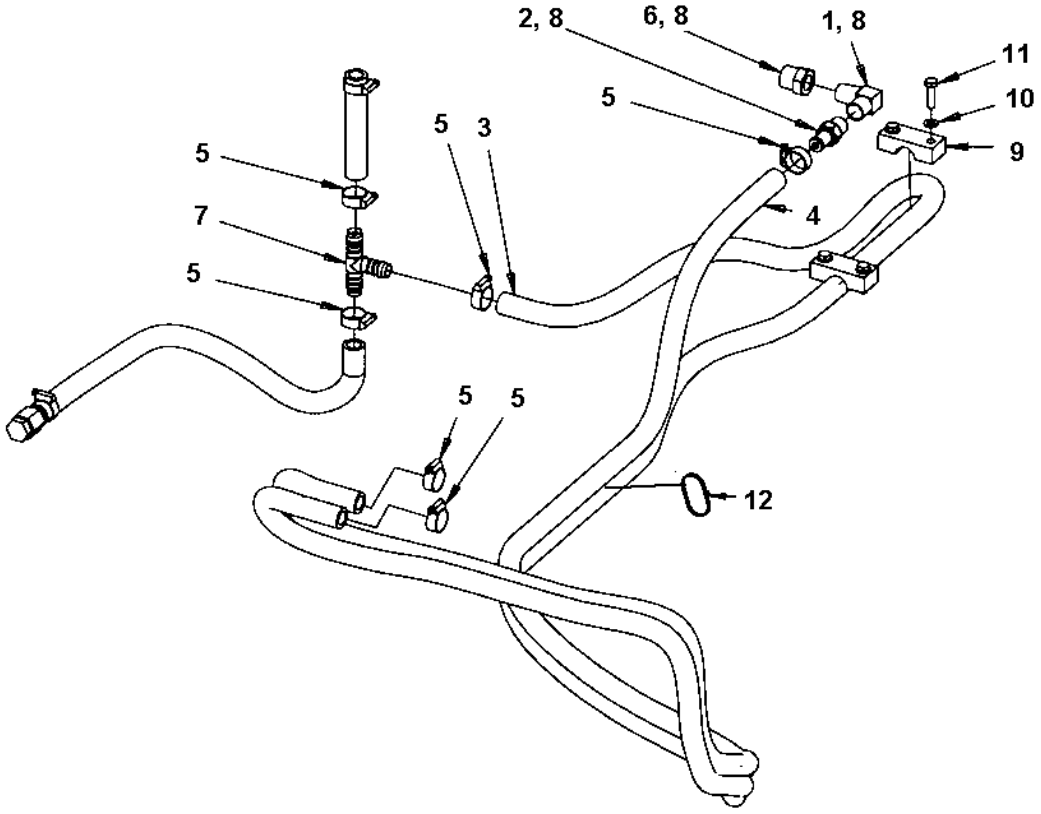

Heater hoses

Item	Part No	Rem	Qty	Description	Code
1	4700234365		1	Elbow 90°	
2	4700387638		1	Hose connection	
3	4700205112	A	1XL	Coolant hose	D
4	4700205112	B	1XL	Coolant hose	D
5	4700313004		6	Hose clamp 19-29mm	D
6	4700813434		1	Reducer	C
7	4700792065		1	Hose connection	C
8	4700901141		N	Sealing compound Loctite 577	D
9	4700395065		2	Pipe clamp	D
10	4700904229		4	Steel plain washer 8,4x16x1,5	C
11	4700500022		4	Screw M8x30H 8.8	C
12	4700313041		N	Cable ties L=200 mm	B

A) L= 4.0 m
B) L= 3.0 m

Cab noise cover

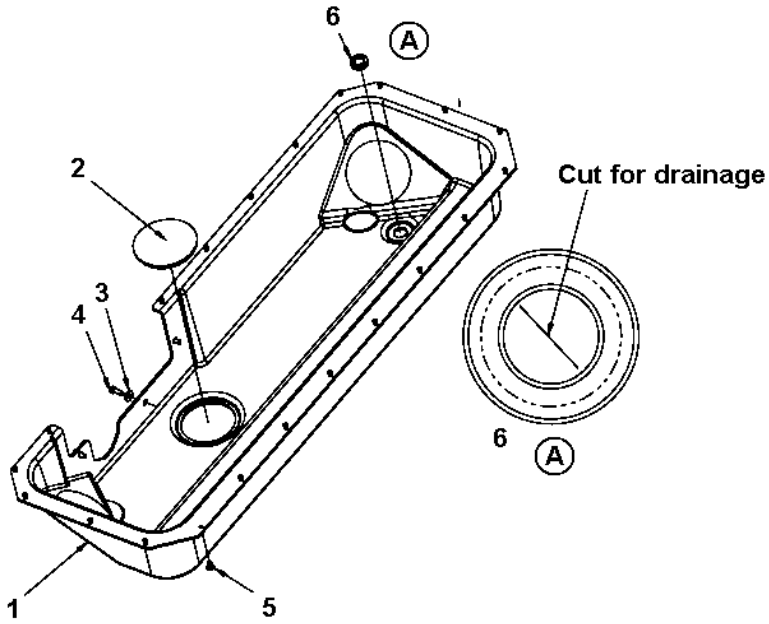

Cab noise cover

Item	Part No	Rem	Qty	Description	Code
1	4700391919		1	Noise reducing hood	
2	4700379992		3	Plug	
3	4700904640		3	Washer 8,4x22x3	C
4	4700500053		3	Screw M8x20H 8.8	C
5	4700792325		21	Blind rivet	
6	4700792392		1	Grommet with membrane	

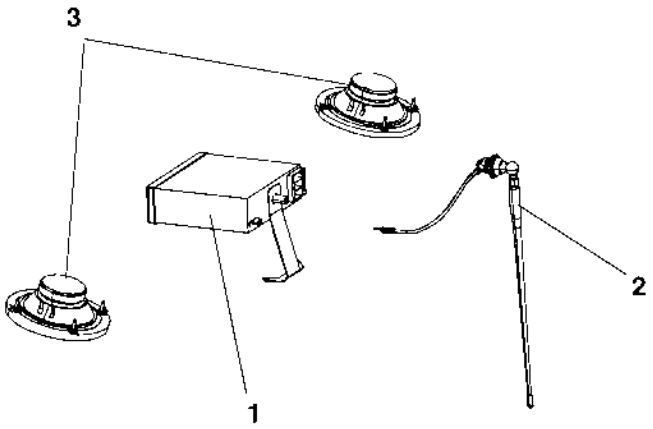
3
2
1

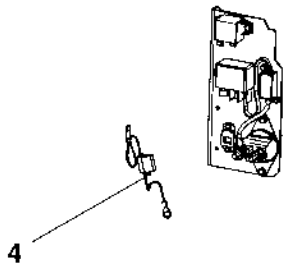
4

Radio and cd player

Item	Part No	Rem	Qty	Description	Code
1			1	**Radio and cd player module (Page 462)**	
2	4700937165		1	Antenna	D
3	4700791968		2	Loud speakers	
4			1	**Power supply module (Page 332)**	

Radio and cd player module

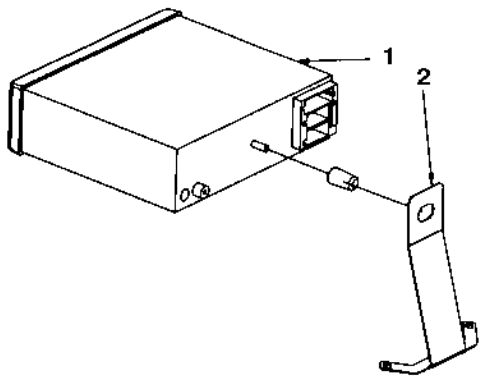

Radio and cd player module

Item	Part No	Rem	Qty	Description	Code
1	4700792583		1	Car stereo	
2	4700394654		1	Bracket	

Rear view mirror module

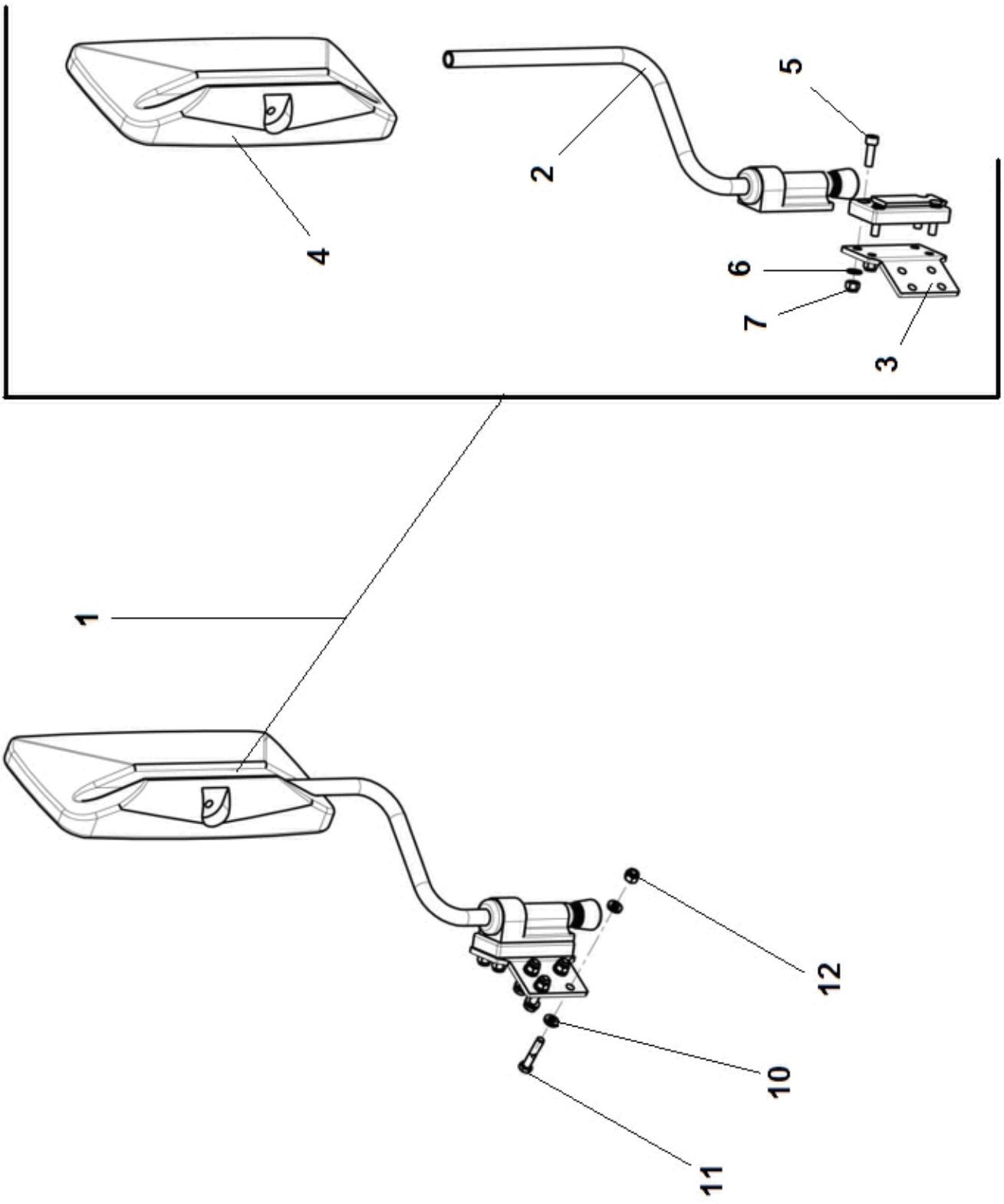

Rear view mirror module

Item	Part No	Rem	Qty	Description	Code
1	4812110352		1	Mirror assy	
2	4700381944		1	. Mirror bracket	
3	4700392316		1	. Bracket	
4	4700381943		1	. Mirror	
5	4700508019		4	. Screw M8x25 8.8	C
6	4700904229		4	. Steel plain washer 8,4x16x1,5	C
7	4700586003		4	. Lock nut M8	C
10	4700904556		8	Washer 8,4x16x3,0	C
11	4700500024	A	4	Screw M8x45	D
12	4700586003		4	Lock nut M8	C
13	4700500025	B	4	Screw M8-1,25x50 8.8	
14	4700500067	C	4	Screw M8-1,25x55 8.8	

A) Used on machines with Handrails.
B) Used on machines with Handrails and Canopy.
C) Used on mashines with Handrails, Canopy and additional Work lights.

Drivers seat

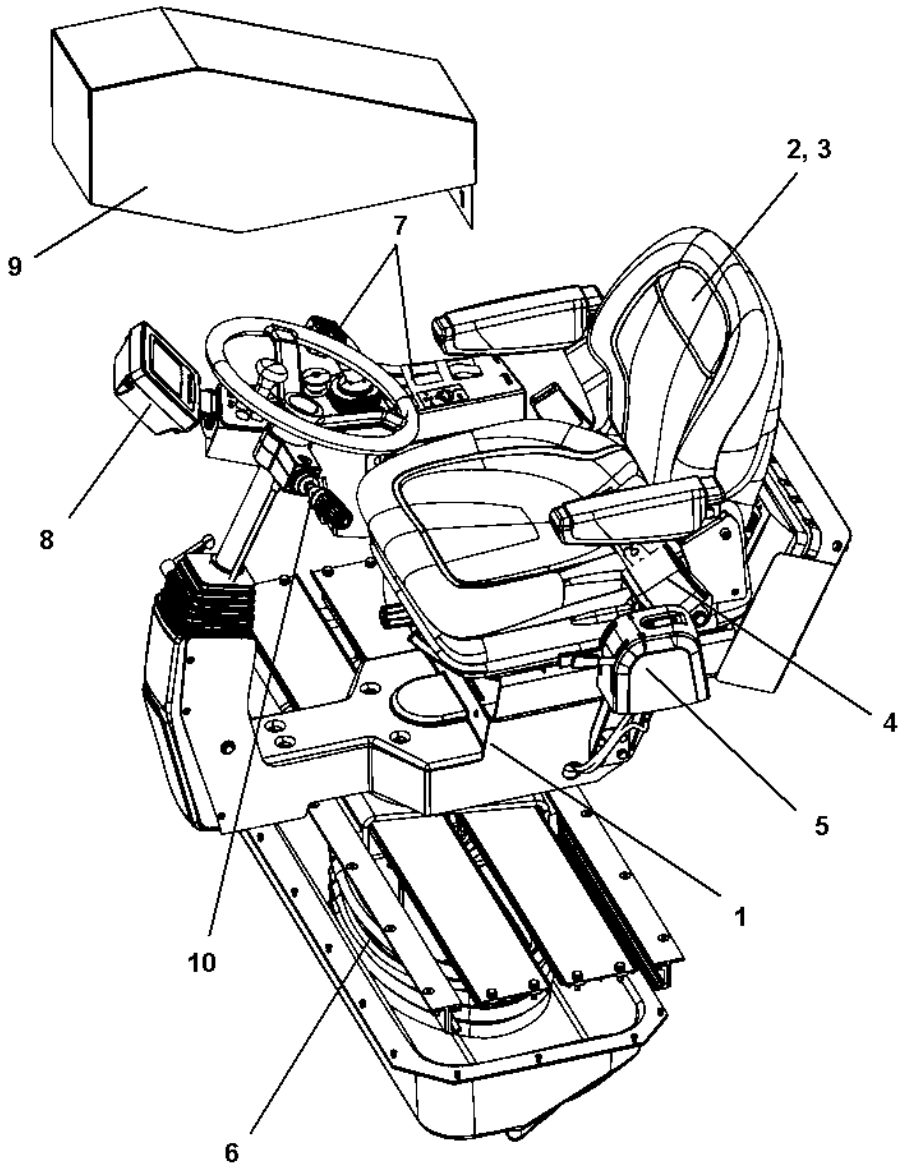

Drivers seat

Item	Part No	Rem	Qty	Description	Code
1				**Seat frame structure (Page 468)**	
2				**Seat, galon suspensioned (Page 474)**	
3				**Seat, fabric suspensioned (option) (Page 476)**	
4	4700377677		1	Seat belt 2"	B
	4700379637		1	Seat belt kit, static 3"	B
5				**Controls, slidable and turning (Page 478)**	
6				**Cross sliding (Page 480)**	
7				**Drive control, cpl (Page 484)**	
8				**Display unit (Page 488)**	
9				**Control panel cover (Page 490)**	
10				**Steering column switch module (Page 346)**	

Seat frame structure

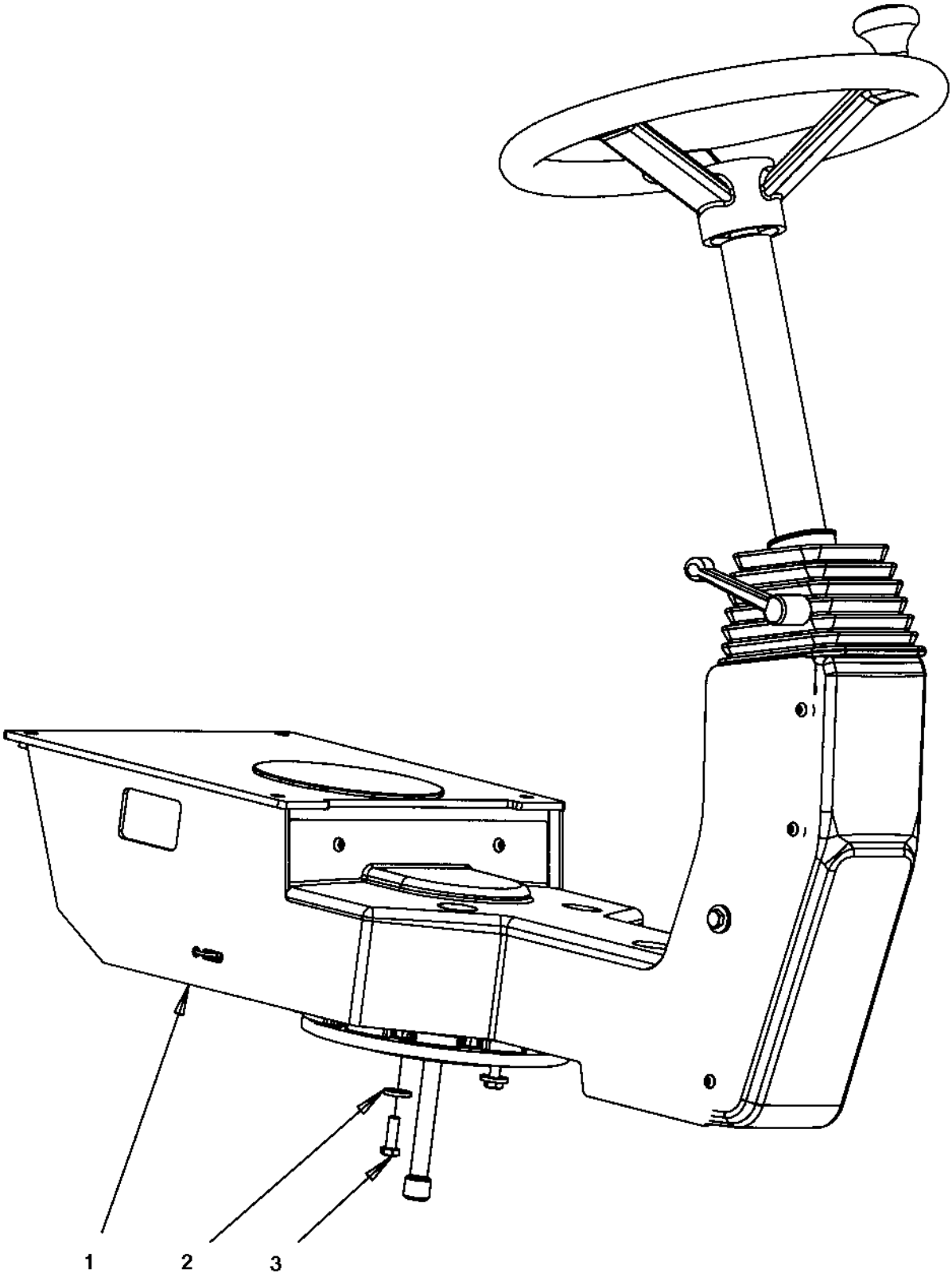

Seat frame structure

Item	Part No	Rem	Qty	Description	Code
1			1	**Seat frame (Page 470)**	
2	4700904229		8	Steel plain washer 8,4x16x1,5	C
3	4700947679		4	Screw	C

Seat frame

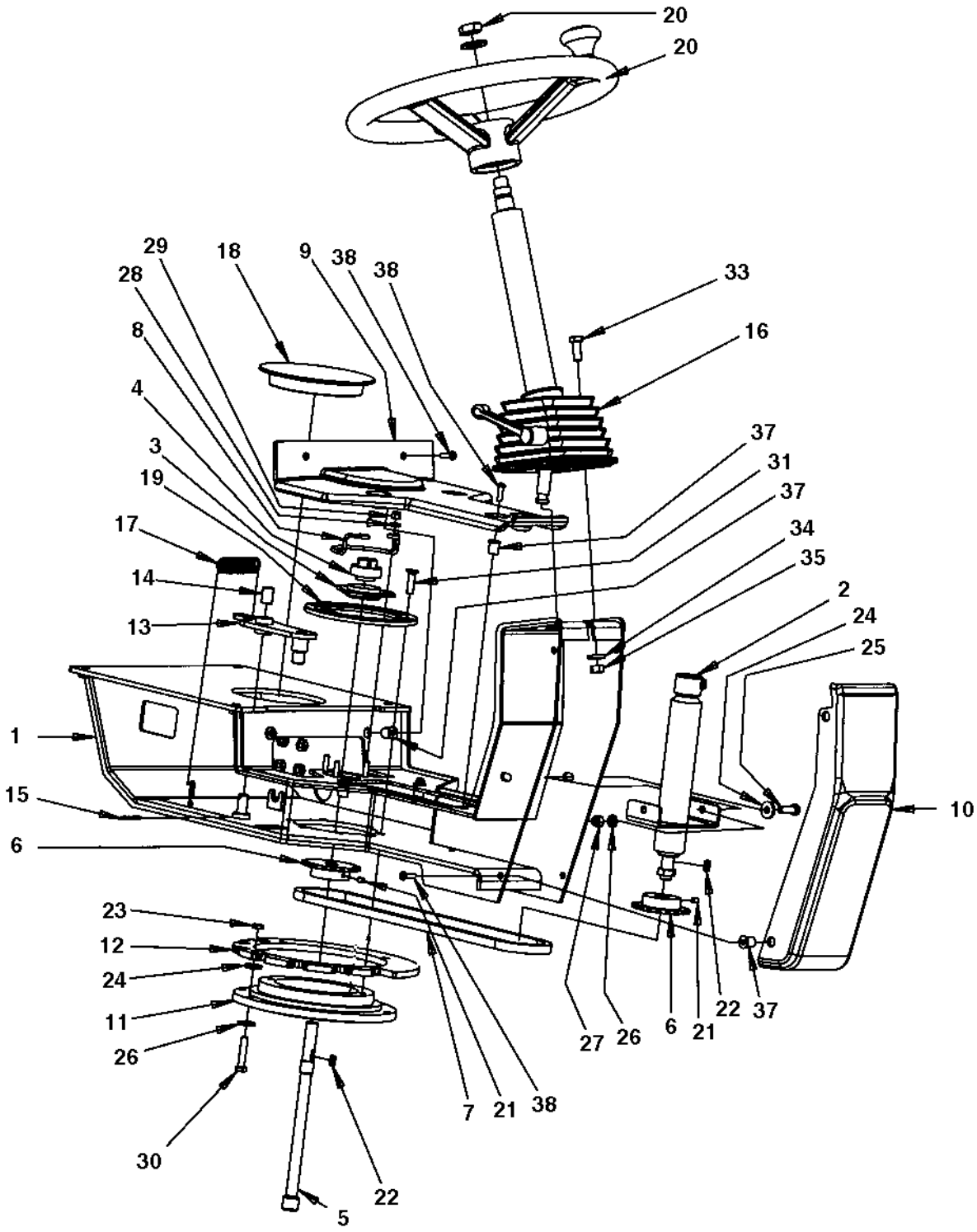
20
20
29
28
18
9
38
38
33
16
8
4
3
19
17
14
13
37
31
37
34
35
2
24
25
1
15
6
10
23
12
24
11
26
30
22
5
7
21
38
27
26
6
21
22
37

Seat frame

Item	Part No	Rem	Qty	Description	Code
1	4700379693		1	Seat frame Up to 384S00097	D
	4700395447		1	Seat frame From 384S00098	D
2	4700359919		1	Shaft	C
3	4700903917		1	Bearing outer	B
4	4700903918		1	Bearing inner	B
5	4700391770		1	Shaft	
6	4700359916		2	Chain wheel	D
7	4700379718		1	Chain and connecting link	C
8	4700372672		1	Chain guard	D
9	4700392839		1	Cover	D
10	4700392840		1	Cover	D
11	4700359125		1	Ball bearing	B
12	4700379728		1	Locking disc	C
13	4700379722		1	Coupling link Up to 384S00097	D
	4700395383		1	Coupling link From 384S00098	C
14	4700359820		1	Bushing Up to 384S00097	D
	4700359819		1	Bushing From 384S00098	C
15	4700630008		1	Pin	D
16	4700391163		1	**Steering column (Page 472)**	D
17	4700359043		1	Spring	D
18	4700359920		1	Plug	C
19	4700372965		1	Lock ring	C
20	4700372964		1	Steering wheel, cpl	D
21	4700516051		2	Set screw	C
22	4700350009		2	Flat key	C
23	4700573008		4	Nut M8	C
24	4700904640		6	Washer 8,4x22x3	C
25	4700500021		2	Screw M8-1,25x25 8.8	C
26	4700904229		6	Steel plain washer 8,4x16x1,5	C
27	4700586003		2	Lock nut M8	C
28	4700603001		3	Washer	C
29	4700586002		3	Lock nut M6 -8	C
30	4700792678		4	Screw	C
31	4700902520		6	Screw	C
33	4700500028		3	Screw Up to 384S00097	C
	4700508029		3	Screw M10-1,5x30H 8,8 From 384S00098	C
34	4700904557		3	Steel plain washer	C
35	4700570006		3	Nut	B
37	4700792539		10	Rubber nut	C
38	4700791524		10	Screw M6X20	C

4700391163 Steering column

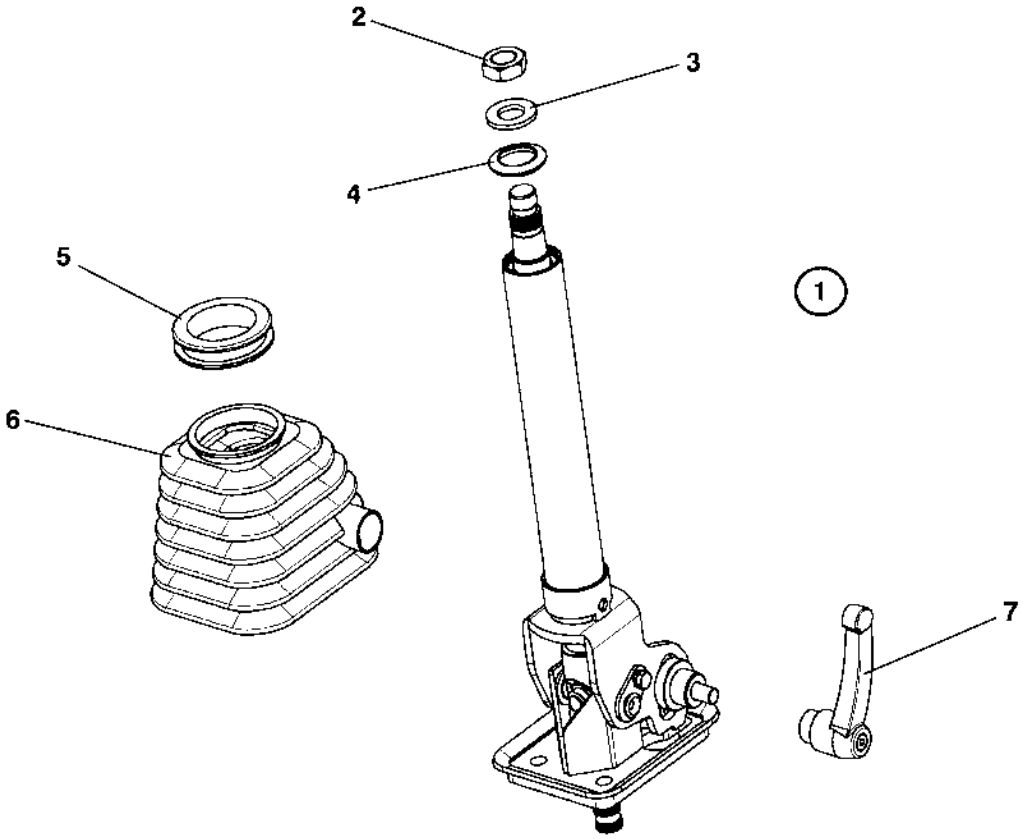

4700391163 Steering column

Item	Part No	Rem	Qty	Description	Code
1	4700391163			**Steering column (Page 472)**	D
2	4700945632		1	. Nut	C
3	4700945633		1	. Washer	C
4	4700945634		1	. Rubber cap	C
5	4700945635		1	. Bellows ring	C
6	4700945636		1	. Bellows	C
7	4700945637		1	. Locking handle	D

Seat, galon suspensioned

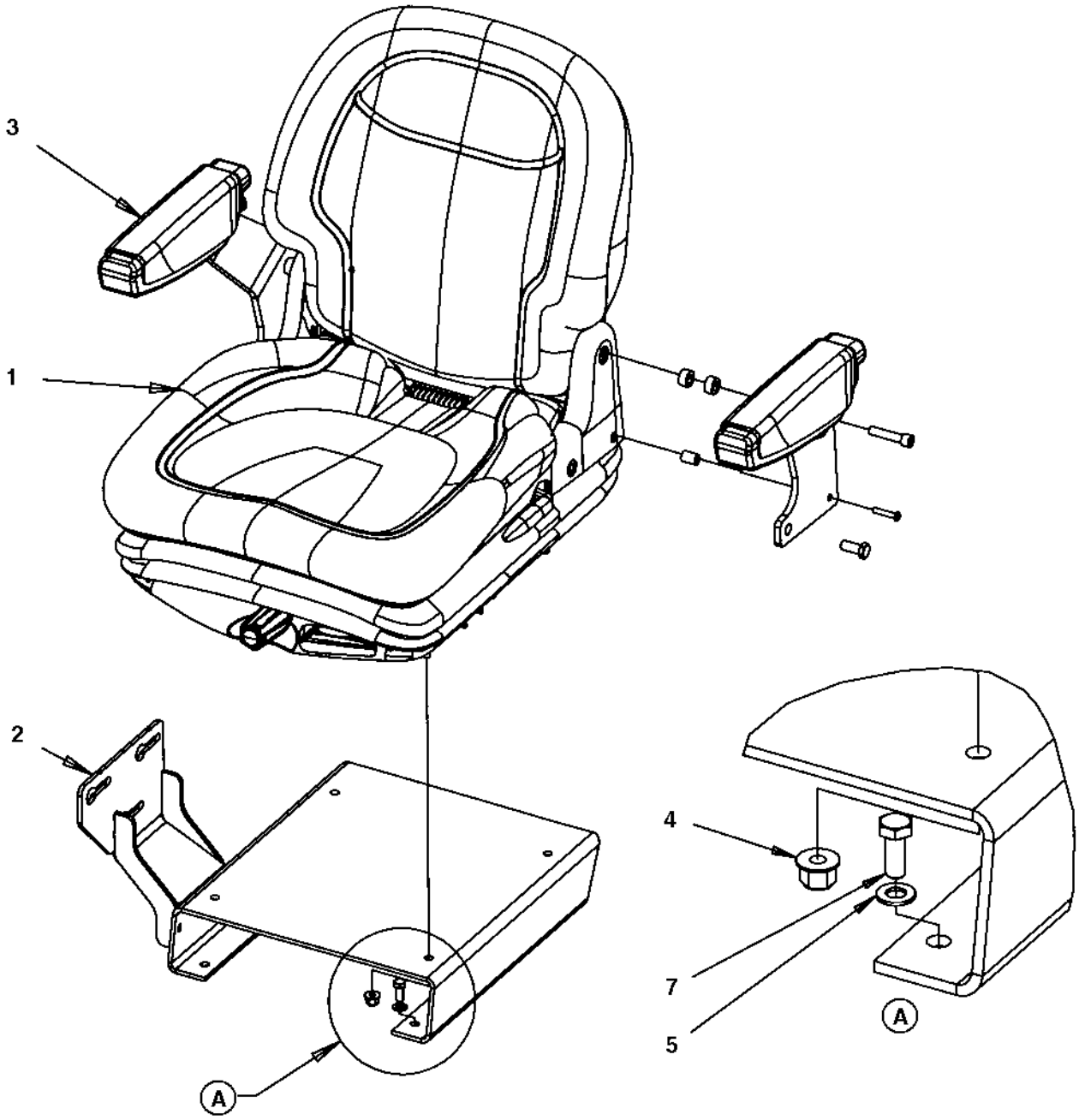

Seat, galon suspensioned

Item	Part No	Rem	Qty	Description	Code
1	4700377518		1	Drivers seat, cpl	D
	4700945622		1	. Seat switch	B
	4700945661	A	1	. Adjuster kit	D
2	4700390561		1	Seat frame	D
3	4700390963		1	Arm rest kit	D
4	4700902286		4	Hexagon lock nut with flange	C
5	4700904229		4	Steel plain washer 8,4x16x1,5	C
7	4700500053		4	Screw M8x20H 8.8	C

A) Left & right sliding rail

Seat, fabric suspensioned (option)

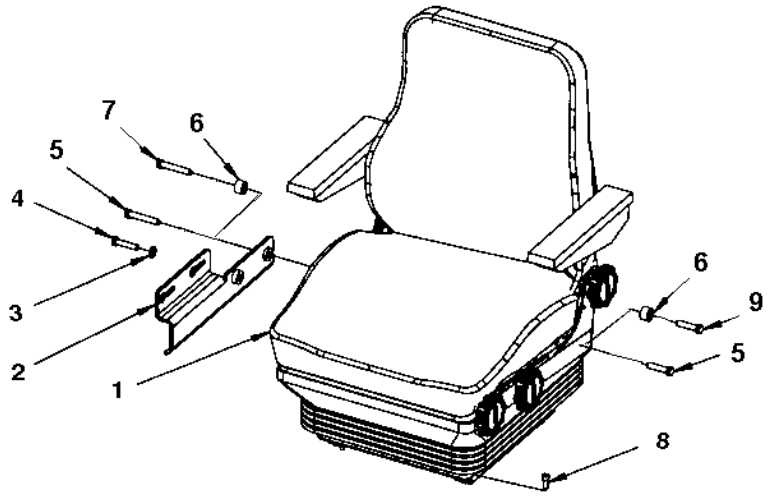

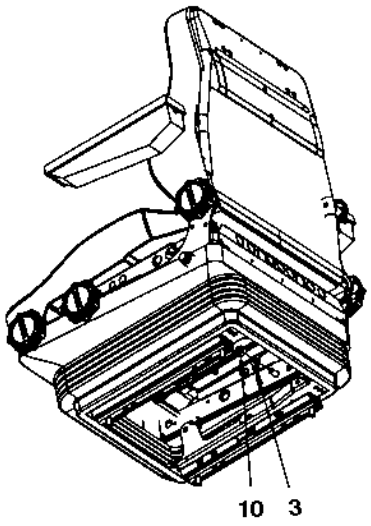

Seat, fabric suspensioned (option)

Item	Part No	Rem	Qty	Description	Code
1	4700390013	A	1	Seat	D
	4700937892		1	. Seat switch	B
	4700937620		1	. Arm rest, right	D
	4812158367		1	. Arm rest wide, right	
	4700937621		1	. Arm rest, left	D
2	4700390169		1	Bracket	D
3	4700904230		2	Steel plain washer	C
4	4700500161		1	Hexagon head screw	C
5	4700903914		2	Screw	C
6	4700791572		2	Spacer washer	C
7	4700792501		1	Screw	C
8	4700508092		4	Screw	C
9	4700792527		1	Screw	C
10	4700586018		1	Hexagon lock nut M10	C

A) Without seat belt

Controls, slidable and turning

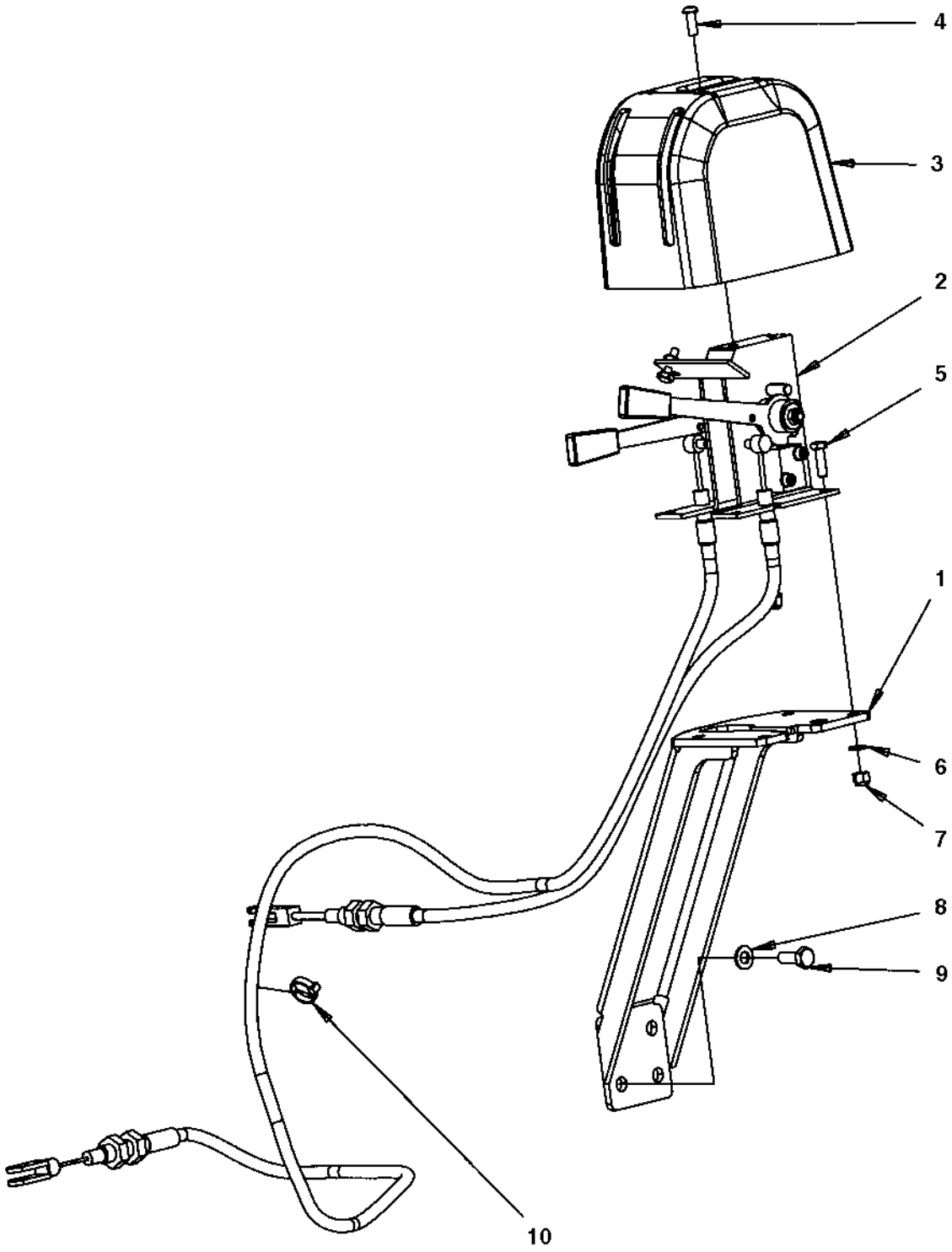

Controls, slidable and turning

Item	Part No	Rem	Qty	Description	Code
1	4700391241		1	Bracket	D
2	4700390239		1	Control	
	4700393496		1	. Cable 675	
	4700393497		1	. Cable 1300	
3	4700392965		1	Control cover	C
4	4700791524		2	Screw M6X20	C
5	4700500040		4	Screw M6-1x20 8,8	C
6	4700904228		4	Washer 6,4x12x1,5	C
7	4700586002		4	Lock nut M6 -8	C
8	4700904229		4	Steel plain washer 8,4x16x1,5	C
9	4700500053		4	Screw M8x20H 8.8	C
10	4700313041		N	Cable ties L=200 mm	B

Cross sliding

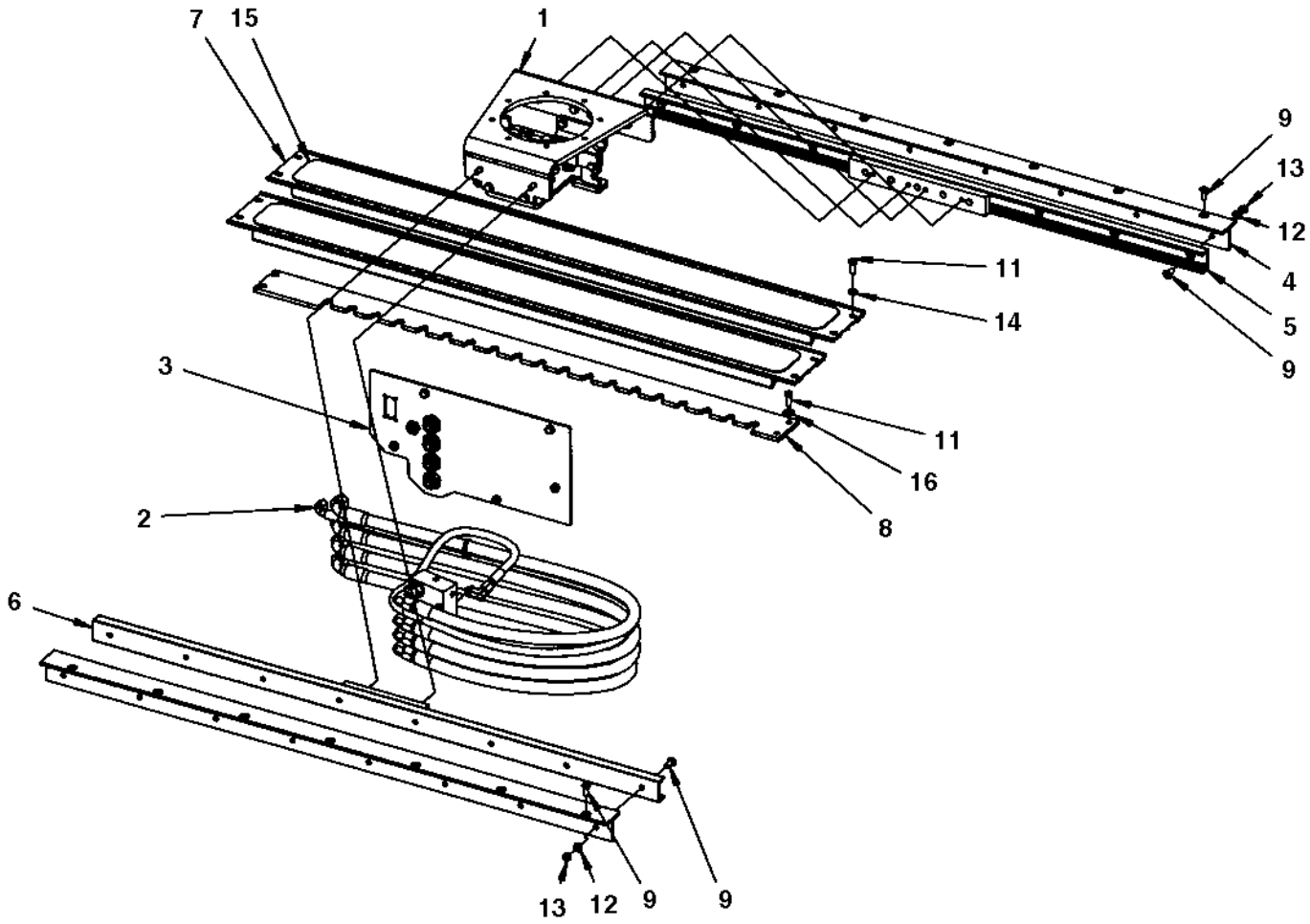

Cross sliding

Item	Part No	Rem	Qty	Description	Code
1			1	**Carrier (Page 482)**	
2			1	**Steering, slideable (Page 278)**	
3			1	**Hose bracket (Page 274)**	
4	4700390428		2	Rail holder	
5	4700391082		1	Linear bearing	
6	4700391083		1	Linear bearing	
7	4700393191		2	Cover	
8	4700379729		1	Locking rail	
9	4700513003		30	Screw	C
11	4700500020		12	Screw M8-1,25x22 8,8	D
12	4700904229		16	Steel plain washer 8,4x16x1,5	C
13	4700570005		16	Nut M8	C
14	4700904556		8	Washer 8,4x16x3,0	C
15	4700393978		2	Slip protection	
16	4700791304		4	Washer	C

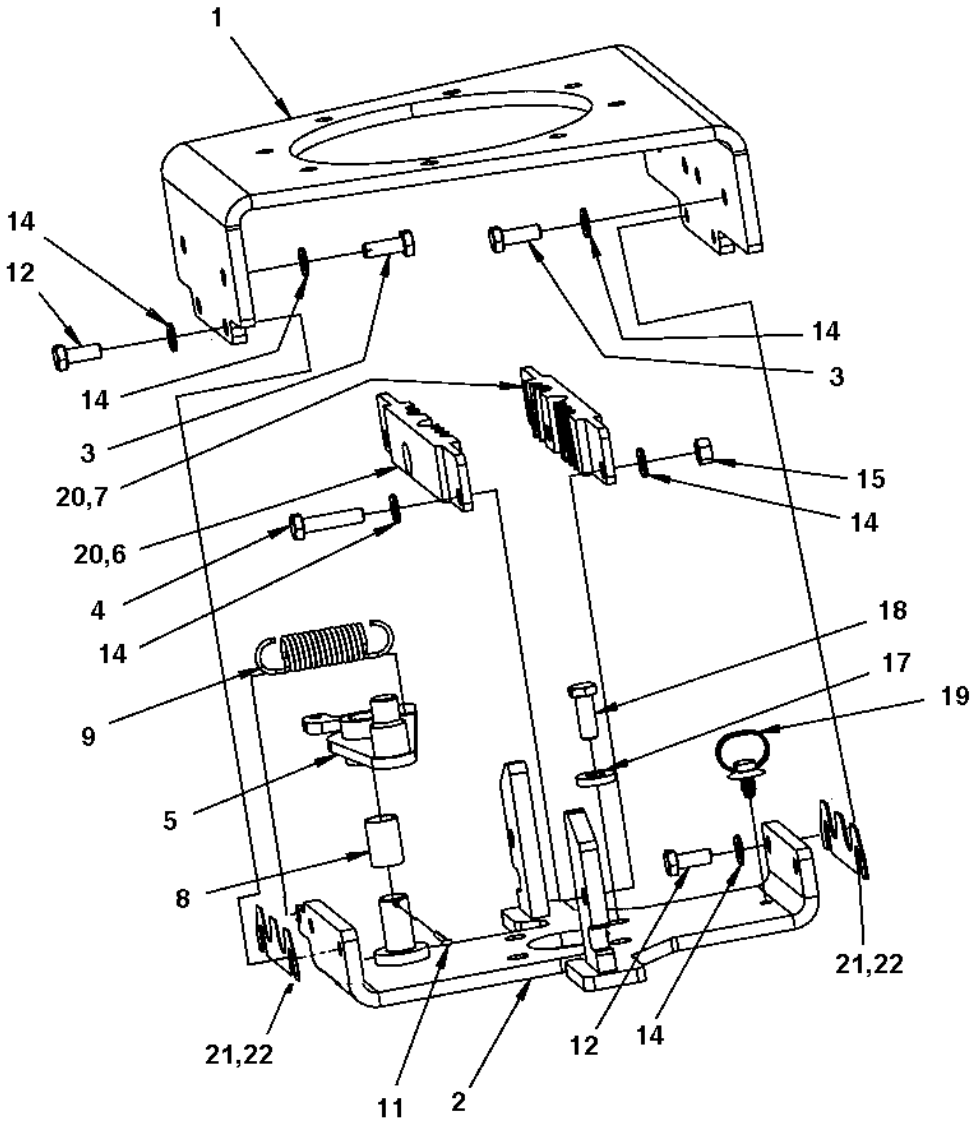
1
14
12
14
3
14
3
20,7
20,6
4
14
9
5
8
21,22
11
2
12
14
21,22
15
14
18
17
19

Carrier

Item	Part No	Rem	Qty	Description	Code
1	4700379715		1	Carrier	D
2	4700391478		1	Steering valve bracket	D
3	4700500020		6	Screw M8-1,25x22 8,8	D
4	4700500047		2	Hexagon head screw	C
5	4700393347		1	Coupling link	D
6	4700372959	2	1	Clamp	C
7	4700372960	2	1	Clamp	C
8	4700359819		1	Bushing	C
9	4700359043		1	Spring	D
11	4700630008		1	Pin	D
12	4700500053		4	Screw M8x20H 8.8	C
14	4700904229		14	Steel plain washer 8,4x16x1,5	C
15	4700570005		2	Nut M8	C
17	4700904557		4	Steel plain washer	C
18	4700502035		4	Screw 3/8"-16UNCx1 8.8	D
19	4700792441		1	Cable tie with holder	C
20	4812110896	1	2	Clamp	C
21	4812115060		N	Shim	
22	4812115061		N	Shim	

1) 2pcs together can replace item 6 and 7.
2) Item 6 and 7 can be replaced by 2pcs of item 20.

Drive control, cpl

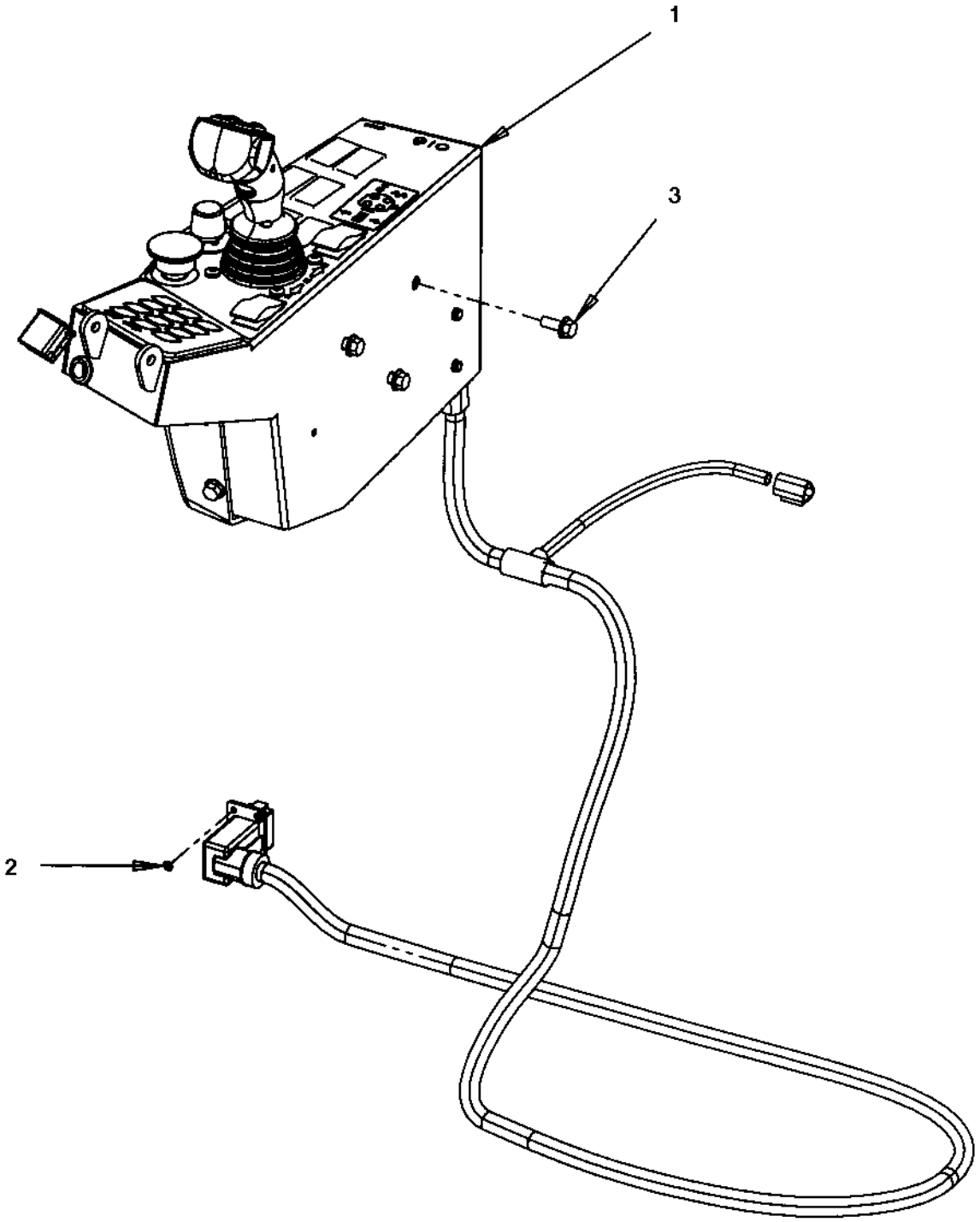

Drive control, cpl

Item	Part No	Rem	Qty	Description	Code
1			1	**Drive control Up to 384S00478**	
			1	**Drive control From 384S00479 (Page 486)**	
2	4700791709		4	Pop rivet	C
3	4700500505		3	Screw M8x20 8.8	C

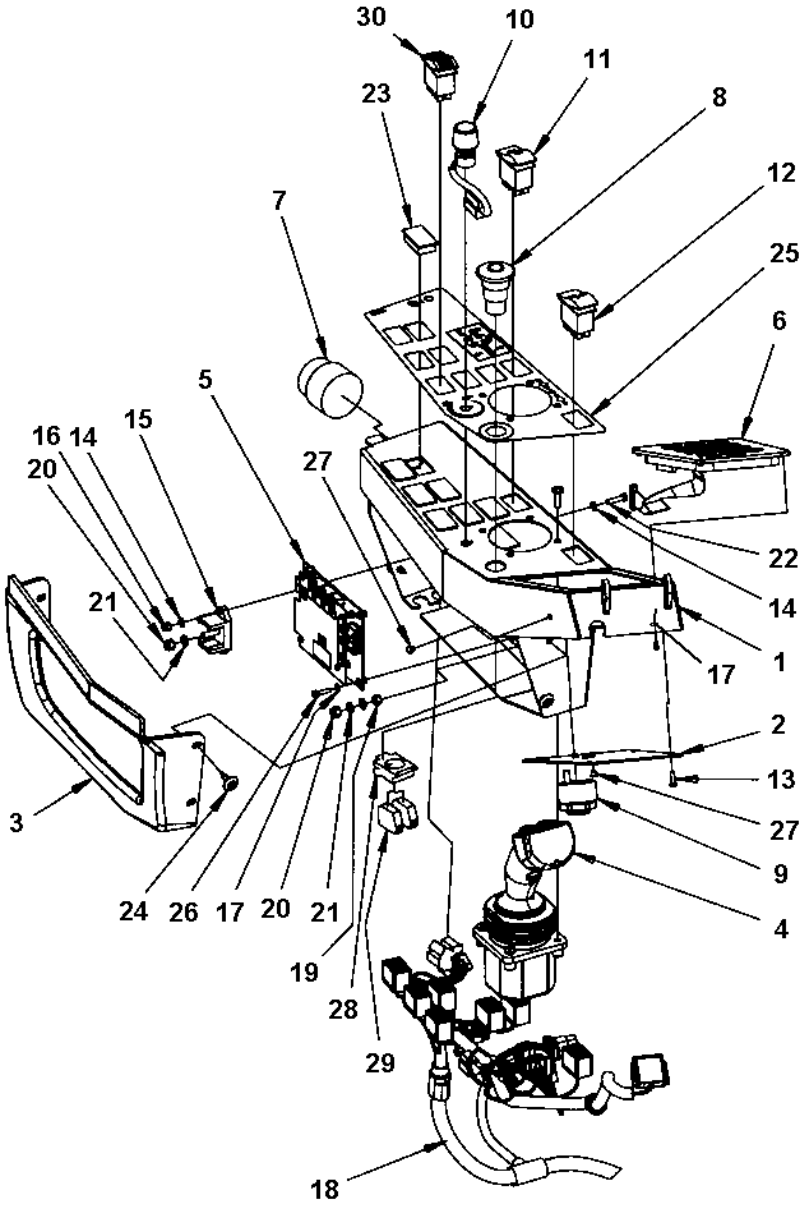
30
10
11
23
8
12
7
25
6
5
16
14
15
20
27
22
21
14
1
17
2
13
3
27
9
4
24
26
17
20
21
19
28
29
18

Drive control

Item	Part No	Rem	Qty	Description	Code
1	4700396661		1	Control box	
2	4700391396		1	Cover	D
3	4700396662		1	Cover	C
4	4700391420		1	Control handle	D
5	4700390861		1	Control unit	
6	4700391421		1	Membrane switch panel	D
7	4812110901		1	Ignition switch	B
	4700940451		1	. Key	D
8	4700791739		1	Emergency stop	B
9	4700385599		1	Buzzer	B
10	4700388737		1	Potentiometer	B
11	4700791582		1	Switch, parking brake	B
12	4700792414		1	Switch, RPM	D
13	4700526010		4	Thread rolling screw	C
14	4700904281		4	Washer 5,3x10x1 300HV	C
15	4700392930		1	Junction box	D
16	4700586001		2	Lock nut	C
17	4700904698		4	Washer 4,3x8x0,8	C
18	4812110989		1	Cable harness	
19	4700570004		1	Nut M6X1,00 -8 A2K	C
20	4700586002		2	Lock nut M6 -8	C
21	4700904228		3	Washer 6,4x12x1,5	C
22	4700500060		2	Screw M5-0,8x20 8.8	C
23	4700791588		7	Panel plug	C
24	4700395785		4	Expansion rivet	D
25	4700393031		1	Decal	D
26	4700508022		4	Screw M4x16	
27	4700902804		5	Plug	C
28	4700791733		1	Fixing collar	C
29	4700791723		2	Connector N/C	B
30	4700792812		1	Switch, displacement shift	D

Display unit

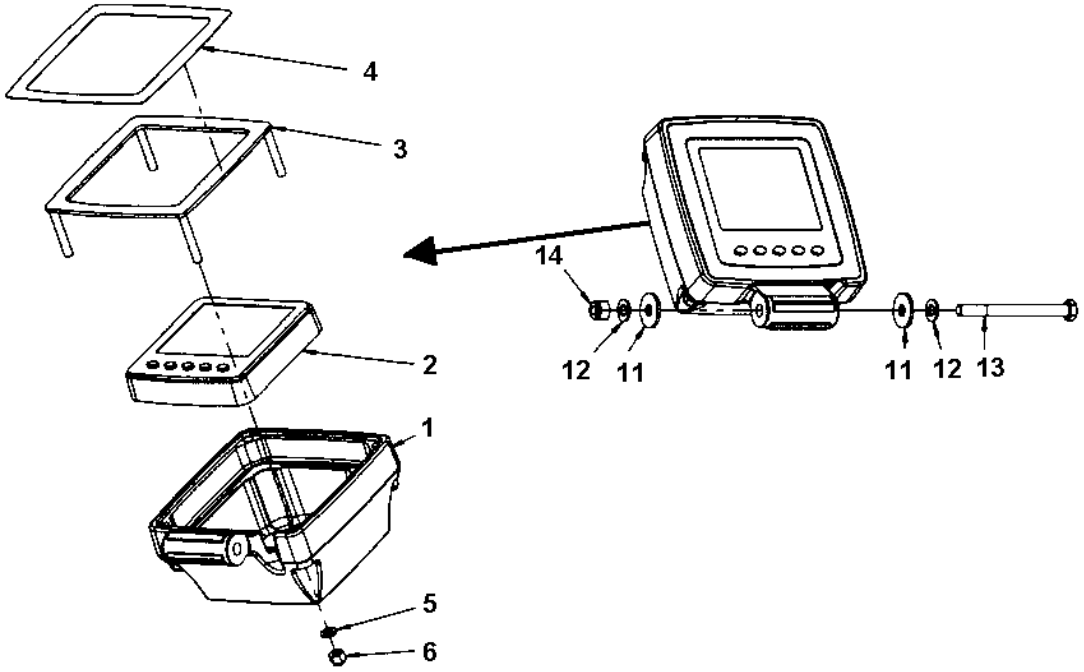

Display unit

Item	Part No	Rem	Qty	Description	Code
1	4700392717		1	Display holder	D
2	4812113786		1	Display unit	B
3	4700392719		1	Cover	D
4	4700393094		1	Decal	D
5	4700904228		4	Washer 6,4x12x1,5	C
6	4700586002		4	Lock nut M6 -8	C
11	4700903662		2	Washer	C
12	4700904229		2	Steel plain washer 8,4x16x1,5	C
13	4700500115		1	Hexagon head screw M8x90 8.8	C
14	4700586003		1	Lock nut M8	C

Control panel cover

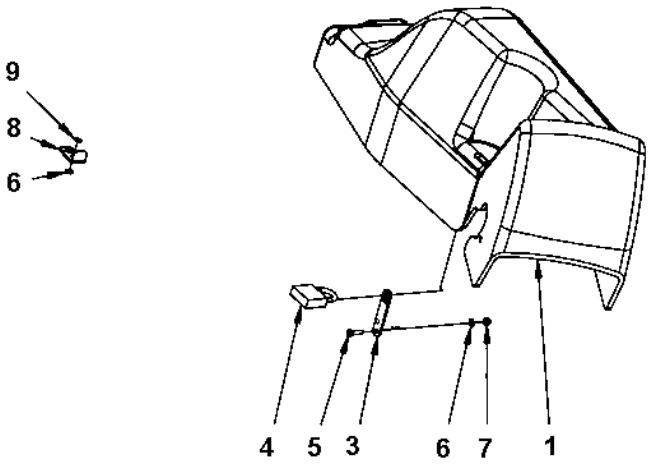

Control panel cover

Item	Part No	Rem	Qty	Description	Code
1	4700395947		1	Instrument panel cover	D
3	4700387545		1	Latch	D
4	4700358881		1	Pad lock	D
5	4700904653		2	Screw M5x16 A2-70	C
6	4700904281		4	Washer 5,3x10x1 300HV	C
7	4700586001		2	Lock nut	C
8	4700396670		1	Bracket	D
9	4700904619		2	Blind rivet	C

Decals

Decals

Item	Part No	Rem	Qty	Description	Code
1				Decals (Page 494)	

Decals

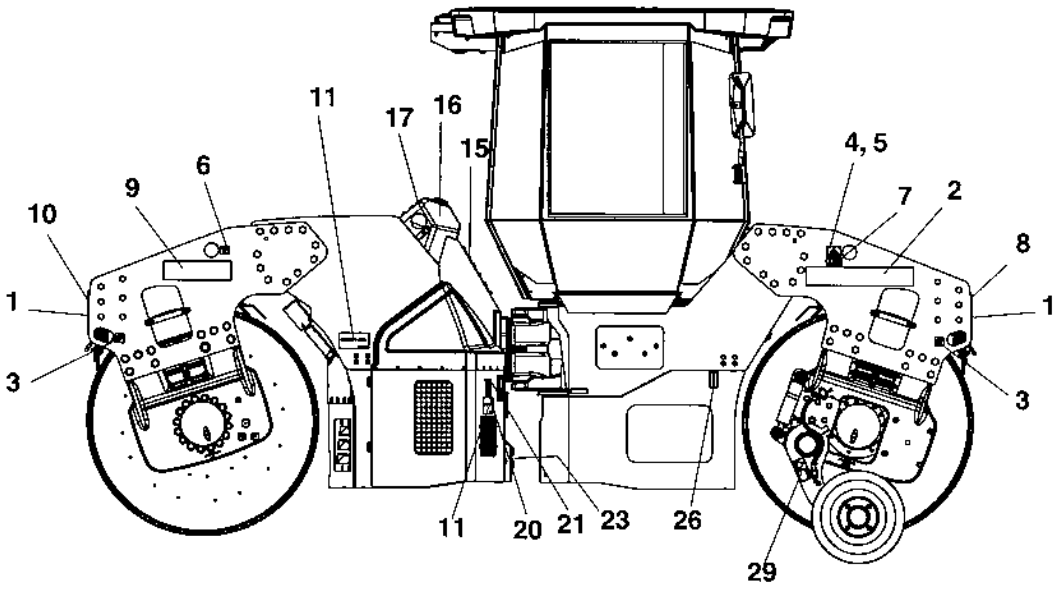
11
17
16
15
6
9
10
1
3
4, 5
7
2
8
1
3
11
20
21
23
26
29

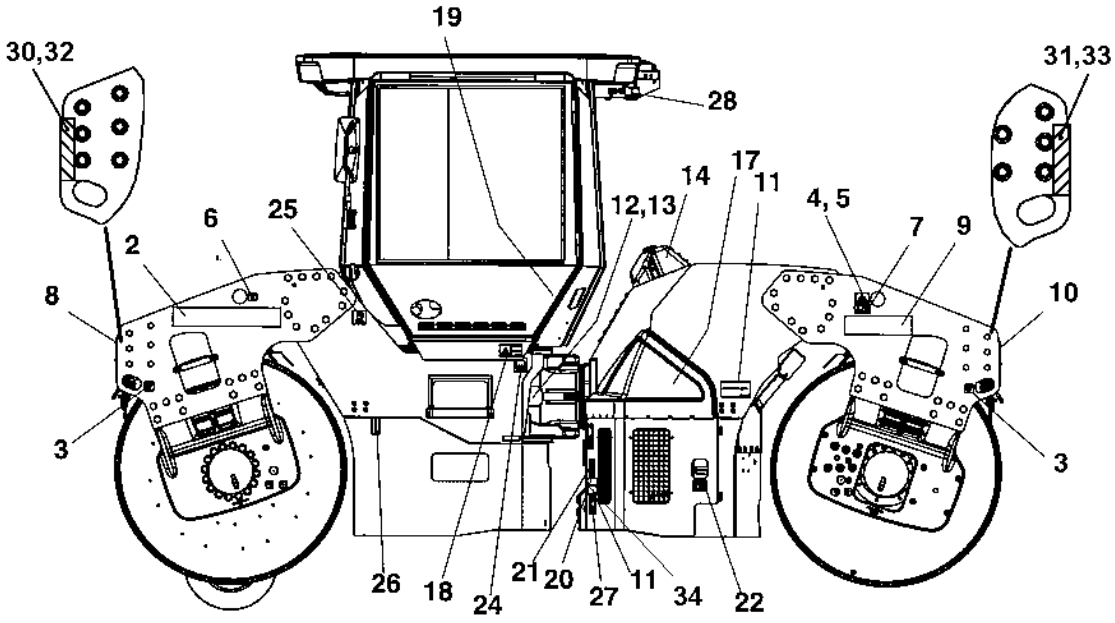
19
30,32
31,33
28
14
17
11
12,13
4, 5
6
25
2
7
9
8
10
3
3
26
18
24
21
20
27
11
34
22

Decals

Item	Part No	Rem	Qty	Description	Code
1	4700904094		2	Decal "DYNAPAC" L=670 mm	
2	4700904092		2	Decal "DYNAPAC" L=590 mm	D
3	4700382751		4	Decal "TIE DOWN POINT"	D
4	4700904870		2	Lifting sign	D
5	4700624005		8	Blind rivet 3,2x6,1	C
6	4700357587		2	Decal "LIFT POINT"	D
7	4700908229		2	Safety decal	D
8	4700377743		2	Reflector, white	D
9	4700792573		2	Decal "MODEL CODE" CC424HF	D
10	4700377742		2	Reflector, red	D
11	4700903422		4	Decal "SAFETY"	D
12			1	Product identification plate	
13	4700624005		4	Blind rivet 3,2x6,1	C
14	4700272372		1	Decal "HYDRAULIC OIL"	D
	4700904601		1	Decal "BIO HYDRAULIC OIL"	D
	4700792772		1	Decal "BIO HYDRAULIC OIL" PANOLIN	D
15	4700272373		1	Decal "HYDRAULIC OIL"	D
16	4700388449		1	Decal "COOLING LEVEL"	
17	4700791642		2	Decal "WARNING" Use of starting fluid prohib.	D
18	4700903459		1	Decal "SAFETY"	D
19	4700903425		2	Decal "SAFETY MANUAL"	D
20	4700903423		2	Decal "SAFETY"	D
21	4700903424		2	Decal "HOT SURFACE"	D
22	4700904835		1	Decal "BATTERY POWER"	D
23	4700393959		1	Decal "24V"	
24	4700991657		1	Decal "WATER"	D
25	4700991658		1	Decal "FUEL"	D
26	4700377744		2	Reflector, yellow	D
27	4700791277		1	Decal "Sound power level" 107dB	D
	4700791278		1	Decal "Sound power level" 108dB	D
28	4700904165		1	Safety decal Toxic gases	D
29	4700904083		1	Safety decal	D
30	4700394596		2	Decal "Risk location"	
31	4700394594		2	Decal "Risk location"	
32	4700394593		2	Decal "Risk location"	
33	4700394595		2	Decal "Risk location"	
34	4700904895		1	Safety decal "Brake release"	D

Optional equipment

Item	Part No	Rem	Qty	Description	Code
1			1	**Air conditioning (Page 498)**	
2			1	**Edge cutter (Page 522)**	
3			1	**Fire extinguisher/First Aid Cushion (Page 544)**	
4			1	**Asphalt temperature meter (Page 548)**	

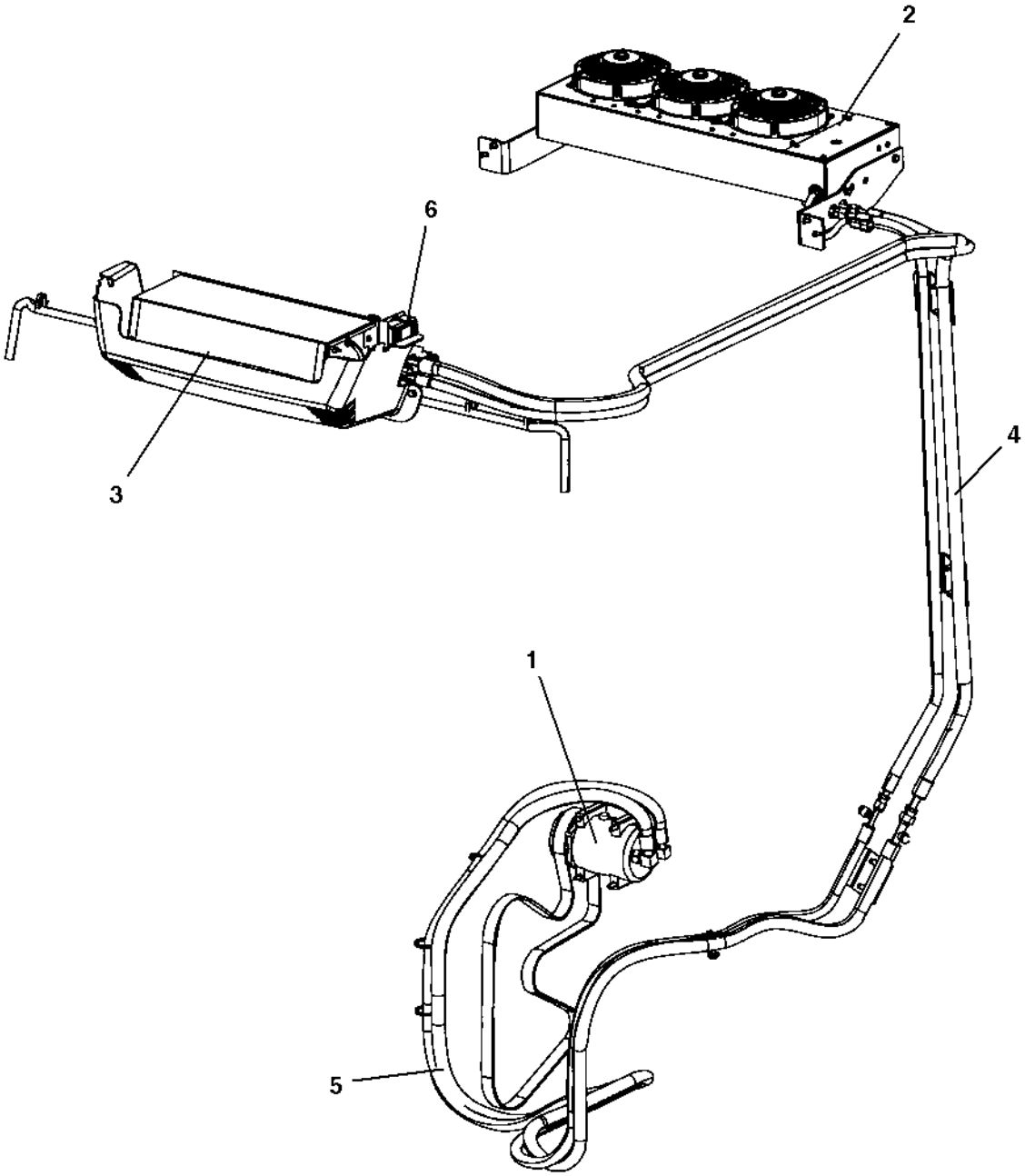
2
6
3
4
1
5

Air conditioning

Item	Part No	Rem	Qty	Description	Code
1			1	**Compressor module (Page 500)**	
2			1	**Condensor module (Page 502)**	
3			1	**Evaporator module (Page 506)**	
4			1	**Hose kit AC (Page 510)**	
5			1	**Hose kit Compressor (Page 514)**	
6			1	**ACC module (Page 518)**	

Compressor module

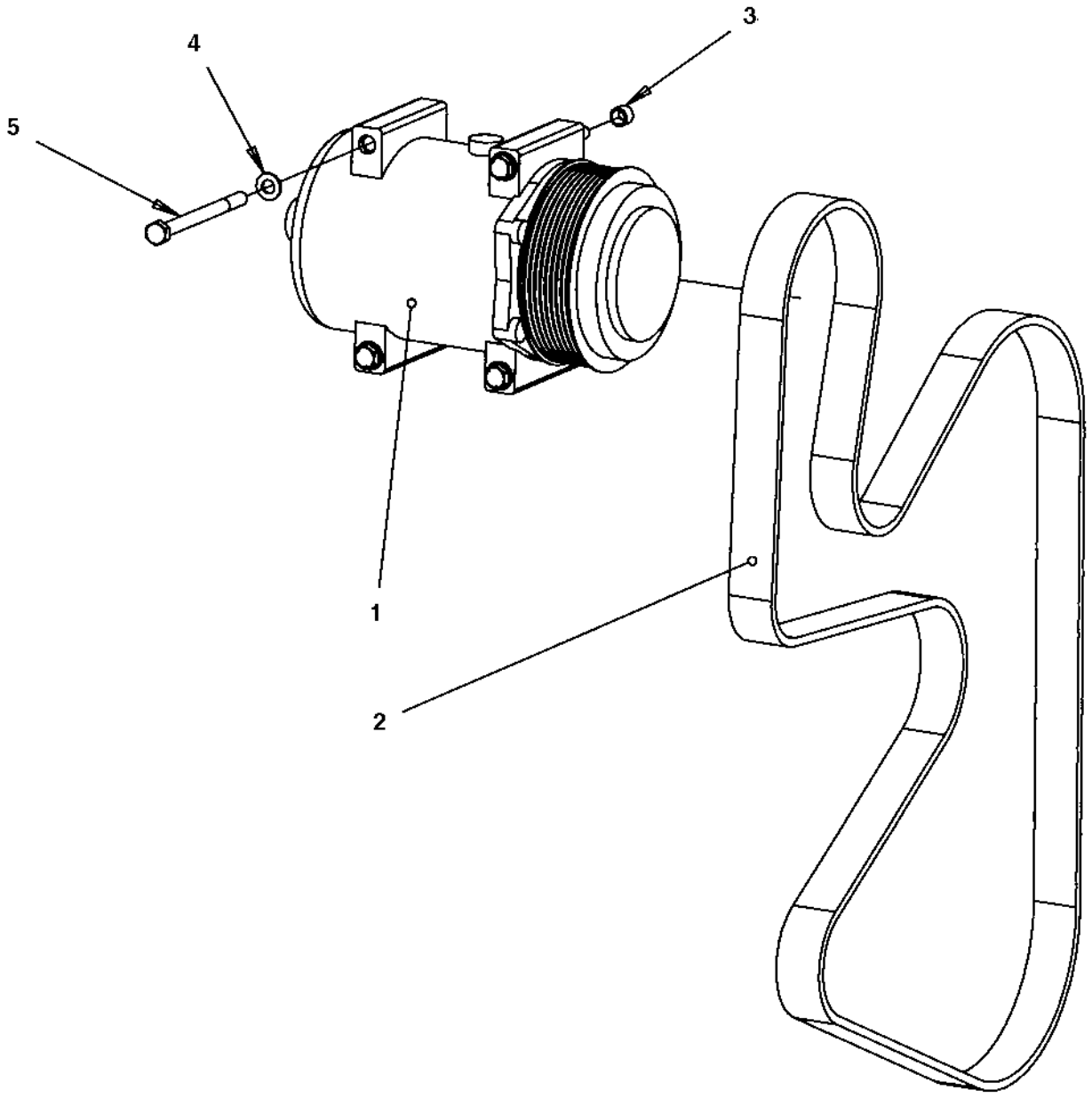

Compressor module

Item	Part No	Rem	Qty	Description	Code
1	4700391621		1	Compressor	
2	4700391622		1	Belt	
3	4700945314		2	Guide ring	
4	4700904229		4	Steel plain washer 8,4x16x1,5	C
5	4700500096		4	Screw	

Condensor module

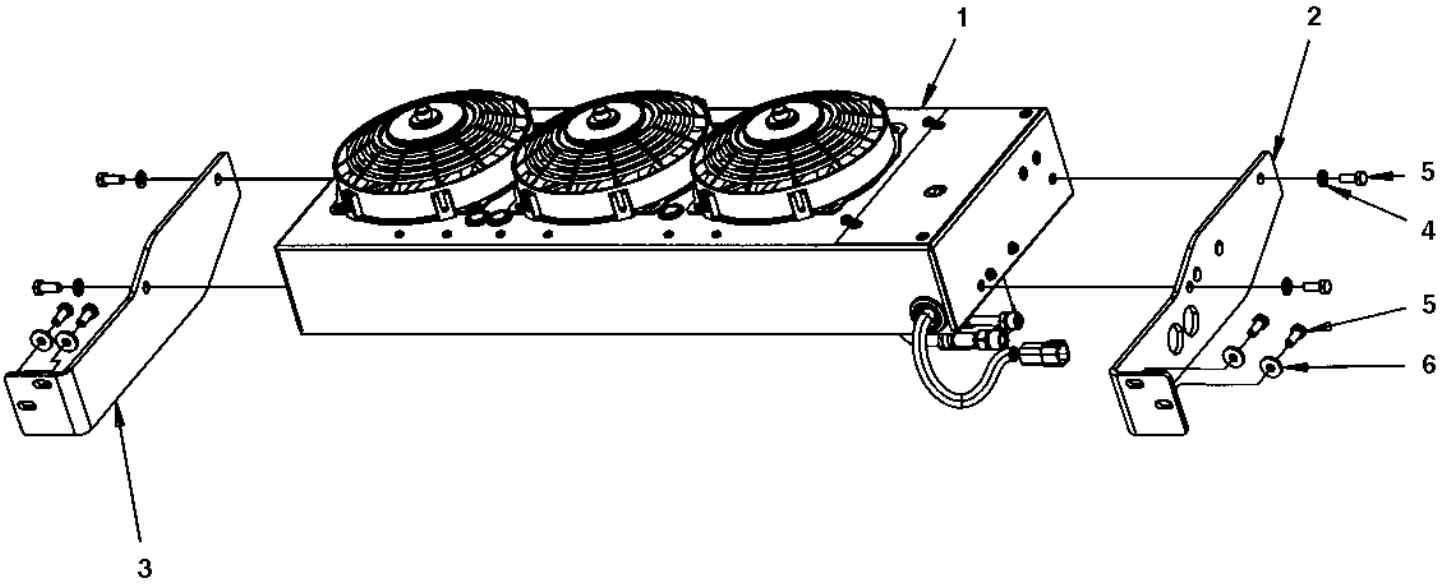

Condensor module

Item	Part No	Rem	Qty	Description	Code
1			1	**Condensor (Page 504)**	
2	4700393222		1	Bracket	
3	4700393223		1	Bracket	
4	4700904229		4	Steel plain washer 8,4x16x1,5	C
5	4700500053		8	Screw M8x20H 8.8	C
6	4700904640		4	Washer 8,4x22x3	C

Condensor

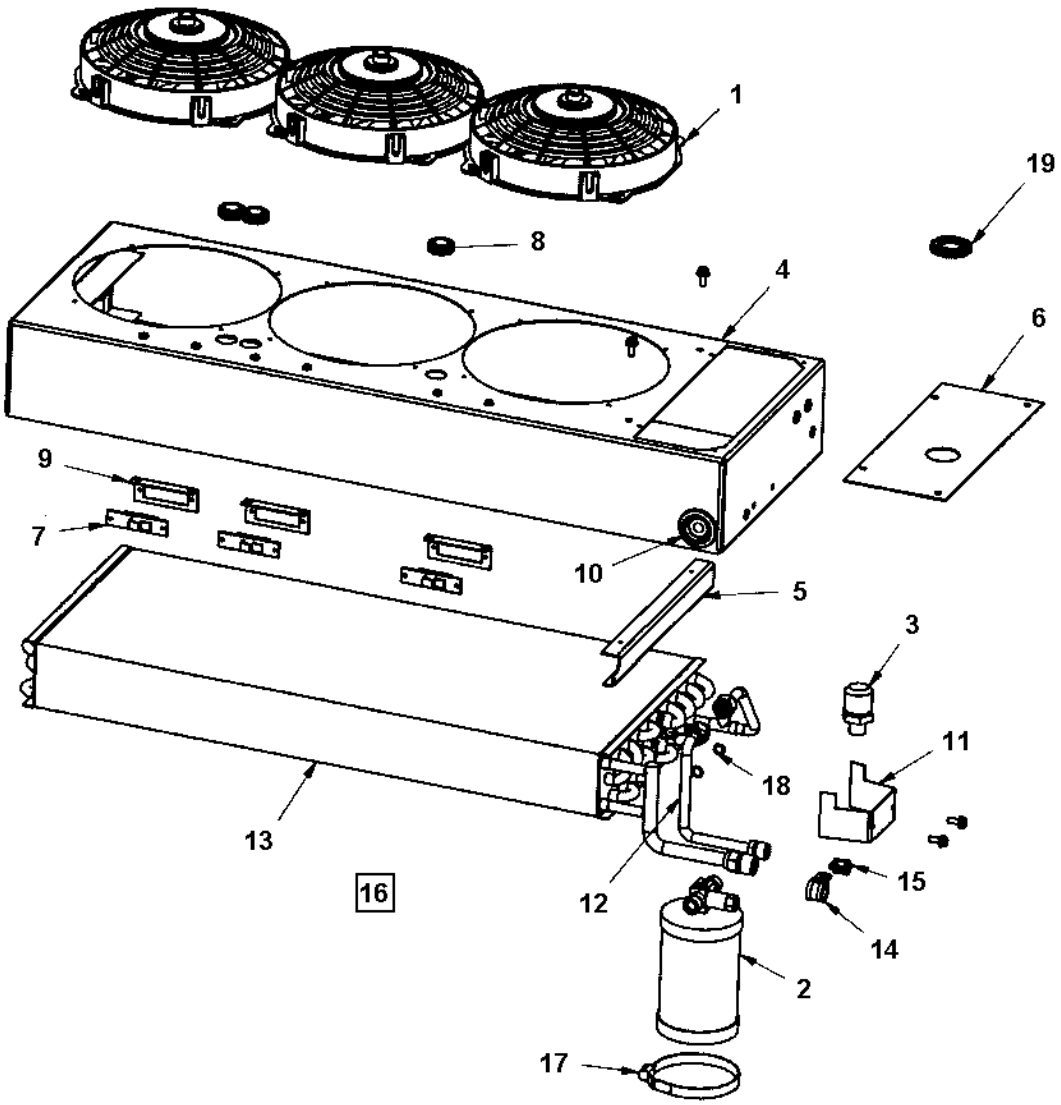

Condensor

Item	Part No	Rem	Qty	Description	Code
1	4700950372		3	Fan	
2	4700950373		1	Dryer	
3	4700938605		1	Pressure switch	B
4			1	Casing	
5			1	Bracket	
6			1	Cover	
7	4700938606		3	Resistor	B
8	4700938609		3	Grommet	
9	4812155658		3	Resistor bracket	
10			1	Grommet	
11			1	Bracket	
12			1	Copper tube	
13	4700950374		1	Condensor Coil	
14			1	Clamp	
15			1	Clamp	
16	4700950375		1	Cable harness	
17	4700938789		1	Clamp	C
18			2	O-ring	
19			1	Grommet	

Evaporator module

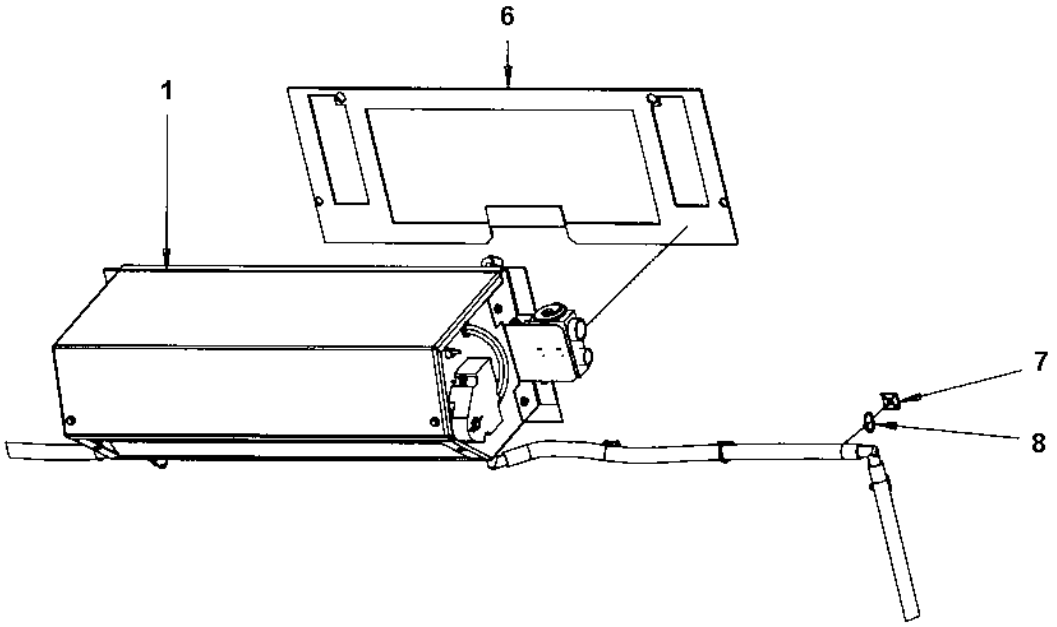

Evaporator module

Item	Part No	Rem	Qty	Description	Code
1	4700393584		1	**Evaporator unit (Page 508)**	
6	4700297018	A	1XL	Rubber strip	
7	4700395352		14	Cable tie holder	
8	4700313068		14	Cable ties L=100 mm	

A) L= 1,6 m

4700393584 Evaporator unit

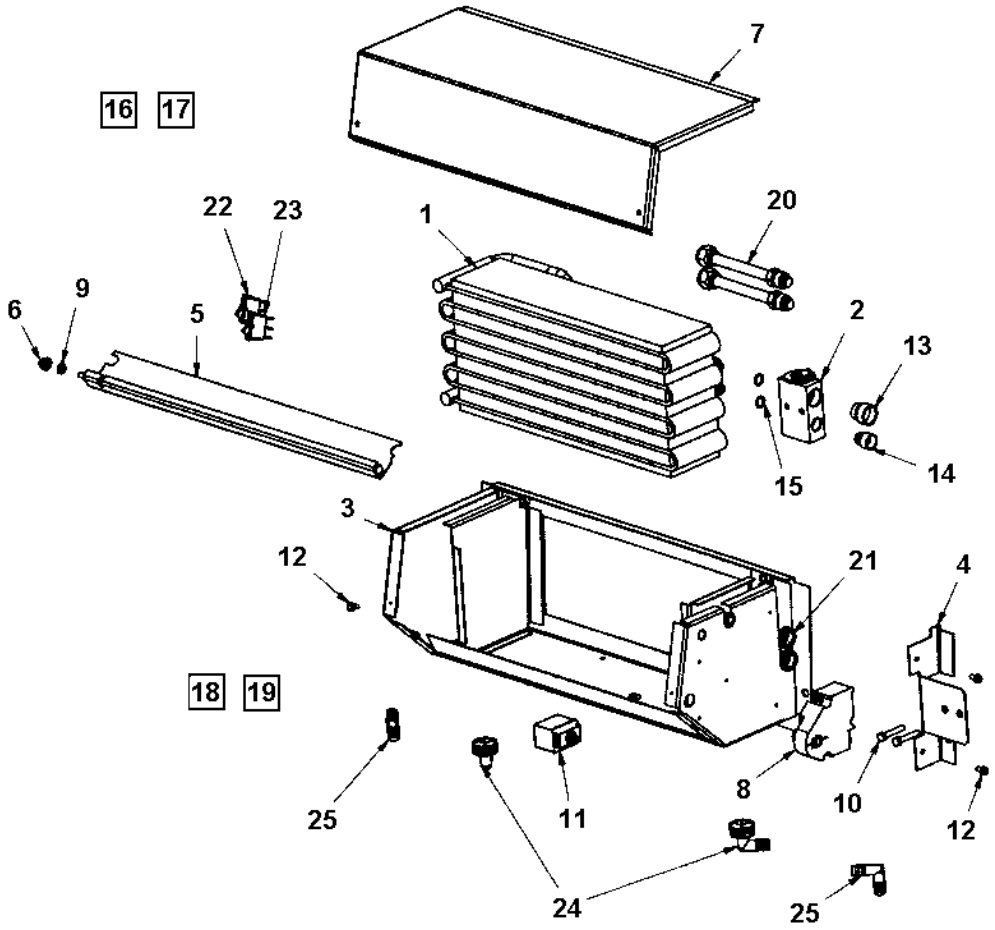

4700393584 Evaporator unit

Item	Part No	Rem	Qty	Description	Code
1	4700950310		1	Evaporator coil	
2	4700950342		1	Block valve	
3			1	Casing	
4			1	Bracket	
5			1	Recirculation cover	
6			1	Bushing	
7			1	Cover	
8	4700950343		1	Actuator motor	
9			1	Washer	
10			2	Screw M6x35	
11	4700950344		1	Thermostat	
12			4	Screw M5x10	
13			1	Plug	
14			1	Plug	
15	4700950345		2	O-ring	
16	4700950346		1	Cable harness, recirc.	
17	4700950347		1	Cable harness, panel	
18			1	Drain hose	
19			1	Drain hose	
20			2	Connect tube	
21			2	Insulation tape	
22	4700950348		1	Switch, air condition	
23	4700950349		1	Switch, recirculation	
24	4700950350		2	Drain valve	
25	4700950380		2	Drain elbow	

Hose kit AC

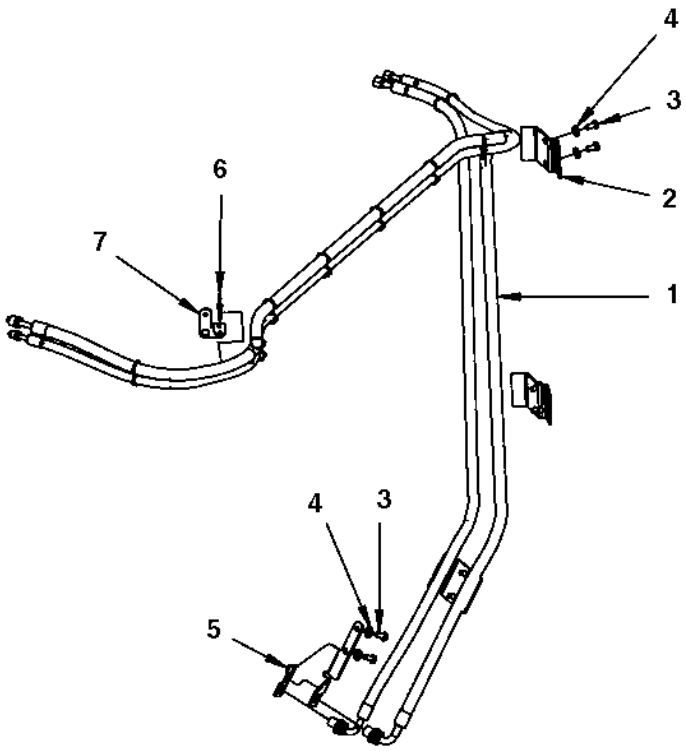

Hose kit AC

Item	Part No	Rem	Qty	Description	Code
1			1	**Hose kit (Page 512)**	
2	4700393418		2	Bracket	
3	4700500048		6	Screw M10-1,5x20 8,8	C
4	4700904557		6	Steel plain washer	C
5	4700394920		1	Bracket	D
6	4700792686		9	Cable tie with holder	
7	4700395156		1	Bracket	

Hose kit

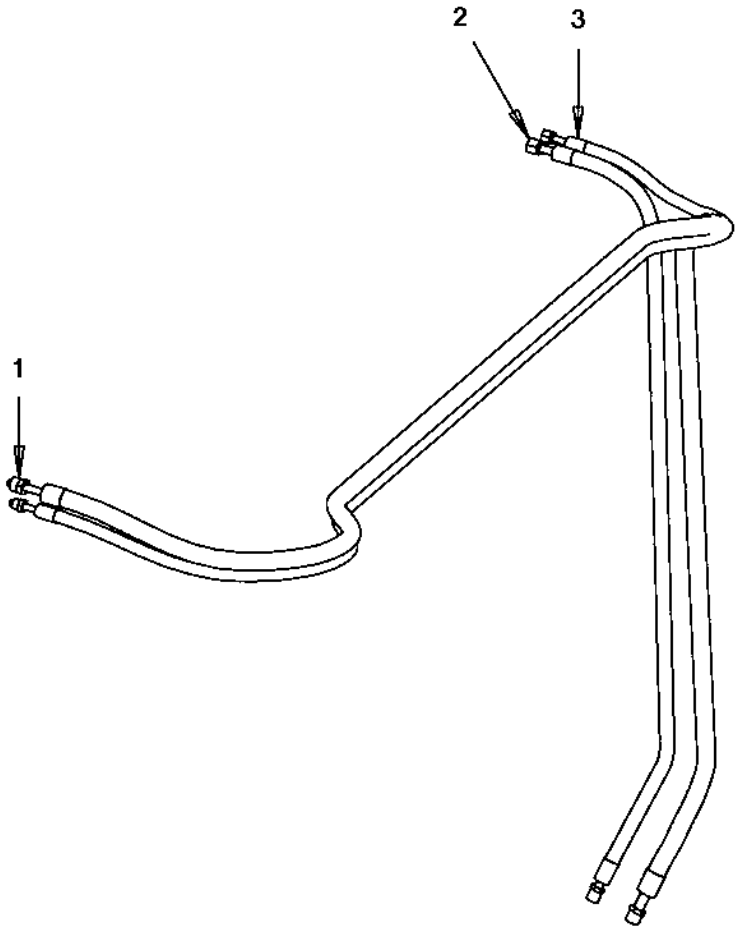

Hose kit

Item	Part No	Rem	Qty	Description	Code
1	4700393597		1	Refrigerant hose	D
2	4700393596		1	Refrigerant hose	D
3	4700393594		1	Refrigerant hose	

Hose kit Compressor

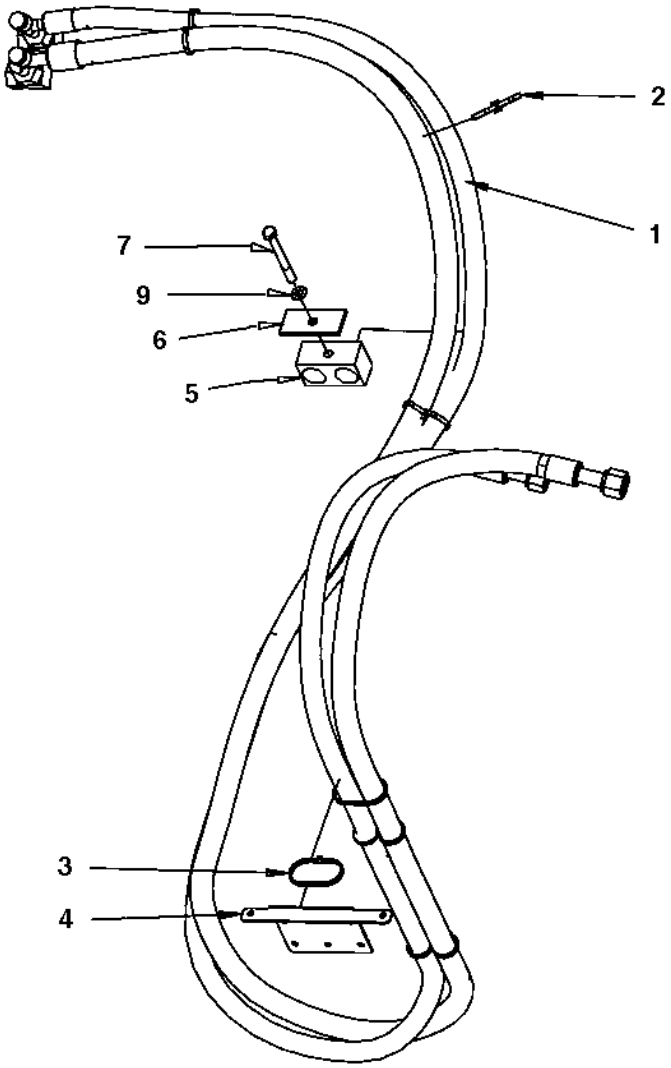

Hose kit Compressor

Item	Part No	Rem	Qty	Description	Code
1			1	**Hose kit AC (Page 516)**	
2	4700792686		15	Cable tie with holder	
3	4700313041		N	Cable ties L=200 mm	B
4	4700394707		1	Bracket	D
5	4700287295		1	Clamp	D
6	4700287294		1	Cover plate	
7	4700500090		1	Screw	C
9	4700904229		1	Steel plain washer 8,4x16x1,5	C

Hose kit AC

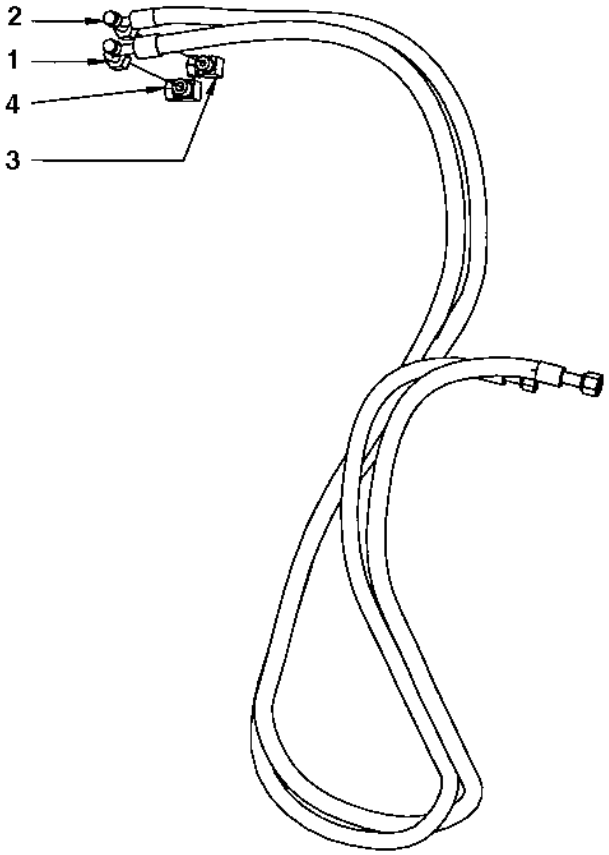

Hose kit AC

Item	Part No	Rem	Qty	Description	Code
1	4700393598		1	Refrigerant hose	D
2	4700393595		1	Refrigerant hose	D
3	4700394705		1	Refrigerant fitting	
4	4700394706		1	Refrigerant fitting	

ACC module

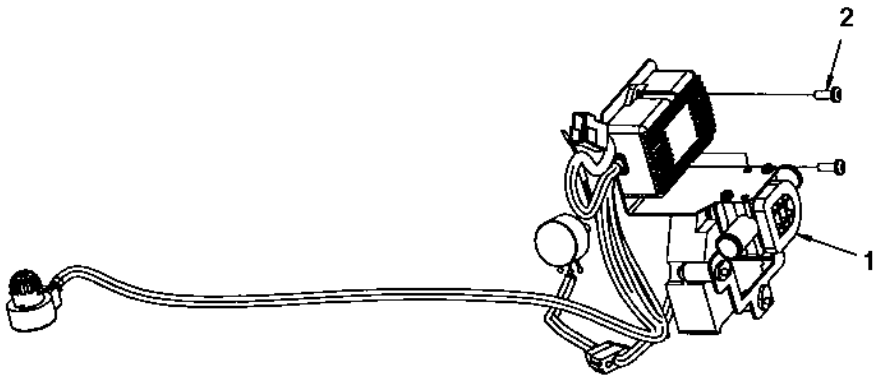

ACC module

Item	Part No	Rem	Qty	Description	Code
1	4700393795		1	**ACC controls (Page 520)**	
2	4700792187		2	Screw M5x14	

4700393795 ACC controls

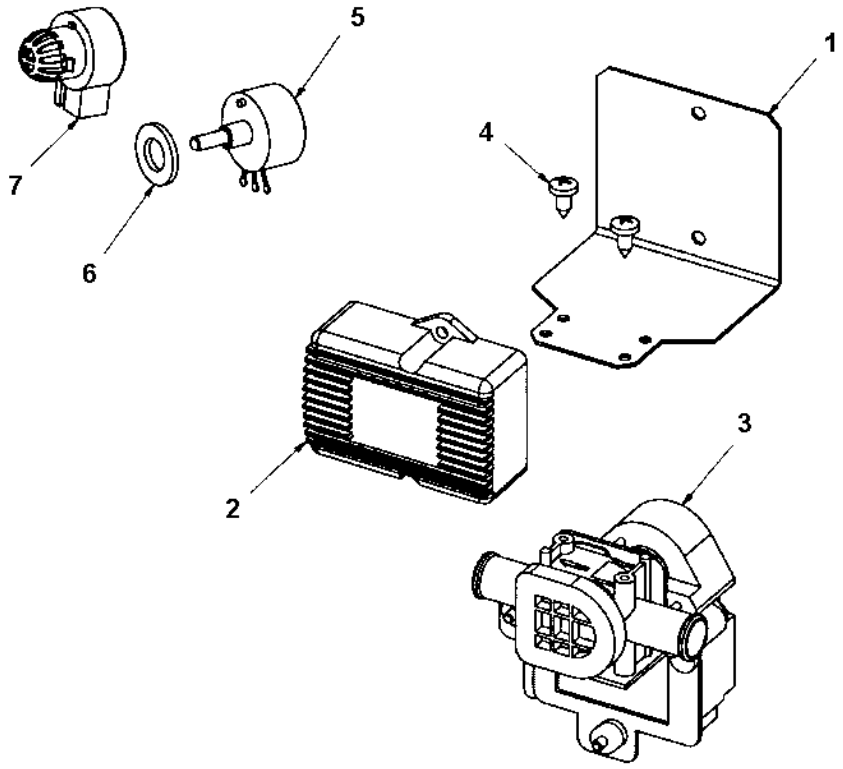

4700393795 ACC controls

Item	Part No	Rem	Qty	Description	Code
1			1	Bracket	
2	4700950369		1	ATM unit	
3	4700950370		1	Heater valve	
4			2	Screw	
5	4700950371		1	Potentiometer	
6			1	Washer	
7	4700938624		1	Sensor	B

Edge cutter

Edge cutter

Item	Part No	Rem	Qty	Description	Code
1			1	**Edge cutter, module (Page 524)**	
2			1	**Cutting disc module (Page 534)**	
			1	**Pressing roller, module (Page 536)**	
3			1	**Hydraulic valve module (Page 538)**	
4			1	**Cover module (Page 46)**	
5			1	**Disc/Roller holder (Page 48)**	
			1	**Disc/Roller holder (Page 50)**	
6	4700391959		1	Cable harness Up to 384S00199	D
8	4700484103		1	Hydraulic hose	D
9	4700484104		1	Hydraulic hose	D
10	4700792395		1	Switch	D
11	4700792396		1	Switch	D

Edge cutter, module

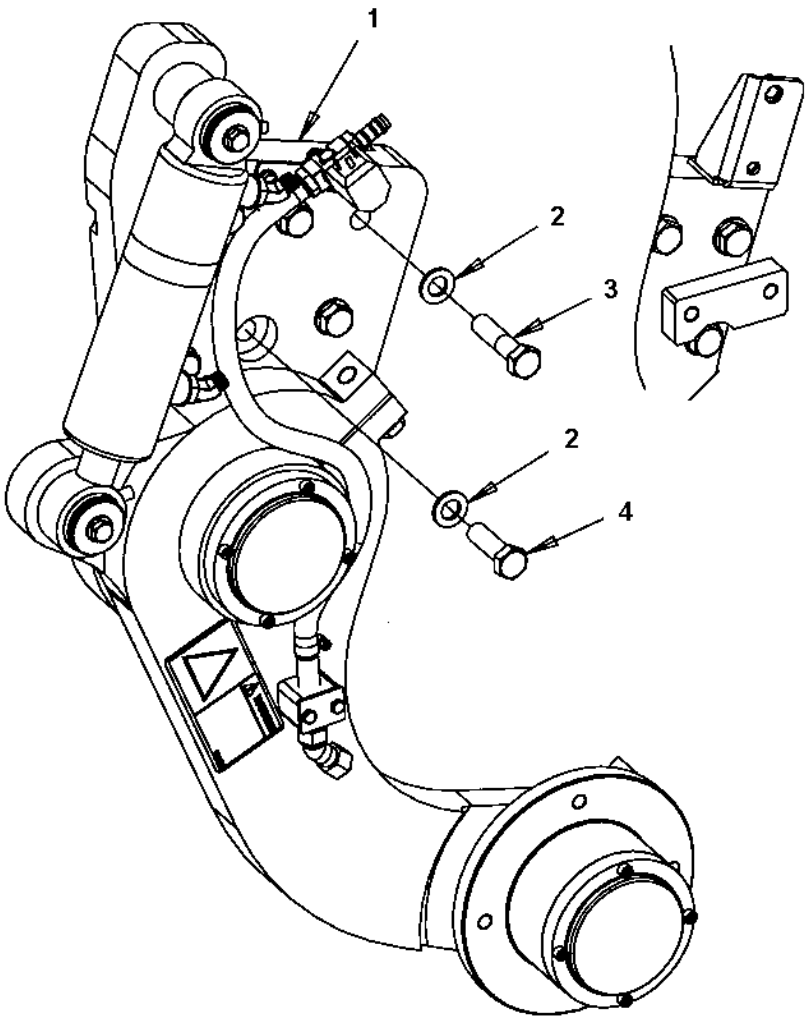

Edge cutter, module

Item	Part No	Rem	Qty	Description	Code
1	4700390998		1	**Edge cutter, cpl (Page 526)**	
2	4700904232		6	Washer	C
3	4700500058		5	Screw M16-2,0x65 8,8	
4	4700500070		1	Screw M16x50	C

4700390998 Edge cutter, cpl

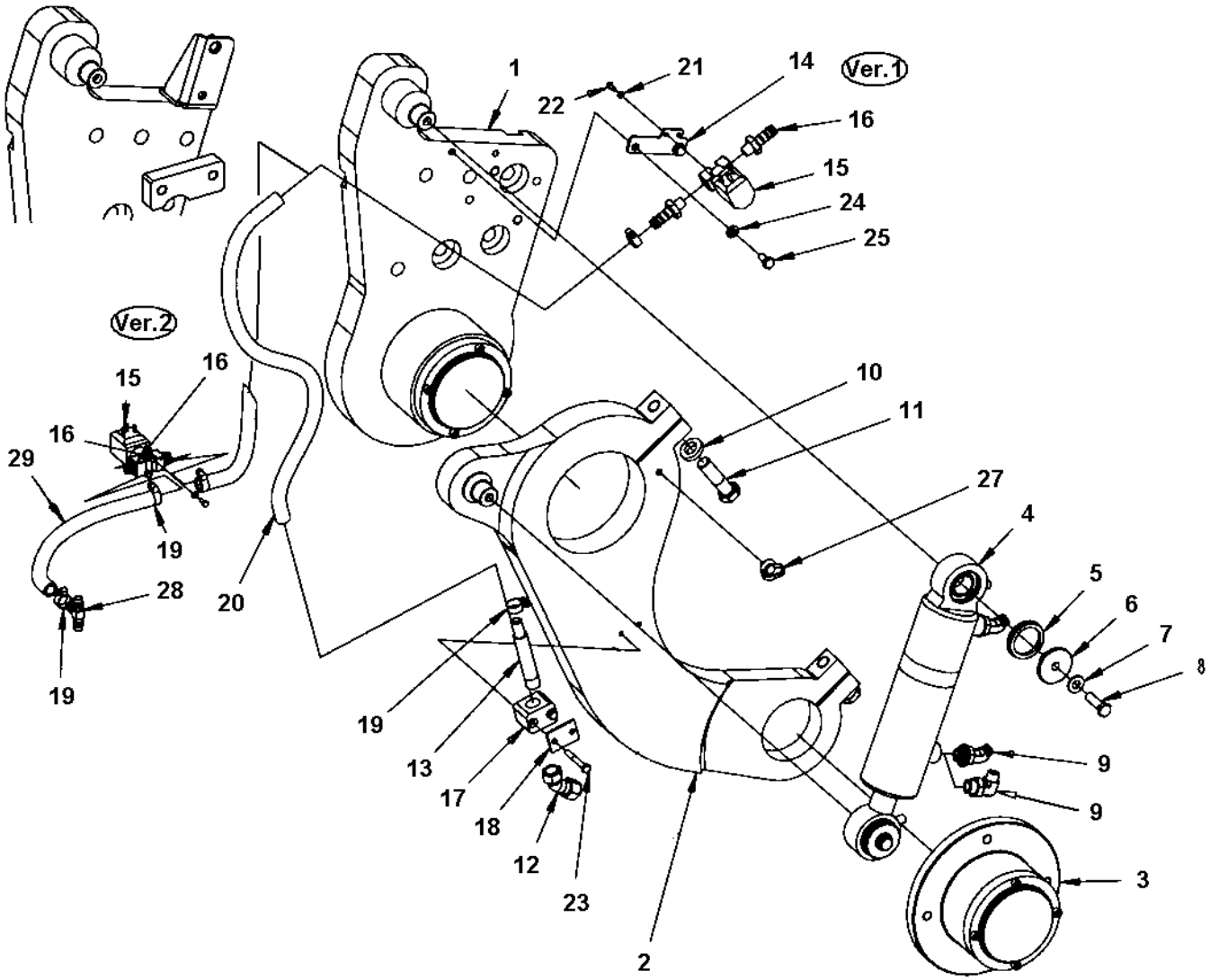

4700390998 Edge cutter, cpl

Item	Part No	Rem	Qty	Description	Code
	4700390998			**Edge cutter, cpl (Page 526)**	
1	4700390999		1	**Holder (Page 528)**	
2	4700391000		1	Lever	
3	4700391009		1	**Bearing unit (Page 530)**	
4	4700387275		1	**Hydraulic cylinder (Page 532)**	
	4700945526		2	. Bearing	
5	4700791565		2	Sealing	
6	4700376861		2	Washer	
7	4700904230		2	Steel plain washer	C
8	4700947684		2	Screw	
9	4700792389		2	Elbow 45 orfs	
	4700792676		1	Elbow 90 orfs	
10	4700904558		2	Washer 17X30X6 300HV	C
11	4700500134		2	Screw M16x60	C
12	4700392123		1	Nozzle body	
13	4700392058		1	Pipe	
14	4700392059		1	Bracket	
15	4700391438		1	Solenoid valve	
16	4700901432		2	Hose connection	
17	4700791453		1	Pipe clamp block	
18	4700791454		1	Cover plate	
19	4700313002		4	Hose clamp 13-20 mm	
20	4812112074	A	1XL	Plastic hose	
21	4700904698		2	Washer 4,3x8x0,8	C
22	4700925784		2	Screw	
23	4700500186		2	Screw	C
24	4700904229		2	Steel plain washer 8,4x16x1,5	C
25	4700500019		2	Hexagon head screw M8x16H 8,8	C
27	4700792441		1	Cable tie with holder	C
28	4700791362		1	Hose connector	
29	4812112074	B	1XL	Plastic hose	

A) Length as required.
B) L= 0.3 m

4700390999 Holder

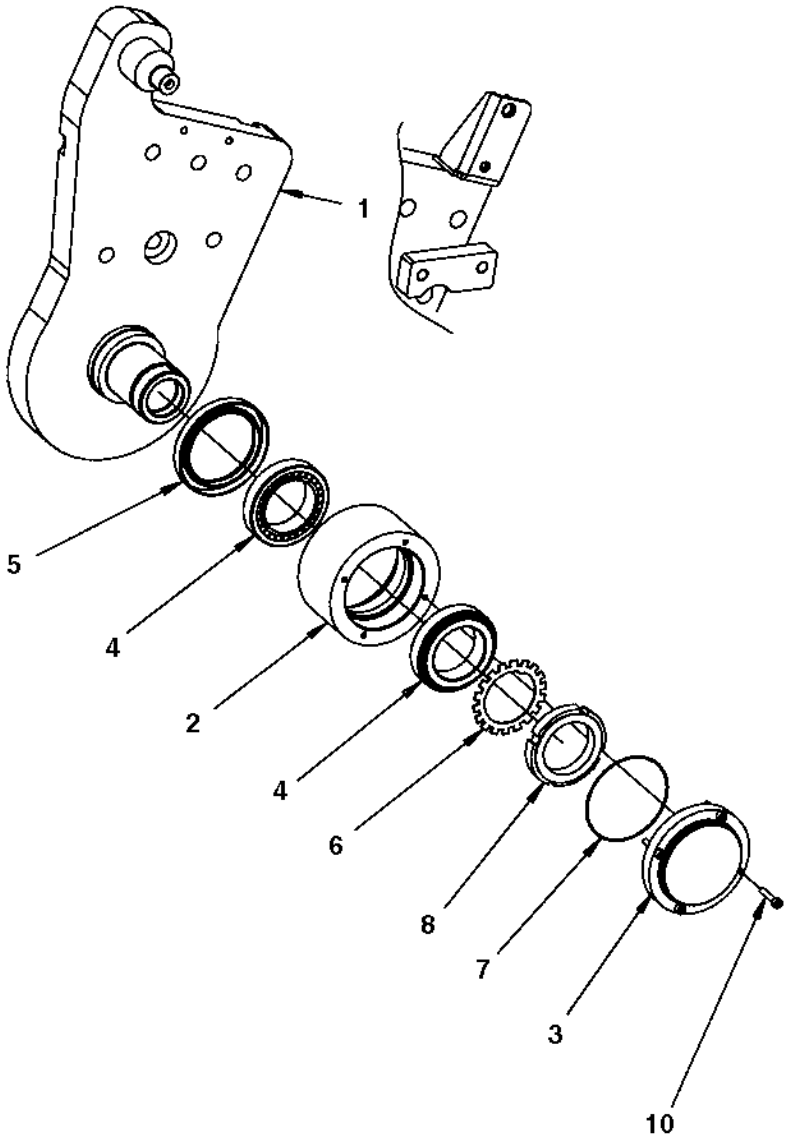

4700390999 Holder

Item	Part No	Rem	Qty	Description	Code
1	4700391001		1	Holder	
2	4700391008		1	Bearing housing	
3	4700391010		1	Bearing cover	
4	4700792385		2	Taper roller bearing	
5	4700792384		1	Radial lip-type seal	
6	4700136012		1	Lock washer	
7	4700900512		1	O-ring 101,32x1,78	D
8	4700135012		1	Shaft nut	
10	4700508018		4	Screw	

4700391009 Bearing unit

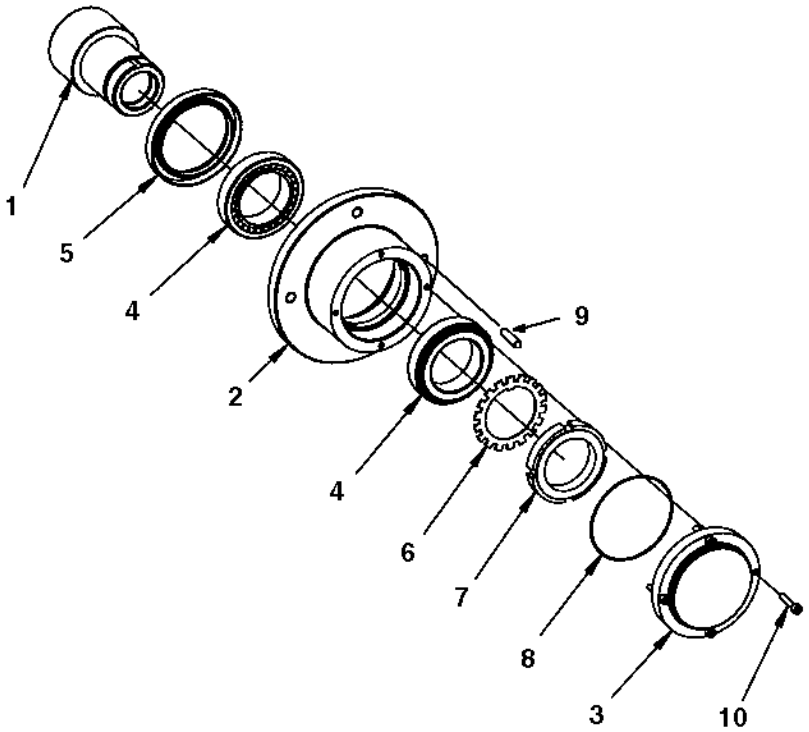

4700391009 Bearing unit

Item	Part No	Rem	Qty	Description	Code
	4700391009			**Bearing unit (Page 530)**	
1	4700391011		1	Shaft	
2	4700391012		1	Bearing housing	
3	4700391010		1	Bearing cover	
4	4700792385		2	Taper roller bearing	
5	4700792384		1	Radial lip-type seal	
6	4700136012		1	Lock washer	
7	4700135012		1	Shaft nut	
8	4700900512		1	O-ring 101,32x1,78	D
9	4700903891		4	Stud	
10	4700508018		4	Screw	

4700387275 Hydraulic cylinder

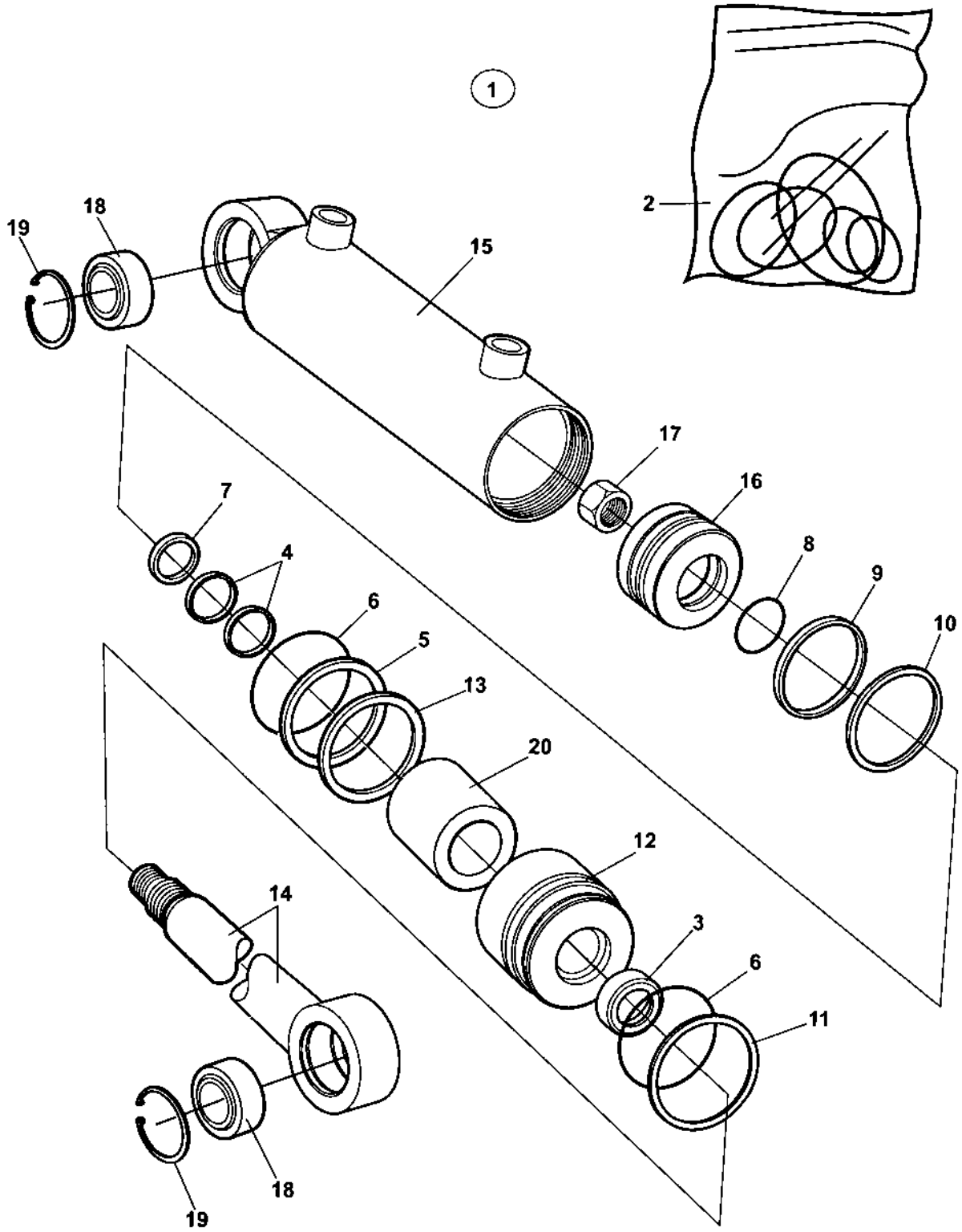

4700387275 Hydraulic cylinder

Item	Part No	Rem	Qty	Description	Code
1	4700387275		1	**Hydraulic cylinder (Page 532)**	
2	4700945668		1	. Seal kit	
3			1	. . Seal	
4			2	. . Seal	
5			1	. . Back-up ring	
6			2	. . O-ring	
7			1	. . Seal	
8			1	. . O-ring	
9			1	. . Seal	
10			1	. . Seal	
11			1	. Retaining ring	
12			1	. Steering	
13			1	. Retaining ring	
14			1	. Piston rod	
15			1	. Cylinder	
16			1	. Piston block	
17			1	. Cylinder nut	
18	4700945526		1	. Bearing	
19			1	. Retaining ring	
20		A	1	. Spacer	

A) Not valid for this model

Cutting disc module

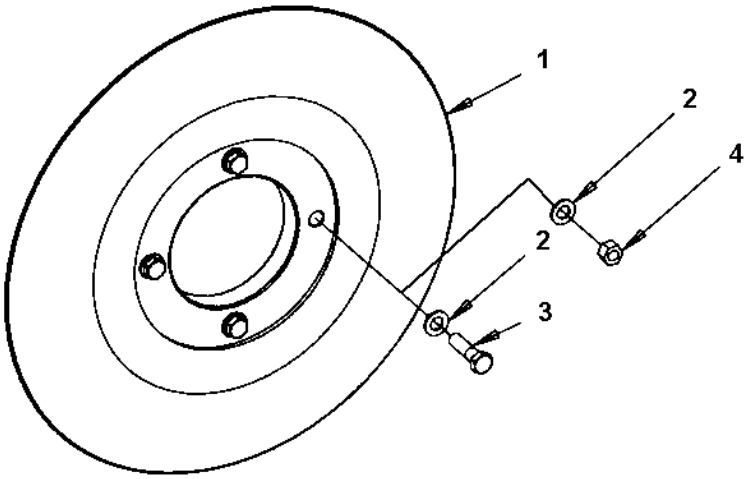

Cutting disc module

Item	Part No	Rem	Qty	Description	Code
1	4700390805		1	Cutting disc 80mm	
	4700390806		1	Cutting disc 120mm	
	4700390807		1	Cutting disc 150mm	
2	4700904231		4	Washer 13x24x2 300 HV	C
3	4700500056		4	Screw	
4	4700570007		4	Hexagon nut M12	C

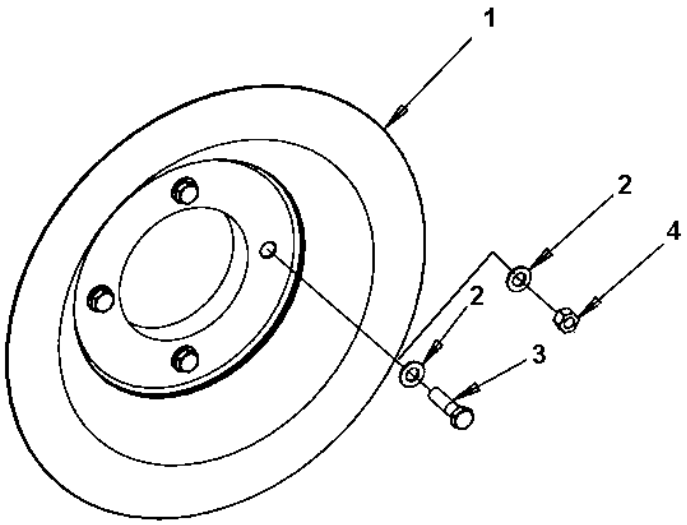
1
2
4
2
3

Pressing roller, module

Item	Part No	Rem	Qty	Description	Code
1	4700390808		1	Pressing roller	D
2	4700904231		4	Washer 13x24x2 300 HV	C
3	4700500056		4	Screw	
4	4700570007		4	Hexagon nut M12	C

Hydraulic valve module

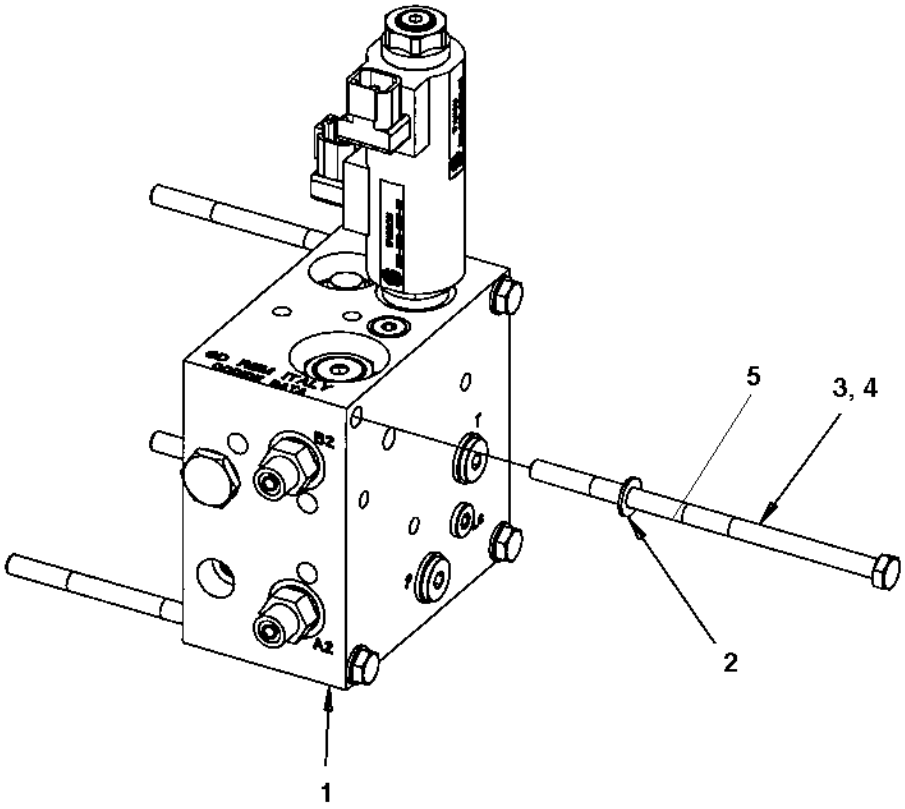

Hydraulic valve module

Item	Part No	Rem	Qty	Description	Code
1			1	**Hydraulic valve (Page 540)**	
2	4700904229		4	Steel plain washer 8,4x16x1,5	C
3	4812118090	1	4	Hexagon head screw M8x165 8.8	
4	4700500115	2	4	Hexagon head screw M8x90 8.8	C
5	4700500170		4	Hexagon head screw M8x140 8.8 From c	

1) Used when option valve is mounted.
2) Used when mounted on base valve.

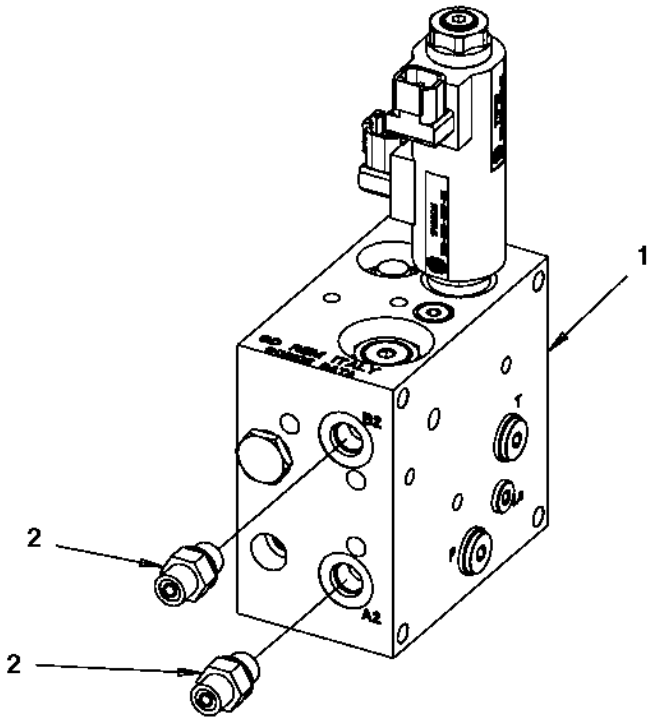
1
2
2
B2
T
P
A2

Hydraulic valve

Item	Part No	Rem	Qty	Description	Code
1	4700391018		1	**Hydraulic valve (Page 542)**	
2	4700791914		2	Straight connector orfs	D

4700391018 Hydraulic valve

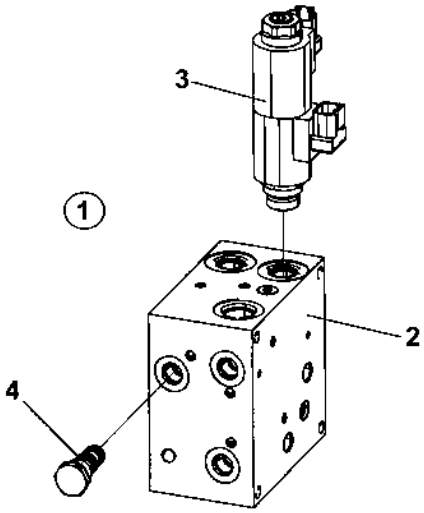

4700391018 Hydraulic valve

Item	Part No	Rem	Qty	Description	Code
1			1	Hydraulic valve	
2			1	. Valve block	
3	4700950587		1	. Proportional valve	
4	4700940572		1	. Shuttle valve	D

Fire extinguisher/First Aid Cushion

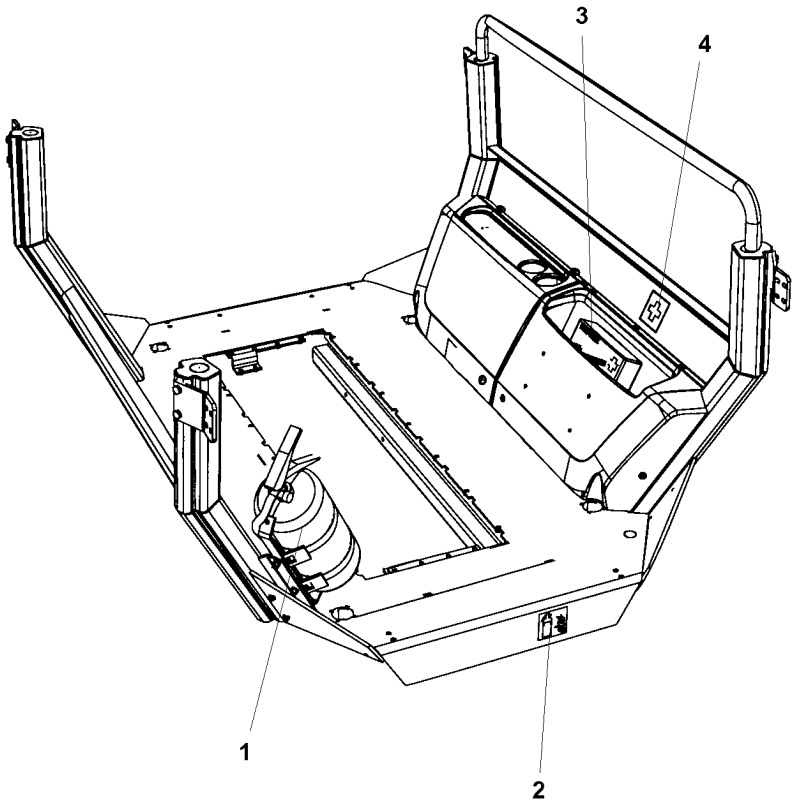

Fire extinguisher/First Aid Cushion

Item	Part No	Rem	Qty	Description	Code
1			1	**Fire extinguisher assembly (Page 546)**	
2	4700792634		1	Decal fire extinguisher	D
3	4700394395		1	First aid cushion	D
4	4700902509		1	Decal	D

Fire extinguisher assembly

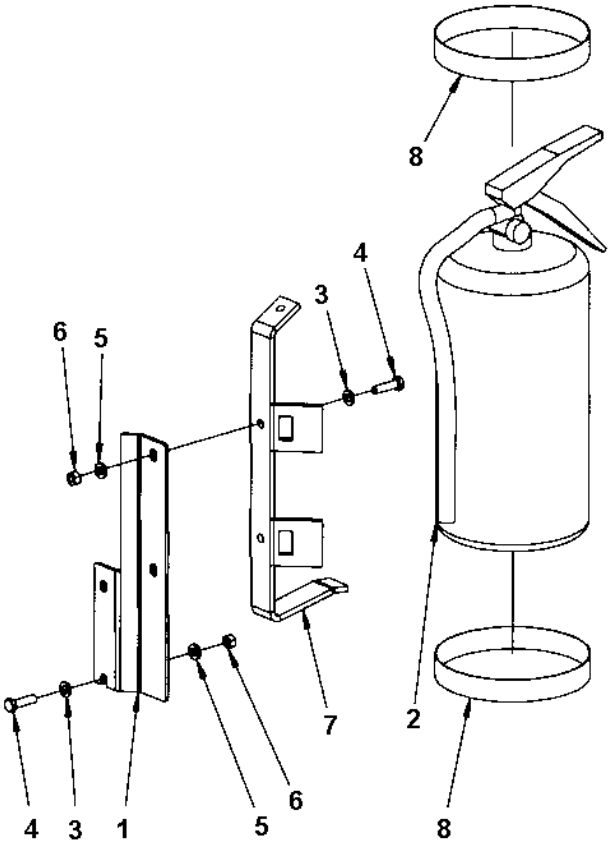

Fire extinguisher assembly

Item	Part No	Rem	Qty	Description	Code
1	4700393862		1	Bracket	D
2			1	Fire extinguisher	
3	4700904229		4	Steel plain washer 8,4x16x1,5	C
4	4700500022		4	Screw M8x30H 8.8	C
5	4700904556		4	Washer 8,4x16x3,0	C
6	4700570005		4	Nut M8	C
7	4700378860		1	Holder	D
8	4700378861		2	Strap	D

Asphalt temperature meter

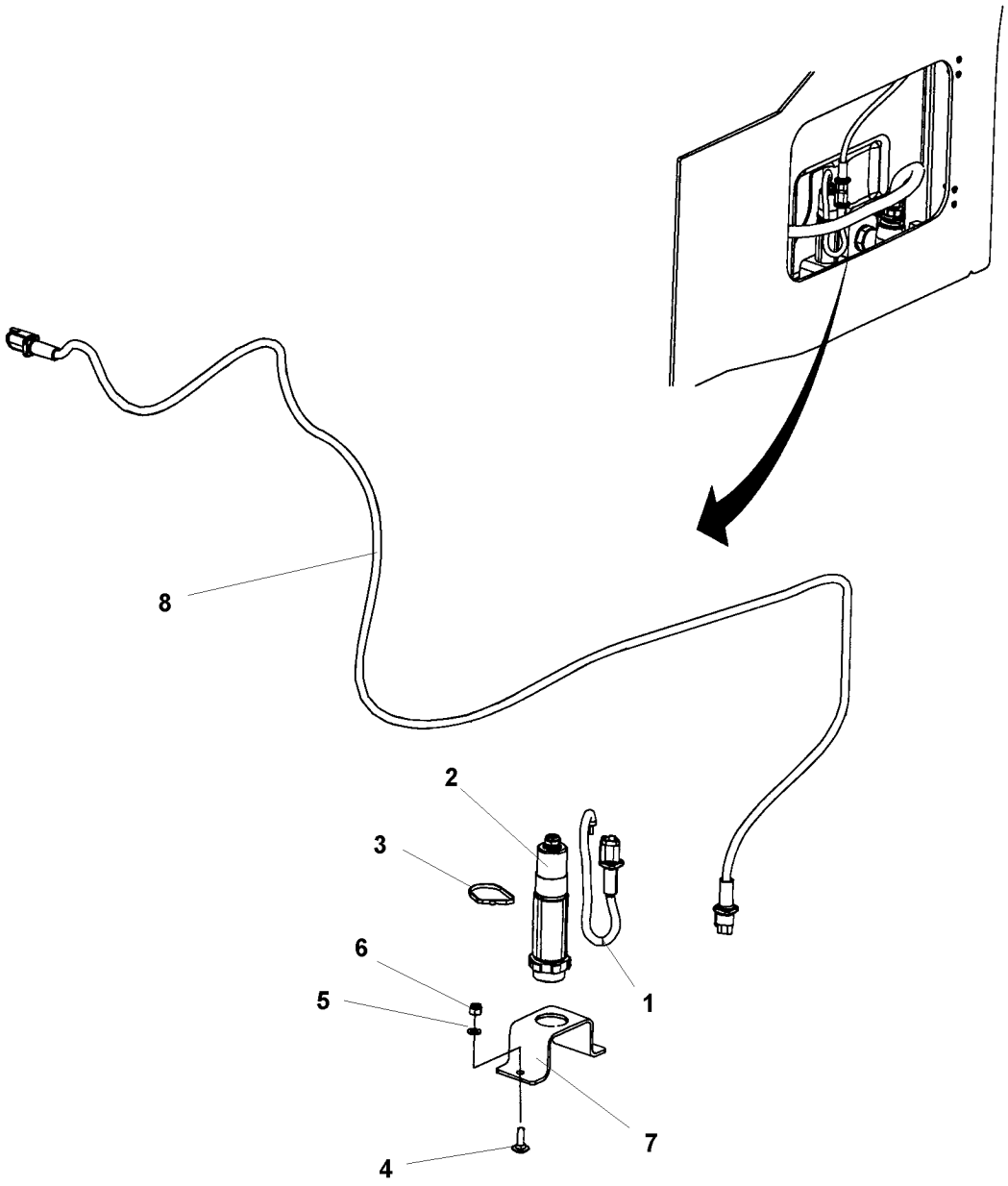

Asphalt temperature meter

Item	Part No	Rem	Qty	Description	Code
1	4700393951		1	Cable harness	
2	4700387982		1	Temperature sender	B
3	4700313041		1	Cable ties L=200 mm	B
4	4700929191		2	Bolt	D
5	4700904229		2	Steel plain washer 8,4x16x1,5	C
6	4700586003		2	Lock nut M8	C
7	4700377422		1	Bracket	D
8	4700396205		1	Cable harness	

NUMERICAL INDEX

Part Number	Page	Part Number	Page	Part Number	Page
4700116041	17,207,213	4700355132	329	4700379976	65
4700135012	529,531	4700355135	329	4700379977	67
4700135015	43	4700355797	353	4700379992	63,459
4700136012	529,531	4700357459	63	4700380435	27
4700151015	43	4700357587	495	4700380506	179
4700160045	15,195	4700358254	391	4700380507	175
4700160105	17,207,213	4700358732	269,287	4700381027	207,213
4700160227	197	4700358846	97	4700381934	399
4700160277	43	4700358881	57,89,91,491	4700381935	395,399
4700160279	207,213	4700359003	97	4700381936	395,399
4700160287	279	4700359043	471,483	4700381943	151,465
4700160313	81,83	4700359125	471	4700381944	151,465
4700160344	15,195,207,213	4700359192	157	4700382751	495
4700162004	245	4700359819	471,483	4700383024	51
4700162006	57	4700359820	471	4700383261	179
4700162015	57,265	4700359916	471	4700383263	183
4700162017	193	4700359919	471	4700383390	183
4700162027	193,207,213	4700359920	471	4700383626	37
4700170671	175	4700359955	193	4700383705	391
4700202057	37,65,67	4700359998	383,411,445	4700384584	391
4700205112	223,457	4700370155	279	4700384855	383,411,445
4700232039	245	4700370286	395,399	4700384911	145
4700232056	57	4700370745	27,33	4700385599	487
4700232231	223	4700372121	383,387	4700386272	17,207,213
4700233215	107,145	4700372424	277,281	4700386966	229
4700234365	457	4700372672	471	4700387275	527,533
4700246069	249	4700372718	27,33	4700387545	491
4700263772	183	4700372959	483	4700387638	457
4700267791	183	4700372960	483	4700387982	549
4700272372	495	4700372964	471	4700388449	495
4700272373	495	4700372965	471	4700388737	487
4700287294	515	4700373183	157	4700388846	59
4700287295	515	4700373363	383,387	4700389821	27
4700287643	403	4700373399	387	4700390013	477
4700297018	507	4700376861	527	4700390018	223
4700313001	93,241,249	4700376922	291	4700390019	229
4700313002	33,81,83,101,527	4700377422	549	4700390020	229
4700313003	35	4700377507	443	4700390021	235
4700313004	223,231,457	4700377508	443	4700390022	235
4700313009	231	4700377518	475	4700390024	231
4700313010	231	4700377677	467	4700390060	113
4700313033	235	4700377742	495	4700390074	113
4700313041	189,279,331,347	4700377743	495	4700390155	395
	371,457,479,515	4700377744	495	4700390160	207,213
	549	4700377913	403	4700390169	477
4700313068	371,507	4700378309	65,67	4700390239	479
4700313094	239	4700378310	63	4700390332	237
4700313102	33,93,145,359	4700378860	547	4700390365	65,67
4700313105	33,235	4700378861	547	4700390428	481
4700330330	223	4700379009	81,101	4700390434	339,341
4700335607	223,301	4700379637	467	4700390435	345
4700335914	27,261	4700379650	207,213	4700390436	339,341,345
4700340862	207,213	4700379652	195	4700390469	113,157
4700343732	261	4700379693	471	4700390470	113,157
4700343744	193	4700379715	483	4700390533	43
4700343775	103,179	4700379718	471	4700390534	43
4700343872	27,261	4700379722	471	4700390538	43
4700344196	193	4700379728	471	4700390539	43
4700345666	221	4700379729	481	4700390541	43
4700347512	411,445	4700379748	193	4700390542	43
4700349715	207,213	4700379753	93,101	4700390543	43
4700350009	471	4700379974	63	4700390561	475

NUMERICAL INDEX

Part Number	Page	Part Number	Page	Part Number	Page
4700390603	197,201	4700391165	221	4700391958	309
4700390604	197,199	4700391192	275	4700391959	523
4700390605	207,209	4700391198	117	4700392003	95
4700390605A	209,211	4700391213	313	4700392011	107,145
4700390607	71	4700391241	479	4700392033	367
4700390608	71	4700391263	229	4700392048	291
4700390609	71	4700391269	305	4700392058	527
4700390613	45	4700391296	57	4700392059	527
4700390618	223	4700391297	69	4700392075	57
4700390627	245	4700391298	57	4700392078	57
4700390629	69	4700391299	57	4700392123	527
4700390630	243	4700391300	57	4700392152	335
4700390716	315	4700391303	223	4700392153	349
4700390780	57	4700391307	33,37	4700392156	307
4700390805	535	4700391353	33	4700392158	361
4700390806	535	4700391358	223	4700392221	315
4700390807	535	4700391369	73	4700392222	33
4700390808	537	4700391370	73	4700392223	33
4700390811	233	4700391371	73	4700392224	33
4700390820	233	4700391375	57	4700392225	33
4700390830	235	4700391376	57	4700392226	33
4700390831	227	4700391396	487	4700392227	33,83,97
4700390832	225	4700391407	113	4700392230	33,97
4700390860	313	4700391420	487	4700392231	33,97
4700390861	487	4700391421	487	4700392232	33,97
4700390862	337	4700391430	27,157	4700392235	33
4700390864	411,413	4700391432	63,283	4700392291	187
4700390884	63	4700391433	7,11,63,283	4700392316	465
4700390902	239	4700391434	57	4700392321	361,365
4700390903	239	4700391438	101,527	4700392364	207,213
4700390919	119	4700391441	63	4700392450	347
4700390925	57	4700391442	27	4700392451	347
4700390926	57	4700391443	27	4700392534	291
4700390934	27	4700391444	45	4700392550	43
4700390963	475	4700391478	483	4700392701	27
4700390994	11,233	4700391481	157	4700392717	489
4700390995	11,233	4700391495	81,85,101	4700392719	489
4700390998	525,527	4700391566	43	4700392748	207,213
4700390999	527,529	4700391580	315	4700392758	277
4700391000	527	4700391584	301	4700392799	63
4700391001	529	4700391585	305	4700392839	471
4700391008	529	4700391621	501	4700392840	471
4700391009	527,531	4700391622	501	4700392930	487
4700391010	529,531	4700391624	33	4700392965	479
4700391011	531	4700391626	45	4700393001	57
4700391012	531	4700391647	47	4700393009	115,117
4700391016	269,271	4700391648	47	4700393010	115,117
4700391017	295,297	4700391674	401,407	4700393029	247
4700391018	541,543	4700391675	401	4700393031	487
4700391023	27,29	4700391676	401	4700393094	489
4700391024	157,171	4700391678	401	4700393115	43
4700391025	63	4700391724	197	4700393149	57
4700391026	11,57	4700391750	59	4700393191	481
4700391029	195	4700391754	19,115,117	4700393218	43
4700391031	43	4700391768	63	4700393222	503
4700391082	481	4700391769	63	4700393223	503
4700391083	481	4700391770	471	4700393235	247
4700391107	193	4700391857	89	4700393250	435,453
4700391110	193	4700391858	89	4700393251	435,453
4700391115	339,341,345	4700391889	167	4700393252	435,453
4700391157	63	4700391919	459	4700393253	435,453
4700391163	471,473	4700391957	359	4700393254	435,453

NUMERICAL INDEX

Part Number	Page	Part Number	Page	Part Number	Page
4700393261	453	4700394400	27,57	4700395759	439
4700393281	57	4700394413	127	4700395761	441
4700393287	33	4700394459	57	4700395762	441
4700393347	483	4700394513	57	4700395774	441
4700393356	113	4700394514	63	4700395775	441
4700393360	157	4700394522	33	4700395783	385,387
4700393364	265	4700394527	27	4700395784	385
4700393412	33	4700394529	57	4700395785	385,387,487
4700393418	511	4700394536	59	4700395786	385,387
4700393464	43	4700394545	53	4700395787	375,419
4700393465	43	4700394567	75	4700395790	435
4700393496	479	4700394568	75	4700395792	419
4700393497	479	4700394587	91	4700395793	425
4700393523	43	4700394590	91	4700395794	425
4700393525	383,387,411,445	4700394591	91	4700395795	425
4700393538	369	4700394593	495	4700395796	421
4700393542	33,83,97	4700394594	495	4700395798	427
4700393550	135	4700394595	495	4700395799	427
4700393582	411,445	4700394596	495	4700395800	427
4700393584	507,509	4700394601	177	4700395803	435,453
4700393590	361	4700394654	463	4700395805	431
4700393592	223	4700394701	63	4700395806	431,433
4700393594	513	4700394705	517	4700395810	421
4700393595	517	4700394706	517	4700395811	421
4700393596	513	4700394707	515	4700395813	423
4700393597	513	4700394715	27	4700395814	423
4700393598	517	4700394787	113	4700395815	425
4700393634	435	4700394806	133	4700395816	305,387,427
4700393635	435	4700394859	403	4700395817	431
4700393636	435	4700394920	511	4700395818	441
4700393637	435	4700394922	161,163	4700395819	441
4700393639	409	4700394931	331	4700395820	441
4700393640	407	4700395023	331	4700395828	441
4700393641	407	4700395065	457	4700395829	413,437,447
4700393642	407	4700395067	183	4700395830	413,447
4700393645	407	4700395111	131	4700395831	437
4700393646	407	4700395112	131	4700395832	437
4700393681	361	4700395128	27	4700395833	433
4700393765	81,101	4700395131	33	4700395834	433
4700393775	329	4700395138	291	4700395835	433
4700393795	519,521	4700395156	511	4700395836	433
4700393862	547	4700395226	325	4700395837	433
4700393951	549	4700395240	309	4700395838	433
4700393959	495	4700395352	371,507	4700395839	433
4700393978	383,481	4700395383	471	4700395840	387,413,447
4700394000	57	4700395390	139	4700395841	443
4700394023	39	4700395412	141	4700395842	443
4700394068	125	4700395428	121,123	4700395853	443
4700394070	125,127	4700395429	121	4700395855	417
4700394139	407	4700395430	123	4700395856	429
4700394140	407	4700395447	471	4700395857	385,387
4700394169	223	4700395457	159	4700395858	413,447
4700394207	43	4700395522	57	4700395859	413,447
4700394229	247	4700395611	159	4700395860	383,451
4700394250	19,197	4700395612	159	4700395898	445,447
4700394251	19,207,213	4700395655	175	4700395915	213,215
4700394267	231	4700395694	157	4700395924	269,273,287
4700394297	57	4700395696	169	4700395947	491
4700394322	223	4700395750	383	4700396054	335
4700394340	109,133	4700395756	439	4700396071	47
4700394351	125,127	4700395757	439	4700396110	161,261
4700394395	545	4700395758	439	4700396118	161,261

NUMERICAL INDEX

Part Number	Page	Part Number	Page	Part Number	Page
4700396136	167	4700397517	365	4700484081	253
4700396154	137	4700397534	103	4700484103	523
4700396176	33	4700397535	103	4700484104	523
4700396179	169	4700397539	221	4700484161	283
4700396183	149	4700397564	371	4700484271	213
4700396205	549	4700397604	377	4700484350	257
4700396210	57	4700397606	189	4700484351	257
4700396218	235	4700397607	189	4700484352	263
4700396220	235	4700450163	403	4700484353	263
4700396259	315	4700475064	125,127	4700484354	263
4700396268	145	4700476019	187	4700484355	263
4700396270	145	4700480354	215	4700484356	263
4700396441	107	4700480446	281	4700484357	263
4700396496	33	4700480447	281	4700484358	263
4700396498	27	4700480449	281	4700484359	263
4700396542	63	4700480450	281	4700499174	395,399
4700396546	183	4700480456	281	4700500002	101
4700396576	97	4700480468	281	4700500012	33,43,319
4700396583	43	4700480852	35	4700500013	167,313,425
4700396584	43	4700483726	283	4700500015	313
4700396585	43	4700483729	283	4700500016	71
4700396588	43	4700484006	279	4700500018	327,395,399,411
4700396607	65,67	4700484007	279		415,431,445,449
4700396634	63	4700484014	259	4700500019	63,79,101,103
4700396635	63	4700484015	259		143,149,159,193
4700396655	261	4700484016	259		303,311,389,403
4700396656	261	4700484017	259		527
4700396657	261	4700484018	259	4700500020	481,483
4700396661	487	4700484019	259	4700500021	35,57,63,69,189
4700396662	487	4700484020	259		223,243,245,393
4700396670	491	4700484021	259		397,417,451,471
4700396672	81,83	4700484022	259	4700500022	33,53,57,63,71
4700396684	65	4700484023	259		161,185,457,547
4700396685	67	4700484024	265	4700500023	45,233,393,397
4700396739	33	4700484025	265		409
4700396754	149	4700484026	265	4700500024	373,465
4700396768	319,323	4700484027	265	4700500025	373,465
4700396844	185	4700484028	283	4700500028	57,63,161,185
4700396861	335	4700484030	283		195,221,267,285
4700396862	335	4700484031	283		361,363,365,471
4700396893	149	4700484032	283	4700500029	105,113,145,179
4700396923	389	4700484033	283	4700500030	111,221
4700396936	147	4700484034	283	4700500031	131,221
4700396975	149	4700484035	283	4700500032	27,129
4700396976	149	4700484037	283	4700500033	141
4700397028	373	4700484038	283	4700500034	161
4700397029	373	4700484039	283	4700500035	223,301
4700397039	39	4700484040	283	4700500037	181
4700397045	373	4700484043	283	4700500040	63,169,187,305
4700397259	223	4700484045	259		479
4700397268	161	4700484046	257	4700500042	323
4700397296	57	4700484047	257	4700500043	63,159,301
4700397318	39	4700484048	257	4700500046	207,213
4700397348	37	4700484049	257	4700500047	31,45,111,135
4700397398	309	4700484050	257		137,373,483
4700397399	189	4700484053	257	4700500048	39,189,419,511
4700397438	161	4700484075	253	4700500049	113,207,213,223
4700397439	161	4700484076	253	4700500051	27,47
4700397440	159	4700484077	253	4700500053	33,57,63,71,81
4700397441	161	4700484078	253		83,85,99,161,189
4700397500	375	4700484079	253		275,317,321,373
4700397516	365	4700484080	253		439,459,475,479

NUMERICAL INDEX

Part Number	Page	Part Number	Page	Part Number	Page
4700500053	483,503	4700516051	471	4700791409	167,269,287
4700500056	183,223,387,535	4700526010	487	4700791414	261
	537	4700533050	169	4700791421	377
4700500057	197	4700570004	149,305,329,487	4700791453	527
4700500058	525	4700570005	27,33,63,189,233	4700791454	527
4700500059	57,65,67		301,309,359,373	4700791479	305
4700500060	305,487		431,481,483,547	4700791524	471,479
4700500067	465	4700570006	63,133,179,185	4700791536	261
4700500070	193,525		471	4700791538	291
4700500077	161	4700570007	49,535,537	4700791551	313
4700500090	81,83,101,515	4700573008	471	4700791565	527
4700500091	375	4700586001	305,329,377,487	4700791568	81,101
4700500092	63		491	4700791572	49,477
4700500096	501	4700586002	33,63,65,67,187	4700791582	487
4700500105	133,179		305,309,313,393	4700791588	427,487
4700500107	221		397,471,479,487	4700791597	313
4700500115	293,489,539		489	4700791630	261
4700500133	47	4700586003	27,45,63,81,83	4700791634	291
4700500134	527		135,137,139,145	4700791635	291
4700500143	407		147,151,157,161	4700791642	233,495
4700500146	111		185,237,373,393	4700791698	223,291
4700500153	403		397,401,405,407	4700791709	357,485
4700500154	417,451		409,421,431,465	4700791711	63
4700500161	111,141,147,477		471,489,549	4700791712	63
4700500170	539	4700586018	129,131,161,367	4700791723	487
4700500175	157		369,477	4700791733	487
4700500180	185	4700586019	133,181,183	4700791739	487
4700500186	527	4700601003	405,407	4700791743	167,269,287
4700500187	337	4700603001	33,57,169,471	4700791744	255,269,287
4700500189	401	4700603009	417,451	4700791745	279
4700500190	373,401,405,407	4700606009	259	4700791754	345
4700500195	27,383,411,445	4700606021	259	4700791776	101
4700500197	223	4700615050	33,63,189	4700791796	213
4700500198	133	4700624005	495	4700791797	27
4700500205	173	4700624018	59	4700791798	259,261,291
4700500206	117	4700624020	65,67	4700791799	63,167,207,213
4700500228	387	4700624021	57,59		269,279,287
4700500265	113	4700629008	91	4700791823	63,269,287
4700500269	57,61	4700630008	471,483	4700791824	291
4700500270	289	4700630012	125,127	4700791831	291
4700500287	41	4700630035	183	4700791840	63
4700500289	111	4700635061	29,171,179,269	4700791841	259
4700500297	155		287	4700791844	63
4700500505	485	4700791082	133	4700791846	295
4700502035	483	4700791120	57,245	4700791853	291
4700508018	529,531	4700791125	101	4700791858	157
4700508019	465	4700791127	101	4700791914	167,541
4700508020	57	4700791163	255	4700791949	81,101
4700508021	421	4700791172	111	4700791950	81,83,101
4700508022	487	4700791182	85	4700791951	339
4700508025	393,397	4700791185	313,427	4700791956	345
4700508029	471	4700791211	427	4700791959	81,101
4700508048	151,223	4700791231	63	4700791968	461
4700508052	161	4700791277	495	4700791975	107
4700508080	223	4700791278	495	4700791977	83,107,145
4700508092	477	4700791304	481	4700792035	353
4700508096	223	4700791314	27	4700792059	341
4700509025	223	4700791321	69	4700792065	457
4700513003	481	4700791362	527	4700792072	107,145
4700513008	103	4700791397	283	4700792073	33
4700513011	125,127	4700791401	197,261,269,287	4700792115	261
4700513017	63	4700791405	57	4700792151	27,197,291

NUMERICAL INDEX

Part Number	Page	Part Number	Page	Part Number	Page
4700792187	519	4700792449	387,401	4700792780	33
4700792210	331,335,355,371	4700792451	259	4700792781	35
4700792219	291	4700792452	259	4700792782	33
4700792245	51	4700792453	259	4700792794	371
4700792258	63	4700792454	259	4700792796	389
4700792270	15,195,207,213	4700792465	291	4700792801	189
4700792276	57	4700792492	57	4700792803	177
4700792295	43,167	4700792501	477	4700792812	487
4700792309	305,313,427	4700792502	223	4700792813	83,93
4700792310	305	4700792504	427	4700792825	63
4700792311	63	4700792505	427	4700813429	223
4700792322	245	4700792506	197	4700813434	457
4700792323	245	4700792507	197	4700813617	215
4700792325	43,63,65,67,459	4700792512	259	4700813618	215
4700792326	57,63	4700792515	43	4700900485	149
4700792327	301	4700792517	43	4700900512	529,531
4700792328	301	4700792518	43	4700900672	33
4700792330	207	4700792519	345	4700900775	195,207,213
4700792331	197,291	4700792520	345	4700901141	457
4700792332	71	4700792521	339,341	4700901145	383,387,411,445
4700792333	291	4700792522	241	4700901157	291
4700792334	63,279	4700792526	241	4700901178	27
4700792336	291	4700792527	477	4700901225	313
4700792337	157	4700792533	283	4700901226	355
4700792338	57	4700792536	391	4700901227	313,333,355,427
4700792339	69	4700792537	349,357	4700901228	371,427
4700792340	283	4700792539	471	4700901317	175
4700792342	275	4700792540	139	4700901331	175
4700792343	275	4700792543	159	4700901332	175
4700792344	259	4700792554	27,43	4700901333	175
4700792349	345	4700792573	495	4700901334	175
4700792350	339,341	4700792583	463	4700901432	101,527
4700792351	345	4700792589	391	4700901446	387
4700792352	367	4700792600	33,83,97	4700901767	313
4700792353	339,341	4700792601	125,127	4700901998	177
4700792354	343,353	4700792602	309	4700902064	343
4700792361	339,341,345	4700792603	223	4700902166	59,65,67
4700792363	309	4700792605	27	4700902228	177
4700792364	301	4700792607	57	4700902252	173
4700792384	529,531	4700792609	347	4700902285	39,403
4700792385	529,531	4700792632	259	4700902286	57,361,365,403
4700792386	93	4700792634	545		475
4700792389	527	4700792649	291	4700902289	95
4700792392	101,161,459	4700792667	331,371	4700902379	387
4700792394	43	4700792669	65,67,73	4700902509	545
4700792395	523	4700792676	527	4700902520	471
4700792396	523	4700792678	471	4700902804	387,487
4700792397	359	4700792684	301	4700902861	281
4700792398	349,357	4700792686	511,515	4700902862	281
4700792410	361,365	4700792695	241,255	4700902866	27,37,65,67,433
4700792414	487	4700792698	255	4700903342	103
4700792417	361	4700792700	259	4700903344	103
4700792419	361	4700792715	427	4700903422	495
4700792421	57	4700792716	177	4700903423	495
4700792422	335,355,371	4700792718	65,67	4700903424	495
4700792433	145	4700792720	259	4700903425	495
4700792441	63,81,83,283,309	4700792726	121,123	4700903456	63
	313,349,357,365	4700792731	315	4700903457	281
	483,527	4700792746	213	4700903459	495
4700792442	259,283,309	4700792772	495	4700903590	419
4700792447	395,399	4700792777	81,83	4700903633	383,411,445
4700792448	395,399	4700792779	35	4700903640	305

NUMERICAL INDEX

Part Number	Page	Part Number	Page	Part Number	Page
4700903641	305	4700904231	113,115,125,127	4700908507	419
4700903662	373,489		133,157,181,183	4700908561	421,423
4700903714	247		193,197,207,213	4700908563	425
4700903726	207,213		223,535,537	4700908564	425
4700903735	157	4700904232	193,197,525	4700909085	329
4700903741	313,335	4700904233	41,113,117,383	4700909211	281
4700903768	63		387,411,445	4700909243	215
4700903773	279	4700904234	111,155,159	4700909335	215
4700903795	27	4700904241	407	4700909336	215
4700903831	157	4700904281	57,305,329,377	4700909338	215
4700903879	93		487,491	4700909339	215
4700903891	531	4700904292	265	4700909340	215
4700903898	49	4700904340	403	4700909342	215
4700903907	65,67	4700904405	95	4700909343	215
4700903914	477	4700904556	81,101,111,159	4700909344	215
4700903917	471		303,373,393,397	4700909346	215
4700903918	471		409,411,445,465	4700909350	215
4700903953	65,67		481,547	4700909351	215
4700904008	259	4700904557	105,111,113,129	4700909352	215
4700904009	259		141,145,147,161	4700909354	215
4700904010	259		179,189,221,369	4700909356	215
4700904015	333		375,471,483,511	4700909358	215
4700904024	333	4700904558	289,527	4700910162	269,287
4700904036	305	4700904584	283	4700910713	215
4700904037	309	4700904601	495	4700911620	281
4700904039	301,307	4700904619	491	4700920819	45
4700904044	57	4700904637	63,223,301	4700921031	309
4700904083	495	4700904638	301	4700921080	347
4700904085	157	4700904640	27,31,33,53,57	4700923087	215
4700904092	495		63,69,71,99,103	4700923090	215
4700904094	495		189,237,243,245	4700923253	103,189,343
4700904131	383		361,365,389,395	4700923405	291
4700904165	495		399,401,459,471	4700923735	81,93
4700904206	27,33		503	4700924544	93,101
4700904213	31,61,207,213	4700904641	261	4700924791	403
4700904214	161	4700904653	329,491	4700924875	65,67
4700904228	33,43,65,67,167	4700904654	403	4700924999	27
	183,187,305,309	4700904697	169	4700925208	41
	313,319,329,337	4700904698	101,487,527	4700925599	57,93,101
	393,397,403,425	4700904703	27,57,223	4700925750	27
	479,487,489	4700904728	57	4700925784	527
4700904229	33,45,57,63,79	4700904734	45,135,137,185	4700926214	157
	81,83,85,87,99		233	4700926215	63
	101,119,125,127	4700904735	63,65,67,71,187	4700926216	401
	135,137,139,143		351	4700926736	207,213
	145,147,149,151	4700904763	175	4700927233	125,127
	157,161,185,193	4700904835	495	4700927637	147,415,449
	223,233,275,293	4700904870	495	4700928381	27
	301,309,311,317	4700904895	495	4700928467	313
	321,323,327,339	4700904911	319	4700928784	33,351
	341,345,359,361	4700904913	103	4700929012	281
	365,373,403,421	4700904914	103	4700929013	281
	457,465,469,471	4700904926	101	4700929014	281
	475,479,481,483	4700904951	167	4700929191	549
	489,501,503,515	4700904956	119	4700929447	17,207,213
	527,539,547,549	4700904984	241	4700929455	353
4700904230	27,39,57,63,111	4700905306	421	4700930046	169
	131,141,157,159	4700908229	495	4700935428	281
	161,185,195,267	4700908284	431	4700935429	281
	285,361,363,365	4700908500	427	4700936277	431
	367,477,527	4700908505	419	4700937165	461
4700904231	27,43,47,49,61	4700908506	419	4700937620	477

NUMERICAL INDEX

Part Number	Page	Part Number	Page	Part Number	Page
4700937621	477	4700950369	521	4812110671	135
4700937892	477	4700950370	521	4812110672	139
4700938256	423	4700950371	521	4812110827	387
4700938605	505	4700950372	505	4812110896	483
4700938606	505	4700950373	505	4812110898	357
4700938609	441,505	4700950374	505	4812110899	355
4700938622	443	4700950375	505	4812110901	487
4700938624	521	4700950380	509	4812110902	355
4700938789	505	4700950417	29,171	4812110943	355
4700938874	439	4700950480	199	4812110982	33
4700938891	13,17	4700950481	163	4812110989	487
4700939333	215	4700950483	163	4812111326	365
4700940451	487	4700950491	199	4812112074	33,81,83,93,101
4700940572	271,273,297,543	4700950492	163,199		527
4700945145	7,9,11,225,227	4700950493	199	4812112099	185
4700945147	7,9,11,225,227	4700950494	199	4812112100	185
4700945314	501	4700950495	199	4812112232	161
4700945526	527,533	4700950498	163	4812112233	179
4700945538	225,227	4700950520	199	4812112256	185
4700945622	475	4700950521	199	4812112413	207,213
4700945624	7,9,11,225,227	4700950522	199	4812113161	221
4700945626	225,227	4700950523	199	4812113426	383
4700945632	473	4700950524	199	4812113496	223
4700945633	473	4700950526	199	4812113724	115
4700945634	473	4700950527	199	4812113786	489
4700945635	473	4700950529	199	4812113939	37
4700945636	473	4700950530	199	4812113949	37
4700945637	473	4700950531	199	4812114312	283
4700945661	475	4700950532	199	4812114393	65,67
4700945668	533	4700950569	271	4812115060	483
4700945760	11,225,227	4700950570	271,273	4812115061	483
4700945767	225,227	4700950571	271,273	4812115511	223
4700945768	225,227	4700950572	271,273	4812115760	383
4700945769	225,227	4700950587	543	4812115903	283
4700945770	225,227	4700950593	215	4812116432	225
4700945771	225,227	4700960067	333	4812116435	227
4700945772	225,227	4700991657	495	4812116436	227
4700945773	225,227	4700991658	495	4812116437	227
4700945774	225,227	4700999014	323	4812118090	539
4700945805	5,7	4811000085	83,93	4812155170	197,205
4700945806	5,9	4811000096	151	4812155278	225,227
4700945807	5,11	4811000107	83	4812155658	505
4700945887	225,227	4811000112	189	4812155790	297
4700945897	423	4811000113	189	4812156060	199
4700945903	13,15	4811000163	355	4812156061	199
4700945904	13,19	4812110210	189	4812156062	199
4700947679	469	4812110211	189	4812156073	225,227
4700947684	527	4812110277	39	4812156074	225,227
4700947689	31,61	4812110293	259	4812156095	21
4700947712	157	4812110334	151	4812156096	21
4700950222	29,171	4812110346	193	4812156097	21
4700950297	215	4812110352	465	4812156159	297
4700950310	509	4812110358	81,85,101	4812156170	19
4700950342	509	4812110394	83,85,101	4812156199	215
4700950343	509	4812110444	193	4812156376	43
4700950344	509	4812110491	81,83	4812156651	163
4700950345	509	4812110586	387	4812156777	365
4700950346	509	4812110641	197	4812156787	273
4700950347	509	4812110643	207,213	4812157165	201
4700950348	509	4812110644	115	4812157166	203
4700950349	509	4812110652	309	4812157167	203
4700950350	509	4812110667	63,283	4812157168	203

NUMERICAL INDEX

Part Number	Page	Part Number	Page	Part Number	Page
4812157169	205				
4812157170	205				
4812157171	205				
4812157188	427				
4812157189	427				
4812157490	209				
4812157491	209				
4812157492	209				
4812157493	209				
4812157494	209				
4812157495	209				
4812157496	209				
4812157497	209				
4812157498	211				
4812157499	211				
4812157551	211				
4812157552	211				
4812157585	273				
4812157762	429				
4812157763	429				
4812157764	429				
4812157769	225,227				
4812158269	63,283				
4812158294	75				
4812158295	75				
4812158367	477				
4812158763	199				
4812158764	199				
4812158765	199				