RUTHZIL TRATOR COMERCIAL DE PEÇAS LTDA 11 97083-6812 ROLANDO CITRANGULO

DYNAPAC CC524HF

SPARE PARTS CATALOGUE

SCC524HF-CN1EN1

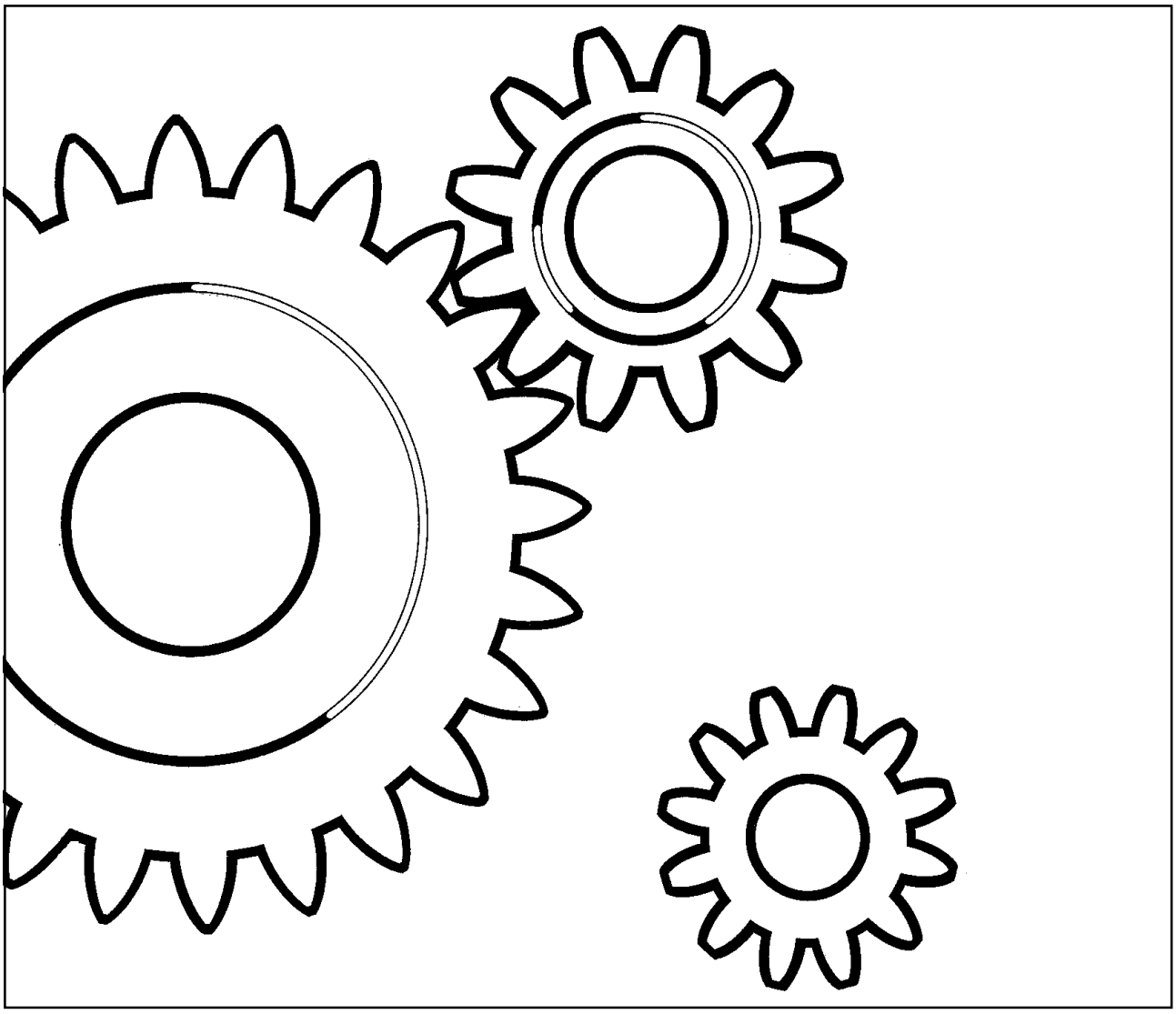

DYNAPAC
Part of the Atlas Copco Group

Box 504, SE-371 23 Karlskrona, Sweden
Phone: +46 455 30 60 00, Fax: +46 455 30 60 10
www.dynapac.com

DYNAPAC
Part of the Atlas Copco Group

Vibratory Roller
CC524HF

Spare Parts Catalogue
SCC524HF-CN1EN1

Valid from roller serial number:

384C30001

Diesel engines:

Cummins QSB 4.5

Published catalogue issues valid for these rollers:

Catalogue	*Issue date*	*Valid for serial numbers*
SCC524HF-CN1EN1	*2008 -11*	**384C30001 -*



We reserve the right to change specifications without notice.
Printed in Sweden.

DYNAPAC
Part of the Atlas Copco Group

RESERVDELSBESTÄLLNING

Följande uppgifter ska lämnas vid beställning av reservdelar för att undvika leveransfel:

1. Maskintyp.
2. Vältens serienummer.
3. Antal av önskad reservdel.
4. Reserdelens artikelnummer.
5. Reservdelens benämning.
6. Måttuppgifter vid beställning av metervara.

ORDERING SPARE PARTS

To avoid errors in delivery, please give the following information when ordering spare parts:

1. Type of machine.
2. Roller serial number.
3. Quantity required.
4. Part number.
5. Parts denomination.
6. Dimensions when ordering per length.

ERSATZTEILBESTELLUNG

Zur Vermeidung von Fehllieferungen sind bei der Bestellung von Ersatzteilen folgende Angaben zu machen:

1. Maschinentyp.
2. Herstellungsnummer.
3. Bestellmenge. (Quantity)
4. Ersatzteilnummer. (Part Nº)
5. Ersatzteilbenennung. (Denomination)
6. Massangaben bei Bestellung von Meterware.

ORDINI DI RICAMBI

Per evitare errori nelle consegne di ricambi, Vi preghiamo di comunicarci le seguenti informazioni al momento dell 'ordinazione:

1. Tipo di macchina.
2. Numero di serie della macchina.
3. Quantità dei pezzi desiderati. (Quantity)
4. Numero di codice del pezzo. (Part Nº)
5. Descrizione del pezzo di ricambio. (Denomination)
6. Misura, in caso di ordine per metro.

PEDIDO DE RECAMBIOS

Para evitar errores en las entregas, deberán indicarse los siguientes datos al hacer un pedido de recambios:

1. Tipo de máquina.
2. Número de serie.
3. Cantidad de piezas deseadas. (Quantity)
4. Número de artículo de la pieza de recambio. (Part Nº)
5. Denominación de la pieza. (Denomination)
6. Indíquese la medida al solicitar un artículo que se expide por metros.

COMMANDE DE PIECES DE RECHANGE

Les indications suivantes doivent être fournies lors de la commande de piéces de rechange, afin d'éviter toute erreur de livraison:

1. Type de machine.
2. Numéro de série.
3. Quantité désirée de pièce de rechange. (Quantity)
4. Numéro de la piéce de rechange. (Part Nº)
5. Dénomination de la piéce de rechange. (Denomination)
6. Longueur en cas de commande au mètre.

YOUR AGENT/DEALER:

Text pages

The text pages is structured as the picture on the right.

1. This is the remarks for specific items and the descriptions of the remarks is at the bottom of the parts list.

2. Parts indicated by a dot and moved to the right are included when buying the assembled unit above.

3. Spare parts and service code for a specific part, mainly for internal use at Dynapac. "A" = Service part, "B" = Fast moving part, "C" = Suggested exchanged part and "D" = Regular spare part.

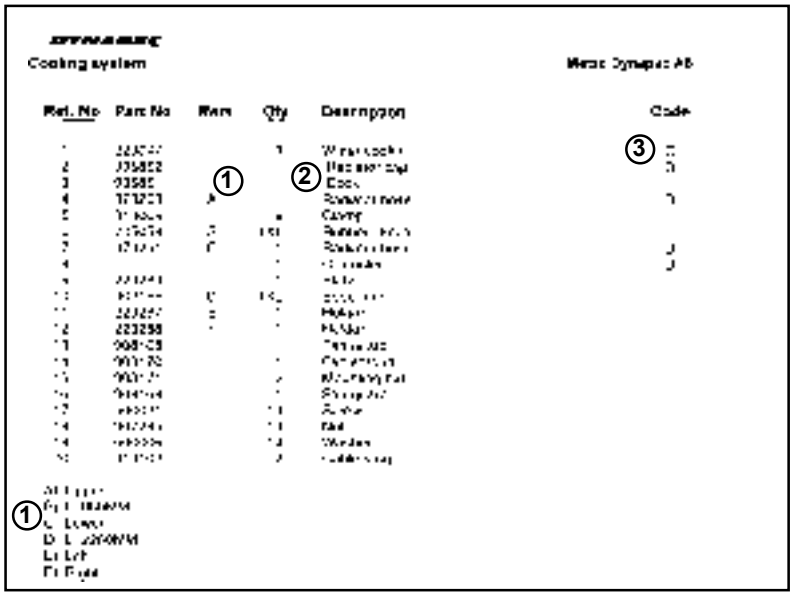

Changes

PARTS INFO	SERVICE INFO	GROUP	PAGE	NOTES

Notes

Notes

PÄRMETIKETT

För att undvika fel vid reservdelsbeställning finns här nedan två etiketter som passar i fickorna på pärmarnas ryggar. På dessa kan man se från vilket vältnummer av aktuell maskin reservdelskatalogen gäller. Gör så här:

1. Tag denna sida ur pärmen.
2. Klipp ut etiketten till **VÄNSTER** (1) och sätt in den i fickan på **DENNA** pärmens rygg.
3. Finns det en etikett till **HÖGER** (2), kan denna användas på pärmen för **FÖREGÅENDE** utgåva av denna katalog.
4. Kasta detta papper.

BINDER LABEL

To avoid errors when ordering spare parts use the labels below to identify the catalogues on the back of the binder. The label contain the serial number range for which the catalogue is valid. Do like this:

1. Remove this page from the binder.
2. Cut out the **LEFT** label (1) and put it on **THIS** binders back.
3. If there is a label to the **RIGHT** (2), it can be used on the binder for **PRECEDING** issue of this catalogue.
4. Throw away this paper.

KATALOG-BESCHRIFTUNG

Zur Vermeidung von Fehlen bei der Ersatzteilbestellung benutzen Sie bitte die unteren Beschriftungen, um die Kataloge auf der Rückseite zu kennzeichen. Auf der Beschriftung ist angegaben, für welche Maschinennummern der jeweilige Katalog gültig ist. Ablauf:

1. Nehmen Sie dieses Blatt aus dem Katalog.
2. Schneiden Sie die **LINKE** Beschriftung (1) aus. Schieben Sie die Beschriftung in die tasche auf **DEM** Katalogrücke.
3. Sollte die Beschriftung unten **RECHTS** (2) mitgeliefert werden, kennzeichen Sie damit bitte die **ÄLTERE** Ausführung dieses Kataloges.
4. Den Rest dieses Blattes bitte vernichten.

ETICHETTA POSTA SUL RACCOGLITORE

Per evitare errori quando ordinate pezzi di ricambio, usate le etichette in calce che servono ad identificare i cataloghi sul retro del raccoglitore. L'etichetta indica il numero di matricola delle maccine prese in considerazione nel catalogo.

1. Rimuovete questa pagina dal raccoglitore.
2. Ritagliate l'etichetta posta a **SINISTRA** (1) e ponetela sul retro **DEL** raccoglitore.
3. Se trovate anche un'etichetta sulla **DESTRA** (2), ritagliatela e ponetela sul raccoglitore relativo alla **PRECEDENTE** edizione del catalogo.
4. Distruggete questo foglio.

ETIQUETA PARA LA CARPETA

Para evitar errores al pedir repuestos utilicen las etiquetas abajo descritas para identificar los catálogos en la parte trasera de la carpeta. En la etiqueta se ven los números de referencia de la serie para la cual es válido el catálogo. Instrucciones:

1. Quitar esta página de la carpeta.
2. Corta la etiqueta **IZQUIERDA** (1) y ponerla est **ESTA** carpeta en la parte trasera.
3. Si hay una etiqueta en la parte **DERECHA** (2) se puede utilizar en la carpeta para el catálogo que **PRECEDE** a esta.
4. Tirar esta hoja.

ETIQUETAGE DU CATALOGUE

Afin d'éviter des erreurs lors de commandes de pièces de rechange, nous vous conseillons d'apposer les marquages ci-dessous à l'arrière du classeur, pour identifier les catalogues. Ce marquage indique les numéros de série pour lesquels le catalogue est adapté. Il convient de procéder de la façon suivante:

1. Retirez cette page du classeur.
2. Découpez l'étiquette de **GAUCHE** (1), et apposez-la à l'arrière de **CE** catalogue.
3. Si il y a une étiquette à **DROITE** (2), vous pourrez l'apposer sur le classeur de l'edition **PRECEDENTE** du catalogue.
4. Détruire cetta feuille.

1.



CC524HF

Catalogue **SCC524HF-CN1EN1**
Valid **from** serial number:
***384C30001* -**

TABLE OF CONTENTS

Page

CC524HF SN 384C30001 - 2

Service kits 4

945805 Service kit 50 h, Cummins QSB 4.5 T3 6
945806 Service kit 500 h, Cummins QSB 4.5 T3 8
945807 Service kit 1000 h, Cummins QSB 4.5 T3 10

Repair kits 12

950151 Scraper kit CC524HF 14
945903 Eccentric shaft kit CC424HF/524HF/624HF 16
938891 Drum rotation kit 18
945904 Shock absorber kit, drum CC424HF/524HF/624HF 20

Frame 22

Front frame 24
Front frame 26
391023 Steering cylinder 28
Tank structure module 30
Tank structure module 32
391307 Cover 34
Hitch module 36
Hitch link 38
Filling pipe module 40
Filling pipe 42
Cover module 44
Holder 46
Grab handle module 48
Rear frame 50
Rear frame 52
Cover, cpl 54
Engine structure, module 56
Engine structure 58
390157 Engine cover 60
390158 Engine cover 62
Oil cooler 64
Oil cooler 66
Fan 68
Fan 70
Noise suppression plates 72
Noise suppression, covers 74
Grab handle module 76
Sprinkler system 78
Sprinkler pump module 80
Sprinkler pump 82
Sprinkler pump, backup 84
Sprinkler pump, additonal sprinkler 86
Sprinkler pump mount 88
Filling pipe module 40
Filling pipe 42
Cover lock module 90
Lock bracket 92
Locking device module 94
Water hoses 96
End frame, front 98
End frame, front 100
Frame 102
Fork, vibration side 104
Fork, propulsion side 106

TABLE OF CONTENTS

Page

Cover plate 108
Hose clamp, propulsion side 110
Hose clamp, vibration side 112
Step, vibration side 114
Step 116
Step, propulsion side 118
Step 120
Scraper module, without nozzles 122
Scraper assy 124
Scraper module, with nozzles 126
Scraper assy with nozzles 128
394340 Scraper bracket, cpl 130
Grab handle, release 132
Grab handle, lift 134
End frame, rear 136
End frame, rear 138
End frame, rear offset 140
Frame 142
Connection block 144
Micro switch 146
391024 Steering cylinder 148
Eyelet module 150
Eyelet module 152
SMV-sign module 154
SMV-sign 156
Grab handle, lift 134

Drum 158

Drum 160
Drum bearing module 162
Drum bearing 164
Propulsion motor module 166
Drive unit 168
390604 Drum gear 170
Vibration motor module 172
Vibrating unit Sauer 174

Engine 176

Engine room 178
Engine 180
Engine module 182
390832 Diesel engine 82kW 184
390831 Diesel engine 93kW 186
379624 Diesel engine 113kW 188
Air cooler hoses 190
Water cooler hoses 192
Air cleaner module 194
Air cleaner hose module 196
Muffler 198
Exhaust pipe module 200
Fuel hose module 202
Charge air cooler 204
Water cooler 206
Radiator, cpl 208
Expansion tank assembly 210
394155 Expansion tank 212
Coolant hoses 214

Hydraulic system 216

Hydraulic system, front drum 218

TABLE OF CONTENTS

Page

Hydraulic system, rear drum std 220
Hydraulic hoses, frame std 222
Hydraulic system, steering Std 224
Hydraulic valve module 226
Hydraulic valve 228
Hose bracket 230
Hydraulic steering, sliding seat Std 232
Steering, slideable 234
372424 Pilot valve, steering 236
Hydraulic hoses, engine structure std 238
Hydraulic pump module 240
Hydraulic pump 242
390602 Hydraulic pump 244
Hydraulic valve module, offset 246
Hydraulic valve 248

Electrical equipment 250

Electric cables, power supply 252
Battery disconnector 254
Battery disconnector 256
Electric cables, power supply cab 258
Electric cables, engine-ECU 260
Standard ECU module 262
Standard ECU assembly 264
Electric cables, sensors/ horn/ back-up alarm 266
Back-up alarm 268
Back-up alarm 270
Horn module 272
Horn 274
Tachograph 276
Tachograph holder module 278
Cable harness kit 280
Power supply module 282
Driving & side direction lights 284
Accessories ECU module 286
Driving lights, front RH 288
Driving lights, front LH 290
Turn signals 292
Driving lights, rear 294
Steering column switch module 296
Cable harness and switch module 298
Registration plate light module 300
Registration plate light 302
Rotating beacon, working light 304
Rotating beacon module 306
Working light module H3 308
Working light module Xenon 310

Drivers platform 312

Platform, no cab 314
Platform no ROPS 316
Hand rail, left 318
Hand rail 320
Hand rail, right 322
Hand rail 324
Hand rail 326
Lunch box module 328
Canopy 330
Canopy assy 332
Bracket 334

TABLE OF CONTENTS

Page

Cab, asymmetric 336
390864 Cab, cpl 338
Cab frame, right side 340
Roof 342
General parts 344
Windshield wiper, front 346
Windshield wiper, rear 348
Windshield washer reservoir 350
Electric equipment 352
Front panel 354
Door frame 356
395806 Door 358
Cab screens 360
Rear covers 362
Air channel 364
Heater unit 366
Heater 368
Heater controls 370
Manual box 372
Cab heater system 374
Heater hoses 376
Cab noise cover 378
Radio and cd player 380
Radio and cd player module 382
Drivers seat 384
Seat frame structure 386
Seat frame 388
391163 Steering column 390
Seat CE 392
Seat with suspension 394
Controls, slidable and turning 396
Cross sliding 398
Carrier 400
Drive control, cpl 402
Drive control 404
Control panel cover 406
Display unit 408
Display 410

Decals 412

Decals 414

Optional equipment 416

Air conditioning 418
Compressor module 420
Condensor module 422
Condensor 424
Evaporator module 426
393584 Evaporator unit 428
Hose kit AC 430
Hose kit 432
Hose kit Compressor 434
Hose kit AC 436
ACC module 438
ACC controls 440
Edge cutter 442
Edge cutter, module 444
390998 Edge cutter, cpl 446
390999 Holder 448
391009 Bearing unit 450

TABLE OF CONTENTS

Page

387275 Hydraulic cylinder ---- 452
Pressing roller, module ---- 454
Hydraulic valve, module ---- 456
Hydraulic valve ---- 458

CC524HF SN 384C30001 -
CC524100



Ref. No.	Part No.	Rem.	Qty	Description	Code
				Service kits (Page 4)	
				Repair kits (Page 12)	
1				Frame (Page 22)	
2				Drum (Page 158)	
3				Engine (Page 176)	
5				Hydraulic system (Page 216)	
6				Electrical equipment (Page 250)	
7				Drivers platform (Page 312)	
8				Decals (Page 412)	
9				Optional equipment (Page 416)	

Service kits

Ref. No.	Part No.	Rem.	Qty	Description	Code
1	945805		1	Service kit (Page 6)	50 h, Cummins QSB 4.5 T3
2	945806		1	Service kit (Page 8)	500 h, Cummins QSB 4.5 T3
3	945807		1	Service kit (Page 10)	1000 h, Cummins QSB 4.5 T3

945805 Service kit 50 h, Cummins QSB 4.5 T3

18517

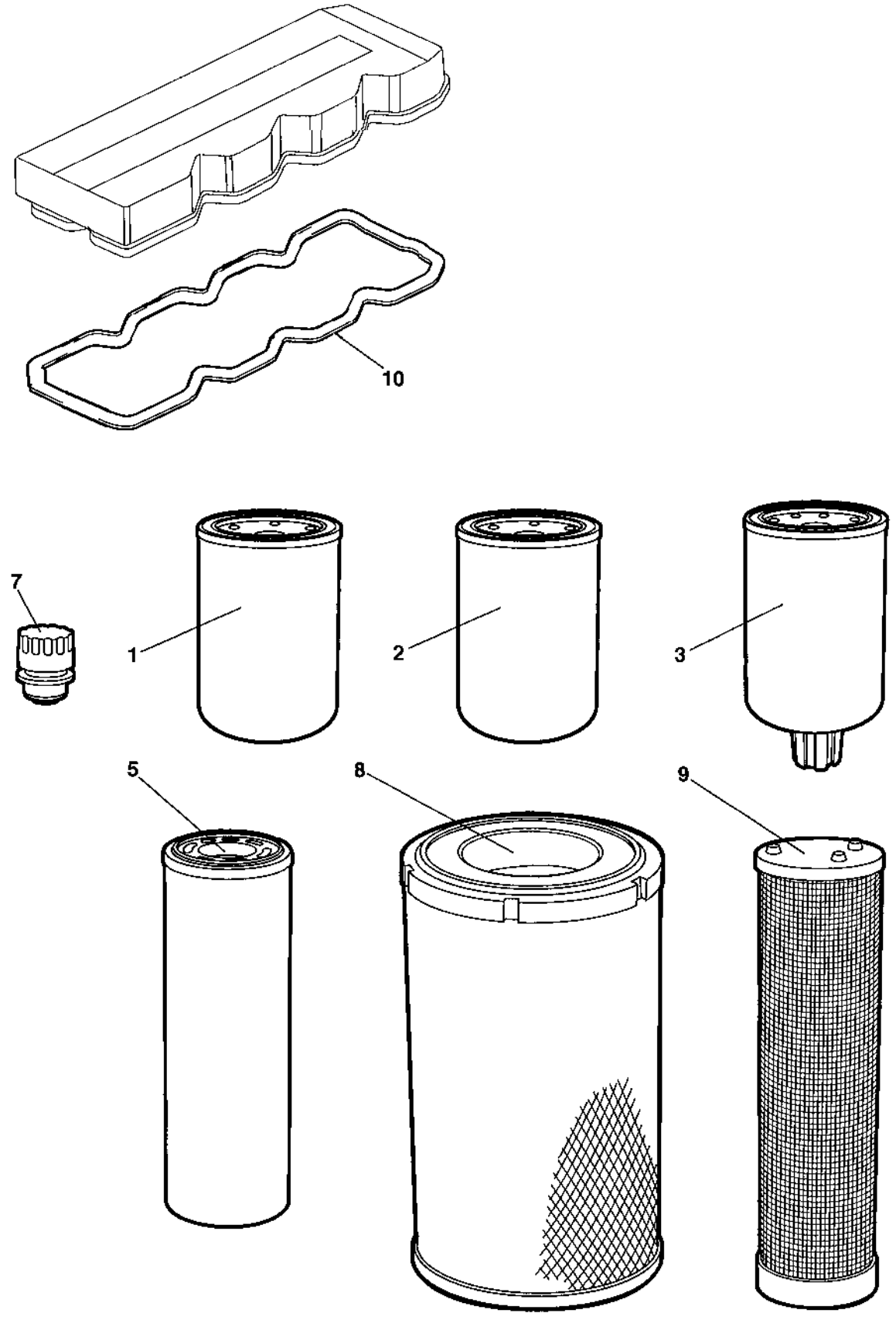

945805 Service kit 50 h, Cummins QSB 4.5 T3

Ref. No.	Part No.	Rem.	Qty	Description	Code
	945805			Service kit (Page 6)	50 h, Cummins QSB 4.5 T3
1	945145		1	Oil filter element	A
2	945624		1	Fuel filter element	A
3	945147		1	Pre-fuel filter element	A
5	391433		1	Filter element	A

945806 Service kit 500 h, Cummins QSB 4.5 T3

18517

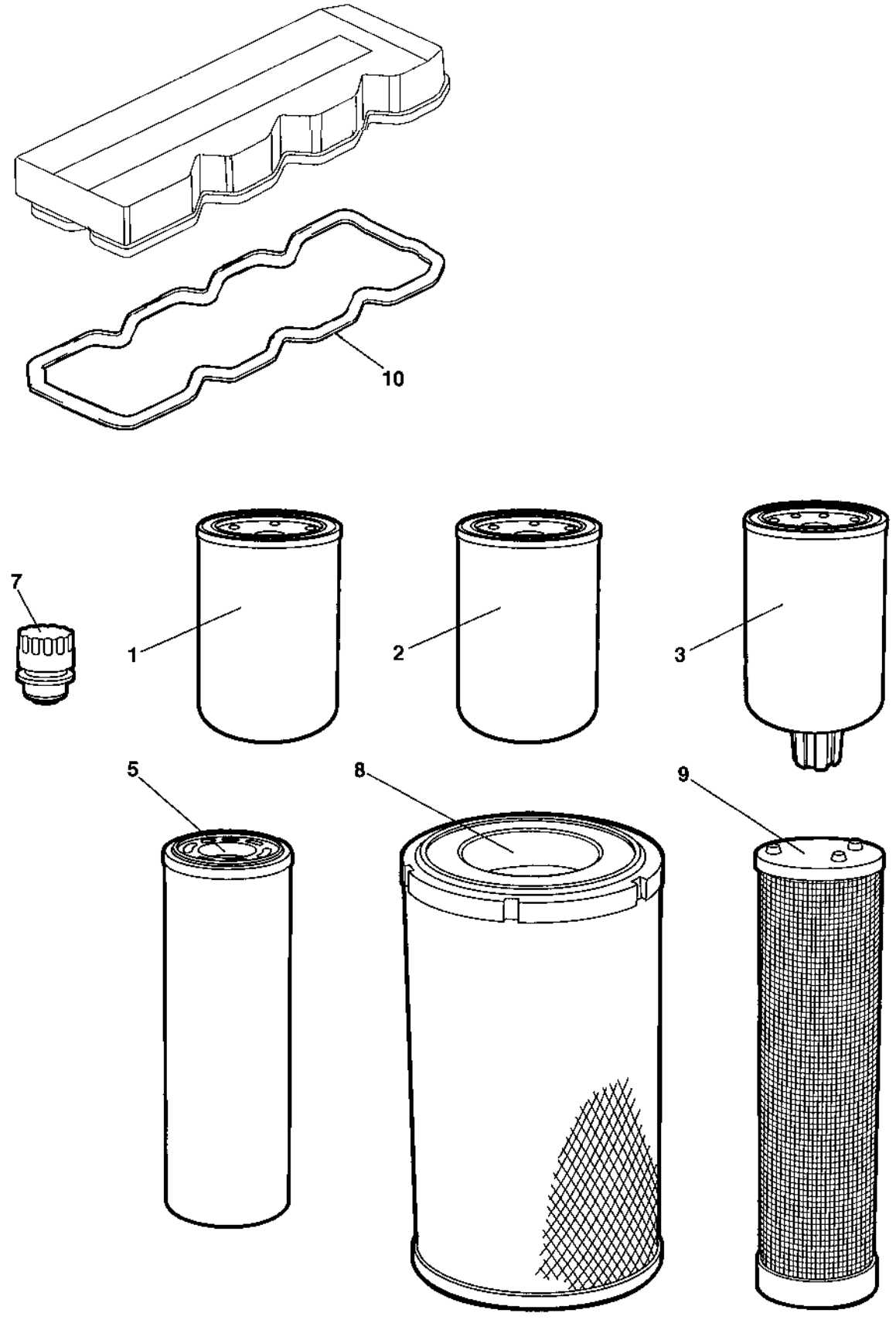

945806 Service kit 500 h, Cummins QSB 4.5 T3

Ref. No.	Part No.	Rem.	Qty	Description	Code
	945806			Service kit (Page 8)	500 h, Cummins QSB 4.5 T3
1	945145		1	Oil filter element	A
2	945624		1	Fuel filter element	A
3	945147		1	Pre-fuel filter element	A

945807 Service kit 1000 h, Cummins QSB 4.5 T3

18517

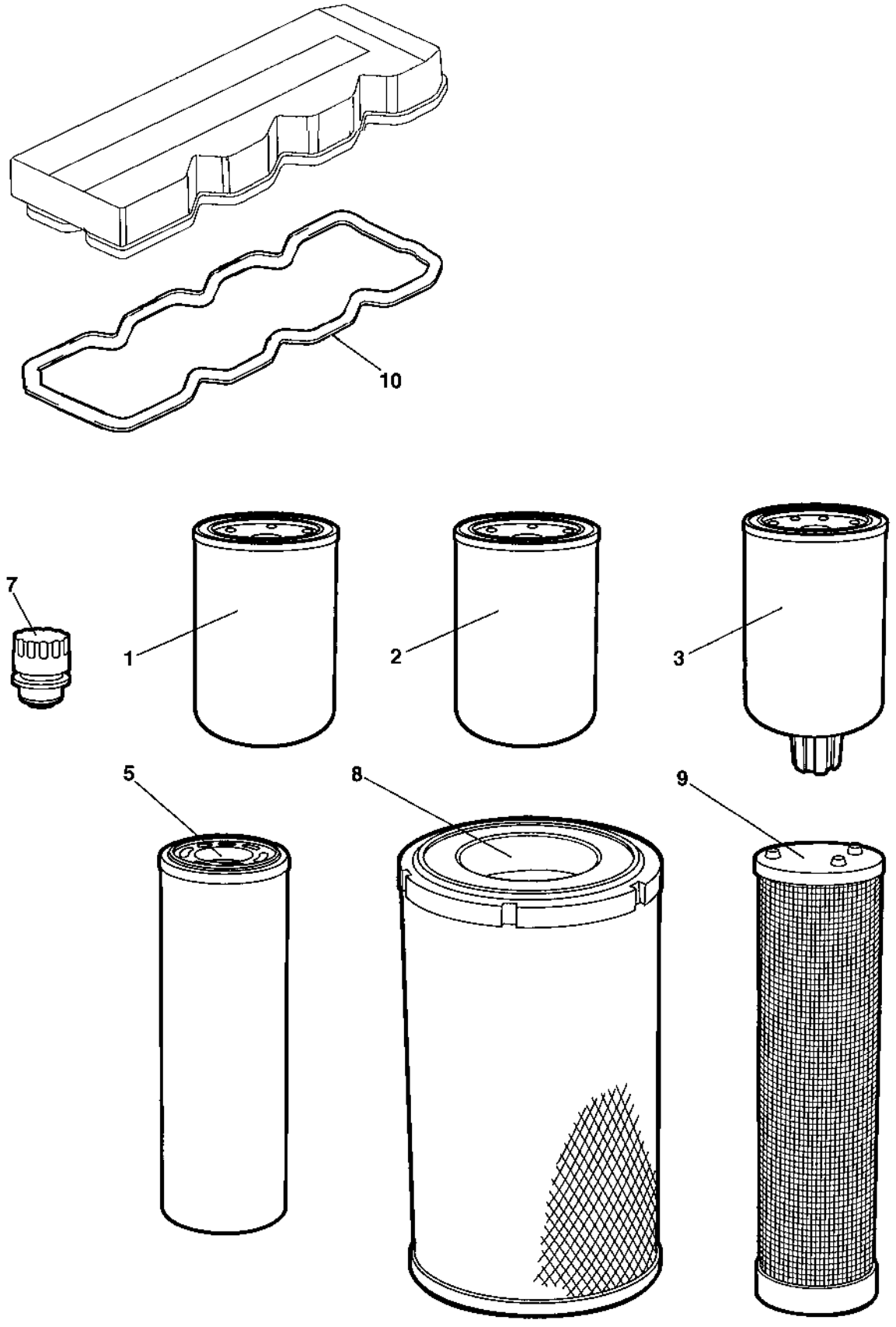

945807 Service kit 1000 h, Cummins QSB 4.5 T3

Ref. No.	Part No.	Rem.	Qty	Description	Code
	945807			Service kit (Page 10)	1000 h, Cummins QSB 4.5 T3
1	945145		1	Oil filter element	A
2	945624		1	Fuel filter element	A
3	945147		1	Pre-fuel filter element	A
5	391433		1	Filter element	A
7	391026	B	1	Ventilating filter	A
8	390995		1	Main filter element	A
9	390994		1	Safety filter element	A
10	945760		1	Valve cover gasket	

B) Ventilated oil filler cap for the hydraulic oil tank

Repair kits

Ref. No.	Part No.	Rem.	Qty	Description	Code
-1				Repair kits	
1	950151		1	Scraper kit (Page 14)	CC524HF
2	945903		2	Eccentric shaft kit (Page 16)	CC424HF/524HF/624HF
3	938891		2	Drum rotation kit (Page 18)	
4	945904		2	Shock absorber kit, drum (Page 20)	CC424HF/524HF/624HF

950151 Scraper kit CC524HF

950151

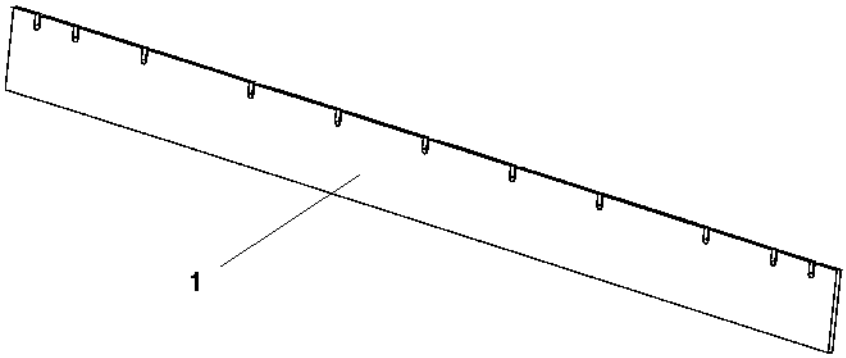

950151 Scraper kit CC524HF

Ref. No.	Part No.	Rem.	Qty	Description	Code
	950151			Scraper kit (Page 14)	CC524HF
1	395114		4	Scraper blade	

945903 Eccentric shaft kit CC424HF/524HF/624HF

945903

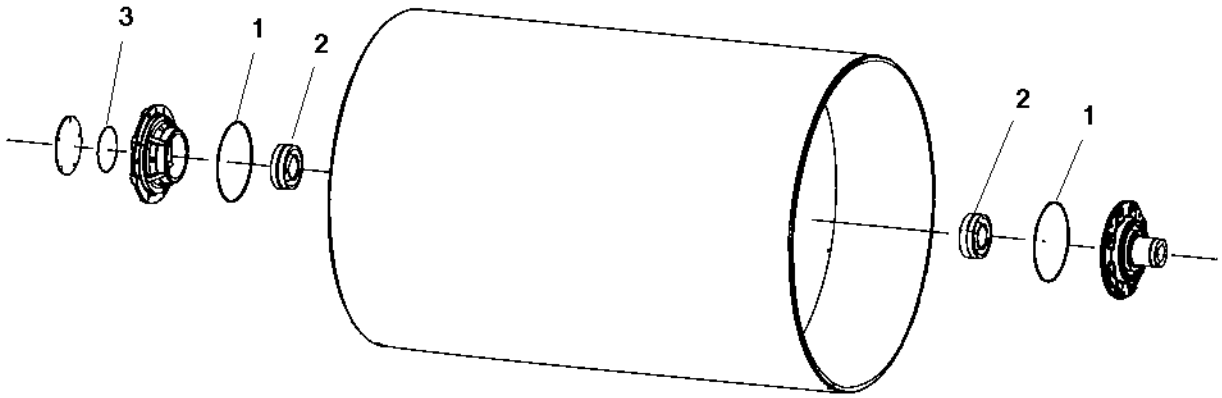

945903 Eccentric shaft kit CC424HF/524HF/624HF

Ref. No.	Part No.	Rem.	Qty	Description		Code
	945903			Eccentric shaft kit (Page 16)	CC424HF/524HF/624HF	
1	160344		2	O-ring 70		D
2	792270		2	Spherical roller bearing		D
3	160045		1	O-ring 70		

938891 Drum rotation kit

RAMLAGER

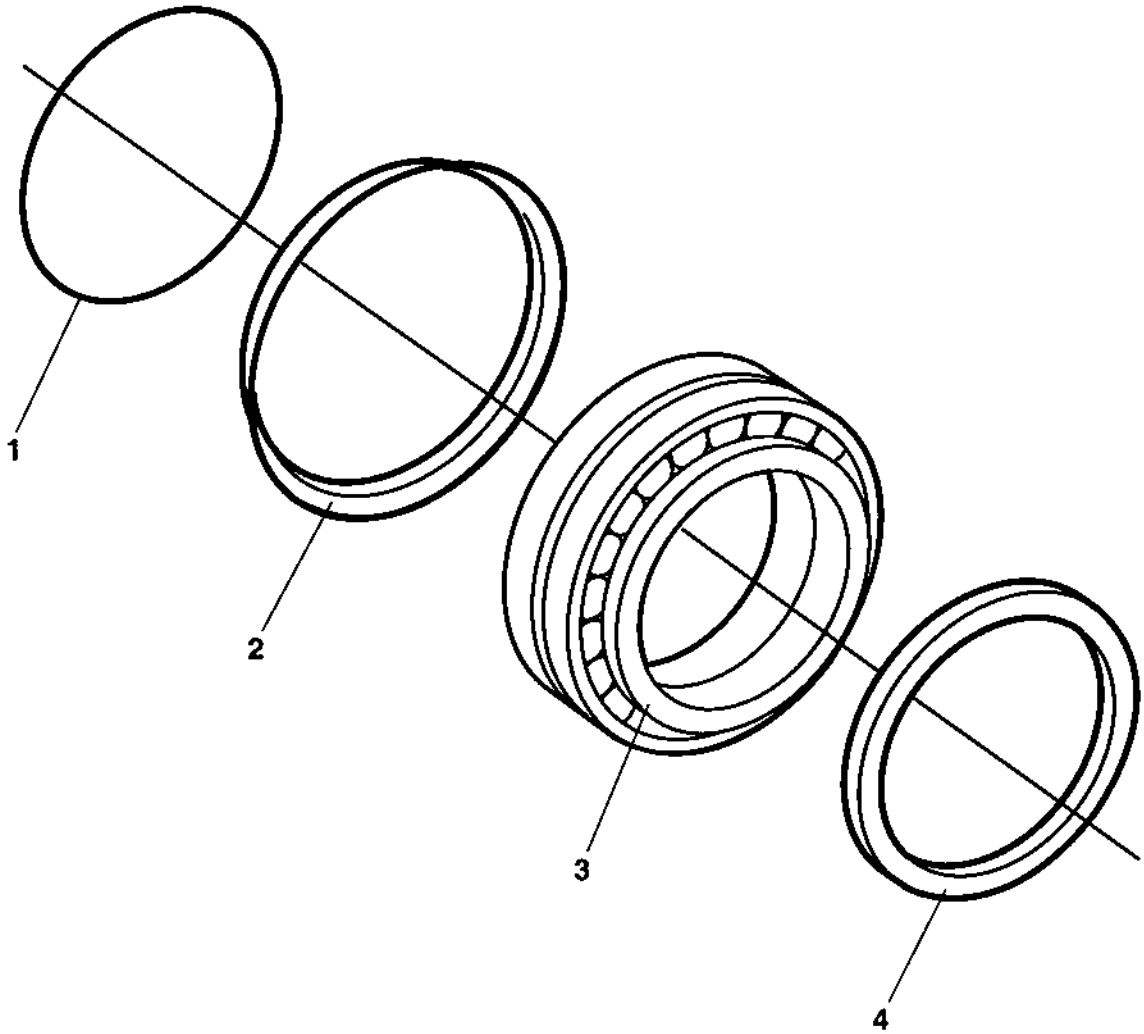

938891 Drum rotation kit

Ref. No.	Part No.	Rem.	Qty	Description	Code
	938891			Drum rotation kit (Page 18)	
1	160105		1	O-ring 70	D
2	929447		1	V-ring	D
3	116041		1	Taper roller bearing	D
4	386272		1	Sealing	D

945904 Shock absorber kit, drum CC424HF/524HF/624HF

945717

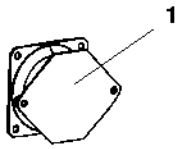

945904 Shock absorber kit, drum CC424HF/524HF/624HF

Ref. No.	Part No.	Rem.	Qty	Description		Code
	945904			Shock absorber kit, drum (Page 20)	CC424HF/524HF/624HF	
1	394250	A	8	Shock absorber		B
2	394251	B	4	Shock absorber		

A) Propulsion side
B) Vibration side

Frame

Frame

Ref. No.	Part No.	Rem.	Qty	Description	Code
1				Front frame (Page 24)	
3				Rear frame (Page 50)	
4				Sprinkler system (Page 78)	
6				End frame, front (Page 98)	
7				End frame, rear (Page 136)	

Front frame

AR0025

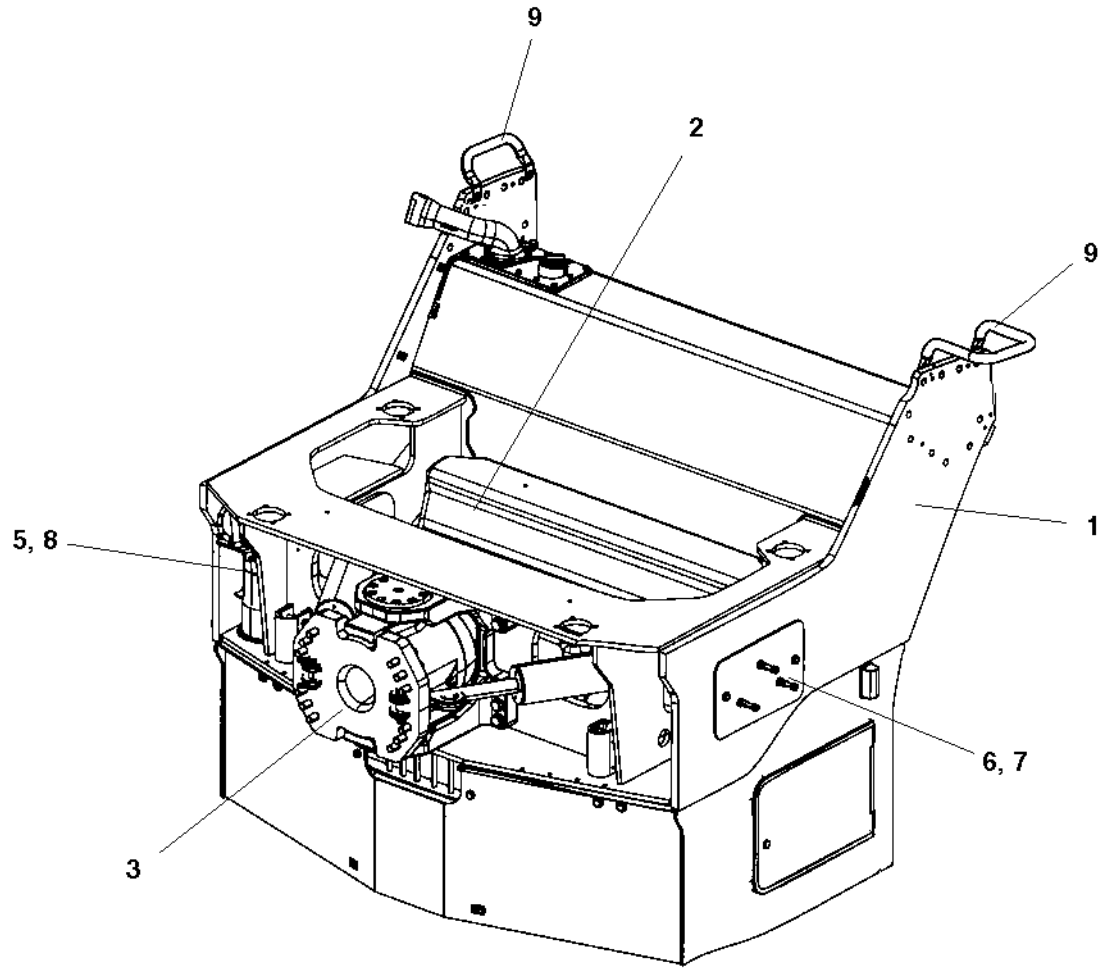

Front frame

Ref. No.	Part No.	Rem.	Qty	Description	Code
1			1	Front frame (Page 26)	
2			1	Tank structure module (Page 30)	
3			1	Hitch module (Page 36)	
5		1	2	Filling pipe module (Page 40)	
6			1	Cover module (Page 44)	
7			1	Holder (Page 46)	
8			1	Cover lock module (Page 90)	
9			2	Grab handle module (Page 48)	

1) Two pieces when use of tank with dual filling holes.

Front frame

395129

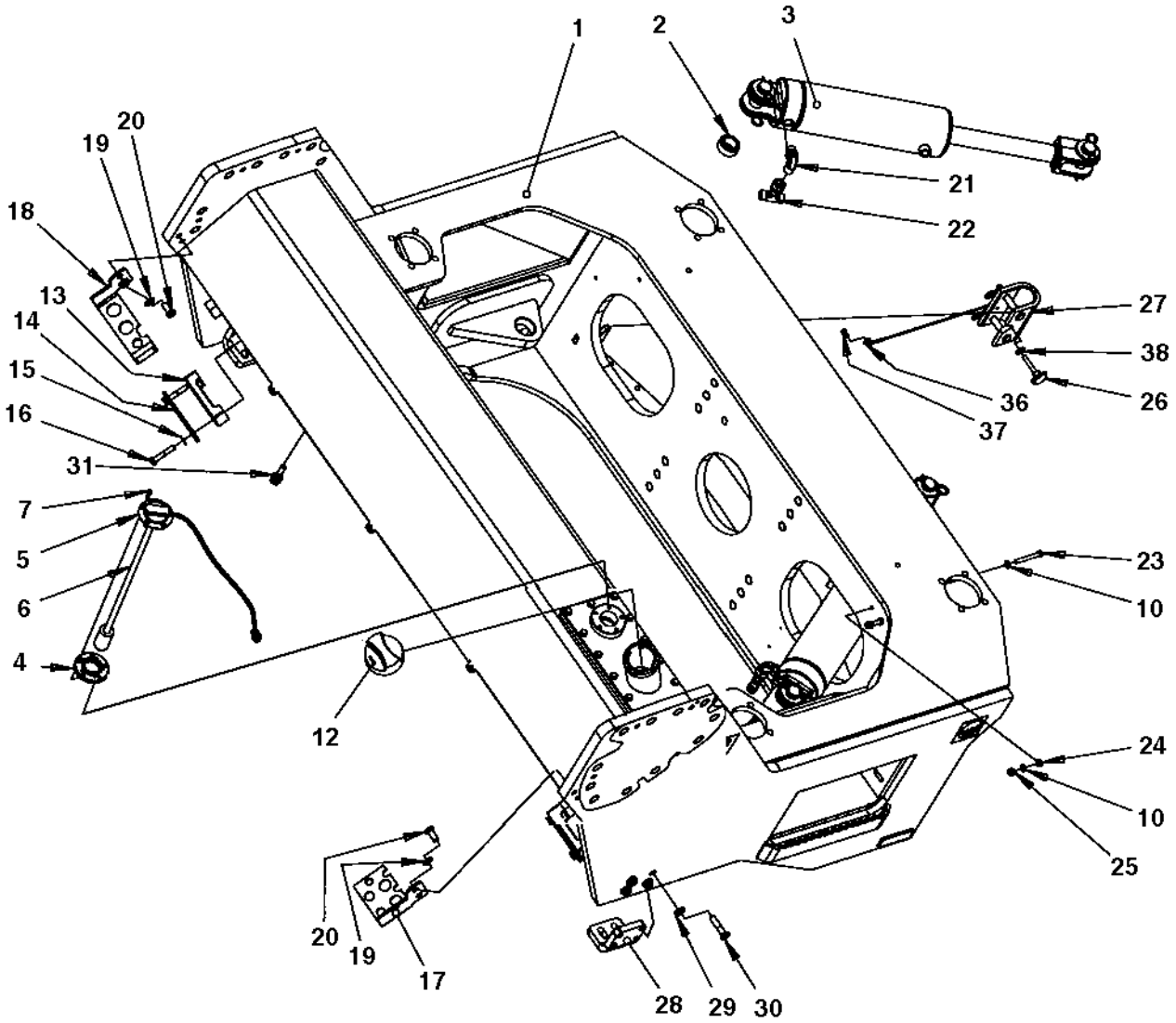

Front frame

Ref. No.	Part No.	Rem.	Qty	Description		Code
1	395128		1	Front frame		
2	792554		2	Radial spherical plain bearing		D
3	391023		2	Steering cylinder (Page 28)		
4	370745		1	Flange, cpl		
5	372718		1	Lid		
6	390934		1	Level sender		
7	904206		5	Screw		
12	373304		1	Cap		D
	902866		1	.Key	Marked "455"	D
13	343872		2	Hose clamp		D
14	335914		2	Cover plate		
15	904230		4	Washer		
16	500032		4	Screw	M10 x 55	
17	391442		1	Hose clamp		
18	391443		1	Hose clamp		
19	904231		4	Washer		
20	500051		4	Screw		
21	792151		2	Elbow adapter 90		
22	791797		2	Tee-connector orfs		
23	925750		2	Screw		
24	570005		2	Nut		
25	586003		2	Lock nut		
26	791314		2	Handle knob		
27	392701		2	Steering hitch lock		
	924999		2	.Clevis pin		
	901178		2	.Hair pin		
	928381		1	.Washer	6,4x18x1,6	
	394715		1	.Wire		
	903795		1	.Screw		
28	394400		2	Bracket		
29	904703		8	Washer		
30	500195		8	Screw		
31	792605		2	Quick connect coupling		
36	928381		2	Washer	6,4x18x1,6	
37	903795		2	Screw		
38	904640		2	Washer		

391023 Steering cylinder

18811

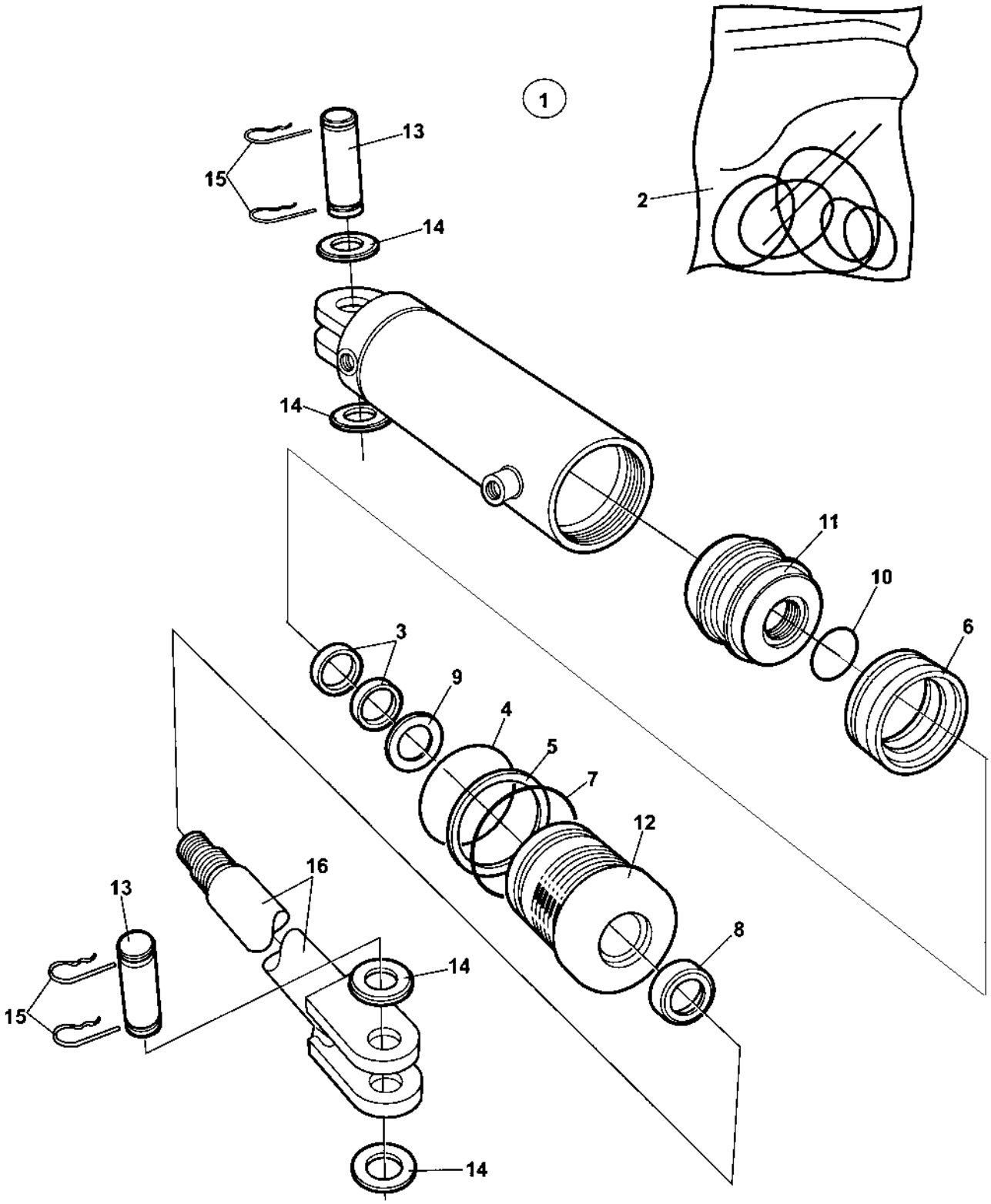

391023 Steering cylinder

Ref. No.	Part No.	Rem.	Qty	Description	Code
1	391023		1	Steering cylinder (Page 28)	
2	950417		1	.Seal kit	
3			2	..Seal	
4			1	..O-ring	
5			1	..Back-up ring	
6			1	..Seal	
7			1	..O-ring	
8			1	..Seal	
9			1	..Seal	
10			1	..O-ring	
11			1	.Piston block	
12			1	.Steering	
13	950222		2	.Shaft	
14			4	.Washer	
15	635061		4	.Hair clip	D
16			1	.Piston rod	D
17			1	.Cylinder	D

Tank structure module

394520

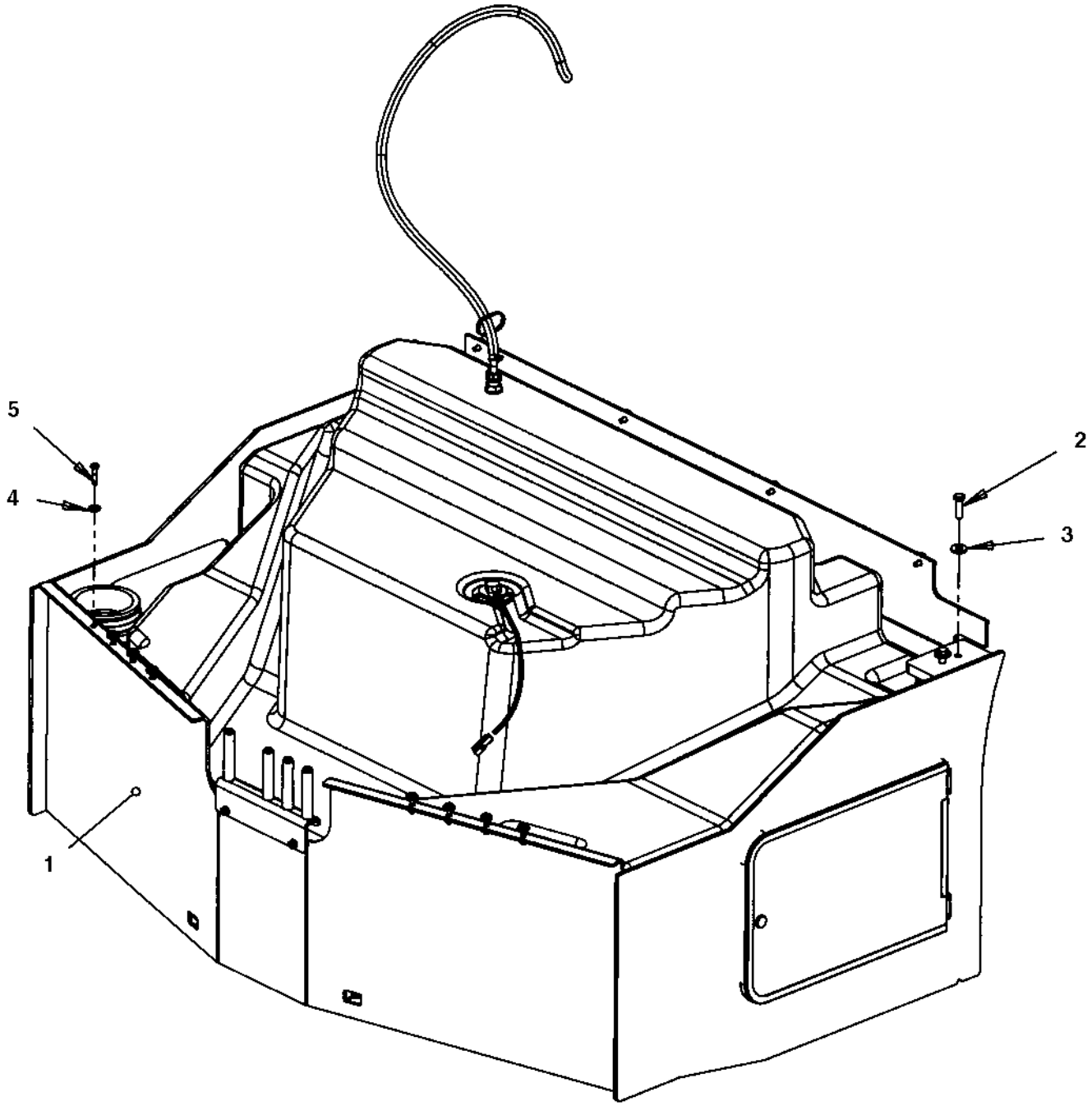

Tank structure module

Ref. No.	Part No.	Rem.	Qty	Description	Code
1			1	Tank structure module (Page 32)	
2	500194		4	Screw	
3	904213		4	Washer	
4	904213		6	Washer	
5	500194		6	Screw	

Tank structure module

394521B

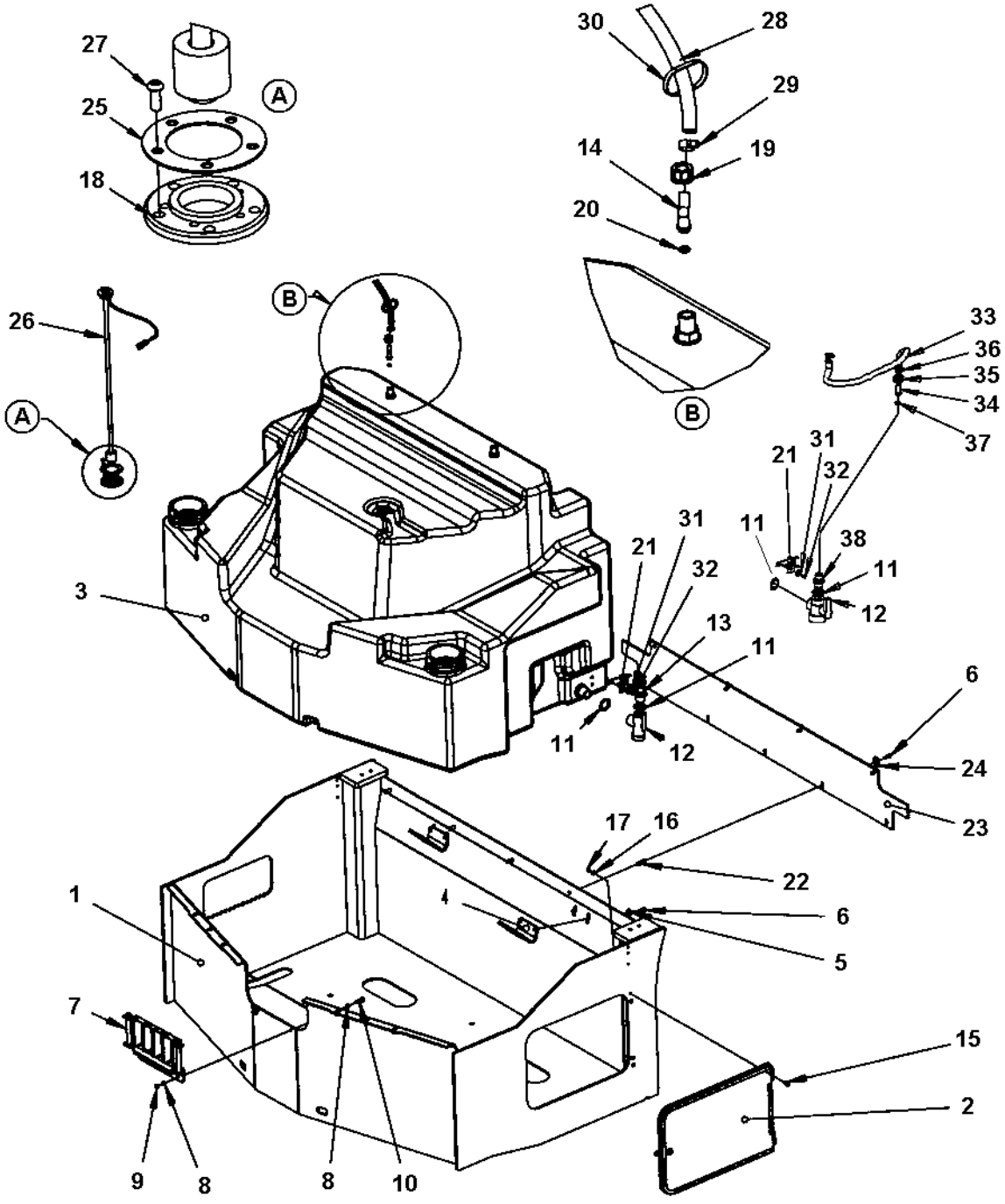

Tank structure module

Ref. No.	Part No.	Rem.	Qty	Description	Code
1	395131		1	Tank structure	
2	391307		1	Cover (Page 34)	
3	396496	1	1	Sprinkling tank	
4	391624		2	Bracket	
5	904640		4	Washer	
6	500053		13	Screw	
7	394022		1	Hose support	
8	904229		4	Washer	
9	570005		2	Nut	
10	500022		2	Screw	
11	392223		2	Plane gasket	
12	792782		1	Ball valve	
14	393542		2	Hose connection swivel	
15	928784		4	Screw	
16	603001		4	Washer	
17	586002		4	Lock nut	
18	370745		1	Flange, cpl	
19	392227		2	Swivel nut	
20	792600		2	O-ring	
21	396739		1	Bracket	
22	900672		5	Blind insert nut	
23	393412		1	Rubber cloth	
24	615050		9	Washer	
25	372718		1	Lid	
26	391353		1	Level sender	
27	904206		5	Screw	
28	904878	A	1XL	Hose reinforced	
29	313001		2	Hose clamp	
30	313102		N	Cable ties	
31	904228		2	Washer	
32	500012		2	Screw	
33	792073	B	1XL	Hose reinforced	D
34	792780		1	Hose connection swivel	
35	792779		1	Swivel nut	
36	313003		2	Hose clamp	D
37	480852		1	O-ring 70	
38	792781		1	Reducer nipple	

1) Tank with two filling holes.
A) Length as required
B) L= 0.7 m

391307 Cover

391307

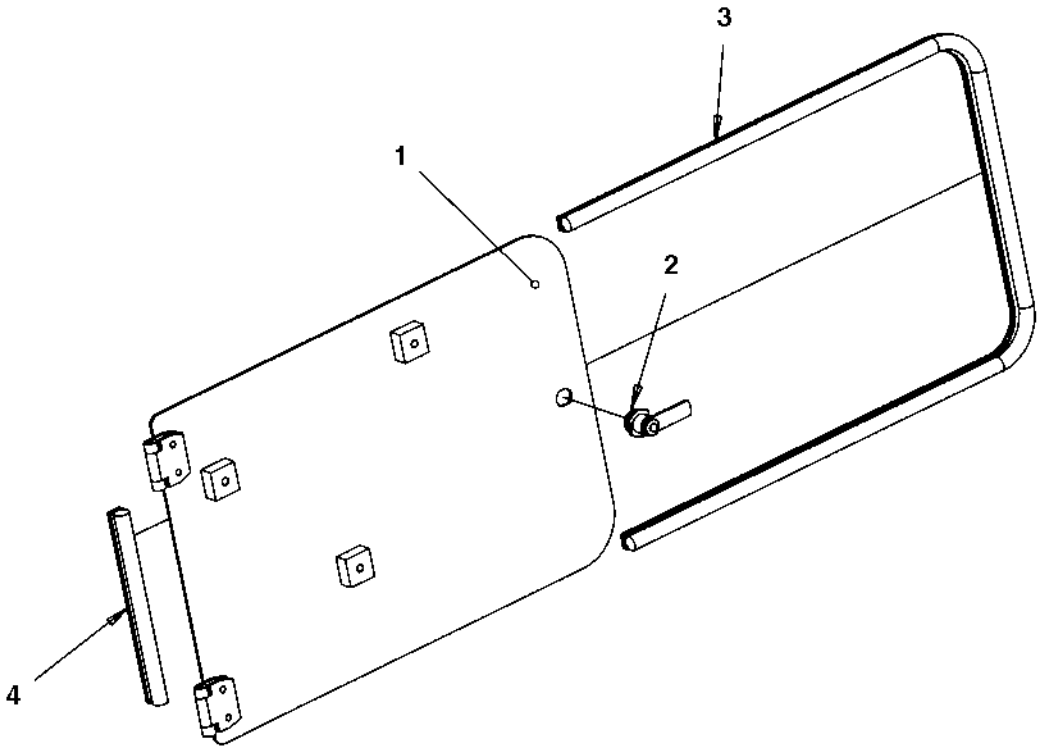

391307 Cover

Ref. No.	Part No.	Rem.	Qty	Description		Code
1	391308		1	Cover		
2	383626		1	Lock		
	902866		1	.Key	Marked "455"	D
3	202057	A	1XL	Edge trim		D
4	202057	B	1XL	Edge trim		D

A) L=1.33 m
B) L=0.21 m

Hitch module

391615

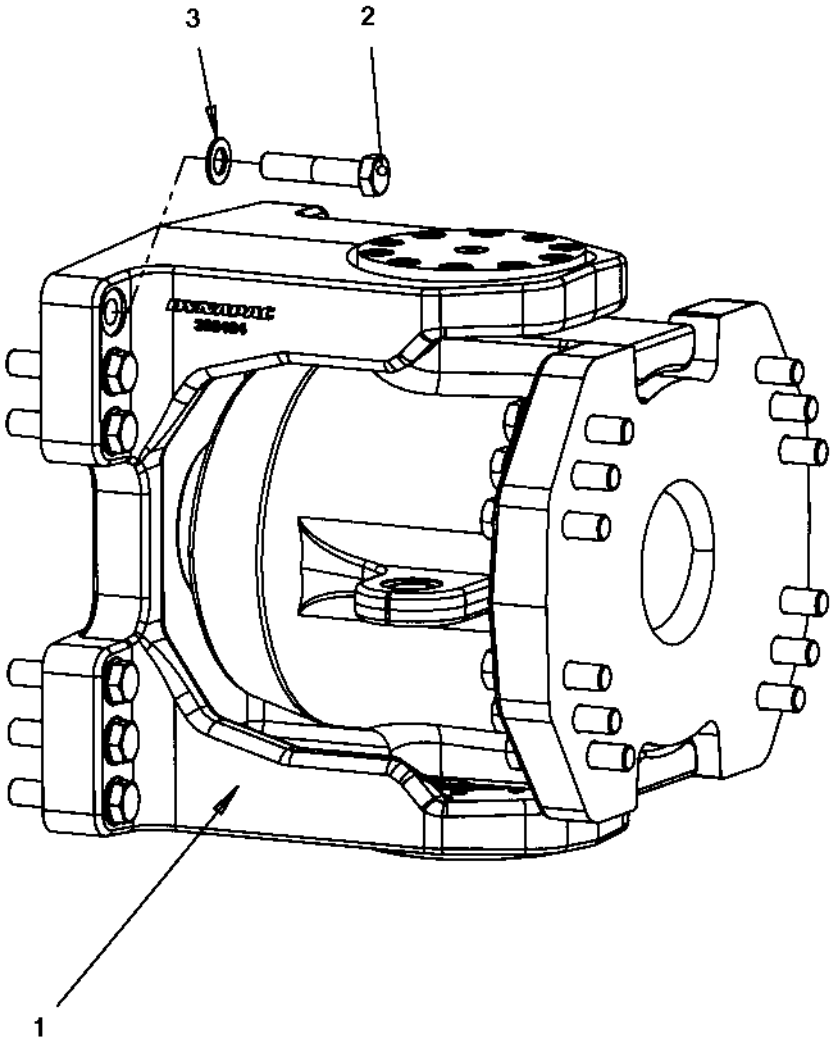

Hitch module

Ref. No.	Part No.	Rem.	Qty	Description	Code
1			1	Hitch link (Page 38)	
2	500287		24	Screw	
3	904233		24	Washer	

Hitch link

390532

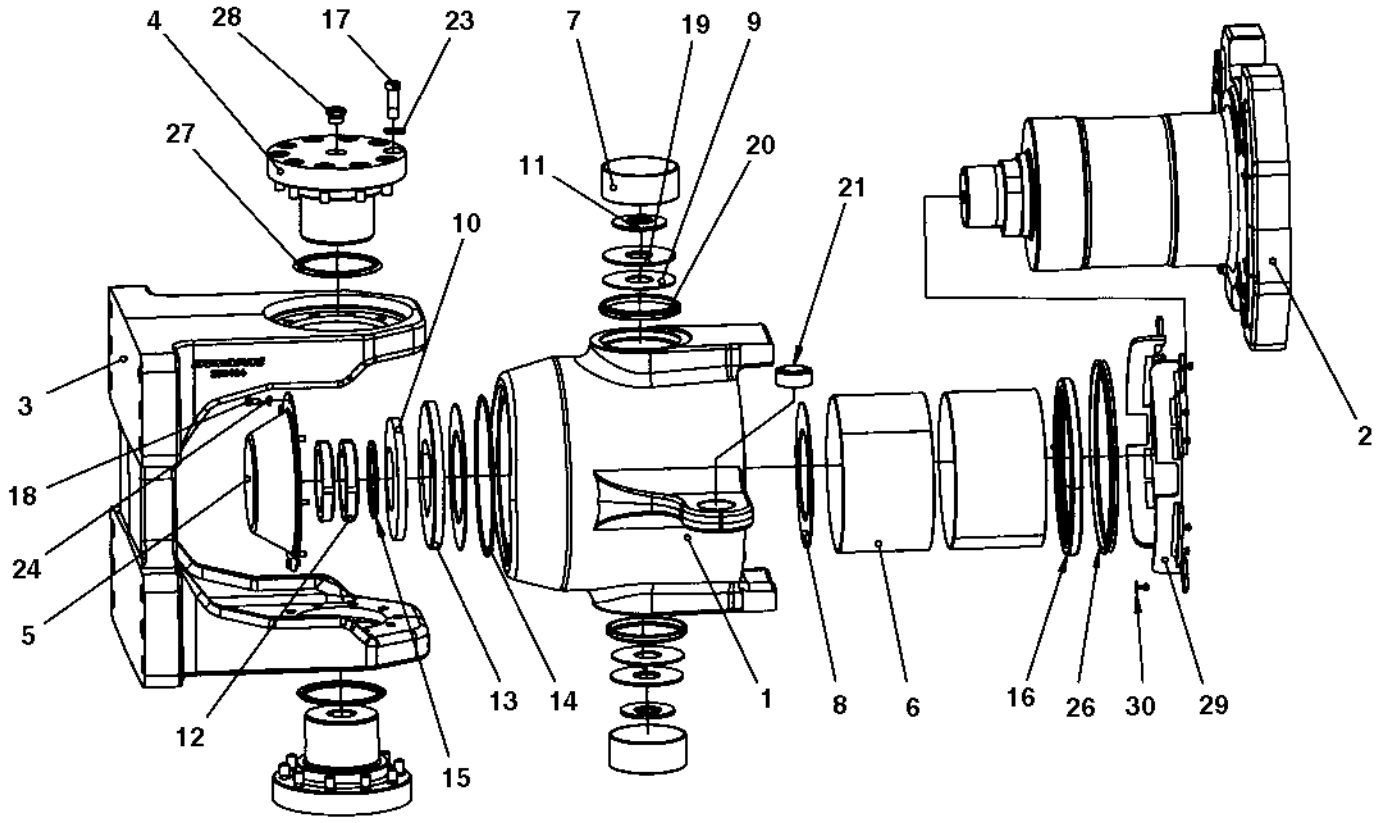

Hitch link

Ref. No.	Part No.	Rem.	Qty	Description	Code
1	390533		1	Hitch yoke	
2	390534		1	Shaft	
3	393464		1	Hitch holder	
4	393465		2	Shaft	
5	392550		1	Cover	
6	390538		2	Sleeve bearing	
7	390539		2	Sleeve bearing	
8	393523		2	Slide washer	
9	390541		2	Slide washer	
10	390542		1	Disc spring	
11	390543		2	Disc spring	
12	135015		2	Shaft nut	
13	393115		1	Thrust washer	
14	160277		1	O-ring	
15	393218		1	Back-up ring	
16	391031		1	Radial lip-type seal	
17	792394		20	Screw	
18	500012		8	Screw	
19	391566		2	Washer	
20	792517		2	Shear wiper	
21	792554		2	Radial spherical plain bearing	D
23	904231		20	Washer	
24	904228		8	Washer	
26	792515		1	Sealing, v-ring	
27	792518		2	Radial lip-type seal	
28	792295		2	Steel plug	
29	394207		2	Flush cover	
30	792325		12	Blind rivet	

Filling pipe module

391627

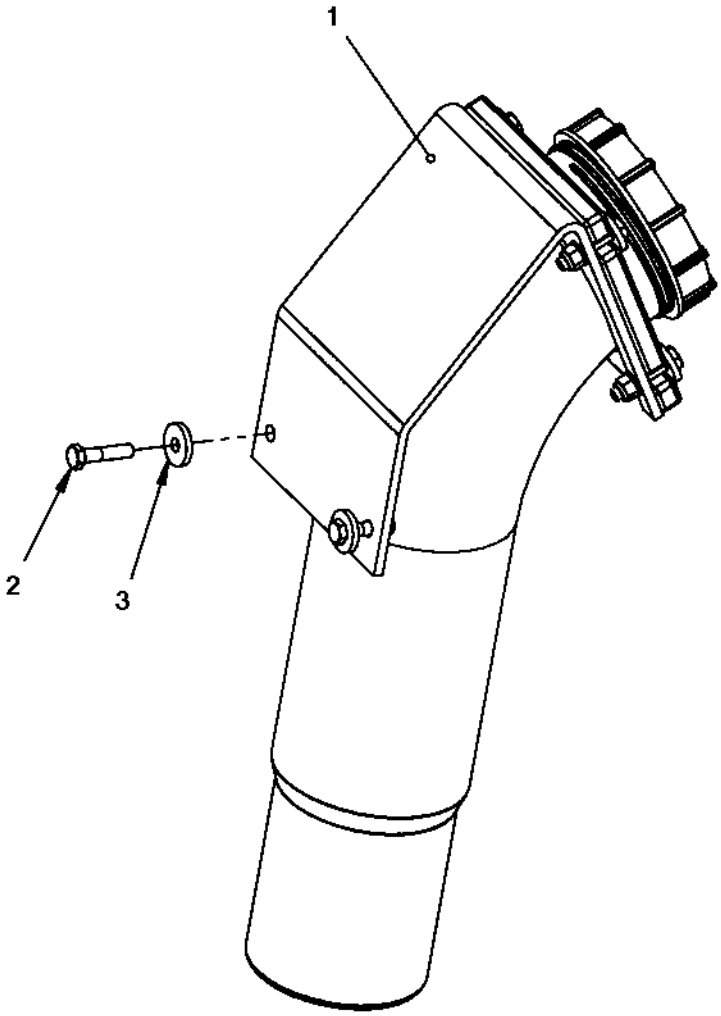

Filling pipe module

Ref. No.	Part No.	Rem.	Qty	Description	Code
1			1	Filling pipe (Page 42)	
2	500047		2	Screw	
3	904734		2	Washer	

Filling pipe

392098A

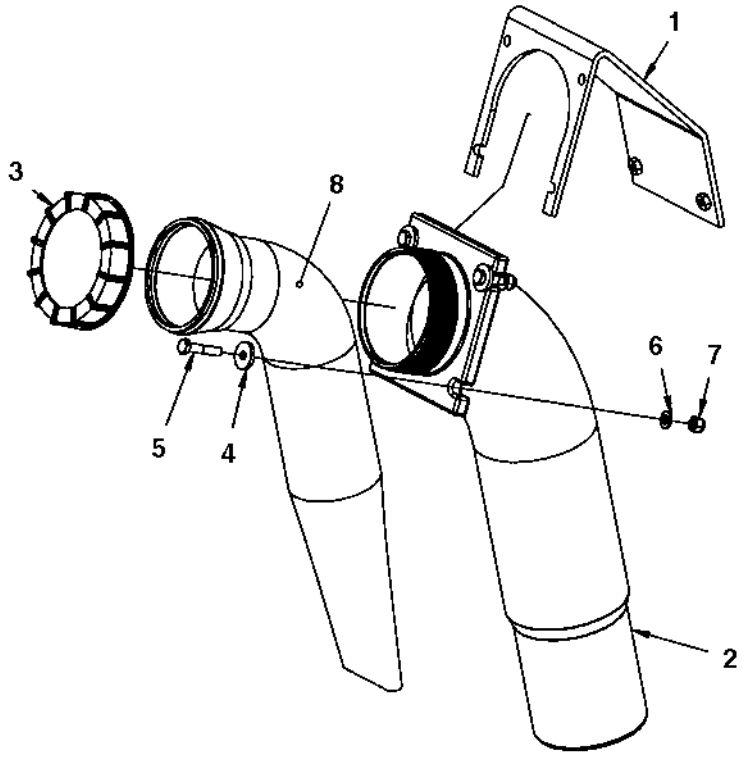

Filling pipe

Ref. No.	Part No.	Rem.	Qty	Description		Code
1	391626		1	Bracket		
2	390613		1	Filling pipe		
3	920819		1	Filler cap		D
4	904734		4	Washer		
5	500023		4	Screw	M8-1,25x40 8,8	
6	904229		4	Washer		
7	586003		4	Lock nut		
8	391444		1	Strainer		

Cover module

391646

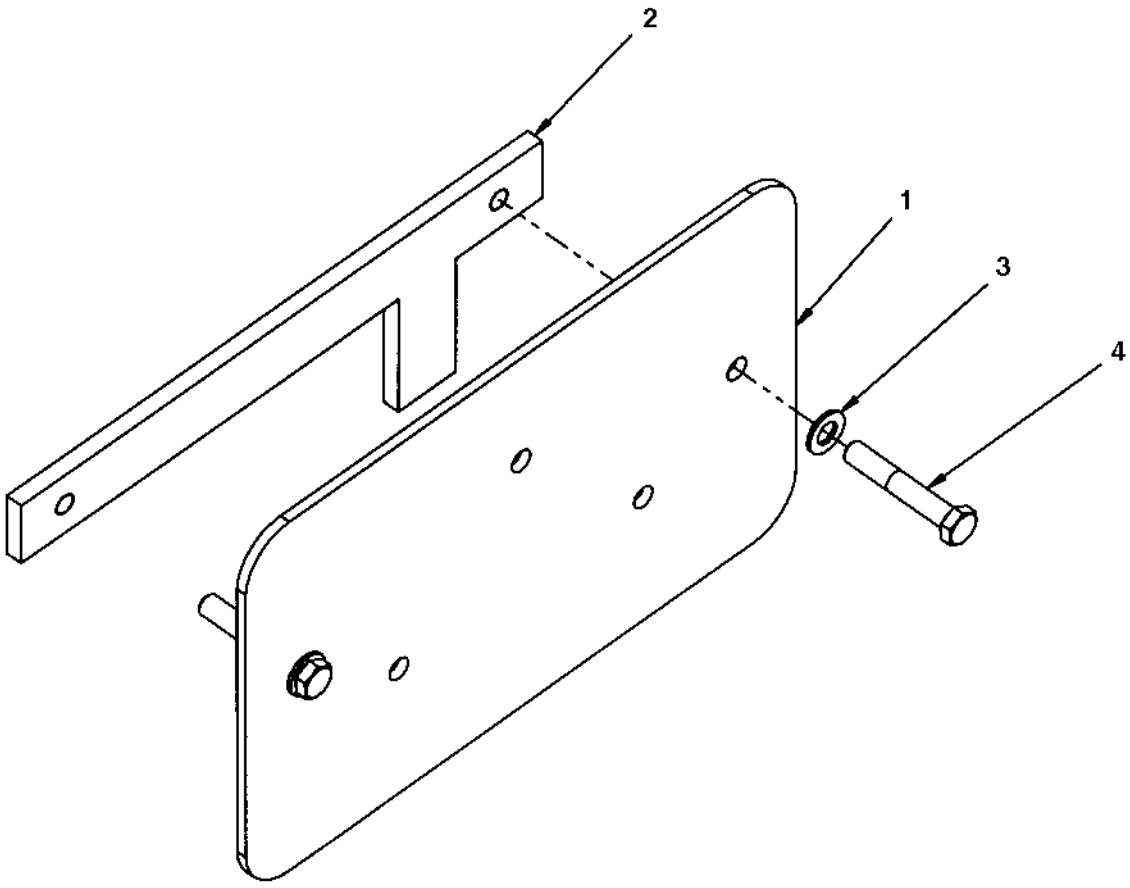

Cover module

Ref. No.	Part No.	Rem.	Qty	Description	Code
1	391647		1	Cover	
2	391648		1	Bracket	
3	904231		2	Washer	
4	500133		2	Screw	

Holder

391649

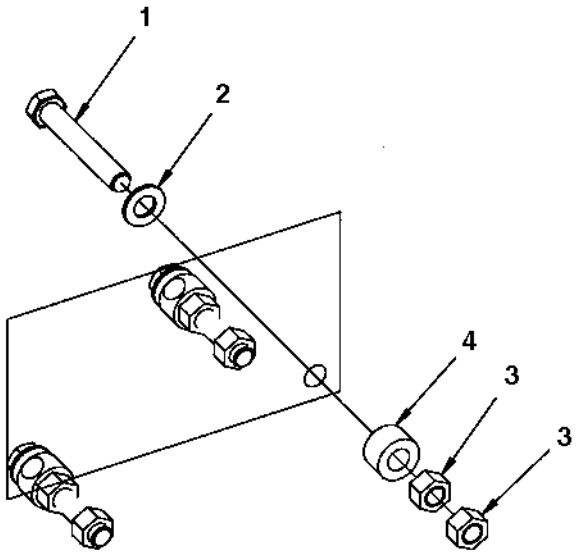

Holder

Ref. No.	Part No.	Rem.	Qty	Description		Code
1	903898		3	Screw		
2	904231		3	Washer		
3	570007		6	Hexagon nut	M12	
4	791572		3	Spacer washer		

Grab handle module

394913A

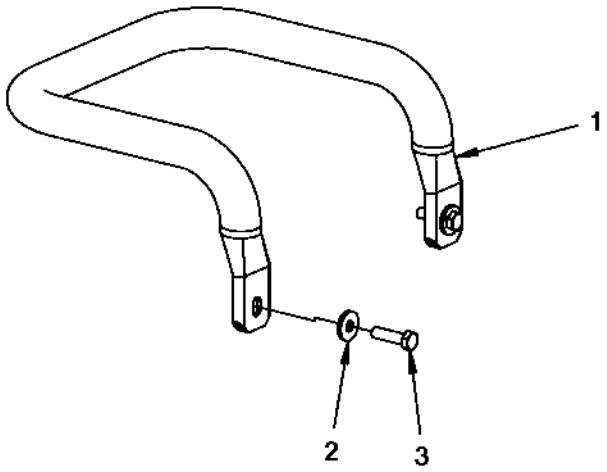

Grab handle module

Ref. No.	Part No.	Rem.	Qty	Description	Code
1	394911		1	Grab handle	
2	904640		2	Washer	
3	500022		2	Screw	

Rear frame

AR0030

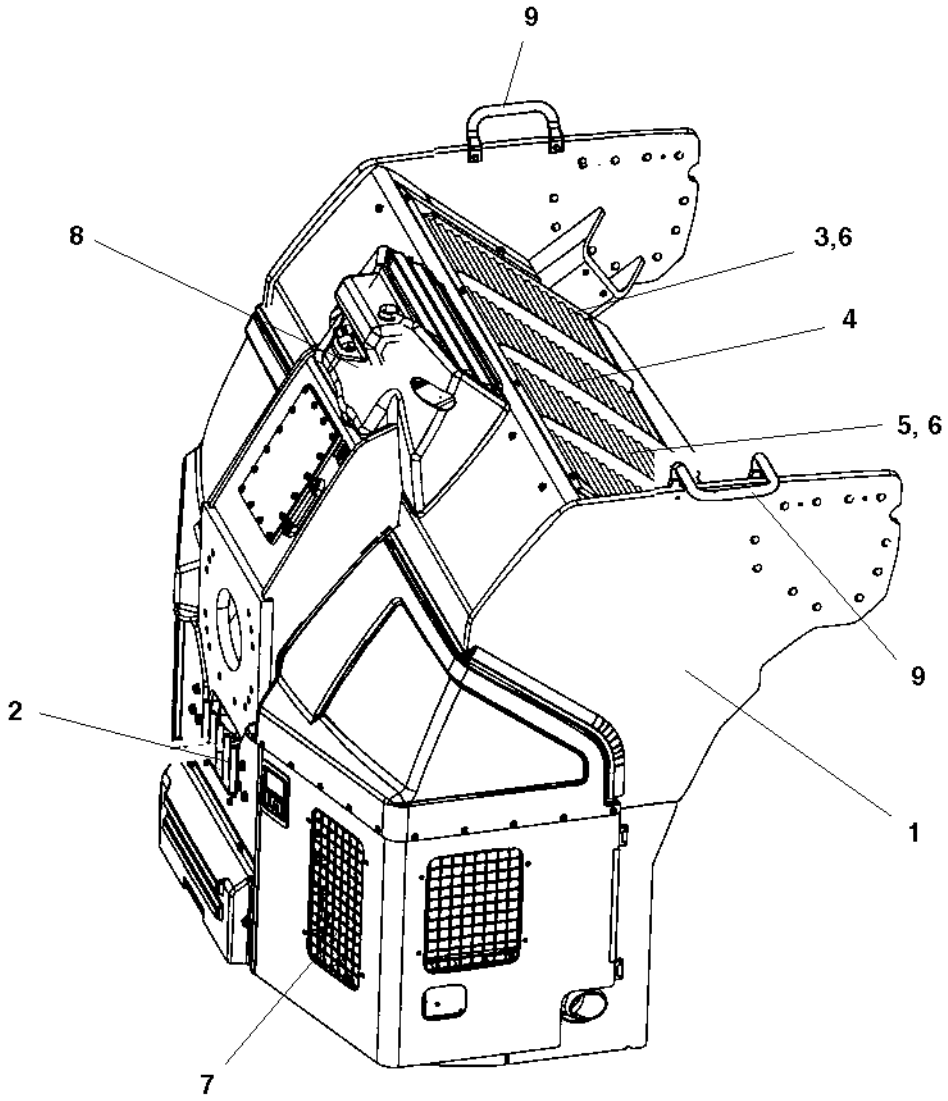

Rear frame

Ref. No.	Part No.	Rem.	Qty	Description	Code
1			1	Rear frame (Page 52)	
2			1	Engine structure, module (Page 56)	
3			1	Water cooler (Page 206)	
4			1	Charge air cooler (Page 204)	
5			1	Oil cooler (Page 64)	
6			2	Fan (Page 68)	
7			1	Noise suppression plates (Page 72)	
			1	Noise suppression, covers (Page 74)	
8			1	Expansion tank assembly (Page 210)	
9			2	Grab handle module (Page 48)	
		A	2	Grab handle module (Page 76)	

A) Offset drum

Rear frame

394528

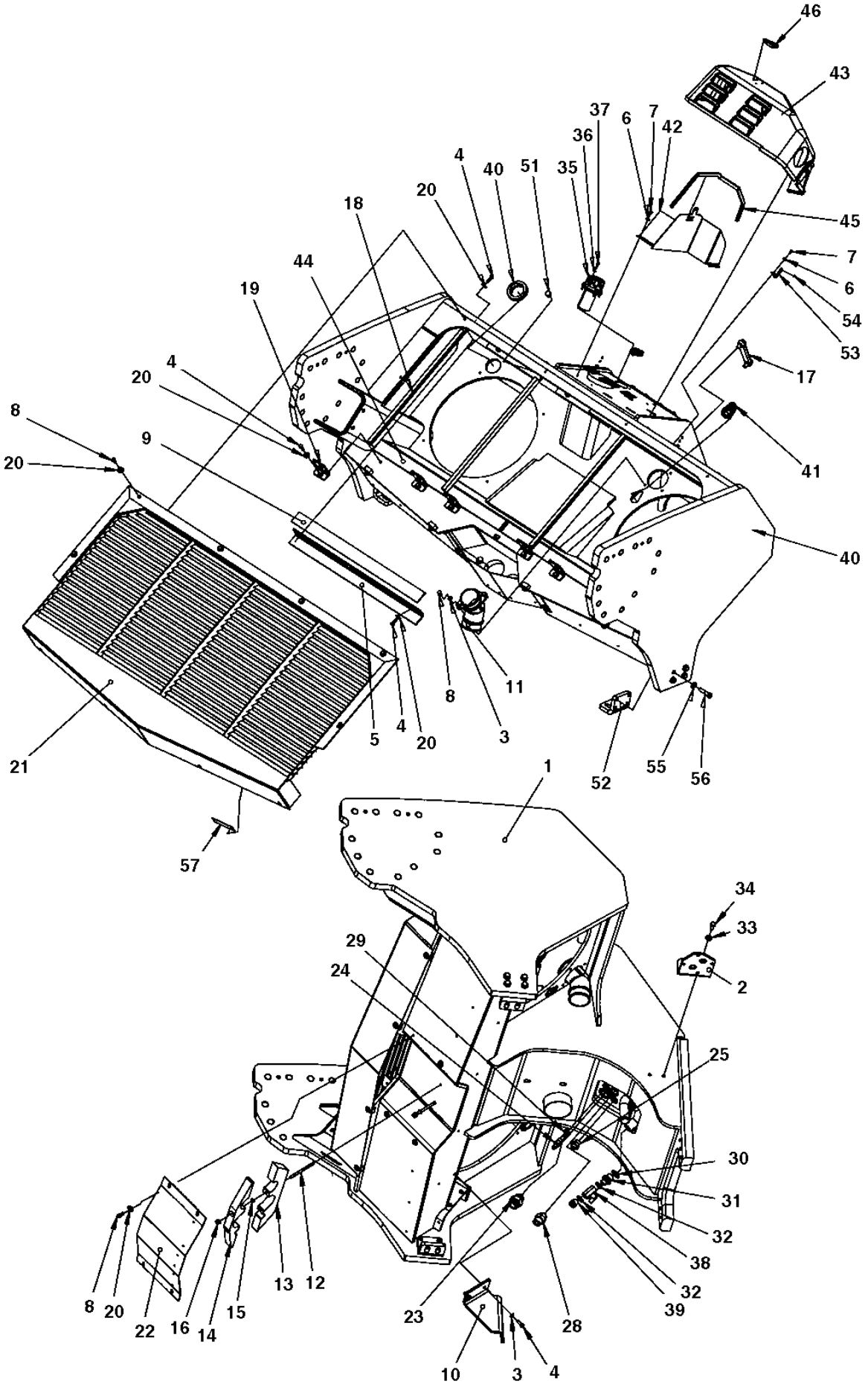

Rear frame

Ref. No.	Part No.	Rem.	Qty	Description	Code
1	394529		1	Rear frame	
2	392288		1	Bracket	
3	904229		4	Washer	
4	500021		16	Screw	
5	390780		2	Bracket	
6	603001		8	Washer	
7	500059		8	Screw	
8	500053		16	Screw	
9	391298		4	Rubber cloth	
10	391300		1	Bracket	
11	394000		1	Bulkhead elbow	
12	792326		2	Stud	
13	391375		1	Hose support	
14	391376		1	Hose support	
15	904044		2	Washer	
16	902286		2	Lock nut	
17	792492		1	Level gauge	D
18	391299	A	1XL	Rubber strip	
19	391296		6	Bracket	
20	904640		28	Washer	
21	390640		1	Cover	
22	391434		1	Cover	
23	792338		1	Straight connector	
24	792276		1	Temperature sensor	D
25	791405		1	Straight o-ring connector	
28	904728		1	Adapter	
29	162015		1	Seal ring	D
30	791120		1	Sealing washer	
31	792421		1	Straight connector	
32	162006		2	Seal ring	
33	904230		2	Washer	
34	500028		2	Screw	
35	391026		1	Ventilating filter	A
36	904281		6	Washer	
37	508020		6	Screw	
38	925599		1	Valve	
39	232056		1	Plug	
40	393001		2	Grommet	
41	393149		2	Grommet	
42	393281		1	Bracket	
43			1	Cover, cpl (Page 54)	
44	394459		2	Rubber cloth	
45	202028	B	N	Edge trim	
46	358881		1	Pad lock	
51	792607		6	Shock absorber	
52	394400		2	Bracket	
53	394297		1	Bracket	
54	624021		4	Pop rivet	
55	904703		8	Washer	
56	500195		8	Screw	
57	394513		1	Rubber cloth	

A) L= 2,34 m
B) L= 0,6 m

Cover, cpl

394298

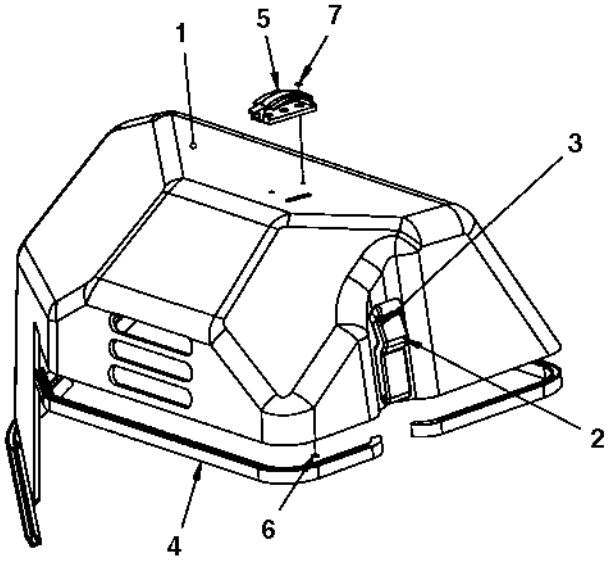

Cover, cpl

Ref. No.	Part No.	Rem.	Qty	Description		Code
1	391750		1	Cover		
2	388846		2	Latch		
3	624021		4	Pop rivet		
4	902166	A	1XL	Edge trim		
5	394536		1	Wiring clip		
6	904697		2	Washer	3,2x6x0,5	
7	624018		2	Rivet		

A) L=1.69 m

Engine structure, module

394519

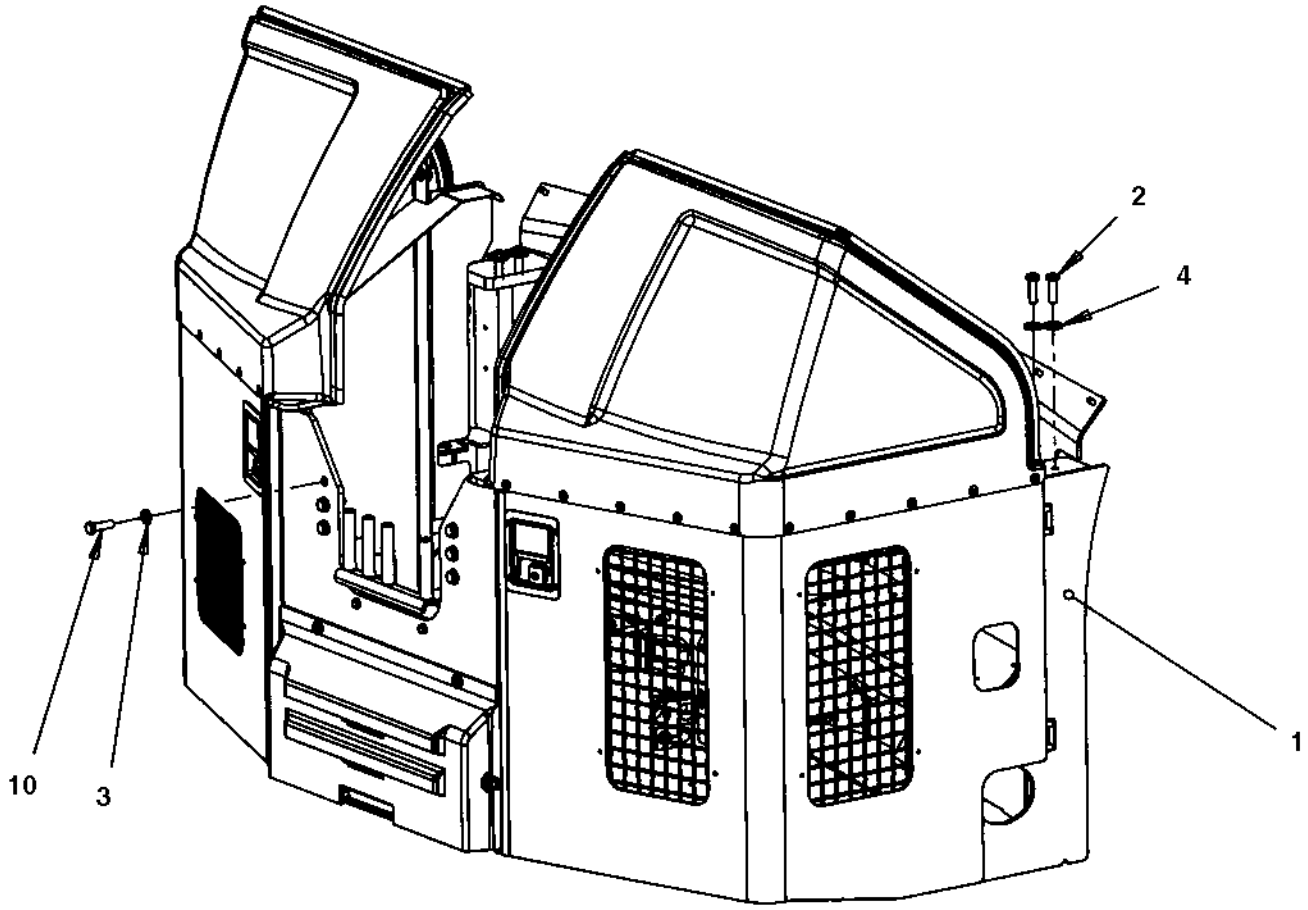

Engine structure, module

Ref. No.	Part No.	Rem.	Qty	Description	Code
1			1	Engine structure (Page 58)	
2	500194		4	Screw	
3	904231		6	Washer	
4	904213		4	Washer	
10	500195		6	Screw	

Engine structure

394533

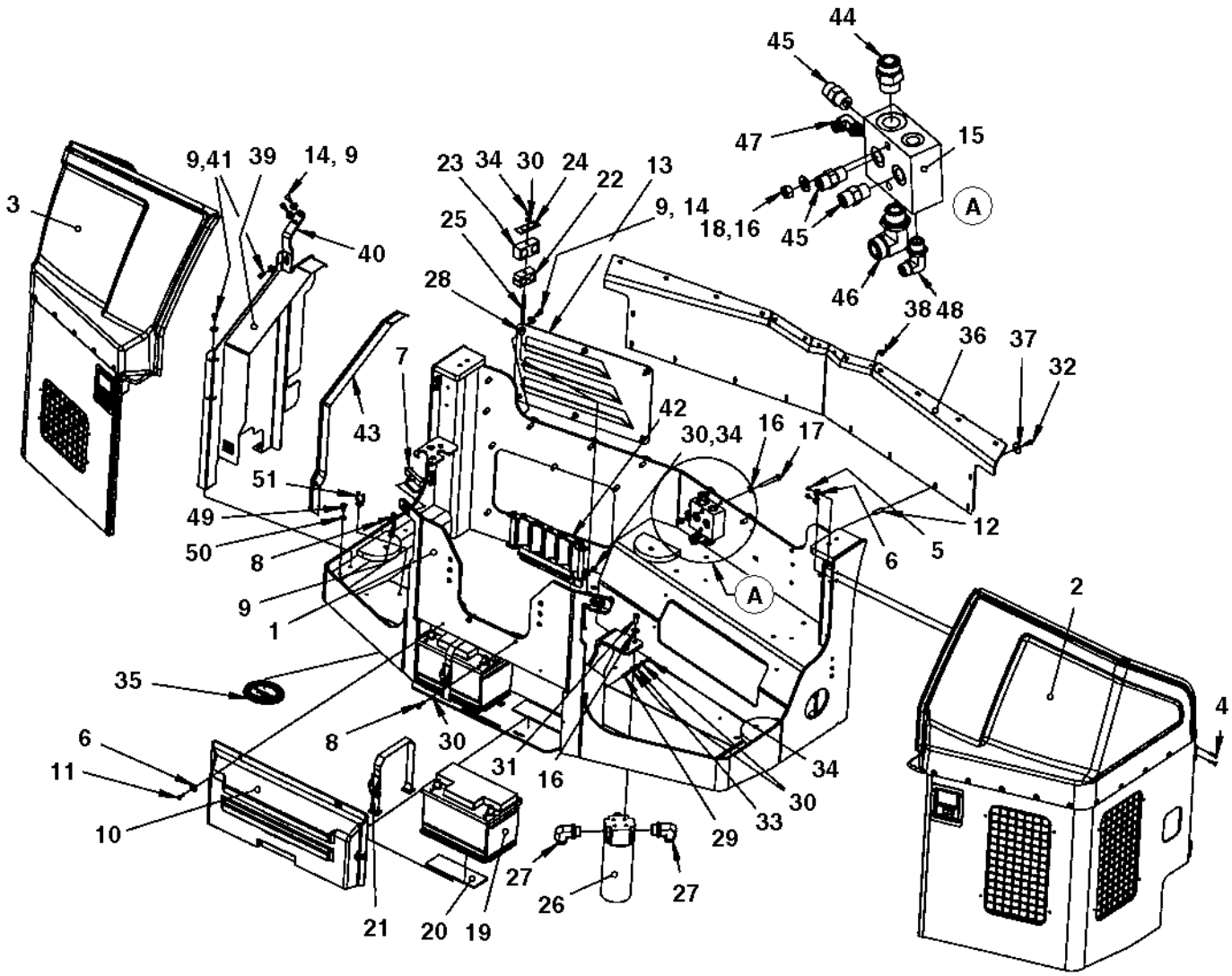

Engine structure

Ref. No.	Part No.	Rem.	Qty	Description	Code
1	394514		1	Engine structure	
2	390157		1	Engine cover (Page 60)	
3	390158		1	Engine cover (Page 62)	
4	928784		8	Screw	
5	586002		8	Lock nut	
6	904735		12	Washer	
7	378310		2	Lock bracket	
8	500022		6	Screw	
9	904640		15	Washer	
10	390884		1	Cover	
11	500040		4	Screw	
12	900672		16	Blind insert nut	
13	392799		1	Grid	
14	500021		8	Screw	
15	391157		1	Connection block	
16	904230		6	Washer	
17	500092		2	Screw	
18	570006		2	Nut	
19	792311		2	Battery	
20	357459		4	Rubber cloth	
21	391441		2	Strap	
22	903456		1	Pipe clamp	
23	791711		1	Pipe clamp	
24	791712		1	Cover plate	
25	791861		1	Stud	
26	391025		1	Hydraulic oil filter	
	391433		1	.Filter element	A
27	791844		2	Elbow adapter 90	
28	791569		1	Blind insert nut	
29	903768		3	Threaded stud	
30	904229		11	Washer	
31	500028		2	Screw	
32	500053		18	Screw	
33	570005		3	Nut	
34	586003		6	Lock nut	
35	379992		1	Plug	
36	379974		1	Rubber cloth	
37	615050		18	Washer	
38	792325		6	Blind rivet	
39	391769		1	Belt guard	
40	391768		1	Bracket	
41	500019		3	Screw	
42	394022		1	Hose support	
43	792258	A	1XL	Edge trim	
44	791823		1	Straight connector orfs	
45	791799		3	Straight connector orfs	
46	791231		1	Elbow 90	D
47	792334		1	Elbow 90 orfs	
48	791840		1	Elbow adapter 90, O-ring with swivel	
49	500043		1	Screw	
50	904637		1	Washer	
51	394701		N	Wiring clip	

A) L=0.87 m

390157 Engine cover

390157

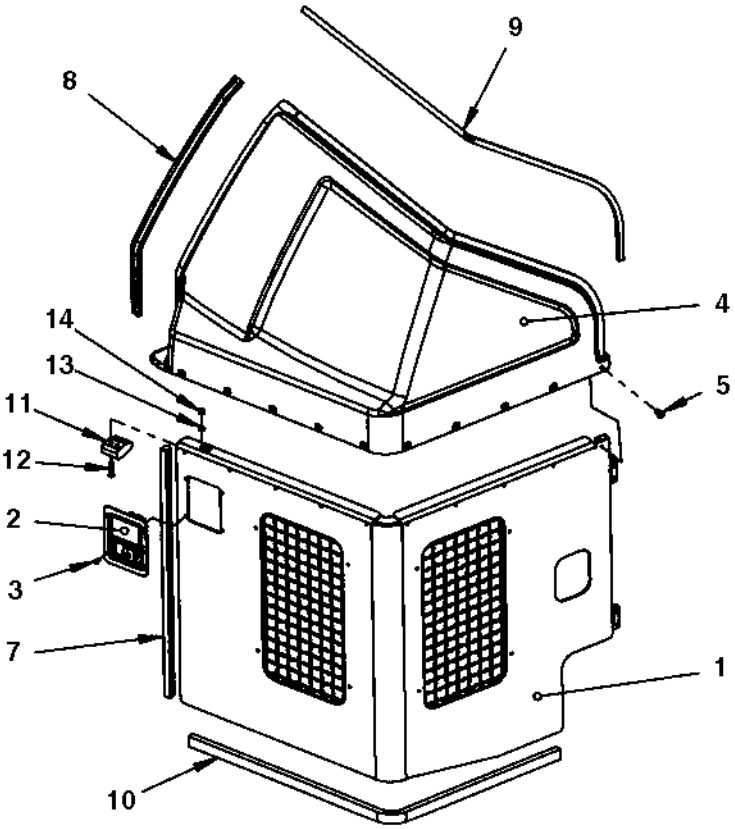

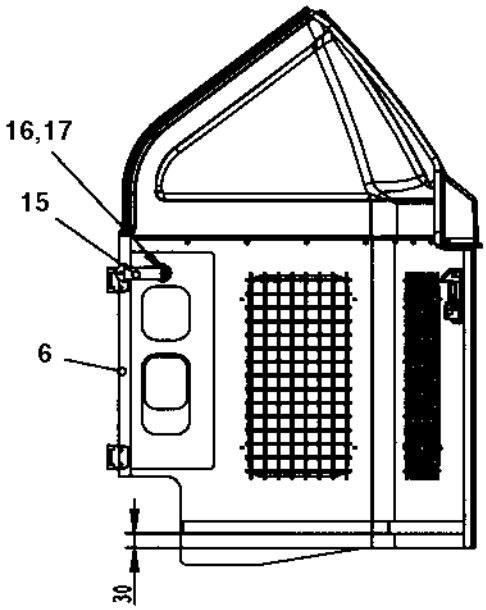

390157 Engine cover

Ref. No.	Part No.	Rem.	Qty	Description		Code
1	390166		1	Cover		
2	378309		1	Lock		
	902866		1	.Key	Marked "455"	D
3	792669		4	Blind rivet		
4	379976		1	Cover		
5	792325		10	Blind rivet		
6	792718	A	1XL	Rubber strip		
7	202057	B	1XL	Edge trim		D
8	902166	C	1XL	Edge trim		
9	903953	D	1XL	Edge trim		
10	792718	E	1XL	Rubber strip		
11	390365		1	Spacer		
12	924875		2	Screw		
13	904228		2	Washer		
14	586002		2	Lock nut		
15	390545		1	Strap		
16	904735		1	Washer		
17	500059		1	Screw		

A) L=0.5m
B) L=0.625m
C) L=0.6m
D) L=1.2m
E) L=1.3m

390158 Engine cover

390158

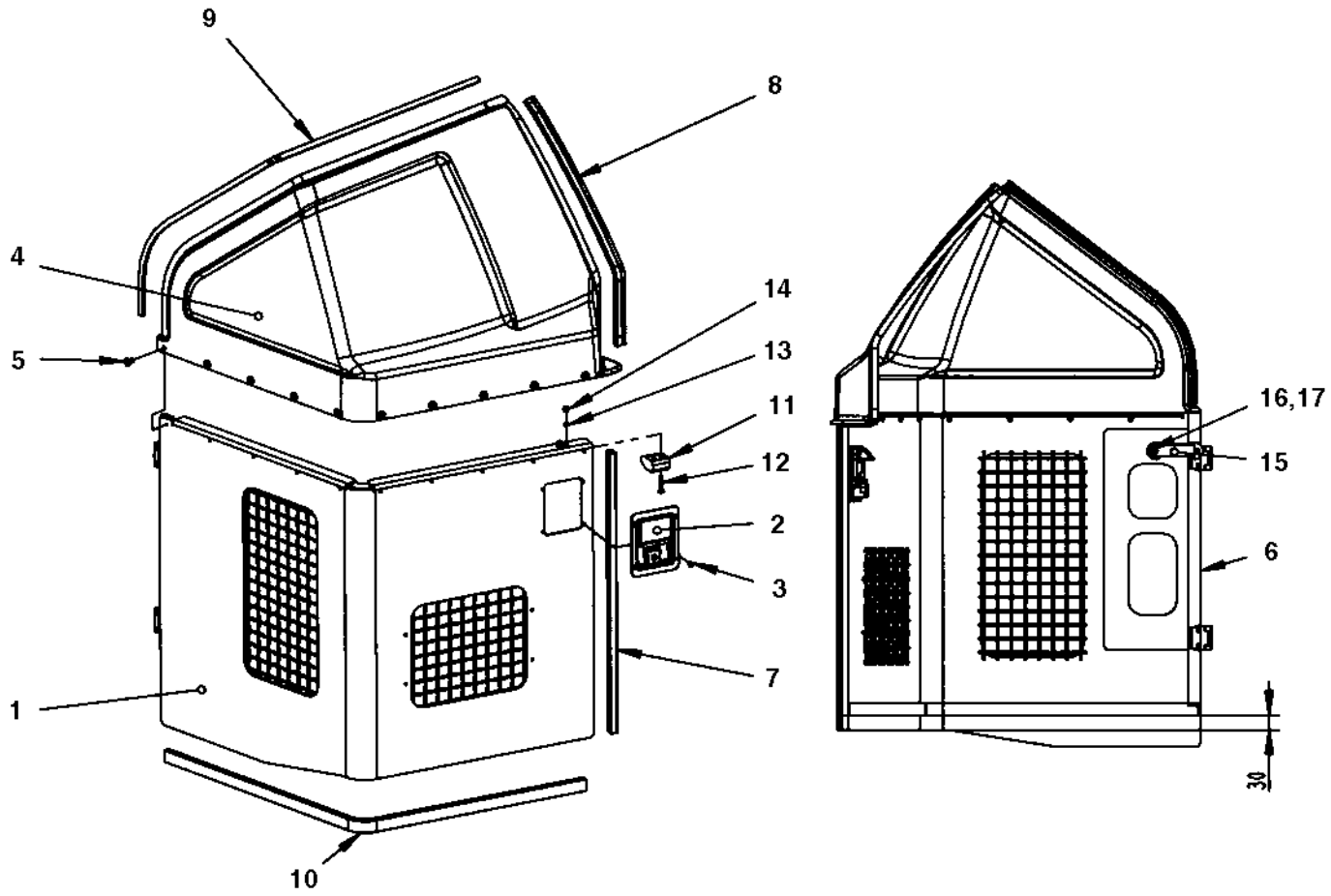

390158 Engine cover

Ref. No.	Part No.	Rem.	Qty	Description		Code
1	390167		1	Cover		
2	378309		1	Lock		
	902866		1	.Key	Marked "455"	D
3	792669		4	Blind rivet		
4	379977		1	Cover		
5	792325		10	Blind rivet		
6	792718	A	1XL	Rubber strip		
7	202057	B	1XL	Edge trim		D
8	902166	C	1XL	Edge trim		
9	903953	D	1XL	Edge trim		
10	792718	E	1XL	Rubber strip		
11	390365		1	Spacer		
12	924875		2	Screw		
13	904228		2	Washer		
14	586002		2	Lock nut		
15	390545		1	Strap		
16	904735		1	Washer		
17	500059		1	Screw		

A) L=0.6m
B) L=0.625m
C) L=0.6m
D) L=1.2m
E) L=1.45m

Oil cooler

391587

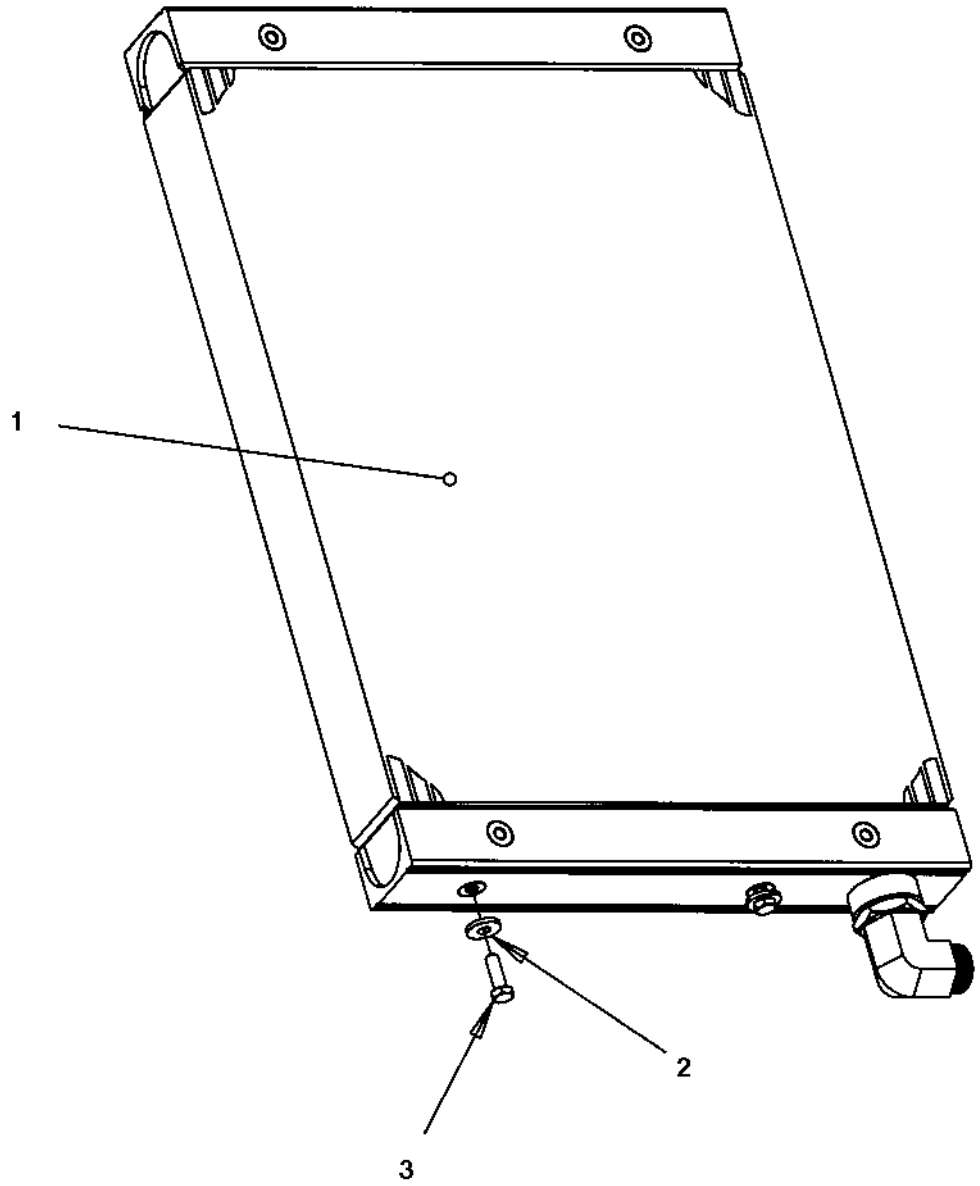

Oil cooler

Ref. No.	Part No.	Rem.	Qty	Description	Code
1			1	Oil cooler (Page 66)	
2	904640		2	Washer	
3	500021		2	Screw	

Oil cooler

391947

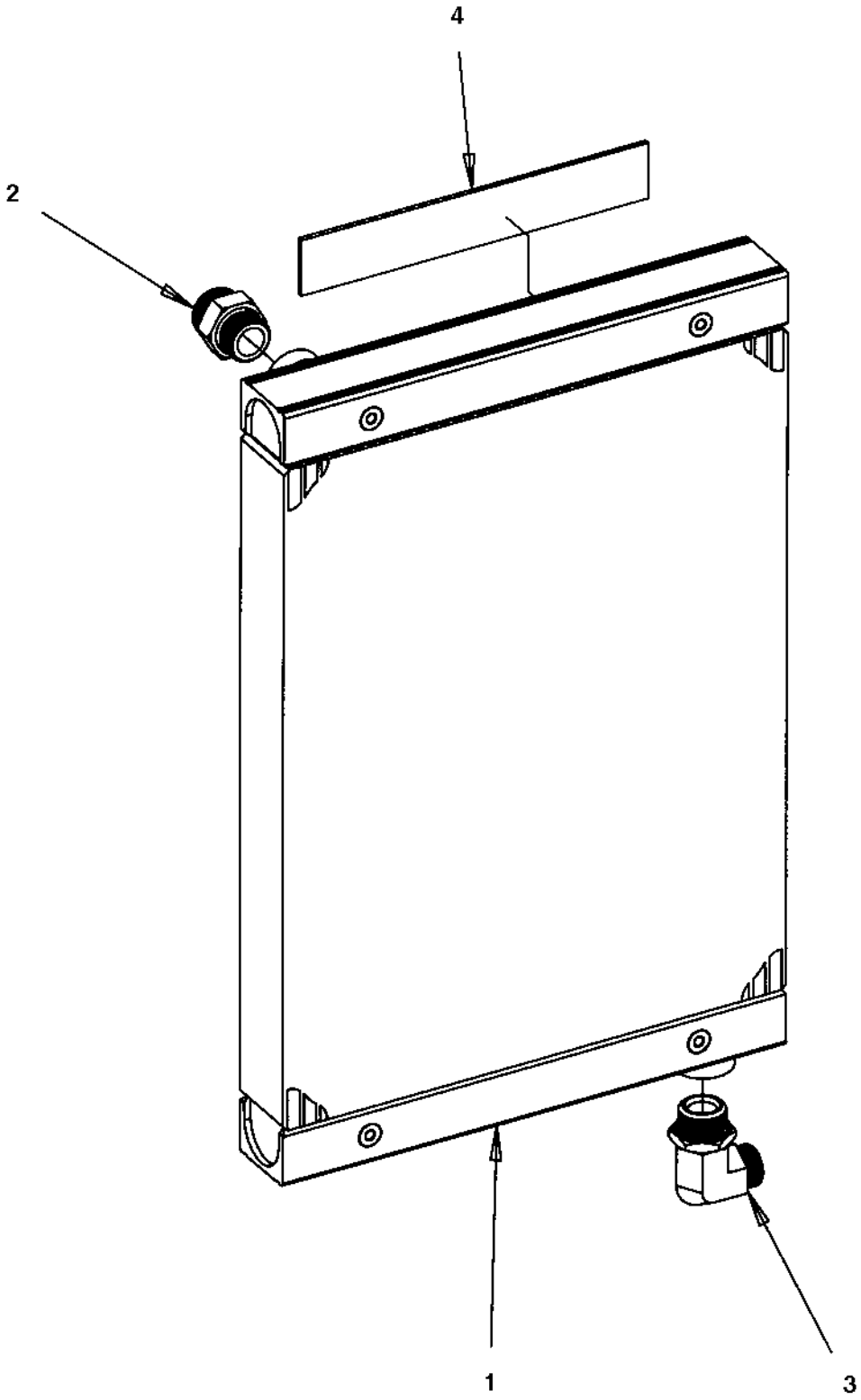

Oil cooler

Ref. No.	Part No.	Rem.	Qty	Description	Code
1	390629		1	Oil cooler	C
2	792339		1	Straight connector orfs	
3	791321		1	Elbow adapter 90	
4	391297		1	Rubber cloth	

Fan

390338

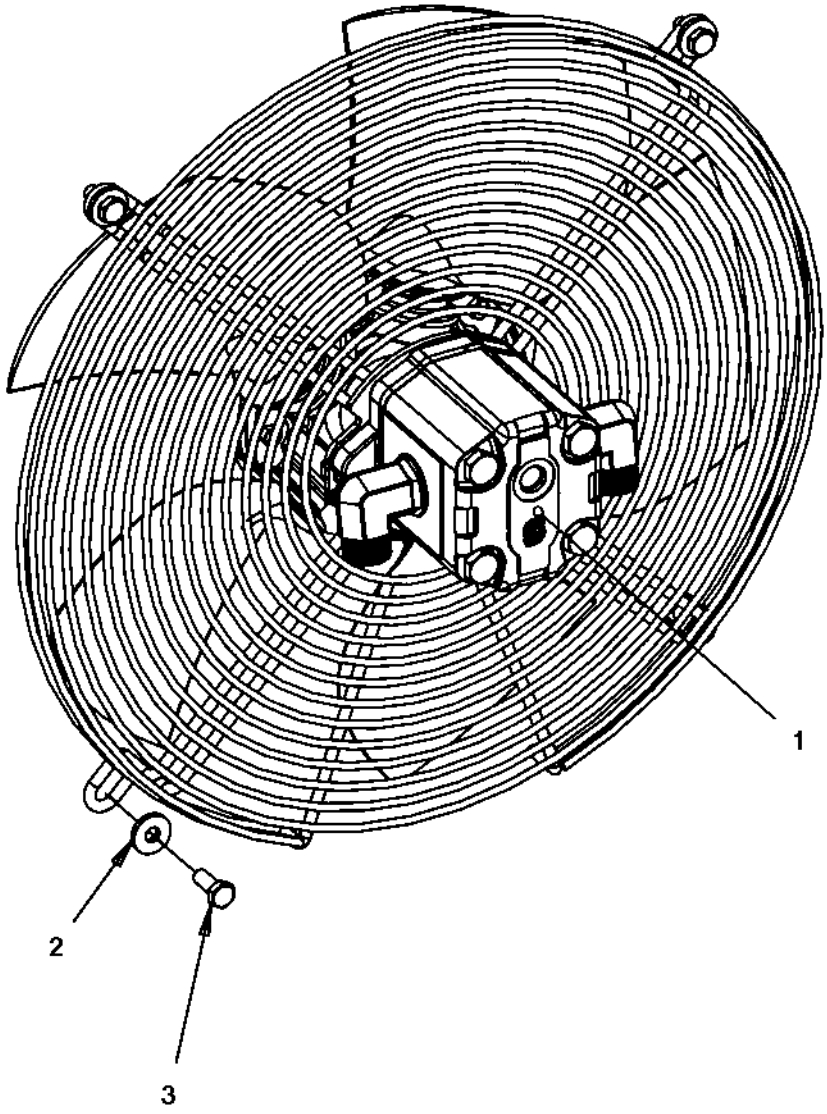

Fan

Ref. No.	Part No.	Rem.	Qty	Description	Code
1			1	Fan (Page 70)	
2	904640		4	Washer	
3	500053		4	Screw	

Fan

391937

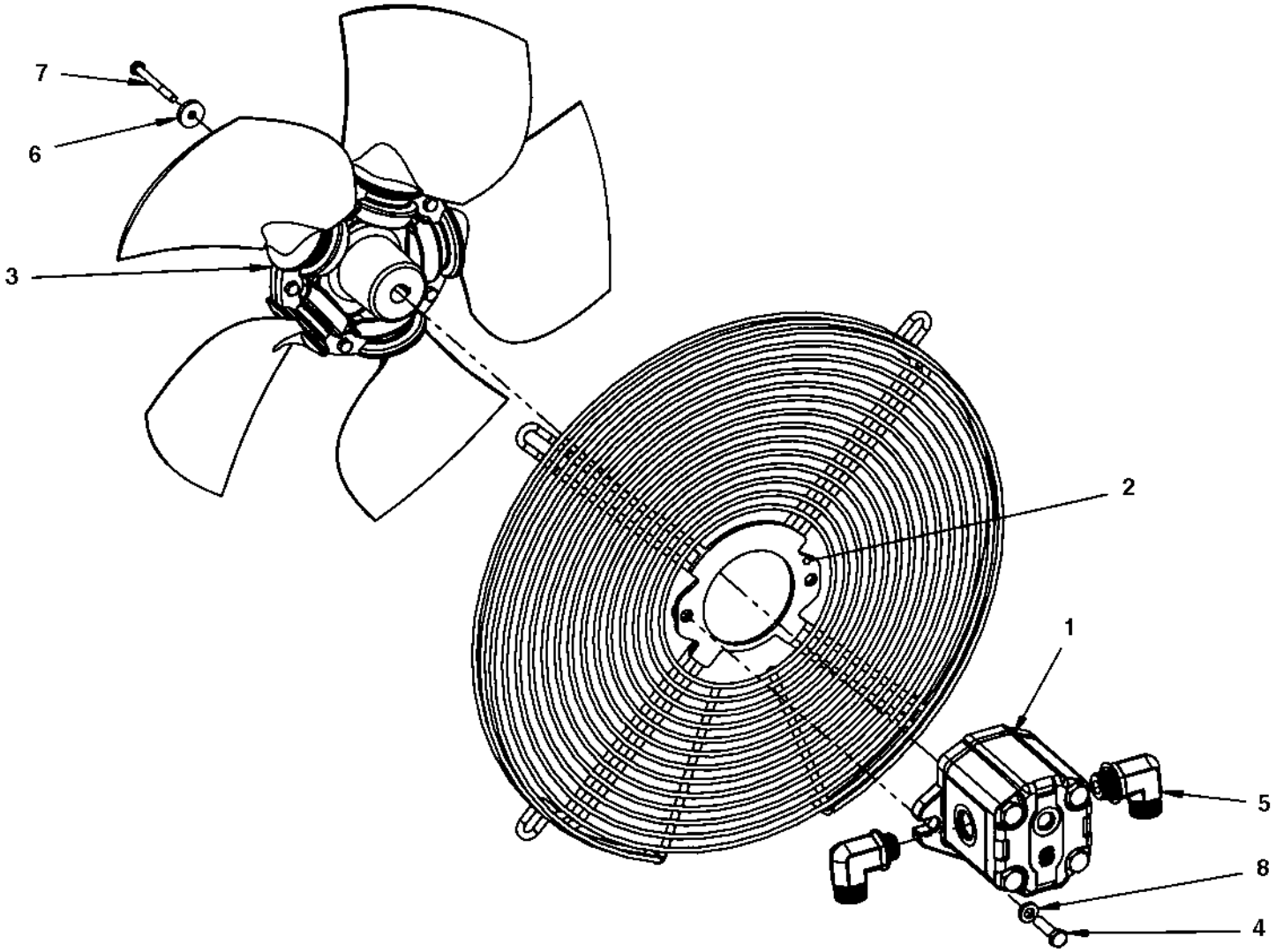

Fan

Ref. No.	Part No.	Rem.	Qty	Description	Code
1	390609		1	Hydraulic motor	D
2	390608		1	Fan guard	
3	390607		1	Fan	D
4	500022		2	Screw	
5	792332		2	Elbow 90 orfs	
6	904735		2	Washer	
7	500016		1	Screw	
8	904640		2	Washer	

Noise suppression plates

379988

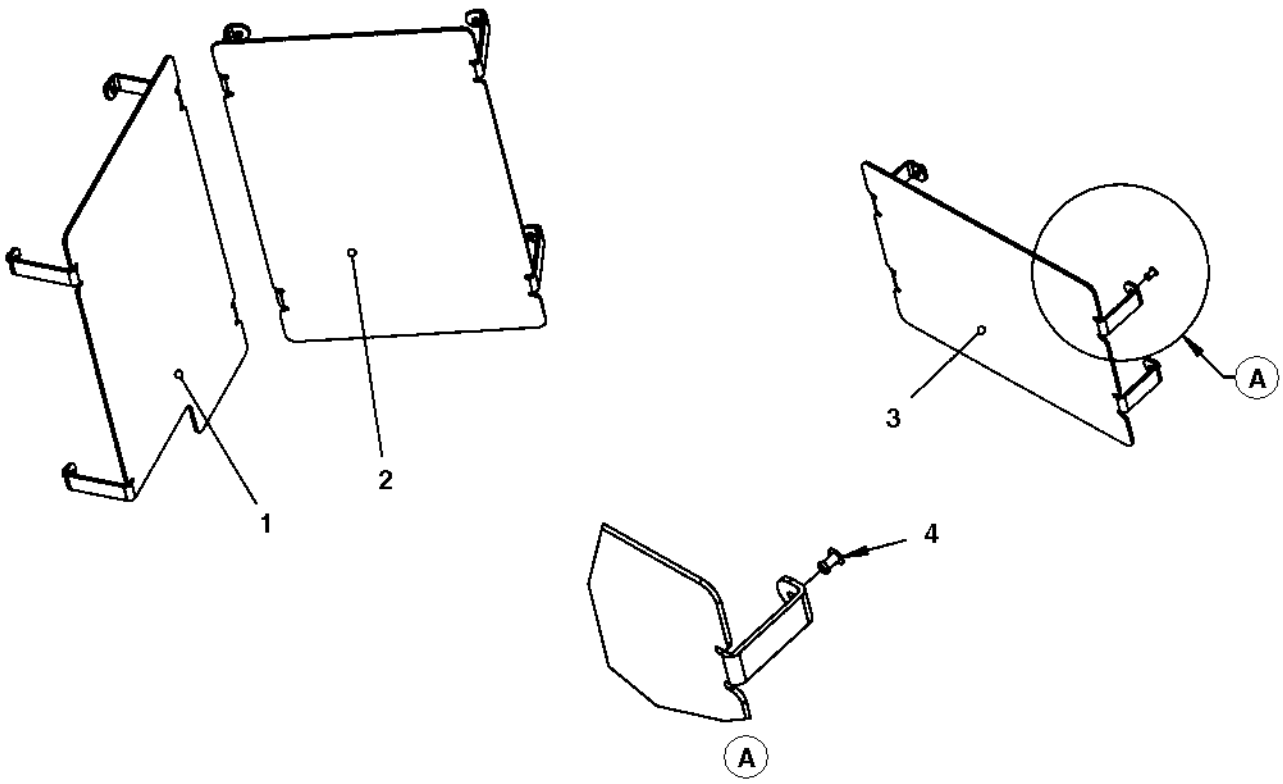

Noise suppression plates

Ref. No.	Part No.	Rem.	Qty	Description	Code
1	391369		1	Noise suppression plate	
2	391370		1	Noise suppression plate	
3	391371		1	Noise suppression plate	
4	792669		12	Blind rivet	

Noise suppression, covers

394566

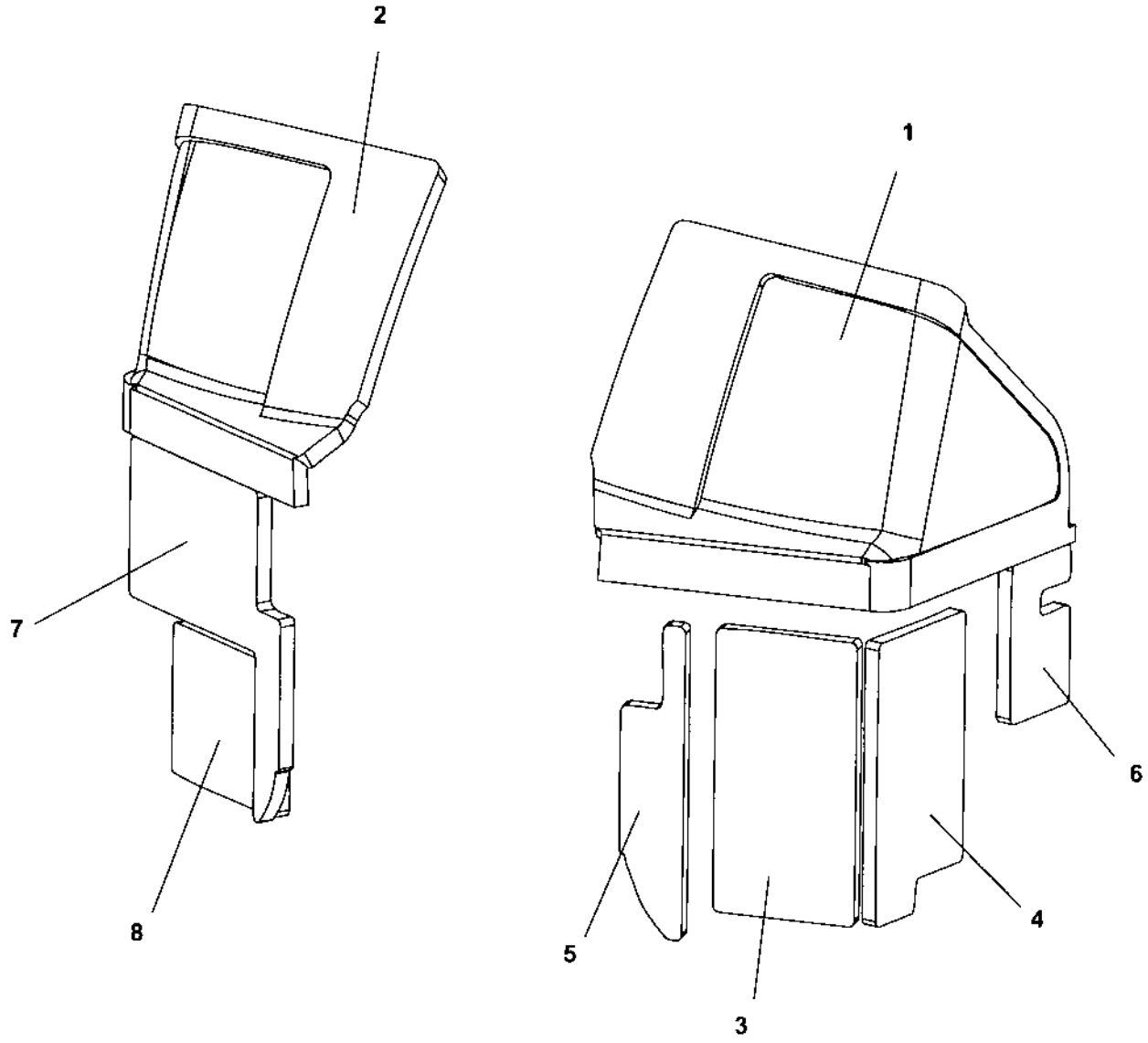

Noise suppression, covers

Ref. No.	Part No.	Rem.	Qty	Description	Code
1	394567		1	Sound absorbent	
2	394568		1	Sound absorbent	
3	394569		1	Sound absorbent	
4	394570		1	Sound absorbent	
5	394571		1	Sound absorbent	
6	394572		1	Sound absorbent	
7	394573		1	Sound absorbent	
8	394575		1	Sound absorbent	

Grab handle module

394819A

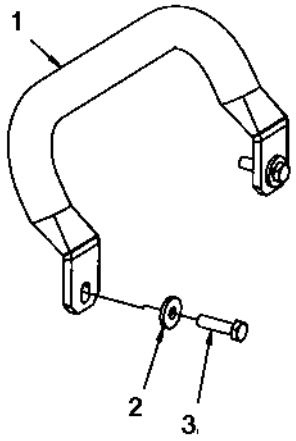

Grab handle module

Ref. No.	Part No.	Rem.	Qty	Description	Code
1	394545		1	Grab handle	
2	904640		2	Washer	
3	500022		2	Screw	

Sprinkler system

18645

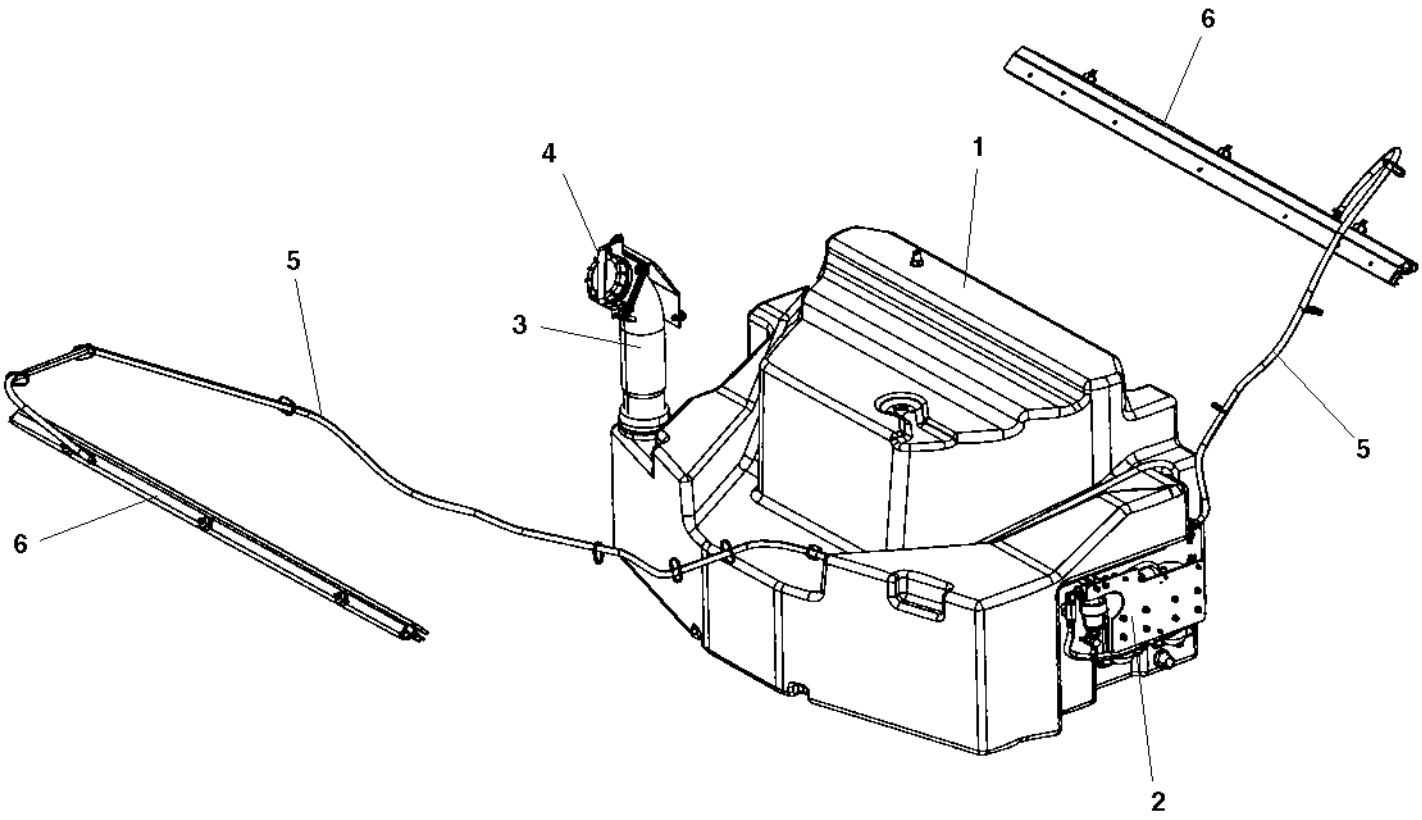

Sprinkler system

Ref. No.	Part No.	Rem.	Qty	Description	Code
1			1	Tank structure module (Page 30)	
2			1	Sprinkler pump module (Page 80)	
			1	Sprinkler pump, backup (Page 84)	
			1	Sprinkler pump, additonal sprinkler (Page 86)	
3		1	2	Filling pipe module (Page 40)	
4			1	Cover lock module (Page 90)	
			1	Locking device module (Page 94)	
5			1	Water hoses (Page 96)	
6			2	Scraper assy with nozzles (Page 128)	

1) Two pieces when use of tank with dual filling holes.

Sprinkler pump module

396722

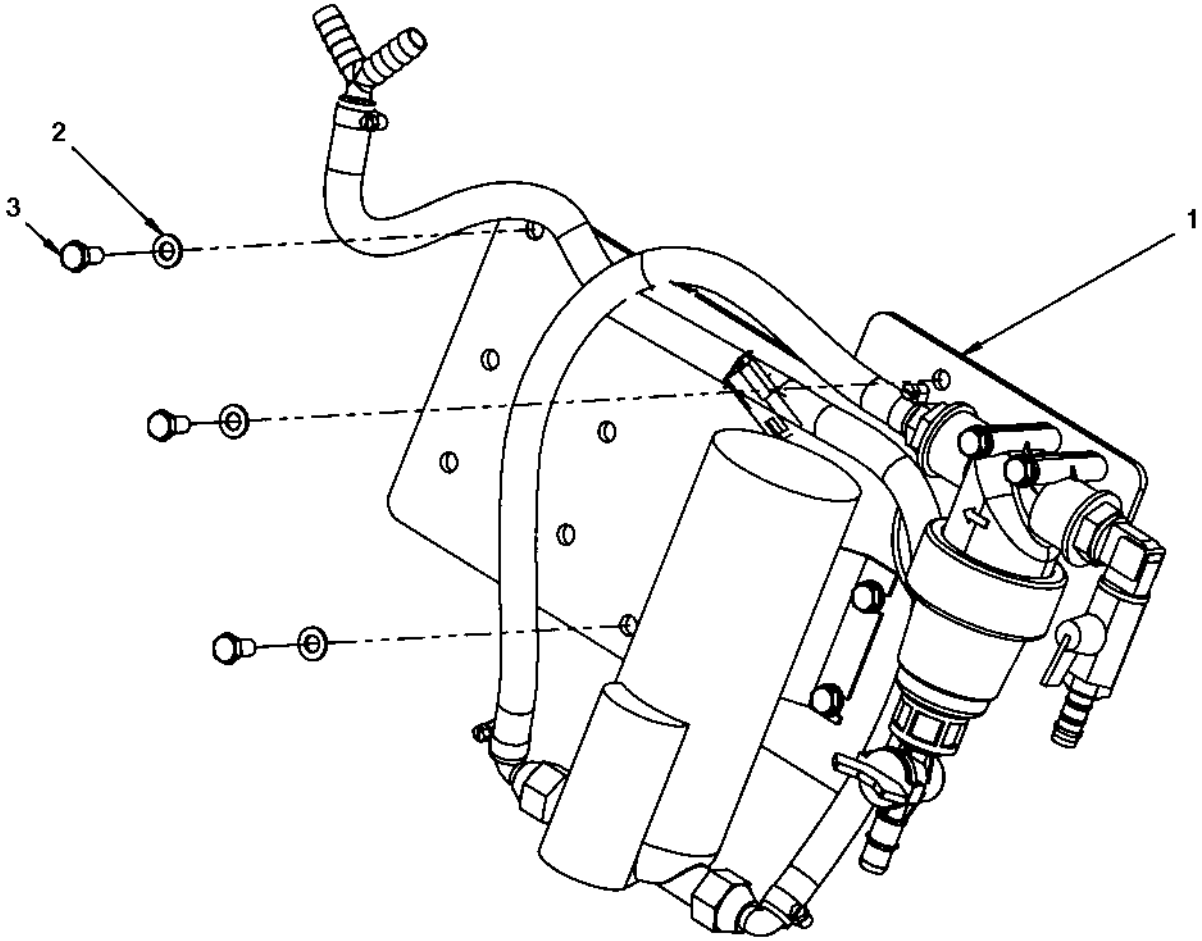

Sprinkler pump module

Ref. No.	Part No.	Rem.	Qty	Description	Code
1			1	Sprinkler pump (Page 82)	
2	904229		3	Washer	
3	500019		3	Screw	

Sprinkler pump

391971C

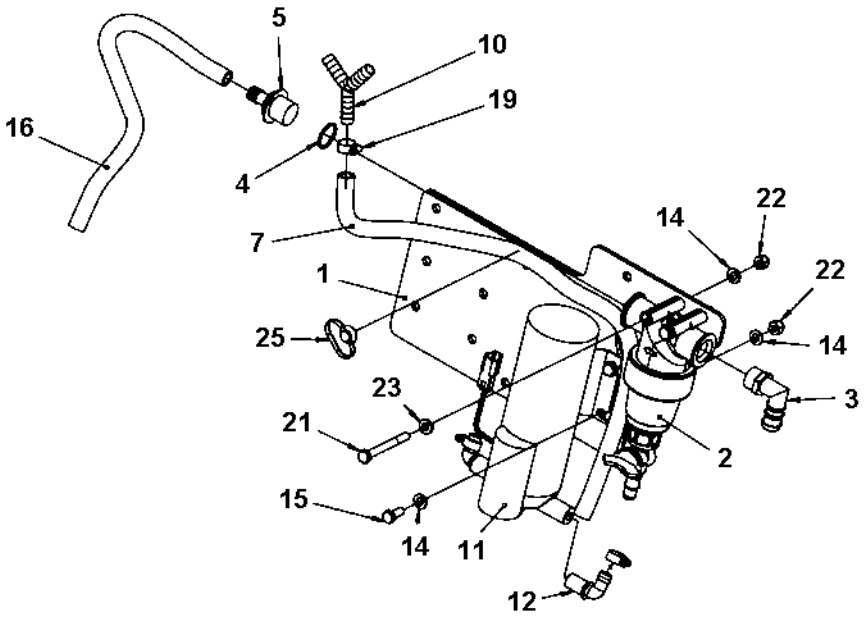

Sprinkler pump

Ref. No.	Part No.	Rem.	Qty	Description	Code
1	390400		1	Sprinkler plate	
2	791950		1	Water strainer, cpl	
	791959		1	.O-ring	
	791949		1	.Filter element	B
	791568		1	.Gasket	
	379009		1	.Valve	
3	792777		1	Hose connection	
4	160313		1	O-ring	
5	396672		1	Hose connection, plastic	
7	904878	B	1XL	Hose reinforced	
10	792386		1	Hose connection, plastic	
11	391495		1	Pump	
12	393765		2	Hose connection	
14	904229		10	Washer	
15	500053		4	Screw	
16	904878	A	1XL	Hose reinforced	
19	313001		4	Hose clamp	
21	500090		2	Screw	
22	586003		6	Lock nut	
23	904556		2	Washer	
25	792441		1	Cable tie with holder	

A) L=0.70 m
B) L=0.57 m

Sprinkler pump, backup

391617

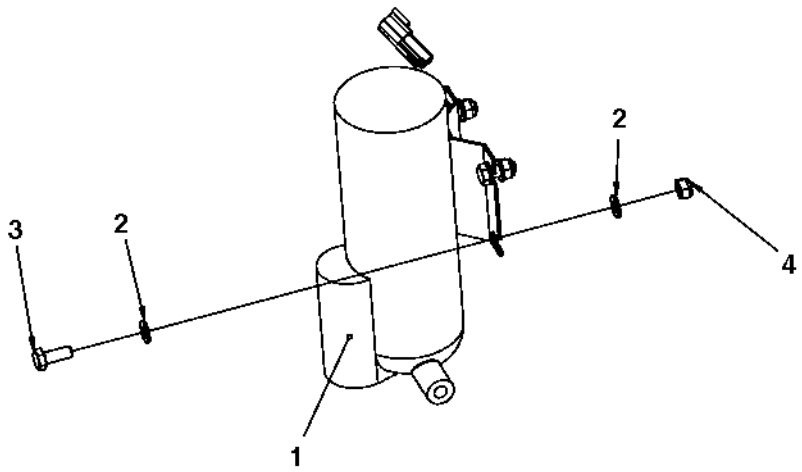

Sprinkler pump, backup

Ref. No.	Part No.	Rem.	Qty	Description		Code
1	391495		1	Pump		
2	904229		8	Washer		
3	500053		4	Screw		
4	791182		4	Lock nut	M8	

Sprinkler pump, additonal sprinkler

396663

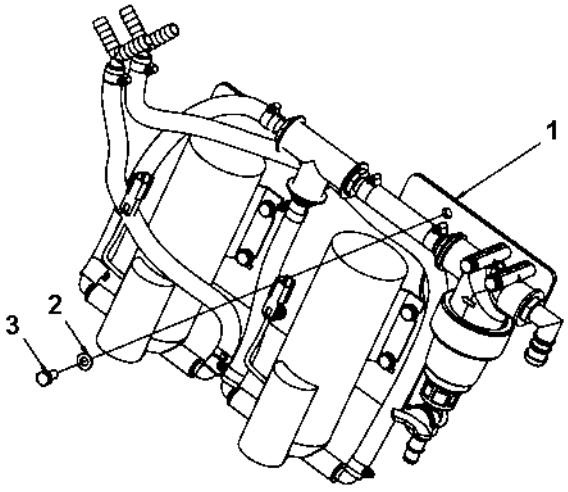

Sprinkler pump, additonal sprinkler

Ref. No.	Part No.	Rem.	Qty	Description	Code
1			1	Sprinkler pump mount (Page 88)	
2	904229		3	Washer	
3	500019		3	Screw	

Sprinkler pump mount

396664

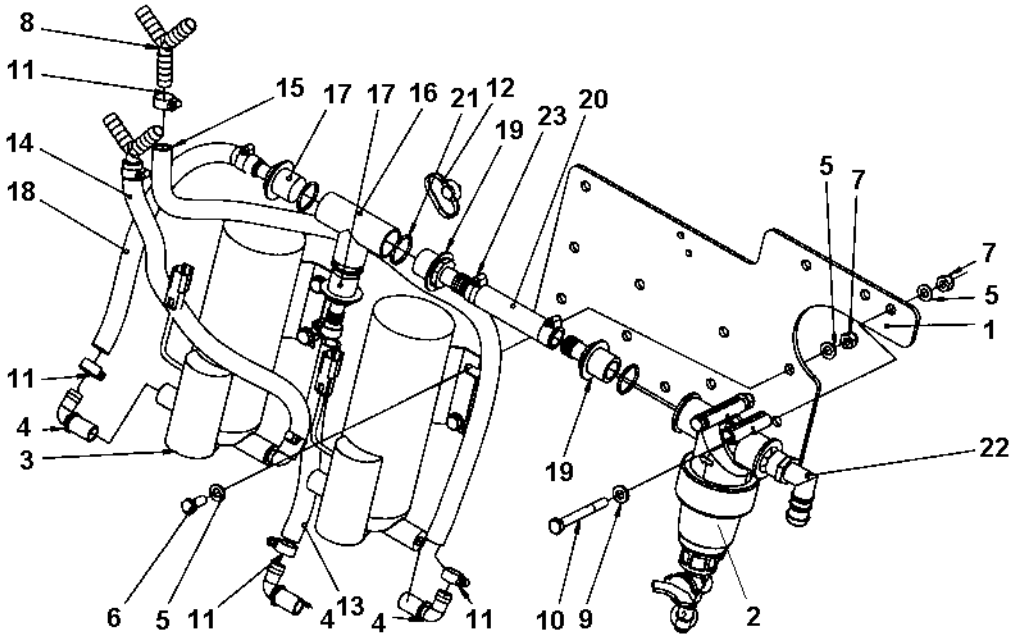

Sprinkler pump mount

Ref. No.	Part No.	Rem.	Qty	Description	Code
1	390400		1	Sprinkler plate	
2	791950		1	Water strainer, cpl	
	791959		1	.O-ring	
	791949		1	.Filter element	B
	791568		1	.Gasket	
	379009		1	.Valve	
3	391495		2	Pump	
4	393765		4	Hose connection	
5	904229		18	Washer	
6	500053		8	Screw	
7	586003		10	Lock nut	
8	792386		2	Hose connection, plastic	
9	904556		2	Washer	
10	500090		2	Screw	
11	313001		8	Hose clamp	
12	792441		N	Cable tie with holder	
13	904878	A	1XL	Hose reinforced	
14	904878	B	1XL	Hose reinforced	
15	904878	C	1XL	Hose reinforced	
16	792778		1	Tee-connector	
17	396672		2	Hose connection, plastic	
18	904878	D	1XL	Hose reinforced	
19	396673		2	Hose connection	
20	792073	E	1XL	Hose reinforced	D
21	160313		4	O-ring	
22	792777		4	Hose connection	
23	313003		2	Hose clamp	D

A) L=0.20 m
B) L=0.38 m
C) L=0.61 m
D) L=0.31 m
E) L=0.10 m

Cover lock module

392097

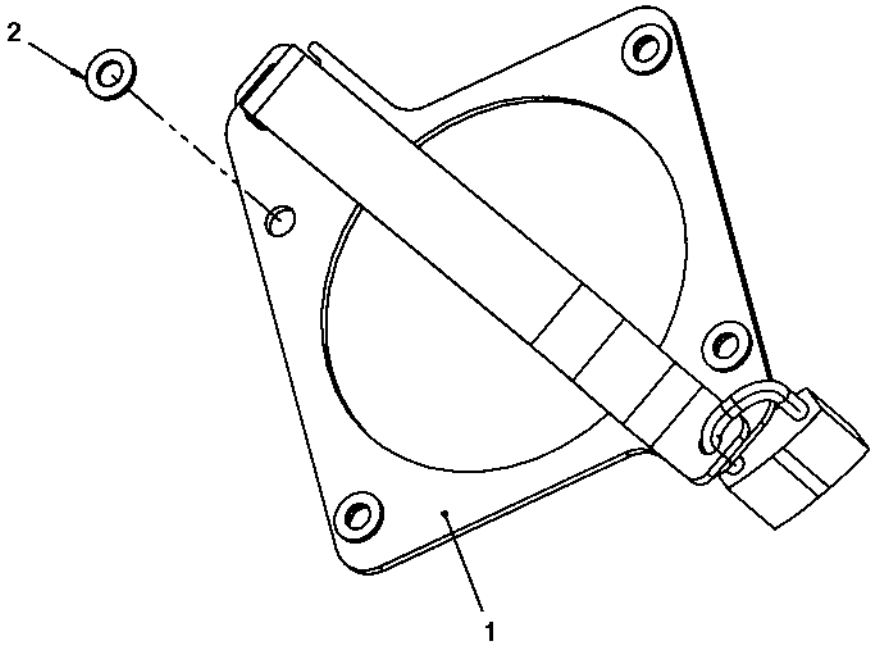

Cover lock module

Ref. No.	Part No.	Rem.	Qty	Description	Code
1			1	Lock bracket (Page 92)	
2	904229		4	Washer	

Lock bracket

391856

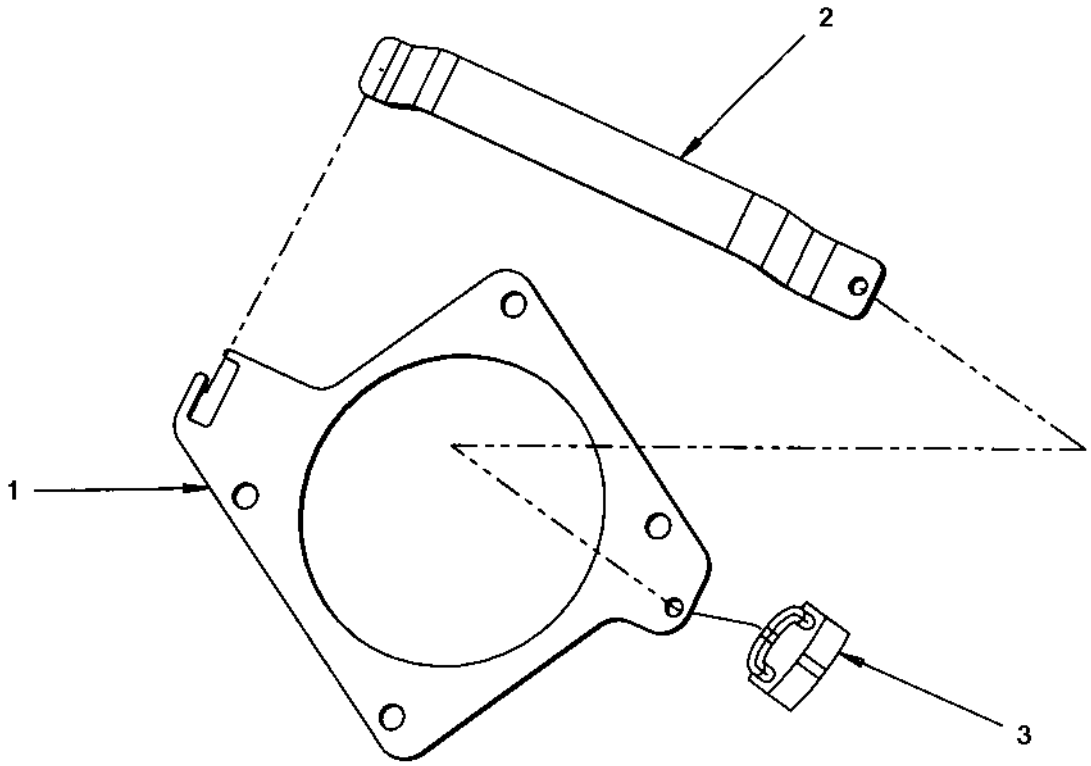

Lock bracket

Ref. No.	Part No.	Rem.	Qty	Description	Code
1	391857		1	Bracket	
2	391858		1	Bracket	
3	358881		1	Pad lock	

Locking device module

394928A

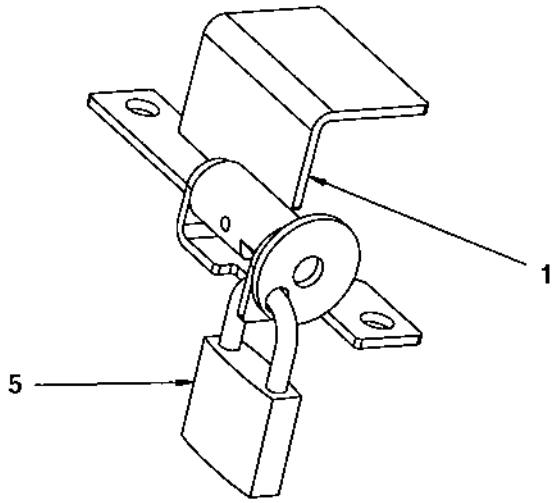

Locking device module

Ref. No.	Part No.	Rem.	Qty	Description	Code
1			1	Locking device	
	394587		1	.Bracket	
	394591		1	.Shaft	
	394590		1	.Lock bracket	
	629008		1	.Spring pin	
5	358881		1	Pad lock	

Water hoses

391907

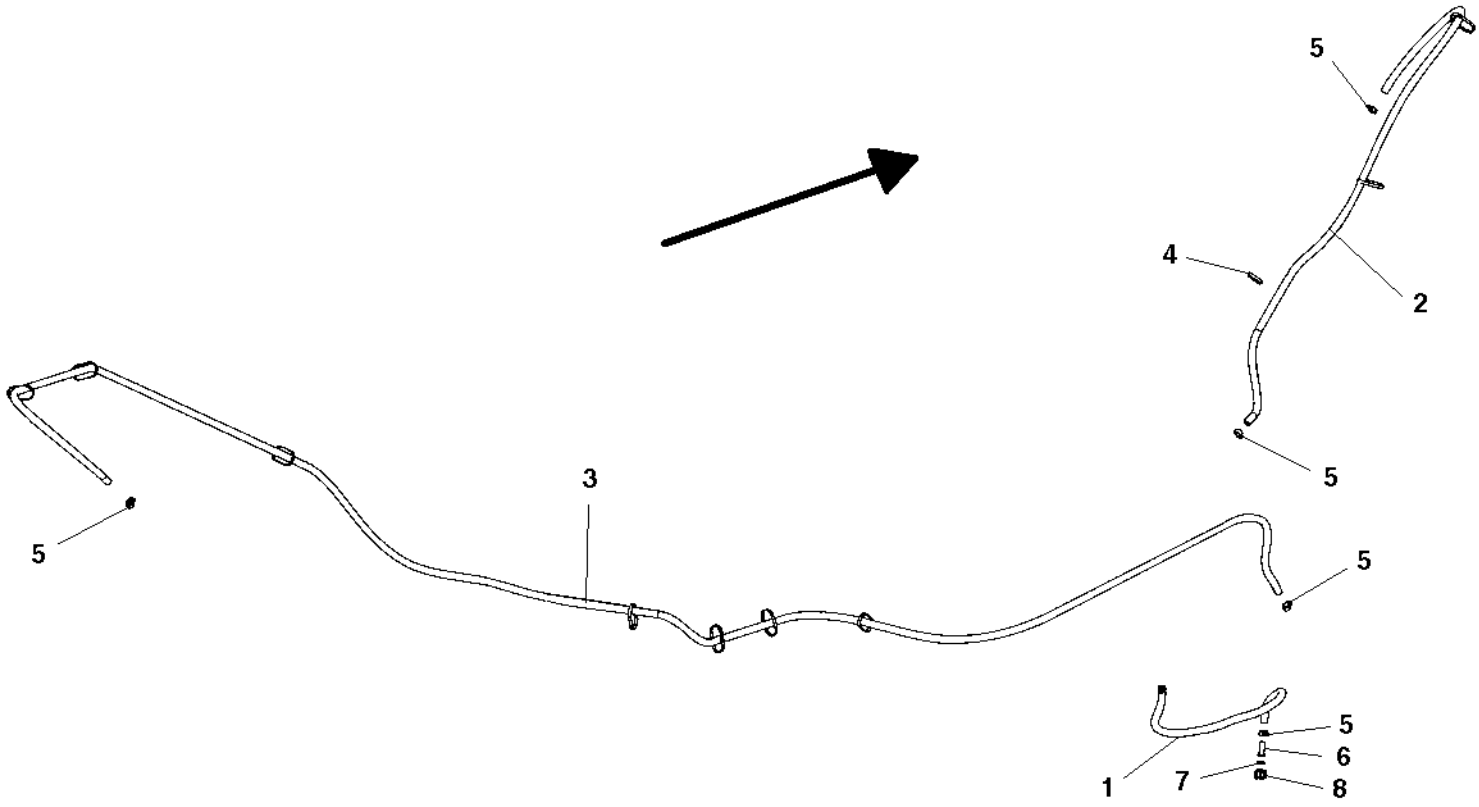

Water hoses

Ref. No.	Part No.	Rem.	Qty	Description	Code
1	904878	A	1XL	Hose reinforced	
2	904878	B	1XL	Hose reinforced	
3	904878	C	1XL	Hose reinforced	
4	313102		N	Cable ties	
5	313001		6	Hose clamp	
6	392228		1	Hose connection swivel	
7	392229		1	Plane gasket	
8	392227		1	Swivel nut	

A) L=0.70 m
B) L=1.68 m, machine with offset L=1.65 m
C) L=4.46 m, machine with offset L=4.23 m

End frame, front

AR0020

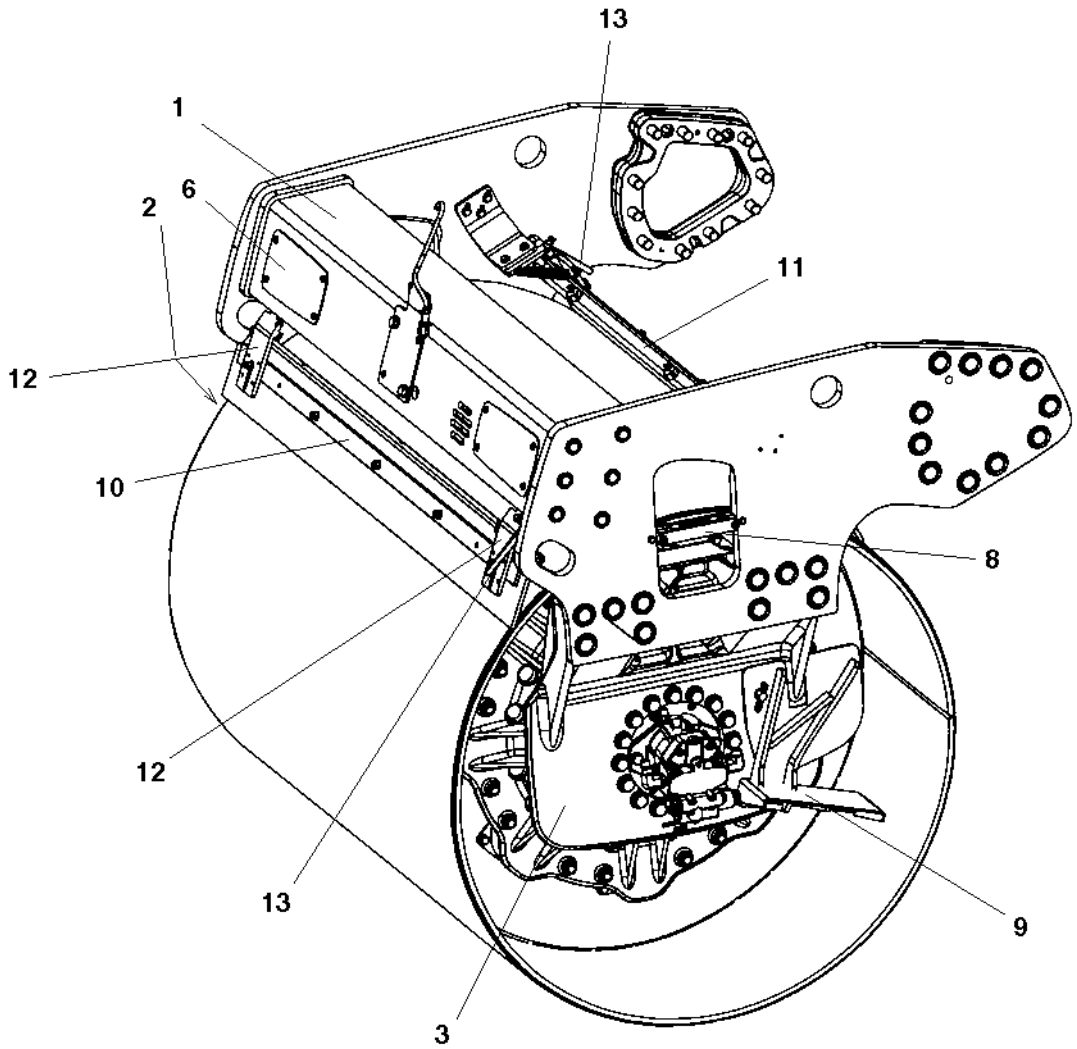

End frame, front

Ref. No.	Part No.	Rem.	Qty	Description	Code
1			1	End frame, front (Page 100)	
2			1	Fork, vibration side (Page 104)	
3			1	Fork, propulsion side (Page 106)	
6			2	Cover plate (Page 108)	
8			1	Hose clamp, propulsion side (Page 110)	
			1	Hose clamp, vibration side (Page 112)	
9			1	Step, vibration side (Page 114)	
			1	Step, propulsion side (Page 118)	
10			1	Scraper module, without nozzles (Page 122)	
11			1	Scraper module, with nozzles (Page 126)	
12	394340		2	Scraper bracket, cpl (Page 130)	
13			2	Grab handle, release (Page 132)	
14			1	Grab handle, lift (Page 134)	

End frame, front

390056

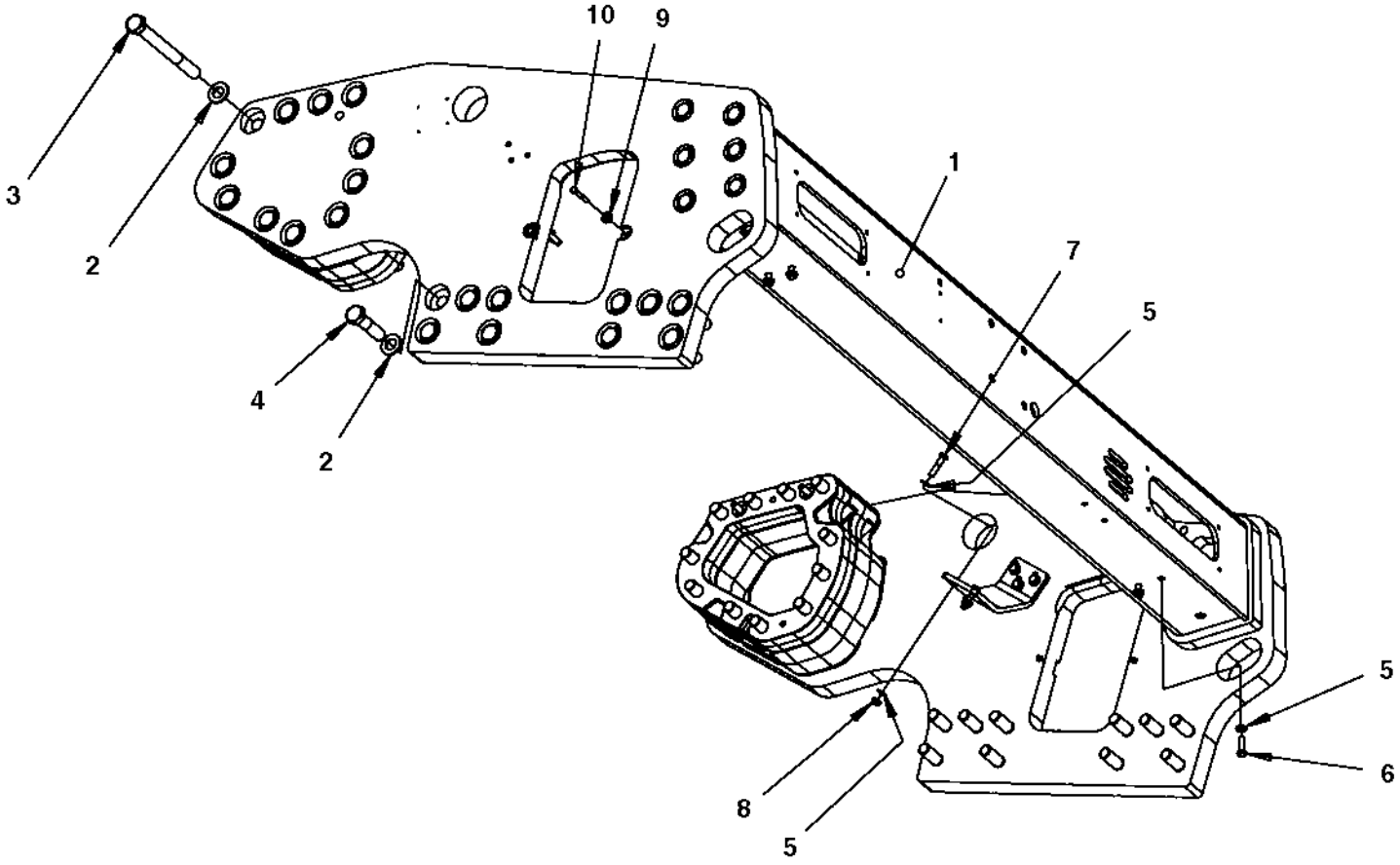

End frame, front

Ref. No.	Part No.	Rem.	Qty	Description	Code
1			1	Frame (Page 102)	
2	904234		42	Washer	
3	792534		22	Screw M24x230	
4	500130		20	Screw M24x90	
5	904230		12	Washer	
6	500030		4	Screw	
7	500161		4	Screw	
8	791172		4	Lock nut	
9	904640		4	Washer	
10	500025		4	Screw M8-1,25x50 8,8	

Frame

391554

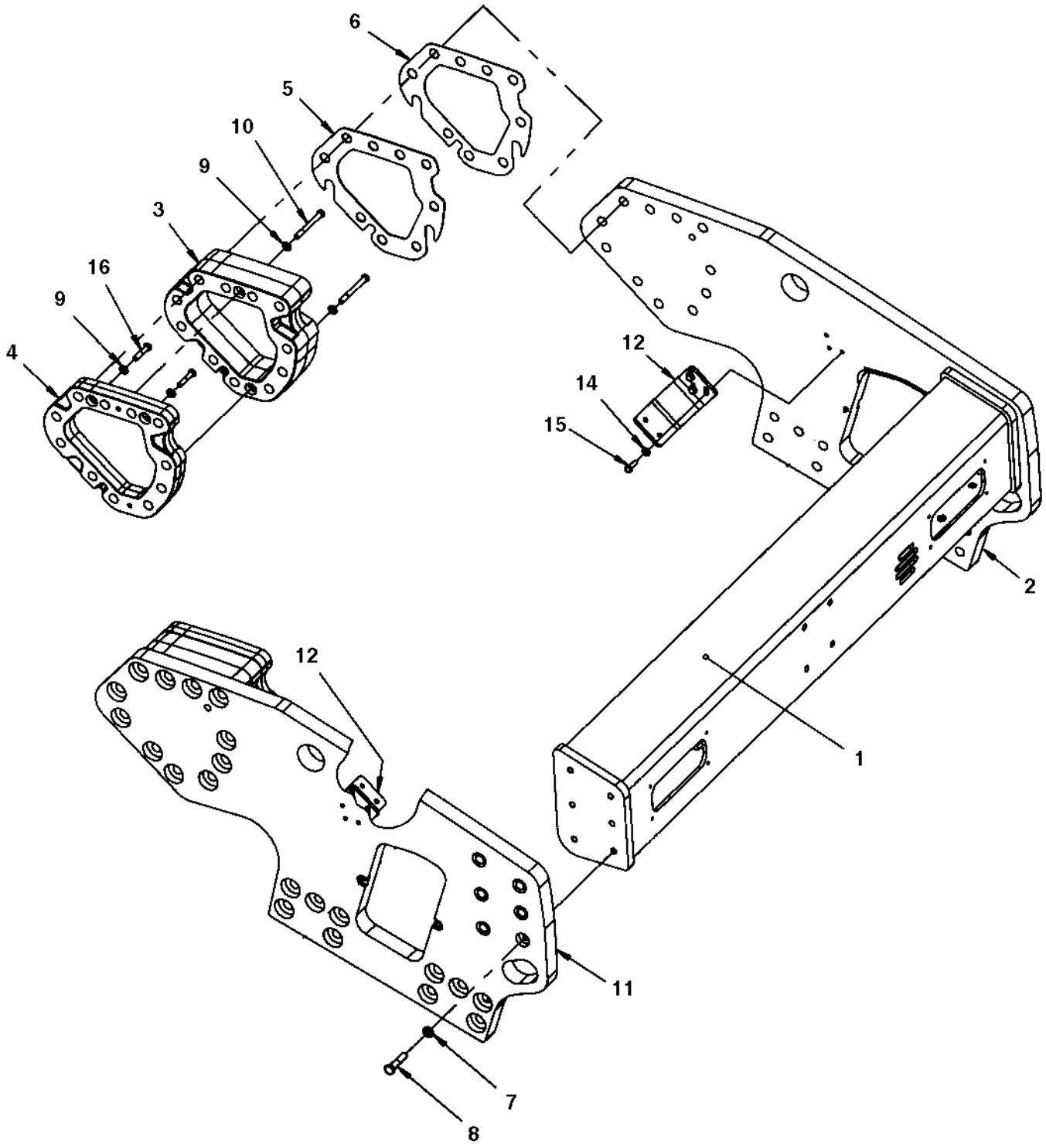

Frame

Ref. No.	Part No.	Rem.	Qty	Description	Code
1	390061		1	Cross beam	
2	390058		1	Side plate	
3	390076		2	Spacer	
4	390074		2	Spacer	
5	390470		N	Shim	
6	390469		N	Shim	
7	904233		12	Washer	
8	500207		12	Screw	M12x70
9	904231		8	Washer	
10	500267		4	Screw	M12x120 8,8 FZB
11	393429		1	Side plate	
12	394787		2	Holder	
14	904557		6	Washer	
15	500030		6	Screw	
16	500049		4	Screw	

Fork, vibration side

391476

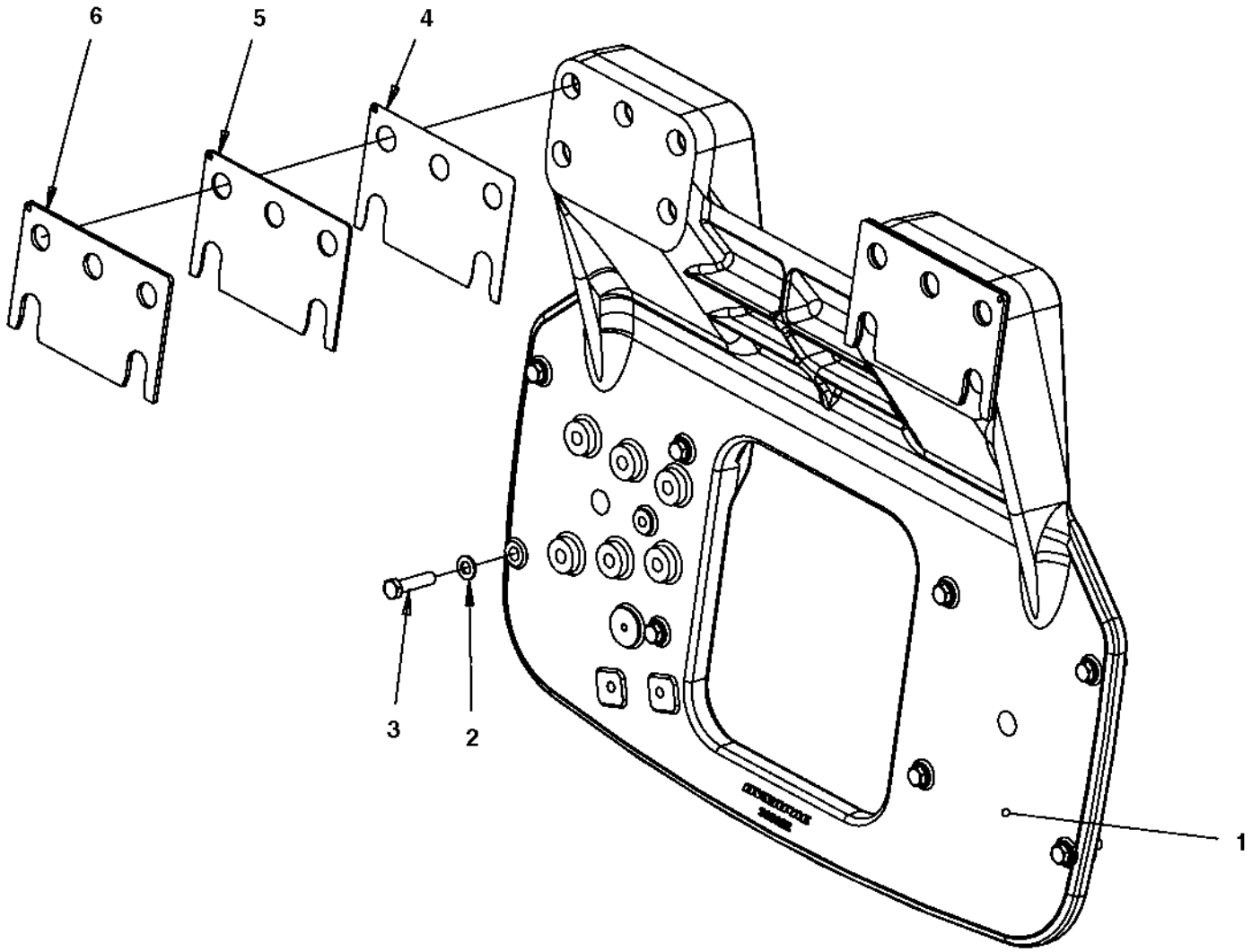

Fork, vibration side

Ref. No.	Part No.	Rem.	Qty	Description	Code
1	392622		1	Fork	
2	904231		8	Washer	
3	500269		8	Screw	
4	391754		N	Shim	
5	393009		N	Shim	
6	393010		N	Shim	

Fork, propulsion side

391477

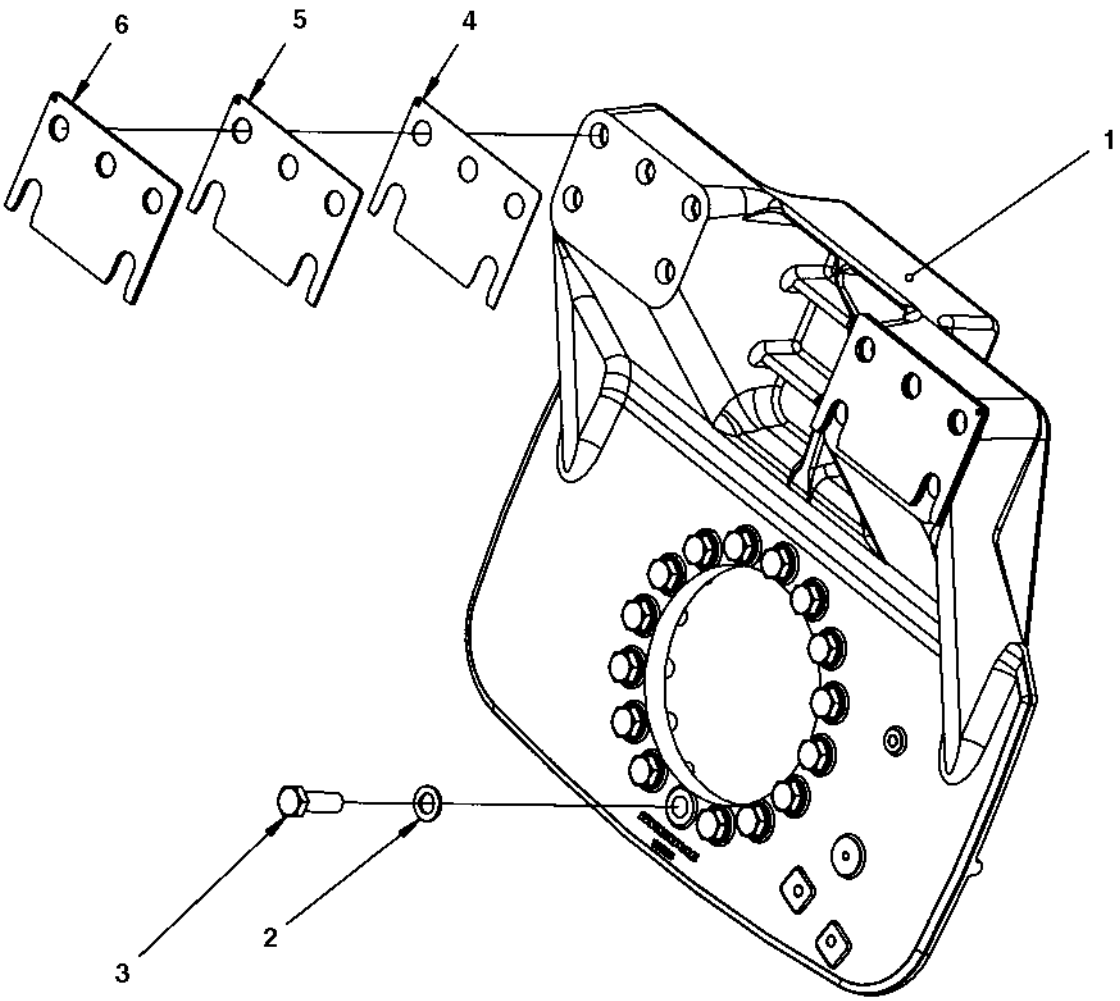

Fork, propulsion side

Ref. No.	Part No.	Rem.	Qty	Description	Code
1	391198		1	Fork	
2	904233		16	Washer	
3	500206		16	Screw	M20-2,5X60 8.8
4	391754		N	Shim	
5	393009		N	Shim	
6	393010		N	Shim	

Cover plate

391642

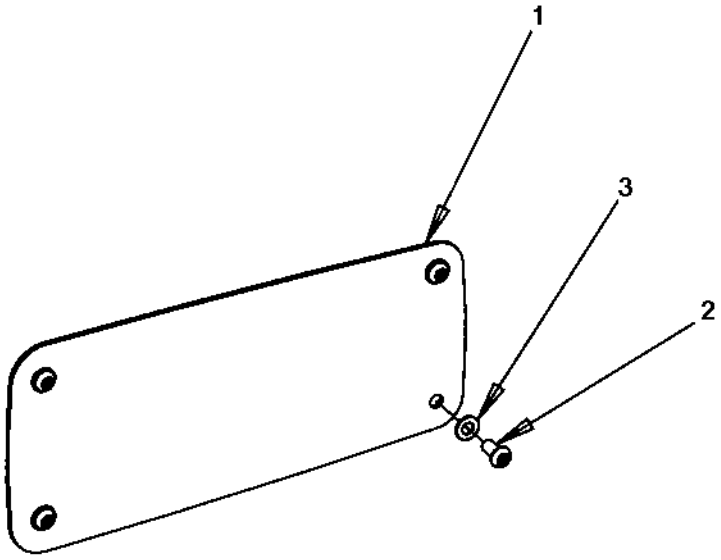

Cover plate

Ref. No.	Part No.	Rem.	Qty	Description	Code
1	390919		1	Cover plate	
2	904956		4	Screw	
3	904229		4	Washer	

Hose clamp, propulsion side

395424B

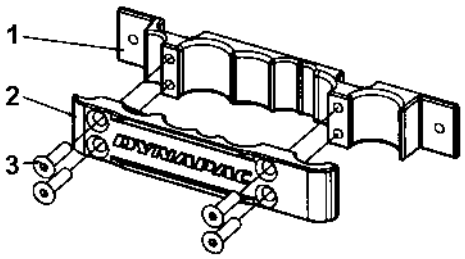

Hose clamp, propulsion side

Ref. No.	Part No.	Rem.	Qty	Description	Code
1	395428		1	Hose clamp	
2	395429		1	Cover	
3	792726		4	Hexagon socket countersunk screw	

Hose clamp, vibration side

395424B

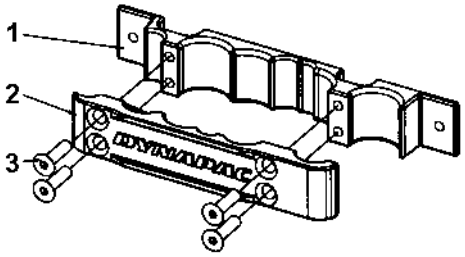

Hose clamp, vibration side

Ref. No.	Part No.	Rem.	Qty	Description	Code
1	395428		1	Hose clamp	
2	395430		1	Cover	
3	792726		4	Hexagon socket countersunk screw	

Step, vibration side

394352

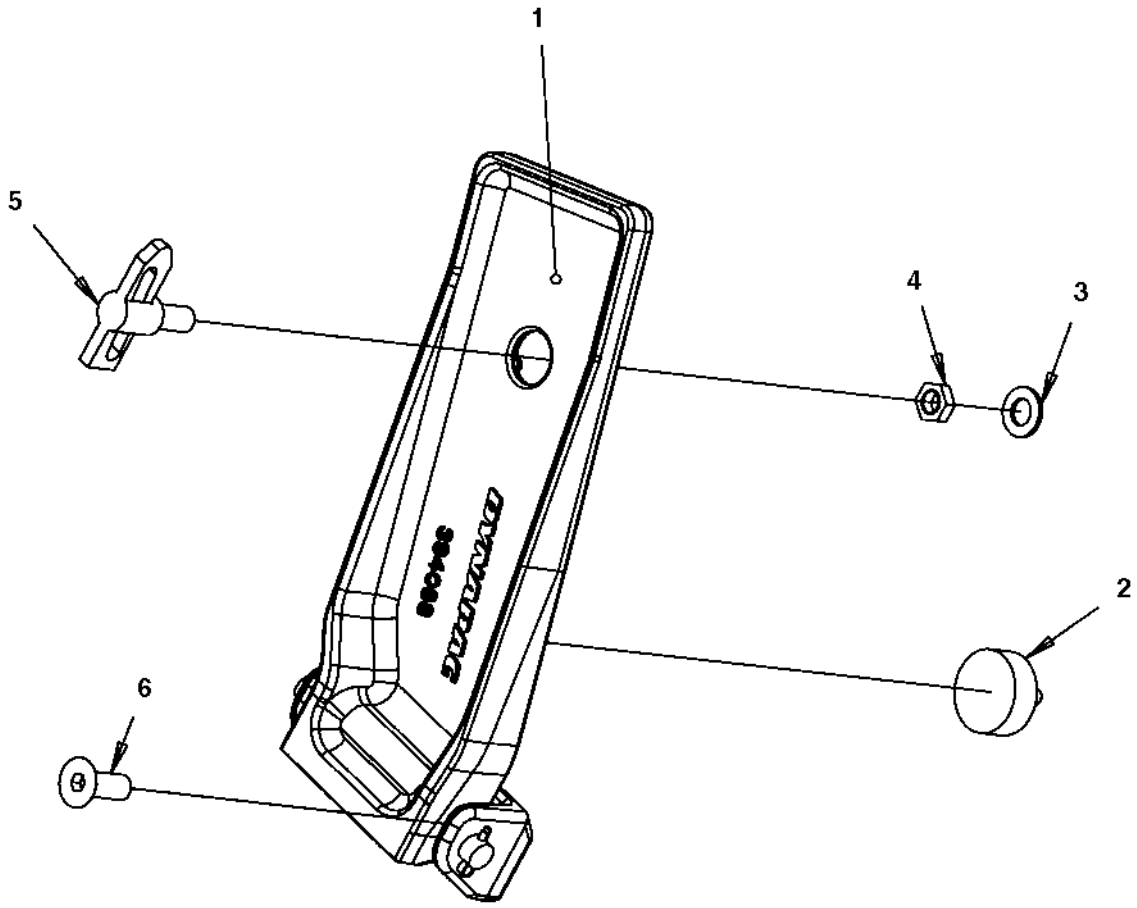

Step, vibration side

Ref. No.	Part No.	Rem.	Qty	Description	Code
1			1	Step (Page 116)	
2	792601		1	Shock absorber	
3	904231		1	Washer	
4	927233		1	Nut	
5	475064		1	Lock	
6	513011		2	Hexagon socket head cap screw	

Step

394353

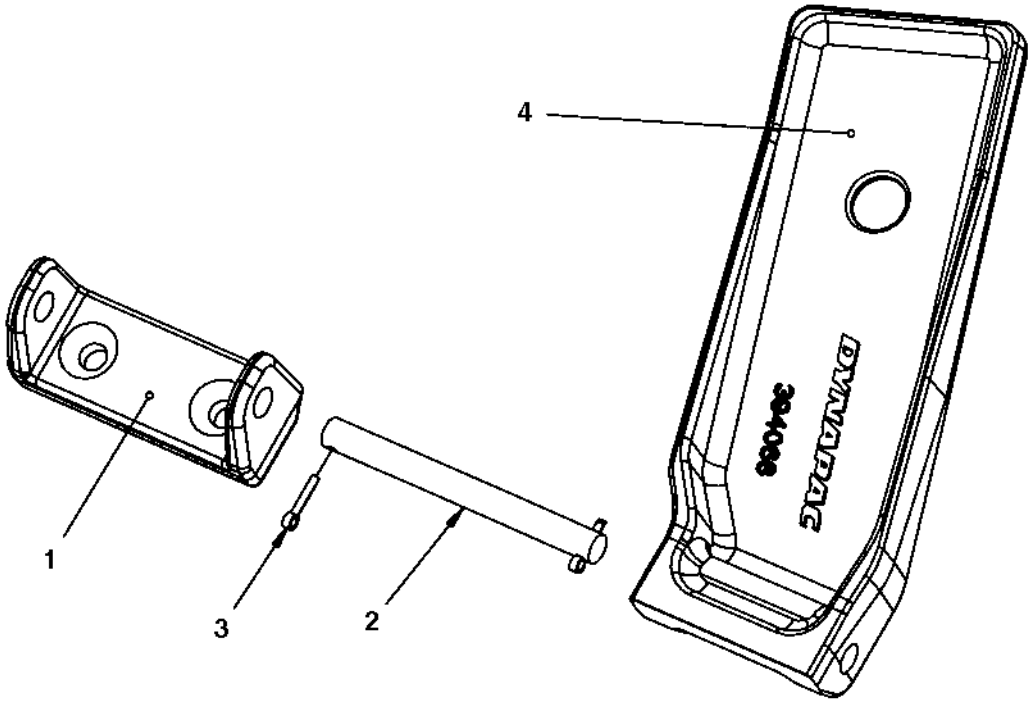

Step

Ref. No.	Part No.	Rem.	Qty	Description	Code
1	394070		1	Bracket	
2	394351		1	Shaft	
3	630012		2	Cotter pin	
4	394068		1	Step	

Step, propulsion side

394410

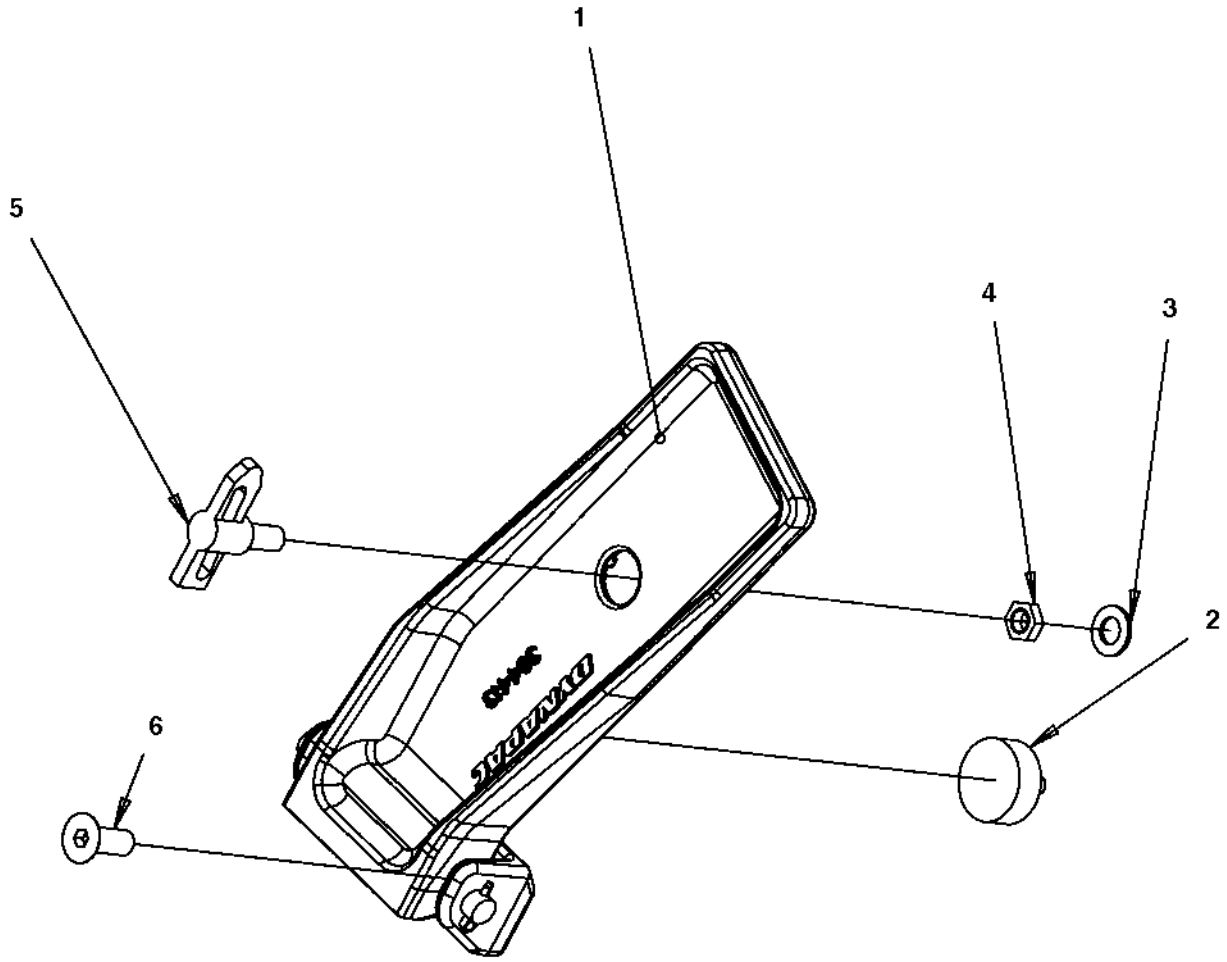

Step, propulsion side

Ref. No.	Part No.	Rem.	Qty	Description	Code
1			1	Step (Page 120)	
2	792601		1	Shock absorber	
3	904231		1	Washer	
4	927233		1	Nut	
5	475064		1	Lock	
6	513011		2	Hexagon socket head cap screw	

Step

394411

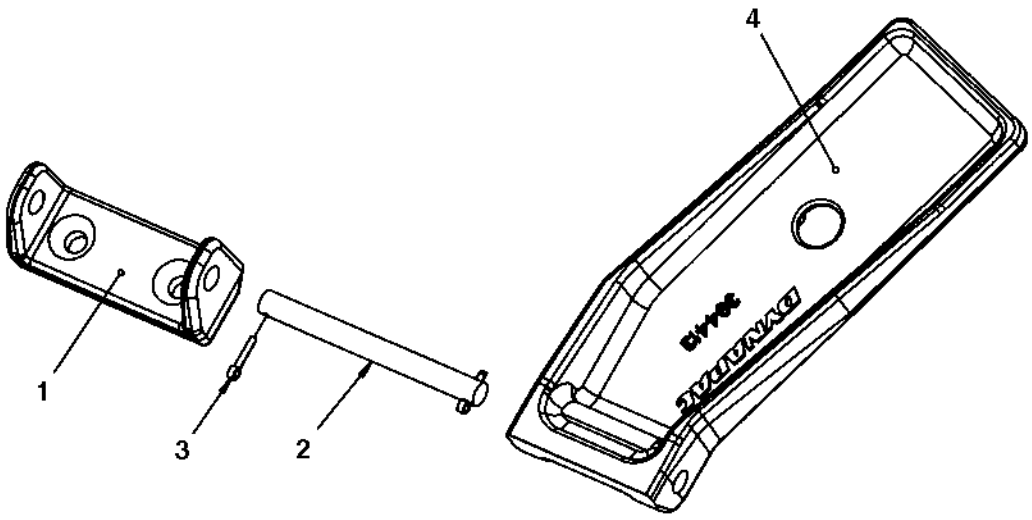

Step

Ref. No.	Part No.	Rem.	Qty	Description	Code
1	394070		1	Bracket	
2	394351		1	Shaft	
3	630012		2	Cotter pin	
4	394413		1	Step	

Scraper module, without nozzles

391228B

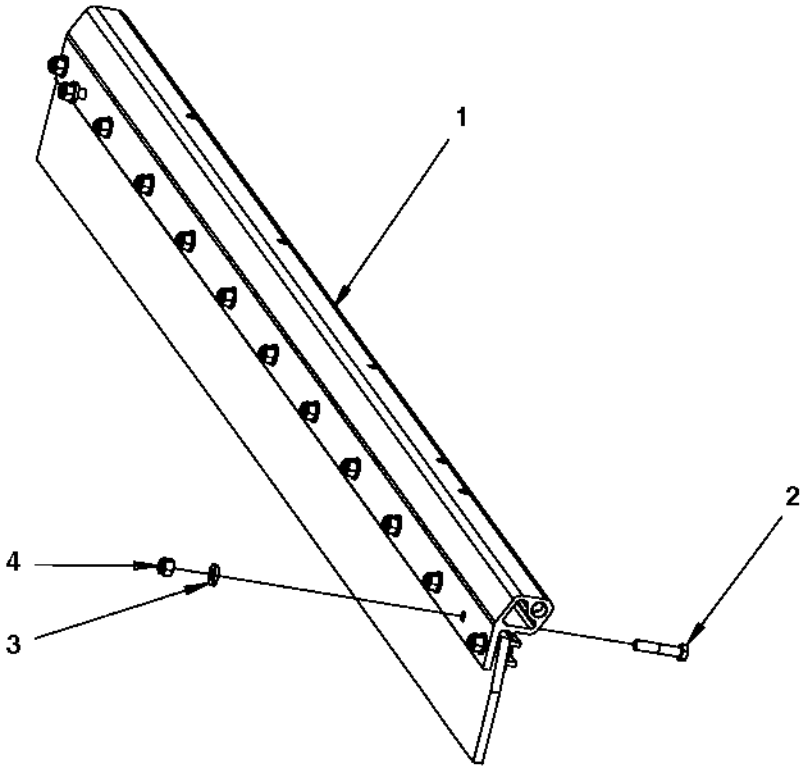

Scraper module, without nozzles

Ref. No.	Part No.	Rem.	Qty	Description	Code
1			1	Scraper assy (Page 124)	
2	500091		2	Screw	
3	904557		2	Washer	
4	586018		2	Lock nut	

Scraper assy

395251A

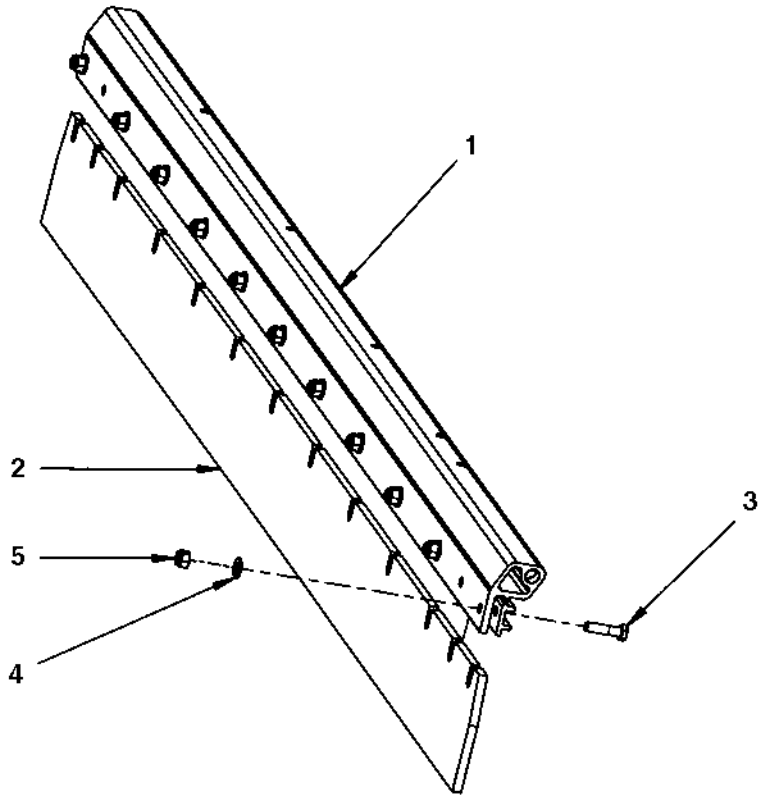

Scraper assy

Ref. No.	Part No.	Rem.	Qty	Description	Code
1	395113		1	Sprinkler pipe	
2	395114		1	Scraper blade	
3	500031		11	Screw	
4	904230		11	Washer	
5	586018		11	Lock nut	

Scraper module, with nozzles

391229D

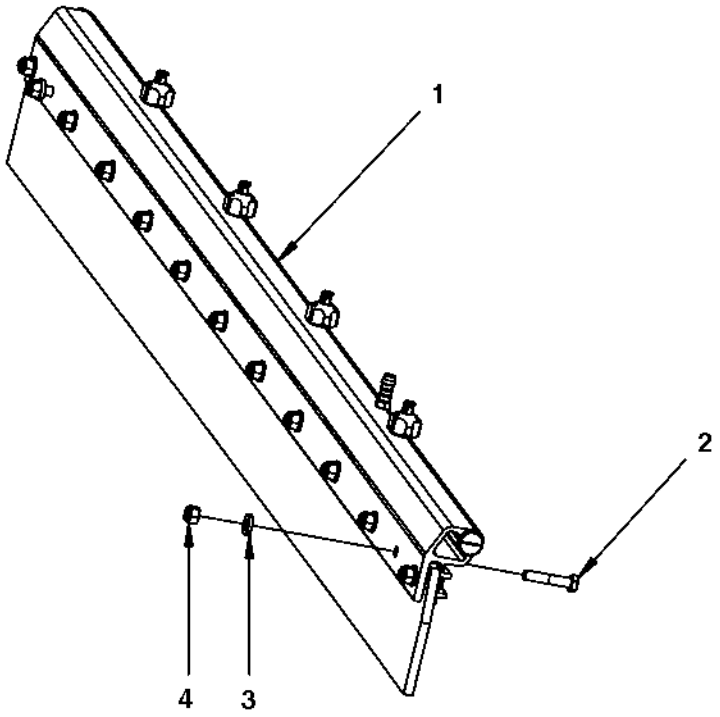

Scraper module, with nozzles

Ref. No.	Part No.	Rem.	Qty	Description	Code
1			1	Scraper assy with nozzles (Page 128)	
2	500091		2	Screw	
3	904557		2	Washer	
4	586018		2	Lock nut	

Scraper assy with nozzles

395252A

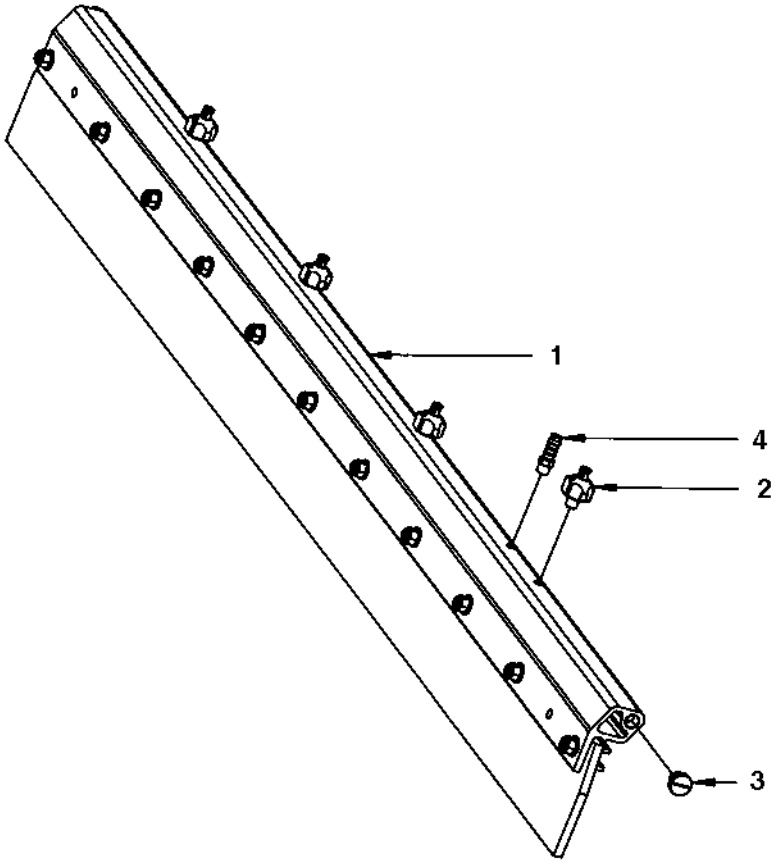

Scraper assy with nozzles

Ref. No.	Part No.	Rem.	Qty	Description	Code
1			1	Scraper assy (Page 124)	
2	392011		4	Spraying nozzle, cpl	
	392509		1	.Retainer, nozzle, strainer, yellow	0.8
	393697		1	..Nozzle and strainer, yellow	0.8
	390615	A	1	..Nozzle and strainer, blue	1.0
	390616	A	1	..Nozzle and strainer, red	1.2
	390619	A	1	..Nozzle and strainer, brown	1.3
3	792072		2	End plug	
4	791977		1	Hose connection	

A) Option

394340 Scraper bracket, cpl

394340

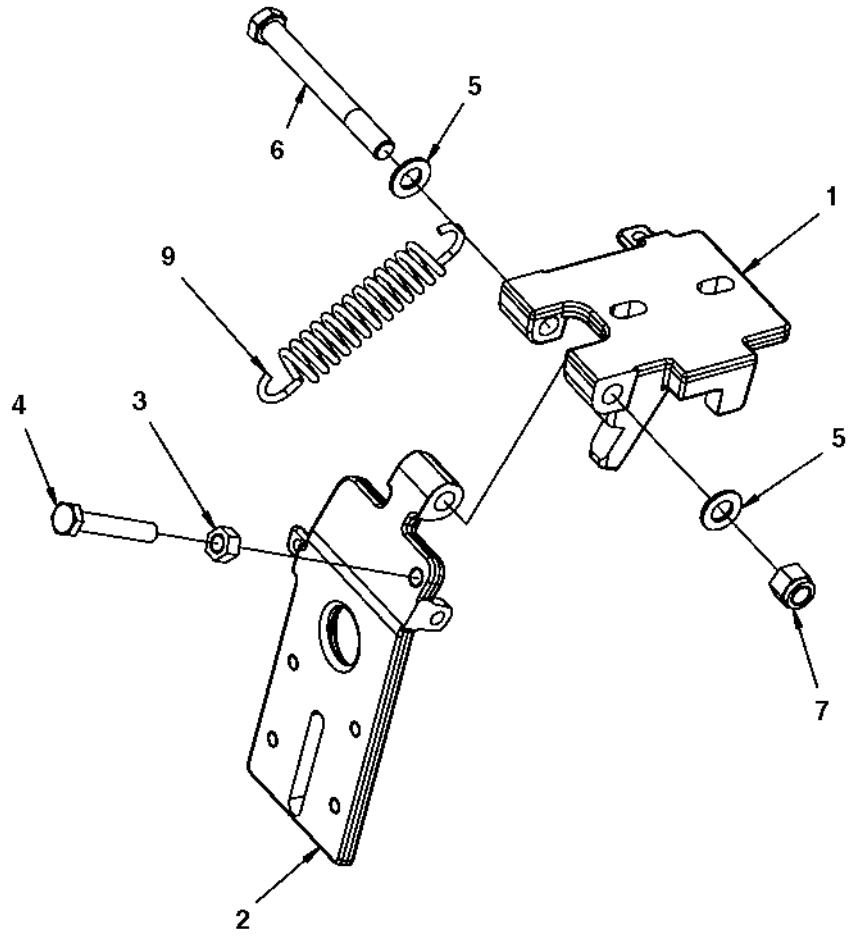

394340 Scraper bracket, cpl

Ref. No.	Part No.	Rem.	Qty	Description	Code
1			1	Scraper bracket	
2			1	Scraper bracket	
3	570006		1	Nut	
4	791082		1	Screw	
5	904231		2	Washer	
6	500198		1	Screw	
7	586019		1	Lock nut	
9	394806		1	Extension spring	

Grab handle, release

393551

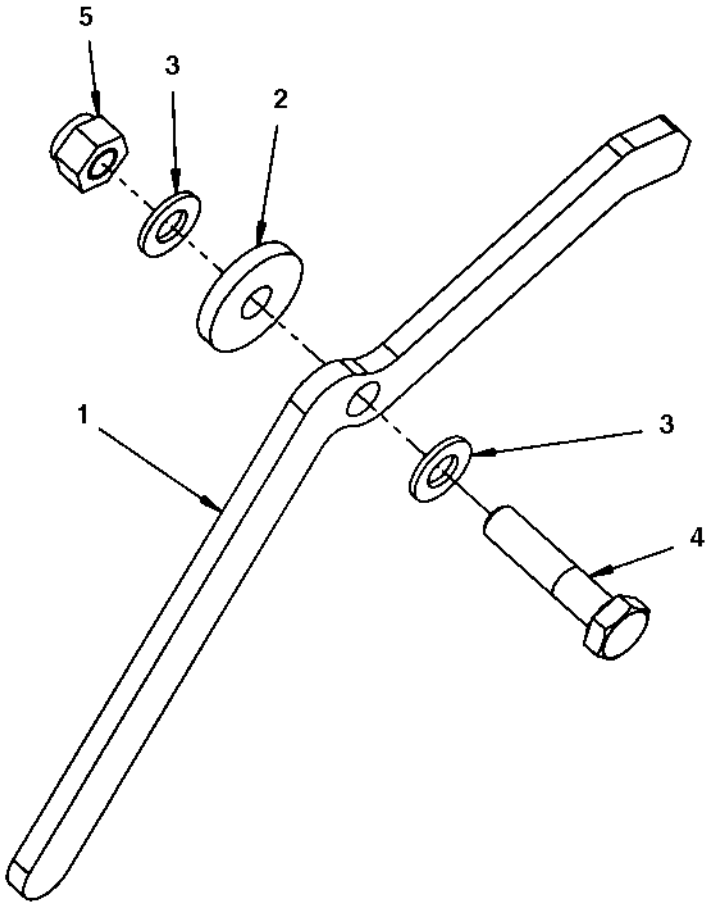

Grab handle, release

Ref. No.	Part No.	Rem.	Qty	Description	Code
1	393550		1	Grab handle	
2	904734		1	Washer	
3	904229		2	Washer	
4	500047		1	Screw	
5	586003		1	Lock nut	

Grab handle, lift

393486

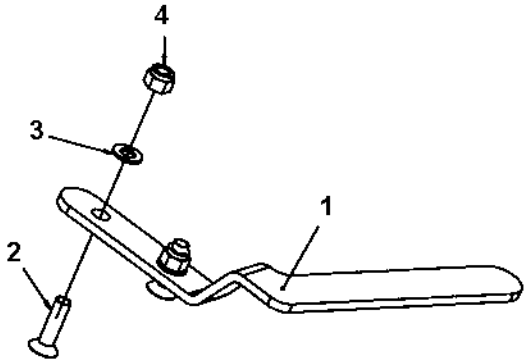

Grab handle, lift

Ref. No.	Part No.	Rem.	Qty	Description	Code
1	395390		1	Grab handle	
2	792540		2	Screw	
3	904229		2	Washer	
4	586003		2	Lock nut	

End frame, rear

AR0022

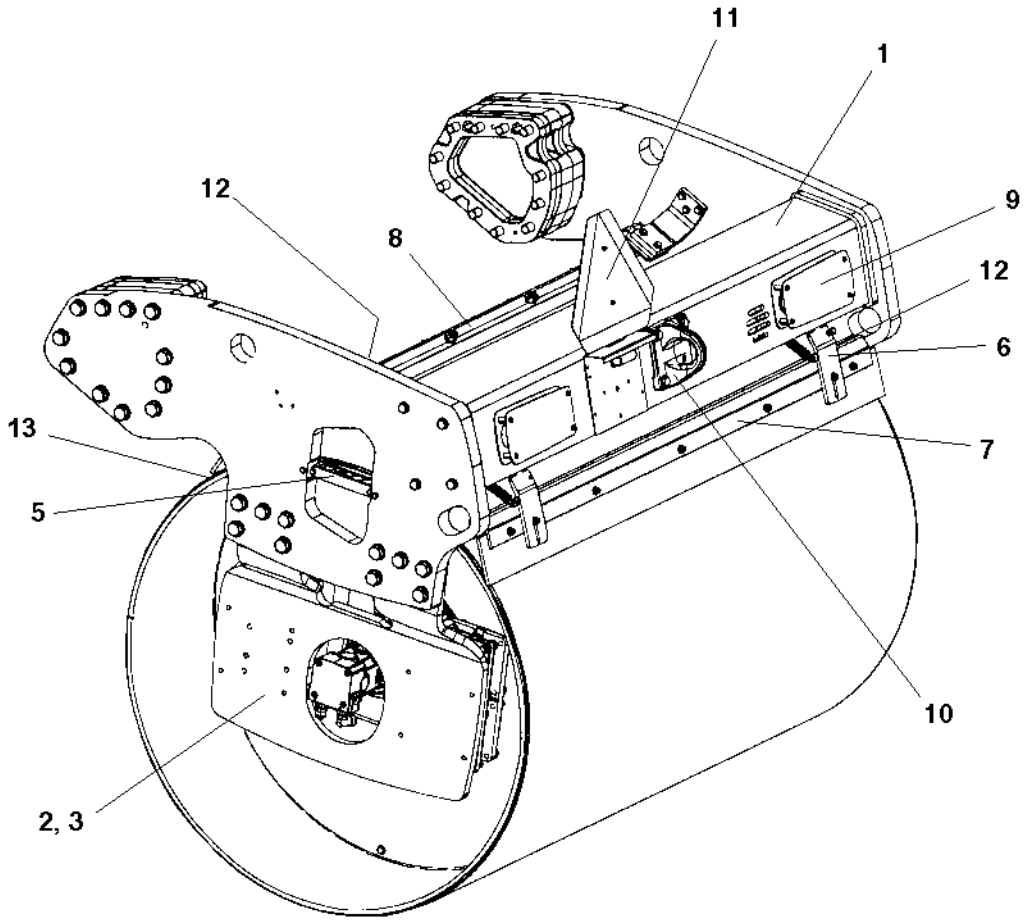

End frame, rear

Ref. No.	Part No.	Rem.	Qty	Description	Code
1			1	End frame, rear (Page 138)	
			1	End frame, rear offset (Page 140)	
2			1	Fork, vibration side (Page 104)	
3			1	Fork, propulsion side (Page 106)	
4			1	Step, vibration side (Page 114)	
			1	Step, propulsion side (Page 118)	
5			1	Hose clamp, propulsion side (Page 110)	
			1	Hose clamp, vibration side (Page 112)	
6	394340		2	Scraper bracket, cpl (Page 130)	
7			1	Scraper module, without nozzles (Page 122)	
8			1	Scraper module, with nozzles (Page 126)	
9			2	Cover plate (Page 108)	
10			1	Eyelet module (Page 150)	
			1	Eyelet module (Page 152)	
11			1	SMV-sign module (Page 154)	
12			2	Grab handle, release (Page 132)	
13			1	Grab handle, lift (Page 134)	
			1	Grab handle, lift offset	

End frame, rear

390056

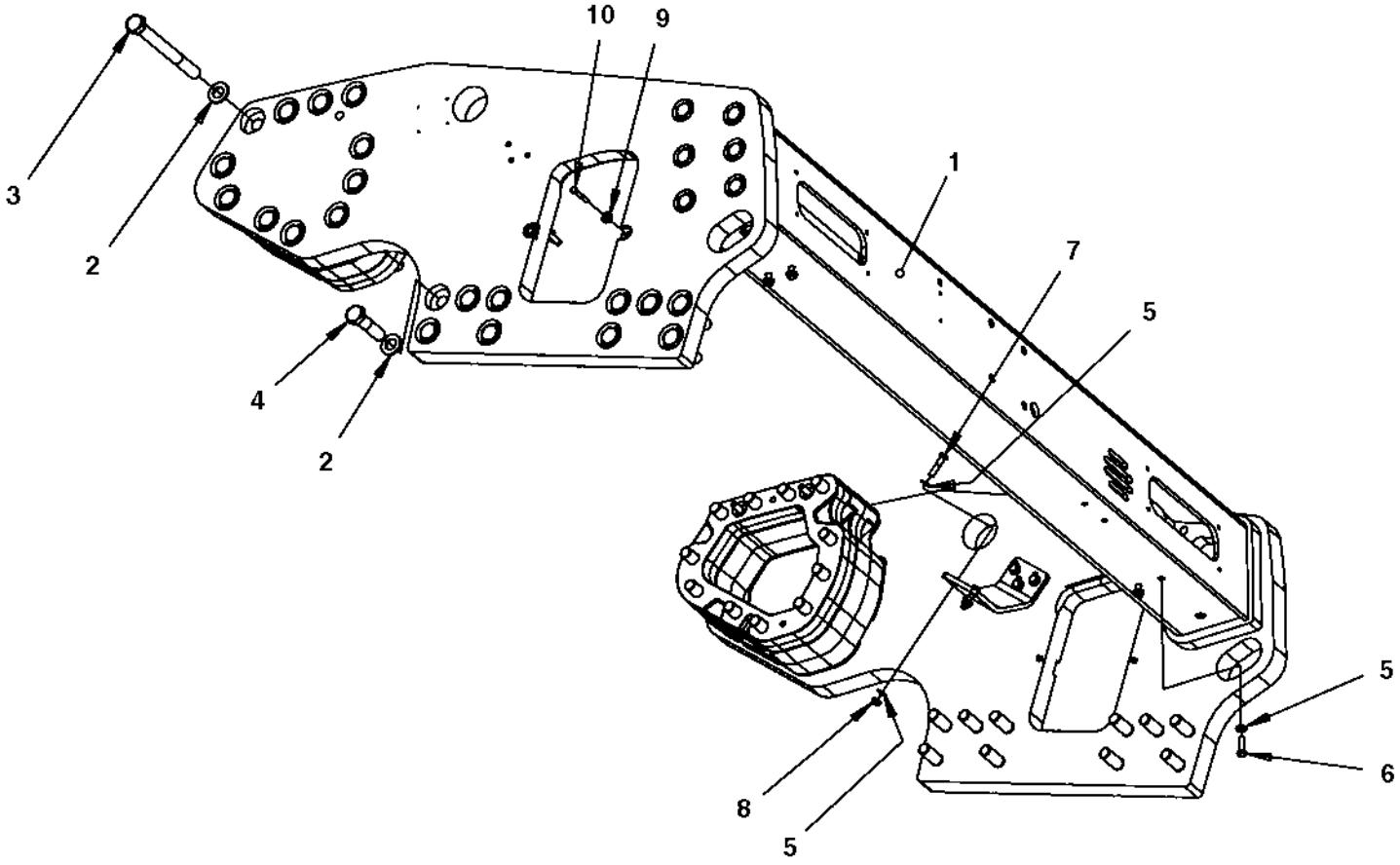

End frame, rear

Ref. No.	Part No.	Rem.	Qty	Description	Code
1			1	Frame (Page 102)	
2	904234		42	Washer	
3	792534		22	Screw M24x230	
4	500130		20	Screw M24x90	
5	904230		12	Washer	
6	500030		4	Screw	
7	500161		4	Screw	
8	791172		4	Lock nut	
9	904640		4	Washer	
10	500025		4	Screw M8-1,25x50 8,8	

End frame, rear offset

391620

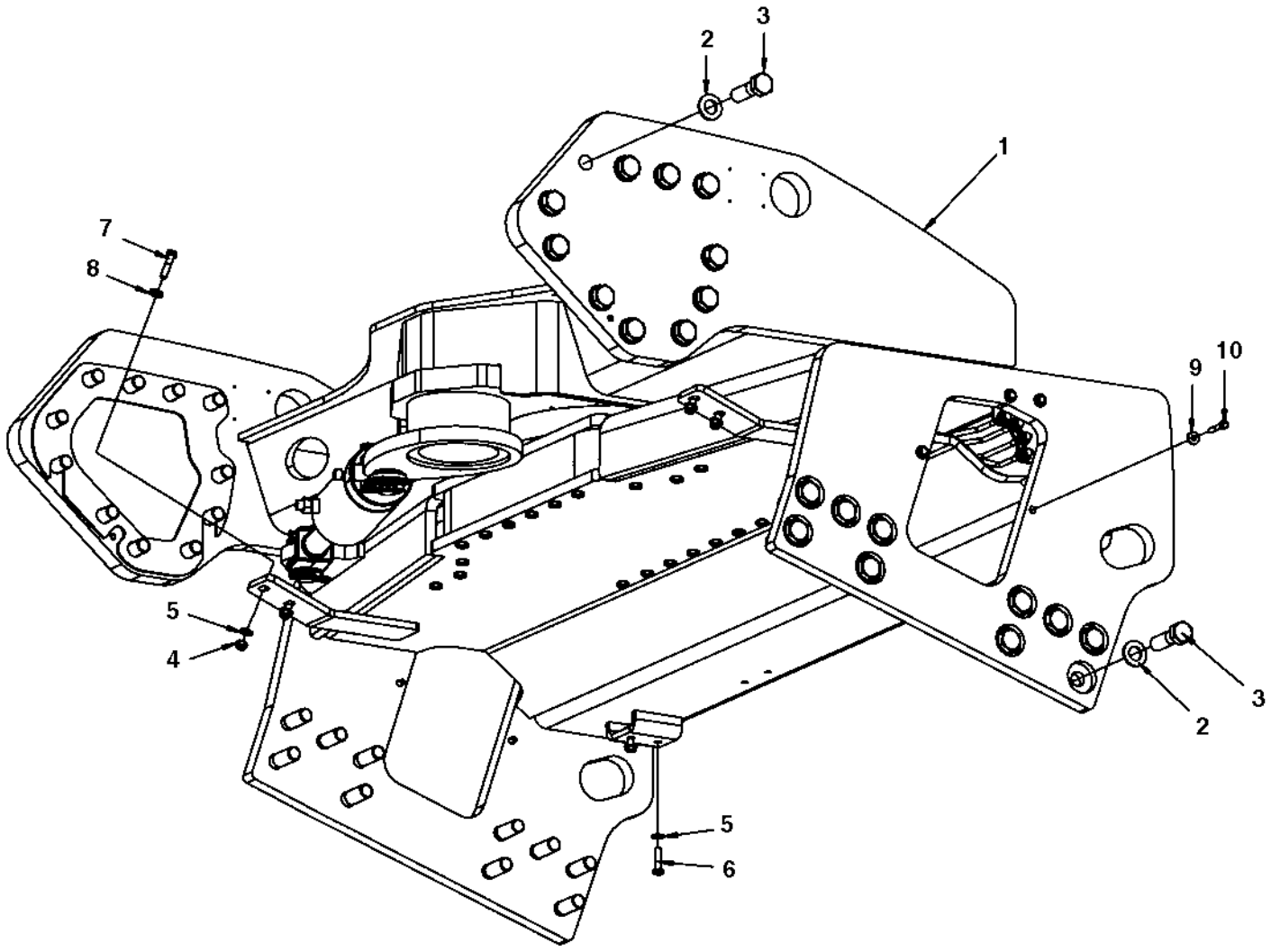

End frame, rear offset

Ref. No.	Part No.	Rem.	Qty	Description	Code
1			1	Frame (Page 142)	
2	904234		42	Washer	
3	500297		42	Screw	M24x80
4	791172		4	Lock nut	
5	904230		8	Washer	
6	500031		4	Screw	
7	500161		4	Screw	
8	904557		4	Washer	
9	904640		4	Washer	
10	500023		4	Screw	M8-1,25x40 8,8

Frame

391619E

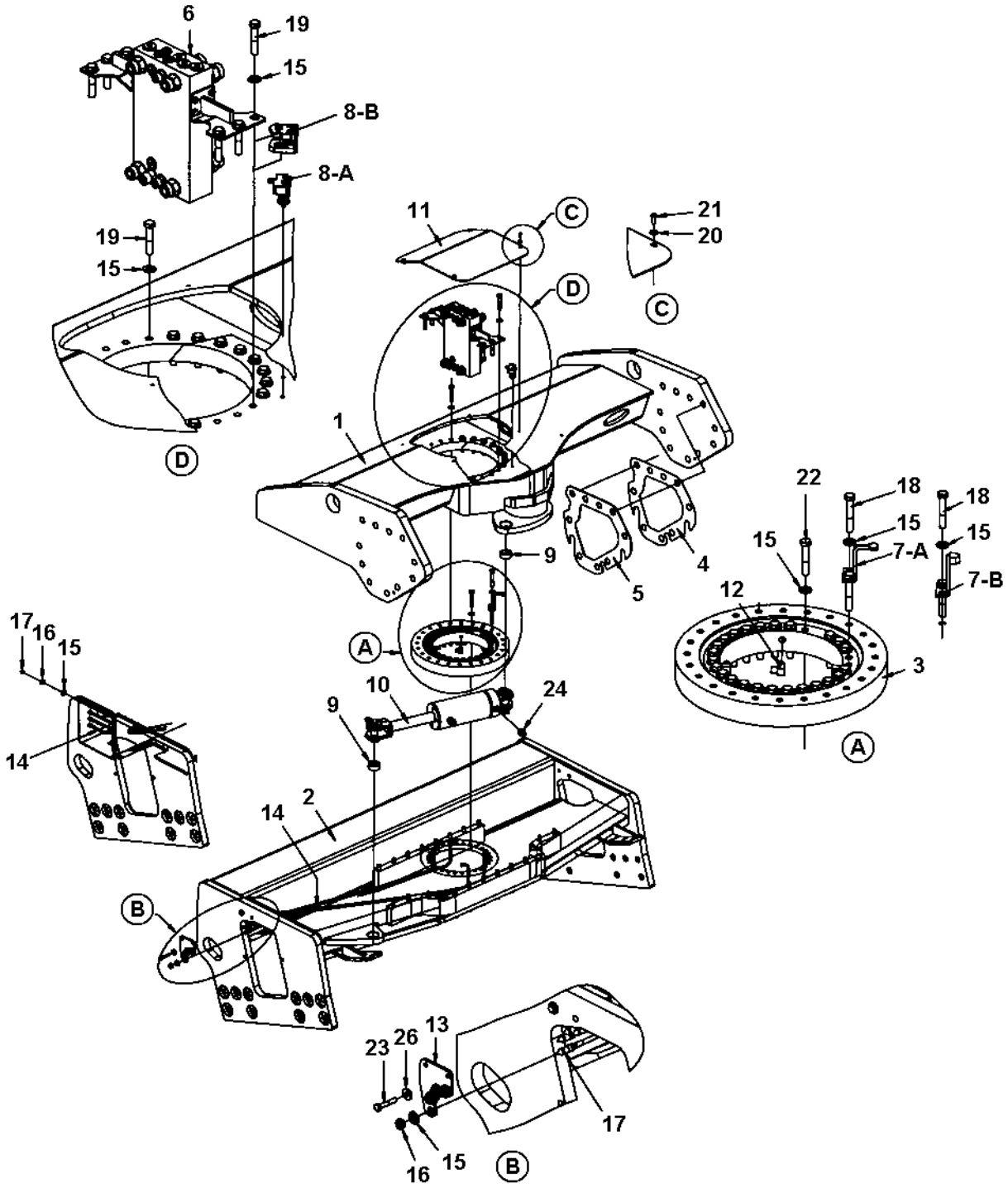

Frame

Ref. No.	Part No.	Rem.	Qty	Description		Code
1	391481		1	Frame		
2	391974		1	Yoke		
3	359192		1	Bearing		
4	390469		N	Shim		
5	390470		N	Shim		
6			1	Connection block (Page 144)		
7-B	395694		1	Cam		
8-B			1	Micro switch (Page 146)		
9	391430		2	Bearing		D
10	391024		1	Steering cylinder (Page 148)		
11	379987		1	Cover		
12	373183		4	Elbow 90		
13	392112		1	Bracket		
14	393345		4	Hydraulic hose		
15	904231		55	Washer		
16	903831		4	Nut		
17	926214		4	Grease fitting		D
18	903735		2	Screw		
19	500175		24	Screw		
20	603001		4	Washer		
21	904206		4	Screw		
22	947712		25	Screw		
23	500024		2	Screw	M8x45	
24	792337		2	Straight connector orfs		
26	904640		2	Washer		

Connection block

390921

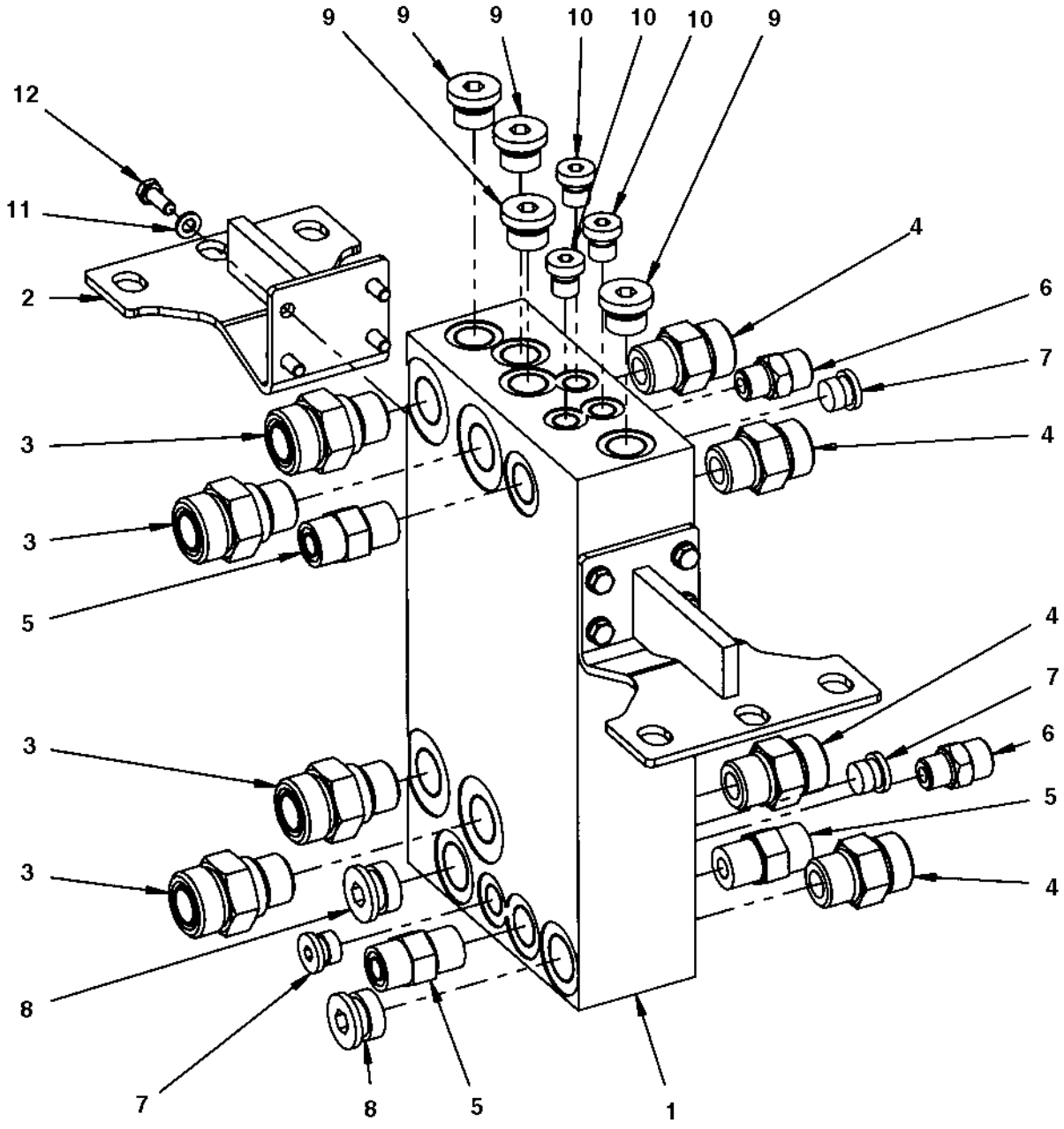

Connection block

Ref. No.	Part No.	Rem.	Qty	Description	Code
1	390463		1	Connection block	
2	391889		2	Bracket	
3	791539		4	Straight connector	
4	791743		4	Straight connector orfs	
5	791799		3	Straight connector orfs	
6	791409		2	Straight connector orfs	
7	792362		3	Steel plug	
8	792296		2	Steel plug	
9	792295		4	Steel plug	
10	904951		3	Plug	
11	904228		8	Washer	
12	500013		8	Screw	

Micro switch

395695

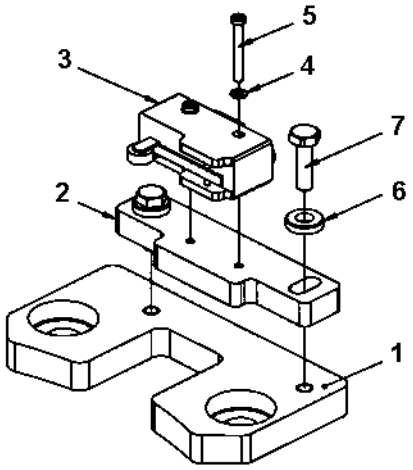

Micro switch

Ref. No.	Part No.	Rem.	Qty	Description		Code
1	396179		1	Bracket		
2	395696		1	Holder plate		
3	930046		1	Micro switch		D
4	904697		2	Washer	3,2x6x0,5	
5	533050		2	Screw		
6	603001		2	Washer		
7	500040		2	Screw		

391024 Steering cylinder

18811

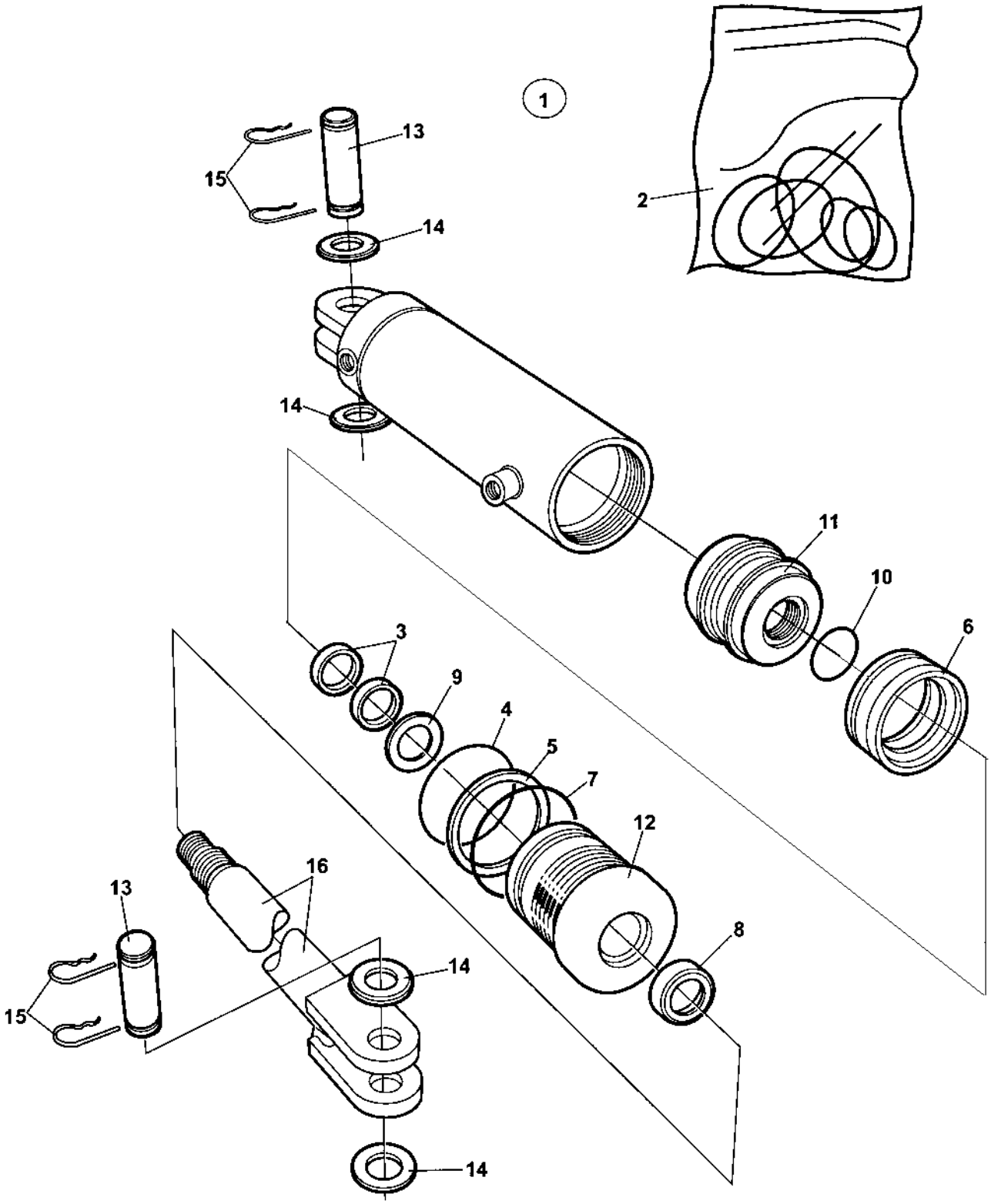

391024 Steering cylinder

Ref. No.	Part No.	Rem.	Qty	Description	Code
1	391024		1	Steering cylinder (Page 148)	
2	950417		1	.Seal kit	
3			2	..Seal	
4			1	..O-ring	
5			1	..Back-up ring	
6			1	..Seal	
7			1	..O-ring	
8			1	..Seal	
9			1	..Seal	
10			1	..O-ring	
11			1	.Piston block	
12			1	.Steering	
13	950222		2	.Shaft	
14			4	.Washer	
15	635061		4	.Hair clip	D
16			1	.Piston rod	D
17			1	.Cylinder	D

Eyelet module

390651

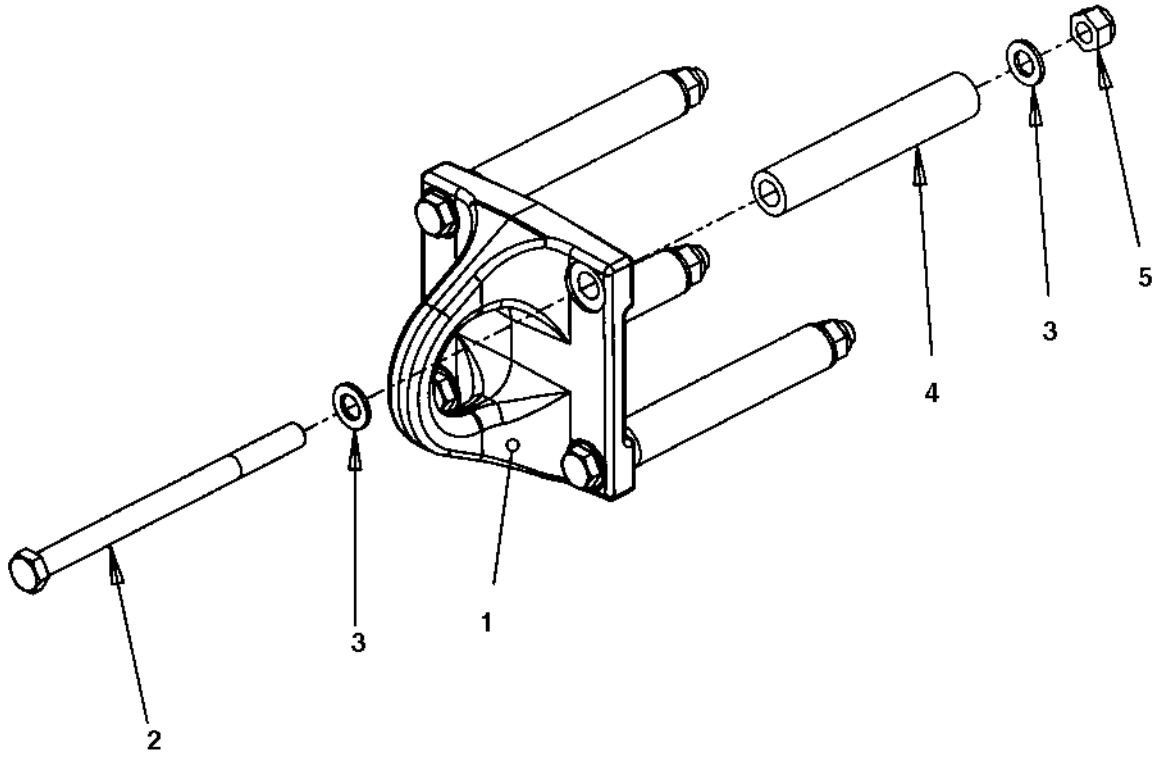

Eyelet module

Ref. No.	Part No.	Rem.	Qty	Description	Code
1	390080		1	Eyelet	
2	904330		4	Screw	
3	904232		8	Washer	
4	390652		4	Spacer sleeve	
5	902297		4	Lock nut	

Eyelet module

392464

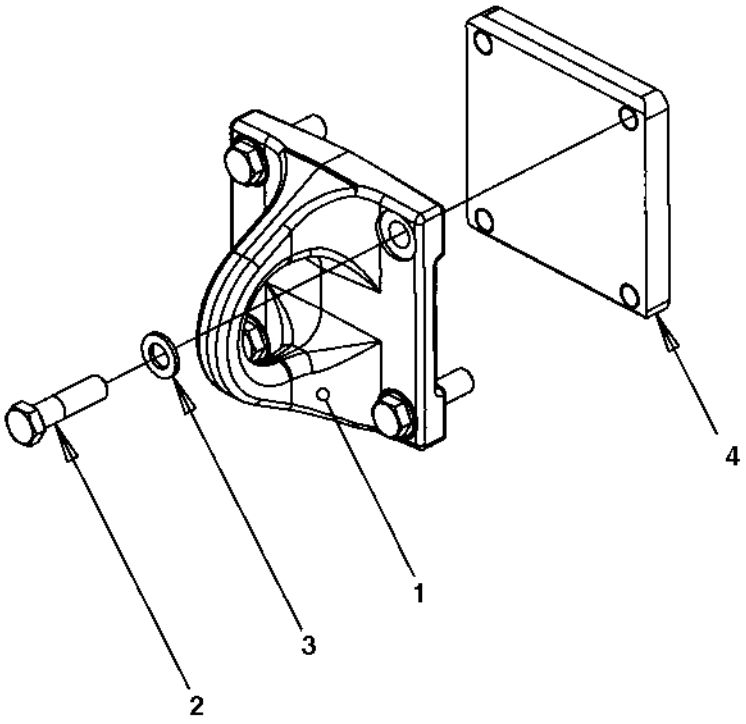

Eyelet module

Ref. No.	Part No.	Rem.	Qty	Description	Code
1	390080		1	Eyelet	
2	500134		4	Screw	
3	904232		4	Washer	
4	390072		1	Holder plate	

SMV-sign module

392289

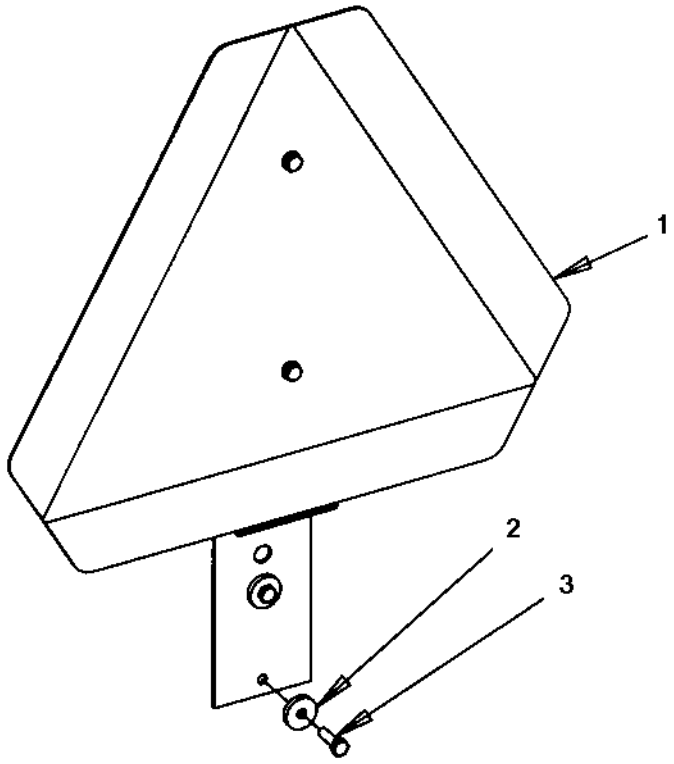

SMV-sign module

Ref. No.	Part No.	Rem.	Qty	Description	Code
1			1	SMV-sign (Page 156)	
2	904735		2	Washer	
3	500040		2	Screw	

SMV-sign

392290

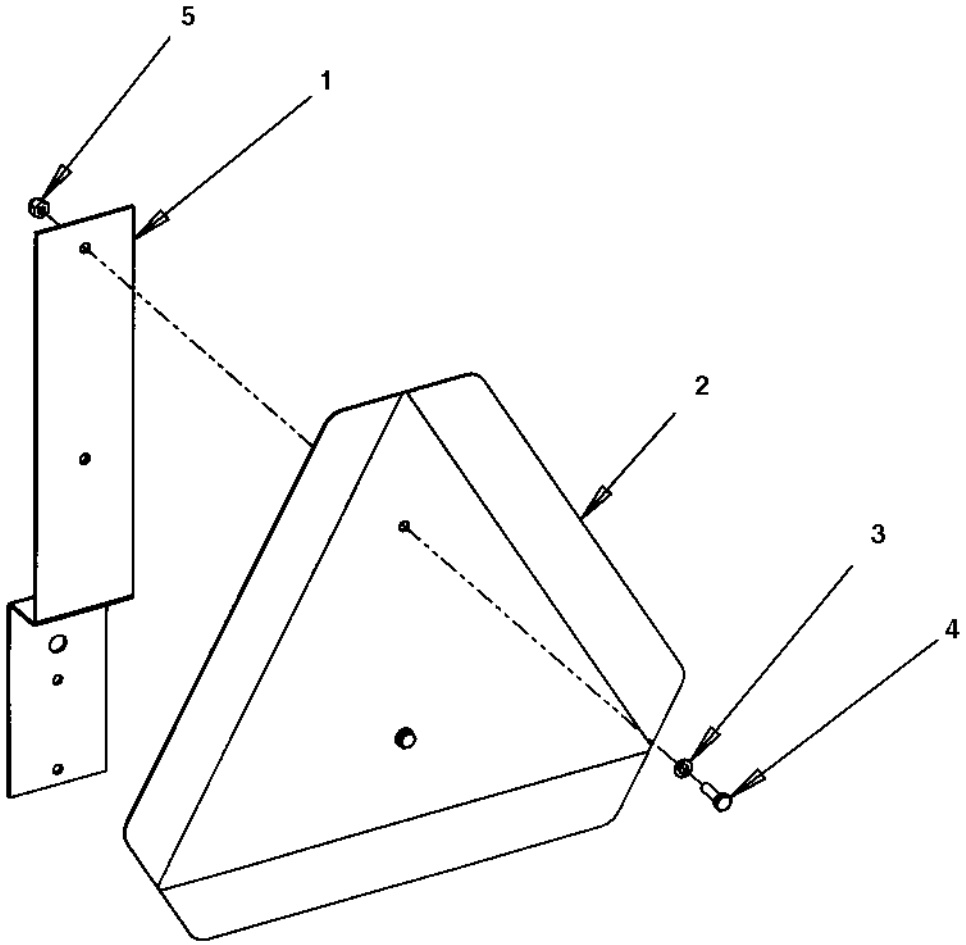

SMV-sign

Ref. No.	Part No.	Rem.	Qty	Description	Code
1	392291		1	Holder	
2	476019		1	SMV sign	D
3	904228		2	Washer	
4	500040		2	Screw	
5	586002		2	Lock nut	

Drum

Ref. No.	Part No.	Rem.	Qty	Description	Code
1			2	Drum (Page 160)	

Drum

DRUM

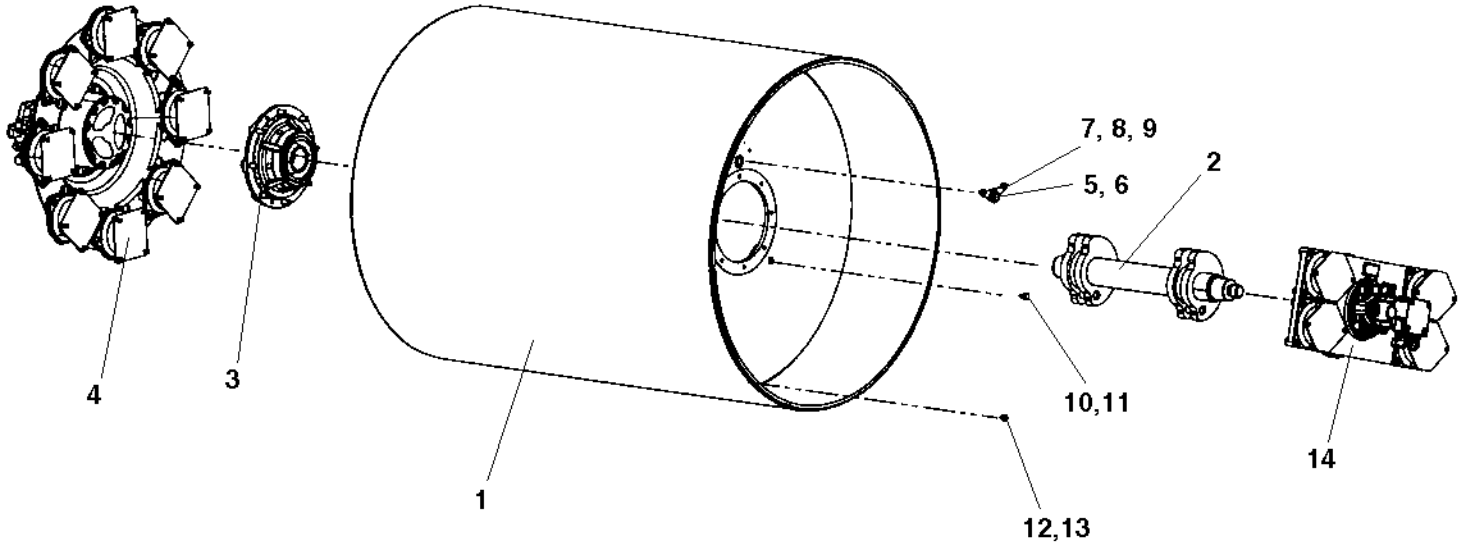

Drum

Ref. No.	Part No.	Rem.	Qty	Description		Code
1	379749		1	Drum		
2	391106		1	Eccentric shaft		
	391109		1	Eccentric shaft	CE	
3			1	Drum bearing module (Page 162)		
4			1	Propulsion motor module (Page 166)		
5	343744		1	Magnetic plug		D
6	162017		1	Seal ring		D
7	359955		1	Drop plate		
8	904229		2	Washer		
9	500019		2	Screw		
10	344196		1	Plug	M12	D
11	162027		1	Sealing		D
12	500163		1	Screw	M12x16	
13	904231		1	Washer		
14			1	Vibration motor module (Page 172)		

Drum bearing module

379800

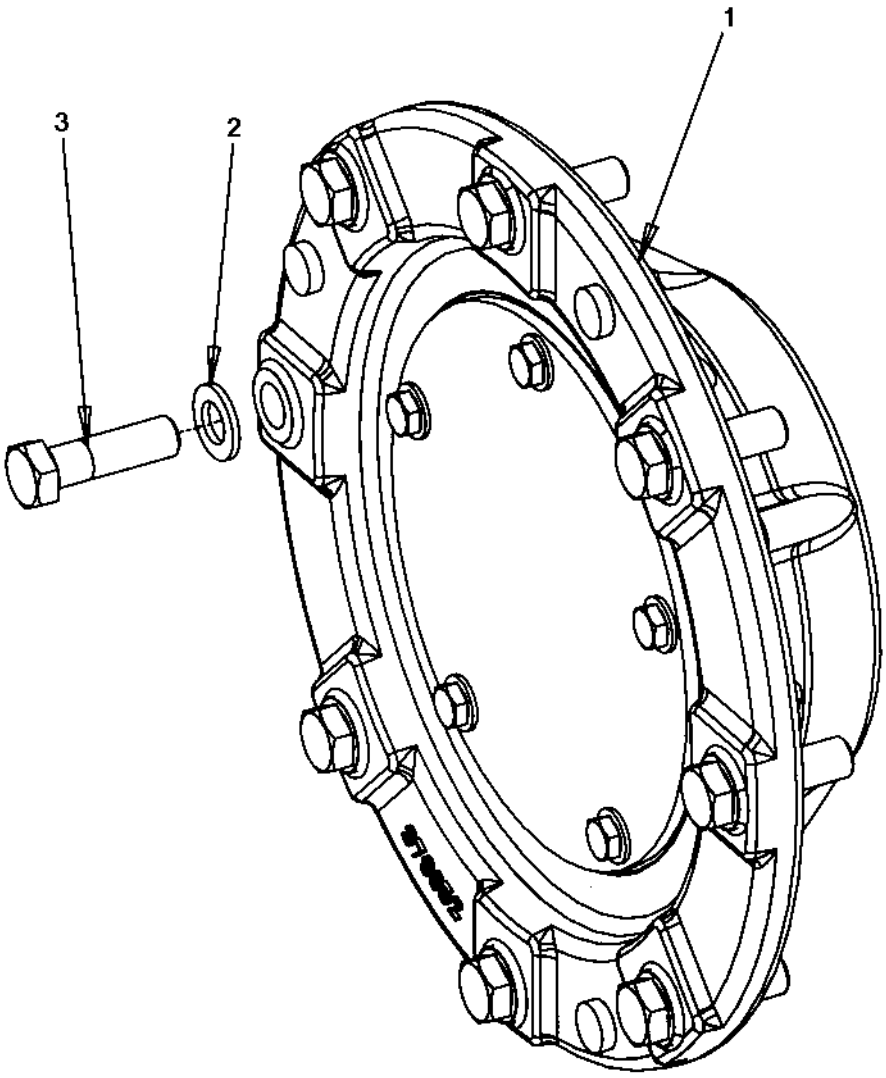

Drum bearing module

Ref. No.	Part No.	Rem.	Qty	Description		Code
1			1	Drum bearing (Page 164)		
2	904232		8	Washer		
3	500070		8	Screw	M16x50	

Drum bearing

392167

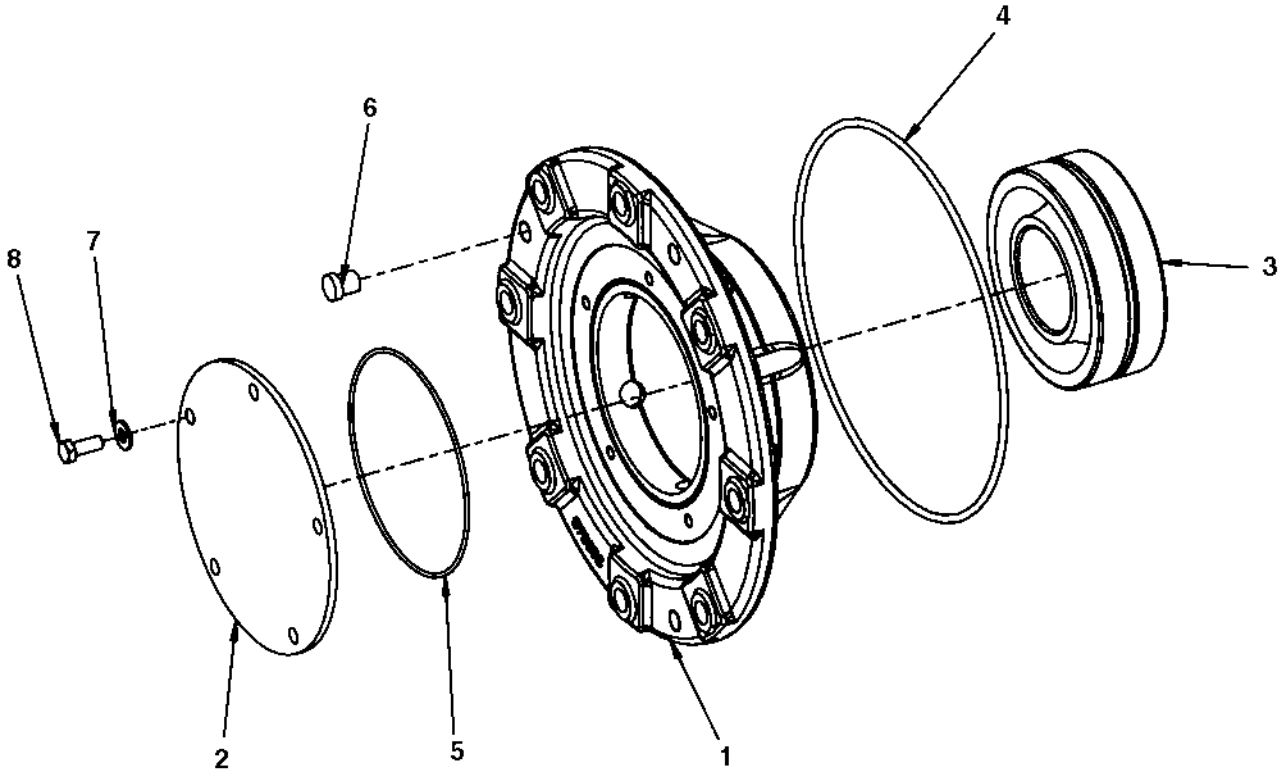

Drum bearing

Ref. No.	Part No.	Rem.	Qty	Description	Code
1	379652		1	Bearing housing	
2	391029		1	Cover	
3	792270		1	Spherical roller bearing	D
4	160344		1	O-ring 70	D
5	160045		1	O-ring 70	
6	900775		3	Plug	
7	904230		5	Washer	
8	500028		5	Screw	

Propulsion motor module

379802

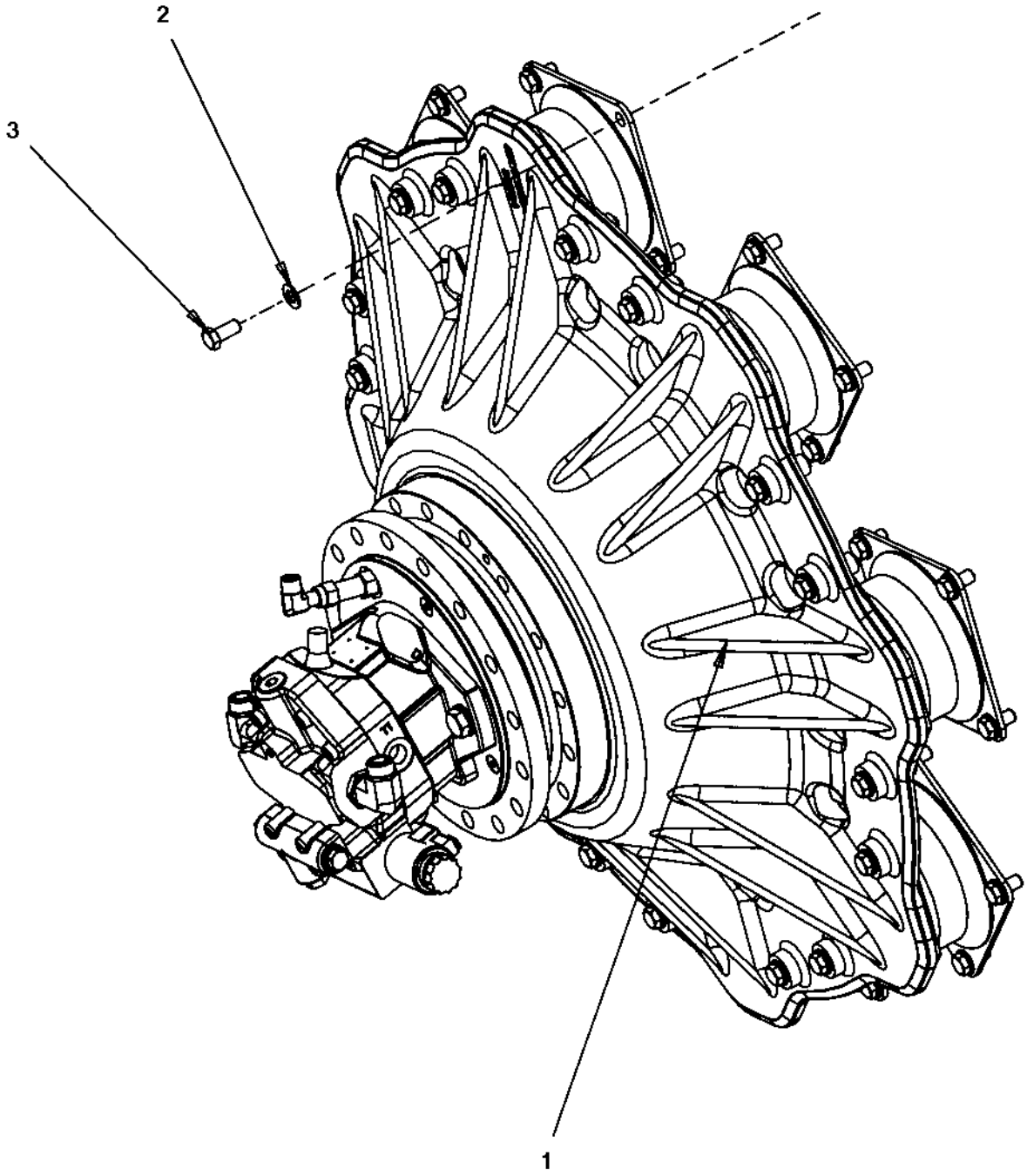

Propulsion motor module

Ref. No.	Part No.	Rem.	Qty	Description	Code
1			1	Drive unit (Page 168)	
2	904231		32	Washer	
3	500051		32	Screw	

Drive unit

392150

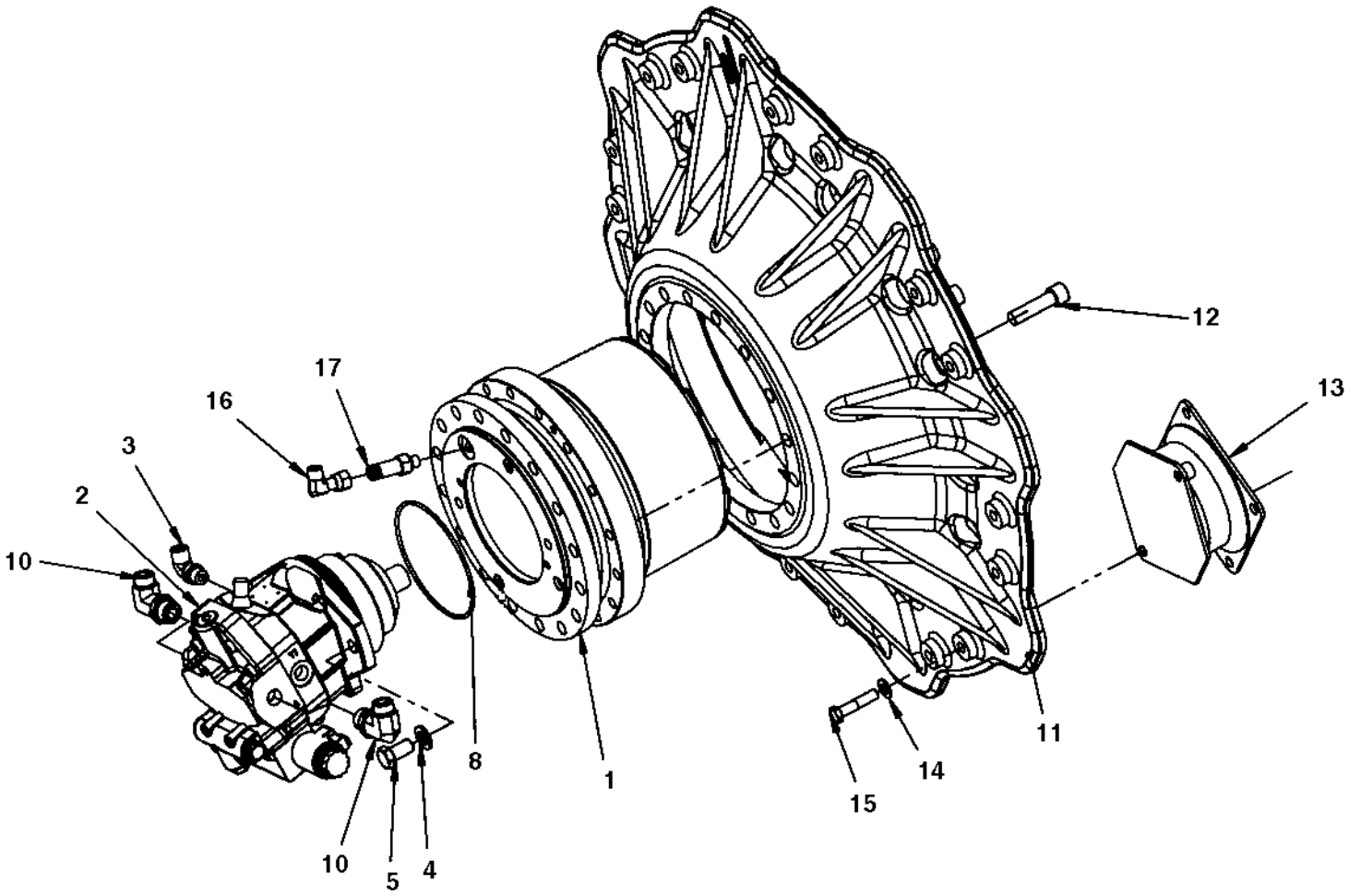

Drive unit

Ref. No.	Part No.	Rem.	Qty	Description		Code
1	390604		1	Drum gear (Page 170)		C
2	390603		1	Hydraulic motor		C
3	792151		1	Elbow adapter 90		
4	904232		2	Washer		
5	500057		2	Screw	M16-2x30 8,8	
8	160227		1	O-ring		D
10	792331		2	Elbow 90 orfs		
11	391724		1	Drive disc		
12	792506		16	Screw		
13	394250		8	Shock absorber		B
14	904231		16	Washer		
15	925519		16	Screw		
16	791401		1	Elbow 90, O-ring with swivel		
17	792507		1	Straight connector orfs		

390604 Drum gear

390604

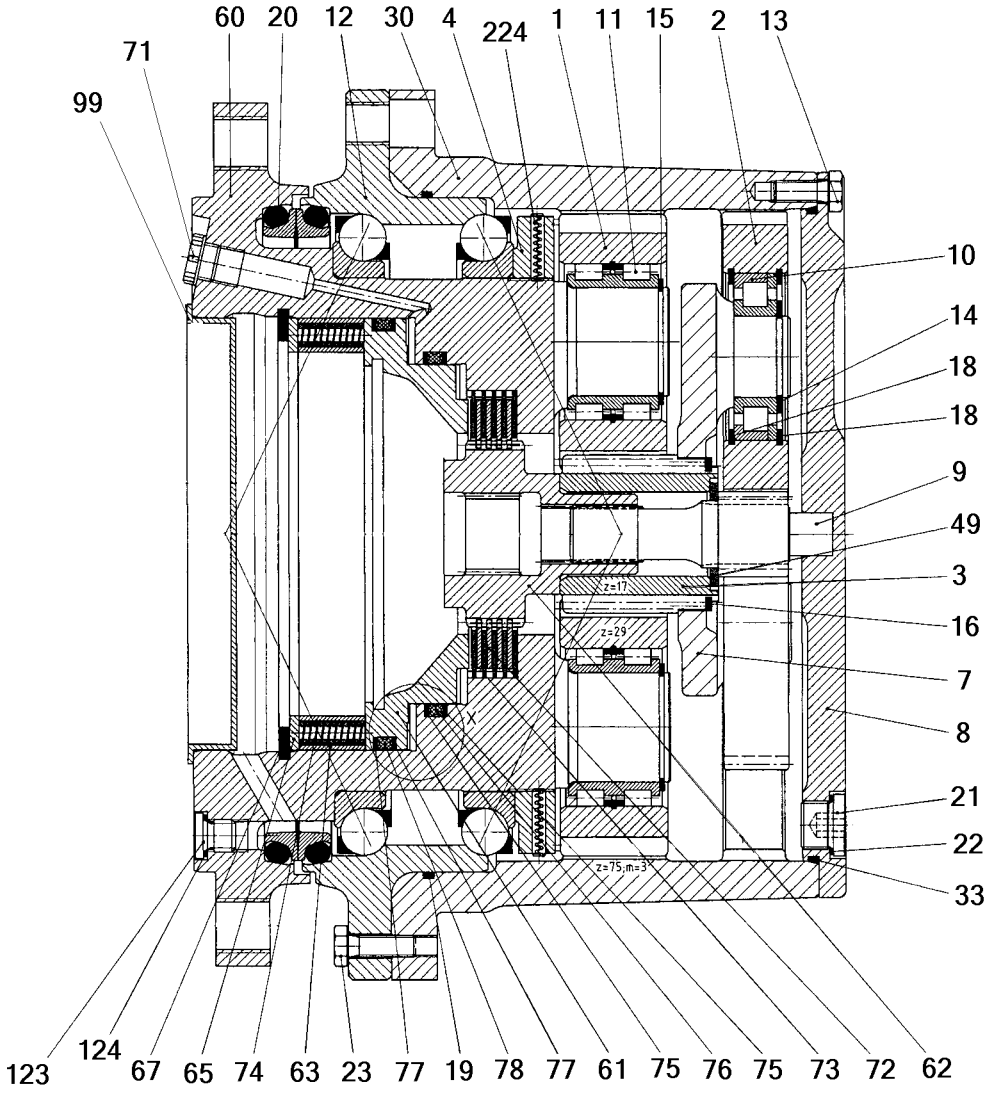

390604 Drum gear

Ref. No.	Part No.	Rem.	Qty	Description	Code
	390604		1	Drum gear (Page 170)	C
1			4	.Planet gear	C
2			3	.Planet gear	C
3			1	.Sun gear	C
4			1	.Shaft nut	C
7			1	.Planet carrier	C
8			1	.Cover	C
9			1	.Cylindrical roller	C
10	950520		3	.Cylindrical roller bearing	
11	950521		4	.Cylindrical roller bearing	
12	950522		1	.Ball bearing	
13			12	.Screw	
14			3	.Snap ring	
15			4	.Snap ring	
16			1	.Snap ring	
18			6	.Snap ring	
19	950523		1	.O-ring	
20	950524		1	.Seal	
21	950525		2	.Plug	
22	950492		2	.Seal ring	
23			2	.Screw	
30			1	.Ring gear	
33	950526		1	.O-ring	
44			1	.Sun gear shaft	
49			1	.Drum flange	
60			1	.Spindle	
61			1	.Piston	
62			1	.Coupler	
63			1	.Spacer	
65			1	.Disc	
67			1	.Snap ring	
71	950495		1	.Plug	
72	950527		4	.Inner disc	
73	950528		5	.Outer disc	
74			28	.Pressure spring	
75	950529		2	.Supporting ring	
76			1	.Supporting ring	
77	950531		2	.Supporting ring	
78	950532		1	.Piston seal	
99			1	.Plug	
123	950533		3	.Plug	
124	950534		3	.Seal ring	
224			2	.Spring dowel sleeve	

Vibration motor module

379803

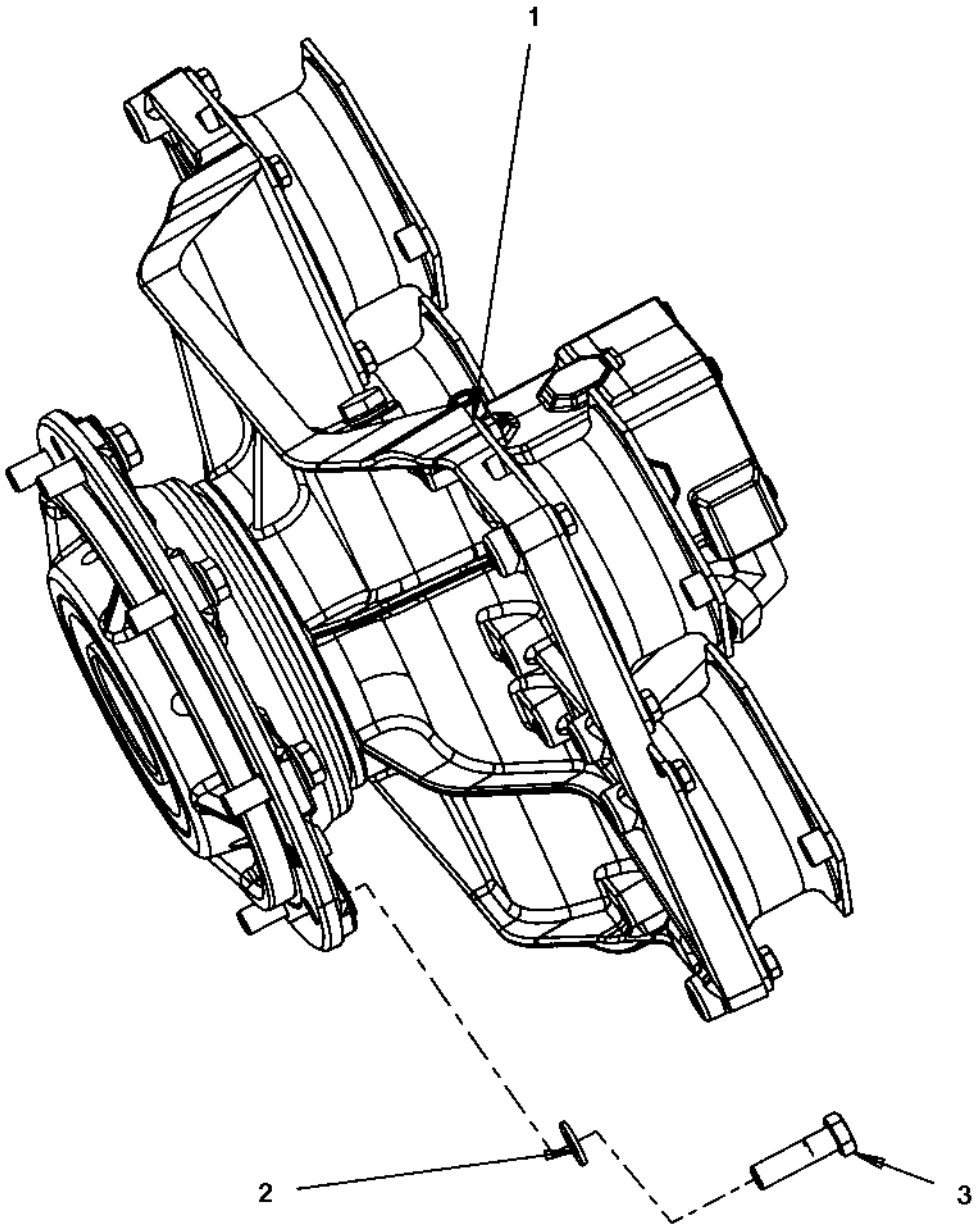

Vibration motor module

Ref. No.	Part No.	Rem.	Qty	Description	Code
1			1	Vibrating unit (Page 174)	Sauer
2	904232		8	Washer	
3	500070		8	Screw	M16x50

Vibrating unit Sauer

396358

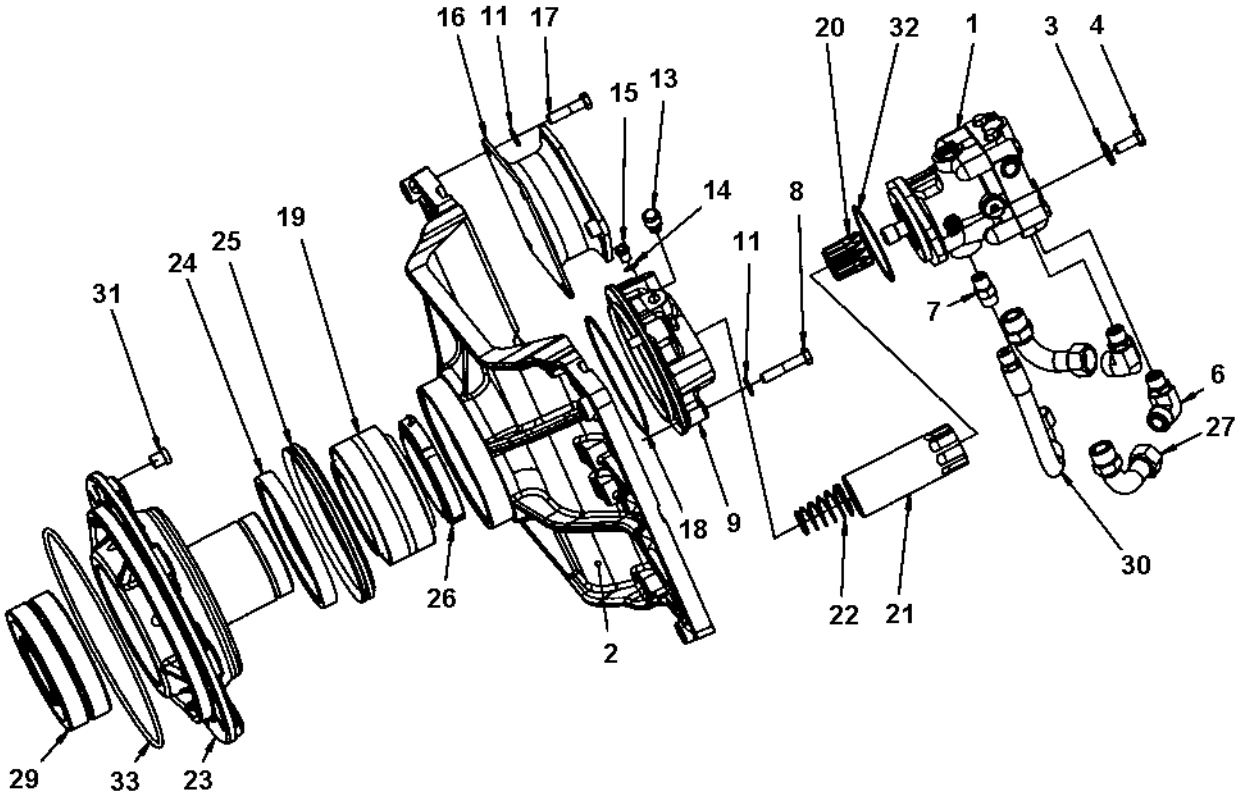

Vibrating unit Sauer

Ref. No.	Part No.	Rem.	Qty	Description	Code
1	395915		1	Hydraulic motor	
2	392364		1	Holder plate	
3	904213		2	Washer	
4	500046		2	Screw	
6	792746		2	Connector elbow 90 orfs	
7	791799		1	Straight connector orfs	
8	500049		4	Screw	
9	390160		1	Motor adapter	
11	904231		20	Washer	
13	926736		1	Breather	B
14	162027		1	Sealing	D
15	903726		1	Steel plug threaded	
16	394251		4	Shock absorber	
17	500195		16	Screw	
18	160105		1	O-ring 70	D
19	116041		1	Taper roller bearing	D
20	340862		1	Splined sleeve	
21	381027		1	Splined sleeve	
22	349715		1	Spring	
23	379650		1	Drum bearing housing	
24	386272		1	Sealing	D
25	929447		1	V-ring	D
26	390897		1	Shaft nut	
27	392748		2	Connector	
29	792270		1	Spherical roller bearing	D
30	484271		1	Hydraulic hose	
31	900775		3	Plug	
32	160279		1	O-ring	D
33	160344		1	O-ring 70	D

Engine

Ref. No.	Part No.	Rem.	Qty	Description	Code
8				Engine room (Page 178)	

Engine room

AR040

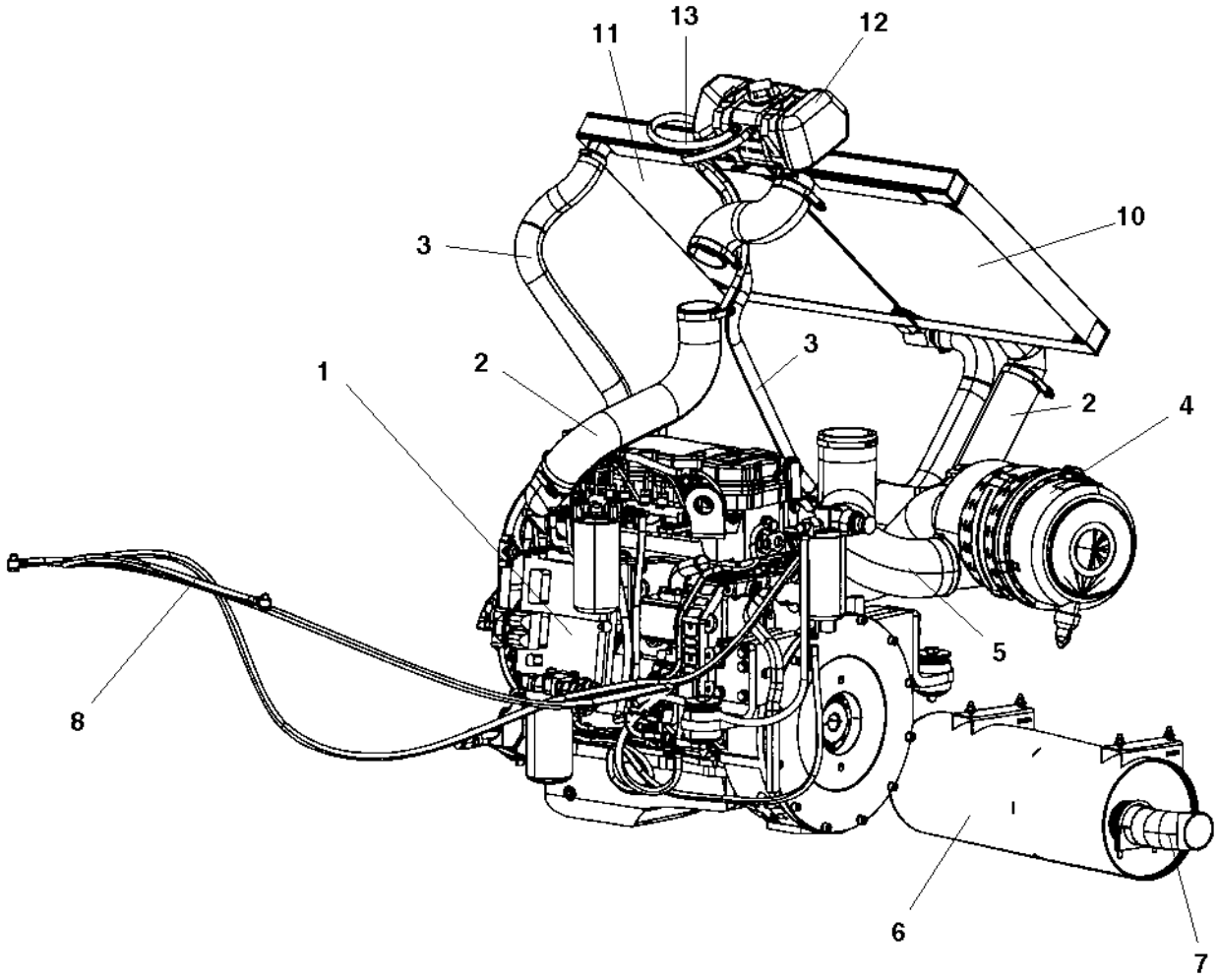

Engine room

Ref. No.	Part No.	Rem.	Qty	Description	Code
1				Engine (Page 180)	
2				Air cooler hoses (Page 190)	
3				Water cooler hoses (Page 192)	
4				Air cleaner module (Page 194)	
5				Air cleaner hose module (Page 196)	
6				Muffler (Page 198)	
7				Exhaust pipe module (Page 200)	
8				Fuel hose module (Page 202)	
10				Charge air cooler (Page 204)	
11				Water cooler (Page 206)	
12				Expansion tank assembly (Page 210)	
13				Coolant hoses (Page 214)	

Engine

394502

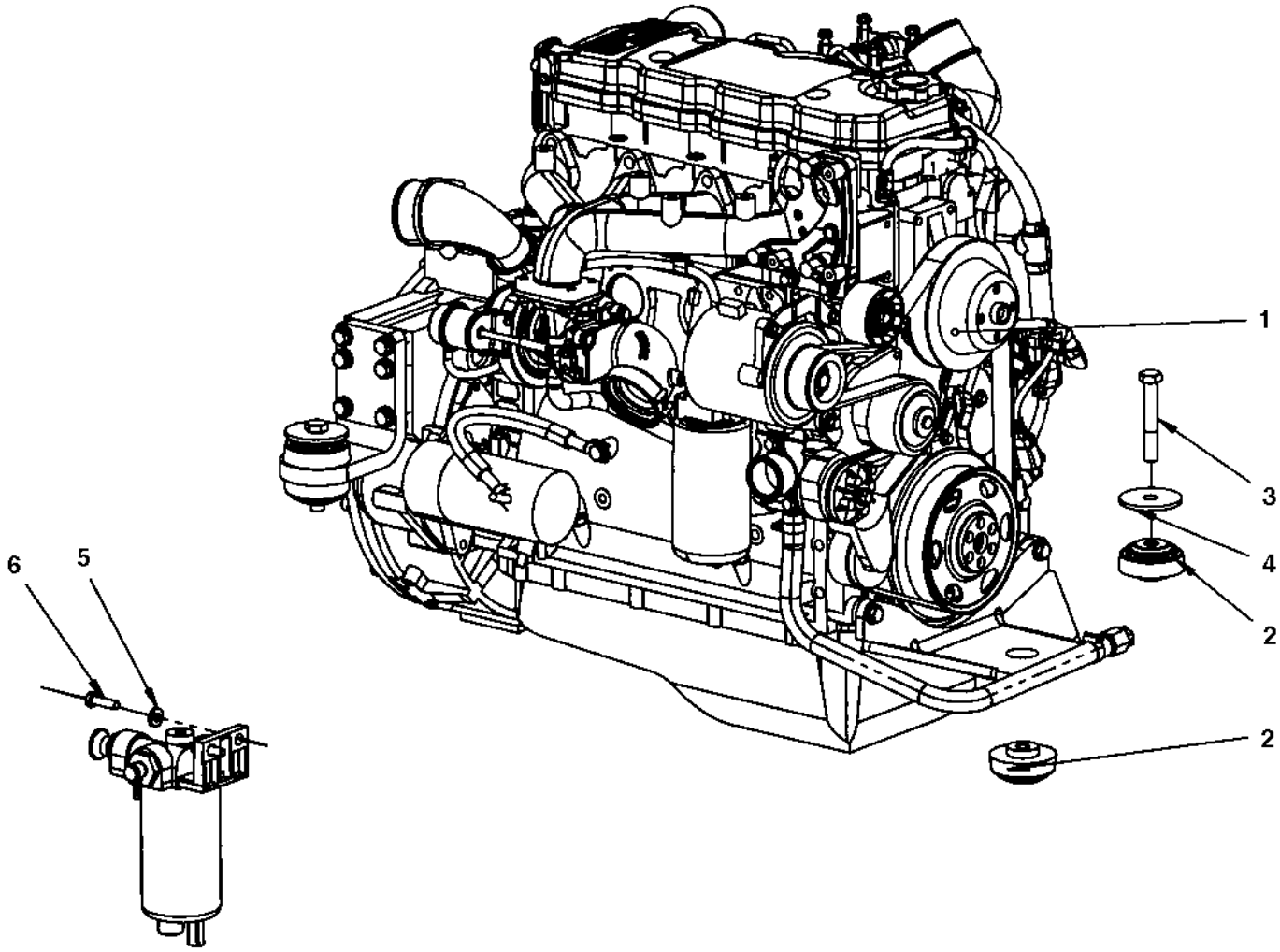

Engine

Ref. No.	Part No.	Rem.	Qty	Description	Code
1			1	Engine module (Page 182)	
2	391165		6	Shock absorber	
3	500107		3	Screw	
4	345666		3	Steel spacer	
5	904557		2	Washer	
6	500030		2	Screw	

Engine module

394505

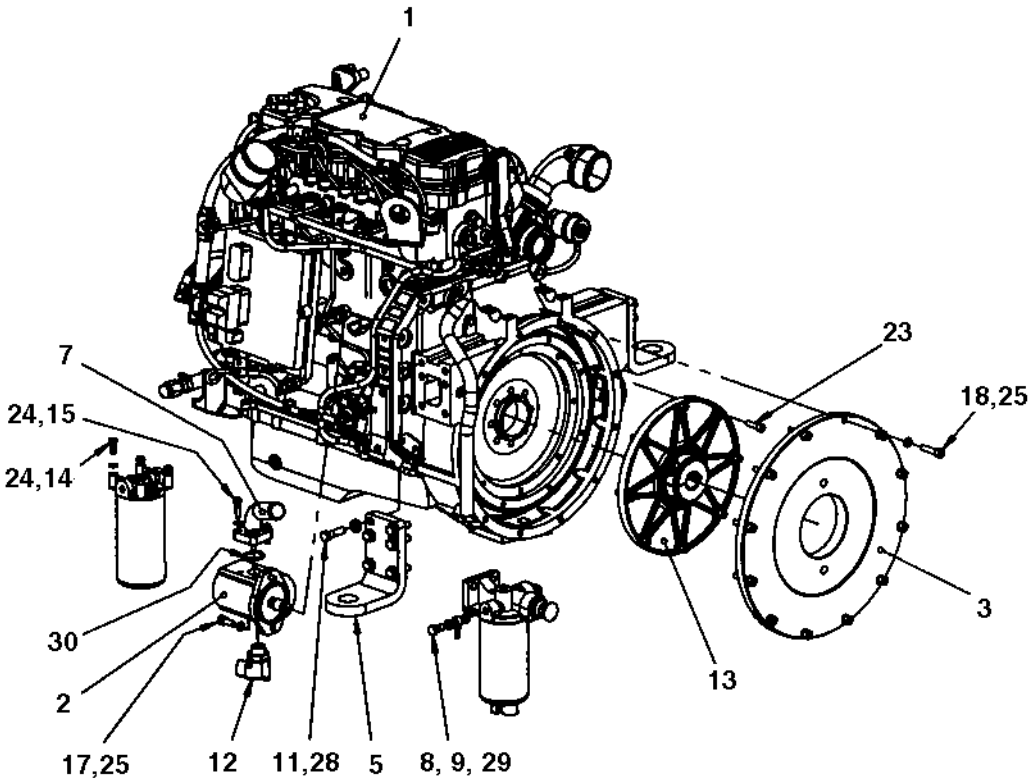

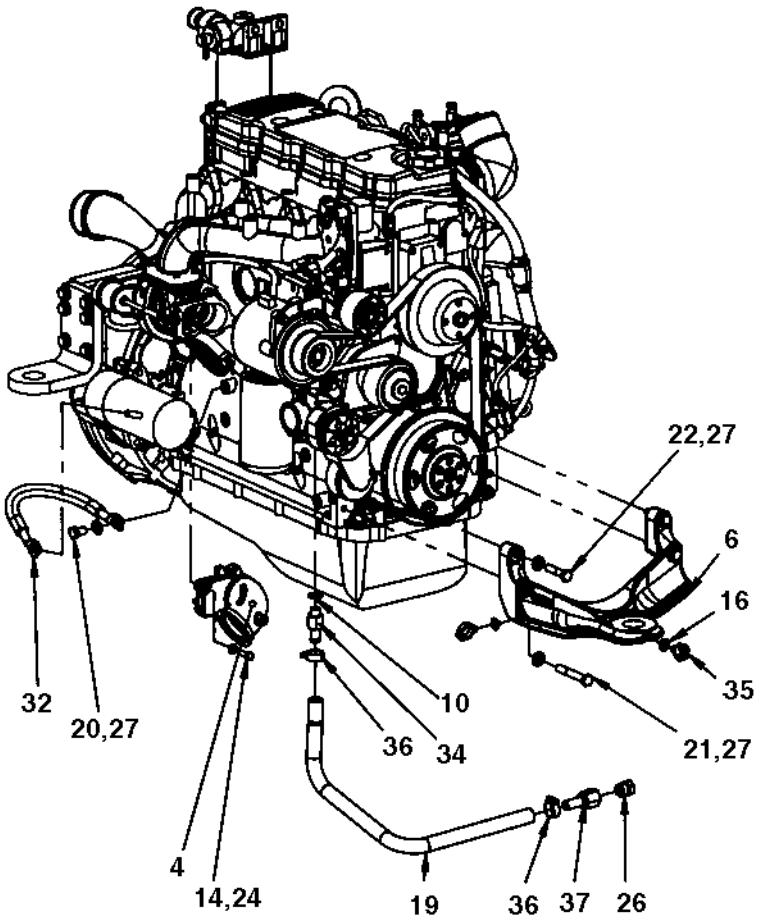

Engine module

Ref. No.	Part No.	Rem.	Qty	Description		Code
1	390832		1	Diesel engine (Page 184)	82kW	
	390831		1	Diesel engine (Page 186)	93kW	
	379624		1	Diesel engine (Page 188)	113kW	
2	391020		1	Hydraulic pump		
3	394169		1	Pump bracket		
4	390618		1	Exhaust connection		
5	390233		2	Engine bracket		
6	393592		1	Engine bracket		
7	390018		1	Suction pipe		
8	792603		2	Quick connect coupling		
9	500049		2	Screw		
10	162011		1	Washer, sealing		D
11	500056		8	Screw		
12	791698		1	Elbow 90, O-ring with swivel		
13	391358		1	Coupling		
14	500021		8	Screw		
15	508048		4	Screw		
17	508096		2	Screw		
18	508080		12	Screw		
19	205112	A	1XL	Coolant hose		
20	500035		1	Screw	M12x020H	
21	500197		2	Screw	12x90	
23	509025		8	Screw	3/8-16UNCx32 8,8	
24	904229		12	Washer		
25	904637		14	Washer		
26	232231		1	Plug		
27	904231		5	Washer		
28	904703		8	Washer		
30	813429		1	O-ring		
32	335607		1	Connection cable, coarse		
34	391303		1	Hose connection		
35	792418		2	Wiring clip		
36	313004		2	Hose clamp		
37	792502		1	Hose connection		
38	394322		1	Gasket		

A) L=0,6 m

390832 Diesel engine 82kW

390832

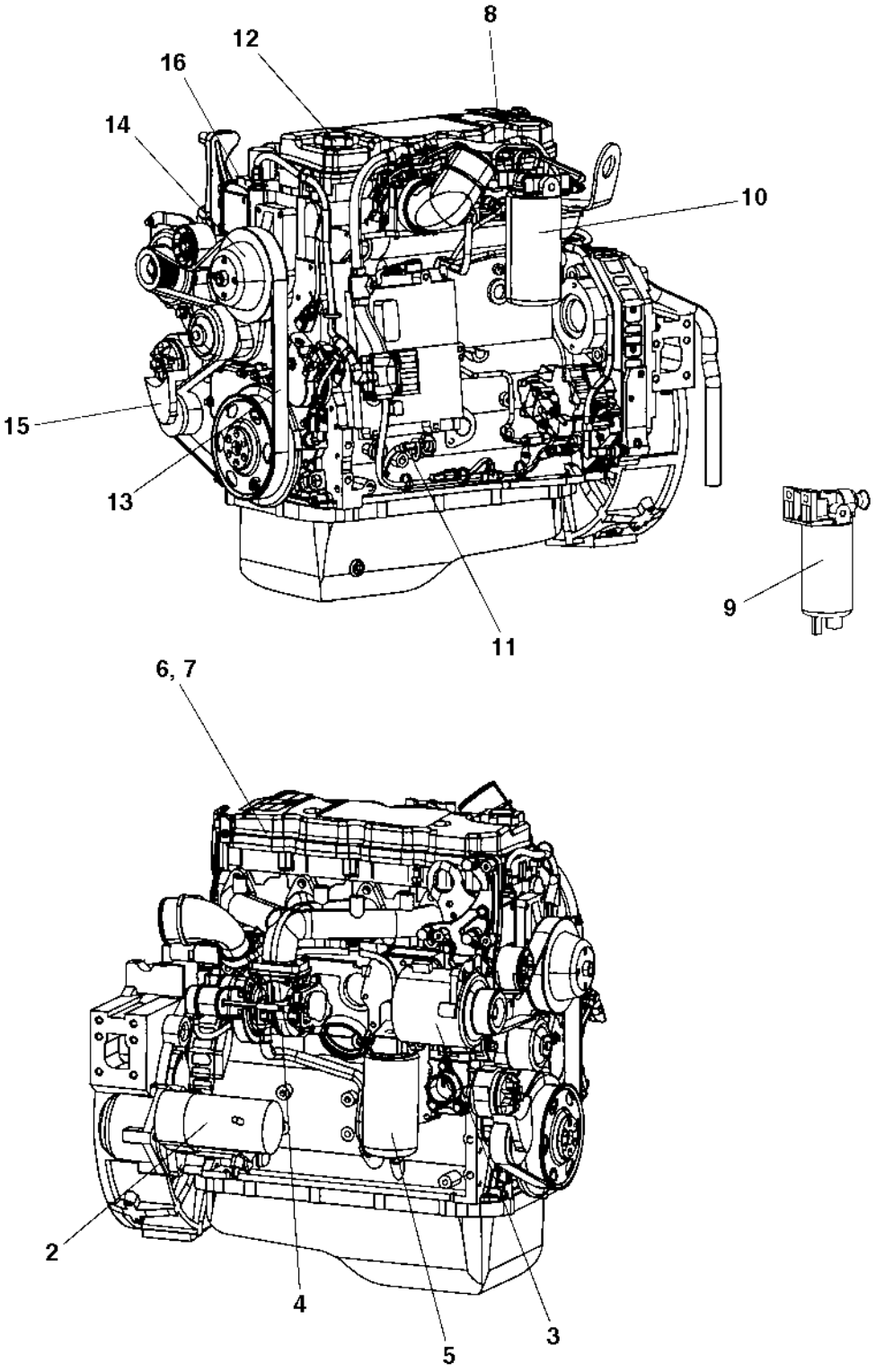

390832 Diesel engine 82kW

Ref. No.	Part No.	Rem.	Qty	Description		Code
1	390832		1	Diesel engine (Page 184)	82kW	
2	945767		1	.Starter		C
3	945768		1	.Alternator		C
4			1	.Turbo charger cpl		C
5	945145		1	.Oil filter element		A
6	945760		1	.Valve cover gasket		
7	945769		1	.Piston ring set		D
8	945626		1	.Injector		
9	945147		1	.Pre-fuel filter element		A
10	945624		1	.Fuel filter element		A
11	945770		1	.Oil dipstick		
12	945771		1	.Oil cap		
13	945772		1	.V-belt		B
14	945773		1	.V- belt pulley		
15	945774		1	.Belt tightener		
16	945887		1	.Sensor, Water temp		

390831 Diesel engine 93kW

390831

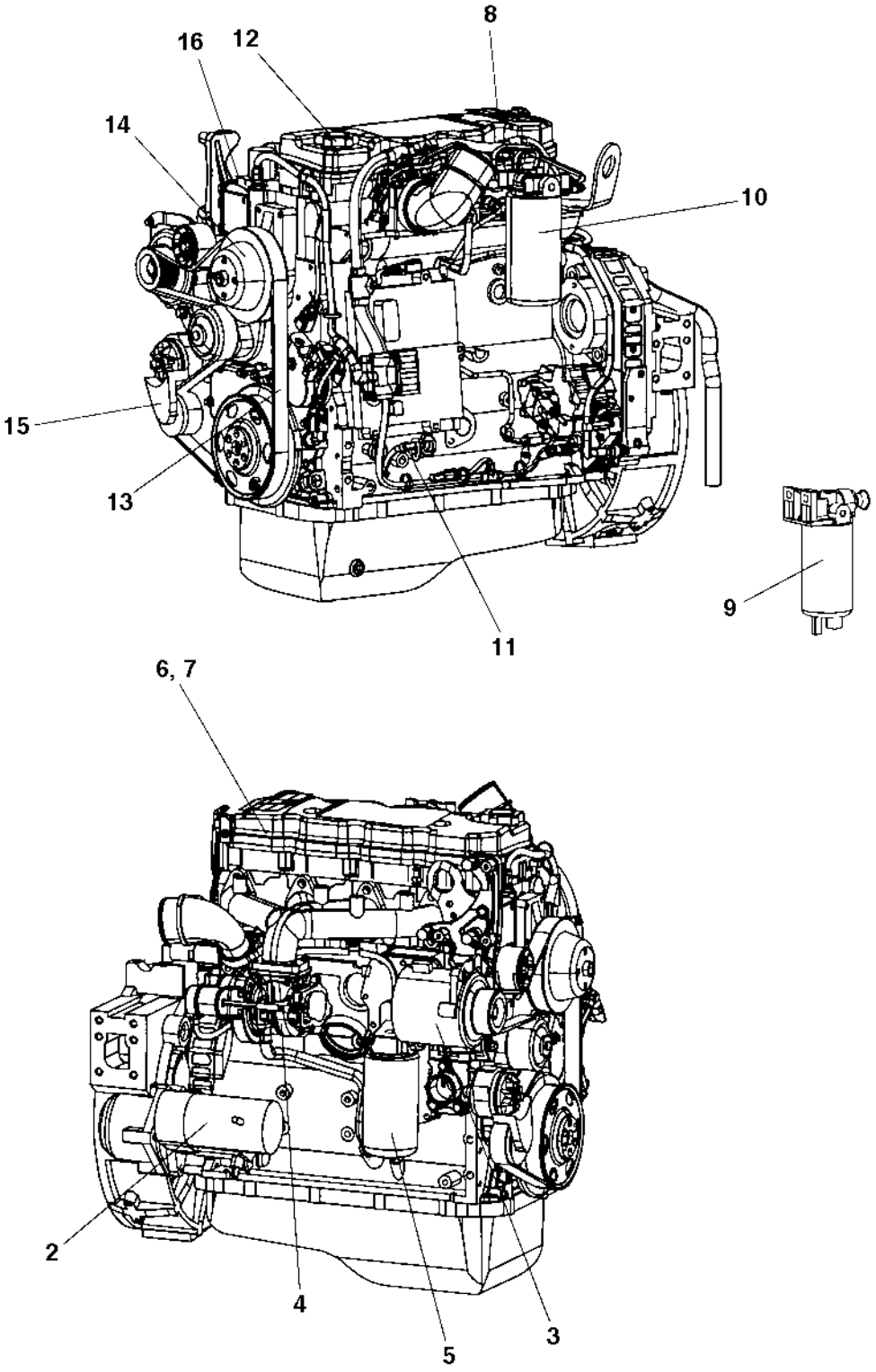

390831 Diesel engine 93kW

Ref. No.	Part No.	Rem.	Qty	Description		Code
1	390831		1	Diesel engine (Page 186)	93kW	
2	945767		1	.Starter		C
3	945768		1	.Alternator		C
4			1	.Turbo charger cpl		C
5	945145		1	.Oil filter element		A
6	945760		1	.Valve cover gasket		
7	945769		1	.Piston ring set		D
8	945626		1	.Injector		
9	945147		1	.Pre-fuel filter element		A
10	945624		1	.Fuel filter element		A
11	945770		1	.Oil dipstick		
12	945771		1	.Oil cap		
13	945772		1	.V-belt		B
14	945773		1	.V- belt pulley		
15	945774		1	.Belt tightener		
16	945887		1	.Sensor, Water temp		

379624 Diesel engine 113kW

379624

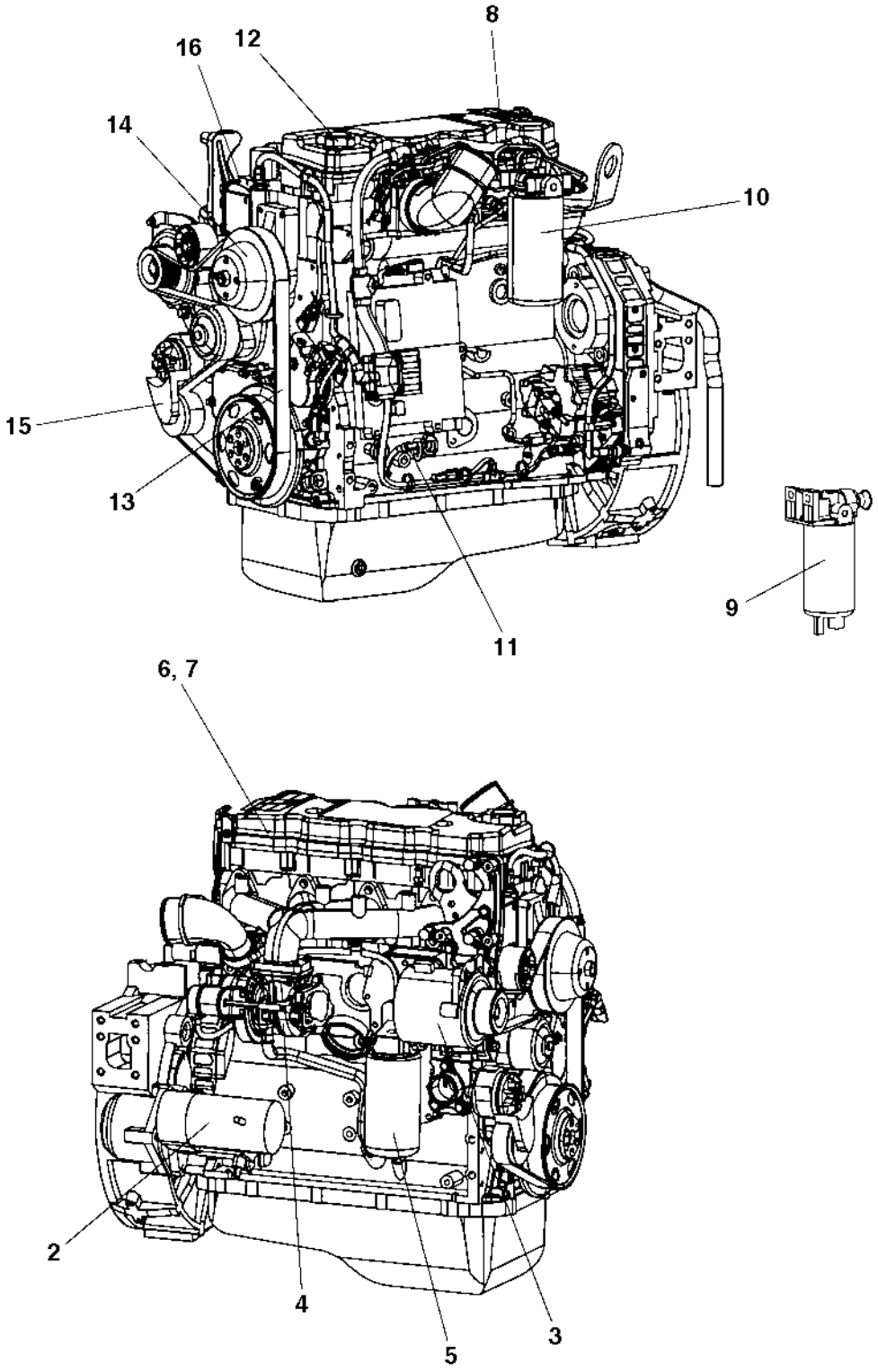

379624 Diesel engine 113kW

Ref. No.	Part No.	Rem.	Qty	Description		Code
1	379624		1	Diesel engine (Page 188)	113kW	
2	945767		1	.Starter		C
3	945768		1	.Alternator		C
4			1	.Turbo charger cpl		C
5	945145		1	.Oil filter element		A
6	945760		1	.Valve cover gasket		
7	945769		1	.Piston ring set		D
8	945626		1	.Injector		
9	945147		1	.Pre-fuel filter element		A
10	945624		1	.Fuel filter element		A
11	945770		1	.Oil dipstick		
12	945771		1	.Oil cap		
13	945772		1	.V-belt		B
14	945773		1	.V- belt pulley		
15	945774		1	.Belt tightener		
16	945887		1	.Sensor, Water temp		

Air cooler hoses

391594

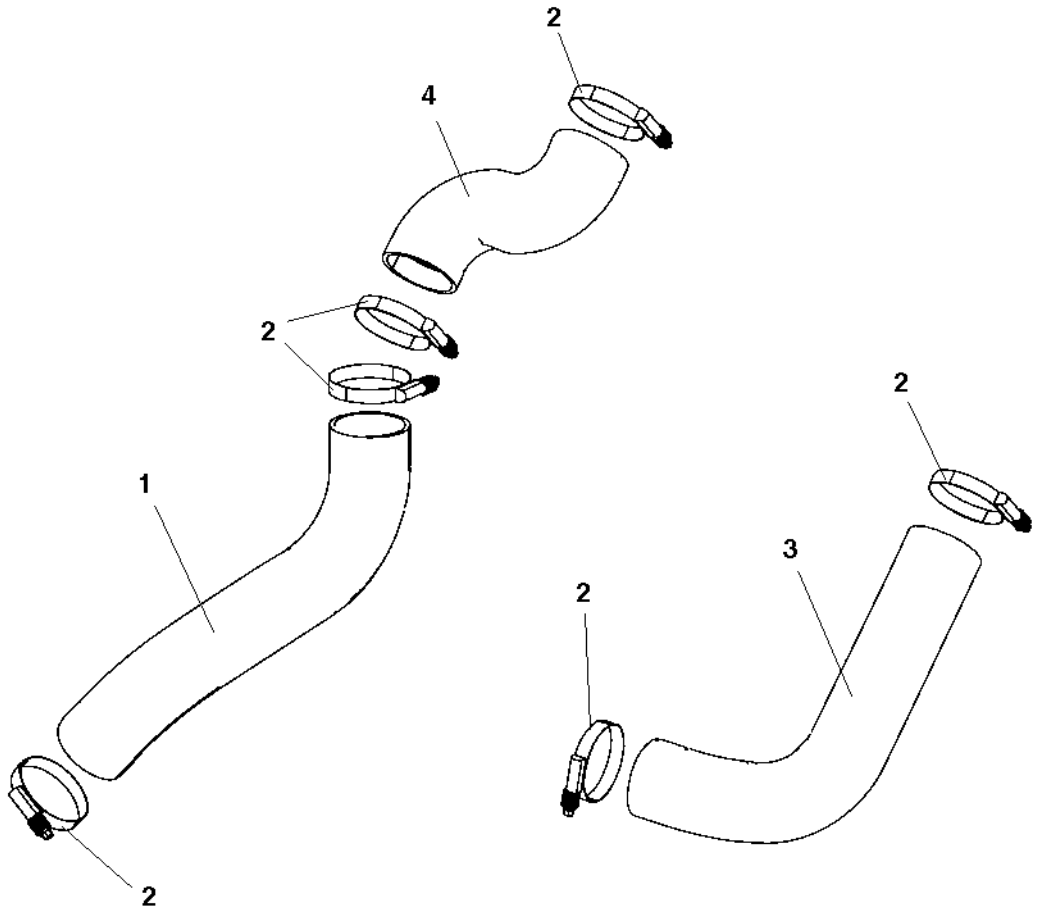

Air cooler hoses

Ref. No.	Part No.	Rem.	Qty	Description	Code
1	390020		1	Charge air hose	
2	386966		6	Hose clamp	2.3/4"-3.5/8"
3	390019		1	Charge air hose	
4	391263		1	Charge air hose	

Water cooler hoses

394269

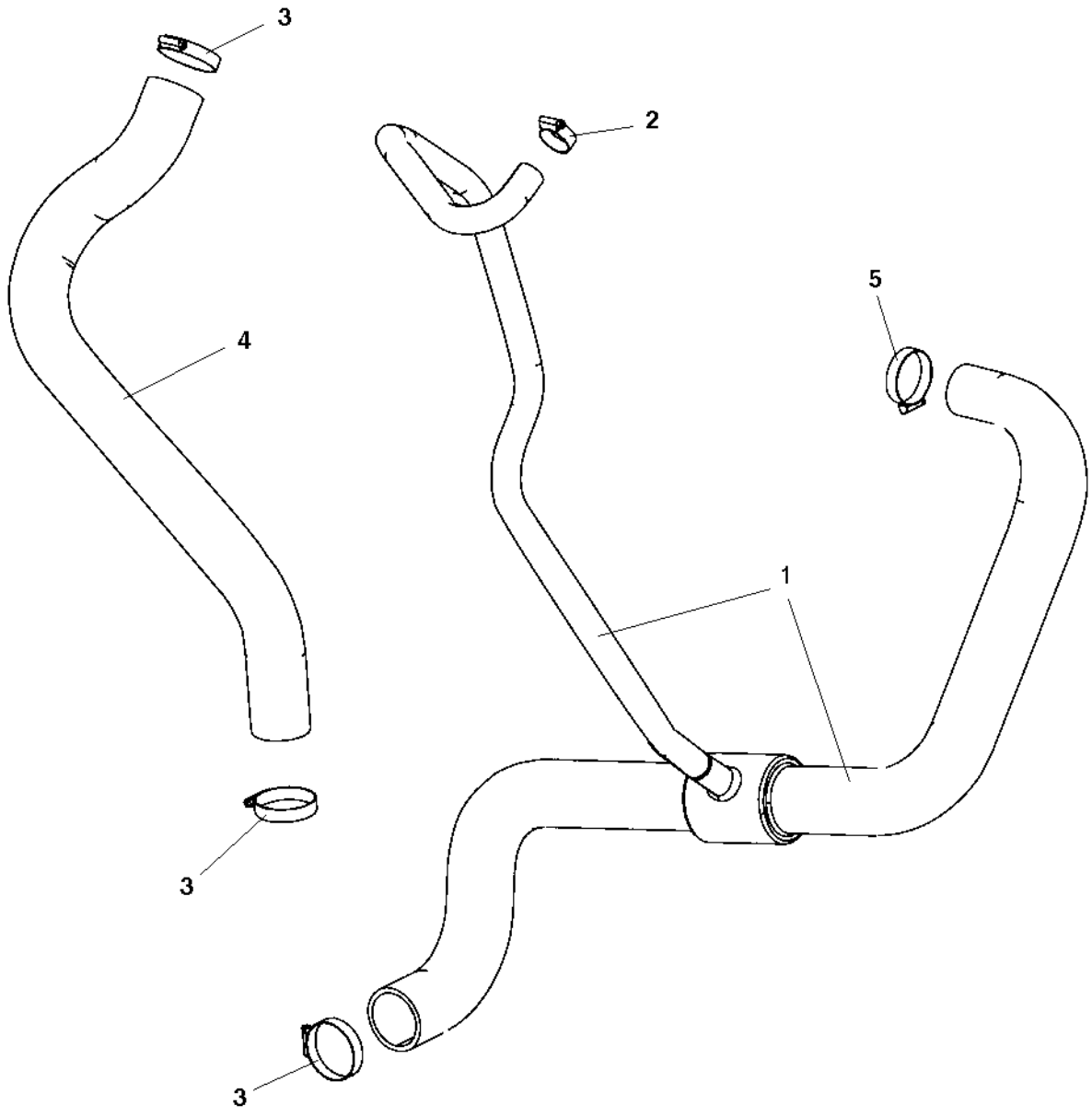

Water cooler hoses

Ref. No.	Part No.	Rem.	Qty	Description	Code
1	394267		1	Coolant hose	
2	313004		1	Hose clamp	
3	313010		3	Hose clamp	
4	390024		1	Coolant hose	
5	313009		1	Hose clamp	

Air cleaner module

390331

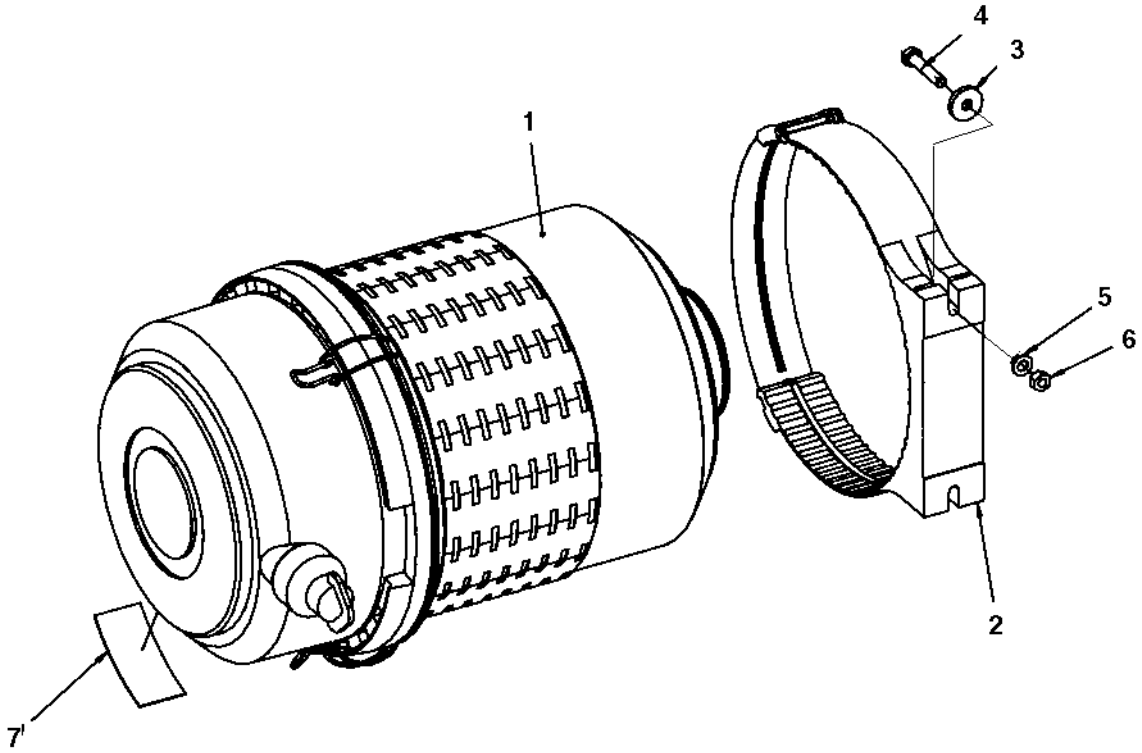

Air cleaner module

Ref. No.	Part No.	Rem.	Qty	Description		Code
1	390820		1	Air cleaner		
	390995		1	.Main filter element		A
	390994		1	.Safety filter element		A
2	390811		1	Bracket		
3	904734		2	Washer		
4	500023		2	Screw	M8-1,25x40 8,8	
5	904229		2	Washer		
6	570005		2	Nut		
7	791642		1	Decal "WARNING"	Use of starting fluid prohib.	

Air cleaner hose module

391590

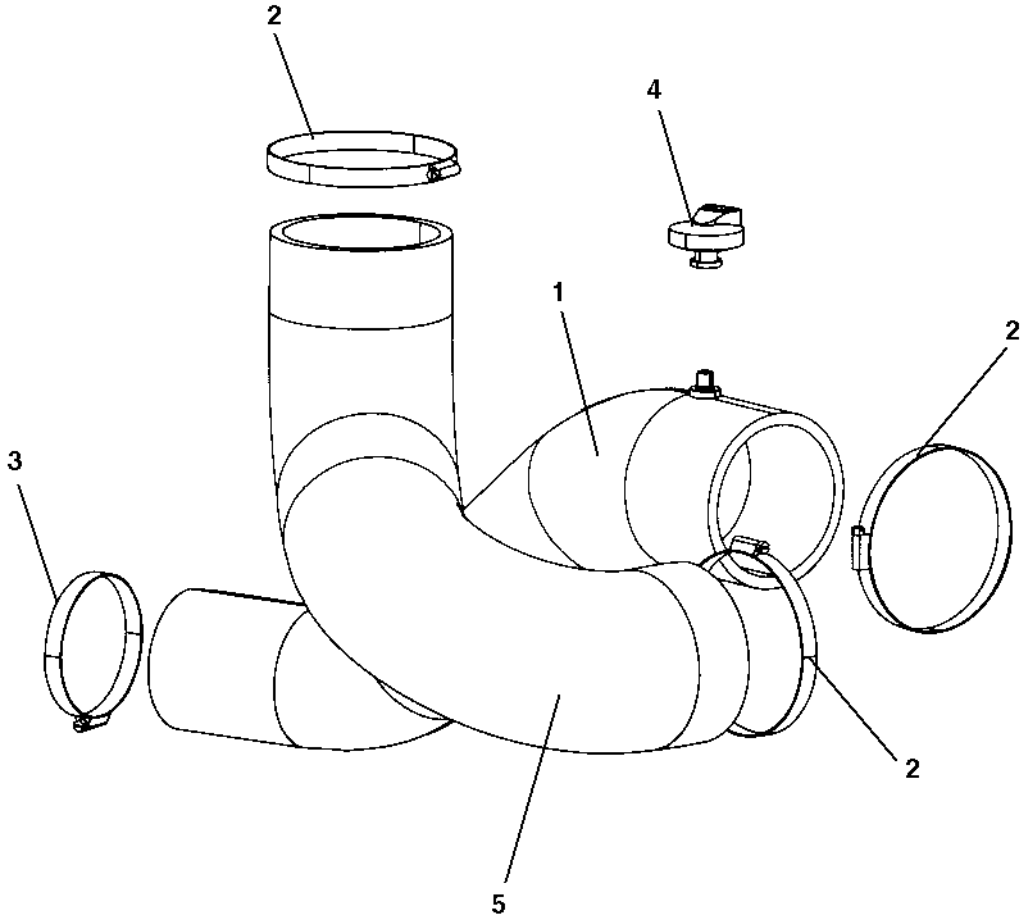

Air cleaner hose module

Ref. No.	Part No.	Rem.	Qty	Description	Code
1	390021		1	Hose	
2	313105		3	Hose clamp	
3	313033		1	Hose clamp	D
4	390830		1	Indicator	
5	390022		1	Hose	

Muffler

391261

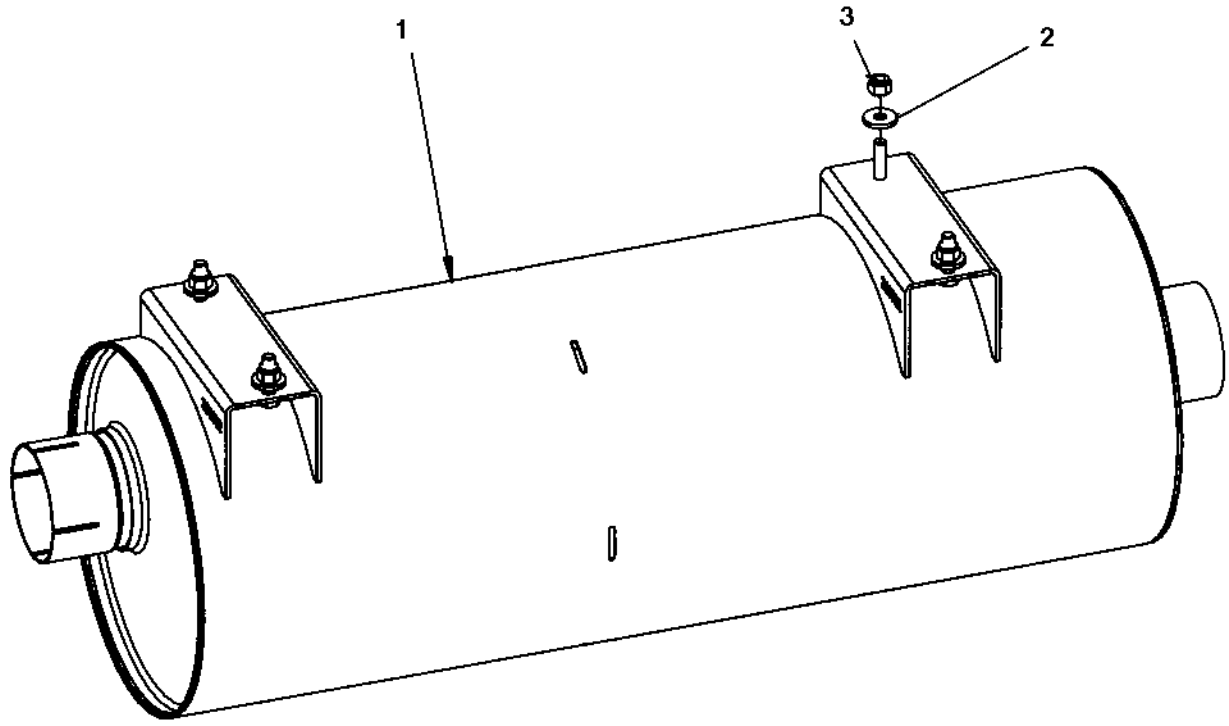

Muffler

Ref. No.	Part No.	Rem.	Qty	Description	Code
1	390332		1	Muffler	
2	904640		4	Washer	
3	586003		4	Lock nut	

Exhaust pipe module

391591

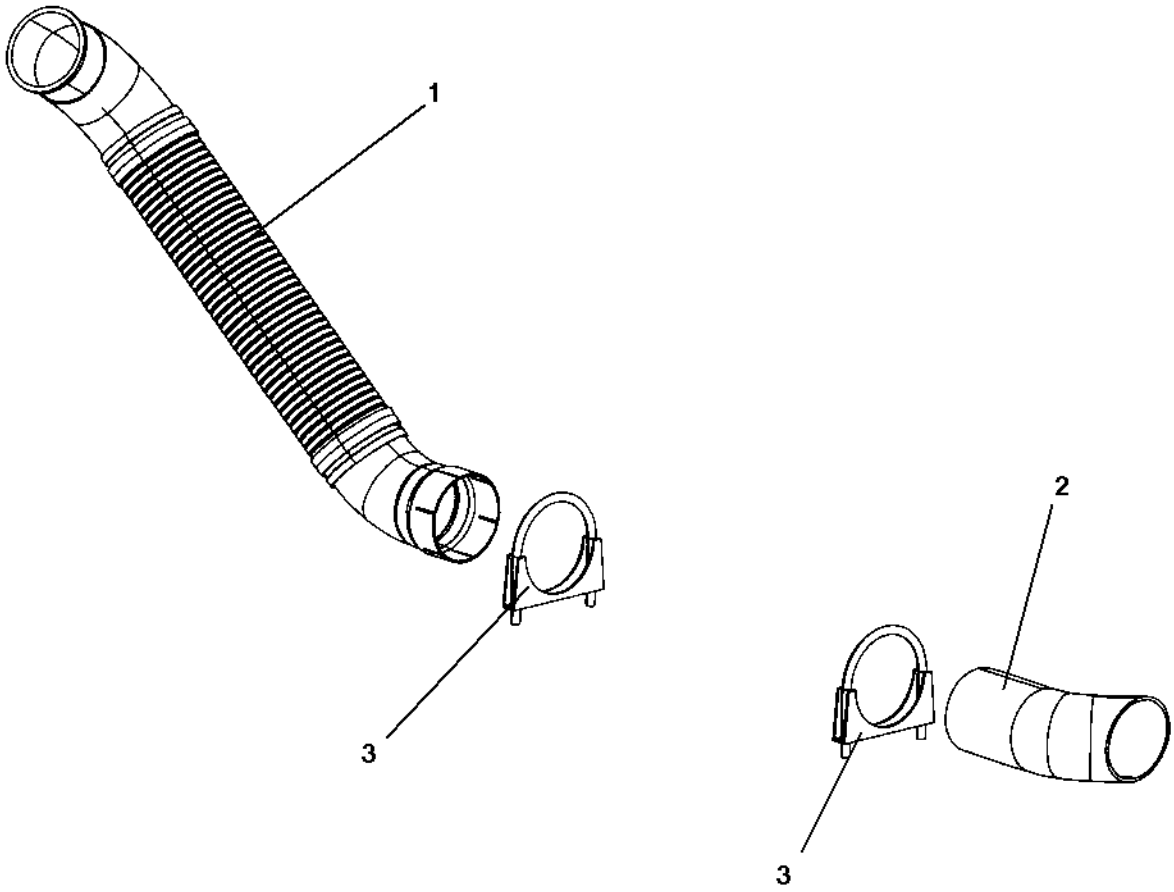

Exhaust pipe module

Ref. No.	Part No.	Rem.	Qty	Description	Code
1	390902		1	Exhaust pipe	
2	390903		1	Exhaust pipe	
3	313094		2	Pipe clamp	

Fuel hose module

394456

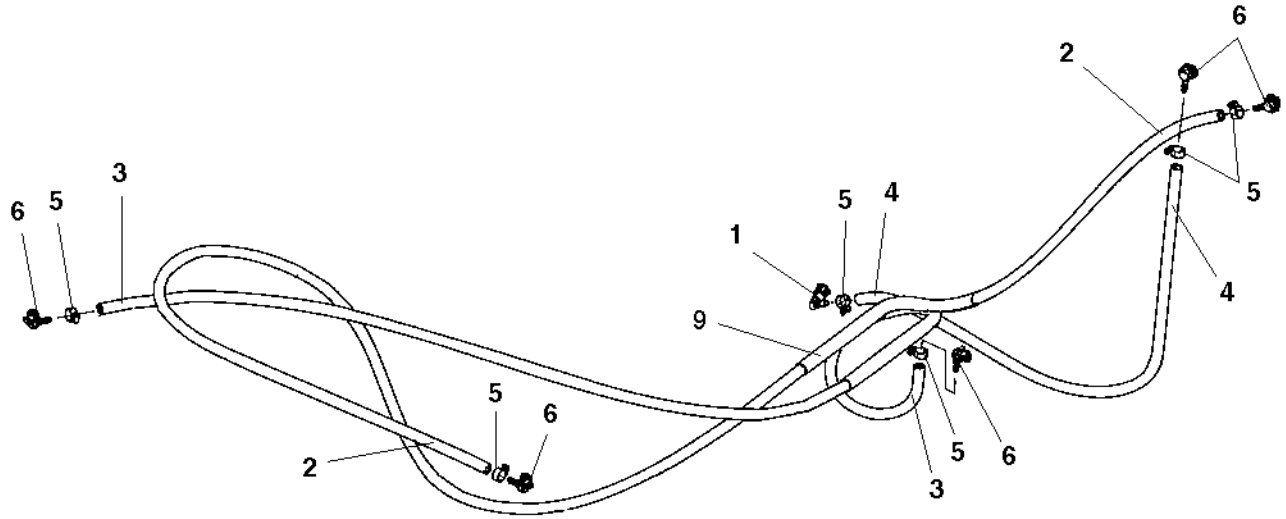

Fuel hose module

Ref. No.	Part No.	Rem.	Qty	Description	Code
1	792522		1	Quick connect coupling	
2	904984	A	1XL	Fuel hose	D
3	904984	B	1XL	Fuel hose	D
4	904984	C	1XL	Fuel hose	D
5	313001		6	Hose clamp	
6	792526		5	Quick connect coupling	
9	792695	D	1XL	Hose guard	

A) L=2.9 m
B) L=1.8m
C) L=1.2m
D) L= 0,5 m

Charge air cooler

391588

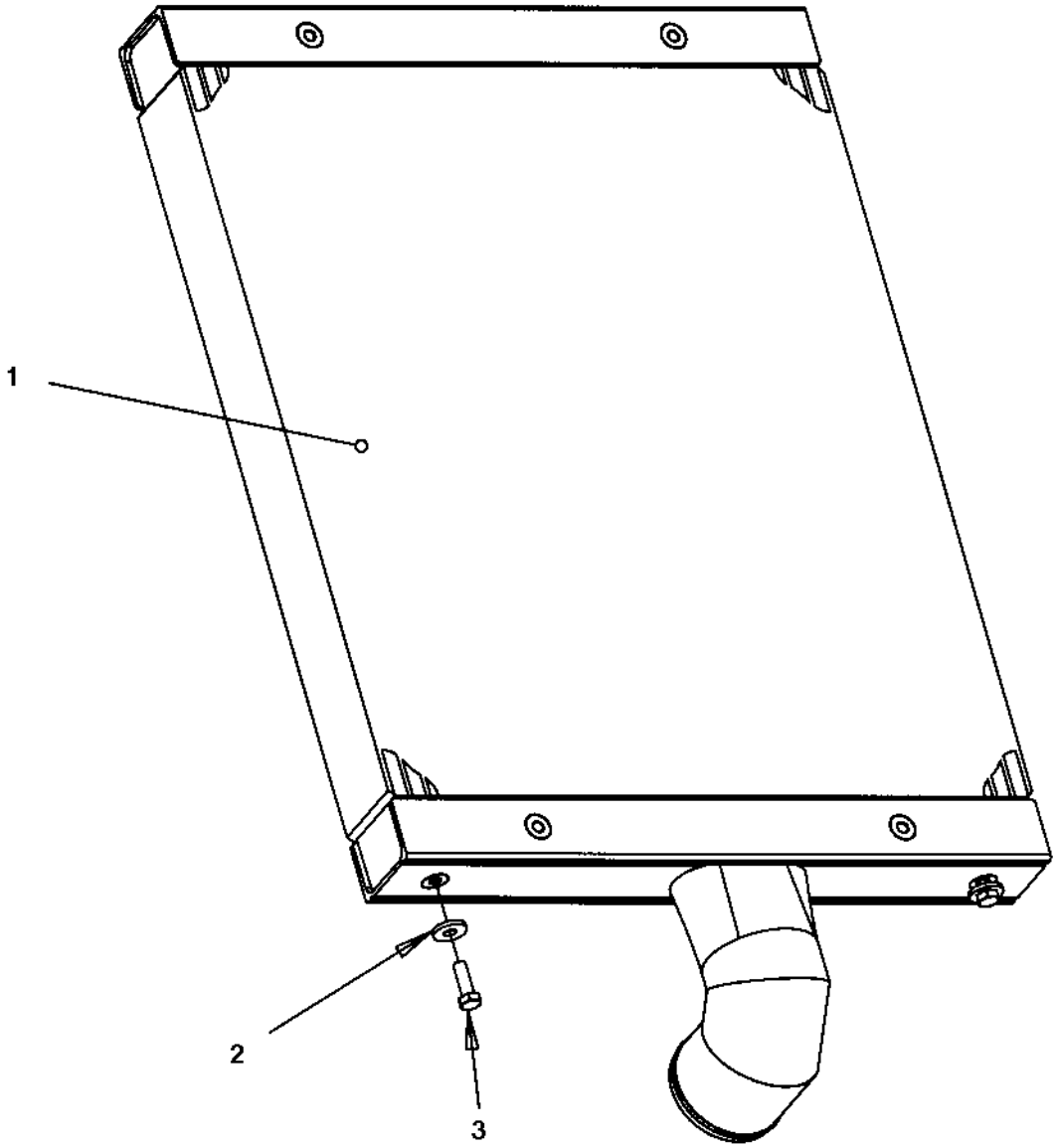

Charge air cooler

Ref. No.	Part No.	Rem.	Qty	Description	Code
1	390630		1	Charge air cooler	C
2	904640		2	Washer	
3	500021		2	Screw	

Water cooler

390336

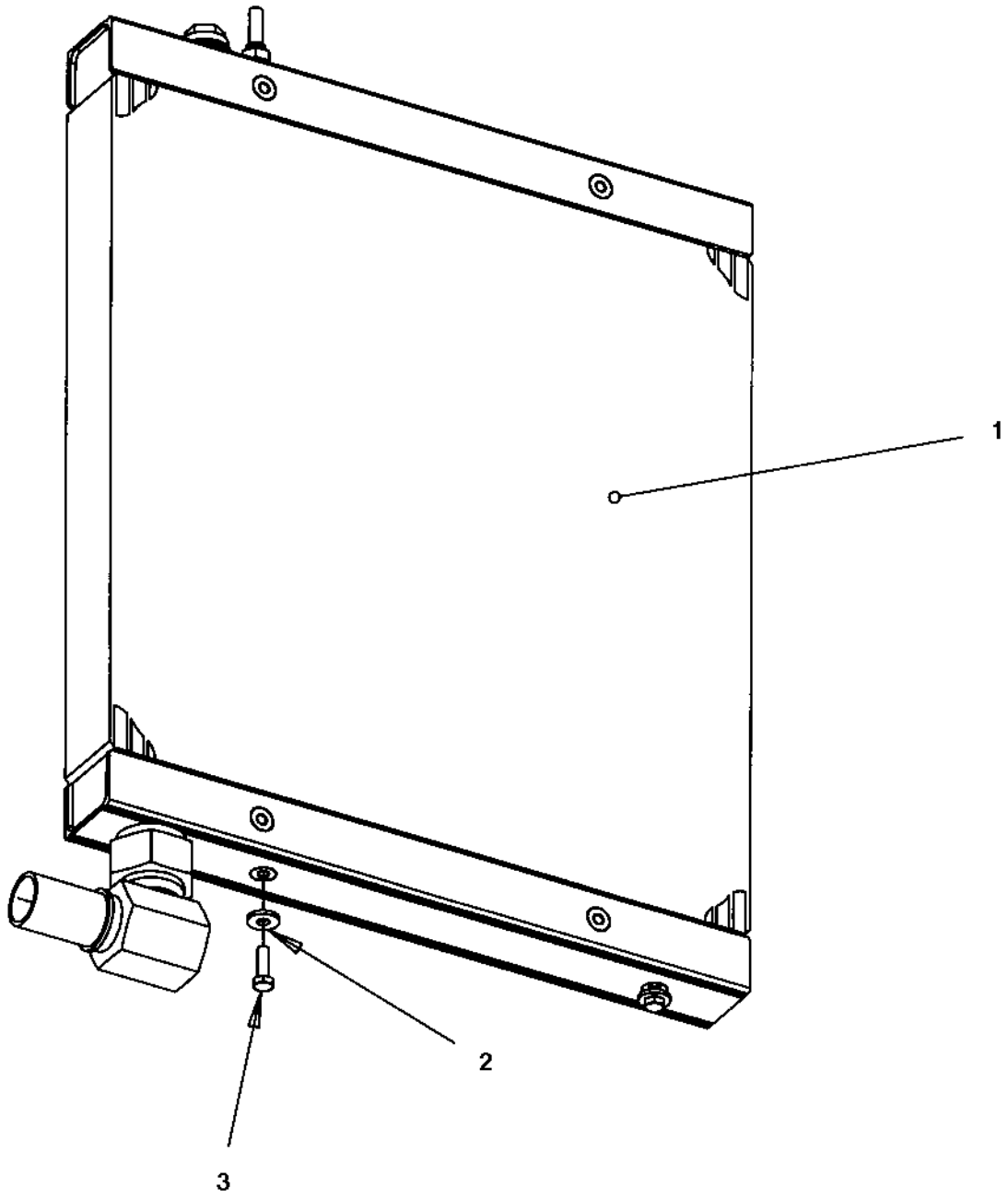

Water cooler

Ref. No.	Part No.	Rem.	Qty	Description	Code
1			1	Radiator, cpl (Page 208)	
2	904640		2	Washer	
3	500021		2	Screw	

Radiator, cpl

391945

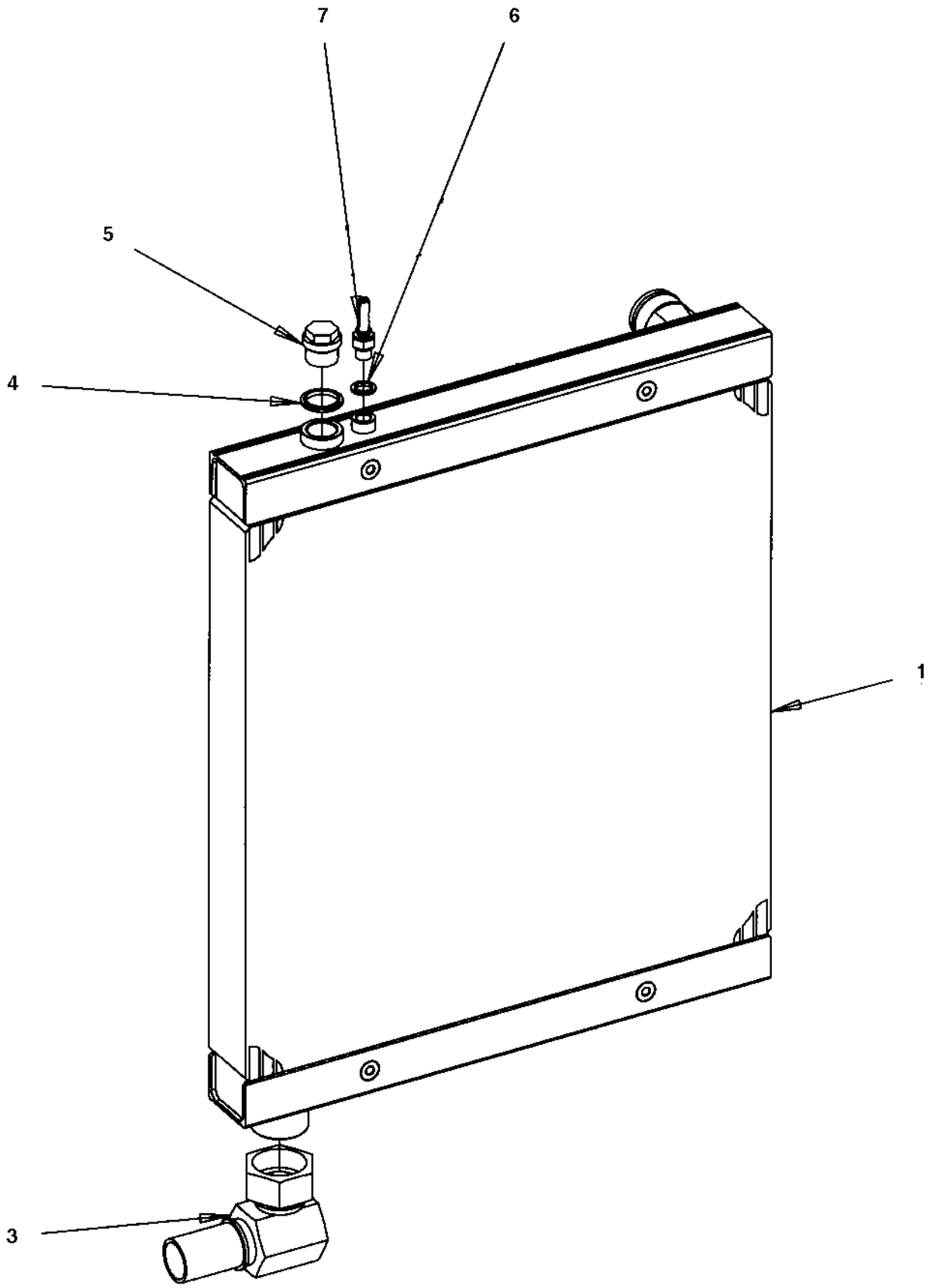

Radiator, cpl

Ref. No.	Part No.	Rem.	Qty	Description		Code
1	390627		1	Water cooler		C
3	792323		1	Hose connection		
4	791120		1	Sealing washer		
5	232039		1	Plug	G3/4	
6	162004		1	Sealing		
7	792322		1	Hose connection		

Expansion tank assembly

394156

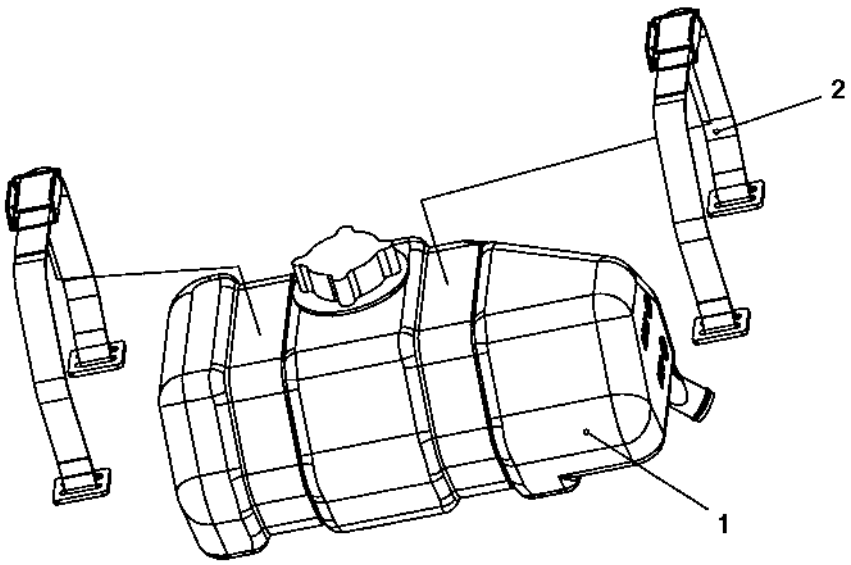

Expansion tank assembly

Ref. No.	Part No.	Rem.	Qty	Description	Code
1	394155		1	Expansion tank (Page 212)	
2	393235		2	Strap	

394155 Expansion tank

394155

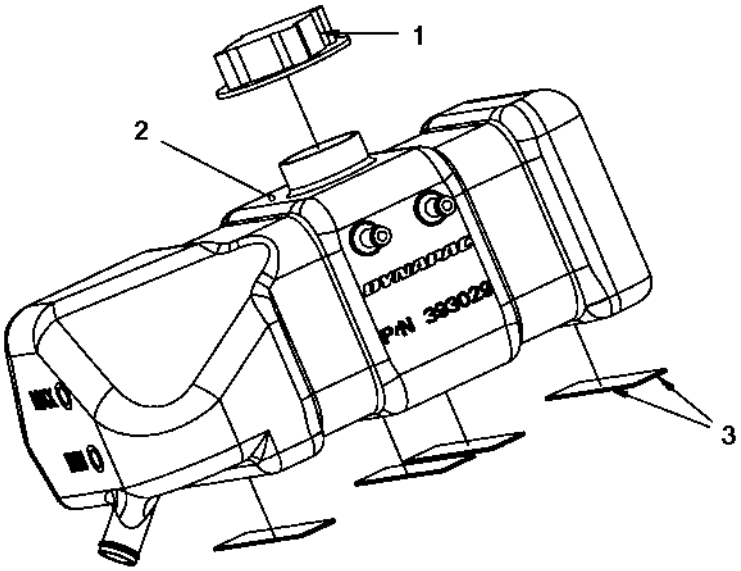

394155 Expansion tank

Ref. No.	Part No.	Rem.	Qty	Description	Code
1	903714		1	Cap	
2	393029		1	Expansion tank	
3	394229		4	Rubber strip	

Coolant hoses

391593

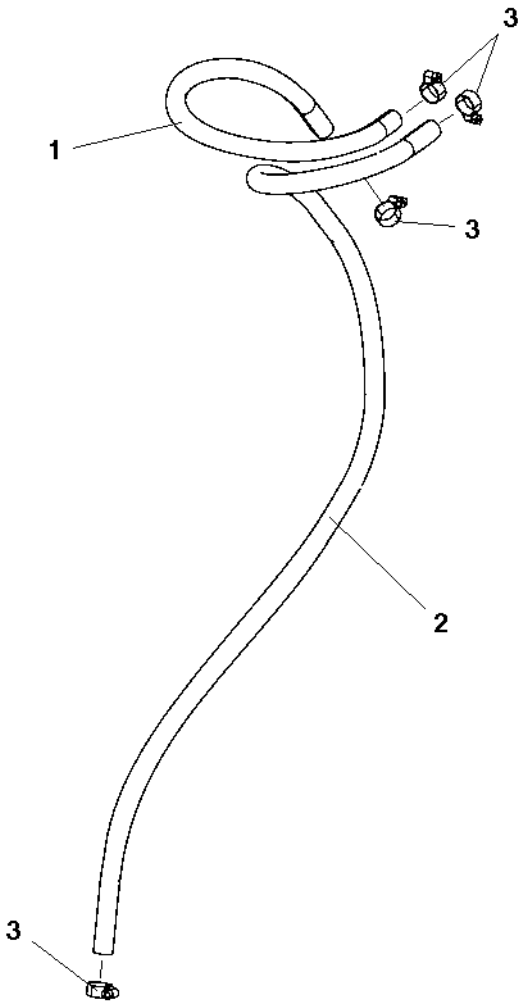

Coolant hoses

Ref. No.	Part No.	Rem.	Qty	Description	Code
1	246069	A	1XL	Fuel hose 3/8"	
2	246069	B	1XL	Fuel hose 3/8"	
3	313001		4	Hose clamp	

A) L= 0,54 m
B) L= 1,19 m

Hydraulic system

Ref. No.	Part No.	Rem.	Qty	Description	Code
1				Hydraulic system, front drum (Page 218)	
2				Hydraulic system, rear drum std (Page 220)	
3				Hydraulic hoses, frame std (Page 222)	
4				Hydraulic system, steering (Page 224)	Std
5				Hydraulic steering, sliding seat (Page 232)	Std
7				Hydraulic hoses, engine structure std (Page 238)	
9			1	Hydraulic pump module (Page 240)	
10			1	Hydraulic valve module, offset (Page 246)	

Hydraulic system, front drum

391548

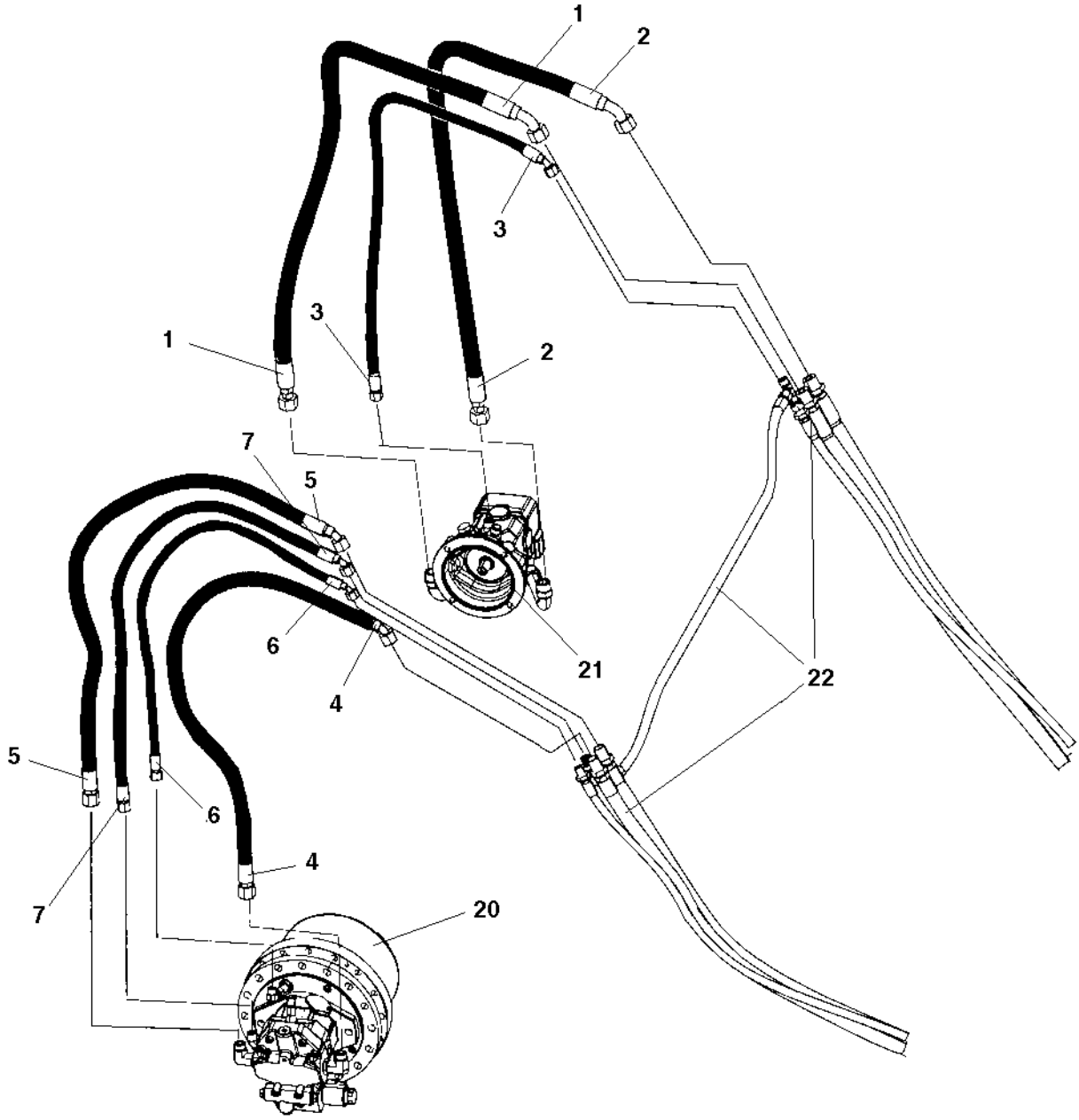

Hydraulic system, front drum

Ref. No.	Part No.	Rem.	Qty	Description	Code
1	484075		1	Hydraulic hose	
2	484076		1	Hydraulic hose	
3	484077		1	Hydraulic hose	
4	484078		1	Hydraulic hose	
5	484079		1	Hydraulic hose	
6	484080		1	Hydraulic hose	
7	484081		1	Hydraulic hose	
20				Drive unit (Page 168)	
21				Vibrating unit	Rexroth
				Vibrating unit (Page 174)	Sauer
22				Hydraulic hoses, frame	

Hydraulic system, rear drum std

391546

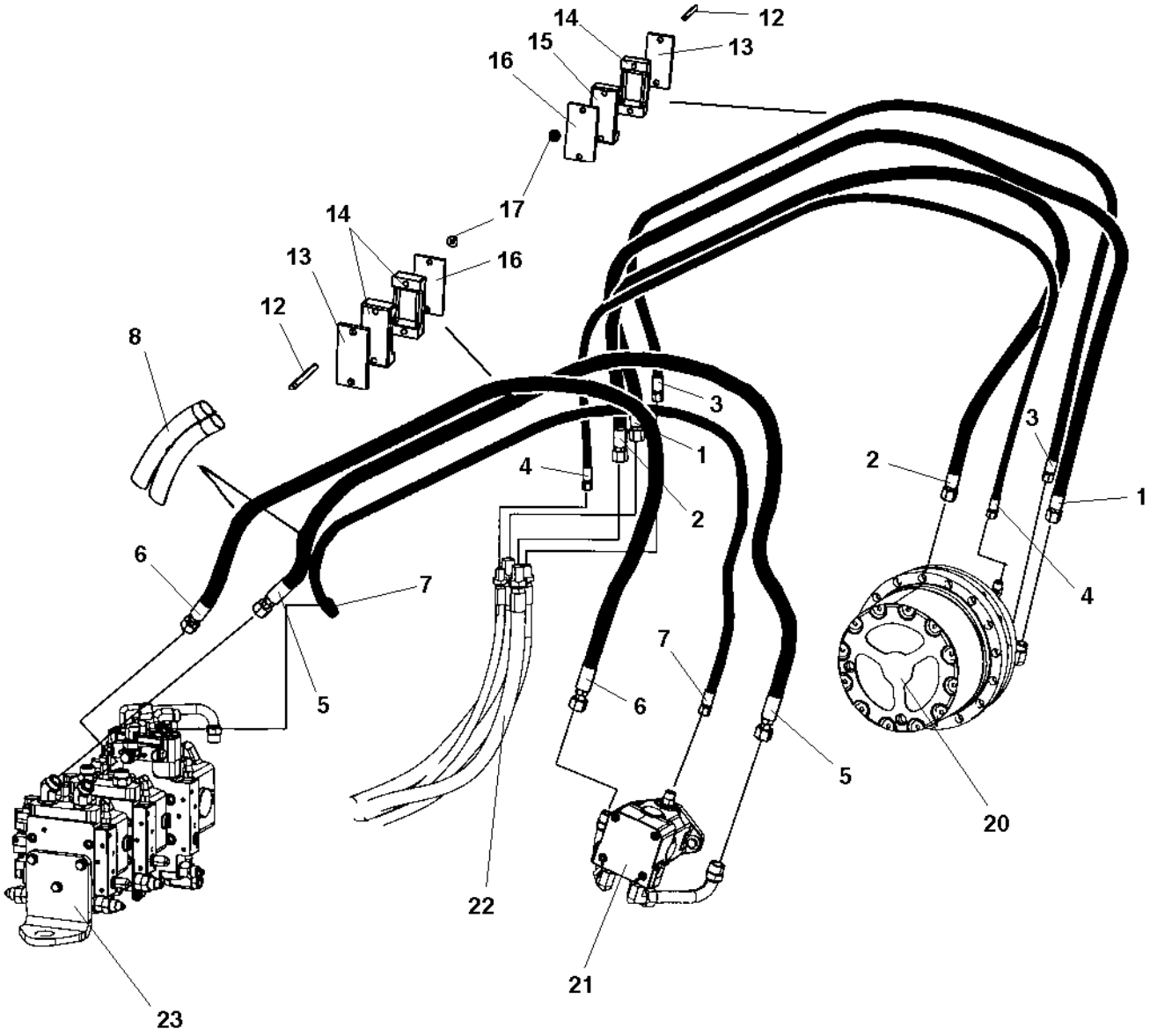

Hydraulic system, rear drum std

Ref. No.	Part No.	Rem.	Qty	Description		Code
1	484238		1	Hydraulic hose		
2	484237		1	Hydraulic hose		
3	484239		1	Hydraulic hose		
4	484085		1	Hydraulic hose		
5	484240		1	Hydraulic hose		D
6	483486		1	Hydraulic hose		D
7	484241		1	Hydraulic hose		
8	903082		N	Hose shield		
12	904629		4	Stud		
13	349210		2	Rubber plate		
14	343872		3	Hose clamp		D
15	343732		1	Hose clamp		
16	335914		2	Cover plate		
17	570103		4	Nut		
20				Drive unit (Page 168)		
21				Vibrating unit	Rexroth	
				Vibrating unit (Page 174)	Sauer	
22				Hydraulic hoses, frame		
23				Hydraulic pump		

Hydraulic hoses, frame std

Ref. No.	Part No.	Rem.	Qty	Description	Code
1	484014		1	Hydraulic hose	
2	484015		1	Hydraulic hose	
3	484016		1	Hydraulic hose	
4	484017		1	Hydraulic hose	
5	484018		1	Hydraulic hose	
6	484019		1	Hydraulic hose	
7	484020		1	Hydraulic hose	
8	484021		1	Hydraulic hose	
9	484022		1	Hydraulic hose	
10	484023		1	Hydraulic hose	
11	606009		1	Lock washer	
42	792454		2	Nut	
43	792453		4	Nut	
44	792452		1	Nut	
45	792451		2	Nut	
48	792344		1	Bulkhead union	
49	791798		1	T-connector	
54	792632		2	O-ring	
55	904008		1	O-ring	
56	904009		4	O-ring	D
57	904010		2	O-ring	
58	792790		2	Lock washer	

Hydraulic system, steering Std

393073_1

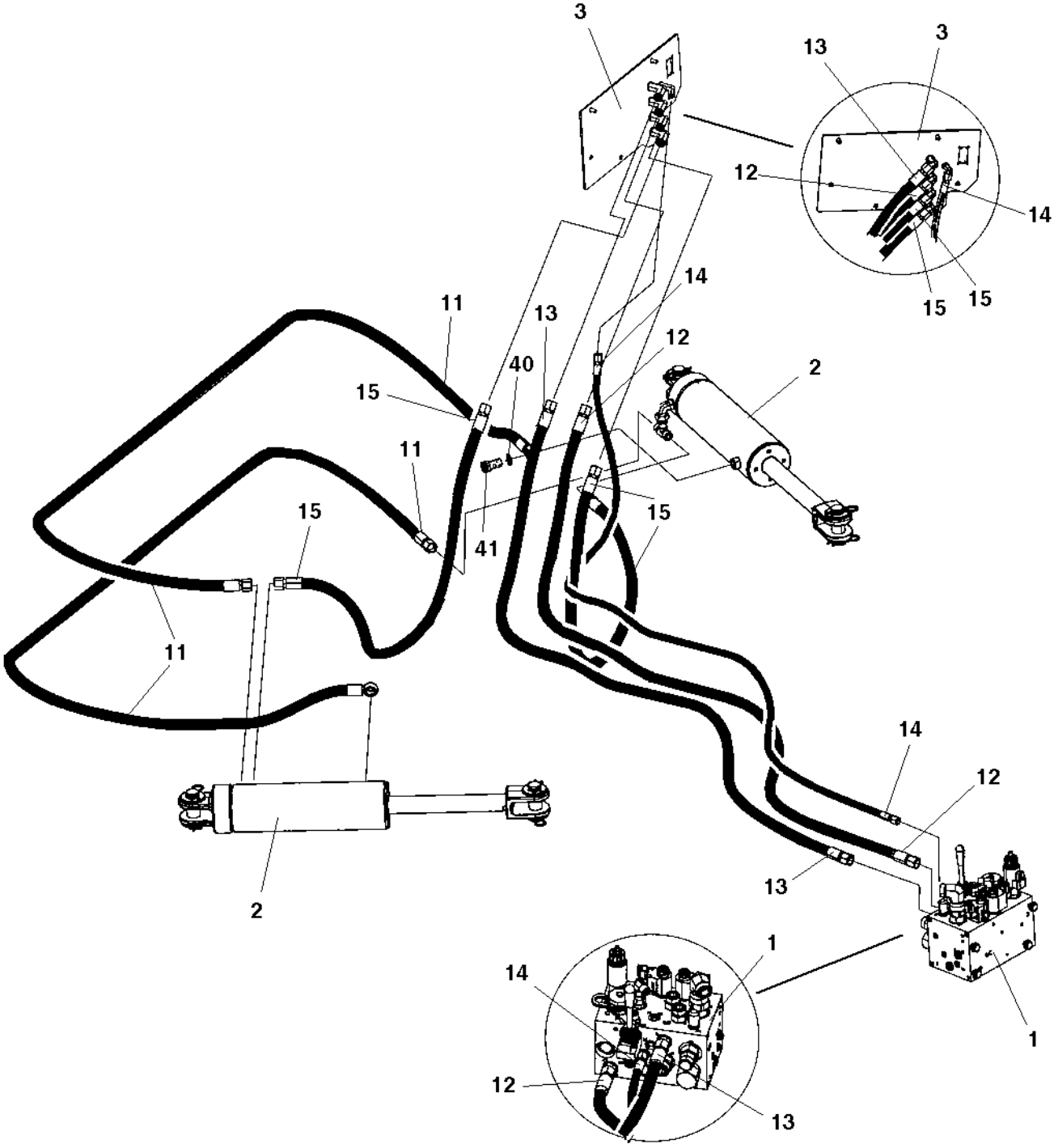

Hydraulic system, steering Std

Ref. No.	Part No.	Rem.	Qty	Description	Code
1			1	Hydraulic valve module (Page 226)	
2		A	2	Steering cylinder	
3			1	Hose bracket (Page 230)	
11	393364		2	Hydraulic hose	
12	484024		1	Hydraulic hose	
13	484025		1	Hydraulic hose	
14	484026		1	Hydraulic hose	
15	484027		2	Hydraulic hose	
40	162015		4	Seal ring	D
41	904292		2	Hollow screw	

A) See section "Front frame"

Hydraulic valve module

391564

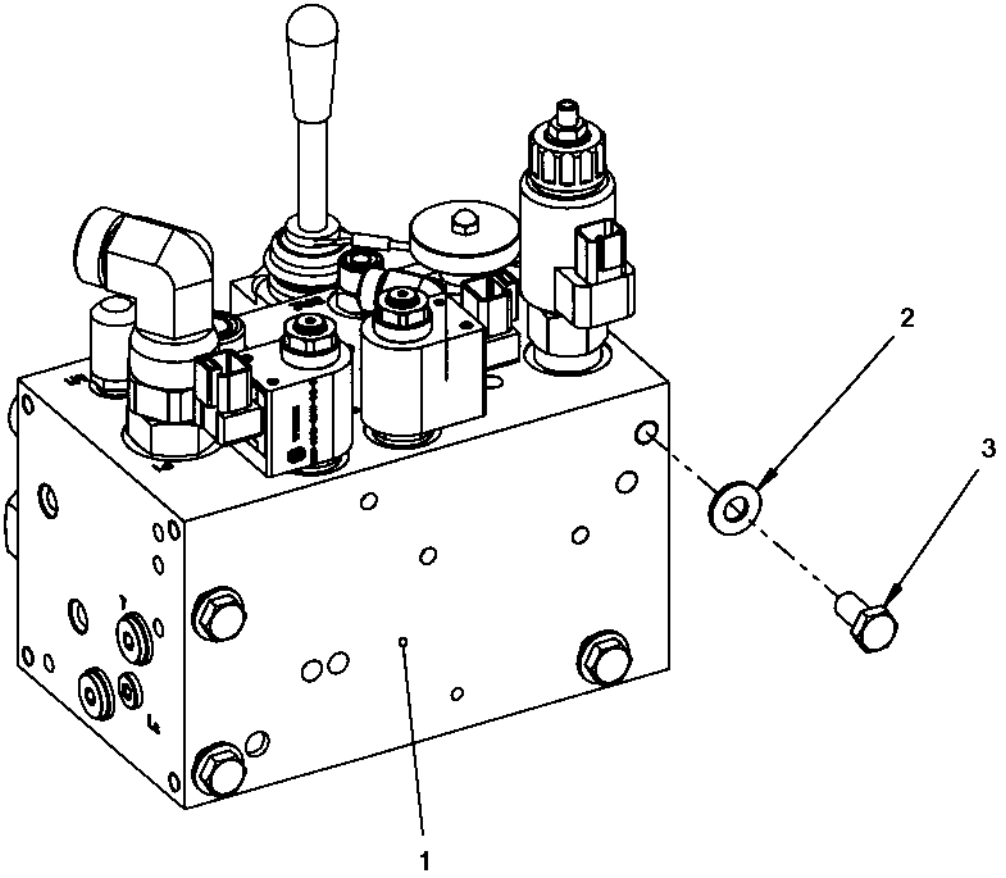

Hydraulic valve module

Ref. No.	Part No.	Rem.	Qty	Description	Code
1			1	Hydraulic valve (Page 228)	
2	904230		4	Washer	
3	500048		4	Screw	

Hydraulic valve

391563

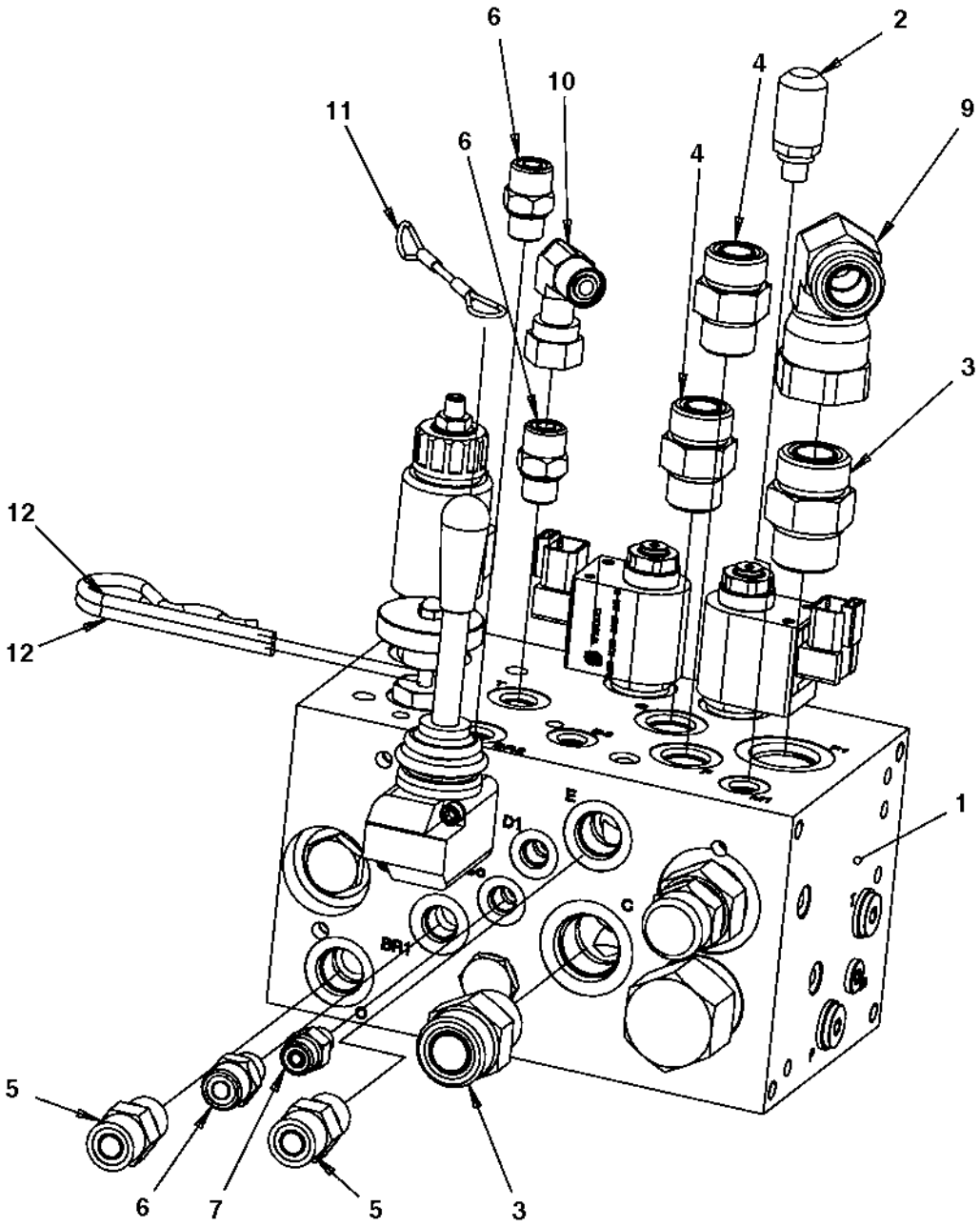

Hydraulic valve

Ref. No.	Part No.	Rem.	Qty	Description	Code
1	391016		1	Hydraulic valve	C
2	910162		1	Measuring nipple	D
3	791823		2	Straight connector orfs	
4	791743		2	Straight connector orfs	
5	791799		2	Straight connector orfs	
6	791409		3	Straight connector orfs	
7	791744		1	Straight connector	
9	904584		1	Elbow connector 90	
10	791401		1	Elbow 90, O-ring with swivel	
11	358732		1	Wire	
12	635057		2	Hair pin	

Hose bracket

391096B

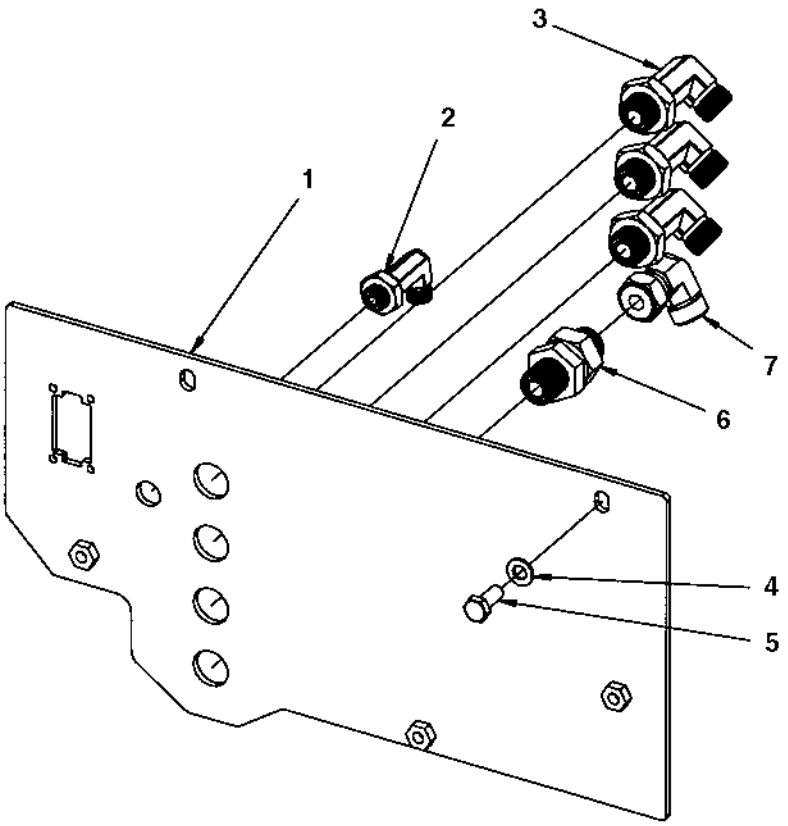

Hose bracket

Ref. No.	Part No.	Rem.	Qty	Description	Code
1	391192		1	Hose bracket	
2	792343		1	Bulkhead elbow	
3	792342		4	Bulkhead elbow	
4	904229		2	Washer	
5	500053		2	Screw	

Hydraulic steering, sliding seat Std

18649

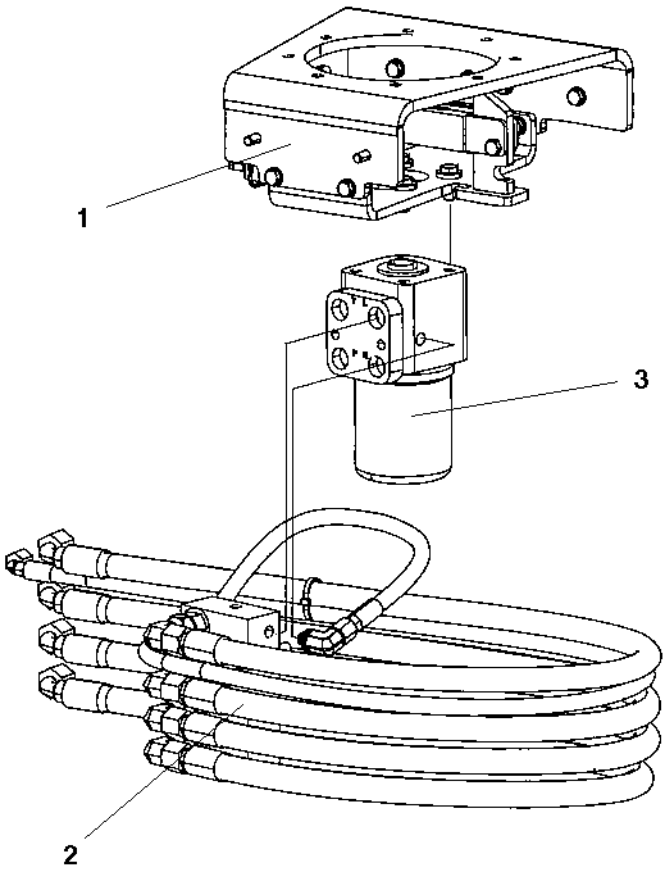

Hydraulic steering, sliding seat Std

Ref. No.	Part No.	Rem.	Qty	Description	Code
1			1	Carrier (Page 400)	
2			1	Steering, slideable (Page 234)	
3	372424		1	Pilot valve, steering (Page 236)	C
	392758		1	Pilot valve, emergency steering	

Steering, slideable

391098

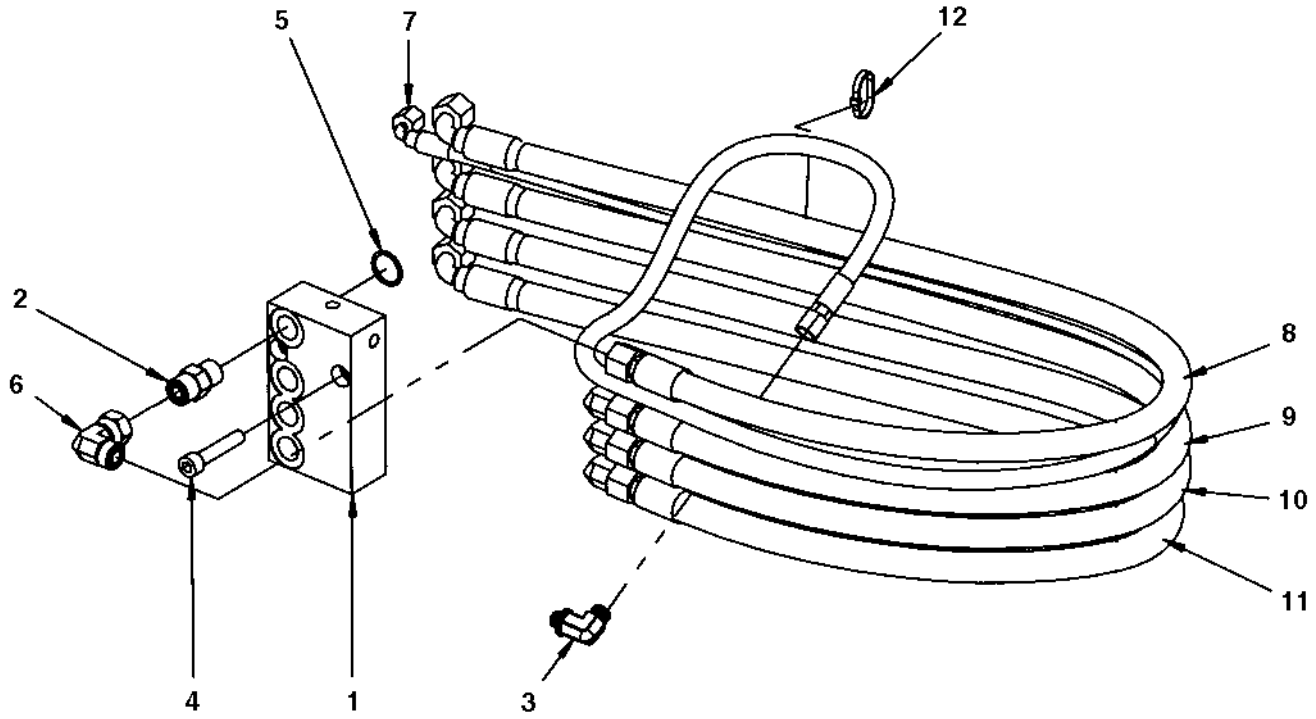

Steering, slideable

Ref. No.	Part No.	Rem.	Qty	Description		Code
1	370155		1	Valve block		
2	791799		4	Straight connector orfs		
3	792334		1	Elbow 90 orfs		
4	903773		2	Screw	M10x1x50 8,8	
5	160287		4	O-ring		D
6	791745		4	Elbow 90, O-ring with swivel		
7	484006		1	Hydraulic hose		
8	484007		1	Hydraulic hose		
9	484007		1	Hydraulic hose		
10	484007		1	Hydraulic hose		
11	484007		1	Hydraulic hose		
12	313041		N	Cable ties		

372424 Pilot valve, steering

15981

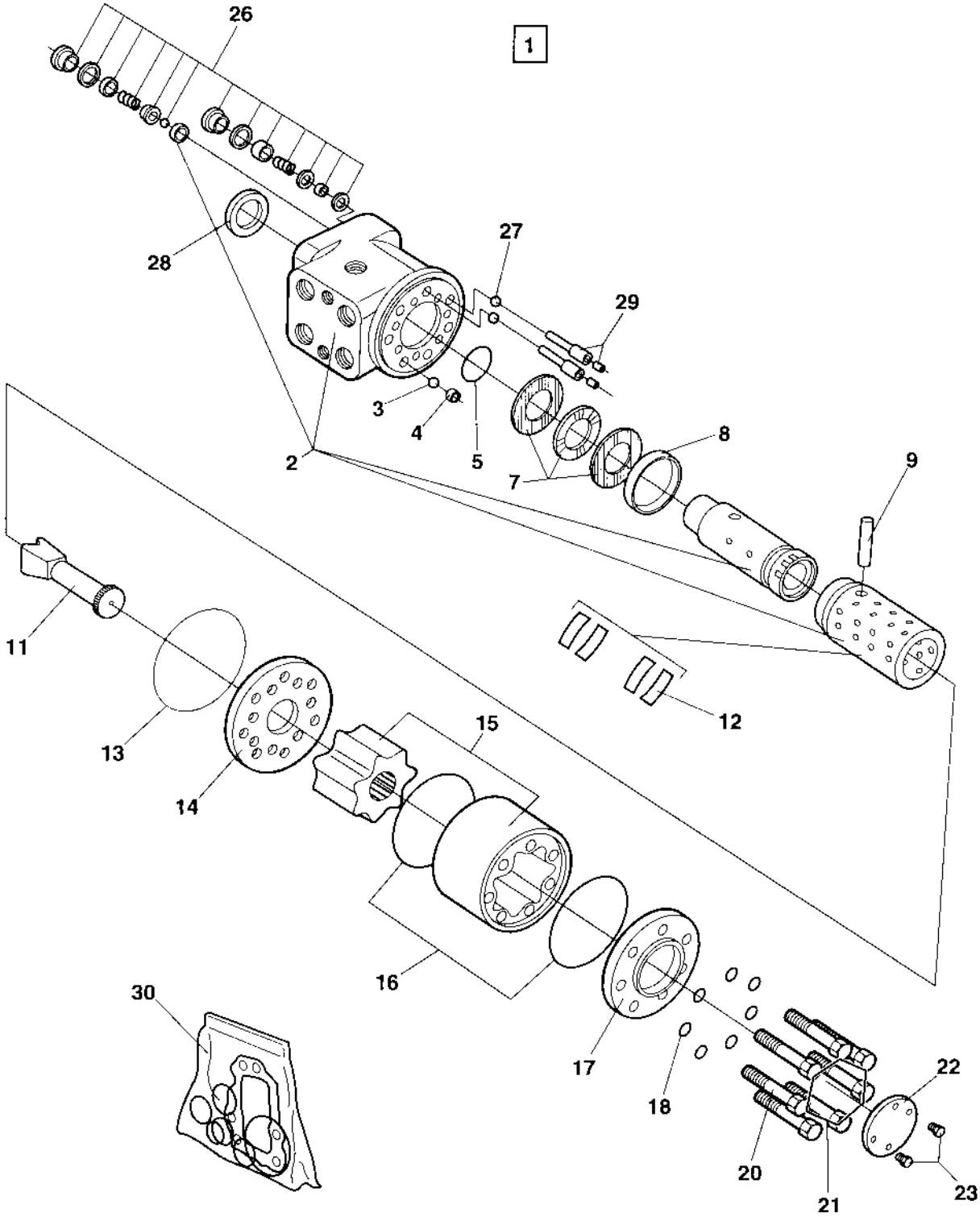

372424 Pilot valve, steering

Ref. No.	Part No.	Rem.	Qty	Description		Code
1	372424		1	Pilot valve, steering (Page 236)		C
2			1	.Housing , spool and sleeve , cpl		C
3	480468		1	.Ball		
4	480446		1	.Threaded bushing		D
5		1	1	.O-ring		D
7	911620		1	.Bearing		D
8	480449		1	.Ring		
9	480447		1	.Cross pin		
11	902861		1	.Cardan shaft		
12	909211		1	.Set of springs		
13		1	1	.O-ring		
14	902862		1	.Valve plate		
15	903457		1	.Gear wheel set		
16		1	2	.O-ring		
17	480450		1	.End cap		
18		1	7	.Washer		
20	480456		1	.Screw with hole		
21	935428		6	.Screw		
22			1	.Name plate		
23			2	.Screw		
26	929012		2	.Shock valve	22,5-24,0 MPa	
27	929013		2	.Ball		
28		1	1	.Seal ring		
29	929014		2	.Rolled pin		
30	935429		1	.Seal kit		

1) Included in seal kit item 30

Hydraulic hoses, engine structure std

Ref. No.	Part No.	Rem.	Qty	Description	Code
16	484028		1	Hydraulic hose	
17	484029		1	Hydraulic hose	
18	484030		1	Hydraulic hose	
19	484031		1	Hydraulic hose	
20	484032		1	Hydraulic hose	
21	484033		1	Hydraulic hose	
22	484034		1	Hydraulic hose	
23	484035		1	Hydraulic hose	
24	483729		1	Hydraulic hose	
25	484036		1	Hydraulic hose	
26	484037		1	Hydraulic hose	
27	484038		1	Hydraulic hose	
28	484039		1	Hydraulic hose	
29	484040		1	Hydraulic hose	
30	484161		1	Hydraulic hose	
31	483726		1	Hydraulic hose	
32	792533		1	Hydraulic hose	
33	484043		1	Hydraulic hose	
34	903082		N	Hose shield	
46	791397		1	Elbow 90, O-ring	
47	792340		1	Tee-connector orfs	
52	902295		2	Clamp	
53	792441		3	Cable tie with holder	

Hydraulic pump module

391562

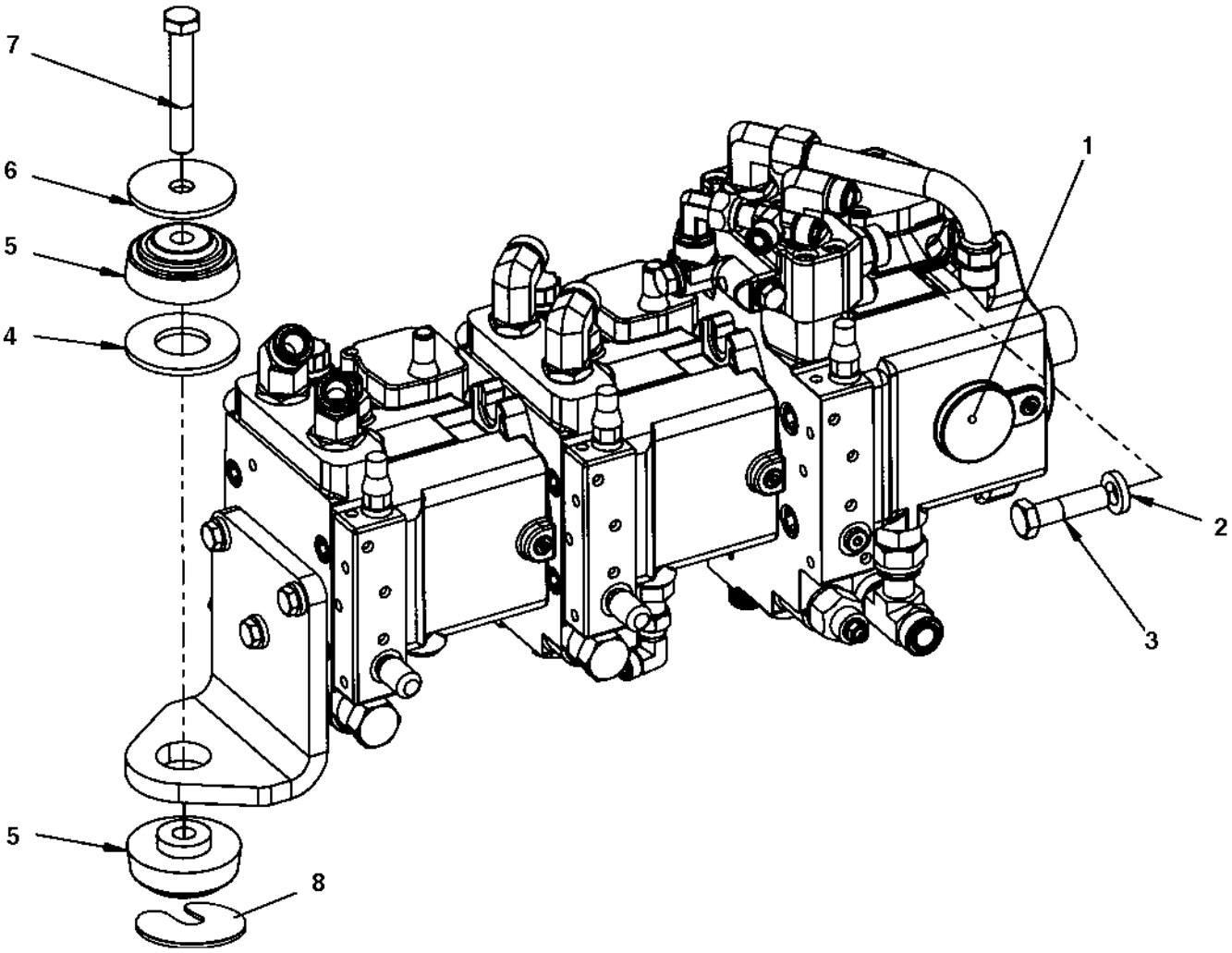

Hydraulic pump module

Ref. No.	Part No.	Rem.	Qty	Description	Code
1			1	Hydraulic pump (Page 242)	
2	904558		2	Washer	
3	500270		2	Screw	
4	393625		1	Spacer washer	
5	391165		2	Shock absorber	
6	345666		1	Steel spacer	
7	500107		1	Screw	
8	397270		1	Steel spacer	

Hydraulic pump

391561

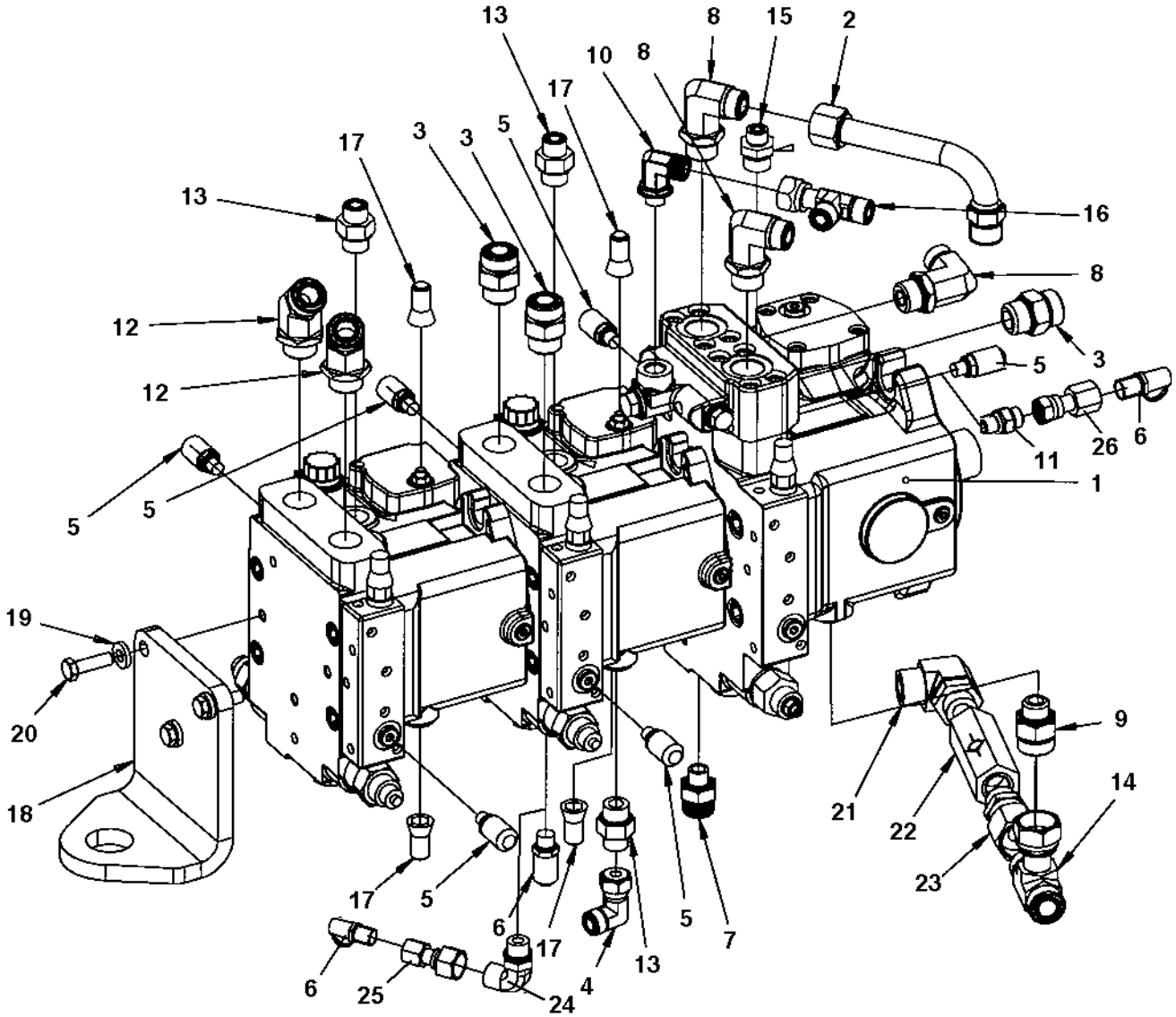

Hydraulic pump

Ref. No.	Part No.	Rem.	Qty	Description	Code
1	390602		1	Hydraulic pump (Page 244)	C
2	392048		1	Connector	
3	791853		3	Straight connector orfs	
4	791745		1	Elbow 90, O-ring with swivel	
5	901157		5	Measuring nipple	D
6	923405		2	Measuring nipple	D
7	792465		1	Straight connector orfs	
8	792331		3	Elbow 90 orfs	
9	792336		1	Straight connector orfs	
10	792333		1	Elbow 90 orfs	
11	791538		1	Straight connector	
12	792157		2	Elbow adapter 45	
13	791635		3	Straight connector	
14	791831		1	Tee-connector	
15	791634		1	Adapter	
16	791798		1	T-connector	
17	392534		4	Sealing	
18	393624		1	Engine bracket	
19	904557		3	Washer	
20	500030		3	Screw	
21	791698		1	Elbow 90, O-ring with swivel	
22	376922		1	Check valve	
23	791824		1	Straight connector	
24	792151		1	Elbow adapter 90	
25	792219		1	Straight connector	
26	792649		1	Straight connector orfs	

390602 Hydraulic pump

390602_1

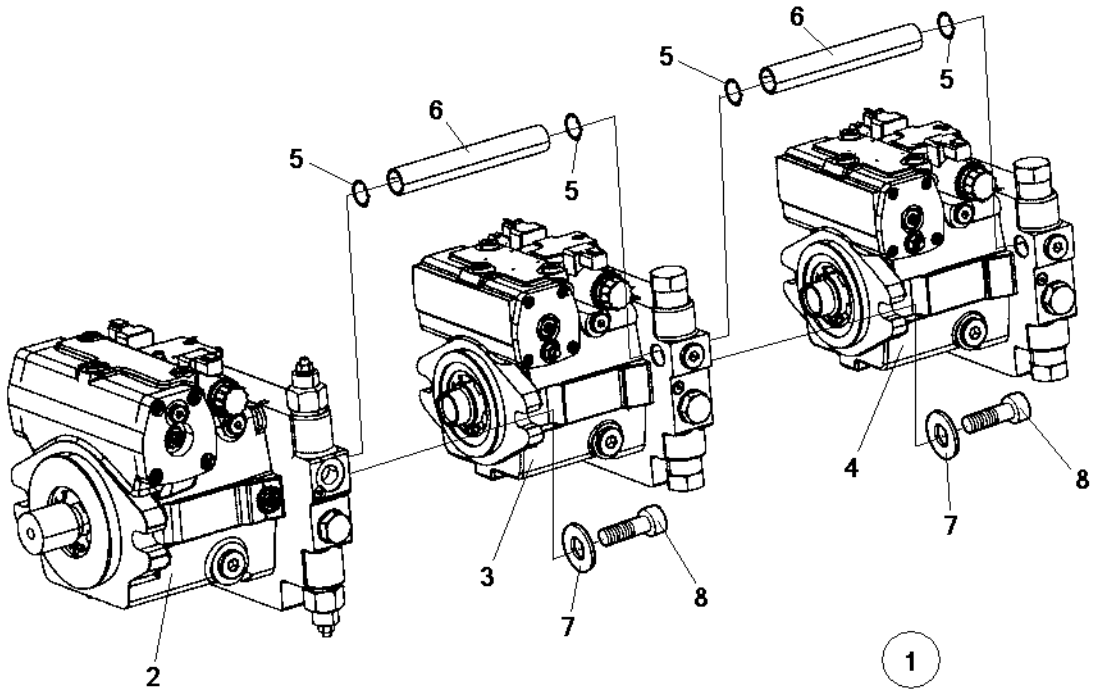

390602 Hydraulic pump

Ref. No.	Part No.	Rem.	Qty	Description	Code
1	390602		1	Hydraulic pump (Page 244)	C
2			1	.Hydraulic pump	C
3			1	.Hydraulic pump	C
4			1	.Hydraulic pump	C
5			4	.O-ring	C
6			2	.Socket pipe	C
7			4	.Washer	C
8			4	.Screw	C

Hydraulic valve module, offset

391575

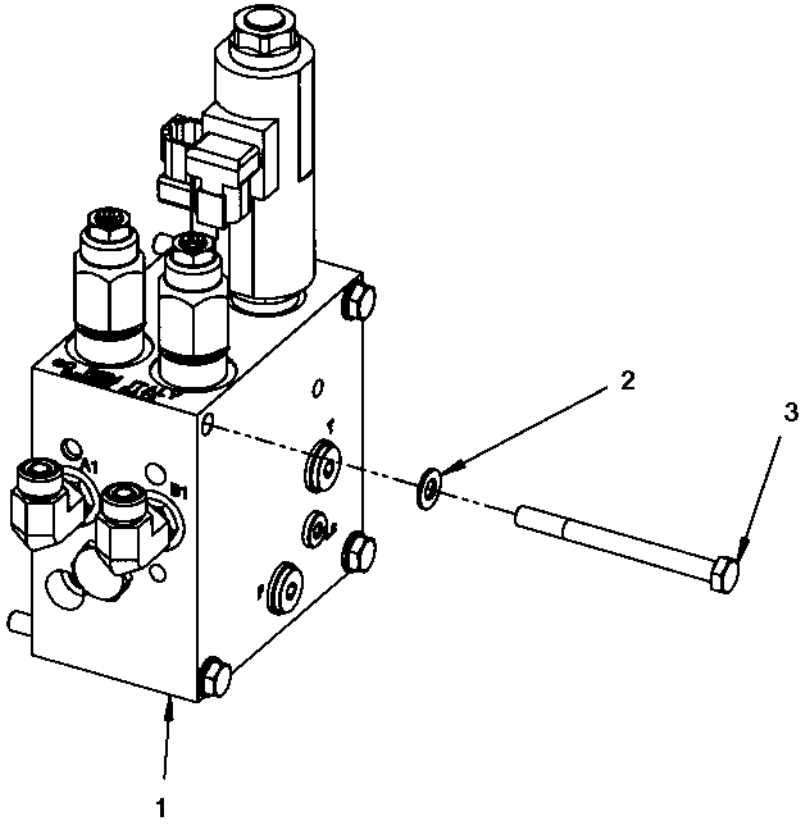

Hydraulic valve module, offset

Ref. No.	Part No.	Rem.	Qty	Description	Code
1			1	Hydraulic valve (Page 248)	
2	904229		4	Washer	
3	500115		4	Screw	M8-1,25x90 8.8

Hydraulic valve

391574

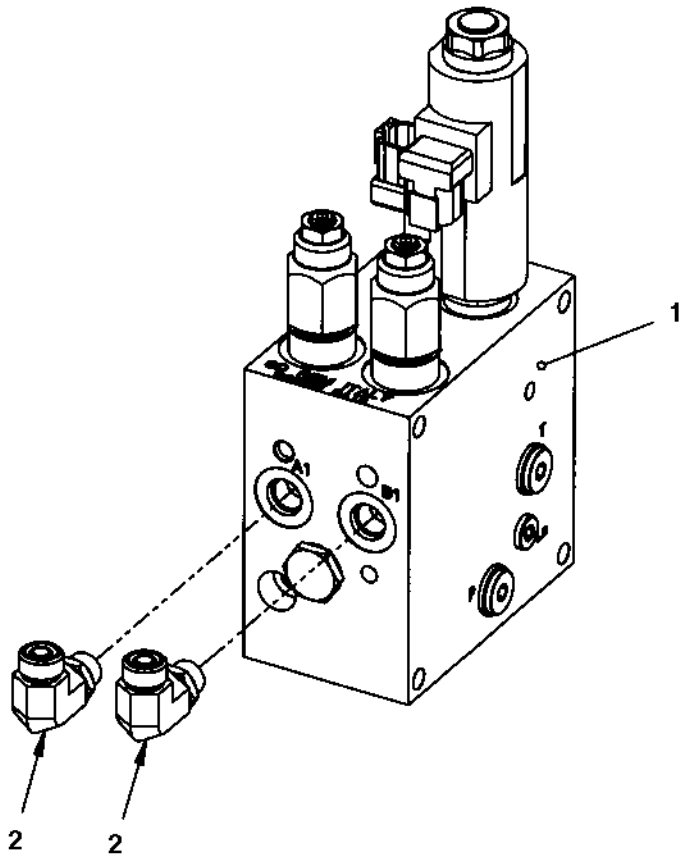

Hydraulic valve

Ref. No.	Part No.	Rem.	Qty	Description	Code
1	391017		1	Hydraulic valve	C
2	791846		2	Elbow 90, O-ring with swivel	

Electrical equipment

Ref. No.	Part No.	Rem.	Qty	Description	Code
1				Electric cables, power supply (Page 252)	
2				Electric cables, power supply cab (Page 258)	
3				Electric cables, engine-ECU (Page 260)	
5				Electric cables, sensors/ horn/ back-up alarm (Page 266)	
6				Tachograph (Page 276)	
8				Driving & side direction lights (Page 284)	
9				Rotating beacon, working light (Page 304)	

Electric cables, power supply

391686_1

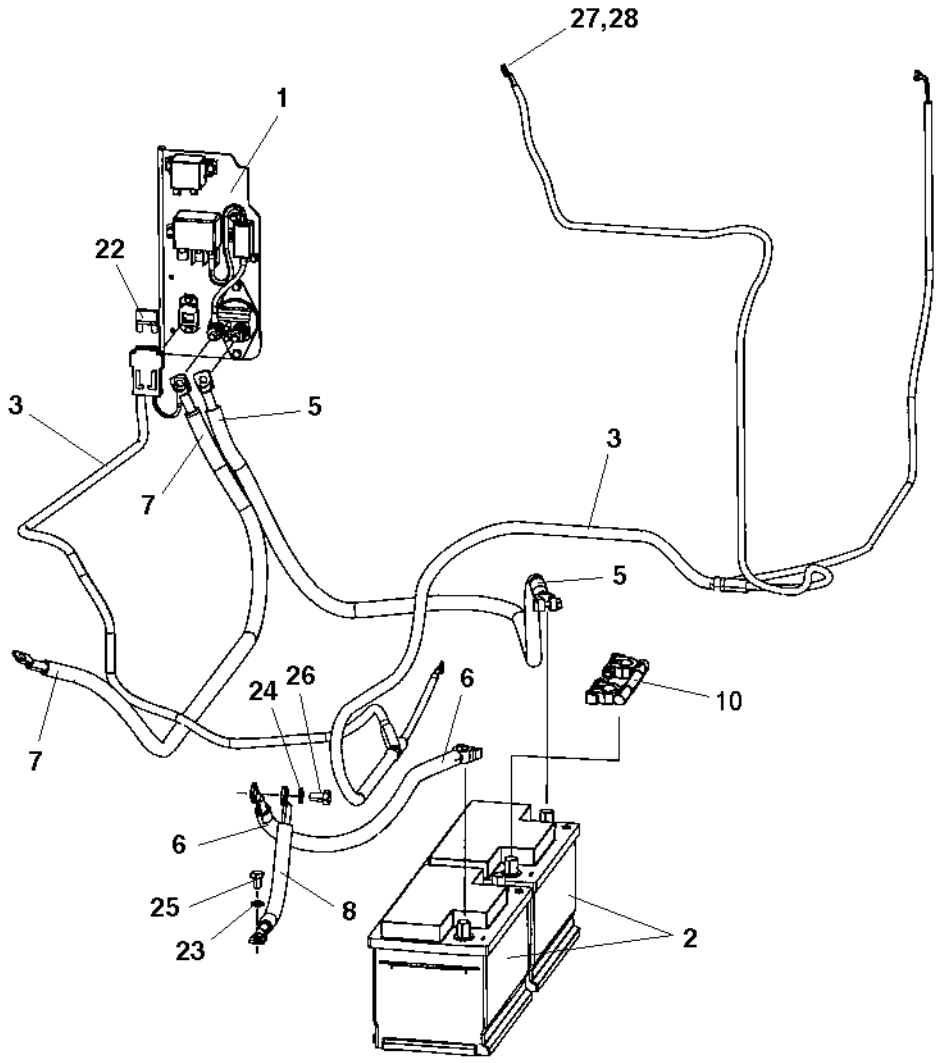

Electric cables, power supply

Ref. No.	Part No.	Rem.	Qty	Description		Code
1			1	Battery disconnector (Page 254)		
2		A		Batteries		
3	391584		1	Cable harness, power supply		
5	792364		1	Battery cable	+	
6	792328		1	Battery cable	-	
7	792327		1	Connection cable, coarse		
8	335607		1	Connection cable, coarse		
10	792684		1	Battery union cable		
22	904039		1	Fuse	50A Red High	D
23	904637		1	Washer		
24	904638		1	Washer	12x22x2	
25	500043		1	Screw		
26	500035		1	Screw	M12x020H	
27	904229		1	Washer		
28	570005		1	Nut		

A) See section " Engine structure"

Battery disconnector

391634

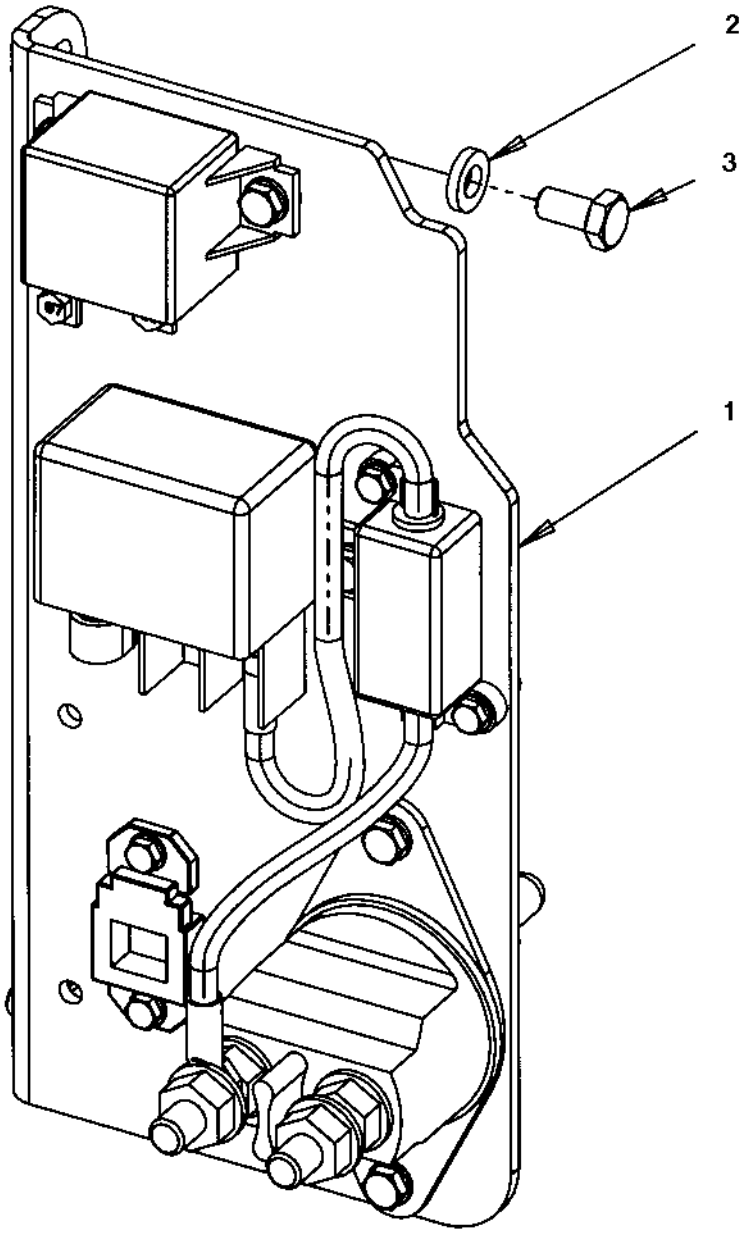

Battery disconnector

Ref. No.	Part No.	Rem.	Qty	Description	Code
1			1	Battery disconnector (Page 256)	
2	904556		3	Washer	
3	500019		3	Screw	

Battery disconnector

391635

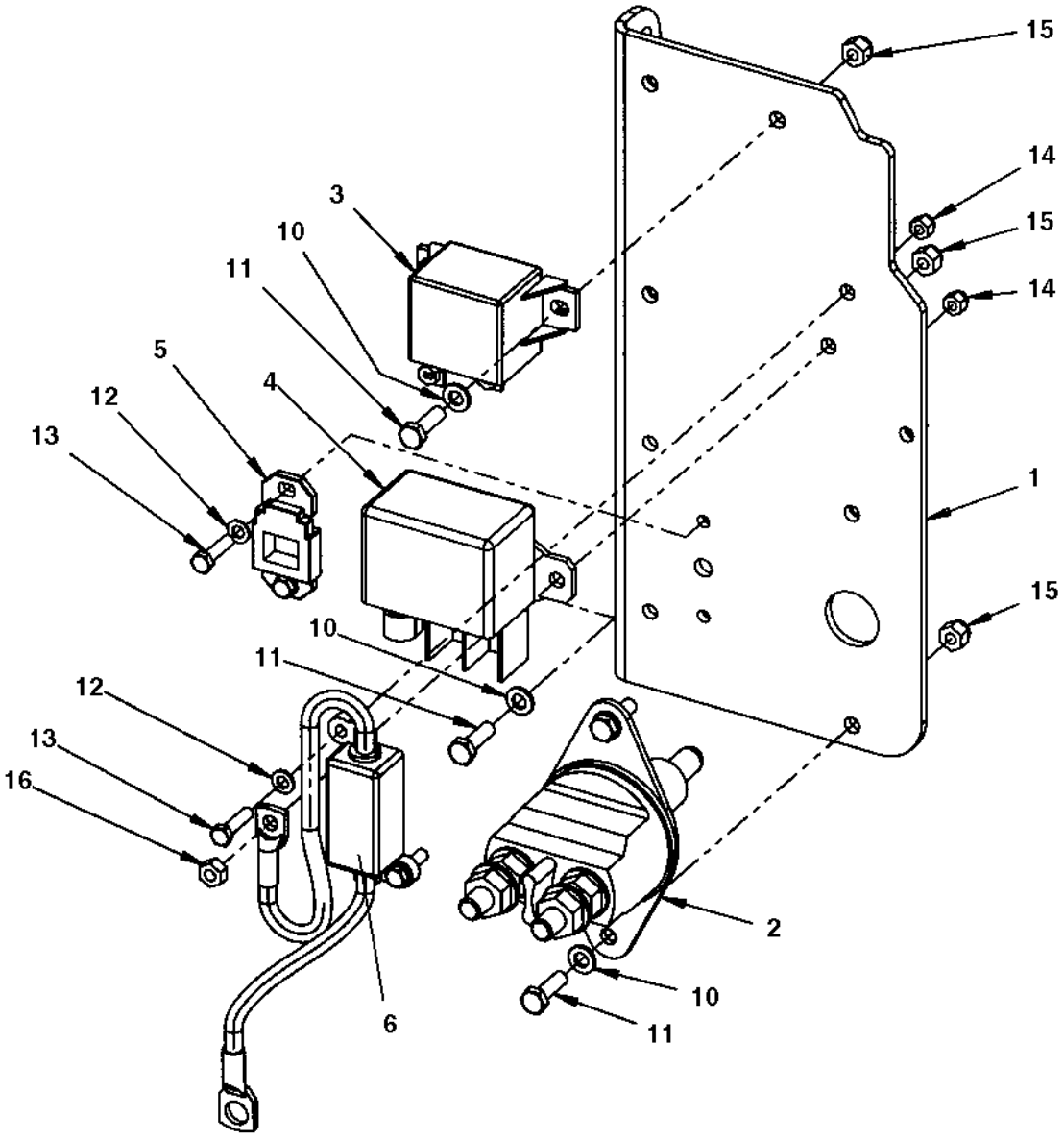

Battery disconnector

Ref. No.	Part No.	Rem.	Qty	Description		Code
1	391269		1	Holder		
2	903640		1	Battery switch		D
	903641		1	.Key		D
3	792309		1	Relay		D
4	792310		1	Relay		
5	904036		1	Fuse holder		
6	391585	A	1	Cable harness		
	791479		1	.Fuse, Orange	125A	
10	904228		6	Washer		
11	500040		6	Screw		
12	904281		4	Washer		
13	500060		4	Screw	M5-0,8x20 8.8	
14	586001		4	Lock nut		
15	586002		6	Lock nut		
16	570004		1	Nut	M6	

A) Pre-heater

Electric cables, power supply cab

392792

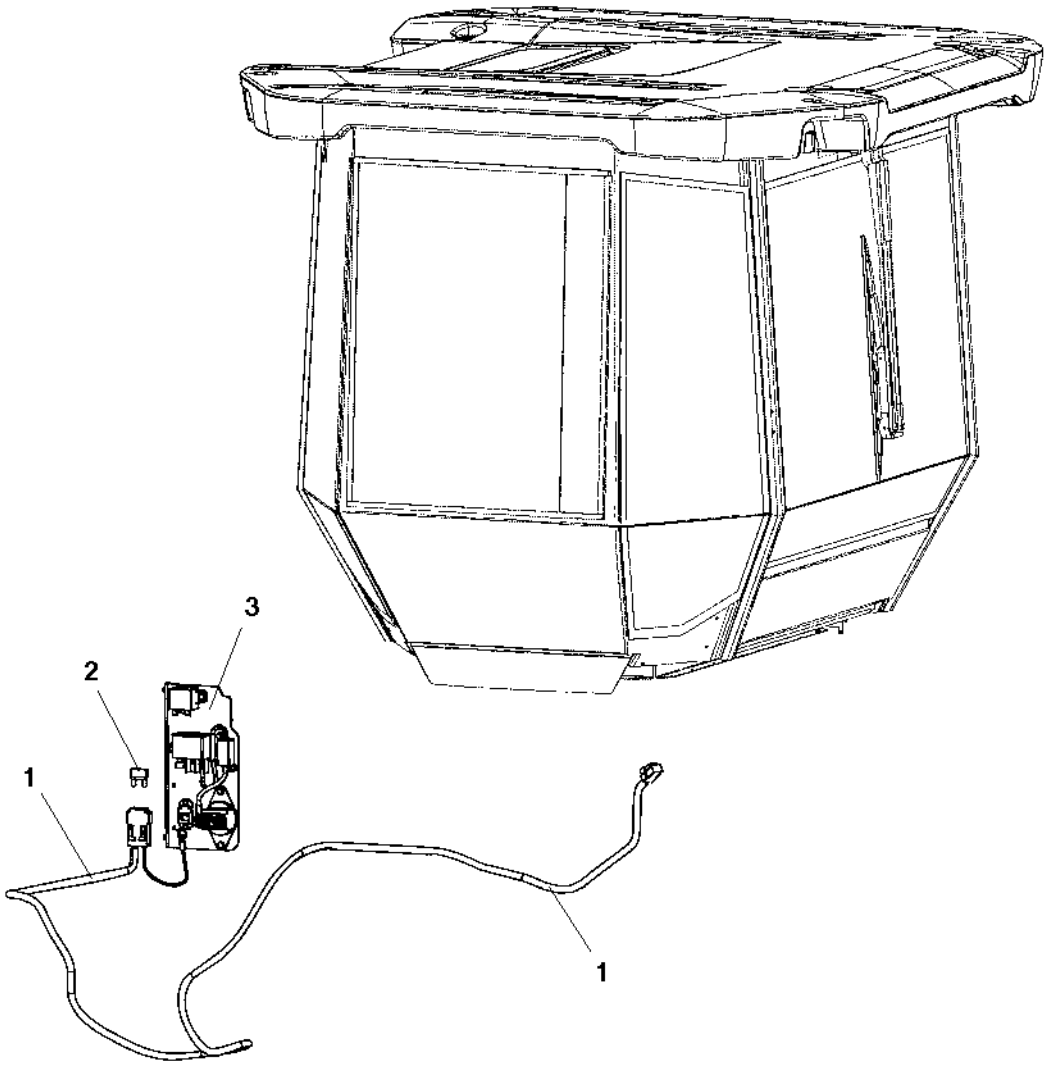

Electric cables, power supply cab

Ref. No.	Part No.	Rem.	Qty	Description		Code
1	392156		1	Cable harness, power supply	Cab	
2	904039		1	Fuse	50A Red High	D
3			1	Battery disconnector (Page 254)		

Electric cables, engine-ECU

391686_2

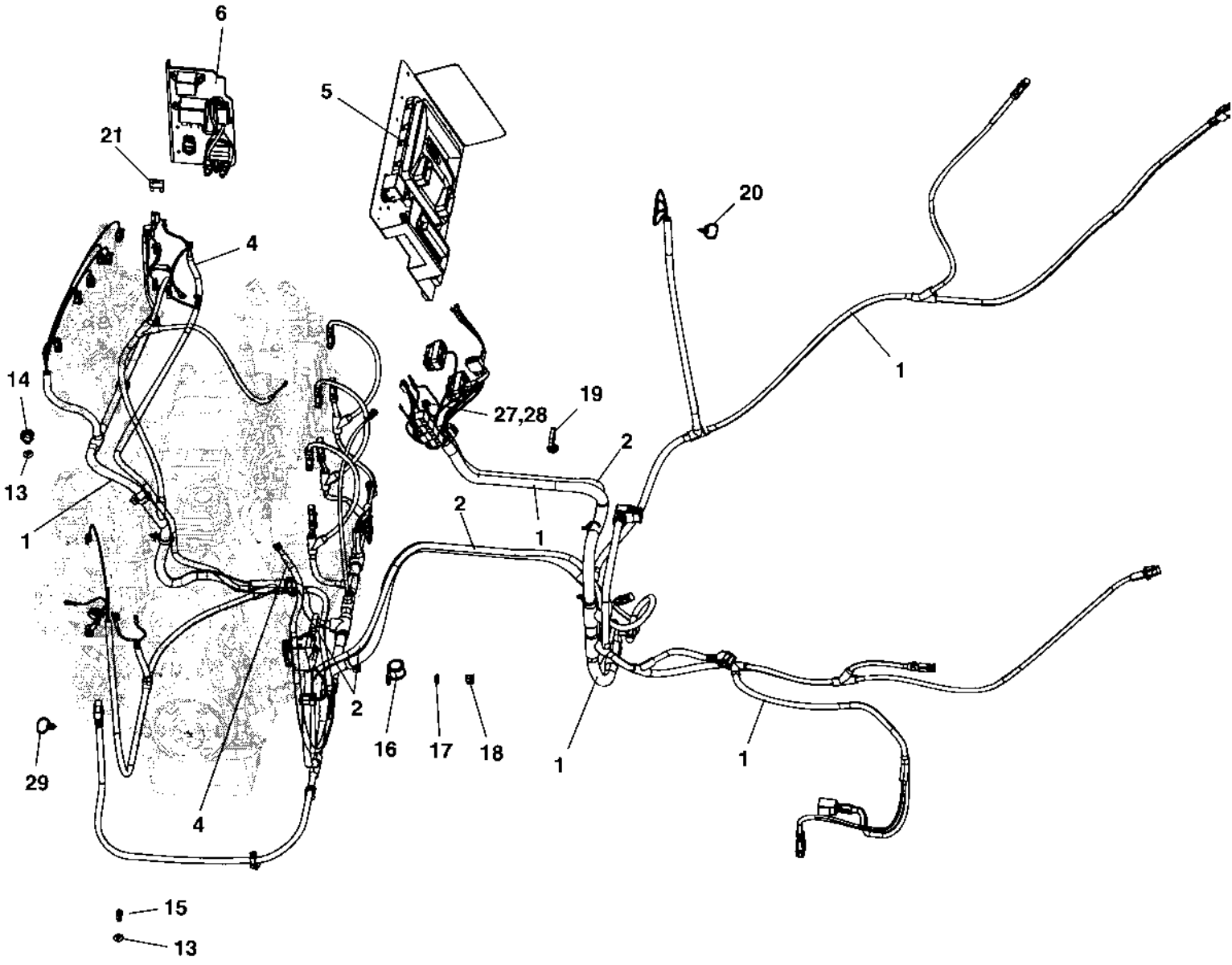

Electric cables, engine-ECU

Ref. No.	Part No.	Rem.	Qty	Description		Code
1	396257		1	Cable harness, ECU		
2	391958		1	Cable harness, CanBus		
4	792363		1	Connection cable, coarse		
5			1	Standard ECU module (Page 262)		
6			1	Battery disconnector (Page 256)		
13	792419		19	T-stud		
14	792418		15	Wiring clip		
15	792417		4	Wiring clip		
16	921031		1	Clamp		
17	904228		1	Washer		
18	586002		1	Lock nut		
19	792442		1	Cable tie with holder		
20	792441		1	Cable tie with holder		
21	904037		1	Fuse	30A	D
27	904229		2	Washer		
28	570005		2	Nut		
29	792602		1	Cable tie with holder		

Standard ECU module

391632

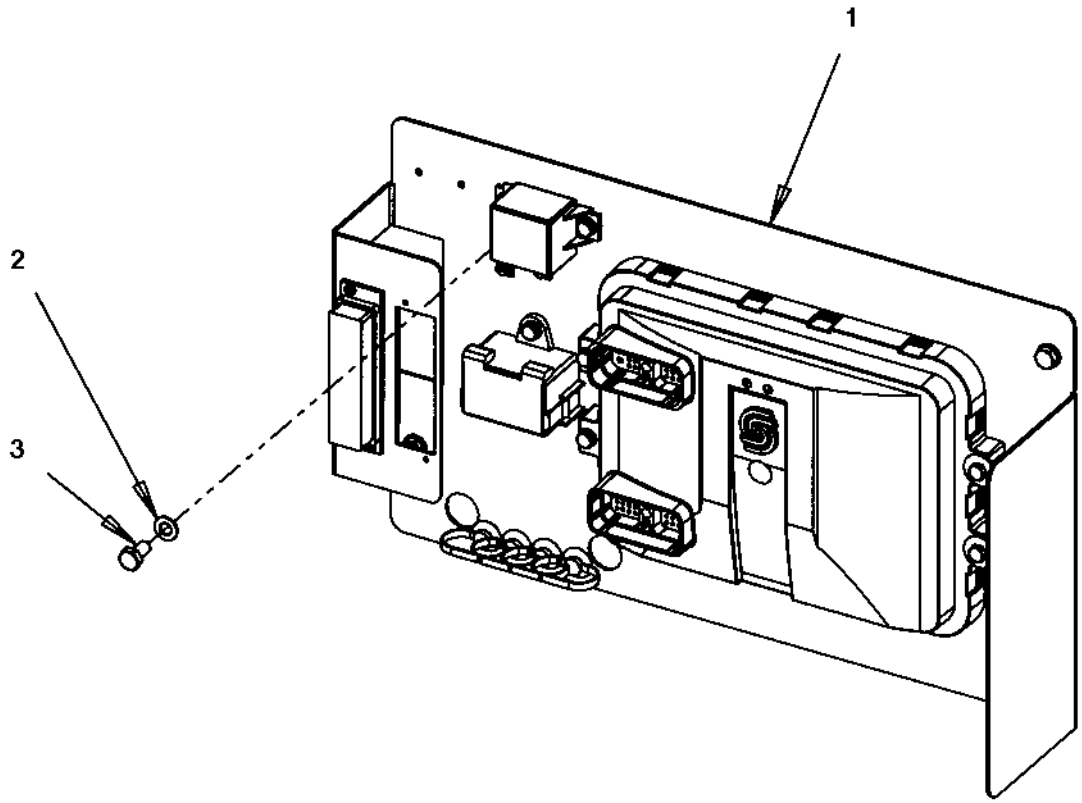

Standard ECU module

Ref. No.	Part No.	Rem.	Qty	Description	Code
1			1	Standard ECU assembly (Page 264)	
2	904229		4	Washer	
3	500019		4	Screw	

Standard ECU assembly

391633

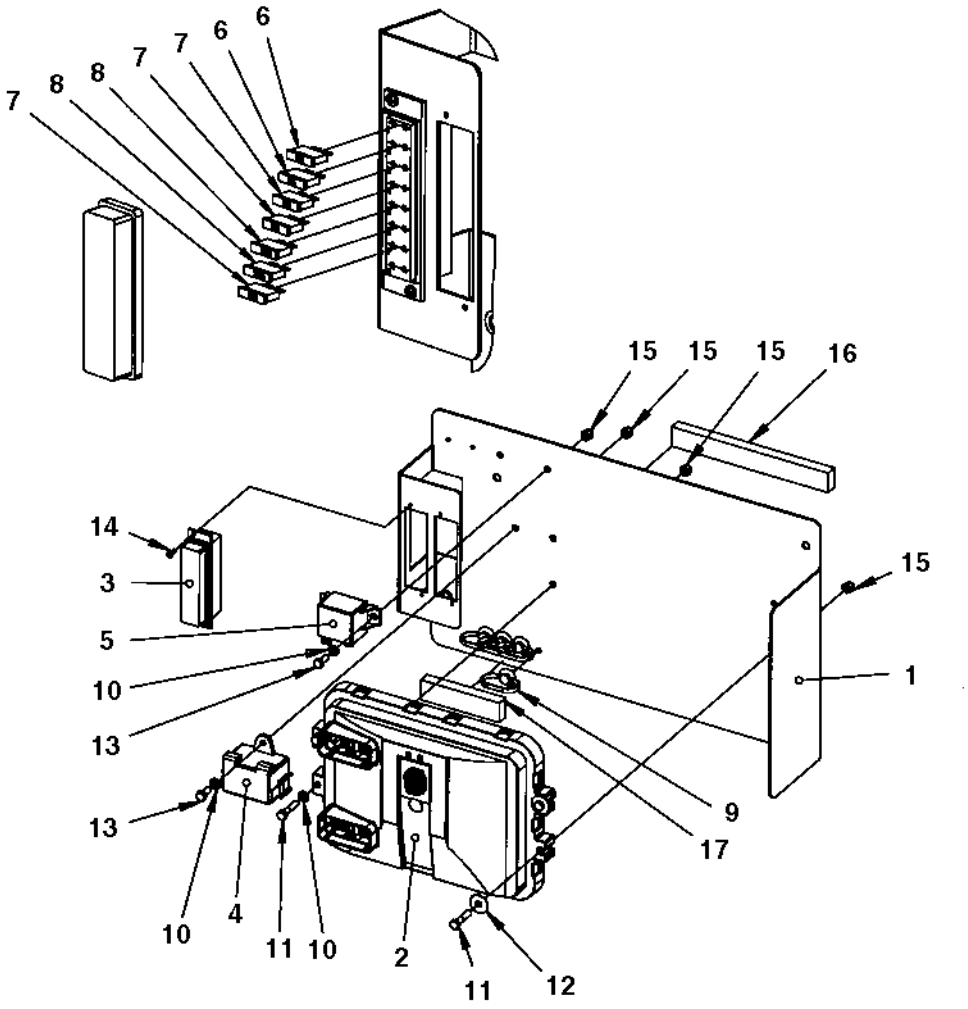

Standard ECU assembly

Ref. No.	Part No.	Rem.	Qty	Description		Code
1	391213		1	Mounting plate		
2	390860		1	Control unit		
3	791185		2	Fuse box		
4	791551		1	Junction block		
5	792309		1	Relay		D
6	901225		2	Fuse	5A	B
7	901227		3	Fuse	10A	B
8	903741		2	Fuse	20A Yellow Medium	B
9	792441		4	Cable tie with holder		
10	904228		5	Washer		
11	500015		4	Screw	M6-1x30 8,8	
12	928467		2	Washer		
13	500013		3	Screw		
14	901767		4	Screw	ST3,5x9,5 Black	
15	586002		7	Lock nut		
16	791597	A	1XL	Rubber strip		
17	791597	B	1XL	Rubber strip		

A) L= 0,2 m
B) L= 0,1 m

Electric cables, sensors/ horn/ back-up alarm

18759-1

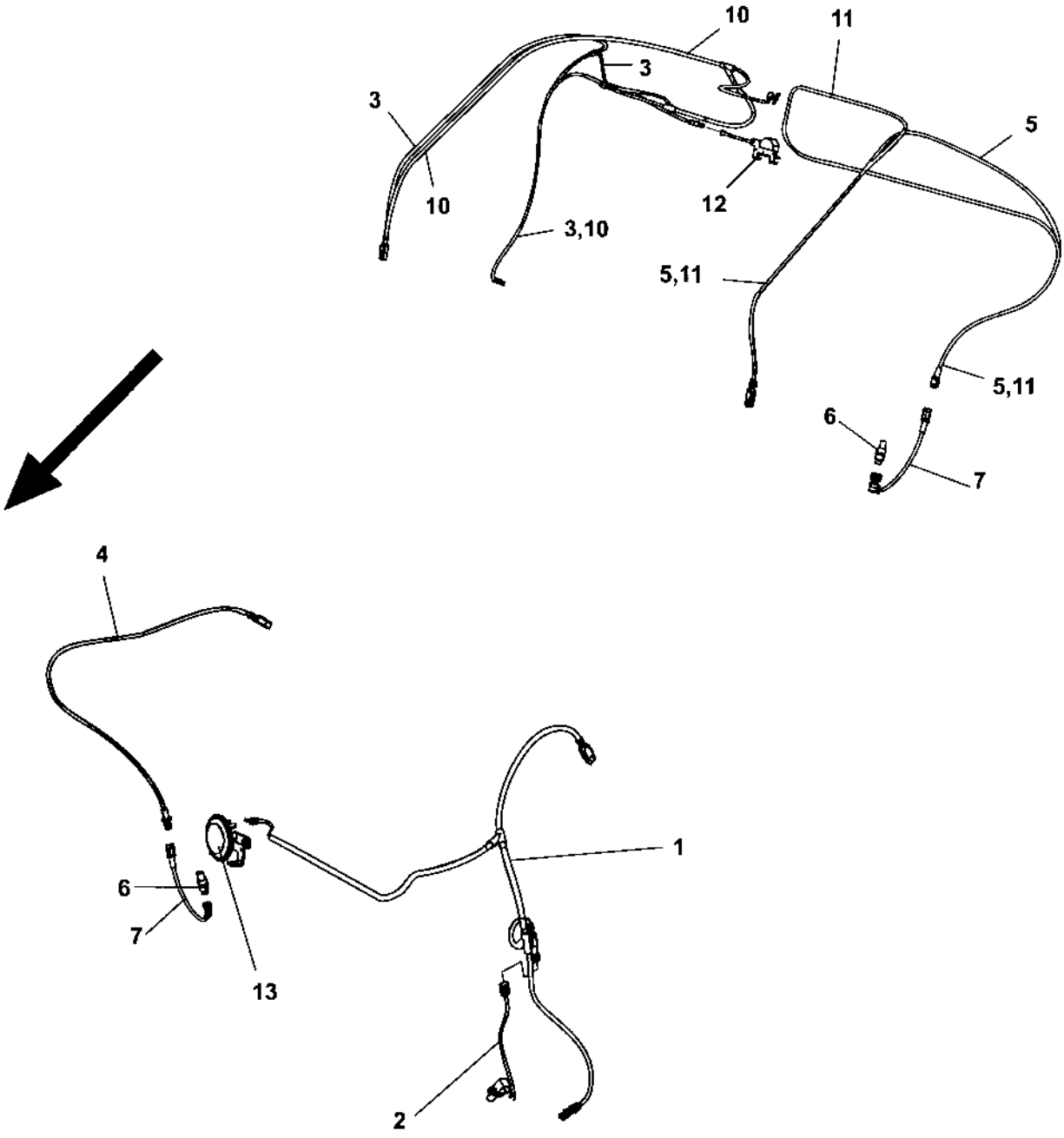

Electric cables, sensors/ horn/ back-up alarm

Ref. No.	Part No.	Rem.	Qty	Description	Code
1	391580	A,C	1	Cable harness	
2	390716		1	Speed sensor	
3	391583	B	1	Cable harness	
4	396259	A,D	1	Cable harness	
5	396260	B,D	1	Cable harness	
6	792731		2	Frequency sensor	
7	392221		2	Mount kit for sensor	
10	391955	E	1	Cable harness	
11	396261	D,E	1	Cable harness	
12			1	Back-up alarm (Page 268)	
13			1	Horn module (Page 272)	

A) Front drum
B) Rear drum, Std
C) Speed
D) Frequency
E) Rear drum, offset

Back-up alarm

391636

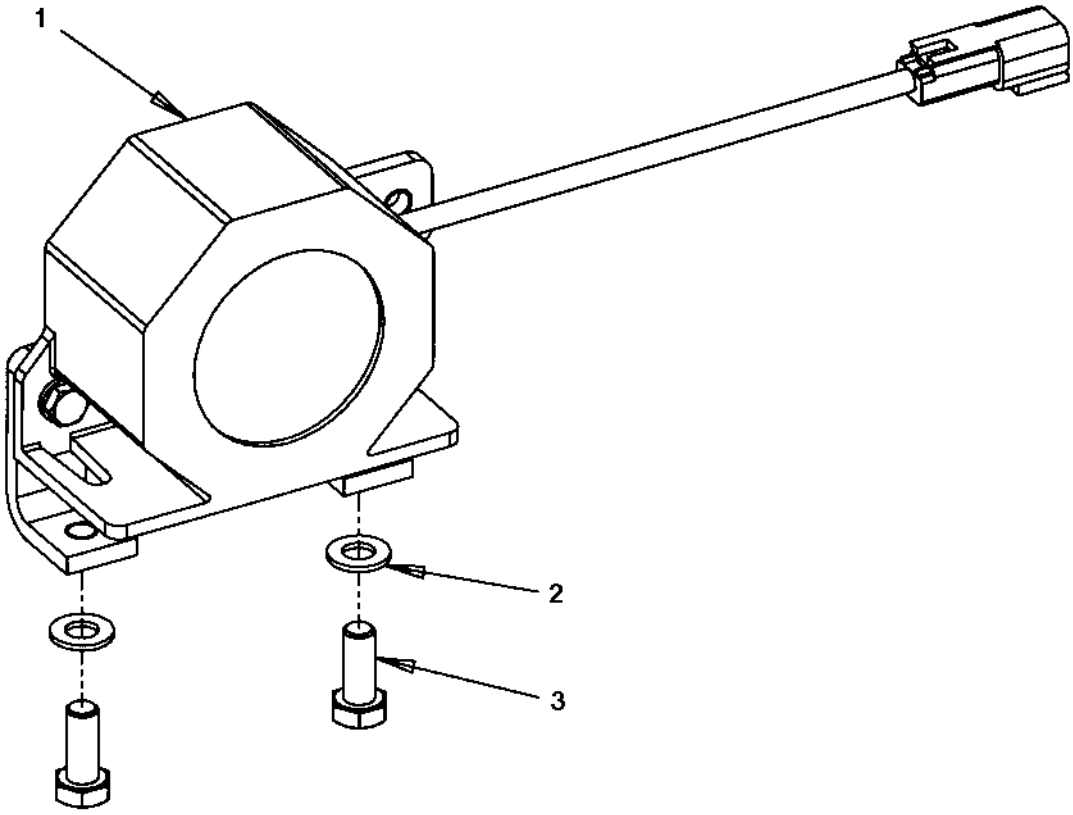

Back-up alarm

Ref. No.	Part No.	Rem.	Qty	Description	Code
1			1	Back-up alarm (Page 270)	
2	904229		2	Washer	
3	500053		2	Screw	

Back-up alarm

391637

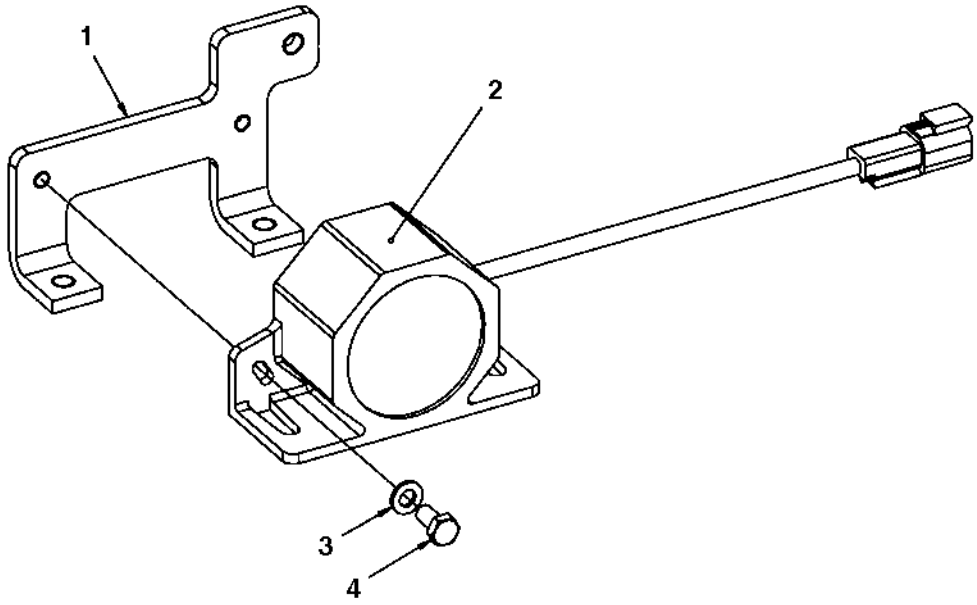

Back-up alarm

Ref. No.	Part No.	Rem.	Qty	Description	Code
1	390826		1	Bracket	
2	904911		1	Back-up alarm	
3	904228		2	Washer	
4	500012		2	Screw	

Horn module

391638

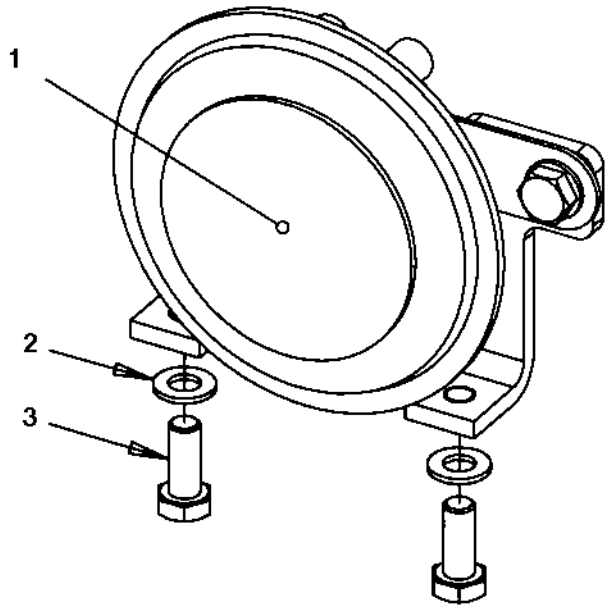

Horn module

Ref. No.	Part No.	Rem.	Qty	Description	Code
1			1	Horn (Page 274)	
2	904229		2	Washer	
3	500053		2	Screw	

Horn

391639

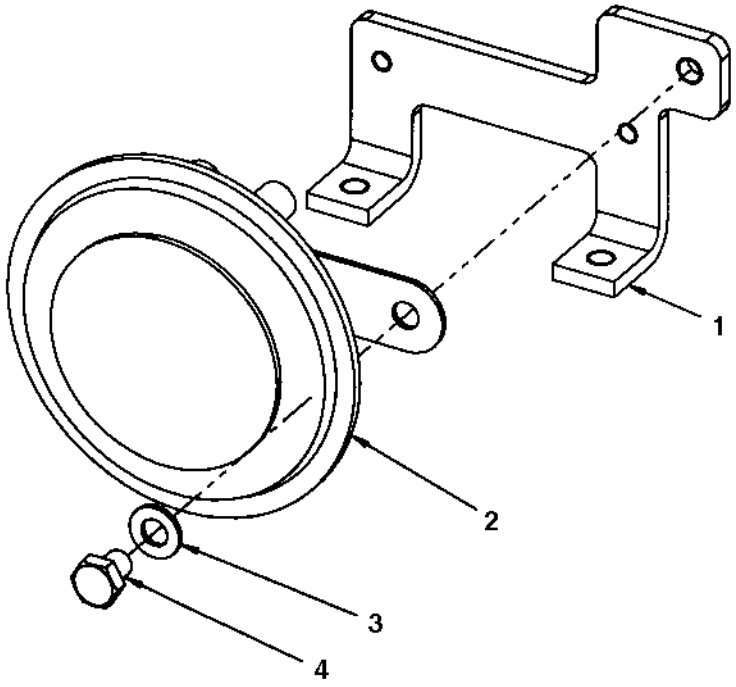

Horn

Ref. No.	Part No.	Rem.	Qty	Description	Code
1	390826		1	Bracket	
2	999014		1	Horn	
3	904229		1	Washer	
4	500042		1	Screw	

Tachograph

18687

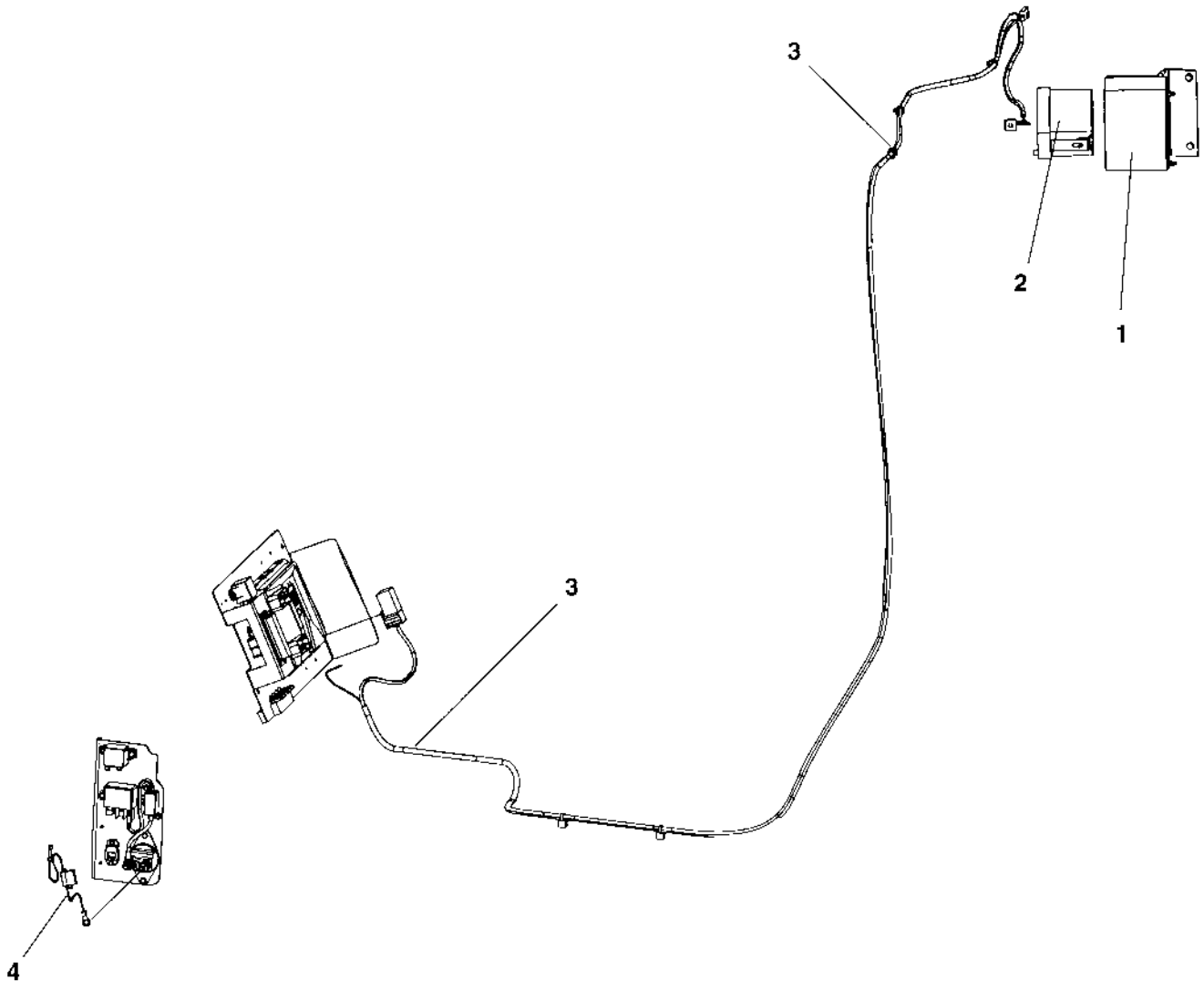

Tachograph

Ref. No.	Part No.	Rem.	Qty	Description	Code
1			1	Tachograph holder module (Page 278)	
2	395226		1	Tachograph	
3			1	Cable harness kit (Page 280)	
4			1	Power supply module (Page 282)	

Tachograph holder module

393812

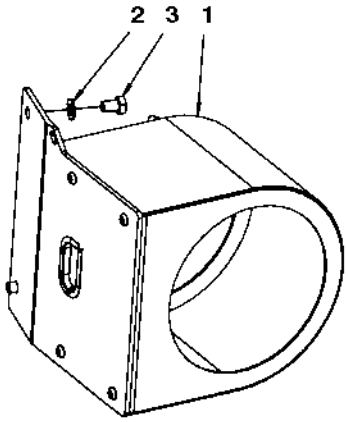

Tachograph holder module

Ref. No.	Part No.	Rem.	Qty	Description		Code
1	393776		1	Tachograph holder		
2	904229		2	Washer		
3	500018		2	Screw	M8-1,25x12 8,8	

Cable harness kit

394930

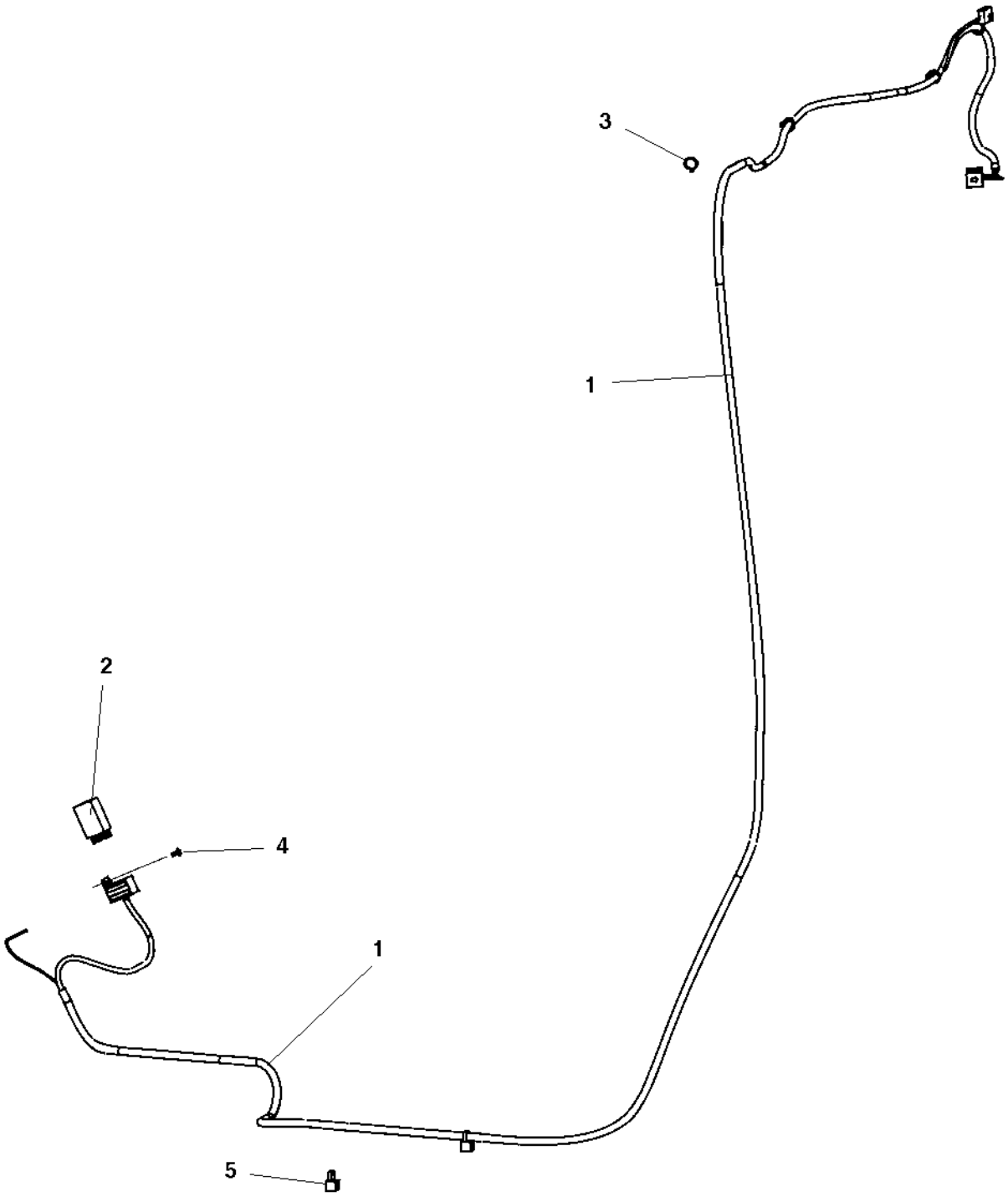

Cable harness kit

Ref. No.	Part No.	Rem.	Qty	Description	Code
1	394931		1	Cable harness	
2	395023		1	Frequency converter	
3	313041		8	Cable ties	
4	792210		1	Screw torx	
5	792667		2	Cable tie with holder	

Power supply module

394698

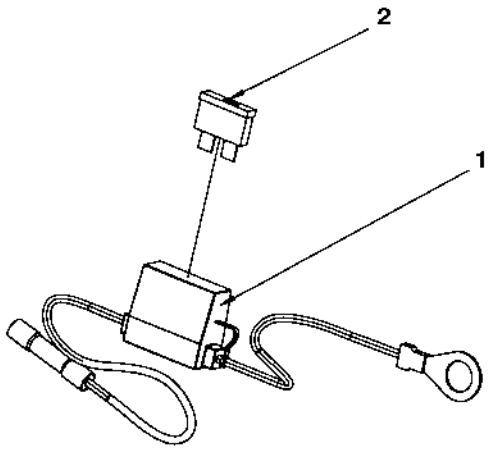

Power supply module

Ref. No.	Part No.	Rem.	Qty	Description		Code
1	394696		1	Power supply cable		
2	901227		1	Fuse	10A	B

Driving & side direction lights

18646

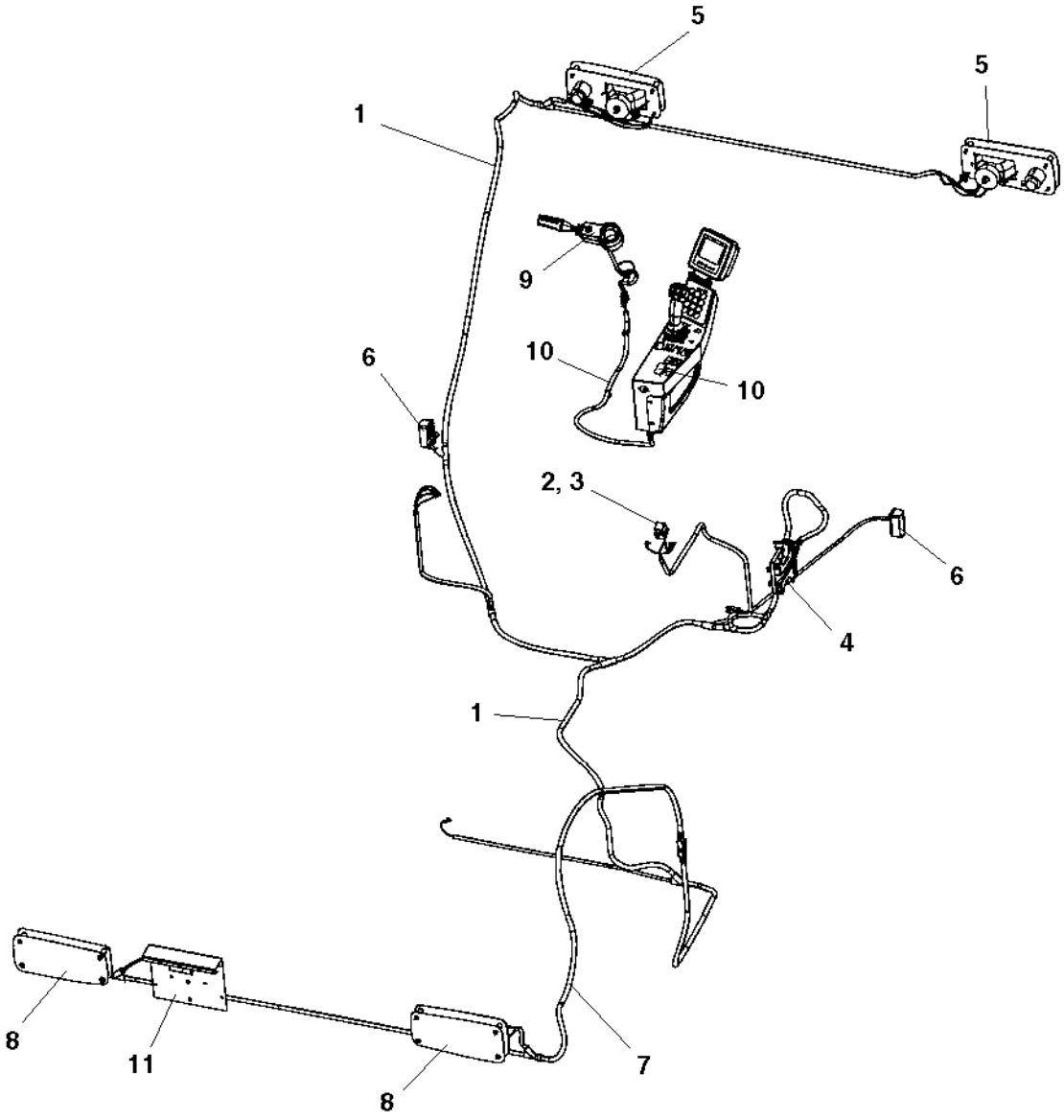

Driving & side direction lights

Ref. No.	Part No.	Rem.	Qty	Description	Code
1	392152		1	Cable harness	
2	792422		1	Relay	
3	792210		1	Screw torx	
4			1	Accessories ECU module (Page 286)	
5			2	Driving lights, front (Page 288)	RH
			2	Driving lights, front (Page 290)	LH
6			2	Turn signals (Page 292)	
7	392154		1	Cable harness	Std
	392155		1	Cable harness	Off-set
8			2	Driving lights, rear (Page 294)	
9			1	Steering column switch module (Page 296)	
10			1	Cable harness and switch module (Page 298)	
11			1	Registration plate light module (Page 300)	

Accessories ECU module

391643

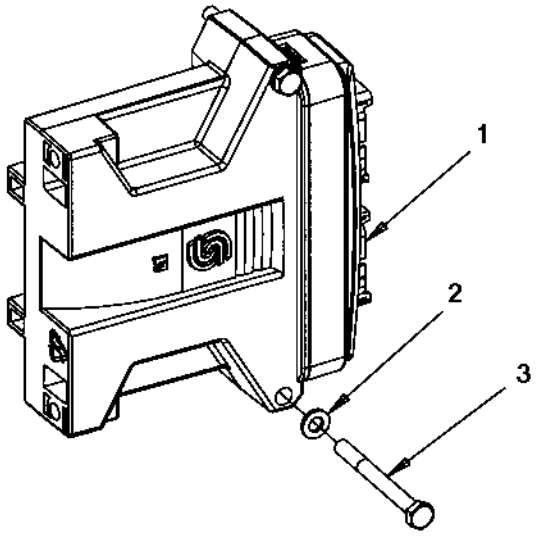

Accessories ECU module

Ref. No.	Part No.	Rem.	Qty	Description		Code
1	390862		1	Control unit without software		
2	904228		2	Washer		
3	500187		2	Screw	M6x60	

Driving lights, front RH

391644

