CC6200

ATLAS COPCO - DYNAPAC

Spare parts list

Vibratory roller

CC6200 s/n 10000349xxA012728 -
Engine: Cummins QSB 4.5 IIIB/T4i

RUTHZIL TRATOR COMERCIAL DE PEÇAS LTDA 11 97083-6812 ROLANDO CITRANGULO



© 2017 Dynapac Compaction Equipment AB | No. 4812159879_B| 2017-03

General information

Use only authorized parts. Any damage or malfunction caused by the use of unauthorized parts is not covered by Warranty or Product Liability.
Any unauthorized use or copying of the contents or any part thereof is prohibited. This applies in particular to trademarks, model denominations, part numbers, and drawings.

Instructions for use
This spare parts list contains no safety regulations and is merely intended to assist in the ordering of spare parts.
For information about operating, servicing, or repairing, the relevant Safety and operating instructions must be consulted at all costs.
Please observe the safety instructions listed in the relevant Safety and operating instructions!

Contents

CC6200 (IIIB/T4i) SN 10000349xxA012728 - . . . 1

Service kits

4812159352 Service kit, 50h Plus . . . 3
4812159353 Service kit, 500h Cummins QSB 4.5 . . . 5
4812159354 Service kit, 500h Plus Cummins QSB 4.5 . . . 7
4812159355 Service kit, 1000h Cummins QSB 4.5 . . . 9
4812159357 Service kit, 1000h Plus Cummins QSB 4.5 . . . 11
4812159360 Service kit, 2000h Plus Cummins QSB 4.5 . . . 13
4812159670 Start up kit . . . 15

Repair kits

4700950152 Scraper kit . . . 17
4700945903 Eccentric shaft kit . . . 19
4700938891 Drum rotation kit . . . 21
4700945904 Shock absorber kit, drum . . . 23
4812155698 Sprinkler kit . . . 25

General - Keys and others

Keys . . . 27
Fuses . . . 29

Frame

Front frame

Front frame . . . 31
Front frame . . . 33
4700391023 Steering cylinder . . . 35
Tank structure module . . . 37
Tank structure module . . . 39
4700391307 Cover . . . 43
Hose support . . . 45
Filling pipe . . . 47
Hitch module . . . 49
4812117737 Articulated joint . . . 51
Locking device module . . . 53
Grab handle module . . . 55

Rear frame

Rear frame . . . 57
Frame, rear . . . 59
Cover, cpl . . . 63
Engine structure, module . . . 65
Engine structure . . . 67
Hose support . . . See page 45
Noise suppression plates . . . 71
Noise suppression, covers . . . 73
Grab handle module . . . See page 55
Grab handle module . . . 75

Sprinkler system

Sprinkler system . . . 77

Sprinkler pump module, To SN A013069

Sprinkler pump module . . . 79
Sprinkler pump . . . 81

Sprinkler pump module, From SN A013070

Sprinkler pump module . . . 83
Sprinkler pump . . . 85
Filling pipe . . . See page 47
Locking device module . . . See page 53
Water hoses . . . 87

Sprinkler pump, additonal sprinkler/cocoa mat, To SN A013069
Sprinkler pump, additonal sprinkler/cocoa mat . . . 89
Sprinkler pumps . . . 91

Sprinkler pump, additonal sprinkler/cocoa mat, From SN A013070
Sprinkler pump module (2 pumps) . . . 95
Sprinkler pump mounted (2 pumps) . . . 97

Sprinkler pump, backup, To SN A013069
Sprinkler pump, backup . . . 101

Sprinkler pump, backup, From SN A013070
Sprinkler pump, backup . . . 103

Extra sprinkler tank/s
Extra sprinkler tank/s . . . 105
Water hoses . . . 107
Filling pipe . . . 109
Sprinkler tank . . . 111

End frame, front
End frame, front . . . 113

End frame, front
End frame, front . . . 115
Frame . . . 117

End frame, extra tank
End frame, extra tank . . . 119
Frame assy . . . 121
Fork, vibration side . . . 123
Fork, propulsion side . . . 125
Cover plate . . . 127
Hose clamp, propulsion side . . . 129
Hose clamp, vibration side . . . 131
Step, vibration side . . . 133
Step, propulsion side . . . 135
Scraper module, without nozzles . . . 137
Scraper module, with nozzles . . . 139
Scraper assy with nozzles . . . 141
Scraper assy . . . 143
4700394340 Scraper bracket, cpl . . . 145
Grab handle, release . . . 147
Grab handle, release . . . 149
Grab handle, release . . . 151
Grab handle, lift . . . 153
Grab handle, lift offset/cocoa mat . . . 155

Cocoa mat
Cocoa mat module . . . 157
Cocoa mat assembly . . . 159
Cocoa mat bracket module . . . 161
Cocoa mat bracket . . . 163
Cocoa mat bracket module . . . 165
Cocoa mat bracket . . . 167
Process mirrors . . . 169

End frame, rear
End frame, rear . . . 171
End frame, rear . . . 173
Frame . . . See page 117

End frame, extra tank

End frame, extra tank . . . See page 119
Frame assy . . . See page 121

End frame, rear offset

End frame, rear offset . . . 175
Frame . . . 177
Connection block . . . 179
Micro switch . . . 181
4700391024 Steering cylinder . . . 183
Fork, vibration side . . . See page 123
Fork, propulsion side . . . See page 125
Step, vibration side . . . See page 133
Step, propulsion side . . . See page 135
Hose clamp, propulsion side . . . See page 129
Hose clamp, vibration side . . . See page 131
4700394340 Scraper bracket, cpl . . . See page 145
Scraper module, without nozzles . . . See page 137
Scraper module, with nozzles . . . See page 139
Scraper assy with nozzles . . . See page 141
Scraper assy . . . See page 143
Cover plate . . . See page 127
Eyelet module . . . 185
SMV-sign . . . 187
Grab handle, release . . . See page 147
Grab handle, release . . . See page 149
Grab handle, release . . . See page 151
Grab handle, lift . . . See page 153
Grab handle, lift offset/cocoa mat . . . See page 155

Cocoa mat module

Cocoa mat module . . . See page 157
Cocoa mat assembly . . . See page 159
Cocoa mat bracket module . . . See page 161
Cocoa mat bracket . . . See page 163
Cocoa mat bracket module . . . See page 165
Cocoa mat bracket . . . See page 167

Drum

Drum . . . 189
Drum bearing . . . 191

Drive unit, To A014206

Drive unit . . . 193
4700390604 Drum gear . . . 195

4700390603 Hydraulic motor

4700390603 Hydraulic motor . . . 199
Engine hydraulic part . . . 201
End plate . . . 203

Drive unit, From A014207

Drive unit . . . 205
4812269526 Gear . . . 207

4812120567 Hydraulic motor

4812120567 Hydraulic motor . . . 211
Housing, cpl . . . 213
Rotary group . . . 215
Connection plate, cpl . . . 217
Sensor . . . 219

4812120568 Hydraulic motor

4812120568 Hydraulic motor . . . 221
Housing, cpl . . . 223

Rotary group . . . 225
Connection plate, cpl . . . 227
Vibrating unit Sauer . . . 229
4700395915 Hydraulic motor Vibration . . . 231

Engine
Engine room . . . 235
Engine module . . . 237
4812114024 Diesel engine Cummins QSB4.5 IIIB/T4i -119kW . . . 239
Air cooler hoses . . . 241
Water cooler hoses . . . 243
Air cleaner module . . . 245
Air cleaner hoses . . . 247
Exhaust system module . . . 249
Fuel hoses . . . 251
Charge air cooler . . . 253
Water cooler . . . 255
Expansion tank assembly . . . 257
Coolant hoses . . . 259
Belt guard . . . 261
Bracket kit . . . 263

Hydraulic system

Hydraulic system, front drum
Hydraulic system, front drum . . . 265

Hydraulic system, rear drum std
Hydraulic system, rear drum std . . . 267

Hydraulic system, rear drum offset
Hydraulic system, rear drum offset . . . 269
Connection block . . . See page 179
4700391024 Steering cylinder . . . See page 183
Hydraulic valve module, offset/combi . . . 271
Hydraulic valve . . . 273
4700391017 Hydraulic valve . . . 275

Hydraulic hoses, frame
Hydraulic hoses, frame . . . 277

Hydraulic hoses, engine room
Hydraulic hoses, engine room . . . 280
Fan module . . . 285
Hydraulic pump module . . . 287
Oil cooler . . . 289
Hydraulic valve module . . . 291
Hydraulic valve . . . 293
4700395924 Hydraulic valve . . . 295
Hydraulic pump module . . . 297
Hydraulic pump . . . 299

4700390602 Hydraulic pump
4700390602 Hydraulic pump . . . 301

4812155785 Hydraulic pump
4812155785 Hydraulic pump . . . 303
Rotating group, cpl . . . 306
Valve block, cpl . . . 309
Control module . . . 311
Flushing valve . . . 313

4812155786 Hydraulic pump
4812155786 Hydraulic pump . . . 315

Rotary group, cpl . . . 319
Valve block, cpl . . . 321

4812155787 Hydraulic pump
4812155787 Hydraulic pump . . . 323
Rotary group, cpl . . . 327
Valve block, cpl . . . 329

Hydraulic system, steering Std
Hydraulic system, steering Std . . . 331
Hydraulic valve module . . . See page 291
Hydraulic valve . . . See page 293
4700395924 Hydraulic valve . . . See page 295
Hose bracket . . . 333

Hydraulic steering, sliding seat
Hydraulic steering, sliding seat . . . 335
Carrier . . . 337
Steering, slideable . . . 339
4700372424 Pilot valve, steering . . . 341

Electrical equipment

Electric cables, power supply
Electric cables, power supply . . . 343
Battery disconnector . . . 345
Battery disconnector . . . 347

Electric cables, power supply cab
Electric cables, power supply cab . . . 349

Electric cables, engine - ECU
Electric cables, engine - ECU . . . 351
Standard ECU module . . . 353
Standard ECU assembly . . . 355

Electric cables, sensors/ horn/ back-up alarm
Electric cables, sensors/ horn/ back-up alarm . . . 357
Back-up alarm module . . . 359
Back-up alarm . . . 361
Horn module . . . 363
Horn . . . 365

Driving & side direction lights
Driving & side direction lights . . . 367
Driving lights, front . . . 369
Steering column switch module . . . 371
Cable harness and switch module . . . 373
Registration plate light module . . . 375
Registration plate light . . . 377
Driving lights, rear . . . 379
Turn signals . . . 381

Rotating beacon, working light
Rotating beacon, working light . . . 383
Rotating beacon module . . . 385
Working light module H3 . . . 387

Drum edge lights
Drum edge lights . . . 389
Bracket . . . 391
Working light module H3 . . . See page 387
Bracket . . . 393

GPS/DCA, Asphalt temp

GPS/DCA, Asphalt temp meter . . . 395
Cable harness kit, GPS . . . 397
Cable and Gateway . . . 399
GPS/DCA equipment assy . . . 401
Temp sensor module . . . 403
Temp sensor module . . . 405
Computer with holder . . . 407

Drivers platform

Platform, no cab

Platform, no cab . . . 409
Platform with 4-post ROPS . . . 411
Decals basic kit . . . 413

4812119369 Platform with 4-post ROPS

4812119369 Platform with 4-post ROPS . . . 415
Roof . . . 417
ROPS interior . . . 419
Manual box . . . 421
Hand rail, left . . . 423
Hand rail . . . 425
Hand rail, right . . . 427
Hand rail . . . 429
Hand rail . . . 431
Lunch box module . . . 433

Cab, asymmetric

Cab, asymmetric . . . 435

4812119361 Cab, cpl

4812119361 Cab, cpl . . . 437
Screens front/rear and ceiling . . . 439
Corner screens left and AC hood . . . 441
24V socket and air nozzels . . . 443
Wipers front/rear and front ceiling . . . 445
Cab frame harness . . . 449
Heating installation . . . 451
Heater cover plate . . . 454
AC-kit . . . 457
Switch kit . . . 459
Door sliding screens . . . 461
Door complete . . . 463
Screens asymmetric right . . . 465
Lower screens front/rear and rear cover . . . 467
Lower screen and water system, left . . . 469
Lower screens and water system, right . . . 471

4812119360 Cab comfort, cpl

4812119360 Cab comfort, cpl . . . 473
Screens front/rear and ceiling . . . See page 439
Corner screens left and AC hood . . . See page 441
24V socket and air nozzels . . . See page 443
Wipers front/rear and front ceiling . . . See page 445
Cab frame harness . . . See page 449
Interior Cab . . . 475
Heating installation . . . See page 451
Evaporator kit . . . 477
4812113623 Evaporator, cpl . . . 479
ACC kit . . . 481
4812113624 ACC kit . . . 483
Door sliding screens . . . See page 461

Door complete . . . See page 463
Screens asymmetric right . . . See page 465
Lower screens front/rear and rear cover . . . See page 467
Lower screen and water system, left . . . See page 469
Lower screens and water system, right . . . See page 471
Manual box . . . See page 421
Decals basic kit . . . 485
Cab noise cover . . . 487
Rear view mirror . . . 489

Drivers seat
Drivers seat . . . 491
Seat frame structure . . . 493
4700391163 Steering column . . . 495
Seat, galon suspensioned . . . 497
Seat comfort, galon suspensioned . . . 499
Seat comfort, fabric suspensioned . . . 501

Seat belts
Seat belt 2" . . . 503
Seat belt 2" with reminder . . . 505
Seat belt 3" . . . 507
Seat belt 3" with reminder . . . 509
Controls, slidable and turning . . . 511
Cross sliding . . . 513
Carrier . . . 515
Steering, slideable . . . See page 339
Hose bracket . . . See page 333

Drive control To A015418
Drive control, cpl . . . 517
Drive control . . . 519

Drive control From A015419
Drive control module . . . 521
Drive control . . . 523
Control handle . . . 525
Display unit . . . 527
Control panel cover . . . 529
Steering column switch module . . . See page 371
Seat frame adapter module, rotating . . . 531

Decals
Decals . . . 533

Optional equipment

Air conditioning
Air conditioning . . . 537
Compressor module . . . 539
Condensor module . . . 541
Condensor . . . 543
Evaporator kit . . . See page 477
ACC kit . . . See page 481
Hose kit Compressor . . . 545
Hose kit AC . . . 547

Radio and cd player
Radio and cd player . . . 549
Radio and cd player module . . . 551
Power supply module . . . 553

Tachograph, Car stereo
Tachograph, Car stereo . . . 555

Tachograph with holder . . . 557
Car stereo module 12V . . . 559

Edge cutter

Edge cutter . . . 561
Edge cutter, module . . . 563

4700390998 Edge cutter, cpl

4700390998 Edge cutter, cpl . . . 565
4700390999 Holder . . . 567
4700391009 Bearing unit . . . 569
4700387275 Hydraulic cylinder . . . 571
Cutting disc module . . . 573
Pressing roller, module . . . 575
Hydraulic valve module . . . 577
Hydraulic valve . . . 579
4700391018 Hydraulic valve . . . 581
Disc/Roller holder . . . 583

Fire extinguisher/First Aid Cushion

Fire extinguisher/First Aid Cushion . . . 585
Fire extinguisher assembly . . . 587

Asphalt temperature meter

Asphalt temperature meter . . . 589
Dyn@lyzer . . . 591
FleetLink module . . . 593
DCM Compaction meter with Evib . . . 595
Appendix B:Parts Index . . . 597

CC6200 (IIIB/T4i) SN 10000349xxA012728 -



Item	Part No.	Name	Qty	L	SN INFO
0	-	Service kits	1		
0	-	Repair kits	1		
1	-	Frame	1		
2	-	Drum	1		
3	-	Engine	1		
5	-	Hydraulic system	1		
6	-	Electric equipment	1		
7	-	Drivers platform	1		
8	-	Decals	1		
10	-	Optional equipment	1		

Service kits 4812159352 Service kit, 50h Plus

NO EXPLODED VIEW
AVAILABLE
FOR THIS BOM

Item	Part No.	Name	Qty	L	SN INFO
-	4812159352	Service kit, 50h Plus			
1	4812112262	Hydraulic oil filter element	1		
2	4812008274	AC Fluid Gearbox 100 / 5 ltr.	1		

Service kits 4812159353 Service kit, 500h Cummins QSB 4.5

Item	Part No.	Name	Qty	L	SN INFO
0	4812159353	Service kit, 500h Cummins QSB 4.5			
1	4700939082	Oil filter	1		
2	4812158187	Fuel filter	1		
3	4812041531	Fuel prefilter	1		
4	4812159185	Air filter element	1		

Service kits 4812159354 Service kit, 500h Plus Cummins QSB 4.5

Item	Part No.	Name	Qty	L	SN INFO
0	4812159354	Service kit, 500h Plus Cummins QSB 4.5			
1	4700939082	Oil filter	1		
2	4812158187	Fuel filter	1		
3	4812041531	Fuel prefilter	1		
4	4812159185	Air filter element	1		
11	5580020624	Engine oil 100 / 5 ltr.	3		

Service kits 4812159355 Service kit, 1000h Cummins QSB 4.5

Item	Part No.	Name	Qty	L	SN INFO
0	4812159355	Service kit, 1000h Cummins QSB 4.5			
1	4700939082	Oil filter	1		
2	4812158187	Fuel filter	1		
3	4812041531	Fuel prefilter	1		
4	4812159185	Air filter element	1		
5	4812112262	Hydraulic oil filter element	1		
6	4812158191	Safety filter element	1		
7	4700391026	Ventilating filter	1		

Service kits 4812159357 Service kit, 1000h Plus Cummins QSB 4.5

Item	Part No.	Name	Qty	L	SN INFO
0	4812159357	Service kit, 1000h Plus Cummins QSB 4.5			
1	4700939082	Oil filter	1		
2	4812158187	Fuel filter	1		
3	4812041531	Fuel prefilter	1		
4	4812159185	Air filter element	1		
5	4812112262	Hydraulic oil filter element	1		
6	4812158191	Safety filter element	1		
7	4700391026	Ventilating filter	1		
11	5580020624	Engine oil 100 / 5 ltr.	3		
13	4812030096	Dynapac Roller Grease	1		
15	4812156456	Dynapac drum oil 1000 5 liters	7		
16	4812030756	Gear Oil 300 / 5 ltr.	1		

Service kits 4812159360 Service kit, 2000h Plus Cummins QSB 4.5

Item	Part No.	Name	Qty	L	SN INFO
0	4812159360	Service kit, 2000h Plus Cummins QSB 4.5			
1	4700939082	Oil filter	1		
2	4812158187	Fuel filter	1		
3	4812041531	Fuel prefilter	1		
4	4812159185	Air filter element	1		
5	4812112262	Hydraulic oil filter element	1		
6	4812158191	Safety filter element	1		
7	4700391026	Ventilating filter	1		
8	4812158465	Crankcase ventilation filter	1		
11	5580020624	Engine oil 100 / 5 ltr.	3		
13	4812030096	Dynapac Roller Grease	1		
14	9106230330	Atlas Copco fluid hydraulic oil 300 / 20 liters	2		
15	4812156456	Dynapac drum oil 1000 5 liters	7		
16	4812030756	Gear Oil 300 / 5 ltr.	1		

Service kits 4812159670 Start up kit

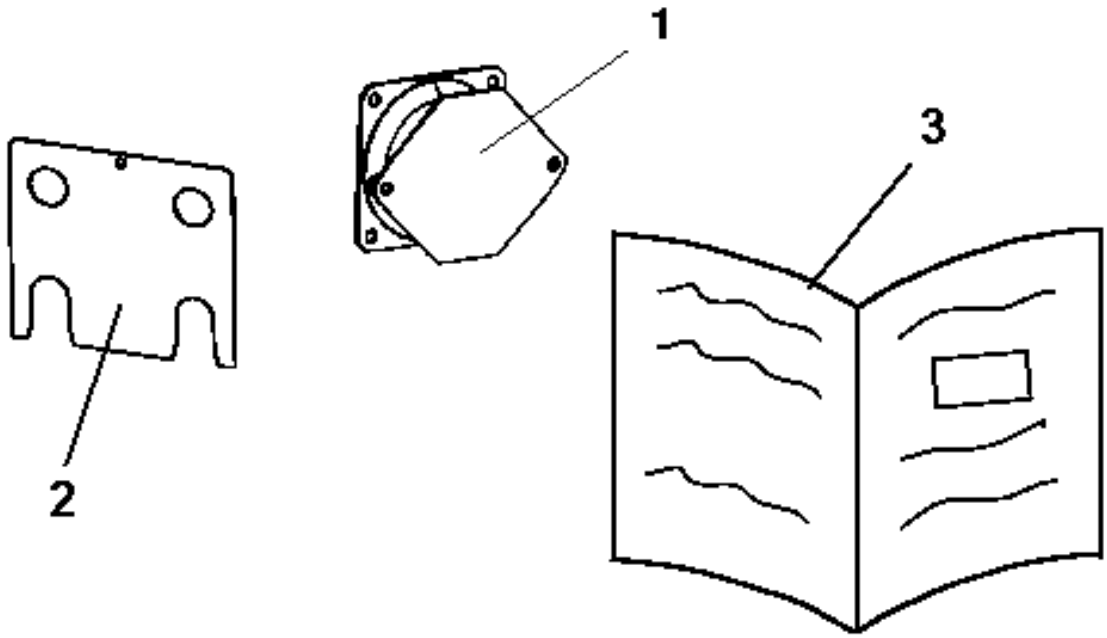

Item	Part No.	Name	Qty	L	SN INFO
1	4812159352	Service kit, 50h Plus	1		
2	4812159354	Service kit, 500h Plus Cummins QSB 4.5	1		
3	4812159357	Service kit, 1000h Plus Cummins QSB 4.5	1		

Repair kits 4700950152 Scraper kit

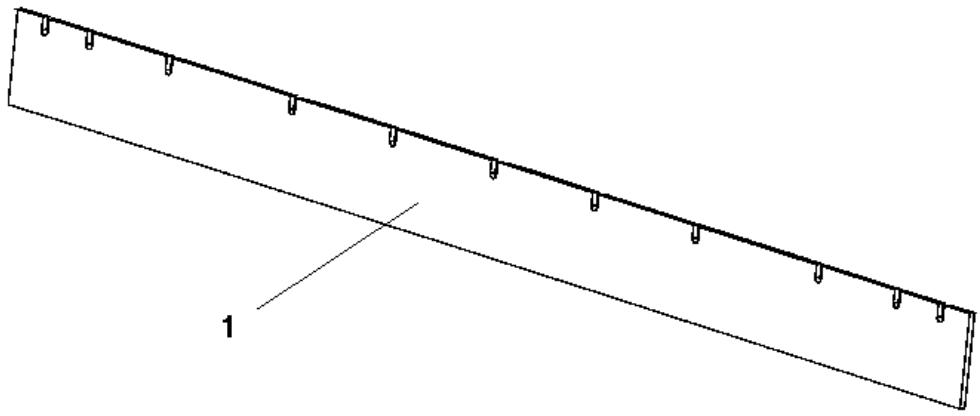

Item	Part No.	Name	Qty	L	SN INFO
0	4700950152	Scraper kit			
1	4700395116	Scraper blade	4		

Repair kits 4700945903 Eccentric shaft kit

Item	Part No.	Name	Qty	L	SN INFO
0	4700945903	Eccentric shaft kit			
1	4700160344	O-ring 70	2		
2	4700792270	Spherical roller bearing	2		
3	4700160045	O-ring 70	1		

Repair kits 4700938891 Drum rotation kit

Item	Part No.	Name	Qty	L	SN INFO
0	4700938891	Drum rotation kit			
1	4700160105	O-ring 70	1		
2	4700929447	V-ring	1		
3	4700116041	Taper roller bearing	1		
4	4700386272	Sealing	1		

Repair kits 4700945904 Shock absorber kit, drum

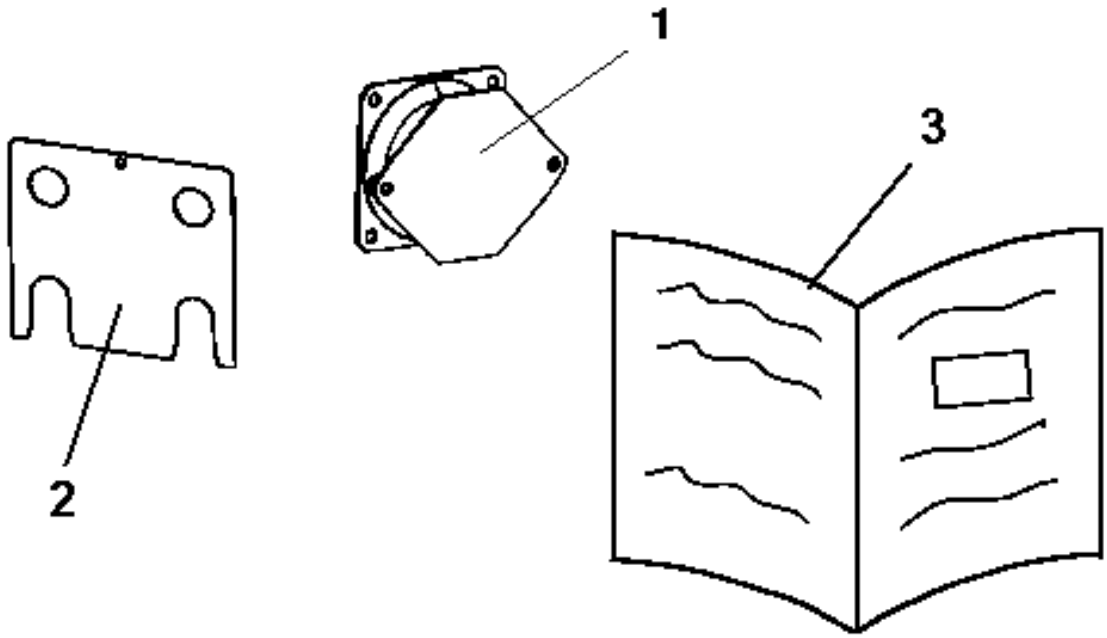

Item	Part No.	Name	Qty	L	SN INFO
0	4700945904	Shock absorber kit, drum			
1	4700394250	Shock absorber	8	A	
1	4700394251	Shock absorber	4	B	
2	4700391754	Shim, t = 1mm	4		
3	4812156170	Instructions	1		

Comments for Page: 4700945904 Shock absorber kit, drum

(L)OCAL REMARKS

A | en_US | Propulsion side

B | en_US | Vibration side

Repair kits 4812155698 Sprinkler kit

Item	Part No.	Name	Qty	L	SN INFO
1	4812155698	Sprinkler kit	1		
2	4700791949	Filter element	1		
3	4700791959	O-ring	1		
4	4700392509	Retainer, nozzle, strainer, yellow	9		
5	4700392510	Gasket	9		

General - Keys and others Keys

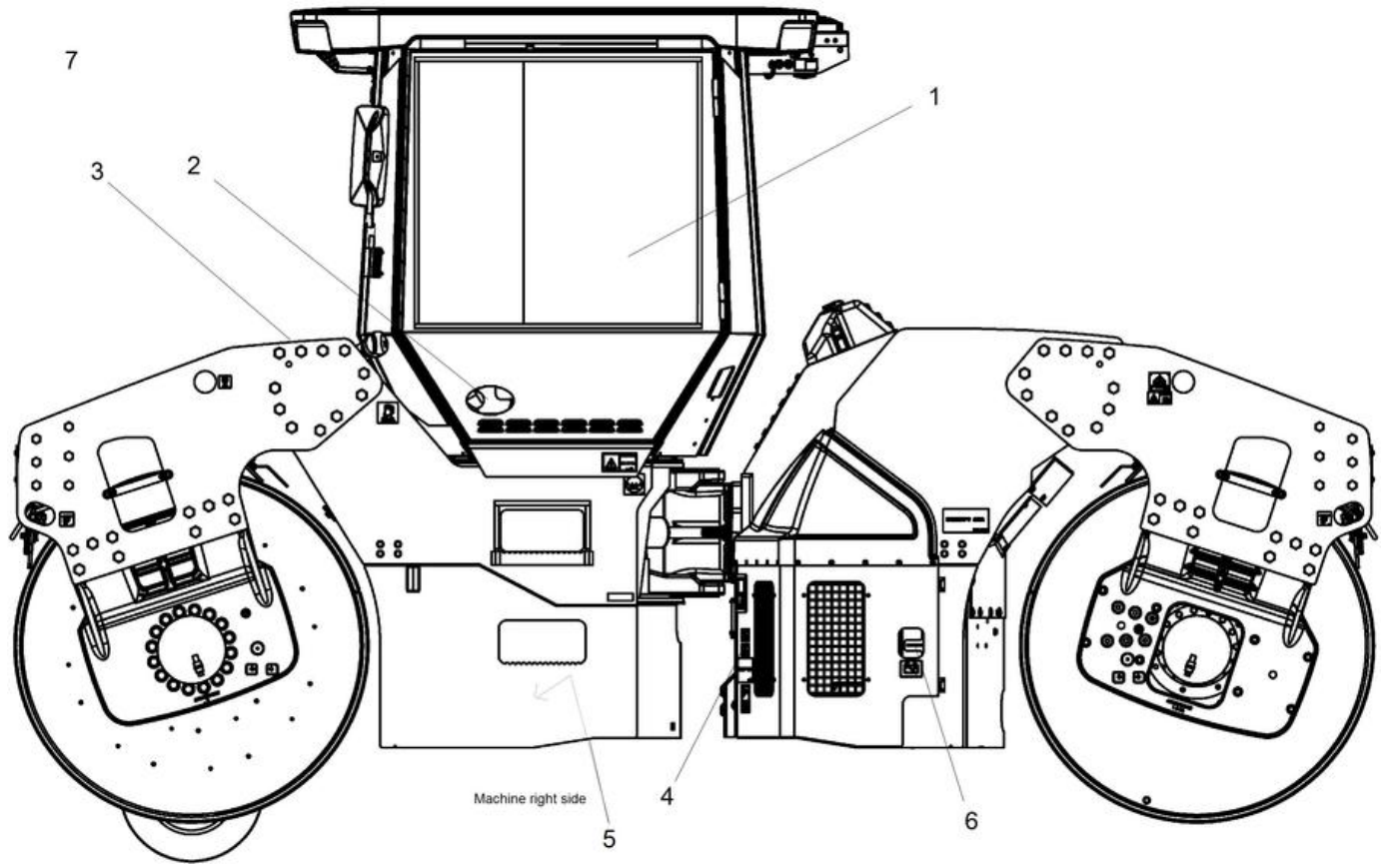

Item	Part No.	Name	Qty	L	SN INFO
1	-	Ignition switch			
1	4700940451	Ignition key			
2	-	Cab Door			
2	4812159558	Key (2pcs)			
3	-	Fuel Cap			
3	4700902866	Key Marked "455"			
4	-	Engine room door			
4	4700902866	Key Marked "455"			
5	-	Sprinkler pump cover			
5	4812113949	T-Key			
6	-	Battery switch			
6	4700903641	Battery key			
7	4700358881	Pad lock			
7	4812161396	Key			

General - Keys and others Fuses

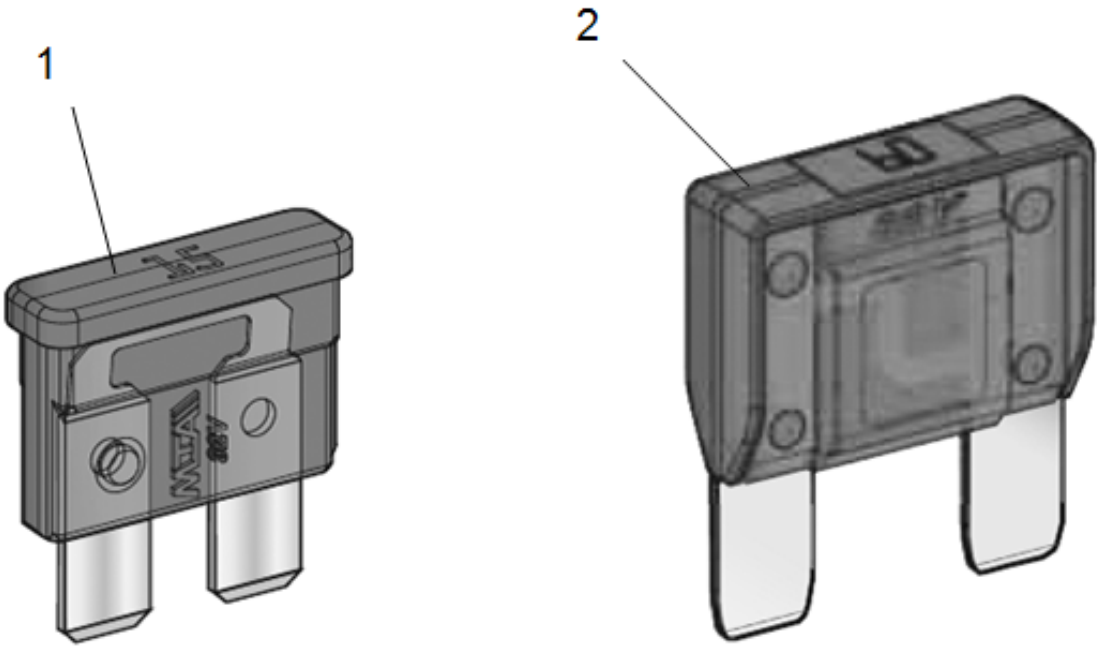

Item	Part No.	Name	Qty	L	SN INFO
1	-	Fuse, blade type Medium			
1	4700901224	Fuse, 3A Violet			
1	4700901225	Fuse 5A Tan			
1	4700901226	Fuse 7.5A Brown			
1	4700901227	Fuse 10A Red			
1	4700901228	Fuse, 15A Blue			
1	4700903741	Fuse 20A Yellow			
1	4700901229	Fuse, 25A Natural			
1	4700901230	Fuse, 30A Green			
2	-	Fuse, blade typ High			
2	4700904294	Fuse 20A Yellow			
2	4700904037	Fuse 30A Green			
2	4700904038	Fuse 40A Orange			
2	4700904039	Fuse 50A Red			
2	4700904040	Fuse 60A Blue			
2	4700904041	Fuse 70A Tan			
2	4700904042	Fuse 80A Natural (White)			

Front frame Front frame

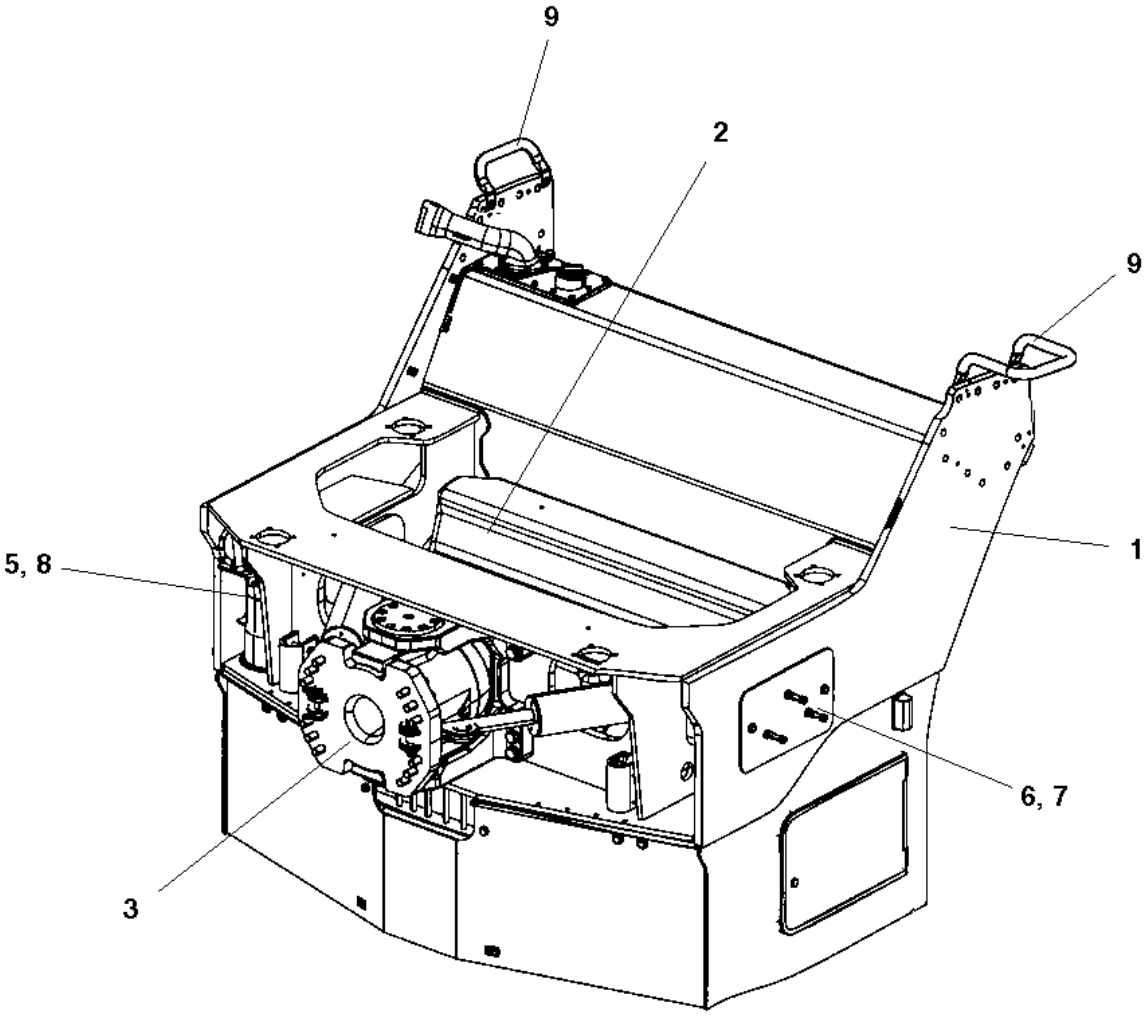

Item	Part No.	Name	Qty	L	SN INFO
1	-	Front Frame	1		
2	-	Tank structure module	1		
3	-	Hitch module	1		
5	-	Filling pipe	2		
8	-	Locking device module	1		
9	-	Grab handle module	2		

Front frame Front frame

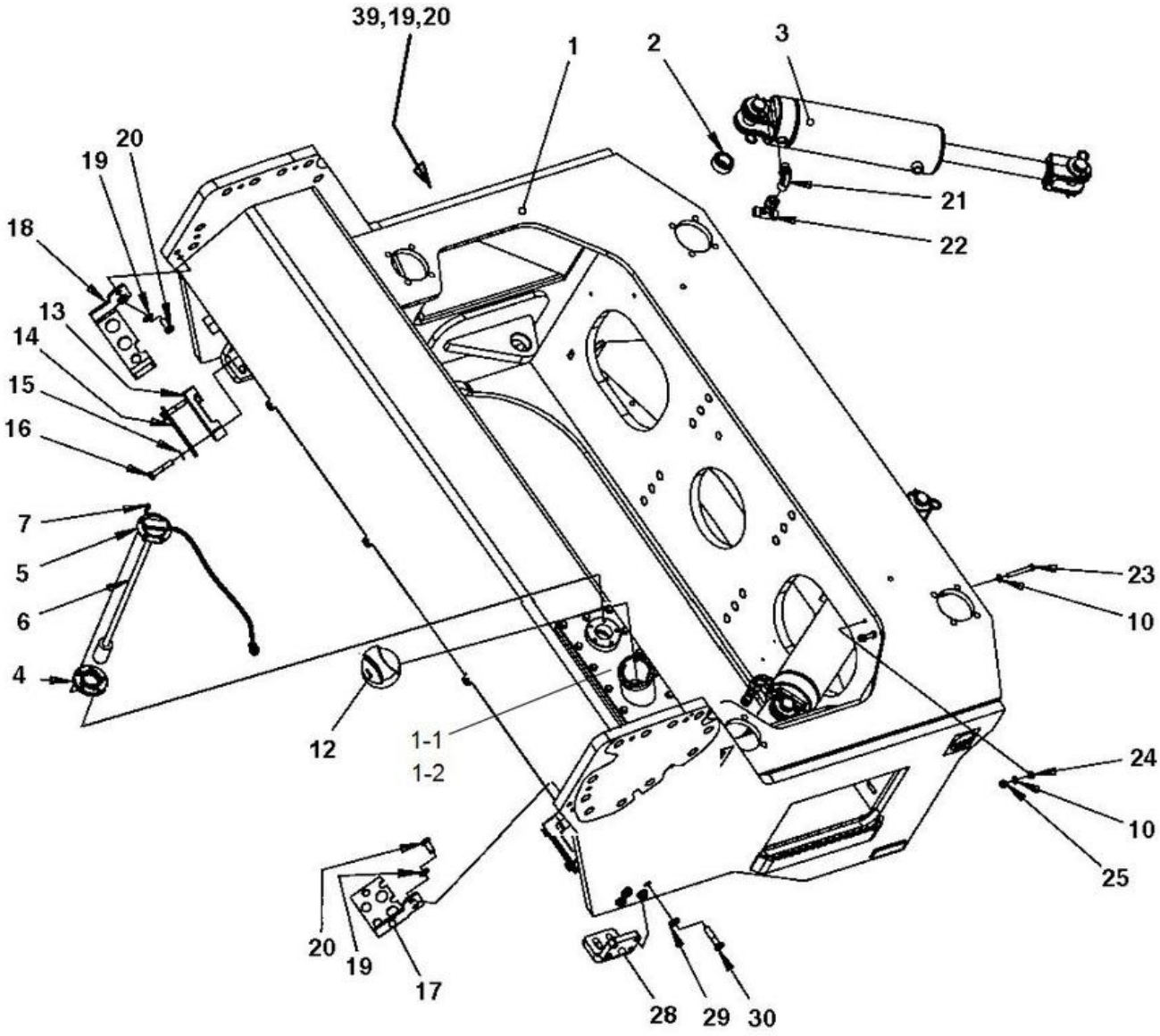

Item	Part No.	Name	Qty	L	SN INFO
1	4700395128	Front frame	1		
Comments for Part Num. 4700395128 "Please contact Customer Support for Price & Availability"					
1-1	4700396498	Fuel tank cover with filler neck	1		
1-2	4700389821	O-ring	1		
2	4700792554	Radial spherical plain bearing	2		
3	4700391023	Steering cylinder	2		
4	4700370745	Flange, cpl	1		
5	4700372718	Lid	1		
6	4700390934	Level sender	1		
7	4700904206	Screw, M6x16 mm	5		
10	4700904229	Washer, 8.4x 6x1.5 mm 300HV	4		
12	4700380435	Cap	1		
12	4700902866	Key Marked "455"	1		
13	4700343872	Hose clamp	2		
14	4700335914	Cover plate	2		
15	4700904230	Plain washer 10.5x22x2 mm	4		
16	4700500032	Screw M10 x 55	4		
17	4700391442	Hose clamp	1		
18	4700391443	Hose clamp	1		
19	4700904231	Washer, 13x24x2 mm 300 HV	6		
20	4700500051	Hex. screw	6		
21	4700792151	Elbow adapter 90	2		
22	4700791797	Tee-connector orfs	2		
23	4700925750	Screw	2		
24	4700570005	Hexagon nut	2		
25	4700586003	Lock nut M8	2		
28	4700394400	Bracket	2		
29	4700904703	Plain washer 13x24x4 mm	8		
30	4700500269	Screw	8		
39	4700396071	Cover	1		

Front frame 4700391023 Steering cylinder

Item	Part No.	Name	Qty	L	SN INFO
1	4700391023	Steering cylinder	1		
2	4700950417	Seal kit	1		
3	---	Seal	2		
4	---	O-ring	1		
5	---	Back-up ring	1		
6	---	Seal	1		
7	---	O-ring	1		
8	---	Seal	1		
9	---	Seal	1		
10	---	O-ring	1		
11	--	Piston block	1		
12	--	Steering	1		
13	4700950222	Shaft	2		
14	--	Washer	4		
15	4700635061	Hair clip	4		
16	--	Rod seal	1		
17	--	Cylinder	1		

Front frame Tank structure module

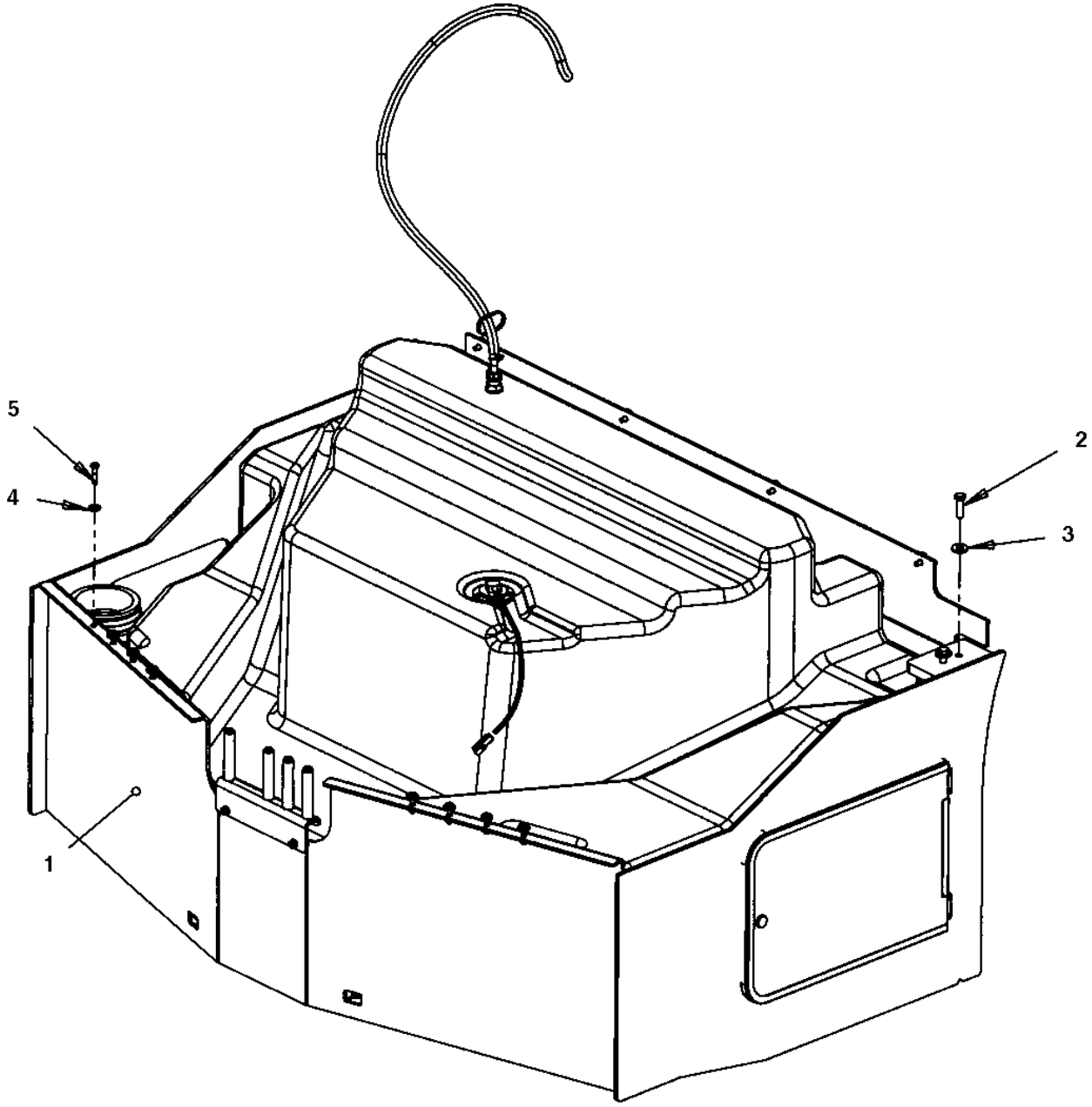

Item	Part No.	Name	Qty	L	SN INFO
1	-	Tank structure module	1		
2	4700947690	Screw	4		
3	4700904213	Steel Plain Washer	4		
4	4700904213	Steel Plain Washer	6		
5	4700947690	Screw	6		

Front frame Tank structure module

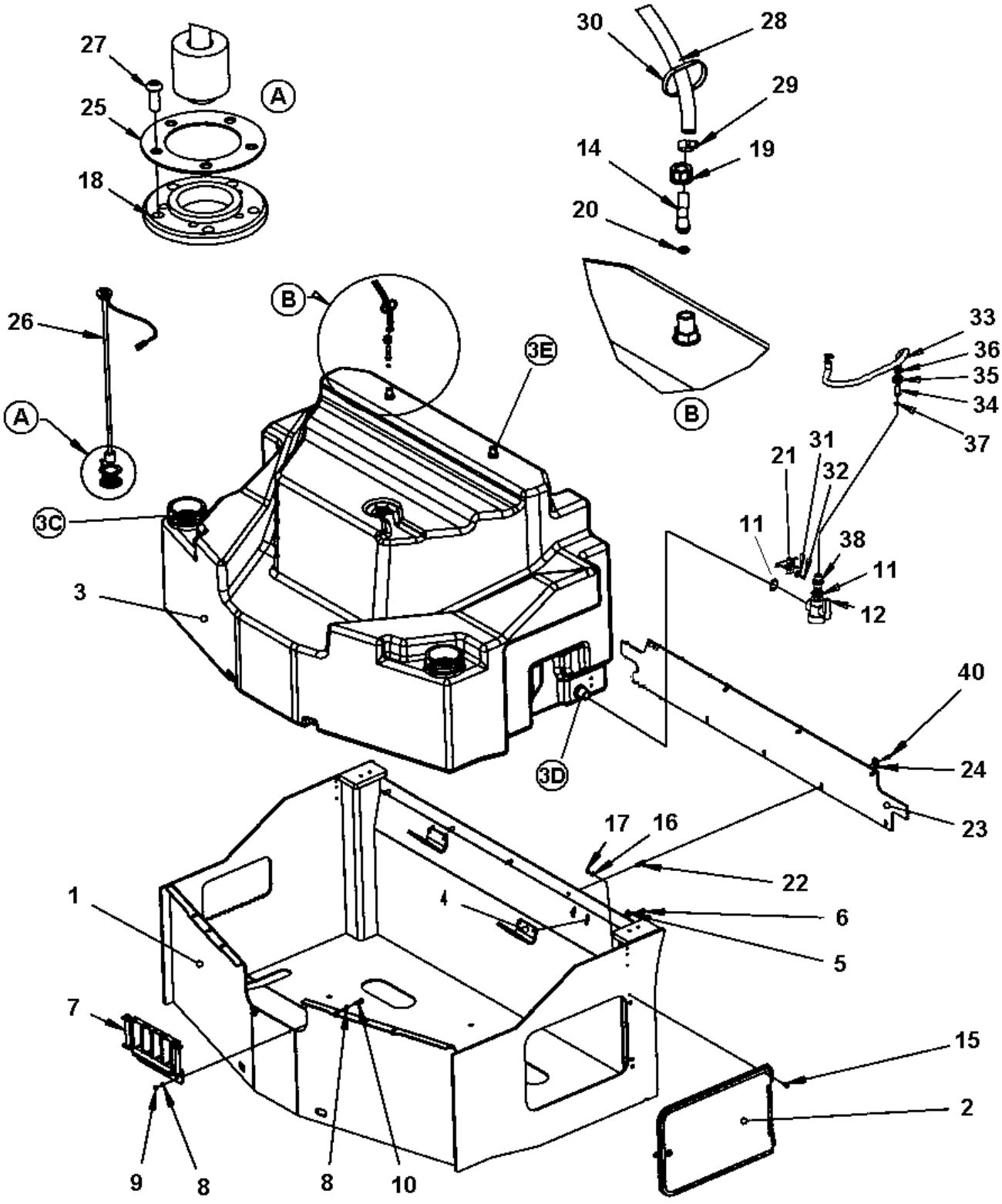

Item	Part No.	Name	Qty	L	SN INFO
1	4700395131	Tank structure	1		
2	4700391307	Cover	1		
3	4812110982	Water tank, cpl	1		
3	4700392235	Gasket	1	C	
3	4700313105	Hose clamp	1	C	
3	4700392223	Plane gasket	1	D	
3	4700392222	Grommet	1	D	
3	4700392224	Lock nut	1	D	
3	4700392231	Plane gasket	3	E	
3	4700392230	Grommet	3	E	
3	4700392232	Nut	3	E	
4	4700391624	Bracket	2		
5	4700904640	Washer, 8.4x22x3 mm 300HV	4		
6	4700500053	Screw, M8x20 mm 8.8 A2K	4		
7	-	Hose support	1		
8	4700904229	Washer, 8.4x 6x1.5 mm 300HV	4		
9	4700570005	Hexagon nut	2		
10	4700500022	Screw	2		
11	4700392223	Plane gasket	2		
12	4812120706	Ball valve	1		
14	4700393542	Hose connection	2		
15	4700928784	Screw	4		
16	4700603001	Washer	4		
17	4700586002	Lock nut M6 -8	4		
18	4700370745	Flange, cpl	1		
19	4700392227	Swivel nut	2		
20	4700792600	O-ring 70	2		
21	4700396739	Bracket	1		
22	4700900672	Blind insert nut	5		
23	4700393412	Rubber cloth	1		
24	4700615050	Washer	9		
25	4700372718	Lid	1		
26	4700391353	Level sender	1		
27	4700904206	Screw, M6x16 mm	5		
28	4812112074	Plastic hose (x m)	2XL	A	
29	4700313002	Hose clamp	2		
30	4700313102	Cable ties	N		

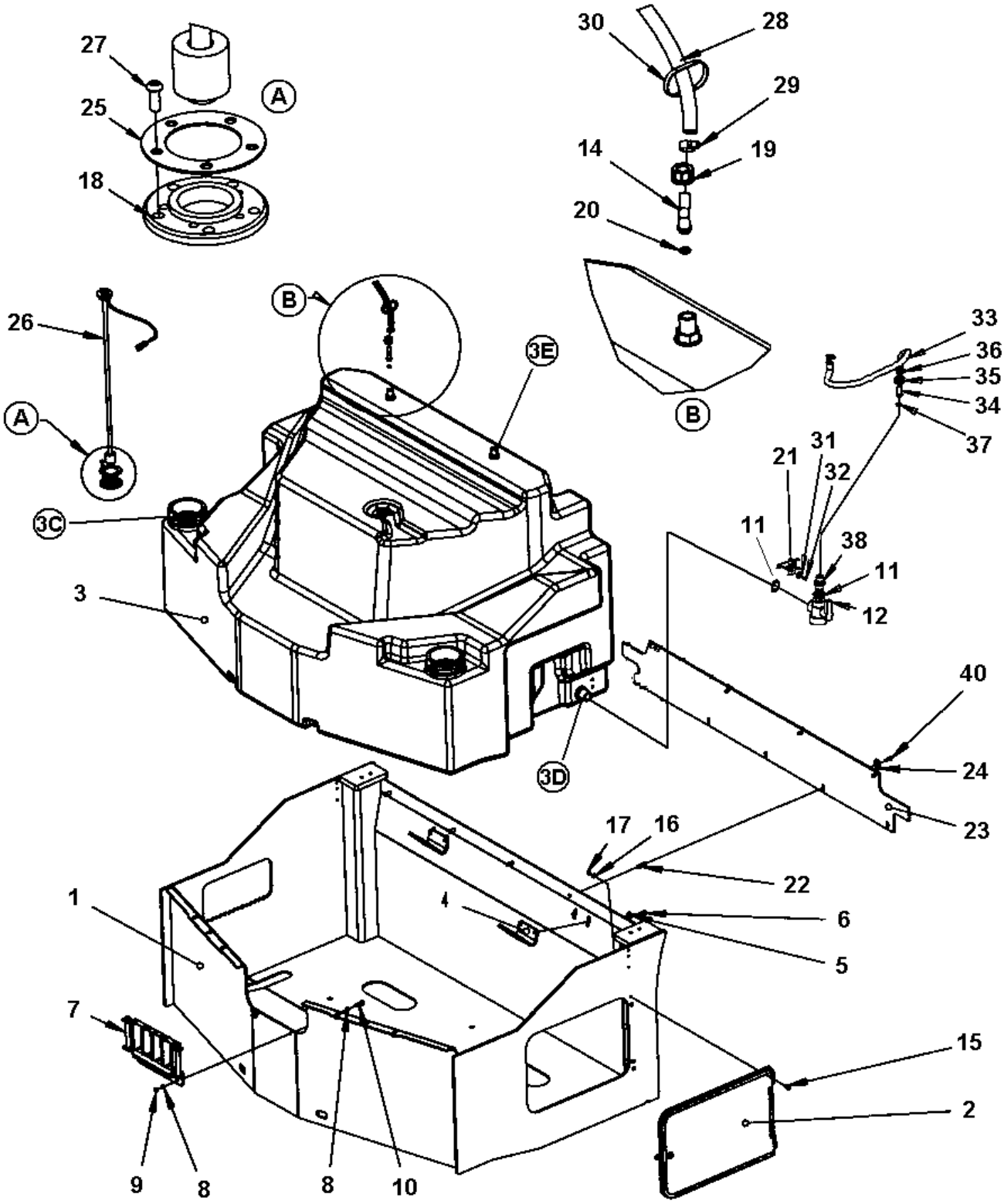
27
25
18
A
30
28
29
14
19
20
B
26
A
B
3E
33
36
35
34
37
21
31
32
11
38
11
12
3C
3
3D
40
24
23
17
16
22
6
5
1
7
15
2
9
8
8
10

Item	Part No.	Name	Qty	L	SN INFO
31	4700904735	Steel plain washer	2		
32	4700500013	Screw, M6x16 mm 8.8 A2K	2		
33	4700792073	Hose reinforced	1XL	B	
34	4700792780	Hose connection swivel	1		
35	4700792779	Swivel nut	1		
36	4700313003	Hose clamp	2		
37	4700480852	O-ring 70	1		
38	4700792781	Reducer nipple	1		
40	4700500021	Screw, M8x25 mm 8.8 A2K	9		

Comments for Page: Tank structure module

(L)OCAL REMARKS

A | en_US | Length as required

B | en_US | L= 0.77 m

C | en_US | Water fill

D | en_US | Drain

E | en_US | Hose connection

Front frame 4700391307 Cover

Item	Part No.	Name	Qty	L	SN INFO
1		Cover	1		
2	4700383626	Lock	1		
2	4700397348	Lock	1	1	
2	4700902866	Key Marked "455"	1		
2	4812113949	T-Key	1		
3	4700202057	Rubber edge trim	1XL	A	
4	4700202057	Rubber edge trim	1XL	B	

Comments for Page: 4700391307 Cover

(L)OCAL REMARKS

A | en_US | L=1.33 m

B | en_US | L=0.21 m

1 | en_US | Lock P/N 4700397348 replaced as spare part by P/N 4812113939.

Front frame Hose support

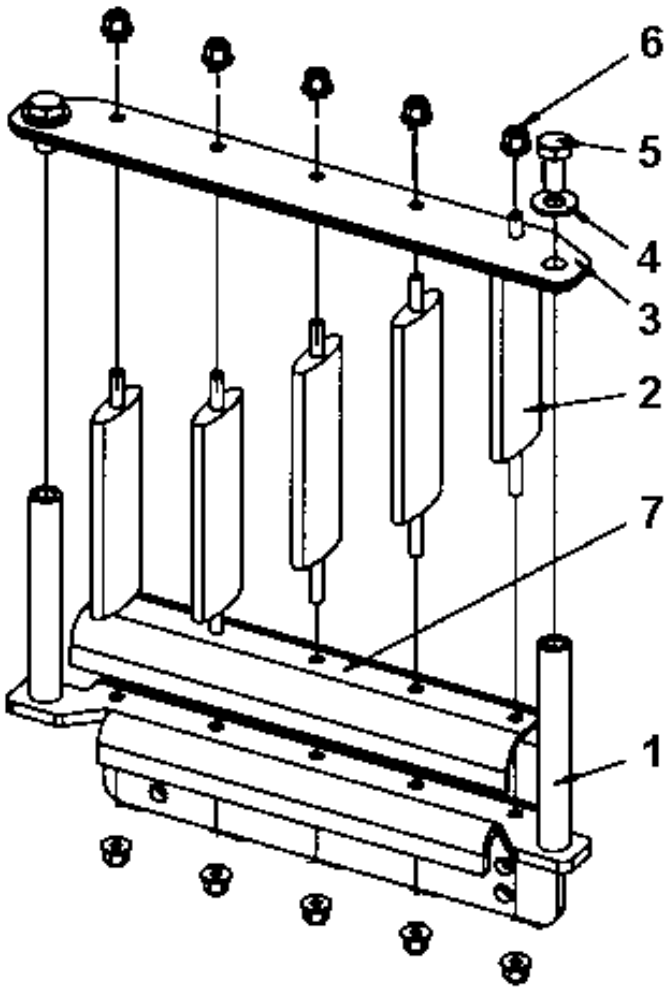

Item	Part No.	Name	Qty	L	SN INFO
1	4700394023	Bracket	1		
2	4700397039	Spacer	5		
3	4700397318	Cap	1		
4	4700904230	Plain washer 10.5x22x2 mm	2		
5	4700500048	Screw, M10x20 mm 8.8 A3K	2		
6	4700902285	Nut	10		
7	4812110277	Hose guard	1		

Front frame Filling pipe

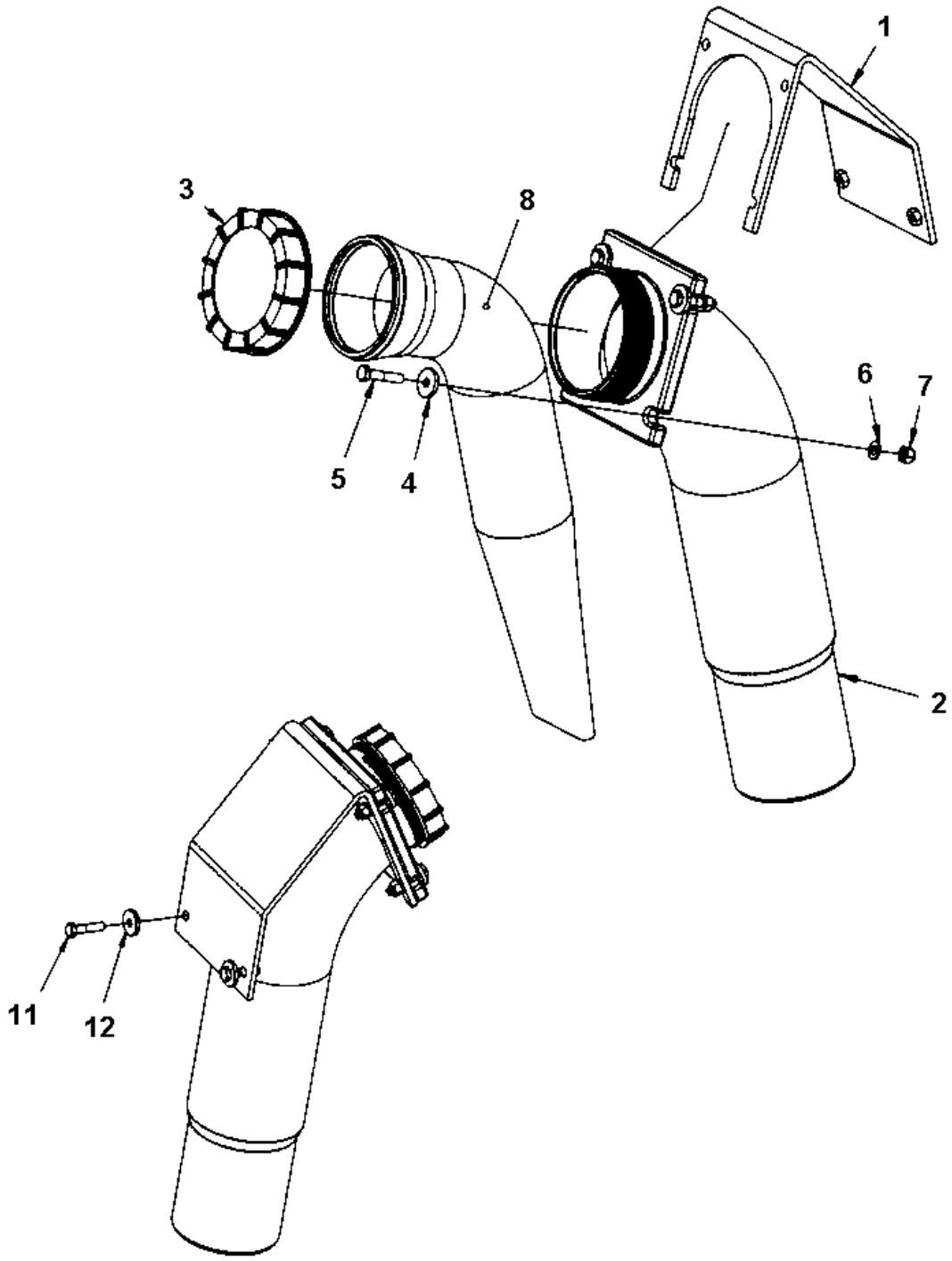

Item	Part No.	Name	Qty	L	SN INFO
1	4700391626	Bracket	1		
2	4700390613	Filling pipe	1		
3	4700920819	Filler cap	1		
4	4700904734	Washer, 8.4x26x4 mm 300 HV	4		
5	4700500023	Screw, M8x40 mm 8.8 A2K	4		
6	4700904229	Washer, 8.4x 6x1.5 mm 300HV	4	1	
7	4700586003	Lock nut M8	4		
8	4700391444	Strainer	1		
11	4700500047	Hexagon head screw	2		
12	4700904734	Washer, 8.4x26x4 mm 300 HV	2		

Comments for Page: Filling pipe

(L)OCAL REMARKS

1 | en_US | 2pcs used on upper side (instead of 2pcs item 4), when machine equipped with lockable cap.

Front frame Hitch module

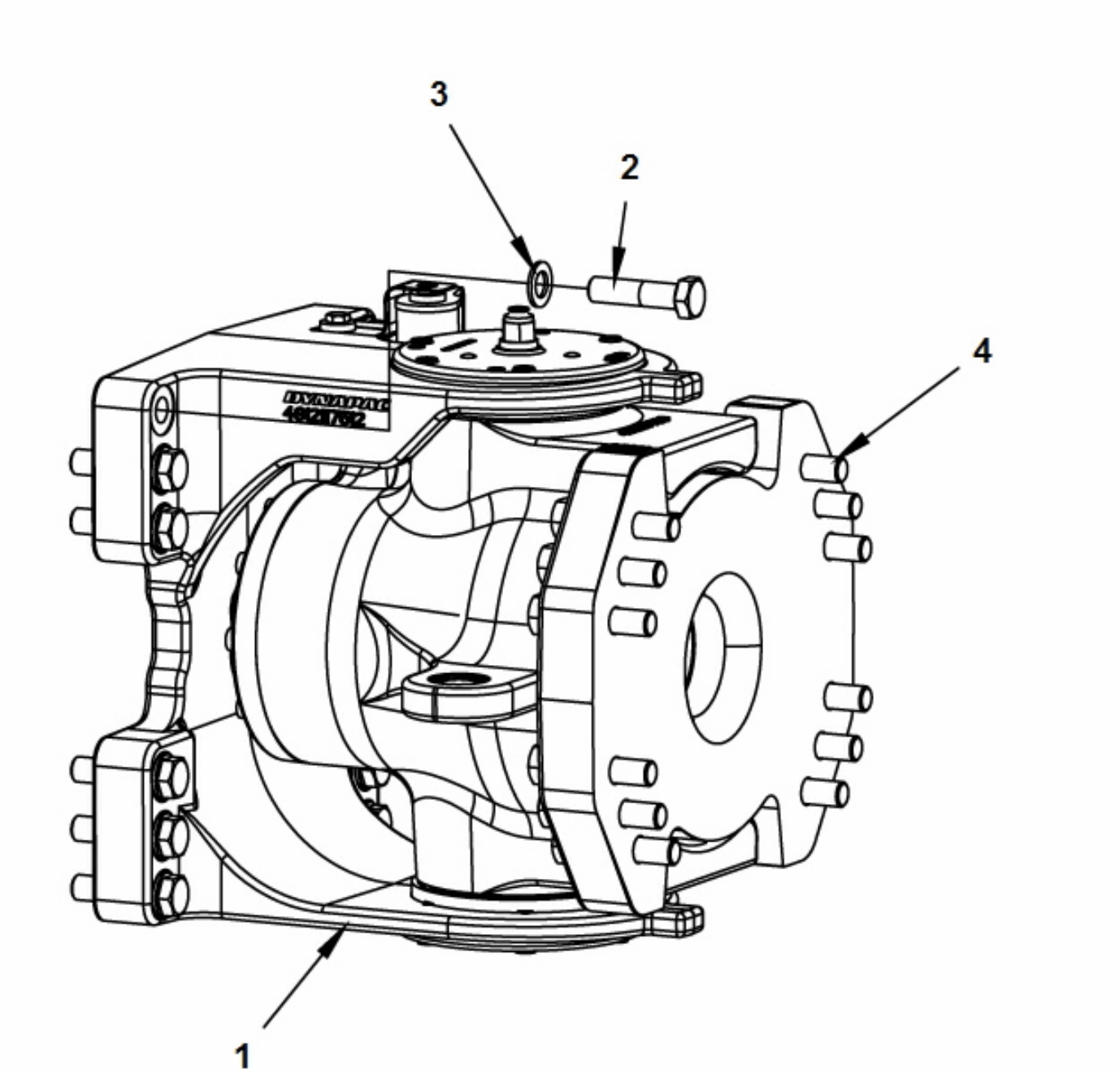

Item	Part No.	Name	Qty	L	SN INFO
1	4812117737	Steering hitch	1		
2	4700500287	Screw M20x80 10,9	12		
3	4700904233	Steel plain washer 21x36x3	24		
4	4700925208	Screw M20x90	12		

Front frame 4812117737 Articulated joint

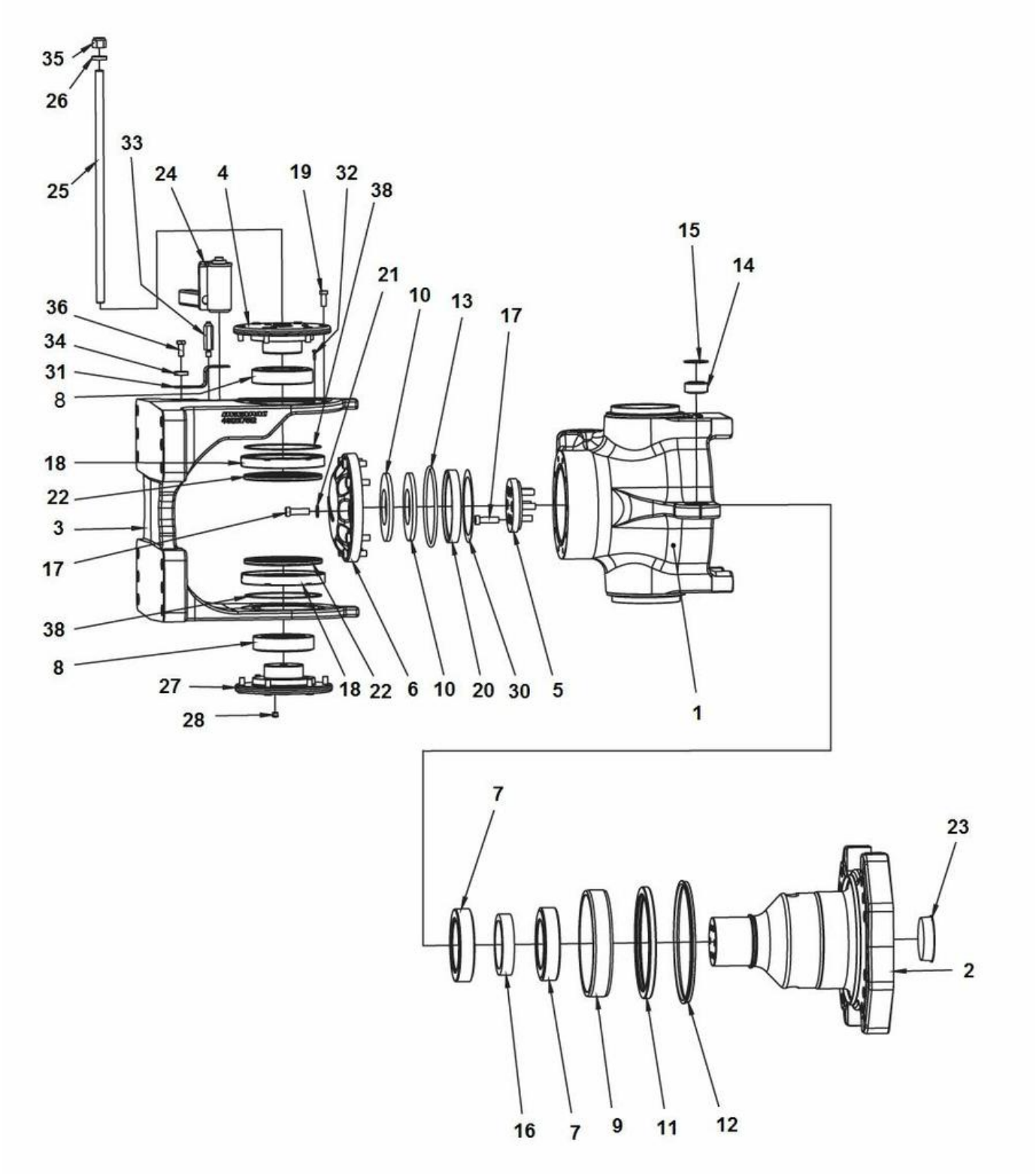

Item	Part No.	Name	Qty	L	SN INFO
1	4812117738	Yoke	1		
2	4812115392	Shaft	1		
3	4812117512	Holder	1		
4	4812121396	Shaft	1		
5	4812115949	Cover cup	1		
6	4812115950	Cover cap	1		
7	4812116334	Spherical plain bearing	2		
8	4812115467	Spherical plain bearing	2		
9	4812115398	Bushing	1		
10	4812116333	Disc spring	2		
11	4700391031	Radial lip-type seal	1		
12	4700792515	Sealing, v-ring	1		
13	4700160296	O-ring 70	1		
14	4700792554	Radial spherical plain bearing	2		
15	4700151015	Snap ring	2		
16	4812116340	Spacer washer	1		
17	4700792394	Screw	16		
18	4812121398	Radial seal	2		
19	4812120414	Hexagon socket head cap screw w Tuflok	12		
20	4812115947	Washer	1		
21	4700904231	Washer, 13x24x2 mm 300 HV	10		
22	4812120615	Radial lip-type seal	2		
23	4812116702	Protective plug	1		
24	4812119809	Locking pin cpl	1		
25	4812120618	Threaded stud	1		
26	4700904558	Washer, 17x30x6 mm 300 HV	1		
27	4812121397	Shaft	1		
28	4700792083	Plug	6		
30	4812117530	Shim washer	1		
31	4812121665	Stop plate	1		
32	4812121282	Thread forming screw m	8		
33	4812119807	Holder	1		
34	4700904567	Washer, 10.5x28x6 mm	1		
35	291112842	Prev torq hex nut m	1		
36	4700500028	Screw, M10 x 25 mm 8.8 A3K	1		
37	4700902541	Lock fluid Loctite 243, 50 ml	0		
38	4812121111	O-ring	2		

Front frame Locking device module

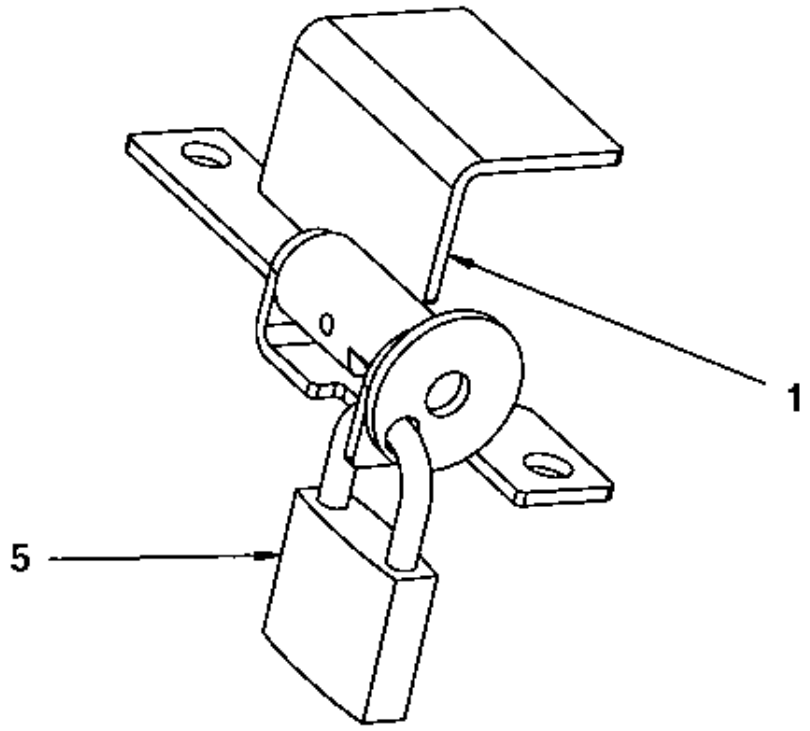

Item	Part No.	Name	Qty	L	SN INFO
1	-	Locking device	1		
1	4700394587	Bracket	1		
1	4700394591	Shaft	1		
1	4700394590	Lock bracket	1		
1	4700629008	Dowel pin	1		
5	4700358881	Pad lock	1		

Front frame Grab handle module

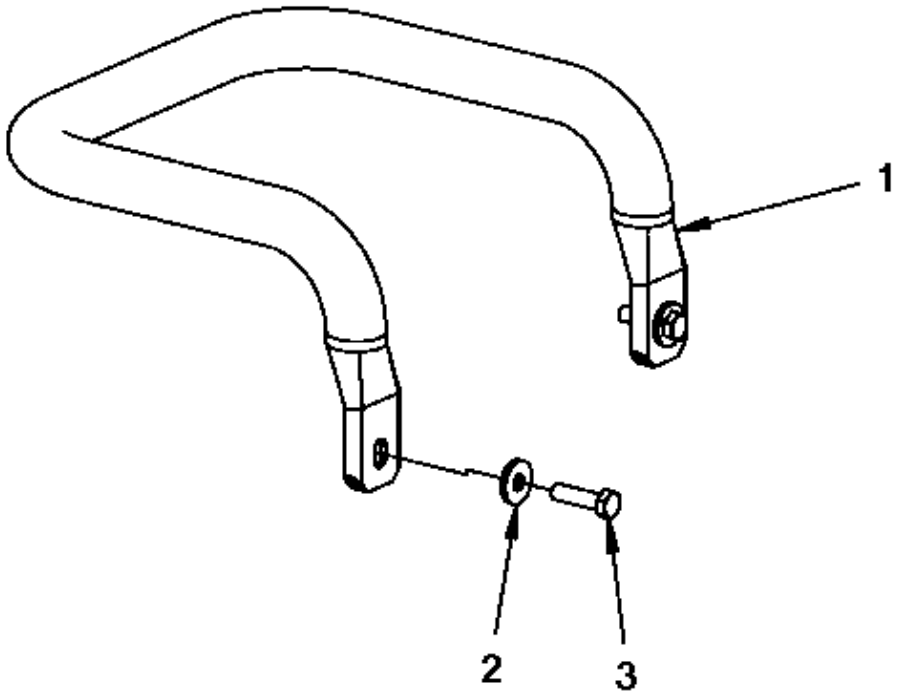

Item	Part No.	Name	Qty	L	SN INFO
1	4700394911	Grab handle	1		
2	4700904640	Washer, 8.4x22x3 mm 300HV	2		
3	4700500022	Screw	2		

Rear frame Rear frame

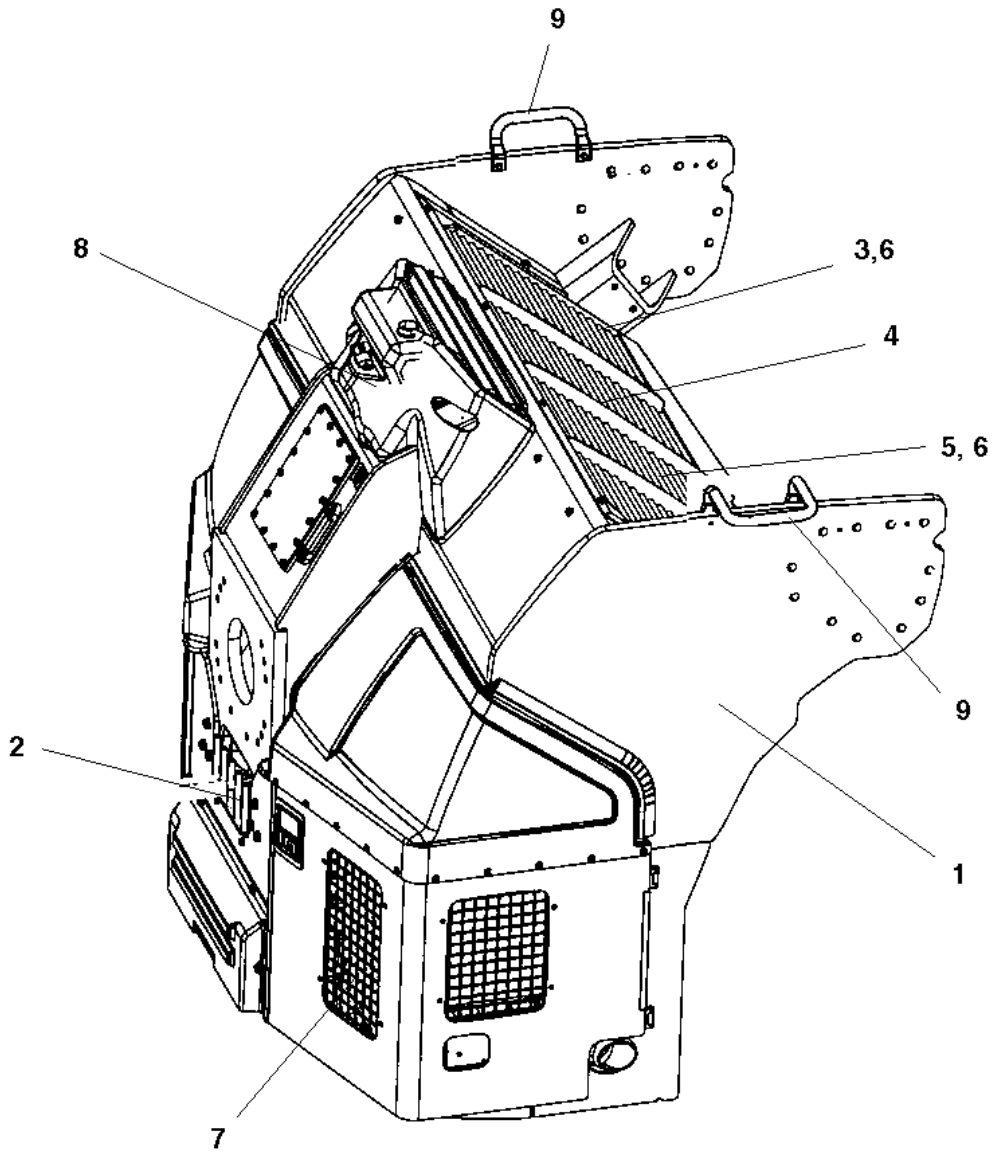

Item	Part No.	Name	Qty	L	SN INFO
1	-	Frame, rear	1		
2	-	Engine structure, module	1		
3	-	Water cooler	1		
4	-	Charge air cooler	1		
5	-	Oil cooler	1		
6	-	Fan module	2		
7	-	Noise suppression plates	1		
7	-	Noise suppression, covers	1		
8	-	Expansion tank assembly	1		
9	-	Grab handle module	2		
9	-	Grab handle module	2	A	

Comments for Page: Rear frame

(L)OCAL REMARKS

A | en_US | Offset drum

Rear frame Frame, rear

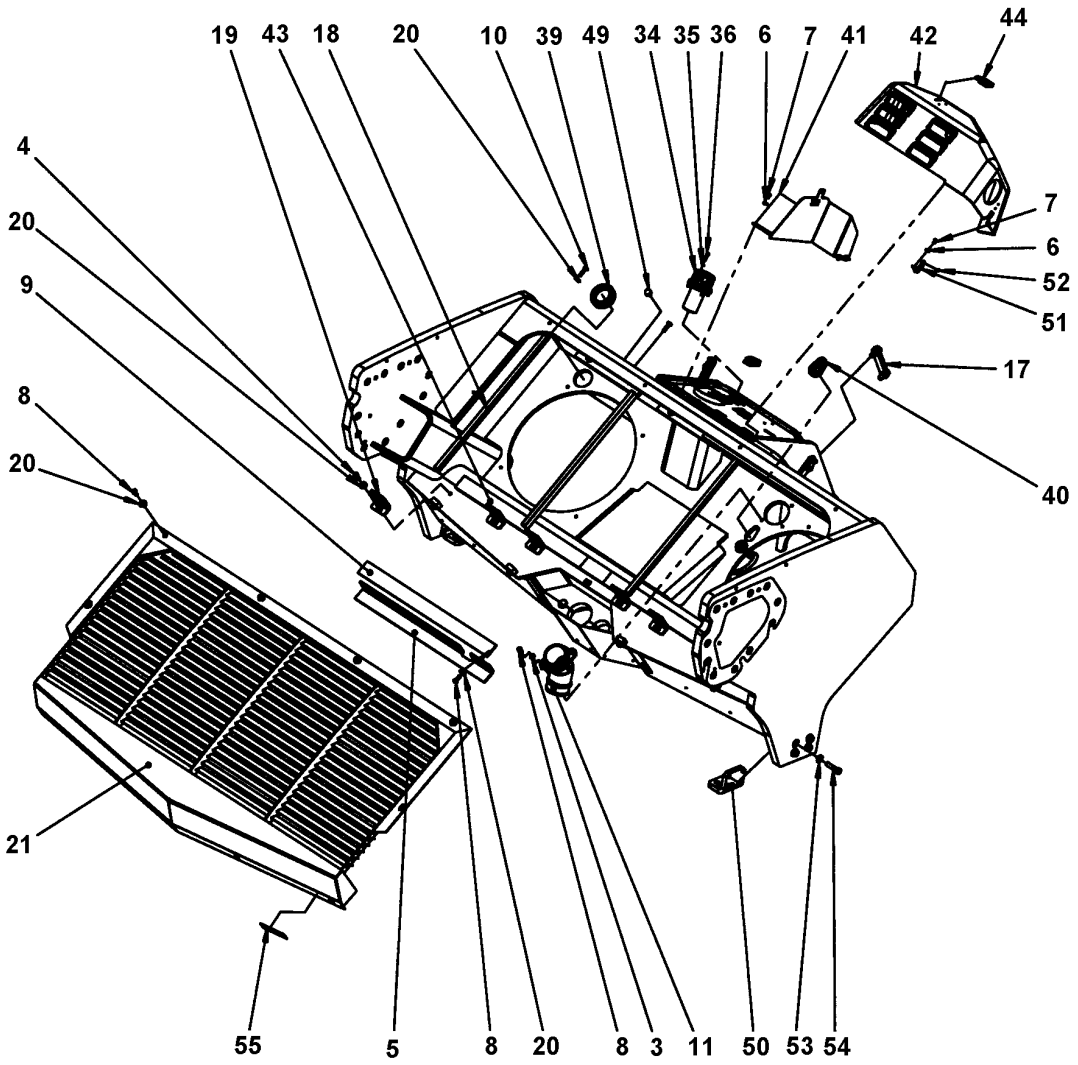

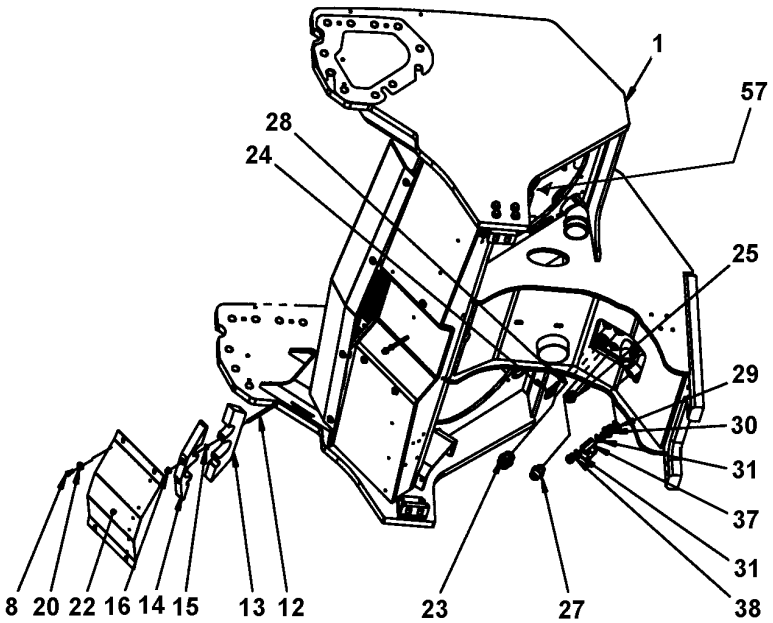

Item	Part No.	Name	Qty	L	SN INFO
1	4812114408	Rear frame	1		
3	4700904229	Washer, 8.4x 6x1.5 mm 300HV	2		
4	4700500021	Screw, M8x25 mm 8.8 A2K	6		
5	4700392075	Bracket	2		
6	4700603001	Washer	8		
7	4700500059	Hex. screw	8		
8	4700500053	Screw, M8x20 mm 8.8 A2K	18		
9	4700392078	Rubber cloth	2		
10	4700500022	Screw	4		
11	4700394000	Bulkhead elbow	1		
12	4700792326	Stud	2		
13	4700391375	Hose support	1		
14	4700391376	Hose support	1		
15	4700904044	Lock washer	2		
16	4700902286	Lock nut, M8x1.25 mm A2K	2		
17	4700792492	Level gauge	1		
18	4700391299	Rubber strip	1XL	A	
19	4700391296	Bracket	6		
20	4700904640	Washer, 8.4x22x3 mm 300HV	26		
21	4700395522	Cover	1		
22	4700391434	Cover	1		
23	4700792338	Adapter	1		
24	4700792276	Temperature sensor	1		
25	4700791405	Straight o-ring connector	1		
26	4812115411	Grommet	2		
27	4700904728	Straight connector ORFS	1		
28	4700162015	Seal ring	1		
29	4700791120	Washer sealing	1		
30	4700792421	Straight connector	1		
31	4700162006	Seal ring	2		
34	4700391026	Ventilating filter	1		
35	4700904281	Washer, 5,3x10x1 300HV	6		
36	4700508020	Screw	6		
37	4700925599	Ball valve	1		
38	4700232056	Steel plug threaded	1		
39	4700393001	Grommet	2		
40	4700393149	Grommet	2		

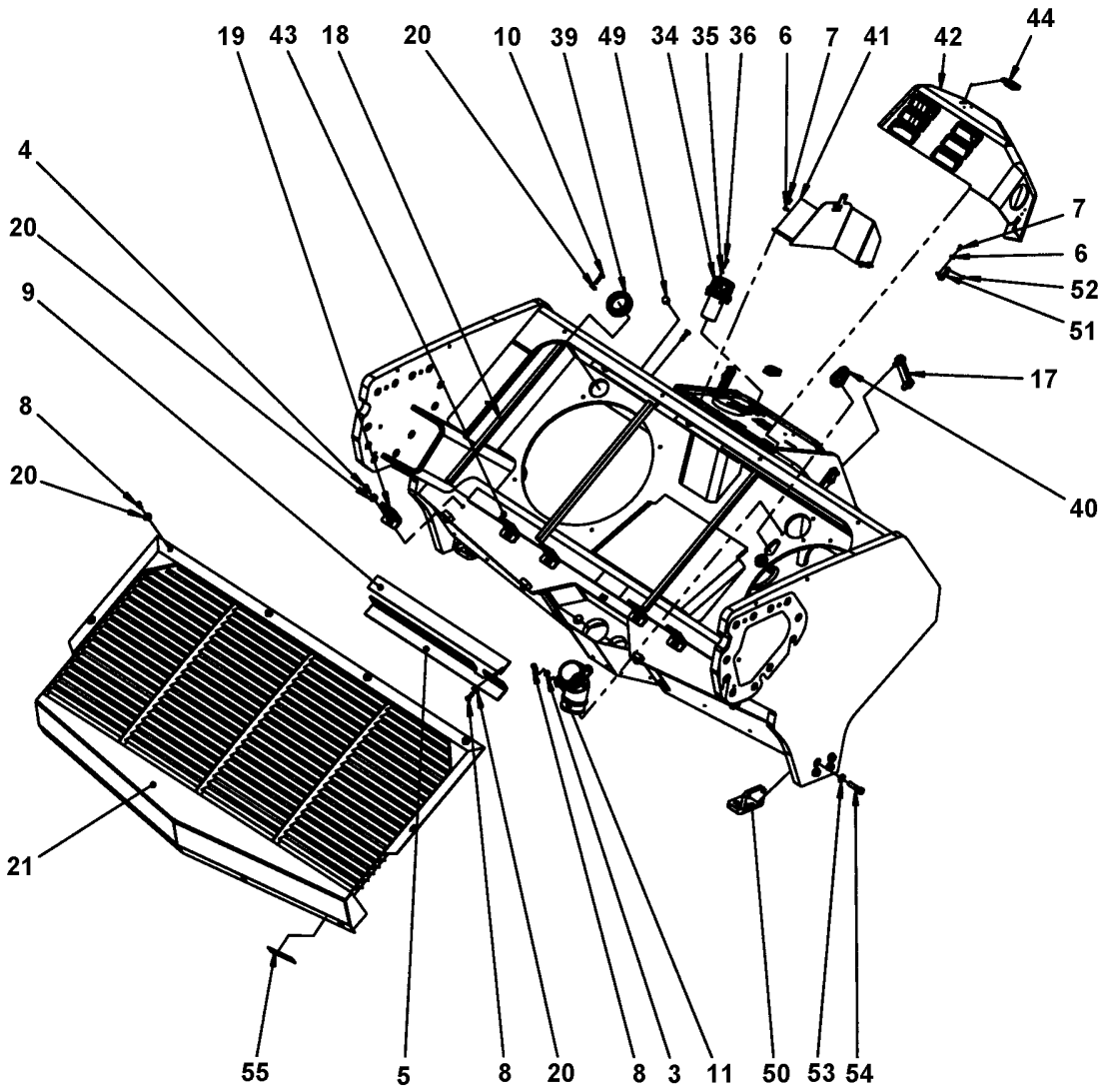
19 43 18 20 10 39 49 34 35 36 6 7 41 42 44
4
20
9
8
20
7
6
52
51
17
40
21
55 5 8 20 8 3 11 50 53 54

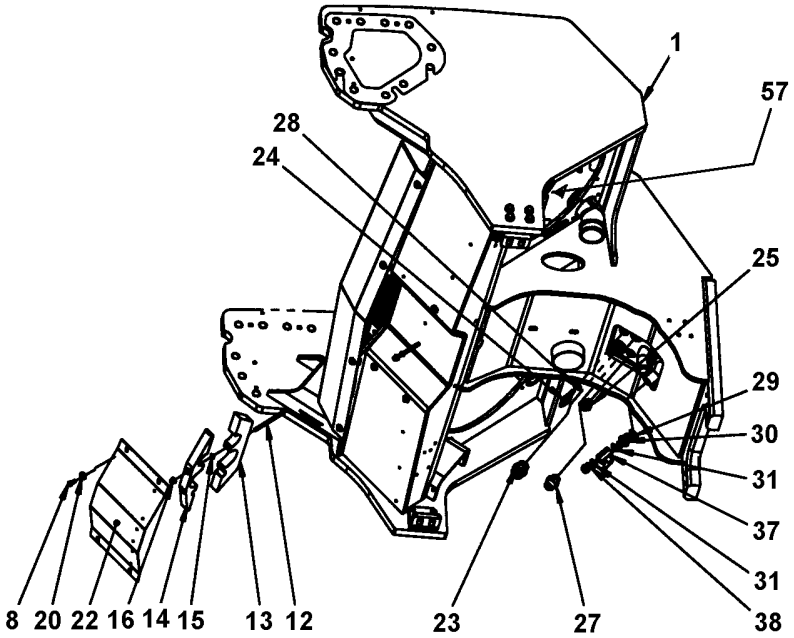
1
57
28
24
25
29
30
31
37
31
38
8 20 22 16 14 15 13 12 23 27

Item	Part No.	Name	Qty	L	SN INFO
41	4700393281	Bracket	1		
42		Cover, cpl	1		
43	4700394459	Rubber cloth	2		
44	4700358881	Pad lock	1		
49	4700792607	Shock absorber	6		
50	4700394400	Bracket	2		
51	4700394297	Bracket	2		
52	4700624021	Pop rivet	4		
53	4700904703	Plain washer 13x24x4 mm	8		
54	4700500269	Screw	8		
55	4700394513	Rubber cloth	2		
57	4812117018	Grommet	1		

Comments for Page: Frame, rear

(L)OCAL REMARKS

A | en_US | L= 2.34 m

Rear frame Cover, cpl

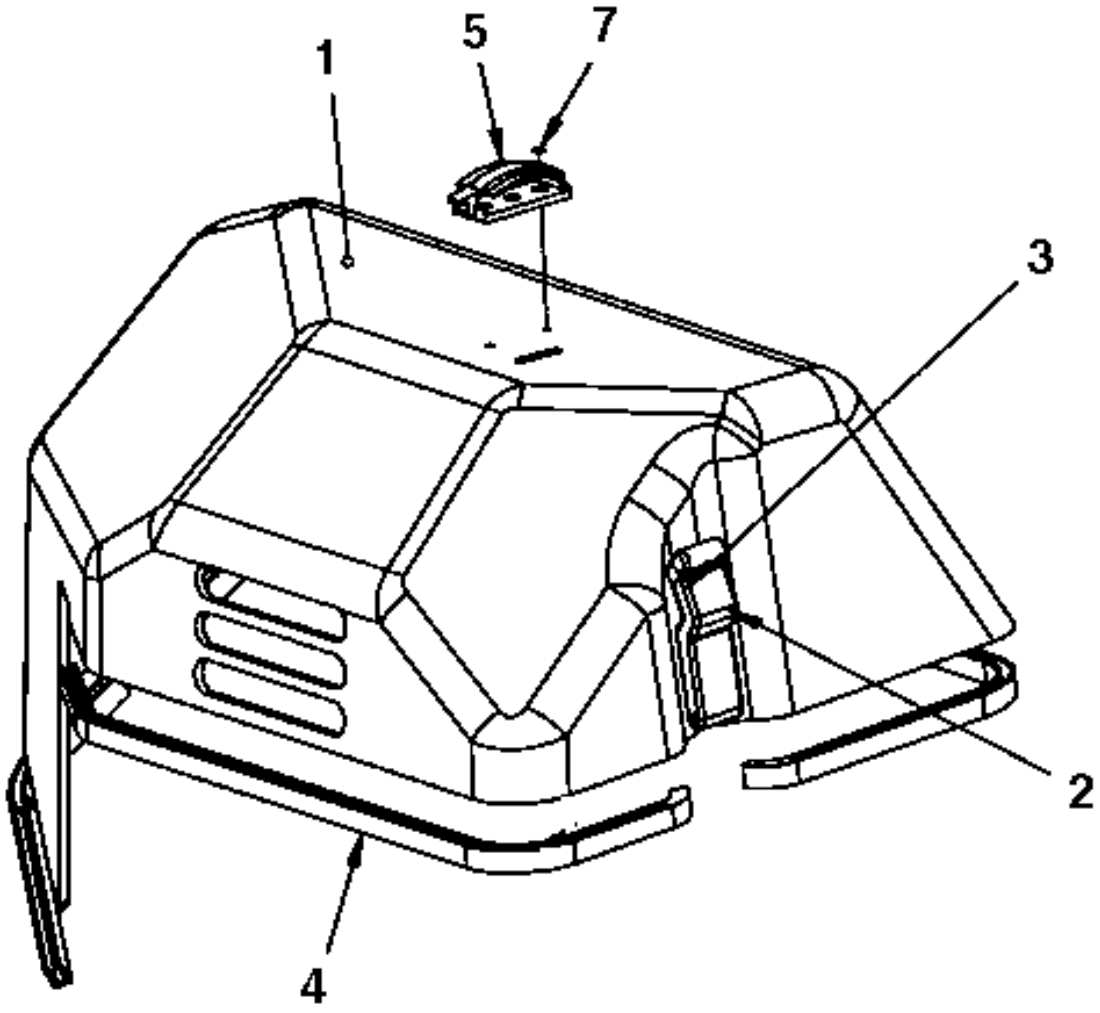

Item	Part No.	Name	Qty	L	SN INFO
1	4700391750	Cover	1		
2	4700388846	Latch, complete	2		
3	4700624021	Pop rivet	4		
4	4700902166	Edge trim	1XL	A	
5	4700394536	Wiring clip	1		
7	4700624018	Blind rivet	2		

Comments for Page: Cover, cpl

(L)OCAL REMARKS

A | en_US | L=1.59 m

Rear frame Engine structure, module

Item	Part No.	Name	Qty	L	SN INFO
1	-	Engine structure	1		
2	4700947689	Hex. head screw M12	4		
3	4700904231	Washer, 13x24x2 mm 300 HV	6		
4	4700904213	Steel Plain Washer	4		
10	4700500269	Screw	6		

Rear frame Engine structure

Item	Part No.	Name	Qty	L	SN INFO
1	4812115569	Engine structure	1		
2	4700396684	Engine cover, cpl	1		
3	4700396685	Engine cover, cpl	1		
4	4700513017	Screw	8		
5	4700904735	Steel plain washer	12		
6	4700586002	Lock nut M6 -8	8		
7	4700926215	Protective plug	8		
8	4700396542	Lock bracket	2		
9	4700904640	Washer, 8.4x22x3 mm 300HV	10		
10	4700500022	Screw	6		
11	4700904229	Washer, 8.4x 6x1.5 mm 300HV	15		
12	4700586003	Lock nut M8	10		
13	4700390884	Cover	1		
14	4700500040	Screw, M6x20 mm 8.8 A2K	4		
15	4700392799	Grid	1		
16	4700500021	Screw, M8x25 mm 8.8 A2K	6		
17	4700379974	Rubber cloth	1		
18	4700615050	Washer	18		
19	4700500053	Screw, M8x20 mm 8.8 A2K	18		
20	4700792325	Blind rivet	6		
21	4700379992	Plug	1		
22	4700391157	Connection block	1		
23	4700904230	Plain washer 10.5x22x2 mm	4		
24	4700500092	Screw	2		
25	4700570006	Hex. nut	2		
26	4700792326	Stud	1		
27	4700357459	Rubber cloth	4		
28	4700792825	Blind insert nut	1		
29	4700903456	Pipe clamp	1		
30	4700791711	Pipe clamp	1		
31	4700791712	Cover plate	1		
35	4700903768	Threaded stud	3		
36	4700570005	Hexagon nut	3		
37	-	Hose support	1		
38	4700791823	Adapter	1		
39	4700791799	Straight connector orfs	3		
40	4700791231	Adapter	1		

Item	Part No.	Name	Qty	L	SN INFO
41	4700792334	Elbow 90 orfs	1		
42	4700791840	Adapter	1		
43	4700394701	Wiring clip	1		
44	4700792441	Cable tie with holder	2		

Rear frame Noise suppression plates

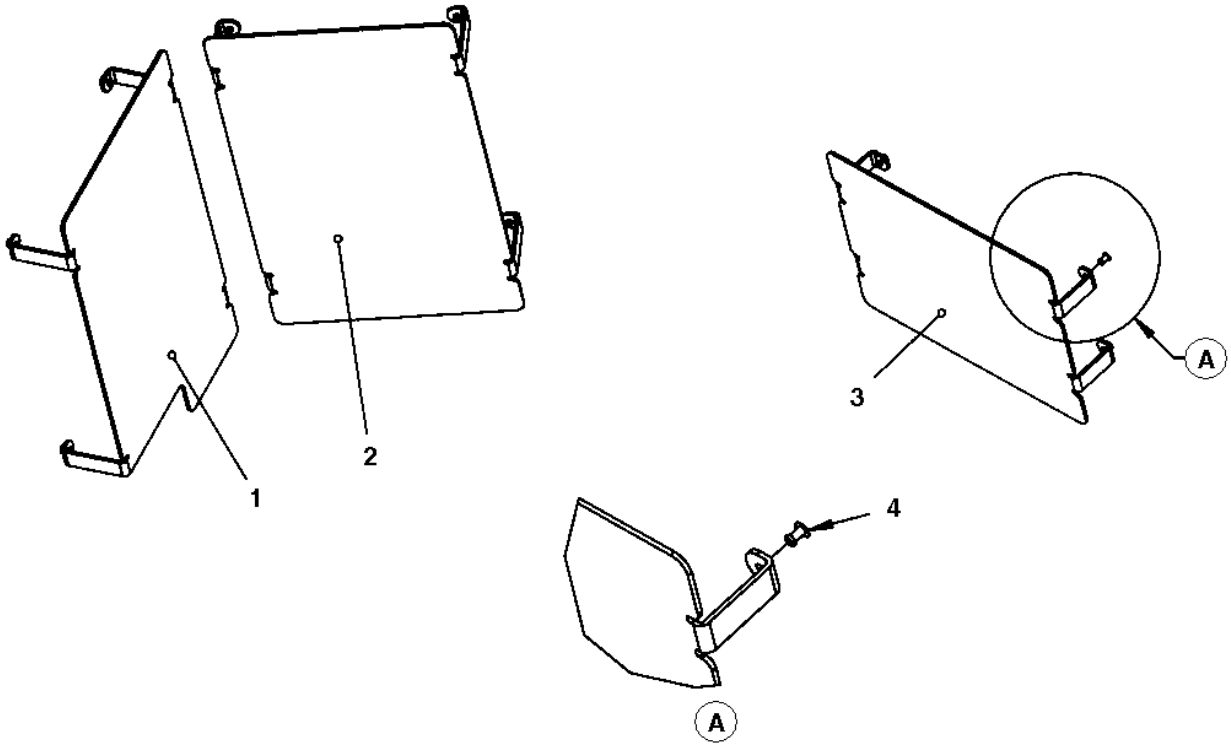

Item	Part No.	Name	Qty	L	SN INFO
1	4700391369	Noise suppression plate	1		
2	4700391370	Noise suppression plate	1		
3	4700391371	Noise suppression plate	1		
4	4700792669	Blind rivet	12		

Rear frame Noise suppression, covers

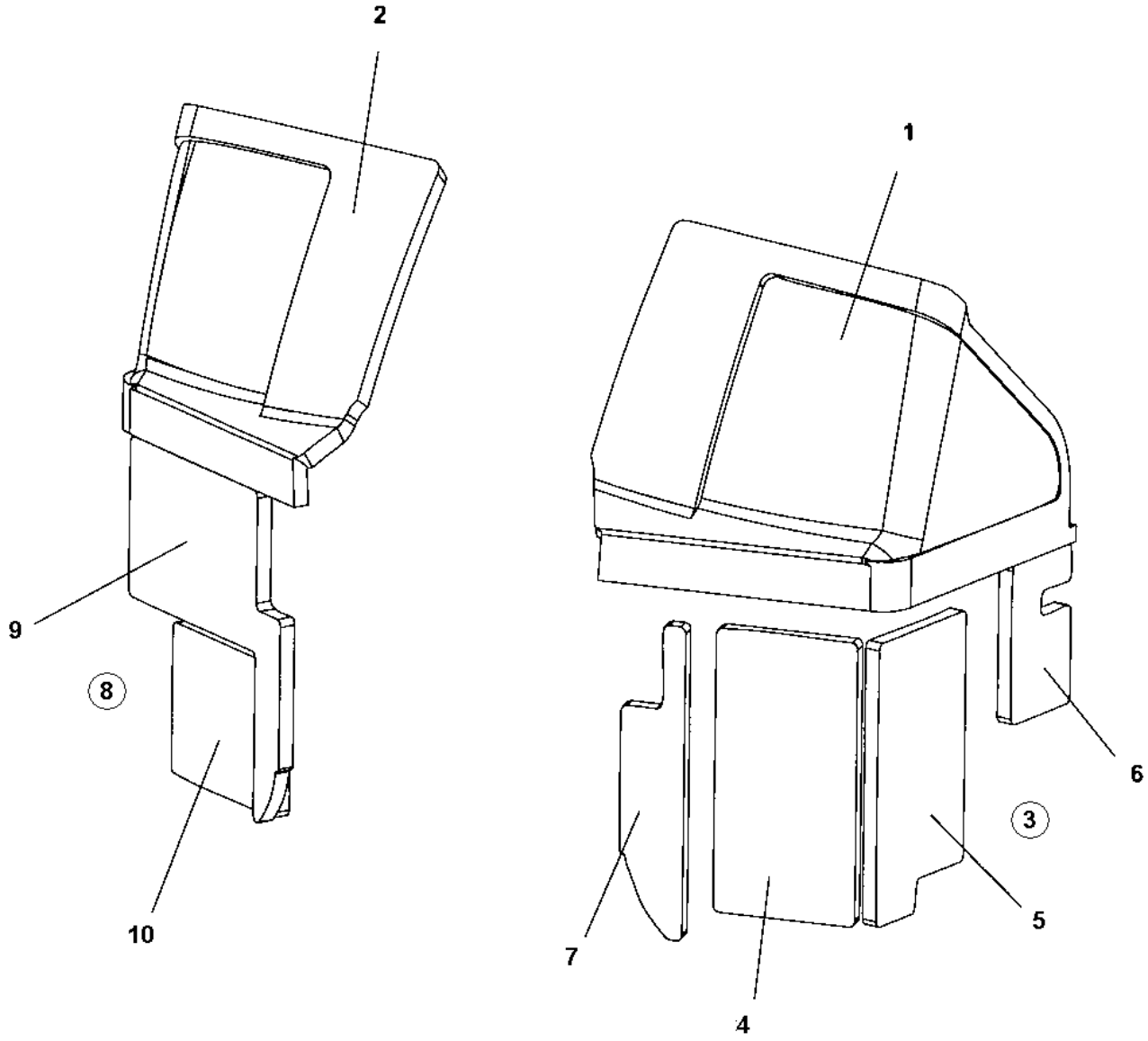

Item	Part No.	Name	Qty	L	SN INFO
1	4700394567	Sound absorbent	1		
2	4700394568	Sound absorbent	1		
3	4812158294	Sound absorbent kit, lower left cover	1		
4	-	Sound absorbent	1	1	
5	-	Sound absorbent	1	1	
6	-	Sound absorbent	1	1	
7	-	Sound absorbent	1	1	
8	4812158295	Sound absorbent kit, lower right cover	1		
9	-	Sound absorbent	1	1	
10	-	Sound absorbent	1	1	

Comments for Page: Noise suppression, covers

(L)OCAL REMARKS

1 | en_US | Not sold separately.

Rear frame Grab handle module

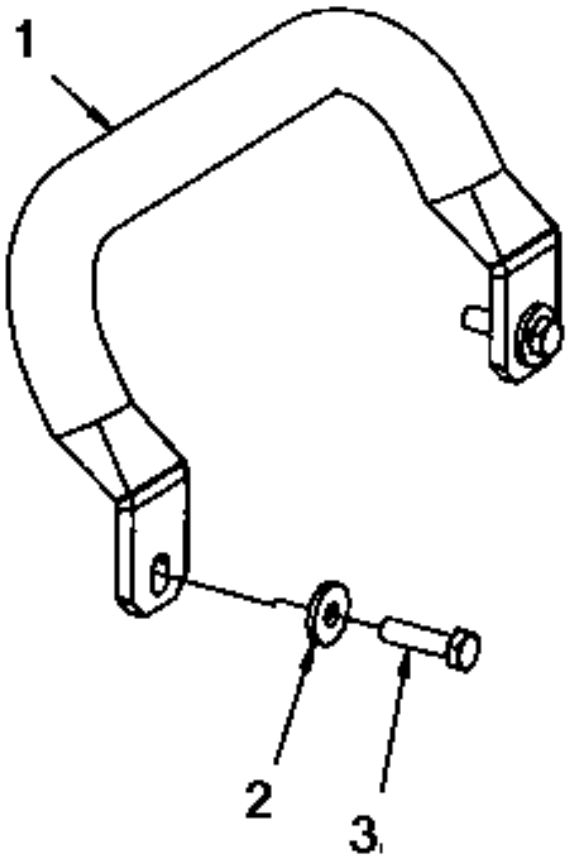

Item	Part No.	Name	Qty	L	SN INFO
1	4700394545	Grab handle	1		
2	4700904640	Washer, 8.4x22x3 mm 300HV	2		
3	4700500022	Screw	2		

Sprinkler system Sprinkler system

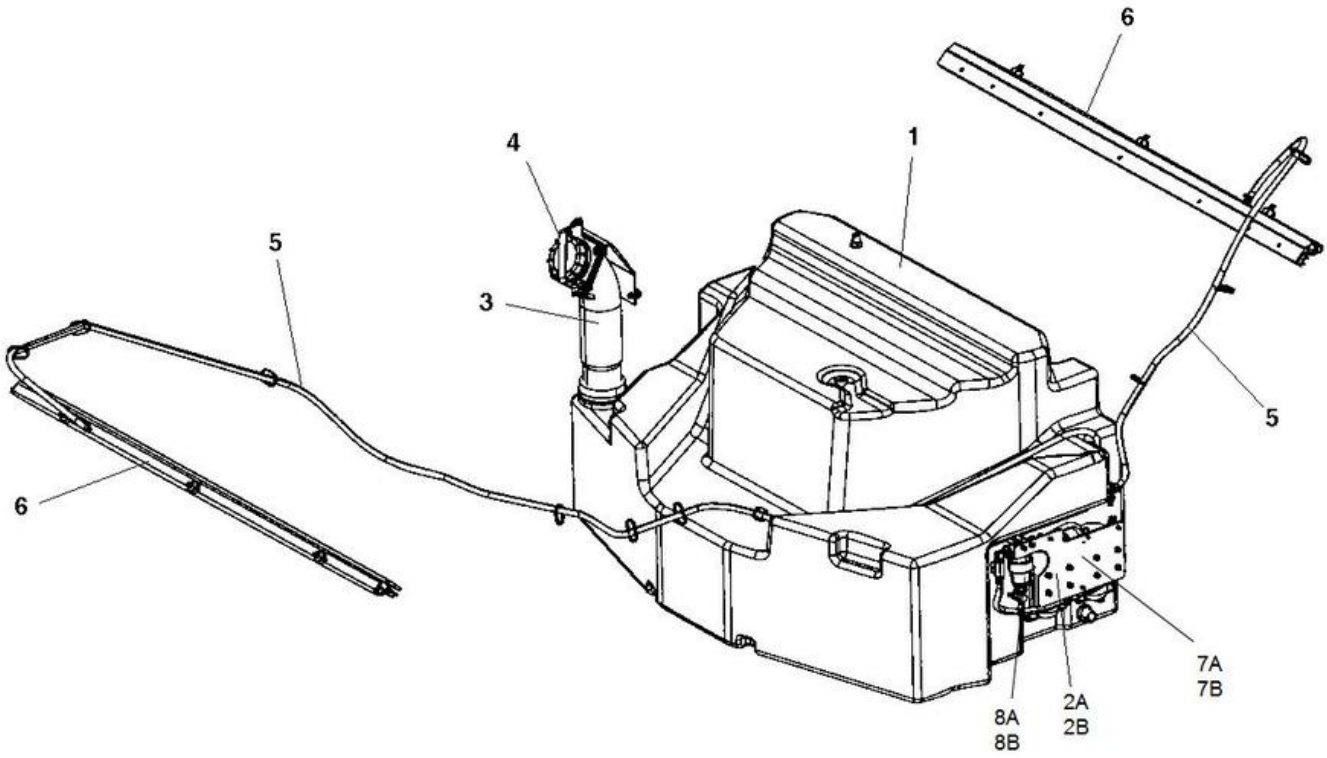

Item	Part No.	Name	Qty	L	SN INFO
1	-	Tank structure module	1		
2A	-	Sprinkler pump module	1		To A013069
2B	-	Sprinkler pump module	1		From A013070
3	-	Filling pipe	2		
4	-	Locking device module	1		
5	-	Water hoses	1		
6	-	Scraper assy with nozzles	2		
7A	-	Sprinkler pump, additonal sprinkler/cocoa mat	1		To A013069
7B	-	Sprinkler pump, additonal sprinkler/cocoa mat	1		From A013070
8A	-	Sprinkler pump, backup	1		To A013069
8B	-	Sprinkler pump, backup	1		From A013070

Sprinkler pump module, To SN A013069 Sprinkler pump module

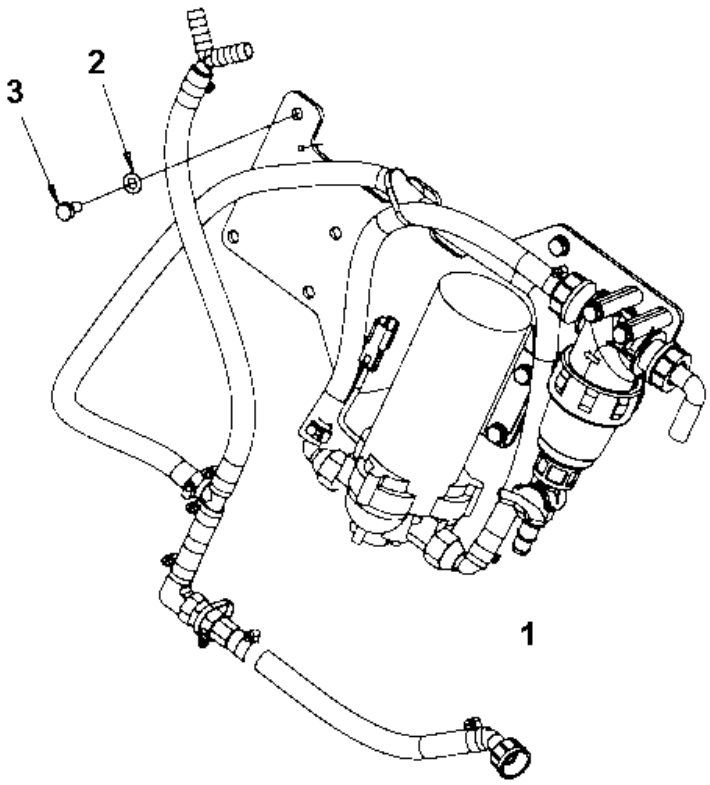

Item	Part No.	Name	Qty	L	SN INFO
1	-	Sprinkler pump	1	2	
2	4700904229	Washer, 8.4x 6x1.5 mm 300HV	3		
3	4700500019	Hexagon screw	3		

Comments for Page: Sprinkler pump module

(L)OCAL REMARKS

2 | en_US | Installation with Water pump with external threads.

Sprinkler pump module, To SN A013069 Sprinkler pump

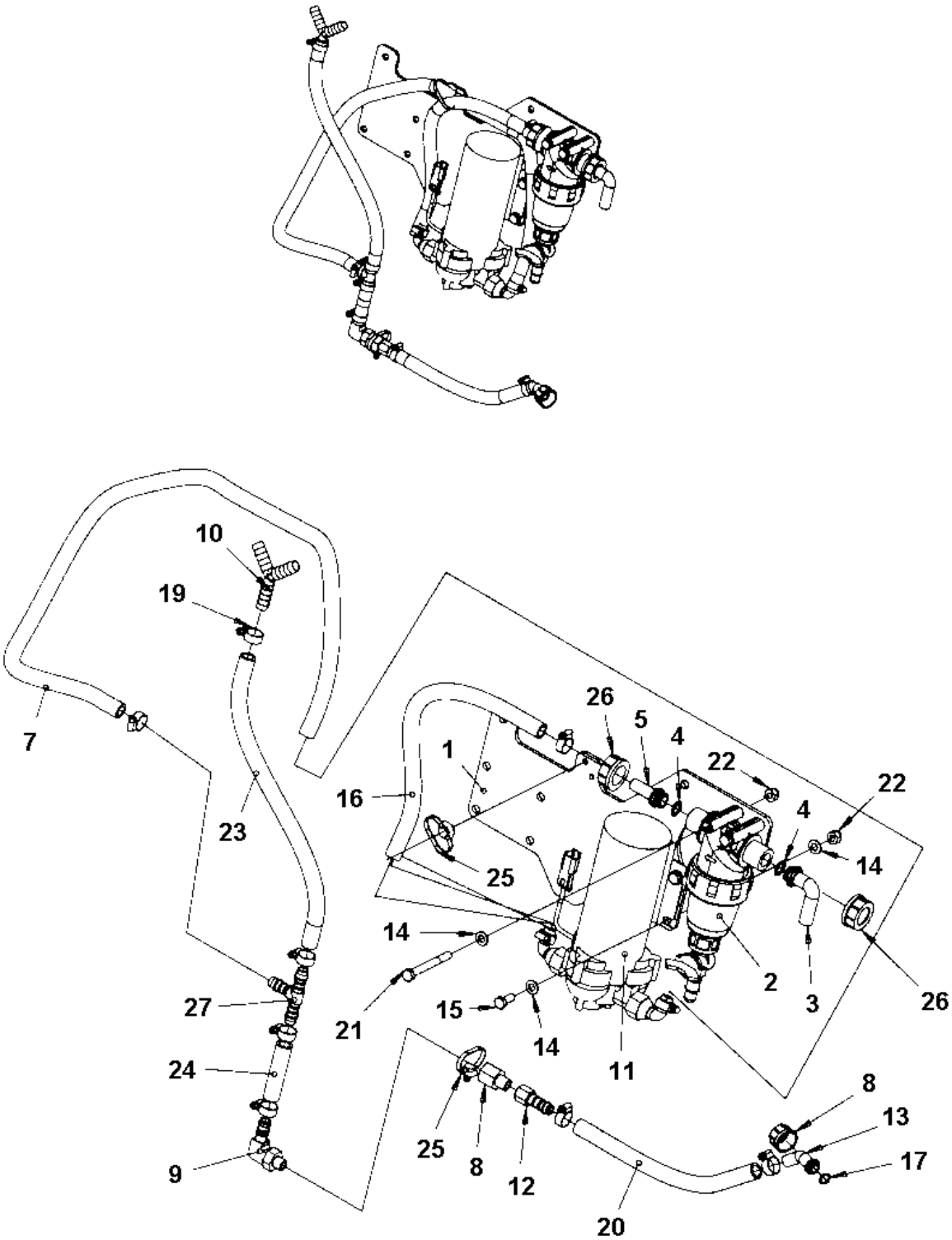

Item	Part No.	Name	Qty	L	SN INFO
1	4812110491	Sprinkler plate	1		
2	4812111325	Water filter	1		
3	4812111332	Hose connection swivel	1		
4	4700480852	O-ring 70	2		
5	4812111329	Hose connebtion swivel	1		
7	4812112074	Plastic hose (x m)	1XL	A	
8	4700792813	Bypass valve	1		
9	4700901431	Hose connection	1		
10	4811000107	Hose connection	1		
11	4812110394	Sprinkler pump	1		
12	4811000085	Hose connection	1		
13	4700393542	Hose connection	1		
14	4700904229	Washer, 8.4x 6x1.5 mm 300HV	10		
15	4700500053	Screw, M8x20 mm 8.8 A2K	4		
16	4812112074	Plastic hose (x m)	1XL	B	
17	4700792600	O-ring 70	1		
18	4700392227	Swivel nut	1		
19	4700313002	Hose clamp	10		
20	4812112074	Plastic hose (x m)	1XL	C	
21	4700500090	Screw	2		
22	4700586003	Lock nut M8	6		
23	4812112074	Plastic hose (x m)	1XL	D	
24	4812112074	Plastic hose (x m)	1XL	E	
25	4700792441	Cable tie with holder	N		
26	4700792779	Swivel nut	2		
27	4700923735	Hose connection	1		

Comments for Page: Sprinkler pump

(L)OCAL REMARKS

A | en_US | L= 1.24 m

B | en_US | L= 0.54 m (when only one pump mounted L= 0.35 m)

C | en_US | L= 0.20 m

D | en_US | L= 0.38 m

E | en_US | L= 0.07

Sprinkler pump module, From SN A013070 Sprinkler pump module

Item	Part No.	Name	Qty	L	SN INFO
1	-	Sprinkler pump	1	2	
2	4700904229	Washer, 8.4x 6x1.5 mm 300HV	3		
3	4700500019	Hexagon screw	3		

Comments for Page: Sprinkler pump module

(L)OCAL REMARKS

2 | en_US | Installation with Water pump with external threads.

Sprinkler pump module, From SN A013070 Sprinkler pump

Item	Part No.	Name	Qty	L	SN INFO
1	4812121292	Sprinkler plate	1		
2	4812111325	Water filter	1		
2	4700791959	O-ring	1		
2	4700791949	Filter element	1		
2	4700791568	Gasket	1		
2	4700379009	Valve	1		
3	4812111332	Hose connection swivel	1		
4	4700480852	O-ring 70	2		
5	4812111329	Hose connebtion swivel	1		
7	4812112074	Plastic hose (x m)	1.24		
8	4700792813	Bypass valve	1		
9	4700901431	Hose connection	1		
10	4811000107	Hose connection	1		
11	4812121289	Sprinkler pump	1		
12	4811000085	Hose connection	1		
13	4700393542	Hose connection	1		
14	4700904229	Washer, 8.4x 6x1.5 mm 300HV	2		
15	4700500013	Screw, M6x16 mm 8.8 A2K	4		
15	4700500012	Hex. screw	4		
16	4812112074	Plastic hose (x m)	0.54	B	
17	4700792600	O-ring 70	1		
18	4700392227	Swivel nut	1		
19	4700313002	Hose clamp	10		
20	4812112074	Plastic hose (x m)	0.2		
21	4700500090	Screw	2		
21	4700500189	Screw	2		
22	4700904228	Washer 6,4x12x1,5	4		
23	4812112074	Plastic hose (x m)	0.38		
24	4812112074	Plastic hose (x m)	0.07		
25	4700792441	Cable tie with holder	2		
26	4700792779	Swivel nut	2		
27	4700923735	Hose connection	1		

Comments for Page: Sprinkler pump

(L)OCAL REMARKS

B | en_US | L= 0.54 m (when only one pump mounted L= 0.35 m)

Sprinkler system Water hoses

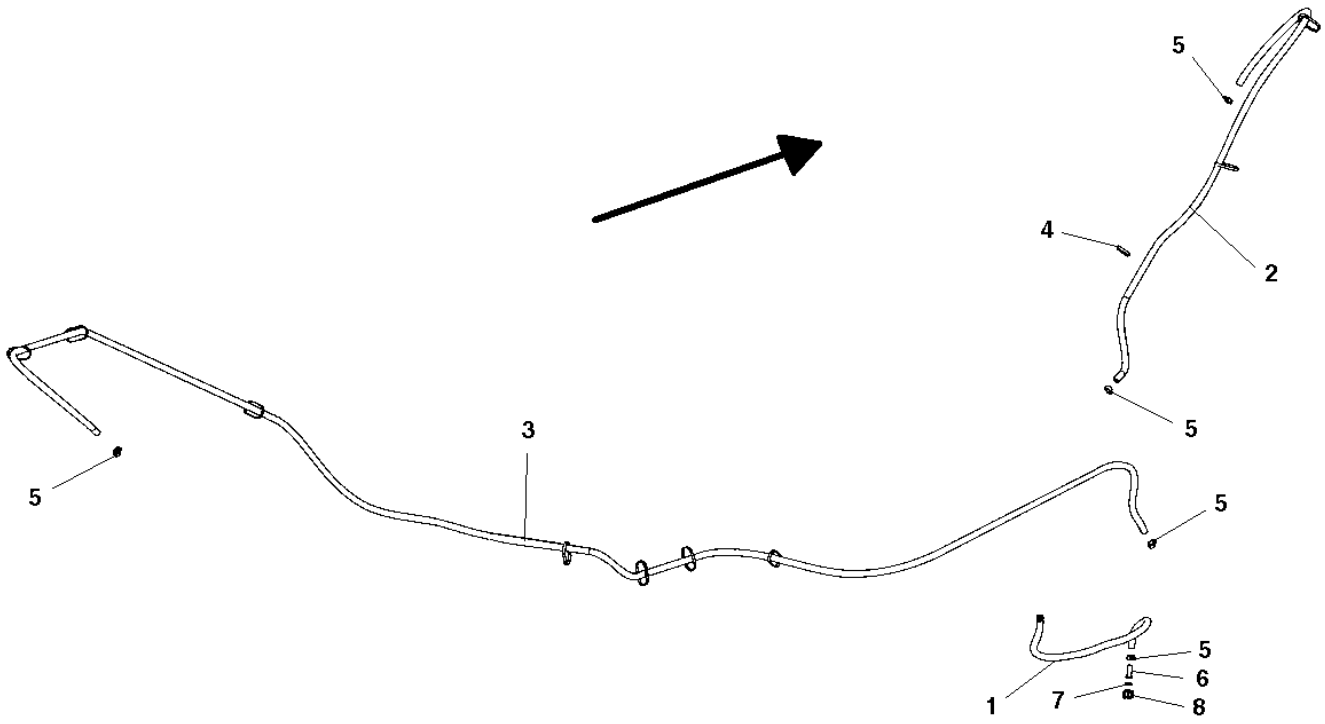

Item	Part No.	Name	Qty	L	SN INFO
1	4812112074	Plastic hose (x m)	1XL	A	
2	4812112074	Plastic hose (x m)	1XL	B	
3	4812112074	Plastic hose (x m)	1XL	C	
4	4700313102	Cable ties	N		
5	4700313002	Hose clamp	6		
6	4700392228	Hose connection swivel	1		
7	4700392229	Plane gasket	1		
8	4700392227	Swivel nut	1		

Comments for Page: Water hoses

(L)OCAL REMARKS

A | en_US | L=0.66 m, machine with offset L=0.70 m

B | en_US | L=1.62 m, machine with offset L=1.64 m

C | en_US | L=4.48 m, machine with offset L=4.23 m

Sprinkler pump, additonal sprinkler/cocoa mat, To SN A013069 Sprinkler pump, additonal sprinkler/cocoa mat

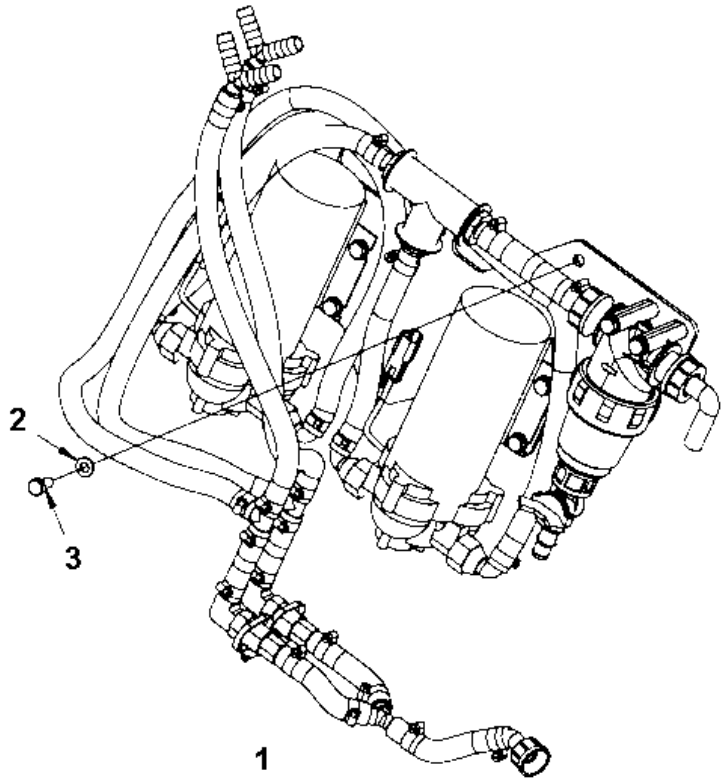

Item	Part No.	Name	Qty	L	SN INFO
1	-	Sprinkler pumps	1		
2	4700904229	Washer, 8.4x 6x1.5 mm 300HV	3		
3	4700500019	Hexagon screw	3		

Sprinkler pump, additonal sprinkler/cocoa mat, To SN A013069 Sprinkler pumps

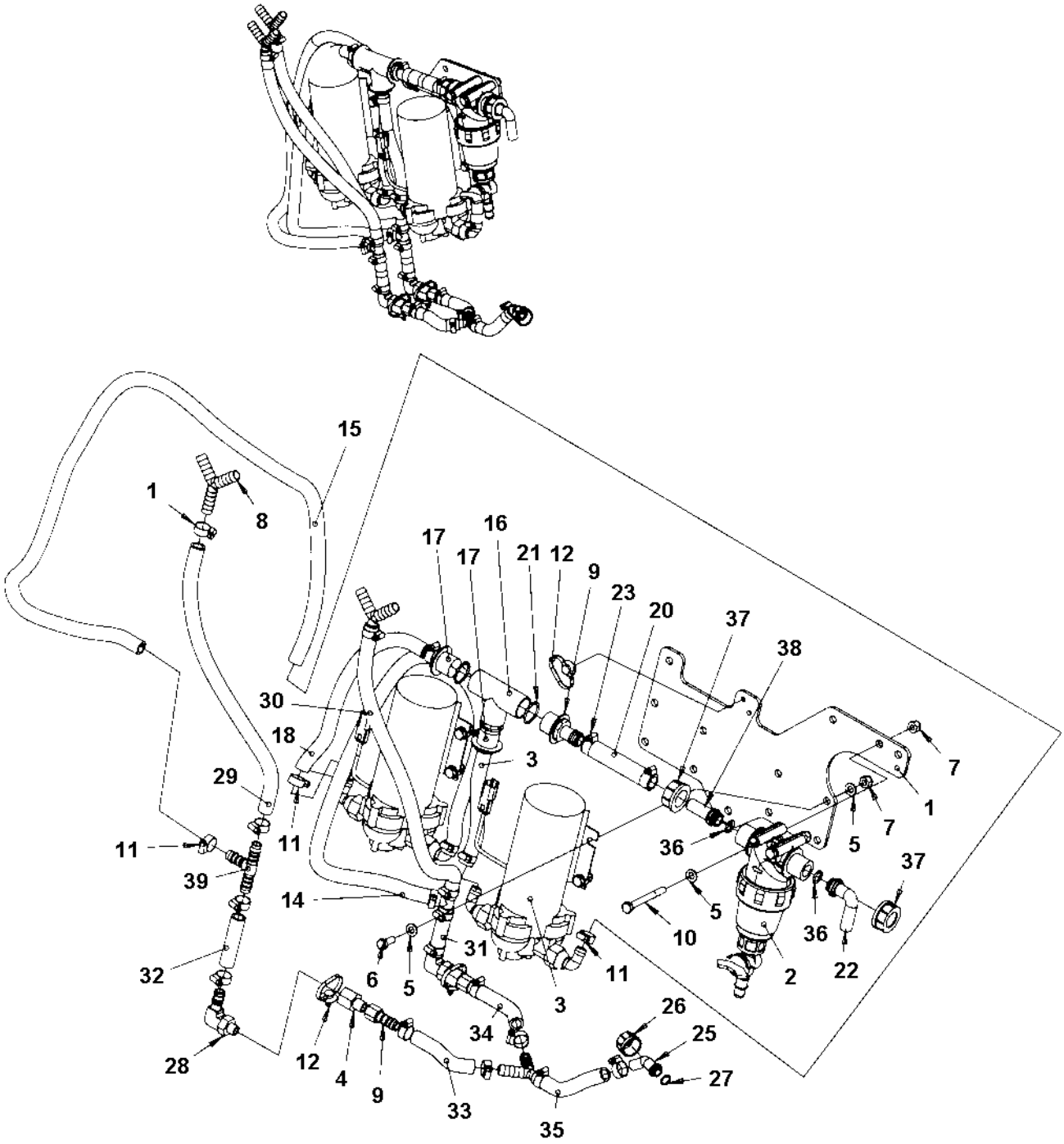

Item	Part No.	Name	Qty	L	SN INFO
1	4812110491	Sprinkler plate	1		
2	4812111325	Water filter	1		
3	4812110394	Sprinkler pump	2		
4	4700792813	Bypass valve	2		
5	4700904229	Washer, 8.4x 6x1.5 mm 300HV	18		
6	4700500053	Screw, M8x20 mm 8.8 A2K	8		
7	4700586003	Lock nut M8	10		
8	4811000107	Hose connection	3		
9	4811000085	Hose connection	2		
10	4700500090	Screw	2		
11	4700313002	Hose clamp	22		
12	4700792441	Cable tie with holder	0		
13	4812112074	Plastic hose (x m)	1XL	A	
14	4812112074	Plastic hose (x m)	1XL	B	
15	4812112074	Plastic hose (x m)	1XL	C	
16	4700792778	Tee-connector	1		
17	4700396672	Hose connection, plastic	2		
18	4812112074	Plastic hose (x m)	1XL	D	
19	4700396673	Hose connection	1		
20	4700792073	Hose reinforced	1XL	E	
21	4700160313	O-ring 70	3		
22	4812111332	Hose connection swivel	1		
23	4700313003	Hose clamp	2		
25	4700393542	Hose connection	1		
26	4700392227	Swivel nut	1		
27	4700792600	O-ring 70	1		
28	4700901431	Hose connection	2		
29	4812112074	Plastic hose (x m)	1XL	F	
30	4812112074	Plastic hose (x m)	1XL	F	
31	4812112074	Plastic hose (x m)	1XL	G	
32	4812112074	Plastic hose (x m)	1XL	G	
33	4812112074	Plastic hose (x m)	1XL	H	
34	4812112074	Plastic hose (x m)	1XL	H	
35	4812112074	Plastic hose (x m)	1XL	I	
36	4700480852	O-ring 70	2		
37	4700792779	Swivel nut	2		
38	4700792780	Hose connection swivel	1		

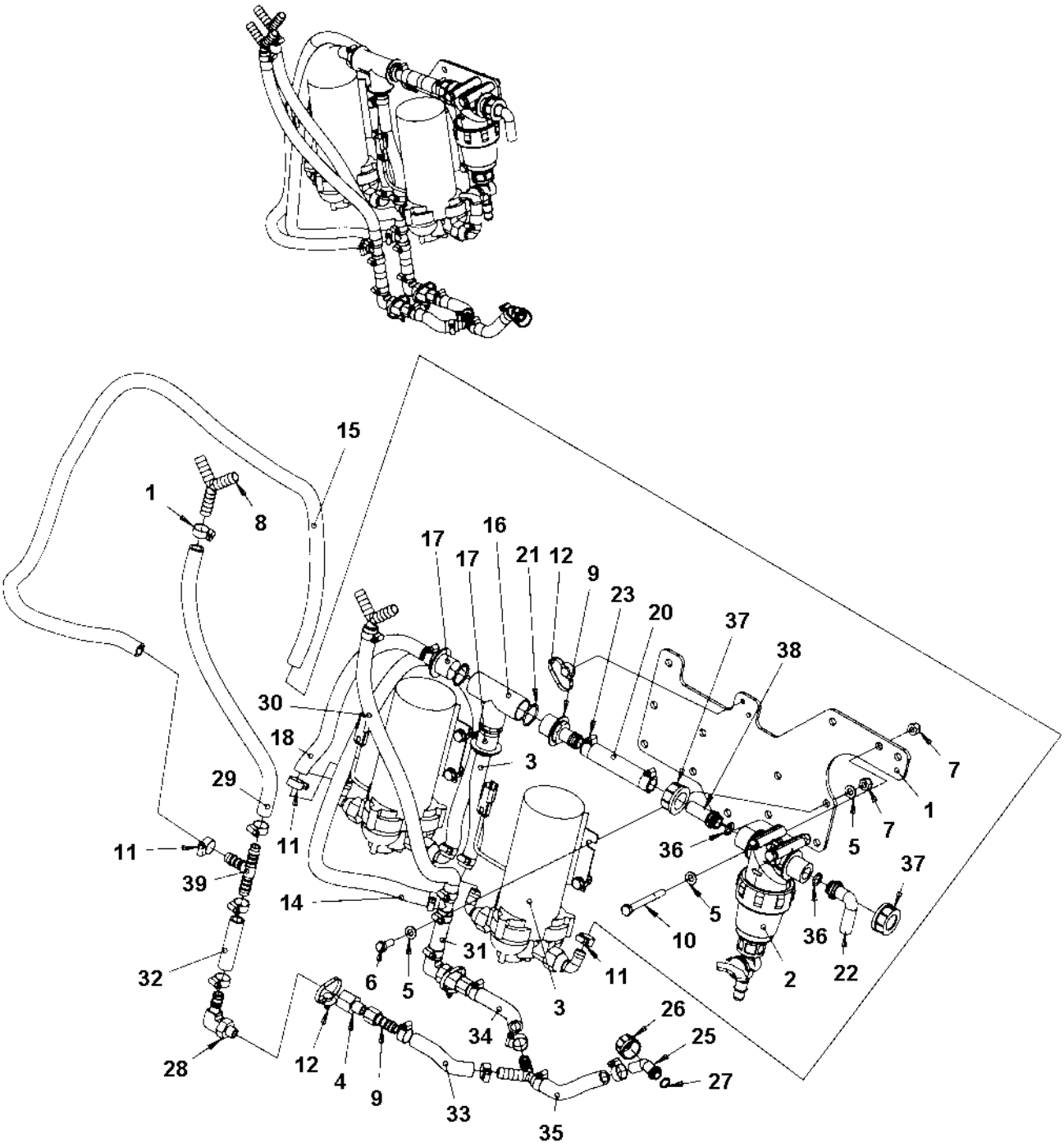
15
1
8
17
16
17
21
12
9
23
20
37
38
30
18
3
29
7
1
11
11
36
5
7
39
37
14
5
10
36
31
6
5
11
3
2
22
32
3
26
34
25
28
12
4
9
33
27
35

Item	Part No.	Name	Qty	L	SN INFO
39	4700923735	Hose connection	2		

Comments for Page: Sprinkler pumps

(L)OCAL REMARKS

A | en_US | L=0.20 m

B | en_US | L= 0.98 m

C | en_US | L= 1.24 m

D | en_US | L= 0.31 m

E | en_US | L= 0.11 m

F | en_US | L= 0.38 m

G | en_US | L= 0.07 m

H | en_US | L= 0.12 m

I | en_US | L= 0.09 m

Sprinkler pump, additonal sprinkler/cocoa mat, From SN A013070 Sprinkler pump module (2 pumps)

Item	Part No.	Name	Qty	L	SN INFO
1	-	Sprinkler pumps	1		
2	4700904229	Washer, 8.4x 6x1.5 mm 300HV	3		
3	4700500019	Hexagon screw	3		

Sprinkler pump, additonal sprinkler/cocoa mat, From SN A013070 Sprinkler pump mounted (2 pumps)

Item	Part No.	Name	Qty	L	SN INFO
1	4812121292	Sprinkler plate	1		
2	4812111325	Water filter	1		
2	4700791959	O-ring	1		
2	4700791949	Filter element	1		
2	4700791568	Gasket	1		
2	4700379009	Valve	1		
3	4812121289	Sprinkler pump	2		
4	4700792813	Bypass valve	2		
5	4700904229	Washer, 8.4x 6x1.5 mm 300HV	2		
6	4700500013	Screw, M6x16 mm 8.8 A2K	8		
6	4700500012	Hex. screw	8		
7	4700904228	Washer 6,4x12x1,5	8		
8	4811000107	Hose connection	3		
9	4811000085	Hose connection	2		
10	4700500090	Screw	2		
10	4700500189	Screw	2		
11	4700313002	Hose clamp	22		
12	4700792441	Cable tie with holder	3		
13	4812112074	Plastic hose (x m)	0.2		
14	4812112074	Plastic hose (x m)	0.98		
15	4812112074	Plastic hose (x m)	1.24		
16	4700792778	Tee-connector	1		
17	4700396672	Hose connection, plastic	2		
18	4812112074	Plastic hose (x m)	0.31		
19	4700396673	Hose connection	1		
20	4700792073	Hose reinforced	0.11		
21	4700160313	O-ring 70	3		
22	4812111332	Hose connection swivel	1		
23	4700313003	Hose clamp	2		
25	4700393542	Hose connection	1		
26	4700392227	Swivel nut	1		
27	4700792600	O-ring 70	1		
28	4700901431	Hose connection	2		
29	4812112074	Plastic hose (x m)	0.38		
30	4812112074	Plastic hose (x m)	0.38		
31	4812112074	Plastic hose (x m)	0.07		
32	4812112074	Plastic hose (x m)	0.07		

Item	Part No.	Name	Qty	L	SN INFO
33	4812112074	Plastic hose (x m)	0.12		
34	4812112074	Plastic hose (x m)	0.12		
35	4812112074	Plastic hose (x m)	0.09		
36	4700480852	O-ring 70	2		
37	4700792779	Swivel nut	2		
38	4700792780	Hose connection swivel	1		
39	4700923735	Hose connection	2		

Sprinkler pump, backup, To SN A013069 Sprinkler pump, backup

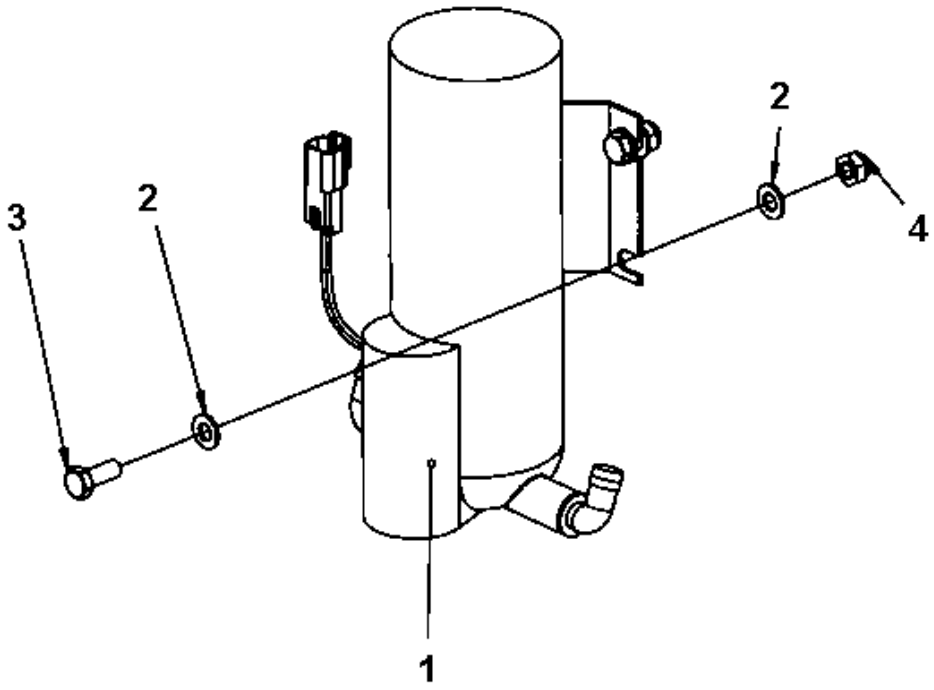

Item	Part No.	Name	Qty	L	SN INFO
1	4700391495	Sprinkler pump	1	1	
1	4812110358	Sprinkler pump	1	A	
1	4812110394	Sprinkler pump	1	A, 2	
2	4700904229	Washer, 8.4x 6x1.5 mm 300HV	8		
3	4700500053	Screw, M8x20 mm 8.8 A2K	4		
4	4700791182	Nut, M8 -8 DIN985	4		

Comments for Page: Sprinkler pump, backup

(L)OCAL REMARKS

A | en_US | Connectors included.

1 | en_US | Replaced as Spare Part by PN 4812110394.

2 | en_US | Replaces PN 4700391495 and 4812110358.

Sprinkler pump, backup, From SN A013070 Sprinkler pump, backup

Item	Part No.	Name	Qty	L	SN INFO
1	4812121289	Sprinkler pump	1		
2	4700904228	Washer 6,4x12x1,5	8		
3	4700500013	Screw, M6x16 mm 8.8 A2K	4		

Extra sprinkler tank/s Extra sprinkler tank/s

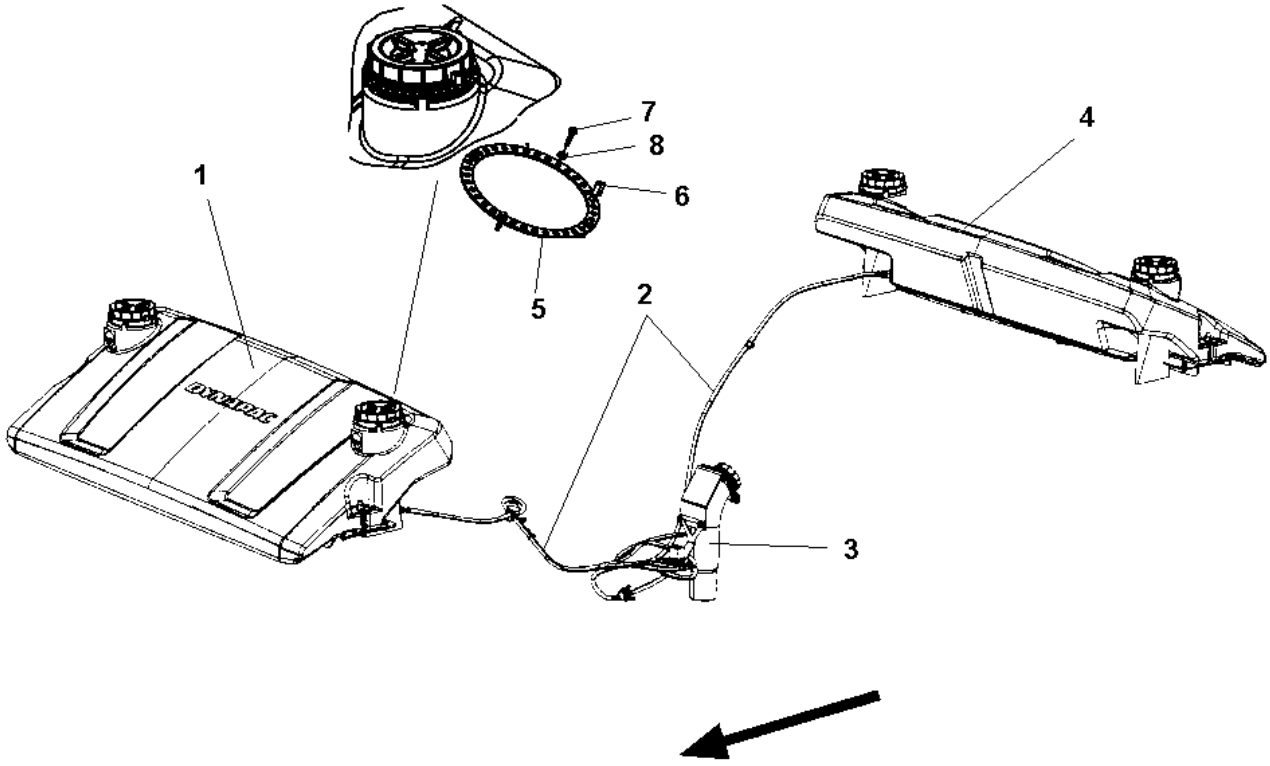

Item	Part No.	Name	Qty	L	SN INFO
1	-	Sprinkler tank	1		
2	-	Water hoses	1		
3	-	Filling pipe	1		
4	-	Sprinkler tank	1		
5	4812118056	Lock plate	1		
6	4700370699	Lock w key	1		
7	4811000457	Thread rolling screw	4		
8	4700904228	Washer 6,4x12x1,5	4		

Extra sprinkler tank/s Water hoses

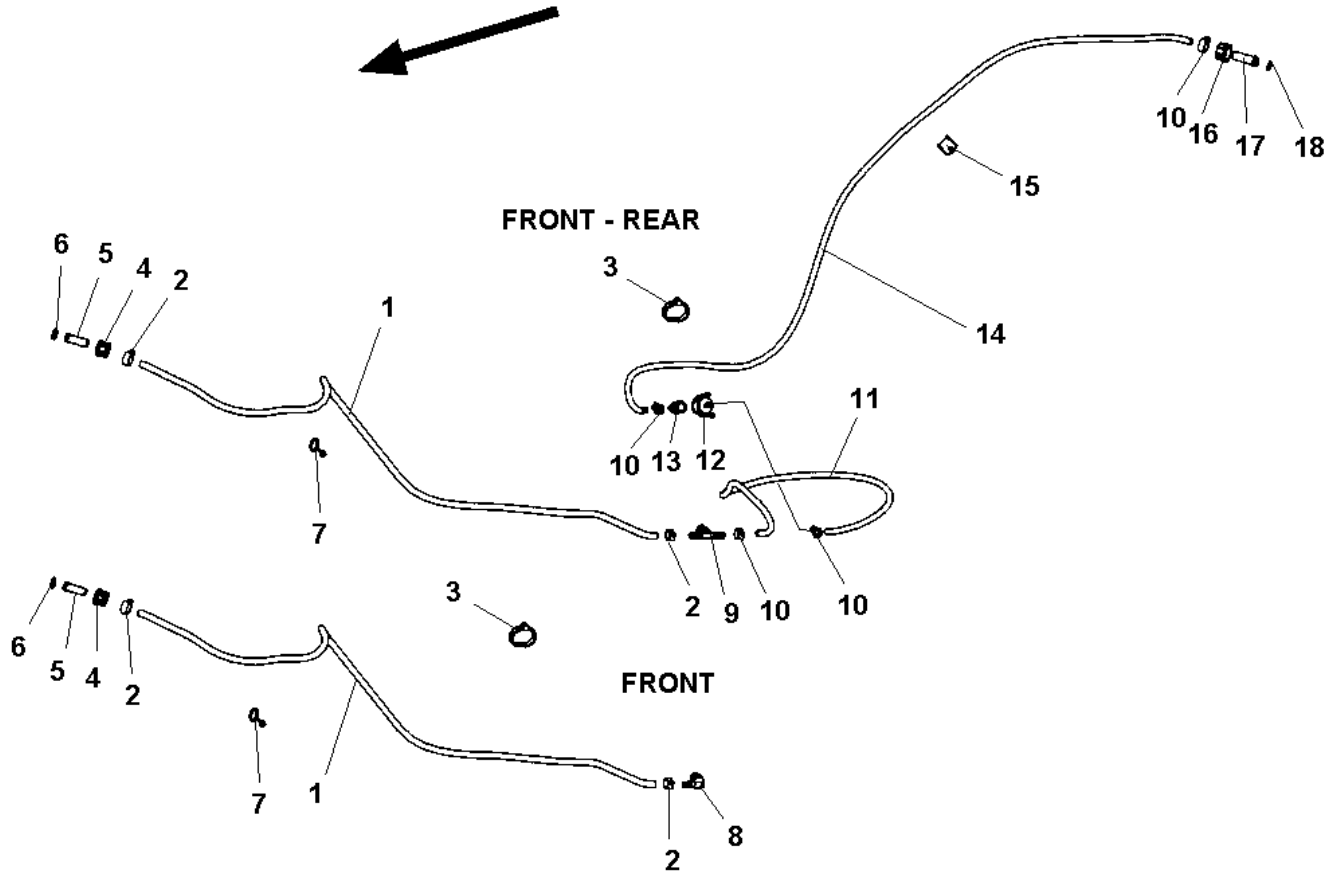

Item	Part No.	Name	Qty	L	SN INFO
1	4700904878	Plastic hose	1XL	A	
2	4700313002	Hose clamp	2		
3	4700313102	Cable ties	N		
4	4700392227	Swivel nut	1		
5	4700392228	Hose connection swivel	1		
6	4700792600	O-ring 70	1		
7	4700792442	Cable tie	1		
8	4700924996	Hose connection	1		
9	4700792130	Adapter, plastic	1		
10	4700313002	Hose clamp	4		
11	4700904878	Plastic hose	1XL	C	
12	4700393173	Quick coupling	1		
13	4700393174	Quick coupling	1		
14	4700904878	Plastic hose	1XL	B	
15	4700921116	Clamp	1		
16	4700392227	Swivel nut	1		
17	4700392228	Hose connection swivel	1		
18	4700792600	O-ring 70	1		

Comments for Page: Water hoses

(L)OCAL REMARKS

A | en_US | L= 2.2 m

B | en_US | L= 2.5 m

C | en_US | L= 1.8 m

Extra sprinkler tank/s Filling pipe

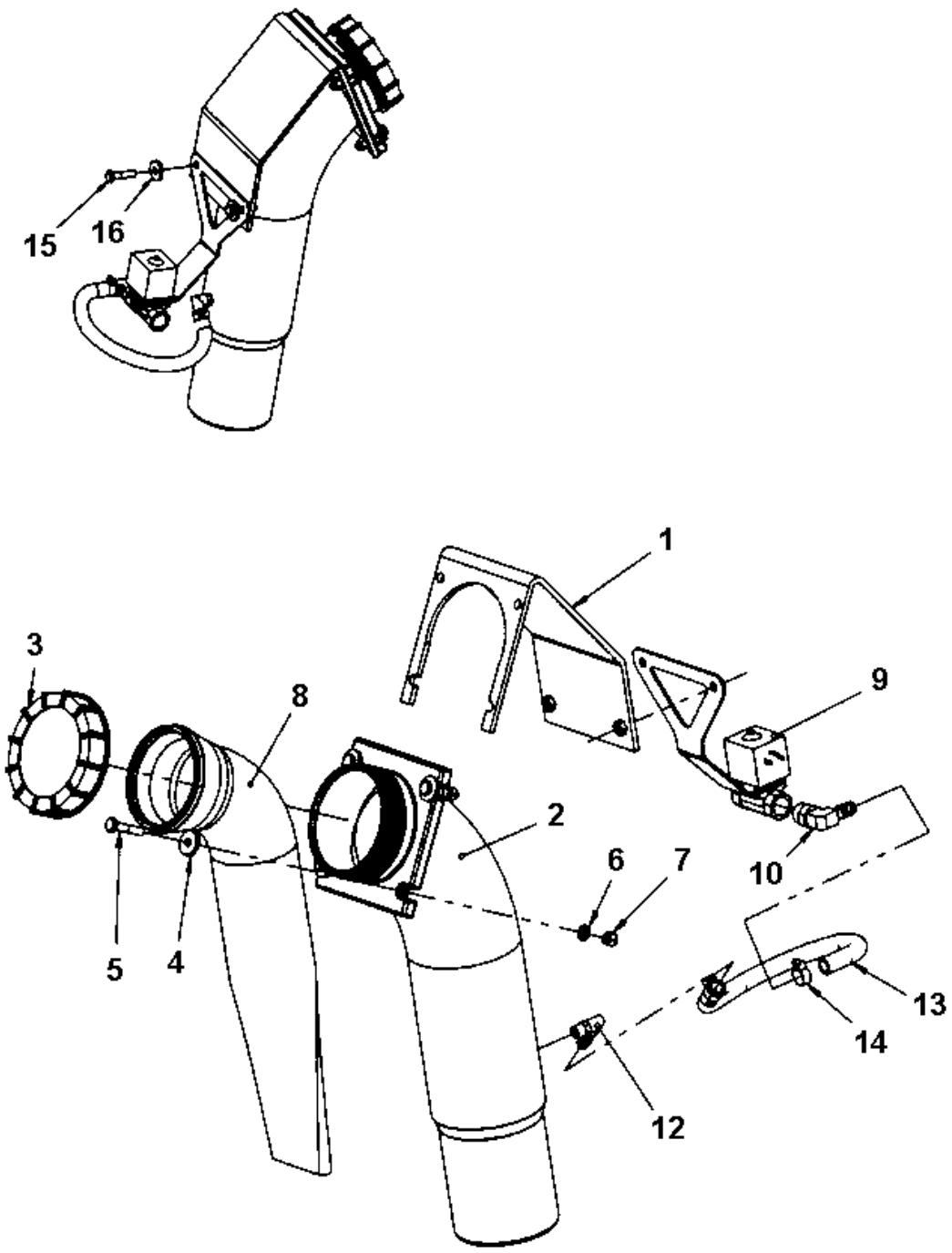

Item	Part No.	Name	Qty	L	SN INFO
1	4700391626	Bracket	1		
2	4700396379	Filling pipe	1		
3	4700920819	Filler cap	1		
4	4700904734	Washer, 8.4x26x4 mm 300 HV	4		
5	4700500023	Screw, M8x40 mm 8.8 A2K	4		
6	4700904229	Washer, 8.4x 6x1.5 mm 300HV	6		
7	4700586003	Lock nut M8	4		
8	4700391444	Strainer	1		
9	4700395418	Solenoid valve assy	1		
10	4700924996	Hose connection	1		
12	4700791776	Adapter	1		
13	4700904878	Plastic hose	1XL		
14	4700313002	Hose clamp	2		
15	4700500047	Hexagon head screw	2		
16	4700904734	Washer, 8.4x26x4 mm 300 HV	2		

Extra sprinkler tank/s Sprinkler tank

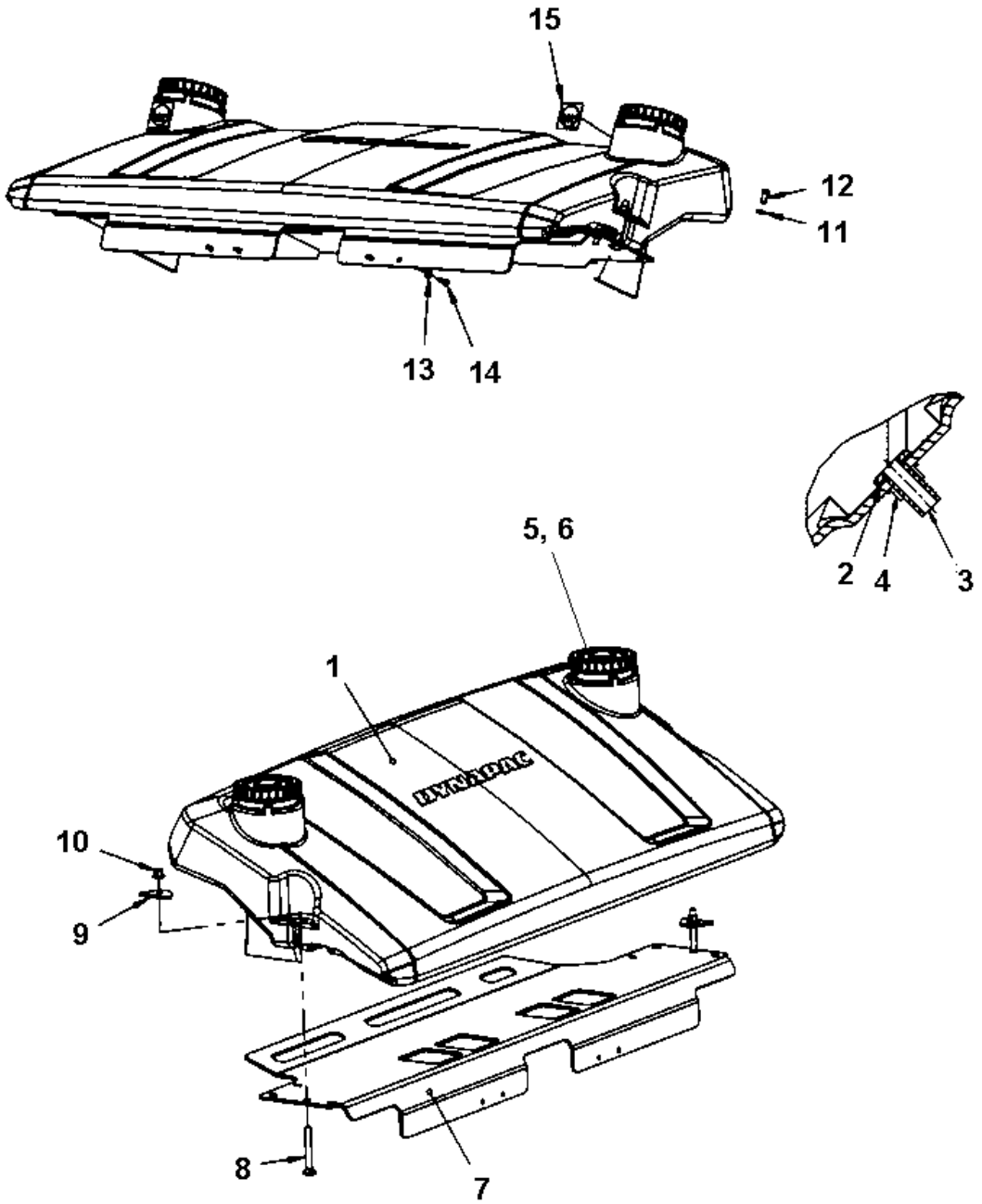

Item	Part No.	Name	Qty	L	SN INFO
1	4700393330	Sprinkler tank	1		
2	4700392231	Plane gasket	1		
3	4700392230	Grommet	1		
4	4700392232	Nut	1		
5	4700359003	Tank Cap	2		
6	4700358846	Strainer	2		
7	4700394323	Support plate	1		
8	4700904405	Screw	2		
9	4700392003	Holder	2		
10	4700902289	Nut	2		
11	4700904703	Plain washer 13x24x4 mm	6		
12	4700500046	Hex. head screw M12x030H	6		
13	4700904230	Plain washer 10.5x22x2 mm	4		
14	4700500029	Screw M10x30	4		
15	4700991657	Decal "WATER"	2		

End frame, front End frame, front

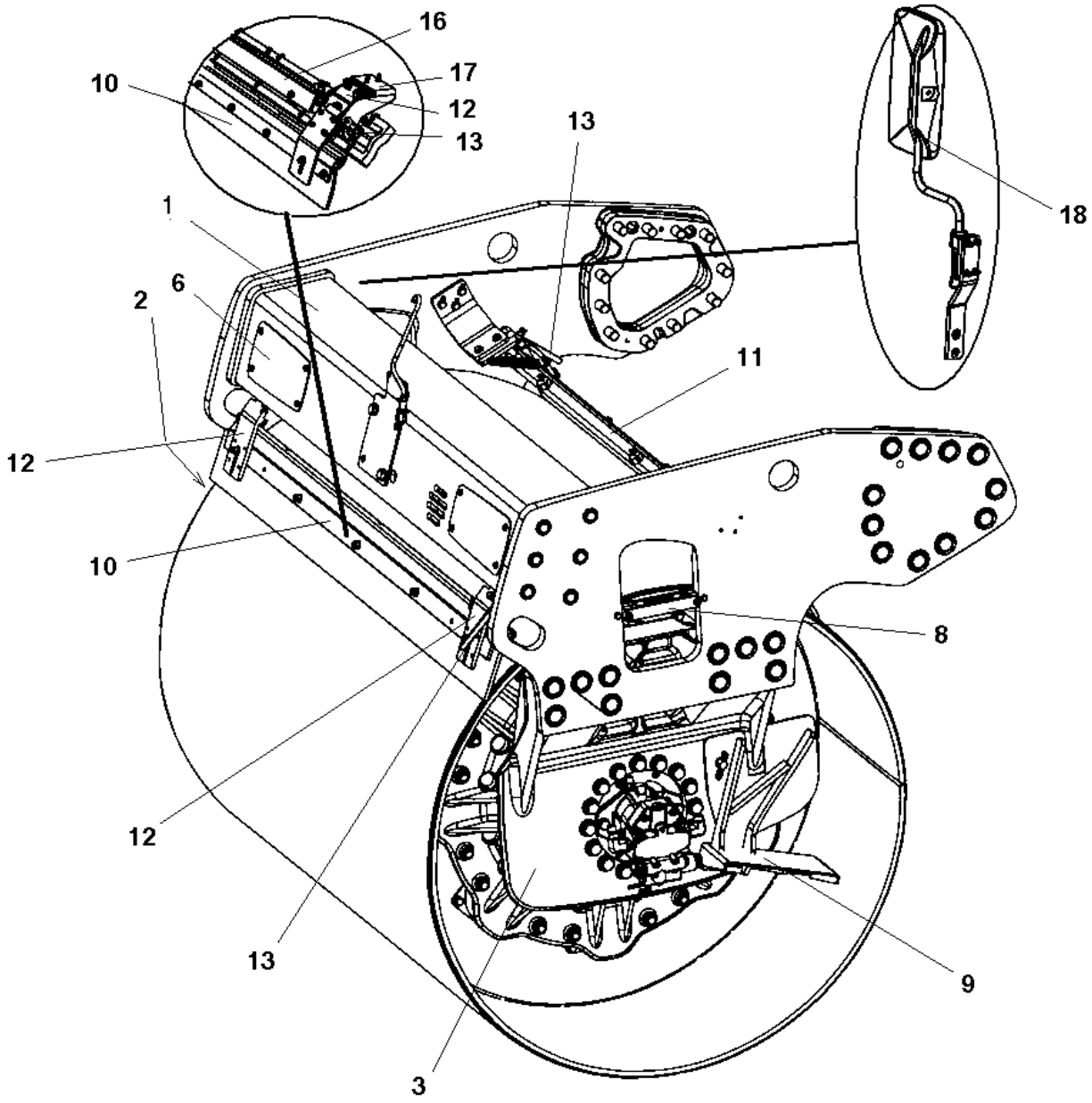

Item	Part No.	Name	Qty	L	SN INFO
1	-	End frame, front	1		
1	-	End frame, extra tank	1		
2	-	Fork, vibration side	1		
3	-	Fork, propulsion side	1		
6	-	Cover plate	2		
8	-	Hose clamp, propulsion side	1		
8	-	Hose clamp, vibration side	1		
9	-	Step, vibration side	1		
9	-	Step, propulsion side	1		
10	-	Scraper module, without nozzles	1		
11	-	Scraper module, with nozzles	1		
12	4700394340	Scraper bracket, cpl	4		
13	-	Grab handle, release	2	1	
13	-	Grab handle, release	1	2	
13	-	Grab handle, release	1	2, 3	
14	-	Grab handle, lift	1		
14	-	Grab handle, lift offset/cocoa mat	1		
16	-	Cocoa mat module	1		
17	-	Cocoa mat bracket module	2		
17	-	Cocoa mat bracket module	2	3	
18	-	Process mirrors	1		

Comments for Page: End frame, front

(L)OCAL REMARKS

1 | en_US | Qty 1 when cocoa mat mounted.

2 | en_US | For cocoa mat

3 | en_US | Valid for machine with front water tank.

End frame, front End frame, front

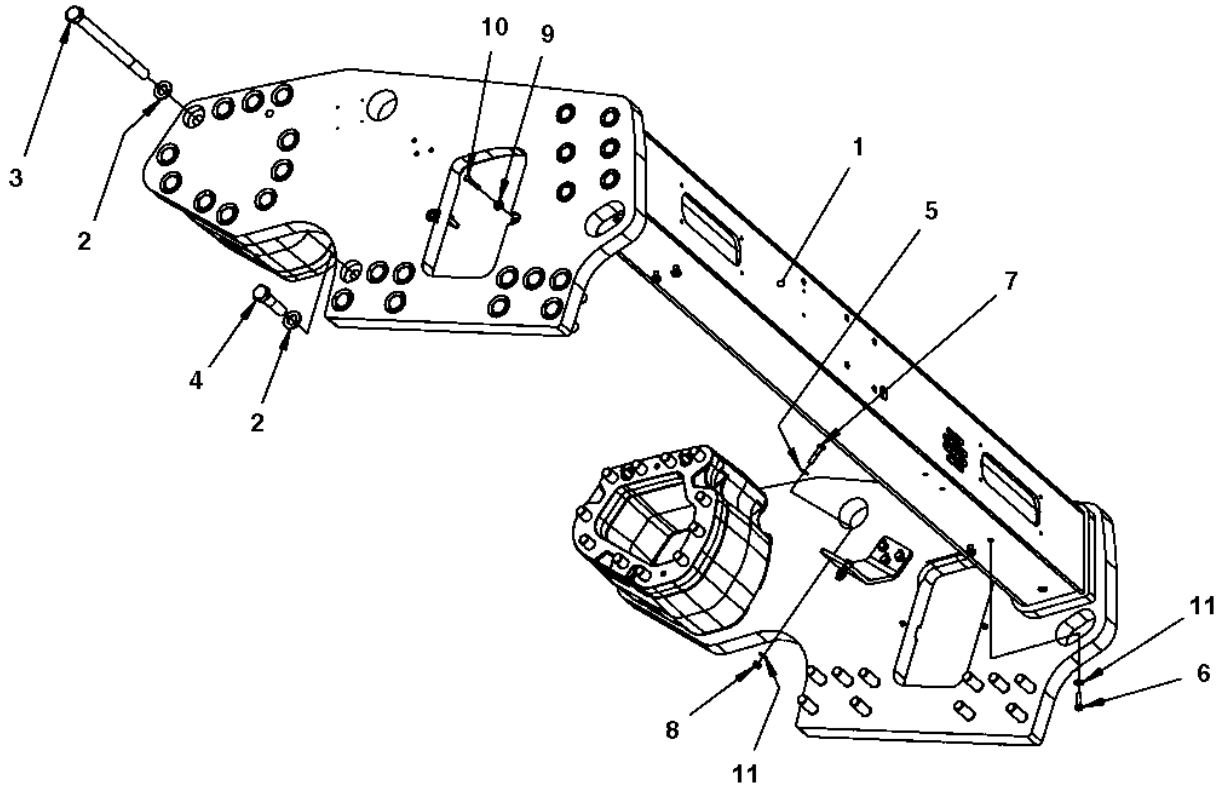

Item	Part No.	Name	Qty	L	SN INFO
1	-	Frame	1		
2	4700904234	Steel plain washer	42		
3	4700792535	Hexagon head screw M24x230	22		
4	4700500130	Hexagon head screw M24x90	20		
5	4700904230	Plain washer 10.5x22x2 mm	4		
6	4700500030	Screw hexagon	4		
7	4700500161	Screw	4		
8	4700791172	Lock nut M10 DIN985	4		
9	4700904556	Steel plain washer 8,4x16x3,0	4		
10	4700500047	Hexagon head screw	4		
11	4700904557	Washer, 10.5x22x4 mm 300 HV	8		

End frame, front Frame

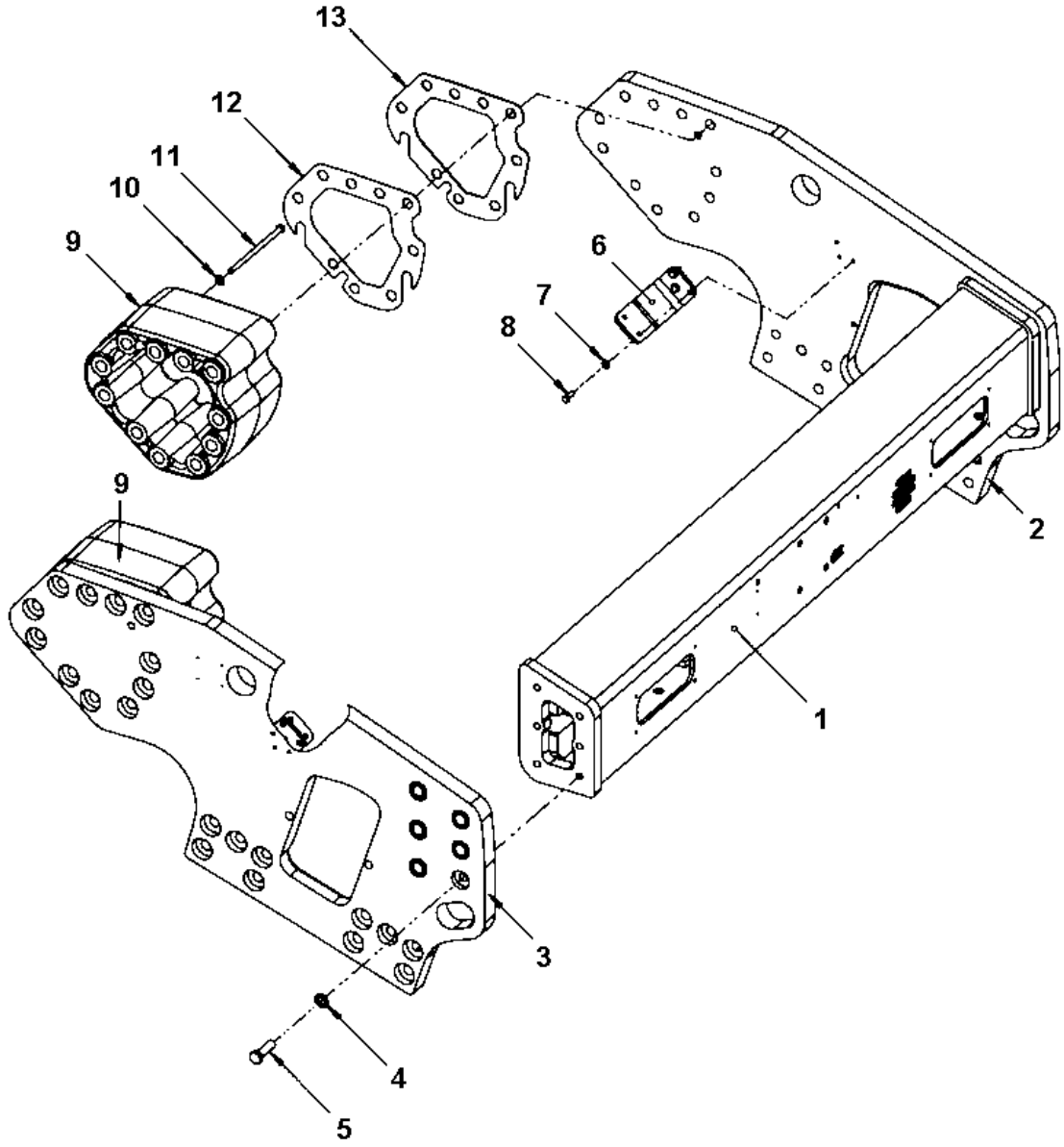

Item	Part No.	Name	Qty	L	SN INFO
1	4700390062	Crossbeam	1		
2	4700390058	Side plate T50	1		
3	4700393429	Side plate T50	1		
4	4700904233	Steel plain washer 21x36x3	12		
5	4700500207	Hexagon head screw	12		
6	4700394787	Holder	2		
7	4700904557	Washer, 10.5x22x4 mm 300 HV	6		
8	4700500029	Screw M10x30	6		
9	4700397391	Spacer	2		
10	4700904231	Washer, 13x24x2 mm 300 HV	4		
11	4700791136	Hexagon head screw	4		
12	4700390469	Shim	N		
13	4700390470	Shim	N		

End frame, extra tank End frame, extra tank

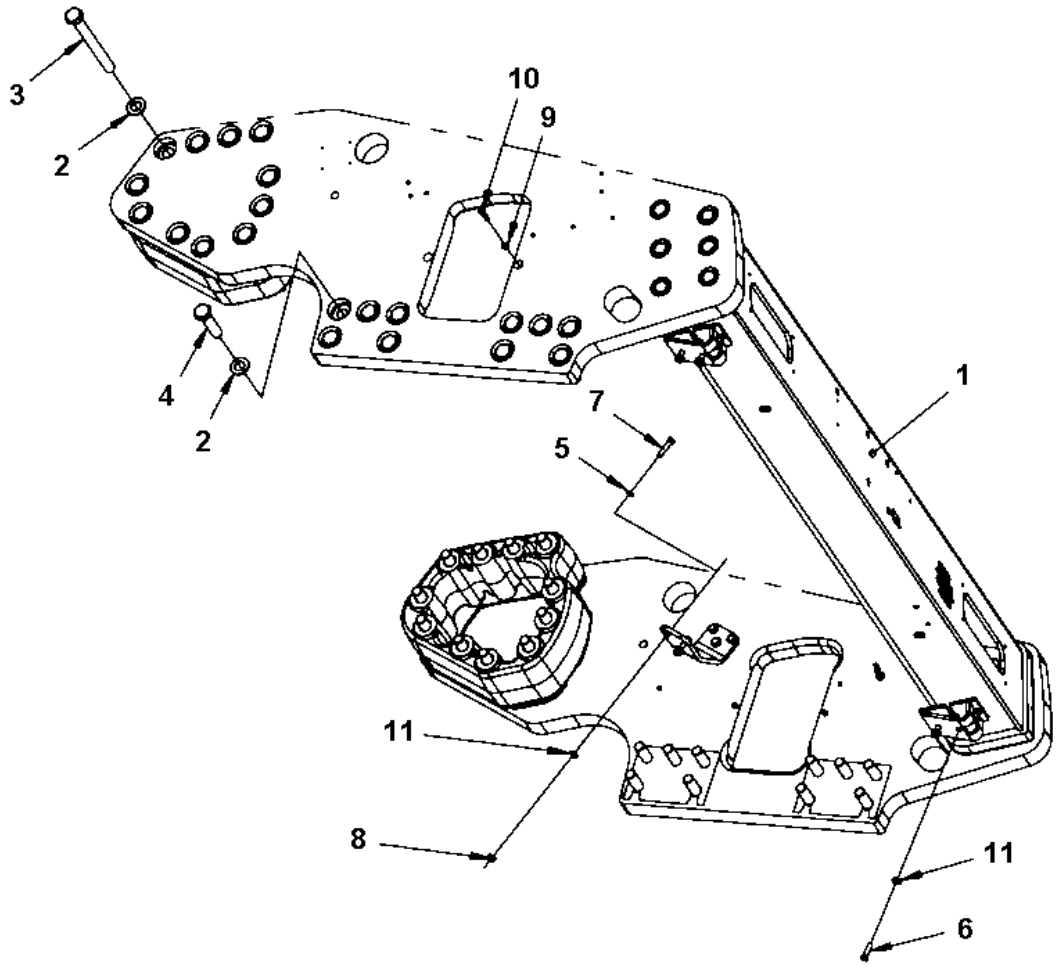

Item	Part No.	Name	Qty	L	SN INFO
1	-	Frame assy	1		
2	4700904234	Steel plain washer	42		
3	4700792534	Hexagon head screw M24x230	22		
4	4700500130	Hexagon head screw M24x90	20		
5	4700904230	Plain washer 10.5x22x2 mm	4		
6	4700500030	Screw hexagon	4		
7	4700500161	Screw	4		
8	4700791172	Lock nut M10 DIN985	4		
9	4700904556	Steel plain washer 8,4x16x3,0	4		
10	4700500047	Hexagon head screw	4		
11	4700904557	Washer, 10.5x22x4 mm 300 HV	8		

End frame, extra tank Frame assy

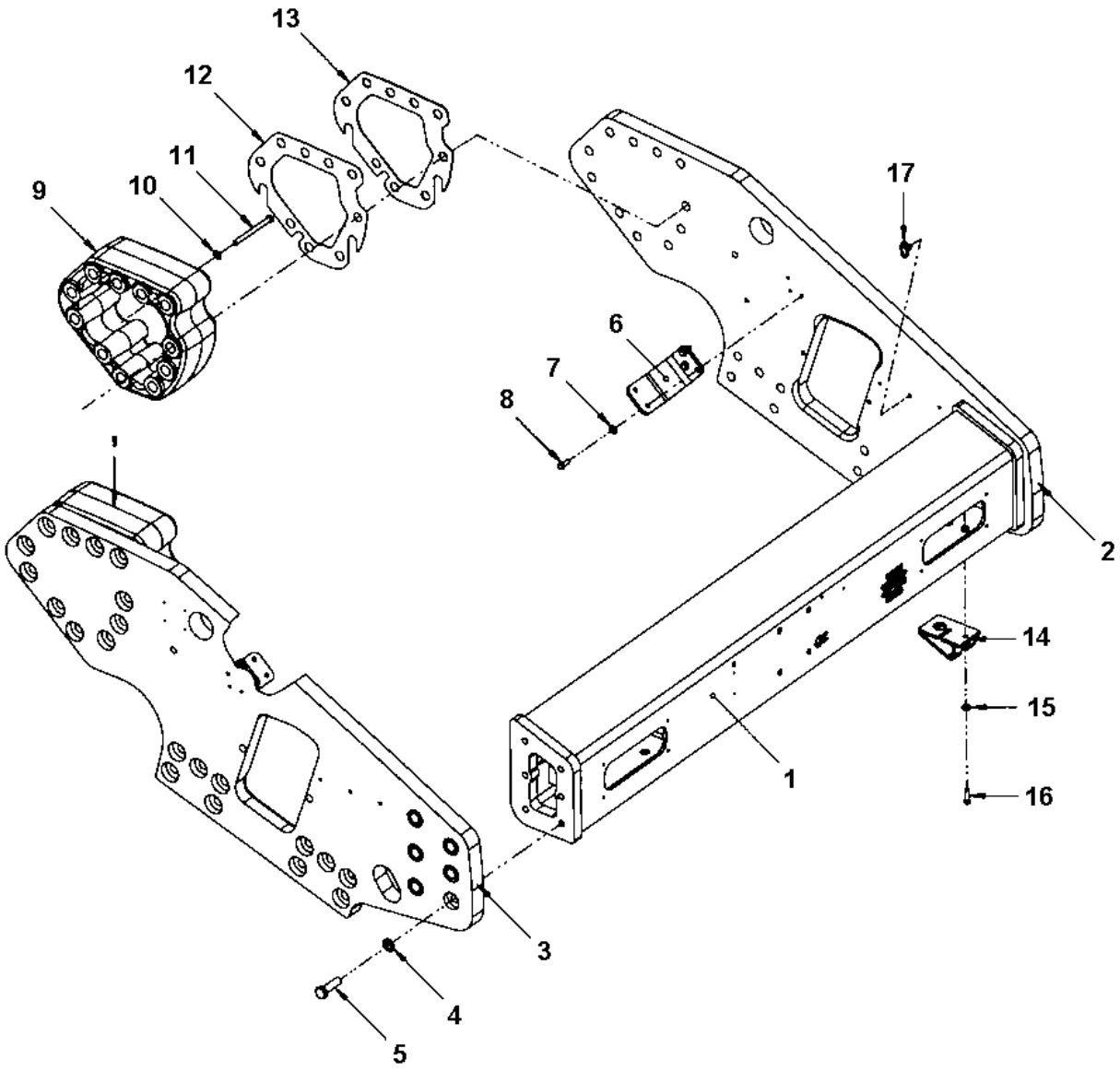

Item	Part No.	Name	Qty	L	SN INFO
1	4700390062	Crossbeam	1		
2	4700390654	Side plate	1		
3	4700393535	Side plate	1		
4	4700904233	Steel plain washer 21x36x3	12		
5	4700500207	Hexagon head screw	12		
6	4700394787	Holder	2		
7	4700904557	Washer, 10.5x22x4 mm 300 HV	6		
8	4700500029	Screw M10x30	6		
9	4700397391	Spacer	2		
10	4700904231	Washer, 13x24x2 mm 300 HV	4		
11	4700791136	Hexagon head screw	4		
12	4700390469	Shim	N		
13	4700390470	Shim	N		
14	4700390968	Scraper bracket	2		
15	4700904557	Washer, 10.5x22x4 mm 300 HV	4		
16	4700500030	Screw hexagon	4		
17	4700792602	Cable tie with holder	1		

End frame, front Fork, vibration side

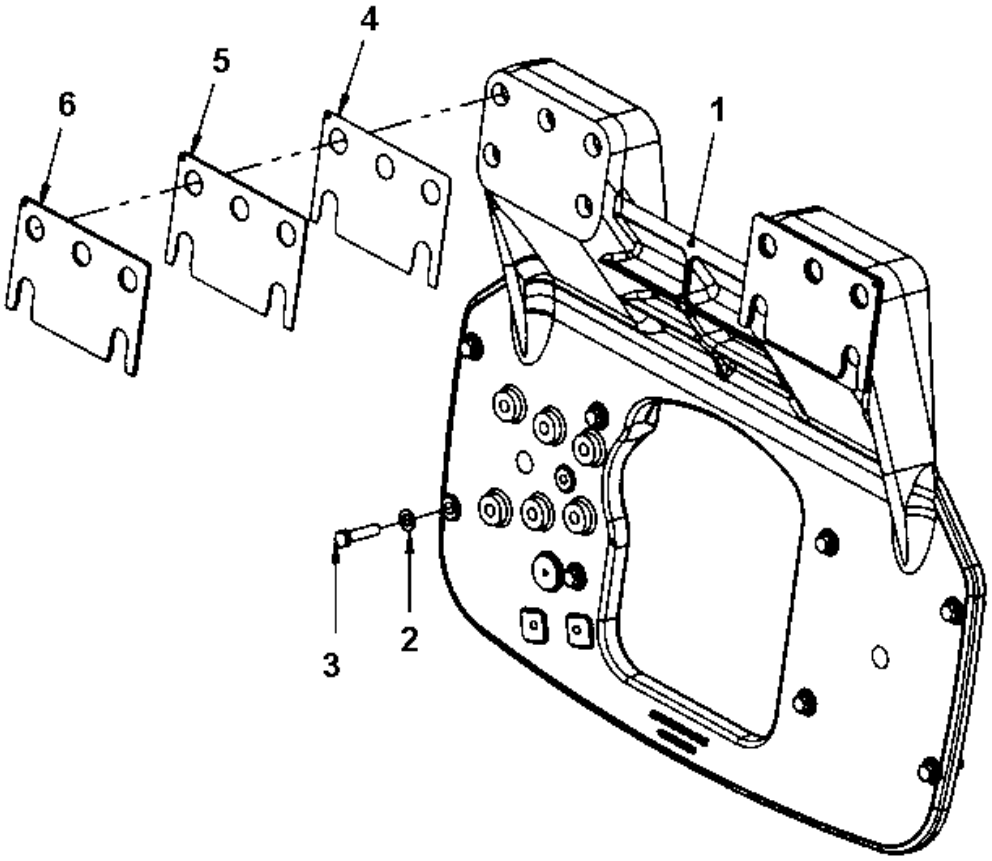

Item	Part No.	Name	Qty	L	SN INFO
1	4812113724	Fork	1		
2	4700904231	Washer, 13x24x2 mm 300 HV	8		
3	4812110644	Hexagon screw w Tuflok M12x50 10.9 GEOMET	8		
4	4700391754	Shim, t = 1mm	N		
5	4700393009	Shim, t = 3mm	N		
6	4700393010	Shim, t = 5mm	N		

End frame, front Fork, propulsion side

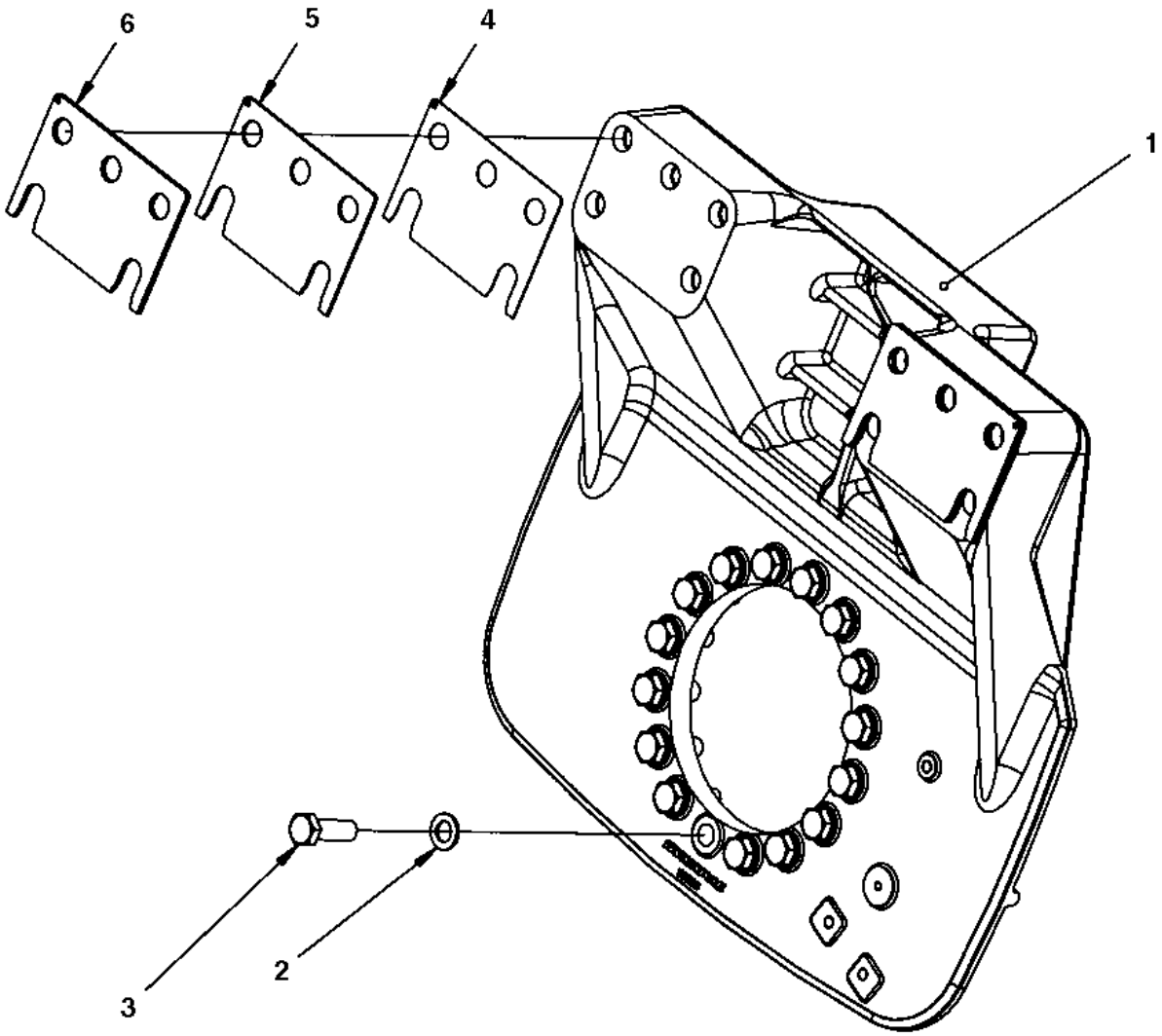

Item	Part No.	Name	Qty	L	SN INFO
1	4700391198	Fork	1		
2	4700904233	Steel plain washer 21x36x3	16		
3	4700500206	Hexagon screw M20x60	16		
4	4700391754	Shim, t = 1mm	N		
5	4700393009	Shim, t = 3mm	N		
6	4700393010	Shim, t = 5mm	N		

End frame, front Cover plate

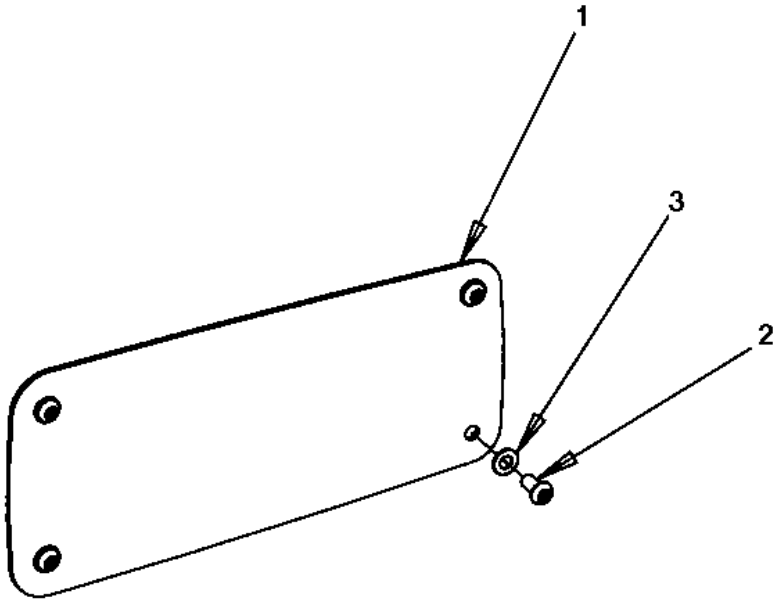

Item	Part No.	Name	Qty	L	SN INFO
1	4700390919	Cover plate	1		
2	4700904956	Screw	4		
3	4700904229	Washer, 8.4x 6x1.5 mm 300HV	4		

End frame, front Hose clamp, propulsion side

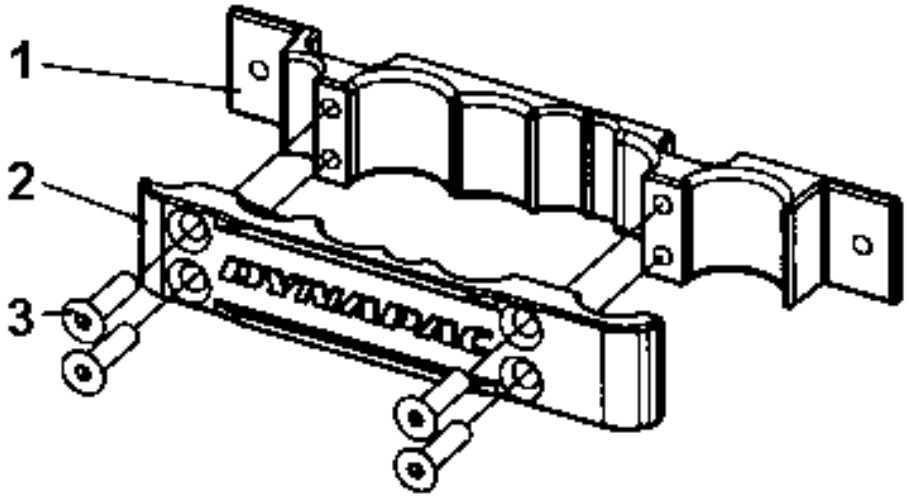

Item	Part No.	Name	Qty	L	SN INFO
1	4700395428	Hose clamp	1		
2	4700395429	Cover	1		
3	4700792726	Hexagon socket countersunk screw	4		

End frame, front Hose clamp, vibration side

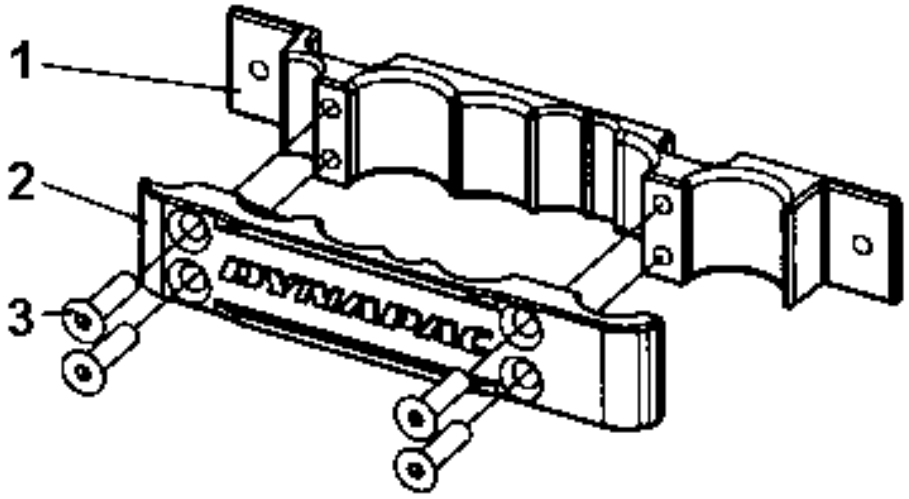

Item	Part No.	Name	Qty	L	SN INFO
1	4700395428	Hose clamp	1		
2	4700395430	Cover	1		
3	4700792726	Hexagon socket countersunk screw	4		

End frame, front Step, vibration side

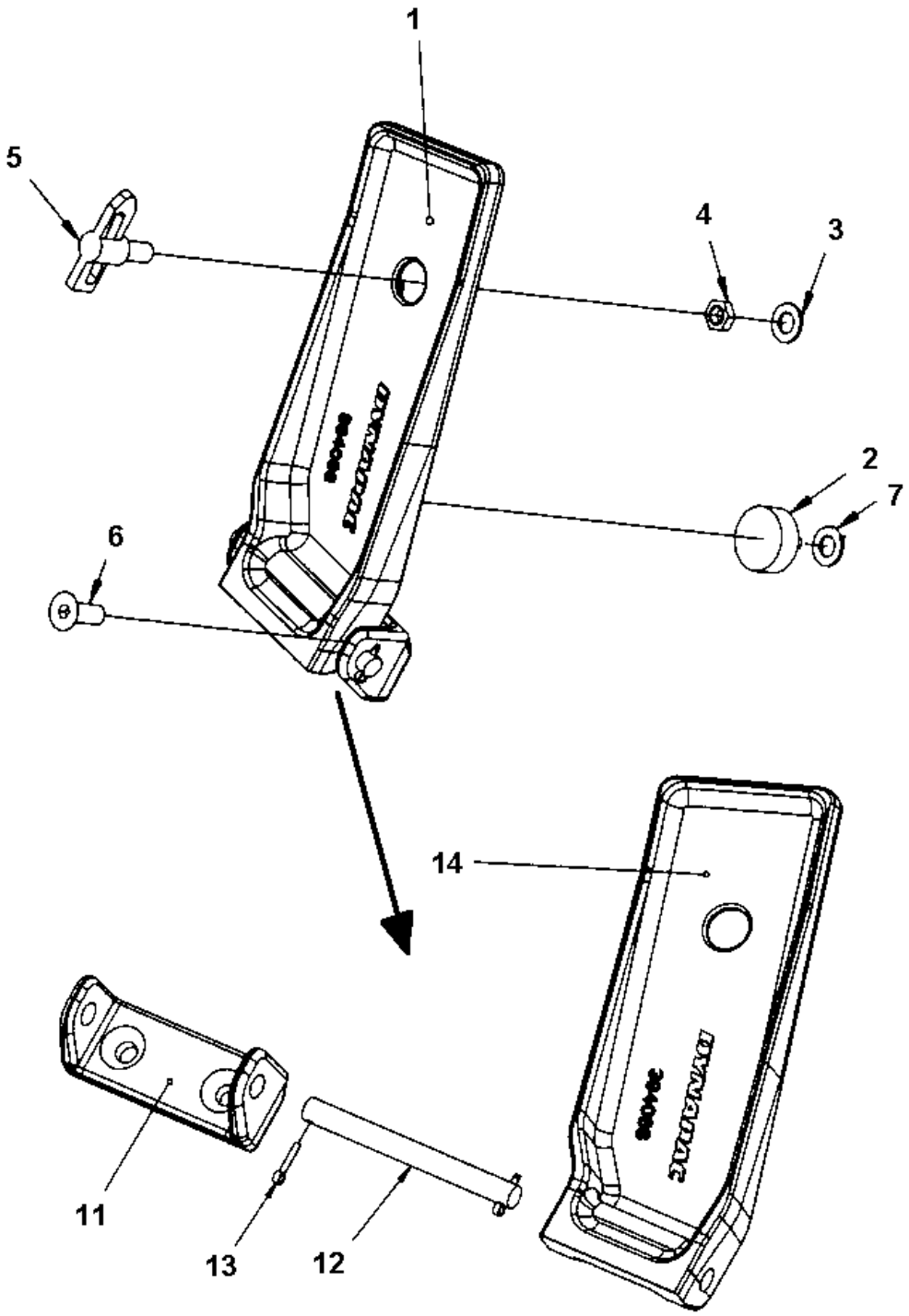

Item	Part No.	Name	Qty	L	SN INFO
1	-	Step, mounted	1		
2	4700792601	Shock absorber	1		
3	4700904231	Washer, 13x24x2 mm 300 HV	1		
4	4700927233	Nut	1		
5	4700475064	Lock	1		
6	4700513011	Hexagon socket head cap screw	2		
7	4700904229	Washer, 8.4x 6x1.5 mm 300HV	1		
11	4700394070	Bracket	1		
12	4700394351	Shaft	1		
13	4700630012	Cotter pin	2		
14	4700394068	Step	1		

End frame, front Step, propulsion side

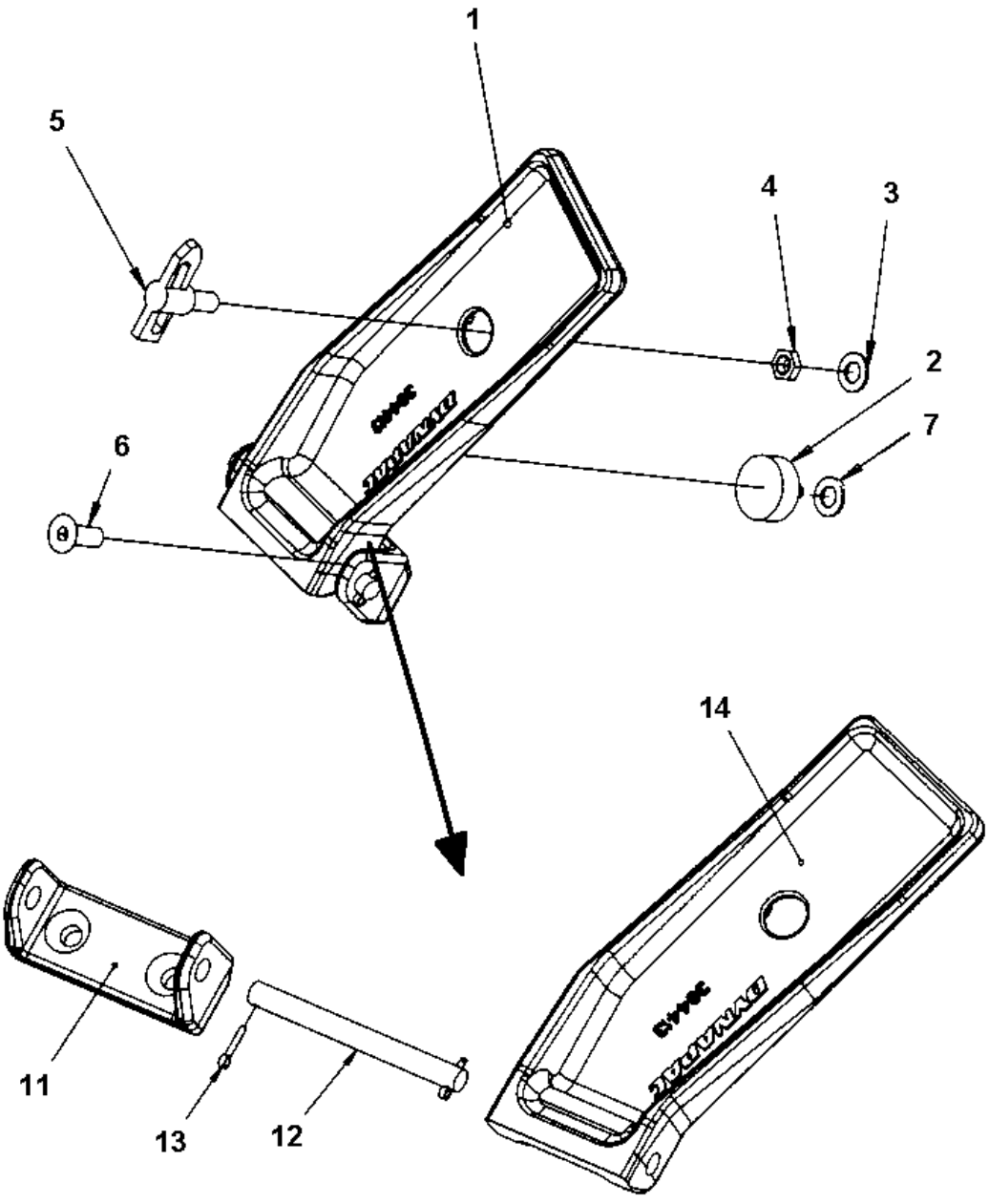

Item	Part No.	Name	Qty	L	SN INFO
1	-	Step, mounted	1		
2	4700792601	Shock absorber	1		
3	4700904231	Washer, 13x24x2 mm 300 HV	1		
4	4700927233	Nut	1		
5	4700475064	Lock	1		
6	4700513011	Hexagon socket head cap screw	2		
7	4700904229	Washer, 8.4x 6x1.5 mm 300HV	1		
11	4700394070	Bracket	1		
12	4700394351	Shaft	1		
13	4700630012	Cotter pin	2		
14	4700394413	Step	1		

End frame, front Scraper module, without nozzles

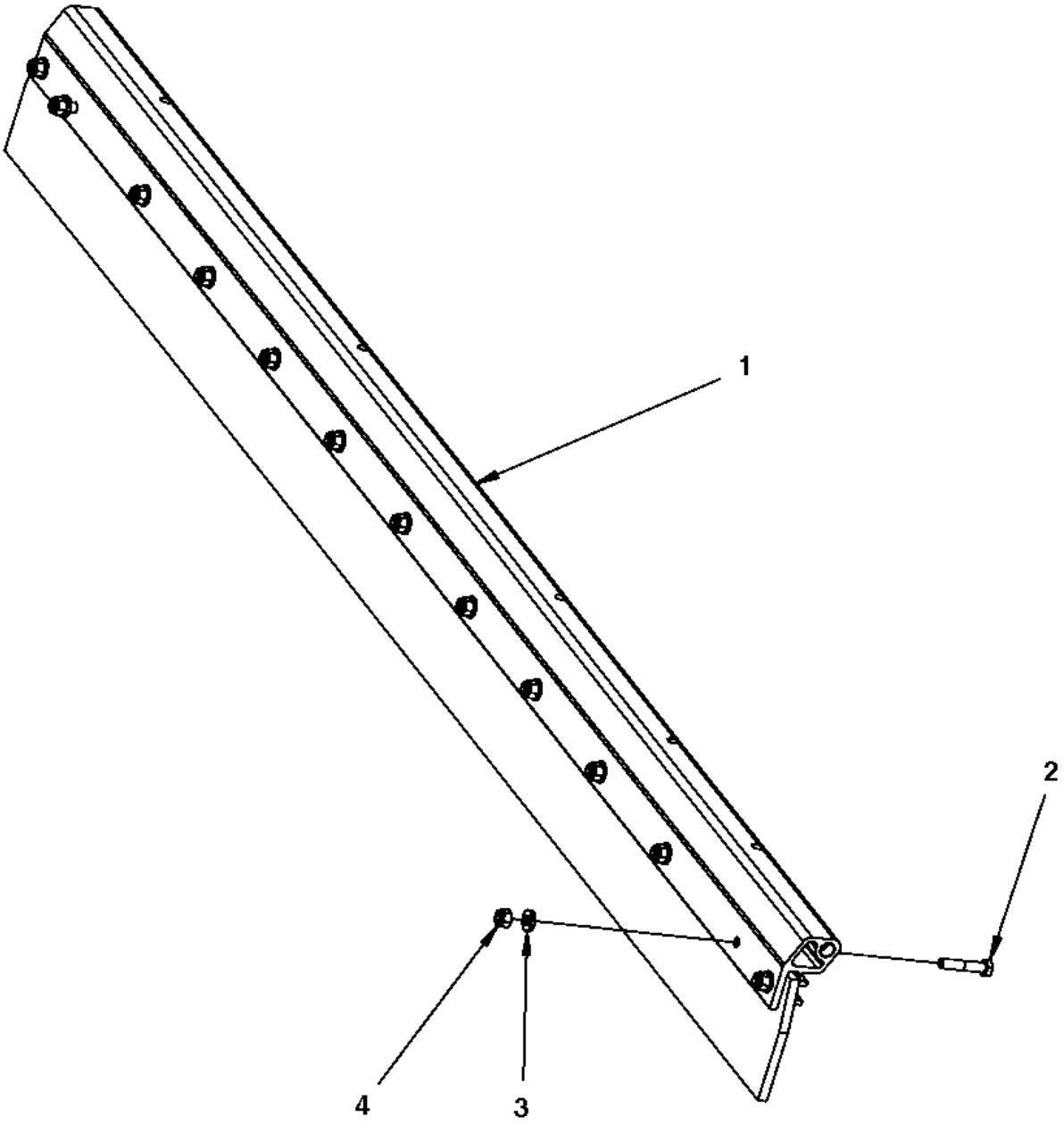

Item	Part No.	Name	Qty	L	SN INFO
1	-	Scraper assy	1		
2	4700500032	Screw M10 x 55	2		
3	4700904557	Washer, 10.5x22x4 mm 300 HV	2		
4	4700586018	Lock nut M10	2		

End frame, front Scraper module, with nozzles

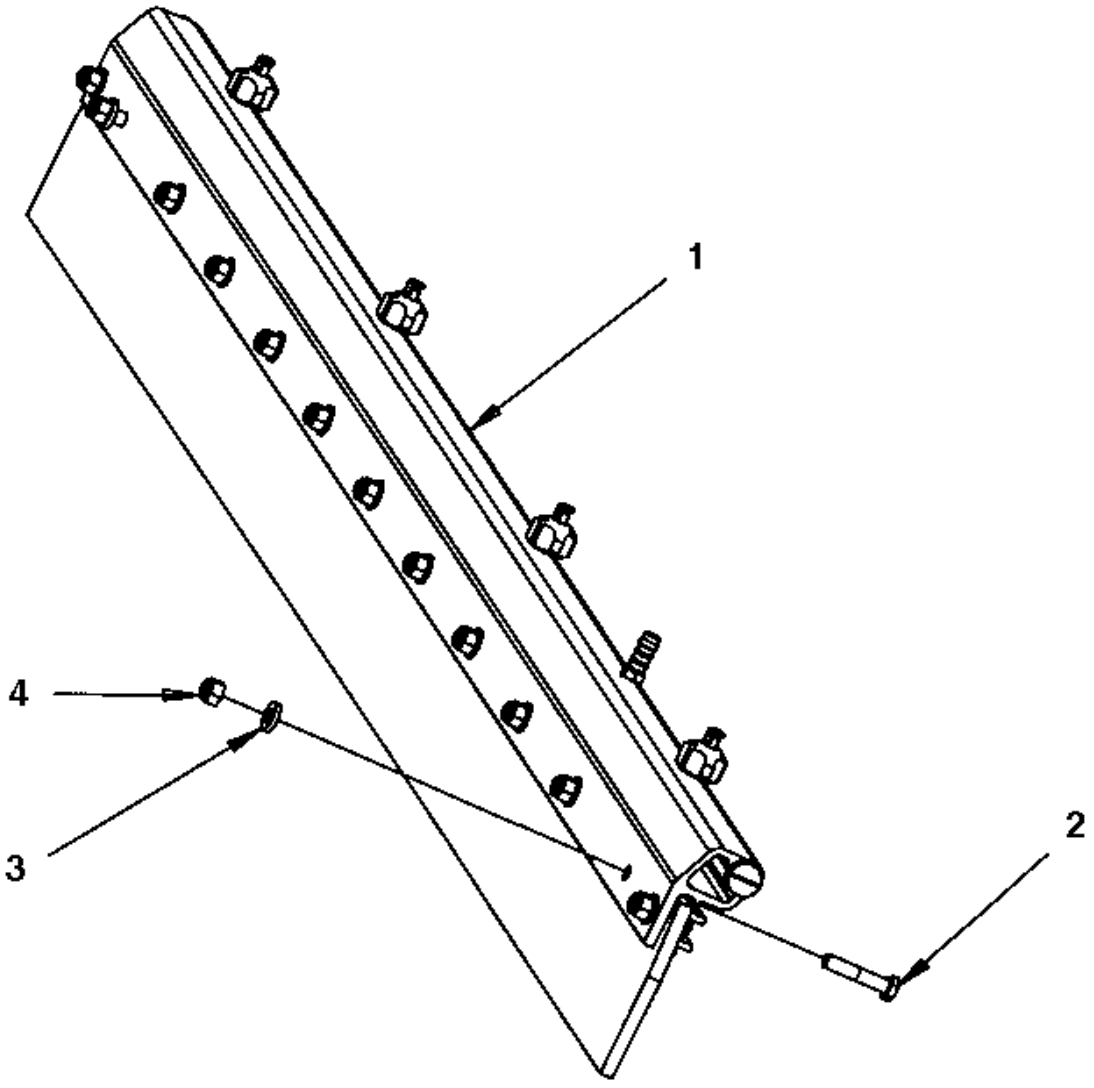

Item	Part No.	Name	Qty	L	SN INFO
1	-	Scraper assy with nozzles	1		
2	4700500032	Screw M10 x 55	2		
3	4700904557	Washer, 10.5x22x4 mm 300 HV	2		
4	4700586018	Lock nut M10	2		

End frame, front Scraper assy with nozzles

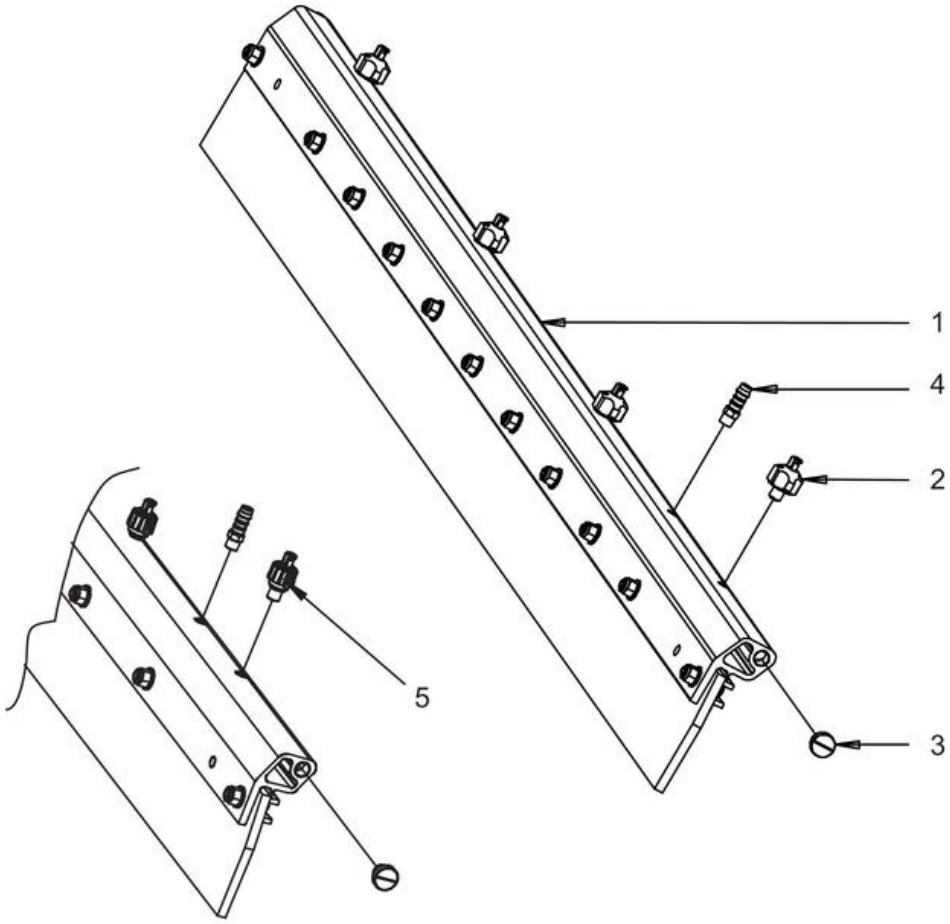

Item	Part No.	Name	Qty	L	SN INFO
1	-	Scraper assy	1		
2	4700392011	Spraying nozzle, cpl	4		
-	4700392509	Retainer, nozzle, strainer, yellow	1		
--	4700392510	Gasket	1		
--	4700393697	Nozzle and strainer, yellow 0.8	1		
2	4700390615	Nozzle, blue 1.0	1	A	
2	4700390616	Nozzle, red 1.2	1	A	
2	4700390619	Nozzle, brown 1.3	1	A	
3	4700792072	End plug	2		
4	4700791977	Hose connection	1		
5	4812124321	Spraying nozzle, cpl	4		
-	4812124323	Cap, blue	1		
-	4812124324	Strainer	1		
-	4812124325	Gasket	1		
-	4700160268	O-ring	1		
-	4812124327	Nozzle, yellow 0.8	1		
5	4812124328	Nozzle, blue 1.0	1		
5	4812124329	Nozzle, red 1.2	1		
5	4812124330	Nozzle, brown 1.3	1		

Comments for Page: Scraper assy with nozzles

(L)OCAL REMARKS

A | en_US | Option

End frame, front Scraper assy

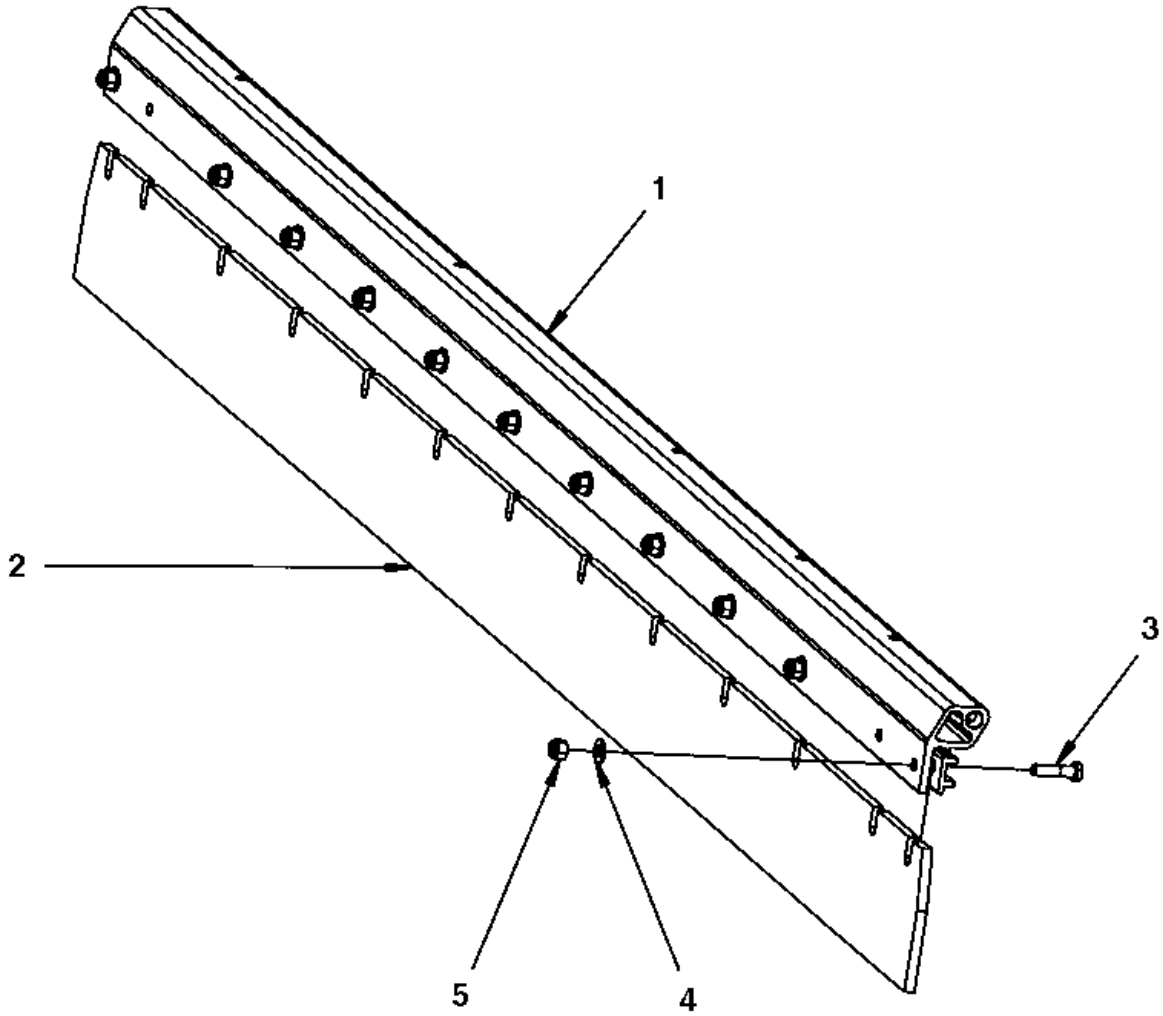

Item	Part No.	Name	Qty	L	SN INFO
1	4700395115	Sprinkler pipe	1		
2	4700395116	Scraper blade	1		
3	4700500031	Screw M10x40	11		
4	4700904230	Plain washer 10.5x22x2 mm	11		
5	4700586018	Lock nut M10	11		

End frame, front 4700394340 Scraper bracket, cpl

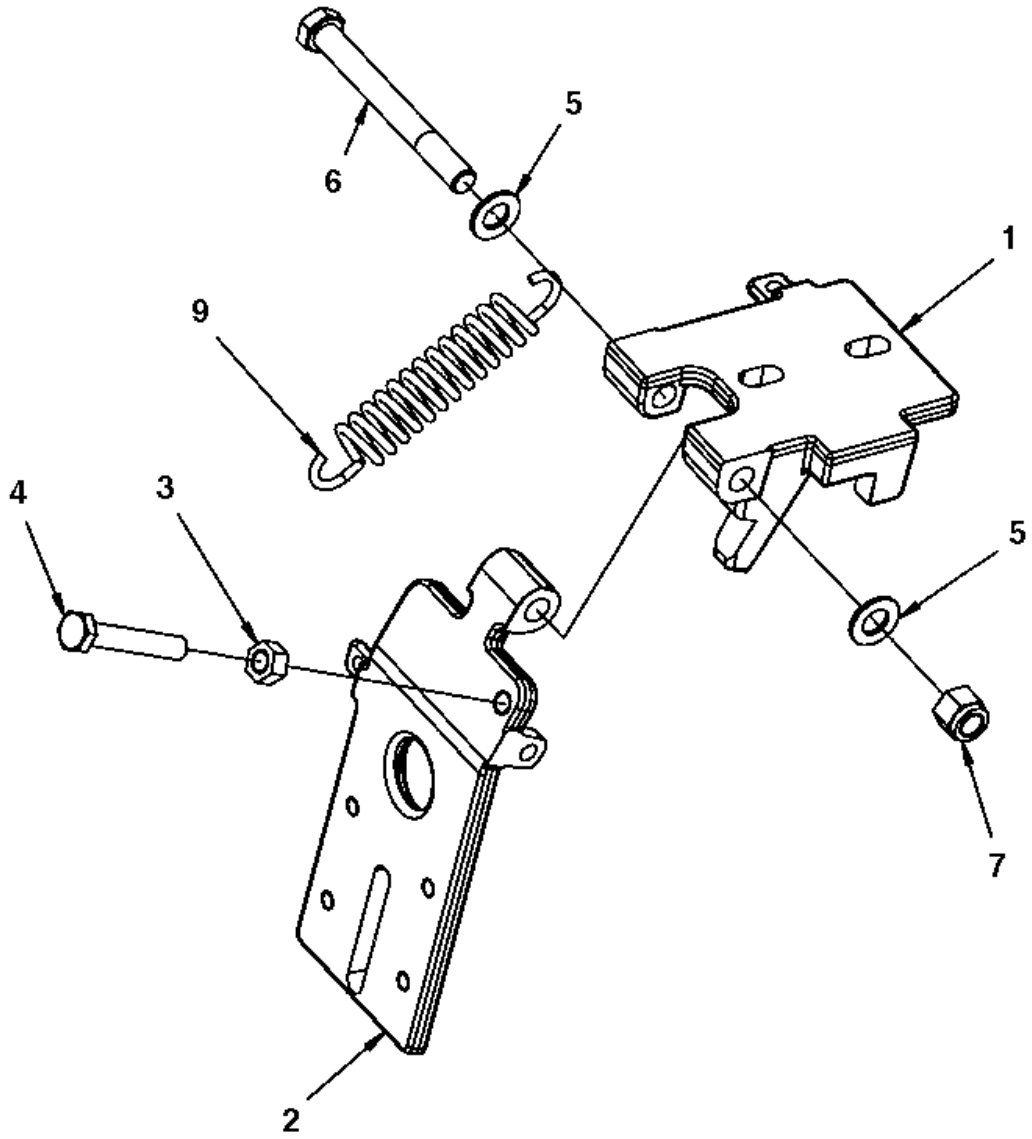

Item	Part No.	Name	Qty	L	SN INFO
1	-	Scraper bracket	1		
2	-	Scraper bracket	1		
3	4700570006	Hex. nut	1		
4	4700500105	Hex. screw	1		
4	4700791082	Screw	1	1	
5	4700904231	Washer, 13x24x2 mm 300 HV	2		
6	4700500198	Wheel bolt	1		
7	4700586019	Lock nut, M12	1		
9	4700394806	Extension spring	1		

Comments for Page: 4700394340 Scraper bracket, cpl

(L)OCAL REMARKS

1 | en_US | Longer screw on outer scraper when cocoa mat is mounted.

End frame, front Grab handle, release

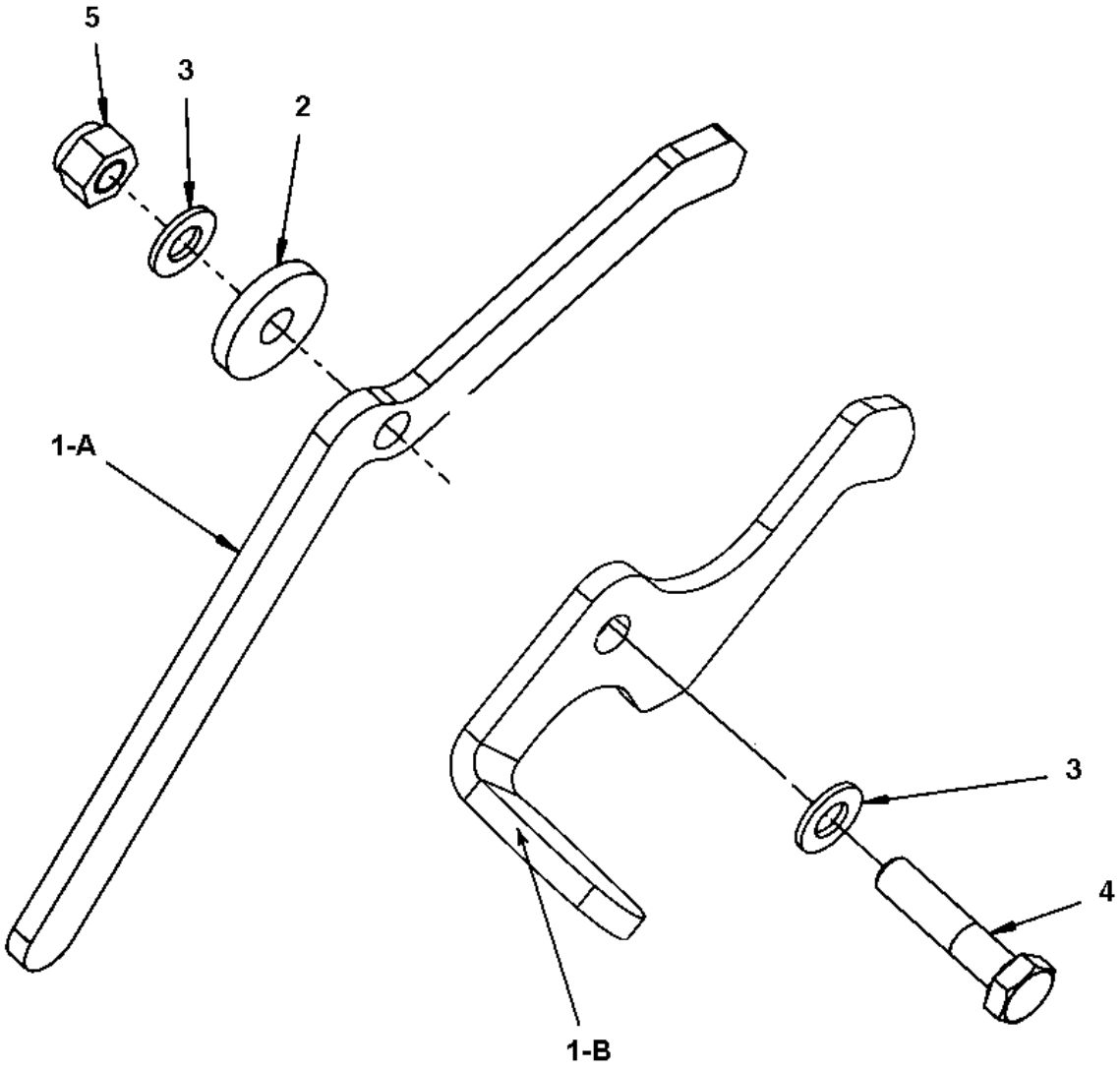

Item	Part No.	Name	Qty	L	SN INFO
1-A	4700393550	Grab handle	1		
1-B	4812110671	Grab handle	1	1	
2	4700904734	Washer, 8.4x26x4 mm 300 HV	1		
3	4700904229	Washer, 8.4x 6x1.5 mm 300HV	2		
4	4700500047	Hexagon head screw	1		
5	4700586003	Lock nut M8	1		

Comments for Page: Grab handle, release

(L)OCAL REMARKS

1 | en_US | Can replace PN 4700393550 as spare part. This part can be mounted together with Grab handle, lift PN 4812110672.

End frame, front Grab handle, release

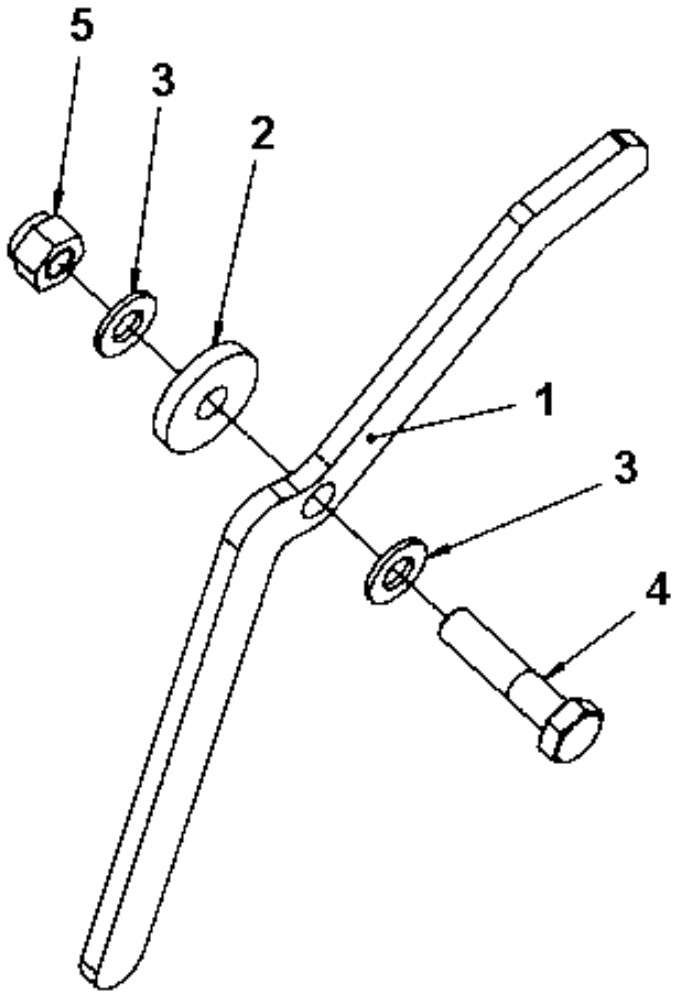

Item	Part No.	Name	Qty	L	SN INFO
1	4700396154	Grab handle	1		
2	4700904734	Washer, 8.4x26x4 mm 300 HV	1		
3	4700904229	Washer, 8.4x 6x1.5 mm 300HV	2		
4	4700500047	Hexagon head screw	1		
5	4700586003	Lock nut M8	1		

End frame, front Grab handle, release

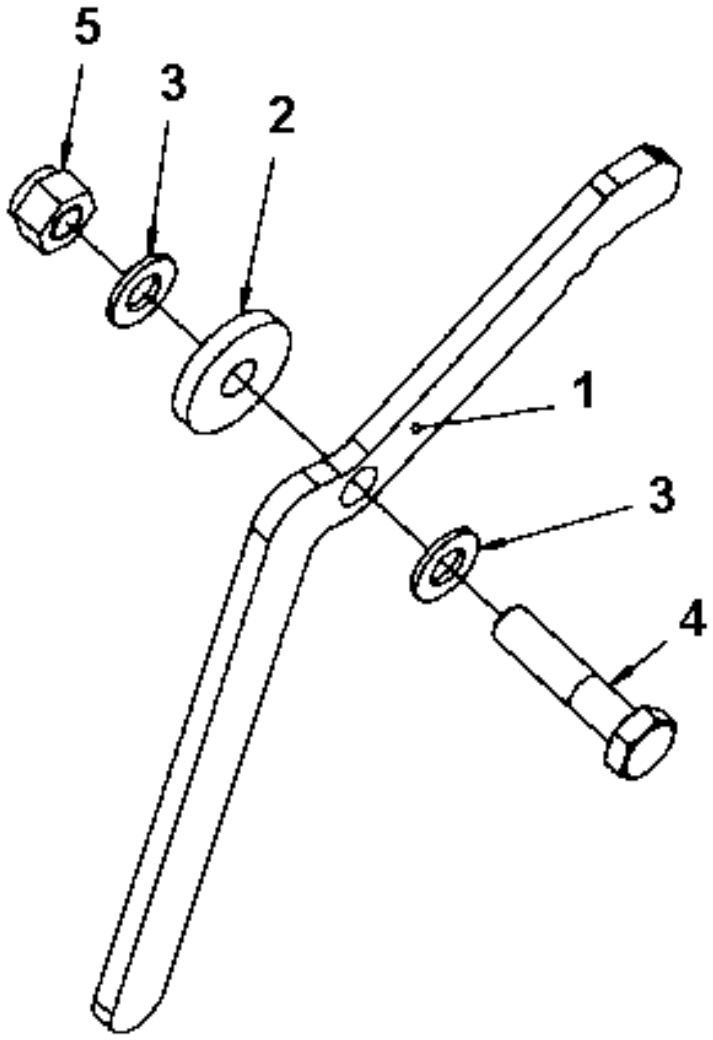

Item	Part No.	Name	Qty	L	SN INFO
1	4700396972	Grab handle	1		
2	4700904734	Washer, 8.4x26x4 mm 300 HV	1		
3	4700904229	Washer, 8.4x 6x1.5 mm 300HV	2		
4	4700500047	Hexagon head screw	1		
5	4700586003	Lock nut M8	1		

End frame, front Grab handle, lift

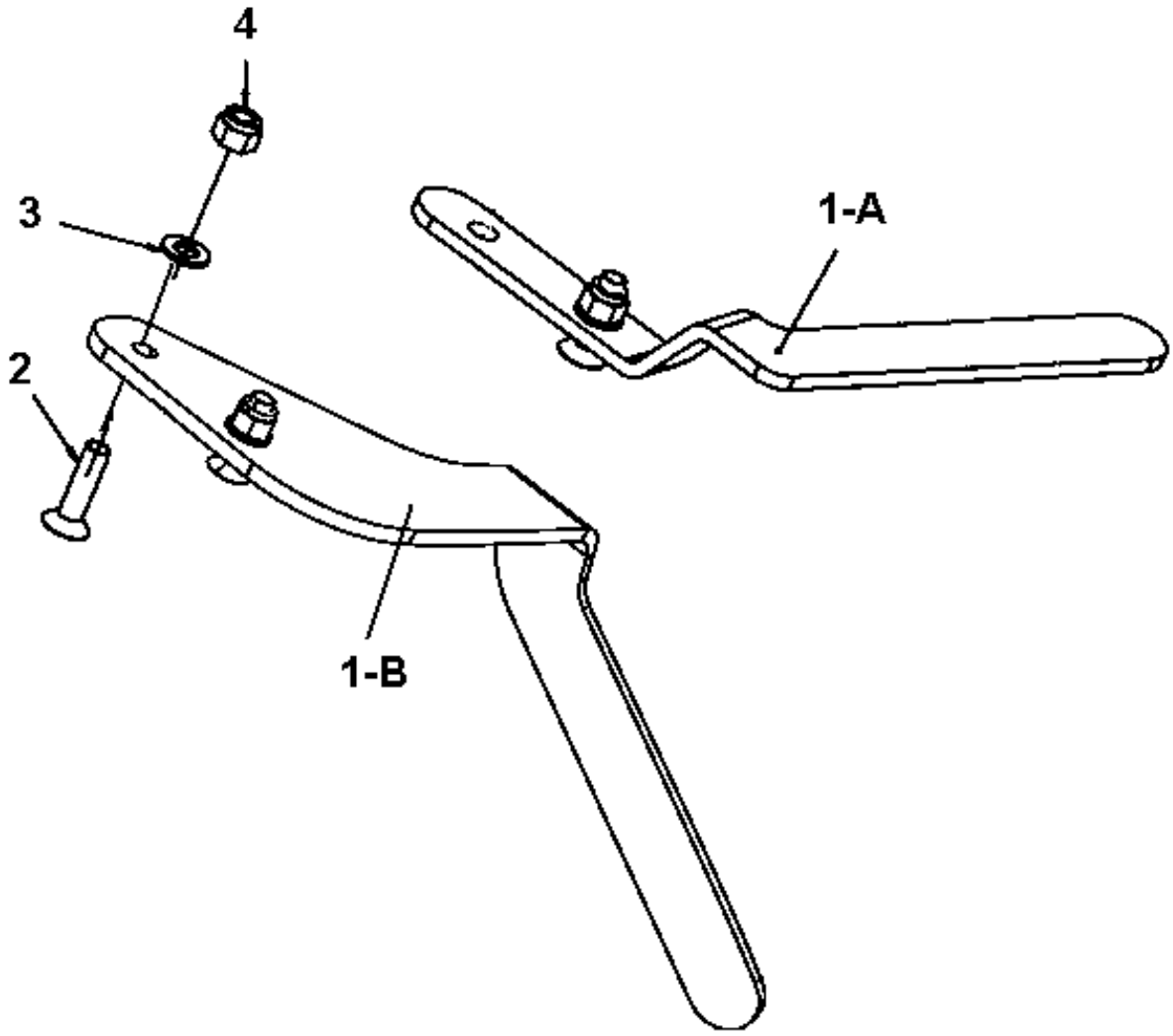

Item	Part No.	Name	Qty	L	SN INFO
1-A	4700395390	Grab handle	1		
1-B	4812110672	Grab handle	1	1	
2	4700792540	Screw	2		
3	4700904229	Washer, 8.4x 6x1.5 mm 300HV	2		
4	4700586003	Lock nut M8	2		

Comments for Page: Grab handle, lift

(L)OCAL REMARKS

1 | en_US | Can together with Grab handle, release PN 4812110671 be used as replacement for PN 4700395390.

End frame, front Grab handle, lift offset/cocoa mat

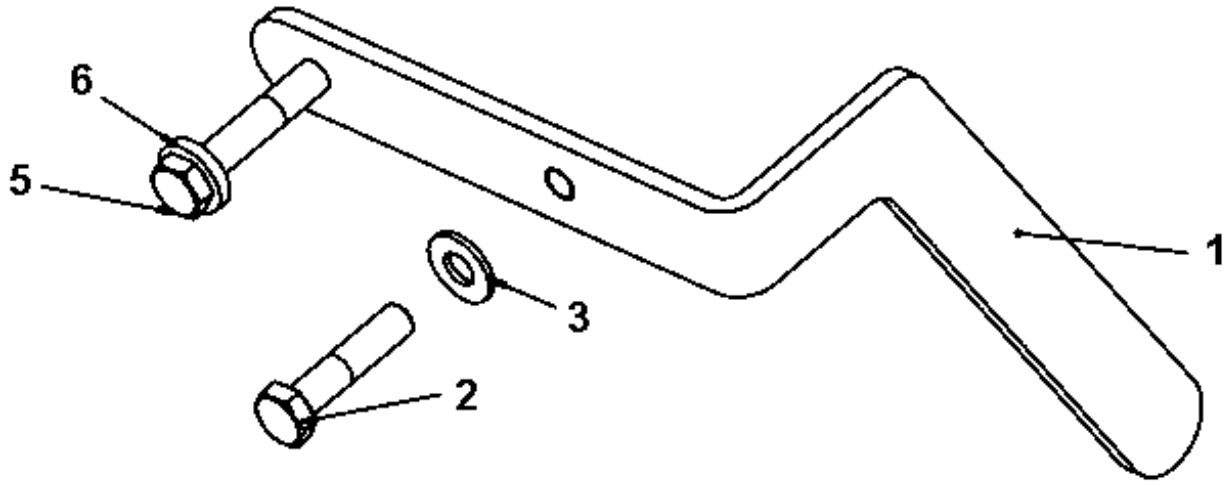

Item	Part No.	Name	Qty	L	SN INFO
1	4700395412	Grab handle	1		
2	4700500161	Screw	1		
3	4700904230	Plain washer 10.5x22x2 mm	1		
5	4700500033	Screw M10-1,5x60 8,8	1		
6	4700904557	Washer, 10.5x22x4 mm 300 HV	1		

Cocoa mat Cocoa mat module

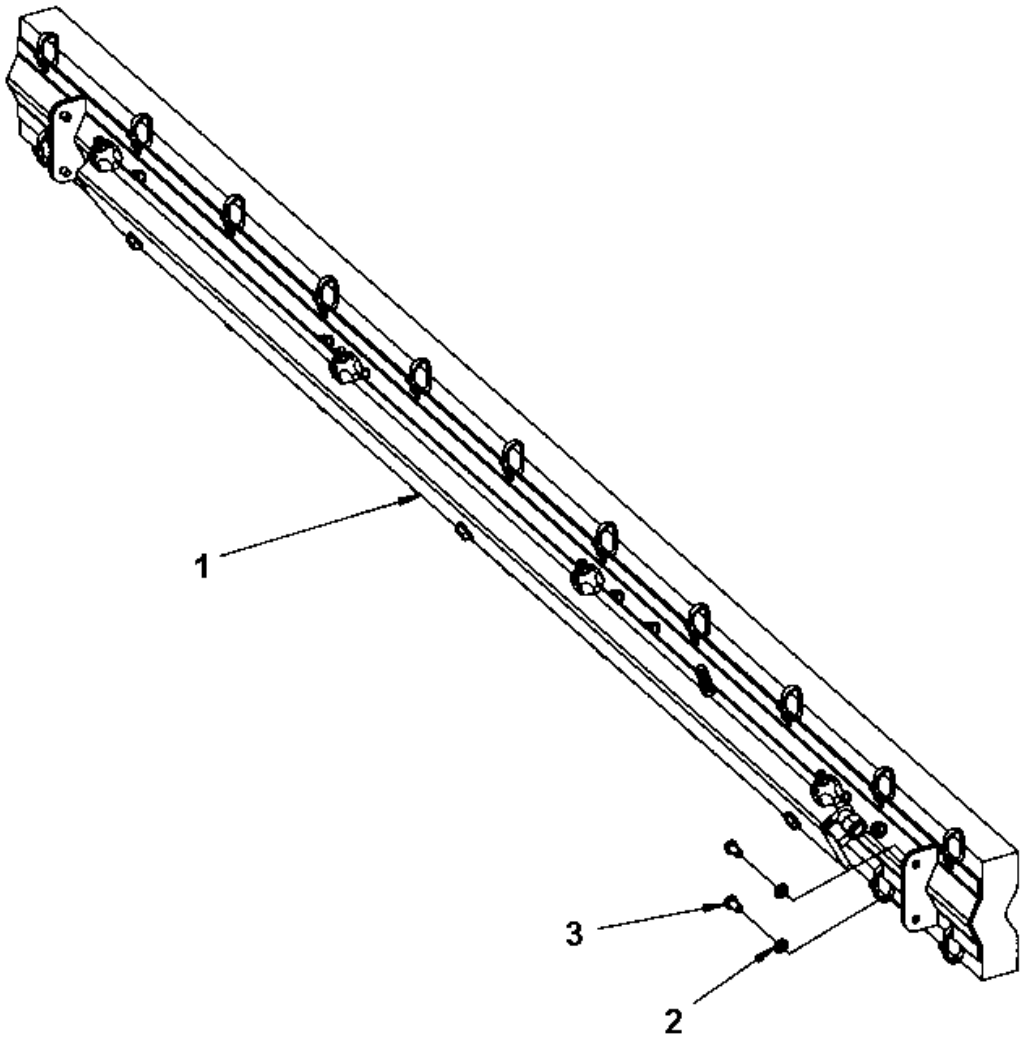

Item	Part No.	Name	Qty	L	SN INFO
1	-	Cocoa mat assembly	1		
2	4700904229	Washer, 8.4x 6x1.5 mm 300HV	4		
3	4700500019	Hexagon screw	4		

Cocoa mat Cocoa mat assembly

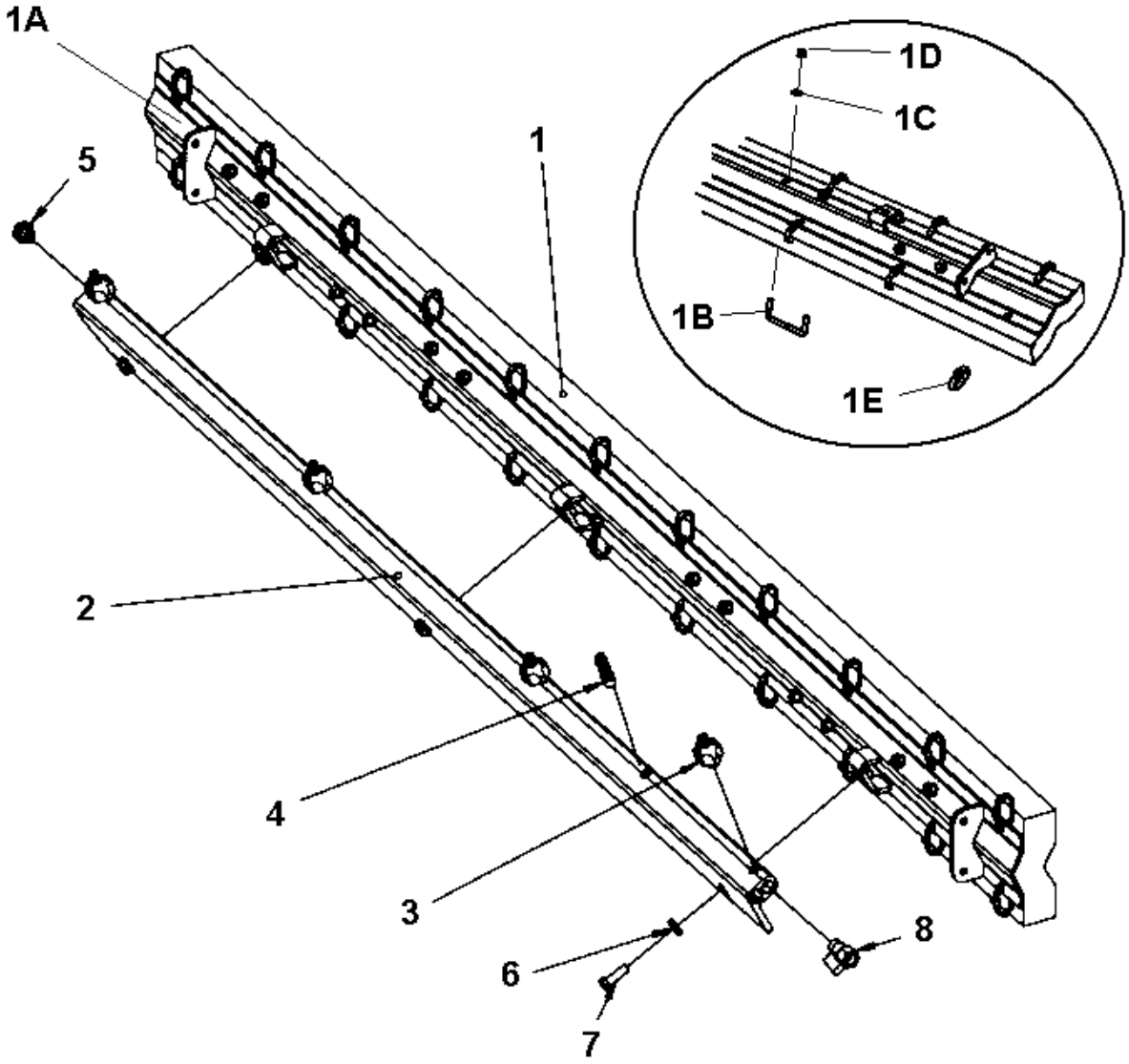

Item	Part No.	Name	Qty	L	SN INFO
1	4700903186	Sprinkler mat	1		
1-A	4700395982	Holder	1		
1-B	4700384911	Clamp	7		
1-C	4700904229	Washer, 8.4x 6x1.5 mm 300HV	14		
1-D	4700586003	Lock nut M8	14		
1-E	4700313102	Cable ties	22		
2	4700395984	Sprinkler pipe	1		
3	4700392011	Spraying nozzle, cpl	4		
4	4700791977	Hose connection	1		
5	4700792072	End plug	1		
6	4700904557	Washer, 10.5x22x4 mm 300 HV	3		
7	4700500029	Screw M10x30	3		
8	4700233215	Ball valve	1		

Cocoa mat Cocoa mat bracket module

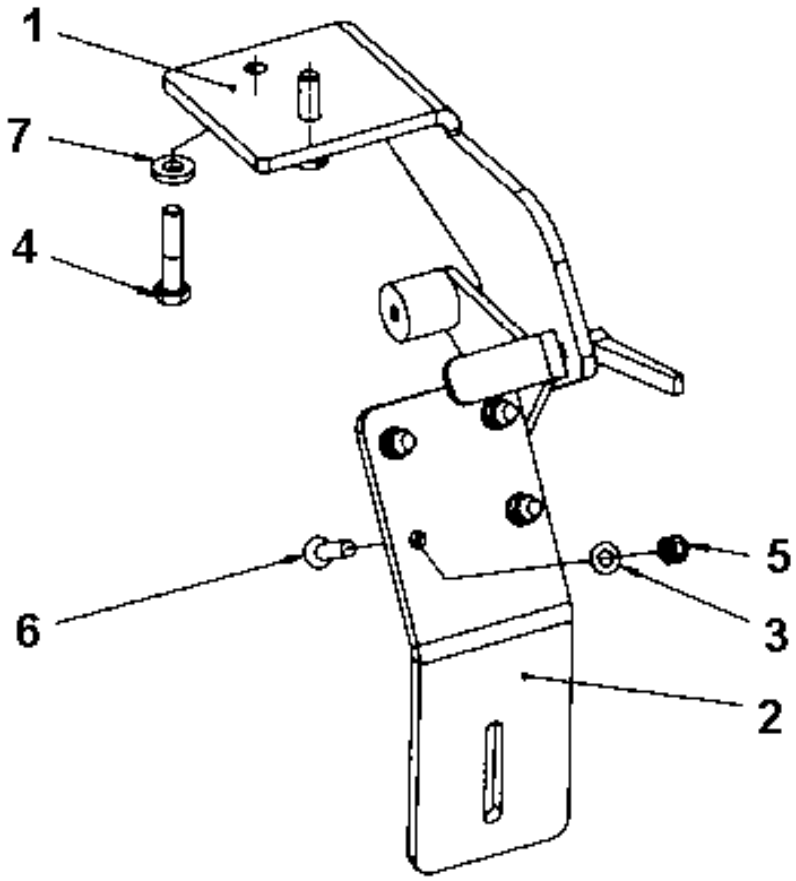

Item	Part No.	Name	Qty	L	SN INFO
1	-	Cocoa mat bracket	1		
2	4700396936	Bracket	1		
3	4700904229	Washer, 8.4x 6x1.5 mm 300HV	4		
4	4700500161	Screw	2		
5	4700586003	Lock nut M8	4		
6	4700927637	Hexagon socket countersunk screw	4		
7	4700904557	Washer, 10.5x22x4 mm 300 HV	2		

Cocoa mat Cocoa mat bracket

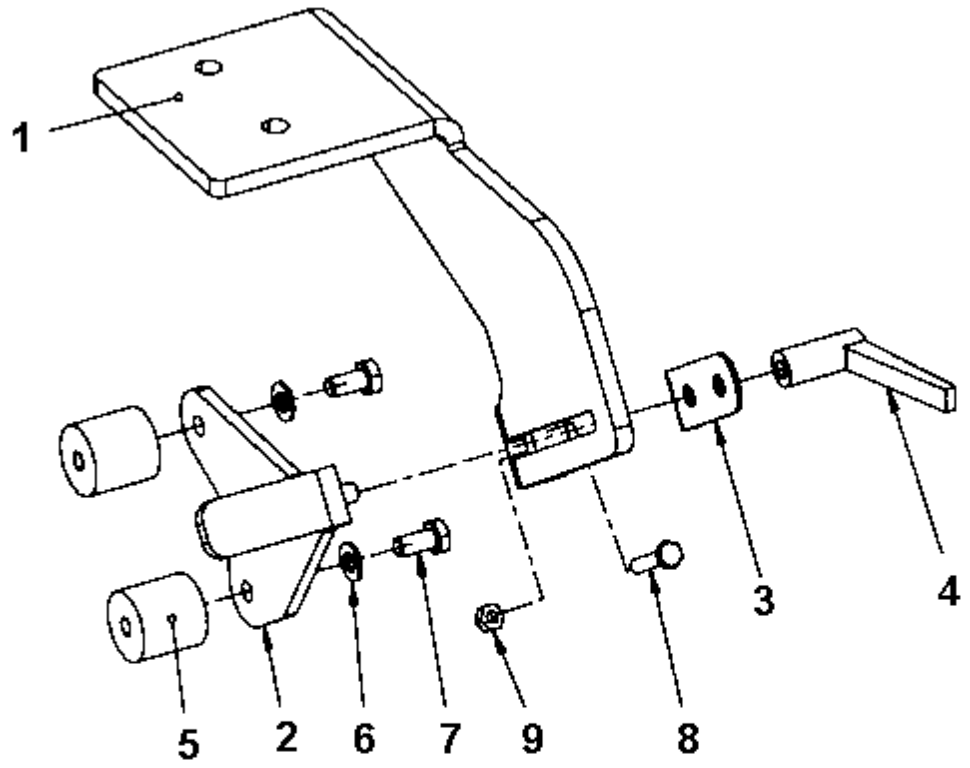

Item	Part No.	Name	Qty	L	SN INFO
1	4700396183	Bracket	1		
2	4700396893	Bracket	1		
3	4700396754	Cover plate	1		
4	4700396975	Lock handle	1		
5	4700396976	Shock absorber	2		
6	4700904229	Washer, 8.4x 6x1.5 mm 300HV	2		
7	4700500019	Hexagon screw	2		
8	4700900485	Hexagon head screw	1		
9	4700570004	Hexagon nut M6	1		

Cocoa mat Cocoa mat bracket module

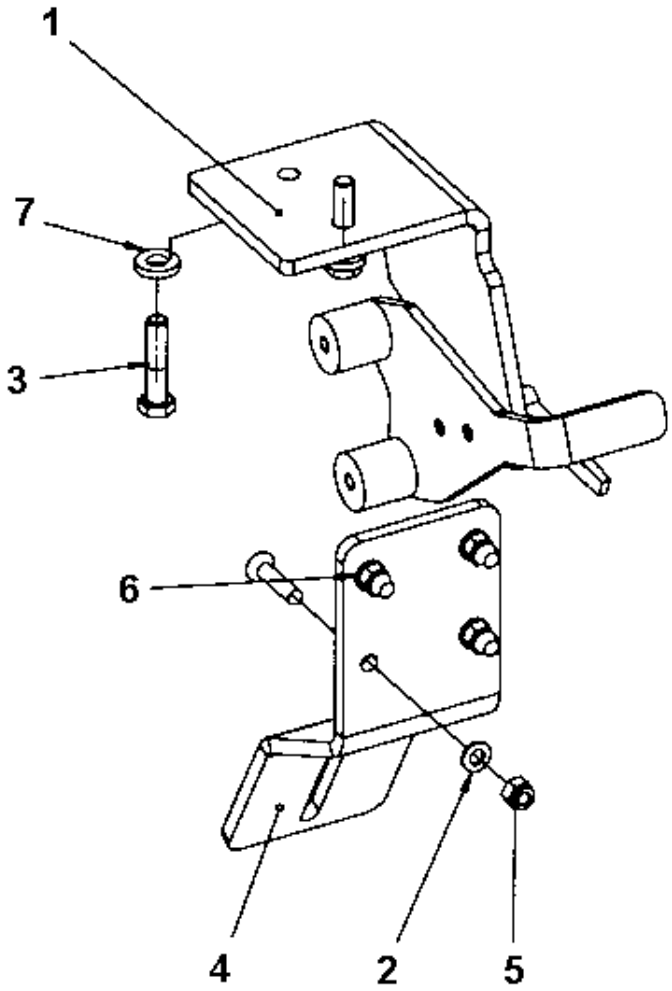

Item	Part No.	Name	Qty	L	SN INFO
1	-	Cocoa mat bracket	1		
2	4700904229	Washer, 8.4x 6x1.5 mm 300HV	4		
3	4700500161	Screw	2		
4	4700396940	Bracket	1		
5	4700586003	Lock nut M8	4		
6	4700927637	Hexagon socket countersunk screw	4		
7	4700904557	Washer, 10.5x22x4 mm 300 HV	2		

Cocoa mat Cocoa mat bracket

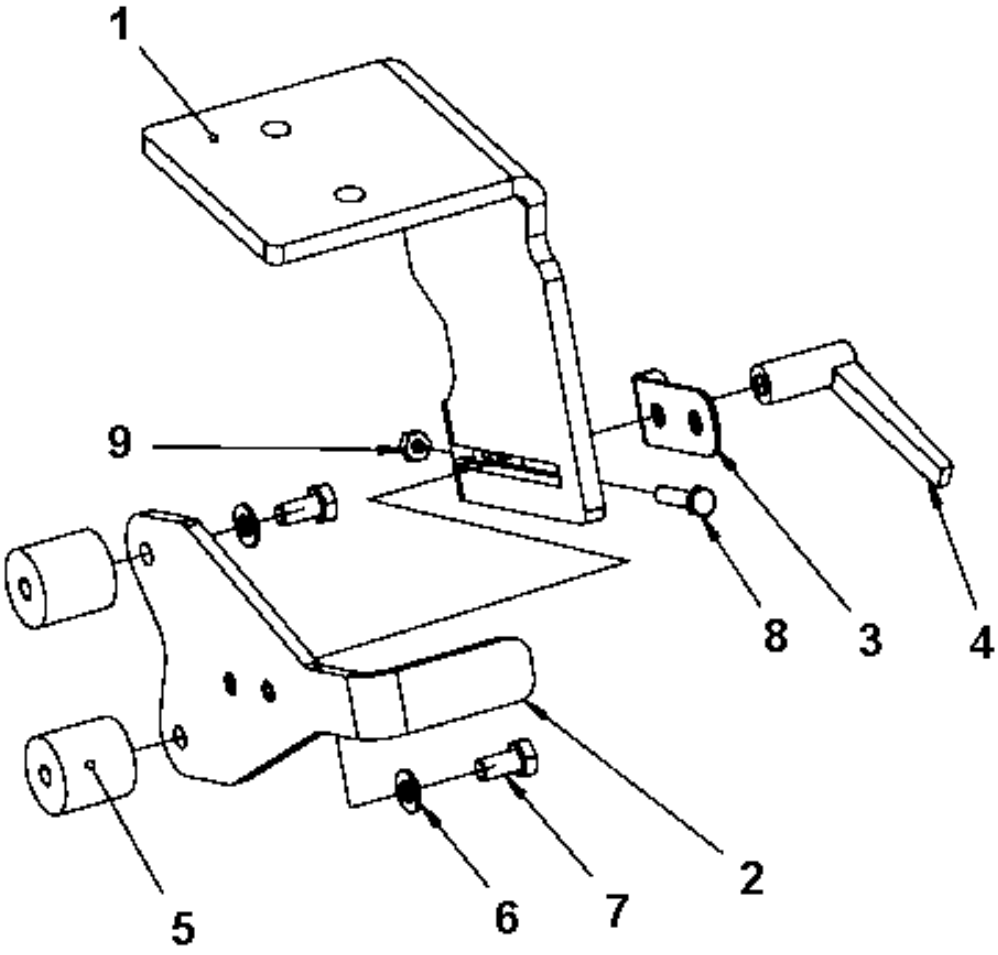

Item	Part No.	Name	Qty	L	SN INFO
1	4700395980	Bracket	1		
2	4700396966	Bracket	1		
3	4700396754	Cover plate	1		
4	4700396975	Lock handle	1		
5	4700396976	Shock absorber	2		
6	4700904229	Washer, 8.4x 6x1.5 mm 300HV	2		
7	4700500019	Hexagon screw	2		
8	4700900485	Hexagon head screw	1		
9	4700570004	Hexagon nut M6	1		

End frame, front Process mirrors

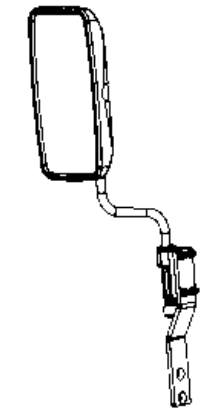

FRONT LEFT

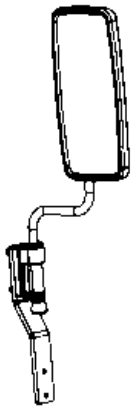

FRONT RIGHT

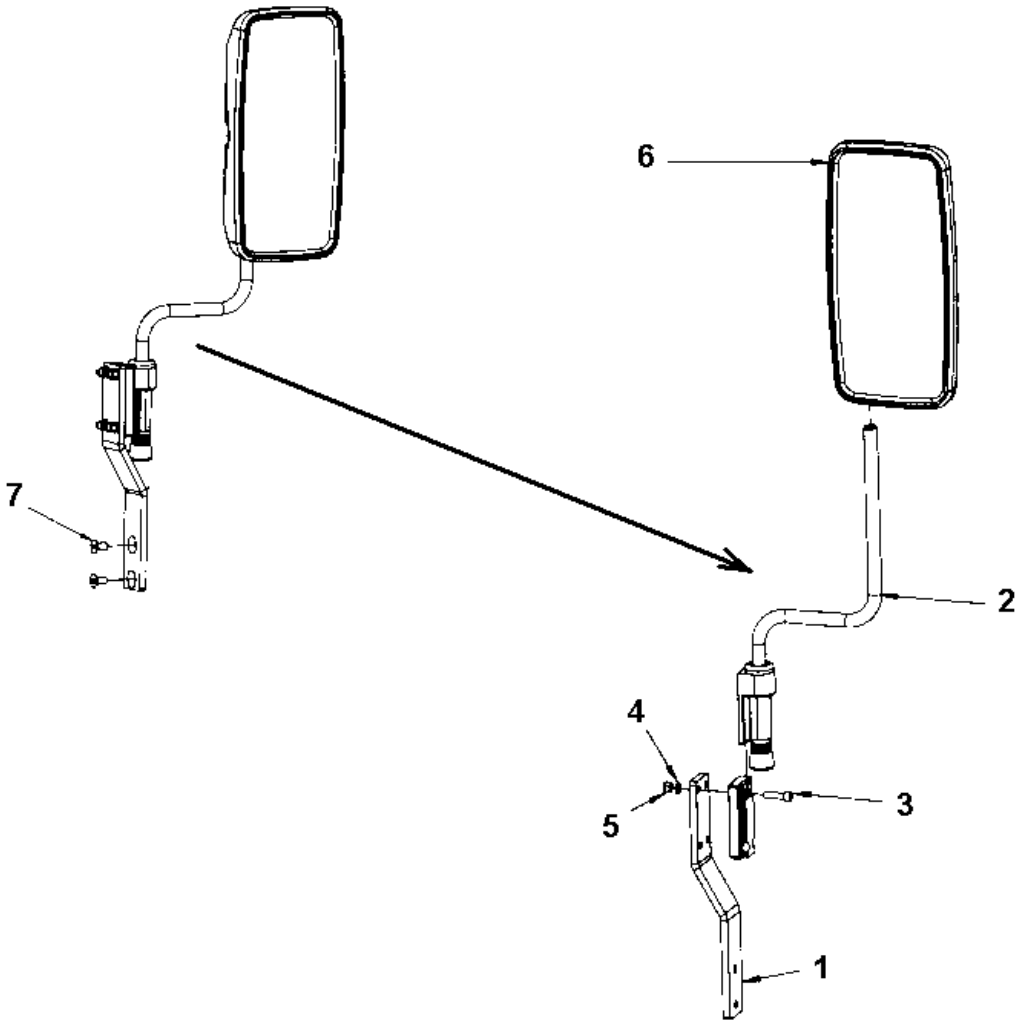

Item	Part No.	Name	Qty	L	SN INFO
0	-	Mirror assy	2		
1	4812110334	Bracket	1		
2	4700381944	Holder	1		
3	4700508048	Hexagon socket head cap screw M	4		
4	4700904229	Washer, 8.4x 6x1.5 mm 300HV	4		
5	4700586003	Lock nut M8	4		
6	4700381943	Mirror	1		
6	4812161276	Mirror glass	1		
7	4811000096	Hex. socket countersunk screw M10x020H, 10.9	2		

End frame, rear End frame, rear

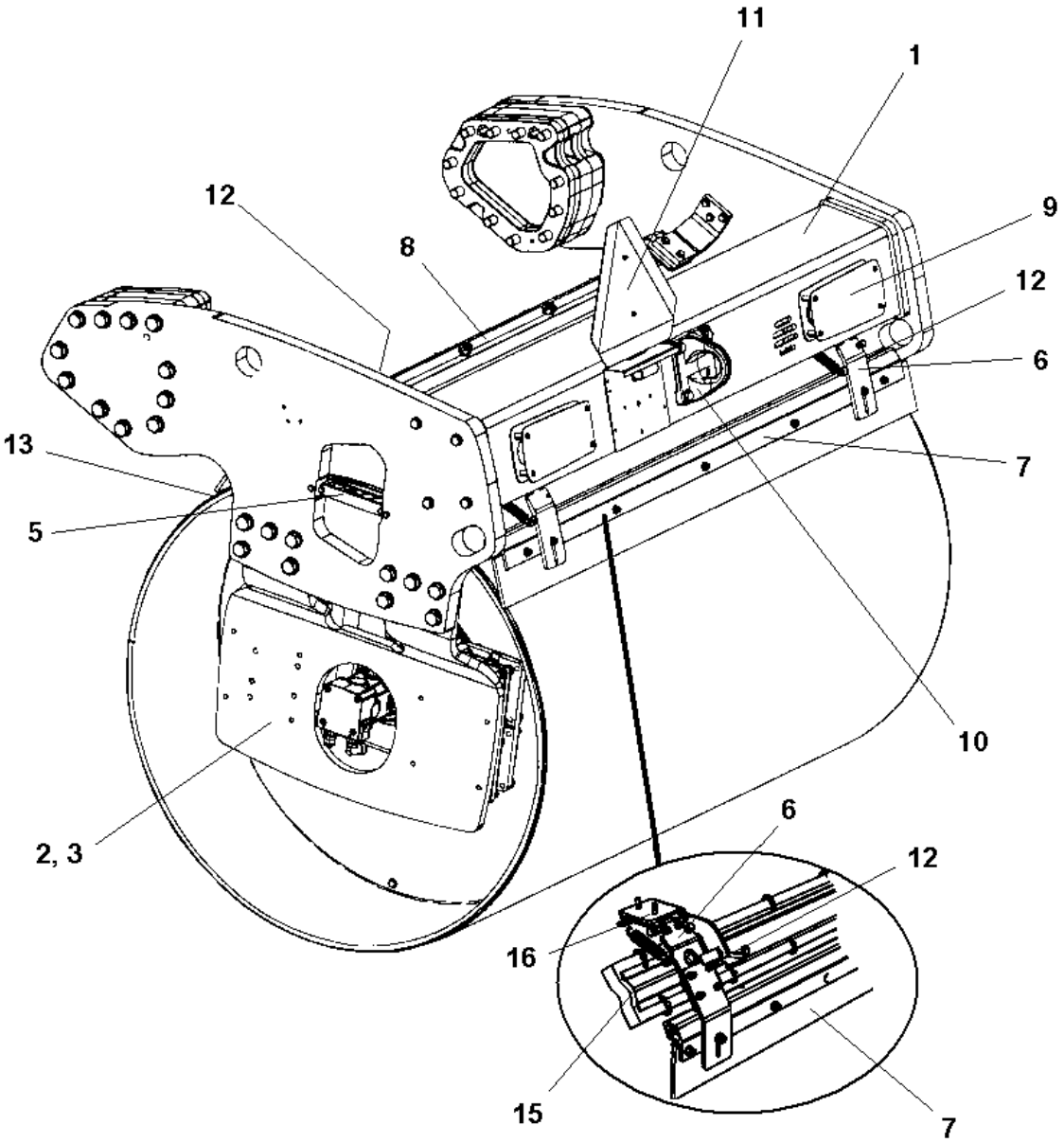

Item	Part No.	Name	Qty	L	SN INFO
1	-	End frame, rear	1		
1	-	End frame, extra tank	1		
1	-	End frame, rear offset	1		
2	-	Fork, vibration side	1		
3	-	Fork, propulsion side	1		
4	-	Step, vibration side	1		
4	-	Step, propulsion side	1		
5	-	Hose clamp, propulsion side	1		
5	-	Hose clamp, vibration side	1		
6	4700394340	Scraper bracket, cpl	4		
7	-	Scraper module, without nozzles	1		
8	-	Scraper module, with nozzles	1		
9	-	Cover plate	2		
10	-	Eyelet module	1		
11	-	SMV-sign	1		
12	-	Grab handle, release	2	1	
12	-	Grab handle, release	1	2	
12	-	Grab handle, release	1	2, 3	
13	-	Grab handle, lift	1		
13	-	Grab handle, lift offset/cocoa mat	1		
15	-	Cocoa mat module	1		
16	-	Cocoa mat bracket module	2		
16	-	Cocoa mat bracket module	2	3	

Comments for Page: End frame, rear

(L)OCAL REMARKS

1 | en_US | Qty 1 when cocoa mat mounted.

2 | en_US | For cocoa mat.

3 | en_US | Valid for machine with rear water tank.

End frame, rear End frame, rear

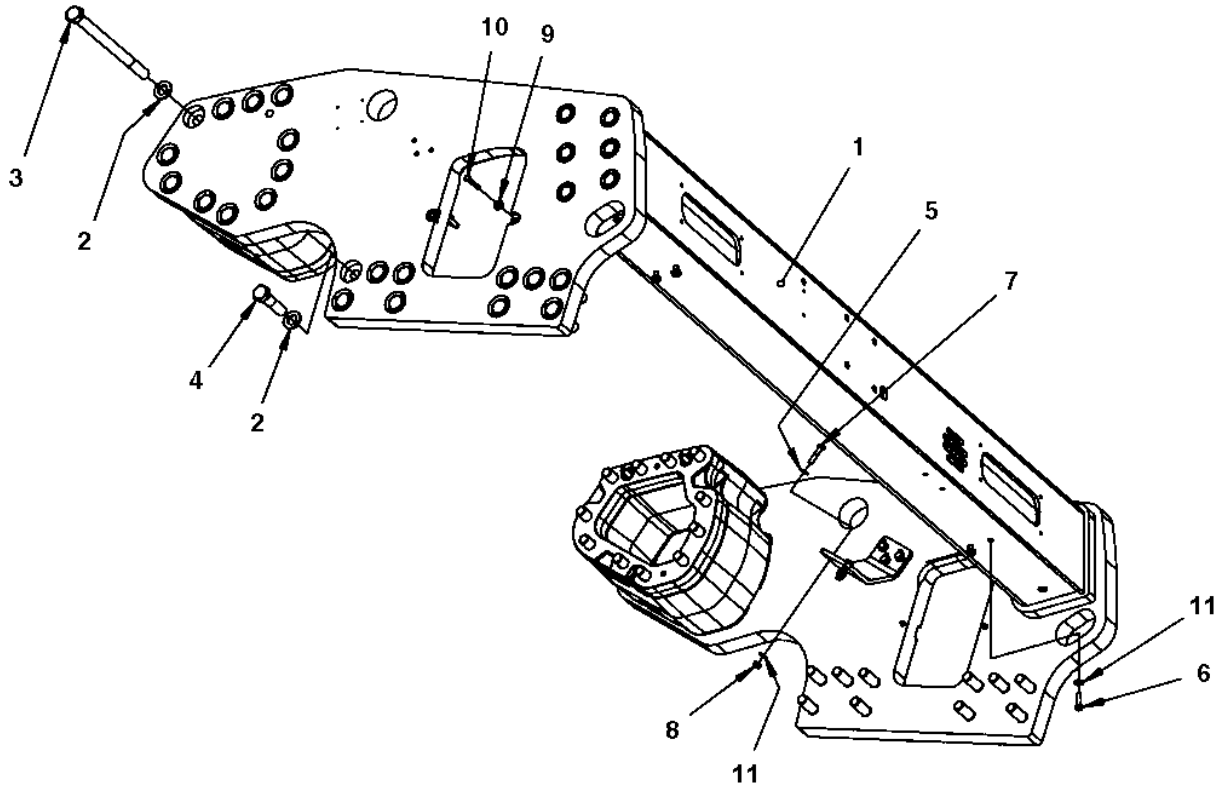

Item	Part No.	Name	Qty	L	SN INFO
1	-	Frame	1		
2	4700904234	Steel plain washer	42		
3	4700792535	Hexagon head screw M24x230	22		
4	4700500130	Hexagon head screw M24x90	20		
5	4700904230	Plain washer 10.5x22x2 mm	4		
6	4700500030	Screw hexagon	4		
7	4700500161	Screw	4		
8	4700791172	Lock nut M10 DIN985	4		
9	4700904556	Steel plain washer 8,4x16x3,0	4		
10	4700500047	Hexagon head screw	4		
11	4700904557	Washer, 10.5x22x4 mm 300 HV	8		

End frame, rear offset End frame, rear offset

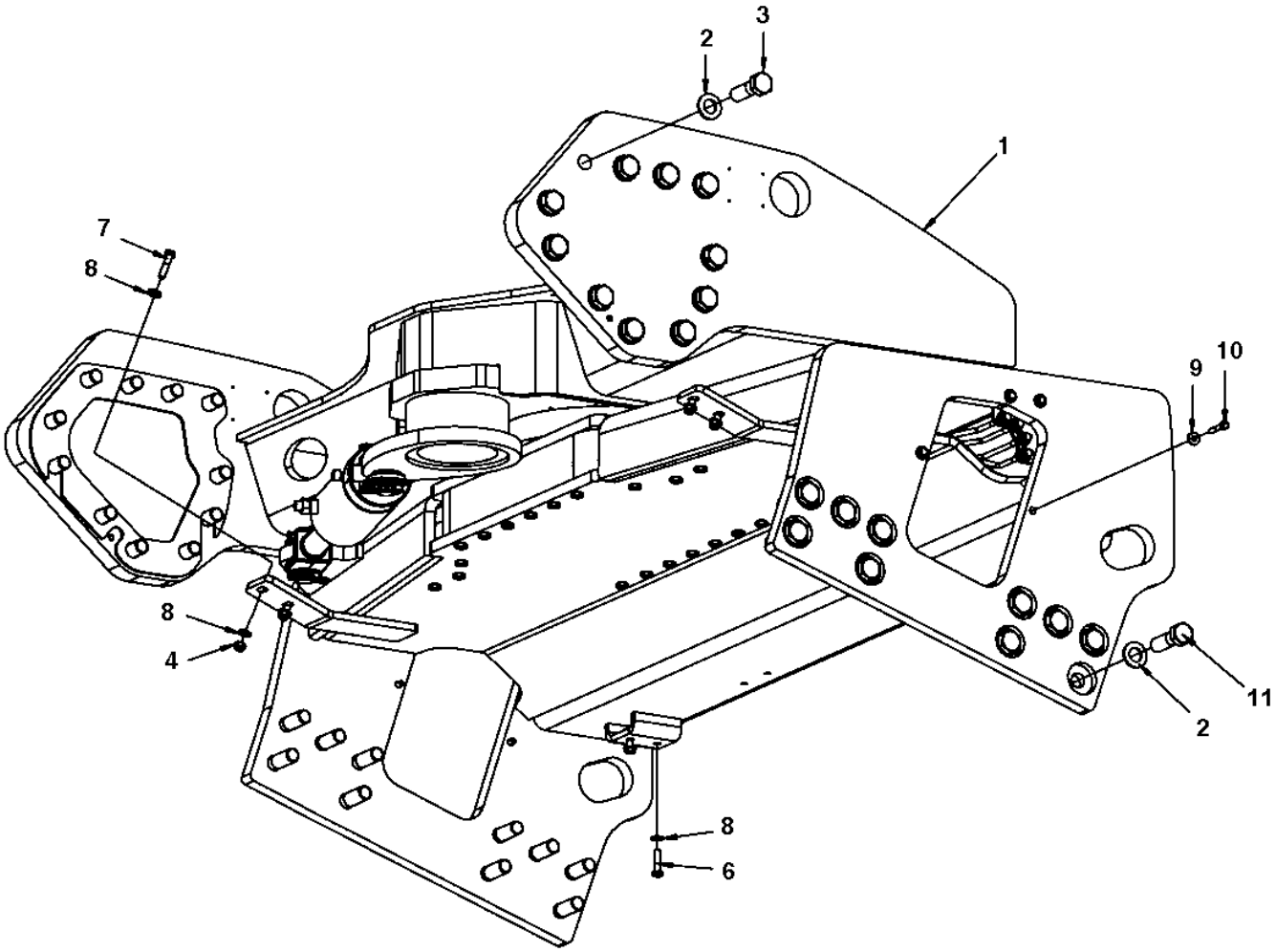

Item	Part No.	Name	Qty	L	SN INFO
1	-	Frame	1		
2	4700904234	Steel plain washer	42		
3	4700500297	Screw	22		
4	4700791172	Lock nut M10 DIN985	4		
5	4700904557	Washer, 10.5x22x4 mm 300 HV	8		
6	4700500031	Screw M10x40	4		
7	4700500161	Screw	4		
8	4700904557	Washer, 10.5x22x4 mm 300 HV	4		
9	4700904556	Steel plain washer 8,4x16x3,0	4		
10	4700500047	Hexagon head screw	4		
11	4700500289	Hex. screw	20		

End frame, rear offset Frame

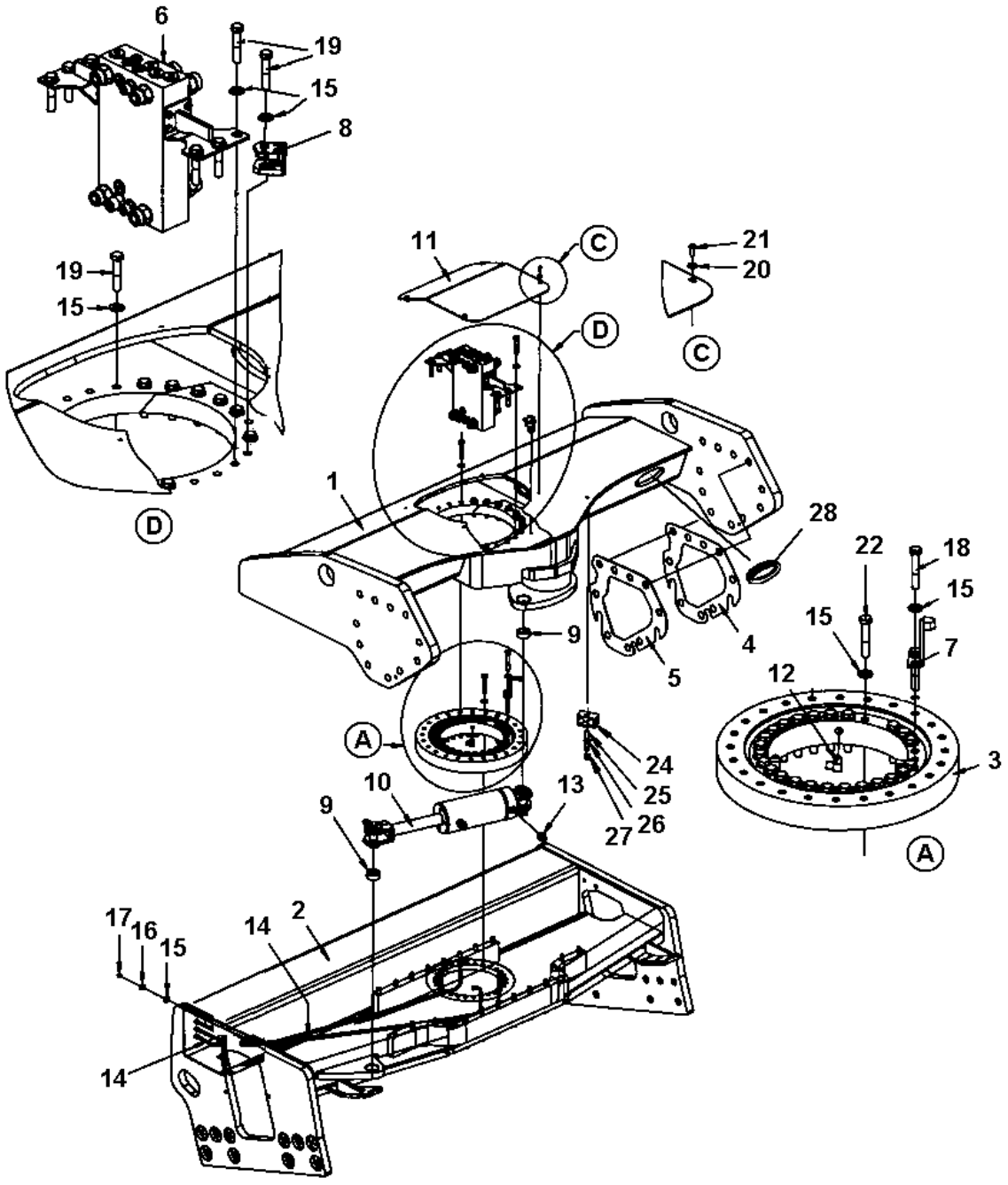

Item	Part No.	Name	Qty	L	SN INFO
1	4700391481	Frame	1		
2	4700388756	Yoke	1		
Comments for Part Num. 4700388756 "Please contact Customer Support for price & availability"					
3	4700359192	Bearing	1		
4	4700390469	Shim	N		
5	4700390470	Shim	N		
6	-	Connection block	1		
7	4700395694	Cam	1		
8	-	Micro switch	1		
9	4700391430	Bearing	2		
10	4700391024	Steering cylinder	1		
11	4700379987	Cover	1		
12	4700373183	Elbow 90°	4		
13	4700792337	Straight connector orfs	2		
14	4700393345	Hydraulic hose	4		
15	4700904231	Washer, 13x24x2 mm 300 HV	55		
16	4700903831	Hexagon nut	4		
17	4700926214	Grease fitting	4		
18	4700903735	Screw, M12 x 70 mm 10.9 GEOMET®	2		
19	4700500175	Hex. screw	24		
20	4700603001	Washer	4		
21	4700904206	Screw, M6x16 mm	4		
22	4700947712	Hexagon head screw m	25		
24	4700904085	Pipe clamp	1		
25	4700791858	Stud	1		
26	4700904229	Washer, 8.4x 6x1.5 mm 300HV	1		
27	4700586003	Lock nut M8	1		
28	4700395653	Hose guard	2		

End frame, rear offset Connection block

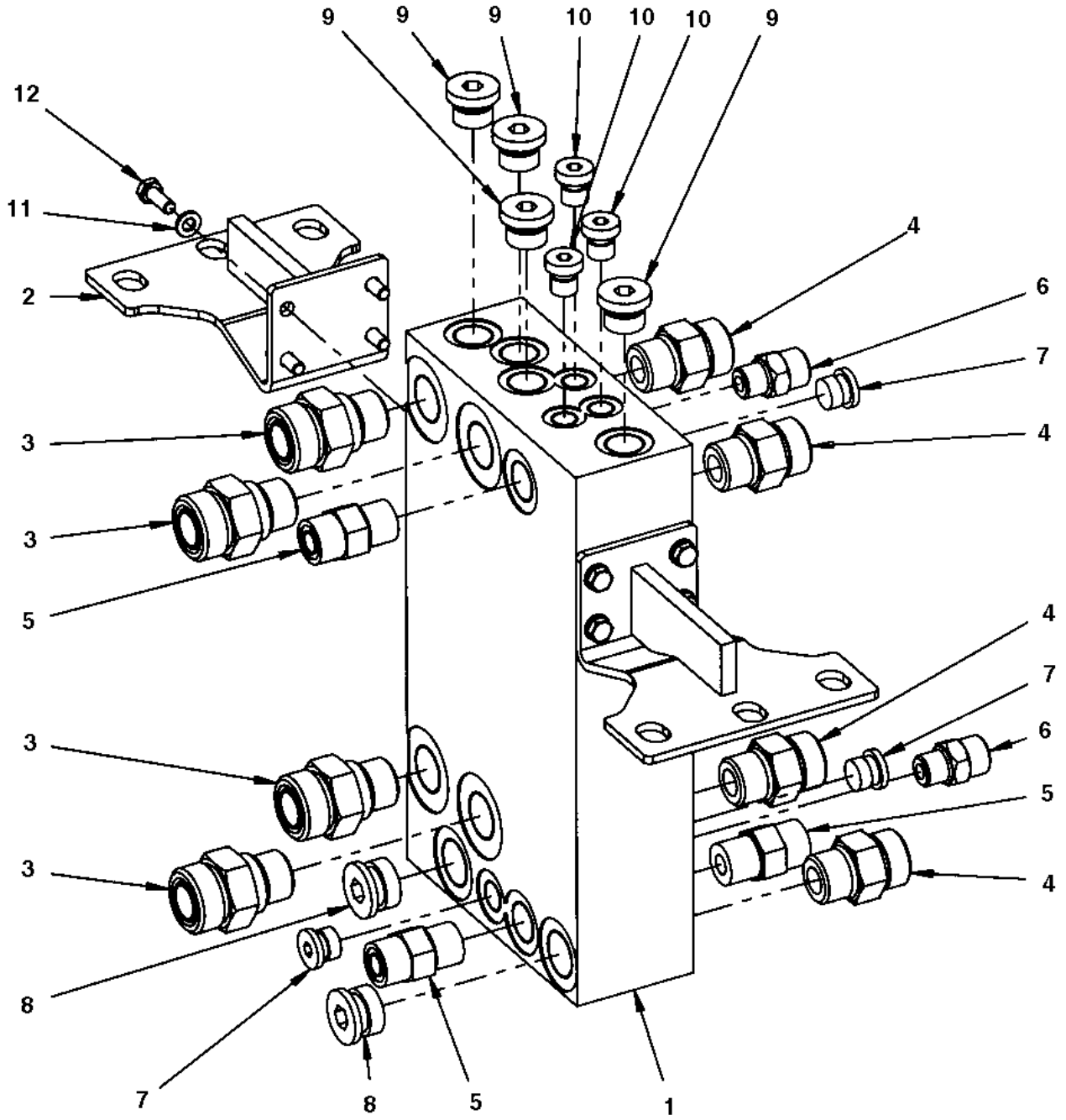

Item	Part No.	Name	Qty	L	SN INFO
1	4700390463	Connection block	1		
2	4700391889	Bracket	2		
3	4700791539	Adapter	4		
4	4700791743	Straight connector orfs	4		
5	4700791799	Straight connector orfs	3		
6	4700791409	Straight connector orfs	2		
7	4700792362	Steel plug	3		
8	4700792296	Steel plug	2		
9	4700792295	Steel plug	4		
10	4700904951	Plug	3		
11	4700904228	Washer 6,4x12x1,5	8		
12	4700500013	Screw, M6x16 mm 8.8 A2K	8		

End frame, rear offset Micro switch

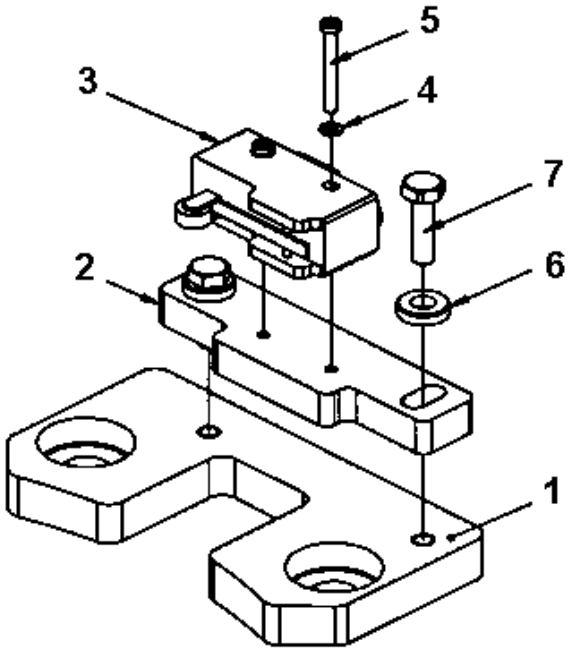

Item	Part No.	Name	Qty	L	SN INFO
1	4700396179	Bracket	1		
2	4700395696	Holder plate	1		
3	4700930046	Micro switch	1		
4	4700904697	Washer 3,2x6x0,5	2		
5	4700533050	Screw	2		
6	4700603001	Washer	2		
7	4700500040	Screw, M6x20 mm 8.8 A2K	2		

End frame, rear offset 4700391024 Steering cylinder

Item	Part No.	Name	Qty	L	SN INFO
1	4700391024	Steering cylinder	1		
2	4700950417	Seal kit	1		
3	---	Seal	2		
4	---	O-ring	1		
5	---	Back-up ring	1		
6	---	Seal	1		
7	---	O-ring	1		
8	---	Seal	1		
9	---	Seal	1		
10	---	O-ring	1		
11	--	Piston block	1		
12	--	Steering	1		
13	4700950222	Shaft	2		
14	--	Gasket	4		
15	4700635061	Hair clip	4		
16	--	Rod seal	1		
17	--	Cylinder	1		

End frame, rear Eyelet module

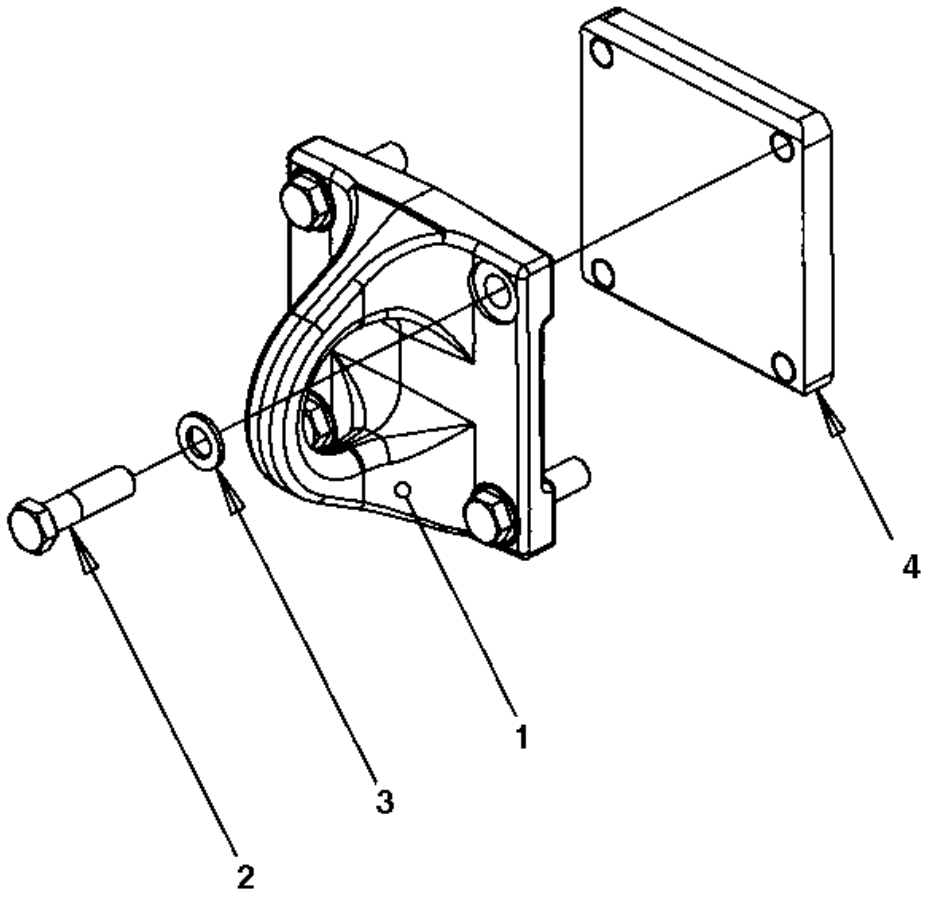

Item	Part No.	Name	Qty	L	SN INFO
1	4700390080	Eyelet	1		
2	4700500134	Hex. screw	4		
3	4700904232	Steel plain washer	4		
4	4700390072	Holder plate	1		

End frame, rear SMV-sign

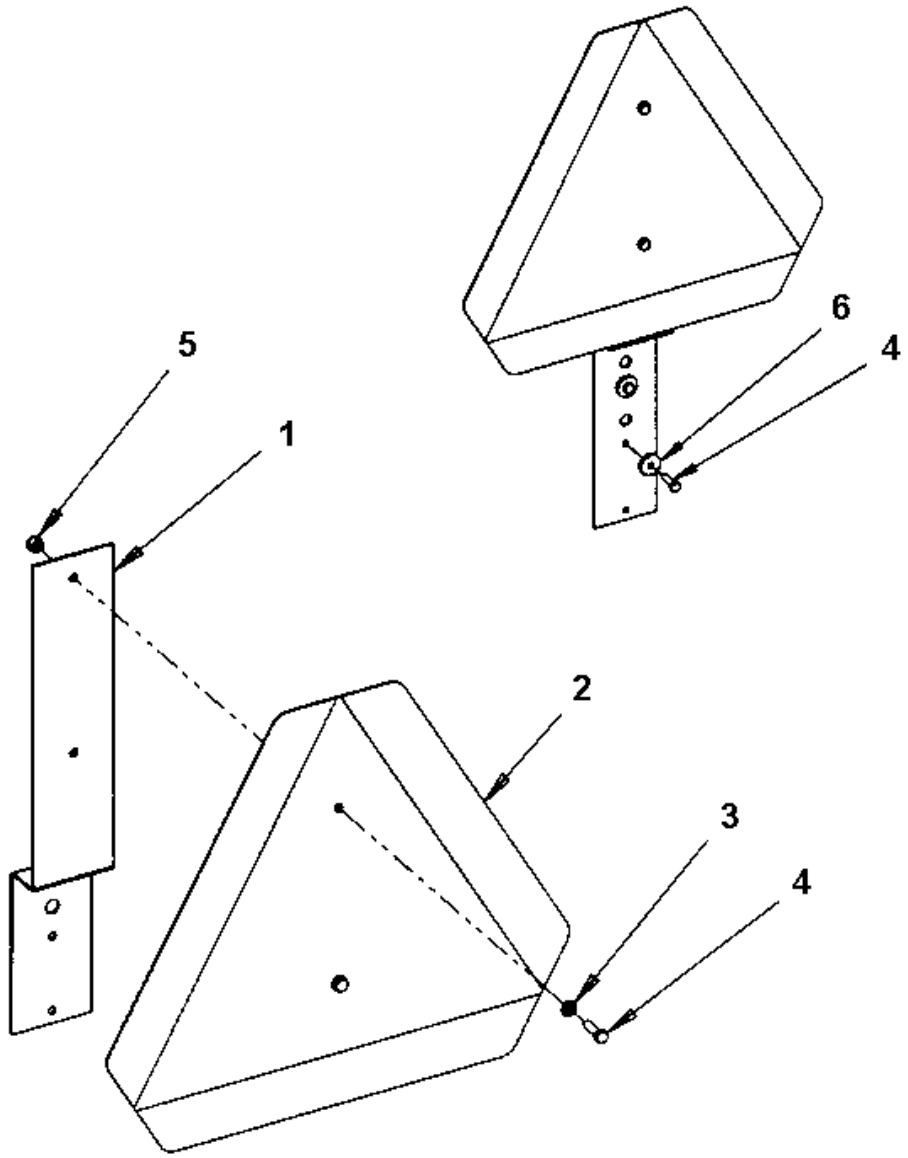

Item	Part No.	Name	Qty	L	SN INFO
1	4700392291	Holder	1		
2	4700476019	SMV-sign	1		
3	4700904228	Washer 6,4x12x1,5	2		
4	4700500040	Screw, M6x20 mm 8.8 A2K	4		
5	4700586002	Lock nut M6 -8	2		
6	4700904735	Steel plain washer	2		

Drum Drum

Item	Part No.	Name	Qty	L	SN INFO
1	4700390347	Drum	1		
2	4700379830	Eccentric shaft	1		
2	4700391108	Eccentric shaft CE	1		
3	-	Drum bearing	1		
4	-	Drive unit	1		To A014206
4	-	Drive unit	1		From A014207
5	4700343744	Magnetic plug	1		
6	4700162017	Seal ring	1		
7	4700359955	Drop plate	1		
8	4700904229	Washer, 8.4x 6x1.5 mm 300HV	2		
9	4700500019	Hexagon screw	2		
10	4700344196	Plug M12	1		
11	4700162027	Sealing	1		
14	-	Vibrating unit Sauer	1		
15	4700500070	Hex. screw	16		
16	4700904232	Steel plain washer	16		
17	4812110444	Hexagon head screw w Tuflok M12x40H 8.8 A3K	32		
18	4700904231	Washer, 13x24x2 mm 300 HV	32		
19	4812110346	Spacer	32		

Drum Drum bearing

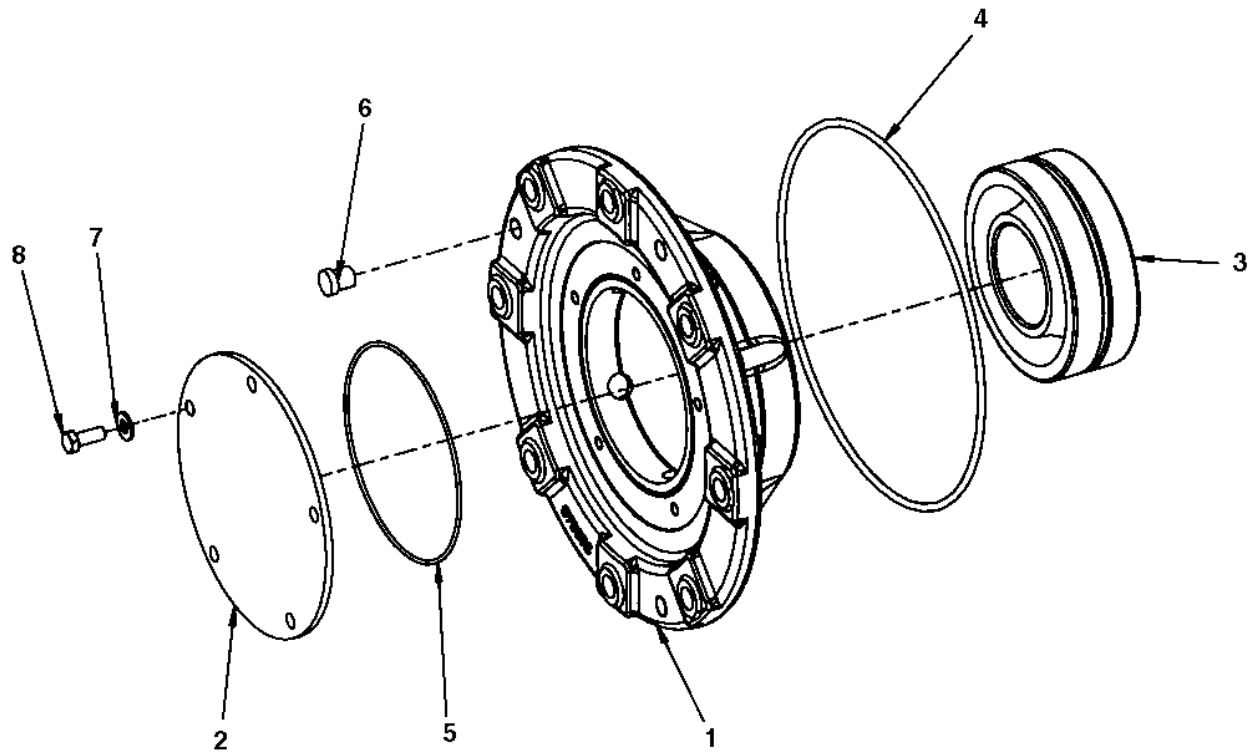

Item	Part No.	Name	Qty	L	SN INFO
1	4700379652	Bearing housing	1		
2	4700391029	Cover	1		
3	4700792270	Spherical roller bearing	1		
4	4700160344	O-ring 70	1		
5	4700160045	O-ring 70	1		
6	4700900775	Plug	3		
7	4700904230	Plain washer 10.5x22x2 mm	5		
8	4700500028	Screw, M10 x 25 mm 8.8 A3K	5		

Drive unit, To A014206 Drive unit

Item	Part No.	Name	Qty	L	SN INFO
1	4700390604	Drum gear	1		
2	4700390603	Hydraulic motor	1		
2	4812155170	Solenoid valve	1		
3	4700792151	Elbow adapter 90	1		
4	4700904232	Steel plain washer	2		
5	4700500057	Screw	2		
8	4700160227	O-ring	1		
10	4700792331	Elbow 90 orfs	2		
11	4700391724	Drive disc	1		
12	4700928022	Screw	16		
13	4700394250	Shock absorber	8		
14	4700904231	Washer, 13x24x2 mm 300 HV	16		
15	4812110641	Hexagon screw w Tuflok M12x55 10.9 GEOMET	16		
16	4700791401	Elbow 90, O-ring with swivel	1		
17	4700792507	Straight connector orfs	1		

Drive unit, To A014206 4700390604 Drum gear

Item	Part No.	Name	Qty	L	SN INFO
-	4700390604	Drum gear	1		
1	4812158763	Planet gear	4		
2	--	Planet gear	3		
3	4812158764	Sun gear	1		
4	4812160391	Shaft nut	1		
7	--	Planet carrier	1		
8	--	Cover	1		
9	--	Cylindrical roller	1		
10	4700950520	Cylindrical roller bearing	3		
11	4700950521	Cylindrical roller bearing	4		
12	4700950522	Ball bearing	1		
13	--	Screw	12		
14	--	Snap ring	3		
15	--	Snap ring	4		
16	--	Snap ring	1		
18	--	Snap ring	6		
19	4700950523	O-ring	1		
20	4700950524	Seal	1		
21	4700950491	Plug	2		
22	4700950492	Seal ring	2		
23	--	Screw	2		
30	4812158765	Ring gear	1		
33	4700950526	O-ring	1		
44	4812161168	Sun gear shaft	1		
49	4812161169	Drum flange	1		
60	--	Spindle	1		
61	4812161164	Piston	1		
62	--	Coupler	1		
63	--	Spacer	1		
65	--	Disc	1		
67	--	Snap ring	1		
71	4700950495	Plug	1		
72	4700950527	Inner disc	4		
73	4700950480	Outer disc	5		
74	--	Pressure spring	28		
75	4700950529	Supporting ring	2		
76	4700950530	Piston seal	1		

Item	Part No.	Name	Qty	L	SN INFO
77	4700950531	Supporting ring	2		
78	4700950532	Piston seal	1		
99	--	Plug	1		
123	4700950493	Plug	3		
124	4700950494	Seal ring	3		
224	4812161198	Spring dowel sleeve	2		
300	4812156060	Seal kit, drive gear	1		
300_19	4700950523	O-ring	1		
300_20	4700950524	Seal	1		
300_33	4700950526	O-ring	1		
301	4812156061	Seal kit, brake	1		
301_75	4700950529	Supporting ring	2		
301_76	4700950530	Piston seal	1		
301_77	4700950531	Supporting ring	2		
301_78	4700950532	Piston seal	1		
302	4812156062	Disc kit	1		
302_72	4700950527	Inner disc	4		
302_73	4700950480	Outer disc	5		
302_74	--	Pressure spring	28		

4700390603 Hydraulic motor 4700390603 Hydraulic motor

Item	Part No.	Name	Qty	L	SN INFO
0	4700390603	Hydraulic motor	1		
1	--	Engine	1		
2	--	Adjustment	1		
3	--	Housing	1		
4	--	Circlip	1		
5	4812160262	Shaft sealing ring	1		
6	--	Supporting disc	1		
7	4812157165	O-ring	1		
8	--	Set screw	2		
9	--	Seal lock collar nut	2		
20	--	Engine hydraulic part	1		
30	--	End plate	1		
40	4812157395	Seal kit	1		

4700390603 Hydraulic motor Engine hydraulic part

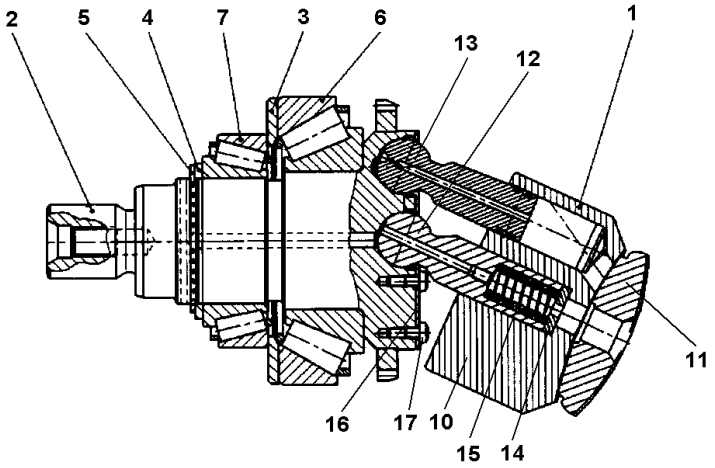

.

Item	Part No.	Name	Qty	L	SN INFO
1	4812157166	Engine hydraulic part	1		
2	-	Drive shaft with tooth ring	1		
3	-	Shim	1		
4	-	Supporting disc	1		
5	-	Circlip	1		
6	4812157167	Tapered roller bearing	1		
7	4812157168	Tapered roller bearing	1		
10	-	Cylinder	1		
11	-	Control lens	1		
12	-	Center pin	1		
13	-	Piston with piston rings	7		
14	-	Shim	1		
15	-	Pressure spring	1		
16	-	Retaining plate	1		
17	-	Lens screw with internal screw torx	14		

4700390603 Hydraulic motor End plate

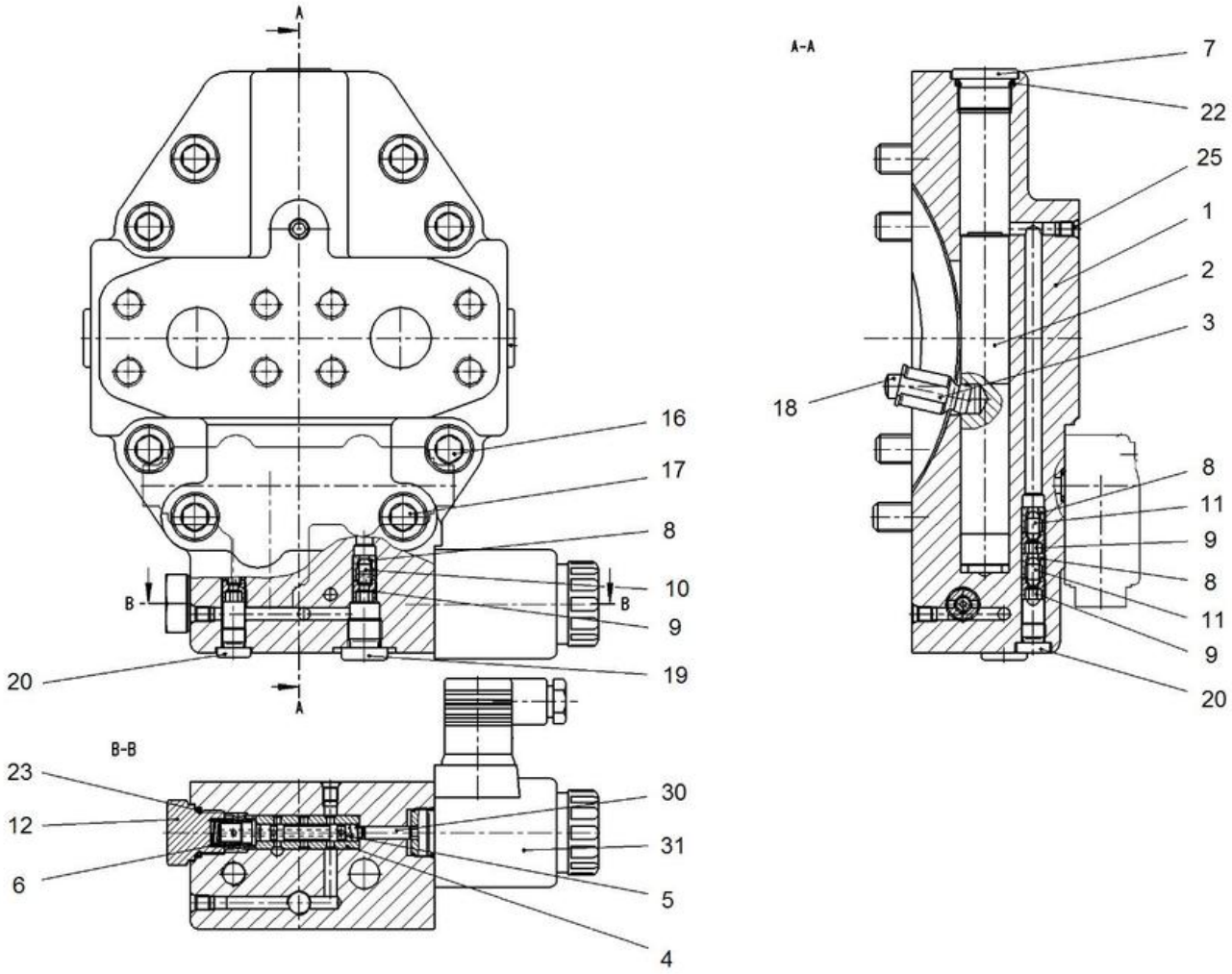

Item	Part No.	Name	Qty	L	SN INFO
1	-	End plate	1		
2	-	Control piston	1		
3	-	Adjustment pin	1		
4	-	Bushing	1		
5	-	Spool	1		
6	-	Pressure spring	1		
7	-	Screw	1		
8	4812161092	Throttle screw	3		
9	4812161093	Throttle screw	3		
10	4812161094	Valve pin	2		
11	-	Throttle pin	1		
12	-	Screw	1		
16	-	Cap screw	6		
17	-	Cap screw	2		
18	-	Dowel	2		
19	4812161095	Locking screw with o-ring	1		
20	4812160294	Locking screw with o-ring	2		
22	4812157169	O-ring	1		
23	4812157170	O-ring	1		
25	-	Double break-off pin	4		
30	4812157171	Needle roller	1		
31	4812155170	Solenoid valve	1		

Drive unit, From A014207 Drive unit

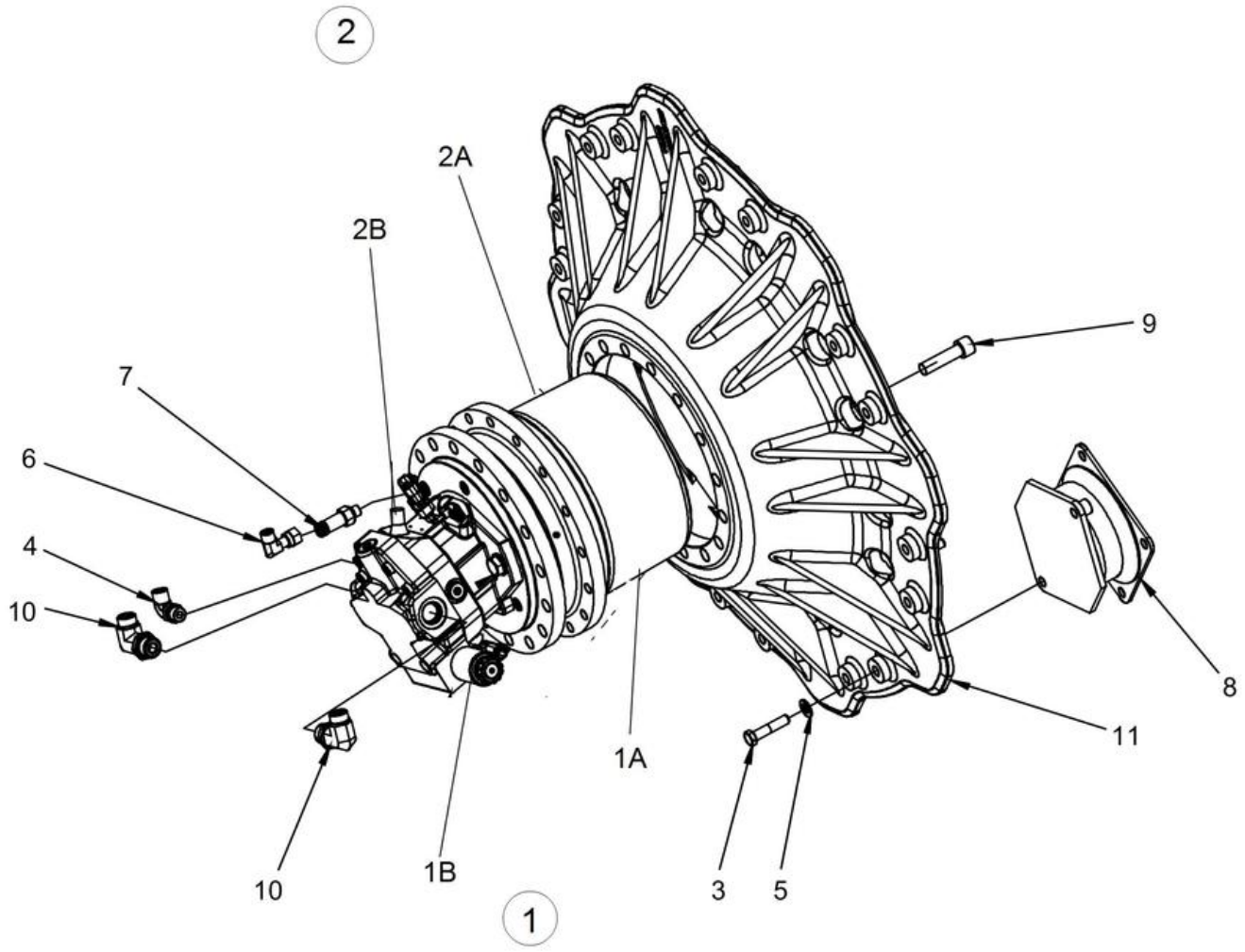

Item	Part No.	Name	Qty	L	SN INFO
1	4812120565	Drive unit	1		
1A	4812269526	Drum gear	1		
1B	4812120567	Hydraulic motor	1		
2	4812120566	Drive unit	1		
2A	4812269526	Drum gear	1		
2B	4812120568	Hydraulic motor	1		
3	4812110641	Hexagon screw w Tuflok M12x55 10.9 GEOMET	16		
4	4700792151	Elbow adapter 90	1		
5	4700904231	Washer, 13x24x2 mm 300 HV	16		
6	4700791401	Elbow 90, O-ring with swivel	1		
7	4700792507	Straight connector orfs	1		
8	4700394250	Shock absorber	8		
9	4700928022	Screw	16		
10	4700792331	Elbow 90 orfs	2		
11	4700391724	Drive disc	1		

Drive unit, From A014207 4812269526 Gear

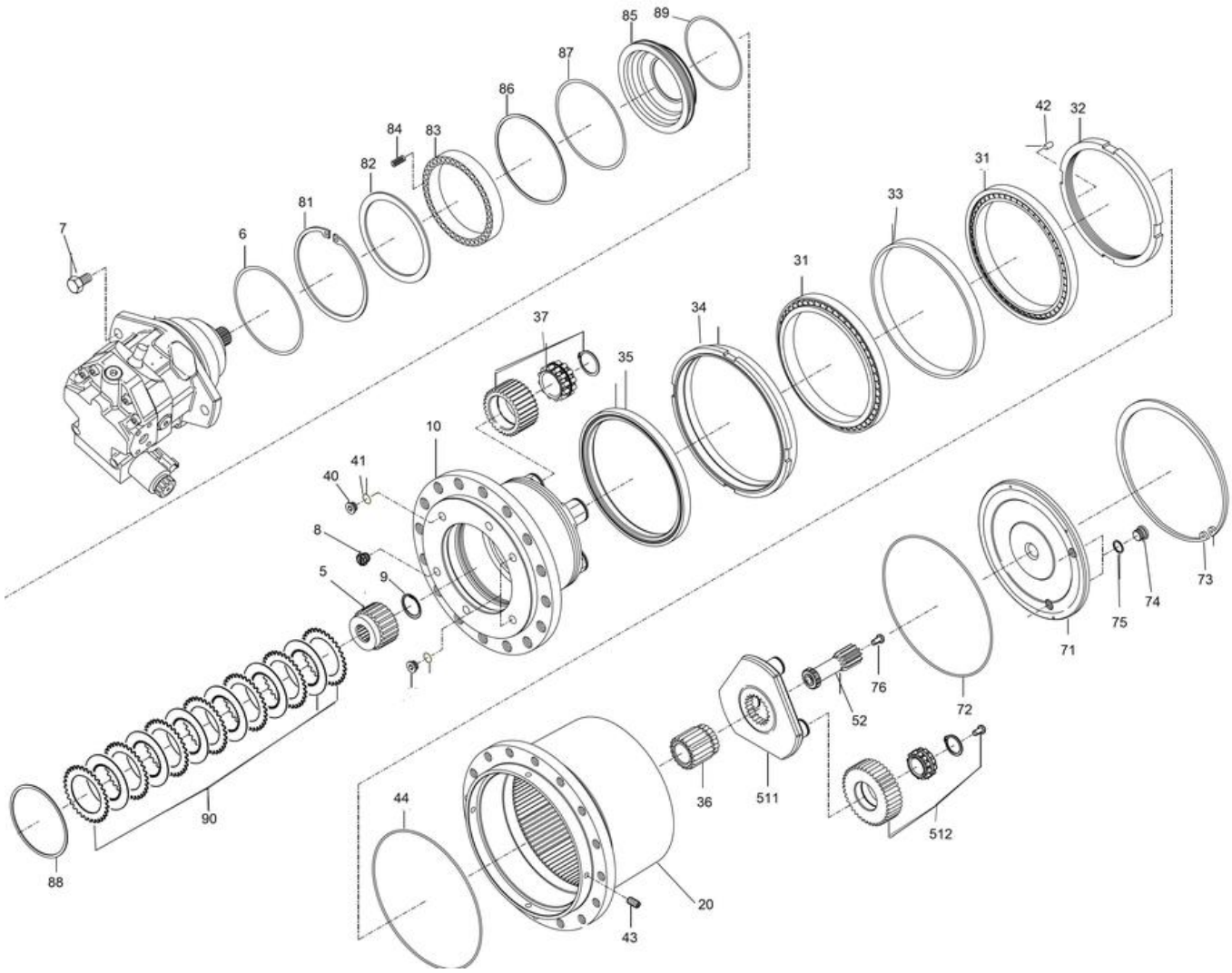

Item	Part No.	Name	Qty	L	SN INFO
5	-	Carrier	1		
6	4812160487	O-ring	1		
7	-	Hexagon screw	2		
8	4700950495	Plug	1		
9	-	Retaining ring	1		
10	-	Spindle	1		
20	-	Ring gear	1		
31	-	Tapered roller bearing	2		
32	-	Shaft nut	1		
33	-	Intermediate ring	1		
34	-	Threaded ring	1		
35	-	Cassette seal	1		
36	-	Sun gear	1		
37	-	Planet gear	4		
40	4700950493	Plug	3		
41	4700950494	Seal ring	3		
42	-	Straight pin	2		
43	-	Setscrew	3		
44	-	O-ring	1		
52	-	Sun gear shaft	1		
71	-	Injector part	1		
72	4812160488	O-ring	1		
73	-	Retaining ring	1		
74	4700950491	Plug	2		
75	4700950492	Seal ring	2		
76	-	Grooved nail	1		
81	-	Retaining ring	1		
82	-	Washer	1		
83	-	Intermediate ring	1		
84	-	Compressor spring	30		
85	-	Piston	1		
86	4700950531	Supporting ring	1		
87	-	O-ring	1		
88	-	Thrust ring	1		
89	-	O-ring	1		
90	-	Brake disc kit	1		
511	-	Planet carrier	1		

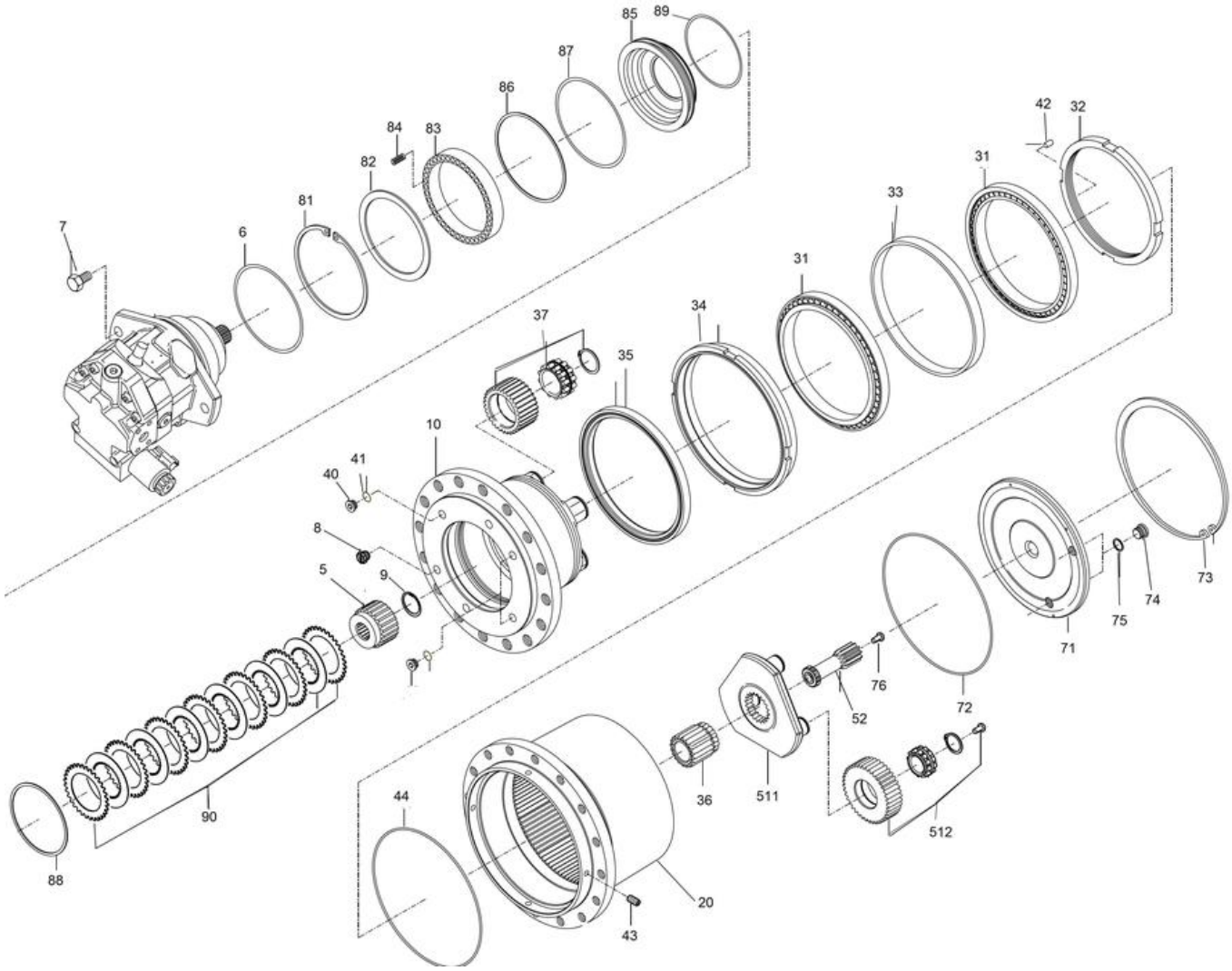
85
89
87
86
84
83
82
81
7
6
42
32
31
33
31
37
34
35
10
41
40
8
5
9
73
74
75
71
76
52
72
36
511
512
44
20
43
90
88

Item	Part No.	Name	Qty	L	SN INFO
512	-	Planet gear	1		

4812120567 Hydraulic motor 4812120567 Hydraulic motor

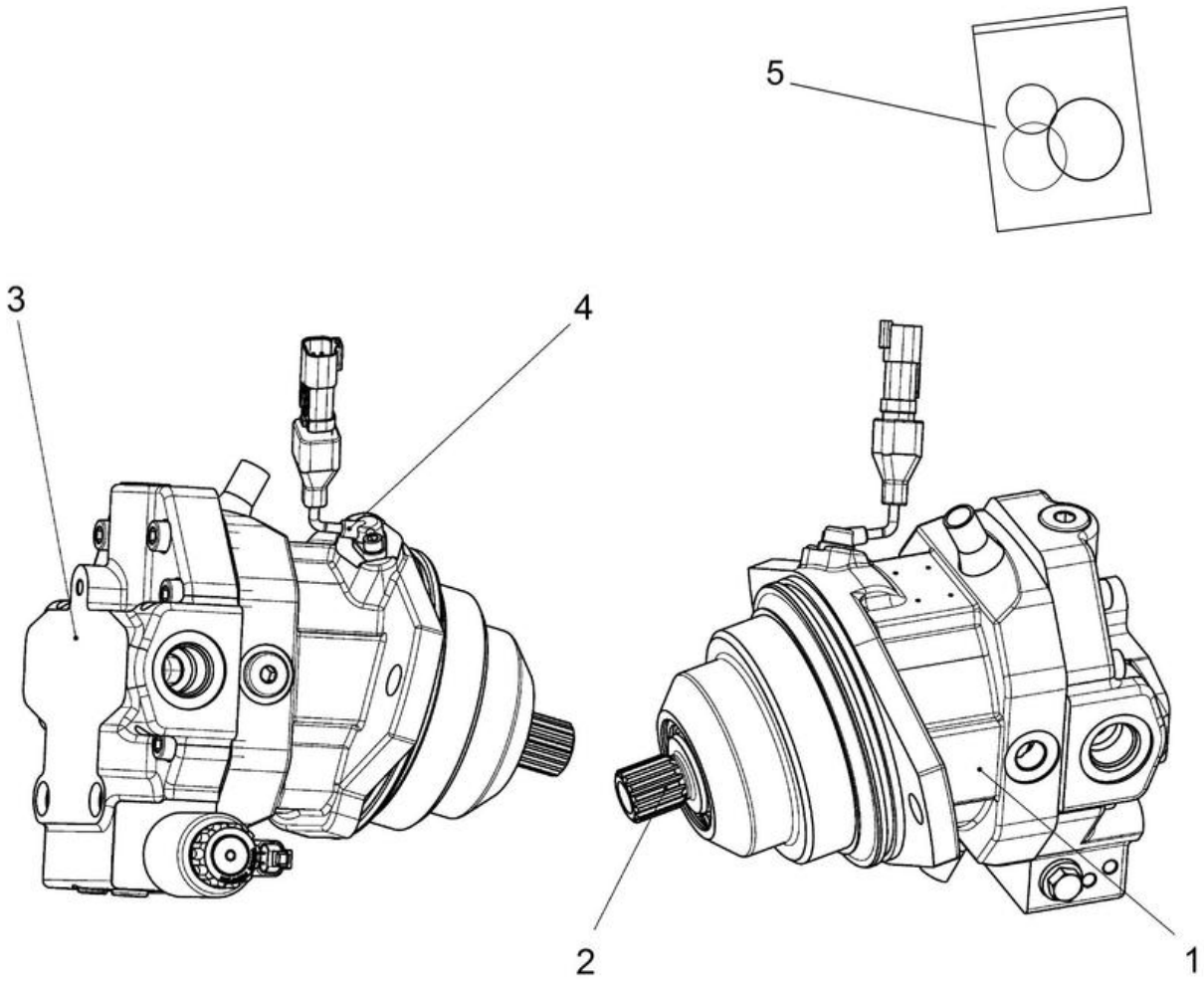

Item	Part No.	Name	Qty	L	SN INFO
1	-	Housing, cpl	1		
2	-	Rotary group	1		
3	-	Connection plate, cpl	1		
4	-	Sensor	1		
5	4812157395	Seal kit	1		

4812120567 Hydraulic motor Housing, cpl

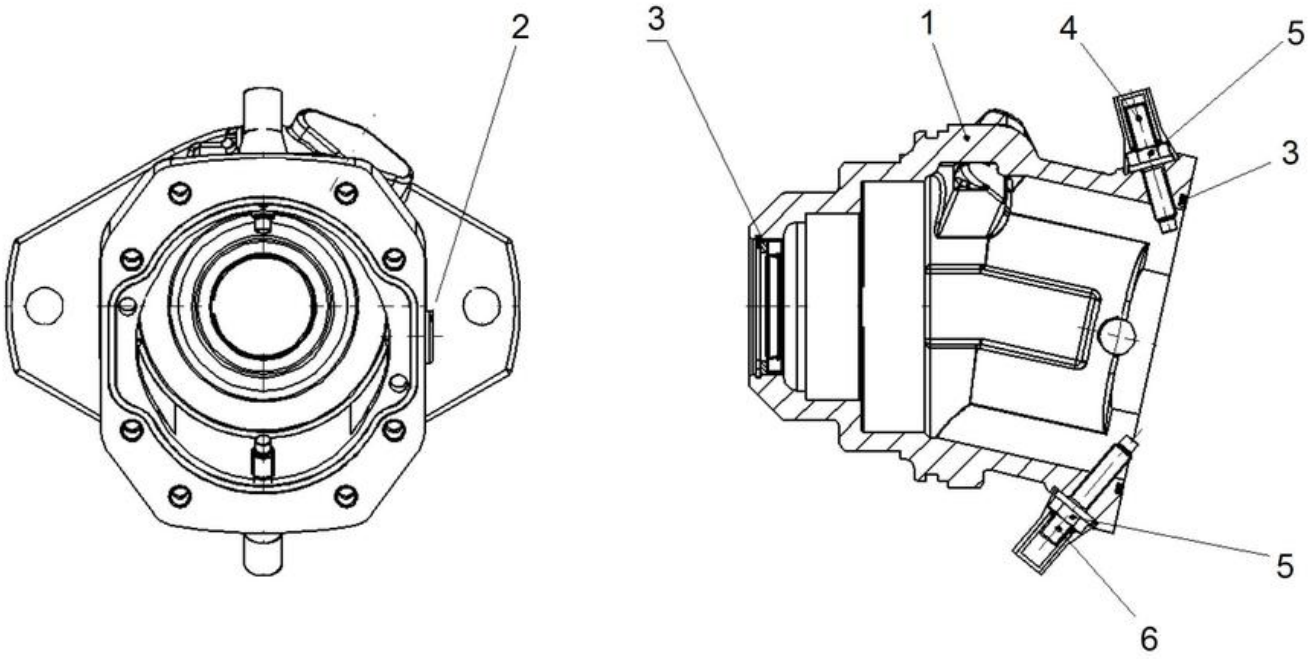

Item	Part No.	Name	Qty	L	SN INFO
1	-	Housing	1		
2	-	Lock screw	1		
3	-	Seal kit rotary group	1		
4	-	Threaded pin	1		
5	-	Sealing nut	2		
6	-	Threaded pin	1		

4812120567 Hydraulic motor Rotary group

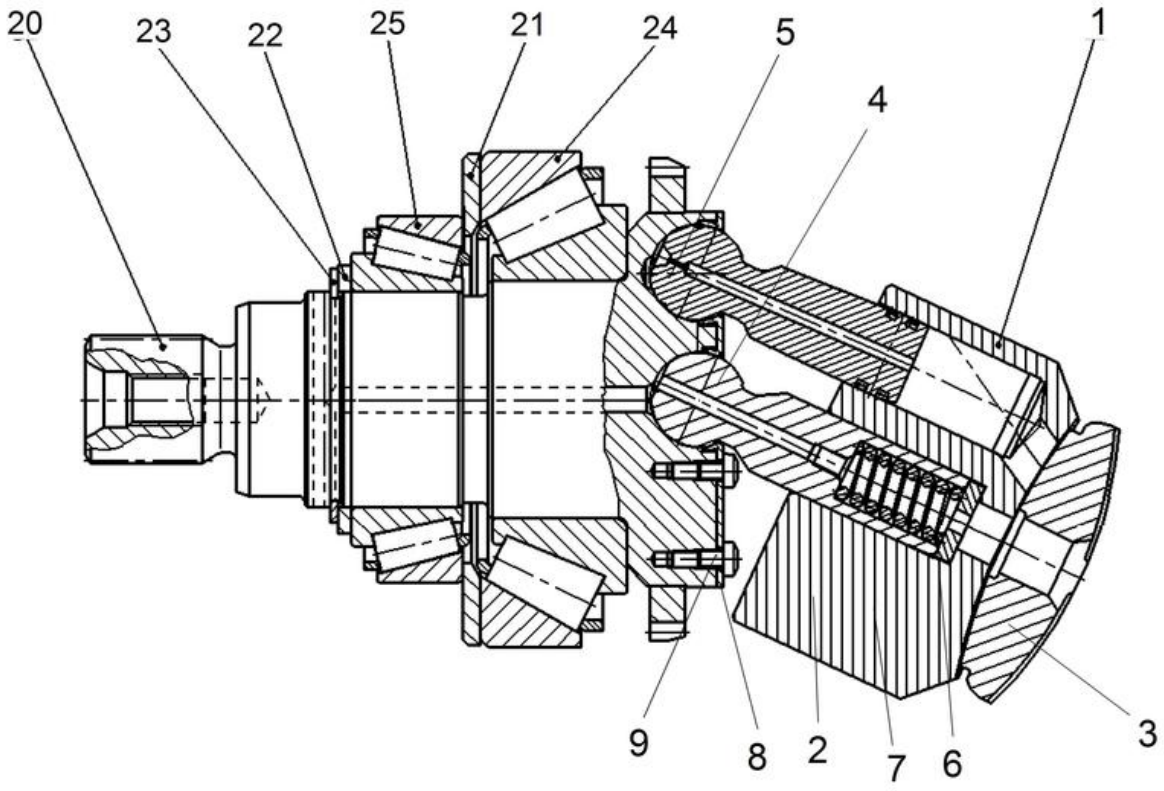

Item	Part No.	Name	Qty	L	SN INFO
1	4812157166	Engine hydraulic part	1		
2	-	Cylinder	1		
3	-	Control lens	1		
4	-	Center pin	1		
5	-	Piston with rings	7		
6	-	Adjustment shim	1		
7	-	Pressure spring	1		
8	-	Retaining plate	1		
9	-	Pan-head screw	14		
20	-	Drive shaft	1		
21	-	Shim	1		
22	-	Back-up plate	1		
22	-	Back-up plate	1		
22	-	Back-up plate	1		
22	-	Back-up plate	1		
22	-	Back-up plate	1		
22	-	Back-up plate	1		
22	-	Back-up plate	1		
22	-	Back-up plate	1		
23	-	Retaining ring	1		
24	4812157167	Tapered roller bearing	1		
25	4812157168	Tapered roller bearing	1		

4812120567 Hydraulic motor Connection plate, cpl

Item	Part No.	Name	Qty	L	SN INFO
1	-	Connection plate with break-off plugs	1		
2	-	Positioning piston	1		
3	-	Positioning trunnion	1		
4	-	Control bush	1		
5	-	Control piston	1		
6	-	Pressure spring	1		
7	-	Locking screw	1		
8	4812161092	Throttle screw	3		
9	4812161093	Throttle screw	3		
10	4812161094	Valve pin	2		
11	-	Throttle pin	1		
12	-	Locking screw	1		
16	-	Socket-head screw	6		
17	-	Socket head screw	2		
18	-	Cylinder pin	2		
19	4812161095	Locking screw with o-ring	1		
20	4812160294	Locking screw with o-ring	2		
22	4812157169	O-ring	1		
23	4812157170	O-ring	1		
30	4812157171	Needle roller	1		
31	-	Control solenoid	1		

4812120567 Hydraulic motor Sensor

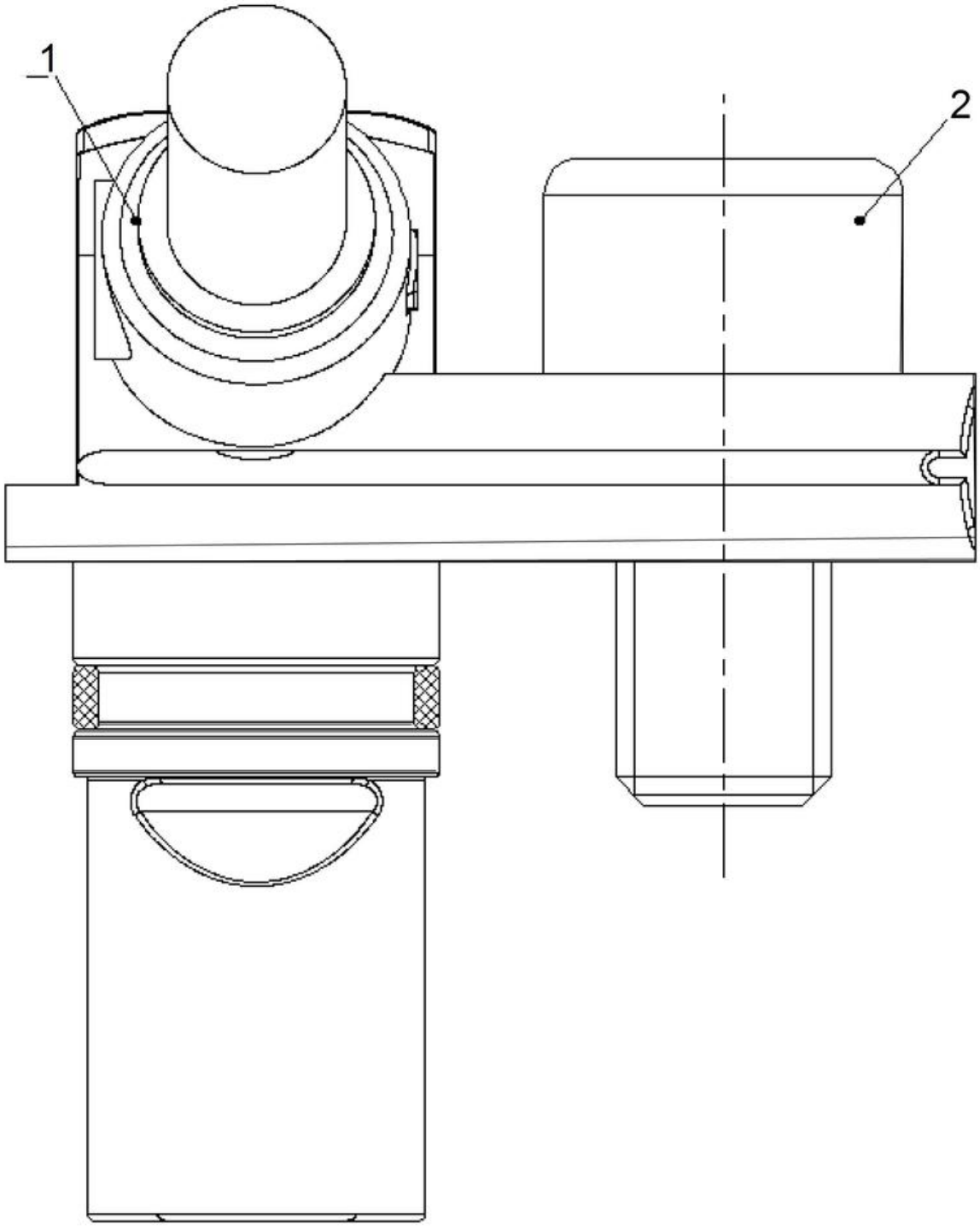

Item	Part No.	Name	Qty	L	SN INFO
1	4812034481	Revolution sensor	1		
2	-	Socket-head screw	1		

4812120568 Hydraulic motor 4812120568 Hydraulic motor

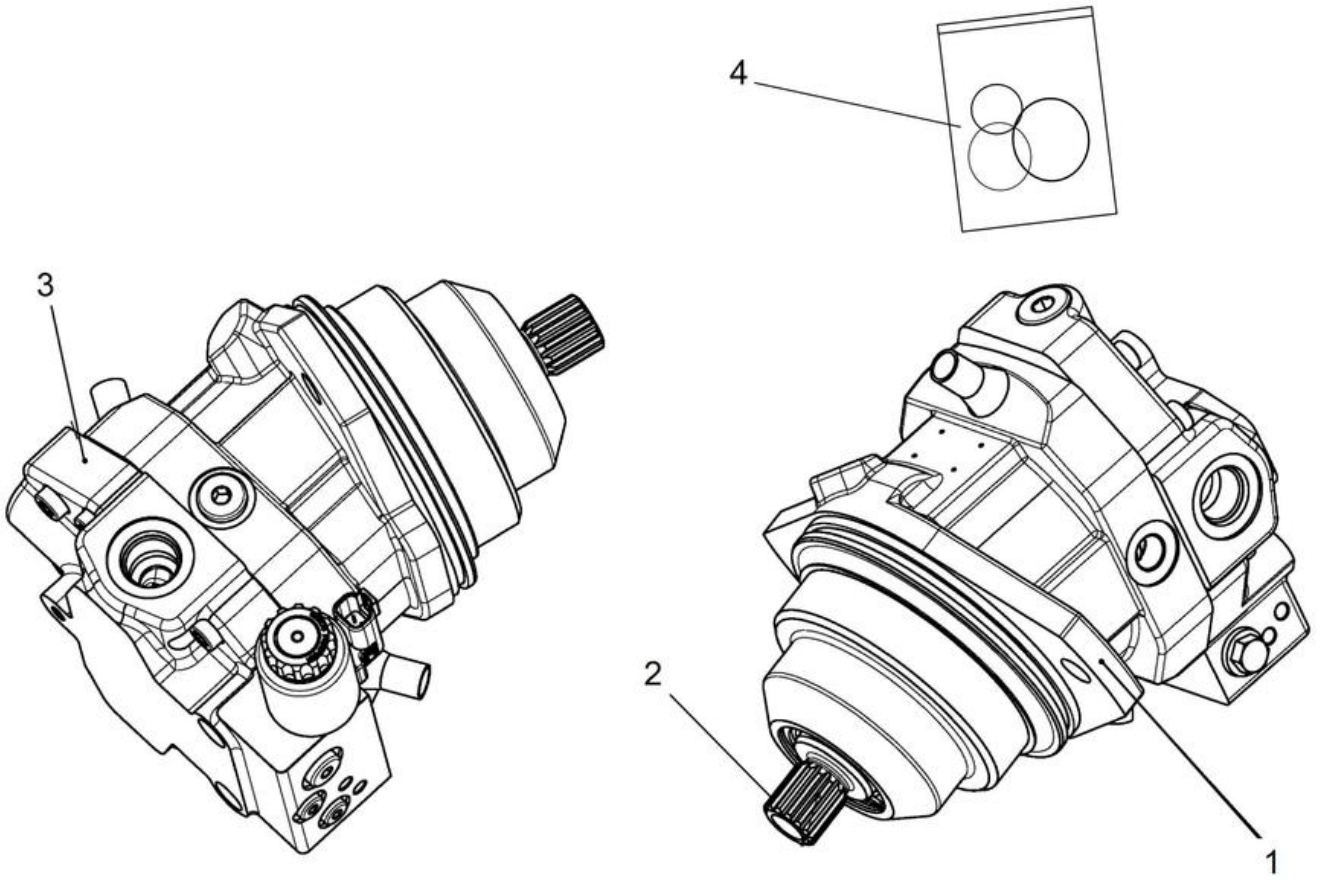

Item	Part No.	Name	Qty	L	SN INFO
1	-	Housing, cpl	1		
2	-	Rotary group	1		
3	-	Connection plate, cpl	1		
4	4812157395	Seal kit	1		

4812120568 Hydraulic motor Housing, cpl

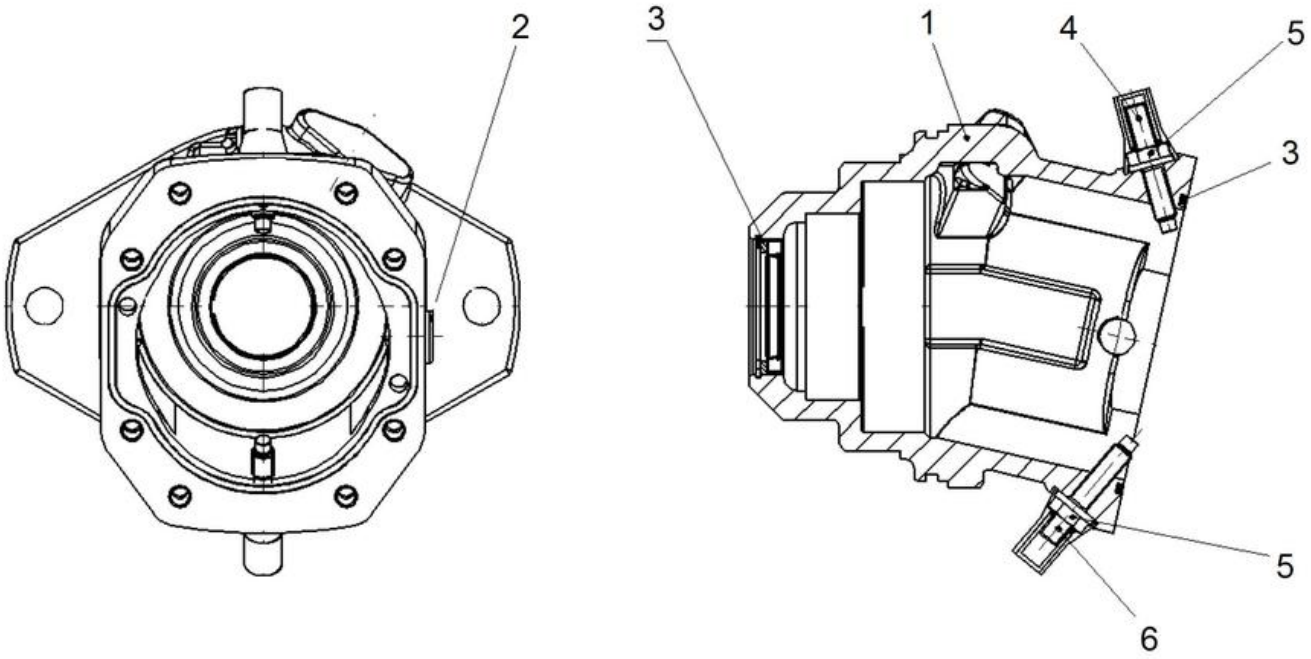

Item	Part No.	Name	Qty	L	SN INFO
1	-	Housing	1		
2	-	Lock screw	1		
3	-	Seal kit rotary group	1		
4	-	Threaded pin	1		
5	-	Sealing nut	2		
6	-	Threaded pin	1		

4812120568 Hydraulic motor Rotary group

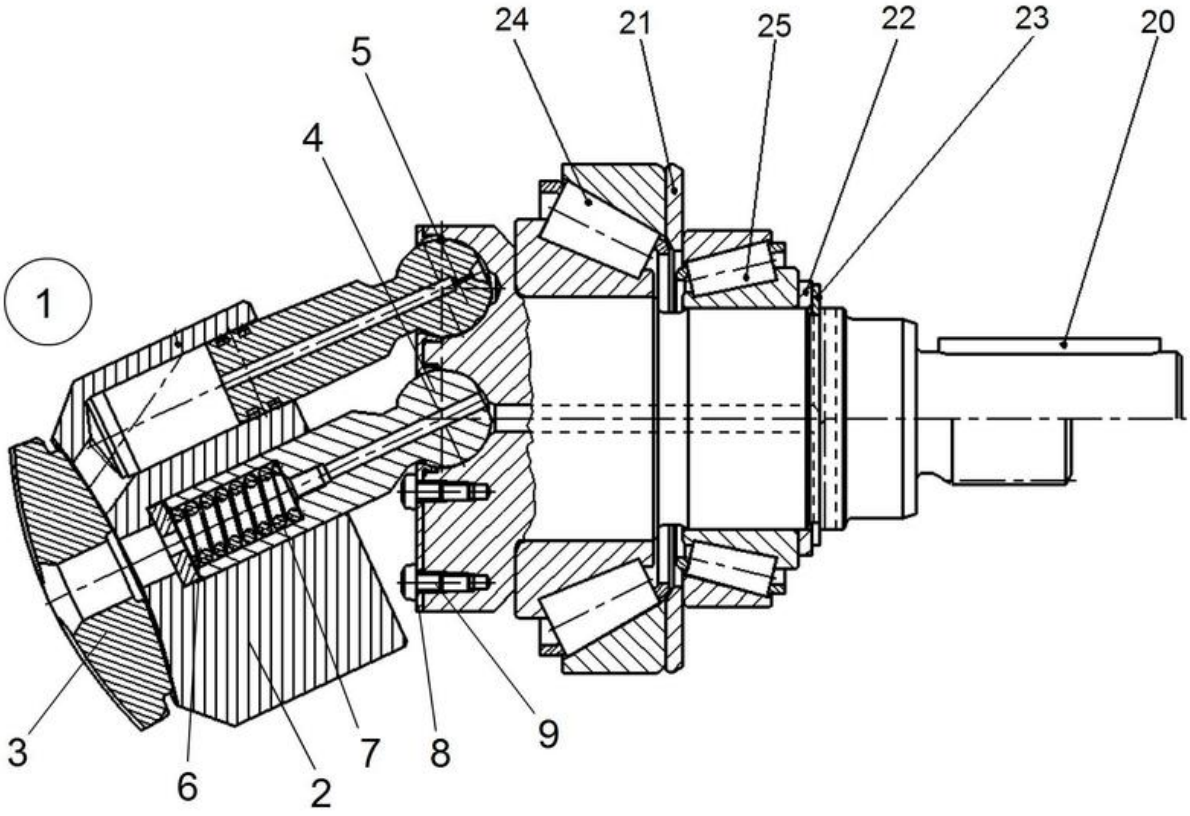

Item	Part No.	Name	Qty	L	SN INFO
1	4812157166	Engine hydraulic part	1		
2	-	Cylinder	1		
3	-	Control lens	1		
4	-	Center pin	1		
5	-	Piston with rings	7		
6	-	Adjustment shim	1		
7	-	Pressure spring	1		
8	-	Retaining plate	1		
9	-	Pan-head screw	14		
20	-	Drive shaft	1		
21	-	Shim	1		
22	-	Back-up plate	1		
22	-	Back-up plate	1		
22	-	Back-up plate	1		
22	-	Back-up plate	1		
22	-	Back-up plate	1		
22	-	Back-up plate	1		
22	-	Back-up plate	1		
22	-	Back-up plate	1		
23	-	Retaining ring	1		
24	4812157167	Tapered roller bearing	1		
25	4812157168	Tapered roller bearing	1		

4812120568 Hydraulic motor Connection plate, cpl

Item	Part No.	Name	Qty	L	SN INFO
1	-	Port plate with break-off plugs	1		
2	-	Positioning piston	1		
3	-	Positioning trunnion	1		
4	-	Control bush	1		
5	-	Control piston	1		
6	-	Pressure spring	1		
7	-	Locking screw	1		
8	4812161092	Throttle screw	3		
9	4812161093	Throttle screw	3		
10	4812161094	Valve pin	2		
11	-	Throttle pin	1		
12	-	Locking screw	1		
16	-	Socket-head screw	6		
17	-	Socket head screw	2		
18	-	Cylinder pin	2		
19	4812161095	Locking screw with o-ring	1		
20	4812160294	Locking screw with o-ring	2		
22	4812157169	O-ring	1		
23	4812157170	O-ring	1		
30	4812157171	Needle roller	1		
31	-	Control solenoid	1		

Drum Vibrating unit Sauer

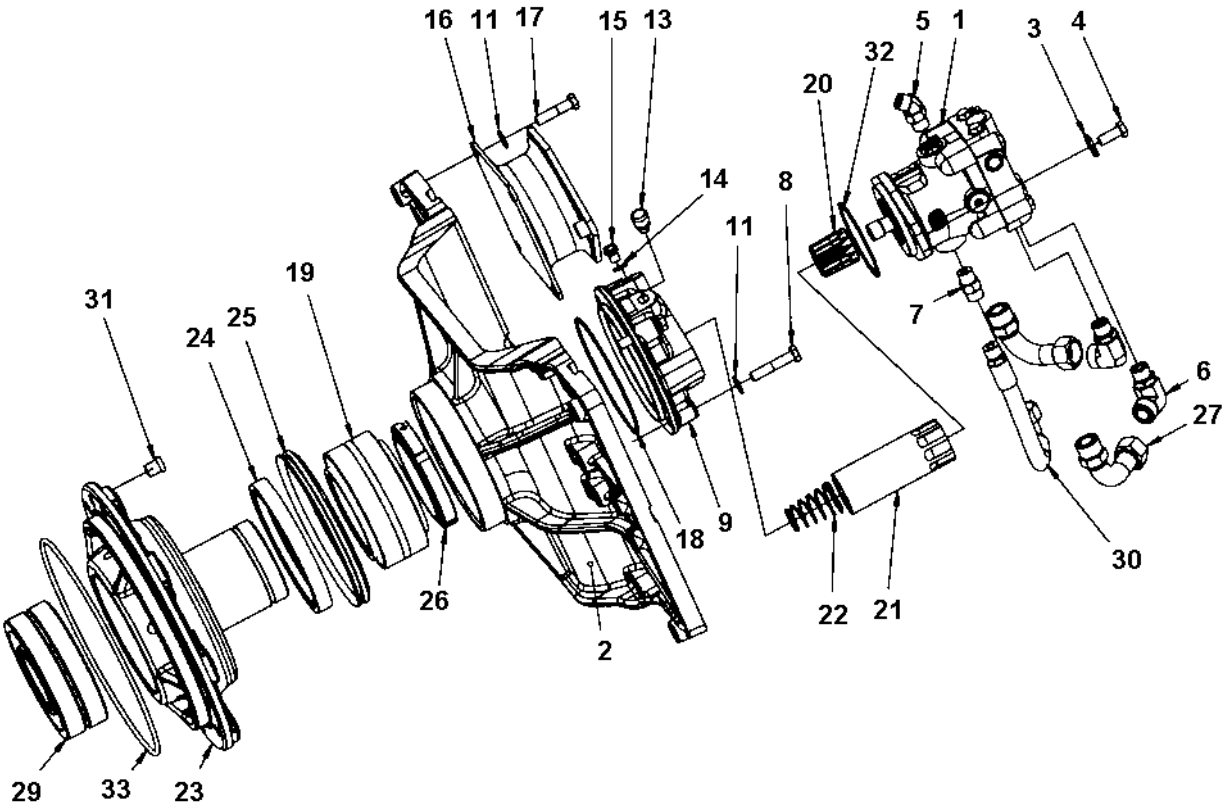

Item	Part No.	Name	Qty	L	SN INFO
1	4700395915	Hydraulic motor Vibration	1		
2	4700392364	Holder plate	1		
3	4700904213	Steel Plain Washer	2		
4	4700500046	Hex. head screw M12x030H	2		
5	4700791796	Elbow 45, O-ring with swivel	1	1	
6	4700792746	Connector elbow 90 orfs	2		
7	4700791799	Straight connector orfs	1	2	
8	4700500049	Screw, M12x60 mm 8.8 A3K	4		
9	4700390160	Motor adapter	1		
11	4700904231	Washer, 13x24x2 mm 300 HV	20		
13	4700926736	Breather	1		
14	4700162027	Sealing	1		
15	4700903726	Steel plug threaded	1		
16	4700394251	Shock absorber	4		
17	4812110643	Hexagon screw w Tuflok M12x50 8.8 A3K	16		
18	4700160105	O-ring 70	1		
19	4700116041	Taper roller bearing	1		
20	4700340862	Splined sleeve	1		
21	4700381027	Splined sleeve	1		
22	4700349715	Spring	1		
23	4700379650	Drum bearing housing	1		
24	4700386272	Sealing	1		
25	4700929447	V-ring	1		
26	4812112413	Shaft nut	1		
27	4700392748	Connector	2		
29	4700792270	Spherical roller bearing	1		
30	4700484271	Hydraulic hose	1	2	
31	4700900775	Plug	3		
32	4700160279	O-ring 70	1		
33	4700160344	O-ring 70	1		

Comments for Page: Vibrating unit Sauer

(L)OCAL REMARKS

1 | en_US | For use of upper leak port.

2 | en_US | For use of lower leak port.

Drum 4700395915 Hydraulic motor Vibration

Item	Part No.	Name	Qty	L	SN INFO
1	4700395915	Hydraulic motor Vibration	1		
2	4700909356	Retaining ring	1		
3	--	Seal carrier	1		
4	4700909354	O-ring	1	A	
5	4700909335	Seal	1	A	
6	--	Retaining ring	1		
7	4700909352	Ball bearing	1		
8	4700909351	Shaft	1		
9	4700939333	Plug, cpl	2		
10	4700923090	O-ring	1	A	
11	4700909358	Housing	1		
12	4700909346	Pin	2		
13	4700909343	Gasket	1	A	
14	4700909336	Thrust plate	1		
15	4700950593	Cylinder block kit	1		
16	---	Piston	9		
17	4700909342	Retainer	1		
18	---	Cylinder block	1		
19	4700909338	Washer	2		
20	4700909339	Spring	1		
21	4700909340	Retaining ring	1		
22	4700909350	Valve plate	1		
23	--	Pin	1		
24	4700909344	Needle roller bearing	1		
25	--	End cap	1		
26	--	Screw	4		
27	4700909243	Plug	1		
28	4700813618	O-ring	1	A	
29	4700480354	Plug and O-ring	2		
30	4700813617	O-ring	1	A	
31	--	Plug, cpl	1		
32	4700910713	O-ring	1	A	
33	--	Spring	1		
34	--	Poppet	1		
35	4812156199	Adapter plug	1		
36	4700923087	O-ring	1	A	
37	---	O-ring	1	A	

Item	Part No.	Name	Qty	L	SN INFO
38	--	Plug, cpl	2		
39	4700923087	O-ring	1	A	
40	--	Spring	1		
41	--	Shuttle spool	1		
42	--	Spring	1		
43	4700950297	Seal kit	1		

Comments for Page: 4700395915 Hydraulic motor Vibration

(L)OCAL REMARKS

A | en_US | Included in seal kit, item 43.

Engine Engine room

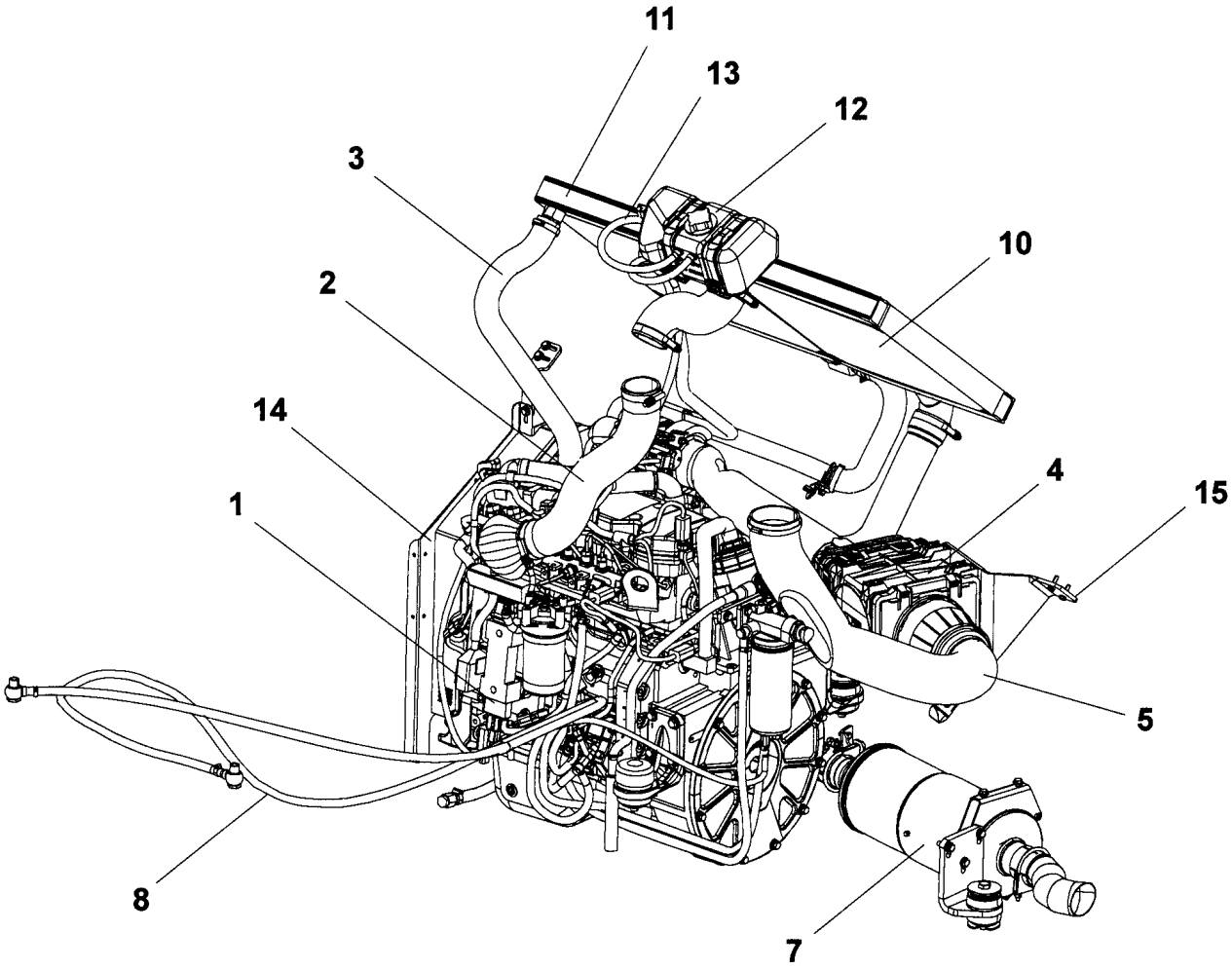

Item	Part No.	Name	Qty	L	SN INFO
1	-	Engine Module	1		
2	-	Air cooler hoses	1		
3	-	Water cooler hoses	1		
4	-	Air cleaner module	1		
5	-	Air cleaner hoses	1		
7	-	Exhaust system module	1		
8	-	Fuel hoses	1		
10	-	Charge air cooler	1		
11	-	Water cooler	1		
12	-	Expansion tank assembly	1		
13	-	Coolant hoses	1		
14	-	Belt guard	1		
15	-	Bracket kit	1		

Engine Engine module

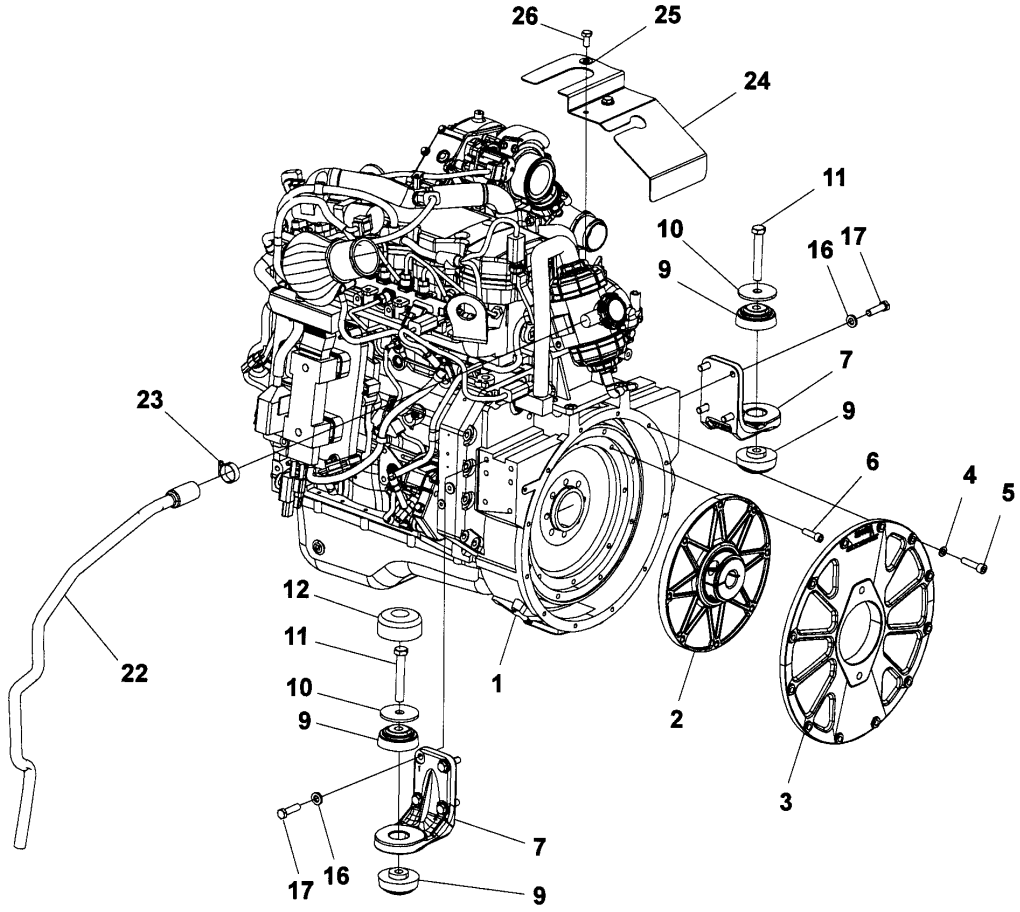

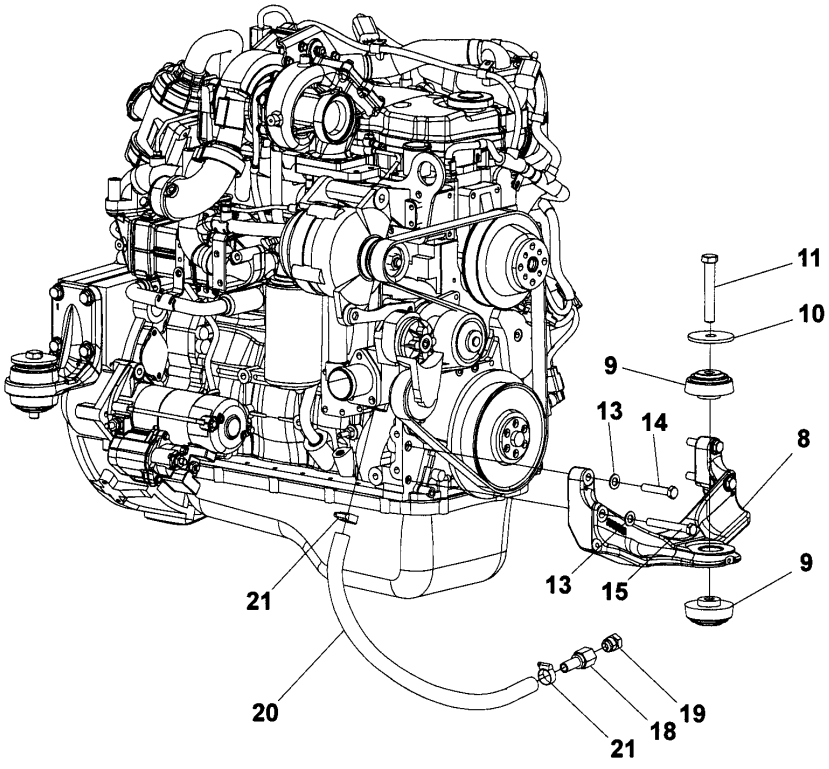

Item	Part No.	Name	Qty	L	SN INFO
1	4812114024	Diesel engine Cummins QSB4.5 IIIB/T4i -119kW	1		
2	4700391358	Coupling	1		
3	4700394169	Pump bracket	1		
4	4700904637	Washer	12		
5	4700508080	Screw	12		
6	4700509025	Screw 3/8-16UNCx32 8,8	8		
7	4700397259	Engine bracket	2		
8	4700393592	Engine bracket	1		
9	4700391165	Shock absorber	6		
10	4700345666	Spacer	3		
11	4700500107	Screw M16x100 8.8	3		
12	4700397539	Protector	1		
13	4700904231	Washer, 13x24x2 mm 300 HV	4		
14	4700500049	Screw, M12x60 mm 8.8 A3K	2		
15	4700500197	Hex. screw	2		
16	4700904703	Plain washer 13x24x4 mm	8		
17	4700500056	Screw, M12x45 mm 8.8 A3K	8		
18	4700792502	Hose connection	1		
19	4700232231	Plug	1		
20	4700205112	Coolant hose	1XL	A	
21	4700313004	Hose clamp 19-29mm	2		
22	4812118506	Oil drain hose	1		
23	4700313035	Clamp	1		
24	4812118545	Heat protection	1		
25	4700904230	Plain washer 10.5x22x2 mm	2	1	
25	4700904557	Washer, 10.5x22x4 mm 300 HV	2	2	
26	4700500043	Screw M10x16	4		

Comments for Page: Engine module

(L)OCAL REMARKS

A | en_US | L = 0.8m

1 | en_US | Upper mounted screws.

2 | en_US | Lower mounted screws.

Engine 4812114024 Diesel engine Cummins QSB4.5 IIIB/T4i -119kW

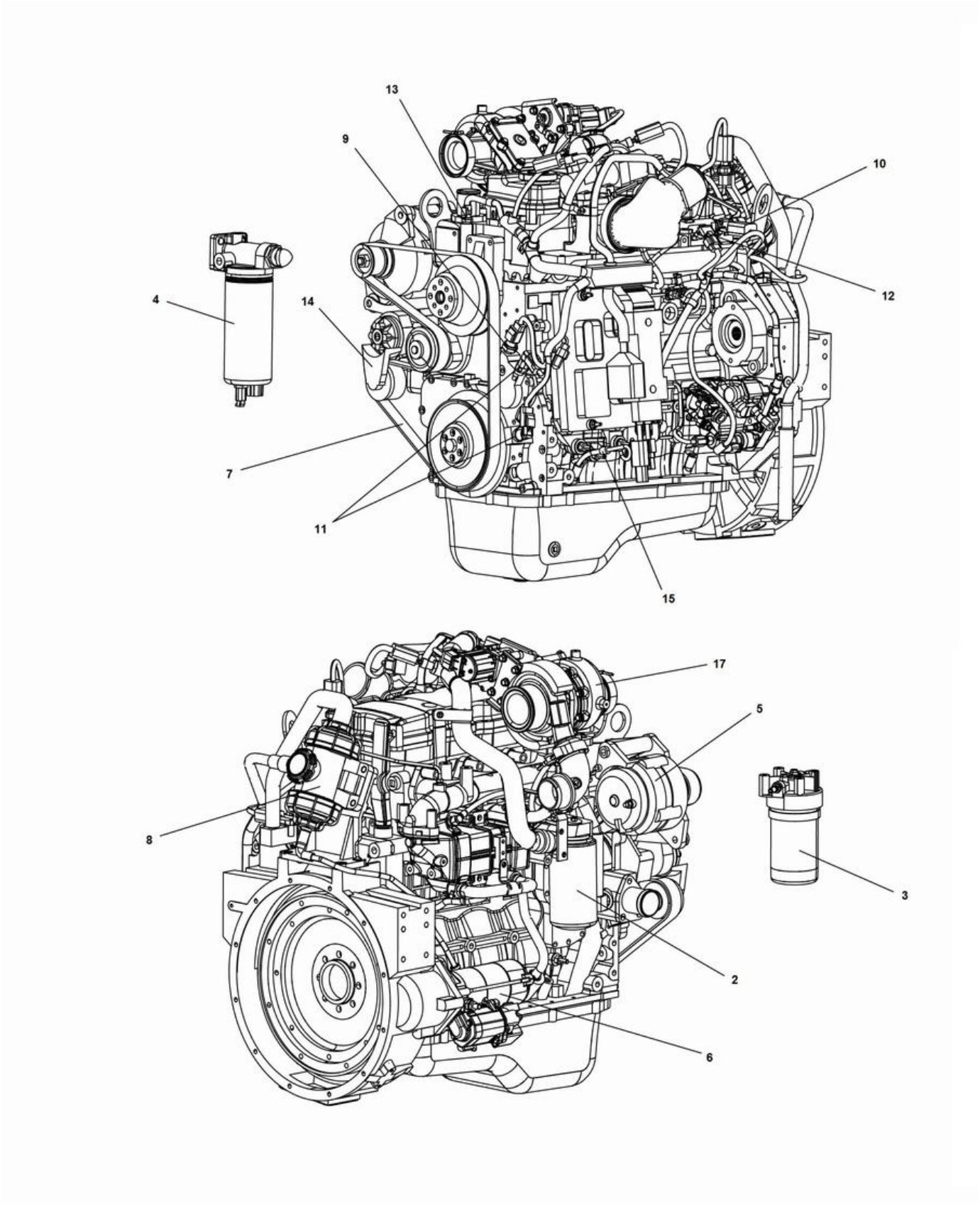

Item	Part No.	Name	Qty	L	SN INFO
1	4812114024	Diesel engine Cummins QSB4.5 IIIB/T4i -119kW	1		
2	4700939082	Oil filter	1		
3	4812158187	Fuel filter	1		
4	4812041531	Fuel prefilter	1		
5	4812040815	Alternator	1		
6	4812159499	Starter motor	1		
7	4812034895	Flat belt	1	A	
7	-	Belt, AC	1		
8	4812158465	Crankcase ventilation filter	1		
9	4700940533	Oil pressure sensor	1		
10	4700950140	Sensor, pressure	1		
11	4812158064	Sensor, position	2		
12	4812158065	Sensor, prs temperature	1		
13	4700945887	Sensor water temperature	1		
14	4700945774	Belt tensioner	1		
15	4700945770	Oil dipstick	1		
16	4812159164	Injector	4		
17	-	Turbo charger, cpl	1		

Comments for Page: 4812114024 Diesel engine Cummins QSB4.5 IIIB/T4i -119kW

(L)OCAL REMARKS

A | en_US | Standard belt, for machines equipped with Air Condition see sections for Air conditioning in Optional equipment.

Engine Air cooler hoses

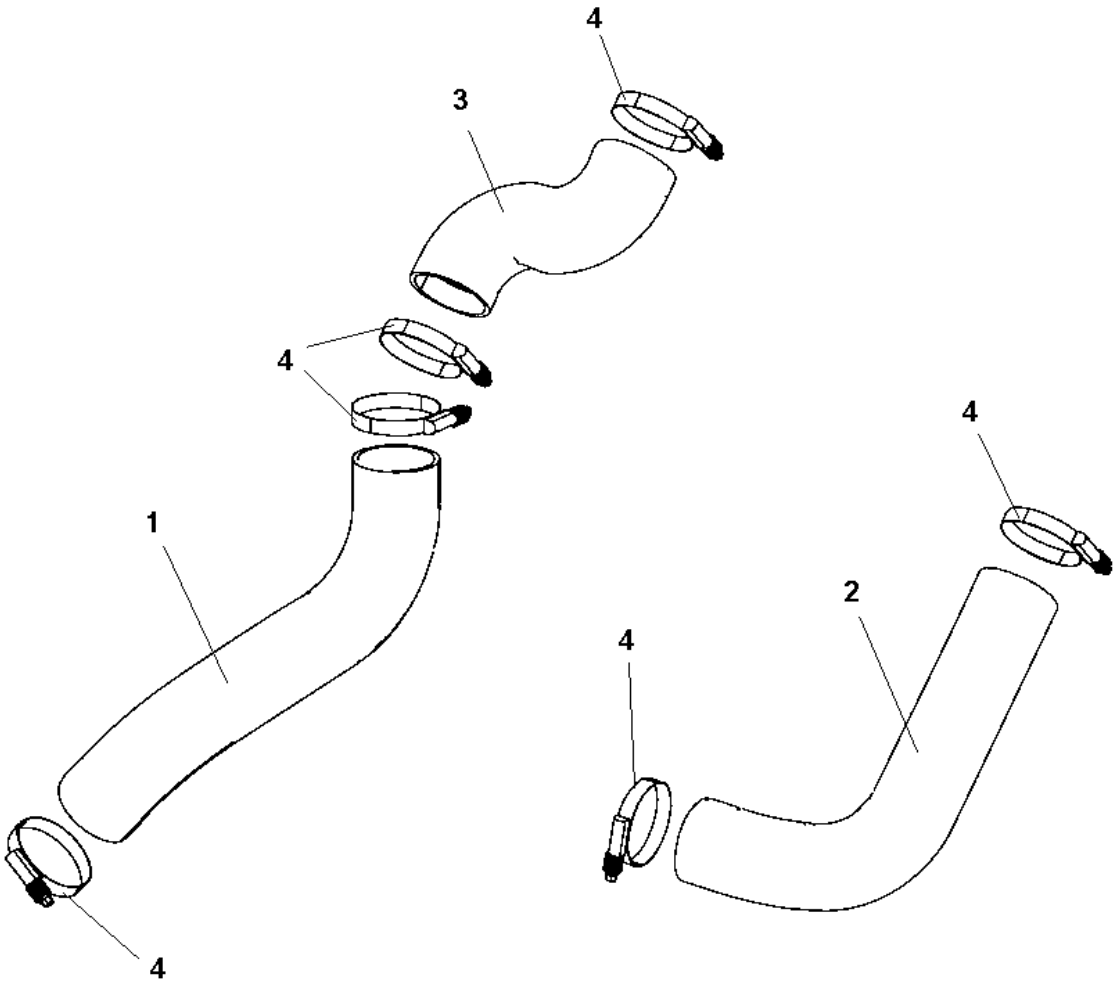

Item	Part No.	Name	Qty	L	SN INFO
1	4812114333	Charge air hose	1		
2	4812114334	Charge air hose	1		
3	4700391263	Charge air hose	1		
4	4700386966	Hose clamp 2.3/4"-3.5/8"	6		

Engine Water cooler hoses

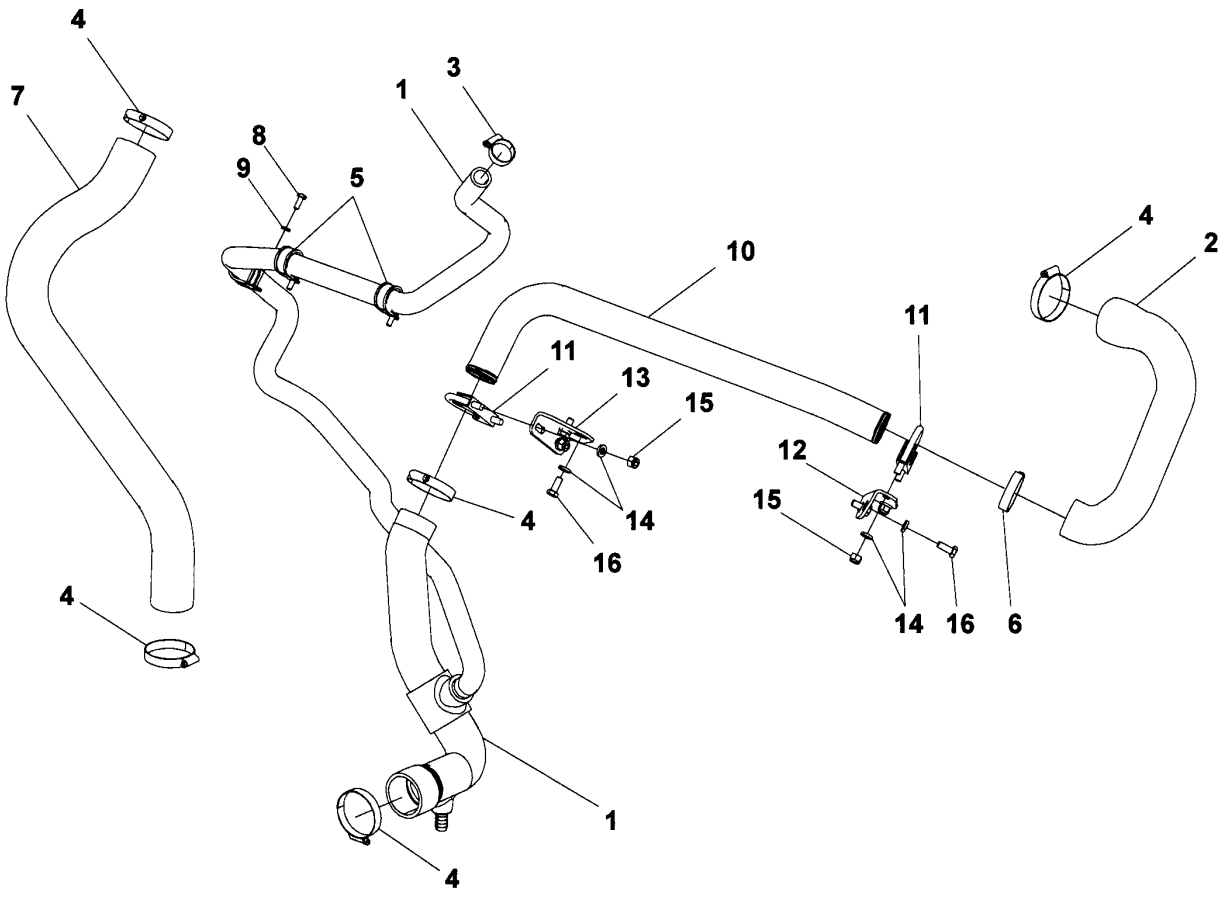

Item	Part No.	Name	Qty	L	SN INFO
1	4812118002	Cooler hose	1		
2	4812118388	Cooler hose	1		
3	4700313004	Hose clamp 19-29mm	1		
4	4700313010	Hose clamp	5		
5	4700921084	Pipe clamp	3		
6	4700313008	Hose clamp	1		
7	4700390024	Coolant hose	1		
8	4700500013	Screw, M6x16 mm 8.8 A2K	3		
9	4700904228	Washer 6,4x12x1,5	3		
10	4812114068	Pipe	1		
11	4700313121	Clamp	2		
12	4812114069	Bracket	1		
13	4812114070	Bracket	1		
14	4700904556	Steel plain washer 8,4x16x3,0	8		
15	4700586003	Lock nut M8	4		
16	4700500053	Screw, M8x20 mm 8.8 A2K	4		

Engine Air cleaner module

Item	Part No.	Name	Qty	L	SN INFO
1	4812116779	Air cleaner, cpl	1		
1	4812159185	Air filter element	1		
1	4812158191	Safety filter element	1		
2	4700904575	Indicator	1		
3	4700791642	Decal "WARNING" Use of starting fluid prohib.	1		
4	4700500502	Hexagon screw with flange M6 -25	4		

Engine Air cleaner hoses

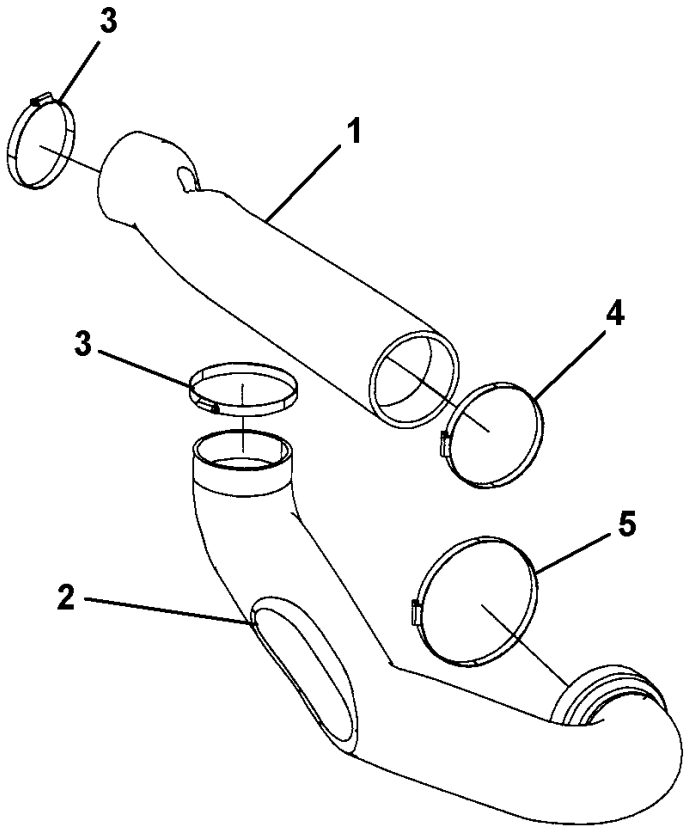

Item	Part No.	Name	Qty	L	SN INFO
1	4812118340	Air intake hose	1		
2	4812118341	Air intake hose	1		
3	4700378712	Clamp	2		
4	4700389600	Hose clamp	1		
5	4700379214	Clamp	1		

Engine Exhaust system module

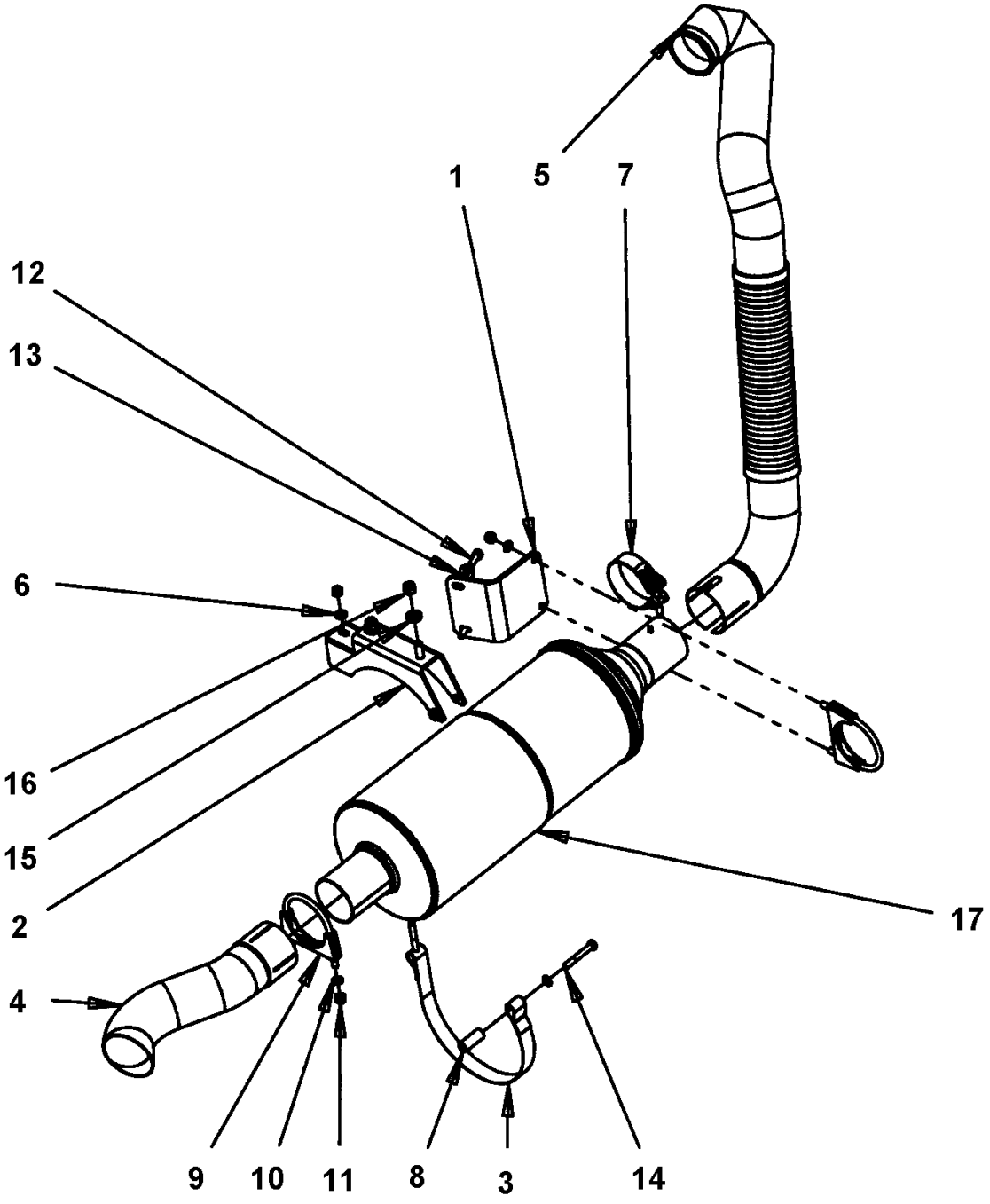

Item	Part No.	Name	Qty	L	SN INFO
1	4812118400	Bracket	1		
2	4812114031	Bracket	1		
3	4812118336	Clamp	1		
4	4812114033	Exhaust pipe	1		
5	4812114034	Exhaust pipe	1		
6	4700904556	Steel plain washer 8,4x16x3,0	1		
7	4812113999	Clamp	1		
8	4700387677	Spacer sleeve	1		
9	4700313094	Pipe clamp	2		
10	4700904229	Washer, 8.4x 6x1.5 mm 300HV	5		
11	4700586003	Lock nut M8	5		
12	4700500021	Screw, M8x25 mm 8.8 A2K	2		
13	4700904640	Washer, 8.4x22x3 mm 300HV	2		
14	4700500026	Screw M8-1,25x60 mm 8.8	1		
15	4700904557	Washer, 10.5x22x4 mm 300 HV	2		
16	4700586018	Lock nut M10	2		
17	4812116778	Catalytic converter	1		

Engine Fuel hoses

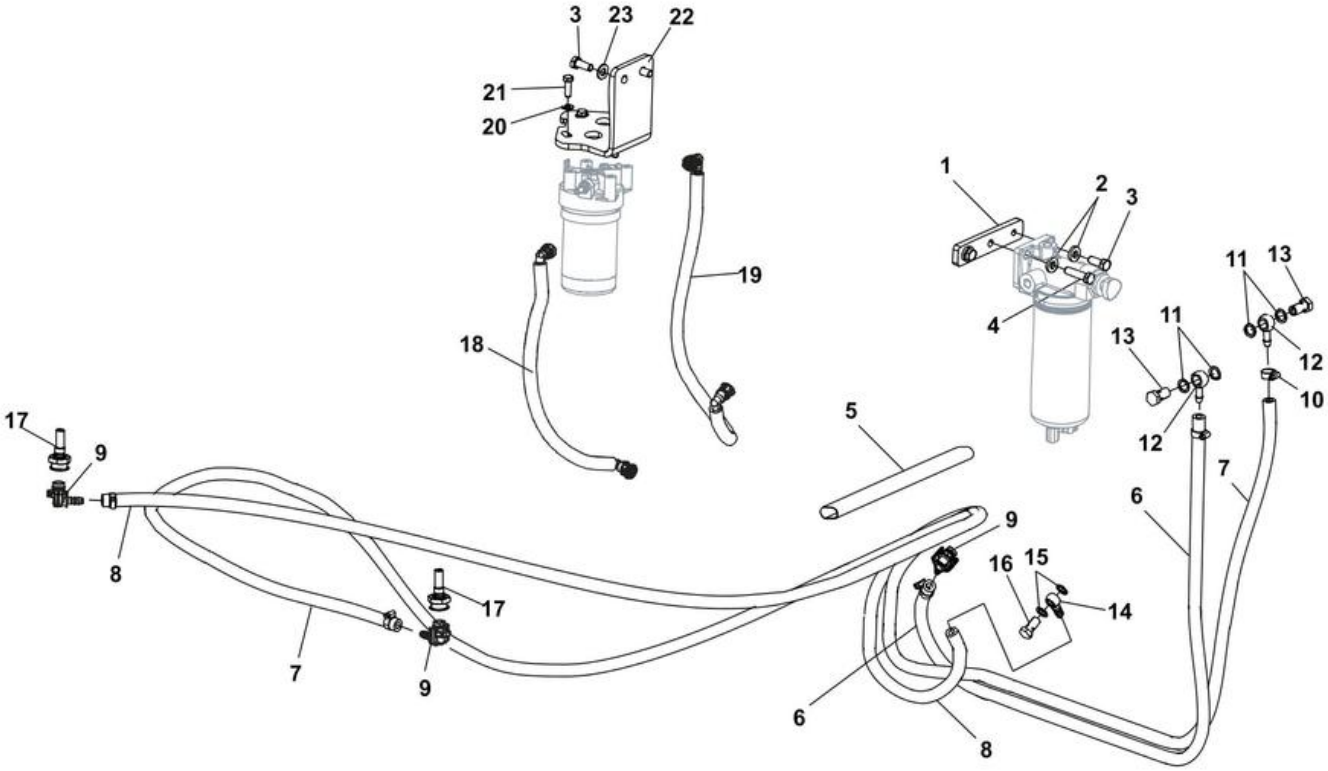

Item	Part No.	Name	Qty	L	SN INFO
1	4812113161	Bracket	1		
2	4700904557	Washer, 10.5x22x4 mm 300 HV	3		
3	4700500028	Screw, M10 x 25 mm 8.8 A3K	4		
4	4700500031	Screw M10x40	1		
5	4700792695	Hose guard	1		
6	4700904985	Fuel hose, fire-resistant	1XL	A	
7	4700904985	Fuel hose, fire-resistant	1XL	B	
8	4700904985	Fuel hose, fire-resistant	1XL	C	
9	4700792547	Quick connect coupling	3		
10	4700313002	Hose clamp	5		
11	4700747282	Copper washer	4		
12	4700330170	Banjo coupling	2		
13	4700330171	Hollow screw, M14	2		
14	4700792808	Banjo coupling	1		
15	4700230277	Copper washer 12,2x17,9x1,5	2		
16	4700234919	Screw M12-1,5-24-3	1		
17	4812119095	Quick coupling	2		
18	4812121213	Fuel hose	1XL	D	
19	4812121212	Fuel hose	1XL	E	
20	4700904229	Washer, 8.4x 6x1.5 mm 300HV	4		
21	4700500021	Screw, M8x25 mm 8.8 A2K	4		
22	4812118422	Bracket	1		
23	4700904230	Plain washer 10.5x22x2 mm	2		

Comments for Page: Fuel hoses

(L)OCAL REMARKS

A | en_US | L= 1.29 m

B | en_US | L= 3.72 m

C | en_US | L= 2.38 m

D | en_US | L= 0.34 m

E | en_US | L= 0.44 m

Engine Charge air cooler

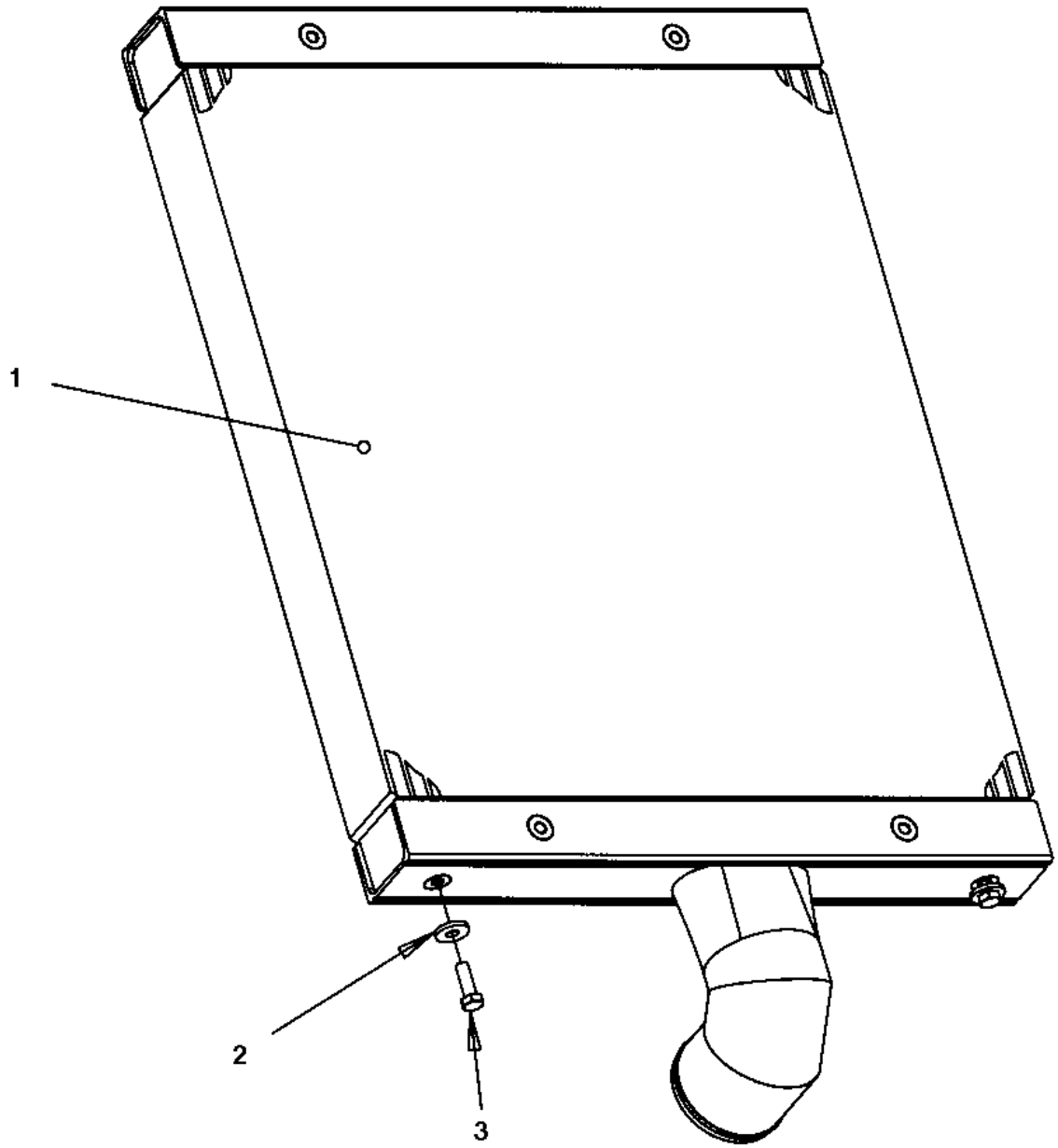

Item	Part No.	Name	Qty	L	SN INFO
1	4812123421	Charge air cooler	1		
2	4700904640	Washer, 8.4x22x3 mm 300HV	2		
3	4700500021	Screw, M8x25 mm 8.8 A2K	2		

Engine Water cooler

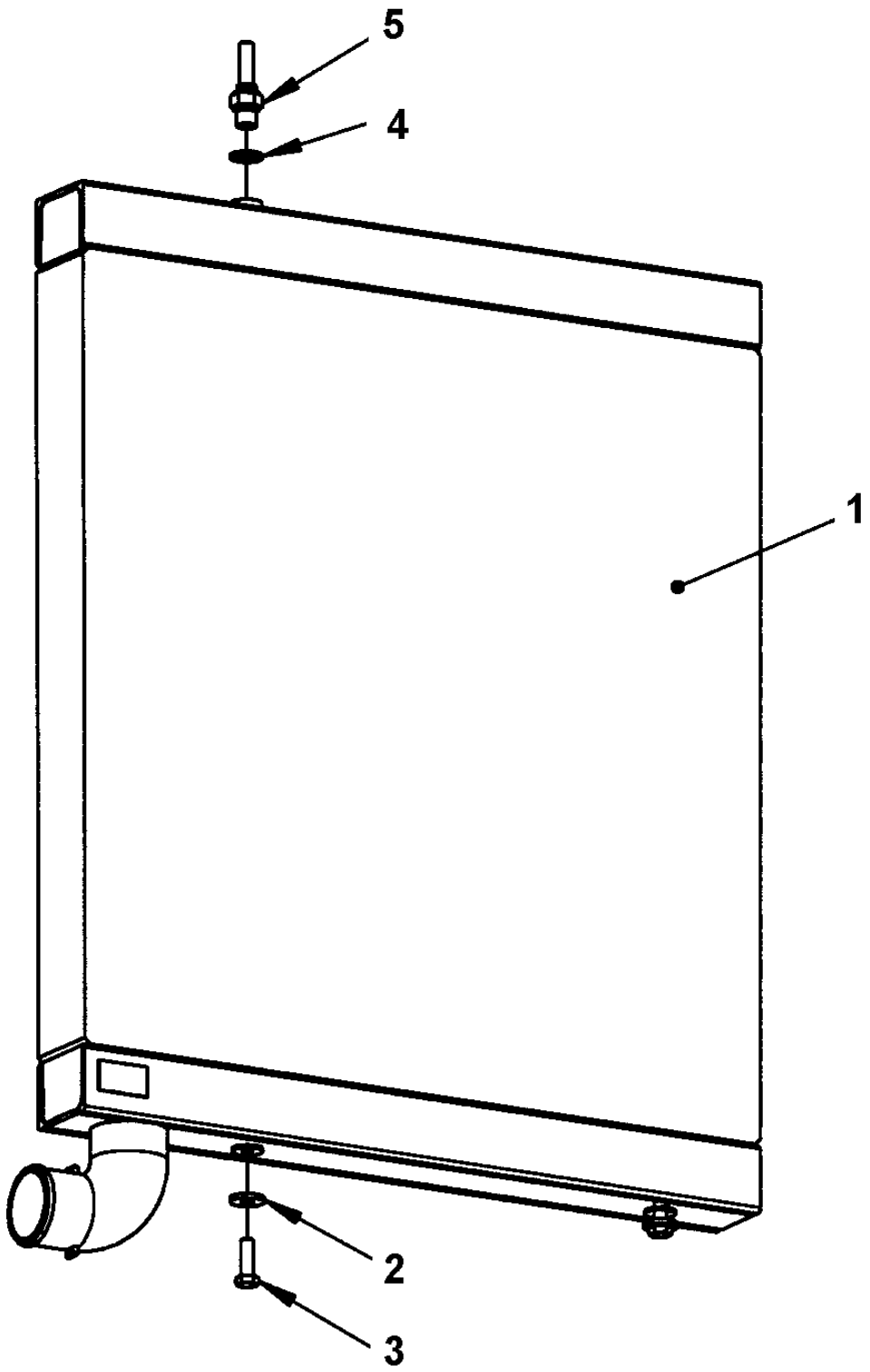

Item	Part No.	Name	Qty	L	SN INFO
1	4812123419	Water cooler	1		
2	4700904640	Washer, 8.4x22x3 mm 300HV	2		
3	4700500021	Screw, M8x25 mm 8.8 A2K	2		
4	4700162004	Sealing	1		
5	4700792322	Hose connection	1		

Engine Expansion tank assembly

Item	Part No.	Name	Qty	L	SN INFO
1	4812118392	Expansion tank, cpl	1		
2	4700393235	Strap	2		
3	4700394229	Rubber strip	2		
4	4700903714	Cooler cap	1		
5	4812114098	Level sensor	1		

Engine Coolant hoses

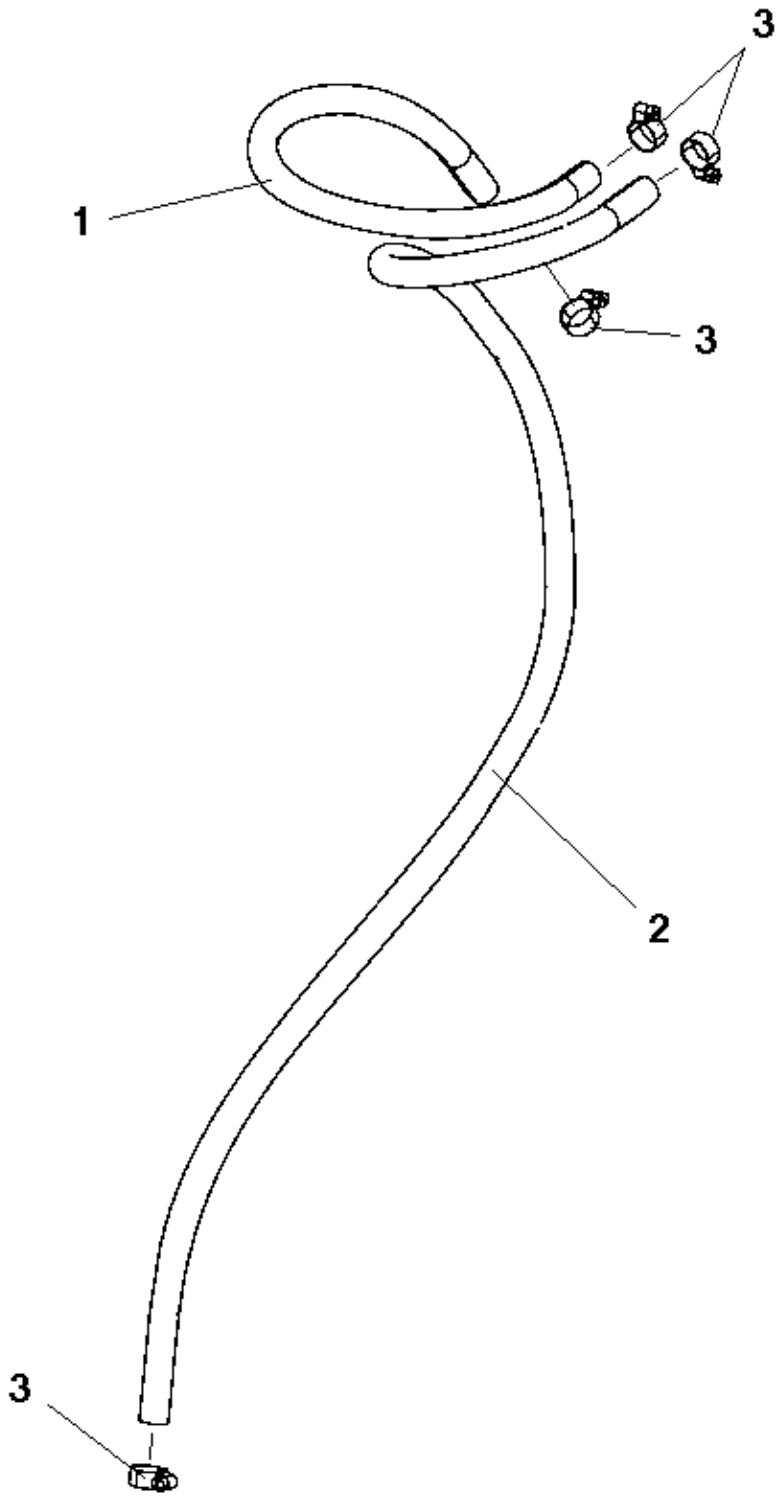

Item	Part No.	Name	Qty	L	SN INFO
1	4700246069	Rubber hose	1XL	A	
2	4700246069	Rubber hose	1XL	B	
3	4700313001	Hose clamp	4		

Comments for Page: Coolant hoses

(L)OCAL REMARKS

A | en_US | L= 0.54m

B | en_US | L= 1.28m

Engine Belt guard

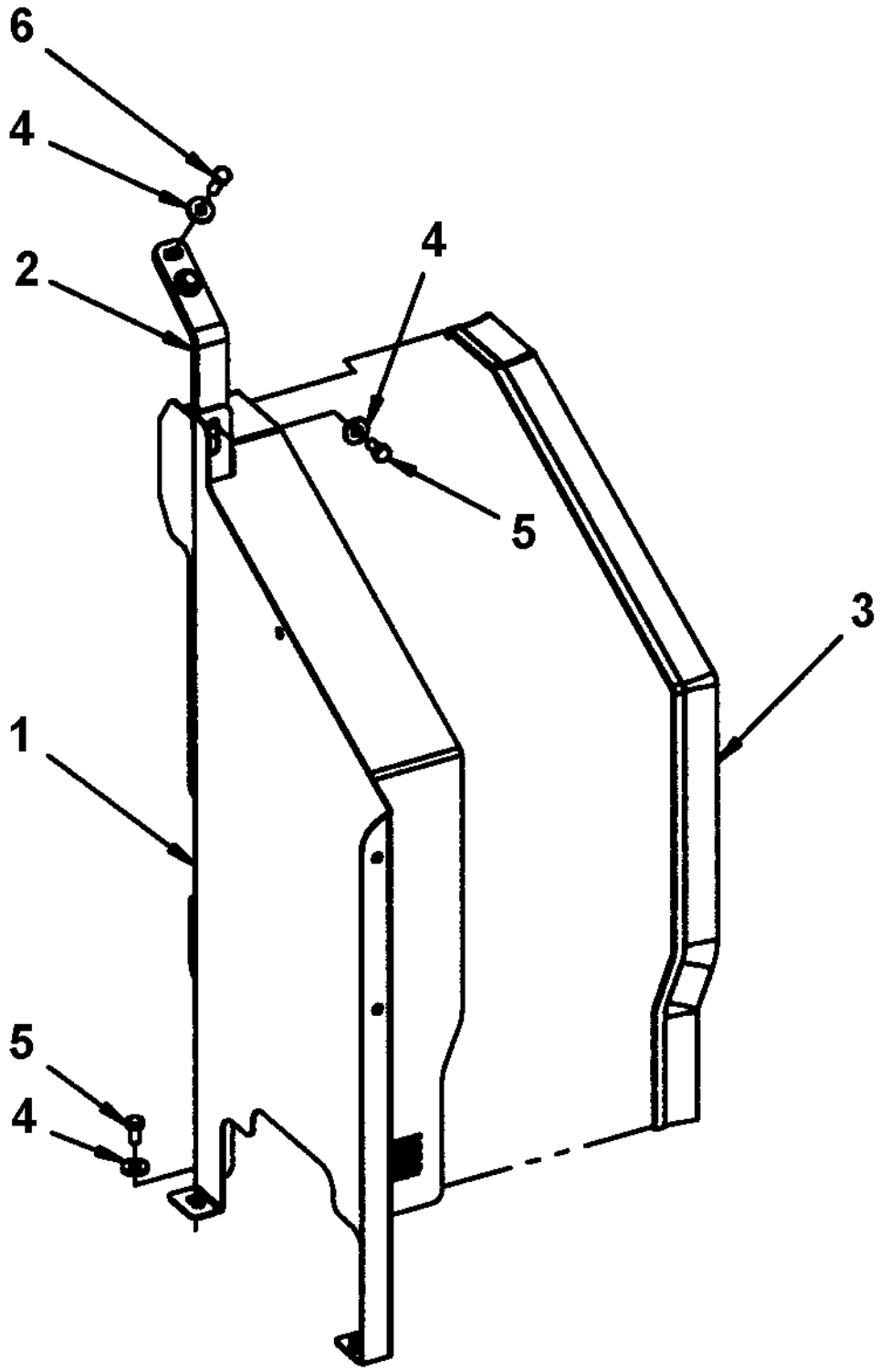

Item	Part No.	Name	Qty	L	SN INFO
1	4700391769	Belt guard	1		
2	4700391768	Bracket	1		
3	4700792258	Edge trim	1XL	A	
4	4700904640	Washer, 8.4x22x3 mm 300HV	5		
5	4700500019	Hexagon screw	3		
6	4700500021	Screw, M8x25 mm 8.8 A2K	2		

Comments for Page: Belt guard

(L)OCAL REMARKS

A | en_US | L = 0.86m

Engine Bracket kit

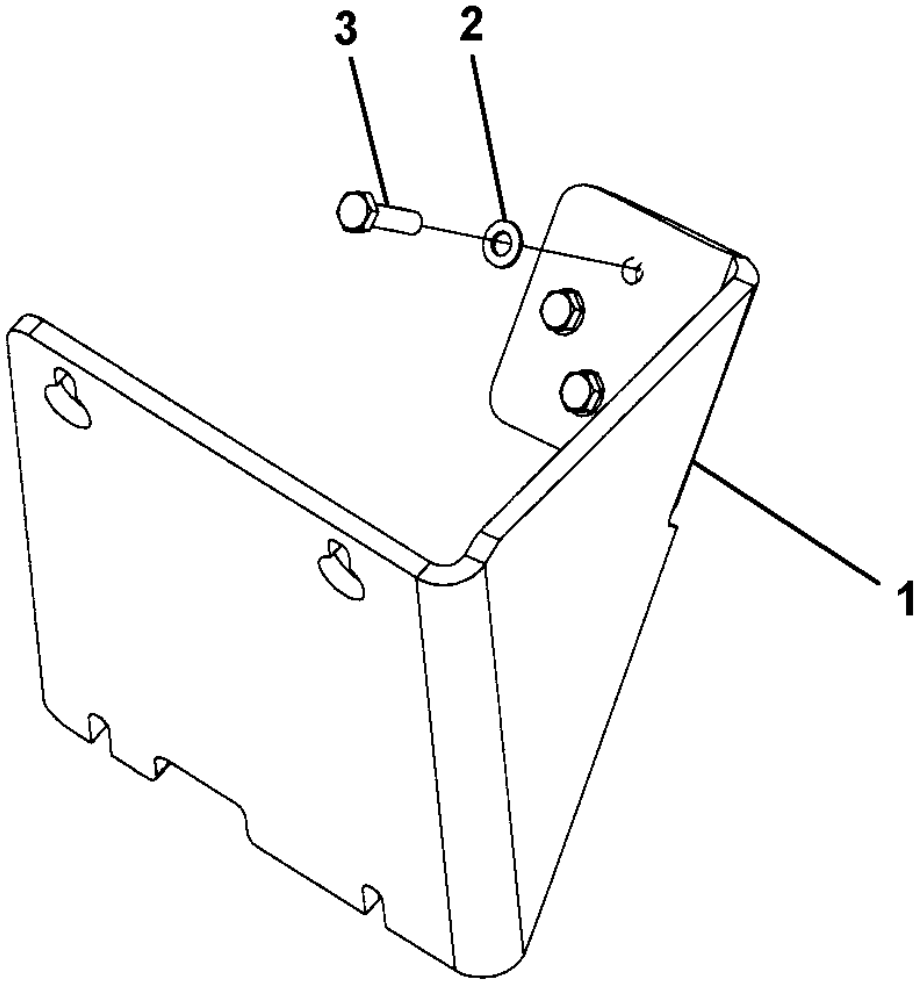

Item	Part No.	Name	Qty	L	SN INFO
1	4812118342	Bracket	1		
2	4700904229	Washer, 8.4x 6x1.5 mm 300HV	3		
3	4700500022	Screw	3		

Hydraulic system, front drum Hydraulic system, front drum

Item	Part No.	Name	Qty	L	SN INFO
1	4700483928	Hydraulic hose	1		
2	4700484097	Hydraulic hose	1		
3	4700484098	Hydraulic hose	1		
4	4700484099	Hydraulic hose	1		
5	4700484100	Hydraulic hose	1		
6	4700484101	Hydraulic hose	1		
7	4700484102	Hydraulic hose	1		
20	-	Drive unit			To A014206
20	-	Drive unit			From A014207
21	-	Vibrating unit Sauer			
22	-	Hydraulic hoses, frame			

Hydraulic system, rear drum std Hydraulic system, rear drum std

Item	Part No.	Name	Qty	L	SN INFO
1	4700484238	Hydraulic hose	1		
2	4700484237	Hydraulic hose	1		
3	4700484239	Hydraulic hose	1		
4	4700484085	Hydraulic hose	1		
5	4700484240	Hydraulic hose	1		
6	4700483486	Hydraulic hose	1		
7	4700484241	Hydraulic hose	1		
8	4700903082	Hose shield	N		
12	4700904629	Stud	4		
13	4700349210	Rubber plate	2		
14	4700343872	Hose clamp	3		
15	4700343732	Hose clamp	1		
16	4700335914	Cover plate	2		
17	4700570103	Nut, M10 x 1.5 mm GEOMET®	4		
20	-	Drive unit			To A014206 incl. A014212
20	-	Drive unit			From A014207 excl. A014212
21	-	Vibrating unit Sauer			
22	-	Hydraulic hoses, frame			
23	-	Hydraulic pump			

Hydraulic system, rear drum offset Hydraulic system, rear drum offset

Item	Part No.	Name	Qty	L	SN INFO
1	4700484046	Hydraulic hose	1		
2	4700484047	Hydraulic hose	1		
3	4700484048	Hydraulic hose	1		
4	4700484049	Hydraulic hose	1		
5	4700484050	Hydraulic hose	1		
6	4700484051	Hydraulic hose	1		
7	4700484052	Hydraulic hose	1		
8	4700484053	Hydraulic hose	1		
9	4700903082	Hose shield	0		
10	4700484068	Hydraulic hose	1		
11	4700484069	Hydraulic hose	1		
12	4700484070	Hydraulic hose	1		
13	4700484071	Hydraulic hose	1		
14	4700484074	Hydraulic hose	1		
15	4700483776	Hydraulic hose	1		
16	4700483776	Hydraulic hose	1		
17	-	Connection block	1		
18	-	Drive unit	1		To A014206
18	-	Drive unit	1		From A014207
19	-	Vibrating unit Sauer	1		
20	4700391024	Steering cylinder	1		
21	-	Hydraulic valve module, offset/combi	1		
22	4700891374	O-ring	4		
23	-	Hydraulic pump	1		
24	-	Hydraulic hoses, frame	1		

Hydraulic system, rear drum offset Hydraulic valve module, offset/combi

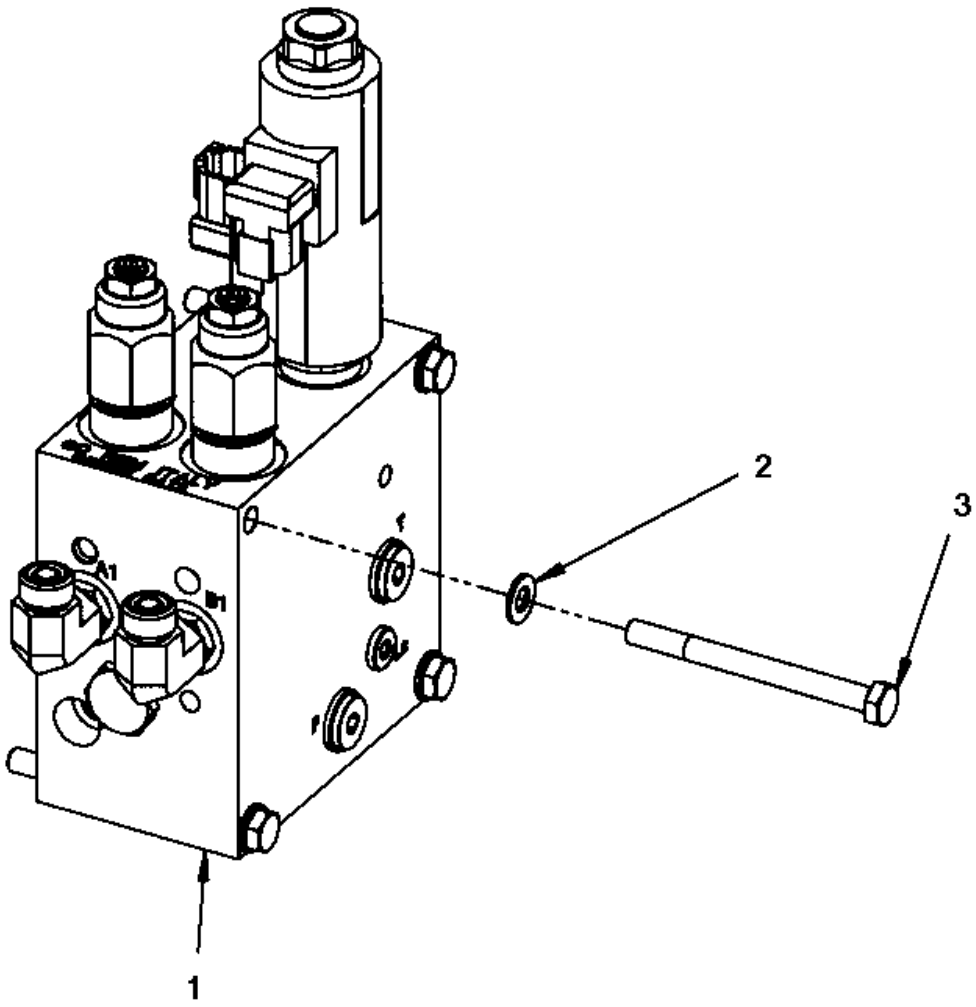

Item	Part No.	Name	Qty	L	SN INFO
1	-	Hydraulic valve	1		
2	4700904229	Washer, 8.4x 6x1.5 mm 300HV	4		
3	4700500115	Screw	4		

Hydraulic system, rear drum offset Hydraulic valve

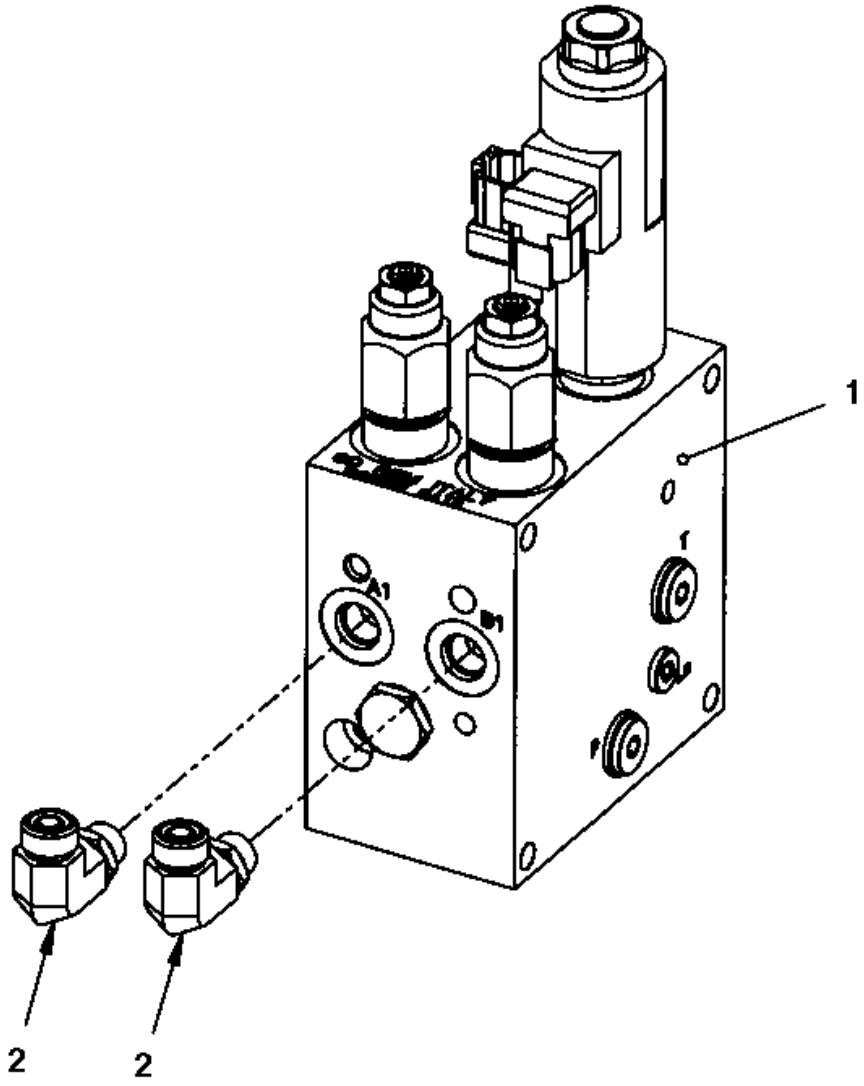

Item	Part No.	Name	Qty	L	SN INFO
1	4700391017	Hydraulic valve	1		
2	4700791846	Adapter	2		

Hydraulic system, rear drum offset 4700391017 Hydraulic valve

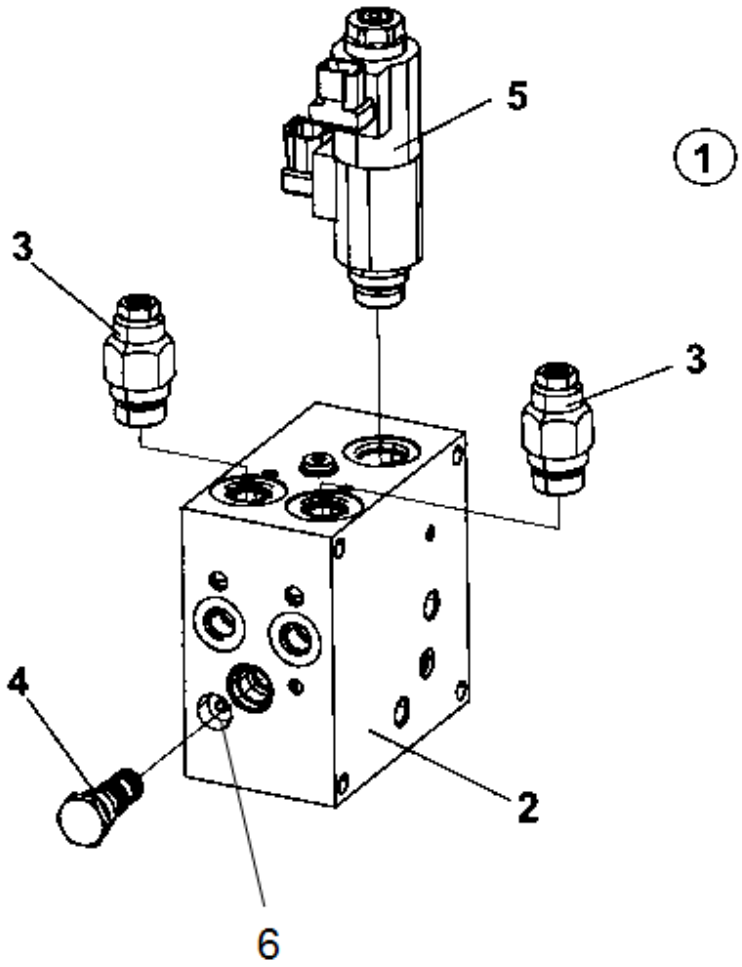

Item	Part No.	Name	Qty	L	SN INFO
1	4700391017	Hydraulic valve	1		
2	-	Valve block	1		
3	4812155790	Pressure relief valve	2		
4	4700940572	Shuttle valve	1		
5	4812156159	Proportional valve	1		
6	4812160775	Check valve	1		

Hydraulic hoses, frame Hydraulic hoses, frame

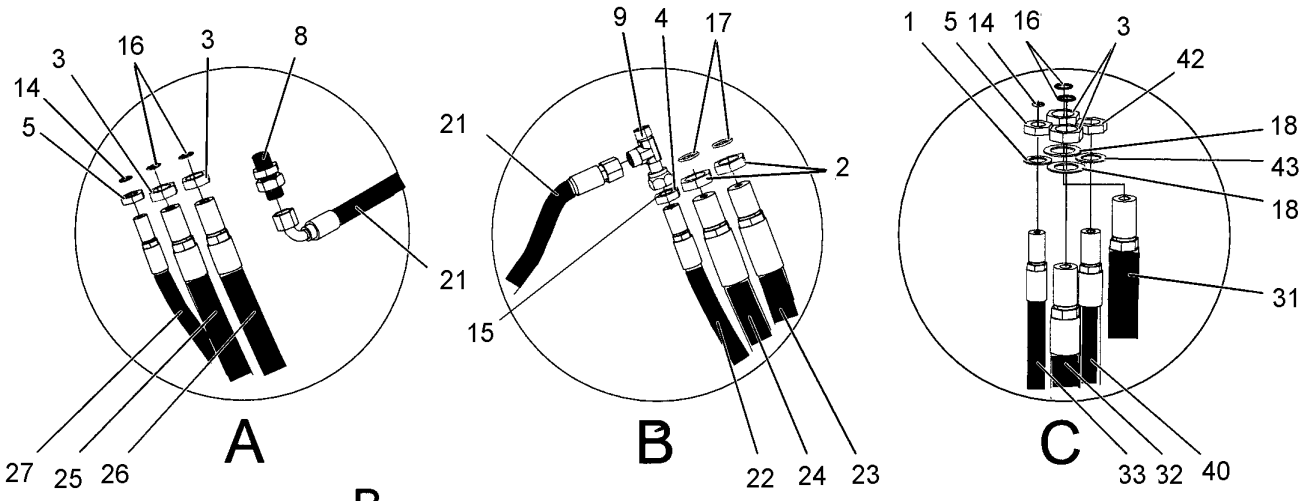

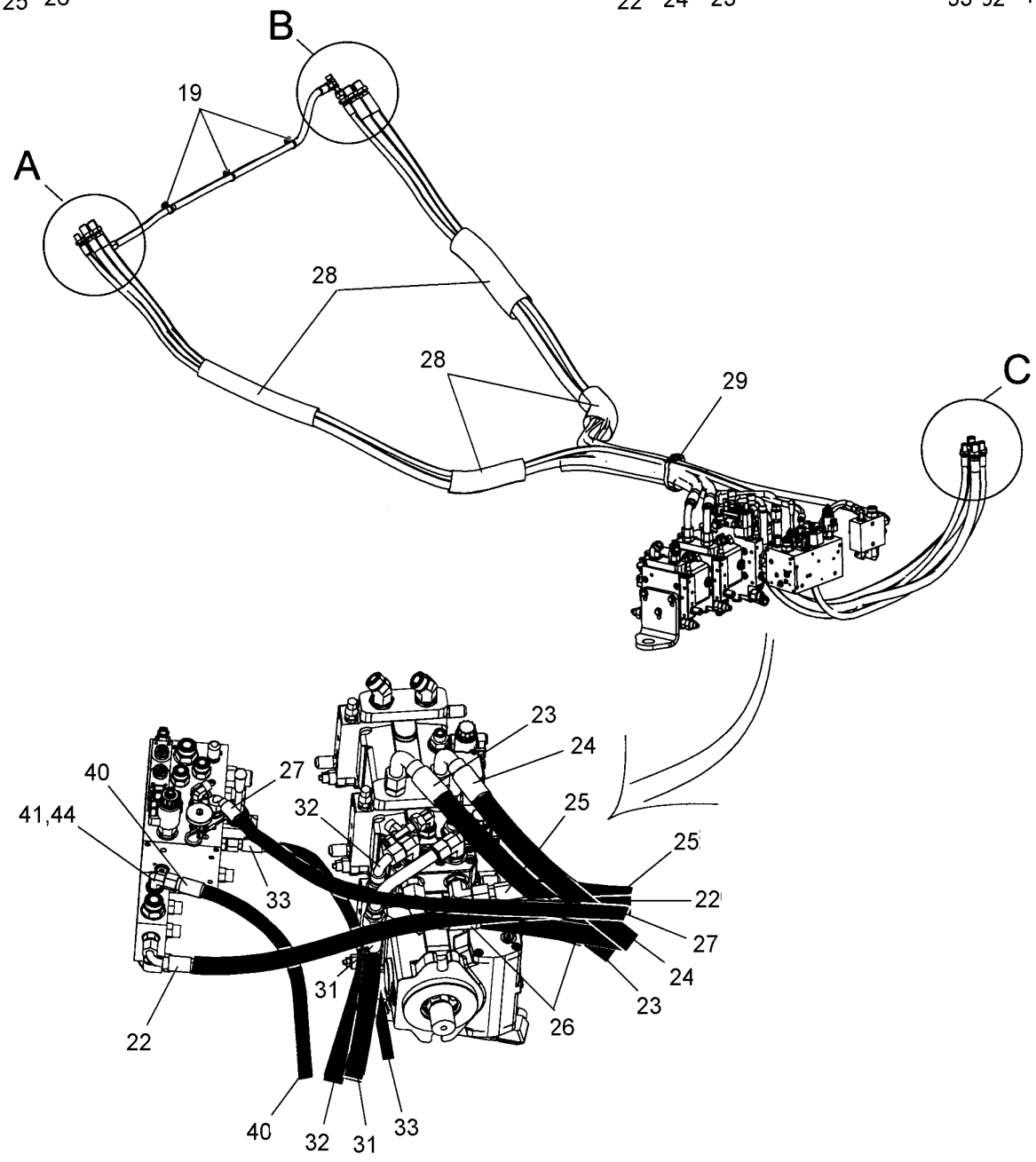

Item	Part No.	Name	Qty	L	SN INFO
1	4700606009	Lock washer	1		
2	4700792454	Nut	2		
3	4700792453	Nut	4		
4	4700792452	Nut	1		
5	4700792451	Nut	2		
8	4700792344	Bulkhead union	1	A	
9	4700791798	Adapter	1	A	
14	4700792632	O-ring	2		
15	4700904008	O-ring	1		
16	4700904009	O-ring	4		
17	4700904010	O-ring	2		
18	4700792720	Serrated lock washer	2		
19	4700792442	Cable tie	3		
21	4700484014	Hydraulic hose	1		
22	4700484015	Hydraulic hose	1	A, C	
23	4700484016	Hydraulic hose	1	A, D	
24	4700484017	Hydraulic hose	1	A, D	
25	4700484018	Hydraulic hose	1	A, E	
26	4700484019	Hydraulic hose	1	A, E	
27	4700484020	Hydraulic hose	1	A, F	
28	4700792700	Hose guard	4		
29	4812110293	Strap	1		
31	4700484021	Hydraulic hose	1	B,G	
32	4700484022	Hydraulic hose	1	B,G	
33	4700484023	Hydraulic hose	1	B,G	
40	4700484045	Hydraulic hose	1	2	
41	4700791841	Elbow 90 orfs	1	2	
42	4700792452	Nut	1	2	
43	4700606021	Serrated lock washer	1	2	
44	4700792512	Steel plug threaded	1	1	

Comments for Page: Hydraulic hoses, frame

(L)OCAL REMARKS

A | en_US | Front

B | en_US | Rear

C | en_US | Vibration motor to valve

D | en_US | Vibration motor to pump

E | en_US | Propulsion motor to pump

F | en_US | Propulsion motor to valve

G | en_US | Propulsion

1 | en_US | Used on machine with offset drum or combi rear.

2 | en_US | Not used on a machine with offset drum or combi rear.

This page intentionally left blank

Hydraulic hoses, engine room Hydraulic hoses, engine room

Item	Part No.	Name	Qty	L	SN INFO
1	-	Fan module	2		
2	4700791397	Elbow 90, O-ring	1		
3	4700484243	Hydraulic hose	1		
4	4700792340	Tee-connector orfs	1		
5	4700484032	Hydraulic hose	1		
6	4812115966	Hydraulic hose	1		
7	4812115967	Hydraulic hose	1		
8	4700484153	Hydraulic hose	1		
10	-	Hydraulic pump module	1		
11	4700792533	Hydraulic hose	1		
12	4812114312	Clamp	2		
13	4812118397	Hydraulic hose	1		
14	4700904584	Connector elbow 90 ORFS	1		
15	4700395653	Hose guard	2		
17	4700484034	Hydraulic hose	1		
18	-	Oil cooler	1		
19	4700484035	Hydraulic hose	1		
20	4700484038	Hydraulic hose	1		
21	-	Hydraulic valve module	1		
22	4700484039	Hydraulic hose	1		
23	4812112260	Hydraulic oil filter	1		
23	4812112262	Hydraulic oil filter element	1		
23	4812160664	Fiction ring, filter head	1		
23	4700936898	Sensor Red (RW)	1		
24	4700484037	Hydraulic hose	1		
25	4700484036	Hydraulic hose	1		
26	4700484040	Hydraulic hose	1		
27	-	Hydraulic pump module	1		
28	4700484043	Hydraulic hose	1		
29	4700483729	Hydraulic hose	1		
30	4700483726	Hydraulic hose	1		
31	-	Connection block	1		
32	4700484161	Hydraulic hose	1		
33	4700390018	Suction pipe	1		
34	4700904229	Washer, 8.4x 6x1.5 mm 300HV	4		
35	4700508084	Screw	4		
36	4700791698	Connector elbow 90 ORFS	1		

Item	Part No.	Name	Qty	L	SN INFO
37	4700791321	Elbow adapter 90	2		
38	4700792074	Straight connector	2		
39	4700792332	Elbow 90 orfs	2		
40	4700904230	Plain washer 10.5x22x2 mm	4		
41	4700500048	Screw, M10x20 mm 8.8 A3K	4		

Hydraulic hoses, engine room Fan module

Item	Part No.	Name	Qty	L	SN INFO
1	4700390609	Hydraulic motor	1		
1	4700902882	Seal kit	1		
2	4700390608	Fan guard	1		
3	4700390607	Fan	1		
4	4700500022	Screw	2		
6	4700904735	Steel plain washer	1		
7	4700500016	Screw M6x55 8.8 A2K	1		
8	4700904640	Washer, 8.4x22x3 mm 300HV	6		
9	4700500053	Screw, M8x20 mm 8.8 A2K	4		

Hydraulic hoses, engine room Hydraulic pump module

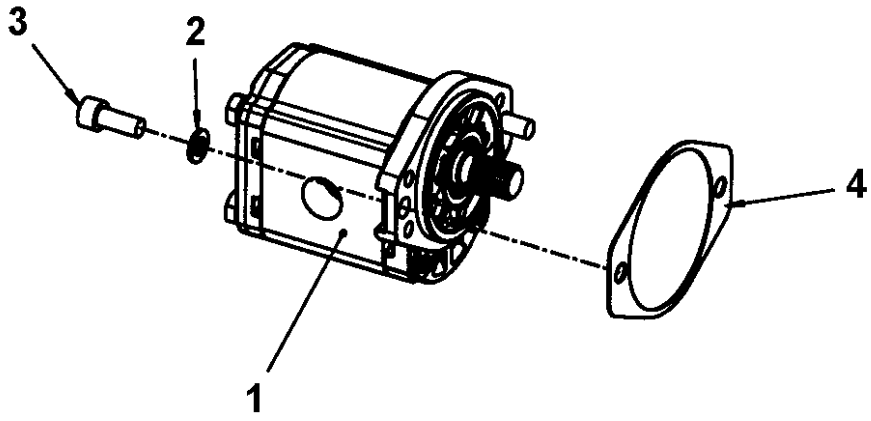

Item	Part No.	Name	Qty	L	SN INFO
1	4812113496	Hydraulic pump, steering	1		
2	4700904637	Washer	2		
3	4700508096	Hexagon socket head cap screw	2		
4	4812115511	Gasket	1		

Hydraulic hoses, engine room Oil cooler

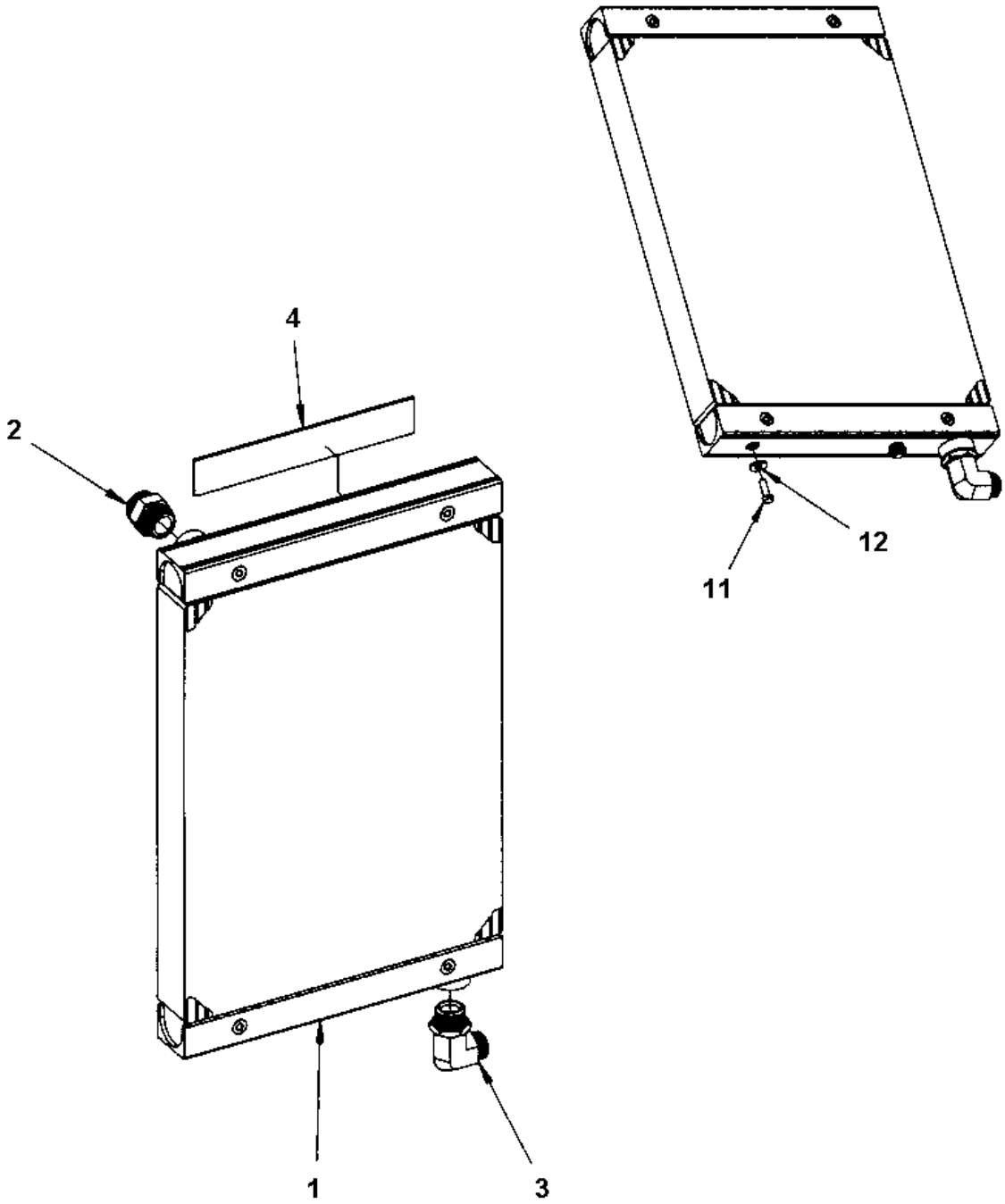

Item	Part No.	Name	Qty	L	SN INFO
1	4812123420	Oil cooler	1		
2	4700792339	Adapter	1		
3	4700791321	Elbow adapter 90	1		
4	4700391297	Rubber cloth	1		
11	4700500021	Screw, M8x25 mm 8.8 A2K	2		
12	4700904640	Washer, 8.4x22x3 mm 300HV	2		

Hydraulic hoses, engine room Hydraulic valve module

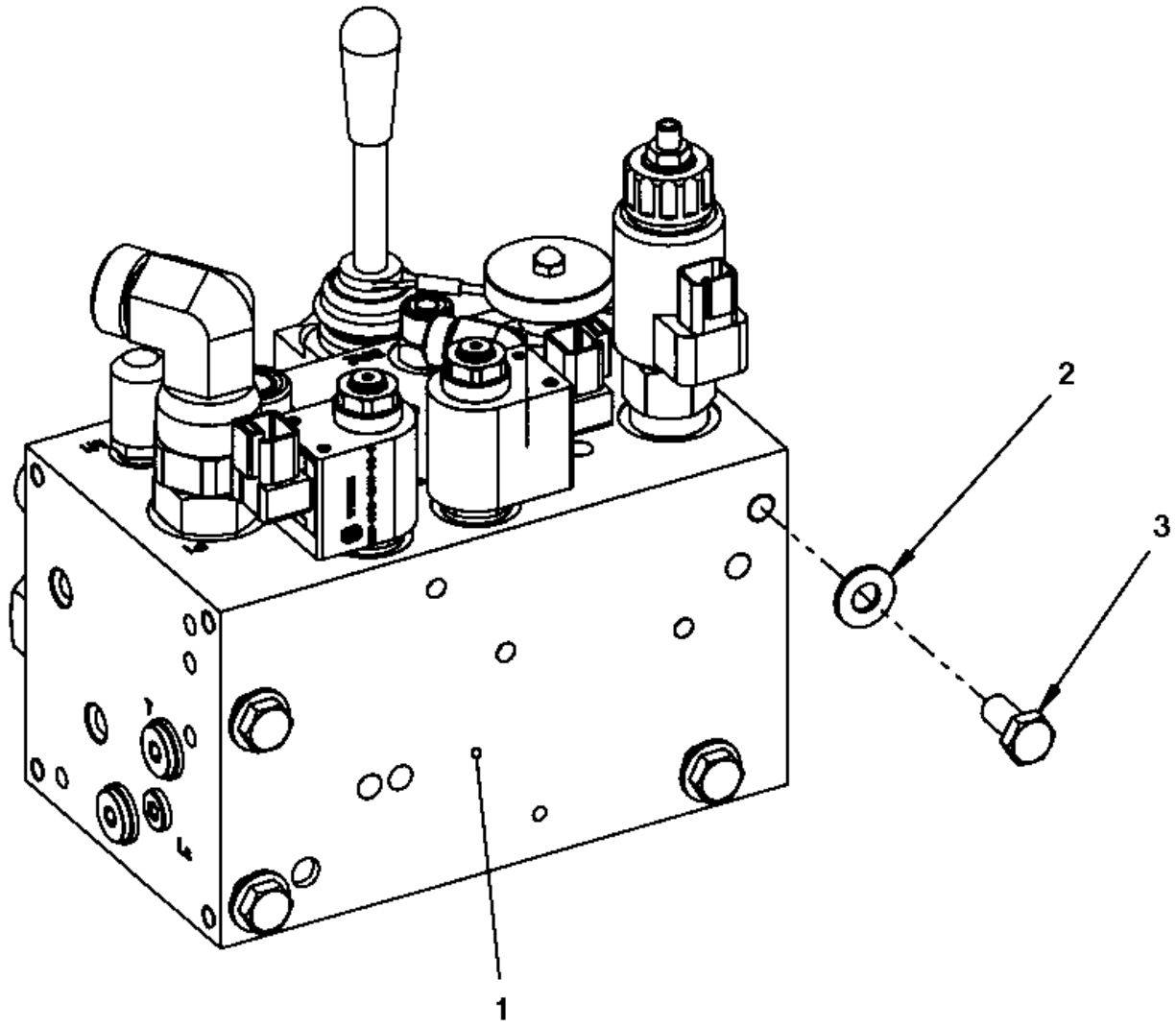

Item	Part No.	Name	Qty	L	SN INFO
1	-	Hydraulic valve	1		
2	4700904230	Plain washer 10.5x22x2 mm	4		
3	4700500028	Screw, M10 x 25 mm 8.8 A3K	4		

Hydraulic hoses, engine room Hydraulic valve

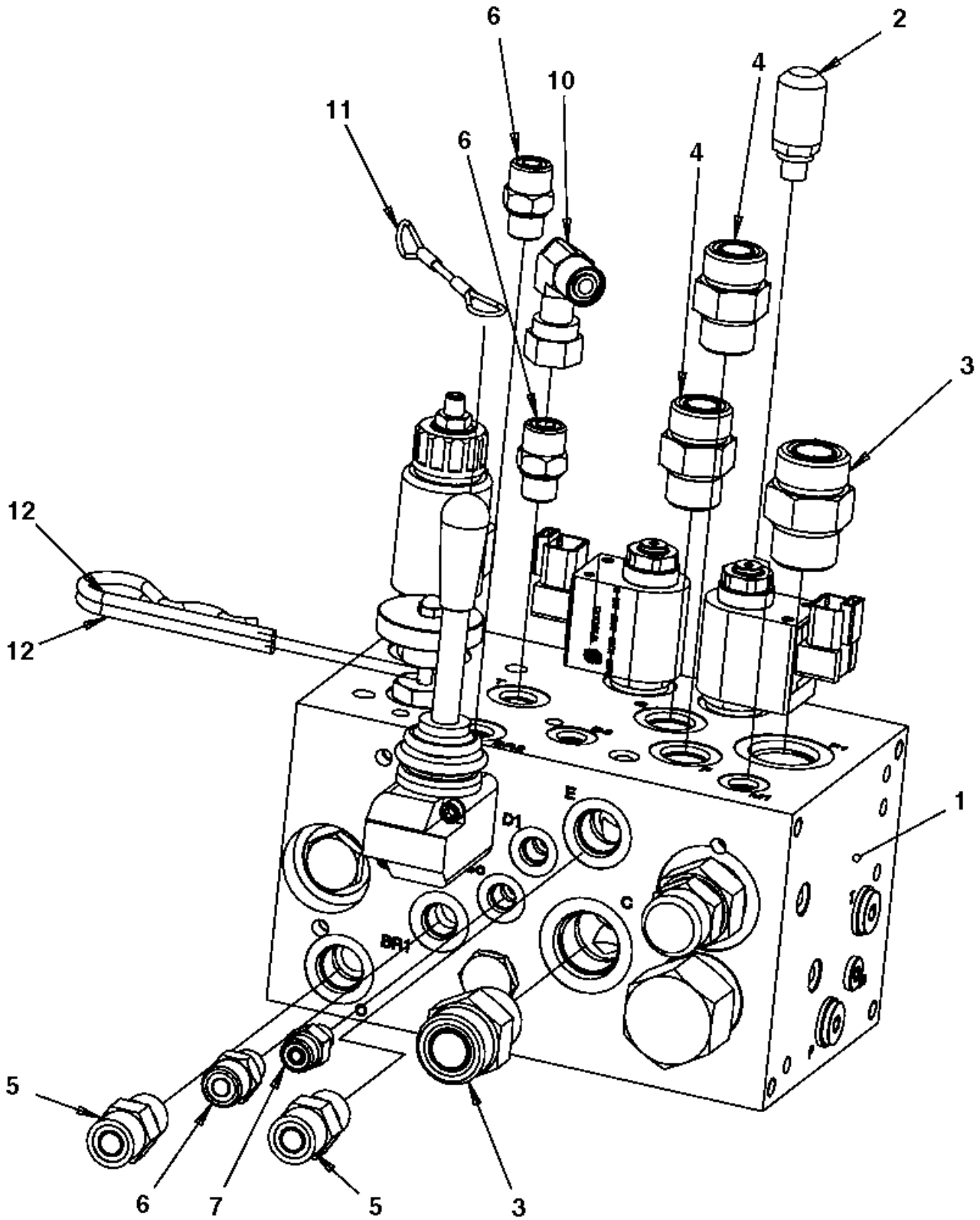

Item	Part No.	Name	Qty	L	SN INFO
1	4700395924	Hydraulic valve	1		
2	4700910162	Measuring nipple	1		
3	4700791823	Adapter	2		
4	4700791743	Straight connector orfs	2		
5	4700791799	Straight connector orfs	2		
6	4700791409	Straight connector orfs	3		
7	4700791744	Adapter	1		
10	4700791401	Elbow 90, O-ring with swivel	1		
11	4700358732	Wire	1		
12	4700635061	Hair clip	2		

Hydraulic hoses, engine room 4700395924 Hydraulic valve

Item	Part No.	Name	Qty	L	SN INFO
1	4700395924	Hydraulic valve	1		
2	--	Valve block	1		
3	4700940572	Shuttle valve	1		
4	4812159770	Check valve	1		
5	4812160491	Brake release valve	1		
6	4700950571	Priority valve	1		
7	4700950572	Pressure relief valve	1		
8	4700950570	Solenoid valve	2		
8	4812156662	Coil	1		
9	4812156787	Fan proportional valve	1		
10	--	Brake release pump	1		
11	4812160160	Brake pressure relief valve	1		
12	4812157585	Orifice with wire 0.5 mm	1		
13	4812159762	Orifice 0.75 mm	1		

Hydraulic hoses, engine room Hydraulic pump module

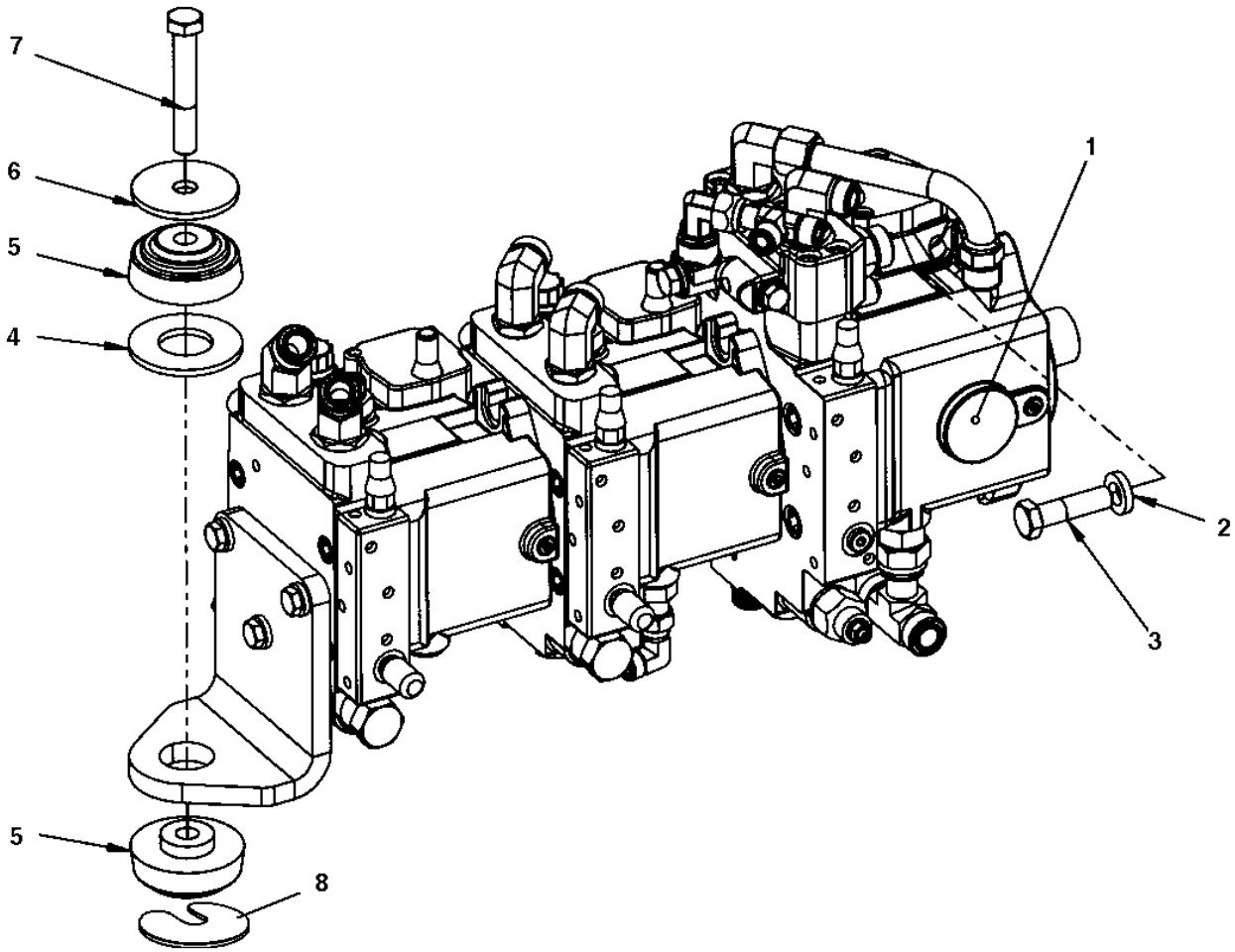

Item	Part No.	Name	Qty	L	SN INFO
1	-	Hydraulic pump	1		
2	4700904558	Washer, 17x30x6 mm 300 HV	2		
3	4700500270	Screw M16x60 10,9	2		
4	4700393625	Spacer washer	1		
5	4700391165	Shock absorber	2		
6	4700345666	Spacer	1		
7	4700500107	Screw M16x100 8.8	1		
8	4700397270	Steel spacer	1		

Hydraulic hoses, engine room Hydraulic pump

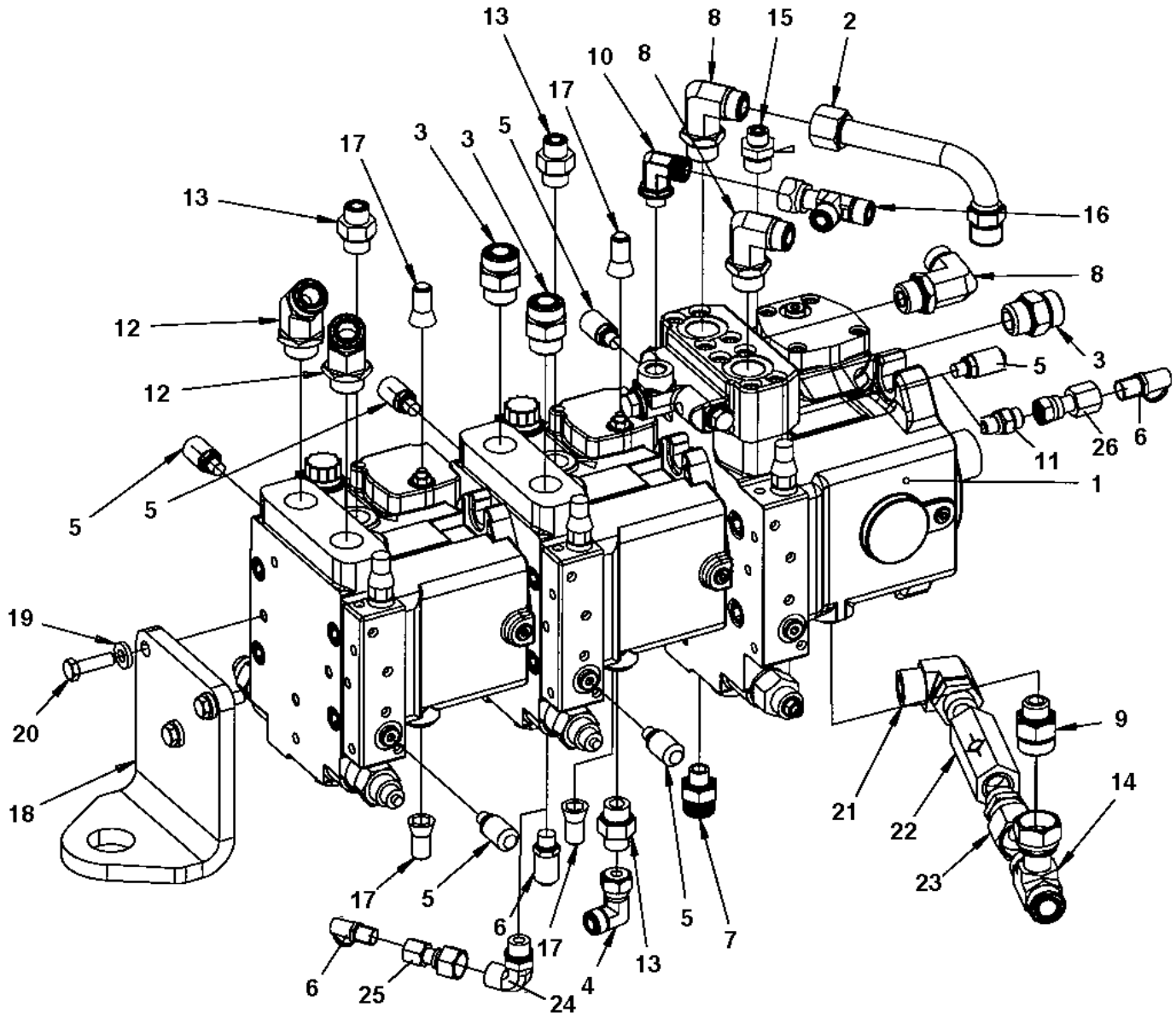

Item	Part No.	Name	Qty	L	SN INFO
1	4700390602	Hydraulic pump	1		
2	4700392048	Connector	1		
3	4700791853	Straight connector orfs	3		
4	4700791745	Elbow 90, O-ring with swivel	1		
5	4700901157	Measuring nipple	5		
6	4700923405	Measuring nipple	2		
7	4700792465	Straight connector orfs	1		
8	4700792331	Elbow 90 orfs	3		
9	4700792336	Straight connector orfs	1		
10	4700792333	Elbow 90 orfs	1		
11	4700791538	Straight connector	1		
12	4700792157	Elbow adapter 45	2		
13	4700791635	Straight connector	3		
14	4700791831	Tee-connector	1		
15	4700791634	Adapter	1		
16	4700791798	Adapter	1		
17	4700392534	Sealing	4		
18	4700393624	Engine bracket	1		
19	4700904557	Washer, 10.5x22x4 mm 300 HV	3		
20	4700500030	Screw hexagon	3		
21	4700791698	Connector elbow 90 ORFS	1		
22	4700376922	Check valve	1		
23	4700791824	Straight connector	1		
24	4700792151	Elbow adapter 90	1		
25	4700792219	Straight connector	1		
26	4700792649	Straight connector orfs	1		

4700390602 Hydraulic pump 4700390602 Hydraulic pump

Item	Part No.	Name	Qty	L	SN INFO
1	4700390602	Hydraulic pump	1		
2	4812155785	Hydraulic pump	1		
3	4812155786	Hydraulic pump	1		
4	4812155787	Hydraulic pump, vibration	1		
5	4812159094	O-ring	4		
6	--	Socket pipe	2		
7	--	Washer	4		
8	--	Screw	4		

4812155785 Hydraulic pump 4812155785 Hydraulic pump

Item	Part No.	Name	Qty	L	SN INFO
1	4812155785	Hydraulic pump	1		
1	4700940676	Seal kit	1		
2	--	Rotating group, cpl	1		
3	--	Valve block, cpl	1		
4	--	Housing	1		
5	4700936612	Pin	1		
6	4700935219	Plug	1	1	
7	4700902724	Plug	2	1	
8	4700902625	Plug	3	1	
9	4700909514	Double break-off pin	2		
10	4700936308	Orifice	2		
11	4700902624	Screw	1	1	
12	4700902687	Pin	1		
13	4700902695	Nut	1	1	
15	--	Control module	1		
26	4812156151	Proportional solenoid	2		
30	--	Hydraulic control, cpl	1		
31	---	Cover	1		
32	---	Cover	1		
33	---	Guide Ring	2		
34	4700936642	Pin	2		
35	4700902638	Nut	1		
36	4700902752	Screw	8		
38	---	Seal ring	2	1	
39	4700936644	Nut	2	1	
40	---	Piston	1		
41	4700936646	Rod	1		
42	---	Ring	2		
43	4700938014	Sleeve	2		
44	4700936647	Spring collar	2		
45	4700936648	Spacer ring	2		
46	4700936654	Spring	2		
47	4700936655	Spring collar	2		
48	4700936656	Retaining ring	2		
49	4700936643	O-ring	2	1	
50	4700909469	O-ring	1		
53	--	Flushing valve	1		

Comments for Page: 4812155785 Hydraulic pump

(L)OCAL REMARKS

1 | en_US | Included in seal kit

This page intentionally left blank

4812155785 Hydraulic pump Rotating group, cpl

Item	Part No.	Name	Qty	L	SN INFO
1	-	Rotating group, cpl	1		
2	4700936615	Cylinder with control plate	1		
3	4700936616	Piston	9		
4	4700936617	Cup spring stack	1		
5	4700936618	Cradle	1		
6	4700936619	Slide ring	1		
7	--	Shaft	1		
8	4700936621	Wire	1		
9	4700935164	Pin	1		
10	4700936622	Wire	1		
11	4700936623	Shim	1		
11	4700936624	Shim	1		
11	4700936625	Shim	1		
11	4700936626	Shim	1		
12	4700936627	Retaining plate	1		
13	4700936628	Retaining ball	1		
14	4700936629	Bearing liner, 1 pair	1		
15	4700936630	Washer	2		
16	4700936631	Pressure spring	1		
17	4700936632	Bearing	1		
18	4700936633	Cradle bearing assembly, 1 set	1		
19	4700927303	Lock ring	1		
20	4700936634	Retaining ring	1		
21	4700936635	Seal ring	1	1	
22	4700936636	Retaining ring	1		
23	4700936637	Retaining ring	1		
24	4700902792	Pin	2		

Comments for Page: Rotating group, cpl

(L)OCAL REMARKS

1 | en_US | Includes in seal kit

4812155785 Hydraulic pump Valve block, cpl

Item	Part No.	Name	Qty	L	SN INFO
1	-	Valve block, cpl	1		
2	4812161086	Pressure relief valve, cpl	2		
3	4812156154	Pressure relief valve	1		
4	4812157095	Pressure overide valve	1		
5	--	Housing	1		
6	--	Screw	4		
7	4700936664	Pin	2		
8	4700936665	O-ring	1		
9	4700909514	Double break-off pin	7		
10	4700936855	Locking screw	1		
11	4700909469	O-ring	1		
12	4700902625	Plug	2		
13	--	Bush	1		
14	4700936662	Bearing bush	1		
15	4700936673	Back-up ring	2		
16	4700927278	O-ring	2		
17	4812157851	O-ring	1		
18	4700902783	O-ring	1		
19	4700936394	O-ring	1		
20	4700936313	Orifice	1		
21	4700935192	O-ring	1		

4812155785 Hydraulic pump Control module

Item	Part No.	Name	Qty	L	SN INFO
1	-	Housing	1		
3	-	Control piston	1		
4	-	Lever pair	1		
6	-	Pin	1		
8	-	Shim	1		
9	-	Feedback lever	1		
10	4812156599	Gasket	1		
11	-	Cover with filter	1		
12	-	Spring	1		
13	-	Seal washer	1		
14	-	Plug	2		
15	4700935210	Screw	4		
16	4700936869	Cylindrical pin	2		
21	4700936689	Screw	1		
23	-	Shim	N		
27	4700945311	O-ring	1		
28	-	Screw	1		

4812155785 Hydraulic pump Flushing valve

Item	Part No.	Name	Qty	L	SN INFO
0	4812161090	Flushing valve, cpl	1		
1	--	Valve plate	1		
2	--	Piston	1		
3	--	Locking screw	2		
4	--	Washer	2		
5	--	Pressure spring	2		
6	--	Valve piston	1		
7	--	Locking screw	1		
8	--	Pressure spring	1		
13	--	Socket head screw	8		
14	--	Pin	1		
15	4812157170	O-ring	2		
16	--	O-ring	2		
17	--	O-ring	1		
18	--	Retaining ring	1		
19	--	Shim	1		
30	-	Orifice	1		

4812155786 Hydraulic pump 4812155786 Hydraulic pump

Item	Part No.	Name	Qty	L	SN INFO
1	4812155786	Hydraulic pump	1		
1	4700950461	Seal kit	1		
2	--	Rotary group, cpl	1		
3	--	Valve block, cpl	1		
4	--	Housing	1		
5	4700935158	Pin	1		
6	4700936869	Cylindrical pin	1		
7	4700935219	Plug	1	1	
8	4700902724	Plug	1	1	
9	4700902625	Plug	3	1	
10	4700902624	Screw	1	1	
11	4700909514	Double break-off pin	1		
12	4700936308	Orifice	2		
13	4700902792	Pin	2		
14	4700937206	O-ring	1	1	
15	4812002474	Control module	1		
16	---	Housing	1		
17	---	Piston	1		
18	4700945776	Spring collar	2		
19	4700936686	Spring	2		
20	---	Gasket	1	1	
21	---	Pin	2		
23	4700909514	Double break-off pin	1		
24	4700927358	Screw	3		
25	4700908383	Screw	2		
26	---	O-ring	1	1	
27	4812156152	Solenoid	2		
31	--	Hydraulic control, cpl	1		
32	---	Piston	1		
33	---	Rod	1		
34	---	Cover	1		
35	---	Guide Ring	1		
36	---	Ring	1		
37	---	Spring collar	1		
38	---	Bush	1		
39	---	Spring	1		
40	4700937195	Pin	1		

Item	Part No.	Name	Qty	L	SN INFO
41	---	Spring collar	1		
43	4700937236	Nut	1		
44	4700937195	Pin	1		
45	---	O-ring	1	1	
46	4700902811	Plug	1		
47	---	Retaining ring	1		
48	4700902688	Screw	4		
49	4700936394	O-ring	1	1	
50	4700936393	Seal lock nut	1	1	
51	4700936393	Seal lock nut	1	1	
55	---	O-ring	2		

Comments for Page: 4812155786 Hydraulic pump

(L)OCAL REMARKS

1 | en_US | Included in seal kit, see item 1.

4812155786 Hydraulic pump Rotary group, cpl

Item	Part No.	Name	Qty	L	SN INFO
1	-	Rotating group	1		
2	--	Cradle	1		
3	4700937174	Slide ring	1		
4	--	Shaft	1		
5	4700936621	Wire	1		
6	4700935164	Pin	1		
7	4700937175	Wire	1		
8	--	Bearing liner	1		
9	--	Cylinder with pistons, cpl	1		
10	4700937185	Bearing	1		
11	4700937186	Cradle bearing assembly, 1 set	1		
12	4700937187	Retaining ring	1		
13	4700937188	V-ring	1		

4812155786 Hydraulic pump Valve block, cpl

Item	Part No.	Name	Qty	L	SN INFO
1	-	Valve block, cpl	1		
2	--	Pressure relief valve, cpl	2		
3	--	Locking set, cpl	1		
4	--	Pressure override valve, cpl	1		
5	--	Housing	1		
6	--	Screw	4		
7	4700937987	Cylindric pin	2		
8	4700909514	Double break-off pin	6		
9	4700936855	Locking screw	1		
10	4700909469	O-ring	1		
11	4700902625	Plug	2		
12	--	Roller bearing	1		
13	4700936673	Back-up ring	2		
14	4700927278	O-ring	2		
15	4700936392	O-ring	1		
16	--	Sealing ring	1		
17	--	O-ring	1		
18	4700936313	Orifice	1		
19	--	O-ring	1		

4812155787 Hydraulic pump 4812155787 Hydraulic pump

Item	Part No.	Name	Qty	L	SN INFO
1	4812155787	Hydraulic pump, vibration	1		
1	4700950461	Seal kit	1		
2	--	Rotary group, cpl	1		
3	--	Valve block, cpl	1		
4	--	Housing	1		
5	4700935158	Pin	1		
6	4700936869	Cylindrical pin	1		
7	4700935219	Plug	1	1	
8	4700902724	Plug	1	1	
9	4700902625	Plug	3	1	
10	4700902624	Screw	1	1	
11	4700909514	Double break-off pin	1		
12	4700936308	Orifice	2		
13	4700902792	Pin	2		
14	4700937206	O-ring	1	1	
15	4812160394	Control valve, cpl	1		
16	---	Housing	1		
17	---	Piston	1		
18	4700945776	Spring collar	2		
19	4700936686	Spring	2		
20	---	Gasket	1	1	
21	---	Pin	2		
23	4700909514	Double break-off pin	1		
24	4700927358	Screw	3		
25	4700908383	Screw	2		
26	---	O-ring	1	1	
27	4812156152	Solenoid	2		
31	--	Hydraulic control, cpl	1		
32	---	Piston	1		
33	---	Rod	1		
34	---	Cover	1		
35	---	Guide Ring	1		
36	---	Ring	1		
37	---	Spring collar	1		
38	---	Bush	1		
39	---	Spring	1		
40	4700937195	Pin	1		

Item	Part No.	Name	Qty	L	SN INFO
41	---	Spring collar	1		
43	4700937236	Nut	1		
44	4700937195	Pin	1		
45	---	O-ring	1	1	
46	4700902811	Plug	1		
47	---	Retaining ring	1		
48	4700902688	Screw	4		
49	4700936394	O-ring	1	1	
50	4700936393	Seal lock nut	1	1	
51	4700936393	Seal lock nut	1	1	
55	---	O-ring	2		

Comments for Page: 4812155787 Hydraulic pump

(L)OCAL REMARKS

1 | en_US | Included in seal kit, see item 1.

4812155787 Hydraulic pump Rotary group, cpl

Item	Part No.	Name	Qty	L	SN INFO
1	-	Rotating group	1		
2	--	Cradle	1		
3	4700937174	Slide ring	1		
4	--	Shaft	1		
5	4700936621	Wire	1		
6	4700935164	Pin	1		
7	4700937175	Wire	1		
8	4700937182	Bearing liner, 1 pair	1		
9	4812159754	Cylinder with pistons, cpl	1		
10	4700937185	Bearing	1		
11	4700937186	Cradle bearing assembly, 1 set	1		
12	4700937187	Retaining ring	1		
13	4700937188	V-ring	1		

4812155787 Hydraulic pump Valve block, cpl

Item	Part No.	Name	Qty	L	SN INFO
1	-	Valve block, cpl	1		
2	--	Pressure relief valve, cpl	2		
3	--	Locking set, cpl	1		
4	--	Pressure override valve, cpl	1		
5	--	Housing	1		
6	--	Screw	4		
7	4700937987	Cylindric pin	2		
8	4700909514	Double break-off pin	6		
9	4700936855	Locking screw	1		
10	4700909469	O-ring	1		
11	4700902625	Plug	2		
12	--	Roller bearing	1		
13	4700936673	Back-up ring	2		
14	4700927278	O-ring	2		
15	4700936392	O-ring	1		
16	--	Sealing ring	1		
17	--	O-ring	1		
18	4700936313	Orifice	1		
19	--	Not valid for this model	1		

Hydraulic system, steering Std Hydraulic system, steering Std

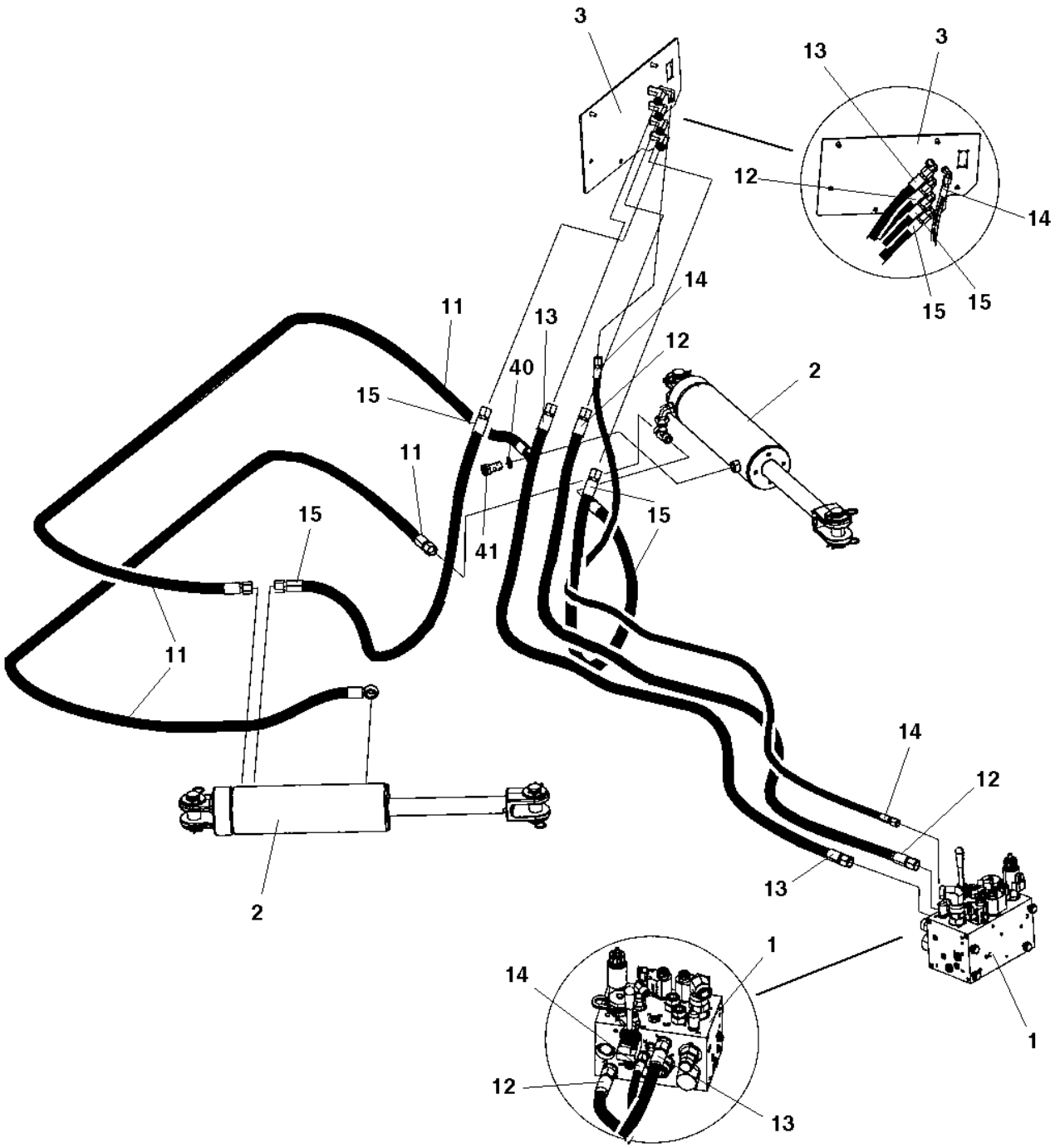

Item	Part No.	Name	Qty	L	SN INFO
1	-	Hydraulic valve module	1		
2	-	Steering cylinder	2	A	
3	-	Hose bracket	1		
11	4700393364	Hydraulic hose	2		
12	4700484024	Hydraulic hose	1		
13	4700484025	Hydraulic hose	1		
14	4700484026	Hydraulic hose	1		
15	4700484027	Hydraulic hose	2		
40	4700162015	Seal ring	4		
41	4700904292	Hollow screw	2		

Comments for Page: Hydraulic system, steering Std

(L)OCAL REMARKS

A | en_US | See section "Front frame"

Hydraulic system, steering Std Hose bracket

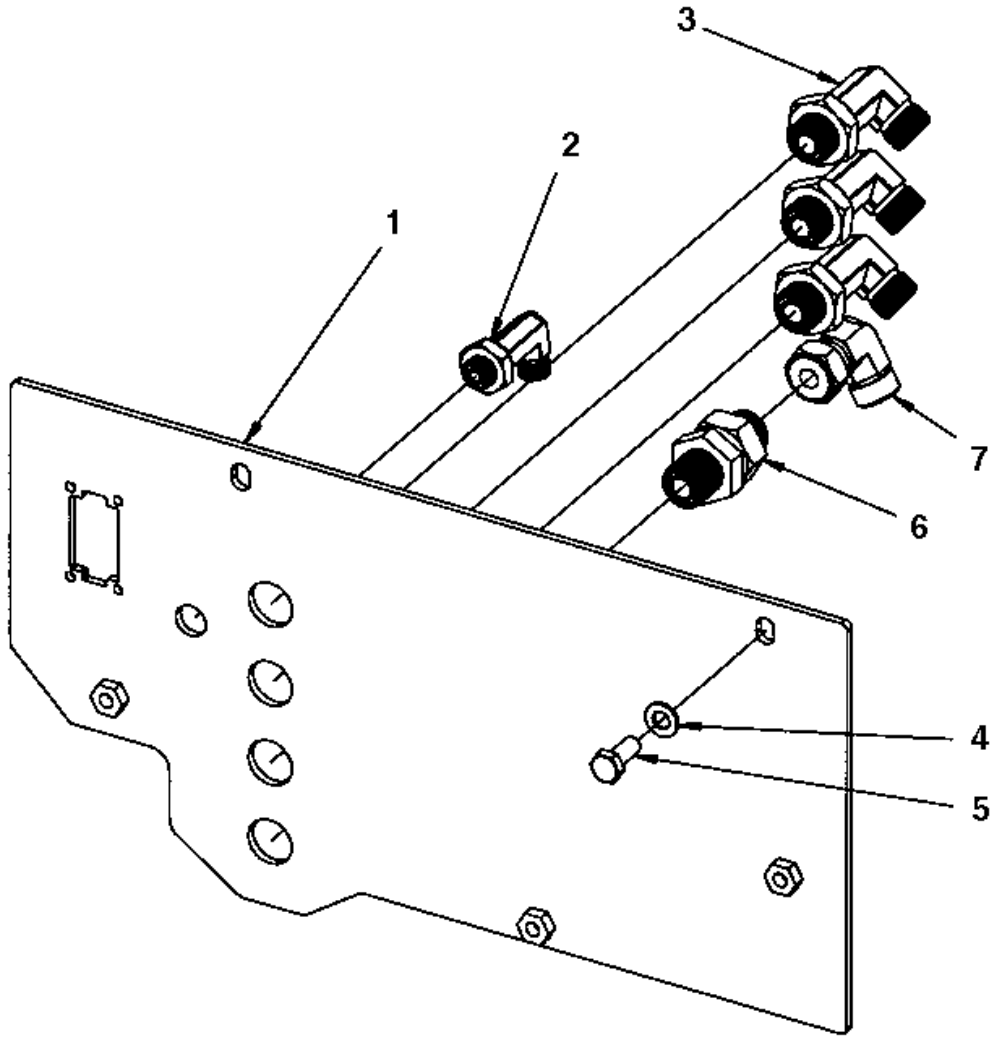

Item	Part No.	Name	Qty	L	SN INFO
1	4700391192	Hose bracket	1		
2	4700792343	Adapter	1		
3	4700792342	Bulkhead elbow	4		
4	4700904229	Washer, 8.4x 6x1.5 mm 300HV	2		
5	4700500053	Screw, M8x20 mm 8.8 A2K	2		

Hydraulic steering, sliding seat Hydraulic steering, sliding seat

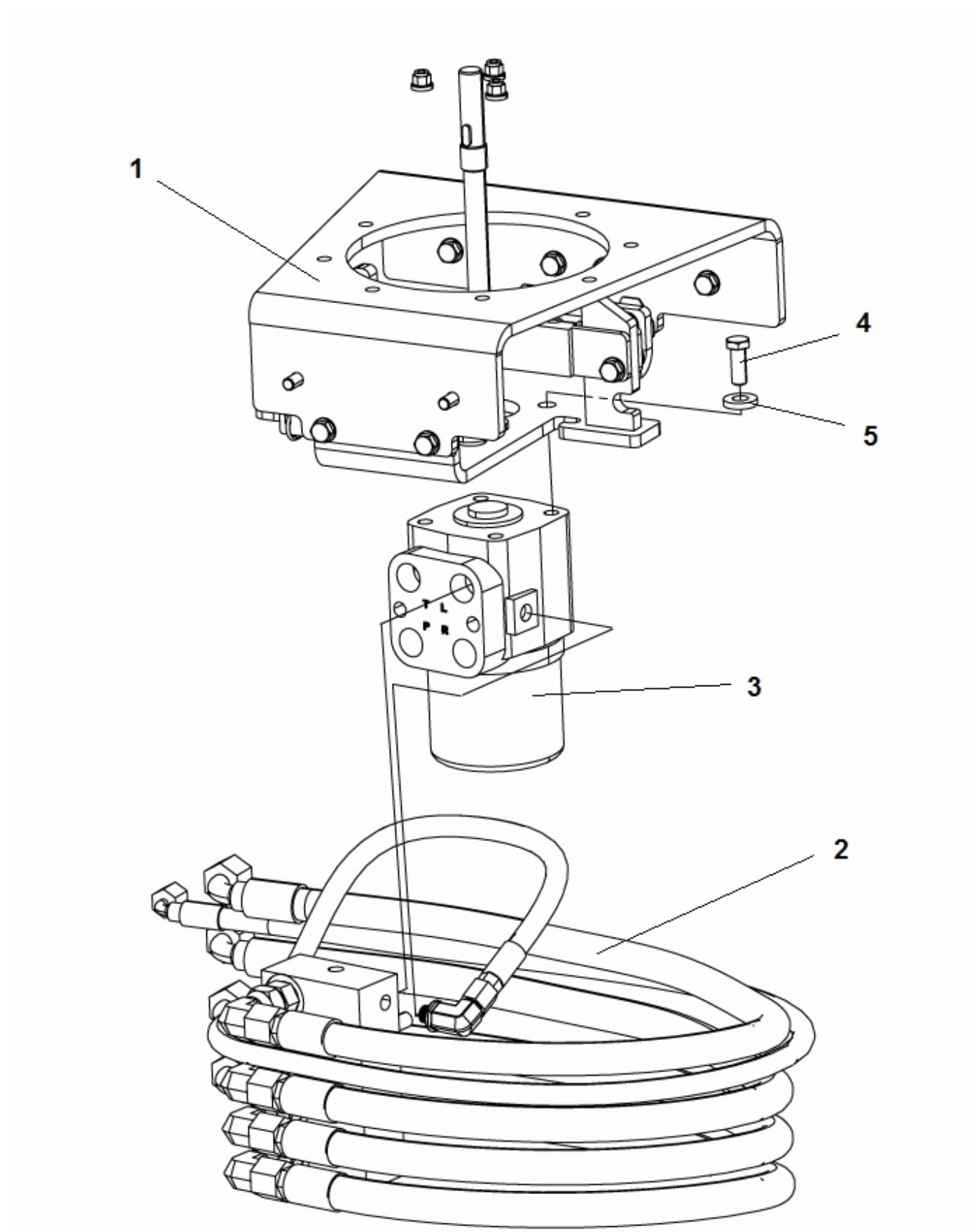

Item	Part No.	Name	Qty	L	SN INFO
1	-	Carrier	1		
2	-	Steering, slideable	1		
3	4700372424	Pilot valve, steering	1		
3	4812120733	Pilot valve, (emergency steering CC)	1		
3	4700935429	Seal kit	1		
4	4700502035	Screw 3/8"-16UNCx1 8.8	4		
5	4700904557	Washer, 10.5x22x4 mm 300 HV	4		

Hydraulic steering, sliding seat Carrier

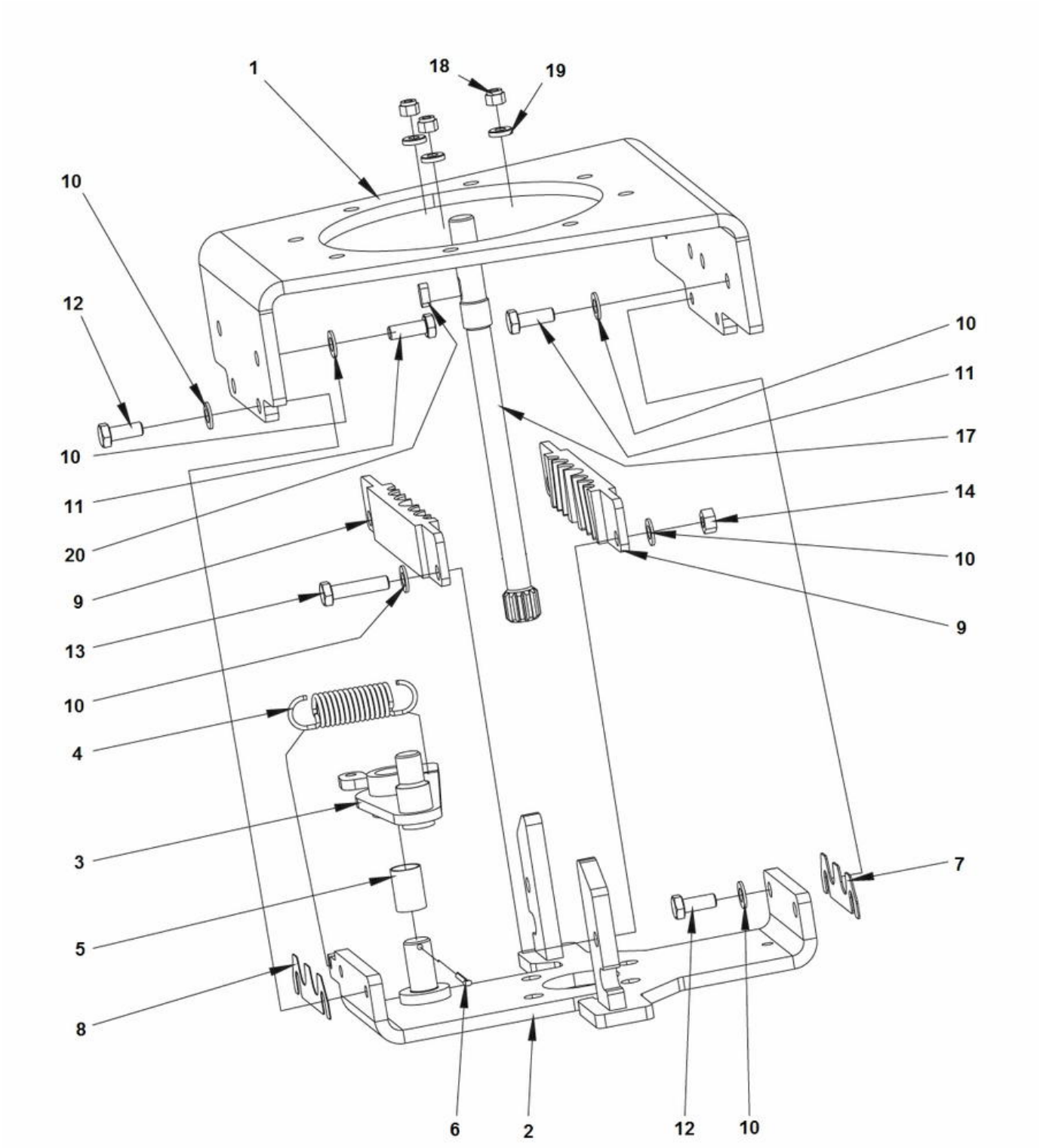

Item	Part No.	Name	Qty	L	SN INFO
1	4700379715	Carrier	1		
2	4700391478	Steering valve bracket	1		
3	4812120035	Coupling link	1		
4	4700359043	Spring	1		
5	4700359819	Bushing	1		
6	4700630008	Pin	1		
7	4812115060	Shim	N		
8	4812115061	Shim	N		
9	4812110896	Clamp	2		
10	4700904229	Washer, 8.4x 6x1.5 mm 300HV	14		
11	4700500020	Hex. screw	6		
12	4700500053	Screw, M8x20 mm 8.8 A2K	4		
13	4700500047	Hexagon head screw	2		
14	4700570005	Hexagon nut	2		
17	4700391770	Shaft	1		
18	4700586002	Lock nut M6 -8	3		
19	4700603001	Washer	3		
20	4700350009	Flat key	1		

Hydraulic steering, sliding seat Steering, slideable

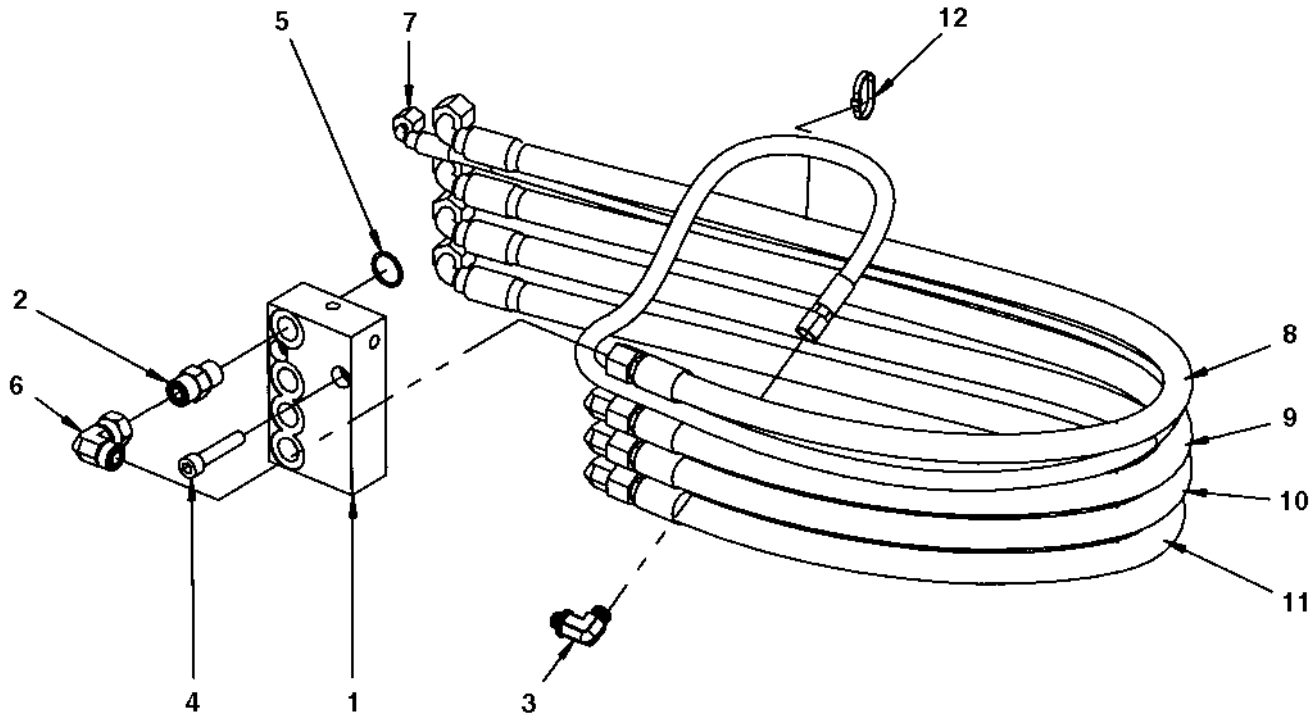

Item	Part No.	Name	Qty	L	SN INFO
1	4700370155	Valve block	1		
2	4700791799	Straight connector orfs	4		
3	4700792334	Elbow 90 orfs	1		
4	4700903773	Screw M10x1x50 8,8	2		
5	4700160287	O-ring	4		
6	4700791745	Elbow 90, O-ring with swivel	4		
7	4700484006	Hydraulic hose	1		
8	4700484007	Hydraulic hose	1		
9	4700484007	Hydraulic hose	1		
10	4700484007	Hydraulic hose	1		
11	4700484007	Hydraulic hose	1		
12	4700313041	Cable ties, L=200 mm	N		

Hydraulic steering, sliding seat 4700372424 Pilot valve, steering

Item	Part No.	Name	Qty	L	SN INFO
1	4700372424	Pilot valve, steering	1		
2	--	Housing , spool and sleeve , cpl	1		
3	4700480468	Ball	1		
4	4700480446	Threaded bushing	1		
5	--	O-ring	1	1	
7	4700911620	Bearing	1		
8	4700480449	Ring	1		
9	4700480447	Cross pin	1		
11	4700902861	Cardan shaft	1		
12	4700909211	Set of springs	1		
13	--	O-ring	1	1	
14	4700902862	Valve plate	1		
15	4700903457	Gear wheel set	1		
16	--	O-ring	2	1	
17	4700480450	End cap	1		
18	--	Washer	7	1	
20	4700480456	Screw with hole	1		
21	4700935428	Screw	6		
22	--	Name plate	1		
23	--	Screw	2		
26	4700929012	Shock valve 22,5-24,0 MPa	2		
27	4700929013	Ball	2		
28	--	Seal ring	1	1	
29	4700929014	Rolled pin	2		
30	4700935429	Seal kit	1		

Comments for Page: 4700372424 Pilot valve, steering

(L)OCAL REMARKS

1 | en_US | Included in seal kit item 30

Electric cables, power supply Electric cables, power supply

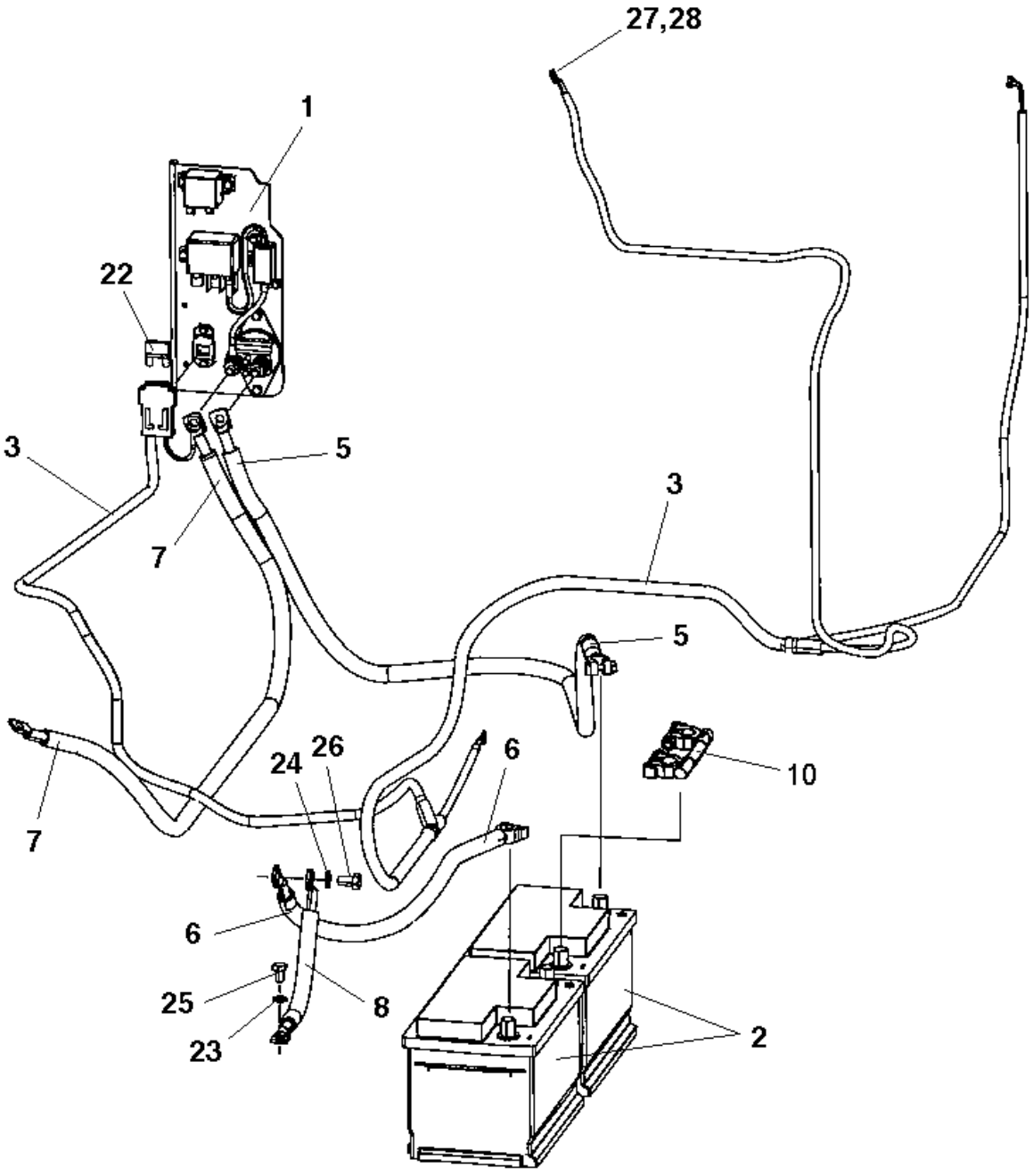

Item	Part No.	Name	Qty	L	SN INFO
1	-	Battery disconnector	1		
2	-	Batteries	2		
3	4700391584	Cable harness, power supply	1		
5	4700792364	Battery cable +	1		
6	4700792328	Battery cable -	1		
7	4812118387	Connection cable	1		
8	4700335607	Connection cable, coarse	1		
10	4700792684	Battery union cable	1		
22	4700904039	Fuse 50A Red	1		
23	4700904637	Washer	1		
24	4700904638	Washer 12x22x2	1		
25	4700500043	Screw M10x16	1		
26	4700500035	Hexagon screw, M12x20H	1		
27	4700904229	Washer, 8.4x 6x1.5 mm 300HV	1		
28	4700570005	Hexagon nut	1		

Electric cables, power supply Battery disconnector

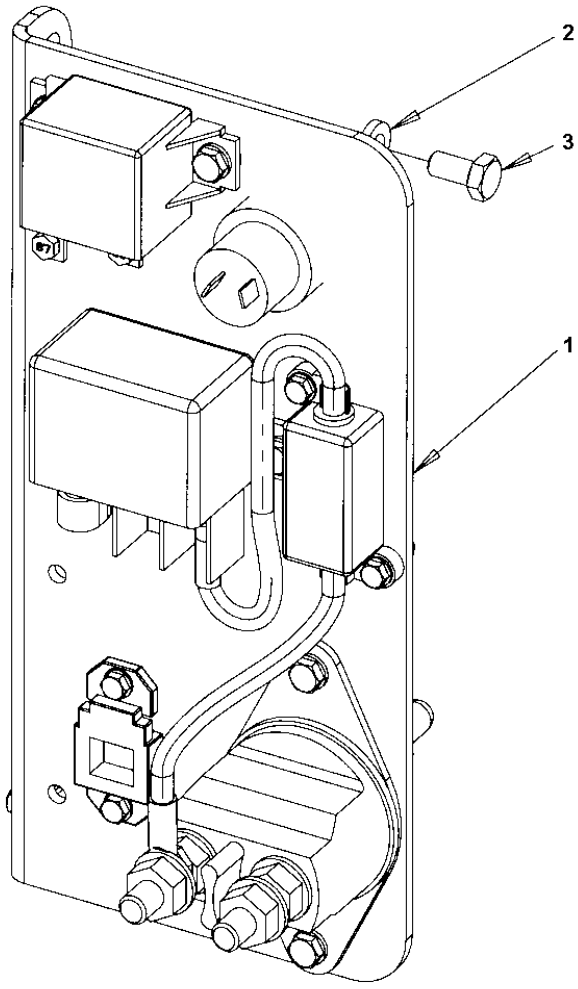

Item	Part No.	Name	Qty	L	SN INFO
1	-	Battery disconnector	1		
2	4700904556	Steel plain washer 8,4x16x3,0	3		
3	4700500019	Hexagon screw	3		

Electric cables, power supply Battery disconnector

Item	Part No.	Name	Qty	L	SN INFO
1	4812104713	Holder	1		
2	4700903640	Battery switch	1		
2	4700903641	Battery key	1		
3	4700792309	Relay	1		
4	4700792310	Relay 120A	1		
5	4700904036	Bracket	1		
6	4700391585	Cable harness	1	A	
6	4700791479	Fuse, Orange 125A	1		
7	4700395816	Plug socket 24V	1		
10	4700904228	Washer 6,4x12x1,5	6		
11	4700500040	Screw, M6x20 mm 8.8 A2K	6		
12	4700904281	Washer, 5,3x10x1 300HV	4		
13	4700500060	Screw M5-0,8x20 8.8	4		
14	4700586001	Lock nut	4		
15	4700586002	Lock nut M6 -8	6		
16	4700570004	Hexagon nut M6	1		

Comments for Page: Battery disconnector

(L)OCAL REMARKS

A | en_US | Pre-heater

Electric cables, power supply cab Electric cables, power supply cab

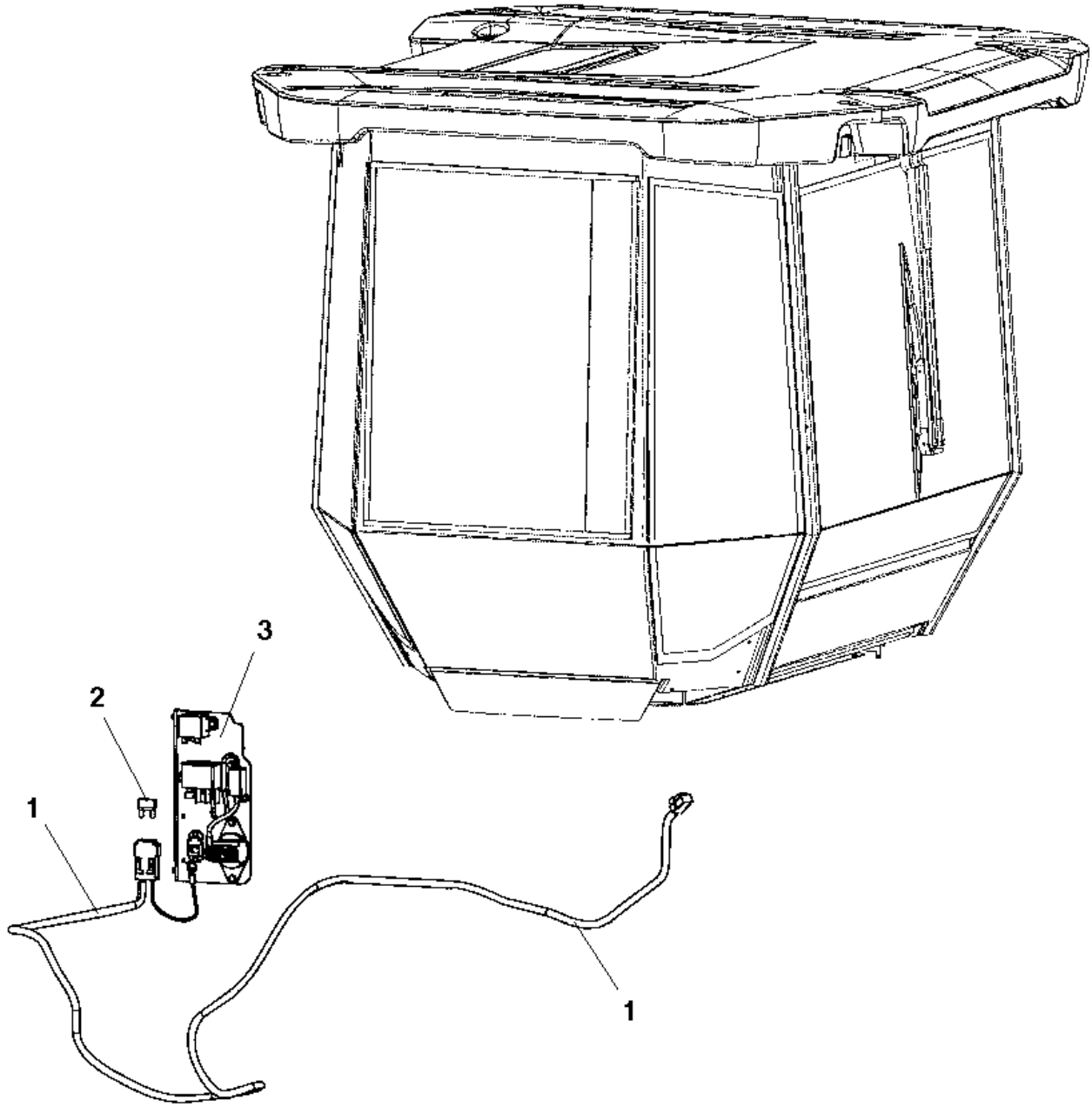

Item	Part No.	Name	Qty	L	SN INFO
1	4812115287	Cable harness	1		
2	4700904039	Fuse 50A Red	1		
3	-	Battery disconnector module	1		

Electric cables, engine - ECU Electric cables, engine - ECU

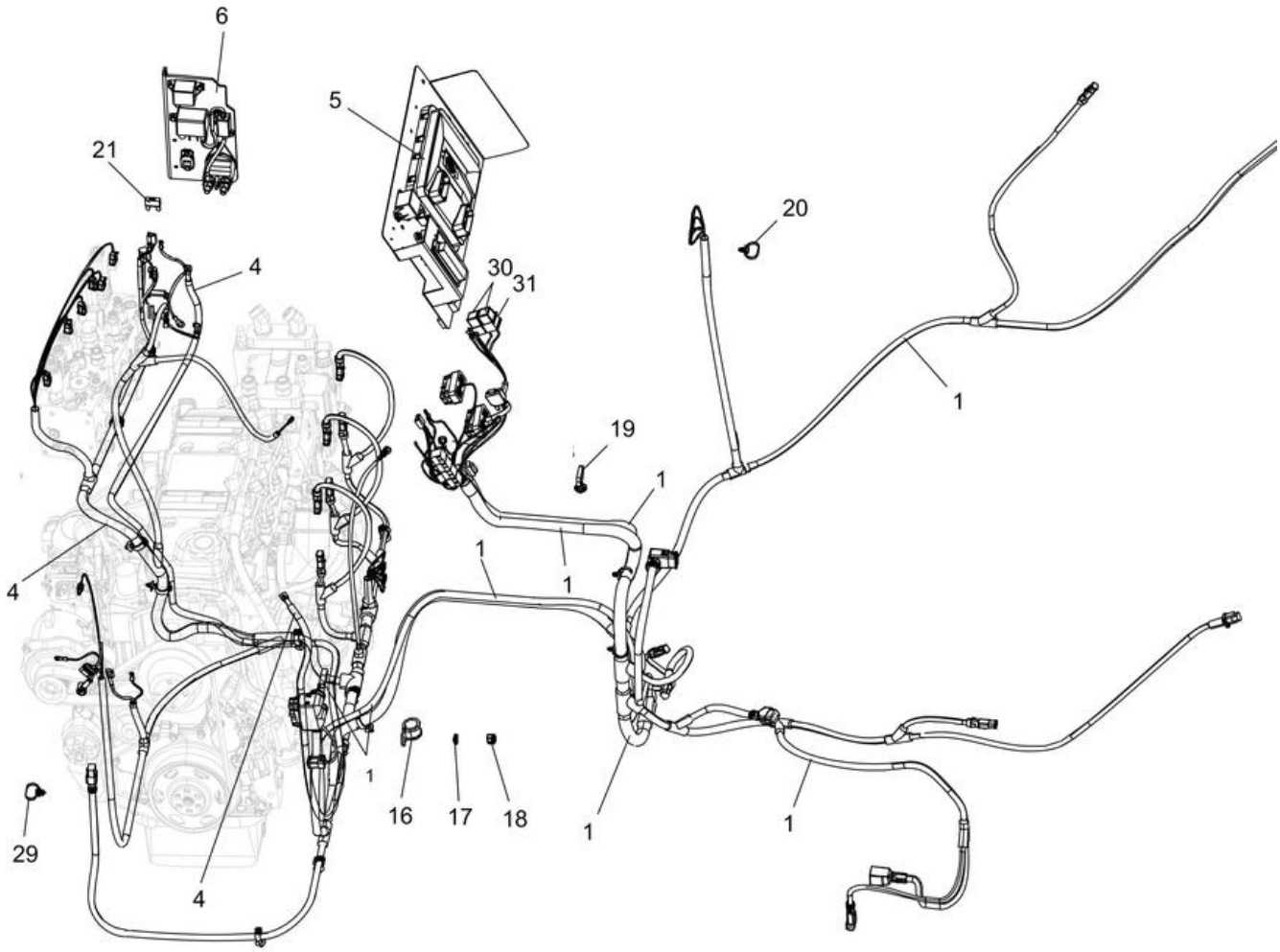

Item	Part No.	Name	Qty	L	SN INFO
1	4812115557	Cable harness, ECU	1		
4	4700792363	Connection cable coarse	1		
5	-	ECU std module	1		
6	-	Battery disconnector	1		
16	4700921031	Clamp	2		
17	4700904228	Washer 6,4x12x1,5	2		
18	4700586002	Lock nut M6 -8	2		
19	4700792442	Cable tie	1		
20	4700792441	Cable tie with holder	22		
21	4700904037	Fuse 30A Green	1		
29	4700792602	Cable tie with holder	1		
30	4700792422	Relay 24V 20A	2		
31	4700792210	Screw torx	2		

Electric cables, engine - ECU Standard ECU module

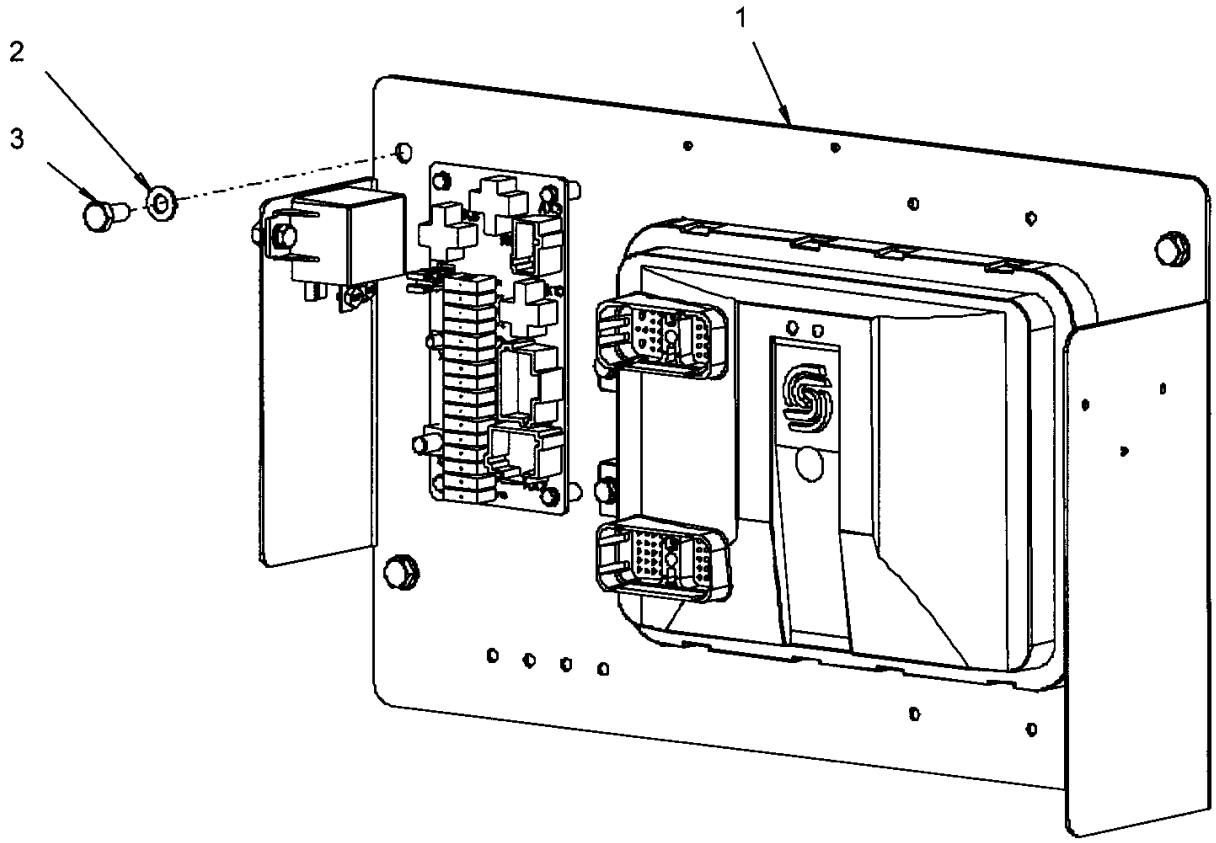

Item	Part No.	Name	Qty	L	SN INFO
1	-	Standard ECU assembly	1		
2	4700904229	Washer, 8.4x 6x1.5 mm 300HV	4		
3	4700500019	Hexagon screw	4		

Electric cables, engine - ECU Standard ECU assembly

Item	Part No.	Name	Qty	L	SN INFO
1	4812114619	Mounting plate	1		
2	4700390860	Control unit, main	1		
3	4700792309	Relay	1	A	
4	4700904228	Washer 6,4x12x1,5	4		
5	4700928467	Washer	2		
6	4700500015	Hex. screw	4		
7	4700500013	Screw, M6x16 mm 8.8 A2K	2		
8	4812114655	Circuit board	1		
9	4700904698	Plain washer	4		
10	4700904312	Screw	4		
11	4700792441	Cable tie with holder	2		
15	4700901227	Fuse 10A Red	7		
16	4700903741	Fuse 20A Yellow	2		
17	4700901225	Fuse 5A Tan	1		

Comments for Page: Standard ECU assembly

(L)OCAL REMARKS

A | en_US | Main.

Electric cables, sensors/ horn/ back-up alarm Electric cables, sensors/ horn/ back-up alarm

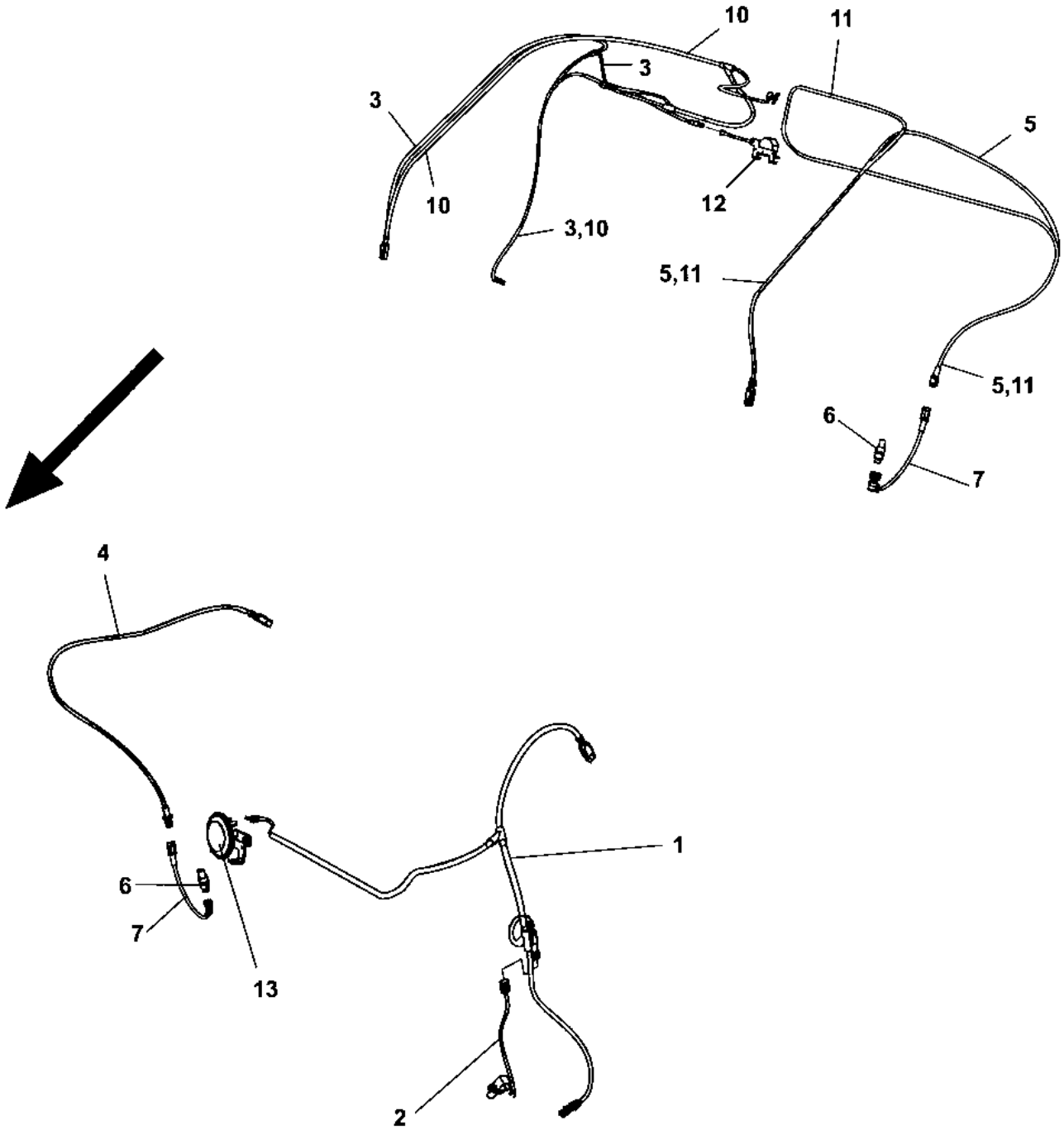

Item	Part No.	Name	Qty	L	SN INFO
1	4700391580	Cable harness	1	A, C	
2	4700390716	Speed sensor	1		
3	4700391583	Cable harness	1	B	
4	4700396259	Cable harness	1	A, D	
5	4700396260	Cable harness	1	B, D	
6	4700792731	Frequency sensor	2		
7	4700392221	Mount kit for sensor	2		
10	4700391955	Cable harness	1	E	
11	4700396261	Cable harness	1	D, E	
12	-	Back-up alarm module	1		
13	-	Horn module	1		

Comments for Page: Electric cables, sensors/ horn/ back-up alarm

(L)OCAL REMARKS

A | en_US | Front drum

B | en_US | Rear drum, Std

C | en_US | Speed

D | en_US | Frequency

E | en_US | Rear drum, offset

Electric cables, sensors/ horn/ back-up alarm Back-up alarm module

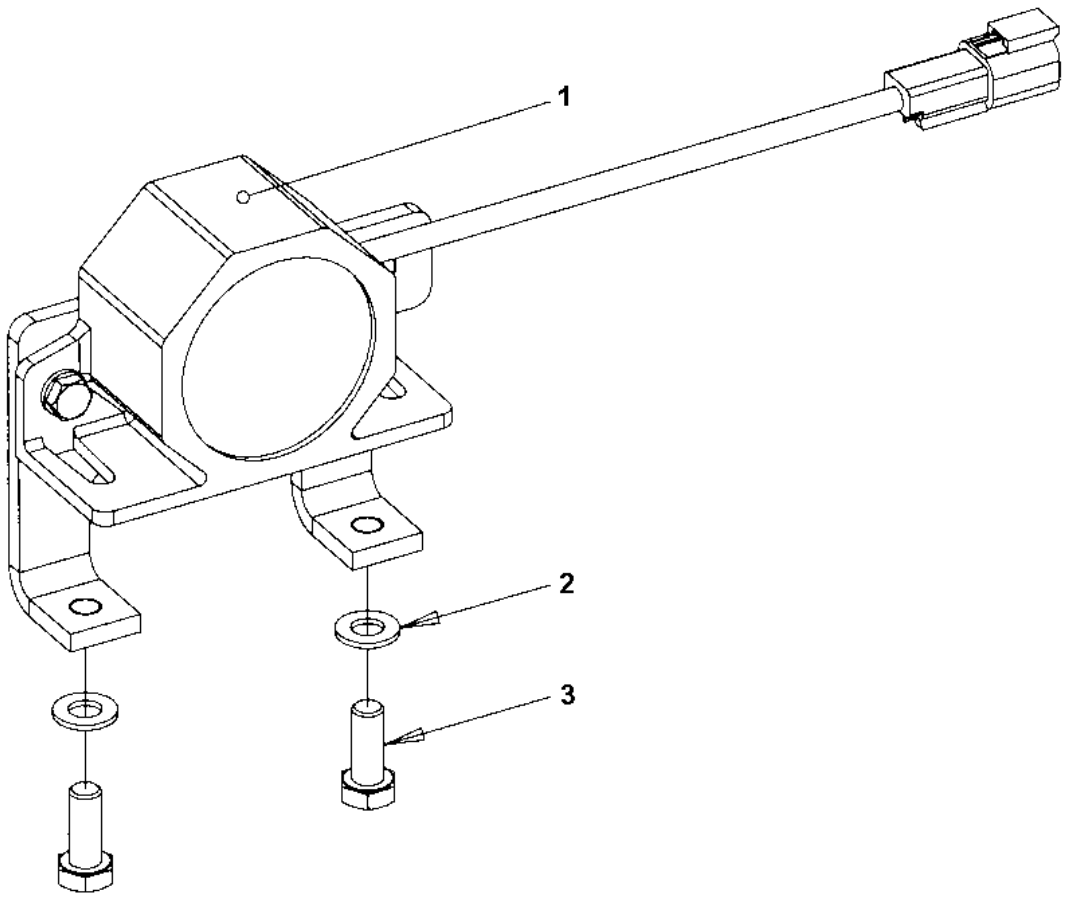

Item	Part No.	Name	Qty	L	SN INFO
1	-	Back-up alarm	1		
2	4700904229	Washer, 8.4x 6x1.5 mm 300HV	2		
3	4700500053	Screw, M8x20 mm 8.8 A2K	2		

Electric cables, sensors/ horn/ back-up alarm Back-up alarm

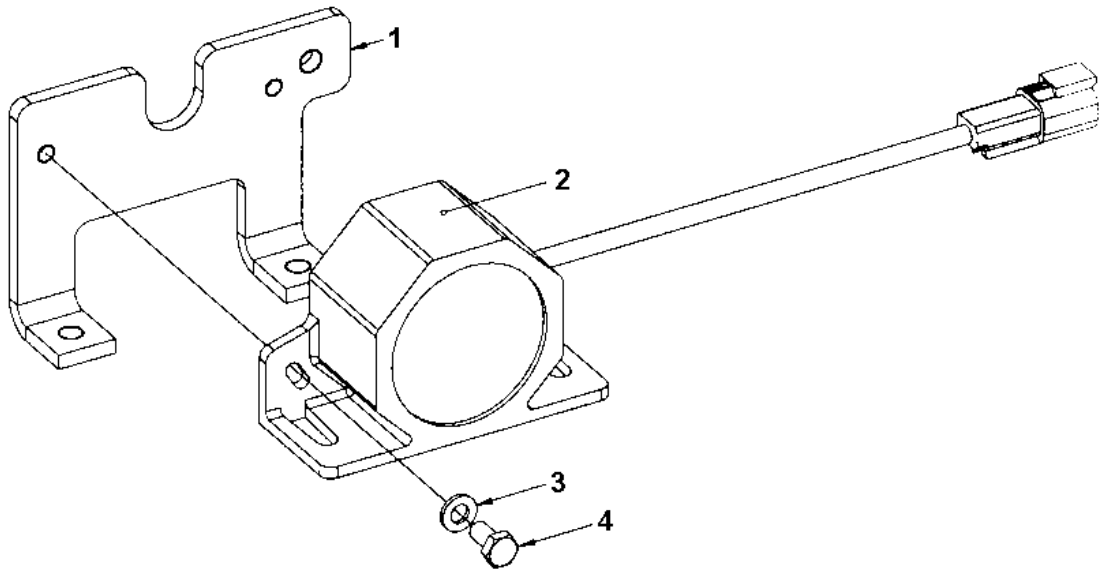

Item	Part No.	Name	Qty	L	SN INFO
1	4700396768	Bracket	1		
2	4700904911	Back-up alarm	1		
3	4700904228	Washer 6,4x12x1,5	2		
4	4700500012	Hex. screw	2		

Electric cables, sensors/ horn/ back-up alarm Horn module

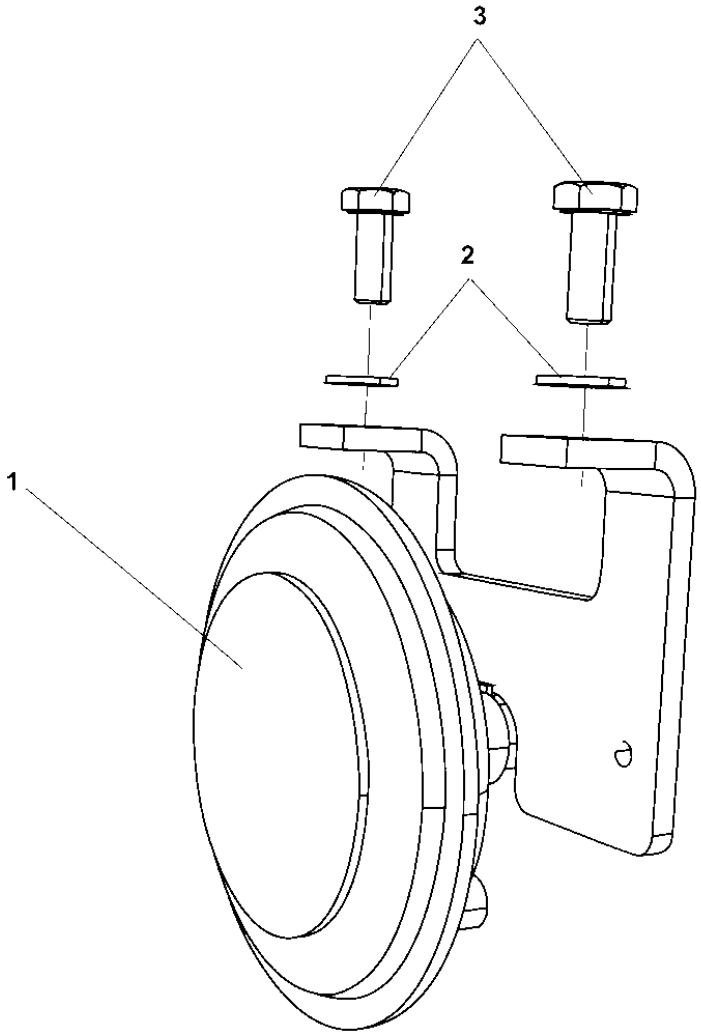

Item	Part No.	Name	Qty	L	SN INFO
1	-	Horn	1		
2	4700904229	Washer, 8.4x 6x1.5 mm 300HV	2		
3	4700500053	Screw, M8x20 mm 8.8 A2K	2		

Electric cables, sensors/ horn/ back-up alarm Horn

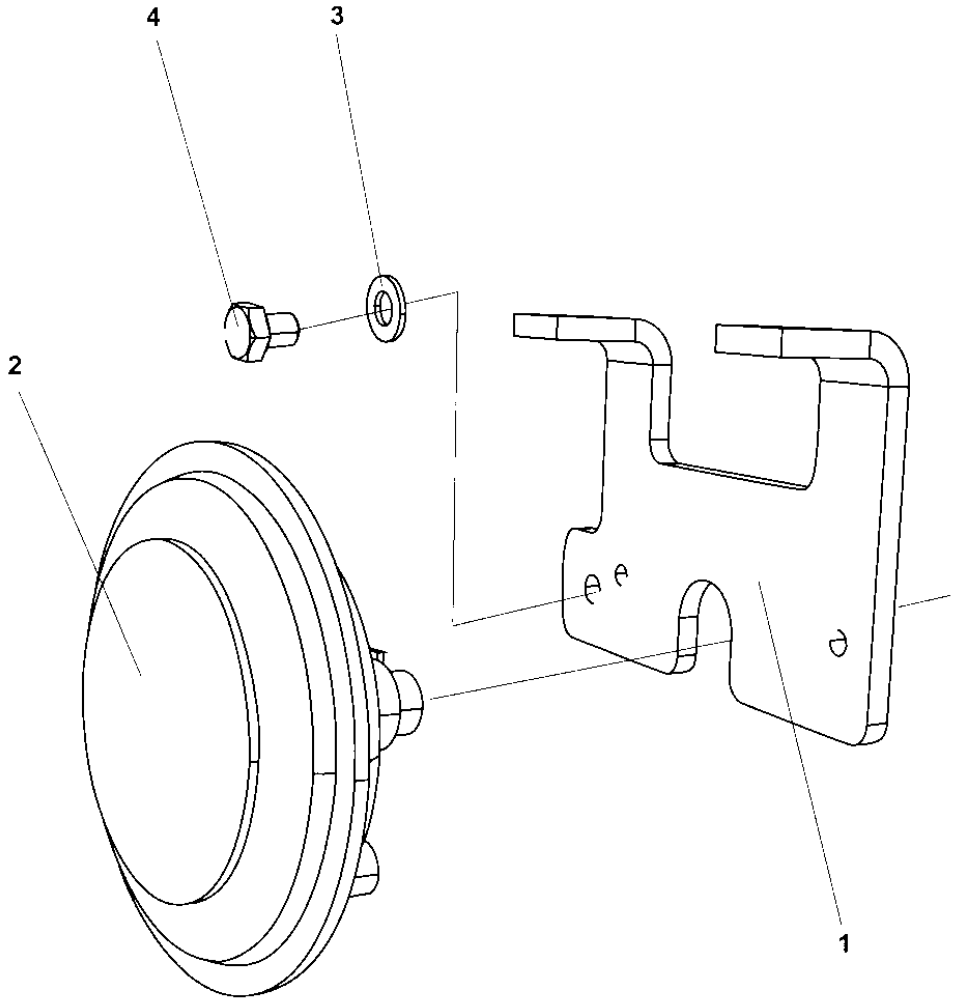

Item	Part No.	Name	Qty	L	SN INFO
1	4700396768	Bracket	1		
2	4700999014	Horn	1		
3	4700904229	Washer, 8.4x 6x1.5 mm 300HV	1		
4	4700500042	Hex. head screw M8	1		

Driving & side direction lights Driving & side direction lights

Item	Part No.	Name	Qty	L	SN INFO
1	4812115291	Cable harness	1		
2	4700792422	Relay 24V 20A	1		
3	4700792210	Screw torx	2		
4	4812110902	Cable harness	1	A	
5	4700901227	Fuse 10A Red	1		
6	4811000163	Flash relay	1		
7	4700901226	Fuse 7.5A Brown	1		
8	-	Driving lights, front	2		
9	-	Steering column switch module	1		
10	-	Cable harness and switch module	1		
11	-	Registration plate light module	1		
12	-	Driving lights, rear	2		
13	4812110903	Cable harness Std	1		
13	4812110904	Cable harness Off-set	1		
14	-	Turn signals	2		

Comments for Page: Driving & side direction lights

(L)OCAL REMARKS

A | en_US | Front

Driving & side direction lights Driving lights, front

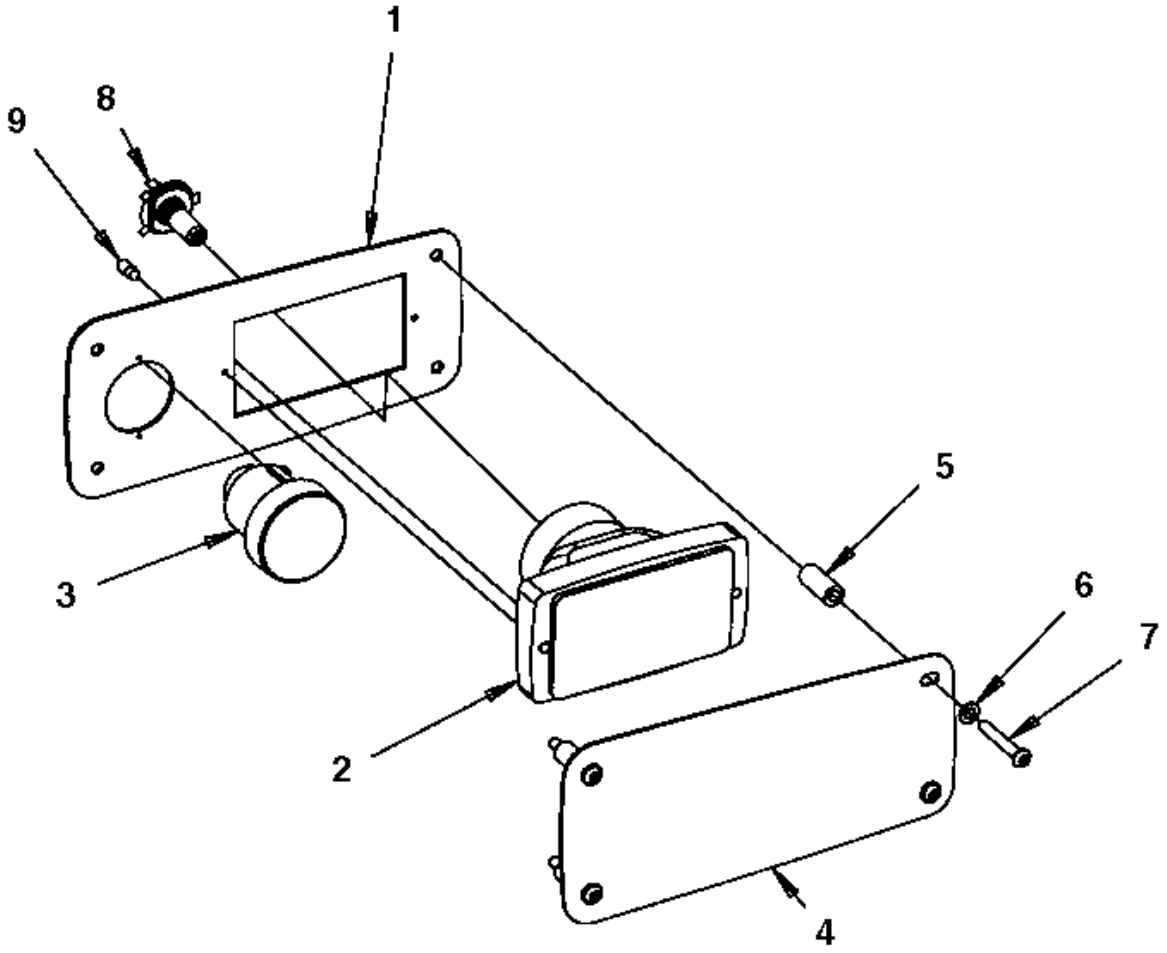

Item	Part No.	Name	Qty	L	SN INFO
1	4700390434	Lights bracket	1		
2	4700791951	Headlight right hand asym. with parking light	1		
2	4700792059	Headlight left hand asym. with parking light	1		
3	4700792521	Direction indicator	1		
4	4700390436	Protecting cover	1		
5	4700391115	Spacer sleeve	4		
6	4700904229	Washer, 8.4x 6x1.5 mm 300HV	4		
7	4700792361	Hexagon socket head cap screw	4		
8	4700792353	Bulb 24V 75/70W H4	1		
9	4700792350	Bulb 24V 2W	1		

Driving & side direction lights Steering column switch module

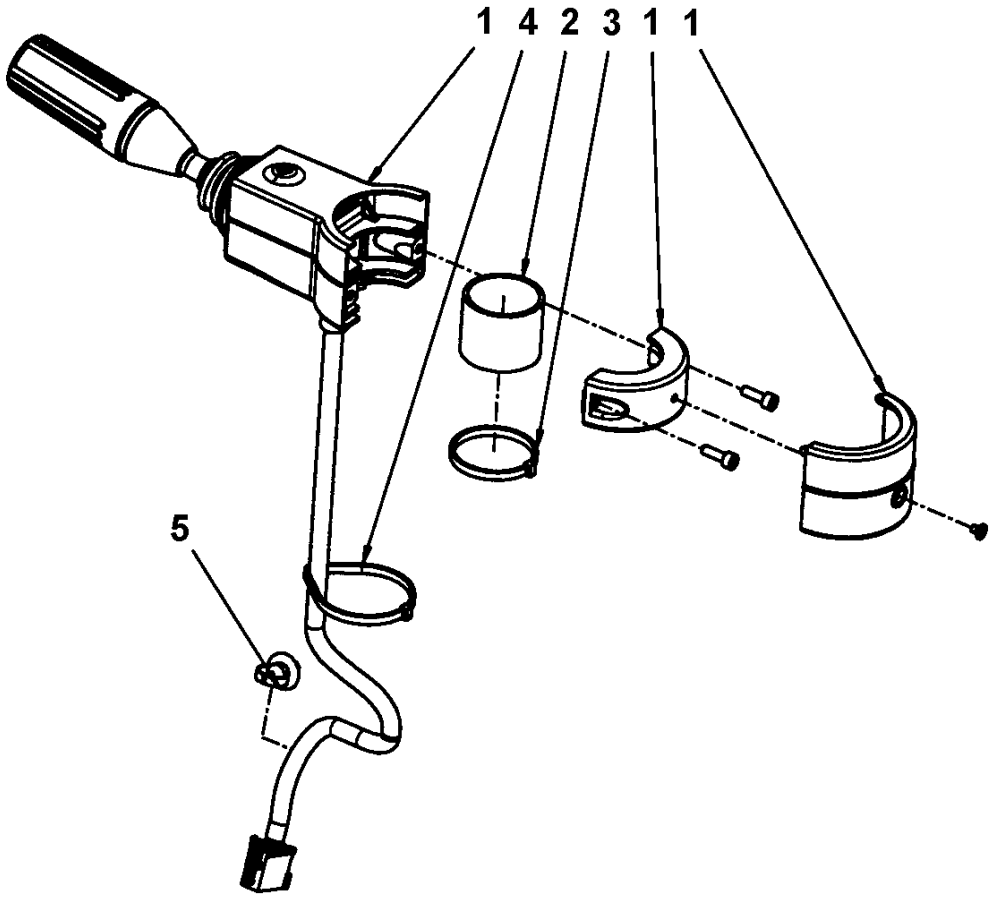

Item	Part No.	Name	Qty	L	SN INFO
1	4700392450	Steering column switch	1		
2	4700392451	Rubber cloth	1		
3	4700313041	Cable ties, L=200 mm	1		
4	4700792609	Cable ties	1		
5	4700921080	Clamp	1		

Driving & side direction lights Cable harness and switch module

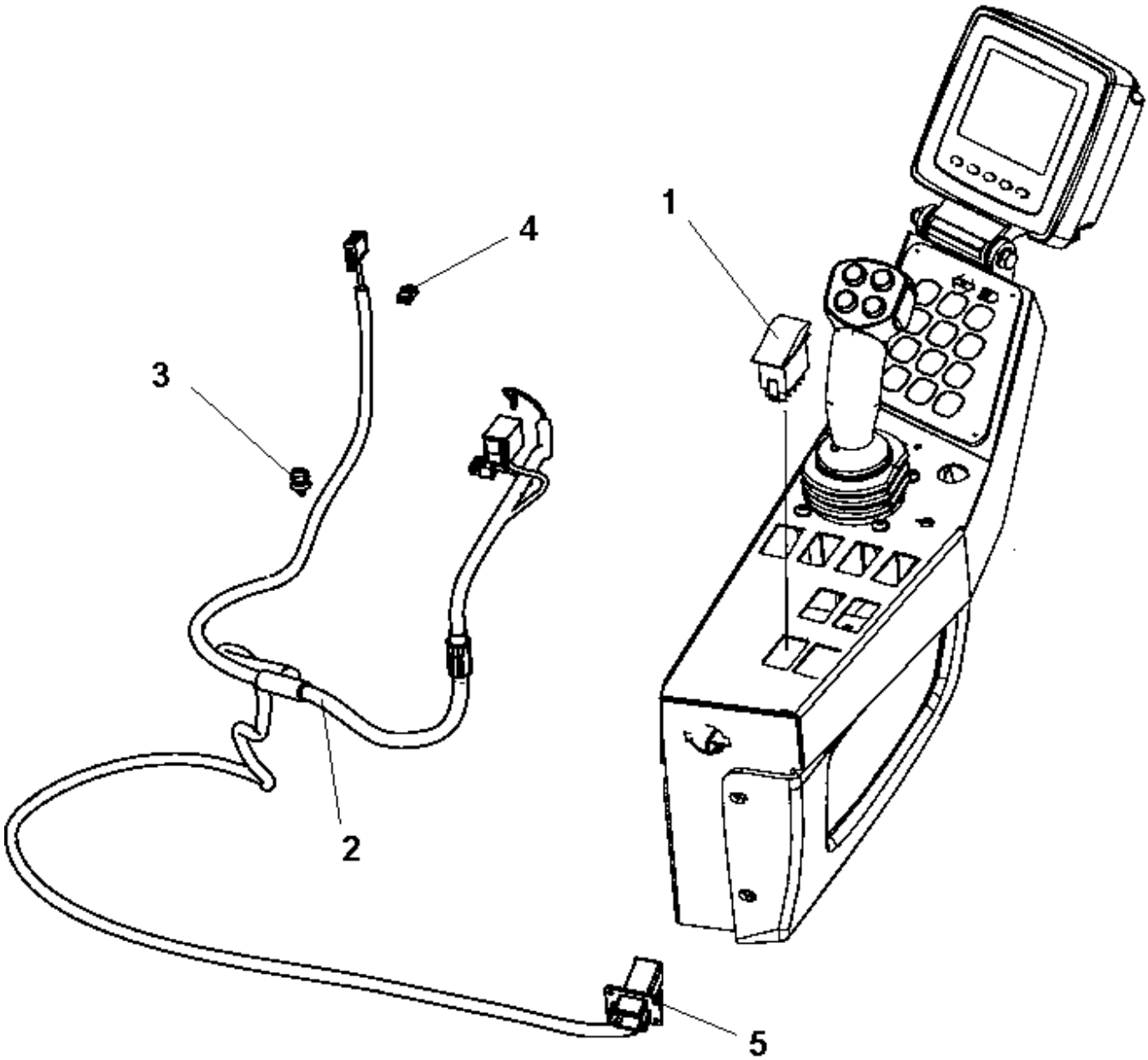

Item	Part No.	Name	Qty	L	SN INFO
1	4700792398	Switch	1		
2	4812115522	Wiring Harness	1		
3	4700792441	Cable tie with holder	1		
4	4700792537	Cable tie with holder	1		
5	4700791709	Blind rivet	4		

Driving & side direction lights Registration plate light module

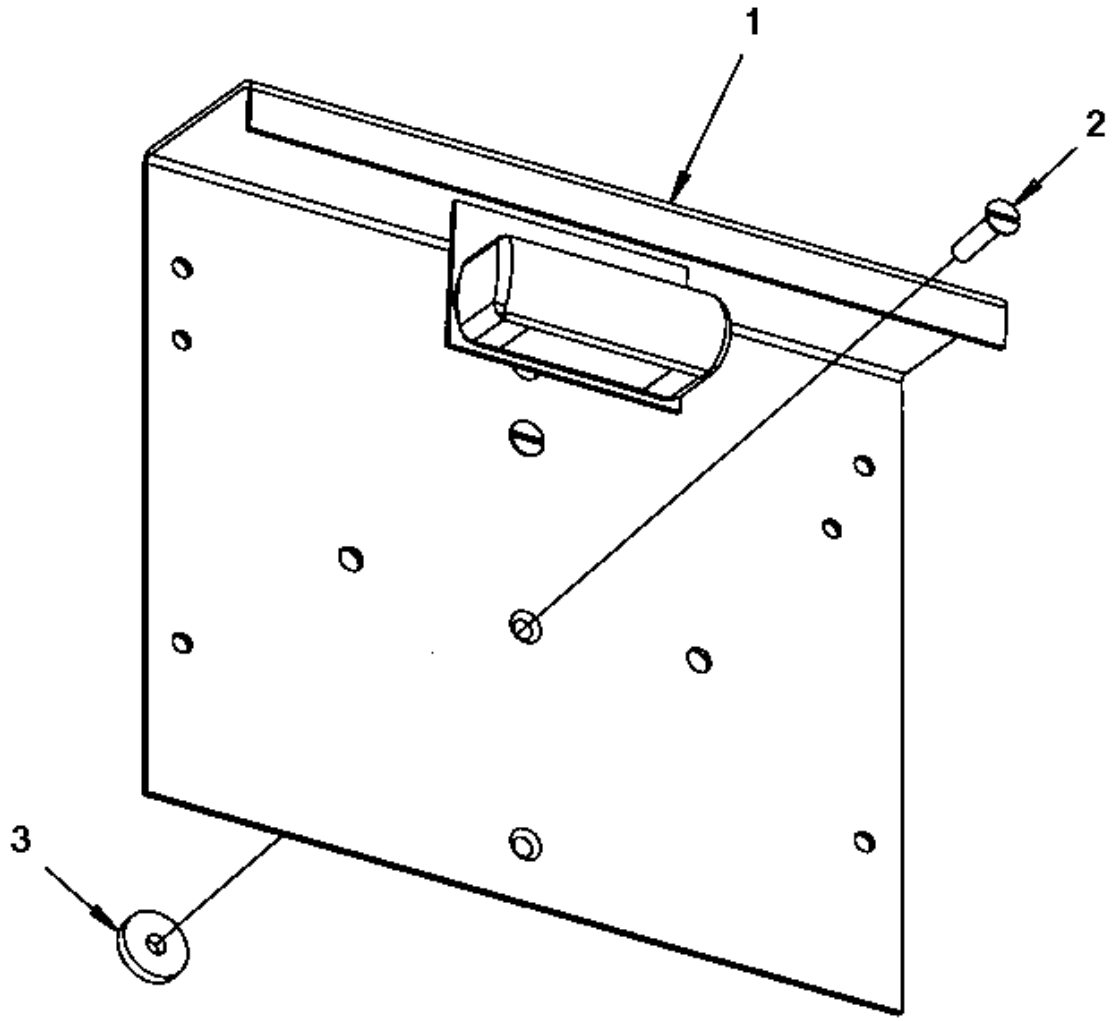

Item	Part No.	Name	Qty	L	SN INFO
1	-	Registration plate light	1		
2	4700928784	Screw	2		
3	4700904735	Steel plain washer	2		

Driving & side direction lights Registration plate light

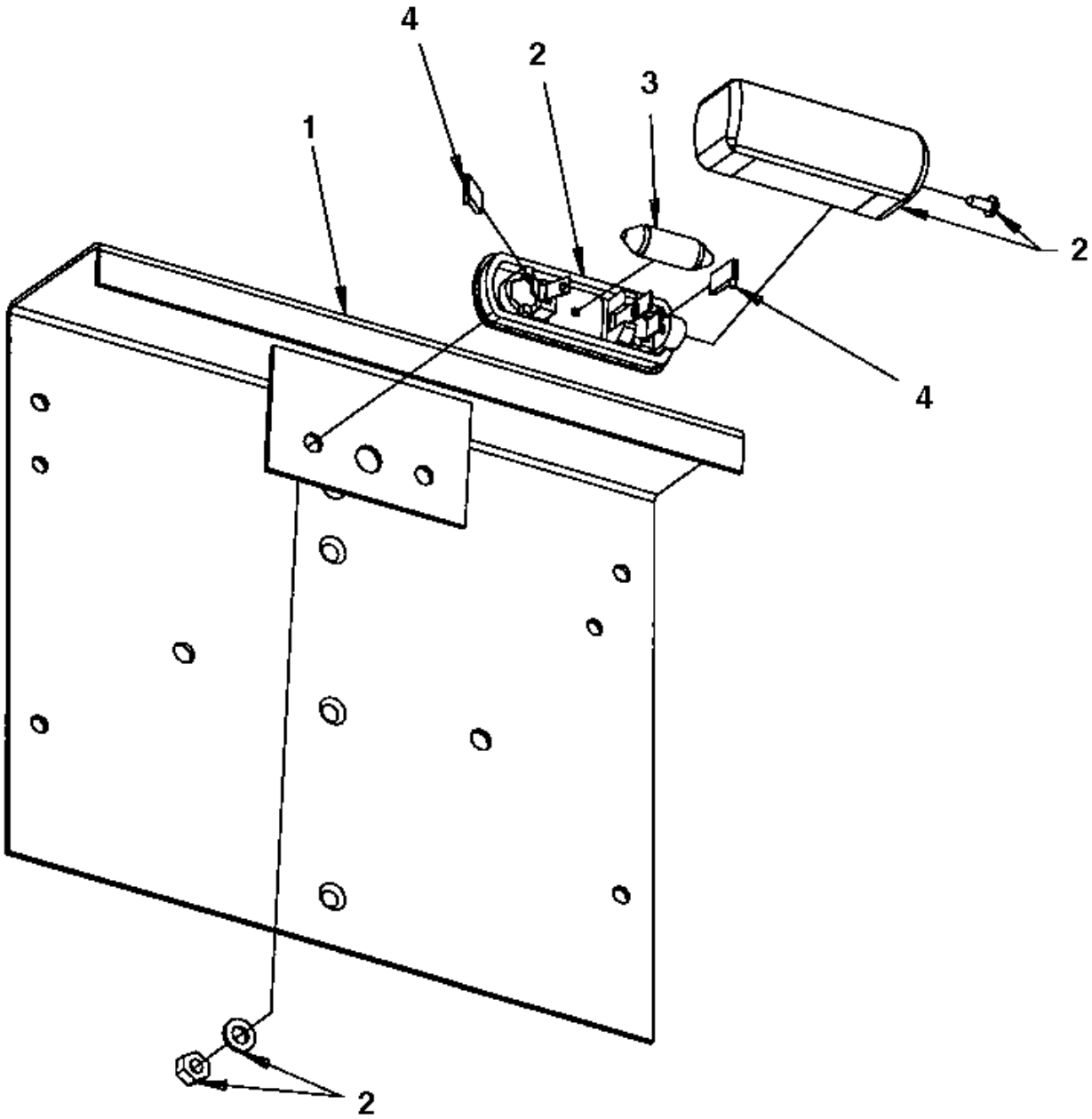

Item	Part No.	Name	Qty	L	SN INFO
1	4700355797	Licence plate holder	1		
2	4700929455	Licence plate light	1		
3	4700792354	Bulb 24V 5W	1		
4	4700792035	Push-on terminal	2		

Driving & side direction lights Driving lights, rear

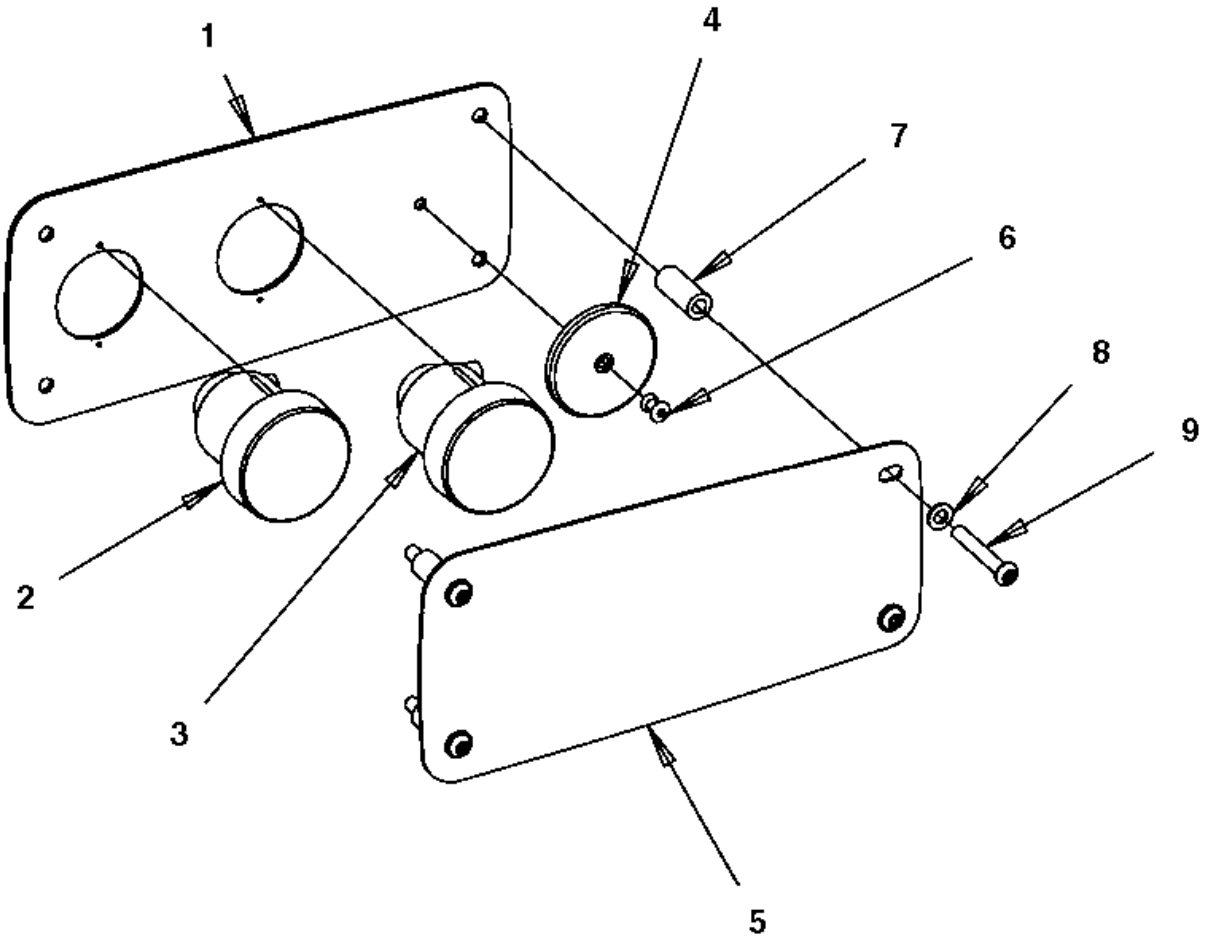

Item	Part No.	Name	Qty	L	SN INFO
1	4700390435	Lights bracket	1		
2	4700792520	Direction indicator	1		
2	4700792349	Bulb 24V 21W	1		
3	4700792519	Brake/position light	1		
3	4700792351	Bulb 24V 21/5W	1		
4	4700791956	Reflector, red	1		
5	4700390436	Protecting cover	1		
6	4700791754	Blind rivet	1		
7	4700391115	Spacer sleeve	4		
8	4700904229	Washer, 8.4x 6x1.5 mm 300HV	4		
9	4700792361	Hexagon socket head cap screw	4		

Driving & side direction lights Turn signals

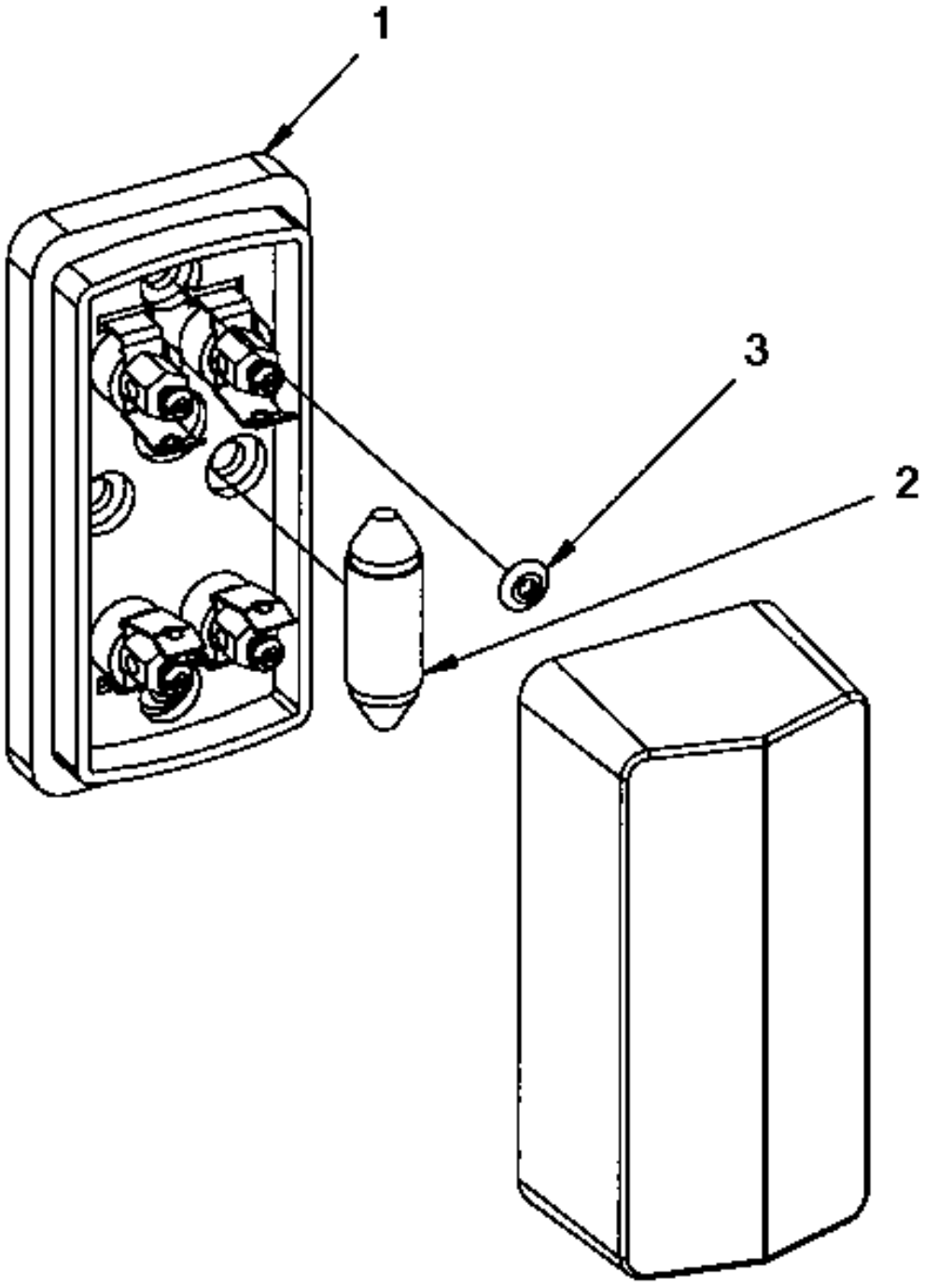

Item	Part No.	Name	Qty	L	SN INFO
1	4700902064	Direction lights	1		
2	4700792354	Bulb 24V 5W	1		
3	4700923253	Rivet	2		

Rotating beacon, working light Rotating beacon, working light

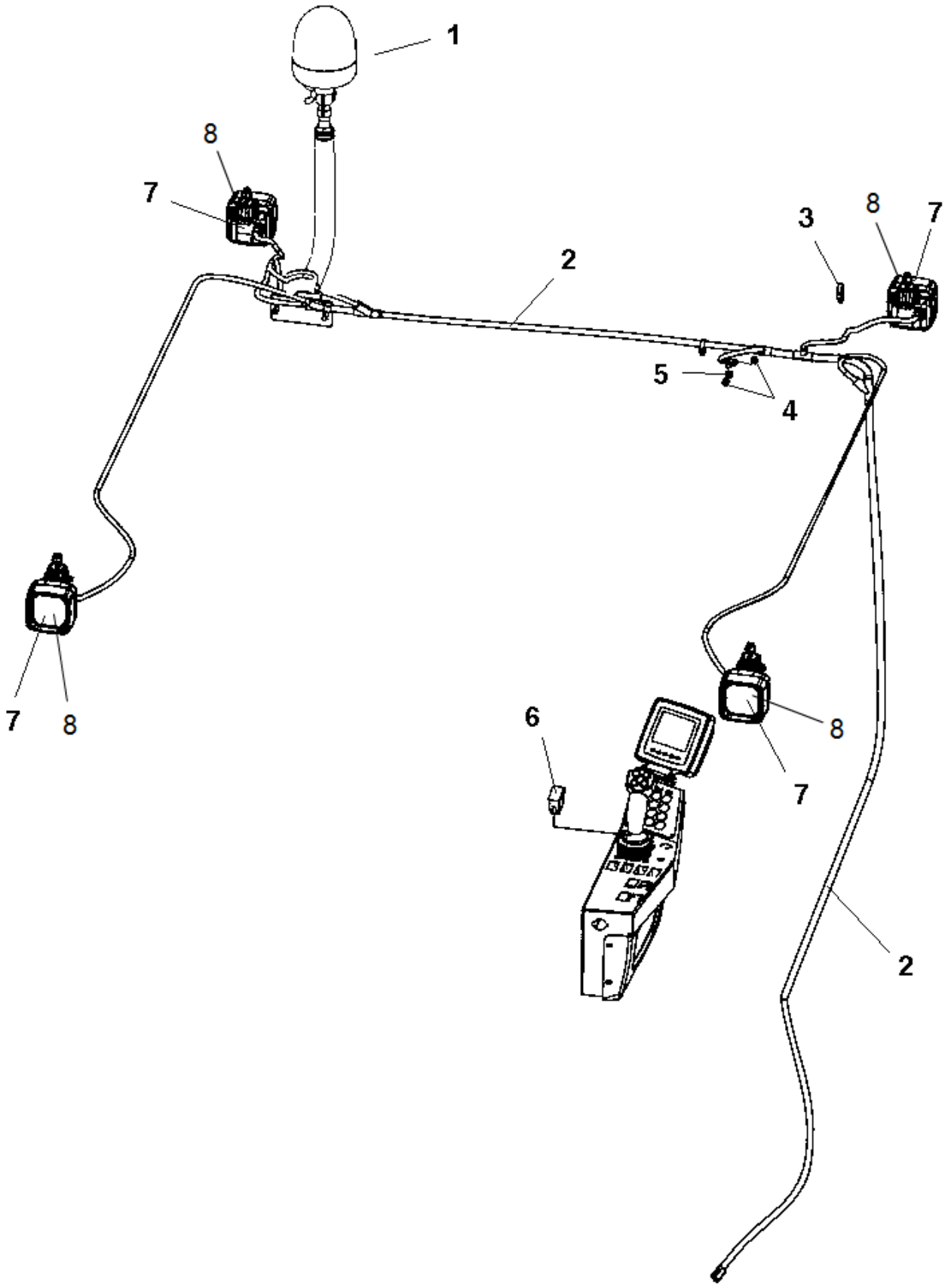

Item	Part No.	Name	Qty	L	SN INFO
1	-	Rotating beacon module	1		
2	4812119163	Wiring harness	1		
3	4700313102	Cable ties	N		
4	4700570005	Hexagon nut	2		
5	4700904229	Washer, 8.4x 6x1.5 mm 300HV	1		
6	4700792397	Switch	1		
7	-	Working light module H3	4		
8	4812121468	Working light, LED	4		

Rotating beacon, working light Rotating beacon module

Item	Part No.	Name	Qty	L	SN INFO
1	4700397516	Bracket	1		
2	4812120467	Lever	1		
3	4812120469	Bracket	1		
4	4812122611	Rotating beacon	1		
5	4700792410	Hand knob nut	1		
6	4700904640	Washer, 8.4x22x3 mm 300HV	1		
7	4700902286	Lock nut, M8x1.25 mm A2K	1		
8	4700904229	Washer, 8.4x 6x1.5 mm 300HV	2		
9	4700792441	Cable tie with holder	1		
10	4700500028	Screw, M10 x 25 mm 8.8 A3K	2		
11	4700904230	Plain washer 10.5x22x2 mm	2		
12	4812121848	Rotating beacon, LED	1		

Rotating beacon, working light Working light module H3

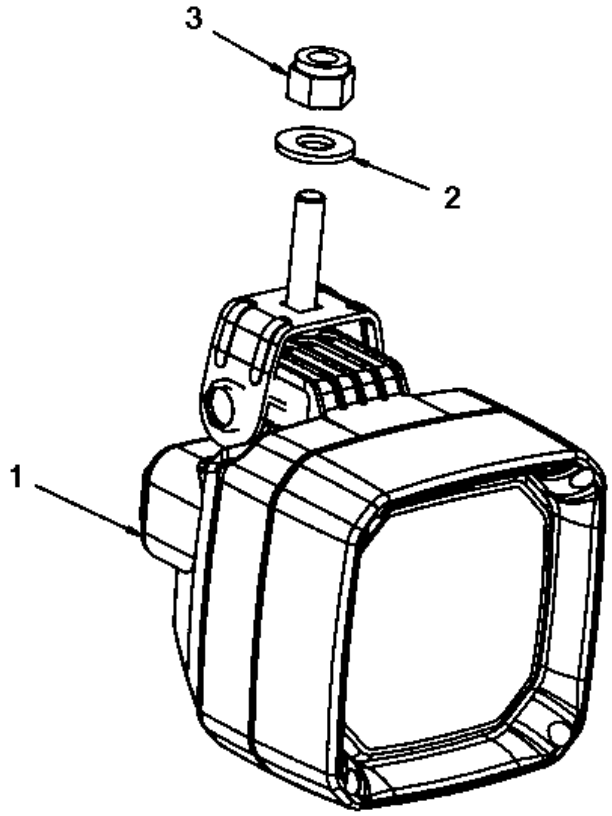

Item	Part No.	Name	Qty	L	SN INFO
1	4700392033	Working light	1		
1	4700792352	Bulb	1		
2	4700904230	Plain washer 10.5x22x2 mm	1		
3	4700586018	Lock nut M10	1		

Drum edge lights Drum edge lights

Item	Part No.	Name	Qty	L	SN INFO
1	-	Bracket	4		
2	-	Working light module H3	4		
3	-	Bracket	4		
5	4700792794	Switch	1		
6	4812115290	Wiring harness	1		
7	4700792422	Relay 24V 20A	1		
8	4700792210	Screw torx	1		
9	4700395352	Cable tie holder	12		
10	4700313068	Cable ties, L=92 mm	12		
11	4700313041	Cable ties, L=200 mm	8		
12	4700901228	Fuse, 15A Blue	1		
13	4700792667	Cable tie holder	7		

Drum edge lights Bracket

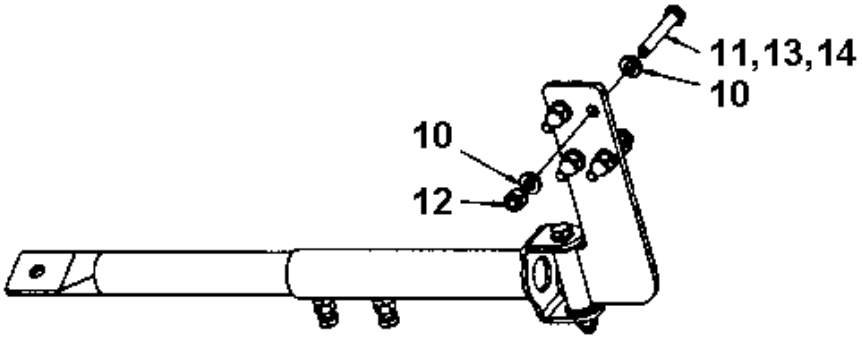

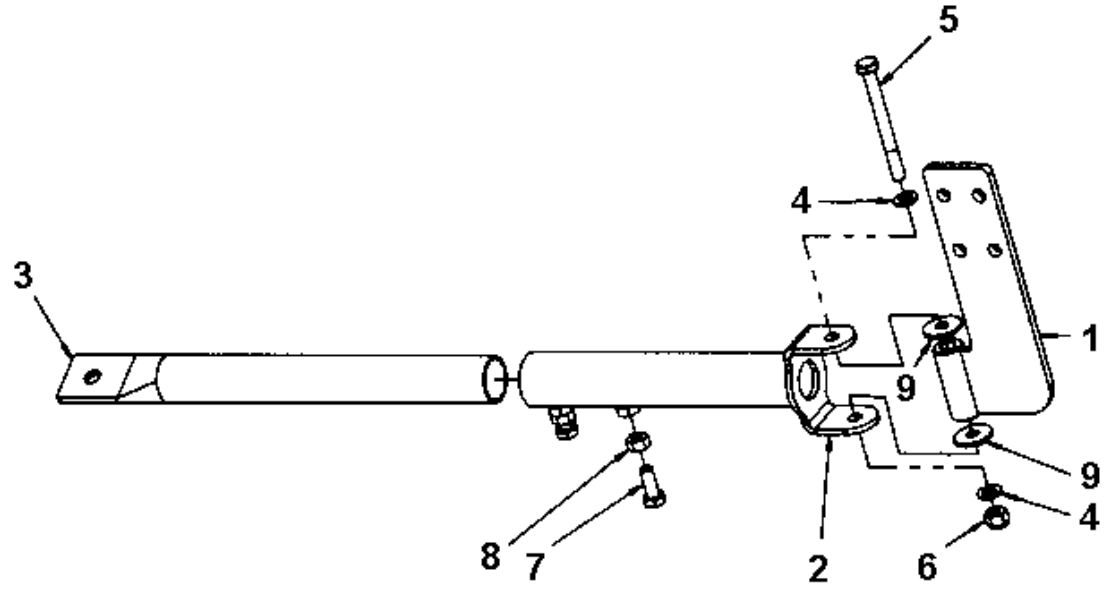

Item	Part No.	Name	Qty	L	SN INFO
1	4700397028	Bracket	1		
2	4700397029	Bracket	1		
3	4700397045	Bracket	1		
4	4700904229	Washer, 8.4x 6x1.5 mm 300HV	2		
5	4700500190	Screw	1		
6	4700586003	Lock nut M8	1		
7	4700500053	Screw, M8x20 mm 8.8 A2K	2		
8	4700570005	Hexagon nut	2		
9	4700903662	Washer	2		
10	4700904556	Steel plain washer 8,4x16x3,0	8		
11	4700500047	Hexagon head screw	4	A	
12	4700586003	Lock nut M8	4		
13	4700500024	Screw M8x45	4	B	
14	4700500025	Screw, M8x50 mm 8.8 A2K	4	C	

Comments for Page: Bracket

(L)OCAL REMARKS

A | en_US | Used on machines with Cab.

B | en_US | Used on machines with Handrails.

C | en_US | Used on machines with Handrails and Canopy.

Drum edge lights Bracket

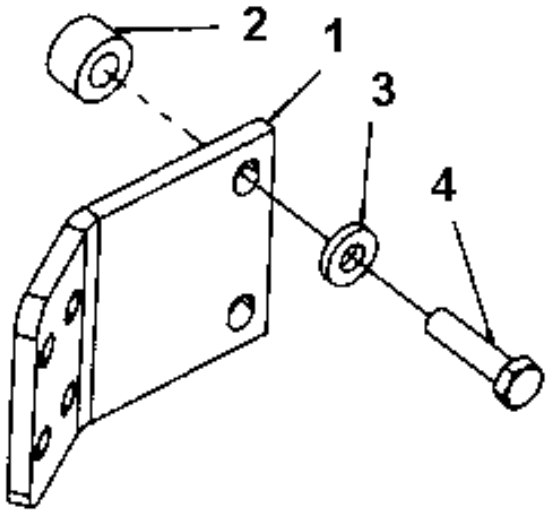

Item	Part No.	Name	Qty	L	SN INFO
1	4700395787	Holder plate	1		
2	4700397500	Spacer sleeve	2	1	
3	4700904557	Washer, 10.5x22x4 mm 300 HV	2		
4	4700500091	Screw	2		

Comments for Page: Bracket

(L)OCAL REMARKS

1 | en_US | Used on machines with Air condition

GPS/DCA, Asphalt temp GPS/DCA, Asphalt temp meter

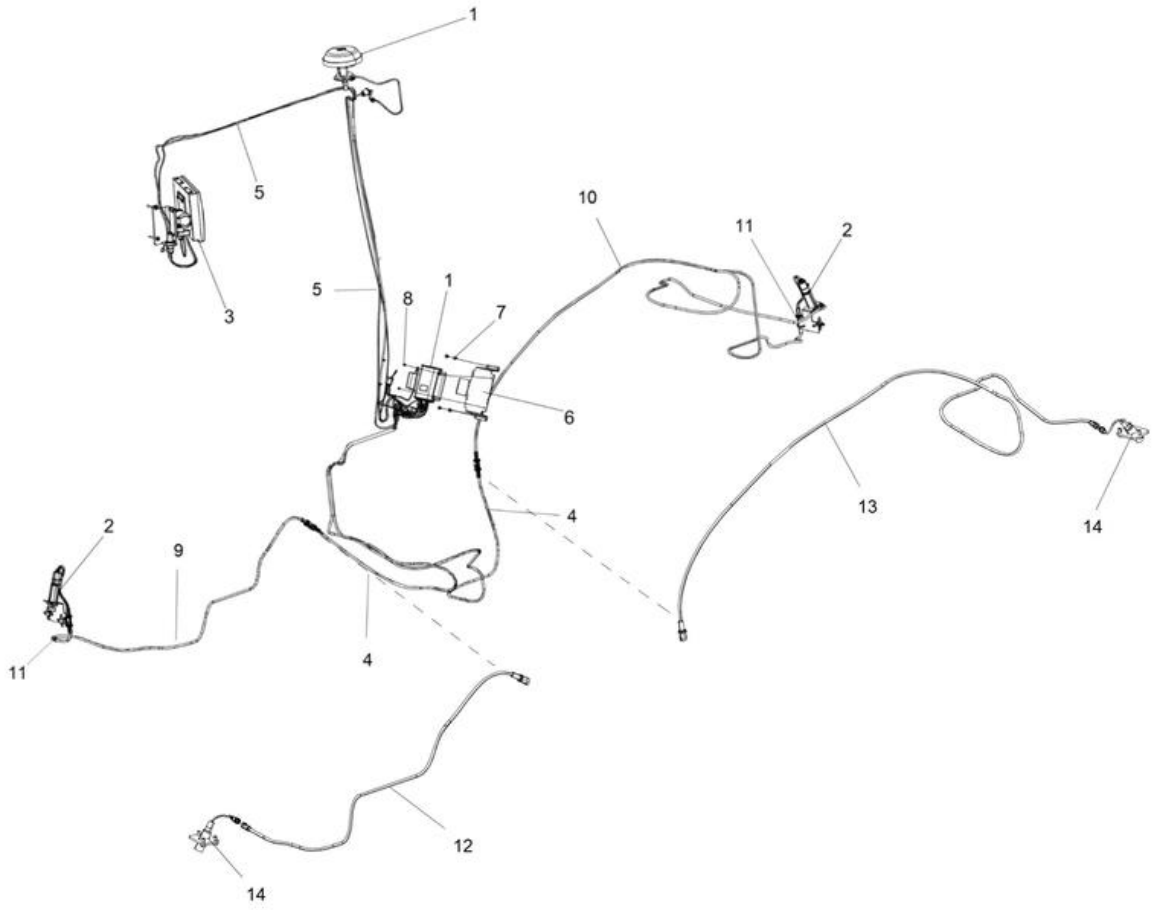

Item	Part No.	Name	Qty	L	SN INFO
1	-	GPS equipment assy	1		
2	-	Temp sensor module	2		To A016813
3	-	Computer with holder	1		
4	4700393947	Wiring harness	2		
5		Cable harness kit, GPS	1		
6	4700394276	Bracket	1		
7	4700541702	Screw M6x12	4		
8	4700792210	Screw torx	4		
9	4700396205	Cable harness	1		To A016813
10	4700393968	Cable harness	1		To A016813
11	4700313041	Cable ties, L=200 mm	2		
12	4812120716	Wiring harness	1		From A016814
13	4812120717	Wiring harness	1		From A016814
14		Temp sensor module	2		From A016814

GPS/DCA, Asphalt temp Cable harness kit, GPS

Item	Part No.	Name	Qty	L	SN INFO
1	4812121597	Cable harness	1		
2	4700313041	Cable ties, L=200 mm	6		
3		Cable harness and Gateway	1		
4	4700901227	Fuse 10A Red	1		
5	4812113158	Antenna lead	1		
6	4700792704	Grommet	1		
7	4812121608	Cable harness	1		
8	4700901224	Fuse, 3A Violet	1		

GPS/DCA, Asphalt temp Cable and Gateway

Item	Part No.	Name	Qty	L	SN INFO
1	4700792660	Gateway CAN/BUS	1		
2	4812115093	Cable harness	1		
3	4700313068	Cable ties, L=92 mm	1		

GPS/DCA, Asphalt temp GPS/DCA equipment assy

Item	Part No.	Name	Qty	L	SN INFO
1	4811000431	GPS antenna	1		
2	4811000432	Antenna bracket	1		
3	4812113160	Bracket	1		
4	4812121818	Bracket	1		
5	4700513016	Hexagon socket countersunk screw M16	1		
6	4812121485	GPS reciever	1		

GPS/DCA, Asphalt temp Temp sensor module

Item	Part No.	Name	Qty	L	SN INFO
1	4700394004	Bracket	1		
2	4700387982	Temperature sender	1		
3	4700393951	Cable harness	1		
4	4700313041	Cable ties, L=200 mm	1		
5	4700904218	Holder	1		
6	4700792669	Blind rivet	1		
7	4700904596	Hand knob	2		

GPS/DCA, Asphalt temp Temp sensor module

Item	Part No.	Name	Qty	L	SN INFO
1	4812119599	Holder	1		
2	4812119520	Temperature sensor	1		
3	4700904229	Washer, 8.4x 6x1.5 mm 300HV	3		
4	4700500053	Screw, M8x20 mm 8.8 A2K	3		

GPS/DCA, Asphalt temp Computer with holder

Item	Part No.	Name	Qty	L	SN INFO
1	4700396119	Computer, cpl.	1		
2	-	Screw-kit, computer	1		
3	4700395888	Bracket	1		
4	4700394542	Ball joint	1		
5	4700904228	Washer 6,4x12x1,5	4		
6	4700500040	Screw, M6x20 mm 8.8 A2K	4		
7	4700904229	Washer, 8.4x 6x1.5 mm 300HV	2		
8	4700500019	Hexagon screw	2		
9	4700500026	Screw M8-1,25x60 mm 8.8	2		

Platform, no cab Platform, no cab

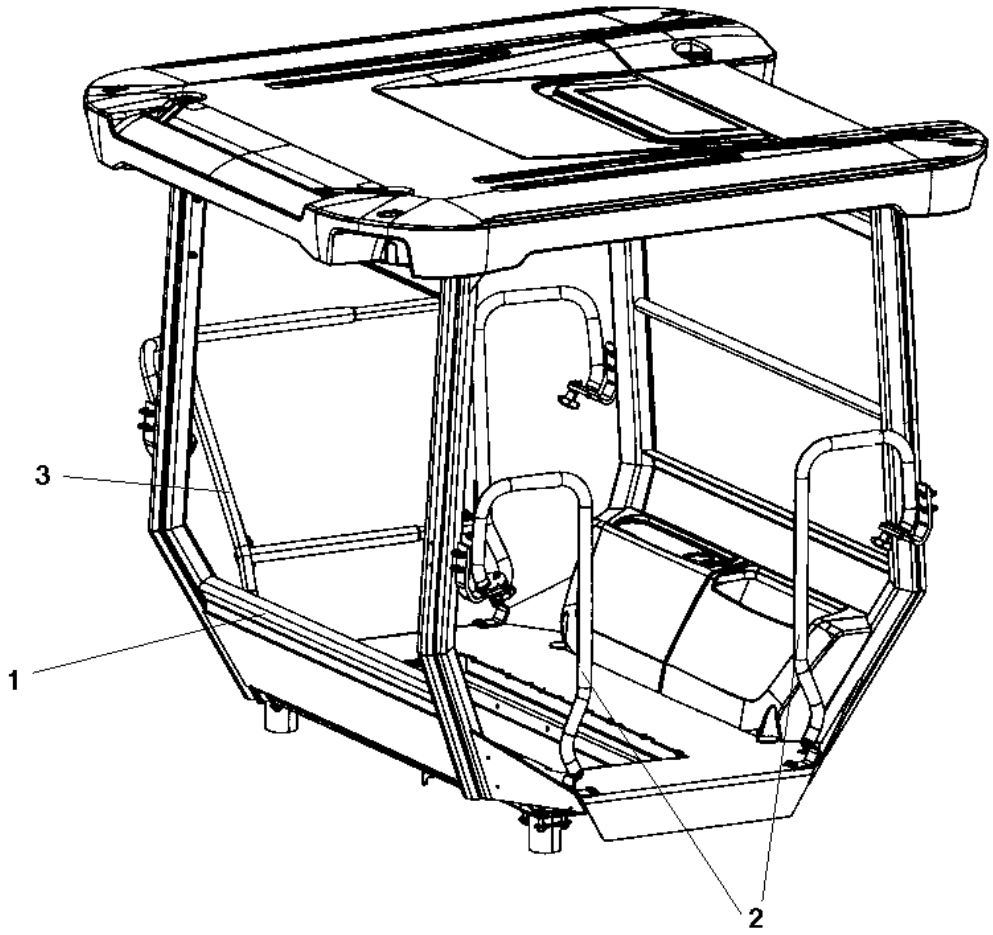

Item	Part No.	Name	Qty	L	SN INFO
1	-	Platform with 4-post ROPS	1		
2	-	Hand rail, left	1		
3	-	Hand rail, right	1		
8	-	Lunch box module	1		

Platform, no cab Platform with 4-post ROPS

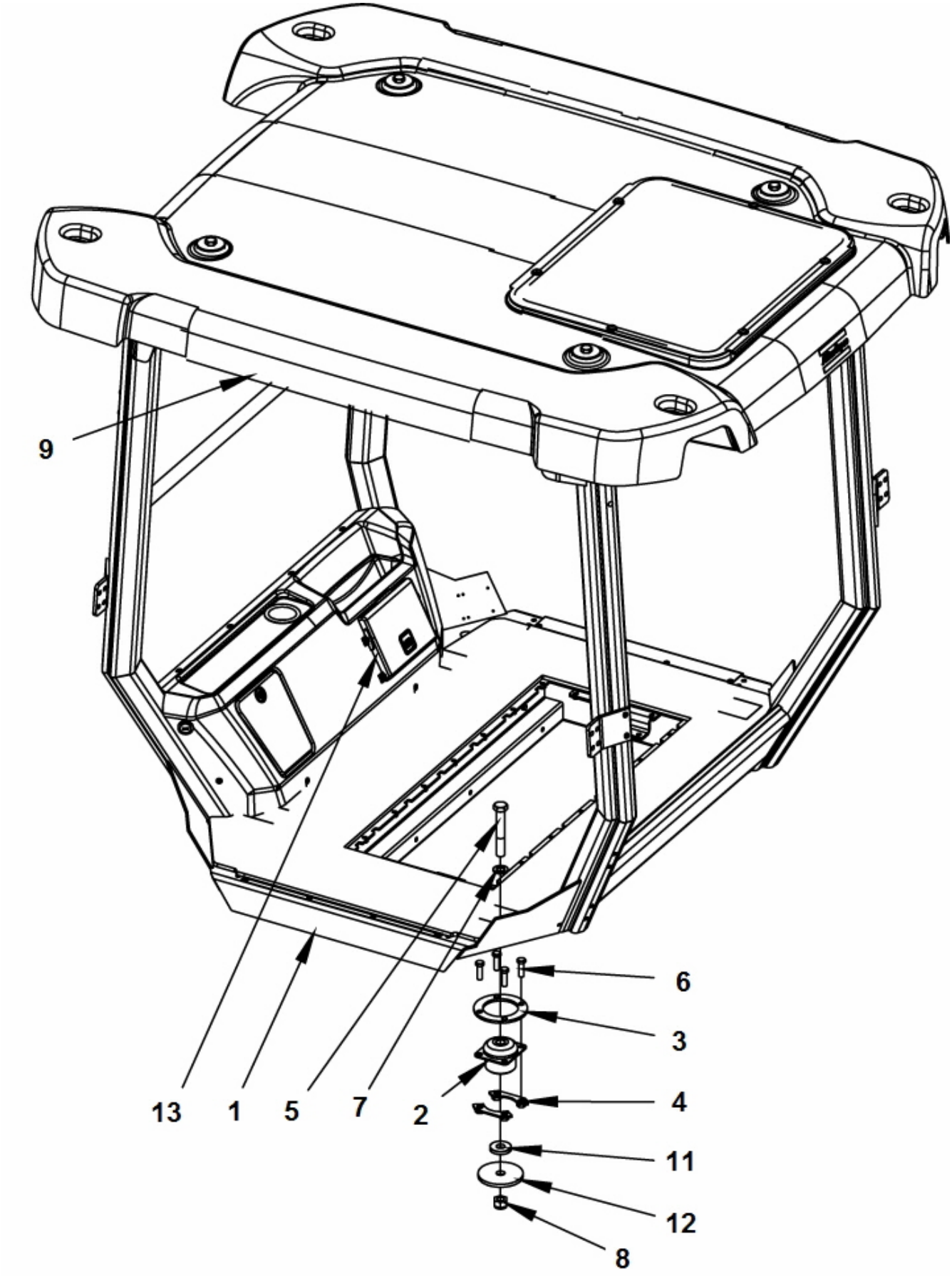

Item	Part No.	Name	Qty	L	SN INFO
1	4812119369	Platform with 4-post ROPS	1		
2	4812116884	Shock absorber	4		
3	4700904233	Steel plain washer 21x36x3	4		
4	4700902282	Screw	4		
5	4700901145	Lock nut M20-10	4		
6	4700393525	Holder	8		
7	4700359998	Back-up ring	4		
8	4700500195	Screw	16		
9	-	Decals basic kit	1		
11	4700927410	Washer	4		
12	4812116867	Spacer	4		
13	-	Manual box	1		

Platform, no cab Decals basic kit

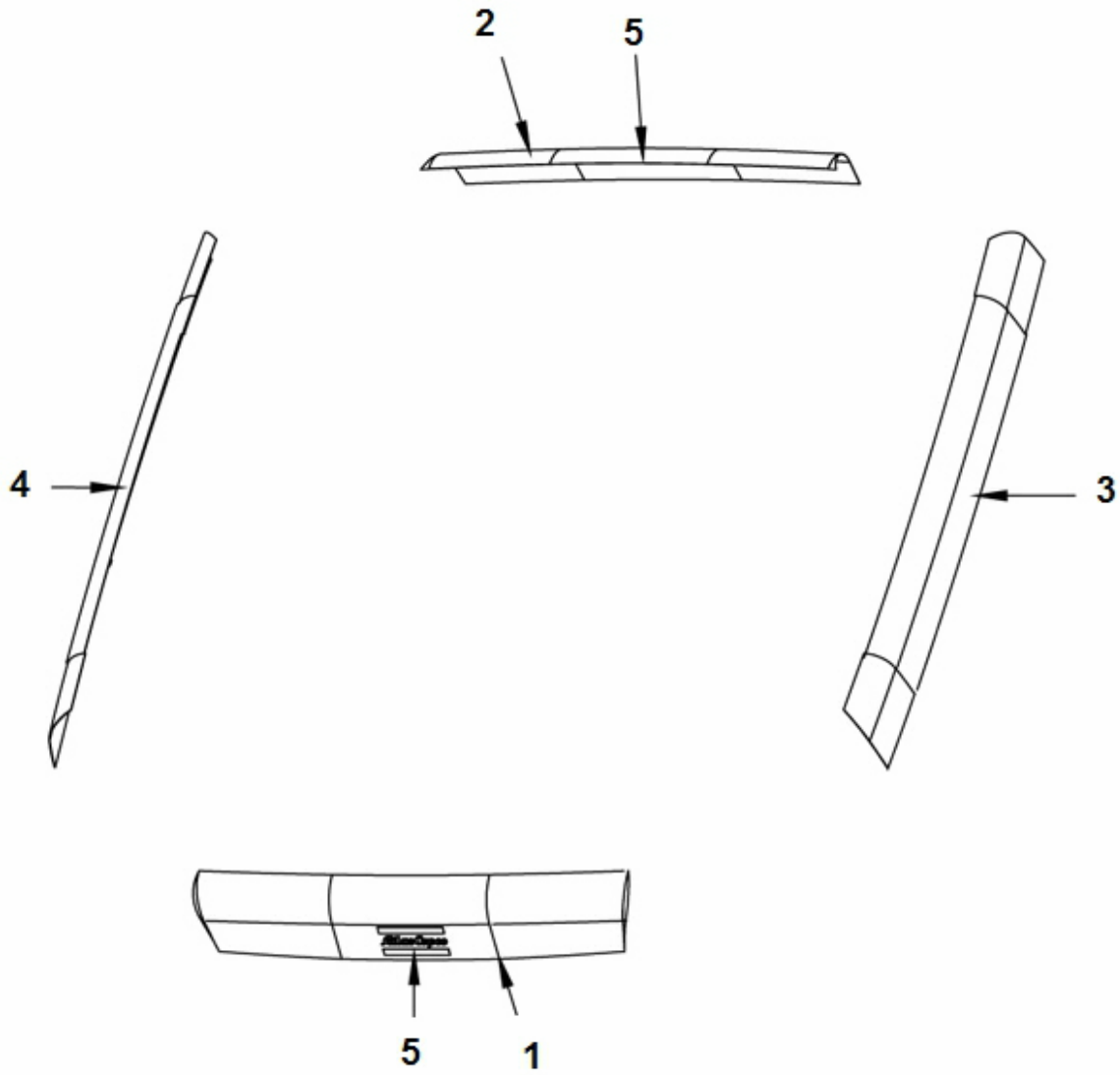

Item	Part No.	Name	Qty	L	SN INFO
1	4812120084	Decal cosmetic Yellow	1		
2	4812120085	Decal cosmetic Yellow	1		
3	4812120081	Decal cosmetic Yellow	1		
4	4812120083	Decal cosmetic Yellow	1		
5	4812120117	Decal AC - logotype	2		

4812119369 Platform with 4-post ROPS 4812119369 Platform with 4-post ROPS

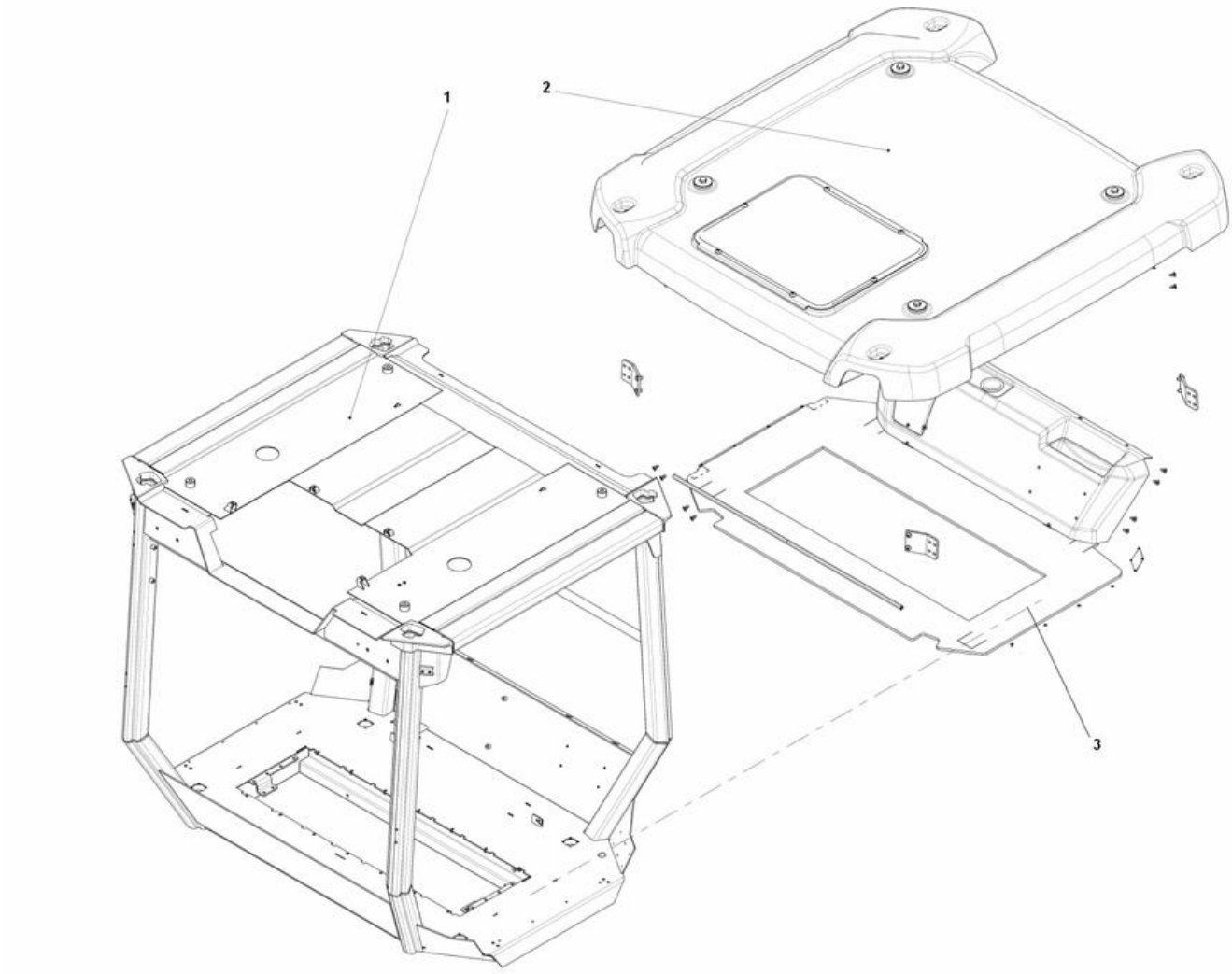

Item	Part No.	Name	Qty	L	SN INFO
1	4812119388	Frame ROPS	1		
2	-	Roof	1		
3	-	ROPS interior	1		

4812119369 Platform with 4-post ROPS Roof

Item	Part No.	Name	Qty	L	SN INFO
1	4812119427	Roof ROPS	1		
2	4812115164	Rubber strip	1XL	A	
3	4812119417	Plate	1		
4	-	Profile	1XL	B	
5	4812120255	Seal washer	6		
6	-	Screw	6		
7	4812120296	Washer	4		
8	4812115171	Washer	4		
9	-	Screw	4		
10	-	Grommet	2		
11	4700791475	Grommet	5		
25	-	Plug	5		
29	-	Plug	4		
30	-	Plug	8		
31	-	Plug	1		
32	-	Plug	2		
33	-	Plug	1		
34	-	Plug	1		
35	-	Plug	4		
37	-	Plug	2		

Comments for Page: Roof

(L)OCAL REMARKS

A | en_US | L=6.030 m

B | en_US | L=2.500 m

4812119369 Platform with 4-post ROPS ROPS interior

Item	Part No.	Name	Qty	L	SN INFO
12	4812120770	Floor mat	1		
13	-	Plate	1		
14	-	Plate	1		
15	-	Screw	8		
16	4812120283	Rear cover	1		
17	4700395816	Plug socket 24V	1		
18	4812119423	Cover	1		
19	4812114566	Turn fastener	1		
20	4812120294	Speed fastener metric	4		
21	4812114567	Speed nut	3		
22	-	Scew	7		
23	-	Typ plate	1		
24	-	Rivet	4		
25	-	Plug	14		
26	4700902379	Edge trim	1XL	A	
27	-	Plate	4		
28	-	Screw	8		

Comments for Page: ROPS interior

(L)OCAL REMARKS

A | en_US | L=1.225 m

Platform, no cab Manual box

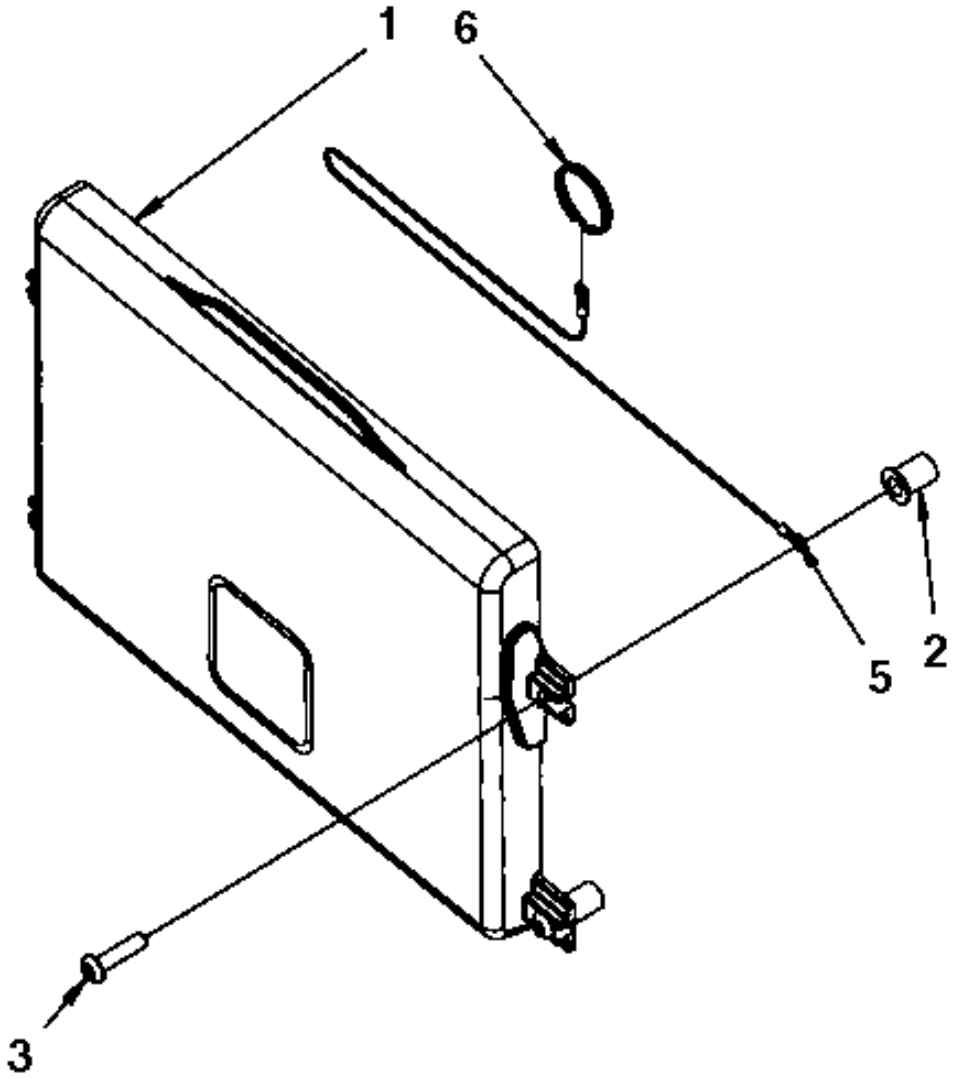

Item	Part No.	Name	Qty	L	SN INFO
1	4700383705	Instruction manual box	1		
2	4700792536	Rubber nut	4		
3	4700792589	Screw	4		
5	4700384584	Wire	1		
6	4700358254	Key-ring	1		

Platform, no cab Hand rail, left

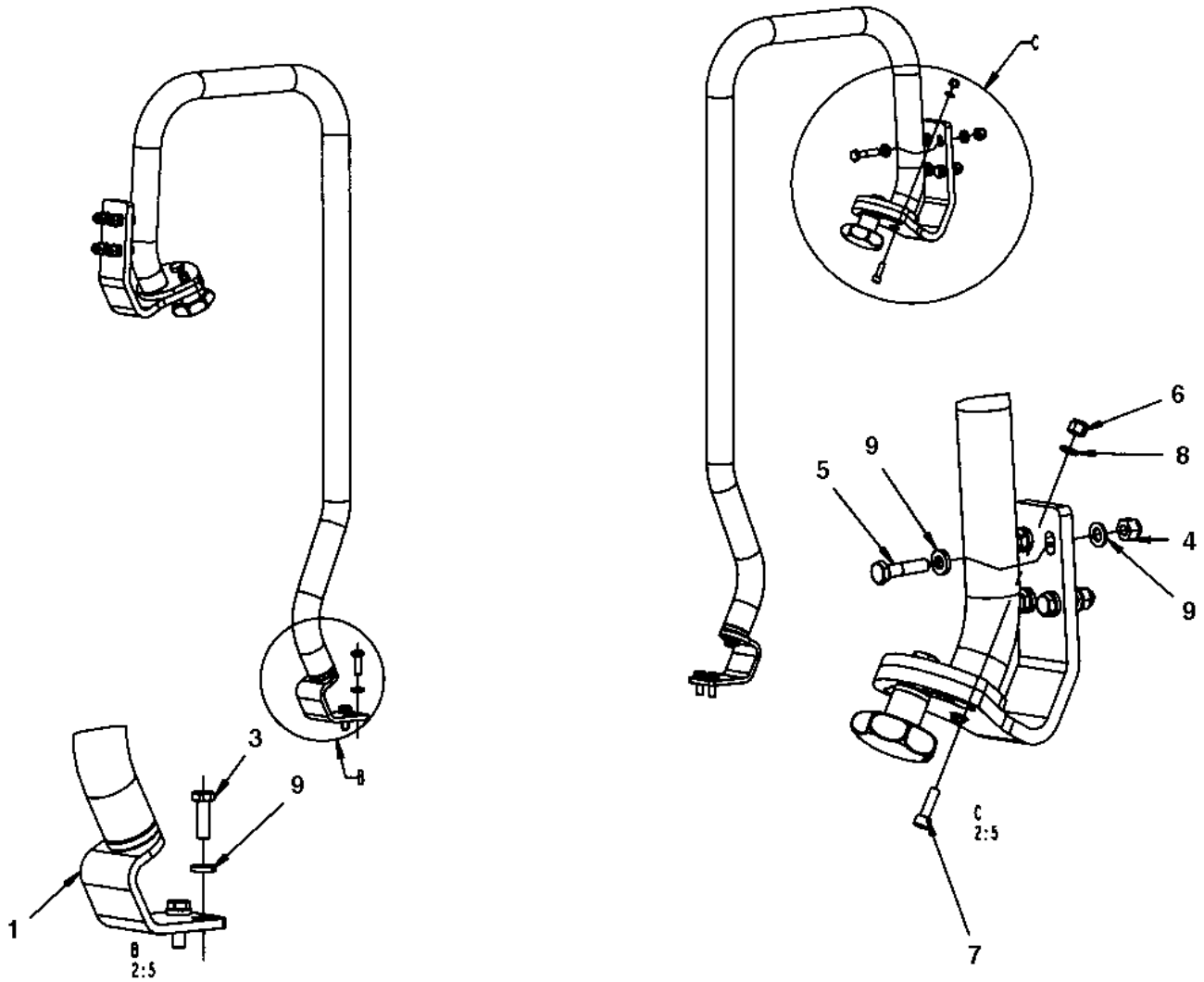

Item	Part No.	Name	Qty	L	SN INFO
1	-	Hand rail	2		
3	4700500021	Screw, M8x25 mm 8.8 A2K	4		
4	4700586003	Lock nut M8	8		
5	4700500023	Screw, M8x40 mm 8.8 A2K	8		
6	4700586002	Lock nut M6 -8	2		
7	4700508025	Screw, M6x20 mm 8.8 A2K	2		
8	4700904228	Washer 6,4x12x1,5	2		
9	4700904556	Steel plain washer 8,4x16x3,0	20		

Platform, no cab Hand rail

Item	Part No.	Name	Qty	L	SN INFO
1	4700381936	Bracket	1		
2	4700381935	Bracket	1		
3	4700390155	Hand rail	1		
4	4700792448	Plastic bushing	1		
5	4700904640	Washer, 8.4x22x3 mm 300HV	1		
6	4700500018	Hex. screw	1		
7	4700370286	Washer	1		
8	4700499174	Knob	1		
9	4700792447	Plastic bushing	1		

Platform, no cab Hand rail, right

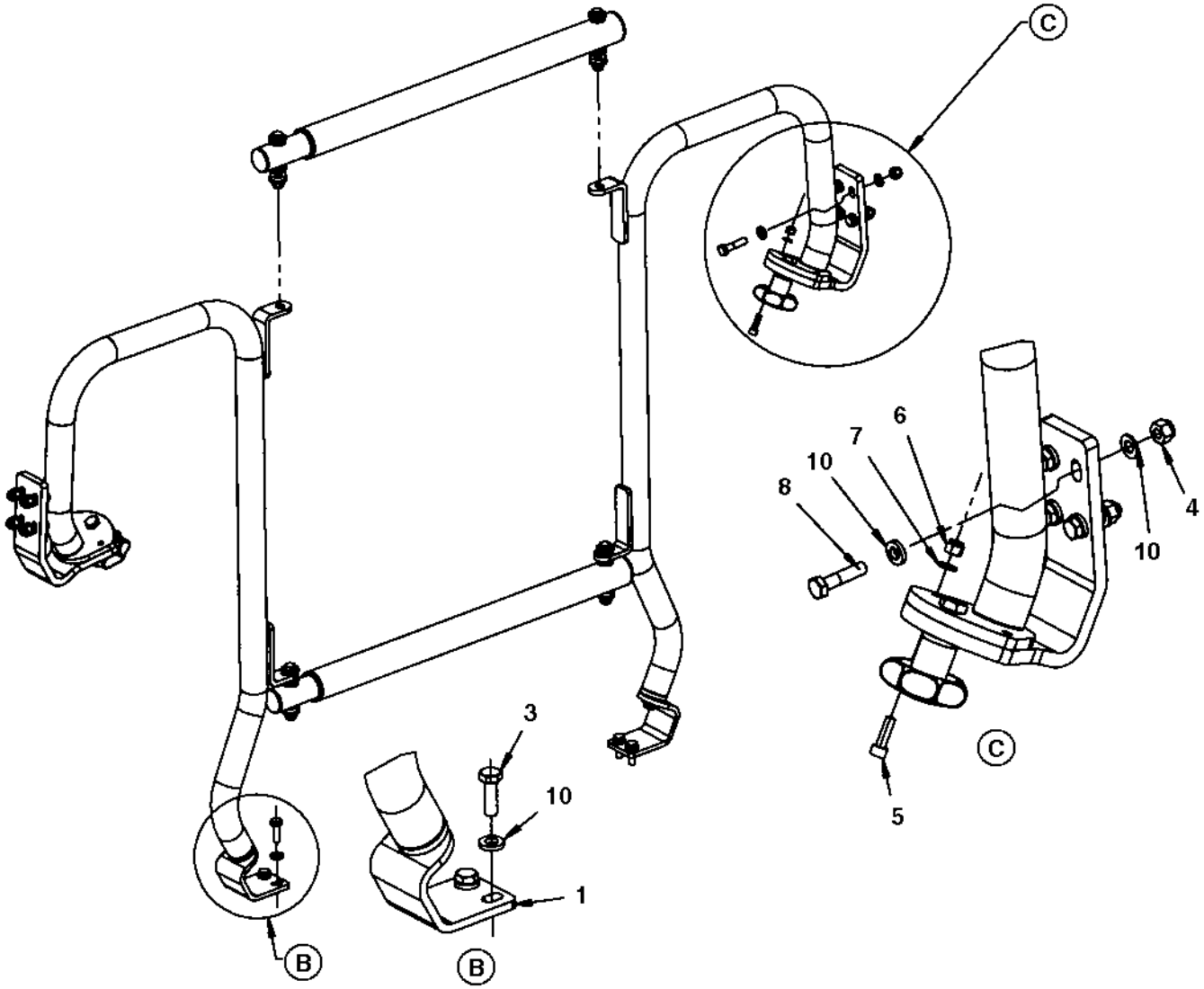

Item	Part No.	Name	Qty	L	SN INFO
1	-	Hand rail	1		
3	4700500021	Screw, M8x25 mm 8.8 A2K	4		
4	4700586003	Lock nut M8	8		
5	4700508025	Screw, M6x20 mm 8.8 A2K	2		
6	4700586002	Lock nut M6 -8	2		
7	4700904228	Washer 6,4x12x1,5	2		
8	4700500023	Screw, M8x40 mm 8.8 A2K	8		
9	-	Hand rail	2		
10	4700904556	Steel plain washer 8,4x16x3,0	20		

Platform, no cab Hand rail

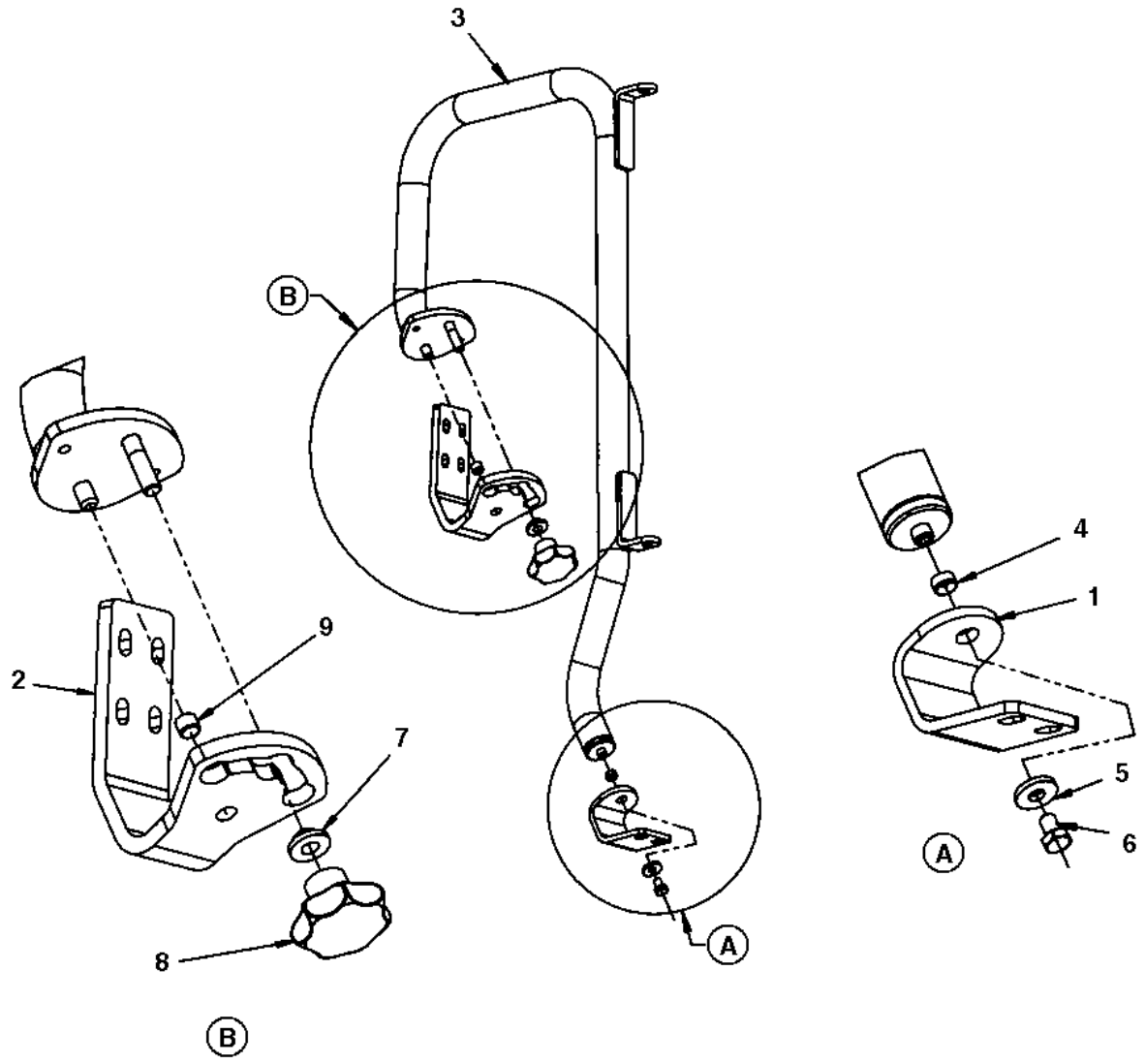

Item	Part No.	Name	Qty	L	SN INFO
1	4700381936	Bracket	1		
2	4700381935	Bracket	1		
3	4700381934	Hand rail	1		
4	4700792448	Plastic bushing	1		
5	4700904640	Washer, 8.4x22x3 mm 300HV	1		
6	4700500018	Hex. screw	1		
7	4700370286	Washer	1		
8	4700499174	Knob	1		
9	4700792447	Plastic bushing	1		

Platform, no cab Hand rail

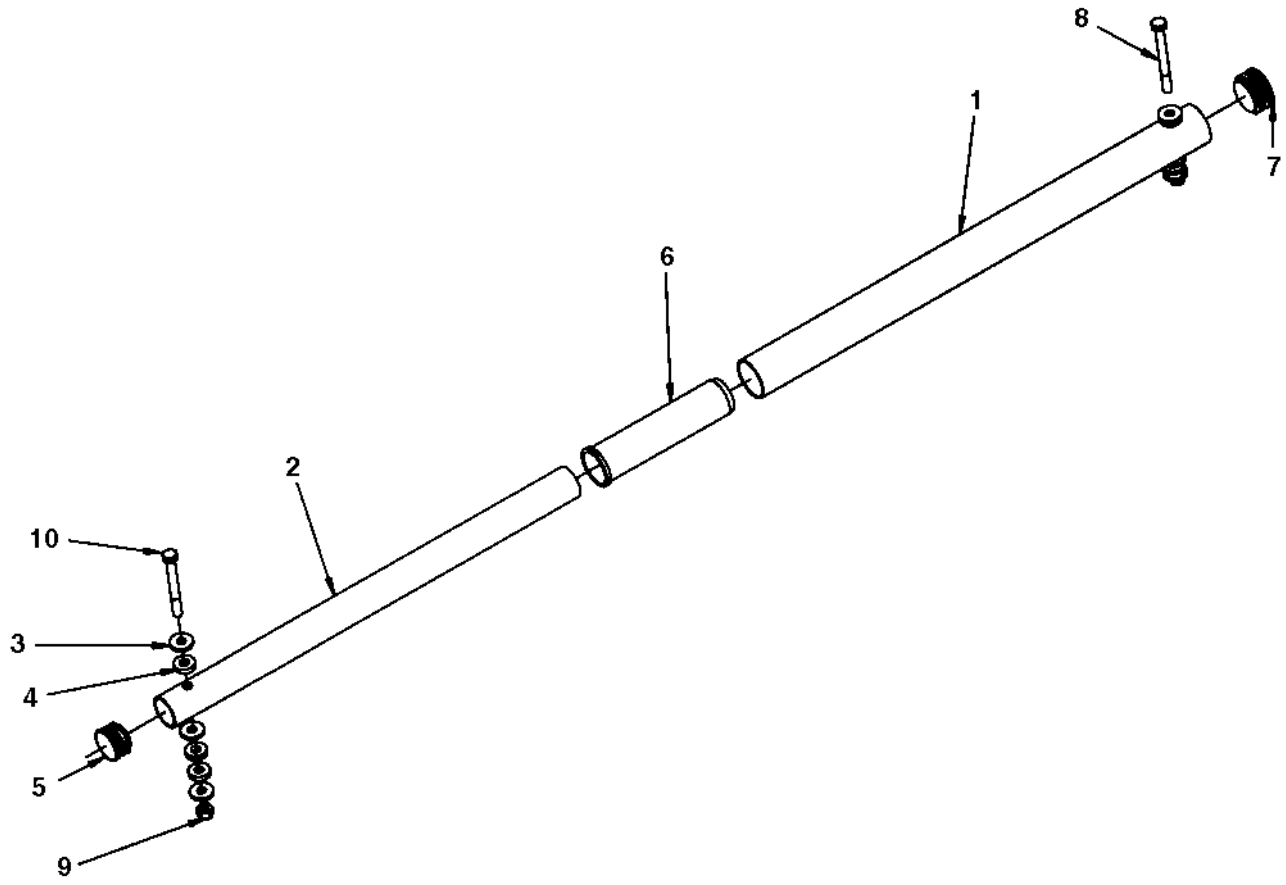

Item	Part No.	Name	Qty	L	SN INFO
1	4700391675	Steel tube	1		
2	4700391676	Steel tube	1		
3	4700904640	Washer, 8.4x22x3 mm 300HV	6		
4	4700391674	Rubber washer	6		
5	4700926216	Protective plug	1		
6	4700391678	Bushing	1		
7	4700792449	Protective plug	1		
8	4700500190	Screw	1		
9	4700586003	Lock nut M8	2		
10	4700500189	Screw	1		

Platform, no cab Lunch box module

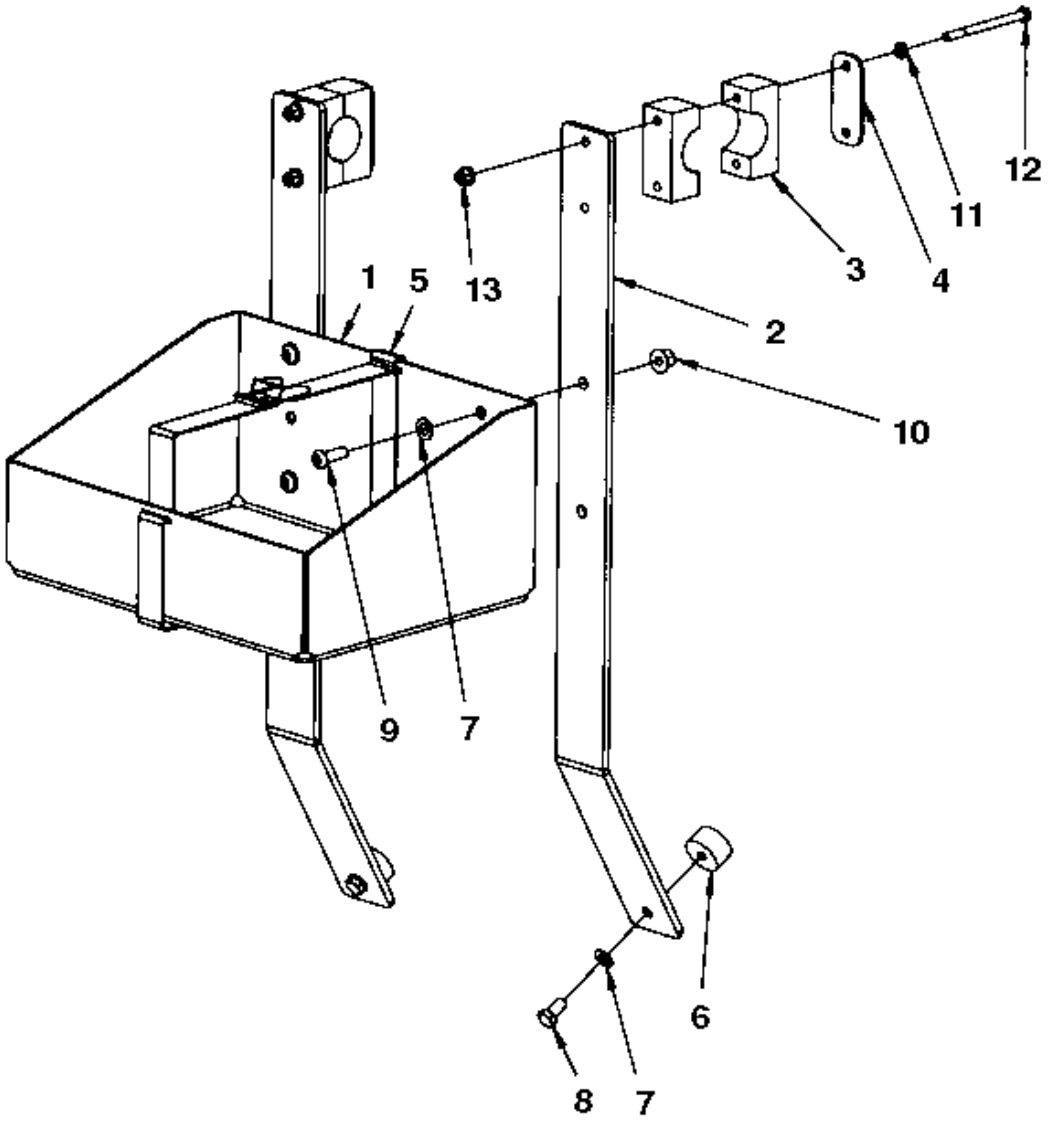

Item	Part No.	Name	Qty	L	SN INFO
1	4700377913	Box	1		
2	4700394859	Bracket	2		
3	4700904340	Pipe clamp	2		
4	4700924791	Cover plate	2		
5	4700287643	Metal strapping	1		
6	4700450163	Shock absorber	2		
7	4700904229	Washer, 8.4x 6x1.5 mm 300HV	6		
8	4700500019	Hexagon screw	2		
9	4700904654	Screw	4		
10	4700902286	Lock nut, M8x1.25 mm A2K	4		
11	4700904228	Washer 6,4x12x1,5	4		
12	4700500153	Screw	4		
13	4700902285	Nut	4		

Cab, asymmetric Cab, asymmetric

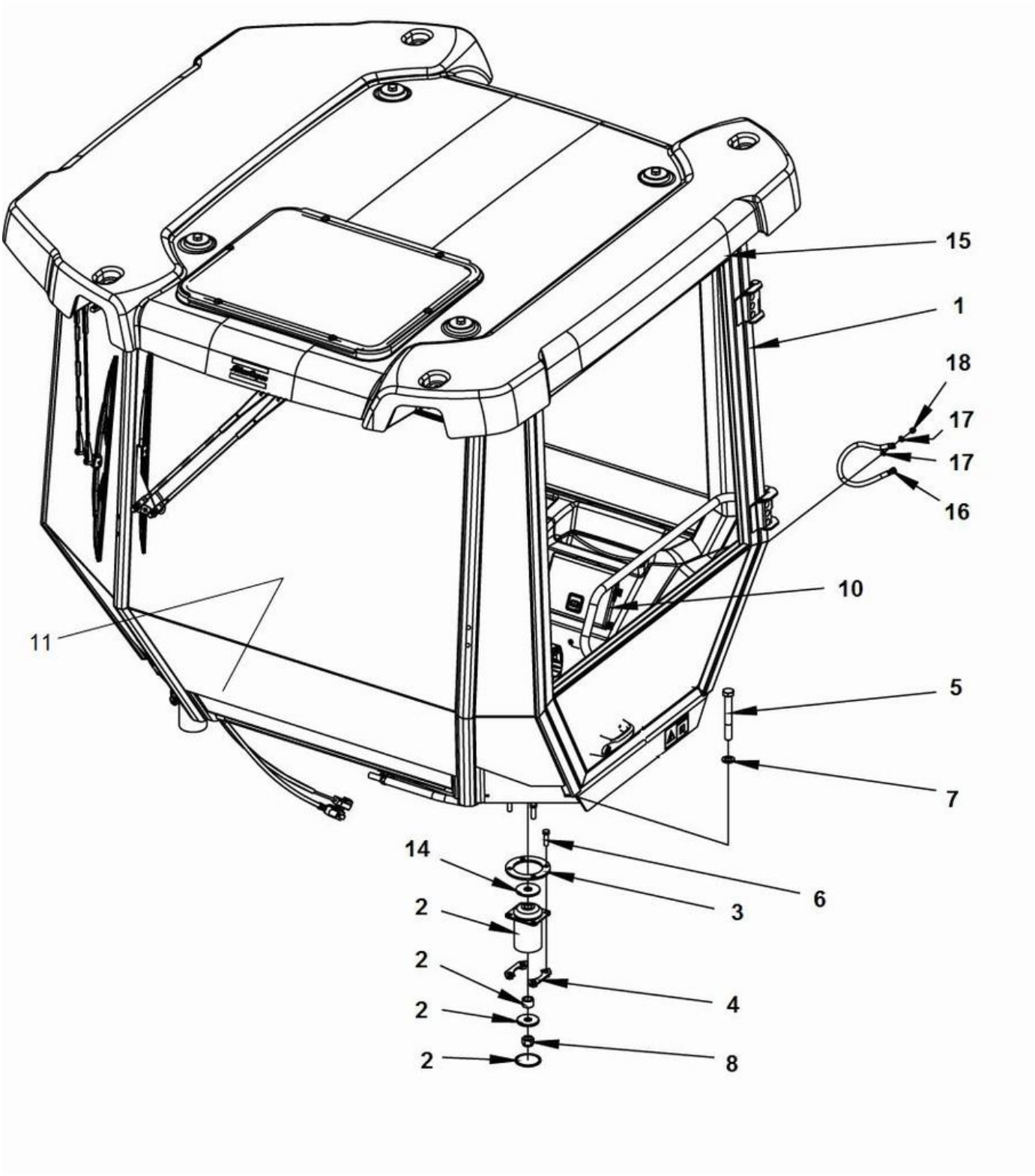

Item	Part No.	Name	Qty	L	SN INFO
1	4812119361	Cab, cpl	1		
1	4812119360	Cab comfort, cpl	1		
2	4812121000	Shock absorber Green	4		
3	4700359998	Back-up ring	4		
4	4700393525	Holder	8		
5	4700904233	Steel plain washer 21x36x3	4		
6	4700903633	Screw M20x150 10,9	4		
7	4700500195	Screw	16		
8	4700901145	Lock nut M20-10	4		
10	-	Manual box	1		
11	4700393978	Slip protection	1		
14	4700347512	Washer	4		
15	-	Decals basic kit	1		
16	4812120736	Connection cable, coarse	1		
17	4700904229	Washer, 8.4x 6x1.5 mm 300HV	2		
18	4700586003	Lock nut M8	1		

4812119361 Cab, cpl 4812119361 Cab, cpl

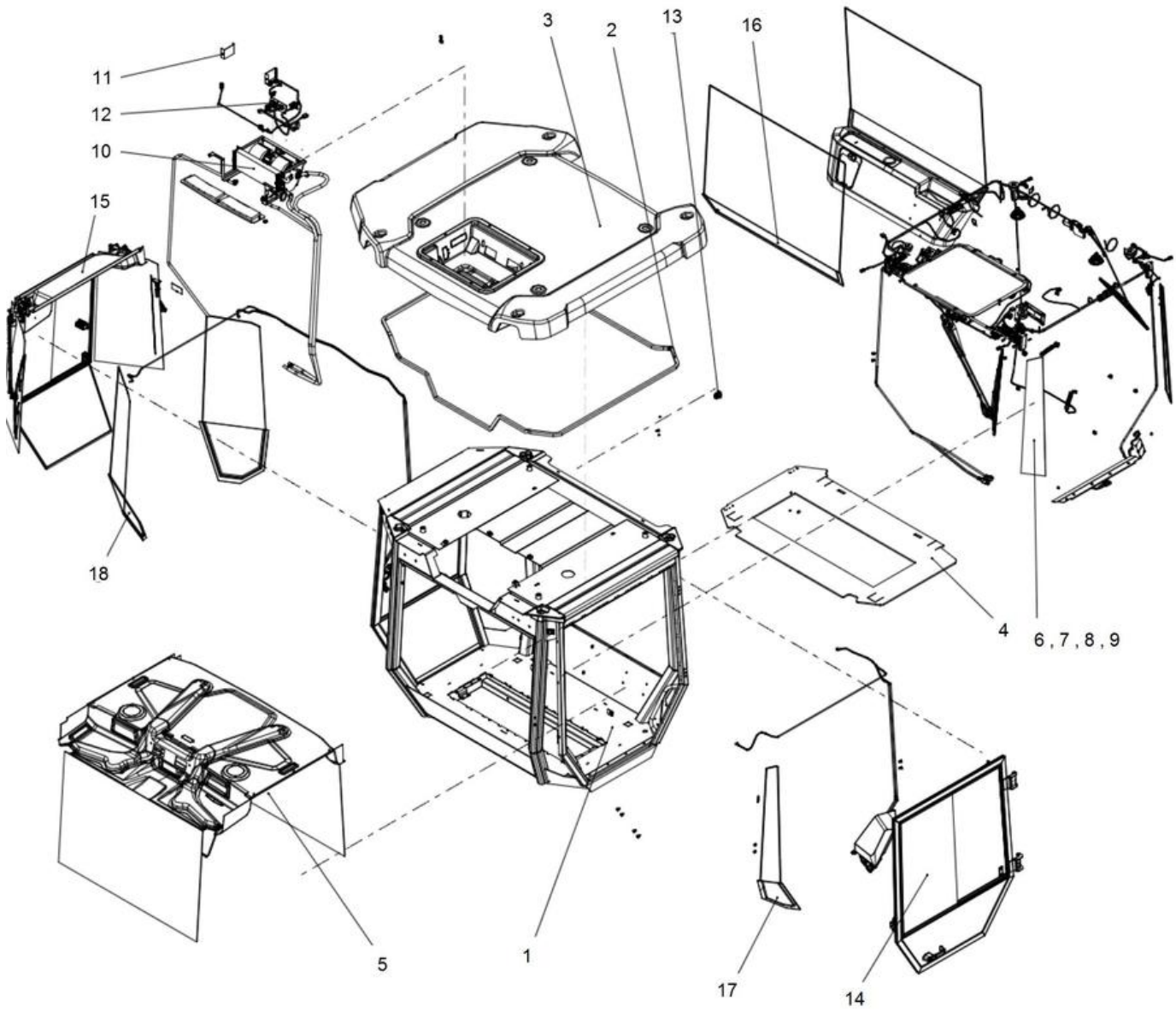

Item	Part No.	Name	Qty	L	SN INFO
1		Frame	1		
2	4812115164	Rubber strip	1XL	A	
3	4812120299	Roof	1		
4	4812120770	Floor mat	1		
5		Screens front and rear	1		
6		Corner screens left and AC hood	1		
7		24V socket and air nozzels	1		
8		Wipers front/rear and front ceiling	1		
9		Cab frame harness	1		
10		Heating installation	1		
11		Heater cover plate	1		
12		AC-kit	1		
13		Switch kit	1		
14		Door sliding screens	1		
15		Screens asymmetric right	1		
16		Lower screens front/rear and rear covers			
17		Lower screen and water system, left			
18		Lower screens and water system, right			

Comments for Page: 4812119361 Cab, cpl

(L)OCAL REMARKS

A | en_US | L=6.310 mm

4812119361 Cab, cpl Screens front/rear and ceiling

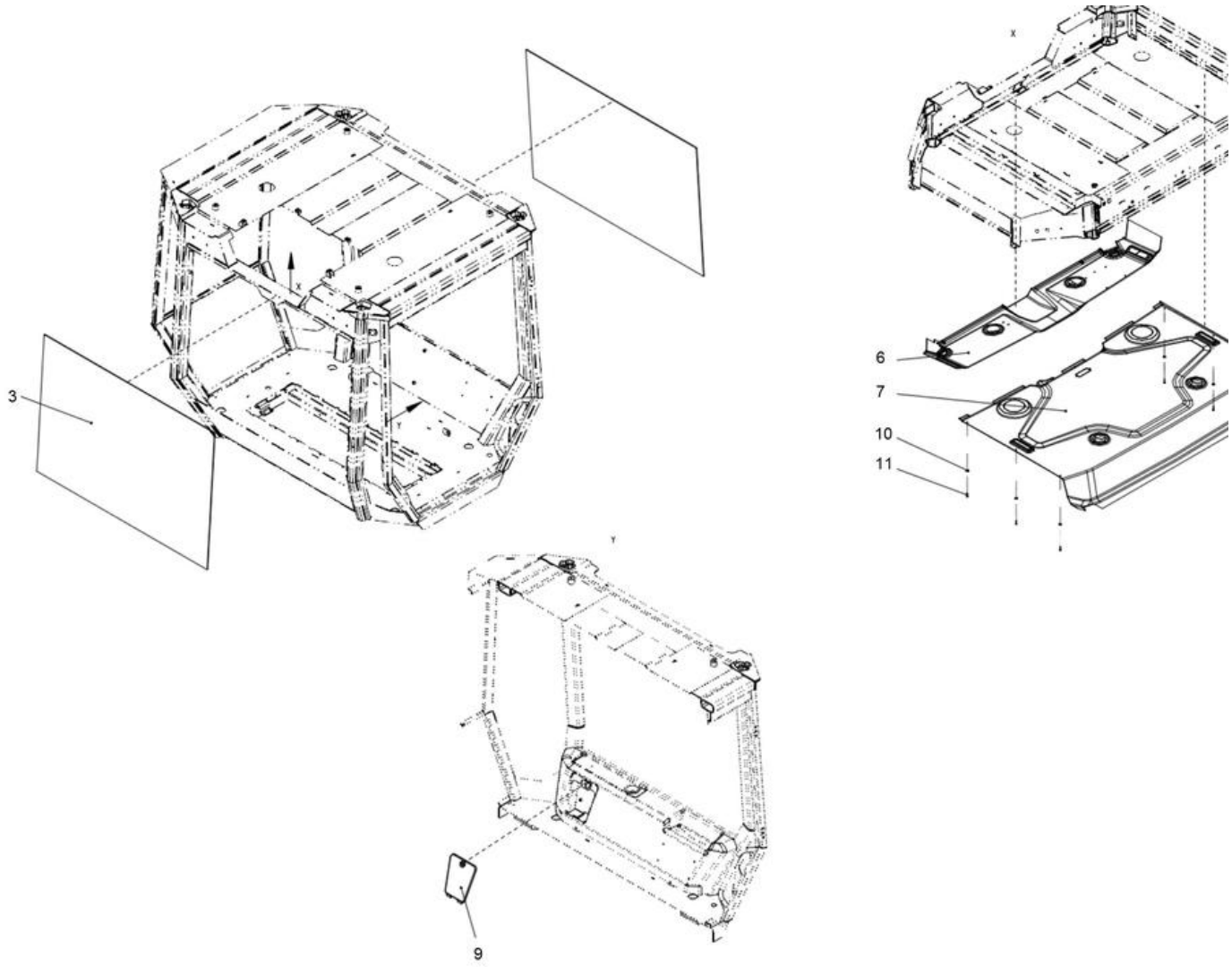

Item	Part No.	Name	Qty	L	SN INFO
3	4812119403	Screen	2		
6	4812120281	Headliner	1		
7	4812120282	Headliner	1		
9	4812119423	Cover	1		
10	4700904228	Washer 6,4x12x1,5	6		
11	-	Screw	6		

Comments for Page: Screens front/rear and ceiling

(L)OCAL REMARKS

A | en_US | L=4.705 m

B | en_US | L=4.760 m

4812119361 Cab, cpl Corner screens left and AC hood

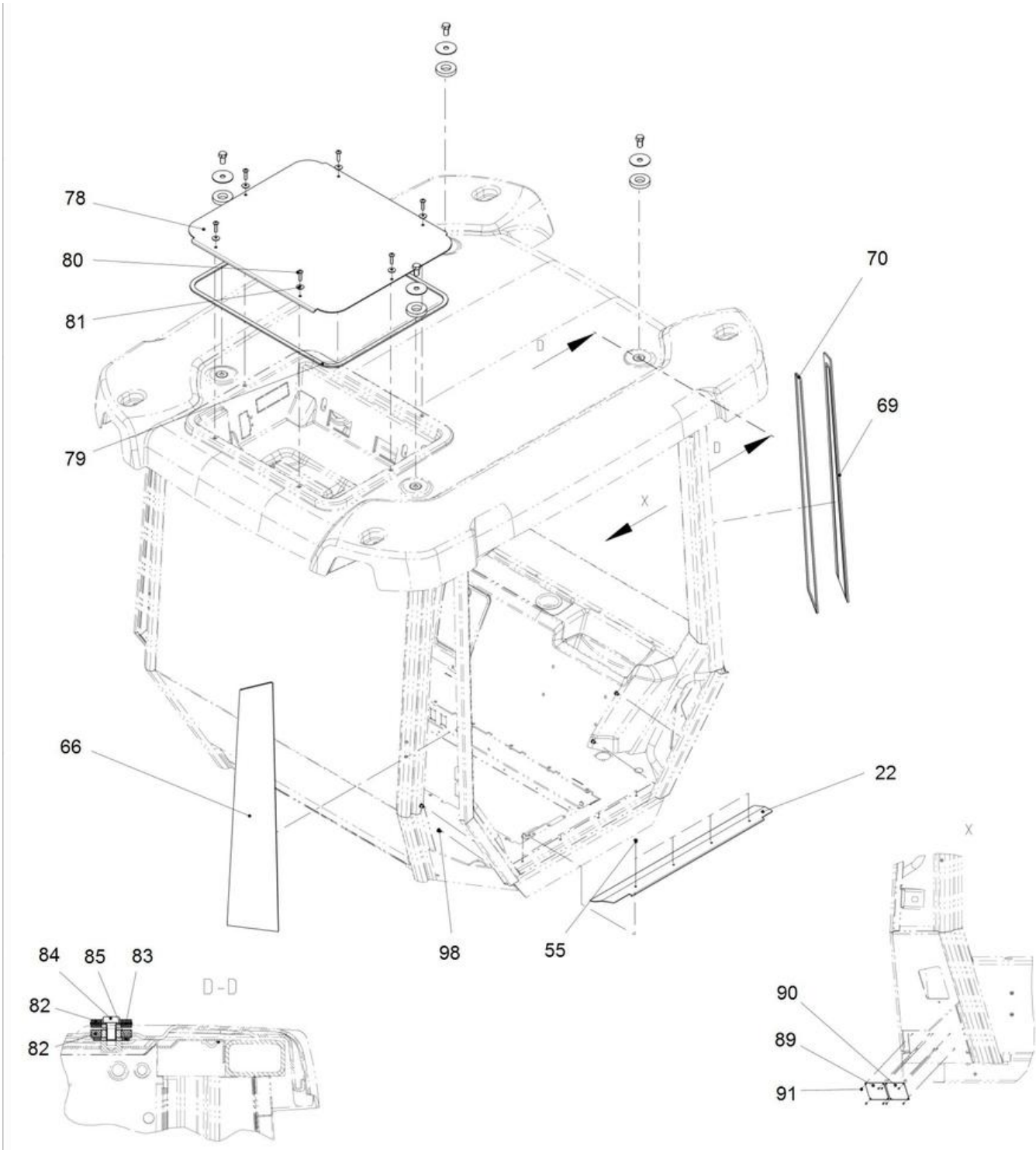

Item	Part No.	Name	Qty	L	SN INFO
22	4812120254	Entrance plate	1		
55	-	Screw	4		
66	4812119392	Front screen top lh	1		
69	4812119393	Rear screen rh top	1		
70	-	Foam rubber	1XL	B	
78	4812119418	Roof cover cab	1		
79	4812161165	Foam strip (Xm)	1XL	C	
80	-	Screw	6		
81	4812120255	Seal washer	6		
82	4812120296	Washer	8		
83	4812115171	Washer	4		
84	-	Screw	4		
85	-	Washer	4		
89	-	Type plate	1		
90	-	Type plate	1		
91	-	Tapping screw	8		
98	-	Blind plug	4		

Comments for Page: Corner screens left and AC hood

(L)OCAL REMARKS

B | L=2.090 m

C | L=2.500 m

4812119361 Cab, cpl 24V socket and air nozzels

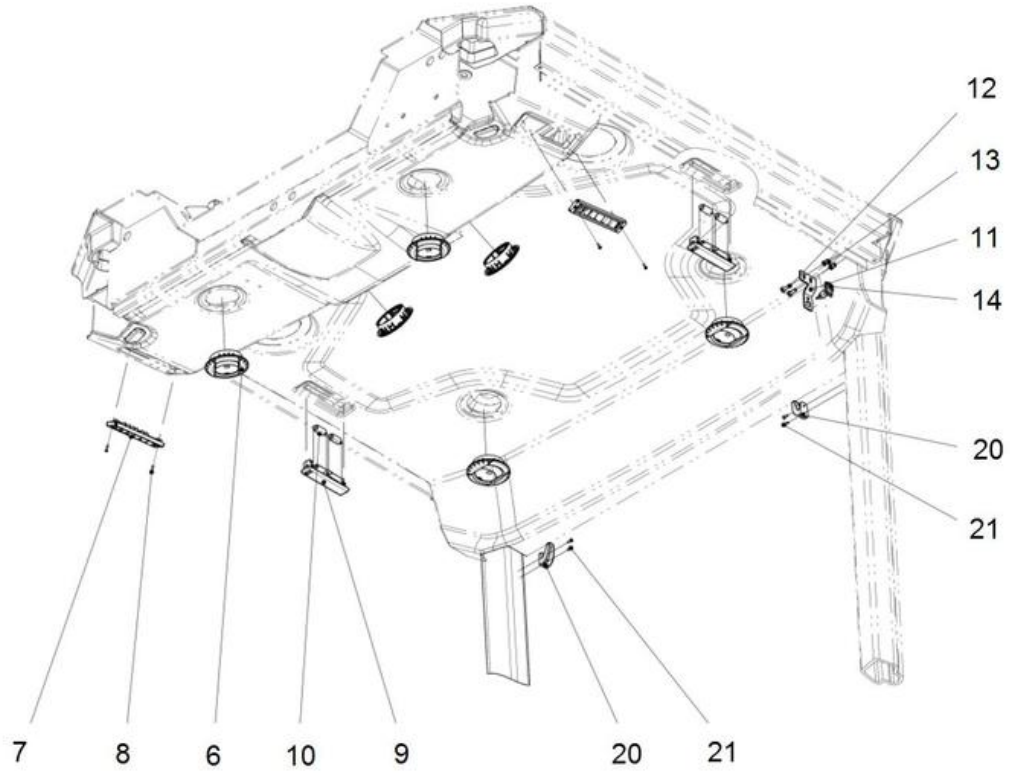

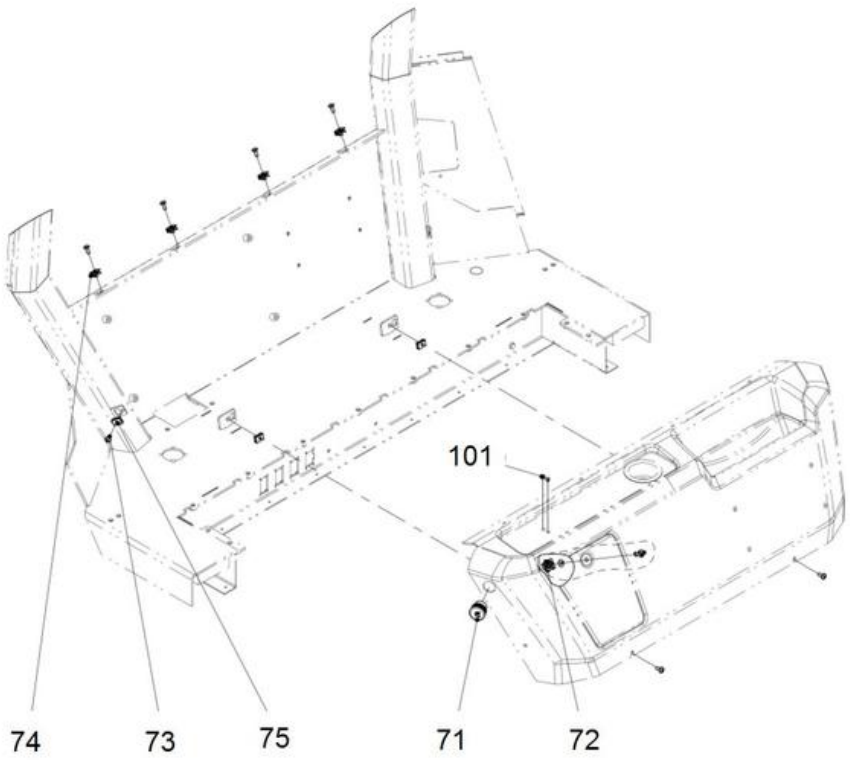

Item	Part No.	Name	Qty	L	SN INFO
6	4812115180	Air nozzle	6		
7	4812120256	Air nozzle	2		
8	-	Screw	4		
9	4812120257	Inner light	2		
10	4700792715	Bulb, 10W	4		
11	4812120258	Bracket	1		
12	-	Screw	2		
13	-	Blind rivet	2		
14	4812115183	Door switch	1		
20	-	Coat hanger	2		
21	-	Screw	4		
71	4700395816	Plug socket 24V	1		
72	4812114566	Turn fastener	1		
73	-	Screw	7		
74	-	Speed nut	4		
75	4812114567	Speed nut	3		
101	-	Plug	2		

4812119361 Cab, cpl Wipers front/rear and front ceiling

Item	Part No.	Name	Qty	L	SN INFO
1	4812120259	Radio support	1		
2	-	Washer	2		
3	-	Screw	2		
4	4812120260	Radio plate	1		
5	4811000458	Speed nut	4		
6	-	Screw	4		
21	4812120261	Wiper motor 24V	1		
22	4812120262	Wiper arm	1		
23	4812120263	Wiper blade	1		
24	4812120264	Wiper motor 24V	1		
25	4812120265	Wiper arm	1		
26	4812120266	Wiper blade	1		
27	4812120267	Switches support	1		
28	-	Screw	1		
29	4700792505	Switch, Windshield washers	1		
30	4812115187	Switch, Windshield wiper, rear	1		
31	4700791588	Panel plug	3		
32	4700921723	Plug	1		
33	4812120268	Bracket	1		
34	4700904504	Screw M5 x 18	2		
35	4700791185	Fuse box	1		
36	4700792309	Relay	1		
37	4700791966	Head screw M4 x 12	2		
38	-	Screw	4		
39	4700901227	Fuse 10A Red	4		
40	4700901228	Fuse, 15A Blue	2		
41	4812114567	Speed nut	2		
42	4812120269	Sealing washer	2		
43	4700792783	Washer, 6.4x18x1.6 mm A2T	2		
44	4700908505	Hook	2		
45	4812120269	Sealing washer	2		
46	4700792783	Washer, 6.4x18x1.6 mm A2T	2		
47	4700792119	Screw, M6x16 mm 8.8 A2K	2		
52	4700908561	Grommet	2		
53	4812115177	Mirror	1		
54	-	Speed nut	2		
55	-	Screw	2		

Item	Part No.	Name	Qty	L	SN INFO
56	-	Radio cover	1		
72	-	Grommet	5		
73	-	Grommet	2		
82	-	Seal	1XL	A	
83	-	Profile	1XL	B	
84	-	Profile	1XL	B	
96	-	Dot red self-adhesive	1		

Comments for Page: Wipers front/rear and front ceiling

(L)OCAL REMARKS

A | en_US | L=0.815 m

B | en_US | L=0.400 m

4812119361 Cab, cpl Cab frame harness

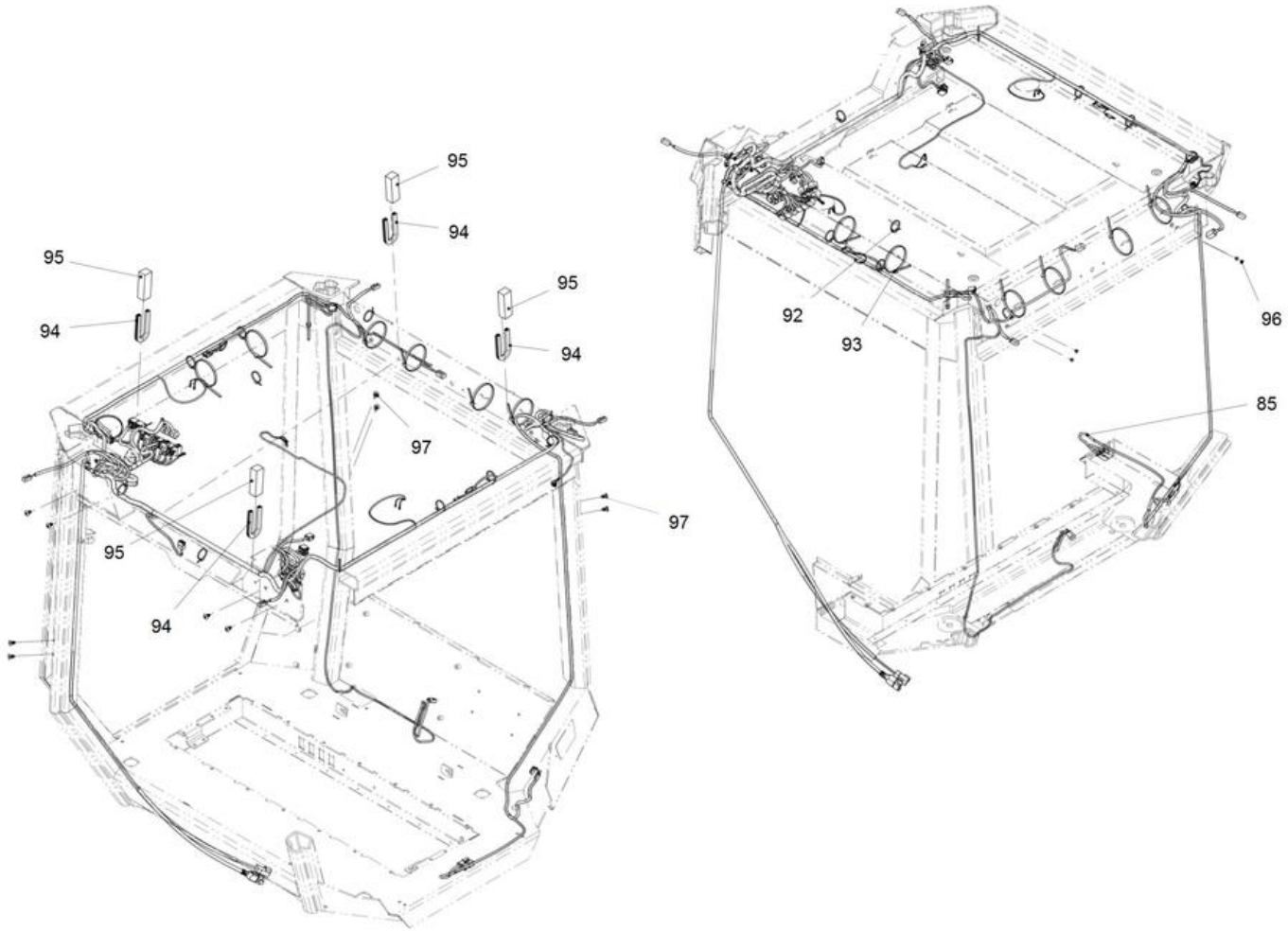

Item	Part No.	Name	Qty	L	SN INFO
85	4812120270	Wiring Harness	1		
92	4700313041	Cable ties, L=200 mm	13		
93	-	Cable tie	8		
94	4700902379	Edge trim	4XL	D	
95	-	Profile	4XL	E	
96	-	Blind plug	4		
97	-	Plug	10		

Comments for Page: Cab frame harness

(L)OCAL REMARKS

D | L=0.232 m

E | L=0.108 m

4812119361 Cab, cpl Heating installation

Item	Part No.	Name	Qty	L	SN INFO
1	4812120240	ACC support	1		
2	4812120269	Sealing washer	2		
3	4700792783	Washer, 6.4x18x1.6 mm A2T	2		
4	4700792119	Screw, M6x16 mm 8.8 A2K	2		
5	4700791666	Blind rivet	2		
6	4700791475	Grommet	1		
7	4700929587	Grommet	1		
8	-	Grommet	1		
9	4700904347	Grommet	2		
10	4812115186	Cover	2		
11	4700395761	Blower 24V	1		
12	4812115230	Bracket	1		
13	4812116192	Bracket	2		
14	4700904299	Washer	4		
15	4700500002	Screw M4-0,7x12H 8.8	4		
16	4700792441	Cable tie with holder	2		
17	4812115164	Rubber strip	1XL	A	
18	4812116193	Heater coil	1		
19	4812116194	Clip	5		
20	4700372174	Spacer	1		
21	4700903670	Clamp	1		
22	-	Hexagon screw	1		
23	4812120241	Floor hose support	1		
24	4700904229	Washer, 8.4x 6x1.5 mm 300HV	1		
25	4700500013	Screw, M6x16 mm 8.8 A2K	1		
26	4700205112	Coolant hose	1XL	B	
27	-	Hose	1XL	C	
28	-	Hose	1XL	D	
29	-	Clamp	4		
30	4812115167	Connector	2		
31	4812115168	Drain hose	1XL	E	
32	4812116197	Air filter	2		
33	4812120242	Air filter cover	1		
34	-	Screw	3		
35	4812120243	Climate control support	1		
36	-	Screw	4		

Comments for Page: Heating installation

(L)OCAL REMARKS

A | en_US | L=0.404 m

B | en_US | L=0.150 m

C | en_US | L=2.900 m

D | en_US | L=2.465 m

E | en_US | L=4.050 m

This page intentionally left blank

4812119361 Cab, cpl Heater cover plate

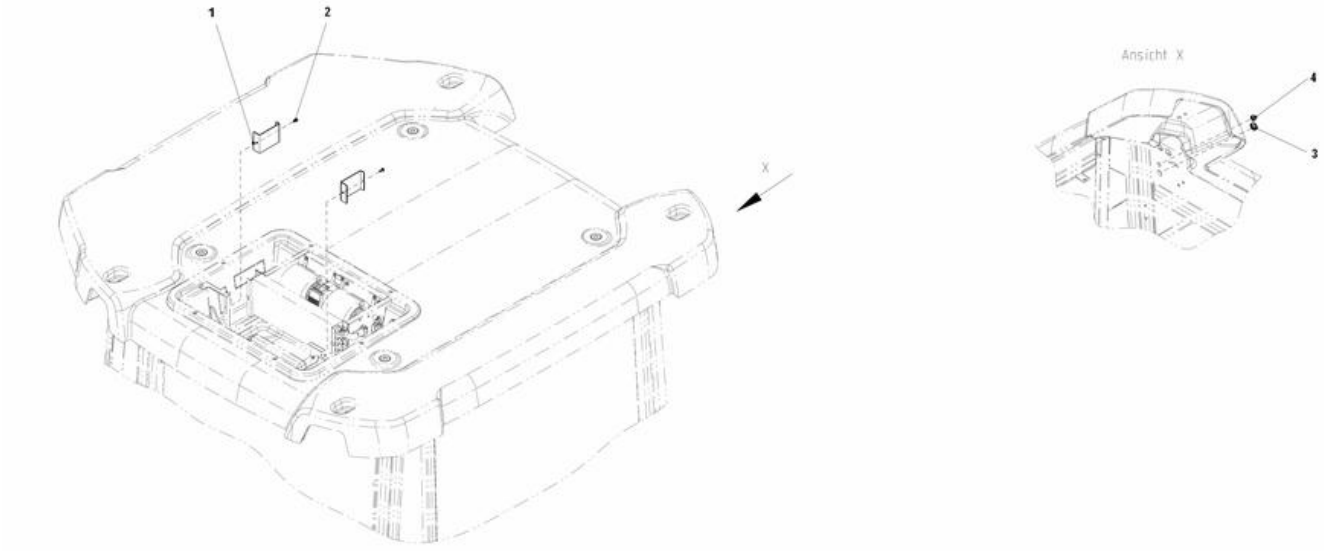

Item	Part No.	Name	Qty	L	SN INFO
1	4812116195	Bracket	2		
2	4700500012	Hex. screw	2		
3	4700791475	Grommet	1		
4	-	Grommet	1		

4812119361 Cab, cpl AC-kit

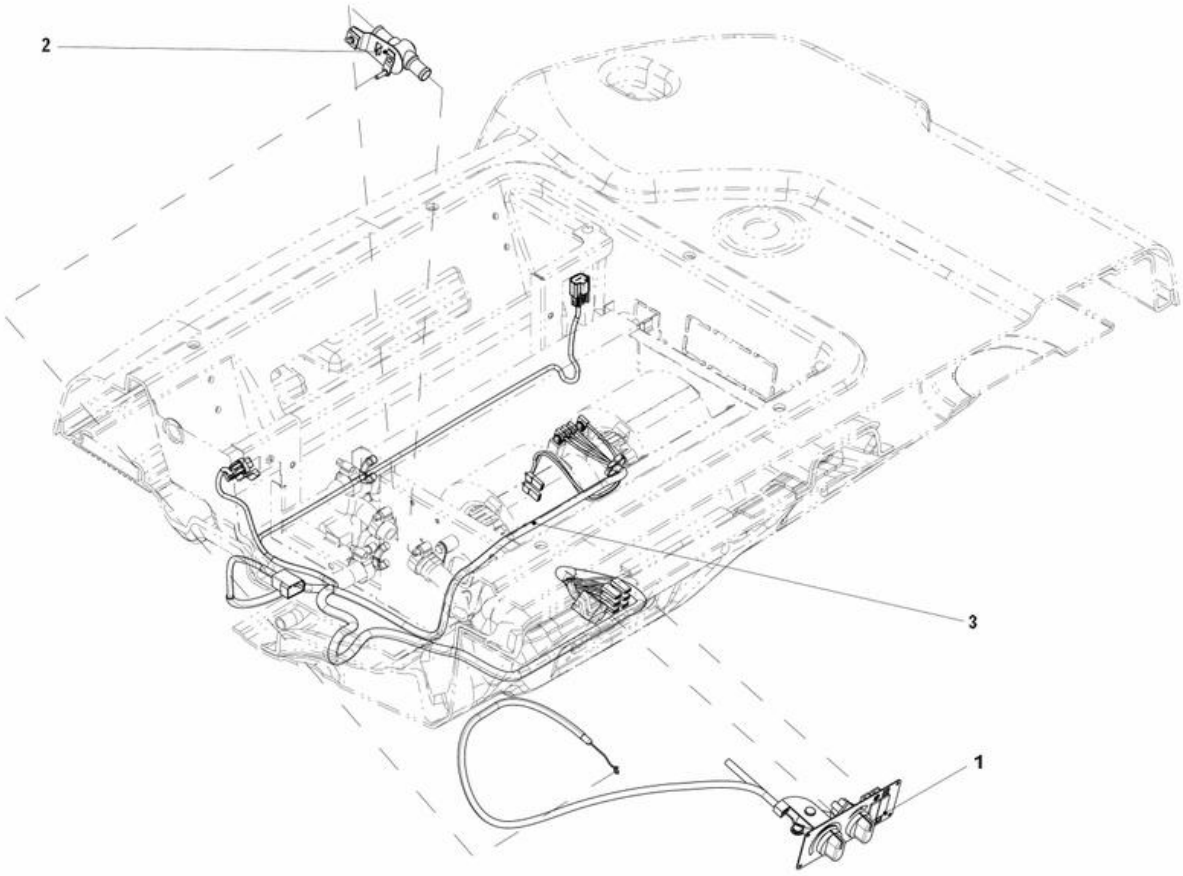

Item	Part No.	Name	Qty	L	SN INFO
1	4812120274	Heater	1		
2	4700939693	Heater control valve	1		
3	-	Harness AC	1		

4812119361 Cab, cpl Switch kit

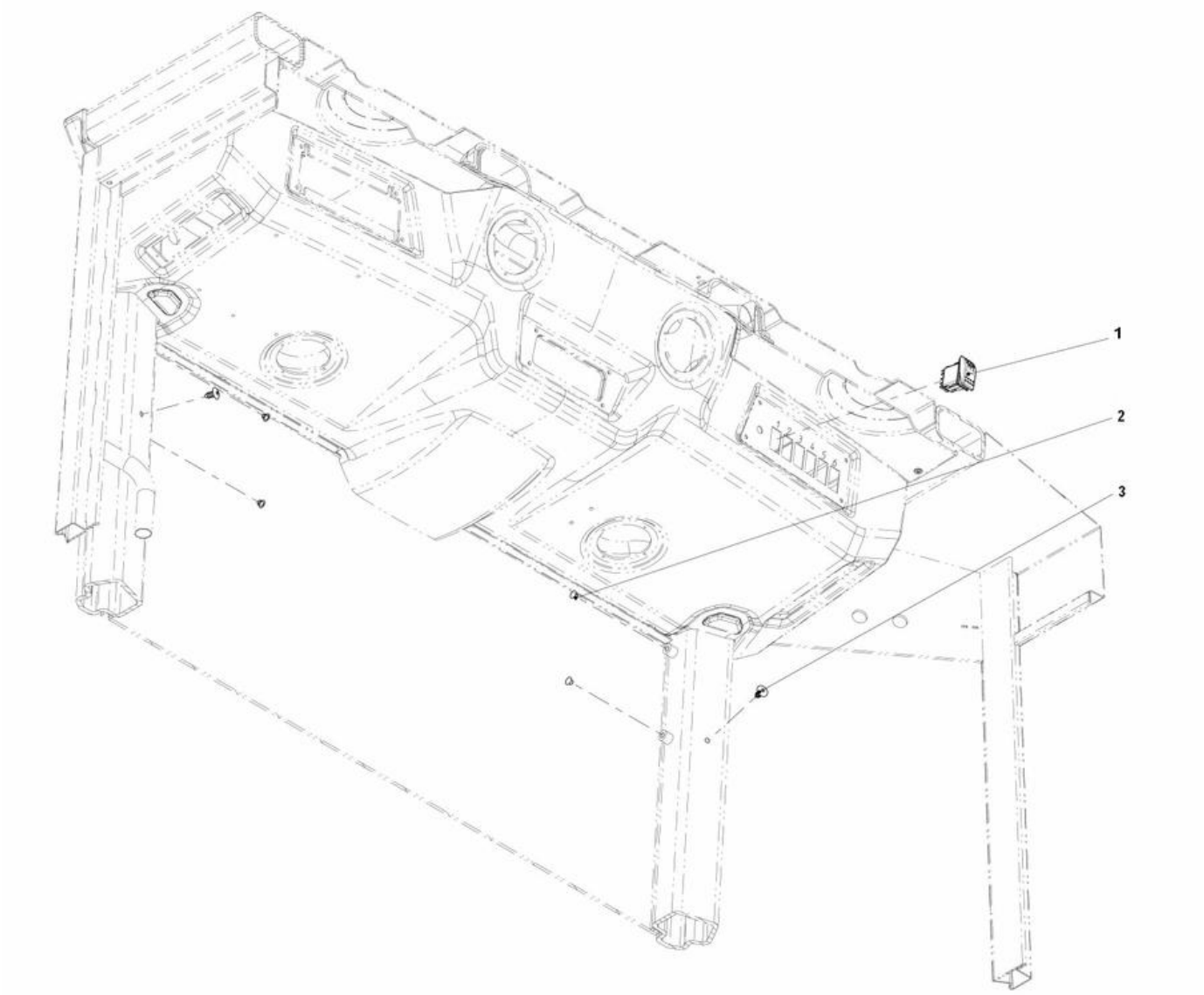

Item	Part No.	Name	Qty	L	SN INFO
1	4812115192	Switch	1		
2	4700902919	Plug	4		
3	-	Plug	2		

4812119361 Cab, cpl Door sliding screens

Item	Part No.	Name	Qty	L	SN INFO
1	-	Door complete	1		
2	4812115215	Ball stud	2		
3	4812120272	Gas spring	1		
4	4812119447	Hinge plate wall	1		
5	4812119448	Hinge plate wall	1		
6	-	Oval-head screw	6		
7	-	Sealing plug	6		
8	-	Washer	4		
9	-	Shim rings	2		
10	4812119449	Pin	2		
11	-	Hexagon nut	2		
12	4812119429	Thread base plate	1		
13	4812114599	Clamp	1		
14	4812114598	Bolt	1		

4812119361 Cab, cpl Door complete

Item	Part No.	Name	Qty	L	SN INFO
1	4812119376	Door	1		
2	4812119377	Sliding screen	1		
3	-	Sealing profile	1XL	A	
4	4812119406	Screen	1		
5	4812119435	Support	1		
6	4812119436	Support	1		
7	4812119437	Support plate	1		
8	4812115203	Handle	1		
8	4812159558	Key (2pcs)	1		
9	4812119438	Support	1		
10	-	Bracket	1		
11	4812119439	Push button	1		
12	4700792783	Washer, 6.4x18x1.6 mm A2T	1		
13	4700500075	Screw, M6-1,0x25 mm 8.8	1		
14	4812119440	Operating locker	1		
15	4700927637	Hexagon socket countersunk screw	2		
16	4812119441	Bowden cable 440mm	1		
17	4700570002	Nut M4	2		
18	4811000458	Speed nut	3		
19	4812120273	Door cover	1		
20	-	Oval-head screw	5		
21	4812119443	Locker cover	1		
22	-	Screw	1		
23	-	Sealing profile	1XL	B	
24	-	Sealing plug	2		

Comments for Page: Door complete

(L)OCAL REMARKS

A | en_US | L=2.400 m

B | en_US | L=4.653 m

4812119361 Cab, cpl Screens asymmetric right

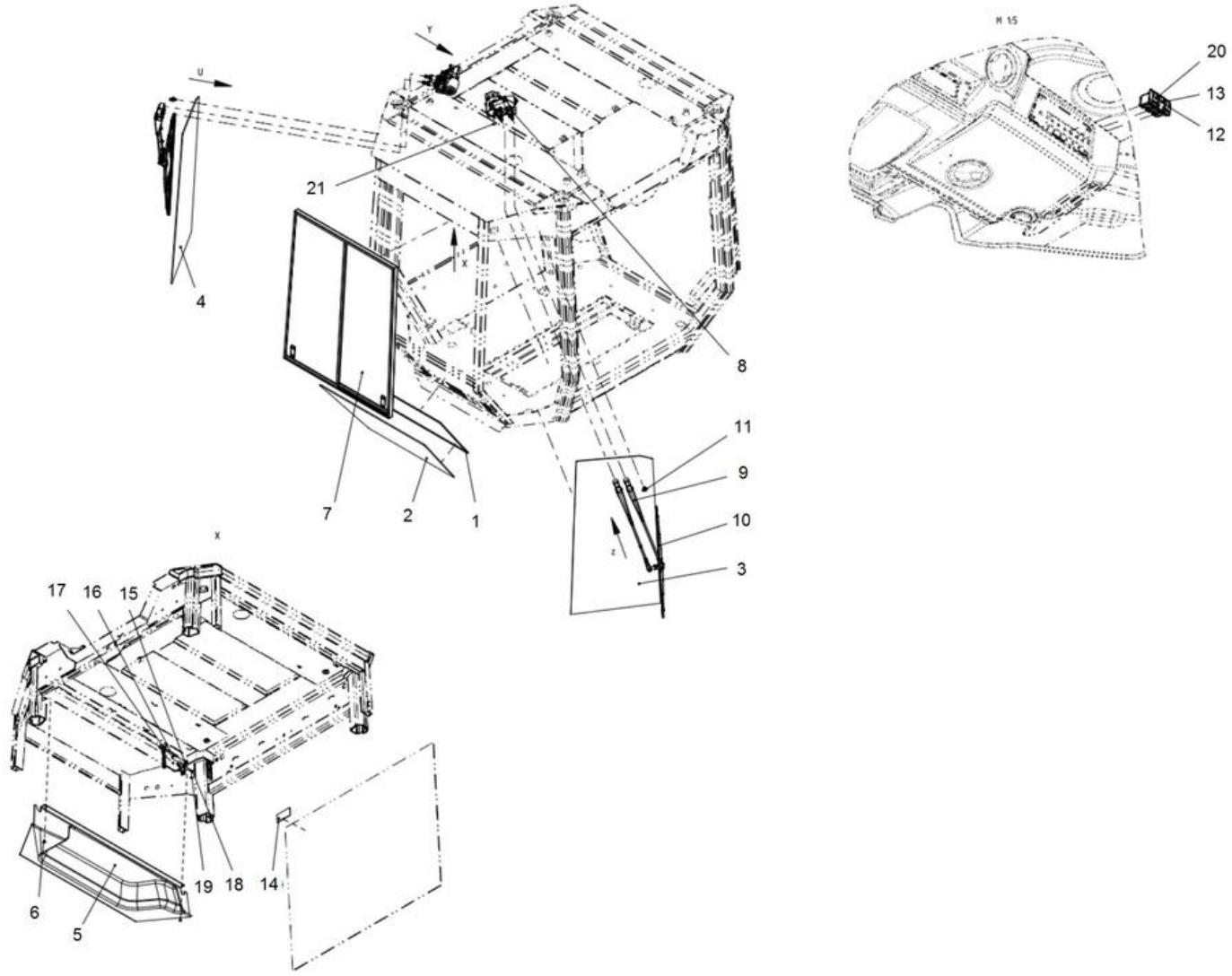

Item	Part No.	Name	Qty	L	SN INFO
1	-	Foam rubber	1XL	A	
2	4812119402	Screen	1		
3	4812119398	Screen	1		
4	4812119399	Screen	1		
5	4812120275	Headliner extension	1		
6	-	Screw	2		
7	4812120276	Sliding screen	1		
8	4812120277	Wiper motor 24V	2		
9	4812120278	Wiper arm	2		
10	4812120263	Wiper blade	2		
11	4700908561	Grommet	2		
12	4812115187	Switch, Windshield wiper, rear	1		
13	4700792505	Switch, Windshield washers	1		
14	4700903590	Decal emergency exit	1		
15	4700908507	Emergency hammer	1		
16	-	Screw	2		
17	4700908506	Emergency hammer hook	1		
18	-	Screw	1		
19	-	Washer	1		
20	4812115187	Switch, Windshield wiper, rear	1		
21	-	Dot red self-adhesive	1		

Comments for Page: Screens asymmetric right

(L)OCAL REMARKS

A | L=2.383 m

4812119361 Cab, cpl Lower screens front/rear and rear cover

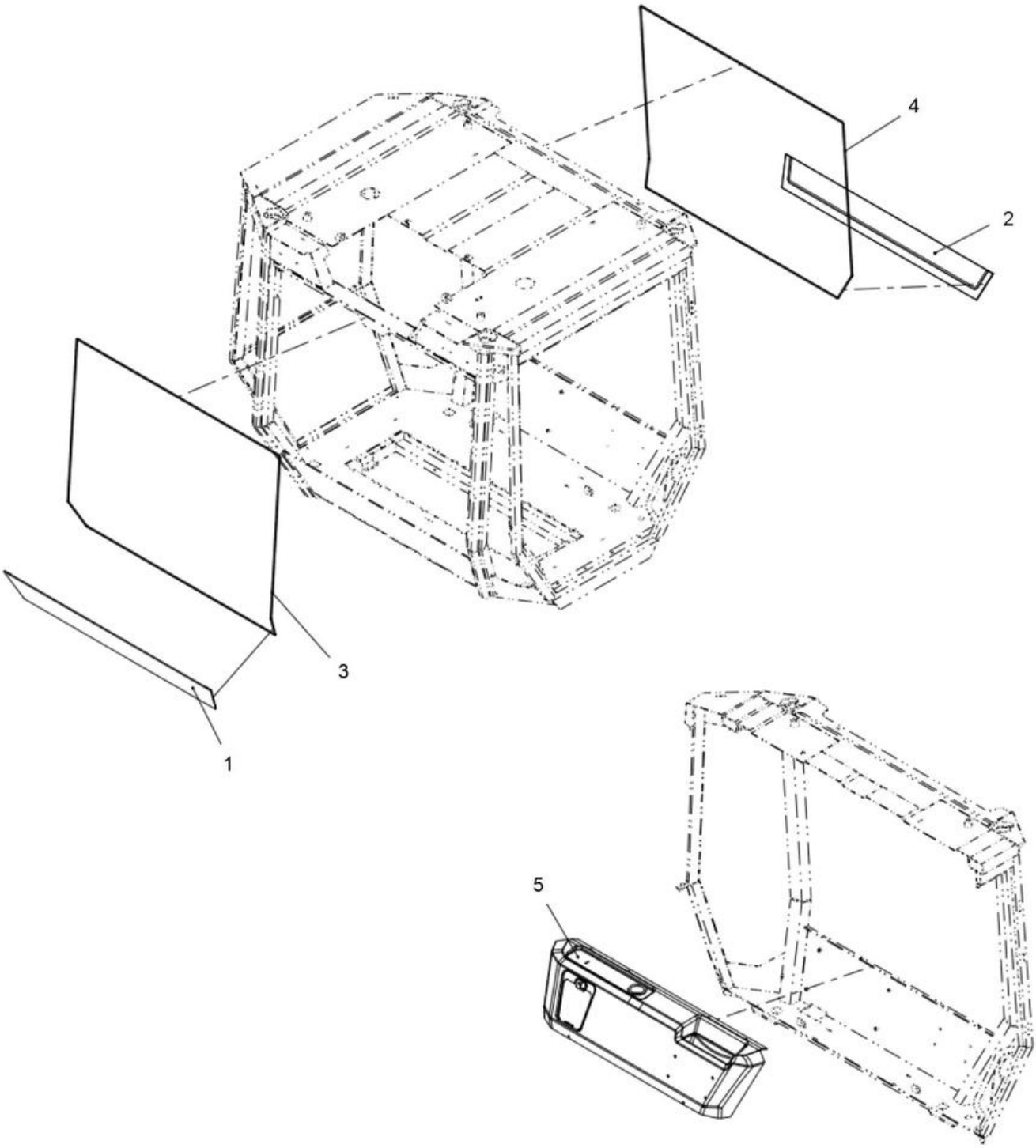

Item	Part No.	Name	Qty	L	SN INFO
1	4812119404	Screen	1		
2	4812119405	Screen	1		
3	4812159184	Rubber list	1XL	A	
4	4812159184	Rubber list	1XL	B	
5	4812119423	Cover	1		

Comments for Page: Lower screens front/rear and rear cover

(L)OCAL REMARKS

A | L=4.760 m

B| L=4.705 m

4812119361 Cab, cpl Lower screen and water system, left

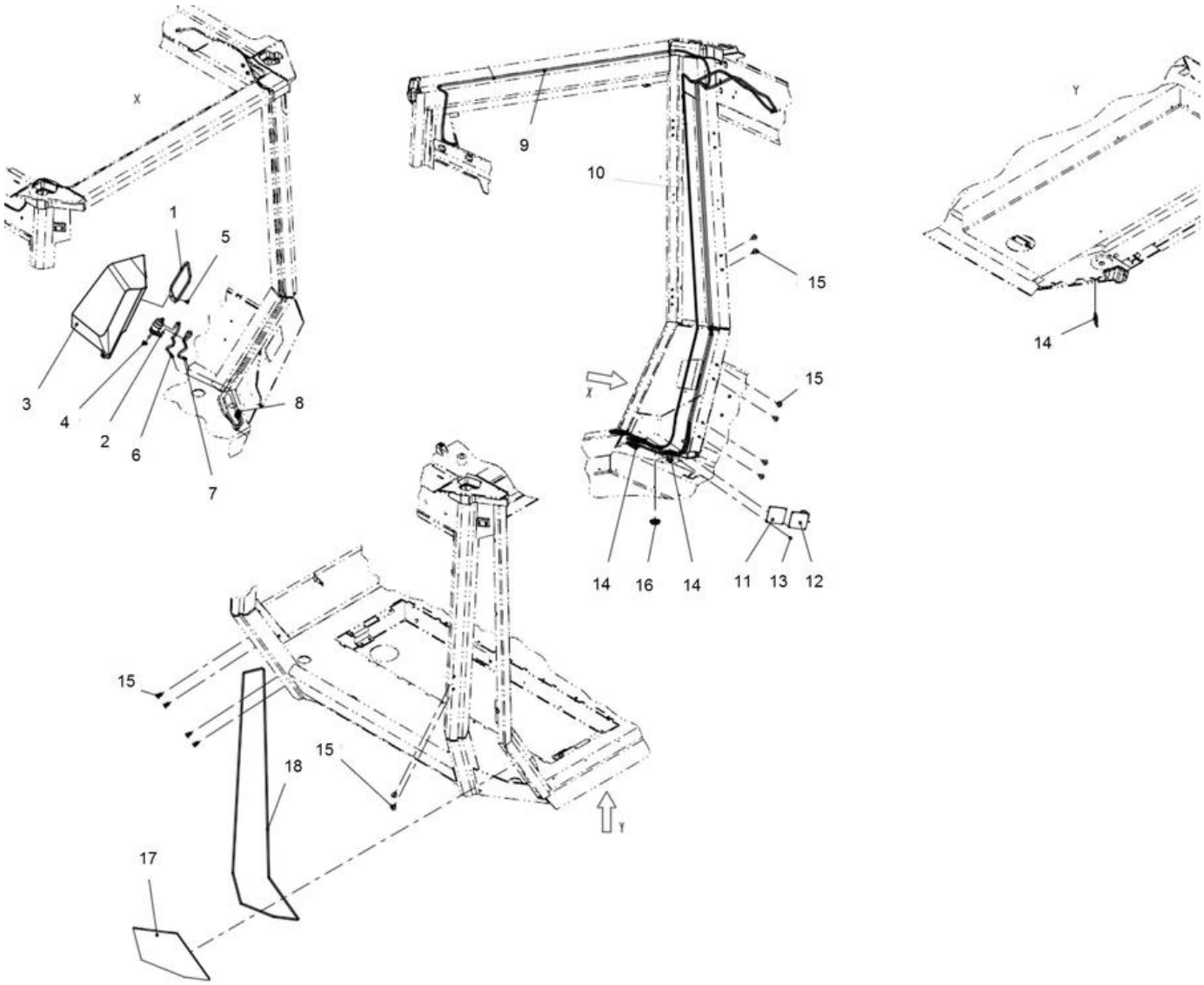

Item	Part No.	Name	Qty	L	SN INFO
1	4700395795	Gasket	1		
2	4700395794	Electric washer pump 24V	1		
3	4700395793	Water reservoir	1		
4	4700395815	Seal ring	1		
5	-	Screw	1		
6	-	Tube	1XL	A	
7	-	Tube	1XL	A	
8	4700908564	Check valve	2		
9	-	Tube	1XL	B	
10	-	Tube	1XL	C	
11	-	Type plate	1		
12	-	Type plate	1		
13	-	Tapping screw	8		
14	4700313041	Cable ties, L=200 mm	3		
15	-	Plug	12		
16	-	Grommet	1		
17	4812119394	Front screen bottom lh	1		
18	-	Foam rubber	1XL	D	

Comments for Page: Lower screen and water system, left

(L)OCAL REMARKS

A | L=0.250 m

B| L=3.753 m

C| L=2.500 m

D| L=2.880 m

4812119361 Cab, cpl Lower screens and water system, right

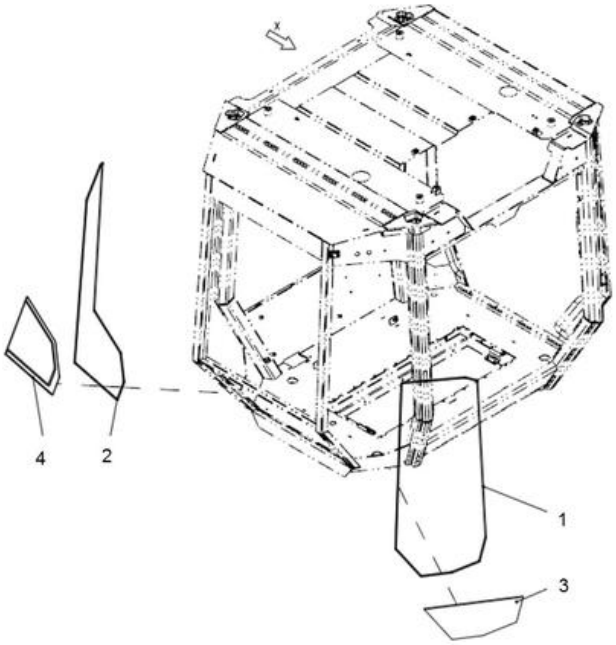

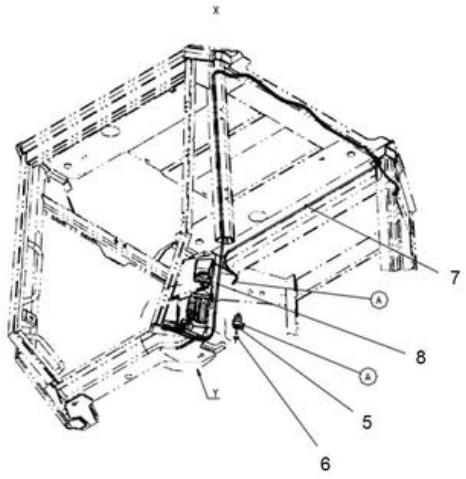

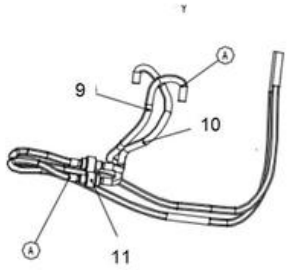

Item	Part No.	Name	Qty	L	SN INFO
1	-	Foam rubber	1XL	A	
2	-	Foam rubber	1XL	A	
3	4812119400	Screen	1		
4	4812119401	Screen	1		
5	4700395794	Electric washer pump 24V	1		
6	4700395815	Seal ring	1		
7	-	Tube	1XL	B	
8	-	Tube	1XL	C	
9	-	Tube	1XL	D	
10	-	Tube	1XL	D	
11	4700908564	Check valve	2		

Comments for Page: Lower screens and water system, right

(L)OCAL REMARKS

A | L=3.255 m

B| L=4.77 m

C| L=3.7 m

D| L=0.25 m

4812119360 Cab comfort, cpl 4812119360 Cab comfort, cpl

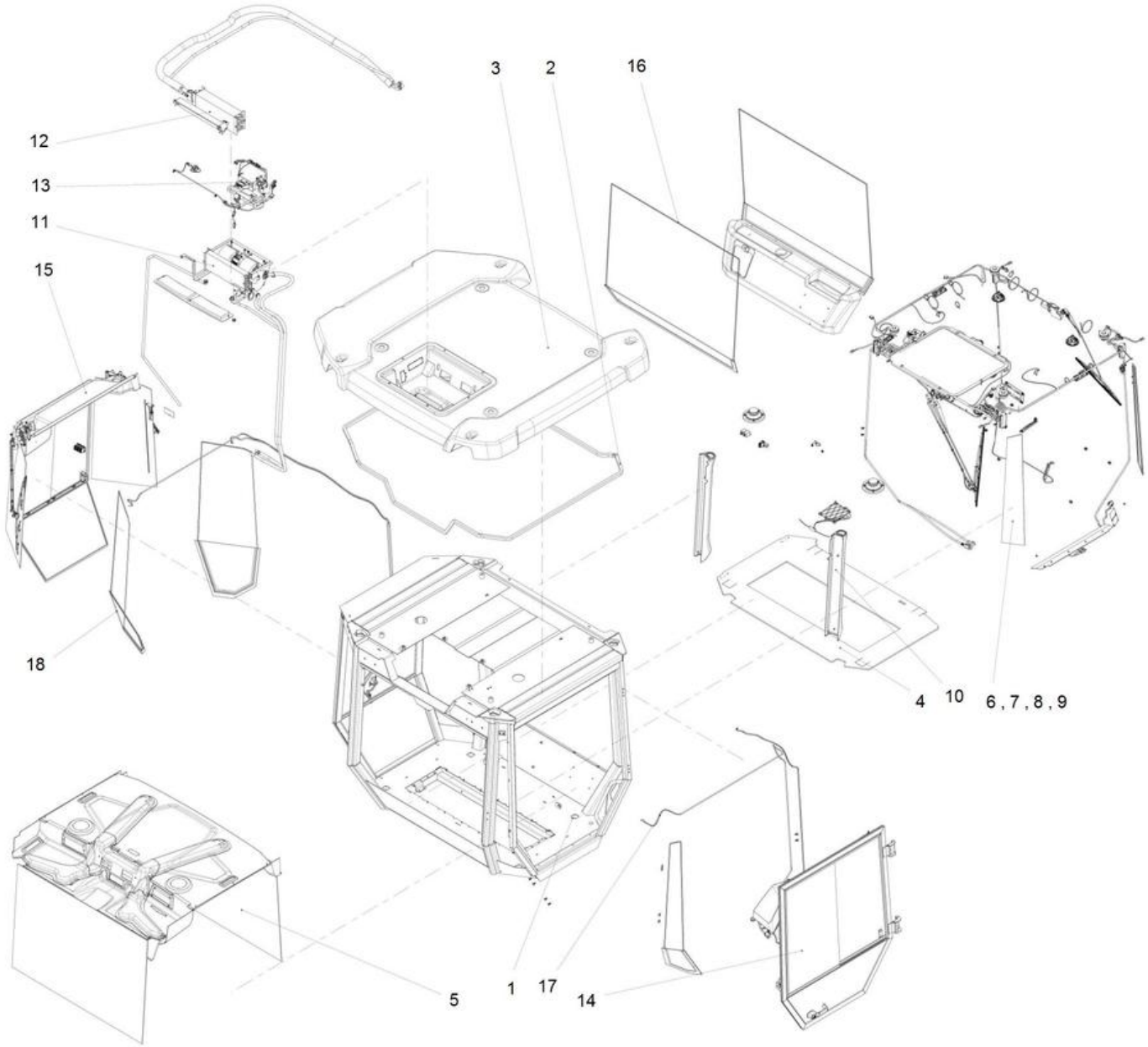

Item	Part No.	Name	Qty	L	SN INFO
1		Frame	1		
2	4812115164	Rubber strip	1XL	A	
3	4812120299	Roof	1		
4	4812120770	Floor mat	1		
5		Screens front and rear	1		
6		Corner screens left and AC hood	1		
7		24V socket and air nozzels	1		
8		Wipers front/rear and front ceiling	1		
9		Cab frame harness	1		
10		Interior Cab	1		
11		Heating installation	1		
12		Evaporator kit	1		
13		ACC kit	1		
14		Door sliding screens	1		
15		Screens asymmetric right	1		
16		Lower screens front/rear and rear covers			
17		Lower screen and water system, left			
18		Lower screens and water system, right			

Comments for Page: 4812119360 Cab comfort, cpl

(L)OCAL REMARKS

A | en_US | L=6.31 m

4812119360 Cab comfort, cpl Interior Cab

Item	Part No.	Name	Qty	L	SN INFO
1	4812120248	Wiper arm	1		
2	4812120249	Cover	1		
3	-	Screw	2		
4	-	Screw	2		
5	-	Foam rubber	1XL	A	
6	-	Foam rubber	1XL	A	
7	4812120250	Air nozzle	2		
8	4812114585	Inner light	1		
9	-	Speed fastener metric	2		
10	-	Screw	2		
11	4812115191	Time control unit	1		
12	4812115190	Wiper Interval Relay	1		
13	4812115189	Potentiometer	1		
14	4812116205	Wiper potentiom. Label	1		
15	4812120251	Knob	1		
16	4812115188	Switch, front wiper	1		
17	-	Net	1		
18	-	Screw	5		
19	4812112767	Radio antenna	1		
20	4811000268	Loud speaker	2		
21	4811000269	Loud speaker cover	2		

Comments for Page: Interior Cab

(L)OCAL REMARKS

A | en_US | L= 0.205 m

4812119360 Cab comfort, cpl Evaporator kit

Item	Part No.	Name	Qty	L	SN INFO
1	4812115013	Air intake	1		
2	4700404229	Washer	4		
3	4700500053	Screw, M8x20 mm 8.8 A2K	4		
4	4700792718	Foam rubber	1XL	A	
5	4812113623	Evaporator, cpl	1		
6	4812120284	Hose	1		
7	4812120285	Hose	1		
8	4812116194	Clip	3		
9	-	Bracket	1		
10	-	Washer	4		
11	4700500040	Screw, M6x20 mm 8.8 A2K	2		
12	-	Hexagon screw	1		
13	-	Hexagon nut	1		
14	-	Speed fastener metric	2		
15	-	Presstite	1XL	B	
16	-	Presstite	1XL	B	

Comments for Page: Evaporator kit

(L)OCAL REMARKS

A | en_US | L= 0.241 m

B | en_US | L= 0.5 m

4812119360 Cab comfort, cpl 4812113623 Evaporator, cpl

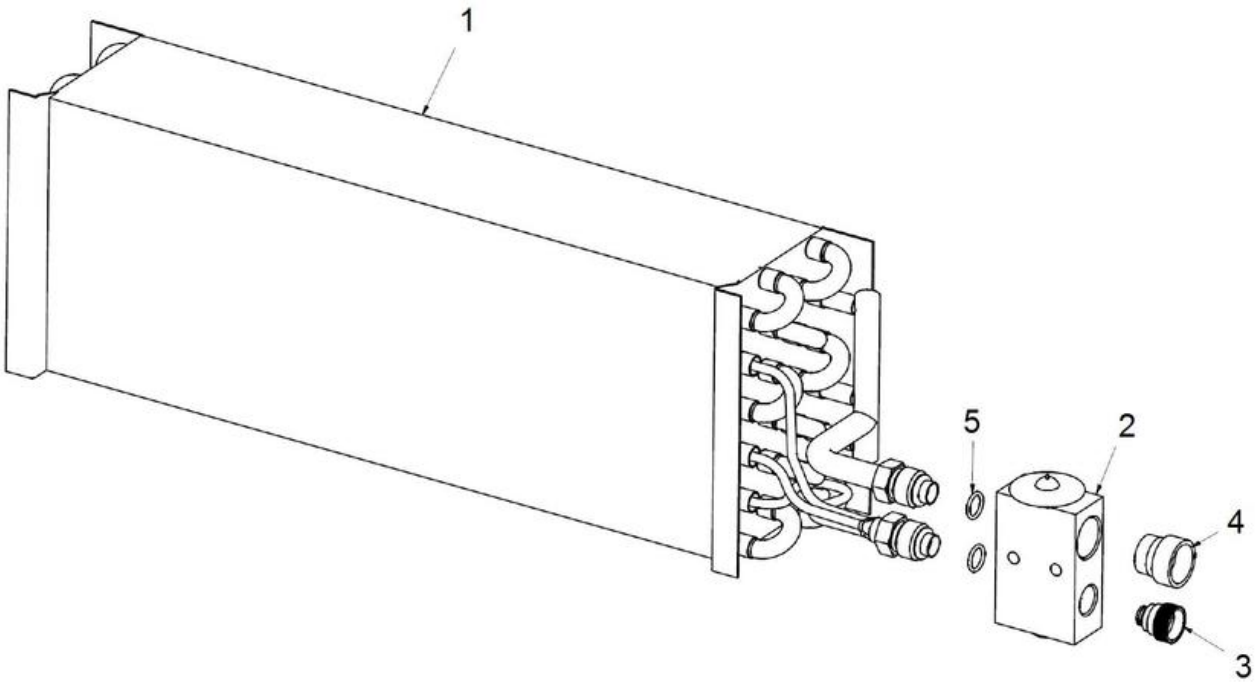

Item	Part No.	Name	Qty	L	SN INFO
1	4812160598	Evaporator coil	1		
2	4700384176	Expansion valve	1		
3	-	Connector plug	1		
4	-	Connector plug	1		
5	4700384878	O-ring Size 8	2		

4812119360 Cab comfort, cpl ACC kit

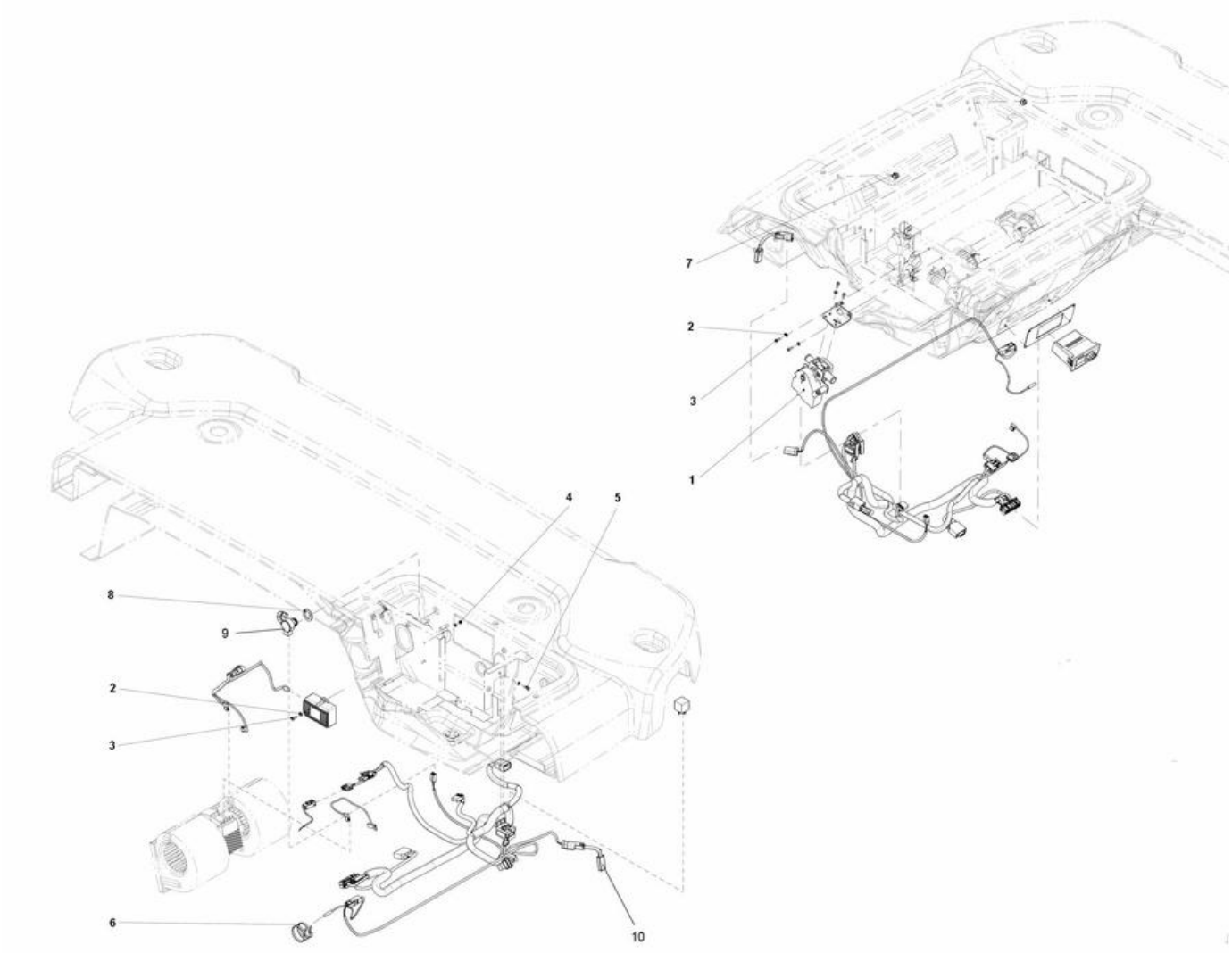

Item	Part No.	Name	Qty	L	SN INFO
1	4812113624	ACC kit	1		
2	4700904698	Plain washer	7		
3	-	Screw	5		
4	4700570002	Nut M4	1		
5	4700500002	Screw M4-0,7x12H 8.8	1		
6	4700313041	Cable ties, L=200 mm	2		
7	4700792441	Cable tie with holder	2		
8	-	Foam rubber	1XL	A	
9	4700938624	Sensor, inner temp	1		
10	4812161298	Sensor, outer temp	1		

Comments for Page: ACC kit

(L)OCAL REMARKS

A | en_US | L= 0.04 m

4812119360 Cab comfort, cpl 4812113624 ACC kit

Item	Part No.	Name	Qty	L	SN INFO
1	4812158289	Micro ECC	1		
1	4812160767	Knob	1		
2	4700383425	Electronic valve	1		
3	-	Bracket	1		
4	-	Panel	1		
5	4812158290	Blower control	1		
6	-	Clip	4		
7	4812158291	Cable harness	1		
8	4812158292	Deicing sensor	1		
9	-	Screw	2		

Cab, asymmetric Decals basic kit

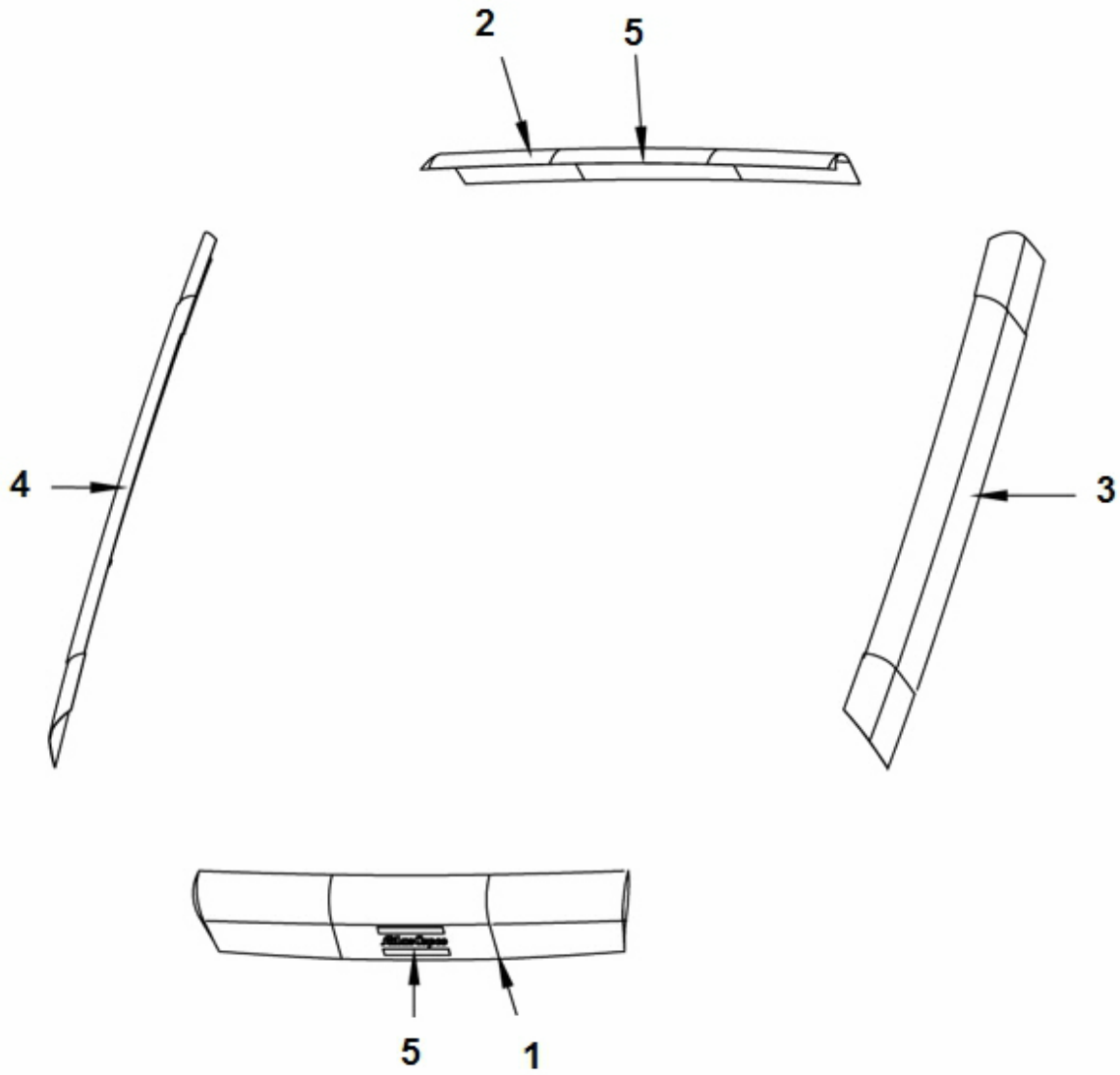

Item	Part No.	Name	Qty	L	SN INFO
1	4812120084	Decal cosmetic Yellow	1		
2	4812120085	Decal cosmetic Yellow	1		
3	4812120081	Decal cosmetic Yellow	1		
4	4812120083	Decal cosmetic Yellow	1		
5	4812120117	Decal AC - logotype	2		

Drivers platform Cab noise cover

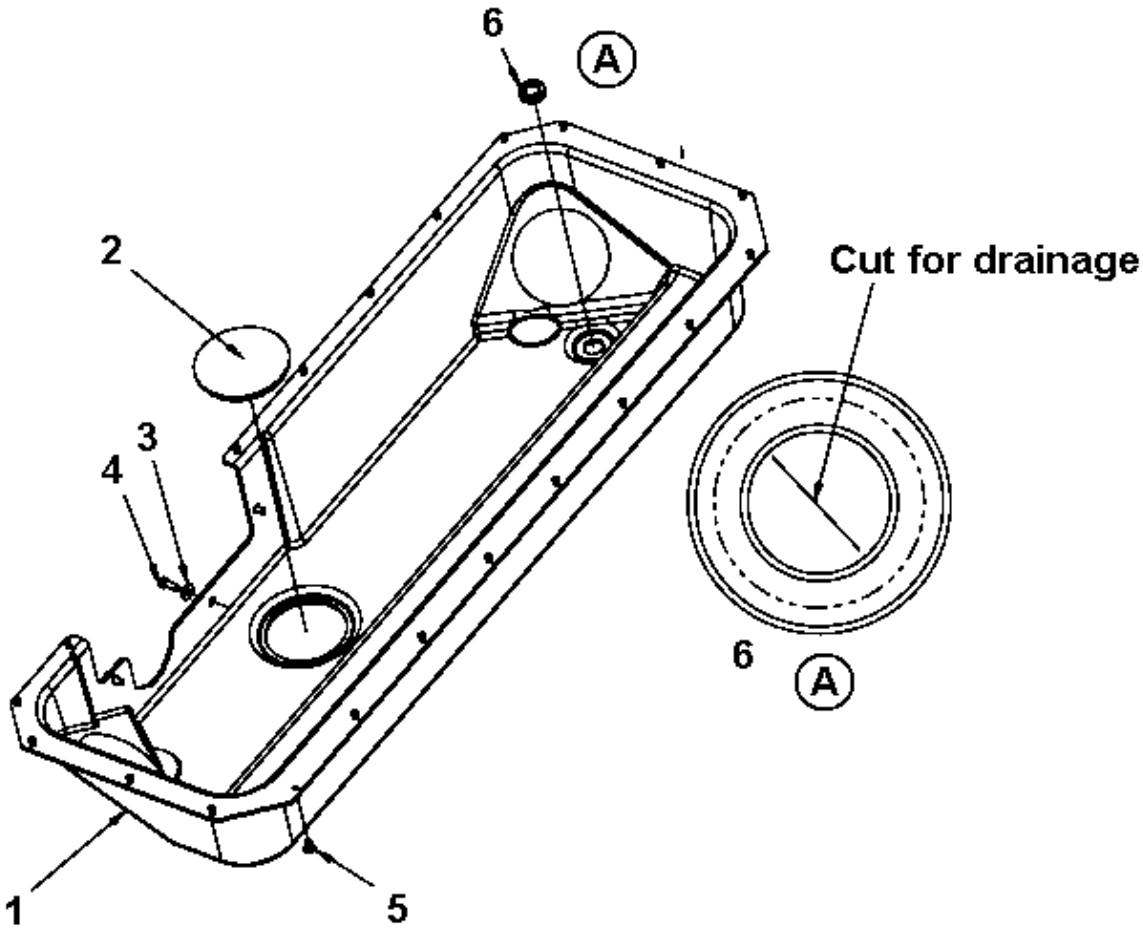

Item	Part No.	Name	Qty	L	SN INFO
1	4700391919	Noise reducing hood	1		
2	4700379992	Plug	3		
3	4700904640	Washer, 8.4x22x3 mm 300HV	3		
4	4700500053	Screw, M8x20 mm 8.8 A2K	3		
5	4700792325	Blind rivet	21		
6	4700792392	Grommet with membrane	1		

Drivers platform Rear view mirror

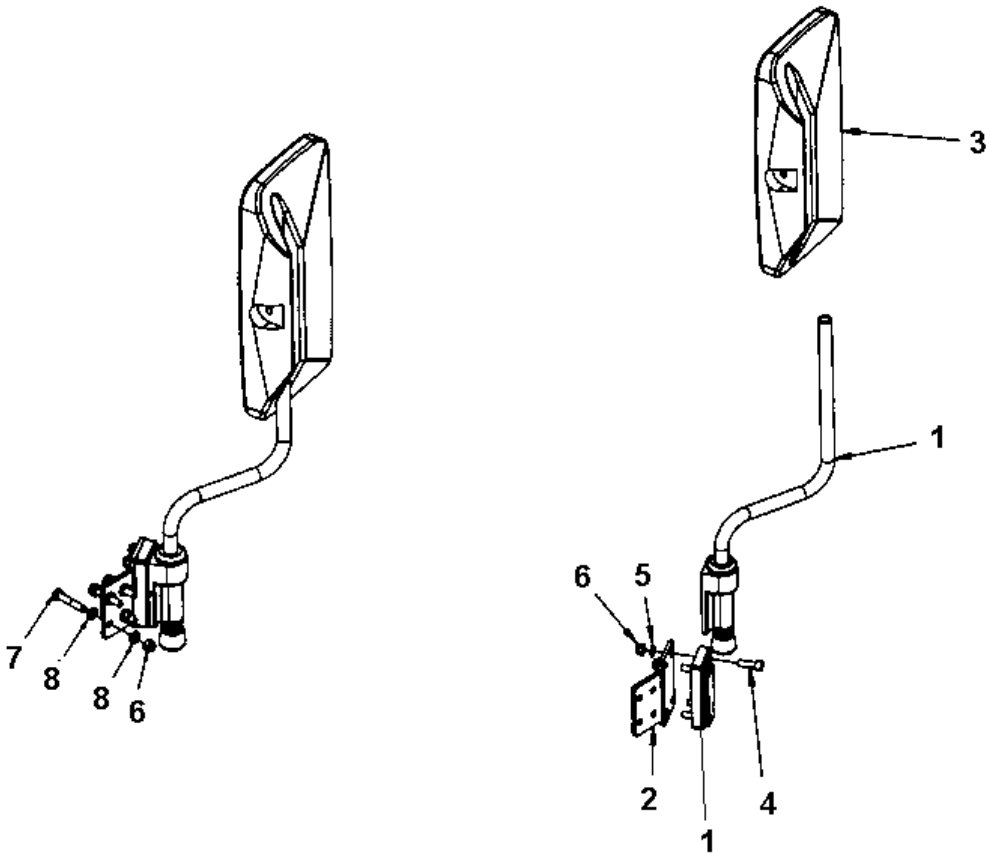

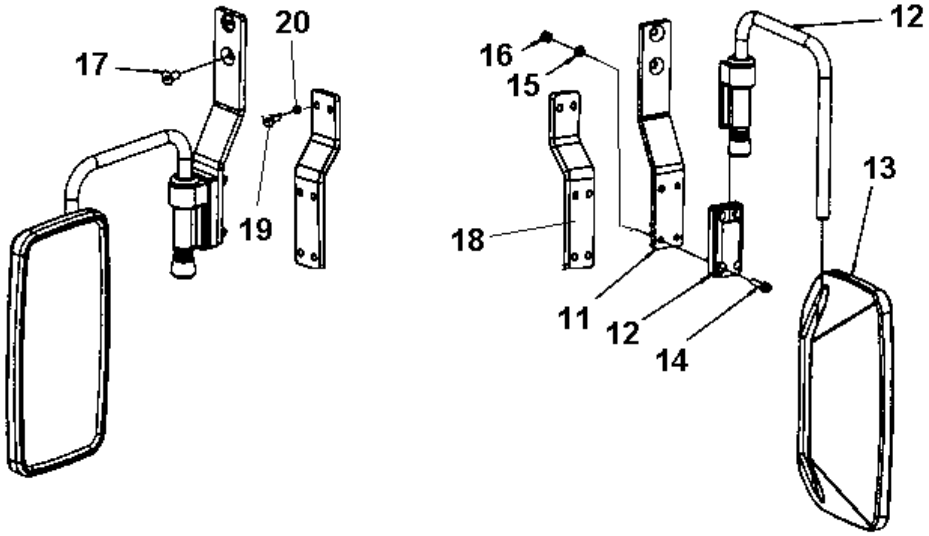

Item	Part No.	Name	Qty	L	SN INFO
1	4700381944	Holder	1		
2	4700392316	Bracket	1		
3	4700381943	Mirror	1		
3	4812161276	Mirror glass	1		
4	4700508019	Cylinder screw	4		
5	4700904229	Washer, 8.4x 6x1.5 mm 300HV	4		
6	4700586003	Lock nut M8	8		
7	4700500024	Screw M8x45	4		
8	4700904556	Steel plain washer 8,4x16x3,0	8		
11	4812110334	Bracket	1		
12	4812110367	Bracket	1		
13	4700381943	Mirror	1		
13	4812161276	Mirror glass	1		
14	4700508019	Cylinder screw	4		
15	4700904229	Washer, 8.4x 6x1.5 mm 300HV	4		
16	4700586003	Lock nut M8	4		
17	4811000096	Hex. socket countersunk screw M10x020H, 10.9	2		
18	4812115053	Bracket	1		
19	4700500053	Screw, M8x20 mm 8.8 A2K	2		
20	4700904229	Washer, 8.4x 6x1.5 mm 300HV	2		

Drivers seat Drivers seat

Item	Part No.	Name	Qty	L	SN INFO
1	-	Seat frame structure	1		
2	-	Seat, galon suspensioned	1		
3	-	Seat, fabric suspensioned	1		
4	-	Seat belt 2"	1		
4	-	Seat belt 2" with reminder	1		
4	-	Seat belt 3"	1		
4	-	Seat belt 3" with reminder	1		
5	-	Controls, slidable and turning	1		
6	-	Cross sliding	1		
7	-	Drive control, cpl	1		
8	-	Display unit	1		
9	-	Control panel cover	1		
10	-	Steering column switch module	1		
11	-	Seat frame adapter module, rotating	1		

Drivers seat Seat frame structure

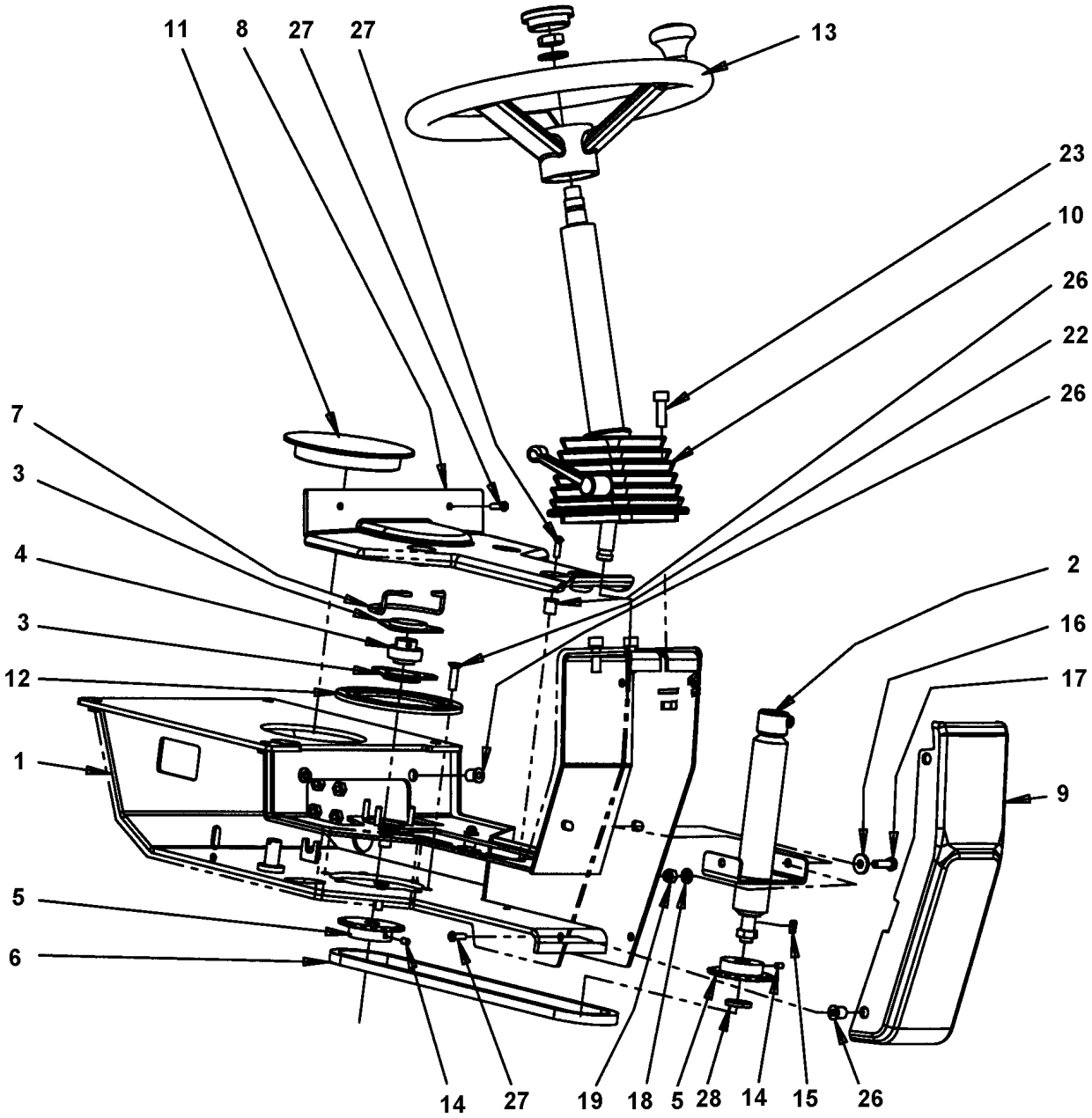

Item	Part No.	Name	Qty	L	SN INFO
1	4700395447	Seat frame	1		
2	4700359919	Shaft	1		
3	4700903917	Bearing outer	2		
4	4700903918	Bearing inner	1		
5	4700359916	Chain wheel	2		
6	4700379718	Chain and connecting link	1		
7	4700372672	Chain guard	1		
8	4700392839	Cover	1		
9	4700392840	Cover	1		
10	4700391163	Steering column	1		
11	4700359920	Plug	1		
12	4700372965	Lock ring	1		
13	4700372964	Steering wheel	1		
14	4700516040	Threaded pin	2		
15	4700350009	Flat key	1		
16	4700904640	Washer, 8.4x22x3 mm 300HV	2		
17	4700500021	Screw, M8x25 mm 8.8 A2K	2		
18	4700904229	Washer, 8.4x 6x1.5 mm 300HV	2		
19	4700586003	Lock nut M8	2		
22	4700902520	Screw	6		
23	4700508029	Cylinder screw	3		
26	4700792539	Rubber nut	10		
27	4700791524	Screw, M6 x 20 mm A2-70	10		
28	4700904214	Washer 15x30x4 300 HV	1		

Drivers seat 4700391163 Steering column

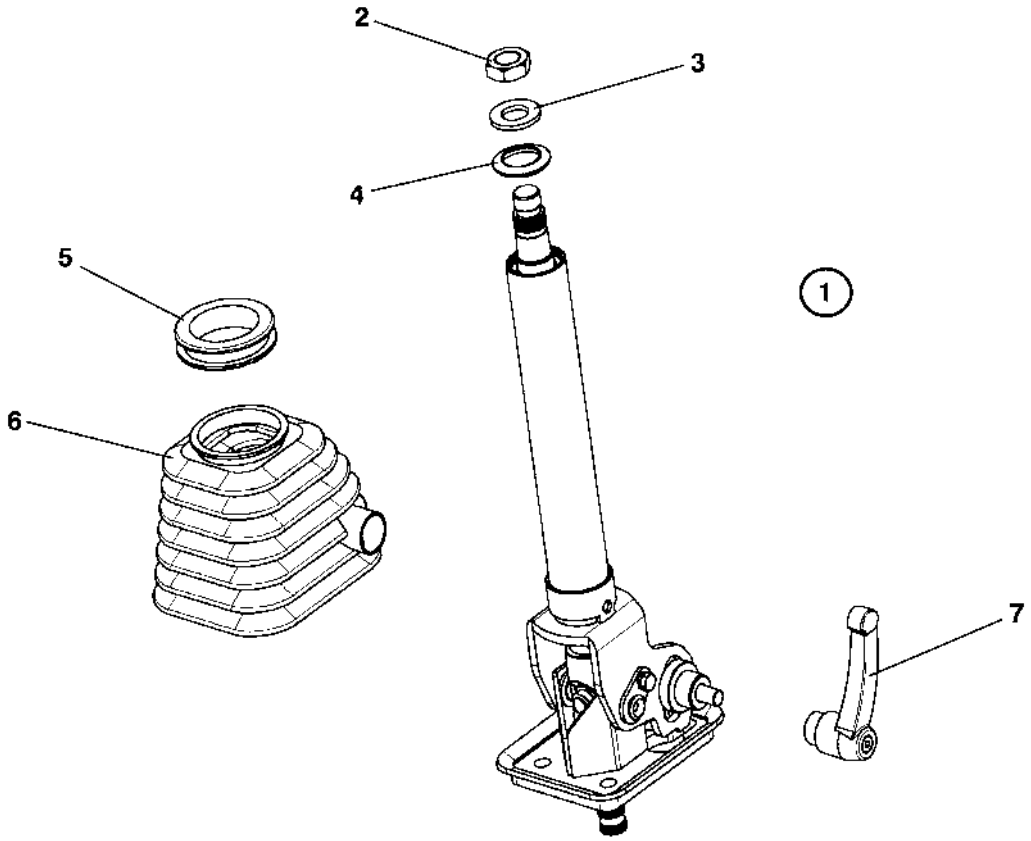

Item	Part No.	Name	Qty	L	SN INFO
1	4700391163	Steering column			
2	4700945632	Nut	1		
3	4700945633	Washer	1		
4	4700945634	Rubber cap	1		
5	4700945635	Bellows ring	1		
6	4700945636	Bellows	1		
7	4700945637	Locking handle	1		

Drivers seat Seat, galon suspensioned

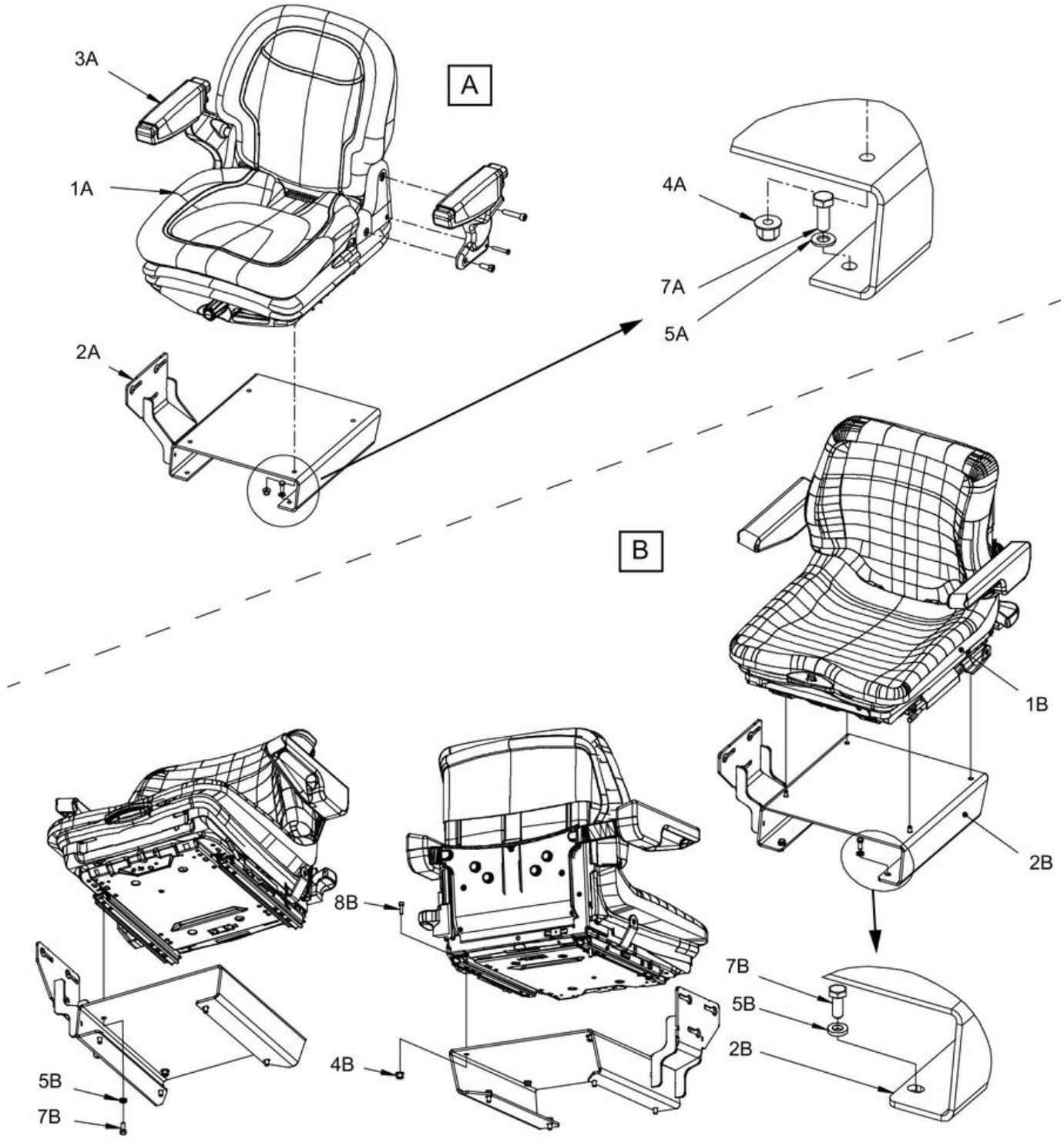

Item	Part No.	Name	Qty	L	SN INFO
1A	4700377518	Seat, galon suspensioned	1		
-	4700945622	Seat switch	1		
-	4700945660	Seat cushion	1		
-	4700945661	Adjuster kit, slide	1	A	
2A	4700390561	Seat frame	1		
3A	4700390963	Arm rest kit	1		
4A	4700902286	Lock nut, M8x1.25 mm A2K	4		
5A	4700904229	Washer, 8.4x 6x1.5 mm 300HV	4		
7A	4700500053	Screw, M8x20 mm 8.8 A2K	4		
Not Shown	-	null			
1B	4700370234	Seat, galon suspensioned	1		
-	4700909535	Sliding rail with handle	1		
-	4700909536	Sliding rail	1		
-	4700936283	Seat switch	1		
-	4700372696	Arm rest, left	1		
-	4700372697	Arm rest, right	1		
2B	4812126698	Seat frame	1		
4B	4700902286	Lock nut, M8x1.25 mm A2K	2		
5B	4700904556	Steel plain washer 8,4x16x3,0	6		
7B	4700500053	Screw, M8x20 mm 8.8 A2K	6		
8B	4700508025	Screw, M6x20 mm 8.8 A2K	2		

Comments for Page: Seat, galon suspensioned

(L)OCAL REMARKS

A | en_US | Left & right sliding rail

Drivers seat Seat comfort, galon suspensioned

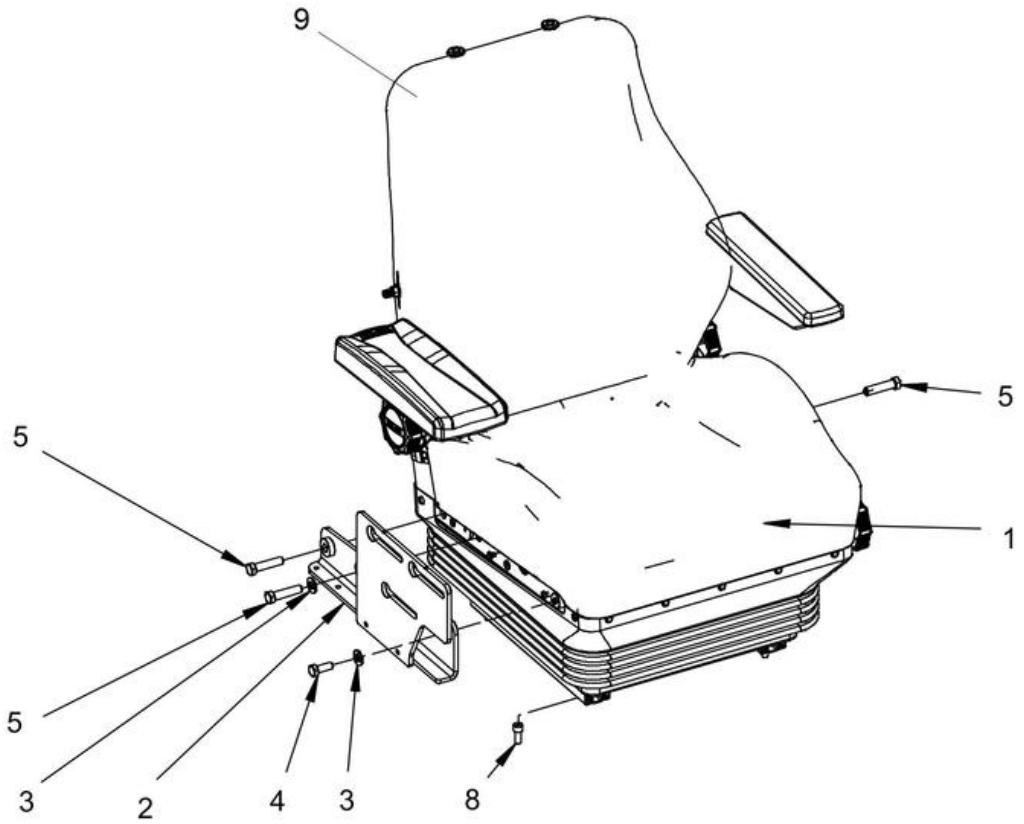

Item	Part No.	Name	Qty	L	SN INFO
1	4812125361	Seat, galon suspensioned	1	A	
-	4700937892	Seat switch	1		
-	4700937620	Arm rest, right	1		
-	4812158367	Arm rest wide, right	1		
-	4700937621	Arm rest, left	1		
2	4812119295	Control bracket	1		
3	4700904230	Plain washer 10.5x22x2 mm	2		
4	4700500028	Screw, M10 x 25 mm 8.8 A3K	1		
5	4700792527	Screw	3		
8	4700508092	Screw	4		
9	4700386075	Seat protection	1		

Comments for Page: Seat comfort, galon suspensioned

(L)OCAL REMARKS

A | en_US | Without seat belt.

Drivers seat Seat comfort, fabric suspensioned

Item	Part No.	Name	Qty	L	SN INFO
1	4812116357	Seat, fabric suspensioned	1	A	
1	4700937892	Seat switch	1		
1	4700937620	Arm rest, right	1		
1	4812158367	Arm rest wide, right	1		
1	4700937621	Arm rest, left	1		
2	4812119295	Control bracket	1		
3	4700904230	Plain washer 10.5x22x2 mm	2		
4	4700500028	Screw, M10 x 25 mm 8.8 A3K	1		
5	4700792527	Screw	3		
8	4700508092	Screw	4		

Comments for Page: Seat comfort, fabric suspensioned

(L)OCAL REMARKS

A | en_US | Without seat belt.

Seat belts Seat belt 2"

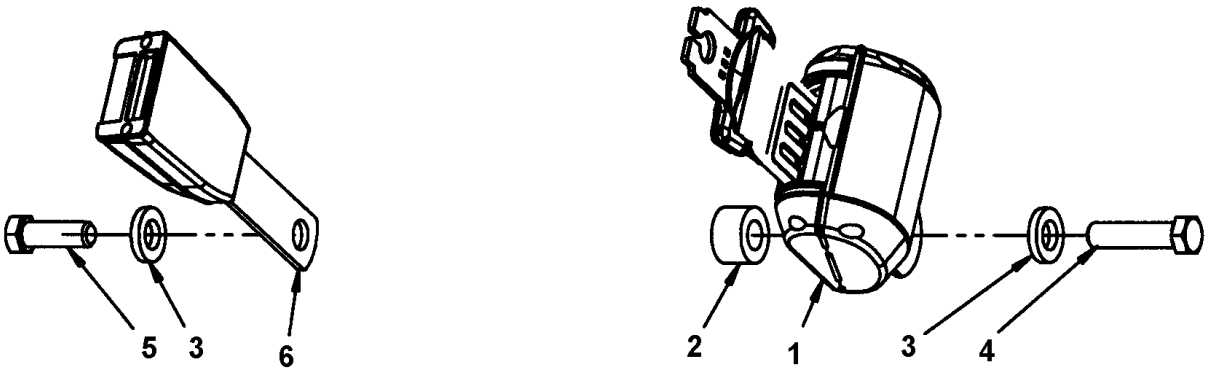

Item	Part No.	Name	Qty	L	SN INFO
1	4812117922	Seat belt 2"	1		
2	4700791572	Spacer washer	1		
3	4700904703	Plain washer 13x24x4 mm	4		
4	4700792527	Screw	1	A	
5	4700928347	Hexagon screw	2	A	
6	4812117924	Buckle	1		

Comments for Page: Seat belt 2"

(L)OCAL REMARKS

A | en_US | Used with seat 4700377518.

Seat belts Seat belt 2" with reminder

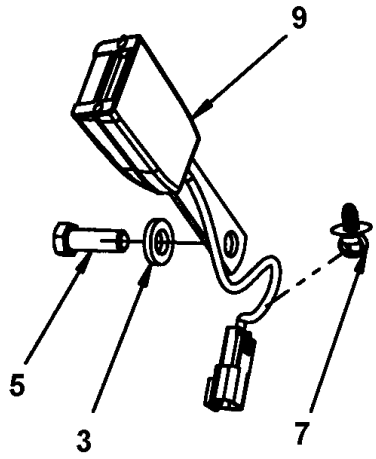

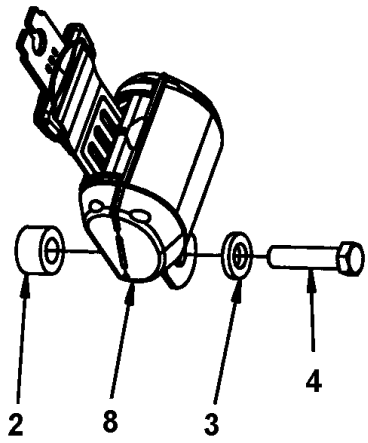

Item	Part No.	Name	Qty	L	SN INFO
2	4700791572	Spacer washer	1		
3	4700904703	Plain washer 13x24x4 mm	4		
4	4700792527	Screw	1		
5	4700928347	Hexagon screw	2		
7	4700792441	Cable tie with holder	1		
8	4812117922	Seat belt 2"	1		
9	4812117925	Buckle with reminder	1		

Seat belts Seat belt 3"

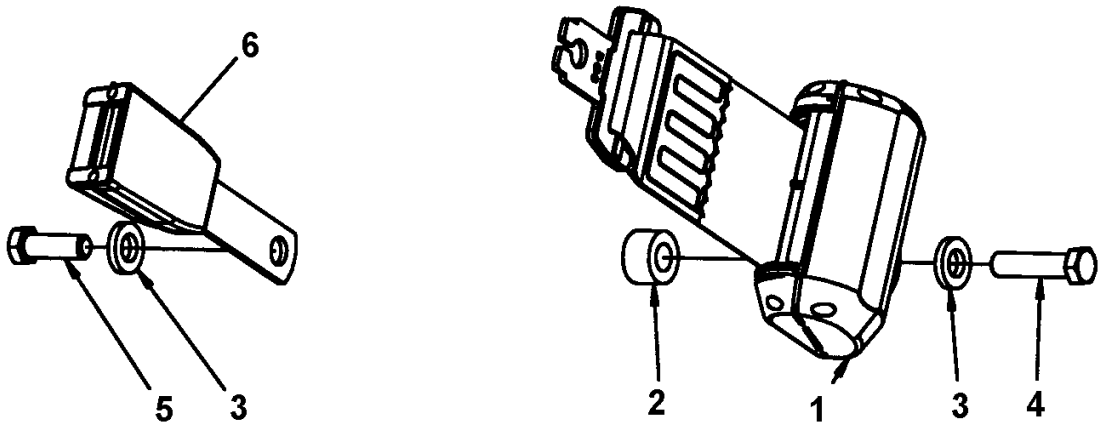

Item	Part No.	Name	Qty	L	SN INFO
1	4812118816	Seat belt 3"	1		
2	4700791572	Spacer washer	1		
3	4700904703	Plain washer 13x24x4 mm	4		
4	4700792527	Screw	1		
5	4700928347	Hexagon screw	2		
6	4812117924	Buckle	1		

Seat belts Seat belt 3" with reminder

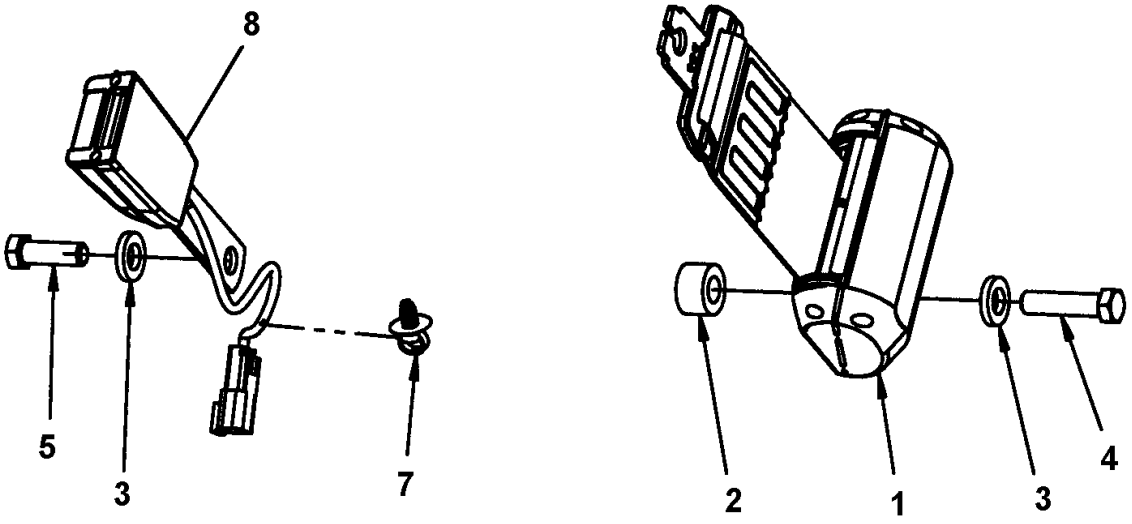

Item	Part No.	Name	Qty	L	SN INFO
1	4812118816	Seat belt 3"	1		
2	4700791572	Spacer washer	1		
3	4700904703	Plain washer 13x24x4 mm	4		
4	4700792527	Screw	1		
5	4700928347	Hexagon screw	2		
7	4700792441	Cable tie with holder	1		
8	4812117925	Buckle with reminder	1		

Drivers seat Controls, slidable and turning

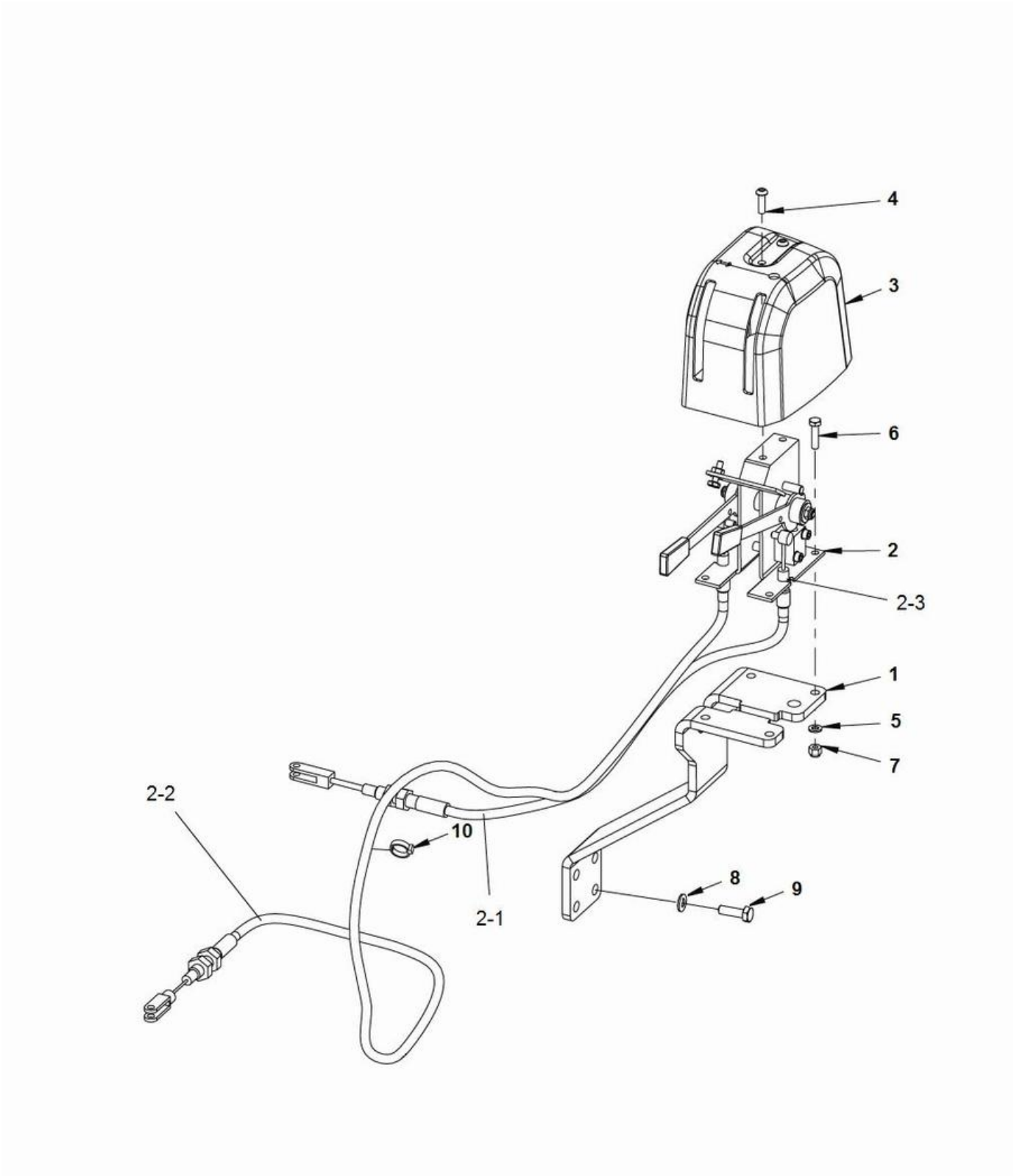

Item	Part No.	Name	Qty	L	SN INFO
1	4812118312	Bracket	1		
2	4812121328	Control	1		
2-1	4812121331	Cable	1		
2-2	4812121330	Cable, sliding	1		
2-3	4700393508	Locking clips	2		
3	4700392965	Control cover	1		
4	4700791524	Screw, M6 x 20 mm A2-70	2		
5	4700904228	Washer 6,4x12x1,5	4		
6	4700500075	Screw, M6-1,0x25 mm 8.8	4		
7	4700586002	Lock nut M6 -8	4		
8	4700904229	Washer, 8.4x 6x1.5 mm 300HV	4		
9	4700500021	Screw, M8x25 mm 8.8 A2K	4		
10	4700313041	Cable ties, L=200 mm	N		

Drivers seat Cross sliding

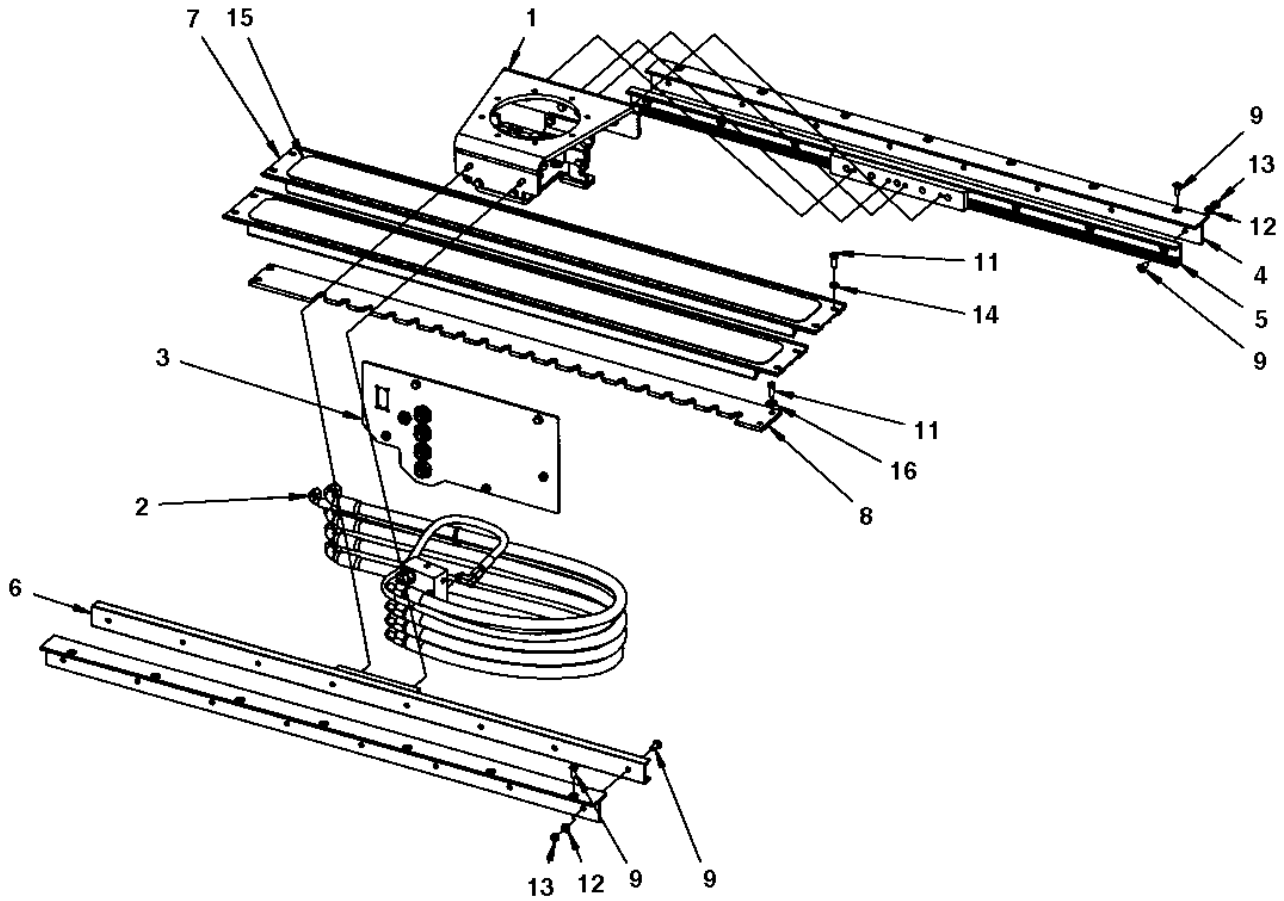

Item	Part No.	Name	Qty	L	SN INFO
1	-	Carrier	1		
2	-	Steering, slideable	1		
3	-	Hose bracket	1		
4	4700390428	Rail holder	2		
5	4700391082	Linear bearing	1		
6	4700391083	Linear bearing	1		
7	4700393191	Cover	2		
8	4700379729	Locking rail	1		
9	4700513003	Screw	30		
11	4700500020	Hex. screw	12		
12	4700904229	Washer, 8.4x 6x1.5 mm 300HV	16		
13	4700570005	Hexagon nut	16		
14	4700904556	Steel plain washer 8,4x16x3,0	8		
15	4700393978	Slip protection	2		
16	4700791304	Steel plain washer	4		

Drivers seat Carrier

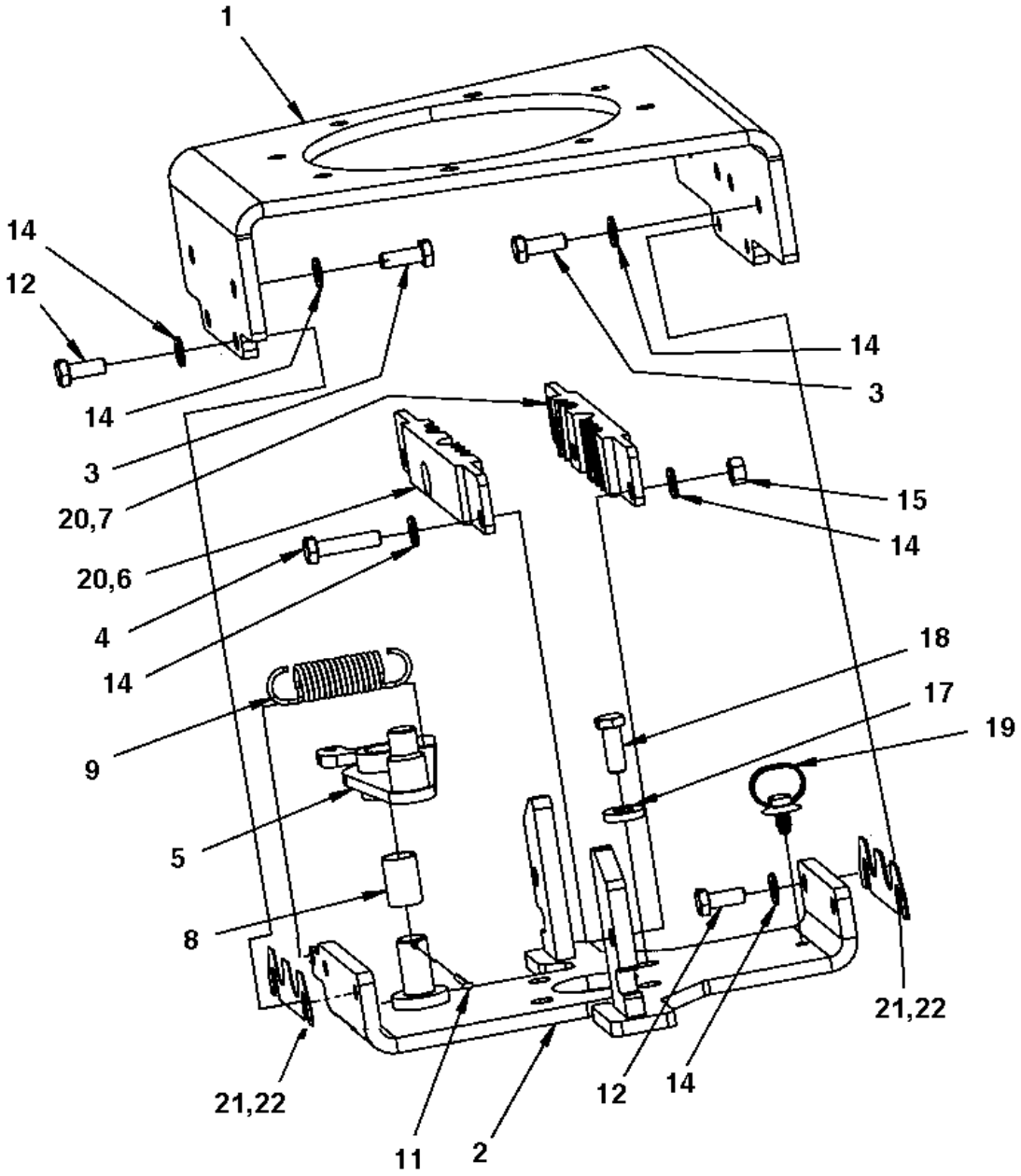

Item	Part No.	Name	Qty	L	SN INFO
1	4700379715	Carrier	1		
2	4700391478	Steering valve bracket	1		
3	4700500020	Hex. screw	6		
4	4700500047	Hexagon head screw	2		
5	4812120035	Coupling link	1		
6	4700372959	Clamp	1	2	
7	4700372960	Clamp	1	2	
8	4700359819	Bushing	1		
9	4700359043	Spring	1		
11	4700630008	Pin	1		
12	4700500053	Screw, M8x20 mm 8.8 A2K	4		
14	4700904229	Washer, 8.4x 6x1.5 mm 300HV	14		
15	4700570005	Hexagon nut	2		
17	4700904557	Washer, 10.5x22x4 mm 300 HV	4		
18	4700502035	Screw 3/8"-16UNCx1 8.8	4		
19	4700792441	Cable tie with holder	1		
20	4812110896	Clamp	2	1	
21	4812115060	Shim	N		
22	4812115061	Shim	N		

Comments for Page: Carrier

(L)OCAL REMARKS

1 | en_US | 2pcs together can replace item 6 and 7.

2 | en_US | Item 6 and 7 can be replaced by 2pcs of item 20.

Drive control To A015418 Drive control, cpl

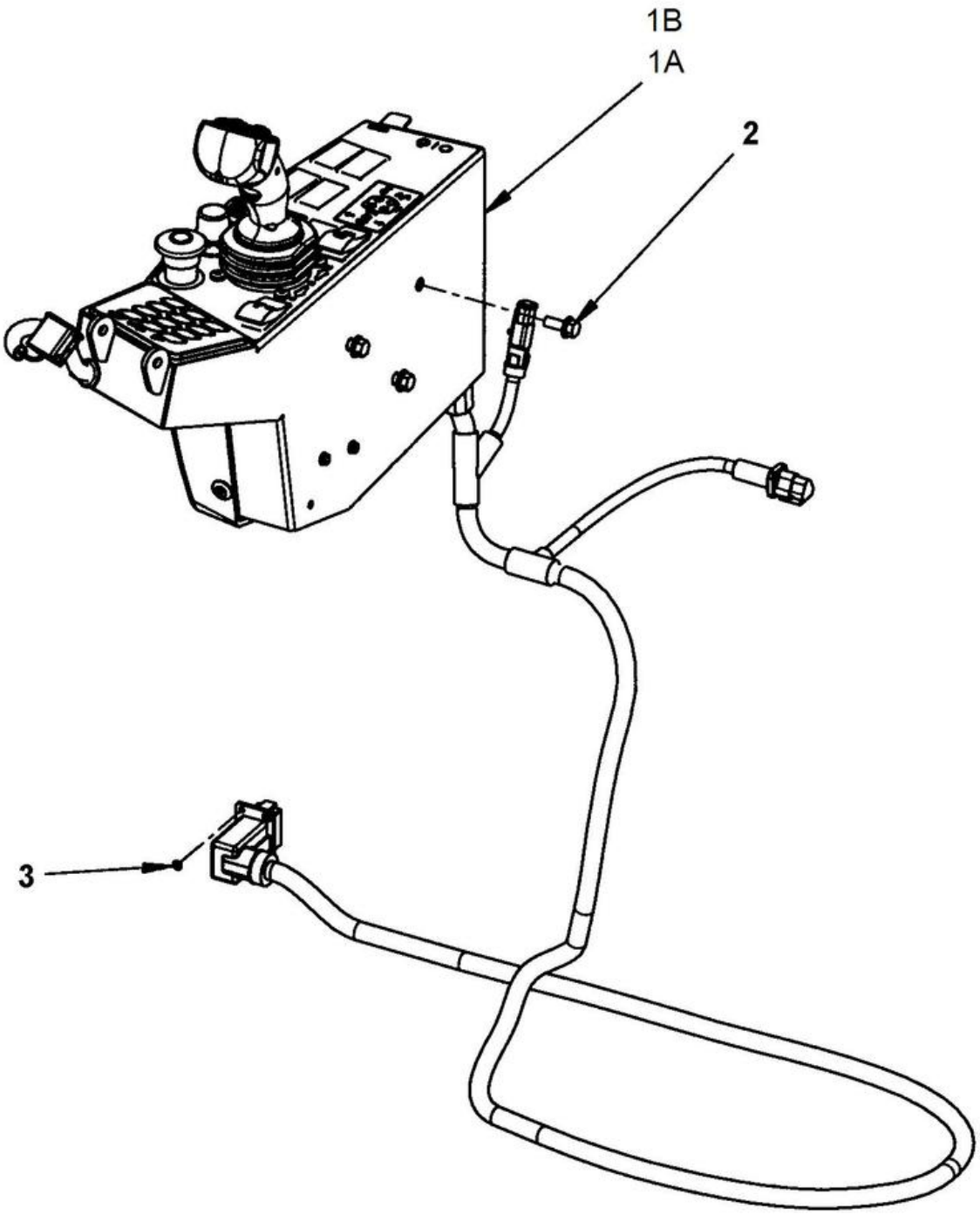

Item	Part No.	Name	Qty	L	SN INFO
1A		Drive control	1		
1B		Drive control	1		
2	4700500505	Screw, M8x20 mm 8.8 A2K	3		
3	4700791709	Blind rivet	4		

Drive control To A015418 Drive control

Item	Part No.	Name	Qty	L	SN INFO
1	4812110886	Control box	1		
2	4700391396	Cover	1		
3	4700396662	Cover	1		
4	4700391420	Control handle, 4 switches	1		
5	4812113875	Control unit, I/O	1		
6	4812110901	Ignition switch	1		
7	4700391421	Membrane switch panel	1		To A014338 excl. A013267, A013270
7	4812121044	Membrane switch panel	1		From A014339 incl. A013267, A013270
8	4700385599	Buzzer	1		
9	4700388737	Potentiometer	1		
10	4812118697	Switch, parking brake	1		
12	4812115292	Cable harness	1		
13	4700392930	Junction box	1		
14	4700393031	Decal	1		
15	4812119227	Thread rolling screw	4		
16	4700904698	Plain washer	8		
17	4700904281	Washer, 5,3x10x1 300HV	4		
18	4700586001	Lock nut	2		
19	4700500060	Screw M5-0,8x20 8.8	2		
20	4700904228	Washer 6,4x12x1,5	3		
21	4700586002	Lock nut M6 -8	2		
22	4700508017	Cylinder screw	4		
23	4700791588	Panel plug	7		
24	4700395785	Expansion rivet	4		
25	4700570004	Hexagon nut M6	1		
26	4700902804	Plug	5		
27	4700791739	Emergency stop	1		
28	4700791733	Fixing collar	1		
29	4700791723	Connector N/C	2		
30	4812115810	Switch, displacement shift	1		
31	4812114214	Cover	1		
32	4812114213	Lock screw	2		
33	4812119317	Holder	1		

Drive control From A015419 Drive control module

Item	Part No.	Name	Qty	L	SN INFO
1		Drive control	1		
2	4700500505	Screw, M8x20 mm 8.8 A2K	3		
3	4700791709	Blind rivet	4		

Drive control From A015419 Drive control

Item	Part No.	Name	Qty	L	SN INFO
1	4812120077	Control box	1		
2	4700391396	Cover	1		
3	4700396662	Cover	1		
5	4812113875	Control unit, I/O	1		
6	4812110901	Ignition switch	1		
7	4812121044	Membrane switch panel	1		
8	4700385599	Buzzer	1		
9	4700388737	Potentiometer	1		
9	4700939826	Knob	1		
10	4812118697	Switch, parking brake	1		
11	4700792414	Switch, RPM	1		
11	4812117490	Switch, green ECO	1		
12	4812121851	Cable harness	1		
13	4700392930	Junction box	1		
14	4812121348	Decal, Information	1		
15	4812119227	Thread rolling screw	4		
16	4700904698	Plain washer	8		
17	4700904281	Washer, 5,3x10x1 300HV	4		
18	4700586001	Lock nut	2		
19	4700500060	Screw M5-0,8x20 8.8	2		
20	4700904228	Washer 6,4x12x1,5	3		
21	4700586002	Lock nut M6 -8	2		
22	4700508017	Cylinder screw	4		
23	4700791588	Panel plug	6		
24	4700395785	Expansion rivet	4		
25	4700570004	Hexagon nut M6	1		
26	4700902804	Plug	5		
27	4700791739	Emergency stop	1		
28	4700791733	Fixing collar	1		
29	4700791723	Connector N/C	2		
30	4812115810	Switch, displacement shift	1		
31	4812114214	Cover	1		
32	4812114213	Lock screw	2		
33	4812119317	Holder	1		
34	4700792441	Cable tie with holder	1		

Drive control From A015419 Control handle

Item	Part No.	Name	Qty	L	SN INFO
1	4700391420	Control handle, 4 switches	1		To A019227, excl. 19049-51
2	4812126248	Control handle, 4 switches	1		From A019228, incl. 19049-51
3	4812121347	Control handle, 6 switches	1		To A018998, incl. 19085-86, 19127, 19147-53
4	4812126247	Control handle, 6 switches	1		From A018999, excl. 19085-86, 19127, 19147-53
5	4700904650	Button head socket screw, M6x12	4		

Drivers seat Display unit

Item	Part No.	Name	Qty	L	SN INFO
1	4700392717	Display holder	1		
2	4812113786	Display unit	1		
3	4700392719	Cover	1		
4	4700393094	Decal	1		
5	4700904228	Washer 6,4x12x1,5	4		
6	4700586002	Lock nut M6 -8	4		
11	4700903662	Washer	2		
12	4700606004	Plastic washer	2		
13	4700500115	Screw	1		
14	4700586003	Lock nut M8	1		

Drivers seat Control panel cover

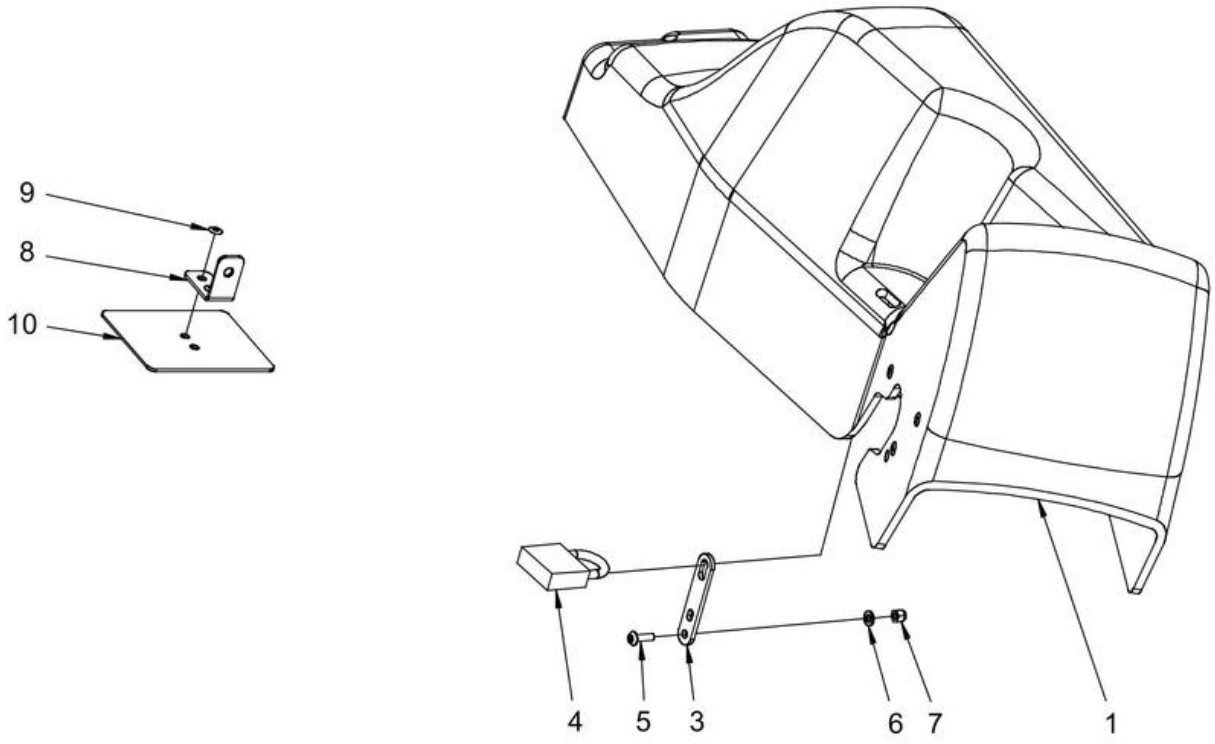

Item	Part No.	Name	Qty	L	SN INFO
1	4812126260	Instrument panel cover	1		
3	4700387545	Latch	1		
4	4700358881	Pad lock	1		
5	4700904653	Screw M5x16 A2-70	2		
6	4700904281	Washer, 5,3x10x1 300HV	4		
7	4700586001	Lock nut	2		
8	4700396670	Bracket	1		
9	4700904619	Blind rivet	2		
10	4812126261	Support plate	1		

Drivers seat Seat frame adapter module, rotating

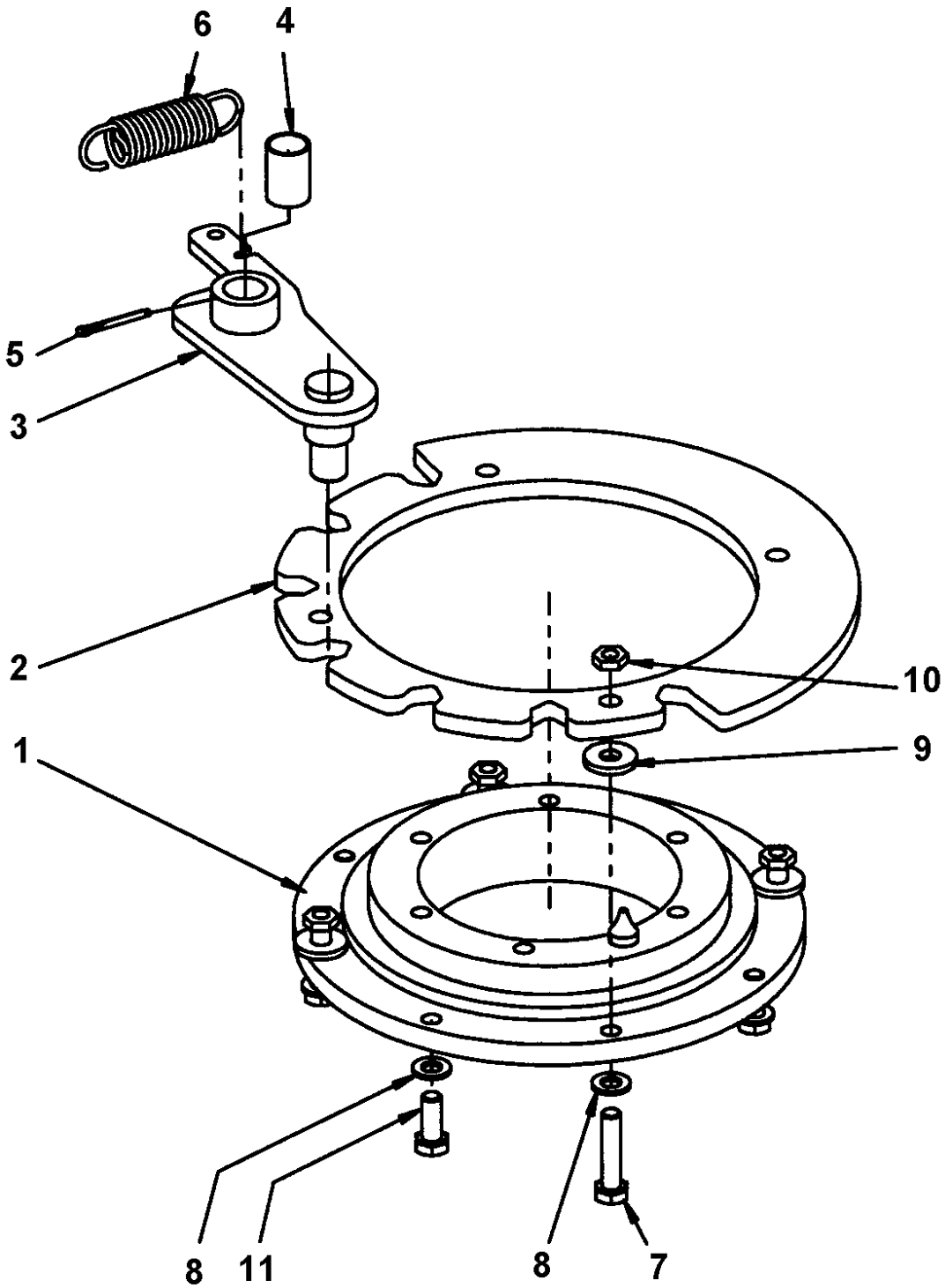

Item	Part No.	Name	Qty	L	SN INFO
1	4700359125	Ball bearing	1		
2	4700379728	Locking disc	1		
3	4812119788	Coupling link	1		
4	4700359819	Bushing	1		
5	4700630008	Pin	1		
6	4700359043	Spring	1		
7	4700792678	Screw	4		
8	4700904229	Washer, 8.4x 6x1.5 mm 300HV	8		
9	4700904640	Washer, 8.4x22x3 mm 300HV	4		
10	4700573008	Nut M8	4		
11	4700947679	Hexagon head screw	4		

Decals Decals

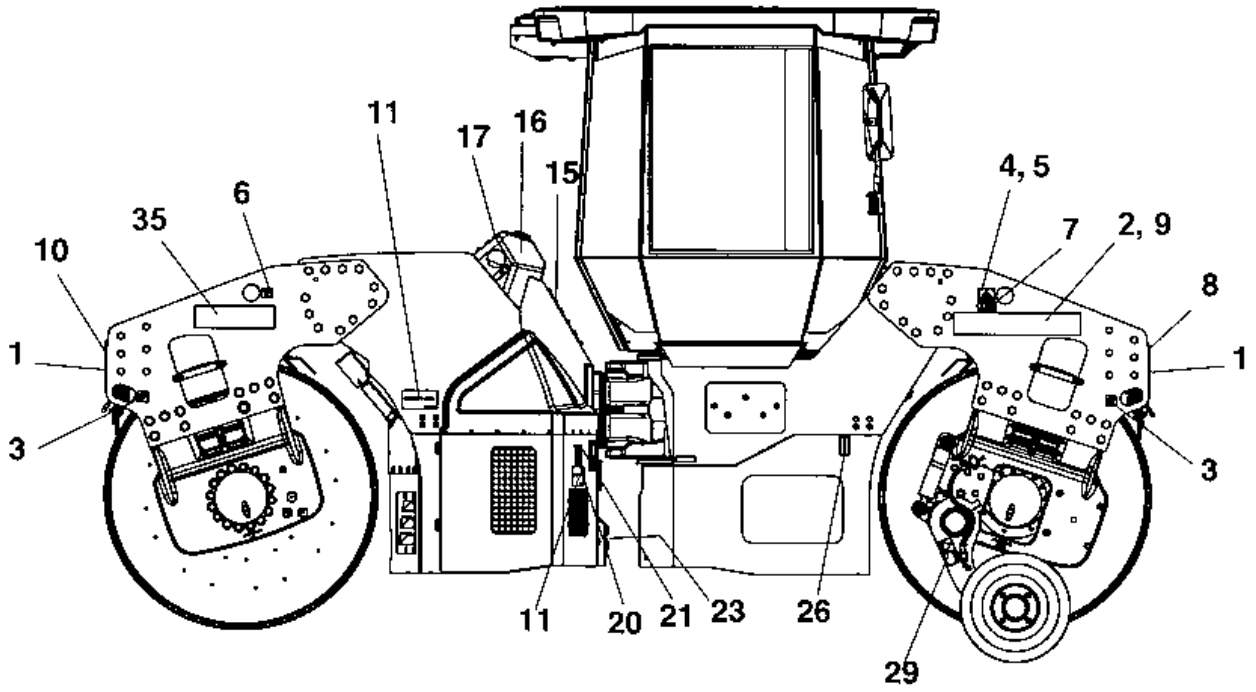

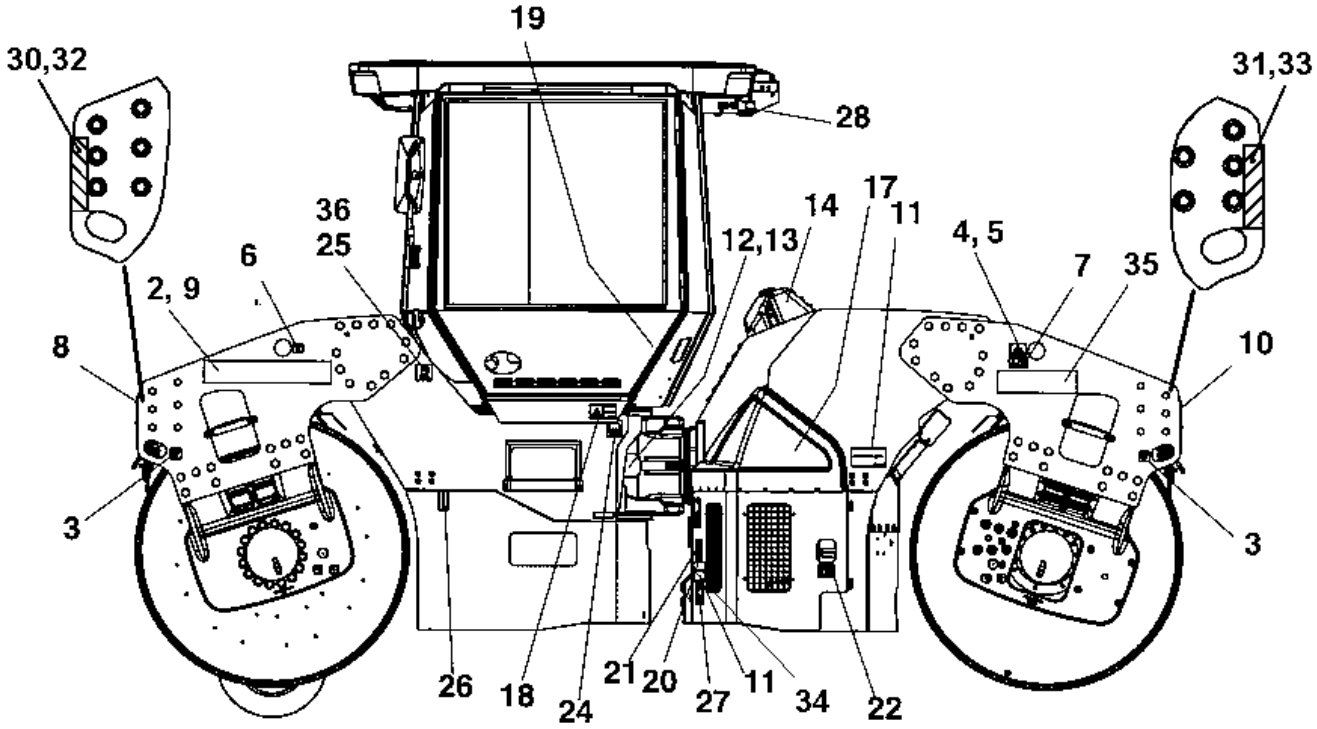

Item	Part No.	Name	Qty	L	SN INFO
1	4812120123	Decal "Atlas Copco" Black, H=118	2		
2	4812120318	Decal "COMPACTING ROCKS" Left	1		
2	4812120319	Decal "COMPACTING ROCKS" Right	1		
3	4700382751	Decal "SECURING POINT/TIE DOWN"	4		
4	4700904870	Lifting data plate	2		
5	4700624005	Blind rivet 3,2x6,1	8		
6	4700357587	Label lifting point	2		
7	4700908229	Safety decal	2		
8	4700377743	Reflector, white	2		
9	4812120433	Decal "MODEL CODE" CC6200	2		
10	4700377742	Reflector, red	2		
11	4700903422	Safety decal "CRUSH AREA"	4		
12	-	Product identification plate	1		
13	4700624005	Blind rivet 3,2x6,1	4		
14	4700272372	Decal "HYDRAULIC OIL"	1		
14	4700792772	Decal "BIO HYDRAULIC OIL" PANOLIN	1		
15	4700272373	Label, hydraulic oil level	1		
16	4700388449	Decal "ENGINE COOLANT FILL"	1		
17	4700791642	Decal "WARNING" Use of starting fluid prohib.	2		
18	4700903459	Decal "SAFETY"	1		
19	4700903425	Safety decal "READ SAFETY INSTRUCTIONS"	2		
20	4700903423	Safety label, Rotating engine components	2		
21	4700903424	Safety label, hot surfaces	2		
22	4700904835	Decal "BATTERY POWER"	1		
23	4700393959	Decal "Battery voltage 24V"	1		
24	4700991657	Decal "WATER"	1		
25	4811000344	Decal, low sulfur	1		
26	4700377744	Reflector, yellow	2		
27	4700791278	Decal "Sound power level" 108dB	1		
27	4700791279	Decal "Sound power level" 109dB	1		
28	4700904165	Safety decal "Toxic gases"	1		
29	4700904083	Safety decal	1		
30	4700394596	Decal "Risk location"	2		
31	4700394594	Decal "Risk location"	2		
32	4700394593	Decal "Risk location"	2		
33	4700394595	Decal "Risk location"	2		
34	4700904895	Safety decal "Brake release"	1		

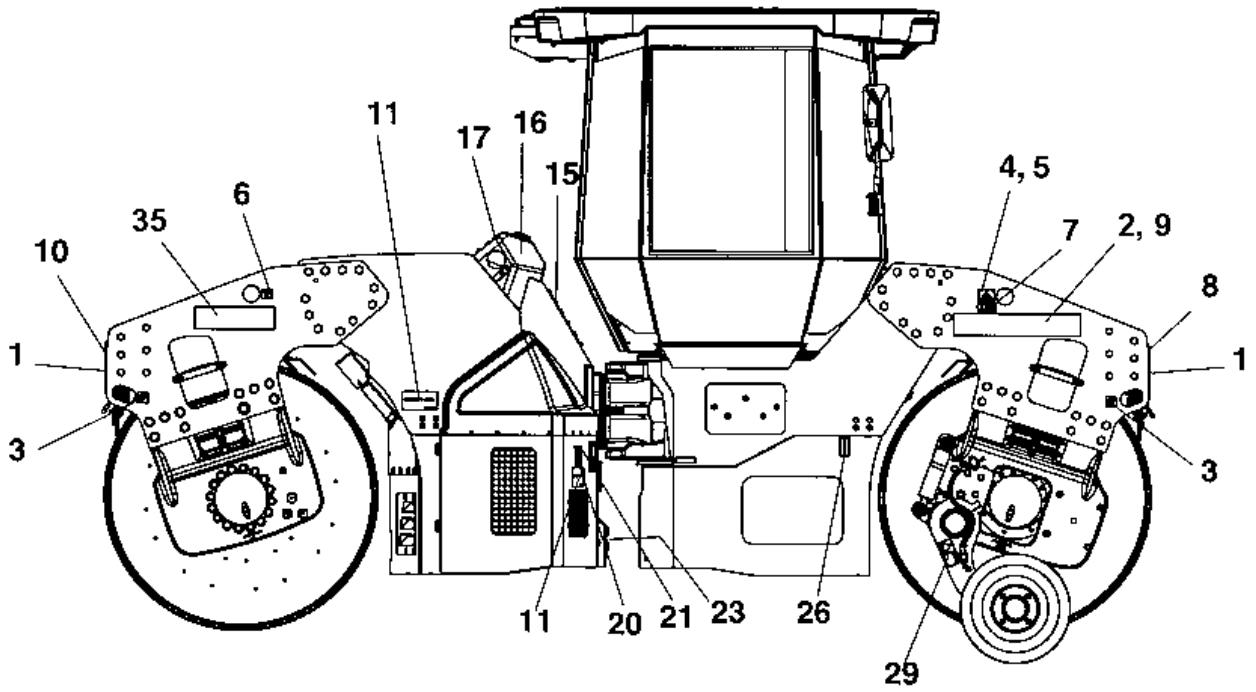
11
17
16
15
6
35
10
1
3
4, 5
7
2, 9
8
1
3
11
20
21
23
26
29

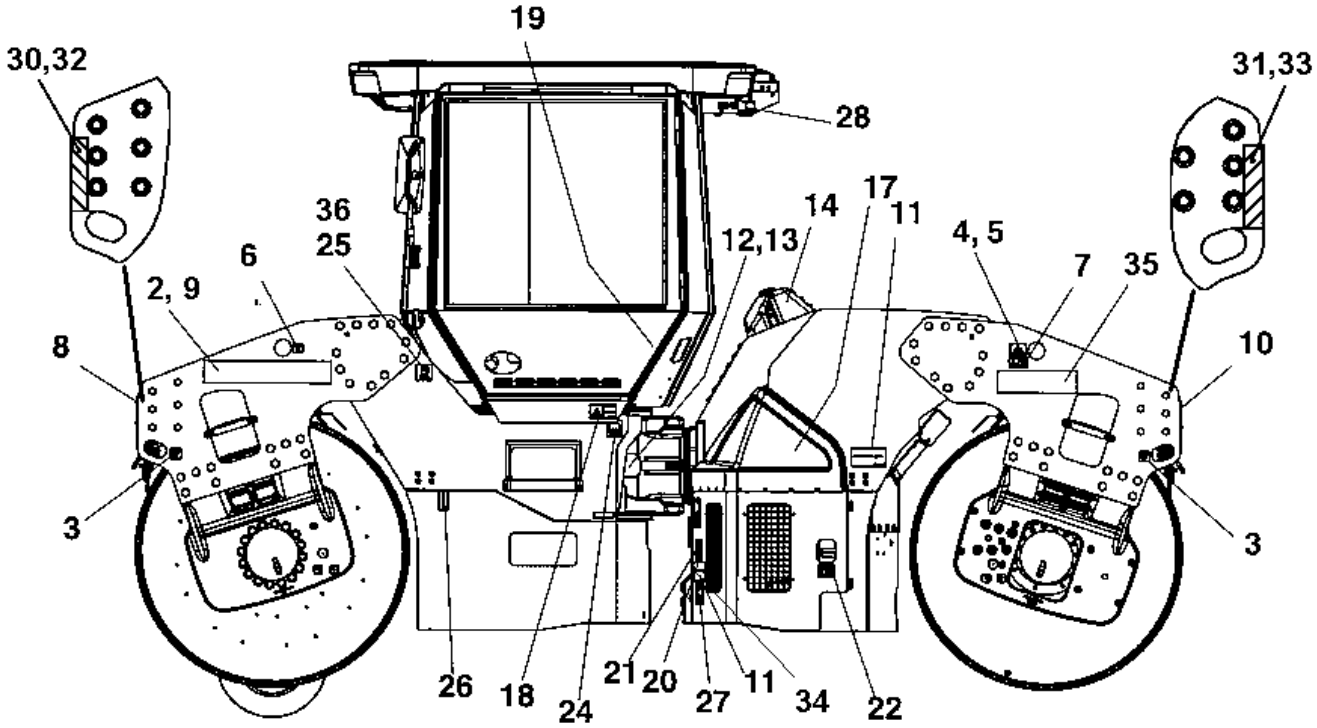
19
30,32
31,33
28
36
25
6
2, 9
8
3
14
17
11
12,13
4, 5
7
35
10
3
26
18
24
21
20
27
11
34
22

Item	Part No.	Name	Qty	L	SN INFO
35	4812120121	Decal "Atlas Copco" Black, H=143	2		
36	4811000345	Decal "ULTRA LOW SULFUR FUEL ONLY"	1		

Air conditioning Air conditioning

Item	Part No.	Name	Qty	L	SN INFO
1	-	Compressor module	1		
2	-	Condensor module	1		
3	-	Evaporator kit	1		
4	-	ACC kit	1		
5	-	Hose kit Compressor	1		

Air conditioning Compressor module

Item	Part No.	Name	Qty	L	SN INFO
1	4700391621	Compressor	1		
2	4700904229	Washer, 8.4x 6x1.5 mm 300HV	3		
3	4700500096	Screw	3		
4	4812118502	Belt	1		
5	4812120129	Tightening pulley	1		
6	4812120128	Water inlet	1		

Air conditioning Condensor module

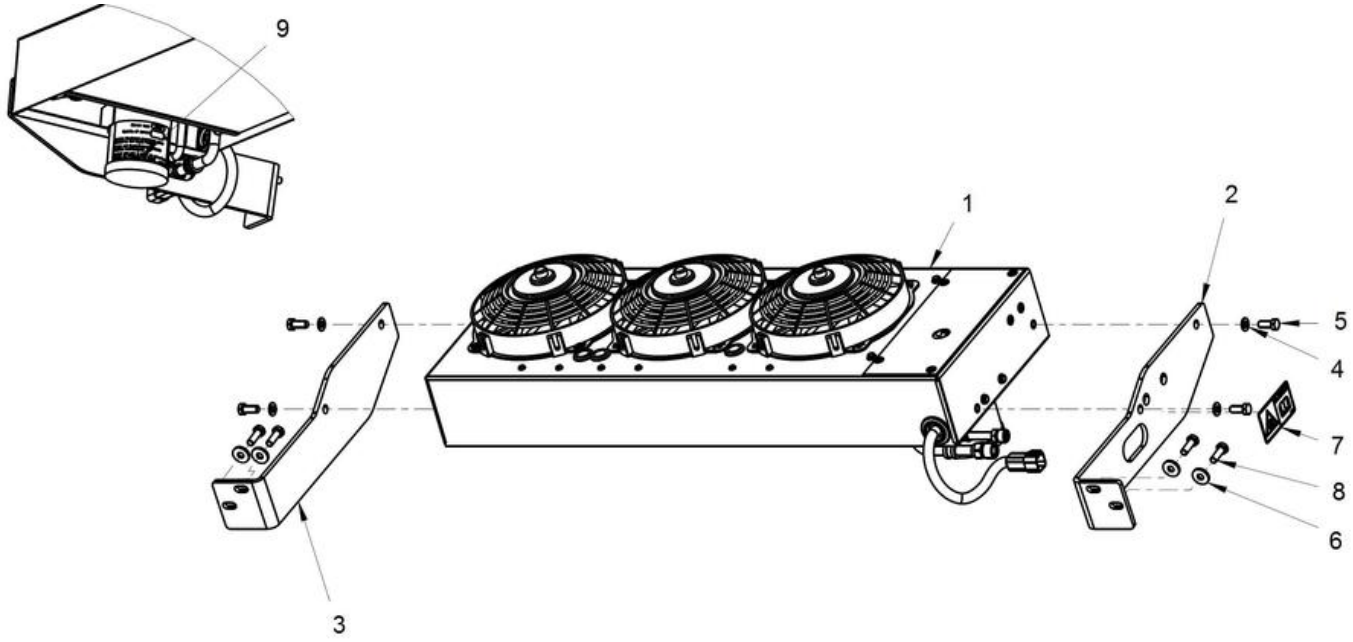

Item	Part No.	Name	Qty	L	SN INFO
1	-	Condensor	1		
2	4700393222	Bracket	1		
3	4700393223	Bracket	1		
4	4700904229	Washer, 8.4x 6x1.5 mm 300HV	4		
5	4700500053	Screw, M8x20 mm 8.8 A2K	4		
6	4700904640	Washer, 8.4x22x3 mm 300HV	4		
7	4700904165	Safety decal "Toxic gases"	1		
8	4700500021	Screw, M8x25 mm 8.8 A2K	4		
9	4812121417	Decal, Flourinated gas	1		

Air conditioning Condensor

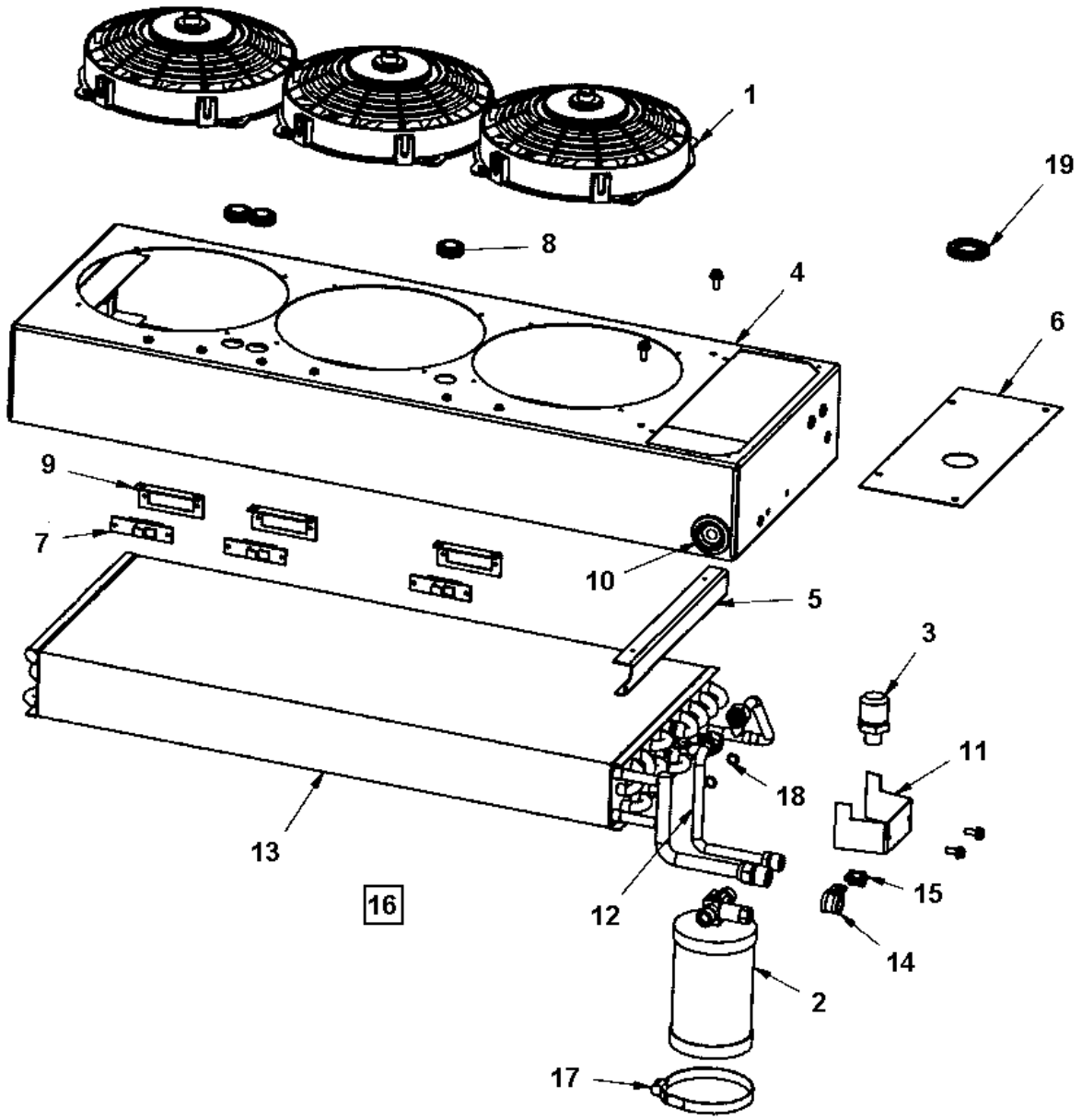

Item	Part No.	Name	Qty	L	SN INFO
1	4700950372	Fan	3		
2	4700950373	Dryer	1		
3	4700938605	Pressure switch	1		
4	-	Casing	1		
5	-	Bracket	1		
6	-	Injector part	1		
7	4700938606	Resistor	3		
8	4700938609	Grommet	3		
9	4812155658	Resistor bracket	3		
10	-	Grommet	1		
11	-	Bracket	1		
12	-	Copper tube	1		
13	4700950374	Condensor Coil	1		
14	-	Clamp	1		
15	-	Clamp	1		
16	4700950375	Cable harness	1		
17	4700938789	Clamp	1		
18	-	O-ring	2		
19	-	Grommet	1		

Air conditioning Hose kit Compressor

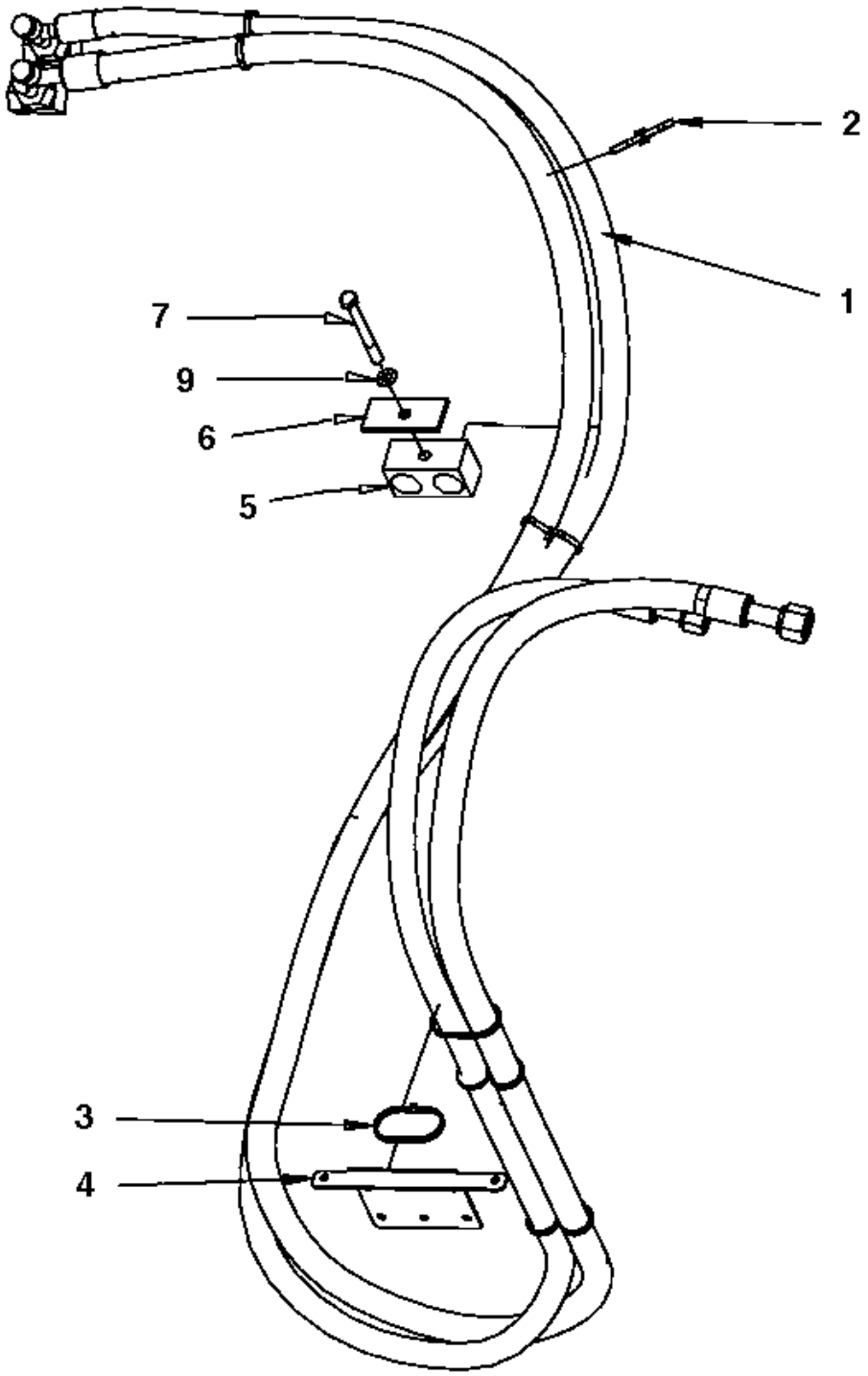

Item	Part No.	Name	Qty	L	SN INFO
1	-	Hose kit AC	1		
2	4700792686	Cable tie with holder	15		
3	4700313041	Cable ties, L=200 mm	N		
4	4700394707	Bracket	1		
5	4700287295	Clamp	1		
6	4700287294	Cover plate	1		
7	4700500090	Screw	1		
9	4700904229	Washer, 8.4x 6x1.5 mm 300HV	1		

Air conditioning Hose kit AC

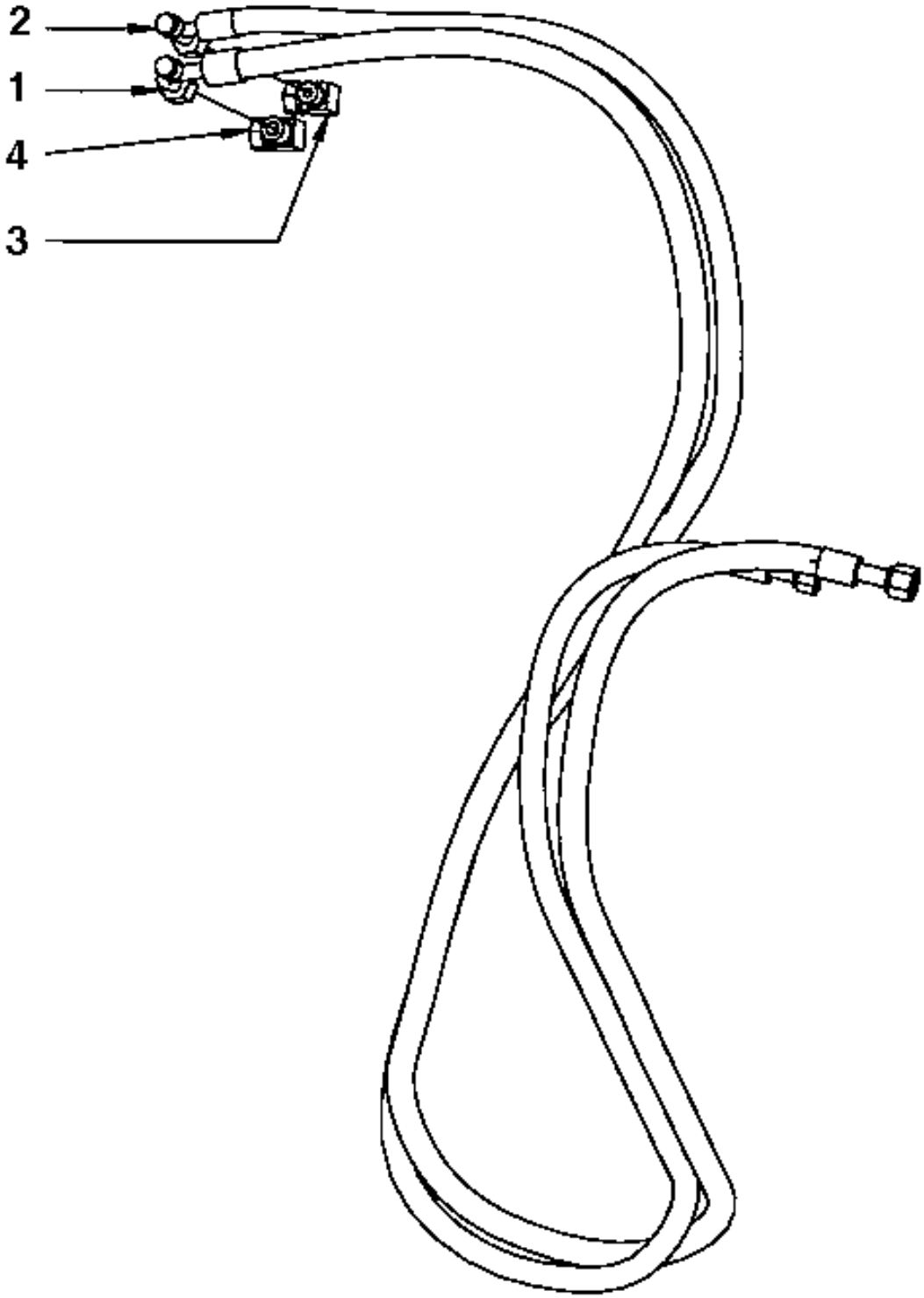

Item	Part No.	Name	Qty	L	SN INFO
1	4700393598	Refrigerant hose	1		
2	4700393595	Refrigerant hose	1		
3	4700394705	Refrigerant fitting	1		
4	4700394706	Refrigerant fitting	1		

Radio and cd player Radio and cd player

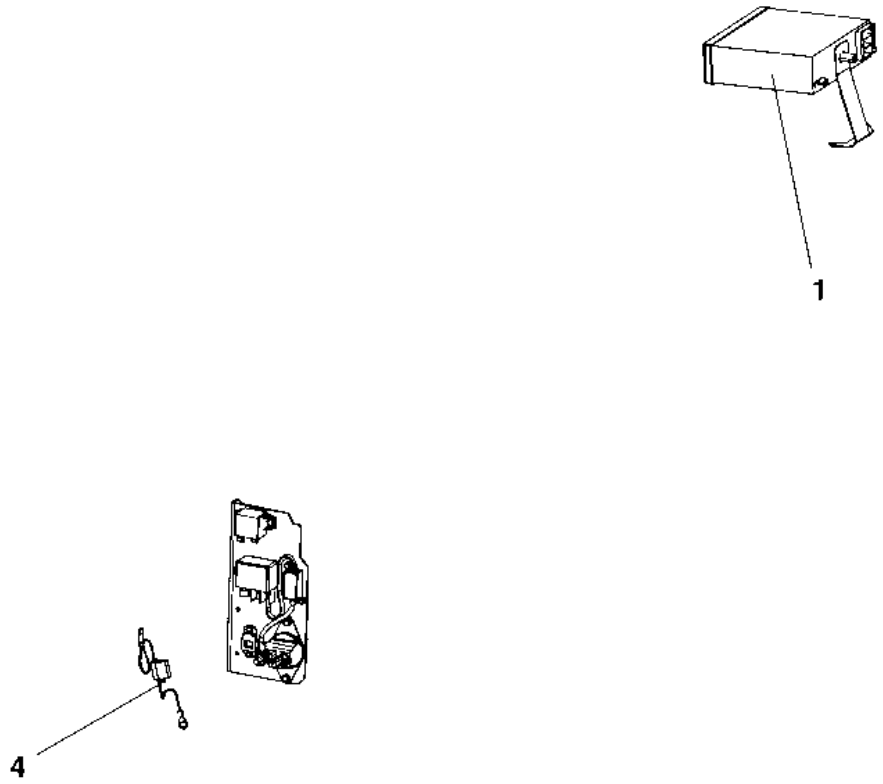

Item	Part No.	Name	Qty	L	SN INFO
1	-	Radio and cd player module	1		
4	-	Power supply module	1		

Radio and cd player Radio and cd player module

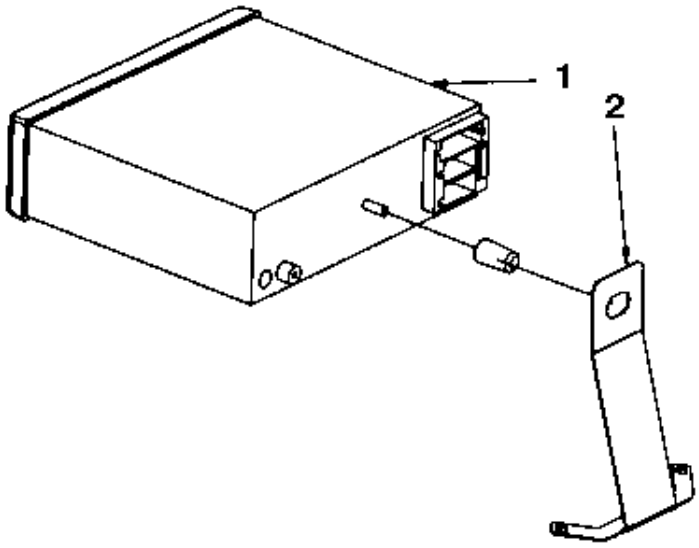

Item	Part No.	Name	Qty	L	SN INFO
1	4700792583	Car stereo	1		
2	4700394654	Bracket	1		

Radio and cd player Power supply module

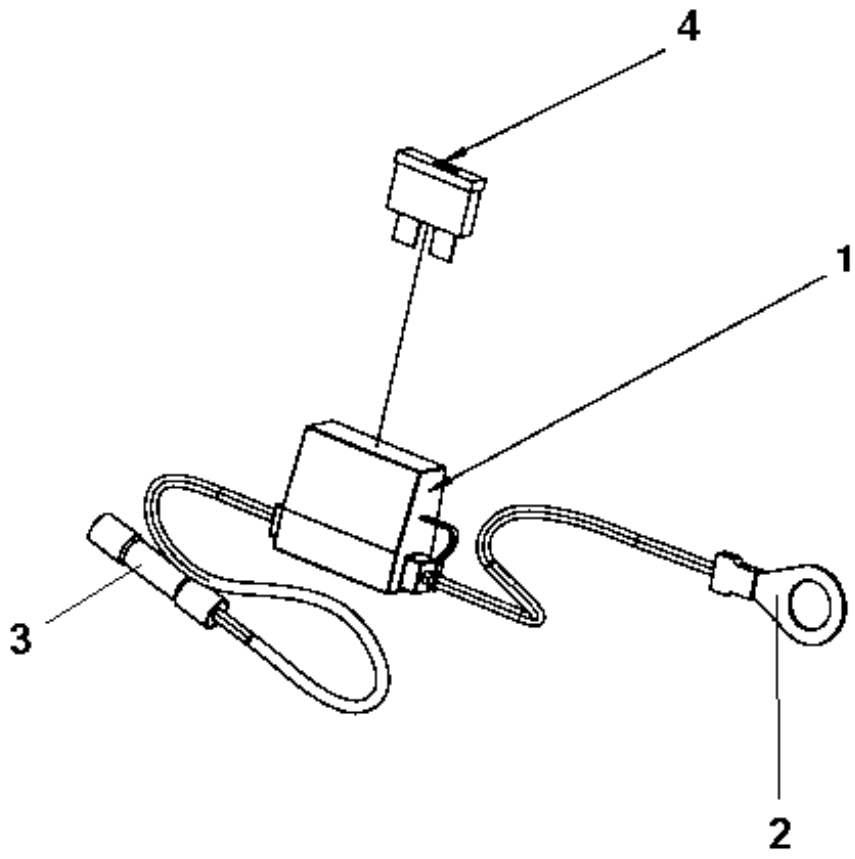

Item	Part No.	Name	Qty	L	SN INFO
1	4700904015	Fuse holder	1		
2	4700960067	Cable clip	1		
3	4700904024	Splicing sleeve	1		
4	4700901227	Fuse 10A Red	1		

Tachograph, Car stereo Tachograph, Car stereo

Item	Part No.	Name	Qty	L	SN INFO
1	-	Tachograph with holder	1		
2	-	Car stereo module	1		
3	4812115288	Wiring harness	1		
4	4700395023	Frequency converter	1		
5	4700313041	Cable ties, L=200 mm	8		
6	4700792210	Screw torx	1		
7	4700792667	Cable tie holder	2		
8	4700904015	Fuse holder	1		
9	4700960067	Cable clip	1		
10	4700904024	Splicing sleeve	1		
11	4700901227	Fuse 10A Red	1		

Tachograph, Car stereo Tachograph with holder

Item	Part No.	Name	Qty	L	SN INFO
1	4811000292	Tachograph	1		
2	4812118625	Seal kit	1		
3	4812118641	Holder	1		
4	4812112837	Holder	1		
5	4812112838	Cover	1		
6	4700904735	Steel plain washer	3		
7	4700500013	Screw, M6x16 mm 8.8 A2K	3		
8	4700904698	Plain washer	4		
9	4700500002	Screw M4-0,7x12H 8.8	4		
10	4812118624	Mounting frame	1		
11	4700904229	Washer, 8.4x 6x1.5 mm 300HV	2		
12	4700500019	Hexagon screw	2		
13	4700500026	Screw M8-1,25x60 mm 8.8	2		

Tachograph, Car stereo Car stereo module 12V

Item	Part No.	Name	Qty	L	SN INFO
1	4811000265	Car stereo	1		
2	4812116986	Spacer frame	1		
3	4812119306	Antenna adapter	1		

Edge cutter Edge cutter

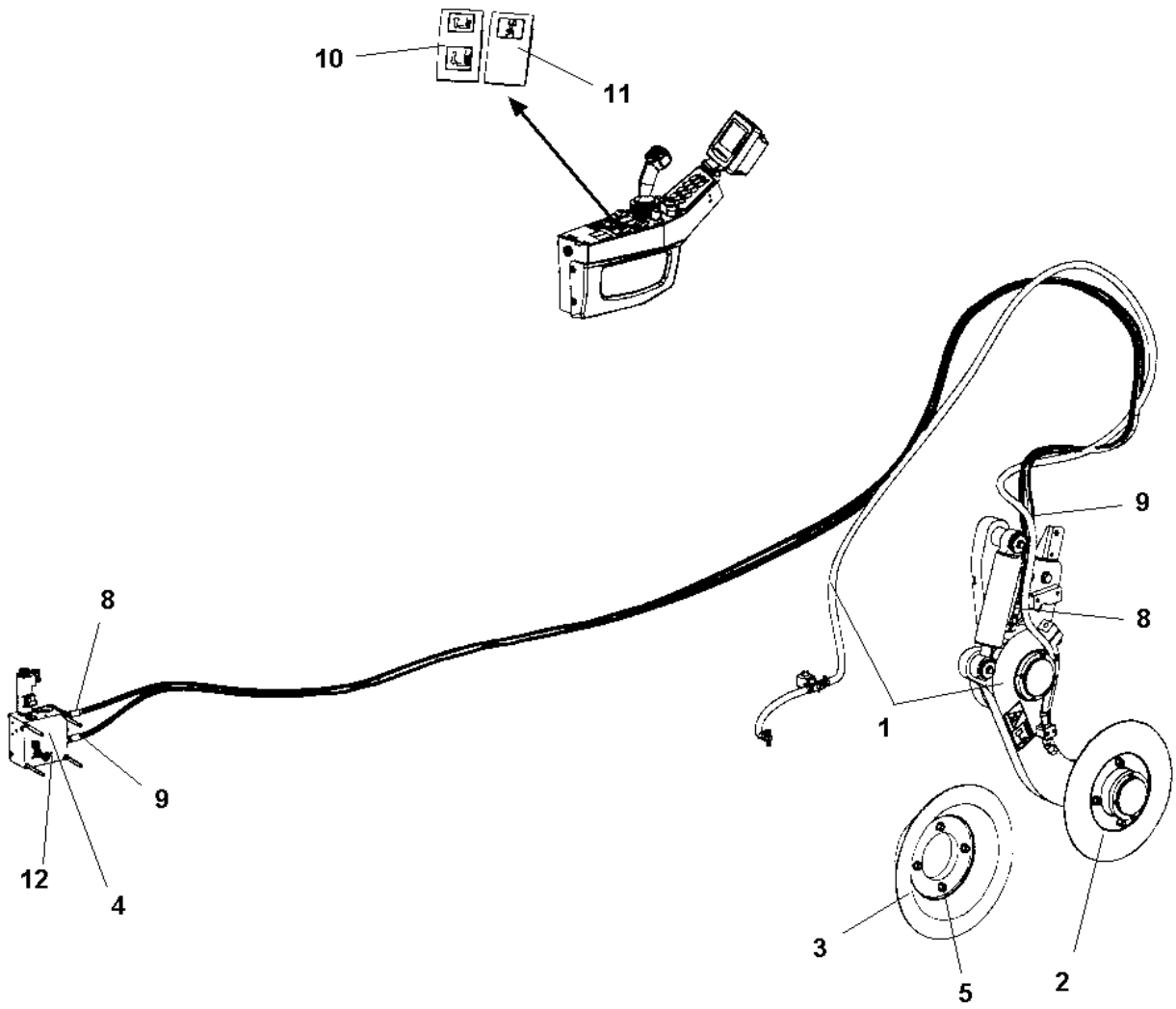

Item	Part No.	Name	Qty	L	SN INFO
1	-	Edge cutter, module	1		
2	-	Cutting disc module	1		
3	-	Pressing roller, module	1		
4	-	Hydraulic valve module	1		
5	-	Disc/Roller holder	1		
8	4700484103	Hydraulic hose	1		
9	4700484104	Hydraulic hose	1		
10	4700792395	Switch	1		
11	4700792396	Switch	1		
12	4700891374	O-ring	4	1	

Comments for Page: Edge cutter

(L)OCAL REMARKS

1 | en_US | Fitted between mounted valves.

Edge cutter Edge cutter, module

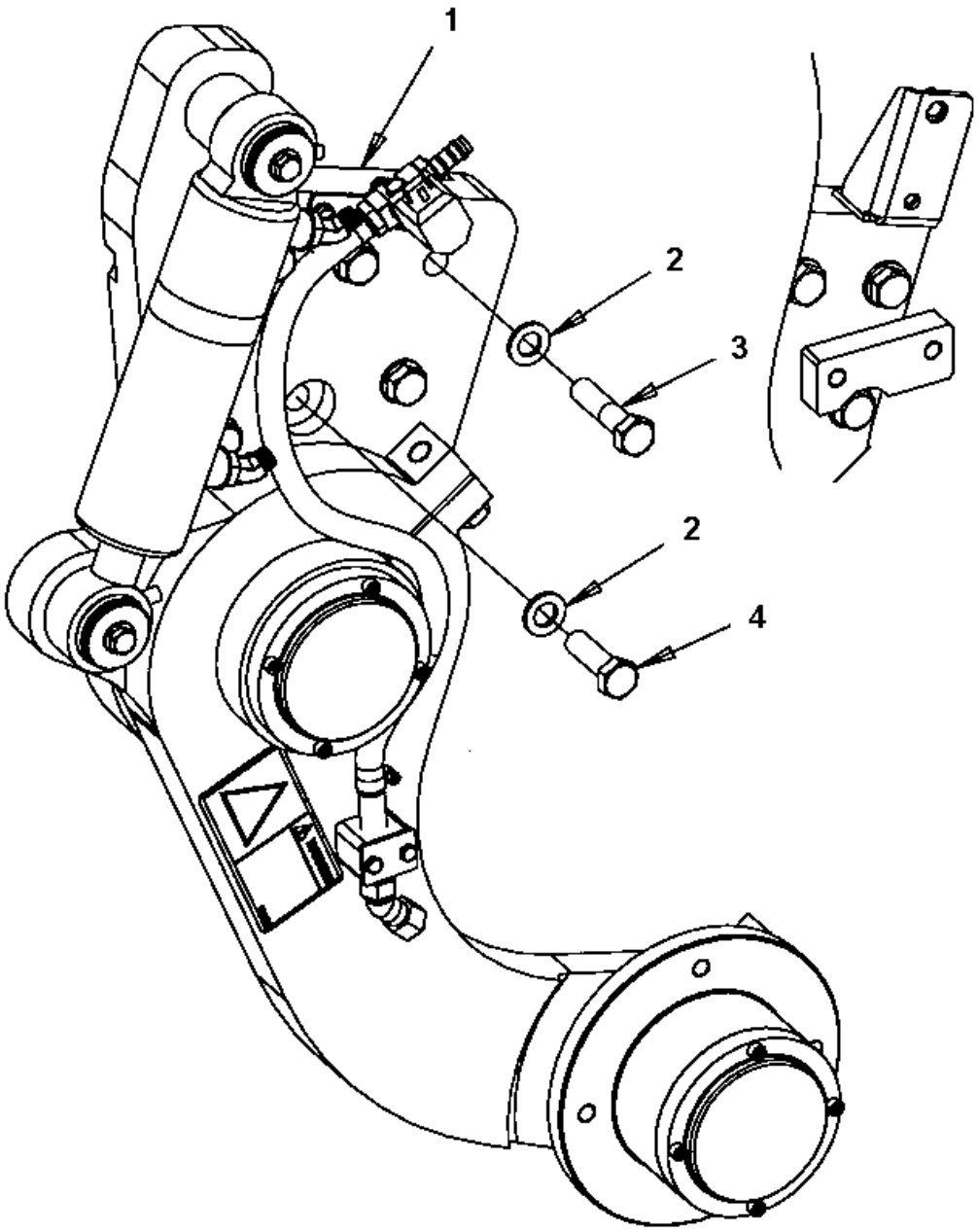

Item	Part No.	Name	Qty	L	SN INFO
1	4700390998	Edge cutter, cpl	1		
2	4700904232	Steel plain washer	6		
3	4700500058	Screw M16-2,0x65 8,8	5		
4	4700500070	Hex. screw	1		

4700390998 Edge cutter, cpl 4700390998 Edge cutter, cpl

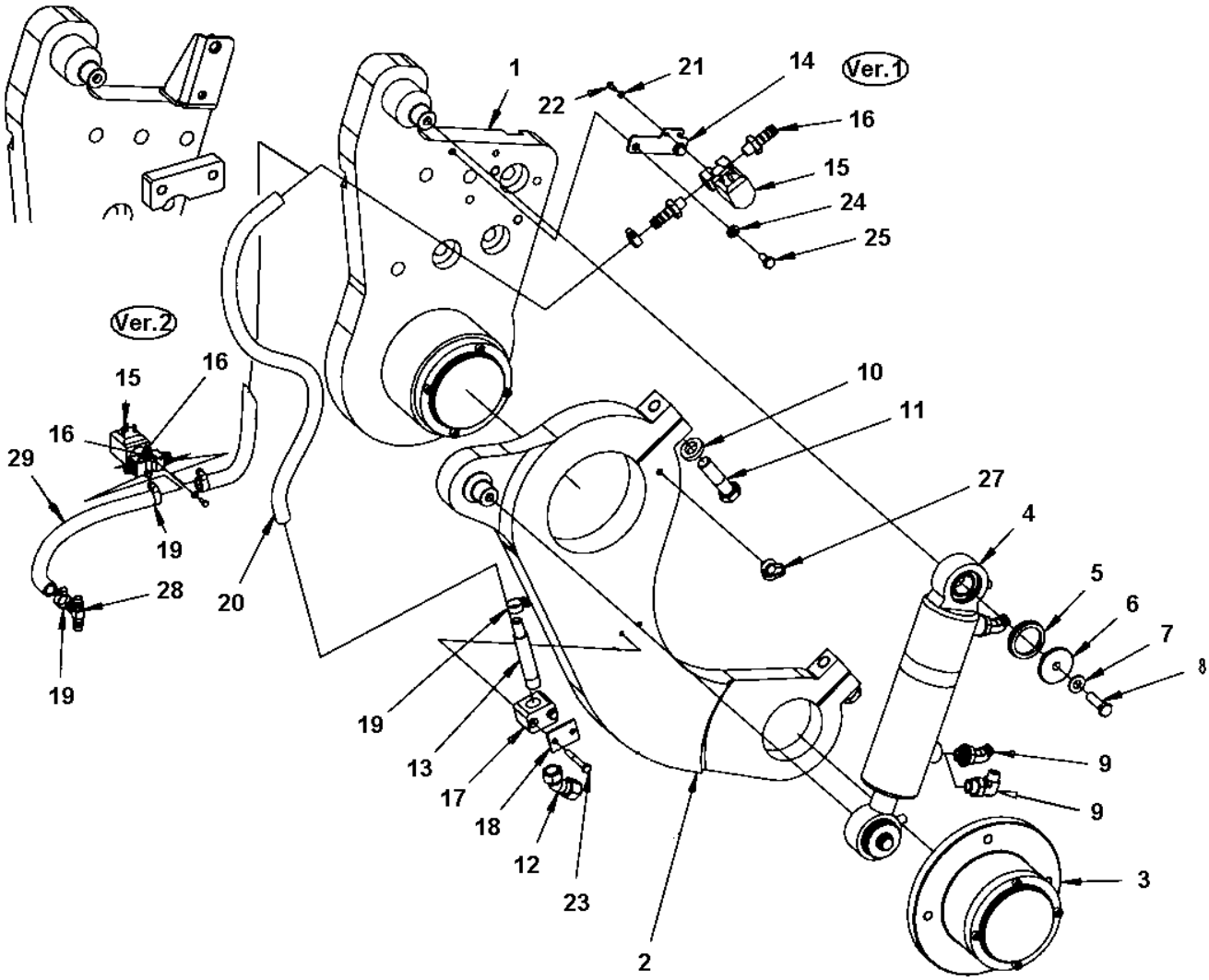

Item	Part No.	Name	Qty	L	SN INFO
-	4700390998	Edge cutter, cpl			
1	4700390999	Holder	1		
2	4700391000	Lever	1		
3	4700391009	Bearing unit	1		
4	4700387275	Hydraulic cylinder	1		
4	4700945526	Bearing	2		
5	4700791565	Sealing	2		
6	4700376861	Washer	2		
7	4700904230	Plain washer 10.5x22x2 mm	2		
8	4700947684	Screw	2		
9	4700792389	Elbow 45 orfs	2		
9	4700792676	Elbow 90 orfs	1		
10	4700904558	Washer, 17x30x6 mm 300 HV	2		
11	4700500134	Hex. screw	2		
12	4700392123	Nozzle body	1		
13	4700392058	Pipe	1		
14	4700392059	Bracket	1		
15	4700391438	Solenoid valve	1		
16	4700901432	Hose connection	2		
17	4700791453	Pipe clamp block	1		
18	4700791454	Cover plate	1		
19	4700313002	Hose clamp	4		
20	4812112074	Plastic hose (x m)	1XL	A	
21	4700904698	Plain washer	2		
22	4700925784	Screw	2		
23	4700500186	Screw	2		
24	4700904229	Washer, 8.4x 6x1.5 mm 300HV	2		
25	4700500019	Hexagon screw	2		
27	4700792441	Cable tie with holder	1		
28	4700791362	T-adapter	1		
29	4812112074	Plastic hose (x m)	1XL	B	

Comments for Page: 4700390998 Edge cutter, cpl

(L)OCAL REMARKS

A | en_US | Length as required.

B | en_US | L= 0.3 m

4700390998 Edge cutter, cpl 4700390999 Holder

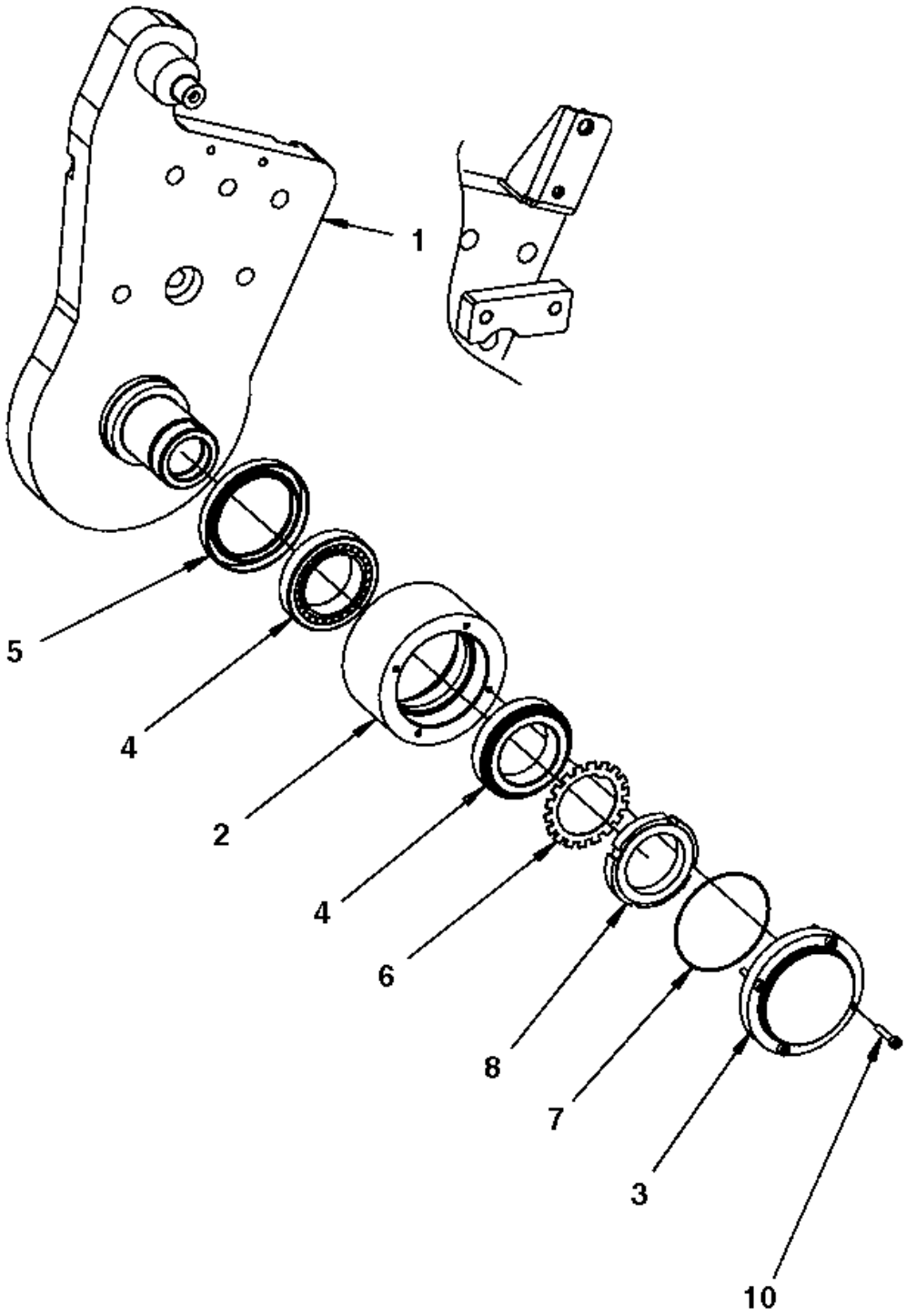

Item	Part No.	Name	Qty	L	SN INFO
1	4700391001	Holder	1		
2	4700391008	Bearing housing	1		
3	4700391010	Bearing cover	1		
4	4700792385	Taper roller bearing	2		
5	4700792384	Radial lip-type seal	1		
6	4700136012	Lock washer	1		
7	4700900512	O-ring	1		
8	4700135012	Shaft nut	1		
10	4700508018	Screw	4		

4700390998 Edge cutter, cpl 4700391009 Bearing unit

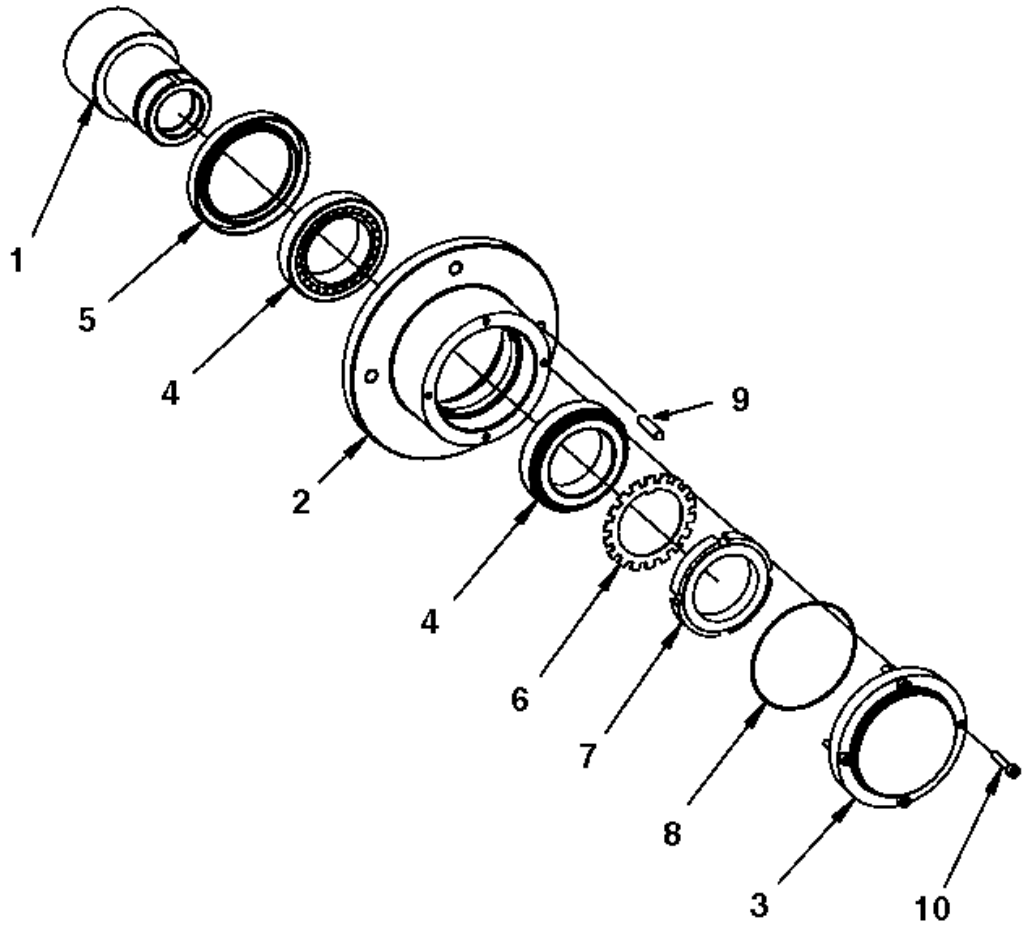

Item	Part No.	Name	Qty	L	SN INFO
-	4700391009	Bearing unit			
1	4700391011	Shaft	1		
2	4700391012	Bearing housing	1		
3	4700391010	Bearing cover	1		
4	4700792385	Taper roller bearing	2		
5	4700792384	Radial lip-type seal	1		
6	4700136012	Lock washer	1		
7	4700135012	Shaft nut	1		
8	4700900512	O-ring	1		
9	4700903891	Stud	4		
10	4700508018	Screw	4		

4700390998 Edge cutter, cpl 4700387275 Hydraulic cylinder

Item	Part No.	Name	Qty	L	SN INFO
1	4700387275	Hydraulic cylinder	1		
2	4700945668	Seal kit	1		
3	---	Seal	1		
4	---	Seal	2		
5	---	Back-up ring	1		
6	---	O-ring	2		
7	---	Seal	1		
8	---	O-ring	1		
9	---	Seal	1		
10	---	Seal	1		
11	--	Retaining ring	1		
12	--	Steering	1		
13	--	Retaining ring	1		
14	--	Rod seal	1		
15	--	Cylinder	1		
16	--	Piston block	1		
17	--	Cylinder nut	1		
18	4700945526	Bearing	1		
19	4812159771	Retaining ring	1		
20	--	Spacer	1	A	

Comments for Page: 4700387275 Hydraulic cylinder

(L)OCAL REMARKS

A | en_US | Not valid for this model

Edge cutter Cutting disc module

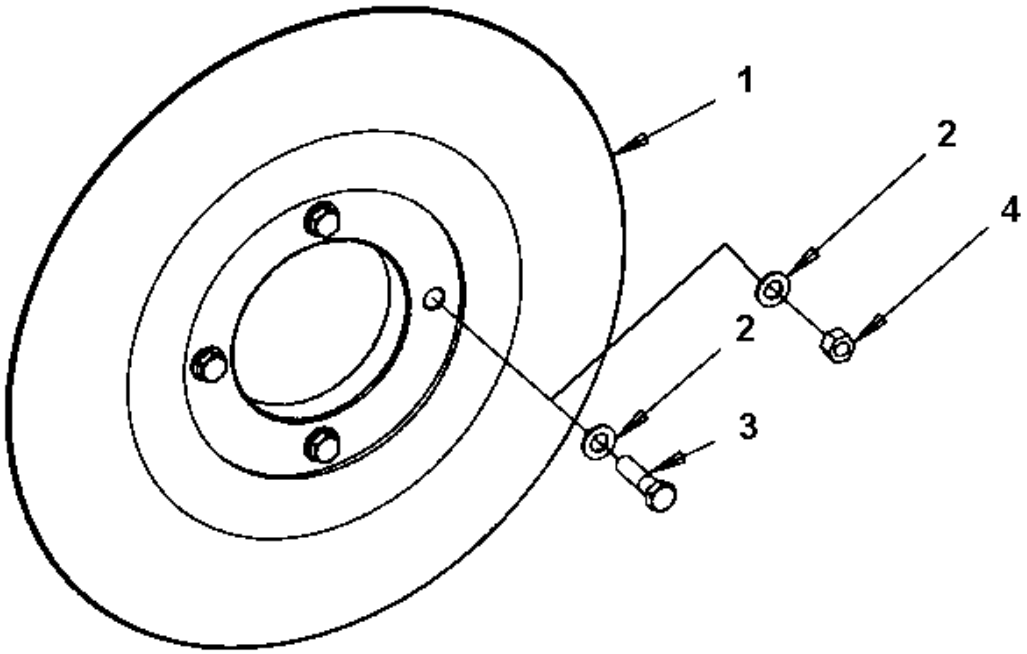

Item	Part No.	Name	Qty	L	SN INFO
1	4700390805	Cutting disc 80mm	1		
1	4700390806	Cutting disc 120mm	1		
1	4700390807	Cutting disc 150mm	1		
2	4700904231	Washer, 13x24x2 mm 300 HV	4		
3	4700500056	Screw, M12x45 mm 8.8 A3K	4		
4	4700570007	Nut	4		

Edge cutter Pressing roller, module

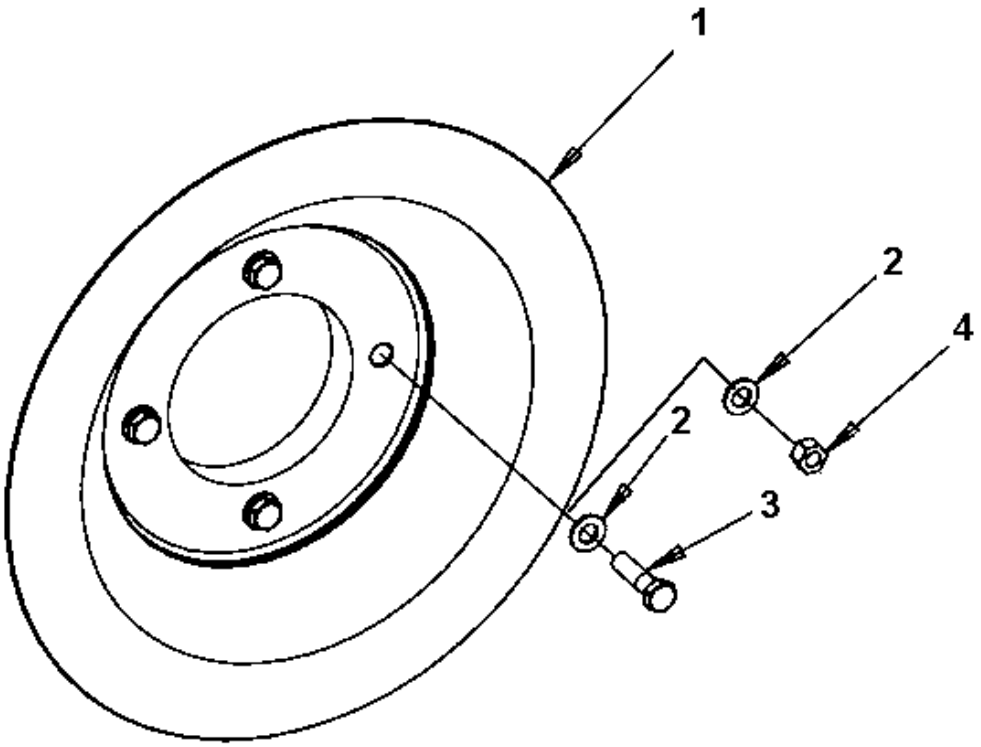

Item	Part No.	Name	Qty	L	SN INFO
1	4700390808	Pressing roller	1		
2	4700904231	Washer, 13x24x2 mm 300 HV	4		
3	4700500056	Screw, M12x45 mm 8.8 A3K	4		
4	4700570007	Nut	4		

Edge cutter Hydraulic valve module

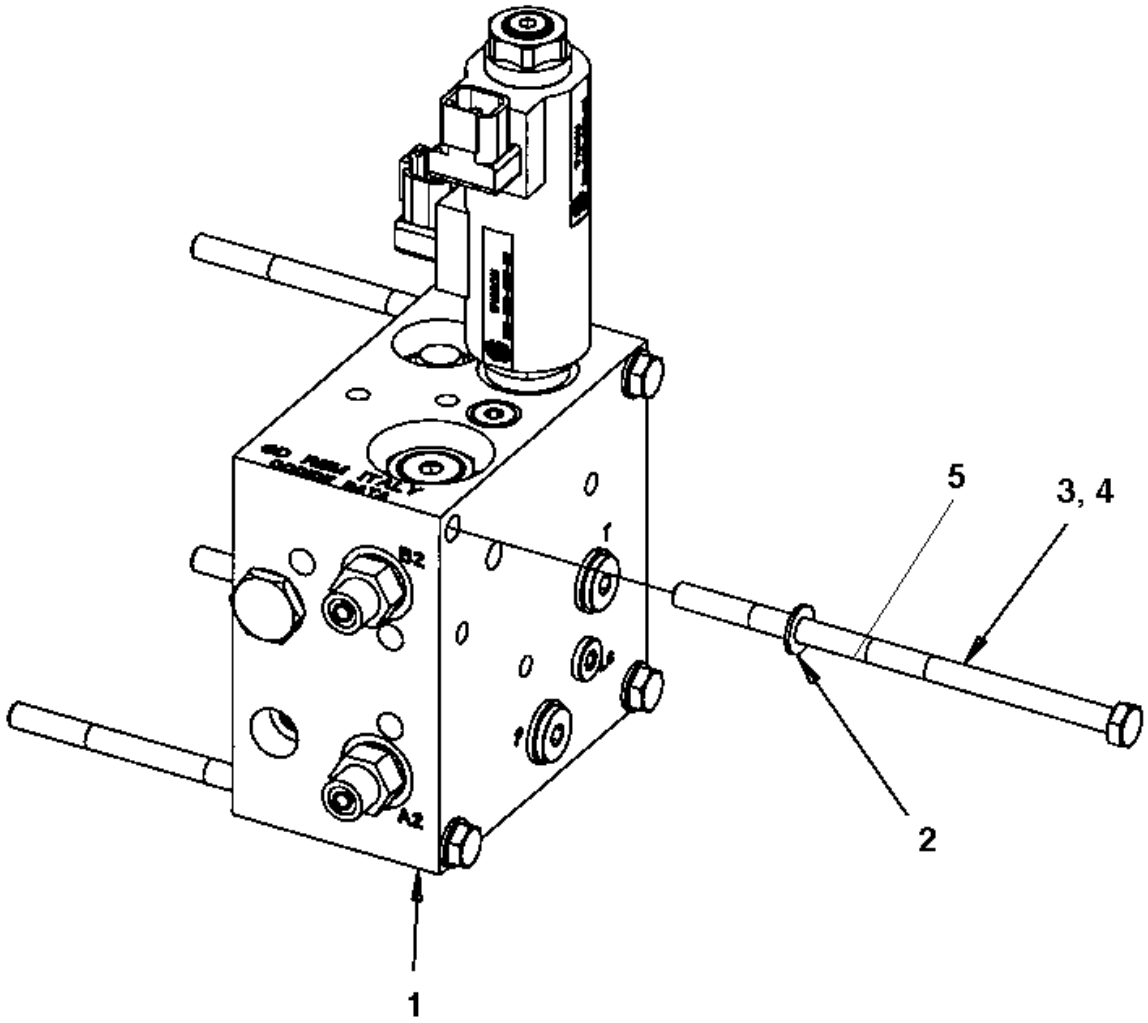

Item	Part No.	Name	Qty	L	SN INFO
1	-	Hydraulic valve	1		
2	4700904229	Washer, 8.4x 6x1.5 mm 300HV	4		
3	4812118090	Hexagon head screw M8x165 8.8	4	1	
4	4700500115	Screw	4	2	
5	4700500170	Screw M8x140 8.8	4		

Comments for Page: Hydraulic valve module

(L)OCAL REMARKS

1 | en_US | Used when option valve is mounted.

2 | en_US | Used when mounted on base valve.

Edge cutter Hydraulic valve

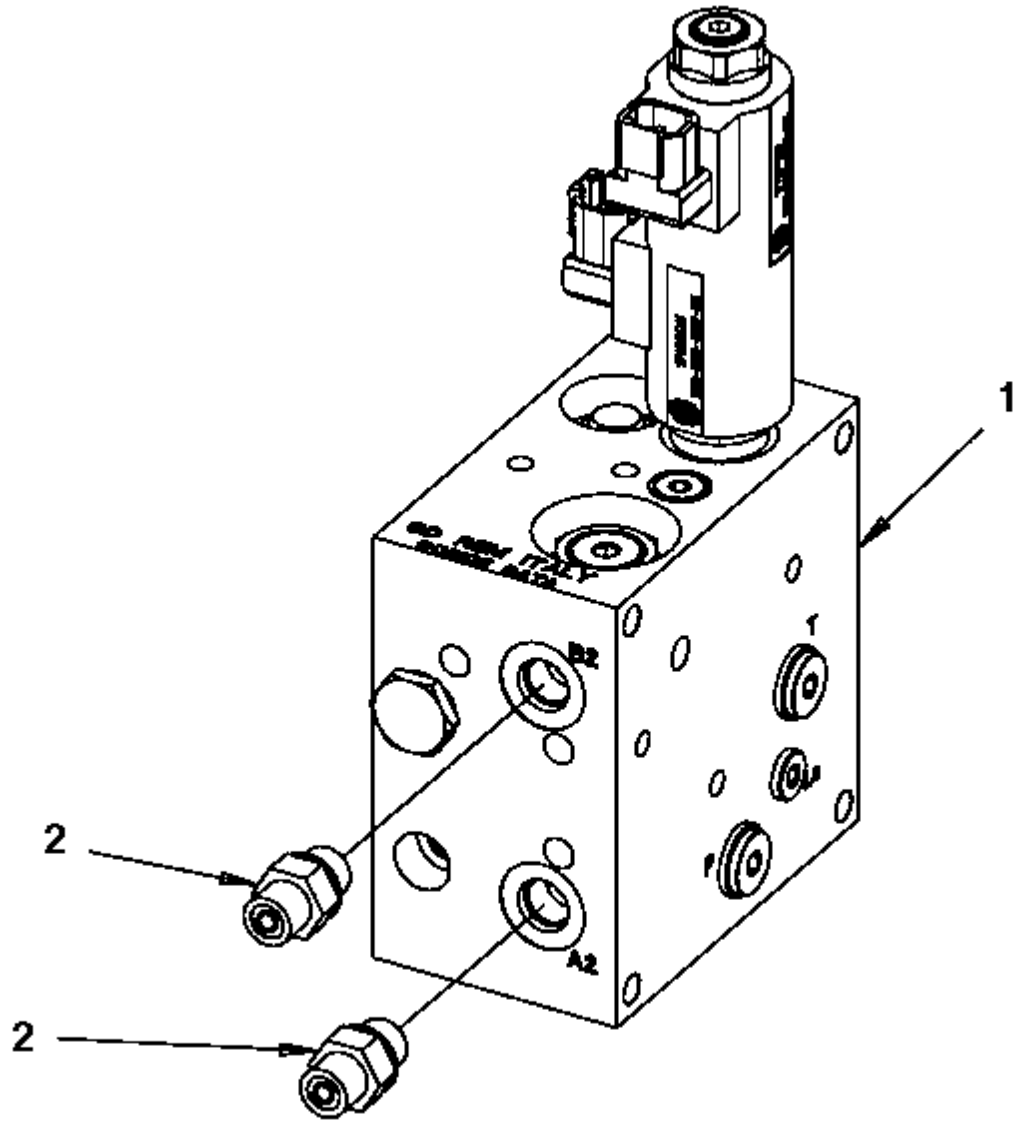

Item	Part No.	Name	Qty	L	SN INFO
1	4700391018	Hydraulic valve	1		
2	4700791914	Adapter	2		

Edge cutter 4700391018 Hydraulic valve

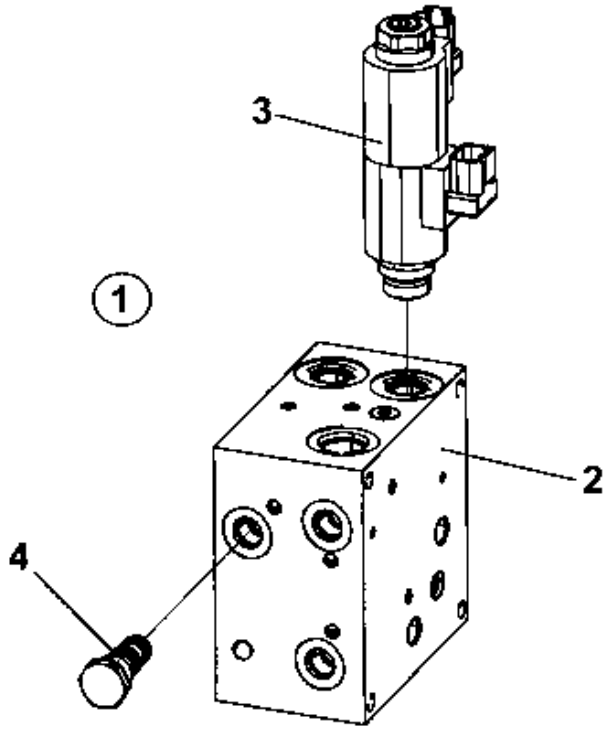

Item	Part No.	Name	Qty	L	SN INFO
1	-	Hydraulic valve	1		
2	-	Valve block	1		
3	4700950587	Proportional valve	1		
4	4700940572	Shuttle valve	1		

Edge cutter Disc/Roller holder

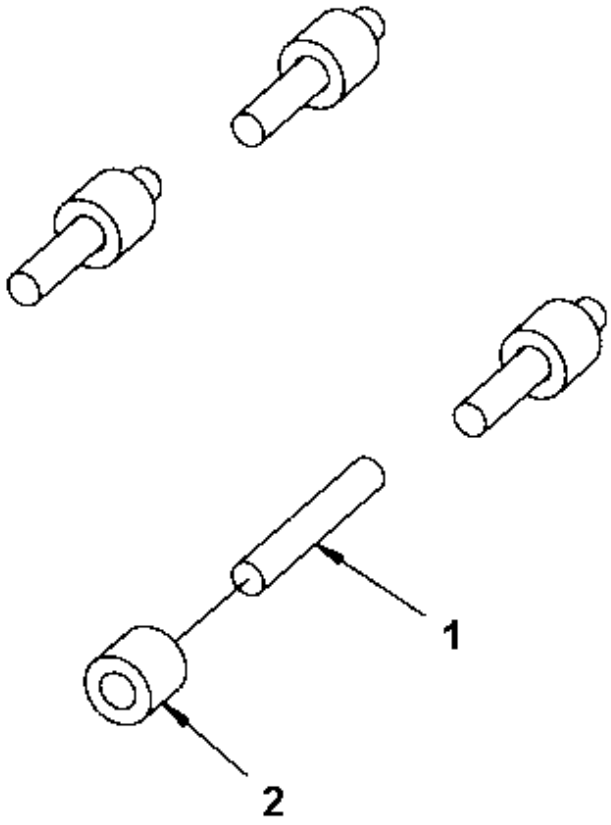

Item	Part No.	Name	Qty	L	SN INFO
1	4700792245	Stud	4		
2	4700383024	Spacer sleeve	4		

Fire extinguisher/First Aid Cushion Fire extinguisher/First Aid Cushion

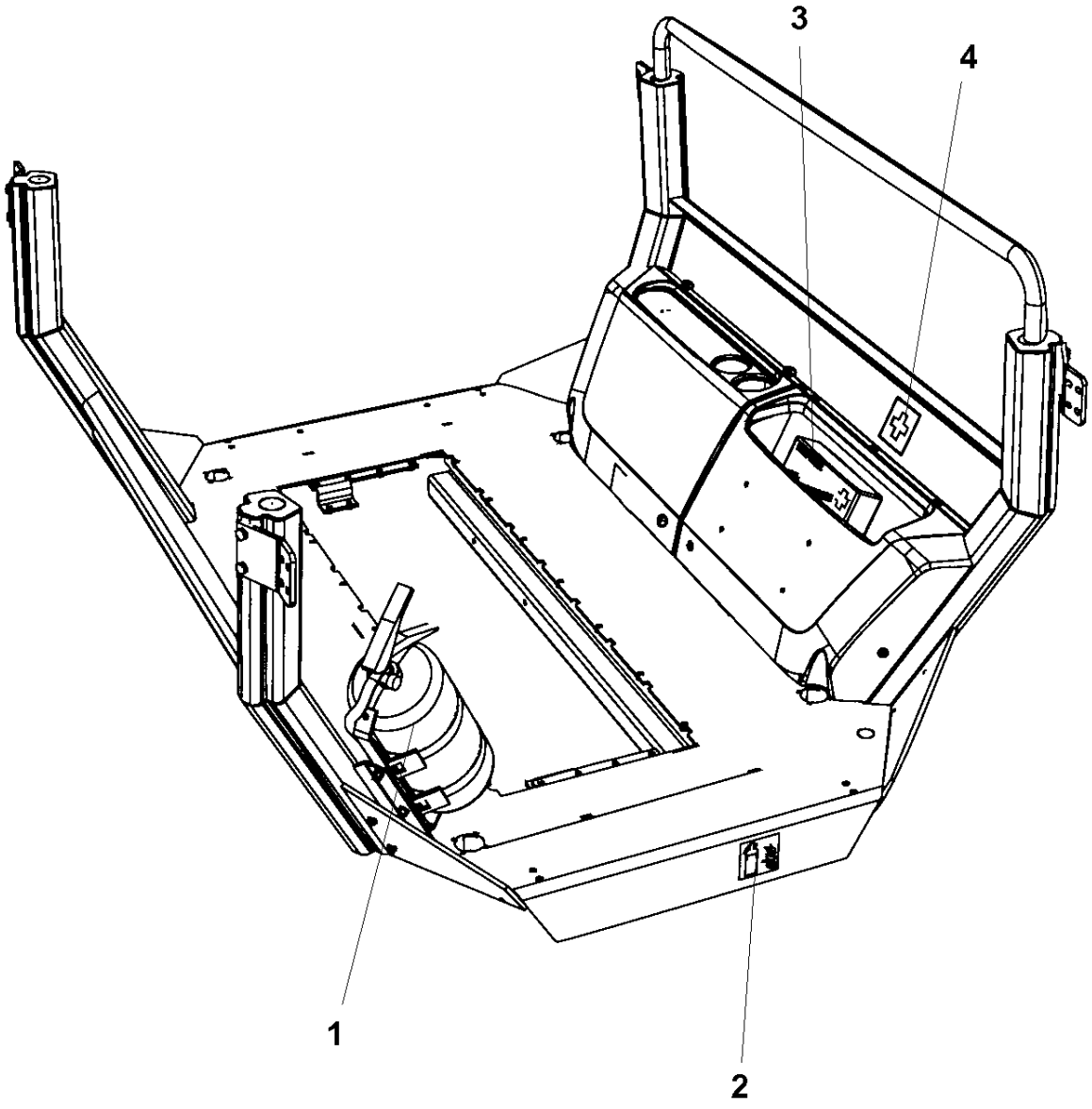

Item	Part No.	Name	Qty	L	SN INFO
1	-	Fire extinguisher assembly	1		
2	4700792634	Decal fire extinguisher	1		
3	4700394395	First aid cushion	1		
4	4700902509	Decal	1		

Fire extinguisher/First Aid Cushion Fire extinguisher assembly

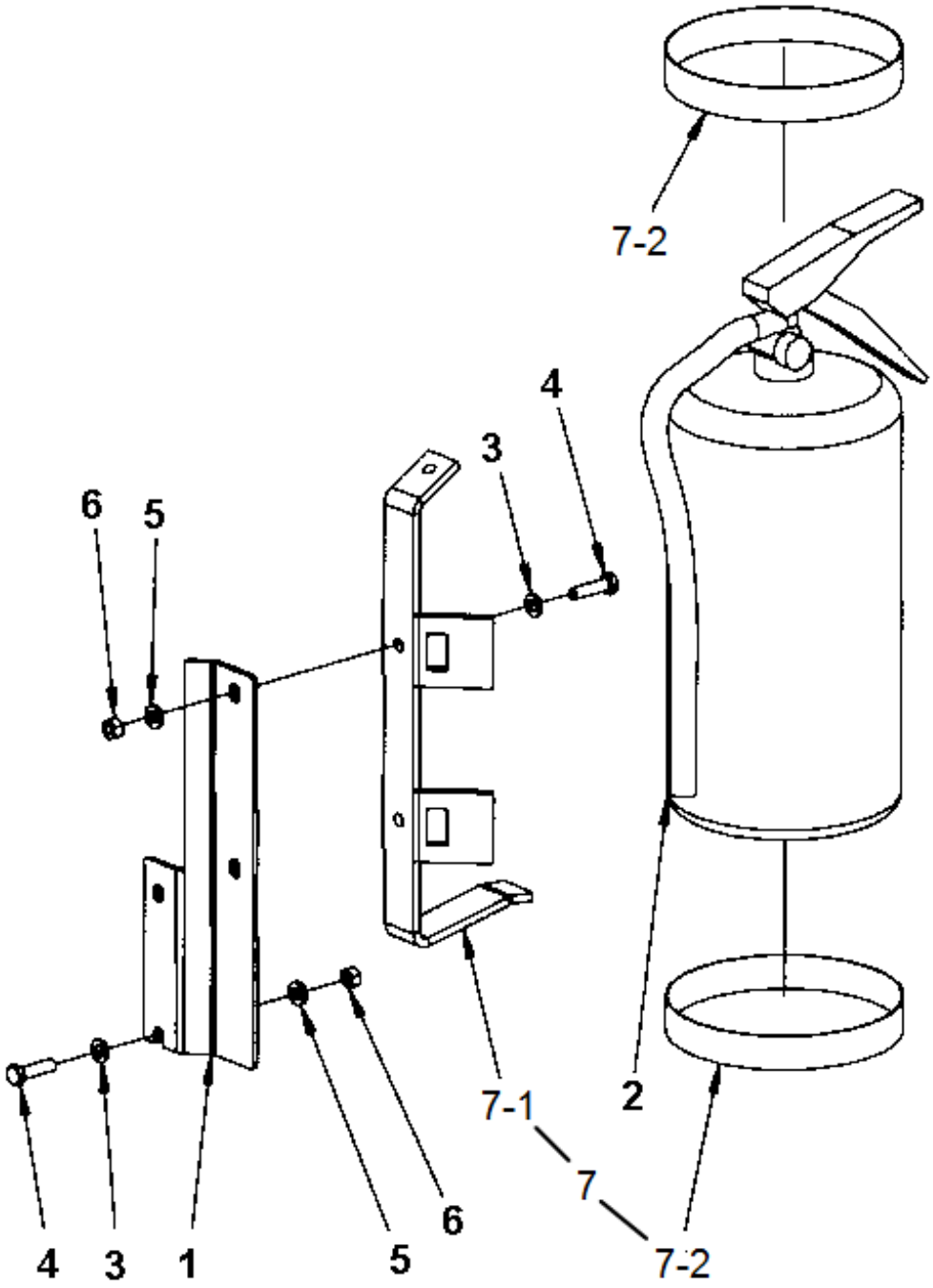

Item	Part No.	Name	Qty	L	SN INFO
1	4700393862	Bracket	1		
2	-	Fire extinguisher	1		
3	4700904229	Washer, 8.4x 6x1.5 mm 300HV	4		
4	4700500022	Screw	4		
5	4700904556	Steel plain washer 8,4x16x3,0	4		
6	4700570005	Hexagon nut	4		
7	4812161496	Holder kit	1		
7-1		Holder	1		
7-2		Strap	2		

Asphalt temperature meter Asphalt temperature meter

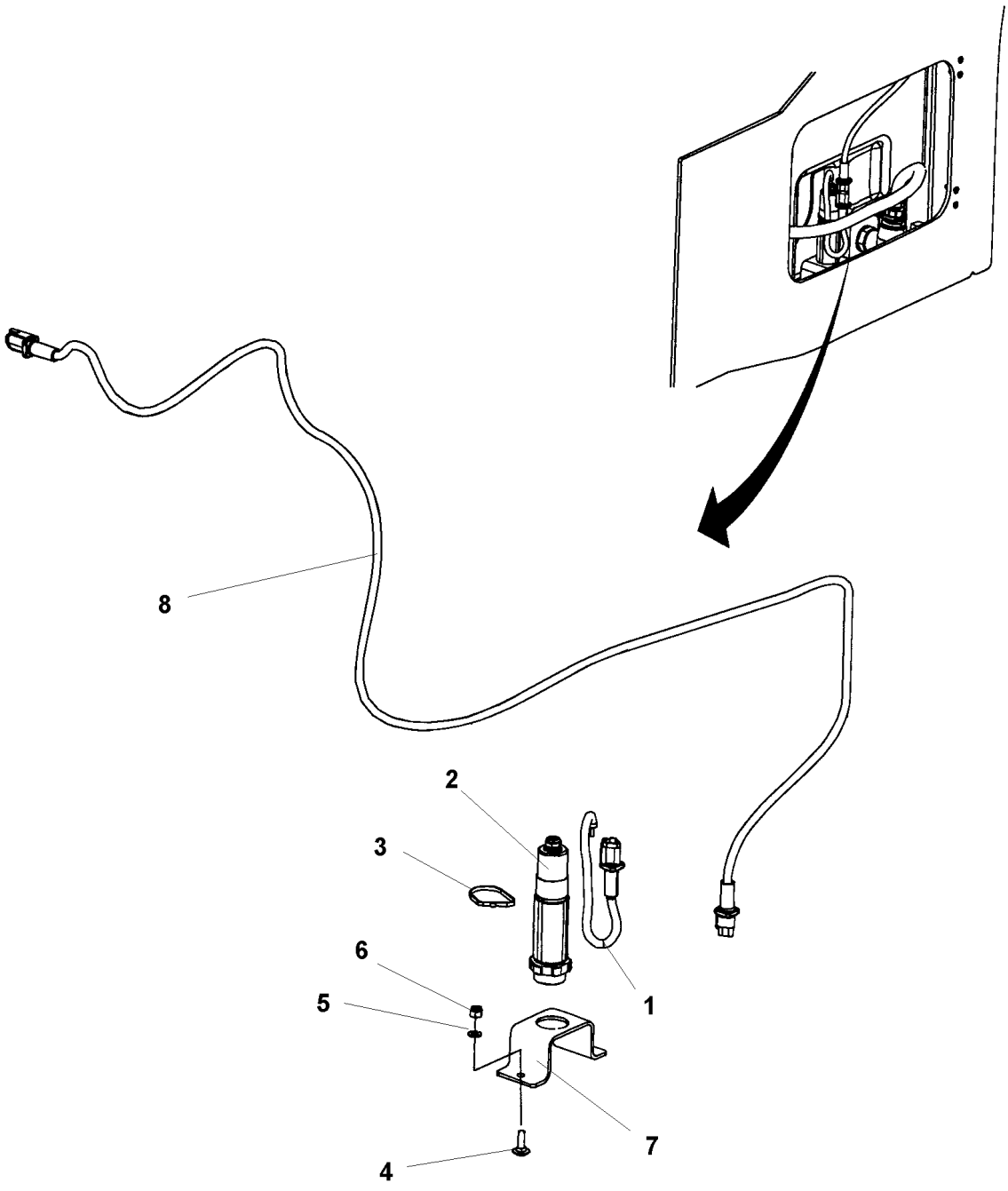

Item	Part No.	Name	Qty	L	SN INFO
1	4700393951	Cable harness	1		
2	4700387982	Temperature sender	1		
3	4700313041	Cable ties, L=200 mm	1		
4	4700929191	Cup square neck bolt	2		
5	4700904229	Washer, 8.4x 6x1.5 mm 300HV	2		
6	4700586003	Lock nut M8	2		
7	4700377422	Bracket	1		
8	4700396205	Cable harness	1		

Optional equipment Dyn@lyzer

Item	Part No.	Name	Qty	L	SN INFO
1	4812123488	Computer	1		
2	4812123489	Holder	1		
3	4812123728	Arm	1		
4	4812123727	Ball joint	1		
5	4812123747	Bracket	1		
6	4700904229	Washer, 8.4x 6x1.5 mm 300HV	2		
7	4700500026	Screw M8-1,25x60 mm 8.8	2		
8	4700500019	Hexagon screw	2		
9	4812123524	Wiring harness	1		
10	4700901226	Fuse 7.5A Brown	1		
11	4700792154	Tapping screw ST	4		
12	4812123490	Gateway	1		
13	4700541702	Screw M6x12	4		
14	4812123471	Bracket	1		
15	4812124090	Carrying case	1		
16	4812124091	Rubber insert	1		
17	4812123523	Wiring harness	1		
18	4812123681	Ground cable	1		
19	4812123533	Wiring harness	1		
20	4812123525	Wiring harness	1		
21	4812121818	Bracket	1		
22	4700513016	Hexagon socket countersunk screw M16	1		
23	4812123534	Thread insert	1		
24	4812113160	Bracket	1		
25	4812123491	Antenna	1		
26	4812123699	Wiring harness	1		
27	4700901226	Fuse 7.5A Brown	1		

Optional equipment FleetLink module

Item	Part No.	Name	Qty	L	SN INFO
1		FleetLink Advanced			
2	4700901225	Fuse 5A Tan	1		
3	4812124256	Wiring harness	1		
4	4700792609	Cable ties	2		
5	4812013040	GPS module	1		
6	4700792210	Screw torx	2		
7	4812124199	Bracket	1		
8		FleetLink			
9	4700901225	Fuse 5A Tan	1		
10	4812124256	Wiring harness	1		
11	4700792609	Cable ties	2		
12	4812013038	GPS module	1		
13	4700792210	Screw torx	2		
14	4812124199	Bracket	1		

Optional equipment DCM Compaction meter with Evib

Item	Part No.	Name	Qty	L	SN INFO
1	4812122777	DCM unit	1		
2	4812116367	Cable entry frame and inserts	1		
3	4700606003	Washer	4		
4	4812123171	Hexagon socket head cap screw	4		
5	4700500079	Screw M6-1x50 8,8	2		
6	4700904228	Washer 6,4x12x1,5	4		
7	4700923859	Cover plate	1		
8	4700923876	Clamp	1		
9	4812122583	Backet	1		
10	4700904230	Plain washer 10.5x22x2 mm	2		
11	4700508096	Hexagon socket head cap screw	2		
12	4700313102	Cable ties	17		
13	4700792441	Cable tie with holder	2		
14	4700792210	Screw torx	2		
15	4812122780	Bracket	1		
16	4700928200	Hexagon socket countersunk screw	4		
17	4812122778	Power supply	1		
18	4700923976	Lock nut	4		
19	4812122726	Position sensor	1		
20	4700508025	Screw, M6x20 mm 8.8 A2K	1		
21	4700904228	Washer 6,4x12x1,5	1		
22	4700160303	O-ring	1		

Appendix B:Parts Index

291112842 52
4700116041 . . . . . 22, 230
4700135012 . . . . . 568, 570
4700136012 . . . . . 568, 570
4700151015 52
4700160045 . . . . . 20, 192
4700160105 . . . . . 22, 230
4700160227 194
4700160268 142
4700160279 230
4700160287 340
4700160296 52
4700160303 596
4700160313 . . . . . 92, 98
4700160344 . . . . . 20, 192, 230
4700162004 256
4700162006 60
4700162015 . . . . . 60, 332
4700162017 190
4700162027 . . . . . 190, 230
4700202057 . . . . . 44, 44
4700205112 . . . . . 238, 452
4700230277 252
4700232056 60
4700232231 238
4700233215 160
4700234919 252
4700246069 . . . . . 260, 260
4700272372 534
4700272373 534
4700287294 546
4700287295 546
4700287643 434
4700313001 260
4700313002 . . . . 40, 82, 86, 88, 92, 98, 108, 108, 110, 252, 566
4700313003 . . . . . 42, 92, 98
4700313004 . . . . . 238, 244
4700313008 244
4700313010 244
4700313035 238
4700313041 340, 372, 390, 396, 398, 404, 450, 470, 482, 512, 546, 556, 590
4700313068 . . . . . 390, 400
4700313094 250
4700313102 . . . . . 40, 88, 108, 160, 384, 596
4700313105 40
4700313121 244
4700330170 252
4700330171 252
4700335607 344
4700335914 . . . . . 34, 268
4700340862 230
4700343732 268
4700343744 190
4700343872 . . . . . 34, 268
4700344196 190
4700345666 . . . . . 238, 298
4700347512 436
4700349210 268
4700349715 230
4700350009 . . . . . 338, 494
4700355797 378
4700357459 68
4700357587 534
4700358254 422
4700358732 294
4700358846 112
4700358881 . . . . . 28, 54, 62, 530
4700359003 112
4700359043 . . . . . 338, 516, 532
4700359125 532
4700359192 178
4700359819 . . . . . 338, 516, 532
4700359916 494
4700359919 494
4700359920 494
4700359955 190
4700359998 . . . . . 412, 436
4700370155 340
4700370234 498
4700370286 . . . . . 426, 430
4700370699 106
4700370745 . . . . . 34, 40
4700372174 452
4700372424 . . . . . 336, 342
4700372672 494
4700372696 498
4700372697 498
4700372718 . . . . . 34, 40
4700372959 516
4700372960 516
4700372964 494
4700372965 494
4700373183 178
4700376861 566
4700376922 300
4700377422 590
4700377518 498
4700377742 534
4700377743 534
4700377744 534

4700377913 434
4700378712 248
4700378860 588
4700378861 588
4700379009 . . . . . 86, 98
4700379214 248
4700379650 230
4700379652 192
4700379715 . . . . . 338, 516
4700379718 494
4700379728 532
4700379729 514
4700379830 190
4700379974 68
4700379987 178
4700379992 . . . . . 68, 488
4700380435 34
4700381027 230
4700381934 430
4700381935 . . . . . 426, 430
4700381936 . . . . . 426, 430
4700381943 . . . . . 170, 490, 490
4700381944 . . . . . 170, 490
4700382751 534
4700383024 584
4700383425 484
4700383626 44
4700383705 422
4700384176 480
4700384584 422
4700384878 480
4700384911 160
4700385599 . . . . . 520, 524
4700386075 500
4700386272 . . . . . 22, 230
4700386966 242
4700387275 . . . . . 566, 572
4700387545 530
4700387677 250
4700387982 . . . . . 404, 590
4700388449 534
4700388737 . . . . . 520, 524
4700388756 178
4700388846 64
4700389600 248
4700389821 34
4700390018 282
4700390024 244
4700390058 118
4700390062 . . . . . 118, 122
4700390072 186
4700390080 186
4700390155 426
4700390160 230
4700390347 190
4700390428 514
4700390434 370
4700390435 380
4700390436 . . . . . 370, 380
4700390463 180
4700390469 . . . . . 118, 122, 178
4700390470 . . . . . 118, 122, 178
4700390561 498
4700390602 . . . . . 300, 302
4700390603 . . . . . 194, 200
4700390604 . . . . . 194, 196
4700390607 286
4700390608 286
4700390609 286
4700390613 48
4700390615 142
4700390616 142
4700390619 142
4700390654 122
4700390716 358
4700390805 574
4700390806 574
4700390807 574
4700390808 576
4700390860 356
4700390884 68
4700390919 128
4700390934 34
4700390963 498
4700390968 122
4700390998 . . . . . 564, 566
4700390999 566
4700391000 566
4700391001 568
4700391008 568
4700391009 . . . . . 566, 570
4700391010 . . . . . 568, 570
4700391011 570
4700391012 570
4700391017 . . . . . 274, 276
4700391018 580
4700391023 . . . . . 34, 36
4700391024 . . . . . 178, 184, 270
4700391026 . . . . . 10, 12, 14, 60
4700391029 192
4700391031 52
4700391082 514

4700391083 514
4700391108 190
4700391115 . . . . . 370, 380
4700391157 68
4700391163 . . . . . 494, 496
4700391165 . . . . . 238, 298
4700391192 334
4700391198 126
4700391263 242
4700391296 60
4700391297 290
4700391299 60
4700391307 40
4700391308 44
4700391353 40
4700391358 238
4700391369 72
4700391370 72
4700391371 72
4700391375 60
4700391376 60
4700391396 . . . . . 520, 524
4700391420 . . . . . 520, 526
4700391421 520
4700391430 178
4700391434 60
4700391438 566
4700391442 34
4700391443 34
4700391444 . . . . . 48, 110
4700391478 . . . . . 338, 516
4700391481 178
4700391495 102
4700391580 358
4700391583 358
4700391584 344
4700391585 348
4700391621 540
4700391624 40
4700391626 . . . . . 48, 110
4700391674 432
4700391675 432
4700391676 432
4700391678 432
4700391724 . . . . . 194, 206
4700391750 64
4700391754 . . . . . 24, 124, 126
4700391768 262
4700391769 262
4700391770 338
4700391889 180
4700391919 488
4700391955 358
4700392003 112
4700392011 . . . . . 142, 160
4700392033 388
4700392048 300
4700392058 566
4700392059 566
4700392075 60
4700392078 60
4700392123 566
4700392221 358
4700392222 40
4700392223 . . . . . 40, 40
4700392224 40
4700392227 . . . . . 40, 82, 86, 88, 92, 98, 108, 108
4700392228 . . . . . 88, 108, 108
4700392229 88
4700392230 . . . . . 40, 112
4700392231 . . . . . 40, 112
4700392232 . . . . . 40, 112
4700392235 40
4700392291 188
4700392316 490
4700392364 230
4700392450 372
4700392451 372
4700392509 . . . . . 26, 142
4700392510 . . . . . 26, 142
4700392534 300
4700392717 528
4700392719 528
4700392748 230
4700392799 68
4700392839 494
4700392840 494
4700392930 . . . . . 520, 524
4700392965 512
4700393001 60
4700393009 . . . . . 124, 126
4700393010 . . . . . 124, 126
4700393031 520
4700393094 528
4700393149 60
4700393173 108
4700393174 108
4700393191 514
4700393222 542
4700393223 542
4700393235 258
4700393281 62

4700393330 112
4700393345 178
4700393364 332
4700393412 40
4700393429 118
4700393508 512
4700393525 . . . . . 412, 436
4700393535 122
4700393542 . . . . . 40, 82, 86, 92, 98
4700393550 148
4700393592 238
4700393595 548
4700393598 548
4700393624 300
4700393625 298
4700393697 142
4700393862 588
4700393947 396
4700393951 . . . . . 404, 590
4700393959 534
4700393968 396
4700393978 . . . . . 436, 514
4700394000 60
4700394004 404
4700394023 46
4700394068 134
4700394070 . . . . . 134, 136
4700394169 238
4700394229 258
4700394250 . . . . . 24, 194, 206
4700394251 . . . . . 24, 230
4700394276 396
4700394297 62
4700394298 62
4700394323 112
4700394340 . . . . . 114, 172
4700394351 . . . . . 134, 136
4700394395 586
4700394400 . . . . . 34, 62
4700394413 136
4700394459 62
4700394513 62
4700394536 64
4700394542 408
4700394545 76
4700394567 74
4700394568 74
4700394587 54
4700394590 54
4700394591 54
4700394593 534
4700394594 534
4700394595 534
4700394596 534
4700394654 552
4700394701 70
4700394705 548
4700394706 548
4700394707 546
4700394787 . . . . . 118, 122
4700394806 146
4700394859 434
4700394911 56
4700395023 556
4700395115 144
4700395116 . . . . . 18, 144
4700395128 34
4700395131 40
4700395352 390
4700395390 154
4700395412 156
4700395418 110
4700395428 . . . . . 130, 132
4700395429 130
4700395430 132
4700395447 494
4700395522 60
4700395653 . . . . . 178, 282
4700395694 178
4700395696 182
4700395761 452
4700395785 . . . . . 520, 524
4700395787 394
4700395793 470
4700395794 . . . . . 470, 472
4700395795 470
4700395815 . . . . . 470, 472
4700395816 . . . . . 348, 420, 444
4700395888 408
4700395915 . . . . . 230, 232
4700395924 . . . . . 294, 296
4700395980 168
4700395982 160
4700395984 160
4700396071 34
4700396119 408
4700396154 150
4700396179 182
4700396183 164
4700396205 . . . . . 396, 590
4700396259 358
4700396260 358

4700396261 358
4700396379 110
4700396498 34
4700396542 68
4700396662 . . . . . 520, 524
4700396670 530
4700396672 . . . . . 92, 98
4700396673 . . . . . 92, 98
4700396684 68
4700396685 68
4700396739 40
4700396754 . . . . . 164, 168
4700396768 . . . . . 362, 366
4700396893 164
4700396936 162
4700396940 166
4700396966 168
4700396972 152
4700396975 . . . . . 164, 168
4700396976 . . . . . 164, 168
4700397028 392
4700397029 392
4700397039 46
4700397045 392
4700397259 238
4700397270 298
4700397318 46
4700397348 44
4700397391 . . . . . 118, 122
4700397500 394
4700397516 386
4700397539 238
4700404229 478
4700450163 434
4700475064 . . . . . 134, 136
4700476019 188
4700480354 232
4700480446 342
4700480447 342
4700480449 342
4700480450 342
4700480456 342
4700480468 342
4700480852 . . . . . 42, 82, 86, 92, 100
4700483486 268
4700483726 282
4700483729 282
4700483776 . . . . . 270, 270
4700483928 266
4700484006 340
4700484007 . . . . . 340, 340, 340, 340
4700484014 278
4700484015 278
4700484016 278
4700484017 278
4700484018 278
4700484019 278
4700484020 278
4700484021 278
4700484022 278
4700484023 278
4700484024 332
4700484025 332
4700484026 332
4700484027 332
4700484032 282
4700484034 282
4700484035 282
4700484036 282
4700484037 282
4700484038 282
4700484039 282
4700484040 282
4700484043 282
4700484045 278
4700484046 270
4700484047 270
4700484048 270
4700484049 270
4700484050 270
4700484051 270
4700484052 270
4700484053 270
4700484068 270
4700484069 270
4700484070 270
4700484071 270
4700484074 270
4700484085 268
4700484097 266
4700484098 266
4700484099 266
4700484100 266
4700484101 266
4700484102 266
4700484103 562
4700484104 562
4700484153 282
4700484161 282
4700484237 268
4700484238 268
4700484239 268

4700484240 268
4700484241 268
4700484243 282
4700484271 230
4700499174 . . . . . 426, 430
4700500002 . . . . . 452, 482, 558
4700500012 . . . . . 86, 98, 362, 456
4700500013 . . . . . 42, 86, 98, 104, 180, 244, 356, 452, 558
4700500015 356
4700500016 286
4700500018 . . . . . 426, 430
4700500019 80, 84, 90, 96, 158, 164, 168, 190, 262, 346, 354, 408, 434, 558, 566, 592
4700500020 . . . . . 338, 514, 516
4700500021 . 42, 60, 68, 250, 252, 254, 256, 262, 290, 424, 428, 494, 512, 542
4700500022 . . . . . 40, 56, 60, 68, 76, 264, 286, 588
4700500023 . . . . . 48, 110, 424, 428
4700500024 . . . . . 392, 490
4700500025 392
4700500026 . . . . . 250, 408, 558, 592
4700500028 . . . . . 52, 192, 252, 292, 386, 500, 502
4700500029 . . . . . 112, 118, 122, 160
4700500030 . . . . . 116, 120, 122, 174, 300
4700500031 . . . . . 144, 176, 252
4700500032 . . . . . 34, 138, 140
4700500033 156
4700500035 344
4700500040 . . . . . 68, 182, 188, 348, 408, 478
4700500042 366
4700500043 . . . . . 238, 344
4700500046 . . . . . 112, 230
4700500047 . 48, 110, 116, 120, 148, 150, 152, 174, 176, 338, 392, 516
4700500048 . . . . . 46, 284
4700500049 . . . . . 230, 238
4700500051 34
4700500053 . 40, 60, 68, 82, 92, 102, 244, 286, 334, 338, 360, 364, 392, 406, 478, 488, 490, 498, 498, 516, 542
4700500056 . . . . . 238, 574, 576
4700500057 194
4700500058 564
4700500059 60
4700500060 . . . . . 348, 520, 524
4700500070 . . . . . 190, 564
4700500075 . . . . . 464, 512
4700500079 596
4700500090 . . . . . 82, 86, 92, 98, 546
4700500091 394
4700500092 68
4700500096 540
4700500105 146
4700500107 . . . . . 238, 298
4700500115 . . . . . 272, 528, 578
4700500130 . . . . . 116, 120, 174
4700500134 . . . . . 186, 566
4700500153 434
4700500161 . . . . . 116, 120, 156, 162, 166, 174, 176
4700500170 578
4700500175 178
4700500186 566
4700500189 . . . . . 86, 98, 432
4700500190 . . . . . 392, 432
4700500195 . . . . . 412, 436
4700500197 238
4700500198 146
4700500206 126
4700500207 . . . . . 118, 122
4700500269 . . . . . 34, 62, 66
4700500270 298
4700500287 50
4700500289 176
4700500297 176
4700500502 246
4700500505 . . . . . 518, 522
4700502035 . . . . . 336, 516
4700508017 . . . . . 520, 524
4700508018 . . . . . 568, 570
4700508019 . . . . . 490, 490
4700508020 60
4700508025 . . . . . 424, 428, 498, 596
4700508029 494
4700508048 170
4700508080 238
4700508084 282
4700508092 . . . . . 500, 502
4700508096 . . . . . 288, 596
4700509025 238
4700513003 514
4700513011 . . . . . 134, 136
4700513016 . . . . . 402, 592
4700513017 68
4700516040 494
4700533050 182
4700541702 . . . . . 396, 592
4700570002 . . . . . 464, 482
4700570004 . . . . . 164, 168, 348, 520, 524
4700570005 . . . . . 34, 40, 68, 338, 344, 384, 392, 514, 516, 588
4700570006 . . . . . 68, 146
4700570007 . . . . . 574, 576
4700570103 268
4700573008 532

4700586001 . . . . . 348, 520, 524, 530
4700586002 . . 40, 68, 188, 338, 348, 352, 424, 428, 512, 520, 524, 528
4700586003 . 34, 48, 68, 82, 92, 110, 148, 150, 152, 154, 160, 162, 166, 170, 178, 244, 250, 392, 392, 424, 428, 432, 436, 490, 490, 494, 528, 590
4700586018 . . . . . 138, 140, 144, 250, 388
4700586019 146
4700603001 . . . . . 40, 60, 178, 182, 338
4700606003 596
4700606004 528
4700606009 278
4700606021 278
4700615050 . . . . . 40, 68
4700624005 . . . . . 534, 534
4700624018 64
4700624021 . . . . . 62, 64
4700629008 54
4700630008 . . . . . 338, 516, 532
4700630012 . . . . . 134, 136
4700635061 . . . . . 36, 184, 294
4700747282 252
4700791082 146
4700791120 60
4700791136 . . . . . 118, 122
4700791172 . . . . . 116, 120, 174, 176
4700791182 102
4700791185 446
4700791231 68
4700791278 534
4700791279 534
4700791304 514
4700791321 . . . . . 284, 290
4700791362 566
4700791397 282
4700791401 . . . . . 194, 206, 294
4700791405 60
4700791409 . . . . . 180, 294
4700791453 566
4700791454 566
4700791475 . . . . . 418, 452, 456
4700791479 348
4700791524 . . . . . 494, 512
4700791538 300
4700791539 180
4700791565 566
4700791568 . . . . . 86, 98
4700791572 . . . . . 504, 506, 508, 510
4700791588 . . . . . 446, 520, 524
4700791634 300
4700791635 300
4700791642 . . . . . 246, 534
4700791666 452
4700791698 . . . . . 282, 300
4700791709 . . . . . 374, 518, 522
4700791711 68
4700791712 68
4700791723 . . . . . 520, 524
4700791733 . . . . . 520, 524
4700791739 . . . . . 520, 524
4700791743 . . . . . 180, 294
4700791744 294
4700791745 . . . . . 300, 340
4700791754 380
4700791776 110
4700791796 230
4700791797 34
4700791798 . . . . . 278, 300
4700791799 . . . . . 68, 180, 230, 294, 340
4700791823 . . . . . 68, 294
4700791824 300
4700791831 300
4700791840 70
4700791841 278
4700791846 274
4700791853 300
4700791858 178
4700791914 580
4700791949 . . . . . 26, 86, 98
4700791951 370
4700791956 380
4700791959 . . . . . 26, 86, 98
4700791966 446
4700791977 . . . . . 142, 160
4700792035 378
4700792059 370
4700792072 . . . . . 142, 160
4700792073 . . . . . 42, 92, 98
4700792074 284
4700792083 52
4700792119 . . . . . 446, 452
4700792130 108
4700792151 . . . . . 34, 194, 206, 300
4700792154 592
4700792157 300
4700792210 . . . . . 352, 368, 390, 396, 556, 594, 594, 596
4700792219 300
4700792245 584
4700792258 262
4700792270 . . . . . 20, 192, 230
4700792276 60
4700792295 180

4700792296 180
4700792309 . . . . . 348, 356, 446
4700792310 348
4700792322 256
4700792325 . . . . . 68, 488
4700792326 . . . . . 60, 68
4700792328 344
4700792331 . . . . . 194, 206, 300
4700792332 284
4700792333 300
4700792334 . . . . . 70, 340
4700792336 300
4700792337 178
4700792338 60
4700792339 290
4700792340 282
4700792342 334
4700792343 334
4700792344 278
4700792349 380
4700792350 370
4700792351 380
4700792352 388
4700792353 370
4700792354 . . . . . 378, 382
4700792361 . . . . . 370, 380
4700792362 180
4700792363 352
4700792364 344
4700792384 . . . . . 568, 570
4700792385 . . . . . 568, 570
4700792389 566
4700792392 488
4700792394 52
4700792395 562
4700792396 562
4700792397 384
4700792398 374
4700792410 386
4700792414 524
4700792421 60
4700792422 . . . . . 352, 368, 390
4700792441 . 70, 82, 86, 92, 98, 352, 356, 374, 386, 452, 482, 506, 510, 516, 524, 566, 596
4700792442 . . . . . 108, 278, 352
4700792447 . . . . . 426, 430
4700792448 . . . . . 426, 430
4700792449 432
4700792451 278
4700792452 . . . . . 278, 278
4700792453 278
4700792454 278
4700792465 300
4700792492 60
4700792502 238
4700792505 . . . . . 446, 466
4700792507 . . . . . 194, 206
4700792512 278
4700792515 52
4700792519 380
4700792520 380
4700792521 370
4700792527 . . . . . 500, 502, 504, 506, 508, 510
4700792533 282
4700792534 120
4700792535 . . . . . 116, 174
4700792536 422
4700792537 374
4700792539 494
4700792540 154
4700792547 252
4700792554 . . . . . 34, 52
4700792583 552
4700792589 422
4700792600 . . . . . 40, 82, 86, 92, 98, 108, 108
4700792601 . . . . . 134, 136
4700792602 . . . . . 122, 352
4700792607 62
4700792609 . . . . . 372, 594, 594
4700792632 278
4700792634 586
4700792649 300
4700792660 400
4700792667 . . . . . 390, 556
4700792669 . . . . . 72, 404
4700792676 566
4700792678 532
4700792684 344
4700792686 546
4700792695 252
4700792700 278
4700792704 398
4700792715 444
4700792718 478
4700792720 278
4700792726 . . . . . 130, 132
4700792731 358
4700792746 230
4700792772 534
4700792778 . . . . . 92, 98
4700792779 . . . . . 42, 82, 86, 92, 100
4700792780 . . . . . 42, 92, 100

4700792781 42
4700792783 . . . . . 446, 446, 452, 464
4700792794 390
4700792808 252
4700792813 . . . . . 82, 86, 92, 98
4700792825 68
4700813617 232
4700813618 232
4700891374 . . . . . 270, 562
4700900485 . . . . . 164, 168
4700900512 . . . . . 568, 570
4700900672 40
4700900775 . . . . . 192, 230
4700901145 . . . . . 412, 436
4700901157 300
4700901224 . . . . . 30, 398
4700901225 . . . . . 30, 356, 594, 594
4700901226 . . . . . 30, 368, 592, 592
4700901227 . . . . . 30, 356, 368, 398, 446, 554, 556
4700901228 . . . . . 30, 390, 446
4700901229 30
4700901230 30
4700901431 . . . . . 82, 86, 92, 98
4700901432 566
4700902064 382
4700902166 64
4700902282 412
4700902285 . . . . . 46, 434
4700902286 . . . . . 60, 386, 434, 498, 498
4700902289 112
4700902379 . . . . . 420, 450
4700902509 586
4700902520 494
4700902541 52
4700902624 . . . . . 304, 316, 324
4700902625 . . . . . 304, 310, 316, 322, 324, 330
4700902638 304
4700902687 304
4700902688 . . . . . 318, 326
4700902695 304
4700902724 . . . . . 304, 316, 324
4700902752 304
4700902783 310
4700902792 . . . . . 308, 316, 324
4700902804 . . . . . 520, 524
4700902811 . . . . . 318, 326
4700902861 342
4700902862 342
4700902866 . . . . . 28, 28, 34, 44
4700902882 286
4700902919 460
4700903082 . . . . . 268, 270
4700903186 160
4700903422 534
4700903423 534
4700903424 534
4700903425 534
4700903456 68
4700903457 342
4700903459 534
4700903590 466
4700903633 436
4700903640 348
4700903641 . . . . . 28, 348
4700903662 . . . . . 392, 528
4700903670 452
4700903714 258
4700903726 230
4700903735 178
4700903741 . . . . . 30, 356
4700903768 68
4700903773 340
4700903831 178
4700903891 570
4700903917 494
4700903918 494
4700904008 278
4700904009 278
4700904010 278
4700904015 . . . . . 554, 556
4700904024 . . . . . 554, 556
4700904036 348
4700904037 . . . . . 30, 352
4700904038 30
4700904039 . . . . . 30, 344, 350
4700904040 30
4700904041 30
4700904042 30
4700904044 60
4700904083 534
4700904085 178
4700904165 . . . . . 534, 542
4700904206 . . . . . 34, 40, 178
4700904213 . . . . . 38, 38, 66, 230
4700904214 494
4700904218 404
4700904228 86, 98, 104, 106, 180, 188, 244, 348, 352, 356, 362, 408, 424, 428, 434, 440, 512, 520, 524, 528, 596, 596
4700904229 . 34, 40, 48, 60, 68, 80, 82, 84, 86, 90, 92, 96, 98, 102, 110, 128, 134, 136, 148, 150, 152, 154, 158, 160, 162, 164, 166, 168, 170, 178, 190, 250, 252, 264, 272, 282, 334, 338, 344, 354, 360, 364, 366, 370, 380, 384, 386, 392, 406, 408, 434, 436, 452, 490, 490, 490, 494, 498, 512, 514,

516, 532, 540, 542, 546, 558, 566, 578, 588, 590, 592
4700904230 . 34, 46, 68, 112, 116, 120, 144, 156, 174, 192, 238, 252, 284, 292, 386, 388, 500, 502, 566, 596
4700904231 . 34, 52, 66, 118, 122, 124, 134, 136, 146, 178, 190, 194, 206, 230, 238, 574, 576
4700904232 . . . . . 186, 190, 194, 564
4700904233 . . . . . 50, 118, 122, 126, 412, 436
4700904234 . . . . . 116, 120, 174, 176
4700904281 . . . . . 60, 348, 520, 524, 530
4700904292 332
4700904294 30
4700904299 452
4700904312 356
4700904340 434
4700904347 452
4700904405 112
4700904504 446
4700904556 116, 120, 174, 176, 244, 250, 346, 392, 424, 428, 490, 498, 514, 588
4700904557 116, 118, 120, 122, 122, 138, 140, 156, 160, 162, 166, 174, 176, 176, 238, 250, 252, 300, 336, 394, 516
4700904558 . . . . . 52, 298, 566
4700904567 52
4700904575 246
4700904584 282
4700904596 404
4700904619 530
4700904629 268
4700904637 . . . . . 238, 288, 344
4700904638 344
4700904640 . 40, 56, 60, 68, 76, 250, 254, 256, 262, 286, 290, 386, 426, 430, 432, 488, 494, 532, 542
4700904650 526
4700904653 530
4700904654 434
4700904697 182
4700904698 . . . . . 356, 482, 520, 524, 558, 566
4700904703 . . . . . 34, 62, 112, 238, 504, 506, 508, 510
4700904728 60
4700904734 . . . . . 48, 48, 110, 110, 148, 150, 152
4700904735 . . . . . 42, 68, 188, 286, 376, 558
4700904835 534
4700904870 534
4700904878 . . . . . 108, 108, 108, 110
4700904895 534
4700904911 362
4700904951 180
4700904956 128
4700904985 . . . . . 252, 252, 252
4700908229 534
4700908383 . . . . . 316, 324
4700908505 446
4700908506 466
4700908507 466
4700908561 . . . . . 446, 466
4700908564 . . . . . 470, 472
4700909211 342
4700909243 232
4700909335 232
4700909336 232
4700909338 232
4700909339 232
4700909340 232
4700909342 232
4700909343 232
4700909344 232
4700909346 232
4700909350 232
4700909351 232
4700909352 232
4700909354 232
4700909356 232
4700909358 232
4700909469 . . . . . 304, 310, 322, 330
4700909514 . . . . . 304, 310, 316, 316, 322, 324, 324, 330
4700909535 498
4700909536 498
4700910162 294
4700910713 232
4700911620 342
4700920819 . . . . . 48, 110
4700921031 352
4700921080 372
4700921084 244
4700921116 108
4700921723 446
4700923087 . . . . . 232, 234
4700923090 232
4700923253 382
4700923405 300
4700923735 . . . . . 82, 86, 94, 100
4700923859 596
4700923876 596
4700923976 596
4700924791 434
4700924996 . . . . . 108, 110
4700925208 50
4700925599 60
4700925750 34
4700925784 566
4700926214 178
4700926215 68

4700926216 432
4700926736 230
4700927233 . . . . . 134, 136
4700927278 . . . . . 310, 322, 330
4700927303 308
4700927358 . . . . . 316, 324
4700927410 412
4700927637 . . . . . 162, 166, 464
4700928022 . . . . . 194, 206
4700928200 596
4700928347 . . . . . 504, 506, 508, 510
4700928467 356
4700928784 . . . . . 40, 376
4700929012 342
4700929013 342
4700929014 342
4700929191 590
4700929447 . . . . . 22, 230
4700929455 378
4700929587 452
4700930046 182
4700935158 . . . . . 316, 324
4700935164 . . . . . 308, 320, 328
4700935192 310
4700935210 312
4700935219 . . . . . 304, 316, 324
4700935428 342
4700935429 . . . . . 336, 342
4700936283 498
4700936308 . . . . . 304, 316, 324
4700936313 . . . . . 310, 322, 330
4700936392 . . . . . 322, 330
4700936393 . . . . . 318, 318, 326, 326
4700936394 . . . . . 310, 318, 326
4700936612 304
4700936615 308
4700936616 308
4700936617 308
4700936618 308
4700936619 308
4700936621 . . . . . 308, 320, 328
4700936622 308
4700936623 308
4700936624 308
4700936625 308
4700936626 308
4700936627 308
4700936628 308
4700936629 308
4700936630 308
4700936631 308
4700936632 308
4700936633 308
4700936634 308
4700936635 308
4700936636 308
4700936637 308
4700936642 304
4700936643 304
4700936644 304
4700936646 304
4700936647 304
4700936648 304
4700936654 304
4700936655 304
4700936656 304
4700936662 310
4700936664 310
4700936665 310
4700936673 . . . . . 310, 322, 330
4700936686 . . . . . 316, 324
4700936689 312
4700936855 . . . . . 310, 322, 330
4700936869 . . . . . 312, 316, 324
4700936898 282
4700937174 . . . . . 320, 328
4700937175 . . . . . 320, 328
4700937182 328
4700937185 . . . . . 320, 328
4700937186 . . . . . 320, 328
4700937187 . . . . . 320, 328
4700937188 . . . . . 320, 328
4700937195 . . . . . 316, 318, 324, 326
4700937206 . . . . . 316, 324
4700937236 . . . . . 318, 326
4700937620 . . . . . 500, 502
4700937621 . . . . . 500, 502
4700937892 . . . . . 500, 502
4700937987 . . . . . 322, 330
4700938014 304
4700938605 544
4700938606 544
4700938609 544
4700938624 482
4700938789 544
4700938891 22
4700939082 . . . . . 6, 8, 10, 12, 14, 240
4700939333 232
4700939693 458
4700939826 524
4700940451 28
4700940533 240

4700940572 . . . . . 276, 296, 582
4700940676 304
4700945311 312
4700945526 . . . . . 566, 572
4700945622 498
4700945632 496
4700945633 496
4700945634 496
4700945635 496
4700945636 496
4700945637 496
4700945660 498
4700945661 498
4700945668 572
4700945770 240
4700945774 240
4700945776 . . . . . 316, 324
4700945887 240
4700945903 20
4700945904 24
4700947679 532
4700947684 566
4700947689 66
4700947690 . . . . . 38, 38
4700947712 178
4700950140 240
4700950152 18
4700950222 . . . . . 36, 184
4700950297 234
4700950372 544
4700950373 544
4700950374 544
4700950375 544
4700950417 . . . . . 36, 184
4700950461 . . . . . 316, 324
4700950480 . . . . . 196, 198
4700950491 . . . . . 196, 208
4700950492 . . . . . 196, 208
4700950493 . . . . . 198, 208
4700950494 . . . . . 198, 208
4700950495 . . . . . 196, 208
4700950520 196
4700950521 196
4700950522 196
4700950523 . . . . . 196, 198
4700950524 . . . . . 196, 198
4700950526 . . . . . 196, 198
4700950527 . . . . . 196, 198
4700950529 . . . . . 196, 198
4700950530 . . . . . 196, 198
4700950531 . . . . . 198, 198, 208
4700950532 . . . . . 198, 198
4700950570 296
4700950571 296
4700950572 296
4700950587 582
4700950593 232
4700960067 . . . . . 554, 556
4700991657 . . . . . 112, 534
4700999014 366
4811000085 . . . . . 82, 86, 92, 98
4811000096 . . . . . 170, 490
4811000107 . . . . . 82, 86, 92, 98
4811000163 368
4811000265 560
4811000268 476
4811000269 476
4811000292 558
4811000344 534
4811000345 536
4811000431 402
4811000432 402
4811000457 106
4811000458 . . . . . 446, 464
4812002474 316
4812008274 4
4812013038 594
4812013040 594
4812030096 . . . . . 12, 14
4812030756 . . . . . 12, 14
4812034481 220
4812034895 240
4812040815 240
4812041531 . . . . . 6, 8, 10, 12, 14, 240
4812104713 348
4812110277 46
4812110293 278
4812110334 . . . . . 170, 490
4812110346 190
4812110358 102
4812110367 490
4812110394 . . . . . 82, 92, 102
4812110444 190
4812110491 . . . . . 82, 92
4812110641 . . . . . 194, 206
4812110643 230
4812110644 124
4812110671 148
4812110672 154
4812110886 520
4812110896 . . . . . 338, 516
4812110901 . . . . . 520, 524

4812110902 368
4812110903 368
4812110904 368
4812110982 40
4812111325 . . . . . 82, 86, 92, 98
4812111329 . . . . . 82, 86
4812111332 . . . . . 82, 86, 92, 98
4812112074 . 40, 82, 82, 82, 82, 82, 86, 86, 86, 86, 86, 88, 88, 88, 92, 92, 92, 92, 92, 92, 92, 92, 92, 92, 92, 98, 98, 98, 98, 98, 98, 98, 98, 100, 100, 100, 566, 566
4812112260 282
4812112262 . . . . . 4, 10, 12, 14, 282
4812112413 230
4812112428 396
4812112767 476
4812112837 558
4812112838 558
4812113158 398
4812113160 . . . . . 402, 592
4812113161 252
4812113496 288
4812113623 478
4812113624 482
4812113724 124
4812113786 528
4812113875 . . . . . 520, 524
4812113949 . . . . . 28, 44
4812113999 250
4812114024 . . . . . 238, 240
4812114031 250
4812114033 250
4812114034 250
4812114068 244
4812114069 244
4812114070 244
4812114098 258
4812114213 . . . . . 520, 524
4812114214 . . . . . 520, 524
4812114312 282
4812114333 242
4812114334 242
4812114408 60
4812114566 . . . . . 420, 444
4812114567 . . . . . 420, 444, 446
4812114585 476
4812114598 462
4812114599 462
4812114619 356
4812114655 356
4812114805 398
4812115013 478
4812115053 490
4812115060 . . . . . 338, 516
4812115061 . . . . . 338, 516
4812115093 400
4812115164 . . . . . 418, 438, 452, 474
4812115167 452
4812115168 452
4812115171 . . . . . 418, 442
4812115177 446
4812115180 444
4812115183 444
4812115186 452
4812115187 . . . . . 446, 466, 466
4812115188 476
4812115189 476
4812115190 476
4812115191 476
4812115192 460
4812115203 464
4812115215 462
4812115230 452
4812115287 350
4812115288 556
4812115290 390
4812115291 368
4812115292 520
4812115392 52
4812115398 52
4812115411 60
4812115467 52
4812115499 522
4812115511 288
4812115522 374
4812115557 352
4812115569 68
4812115810 . . . . . 520, 524
4812115947 52
4812115949 52
4812115950 52
4812115966 282
4812115967 282
4812116192 452
4812116193 452
4812116194 . . . . . 452, 478
4812116195 456
4812116197 452
4812116205 476
4812116333 52
4812116334 52
4812116340 52
4812116357 502

4812116367 596
4812116702 52
4812116778 250
4812116779 246
4812116867 412
4812116884 412
4812116986 560
4812117018 62
4812117490 524
4812117512 52
4812117530 52
4812117737 50
4812117738 52
4812117922 . . . . . 504, 506
4812117924 . . . . . 504, 508
4812117925 . . . . . 506, 510
4812118002 244
4812118056 106
4812118090 578
4812118312 512
4812118336 250
4812118340 248
4812118341 248
4812118342 264
4812118387 344
4812118388 244
4812118392 258
4812118397 282
4812118400 250
4812118422 252
4812118502 540
4812118506 238
4812118545 238
4812118624 558
4812118625 558
4812118641 558
4812118697 . . . . . 520, 524
4812118816 . . . . . 508, 510
4812119095 252
4812119163 384
4812119227 . . . . . 520, 524
4812119295 . . . . . 500, 502
4812119306 560
4812119317 . . . . . 520, 524
4812119360 436
4812119361 436
4812119369 412
4812119373 . . . . . 438, 474
4812119374 . . . . . 438, 474
4812119376 464
4812119377 464
4812119378 438
4812119379 438
4812119380 438
4812119381 . . . . . 438, 474
4812119383 . . . . . 438, 474
4812119384 474
4812119388 416
4812119392 442
4812119393 442
4812119394 470
4812119398 466
4812119399 466
4812119400 472
4812119401 472
4812119402 466
4812119403 440
4812119404 468
4812119405 468
4812119406 464
4812119417 418
4812119418 442
4812119423 . . . . . 420, 440, 468
4812119427 418
4812119429 462
4812119435 464
4812119436 464
4812119437 464
4812119438 464
4812119439 464
4812119440 464
4812119441 464
4812119443 464
4812119447 462
4812119448 462
4812119449 462
4812119520 406
4812119599 406
4812119737 396
4812119788 532
4812119807 52
4812119809 52
4812120035 . . . . . 338, 516
4812120077 524
4812120081 . . . . . 414, 486
4812120083 . . . . . 414, 486
4812120084 . . . . . 414, 486
4812120085 . . . . . 414, 486
4812120117 . . . . . 414, 486
4812120121 536
4812120123 534
4812120128 540

4812120129 540
4812120239 . . . . . 438, 474
4812120240 452
4812120241 452
4812120242 452
4812120243 452
4812120247 474
4812120248 476
4812120249 476
4812120250 476
4812120251 476
4812120253 474
4812120254 442
4812120255 . . . . . 418, 442
4812120256 444
4812120257 444
4812120258 444
4812120259 446
4812120260 446
4812120261 446
4812120262 446
4812120263 . . . . . 446, 466
4812120264 446
4812120265 446
4812120266 446
4812120267 446
4812120268 446
4812120269 . . . . . 446, 446, 452
4812120270 450
4812120271-1 . . . . . 438, 474
4812120271-2 . . . . . 438, 474
4812120271-3 . . . . . 438, 474
4812120271-4 . . . . . 438, 474
4812120272 462
4812120273 464
4812120274 458
4812120275 466
4812120276 466
4812120277 466
4812120278 466
4812120281 440
4812120282 440
4812120283 420
4812120284 478
4812120285 478
4812120294 420
4812120296 . . . . . 418, 442
4812120299 . . . . . 438, 474
4812120318 534
4812120319 534
4812120414 52
4812120433 534
4812120467 386
4812120469 386
4812120565 206
4812120566 206
4812120567 206
4812120568 206
4812120615 52
4812120618 52
4812120706 40
4812120716 396
4812120717 396
4812120733 336
4812120736 436
4812120770 . . . . . 420, 438, 474
4812120782 . . . . . 438, 474
4812120783 . . . . . 438, 474
4812120784 . . . . . 438, 474
4812121000 436
4812121044 . . . . . 520, 524
4812121111 52
4812121212 252
4812121213 252
4812121282 52
4812121289 . . . . . 86, 98, 104
4812121292 . . . . . 86, 98
4812121328 512
4812121330 512
4812121331 512
4812121347 526
4812121348 524
4812121396 52
4812121397 52
4812121398 52
4812121417 542
4812121468 384
4812121485 402
4812121597 398
4812121608 398
4812121665 52
4812121818 . . . . . 402, 592
4812121848 386
4812121851 524
4812122583 596
4812122611 386
4812122726 596
4812122777 596
4812122778 596
4812122780 596
4812123171 596
4812123419 256

4812123420 290
4812123421 254
4812123471 592
4812123488 592
4812123489 592
4812123490 592
4812123491 592
4812123523 592
4812123524 592
4812123525 592
4812123533 592
4812123534 592
4812123681 592
4812123699 592
4812123727 592
4812123728 592
4812123747 592
4812124090 592
4812124091 592
4812124199 . . . . . 594, 594
4812124256 . . . . . 594, 594
4812124321 142
4812124323 142
4812124324 142
4812124325 142
4812124327 142
4812124328 142
4812124329 142
4812124330 142
4812125361 500
4812126247 526
4812126248 526
4812126260 530
4812126261 530
4812126698 498
4812142385 594
4812142386 594
4812155170 . . . . . 194, 204
4812155658 544
4812155698 26
4812155785 . . . . . 302, 304
4812155786 . . . . . 302, 316
4812155787 . . . . . 302, 324
4812155790 276
4812156060 198
4812156061 198
4812156062 198
4812156151 304
4812156152 . . . . . 316, 324
4812156154 310
4812156159 276
4812156170 24
4812156199 232
4812156456 . . . . . 12, 14
4812156599 312
4812156662 296
4812156787 296
4812157095 310
4812157165 200
4812157166 . . . . . 202, 216, 226
4812157167 . . . . . 202, 216, 226
4812157168 . . . . . 202, 216, 226
4812157169 . . . . . 204, 218, 228
4812157170 . . . . . 204, 218, 228, 314
4812157171 . . . . . 204, 218, 228
4812157395 . . . . . 200, 212, 222
4812157585 296
4812157851 310
4812158064 240
4812158065 240
4812158187 . . . . . 6, 8, 10, 12, 14, 240
4812158191 . . . . . 10, 12, 14, 246
4812158289 484
4812158290 484
4812158291 484
4812158292 484
4812158294 74
4812158295 74
4812158367 . . . . . 500, 502
4812158465 . . . . . 14, 240
4812158763 196
4812158764 196
4812158765 196
4812159094 302
4812159164 240
4812159184 . . . . . 468, 468
4812159185 . . . . . 6, 8, 10, 12, 14, 246
4812159352 . . . . . 4, 16
4812159353 6
4812159354 . . . . . 8, 16
4812159355 10
4812159357 . . . . . 12, 16
4812159360 14
4812159499 240
4812159558 . . . . . 28, 464
4812159754 328
4812159762 296
4812159770 296
4812159771 572
4812160160 296
4812160262 200
4812160294 . . . . . 204, 218, 228

4812160391 196
4812160394 324
4812160487 208
4812160488 208
4812160491 296
4812160598 480
4812160664 282
4812160767 484
4812160775 276
4812161086 310
4812161090 314
4812161092 . . . . . .204, 218, 228
4812161093 . . . . . .204, 218, 228
4812161094 . . . . . .204, 218, 228
4812161095 . . . . . .204, 218, 228
4812161164 196
4812161165 442
4812161168 196
4812161169 196
4812161198 198
4812161276 . . . . . .170, 490, 490
4812161298 482
4812161396 28
4812161496 588
4812269526 . . . . . 206, 206
5580020624 . . . . . 8, 12, 14
9106230330 14

Any unauthorized use or copying of the contents or any part thereof is prohibited. This applies in particular to trademarks, model denominations, part numbers, and drawings.