RUTHZIL TRATOR COMERCIAL DE PEÇAS LTDA 11 97083-6812 ROLANDO CITRANGULO

DYNAPAC
CC800

SPARE PARTS CATALOGUE

SCC800-2EN3

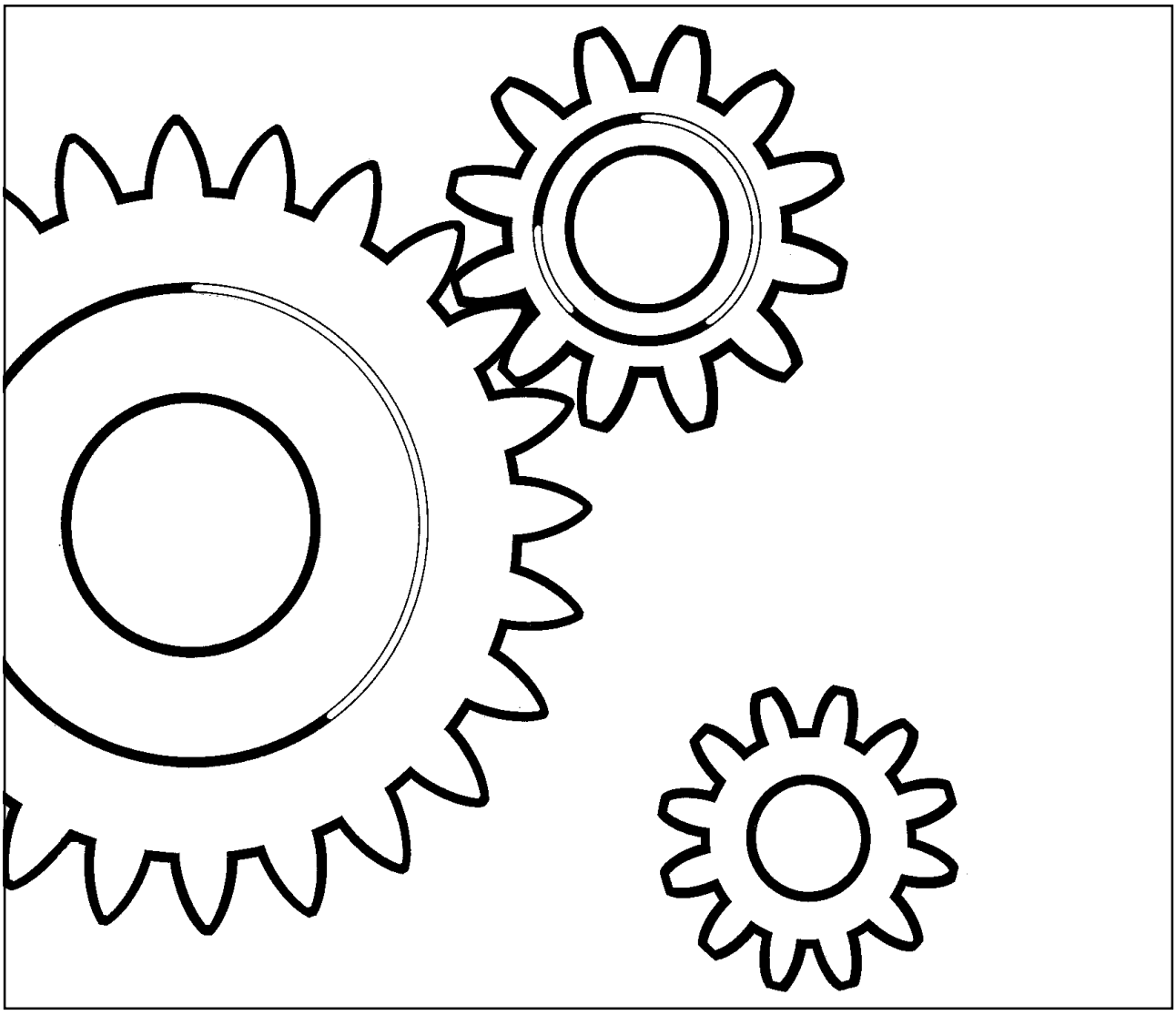

DYNAPAC
Part of the Atlas Copco Group

Box 504, SE-371 23 Karlskrona, Sweden
Phone: +46 455 30 60 00, Fax: +46 455 30 60 10
www.dynapac.com

DYNAPAC
Part of the Atlas Copco Group

Vibratory Roller
CC800

Spare Parts Catalogue
SCC800-2EN3

Valid from roller serial number:

**89132700* -*

Diesel engines:

Perkins 403D-11

Published catalogue issues valid for these rollers:

Catalogue	Issue date	Valid for serial numbers
SCC800-2EN1	2008-03	Replaced by SCC800-2EN2
SCC800-2EN2	2009-04	Replaced by SCC800-2EN3
SCC800-2EN3	2009-12	See above



We reserve the right to change specifications without notice.
Printed in Sweden.

DYNAPAC
Part of the Atlas Copco Group

RESERVDELSBESTÄLLNING

Följande uppgifter ska lämnas vid beställning av reservdelar för att undvika leveransfel:

1. Maskintyp.
2. Vältens serienummer.
3. Antal av önskad reservdel.
4. Reserdelens artikelnummer.
5. Reservdelens benämning.
6. Måttuppgifter vid beställning av metervara.

ORDERING SPARE PARTS

To avoid errors in delivery, please give the following information when ordering spare parts:

1. Type of machine.
2. Roller serial number.
3. Quantity required.
4. Part number.
5. Parts denomination.
6. Dimensions when ordering per length.

ERSATZTEILBESTELLUNG

Zur Vermeidung von Fehllieferungen sind bei der Bestellung von Ersatzteilen folgende Angaben zu machen:

1. Maschinentyp.
2. Herstellungsnummer.
3. Bestellmenge. (Quantity)
4. Ersatzteilnummer. (Part Nº)
5. Ersatzteilbenennung. (Denomination)
6. Massangaben bei Bestellung von Meterware.

ORDINI DI RICAMBI

Per evitare errori nelle consegne di ricambi, Vi preghiamo di comunicarci le seguenti informazioni al momento dell 'ordinazione:

1. Tipo di macchina.
2. Numero di serie della macchina.
3. Quantità dei pezzi desiderati. (Quantity)
4. Numero di codice del pezzo. (Part Nº)
5. Descrizione del pezzo di ricambio. (Denomination)
6. Misura, in caso di ordine per metro.

PEDIDO DE RECAMBIOS

Para evitar errores en las entregas, deberán indicarse los siguientes datos al hacer un pedido de recambios:

1. Tipo de máquina.
2. Número de serie.
3. Cantidad de piezas deseadas. (Quantity)
4. Número de artículo de la pieza de recambio. (Part Nº)
5. Denominación de la pieza. (Denomination)
6. Indíquese la medida al solicitar un artículo que se expide por metros.

COMMANDE DE PIECES DE RECHANGE

Les indications suivantes doivent être fournies lors de la commande de piéces de rechange, afin d'éviter toute erreur de livraison:

1. Type de machine.
2. Numéro de série.
3. Quantité désirée de pièce de rechange. (Quantity)
4. Numéro de la piéce de rechange. (Part Nº)
5. Dénomination de la piéce de rechange. (Denomination)
6. Longueur en cas de commande au mètre.

YOUR AGENT/DEALER:

Text pages

The text pages is structured as the picture on the right.

1. This is the remarks for specific items and the descriptions of the remarks is at the bottom of the parts list.

2. Parts indicated by a dot and moved to the right are included when buying the assembled unit above.

3. Spare parts and service code for a specific part, mainly for internal use at Dynapac. "A" = Service part, "B" = Fast moving part, "C" = Suggested exchanged part and "D" = Regular spare part.

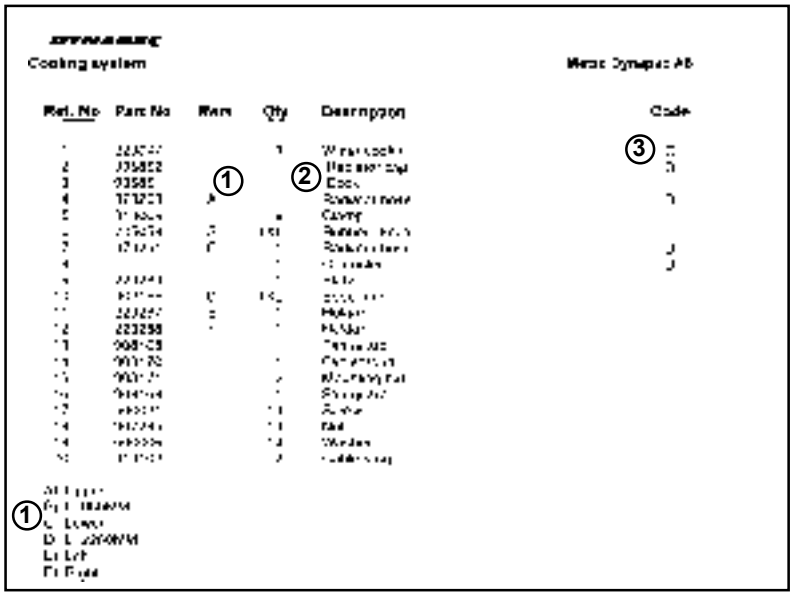

Changes

PARTS INFO	SERVICE INFO	GROUP	PAGE	NOTES

Notes

Notes

PÄRMETIKETT

För att undvika fel vid reservdelsbeställning finns här nedan två etiketter som passar i fickorna på pärmarnas ryggar. På dessa kan man se från vilket vältnummer av aktuell maskin reservdelskatalogen gäller. Gör så här:

1. Tag denna sida ur pärmen.
2. Klipp ut etiketten till **VÄNSTER** (1) och sätt in den i fickan på **DENNA** pärmens rygg.
3. Finns det en etikett till **HÖGER** (2), kan denna användas på pärmen för **FÖREGÅENDE** utgåva av denna katalog.
4. Kasta detta papper.

BINDER LABEL

To avoid errors when ordering spare parts use the labels below to identify the catalogues on the back of the binder. The label contain the serial number range for which the catalogue is valid. Do like this:

1. Remove this page from the binder.
2. Cut out the **LEFT** label (1) and put it on **THIS** binders back.
3. If there is a label to the **RIGHT** (2), it can be used on the binder for **PRECEDING** issue of this catalogue.
4. Throw away this paper.

KATALOG-BESCHRIFTUNG

Zur Vermeidung von Fehlen bei der Ersatzteilbestellung benutzen Sie bitte die unteren Beschriftungen, um die Kataloge auf der Rückseite zu kennzeichen. Auf der Beschriftung ist angegaben, für welche Maschinennummern der jeweilige Katalog gültig ist. Ablauf:

1. Nehmen Sie dieses Blatt aus dem Katalog.
2. Schneiden Sie die **LINKE** Beschriftung (1) aus. Schieben Sie die Beschriftung in die tasche auf **DEM** Katalogrücke.
3. Sollte die Beschriftung unten **RECHTS** (2) mitgeliefert werden, kennzeichen Sie damit bitte die **ÄLTERE** Ausführung dieses Kataloges.
4. Den Rest dieses Blattes bitte vernichten.

ETICHETTA POSTA SUL RACCOGLITORE

Per evitare errori quando ordinate pezzi di ricambio, usate le etichette in calce che servono ad identificare i cataloghi sul retro del raccoglitore. L'etichetta indica il numero di matricola delle maccine prese in considerazione nel catalogo.

1. Rimuovete questa pagina dal raccoglitore.
2. Ritagliate l'etichetta posta a **SINISTRA** (1) e ponetela sul retro **DEL** raccoglitore.
3. Se trovate anche un'etichetta sulla **DESTRA** (2), ritagliatela e ponetela sul raccoglitore relativo alla **PRECEDENTE** edizione del catalogo.
4. Distruggete questo foglio.

ETIQUETA PARA LA CARPETA

Para evitar errores al pedir repuestos utilicen las etiquetas abajo descritas para identificar los catálogos en la parte trasera de la carpeta. En la etiqueta se ven los números de referencia de la serie para la cual es válido el catálogo. Instrucciones:

1. Quitar esta página de la carpeta.
2. Corta la etiqueta **IZQUIERDA** (1) y ponerla est **ESTA** carpeta en la parte trasera.
3. Si hay una etiqueta en la parte **DERECHA** (2) se puede utilizar en la carpeta para el catálogo que **PRECEDE** a esta.
4. Tirar esta hoja.

ETIQUETAGE DU CATALOGUE

Afin d'éviter des erreurs lors de commandes de pièces de rechange, nous vous conseillons d'apposer les marquages ci-dessous à l'arrière du classeur, pour identifier les catalogues. Ce marquage indique les numéros de série pour lesquels le catalogue est adapté. Il convient de procéder de la façon suivante:

1. Retirez cette page du classeur.
2. Découpez l'étiquette de **GAUCHE** (1), et apposez-la à l'arrière de **CE** catalogue.
3. Si il y a une étiquette à **DROITE** (2), vous pourrez l'apposer sur le classeur de l'edition **PRECEDENTE** du catalogue.
4. Détruire cetta feuille.

1 .



CC800

Catalogue **SCC800-2EN3**
Valid **from** serial number:
***89132700* -**

TABLE OF CONTENTS

Page

CC800 SN 89132700 - 2

Service kits 4

4700940208 Service kit, Perkins 50h 6
4700940209 Service kit, Perkins 500h 8
4700940210 Service kit, Perkins 1000h 10

Repair kits 12

4700945552 Shock absorber kit, drum 14
4700940672 Scraper kit CC800 16
4700945928 Repair kit, Steering hitch 18
4700945710 Eccentric shaft kit 20
4700945711 Drum rotation kit 22

Frame 24

Frames 26
4700377621 Hitch 28
Scrapers 30
Engine hood 32
Sprinkler system 34

Drum 36

Drum 38

Engine 40

Engine Perkins 403D-11 42
Cooling system 44
Exhaust system 46
Fuel system 48
Air intake system 50

Hydraulic system 52

Hydraulic propulsion and brake system motor 54
4700387270 Hydraulic motor 56
Hydraulic propulsion and brake system pump 58
Hydraulic vibration 60
Hydraulic steering 62
4700387274 Steering valve 64
4700387275 Hydraulic cylinder 66

Electrical equipment 68

Electrical equipment 70
Control panel, relays Up to 89132869 72
Control panel, relays From 89132870 74
Driving lights Option 76
Driving lights Option 78
Working lights Option 80
Rotating beacon with Rops Option 82
Back-up alarm Option 84

Drivers platform 86

Drivers seat 88
F/R- and throttle control 90
Forward and reverse control handle 92
Rops Option 94

TABLE OF CONTENTS

Page

Decals and documentation 96

Decals and documentation 98

Standard equipment 100

Standard equipment 102

Optional equipment 104

Battery disconnector 106
Battery disconnector From ECN 09452 108
Water tank, option 110
Dual forward/reverse control 112
SMV-sign 114
SMV-sign Mounting on watertank 116
SMV-sign on high water tank 118
Registrations - plate with light 120
Hydraulic vibration, shut off front/rear drum 122
4700387276 Combination valve 124
Rear view mirror 126
Rear view mirror 128
Tool equipment 130


50
60
70
30
10
80
20

Item	Part No	Rem	Qty	Description	Code
5				Service kits (Page 4)	
6				Repair kits (Page 12)	
10				Frame (Page 24)	
20				Drum (Page 36)	
30				Engine (Page 40)	
50				Hydraulic system (Page 52)	
60				Electrical equipment (Page 68)	
70				Drivers platform (Page 86)	
80				Decals and documentation (Page 96)	
90				Standard equipment (Page 100)	
91				Optional equipment (Page 104)	

Service kits

Item	Part No	Rem	Qty	Description		Code
1	4700940208			Service kit, Perkins (Page 6)	50h	
2	4700940209			Service kit, Perkins (Page 8)	500h	
3	4700940210			Service kit, Perkins (Page 10)	1000h	

4700940208 Service kit, Perkins 50h

17996

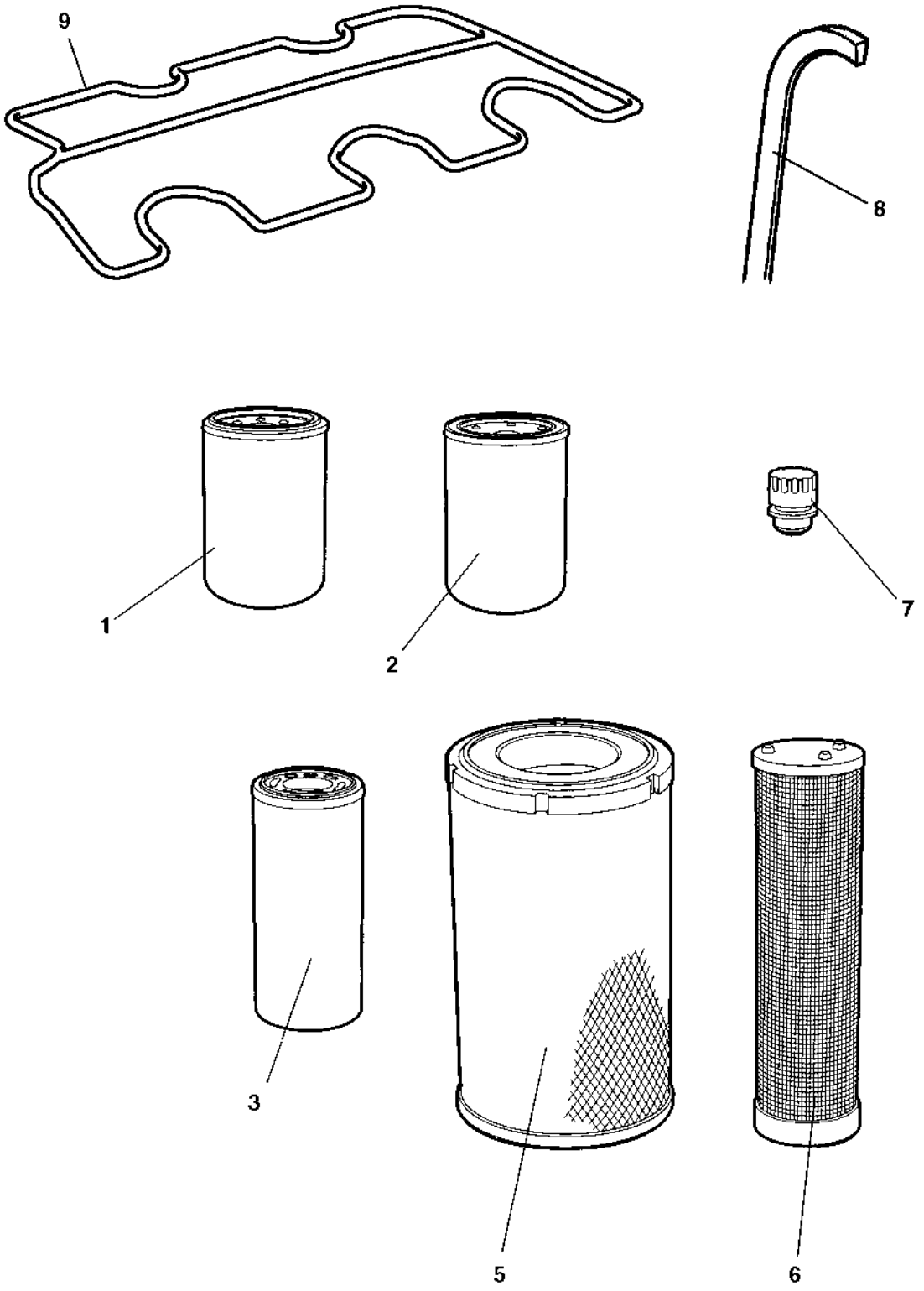

4700940208 Service kit, Perkins 50h

Item	Part No	Rem	Qty	Description		Code
	4700940208			Service kit, Perkins (Page 6)	50h	
1	4700376554		1	Oil filter		A
2	4700376555		1	Fuel filter		A
3	4700376637		1	Filter element		A

4700940209 Service kit, Perkins 500h

17996

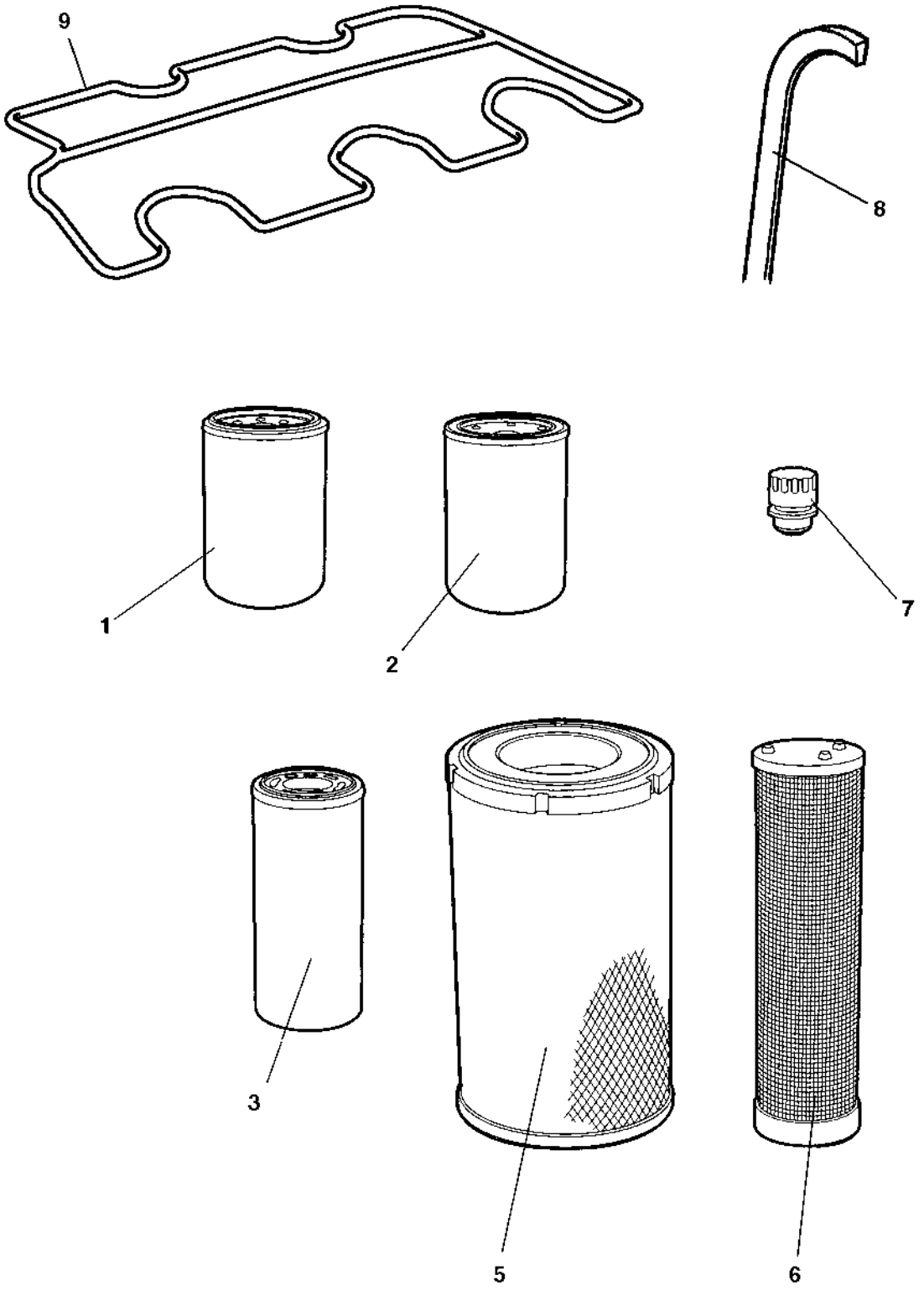

4700940209 Service kit, Perkins 500h

Item	Part No	Rem	Qty	Description		Code
	4700940209			Service kit, Perkins (Page 8)	500h	
1	4700376554		1	Oil filter		A
2	4700376555		1	Fuel filter		A
5	4700939802		1	Air filter element	Main	A
6	4700939803		1	Air filter element	Safety	A
7	4700357138		1	Ventilating filter		A

4700940210 Service kit, Perkins 1000h

17996

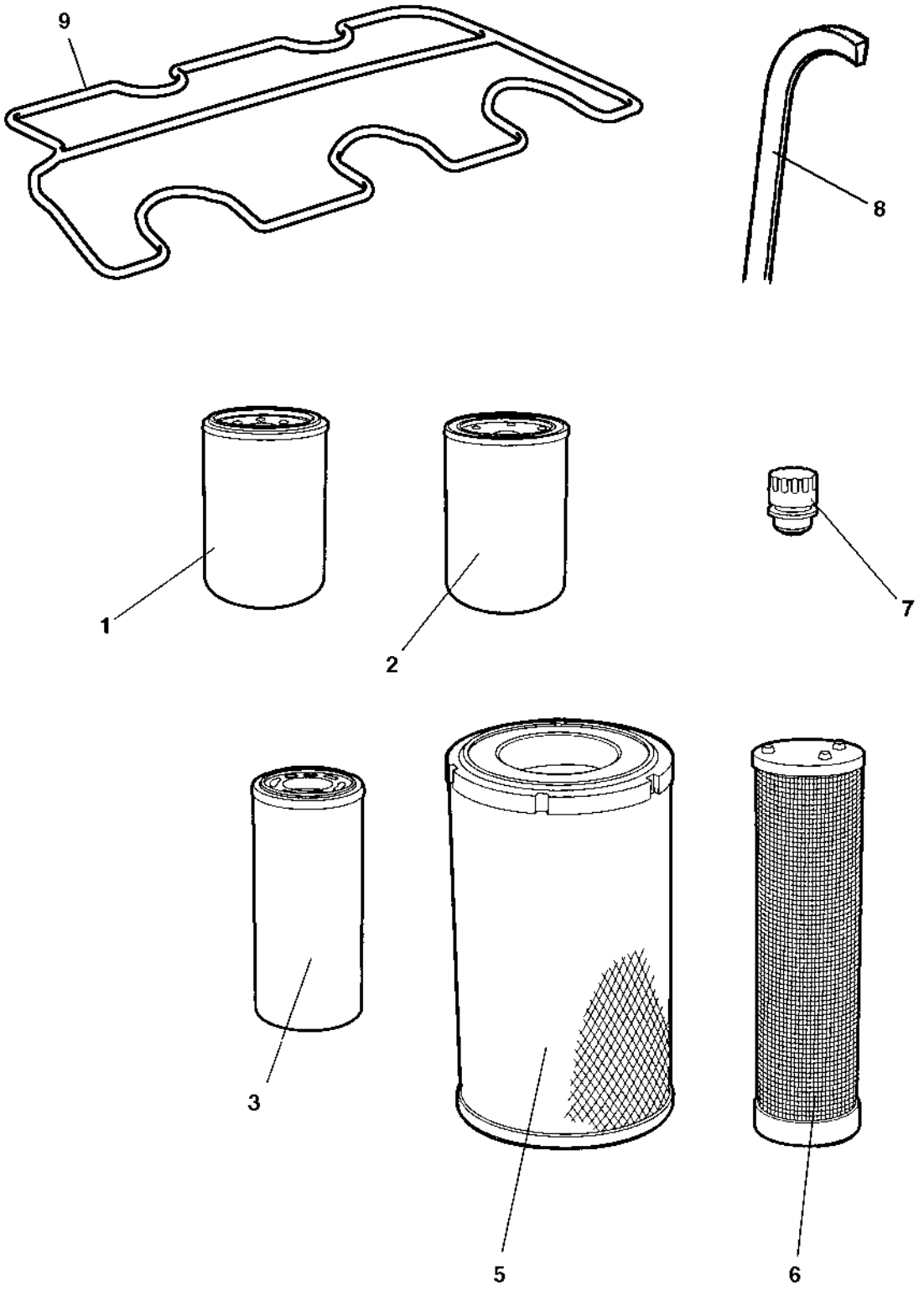

4700940210 Service kit, Perkins 1000h

Item	Part No	Rem	Qty	Description		Code
	4700940210			Service kit, Perkins (Page 10)	1000h	
1	4700376554		1	Oil filter		A
2	4700376555		1	Fuel filter		A
3	4700376637		1	Filter element		A
5	4700939802		1	Air filter element	Main	A
6	4700939803		1	Air filter element	Safety	A
7	4700357138		1	Ventilating filter		A
8	4700939932		1	V-belt		A
9	4700940212		1	Valve gasket		

Repair kits

Item	Part No	Rem	Qty	Description	Code
11	4700945552		2	Shock absorber kit, drum (Page 14)	
12	4700940672		1	Scraper kit (Page 16)	CC800
13	4700945928		1	Repair kit, Steering hitch (Page 18)	
14	4700945710		2	Eccentric shaft kit (Page 20)	
15	4700945711		2	Drum rotation kit (Page 22)	

4700945552 Shock absorber kit, drum

940668

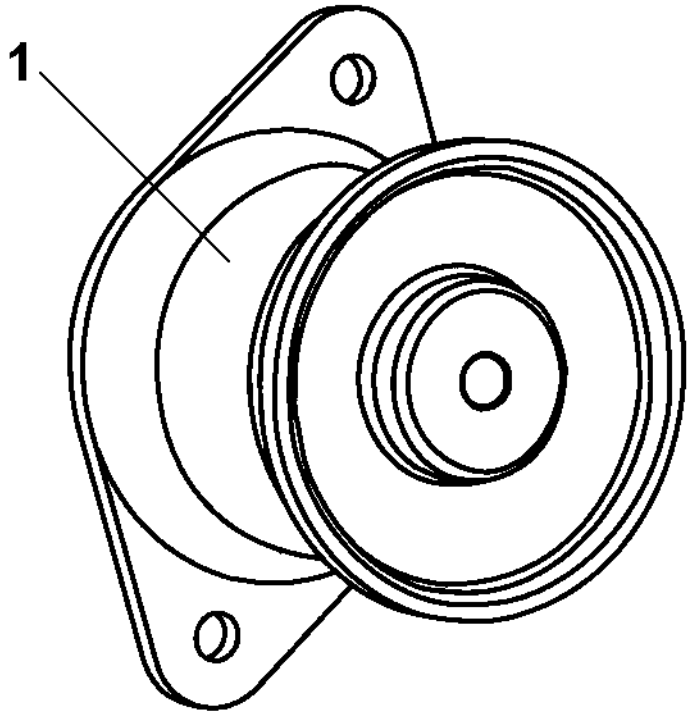

4700945552 Shock absorber kit, drum

Item	Part No	Rem	Qty	Description	Code
	4700945552			Shock absorber kit, drum (Page 14)	
1	4700391984		7	Shock absorber	

4700940672 Scraper kit CC800

18187

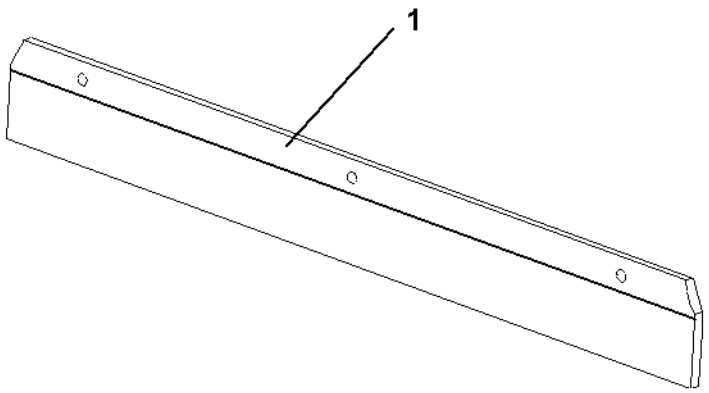

4700940672 Scraper kit CC800

Item	Part No	Rem	Qty	Description		Code
	4700940672			Scraper kit (Page 16)	CC800	
1	4700387045		4	Scraper blade		

4700945928 Repair kit, Steering hitch

18651

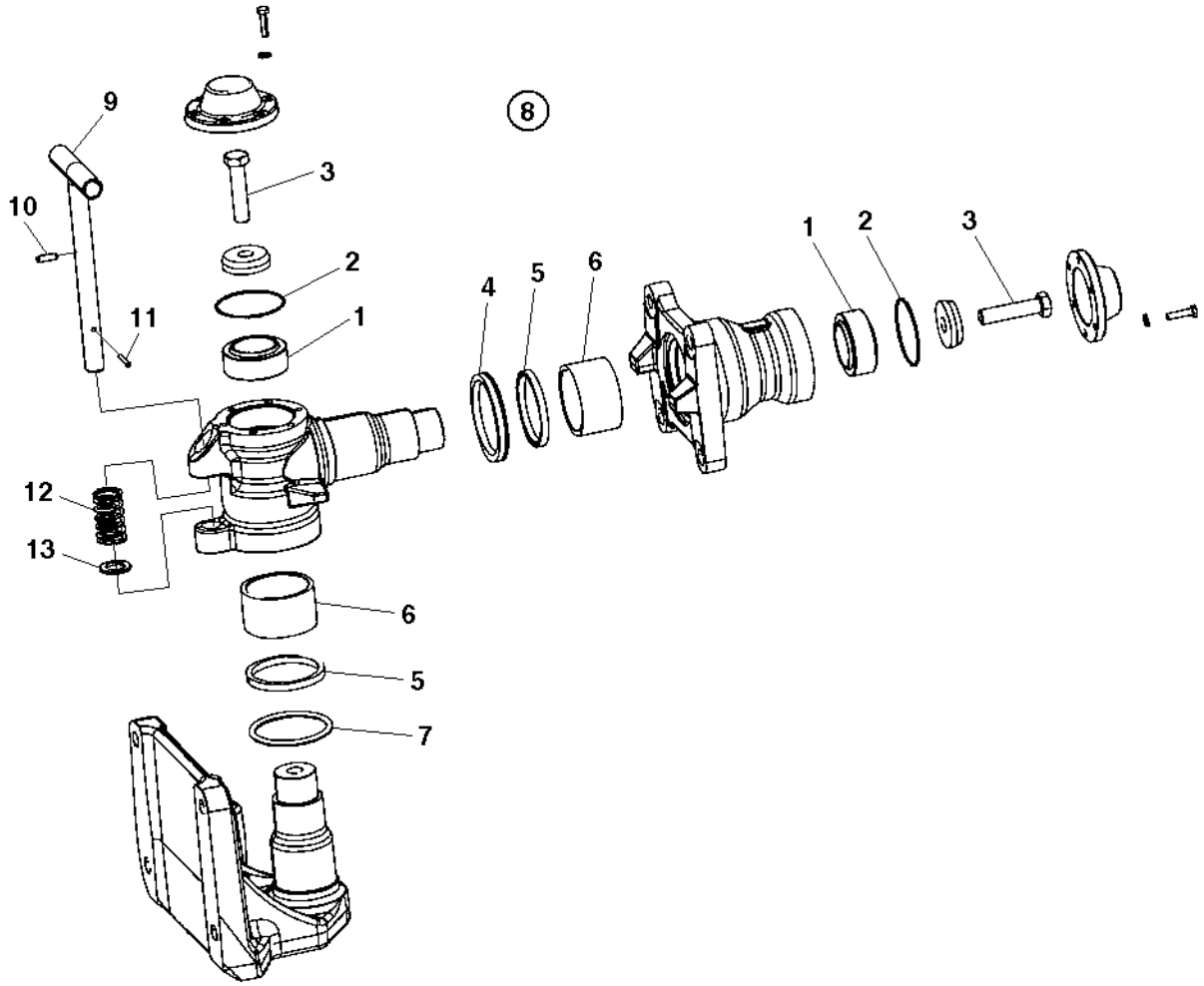

4700945928 Repair kit, Steering hitch

Item	Part No	Rem	Qty	Description	Code
	4700945928			Repair kit, Steering hitch (Page 18)	
1	4700792611		2	Radial spherical plain bearing	
2	4700791962		2	O-ring	
3	4700500050		2	Screw	C
4	4700388171		1	Sealing, v-ring	
5	4700388173		2	Shear wiper	
6	4700388172		2	Bushing	
7	4700160058		1	O-ring	C

4700945710 Eccentric shaft kit

18701

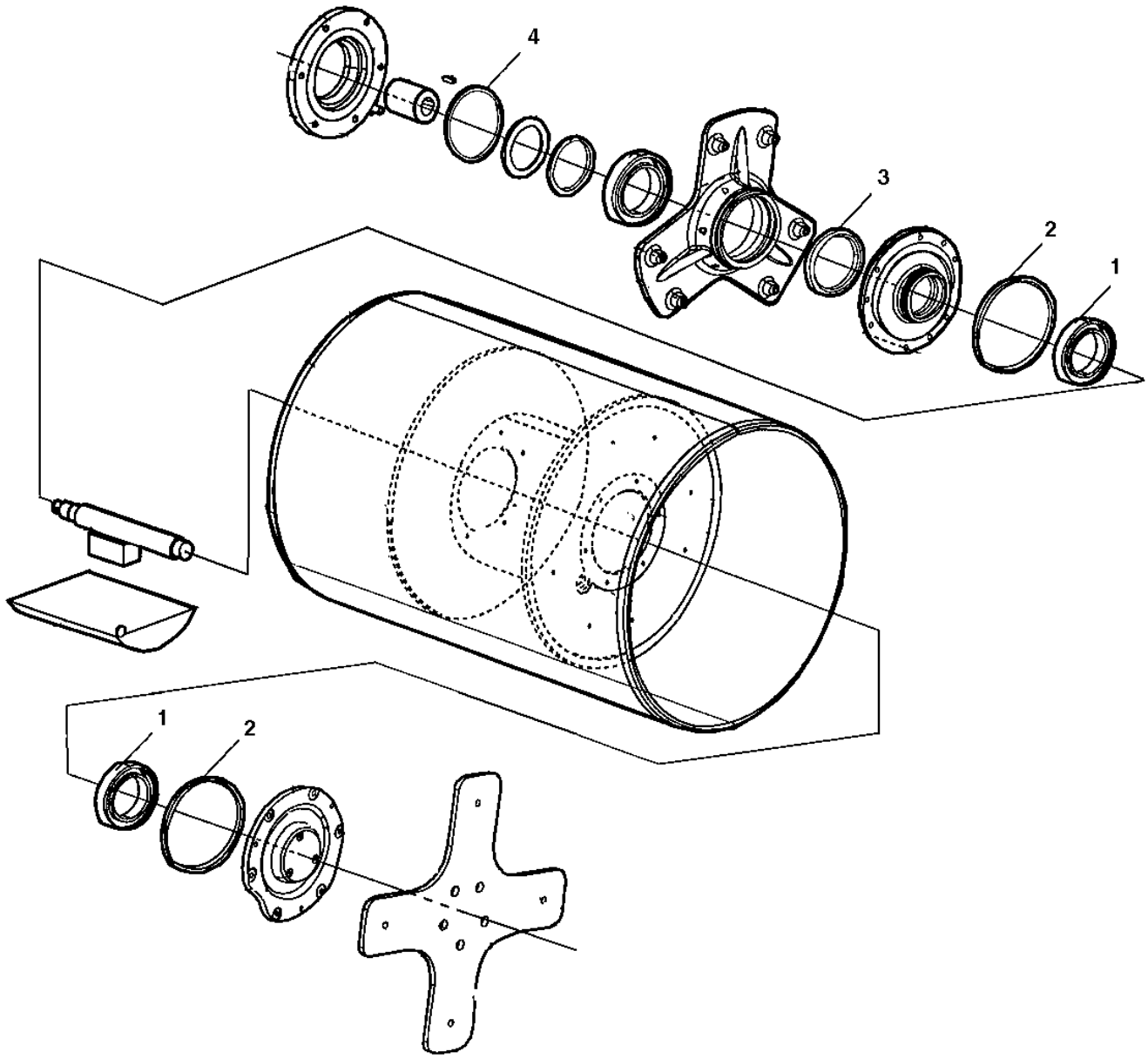

4700945710 Eccentric shaft kit

Item	Part No	Rem	Qty	Description		Code
	4700945710			Eccentric shaft kit (Page 20)		
1	4700791433		2	Spherical roller bearing		
2	4700791425		2	O-ring	174, 20x5, 70	
3	4700791426		1	Radial lip seal		
4	4700160132		1	O-ring	124, 50x3, 00	D

4700945711 Drum rotation kit

945711

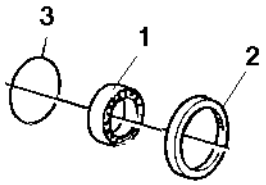

4700945711 Drum rotation kit

Item	Part No	Rem	Qty	Description		Code
	4700945711			Drum rotation kit (Page 22)		
1	4700111018		1	Ball bearing		D
2	4700791426		1	Radial lip seal		
3	4700160132		1	O-ring	124, 50x3, 00	D

Frame

Frame

Item	Part No	Rem	Qty	Description	Code
10				Frames (Page 26)	
30				Scrapers (Page 30)	
40				Engine hood (Page 32)	
41				Sprinkler system (Page 34)	

Frames

17862-1

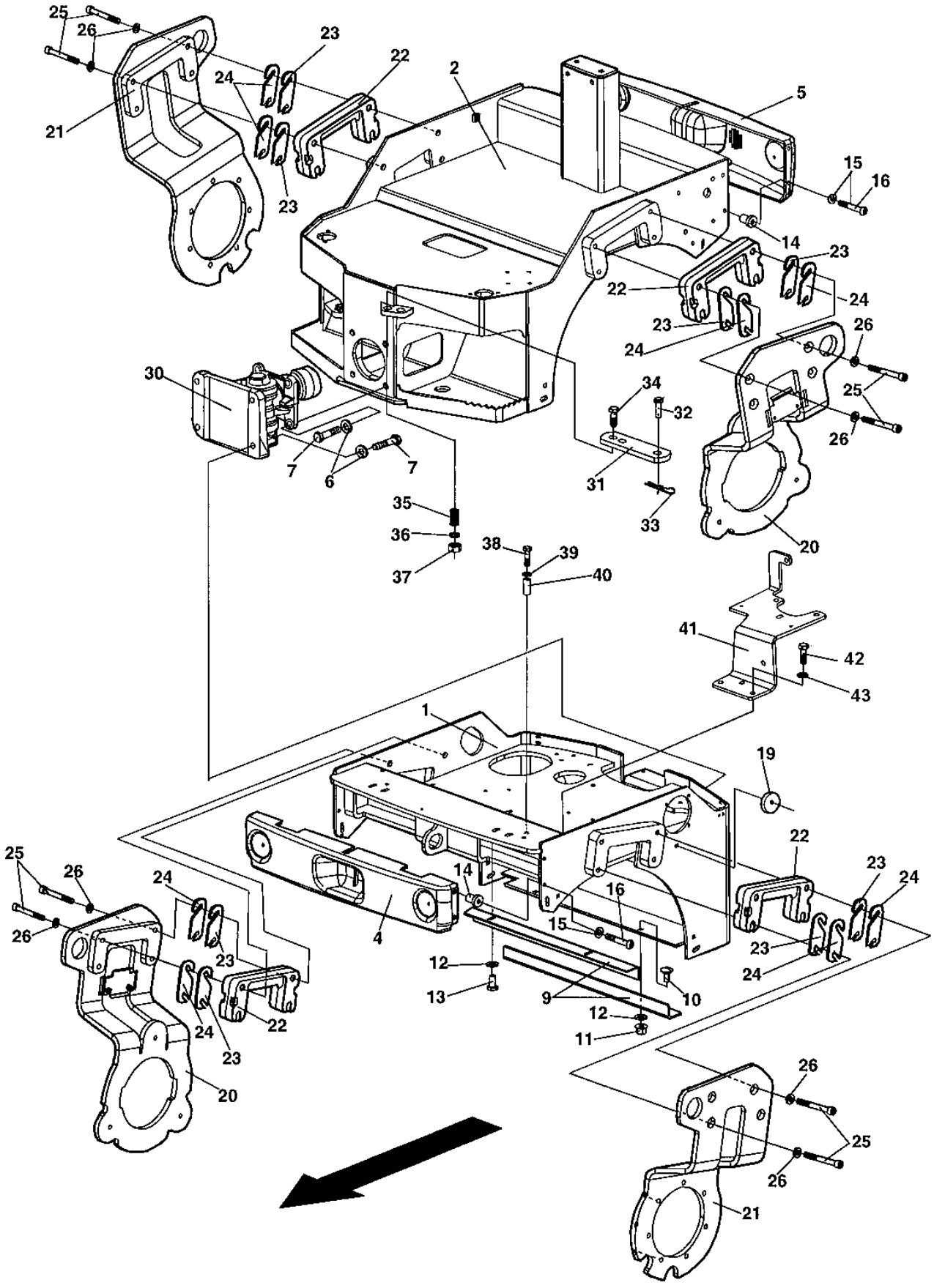

Frames

Item	Part No	Rem	Qty	Description		Code
1	4700387055		1	Frame, front		
2	4700387056		1	Frame, rear		
4	4700387376		1	Cover, frame		
5	4700387886		1	Cover, frame		
6	4700904214		8	Washer	15x30x4 300 HV	
7	4700500176		8	Screw	M14x060	
9	4700387779		2	Press plate		
10	4700929191		2	Bolt		C
11	4700902286		2	Hexagon lock nut with flange		C
12	4700904556		4	Steel plain washer		C
13	4700500053		2	Screw	M8x20H 8.8	C
14	4700387949		8	Rubber nut		
15	4700904228		8	Washer	6,4x12x1,5	C
16	4700791559		8	Screw	M06x35	
19		B	1	Reflector		
20	4700388850		2	Fork, vibration side		
21	4700388849		2	Fork, drive side		
22				Not used on this model		
23	4700387425		N	Shim		
24	4700387424		N	Shim		
25	4700500269		16	Screw		C
26	4700904231		16	Washer	13x24x2 300 HV	C
30	4700377621		1	Hitch (Page 28)		
31	4700377610		1	Lock link		
32	4700530027		1	Clevis pin		
33	4700635061		1	Hair clip		C
34	4700500208		1	Screw	M20x80	
35	4700349332		1	Pressure spring		
36	4700904233		1	Washer	21x36x3	C
37	4700586022		1	Lock nut	M20-8	C
38	4700500067		1	Screw	M8-1,25x55 8,8	
39	4700904229		1	Washer	8,4x16x1,5	C
40	4700387677		1	Spacer sleeve		
41	4700387284		1	Battery shelf		

B) See section "Decals"

4700377621 Hitch

18651

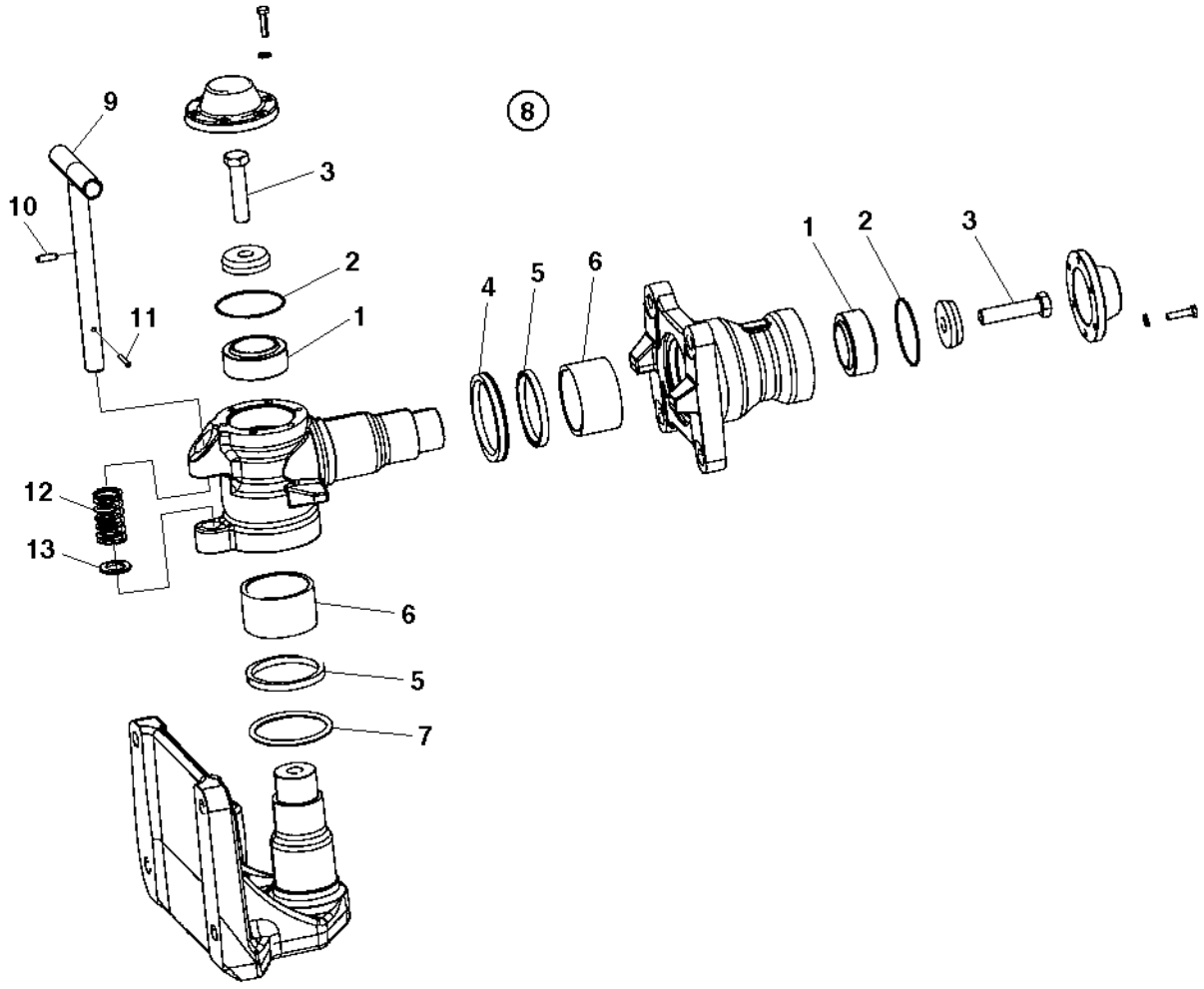

4700377621 Hitch

Item	Part No	Rem	Qty	Description	Code
1	4700792611		2	Radial spherical plain bearing	
2	4700791962		2	O-ring	
3	4700500050		2	Screw	C
4	4700388171		1	Sealing, v-ring	
5	4700388173		2	Shear wiper	
6	4700388172		2	Bushing	
7	4700160058		1	O-ring	C
8	4700945928		1	Repair kit, Steering hitch (Page 18)	
9				Not used on this model	
10				Not used on this model	
11				Not used on this model	
12				Not used on this model	
13				Not used on this model	

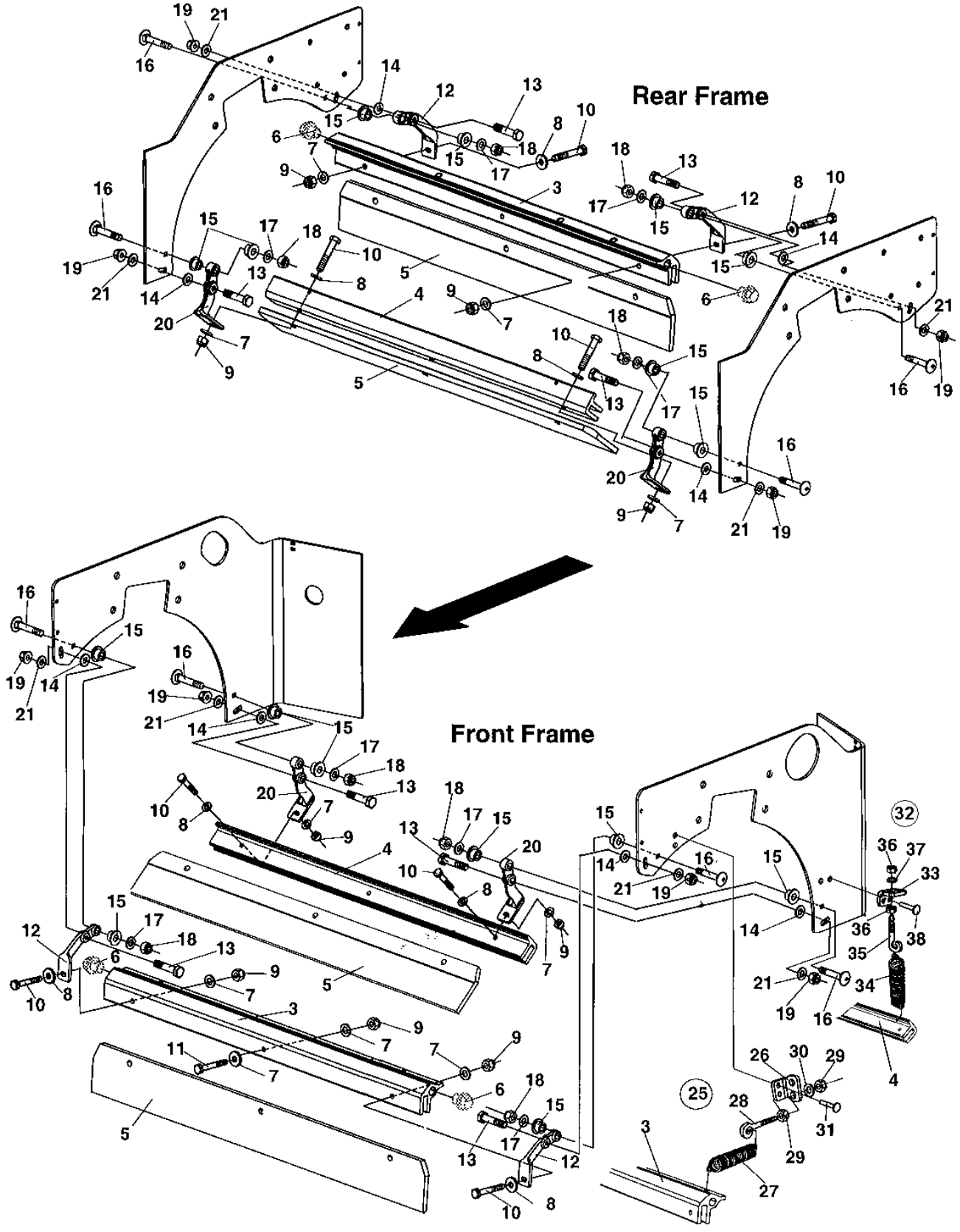
Rear Frame
Front Frame

Scrapers

Item	Part No	Rem	Qty	Description		Code
3	4700387040		2	Sprinkler pipe		
4	4700387044		2	Scraper bracket		
5	4700387045		4	Scraper blade		
6	4700792072		4	End plug		
7	4700904229		16	Washer	8,4x16x1,5	C
8	4700904640		8	Washer	8,4x22x3	C
9	4700586003		12	Lock nut	M8	C
10	4700500067		8	Screw	M8-1,25x55 8,8	
11	4700500024	A	4	Screw	M8x45	C
12	4700387039		4	Upper hold		
13	4700500105		8	Hexagon screw		C
14	4700791938		8	Washer		
15	4700791939		16	Bushing		
16	4700791775		8	Bolt		
17	4700904229		8	Washer	8,4x16x1,5	C
18	4700586003		8	Lock nut	M8	C
19	4700586018		8	Lock nut		C
20	4700387043		4	Lower hold		
21	4700791938		8	Washer		
25		B,C	2	Spring loaded scraper		
26	4700378178	B	4	Bracket		
27	4700359043	B	2	Spring		C
28	4700792189	B	4	Eye bolt		
29	4700570005	B	8	Nut	M8	C
30	4700904229	B	4	Washer	8,4x16x1,5	C
31	4700792190		8	Blind rivet		
	4700791754		8	Blind rivet		
32		B,D	1	Spring loaded scraper		
33	4700378178	B	4	Bracket		
34	4700792188	B	2	Extension spring		D
35	4700792189	B	4	Eye bolt		
36	4700570005	B	8	Nut	M8	C
37	4700904229	B	4	Washer	8,4x16x1,5	C
38	4700792190	B	8	Blind rivet		
	4700791754	B	8	Blind rivet		

A) Valid for all scrapers
B) Option
C) Used on front and rear drum together with Sprinkler pipe 4700387040.
D) Used on front and rear drum together with holder 4700387044.

Engine hood

17977-1

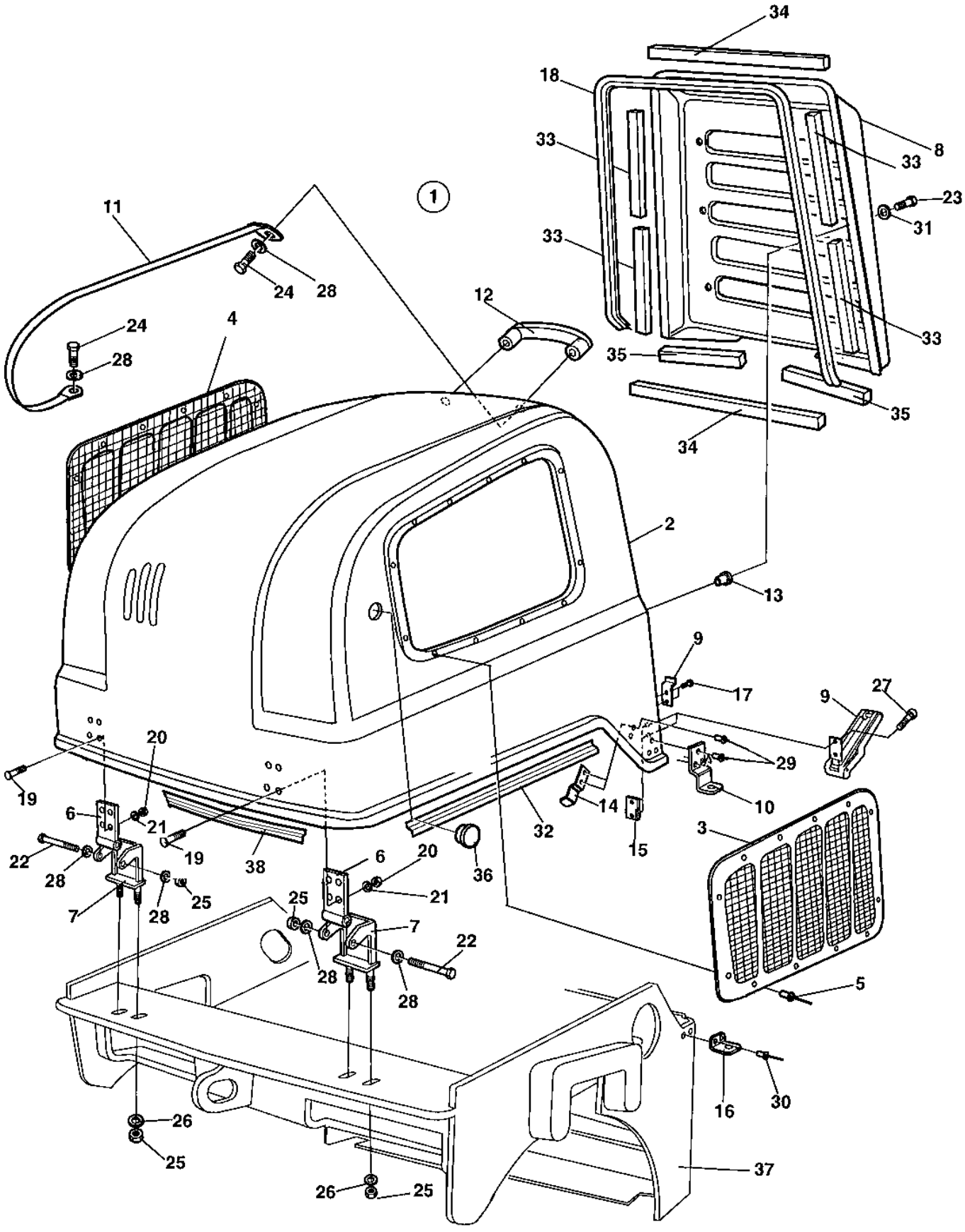

Engine hood

Item	Part No	Rem	Qty	Description		Code
1	4700377042		1	Engine hood		
2			1	.Engine hood		
3	4700377043		1	.Grid, left		
4	4700377044		1	.Grid, right		
5	4700904012		24	.Rivet		
6	4700387148		2	Hinge		
7	4700387151		2	Hinge		
8	4700387154		1	Cover, radiator		
9	4700388846		2	Latch		
10	4700377061		1	Lock plate		
11	4700387947		1	Metal strapping		
12	4700387948		1	Handle		
13	4700387949		6	Rubber nut		
14	4700388733		2	Controlling plate		
15	4700387956		1	Stop plate		
16	4700388852		1	Lock plate		
17	4700791643		4	Screw		
18	4700902166	A	1	Edge trim		D
19	4700903856		8	Bolt	M06x30	C
20	4700586002		8	Lock nut	M6 -8	C
21	4700904228		8	Washer	6,4x12x1,5	C
22	4700500068		2	Screw	M08x65	C
23	4700791559		6	Screw	M06x35	
24	4700500053		3	Screw	M8x20H 8.8	C
25	4700586003		6	Lock nut	M8	C
26	4700904556		4	Steel plain washer		C
27	4700508022		4	Screw	M4x16	
28	4700904229		7	Washer	8,4x16x1,5	C
29	4700791666		7	Blind rivet		
30	4700791666		2	Blind rivet		
31	4700928381		6	Washer	6,4x18x1,6	C
32	4700297018	B	2	Rubber strip		
33	4700791597	C	4	Rubber strip		
34	4700791597	D	2	Rubber strip		
35	4700791597	E	2	Rubber strip		
36	4700923270		2	Protective plug		
37			1	See sections "Frames"		
38	4700791228	F	1	Edge trim		

A) L = 1620 mm
B) L = 450 mm
C) L = 125 mm
D) L = 420 mm
E) L = 170 mm
F) Old version, L = 700 mm

Sprinkler system

17975

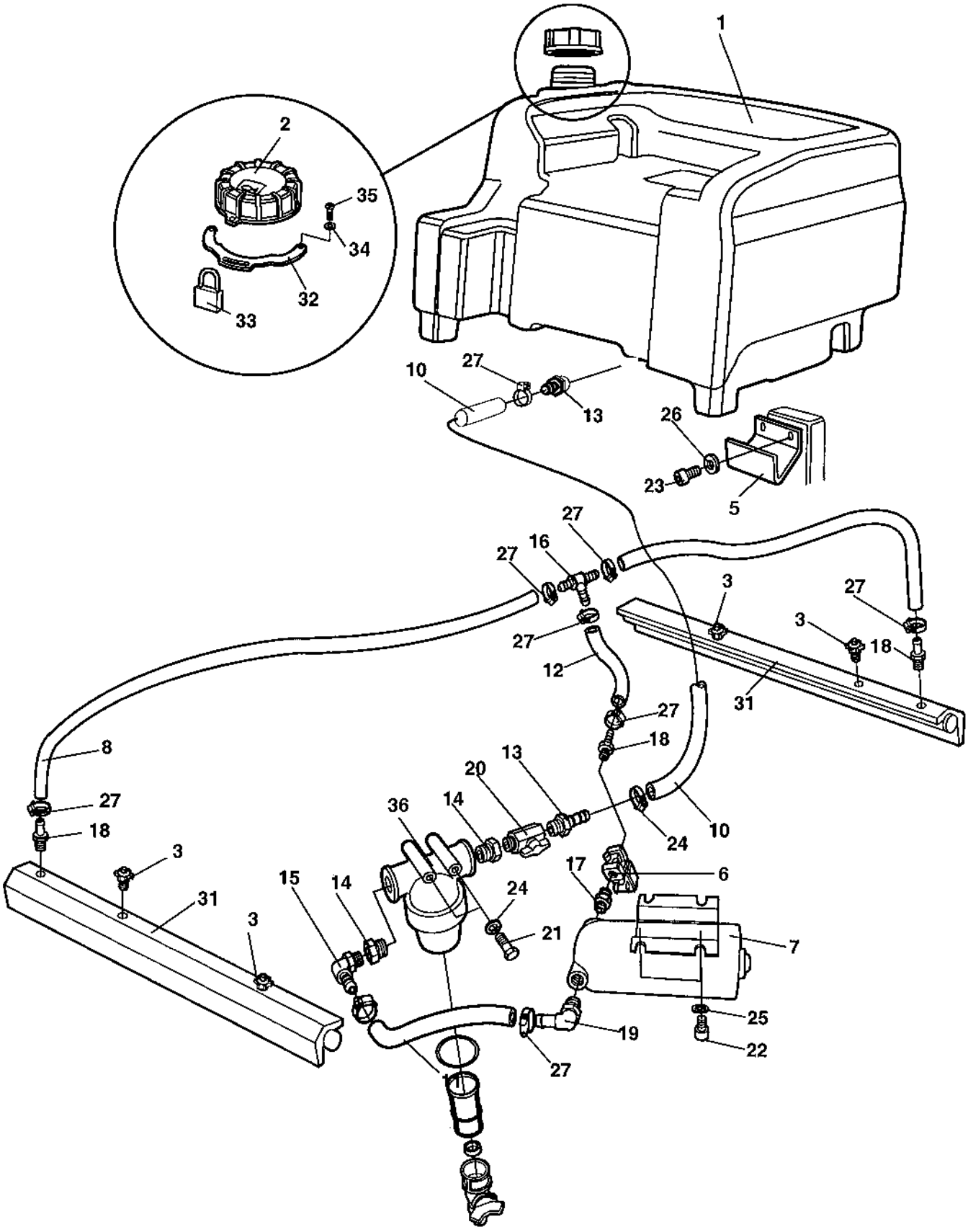

Sprinkler system

Item	Part No	Rem	Qty	Description		Code
1	4700389218		1	Water tank, cpl		
2	4700388087		1	Tank cap		
3	4700392011		4	Spraying nozzle, cpl		A
	4700392508		1	.Housing		D
	4700392509		1	.Retainer, nozzle, strainer, yellow	0.8	D
	4700376876		1	.Gasket		B
5	4700387935		1	Bracket		
6	4700287713		1	Solenoid valve		C
7	4700383697		1	Water pump		C
8	4700904878	A	1	Hose reinforced		C
9	4700904878	B	1	Hose reinforced		C
10	4700904878	C	1	Hose reinforced		C
11	4700904878	D	1	Hose reinforced		C
12	4700904878	E	1	Hose reinforced		C
13	4700924544		2	Hose connection		C
14	4700903886		2	Adapter		C
15	4700924996		1	Hose connection		C
16	4700923735		1	Hose connection		C
17	4700377611		1	Straight connector		
18	4700901432		1	Hose connection		
19	4700923734		1	Hose connection		C
20	4700924986		1	Valve		C
21	4700500090		2	Screw		
22	4700508004		4	Socket head cap screw	M8-1,25x12H 8.8	
23	4700500029		2	Hexagon head screw		C
24	4700904640		2	Washer	8,4x22x3	C
25	4700904229		4	Washer	8,4x16x1,5	C
26	4700904567		2	Washer	10,5x28x6 HB305	C
27	4700313002		10	Hose clamp	13-20 mm	
29	4700791977		2	Hose connection		C
31		F	2	Sprinkler pipe		C
32	4700389155	G	1	Lock bracket		
33	4700358881	G	1	Pad lock		D
34	4700904281	G	2	Washer	5,3x10x1 300HV	C
35	4700903658	G	2	Screw	M5x10	C
36	4700791950		1	Water strainer, cpl		
37	4700791959		1	.O-ring		C
38	4700791949		1	.Filter element		A
39	4700791568		1	.Gasket		
40	4700379009		1	.Valve		

A) L = 1565 mm
B) L = 835 mm
C) L = 520 mm
D) L = 160 mm
E) L = 130 mm
F) See section "Scraper"
G) Option

Drum

Item	Part No	Rem	Qty	Description	Code
10				Drum (Page 38)	

Drum

17866-1

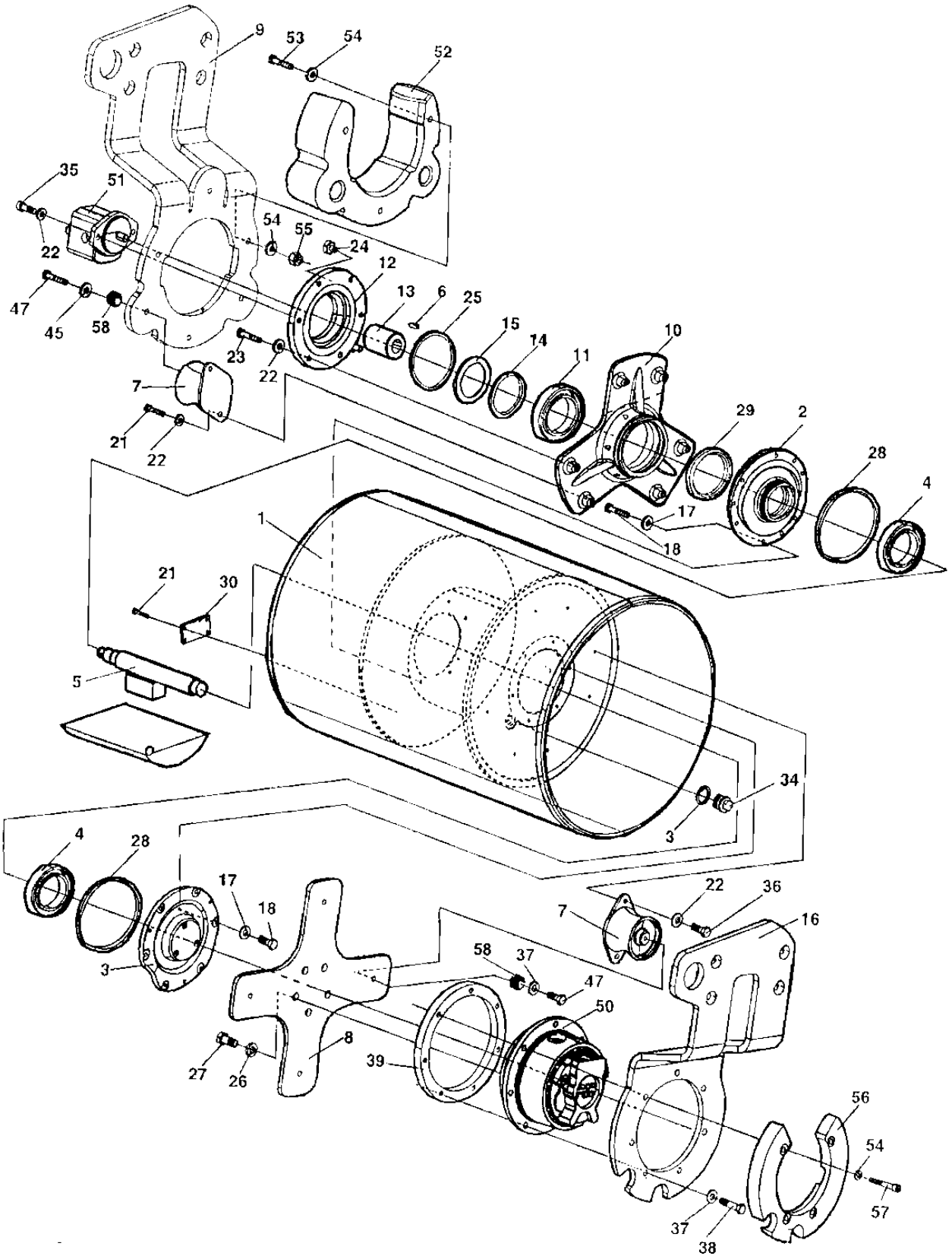
9
53
54
52
35
51
22
54
55
24
12
47
45
58
23
22
13
6
25
15
14
11
10
7
21
22
29
2
28
4
17
18
1
21
30
5
34
3
4
28
17
18
3
22
36
7
16
58
37
47
50
8
27
26
39
56
54
57
37
38

Drum

Item	Part No	Rem	Qty	Description		Code
1	4700386906		1	Drum		
2	4700386619		1	Bearing housing		
3	4700386620		1	Bearing housing		
4	4700791433		2	Spherical roller bearing		
5	4700386907		1	Eccentric shaft		
6	4700350029		1	Key		
7	4700391984		7	Shock absorber		
8	4700386622		1	Drive disc		
9		A	1	Fork, vibration side		
10	4700386241		1	Bearing housing		
11	4700111018		1	Ball bearing		D
12	4700358666		1	Adapter		
13	4700349202		1	Coupling		D
14	4700358689		1	Spacer ring		
15	4700903154		1	Retaining ring		
16		A	1	Fork, drive side		
17	4700904640		12	Washer	8,4x22x3	C
18	4700500022		12	Screw	M8x30H 8.8 A2K	C
19	4700904228		3	Washer	6,4x12x1,5	C
20	4700500012		3	Screw	M6x12	C
21	4700500212		6	Screw		
	4812110596		6	Hexagon head screw From ECN 09350	M10x40 10,9 A3K	
22	4700904557		22	Steel plain washer		C
23	4700500029		6	Hexagon head screw		C
24	4700343490		1	Air breather		D
25	4700160132		1	O-ring	124, 50x3, 00	D
26	4700904558		5	Washer	17X30X6 300HV	
27	4700947694		5	Screw		
28	4700791425		2	O-ring	174, 20x5, 70	
29	4700791426		1	Radial lip seal		
30	4700343801		1	Sign plate		D
31	4700527002		4	Drive screw		C
33	4700162017		1	Seal ring		B
34	4700343744		1	Magnetic plug		C
35	4700508029		2	Screw	M10-1,5x30H 8,8	C
36	4700500280		8	Screw	M10x1,5x25	
	4812110663		8	Hexagon head screw From ECN 09350	M10x25H 10,9 A3K	
37	4700904703		11	Washer		C
38	4700925519		7	Screw	M12x55 10.9 GEOMET	C
39	4700387137		1	Thread ring		
45	4700904231		3	Washer	13x24x2 300 HV	C
47	4700947687		7	Screw	M12-1,75x30 10,9	
	4812110595		7	Hexagon head screw From ECN 09350	M12x45H 10,9 A3K	
49	4700903374		6	Protective plug		
50		B	1	Hydraulic motor		
51		C	1	Hydraulic motor		
52	4700389434	D	1	Ballast		
53	4700925228	D	3	Screw	M12x150	
54	4700904703	D	10	Washer		C
55	4700570007	D	3	Hexagon nut	M12	C
56	4700389432	D	1	Ballast		
57	4700928198	D	4	Screw		C
58	4812110346		7	Spacer From ECN 09350		

A) See section " Frame"
B) See section "Hydraulic propulsion and brake"
C) See section "Hydraulic vibration"
D) Option

Engine

Item	Part No	Rem	Qty	Description		Code
10				Engine (Page 42)	Perkins 403D-11	
20				Cooling system (Page 44)		
30				Exhaust system (Page 46)		
40				Fuel system (Page 48)		
50				Air intake system (Page 50)		

Engine Perkins 403D-11

18719-1

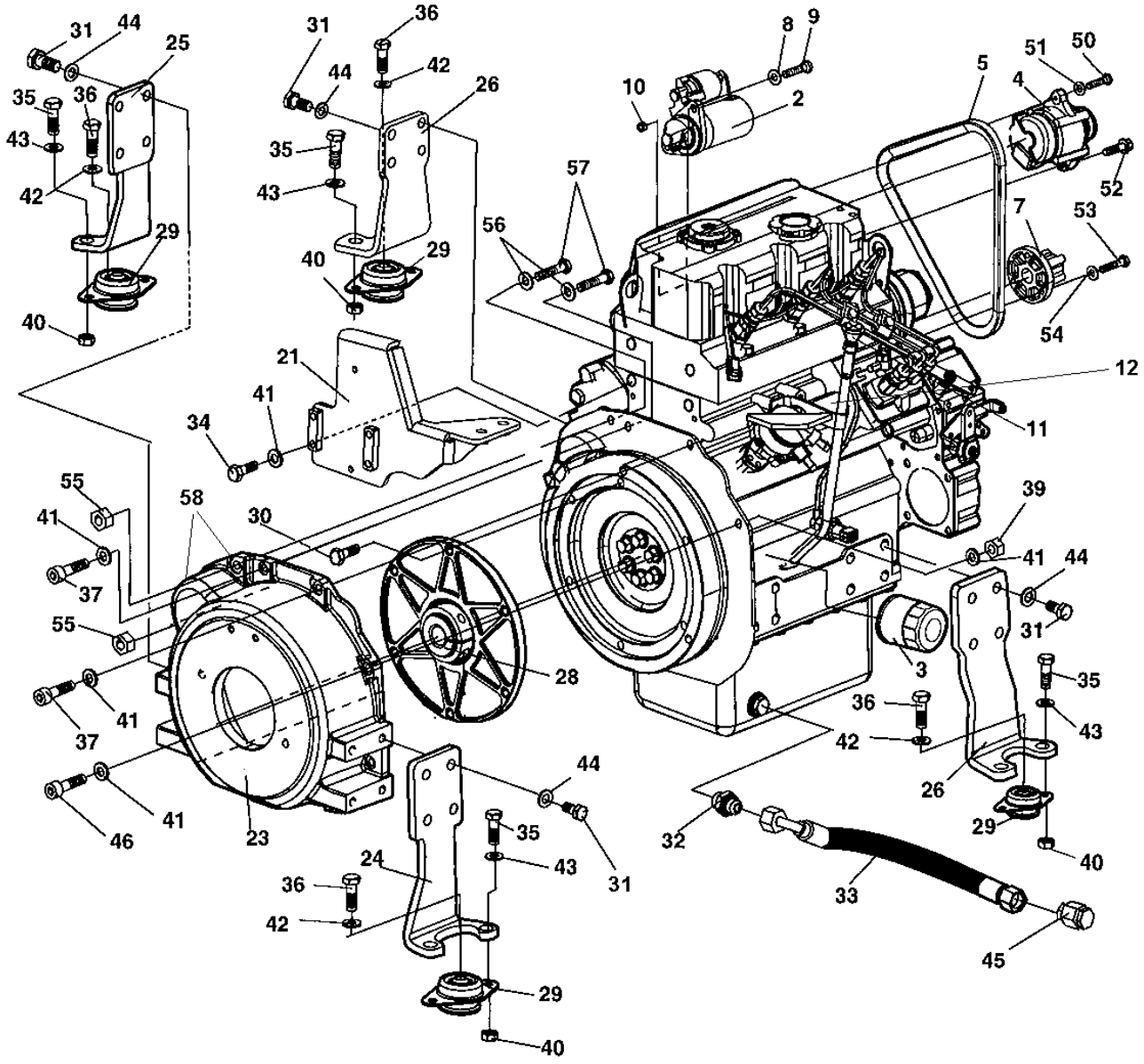

Engine Perkins 403D-11

Item	Part No	Rem	Qty	Description		Code
1	4700394541		1	Engine, Perkins 403D-11		
	4700940227		1	.Water pump		C
	4700945123		1	..Gasket		C
	4700945284		1	.Water temperature sensor		
	4700940228		1	.Thermostat		
	4700940976		1	.Gasket, oil sump		
2	4700940231		1	.Starter		C
3	4700376554		1	.Oil filter		A
4	4700939977		1	.Alternator		C
5	4700939932		1	.V-belt		A
7			1	.Fan coupling		A
8	4700904230		2	.Steel plain washer		C
9	4700500161		2	.Hexagon head screw		C
10	4700570006		2	.Nut		C
11	4700940229		1	.Oil dipstick		
12	4700940447		1	.Fuel solenoid		
13	4700945286		1	.Washer		
14	4700945473		1	.Lift pump		
	4700945629		1	.O-ring, lift pump		
21	4700389003		1	Holder, air cleaner		
23	4700386949		1	Bell housing		
24	4700376770		1	Engine foot		
25	4700376771		1	Engine foot		
26	4700376772		2	Engine foot		
28	4700357002		1	Coupling		D
29	4700792026		4	Rubber mounts		D
30	4700502019		6	Screw		
31	4700792250		16	Screw		
32	4700791535		1	Connector		
33	4700483684		1	Hydraulic hose		
34	4700500022		4	Screw	M8x30H 8.8 A2K	C
35	4700500029		8	Hexagon head screw		C
36	4700500033		4	Screw	M10-1,5x60 8,8	
37	4700508048		2	Screw		C
39	4700570005		5	Nut	M8	C
40	4700586018		8	Lock nut		C
41	4700904229		16	Washer	8,4x16x1,5	C
42	4700904230		4	Steel plain washer		C
43	4700904557		8	Steel plain washer		C
44	4700904231		16	Washer	13x24x2 300 HV	C
45	4700791493		1	Steel plug threaded		
46	4700508048		5	Screw		C
50	4700500047		1	Hexagon head screw		C
51	4700904640		1	Washer	8,4x22x3	C
52	4700500506		1	Screw		
53	4700508019		3	Screw	M8x25	C
54	4700904229		3	Washer	8,4x16x1,5	C
55	4700570006		2	Nut		C
56	4700904230		2	Steel plain washer		C
57		B	2	Screw		C
58	4700904637		2	Washer		C

B) Exist on engine

Cooling system

17871-1

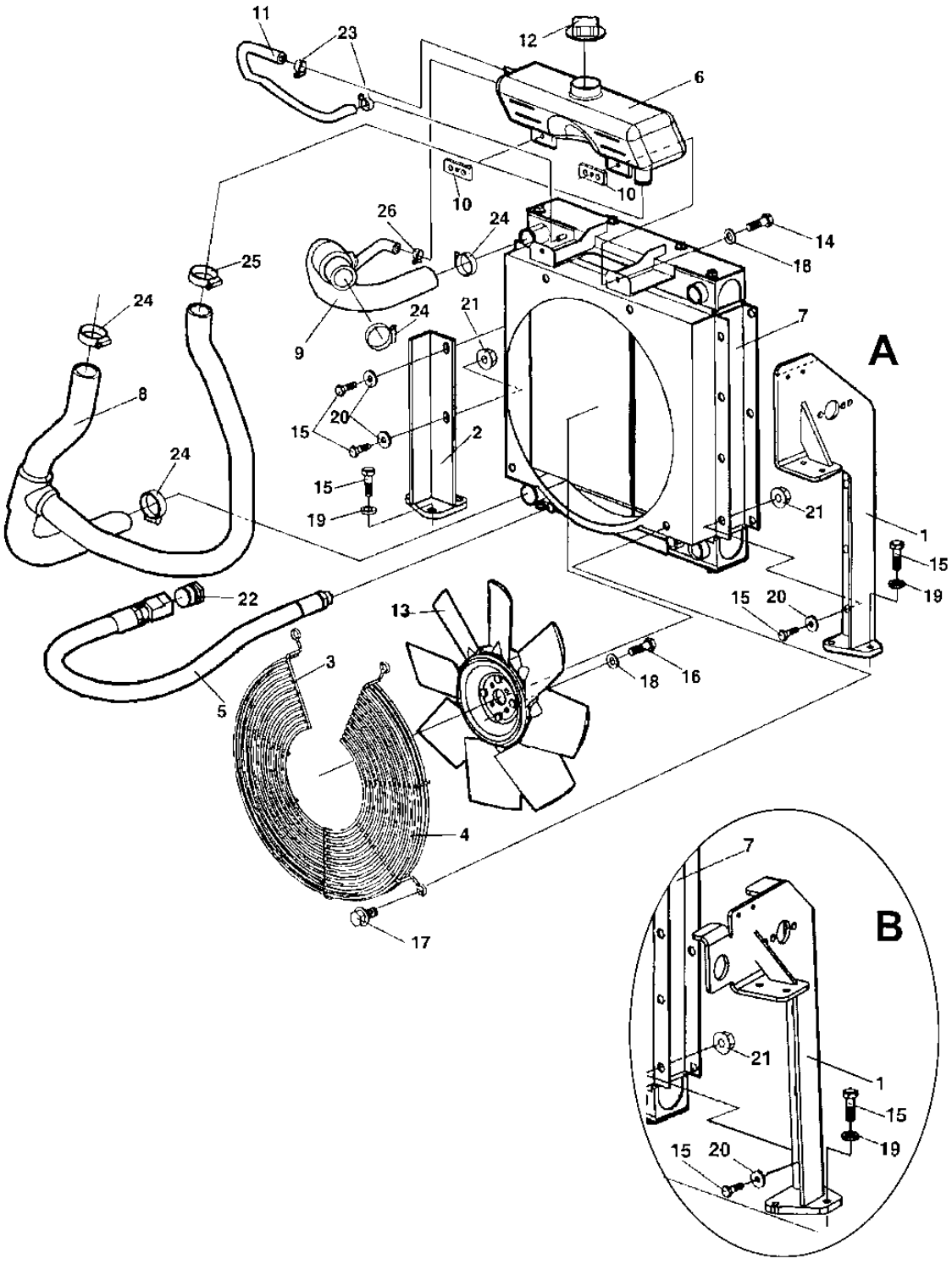

Cooling system

Item	Part No	Rem	Qty	Description		Code
1	4700387101	C	1	Cooler bracket		
	4812110974	D	1	Cooler console From ECN 09452		
2	4700387287		1	Cooler bracket		
3	4700386963		1	Fan guard		
4	4700387205		1	Fan guard		
5	4700791780		1	Drainage hose		
6	4700386893		1	Expansion reservoir		
7	4700395227	B	1	Radiator		
8	4700387099		1	Coolant hose		
9	4700387100		1	Coolant hose		
10	4700387428		2	Plate		
11	4700371785	A	1	Rubber hose		
12	4700903714		1	Cap		
13	4700389142		1	Fan		
14	4700500040		2	Screw	M6-1x20 8,8	C
15	4700500021		11	Screw	M8-1,25x25 8.8	C
16	4700500040		4	Screw	M6-1x20 8,8	C
17	4700901832		4	Screw		C
18	4700904228		6	Washer	6,4x12x1,5	C
19	4700904556		6	Steel plain washer		C
20	4700904640		5	Washer	8,4x22x3	C
21	4700902286		5	Hexagon lock nut with flange		C
22	4700791493		1	Steel plug threaded		
23	4700313108		2	Hose clamp		
24	4700313035		4	Hose clamp		
25	4700313035		1	Hose clamp		
26	4700313001		1	Hose clamp		C

A) L = 240 mm
B) Replaces earlier used 4700386950
C) Illustration A
D) Illustration B

Exhaust system

17873

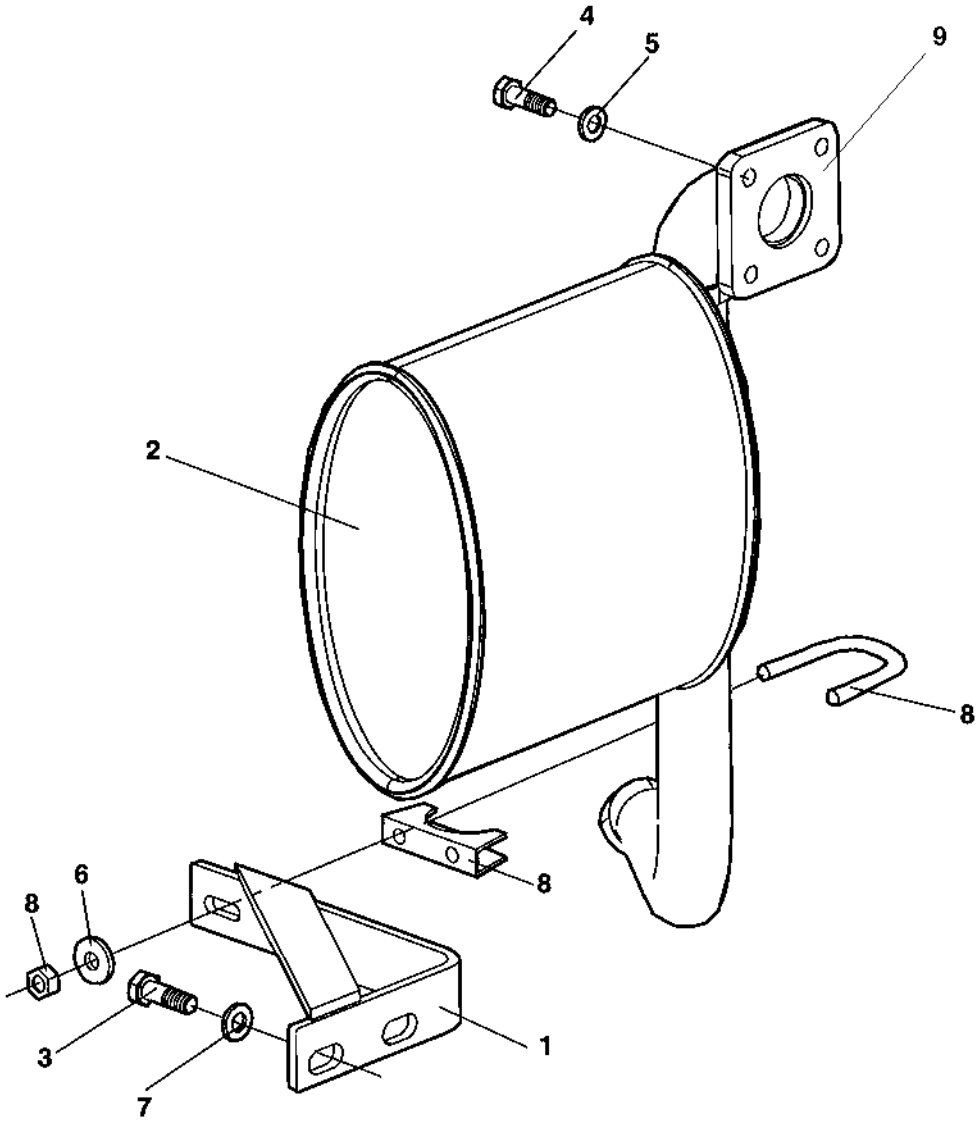

Exhaust system

Item	Part No	Rem	Qty	Description		Code
1	4700387201		1	Bracket		
2	4700387097		1	Muffler		
3	4700791483		2	Screw	M12-1,25x25H 8.8	
4	4700500021		4	Screw	M8-1,25x25 8.8	C
5	4700904229		4	Washer	8,4x16x1,5	C
6	4700904640		2	Washer	8,4x22x3	C
7	4700904703		2	Washer		C
8	4700927568		1	Clamp		
9	4700945878	1	1	Gasket		

1) Delivered with engine.

Fuel system

18713

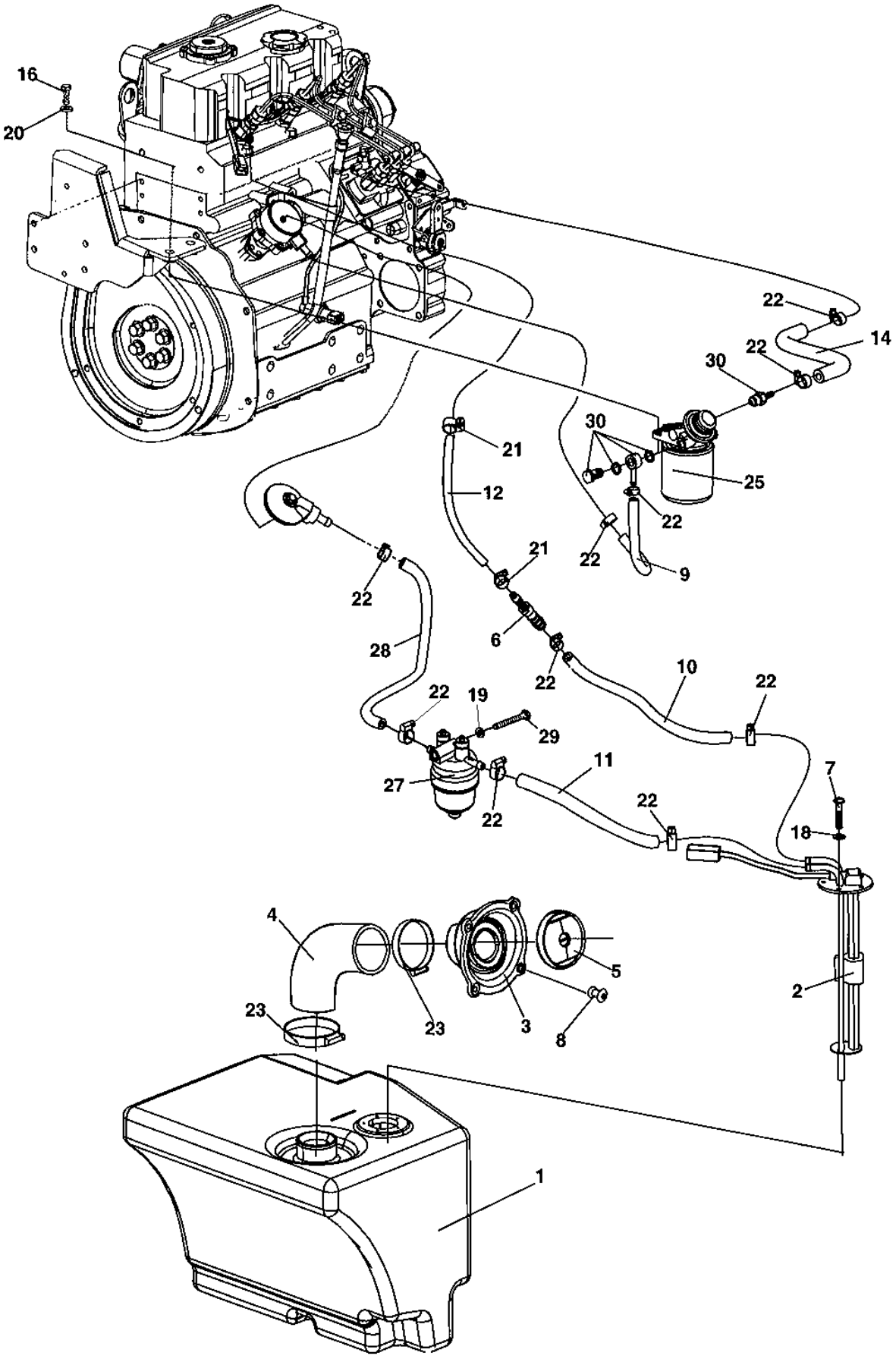

Fuel system

Item	Part No	Rem	Qty	Description		Code
1	4700387279		1	Fuel tank		
2	4700387552		1	Level gauge		
	4700945777		1	.Gasket		
3	4700387682		1	Filler neck		
4	4700387695		1	Fuel hose		
5	4700394253		1	Fuel cap		D
	4700945753		1	.Key	2pcs "921"	
6	4700791774		1	Hose connection		
7	4700903236		5	Screw, Thread rolling	K40x20	
8	4700791754		4	Blind rivet		
9	4700904984	A	1	Fuel hose		C
10	4700904984	B	1	Fuel hose		C
11	4700904984	B	1	Fuel hose		C
12	4700791422	C	1	Hose		
14	4700904984	E	1	Fuel hose		C
16	4700500029		2	Hexagon head screw		C
18	4700904698		5	Washer		C
19	4700904229		1	Washer	8,4x16x1,5	C
20	4700904557		2	Steel plain washer		C
21	4700313108		2	Hose clamp		
	4700313075		2	Hose clamp		C
22	4700313108		10	Hose clamp		
23	4700313023		2	Hose clamp		
25	4700376555		1	Fuel filter		A
	4700945418		1	Filter head		
27	4700940894		1	Water separator, cpl		
	4700940922		1	.Filter element		
	4700940203		1	.O-ring		
28	4700904984	K	1	Fuel hose		C
29	4700500068		1	Screw	M08x65	C
30			N	Existing on engine		C

A) L = 465 mm
B) L = 395 mm
C) L = 350 mm
E) L = 200 mm
K) L = 290 mm

Air intake system

17967

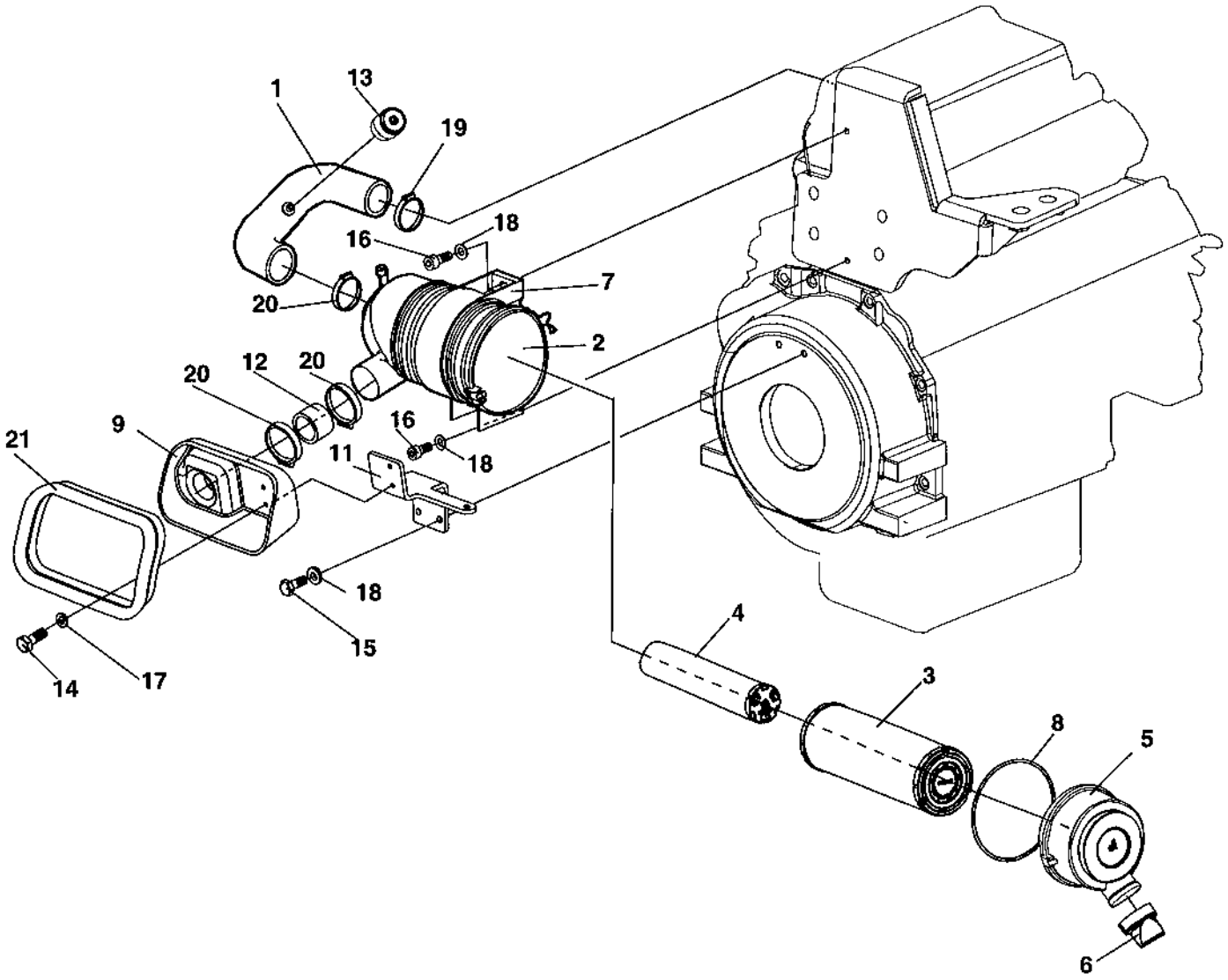

Air intake system

Item	Part No	Rem	Qty	Description		Code
1	4700389019		1	Air inlet hose		
2	4700386951		1	Air filter		
3	4700939802		1	.Air filter element	Main	A
4	4700939803		1	.Air filter element	Safety	A
5	4700939804		1	.Dust cap		
6	4700939805		1	.Vacuator cap		
7	4700939806		1	.Plastic mounting band		
8	4700939807		1	.O-ring		
9	4700387118		1	Box		
11	4700389005		1	Bracket		
12	4700387200		1	Hose		
13	4700389036		1	Mechanical indicator		
14	4700500013		2	Screw	M6-1x16 8,8	C
15	4700500053		2	Screw	M8x20H 8.8	C
16	4700508092		2	Screw		C
17	4700904228		2	Washer	6,4x12x1,5	C
18	4700904229		4	Washer	8,4x16x1,5	C
19	4700313010		1	Hose clamp		C
20	4700313010		3	Hose clamp		C
21	4700288129	A	N	Edge trim		

A) L = 0,66 m

Hydraulic system

Item	Part No	Rem	Qty	Description	Code
10				Hydraulic propulsion and brake system (Pagemotor	
20				Hydraulic propulsion and brake system (Pagepump	
30				Hydraulic vibration (Page 60)	
50				Hydraulic steering (Page 62)	

Hydraulic propulsion and brake system motor

17868

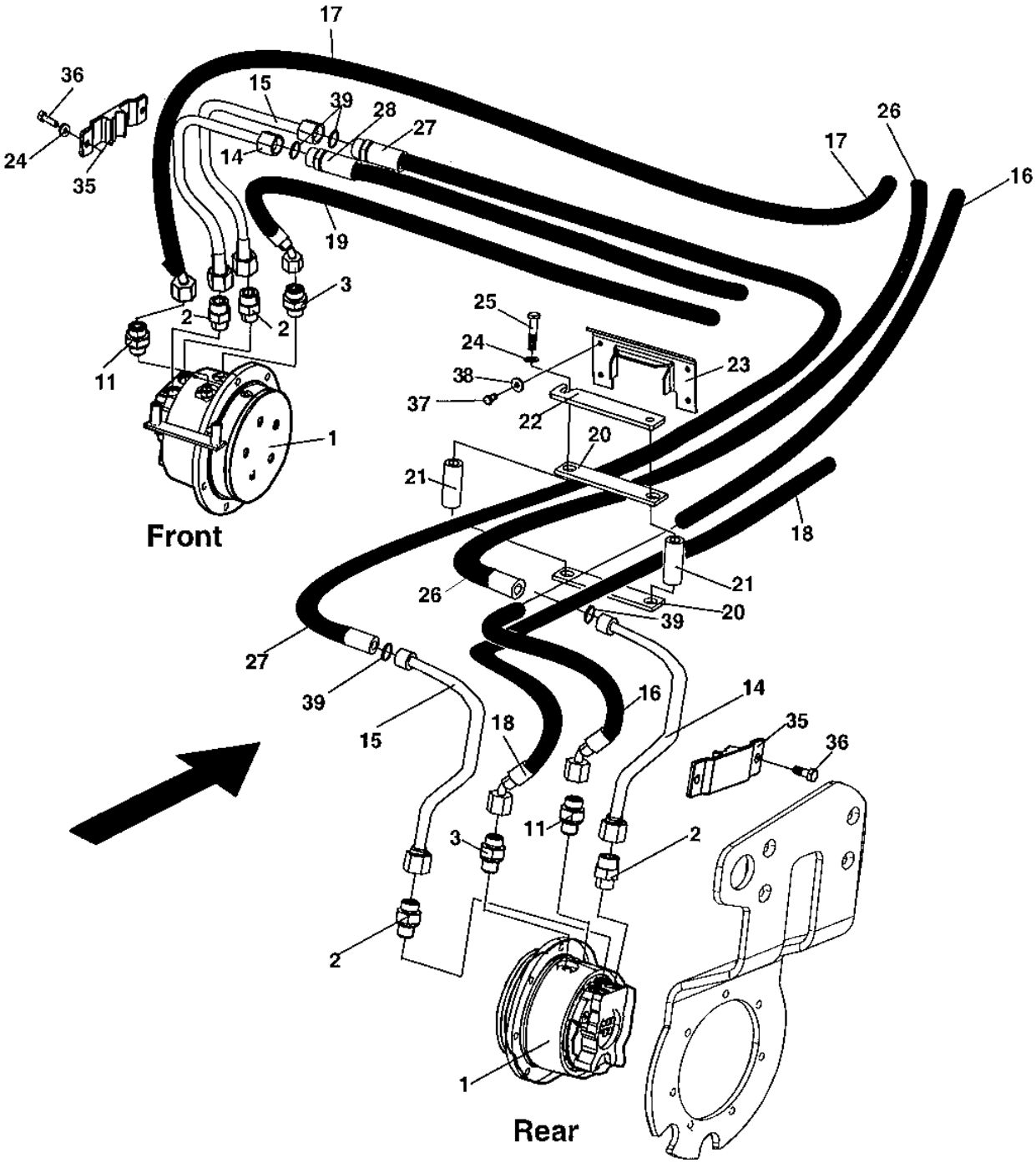

Hydraulic propulsion and brake system motor

Item	Part No	Rem	Qty	Description		Code
1	4700387270		2	Hydraulic motor (Page 56)		
2	4700904641		4	Connector		
3	4700791535		2	Connector		
11	4700791537		2	Straight connector		
14	4700387597		2	Pipe		
15	4700387598		2	Pipe		
16		A	1	Hydraulic hose		
17		A	1	Hydraulic hose		
18		A	1	Hydraulic hose		
19		A	1	Hydraulic hose		
20	4700387678		2	Rubber part		
21	4700387677		2	Spacer sleeve		
22	4700387676		1	Hose bracket		
23	4700389556		1	Rubber part		
24	4700904229		6	Washer	8,4x16x1,5	C
25	4700500068		2	Screw	M08x65	C
26		A	1	Hydraulic hose		C
27	4700483646		1	Hydraulic hose		
28		A	1	Hydraulic hose		
35	4700388960		2	Hose clamp		
36	4700500053		4	Screw	M8x20H 8.8	C
37	4700500019		4	Screw	M8x16H 8.8 A2K	C
38	4700904640		4	Washer	8,4x22x3	C
39	4700904009		4	O-ring		D

A) See section " Propulsion system, pump"

4700387270 Hydraulic motor

18817

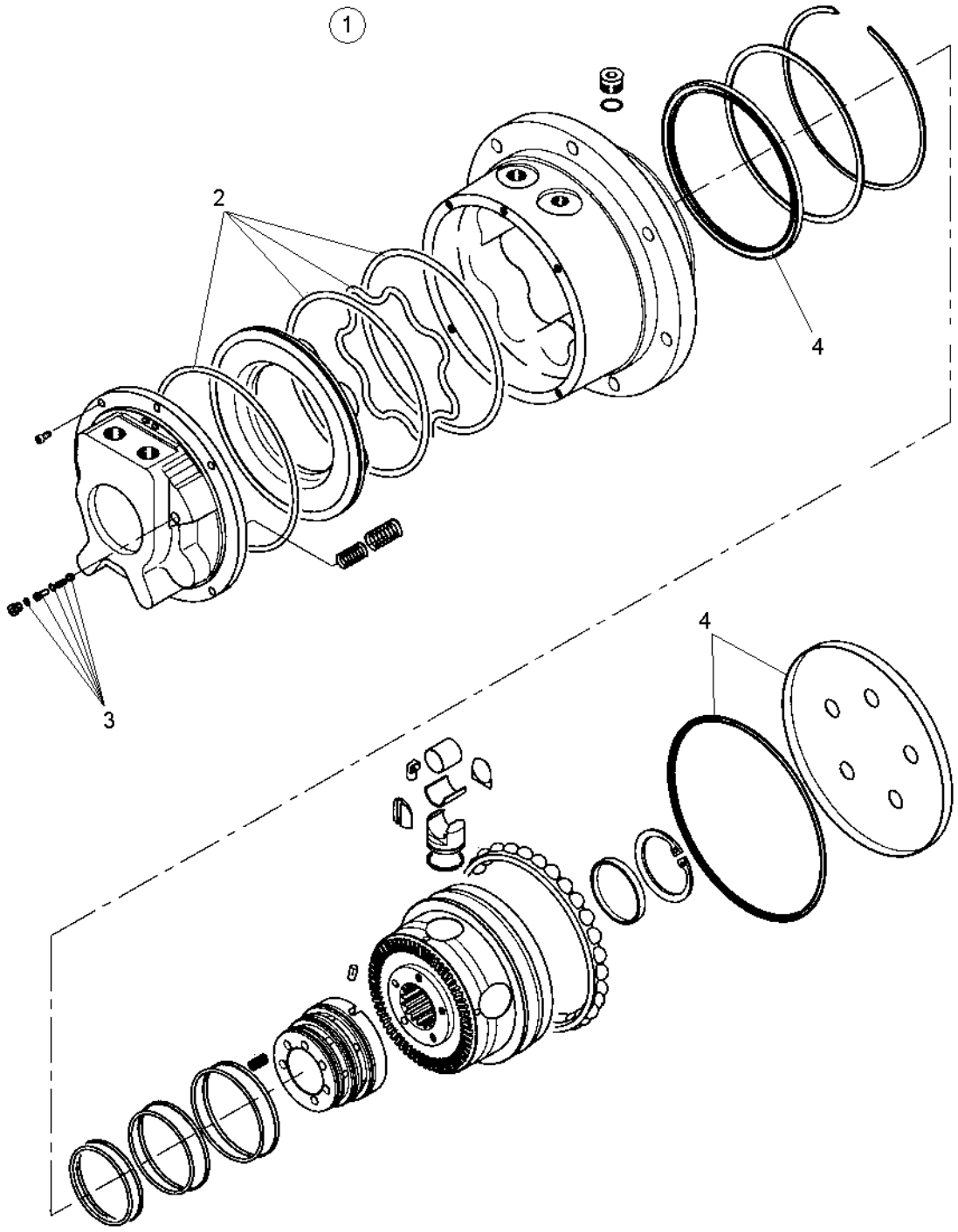

4700387270 Hydraulic motor

Item	Part No	Rem	Qty	Description		Code
1	4700387270		1	Hydraulic motor (Page 56)		
2	4700945532		1	.Sealing kit	Debraking system	
3			1	.Sealing kit		
4	4700945531		1	.Seal kit	Rotating parts	

Hydraulic propulsion and brake system pump

17946

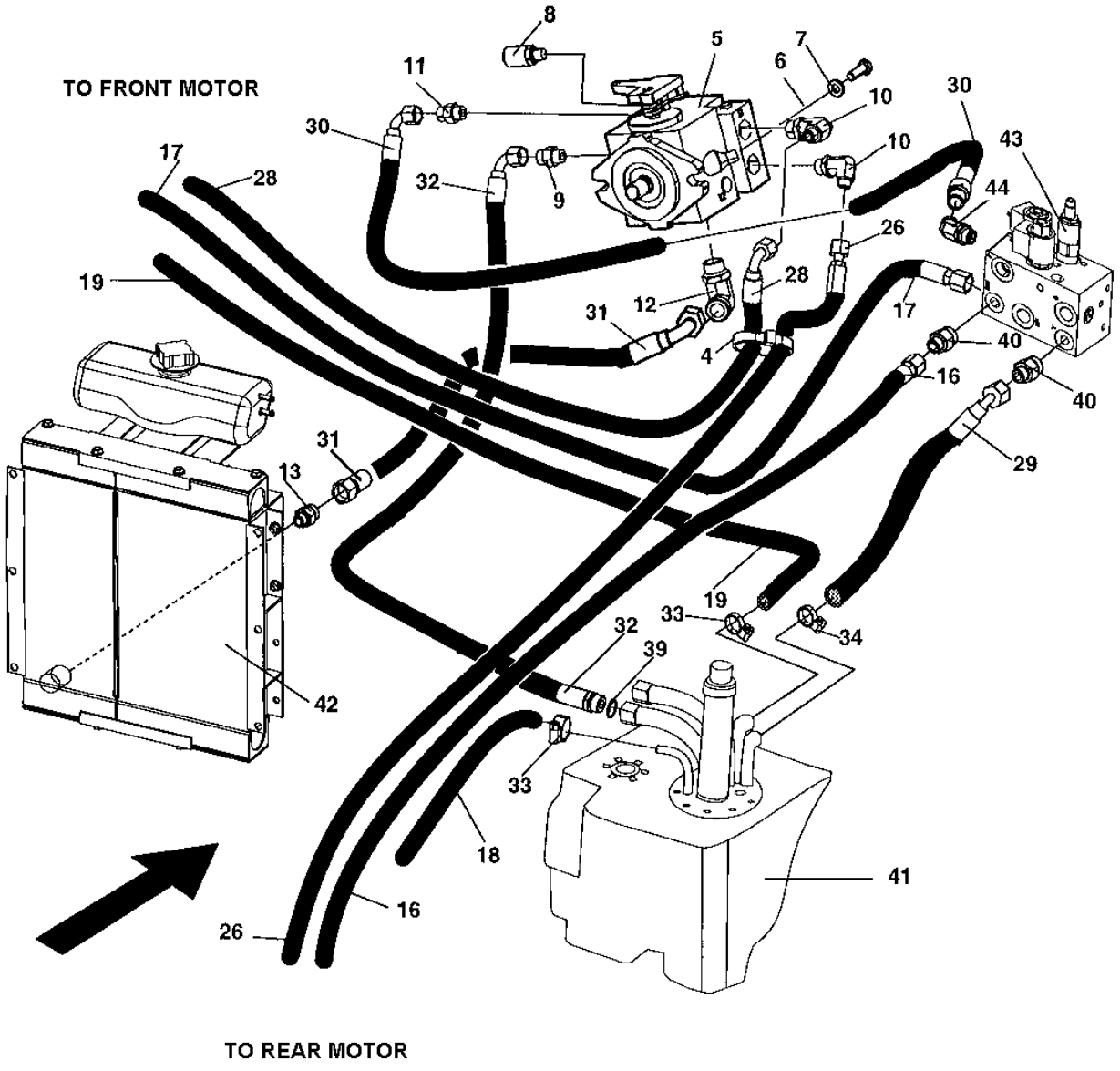

Hydraulic propulsion and brake system pump

Item	Part No	Rem	Qty	Description	Code
4	4700313102		1	Cable ties	
5	4700387269		1	Hydraulic pump	
	4700940613		1	.Seal kit	
6	4700904703		2	Washer	C
7	4700500037		2	Screw	C
8	4700901157		1	Measuring nipple	C
9	4700791412		1	Straight o-ring connector	
10	4700791599		2	Elbow 90	
11	4700791537		1	Straight connector	
12	4700791549		1	Elbow adapter 90	
13	4700791539		1	Straight connector	
16	4700483689		1	Hydraulic hose	
17	4700483690		1	Hydraulic hose	
18	4700389403		1	Hydraulic hose	
19	4700389404		1	Hydraulic hose	
26	4700483665		1	Hydraulic hose	
28	4700483688		1	Hydraulic hose	
29	4700389400		1	Hydraulic hose	
30	4700483652		1	Hydraulic hose	
31	4700483879		1	Hydraulic hose	
32	4700483661		1	Hydraulic hose	
33	4700313001		2	Hose clamp	C
34	4700313108		1	Hose clamp	
39	4700904009		1	O-ring	D
40	4700791538		1	Straight connector	
41		B	1	Hydraulic tank	
42		C	1	Radiator	
43		B	1	Combination valve	
44	4700791543	D	1	Elbow 45	

B) See section " Hydraulic vibration"
C) See section " Cooling system"
D) Replace one adapter 4700791538

Hydraulic vibration

18715

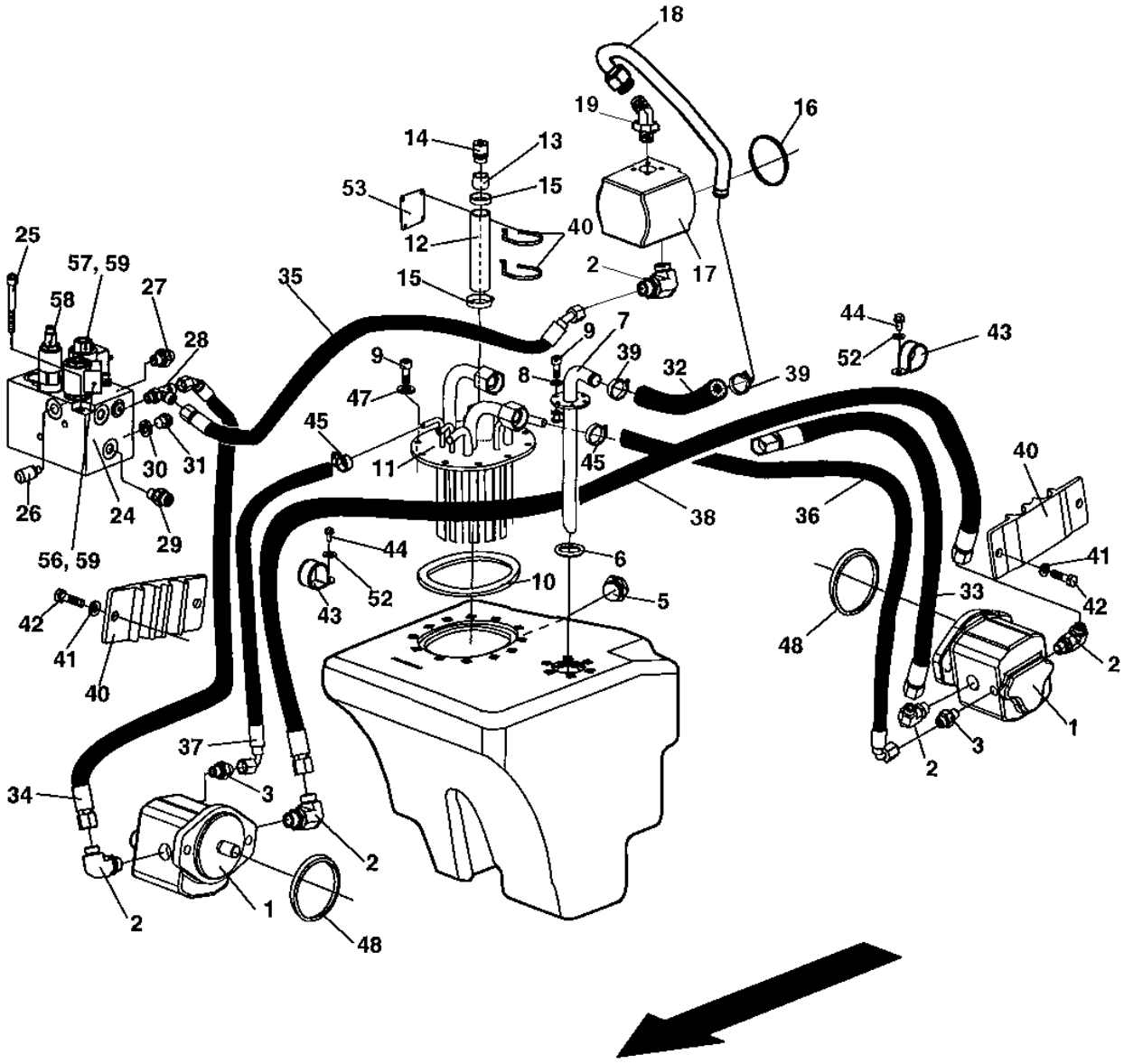

Hydraulic vibration

Item	Part No	Rem	Qty	Description		Code
1	4700390316		2	Hydraulic motor		
	4700945340		1	Seal kit		
2	4700791699		5	Elbow 90		
3	4700791541		2	Straight connector		
4	4700387278		1	Hydraulic oil tank		
5	4700791395		1	Sight plug		
6	4700791794		1	O-ring		
7	4700387758		1	Suction pipe		
8	4700904228		6	Washer	6,4x12x1,5	C
9	4700508002		16	Screw		
10	4700792070		1	O-ring		
11	4700387713		1	Return filler pipe		
12	4700205067	A	N	Rubber hose		C
13	4700357139		1	Connector		C
14	4700357138		1	Ventilating filter		A
15	4700313008		2	Hose clamp		C
16	4700160101		1	O-ring		
17	4700395520		1	Hydraulic pump		
18	4700395497		1	Suction pipe		
19	4700792707		1	Elbow 45		
24	4700388194		1	Combination valve		
25	4700508094		2	Screw		
26	4700901157		1	Measuring nipple		C
27		C	1	Straight o-ring connector		C
28	4700791700		1	Tee-connector		
29	4700791538		4	Straight connector		
30	4700162015		1	Seal ring		D
31	4700232160		1	Plug		
32	4700791941		1	Hydraulic hose		
33	4700483649		1	Hydraulic hose		
34	4700483651		1	Hydraulic hose		
35	4700484257		1	Hydraulic hose		
36	4700389401		1	Hydraulic hose		
37	4700389402		1	Hydraulic hose		
38	4700483691		1	Hydraulic hose		
39	4700313035		2	Hose clamp		
40	4700388653		2	Hose clamp		
41	4700904229		4	Washer	8,4x16x1,5	C
42	4700500053		4	Screw	M8x20H 8.8	C
43	4700283711		3	Hose clamp		
44	4700508092		3	Screw		C
45	4700313108		2	Hose clamp		
47	4700904735		10	Washer		C
48	4700160032		2	O-ring		D
52	4700904556		3	Steel plain washer		C
53	4700380343		1	Sign "BIO HYDRAULIC OIL"		
	4700792773		1	Sign "BIO HYDRAULIC OIL"	PANOLIN	
54	4700925802		2	Cable ties	L=142 mm	C
56	4700940885	D	1	Solenoid valve, cpl		
57	4700940886	D	1	Solenoid valve, cpl		
58	4700940888	D	1	Valve		
59	4700940887	D	1	Coil		

A) L = 0,22m
C) See section " Hydraukic steering "
D) Complete with pos. 24

Hydraulic steering

17951

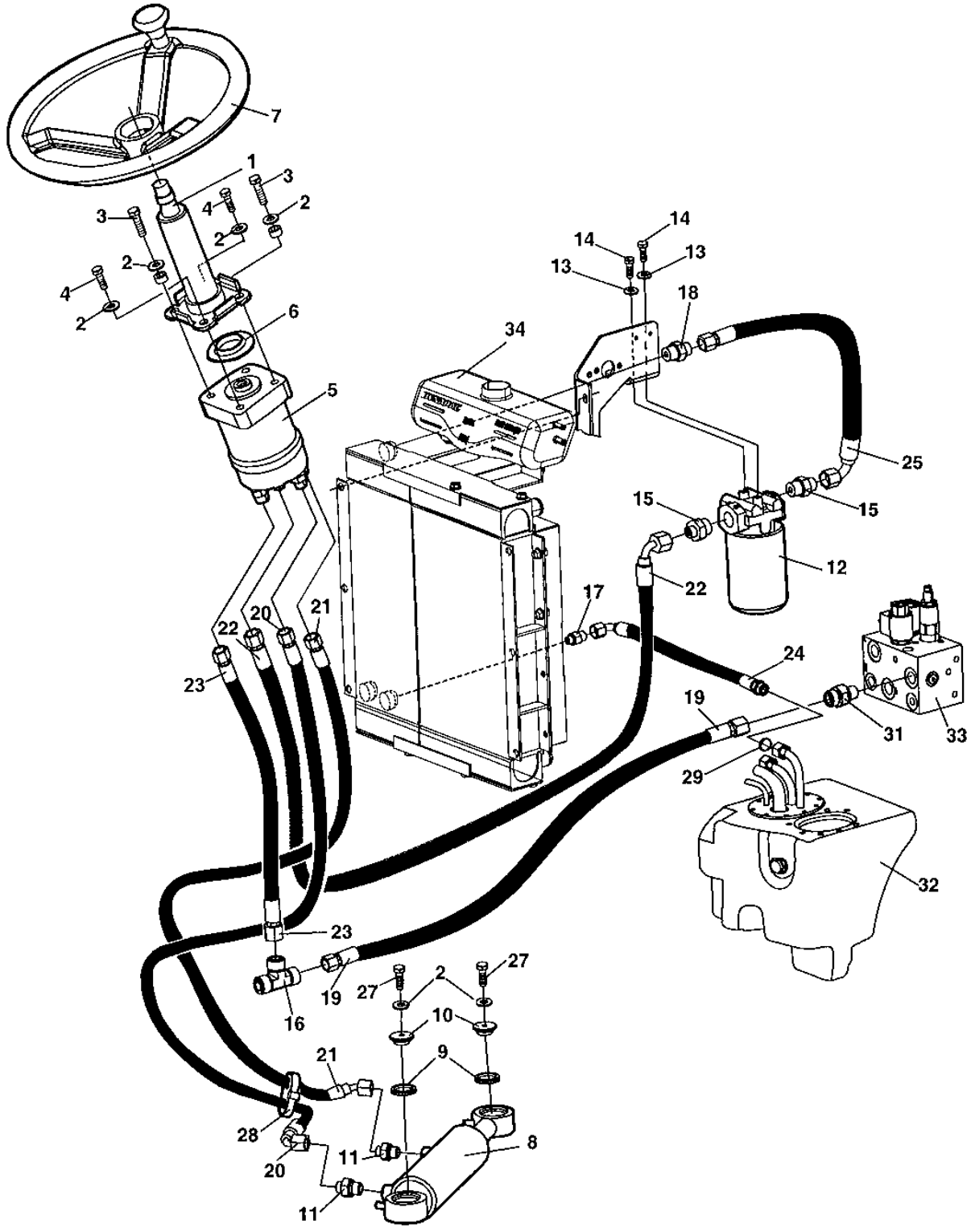

Hydraulic steering

Item	Part No	Rem	Qty	Description		Code
1	4700902123		1	Steering column		
2	4700904230		6	Steel plain washer		C
3	4700500031		2	Screw		C
4	4700500048		2	Hexagon head screw		C
5	4700387274		1	Steering valve (Page 64)		
6	4700928830		1	Rubber washer		
7	4700372964		1	Steering wheel, cpl		D
	4700935614		1	.Turning knob		D
	4700935613		1	.Cover		
8	4700387275		1	Hydraulic cylinder (Page 66)		
	4700945526		2	.Bearing		
9	4700791565		2	Sealing		
10	4700376861		2	Washer		
11	4700791542		2	Straight connector		
12	4700387277		1	Hydraulic oil filter, cpl		
	4700376636		1	.Cleaning filter element	Maximum 50 hours use	
	4700376637	C	1	Filter element		A
13	4700904229		2	Washer	8,4x16x1,5	C
14	4700500053		2	Screw	M8x20H 8.8	C
15	4700791408		2	Straight o-ring connector		
16	4700791701		1	Tee-connector		
17	4700791540		1	Straight connector		
18	4700791410		1	Straight o-ring connector		
19	4700483653		1	Hydraulic hose		
20	4700483654		1	Hydraulic hose		
21	4700483655		1	Hydraulic hose		
22	4700483656		1	Hydraulic hose		
23	4700483657		1	Hydraulic hose		
24	4700483696		1	Hydraulic hose		
25	4700483662		1	Hydraulic hose		
26	4700355869		2	Spacer sleeve		
27	4700947684		2	Screw		
28	4700313102		1	Cable ties		
29	4700904009		1	O-ring		D
31	4700791412		1	Straight o-ring connector		
32		A	1	Hydraulic tank		
33		A	1	Combination valve		
34		B	1	Radiator		

A) See section " Hydraulic vibration"
B) See section " Cooling system "
C) Spare part for ordinary service

4700387274 Steering valve

18885

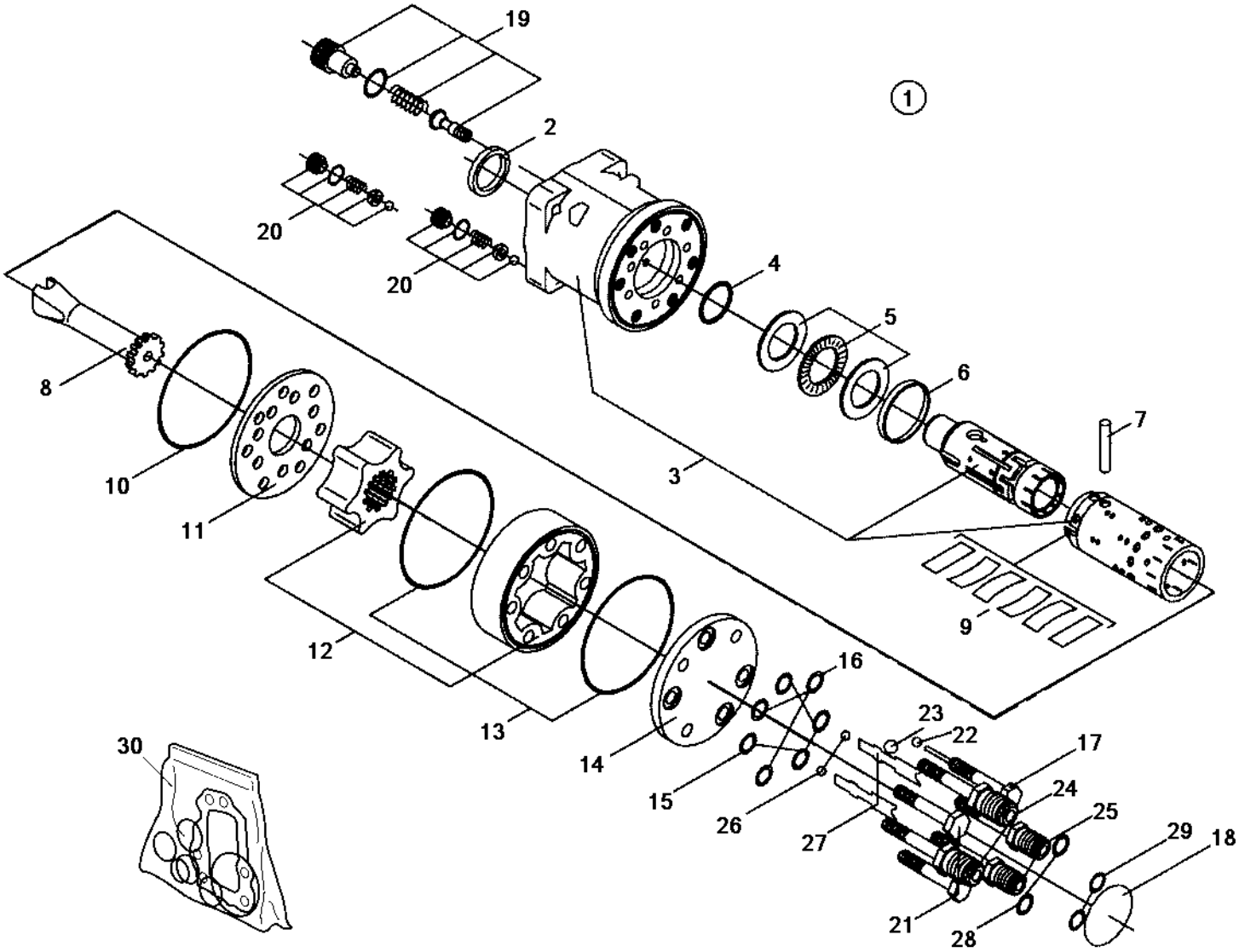

4700387274 Steering valve

Item	Part No	Rem	Qty	Description	Code
1			1	Steering valve, cpl	
2		A	1	.Seal ring	
3			1	.Housing, spool and sleeve	
4		A	1	.O-ring	
5			1	.Bearing	
6			1	.Ring	
7			1	.Cross pin	
8			1	.Cardan shaft	
9			1	.Set of springs	
10		A	1	.O-ring	
11			1	.Distributor plate	
12			1	.Gear wheel set	
13		A	2	.O-ring	
14			1	.End cover	
15		A	4	.O-ring	
16		A	3	.Washer	
17			1	.Screw with pin	
18			1	.Name plate	
19			1	.Relief valve	
20			2	.Shock valves	
21			2	.Screw	
22			1	.Ball	
23			1	.Ball	
24			2	.Port	
25			2	.Port	
26			2	.Ball	
27			2	.Ball stop	
28			2	.O-ring	
29			2	.O-ring	
30	4700935429		1	.Seal kit	

A) Included in sealkit, item 30

4700387275 Hydraulic cylinder

18812

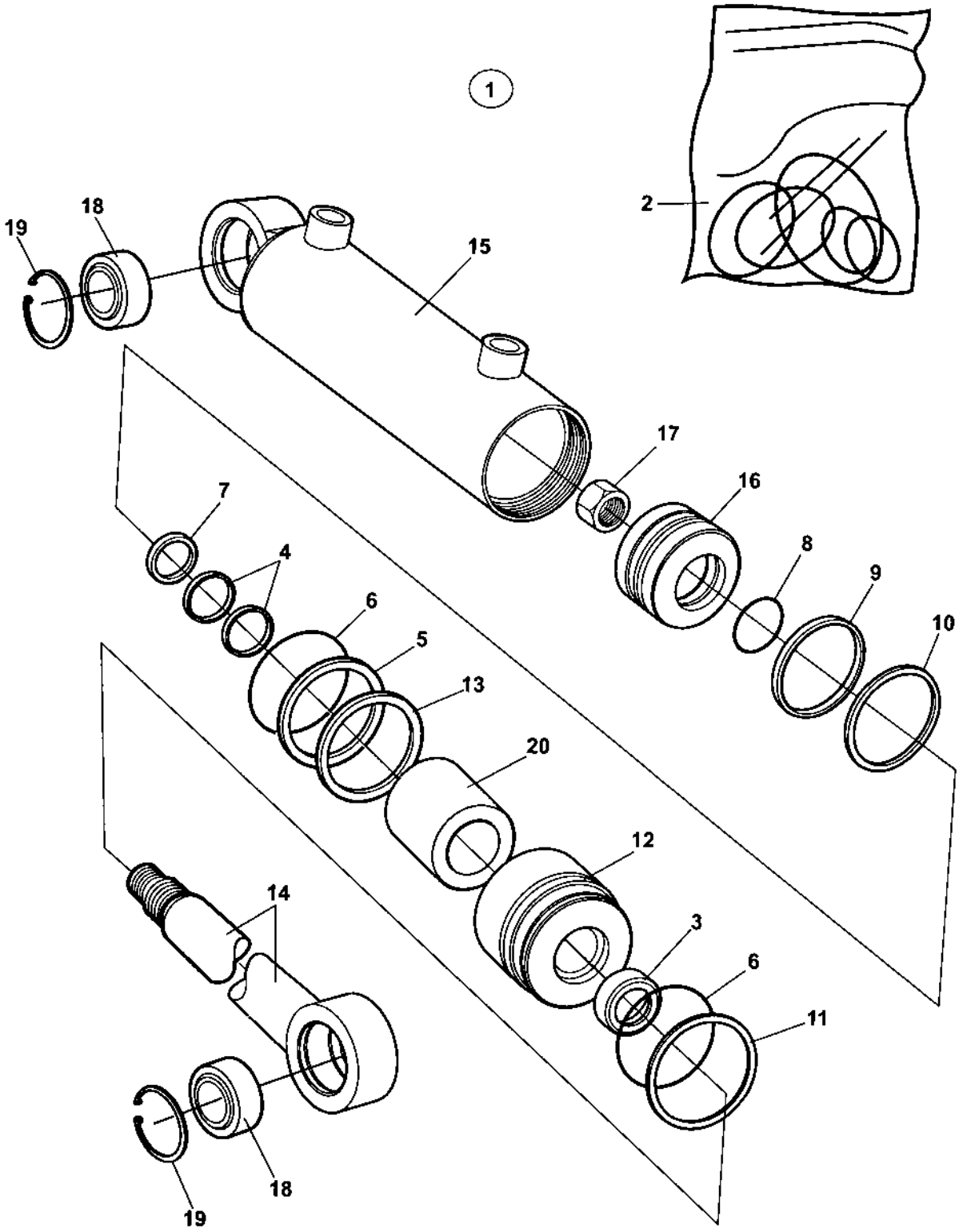

4700387275 Hydraulic cylinder

Item	Part No	Rem	Qty	Description	Code
1	4700387275		1	Hydraulic cylinder (Page 66)	
2	4700945668		1	.Seal kit	
3			1	..Seal	
4			2	..Seal	
5			1	..Back-up ring	
6			2	..O-ring	
7			1	..Seal	
8			1	..O-ring	
9			1	..Seal	
10			1	..Seal	
11			1	.Retaining ring	
12			1	.Steering	
13			1	.Retaining ring	
14			1	.Piston rod	
15			1	.Cylinder	
16			1	.Piston block	
17			1	.Cylinder nut	
18	4700945526		1	.Bearing	
19			1	.Retaining ring	
20		A	1	.Spacer	

A) Not valid for this model

Electrical equipment

Item	Part No	Rem	Qty	Description	Code
10				Electrical equipment (Page 70)	
20				Control panel, relays Up to 89132869 (Page 72)	
21				Control panel, relays From 89132870 (Page 74)	
30				Driving lights (Page 76)	Option
31				Driving lights (Page 78)	Option
40				Working lights (Page 80)	Option
50				Rotating beacon with Rops (Page 82)	Option
60				Back-up alarm (Page 84)	Option

Electrical equipment

17961

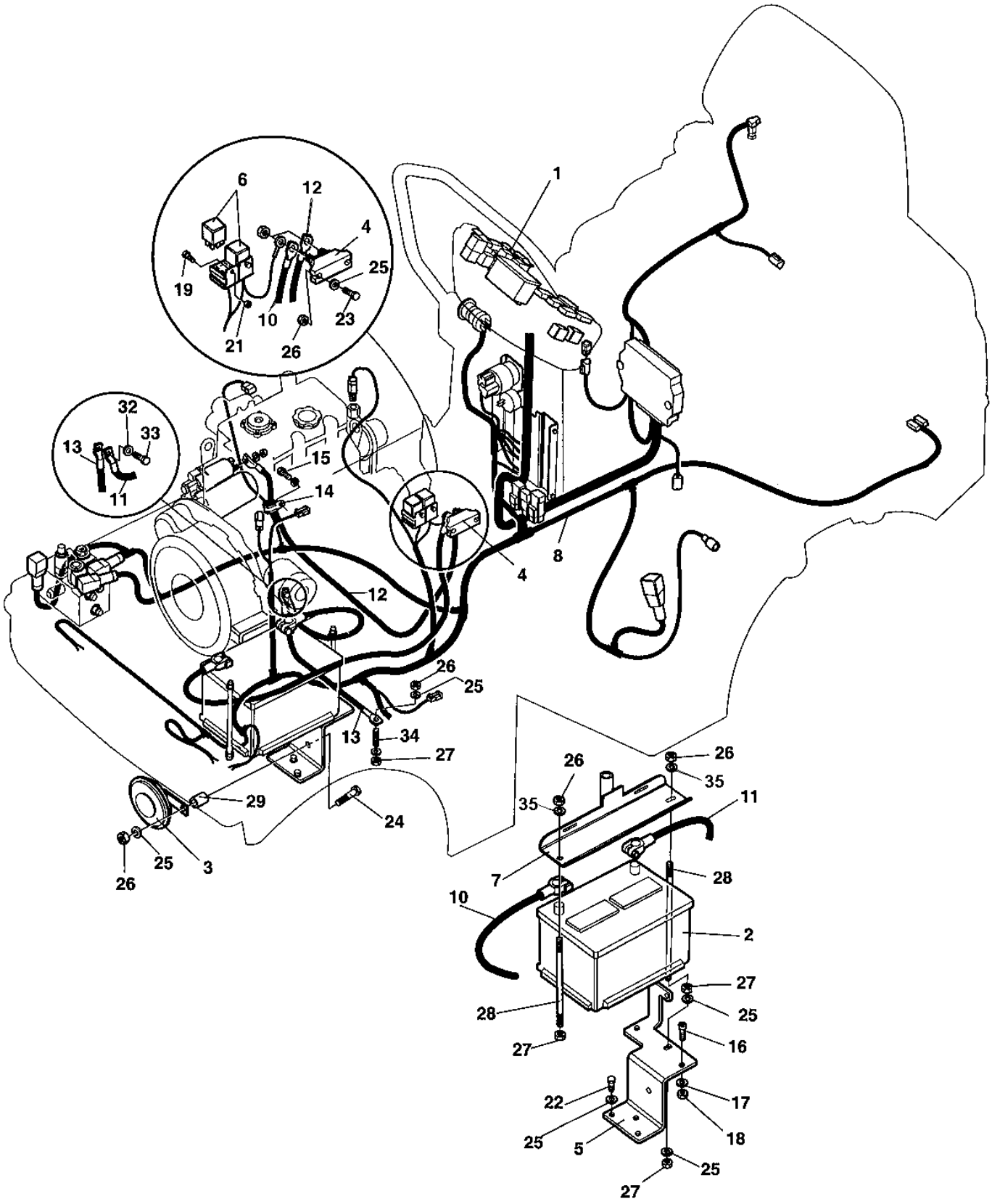

Electrical equipment

Item	Part No	Rem	Qty	Description		Code
1			1	Control panel		
2	4700791502		1	Battery		
3	4700999027		1	Horn		B
4	4700377058	A	1	Connection block		
5	4700387284		1	Battery shelf		
6	4700903956		2	Relay		A
7	4700388721		1	Battery holder		
8	4700388009		1	Cable harness		
	4700397093		1	Cable harness From ECN 08408		
10	4700792019		1	Battery cable		
11	4700792020		1	Battery cable		
12	4700377063		1	Connection cable, coarse		
13	4700791639		1	Connection cable, coarse		
14	4700921050		1	Clamp		C
15	4700508092		1	Screw		C
16	4700508041		2	Screw	M4x12H	
17	4700904698		2	Washer		C
18	4700923976		2	Nut		C
19	4700500006		2	Screw	M5x16	C
21	4700586001		2	Lock nut		C
22	4700500053		3	Screw	M8x20H 8.8	C
23	4700500021		2	Screw	M8-1,25x25 8.8	C
24	4700500024		1	Screw	M8x45	C
25	4700904229		11	Washer	8,4x16x1,5	C
26	4700586003		6	Lock nut	M8	C
27	4700570005		4	Nut	M8	C
28	4700791550		2	Threaded stud		
29	4700355704		1	Spacer sleeve		
30	4700904228		1	Washer	6,4x12x1,5	C
31	4700570004		1	Nut	M6X1,00 -8 A2K	C
32	4700904231		1	Washer	13x24x2 300 HV	C
33	4700791483		1	Screw	M12-1,25x25H 8.8	
34	4700903768		1	Threaded stud		C
35	4700904556		2	Steel plain washer		C

A) Exsist in machines without battery disconnector.

Control panel, relays

17978-1

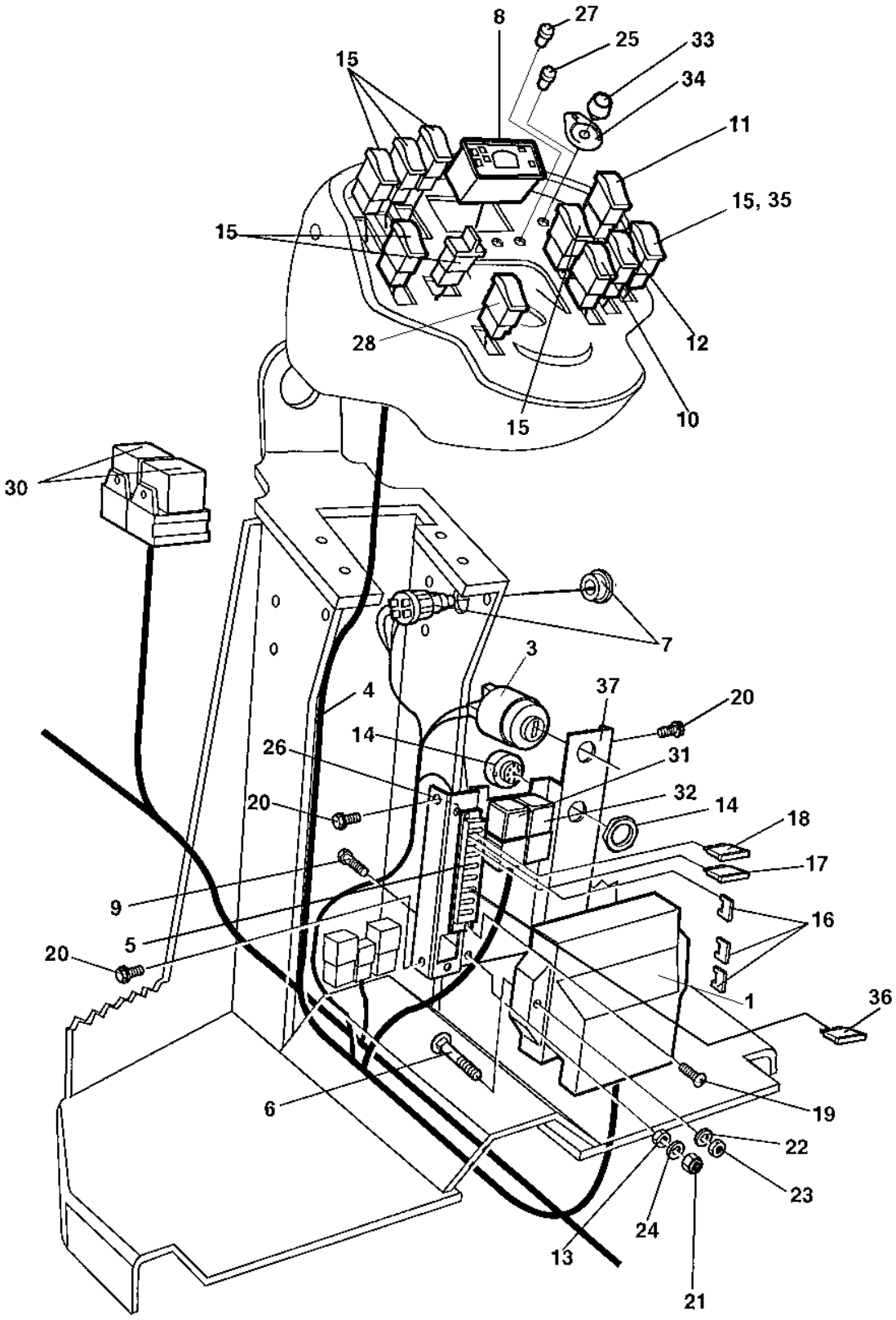

Control panel, relays

Item	Part No	Rem	Qty	Description		Code
1	4700378745	E	1	Control unit, ECU		
			1	.Decal		
		E	1	.Software		
	4700378932		1	.Instruction		D
3	4700238158		1	Ignition switch		
	4700940451		1	.Key		
4	4700393956		1	Cable harness		
5	4700791185		1	Fuse box		
6	4700791775		2	Bolt		
7	4700791647		1	Emergency stop		
8	4700395394		1	Control panel		
9	4700500075		1	Screw	M6-1,0x25 8.8	C
10	4700791578		1	Switch, horn		
11	4700791579		1	Switch, sprinkler		
12	4700791580		1	Switch, vibration		
13	4700570004		1	Nut	M6X1,00 -8 A2K	C
14	4700385599		1	Buzzer		B
15	4700791588	D	7	Panel plug		
16	4700791211		2	Contact bridge		
17	4700901228		1	Fuse	15A	A
18	4700903741		1	Fuse	20A Yellow Medium	A
19	4700901767		2	Screw	ST3,5x9,5 Black	
20	4700903782		4	Screw	M5x12	C
21	4700586002		1	Lock nut	M6 -8	C
22	4700904556		2	Steel plain washer		C
23	4700586003		2	Lock nut	M8	C
24	4700904228		1	Washer	6,4x12x1,5	C
25	4700792083		1	Plug		
26	4700202042	A	1	Rubber strip		
27	4700792320		4	Plug		
28	4700791582		1	Switch, parking brake		
30		C	2	Relay		
31		B	1	Relay		
32		B	1	Relay		
33	4700388737	F	1	Potentiometer		B
34	4700377139	F	1	Decal		
35	4700791581	F,G	1	Switch		
36	4700901227	H	1	Fuse	10A	A
37	4700387683		1	Distribution control plate		

A) L = 70 mm
B) See section "driving lights"
C) See section "Electric equipment"
D) For Option switch, see another section of Electrical system or Optional equipment
E) Machine SN required when placing order
F) Option
G) See section "Vibration shot-off one drum"
H) Option, Rotating beacon

Control panel, relays

18835

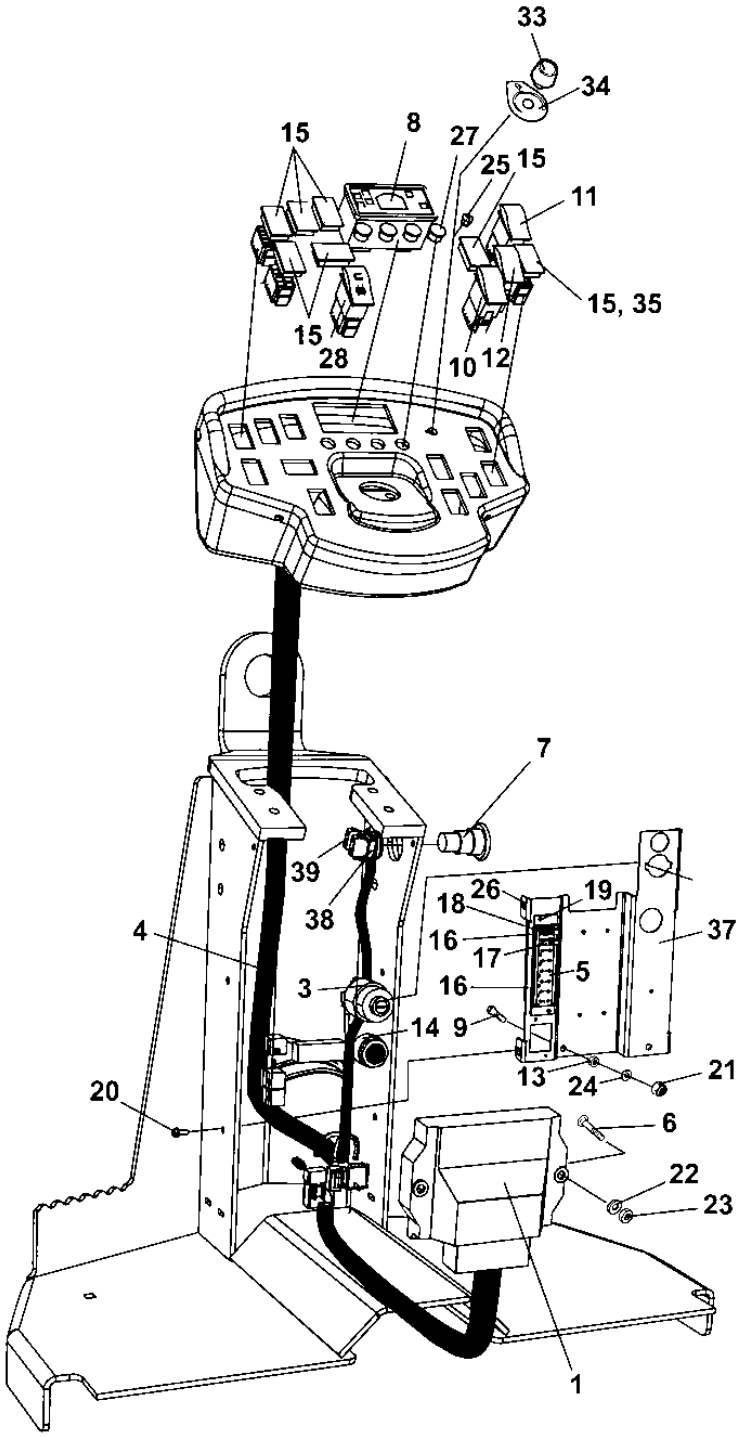

Control panel, relays

Item	Part No	Rem	Qty	Description		Code
1	4700378745	E	1	Control unit, ECU		
			1	.Decal		
		E	1	.Software		
	4700378932		1	.Instruction		D
3	4700238158		1	Ignition switch		
	4700940451		1	.Key		
4	4700396971		1	Cable harness		
5	4700791185		1	Fuse box		
6	4700791775		2	Bolt		
7	4700791739		1	Emergency stop		
8	4700395394		1	Control panel		
9	4700500075		1	Screw	M6-1,0x25 8.8	C
10	4700791578		1	Switch, horn		
11	4700791579		1	Switch, sprinkler		
12	4700791580		1	Switch, vibration		
13	4700570004		1	Nut	M6X1,00 -8 A2K	C
14	4700385599		1	Buzzer		B
15	4700791588	D	7	Panel plug		
16	4700791211		2	Contact bridge		
17	4700901228		1	Fuse	15A	A
18	4700903741		1	Fuse	20A Yellow Medium	A
19	4700901767		2	Screw	ST3,5x9,5 Black	
20	4700903782		4	Screw	M5x12	C
21	4700586002		1	Lock nut	M6 -8	C
22	4700904556		2	Steel plain washer		C
23	4700586003		2	Lock nut	M8	C
24	4700904228		1	Washer	6,4x12x1,5	C
25	4700792083		1	Plug		
26	4700202042	A	1	Rubber strip		
27	4700792320		4	Plug		
28	4700791582		1	Switch, parking brake		
33	4700388737	F	1	Potentiometer		B
34	4700377139	F	1	Decal		
35	4700791581	F,G	1	Switch		
37	4700387683		1	Distribution control plate		
38	4700389840		1	Connector		
39	4700791723		1	Connector		

A) L = 70 mm
D) For Option switch, see another section of Electrical system or Optional equipment
E) Machine SN required when placing order
F) Option
G) See section "Vibration shot-off one drum"

Driving lights Option

17991

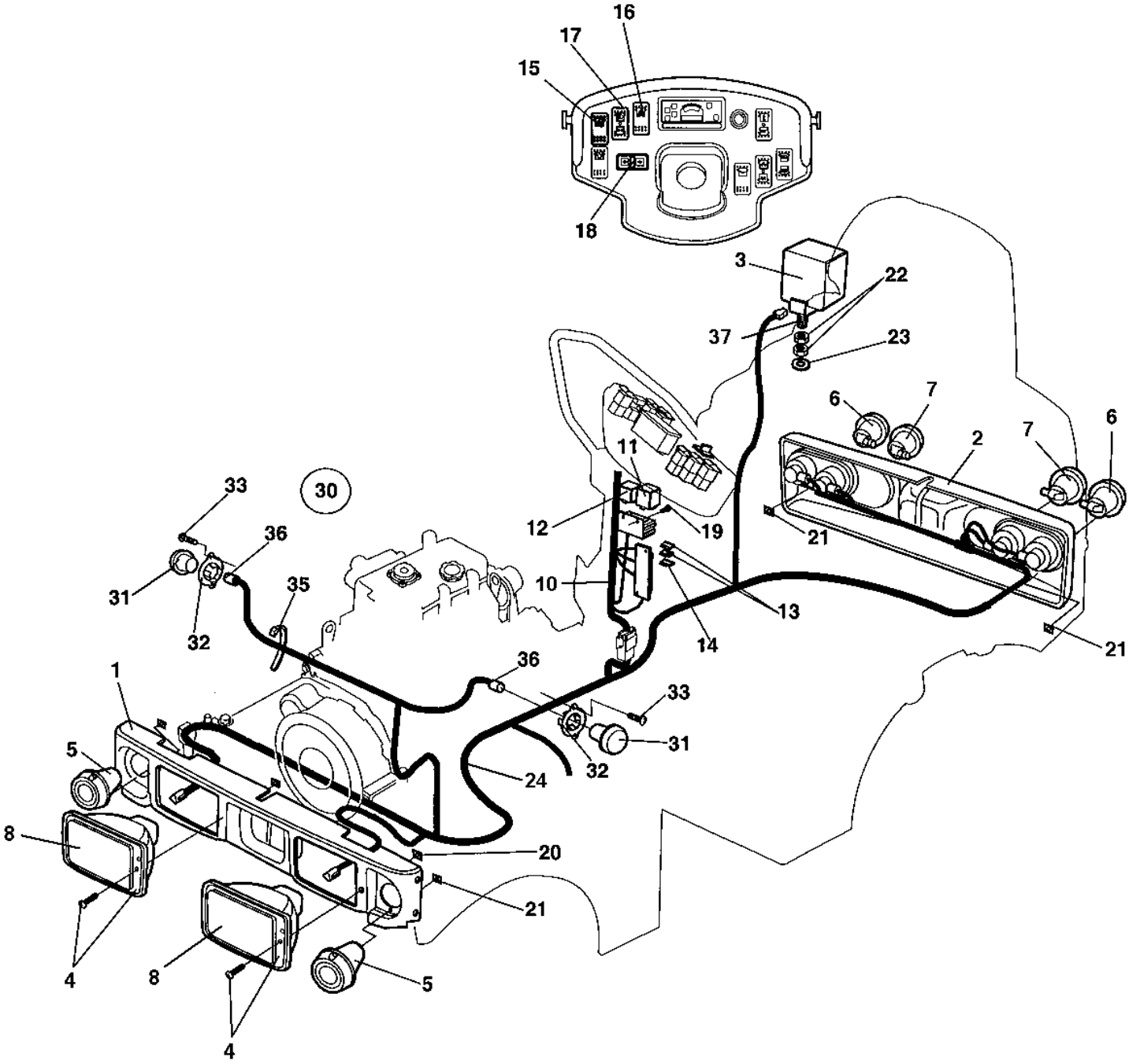

Driving lights Option

Item	Part No	Rem	Qty	Description		Code
1	4700387377		1	Frame cover		
2	4700387378		1	Frame cover		
3	4700904314		1	Work lamp		B
4	4700791951	A	2	Headlight		
	4700792059	B	2	Headlight		
5	4700791953		2	Direction indicator		
6	4700791954		2	Direction indicator		
7	4700791955		2	Brake/position light		
8	4700900790	C	2	Bulb	60/55w H4	B
	4700985125	D	2	Bulb	12V	B
10	4700388636		1	Cable harness		
11	4700904989		1	Flash relay	Option	A
12	4700903956		1	Relay		A
13	4700901225		2	Fuse	5A	A
14	4700901227		1	Fuse	10A	A
15	4700791587		1	Switch, working light		
16	4700791584		1	Switch, hazard flashers		
17	4700791583		1	Switch, driving light		
18	4700791586		1	Switch, drive direction		
19	4700791916		2	Screw		C
20	4700791970		4	Speed nut		
21	4700791971		12	Quick lock nut		
22	4700573005		2	Nut		C
23	4700904230		1	Steel plain washer		C
24	4700377140		1	Cable harness		
30			1	Side direction lights		
31	4700791704		2	.Side direction light		
	4700904889		2	.Bulb		
32	4700388382		2	.Holder side light		
33	4700791643		4	.Screw		
35	4700903810		4	.Cable tie holder		
36	4700960079		4	.Connector		
37	4700500029		1	Hexagon head screw		C

A) Right asym
B) Left asym.
C) Head light
D) Parking light

Driving lights Option

17991-1

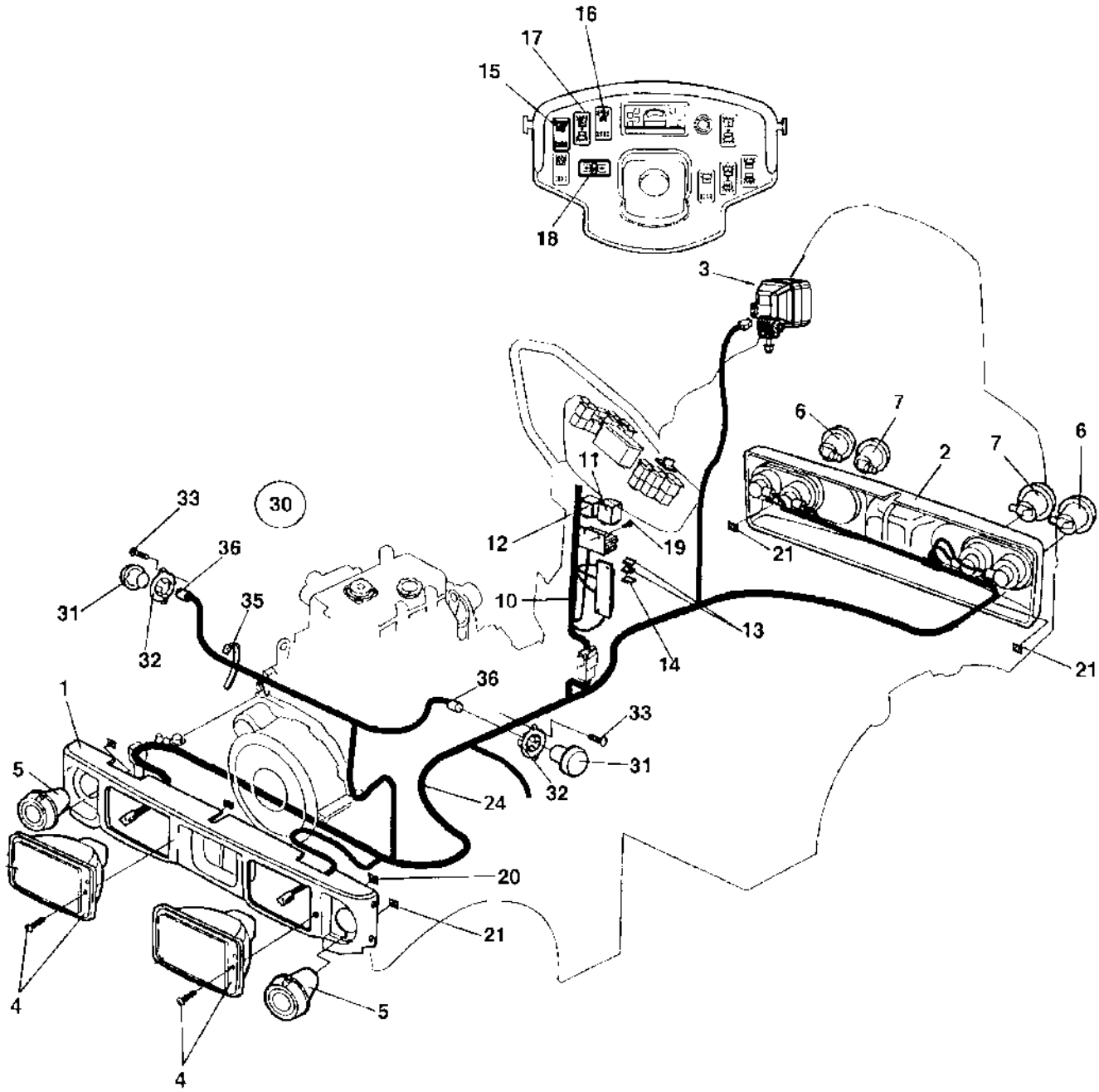

Driving lights Option

Item	Part No	Rem	Qty	Description		Code
1	4700387377		1	Frame cover		
2	4700387378		1	Frame cover		
3	4812110216		1	Work lamp		
	4700500230		1	.Screw	M8-1.25x35	
	4700904230		1	.Steel plain washer		C
	4700586018		1	.Lock nut		C
4	4700791951	A	2	Headlight		
	4700792059	B	2	Headlight		
5	4700791953		2	Direction indicator		
6	4700791954		2	Direction indicator		
7	4700791955		2	Brake/position light		
10	4700388636		1	Cable harness		
11	4700904989		1	Flash relay	Option	A
12	4700903956		1	Relay		A
13	4700901225		2	Fuse	5A	A
14	4700901227		1	Fuse	10A	A
15	4700791587		1	Switch, working light		
16	4700791584		1	Switch, hazard flashers		
17	4700791583		1	Switch, driving light		
18	4700791586		1	Switch, drive direction		
19	4700791916		2	Screw		C
20	4700791970		4	Speed nut		
21	4700791971		12	Quick lock nut		
24	4700377140		1	Cable harness		
30			1	Side direction lights		
31	4700791704		2	.Side direction light		
	4700904889		2	.Bulb		
32	4700388382		2	.Holder side light		
33	4700791643		4	.Screw		
35	4700903810		4	.Cable tie holder		
36	4700960079		4	.Connector		

A) Right asym
B) Left asym.

Working lights Option

17992-1

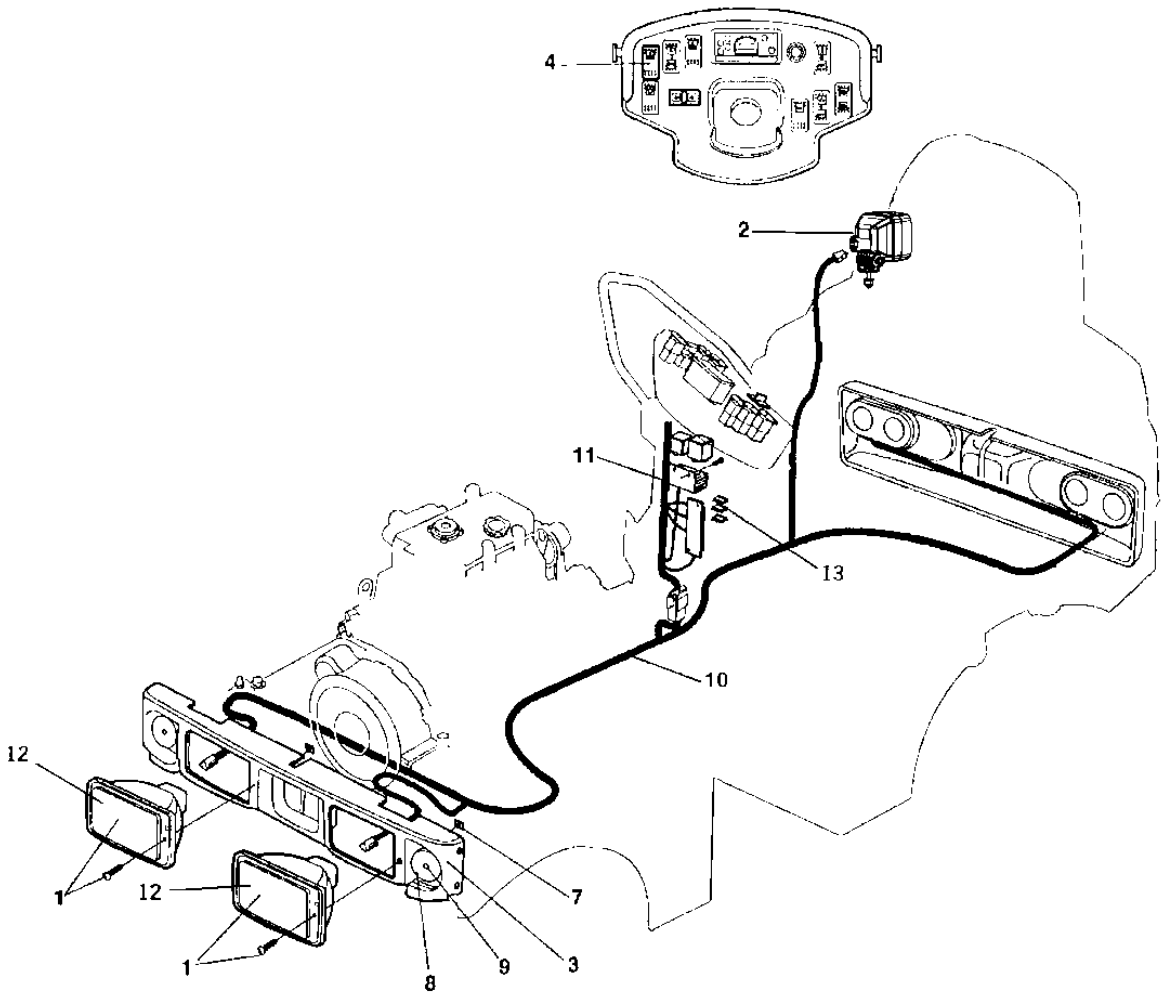

Working lights Option

Item	Part No	Rem	Qty	Description		Code
1	4700902227		2	Work light		B
			2	.Screw		B
2	4812110216		1	Work lamp		
	4700500230		1	.Screw	M8-1.25x35	
	4700904230		1	.Steel plain washer		C
	4700586018		1	.Lock nut		C
3	4700387377		1	Frame cover		
4	4700791587		1	Switch, working light		
7	4700791970		4	Speed nut		
8	4700791754		N	Blind rivet		
9	4700791957		N	Reflector, white		
10		A	1	Cable harness		
11		A	1	Cable harness		
12	4700901369		2	Bulb	55w H3	B
13	4700901228		2	Fuse	15A	A

A) See section "Driving lights"

Rotating beacon with Rops Option

17993

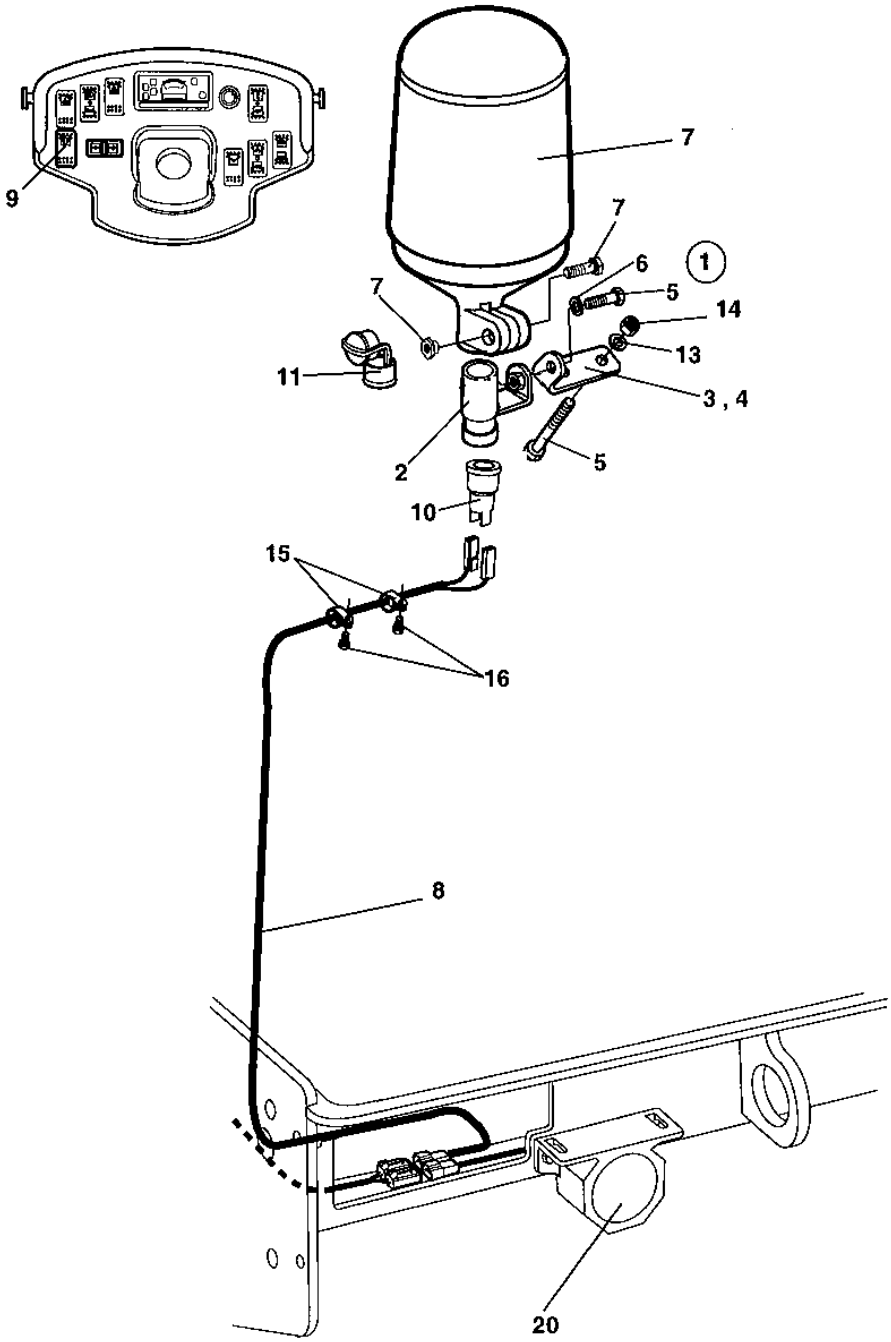

Rotating beacon with Rops Option

Item	Part No	Rem	Qty	Description		Code
1	4700389561		1	Bracket		
2	4700388772		1	.Bracket		
3	4700388773		1	.Bracket		D
4	4700629101		1	.Spirol pin		
5	4700500021		1	.Screw	M8-1,25x25 8.8	C
6	4700904229		1	.Washer	8,4x16x1,5	C
7	4700389577		1	Rotating beacon		D
			1	.Screw		D
			1	.Nut		D
8	4700389763		1	Cable harness		
9	4700791585		1	Switch, rotating beacon		
10	4700791981		1	Connector plug		
11	4700791980		1	Rubber protection		
12	4700500180		2	Screw		C
13	4700904229		4	Washer	8,4x16x1,5	C
14	4700586003		2	Lock nut	M8	C
15	4700921039		2	Pipe clamp		C
16	4700541702		2	Screw	M6x12	C
17		B	1	Fuse		C
20		A	1	Back-up alarm		C

A) See section "Back up alarm"
B) See section "Control panel, relay"

Back-up alarm Option

17963

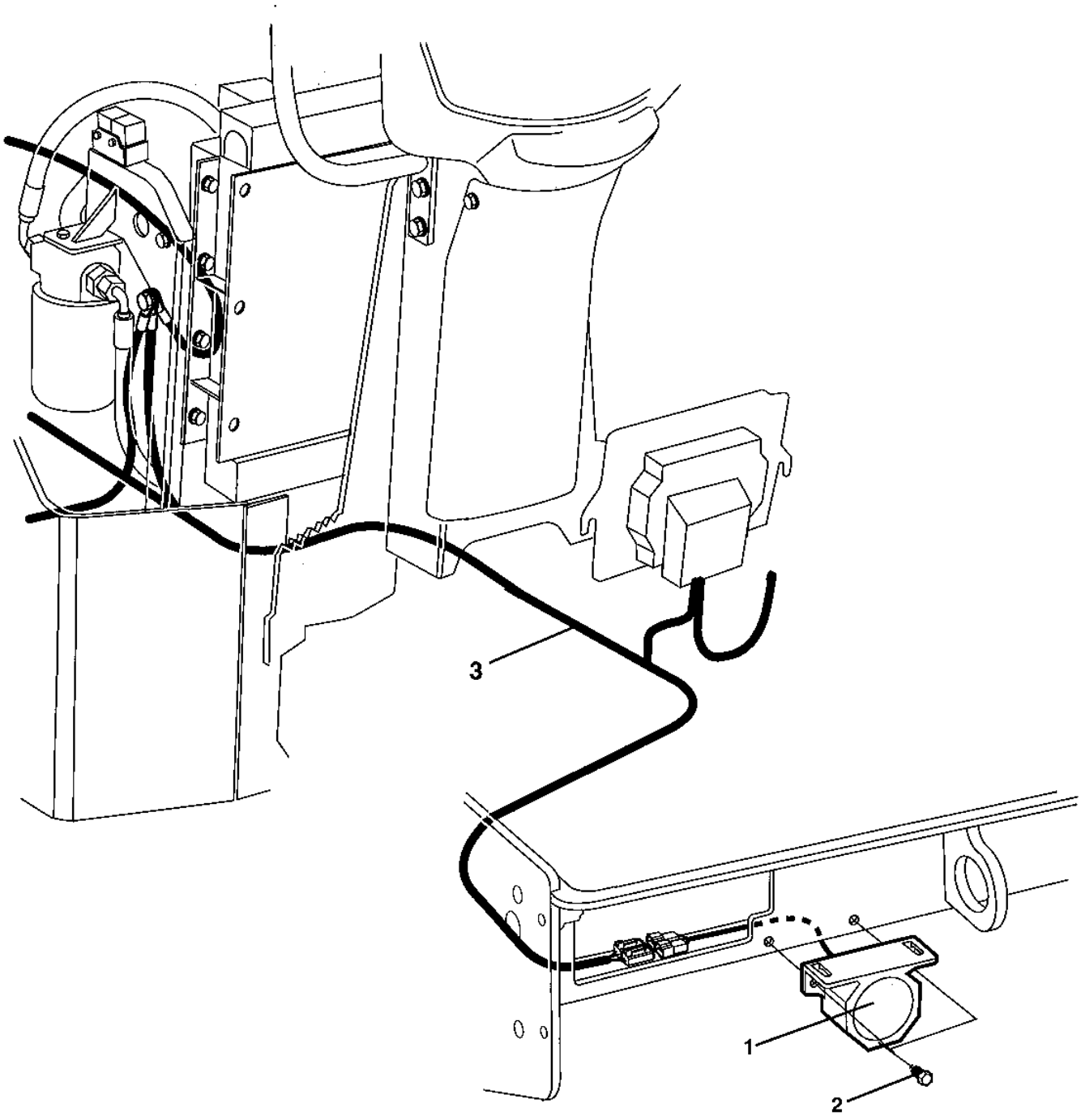

Back-up alarm Option

Item	Part No	Rem	Qty	Description		Code
1	4700792098		1	Back-up alarm		
2	4700541702		2	Screw	M6x12	C
3	4700388009		1	Cable harness		

Drivers platform

Item	Part No	Rem	Qty	Description	Code
15				Drivers seat (Page 88)	
20				F/R- and throttle control (Page 90)	
27				Forward and reverse control handle (Page 92)	
30				Rops (Page 94)	Option

Drivers seat

18591

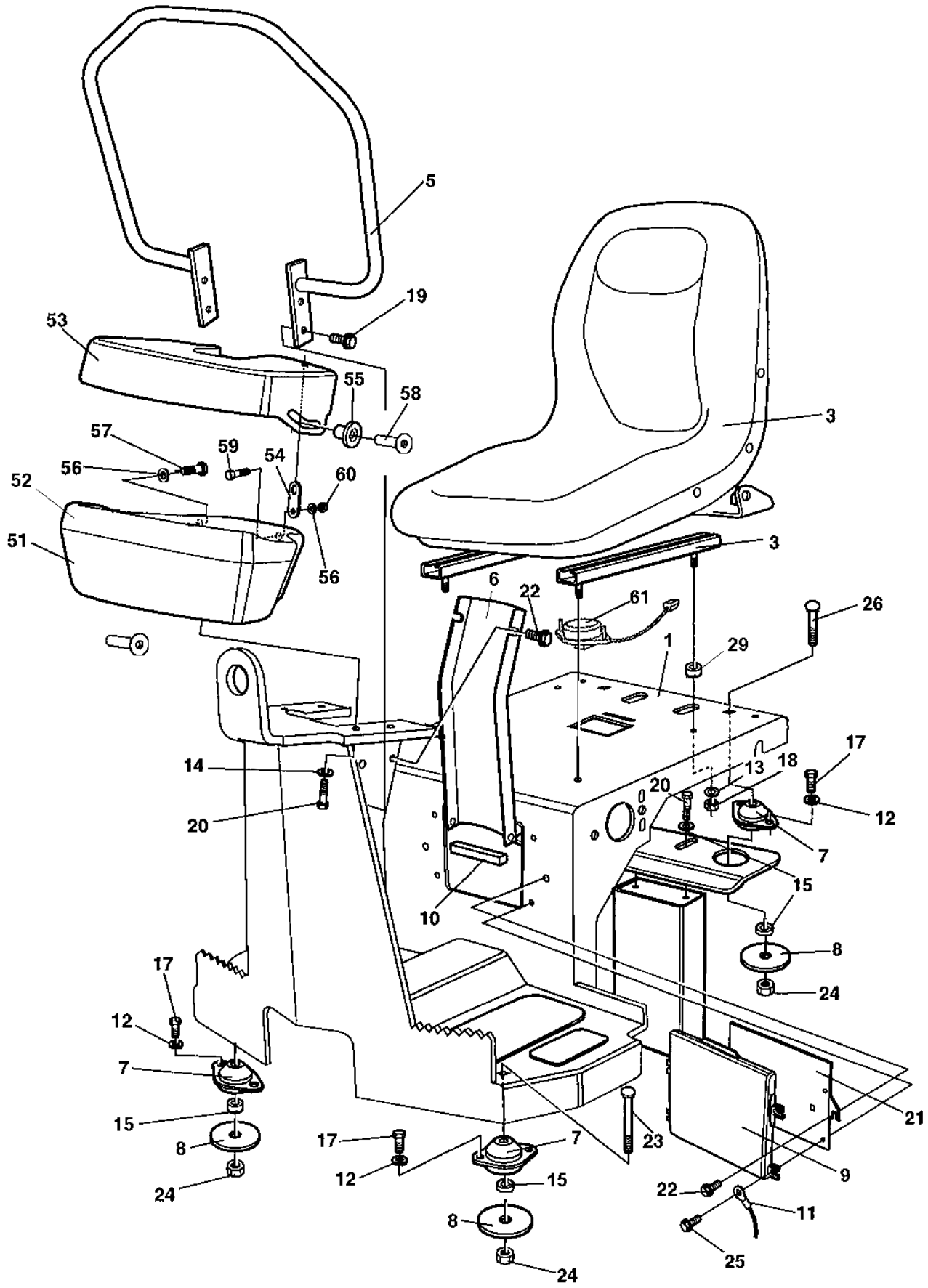

Drivers seat

Item	Part No	Rem	Qty	Description		Code
1	4700390586		1	Platform Up to 89132869		
	4700397157		1	Platform From 89132870		
3	4700377556		1	Drivers seat, cpl		
	4700348331		1	Seat cover		D
4	4700387236		1	Platform bracket		
5	4700387453		1	Hand rail		
6	4700387226		1	Column cover		
7	4700387685		4	Conical rubber mount		
8	4700358232		4	Washer		
9	4700383705		1	Instruction book holder		D
10	4700902166	A	1	Edge trim		D
11	4700357643		1	Wire		D
12	4700904556		8	Steel plain washer		C
13	4700904229		4	Washer	8,4x16x1,5	C
14	4700904230		4	Steel plain washer		C
15	4700904557		10	Steel plain washer		C
17	4700500018		8	Screw	M8-1,25x12 8,8	C
18	4700586003		4	Lock nut	M8	C
19	4700500509		4	Screw		
20	4700500030		6	Hexagon head screw		C
21	4700388447		1	Cover		
22	4700500505		4	Screw	M8x20 8.8	
23	4700792236		2	Screw	M10x100	
24	4700586018		4	Lock nut		C
25	4700791226		4	Screw		C
26	4700791616		2	Bolt		
28	4700357855		2	Bushing		C
29	4700394301		4	Spacer sleeve		
51	4700387720		1	Control panel holder		
52	4700391784		1	Control panel		
	4700387225		1	Instrument panel		
53	4700387227		1	Control panel cover		
54	4700387545		1	Latch		
55	4700357855		2	Bushing		C
56	4700904281		4	Washer	5,3x10x1 300HV	C
57	4700903658		3	Screw	M5x10	C
58	4700513017		2	Screw	M6x30H 10,9	
59	4700500007		1	Screw	M5-0,8x22H 8,8	
60	4700791476		1	Nut	M5 -8	
61	4700379636		1	Seat switch		

A) L = 185 mm

F/R- and throttle control

17971

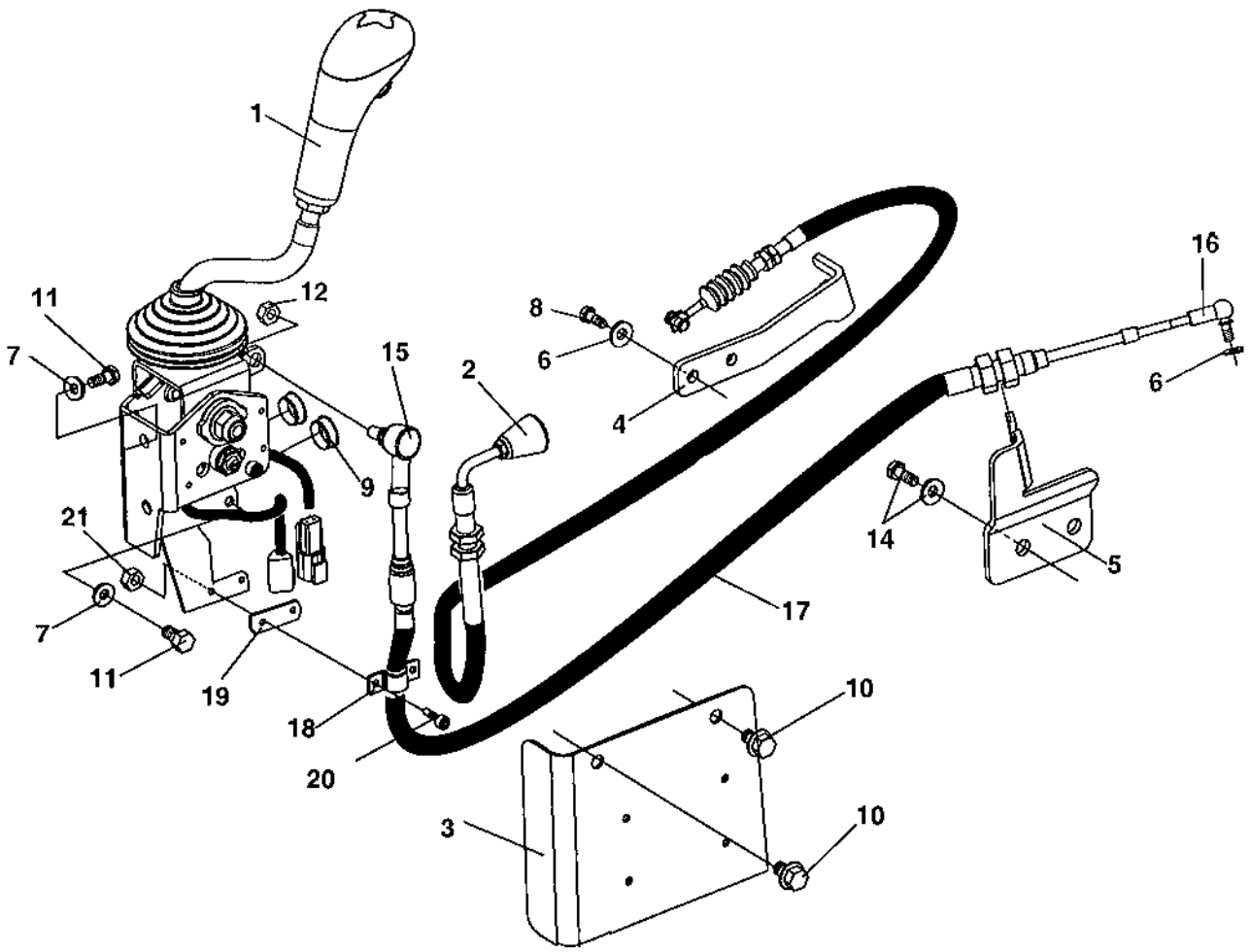

F/R- and throttle control

Item	Part No	Rem	Qty	Description		Code
			1			
2	4700387229		1	Throttle control		
	4700940960		1	.Knob		
3	4700388476		1	Control cover		
4	4700395257	C	1	Control bracket		
5	4700387298		1	Control bracket		
6	4700904228		3	Washer	6,4x12x1,5	C
7	4700904229		2	Washer	8,4x16x1,5	C
8	4700500013		2	Screw	M6-1x16 8,8	C
9	4700923270		2	Protective plug		
10	4700904755		2	Screw	M8x12 8,8 FZB	
11	4700508092		3	Screw		C
12	4700586003		1	Lock nut	M8	C
13	4700904556		1	Steel plain washer		C
14		B	2	Screw		C
		B	2	Washer		C
15	4700377019		1	Ball joint		
	4700950382		1	Ball stud	M8	
16	4700416034		1	Ball joint		C
17	4700377024		1	Cable	Forward/Reverse	
18	4700377020		1	Clamp		
19	4700377021		1	Spacer		
20	4700926537		2	Screw	M5-0,8x16H 8,8	
21	4700586001		2	Lock nut		C

B) See section " Engine "
C) Picture not updated yet with the new design of this item

Forward and reverse control handle

18071-2

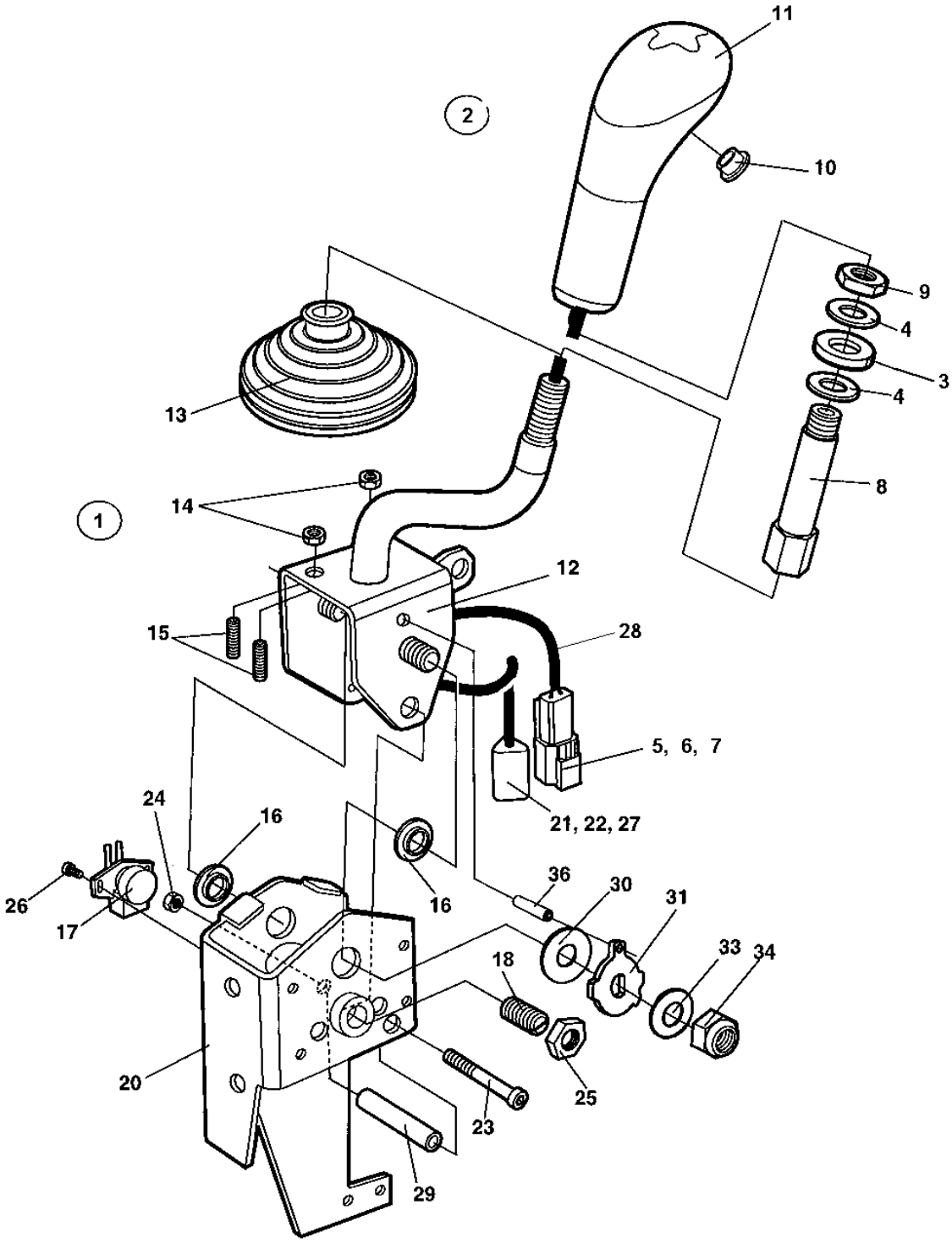

Forward and reverse control handle

Item	Part No	Rem	Qty	Description		Code
1	4700945407		1	Lever, cpl		
2	4700940374		1	.Handle kit, cpl		
			1	..Handle		
	4700945729		1	...Push-button switch		
			1	...Cable		
			1	..Lockfluid		
			1	..Service information		
3			1	..Washer		
4			2	..Washer		
5			1	..Connector, receptable		
6			1	..Lock wedge		
7			2	..Pin		
8			1	..Rod		
9			1	..Nut		
10	4700377018		1	..Protection plug		
11	4700378759		1	..Handle top		
12	4700391379		1	.Lever		
13	4700377009		1	.Bellows		
14	4700570004		2	.Nut	M6X1,00 -8 A2K	C
15	4700377015		2	.Set screw		
16	4700391381		1	Bushing		
17	4700391382		1	Potentiometer with cable		
18	4700377016		1	Spring loaded pin		
20	4700377010		1	Bracket		
21	4700903945		1	Connector, plug		
22	4700903946		1	Lock wedge		
23	4700508068		1	Screw		
24	4700904563		1	Lock nut	M6	C
25	4700927233		1	Nut		C
26	4700391383		1	Screw		
27	4700903947		3	Pin		
28		B	1	Cable		
29	4700377011		1	Spacer		
30	4700377012		1	Friction washer		
31	4700391380		1	Cam washer		
33	4700377014		1	Spring washer		
34	4700586019		1	Lock nut		C
36	4700391386		1	Spirol pin		

B) Included in potentiometer Pos 17

Rops Option

17962

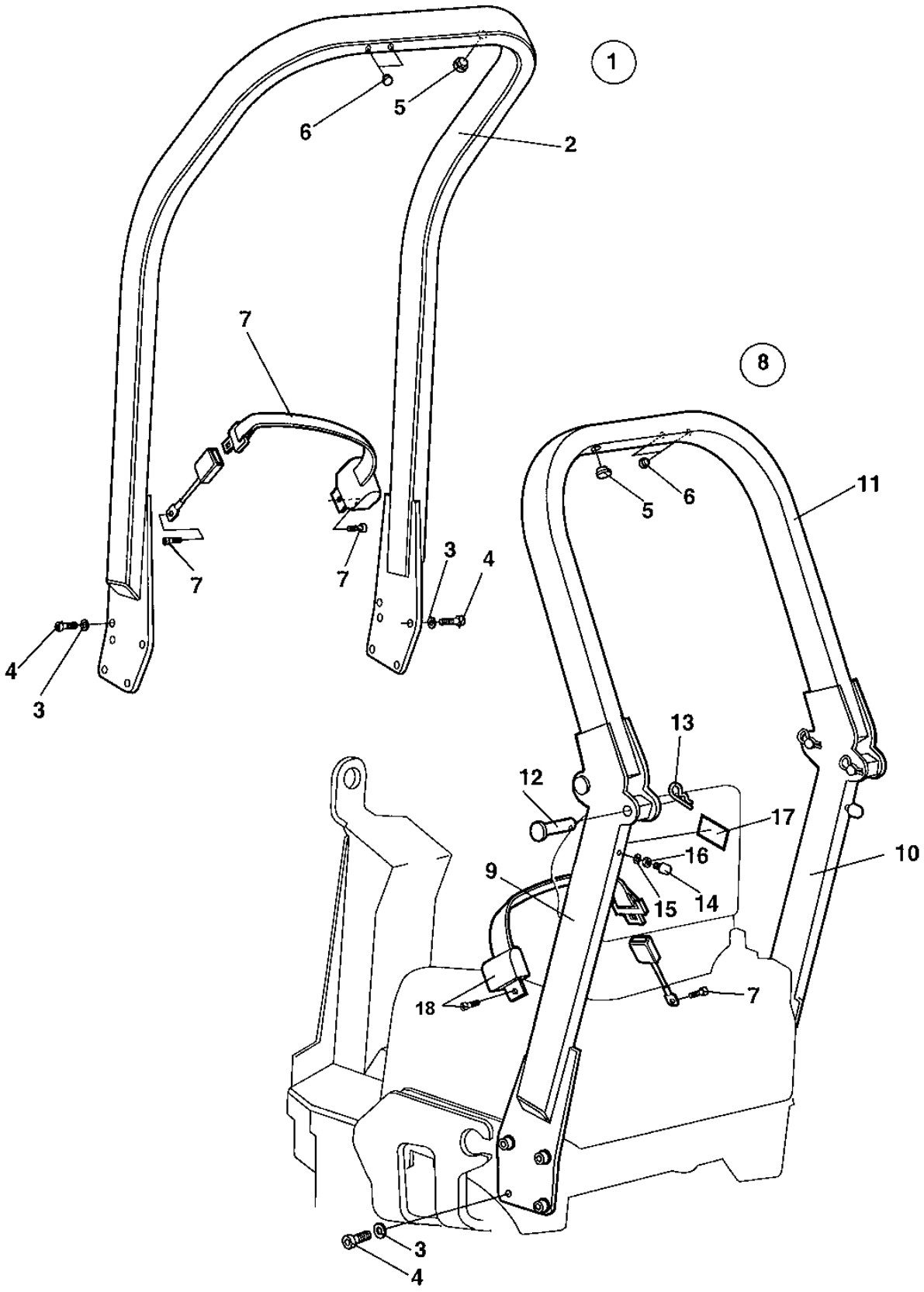

Rops Option

Item	Part No	Rem	Qty	Description		Code
1			1	Rops, cpl		
2	4700387142		1	Rops		
3	4700904231		8	.Washer	13x24x2 300 HV	C
4	4700508063		8	.Screw		C
5	4700282603		1	.Plastic plug		
6	4700900986		1	.Plug		
7	4700377677	A	1	.Seat belt	2"	B
8			1	Rops foldable, cpl		B
9		C,D	1	.Rops beam		B
10		C,D	1	.Rops beam		B
11		C,D	1	.Robs beam		B
12	4700389798		4	.Threaded spike		
13	4700635061		4	.Hair clip		C
14	4700280101		2	.Shock absorber		
15	4700904229		2	.Washer	8,4x16x1,5	C
16	4700573008		2	.Nut	M8	C
17	4700908229		1	.Safety decal		D
18	4700377677	A	1	.Seat belt	2"	B

A) Hardware supplied
C) Not sold separately due to safety regulations
D) Only available as a complete ROPS kit ; please check the machine SN and contact Dynapac for valid PN

Decals and documentation

Item	Part No	Rem	Qty	Description	Code
10				Decals and documentation (Page 98)	

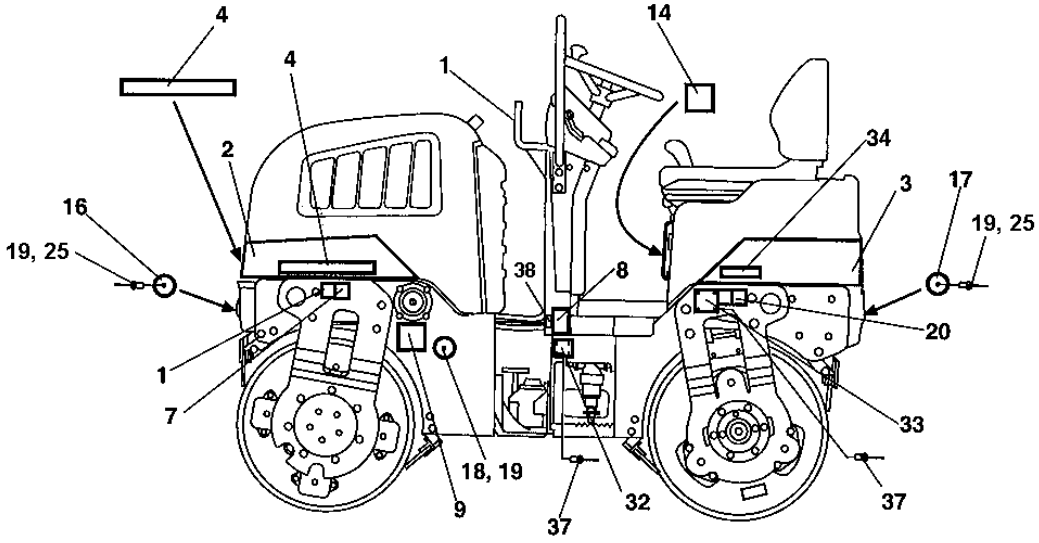
4
4
1
14
2
34
3
17
16
19, 25
19, 25
38
8
1
20
7
33
18, 19
9
32
37
37

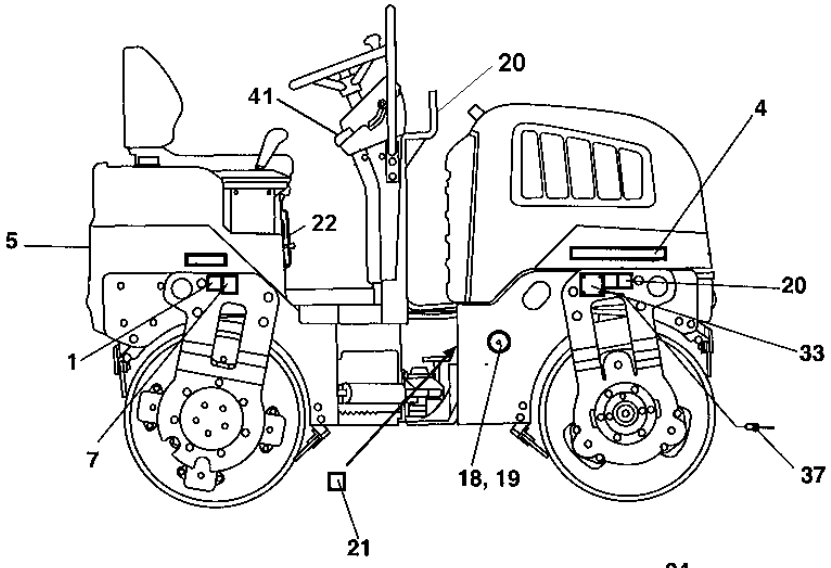
20
41
4
22
5
20
1
33
7
18, 19
37
21

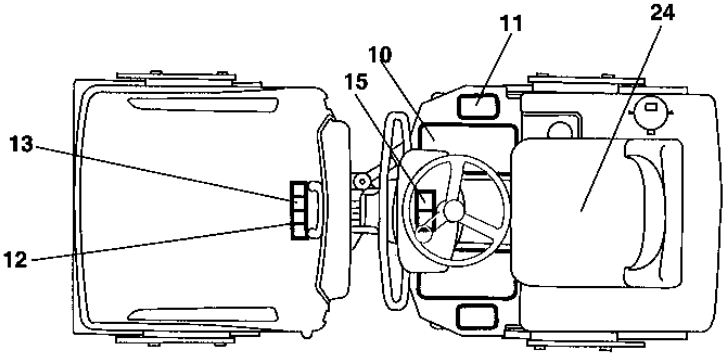
11
24
10
15
13
12

Decals and documentation

Item	Part No	Rem	Qty	Description		Code
1	4700357587		3	Decal "LIFT POINT"		D
2	4700389919		1	Engine hood decal		
3	4700389920		1	Decal		
4	4700904097		3	Decal "DYNAPAC"	L=290 mm	
5	4700904092		1	Decal "DYNAPAC"	L=590 mm	D
7	4700382751		2	Decal "TIE DOWN POINT"		D
8	4700903422		2	Decal "SAFETY"		D
9	4700991658		1	Decal "FUEL"		D
10	4700373363		2	Slip protection		
11	4700372123		2	Protection		
12	4700903423		1	Decal "SAFETY"		D
13	4700903424		1	Decal "HOT SURFACE"		D
14	4700903425		1	Decal "SAFETY MANUAL"		D
15	4700903459		1	Decal "SAFETY"		D
16	4700791957		2	Reflector, white		
17	4700791956		2	Reflector, red		
18	4700791958		2	Reflector, light		
19	4700791666		6	Blind rivet		
20	4700908229		2	Safety decal		D
21	4700272373		1	Decal "HYDRAULIC OIL"		D
22			1	Roller safety manual		D
24	4700348331		1	Seat cover		D
25	4700904228		4	Washer	6,4x12x1,5	C
32			1	Product identif. decal "Dynapac"		C
33	4700904870		2	Lifting sign		D
34	4700791917		2	Decal "MODEL CODE"	CC800	
37	4700624015		12	Blind rivet	4,0x8,5	C
38	4700791290		1	Decal "Sound power level"		
41	4700379012		1	Decal "Start instruction"		

Standard equipment

Item	Part No	Rem	Qty	Description	Code
1				Standard equipment (Page 102)	

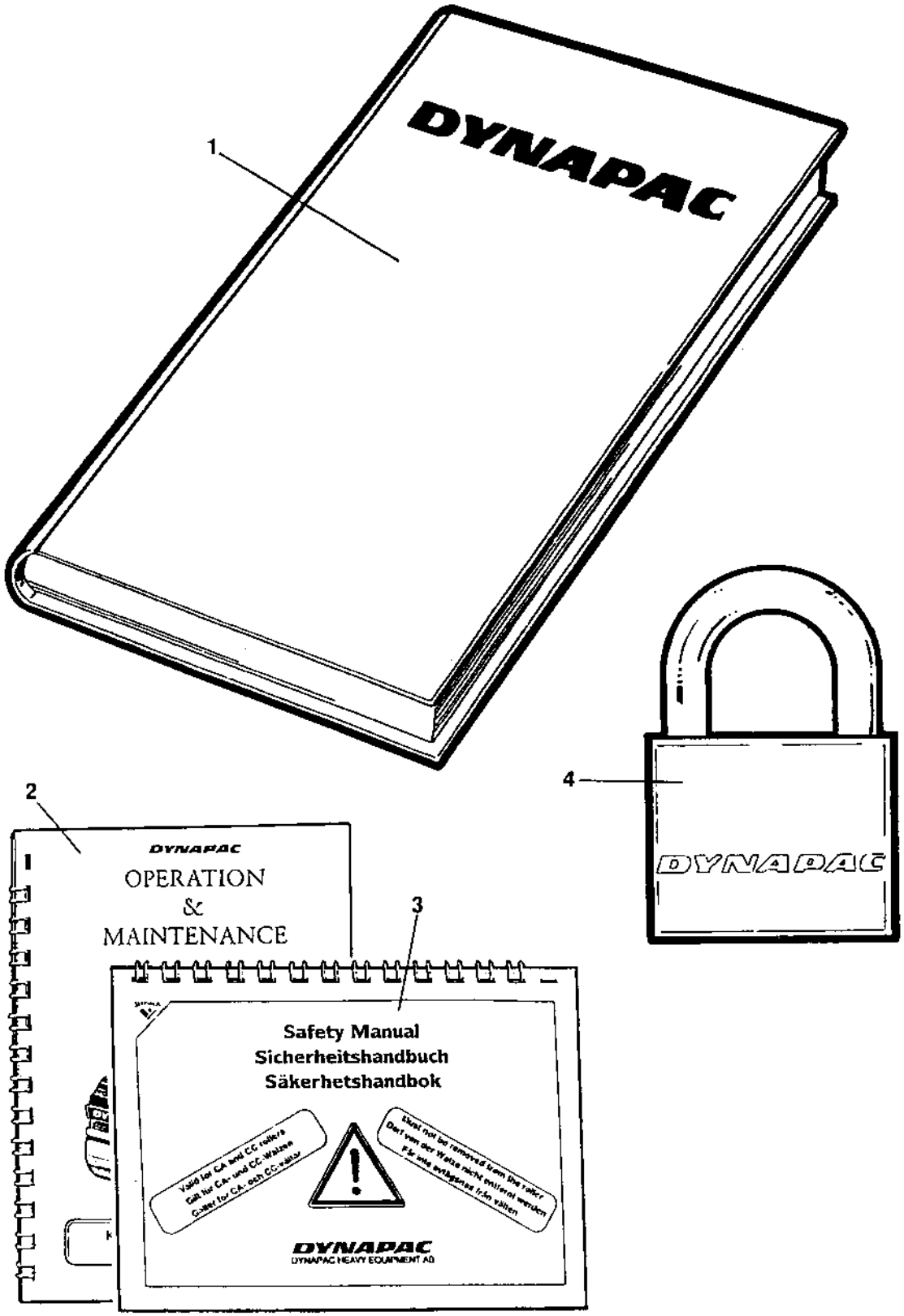
1
DYNAPAC
2
DYNAPAC
OPERATION
&
MAINTENANCE
3
Safety Manual
Sicherheitshandbuch
Säkerhetshandbok
DYNAPAC
DYNAPAC HEAVY EQUIPMENT AB
4
DYNAPAC

Standard equipment

Item	Part No	Rem	Qty	Description		Code
1			1	Documentation	ISCC800	
			1	Warranty conditions		
			1	Warranty registration certificate		
			1	Spare parts catalogue	SCC800	
			1	Warranty registration card		
			1	Instruction manual	Perkins 403D-11	
2			1	Operating / maintenance instruction	ICC800	
3			1	Safety manual	RSAFE	
4	4700358881		2	Pad lock		D

Optional equipment

Item	Part No	Rem	Qty	Description	Code
10				Battery disconnector (Page 106)	
15				Battery disconnector From ECN 09452 (Page 108)	
20				Water tank, option (Page 110)	
50				Dual forward/reverse control (Page 112)	
60				SMV-sign (Page 114)	
63				SMV-sign (Page 116) Mounting on watertank	
64				SMV-sign on high water tank (Page 118)	
65				Registrations - plate with light (Page 120)	
70				Hydraulic vibration, shut off front/rear drum (Page 122)	
80				Rear view mirror (Page 126)	
81				Rear view mirror (Page 128)	
90				Tool equipment (Page 130)	

Battery disconnector

18050

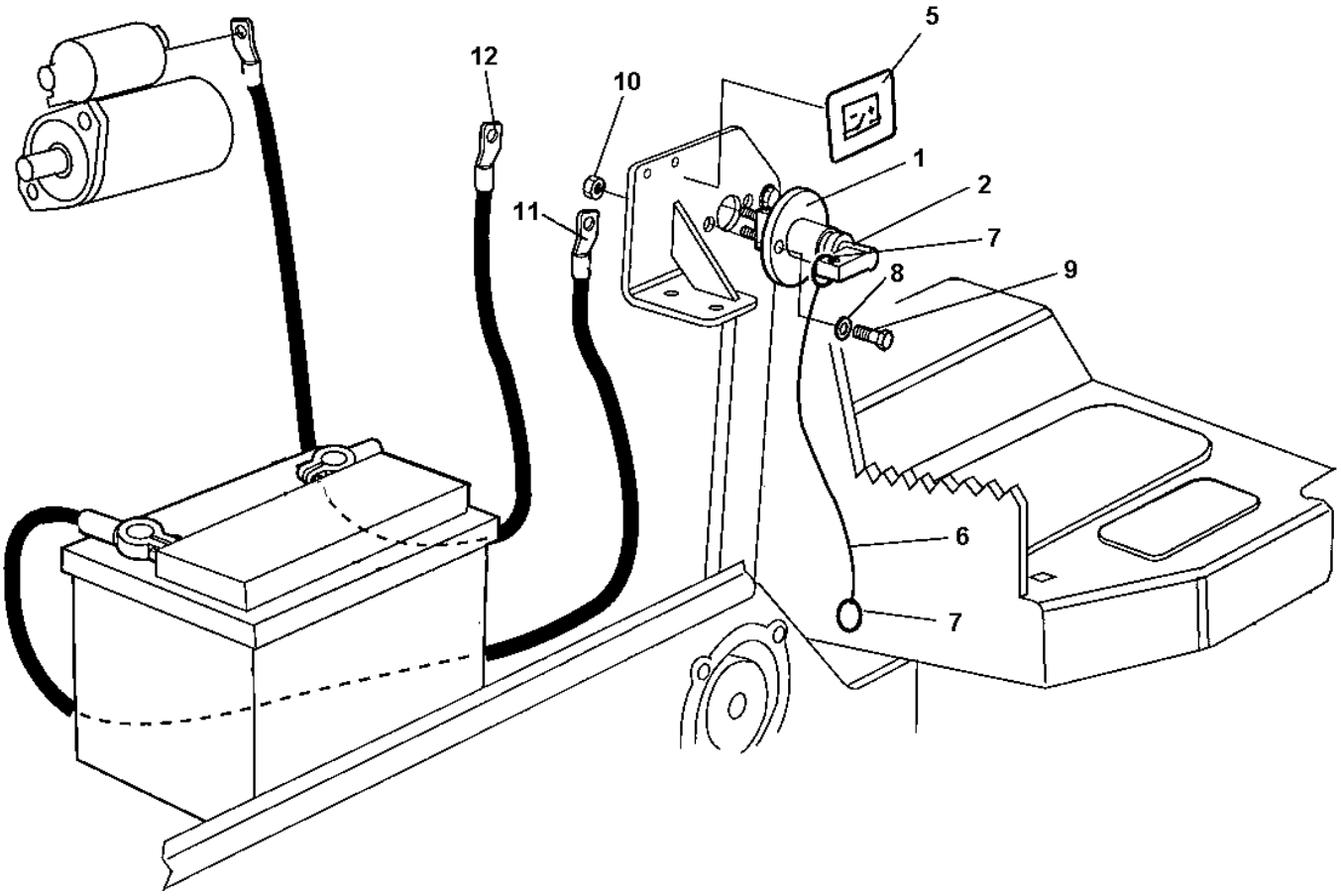

Battery disconnector

Item	Part No	Rem	Qty	Description	Code
1	4700357567		1	Battery switch, cpl	D
2	4700902560		1	.Handle	D
5	4700904835		2	Decal "BATTERY POWER"	D
6	4700377253		1	Wire	
7	4700358254		2	Key-ring	
8		B	1	Washer	
9		B	1	Screw	
10		B	1	Nut	
11		C	1	Battery cable	
12		D	1	Cable	

B) Use existing
C) Cable from positive pole of the battery.
D) Cable from starter motor.

Battery disconnector

18050-1

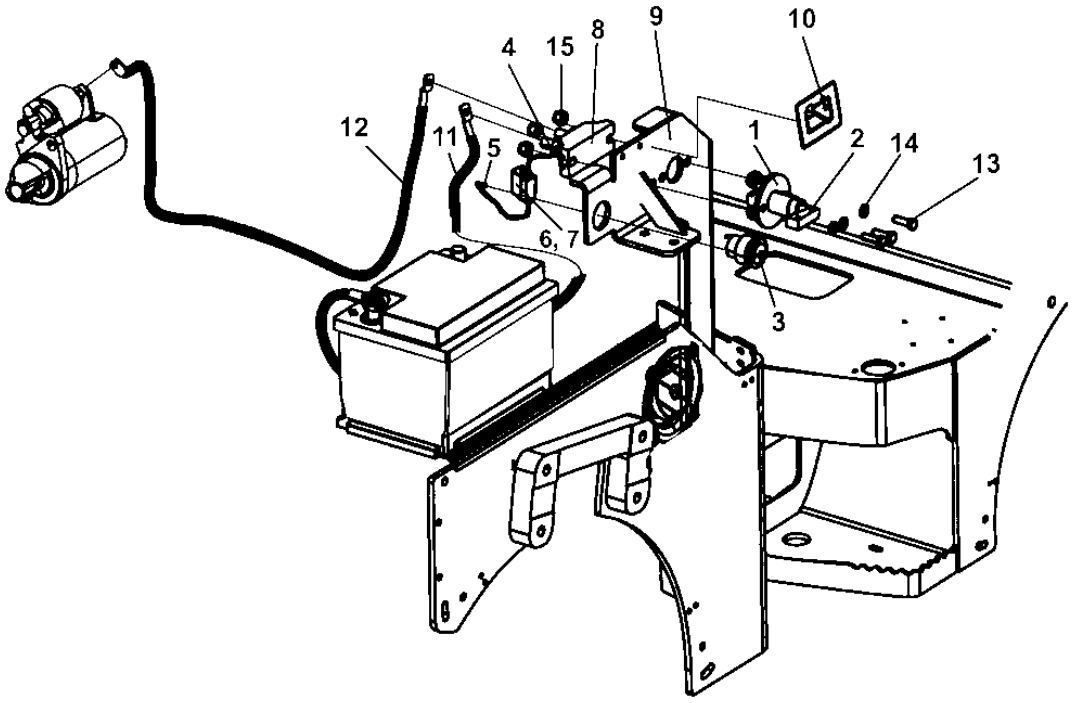

Battery disconnector

Item	Part No	Rem	Qty	Description		Code
1	4700357567		1	Battery switch, cpl		D
2	4700902560		1	.Handle		D
3	4812110560		1	Power socket	12V	
4	4700960041		1	Ring terminal		
5	4700960079		1	Connector		
6	4700904015		1	Fuse holder		D
7	4700901227		1	Fuse	10A	A
8	4700377058		1	Connection block		
9	4812110974		1	Cooler console		
10	4700904835		2	Decal "BATTERY POWER"		D
11		C	1	Battery cable		D
12		D	1	Cable		D
13		B	3	Screw		D
14		B	3	Washer		D
15		B	3	Nut		D

B) Use existing
C) Cable from positive pole of the battery.
D) Cable from starter motor.

Water tank, option

18309

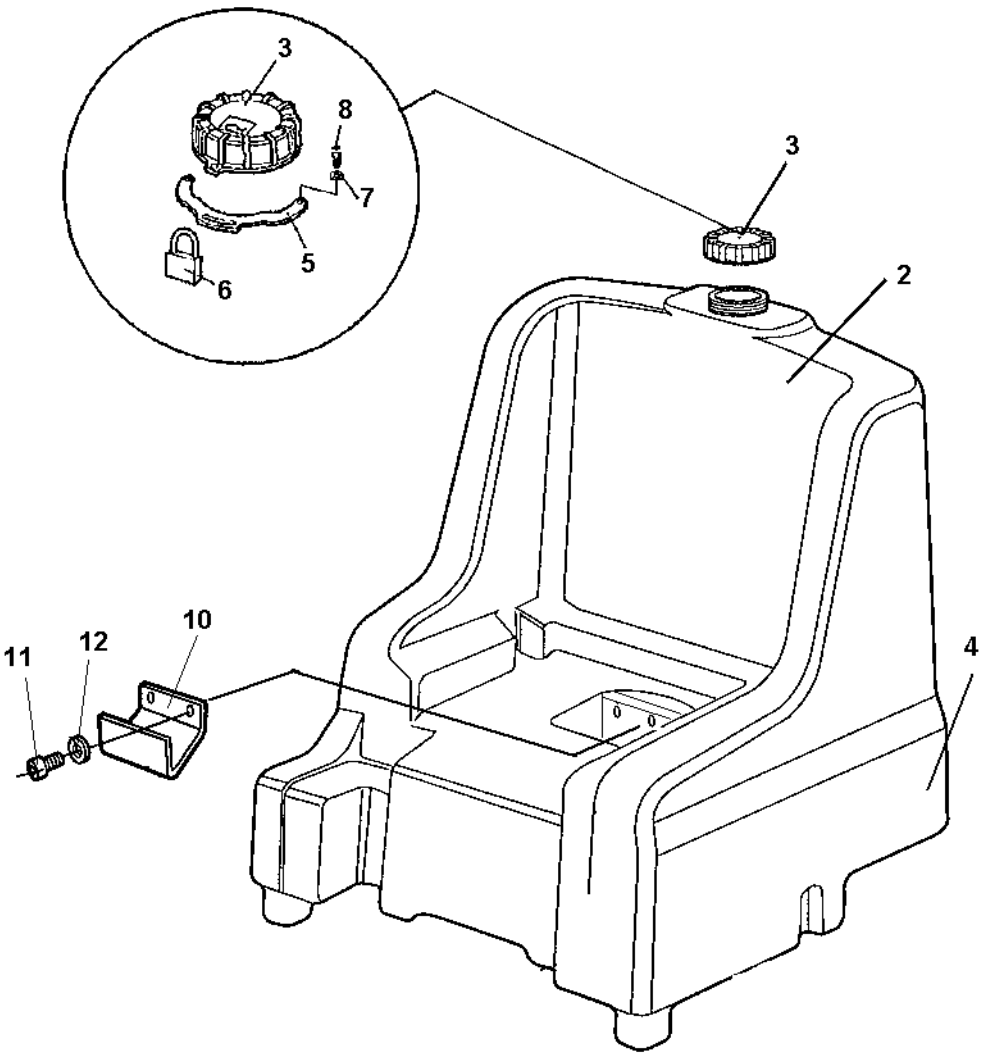

Water tank, option

Item	Part No	Rem	Qty	Description		Code
1				Water tank, cpl		D
2	4700388017		1	.Water tank		
3	4700388087		1	.Tank cap		
4	4700377343			Decal		
5	4700389155	A	1	Lock bracket		
6	4700358881	A	1	Pad lock		D
7	4700904281	A	2	Washer	5,3x10x1 300HV	C
8	4700903658	A	2	Screw	M5x10	C
10	4700387935		1	Bracket		
11	4700500029		2	Hexagon head screw		C
12	4700904557		2	Steel plain washer		C

A) Option,

Dual forward/reverse control

18068-1

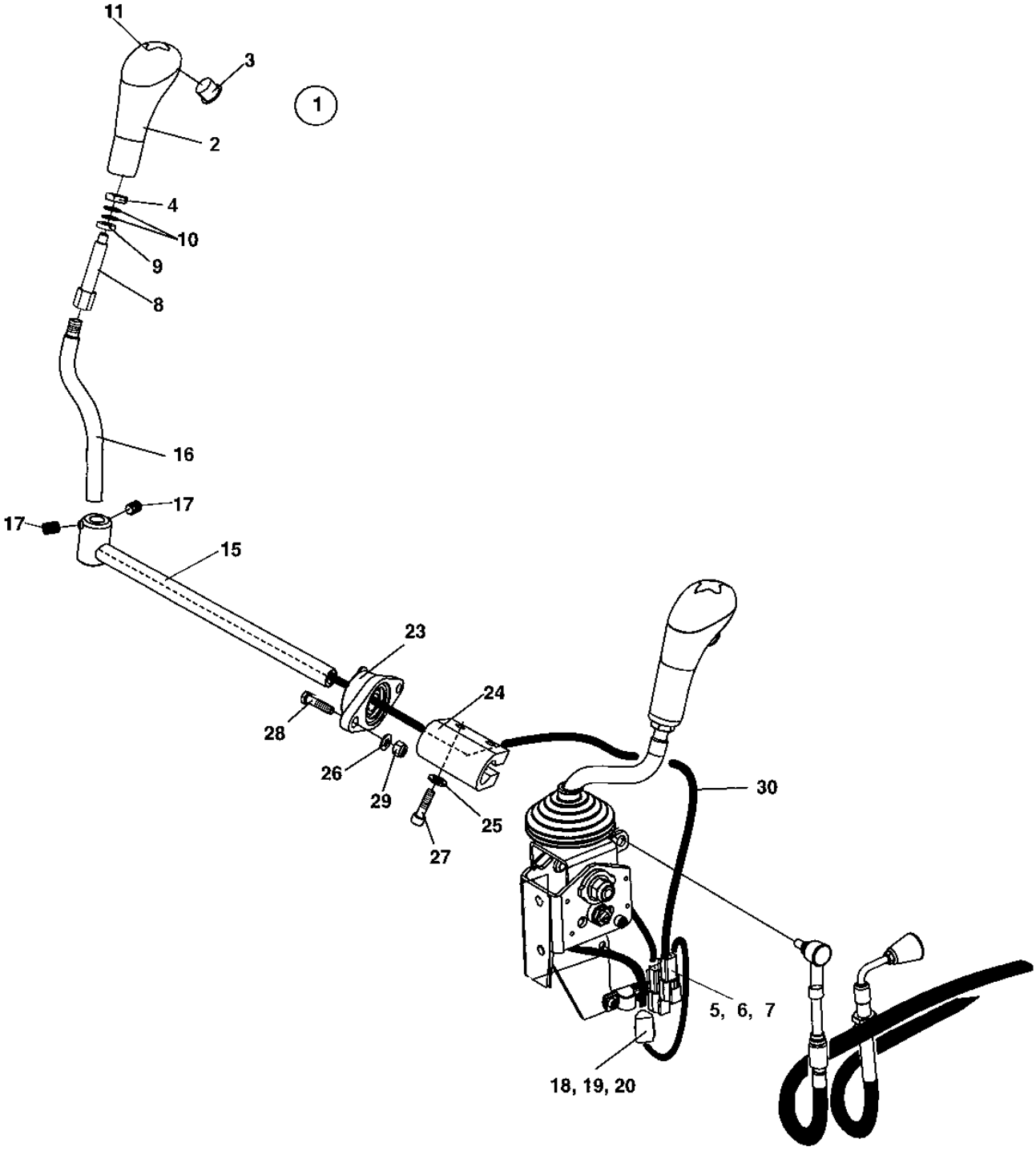

Dual forward/reverse control

Item	Part No	Rem	Qty	Description		Code
1	4700940374		1	Handle kit, cpl		
2			1	.Handle		
	4700945729		1	..Push-button switch		
			1	.Service information		
			1	.Lock fluid		
3	4700377018		1	.Protection plug		
4			1	.Nut		
5			1	.Connector, receptable		
6			1	.Lock wedge		
7			2	.Pin		
8			1	.Rod		
9			1	.Washer		
10			2	.Washer		
11	4700378759		1	.Handle top		
15	4700377053		1	Control shaft		
16	4700377055		1	Lever		
17	4700377056		2	Socket set screw		
18	4700791668		1	Connector plug		
19	4700791669		1	Lock wedge		
20	4700903948		2	Socket		
23	4700791926		1	Y-bearing unit		
24	4700346420		1	Coupling		
25	4700904229		2	Washer	8,4x16x1,5	C
26	4700904230		4	Steel plain washer		C
27	4700508048		2	Screw		C
28	4700500031		2	Screw		C
29	4700586018		2	Lock nut		C
30			1	Cable		C

SMV-sign

18059

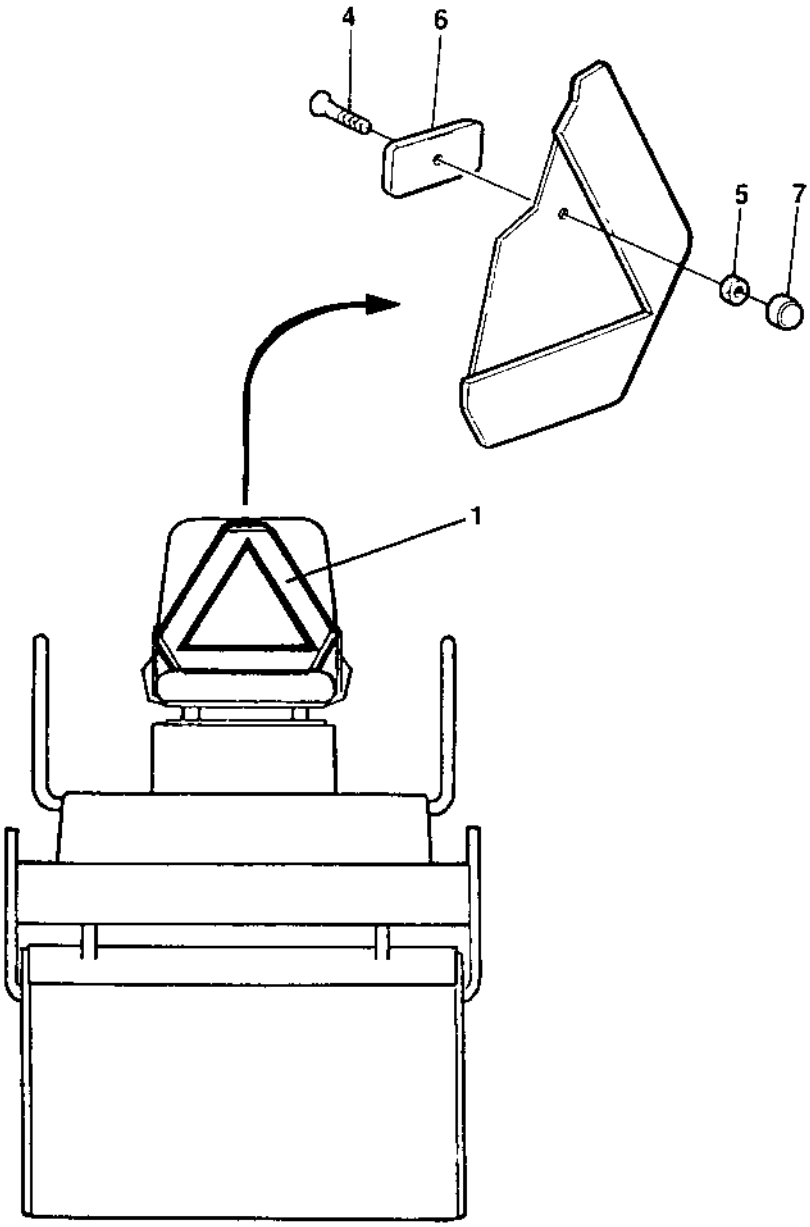

SMV-sign

Item	Part No	Rem	Qty	Description		Code
1	4700476019		1	SMV-sign		D
4	4700513013	A	2	Screw		C
5	4700570005	A	2	Nut	M8	C
6	4700374460	A	2	Spacer		
7	4700904203	A	2	Nut protection		

A) On seats with armrests use existing

SMV-sign Mounting on watertank

18382

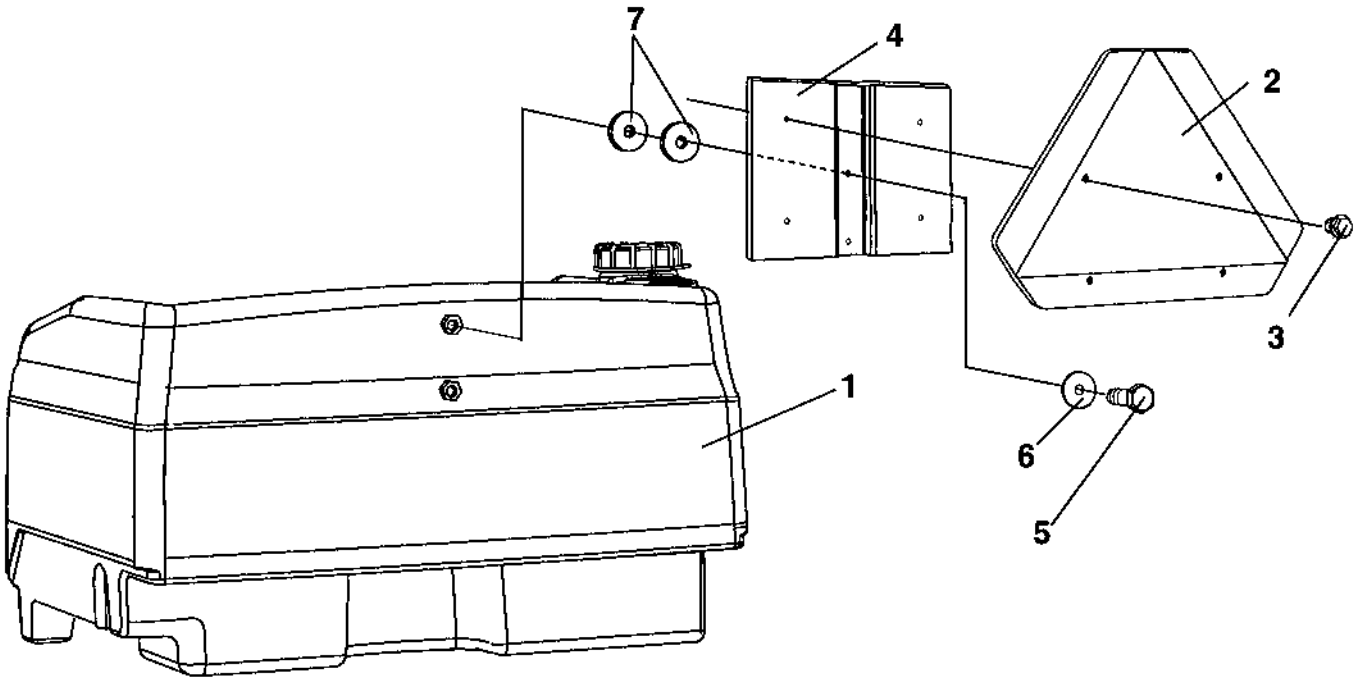

SMV-sign Mounting on watertank

Item	Part No	Rem	Qty	Description		Code
1			1	Water tank		
2	4700476019		1	SMV-sign		D
3	4700903782		4	Screw	M5x12	C
4	4700391920		1	Holder		
5	4700500006		2	Screw	M5x16	C
6	4700927974		2	Washer		
7	4700904735		4	Washer		C

SMV-sign on high water tank

18906

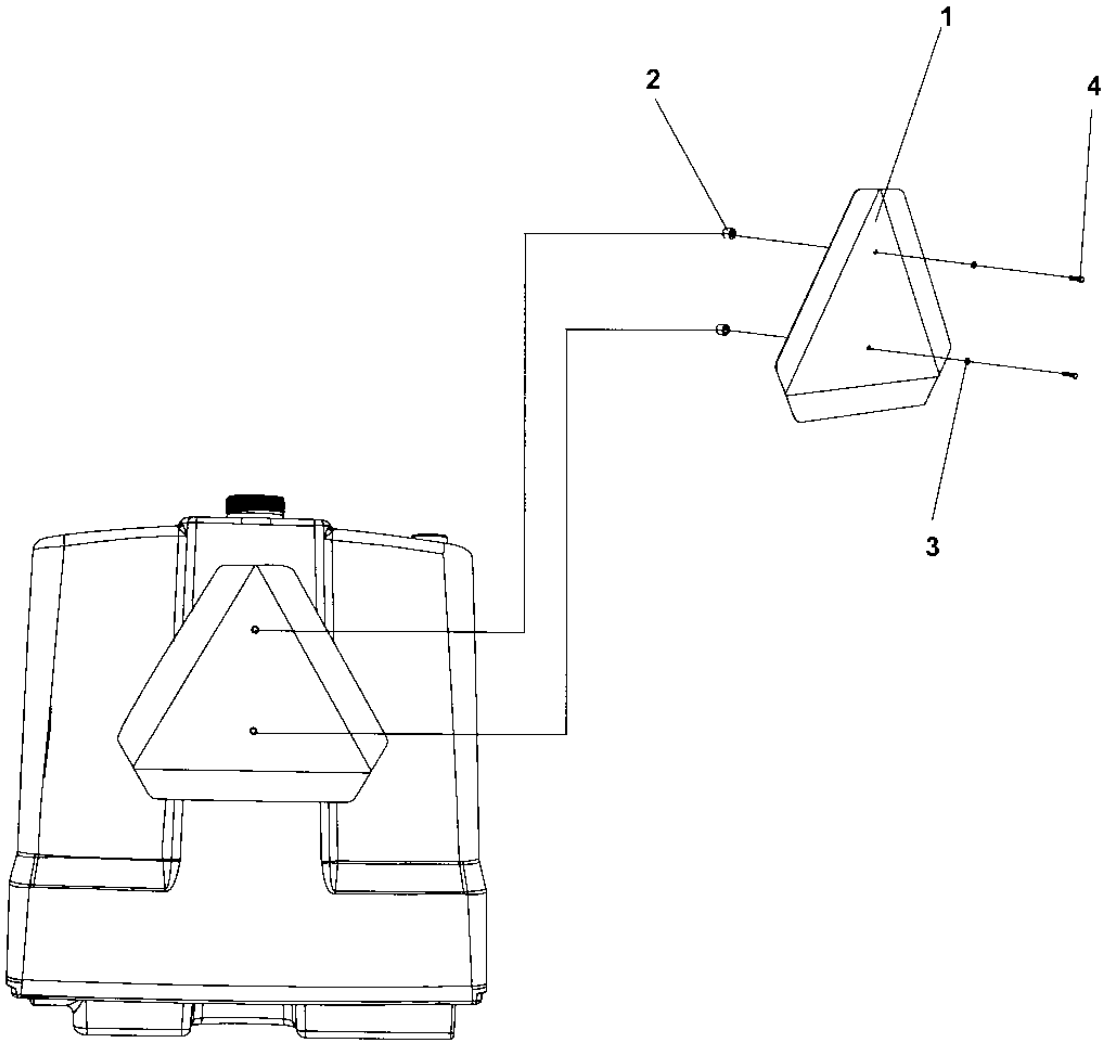

SMV-sign on high water tank

Item	Part No	Rem	Qty	Description		Code
1	4700476019		1	SMV-sign		D
2	4700371728		2	Spacer sleeve		
3	4700904281		2	Washer	5,3x10x1 300HV	C
4	4700500007		2	Screw	M5-0,8x22H 8,8	

Registrations - plate with light

18067

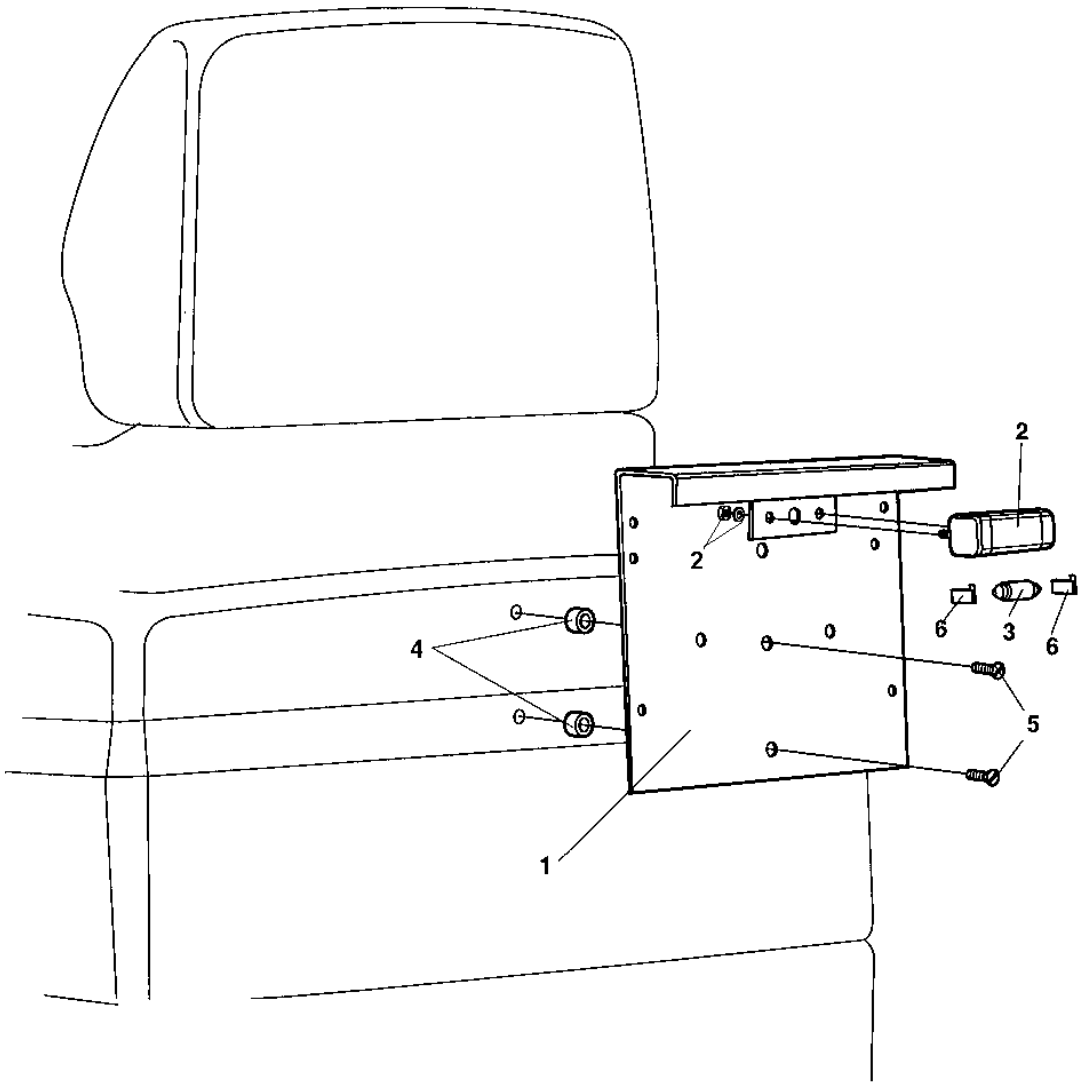

Registrations - plate with light

Item	Part No	Rem	Qty	Description		Code
1	4700355797		1	Licence plate holder		
2	4700929455		1	Licence plate light		D
			2	.Washer		D
			2	.Nut		D
3	4700985013		1	Bulb	12V,5W	B
4	4700371728		2	Spacer sleeve		
5	4700535008		2	Screw	M5x20	C
6	4700792035		2	Push-on terminal		

Hydraulic vibration, shut off front/rear drum

18062

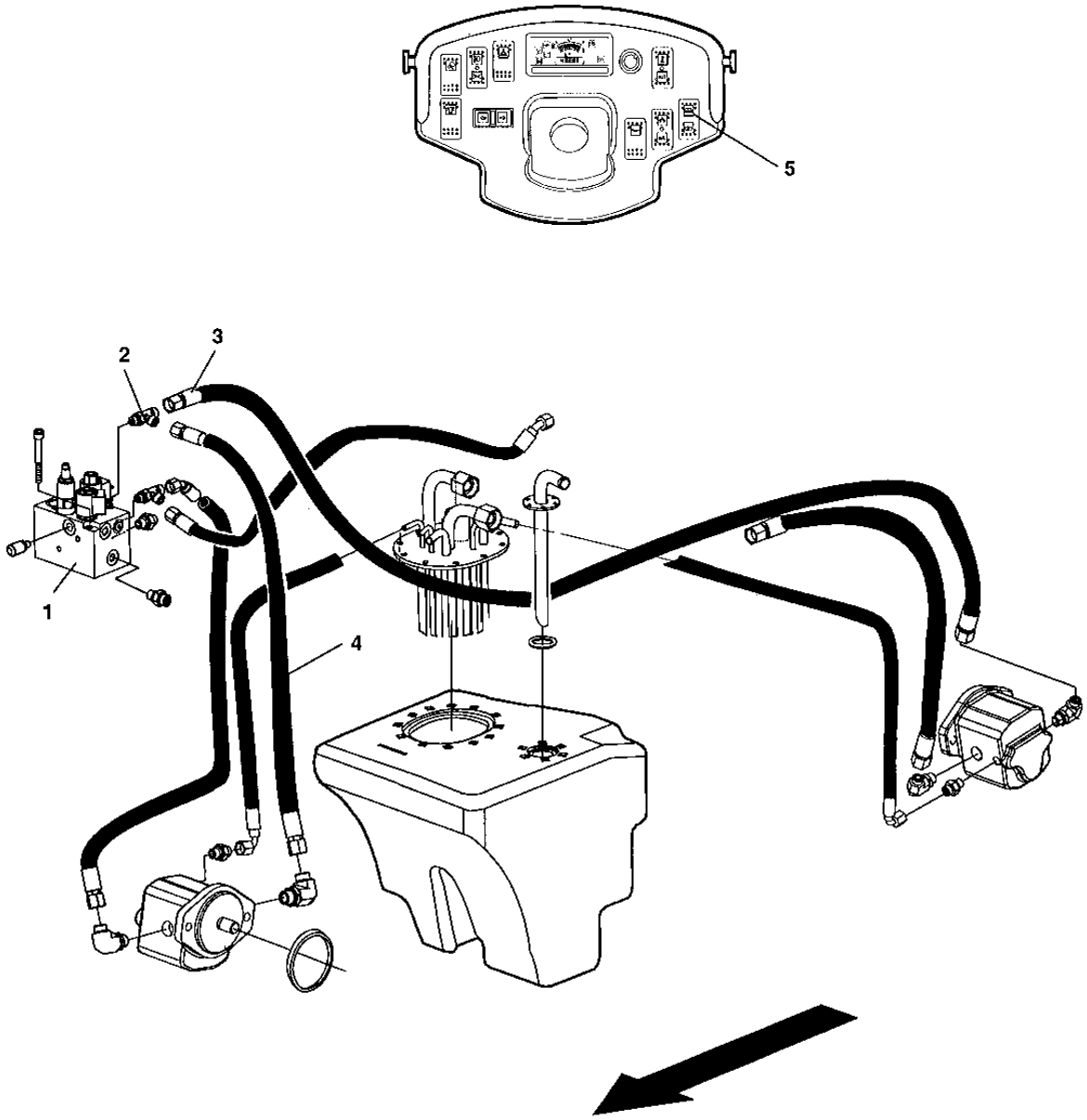

Hydraulic vibration, shut off front/rear drum

Item	Part No	Rem	Qty	Description	Code
1	4700387276		1	Combination valve (Page 124)	
2	4700791700		1	Tee-connector	
3	4700483668		1	Hydraulic hose	
4	4700483651		1	Hydraulic hose	
5	4700791581		1	Switch	

4700387276 Combination valve

18928

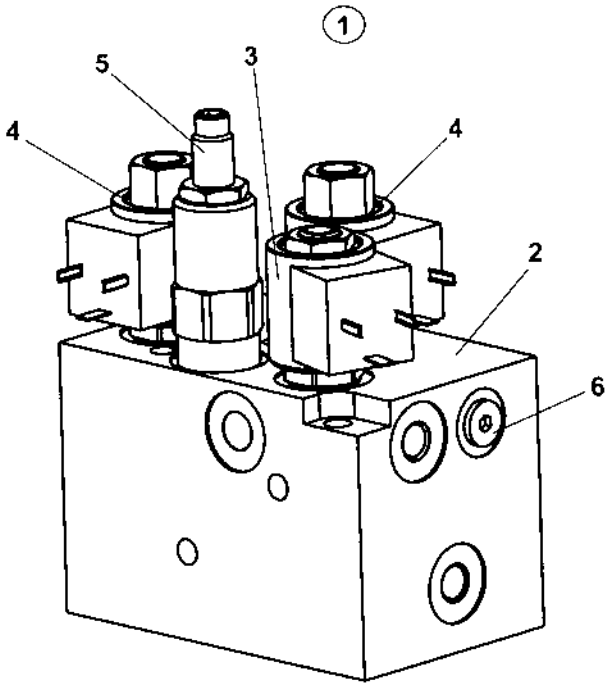

4700387276 Combination valve

Item	Part No	Rem	Qty	Description	Code
1	4700387276		1	Combination valve (Page 124)	
2			1	.Valve block	
3	4700940885		1	.Solenoid valve, cpl	
	4700940887		1	..Coil	
4	4700940886		2	.Solenoid valve, cpl	
	4700940887		2	..Coil	
5			1	.Pilot valve	
6			3	.Plug	

Rear view mirror

18061

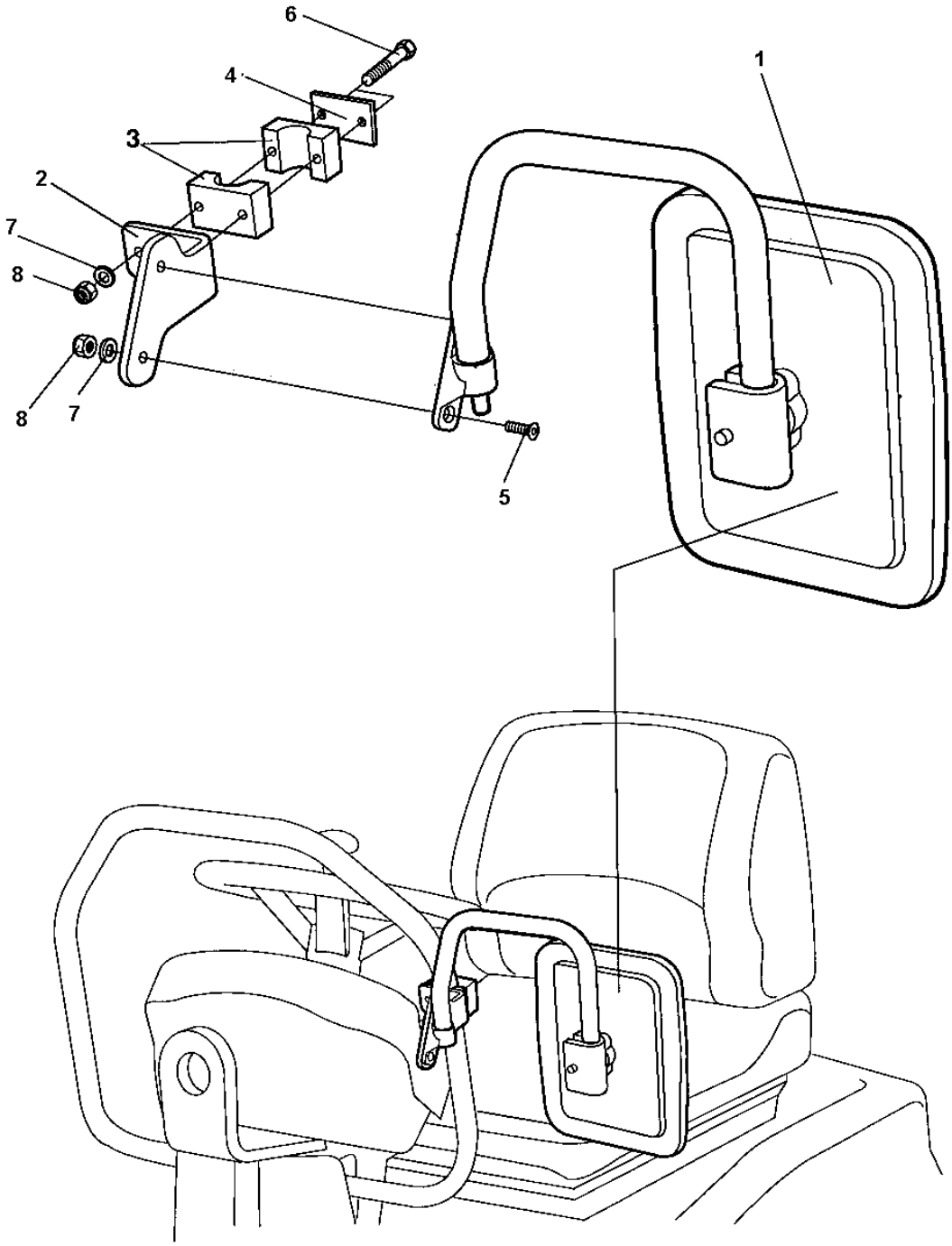

Rear view mirror

Item	Part No	Rem	Qty	Description		Code
1	4700355705		1	Rear mirror		D
2	4700357939		1	Holder plate		
3	4700902496		1	Clamp		
4	4700923859		1	Cover plate		
5	4700902845		2	Screw		
6	4700500016		2	Screw	M6x55 8.8 A2K	C
7	4700904228		4	Washer	6,4x12x1,5	C
8	4700586002		4	Lock nut	M6 -8	C

Rear view mirror

18061-1

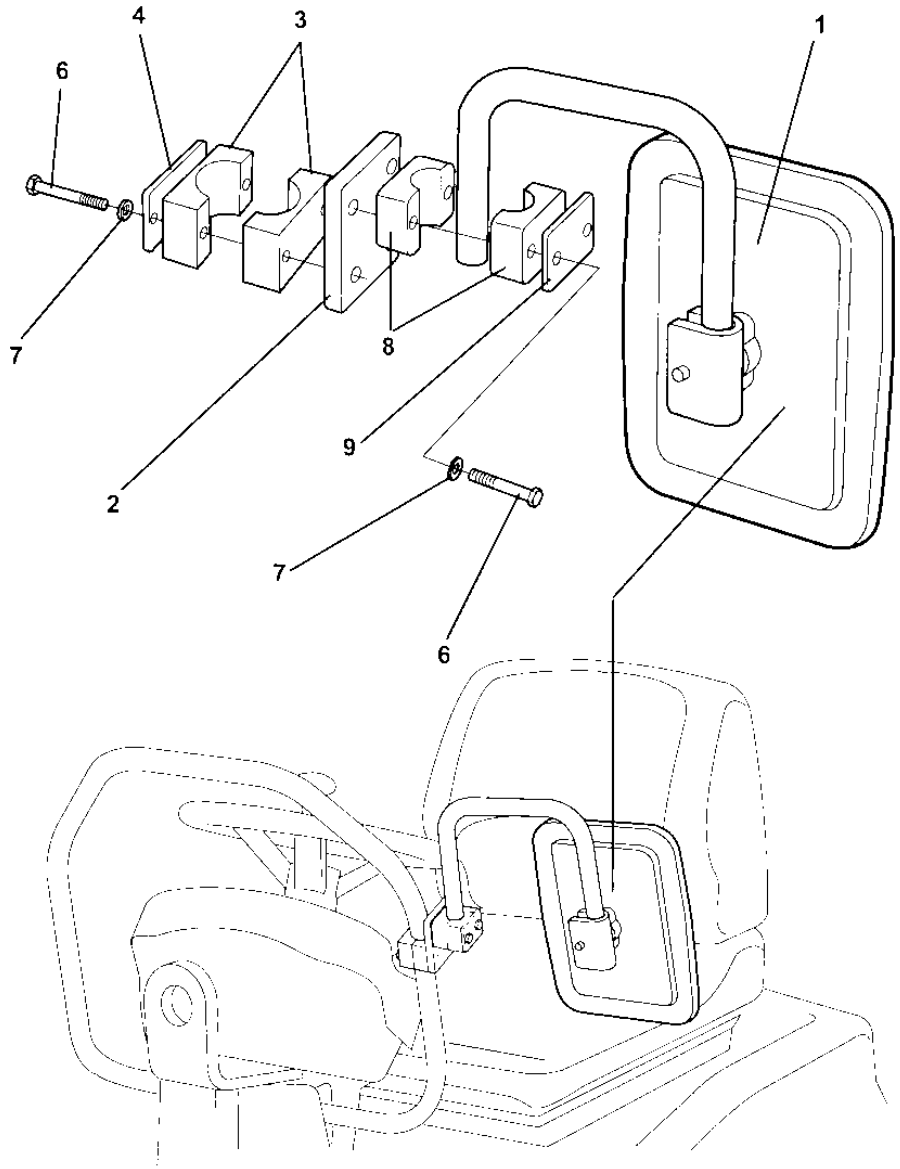

Rear view mirror

Item	Part No	Rem	Qty	Description		Code
1	4700393204		1	Rear mirror		
2	4812110283		1	Bracket		
3	4700902496		1	Clamp		
4	4700923859		1	Cover plate		
6	4700500079		4	Screw	M6-1x50 8,8	
7	4700904228		4	Washer	6,4x12x1,5	C
8	4700791453		1	Pipe clamp block		
9	4700791454		1	Cover plate		

Tool equipment

18060

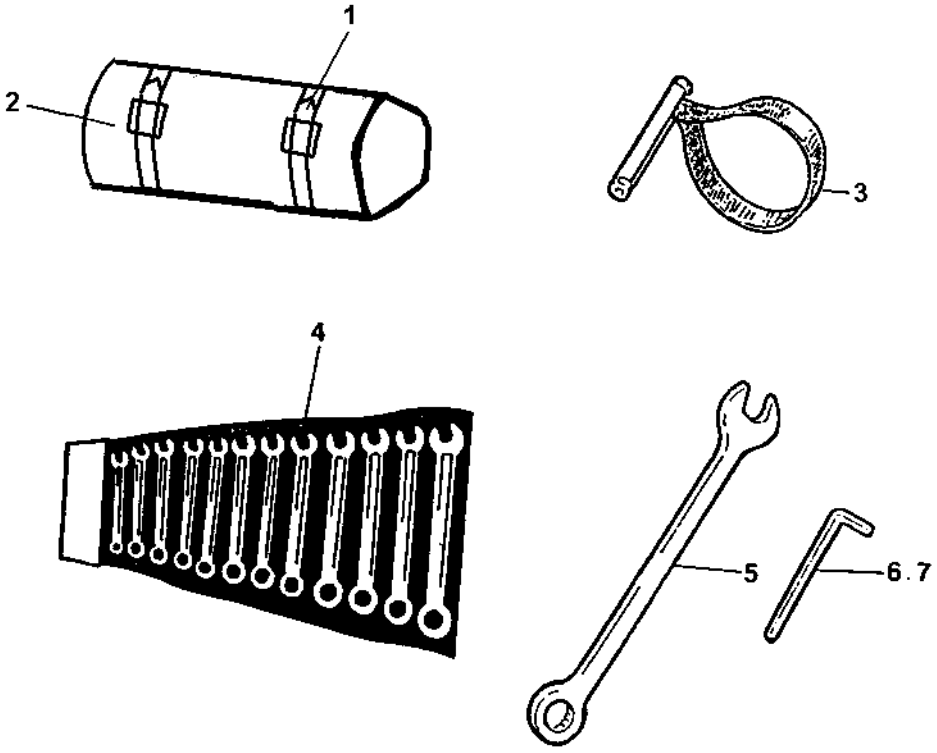

Tool equipment

Item	Part No	Rem	Qty	Description		Code
1	4700792061		2	Strap		
2	4700277992		1	Tool bag		
3	4700902610		1	Belt pliers		D
4	4700901212	A	1	Open end spanner		
5	4700485177		1	Wrench	6"	
6	4700485034		1	Allen wrench	4 mm	
7	4700792060		1	Allen wrench	3 mm	

A) Kit

NUMERICAL INDEX

Part Number	Page	Part Number	Page	Part Number	Page
4700111018	23,39	4700376636	63	4700387044	31
4700160032	61	4700376637	7,11,63	4700387045	17,31
4700160058	19,29	4700376770	43	4700387055	27
4700160101	61	4700376771	43	4700387056	27
4700160132	21,23,39	4700376772	43	4700387097	47
4700162015	61	4700376861	63	4700387099	45
4700162017	39	4700376876	35	4700387100	45
4700202042	73,75	4700377009	93	4700387101	45
4700205067	61	4700377010	93	4700387118	51
4700232160	61	4700377011	93	4700387137	39
4700238158	73,75	4700377012	93	4700387142	95
4700272373	99	4700377014	93	4700387148	33
4700277992	131	4700377015	93	4700387151	33
4700280101	95	4700377016	93	4700387154	33
4700282603	95	4700377018	93,113	4700387200	51
4700283711	61	4700377019	91	4700387201	47
4700287713	35	4700377020	91	4700387205	45
4700288129	51	4700377021	91	4700387225	89
4700297018	33	4700377024	91	4700387226	89
4700313001	45,59	4700377042	33	4700387227	89
4700313002	35	4700377043	33	4700387229	91
4700313008	61	4700377044	33	4700387236	89
4700313010	51	4700377053	113	4700387269	59
4700313023	49	4700377055	113	4700387270	55,57
4700313035	45,61	4700377056	113	4700387274	63,65
4700313075	49	4700377058	71,109	4700387275	63,67
4700313102	59,63	4700377061	33	4700387276	123,125
4700313108	45,49,59,61	4700377063	71	4700387277	63
4700343490	39	4700377139	73,75	4700387278	61
4700343744	39	4700377140	77,79	4700387279	49
4700343801	39	4700377253	107	4700387284	27,71
4700346420	113	4700377343	111	4700387287	45
4700348331	89,99	4700377556	89	4700387298	91
4700349202	39	4700377610	27	4700387376	27
4700349332	27	4700377611	35	4700387377	77,79,81
4700350029	39	4700377621	27,29	4700387378	77,79
4700355704	71	4700377677	95	4700387424	27
4700355705	127	4700378178	31	4700387425	27
4700355797	121	4700378745	73,75	4700387428	45
4700355869	63	4700378759	93,113	4700387453	89
4700357002	43	4700378932	73,75	4700387545	89
4700357138	9,11,61	4700379009	35	4700387552	49
4700357139	61	4700379012	99	4700387597	55
4700357567	107,109	4700379636	89	4700387598	55
4700357587	99	4700380343	61	4700387676	55
4700357643	89	4700382751	99	4700387677	27,55
4700357855	89	4700383697	35	4700387678	55
4700357939	127	4700383705	89	4700387682	49
4700358232	89	4700385599	73,75	4700387683	73,75
4700358254	107	4700386241	39	4700387685	89
4700358666	39	4700386619	39	4700387695	49
4700358689	39	4700386620	39	4700387713	61
4700358881	35,103,111	4700386622	39	4700387720	89
4700359043	31	4700386893	45	4700387758	61
4700371728	119,121	4700386906	39	4700387779	27
4700371785	45	4700386907	39	4700387886	27
4700372123	99	4700386949	43	4700387935	35,111
4700372964	63	4700386951	51	4700387947	33
4700373363	99	4700386963	45	4700387948	33
4700374460	115	4700387039	31	4700387949	27,33
4700376554	7,9,11,43	4700387040	31	4700387956	33
4700376555	7,9,11,49	4700387043	31	4700388009	71,85

NUMERICAL INDEX

Part Number	Page	Part Number	Page	Part Number	Page
4700388017	111	4700395227	45	4700500176	27
4700388087	35,111	4700395257	91	4700500180	83
4700388171	19,29	4700395394	73,75	4700500208	27
4700388172	19,29	4700395497	61	4700500212	39
4700388173	19,29	4700395520	61	4700500230	79,81
4700388194	61	4700396971	75	4700500269	27
4700388382	77,79	4700397093	71	4700500280	39
4700388447	89	4700397157	89	4700500505	89
4700388476	91	4700416034	91	4700500506	43
4700388636	77,79	4700476019	115,117,119	4700500509	89
4700388653	61	4700483646	55	4700502019	43
4700388721	71	4700483649	61	4700508002	61
4700388733	33	4700483651	61,123	4700508004	35
4700388737	73,75	4700483652	59	4700508019	43
4700388772	83	4700483653	63	4700508022	33
4700388773	83	4700483654	63	4700508029	39
4700388846	33	4700483655	63	4700508041	71
4700388849	27	4700483656	63	4700508048	43,113
4700388850	27	4700483657	63	4700508063	95
4700388852	33	4700483661	59	4700508068	93
4700388960	55	4700483662	63	4700508092	51,61,71,91
4700389003	43	4700483665	59	4700508094	61
4700389005	51	4700483668	123	4700513013	115
4700389019	51	4700483684	43	4700513017	89
4700389036	51	4700483688	59	4700527002	39
4700389142	45	4700483689	59	4700530027	27
4700389155	35,111	4700483690	59	4700535008	121
4700389218	35	4700483691	61	4700541702	83,85
4700389400	59	4700483696	63	4700570004	71,73,75,93
4700389401	61	4700483879	59	4700570005	31,43,71,115
4700389402	61	4700484257	61	4700570006	43
4700389403	59	4700485034	131	4700570007	39
4700389404	59	4700485177	131	4700573005	77
4700389432	39	4700500006	71,117	4700573008	95
4700389434	39	4700500007	89,119	4700586001	71,91
4700389556	55	4700500012	39	4700586002	33,73,75,127
4700389561	83	4700500013	51,91	4700586003	31,33,71,73,75
4700389577	83	4700500016	127		83,89,91
4700389763	83	4700500018	89	4700586018	31,43,79,81,89
4700389798	95	4700500019	55		113
4700389840	75	4700500021	45,47,71,83	4700586019	93
4700389919	99	4700500022	39,43	4700586022	27
4700389920	99	4700500024	31,71	4700624015	99
4700390316	61	4700500029	35,39,43,49,77	4700629101	83
4700390586	89		111	4700635061	27,95
4700391379	93	4700500030	89	4700791185	73,75
4700391380	93	4700500031	63,113	4700791211	73,75
4700391381	93	4700500033	43	4700791226	89
4700391382	93	4700500037	59	4700791228	33
4700391383	93	4700500040	45	4700791290	99
4700391386	93	4700500047	43	4700791395	61
4700391784	89	4700500048	63	4700791408	63
4700391920	117	4700500050	19,29	4700791410	63
4700391984	15,39	4700500053	27,33,51,55,61	4700791412	59,63
4700392011	35		63,71	4700791422	49
4700392508	35	4700500067	27,31	4700791425	21,39
4700392509	35	4700500068	33,49,55	4700791426	21,23,39
4700393204	129	4700500075	73,75	4700791433	21,39
4700393956	73	4700500079	129	4700791453	129
4700394253	49	4700500090	35	4700791454	129
4700394301	89	4700500105	31	4700791476	89
4700394541	43	4700500161	43	4700791483	47,71

NUMERICAL INDEX

Part Number	Page	Part Number	Page	Part Number	Page
4700791493	43,45	4700791962	19,29	4700903946	93
4700791502	71	4700791970	77,79,81	4700903947	93
4700791535	43,55	4700791971	77,79	4700903948	113
4700791537	55,59	4700791977	35	4700903956	71,77,79
4700791538	59,61	4700791980	83	4700904009	55,59,63
4700791539	59	4700791981	83	4700904012	33
4700791540	63	4700792019	71	4700904015	109
4700791541	61	4700792020	71	4700904092	99
4700791542	63	4700792026	43	4700904097	99
4700791543	59	4700792035	121	4700904203	115
4700791549	59	4700792059	77,79	4700904214	27
4700791550	71	4700792060	131	4700904228	27,33,39,45,51
4700791559	27,33	4700792061	131		61,71,73,75,91
4700791565	63	4700792070	61		99,127,129
4700791568	35	4700792072	31	4700904229	27,31,33,35,43
4700791578	73,75	4700792083	73,75		47,49,51,55,61
4700791579	73,75	4700792098	85		63,71,83,89,91
4700791580	73,75	4700792188	31		95,113
4700791581	73,75,123	4700792189	31	4700904230	43,63,77,79,81
4700791582	73,75	4700792190	31		89,113
4700791583	77,79	4700792236	89	4700904231	27,39,43,71,95
4700791584	77,79	4700792250	43	4700904233	27
4700791585	83	4700792320	73,75	4700904281	35,89,111,119
4700791586	77,79	4700792611	19,29	4700904314	77
4700791587	77,79,81	4700792707	61	4700904556	27,33,45,61,71
4700791588	73,75	4700792773	61		73,75,89,91
4700791597	33	4700900790	77	4700904557	39,43,49,89,111
4700791599	59	4700900986	95	4700904558	39
4700791616	89	4700901157	59,61	4700904563	93
4700791639	71	4700901212	131	4700904567	35
4700791643	33,77,79	4700901225	77,79	4700904637	43
4700791647	73	4700901227	73,77,79,109	4700904640	31,35,39,43,45
4700791666	33,99	4700901228	73,75,81		47,55
4700791668	113	4700901369	81	4700904641	55
4700791669	113	4700901432	35	4700904698	49,71
4700791699	61	4700901767	73,75	4700904703	39,47,59
4700791700	61,123	4700901832	45	4700904735	61,117
4700791701	63	4700902123	63	4700904755	91
4700791704	77,79	4700902166	33,89	4700904835	107,109
4700791723	75	4700902227	81	4700904870	99
4700791739	75	4700902286	27,45	4700904878	35
4700791754	31,49,81	4700902496	127,129	4700904889	77,79
4700791774	49	4700902560	107,109	4700904984	49
4700791775	31,73,75	4700902610	131	4700904989	77,79
4700791780	45	4700902845	127	4700908229	95,99
4700791794	61	4700903154	39	4700921039	83
4700791916	77,79	4700903236	49	4700921050	71
4700791917	99	4700903374	39	4700923270	33,91
4700791926	113	4700903422	99	4700923734	35
4700791938	31	4700903423	99	4700923735	35
4700791939	31	4700903424	99	4700923859	127,129
4700791941	61	4700903425	99	4700923976	71
4700791949	35	4700903459	99	4700924544	35
4700791950	35	4700903658	35,89,111	4700924986	35
4700791951	77,79	4700903714	45	4700924996	35
4700791953	77,79	4700903741	73,75	4700925228	39
4700791954	77,79	4700903768	71	4700925519	39
4700791955	77,79	4700903782	73,75,117	4700925802	61
4700791956	99	4700903810	77,79	4700926537	91
4700791957	81,99	4700903856	33	4700927233	93
4700791958	99	4700903886	35	4700927568	47
4700791959	35	4700903945	93	4700927974	117

NUMERICAL INDEX

Part Number	Page	Part Number	Page	Part Number	Page
4700928198	39	4700960041	109		
4700928381	33	4700960079	77,79,109		
4700928830	63	4700985013	121		
4700929191	27	4700985125	77		
4700929455	121	4700991658	99		
4700935429	65	4700999027	71		
4700935613	63	4812110216	79,81		
4700935614	63	4812110283	129		
4700939802	9,11,51	4812110346	39		
4700939803	9,11,51	4812110560	109		
4700939804	51	4812110595	39		
4700939805	51	4812110596	39		
4700939806	51	4812110663	39		
4700939807	51	4812110974	45,109		
4700939932	11,43				
4700939977	43				
4700940203	49				
4700940208	5,7				
4700940209	5,9				
4700940210	5,11				
4700940212	11				
4700940227	43				
4700940228	43				
4700940229	43				
4700940231	43				
4700940374	93,113				
4700940447	43				
4700940451	73,75				
4700940613	59				
4700940672	13,17				
4700940885	61,125				
4700940886	61,125				
4700940887	61,125				
4700940888	61				
4700940894	49				
4700940922	49				
4700940960	91				
4700940976	43				
4700945123	43				
4700945284	43				
4700945286	43				
4700945340	61				
4700945407	93				
4700945418	49				
4700945473	43				
4700945526	63,67				
4700945531	57				
4700945532	57				
4700945552	13,15				
4700945629	43				
4700945668	67				
4700945710	13,21				
4700945711	13,23				
4700945729	93,113				
4700945753	49				
4700945777	49				
4700945878	47				
4700945928	13,19,29				
4700947684	63				
4700947687	39				
4700947694	39				
4700950382	91				