RUTHZIL TRATOR COMERCIAL DE PEÇAS LTDA 11 97083-6812 ROLANDO CITRANGULO

DYNAPAC CC900S

SPARE PARTS CATALOGUE

SCC900S-2EN3

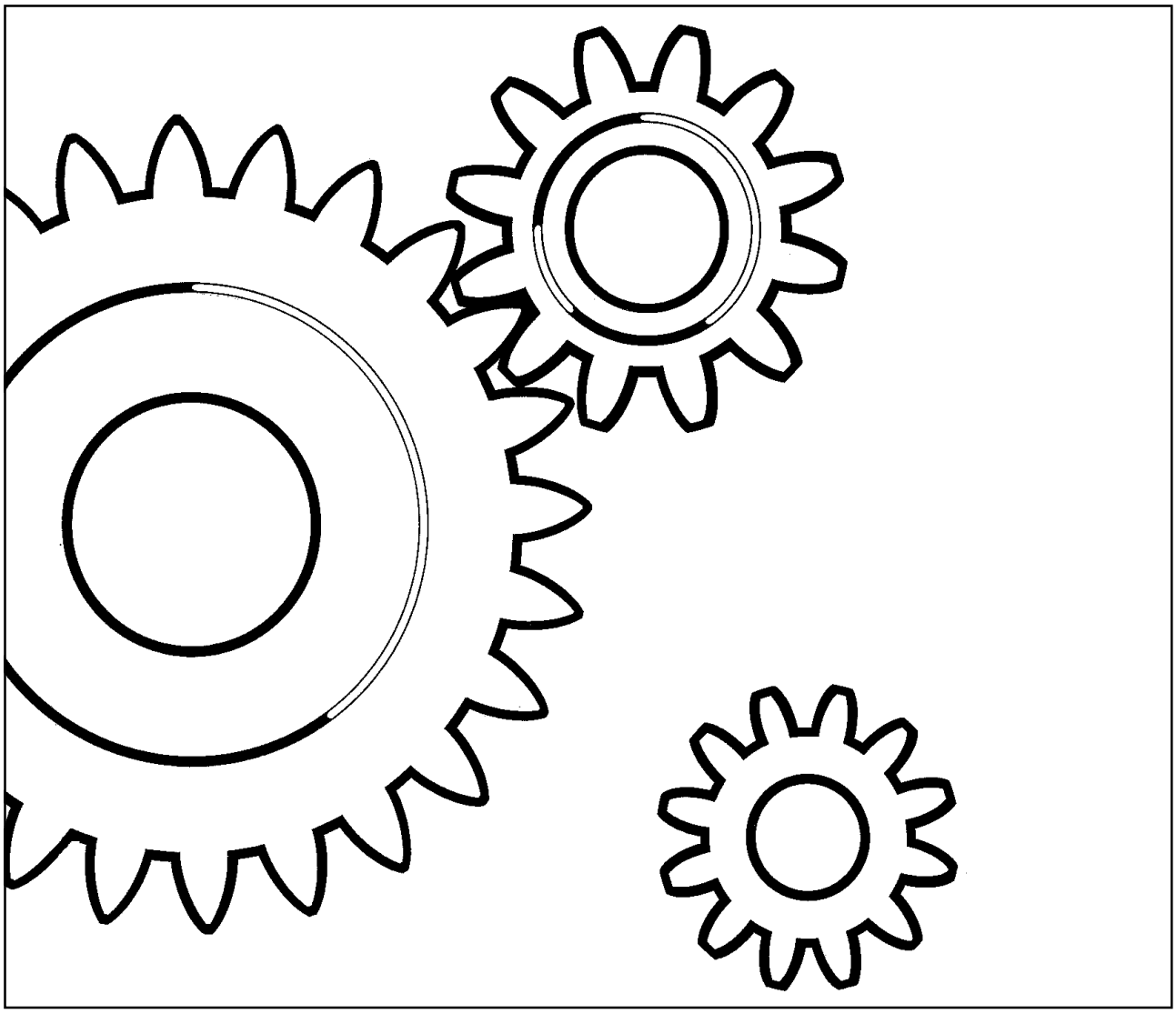

DYNAPAC
Part of the Atlas Copco Group

Box 504, SE-371 23 Karlskrona, Sweden
Phone: +46 455 30 60 00, Fax: +46 455 30 60 10
www.dynapac.com

DYNAPAC
Part of the Atlas Copco Group

Vibratory Roller
CC900S

Spare Parts Catalogue
SCC900S-2EN3

Valid from roller serial number:

**89532700* -*

Diesel engines:

Perkins 403D-11

Published catalogue issues valid for these rollers:

Catalogue	Issue date	Valid for serial numbers
SCC900S-2EN1	2008-03	Replaced by SCC900S-2EN2
SCC900S-2EN2	2009-04	Replaced by SCC900S-2EN3
SCC900S-2EN3	2009-12	See above



We reserve the right to change specifications without notice.
Printed in Sweden.

DYNAPAC
Part of the Atlas Copco Group

RESERVDELSBESTÄLLNING

Följande uppgifter ska lämnas vid beställning av reservdelar för att undvika leveransfel:

1. Maskintyp.
2. Vältens serienummer.
3. Antal av önskad reservdel.
4. Reserdelens artikelnummer.
5. Reservdelens benämning.
6. Måttuppgifter vid beställning av metervara.

ORDERING SPARE PARTS

To avoid errors in delivery, please give the following information when ordering spare parts:

1. Type of machine.
2. Roller serial number.
3. Quantity required.
4. Part number.
5. Parts denomination.
6. Dimensions when ordering per length.

ERSATZTEILBESTELLUNG

Zur Vermeidung von Fehllieferungen sind bei der Bestellung von Ersatzteilen folgende Angaben zu machen:

1. Maschinentyp.
2. Herstellungsnummer.
3. Bestellmenge. (Quantity)
4. Ersatzteilnummer. (Part Nº)
5. Ersatzteilbenennung. (Denomination)
6. Massangaben bei Bestellung von Meterware.

ORDINI DI RICAMBI

Per evitare errori nelle consegne di ricambi, Vi preghiamo di comunicarci le seguenti informazioni al momento dell 'ordinazione:

1. Tipo di macchina.
2. Numero di serie della macchina.
3. Quantità dei pezzi desiderati. (Quantity)
4. Numero di codice del pezzo. (Part Nº)
5. Descrizione del pezzo di ricambio. (Denomination)
6. Misura, in caso di ordine per metro.

PEDIDO DE RECAMBIOS

Para evitar errores en las entregas, deberán indicarse los siguientes datos al hacer un pedido de recambios:

1. Tipo de máquina.
2. Número de serie.
3. Cantidad de piezas deseadas. (Quantity)
4. Número de artículo de la pieza de recambio. (Part Nº)
5. Denominación de la pieza. (Denomination)
6. Indíquese la medida al solicitar un artículo que se expide por metros.

COMMANDE DE PIECES DE RECHANGE

Les indications suivantes doivent être fournies lors de la commande de piéces de rechange, afin d'éviter toute erreur de livraison:

1. Type de machine.
2. Numéro de série.
3. Quantité désirée de pièce de rechange. (Quantity)
4. Numéro de la piéce de rechange. (Part Nº)
5. Dénomination de la piéce de rechange. (Denomination)
6. Longueur en cas de commande au mètre.

YOUR AGENT/DEALER:

Text pages

The text pages is structured as the picture on the right.

1. This is the remarks for specific items and the descriptions of the remarks is at the bottom of the parts list.

2. Parts indicated by a dot and moved to the right are included when buying the assembled unit above.

3. Spare parts and service code for a specific part, mainly for internal use at Dynapac. "A" = Service part, "B" = Fast moving part, "C" = Suggested exchanged part and "D" = Regular spare part.

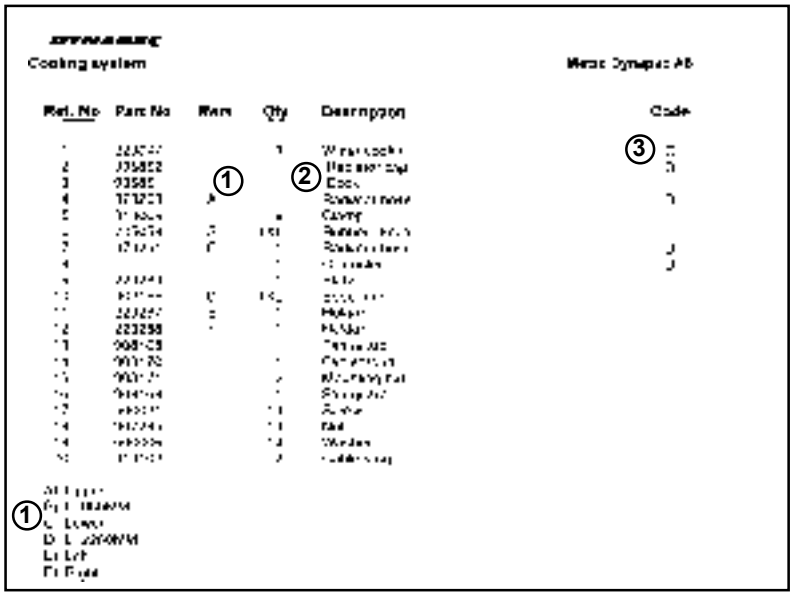

Changes

PARTS INFO	SERVICE INFO	GROUP	PAGE	NOTES

Notes

Notes

PÄRMETIKETT

För att undvika fel vid reservdelsbeställning finns här nedan två etiketter som passar i fickorna på pärmarnas ryggar. På dessa kan man se från vilket vältnummer av aktuell maskin reservdelskatalogen gäller. Gör så här:

1. Tag denna sida ur pärmen.
2. Klipp ut etiketten till **VÄNSTER** (1) och sätt in den i fickan på **DENNA** pärmens rygg.
3. Finns det en etikett till **HÖGER** (2), kan denna användas på pärmen för **FÖREGÅENDE** utgåva av denna katalog.
4. Kasta detta papper.

BINDER LABEL

To avoid errors when ordering spare parts use the labels below to identify the catalogues on the back of the binder. The label contain the serial number range for which the catalogue is valid. Do like this:

1. Remove this page from the binder.
2. Cut out the **LEFT** label (1) and put it on **THIS** binders back.
3. If there is a label to the **RIGHT** (2), it can be used on the binder for **PRECEDING** issue of this catalogue.
4. Throw away this paper.

KATALOG-BESCHRIFTUNG

Zur Vermeidung von Fehlen bei der Ersatzteilbestellung benutzen Sie bitte die unteren Beschriftungen, um die Kataloge auf der Rückseite zu kennzeichen. Auf der Beschriftung ist angegaben, für welche Maschinennummern der jeweilige Katalog gültig ist. Ablauf:

1. Nehmen Sie dieses Blatt aus dem Katalog.
2. Schneiden Sie die **LINKE** Beschriftung (1) aus. Schieben Sie die Beschriftung in die tasche auf **DEM** Katalogrücke.
3. Sollte die Beschriftung unten **RECHTS** (2) mitgeliefert werden, kennzeichen Sie damit bitte die **ÄLTERE** Ausführung dieses Kataloges.
4. Den Rest dieses Blattes bitte vernichten.

ETICHETTA POSTA SUL RACCOGLITORE

Per evitare errori quando ordinate pezzi di ricambio, usate le etichette in calce che servono ad identificare i cataloghi sul retro del raccoglitore. L'etichetta indica il numero di matricola delle maccine prese in considerazione nel catalogo.

1. Rimuovete questa pagina dal raccoglitore.
2. Ritagliate l'etichetta posta a **SINISTRA** (1) e ponetela sul retro **DEL** raccoglitore.
3. Se trovate anche un'etichetta sulla **DESTRA** (2), ritagliatela e ponetela sul raccoglitore relativo alla **PRECEDENTE** edizione del catalogo.
4. Distruggete questo foglio.

ETIQUETA PARA LA CARPETA

Para evitar errores al pedir repuestos utilicen las etiquetas abajo descritas para identificar los catálogos en la parte trasera de la carpeta. En la etiqueta se ven los números de referencia de la serie para la cual es válido el catálogo. Instrucciones:

1. Quitar esta página de la carpeta.
2. Corta la etiqueta **IZQUIERDA** (1) y ponerla est **ESTA** carpeta en la parte trasera.
3. Si hay una etiqueta en la parte **DERECHA** (2) se puede utilizar en la carpeta para el catálogo que **PRECEDE** a esta.
4. Tirar esta hoja.

ETIQUETAGE DU CATALOGUE

Afin d'éviter des erreurs lors de commandes de pièces de rechange, nous vous conseillons d'apposer les marquages ci-dessous à l'arrière du classeur, pour identifier les catalogues. Ce marquage indique les numéros de série pour lesquels le catalogue est adapté. Il convient de procéder de la façon suivante:

1. Retirez cette page du classeur.
2. Découpez l'étiquette de **GAUCHE** (1), et apposez-la à l'arrière de **CE** catalogue.
3. Si il y a une étiquette à **DROITE** (2), vous pourrez l'apposer sur le classeur de l'edition **PRECEDENTE** du catalogue.
4. Détruire cetta feuille.

1 .



CC900S

Catalogue **SCC900S-2EN3**
Valid **from** serial number:
***89532700* -**

TABLE OF CONTENTS

Page

CC900S SN 89532700 - 2

Service kits 4

4700940208 Service kit, Perkins 50h 6
4700940209 Service kit, Perkins 500h 8
4700940210 Service kit, Perkins 1000h 10

Repair kits 12

4700945850 Shock absorber kit, front drum 14
4700945552 Shock absorber kit, drum 16
4700940671 Scraper kit CC900/900G/900S 18
4700945928 Repair kit, Steering hitch 20
4700945710 Eccentric shaft kit 22
4700945711 Drum rotation kit 24
4700950150 Eccentric shaft kit Single arm drum 26

Frames 28

Frames 30
4700377621 Hitch 32
Scrapers 34
Spring loaded Scrapers Option 36
Engine hood 38
Sprinkler system 40

Drum 42

Drum Single arm 44
Drum Rear 46

Engine 48

Engine Perkins 403D-11 50
Cooling system 52
Exhaust system 54
Fuel system 56
Air intake system 58

Hydraulic system 60

Hydraulic propulsion and brake system 62
Hydraulic vibration 66
4700387276 Combination valve 70
Hydraulic steering 72
4700387274 Steering valve 74
4700387275 Hydraulic cylinder 76

Electrical equipment 78

Electrical equipment 80
Control panel, relays Up to 89532816 82
Control panel, relays From 89532817 84
Driving lights Option 86
Driving lights Option 88
Working lights Option 90
Rotating beacon with Rops Option 92
Back-up alarm Option 94

Drivers platform 96

Drivers seat 98
F/R- and throttle control 100

TABLE OF CONTENTS

Page

Forward and reverse control handle 102
Rops Option 104

Decals and documentation 106

Decals and documentation 108

Standard equipment 110

Standard equipment 112

Optional equipment 114

Battery disconnector 116
Battery disconnector From ECN 09452 118
Water tank, option 120
Dual forward/reverse control 122
SMV-sign 124
SMV-sign Mounting on watertank 126
SMV-sign on high water tank 128
Registrations - plate with light 130
Hydraulic vibration, shut off front/rear drum 132
4700387276 Combination valve 70
Rear view mirror 134
Rear view mirror 136
Tool equipment 138


5
50
60
80
90
70
30
CC900S
DYNAPAC
DYNAPAC
10
20

Item	Part No	Rem	Qty	Description	Code
5				Service kits (Page 4)	
6				Repair kits (Page 12)	
10				Frames (Page 28)	
20				Drum (Page 42)	
30				Engine (Page 48)	
50				Hydraulic system (Page 60)	
60				Electrical equipment (Page 78)	
70				Drivers platform (Page 96)	
80				Decals and documentation (Page 106)	
90				Standard equipment (Page 110)	
91				Optional equipment (Page 114)	

Service kits

Item	Part No	Rem	Qty	Description		Code
1	4700940208			Service kit, Perkins (Page 6)	50h	
2	4700940209			Service kit, Perkins (Page 8)	500h	
3	4700940210			Service kit, Perkins (Page 10)	1000h	

4700940208 Service kit, Perkins 50h

17996

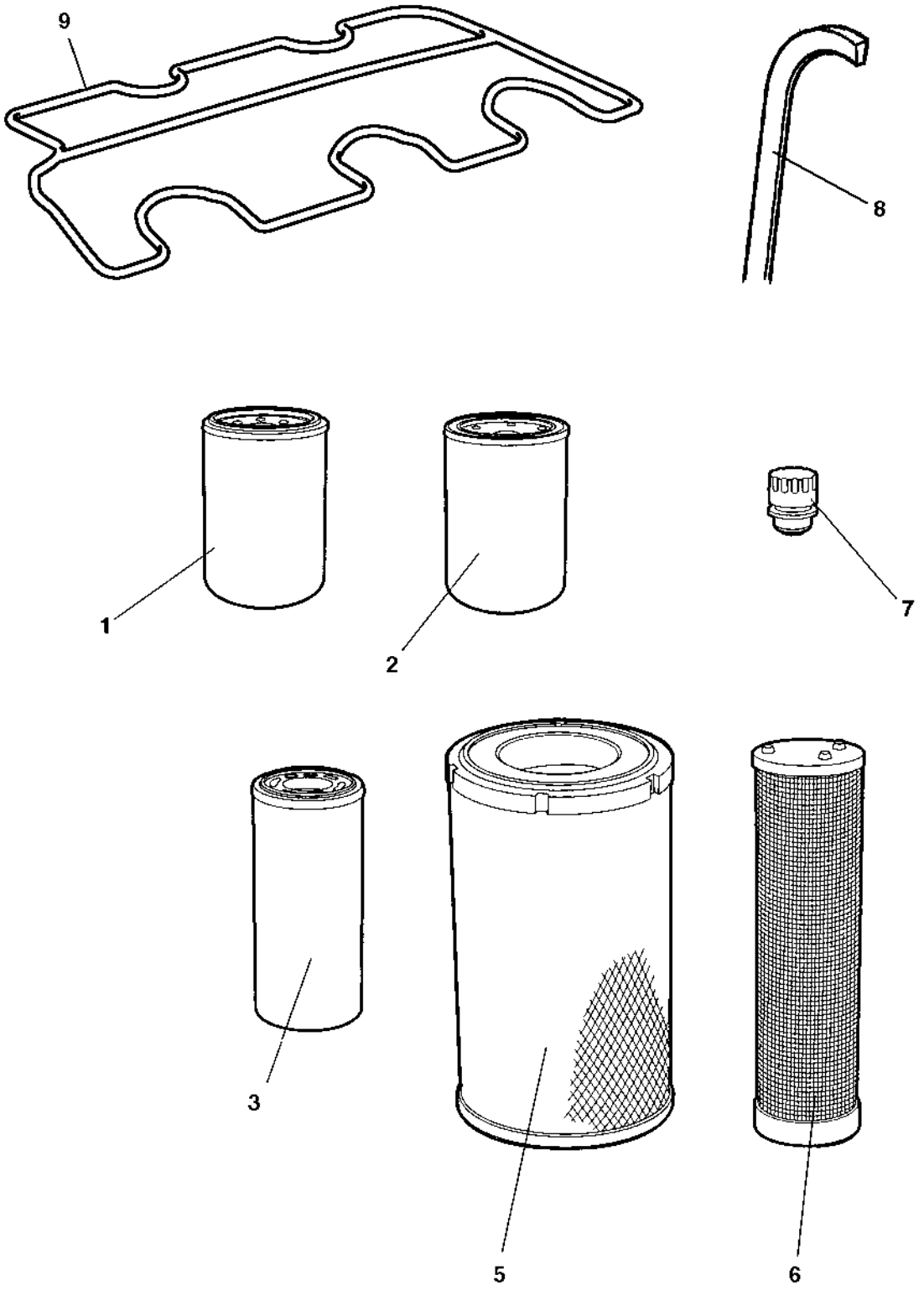

4700940208 Service kit, Perkins 50h

Item	Part No	Rem	Qty	Description		Code
	4700940208			Service kit, Perkins (Page 6)	50h	
1	4700376554		1	Oil filter		A
2	4700376555		1	Fuel filter		A
3	4700376637		1	Filter element		A

4700940209 Service kit, Perkins 500h

17996

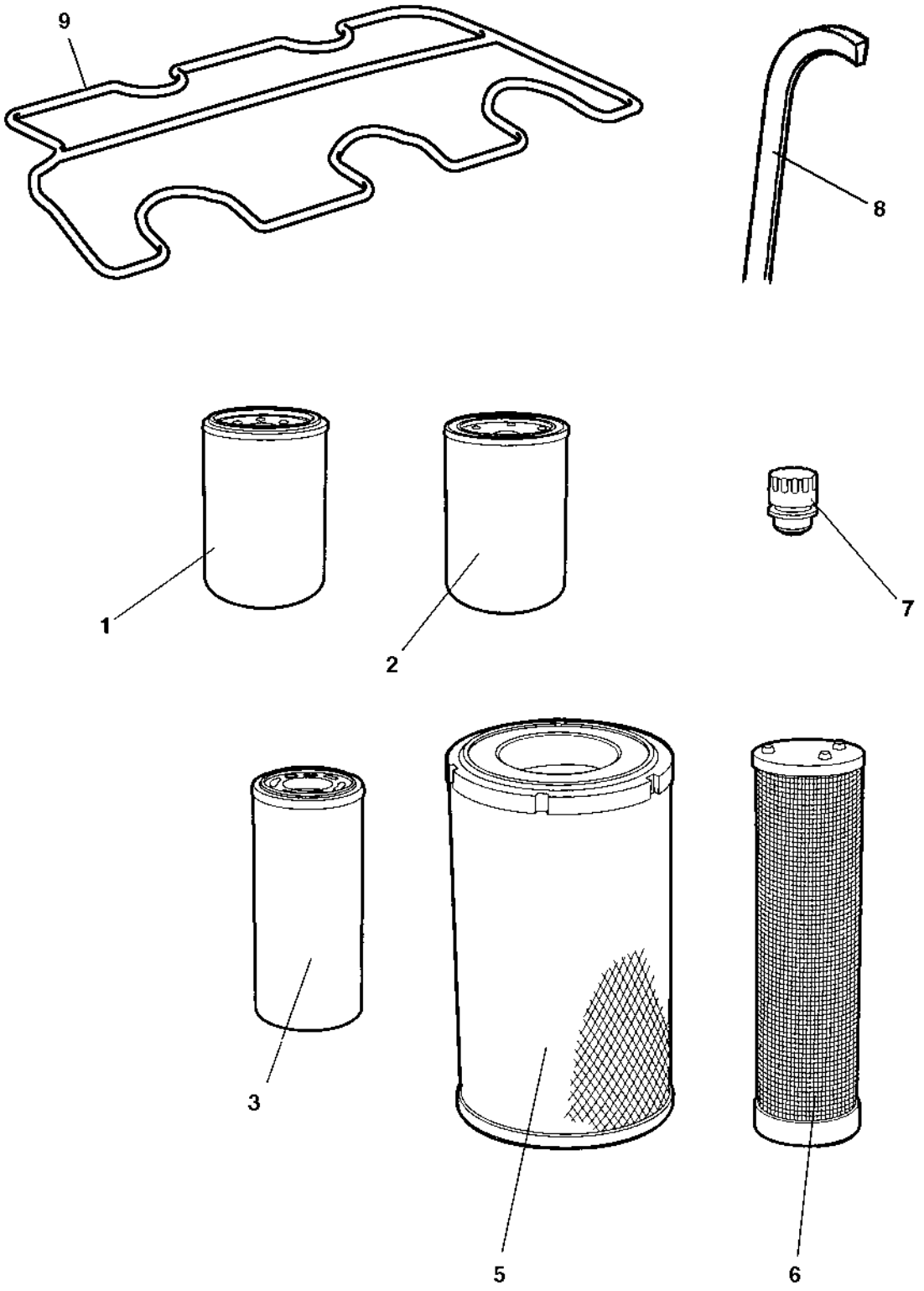

4700940209 Service kit, Perkins 500h

Item	Part No	Rem	Qty	Description		Code
	4700940209			Service kit, Perkins (Page 8)	500h	
1	4700376554		1	Oil filter		A
2	4700376555		1	Fuel filter		A
5	4700939802		1	Air filter element	Main	A
6	4700939803		1	Air filter element	Safety	A
7	4700357138		1	Ventilating filter		A

4700940210 Service kit, Perkins 1000h

17996

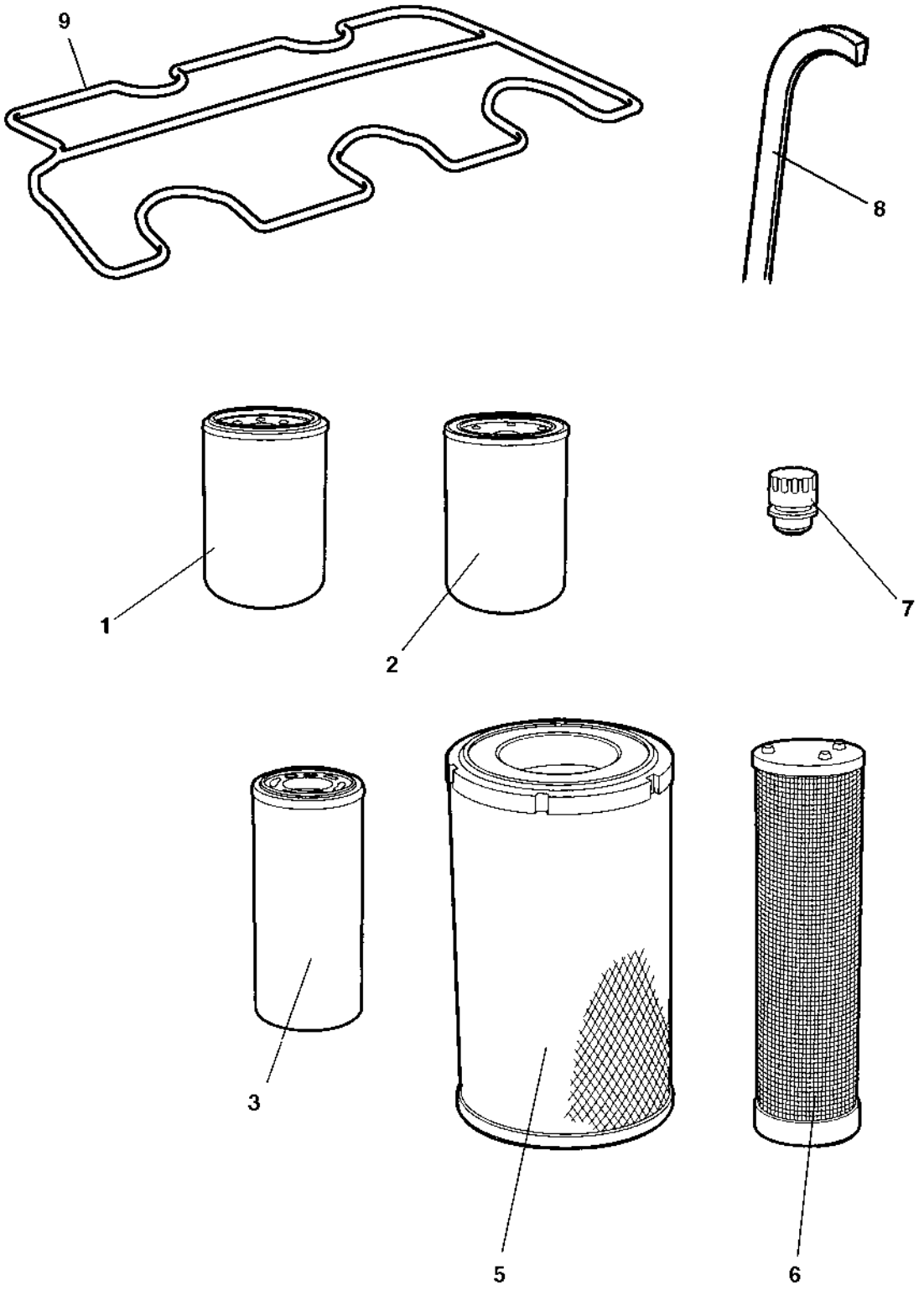

4700940210 Service kit, Perkins 1000h

Item	Part No	Rem	Qty	Description		Code
	4700940210			Service kit, Perkins (Page 10)	1000h	
1	4700376554		1	Oil filter		A
2	4700376555		1	Fuel filter		A
3	4700376637		1	Filter element		A
5	4700939802		1	Air filter element	Main	A
6	4700939803		1	Air filter element	Safety	A
7	4700357138		1	Ventilating filter		A
8	4700939932		1	V-belt		A
9	4700940212		1	Valve gasket		

Repair kits

Item	Part No	Rem	Qty	Description	Code
10	4700945850		1	Shock absorber kit, front drum (Page 14)	
11	4700945552	B	1	Shock absorber kit, drum (Page 16)	
12	4700940671		1	Scraper kit (Page 18)	CC900/900G/900S
13	4700945928		1	Repair kit, Steering hitch (Page 20)	
14	4700945710		1	Eccentric shaft kit (Page 22)	
15	4700945711		1	Drum rotation kit (Page 24)	
16	4700950150		1	Eccentric shaft kit (Page 26)	Single arm drum

B) Rear drum

4700945850 Shock absorber kit, front drum

940668

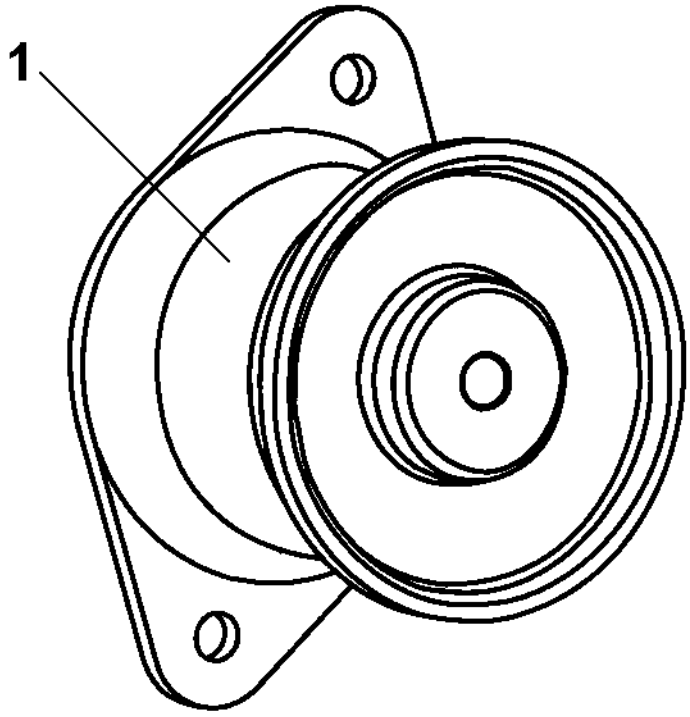

4700945850 Shock absorber kit, front drum

Item	Part No	Rem	Qty	Description	Code
	4700945850			Shock absorber kit, front drum (Page 14)	
1	4700394242		8	Shock absorber	

4700945552 Shock absorber kit, drum

940668

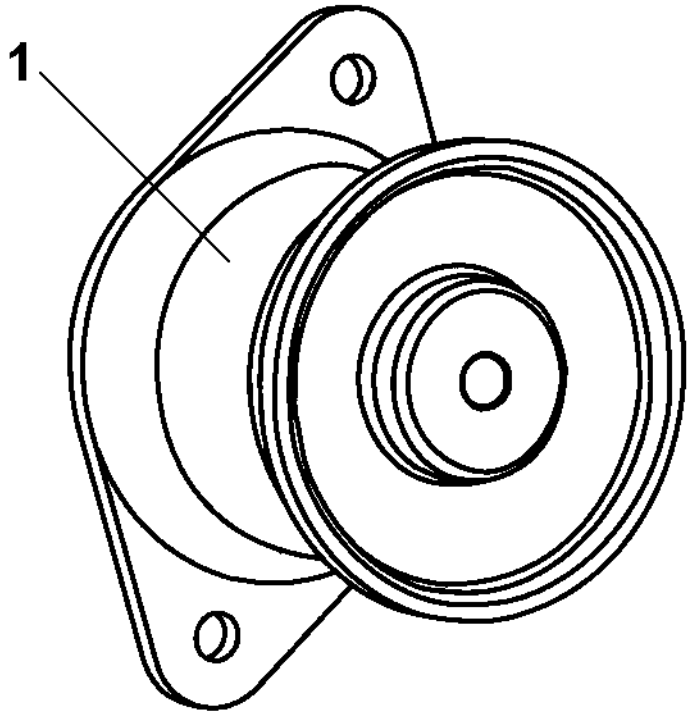

4700945552 Shock absorber kit, drum

Item	Part No	Rem	Qty	Description	Code
	4700945552			Shock absorber kit, drum (Page 16)	
1	4700391984		7	Shock absorber	

4700940671 Scraper kit CC900/900G/900S

18187

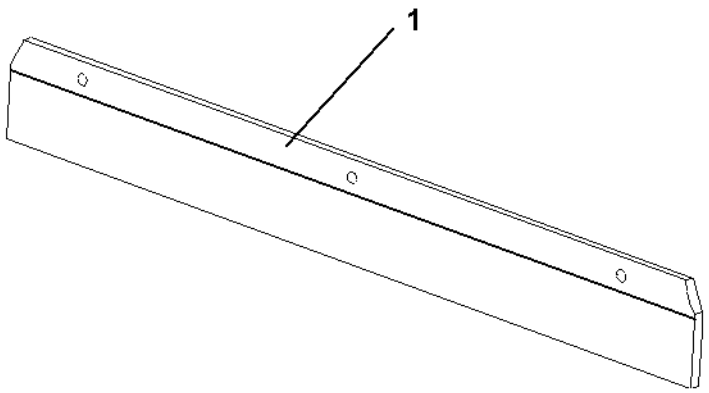

4700940671 Scraper kit CC900/900G/900S

Item	Part No	Rem	Qty	Description	Code
	4700940671			Scraper kit (Page 18) CC900/900G/900S	
1	4700387346		4	Scraper blade Polyurethan	

4700945928 Repair kit, Steering hitch

18651

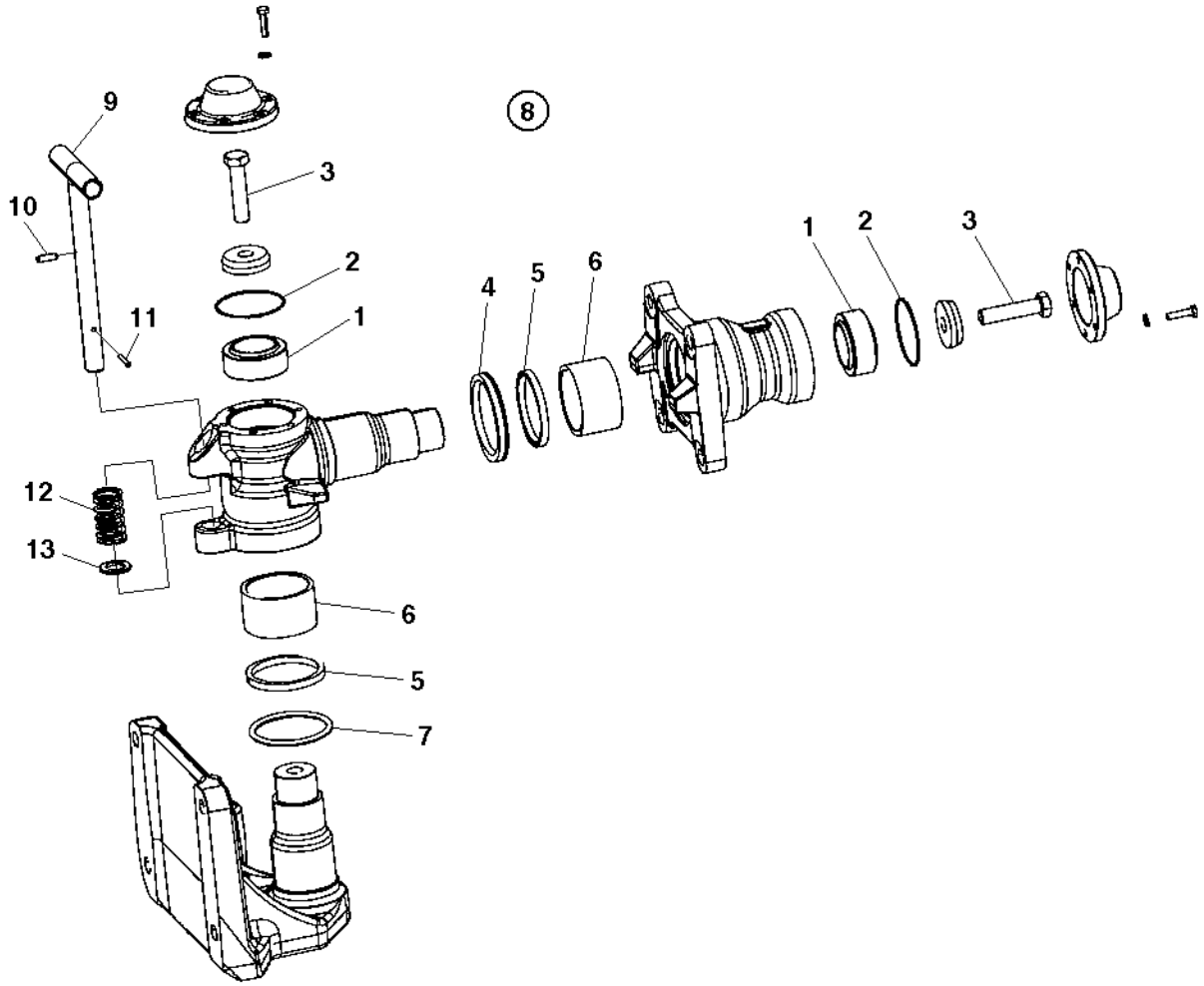

4700945928 Repair kit, Steering hitch

Item	Part No	Rem	Qty	Description	Code
	4700945928			Repair kit, Steering hitch (Page 20)	
1	4700792611		2	Radial spherical plain bearing	
2	4700791962		2	O-ring	
3	4700500050		2	Screw	C
4	4700388171		1	Sealing, v-ring	
5	4700388173		2	Shear wiper	
6	4700388172		2	Bushing	
7	4700160058		1	O-ring	C

4700945710 Eccentric shaft kit

18701

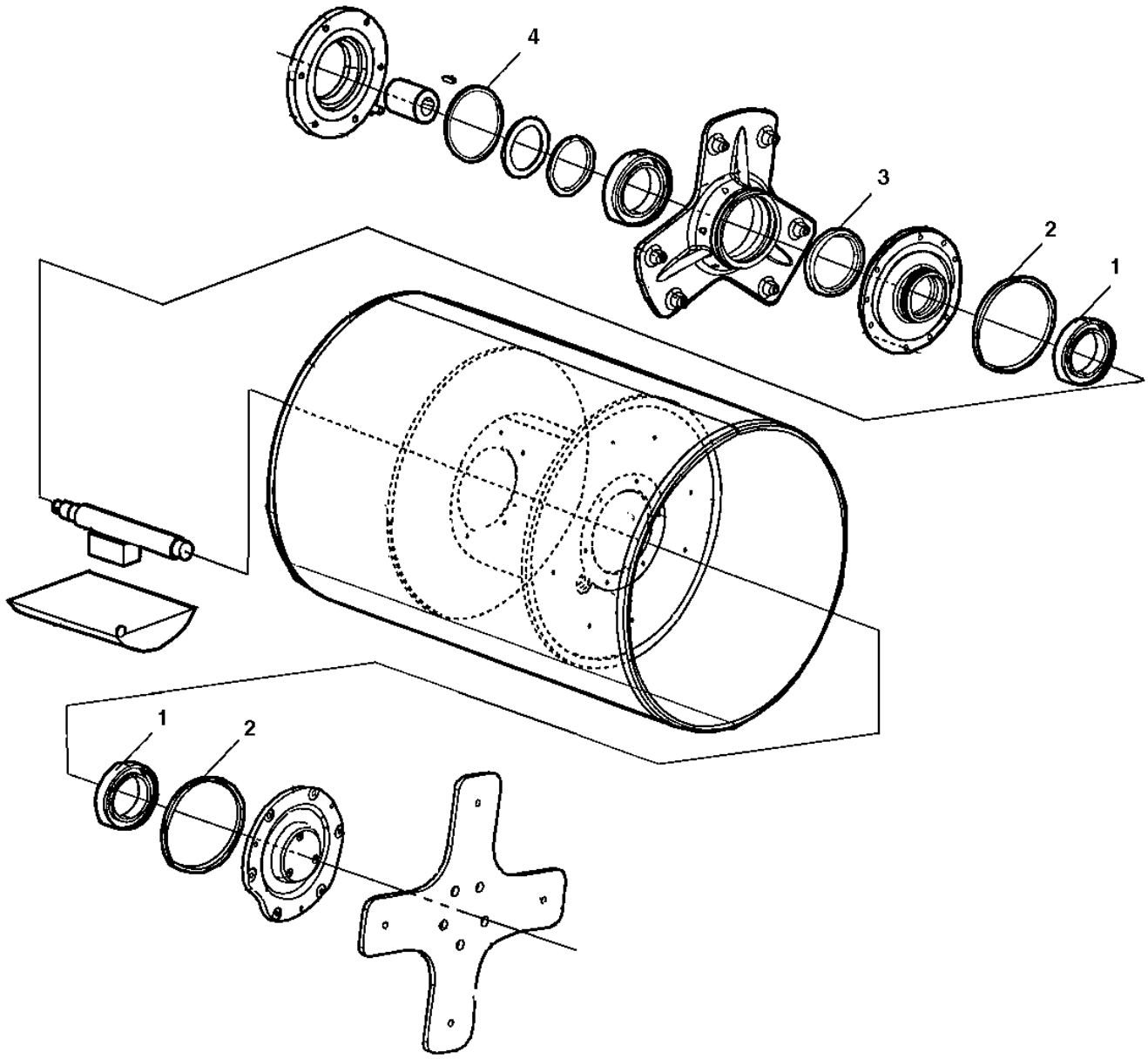

4700945710 Eccentric shaft kit

Item	Part No	Rem	Qty	Description		Code
	4700945710			Eccentric shaft kit (Page 22)		
1	4700791433		2	Spherical roller bearing		
2	4700791425		2	O-ring	174, 20x5, 70	
3	4700791426		1	Radial lip seal		
4	4700160132		1	O-ring	124, 50x3, 00	D

4700945711 Drum rotation kit

945711

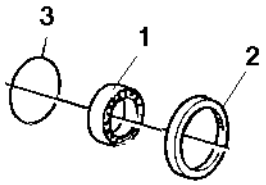

4700945711 Drum rotation kit

Item	Part No	Rem	Qty	Description		Code
	4700945711			Drum rotation kit (Page 24)		
1	4700111018		1	Ball bearing		D
2	4700791426		1	Radial lip seal		
3	4700160132		1	O-ring	124, 50x3, 00	D

4700950150 Eccentric shaft kit Single arm drum

950150

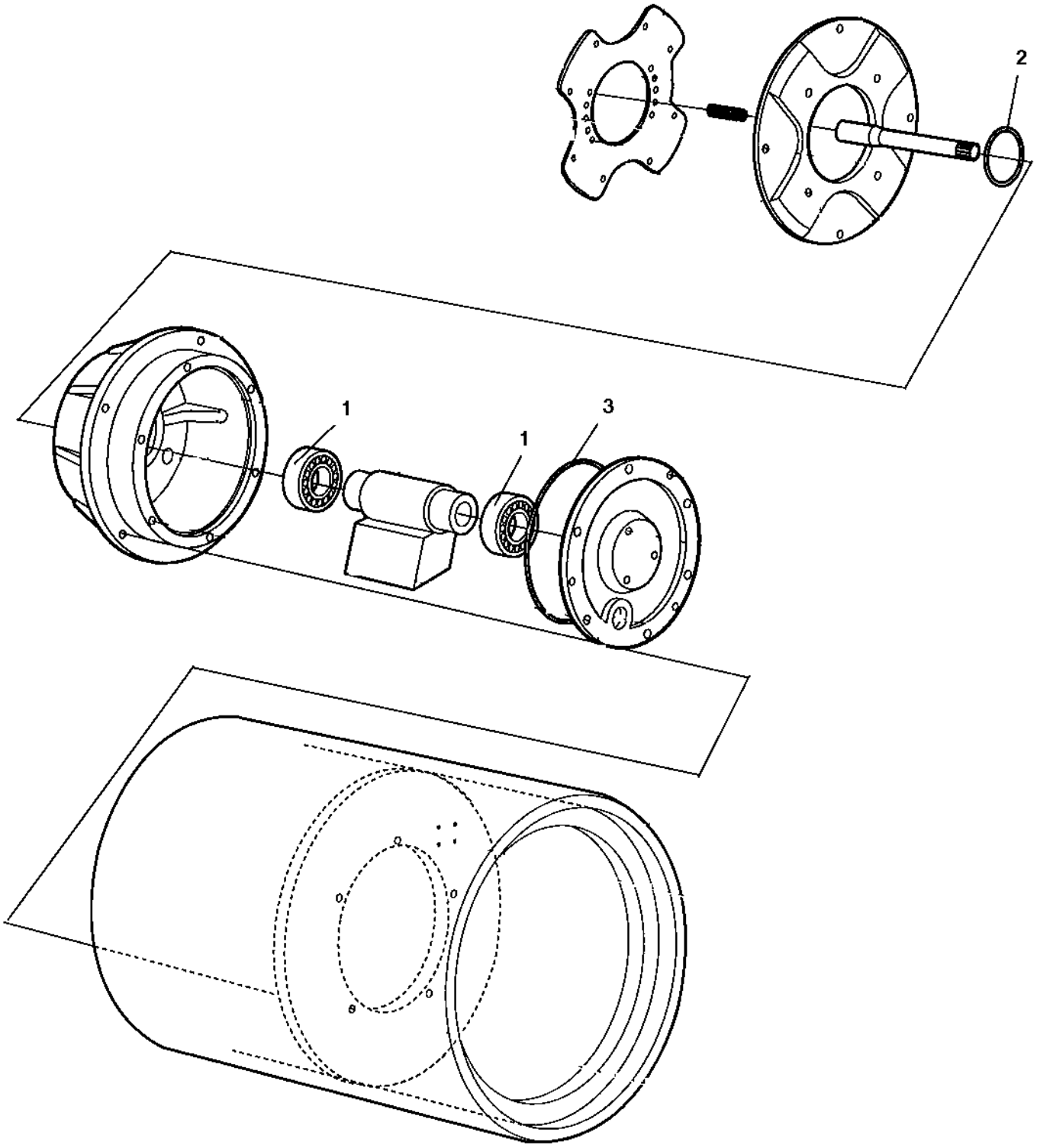

4700950150 Eccentric shaft kit Single arm drum

Item	Part No	Rem	Qty	Description		Code
	4700950150			Eccentric shaft kit (Page 26)	Single arm drum	
1	4700791750		2	Cylinder roller bearing		
2	4700160111		1	O-ring		
3	4700791923		1	O-ring		

Frames

Item	Part No	Rem	Qty	Description	Code
10				Frames (Page 30)	
30				Scrapers (Page 34)	
35				Spring loaded Scrapers (Page 36)	Option
40				Engine hood (Page 38)	
50				Sprinkler system (Page 40)	

Frames

18139

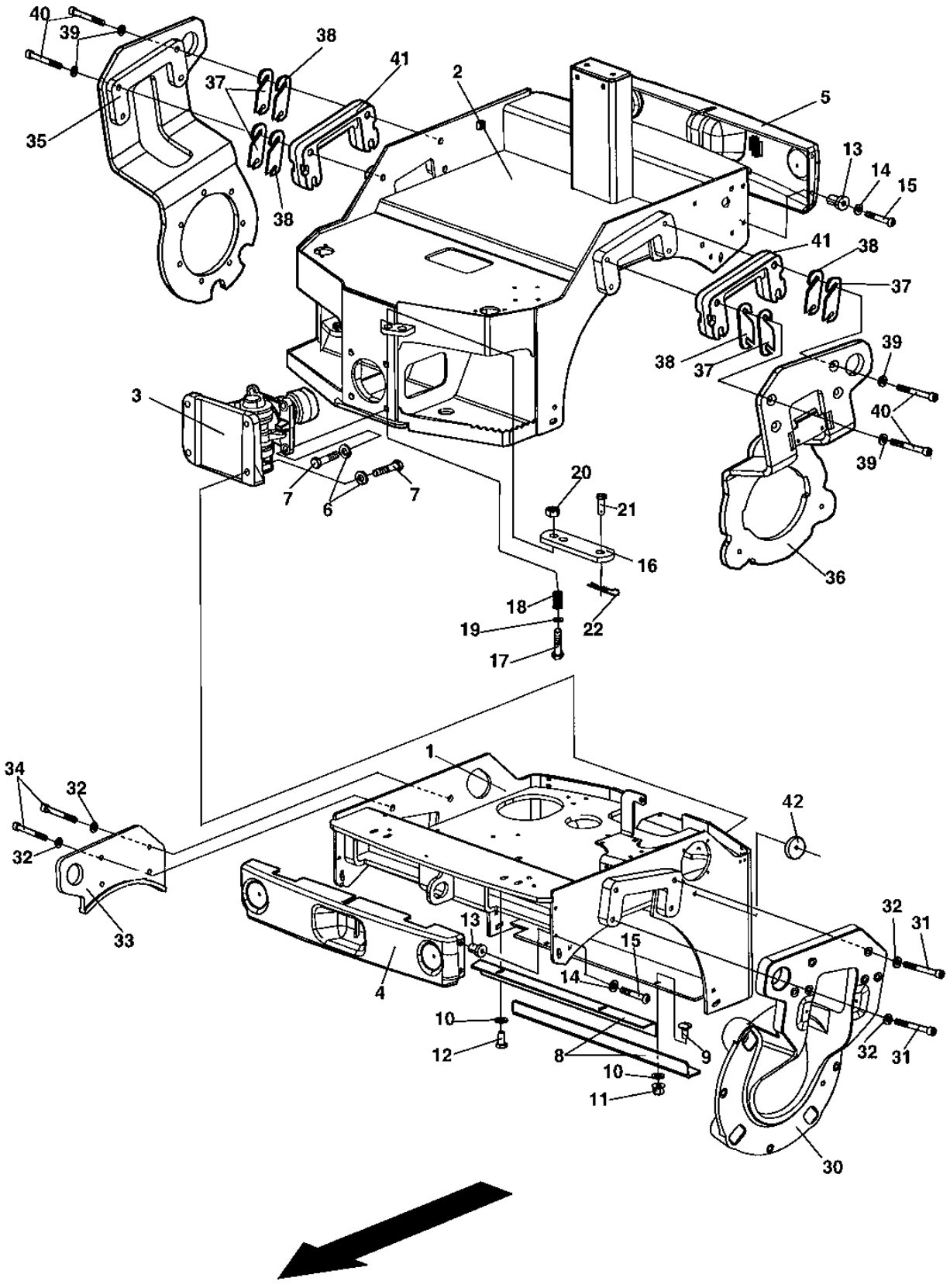

Frames

Item	Part No	Rem	Qty	Description		Code
1	4700389602		1	Front frame		
2	4700387056		1	Frame, rear		
3	4700377621		1	Hitch (Page 32)		
4	4700387376		1	Cover, frame		
5	4700387886		1	Cover, frame		
6	4700904214		8	Washer	15x30x4 300 HV	
7	4700500176		8	Screw	M14x060	
8	4700387779		2	Press plate		
9	4700929191		2	Bolt		C
10	4700904640		4	Washer	8,4x22x3	C
11	4700586003		2	Lock nut	M8	C
12	4700500053		2	Screw	M8x20H 8.8	C
13	4700387949		8	Rubber nut		
14	4700904228		8	Washer	6,4x12x1,5	C
15	4700792149		8	Screw	M6x35 8.8	
16	4700377610		1	Lock link		
17	4700500208		1	Screw	M20x80	
18	4700349332		1	Pressure spring		
19	4700904233		1	Washer	21x36x3	C
20	4700586022		1	Lock nut	M20-8	C
21	4700530027		1	Clevis pin		
22	4700635061		1	Hair clip		C
30	4700377806		1	Fork		
31	4700500175		6	Screw		C
32	4700904231		10	Washer	13x24x2 300 HV	C
33	4700389459		1	Lifting lug		
34	4700500269		4	Screw		C
35	4700387582		1	Fork		
36	4700388850		1	Fork, vibration side		
37	4700387425		N	Shim		
38	4700387424		N	Shim		
39	4700904231		8	Washer	13x24x2 300 HV	C
40	4700500122		8	Screw		C
41	4700388153		2	Spacer		
42		A	2	Reflector		

A) See section " Decals and documentation"

4700377621 Hitch

18651

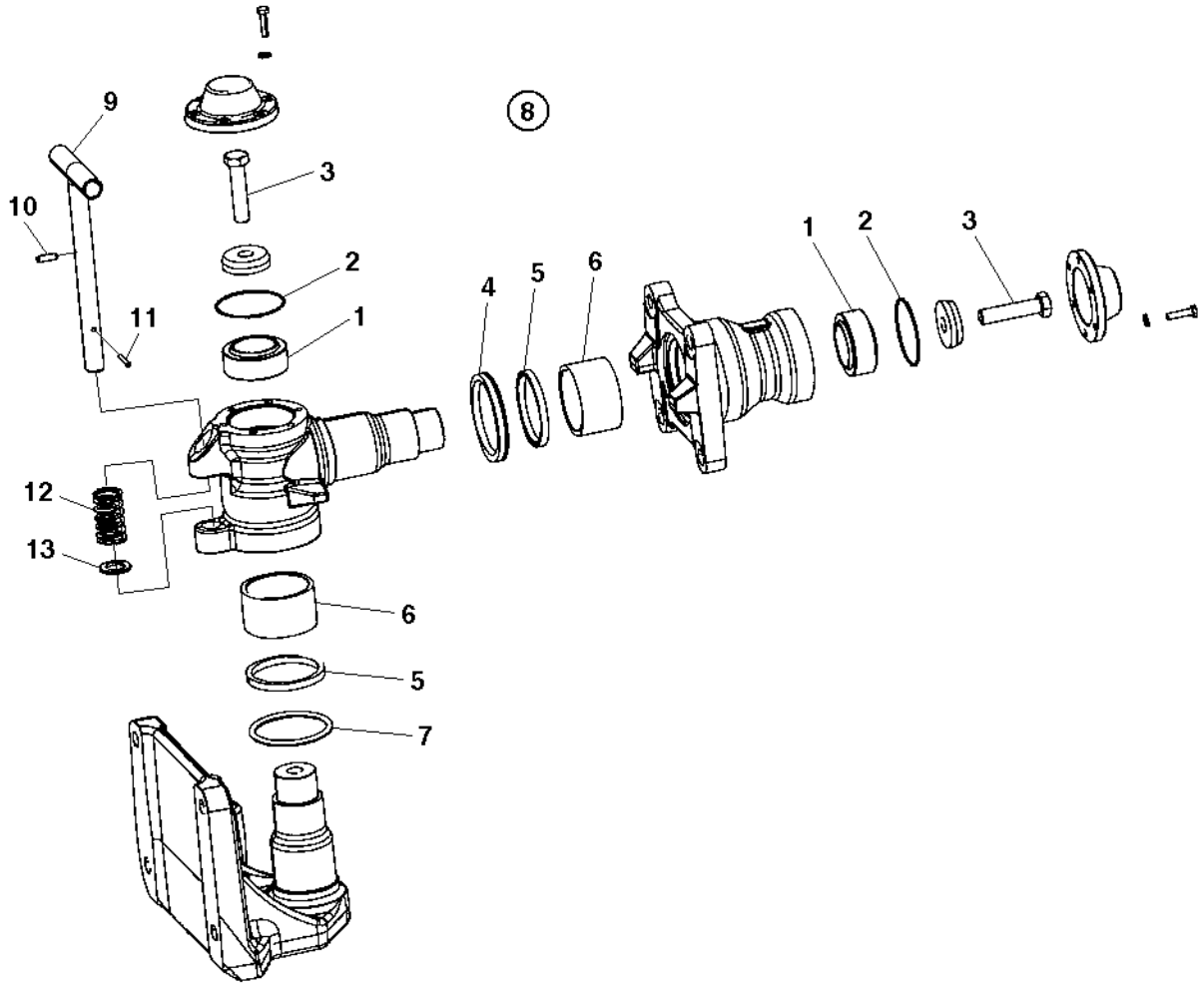

4700377621 Hitch

Item	Part No	Rem	Qty	Description	Code
1	4700792611		2	Radial spherical plain bearing	
2	4700791962		2	O-ring	
3	4700500050		2	Screw	C
4	4700388171		1	Sealing, v-ring	
5	4700388173		2	Shear wiper	
6	4700388172		2	Bushing	
7	4700160058		1	O-ring	C
8	4700945928		1	Repair kit, Steering hitch (Page 20)	
9				Not used on this model	
10				Not used on this model	
11				Not used on this model	
12				Not used on this model	
13				Not used on this model	

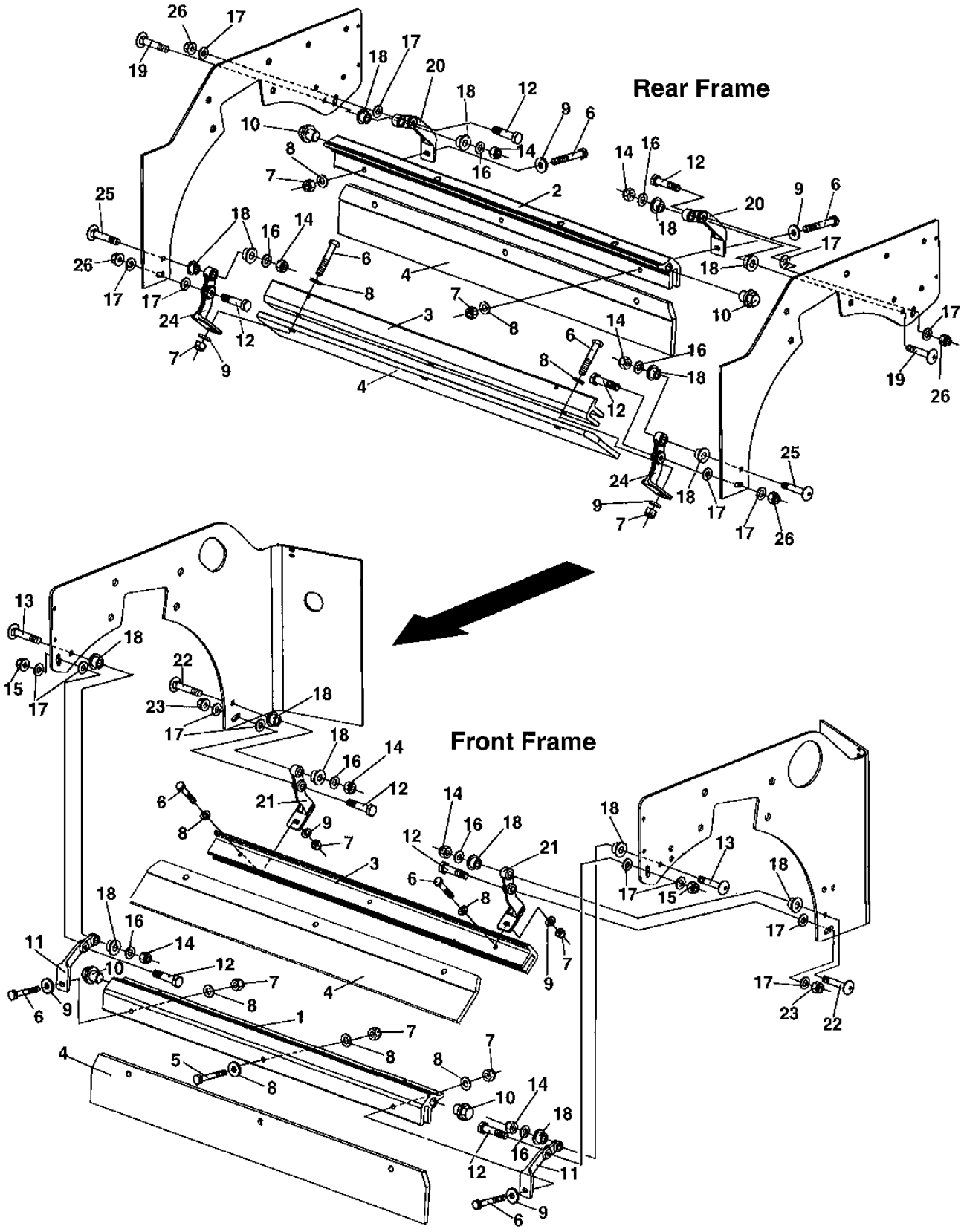
Rear Frame
Front Frame

Scrapers

Item	Part No	Rem	Qty	Description		Code
1	4700377817		1	Sprinkler pipe		
2	4700387344		1	Sprinkler pipe		
3	4700387345		2	Scraper bracket		
4	4700387346		4	Scraper blade	Polyurethan	
5	4700500024	B	4	Screw	M8x45	C
6	4700500067		12	Screw	M8-1,25x55 8,8	
7	4700586003		12	Lock nut	M8	C
8	4700904229		16	Washer	8,4x16x1,5	C
9	4700904640		8	Washer	8,4x22x3	C
10	4700792072		4	End plug		
			1	.Gasket		
11	4700377745		1	Upper hold		
12	4700500105		16	Hexagon screw		C
13	4700791775		4	Bolt		
14	4700586003		8	Lock nut	M8	C
15	4700586018		2	Lock nut		C
16	4700904229		8	Washer	8,4x16x1,5	C
17	4700791938		16	Washer		
18	4700791939		16	Bushing		
19	4700792134		2	Bolt		
20	4700387039		2	Upper hold		
21	4700377746		2	Lower hold		
22	4700791775		2	Bolt		
23	4700586018		2	Lock nut		C
24	4700387043		1	Lower hold		
25	4700792134		2	Bolt		
26	4700902287		2	Nut		C

B) Valid for all scrapers

Spring loaded Scrapers Option

18292

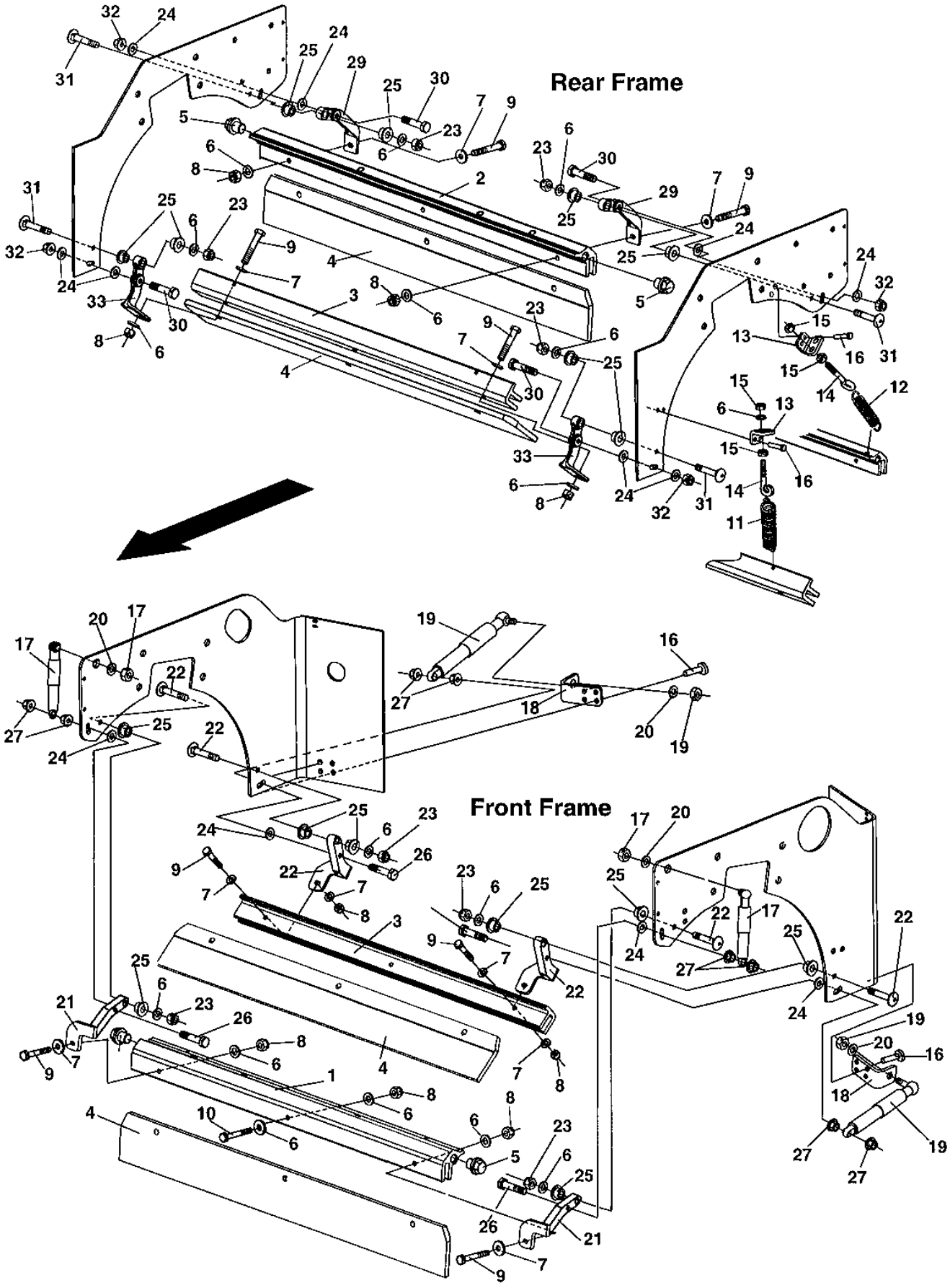

Spring loaded Scrapers Option

Item	Part No	Rem	Qty	Description		Code
1	4700377817		1	Sprinkler pipe		
2	4700387344		1	Sprinkler pipe		
3	4700387345		2	Scraper bracket		
4	4700387346		4	Scraper blade	Polyurethan	
5	4700792072		4	End plug		
			1	.Gasket		
6	4700904229		24	Washer	8,4x16x1,5	C
7	4700904640		8	Washer	8,4x22x3	C
8	4700586003		8	Lock nut	M8	C
9	4700500067		8	Screw	M8-1,25x55 8,8	
10	4700500024	B	4	Screw	M8x45	C
11	4700792188		2	Extension spring		D
12	4700359043		2	Spring		C
13	4700378178		4	Bracket		
14	4700792189		4	Eye bolt		
15	4700570005		8	Nut	M8	C
16	4700792190		16	Blind rivet		
	4700791754		16	Blind rivet		
17	4700792286		2	Gas spring		
18	4700379656		2	Bracket		
19	4700792287		2	Gas spring		
20	4700904230		4	Steel plain washer		C
21	4700377745		2	Upper hold		
22	4700791775		4	Bolt		
23	4700586003		2	Lock nut	M8	C
24	4700791938		12	Washer		
25	4700791939		16	Bushing		
26	4700500241		4	Screw		
27	4700902287		8	Nut		C
28	4700377746		2	Lower hold		
29	4700387039		2	Upper hold		
30	4700500105		4	Hexagon screw		C
31	4700792134		4	Bolt		
32	4700902287		4	Nut		C
33	4700387043		2	Lower hold		

B) Valid for all scrapers

Engine hood

17977-1

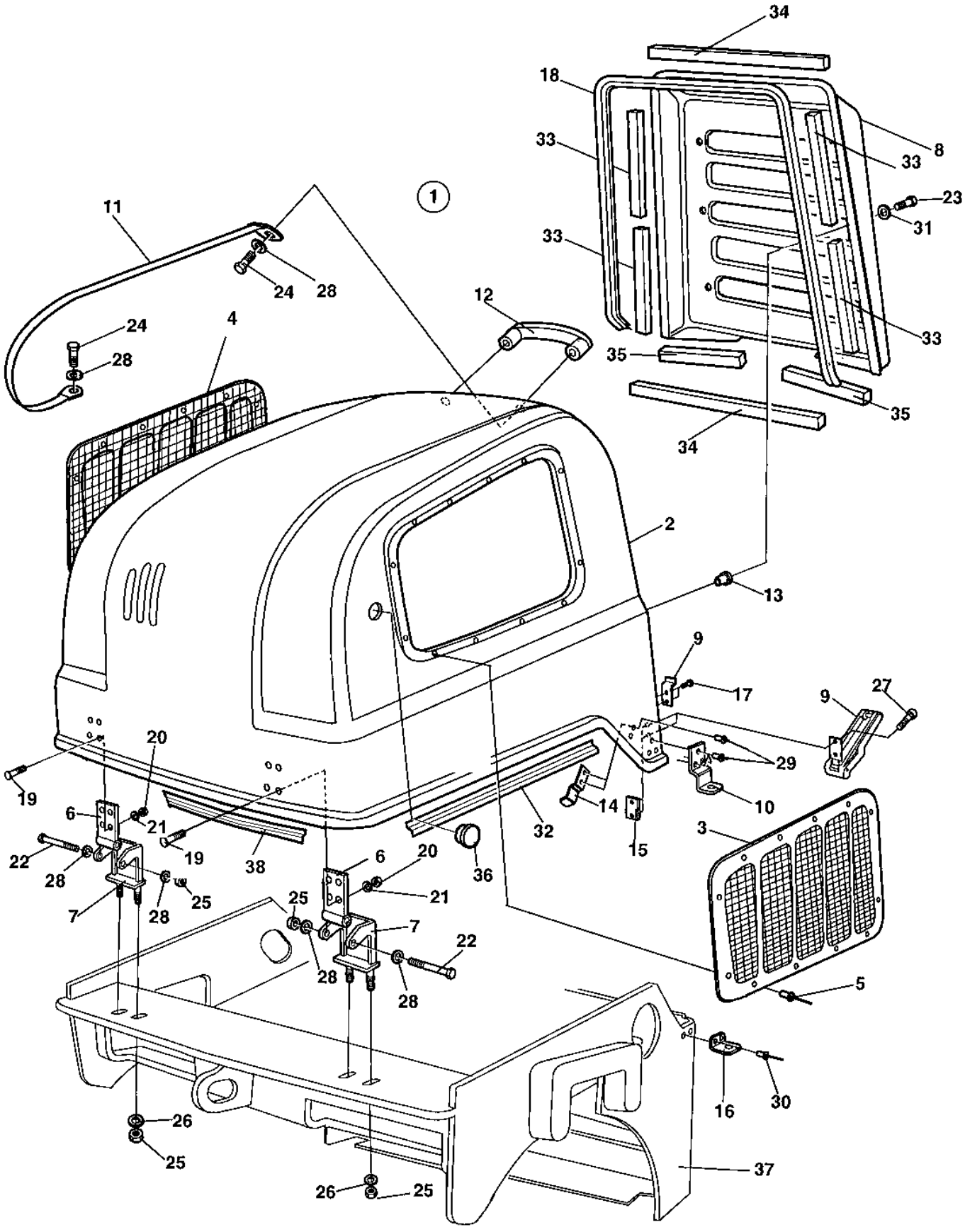

Engine hood

Item	Part No	Rem	Qty	Description		Code
1	4700377042		1	Engine hood		
2			1	.Engine hood		
3	4700377043		1	.Grid, left		
4	4700377044		1	.Grid, right		
5	4700904012		24	.Rivet		
6	4700387148		2	Hinge		
7	4700387151		2	Hinge		
8	4700387154		1	Cover, radiator		
9	4700388846		2	Latch		
10	4700377061		1	Lock plate		
11	4700387947		1	Metal strapping		
12	4700387948		1	Handle		
13	4700387949		6	Rubber nut		
14	4700388733		2	Controlling plate		
15	4700387956		1	Stop plate		
16	4700388852		1	Lock plate		
17	4700791643		4	Screw		
18	4700902166	A	1	Edge trim		D
19	4700903856		8	Bolt	M06x30	C
20	4700586002		8	Lock nut	M6 -8	C
21	4700904228		8	Washer	6,4x12x1,5	C
22	4700500068		2	Screw	M08x65	C
23	4700791559		6	Screw	M06x35	
24	4700500053		3	Screw	M8x20H 8.8	C
25	4700586003		6	Lock nut	M8	C
26	4700904556		4	Steel plain washer		C
27	4700508022		4	Screw	M4x16	
28	4700904229		7	Washer	8,4x16x1,5	C
29	4700791666		7	Blind rivet		
30	4700791666		2	Blind rivet		
31	4700928381		6	Washer	6,4x18x1,6	C
32	4700297018	B	2	Rubber strip		
33	4700791597	C	4	Rubber strip		
34	4700791597	D	2	Rubber strip		
35	4700791597	E	2	Rubber strip		
36	4700923270		2	Protective plug		
37			1	See sections "Frames"		
38	4700791228	F	1	Edge trim		

A) L = 1620 mm
B) L = 450 mm
C) L = 125 mm
D) L = 420 mm
E) L = 170 mm
F) Old version, L = 700 mm

Sprinkler system

17975

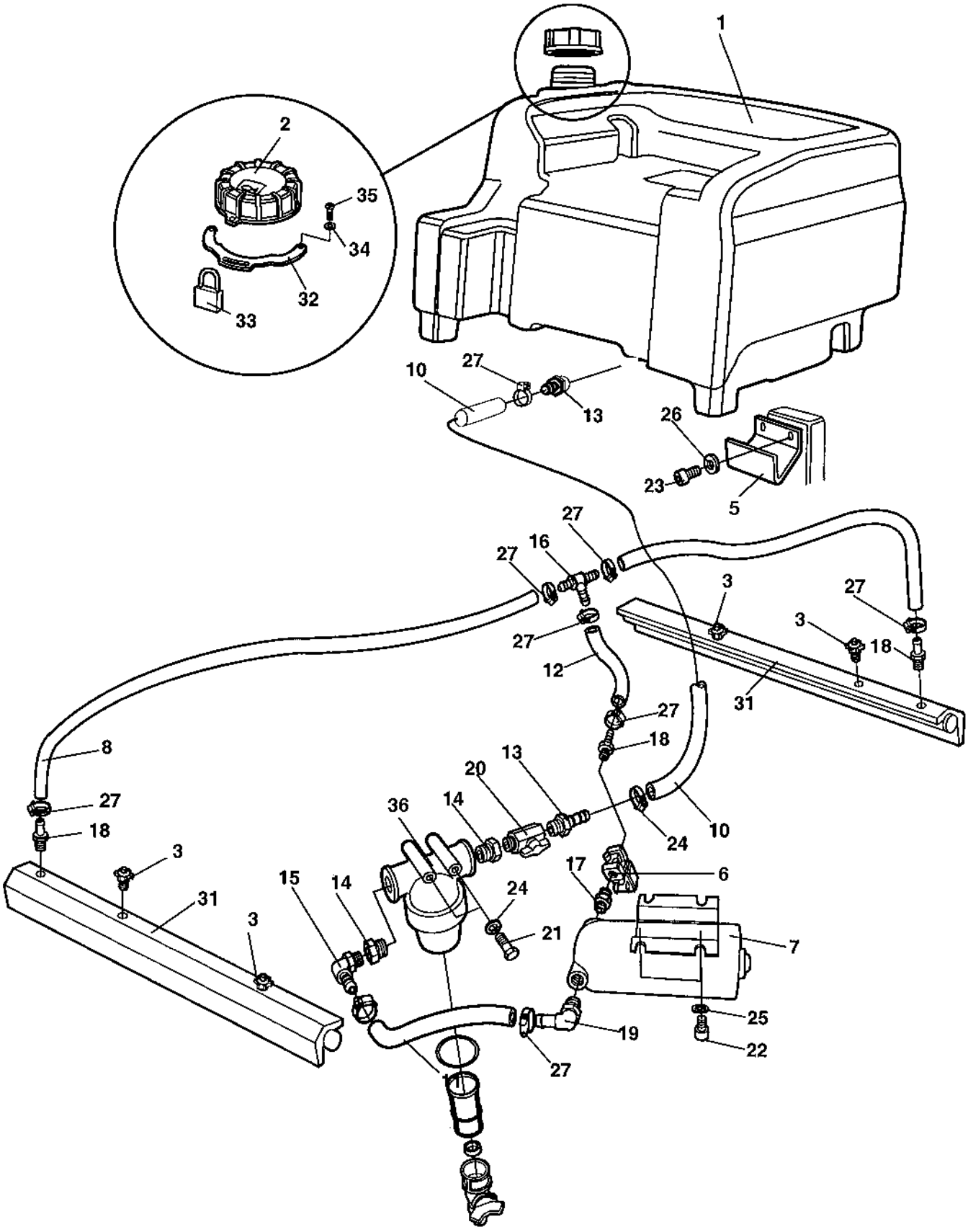

Sprinkler system

Item	Part No	Rem	Qty	Description		Code
1	4700389218		1	Water tank, cpl		
2	4700388087		1	Tank cap		
3	4700392011		4	Spraying nozzle, cpl		A
	4700392508		1	.Housing		D
	4700392509		1	.Retainer, nozzle, strainer, yellow	0.8	D
	4700376876		1	.Gasket		B
5	4700387935		1	Bracket		
6	4700287713		1	Solenoid valve		C
7	4700383697		1	Water pump		C
8	4700904878	A	1	Hose reinforced		C
9	4700904878	B	1	Hose reinforced		C
10	4700904878	C	1	Hose reinforced		C
11	4700904878	D	1	Hose reinforced		C
12	4700904878	E	1	Hose reinforced		C
13	4700924544		2	Hose connection		C
14	4700903886		2	Adapter		C
15	4700924996		1	Hose connection		C
16	4700923735		1	Hose connection		C
17	4700377611		1	Straight connector		
18	4700901432		1	Hose connection		
19	4700923734		1	Hose connection		C
20	4700924986		1	Valve		C
21	4700500090		2	Screw		
22	4700508004		4	Socket head cap screw	M8-1,25x12H 8.8	
23	4700500029		2	Hexagon head screw		C
24	4700904640		2	Washer	8,4x22x3	C
25	4700904229		4	Washer	8,4x16x1,5	C
26	4700904567		2	Washer	10,5x28x6 HB305	C
27	4700313002		10	Hose clamp	13-20 mm	
29	4700791977		2	Hose connection		C
31		F	2	Sprinkler pipe		C
32	4700389155	G	1	Lock bracket		
33	4700358881	G	1	Pad lock		D
34	4700904281	G	2	Washer	5,3x10x1 300HV	C
35	4700903658	G	2	Screw	M5x10	C
36	4700791950		1	Water strainer, cpl		
37	4700791959		1	.O-ring		C
38	4700791949		1	.Filter element		A
39	4700791568		1	.Gasket		
40	4700379009		1	.Valve		

A) L = 1565 mm
B) L = 835 mm
C) L = 520 mm
D) L = 160 mm
E) L = 130 mm
F) See section "Scraper"
G) Option

Drum

Item	Part No	Rem	Qty	Description		Code
10				Drum Single arm (Page 44)		
20				Drum (Page 46)	Rear	

Drum Single arm

18118-2

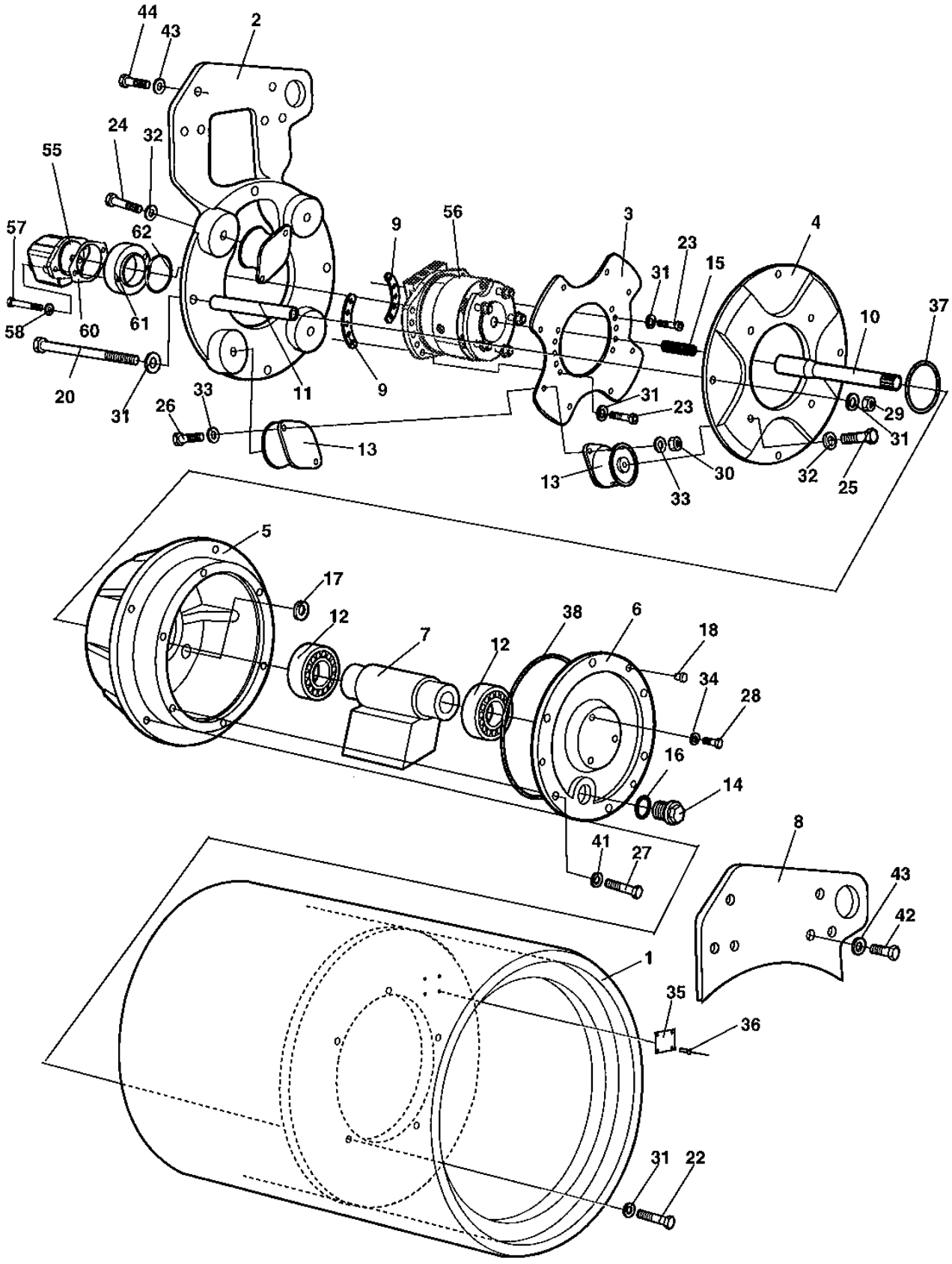

Drum Single arm

Item	Part No	Rem	Qty	Description		Code
1	4700388975		1	Drum, front		
2		A	1	Fork		
3	4700389455		1	Motor bracket		
4	4700389456		1	Drive disc		
5	4700389132		1	Bearing housing		
6	4700389134		1	Bearing housing		
7	4700389136		1	Eccentric shaft		
8		A	1	Lifting lug		
9	4700389462		2	Holder		
10	4700390554		1	Splined shaft, kit		
	4700390175	B	1	.Splined shaft		
		B	1	.Instruction		
11	4700389457		4	Spacer		
12	4700791750		2	Cylinder roller bearing		
13	4700394242		8	Shock absorber		
14	4700343744		1	Magnetic plug		C
15	4700791922		1	Compression spring		
16	4700162017		1	Seal ring		B
17	4700162024		5	Washer, sealing		
18	4700903374		3	Protective plug		
20	4700791929		4	Screw	M12x260	
21	4700500175		6	Screw		C
22	4700500195		5	Screw		C
23	4700508032		10	Screw	M12-1,75x50H 8,8	
24	4700947688		4	Screw	M12x35H	
	4812110668		4	Hexagon head screw From ECN 09350	M12x35H 10,9 A3K	
25	4700947687		4	Screw	M12-1,75x30 10,9	
	4812110670		4	Hexagon head screw From ECN 09350	M12x30H 10,9 A3K	
26	4700900329		8	Screw	M10x50	
	4812110669		8	Hexagon head screw From ECN 09350	M10x50 10,9 A3K	
27	4700500022		6	Screw	M8x30H 8.8 A2K	C
28	4700500012		3	Screw	M6x12	C
29	4700570007		4	Hexagon nut	M12	C
30	4700928847		8	Nut		
31	4700904231		23	Washer	13x24x2 300 HV	C
32	4700904703		8	Washer		C
33	4700904557		16	Steel plain washer		C
34	4700904228		3	Washer	6,4x12x1,5	C
35	4700343801		1	Sign plate		D
36	4700527002		4	Drive screw		C
37	4700160111		1	O-ring		
38	4700791923		1	O-ring		
41	4700904556		6	Steel plain washer		C
42		A	4	Screw		C
43		A	10	Washer		C
44		A	6	Screw		C
55	4700390854		1	Hydraulic motor		
			1	Seal kit		
56		C	1	Hydraulic motor		
57	4700508014	B	2	Screw	M10x60	
58	4700904557	B	2	Steel plain washer		C
60	4700379458	B	1	Gasket		
61	4700390176	B	1	Adapter		
62	4700160032	B	2	O-ring		D

A) See section "Frames"
B) Inkluded in Splined shaft, kit
C) See section "Hydraulic propulsion and brake"

Drum Rear

18119-1

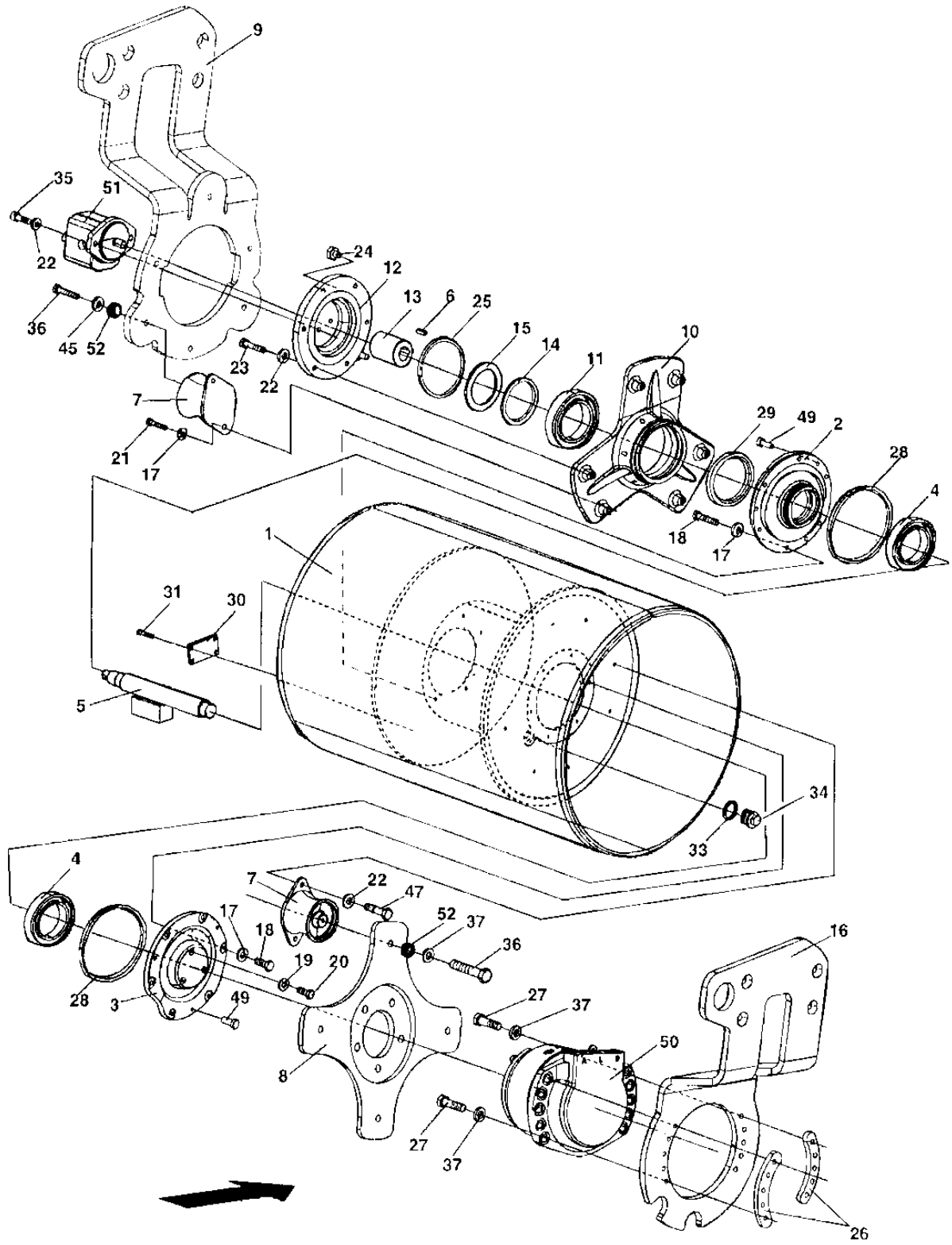

Drum Rear

Item	Part No	Rem	Qty	Description		Code
1	4700386628		1	Drum		
2	4700386619		1	Bearing housing		
3	4700386620		1	Bearing housing		
4	4700791433		2	Spherical roller bearing		
5	4700386624		1	Eccentric shaft		
6	4700350029		1	Key		
7	4700391984		7	Shock absorber		
8	4700387583		1	Drive disc		
9		A	1	Fork, vibration side		
10	4700386241		1	Bearing housing		
11	4700111018		1	Ball bearing		D
12	4700358666		1	Adapter		
13	4700349202		1	Coupling		D
14	4700358689		1	Spacer ring		
15	4700903154		1	Retaining ring		
16		A	1	Fork, drive side		
17	4700904640		12	Washer	8,4x22x3	C
18	4700500022		12	Screw	M8x30H 8.8 A2K	C
19	4700904228		3	Washer	6,4x12x1,5	C
20	4700500012		3	Screw	M6x12	C
21	4700500212		6	Screw		
	4812110596		6	Hexagon head screw From ECN 09350	M10x40 10,9 A3K	
22	4700904557		22	Steel plain washer		C
23	4700500029		6	Hexagon head screw		C
24	4700343490		1	Air breather		D
25	4700160132		1	O-ring	124, 50x3, 00	D
26	4700389462		2	Holder		
27	4700508032		10	Screw	M12-1,75x50H 8,8	
28	4700791425		2	O-ring	174, 20x5, 70	
29	4700791426		1	Radial lip seal		
30	4700343801		1	Sign plate		D
31	4700527002		4	Drive screw		C
33	4700162017		1	Seal ring		B
34	4700343744		1	Magnetic plug		C
35	4700508029		2	Screw	M10-1,5x30H 8,8	C
36	4700947687		7	Screw	M12-1,75x30 10,9	
	4812110595		7	Hexagon head screw From ECN 09350	M12x45H 10,9 A3K	
37	4700904703		14	Washer		C
45	4700904231		3	Washer	13x24x2 300 HV	C
47	4700500280		8	Screw	M10x1,5x25	
	4812110663		8	Hexagon head screw From ECN 09350	M10x25H 10,9 A3K	
49	4700903374		6	Protective plug		
50		B	1	Hydraulic motor		
51		C	1	Hydraulic motor		
52	4812110346		7	Spacer From ECN 09350		

A) See section "Frames"
B) See section "Hydraulic propulsion and brake"
C) See section "Hydraulic vibration"

Engine

Item	Part No	Rem	Qty	Description		Code
10				Engine (Page 50)	Perkins 403D-11	
20				Cooling system (Page 52)		
30				Exhaust system (Page 54)		
40				Fuel system (Page 56)		
50				Air intake system (Page 58)		

Engine Perkins 403D-11

18719-1

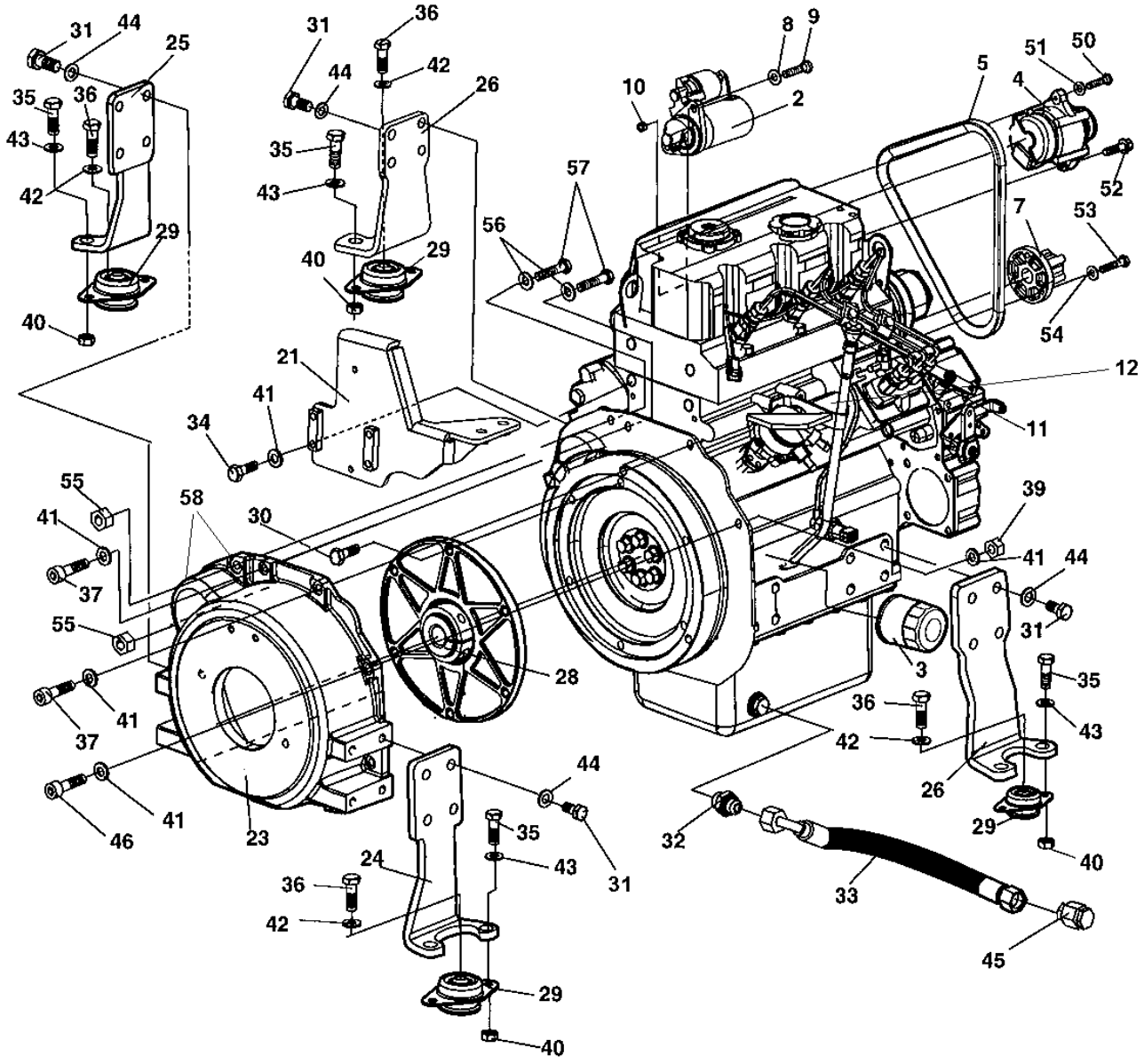

Engine Perkins 403D-11

Item	Part No	Rem	Qty	Description		Code
1	4700394541		1	Engine, Perkins 403D-11		
	4700940227		1	.Water pump		C
	4700945123		1	..Gasket		C
	4700945284		1	.Water temperature sensor		
	4700940228		1	.Thermostat		
	4700940976		1	.Gasket, oil sump		
2	4700940231		1	.Starter		C
3	4700376554		1	.Oil filter		A
4	4700939977		1	.Alternator		C
5	4700939932		1	.V-belt		A
7			1	.Fan coupling		A
8	4700904230		2	.Steel plain washer		C
9	4700500161		2	.Hexagon head screw		C
10	4700570006		2	.Nut		C
11	4700940229		1	.Oil dipstick		
12	4700940447		1	.Fuel solenoid		
13	4700945286		1	.Washer		
14	4700945473		1	.Lift pump		
	4700945629		1	.O-ring, lift pump		
21	4700389003		1	Holder, air cleaner		
23	4700386949		1	Bell housing		
24	4700376770		1	Engine foot		
25	4700376771		1	Engine foot		
26	4700376772		2	Engine foot		
28	4700357002		1	Coupling		D
29	4700792026		4	Rubber mounts		D
30	4700502019		6	Screw		
31	4700792250		16	Screw		
32	4700791535		1	Connector		
33	4700483684		1	Hydraulic hose		
34	4700500022		4	Screw	M8x30H 8.8 A2K	C
35	4700500029		8	Hexagon head screw		C
36	4700500033		4	Screw	M10-1,5x60 8,8	
37	4700508048		2	Screw		C
39	4700570005		5	Nut	M8	C
40	4700586018		8	Lock nut		C
41	4700904229		16	Washer	8,4x16x1,5	C
42	4700904230		4	Steel plain washer		C
43	4700904557		8	Steel plain washer		C
44	4700904231		16	Washer	13x24x2 300 HV	C
45	4700791493		1	Steel plug threaded		
46	4700508048		5	Screw		C
50	4700500047		1	Hexagon head screw		C
51	4700904640		1	Washer	8,4x22x3	C
52	4700500506		1	Screw		
53	4700508019		3	Screw	M8x25	C
54	4700904229		3	Washer	8,4x16x1,5	C
55	4700570006		2	Nut		C
56	4700904230		2	Steel plain washer		C
57		B	2	Screw		C
58	4700904637		2	Washer		C

B) Exist on engine

Cooling system

17871-1

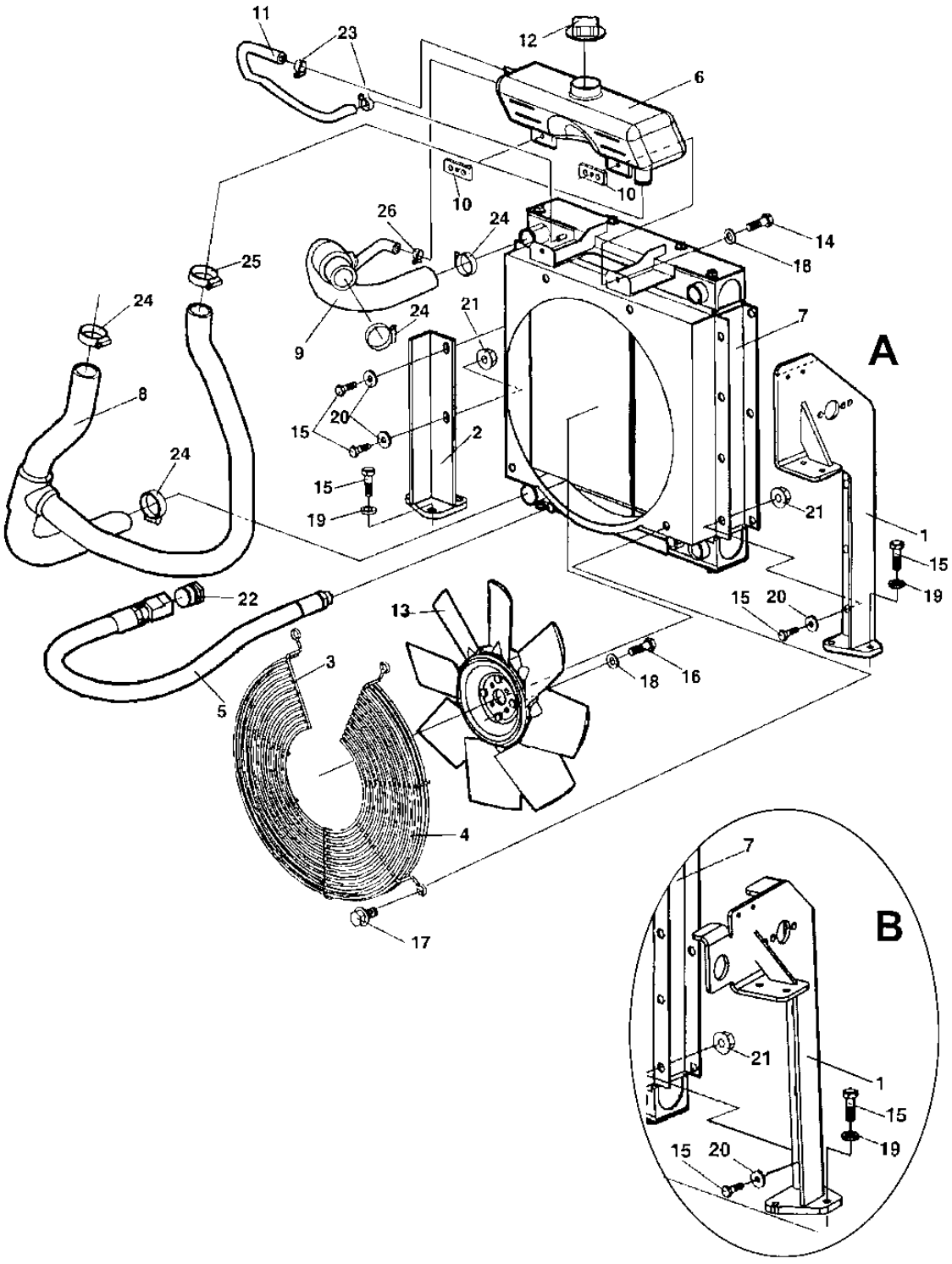

Cooling system

Item	Part No	Rem	Qty	Description		Code
1	4700387101	C	1	Cooler bracket		
	4812110974	D	1	Cooler console From ECN 09452		
2	4700387287		1	Cooler bracket		
3	4700386963		1	Fan guard		
4	4700387205		1	Fan guard		
5	4700791780		1	Drainage hose		
6	4700386893		1	Expansion reservoir		
7	4700395227	B	1	Radiator		
8	4700387099		1	Coolant hose		
9	4700387100		1	Coolant hose		
10	4700387428		2	Plate		
11	4700371785	A	1	Rubber hose		
12	4700903714		1	Cap		
13	4700389142		1	Fan		
14	4700500040		2	Screw	M6-1x20 8,8	C
15	4700500021		11	Screw	M8-1,25x25 8.8	C
16	4700500040		4	Screw	M6-1x20 8,8	C
17	4700901832		4	Screw		C
18	4700904228		6	Washer	6,4x12x1,5	C
19	4700904556		6	Steel plain washer		C
20	4700904640		5	Washer	8,4x22x3	C
21	4700902286		5	Hexagon lock nut with flange		C
22	4700791493		1	Steel plug threaded		
23	4700313108		2	Hose clamp		
24	4700313035		4	Hose clamp		
25	4700313035		1	Hose clamp		
26	4700313001		1	Hose clamp		C

A) L = 240 mm
B) Replaces earlier used 4700386950
C) Illustration A
D) Illustration B

Exhaust system

17873

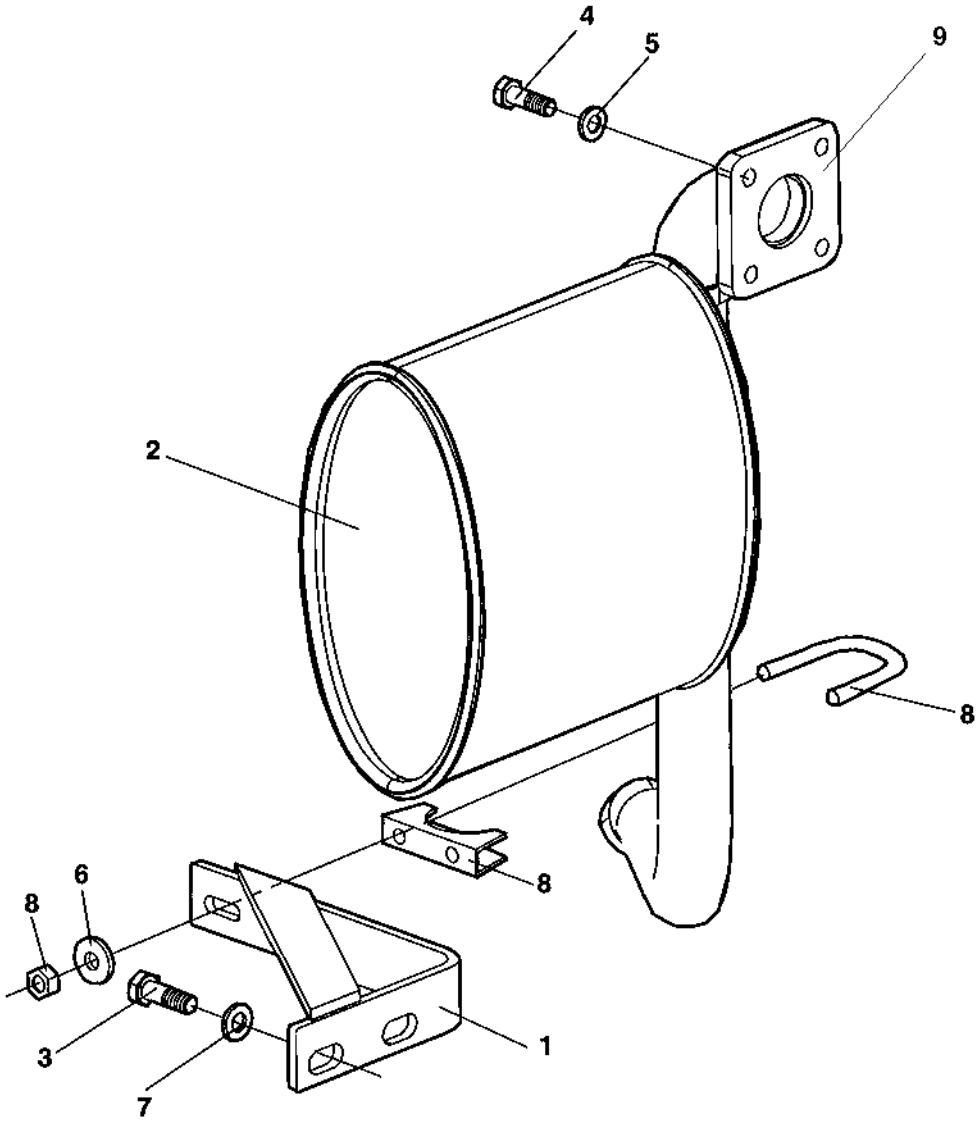

Exhaust system

Item	Part No	Rem	Qty	Description		Code
1	4700387201		1	Bracket		
2	4700387097		1	Muffler		
3	4700791483		2	Screw	M12-1,25x25H 8.8	
4	4700500021		4	Screw	M8-1,25x25 8.8	C
5	4700904229		4	Washer	8,4x16x1,5	C
6	4700904640		2	Washer	8,4x22x3	C
7	4700904703		2	Washer		C
8	4700927568		1	Clamp		
9	4700945878	1	1	Gasket		

1) Delivered with engine.

Fuel system

18713

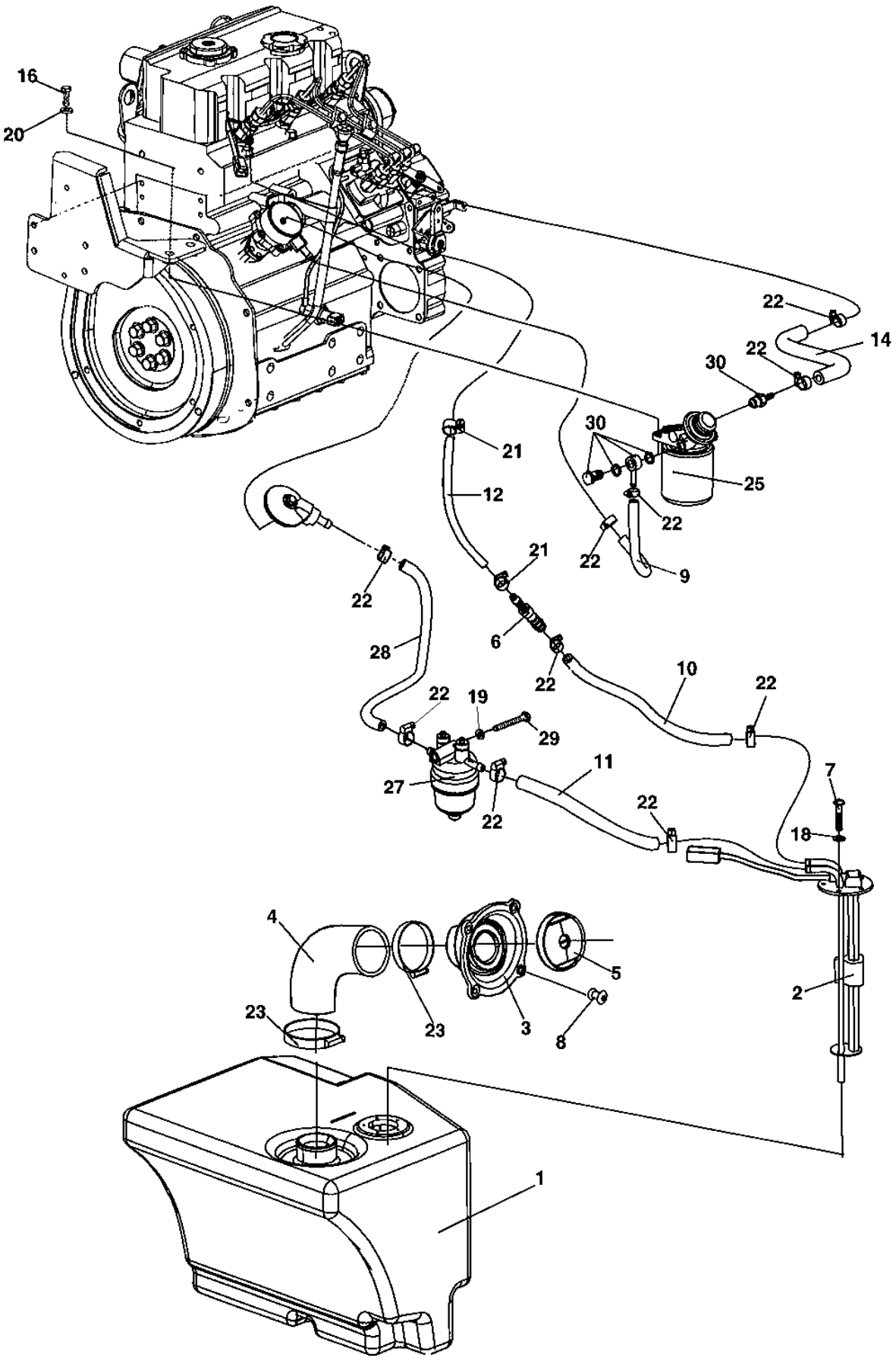

Fuel system

Item	Part No	Rem	Qty	Description		Code
1	4700387279		1	Fuel tank		
2	4700387552		1	Level gauge		
	4700945777		1	.Gasket		
3	4700387682		1	Filler neck		
4	4700387695		1	Fuel hose		
5	4700394253		1	Fuel cap		D
	4700945753		1	.Key	2pcs "921"	
6	4700791774		1	Hose connection		
7	4700903236		5	Screw, Thread rolling	K40x20	
8	4700791754		4	Blind rivet		
9	4700904984	A	1	Fuel hose		C
10	4700904984	B	1	Fuel hose		C
11	4700904984	B	1	Fuel hose		C
12	4700791422	C	1	Hose		
14	4700904984	E	1	Fuel hose		C
16	4700500029		2	Hexagon head screw		C
18	4700904698		5	Washer		C
19	4700904229		1	Washer	8,4x16x1,5	C
20	4700904557		2	Steel plain washer		C
21	4700313108		2	Hose clamp		
	4700313075		2	Hose clamp		C
22	4700313108		10	Hose clamp		
23	4700313023		2	Hose clamp		
25	4700376555		1	Fuel filter		A
	4700945418		1	Filter head		
27	4700940894		1	Water separator, cpl		
	4700940922		1	.Filter element		
	4700940203		1	.O-ring		
28	4700904984	K	1	Fuel hose		C
29	4700500068		1	Screw	M08x65	C
30			N	Existing on engine		C

A) L = 465 mm
B) L = 395 mm
C) L = 350 mm
E) L = 200 mm
K) L = 290 mm

Air intake system

17967

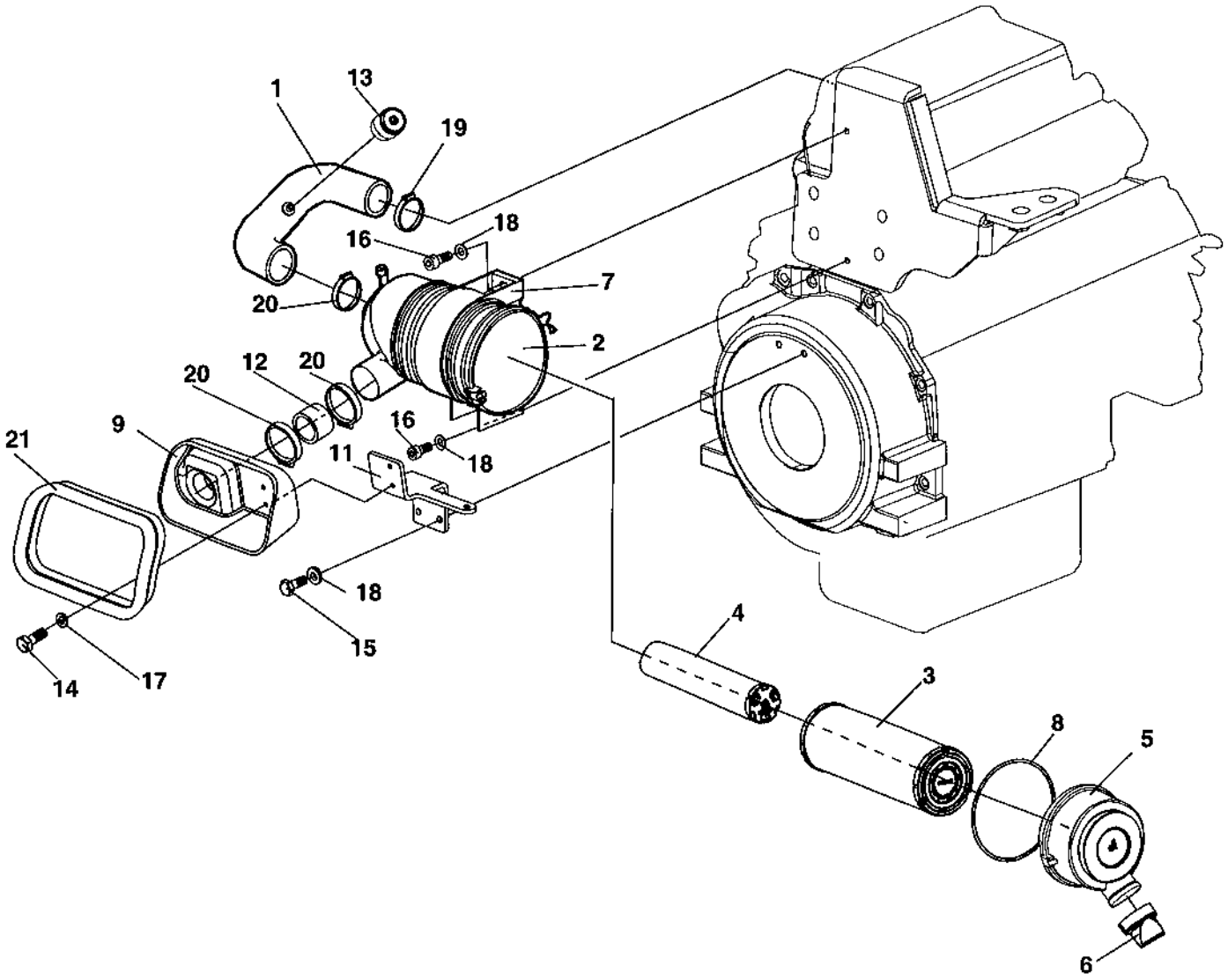

Air intake system

Item	Part No	Rem	Qty	Description		Code
1	4700389019		1	Air inlet hose		
2	4700386951		1	Air filter		
3	4700939802		1	.Air filter element	Main	A
4	4700939803		1	.Air filter element	Safety	A
5	4700939804		1	.Dust cap		
6	4700939805		1	.Vacuator cap		
7	4700939806		1	.Plastic mounting band		
8	4700939807		1	.O-ring		
9	4700387118		1	Box		
11	4700389005		1	Bracket		
12	4700387200		1	Hose		
13	4700389036		1	Mechanical indicator		
14	4700500013		2	Screw	M6-1x16 8,8	C
15	4700500053		2	Screw	M8x20H 8.8	C
16	4700508092		2	Screw		C
17	4700904228		2	Washer	6,4x12x1,5	C
18	4700904229		4	Washer	8,4x16x1,5	C
19	4700313010		1	Hose clamp		C
20	4700313010		3	Hose clamp		C
21	4700288129	A	N	Edge trim		

A) L = 0,66 m

Hydraulic system

Item	Part No	Rem	Qty	Description	Code
10				Hydraulic propulsion and brake system (Page 62)	
20				Hydraulic vibration (Page 66)	
30				Hydraulic steering (Page 72)	

Hydraulic propulsion and brake system

18117

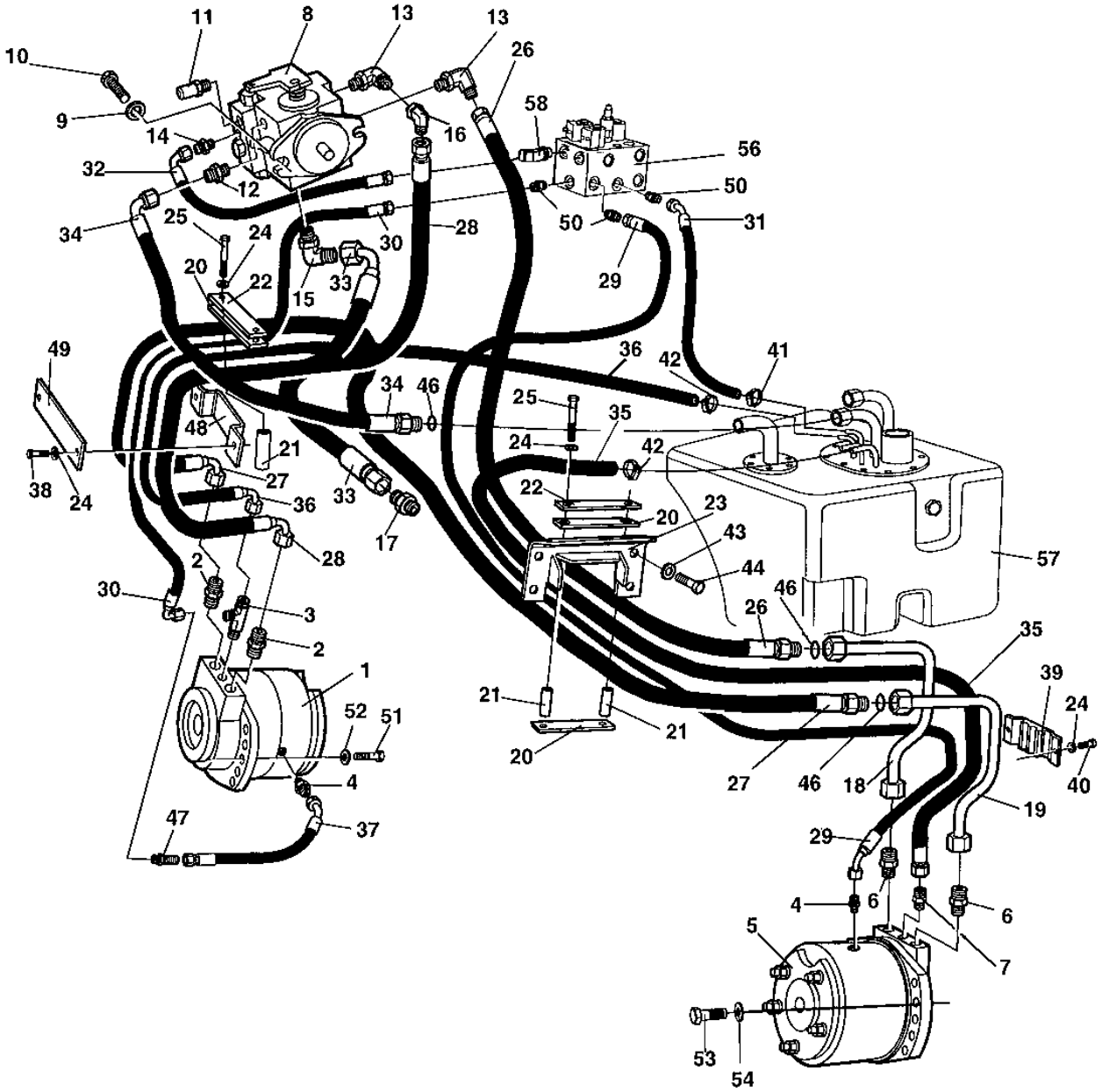

Hydraulic propulsion and brake system

Item	Part No	Rem	Qty	Description		Code
1	4700389017		1	Hydraulic motor front		
	4812155080		1	.Seal kit		
	4700396883		1	Hydraulic motor		
2	4700791410		2	Straight o-ring connector		
3	4700791746		1	Tee-connector		C
4	4700791744		2	Straight connector		
5	4700387890		1	Hydraulic motor rear		
	4700396884		1	Hydraulic motor		
6	4700791743		2	Straight connector orfs		
7	4700791409		1	Straight connector orfs		C
8	4700387269		1	Hydraulic pump		
	4700940613		1	.Seal kit		
9	4700904703		2	Washer		C
10	4700500037		2	Screw		C
11	4700901157		1	Measuring nipple		C
12	4700791412		1	Straight o-ring connector		
13	4700791599		2	Elbow 90		
14	4700791537		1	Straight connector		
15	4700791549		1	Elbow adapter 90		
16	4700791745		1	Elbow 90, O-ring with swivel		
17	4700791539		1	Straight connector		
18	4700387914		1	Pipe		
19	4700387915		1	Pipe		
20	4700387678		2	Rubber part		
21	4700387677		4	Spacer sleeve		
22	4700387676		1	Hose bracket		
23	4700389556		1	Rubber part		
24	4700904229		6	Washer	8,4x16x1,5	C
25	4700500068		2	Screw	M08x65	C
26	4700483665		1	Hydraulic hose		
27	4700483852		1	Hydraulic hose		
28	4700483853		1	Hydraulic hose		
29	4700483689		1	Hydraulic hose		
30	4700483654		1	Hydraulic hose		
31	4700389400		1	Hydraulic hose		
32	4700483652		1	Hydraulic hose		
33	4700483879		1	Hydraulic hose		
34	4700483661		1	Hydraulic hose		
35	4700389409		1	Hydraulic hose		
36	4700389410		1	Hydraulic hose		
37	4700483652		1	Hydraulic hose		
38	4700500022		2	Screw	M8x30H 8.8 A2K	C
39	4700388960		1	Hose clamp		
40	4700500053		2	Screw	M8x20H 8.8	C
41	4700313108		1	Hose clamp		
42	4700313001		2	Hose clamp		C
43	4700904640		4	Washer	8,4x22x3	C
44	4700500019		4	Screw	M8x16H 8.8 A2K	C
46	4700904009		3	O-ring		D
47	4700792170		1	Bulkhead union		
48	4700378024		1	Hose clamp		
49	4700378025		1	Hose clamp		
50	4700791538		3	Straight connector		
51		B	10	Screw		
52		B	10	Washer		
53		C	10	Screw		

B) See section "Drum single arm"
C) See section "Drum"

Hydraulic propulsion and brake system

18117

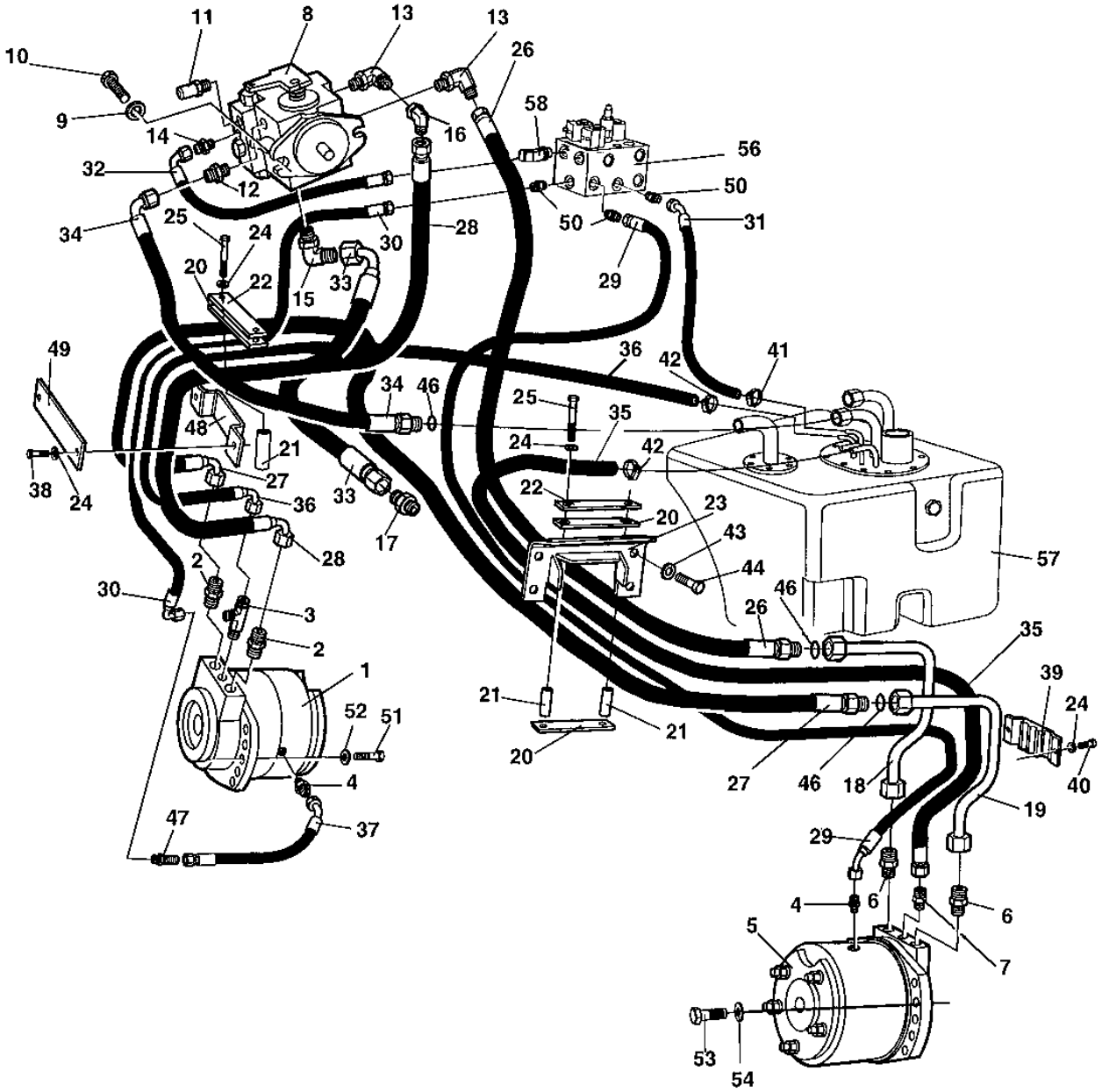

Hydraulic propulsion and brake system

Item	Part No	Rem	Qty	Description	Code
54		C	10	Washer	
56		A	1	Combination valve	
57		A	1	Hydraulic oil tank	
58	4700791543	E	1	Elbow 45	
59	4700390176		1	Adapter	

A) See section "Hydraulic vibrarion"
C) See section "Drum"
E) Replace one adaprter PN 791538

Hydraulic vibration

18731

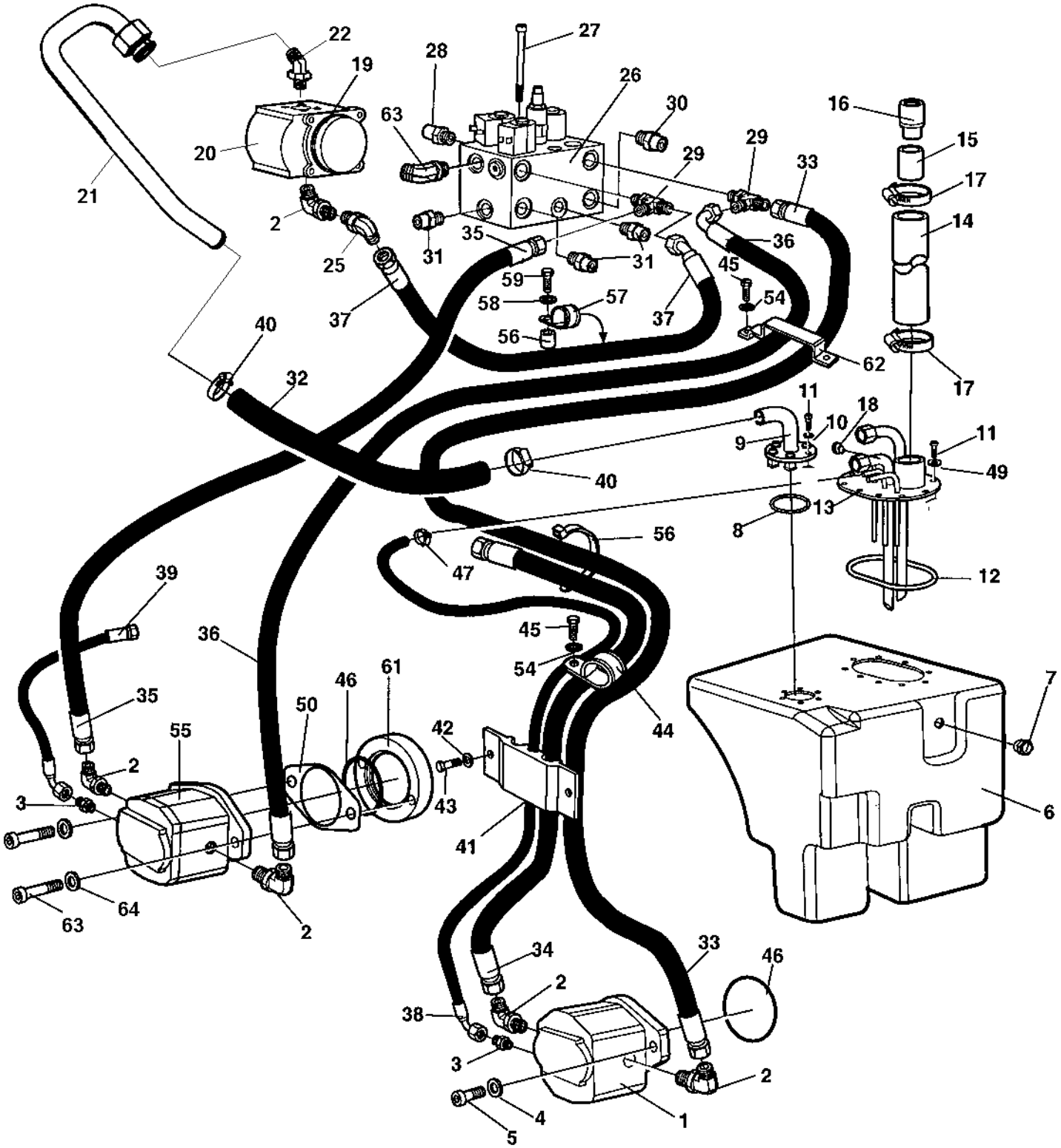

Item	Part No	Rem	Qty	Description		Code
1	4700390316		1	Hydraulic motor		
	4700945340		2	Seal kit		
2	4700791699		7	Elbow 90		
3	4700791541		2	Straight connector		
4	4700904557		2	Steel plain washer		C
5	4700508029		2	Screw	M10-1,5x30H 8,8	C
6	4700387278		1	Hydraulic oil tank		
7	4700791395		1	Sight plug		
8	4700791794		1	O-ring		
9	4700387758		1	Suction pipe		
10	4700904228		6	Washer	6,4x12x1,5	C
11	4700508002		16	Screw		
12	4700792070		1	O-ring		
13	4700387713		1	Return filler pipe		
14	4700205067		1	Rubber hose		C
15	4700357139		1	Connector		C
16	4700357138		1	Ventilating filter		A
17	4700313008		2	Hose clamp		C
18	4700389196		1	Protective plug		
19	4700160101		1	O-ring		
20	4700395520		1	Hydraulic pump		
21	4700395497		1	Suction pipe		
22	4700792707		1	Elbow 45		
25	4700791745		1	Elbow 90, O-ring with swivel		
26	4700387276		1	Combination valve (Page 70)		
27	4700508094		2	Screw		
28	4700901157		1	Measuring nipple		C
29	4700791700		2	Tee-connector		
30	4700791412		1	Straight o-ring connector		
31			4	Straight connector		
32	4700791941		1	Hydraulic hose		
33	4700483668		1	Hydraulic hose		
34	4700483649		1	Hydraulic hose		
35	4700483854		1	Hydraulic hose		
36	4700483878		1	Hydraulic hose		
37	4700483651		1	Hydraulic hose		
38	4700389401		1	Hydraulic hose		
39	4700483855		1	Hydraulic hose		
40	4700313035		2	Hose clamp		
41	4700388653		1	Hose clamp		
42	4700904229		2	Washer	8,4x16x1,5	C
43	4700500053		2	Screw	M8x20H 8.8	C
44	4700283711		2	Hose clamp		
45	4700508092		2	Screw		C
46		A	1	O-ring		C
47	4700313108		1	Hose clamp		
49	4700904735		10	Washer		C
50		A	1	Gasket		C
54	4700904556		2	Steel plain washer		C
55		A	1	Hydraulic motor		C
56	4700359434		1	Spacer sleeve		C
57	4700921104		1	Clamp		C
58	4700904230		1	Steel plain washer		C
59	4700500192		1	Screw	M10x80	C
60			1	Strap		C
61		A	1	Adapter		C
62	4700379668		1	Hose clamp		
	4700359606	B	1	Rubber protection		

A) See section "drum, single arm"
B) Not illustrated

Hydraulic vibration

18731

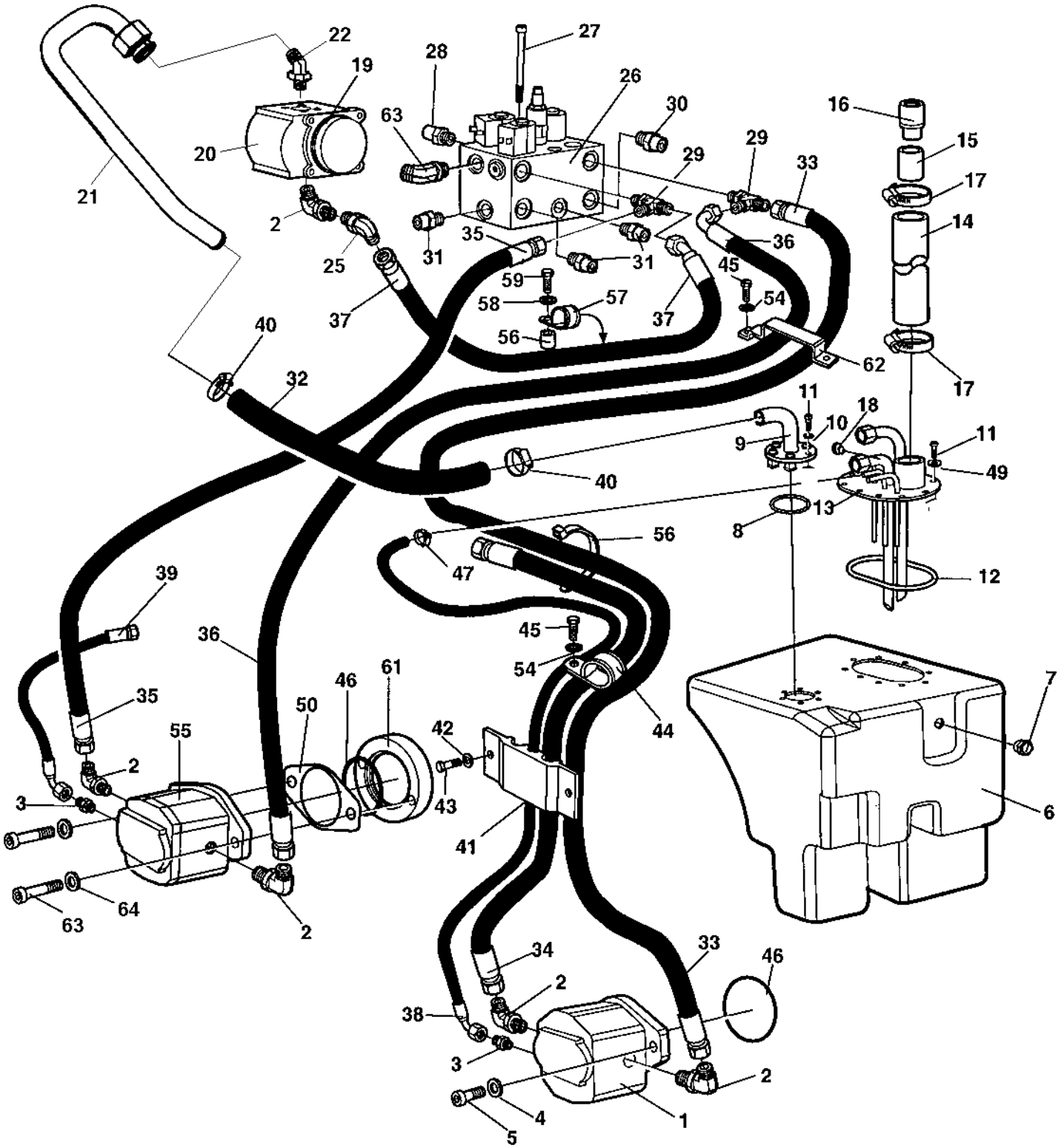

Hydraulic vibration

Item	Part No	Rem	Qty	Description	Code
63		A	2	Screw	
64		A	2	Washer	

A) See section "drum, single arm"

4700387276 Combination valve

18928

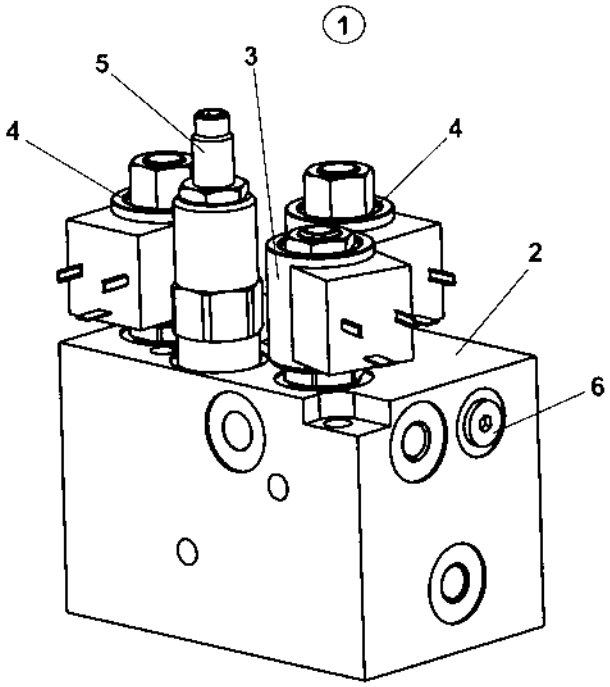

4700387276 Combination valve

Item	Part No	Rem	Qty	Description	Code
1	4700387276		1	Combination valve (Page 70)	
2			1	.Valve block	
3	4700940885		1	.Solenoid valve, cpl	
	4700940887		1	..Coil	
4	4700940886		2	.Solenoid valve, cpl	
	4700940887		2	..Coil	
5			1	.Pilot valve	
6			3	.Plug	

Hydraulic steering

17951

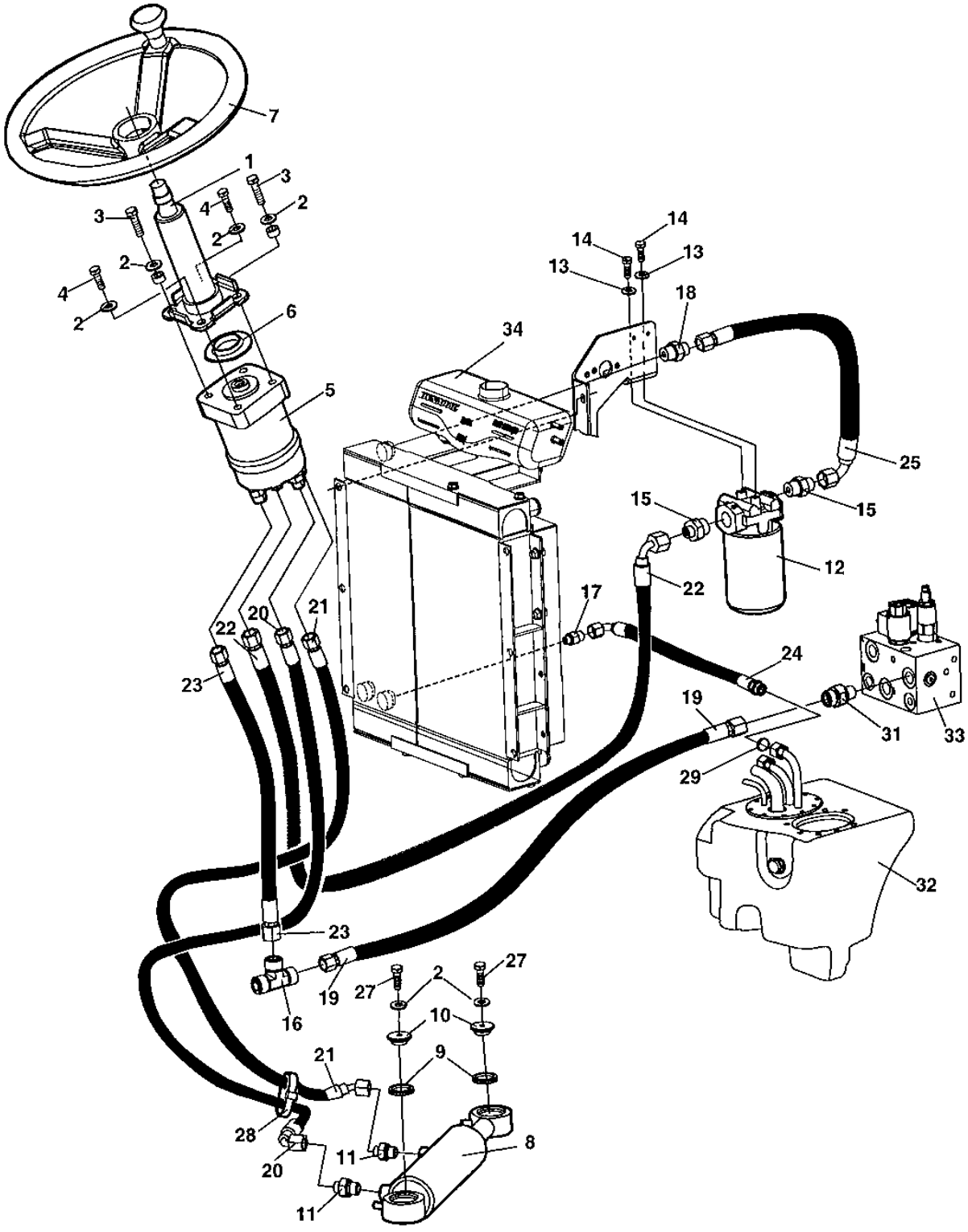

Hydraulic steering

Item	Part No	Rem	Qty	Description		Code
1	4700902123		1	Steering column		
2	4700904230		6	Steel plain washer		C
3	4700500031		2	Screw		C
4	4700500048		2	Hexagon head screw		C
5	4700387274		1	Steering valve (Page 74)		
6	4700928830		1	Rubber washer		
7	4700372964		1	Steering wheel, cpl		D
	4700935614		1	.Turning knob		D
	4700935613		1	.Cover		
8	4700387275		1	Hydraulic cylinder (Page 76)		
	4700945526		2	.Bearing		
9	4700791565		2	Sealing		
10	4700376861		2	Washer		
11	4700791542		2	Straight connector		
12	4700387277		1	Hydraulic oil filter, cpl		
	4700376636		1	.Cleaning filter element	Maximum 50 hours use	
	4700376637	C	1	Filter element		A
13	4700904229		2	Washer	8,4x16x1,5	C
14	4700500053		2	Screw	M8x20H 8.8	C
15	4700791408		2	Straight o-ring connector		
16	4700791701		1	Tee-connector		
17	4700791540		1	Straight connector		
18	4700791410		1	Straight o-ring connector		
19	4700483653		1	Hydraulic hose		
20	4700483654		1	Hydraulic hose		
21	4700483655		1	Hydraulic hose		
22	4700483656		1	Hydraulic hose		
23	4700483657		1	Hydraulic hose		
24	4700483696		1	Hydraulic hose		
25	4700483662		1	Hydraulic hose		
26	4700355869		2	Spacer sleeve		
27	4700947684		2	Screw		
28	4700313102		1	Cable ties		
29	4700904009		1	O-ring		D
31	4700791412		1	Straight o-ring connector		
32		A	1	Hydraulic tank		
33		A	1	Combination valve		
34		B	1	Radiator		

A) See section " Hydraulic vibration"
B) See section " Cooling system "
C) Spare part for ordinary service

4700387274 Steering valve

18885

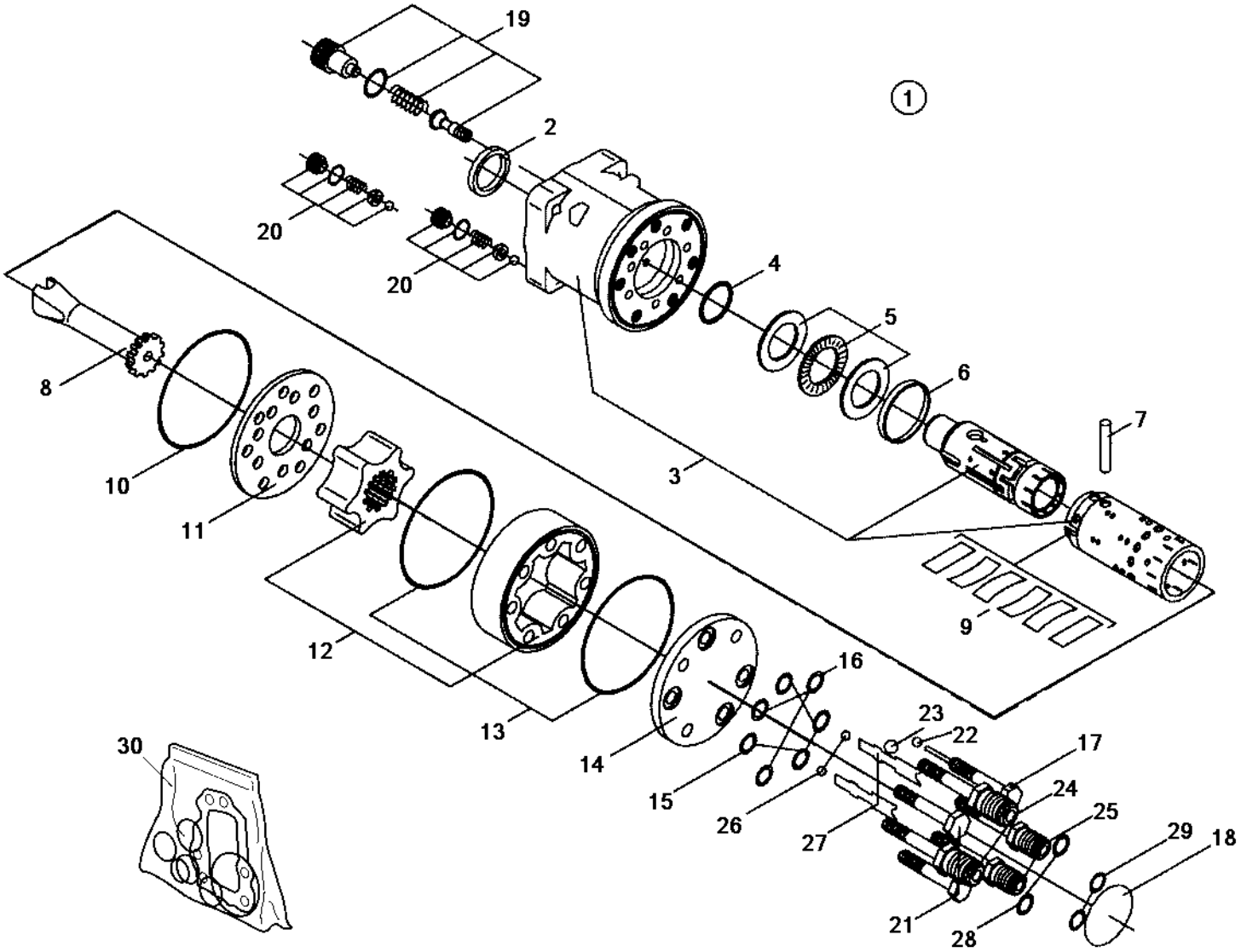

4700387274 Steering valve

Item	Part No	Rem	Qty	Description	Code
1			1	Steering valve, cpl	
2		A	1	.Seal ring	
3			1	.Housing, spool and sleeve	
4		A	1	.O-ring	
5			1	.Bearing	
6			1	.Ring	
7			1	.Cross pin	
8			1	.Cardan shaft	
9			1	.Set of springs	
10		A	1	.O-ring	
11			1	.Distributor plate	
12			1	.Gear wheel set	
13		A	2	.O-ring	
14			1	.End cover	
15		A	4	.O-ring	
16		A	3	.Washer	
17			1	.Screw with pin	
18			1	.Name plate	
19			1	.Relief valve	
20			2	.Shock valves	
21			2	.Screw	
22			1	.Ball	
23			1	.Ball	
24			2	.Port	
25			2	.Port	
26			2	.Ball	
27			2	.Ball stop	
28			2	.O-ring	
29			2	.O-ring	
30	4700935429		1	.Seal kit	

A) Included in sealkit, item 30

4700387275 Hydraulic cylinder

18812

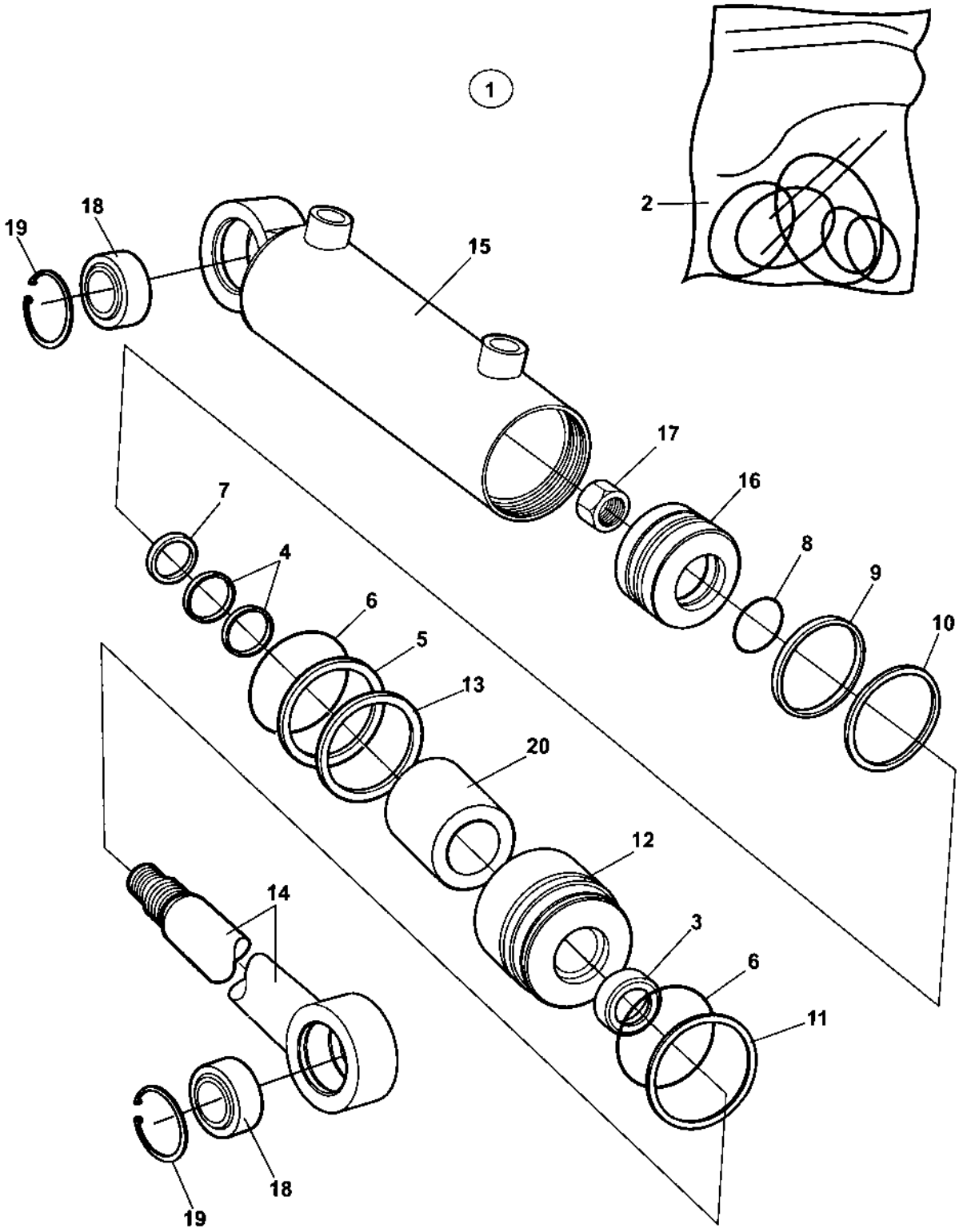

4700387275 Hydraulic cylinder

Item	Part No	Rem	Qty	Description	Code
1	4700387275		1	Hydraulic cylinder (Page 76)	
2	4700945668		1	.Seal kit	
3			1	..Seal	
4			2	..Seal	
5			1	..Back-up ring	
6			2	..O-ring	
7			1	..Seal	
8			1	..O-ring	
9			1	..Seal	
10			1	..Seal	
11			1	.Retaining ring	
12			1	.Steering	
13			1	.Retaining ring	
14			1	.Piston rod	
15			1	.Cylinder	
16			1	.Piston block	
17			1	.Cylinder nut	
18	4700945526		1	.Bearing	
19			1	.Retaining ring	
20		A	1	.Spacer	

A) Not valid for this model

Electrical equipment

Item	Part No	Rem	Qty	Description	Code
10				Electrical equipment (Page 80)	
20				Control panel, relays Up to 89532816 (Page 82)	
21				Control panel, relays From 89532817 (Page 84)	
30				Driving lights (Page 86)	Option
31				Driving lights (Page 88)	Option
40				Working lights (Page 90)	Option
50				Rotating beacon with Rops (Page 92)	Option
60				Back-up alarm (Page 94)	Option

Electrical equipment

17961

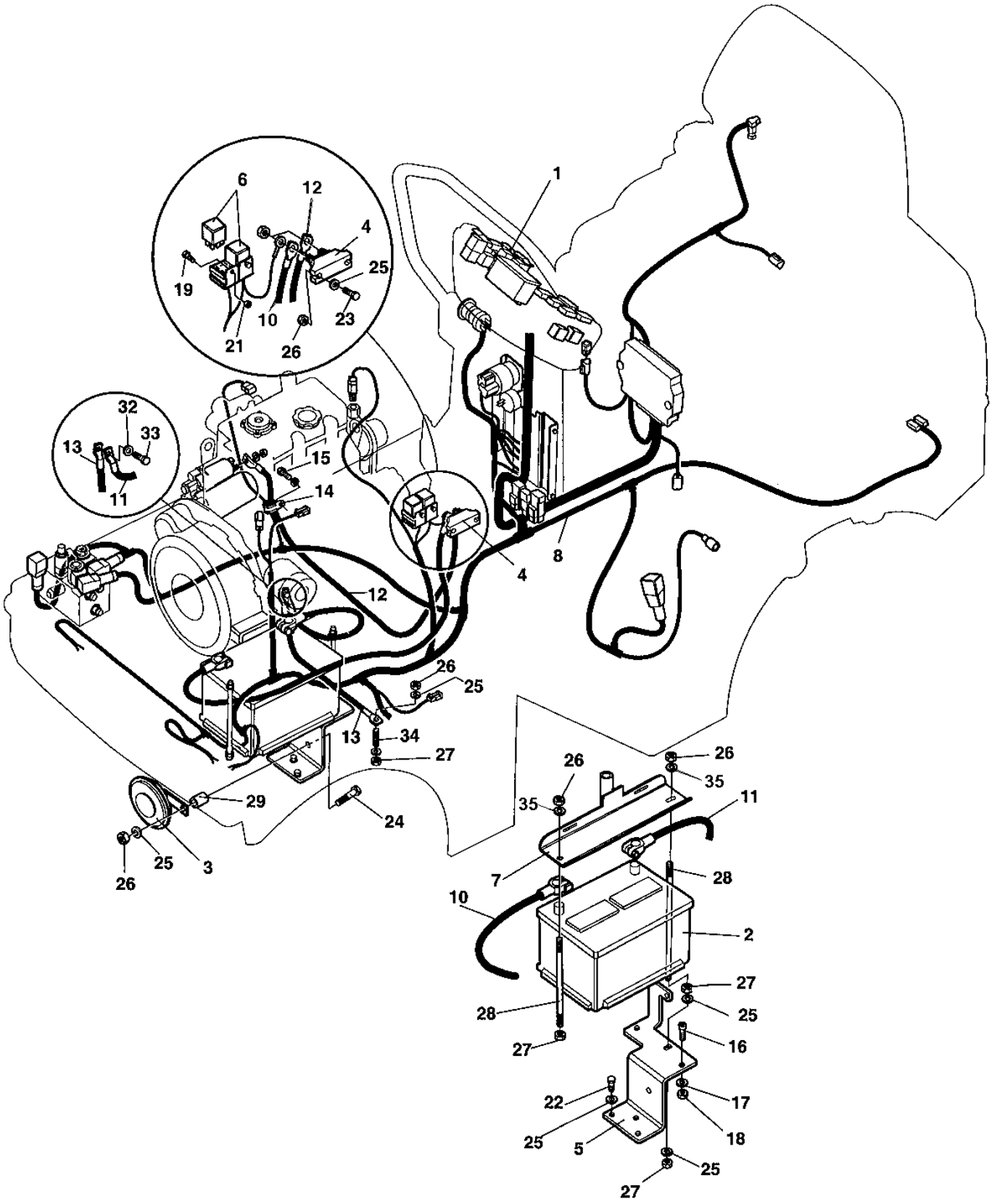

Electrical equipment

Item	Part No	Rem	Qty	Description		Code
1			1	Control panel		
2	4700791502		1	Battery		
3	4700999027		1	Horn		B
4	4700377058	A	1	Connection block		
5	4700387284		1	Battery shelf		
6	4700903956		2	Relay		A
7	4700388721		1	Battery holder		
8	4700388009		1	Cable harness		
	4700397093		1	Cable harness From ECN 08408		
10	4700792019		1	Battery cable		
11	4700792020		1	Battery cable		
12	4700377063		1	Connection cable, coarse		
13	4700791639		1	Connection cable, coarse		
14	4700921050		1	Clamp		C
15	4700508092		1	Screw		C
16	4700508041		2	Screw	M4x12H	
17	4700904698		2	Washer		C
18	4700923976		2	Nut		C
19	4700500006		2	Screw	M5x16	C
21	4700586001		2	Lock nut		C
22	4700500053		3	Screw	M8x20H 8.8	C
23	4700500021		2	Screw	M8-1,25x25 8.8	C
24	4700500024		1	Screw	M8x45	C
25	4700904229		11	Washer	8,4x16x1,5	C
26	4700586003		6	Lock nut	M8	C
27	4700570005		4	Nut	M8	C
28	4700791550		2	Threaded stud		
29	4700355704		1	Spacer sleeve		
30	4700904228		1	Washer	6,4x12x1,5	C
31	4700570004		1	Nut	M6X1,00 -8 A2K	C
32	4700904231		1	Washer	13x24x2 300 HV	C
33	4700791483		1	Screw	M12-1,25x25H 8.8	
34	4700903768		1	Threaded stud		C
35	4700904556		2	Steel plain washer		C

A) Exsist in machines without battery disconnector.

Control panel, relays

17978-1

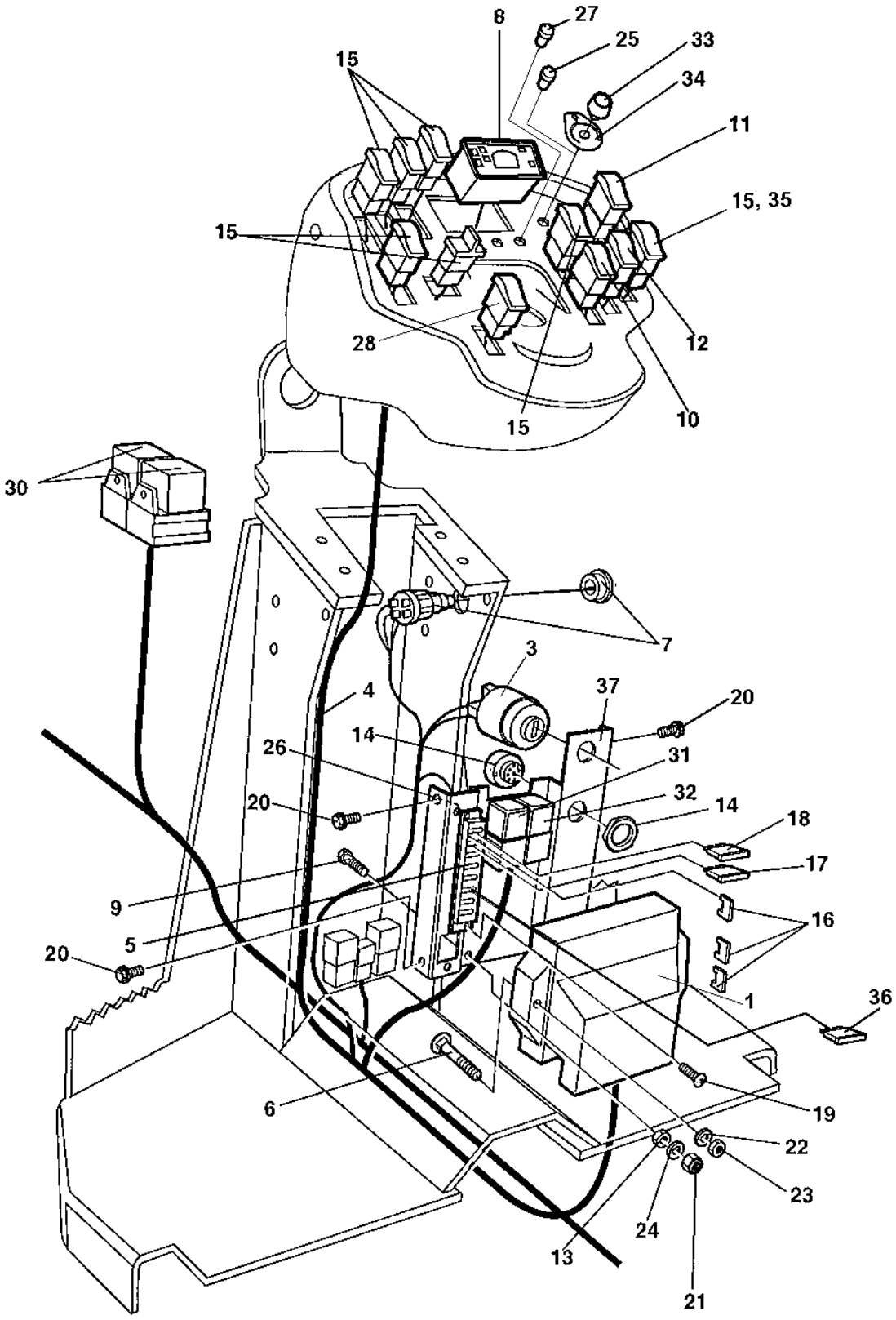

Control panel, relays

Item	Part No	Rem	Qty	Description		Code
1	4700378745	E	1	Control unit, ECU		
			1	.Decal		
		E	1	.Software		
	4700378932		1	.Instruction		D
3	4700238158		1	Ignition switch		
	4700940451		1	.Key		
4	4700393956		1	Cable harness		
5	4700791185		1	Fuse box		
6	4700791775		2	Bolt		
7	4700791647		1	Emergency stop		
8	4700395394		1	Control panel		
9	4700500075		1	Screw	M6-1,0x25 8.8	C
10	4700791578		1	Switch, horn		
11	4700791579		1	Switch, sprinkler		
12	4700791580		1	Switch, vibration		
13	4700570004		1	Nut	M6X1,00 -8 A2K	C
14	4700385599		1	Buzzer		B
15	4700791588	D	7	Panel plug		
16	4700791211		2	Contact bridge		
17	4700901228		1	Fuse	15A	A
18	4700903741		1	Fuse	20A Yellow Medium	A
19	4700901767		2	Screw	ST3,5x9,5 Black	
20	4700903782		4	Screw	M5x12	C
21	4700586002		1	Lock nut	M6 -8	C
22	4700904556		2	Steel plain washer		C
23	4700586003		2	Lock nut	M8	C
24	4700904228		1	Washer	6,4x12x1,5	C
25	4700792083		1	Plug		
26	4700202042	A	1	Rubber strip		
27	4700792320		4	Plug		
28	4700791582		1	Switch, parking brake		
30		C	2	Relay		
31		B	1	Relay		
32		B	1	Relay		
33	4700388737	F	1	Potentiometer		B
34	4700377139	F	1	Decal		
35	4700791581	F,G	1	Switch		
36	4700901227	H	1	Fuse	10A	A
37	4700387683		1	Distribution control plate		

A) L = 70 mm
B) See section "driving lights"
C) See section "Electric equipment"
D) For Option switch, see another section of Electrical system or Optional equipment
E) Machine SN required when placing order
F) Option
G) See section "Vibration shot-off one drum"
H) Option, Rotating beacon

Control panel, relays

18835

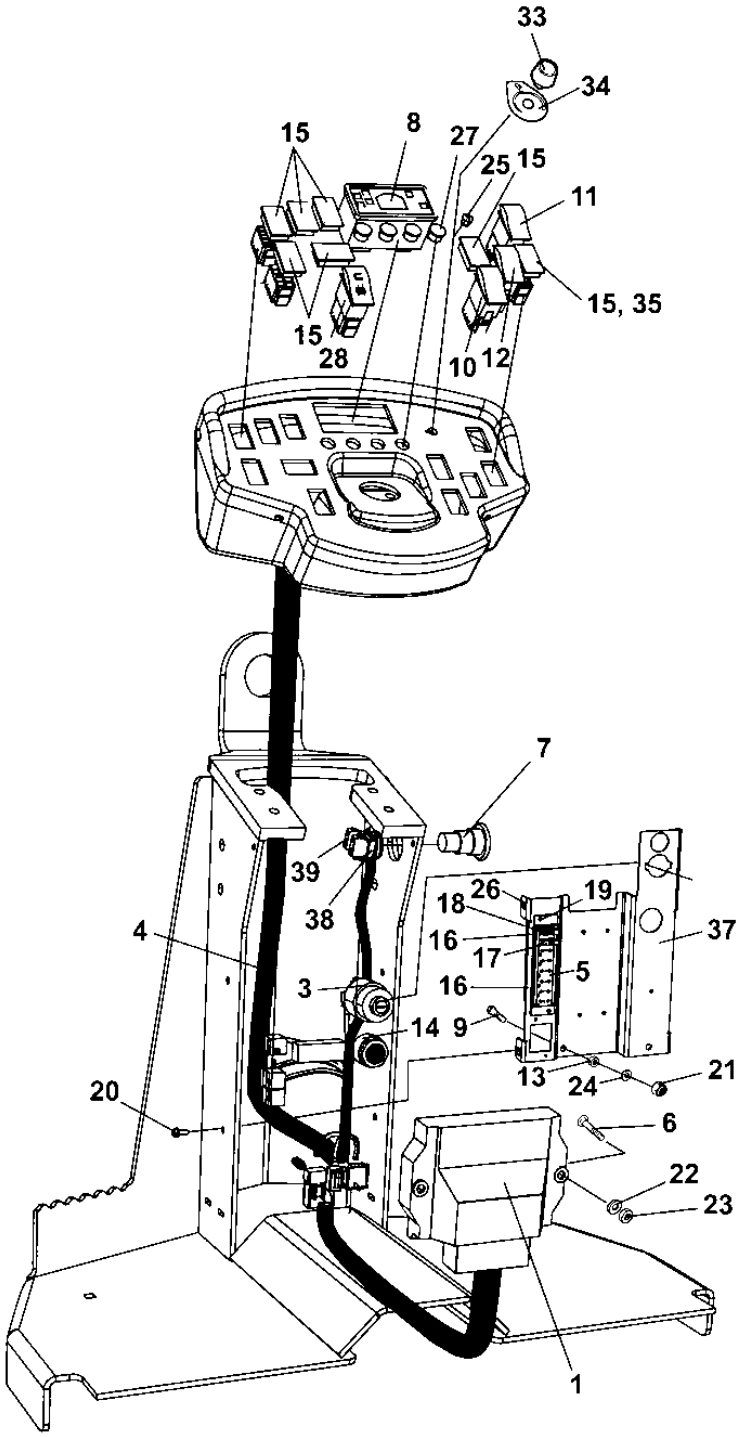

Control panel, relays

Item	Part No	Rem	Qty	Description		Code
1	4700378745	E	1	Control unit, ECU		
			1	.Decal		
		E	1	.Software		
	4700378932		1	.Instruction		D
3	4700238158		1	Ignition switch		
	4700940451		1	.Key		
4	4700396971		1	Cable harness		
5	4700791185		1	Fuse box		
6	4700791775		2	Bolt		
7	4700791739		1	Emergency stop		
8	4700395394		1	Control panel		
9	4700500075		1	Screw	M6-1,0x25 8.8	C
10	4700791578		1	Switch, horn		
11	4700791579		1	Switch, sprinkler		
12	4700791580		1	Switch, vibration		
13	4700570004		1	Nut	M6X1,00 -8 A2K	C
14	4700385599		1	Buzzer		B
15	4700791588	D	7	Panel plug		
16	4700791211		2	Contact bridge		
17	4700901228		1	Fuse	15A	A
18	4700903741		1	Fuse	20A Yellow Medium	A
19	4700901767		2	Screw	ST3,5x9,5 Black	
20	4700903782		4	Screw	M5x12	C
21	4700586002		1	Lock nut	M6 -8	C
22	4700904556		2	Steel plain washer		C
23	4700586003		2	Lock nut	M8	C
24	4700904228		1	Washer	6,4x12x1,5	C
25	4700792083		1	Plug		
26	4700202042	A	1	Rubber strip		
27	4700792320		4	Plug		
28	4700791582		1	Switch, parking brake		
33	4700388737	F	1	Potentiometer		B
34	4700377139	F	1	Decal		
35	4700791581	F,G	1	Switch		
37	4700387683		1	Distribution control plate		
38	4700389840		1	Connector		
39	4700791723		1	Connector		

A) L = 70 mm
D) For Option switch, see another section of Electrical system or Optional equipment
E) Machine SN required when placing order
F) Option
G) See section "Vibration shot-off one drum"

Driving lights Option

17991

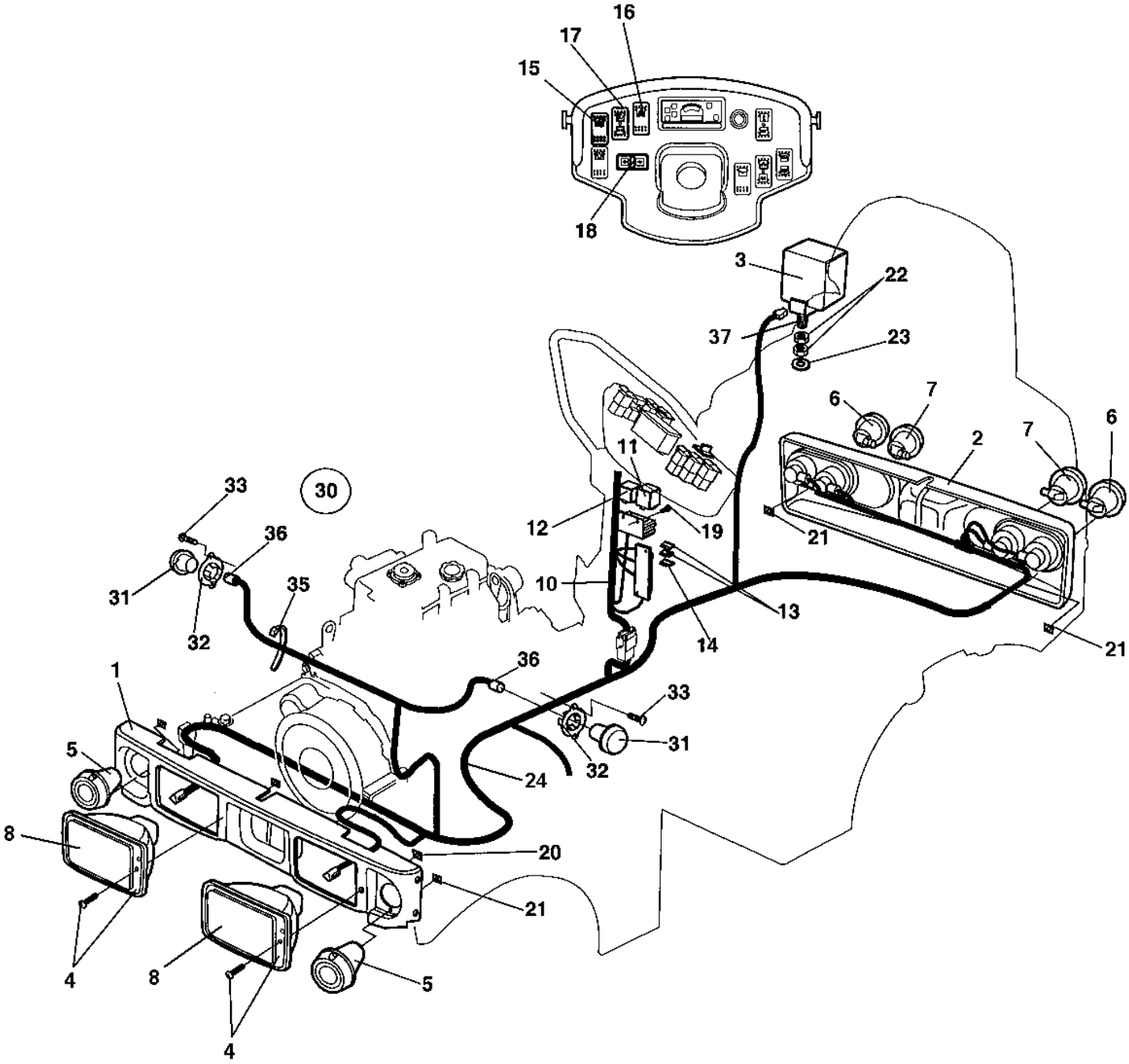

Driving lights Option

Item	Part No	Rem	Qty	Description		Code
1	4700387377		1	Frame cover		
2	4700387378		1	Frame cover		
3	4700904314		1	Work lamp		B
4	4700791951	A	2	Headlight		
	4700792059	B	2	Headlight		
5	4700791953		2	Direction indicator		
6	4700791954		2	Direction indicator		
7	4700791955		2	Brake/position light		
8	4700900790	C	2	Bulb	60/55w H4	B
	4700985125	D	2	Bulb	12V	B
10	4700388636		1	Cable harness		
11	4700904989		1	Flash relay	Option	A
12	4700903956		1	Relay		A
13	4700901225		2	Fuse	5A	A
14	4700901227		1	Fuse	10A	A
15	4700791587		1	Switch, working light		
16	4700791584		1	Switch, hazard flashers		
17	4700791583		1	Switch, driving light		
18	4700791586		1	Switch, drive direction		
19	4700791916		2	Screw		C
20	4700791970		4	Speed nut		
21	4700791971		12	Quick lock nut		
22	4700573005		2	Nut		C
23	4700904230		1	Steel plain washer		C
24	4700377140		1	Cable harness		
30			1	Side direction lights		
31	4700791704		2	.Side direction light		
	4700904889		2	.Bulb		
32	4700388382		2	.Holder side light		
33	4700791643		4	.Screw		
35	4700903810		4	.Cable tie holder		
36	4700960079		4	.Connector		
37	4700500029		1	Hexagon head screw		C

A) Right asym
B) Left asym.
C) Head light
D) Parking light

Driving lights Option

17991-1

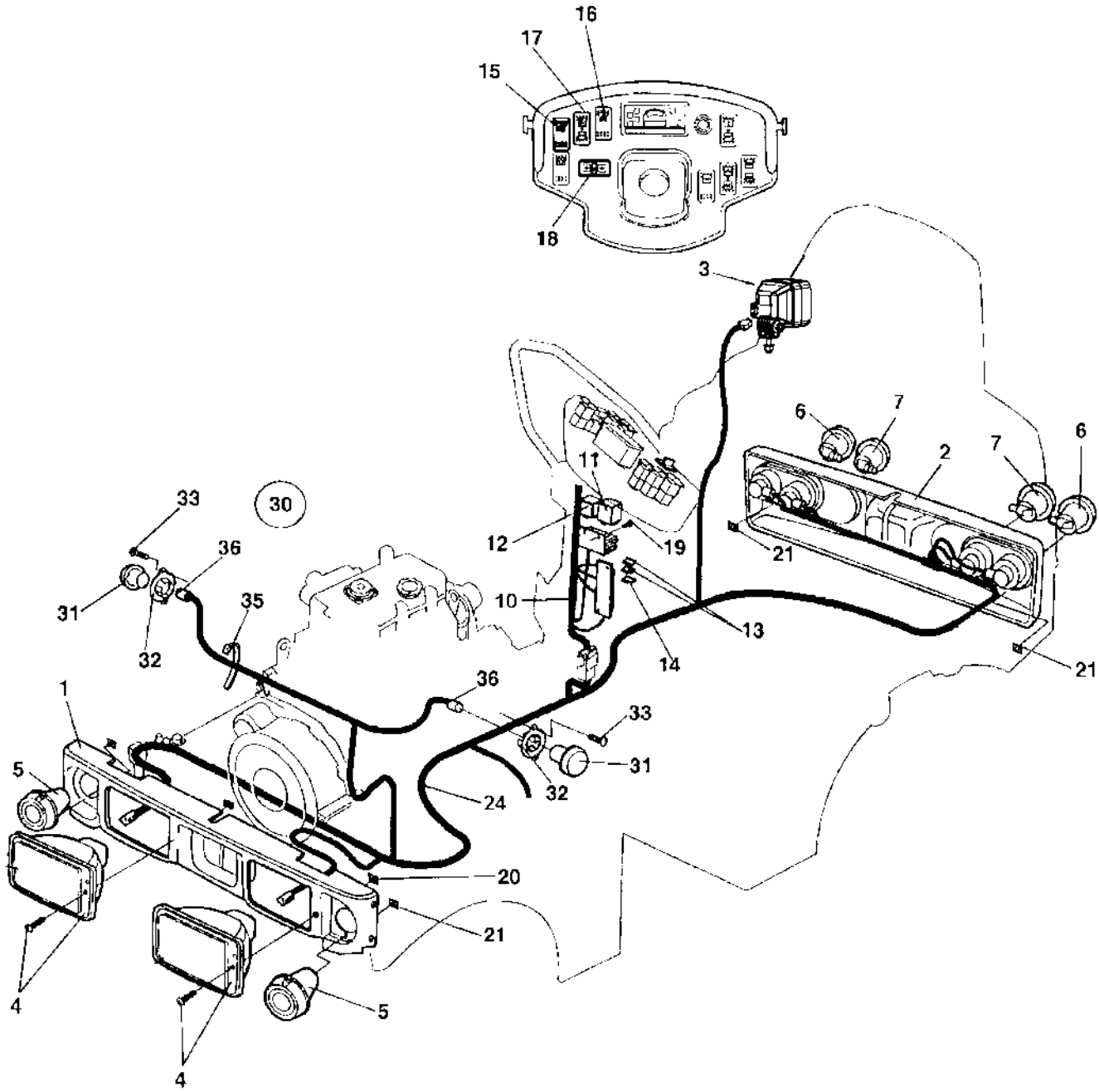

Driving lights Option

Item	Part No	Rem	Qty	Description		Code
1	4700387377		1	Frame cover		
2	4700387378		1	Frame cover		
3	4812110216		1	Work lamp		
	4700500230		1	.Screw	M8-1.25x35	
	4700904230		1	.Steel plain washer		C
	4700586018		1	.Lock nut		C
4	4700791951	A	2	Headlight		
	4700792059	B	2	Headlight		
5	4700791953		2	Direction indicator		
6	4700791954		2	Direction indicator		
7	4700791955		2	Brake/position light		
10	4700388636		1	Cable harness		
11	4700904989		1	Flash relay	Option	A
12	4700903956		1	Relay		A
13	4700901225		2	Fuse	5A	A
14	4700901227		1	Fuse	10A	A
15	4700791587		1	Switch, working light		
16	4700791584		1	Switch, hazard flashers		
17	4700791583		1	Switch, driving light		
18	4700791586		1	Switch, drive direction		
19	4700791916		2	Screw		C
20	4700791970		4	Speed nut		
21	4700791971		12	Quick lock nut		
24	4700377140		1	Cable harness		
30			1	Side direction lights		
31	4700791704		2	.Side direction light		
	4700904889		2	.Bulb		
32	4700388382		2	.Holder side light		
33	4700791643		4	.Screw		
35	4700903810		4	.Cable tie holder		
36	4700960079		4	.Connector		

A) Right asym
B) Left asym.

Working lights Option

17992-1

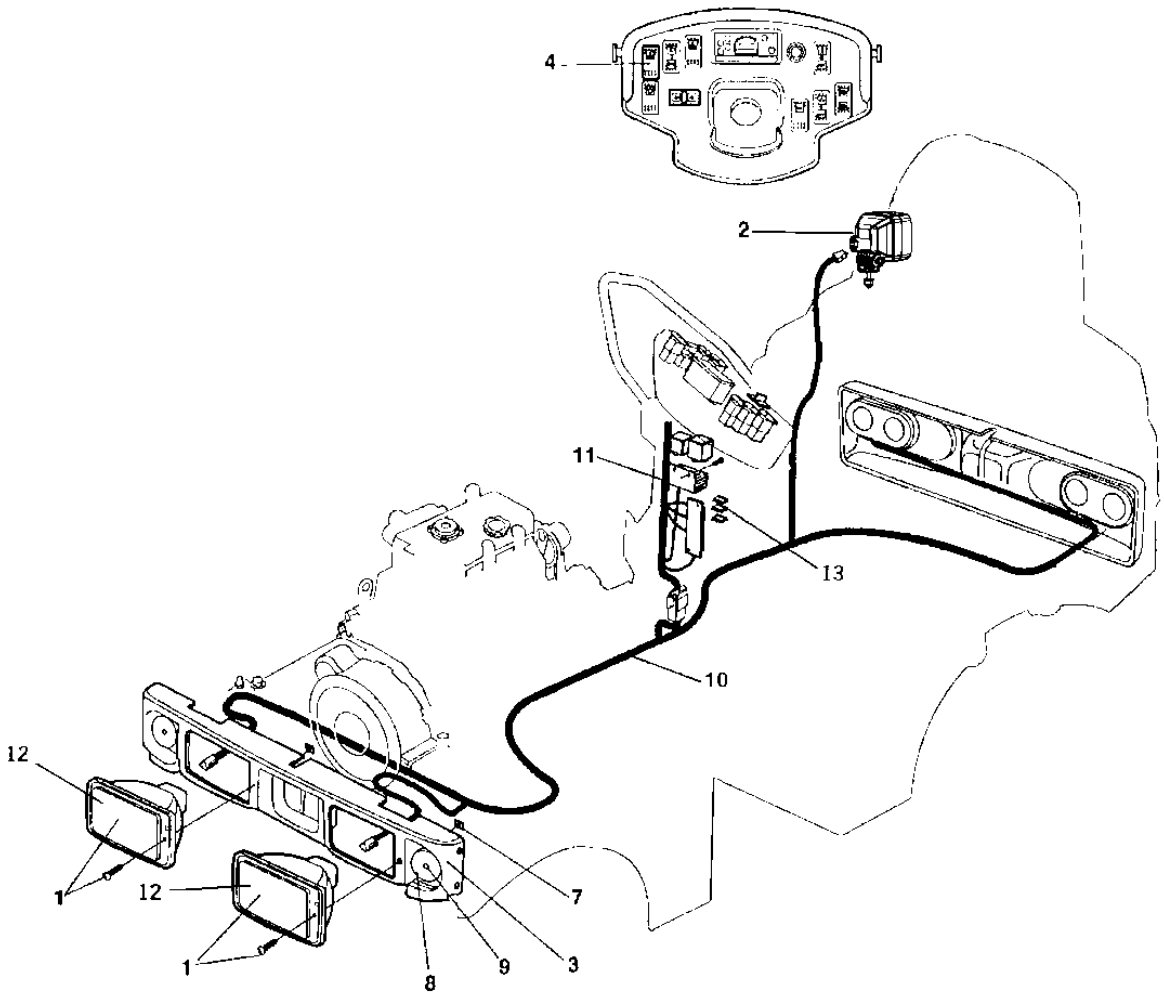

Working lights Option

Item	Part No	Rem	Qty	Description		Code
1	4700902227		2	Work light		B
			2	.Screw		B
2	4812110216		1	Work lamp		
	4700500230		1	.Screw	M8-1.25x35	
	4700904230		1	.Steel plain washer		C
	4700586018		1	.Lock nut		C
3	4700387377		1	Frame cover		
4	4700791587		1	Switch, working light		
7	4700791970		4	Speed nut		
8	4700791754		N	Blind rivet		
9	4700791957		N	Reflector, white		
10		A	1	Cable harness		
11		A	1	Cable harness		
12	4700901369		2	Bulb	55w H3	B
13	4700901228		2	Fuse	15A	A

A) See section "Driving lights"

Rotating beacon with Rops Option

17993

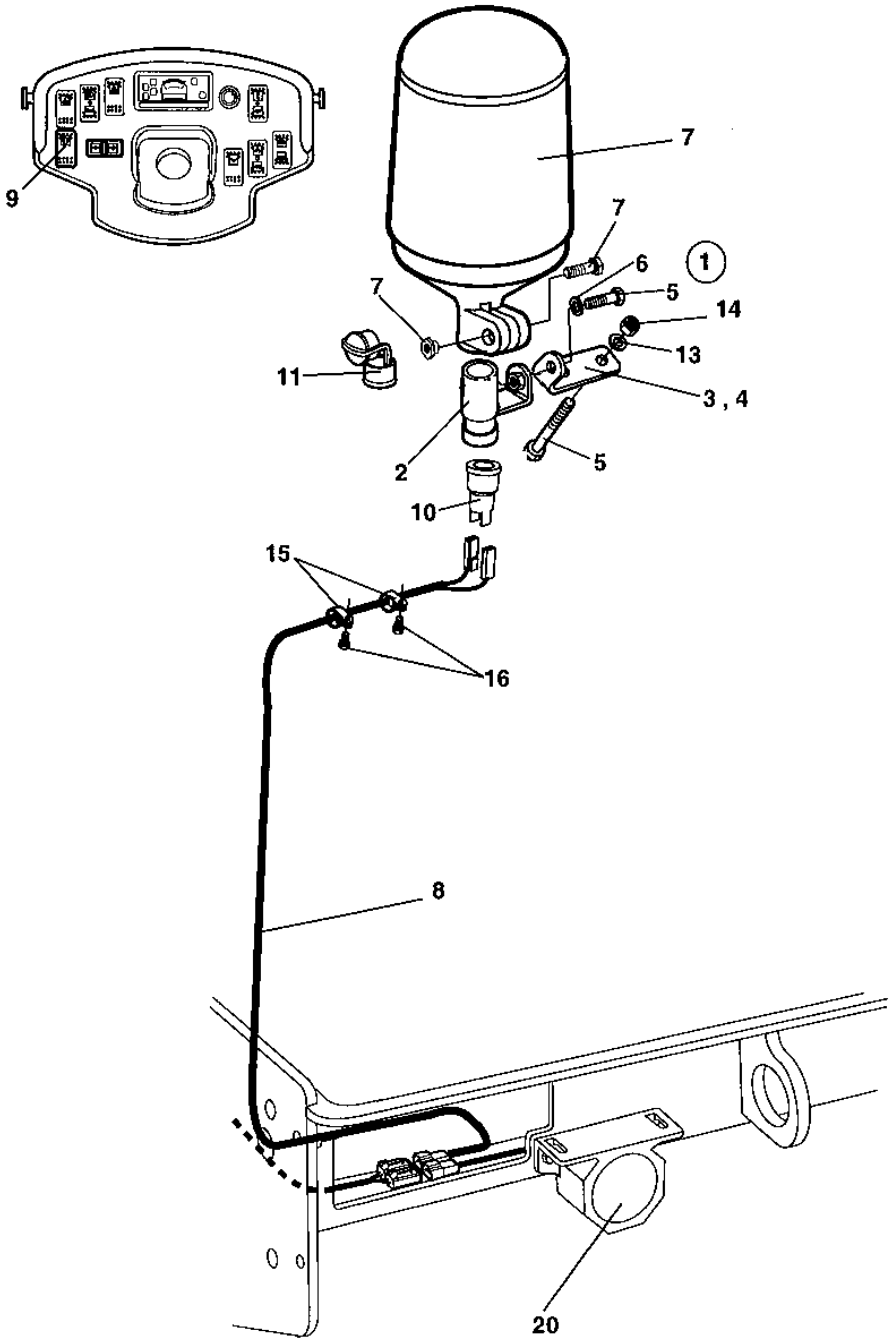

Rotating beacon with Rops Option

Item	Part No	Rem	Qty	Description		Code
1	4700389561		1	Bracket		
2	4700388772		1	.Bracket		
3	4700388773		1	.Bracket		D
4	4700629101		1	.Spirol pin		
5	4700500021		1	.Screw	M8-1,25x25 8.8	C
6	4700904229		1	.Washer	8,4x16x1,5	C
7	4700389577		1	Rotating beacon		D
			1	.Screw		D
			1	.Nut		D
8	4700389763		1	Cable harness		
9	4700791585		1	Switch, rotating beacon		
10	4700791981		1	Connector plug		
11	4700791980		1	Rubber protection		
12	4700500180		2	Screw		C
13	4700904229		4	Washer	8,4x16x1,5	C
14	4700586003		2	Lock nut	M8	C
15	4700921039		2	Pipe clamp		C
16	4700541702		2	Screw	M6x12	C
17		B	1	Fuse		C
20		A	1	Back-up alarm		C

A) See section "Back up alarm"
B) See section "Control panel, relay"

Back-up alarm Option

17963

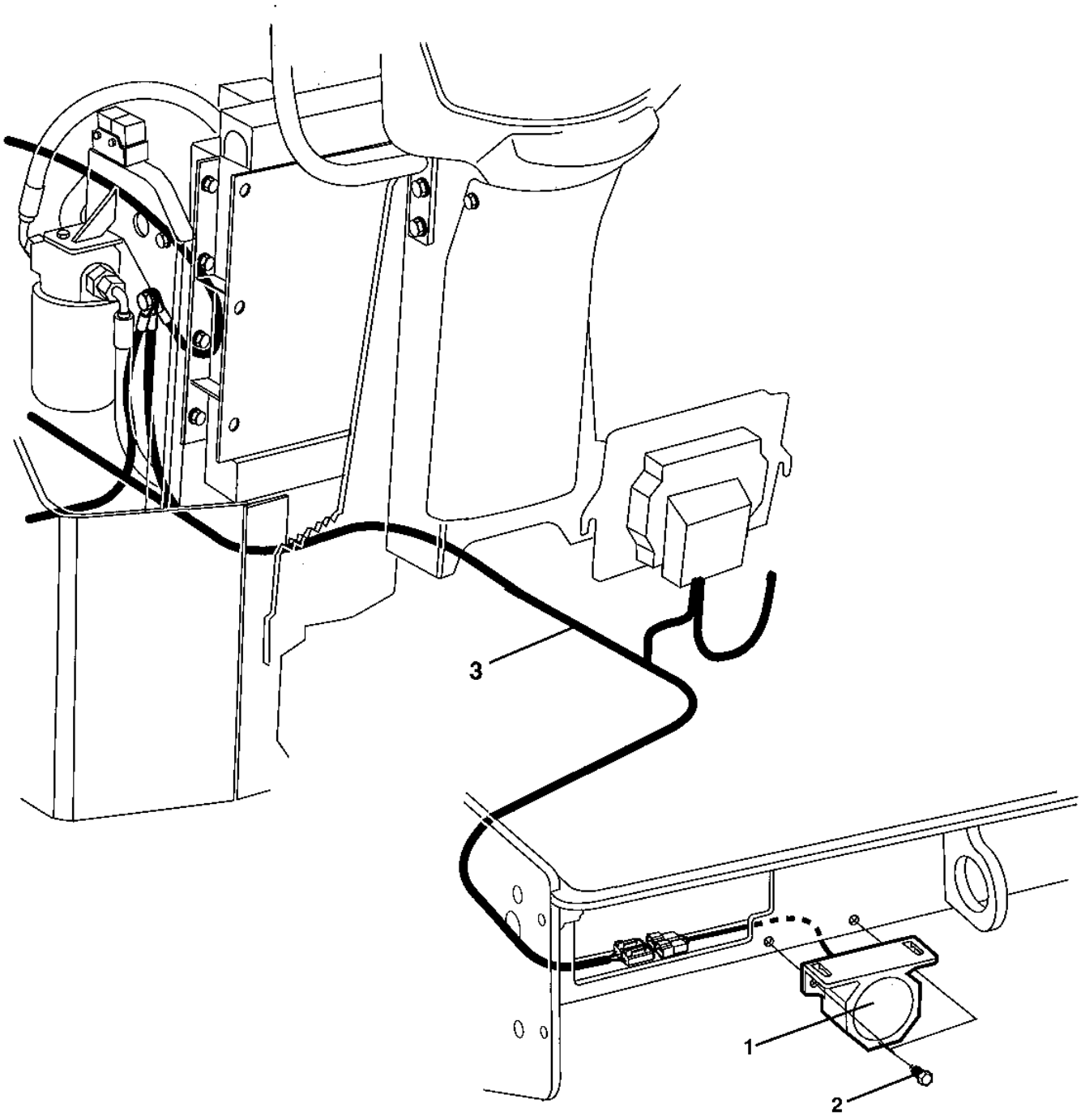

Back-up alarm Option

Item	Part No	Rem	Qty	Description		Code
1	4700792098		1	Back-up alarm		
2	4700541702		2	Screw	M6x12	C
3	4700388009		1	Cable harness		

Drivers platform

Item	Part No	Rem	Qty	Description	Code
15				Drivers seat (Page 98)	
20				F/R- and throttle control (Page 100)	
27				Forward and reverse control handle (Page 102)	
30				Rops (Page 104)	Option

Drivers seat

18591

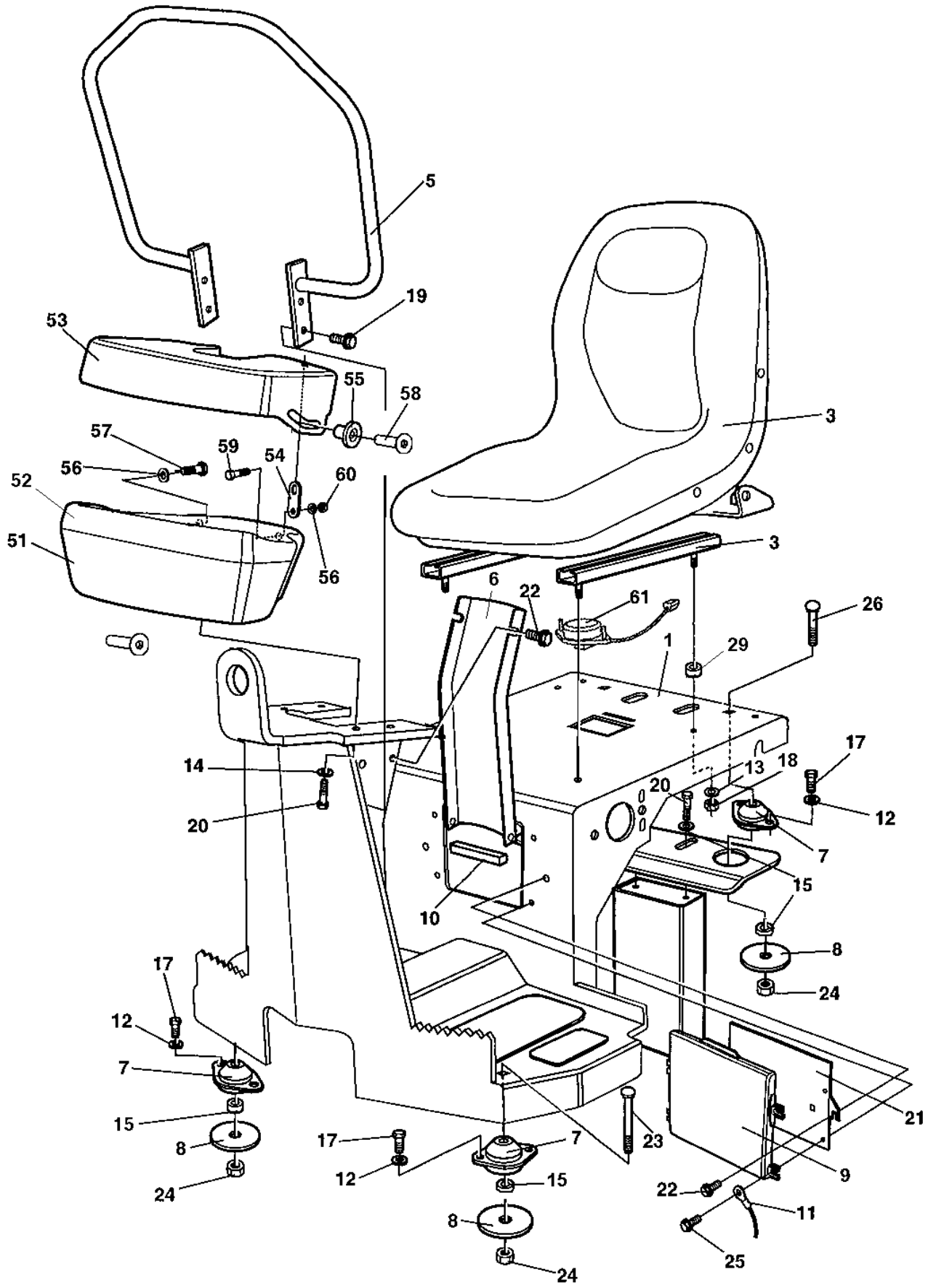

Drivers seat

Item	Part No	Rem	Qty	Description		Code
1	4700390586		1	Platform Up to 89232817		
	4700397157		1	Platform From 89232818		
3	4700377556		1	Drivers seat, cpl		
	4700348331		1	Seat cover		D
4	4700387236		1	Platform bracket		
5	4700387453		1	Hand rail		
6	4700387226		1	Column cover		
7	4700387685		4	Conical rubber mount		
8	4700358232		4	Washer		
9	4700383705		1	Instruction book holder		D
10	4700902166	A	1	Edge trim		D
11	4700357643		1	Wire		D
12	4700904556		8	Steel plain washer		C
13	4700904229		4	Washer	8,4x16x1,5	C
14	4700904230		4	Steel plain washer		C
15	4700904557		10	Steel plain washer		C
17	4700500018		8	Screw	M8-1,25x12 8,8	C
18	4700586003		4	Lock nut	M8	C
19	4700500509		4	Screw		
20	4700500030		6	Hexagon head screw		C
21	4700388447		1	Cover		
22	4700500505		4	Screw	M8x20 8.8	
23	4700792236		2	Screw	M10x100	
24	4700586018		4	Lock nut		C
25	4700791226		4	Screw		C
26	4700791616		2	Bolt		
28	4700357855		2	Bushing		C
29	4700394301		4	Spacer sleeve		
51	4700387720		1	Control panel holder		
52	4700391784		1	Control panel		
	4700387225		1	Instrument panel		
53	4700387227		1	Control panel cover		
54	4700387545		1	Latch		
55	4700357855		2	Bushing		C
56	4700904281		4	Washer	5,3x10x1 300HV	C
57	4700903658		3	Screw	M5x10	C
58	4700513017		2	Screw	M6x30H 10,9	
59	4700500007		1	Screw	M5-0,8x22H 8,8	
60	4700791476		1	Nut	M5 -8	
61	4700379636		1	Seat switch		

A) L = 185 mm

F/R- and throttle control

17971

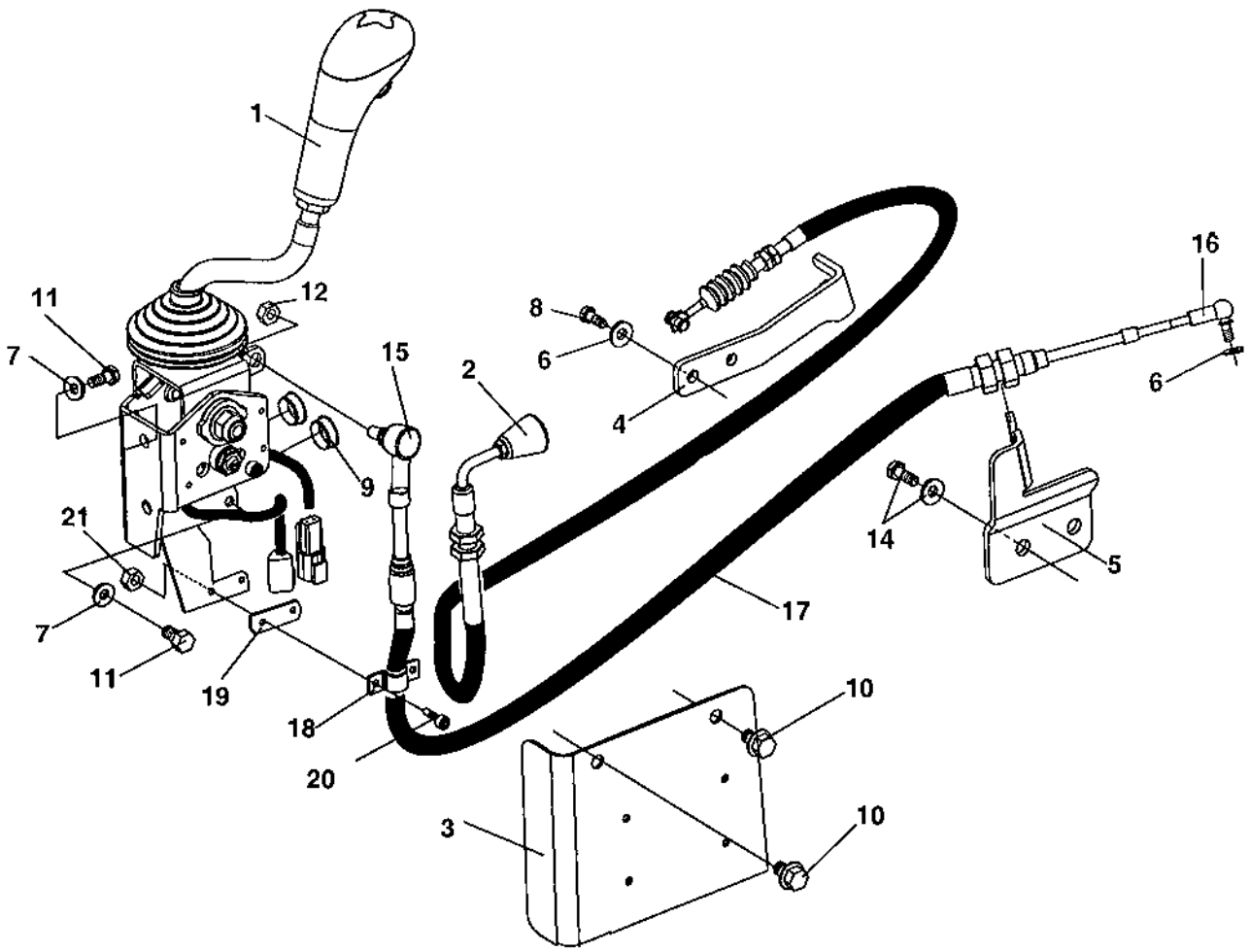

F/R- and throttle control

Item	Part No	Rem	Qty	Description		Code
			1			
2	4700387229		1	Throttle control		
	4700940960		1	.Knob		
3	4700388476		1	Control cover		
4	4700395257	C	1	Control bracket		
5	4700387298		1	Control bracket		
6	4700904228		3	Washer	6,4x12x1,5	C
7	4700904229		2	Washer	8,4x16x1,5	C
8	4700500013		2	Screw	M6-1x16 8,8	C
9	4700923270		2	Protective plug		
10	4700904755		2	Screw	M8x12 8,8 FZB	
11	4700508092		3	Screw		C
12	4700586003		1	Lock nut	M8	C
13	4700904556		1	Steel plain washer		C
14		B	2	Screw		C
		B	2	Washer		C
15	4700377019		1	Ball joint		
	4700950382		1	Ball stud	M8	
16	4700416034		1	Ball joint		C
17	4700377024		1	Cable	Forward/Reverse	
18	4700377020		1	Clamp		
19	4700377021		1	Spacer		
20	4700926537		2	Screw	M5-0,8x16H 8,8	
21	4700586001		2	Lock nut		C

B) See section " Engine "
C) Picture not updated yet with the new design of this item

Forward and reverse control handle

18071-2

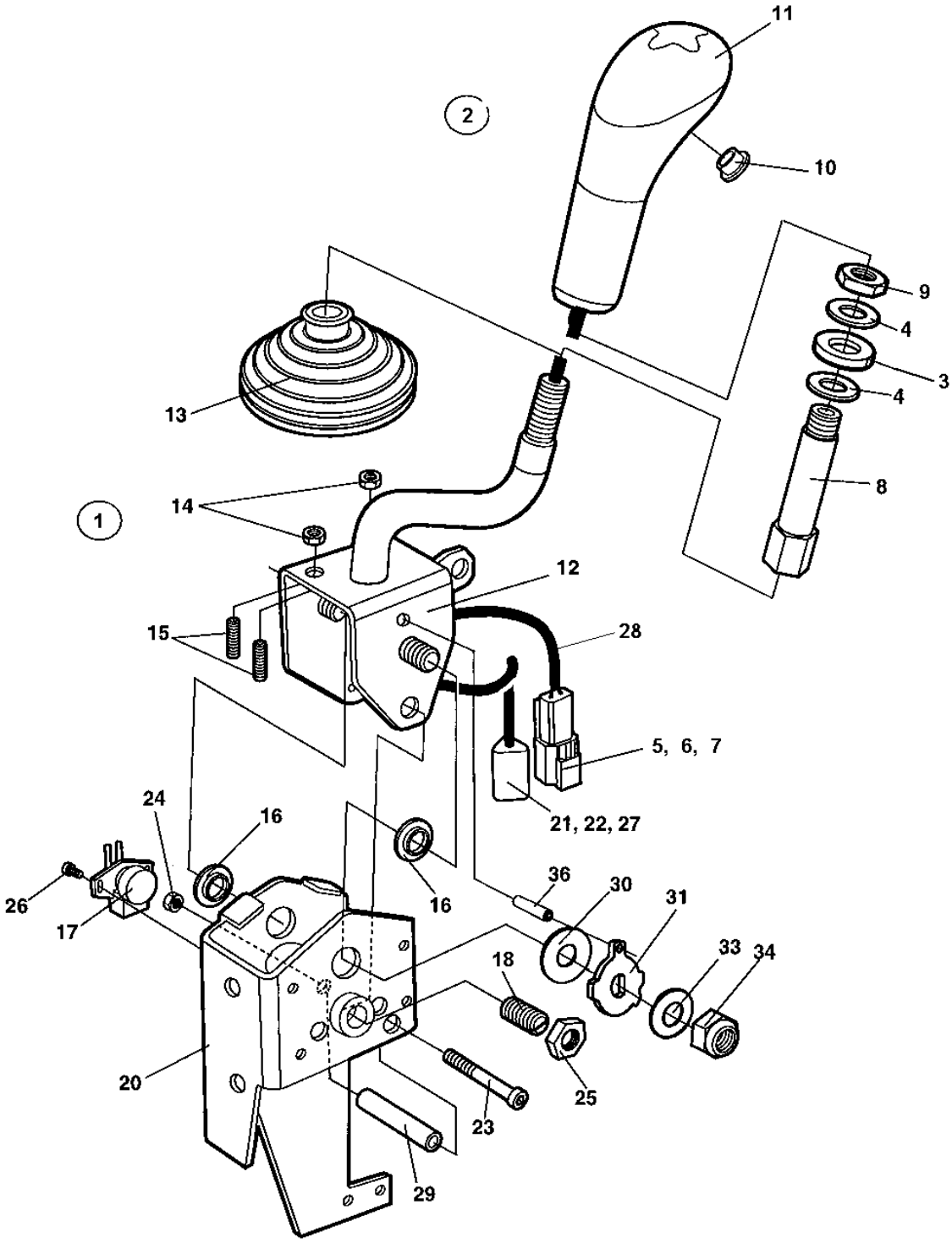

Forward and reverse control handle

Item	Part No	Rem	Qty	Description		Code
1	4700945407		1	Lever, cpl		
2	4700940374		1	.Handle kit, cpl		
			1	..Handle		
	4700945729		1	...Push-button switch		
			1	...Cable		
			1	..Lockfluid		
			1	..Service information		
3			1	..Washer		
4			2	..Washer		
5			1	..Connector, receptable		
6			1	..Lock wedge		
7			2	..Pin		
8			1	..Rod		
9			1	..Nut		
10	4700377018		1	..Protection plug		
11	4700378759		1	..Handle top		
12	4700391379		1	.Lever		
13	4700377009		1	.Bellows		
14	4700570004		2	.Nut	M6X1,00 -8 A2K	C
15	4700377015		2	.Set screw		
16	4700391381		1	Bushing		
17	4700391382		1	Potentiometer with cable		
18	4700377016		1	Spring loaded pin		
20	4700377010		1	Bracket		
21	4700903945		1	Connector, plug		
22	4700903946		1	Lock wedge		
23	4700508068		1	Screw		
24	4700904563		1	Lock nut	M6	C
25	4700927233		1	Nut		C
26	4700391383		1	Screw		
27	4700903947		3	Pin		
28		B	1	Cable		
29	4700377011		1	Spacer		
30	4700377012		1	Friction washer		
31	4700391380		1	Cam washer		
33	4700377014		1	Spring washer		
34	4700586019		1	Lock nut		C
36	4700391386		1	Spirol pin		

B) Included in potentiometer Pos 17

Rops Option

17962

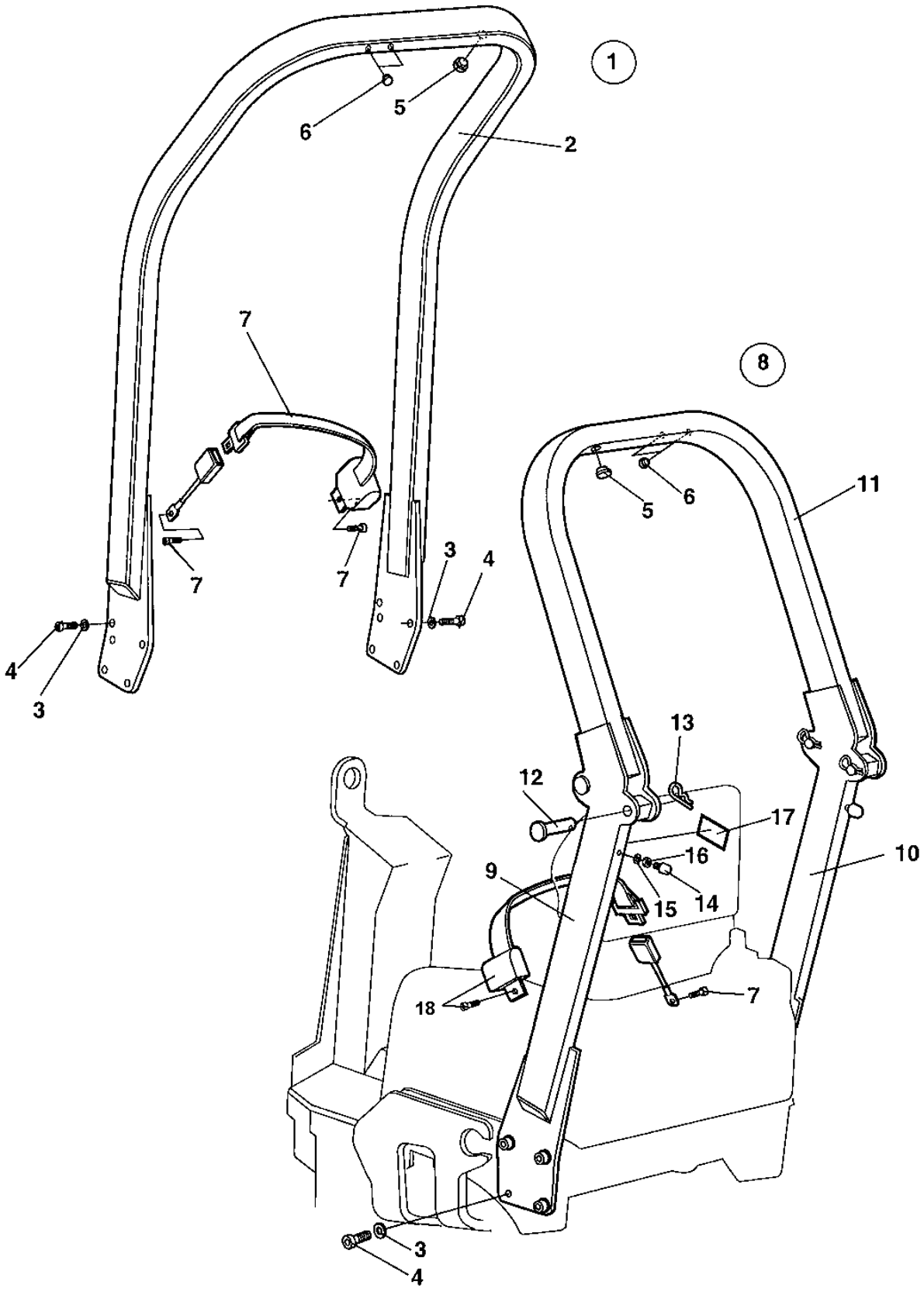

Rops Option

Item	Part No	Rem	Qty	Description		Code
1			1	Rops, cpl		
2	4700387142		1	Rops		
3	4700904231		8	.Washer	13x24x2 300 HV	C
4	4700508063		8	.Screw		C
5	4700282603		1	.Plastic plug		
6	4700900986		1	.Plug		
7	4700377677	A	1	.Seat belt	2"	B
8			1	Rops foldable, cpl		B
9		C,D	1	.Rops beam		B
10		C,D	1	.Rops beam		B
11		C,D	1	.Robs beam		B
12	4700389798		4	.Threaded spike		
13	4700635061		4	.Hair clip		C
14	4700280101		2	.Shock absorber		
15	4700904229		2	.Washer	8,4x16x1,5	C
16	4700573008		2	.Nut	M8	C
17	4700908229		1	.Safety decal		D
18	4700377677	A	1	.Seat belt	2"	B

A) Hardware supplied
C) Not sold separately due to safety regulations
D) Only available as a complete ROPS kit ; please check the machine SN and contact Dynapac for valid PN

Decals and documentation

Item	Part No	Rem	Qty	Description	Code
10				Decals and documentation (Page 108)	

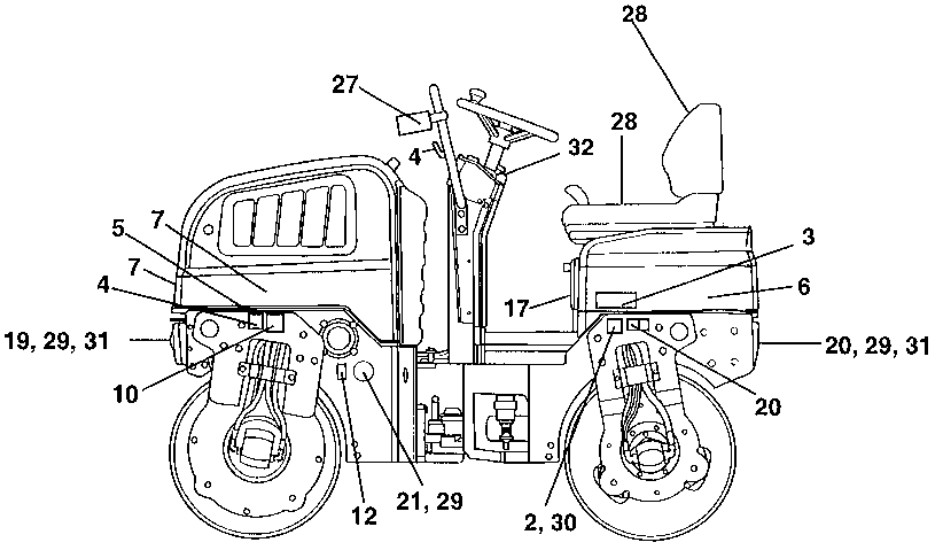
28
27
28
4
32
5
7
3
7
6
4
17
19, 29, 31
20, 29, 31
10
20
12
21, 29
2, 30

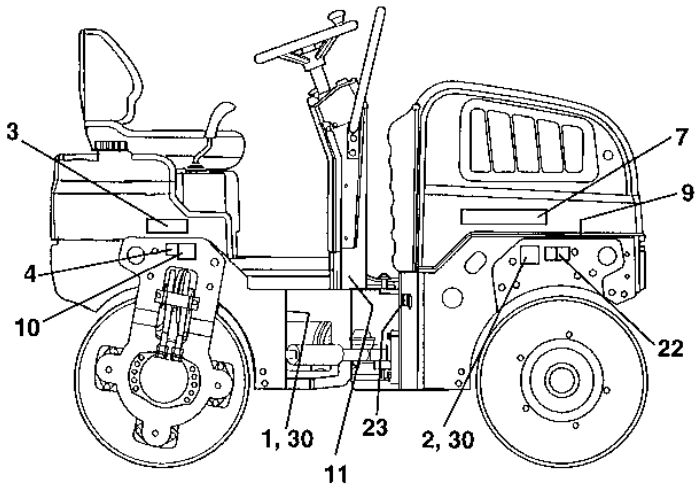
3
7
9
4
10
22
1, 30
23
2, 30
11

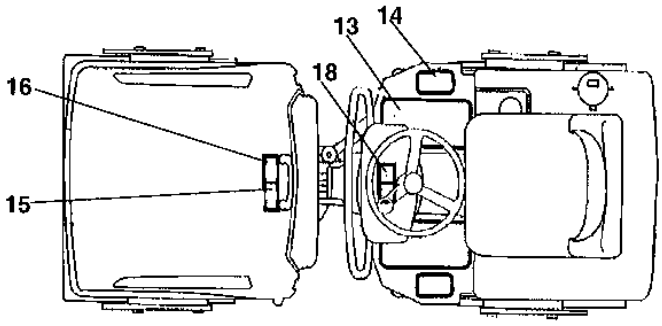
13
14
16
18
15

Decals and documentation

Item	Part No	Rem	Qty	Description		Code
1			1	Product identification plate		
2	4700904870		2	Lifting sign		D
3	4700792155		1	Decal "MODEL CODE"		
4	4700357587		3	Decal "LIFT POINT"		D
5	4700389919		1	Engine hood decal		
6	4700389920		1	Decal		
7	4700904097		3	Decal "DYNAPAC"	L=290 mm	
8	4700904092		1	Decal "DYNAPAC"	L=590 mm	D
9			1	Product identif. decal "Dynapac"		D
10	4700382751		2	Decal "TIE DOWN POINT"		D
11	4700903422		2	Decal "SAFETY"		D
12	4700991658		1	Decal "FUEL"		D
13	4700373363		2	Slip protection		
14	4700372123		2	Protection		
15	4700903423		1	Decal "SAFETY"		D
16	4700903424		1	Decal "HOT SURFACE"		D
17	4700903425		1	Decal "SAFETY MANUAL"		D
18	4700903459		1	Decal "SAFETY"		D
19	4700791957		2	Reflector, white		
20	4700791956		2	Reflector, red		
21	4700791958		2	Reflector, light		
22	4700908229		2	Safety decal		D
23	4700272373		1	Decal "HYDRAULIC OIL"		D
27	4700377066		1	Loading/Unloading instruction		
28	4700348331		1	Seat cover		D
29	4700791666		6	Blind rivet		
30	4700624015		12	Blind rivet	4,0x8,5	C
31	4700904228		4	Washer	6,4x12x1,5	C
32	4700379012		1	Decal "Start instruction"		

Standard equipment

Item	Part No	Rem	Qty	Description	Code
10				Standard equipment (Page 112)	

Standard equipment

CC900S100900010

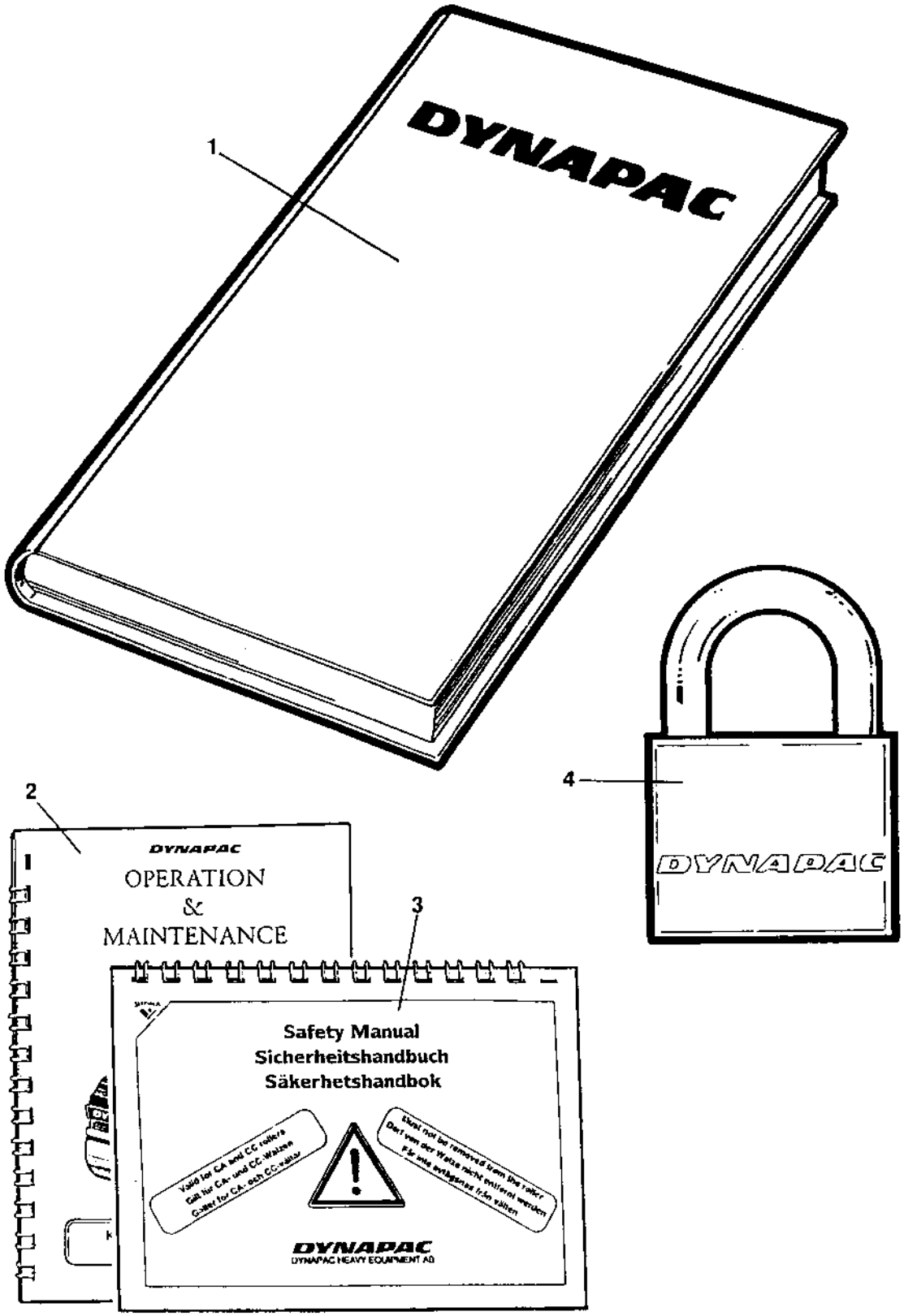

Standard equipment

Item	Part No	Rem	Qty	Description		Code
1			1	Documentation	ISCC900S	
			1	.Warranty conditions		
			1	.Warranty registration certificate		
			1	.Spare parts catalogue	SCC900S	
			1	.Warranty registration card		
			1	.Instruction manual	Perkins 403D-11	
2			1	.Operating / maintenance instruction	ICC900S	
3			1	.Safety manual	RSAFE	
4	4700358881		2	Pad lock		D

Optional equipment

Item	Part No	Rem	Qty	Description	Code
10				Battery disconnector (Page 116)	
15				Battery disconnector From ECN 09452 (Page 118)	
20				Water tank, option (Page 120)	
50				Dual forward/reverse control (Page 122)	
60				SMV-sign (Page 124)	
63				SMV-sign (Page 126)	Mounting on watertank
64				SMV-sign on high water tank (Page 128)	
65				Registrations - plate with light (Page 130)	
70				Hydraulic vibration, shut off front/rear drum (Page 132)	
80				Rear view mirror (Page 134)	
81				Rear view mirror (Page 136)	
90				Tool equipment (Page 138)	

Battery disconnector

18050

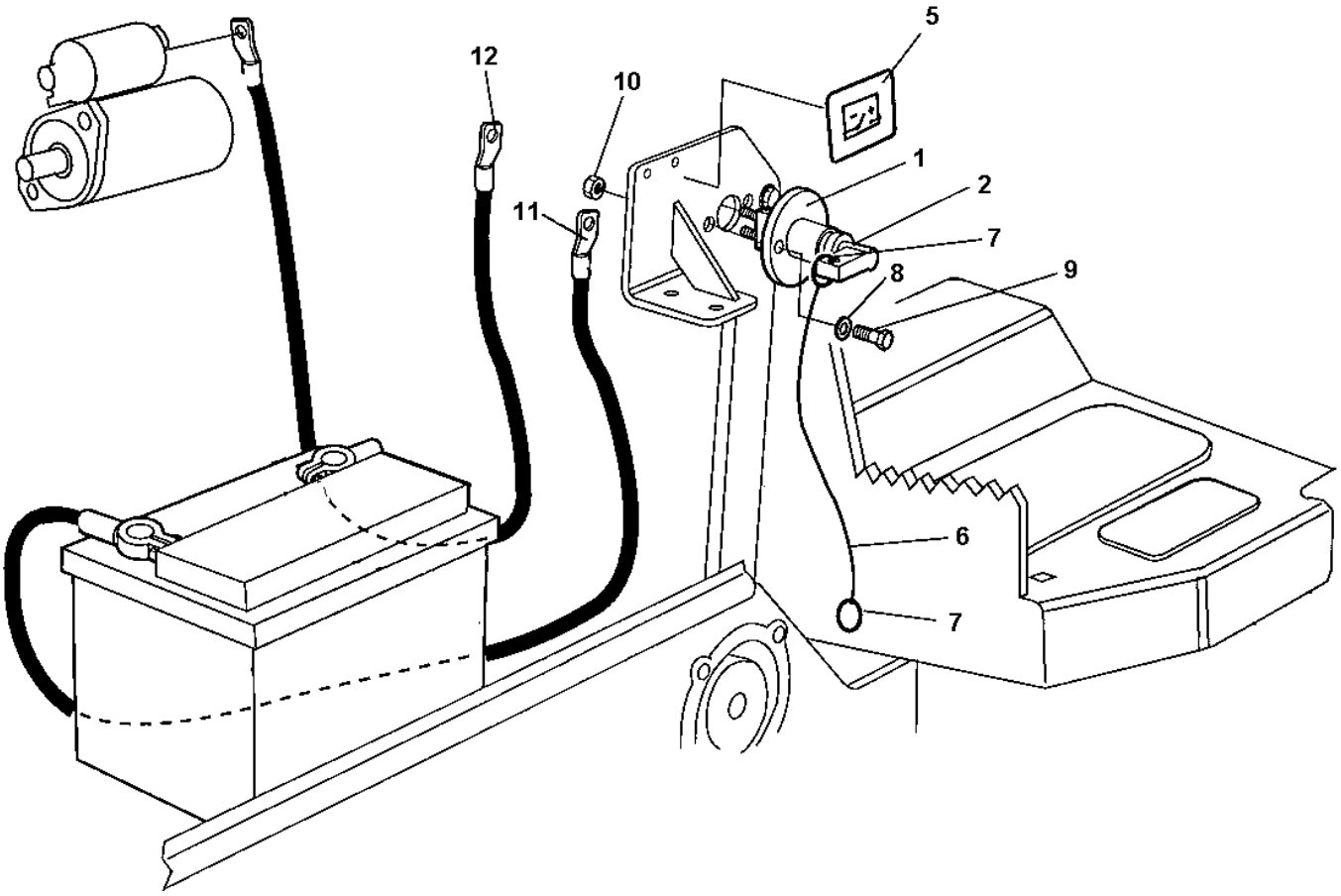

Battery disconnector

Item	Part No	Rem	Qty	Description	Code
1	4700357567		1	Battery switch, cpl	D
2	4700902560		1	.Handle	D
5	4700904835		2	Decal "BATTERY POWER"	D
6	4700377253		1	Wire	
7	4700358254		2	Key-ring	
8		B	1	Washer	
9		B	1	Screw	
10		B	1	Nut	
11		C	1	Battery cable	
12		D	1	Cable	

B) Use existing
C) Cable from positive pole of the battery.
D) Cable from starter motor.

Battery disconnector

18050-1

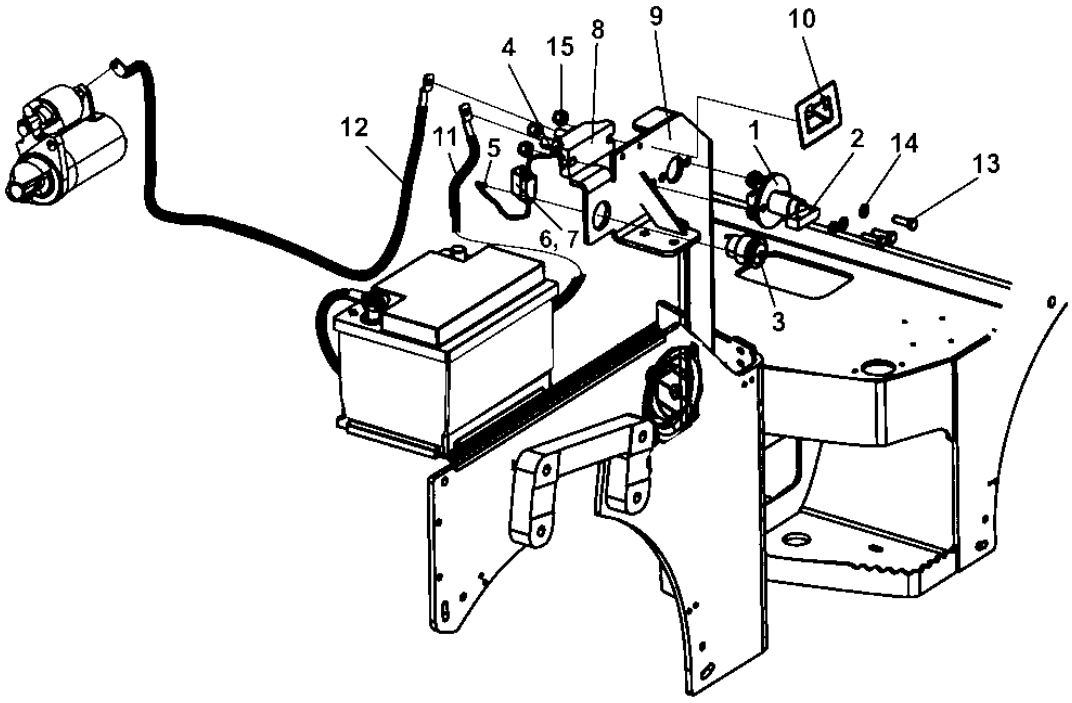

Battery disconnector

Item	Part No	Rem	Qty	Description		Code
1	4700357567		1	Battery switch, cpl		D
2	4700902560		1	.Handle		D
3	4812110560		1	Power socket	12V	
4	4700960041		1	Ring terminal		
5	4700960079		1	Connector		
6	4700904015		1	Fuse holder		D
7	4700901227		1	Fuse	10A	A
8	4700377058		1	Connection block		
9	4812110974		1	Cooler console		
10	4700904835		2	Decal "BATTERY POWER"		D
11		C	1	Battery cable		D
12		D	1	Cable		D
13		B	3	Screw		D
14		B	3	Washer		D
15		B	3	Nut		D

B) Use existing
C) Cable from positive pole of the battery.
D) Cable from starter motor.

Water tank, option

18309

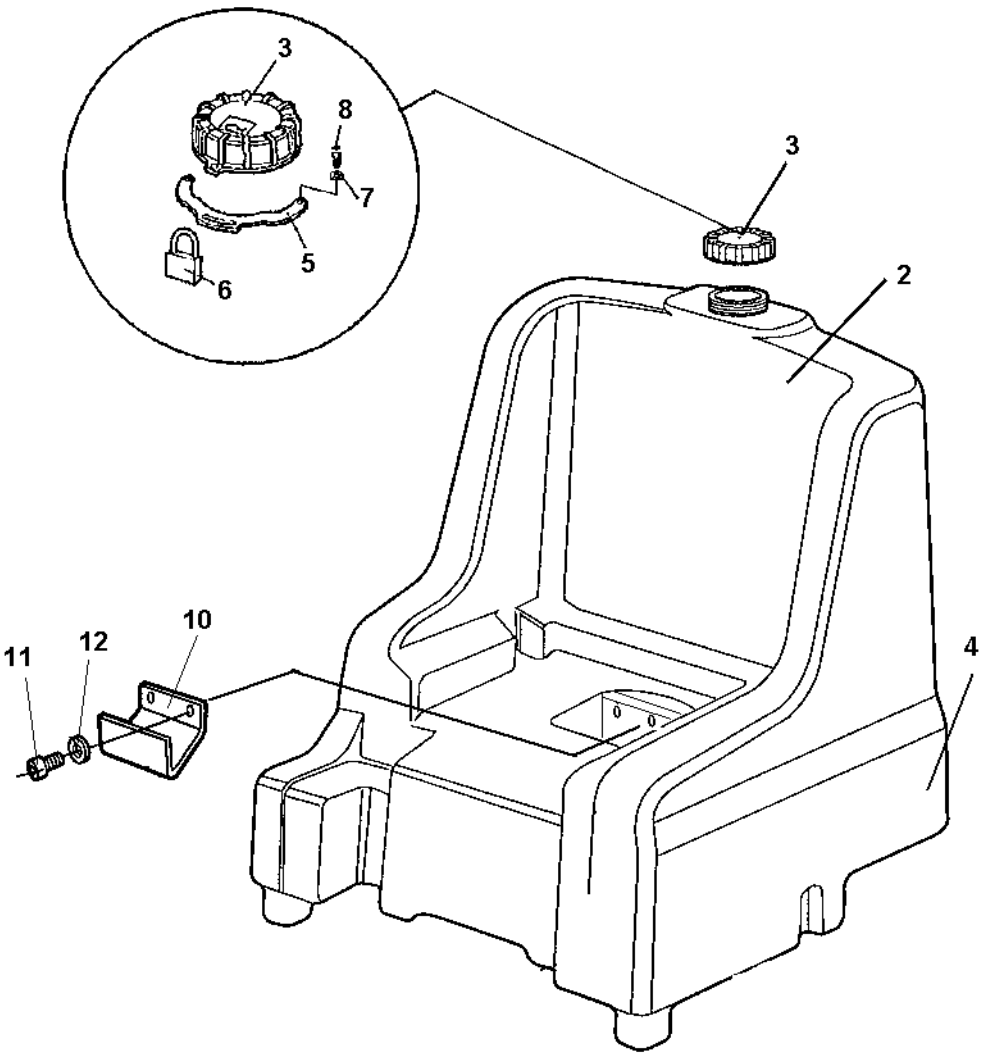

Water tank, option

Item	Part No	Rem	Qty	Description		Code
1				Water tank, cpl		D
2	4700388017		1	.Water tank		
3	4700388087		1	.Tank cap		
4	4700377343			Decal		
5	4700389155	A	1	Lock bracket		
6	4700358881	A	1	Pad lock		D
7	4700904281	A	2	Washer	5,3x10x1 300HV	C
8	4700903658	A	2	Screw	M5x10	C
10	4700387935		1	Bracket		
11	4700500029		2	Hexagon head screw		C
12	4700904557		2	Steel plain washer		C

A) Option,

Dual forward/reverse control

18068-1

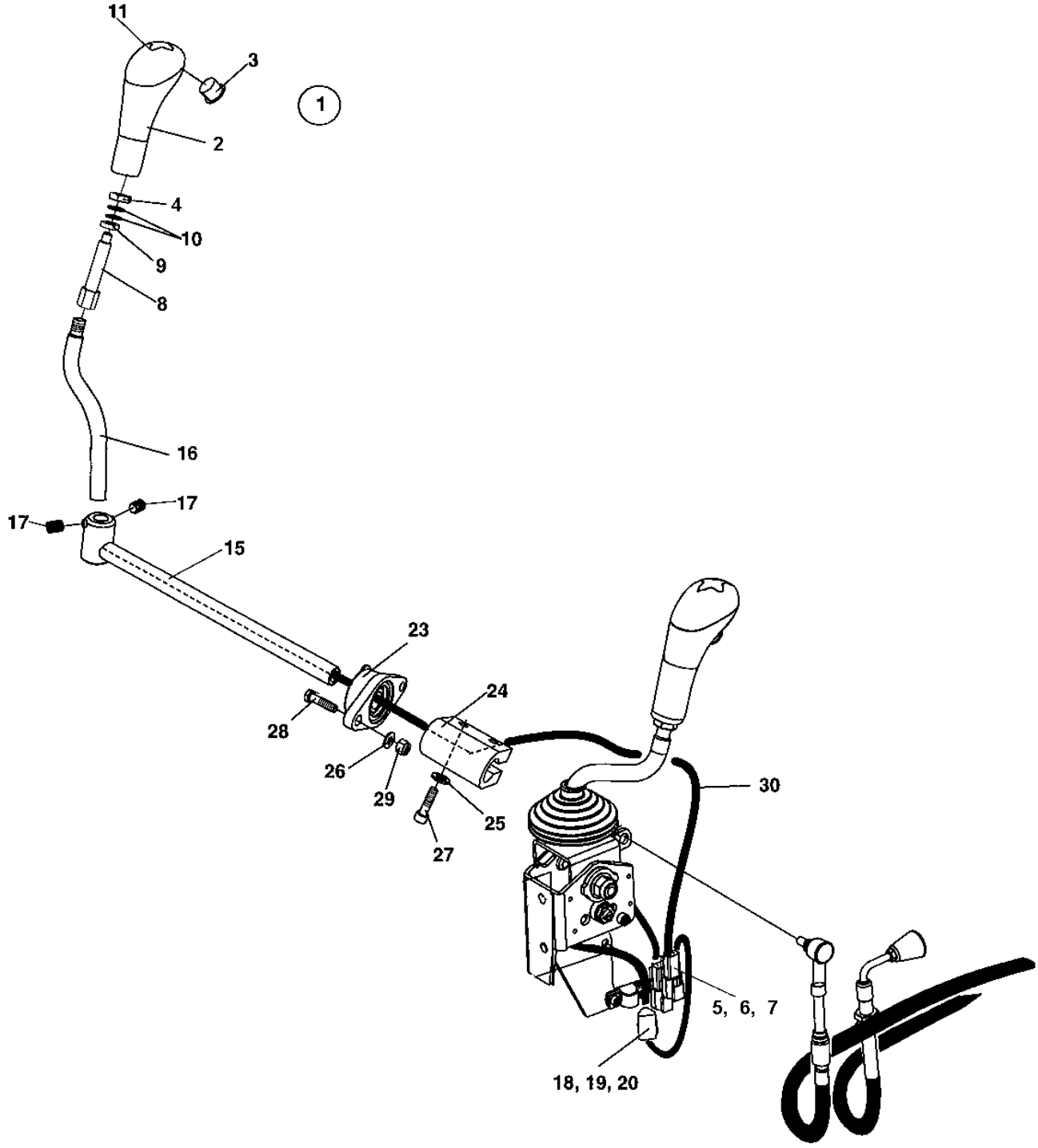

Dual forward/reverse control

Item	Part No	Rem	Qty	Description		Code
1	4700940374		1	Handle kit, cpl		
2			1	.Handle		
	4700945729		1	..Push-button switch		
			1	.Service information		
			1	.Lock fluid		
3	4700377018		1	.Protection plug		
4			1	.Nut		
5			1	.Connector, receptable		
6			1	.Lock wedge		
7			2	.Pin		
8			1	.Rod		
9			1	.Washer		
10			2	.Washer		
11	4700378759		1	.Handle top		
15	4700377053		1	Control shaft		
16	4700377055		1	Lever		
17	4700377056		2	Socket set screw		
18	4700791668		1	Connector plug		
19	4700791669		1	Lock wedge		
20	4700903948		2	Socket		
23	4700791926		1	Y-bearing unit		
24	4700346420		1	Coupling		
25	4700904229		2	Washer	8,4x16x1,5	C
26	4700904230		4	Steel plain washer		C
27	4700508048		2	Screw		C
28	4700500031		2	Screw		C
29	4700586018		2	Lock nut		C
30			1	Cable		C

SMV-sign

18059

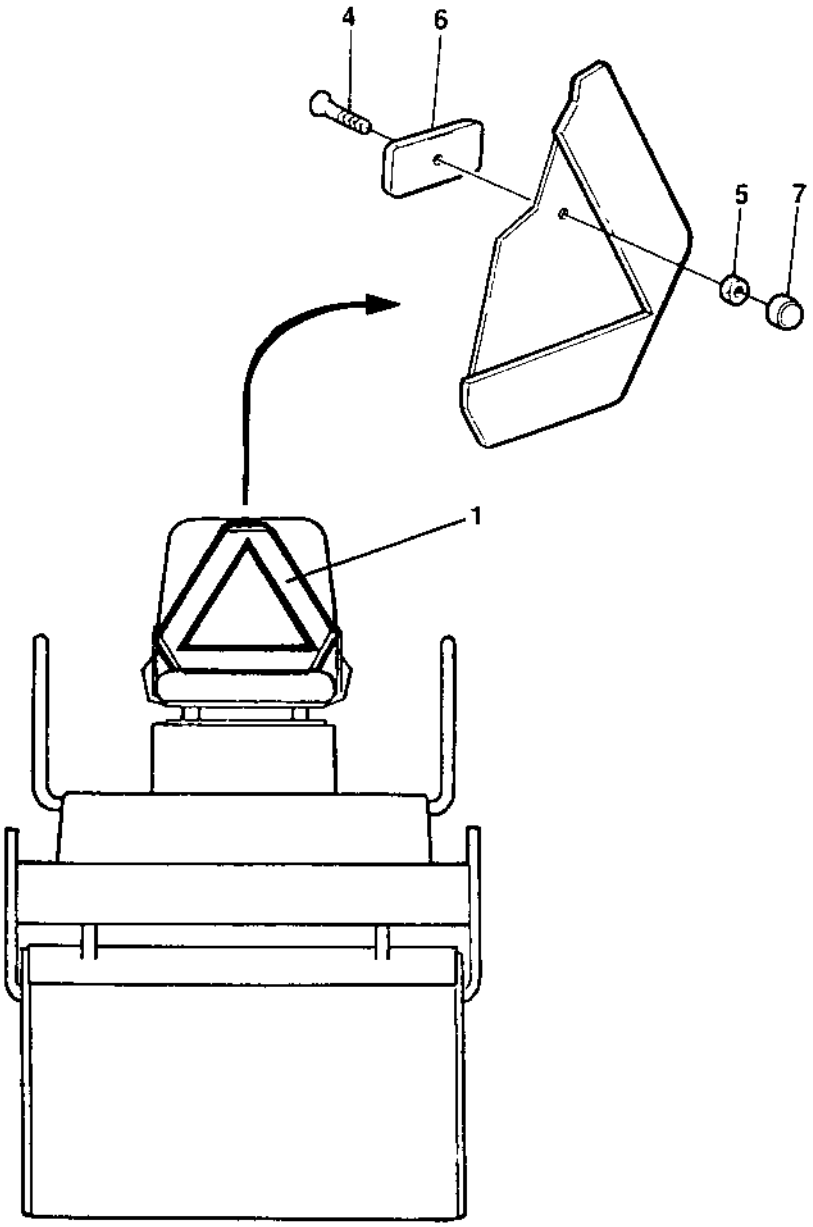

SMV-sign

Item	Part No	Rem	Qty	Description		Code
1	4700476019		1	SMV-sign		D
4	4700513013	A	2	Screw		C
5	4700570005	A	2	Nut	M8	C
6	4700374460	A	2	Spacer		
7	4700904203	A	2	Nut protection		

A) On seats with armrests use existing

SMV-sign Mounting on watertank

18382

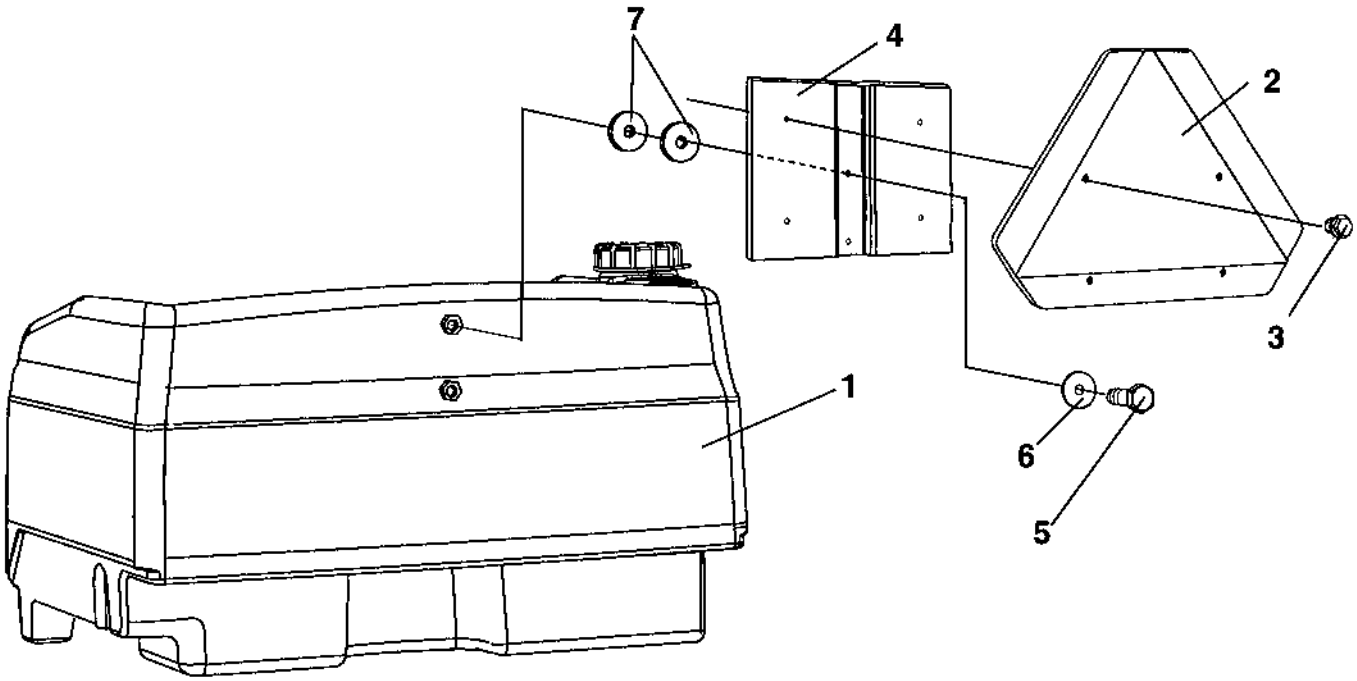

SMV-sign Mounting on watertank

Item	Part No	Rem	Qty	Description		Code
1			1	Water tank		
2	4700476019		1	SMV-sign		D
3	4700903782		4	Screw	M5x12	C
4	4700391920		1	Holder		
5	4700500006		2	Screw	M5x16	C
6	4700927974		2	Washer		
7	4700904735		4	Washer		C

SMV-sign on high water tank

18906

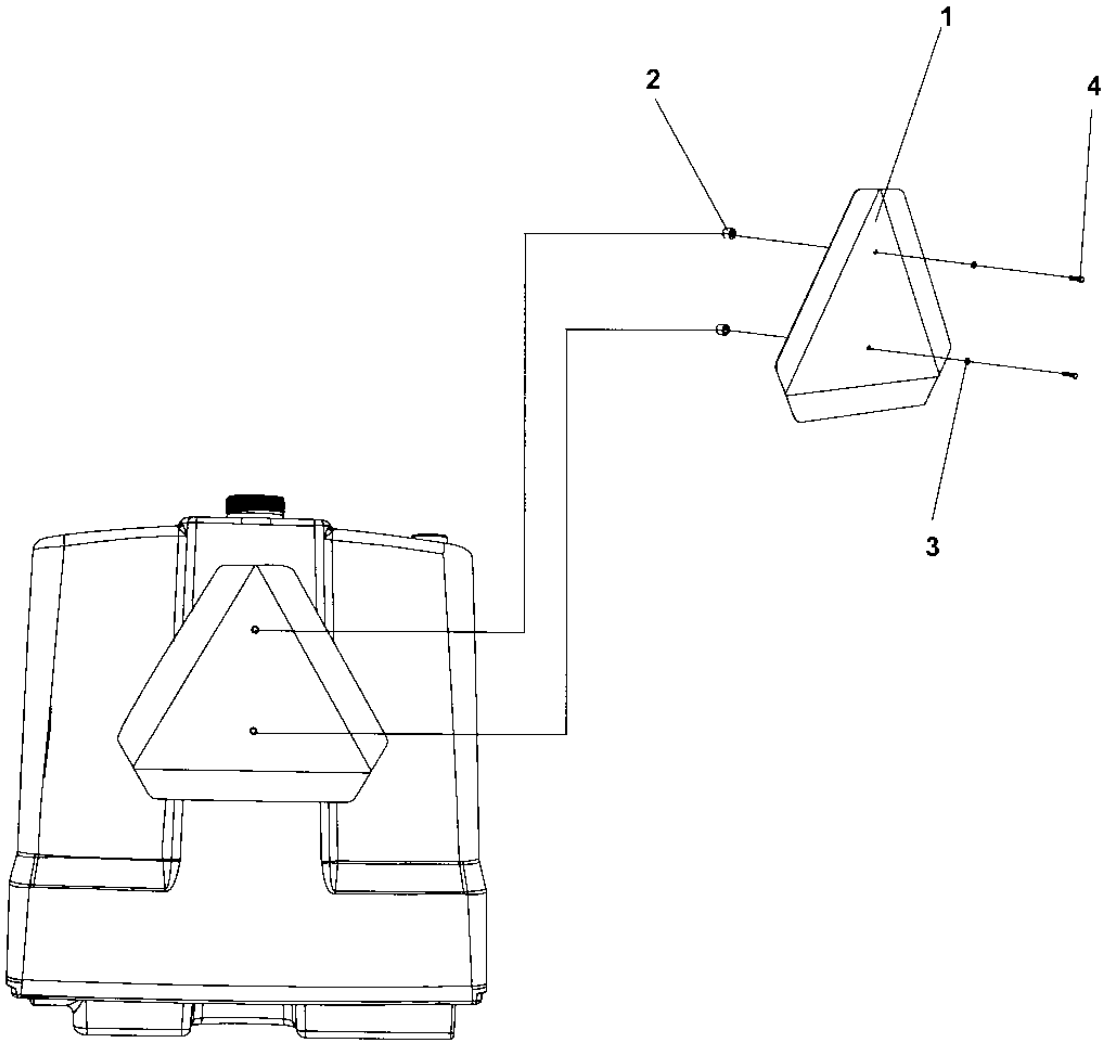

SMV-sign on high water tank

Item	Part No	Rem	Qty	Description		Code
1	4700476019		1	SMV-sign		D
2	4700371728		2	Spacer sleeve		
3	4700904281		2	Washer	5,3x10x1 300HV	C
4	4700500007		2	Screw	M5-0,8x22H 8,8	

Registrations - plate with light

18067

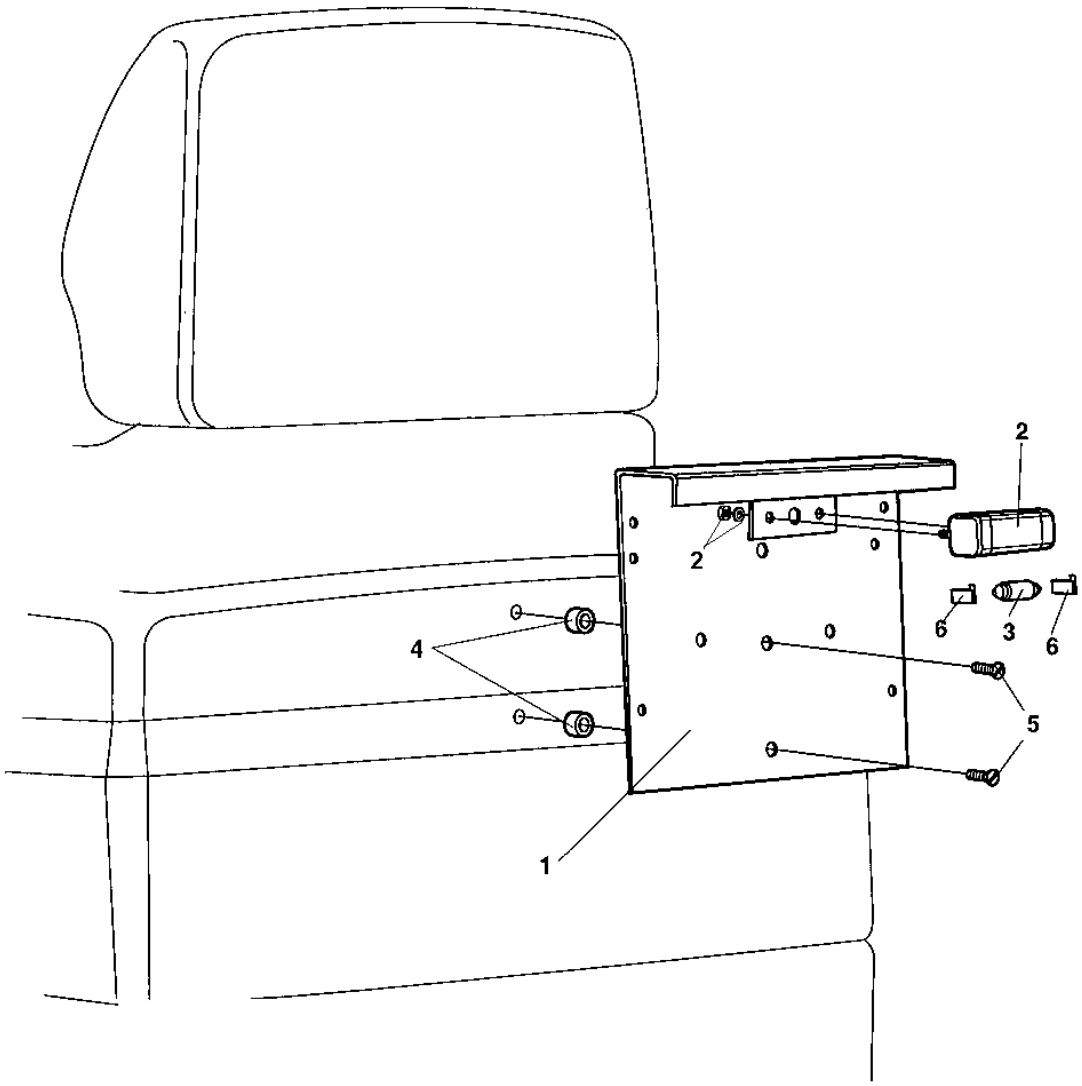

Registrations - plate with light

Item	Part No	Rem	Qty	Description		Code
1	4700355797		1	Licence plate holder		
2	4700929455		1	Licence plate light		D
			2	.Washer		D
			2	.Nut		D
3	4700985013		1	Bulb	12V,5W	B
4	4700371728		2	Spacer sleeve		
5	4700535008		2	Screw	M5x20	C
6	4700792035		2	Push-on terminal		

Hydraulic vibration, shut off front/rear drum

18062

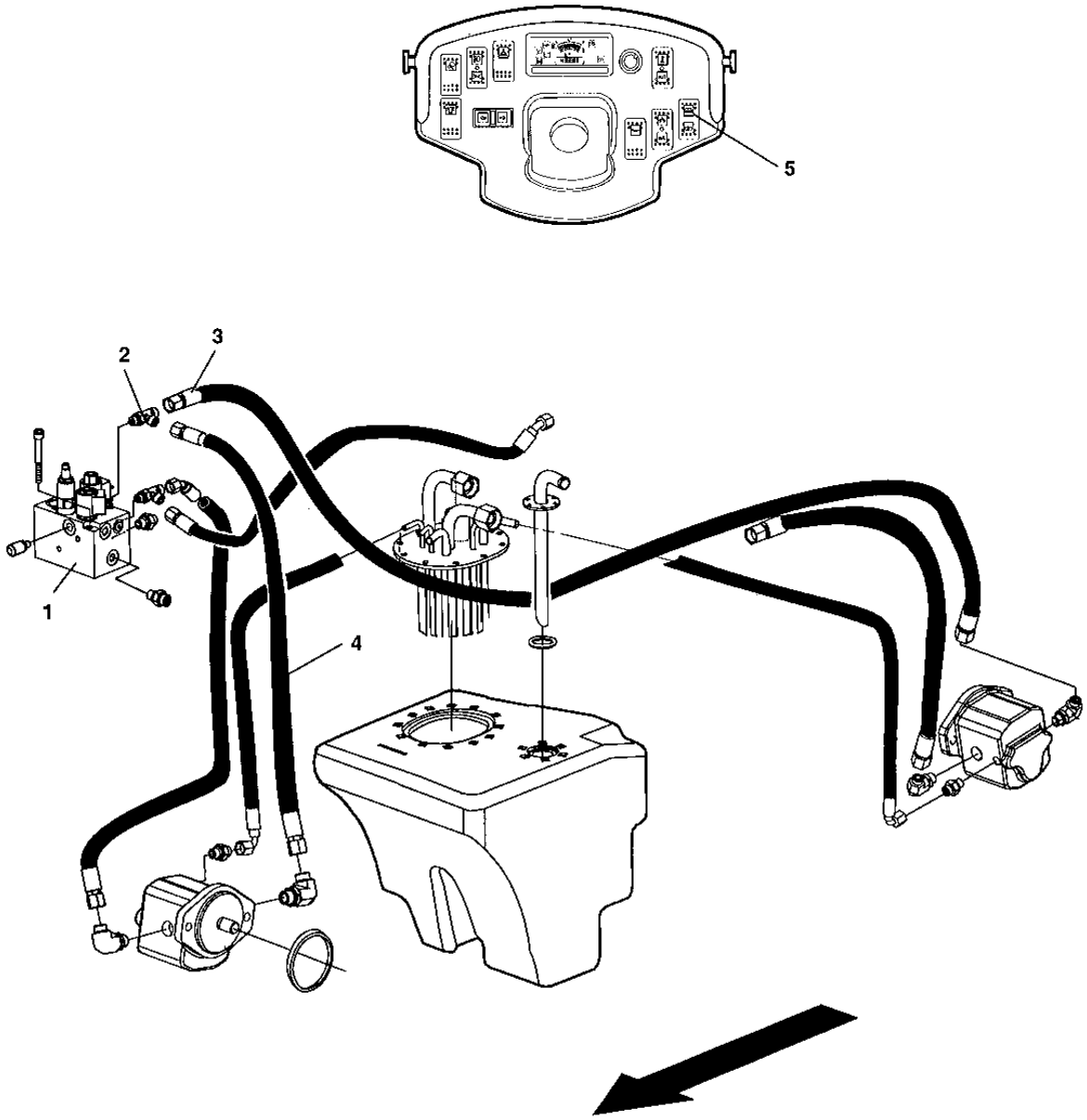

Hydraulic vibration, shut off front/rear drum

Item	Part No	Rem	Qty	Description	Code
1	4700387276		1	Combination valve (Page 70)	
2	4700791700		1	Tee-connector	
3	4700483668		1	Hydraulic hose	
4	4700483664		1	Hydraulic hose	
5	4700791581		1	Switch	

Rear view mirror

18061

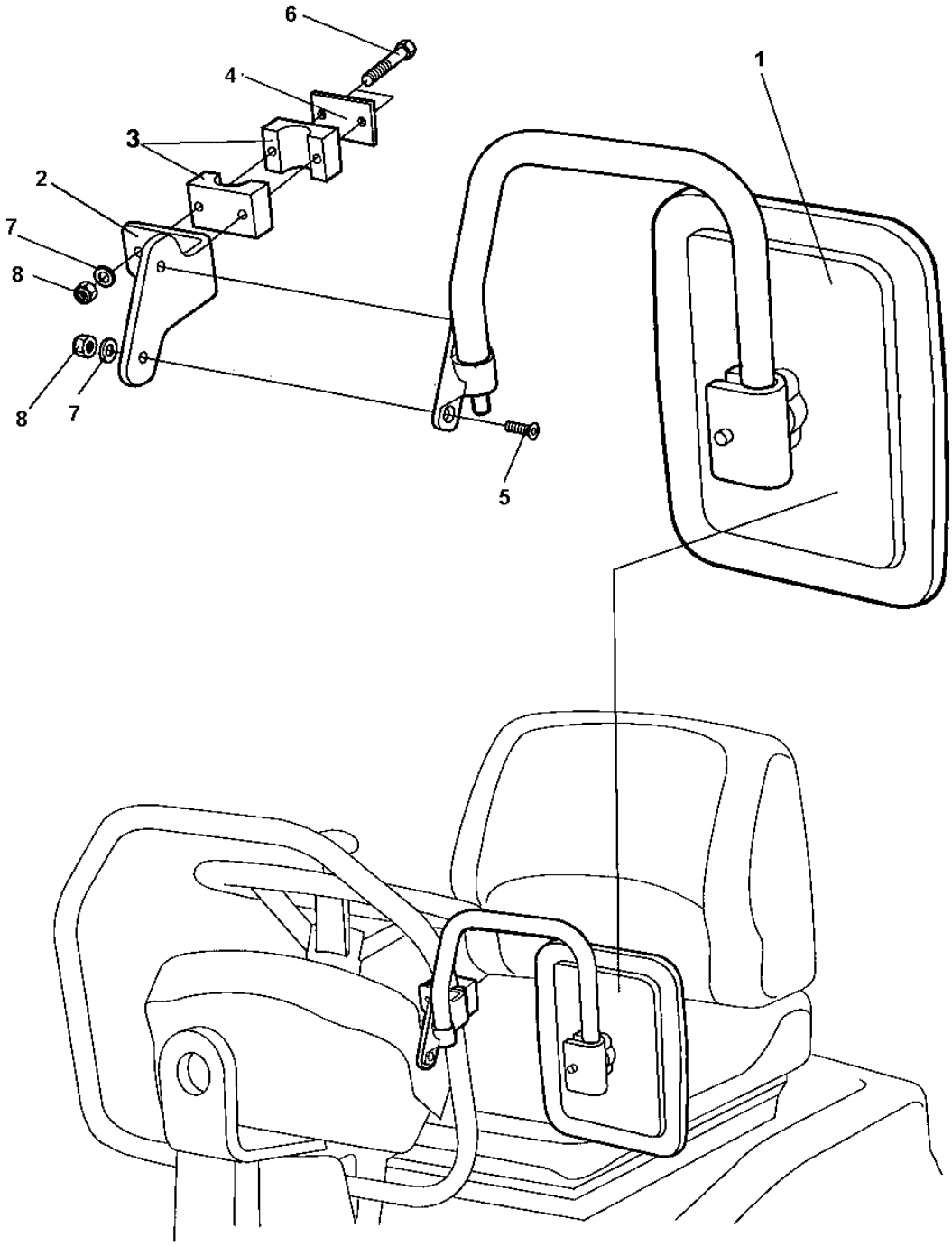

Rear view mirror

Item	Part No	Rem	Qty	Description		Code
1	4700355705		1	Rear mirror		D
2	4700357939		1	Holder plate		
3	4700902496		1	Clamp		
4	4700923859		1	Cover plate		
5	4700902845		2	Screw		
6	4700500016		2	Screw	M6x55 8.8 A2K	C
7	4700904228		4	Washer	6,4x12x1,5	C
8	4700586002		4	Lock nut	M6 -8	C

Rear view mirror

18061-1

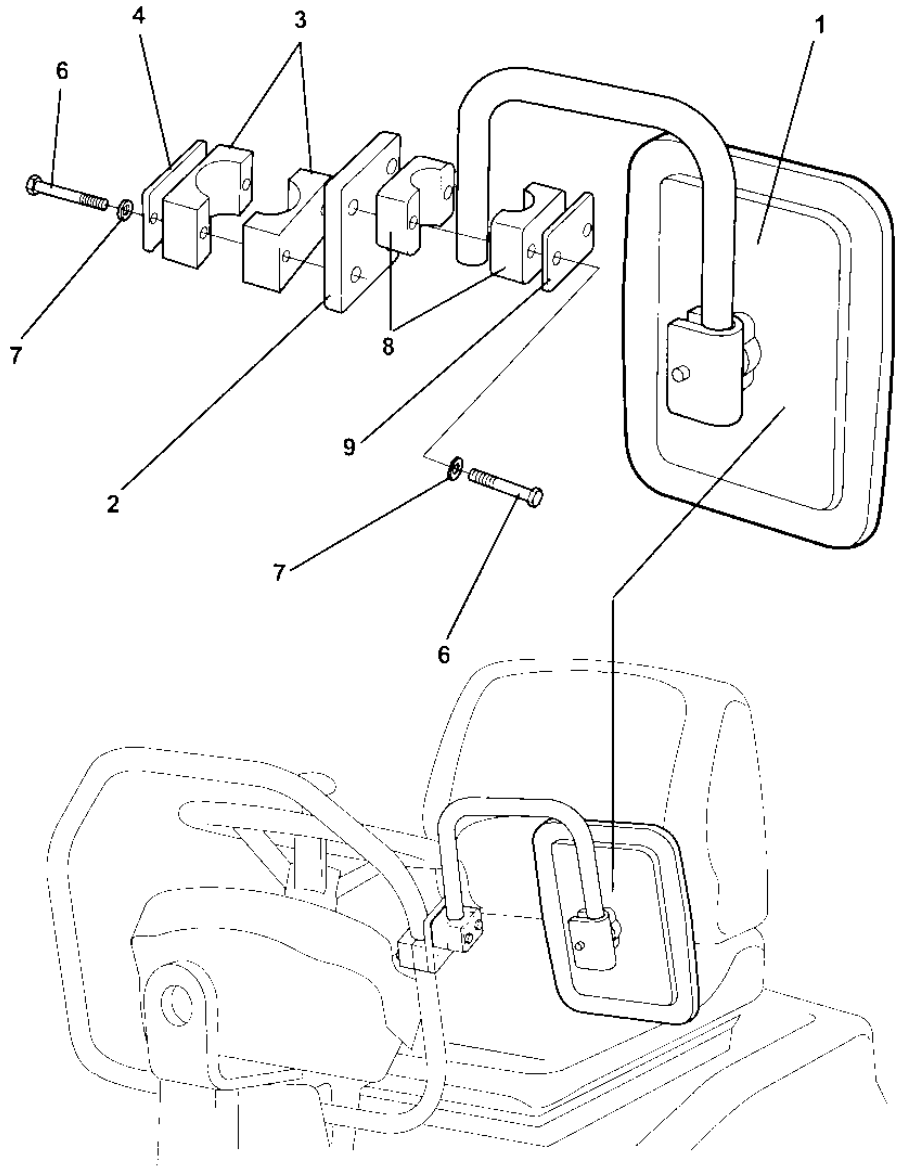

Rear view mirror

Item	Part No	Rem	Qty	Description		Code
1	4700393204		1	Rear mirror		
2	4812110283		1	Bracket		
3	4700902496		1	Clamp		
4	4700923859		1	Cover plate		
6	4700500079		4	Screw	M6-1x50 8,8	
7	4700904228		4	Washer	6,4x12x1,5	C
8	4700791453		1	Pipe clamp block		
9	4700791454		1	Cover plate		

Tool equipment

18060

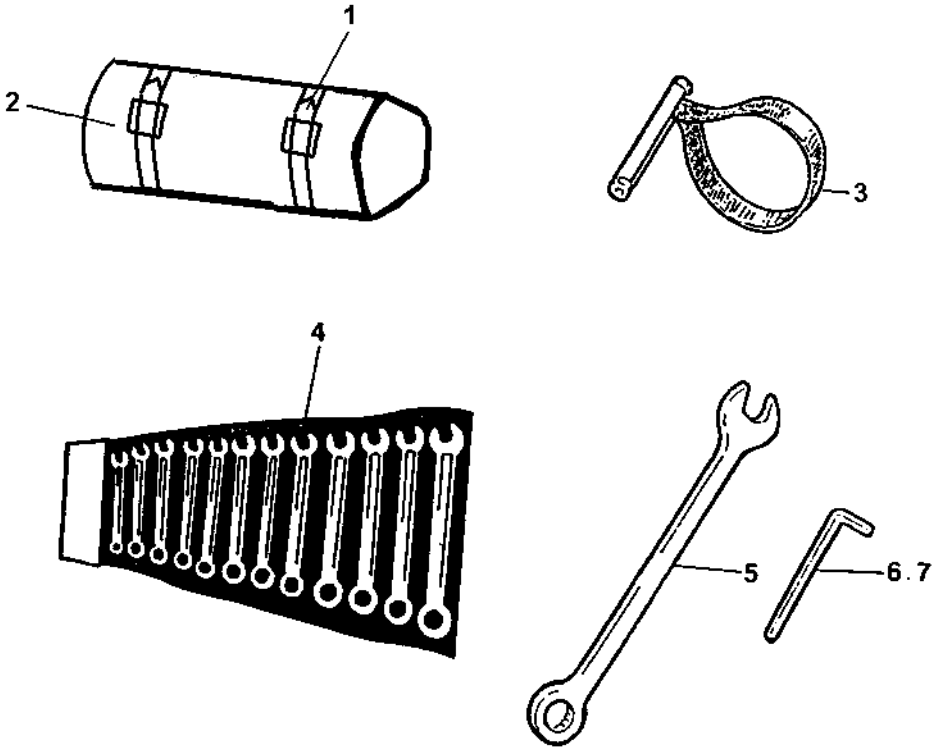

Tool equipment

Item	Part No	Rem	Qty	Description		Code
1	4700792061		2	Strap		
2	4700277992		1	Tool bag		
3	4700902610		1	Belt pliers		D
4	4700901212	A	1	Open end spanner		
5	4700485177		1	Wrench	6"	
6	4700485034		1	Allen wrench	4 mm	
7	4700792060		1	Allen wrench	3 mm	

A) Kit

NUMERICAL INDEX

Part Number	Page	Part Number	Page	Part Number	Page
4700111018	25,47	4700376554	7,9,11,51	4700386620	47
4700160032	45	4700376555	7,9,11,57	4700386624	47
4700160058	21,33	4700376636	73	4700386628	47
4700160101	67	4700376637	7,11,73	4700386893	53
4700160111	27,45	4700376770	51	4700386949	51
4700160132	23,25,47	4700376771	51	4700386951	59
4700162017	45,47	4700376772	51	4700386963	53
4700162024	45	4700376861	73	4700387039	35,37
4700202042	83,85	4700376876	41	4700387043	35,37
4700205067	67	4700377009	103	4700387056	31
4700238158	83,85	4700377010	103	4700387097	55
4700272373	109	4700377011	103	4700387099	53
4700277992	139	4700377012	103	4700387100	53
4700280101	105	4700377014	103	4700387101	53
4700282603	105	4700377015	103	4700387118	59
4700283711	67	4700377016	103	4700387142	105
4700287713	41	4700377018	103,123	4700387148	39
4700288129	59	4700377019	101	4700387151	39
4700297018	39	4700377020	101	4700387154	39
4700313001	53,63	4700377021	101	4700387200	59
4700313002	41	4700377024	101	4700387201	55
4700313008	67	4700377042	39	4700387205	53
4700313010	59	4700377043	39	4700387225	99
4700313023	57	4700377044	39	4700387226	99
4700313035	53,67	4700377053	123	4700387227	99
4700313075	57	4700377055	123	4700387229	101
4700313102	73	4700377056	123	4700387236	99
4700313108	53,57,63,67	4700377058	81,119	4700387269	63
4700343490	47	4700377061	39	4700387274	73,75
4700343744	45,47	4700377063	81	4700387275	73,77
4700343801	45,47	4700377066	109	4700387276	67,71,133
4700346420	123	4700377139	83,85	4700387277	73
4700348331	99,109	4700377140	87,89	4700387278	67
4700349202	47	4700377253	117	4700387279	57
4700349332	31	4700377343	121	4700387284	81
4700350029	47	4700377556	99	4700387287	53
4700355704	81	4700377610	31	4700387298	101
4700355705	135	4700377611	41	4700387344	35,37
4700355797	131	4700377621	31,33	4700387345	35,37
4700355869	73	4700377677	105	4700387346	19,35,37
4700357002	51	4700377745	35,37	4700387376	31
4700357138	9,11,67	4700377746	35,37	4700387377	87,89,91
4700357139	67	4700377806	31	4700387378	87,89
4700357567	117,119	4700377817	35,37	4700387424	31
4700357587	109	4700378024	63	4700387425	31
4700357643	99	4700378025	63	4700387428	53
4700357855	99	4700378178	37	4700387453	99
4700357939	135	4700378745	83,85	4700387545	99
4700358232	99	4700378759	103,123	4700387552	57
4700358254	117	4700378932	83,85	4700387582	31
4700358666	47	4700379009	41	4700387583	47
4700358689	47	4700379012	109	4700387676	63
4700358881	41,113,121	4700379458	45	4700387677	63
4700359043	37	4700379636	99	4700387678	63
4700359434	67	4700379656	37	4700387682	57
4700359606	67	4700379668	67	4700387683	83,85
4700371728	129,131	4700382751	109	4700387685	99
4700371785	53	4700383697	41	4700387695	57
4700372123	109	4700383705	99	4700387713	67
4700372964	73	4700385599	83,85	4700387720	99
4700373363	109	4700386241	47	4700387758	67
4700374460	125	4700386619	47	4700387779	31

NUMERICAL INDEX

Part Number	Page	Part Number	Page	Part Number	Page
4700387886	31	4700390176	45,65	4700500013	59,101
4700387890	63	4700390316	67	4700500016	135
4700387914	63	4700390554	45	4700500018	99
4700387915	63	4700390586	99	4700500019	63
4700387935	41,121	4700390854	45	4700500021	53,55,81,93
4700387947	39	4700391379	103	4700500022	45,47,51,63
4700387948	39	4700391380	103	4700500024	35,37,81
4700387949	31,39	4700391381	103	4700500029	41,47,51,57,87
4700387956	39	4700391382	103		121
4700388009	81,95	4700391383	103	4700500030	99
4700388017	121	4700391386	103	4700500031	73,123
4700388087	41,121	4700391784	99	4700500033	51
4700388153	31	4700391920	127	4700500037	63
4700388171	21,33	4700391984	17,47	4700500040	53
4700388172	21,33	4700392011	41	4700500047	51
4700388173	21,33	4700392508	41	4700500048	73
4700388382	87,89	4700392509	41	4700500050	21,33
4700388447	99	4700393204	137	4700500053	31,39,59,63,67
4700388476	101	4700393956	83		73,81
4700388636	87,89	4700394242	15,45	4700500067	35,37
4700388653	67	4700394253	57	4700500068	39,57,63
4700388721	81	4700394301	99	4700500075	83,85
4700388733	39	4700394541	51	4700500079	137
4700388737	83,85	4700395227	53	4700500090	41
4700388772	93	4700395257	101	4700500105	35,37
4700388773	93	4700395394	83,85	4700500122	31
4700388846	39	4700395497	67	4700500161	51
4700388850	31	4700395520	67	4700500175	31,45
4700388852	39	4700396883	63	4700500176	31
4700388960	63	4700396884	63	4700500180	93
4700388975	45	4700396971	85	4700500192	67
4700389003	51	4700397093	81	4700500195	45
4700389005	59	4700397157	99	4700500208	31
4700389017	63	4700416034	101	4700500212	47
4700389019	59	4700476019	125,127,129	4700500230	89,91
4700389036	59	4700483649	67	4700500241	37
4700389132	45	4700483651	67	4700500269	31
4700389134	45	4700483652	63	4700500280	47
4700389136	45	4700483653	73	4700500505	99
4700389142	53	4700483654	63,73	4700500506	51
4700389155	41,121	4700483655	73	4700500509	99
4700389196	67	4700483656	73	4700502019	51
4700389218	41	4700483657	73	4700508002	67
4700389400	63	4700483661	63	4700508004	41
4700389401	67	4700483662	73	4700508014	45
4700389409	63	4700483664	133	4700508019	51
4700389410	63	4700483665	63	4700508022	39
4700389455	45	4700483668	67,133	4700508029	47,67
4700389456	45	4700483684	51	4700508032	45,47
4700389457	45	4700483689	63	4700508041	81
4700389459	31	4700483696	73	4700508048	51,123
4700389462	45,47	4700483852	63	4700508063	105
4700389556	63	4700483853	63	4700508068	103
4700389561	93	4700483854	67	4700508092	59,67,81,101
4700389577	93	4700483855	67	4700508094	67
4700389602	31	4700483878	67	4700513013	125
4700389763	93	4700483879	63	4700513017	99
4700389798	105	4700485034	139	4700527002	45,47
4700389840	85	4700485177	139	4700530027	31
4700389919	109	4700500006	81,127	4700535008	131
4700389920	109	4700500007	99,129	4700541702	93,95
4700390175	45	4700500012	45,47	4700570004	81,83,85,103

NUMERICAL INDEX

Part Number	Page	Part Number	Page	Part Number	Page
4700570005	37,51,81,125	4700791639	81	4700792189	37
4700570006	51	4700791643	39,87,89	4700792190	37
4700570007	45	4700791647	83	4700792236	99
4700573005	87	4700791666	39,109	4700792250	51
4700573008	105	4700791668	123	4700792286	37
4700586001	81,101	4700791669	123	4700792287	37
4700586002	39,83,85,135	4700791699	67	4700792320	83,85
4700586003	31,35,37,39,81	4700791700	67,133	4700792611	21,33
	83,85,93,99,101	4700791701	73	4700792707	67
4700586018	35,51,89,91,99	4700791704	87,89	4700900329	45
	123	4700791723	85	4700900790	87
4700586019	103	4700791739	85	4700900986	105
4700586022	31	4700791743	63	4700901157	63,67
4700624015	109	4700791744	63	4700901212	139
4700629101	93	4700791745	63,67	4700901225	87,89
4700635061	31,105	4700791746	63	4700901227	83,87,89,119
4700791185	83,85	4700791750	27,45	4700901228	83,85,91
4700791211	83,85	4700791754	37,57,91	4700901369	91
4700791226	99	4700791774	57	4700901432	41
4700791228	39	4700791775	35,37,83,85	4700901767	83,85
4700791395	67	4700791780	53	4700901832	53
4700791408	73	4700791794	67	4700902123	73
4700791409	63	4700791916	87,89	4700902166	39,99
4700791410	63,73	4700791922	45	4700902227	91
4700791412	63,67,73	4700791923	27,45	4700902286	53
4700791422	57	4700791926	123	4700902287	35,37
4700791425	23,47	4700791929	45	4700902496	135,137
4700791426	23,25,47	4700791938	35,37	4700902560	117,119
4700791433	23,47	4700791939	35,37	4700902610	139
4700791453	137	4700791941	67	4700902845	135
4700791454	137	4700791949	41	4700903154	47
4700791476	99	4700791950	41	4700903236	57
4700791483	55,81	4700791951	87,89	4700903374	45,47
4700791493	51,53	4700791953	87,89	4700903422	109
4700791502	81	4700791954	87,89	4700903423	109
4700791535	51	4700791955	87,89	4700903424	109
4700791537	63	4700791956	109	4700903425	109
4700791538	63	4700791957	91,109	4700903459	109
4700791539	63	4700791958	109	4700903658	41,99,121
4700791540	73	4700791959	41	4700903714	53
4700791541	67	4700791962	21,33	4700903741	83,85
4700791542	73	4700791970	87,89,91	4700903768	81
4700791543	65	4700791971	87,89	4700903782	83,85,127
4700791549	63	4700791977	41	4700903810	87,89
4700791550	81	4700791980	93	4700903856	39
4700791559	39	4700791981	93	4700903886	41
4700791565	73	4700792019	81	4700903945	103
4700791568	41	4700792020	81	4700903946	103
4700791578	83,85	4700792026	51	4700903947	103
4700791579	83,85	4700792035	131	4700903948	123
4700791580	83,85	4700792059	87,89	4700903956	81,87,89
4700791581	83,85,133	4700792060	139	4700904009	63,73
4700791582	83,85	4700792061	139	4700904012	39
4700791583	87,89	4700792070	67	4700904015	119
4700791584	87,89	4700792072	35,37	4700904092	109
4700791585	93	4700792083	83,85	4700904097	109
4700791586	87,89	4700792098	95	4700904203	125
4700791587	87,89,91	4700792134	35,37	4700904214	31
4700791588	83,85	4700792149	31	4700904228	31,39,45,47,53
4700791597	39	4700792155	109		59,67,81,83,85
4700791599	63	4700792170	63		101,109,135,137
4700791616	99	4700792188	37	4700904229	35,37,39,41,51

NUMERICAL INDEX

Part Number	Page	Part Number	Page	Part Number	Page
4700904229	55,57,59,63,67	4700940208	5,7		
	73,81,93,99,101	4700940209	5,9		
	105,123	4700940210	5,11		
4700904230	37,51,67,73,87	4700940212	11		
	89,91,99,123	4700940227	51		
4700904231	31,45,47,51,81	4700940228	51		
	105	4700940229	51		
4700904233	31	4700940231	51		
4700904281	41,99,121,129	4700940374	103,123		
4700904314	87	4700940447	51		
4700904556	39,45,53,67,81	4700940451	83,85		
	83,85,99,101	4700940613	63		
4700904557	45,47,51,57,67	4700940671	13,19		
	99,121	4700940885	71		
4700904563	103	4700940886	71		
4700904567	41	4700940887	71		
4700904637	51	4700940894	57		
4700904640	31,35,37,41,47	4700940922	57		
	51,53,55,63	4700940960	101		
4700904698	57,81	4700940976	51		
4700904703	45,47,55,63	4700945123	51		
4700904735	67,127	4700945284	51		
4700904755	101	4700945286	51		
4700904835	117,119	4700945340	67		
4700904870	109	4700945407	103		
4700904878	41	4700945418	57		
4700904889	87,89	4700945473	51		
4700904984	57	4700945526	73,77		
4700904989	87,89	4700945552	13,17		
4700908229	105,109	4700945629	51		
4700921039	93	4700945668	77		
4700921050	81	4700945710	13,23		
4700921104	67	4700945711	13,25		
4700923270	39,101	4700945729	103,123		
4700923734	41	4700945753	57		
4700923735	41	4700945777	57		
4700923859	135,137	4700945850	13,15		
4700923976	81	4700945878	55		
4700924544	41	4700945928	13,21,33		
4700924986	41	4700947684	73		
4700924996	41	4700947687	45,47		
4700926537	101	4700947688	45		
4700927233	103	4700950150	13,27		
4700927568	55	4700950382	101		
4700927974	127	4700960041	119		
4700928381	39	4700960079	87,89,119		
4700928830	73	4700985013	131		
4700928847	45	4700985125	87		
4700929191	31	4700991658	109		
4700929455	131	4700999027	81		
4700935429	75	4812110216	89,91		
4700935613	73	4812110283	137		
4700935614	73	4812110346	47		
4700939802	9,11,59	4812110560	119		
4700939803	9,11,59	4812110595	47		
4700939804	59	4812110596	47		
4700939805	59	4812110663	47		
4700939806	59	4812110668	45		
4700939807	59	4812110669	45		
4700939932	11,51	4812110670	45		
4700939977	51	4812110974	53,119		
4700940203	57	4812155080	63		