RUTHZIL TRATOR COMERCIAL DE PEÇAS LTDA 11 97083-6812 ROLANDO CITRANGULO

Shuttlelift CD3339
Grove YB4409-2

Service/Maintenance Manual

FEVEREIRO 2016





Reference Only

Reference Only

GROVE by Manitowoc

SHUTTLELIFT by Manitowoc

SERVICE MANUAL

This Manual has been prepared for and is considered part of -

CD3339/YB4409-2

Crane Model Number

Crane Serial Number

This Manual is Divided into the following Sections:

SECTION 1	**INTRODUCTION**
SECTION 2	**SAFETY PRACTICES**
SECTION 3	**ELECTRIC SYSTEM**
SECTION 4	**HYDRAULIC SYSTEM**
SECTION 5	**PREVENTATIVE MAINTENANCE**
SECTION 6	**ENGINE AND ENGINE SYSTEMS**
SECTION 7	**TRANSMISSION AND TORQUE CONVERTER**
SECTION 8	**AXLES/DRIVE SHAFTS/WHEELS AND TIRES**
SECTION 9	**BRAKE SYSTEM**
SECTION 10	**STEERING SYSTEM**
SECTION 11	**STRUCTURALS**
SECTION 12	**SCHEMATICS/WIRING DIAGRAMS**

NOTICE

The crane serial number is the only method your distributor or the factory has of providing you with correct parts and service information.

The crane serial number is identified on the builder's decal attached to the operator's cab. ***Always furnish crane serial number*** when ordering parts or communicating service problems with your distributor or the factory.

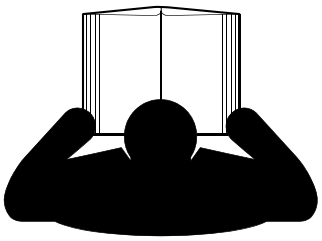

⚠DANGER

An untrained operator subjects himself and others to death or serious injury. Do not operate this crane unless:

- You are trained in the safe operation of this crane. Manitowoc is not responsible for qualifying personnel.
- You read, understand, and follow the safety and operating recommendations contained in the crane manufacturer's manuals and load charts, your employer's work rules, and applicable government regulations.
- You are sure that all safety signs, guards, and other safety features are in place and in proper condition.
- The Operator Manual and Load Chart are in the holder provided on crane.

© 2016 Manitowoc

Published 2-23-2016, Control# 592-00

Reference Only

CALIFORNIA
PROPOSITION 65 WARNING

Diesel engine exhaust and some of its constituents are known to the State of California to cause cancer, birth defects, and other reproductive harm.

CALIFORNIA
PROPOSITION 65 WARNING

Battery posts, terminals, and related accessories contain chemical lead and lead compounds, chemicals known to the State of California to cause cancer, birth defects or other reproductive harm. Wash hands after handling.

The original language of this publication is English.

Reference Only

SECTION 1 . . . . . Introduction
Directional Reference 1-1
Serial Number Plate. 1-1
Specifications. 1-2
General Maintenance 1-5
Cleanliness 1-5
After Cleaning 1-5
Removal and Installation. 1-5
Disassembly and Assembly 1-5
Pressing Parts. 1-6
Locking Devices 1-6
Wires and Cables 1-6
Shims 1-6
Hoses and Tubes 1-6
Bearings 1-7
Gaskets. 1-8
Batteries 1-8
Hydraulic Systems 1-8
O-ring, Seal and Elastic Nut Replacement 1-9
O-Ring Face Seal (ORFS) Hydraulic Fittings 1-9
Recommended O-Ring Face Seal Fitting (ORFS) Assembly Instructions 1-9
Hydraulic Pressure Testing. 1-11
Electrical System 1-11
Fatigue of Welded Structures 1-12
Loctite®. 1-12
Fasteners and Torque Values. 1-12
Weld Studs (Table 1-13) 1-16
Wire Rope 1-17
Environmental Conditions. 1-17
Dynamic Shock Loads 1-17
Lubrication 1-17
Precautions and Recommendations During Inspection or Replacement 1-17
Wire Rope Inspection (Running Ropes and Pendant Cables) 1-18
Keeping Records 1-18
Frequent Inspection 1-18
Wire Rope Inspection (Boom Extension and Retraction Cables) 1-19
Wire Rope Inspection/Replacement (All Wire Rope) 1-19
Seizing Wire Rope 1-20
Installing Flex-X 35 Wire Rope 1-21
Procedures for Cutting and Preparing Flex-X 35 1-21

SECTION 2 . . . . . Safety Practices
Introduction 2-1
Signal Words 2-1
Personal Considerations. 2-2
Equipment Considerations 2-2
General Considerations 2-3
Operational Considerations 2-3
Final Word 2-4

SECTION 3 . . . . . Electric System
General 3-1
Comparing Electrical System to a Hydraulic System 3-2
Magnetism 3-2
Main Electrical System 3-2
Wire Harnesses 3-2

Reference Only

Fuses . . . 3-2
Charging System . . . 3-4
Alternator and Voltage Regulator . . . 3-4
Battery . . . 3-4
Special Precautions . . . 3-4
Battery Maintenance and Charging . . . 3-4
Battery Replacement . . . 3-4
Starting Circuit . . . 3-5
General Inspections . . . 3-5
Starting Circuit Check . . . 3-5
Instrument and Light Circuits . . . 3-6
Light Bulbs . . . 3-6
Gauges . . . 3-6
Warning Lights . . . 3-6
Wire Harnesses . . . 3-7
Engine Wire Harness . . . 3-7
Instrument Panel Wire Harness . . . 3-7
Accessory Circuits . . . 3-8
Anti-Double Blocking System . . . 3-8
Rated Capacity Limiter (RCL) System . . . 3-9
Heater . . . 3-10
Below Deck Auxiliary Winch . . . 3-10
Troubleshooting . . . 3-11

SECTION 4. . . . Hydraulic System
Technical Data . . . 4-2
General Description . . . 4-3
Hydraulic System . . . 4-3
Draining and Flushing . . . 4-3
Removing Air From the Hydraulic System . . . 4-4
Troubleshooting . . . 4-5
Troubleshooting Aids . . . 4-5
Troubleshooting Procedures . . . 4-5
Troubleshooting Guides . . . 4-6
Hydraulic System . . . 4-10
System Description . . . 4-10
Description of Operation . . . 4-10
Suction, Return and Pump Pressure Circuits . . . 4-12
Hydraulic Pumps . . . 4-16
Main Control Valves . . . 4-21
Lift Circuit . . . 4-28
Oil Flow . . . 4-28
Counterbalance Valve . . . 4-28
Lift Cylinder Leakage Test . . . 4-32
Hydraulic Swivel . . . 4-33
Telescope Circuit . . . 4-34
Oil Flow . . . 4-34
Counterbalance Valve . . . 4-34
Port Relief Valve (Retract Function) . . . 4-37
Telescope Relief Valve (Extend Function) . . . 4-37
Telescope Cylinder Leakage Test . . . 4-38
Hydraulic Swivel . . . 4-38
Main Hoist Circuit . . . 4-38
General . . . 4-38
Oil Flow . . . 4-38
Counterbalance Valve . . . 4-39

Reference Only

Swing Circuit 4-42
General 4-42
Oil Flow 4-42
Anti-Double Block System 4-44
General 4-44
System Function 4-44
Outrigger Circuits 4-47
Oil Flow 4-47
Pilot Operated Check Valves 4-47
Outrigger Cylinder Leakage Test 4-49
Component Repair 4-49
Primary Hydraulic Pump Repair 4-49
Secondary Hydraulic Pump Repair 4-51
Main Control Valve 4-51
Swing Motor 4-56
Hoist Motor 4-62
Hydraulic Swivel 4-67
Hydraulic Cylinders 4-70

SECTION 5 . . . . . Preventive Maintenance
Introduction 5-1
Environmental Protection 5-1
Lubricants and Capacities 5-1
Maintenance Records 5-1
Special Maintenance 5-2
After First 50 Hours of Operation (New Cranes) 5-2
Cranes not in Regular Use 5-2
Preventive Maintenance 5-3
Maintenance Schedule and Checklist 5-3
Lubricants 5-5
Lubrication Points 5-6
Lubrication Points 5-8
Scheduled Maintenance 5-13
Daily (Walk-Around) 5-13
50 Hours of Operation 5-18
250 Hours of Operation 5-22
500 Hours of Operation 5-28
1000 Hours of Operation 5-32
2000 Hours of Operation 5-39
Miscellaneous Maintenance 5-39
Carwell® Rust Inhibitor 5-41
Protecting Cranes from Rusting 5-41
Cleaning Procedures 5-41
Inspection and Repair 5-42
Application 5-42
Areas of Application 5-42

SECTION 6 . . . . . Engine and Engine Systems
Engine Type 6-1
Engine Performance 6-1
Engine RPM 6-1
Engine Crankcase System 6-1
Crankcase Oil Data 6-1
Environmental Protection 6-2
Engine Cooling System 6-2
Coolant Requirements 6-3

Reference Only

Radiator Cap 6-3
Thermostat. 6-3
Engine Electrical System 6-3
Engine Fuel System 6-3
Types of Fuel To Use 6-4
Fuel Tank. 6-4
In-line Fuel Filters 6-4
Fuel Level Sender and Gauge. 6-4
Fuel Pump 6-4
Fuel Filter. 6-4
Fuel Injection Pump. 6-5
Engine Air Intake System 6-5
Engine Exhaust System 6-5
Troubleshooting 6-6
Removal and Installation 6-7
Removal. 6-7
Installation 6-8

SECTION 7. . . . . Transmission and Torque Converter
Technical Data 7-1
General Technical Data. 7-1
Clutch Solenoid Technical Data. 7-3
Description of Operation. 7-3
General 7-3
Troubleshooting 7-6
General Troubleshooting 7-6
Water Contamination. 7-10
Tests. 7-11
Torque Converter Stall Test. 7-11
Pressure and Flow Test. 7-11
Transmission Oil Cooler Motor Control Valve 7-13
Checking/Setting Transmission Oil Cooler Motor Control Valve 7-13
Transmission Repair. 7-15
Servicing the Torque Converter. 7-15
Servicing the Transmission 7-17
Transmission Gearbox Repair. 7-18

SECTION 8. . . . . Axles/Drive Shafts/Wheels and Tires
Description 8-1
Front Axle 8-1
Rear Axle. 8-2
Technical Data 8-2
Front Steering Drive Axle. 8-2
Rear Steering Non-Drive Axle 8-3
Toe-In/Steering Angle Alignment 8-4
Front Steering Axle 8-4
Rear Steering Axle. 8-6
Front Drive Axle Problems and Diagnosis 8-7
Front Drive Axle Repair 8-8
Removal. 8-8
Disassembly 8-8
Assembly. 8-19
Toe-In Adjustment 8-31
Steer Angle Adjustment. 8-31
Installation 8-31
Rear Steering Axle Repair 8-32

Reference Only

Removal 8-32
Inspection 8-32
Assembly 8-34
Installation 8-35
Drive Shafts 8-35
Checking for Bearing Wear 8-35
Removal 8-35
Disassembly 8-35
Inspection 8-36
Assembly 8-36
Installation 8-37
Lubrication Procedure 8-37
Wheels and Tires 8-37
Tire Inflation 8-38
Wheel Nut Torque 8-38

SECTION 9 . . . . . Brake System
Technical Data 9-1
Front Axle Brakes 9-1
Accumulator 9-1
Accumulator Charging Valve 9-1
Priority Flow Control Valve 9-2
Description 9-2
Service Brake System 9-2
Parking Brake System 9-4
Maintenance and Adjustments 9-5
Service Brake Bleeding 9-5
Parking Brake Bleeding 9-5
Parking Brake Adjustment 9-6
Accumulator Charging 9-6
Test 9-6
Brake Piston Seal Leakage Test 9-6
Service Brake Repair 9-8
Parking Brake Repair 9-8
Lining Kit Replacement 9-8
Repair Kit Installation 9-11
Seal Kit Installation 9-12
Brake Modulating Valve Repair 9-14
Removal 9-14
Disassembly 9-14
Assembly 9-14
Installation 9-15
Troubleshooting 9-16
Service Brakes 9-16
Parking Brake 9-16

SECTION 10 . . . . . Steering System
Technical Data 10-1
Steering Modes 10-1
Two-Wheel Steering 10-3
Four-Wheel Steering 10-5
Crab Steering 10-7
Relief Valve Pressure Check 10-9
Troubleshooting 10-10
Steering Orbitrol 10-13
Description 10-13

Reference Only

Orbitrol Repair 10-13
Rear Steering Cylinder 10-20
Technical Data 10-20
Special Tools 10-20
Front Steering Cylinder 10-23
Cylinder Repair 10-23

SECTION 11. . . . . Structurals
Booms 11-1
3-Section Boom Assembly 11-1
Adjustments 11-2
Boom Repair 11-4
Wire Rope, Sheaves And Hoist Blocks 11-14
Wire Rope Description 11-14
Wire Rope Safety 11-14
Inspecting Wire Rope 11-15
Inspection of Sheaves 11-15
Wire Rope Lubrication 11-15
Wire Rope Installation 11-16
Main Hoist 11-18
Theory of Operation 11-18
Repair 11-20
Bearing, Mast and Related Parts 11-31
General 11-31
Mast Bearing 11-32
Mast Bearing Bolts 11-32
Inspection for Bearing Wear 11-32
Replacing the Mast Bearing 11-33
Swing Gearbox and Pinion 11-35
Swing Gearbox Repair 11-36
Outriggers 11-38

SECTION 12. . . . . Schematics/Wiring Diagrams

Reference Only

1

SECTION 1
INTRODUCTION

SECTION CONTENTS

Directional Reference 1-1
Serial Number Plate 1-1
Specifications 1-2
General Maintenance 1-5
Cleanliness 1-5
After Cleaning 1-5
Removal and Installation 1-5
Disassembly and Assembly 1-5
Pressing Parts 1-6
Locking Devices 1-6
Wires and Cables 1-6
Shims 1-6
Hoses and Tubes 1-6
Bearings 1-7
Gaskets 1-8
Batteries 1-8
Hydraulic Systems 1-8
O-ring, Seal and Elastic Nut Replacement 1-9
O-Ring Face Seal (ORFS) Hydraulic Fittings 1-9
Recommended O-Ring Face Seal Fitting (ORFS) Assembly Instructions 1-9
Hydraulic Pressure Testing 1-11
Electrical System 1-11
Fatigue of Welded Structures 1-12
Loctite® 1-12
Fasteners and Torque Values 1-12
Weld Studs 1-16
Wire Rope 1-17
General 1-17
Environmental Conditions 1-17
Dynamic Shock Loads 1-17
Lubrication 1-17
Precautions and Recommendations During Inspection or Replacement 1-17
Wire Rope Inspection (Running Ropes and Pendant Cables) 1-18
Keeping Records 1-18
Frequent Inspection 1-18
Wire Rope Inspection (Boom Extension and Retraction Cables) 1-19
Wire Rope Inspection/Replacement (All Wire Rope) 1-19
Seizing Wire Rope 1-20
Installing Flex-X 35 Wire Rope 1-21
Procedures for Cutting and Preparing Flex-X 35 . 1-21

Reference Only

This manual contains information on maintenance, service and repair of the Models 3339 & YB4409-2 cranes. Major components and systems are included, except service on the engine. This information will be found in the engine manufacturer's service manual.

DIRECTIONAL REFERENCE

All directional references in this manual, unless otherwise noted, are viewed from the normal operator's working position at the main controls. "LEFT" is the operator's left and "RIGHT" is the operator's right.

SERIAL NUMBER PLATE

When contacting the distributor/manufacturer about this crane, provide the crane's serial number. The serial number is stamped on the serial number plate, which is located on the left front outrigger box, see Figure 1-1. Components, such as the pump, transmission, engine, axles, etc., have their own serial number plates that will be found on the housing of the component.

NOTE: The replacement of any part of this product with anything other than a manufacturer's authorized replacement part may adversely affect the performance, durability, or safety of this product and will void the warranty. The manufacturer assumes no liability for unauthorized replacement parts which adversely affect the performance, durability, or safety of this product.

SPECIFICATIONS

ENGINE

Diesel Engine

Make and Model	Cummins QSF2.8 Tier 4i diesel
Type of Aspiration	Turbocharged
Horsepower	74 hp (55.2 kW) @ 2500 rpm
Low Idle Speed	750 rpm
Intermediate Speed Control (ISC) Idle Speed	1200 rpm - Coolant Temperature is less than 71° C (160° F)
Maximum Engine Speed	2675 rpm

BOOM

Construction	Telescopic, welded box sections
Number of Sections	Three section, full proportional
Boom Length (From Boom Pivot Point)	4.2 m (13’ 10”) to 10.0 m (32’ 10”)

MAST ROTATION - 360°

Mast Bearing (Diameter)	860.6 mm (33.884 in)
Swing Drive Mechanism	Hydraulic motor driven gearbox
Swing Speed	2.05 rpm

ELECTRICAL

Type	12 volts, direct current
Alternator	120 amps
Battery	730 Cold Cranking AMPS @0 Degrees F., 190 Reserve Capacity (minutes)

FUEL TANK

Capacity	64.4 L (17 gal)

HYDRAULIC SYSTEM

Primary Pump	Variable displacement piston pump
Secondary Pump	Gear, two-section

Reference Only

Published 2/23/2016, Control # 592-00

MAIN CONTROL VALVES

Standard Outriggers	Six-section, closed center, load sense, with individual section compensation
Independent Outriggers	Eight-section, closed center, load sense, with individual section compensation
Swing Motor	Single section, gerotor-type
Hoist Motor	Fixed displacement, axial piston
Hydraulic Filters	One 10-micron filter in line from valves, One 30-mesh suction filter inside hydraulic tank
Hydraulic Cylinders	Double-acting cylinders for lift, telescope, steering and outriggers
Hydraulic Tank	89.0 L (23.5 gal) capacity, steel construction with internal baffles

WIRE ROPE

Wire Rope (Main Hoist):	
Diameter	14.3 mm (9/16 in)
Type	EEIPS, 6 x 19
Length	36.6 m (120 ft)
Wire Rope (Optional Below Deck Winch):	
Diameter	6 mm (1/4 in)
Length	30.5 m (100 ft)

TRANSMISSION

Type	International Transmissions Limited
Model	SS6620
Type	Synchroshuttle
Travel Speed:	
First	4.02 km/h (2.5 mph)
Second	8.69 km/h (5.4 mph)
Third	22.05 km/h (13.7 mph)
Fourth	32.51 km/h (20.2 mph)

FRONT AXLE, DRIVE/STEER

Type	Carraro
Model	26.18M-164
Ratio	10.66:1

Reference Only

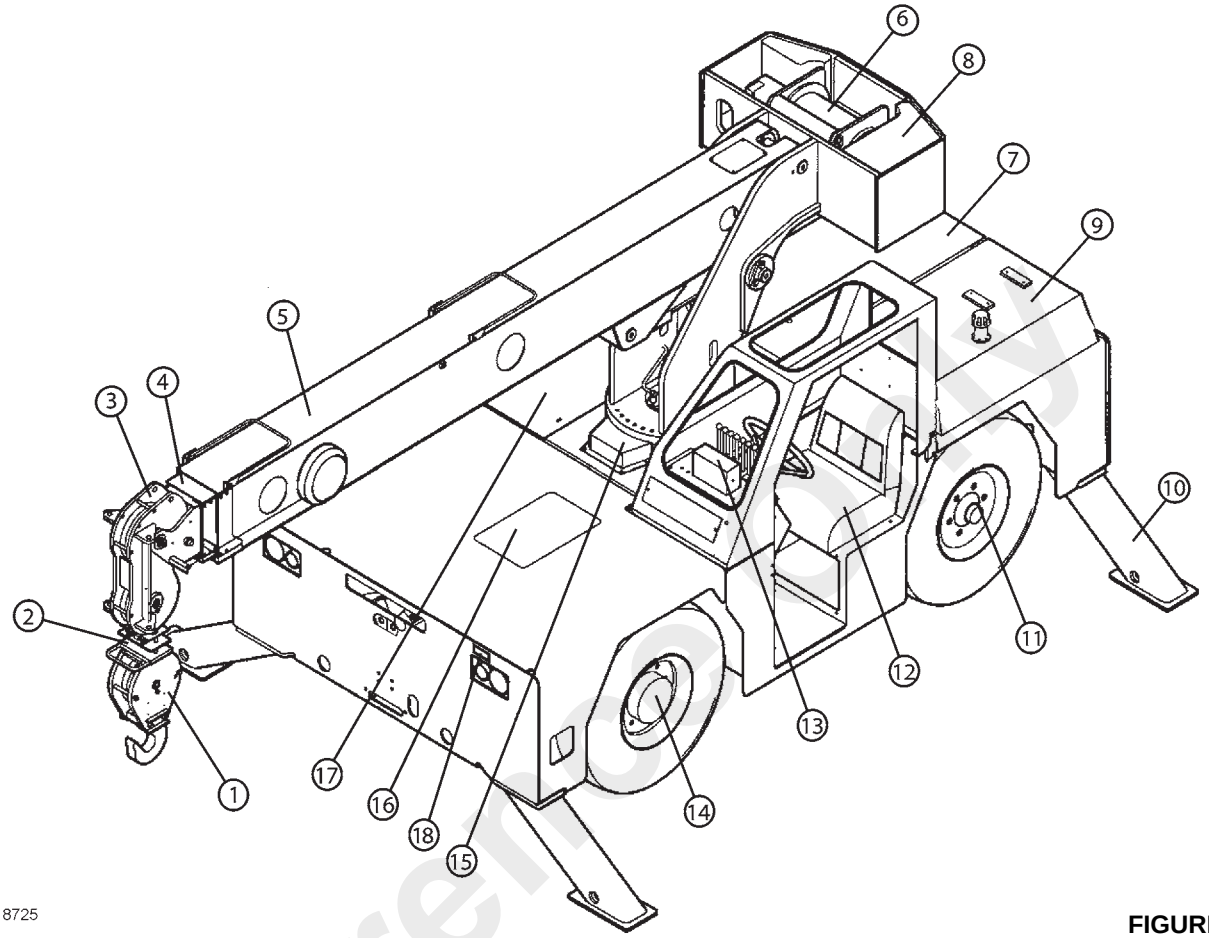

FIGURE 1-1

Item	Description	Item	Description
1	Hook Block	10	Outriggers
2	Anti-Double Blocking System	11	Rear Axle
3	3rd Boom Section	12	Operator's Cab
4	2nd Boom Section	13	Main Control Valve Location
5	1st Boom Section	14	Front Axle
6	Main Hoist	15	Swing Motor and Gearbox
7	Engine Location	16	Battery Location
8	Mast and Counterweight	17	Fuel Tank Location
9	Hydraulic Tank Location	18	Serial Number Plate

Reference Only

Published 2/23/2016, Control # 592-00

GENERAL MAINTENANCE

These general suggestions should be helpful in following the instructions in this manual. In analyzing a system malfunction, use a systematic approach to locate and correct the problem.

NOTE: Your safety and that of others is always the number one consideration when working around machines. Safety is a matter of thoroughly understanding the job to be done and the application of good common sense. It is not just a matter of do's and don'ts. Stay clear of all moving parts.

1. Determine the problem.
2. List possible causes.
3. Devise checks.
4. Conduct checks in a logical order to determine the cause.
5. Consider the remaining service life of components against the cost of parts and labor necessary to replace them.
6. Make the necessary repair.
7. Recheck to ensure that nothing has been overlooked.
8. Functionally test the failed part in its system.

Cleanliness

An important item in preserving the long life of the machine is keeping dirt out of working parts. Enclosed compartments, seals, and filters have been provided to keep the supply of air, fuel, and lubricants clean. It is important that these enclosures be maintained.

Whenever hydraulic, fuel, lubricating oil lines, or air lines are disconnected, clean the adjacent area, as well as, the point of connection. As soon as the disconnection is made, cap, plug, or tape each line or opening to prevent entry of foreign material. The same recommendations for cleaning and covering apply when access covers or inspection plates are removed.

Clean and inspect all parts. Be sure all passages and holes are open. Cover all parts to keep them clean. Be sure parts are clean when they are installed. Leave new parts in their containers until ready for assembly.

Clean the rust preventive compound from all machined surfaces of new parts before installing them.

After Cleaning

Remove all water or solvent from the parts immediately after cleaning. Use compressed air or a clean cloth. Make sure the parts are completely dry and clean. DO NOT use compressed air on bearings. Spinning bearings without lubricant will cause damage to the bearing, and could cause the bearing to fly apart.

CAUTION

Eye Injury Hazard!

When using compressed air use only low air pressure and keep air stream from direction of face.

Always wear eye and face protection when using compressed air. Injury to eyes could occur.

Removal and Installation

When performing maintenance, do not attempt to manually lift heavy parts when hoisting equipment should be used. Never locate or leave heavy parts in an unstable position. When raising a crane or portion thereof, ensure the crane is blocked securely and the weight is supported by blocks or jack stands rather than by lifting equipment.

When using hoisting equipment, follow the hoist manufacturers recommendations and use lifting devices that will allow you to achieve the proper balance of the assemblies being lifted and to ensure safe handling. Unless otherwise specified, all removals requiring hoisting equipment should be accomplished using an adjustable lifting attachment or straps designed for that purpose. All supporting members (straps, chains and cables) should be parallel to each other and as near perpendicular as possible to the top of the object being lifted.

NOTE: The capacity of an eyebolt diminishes as the angle between the supporting members and the object becomes less than 90°. Eyebolts and brackets should never be bent and should only have stress in tension

Some removals require the use of lifting fixtures to obtain proper balance. The weights of some components are given in their respective sections of the manual.

If a part resists removal, check to be certain all nuts and bolts have been removed and that an adjacent part is not interfering.

Disassembly and Assembly

When disassembling or assembling a component or system, complete each step in turn. Do not partially assemble one part and start assembling another. Make all adjustments as recommended. Always check the job after it is completed to see that nothing has been overlooked. Recheck the various adjustments by operating the machine before returning it to service.

Reference Only

Pressing Parts

When pressing one part into another, use an anti-seize compound or a molybdenum disulfide base compound to lubricate the mating surfaces.

Assemble tapered parts dry. Before assembling parts with tapered splines, be sure the splines are clean, dry, and free from burrs. Position the parts together by hand to mesh the splines before applying pressure.

Parts which are fitted together with tapered splines are always very tight. If they are not tight, inspect the tapered splines and discard the part if the splines are worn.

Locking Devices

Lockwashers, flat metal locks, or cotter pins are used to lock nuts and bolts.

Flat metal locks must be installed properly to be effective. Bend one end of the lock around the edge of the part. Bend the other end against one flat surface of the nut or bolt head.

Always use new locking devices on components which have moving parts.

When installing lockwashers on housings made of aluminum or thin sheet metal, use a flat washer between the lockwasher and the housing.

Wires and Cables

Batteries should always be disconnected prior to working on the electrical system.

When removing or disconnecting a group of wires or cables, tag each one to ensure proper identification during assembly.

Shims

When shims are removed, tie them together and identify them as to location. Keep shims clean and flat until they are reinstalled.

Hoses and Tubes

⚠ DANGER

High Pressure/Temperature Hazard!

Exercise extreme care around pressurized hydraulic hoses or tubes. DO NOT work on a hydraulic system while it is in operation or until all pressure is released.

Hydraulic oil is hot, it can cause severe burns.

Pressurized hydraulic oil can cause death or serious injury.

Stay clear of all hydraulic oil leaks. Relieve system pressure and use a piece of cardboard or paper to check for leaks. Do not use your hands.

Fluid injected into skin must be surgically removed within a few hours by a doctor familiar with this type of injury or gangrene will result.

Inspection

Check hoses carefully. Do not use your bare hands to check for leaks.

Tighten all connections to recommended torque.

If the hose end connections are damaged, always replace the hose or tube. Damaged, dented, crushed, or leaking hose fittings restrict oil flow and the operation of the parts being served. Fittings showing signs of movement from their original position have failed and must be replaced.

Be sure hoses are in good condition. If in doubt, replace them.

Replace hoses if any of the following is evident Figure 1-2:

- Evidence of kinking or crushing (1)
- Chaffing or cuts; wire is exposed (2)
- Damaged or leaking fittings (3)
- Localized ballooning (4)

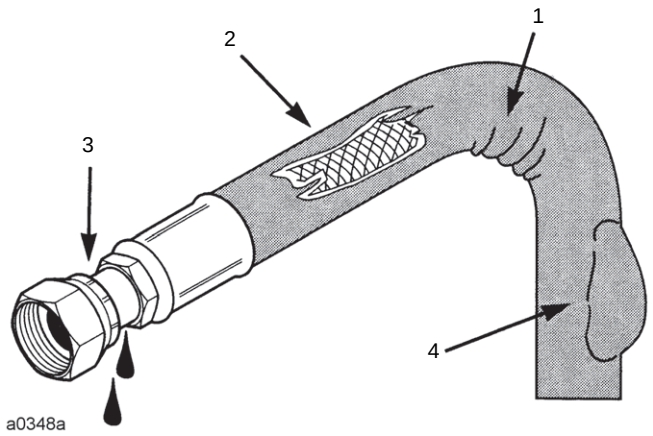

FIGURE 1-2

Reference Only

Published 2/23/2016, Control # 592-00

Installation

1. When installing a new hose, loosely connect each end and make sure the hose takes up the designed position before tightening the connection. Clamps should be tightened sufficiently to hold the hose without crushing and to prevent chafing.
2. If a hose is replaced on a part that moves during operation, be sure it moves freely by moving the part through its complete range of movement.
3. Be sure any hose which has been installed is not kinked or twisted.

Free moving, unsupported hoses must never rub on each other or related work surfaces. This causes chafing and reduces hose life.

Bearings

Antifriction Bearings

When an antifriction bearing is removed, cover it to keep out dirt and abrasives. Wash bearings in non-flammable cleaning solution and allow them to drain dry. The bearing may be dried with compressed air but do not spin the bearing. Discard the bearings if the races and balls or rollers are pitted, scored, or show signs of heat damage. If the bearing is serviceable, coat it with oil and wrap it in clean waxed paper. Do not unwrap new bearings until time of installation. The life of an antifriction bearing will be shortened if not properly lubricated. Dirt in an antifriction bearing can cause the bearing to lock resulting in the shaft turning in the inner race or the outer race turning within the cage.

Double Row, Tapered Roller

Double row, tapered roller bearings are precision fit during manufacture and components are not interchangeable. The cups, cones, and spacers are usually etched with the same serial number and letter designator. If no letter designators are found, wire the components together to assure correct installation. Reusable bearing components should be installed in their original positions.

Heating Bearings

Bearings which require expansion for installation should be heated in oil not to exceed 121° C (250 °F). When more than one part is heated to aid in assembly, they must be allowed to cool and then pressed together again. Parts often separate as they cool and contract.

Removal

1. Bearings should never be removed unless absolutely necessary. Always use the appropriate puller to reduce the risk of bearing or related component damage.
2. When bearings or bushings are removed, check that the bearing is free from discoloration, nicks, scuffing, and signs of overheating. If in doubt, replace the bearing or bushing.

Cleaning

Bearings acceptable for service should be cleaned in a suitable solvent and immersed in clean lubricating oil until needed.

Installation

1. Be sure bearings are installed with care during servicing, maintenance and repair.
2. Whenever possible, always install the bearing on the rotating part first.
3. Use proper tools or a press when installing a bearing or bushing.

Lubricate new or used bearings before installation. Bearings that are to be preloaded must have a film of oil over the entire assembly to obtain accurate pre-loading. When installing a bearing, spacer, or washer against a shoulder on a shaft, be sure the chamfered side is toward the shoulder.

When pressing bearings into a retainer or bore, uniformly apply pressure to the outer race. If the bearing is pressed on the shaft, uniformly apply pressure on the inner race.

Preload

Preload is an initial load placed on the bearing at the time of assembly. Whether a tapered roller bearing should have preload could depend on any of several conditions: rigidity of the housings and shaft, bearing spread, speed of operation, etc.

To determine whether a bearing requires preload or end clearance, consult the disassembly and assembly instructions pertaining to that bearing.

Care should be exercised in applying preload. Misapplication while preloading bearings requiring end clearance can result in bearing failure.

Sleeve Bearings

Do not install sleeve bearings with a hammer. Use a press and be sure to apply the pressure directly in line with the bore. If it is necessary to drive a bearing into place, use a bearing driver or a bar with a smooth flat end. If a sleeve bearing has an oil hole, align it with the oil hole in the mating part.

Reference Only

Gaskets

Be sure the holes in the gaskets correspond with the passages in the mating parts. If it is necessary to make gaskets, select material of the proper type and thickness. Be sure to cut holes in the right places. Blank gaskets can cause serious damage.

When removed, always install new cylinder head and manifold gaskets using recommended gasket compound on head gaskets to allow uniform sealing.

Batteries

Clean batteries by scrubbing them with a solution of baking soda and water. Rinse with clear water. After cleaning, dry thoroughly and coat terminals and connections with an anti corrosion compound or grease.

If the machine is to be stored or not used for an extended period of time, the batteries should be removed. Store the batteries in a cool (not subfreezing), dry place, preferably on wooden shelves. Never store on concrete. A small charge should be introduced periodically to keep the specific gravity rating at recommended level.

Hydraulic Systems

⚠ DANGER

High Pressure/Temperature Hazard!

Exercise extreme care around pressurized hydraulic systems. DO NOT work on a hydraulic system while it is in operation or until all pressure is released.

Hydraulic oil is hot, it can cause severe burns.

Pressurized hydraulic oil can cause death or serious injury.

Stay clear of all hydraulic oil leaks. Relieve system pressure and use a piece of cardboard or paper to check for leaks. Do not use your hands.

Fluid injected into skin must be surgically removed within a few hours by a doctor familiar with this type of injury or gangrene will result.

Cleanliness

Contaminants in a hydraulic system affect operation and will result in serious damage to the system components. Dirty hydraulic systems are a major cause of component failures.

Keep the System Clean

When removing components of a hydraulic system, cover all openings on both the component and the crane.

If evidence of foreign particles is found in the hydraulic system, flush the system.

Disassemble and assemble hydraulic components on a clean surface.

Clean all metal parts in a nonflammable cleaning fluid. Then lubricate all components to aid in assembly.

Sealing Elements

Inspect all sealing elements (O-ring, gaskets, etc.) when disassembling and assembling the hydraulic system components. Installation of new elements is always recommended.

Hydraulic Lines

When installing metal tubes, tighten all bolts finger-tight. Then, in order, tighten the bolts at the rigid end, the adjustable end, and the mounting brackets. After tubes are mounted, install the hoses. Connect both ends of the hose with all bolts finger-tight. Position the hose so it does not rub on the machine or another hose and has a minimum of bending and twisting. Tighten both couplings.

Due to manufacturing methods there is a natural curvature to a hydraulic hose. The hose should be installed so any bend is with this curvature.

Visual Inspection of Hoses and Fittings

1. Visually inspect hoses and fittings once a month or every 250 hours for the following:
   - Leaks at hose fitting or in hose
   - Damaged, cut, or abraded cover
   - Exposed reinforcement
   - Kinked, crushed, flattened, or twisted hose
   - Hard, stiff, heat cracked, or charred hose
   - Blistered, soft, degraded, or loose cover
   - Cracked, damaged, or badly corroded fittings
   - Fitting slippage on hose
   - Other signs of significant deterioration

   If any of the above conditions exist, evaluate hose assemblies for correction or replacement. For replacement of hose assemblies, refer to your Manitowoc Crane Care Parts Manual.
2. At the same service interval, visually inspect all other hydraulic components and valves for the following:
   - Leaking ports.
   - Leaking valve sections or manifolds and valves installed into cylinders or onto motors.
   - Damaged or missing hose clamps, guards, or shields.
   - Excessive dirt and debris around the hose assemblies.

   If any of these conditions exist, address them appropriately.

Reference Only

Published 2/23/2016, Control # 592-00

Table 1-1 All hydraulic hose assemblies are recommended to be replaced after 8000 hours of service life.

Zone	Classification
A	Tropical Moist: All months average above 18° C. Latitude 15° - 25° North and South
B	Dry or Arid: Deficient precipitation most of the year. Latitude 20° - 35° North and South
C	Moist Mid-Latitude: Temperature with mild winters. Latitude 30° - 50° North & South
D	Moist Mid-latitude: Cold winters. Latitude 50° - 70° North & South
E	Polar: Extremely cold winters and summers. Latitude 60° - 75° North & South

3. Hydraulic hose assemblies operating in a temperature climate zone “C” Table 1-1 are recommended to be replaced after 8000 hours of service life.
4. Hydraulic hose assemblies operating in climate zones “A” and “B” with high ambient temperatures, could see hose service life reduced by 40 to 50%, therefore, it is recommended to replace these hoses after 4000 to 5000 hours of service life.
5. Hydraulic hose assemblies operating in climate zones “D” and “E” should expect a degradation of mechanical properties such as elasticity, therefore, it is recommended these hoses be inspected and addressed accordingly.

O-ring, Seal and Elastic Nut Replacement

Replace O-rings and gaskets whenever they are disturbed. Never mix new and old seals or O-rings regardless of condition. Always lubricate new seals and O-rings (unless stated otherwise) with 10W30 oil or petroleum jelly before installation. Replace all used elastic locknuts with new parts.

O-RING FACE SEAL (ORFS) HYDRAULIC FITTINGS

ORFS fittings are used on the hydraulic system throughout the carrier.

ORFS (O-Ring Face Seal) fittings have a straight thread and a flat face with an O-ring groove machined in the flat face. Sealing takes place by compressing the O-ring onto the flat face of the female connector.

Fittings with O-rings offer advantages over metal-to-metal fittings. Under or overtightening any fitting can allow leakage, but all-metal fittings are more susceptible to leakage because they must be tightened to a higher and narrower torque range. This makes it easier to strip threads or crack or distort fitting components, which prevents proper sealing.

Leaks can result from vibration, thermal cycling and from loads being supported by the connection (i.e. using the fitting in the connection to support mechanical loads).

Recommended O-Ring Face Seal Fitting (ORFS) Assembly Instructions

1. If installing new fittings, inspect for possible contamination or damage from shipping or handling. Confirm face seal O-ring is properly installed.
2. Lubricate the threads and the O-ring with your systems hydraulic fluid or a light lubricant.
3. Align mating face seal flange against O-ring and finger tighten face seal flange nut.
4. Torque flange nut to the value shown in the table below.

Alternate Assembly Method

1. If torque method not possible, follow steps 1-3 above, then proceed to the steps below.
2. Lightly wrench tighten the nut until there is firm resistance.
3. Place a wrench on wrench pad next to nut as near the 6 o’clock position as possible.
4. Place second wrench on nut as near the 3 o’clock position as possible.
5. Turn nut clockwise to no less than the 4 o’clock position, but no more than the 6 o’clock position. Required rotation generally decreases as size increases.

Fitting Size	Dash Size	Thread Size	Torque ft-lbs
ORFS 4	-04	9/16-18	19
ORFS 6	-06	11/16-16	32
ORFS 8	-08	13/16-16	42
ORFS 10	-10	1-14	63
ORFS 12	-12	1 3/16-12	89
ORFS 16	-16	1 7/16-12	116
ORFS 20	-20	1 11/16-12	158
ORFS 24	-24	2-12	242

TORQUE VALUES: The minimum torque values listed are to provide a benchmark that give optimum results for leak free

Reference Only

connections. Actual torque values should be based on individual application.

F.F.F.T. METHOD (Flats from Finger Tight)

Manitowoc Cranes, Inc. recommends that the F.F.F.T. tightening method described here be used when assembling all hydraulic fittings. This method will minimize the risk of fitting damage or failure due to under or overtightening.

It will also reduce the chance of a leaky connection which is caused normally by different plating combinations of fittings. This method is particularly useful when plating type of fitting is unknown and during maintenance or repair when a joint may be oily.

Follow these steps when tightening all fitting connections:

1. Make sure both threads and sealing surfaces are free of burrs, nicks, scratches or any foreign particles.
2. Align tube or hose to the mating fitting and check to see that the flare seats properly on the nose of the fitting.
3. Finger tighten the nut onto the fitting. If necessary, a wrench should be used to seat the nut snugly against the fitting. This is considered the “FINGER TIGHT” condition.
4. Using a permanent-type ink marker, make a mark on one of the flats of the nut and continue it onto the hex of the static fitting or port
5. Tighten the joint by the number of flats (F.F.F.T.) as specified in Table 1-2 and 1-3 for size and type of fitting.

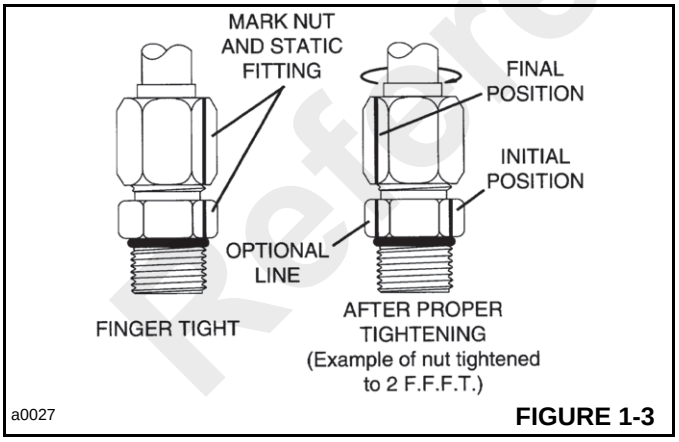

FIGURE 1-3

6. Optional for future tightening of the same connection.) Extend the line from the nut at its new location onto the hex of the static fitting or port (Figure 1-3).

37° Flared Steel Fitting - Tube or Hose to Fitting

1. Follow F.F.F.T. method, see F.F.F.T. METHOD (Flats from Finger Tight).

Table 1-2

SAE Size	TUBE Conn. (F.F.F.T)	Swivel Nut/ Hose Conn. (F.F.F.T)
2	-	-
3	-	-
4	2.5	2
5	2.5	2
6	2.5	2
8	2.5	2
10	1.5	1.5
12	1.5	1.5
14	1.5	1.5
16	1	1.5
20	1	1
24	1	1
32	1	1

Adjustable Straight

Table 1-3
Adjustable Straight Thread O-ring

ADJUSTABLE STEEL STR. THREAD O-RING FITTINGS	
SAE SIZE	(F.F.F.T.)
2	1.0 ±0.25
3	1.0 ±0.25
4	1.5 ±0.25
5	1.5 ±0.25
6	1.5 ±0.25
8	1.5 ±0.25
10	1.5 ±0.25
12	1.5 ±0.25
14	1.5 ±0.25
16	1.5 ±0.25
20	2.0 ±0.25
24	2.0 ±0.25
32	2.0 ±0.25

Thread O-ring Fitting - Fitting to Port (Figure 1-4)

1. Inspect both mating parts for burrs, nicks, scratches, or foreign particles.
2. Lubricate O-ring with a light coat of clean oil (Figure 1-4A).
3. Back off locknut as far as possible (Figure 1-4A).

Reference Only

Published 2/23/2016, Control # 592-00

4. Screw fitting into port by hand until the backup washer contacts face of port and is pushed all the way towards the locknut (Figure 1-4B).
5. To orientate the fitting, unscrew the fitting the required amount, but not more than one full turn (Figure 1-4C).
6. Hold the fitting in the desired position and tighten the nut (Figure 1-4D) following the F.F.F.T. method, See F.F.F.T. METHOD (Flats from Finger Tight) starting with step 4.

Nonadjustable Straight Thread O-ring Fitting - Fitting to Port (Table 1-4)

1. Make sure both threads and sealing surfaces are free of burrs, nicks, scratches or any foreign particles.
2. Lubricate O-ring with clean oil (Figure 1-5).
3. Turn fitting until finger tight.
4. Using the assembly torque method, tighten to given torque for size from Table 1-4.

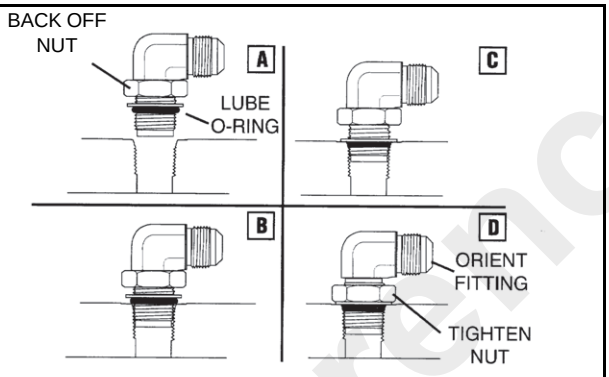

a0030 Adjustable Fitting to Port **FIGURE 1-4**

Table 1-4

NON--ADJUSTABLE STEEL STR. THREAD O-RING FITTINGS		
THREAD SIZE	TORQUE* ± 5%	
	(lb in)	(lb ft)
7/16-20	326	27
1/2-20	378	32
9/16-18	441	37
3/4-16	-	63
7/8-14	-	105
1 1/16-12	-	142
1 3/16-12	-	184
1 5/16-12	-	210
1 5/8-12	-	263
1 7/8-12	-	320
2-12	-	394

* Torque values are reduced by 35% for adapters used in soft metal ports, such as aluminum and brass valves.

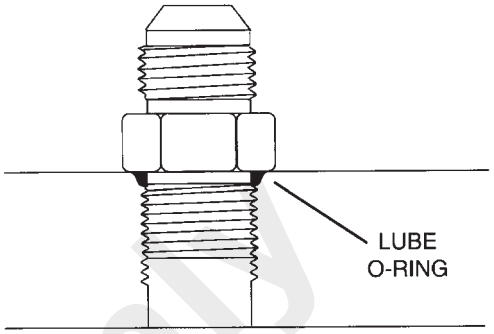

a0032 Non-Adjustable Fitting to Port **FIGURE 1-5**

Hydraulic Pressure Testing

Prior to pressure testing, be sure all hoses are in good condition and all fittings are tight.

Use a pressure gauge with a range that is high enough to measure the specific pressure.

Comply with the correct procedure to inhibit damage to the system or the equipment and eliminate the possibility of injury.

Electrical System

Harnesses, Wires, and Connectors

Visually inspect all electrical harnesses, cables, and connectors every month or 250 hours for the following:

- Damaged, cut, blistered, or cracked insulation.
- Exposed bare wires.
- Kinked or crushed wires and cables.
- Cracked or corroded connectors, battery terminals, and ground connections.

If any the above conditions exist, evaluate, clean and replace as necessary.

The climate in which the crane operates affects the service life of the electrical components. The climate zones are defined in Table 1-1. Recommended replacement of harness and cables is as follows:

- Climate zone C after 10,000 hours of service.
- Climate zones A and B with high ambient temperatures and duty cycles after 8000 hours of service.
- Climate zones D and E after 5,000 hours of service.

Reference Only

- Salt water conditions after 8,000 hours of service.

Fatigue of Welded Structures

Experience has shown that highly stressed welded structures when repeatedly subjected to varying stresses caused by twisting, shock, bending, and intentional and/or unintentional overloads, often become subject to weld cracking which may be attributed to fatigue of the welded joint. This condition is not uncommon in construction equipment.

Equipment should be periodically inspected for evidence of weld fatigue. The frequency of these inspections should increase with the age of the equipment and the severity of the application. The following are known high stress areas applicable to Grove machines, and a visual inspection of these areas should be made part of an owner's planned preventive maintenance program:

- Telescopic Boom: wear pad retaining structures, hydraulic cylinder attaching points, boom pivot shaft retaining structures.
- Outrigger pads, beams, boxes and attachment structures.
- Main frame: generally in the area of doubler plates and crossmembers; at the junction of front and rear frame members on truck cranes.
- Turntable bearing connection—where bearing is welded to the crane superstructure or chassis.
- Counterweight support structures.
- Chassis axle and suspension mounting structures.
- Hydraulic cylinder end connections.

The above is provided only as a guide, and your inspection plan should not be limited to the areas listed. A thorough visual inspection of all weldments is good practice.

Anyone requiring more detailed inspection instructions and/or repair procedures may request same by contacting your local Manitowoc distributor.

Loctite®

⚠ CAUTION

Skin and/or Eye Hazard!

Loctite type adhesives contain chemicals that may be harmful if misused. Read and follow the instructions on the container.

Always follow the directions on the Loctite container, as not all Loctite types are suitable for all applications.Various types of Loctite are specified throughout the Service Manual. The following types of Loctite brand adhesives are available from the Parts Department of the local Manitowoc distributor.

Application of Medium Strength Loctite®

NOTE: The fastener may be re-used; the adhesive may be re-applied over cured adhesive residue.

The following procedure covers the proper application and curing method for medium strength Loctite® adhesive/sealant (Loctite® #243).

NOTE: Ensure the threaded surface, both male and female, is clean of contaminants and free of dirt and oil. Adhesive/Sealant Application

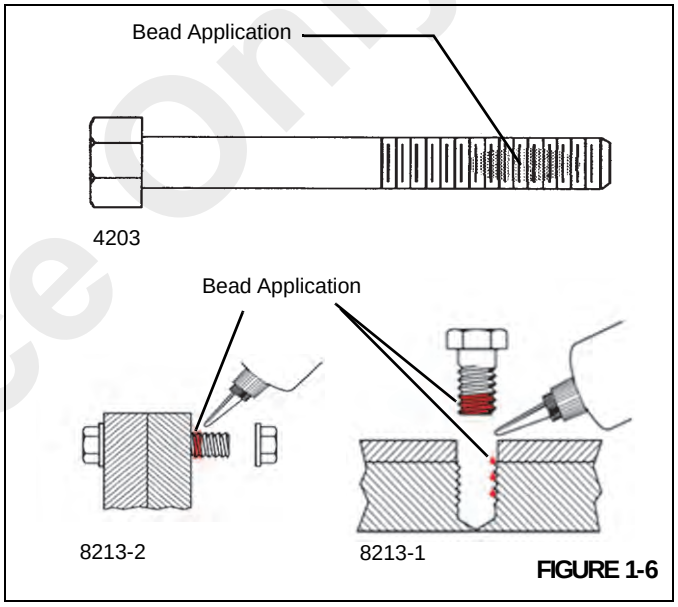

FIGURE 1-6

1. Apply a bead perpendicular to the thread, several threads wide, in the approximate area of threaded engagement (see Figure 1-1).
2. In a blind hole application, a bead of several drops of adhesive should be applied into the bottom of the hole to be hydraulically forced up during engagement.
3. After application and engagement of mated threads, fixturing will occur within five (5) minutes. Time required to achieve full strength is 24 hours.

Fasteners and Torque Values

Use bolts of the correct length. A bolt which is too long may bottom before the head is tight against the part it is to hold. If a bolt is too short, there may not be enough threads engaged to hold the part securely. Threads can be damaged. Inspect them and replace fasteners, as necessary.

Torque values should correspond to the type bolts, studs, and nuts being used.

The torque tables are provided by Manitowoc for reference when performing maintenance.

Reference Only

Published 2/23/2016, Control # 592-00

Use of proper torque values is extremely important. Improper torquing can seriously affect performance and reliability.

Identification of fastener grade is always necessary. When marked as a high strength bolt (grade 5, 8, etc.), the mechanic must be aware that he/she is working with a highly stressed component and the fastener should be torqued accordingly.

NOTE: Some special applications require variation from standard torque values. Reference should always be made to component overhaul procedures for recommendations.

Special attention should be given to the existence of lubricant, plating, or other factors that might require variation from standard torque values.

The use of lubricants on zinc-flake coated parts shall be prohibited since this will change the required torque value.

When maximum recommended torque values have been exceeded, the fastener should be replaced.

Previously installed bolts and nuts of Grade 8 or Class 10.9 and higher may not be reused.

When referring to the applicable torque charts, use values as close as possible to the torque values shown to allow for wrench calibration tolerance.

Torque Wrenches

Flexible beam type wrenches, even though they might have a pre-set feature, must be pulled at right angle and the force must be applied at the center of the handle. Force value readings must be made while the tool is in motion. Rigid handle type, with torque limiting devices that can be pre-set to required values, eliminate dial readings and provide more reliable, less variable readings.

NOTE: If multipliers and/or special tools are used to reach hard to get at areas, ensure torque readings are accurate.

Torque wrenches are precision instruments and must be handled with care. To ensure accuracy, calibrations must be made on a scheduled basis. Whenever there is a possibility that a torque wrench may have been either overstressed or damaged, it should immediately be removed from service until recalibrated. When using a torque wrench, any erratic or jerking motion can result in the application of excessive or improper torque. ALWAYS use a slow, even movement and STOP when the predetermined value has been reached.

When using step wrenches, calculated wrench settings are valid only when the following conditions are met:

- Torque wrenches must be those specified and forces must be applied at the handle grip. The use of handle extensions will change applied torque to the bolt.
- All handles must be parallel to the step wrench during final tightening. Multiplier reaction bars may be misaligned no more than 30 degrees without causing serious error in torque.
- Multiplier bar handles must be propped or supported within the outer 1/4 of the handle length, or serious under or over tightening will occur.

To convert pounds-foot (lb-ft) of torque to newton meters (Nm), multiply the pounds-foot quantity by 1.3558.

To convert pounds-inch (lb-in) of torque to newton meters (Nm), multiply the pounds-inch quantity by 0.11298.

Torque Values

The following tables list the torque values for both ASME standard and metric fasteners. The tables list the values for grade 5 and grade 8 zinc-flake coated, untreated (black) finish and stainless steel fasteners.

Reference Only

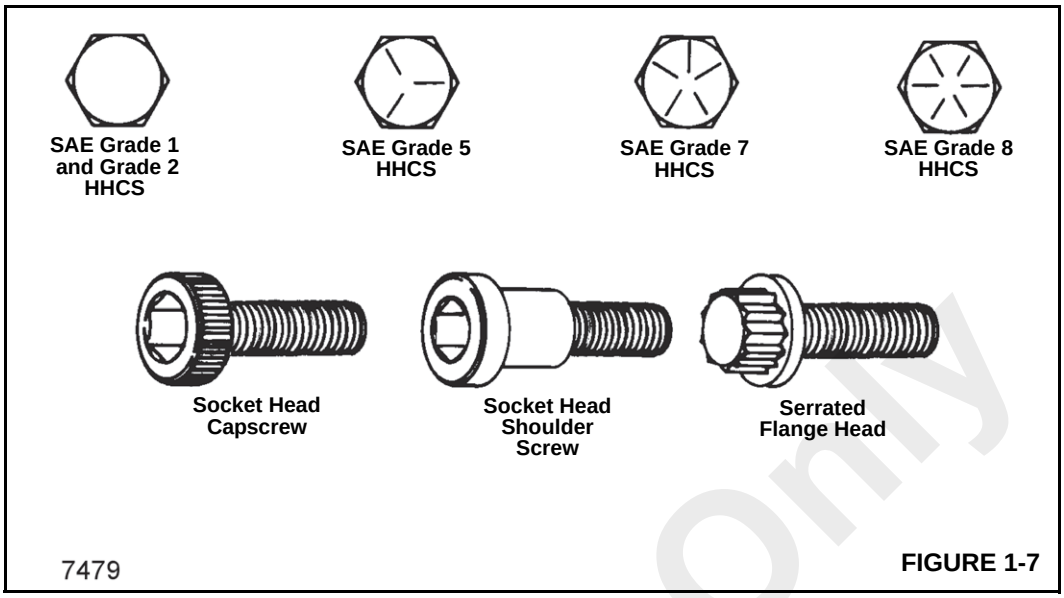

FIGURE 1-7

Table 1-5: UNC (Coarse) Thread: Torque Values for Zinc-Flake Coated and Untreated Fasteners

Bolt Diameter - Inches

Torque Values (Pounds-Foot, Maximum/Minimum)

	SAE Grade	1/4	5/16	3/8	7/16	1/2	9/16	5/8	3/4	7/8	1	1-1/8	1-1/4	1-1/2
Zinc-Flake	**5**	7	14	25	40	61	88	121	213	342	512	636	884	1532
	8	10	20	36	57	86	124	171	301	483	723	1032	1433	2488
Untreated	**5**	9.0	19	32	52	78	114	156	270	416	606	813	1141	2028
		7.7	17	30	48	72	106	144	249	384	560	751	1053	1865
	8	12.5	26	48	73	120	161	234	385	615	929	1342	2043	3276
		11.5	24	44	67	110	143	216	355	567	857	1234	1885	3024

NOTE: Studs shall be torqued using capscrew values when grade is known.

Table 1-6: UNF (Fine) Thread: Torque Values for Zinc-Flake Coated and Untreated Fasteners

Bolt Diameter - Inches

Torque Values (Pounds-Foot, Maximum/Minimum)

	SAE Grade	1/4	5/16	3/8	7/16	1/2	9/16	5/8	3/4	7/8	1	1-1/8	1-1/4	1-1/2
Zinc-Flake	**5**	8	15	28	44	66	95	132	229	364	543	785	944	1654
	8	11	22	39	61	94	134	186	323	514	766	1109	1530	2682
Untreated	**5**	10	21	36	57	88	126	182	312	458	658	882	1251	2288
		9	19	34	53	81	116	167	287	421	606	814	1155	2105
	8	14.5	26	53	85	125	177	250	425	672	1009	1500	2092	3640
		13.5	24	49	79	115	163	230	393	620	931	1380	1925	3360

NOTE: Studs shall be torqued using capscrew values when grade is known.

Reference Only

Published 2/23/2016, Control # 592-00

Table 1-7: Metric Fasteners, Coarse Thread, Zinc-Flake Coating

Bolt Diameter - Metric Torque Values (Nm)																
Class	**M4**	**M5**	**M6**	**M8**	**M10**	**M12**	**M14**	**M16**	**M18**	**M20**	**M22**	**M24**	**M27**	**M30**	**M33**	**M36**
8.8	2.6	5.2	9.0	21.6	42.4	73.1	116	178	250	349	467	600	877	1195	1608	2072
10.9	3.7	7.5	12.5	31.5	62.0	110	170	265	365	520	700	900	1325	1800	2450	3150
12.9	4.3	9.0	15.0	36.0	75.0	128	205	315	435	615	830	1060	1550	2125	2850	3700

Table 1-8: Metric Fasteners, Coarse Thread, Untreated

Bolt Diameter - Metric Torque Values (Nm, Maximum/Minimum)															
Class	**M4**	**M5**	**M6**	**M7**	**M8**	**M10**	**M12**	**M14**	**M16**	**M18**	**M20**	**M22**	**M24**	**M27**	**M30**
8.8	3.1	6.5	11	19	27	53	93	148	230	319	447	608	774	1134	1538
	2.8	5.9	10	17	25	49	85	136	212	294	413	562	714	1046	1420
10.9	4.5	9.2	16	26	38	75	130	212	322	455	629	856	1089	1591	2163
	4.1	8.5	14	24	35	69	120	195	298	418	581	790	1005	1469	1997
12.9	5.4	11	19	31	45	89	156	248	387	532	756	1029	1306	1910	2595
	4.9	10	17	28	42	83	144	228	357	490	698	949	1206	1763	2395

Table 1-9: Metric Fasteners, Fine Thread, Zinc-Flake Coating

Bolt Diameter - Metric Torque Values (Nm)													
Class	**M8x1**	**M10x1**	**M10x1.25**	**M12x1.5**	**M14x1.5**	**M16x1.5**	**M18x1.5**	**M20x1.5**	**M22x1.5**	**M24x2**	**M27x2**	**M30x2**	**M33x2**	**M36x3**
8.8	23	46	44	75	123	185	270	374	496	635	922	1279	1707	2299
10.9	34	71	66	113	188	285	415	575	770	980	1425	2025	2500	3590
12.9	41	84	79	135	220	335	485	675	900	1145	1675	2375	2900	4200

Table 1-10: Metric Fasteners, Fine Thread, Untreated

Bolt Diameter - Metric Torque Values (Nm, Maximum/Minimum)														
Class	**M8x1**	**M10x1**	**M10x1.25**	**M12x1.5**	**M14x1.5**	**M16x1.5**	**M18x1.5**	**M20x1.5**	**M22x1.5**	**M24x2**	**M27x2**	**M30x2**	**M33x2**	**M36x3**
8.8	29	57	57	100	160	248	345	483	657	836	1225	1661	—	—
	27	53	53	92	147	229	318	446	607	771	1130	1534	—	—
10.9	41	81	81	1140	229	348	491	679	924	1176	1718	2336	—	—
	38	75	75	130	211	322	451	627	853	1085	1587	2157	—	—
12.9	49	96	96	168	268	418	575	816	1111	1410	2063	2800	—	—
	45	90	90	156	246	386	529	754	1025	1302	1904	2590	—	—

Reference Only

Table 1-11: UNC (Coarse) Thread: Torque Values for Stainless Steel Fasteners with Oil Lubrication

Size	Torque Value	
	lb-in	lb-ft
#5 (0.125)	6.9	—
#8 (0.164)	18	—
#10 (0.190)	21	—
1/4	68	—
5/16	120	10
3/8	210	17.5
7/16	340	28
1/2	—	39
5/8	—	74
3/4	—	114

NOTE: Stainless steel fasteners tend to gall while being tightened. To reduce this risk, lubricate the threads with oil or molybdenum disulfide and torque at low speeds without interruptions. Do not use excessive pressure. Impact wrenches are not recommended.

Table 1-12: Metric Coarse Thread: Torque Values for Stainless Steel Fasteners with Oil Lubrication

Size	Torque Value Nm
M2.5	0.4
M3	0.9
M4	1.5
M5	3.1
M6	5.3
M8	13.0
M10	27.0
M12	45.0
M14	71.1
M16	109
M18	157
M20	220

Stainless steel fasteners tend to gall while being tightened. To reduce this risk, lubricate the threads with oil or molybdenum disulfide and torque at low speeds without interruptions. Do not use excessive pressure. Impact wrenches are not recommended.

WELD STUDS (TABLE 1-13)

Unless otherwise specified the following grade 2 torque values (+/- 10%) apply:

Table 1-13
Weld Stud Torque Values

STUD SIZE	TORQUE
#10	20 lb in
1/4"	4 lb ft
5/16"-18	9 lb ft
5/16"-24	10 lb ft
3/8"	14 lb ft
1/2"	35 lb ft
5/8"	70 lb ft

T-2-4

Reference Only

Published 2/23/2016, Control # 592-00

WIRE ROPE

General

The following compendium of information is from various wire rope manufacturers and includes inspection, replacement, and maintenance guidelines for wire rope as established by ANSI/ASME B30.5, federal regulations, and Manitowoc. The inspection interval shall be determined by a qualified person and shall be based on such factors as expected rope life as determined by experience on the particular installation or similar installations, severity of environment, percentage of capacity lifts, frequency rates of operation, and exposure to shock loads. Periodic Inspections need not be at equal calendar intervals and should be performed at shorter time intervals as the wire rope approaches the end of its useful life. A periodic inspection shall be performed at least once a year. The following provides inspection and maintenance procedures for wire ropes used on Grove products (e.g. wire rope used as load lines [hoisting cables], boom extension and retraction cables, pendant cables, tow winch cables, and hook block tie down cables).

Environmental Conditions

The life expectancy of wire rope may vary due to the degree of environmental hostility and other conditions to which these mechanical devices are subjected. Variation in temperature, continuous excessive moisture levels, exposure to corrosive chemicals or vapors or subjecting the wire rope to abrasive material may shorten normal wire rope life. Frequent/ periodic inspections and maintenance of your wire rope is recommended for preventing premature wear and to insure long-term satisfactory performance.

Dynamic Shock Loads

Subjecting wire rope to abnormal loads beyond the endurance limit will shorten the wire rope's life expectancy. Examples of this type of loading are listed below.

1. High velocity movement e.g.; hoisting or swinging of a load followed by abrupt stops.
2. Suspending loads while traveling over irregular surfaces such as railroad tracks, potholes, and rough terrain.
3. Moving a load that is beyond the rated capacity of the lifting mechanism, i.e.; overloading.

Lubrication

A wire rope cannot be lubricated sufficiently during manufacture to last it's entire life. Therefore, new lubricant must be added throughout the life of a rope to replace factory lubricant which is used or lost. It is important that lubricant applied as part of a maintenance program shall be compatible with the original lubricant, and to this end, the rope manufacturer should be consulted. Lubricant applied shall be of the type which does not hinder visual inspection. Those sections of rope which are located over sheaves or otherwise hidden during inspection and maintenance procedures require special attention when lubricating rope. The object of rope lubrication is to reduce internal friction and to prevent corrosion.

During fabrication, ropes receive lubrication; the kind and amount depends on the rope's size, type, and anticipated use. This in-process treatment will provide the finished rope with ample protection for a reasonable time if it is stored under proper conditions. But, when the rope is put into service, the initial lubrication may be less than needed for the full useful life of the rope. Because of this possibility, periodic applications of a suitable rope lubricant are necessary.

The following are important characteristics of a good wire rope lubricant:

- It should be free from acids and alkalis.
- It should have sufficient adhesive strength to remain on the rope.
- It should be of a viscosity capable of penetrating the interstices between wires and strands.
- It should not be soluble in the medium surrounding it under the actual operating conditions (i.e. water).
- It should have a high film strength.
- It should resist oxidation.

Before applying lubrication, accumulations of dirt or other abrasive material should be removed from the rope. Cleaning can be accomplished by using a stiff wire brush and solvent, compressed air, or live steam. Immediately after the wire rope is cleaned, it should be lubricated. Many techniques may be used; these include bath, dripping, pouring, swabbing, painting or pressure spray methods. Whenever possible, the lubricant should be applied at the top of a bend in the rope, because at that point the strands are spread by bending and are more easily penetrated. There should be no load on the rope while it is being lubricated. It should be noted, the service life of wire rope will be directly proportional to the effectiveness of the method used and amount of lubricant reaching the working parts of the rope.

Precautions and Recommendations During Inspection or Replacement

1. Always lock out equipment power when removing or installing wire rope assemblies.
2. Always use safety glasses for eye protection.
3. Wear protective clothing, gloves, and safety shoes as appropriate.
4. Use supports and clamps to prevent uncontrolled movement of wire rope, parts, and equipment.

Reference Only

5. When replacing fixed length cable assemblies (e.g. pendants) having permanently attached end fittings use only pre-assembled lengths of wire rope as supplied from Manitowoc. Do not build lengths from individual components.
6. Replace an entire wire rope assembly. Do not attempt to rework damaged wire rope or wire rope ends.
7. Never electroplate wire rope assemblies.
8. Do not weld any wire rope assembly or component unless welding is recommended by the wire rope manufacturer. Welding spatter shall never be allowed to come in contact with the wire rope or wire rope ends. In addition, be sure that the wire rope is not an electrical path during other welding operations.
9. Wire ropes are manufactured from special steels. If heating a wire rope assembly is absolutely necessary for removal, the entire wire rope assembly shall be discarded.
10. On systems equipped with two or more wire rope assemblies operating as a matched set, they shall be replaced as an entire set.
11. Do not paint or coat wire ropes with any substance except approved lubricants.
12. Measure the rope's diameter across crowns (1) of the strands when determining if rope has become damaged (Figure 1-8).

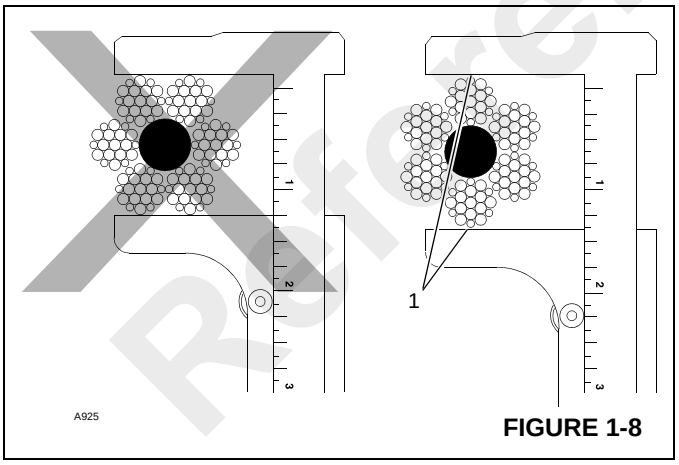

FIGURE 1-8

13. When checking for broken wires (5) Figure 1-9 relax the rope, move it off "pick-up points", and flex it as much as possible. Defect in the rope is in relation to "Lay Length" (2) which is the distance measured along rope in which one strand (3) makes one complete revolution around the core (4).

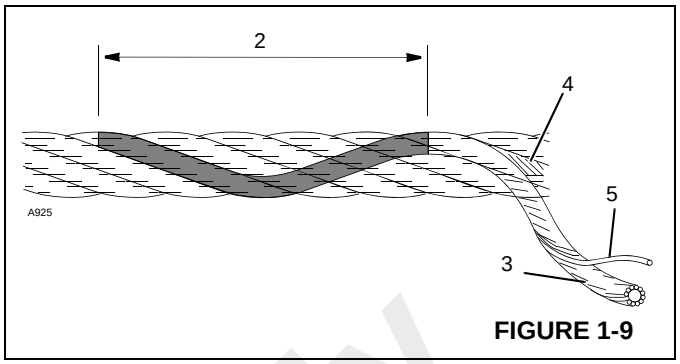

FIGURE 1-9

Wire Rope Inspection (Running Ropes and Pendant Cables)

Wire rope should be inspected frequently/daily and periodically/yearly in accordance with the following information excerpted from a National Consensus Standard as referenced by Federal Government Agencies. Recommended inspection intervals may vary from machine to machine and may vary based on environmental conditions, frequency of lifts, and exposure to shock loads. The inspection time intervals may also be predetermined by state and local regulatory agencies.

NOTE: Wire rope may be purchased through Manitowoc Crane Care.

Any deterioration observed in the wire rope should be noted in the equipment inspection log and an assessment concerning wire rope replacement should be made by a qualified person.

Keeping Records

A signed and dated report of the wire rope's condition at each periodic inspection must be kept on file at all times. The report must cover all inspection points listed in this section. The information in the records can then be used to establish data which can be used to determine when a wire rope should be replaced.

It is recommended that the wire rope inspection program include reports on the examination of wire rope removed from service. This information can be used to establish a relationship between visual inspection and the rope's actual internal condition at the time of removal from service.

Frequent Inspection

A frequent daily visual inspection is recommended for all running ropes in service. This inspection should be made on all wire rope which can be expected to be in use during the day's operation. This inspection should be used to monitor progressive degradation and to discover severe damages necessitating wire rope replacement such as:

- Distortion, kinking, crushing, un-stranding, birdcaging, reduction of diameter, etc.

Reference Only

Published 2/23/2016, Control # 592-00

- General corrosion.
- Broken or cut strands.
- Number, distribution and type of broken wires.
- Evidence of core failure.
- End fitting wear/abrasion.

Pay particular attention to areas of the rope where wear and other damage is likely to occur:

- Pick-up Points: Sections of wire rope that are repeatedly stressed during each lift, such as those sections in contact with sheaves.
- End Attachments: The point where a fitting is attached to the wire rope or the point where the wire rope is attached to the drum.
- Abuse Points: The point where the wire rope is subjected to abnormal scuffing and scraping.

Periodic Inspection

Wire rope should be inspected periodically/annually or at a shorter time interval if necessitated by environmental or other adverse conditions, and shall cover the entire length of the wire rope. Only the outer surface of the wire rope need be inspected, and no attempt should be made to open the rope. Periodic inspection should include all items listed under frequent inspection plus the following:

- Inspect for reduction of rope diameter below nominal diameter.
- Inspect for severely corroded or broken wires at end connections.
- Inspect for severely corroded, cracked, bent, worn, or improperly applied end connections.
- Inspect wire rope in areas subjected to rapid deterioration such as:
  - Sections in contact with saddles, equalizer sheaves, or other sheaves where wire rope travel is limited.
  - Sections of wire rope at or near terminal ends where corroded or broken wires may protrude.
- Inspect boom nose sheaves, hook block sheaves, boom extension/jib sheaves, auxiliary boom nose sheaves, and hoist drums for wear. Damaged sheaves or hoist drums can accelerate wear and cause rapid deterioration of the wire rope.

Wire Rope Inspection (Boom Extension and Retraction Cables)

Periodic Inspection

It is recommended that a periodic inspection of all boom extension and retraction cables be performed using the following guidelines. This inspection shall cover the entire length of the extension and retraction cables. This inspection should be used to monitor progressive degradation and to discover severe damages necessitating wire rope replacement or equipment repair. Inspection criteria are as follows:

- Inspect for reduction of rope diameter below nominal diameter.
- Inspect for severely corroded or broken wires at end connections.
- Inspect for severely corroded, cracked, bent, worn, or improperly applied end connections.
- Inspect wire rope in areas subjected to rapid deterioration such as:
  - Sections in contact with saddles, equalizer sheaves, or other sheaves where wire rope travel is limited.
  - Sections of wire rope at or near terminal ends where corroded or broken wires may protrude.
  - Sections of wire rope in contact with stationary surfaces where abrasion or chafing may take place as a result of equipment vibration.
- Inspect for damaged or wobbly boom extension and retraction sheaves that may cause rapid deterioration of the wire rope.
- Inspect for unusual cable sag/stretch and be sure cables used in sets all have an equal tension applied. Repeated need for adjustment of an individual cable is evidence of cable stretch and indicates the need for additional and more thorough inspection in order to determine and correct the cause.

Wire Rope Inspection/Replacement (All Wire Rope)

No precise rules can be given for determination of the exact time for replacement of wire rope since many variable factors are involved. Determination regarding continued use or replacement of wire rope depends largely upon the good judgment of an appointed and qualified person who evaluates the remaining strength in a used rope after allowance for any deterioration disclosed by inspection.

Wire rope replacement should be determined by the following information excerpted from a National Consensus Standard as referenced by Federal Government Agencies and as recommended by Manitowoc. All wire rope will eventually deteriorate to a point where it is no longer usable. Wire rope shall be taken out of service when any of the following conditions exist:

- Kinking, crushing, birdcaging, or any other damage resulting in distortion of the rope structure.
- Evidence of any heat damage from any cause.

Reference Only

- Reductions from nominal diameter of more than 5%.
- In running ropes, six randomly distributed broken wires in one lay or three broken wires in one strand in one lay.
- In standing ropes, more than two broken wires in one lay in sections beyond end connections or more than one broken wire at an end connection.
- In rotation resistant rope, two randomly distributed broken wires in six rope diameters or four randomly distributed broken wires in 30 rope diameters.
- Severe corrosion as evidenced by pitting.
- Manitowoc recommends that for cable extended booms, a single damaged wire rope assembly shall require replacement of the entire set of extension cables.
- Manitowoc recommends for cable extended booms, that boom extension cables be replaced every seven (7) years.

Seizing Wire Rope

It is important to seize the ends of rotation resistant wire ropes to prevent the displacement and unraveling of the individual wires and strands at the ends. All preformed and non-preformed styles of wire rope should be seized prior to cutting. Seizings must be placed on both sides of the point where the wire rope is to be cut.

The two preferred methods for seizing wire ropes are:

Method 1

Using a length of soft annealed wire Figure 1-10, place one end in the groove between two strands of the wire rope. Turn the long end of the annealed wire at right angles to the wire and wrap it tightly over the portion in the groove.

The two ends of the annealed wire should be twisted together tightly. Cut off the excess wire and pound the twist flat against the wire rope.

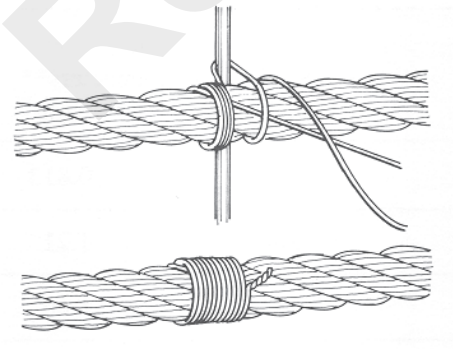

FIGURE 1-10

Method 2

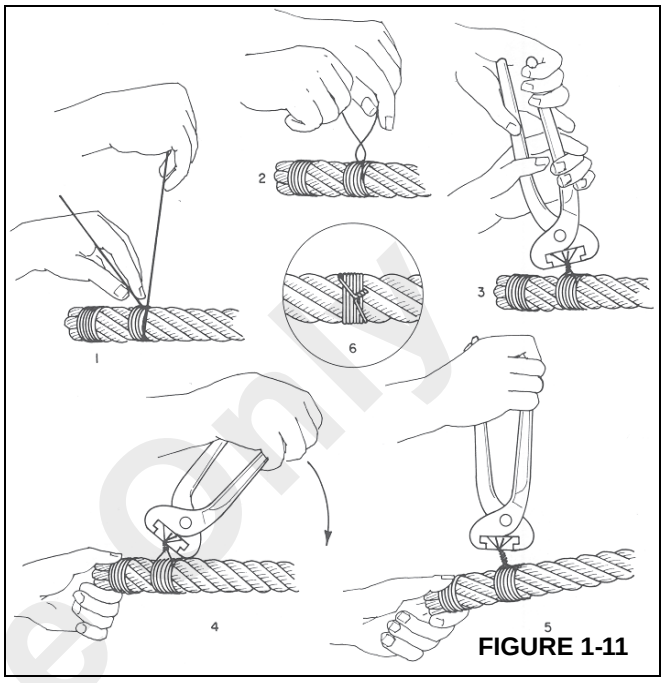

FIGURE 1-11

Wind a length of soft annealed wire Figure 1-11 around the wire rope at least seven times. The two ends should be twisted together in the center of the seizing. Tighten the seizing by alternately prying and twisting. Cut off both ends of the wire and pound the twist flat against the rope.

NOTE: Non-preformed wire rope (1) Figure 1-12 should have three seizings (3) located on each side of the cut (4) as compared to preformed wire rope (2).

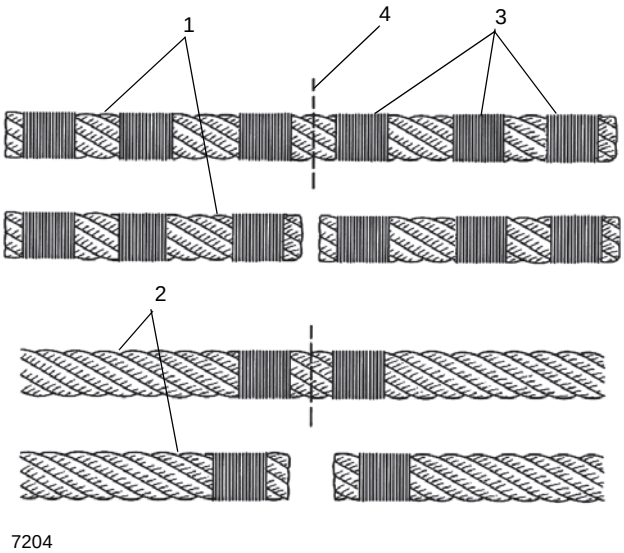

FIGURE 1-12

Reference Only

Published 2/23/2016, Control # 592-00

Installing Flex-X 35 Wire Rope

CAUTION

Any cutting of this specific wire rope is not recommended. If FLEX-X 35 wire rope must be cut for any reason, it is necessary to follow the following instructions. Also, unlike other types of wire rope, the ends on this wire rope must be welded to retain the rotation resistant characteristics.

1. Unload properly and relieve any twists. Pull the rope off the shipping reel or unroll it from a shipping coil. (If done improperly, you may kink the rope, which will result in permanent damage to the rope.) Then, lay the rope on the ground in direct line with the boom. This helps release any twist in the rope.
2. Pull the rope over the point sheave and attach the end to the hoist drum. Be sure not to remove the welded end.
3. Wind rope onto drum slowly and carefully. At this point, it isn't necessary to provide additional load other than the weight of the rope being pulled across the ground.
4. Spool first layer tightly. It is essential on smooth-faced drums that the first layer is spooled with wraps tight and close together since the first layer forms the foundation for succeeding layers. If need be, use a rubber, lead or brass mallet (but never a steel hammer) to tap the rope into place.
5. Spool multiple layers with sufficient tension. It's very important to apply a tensioning load to the ropes during the rope breaking-in process. (If not, the lower layers may be loose enough that the upper layers become wedged into the lower layers under load, which can seriously damage the rope.) The tensioning load should range from 1 to 2% of the rope's minimum breaking force.
6. For ropes in multi-part systems: Reeve the traveling block and boom tip sheaves so the rope spacing is maximized and the traveling (hook) block hangs straight and level to help assure block stability.
7. Breaking in new Flex-X 35—After installation, properly break in the rope, which allows the rope's component parts to adjust themselves to the operating conditions:

   With the boom fully raised and fully extended, attach a light load at the hook and raise it a few inches off the ground. Allow to stand for several minutes. Then cycle the load between the full "up" and "down" positions several times. Observe the drum winding and rope travel for any potential problems.

   After making the lifts with a light load, increase the load and cycle it up and down a few times. This procedure will train the rope and help assure smooth operation during its useful life.

   Ideally, you should run these loads with reeving that lets you place the loads on the block with all rope off the drum except the last three wraps. If this is not possible, alternate methods must be used to assure proper tensioning of the rope on the drum.

Procedures for Cutting and Preparing Flex-X 35

Flex-X 35 is a special wire rope that must be handled differently than any other rope manufactured. One characteristic that makes this rope special is that the outer strands are not preformed. It is because of this that the following procedures for cutting and preparing Flex-X 35 must be followed:

1. The welded ends prepared by the manufacturer are not to be removed.
2. Before cutting the rope, make three separate bands with seizing strand on each side of where the cut is to be made (total of six bands for each cut). Each band is to have a minimum length of one and one half times the rope diameter. The two bands closest to the cut should be located at a distance equal to one rope diameter away from the cut. The four remaining bands should be evenly spaced at a distance equal to three rope diameters.

   a. If a welder is available, the cut should be made with an abrasive saw. Immediately after the cut, both ends of the rope are to be cap welded so that all inner and outer strands are welded together, preventing any movement between them.

NOTE: The outer strands must not be able to move with respect to the inner strands. The weld must not exceed the diameter of the rope.

   b. If a welder is not available, the cut is to be made with an acetylene torch. The cut is to be made in such a way that both ends of the rope are completely fused so that all inner and outer strands are bonded together, preventing any movement between strands.

NOTE: The outer strands must not be allowed to move with respect to the inner strands. The fused end must not exceed the diameter of the rope.

3. Once the cuts have been completed, the seizing bands are to be left in place.

Reference Only

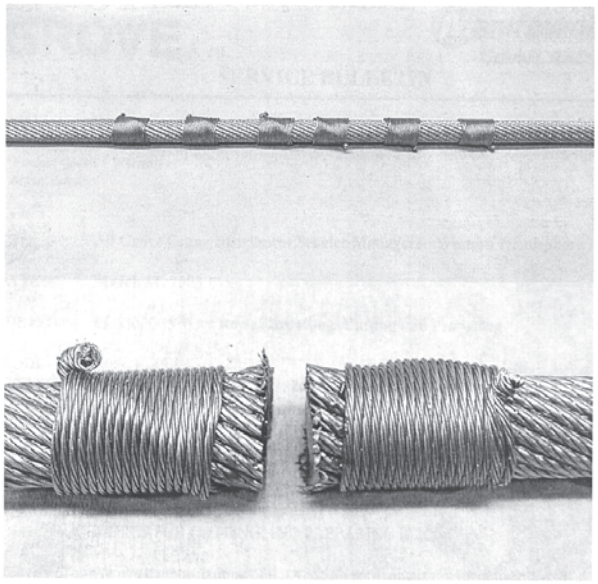

FIGURE 1-13

Reference Only

Published 2/23/2016, Control # 592-00

SECTION 2
SAFETY PRACTICES

SECTION CONTENTS

Introduction **2-1**
Signal Words **2-1**
Personal Considerations 2-2
Equipment Considerations 2-2
General Considerations 2-3
Operational Considerations 2-3
Final Word **2-4**

INTRODUCTION

Some of the SERVICE work involves the need to drive the crane. The operator manual supplied with each crane contains the detailed safety practices relating to driving and operating. These practices apply to the service technician and should be read, understood and practiced.

Prior to performing any service on the crane, considerations should be given to factors that may have an effect upon safety; not only for the mechanic; but also the bystanders.

SIGNAL WORDS

This symbol means **"Attention! Become Alert! Your Safety is involved!"** The symbol is used with the following signal words to attract your attention to safety messages found on the decals and throughout this manual. The message that follows the symbol contains important information about **Safety**. To avoid injury and possible death, *carefully read the message*! Be sure to fully understand the causes of possible injury or death.

Signal Word:

It is a distinctive word on safety decals and throughout this manual that alerts the viewer to the existence and relative degree of the hazard.

DANGER

The signal word "DANGER" denotes that an extremely hazardous situation exists on or near the machine which would result in high probability of death or irreparable injury if proper precautions are not taken.

WARNING

The signal word "WARNING" denotes a hazard exists on or near the machine which could result in injury or death if proper precautions are not taken.

CAUTION

The signal word "CAUTION" denotes a reminder of safety practices or directs attention to unsafe practices on or near the machine which could result in personal injury if the proper precautions are not taken.

CAUTION

The signal word CAUTION without the safety alert symbol denotes a hazard that will cause property damage if the proper precautions are not taken.

IMPORTANT

The information in this manual does not replace any safety rules and laws used in your area. Before operating the crane, learn the rules and laws for your area. Make sure the machine has the correct equipment according to these rules and laws.

Your safety and the safety of others in the work area depend significantly upon your knowledge and understanding of all correct operating and service practices and procedures for this machine.

Reference Only

Personal Considerations

	What to do	Why
Clothing	Check to see that you are suitably clothed. For certain work it may be necessary to wear flame or acid resistant clothing.	The wrong cloths or carelessness in dress can cause accidents and injury.
Eye Protection	Wear eye protection when chiseling, grinding, dazing, welding, painting, etc.	The smallest eye injury may cause loss of vision.
Breathing Protection	Wear respiratory protection.	Fume, dust and paint spray are unpleasant and harmful.
Hearing Protection	Use ear protection if noise is excessive.	A load noise may damage your hearing. The greater the exposure, the worse the damage.
Hand Protection	Use protective cream before work and clean hands thoroughly after.	Prevents irritation and skin contamination.
Foot Protection	Wear protective footwear with reinforced toe caps and oil-resistant soles.	Protects feet from falling objects and to avoid slipping.
Lifting	Make sure you are capable of lifting the object. If in doubt, get help.	Avoids injury through incorrect handling of components.

Equipment Considerations

	What to do	Why
Operator's Cab	Before using the crane, be sure there are no loose items in operator's cab.	Inhibits operator injury from parts of operator's body or clothing being caught on objects when leaving the cab.
Lifting Equipment	Ensure that lifting equipment (chains, brackets, hooks, etc.) is checked before use. If in doubt, select stronger equipment. Replace worn or damaged equipment.	Prevents serious injury or death due to falling objects.
	Never stand under a suspended load.	Prevents serious injury or death.
Compressed Air	Never use compressed air to blow dust, filings, dirt, etc., from work area unless the correct type of nozzle is used.	Prevents serious injury to operator and/or bystanders.
	Look around before using an air hose. Warn others.	Yourself and bystanders may get grit into their eyes, ears or skin.
Hand Tools	Never use the wrong tool for the job.	Many cuts, abrasions and injuries are caused by defective or wrong tools.
	Always use the recommended tool.	These tools will reduce work, labor and cost.
	Always keep tools clean and in good working condition.	

Reference Only

Published 2/23/2016, Control # 592-00

General Considerations

	What to Do	Why
Solvents	Use only cleaning fluids and solvents that are known to be safe.	Certain types of fluids cause damage to components and can cause skin irritations.
Housekeeping	Clean and remove all hazards from the area.	Improves surroundings and daily environment for everybody.
First Aid	Do not overlook any cut, abrasion or burn. Have it cleaned and dressed properly.	What appears at first trivial could become painful and injurious.
	Make sure you know the location of the First Aid Box.	Results in quick application of aid procedures.
Cleanliness	Plug all hose ends and connections.	Ensures optimum performance.
	Clean exterior of all parts before repairing.	Dirt and abrasive dust can reduce the efficiency and working life of a component and lead to costly replacement.

Operational Considerations

	What to do	Why
Engine	Stop the engine and engage parking brake before performing any service.	Inhibits serious injury and/or death.
	Place a warning sign in cab to warn others that service is being performed on the crane. Disconnect the battery leads if leaving the unit unattended.	Inhibits serious injury and/or death.
	Do not attempt to start the engine while standing beside it.	Inhibits serious injury and/or death.
Hoists	Do not remove any hoist component unless the drop block or hook and ball are lowered to the ground.	Inhibits serious injury and/or death.
Radiator Cap	Always remove the radiator cap only when the engine cooling system is cool. Turn the radiator cap slowly to first stop to relieve pressure.	Escaping coolant will burn.
Supports	Make sure safe and stable supports are installed before removing any component or structural item.	Inhibits serious injury and/or death.
	Be sure to remove the ignition key before working underneath the machine. Always apply the parking brake.	Inhibits accidental start and movement of the machine which could cause serious injury or death.
Oil Pressure	Before loosening hoses or tubes, make sure all hydraulic pressure is relieved.	A pressure explosion will cause serious injury.

Reference Only

	What to do	Why
Pressure Testing	Make sure all test equipment is in good condition. Use only specified gauges. Comply with test procedures specified.	Inhibits damage to the system or the equipment and inhibits the possibility of personal injury.
Parking	Do not park or attempt to service the crane on an incline. If unavoidable block the tires.	Inhibits serious injury and/or death.
Wheels and Tires	Do not over inflate the tires.	Over-inflation can cause tires to burst and could result in injury.

FINAL WORD

Safety precautions are very seldom the figment of someone's imagination. They are the result of sad experiences-most likely personal injury. Heed these precautions and you will protect yourself and others accordingly. Disregard them and you may duplicate the sad experiences of others.

Reference Only

Published 2/23/2016, Control # 592-00

SECTION 3
ELECTRIC SYSTEM

SECTION CONTENTS

General 3-1
Comparing Electrical System to a Hydraulic System 3-2
Magnetism 3-2
Main Electrical System. 3-2
General 3-2
Wire Harnesses 3-2
Fuses 3-2
Charging System 3-4
Alternator and Voltage Regulator 3-4
Battery 3-4
Special Precautions 3-4
Battery Maintenance and Charging 3-4
Battery Replacement 3-4
Starting Circuit 3-5
General Inspections 3-5
Starting Circuit Check 3-5
Instrument and Light Circuits 3-6
General 3-6
Light Bulbs. 3-6
Gauges 3-6
Warning Lights. 3-6
Wire Harnesses 3-7
Engine Wire Harness. 3-7
Instrument Panel Wire Harness. 3-7
Accessory Circuits 3-8
Anti-Double Blocking System 3-8
Rated Capacity Limiter (RCL) System. 3-9
Heater 3-10
Below Deck Auxiliary Winch 3-10
Troubleshooting 3-11

3

GENERAL

To aid in the understanding and troubleshooting of an electrical system, review the terms and information that follows.

CAUTION

Know the electrical circuit before connecting or disconnecting an electrical component. A wrong connection can cause personal injury or damage to the component and/or system.

Electrical Energy - power which comes from the movement of electrons. Electrons are particles with a negative charge. Electrons will collect around particles with a positive charge, called protons, until an electrical imbalance occurs.

Amperage - rate of flow of electrons (CURRENT), measured in amperes.

Voltage - the electromotive force (EMF) which causes electrons to move through an electrical circuit, measured in volts.

Resistance - any resistance to flow of electrons in an electrical circuit, measured in Ohms.

Ohm's Law - "Electric current increases in direct relation to the voltage and decreases in relation to the amount of resistance in any circuit."

To Find:

EMF (Voltage) - Multiply CURRENT (amps) by RESISTANCE (Ohms)

RESISTANCE (Ohms) - Divide EMF (voltage) by CURRENT (amps)

CURRENT (Amps) - Divide EMF (voltage) by RESISTANCE (Ohms).

Consider the following when trying to find trouble in an electrical system:

1. Current always flows from (+) positive to (-) negative, or from the point of highest voltage.
2. Because the system used on this machine is a negative ground system, current that leaves the supply (battery) returns to the supply (battery).
3. In series circuit arrangements, the voltage is completely used in the circuit when the current is flowing. In parallel circuit arrangements, the voltage is constant.
4. When the voltage is constant, resistance controls the rate of current (amps) in the circuit. Refer to Ohm's Law.

Reference Only

Comparing Electrical System to a Hydraulic System

The electrical system is in many ways similar to a hydraulic system. Both systems need a “pump” to cause the flow which generates the energy. Each system needs a complete circuit so the flow can return to storage or supply. Both systems need “valves” to control the flow through the system. See Table 3-1.

Table 3-1
Comparing Electrical System and Hydraulic System

ELECTRICAL SYSTEM	HYDRAULIC SYSTEM
Alternator	Pump
Battery	Reservoir
Switches	Valves
Wires and Cables	Tubes and Hoses
Diodes	Check Valves
Volts	PSI or kPa
Amps	gpm or L/min
Ohms	Resistance

Magnetism

When electrical current passes through a conductor it creates a magnetic field around the conductor. This magnetic field can be used to induce current into a second conductor. This is the principle behind generators, coils, relays and solenoids, which are the working components of the electrical system. These components will be covered further in the discussion of the electrical system.

MAIN ELECTRICAL SYSTEM

General

The electrical system used on this machine is a 12 volt, direct current (DC) system with a (-) negative ground. The power is supplied by one 12 volt battery.

An alternator supplies the necessary current (amps) for system operation, and charging of the battery, when the engine is running. A voltage regulator on the alternator controls the voltage in the charging system. A warning light in the dash indicates when the alternator is not charging the battery.

Wire Harnesses

Four wire harnesses connect the electrical system components:

1. Dash Wire Harness
2. Main Frame Wire Harness
3. Engine Wire Harness (Diesel)
4. Engine Wire Harness (Gasoline/Dual Fuel)

Fuses

The fuses are located for easy access in a compartment behind the cab. See Figure 3-1.



8545 Fuse Block Locations **FIGURE 3-1**

Identification of the fuses and relays for fuse box 1 (1, Figure 3-1), and the circuits protected is shown in Figure 3-2 and Figure 3-3.

Identification of the fuses and relays for fuse box 2 (2, Figure 3-1), and the circuits protected is shown in Figure 3-4 and Figure 3-5.

Always replace a fuse with one of the same rating.

Reference Only

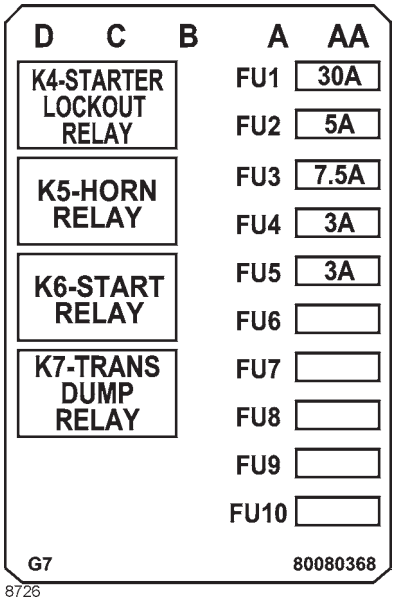

8726

8726

FIGURE 3-2

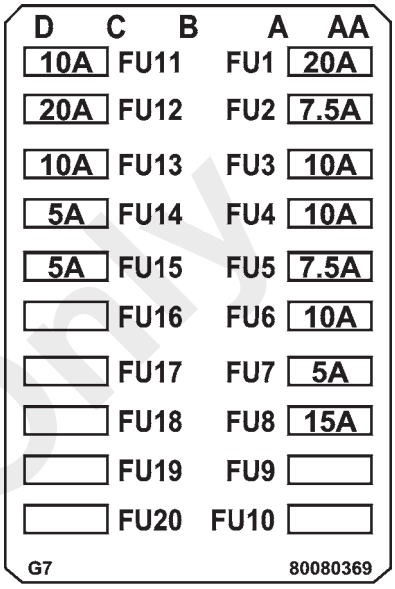

8726-1

8726-1

FIGURE 3-4

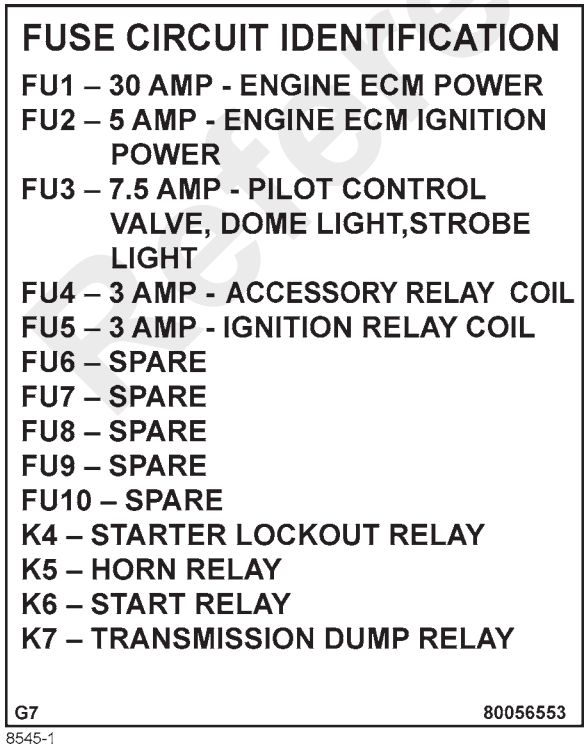

8545-1

8545-1

FIGURE 3-3



8726-2

8726-2

FIGURE 3-5

Reference Only

CHARGING SYSTEM

The purpose of the charging system is to give power for operation of the lights, instruments, electrical accessories and controls, and to keep a full charge on the battery. The charging circuit includes the alternator, voltage regulator, warning light, battery, and wiring.

Alternator and Voltage Regulator

The alternator changes the mechanical energy from the engine into electrical energy. The alternator has a “Rotor Assembly,” which rotates inside a series of windings called the “Stator.” The field windings on the rotor receive controlled current from the voltage regulator, which causes a magnetic field around the winding. When the rotor turns, an alternating current (AC) voltage occurs in the windings of the stator. This alternating current is changed to direct current by diodes in the alternator.

The alternator has an internal voltage regulator, which controls the output voltage of the alternator by controlling the amount of current through the field windings of the alternator. When the voltage on the line is 14.6 volts, current through the field winding is zero. Below 12 volts, the current is maximum. The voltage regulator keeps the voltage on the line to approximately 14 volts.

Battery

The battery is a maintenance-free, lead-acid type battery. The battery has four functions:

1. To provide adequate power for starting the engine.
2. To be a stabilizer for voltage in the system.
3. To give power to the system when the electrical loads are greater than the output of the alternator.
4. Store power.

Special Precautions

- Never cause a short circuit or ground in the output or field wires of the alternator. These wires are always hot (charged). A short circuit can cause damage to the alternator diodes.
- An alternator is not the same as a generator. Never try to change the polarity of the alternator. The diodes keep the correct polarity.
- Always connect the positive (+) cable from the starter to the positive (+) terminal of the battery. Connect the ground cable from the engine to the negative (-) terminal of the battery. Never change these connections.
- Never operate the alternator on an open circuit or disconnect the battery when the alternator is operating. A high voltage condition will occur and cause damage to the diodes.
- When a booster battery is used, make sure the battery is connected correctly (positive terminal to positive terminal; negative terminal to negative terminal).
- Never use a battery charger as a booster for battery output.
- Heat can cause damage to the diodes. Keep all sources of heat away from the alternator.

Battery Maintenance and Charging

Battery

A maintenance-free battery is used on this machine. A limited amount of maintenance is required on the battery.

Charging the Battery

WARNING

Batteries produce explosive gases. Keep sparks, flame and lit smoking materials away. Ventilate when charging or using batteries in an enclosed place. Always wear eye protection when working near batteries.

1. Always connect the positive wire (normally red) of the battery charger to the positive (+) terminal of the battery first.
2. Connect the negative wire (normally black) of the battery charger to the engine or frame, far enough away from the battery to inhibit explosion should a spark occur.

NOTE: *Sparks occur when current moves from the positive to the negative terminals of the charger. If you disconnect either of the connections, the current in both wires is stopped.*

3. When disconnecting the charger, always remove the negative (-) or ground connection first. Wait approximately one minute after the charger has stopped before disconnecting the chargers positive (+) wire. This procedure will decrease the possibility of explosion of hydrogen gas around the battery.

NOTE: *When two batteries are used, as in the case when a below deck winch is installed, keep both batteries fully charged. Charging one of the batteries and leaving the other at low charge can cause damage to the fully charged battery. A weak battery in the system puts an overload on the electrical system.*

Battery Replacement

Removal

1. Remove the negative battery cables.
2. Remove the positive battery cables.
3. Tag and disconnect leads from the battery terminals starting with the positive terminals.

Reference Only

Published 2/23/2016, Control # 592-00

4. Remove the nuts and washers from the bracket hold down rods. Remove the hold down bracket.
5. Remove the battery.

Installation

1. Place the battery in the battery box.
2. Install the hold down bracket so it can hold down the battery. Secure the bracket (and battery) to the bracket hold down rods with nuts and washers.
3. Connect leads to the battery terminals starting with the positive terminals.
4. Verify replacement battery works by starting crane's engine and operating various crane components.

STARTING CIRCUIT

The starting circuit includes the battery, starter motor and solenoid, starter relay, neutral start relay, and the ignition switch.

General Inspections

Many starting problems can be found by making the following checks:

1. Check that the parking brake is engaged.
2. Check battery condition. Charge or replace the battery as necessary. Clean battery posts and cable connectors.
3. Inspect wiring for worn insulation or other damage. Replace bad wiring. Inspect all connections at the starter motor, starter solenoid, starter relay (diesel engine), neutral start relay and wire harness plugs. Clean and tighten all connections and replace any bad wiring.
4. If the starter still does not operate after correcting the circuit, perform the Starting Circuit Check.

Starting Circuit Check

NOTE: *If the starter will not turn the engine, the following checks will help find a faulty component in the starting circuit. Use a test lamp or voltmeter to perform the checks.*

CAUTION

The ignition switch must be in the OFF position when performing steps 1 and 2. If the switch is in the ON position, the engine may start if the parking brake is engaged. Personal injury is possible.

1. Place the ignition switch in the OFF position, chock all four tires, and **disengage** the parking brake.
2. See the electrical schematic at the end of this manual. Momentarily connect a jumper cable to the "B" and "S" terminals on the starter solenoid.
   a. If the starter operates, the starter and solenoid are good. The problem is somewhere between the solenoid and the ignition switch. Go to step 3.
   b. If the starter does not operate, connect the jumper cable to the "B" and "M" terminals on the starter solenoid. If the starter operates correctly, the problem is in the starter solenoid. Replace the solenoid. If the starter still does not operate, the starter is bad and must be repaired or replaced.
3. Check the voltage at the "BAT" terminal of the ignition switch. If no voltage is indicated, there are wrong connections or damage to the wiring between the starter and the ignition switch. If voltage is indicated, go to step 4.
4. Turn the ignition switch to the START position and check voltage at the start "ST" terminal. Go to step 5 if voltage is indicated. If no voltage is indicated, replace the ignition switch.
5. Make sure that the parking brake is engaged. Have someone hold the key switch in the START position, check for voltage at wires 21 and 21A on the neutral start relay located under the instrument panel. If voltage is indicated at the relay wire 21A, go to step 6. If there is no voltage at wire 21, check the wire to the ignition switch. If there is voltage at wire 21 and no voltage at wire 21A, replace the relay.
6. Turn the ignition switch to the START position. Connect a jumper wire between wires 21A and "B" on the starter solenoid. If the starter operates, the starter relay is defective and must be replaced. If the starter did not operate, go to step 7.
7. With the ignition switch in the START position, check for voltage at the switch "S" terminal of the starter solenoid. If there is no voltage, the problem is in the wire from the starter relay to the starter solenoid. Repair or replace the wiring. If voltage is indicated, the problem is in the starter solenoid.

Reference Only

INSTRUMENT AND LIGHT CIRCUITS

General

Power is available to the light switch from a 20 amp fuse on the fuse block. The light switch has three positions. The upper position illuminates the work lights, head lights, tail lights, gauge lights and the instrument panel light. The center position turns all lights off. The lower position illuminates the head and tail lights, as well as, the instrument panel lights.

Light Bulbs

Table 3-2
Light Bulbs

Location	Part No.	Trade No.
Panel Lights	71421	T-61
Head Lights	--	4411 Sealed
Tail Lights	--	1157
Turn Signal	--	1156
Work Lights	--	4411 Sealed
Mast Lights	--	4411 Sealed

Gauges

The gauges are 12 volt components. Power is available to the gauges through a 15 amp fuse when the ignition switch is in the ON position.

Fuel Gauge

The fuel gauge connects to a sending unit in the fuel tank. This sending unit puts a variable resistance in the circuit and causes a corresponding indication on the fuel gauge, representing fuel level.

Hour Meter

Power is available through the oil pressure switch on the engine. The hour meter operates only when the engine is running.

Warning Lights

The warning lights (Figure 3-6) are 12 volt components. Power is available to the lights through a 20 amp fuse when the ignition switch is in the ON position. See Electrical Wiring Diagrams for circuit information.

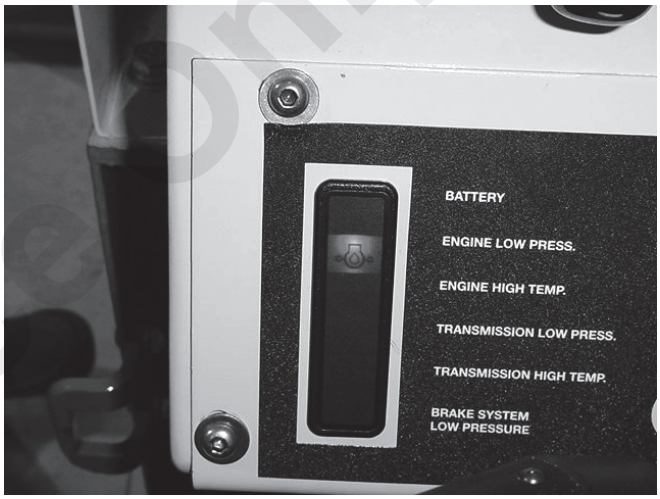

p1036

FIGURE 3-6

Reference Only

Published 2/23/2016, Control # 592-00

WIRE HARNESSES

Engine Wire Harness

The engine wire harnesses supply electrical current from the battery to the charging circuit, starting circuit, and senders attached to the engine. It also supplies the current to the main frame wire harness.

Main Frame Wire Harness

The main frame wire harness supplies electrical current to operate the electrical components attached to the main frame. It also connects to the instrument panel and engine wire harnesses.

Instrument Panel Wire Harness

The instrument panel wire harness supplies electrical current to the gauges, lights and switches in the instrument panel. It connects to the main frame wire harness.

NOTE: *For wire harness wiring diagrams, see Schematics/ Wiring Diagrams, page 12-1.*

Table 3-3
Amp Extraction Tool Table

Description	Deutsch Part Number	Grove Part Number
14 gauge wire (connectors)	305183	9999100176
12 to 8 gauge wire (connectors)	91019-3	9999100175
4 to 9 circuit (in-line connectors)	453300-1	N/A
15 circuit (in-line connectors)	458944-1	N/A

Table 3-4
Amp Crimping Tool Table

Description	Amp Part Number		Grove Part Number	
	Tool	Die	Tool	Die
14 to 12 gauge wire	69710-1	90145-1	9999100177	N/A
10 to 8 gauge wire	69710-1	90140-1	9999100177	9999100178
4 to 9 circuit (in-line connectors	69710-1	90306-1	9999100177	N/A
15 circuit (in-line connectors	90299-1	--	N/A	--

Table 3-5
Deutsch Extraction Tool Table

Description	Deutsch Part Number	Grove Part Number
12 gauge wire	114010	9999100194
16 gauge wire	0411-204-1605	9999100195
8-10 gauge wire	114008	7902000012
4-6 gauge wire	114009	7902000009

Table 3-6
Deutsch Crimping Tool Table

Description	Deutsch Part Number	Grove Part Number
12, 14, 16, 18, 20 gauge wire	HDT48-00	9999100808
4, 6, 8, 10 gauge wire	HDT 04-08	9999100842

Reference Only

ACCESSORY CIRCUITS

Anti-Double Blocking System

General

This mechanism inhibits the hook block from being pulled into the boom head during extension of the booms and during hoist operation. When the hook block actuates the limit switch on the boom head, oil flow to the telescope cylinder and hoist motor is stopped. A horn is activated to give a warning to the operator in all cases. To move the hook block away from the boom head, the operator must retract the boom or lower the hoist.

Circuit Description

See the wiring diagrams in *Schematics/Wiring Diagrams*, page 12-1. Power is made available through a 20 amp fuse to the circuit relay in the compartment behind the cab and to the limit switch on the boom head. The anti-double blocking circuit is controlled by the RCL system. When the hook block reaches the upper limit, the limit switch on the boom head opens, signaling the RCL system through the cable reel on the side of the boom and through the electrical swivel to de-energize the anti-blocking relay (K9) located under the dash. This opens the valves to divert hydraulic oil from the lift down, telescope out and hoist up circuits to tank.

Electric Swivel

An electrical swivel is installed at the center of the mast rotation. The swivel gives electric current continuity through full rotation of the mast.

Reference Only

Published 2/23/2016, Control # 592-00

Rated Capacity Limiter (RCL) System

Description

The rated capacity limiter (RCL) (Figure 3-7) is a length, load, angle, radius, lifting capacity and anti-double block indicator. A display in the cab provides information to assist the operator in operating the crane. The system can be set with limits by the operator to warn of approach into undesired areas of angle, length or height.

For more information on the RCL system, see the Owner's Manual furnished with the crane.

A third solenoid is installed in the anti-double blocking portion of the RCL circuit to shutdown the lift function when the anti-double blocking switch is actuated. This solenoid works in conjunction with the solenoids for the hoist and telescope functions. See *Anti-Double Blocking System*, page 3-8.

See wiring diagram in *Schematics/Wiring Diagrams*, page 12-1.

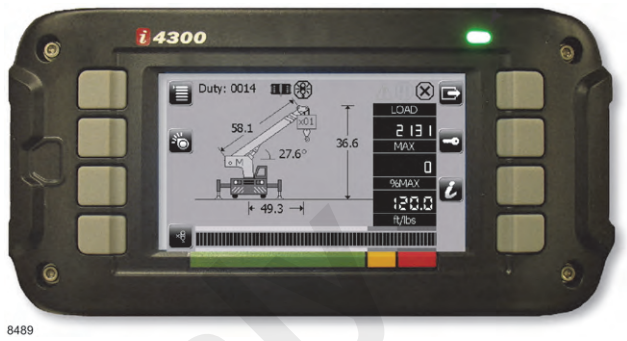

8489

FIGURE 3-7

Reference Only

Heater

The heater is a hot water heater and is connected into the cooling system of the engine. An electric blower pushes air through the heater core and into the cab. A defroster fan blows air onto the windshield.

See the electrical wiring diagrams in *Schematics/Wiring Diagrams*, page 12-1. Power is available through a 15 amp fuse to the heater/defroster switch in the instrument panel when the ignition switch is in the ON position. The switch is a three position switch (HI, LO and OFF).

Below Deck Auxiliary Winch

The below deck auxiliary winch is connected to the main frame harness and is actuated by a switch in the operator's cab. The switch actuates the two solenoids included in the assembly (Figure 3-8), one for each direction of rotation. Power is supplied from an auxiliary battery installed next to the crane's primary battery.

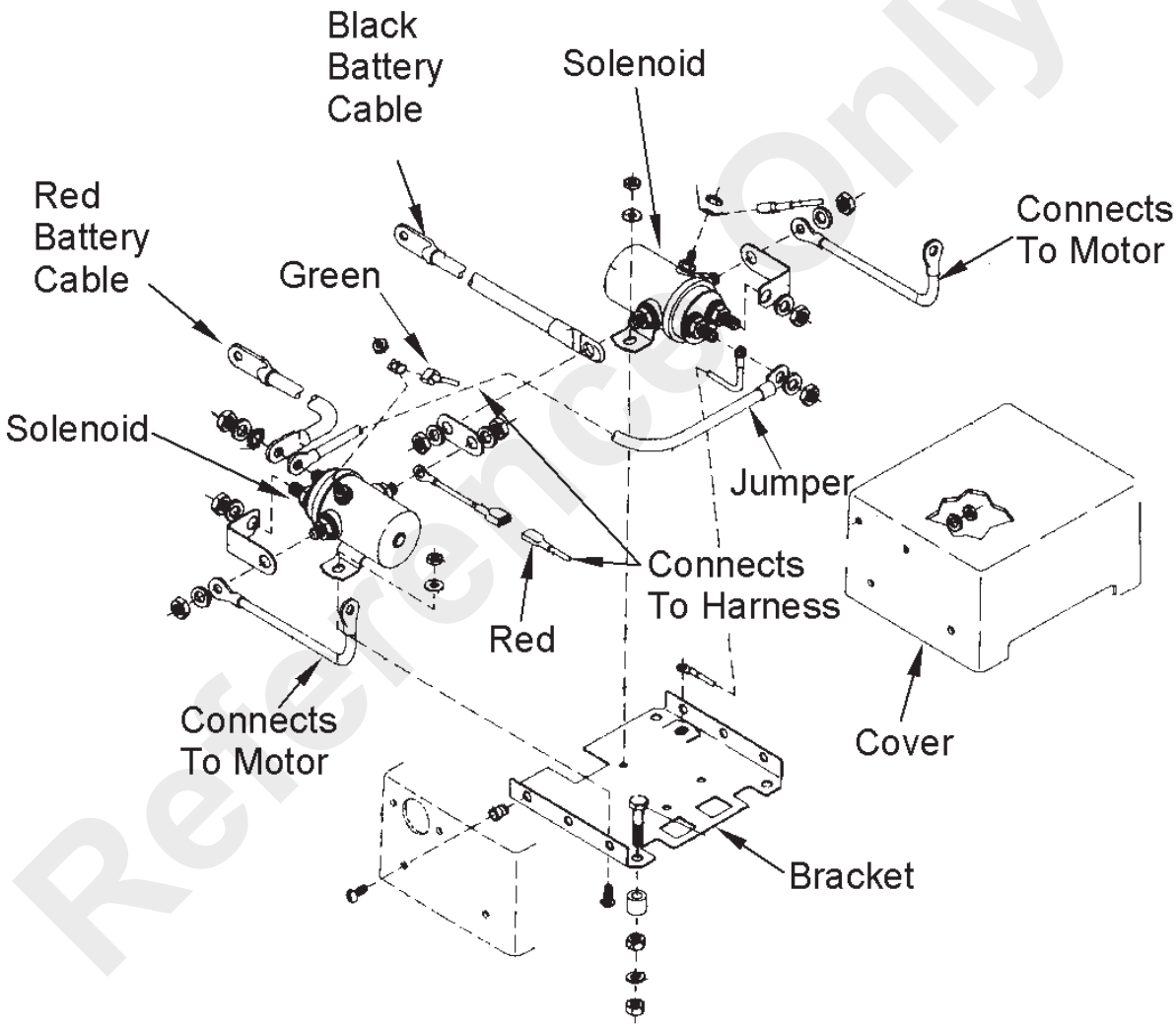

a0981

Below Deck Winch Solenoids Assembly **FIGURE 3-8**

Reference Only

Published 2/23/2016, Control # 592-00

TROUBLESHOOTING

Finding a problem in the electrical system is not difficult if you know basic electricity and understand the arrangement of the electrical system. Use the wiring diagrams in *Schematics/Wiring Diagrams*, page 12-1 as your guide.

Accurate testing equipment is also necessary. The instruments normally used are a voltmeter, ammeter, ohmmeter and test light.

Many times the problem can be found by visual inspection of the components in the circuit. Corrosion on terminals, loose connections or bad wiring are the causes of many problems.

Each circuit in the system has a fuse for protection against overloads. Remember that a burnt fuse is an indication of an overload or **SHORT** circuit, not an **OPEN** circuit.

If you did not find the cause of the problem during the visual inspection, use a voltmeter to check the voltage at several points in the circuit, or measure voltage drop across the component. Normally, the best method is to start at the furthest component in the circuit and move backwards toward the power supply. An ohmmeter can be used to measure the resistance in any component. Remember to disconnect the component from the power supply before you connect the ohmmeter.

Table 3-7
Charging System Troubleshooting

Problem	Possible Cause	Solution
Alternator does not charge	**1.** Alternator belt loose or broken.	**1.** Replace and/or tighten to specification.
	2. Worn brushes or open brush leads or connections.	**2.** Replace or repair alternator.
	3. Open circuit, short circuit or ground stator winding.	**3.** Replace alternator.
	4. Fault in voltage regulator.	**4.** Replace voltage regulator.
	5. Short circuit or open circuit in rectifier diodes.	**5.** Replace or repair alternator.
	6. Open circuit or short circuit in rotor (field) winding.	**6.** Replace alternator.
	7. Wires connected wrong, loose, or broken.	**7.** See wiring diagram. Repair or replace wires.
	8. Dirty slip rings or bad slip ring connections.	**8.** Inspect slip rings. Clean or repair as required.
High charging rate (battery at full charge)	**1.** Low electrolyte level in battery.	**1.** Add distilled water.
	2. Fault in wiring system.	**2.** Repair or replace faulty wiring.
	3. Loose or dirty connections.	**3.** Clean and tighten connections.
	4. Malfunction in voltage regulator.	**4.** Replace voltage regulator.
Low charging rate	**1.** Loose or worn alternator belt.	**1.** Adjust or replace belt.
	2. Bad alternator.	**2.** Replace or repair.
	3. Bad battery.	**3.** Replace battery.
	4. Low electrolyte level.	**4.** Add distilled water.
	5. Short circuit in system.	**5.** Check and repair.
	6. Worn alternator.	**6.** Test, replace or repair alternator.
	7. Malfunctioning voltage regulator.	**7.** Replace the voltage regulator.
	8. Low engine speed.	**8.** Run engine at higher speed.

Reference Only

Problem	Possible Cause	Solution
Alternator Noise	**1.** Badly worn belt	**1.** Replace belt and adjust.
	2. Pulleys out of alignment.	**2.** Align fan and alternator pulleys.
	3. Loose pulley.	**3.** Check for broken key or worn keyway, if used.Tighten pulley nut.
	4. Worn bearings.	**4.** Replace or repair alternator.
	5. Short in rectifier diodes.	**5.** Replace or repair alternator.
Starter motor does not turn	**1.** Open circuit, dirty or loose connections.	**1.** Clean and tighten connections at battery and starter. Check wiring and connections between ignition switch and starter solenoid.
	2. Bad starter relay (diesel engines only).	**2.** Replace starter relay.
	3. Bad ignition switch.	**3.** Replace switch.
	4. Worn starter motor, bad starter solenoid, or internal problem in engine.	**4.** Repair or replace starter, replace solenoid, or see engine manual.
	5. Dead battery.	**5.** Recharge or replace battery.
	6. Parking brake not engaged.	**6.** Engage parking brake.
	7. Bad neutral start relay.	**7.** Replace relay.
Winch motor runs in only one direction	**1.** Defective solenoid or stuck solenoid.	**1.** Jar solenoid to free contacts. Check by applying 12 volts to coil terminal (should hear an audible click when energized). Replace solenoid.
	2. Defective control switch.	**2.** Check and replace if necessary.
Winch motor runs extremely hot	**1.** Long period of operation.	**1.** Cooling-off periods are essential to prevent overheating.
	2. Insufficient battery power.	**2.** Check battery terminal voltage under load. If 10 volts or less, replace the battery.
	3. Bad connection.	**3.** Check battery cables for corrosion, clean and grease
Winch motor runs but with insufficient power, or with slow line speed.	**1.** Insufficient battery power.	**1.** Check battery terminal voltage under load. If 10 volts or less, replace the battery.
	2. Bad connection.	**2.** Check battery cables for corrosion, clean and grease.
Winch motor runs but drum does not rotate	**1.** Clutch not engaged.	**1.** Engage clutch.
	2. Clutch engaged.	**2.** Disassemble the winch to determine cause and repair.

Reference Only

Problem	Possible Cause	Solution
Winch motor will not operate	**1.** Defective solenoid or stuck solenoid.	**1.** Jar solenoid to free contacts Check by applying 12 volts to coil terminal (should hear an audible click when energized). Replace solenoid.
	2. Defective control switch	**2.** Check and replace if necessary.
	3. Defective motor.	**3.** If solenoids operate, check voltage at armature post. Replace motor if defective.
	4. Loose connections.	**4.** Tighten connections on bottom side of hood and on motor.

Reference Only

Reference Only

Published 2/23/2016, Control # 592-00

SECTION 4
HYDRAULIC SYSTEM

SECTION CONTENTS

Technical Data 4-2

General Description 4-3
General 4-3
Hydraulic System 4-3

Draining and Flushing 4-3

Removing Air From the Hydraulic System 4-4

Troubleshooting 4-5
Troubleshooting Aids 4-5
Troubleshooting Procedures 4-5

Troubleshooting Guides 4-6

Hydraulic System 4-10
System Description 4-10
Description of Operation 4-10

Suction, Return and Pump Pressure Circuits . . 4-12
General 4-12
Hydraulic Pumps 4-16
Main Control Valves 4-21

Lift Circuit 4-28
General 4-28
Oil Flow 4-28
Counterbalance Valve 4-28
Lift Cylinder Leakage Test 4-32
Hydraulic Swivel 4-33

Telescope Circuit 4-34
General 4-34
Oil Flow 4-34
Counterbalance Valve 4-34
Port Relief Valve (Retract Function) 4-37
Telescope Relief Valve (Extend Function) 4-37
Telescope Cylinder Leakage Test 4-38
Hydraulic Swivel 4-38

Main Hoist Circuit 4-38
General 4-38
Oil Flow 4-38
Counterbalance Valve 4-39

Swing Circuit 4-42
General 4-42
Oil Flow 4-42

Anti-Double Block System 4-44
General 4-44
System Function 4-44

Outrigger Circuits 4-47
Oil Flow 4-47
Pilot Operated Check Valves 4-47
Outrigger Cylinder Leakage Test 4-49

Component Repair 4-49
Primary Hydraulic Pump Repair 4-49
Secondary Hydraulic Pump Repair 4-51
Main Control Valve 4-51
Swing Motor 4-56
Hoist Motor 4-62

Hydraulic Swivel 4-67
Hydraulic Cylinders 4-70

Reference Only

TECHNICAL DATA

Hydraulic Pressures:

Main System Pressure (Pump Compensator)	26 200 ± 345 kPa (3800 ± 50 psi)
Pump Margin Pressure	22 ± 1.7 bar (325 ± 25 psi)
Swing Circuit Relief Valve	13 790 ± 345 kPa (2000 ± 50 psi)
Steering Relief Valve	17 237 ± 689 kPa (2500 ± 100 psi)
Outrigger Relief Valve	17 237 ± 345 kPa (2500 ± 50 psi)
Telescope Circuit Port Relief	19 477 ± 345 kPa (2825 ± 50 psi)
Load Sense Relief Valve	271 ± 3.5 bar (3925 ± 50 psi)
Lift Cylinder Holding Valves	Not adjustable
Telescope Cylinder Holding Valve	Not adjustable
Outrigger Holding Valves	Not adjustable
Hoist Holding Valve	Not adjustable
Service Brake Charge (In)	11 376 ± 1034 kPa (1650 ± 150 psi)
Service Brake Charge (Out)	13 790 ± 1034 kPa (2000 ± 150 psi)
Transmission Oil Cooler Motor Control Valve	2413 ± 172 kPa (350 ± 25 psi)

Rated Pump Output at 2500 rpm:

Main Pump	106 L/min (28 gpm)
Secondary Pump - Section 1	37 L/min (9.8 gpm)
Secondary Pump - Section 2	37 L/min (9.8 gpm)

Hydraulic Speeds:

	Cycle Times	
	1000 rpm	**2500 rpm**
Hoist Cylinder (full stroke):		
Up	14.0 sec.	11.0 sec.
Down	12.2 sec.	9.2 sec.
Telescope Cylinder (full stroke):		
Out	62.8 sec.	28.9 sec.
In	28.3 sec.	25.0 sec.
Outrigger Cylinders (Individual):		
Down	20.0 sec.	9.0 sec.
Up	11.6 sec.	5.4 sec.
Swing speed	—	2.05 rpm
Main Hoist Line Speed (Average)	—	26.8 m/m (88 fpm)

Reference Only

Published 2/23/2016, Control # 592-00

GENERAL DESCRIPTION

General

A hydraulic system uses liquid to make a transfer of force. Any force on a confined liquid is applied to any point in the system that the liquid reaches. Oil is used as the hydraulic liquid for this system because the liquid must be a lubricant for the components of the system.

There are several main components in a hydraulic system. Each component has a specific function in the system.

The **pump** moves the oil through the system. It is important to remember that the pump causes the flow, not the pressure in the system. Pressure is caused by resistance to the flow. This resistance can be **external** (for example, a load on a cylinder or motor), or **internal** (the resistance of the components of the system). Pressure increases as the resistance to the flow increases. The pump will continue to push more oil into the system until the resistance is overcome or the relief valve opens (fixed displacement pumps) or the pump compensator setting is reached (variable displacement pumps).

Valves are used to control the flow, pressure, direction, and volume of the oil in the system. There are many different types of valves. An explanation of the different valves used on this machine is given in the description of each circuit.

Filters remove dirt and particles of foreign materials from the oil in the system. The oil in the system must be kept clean to inhibit damage to the pumps, cylinders, valves, and other components of the system.

Motors and Cylinders are the actuators or working tools of the system. In the motors and cylinders, hydraulic energy is changed into mechanical force (rotary or straight line movement).

The **Hydraulic Oil Tank** has three important functions: storage, cooling, and supply of oil to the pumps. Because piston rods take space in the cylinders, the level of the oil in the tank will be higher when all the cylinders are retracted.

To understand how a hydraulic system works, it is important to understand the following words:

Flow - The flow through the system is caused by the pump. The amount of fluid which is sent to a circuit or actuator generally controls the speed of that function. The flow is measured in gallons per minute (gpm) or liters per minute (L/min).

Pressure - is caused by any resistance to the flow of the oil. Pressure is normally measured in pounds per square inch (psi) or kilopascals (kPa) or bar. There are four general types of pressure.

- **High Pressure**, which is normally the result of an external load on the system.
- **Low Pressure**, normally the result of the internal resistance of the components in the system.
- **Static Pressure**, where the oil is closed in a circuit between two components. There is no movement of the oil, but there is pressure on the oil, normally because there is an external load on the circuit.
- **Series Pressure**, which is found where oil is confined between two components in a series arrangement, for example when the rod port of one cylinder is connected to the base port of another cylinder. Movement of either cylinder will cause movement in the other cylinder.

Hydraulic System

There are four hydraulic systems on this machine. Information on the hydraulic system for the transmission, brakes, and steering is found in Sections 7, 9 and 10 respectively. Only the main hydraulic system is included in this section. The main hydraulic system gives hydraulic power to:

- The swing motor
- The boom cylinders; lift and telescope
- The front and rear outrigger cylinders
- The main hoist motor

The hydraulic components on the boom and mast are connected to the hydraulic components on the lower structure through a hydraulic swivel. The hydraulic swivel is at the center of rotation of the mast. The design of the hydraulic swivel permits operation of the hydraulic functions through full rotation of the mast.

DRAINING AND FLUSHING

If a component has been changed because of a failure that might allow metal or abrasive particles to enter the system, all systems must be thoroughly checked, drained, and flushed.

1. Remove the reservoir drain plug. Allow about three minutes after hydraulic oil stops flowing from the drain port for the side walls to drain.
2. Clean and install the reservoir plug and fill the reservoir with a 50/50 mixture of fuel oil and clean hydraulic oil.
3. Cycle the crane through all functions several times. Then return the crane to its stowed position and turn the front and rear wheels to the extreme left. Shut down the engine.
4. Remove the reservoir drain plug and drain the reservoir. Clean and install the drain plug and fill the reservoir with clean hydraulic oil.

NOTE: Hydraulic oil supply lines must be connected to the cylinders when flushing the system.

Draining the various components will be aided by connecting a drain line in place of the disconnected return line.

Reference Only

5. Disconnect the return line from the lift cylinder and raise the boom to maximum elevation.
6. Connect the cylinder return line and lower the boom to its stowed position. Replenish the reservoir hydraulic oil level as required.
7. Disconnect the return line from an outrigger extension cylinder and fully extend the outrigger.
8. Connect the outrigger return line and retract the outrigger. Replenish the reservoir hydraulic oil level as necessary.
9. Repeat Steps 7 and 8 for the remaining outriggers.

CAUTION

When draining the outrigger cylinders, always operate either both front or both rear cylinders together to prevent twisting the crane.

10. Disconnect the return lines from a pair of outrigger jack cylinders and activate the cylinders to their maximum down positions.
11. Connect the return lines and raise the outrigger jack cylinders to the stowed position. Replenish the reservoir hydraulic oil level as necessary.
12. Repeat Steps 10 and 11 for the remaining two outrigger cylinders.
13. Disconnect the return line from the telescope cylinder and fully extend the boom.
14. Connect the return line and retract the boom. Replenish the reservoir hydraulic oil level as necessary.
15. Disconnect the return line from the front steer cylinder and turn the front wheels to the extreme right.
16. Connect the return line and turn the front wheels to the extreme left and then back to center. Replenish the reservoir hydraulic oil level as necessary.
17. Repeat Steps 15 and 16 for the rear steering cylinder.
18. Raise the crane on outriggers.
19. Disconnect the return line from the hoist motor and fully hoist up the hoist.
20. Connect the return line to the hoist motor and fully hoist down the hoist, then hoist up again. Replenish the reservoir hydraulic oil level as necessary.
21. Disconnect one of the lines from the swing motor and drive the motor in the direction it will go.
22. Connect the line to the swing motor, then drive the swing motor in the opposite direction until the boom is centered and forward. Replenish the reservoir hydraulic oil level as necessary.

CAUTION

When hydraulic oils are changed or added, ensure that hydraulic oils of different manufacturers are of the same specifications, however, discoloration (milkiness) may occur. Mixing incompatible hydraulic oils may result in improper operation or damage to the machine.

When hydraulic oils are changed, recheck the reservoir hydraulic oil level after brief system operation and add hydraulic oil as required. Ensure the crane is level and in the travel mode of operation when the hydraulic system is being filled. The system must be filled with all cylinders retracted. Fill the reservoir to the full mark on the reservoir sight gauge. After the reservoir is filled, operate all circuits and recheck the reservoir sight gauge. Add hydraulic oil as required.

REMOVING AIR FROM THE HYDRAULIC SYSTEM

Air entering the hydraulic oil will normally be removed automatically by passage of the hydraulic oil over the baffles in the hydraulic reservoir. If a component has been replaced, the reservoir level is too low, or a leak develops in the suction lines to the pumps, air can enter the system. If air becomes entrapped in the hydraulic oil, it may be detectable in pumps and motor operated components such as the swing mechanism and hoist(s), because it can cause these units to become noisy during operation. If noisy operation occurs, first check the level of the hydraulic reservoir and replenish as necessary. Then inspect for leaks in the suction lines leading to the pumps.

Minute leaks may be hard to locate. If a leak is not readily detectable, use the following way to check for it:

- Seal all normal openings in the hydraulic system and the reservoir. Using a positive means to control the pressure (like a regulator), pressurize the hydraulic system to 0.138 to 0.276 bar (2 to 4 psi) and inspect all joints and fittings for evidence of leaks. A soap solution applied to the fittings and joints may also prove helpful in detecting minute leaks while the system is pressurized. Remove the pressure, repair any leaks found, and reopen any openings (such as a vent) closed for inspection. Refill the reservoir after completing any repairs or service. Operate all hydraulic circuits several times in both directions.
- This action should return any entrapped air to the reservoir where it can be removed from the hydraulic oil by the baffles.

Reference Only

Published 2/23/2016, Control # 592-00

CAUTION

Always locate the machine on a firm supporting surface, extend the outriggers and level the machine and position the boom over the front to extend the boom at low angles. Injury or damage to the machine may result if this caution is not followed.

- To remove entrapped air from telescope cylinders, lower the boom to below horizontal and fully telescope the boom in and out several times.
- If the air is not readily removed, lower the boom to below horizontal, extend the telescope cylinders as far as practicable, and allow the boom to remain in this position overnight. This should allow entrapped air to find its way to the holding valve so that telescoping the boom IN the next morning should force the air back to the reservoir. Ensure the boom is first telescoped IN (not OUT) in the morning. Telescoping OUT may cause air to be forced back into the cylinder.

CAUTION

Do not attempt to loosen fittings in pressurized lines or while the hydraulic pumps are in operation.

Extreme care must be used when removing any plugs or restrictions from a hydraulic system suspected to have entrapped air that may be pressurized. Moderate to minor injury may result from pressurized air in a hydraulic system.

- Entrapped air may be removed from cylinders having wet rods by cycling. On certain cylinders, a plugged port is provided on the rod end to bleed off entrapped air.
- In the event that air entrapment should persist, bleeding of air by loosening various clamp and screw type fittings may become necessary.
- If the above procedures fail to eliminate air entrapment, contact your authorized Grove distributor.

TROUBLESHOOTING

To find a problem in the hydraulic system with minimum loss of time, use the following aids and procedures.

Troubleshooting Aids

- **Hydraulic schematics** — an exact illustration of the arrangement of the system. The schematic shows all the components in relation to the system. The ability to understand the schematic is important to good troubleshooting. The schematic can be found at the end of this manual.
- **Flowmeter** — an instrument that can be connected into the system to measure the flow of the oil in the system. The flow is measured in liters per minute (Lpm) or gallons per minute (gpm). Normally, the flowmeter is used to check the output of the pump. The flowmeter can also be used to find the location of leakage or restriction in the system. Instructions for installation of the flowmeter and the use of the flowmeter are normally included with the flowmeter.
- **Pressure Gauge** — an instrument for measurement of the pressure in the system. This indication is normally given in kilo Pascals (kPa) or pounds per square inch (psi). On this machine, quick couplers are installed in the pressure lines from the pumps. Pressure taken at these locations will give an indication of operating pressure or relief pressure.

Troubleshooting Procedures

For good troubleshooting, a step by step analysis of the problem and the possible cause is necessary. First, find the symptoms.

- Check with the operator. Learn if there was a loss of power (machine did not move the load) or a loss of speed (slow cycle time).
- Learn if the problem is common to all circuits or is found in one or two circuits.
- Make a visual inspection. Look for a restriction in the linkages, low level of hydraulic oil, bent tubes, collapsed or ballooned hoses, leakage around the hydraulic components, etc.

Second, make an analysis of symptoms. The function of each component in the system must be known before a correct analysis can be made.

- Remember:
- If a problem is common to all circuits, the component which is causing the problem must also be common to all circuits. Examples are: the engine, pump, hydraulic tank and filters.
- If the problem is common to only two or three circuits, the component which is causing the problem must be common to those two or three circuits. Examples are: pump section, relief valve, hydraulic swivel, etc.
- If a problem is in only one circuit, then the component which is causing the problem must be in that circuit. Examples are: valve section, cylinder, motor.

Again, use the schematic. Find which components are in the circuit or circuits. What component can cause the problem with these symptoms? Make a list of the possible causes.

Reference Only

Start at the source of the flow in that circuit. If the problem is in all circuits, start at the pump. Know the direction of oil flow through each circuit.

Use the flowmeter and pressure gauge to check your diagnosis of the problem. Start at the source of the flow and check each component in sequence until the exact location of the problem is found.

If the problem is two or three circuits, check each circuit separately. After a circuit is checked, use caps or plugs to remove that circuit from the system. Continue to next circuit down the line until the problem is found.

NOTE: Do not remove the main relief valve from the circuit. The relief valve must be kept in the circuit to inhibit damage to the pump and other components.

TROUBLESHOOTING GUIDES

Table 4-1
General Hydraulic System Troubleshooting

Problem	Possible Cause	Remedy
Noise (above normal).	Air in system.	With engine at low rpm, operate all control functions several times to return the air to atmosphere through the tank breather.
	Low oil supply	Add recommended oil.
	Restriction in pump inlet line.	Remove and clean inlet line to pump.
	Dirty oil.	Change oil and filters. See *Preventive Maintenance*, page 5-1.
	Loose clamps, vibration of hydraulic lines	Check and tighten.
	Dirt or foreign material in a relief valve.	Clean or replace the relief valve.
	Broken control valve spool.	Replace the control valve section.
	Pump bearings worn.	Replace the bearings or pump.
Slow operating speeds (All functions).	Low engine rpm.	Increase engine rpm.
	Air leak in pump inlet line.	Tighten pump inlet line. Replace O-ring in inlet flange.
	Air in oil (foam in tank).	Check oil level, look for leaks in the system.
	Leakage in the load sense relief valve.	Remove and clean or replace the relief valve.
	Improper load sense relief valve setting.	Replace the relief valve.
	Leakage in hydraulic swivel.	Replace seals on swivel shaft.
	Control valve not fully actuated.	Check spool travel.
	Improper primary pump	Check and adjust pump pressure settings. See Pump Margin Pressure Setting.
	Faulty pump.	Overhaul or replace pump.
No movement when system is first started.	Low oil level.	Check and add oil.
	Air or restriction in inlet line to pump pressure.	Check and tighten inlet line. Clear restriction.
	Cold oil or wrong weight of oil.	Use correct oil, follow normal warming procedure.

Reference Only

Problem	Possible Cause	Remedy
Loss of movement during operation.	Low oil level.	Check and add oil.
	Vacuum in hydraulic tank.	Clean tank filler/breather cap.
	Restriction or leakage in the relief valve.	Clean or replace the relief valve.
	Broken hydraulic line.	Replace.
	Bad seal in hydraulic swivel.	Replace seals.
	Broken gear or shaft in pump.	Overhaul or replace.
Overheating of hydraulic oil.	Wrong operation (running over the load sense relief pressure setting for long periods).	Change procedure of operation.
	Dirty filters.	Change filter. See *Preventive Maintenance*, page 5-1.
	Oil too light.	Use correct oil.
	Low oil level.	Check and add oil.
	Dirty oil.	Change oil and filters. See *Preventive Maintenance*, page 5-1.
Foam in hydraulic oil tank.	Leak in system.	Check O-ring on pump inlet. Check for leak in system and correct.
	Wrong type of oil.	Use correct oil.
	Low oil level.	Check and add oil.
	Bad seal in pump, motor or cylinder.	Overhaul or replace.
Short life of pump bearings, shafts, etc.	Dirt in oil.	Change oil and filter more frequently.
	Wrong type of oil.	Use correct oil.
Pump leakage (external).	Bad seal on pump shaft.	Replace shaft seal.
	Bad seals between pump sections (Swing & Steering).	Replace seals.
Difficult to engage valve spools.	Dirt or foreign material between spool and valve bore.	Remove and clean valve spool valve and bore.
	Broken spring (spool return).	Replace spring.
	Distortion or damage to valve spool.	Replace valve section.

Table 4-2
Lift Circuit Troubleshooting

Problem	Possible Cause	Remedy
Lift cylinder does not extend or retract.	Control valve not actuated.	See Difficult to Engage Valve Spools.
	Not enough oil from pump to operate the cylinder.	See Loss of Movement During Operation.
	Bad leak in hydraulic swivel.	Replace seals.
	Load sense relief valve held open by dirt on valve seat.	Disassemble and clean or replace the load sense relief valve.
Cylinder extends, but does not retract.	Malfunction in holding valve.	Replace the holding valve. DO NOT ADJUST.
	Restriction in hose to control valve.	Check and correct.

Reference Only

Problem	Possible Cause	Remedy
Boom moves slowly downward when control valve is in NEUTRAL position.	Internal leakage in cylinder.	Replace piston seals.
	Leakage in holding valve.	Replace holding valve. DO NOT ADJUST.
	Broken centering spring in control valve section.	Replace broken spring.

Table 4-3
Telescope (Crowd) Circuit Troubleshooting

Problem	Possible Cause	Remedy
Cylinder will not extend the boom under load.	Restriction in boom sections.	Clean and apply lubricant to boom wear pads. See *Preventive Maintenance*, page 5-1.
	Load too heavy.	Reduce load.
	Faulty pump.	Overhaul or replace.
	Leakage in hydraulic swivel.	Replace seals in the swivel.
	Load sense relief valve malfunction.	Check load sense relief pressure.
	Dirt or restriction in main relief.	Disassemble the relief valve and clean.
Boom extends, but will not retract.	Restriction in hose to the control valve.	Check and correct.
	Malfunction in the holding valve.	Replace the holding valve. DO NOT ADJUST
Boom slow at extending.	Restriction in boom sections.	Clean and lubricate boom wear pads. See *Preventive Maintenance*, page 5-1.

Reference Only

Published 2/23/2016, Control # 592-00

Table 4-4
Outrigger Circuit Troubleshooting

Problem	Possible Cause	Remedy
No movement, all outriggers.	Faulty pump section.	Overhaul or replace the pump.
Slow movement, all outriggers.	Low engine rpm.	Increase engine speed.
	Leakage in relief valve.	Clean or replace the relief valve.
Slow movement, one cylinder.	Internal leakage in the cylinder	Replace piston seals.
Outrigger lowers but will not raise.	Faulty counterbalance valve.	Replace counterbalance valve.
Outrigger cylinder does not hold under load.	Leakage in counterbalance valve in base of cylinder.	Clean or replace counterbalance valve.
	Internal leakage in cylinder.	Replace piston seals.
Outriggers operate only on one side.	Faulty control valve section.	Repair or replace valve section.
	Faulty selector valve.	Replace selector valve.

Table 4-5
Main Hoist Circuit Troubleshooting

Problem	Possible Cause	Remedy
Hoist will not lift maximum (rated) load, considerable reduction in line speed.	Faulty load sense relief valve.	Replace the relief valve.
	Dirt in load sense relief valve, keeping the valve off the valve seat.	Remove and clean the relief valve. See Main Relief and Port Relief Valves
	Not enough oil from the pump.	Check hoses and lines for restrictions to or from pump.
	Improper primary pump pressure.	Check and adjust pressures. See Testing the Hydraulic Pressure Settings.
	Malfunction or damage to hoist components.	Check and overhaul the hoist, if necessary. See *Structurals*, page 11-1. Check for binding or damaged sheaves.
	Internal leakage in the hoist motor.	Replace the hoist motor.
Raise speed is slower than lowering speed.	Restriction in hose to control valve.	Check and repair.
	Faulty counterbalance valve	Replace the counterbalance valve.
Motor will not hold the load when the control lever is in neutral — load drops rapidly.	Overload condition.	Decrease the load.
	Faulty counterbalance valve.	Replace the counterbalance valve.
Motor will not hold the load when the control lever is in neutral — load drifts down slowly.	Overload condition.	Decrease the load.
	Faulty counterbalance valve.	Replace the counterbalance valve.
Hook block lowers, but will not raise.	Malfunction in anti-double blocking electrical system.	See Electric System.
	Restriction in hoses to control valve.	Check and correct.

Reference Only

Table 4-6
Swing Circuit Troubleshooting

Problem	Possible Cause	Remedy
Mast will not rotate when the swing control is actuated.	Damaged or broken motor shaft.	Repair or replace the swing motor.
	Damaged or broken gearbox shaft or gear.	Overhaul or replace the gearbox. See *Structurals*, page 11-1.
	Faulty pump.	Overhaul or replace the pump.
	Leakage in hydraulic swivel.	Replace seals in the swivel.
	Swing relief valve malfunction.	Check swing relief pressure. See Adjusting Hydraulic Pressure Settings.
	Dirt or restriction in swing relief.	Clean the relief valve.
Difficult or slow swing.	Friction or restriction in mast bearing.	See *Structurals*, page 11-1.
	Faulty swing motor or gearbox.	Repair or replace.

HYDRAULIC SYSTEM

System Description

The hydraulic system used on the crane is comprised of two separate hydraulic systems; primary and secondary.

The primary hydraulic system (lift, telescope, outrigger, and hoist functions) is a closed-center hydraulic system with pressure compensated load sensing characteristics driven by a variable displacement axial piston pump. The secondary hydraulic system (swing, steering, and brake functions) is an open-center hydraulic system driven by a two section gear pump.

Primary Hydraulic System

The primary hydraulic system includes a variable displacement axial piston pump and pressure compensated sections of the main control valve. The main control valve is used for both the primary and secondary hydraulic systems. See Main Control Valves.

The variable displacement axial piston pump has an attached pressure compensator. This compensator senses the output pressure at the pump vs. the load sense signal from the control valve. The compensator regulates the flow to the control valve until flow requirements, as defined by the margin pressure requirements of the pressure compensator, are met.

When the metering notches of the control valve spool are open a small amount, very little is needed to satisfy the margin pressure requirement. Stroking the valve spool further causes the load sense control to increase the pump stroke until the margin pressure is once again attained. Conversely, reducing the control valve stroke will cause the control to de-stroke the pump to meet the new flow requirements.

Secondary Hydraulic System

The secondary hydraulic system includes a two-section gear pump; one section for the swing function and the other for steering and brake functions. It also includes the inlet section and one working section of the main control valve.

For information on the steering system, see *Steering System*, page 10-1.

For information on the brake system, see *Brake System*, page 9-1.

Description of Operation

Primary Hydraulic System

The primary hydraulic system is a closed-center hydraulic system. Which means that hydraulic oil is blocked from returning to tank when the valves spools are in the neutral position. The control valve sections used in the primary hydraulic system are part of the main control valve and are pressure compensated valve sections incorporating a flow divider principle in their operation. This provides the ability to control multifunction operation when flow demand exceeds pump capacity though slowed down proportionally. This means that all circuits will continue to function regardless of differences in their load and regardless of the pump flow. The flow relationships specified between functions are maintained over the full range of the pump.

Figure 4-1 illustrates the interrelationship of the load sense shuttle (1), the compensator (2), the directional spool or variable orifice (3), combined with the variable displacement load sense pump (4).

After the spool is activated the work port load pressure is transmitted to the bridge (5). The load sense shuttle (1), in turn, transmits the highest work port pressure to the load sense port of the pump (4) and all compensators (2) within the valve assembly. Pump (4) responds to the load sense signal with load sense pressure plus pump margin or differential pressure. It is this margin or differential pressure

Reference Only

that overcomes the compensators (2) and permits flow to bridge (5) and work port A (16) or B (17). This system establishes a constant pressure differential across a variable orifice spool (3). At full stroke of spool (3) the maximum orifice can be determined, thus creating spool flow ranges (i.e. 20, 30, 40 gpm [76, 114, 151 Lpm]) at a predetermined pressure differential at spool (3). It is the working combination of the components that sets up the flow dividing principle.

Mid-Inlet Section

The mid-inlet section (Figure 4-2) is connected to the pressure side of the variable displacement load sense pump by a hydraulic hose. There is a relief valve installed in the mid-inlet section. The load sense relief valve is a direct-acting design. It limits the pressure sent to the variable displacement load sensing pump. Using the load sense relief valve to limit system pressure versus a main relief valve, maintains flow to any function operating below the load sense relief valve setting.

Working Valve Sections

There are seven working sections (Figure 4-2), that receive hydraulic oil from the variable displacement load sense pump. These sections control the hoist, lift, telescope and outrigger functions. They are closed-center sections, blocking any return of oil back to tank until the valve spool is actuated to operate a function. Flow is then directed through the return core (14, Figure 4-1) to the outlet port of the inlet/outlet section and then to tank.

Outlet/Inlet Section

The inlet port of the valve section is used to bring oil into the opposite end of the valve section to inhibit a pressure drop across the valve sections. The outlet port returns oil to the return filter and back to tank.

Secondary Hydraulic System

The secondary hydraulic system is an open-center system. Which means that hydraulic oil is returned to tank when the valve section spool is in the neutral position. The control valve sections used for the secondary hydraulic system are part of the main control valve.

Inlet Section

The inlet section (Figure 4-2) is connected to the pressure side of the secondary pump by a hydraulic hose to the inlet port. There is a relief valve in the inlet section to regulate the system pressure. Hydraulic oil returning to tank passes through the outlet port of the outlet/inlet section.

Working Valve Section

There is one working section (Figure 4-2) in the main control valve that receives hydraulic oil from the secondary pump. This section controls the swing function.

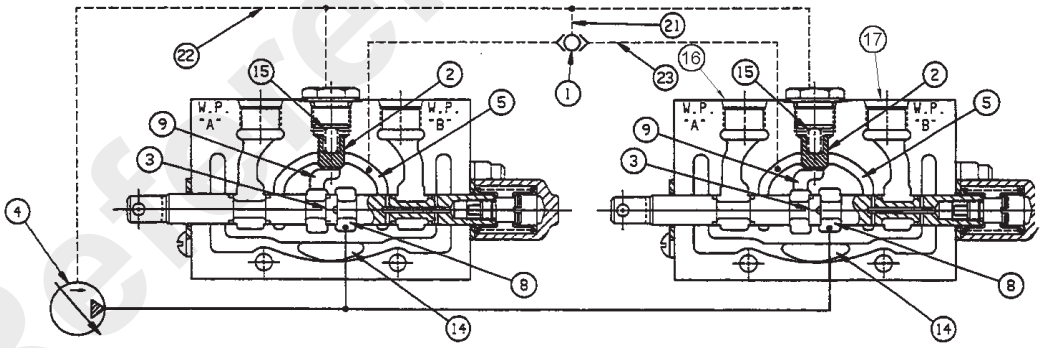

Item	Description	Item	Description
1	Load Sense Shuttle	14	Return Core (To Tank/Outlet)
2	Compensator	15	Bias Spring
3	Spool	16	Work Port A
4	Pump	17	Work Port B
5	Work Port Feeder Core (Bridge)	21	Section Sense Signal Line
8	Pump Supply (From Inlet Port)	22	Load Sense & Compensator Signal Line
9	Pump supply After Spool To Compensator	23	Load Sense Shuttle Signal Line From Work Port Feeder Core (Bridge)

FIGURE 4-1

Reference Only

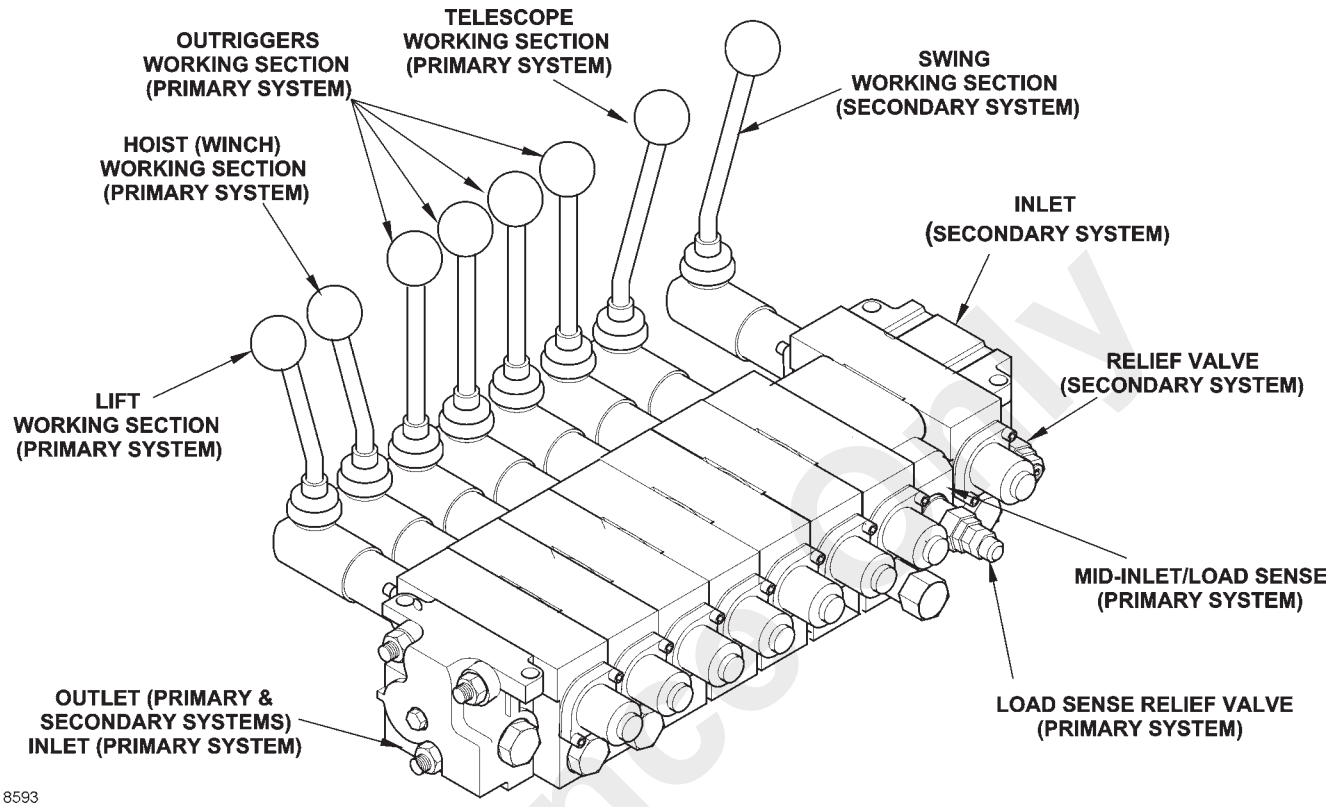

FIGURE 4-2

SUCTION, RETURN AND PUMP PRESSURE CIRCUITS

General

The suction, return and pump pressure circuits (Figure 4-3 through 4-5) include two pumps. The primary system pump (Figure 4-3 and 4-4) is a variable displacement axial piston pressure compensated pump. This pump moves hydraulic oil to the mid-inlet and outlet/inlet sections of the main control valve. Here the oil is available to operate the lift, telescope, outrigger, and hoist functions. Hydraulic oil returns to the hydraulic oil tank through the return filter.

The secondary pump (Figure 4-4 and 4-5) is a two-section gear pump. The first section, nearest the flange end, moves hydraulic oil to the inlet section of the main control valve. Here oil is available to operate the swing function. Return oil passes through the return filter before entering the hydraulic oil tank.

The second section, moves oil through the priority flow control valve to the steering orbitrol (See *Steering System*, page 10-1). It also moves oil to the brake circuit (See *Brake System*, page 9-1).

Reference Only

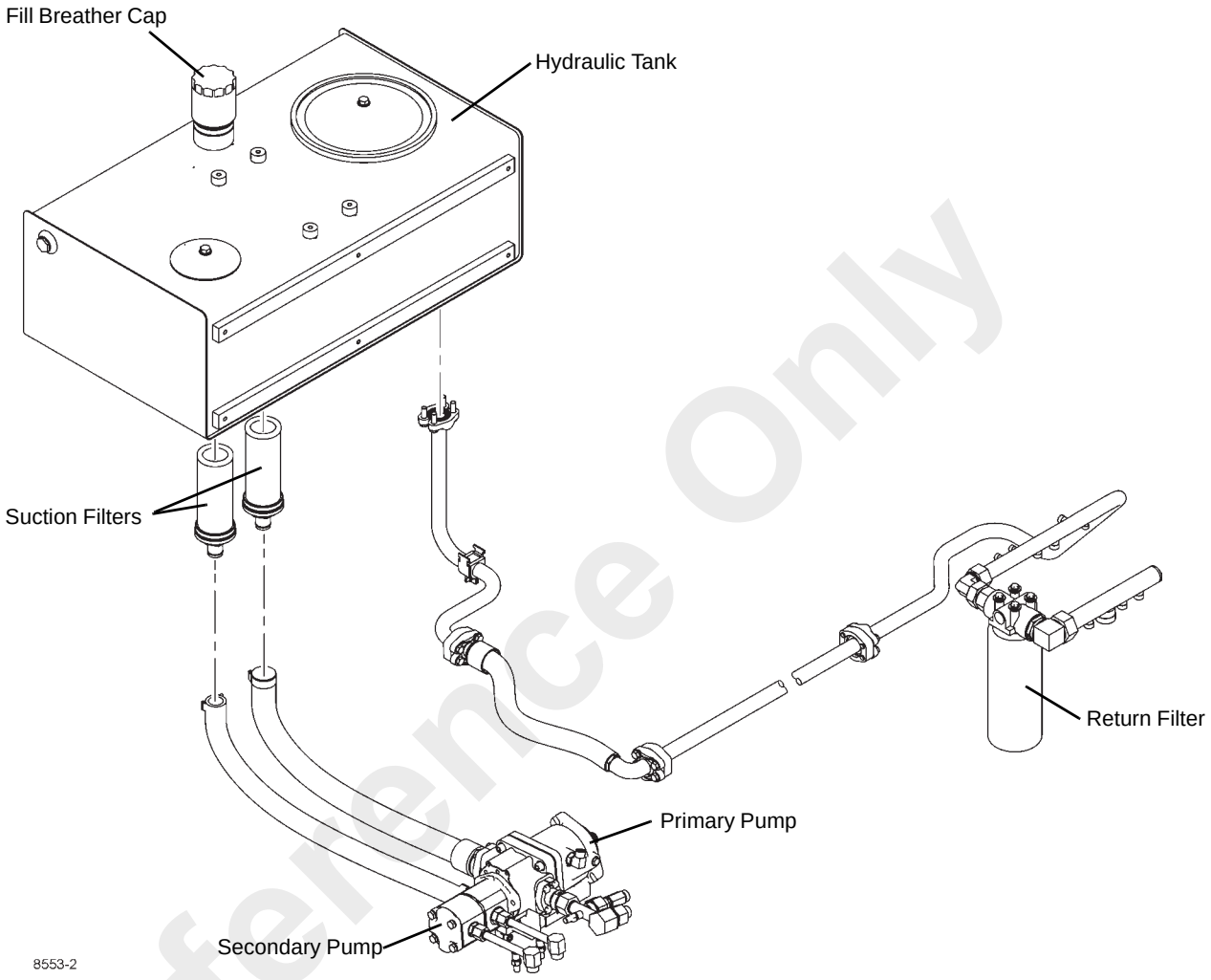

a1203

FIGURE 4-3

Reference Only

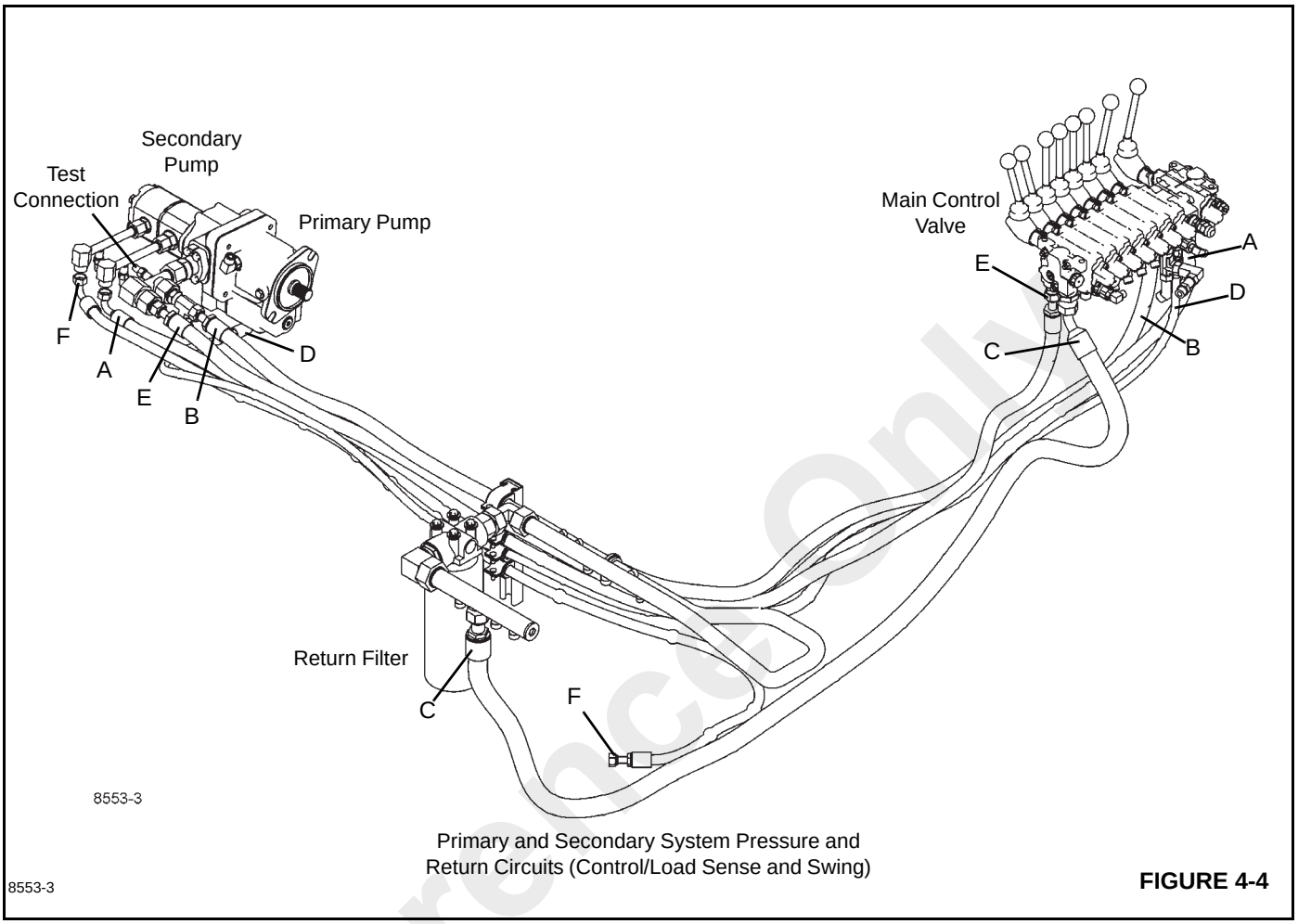

Primary and Secondary System Pressure and Return Circuits (Control/Load Sense and Swing)

8553-3

FIGURE 4-4

Reference Only

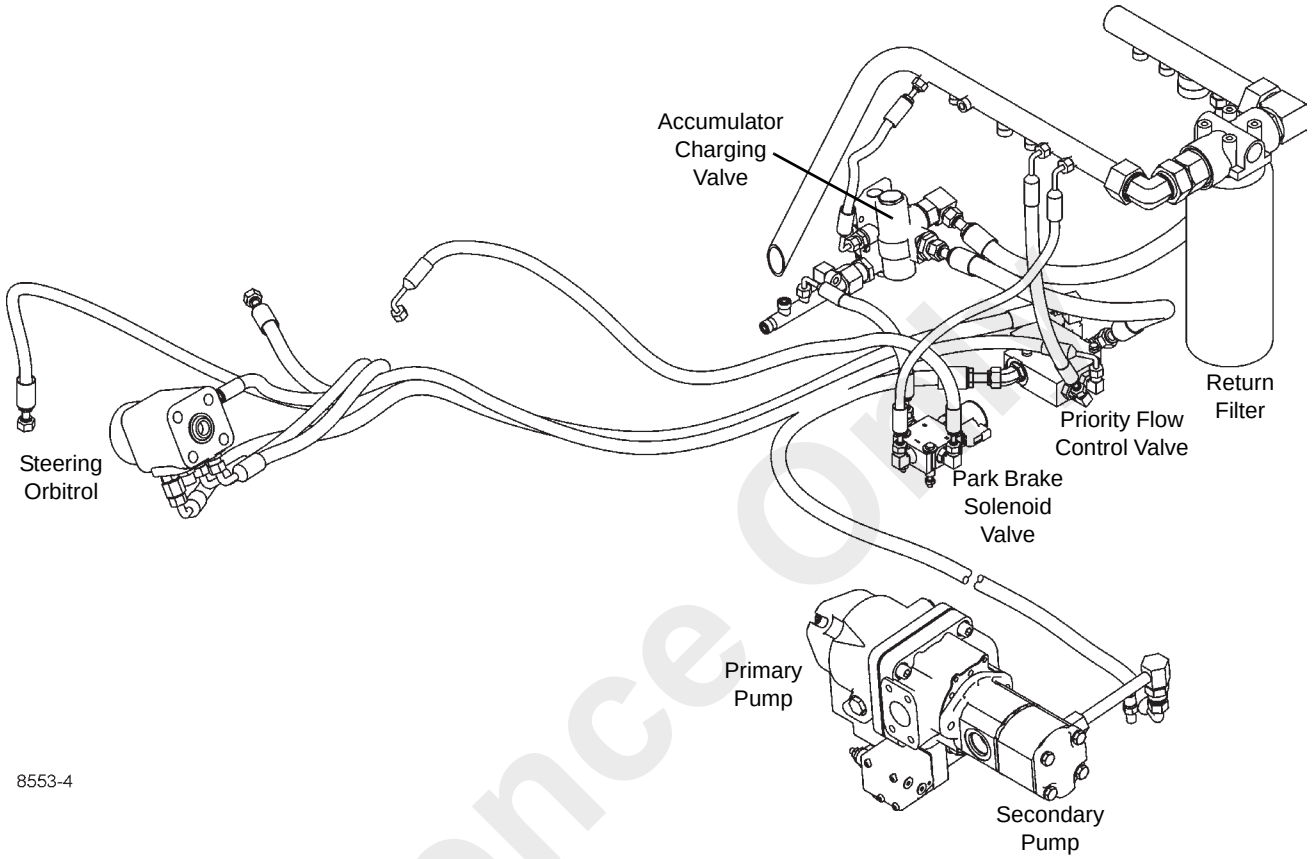

Secondary System Pump Pressure and Return Circuit
(Steering and Brake)

FIGURE 4-5

8553-4

Reference Only

4

Hydraulic Pumps

Primary Hydraulic Pump

Description

The primary hydraulic pump is a variable displacement axial piston pressure compensated pump. The pump generates a fluid flow and imparts to that fluid the necessary pressure forces to obtain the hydraulic system pressure.

The pump basically consists of the housing (1, Figure 4-6), pistons (2), shoes (3), port plate, drive shaft (4), swash plate (5), shaft seal (6), compensator (7) and valve plate (8).

Rotation of the drive shaft (4) and control piston (not shown) causes a linear piston movement as the piston shoe (3) slides along the tilted swash plate (5). As the piston retracts in the cylinder bore, hydraulic oil from the hydraulic oil tank fills the developing vacuum cavity by way of the suction kidney in the valve plate (8). At maximum retraction of the piston, shaft rotation causes the piston to go beyond the suction kidney and begin communication with the pressure kidney. Continuing rotation then extends the piston into the cylinder bore, forcing oil into the pressure port and out to the hydraulic system.

Pressure Regulation

System pressure is working on the pressure compensator against a setting spring. When system pressure overcomes the spring force, the spool shifts allowing system pressure into the control piston. This causes the pump to stroke to a regulating point sufficient to maintain the increased compensator setting (system pressure) and the lubrication fluid flow required.

When the system pressure setting is reached, only the amount of fluid necessary to satisfy the load conditions is delivered. If the load condition is such that no flow is required, only cooling and lubricating fluid is delivered. Power usage and heating of the fluid are kept to a minimum.

When the system pressure falls below the compensator spring setting, spring force returns the spool back to the normal position, which drains the control piston (2, Figure 4-6) to the pump case drain. This causes the pump to de-stroke, reducing the fluid flow to the level required.

Item	Description
1	Housing
2	Piston
3	Shoe
4	Drive Shaft
5	Swash Plate
6	Shaft Seal
7	Compensator Control
8	Valve Plate

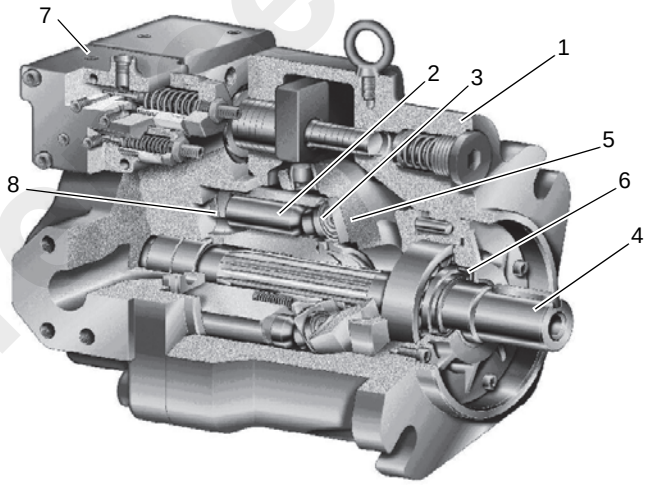

a0727

FIGURE 4-6

Secondary Pump

The secondary pump is a gear pump with two sections. Oil is supplied to both pump sections through a single suction port in the pump. The drive gears in both pump sections are turned by a drive shaft connected to the drive shaft of the primary hydraulic pump.

The cross section view (Figure 4-7) of the pumping chambers illustrates the flow path of the hydraulic oil through a gear pump. As the gears counter rotate the separating teeth create a vacuum drawing oil into the inlet. Oil is picked up by each tooth and carried around the outside of the gear, oil is not drawn through the center. The pockets between the gear teeth and the housing are referred to as the pumping chambers. As the gear teeth mesh on the outlet side, oil is forced out of the pockets and exits the pump.

Reference Only

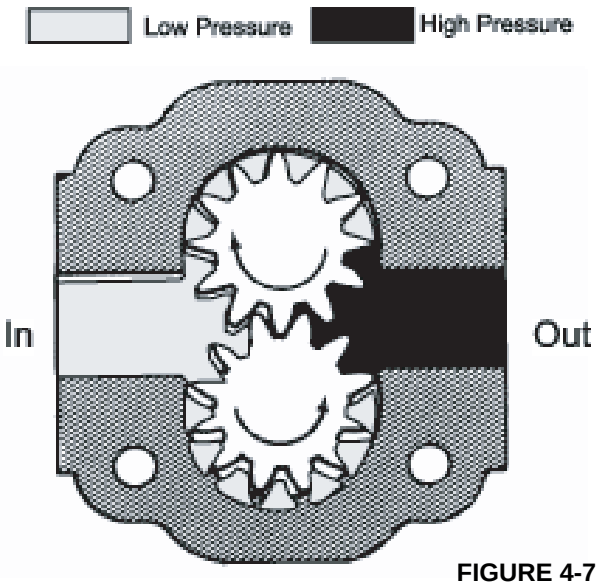

FIGURE 4-7

Downstream resistance to the output flow causes an increase in pressure. High pressure on the outlet side of the housing forces the gears to deflect into the low pressure (inlet) side. The tips of the gear teeth contact the housing preventing high pressure output oil from leaking back to the low pressure inlet. High pressure on the outlet side of the pump also pushes the pressure plates against the gears to inhibit leakage or bypass of hydraulic oil in the pump.

Lubrication of internal parts is provided through passages in the pump body and grooves in the pressure plates. A lip seal on the shaft and O-rings between the sections prevents external leakage from the pump.

Test - Pump Output

Primary Hydraulic Pump

The primary hydraulic pump output can not be checked using a flowmeter. The efficiency of the pump must be checked by using function cycling speeds. See Technical Data.

Secondary Hydraulic Pump

To check the output of the secondary hydraulic pump use a flowmeter. Follow the instructions in the flowmeter manual. For rated output, see Technical Data. Each pump section should be checked.

NOTE: All flow tests must be taken when the temperature of the hydraulic oil is 45° - 54° C (120° - 130° F).

Swing Function Pump Section

To check the efficiency of the gear pump section used for the swing function, use the following procedure:

1. Connect the flowmeter between the pump and the control valve (Figure 4-8) according to instructions in the flowmeter manual. Make sure the needle valve is fully open.
2. Start the engine and set the engine speed at maximum RPM. Wait until the oil reaches operating temperature of 45° - 54° C (120° - 130° F).
3. Slowly close the needle valve of the flowmeter until the pressure reaches 13 790 kPa (2000 psi).
4. Read the amount of flow on the flow meter. Record the flowmeter reading and engine RPM.
5. Fully open the flowmeter valve.
6. Accelerate the engine until the engine speed matches the speed recorded in step 4. Read the amount of flow on the flowmeter. Record this reading.
7. Compare the results to find the efficiency of the pump.

$$\% \text{ of Pump Efficiency} = \frac{\text{Flow at 2000 psi (13 790 kPa x 100)}}{\text{Flow at 0 psi (0 kPa)}}$$

8. If the pump is less than 80% efficient, repair or replace the pump.

Brake and Steering Function Pump Section

To check the efficiency of the gear pump section used for the brake and steering functions, use the following procedure:

1. Connect the flowmeter between the pump and the priority flow control valve (Figure 4-9) according to instructions in the flowmeter manual. Make sure the needle valve is fully open.
2. Start the engine and set the engine speed at maximum RPM. Wait until the oil reaches operating temperature of 45° - 54° C (120° - 130° F).

Reference Only

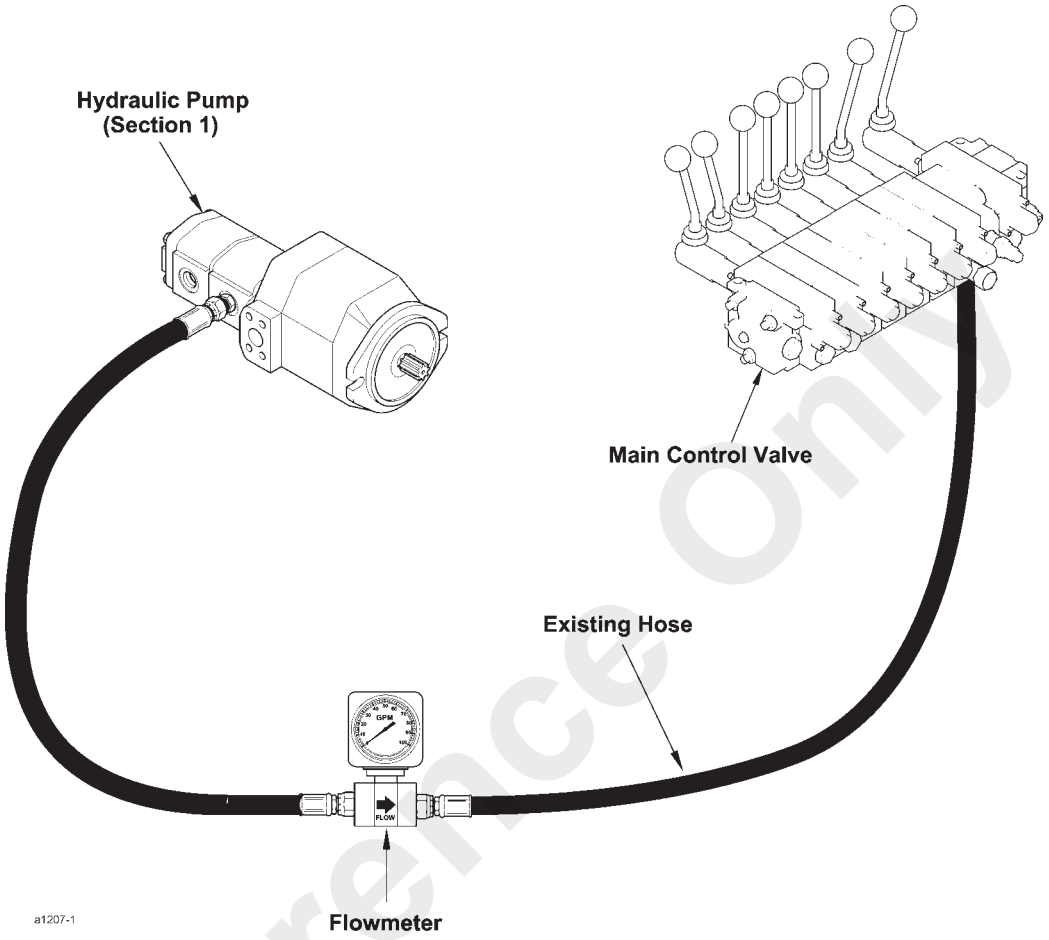

a1207-1

FIGURE 4-8

3. Slowly close the needle valve of the flowmeter until the pressure reaches 17 237kPa (2500 psi).
4. Read the amount of flow on the flow meter. Record the flowmeter reading and engine RPM.
5. Fully open the flowmeter valve.
6. Accelerate the engine until the engine speed matches the speed recorded in step 4. Read the amount of flow on the flowmeter. Record this reading.
7. Compare the results to find the efficiency of the pump.

$$\% \text{ of Pump Efficiency} = \frac{\text{Flow at 2500 psi (17 237 kPa x 100)}}{\text{Flow at 0 psi (0 kPa)}}$$

8. If the pump is less than 80% efficient, repair or replace the pump.

Reference Only

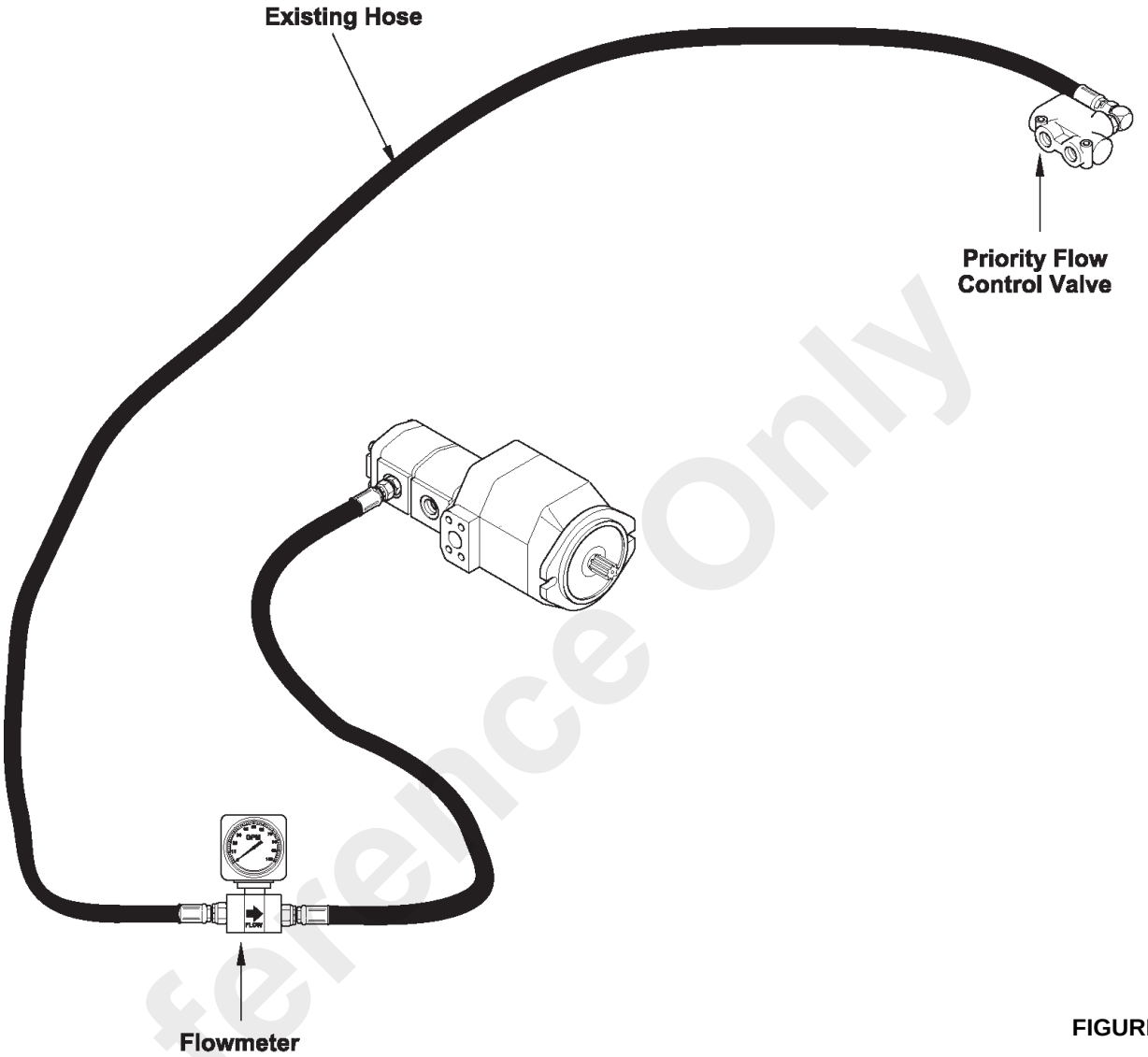

FIGURE 4-9

Reference Only

System Pressure Relief Valves

Primary System Pressure

The primary hydraulic system does not use a relief valve to regulate system pressure. System pressure is regulated by a pressure compensating valve (Figure 4-10) located on the main hydraulic pump.

The purpose of the pressure compensator is to stroke and de-stroke the hydraulic pump, supplying only the amount of hydraulic oil that is required to operate the hydraulic functions. It also acts similar to a relief valve by protecting the hydraulic components. It de-strokes the pump when the setting of the compensator valve is reached, thus preventing an overload condition in the circuit, by cutting back on the amount of oil furnished in the circuit.

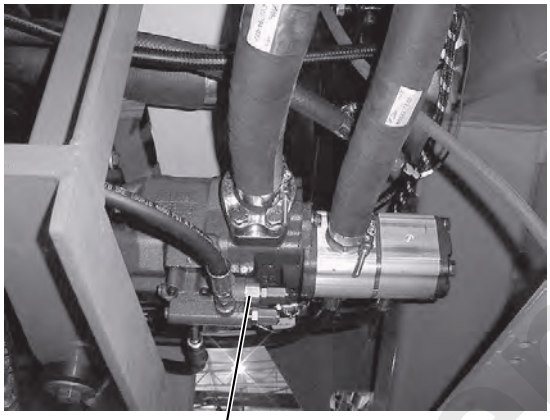

p1016 Pump Pressure Compensator **FIGURE 4-10**

Load Sense Relief Valve

The load sense relief valve (Figure 4-11) is a direct-acting design. It limits the pressure sent to the variable displacement load sensing pump. Using the load sense relief valve to limit system pressure versus a main relief valve, maintains flow to any function operating below the load sense relief valve setting.

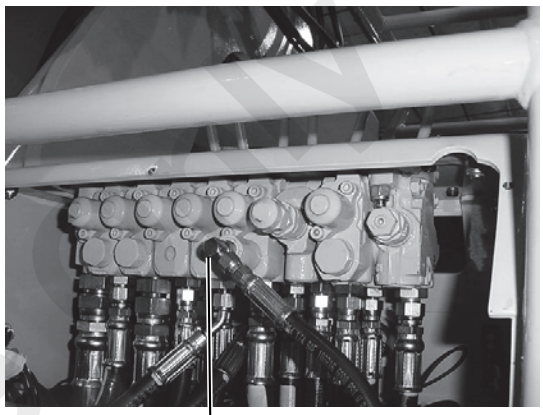

p1014 Load Sense Relief Valve **FIGURE 4-11**

Reference Only

Main Control Valves

Technical Data

Spool Type ..... 3-position, Sliding, Double Action, Cylinder
Spool actuation..... Manual
Relief Valve ..... See Figure 4-12
Port Relief Valve..... See Figure 4-12
Load Sensing Relief Valve ..... See Figure 4-12
Port pressurized:
- Spool in.....B-Port
- Spool out.....A-Port

Valve Identification

NOTE: The directional control valve is equipped with an internal 2500 PSI relief and an external tele circuit blocking valve that shuts off flow to the tele cylinder.

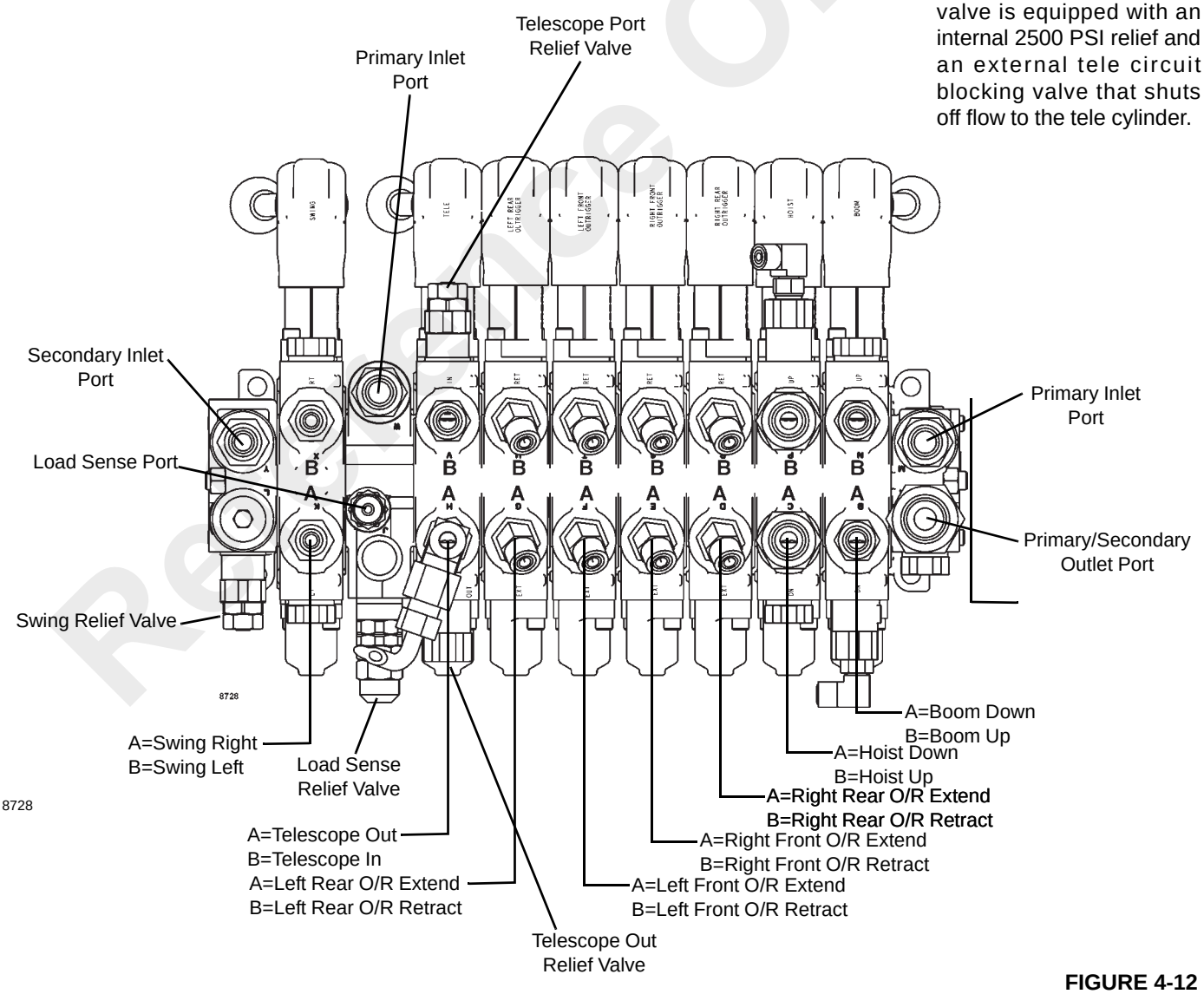

FIGURE 4-12

Reference Only

Valve Description

The valve assembly is mounted under dash panel in the operator's cab (Figure 4-13). The control valve is a multi-section, 3-position directional control valve equipped with spring centering spools.

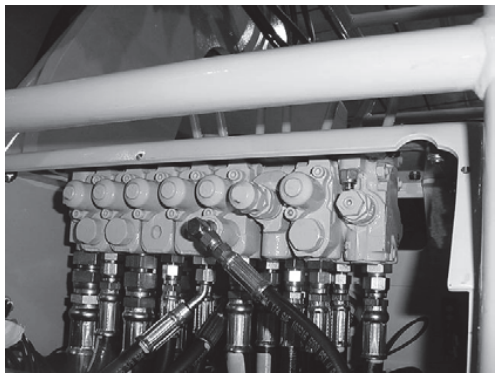

p1014

FIGURE 4-13

The valve assembly includes one parallel working section, seven post-pressure compensated working sections, one inlet section with a relief valve, one inlet/outlet section, and one mid-inlet section with a load-sense port and a load-sensing relief valve. The swing valve and outrigger sections are a cylinder spool section, the telescope and lift valve sections are a combination motor and cylinder spool section, while the hoist section is a motor spool section. A **motor spool** section allows oil to return to the hydraulic tank when the valve spool is in the centered or neutral position. A **cylinder spool** section blocks the oil from returning to the hydraulic tank when the valve spool is in the centered or neutral position. A **combination motor and cylinder spool** valve sections block oil from returning through the B port back to tank, but allows oil to return to tank through the A port when the spool is in the centered or neutral position.

Post-Pressure Compensated Valve Section Description

The post-pressure compensated valve section relies on post main spool compensation using a flow divider principle which is based on the pump load-sense differential, or margin pressure. This means that as long as some pump margin exists in the system, even if its lower than normal, the specified flow relationships between the functions will be maintained. Should the margin drop to zero or essentially zero, the issue will be irrelevant, since this means the pump cannot produce enough flow to build any load pressure, and therefore the system will not be operating.

The most important benefit of this principle is that in multifunction operation, when total demand exceeds pump output capacity, all functions can still be operated, but will "slow down" proportionally.

Main Relief, Load-Sensing and Port Relief Valves

The main relief valve for the secondary hydraulic system is located in the inlet section of the valve assembly. The relief valve is in communication with the center or high pressure passage of the control valve and will open to release excess oil to tank when the pressure in the center passage exceeds the pressure setting of the main relief valve. The purpose of the main relief valve is to control maximum pressure in the pumping circuit and to control any pressure surges or spikes caused by a sudden load on the system.

The load-sensing relief valve is located in the load-sensing section of the valve assembly. The purpose of the load-sensing relief valve is to limit the amount of pressure being sent back to the pressure compensator on the main pump and to control any pressure surges or spikes caused by a sudden load change on the system.

The port relief is located in the telescope (crowd) section of the control valve. The purpose of the port relief valve is to control maximum pressure in the telescope hydraulic circuit to protect the telescope cylinder.

Since pressure applied to any point in the circuit is applied equally through the circuit, a pressure surge at a motor or cylinder is felt all the way back to the pump.

A relief valve, either main or port, is in communication between the high pressure port "HP" (Figure 4-14) and the low pressure area "LP". Oil is admitted through the hole in poppet "C" and because of a differential area between diameters "A" and "B", relief valve poppet "D" and check valve poppet "K" are tightly sealed.

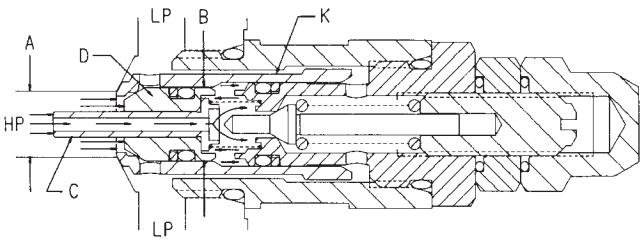

a0967

FIGURE 4-14

The oil pressure in the high pressure port "HP" (Figure 4-15) has reached the setting of the pilot poppet spring force and unseats pilot poppet "E" and oil flows around the poppet, through the cross drilled holes and to the low pressure area "LP".

Reference Only

Published 2/23/2016, Control # 592-00

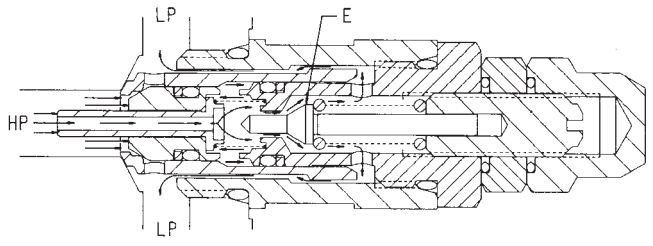

a0968

FIGURE 4-15

The loss of oil behind poppet “C” (Figure 4-16) affected by the opening of pilot poppet “E” causes poppet “C” to move back and seat against pilot poppet “E”. This shuts off the oil flow to the area behind relief valve poppet “D” and causes a low pressure area internally.

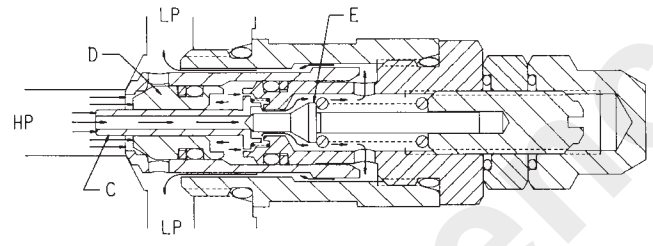

a0969

FIGURE 4-16

The imbalance of pressure on the inside as compared to that of the high pressure port “HP” forces the relief valve poppet “D” (Figure 4-17) to open and relieve the oil directly to the low pressure chamber “LP” in the valve. Oil then flows back to the hydraulic oil tank.

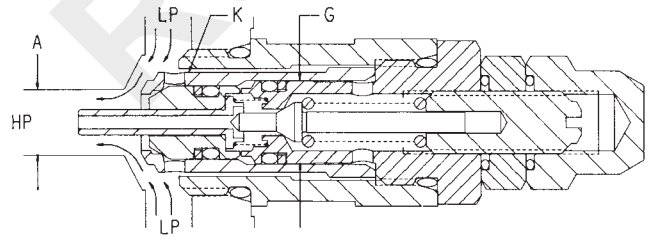

a0971

FIGURE 4-17

Anti-Void Check Valve

The ventable anti-void check valve (Figure 4-18) opens when the low pressure passage pressure exceeds the high pressure passage pressure or when vent port is opened to tank.

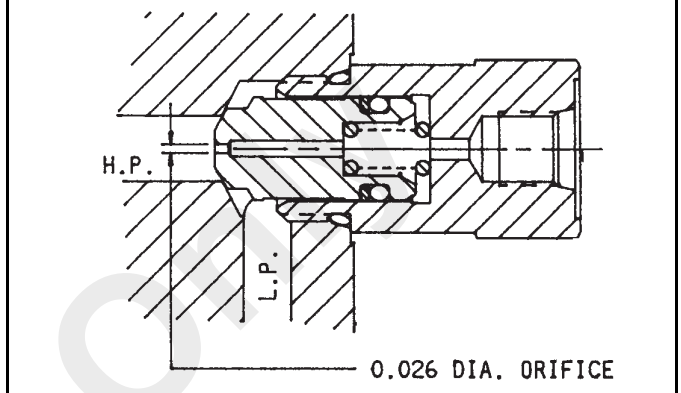

a0956

FIGURE 4-18

Testing the Hydraulic Pressure Settings

NOTE: It is necessary to climb under the crane to perform pressure setting testing. Be sure engine is shut off (unless noted), ignition key is removed, parking brake is engaged and chock blocks are in place before climbing under the crane.

NOTE: If maintenance or adjustments must be performed with the engine running, have a person at the controls while another person performs the work. This will inhibit accidental movement of the crane which could cause injury or death.

Pump Margin Pressure Setting

The pump margin pressure is the pressure that the hydraulic system will produce when the engine is at idle and no hydraulic function is actuated. It is regulated by the pressure compensation valve located on the primary hydraulic pump (Figure 4-10). The pump margin pressure should be checked with the engine at idle and NO hydraulic functions actuated.

CAUTION

The engine must be running at idle speed when installing the pressure gauge. If the gauge is installed when the engine is not running, starting the engine will create a spike in the hydraulic system that could damage a 3450 kPa (500 psi) pressure gauge.

Reference Only

1. Start the engine and leave it idle. Install a 0 - 3445 kPa (0 - 500 psi) pressure gauge on the quick coupler in the hydraulic line attached to the outlet of the primary hydraulic pump. See Figure 4-19.

NOTE: **DO NOT** actuate any hydraulic function or increase engine speed with the 500 psi pressure gauge installed. The gauge will be damaged by high hydraulic pressure.

2. Read the pressure indicated on the pressure gauge. A reading of 1921 ± 35 kPa (280 ± 5 psi) should be observed.

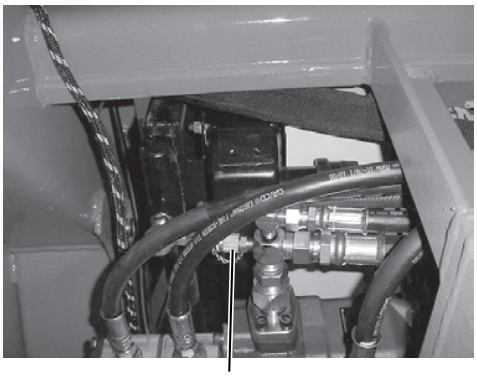

p1048

Quick Coupler Location **FIGURE 4-19**

3. If pressure reading is correct, shut off the engine, and disconnect the pressure gauge.

4. If the pressure reading is not correct, adjust the margin pressure setting. See Adjusting Hydraulic Pressure Settings.

Pump Compensator Pressure Setting

The pump compensator pressure is the primary hydraulic system pressure. It is regulated by the pressure compensating valve located on the primary hydraulic pump (Figure 4-10).

1. With the engine shut off, install a 0 - 34 450 kPa (0 - 5000 psi) pressure gauge on the quick coupler in the hydraulic line attached to the outlet of the primary pump. See Figure 4-19.

2. Start the engine and accelerate to full rpm.

3. Fully retract the lift cylinder (boom lowered). Continue to hold the control in position after the cylinder rod has stopped.

4. Read the pressure indicated on the pressure gauge. It should be 26 200 ± 345 kPa (3800 ± 50 psi).

5. Release the control lever.

6. If the pressure reading is correct, stop the engine and remove the pressure gauge.

7. If the pressure reading is incorrect, adjust the pressure setting of the pump compensator valve, see *Pump Compensator Pressure Setting*, page 4-24.

Swing Circuit Relief Valve Setting

1. To check the swing circuit relief pressure, shut off the engine, disconnect the two hydraulic hoses from the swing motor. Plug the hoses and cap the fittings on the swing motor.

2. Remove the access panel at the front of the dash panel (Figure 4-20). Install a tee, with a 0 - 34 450 kPa (0 - 5000 psi) pressure gauge attached, between the front hose and fitting installed in the swing section of the main control valve.

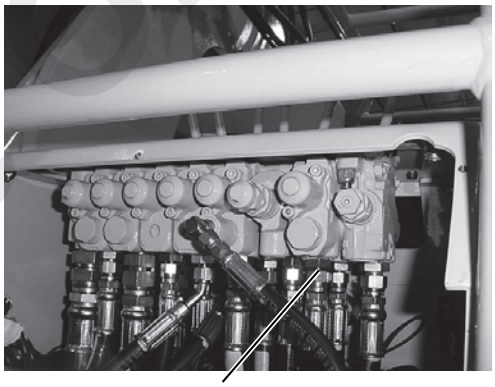

p1014

Install Tee and Pressure Gauge Between Fitting and Hose **FIGURE 4-20**

3. Start and accelerate the engine to maximum RPM.

4. Watching the pressure gauge, actuate the swing control lever until the swing relief valve opens. The valve should open at 13 790 ± 345 kPa (2000 psi ± 50 psi).

5. Move the swing control lever to neutral.

6. If the pressure reading is correct, stop the engine. Release any pressure in the circuit and remove the pressure gauge and tee. Reconnect the hose to the fitting on the valve section. Remove the plugs and caps and connect the two hoses to the swing motor.

7. If the pressure reading is incorrect, adjust the pressure setting of the swing relief valve. See Tele Retract Pressure.

Adjusting Hydraulic Pressure Settings

Pump Margin Pressure Setting

NOTE: Before starting this procedure, raise the crane up on outriggers.

Reference Only

1. With the engine shut off, install pressure check diagnostic quick disconnect (Parker PD240) with 0 - 3450 kPa (0 - 500 psi) pressure gauge onto Piston Pump Gauge Port shown in Figure 4-21.

CAUTION

DO NOT actuate any hydraulic function or increase engine speed with the 0 - 3450 kPa (0 - 500 psi) pressure gauge installed. The gauge will be damaged by high hydraulic pressure.

2. Start the engine and read the pressure gauge with the engine at idle. The gauge should read 2200 ± 172 kPa (325 ± 25 psi).

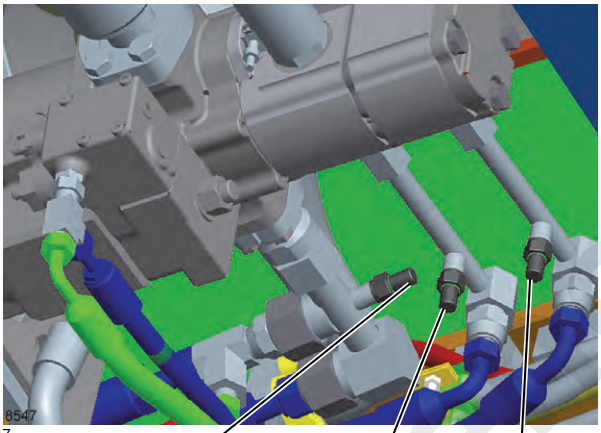

FIGURE 4-21

3. If pressure needs adjusted, loosen the jam nut on the margin adjustment screw, shown in Figure 4-22, and adjust the margin pressure setting by turning the margin adjusting screw until 2200 ± 172 kPa (325 ± 25 psi) pressure is showing on the gauge; clockwise increases pressure, counterclockwise reduces the pressure.
4. Tighten the jam nut on the margin adjustment screw.
5. Shut off the engine.

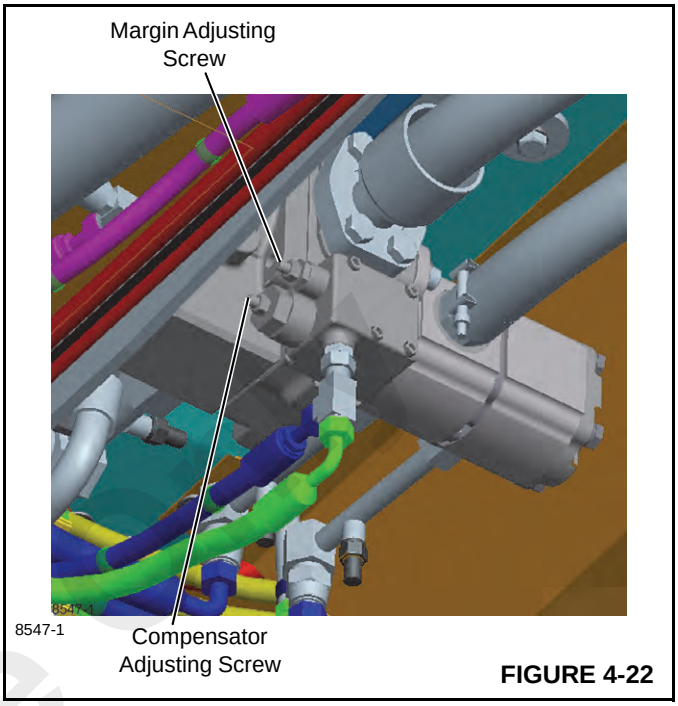

FIGURE 4-22

Load Sense Relief Pressure

1. The pressure check diagnostic quick disconnect (Parker PD240) with gauge should still be installed onto Piston Pump Gauge Port (Figure 4-21).
2. Loosen the jam nut on the compensator adjustment screw and turn it clockwise until it softly seats or bottoms out. Then turn it counterclockwise a ½ turn and lock it in place by tightening the jam nut. This will ensure full system pressure can be reached.
3. Start the engine. With the engine at full RPM, pull the boom down function until it is fully stowed and hold. The pressure gauge should read 27100 ± 350 kPa (3925 ± 50 psi).
4. If the pressure needs adjusted, remove the cap off the load sense relief, loosen the jam nut and turn the load sense relief adjustment screw, shown in Figure 4-23, until 27100 ± 350 kPa (3925 ± 50 psi) pressure is showing on the pressure gauge; clockwise increases pressure, counterclockwise reduces the pressure.

Reference Only



FIGURE 4-23

5. Tighten the jam nut on the load sense relief and put the cap back on.
6. Shut off the engine and remove the pressure gauge.

Tele Retract Pressure

1. The pressure check diagnostic quick disconnect (Parker PD240) with gauge should still be installed onto Piston Pump Gauge Port (Figure 4-21).
2. Start the engine. With the engine at full RPM, pull the tele retract lever until the boom is fully retracted and hold. The pressure gauge should read 19500 ± 350 kPa (2825 ± 50 psi).
3. If the pressure needs adjusted, loosen the jam nut on the tele retract relief, shown in Figure 4-24, and turn the tele retract relief adjustment until 19500 ± 350 kPa (2825 ± 50 psi) is showing on the pressure gauge; clockwise increases pressure, counterclockwise reduces the pressure.
4. Tighten the jam nut on the tele retract relief.

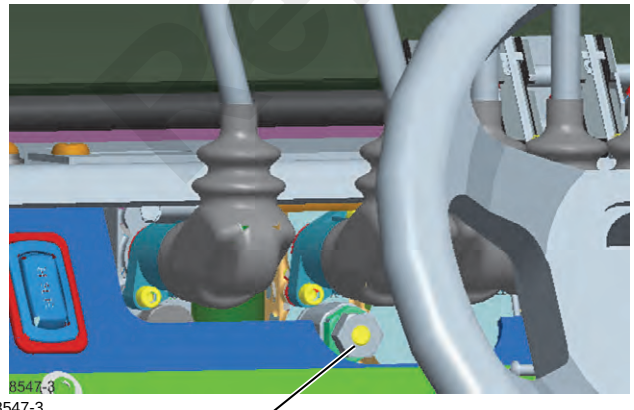

FIGURE 4-24

Tele Extend Pressure

1. The pressure check diagnostic quick disconnect (Parker PD240) with gauge should still be installed onto Piston Pump Gauge Port (Figure 4-21).
2. With the engine at full RPM and the crane up on outriggers, push the tele extend lever forward until the boom is fully extended and hold. Pressure gauge should read 19500 ± 350 kPa (2825 ± 50 psi).
3. If the pressure needs adjusted, loosen the jam nut on the tele extend relief, shown in Figure 4-25, and turn the tele extend relief adjustment until 19500 ± 350 kPa (2825 ± 50 psi) is showing on the pressure gauge; clockwise increases pressure, counterclockwise reduces the pressure.

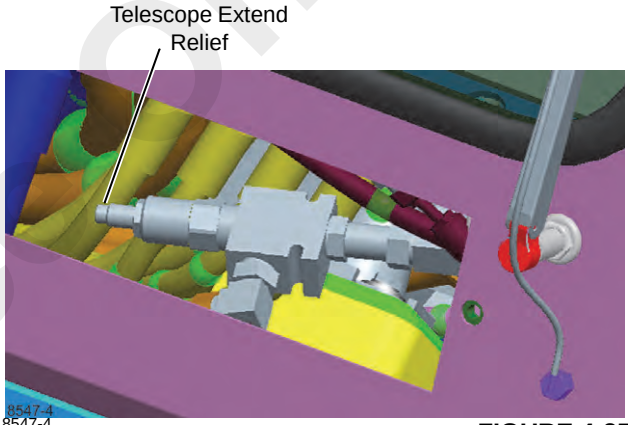

FIGURE 4-25

4. Tighten the jam nut on the tele extend relief.
5. Shut off the engine.

Priority Flow Relief Pressure

1. Install pressure check diagnostic quick disconnect (Parker PD240) with gauge on Gear Pump 2 Gauge Port shown in Figure 4-21.
2. Start the engine. With the engine at idle, steer the wheels to the left as far as the wheel will turn and hold it in that position. The pressure gauge should read 17200 ± 700 kPa (2500 ± 100 psi).
3. If the gauge reads outside these pressure limits, replace the flow relief valve, as it is not adjustable.
4. Shut off the engine.

Accumulator Charge Valve Cut In/Out Pressures

1. Install pressure check diagnostic quick disconnect (ParkerPD240) with gauge on Brake Charge Gauge Port

Preferences only

shown in Figure 4-26 (except for tier 3 units where the gauge port is on the other leg of the tee.)

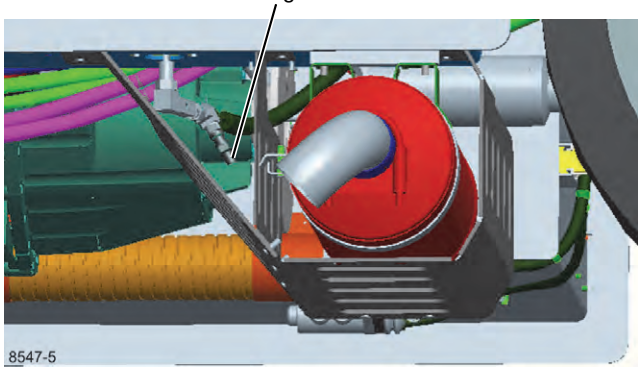

8547-5

FIGURE 4-26

2. Start the engine and let it idle.
3. Reset the maximum and minimum pressure readings stored in the pressure gauge.
4. Pump the brakes slowly and watch the pressure gauge to verify the pressure drops until it reaches a minimum cut in pressure of 11400 ± 1030 kPa (1650 ± 150 psi) when the brakes will start to recharge.
5. Continue pumping the brakes slowly while watching the pressure gauge to verify the pressure builds until it reaches a maximum cut out pressure of 13800 ± 1030 kPa (2000 ± 150 psi).
6. To verify the max and min pressures from Steps 4 and 5, use the recall function on the pressure gauge.
7. Shut off the engine and pump the brakes down to relieve the pressure before disconnecting the pressure gauge.
8. If gauge readings were not observed within the limits of 1650 psi or 2000 psi, replace the accumulator charge valve, as it is not adjustable.

Swing Relief Pressure

1. Install pressure check diagnostic quick disconnect (Parker PD240) with gauge on Gear Pump 1 Gauge Port shown in Figure 4-21.
2. The hoses connected to the swing drive, shown in Figure 4-27, will need disconnected. Both the fittings at the swing drive will need capped and the hoses will both need plugged.

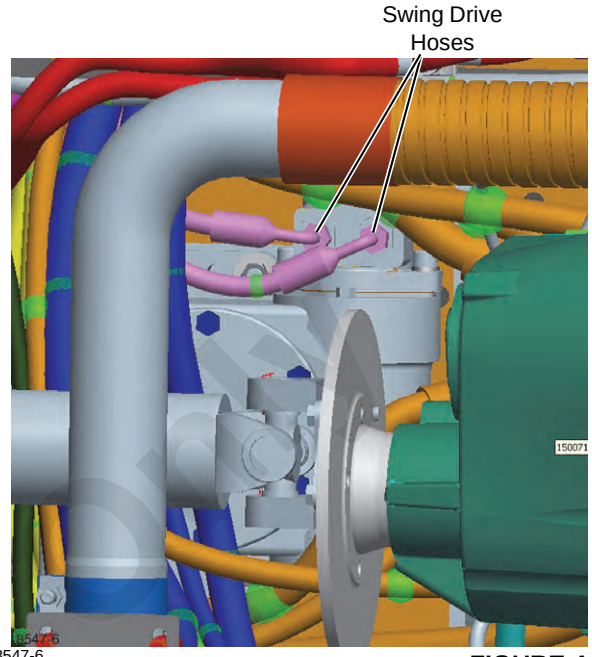

8547-6

FIGURE 4-27

3. With the engine at idle, pull the swing lever back the entire way and hold. The pressure gauge should read 13800 ± 350 kPa (2000 ± 50 psi).
4. If the pressure needs adjusted, loosen the jam nut on the swing relief, shown in Figure 4-28, and turn the swing relief adjustment until 13800 ± 350 kPa (2000 ± 50 psi) is showing on the pressure gauge; clockwise increases pressure, counterclockwise reduces the pressure.

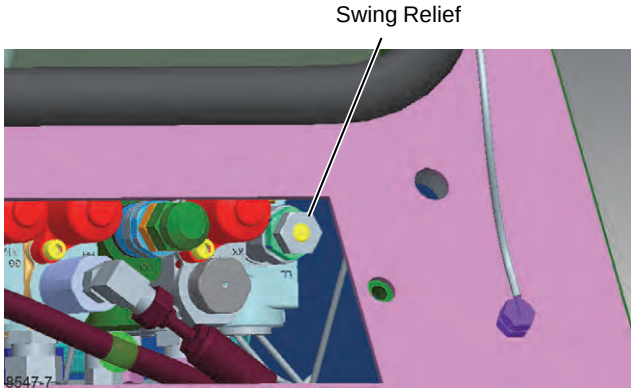

8547-7

FIGURE 4-28

5. Reconnect the hoses to the swing drive and tighten the jam nut on the swing relief.
6. Shut off the engine.

Reference Only

Transmission Oil Cooler Motor Control Valve

1. The pressure check diagnostic quick disconnect (Parker PD240) with gauge should still be installed onto Oil Cooler Motor Valve “G” Port shown in Figure 4-29.

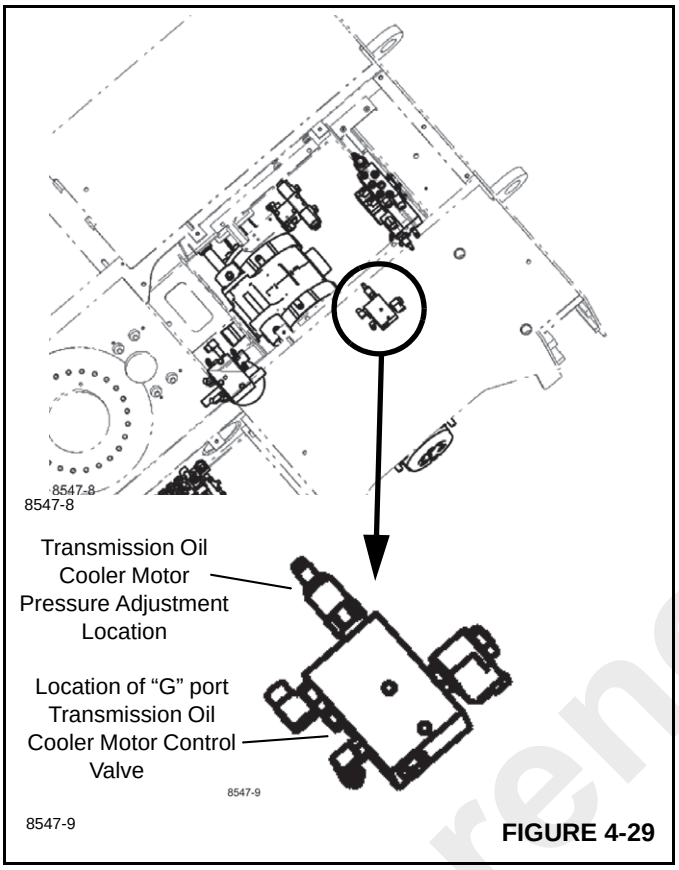

FIGURE 4-29

2. Remove the electrical connector to the Motor Control Valve to default the valve to the de-energized or motor-on position.
3. Start the engine. With the engine at idle RPM the pressure gauge should read 2413 ± 172 kPa (350 ± 25 psi).
4. If the pressure needs adjusted, loosen the jam nut and turn the pressure reducing valve adjustment screw, shown in Figure 4-29 until the pressure in step 3 is showing on the pressure gauge; clockwise increases pressure, counterclockwise reduces the pressure.
5. Tighten the jam nut on the pressure reducing valve.
6. Shut off the engine.

LIFT CIRCUIT

General

The lift hydraulic circuit (Figure 4-30 through 4-32) includes the lift cylinder, a holding valve, Ports 1 and 6 in the hydraulic swivel, a working section of the main control valve, and the hydraulic lines.

Oil Flow

Raising the Booms (Figure 4-30)

Actuating the lift control in the operator’s cab to raise the boom pushes the valve spool IN connecting the pump supply to Port “B” in the control valve section. Oil leaves Port B of the control valve and passes through Port 1 of the hydraulic swivel and enters the base end of the lift cylinder through the counterbalance valve. In this direction, the oil flows freely through the counterbalance valve and into the base end of the cylinder. The cylinder rod starts to extend, pushing oil ahead of the piston out the rod end port. The oil returns through Port 6 of the hydraulic swivel to Port A of the control valve section. From here, the oil is routed to the outlet port of the control valve assembly and returns through the in-line return filter to the hydraulic oil tank.

Lowering the Booms (Figure 4-31)

Actuating the lift control in the operator’s cab to lower the boom pulls the valve spool OUT, sending oil in the opposite direction, through Port A, causing the cylinder to retract. The counterbalance valve lets the cylinder retract only if there is enough pressure available to the rod port of the cylinder. See Counterbalance Valve.

Counterbalance Valve

The counterbalance valve used in the lift circuit has three functions:

- Inhibit cavitation of the cylinder,
- Give full control of the lowering of the boom, and
- Hold the load in event of a hydraulic failure.

Pressure from the rod side of the piston opens the counterbalance valve. If the cylinder starts to retract faster than the pump can fill the cylinder, there will be a decrease in the rod side pressure. The counterbalance valve will close and interrupt the flow of oil from the cylinder. The counterbalance valve will interrupt the flow as often as necessary to keep the cylinder filled. Also, if there is a failure of the pump or hydraulic line, the counterbalance valve will hold the boom in position.

Engine speed is important for good lowering of the boom. At low engine speed, normally there is not enough oil from the pump to keep the cylinder filled. As a result, the boom will move down in a movement that is not regular.

NOTE: Do not adjust the counterbalance valve setting. The valve is adjusted at the factory. If the valve is suspected of being faulty, replace the valve.

When an RCL (rated capacity limiter) system is installed, an anti-double block solenoid valve is used to protect the

Reference Only

hydraulic system, should the drop block double-block against the boom head when lowering the boom. See Anti-Double Block System.

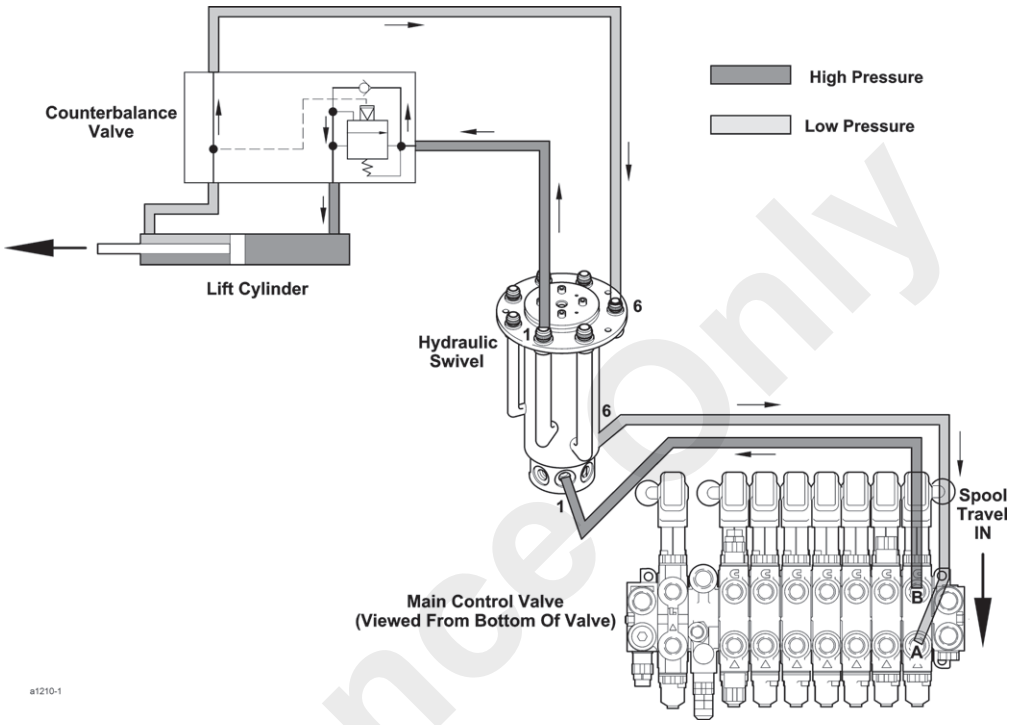

a1210-1

FIGURE 4-30

Reference Only

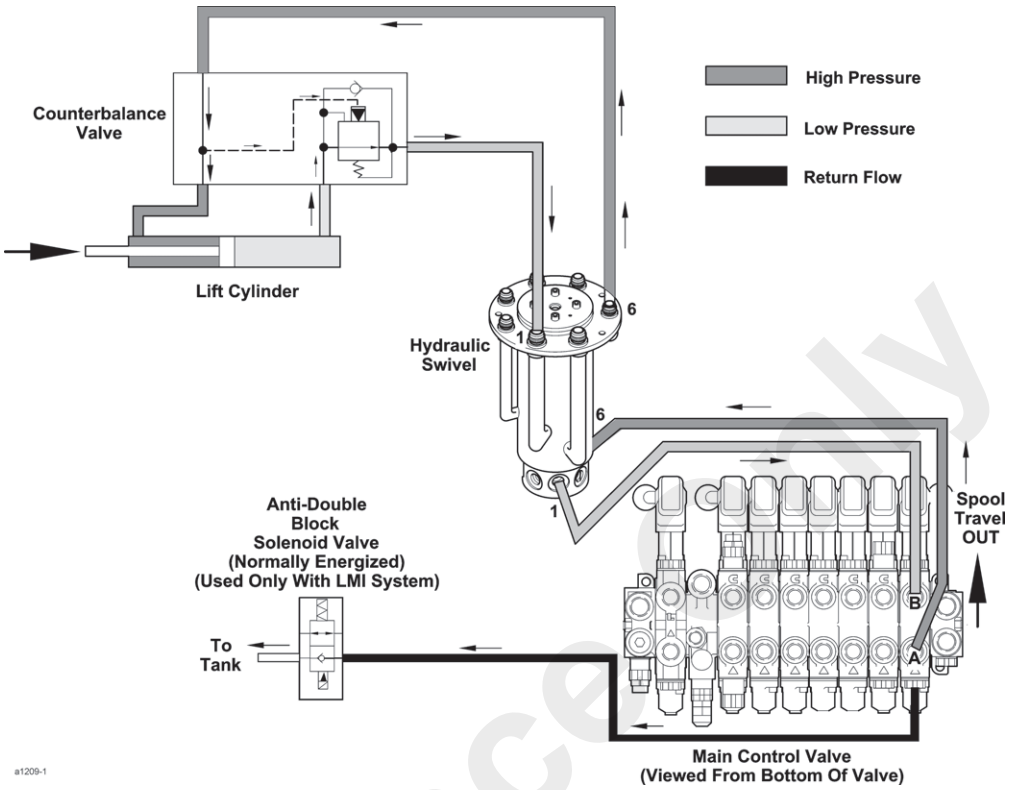

FIGURE 4-31

Reference Only

Lift Circuit Hydraulic Lines

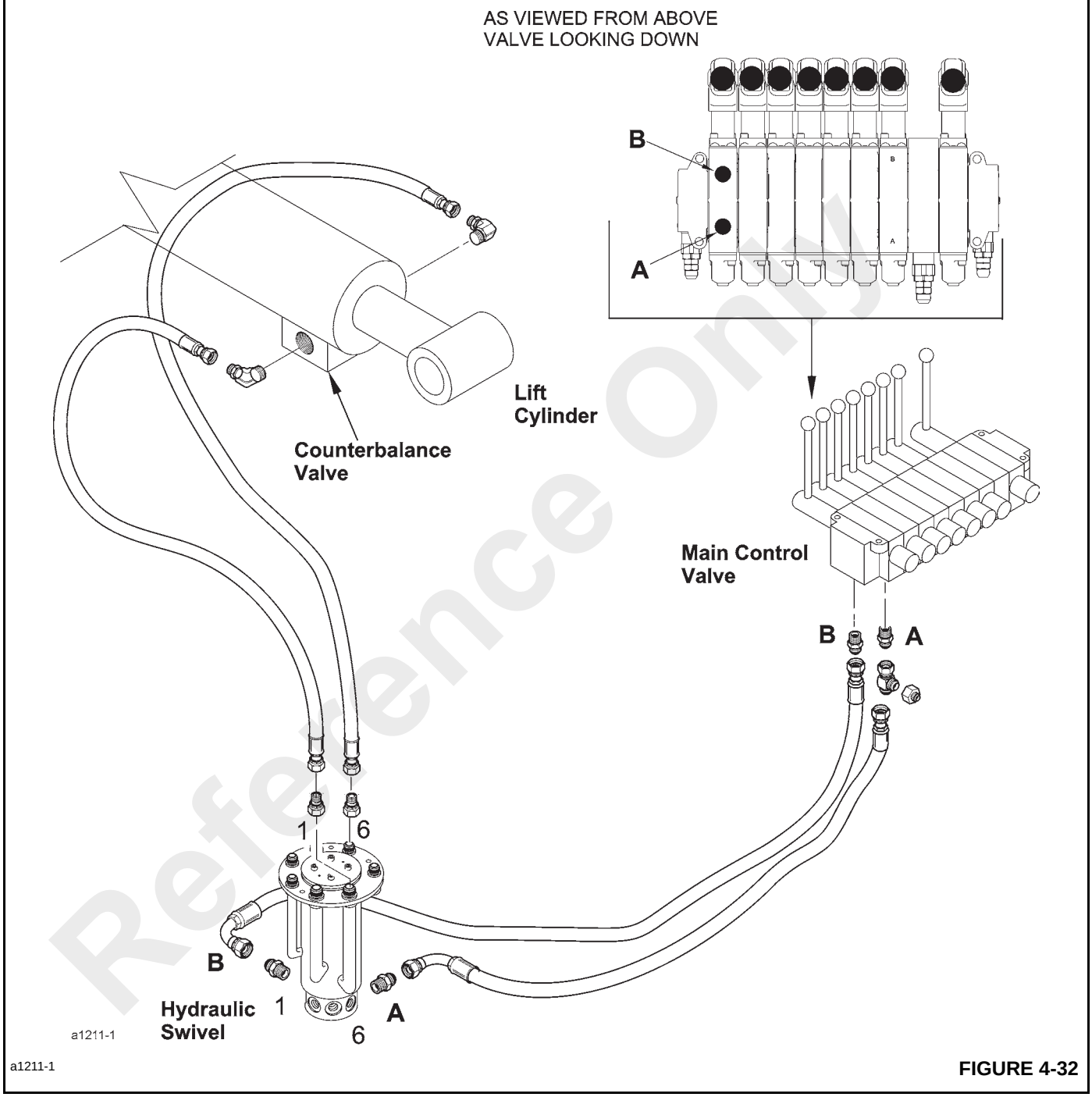

a1211-1

FIGURE 4-32

Reference Only

4

Lift Cylinder Leakage Test

If internal leakage in the lift cylinder is suspected, check for leakage as follows:

1. Fully extend the lift cylinder to raise the boom. Use a chain hoist to hold the boom in position.

WARNING

To perform this test safely, the boom must be fastened to chain hoist to prevent it from falling. Personal injury is possible from a falling boom.

2. Stop the engine and release any pressure in circuit by actuating the lift control in both directions.
3. Disconnect the hydraulic line from the rod end port of the cylinder. A small amount of oil will drain from the port.
4. Start the engine. Actuate the lift control lever in the cab in the direction to raise the boom. Check the amount of leakage from the rod port of the cylinder. If the cylinder leaks more than a few drops of oil per minute, replacement of the piston seals is warranted.
5. Connect the hydraulic line to the rod port of the cylinder.
6. Remove the chain hoist.
7. Raise and lower the boom to remove any air in the hydraulic circuit.
8. For cylinder repair, see *Hydraulic Cylinders*, page 4-70.

Reference Only

Published 2/23/2016, Control # 592-00

Hydraulic Swivel

General

The hydraulic swivel is at the center of rotation of the mast. The purpose of the hydraulic swivel is to permit the flow of hydraulic oil between the hydraulic components on the mast and boom and the components on the lower structure during rotation of the mast.

The hydraulic swivel has seven passages (Figure 4-33). Grooves and ports in the inner shaft align with ports in the outer housing. Seals between the grooves of the shaft inhibit leakage between the passages. The seals fit tightly against the housing. The housing rotates with the mast and the shaft is stationary.

Functions

The number of each port is stamped on the housing and on the lower end of the shaft.

Port No. 1

Hydraulic oil under pressure flows through this port when the boom is being raised. When lowering the boom, low pressure hydraulic oil returns through this port back to tank.

Port No. 2

Hydraulic oil under pressure flows though this port when the boom sections are being retracted. When extending the boom sections, low pressure oil flows through this port back to tank.

Port No. 3

Hydraulic oil under pressure flows through this port when the hoist block (main hoist) is being raised. When lowering the hoist block, low pressure hydraulic oil flows though this port back to tank.

Port No. 4

Hydraulic oil under pressure flows through this port when the hoist block (main hoist) is being lowered. When raising the hoist block, low pressure hydraulic oil flows through this port back to tank.

Port No. 5

Hydraulic oil under pressure flows through this port when the boom sections are being extended. When retracting the boom sections, low pressure hydraulic oil flows through this port back to tank.

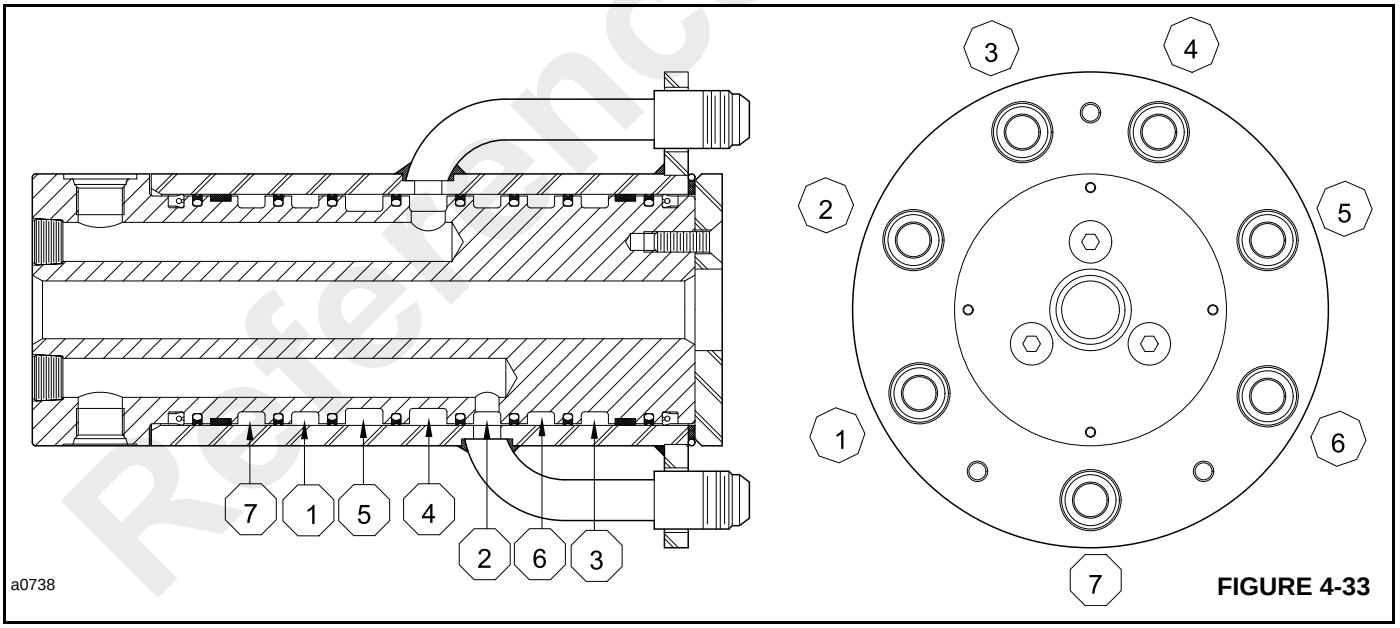

FIGURE 4-33

Port No. 6

Hydraulic oil under pressure flows through this port when the boom is being lowered. When raising the boom, low pressure hydraulic fluid flows through this port back to tank.

Port No. 7

Hydraulic oil under low pressure flows through this port from the hoist motor drain back to tank.

Troubleshooting

Leakage between the passages of the hydraulic swivel cause loss of power or possible wrong operation of one of the circuits. It is important to know the arrangement of the passages in the hydraulic swivel. Remember that hydraulic oil will always follow the path of least resistance.

Reference Only

TELESCOPE CIRCUIT

General

The telescope circuit (Figure 4-34 through 4-36) includes the telescope cylinder, a counterbalance valve, ports 2 and 5 of the hydraulic swivel, a port relief valve in the telescope section of the main control valve, an anti-double block cutout solenoid, a working valve section of the main control valve, and the hydraulic lines.

Oil Flow

Telescope Out (Figure 4-34)

Actuating the telescope control in the operator's cab to extend the boom sections pulls the valve spool OUT connecting the supply from the pump to port "A" of the control valve section. Oil leaves Port A and is routed through swivel port 5 to the base end of telescope cylinder through the counterbalance valve.

In the extending direction, oil flows freely through the counterbalance valve and into the base end of the cylinder. The cylinder rod extends and pushes oil ahead of the piston through the rod end port of the cylinder. The oil returns through swivel port 2 and Port B of the control valve section. From there, the oil is routed to the outlet passage of the valve and returns to the hydraulic tank through the in-line return filter.

An anti-double block valve is used to protect the hydraulic system, should the drop block double-block against the boom head. See *Anti-Double Block System*, page 4-44.

The relief valve integrated into the DCV protects the telescope cylinder and boom during boom extension. If the pressure should ever reach 17 237 kPa (2500 psi) the relief valve will open and return oil to tank, stopping any movement of the telescope cylinder and the booms. Besides this integrated relief, there is a blocking valve to completely stop all tele flow when the A2B system is activated

Telescope In (Figure 4-35)

Actuating the telescope control in the operator's cab to retract the boom sections pushes the valve spool IN connecting the supply from the pump to Port "B". Oil leaves Port B and is routed through port 2 of the hydraulic swivel to the rod port of the hydraulic cylinder. The cylinder starts to retract but meets resistance from oil held in the base end of the cylinder by the counterbalance valve. This restriction causes an increase of pressure as the pump continues to push more oil into the rod end of the cylinder. When the pressure is high enough to open the counterbalance valve, the cylinder retracts. See Counterbalance Valve below.

The port relief valve in the main control valve protects the telescope cylinder and boom during boom retraction. If the pressure should ever reach 17 237 kPa (2500 psi) the relief valve will open and return oil to tank, stopping any movement of the telescope cylinder and the booms.

Oil from the base end of the telescope cylinder returns through port 5 of the hydraulic swivel to Port A of the control valve section. From there, the oil is routed to the outlet port of the valve and returns to the hydraulic tank through the in-line return filter.

Counterbalance Valve

The counterbalance valve used in the telescope circuit has three functions:

- Inhibit cavitation of the cylinder.
- Give full control of the retraction of the boom.
- Hold the boom in position in the event of a hydraulic failure.

Pilot pressure from the rod side of the piston opens the counterbalance valve. If the cylinder starts to retract faster than the pump can fill the cylinder, there will be a decrease in the pilot pressure. The counterbalance valve will close and interrupt the flow of oil from the cylinder. The counterbalance valve will interrupt the flow as often as necessary to keep the cylinder filled. Also, if there is a failure of the pump or the hydraulic lines, the counterbalance valve will hold the boom in position.

Engine speed is important for good retracting of the boom. At low engine speed, normally there is not enough oil from the pump to keep the cylinder filled. As a result, the boom will retract in a movement that is not regular.

NOTE: Do not adjust the counterbalance valve setting. The valve is adjusted at the factory. If the valve is suspected of being faulty, replace the valve.

Reference Only

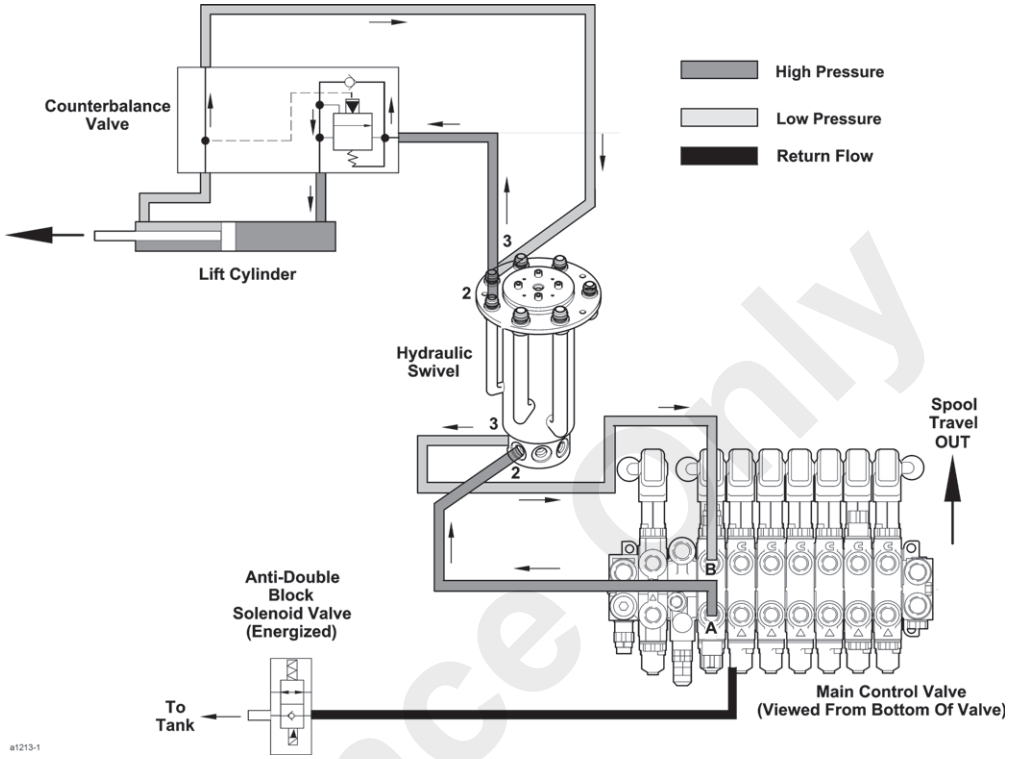

a1213-1

FIGURE 4-34

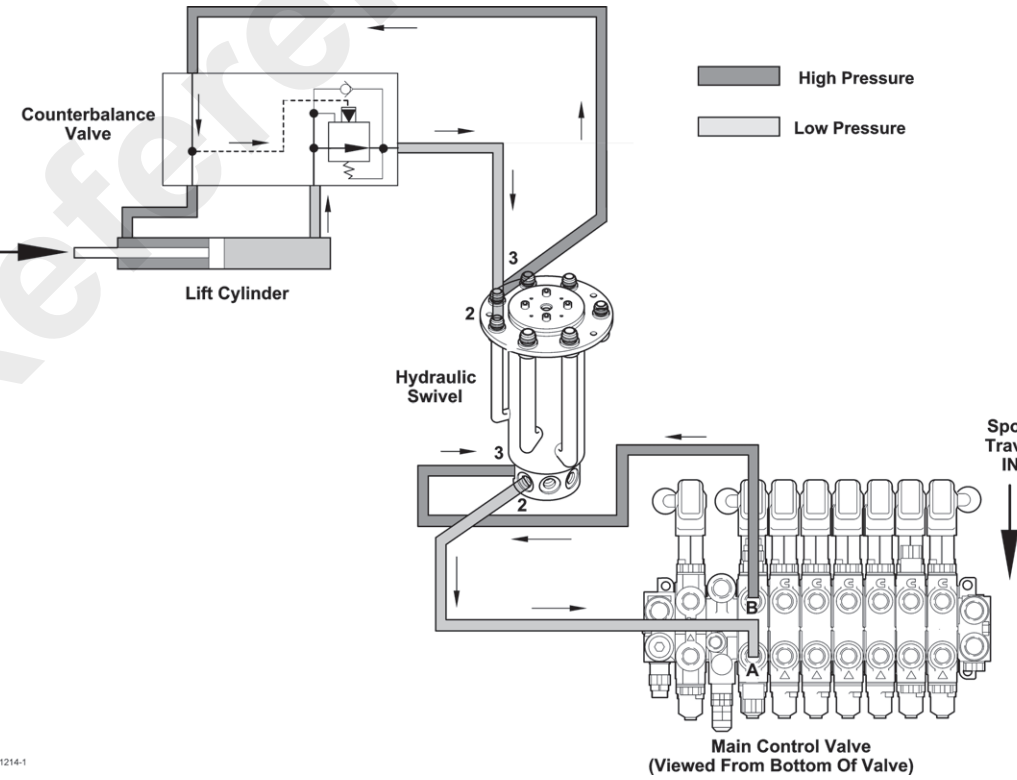

a1214-1

FIGURE 4-35

Reference Only

a1215-1

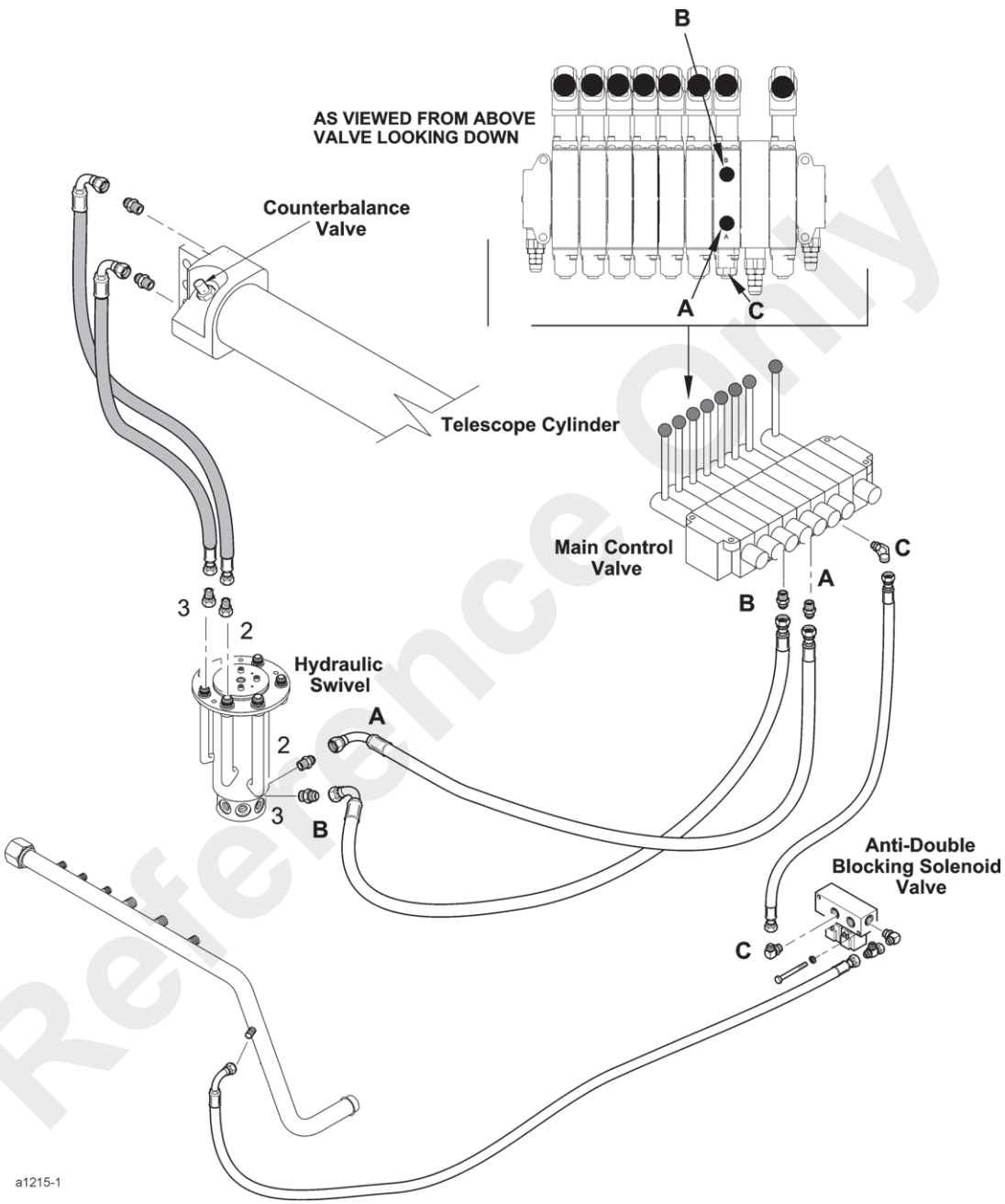

FIGURE 4-36

Reference Only

Published 2/23/2016, Control # 592-00

Port Relief Valve (Retract Function)

The port relief valve installed in the telescope circuit is used to protect the telescope cylinder and booms from damage caused by high oil pressure in the telescope retract circuit.

The valve is installed in the telescope section of the main control valve. See Figure 4-37.

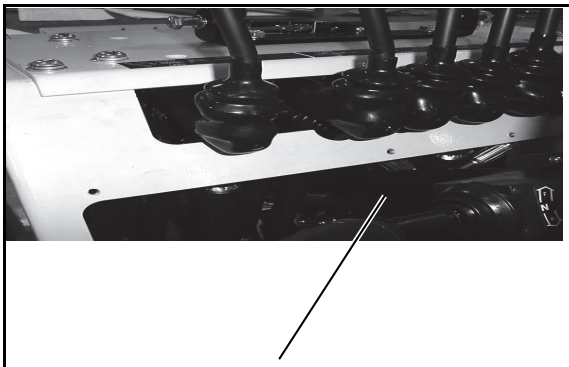

p1212 Telescope Circuit Relief Valve Location - Retract **FIGURE 4-37**

Checking the Telescope Circuit Relief Valve Setting

1. With the engine shut down, install a 0 - 34 450 kPa (0 - 5000 psi) pressure gauge on the quick coupling located at the outlet (pressure) line of the primary pump. See Figure 4-38.
2. Start the engine and accelerate the engine to maximum RPM.
3. Fully retract the boom sections. Continue to hold the control in position after the sections have stopped moving.

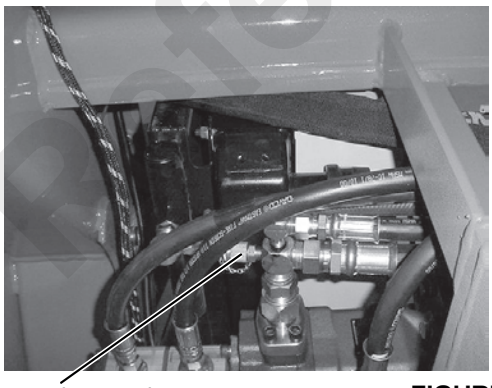

p1048 Quick Coupler Location **FIGURE 4-38**

4. Read the pressure gauge when the relief valve opens. The reading should be 19 477 kPa ± 345 kPa (2825 ± 50 psi).
5. Release the control.
6. If the pressure reading is correct, stop engine and remove the pressure gauge.
7. If the pressure reading is incorrect, adjust the pressure setting of the relief valve.

Adjusting the Telescope Circuit Relief Valve Setting

1. Loosen the jam nut on the relief valve (Figure 4-37)
2. With a pressure gauge installed and the engine running at full RPM, retract the boom sections. Hold the control in position after the boom sections are retracted all the way.
3. Turn the relief valve adjusting screw until a pressure setting of 19 477 ± 345 kPa (2825 ± 50 psi) is obtained. 1/4 turn equals 1551 kPa (225 psi). Turning the adjusting screw clockwise increases the pressure. Turning the adjusting screw counterclockwise decreases the pressure.
4. Release the control lever.
5. Tighten the jam nut against the relief valve body.
6. Check the pressure again. If correct, shut down the engine and remove the pressure gauge. If incorrect, repeat the adjustment procedure.

Telescope Relief Valve (Extend Function)

The relief valve installed in the telescope circuit is used to protect the telescope cylinder and booms from damage caused by high oil pressure in the telescope extend circuit.

The valve is installed in the valve block of the anti-double blocking solenoids (Figure 4-39).

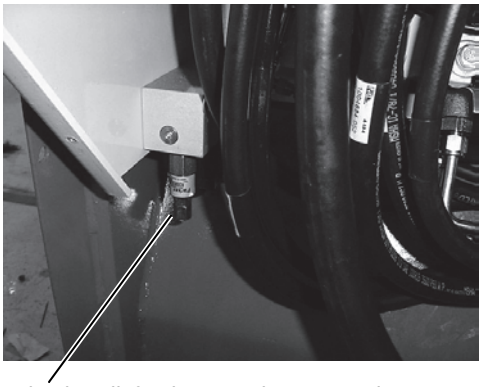

p1213 Telescope Circuit Relief Valve Location - Extend **FIGURE 4-39**

Checking the Telescope Circuit Relief Valve Setting

1. With the engine shut down, install a 0 - 34 450 kPa (0 - 5000 psi) pressure gauge on the quick coupling located at the outlet (pressure) line of the primary pump. See Figure 4-38.
2. Start the engine and accelerate the engine to maximum RPM.

Reference Only

3. Fully extend the boom sections. Continue to hold the control in position after the sections have stopped moving.
4. Read the pressure gauge when the relief valve opens. The reading should be 19 477 kPa ± 345 kPa (2825 ± 50 psi).
5. Release the control.
6. If the pressure reading is correct, stop engine and remove the pressure gauge.
7. If the pressure reading is incorrect, adjust the pressure setting of the relief valve.

Adjusting the Telescope Circuit Relief Valve Setting

1. Loosen the jam nut on the relief valve (Figure 4-39).
2. With a pressure gauge installed and the engine running at full RPM, extend the boom sections. Hold the control in position after the boom sections are extended all the way.
3. Turn the relief valve adjusting screw until a pressure setting of 19 477 kPa ± 345 kPa (2825 ± 50 psi) is obtained. 1/4 turn equals 1551 kPa (225 psi). Turning the adjusting screw clockwise increases the pressure. Turning the adjusting screw counterclockwise decreases the pressure.
4. Release the control lever.
5. Tighten the jam nut against the relief valve body.
6. Check the pressure again. If correct, shut down the engine and remove the pressure gauge. If incorrect, repeat the adjustment procedure.

Telescope Cylinder Leakage Test

If the telescope cylinder does not hold in position, the problem is normally internal leakage in the cylinder. This problem could also be caused by leakage in the control valve or holding valve. To check leakage in the cylinder:

1. Raise the boom slightly above horizontal.
2. Fully extend the boom sections.
3. Stop the engine and release any pressure in the circuit by actuating the control lever in both directions.
4. Disconnect the hydraulic hose from the adapter which connects to the rod end port of the telescope cylinder. A small amount of oil will drain from the elbow.
5. Start the engine. Actuate the telescope control in the direction to extend the boom sections.
6. Check the amount of leakage from the bulkhead elbow. If the leakage is more than a few drops per minute, the piston seals need replacement.
7. Connect the hydraulic line to the bulkhead elbow and extend and retract the boom sections to remove any air in the hydraulic circuit. For cylinder repair, see Hydraulic Cylinders.

Hydraulic Swivel

See *Hydraulic Swivel*, page 4-67 for hydraulic swivel information.

MAIN HOIST CIRCUIT

General

The main hoist circuit (Figure 4-40 through 4-42) includes a hoist motor, a hydraulic brake, a counterbalance valve, ports 3, 4 and 7 of the hydraulic swivel, an anti-double block solenoid valve, a working valve section of the main control valve, and the hydraulic lines.

Oil Flow

Hoist Up (Figure 4-40)

Actuating the hoist control in the operator's cab to raise the block pushes the valve spool IN connecting the pump supply to Port B in the control valve section. Oil leaves Port B of the control valve and passes through Port 3 of the hydraulic swivel to the counterbalance valve. In this direction, the oil flows freely through the counterbalance valve to the hoist motor.

The oil returns through Port 4 of the hydraulic swivel to Port A of the control valve section. From here, the oil is routed to the outlet port of the control valve assembly and returns through the in-line return filter to the hydraulic oil tank.

An anti-double block valve is used to protect the hydraulic system, should the drop block double-block against the boom head. See *Anti-Double Block System*, page 4-44.

Hoist Down (Figure 4-40)

Actuating the hoist control in the operator's cab to lower the boom pulls the valve spool OUT, sending oil through port A of the valve section. Oil is pushed through swivel port 4 to the hoist motor. The motor starts to turn and the increase in pressure on the up stream side of the motor causes the counterbalance valve to open. The oil then returns through swivel port 3 to the control valve Port. From here, the oil is routed to the outlet port and back to tank through the in-line return filter.

Drain Line

A drain line is connected to the hoist motor and returns drain oil from the motor through swivel Port 7 back to tank.

Reference Only

Counterbalance Valve

The counterbalance valve used in the hoist circuit has three functions:

1. Inhibit cavitation of the motor,
2. Give full control of the lowering of the load, and
3. Hold the load in event of a hydraulic failure.

Pilot pressure from the down stream side of the motor opens the counterbalance valve. If the motor starts to retract faster than the pump can fill the motor, there will be a decrease in the pilot pressure. The counterbalance valve will close and interrupt the flow of oil from the motor. The counterbalance valve will interrupt the flow as often as necessary to keep a constant flow to the motor. Also, if there is a failure of the pump or the hydraulic lines, the counterbalance valve will hold the hoist in position.

NOTE: Do not adjust the counterbalance valve setting. The valve is adjusted at the factory. If the valve is suspected of being faulty, replace the valve.

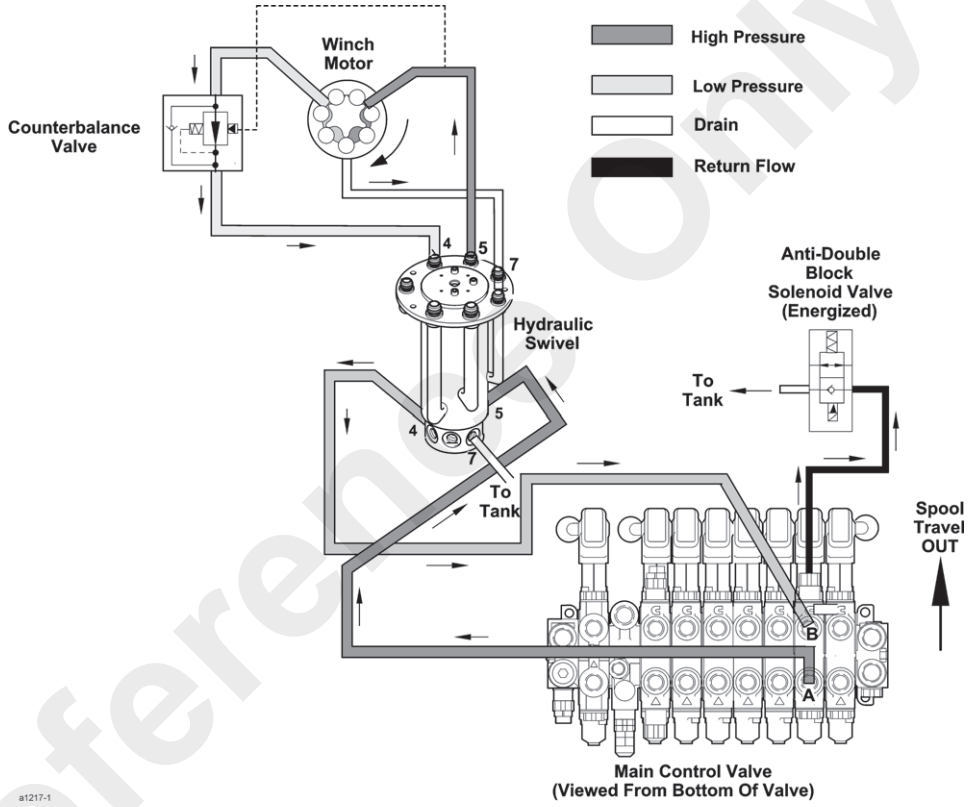

FIGURE 4-40

Reference Only

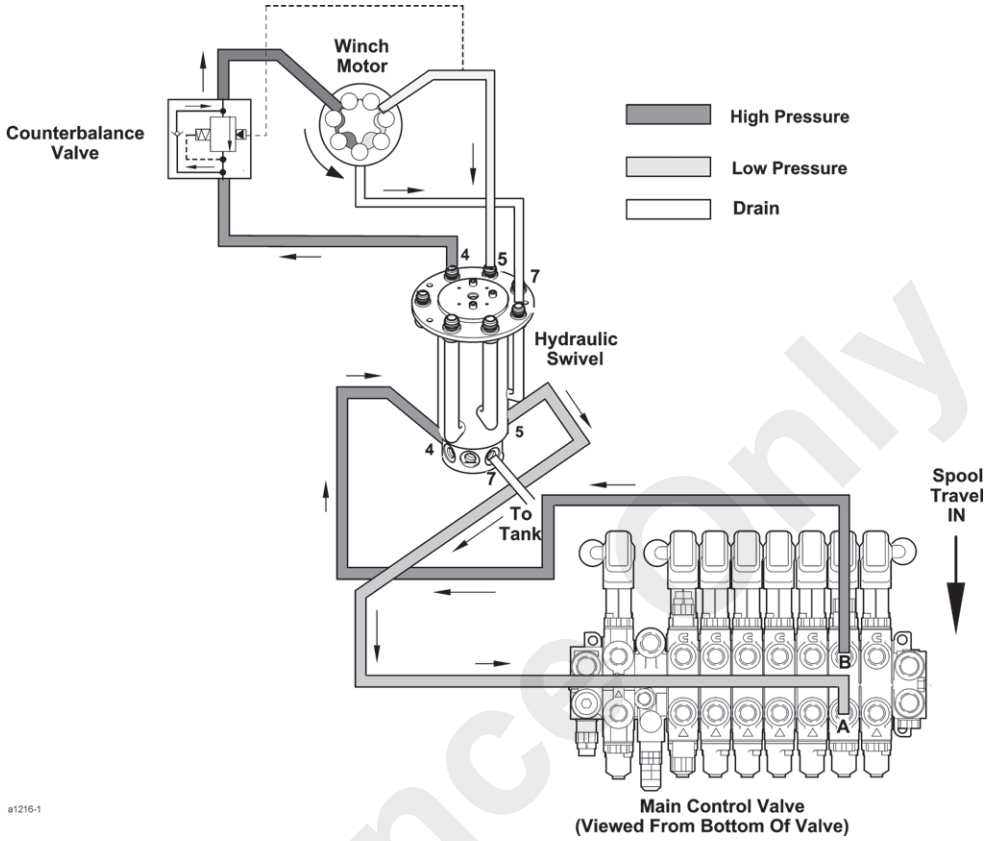

FIGURE 4-41

Reference Only

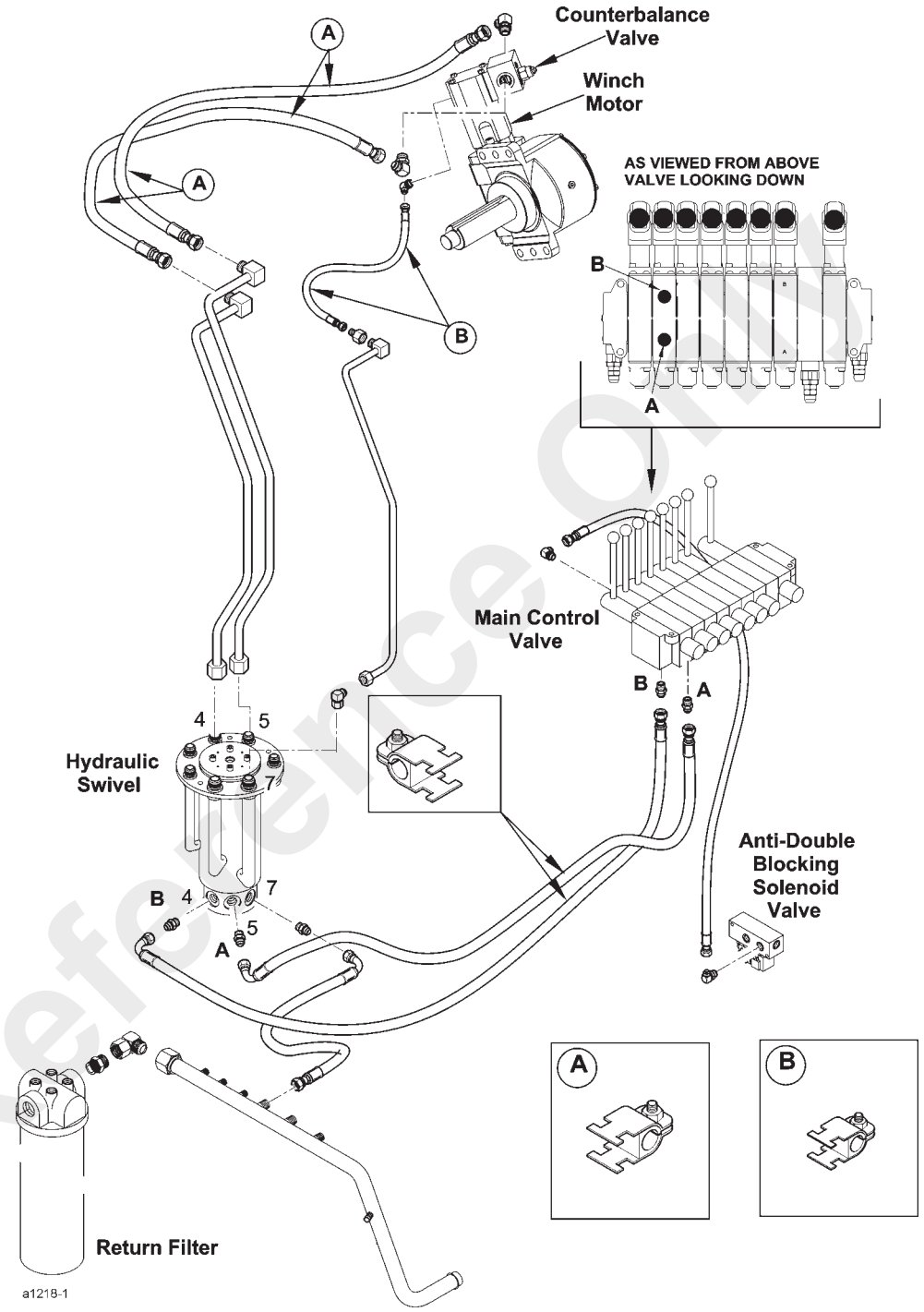

a1218-1

FIGURE 4-42

Reference Only

SWING CIRCUIT

General

The swing circuit (Figure 4-43 and 4-44) includes a swing motor, a working valve section of the main control valve, and the hydraulic lines.

Oil Flow

In the neutral position, hydraulic oil is held in the circuit and the motor is prevented from turning. The swing motor is protected by a relief valve in the inlet section of the main control valve.

Swing Right

Actuating the swing control in the operators cab to swing the mast and boom right pushes the spool in the swing section of the main control valve OUT. This sends oil through port A of the valve section to the swing motor. The motor rotates clockwise and causes the mast and booms to rotate right. Oil from the downstream side of the motor returns to port B of the control valve section. From there the oil is routed to the outlet port of the valve and through the in-line return filter to the hydraulic tank.

Swing Left

Actuating the swing control in the operator's cab to swing the mast and boom left pulls the spool in the swing section of the main control valve IN. This sends oil through port B of the valve section to the swing motor. The motor rotates counterclockwise and causes the mast and booms to rotate left. Oil from the downstream side of the motor returns to port A of the control valve section. From there the oil is routed to the outlet port of the valve and through the in-line return filter to the hydraulic tank.

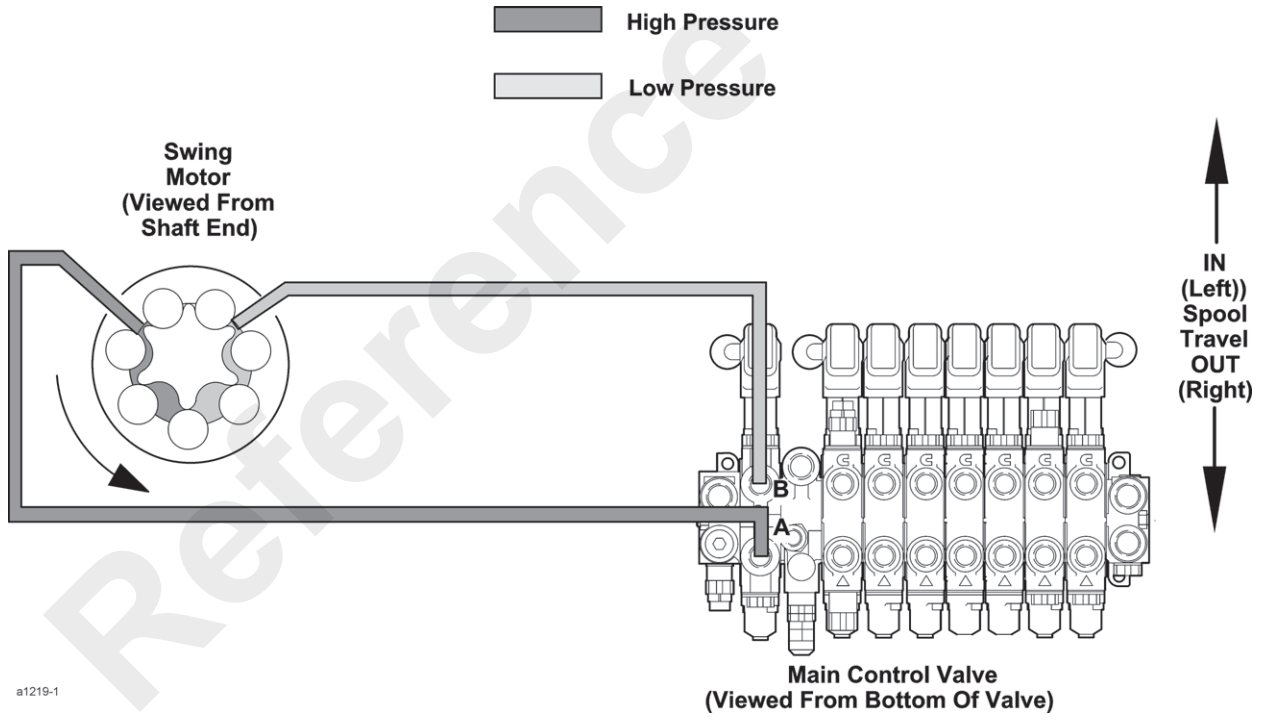

a1219-1

FIGURE 4-43

Reference Only

Published 2/23/2016, Control # 592-00

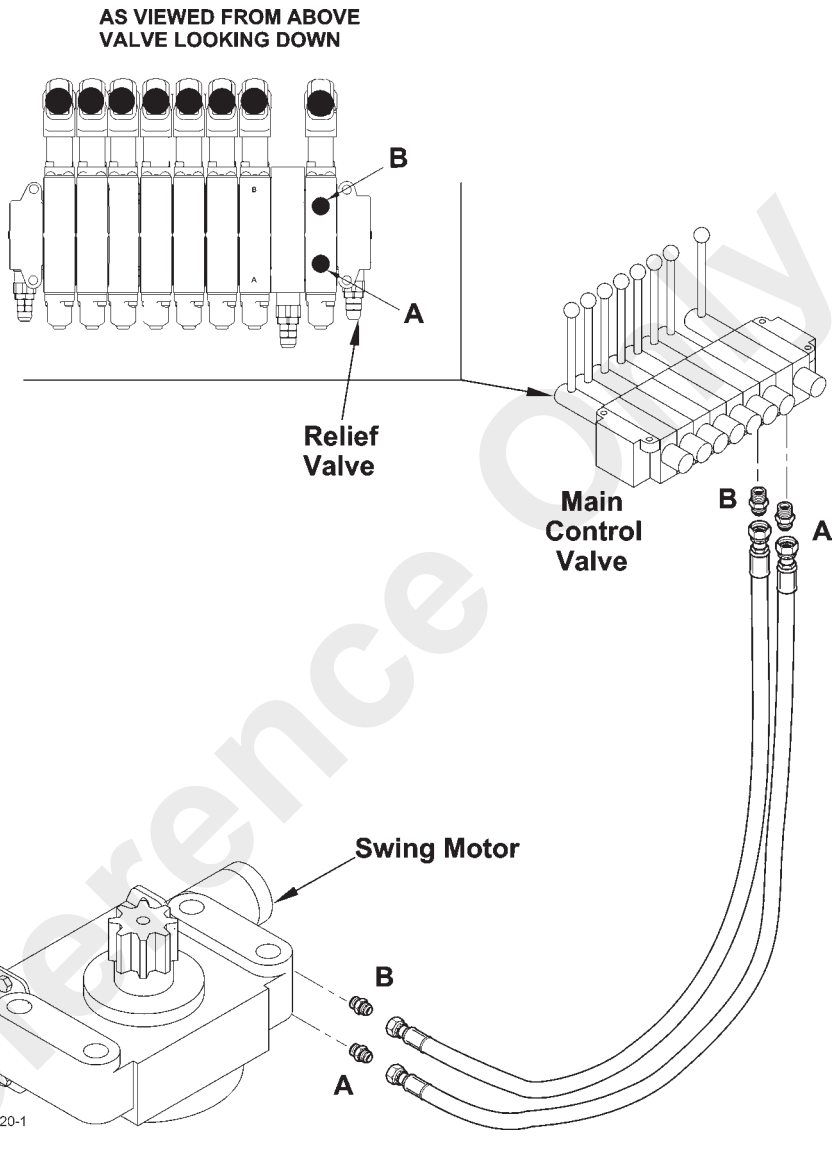

a1220-1

FIGURE 4-44

Reference Only

ANTI-DOUBLE BLOCK SYSTEM

General

The anti-double block circuit protects the hoist and telescope circuits from damage in the event that the hoist block comes in contact with the boom head causing a double blocking situation. The anti-double block system includes an anti-double block mechanism (Figure 4-45) at the end of the boom head, a valve block with three normally closed solenoids (Figure 4-46), and an anti-void assembly in the main control valve sections for telescope, hoist, and lift functions.

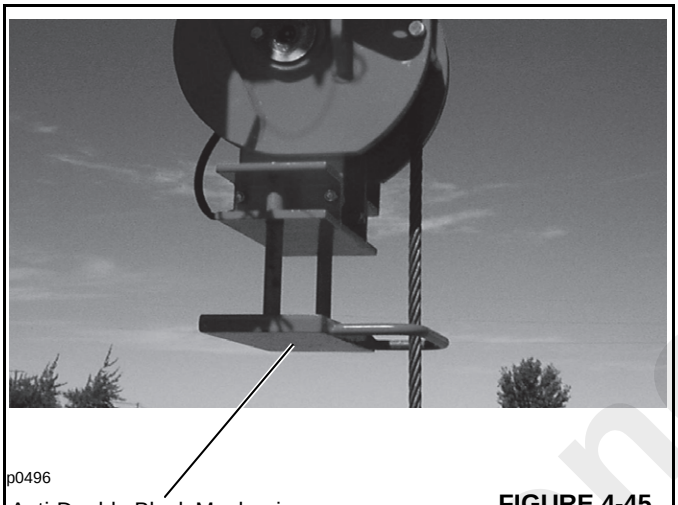

p0496

Anti-Double Block Mechanism **FIGURE 4-45**

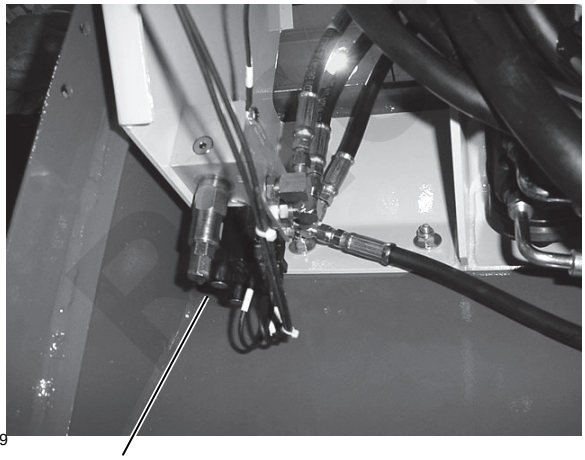

p1249

Anti-Double Block Solenoids **FIGURE 4-46**

System Function

The main control valve sections for the hoist, telescope and lift functions each have an anti-void assembly (check valve) installed internally (Figure 4-47 and 4-48). This check valve is connected to the return passage in the valve section and to port A of the valve section. Its primary function is to release hydraulic oil back to tank whenever the anti-double block solenoid valves are open (de-energized).

During normal operation the solenoid valves are in the closed (energized) position (Figure 4-47). In the closed position, oil under pressure is stopped by the solenoid valve from returning to tank. The blocked fluid under pressure passes through a restriction in the valve section to the check valve (anti-void assembly). The check valve is held closed by a combination of the check valve spring and oil pressure from the closed solenoid valve. In combination, the oil pressure and spring pressure is greater than the return oil pressure and the check valve is kept closed. Return oil is then directed through the valve spool to the outlet port of the control valve.

When the hoist block comes in contact with the anti-double blocking bracket at the end of the boom head, the bracket raises and actuates a switch. This switch, when actuated, closes an electrical signal to the three solenoid valves opening them (Figure 4-48). With the solenoid valves open, oil supply to the check valve is reduced. The check valve spring alone is not enough to hold the check valve closed, therefore, the check valve opens. With the check valve open, hydraulic oil which would normally flow to the lift cylinder, telescopic cylinder or hoist motor through port A of the valve section is returned through the check valve to the outlet of the control valve, or through the open solenoid valve, back to tank.

Lowering the hoist block will deactivate the switch to close the solenoid valves and return flow through port A to the function.

Preliminary

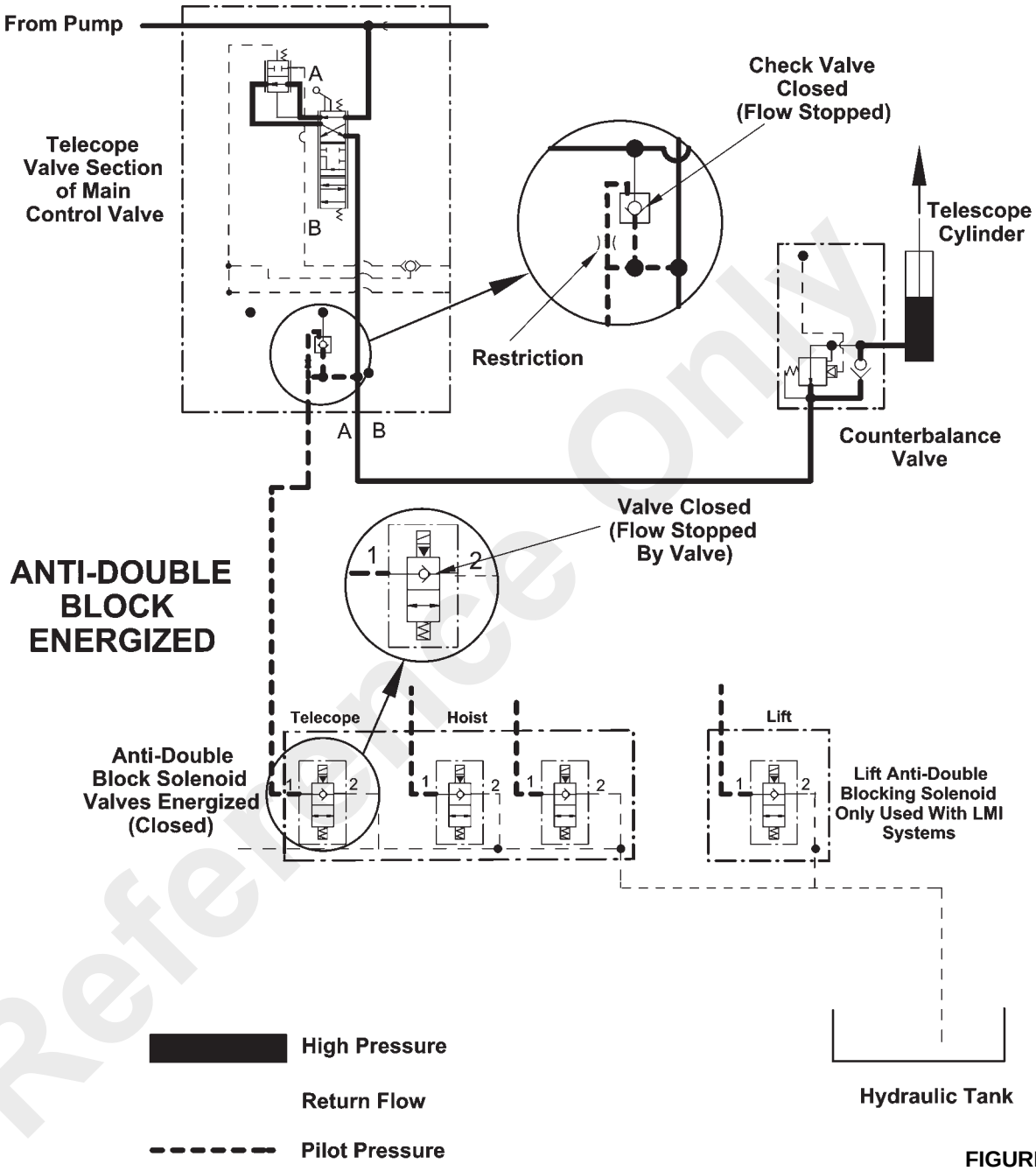

FIGURE 4-47

Reference Only

4

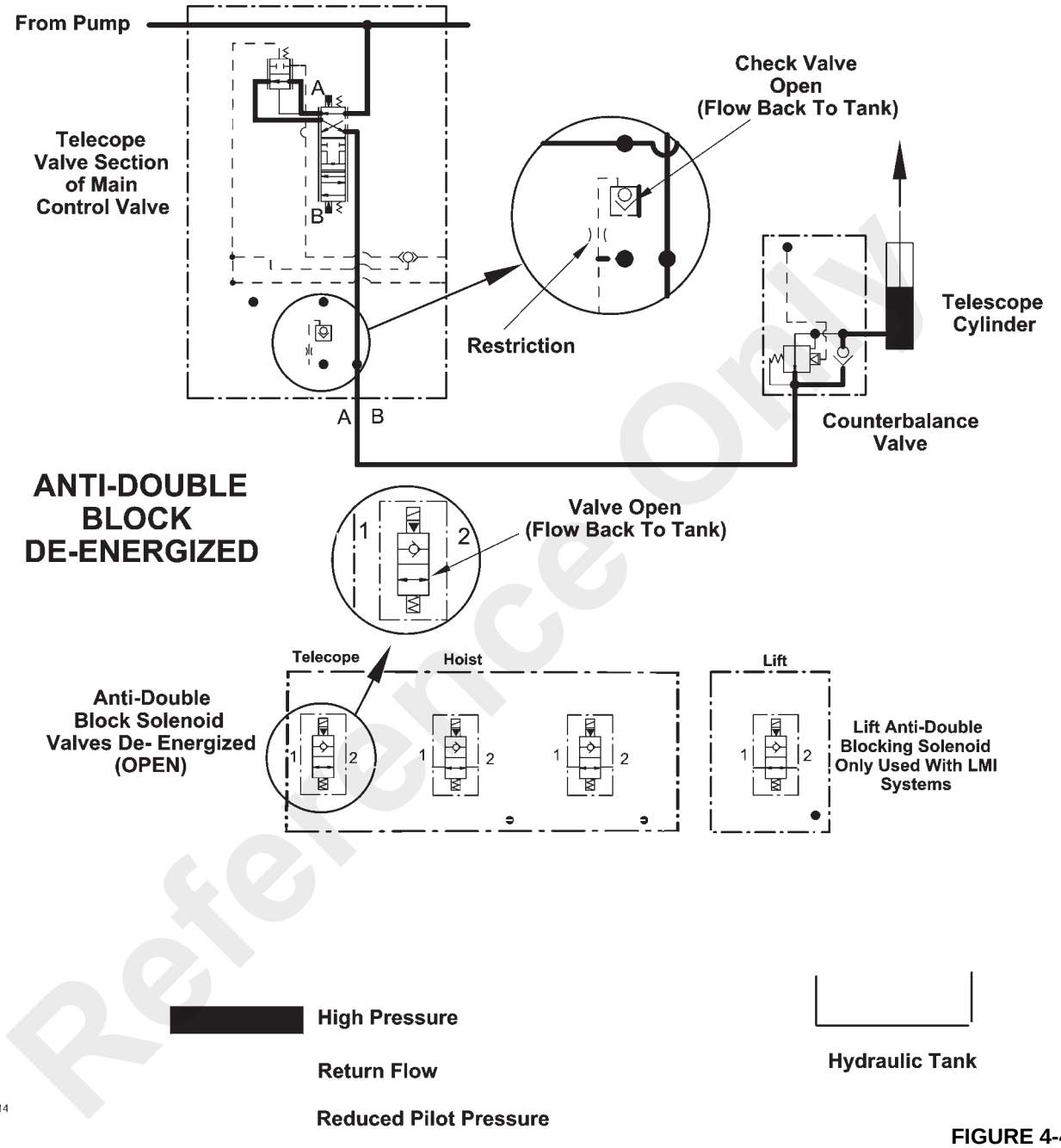

8614

FIGURE 4-48

Reference Only

Published 2/23/2016, Control # 592-00

OUTRIGGER CIRCUITS

Independently Controlled Outrigger Hydraulic System

The independently controlled outrigger hydraulic system (Figure 4-49) includes four sections of the main control valve, four outrigger cylinders and the connecting lines and hoses.

Oil Flow

NOTE: Independent outrigger circuits can be found in Figure 4-49.

Actuating the hoist control in the operator's cab to lower the left outrigger pulls the valve spool IN connecting the pump supply to port A in the control valve section. Oil leaves the port A of the control valve section and passes through the pilot operated check valves to the base end of the left outrigger cylinder causing the cylinder to extend. Return oil from the rod end of the outrigger cylinders passes through port B of the control valve section, back to tank through an in-line filter.

Pilot Operated Check Valves

The outrigger cylinders have load-holding check valves installed in the base of the cylinder. The purpose of these valves is to inhibit the cylinder from retracting if a hydraulic hose breaks. The check valve will hold the oil in the base of the cylinder until there is sufficient oil and pressure from the pump available to the rod side of the cylinder.

Oil flows freely through the check valve and into the cylinder base end when the cylinder is being extended. To retract the cylinder, oil is sent to the rod port of the cylinder. As the cylinder starts to retract, the piston meets resistance from the oil held in the cylinder base end by the check valve. Pressure increases as the pump tries to overcome the resistance.

When the pressure is high enough to overcome the spring in the check valve plus the pressure in the cylinder base end, the check valve opens and the cylinder retracts.

NOTE: The engine must be running to retract the outriggers. The pilot operated check valves inhibit retracting the outrigger cylinders simply from the weight of the crane.

Reference Only

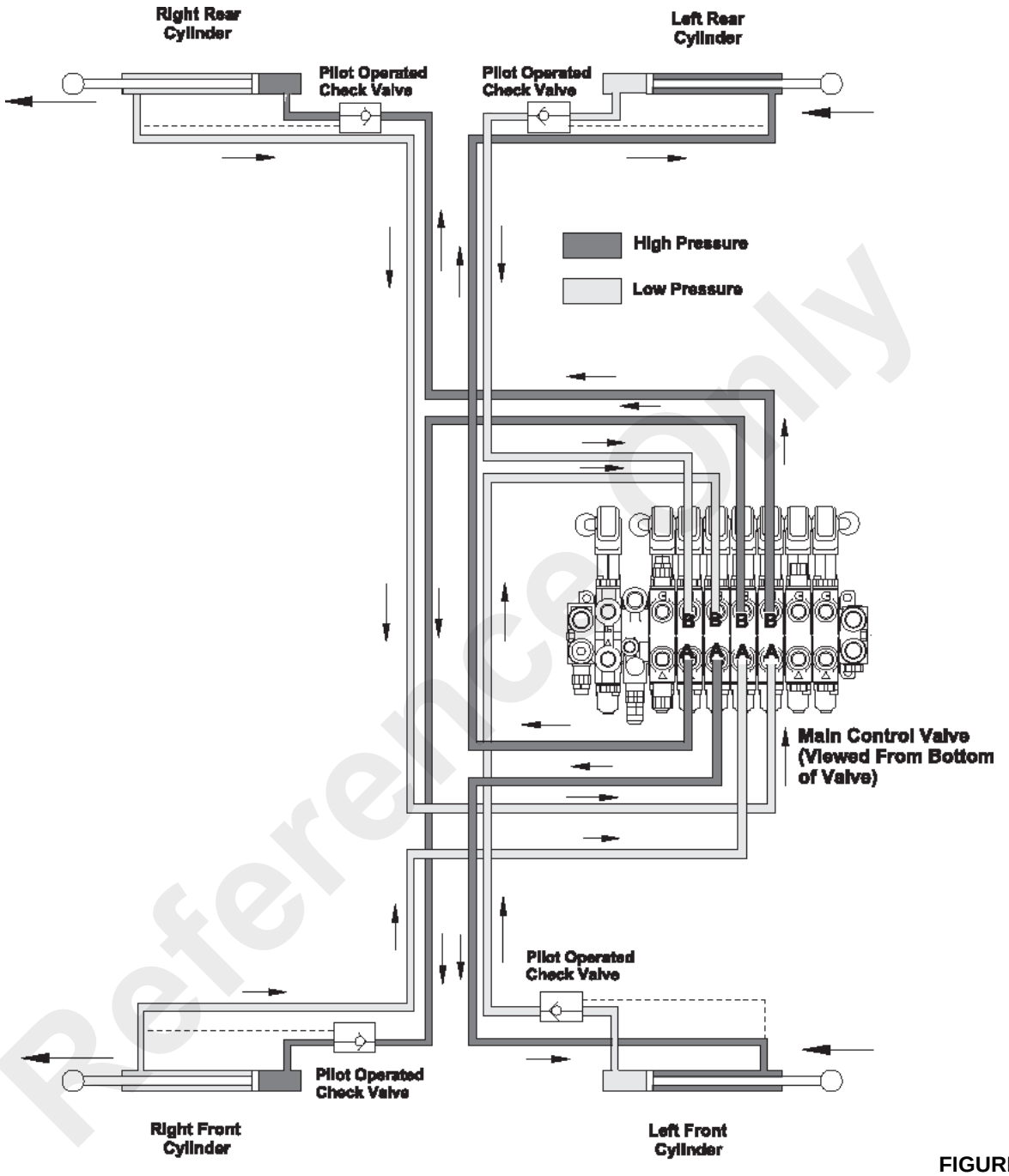

a1224

FIGURE 4-49

Reference Only

Published 2/23/2016, Control # 592-00

Outrigger Cylinder Leakage Test

If an outrigger cylinder will not hold under load, the problem is either the pilot operated check valve or internal cylinder leakage. To check for internal leakage in the cylinder:

1. Start the engine and engage the parking brake.
2. Fully lower the outrigger.
3. Shut off the engine and release hydraulic pressure in the circuit by actuating the control lever in both directions.
4. Remove the hydraulic line from the rod port of the outrigger cylinder.
5. Start the engine and actuate the control in the direction to lower the outrigger. Check the amount of leakage from the open port. If the leakage is more than a couple of drops per minute, replacement of the piston seals is recommended. See Hydraulic Cylinders.

COMPONENT REPAIR

Primary Hydraulic Pump Repair

Removal

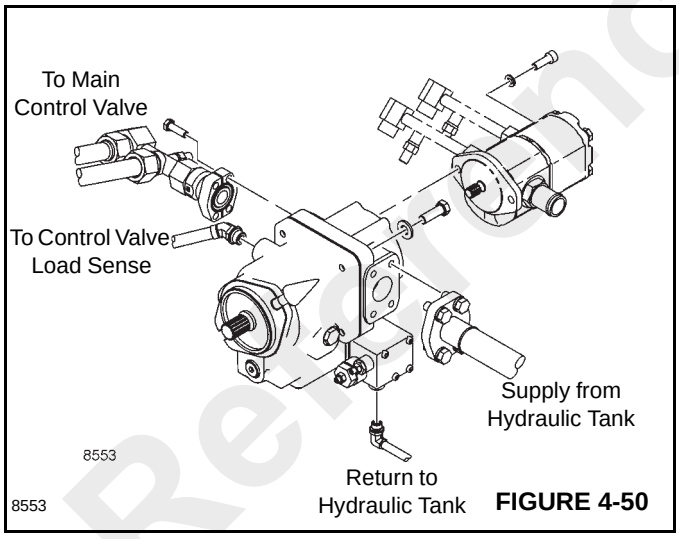

FIGURE 4-50

1. Drain the hydraulic tank.
2. Remove the secondary pump from the primary pump. See Secondary Hydraulic Pump Repair removal instructions.
3. Remove two socket head cap screws (1, Figure 4-51) and flat washers (2) securing pump support bracket (3) to the rear of the primary pump (9)
4. Remove the six cap screws (6), lock washers (5) washers and flat washers (4) securing pump support bracket (3) to pump mounting bracket (10). Remove pump support bracket (3).
5. Disconnect the suction line and pressure line from the primary pump (Figure 4-50). Disconnect the load sense and drain lines from the pump. Cap and plug all hoses and ports.
6. The pump is heavy. Use an overhead crane and a sling or a support to hold the pump in position.
7. Remove the pump mounting bolts (7, Figure 4-51) and flat washers (8). Remove pump (9) from the pump mounting bracket (10).

Disassembly and Repair

The hydraulic pump is not a field repairable component. The pump must be sent back to the pump manufacturer for repair. Contact your distributor for information.

Reference Only

Installation

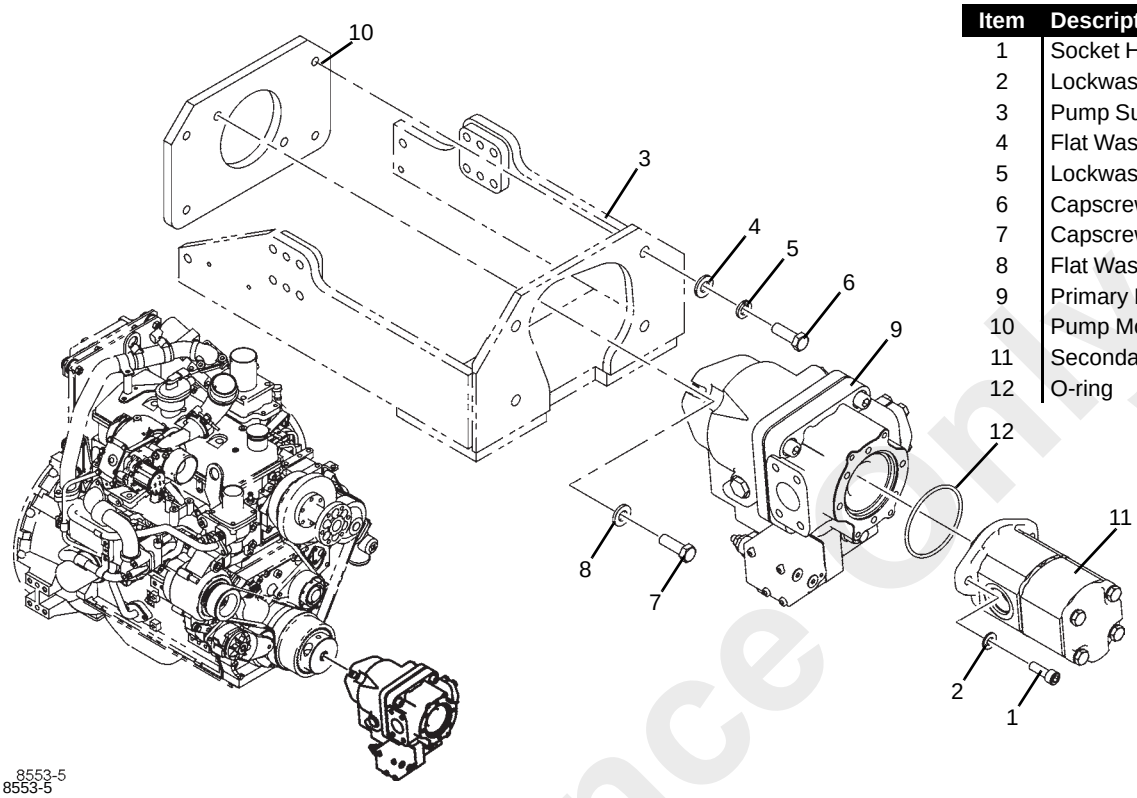

Item	Description
1	Socket Head Capscrews
2	Lockwashers
3	Pump Support Bracket
4	Flat Washers
5	Lockwashers
6	Capscrews
7	Capscrew
8	Flat Washers
9	Primary Pump
10	Pump Mounting Bracket
11	Secondary Pump
12	O-ring

FIGURE 4-51

1. Attach the pump fittings to the pump before installing the pump to engine. Check the O-rings on the inlet and outlet hose fittings. If damaged replace the O-rings.

2. Align the spline of the pump shaft with the spline of the pump coupler on the engine. Position the pump with the compensator at the bottom of the pump. Install the mounting hardware (7 and 8, Figure 4-51).

3. Install the secondary pump to the primary pump. See *Secondary Hydraulic Pump Repair*, page 4-51 installation instructions.

4. Attach the suction and pressure hoses to the primary pump.

5. Install pump support bracket (3, Figure 4-51) to pump mounting bracket (10) using cap screws (6), lock washers (5) and flat washers (4). Do not tighten the cap screws at this time.

Using the two socket head cap screws (1) and flat washers (2) removed during removal of the pump, attach support bracket (3) to piston pump (9). Tighten the cap screws to a torque of 93.8 Nm (69 lb-ft).

6. Tighten cap screws (6) to a torque of 93.8 Nm (69 lb-ft).

7. Attach the secondary pump (11) to the primary pump (9). See *Secondary Hydraulic Pump Repair*, page 4-51 for instructions.

8. Connect the load sense line to the pump compensator. Make sure the hose is routed under the pump support bracket.

9. Connect the pump drain line to the pump. Make sure the hose is routed above the pump support bracket.

10. Fill the hydraulic tank with clean filtered hydraulic oil.

CAUTION

The variable displacement pump and all other components require clean, filtered hydraulic oil for proper operation. Contaminated hydraulic oil may cause damage to the pump and other components. Before adding any oil to the hydraulic tank, be sure it is filtered through a 10 micron (absolute) or less filter.

11. The pump will fill with hydraulic oil when the tank is filled. The air in the pump will work itself back to tank.

12. Perform pump start-up. See *Pump Start-up*, page 4-51.

Reference Only

Pump Start-up

1. Start the engine and let it idle. Do not allow the engine to surge or run excessively fast during the initial start-up. ***Do not operate any hydraulic function at this time.***
2. Let the pump run for about 60 seconds to release any air that might be in the hydraulic system. Check the suction hose connections for loose clamps, fittings, etc.
3. Adjust the pump to deliver system pressures. Follow the instruction under *Adjusting Hydraulic Pressure Settings*, page 4-24.
4. Check the level of hydraulic oil in the hydraulic oil tank. If low, add only pre-filtered hydraulic oil.

CAUTION

The variable displacement pump and all other components require clean, filtered hydraulic oil for proper operation. Contaminated hydraulic oil may cause damage to the pump and other components. Before adding any oil to the hydraulic tank, be sure it is filtered through a 10 micron (absolute) or less filter.

Secondary Hydraulic Pump Repair

Technical Data

See *Technical Data*, page 4-2 at the beginning of this section.

Removal

1. Drain the hydraulic tank.
2. Disconnect the suction hose from the fitting in the inlet side of the secondary pump. Plug the port and cap the hose.
3. Disconnect the two pressure hoses from the outlet side of the pump. Plug the ports and cap the hoses to inhibit contamination from entering the hoses.
4. Support the pump and then remove two cap screws (1, Figure 4-51) and lock washers (2) securing the secondary pump to the main hydraulic pump.
5. Remove the secondary pump. Be careful not to damage the O-ring between the two pumps.

Disassembly and Repair

The secondary pump is not repairable, although seals are replaceable. If the pump needs repair, replace the pump.

Installation

1. Inspect the mounting O-ring (12, Figure 4-51) for damage. If damaged, replace it.
2. Install the O-ring in the O-ring groove of the main hydraulic pump.
3. Position the secondary pump against the main pump and install two screws (1) and lock washers (2). Be careful not to pinch the O-ring.
4. Install the fittings in pump, if removed.
5. Connect the two pressure hoses and one suction hose to the hydraulic fittings.
6. Fill the hydraulic oil tank with recommended oil.

CAUTION

The variable displacement pump and all other components require clean, filtered hydraulic oil for proper operation. Contaminated hydraulic oil may cause damage to the pump and other components. Before adding any oil to the hydraulic tank, be sure it is filtered through a 10 micron (absolute) or less filter.

7. Start the engine and let it run for several minutes at no load. Then raise and lower each outrigger to release any air in the system.

Main Control Valve

General

The main control valve is designed with very close tolerances between the spools and the valve bores. Dirt, chips or sludge can cause these surfaces and seals to wear and result in internal leakage, sticking spools or both. A thorough cleaning of the valve and replacement of seals will generally remedy a leaking problem. Extreme care must be taken to prevent nicks or scratches in machined surfaces. All spools must be installed in their original bores. If a spool or valve bore is damaged, the entire valve section must be replaced.

Removal

1. Shut off the engine. Before disconnecting any hoses from the main control valve. Actuate each control, several times, in each direction to release any pressure in the hydraulic lines.
2. Remove the front cover of the dash panel to gain access to the main control valve.
3. Mark for assembly, disconnect and plug all hoses attached to the valve assembly. Cap all the valve ports.
4. Remove the four button head cap screws, lock washers and flat washers securing the valve mounting plate to the dash. Remove plate with the valve attached.
5. Remove the four button head cap screws, lock washers and flat washers securing the valve to the mounting plate. Remove the valve and take it to a clean work area.

Reference Only

Disassembly

Complete Valve Assembly

1. Place the valve assembly on the work bench and remove all hydraulic fittings.
2. Position the valve with the outlet section (10, Figure 4-52) facing up.
3. Remove the three nuts (17 and 18) from the studs (16 and 19) at the outlet section (10).
4. Slowly, lift the outlet section (10) from the studs.

CAUTION

Be careful when separating the valve sections. The working sections (3, 6, 7, 8 and 9) have spring loaded check valve assemblies. The spring could fly out of the valve section when the section is removed.

5. Slowly, lift the seven working valve sections from the studs.
6. Slowly, lift the mid-inlet valve section (4) from the studs.
7. Slowly, lift working valve section (3) from the studs.
8. Remove the studs (16 and 19) from inlet section (1).
9. Remove and discard O-rings (2, Figure 4-52) from the valve sections.
10. Remove load sense shuttle disc (5) from valve sections (6, 7 and 8).

Spool Section

1. Remove load check spring (14 or 17, Figure 4-53) and load check poppet (15 or 16).
2. Remove cap assembly (9) by removing the two socket head cap screws (9).
3. On the opposite end, remove the handle assembly (22 or 23, Figure 4-53) by removing two socket head cap screws (21) and a roll pin. Remove seal plate (1). Remove and discard wiper seal (4, Figure 4-53) and O-ring (5).
4. Slowly loosen spool end shoulder screw (10, Figure 4-53). The screw is under pressure from spring (12), be sure to hold the spring seats (11) and spring (12) when removing screw (10).
5. Remove spring seats (11) and spring (12). Remove seal plate (1). Remove and discard wiper seal (4, Figure 4-53) and O-ring (5).

CAUTION

Valve section 3 has a different spring than valve sections 6, 7, 8 and 9. Be sure not to mix the springs.

6. If equipped, remove anti-void valve assembly (15, Figure 4-52)
7. If equipped, remove port relief (11).
8. Remove shut-off plug(s) (13).
9. If a valve spool (7, Figure 4-53) must be removed, keep it with its valve housing (6). Do not mix valve spools and valve housings.

Reference Only

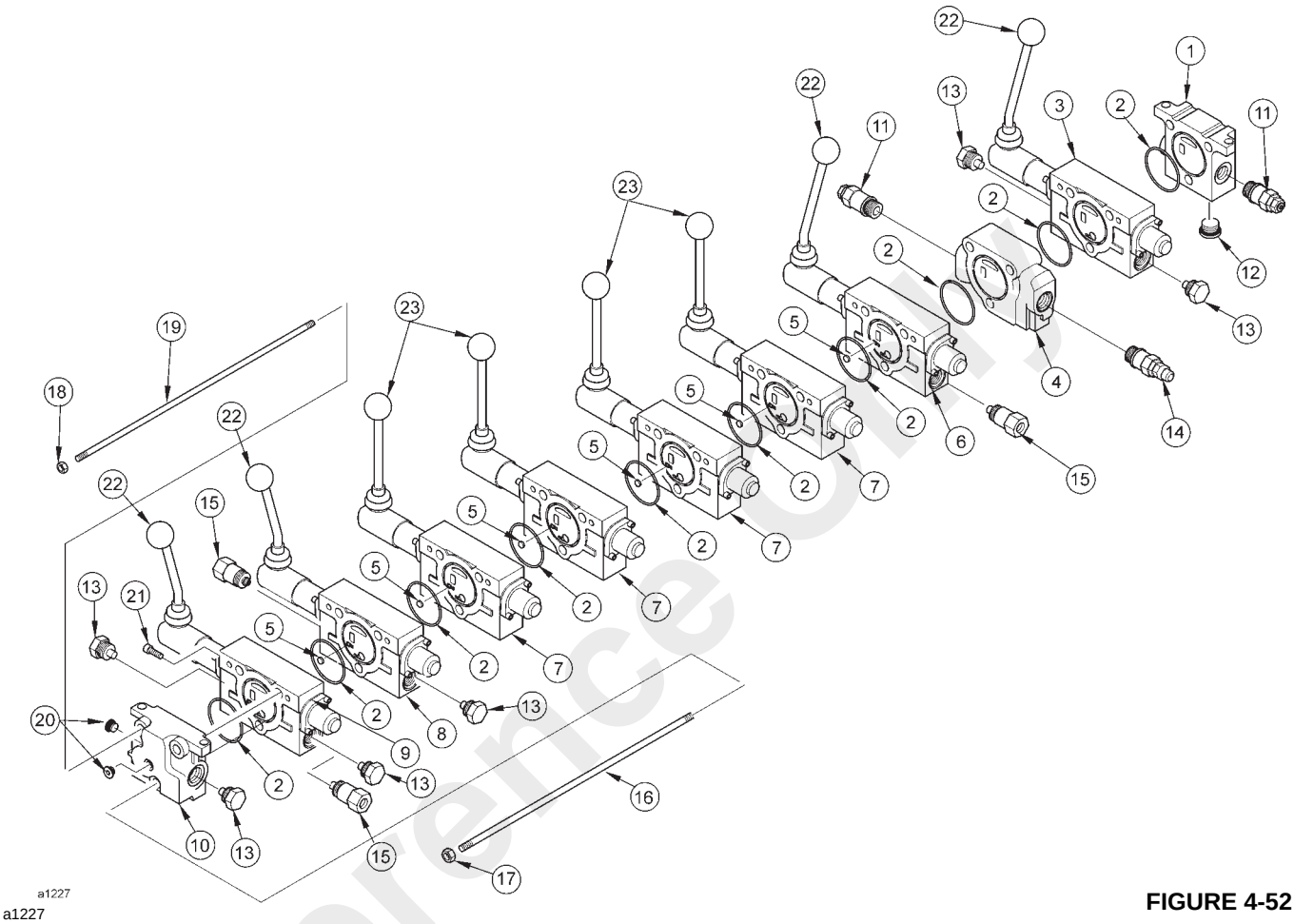

a1227

FIGURE 4-52

Item	Description	Item	Description
1	Inlet Valve Section	13	Shut-Off Plug (6)
2	O-ring (8)	14	Load Sensing Relief Valve
3	Working Valve Section (Swing)	15	Anti-Void Assembly (2 Std - 3 w/ RCL)
4	Mid-Inlet Valve Section	16	Tie Rod
5	Load Sense Shuttle Disc (4 Std - 6 w/ RCL)	17	Nut (2)
6	Working Valve Section (Telescope)	18	Nut (4
7	Working Valve Section (Outrigger	19	Tie Rod (2)
8	Working Valve Section (Hoist)	20	Plug (2)
9	Working Valve Section (Lift)	21	Hex Socket Capscrew (12)
10	Outlet Valve Section	22	Handle Assembly (4)
11	Main and Port Relief Valves	23	Handle Assembly (2)
12	Plug		

Reference Only

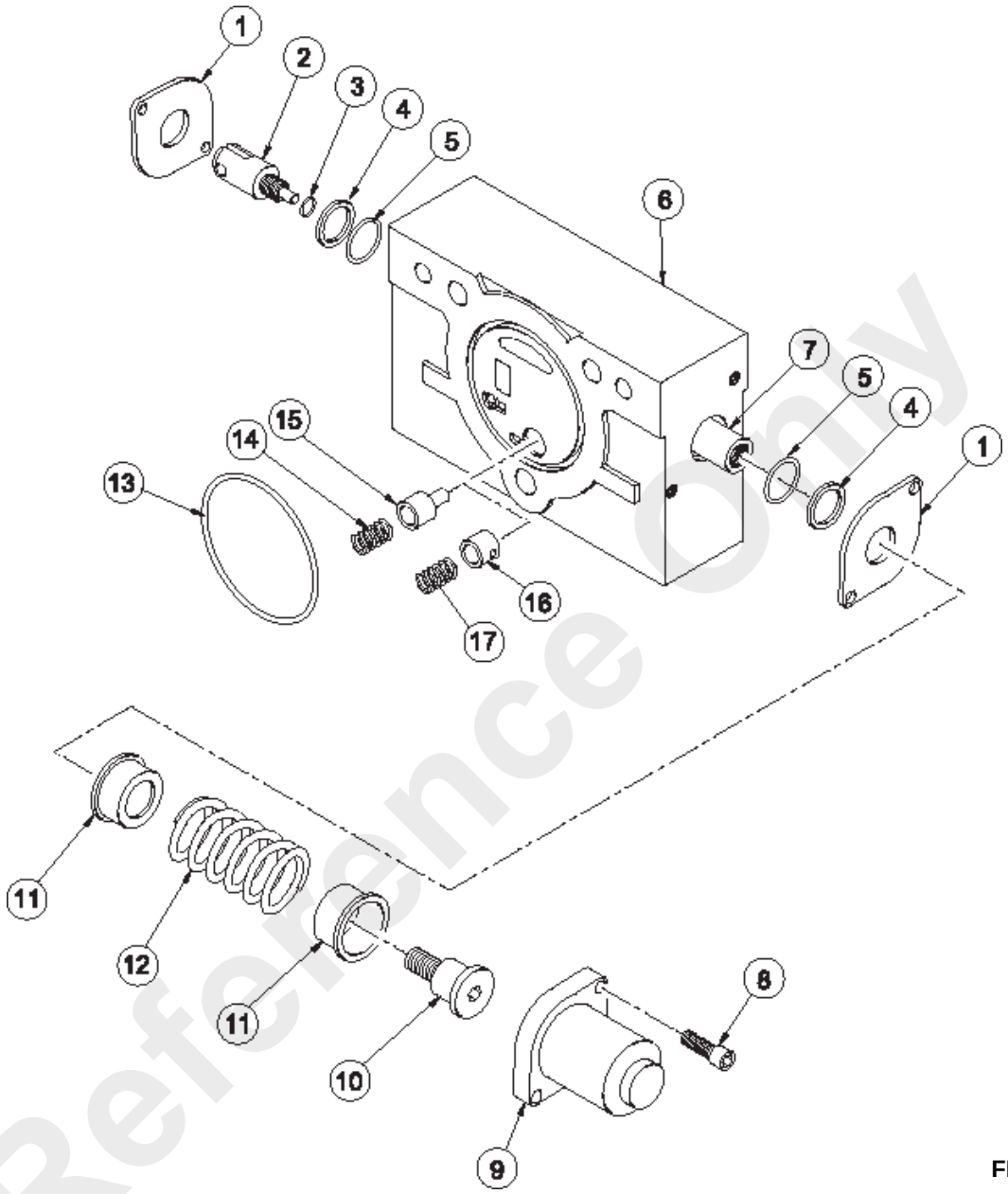

a1228

FIGURE 4-53

Item	Description	Item	Description
1	Seal Plate (2)	10	Shoulder Screw
2	Spool End	11	Spring Seat
3	O-ring	12	Spring
4	Wiper Seal (2)	13	O-ring
5	O-ring (2)	14	Spring (All Sections Except Swing)
6	Valve Housing	15	Load Check Popper (All Sections Except Swing)
7	Spool	16	Poppet (Swing Section Only)
8	Hex Socket Capscrew (2)	17	Spring (Swing Section Only)
9	Cap		

Reference Only

Assembly

Spool Section

1. If any valve spool was removed from its valve housing, apply petroleum jelly to the spool and then insert the spool into the section.
2. Coat all seals with a light coat of hydraulic oil, and then install O-ring (4, Figure 4-53), and wiper seal (5) into valve section (6) at the spring end. Locate seal plate (1) over the wiper seal.
3. Using shoulder bolt (10), attach spring seats (11) and spring (12) to valve spool (7). Tighten the shoulder bolt (10) to 8.2 - 10.8 Nm (6 - 8 lb-ft).
4. Install end cap (9) and secure with two socket head cap screws (8). Tighten to a torque of 8.2 - 10.8 Nm (6 - 8 lb-ft).
5. Install O-ring (5) and wiper seal (4) into housing (6). Install seal plate (1, Figure 4-53) and handle assembly (22 or 23, Figure 4-52). Tighten to a torque of 8.2 - 10.8 Nm (6 - 8 lb-ft).
6. If equipped, install the shut-off plug(s) (13). Tighten to a torque of 39.4 - 50.0 Nm (29 - 36 lb-ft).
7. If equipped, install the anti-void valve assembly (15). Tighten to a torque of 39.4 - 50.0 Nm (29 - 36 lb-ft).
8. If equipped, install port relief valve (11). Tighten to a torque of 39.4 - 50.0 Nm (29 - 36 lb-ft).

Complete Valve Assembly

1. Lay the valve components on a clean, flat work surface.
2. Assemble nuts (17 and 18, Figure 4-52) to one end of each stud (16 and 19). Insert the studs through the stud holes in the inlet valve section (1). Lay the inlet section on the work bench with the studs facing up.
3. Place O-ring (2) in position on the face of the inlet section.
4. Place the first spool valve section (3) (Swing), O-ring side up over the studs onto inlet section (1). Place O-ring (2) in position on the face of the valve section. Install the load check poppet (15 or 16, Figure 4-52) and spring (14 or 17) into the load check cavity. Be sure the nose of the check poppet is facing down.
5. Install mid-inlet section (4) over the studs and onto valve section (3). Position O-ring (2) on the mid-inlet section (4).
6. Install the second spool valve section (6) (Telescope). Position O-ring (2) on the valve section. Install load sense shuttle disc (5).
7. Repeat step 6 for the remaining valve sections. The last spool section (Lift) does not require item 5 (load sense shuttle disc) to be installed.
8. Position outlet valve section (10) on the last working valve section and hand tighten stud nuts (17 and 18).
9. Position the valve assembly with the mounting pads of the end sections on a flat surface. To obtain proper alignment of the end sections relative to the spool sections, apply a downward force. Snug tie rod nuts (17 and 18) to about 13.6 Nm (10 lb-ft). Final torque is 44.8 Nm (33 lb-ft.) on larger nut and 19 Nm (14 lb-ft) on the smaller nuts.

Installation

1. Install fittings into valve
2. Position the valve assembly on the mounting plate and secure with four button head cap screws, lock washers and flat washers.
3. Attach the valve mounting plate to the dash using four button head cap screws, lock washers and flat washers.
4. Connect all hoses to the control valve.
5. Start the engine and release the air in the hydraulic lines by operating each hydraulic function several times in both directions.
6. Check for leaks and fill the reservoir, if required.

Main Relief and Port Relief Valves

The cartridge-type relief valves are typically of the pilot poppet type with external adjustment. Any malfunction is usually the result of foreign matter lodging between the piston (see Figure 4-54), the relief valve poppet and the check valve.

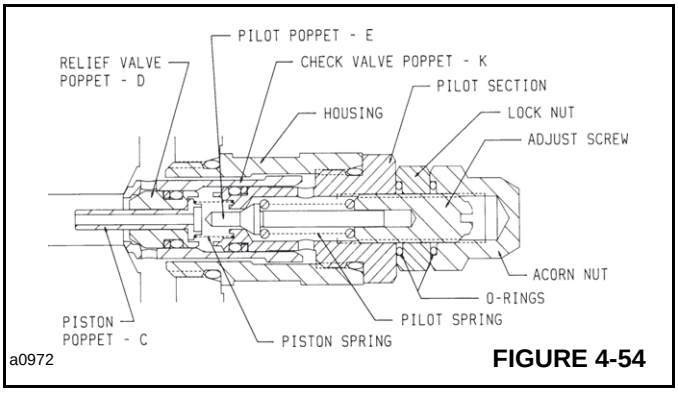

FIGURE 4-54

To perform service, clean the surrounding area and remove the complete relief valve cartridge. Examine the seat in the main relief housing and if grooves and ridges are evident, the valve must be replaced.

The design of the pilot poppet and its seal provides positive seating and very seldom requires any maintenance. Therefore, the pilot section can be removed from the cartridge housing without disturbing the pressure setting. With it will come the check valve poppet and other internal parts.

Reference Only

These are easily disassembled and should be examined for foreign material. All seats and seating surfaces should be smooth and free of nicks, scratches or grooves. Examine O-rings and backup washers for any damage and replace if necessary. All moving parts should slide freely, with oil seal friction being present.

After inspecting and cleaning, immerse all parts in hydraulic oil and reassemble. Since the pressure setting was not disturbed, the relief valve can be tested for proper function under actual working conditions.

If operating difficulties indicate that the pilot poppet is leaking or sticking, remove internal parts of the pilot section, and follow the same procedure as above. After assembly, adjust the relief valve pressure per instructions in this section.

If the relief valve still does not function properly, replace the relief valve.

Anti-Void Troubleshooting

Trouble resulting in a malfunctioning anti-void valve can usually be traced back to foreign matter plugging the sensing hole or preventing free movement of the poppet. Also, check seat for scratches, nicks and other marks.

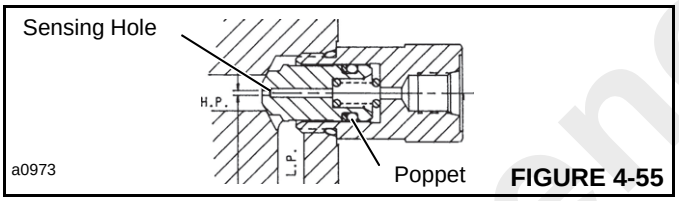

FIGURE 4-55

Swing Motor

Removal

1. Shut off the engine, set the parking brake and place chock blocks at each wheel. Before disconnecting any lines or hoses from the swing motor, actuate the swing control lever in both directions, several times, to release any pressure in the circuit.

CAUTION

The swing motor can only be reached from under the machine. Shut off the engine, set the parking brake and remove the ignition key. Block all tires.

2. Before disconnecting the hydraulic lines, clean the port area of the swing motor thoroughly. Disconnect the hydraulic lines from the swing motor. Put caps and plugs on the hoses and ports to keep dirt out.
3. Remove the two mounting socket head cap screws and lock washers from the swing motor. Remove the swing motor and gasket. Discard the gasket.

Table 4-7
Relief Valve Troubleshooting

Problem	Probable Cause	Remedy
Can't get pressure.	Poppet D, E, or K stuck open or contamination under seat (Figure 4-54).	Check for foreign matter between poppets D, E or K and their mating parts. Parts must slide freely.
Erratic Pressure.	Pilot poppet seat damaged. Poppet C sticking in D (Figure 4-54).	Replace the relief valve. Clean and remove surface marks for free movement.
Pressure setting not correct.	Normal wear. Lock nut & adjusting screw loose.	Adjust pressure.
Leaks.	Damaged seats. Worn O-ring. Parts sticking due to contamination.	Replace the relief valve. Replace the relief valve. Disassemble and clean.

Reference Only

Disassembly

NOTE: Cleanliness is extremely important when repairing the swing motor. Work in a clean area. Plug the ports then use a wire brush to remove foreign material and debris from around the external joints of the motor. Check the shaft and key slot, remove all nicks, burrs or sharp edges that might damage seals during installation. Before starting the disassembly procedures, drain any remaining oil from inside the motor.

1. Place the motor in a vice and clamp across the edges of the flange (Figure 4-56) with the output shaft facing down. When clamping use protective devices on the jaws, such as soft jaws, pieces of rubber or wood.

CAUTION

Although not all drawings show the motor in a vice, it is recommended that you keep the motor in the vice during disassembly and assembly. Follow the clamping procedure explained in Step 1.

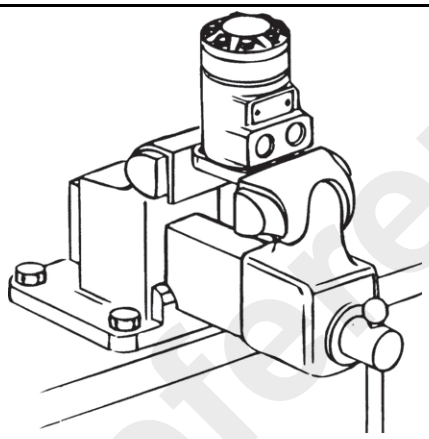

a0763 **FIGURE 4-56**

2. Remove seven cap screws (19, Figure 4-58) and seal washers (18).
3. Remove end cap (17). Remove and discard seal (13) from the end cap.
4. Remove gerotor (16). Remove and discard seal (13) from the gerotor.
5. Remove drive shaft (14).
6. Remove spacer plate (15).
7. Remove seal (13) from housing (10).
8. Remove output shaft (9) from housing (10).
9. Remove needle thrust bearing (8) from shaft or housing.
10. Reposition the motor in the vice. Clamp across ports as shown in Figure 4-57. DO NOT clamp on housing. Excessive clamping pressure on side of housing causes distortion.

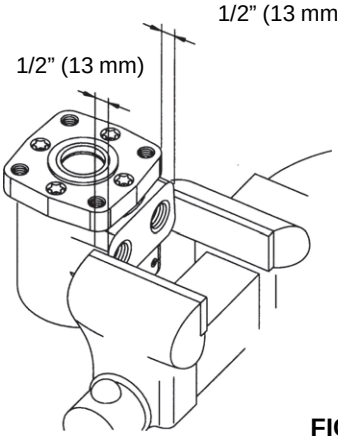

a0764 **FIGURE 4-57**

Reference Only

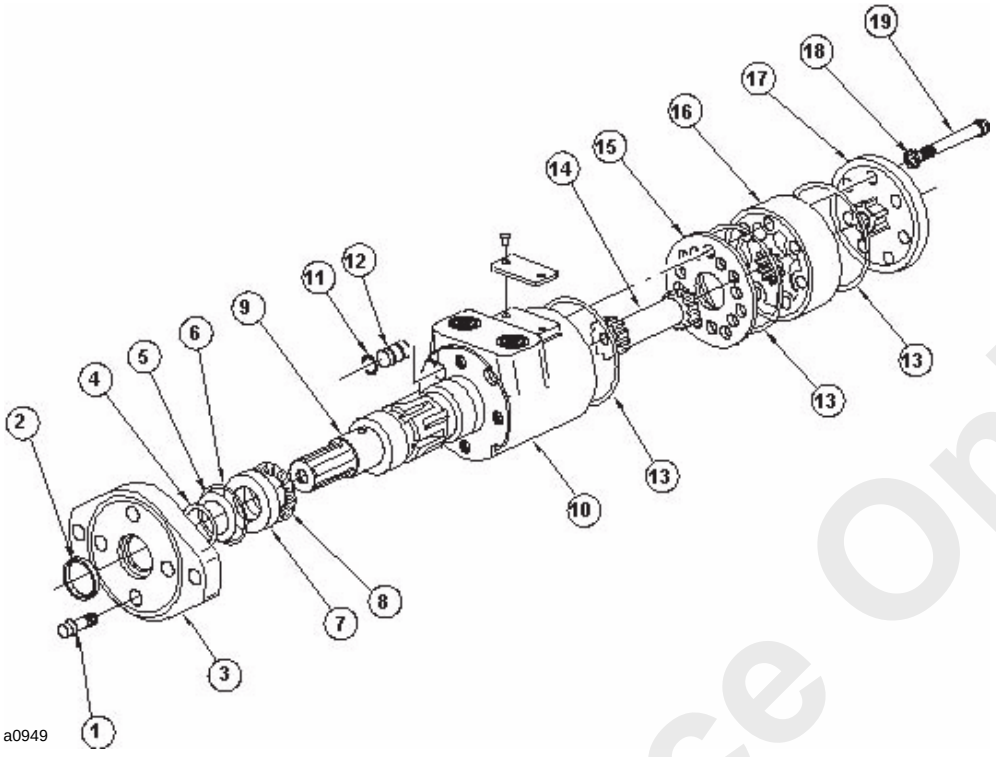

Item	Description
1	Screw (4)
2	Exclusion Seal
3	Mounting Flange
4	Backup Ring *
5	Shaft Pressure Seal *
6	Seal *
7	Bearing Race
8	Thrust Needle Bearing
9	Output Shaft
10	Housing
11	O-ring
12	Plug
13	Seal (3) *
14	Drive Shaft
15	Spacer Plate
16	Gerotor Set
17	End Cap
18	Seal Washer (7) *
19	Screw (7)

*Included In Seal Kit

FIGURE 4-58

11. Remove four cap screws (1) from mounting flange (3). These screws were installed with Loctite to hold them in place.

The screws will require 300 - 400 lb-in (35 - 45 Nm) of torque to break loose and 100 lb-in (11 Nm) torque to remove. Do not use an impact wrench on the screws. This could result in rounded heads or broken sockets.

NOTE: If a torque higher than given above is required to break the cap screws loose, apply heat according to the following:

When heated, Loctite partially melts. This reduces the torque required to remove screw. Use a small flame propane torch to heat a small area of the housing where the screws enter. See Figure 4-59. **Be careful not to overheat the housing** and damage the motor. Gradually apply torque to the cap screw with a socket wrench as heat is applied for 8 to 10 seconds. As soon as the screw breaks loose, remove the heat from the housing. Continue turning the screw until it is completely removed. Repeat for other cap screws.

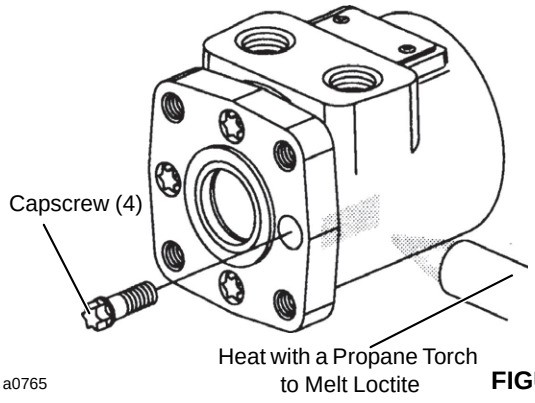

FIGURE 4-59

12. Carefully remove flange (3, Figure 4-58) from housing (10).

13. Exclusion seal (2), backup ring (4), pressure seal (5) and seal (6) will come off with flange (3). Use the seal removal tool shown in Figure 4-60 and 4-61 to remove the exclusion and pressure seals.

Reference Only

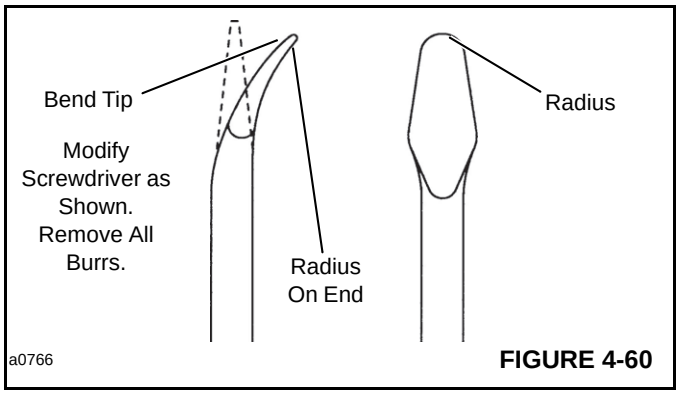

FIGURE 4-60

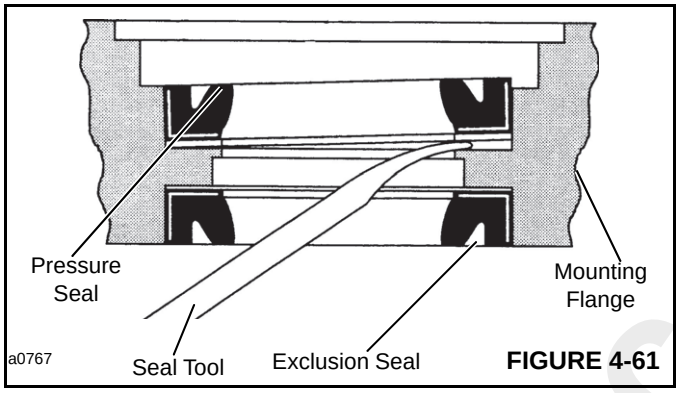

FIGURE 4-61

14. A metal plug (12, Figure 4-58), with O-ring (11), plugs a machined hole in the housing. It is not necessary to remove the plug and replace the O-ring unless leakage occurs around the plug. To remove the plug, insert a 5 mm (0.187 in) hex key through the port opening and push it out.

Inspection/Cleaning

Check all mating surfaces. Replace any parts with scratches or burrs that could cause leakage or damage. Clean all metal parts in a suitable solvent. Blow dry with air. Do not wipe parts with a cloth or paper towels, because lint or other matter could get into the hydraulic system and cause damage.

Check around the key slot and chamfered area of the shaft for burrs, nicks or sharp edges that could damage seals during assembly. Remove nicks or burrs with a hard smooth stone. Do not file or grind motor parts.

NOTE: Lubricate all seals with petroleum jelly. Use new seals when assembling the motor. **DO NOT stretch the seals before installing them**.

Cleanliness is extremely important in the successful application of Loctite. Before Loctite can be applied, the parts should be cleaned as follows:

NOTE: Fully cured Loctite resists most solvents, oils, gasoline, and kerosene and is not affected by cleaning operations. It is not necessary to remove cured Loctite that is securely bonded in tapped holes; however, any loose particles of cured Loctite should be removed.

1. Wash the housing with a suitable solvent to remove oil, grease and debris. Pay particular attention to the four tapped holes on the flange end.

2. Blow dry with compressed air. Clean and dry the tapped holes.

3. Wire brush the screw threads to removed cured Loctite and other debris. Discard any screws that have damaged threads or rounded heads.

4. Wash the screws with a non-petroleum base solvent. Blow dry with compressed air.

Assembly

Shaft End

1. If plug (12, Figure 4-58) was removed, lubricate the new O-ring (11) and install on the plug. The plug has two O-ring grooves, but requires only one O-ring in the groove closest to the end of the plug. Push the plug into the housing (10) until it is flush with the housing. Be careful not to damage the O-ring.

2. Lubricate output shaft (9, Figure 4-58) with hydraulic oil (See Figure 4-62) and install the shaft into housing (10).

NOTE: Do not permit oil to get into the four tapped holes of the housing (10).

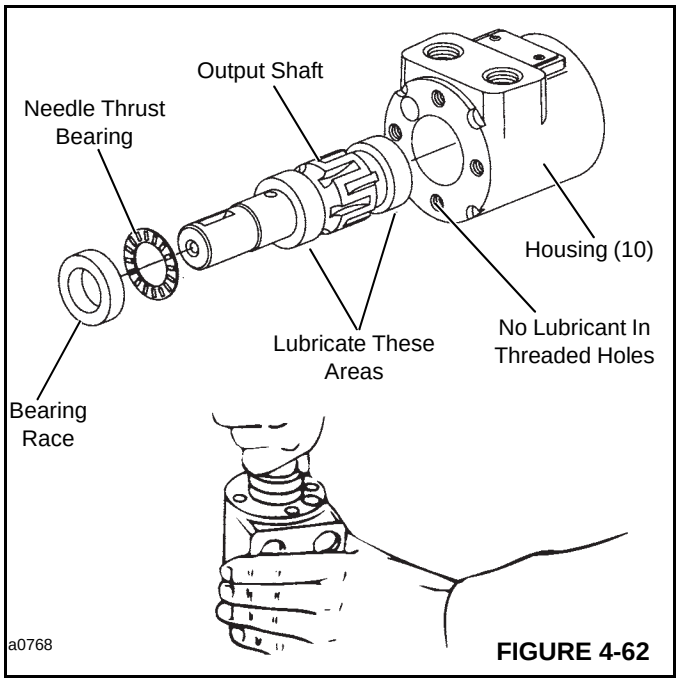

FIGURE 4-62

3. Install needle thrust bearing (8), then bearing race (7) on shaft (9). Pull shaft partially out of housing. Push all three parts in housing (10) together (See Figure 4-62). The bearing race must rotate freely when in position.

Reference Only

4. Visually check seal seats in the mounting flange (3) for scratches or other marks that might damage the seals (5). Check for cracks in flange (3) that could cause leakage.

5. Install exclusion seal (2, Figure 4-58) in flange (3) with the lips of the seal facing out. See Figure 4-63. Carefully press the exclusion seal in place.

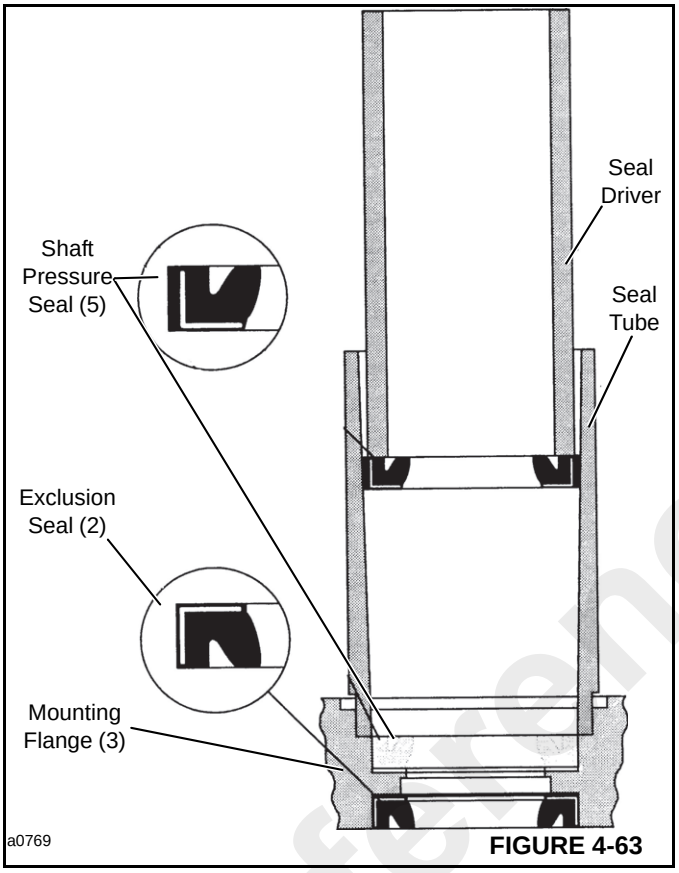

FIGURE 4-63

6. Install shaft pressure seal (5) in flange (3) with lips of seal face up using a suitable driver. See Figure 4-63. Carefully press the pressure seal in place.

NOTE: After installing the seal in the flange, examine the seal condition. If damaged or improperly installed, replace the seal before continuing with assembly.

7. Install O-ring (6, Figure 4-58) into groove in flange (3).

8. It is recommended to apply a light coat of Loctite Primer NF in tapped holes of housing (10). Allow the primer to air dry for at least 1 minute. Do not force dry with air jet; the primer will blow away.

   Use of primer is optional. With primer, Loctite curing time is approximately 15 minutes. Without the primer the curing time is approximately 6 hours.

9. Apply 3 or 4 drops of Loctite sealant at the top of the threads for each of the four holes in the housing (see Figure 4-64). Do not allow parts with Loctite to come in contact with any metal parts other than those for assembly. Wipe off excess Loctite from housing face, using a non-petroleum base solvent.

   Do not apply Loctite to threads more than 15 minutes before installing screws. If the housing stands for more than 15 minutes, repeat application. No additional cleaning or removal of previously applied Loctite is necessary.

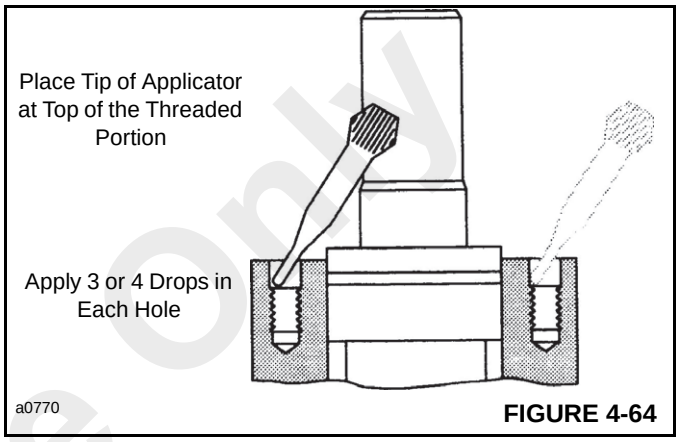

FIGURE 4-64

10. Before installing the flange and seal assembly over shaft (9, Figure 4-58), place a protective sleeve or bullet over the shaft. Then lubricate the space between exclusion seal (2) and pressure seal (5), as well as the lips of both seals (see Figure 4-65).

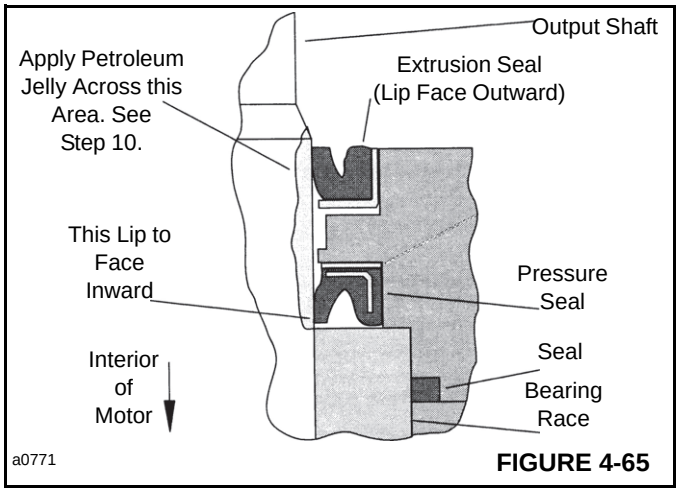

FIGURE 4-65

Install flange. Rotate flange slowly while pushing down over the shaft. Be careful not to invert or damage the seals.

11. After removing the protective sleeve or bullet, clamp the motor in a vise. Make sure the shaft cannot fall out. Install dry screws and alternately torque them immediately to 28 Nm (250 lb-in). If you use primer, allow to cure for 10 to 15 minutes. Without primer, allow 6 hours curing before subjecting the motor to high torque reversals.

Reference Only

Published 2/23/2016, Control # 592-00

Gerotor End

12. Reposition the motor in the vise with gerotor end up. Clamp across the ports. Do not clamp on side of housing.

NOTE: To aid installation of seals, apply a light coat of clean petroleum jelly to seals. Do not stretch the seals before installing them in a groove.

13. Pour approximately 30 ml (1 oz) of clean hydraulic oil in the output shaft cavity.

14. Install O-ring (13, Figure 4-58) in the housing groove. Avoid twisting the seal.

Timing Procedure

15. Install drive shaft (14, Figure 4-58). Use a felt tip pen to mark one drive tooth. Align this mark with the timing dot on the output shaft (Figure 4-66).

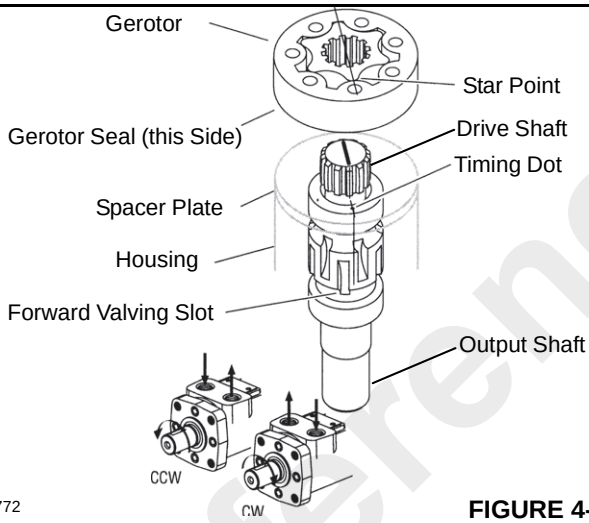

FIGURE 4-66

NOTE: If drive shaft (14) is not symmetrical, install larger splined end into output shaft (9).

16. Install spacer plate (15).

17. Install seal (13) in gerotor seal groove. Carefully place gerotor on spacer plate, seal side toward the spacer plate. Align any star point with tooth marked on drive shaft (Figure 4-66).

18. Rotate gerotor (16, Figure 4-58) to line up with bolt holes. Be careful not to disengage star from drive or disturb the gerotor seal.

19. Install seal (13) in end cap (17). Carefully place the end cap on gerotor (16).

20. Install cap screws (19) and seal washers (18) in end cap (17). Tighten the cap screws to 7.4 Nm (40 lb-in). Make sure the seal washers are properly seated. Then, tighten the cap screws to a torque of 27-29 Nm (235-250 lb-in) in the sequence shown in Figure 4-67.

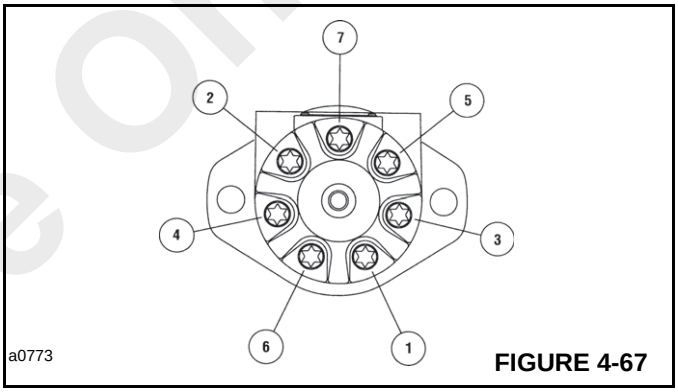

FIGURE 4-67

Installation

1. Place a new gasket on the face of the swing motor mounting flange.

2. Align the splines of the swing motor shaft with the splines of the worm gear shaft of the swing gear box. Install the swing motor to the gearbox with two socket head cap screws and lock washers.

3. Connect the hydraulic lines and fittings to the swing motor.

4. Start the engine and slowly rotate the mast to remove any air in the swing hydraulic circuit. Check for leaks.

Reference Only

Hoist Motor

Removal

- Shut off the engine, set the parking brake.
- Before disconnecting the hydraulic lines, clean the port area of the hoist motor thoroughly. Disconnect the hydraulic lines from the hoist motor. Put caps and plugs on the hoses and ports to keep dirt out.
- Loosen and remove the two socket head cap screws and lock washers (Figure 4-68) securing the motor to the hoist. Remove the hoist motor.

Special Tools

- Shaft seal installation tool.
- Bullet.
- Alignment studs (2) - Figure 4-69.

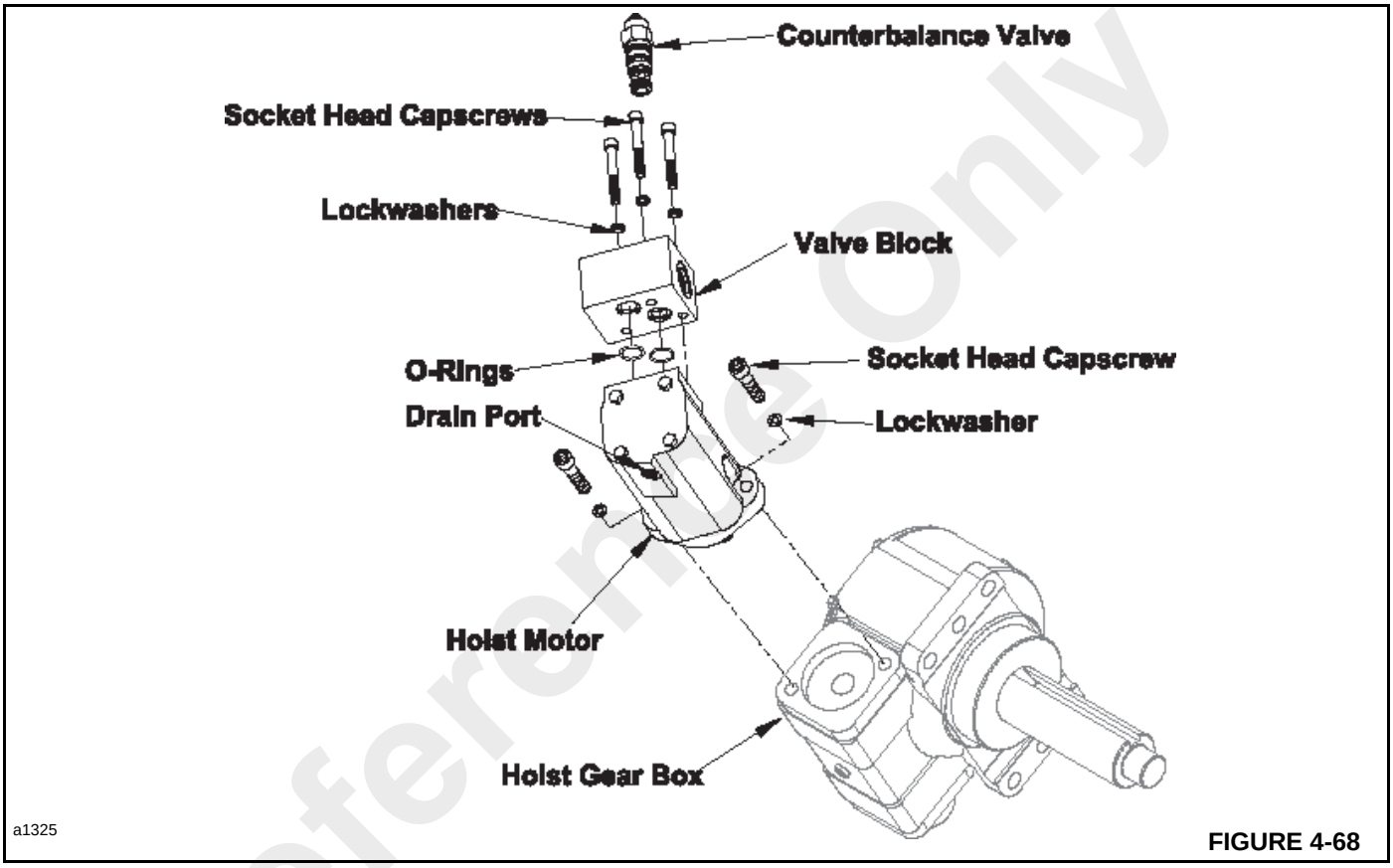

FIGURE 4-68

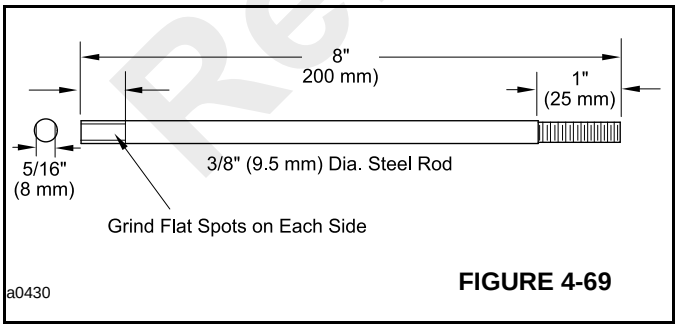

FIGURE 4-69

Reference Only

Published 2/23/2016, Control # 592-00

Disassembly

CAUTION

Cleanliness is extremely important when repairing a hydraulic motor. Work in a clean area. Use a wire brush to remove foreign materials and debris from around the external joints of the motor. Check the shaft and key slot, remove all nicks, burrs or sharp edges that might damage the bearing housing seals when installing the shaft and bearing assembly. Before starting the disassembly procedures, drain the oil from inside the motor.

1. Place the motor in a vice with the output shaft down. Clamp across the mounting flange of the motor, not the housing. Excessive clamping pressure will cause distortion. When clamping, use some protective device on the vice, such as special soft jaws, pieces of hard rubber or board.

CAUTION

Although not all drawings show the motor in a vice, it is recommended that you keep the motor in the vice during disassembly and assembly. Follow the clamping procedures explained.

2. Remove four cap screws (22, Figure 4-70) from the motor.
3. Lift valve housing (19) straight up. If done carefully the pins (17), springs (18) and balance ring assembly (14) and valve (13) will remain in valve plate (9).
4. Carefully remove seal (3) from valve housing (19).
5. Remove case drain plug (20) with O-ring from the valve housing.
6. Remove two pins (17) and springs (18) from valve housing (19).
7. Remove balance ring assembly (14).

Reference Only

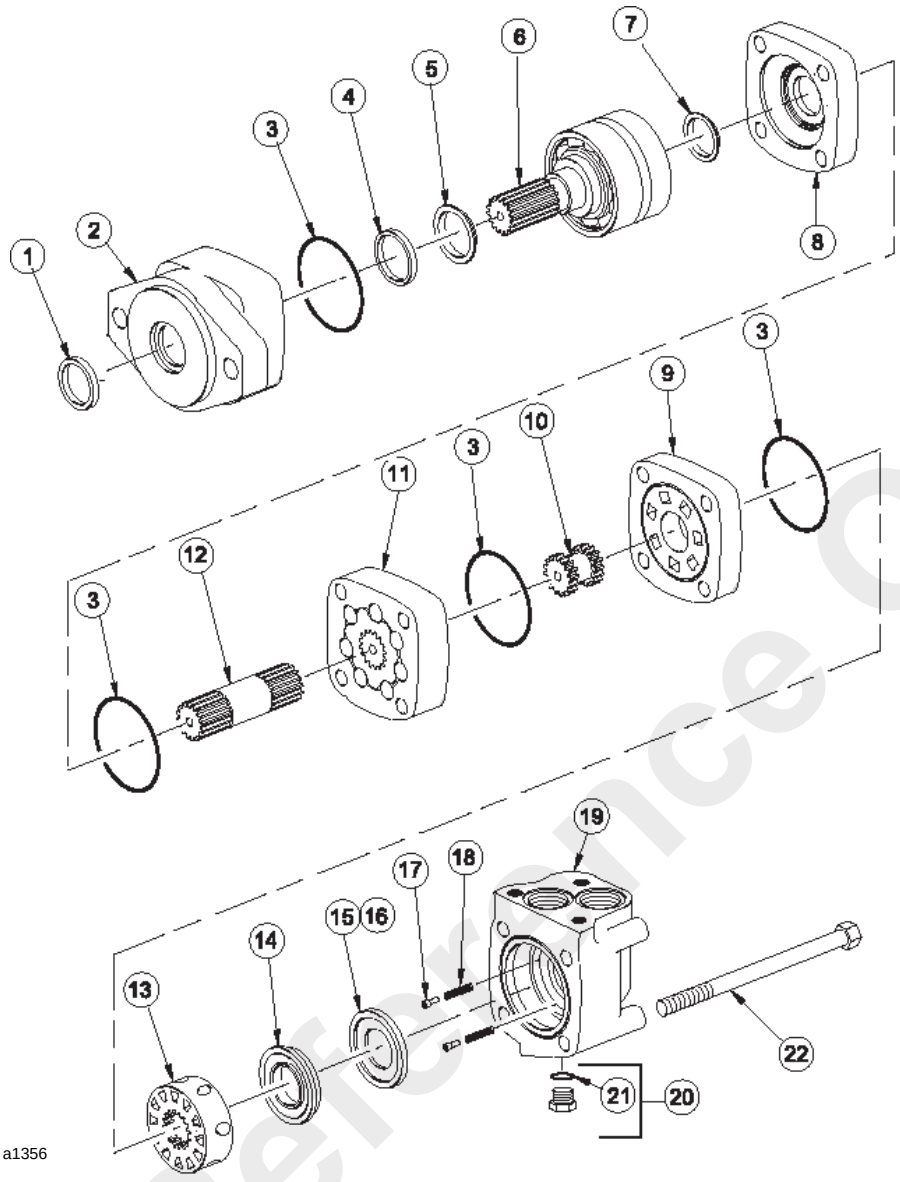

Item	Description
1	Exclusion Seal
2	Bearing Housing
3	Seal (4)
4	Back-Up Ring
5	Shaft Seal
6	Shaft and Bearing Kit
7	Shaft Face Seal
8	Wear Plate
9	Valve Plate
10	Valve Drive
11	Gerotor
12	Main Drive
13	Valve
14	Balance Ring
15	Inner Face Seal
16	Outer Face Seal
17	Balance Ring Pin
18	Compression Spring
19	Valve Housing
20	Case Drain Plug Assembly
21	O-ring
22	Capscrew (4)

FIGURE 4-70

Reference Only

Published 2/23/2016, Control # 592-00

8. Remove inner and outer face seals (15 and 16) from balance ring (14).
9. Remove valve (13).
10. Remove valve plate (9).
11. Remove seal (3) from valve plate (9).
12. Remove valve drive (10).
13. Remove gerotor (11). Be sure to retain the rollers in the outer ring if they are loose.
14. Remove main drive (12).
15. Remove seal (3) from wear plate (8).
16. Remove wear plate (8).
17. Remove shaft face seal (7) from wear plate (8).
18. Remove seal (3) from bearing housing (2).
19. A press may be needed to remove shaft and bearing assembly (6). Key must be removed before removing shaft.
20. Use a small screwdriver to remove shaft seal (5), backup ring (4) and exclusion seal (1) from bearing housing (2). Do not damage the bore of the bearing housing.

NOTE: Individual parts of shaft and bearing assembly (6) are not sold separately. Replace as a unit.

Inspection

Check all mating surfaces. Replace any parts that have scratches or burrs that could cause leakage. Clean all metal parts in a clean, suitable solvent. Blow dry with compressed air. Do not wipe with a cloth or paper towel because lint or other matter can get into the hydraulic system and cause damage. Do not use a course grit emery cloth or try to file or grind these parts. Check around the keyway and chamfered area of the shaft for burrs, nicks or sharp edges that can damage the seals when assembling the bearing housing.

Lubricate all seals prior to installation with petroleum jelly, such as Vaseline. Use new seals when assembling the motor.

Assembly

1. Use a press to install new exclusion seal (1, Figure 4-70) into outer bore of bearing housing (2). The lip of the seal must face outward. See Figure 4-71. If a press is not available, use a plastic or rubber hammer, being careful not to damage or cock the seal in the bore.

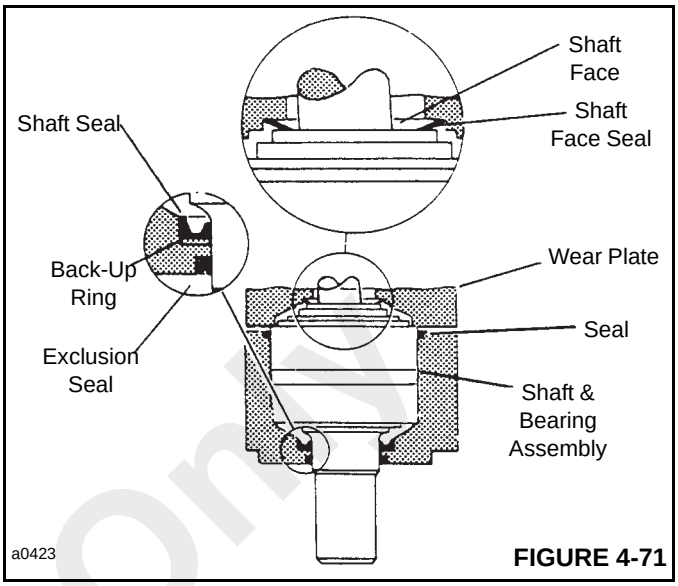

FIGURE 4-71

2. Place new backup ring (4) into seal bore of bearing housing (2). Use special tool to install new shaft seal (5). Place shaft seal (5) over the special tool and press seal into the seal bore of the bearing housing.
3. Clamp the bearing housing into a vice as described in step 1 of disassembly.
4. A special tool is available for this step. Bullet tool should be placed over the shaft of bearing and shaft assembly (6). If the tool is not obtainable, use tape over the shaft to inhibit cutting of the seals.

   Apply petroleum jelly to inside of exclusion seal (1) and shaft seal (5). You may need a press to install bearing and shaft assembly (6). Do not distort the shaft seal. Damage to this seal will cause leakage.
5. Apply petroleum jelly to a new seal (3). Install the seal into bearing housing (2).
6. Alignment studs may be very helpful in reassembling the motor. See Special Tools. If you use these studs, install them diagonally opposed in the bearing housing.
7. Install shaft face seal (7) into wear plate (8) as shown in Figure 4-71. Do not distort the seal.
8. Install wear plate (8).
9. Apply a light film of petroleum jelly to one of the seals (3) and install the seal in wear plate (8).
10. Install the main valve drive (12) into the out shaft of the bearing and shaft assembly (6).
11. Align the notch on the outside of gerotor (11) with the notch on wear plate (8). Install the gerotor against the wear plate. Be sure to retain the rollers in the outer ring if they are loose.

Reference Only

NOTE: Assembly at this time involves five steps (12, 13, 14, 15 and 16) in the timing of the motor. Timing determines the direction of rotation of the output shaft. Timing parts include the gerotor, valve drive, valve plate and the valve. See Figure 4-72.

12. Locate the largest open pocket in the gerotor and mark it on the outside edge of the gerotor.

13. Apply a light film of petroleum jelly to one of seals (3) and install seal in groove of valve plate (9).

14. Align the notch on the outside of valve plate (9) with the notch on gerotor (11) as shown in Figure 4-72.

15. Locate the timing slot opening in valve plate (9) which is line with the largest open pocket of the gerotor.

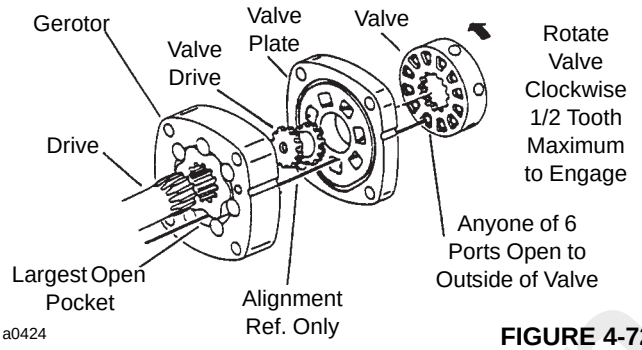

FIGURE 4-72

16. Locate any one of side openings of the valve (13) and align this opening with the open slot of the valve plate that is line with largest open pocket of the gerotor. Install the valve by rotating it clockwise until the spline teeth engage (1/2 spline tooth maximum). This will provide the proper rotation when pressurized as shown in Figure 4-73.

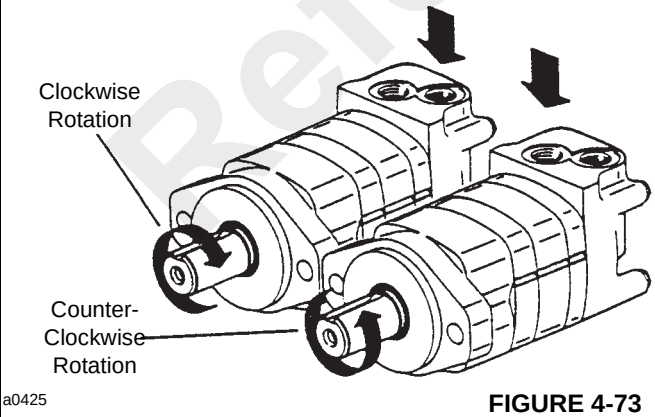

FIGURE 4-73

17. Install two springs (18) and pins (17) in the holes located in the bore of valve housing (19). See Figure 4-74.

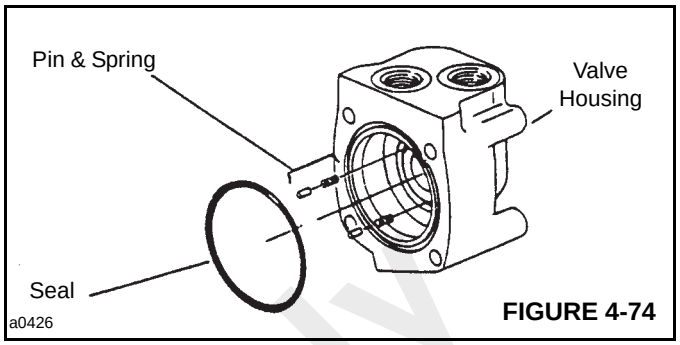

FIGURE 4-74

18. Apply a light film of petroleum jelly to seal (3) and install the seal in valve housing (19).

19. Apply petroleum jelly to new inner and outer face seals (15 and 16). Install the seals on balance ring (14) as shown in Figure 4-75.

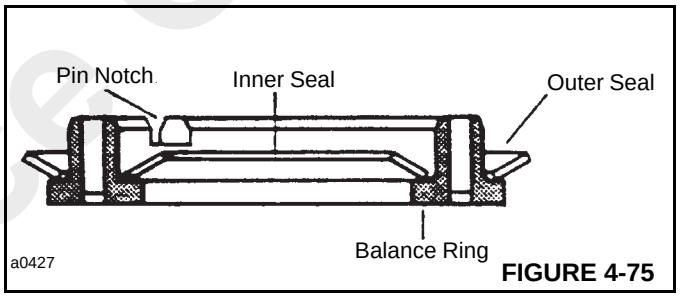

FIGURE 4-75

CAUTION

Install the new face seals in the positions shown in Figure 4-75, or motor will not operate properly. Do not force or bend the face seals. Any damage to these seals will affect the operation of the motor.

20. Align pin notches in balance ring (14) with pins in bore of valve housing (19). Install balance ring assembly in the valve housing.

21. Insert fingers through port of valve housing (Figure 4-76). Apply pressure to side of balance ring. Hold the ring in place until the valve housing is in place against the valve plate. See Figure 4-77.

Reference Only

Published 2/23/2016, Control # 592-00

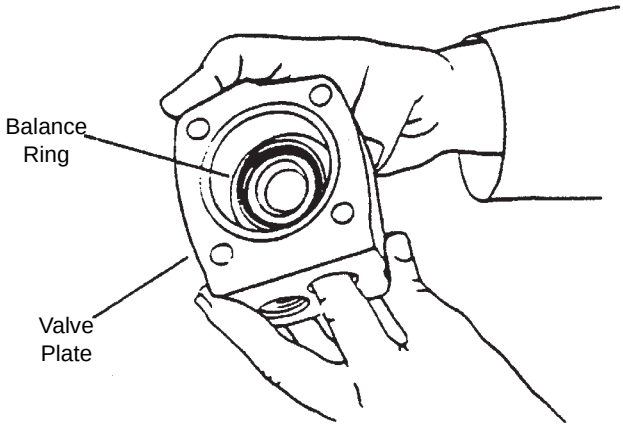

FIGURE 4-76

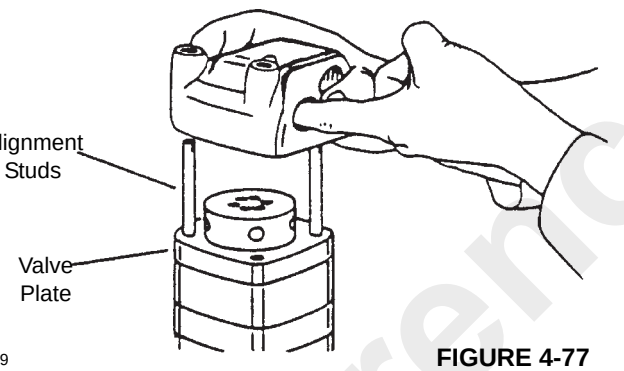

FIGURE 4-77

NOTE: After installing the valve housing on the valve plate check for proper placement. Push down on the valve housing. There should be a slight spring action.

22. Install tie bolts (22). If alignment studs were used, install two bolts opposite the studs. Finger tighten the bolts. Remove the alignment studs and replace with two remaining bolts. Tighten all four bolts to a torque of 50 Nm (460 lb-in).

23. Install new seal (21) on case drain plug (20) and install in the valve housing. Tighten to a torque of 6 Nm (50 lb-in).

Installation

1. Install the counterbalance valve and block (Figure 4-68). Be sure to use new O-ring seals.

2. Install the hoist motor to the hoist using two socket head cap screws and lock washers.

3. Connect all the hydraulic hoses and fittings to the motor.

4. Start the engine and slowly run the boom hoist through several cycles to remove any air in the system. Check for hydraulic leaks.

HYDRAULIC SWIVEL

Removal

NOTE: The area around the swivel and the swivel must be completely cleaned before removing the swivel from the machine.

1. Stop the engine and engage the parking brake. Before disconnecting any lines or hoses from the hydraulic swivel, actuate all the control valve handles several times, in both directions, to release any pressure in the circuits.

2. Put tags on the hydraulic lines with the number of the hydraulic port to which the line connects.

3. Disconnect the hydraulic lines from the upper and lower swivel ports. Be prepared to collect the hydraulic oil in the lines. Put caps or plugs on the fittings and hydraulic lines.

4. Remove the stop from the bottom of the swivel.

5. Remove the three bolts and lock washers securing the swivel to the mast.

6. Remove the hydraulic swivel.

Disassembly

1. Remove the three hex socket flat head cap screws (1, Figure 4-79) from flange (2). Remove the flange (2), O-ring (3) and thrust washer (4). Discard the thrust washer and the O-ring.

2. Carefully pull the swivel stem (7) from swivel housing (5). If the swivel can not be pulled from the housing, hit the top of the swivel stem with a soft hammer.

3. Remove and discard seals (6), seals (8) and O-rings (9).

Inspection

Wash the housing and shaft in a suitable solvent. Check the housing for damage. If there is scoring or deep grooves, the housing must be replaced.

Use compressed air to remove foreign materials from the passages in the swivel shaft. Check the shaft for rough edges that could cause damage to the seals during installation.

Assembly

1. Lubricate all seals in the seal kit.

2. Place the swivel stem (7, Figure 4-79) on the work bench in the vertical position.

3. Walk the lower seal (6) down the swivel stem one flow groove at a time until it reaches the swivel stem base. Carefully work the seal until it slips into the seal groove at the swivel stem base.

Reference Only

4. Install one O-ring (9) into each of the seal grooves of stem (7). Make sure that the O-ring is not twisted in the groove.

5. Slip one seal (8) over the top of the spool and walk the seal down the swivel one flow groove at a time until it reaches the bottom seal groove.

NOTE: Allow a 1/32” max gap between bolt and the retaining lug on the frame. Do not tighten bolt against lug.

6. A seal assembly tool must now be fabricated from a piece of 19 mm (3/4 in) wide fiberglass packing tape approximately 457 mm (18 in) long. Fold the tape in half with glue sides together (Figure 4-78). No glue can be exposed on the tape.

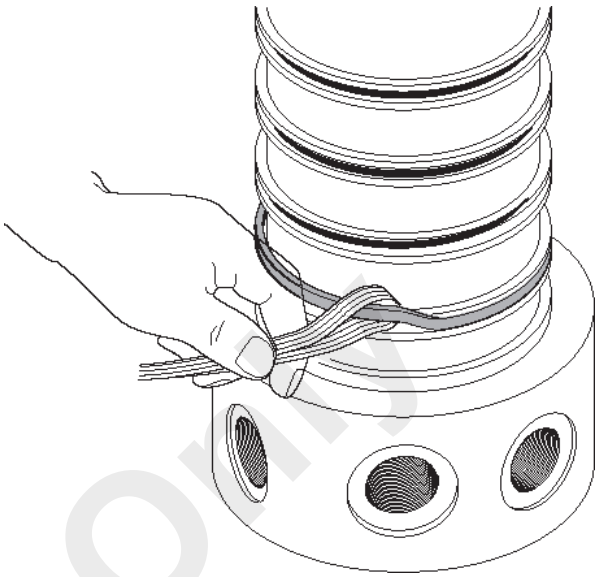

FIGURE 4-78

Reference Only

Published 2/23/2016, Control # 592-00

Item	Description
1	Flat Head Screw (3)
2	Flange
3	O-ring*
4	Thrust Washer*
5	Swivel Housing
6	Seal (2)*
7	Swivel Stem
8	Seal (8)*
9	O-ring (8)*

*Included In Seal Kit

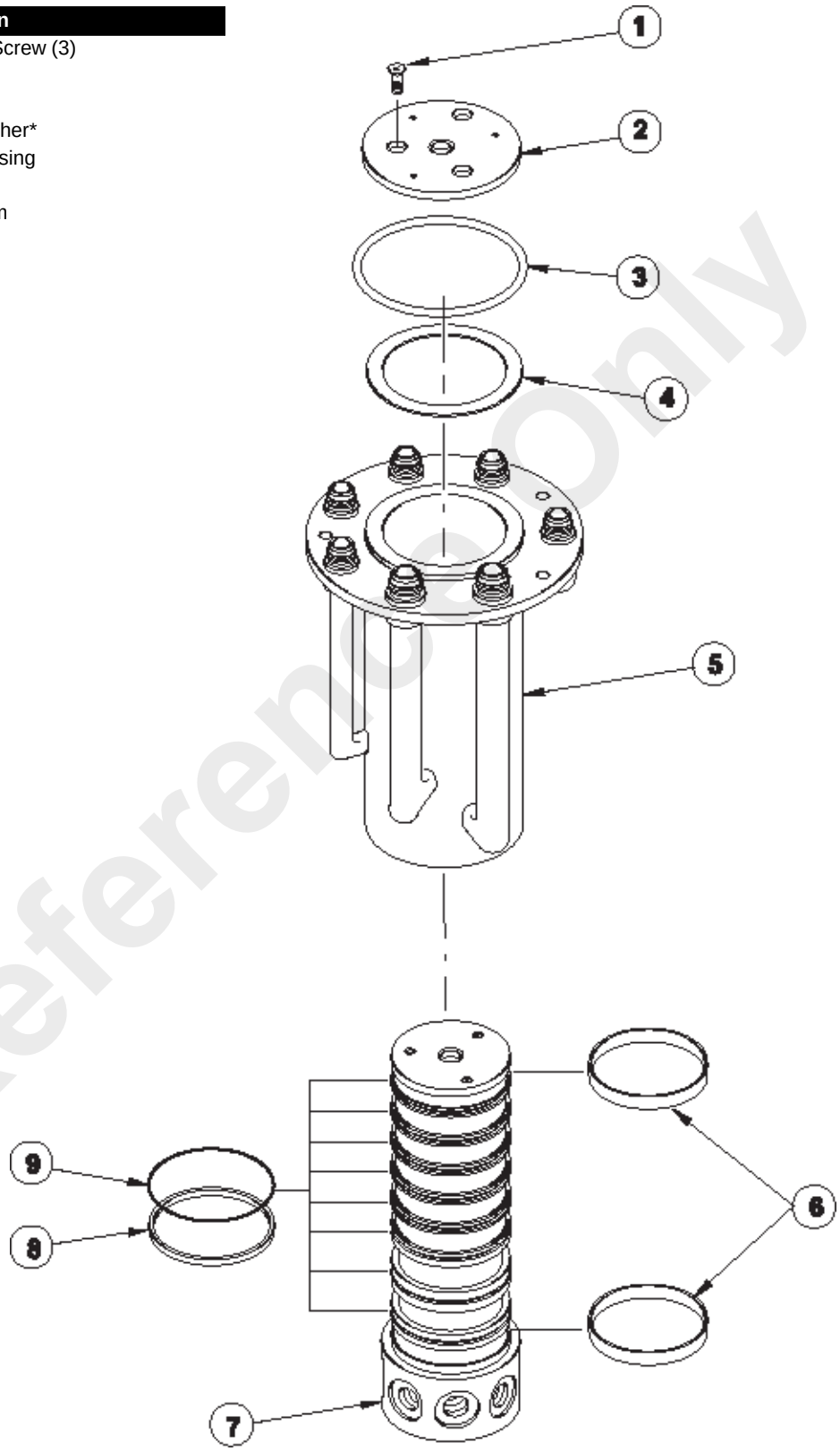

a0962

FIGURE 4-79

Reference Only

7. See Figure 4-78 and insert the piece of packaging tape around the seal ring to form a puller. Place the seal ring into the seal groove over the O-ring. The seal ring will not fit entirely in the groove.
8. Using the tape, stretch the seal ring just enough to work the seal ring over the edge of the flow groove and into the seal groove. See Figure 4-78. Slowly slide the tape along the seal until the entire seal is installed in the seal groove. Be careful not to damage the seal ring.

NOTE: Do not stretch the seal too far. The seal will not return to its original shape. If the seal diameter is too large, damage to the seal will occur when the spool is installed into the housing.

9. Slowly pull the tape from the seal ring, being careful not to damage the seal.
10. Repeat steps 5 through 8 for the remaining seal grooves.
11. Install the top seal (6, Figure 4-79) to stem (7).
12. Place the swivel housing (5) on the work bench with bottom of the housing up. Lubricate the lower 1/4 of the bore of the swivel housing with hydraulic oil.
13. Insert the assembled stem into the housing and then push the stem into the housing bore until it is seated.
14. Install thrust washer (4), O-ring (3) and plate (2).
15. Install three hex socket flat head cap screws (1) and tighten to a torque of 41 Nm (30 lb-ft).

Test

Pressure test the hydraulic swivel at 24 132 kPa (3500 psi). Test each port individually for approximately 1 minute while rotating the swivel stem 360°. No leakage past the seals is permitted.

If internal bypass should occur, rotate the swivel stem and then back pressure the port that the oil was leaking into. If bypass persists, disassemble the swivel and examine for damaged seals. If external leakage occurs, disassemble the swivel, identify the defective component, and replace.

Installation

1. Put the hydraulic swivel in place on the machine. Fasten the hydraulic swivel to the brackets in the mast using three bolts and lock washers.
2. Install the swivel stop to the bottom of the hydraulic swivel using three bolts and lock washers.
3. Connect the hydraulic lines to the lower ports of the hydraulic swivel.
4. Fill the lower hydraulic system by adding recommended hydraulic oil through the upper ports of the hydraulic swivel.
5. Connect the hydraulic lines to the upper ports.
6. Start the engine and move the hydraulic oil through the swivel by actuating all functions. Visually, check for leaks.

NOTE: Do not rotate the mast until the oil has moved through the hydraulic swivel for several minutes.

HYDRAULIC CYLINDERS

Removal

NOTE: The following removal instructions are general and should be modified to suit the cylinder being removed. The telescope cylinder and outrigger cylinder removal instructions will be found in *Structurals*, page 11-1. Steering cylinder removal instructions can be found in *Steering System*, page 10-1.

1. Put a support under the component to which the cylinder is fastened. Make sure the component will not fall after the cylinder is removed.
2. Stop the engine. If the lift cylinder is being removed, before disconnecting any lines or hoses from the cylinder, actuate the lift control lever in both directions, several times, to release any hydraulic pressure in the lift circuit.
3. Disconnect the hydraulic lines from the cylinder. Put caps on the hydraulic lines and plugs on the cylinder ports to keep dirt out of the system.
4. Connect a hoist to lift the weight of the cylinder.
5. Remove the cylinder mounting pins. Remove the cylinder.

Disassembly

NOTE: The following procedures gives general instructions for repair of the hydraulic cylinders. See illustrations for relation of the component parts.

Steering cylinder repair instructions can be found in *Steering System*, page 10-1.

1. Position the ports of the cylinder down to drain the oil from the cylinder.
2. Fasten the base of the cylinder in a vise with soft jaws. Place a support under the rod so the cylinder is level.
3. Use a spanner wrench to loosen and remove the head gland. Slide the head gland forward on the cylinder rod.
4. Pull the cylinder rod and piston straight out of the cylinder tube. If the cylinder and piston are hard to remove, install the head gland back into the cylinder and apply shop air to the base port to push the piston out to the head gland.

Reference Only

CAUTION

If air or hydraulic pressure is used to force out the piston assembly, ensure that the head gland is securely installed in the cylinder tube.

5. Fasten the eye of the rod in a vise with soft jaws. Put a support under the opposite end of the rod to hold the rod level. Use care not to cause damage to the chrome surface of the rod.
6. The piston is fastened to the rod either by internal threads or with a locking nut. To remove the piston:
   a. On pistons with internal threads, remove the set screw from the piston. Use a spanner wrench to loosen and remove the piston.
   b. On pistons which are fastened with a locking nut, use a socket wrench to loosen the nut.
7. Remove and discard the seals and wear rings from the piston.
8. Remove and discard all seals, backup rings, wear rings, etc. from the head gland.

Inspection

Wash the parts in a suitable solvent. Use compressed air to remove all residue and dry.

Check the bore of the cylinder tube for damage or distortion. Move the piston through the full length of the cylinder and check the clearance between the piston and the bore of the cylinder. If there is damage or distortion, replace the cylinder tube.

Look for damage to the chrome surface of the rod. The rod must be smooth and straight. A bent rod indicates possible loss of strength in the rod and replacement is necessary. If the chrome surface has damage, completely remove the old chrome and apply new chrome 0.03 mm (0.001 in) thick.

Assembly

1. Install new rings, rod wiper and seals on the head gland. See cylinder illustrations for location and correct installation.
2. Apply hydraulic oil to the rod and slide the assembled head gland on the rod.
3. Assemble the rings and seals on the piston.
4. If applicable, be sure O-ring is installed between the piston and the rod. Apply Loctite 243 to the threads on the cylinder rod. Fasten the piston to the rod with locking nut and tighten to the specified torque. On pistons with internal threads, screw piston onto cylinder rod and torque in place.
5. Apply hydraulic oil to the bore of cylinder and the rings on the piston. Carefully slide the piston and rod into the cylinder tube. Keep the rod straight during installation. Use care not to damage the piston rings when you move the piston past the threads in the bore of the cylinder tube.
6. Slide the head gland into the cylinder tube and tighten to the specified torque. See illustrations. If equipped, install the set screw to secure the gland head in the cylinder.

TEST

1. Fill the cylinder with clean hydraulic oil. Test to pressure in both directions as directed in steps 2 through 5.

Table 4-8
Cylinder Test Pressures

CYLINDER	TEST PRESSURE
Lift	34 474 kPa (5000 psi)
Telescope	34 474 kPa (5000 psi)
Outrigger	34 474 kPa (5000 psi)

2. Move the cylinder rod through two complete strokes at 5510 kPa (800 psi) to remove air from the cylinder. Look for external leaks. If the pressure difference between cylinder ports is more than 689 kPa (100 psi) during the second stroke, the cylinder assembly is not acceptable. Disassemble and inspect for foreign materials or wrong assembly.
3. Wipe the cylinder rod clean, then move the cylinder through four complete strokes at 5510 kPa (800 psi), but do not permit the cylinder to hit bottom on each stroke. After four strokes, extend the cylinder rod just far enough to see how much oil has collected during the four strokes. Inspect the cylinder rod for indication of rod seal leakage. A thin layer of oil on the cylinder rod is normal.
4. Fully retract the cylinder rod. Keep the base port open. Apply test pressure (Table 4-8) to the rod port. Hold this pressure for a minimum of 10 seconds. Visually check for internal and external leakage. No internal or external leakage is permitted.
5. Fully extend the cylinder rod. Keep the rod port open. Apply test pressure (Table 4-8) to the base port. Hold this pressure for a minimum of 10 seconds. Visually check for internal and external leakage. No internal or external leakage is permitted.
6. Retract rod and put plugs in the cylinder ports to keep out dirt during installation.

Reference Only

Installation

1. Install the cylinder on the machine using the correct mounting hardware.
2. Connect the hydraulic lines.
3. Lubricate the cylinder pivot grease fittings with recommended grease.
4. Check hydraulic oil level in the hydraulic oil reservoir. Add oil if necessary.

a1229

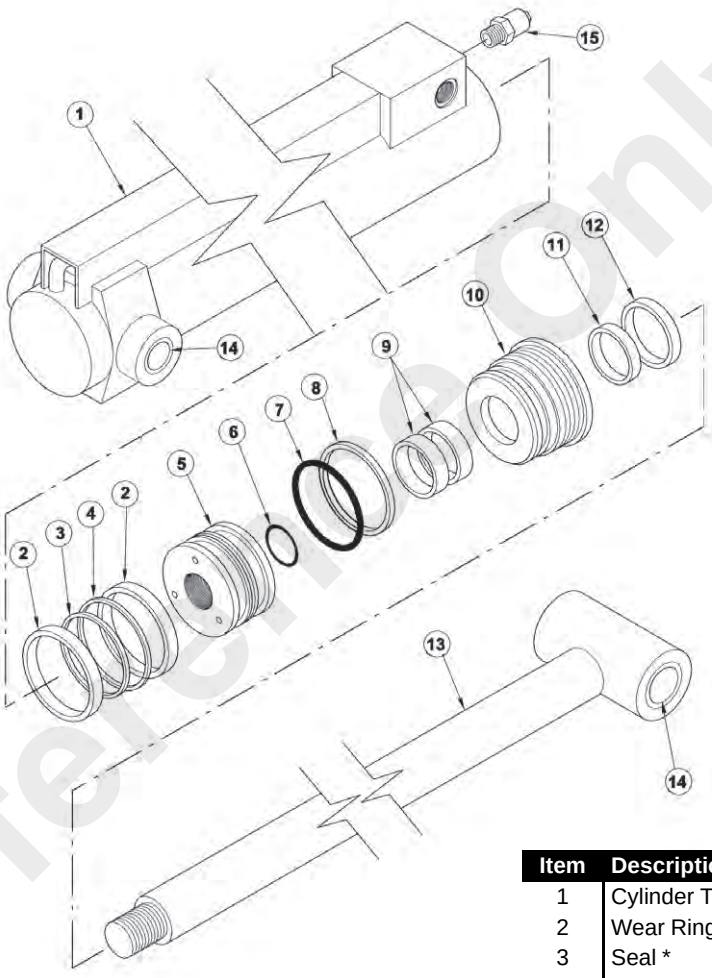

Item	Description
1	Cylinder Tube
2	Wear Ring *
3	Seal *
4	Loader *
5	Piston
6	O-Ring *
7	O-Ring *
8	Back Up Ring *
9	Wear Ring *
10	Gland
11	Seal *
12	Wiper *
13	Rod
14	Bronze Bushing
15	Counterbalance Valve

* Included In Seal Kit

FIGURE 4-80

Reference Only

Published 2/23/2016, Control # 592-00

a1230

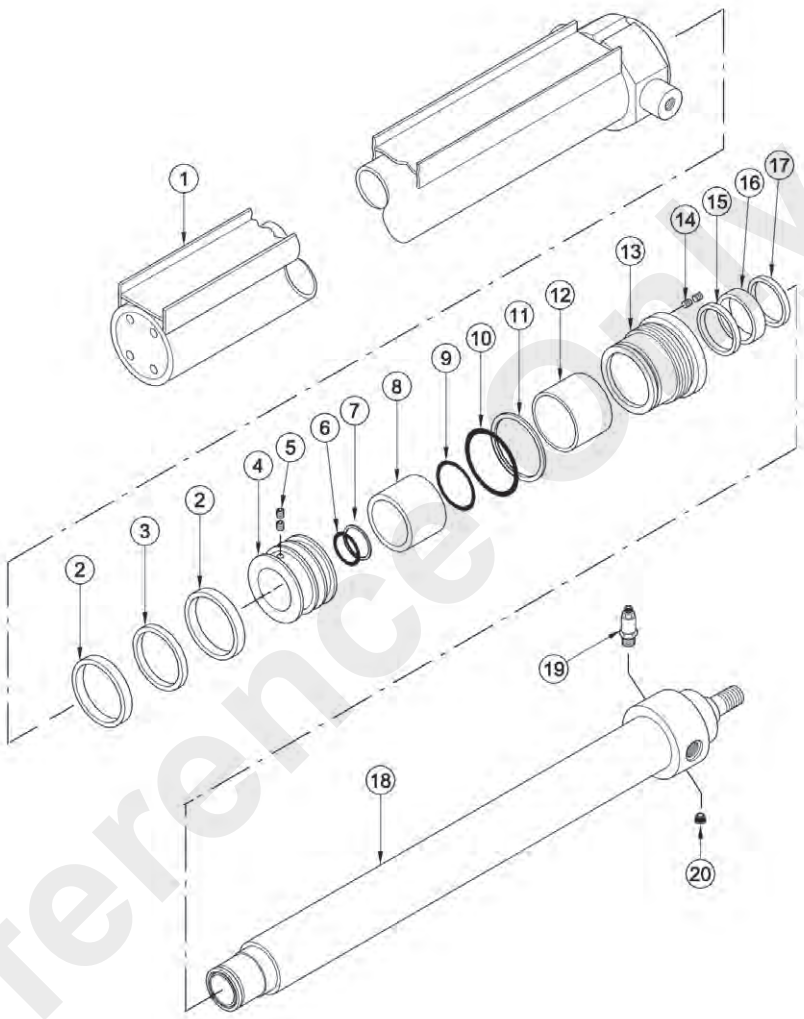

Item	Description	Item	Description
1	Tube Assembly	11	Back Up Ring *
2	Wear Ring (2) *	12	Wear Ring *
3	Piston Seal *	13	Gland
4	Piston	14	Set Screw (4)
5	Set Screw (4)	15	Step Seal *
6	O-Ring*	16	U-Cup *
7	Back Up Ring *	17	Wiper Seal *
8	Spacer	18	Rod
9	O-Ring *	19	Plug
10	O-Ring *	20	Counterbalance Valve

* Included In Seal Kit

FIGURE 4-81

Reference Only

a1358

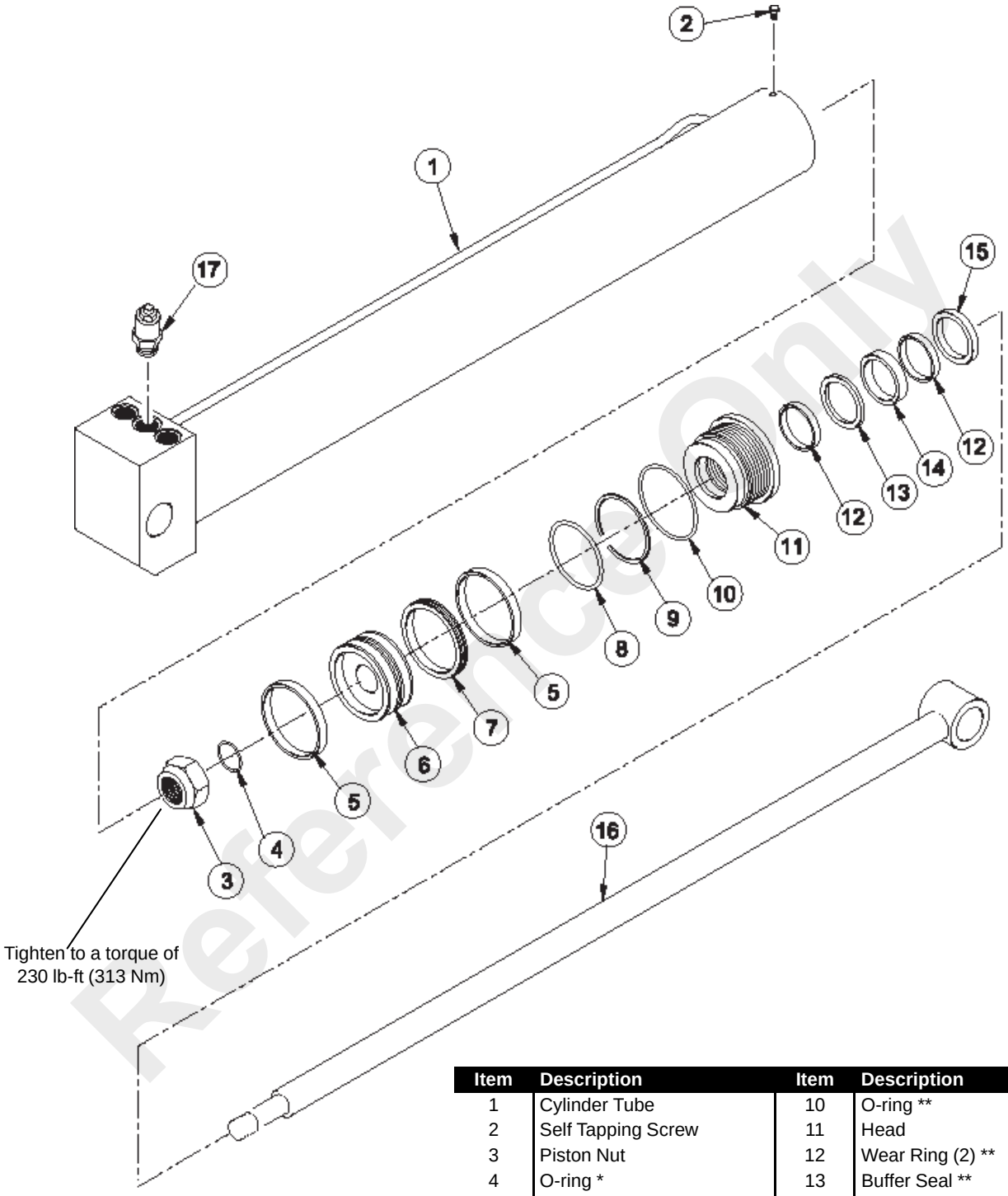

Item	Description	Item	Description
1	Cylinder Tube	10	O-ring **
2	Self Tapping Screw	11	Head
3	Piston Nut	12	Wear Ring (2) **
4	O-ring *	13	Buffer Seal **
5	Wear Ring (2) *	14	Rod Seal **
6	Piston	15	Wiper
7	Piston Seal *	16	Cylinder Rod
8	O-ring **	17	Pilot Operated Check Valve
9	Backup Ring **		

*Included In Piston Kit

** Included In Head Seal Kit

FIGURE 4-82

Reference Only

Published 2/23/2016, Control # 592-00

SECTION 5
PREVENTIVE MAINTENANCE

SECTION CONTENTS

Introduction 5-1
General 5-1
Environmental Protection 5-1
Lubricants and Capacities 5-1
Maintenance Records 5-1
Special Maintenance 5-2
After First 50 Hours of Operation (New Cranes) . . 5-2
Cranes not in Regular Use 5-2
Preventive Maintenance 5-3
Maintenance Schedule and Checklist 5-3
Lubrication Points 5-5
Scheduled Maintenance 5-10
Daily (Walk-Around) 5-10
50 Hours of Operation 5-15
250 Hours of Operation 5-19
500 Hours of Operation 5-25
1000 Hours of Operation 5-29
Replace the Spark Plugs (Gasoline Engine) 5-36
2000 Hours of Operation 5-37
Miscellaneous Maintenance 5-37
Carwell® Rust Inhibitor 5-39
Protecting Cranes From Rusting 5-39
Cleaning Procedures 5-39
Inspection and Repair 5-40
Application 5-40
Areas of Application 5-40

INTRODUCTION

General

Preventive maintenance at regular intervals is necessary to keep your machine in good condition as long as possible. Adjust the maintenance schedule to your operation, according to type of work, size of loads, temperature conditions and frequency of machine use.

The intervals in the Maintenance Schedule are average operating conditions and must be understood as the MINIMUM maintenance necessary for the machine. Shorten these intervals if the machine is operated in conditions that are below average (for example – in dust, in high or low temperatures, with heavy loads or frequent starting and stopping).

Use the hour meter to make sure that all necessary maintenance is done according to schedule.

ENVIRONMENTAL PROTECTION

Dispose of waste properly! Improperly disposing of waste can threaten the environment.

Potentially harmful waste used in Manitowoc cranes includes — but is not limited to — oil, fuel, grease, coolant, air conditioning refrigerant, filters, batteries, and cloths which have come into contact with these environmentally harmful substances.

Handle and dispose of waste according to local, state, and federal environmental regulations.

When filling and draining crane components, observe the following:

- Do not pour waste fluids onto the ground, down any drain, or into any source of water.
- Always drain waste fluids into leak proof containers that are clearly marked with what they contain.
- Always fill or add fluids with a funnel or a filling pump.
- Immediately clean up any spills.

Lubricants and Capacities

It is not the policy of Manitowoc Cranes, Inc. to publish lists of approved lubricants or to guarantee lubricant performance. The responsibility for the quality of a lubricant rests completely with the distributor or manufacturer of the lubricant.

In various paragraphs of this manual, statements may be found, “Use (lubricant brand name) or equivalent.” This statement does not constitute an unconditional guarantee of the performance of the brand oil mentioned. It is intended only as a guide to the type of lubricant recommended for a given application.

Maintenance Records

Dated records must be kept for inspection of critical components such as, brakes, crane hooks, wire ropes, hydraulic cylinders and relief valve pressure settings. These records must be kept where they can be easily obtained and reviewed.

Reference Only

Table 5-1
Machine Lubricants and Capacities

ITEM	CAPACITY		FLUID/LUBRICANT
	Gal.	Liters	
Engine Crankcase			(See engine manual)
Cooling System	3.67	13.9	50% permanent-type antifreeze solution (See engine manual)
Supplemental Coolant Additive (SCA)			6829012858 Fleetguard DCA4 Fleetguard DCA2 Penray Pencool 3000
Fuel Tank:	17	64.4	See engine manual
Transmission (Approximate)	4	20.8	CAT TO-4, or equivalent
Front Drive Axle			
Planetary Hubs (x2)	0.53	0.8	Mobil 424 hydraulic oil (ISO 46/68)
Housing	2.1	7.95	Mobil 424 hydraulic oil (ISO 46/68)
Swing Gearbox	A/R	A/R	Lithium based, E.P. No. 2 bearing grease
Hoist Gearbox	0.50	0.95	SAE 90 EP gear lube
Hoist Brake	0.125	0.24	SAE 20-20 motor oil
Swing Gear and Pinion	A/R	A/R	Ceplattyn spray lube
Hydraulic Tank	42.0	147.6	Mobil 424 hydraulic oil (ISO 46/68)

SPECIAL MAINTENANCE

After First 50 Hours of Operation (New Cranes)

Engine.....Change the engine oil and filter. See page 5-25.
Transmission.....Change the transmission oil filter. See page 5-32.
Swing Gearbox.....Check and tighten mounting bolts. See page 5-26.
Hoist Gearbox.....Check and tighten mounting bolts. See page 5-25.
Swing Gear Pinion and Swing Gear.....Lubricate. See page 5-29.
Grease Fittings.....Apply grease to all grease fittings. See page 5-18.
Boom Chains.....Inspect chains for looseness and tighten. See page 5-20.
Boom Wear Pads.....Lubricate. See page 5-20.
Wheel Mounting Nuts.....Check Torque. See page 5-21.

Cranes not in Regular Use

A crane which has been idle for a period of one month or more, but less than six months, must be given an inspection by a qualified person. This person should use the daily through monthly inspections.

A crane which has been idle for a period of over 6 months must be given a complete inspection covering all inspections through one year, by a qualified person.

Standby cranes must be inspected using the daily through monthly inspection, by a qualified person.

Reference Only

Published 2/23/2016, Control # 592-00

PREVENTIVE MAINTENANCE

Maintenance Schedule and Checklist

NOTE: Hour intervals in each maintenance chart show the correct time for service. The hourmeter located in the operator's cab indicates the total hours the crane has been running.

NOTE: In addition to the following scheduled maintenance, perform the scheduled maintenance suggested in the engine manual furnished with the crane.

NOTE: When performing maintenance, do the required maintenance interval as well as all previous interval maintenance. For example, when performing the Monthly maintenance interval, perform all the tasks required for Daily, 50 Hour and 100 Hour maintenance.

SERVICE/CHECK	*INTERVAL (Whichever Occurs First							See Page
	Daily Before Operation	**50 Hours** Weekly	**100 Hours** Two Weeks	**250 Hours** Monthly	**500 Hours** Three Months	**1000 Hours** Six Months	**2000 Hours** Yearly	
Inspect The Anti-Double Blocking System	X							5-13
Inspect The Wire Rope	X							5-13
Inspect Reeving, Clamps and Connections	X							5-13
Inspect The Lifting Hook	X							5-13
Inspect Safety Devices	X							5-13
Check Controls Operation	X							5-13
Check Engine Crankcase Oil Level	X							5-14
Check Transmission Oil Level	X							5-14
Check Engine Coolant Level	X							5-15
Check Fuel Level	X							5-14
Check Tire Pressure	X							5-17
Drain Water From Engine Fuel Filter/Water Separator	X							5-15
Check Air Cleaner Restriction Indicator	X							5-16
Check Hydraulic Oil Level	X							5-15
Inspect Wire Rope and Sheaves		X						5-18
Apply Grease to All Lubrication Fitting		X						5-18
Lubricate the Boom Wear Pads		X						5-20
Lubricate the Boom Chains		X						5-20
Clean/Inspect Air Cleaner Dust Baffle		X						5-18
Inspect The Engine Fan Belts			X					5-21
Check Wheel Nut Torque			X					5-21
Lubricate the Swing Gear and Pinion				X				5-24
Lubricate the Wire Rope				X				5-24
Inspect the Boom Chains				X				
Inspect All Hydraulic Hoses				X				5-22
Replace Engine Crankcase Oil*				X				5-25
Replace Engine Crankcase Filter*				X				
Clean Radiator Fins and Core				X				5-24

Reference Only

SERVICE/CHECK	*INTERVAL (Whichever Occurs First							See Page
	Daily Before Operation	**50 Hours** Weekly	**100 Hours** Two Weeks	**250 Hours** Monthly	**500 Hours** Three Months	**1000 Hours** Six Months	**2000 Hours** Yearly	
Clean Battery and Connections				X				5-22
Torque Critical Bolts				X				5-25
Check Axle Wheel Hub Lubricant Level (2)					X			5-33
Check Axle Housing Lubricant Level					X			5-30
Check Hoist Gearbox & Brake Lubricant Level					X			5-30
Lubricate the Outrigger Wear Pads					X			5-29
Add Grease to Swing Gearbox					X			5-29
Replace Fuel Filter Elements					X			5-28
Replace In-Line Fuel Filter					X			5-28
Inspect the Parking Brake Pads					X			
Inspect Tires for Damage					X			5-28
Add Rust Inhibitor to Engine Cooling System					X			5-29
Replace the Air Cleaner Element*					X			5-28
Lubricate the Wheel Bearings (Rear Axle)						X		5-30
Check Swing Gear to Pinion Backlash						X		5-38
Change the Transmission Oil and Filter						X		5-32
Replace the Axle Wheel Hub Lubricant (2)						X		5-33
Replace the Axle Housing Lubricant (1)						X		5-33
Replace the Hoist Gearbox Lubricant						X		5-34
Replace the Hydraulic Oil						X		5-36
Replace the Hydraulic Oil Filter						X		5-38
Replace The Engine Coolant							X	5-39
Inspect the Crane Structure and Booms for Damage							X	5-39
Test the Optional Rated Capacity Limiter (RCL)							X	5-39

* Under extremely dusty conditions, the engine oil, oil filter and air cleaner element may require replacement more frequently.

Reference Only

Published 2/23/2016, Control # 592-00

LUBRICANTS

Lube Symbol	Description	Specification
EP-MPG	EP-MPG- Multipurpose Grease	A6-829-003477
AFC	AFC- Anti-freeze/coolant	A6-829-101130
HYDO	Hydraulic Oil	A6-829-006444
HTF	HTF- Hydraulic Transmission Fluid	80057784
EO-15w-40	EO-15w-40- Engine Oil	A6-829-104182
ASC	Anti-Seize Compound	A6-829-003689
EP-OGL	Open Gear Lube Ceplattyn 300 Spray	A6-829-102971
EPGL-5	EPGL-5- Gear Lubricant	A6-829-003479
Transynd	Transynd- Synthetic Transmission Fluid	A6-829-101690

Reference Only

LUBRICATION POINTS

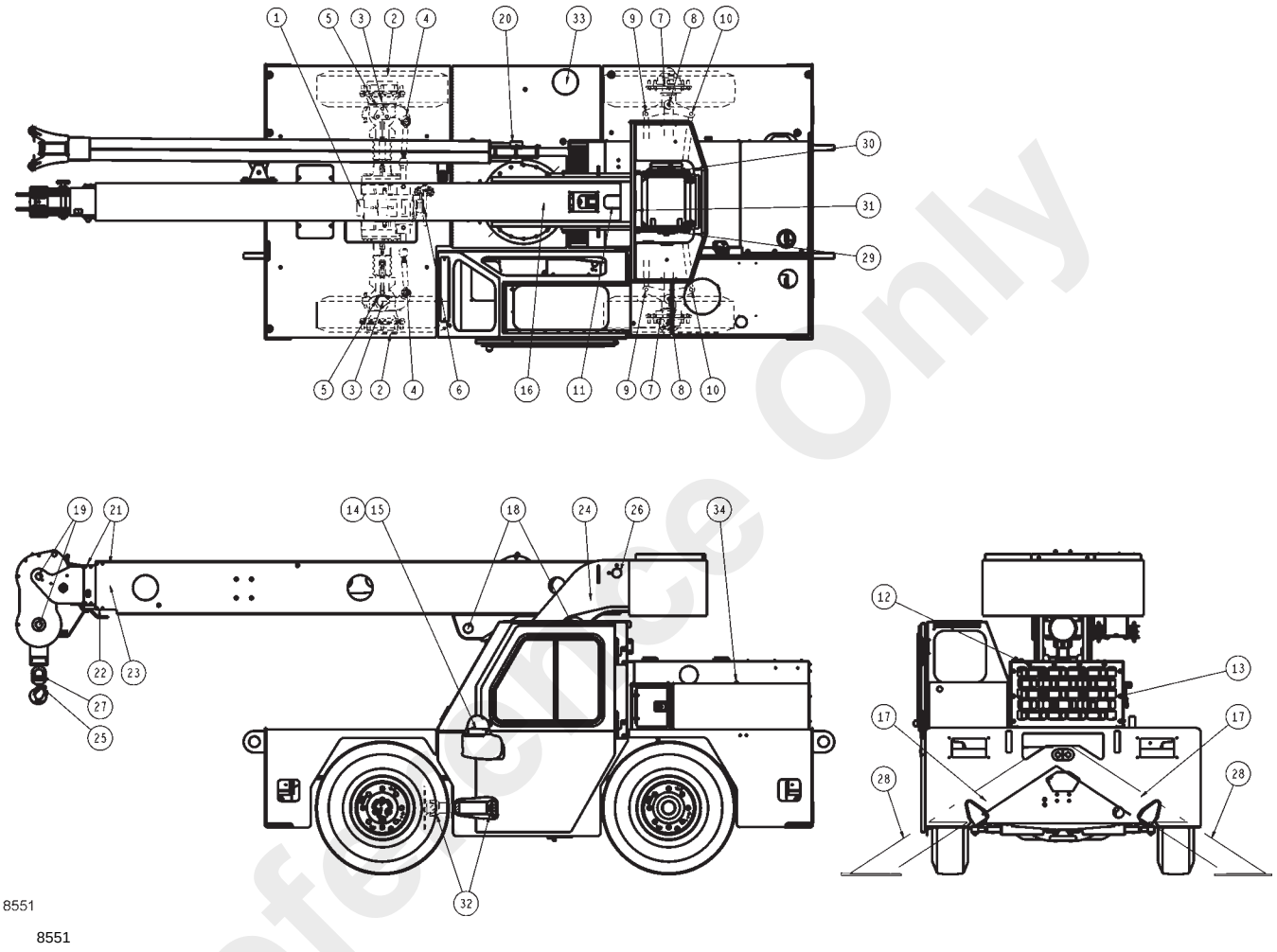

FIGURE 5-1

No	Location Name	Capacity	Symbol	Instruction
Front Drive/steer Axle				
1	Differential	2.1 Gal (8 Liters)	HYDO	
2	Planetary Hub Gears	0.21 Gal (0.8 Liters)	HYDO	
3	Kingpin Bearings		EP-MPG	
4	Steer Cylinder Bearing		EP-MPG	
5	Universal Joints		EP-MPG	
6	Brake Caliper		EP-MPG	
Rear Steer Axle				
7	Hub Bearings		EP-MPG	
8	Kingpin Bearings		EP-MPG	

Reference Only

No	Location Name	Capacity	Symbol	Instruction
9	Steer Linkage Bearing		EP-MPG	
10	Steering Cylinder		EP-MPG	
Engine & Trans.				
11	Engine Crankcase	5.8-7.4 Qts (5.5-7.0 L)	EO-15W-40	See Note 4
12	Engine Coolant	3.7 Gal (13.9 Liters)	AFC	See Notes 2 & 10
13	Transmission	5.5 Gal (20.8 Liters)	HTF	
Turntable				
14	T/T Gear Box		EP-MPG	
15	T/T Gear & Pinion		EP-OGL	
16	T/T Bearing		EP-MPG	
Cylinders				
17	O/R Cylinder		ASC	See Note 6
18	Lift Cylinder		EP-MPG	See Note 6
Boom				
19	Boom Nose Sheaves		EP-MPG	
20	Jib Boom Sheave		EP-MPG	
21	Boom Sections		EP-MPG	See Note 9
22	Tele Cylinder Wear Pads		EP-MPG	
23	Boom Extension Sheave		EP-MPG	
24	Boom Ret Sheave		EP-MPG	
25	Hook Block Swivel Bearing		EP-MPG	
26	Boom Pivot Shaft		EP-MPG	
27	Hook Block Sheaves		EP-MPG	
Outriggers				
28	Jack Tube		EP-MPG	See Note 8
Hoist				
29	Hoist Gearbox (Tulsa)	1.0 Qts (0.95 Liters)	EPGL-5	
30	Hoist Brake (Tulsa)	0.25 Qts (0.24 Liters)	Transynd	
31	Cable Follower		EP-MPG	
Misc.				
32	Driveline Joints		EP-MPG	
33	Fuel Tank	17.0 Gal (64.4 Liters)		
34	Hydraulic, Oil Tank	39.0 Gal (147.6 Liters)	HYDO	See Notes 4 & 5

Notes:

1. All pintle hooks, etc. shall be oiled or greased as required.

2. A mixture of 50% AFC and 50% water is required for all standard units.

3. All moveable control links and clevis pins shall be lubricated with ASC.

4. Final fluid levels shall be adjusted by use of dip sticks, markings or filler plugs.

5. The hydraulic oil shall meet or exceed manitowoc cleanliness spec. 6829014631.

6. Apply to pins prior to assembly.

7. Both sides.

Reference Only

8. All sides.

9. Lubricate all surfaces in contact with wear pads.

10. Engine coolant capacity listed is the combined capacity for coolant in the engine and radiator.

Lubrication Points

Apply grease to the following fittings every 50 hours of operation. Use a Lithium Base, E.P. No. 2 bearing grease or equivalent. Apply enough grease to remove the old grease.

Booms and Main Frame

NO.	LOCATION	QTY
1	Mast Bearing (See Figure 5-1)	2
2	Boom Pivot (See Figure 5-2)	2
3	Retract Chain Roller - 2nd Boom Section (See Figure 5-3)	2
4	Boom Head Sheaves and Pivot (See Figure 5-4)	2
5	Extend Chain Roller Assembly (See Figure 5-5)	2
6	Lift Cylinder Pivots (See Figure 5-6)	2

Drive Train

NO.	LOCATION	QTY
7	Steering Knuckles - Rear Axle (See Figure 3-7)	2
8	Steering Cylinder Pivot Ends - Rear Axle (See Figures 3-8 and 3-9)	2
9	Steering Link Pivot Ends - Rear Axle (See Figure 3-10)	2
10	Steering Knuckles - Front Axle - (See Figure 3-11)	4
11	Drive Shaft (See Figure 3-12)	3
12	Parking Brake (See Figure 3-13)	1

Optional Equipment and Accessories

NO.	LOCATION	QTY
13	Drop Block (See Figure 3-14)	1
14	Jib Boom Head Sheave (See Figure 3-15)	1
15	Jib Boom Deflector Sheave (See Figure 3-16)	1

Reference Only

Published 2/23/2016, Control # 592-00

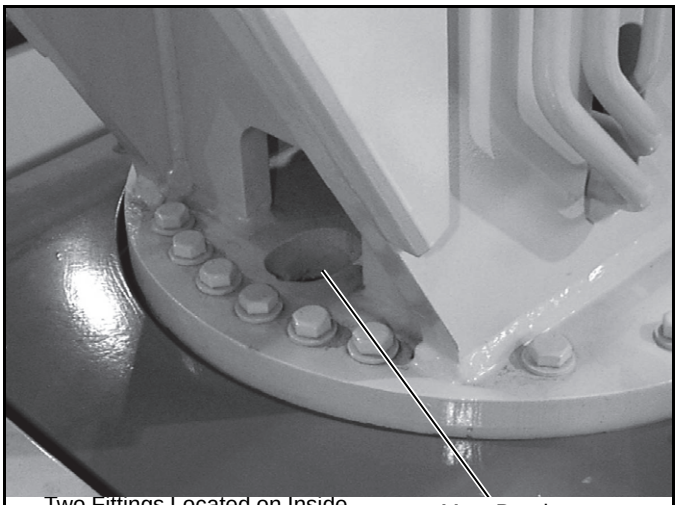

Two Fittings Located on Inside Surface of Bearing Ring

Mast Bearing Lube Points

p0305

FIGURE 5-2



Boom Pivot Lube Points

p0306

FIGURE 5-3

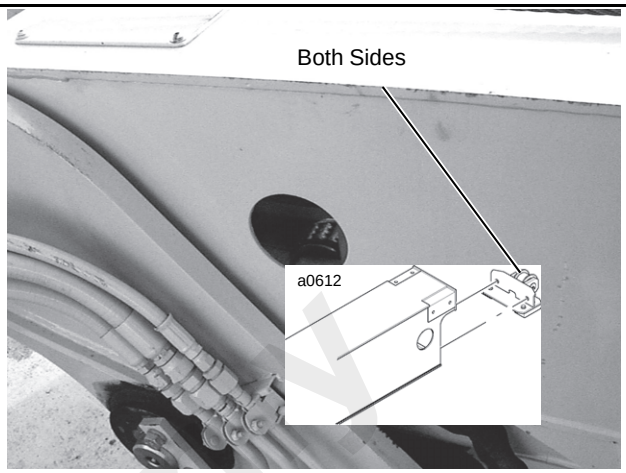

p0469

Retract Chain Roller Lube Points

FIGURE 5-4

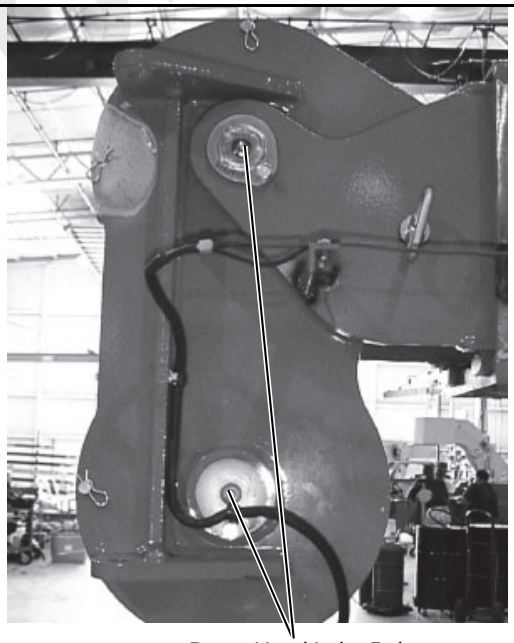

Boom Head Lube Points

p00498

FIGURE 5-5

5

Reference Only

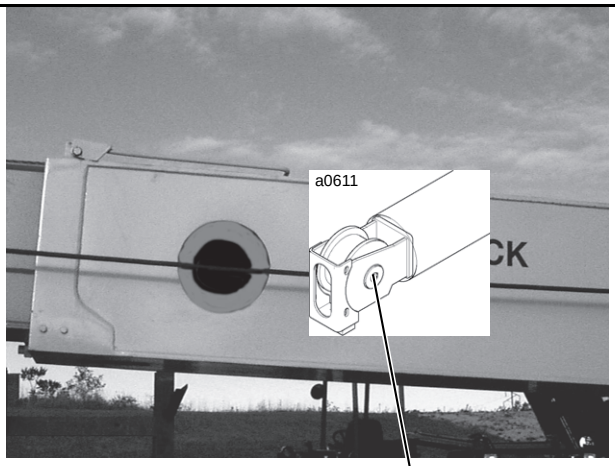

p0470 Extended Chain Roller Lube Points **FIGURE 5-6**

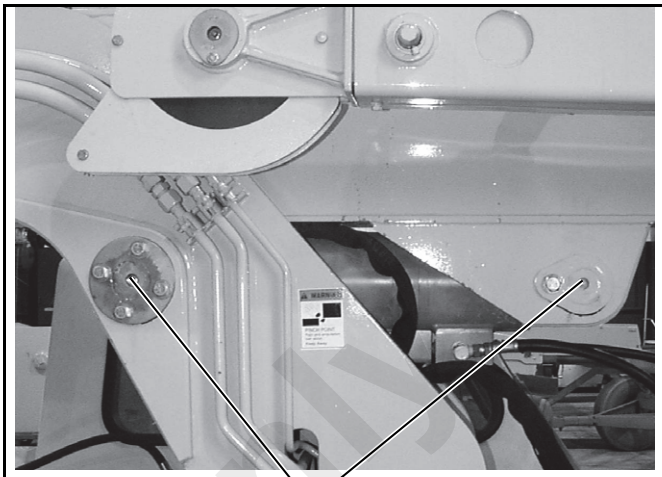

p0307 **FIGURE 5-7**

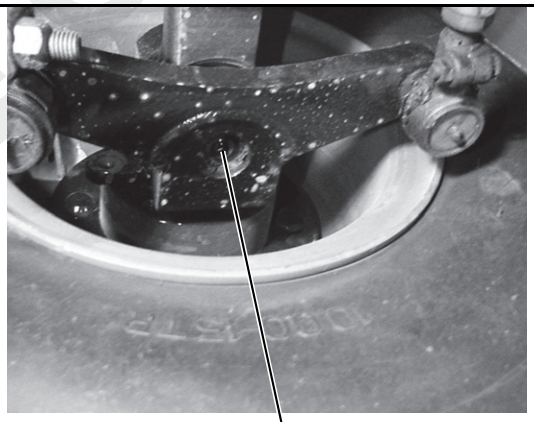

p0308 Steering Knuckle Lube Points (Rear Axle) **FIGURE 5-8**

Reference Only

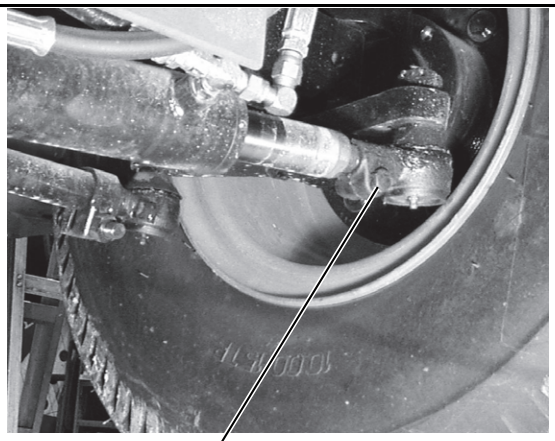

Steering Cylinder Pivot Lube Points - Rod End (Rear Axle)

p0309 **FIGURE 5-9**

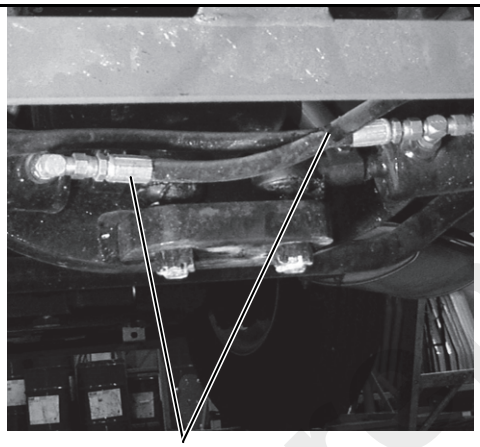

Steering Cylinder Pivot Lube Points - Rod End (Rear Axle)

p0310 **FIGURE 5-10**

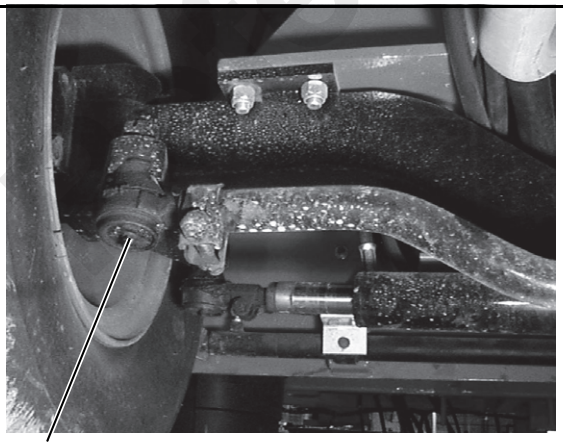

Both Sides Steering Link Lube Points (Rear Axle)

p0311 **FIGURE 5-11**

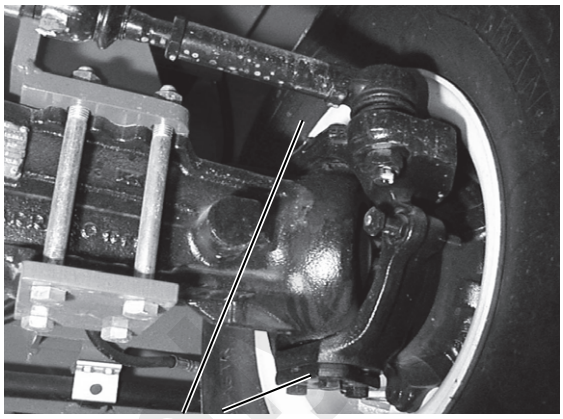

Steering Knuckle Lube Points (Front Axle)

p0312 **FIGURE 5-12**

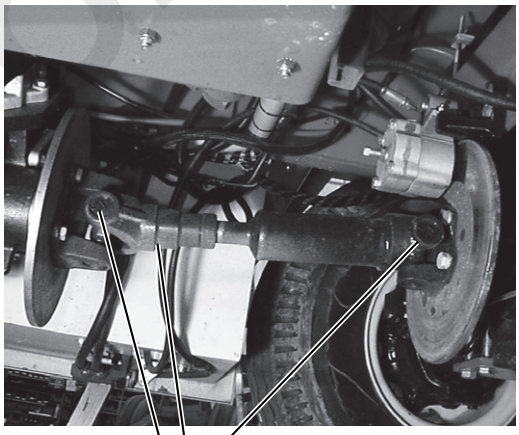

p0313 Drive Shaft Lube Points **FIGURE 5-13**

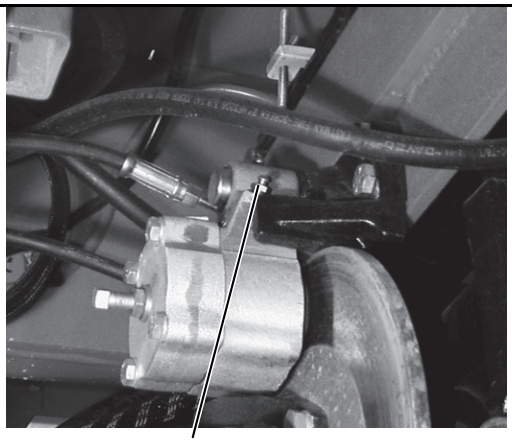

p0314 Parking Brake Lube Point **FIGURE 5-14**

5

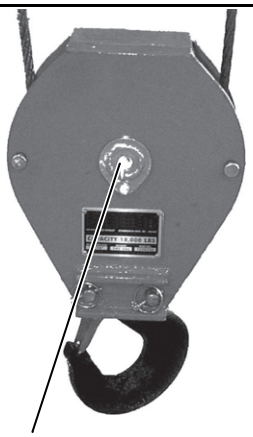

p0447 Drop Block Lube Point **FIGURE 5-15**



p0316 Boom Extension Deflector Sheave Lube Point **FIGURE 5-17**

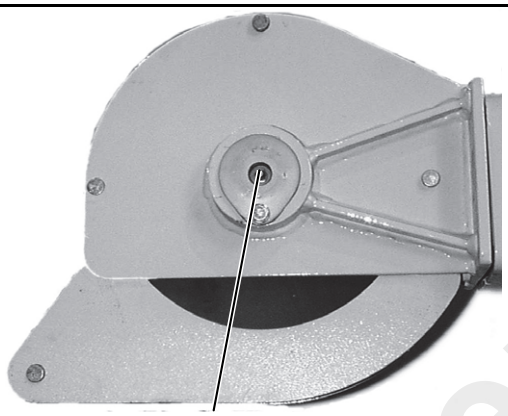

p0315 Boom Extension Head Sheave Lube Point **FIGURE 5-16**

Reference Only

SCHEDULED MAINTENANCE

Daily (Walk-Around)

NOTE: *You must read and understand the warnings and basic safety rules, found in Safety Practices page 2-1 of this manual, before performing any operation or maintenance procedures.*

For additional engine maintenance guidelines, see the engine manual furnished with this crane.

Inspections

Inspect the Anti-Double Blocking System

Test the anti-double block system daily before beginning operation to make sure it is functioning properly.

Raise the drop block until it touches the anti-double blocking bracket under the boom head. An alarm should sound and the raising of the hoist block should stop.

Lower the hoist block and the alarm should stop.

If there is a malfunction in the system, DO NOT operate the crane. Have the malfunction corrected.

Inspect the Wire Rope

Each day before beginning operation, visually inspect the wire rope for damage. See 50 Hour Scheduled Maintenance, for examples of damage that can be visually inspected for. If any damage is found, do not operate the crane. The wire rope must be changed out for a new rope before operation can resume.

Inspect Reeving, Clamps and Connections

Each day before beginning operation, inspect for correct reeving of the boom and drop block.

Inspect the terminal ends of the wire rope for damaged parts, loose clamps or wrong installation.

WARNING

Loads may fall if the wedge and socket is not installed properly or has damage. A falling load can injure or kill.

Do not operate the crane if any of the above is found. Only after correcting the problem should the crane be put back in service.

Inspect the Lifting Hook

WARNING

Loads may fall if the lifting hook is damaged or loose. A falling load can injure or kill.

Daily before beginning operation, inspect the lifting hook for damage; cracks, deformation, loose retaining hardware, etc. If any damage is found, DO NOT operate the crane until the damage is repaired.

Inspect all Safety Devices

Daily before beginning operation, check all safety devices for proper operation. Examples of safety devices include, backup alarm, horn, and beacon light.

If any are found to be malfunctioning, correct the problem before placing the crane in service.

Check Controls Operation

Each control should be checked for proper operation after the above inspections have been completed. Do not place the crane in service if any control is not functioning properly.

Reference Only

Component/System Checks

Check Fuel Level

Check the fuel supply daily before operation. Turn the ignition key to the ON position and view the fuel gauge on the instrument panel. If necessary, fill the tank with recommended fuel.

Engine fuel is **flammable** and can cause a fire and/or explosion. Avoid personal injury or death by keeping sparks, open flames, and smoking materials away from the crane and fuel during refueling or fuel system servicing. Know the location of the fire extinguishers on the job site and how to use them.



w0015 **FIGURE 5-18**

Maintain control of the hose nozzle when filling the fuel tank. Do not allow fuel to spill. Clean up spilled fuel immediately. Dispose of clean up materials properly.



w0033 **FIGURE 5-19**

Do not fill the fuel tank to capacity. Allow room for fuel expansion.

Tighten the fuel cap securely. If the cap is lost, replace only with original equipment.

Check the Engine Crankcase Oil Level

1. If the engine has been running, level the crane, engage the parking brake and shut off the engine. Wait approximately 15 minutes after the engine was shut off to check the oil level.
2. Lift the engine compartment cover and prop it in place using the furnished prop rod.
3. Remove the engine oil dipstick and check the oil level. Oil should be present within the low and high marks on the diesel engine and add and full marks on the dual fuel engine.
4. If the oil is low, add recommended oil to bring the level between the marks on the dipstick. **DO NOT OVERFILL** the engine. When full, install the dipstick and close the engine compartment cover. For more information see the engine manual furnished with the crane.

Check the Transmission Oil Level

1. Check the oil when the oil is cold.
2. Level the crane, engage the parking brake and shut off the engine.
3. Open and support the engine compartment cover. Remove the transmission dipstick (Figure 3-14) and check the oil level. Oil should be between the minimum and maximum marks on the dipstick.

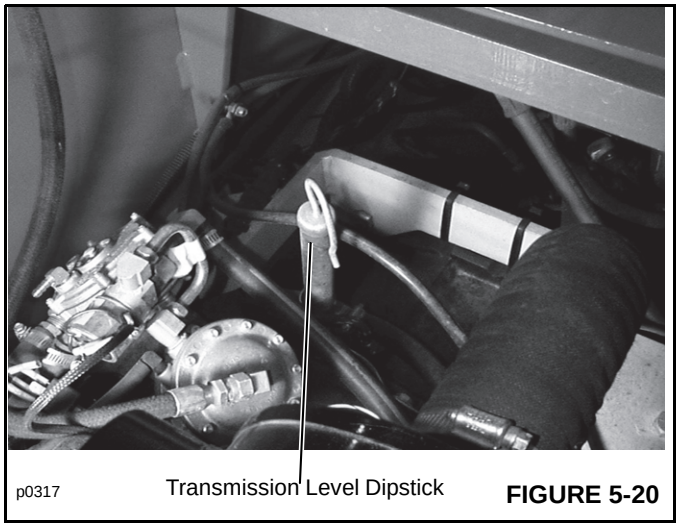

p0317 Transmission Level Dipstick **FIGURE 5-20**

4. If oil has to be added, add only recommended oil until it is between the two marks. **DO NOT OVERFILL**.
5. Install the dipstick and close the engine compartment cover.

Reference Only

Check Engine Coolant Level

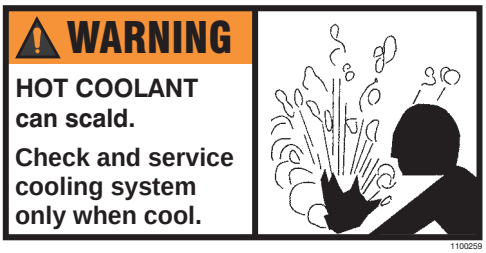

w0020 **FIGURE 5-21**

- **Never** remove the radiator cap while the cooling system is hot. Check coolant level only when the coolant temperature is cool. The system is under pressure and the coolant can cause severe burns or eye injury. Wear protective clothing and safety glasses. Always turn the cap slowly to the first stop and allow the pressure to escape before removing the cap completely.

1. Level the crane, engage the parking brake and shut off the engine.
2. Open the engine compartment cover and prop in place. **BE SURE THE ENGINE IS COOL**, then slowly loosen the radiator cap to the first stop. Allow all pressure to release. Remove the radiator cap and check the fluid level. Coolant should be visible in the radiator.
3. If level is low, add only a 50-50 mixture of glycol antifreeze and water, do not add only water as this could cause rust to form in the radiator and engine.

NOTE: For more details on proper radiator checking and maintenance procedures, see the engine manual furnished with the crane.

Drain Water from Engine Fuel Filter/ Water Separator

1. Shut off the engine and engage the parking brake.
2. See the engine manual furnished with the crane and follow the water draining instructions.

Check Hydraulic Oil Level

If the hydraulic oil is constantly low, check for leaks in the hydraulic system.



w0017 **FIGURE 5-22**

1. Be sure the boom is fully retracted and lowered and the outriggers are retracted and up.
2. Level the crane, engage the parking brake and shut off the engine.
3. On earlier units, remove the hydraulic fill cap (Figure 5-23). Visually check the oil level in the fill tube. The hydraulic oil should be level with the bottom of the fill strainer. If low, fill the tank with pre-filtered recommended hydraulic oil, until oil is visible.



8548 **FIGURE 5-23**

5

Reference Only

NOTE: *The pump used on this crane requires clean hydraulic oil for proper operation.* ***Contaminated oil can cause damage to the pump.*** *Before adding any hydraulic oil to the hydraulic system, be sure the oil has been filtered through a 10 micron (absolute), or less, filter.*



FIGURE 5-24

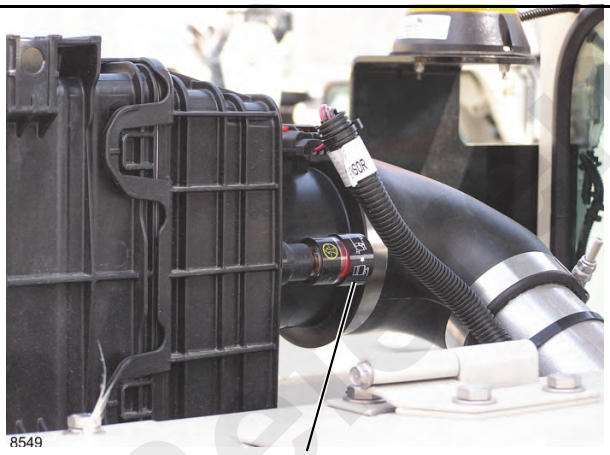

FIGURE 5-25

Check the Air Cleaner Restriction Indicator

The air cleaner is equipped with a filter restriction indicator (Figure 5-25). The air cleaner element needs replacing if the indicator's RED flag is visible in the indicator's window.

To check the visual indicator the engine must be running, but the transmission must be in neutral and the parking brake must be applied. If it has popped out, service the element.

Removing Element

NOTE: *Service the air cleaner only with the engine shut down. Dirt and debris can enter the engine and cause damage if the engine is operated with the air cleaner element removed.*

1. Unlatch and remove the service cover of the air cleaner. Make sure the latches are folded back against the cover so that they do not hinder filter removal and installation.
2. The filter fits tightly over the outlet tube, creating the critical seal on the inside diameter of the filter end cap. The filter should be removed gently to reduce the amount of dust dislodged. There will be some initial resistance, similar to breaking the seal on a jar. Gently move the end of the filter back and forth to break the seal.
3. Gently pull the filter element off the outlet tube and out the housing. Avoid knocking the filter against the housing.
4. Use a clean water dampened cloth to wipe the sealing surface. Dust on the outside diameter of the outlet tube could hinder an effective seal and cause leakage. Make sure that all contaminants are removed before the new filter is installed.
5. Carefully wipe the inside of the outlet tube with a clean cloth. Dirt accidentally transferred to the inside of the outlet tube will reach the engine and cause wear. Be careful not to damage the sealing surface of the tube.

Inspecting the Element

1. Don't be fooled by the appearance of the element, it should look dirty.
2. Check the element for uneven dirt patterns. The dirty element is a valuable clue to dust leakage or gasket sealing problems. A dust trail or pattern on the element clean side is a sign that the element gasket was not firmly sealed or that a dust leak exists. Make sure the cause of the leak is identified and rectified before replacing the element.

Installing the Element

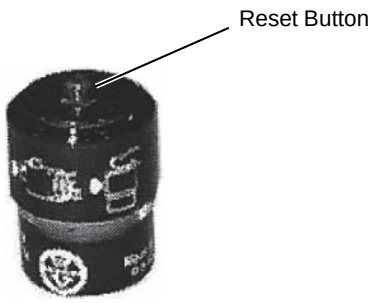

FIGURE 5-26

Reference Only

1. Inspect the new filter carefully, paying attention to the inside of the open end, which is the sealing area. NEVER install a damaged filter.
2. Carefully insert the filter into the air cleaner housing. Seat the filter by hand, making certain it is completely into the air cleaner. To complete a tight seal, apply hand pressure at the outer rim of the filter, not the flexible center. Avoid pushing on the center of the urethane end cap. Install the cover. If the cover hits the filter before it is fully in place, remove the cover and push (by hand) the filter further into the air cleaner and try again. The cover should go on with no extra force.

   Never use the latches on the cover to force the filter into the air cleaner. Using the latches to push the filter into the air cleaner could cause damage to the housing and will void the warranty.
3. Reset the air cleaner restriction indicator by pushing in the reset button (Figure 5-26).

Check the Tire Pressure

Check the air pressure in the crane's four tires. Correct pressure is 8.62 bar (125 psi). This pressure will differ from the recommended tire pressure from the tire manufacture.

Also, check for broken studs, rim damage, loose nuts, cracks and other tire damage.

Reference Only

50 Hours of Operation

NOTE: *You must read and understand the warnings and basic safety rules, found in Safety Practices page 2-1 of this manual, before performing any operation or maintenance procedures.*

For additional engine maintenance guidelines, see the engine manual furnished with this crane.

Clean/Inspect the Air Cleaner VacValve

Inspect the VacValve (Figure 3-19) for damage. Replace if any of the following is found.

- It remains open.
- It is cracked.
- It is torn.
- It is missing.

If any of the above conditions are found, replace the VacValve. Dust particles that are normally expelled can deposit themselves onto the filter and will shorten the air filter service life.



8548 **FIGURE 5-27**

Dust particles that are normally expelled can deposit themselves onto the filter and will shorten the air filter service life.

Wire Rope and Sheave Inspection

All wire ropes wear out eventually and lose work capability throughout their service life. That's why periodic inspections are critical. SAE J959, Lifting Crane, Wire-Rope Strength Factors, requires that a thorough inspection be performed and recorded on the wire rope not less often than weekly when the crane is in continuous service.

Regular inspection of wire rope and equipment should be performed for three good reasons:

- It reveals the rope's condition and indicates the need for replacement.
- It indicates if you are using the most suitable type of rope.
- It makes possible the discovery and correction of faults in equipment or operation that can cause costly accelerated rope wear.

Inspection

Inspections should be carried out by a person who has learned through special training or practical experience what to look for and who knows how to judge the importance of any abnormal conditions they may discover. It is the inspector's responsibility to obtain and follow proper inspection criteria for each application inspected.

If you are not familiar with wire rope inspection, information on how to inspect wire rope, sheaves and drums is available from your distributor. Order Wireco Report No. 107.

General Inspection

NOTE: Always wear gloves when working with wire rope to inhibit hand injuries.

1. Wire Rope - Inspect for damage, rust or wear to the wire rope. Keep a record of each inspection. Replace the wire rope if any of the conditions in Figure 5-28 are present.
2. Sheaves - Inspect sheaves for damage and/or wear. The sheave grooves must be smooth and a little larger than the wire rope. Use a sheave gauge to check the size of the sheave groove. Rough edges, narrow or worn grooves will cause damage to the wire rope. Replace any worn or damaged sheaves.

NOTE: As a sheave wears, the groove for the wire rope becomes smaller. The tracks on the sheave are caused by the wire rope. Yet, the wire rope will continue to engage these tracks, for example as a chain engages a sprocket. As the wire rope turns and twists on the sheave, the wire rope will move out of the worn track. This will cause increased wear on the wire rope.

Grease Fittings

Lubricate all points indicated under the heading Lubrication Points.

Reference Only

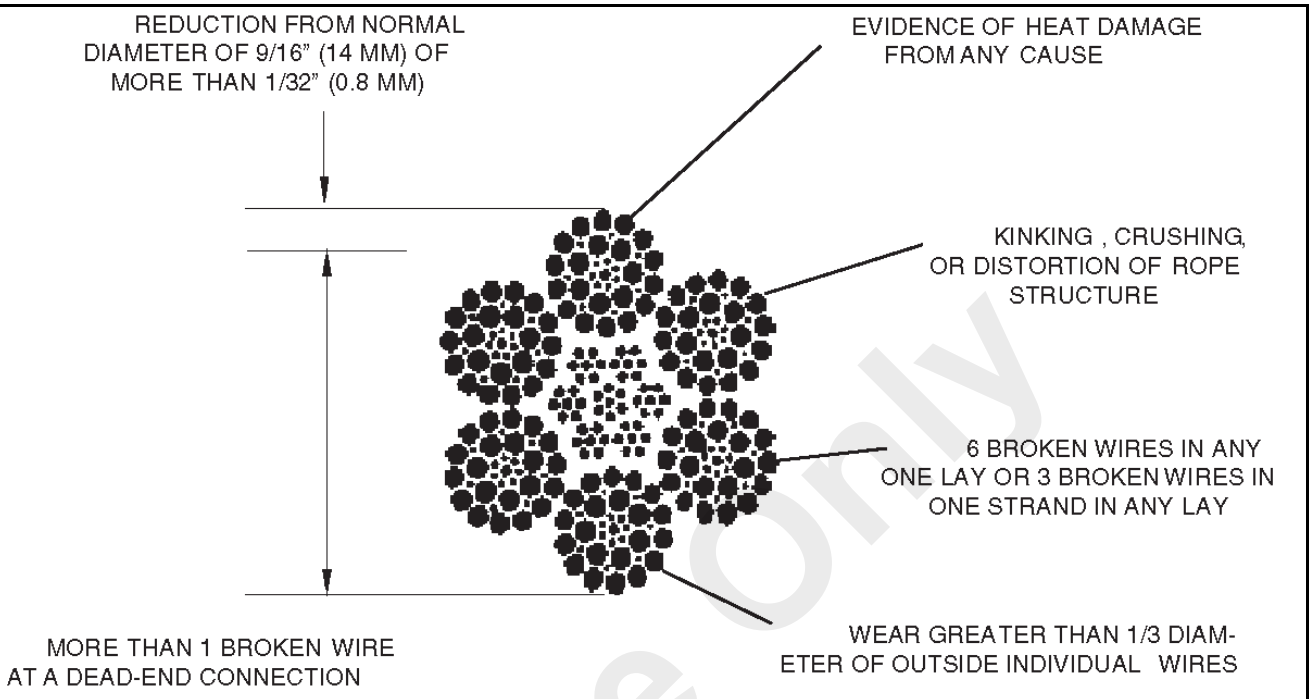

Wire Rope Inspection Criteria

FIGURE 5-28

5

Reference Only

Lubricate the Boom Wear Pads

1. Lower the boom and then extend it to its maximum out position.
2. Engage the parking brake and shut off the engine.
3. Clean the old lubricant from the booms.
4. Apply bronze anti-seize, or equivalent, to the boom sliding surfaces (Figure 5-29) on the boom sections. Only use a small amount of lubricant for best results.
5. Align the boom access holes to gain access to the chain roller bracket and wear pad at the end of the boom telescope cylinder.
6. Apply bronze anti-seize, or equivalent, to the inner boom surface in front of and behind the wear pad. Only use a small amount of lubricant for best results. Extend and retract the booms to distribute the lubricant along the slide path.

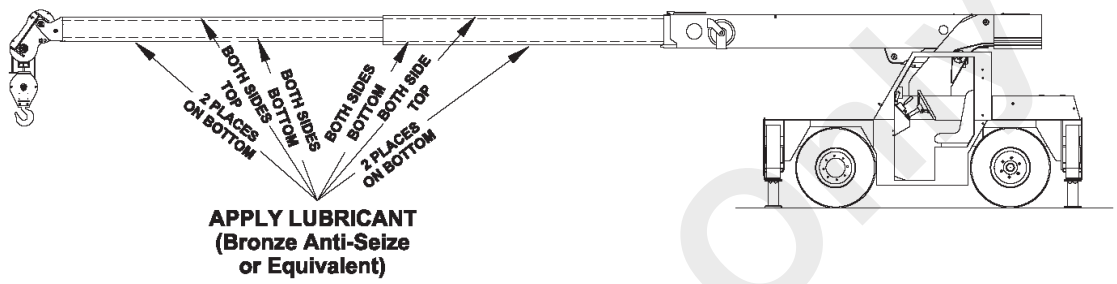

a0601 Wire Rope Inspection Criteria **FIGURE 5-29**

Lubricate the Boom Chains

NOTE: One of the most important, but overlooked factors causing premature wear or breakage of chains is inadequate lubrication. In addition to reducing internal friction, maintaining a film of lubricant on all chain surfaces will inhibit rust and corrosion.

The boom retract chain is lubricated through the access holes in the boom. Align the holes to expose sections of the boom chain. Each section must be lubricated as directed

NOTE: Use a good grade of spray chain lubricant. If none is available, use preheated oil (15° to 37° C [60° to 100° F]) to provide a better penetration of oil to the chain joints.

Apply ample lubricant to each pin, between the inner and outer side plates and between the inner side plates and roller. DO NOT, under any circumstances apply grease lubricant to the chain. Grease will not penetrate to the pin bearings. Lack of lubricant in the pin bearings is usually indicated by squealing or groaning sounds when the boom is extended or retracted.

NOTE: Under normal operating conditions, especially in dusty environments, lubricated chains will accumulate a paste-like buildup of grime. This buildup should never be permitted to accumulate sufficiently to seal off the clearances, thereby restricting the lubricant to the bearing surfaces. Whenever the buildup is excessive, the buildup must be removed by cleaning and the chain immediately lubricated. **DO NOT** steam clean or use degreasers; use a suitable solvent.

Reference Only

100 Hours of Operation

NOTE: *You must read and understand the warnings and basic safety rules, found in Safety Practices page 2-1 of this manual, before performing any operation or maintenance procedures.*

For additional engine maintenance guidelines, see the engine manual furnished with this crane.

Check Wheel Nut Torque

Check the torque on the rear wheel nuts in a crisscross pattern. Wheel torque should be 408 Nm (300 lb-ft).

Check the torque on the front wheel nuts in a crisscross pattern. Wheel torque should be 302 Nm (225 lb-ft).

Inspect the Fan Belts

Keep the engine and accessory belts properly tensioned for maximum engine performance and fuel economy. Proper belt tension minimizes slippage and increases belt life.



w0021 FIGURE 5-30

Belts that are too loose see excessive vibration and increased wear. Belts that are too tight produce wear on the belts and the bearings of the pulleys it travels around.

Check ribbed belts for intersecting cracks. Cracks across the belt are acceptable. Cracks along the length of a ribbed belt are not acceptable. Ribbed belts with cracks along their length or intersecting cracks should be replaced. See Figure 5-31.

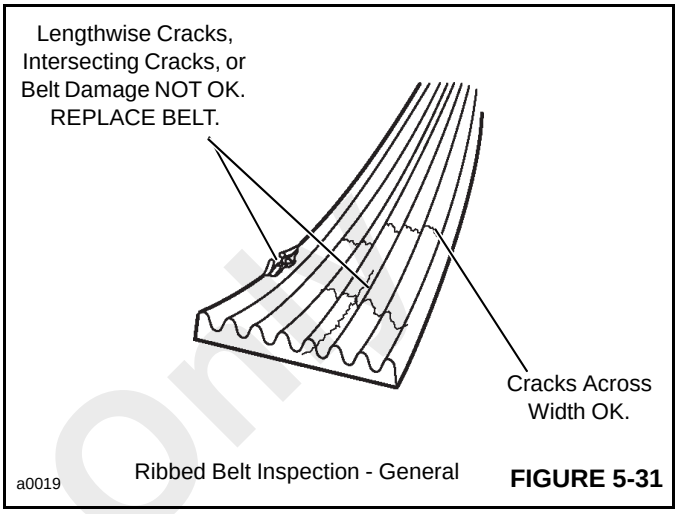

a0019 Ribbed Belt Inspection - General **FIGURE 5-31**

Any cracking on V-belts is not acceptable. Replace any V-belt that has cracking. See Figure 5-32.

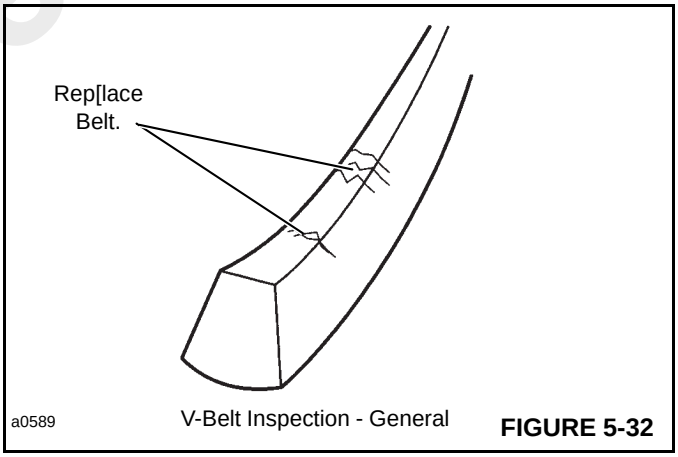

a0589 V-Belt Inspection - General **FIGURE 5-32**

Any ribbed belt or V-belt showing signs of wear or that has material missing should be replaced. When a belt is replaced, check its tension again after 30 minutes of operation. New belts will stretch with use.

5

Reference Only

250 Hours of Operation

NOTE: *You must read and understand the warnings and basic safety rules, found in Safety Practices page 2-1 of this manual, before performing any operation or maintenance procedures.*

For additional engine maintenance guidelines, see the engine manual furnished with this crane.

Inspecting the Boom Chains

1. Place the booms in the fully lowered position.

2. Extend the booms to expose all of the side access holes.

3. Visually inspect the chains through the access holes. A light may be needed to see most of the chain. Look for any damage to the chains.

NOTE: If chain damage is found during the inspection, DO NOT USE THE CRANE. Cease operation and replace the damaged chain before placing the crane back in service. A damaged chain could break, causing boom to not function properly. Personal injury or property damage could result.

4. Damage could be any of the following:

a. A crack or complete break of a link plate, particularly an outer plate on either side of the chain (Figure 5-33).

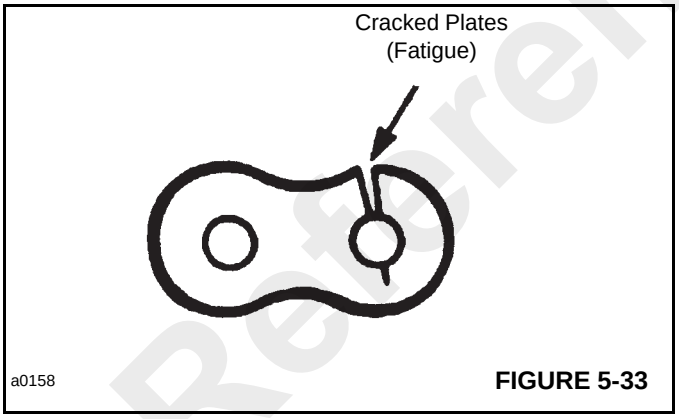

FIGURE 5-33

b. Distortion or spreading of an outside link plate, evidenced by increasing clearance between overlapping link plates, or between the inner link plates and the roller. This indicates a hidden break in a pin (Figure 5-34).

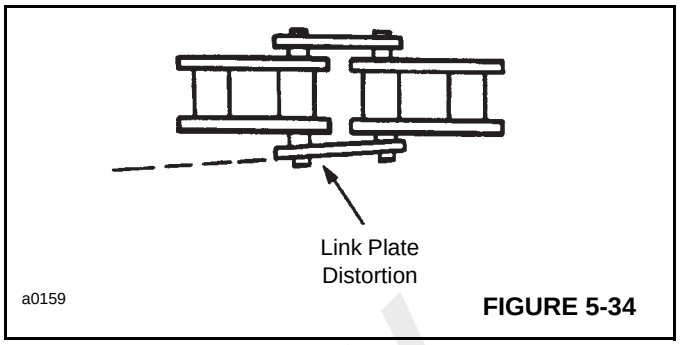

FIGURE 5-34

c. Looseness between the riveted ends of a chain pin and the outer link plates. If a pin is broken, the normal rigid riveting may loosen, leaving a visible clearance around the exposed ends of the pin (Figure 5-35).

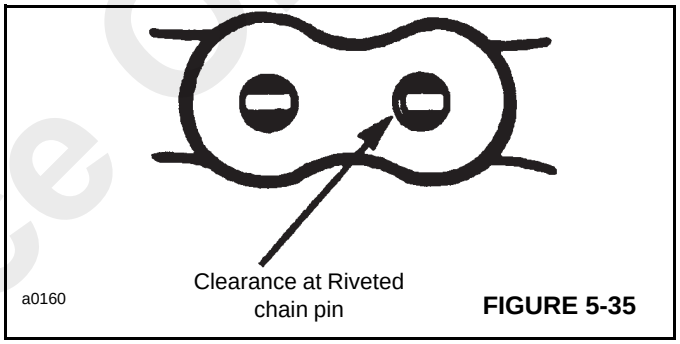

FIGURE 5-35

d. The pin head rivets should be examined to determine if the V-flats are still in the correct alignment. Chain with rotated or displaced heads or abnormal protrusion (Figure 5-36) should be replaced immediately.

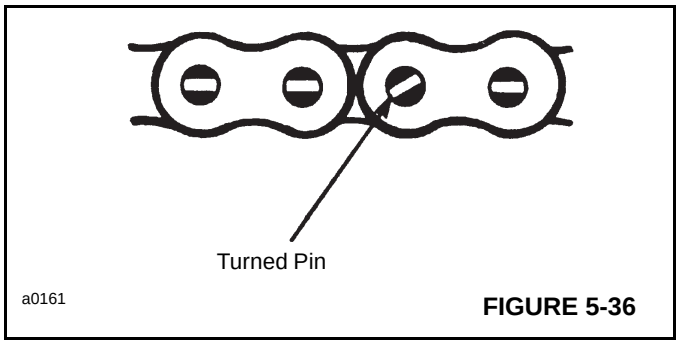

FIGURE 5-36

Inspect the Boom Chain Tension

The boom chains should be checked for the correct tension to ensure proper retraction of the boom sections.

To check for correct tension:

1. Visually check the boom chain through the side access hole in the boom with the booms completely retracted. There should be no slack in the chain. If there is slack in

Reference Only

the chains, see SECTION 11 and adjust the boom chain tension

2. Remove the top boom cover and visually inspect that 2nd and 3rd boom sections have bottomed out against each other and the 1st boom section. If the booms sections are not bottomed out, adjust the boom chains as described in SECTION 11.

Inspect Hydraulic Hoses



w0017 **FIGURE 5-37**

Inspect hydraulic hose assemblies for leaks, damaged fittings and worn exterior. Do not use your hands to check for hydraulic leaks. Hydraulic oil under pressure can cause serious injury or possible death. Use a piece of cardboard or other material as a deflector to detect leaks. Replace any problem hose before beginning work.

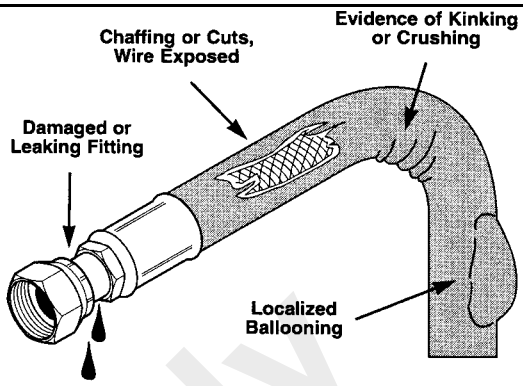

Check hoses carefully. Do not use your bare hands to check for leaks.
Tighten all connections to recommended torque.
Replace if any of the following are found:

- ***End fittings damaged or leaking.***
- ***Outer covering chafed or cut and wire reinforcing exposed.***
- ***Outer covering ballooning locally.***
- ***Hose shows evidence of kinking or crushing.***

a0591 **FIGURE 5-38**

Clean Battery and Cables



w0019 **FIGURE 5-39**

1. Open the battery compartment cover (Figure 5-40).

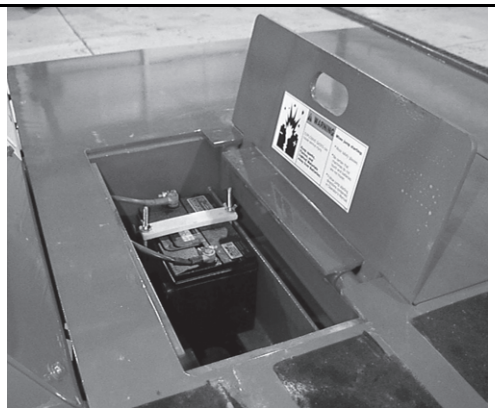

p0299 **FIGURE 5-40**

Reference Only

2. Tighten all battery mounting hardware to keep the battery securely in place.
3. Disconnect the battery cables.
4. Sprinkle the top of the battery with baking soda. Apply water to wash the baking soda from battery. Be careful not get any of solution into the battery
5. Clean the battery posts and cable ends with a battery brush.
6. Coat the battery posts with petroleum jelly and reinstall the battery cables.
7. Close the battery box cover.

Cleaning the Radiator

NOTE: To inhibit personal injury, always wear safety glasses when using compressed air.

Clean the radiator fins using compressed air or a water hose to remove all foreign materials. If these materials are not removed, the engine may over heat due to blocked air through the radiator fins and core.

Lubricate the Wire Rope

Apply lubricant to the hoist wire rope to inhibit rust, corrosion and wear.

1. Unwind the wire rope from the hoist drum.
2. Be sure the wire is clean and dry before applying the lubricant.
3. Apply a good grade spray wire rope lubricant to the entire length of the wire rope. If a wire rope lubricant is not available, a light weight engine oil may be used. Preheating the oil to between 18° and 36° C (60° and 100° F) will help the oil penetrate into the wire rope. Use a brush or cloth to apply the oil.

NOTE: Be sure the lubricant enters the strands of the wire rope for proper lubrication. Do not use grease to lubricate the wire rope.

Lubricate the Swing Gear and Pinion

1. Engage the parking brake and shut off the engine.
2. Remove the guard covering the swing gear and pinion.



w0022 **FIGURE 5-41**

NOTE: Rotating gears can cause injury. Keep hands clear of rotating pinion and gear while the mast is rotating.

3. Spray Ceplattyn lubricant onto the pinion and swing gear teeth (Figure 5-42).

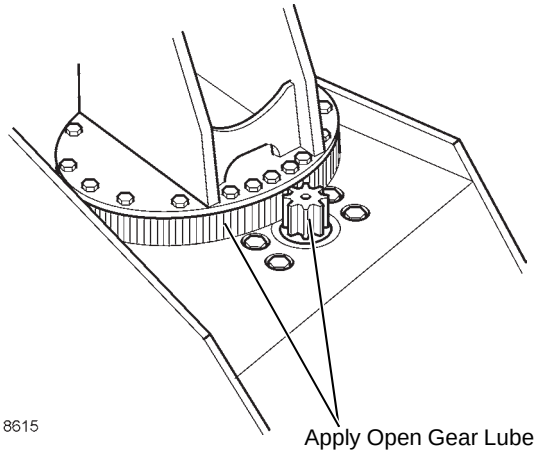

8615 Swing Gear and Pinion Lubrication - Typical **FIGURE 5-42**

4. Start the engine and rotate the mast to spray the lubricant evenly over the entire gear.
5. Shut off the engine.
6. Install the guard over the exposed pinion and swing gear.

Reference Only

Replace the Crankcase Oil and Filter

Change the engine oil more frequently if operating under difficult conditions, for example in high or low temperatures, dusty surroundings or frequent starting and stopping.

NOTE: *It is necessary to climb under the crane to change the engine oil and replace the engine oil filter. Be sure engine is shut off, the ignition key is removed, parking brake is engaged and chock blocks are in place before climbing under the crane.*

NOTE: *Drain the engine oil only when it is hot and the contaminants are in suspension.*

WARNING

Hot oil can cause personal injury.

1. Operate the engine until the water temperature reaches 60° C (140° F).
2. Shut off the engine.
3. Place a suitable container under the engine oil drain plug. Remove the oil drain plug.
4. Clean the area around the engine oil filter head.
5. Remove the filter and clean the gasket surface of the filter head.

NOTE: *The gasket can stick on the filter head. Make sure it is removed before installing the new filter*

6. Fill the new filter with clean recommended lubricating oil (See *Operator Manual*).
7. Apply a small amount of clean engine oil to the gasket of the new oil filter. Turn the filter clockwise to tighten it until the gasket makes contact. Then, tighten the filter 1/2 to 3/4 turn to get correct seal.
8. Fill the engine crankcase with clean recommended lubricating oil.
9. Operate the engine at idle and inspect for leaks at the filter and drain plug.

Torque Critical Bolts

NOTE: *Maintain correct torque on all bolts. Failure to do so may result in severe damage to the machine and/or personal injury.*

Hoist Gearbox Mounting Bolts

Torque the 3/4” mounting bolts (4) to 272 Nm (200 lb-ft). See Figure 5-43.

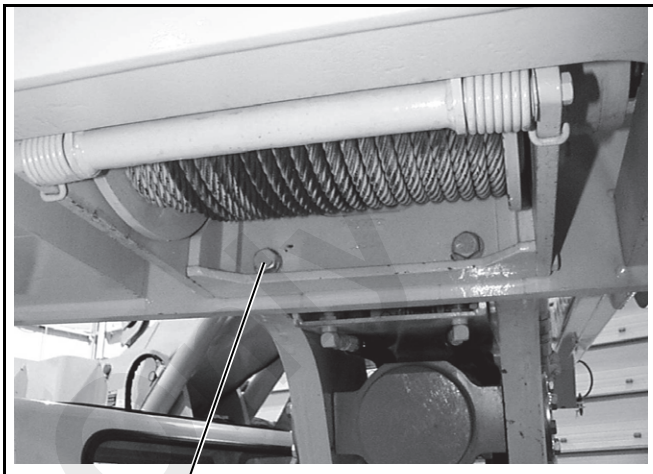

FIGURE 5-43

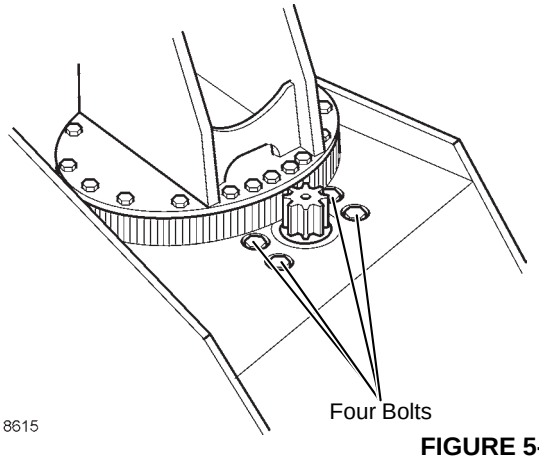

FIGURE 5-44

Swing Gearbox Mounting Bolts

Torque the 1/2” gearbox mounting bolts (4) see *Fasteners and Torque Values page 1-12*. Refer to Figure 5-44 for bolt locations.

Reference Only

Mast Mounting Bolts

Because of the cyclic loading on the mast bolts, it is important that these bolts be checked at regular intervals.

Make a record of any loose bolts. If any bolt does not hold to correct torque after the second check, remove and replace the bolt. A loose bolt indicates possible failure of the bolt.

Use the torque sequence shown in Figure 5-46 when checking the torque on the bolts.

Swing Bearing to Frame Bolts

Torque the 3/4” bearing to frame mounting bolts (24) to 384 Nm (282 lb-ft). To gain access to the bolts, rotate the mast until a bolt is visible in the access hole in the mast mounting plate (Figure 5-45). Rotate the mast as needed and tighten each bolt in a criss cross pattern as shown in Figure 5-46 until all bolts are torqued.

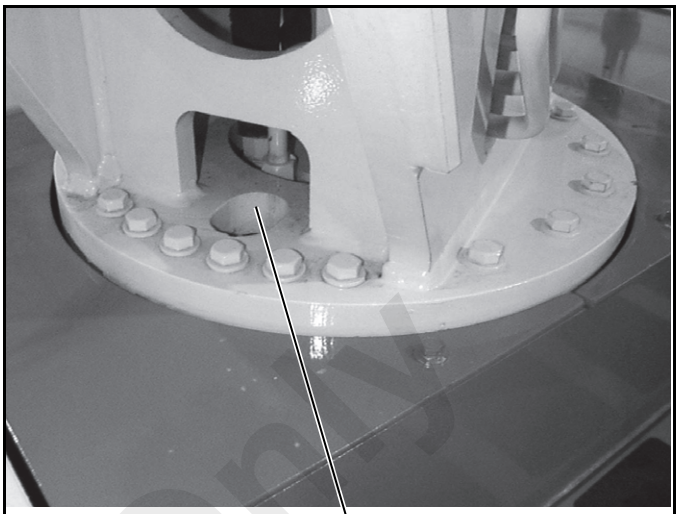

p0325 Bearing to Frame Mounting Bolts **FIGURE 5-45**

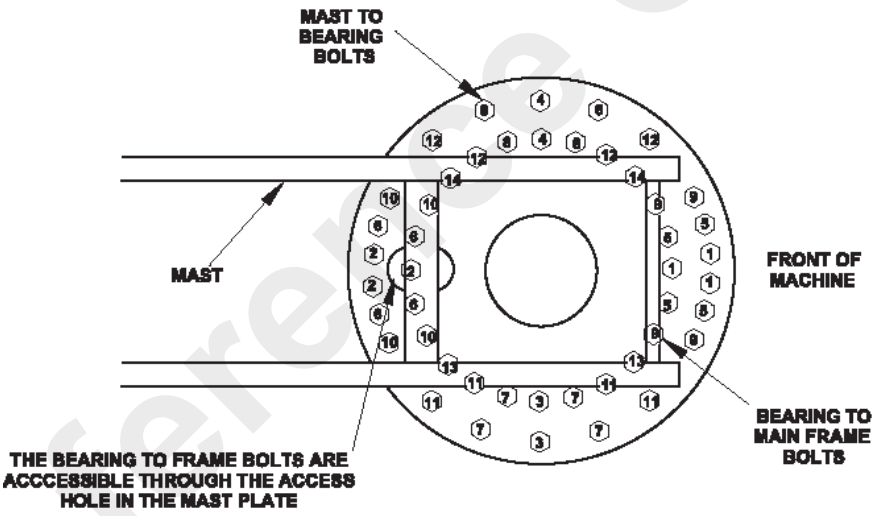

a0602 **FIGURE 5-46**

Reference Only

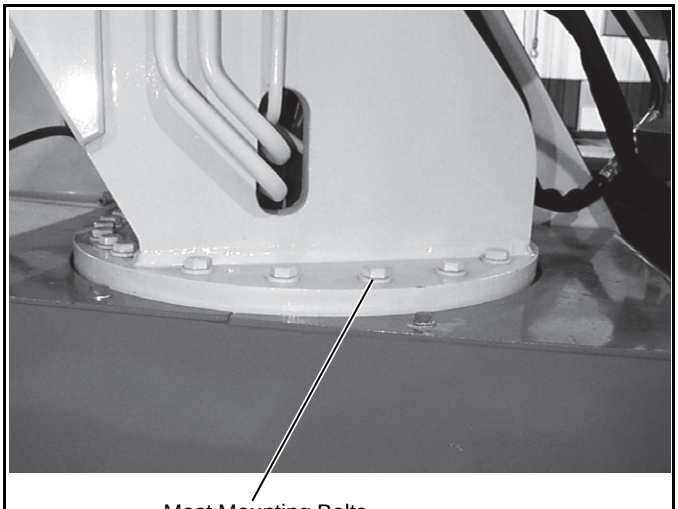

FIGURE 5-47

Front Axle Mounting bolts

NOTE: *It is necessary to climb under the crane to check the axle mounting bolts. Be sure engine is shut off, the ignition key is removed, parking brake is engaged and chock blocks are in place before climbing under the crane.*

Torque the 3/4” axle mounting bolts (8) to 362 Nm (266 lb-ft). See Figure 5-48.

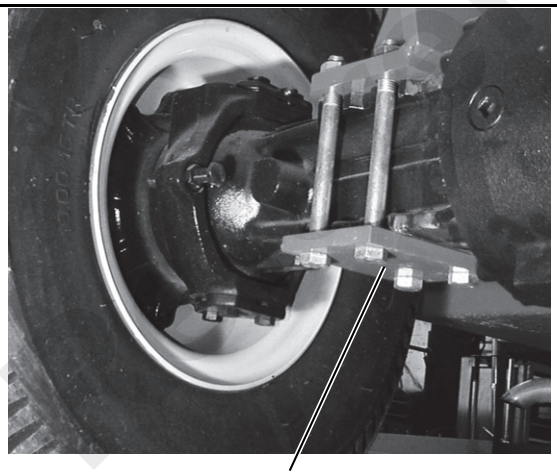

FIGURE 5-48

Rear Axle Mounting Bolts

NOTE: *It is necessary to climb under the crane to check the axle mounting bolts. Be sure engine is shut off, the ignition key is removed, parking brake is engaged and chock blocks are in place before climbing under the crane.*

Torque the 5/8” axle mounting bolts (8) to 245 Nm (180 lb-ft). See Figure 5-49.

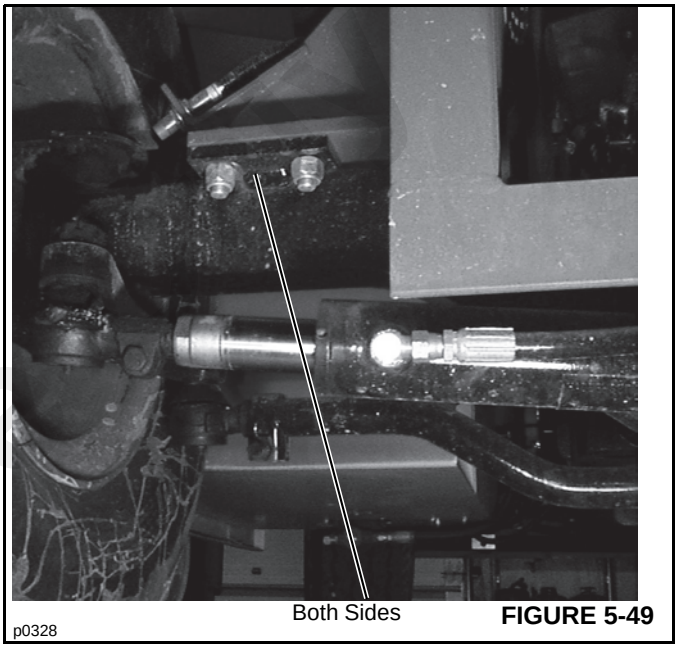

FIGURE 5-49

5

500 Hours of Operation

NOTE: *You must read and understand the warnings and basic safety rules, found in Safety Practices page 2-1 of this manual, before performing any operation or maintenance procedures.*

For additional engine maintenance guidelines, see the engine manual furnished with this crane.

Inspect the Tires

Inspect the tires for any signs of damage, such as cracks, large gouges, deterioration, etc. If damage is found, it must be carefully analyzed to determine if the tire is safe to use. Replace all tires that are unsafe.

Inspect the Parking Brake Pads

NOTE: *It is necessary to climb under the crane to check the parking brake pads. Be sure engine is shut off, the ignition key is removed and chock blocks are in place before climbing under the crane.*

Inspect the thickness of the brake pads (Figure 5-50). Replace the brake pads if they are 7.1 mm (0.28 in) thick or less.

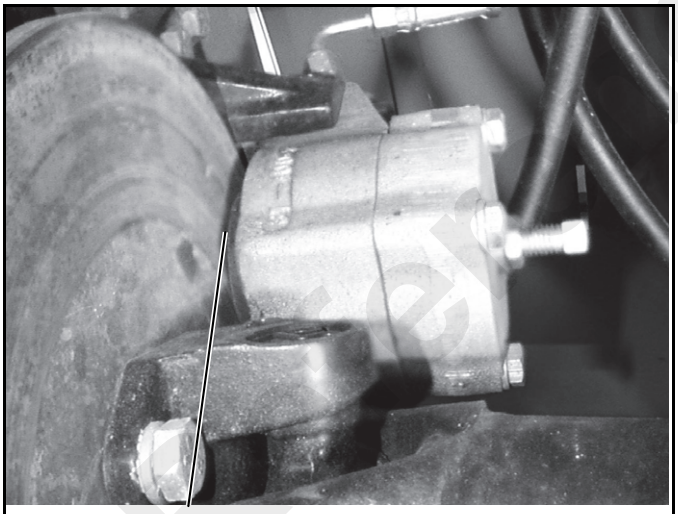

P0329 Both Sides of Disc **FIGURE 5-50**

Replace Fuel Filter

See the engine operator's manual furnished with the crane and follow the replacement procedures.

NOTE: *If the filter is not filled with fuel prior to installation, the engine will not start due to air in the fuel system. The fuel system will have to be bled as instructed in the engine operator's manual furnished with the crane.*

In-Line Fuel Filter

Replace the in-line fuel filter by removing the clamps securing the fuel hoses to the filter.

Replace Air Cleaner Element

Service the air cleaner only with the engine shut down. Dirt and debris can enter the engine and cause damage if the engine is operated with the air cleaner element removed.

1. Remove the housing cover.
2. Remove the element as gently as possible until you get outside of the housing. Accidently bumping it while it is still inside the housing means dropped dirt and dust that may contaminate the clean side of the air cleaner housing before the new element has a chance to do its job.
3. Clean the inside of the housing carefully. Any dirt left inside the housing could cause damage to the engine. Use a clean, water-dampened cloth to wipe every surface clean. Check it visually to make sure it is clean before installing a new element.
4. Always clean the gasket sealing surfaces of the housing. An improper gasket seal is one of the most common causes of engine contamination. Make sure that all hardened ridges are completely removed, both on the bottom and top of the housing.
5. Install the new element over the stud in the housing and slide it all the way in.
6. Make sure the gasket is seating evenly. If the gasket is not seating evenly for a perfect seal, you won't have protection. Recheck to see if the sealing surface in the housing is clean, or if the element is not the right model number. It may be too short for the housing.
7. Install the air cleaner housing cover.
8. Reset the air cleaner restriction indicator by pushing in the reset button (Figure 5-51).

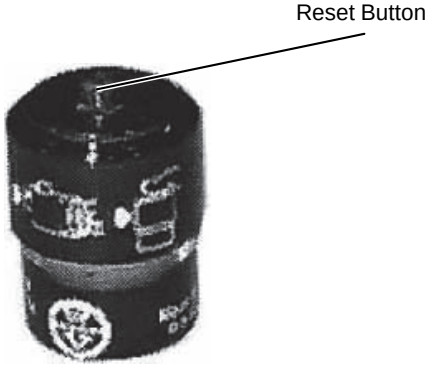

p0450 **FIGURE 5-51**

Reference Only

Add Rust Inhibitor to Engine Cooling System

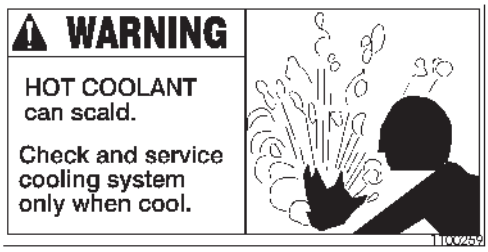

w0020 **FIGURE 5-52**

For maximum protection of the engine cooling system, add a corrosive inhibitor to the radiator. When the engine is cold, remove the radiator cap and pour the inhibitor in the radiator reservoir.

Lubricate the Outrigger Wear Pads

1. Lower the outriggers.
2. Clean the slide beams, top and bottom, with a suitable solvent.
3. Apply Mobil EP grease, or equivalent, to the areas shown in Figure 5-53. Do not over lubricate. Extend and retract the beams several times to spread the grease.

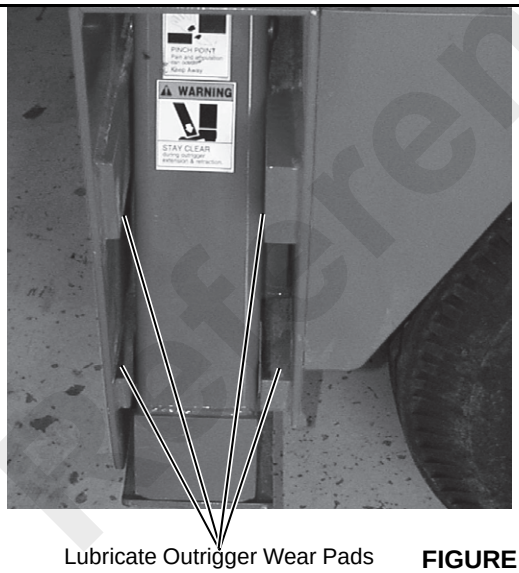

p0448 Lubricate Outrigger Wear Pads **FIGURE 5-53**

Add Grease to the Swing Gearbox

NOTE: *It is necessary to climb under the crane to add grease to the swing gearbox. Be sure engine is shut off, the ignition key is removed and chock blocks are in place before climbing under the crane.*

The grease fitting for adding grease to the swing gearbox can only be reached from under the crane. It will be necessary to use a light to see the fitting.

1. Lower the boom, engage the parking brake and shut off the engine. Remove the ignition key.
2. Clean the grease fitting (Figure 5-54), located on the swing gearbox housing.

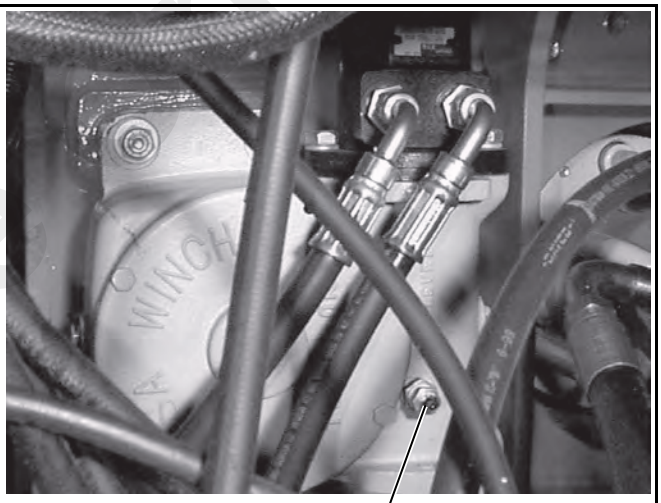

p1018 Swing Gearbox Grease Fitting **FIGURE 5-54**

3. Clean around the check plug, located below the gearbox mounting flange. Remove the check plug.
4. Apply Lithium Base, E.P. No. 2 bearing grease to the fitting. Fill gear box until grease exits the vent on top of the gearbox.
5. Install the check plug.

5

Reference Only

Check the Axle Housing Lubricant Level

NOTE: *It is necessary to climb under the crane to check the axle housing lubricant level. Be sure engine is shut off, the ignition key is removed and chock blocks are in place before climbing under the crane.*

1. Clean around both fill/check plugs (Figure 5-55) in the brake housings and remove the plugs.

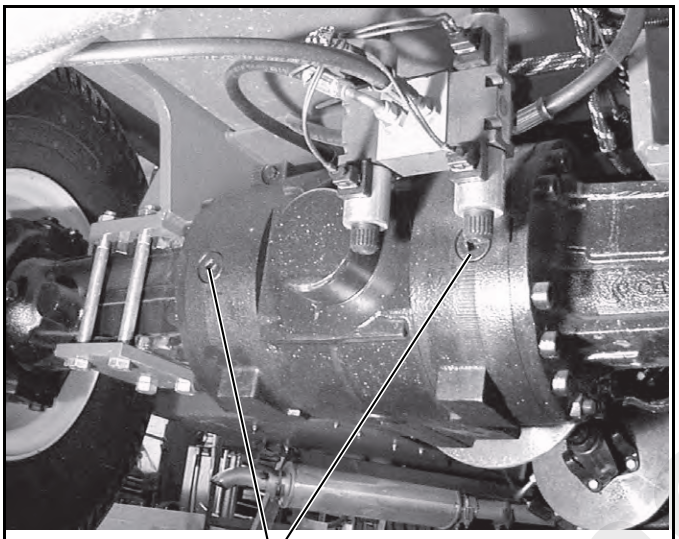

p0319 Fill/Check Plugs - Axle Housing **FIGURE 5-55**

2. Check the lubricant level, which should be even with the bottom of each fill/check hole.
3. If necessary, add oil to fill the housings to the recommended level.

Check the Wheel Hub Lubricant Level

1. Position the wheel so that the fill/check plug is horizontal with the ground (Figure 5-56).
2. Clean around the plug and then remove it.
3. Check the lubricant level which should be even with the bottom of the hole.
4. If necessary, add oil to fill the hub to the recommended level.
5. Repeat Steps 1 through 4 for the other wheel hub.

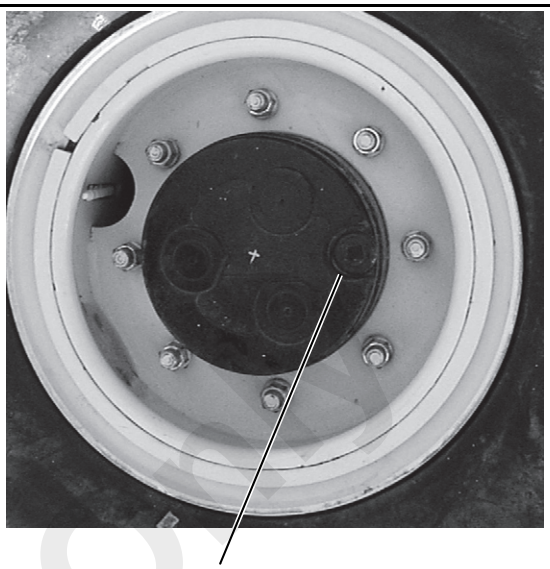

p0459 Fill/Check Plug - Wheel Hub **FIGURE 5-56**

Check Hoist Gearbox Lubricant Level

Check Hoist Gearbox Lubricant Level (Model 1259W)

NOTE: Two different model boom hoists have been used on the Models CD3339/YB4409-2. Before performing any maintenance on the hoist gearbox, verify which hoist is installed. Model 1250C hoists use a plug in the center of the drum to check the lubricant level. Model PD12C hoists use a sight gauge to check lubricant level.

1. Engage the parking brake and shut off the engine.
2. Lower the boom to its lowest position.
3. Clean around the fill/check plug (Figure 6-57) and then remove the plug.

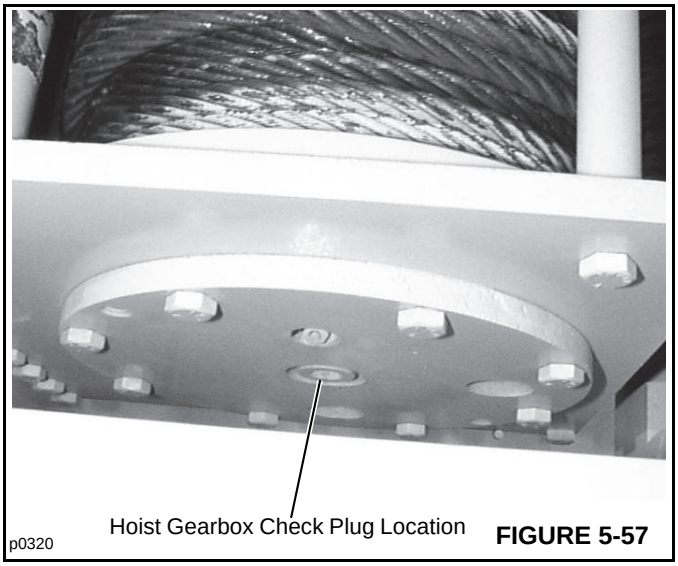

p0320 Hoist Gearbox Check Plug Location **FIGURE 5-57**

4. Check the lubricant level, which should be even with the bottom of the fill/check plug hole.

Reference Only

5. If necessary, add SAE 90 EP gear lube to fill to the bottom of the fill/check plug hole.

6. Clean around the area of the brake breather (Figure 5-58). Remove the breather.

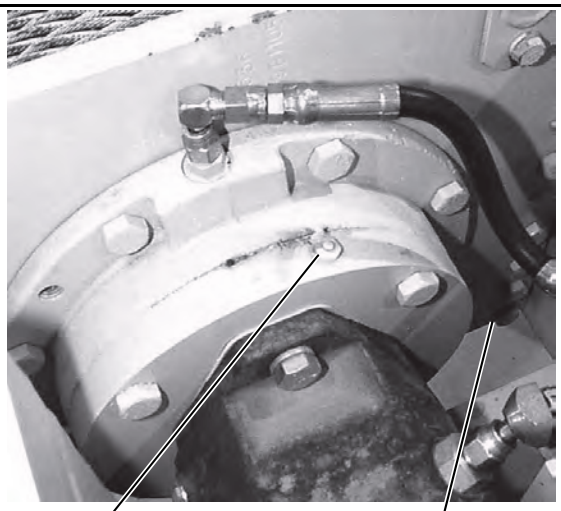

p0319 **FIGURE 5-58**

7. Remove the check plug (Figure 5-58).

8. Check the lubricant level, which should be level with the bottom of the check plug hole.

WARNING

Do not use EP type gear lube in the brake section of this hoist. EP lube may prevent the clutch from locking up, causing the load to fall and resulting in property damage, personal injury or death.

9. If necessary, add Mobilfluid 424,or equivalent, through the breather hole to fill the brake level with the bottom of the check plug hole.

10. Install both the breather and the check plugs.

Check Boom Hoist Lubricant Level (Model PD12C)

NOTE: Two different model boom hoists have been used on the Model 3339. Before performing any maintenance on the hoist gearbox, verify which hoist is installed. Model 1250C hoists use a plug in the center of the drum to check the lubricant level. Model PD12C hoists use a sight gauge to check lubricant level.

1. Lower the boom to its lowest position and engage the parking brake and shut off the engine.

2. Clean around the gearbox breather and check plug (Figure 5-59). Remove the breather and clean it in a suitable solvent.

3. Check the lubricant level, which should be even with the bottom of the check plug hole.

4. Using a mirror, and light if needed, check the lubricant level in the sight gauge. Lubricant must be visible in the sight gauge.

5. If lubricant must be added, rotate the hoist drum until the drain/fill plug is visible in the access hole aligned with the level sight gauge. Clean around the drain/fill and then remove it. Add recommended lubricant (see Section 8) through the plug hole until it exits the fill plug hole. Install the plug.

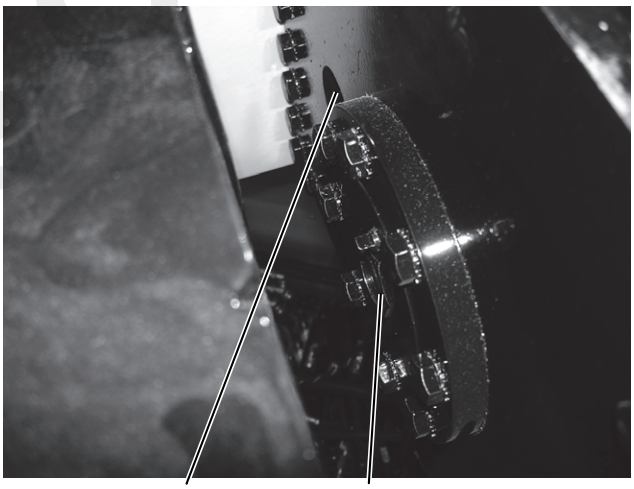

p1216 Gearbox Sight Gauge and Fill Plug. **FIGURE 5-59**

WARNING

Failure to use the proper type and viscosity of planetary gear oil may contribute to intermittent brake clutch slippage which could result in property damage, severe personal injury or death. Some gear lubricants contain large amounts of EP (extreme pressure) and anti-friction additives which may contribute to brake clutch slippage and damage to brake friction discs and seals. Oil viscosity with regard to ambient temperature is also critical to reliable brake clutch operation. Test have indicated that excessively heavy or thick gear oil may contribute to intermittent brake clutch slippage. Make certain that the gear oil viscosity in the hoist is correct for prevailing ambient temperature.

Reference Only

1000 Hours of Operation

NOTE: *You must read and understand the warnings and basic safety rules, found in Safety Practices page 2-1 of this manual, before performing any operation or maintenance procedures.*

For additional engine maintenance guidelines, see the engine manual furnished with this crane.

Replace the Transmission Oil and Filter

1. Engage the parking brake and shut off the engine. Remove the ignition key.

NOTE: *It is necessary to climb under the crane to drain the transmission oil. Be sure engine is shut off, the ignition key is removed and chock blocks are in place before climbing under the crane.*

NOTE: *When the strainer is removed, oil will gush out. Keep to one side when you remove the strainer.*

2. Place suitable container under the strainer (Figure 5-60). Remove the strainer and gasket and drain the oil into the container. Discard the gasket.

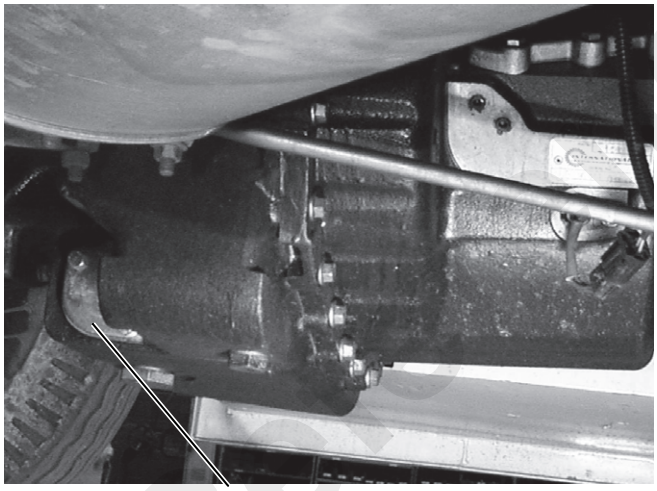

p0331 Transmission Strainer **FIGURE 5-60**

NOTE: *Before removing the strainer, be sure you have a new strainer gasket. The old strainer gasket will be damaged during removal of the strainer, and if it is installed with the strainer, leakage will occur. It is recommended that three gaskets be kept in supply at all times. This will cover a years maintenance and one for emergency maintenance.*

3. Place the container under the drain plug and remove the drain plug (Figure 5-61). Drain any oil left in the transmission into the container. Install the drain plug.

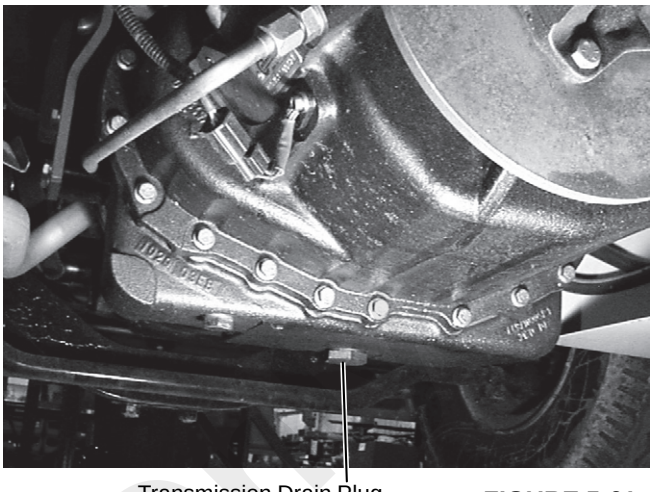

p0332 Transmission Drain Plug **FIGURE 5-61**

4. Clean the strainer in a suitable solvent.

5. Install the cleaned strainer and a new gasket. Tighten the strainer mounting bolts to a torque of 10 Nm (7.4 lb-ft).

6. Remove the transmission oil filter by unscrewing it from the transmission housing (Figure 5-62). Properly discard the filter.

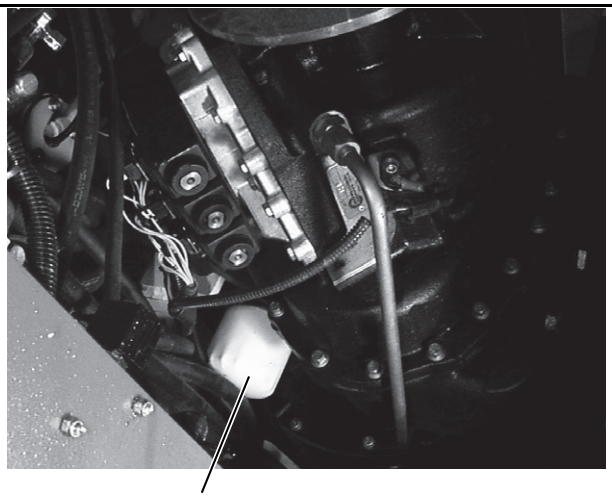

p0333 Fill/Check Plug - Wheel Hub **FIGURE 5-62**

7. Coat the seal of the new filter with clean transmission oil.

8. Screw on the transmission filter until it touches the filter head. Then, turn the filter another 3/4 of a turn to seat the seal.

9. Fill the transmission with CAT TO-4 transmission fluid to the full mark on the dipstick (approximately 15.1 l [4 gal]).

10. Start the engine and let it run at idle speed for approximately five minutes. This allows the oil to fill the transmission filter, torque converter and hoses.

11. Stop the engine, wait approximately one minute and then check oil level. If low, add oil to the full mark on the transmission dipstick. **DO NOT OVERFILL**.

Replace the Axle Housing Lubricant

NOTE: *It is necessary to climb under the crane to drain the differential oil. Be sure engine is shut off, the ignition key is removed and chock blocks are in place before climbing under the crane*.

1. Place a container under the differential drain plug (Figure 5-63). Loosen the axle housing breather. Remove the drain plug and drain the fluid into the container. Install the drain plug.

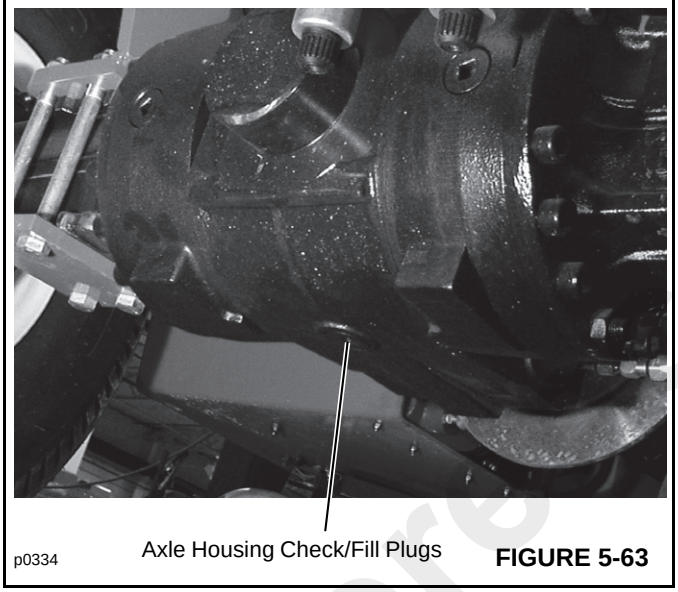

FIGURE 5-63

2. Clean around the axle housing breather (Figure 5-64). Remove the breather and clean it in a suitable solvent. When clean install the breather back into the axle housing.

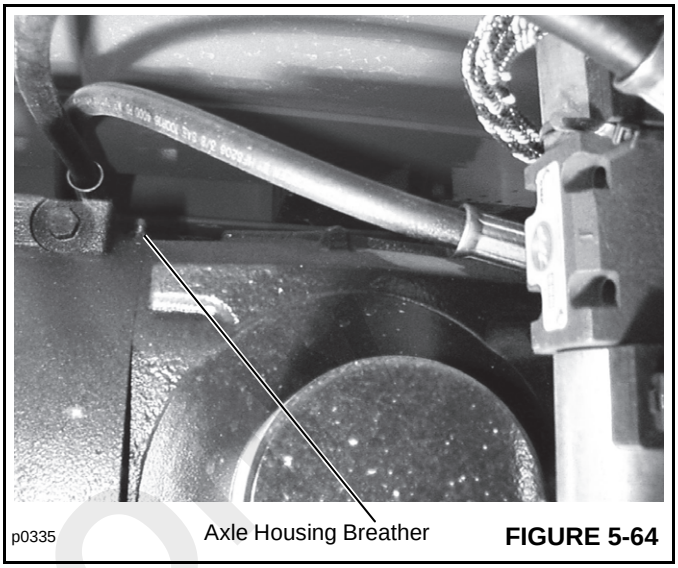

FIGURE 5-64

3. Clean around the two check/fill plugs in the axle brake housings (Figure 5-64). Remove both plugs.

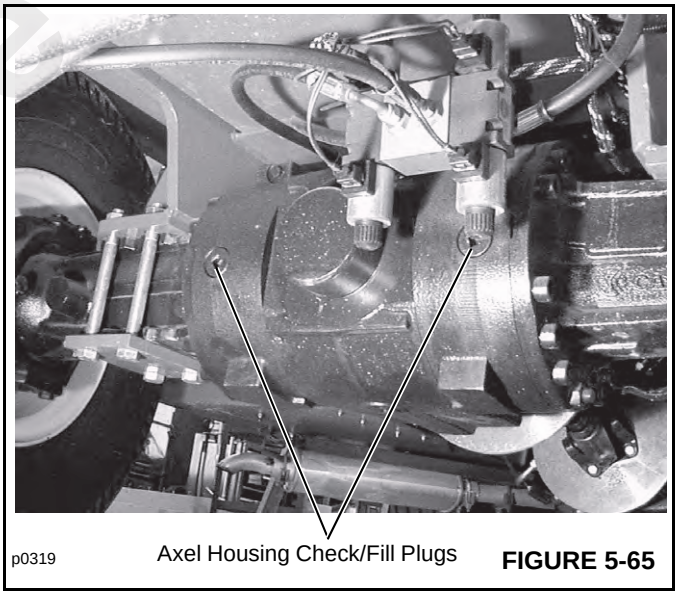

FIGURE 5-65

4. Fill the differential and brake housings with appropriate oil through both check fill plugs. Fill until the oil reaches the bottom of each fill hole.

5. Install both check/fill plugs.

Reference Only

Replace the Axle Wheel Hub Lubricant

1. Drive the crane until one of the front axle wheel hub drain plugs is located at the bottom of the wheel hub (Figure 5-66).

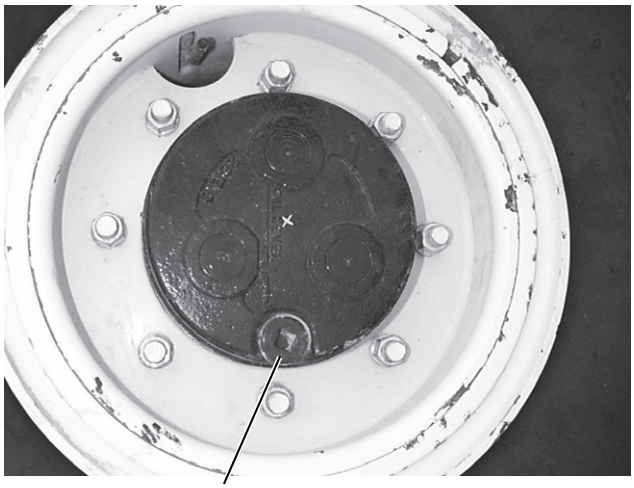

p0460 Drain Position **FIGURE 5-66**

2. Clean around the drain plug and then remove it. Drain the wheel hub oil into a suitable container.
3. Drive the crane until the drain hole is horizontal (Figure 5-67).

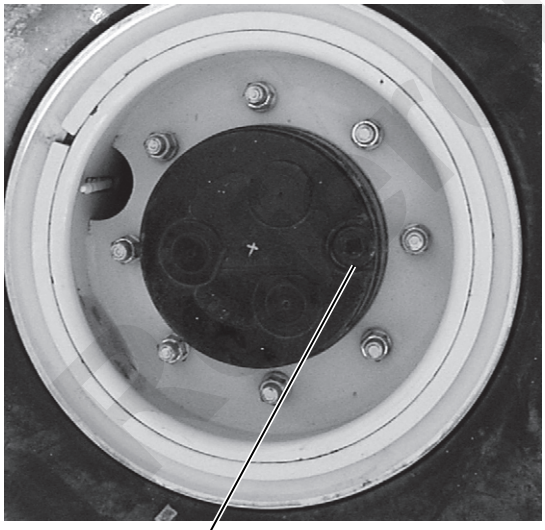

p0459 Fill Position **FIGURE 5-67**

4. Fill the wheel hub with appropriate oil through the exposed hole until the oil reaches the bottom of the hole.
5. Install the plug.
6. Repeat the above procedure for the other wheel hub.

Replace the Hoist Gearbox and Brake Lubricant (Tulsa Model 1259W)

NOTE: Two different model boom hoists have been used on the Models CD3339/YB4409-2. Before performing any maintenance on the hoist gearbox, verify which hoist is installed. Tulsa Model 1259W hoists use a plug in the center of the drum to check the lubricant level.Model PD12C hoists use a sight gauge to check lubricant level.

1. Lower the boom to lowest position, engage the parking brake. Leave the engine running.
2. Rotate the drum until the drain plug is visible through the hole in the side of the mounting bracket.

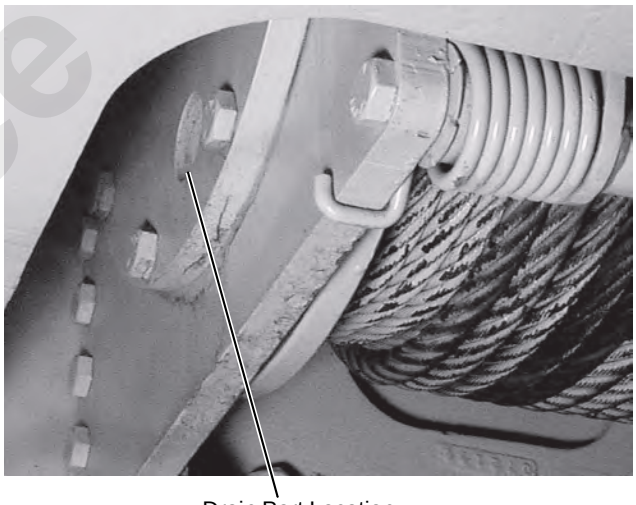

p0336 Drain Port Location **FIGURE 5-68**

3. Clean around the gearbox breather and the fill/check plug hole. Remove the gearbox breather (Figure 5-69) and clean it in a suitable solvent. After it is cleaned, install the breather.

Reference Only

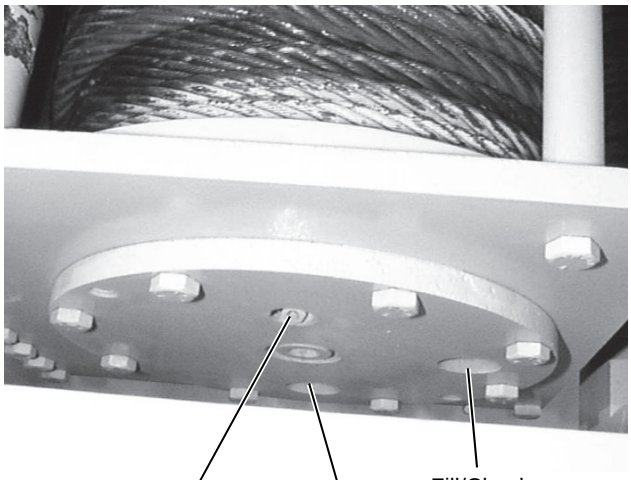

FIGURE 5-69

4. Remove the fill/check plug (Figure 5-69).
5. Place a suitable container under the drain plug.
6. Using a ratchet wrench with an extension and a 3/8” hex socket attached, remove the drain plug. Allow the fluid to drain into the container. Examine the oil for signs of significant metal particles. If any particles are found, the gearbox may require disassembly and repair.
7. Install the drain plug.
8. Fill the gearbox through the fill hole until the fluid is even with the bottom of the fill hole. Fill with SAE 90 EP gear lube.
9. Install the fill/check plug.

Hoist Brake

1. Clean around the brake breather (Figure 5-70). Remove the breather and clean it in a suitable solvent.

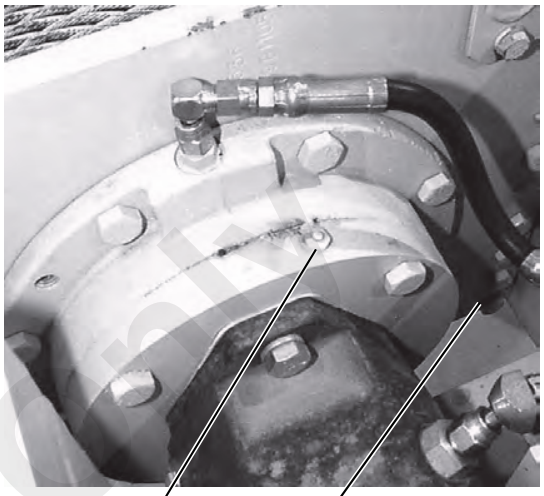

FIGURE 5-70

2. Place a suitable container under the brake drain plug. Clean around the drain plug and then remove the plug and allow the fluid to drain into the container.



FIGURE 5-71

3. Install the drain plug.

WARNING

Do not use EP type gear lube in the brake section of this hoist. EP lube may prevent the clutch from locking up, causing the load to fall and resulting in property damage, personal injury or death.

4. Fill the brake through the breather hole until fluid is even with the bottom of the check plug hole. Use Mobilfluid 424, or equivalent.

Reference Only

5. Install the breather and the check plug.

Replace the Hoist Gearbox and Brake Lubricant (PD12C)

NOTE: Two different model boom hoists have been used on the Model 3339. Before performing any maintenance on the hoist gearbox, verify which hoist is installed. Model 1259W hoists use a plug in the center of the drum to check the lubricant level. Model PD12C hoists use a sight gauge to check lubricant level.

1. Lower the boom to its lowest position and engage the parking brake.

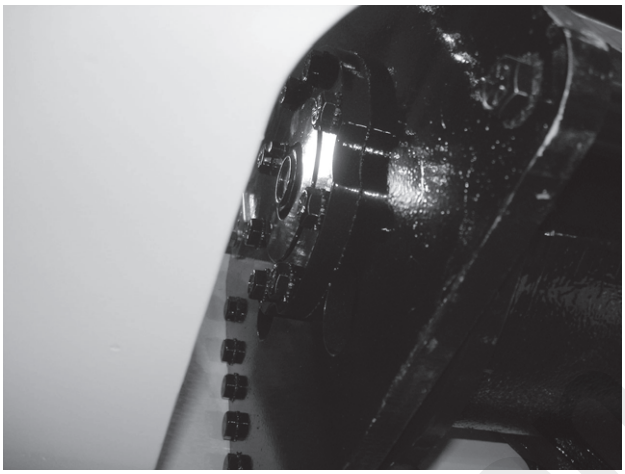

p3020 **FIGURE 5-72**

2. Rotate the hoist drum until the drain/fill plug aligns with the lower access hole in the hoist side plate.
3. Clean around the hoist breather and the drain/fill plug. Remove the breather and clean it in a suitable solvent. After it is cleaned, reinstall it.
4. Install a 1” pipe nipple in the threads of the drain hole in the hoist drum.
5. Place a suitable container under the drain plug.
6. Using a 5/16 inch Allen wrench, remove the drain/fill plug and allow the fluid to completely drain into the container. Examine the oil for signs of significant metal particles. If particles are found, the gearbox may require disassembly and repair.
7. Remove the 1” pipe nipple and then rotate the hoist drum until the open drain hole aligns with the access hole even with the lubricant level sight gauge.

WARNING

Failure to use the proper type and viscosity of planetary gear oil may contribute to intermittent brake clutch slippage which could result in property damage, severe personal injury or death. Some gear lubricants contain large amounts of EP (extreme pressure) and anti-friction additives which may contribute to brake clutch slippage and damage to brake friction discs and seals. Oil viscosity with regard to ambient temperature is also critical to reliable brake clutch operation. Tests have indicated that excessively heavy or thick gear oil may contribute to intermittent brake clutch slippage. Make certain that the gear oil viscosity in the hoist is correct for prevailing ambient temperature.

8. Fill the hoist through the open hole until the fluid starts to drain out of the hole. Fill with recommended fluid (see *Lubrication Points page 5-6*).
9. Install the drain/fill plug.

Lubricate the Rear Axle Bearings

The rear axle wheel bearings should be lubricated with grease. The hubs have to be removed to gain access to the wheel bearings.

Replace the Hydraulic Oil

NOTE: *ISO (international Standards Organization) #46/68 Hydraulic Oil (Mobil Fluid #424) is recommend for year-round use in the hydraulic system.*

In very cold temperatures, SAE 5W or SAE 5W-20 oils can be used if the viscosity of the oil will not be less than 60 SUS (Saybolt Universal Seconds) at maximum operating temperature. It may be necessary to use a pre-heater and a longer than normal warming period at low operating speed to heat the oil to operating temperature.

NOTE: *The main hydraulic pump used on this crane requires clean hydraulic oil for proper operation.* **Contaminated oil can cause damage to the pump and other components.** *Before adding any hydraulic oil to the hydraulic system, be sure the oil has been filtered through a 10 micron (absolute), or less, filter.*

To change the hydraulic oil:

1. Fully retract and lower the booms.
2. Retract all outriggers.
3. Operate the hydraulic system until the hydraulic oil is warm.

Reference Only

NOTE: *It is necessary to climb under the crane to drain the hydraulic oil. Be sure engine is shut off, the ignition key is removed, parking brake is engaged, and chock blocks are in place before climbing under the crane.*

4. Level the crane, engage the parking brake, shut off the engine and remove the ignition key.
5. Place a suitable container under the hydraulic pump, located in front of the engine.
6. Loosen the suction hose at the secondary hydraulic pump (Figure 5-73) and let the oil drain from the hydraulic tank into the container. DO NOT remove the suction hose from the main pump.

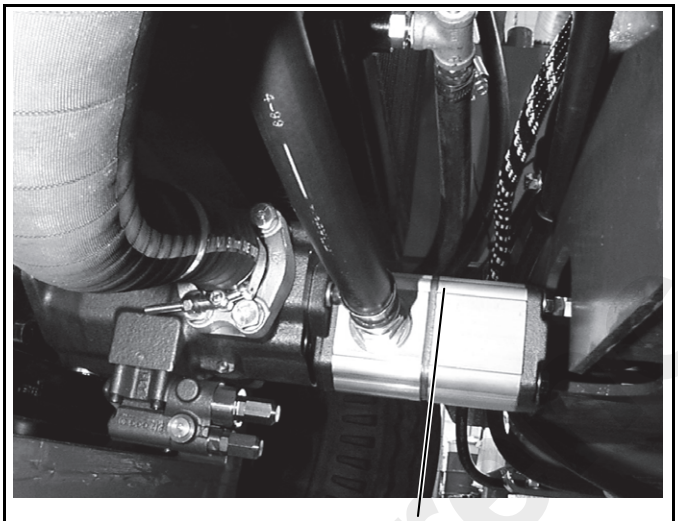

Steering Pump Suction Line

p0445 **FIGURE 5-73**

7. When the tank is drained, connect the suction line to the secondary pump. Tighten the clamp. Be sure the suction hose is tight and the clamp on the main pump suction hose is tight.
8. Remove the wheel and tire under the hydraulic tank. It will make it much easier to reach under the hydraulic tank if the wheel and tire are removed. Block the frame.
9. Disconnect all hoses from hydraulic tank (Figure 5-74). Secure the main pump suction line so that the hydraulic oil in the hose will not drain out.

NOTE: *DO NOT lower the main pump suction line lower than the pump. The pump requires that it be full of oil at start-up. Lowering the hose lower than the pump will drain the oil from the pump and cause damage to the pump when it is started.*

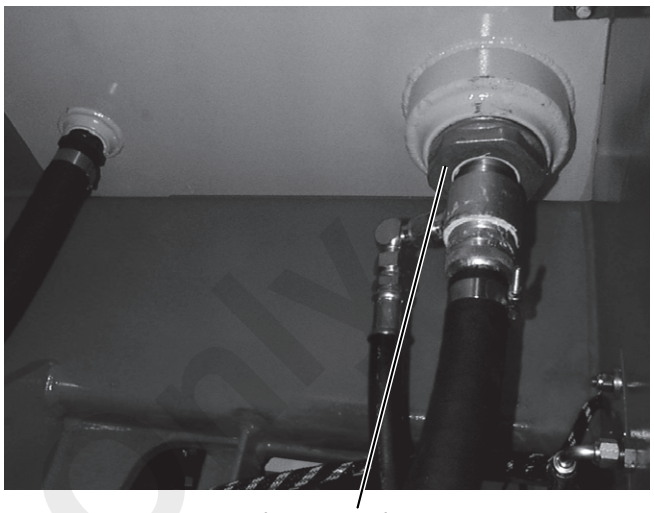

Tank Hoses and Suction Strainer

p0446 **FIGURE 5-74**

10. Remove the suction strainer from the hydraulic tank and clean it in a suitable solvent.
11. Remove the fill strainer from the fill tube and clean it in a suitable solvent.
12. Clean the inside of the hydraulic tank and remove any sediment.
13. Install the fill strainer, suction strainer, suction hoses and return hose to the hydraulic tank.
14. Replace the hydraulic oil filter. See *Replace the Hydraulic Oil Filter page 5-38*.
15. Install the wheel and tire assembly. Tighten the wheel nuts to 405 Nm (300 lb-ft).
16. Fill the hydraulic tank with Mobil #424 hydraulic oil until it is visible in the sight gauge.
17. After the tank is filled, start the engine and operate each function until all the cylinders and lines are filled.
18. Fully retract and lower the boom and retract the outriggers. Check the hydraulic oil level. Oil must be visible in the sight gauge. Add hydraulic oil if necessary.
19. Visually check for leaks.

Reference Only

Replace the Hydraulic Oil Filter

1. Engage the parking brake and shut off the engine.
2. Remove the side panel to expose the hydraulic compartment and the hydraulic filter (Figure 5-75).

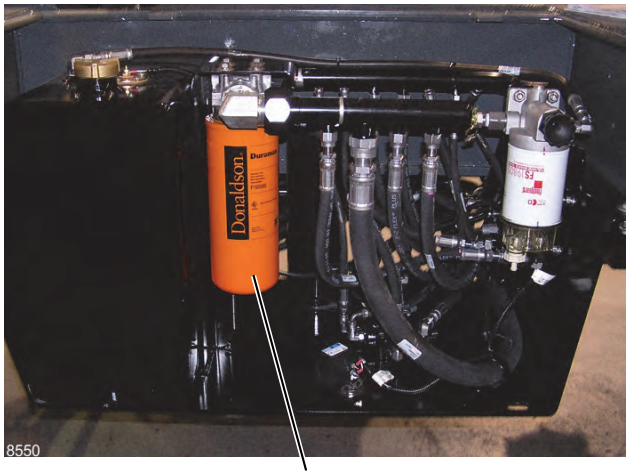

p0451 Hydraulic Filter **FIGURE 5-75**

3. Remove the filter:
   a. Using a filter wrench, turn the filter counterclockwise to loosen and remove the filter. Properly discard the removed filter.
   b. Clean the mounting surface on the filter head for the filter seat.
4. Install the filter:
   a. Apply a small amount of clean hydraulic oil to the gasket of the new hydraulic filter. Install the filter to the filter head by turning it clockwise until the filter gasket makes contact. Then, tighten the filter 1/2 to 3/4 turn to achieve a tight seal.
   b. Start the engine and check for leaks around the filter.

Check Swing Gear/Pinion Backlash

1. Remove the cover to expose the swing pinion and ring gear.



w0022 **FIGURE 5-76**

WARNING

Rotating gears can cause injury. Keep hand clear of rotating pinion and gear while the mast is rotating.

2. Start the engine and rotate the mast until the high point on the swing gear is in alignment with the pinion. The high point is punch-marked on the edge of the mast base plate (Figure 5-77).
3. Using a feeler gauge, check the backlash between the gear and pinion. There should be no clearance between the swing gear tooth and the pinion tooth. If there is any clearance, adjust the backlash. See Section 11.

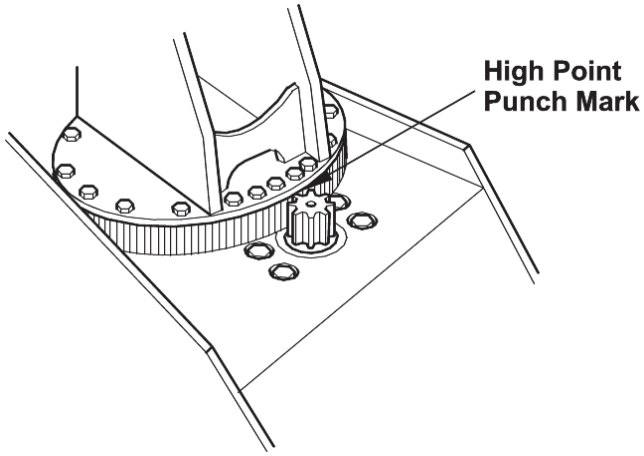

a0603 **FIGURE 5-77**

Reference Only

2000 Hours of Operation

NOTE: You must read and understand the warnings and basic safety rules, found in *Safety Practices page 2-1* of this manual, before performing any operation or maintenance procedures.

For additional engine maintenance guidelines, see the engine manual furnished with this crane.

Replace the Engine Coolant

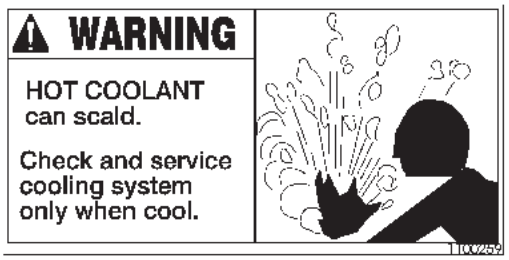

w0020 **FIGURE 5-78**

1. Open and prop in place the engine compartment cover.
2. **BE SURE THE ENGINE IS COOL** and follow the cooling system draining and filling procedures in the Engine Operation and Maintenance Manual furnished with the crane.
3. After the coolant is replaced, close the engine compartment cover.

Inspect the Crane Structure and Booms for Damage

Thoroughly inspect the crane structure and booms for the following:

- Inspect for loose mounting hardware. Tighten any loose hardware.
- Inspect for cracked or broken welds. Do not operate the crane if a critical weld is cracked or broken until the weld is repaired.
- Inspect for missing or unreadable warning decals. Replace if necessary.
- Inspect for excessive rust or corrosion on crane structure and booms. Clean and paint any areas with excessive rust or corrosion.
- Inspect for missing items. Replace if necessary.
- Inspect the crane for any damage that might inhibit safe operation of the crane. Repair any damage.

Testing the Optional Rated Capacity Limiter (RCL)

See the Rated Capacity Limiter manual furnished with this crane and test the indicator according to instructions in the manual.

Miscellaneous Maintenance

Batteries/Charging System

NOTE: *Lead-acid batteries produce flammable and explosive gases. To avoid personal injury, when checking, testing or charging batteries:*

- **DO NOT** use smoking materials near batteries.
- Keep arcs, sparks and flames away from batteries.
- Provide ventilation and wear safety glasses.
- Never check battery charge by placing a metal object across the posts. The sparks could explode battery gases and cause injury or death. Use a voltmeter or hydrometer.



w0019 **FIGURE 5-79**

Check the Charging System

If the battery warning light on the dash is illuminated, check the voltage reading using a voltmeter. Connect the voltmeter to the jumper connection in front of the radiator. Normal voltmeter readings are as follows:

Normal Operating Ranges

Engine above idle - 14 to 16 volts
Engine stopped - 10 to 14 volts

A reading of less than 10 volts with the engine at low idle indicates a low battery charge.

A reading of less than 14 volts with the engine speed above low idle indicates a problem in the charging system. See Section 11, Electrical System.

When the voltmeter indicates a low battery charge, attach a battery charger and increase the battery charge.

Charging the Battery

Under normal conditions, the engine's alternator will have no problem keeping a charge on the battery. The only condition in which the battery may cause a problem is when it has been completely discharged for a long period of time. Under this condition the alternator may not be able to recharge the battery and a battery charger will be required for charging the battery.

Reference Only

Before using a battery charger, an attempt can be made to recharge the battery using the engine alternator by first jump starting the crane (See Jump Starting, in the Operation and Maintenance Manual) and letting the engine run.

DO NOT charge a frozen battery; it may explode and cause injury. Let the battery warm up before attaching a charger.

Charging rates between 3 to 50 amperes are satisfactory if no excessive gassing or spewing of electrolyte occurs or the battery does not feel excessively warm (over 52° C [125° F]). If spewing or gasing occurs or temperatures exceed 52° C (125° F), the charging rate must be reduced or temporarily stopped to permit cooling.

Replacing the Battery

DANGER

The fluid in electric storage batteries contains sulfuric acid, which is a **POISON** and can cause **SEVERE CHEMICAL BURNS**. Avoid all contact of fluid with eyes, skin or clothing. Use proper protective gear when handling batteries. **DO NOT** tip any battery beyond a 45° angle in any direction. If fluid contact does occur, perform the following First Aid suggestions.

BATTERY ELECTROLYTE FIRST AID:

- **External Contact -** Flush with water.
- **Eyes -** Flush with water for at least 15 minutes and get immediate medical attention.
- **Internal -** Drink large quantities of water. Follow with Milk of Magnesia beaten egg or vegetable oil. Get immediate medical attention.

NOTE: In case of internal contact, DO NOT give fluids that would induce vomiting.

Remove the battery very carefully to avoid spillage of battery fluid. Properly dispose of the battery.

Fuel Storage



FIGURE 5-80

Storage of fuel for an extended period causes accumulation of sediment, dirt, water and other foreign materials in the fuel. Many engine problems are caused by dirty fuel and long storage periods.

Keep fuel in an outside location. Use a shelter to keep the fuel as cool as possible. The water from condensation must be removed at regular intervals from the storage tank.

Reference Only

CARWELL® RUST INHIBITOR

Protecting Cranes from Rusting

Manitowoc Crane Group's cranes are manufactured to high quality standards, including the type of paint finish demanded by today's industry. In partnership with our paint supplier, we are also doing our part to help prevent premature corrosion of cranes.

Grove cranes will be treated with a rust inhibitor called Carwell T32-CP-90. While a rust inhibitor cannot guarantee that a machine will never rust, this product will help protect against corrosion on Grove cranes that are treated with this product.

Carwell is a treatment, not a coating. It contains no silicones, solvents, CFCs or anything that would be classified as hazardous under OSHA Regulation 29CRF-19-10.1200. The product is a liquid blend of petroleum derivatives, rust inhibitors, water-repelling and water-displacing agents.

Special equipment is used to spray a light film onto the entire undercarriage and various other areas of each new crane prior to shipment. When applied the product has a red tint to allow applicators to view coverage during application. This red tint will turn clear on its own within approximately 24 hours after application.

Once applied, treatment can appear to leave a slightly “oily” residue on painted surfaces and until the red tinting fades could initially be mistaken for a hydraulic oil leak. While the product is not harmful to painted surfaces, glass, plastic or rubber, it must be removed using standard steam-cleaning techniques.

This treatment works in various ways: (1) it eliminates the moisture containing salt, dirt and other pollutants by lifting and removing them from the metal surface; (2) the film creates a barrier to repel further moisture from coming in contact with the metal; and (3) it penetrates crevices.

In addition to the factory-applied treatment, Grove crane owners must provide proper maintenance and care to help ensure long-term protection of their crane against corrosion. This procedure provides information and guidelines to help maintain the paint finish on Grove cranes.

The most common causes of corrosion include the following:

- Road salts, chemicals, dirt, and moisture trapped in the hard-to-reach areas;
- Chipping or wear of paint, cased by minor incidents or moving components;
- Damage caused by personal abuse, such as using the decks to transport rigging gear, tools, or cribbing; and
- Exposure to harsh environmental hazards such as alkaline, acids, or other chemicals that can attack the crane's paint finish.

While the surfaces of the crane that are easily seen have the biggest impact on the appearance of the crane, particular attention should be given to the undercarriage of the crane to minimize the harmful effects of corrosion.

Exercise special care and increase the frequency of cleanings if the crane is operated:

- on roads where large quantities of salt or calcium are applied to treat icy and snowy road surfaces;
- in areas that use dust control chemicals;
- anywhere there are increased levels of wetness - especially near salt water;
- during prolonged periods of exposure to damp conditions (e.g., moisture held in mud), where certain crane parts may become corroded even though other parts remain dry; or
- in high humidity, or when temperatures are just above the freezing point.

Cleaning Procedures

To help protect against corrosion of Grove cranes, Manitowoc Crane Care recommends washing the crane at least monthly to remove all foreign matter. More frequent cleanings may be needed when operating in harsh environmental conditions. To clean the crane, follow these guidelines:

- High pressure water or steam is effective for cleaning the crane's undercarriage and wheel housings. Keeping these areas clean will not only help retard the effects of corrosion, but will also improve the ability to identify potential issues before they grow into larger problems.

CAUTION

High pressure water can be forced into spaces and infiltrate beyond seals. Avoid pressure washing in the vicinity of electrical controls, panels, wiring, sensors, hydraulic hoses and fittings, or anything that can be damaged by high pressure cleaning/spraying.

- Rinse the dirt and dust off before washing the crane. Dirt can scratch the crane's finish during washing/cleaning.
- Hard to clean spots caused by road tar or bugs should be treated and cleaned after rinsing and prior to washing. Do not use solvents or gasoline.
- Wash using only soaps and detergents recommended for automotive paint finishes.
- Rinse all surfaces thoroughly to prevent streaking caused by soap residue.

Reference Only

- Allow the crane to dry thoroughly. You can accelerate drying by using compressed air to remove excess water.

NOTE: Polishing and waxing (using an automotive-type wax) is recommended to maintain the original paint finish.

Inspection and Repair

- Immediately following cleaning, Manitowoc Crane Care recommends an inspection to detect areas that may have become damaged by stone chips or minor mishaps. A minor scratch (one that has not penetrated to the substrate surface) can be buffed with an automotive-type scratch remover. It is recommended that a good coat of automotive wax be applied to this area afterwards.
- All identified spots and/or areas that have been scratched through to the metal should be touched up and repaired as soon as possible to prevent flash rusting. To repair a major scratch (down to bare metal) or minor damage, follow these procedures:

NOTE: Manitowoc Crane Care recommends that a qualified body repairman prepare, prime and paint any major scratch(es) or minor damage.

CAUTION

To the extent any damage is structural in nature, Manitowoc Crane Care must be contacted and consulted as to what repairs may be required.

For scratches and marks in highly visible areas:

- Sand to remove the scratch and feather outward from the mark to blend the repair into the original surface. Body putty may be applied as necessary to hide the defect; then sand smooth.
- Cover all bare metal with a primer that is compatible with the original paint finish and allow to dry thoroughly.
- Prepare the surface prior to applying the finish coat of paint.
- Apply a finish coat of paint using accepted blending techniques. Use of original paint colors is recommended to insure the best color match possible.

For scratches and marks in areas of low visibility:

- Consider touching up the spots with a brush technique to cover the bare metal. This will retard the effects of corrosion and enable you to do the repair at a later time during a normal maintenance interval.

Spots should be touched up with quality paint. Primers tend to be porous; using a single coat of primer only will allow air and water to penetrate the repair over time.

Application

Depending upon the environment in which a crane is used and/or stored, the initial factory application of Carwell T32-CP-90 should help inhibit corrosion for up to approximately 12 months.

It is recommended that the treatment be periodically reapplied by the crane owner after that time to help continue to protect against corrosion of the crane and its components.

However, if a crane is used and/or stored in harsh environments (such as islands, coastal regions, industrial areas, areas where winter road salt is regularly used, etc.), reapplication of treatment is recommended sooner than 12 months, e.g., repeat treatment in 6-9 months.

- Do not apply to recently primered and painted areas for at least 48 hours after paint is properly dried and cured. For minor touch up areas a 24 hour period is needed for cure time before applying treatment.

NOTE: Unit must be completely dry before applying treatment.

- Do not allow product to puddle or build-up on weather stripping, rubber gaskets, etc. Unit should not have puddles or runs evident anywhere.
- To ensure proper coverage of treatment, the product needs to be fogged on the unit.
- Use of pressure pots to apply the treatment to the unit being processed is recommended.
- Carwell treatment is available in 16 ounce spray bottles from Manitowoc Crane Care (order part number 8898904099).
- After application of the treatment is complete, wash or clean film residue from lights, windshield, grab handles, ladders/steps and all access areas to crane, as necessary.

Please contact Manitowoc Crane Care should you have any questions.

Areas of Application

Refer to Figure 5-81

- The underside of the unit will have full coverage of the rust inhibitor. These are the only areas that a full coat of the rust inhibitor is acceptable on the painted surfaces. Areas include; Valves, hose end and fittings, Swivel, pumps, axles, drivelines, transmission, slew ring fasteners and all interior surfaces of the frame.
- Frame application areas are; hose ends and fittings, all unpainted fasteners and hardware, all bare metal surfaces, outrigger pads, and back up alarm hardware.
- Superstructure applications are; hose end and fittings, wire rope on hoist roller tensioning springs on hoists, all

Reference Only

unpainted fasteners and hardware, valves, slew ring fasteners and all bare metal surfaces.

- Boom applications areas are; pivot pins, hose end and fittings, jib pins and shafts, all bare metal surfaces, headache ball pins/ hook block pins and fasteners.
- All hardware, clips, pins, hose connections not painted will have treatment applied.



7650-25

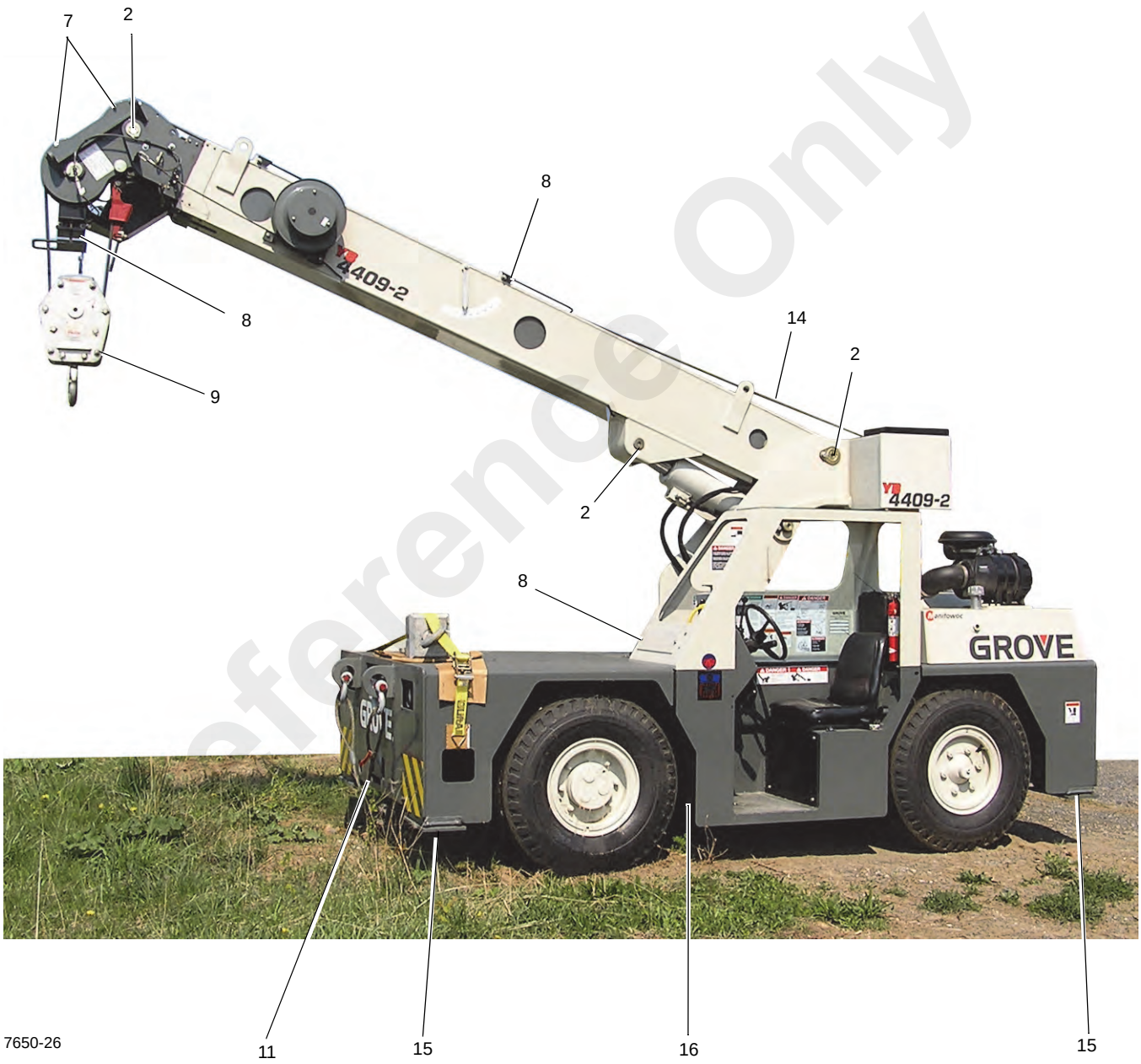

FIGURE 5-81

Reference Only

Item	Description
1	Hoist Tension Spring
2	Pivot Shaft
3	Hoist Hose Connections
4	Boom Extension Pins, Clips
5	Hose Connections inside turntable
6	Boom Extension Hanger Hardware
7	Boom Nose Pins, Clips
8	All Hardware, Clips, Pins, Hose Connections not painted O/R Pins, Clips

Item	Description
9	Headache Ball/Hook block
10	O/R Hose Connections
11	Hook block Tiedown Cable
12	Turntable Bearing Fasteners
13	Powertrain Hardware inside compartment
14	Wire Rope
15	O/R Pins, Clips
16	Entire underside of unit

Reference Only

Reference Only

THIS PAGE BLANK

Published 2/23/2016, Control # 592-00

SECTION 6
ENGINE AND ENGINE SYSTEMS

SECTION CONTENTS

General 6-1
Engine Type 6-1
Engine Performance 6-1
Engine RPM 6-1
Engine Crankcase System 6-1
Crankcase Oil Data 6-1
Environmental Protection 6-2
Engine Cooling System 6-2
Coolant Requirements 6-3
Radiator Cap 6-3
Thermostat 6-3
Engine Electrical System 6-3
Engine Fuel System 6-3
Types of Fuel To Use 6-4
Fuel Tank 6-4
In-line Fuel Filters 6-4
Fuel Level Sender and Gauge 6-4
Fuel Pump 6-4
Fuel Filter 6-4
Fuel Injection Pump 6-5
Engine Air Intake System 6-5
Engine Exhaust System 6-5
Troubleshooting 6-6
Removal and Installation 6-7
Removal 6-7
Installation 6-8

Reference Only

GENERAL

These instructions are written for worldwide use. In territories where legal requirements govern engine smoke emissions, noise, safety factors, etc., then all instructions, data and dimensions given must be applied in such a way that, after maintaining or repairing the engine, it does not contravene regulations when in use.

NOTE: These instructions cover only the routine maintenance of the engine. See the engine manual furnished with the crane for engine diagnosis, repair and component replacement.

ENGINE TYPE

The crane is equipped with a Cummins QSF2.8 Tier 4 Interim diesel engine.

ENGINE PERFORMANCE

Engine performance is very important to the operation of the crane, The engine is the drive for the hydraulic pump, which supplies power to operate the work functions of the crane. For maximum power the engine must be kept in good working condition.

ENGINE RPM

To check the engine speed, follow the instructions in the engine operator's manual. Maximum and minimum speeds are controlled by a governor installed on the engine. The throttle gives variable control of the engine speed within the limits set by the governor.

ENGINE CRANKCASE SYSTEM

The engine crankcase system must be well lubricated to inhibit damage to the engine. The correct type of oil must be used, as well as proper maintenance at regular intervals. For correct intervals, see *Preventive Maintenance*, page 5-1.

Crankcase Oil Data

Use oil viscosity based upon the expected air temperature range during the period between oil changes.

Oil Performance Recommendations

CJ-4 for use in naturally aspirated engines and in engines that operate in light duty service including standby and emergency operation (equivalent to MIL-L-2104B).

Sulfated Ash Limit of 1.0% by weight is recommended. Oils with higher ash count may produce deposits on valves that can progress to guttering and valve burning.

Do not use “break-in” lubricating oils in new or rebuilt engines. Only use lubricating oils specified for normal engine operation.

Oil Viscosity Recommendations

The use of a multi-grade lubricating oil improves oil consumption control and improves engine cranking in cold temperatures while maintaining lubrication at high operating temperatures. A multi-grade oil is therefore recommended with the viscosity grades shown in Figure 6-1. The use of single grade lubricating oils is not recommended, except for synthetic oils used in Arctic conditions.

ENVIRONMENTAL PROTECTION

Dispose of waste properly! Improperly disposing of waste can threaten the environment.

Potentially harmful waste used in Manitowoc cranes includes — but is not limited to — oil, fuel, grease, coolant, air conditioning refrigerant, filters, batteries, and cloths which have come into contact with these environmentally harmful substances.

Handle and dispose of waste according to local, state, and federal environmental regulations.

When filling and draining crane components, observe the following:

- Do not pour waste fluids onto the ground, down any drain, or into any source of water.
- Always drain waste fluids into leak proof containers that are clearly marked with what they contain.
- Always fill or add fluids with a funnel or a filling pump.
- Immediately clean up any spills.

Oil Viscosity Recommendations - Diesel Engine a0103

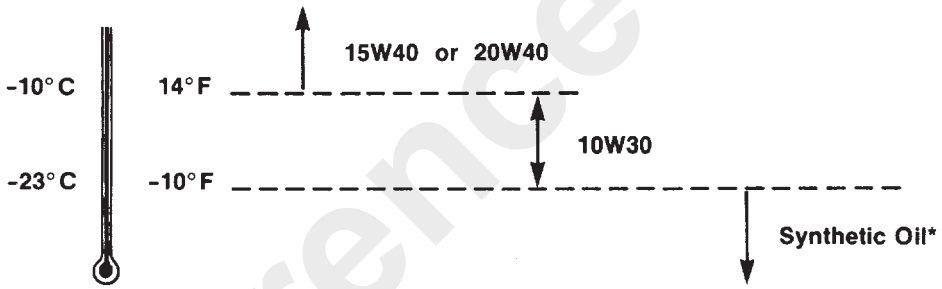

FIGURE 6-1

Arctic Operation

NOTE: *SAE 5W viscosity grade synthetic oil may be used when operating the engine in ambient temperatures below -23°C (-10°F) provided it meets the minimum viscosity at 100°C (212°F).*

When there is no provision to keep the engine warm when operating in ambient temperatures consistently below -23° C (-10° F), use a lubricating oil that meets the following requirements:

Parameter (Test Method)	Specification
Performance	API Classification CJ4
Viscosity	10,000 mPa°s Maximum at -35°C (-31°F) 4.1 mm (0.16 in) Squared Minimum at 100°C (212°F)

Parameter (Test Method)	Specification
Pour Point (ASTM D-97)	Maximum of 5°C (41°F) Below the Lowest Expected Ambient Temperature
Sulfated Ash Content	Maximum of 1.0% by weight (ASTM D-874)

ENGINE COOLING SYSTEM

The engine cooling system consists of the coolant passages in the engine, a thermostat, water pump, hoses and radiator.

The engine is cooled by the circulation of coolant through the passages in the engine block and head. Circulation is by a thermo-siphon action assisted by a water pump driven by a belt from the crankshaft pulley.

The water pump bearings are packed with a special grease during assembly and do not require attention in maintenance.

Reference Only

Coolant Requirements

The quality of coolant will determine the efficiency and life of the cooling system.

1. Check the antifreeze concentration several weeks before the beginning of the cold season or hot season. The antifreeze must have an ethylene glycol (ethanediol) base. Use a low silicone antifreeze that conforms to one of the standards below, or which contains no more than 0.1% anhydrous alkali metasilicate.

   U.S.A. - Engineering Standard GM6038-M

   U.K. - BS3151: 1959: Ethandiol antifreeze type B with sodium nitrate inhibitors.

   Australia - AS 2108-1977: Antifreeze compounds and corrosive inhibitors for engine cooling systems.

2. There is an advantage to using antifreeze even when frost protection is not necessary. Antifreeze protects against corrosion and also raises the boiling point of the coolant. A 50% concentration of antifreeze is preferred, but if this much protection is not preferred, a 33% concentration can be used. Never use more than a 65% concentration under any conditions. Where frost protection will never be required, use a ***non-chromate corrosion inhibitor*** and clean soft water. Change the water/corrosion inhibitor every 12 months, or 500 hours, or to manufacturer's recommendation.

   Do not use hard water in the cooling system. Hard water, or water with high levels of calcium and magnesium ions, encourages silica gel formations, especially after a number of heating and cooling cycles. These gel formations can result in loss of cooling or heating in radiators and cab heater cores by coating and plugging the tubes. The formations usually deposit in the cooler sections of the cooling system, such as the radiator bottom tank.

   Use soft water, distilled water or deionized water to reduce the potential and severity of silicate dropouts.

NOTE: If you use water without a corrosion inhibitor, rust will form and plug the small holes in the head gasket. These holes are orifices and their size is critical. Do not enlarge the size of the orifices. To do so will disturb the coolant flow and will not solve any overheating problem. If you use water without a corrosion inhibitor for even a short period, the cup plugs will rust through, allowing coolant leakage. An incorrect or malfunctioning radiator cap can result in the loss of coolant and engine running hot. Any sudden loss of coolant from a heavily loaded engine can result in severe damage to the pistons and cylinder bore.

NOTE: Some corrosion inhibitor mixtures contain soluble oil which can have an adverse effect on some types of water hoses.

Radiator Cap

The cooling system is designed to use a radiator cap to prevent the boiling of lubricant. The radiator cap is set to open at 103 kPa (15 psi). An incorrect radiator cap can result in a great loss of coolant and the engine running hot.

Thermostat

A malfunctioning thermostat can result in the engine running hot or cold. If it becomes necessary to replace the thermostat see the engine manual furnished with the crane.

ENGINE ELECTRICAL SYSTEM

The engine electrical system, the charging and starting circuits, as well as the sending units, are described in Engine and Engine Systems.

ENGINE FUEL SYSTEM

The diesel engine fuel system is a closed-loop fuel system which includes a fuel tank, an inline fuel filter, an engine fuel filter, an engine fuel pump and the fuel lines.

A fuel supply line carries fuel from the bottom of the fuel tank to the engine fuel pump (Figure 6-2). A line carries the fuel from the engine fuel pump to the engine fuel filter. Fuel that has been filtered flows to the fuel injector pump.

Fuel is distributed to the fuel injectors from the fuel injector pump. Excess fuel from the fuel injector pump is returned to tank.

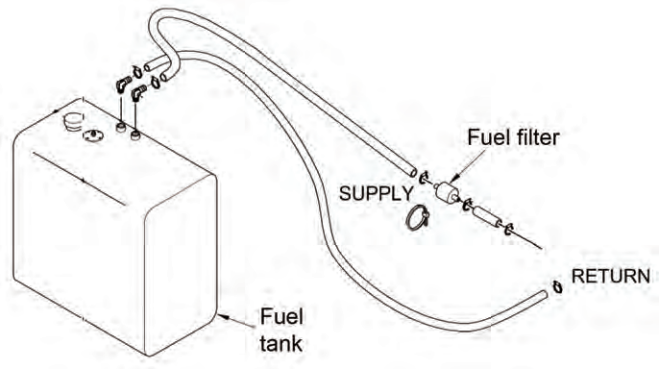

a1338 Diesel Fuel Lines **FIGURE 6-2**

Reference Only

Types of Fuel To Use

Diesel Fuel

Fuel represents the major portion of the crane's operating costs. Therefore, it is important to use it efficiently. Don't let cost tempt you to use an inferior diesel fuel. The savings is a false economy when you consider the damage poor fuel can do to your crane's engine.

WARNING

Do not mix gasoline or alcohol with diesel fuel. This mixture can cause an explosion.

NOTE: Use only diesel fuel designed for diesel engines. Some heating fuels contain harmful chemicals which can seriously affect engine efficiency and performance.

NOTE: Due to precise tolerances of diesel fuel injection systems, it is extremely important that the fuel be kept clean and free of dirt and water. Dirt or water in the system can cause severe damage to both the injection pump and the injection nozzles.

Use either a Grade No. 1 or a Grade No. 2 diesel fuel as defined by ASTM Designation D-975 for diesel engines. In European countries, use ISO 1585 commercial diesel fuel. Find the expected air temperature at time of start up on the thermostatic scale in Figure 6-3. Correct diesel fuel grade (A, B) is shown next to the scale.

Fuel Range Diagram a0321

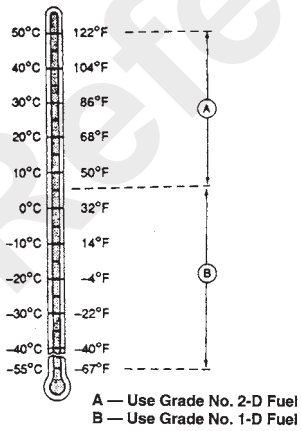

FIGURE 6-3

NOTE: If engine is operating at temperatures -40° to -57°C (-40° to -70°F), Grade DF-A arctic fuel is recommended. Also consult the engine distributor for special lubricants and starting aids.

Cetane number should be a minimum of 40 to assure satisfactory starting and overall performance. At low temperatures and/or high altitudes, minimum cetane number of 45 is recommended.

NOTE: Excessive white smoke at start up could be a result of low cetane fuel.

Use low sulfur content fuel with a cloud point of at least 6°C (10°F) below the lowest expected air temperature at time of starting. The cloud point is temperature at which wax crystals begin to form in diesel fuel.

NOTE: When using diesel fuel with a sulfur content above 0.5%, the engine oil change interval must be reduced by 50%. DO NOT use a fuel with more than 1% sulfur.

Fuel Tank

The fuel tank is located on the right side of the crane. It is a welded box construction with a suction tube installed in the fuel support port. The tube inhibits sediment and water from being picked up off the bottom and sent to the engine.

In-line Fuel Filters

An in-line filter is connected in the fuel line from the fuel tank to engine. This filter removes contamination before it reaches the fuel pump.

Fuel Level Sender and Gauge

The fuel level sender and gauge are described in the Electric System.

Fuel Pump

The fuel pump is installed externally on the engine and is used to pump fuel from the fuel tank and send it under pressure to the fuel filters and injection pump.

The fuel pump includes a priming button. This button is used to bleed the fuel system if one of the following should occur:

- The fuel filter is not filled prior to installation.
- The injection pump is replaced.
- High pressure fuel line connections are loosened or lines are replaced.
- Initial start up or start up after an extended period of time.
- The fuel tank has run empty.

See the diesel *Operator Manual* furnished with this crane for bleeding procedures.

Fuel Filter

The filter is used to collect contaminants and water that has accumulated in the fuel tank. It must be serviced at regular intervals. See *Preventive Maintenance*, page 5-1 for maintenance intervals.

Reference Only

Published 2/23/2016, Control # 592-00

Fuel Injection Pump

The fuel injection pump is a distributor-type pump with a mechanical flywheel-type governor. The pump is flange mounted and is driven from the engine timing case.

ENGINE AIR INTAKE SYSTEM

Air for combustion is pulled through an air filter by the engine. Dust and foreign materials are removed from the air by the air filter.

Replace the air filter at the intervals given in *Preventive Maintenance*, page 5-1. Make sure all clamps on the intake tube and filter are tight. If dust or foreign materials enter the engine, permanent damage can be caused to the engine.

NOTE: **NEVER** *run the engine without an air cleaner installed.*

ENGINE EXHAUST SYSTEM



EXHAUST FUMES CAN BE FATAL. When operating in enclosed areas with a gasoline or diesel engine, provide adequate ventilation.

FIGURE 6-4

Exhaust system components get very hot and can cause severe burns.

The exhaust system is installed under the frame to minimize the transfer of noise and vibration into the operator's compartment.

Annoying rattles and noise vibrations in the exhaust system are usually caused by misalignment of parts. When aligning the system, leave all bolts and nuts loose until all parts are properly aligned, then tighten working from top to bottom.

When installing exhaust parts, make sure there is sufficient clearances between the hot exhaust parts and parts that would be adversely affected by heat.

When installing an exhaust system, allow for expansion when the system is hot.

Periodic maintenance of the exhaust system is not required, however, it is advisable to check the condition of the system when performing other maintenance on the crane.

Check the complete exhaust system for broken, damaged, missing or mispositioned parts, open seams, holes, loose connections and other deterioration which could cause exhaust fumes to seep into the operator's compartment. Any damaged areas must be corrected.

Reference Only

TROUBLESHOOTING

Table 6-1
Engine Troubleshooting Chart

Problem	Probable Cause	Action
Engine hard to start or will not start	**1.** Improper starting procedure.	**1.** Review starting procedure in Engine Operator's Manual.
	2. No fuel.	**2.** Check fuel gauge.
	3. Air in fuel line(s).	**3.** Bleed the fuel line(s)
	4. Crankcase oil too heavy. (Cold weather starting)	**4.** Use oil with proper viscosity.
	5. Improper type of fuel.	**5.** Use proper fuel for operating conditions.
	6. Water, dirt or air in fuel system.	**6.** Drain, flush, fill and bleed system.
	7. Clogged fuel filter.	**7.** Replace filter.
Engine runs irregularly or stalls frequently	**1.** Low coolant temperature.	**1.** Remove and check thermostat.
	2. Clogged fuel filter.	**2.** Replace filter element.
	3. Water, dirt or air in fuel system.	**3.** Drain, flush, fill and bleed system.
	4. Dirty or faulty fuel injection nozzles.	**4.** Have authorized engine distributor check the nozzles.
	5. Clogged air filter.	**5.** Replace the filter elements.
Below normal engine temperature	**1.** Defective thermostat.	**1.** Remove and check thermostat.
	2. Defective temperature gauge or sender.	**2.** Check gauge, sender and all connections.
Lack of power	**1.** Engine overload.	**1.** Reduce the load.
	2. Intake air restriction.	**2.** Service air cleaner.
	3. Clogged fuel filters.	**3.** Replace fuel filters.
	4. Overheated engine.	**4.** See Engine Operator's Manual. Check for plugged radiator/oil cooler fins. Check thermostat and coolant level.
	5. Below normal engine temperature.	**5.** Remove and check thermostat.
	6. Faulty engine.	**6.** See Engine Operator's Manual.
Low oil pressure	**1.** Low oil level.	**1.** Add oil.
	2. Faulty gauge or sender.	**2.** Check gauge, sender and connections.
	3. Improper type of oil.	**3.** Drain and fill crankcase with proper viscosity and quality.

Reference Only

Published 2/23/2016, Control # 592-00

Problem	Probable Cause	Action
Engine overheats	**1.** Engine overloaded.	**1.** Reduce the load.
	2. Low coolant level.	**2.** Fill radiator to proper level, check radiator and hose for loose connections or leaks.
	3. Plugged radiator/oil cooler fins.	**3.** Clean fins.
	4. Faulty radiator cap.	**4.** Replace the radiator cap.
	5. Cooling system needs flushing.	**5.** Flush cooling system.
	6. Defective thermostat.	**6.** Replace the thermostat.
	7. Defective temperature gauge or sender.	**7.** Check and replace.

REMOVAL AND INSTALLATION

Removal

WARNING

A raised and badly supported machine can fall on you causing sever injury or death. Position the machine on a firm, level surface before raising one end. Ensure that the other end is securely chocked. Do not rely solely on the machine hydraulics or outriggers to support the machine when working under it.

1. Position the boom off to one side of the crane.

2. Either block all four tires or lower the outriggers to inhibit movement during engine removal.

3. Remove the engine cover.

4. Disconnect and remove transmission shift lever.

5. Disconnect the battery ground cable from the transmission mounting bolt. Remove the battery cable and the remote start cable from the engine starter.

6. Disconnect the frame electrical wire harness from the engine electrical wire harness.

7. Disconnect all wires from the transmission.

8. Drain the radiator. Disconnect the upper and lower hoses from the radiator.

9. Disconnect the transmission cooling lines from the oil cooler. Put plugs and caps on all lines to keep dirt out of the system.

10. Remove the radiator.

11. Remove the air cleaner and intake hose.

NOTE: *Have a fire extinguisher handy and know how to use it before performing the next step.*

12. Disconnect the fuel lines from the engine. Plug or cap the lines to prevent leakage.

13. If equipped, disconnect the heater hoses from the engine.

14. Drain the hydraulic oil tank. Disconnect all hydraulic lines from the hydraulic pumps. See *Engine and Engine Systems*, page 6-1.

15. Remove the secondary pump. See *Engine and Engine Systems*, page 6-1.

16. Disconnect the drive shaft from the transmission. See *Axles/Drive Shafts/Wheels and Tires*, page 8-1.

17. Disconnect the exhaust pipe from the exhaust manifold of the engine.

18. If equipped, remove the optional cold start kit from the bracket inside the chassis frame.

19. Disconnect the engine ground cable from the engine flywheel housing.

20. Attach a chain and pull jack to the front engine lifting bracket and to an overhead crane. Wrap a sling under the bell housing of the engine and connect it to the same overhead crane.

21. Remove the front engine mounting hardware.

22. Remove the bolts, washers, rubber mounts and nuts securing the transmission mounting bracket to the frame.

23. Using the overhead hoist, slowly raise the engine and check that all lines and components which can possibly cause interference with the engine removal have been removed. Carefully lift the engine and transmission out the rear of the frame at about a 30 degree angle.

Reference Only

Installation

1. Attach a hoist to the engine the same way removal was accomplished. Use a chain, pull jack and sling.
2. Lift the engine into place over the chassis. Tilt the engine at about a 30 degree angle to insert the engine into the chassis. Lower the engine into the chassis and align the transmission mounting bracket holes with the holes on the frame mounting brackets. Install the transmission mounting hardware, but do not tighten.
3. Install the front engine mounting hardware and tighten.
4. Tighten the transmission mounting hardware.
5. Install the secondary hydraulic pump. See *Hydraulic System*, page 4-1.
6. Connect the hydraulic lines to the pumps. See *Hydraulic System*, page 4-1.
7. If equipped, connect the heater hoses to the engine.
8. Connect the fuel lines to the engine.
9. Connect the engine ground cable to the engine flywheel housing.
10. If equipped, connect the cold start kit.
11. Connect the exhaust pipe to the engine manifold. If a gasket is used, install a new gasket.
12. Connect the drive shaft to the engine. See *Axles/Drive Shafts/Wheels and Tires*, page 8-1.
13. Install the air cleaner and intake hose.
14. Install the radiator in place on the chassis.
15. Connect the transmission cooling lines to the oil cooler. Connect the upper and lower radiator hoses.
16. Connect all leads from the transmission harness to the transmission.
17. Connect the engine wire harness to the frame wire harness.
18. Connect the battery ground cable to the engine flywheel housing. Connect the battery cable and remote start cable to the engine starter.
19. Connect the shift lever to the transmission.
20. Check complete installation to be sure all components are installed and secure.
21. Fill the engine and transmission with recommended oil.

NOTE: The diesel fuel supply fuel line must be bled of air before engine can be started. See the engine operator's manual furnished with this crane, for bleeding procedure.

22. Fill the radiator with recommended coolant.
23. Fill the hydraulic tank with recommended hydraulic oil. See *Lubricants and Capacities*, page 5-1.
24. Start the engine. Continue to add transmission fluid until transmission cooling lines are full. Add fluid as needed to fill the cooling system.
25. Check coolant level after engine has run for several minutes. Add coolant if necessary.
26. Stop the engine and check for leaks. Tighten fittings if necessary.
27. Install the engine cover.
28. Start the engine and operate each hydraulic function to release any air that may be trapped in the hydraulic circuits.

Reference Only

Published 2/23/2016, Control # 592-00

SECTION 7
TRANSMISSION AND TORQUE CONVERTER

SECTION CONTENTS

Technical Data 7-1
General Technical Data 7-1
Clutch Solenoid Technical Data 7-3
Description of Operation 7-3
General 7-3
Troubleshooting 7-6
General Troubleshooting 7-6
Water Contamination 7-10
Tests 7-11
Torque Converter Stall Test. 7-11
Pressure and Flow Test. 7-11
Transmission Oil Cooler Motor Control Valve . . 7-13
Checking/Setting Transmission Oil Cooler Motor Control Valve 7-13
Transmission Repair 7-15
Servicing the Torque Converter. 7-15
Servicing the Transmission 7-17
Transmission Gearbox Repair. 7-18

TECHNICAL DATA

General Technical Data

Description	Transmission with combined torque converter, reverse and gearbox
Weight (dry)	156 kg (346 lb)
Number of Teeth	
Transfer Gear	19
Layshaft	36
Overall Ratio	1:1
Gear Ratios:	
1st	5.56:1
2nd	3.45:1
3rd	1.83:1
4th	1.00:1
Torque Converter Dia.	279 mm (11 in)
Torque Converter at Stall	2.20:1
Torque Converter Color Code Identification:	
Color Coded Dots	2 Purple
	1 White
Minimum Engine RPM at Converter Stall:	
4th Gear (Diesel Engine)	1449 rpm
4th Gear (Gasoline/Dual Fuel Engine)	1918 rpm

Converter Pressures (in neutral):	PSI	kPa
Converter IN at 122° F (50° C)		
1000 rpm	35 – 49	*240 – 340*
2000 rpm	73 – 94	*520 – 650*
Converter IN at 212° F (100° C)		
1000 rpm	19 – 29	*130 – 200*

Reference Only

2000 rpm	75 – 86	520 – 590
Converter OUT at 122° F (50° C)	PSI	kPa
1000 rpm	27 – 33	184 – 224
2000 rpm	33– 39	224 – 265
Converter OUT at 212° F (100° C)		
1000 rpm	5 – 8	30 – 60
2000 rpm	14 – 25	100 – 170
Converter Inlet Relief Valve Pressure (Max.)	94	650
Lubrication Pressures (in neutral)	PSI	kPa
At 122° F (50° C)		
1000 rpm	3 – 5	20 – 30
2000 rpm	6 – 10	40 – 70
At 212° F (100° C)		
1000 rpm	2 – 3	10 – 20
2000 rpm	4 – 8	30 – 60
*Mainline Pressure (in neutral)	PSI	kPa
At 122° F (50° C)		
1000 rpm	135 – 150	*930 – 1030*
2000 rpm	155 – 170	*1070 – 1170*
Full engine revolutions	160 – 180	1100 – 1240
At 212° F (100° C)		
1000 rpm	135 – 150	*930 – 1030*
2000 rpm	135 – 150	*930 – 1030*
Clutch Pressure (forward and reverse)	PSI	*kPa*
At 122° F (50° C)		
1000 rpm	120 – 130	*830 – 900*
2000 rpm	130 – 145	*900 – 1000*
At 212° F (100° C)		
1000 rpm	120 – 130	*830 – 900*
2000 rpm	120 – 130	*830 – 900*
Flow Rates (in neutral)	GPM	*LPM*
Cooler at 122° F (50° C)		
1000 rpm	2.8 – 3.6	10.4 – 13.6
2000 rpm	3.8 – 5.3	14.5 – 20.0
Cooler at 212° F (100° C)		
1000 rpm	2.7 – 3.3	10.2 – 12.5
2000 rpm	6.0 – 6.9	22.5 – 26.1
Pump at 122° F (50° C)		
1000 rpm	2.9 – 4.0	*11.0 – 15.0*
2000 rpm	6.0 – 7.8	*22.5 – 29.5*

NOTE: *For new gearboxes (i.e. under 100 hours of service) or gearboxes that have been fully repaired, the pressures will be slightly higher than those listed (10 -15 psi; 70 -100 kPa).*

Reference Only

Published 2/23/2016, Control # 592-00

Clutch Solenoid Technical Data

Type	4 way, 3 position, directional control
Operating Flow	40 L/min (9.85 gpm)
Operating Pressure	100 kPa (145 psi)
Leakage (maximum	50 cc/min @ 40° C, 100 kPa (14 in/min @ 104° F, 145 psi)
Coil Operating Voltage	+12V DC nominal (9V – 16V)
Pull-in Voltage	+10.5V (max.) @ 25°C (77°F) air (after energized for 10 minutes and off for 10 seconds)
Dropout Voltage	+1.5V (min.) at 20°C (68°F) air
Peak Voltage	+ 26V DC for 5 minutes at 0°C (32°F)
Coil Resistance	4.9 ohms ± 5% @ 20°C (68°F)

DESCRIPTION OF OPERATION

General

The transmission consists of a torque converter, hydraulic reverser unit and integral manual four speed gearbox.

Torque Converter

See Figure 7-1 for the following procedure.

The torque converter is the hydraulic link between the engine and the drive train. There are three main components in the torque converter:

1. A turbine
2. An impeller (pump)
3. A stator and One-Way Clutch

The **impeller** is the pump for the torque converter. This component starts the movement of the oil to the other components. The impeller is connected to the engine flywheel through the torque converter and a drive plate. The impeller rotates at engine speed. Similar to a centrifugal pump, the impeller takes oil at the inner diameter and releases the oil at the outer diameter.

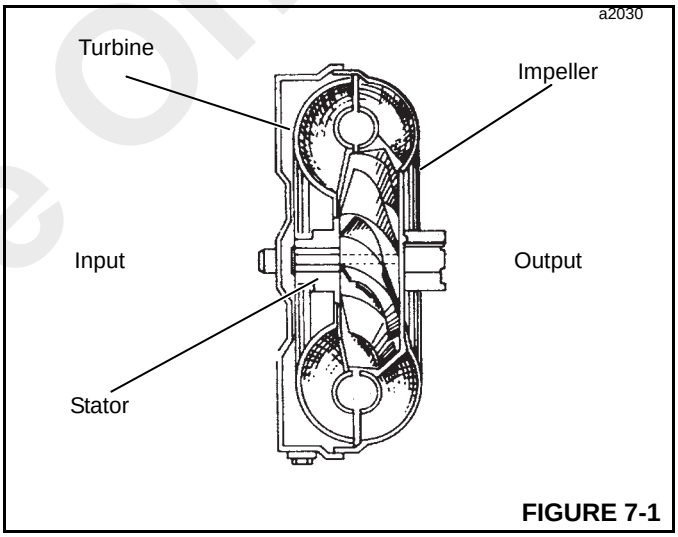

FIGURE 7-1

The **turbine** is opposite the impeller and is connected by splines to the input shaft of the transmission. The turbine receives oil at the outer diameter and releases the oil to the stator at the inner diameter. The movement of oil from the impeller to the turbine makes a multiplication of torque possible. The torque converter gives maximum torque when the turbine is at zero (0) rpm.

The **stator** is between and at the center of the impeller and turbine. The stator changes the direction of the oil which leaves the turbine so the oil will enter correctly again into the impeller.

The torque converter and transmission have a common hydraulic system. Figure 7-2 shows the arrangement of the system.

NOTE: Normal operating temperature is 82° - 88°C (180° - 190°F). High temperatures will cause damage and leakage in the seals and gaskets of the torque converter. Do not continue operation if the temperature increases above 82° - 88°C (180° - 190°F). A warning light on the cab instrument panel will illuminate when the temperature rises above a

Reference Only

safe temperature. Put the transmission in “neutral” position and let the engine run at low RPM until the temperature returns to normal and the warning light goes out. If temperature does not return to normal, check for restriction in the lubrication and cooling lines of the torque converter.

Transmission

See Figure 7-2 for the following procedure.

The reverser unit **A** has a pair of hydraulically operated clutches giving forward - neutral - reverse drive. Oil pressure is provided by a crescent type pump **B** driven at engine speed by the drive lugs of the torque converter **C**. The oil passage is controlled by the pressure maintaining valve **D**, and clutch selection is achieved by means of an electric solenoid valve **E**.

Drive is transferred from the reverser unit by helical gears to the mainshaft **F**, which carries the 3rd/4th synchromesh unit **G**, and to the layshaft **H**, which carries the 1st/2nd synchromesh unit **J**. The synchromesh units are of the “Blocking Pin” type. See description of the Synchromesh Unit.

Drive is transmitted finally via the output shaft **K** to the front axle.

Oil from pump **B** is fed through an internal passage via the filter **M** to the pressure maintenance valve **D**, which maintains pressure to the solenoid valve **E** for clutch selection. Excess oil from the maintenance valve flows back through the casing to the torque converter. Oil enters the converter between the converter hub and stator support. Pressure in the converter is controlled by relief valve **N** which dumps oil from the converter back to the sump.

Oil from the torque converter flows out of the transmission to the external oil cooler, returning at the rear of the transmission unit to pass through the center of the reverser unit for clutch lubrication.

In neutral the flow of pressurized oil is blocked at the solenoid valve.

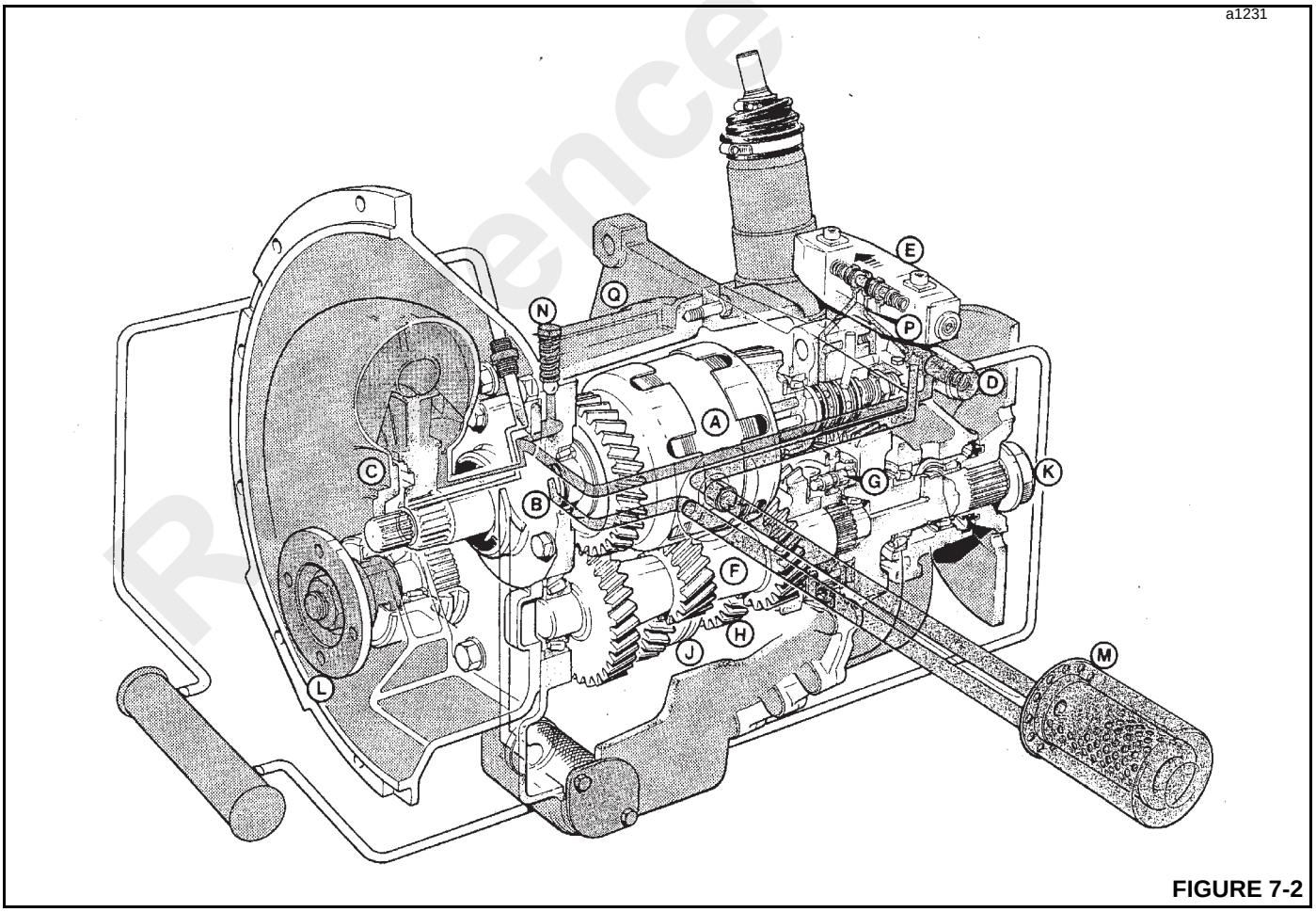

FIGURE 7-2

When either forward or reverse is selected, the solenoid valve **E** diverts pressurized oil via the reverser unit shaft to the appropriate clutch in the reverser unit **A**. A restrictor orifice **P** in the feed to the solenoid valve modulates the pressure to clutch to give a smooth engagement. Pressure

Reference Only

from the other clutch is vented back to sump via the solenoid valve spool.

Synchromesh Unit

See Figure 7-3 for the following procedure.

Description

The transmission is equipped with “Blocking Pin” synchromesh units, comprising of the following parts:

a. SYNCHRO HUB. Controls the operation of the synchromesh unit and gear selection, the selector fork engaging into the outer groove. Internal dog teeth link the selected gear to the drive shaft. Through the synchro hub center are two sets of holes for the blocker pins **(C)** and the split energizer pins **(D),** spaced alternately.

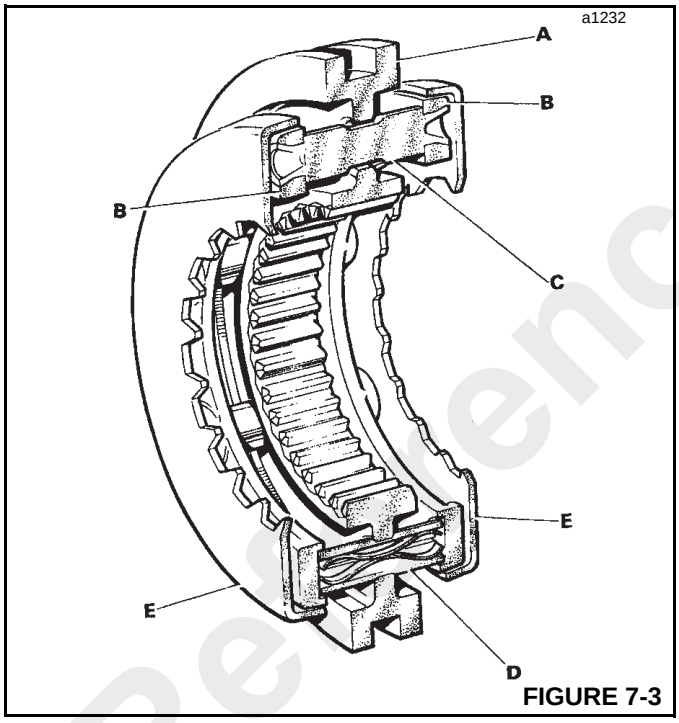

FIGURE 7-3

b. SYNCHRO RINGS. They are rigidly joined by the blocker pins, with the split energizer pins held, in counterbores, between the two synchro rings.

c. BLOCKER PINS. These pins have a narrow neck in the center, against which the synchro hub transmits radial drive during gear changes. The edges of the blocker pin neck and their mating synchro hub holes are designed so that, as the radial loads are reduced, the synchro hub can slide over the shoulder of the blocker pin.

d. SPIT ENERGIZER PINS. These pins take the initial axial load of the synchro hub on the shoulder of the split energizer pin neck. As the axial load reaches approximately 90 lb. (40.8 kg) the internal springs allow the split energizer pin to collapse and the synchro hub to move axially.

e. SYNCHRO CUPS. These take the frictional drive from the synchro ring on their inner faces. The synchro cups are splined to drive their respective gears while synchronization is taking place.

Operation

Figure 7-4 shows the gearbox with the first gear engaged. Synchro ring **B** is in contact with synchro cup **E** and the synchro hub dog teeth are linking first gear to the shaft gear. In this position the split energizer pins **D** are “collapsed.”

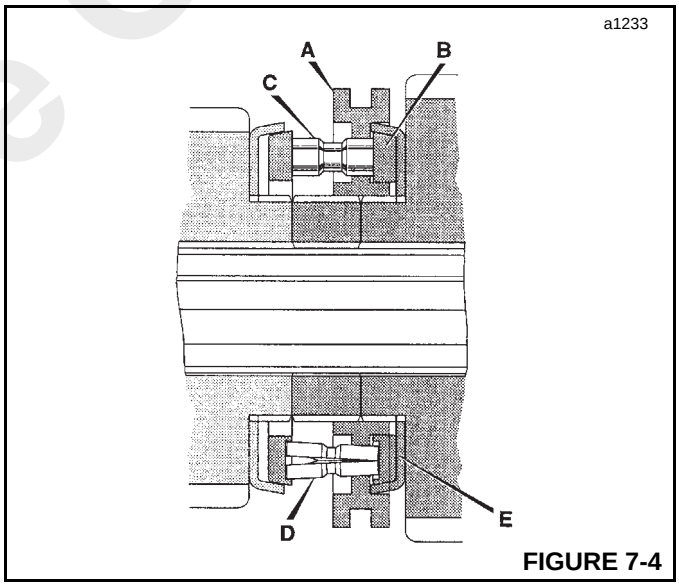

FIGURE 7-4

When selecting second gear the synchro hub **A** slides along the split energizer pins until the pin recess and synchro hub flange are in line. At this point, the split energizer pins open and the synchro rings are moved by the synchro hub pushing on the split energizer pin shoulder.

Initial contact between the synchro ring and the synchro cup starts to synchronize the speed of the shaft and second gear. The rotational force of the synchro ring is taken by the blocker pin against the edge of the synchro hub hole as shown in Figure 7-5.

Reference Only

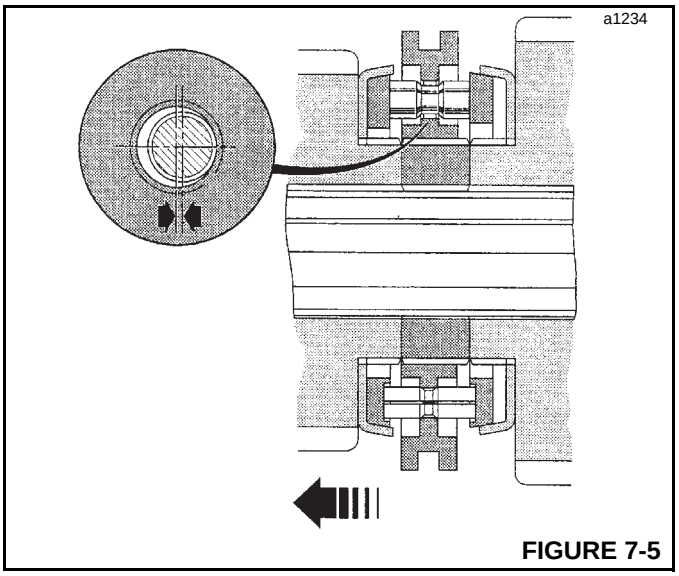

FIGURE 7-5

As the axial load on the synchro hub increases, the split energizer pin “collapses” and the conical faces of the blocking pin and synchro hub hole come into contact, as shown in Figure 7-6.

Further increases in the axial loads increases the frictional grip of the synchro ring and the synchro cup, causing the shaft and gear speeds to synchronize.

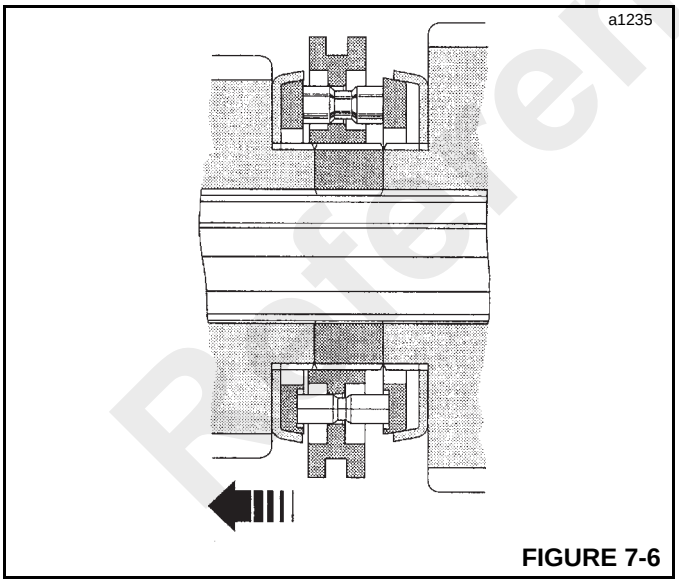

FIGURE 7-6

As the speeds are synchronized the radial load on the blocker pin and synchro hub is reduced. This allows the synchro hub to slide freely along the blocker pin and engage its dog teeth with second gear, as shown in Figure 7-7.

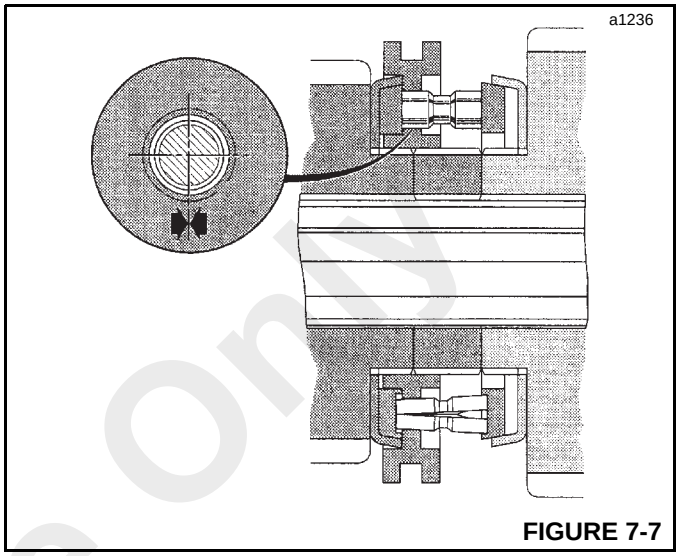

FIGURE 7-7

TROUBLESHOOTING

General Troubleshooting

Before carrying out the checks listed, the machine, if possible, should be operated to determine the problem area(s) and to bring the system to its normal working temperature.

Ensure that the correct quantity and grade of oil is being used and that there are no obvious leaks.

- **a.** If the transmission is noisy, start at check 1.
- **b.** If the transmission is overheating, start at check 4.
- **c.** If the transmission will not pull, start at check 12.
- **d.** If there is no drive in one or both directions, start at check 17.
- **e.** If the transmission is jumping out of gear, start at check 29.
- **f.** If the transmission is sticking in gear, start with check 39.
- **g.** If ratios are “crash changing,” start at check 41.

Reference Only

Published 2/23/2016, Control # 592-00

CHECK		ACTION
1. Is there noise when selecting direction?	YES	Check 3.
	NO	Check 2.
2. Is there noise when running with direction selector in neutral and ratio selector is in first?	YES	Check 9.
	NO	Check 19.
3. Is there air in the hydraulic system?	YES	Continue running to expel air.
	NO	Check 4.
4. Is the fluid level correct?	YES	Check 5.
	NO	Check level only when machine is cold and top off as required.
5. Are the oil passages restricted?	YES	Clear the restriction.
	NO	Check 6.
6. Is the suction strainer restricted?	YES	Remove and clean strainer.
	NO	Check 7.
7. Is pump pressure as specified?	YES	Check 9.
	NO	Check clutch pressure maintenance valve is free to operate.
8. When flow testing pump, is output low?	YES	Replace pump.
	NO	Check converter sprag clutch for wear and slip.
9. Does the noise continue when direction selector is in forward or reverse?	YES	Check 10.
	NO	Check 11.
10. Is transmission misaligned?	YES	Replace mountings and check position.
	NO	Check “Converter Out” pressure and flow.
11. Are the pump bushings worn?	YES	Replace pump.
	NO	Check converter for wear or cooler for restriction to flow.
12. Is the transmission not pulling in one direction?	YES	Check 16.
	NO	Check 13.
13. Is transmission not pulling in both Forward and Reverse?	YES	Stall test machine, Check 14.
	NO	Check 16.
14. Is “Converter In” pressure as specified?	YES	Check 15.
	NO	Inspect converter relief valve for damage. Check cooler bypass valve pressure setting.
15. Is pump being driven by converter?	YES	Check pump pressure.
	NO	Replace damaged parts.

Reference Only

CHECK		ACTION
16. Are clutch sealing rings damaged?	YES	Install pressure gauge into clutch feed lines to monitor pressure.
	NO	Check clutch plates for damage.
17. Is there drive in one direction only?	YES	Check 19.
	NO	Check 18.
18. Is the start switch in the run position and supplying current to neutral start relay?	YES	Check 19.
	NO	Rectify.
19. Is the fault only when the transmission is hot?	YES	Disassemble solenoid and check components.
	NO	Check relay and wiring.
20. Is the noise a growl, hum or grinding?	YES	Check gears for damage or wear.
	NO	Check 22.
21. Is the noise a hiss, thump or bumping?	YES	Check bearings for damage or wear.
	NO	Check 22.
22. Is the noise a squeal?	YES	Check free running gears or seizure.
	NO	Check 23.
23. Is the noise present in neutral or in gear?	NEUTRAL	Check 24.
	GEAR	Check 27.
24. Is the countershaft or bearings worn or damaged?	YES	Replace damaged parts.
	NO	Check 25.
25. Is there excessive backlash in the gears?	YES	Adjust by checking shaft end float.
	NO	Check 26.
26. Is the mainshaft pilot bearing worn?	YES	Replace.
	NO	Check gear teeth or scuffing.
27. Is the mainshaft rear bearing worn?	YES	Replace.
	NO	Check 28.
28. Are the sliding gear teeth worn or damaged?	YES	Replace gears.
	NO	Check 29.
29. Are the selector forks loose?	YES	Tighten screws.
	NO	Check 30.
30. Are the selector fork pads or grooves in gears worn?	YES	Replace worn parts.
	NO	Check 31.
31. Are the dog gear teeth worn?	YES	Replace.
	NO	Check 32.
32. Are the selector rod detent springs broken?	YES	Replace.
	NO	Check 33.
33. Are the selector rods worn or damaged?	YES	Replace.
	NO	Check 34.

Reference Only

Published 2/23/2016, Control # 592-00

CHECK		ACTION
34. Are the selector fork pads out of position?	YES	Reposition or replace (check interlock).
	NO	Check 35
35. Is there excessive end float in gears or shafts?	YES	Adjust.
	NO	Check thrust washers and mating surfaces.
36. Is the synchronizer bronze worn?	YES	Replace synchronizer pack.
	NO	Check 37
37. Are steel chips embedded in the bronze?	YES	Continue using, chips will either embed below the surface or will be dislodged.
	NO	Check 38
38. Are the synchronizer components damaged?	YES	Replace.
	NO	Check free running gears for seizure or damage.
39. Are the sliding gears tight on the splines?	YES	Loosen or replace.
	NO	Check 40
40. Are chips wedged between splines of shaft or gears?	YES	Remove chips.
	NO	Ensure that clutch is disengaging.
41. Are steel chips embedded in bronze?	YES	Continue using, chip will either embed below the surface or will be dislodged.
	NO	Check 42
42. Are the synchronizer spring pins damaged?	YES	Replace Synchronizer.
	NO	Check 43
43. Is the synchronizer bronze worn?	YES	Renew synchronizer.
	NO	Check blocker pins.

Reference Only

Water Contamination

Troubleshooting

SYMPTOM	REASON	REMEDY
1. Emulsified oil Overheating (see also General Troubleshooting).	Water ingress.	Find source and rectify accordingly. Carry out the flush procedure and refill with the recommended grade of oil.
2. Dipstick and oil blown out	Water ingress. Overfilling the transmission system.	Find source and rectify accordingly. Carry out flush procedure. Refill with recommended grade of oil. Drain transmission to correct level and check that the correct dipstick combination is installed.
3. Friction lining separation from clutch plate	Oil contamination by ingress of water.	Replace friction plates and carry out the flush procedure. Refill with recommended grade of oil.
4. Badly worn or noisy bearings	Oil contamination by ingress of water.	Replace bearing and carry out the flush procedure. Refill with recommended grade of oil.
5. Clutch piston seizing	Ingress of water causing Verton composite material to swell.	Carry out flush procedure and refill with the recommended grade of oil. **NOTE:** If, after a period of service without water contamination, seizing still occurs, replace the piston.

Transmission Flush Procedure

1. Install a new oil filter.
2. Be sure transmission is full of recommended grade of fresh oil.
3. Start the engine and continue running for several minutes to reach normal operating temperature.
4. Stall the torque converter for 5 seconds. See Stalling the Torque Converter.
5. Continue running the engine for 5 minutes.
6. Repeat the torque converter stall for 5 seconds.
7. Continue this procedure for a period for up to 30 minutes, if possible during crane operation.
8. Drain the oil and install a new filter. Test the oil for water contamination.
9. Refill the transmission with the recommended grade of oil.

NOTE: *If the oil drained at step 7 is clean and free of water contamination, return the transmission to service. If not, repeat the flush and fill procedure.*

Stalling the Torque Converter

1. Apply the foot brake firmly. If necessary, set the crane against a fixed obstruction.
2. Select 4th speed forward and open the throttle fully.

NOTE: *DO NOT stall the converter for more than 10 seconds or the transmission fluid will overheat.*

Reference Only

Published 2/23/2016, Control # 592-00

TESTS

Torque Converter Stall Test

NOTE: *Engine speed must be recorded during this test. This crane is not equipped with a tachometer. One must be installed to perform this test.*

NOTE: *DO NOT stall the converter longer than 10 seconds or the transmission fluid will overheat. Make sure that the oil level is correct and at normal operating temperature*

1. Ensure that the engine and transmission are at normal operating temperature. Run engine at maximum speed and check the **High Idle Speed**. See Engine Technical Data in the engine operator's manual furnished with the crane.
2. The crane must not move during this test. Apply the foot brake firmly. If necessary, set the crane against a fixed object.
3. Select 4th speed Forward and open the throttle fully. Engine speed should be as specified at Torque Converter Stall in the Transmission Section Contents. Select reverse and repeat the test.
4. If the engine speed is below the stated value, either the engine is loosing power and needs to be serviced/overhauled or the torque converter reaction member clutch is slipping.

   To check the engine, select Neutral, open the throttle fully and fully lower the booms to open main system pressure relief valve. The engine should fall slightly below the Maximum Governed Speed. If engine speed is correct, the torque converter reaction member clutch is slipping.

NOTE: *Maximum Governed Speed is a datum figure only. It cannot be adjusted or changed with the engine installed in the crane.*

If the engine speed is higher than the Maximum Governed Speed, check the transmission for clutch slippage or internal leakage.

Pressure and Flow Test

WARNING

Fine jets of hydraulic oil at high pressure can penetrate the skin. Do not use your hands to check for hydraulic leaks. Do not put your face close to suspected leaks. Hold a piece of cardboard close to suspected leaks and inspect the cardboard for signs of hydraulic oil. If hydraulic oil penetrates your skin, get medical help immediately.

WARNING

Take care when disconnecting hydraulic hoses and fittings. The oil will be hot and could cause burns.

WARNING

DO NOT go under the crane with the engine running. Turn the engine off, apply the parking brake and remove the ignition key before going underneath the crane.

NOTE: *The tests must be carried out only in the following order, step by step.*

NOTE: *Special adapters are required to perform the tests. These adapters are available from your distributor.*

Before completing any transmission pressure/flow tests, make sure that the oil level is correct and is at normal operating temperature.

7

Reference Only

Flow and Pressure Tests

a1238

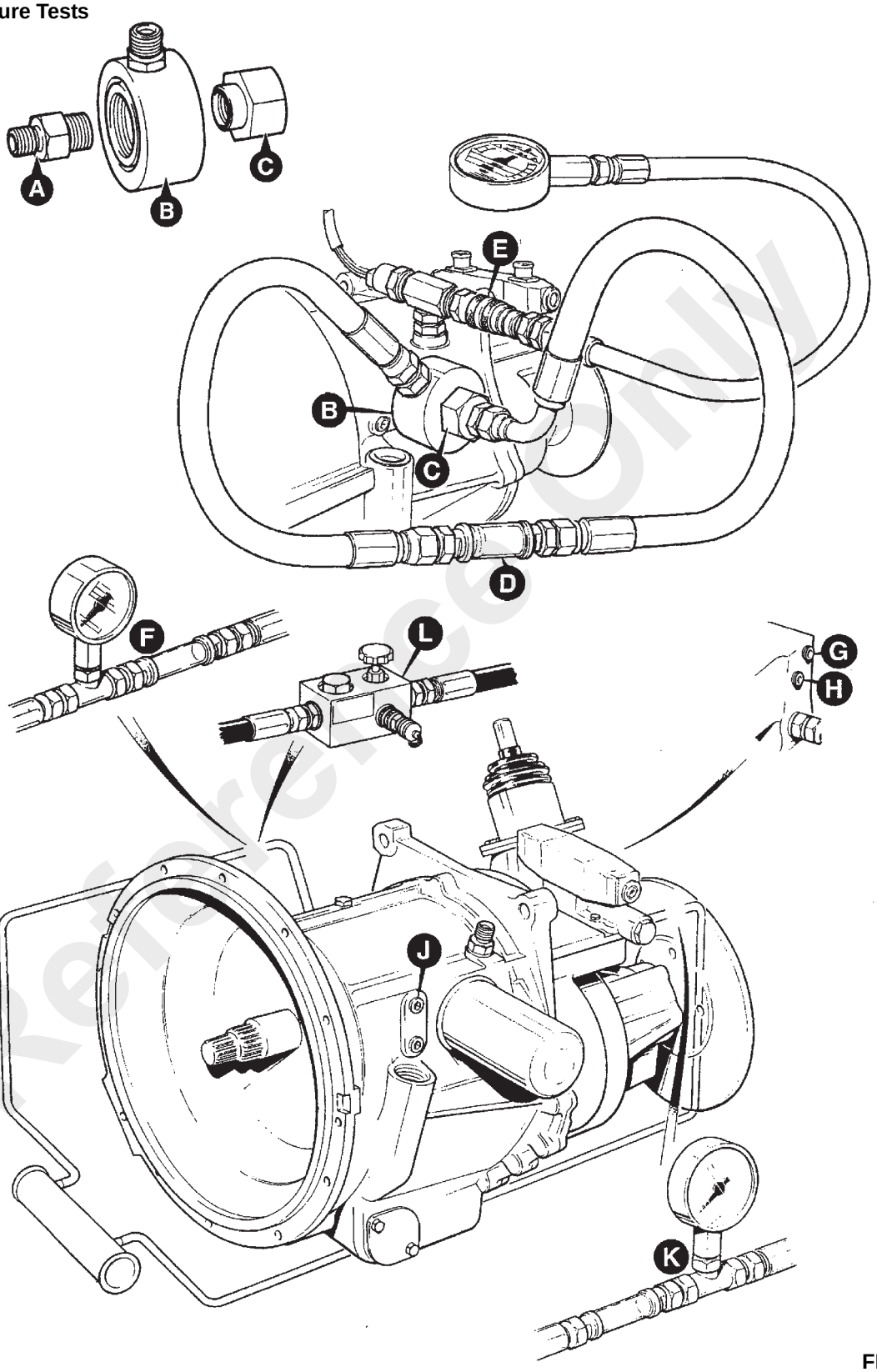

FIGURE 7-8

Reference Only

Published 2/23/2016, Control # 592-00

1. Stop the engine, remove the transmission filter and filter head adapter. Install adapter **A** (Figure 7-8) into the gear box casing. Install test adapter **B** and secure with adapter **C**. Connect a flow meter **D** as shown and connect a 0 - 2070 kPa (0 - 300 PSI) pressure gauge to test connector **E**.
2. Start the engine and run at 1000 rpm. The flowmeter will show the **Pump Flow** which should be as shown in the *General Technical Data*, page 7-1. A low reading indicates a worn pump or blocked suction strainer. The pressure gauge will show the **Main Line Pressure**, (See *General Technical Data*, page 7-1). A low reading can be caused by a faulty pressure maintenance valve or a worn pump. A high reading indicates a faulty pressure maintenance valve or, if the flow is low, the oil cooler may be blocked.
3. Stop the engine, remove the flow test adapters and install the filter head adapter and filter. Connect the pressure gauge and flowmeter into the converter out line, as shown in F. Run the engine at 1000 rpm with the transmission in Neutral and note **Converter Out Pressure and Oil Cool Flow**, which are referenced in the *General Technical Data*, page 7-1. A high pressure together with low flow could be caused by a blocked oil cooler. See also step 7.
4. With the foot brake firmly applied, select Forward and check flow reading, which should not fall by more than 4.5 l (1.2 gal) per minute. A low reading indicates a high leakage rate in that particular clutch, which should be caused by worn or broken piston seals or shaft sealing rings. Select Reverse and repeat the test.
5. If the clutch leakage rate is high, the **Clutch Pressures** may be checked by connecting the pressure gauge into ports **G** and **H** and repeat step 4. A low reading (see *General Technical Data*, page 7-1) would confirm a high leakage rate in the particular clutch selected.
6. Stop the engine and connect the pressure gauge into port **J** in the transmission. Install a load valve L into the converter out line (see Note).

NOTE: *Make sure that load valve **L** has been screwed fully OUT before starting the engine, otherwise converter seals will be damaged.*

Start the engine, run at 1000 rpm and slowly screw down the load valve while observing the gauge reading, which should rise to the setting of the **Converter Relief Valve** (see Section Contents). **DO NOT** allow the pressure to exceed 1034 kPa (150 psi) or the converter seals will be damaged.

If reading is higher than specified, the relief valve is faulty. A low reading indicates a faulty relief valve, leaking converter “piston ring” type seal or leaking pump seal.

7. Stop engine and connect the pressure gauge and flowmeter into the return line from the oil cooler to the transmission as shown in **K** (Figure 7-8). Start the engine, and with the transmission in Neutral check the flowmeter reading, which should show the **Cooler Flow Rate** (see *General Technical Data*, page 7-1). The pressure gauge will show the **Lubrication Pressure** (see *General Technical Data*, page 7-1). Low flow and pressure readings could indicate a blocked oil cooler.

TRANSMISSION OIL COOLER MOTOR CONTROL VALVE

Checking/Setting Transmission Oil Cooler Motor Control Valve

1. The pressure check diagnostic quick disconnect with gauge should be installed onto oil cooler motor valve “G” port, located at the oil cooler (Figure 7-9).
2. Remove the electrical connector to the motor control valve to default the valve to the de-energized or motor-on position.
3. Start and idle the engine. The pressure gauge should read 2413 ± 172 kPa (350 ± 25 psi).
4. If the pressure needs adjusted, loosen the jam nut and turn the pressure reducing valve adjustment screw until the pressure is showing on the pressure gauge. Clockwise increases pressure, counterclockwise reduces the pressure.
5. Tighten the jam nut on the pressure reducing valve.
6. Shut-off the engine and reconnect the electrical connector to motor control valve.

Reference Only

Transmission Oil Cooler
Motor Control Valve

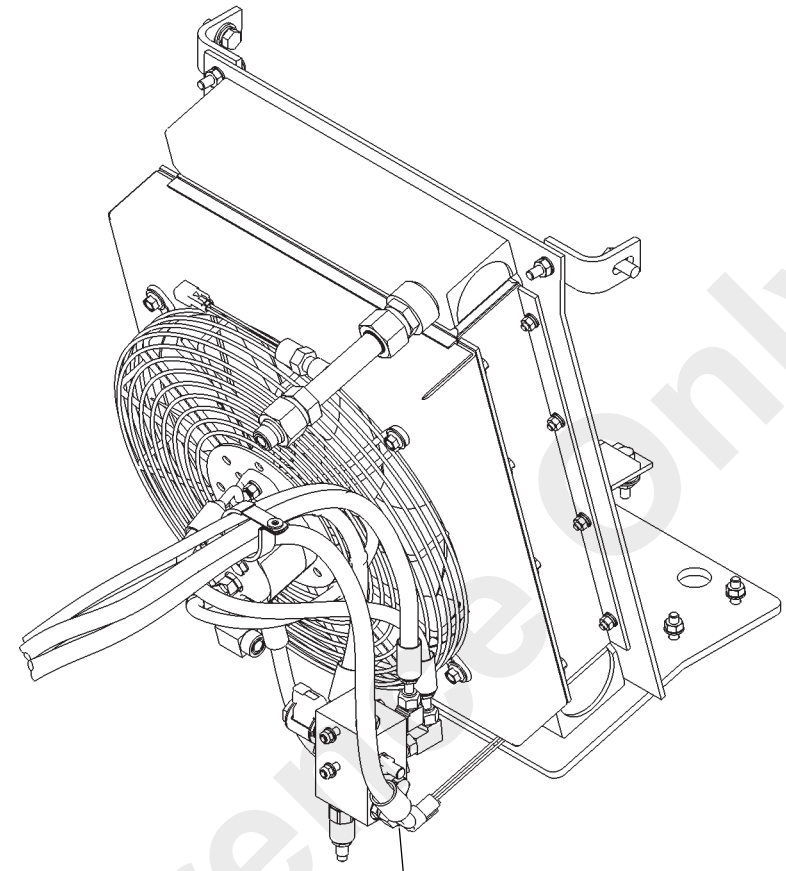

8429-1

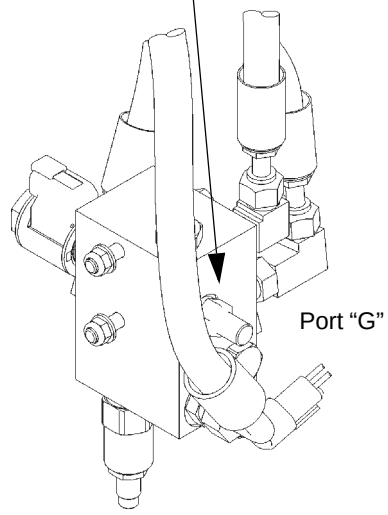

8429-2

FIGURE 7-9

Reference Only

TRANSMISSION REPAIR

Servicing the Torque Converter

Removal

1. Remove the complete power unit. See *Engine and Engine Systems*, page 6-1.
2. Fasten the engine to an engine stand.
3. Using an overhead crane and chains, support the weight of the transmission and remove the twelve capscrews (2, Figure 7-10) and lockwashers (3) securing the transmission to the engine flywheel housing.

CAUTION

The transmission weighs approximately 159 kg (350 lb) dry. Use adequate hoist and chains. Personal injury could occur from improper lifting of the transmission.

4. Remove the transmission (1) and place it in a clean work area where the torque converter can be removed. It is recommended that the transmission be mounted in a service fixture.
5. The torque converter assembly (4) is fastened to the engine flywheel (10) through a drive plate (7). Remove the drive plate mounting screws (6) and remove the torque converter (5) and drive plate (7).
6. Remove the bolts (9) securing torque converter (5) to drive plate (7). Remove drive plate (7) and its reinforcement (8).
7. Replace the complete torque converter. The parts are not serviced separately. Replace drive (8) if it is distorted or damaged.

NOTE: *It is recommended that the torque converter be replaced any time system contamination occurs. It is not possible to completely clean the torque converter by flushing to remove the contamination. Replacement of the complete assembly is necessary to prevent early failure of other components in the system.*

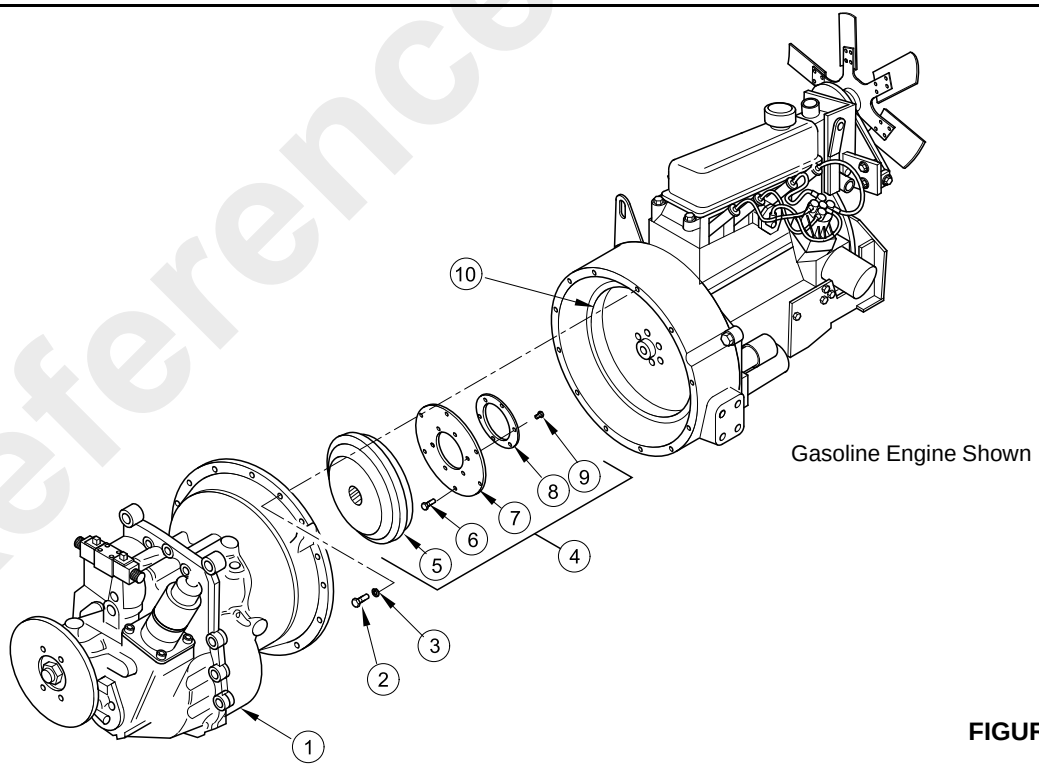

FIGURE 7-10

Installation

NOTE: *It is recommended, when installing the torque converter, that the alignment tool procedure be used. The alignment tool is available from your distributor under part number 1902662. If the tool can not be obtained, use the optional procedure, Installing Without Alignment Tool.*

Installing with Alignment Tool

Ensure that the flywheel face, drive plate and hardware are clean and free from burrs or other surface imperfections.

Reference Only

1. Place the drive plate and annulus (1 Figure 7-11) onto the torque converter.

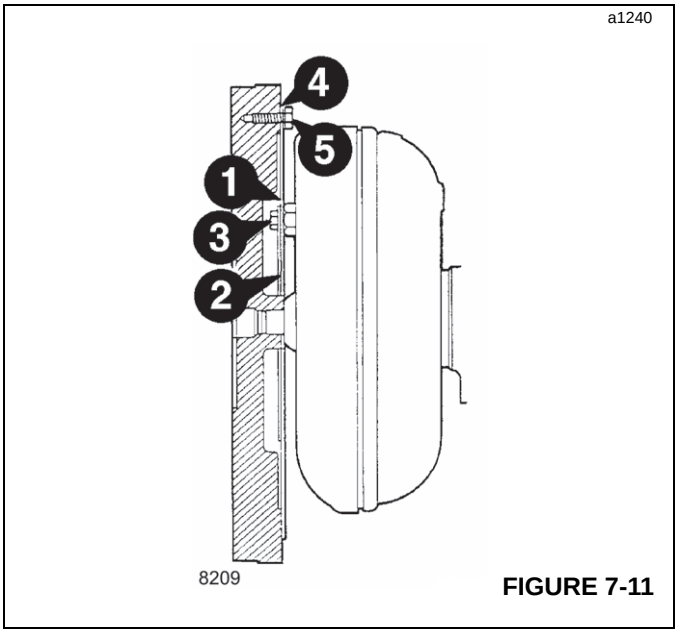

FIGURE 7-11

2. Place the torque converter alignment tool **A** (Figure 7-12) over the torque converter spigot, making sure that the tool locates in two of the converter bolt holes as shown. It is important to note that the converter drive tube must be protected against damage or contamination at all times.

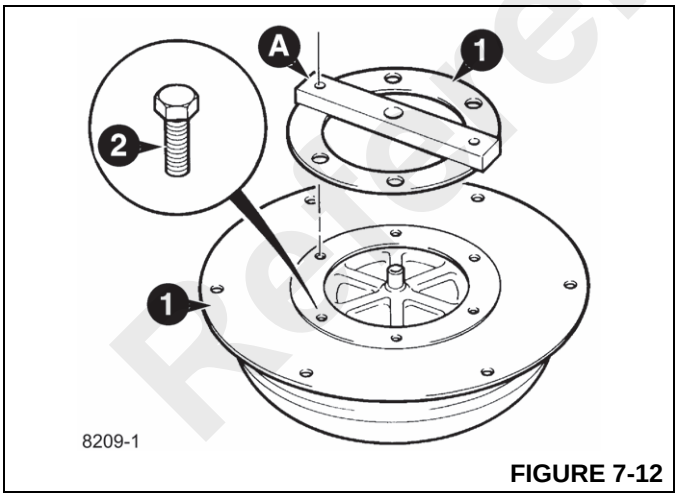

FIGURE 7-12

3. Apply Loctite® 243 to the threads of four new special drive plate retaining bolts (2), attaching the drive plate to the torque converter. Tighten the bolts to 40 Nm (30 lb-ft). Remove the alignment tool and install the remaining two bolts. Tighten to a torque of 40 Nm (30 lb-ft).

4. Locate the torque converter and drive plate assembly on the flywheel. Install three bolts to attach the drive plate to the flywheel. Check the converter run-out as shown in B of Figure 7-13, which should not exceed 0.38 mm (0.015 in). Adjust as necessary.

NOTE: In the unlikely event that the run-out exceeds 0.38 mm (0.015 in), remove the converter and check the spigot for burrs, remove the drive plate and rotate it 180° on the torque converter. Repeat steps 2 to 4.

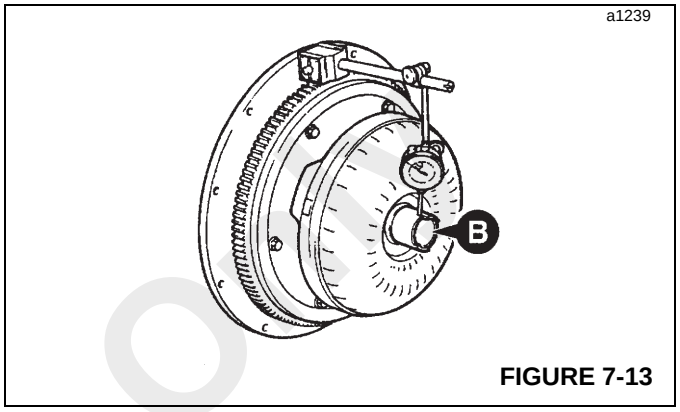

FIGURE 7-13

5. Remove the torque converter and drive plate/annulus assembly from the flywheel.

6. Install the converter assembly to the transmission/engine:

   a. Install the torque converter with its drive plate/annulus sub-assembly onto the transmission input shaft, making sure that the dogs on the converter pump drive shaft engage with the recesses in the pump. Also take care not to damage the oil seal.

   b. Rotate the engine flywheel so that one bolt hole is in the six o'clock position.

   c. Rotate the torque converter and drive plate assembly so that one bolt hole is in the six o'clock position.

   d. Install the transmission/torque converter assembly to the engine.

   e. Remove the access plate from the bottom of the engine flywheel housing and, through the access hole, fit and hand tighten one bolt (3, Figure 7-11) in the six o'clock position.

NOTE: It is important to mount washers (4) with the outside diameter radius against the drive plate, that is, facing towards the flywheel.

   f. Rotate the flywheel until the next bolt hole is accessible. Apply Loctite 243 to the threads of the next bolt (3) then fit and hand-tighten. Repeat this operation until all bolts are installed. Finally, torque all bolts (3) to 19 Nm (14 lb-ft), rotating the flywheel each time to align the bolts with the access hole. Re-install access plate.

Reference Only

Published 2/23/2016, Control # 592-00

Installing without Alignment Tool (Optional)

If the torque converter alignment tool (A) is not available, the following method should be used to replace the converter.

1. Assemble the drive plate and drive plate annulus (1, Figure 7-11) to the torque converter using bolts (3), finger tighten at this time.
2. Bolt drive plate to flywheel and check that run-out of pump drive shaft (B) does not exceed maximum permissible 0.38 mm (0.015 in). If incorrect, tap torque converter by hand to reposition.
3. When correct, mark position of flywheel and drive plate, then remove drive plate and annulus from flywheel.
4. Apply Loctite 243 to threads of bolts (3) and tighten to 40 Nm (30 lb-ft).
5. Fit torque converter/drive plate sub-assembly to flywheel; align marks, then fit washers (4) and bolts (5). Apply Loctite 243 to bolts (5) and tighten to 19 Nm (14 lb-ft).

NOTE: It is important to mount washers (4) with the outside diameter radius against the drive plate (that is, facing toward the flywheel).

When installing transmission to washers converter assembly, ensure that the dogs on the converter oil seal spigot engage with the recesses on the transmission input. Take care not to damage the oil seal.

Installing Transmission

1. Clean and lubricate the splines of the transmission input shaft. Install the transmission to the converter, ensuring that the dogs on the converter oil seal shaft engage with the recesses on the transmission input. Take care not to damage the oil seal.
2. Install twelve bolts (2, Figure 7-10) and lockwashers (3). Tighten bolts to a torque of 31 Nm (23 lb-ft).
3. Install the power unit into the crane. See *Engine and Engine Systems*, page 6-1.
4. Connect all removed hydraulic lines, electrical harnesses, cables, etc.
5. Fill the transmission with recommended oil. See *Preventive Maintenance*, page 5-1.

Servicing the Transmission

Removal

1. Remove complete power unit. See *Engine and Engine Systems*, page 6-1.
2. Fasten engine to an engine stand.
3. Drain the transmission. See *Preventive Maintenance*, page 5-1.

CAUTION

The transmission weighs approximately 150 kg (350 lb) dry. Use adequate hoist and chains. Personal injury could occur from improperly supported transmission.

4. Using an overhead crane and chains to support the weight of the transmission, remove the 12 bolts (2, Figure 7-10) and lockwashers (3) that fasten the transmission housing (1) to the engine flywheel housing. Remove the transmission and torque converter assembly and place in a clean, work area where the torque converter can be removed. It is recommended that the transmission be mounted in a service fixture. Remove the torque converter.

Reference Only

Transmission Gearbox Repair

WARNING

Certain seals and gaskets may contain fluoroelastomeric materials such as Viton, Fluorel and Technoflon. Fluoroelastomeric materials subject to high temperatures can produce highly corrosive hydrofluoric acid. THIS ACID CAN SEVERELY BURN.

New fluoroelastomeric components at ambient temperature require no special safety precautions.

Use of fluoroelastomeric components whose temperatures have not exceeded 300°C (572°F) require no special safety precautions. If evidence of decomposition (e.g. charring) is found, see the next paragraph for safety instructions. DO NOT TOUCH COMPONENTS OR SURROUNDING AREA.

Used fluoroelastomeric components subjected to temperatures greater than 300°C (572°F) (e.g. engine fire) must be treated using the following safety procedure. Make sure that heavy duty gloves and safety glasses are worn:

1. Ensure that components have cooled then remove and place materials into plastic bags.
2. Thoroughly wash contaminated area with a 10% calcium hydroxide or other suitable alkali solution, if necessary use wire wool to remove burnt remains.
3. Thoroughly wash contaminated area with detergent and water.
4. Contain all removed material, gloves etc., used in this operation in sealed plastic bags and dispose of in accordance with Local Regulations.

NOTE: DO NOT BURN FLUORO-ELASTOMERIC MATERIALS. If contamination of skin or eyes occurs, wash the affected area with a continuous supply of clean water or with calcium hydroxide solution for 15 - 60 minutes. Get medical attention immediately.

Reference Only

Disassembly

NOTE: *Paragraph numbers correspond with numbers in illustration.*

1. If not previously done, drain the oil from the transmission casing by removing the suction strainer (1, Figure 7-14).

NOTE: *When the stainer is removed, oil will gush out. Keep to one side when removing the strainer.*

2. Remove discard the oil filter (2).

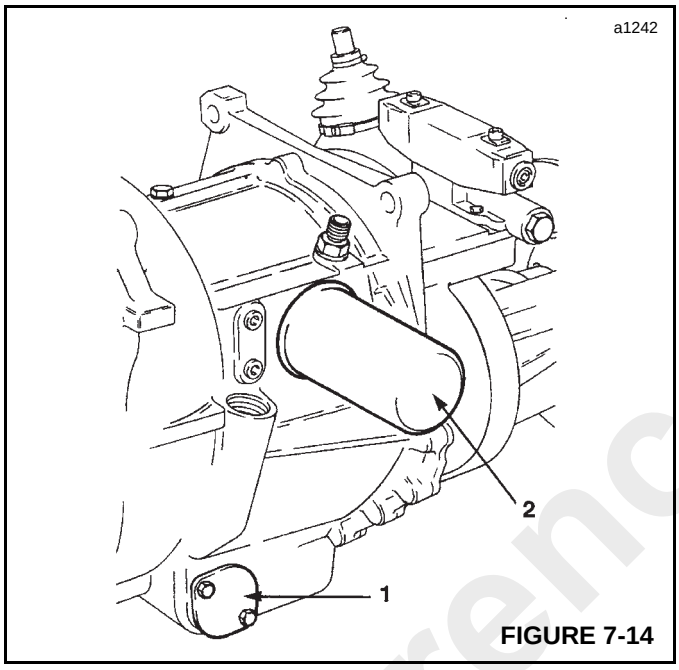

FIGURE 7-14

3. Unscrew bolts (3, Figure 7-15) and remove the pump (5).

4. Remove and discard pump sealing ring (4).

5. Separate pump components (5).

6. Remove and discard oil seal (6) from pump housing.

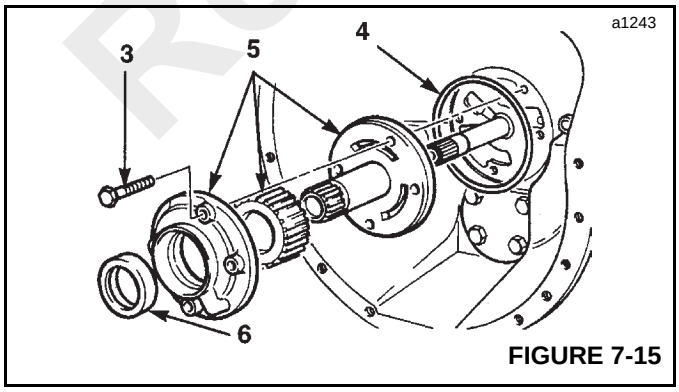

FIGURE 7-15

NOTE: *The input shaft protrudes from the flywheel housing, therefore it is necessary to stand the housing on blocks of wood.*

7. Position transmission vertically, standing on the face of the flywheel housing. Remove gear lever turret by removing bolts (7, Figure 7-16).

8. Unscrew capscrews and remove selector valve (8).

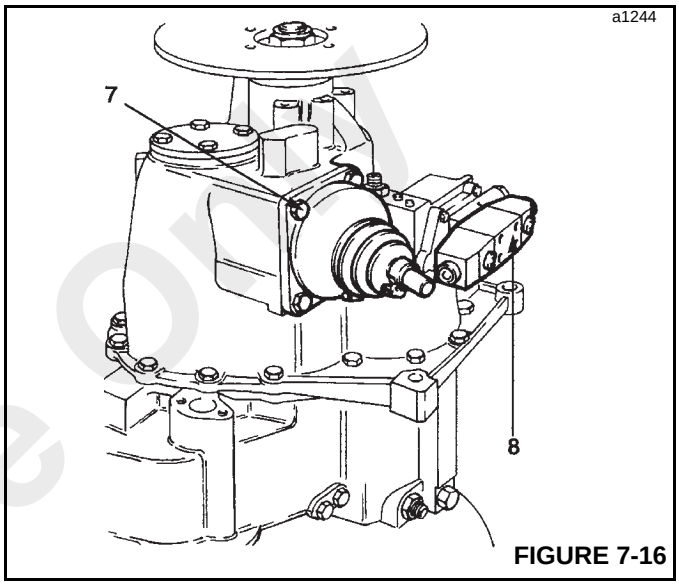

FIGURE 7-16

9. Loosen worm drive clips and remove rubber boot from lever turret. Remove spring retaining ring (9, Figure 7-17).

NOTE: *BEWARE of spring pressure acting on nylon seat when retaining ring is removed.*

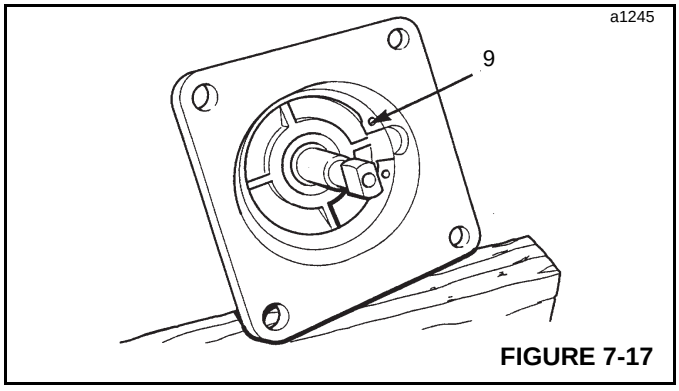

FIGURE 7-17

10. Figure 7-18 illustrates the components of the one piece gear lever turret. If there is excessive play in the lever, replace the complete turret assembly.

Reference Only

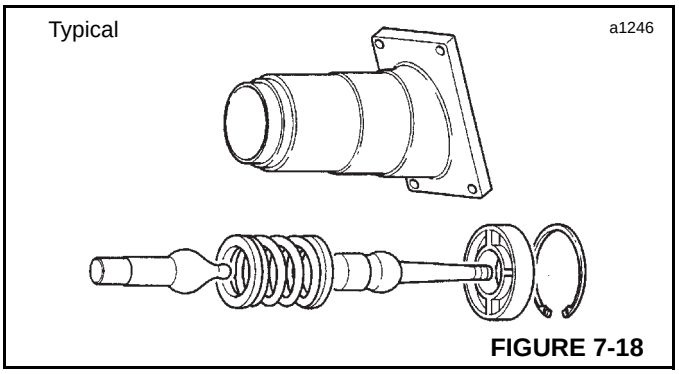

FIGURE 7-18

11. Unscrew four bolts and remove pressure maintenance valve (11, Figure 7-19).

12. Unscrew plug and remove pressure maintenance spool and spring (12).

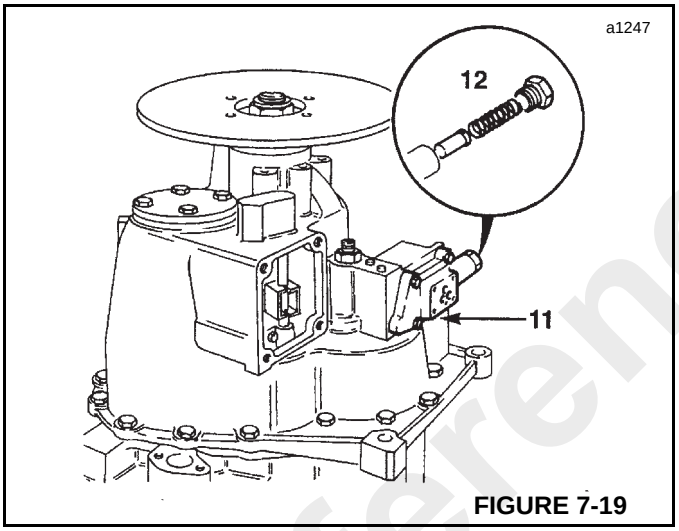

FIGURE 7-19

13. Remove torque converter pressure relief valve (13, Figure 7-20).

14. Unscrew bolts (14) and lift off output casing.

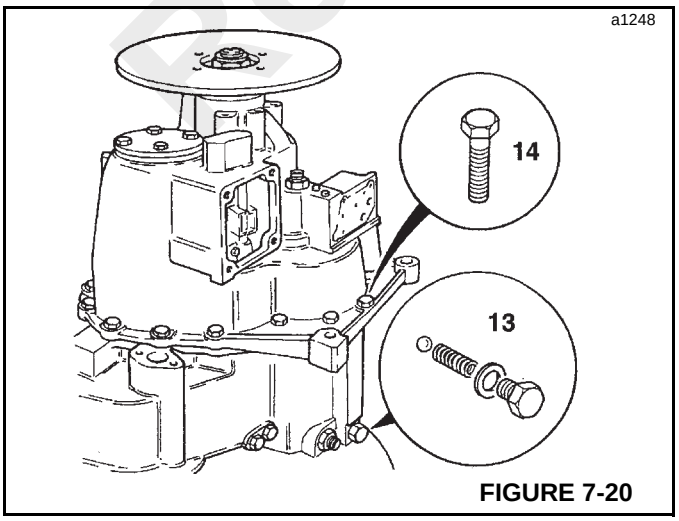

FIGURE 7-20

15. Unscrew selector detent screws (15, Figure 7-21).

16. Remove selector detent balls and springs (16).

17. Unscrew selector fork retaining screws (17) and lift out the selector rods.

18. Remove selector forks (18).

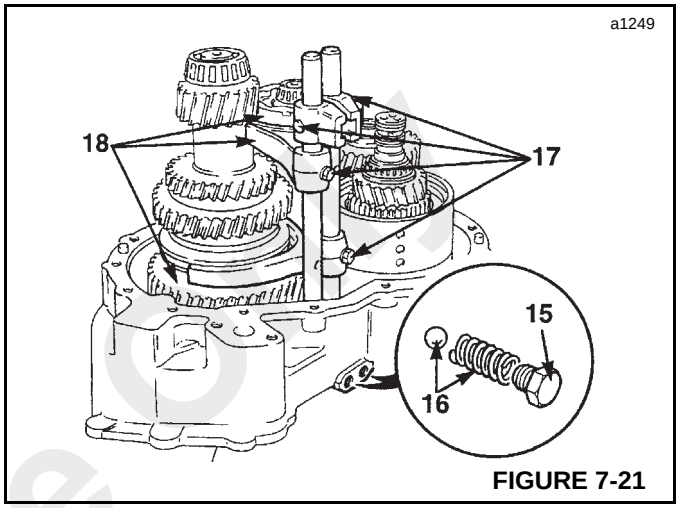

FIGURE 7-21

19. Using a wire support as shown in Figure 7-22, remove interlock plunger (19) situated between the selector rods.

20. Lift off 3rd/4th synchro-hub (20). Note the positions for reinstalling the mating cups.

21. Lift out layshaft assembly (21).

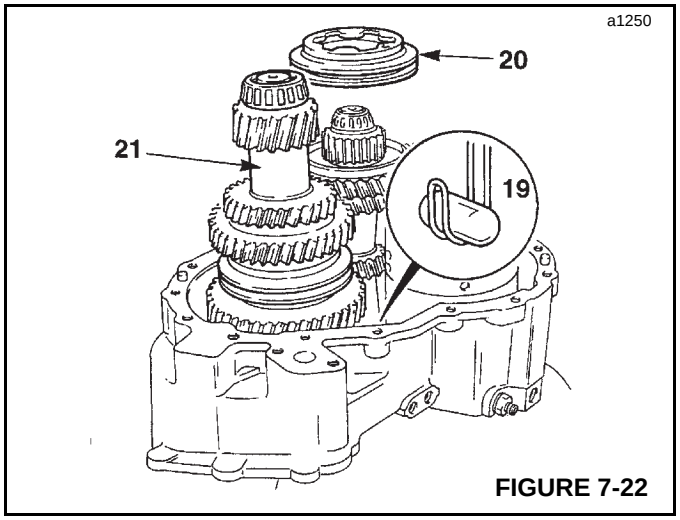

FIGURE 7-22

Reference Only

Published 2/23/2016, Control # 592-00

22. Remove idler gear upper thrust washer (22, Figure 7-23).

23. Tilt mainshaft **L** to one side and lift off idler gear (23).

24. Remove idler gear lower thrust washer (24).

25. Lift off idler gear spacer (25).

26. Tilt mainshaft **L** to one side and lift out reverser unit (26), taking care not to damage the piston ring seals.

27. Remove mainshaft **L**.

28. The idler gear spindle is a press fit in the casing. Use a suitable puller screwed into the 1/2 inch B.S.P hole in the end of the spindle for extraction.

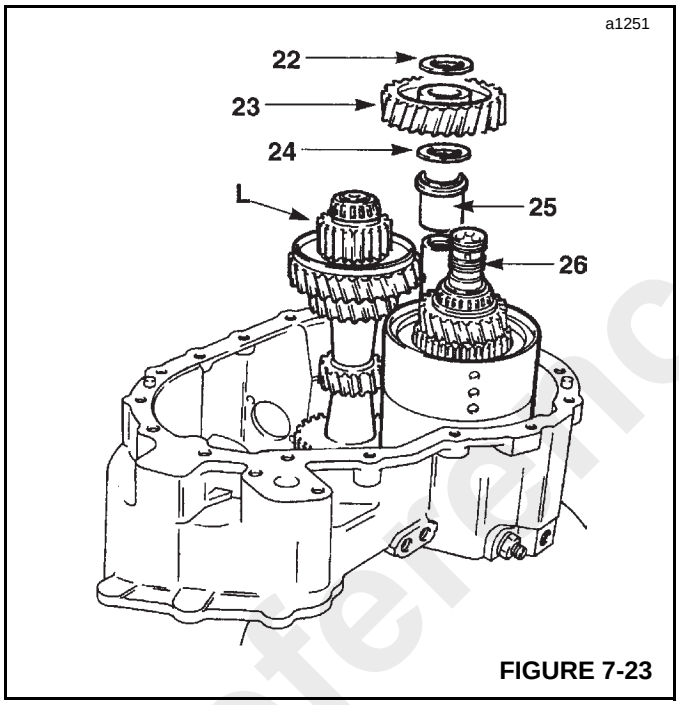

FIGURE 7-23

29. Mark the location of the disc on the splined shaft. While retaining the brake disc from turning, unscrew output shaft nut (29, Figure 7-24).

30. Pry out oil seal (30) and discard.

31. Remove output shaft assembly (31) and remove outer bearing **M**. Remove and discard spacer and any shims at **N**.

32. Using a suitable bearing puller, remove output inner bearing (32).

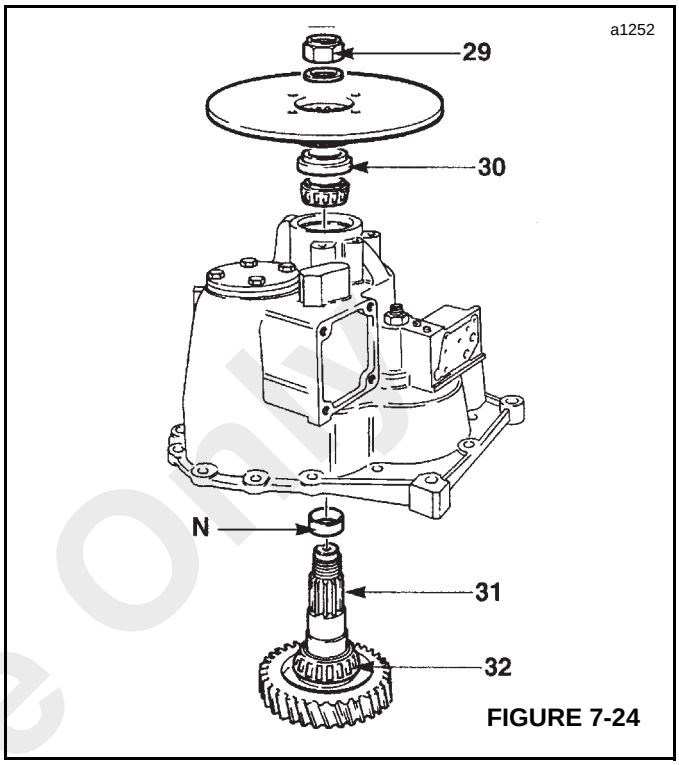

FIGURE 7-24

33. Pull off 3rd gear, synchro-hub and bearing (33, Figure 7-25) from the main shaft using a suitable bearing puller.

34. Using a suitable bearing puller, remove bearing (34) from the mainshaft.

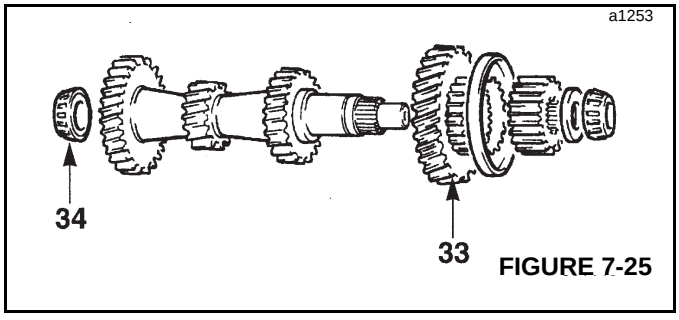

FIGURE 7-25

35. Remove spacer and bearing (35, Figure 7-26). Illustration shows a gear (35), which is only used on a 4WD transmission. The transmission being serviced is a 2WD transmission.

36. Lift off 1st gear (36).

37. Remove first gear needle roller bearings (37).

38. Lift off 1st/2nd synchro unit (38). Keep synchro cups and cones in correct relationship, i.e. cup and cone as a pair.

39. Pull off 2nd gear, synchro-hub, synchro cup and needle roller bearings (39) from layshaft.

Reference Only

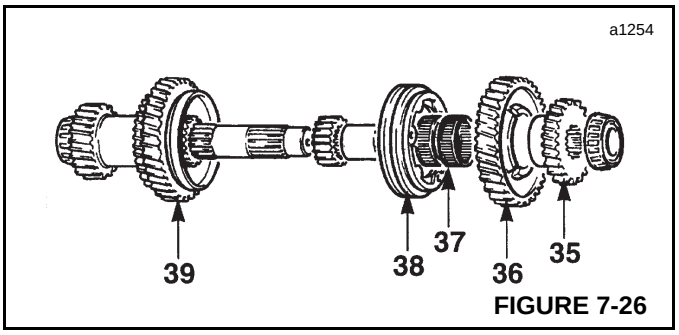

FIGURE 7-26

Assembly

NOTE: *Finally, after repair and installation of new parts, make sure casings and parts have been thoroughly cleaned using suitable solvents before starting assembly procedures.*

When assembling, coat all bearings, except where noted, with a Lithium Base, E.P. No. 2 bearing grease. Replace all O-rings, seals and gaskets.

Remember that dirt in the transmission system will cause damage to the transmission and its associated parts, particularly the transmission pump.

1. Smear bearing surface with a Lithium Base, E.P. No. 2 bearing grease and install 2nd gear and synchro cup (1, Figure 7-27) onto the lay shaft.

2. Press 2nd gear synchro-hub and 1st gear needle roller bearing sleeve (2) onto the layshaft.

3. Install 1st/2nd synchro unit (3) the correct way to match the cups.

4. Slide 1st gear needle roller bearings (4) over the sleeve. Be sure to coat the bearings with oil.

5. Install 1st gear (5) over the needle roller bearings.

6. Slide spacer (6) over the shaft splines. Illustration shows a gear (6) which is only used on a 4WD transmission. The transmission being serviced is a 2WD transmission.

7. Press bearing (7) onto assembled layshaft and coat bearing with grease.

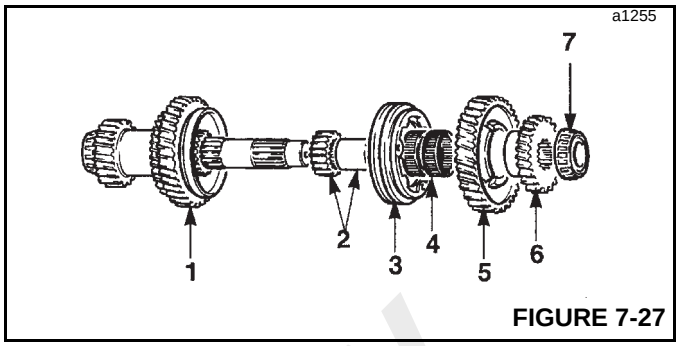

FIGURE 7-27

8. Coat bearing surfaces of mainshaft with grease and assemble 3rd gear and synchro-hub. Install spacer washer S (Figure 7-28) with bevel towards bearings. Press the bearing onto the shaft and coat with grease.

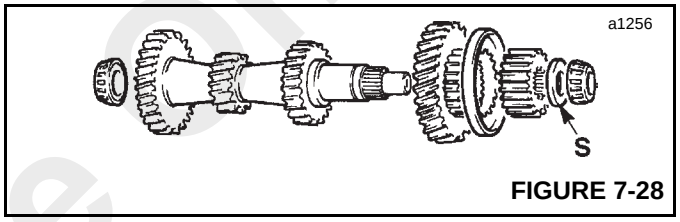

FIGURE 7-28

9. Liberally, coat output shaft inner bearing (9, Figure 7-29) with grease before installing.

10. Install a new collapsible spacer (10) over the output shaft, assembly into output end casing.

11. After coating with grease, install outer bearing (11) followed by a new oil seal (11A). Assemble the brake disc using locating marks made during disassembly. Install new retaining nut (12).

NOTE: *Do not excessively hammer the disc during assembly; damage to the shaft bearings could occur. If necessary, press fit the parts. Fully support the shaft during assembly.*

12. Tighten retaining nut (12) to achieve a rolling torque of 0.7 to 2.0 Nm (0.5 to 1.5 lb-ft). Stake the nut into the slot.

NOTE: *If the torque value in step 12 is accidently exceeded, the output shaft must be disassembled and the collapsible spacer replaced.*

Reference Only

Published 2/23/2016, Control # 592-00

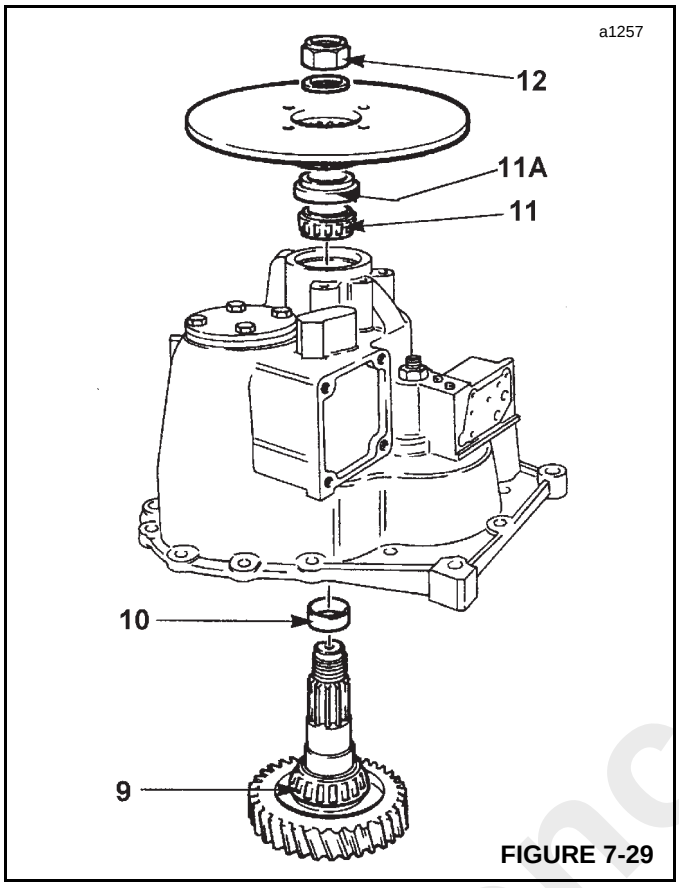

FIGURE 7-29

13. Press idler gear spindle (13, Figure 7-30) into casing. Ensure that oil drain hole V points toward bottom of casing.

14. Grease piston ring seal and pack pump end bearing with grease. Then, carefully, lower reverser (14) into the casing.

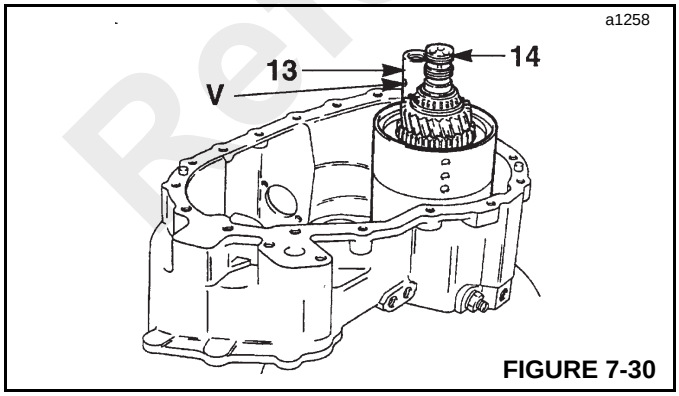

FIGURE 7-30

15. Assemble the two halves of the casing with bolts (15, Figure 7-31). Tighten to a torque of 56 Nm (42 lb-ft).

CAUTION

Assembling the case halves at this time is a temporary arrangement to enable measurement of the reverser shaft end play. DO NOT apply Loctite 243 to the bolts at this time or bond mating surfaces.

CAUTION

To prevent damaging the reverser unit piston ring seals, it is permissible to remove the seals prior to assembling the case halves. However, this is only applicable while measuring reverser shaft end play. INSTALL THE SEALS BEFORE FINAL ASSEMBLY.

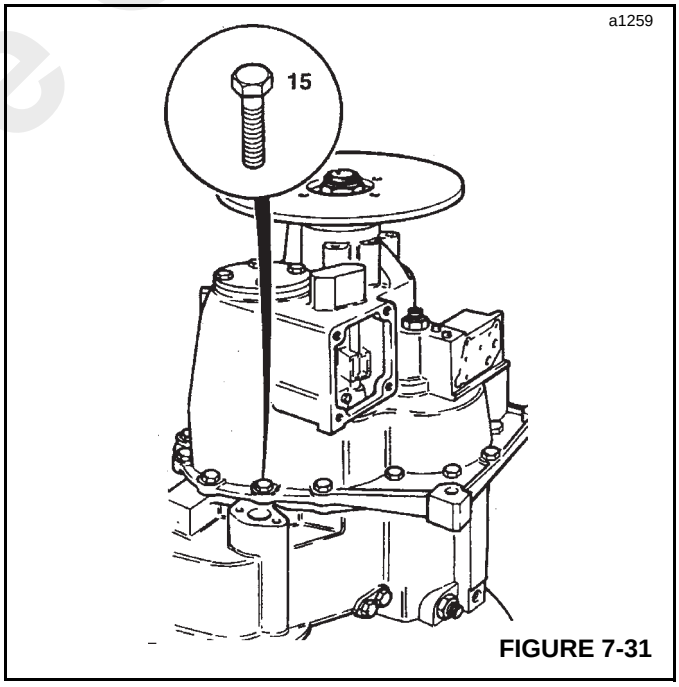

FIGURE 7-31

16. Measure the end play (Figure 7-32) of reverser shaft which should be 0.03 to 0.08 mm (0.001 to 0.003 in).

NOTE: Rotate the shaft while measuring to seat the bearings fully. Position the pointer of the dial test indicator on the chamfer of the shaft, not on the end face. This will ensure a constant reading is given.

Reference Only

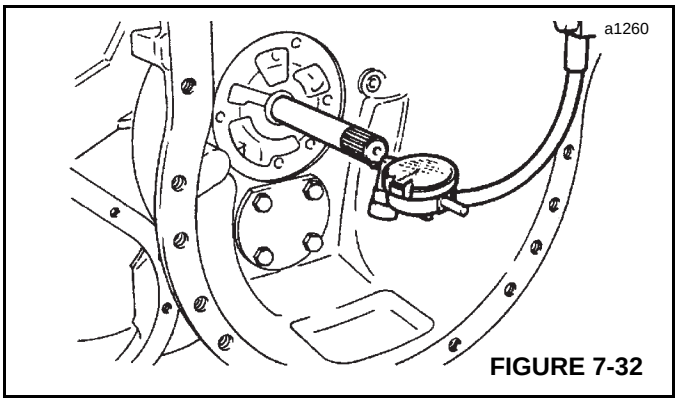

FIGURE 7-32

17. Separate two halves of casing and add or subtract shims (17, Figure 7-33) installed beneath the bearing outer race (in the rear casing) in order to correct reverser shaft end play.

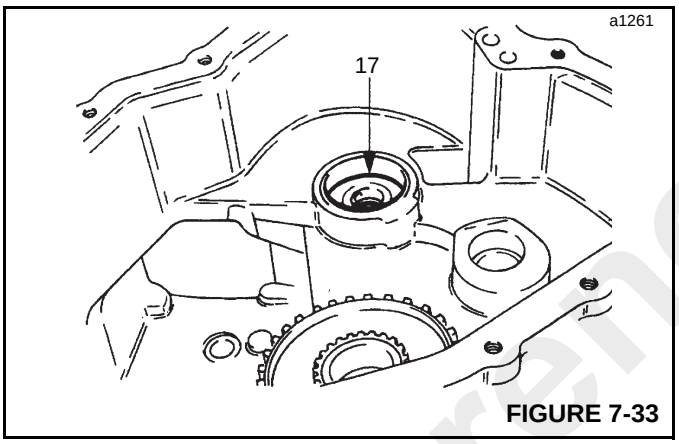

FIGURE 7-33

18. Coat the mainshaft **L** (Figure 7-34) output bearing with grease and place in position, followed by reverser assembly **M**.

19. Install idler gear spacer (19, Figure 7-34).

20. Install thrust washer (20)

21. Install synchro cup to 3rd gear (21) (mainshaft **L**). Lubricate idler gear roller bearings and assemble to spindle while tilting mainshaft **L** to one side.

22. Install thrust washer (22).

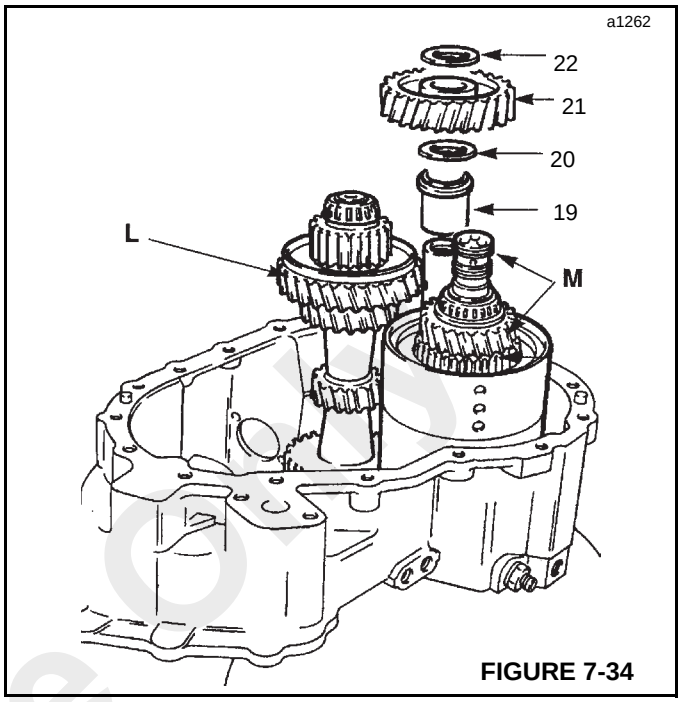

FIGURE 7-34

23. Pack output end bearing of layshaft (23, Figure 7-35) with grease, and carefully lower the layshaft into position.

24. Install 3rd/4th synchro-hub (24) correctly to mate with the cups.

25. Using a suitable wire support, locate plunger (25) into its bore. A small amount of grease will hold the plunger in position.

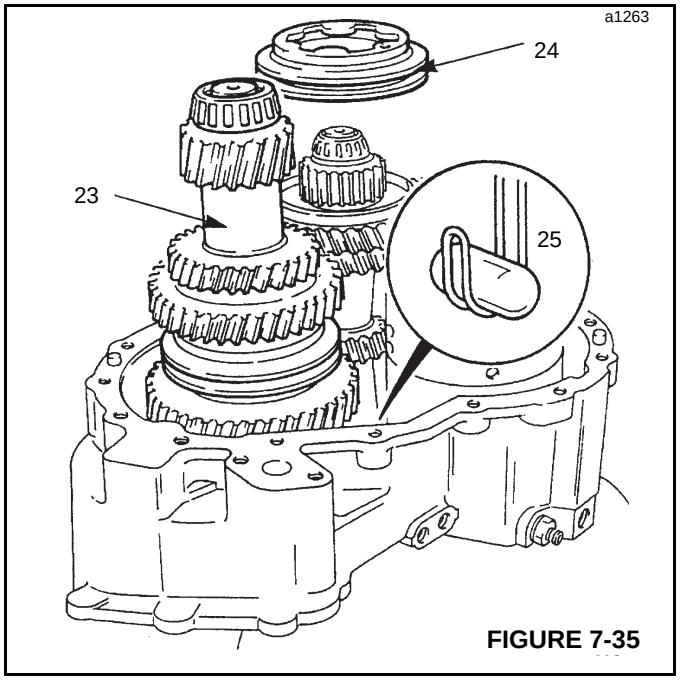

FIGURE 7-35

Reference Only

Published 2/23/2016, Control # 592-00

26. Install selector forks.

27. Slide selector rods (27, Figure 5-35) into position, taking care not to dislodge the interlock plunger. Apply Loctite 243 to selector fork retaining screws **H**, and tighten to 35 Nm (26 lb-ft).

28. Install selector balls and springs (28).

29. Apply Loctite 243 to selector detent plugs (29), install and tighten. Check that each gear engages fully, and that the interlock plunger inhibits simultaneous engagement of two ratios.

30. Apply Loctite 574 to mating face of casing (30). Insert O-rings **Z** (located near reverser unit). Smear grease onto reverser shaft piston ring seals, and apply grease to bearings prior to installing output end casing.

NOTE: Make sure that the reverser unit piston rings are in good condition before installing output end casing.

NOTE: Do not apply an excessive amount of Loctite 574 around the O-rings, too much can dislodge them.

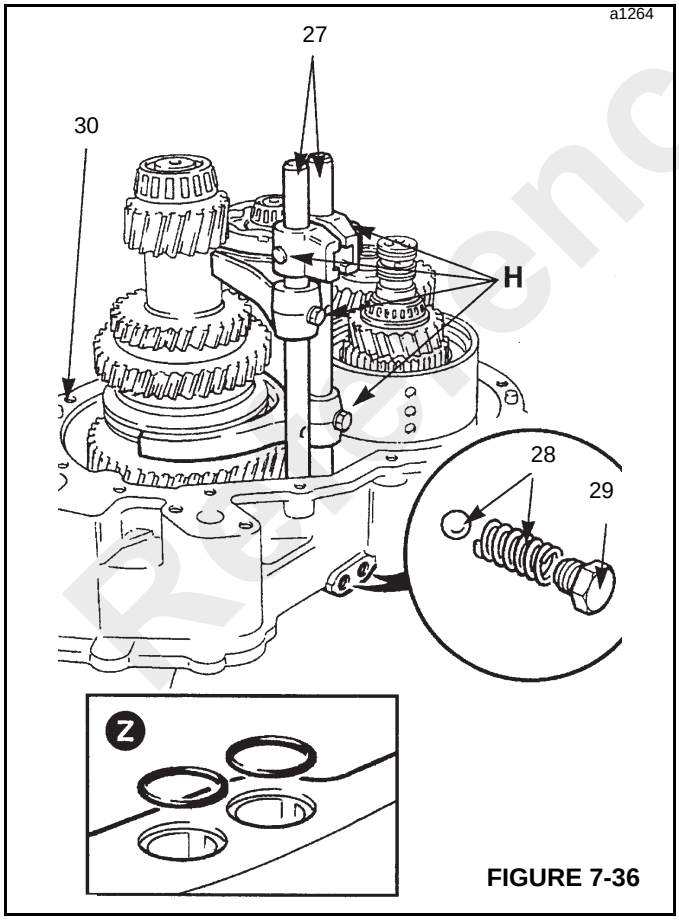

FIGURE 7-36

31. Carefully, lower output end casing into position. Apply Loctite 243 to bolts (31, Figure 7-37) and tighten to a torque of 56 Nm (42 lb-ft).

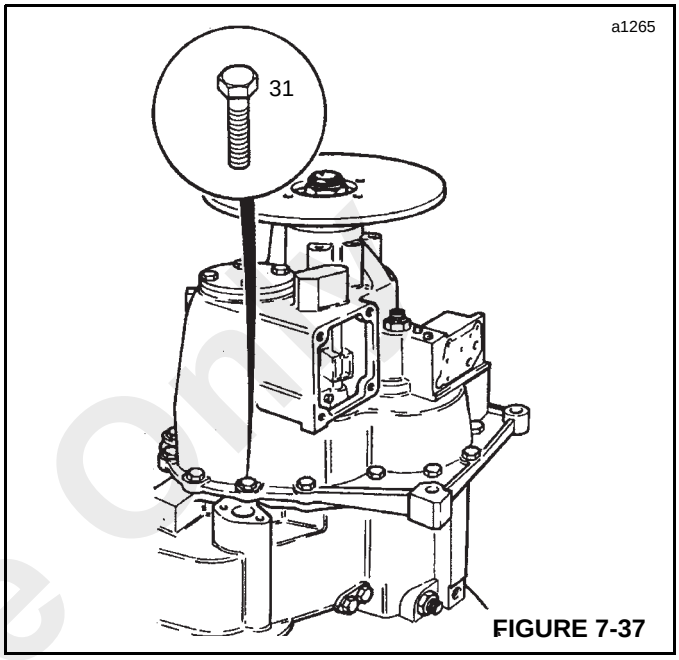

FIGURE 7-37

32. Remove the layshaft bearing cap and substitute tool (32, Figure 7-38) together with a new gasket. Tighten securing bolts to a torque of 56 Nm (42 lb-ft).

NOTE: Take care not to damage the gasket for it must be used for final assembly.

33. Measure layshaft end play (33), which should be 0.03 to 0.08 mm (0.001 to 0.003 in).

NOTE: Rotate the layshaft while measuring the end play to fully seat the bearing.

34. Add or subtract shims (34) to correct end play. Install shims between outer race and spacer.

Reference Only

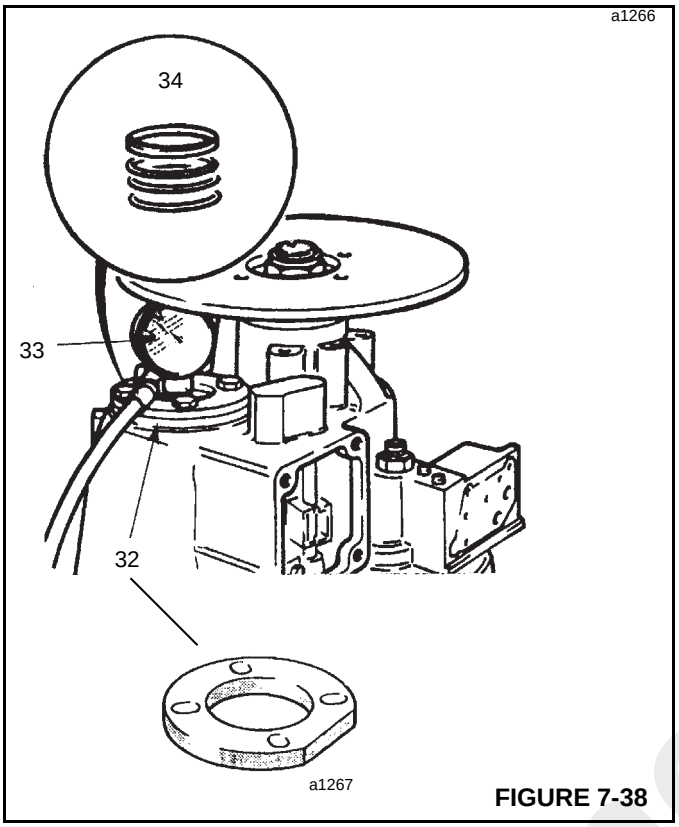

FIGURE 7-38

35. After checking that the layshaft outer bearing is adequately lubricated with grease, install the layshaft bearing cap (35, Figure 7-39) with the gasket used in step 32. Coat threads of bolts with Loctite 243 and tighten to a torque of 56 Nm (42 lb-ft).

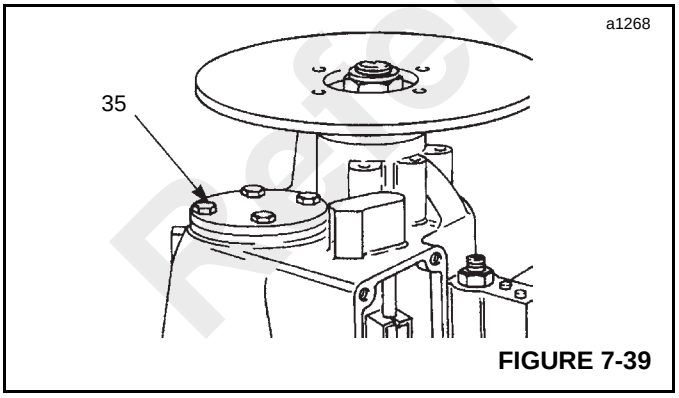

FIGURE 7-39

36. Unscrew bolts (36, Figure 7-40) and remove flywheel housing.

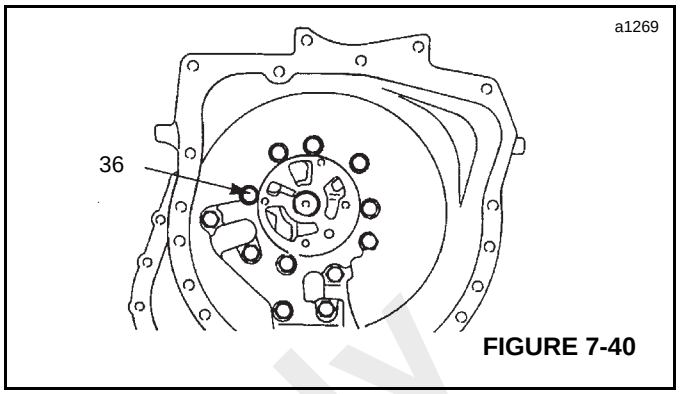

FIGURE 7-40

37. Install tool (37, Figure 7-41) over the mainshaft end bearing as shown. Tighten securing bolts to a torque of 56 Nm (42 lb-ft).

38. Measure main shaft end play (38), which should be 0.03 to 0.08 mm (0.001 to 0.003 in).

NOTE: Rotate the mainshaft while measuring the end play to fully seat the bearings.

39. Add or subtract shims (39) to correct end play. The shims must only be installed between the bearing outer race and spacer.

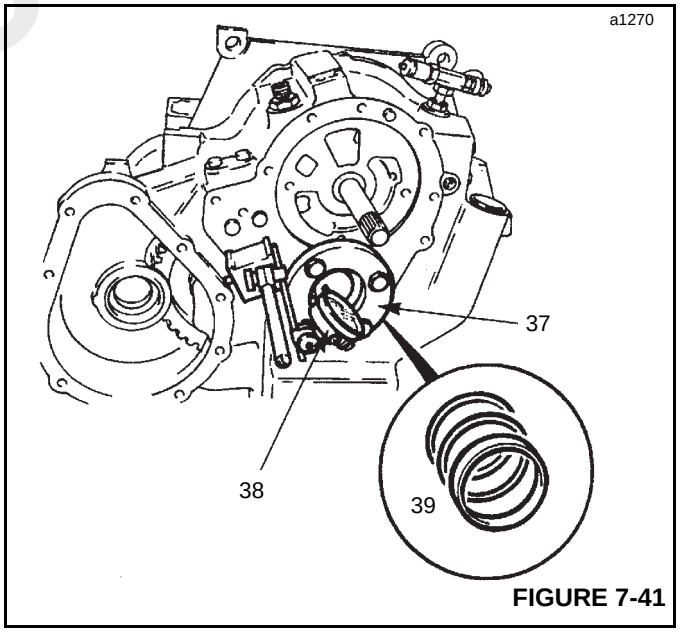

FIGURE 7-41

40. Place new pump sealing ring (40, Figure 7-42) in position. Make sure that the charge pump drain hole is clear before installing a new oil seal to the pump housing.

41. Install pump, taking care to align mounting holes. Apply Loctite 243 to the mounting bolts (41), and using new sealing washers, tighten to a torque of 20 to 27 Nm (18 to 20 lb-ft).

Reference Only

Published 2/23/2016, Control # 592-00

42. Check that the mainshaft end bearing is adequately lubricated with grease. Prior to installing the flywheel housing, apply Loctite 574 to the flywheel housing face. Apply Loctite 243 to the bolts (42) and tighten to a torque of 56 Nm (42 lb-ft).

NOTE: On gearboxes without locating dowels in the flywheel housing, the transmission pump provides the location for the flywheel housing. When the housing is removed, the pump must be installed before the housing. When gearboxes are installed with dowels, ensure correct alignment with the holes in the casing.

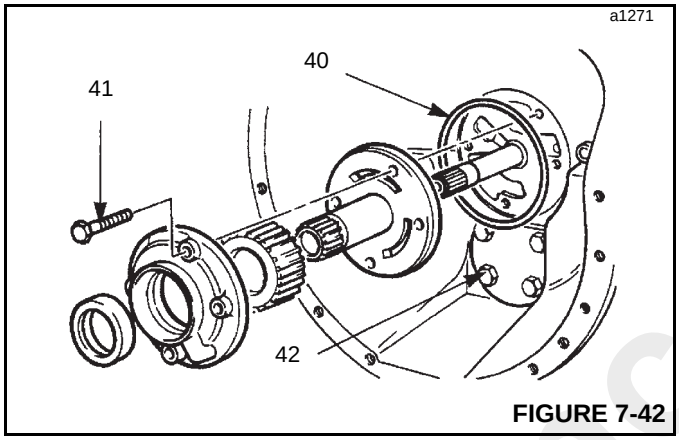

FIGURE 7-42

43. Install the torque converter pressure relief valve ball and spring (43, Figure 7-43). Ensure that the large diameter of the spring is located securely over the shaft on the plug. Use a new sealing washer, apply Loctite 243 to the plug and then tighten.

44. Assemble pressure maintaining valve spool with NEW spring and plug (44) into adapter block. Install and tighten the plug. **Do not overtighten** as damage to the aluminum housing could occur. See parts manual for correct parts.

45. Using a new gasket, install the pressure maintenance valve (45) onto the casing. Use 12.9 grade capscrews (encapsulated), and tighten to a torque of 10 Nm (7.4 lb-ft). When the capscrews are not encapsulated, apply Loctite 243 to the threads.

NOTE: *To avoid contamination of sealant printed on gasket face, keep the gasket in protective wrapper until needed.*

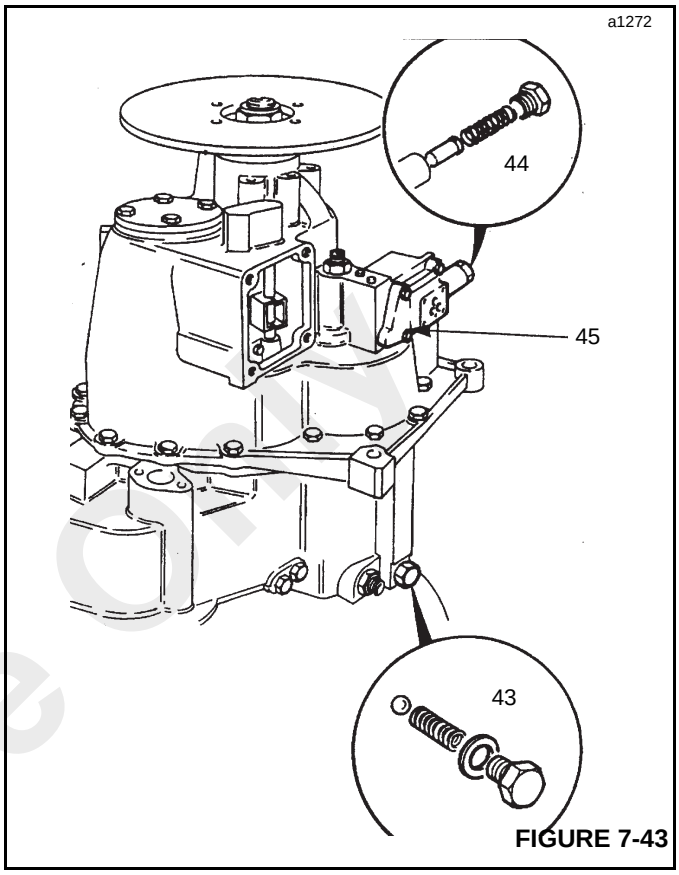

FIGURE 7-43

46. Install new O-rings around ports on mating face of solenoid valve (46, Figure 7-44). Mount the solenoid valve onto the pressure maintenance valve, ensuring that port “P” aligns with metering orifice in the pressure maintenance valve body. Apply Loctite 243 to capscrews and tighten to a torque of 5 Nm (3.7 lb-ft).

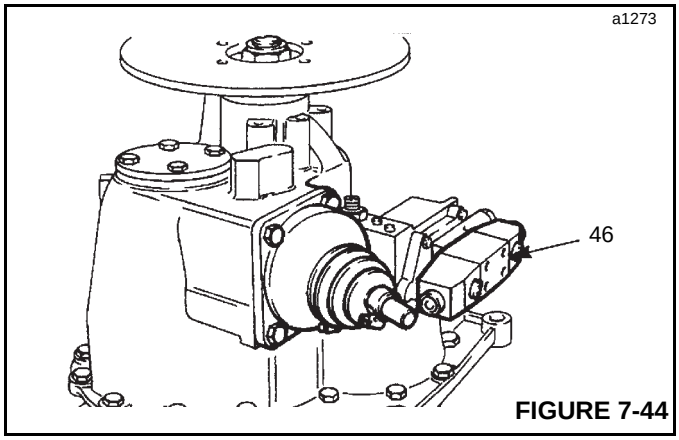

FIGURE 7-44

47. Assemble gear lever components (Figure 7-45), applying grease liberally to the working surfaces.

Reference Only

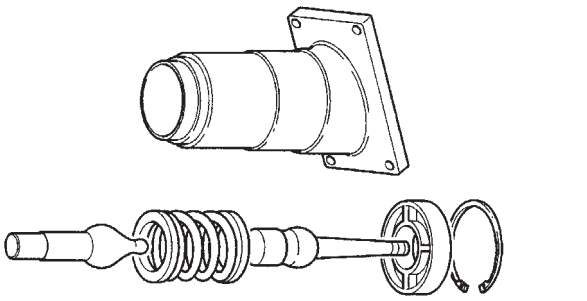

FIGURE 7-45

48. Install the components into the gear lever housing. Secure in position with retaining ring (48, Figure 7-46).

NOTE: If necessary, use a bench press to compress the spring to allow installation of the retaining ring.

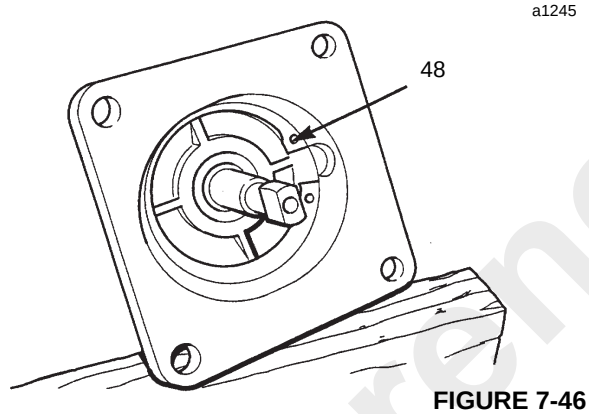

FIGURE 7-46

49. Using a new gasket, install the gear turret (49, Figure 7-47) to the transmission. Apply Loctite 243 to mounting bolts and tighten to a torque of 56 Nm (42 lb-ft). Check for gear selection.

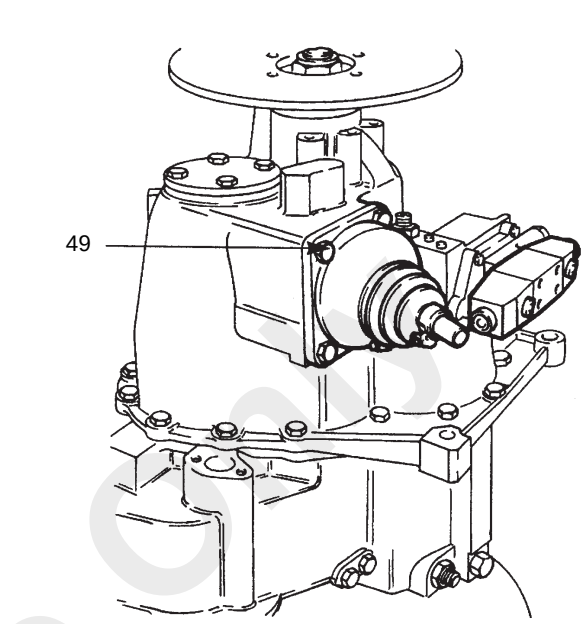

FIGURE 7-47

50. Using a new gasket, install suction strainer (50, Figure 7-48). Apply Loctite 243 to bolts and tighten to a torque of 10 Nm (7 lb-ft).

51. Install a new filter (51).

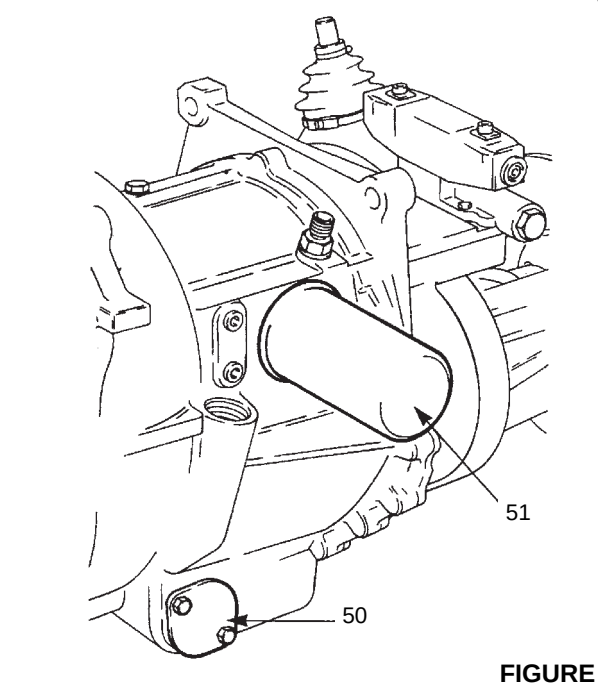

FIGURE 7-48

Reference Only

Published 2/23/2016, Control # 592-00

52. Install dipstick/oil tube (not shown) as follows:

a. Install the nut to the tube followed by the seal.

b. Insert the tube fully down bore in casing. Engage the nut and tighten down loosely onto the seal.

c. Fully tighten the nut after the tube as been correctly aligned.

Reverser Unit Repair

Disassembly

1. Carefully, remove piston ring seals (1, Figure 7-49).

NOTE: If the piston ring seals are excessively worn, then check for burrs or damage on the shaft grooves. If necessary, remove burrs with a fine grade abrasive paper and oil.

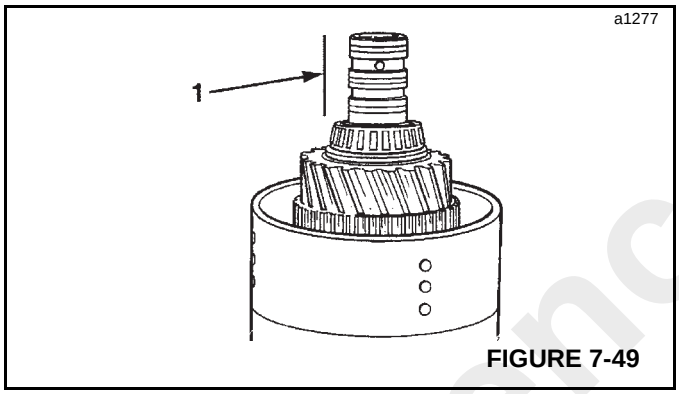

FIGURE 7-49

2. Loosen the clutch end bearing by tapping the assembly on a piece of wood as shown in Figure 7-50. Remove the bearing using a suitable puller.

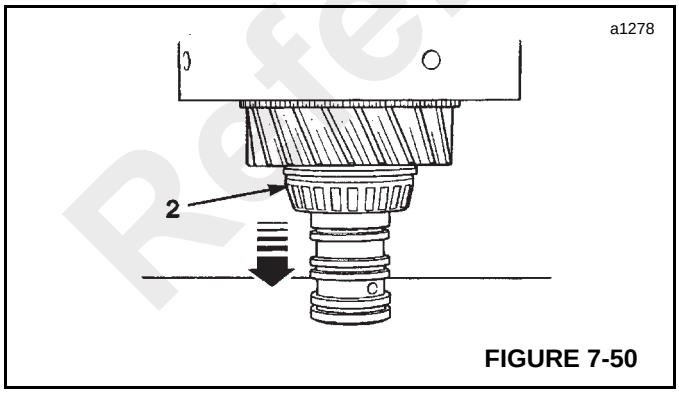

FIGURE 7-50

3. Remove bearing (3, Figure 7-51) using a suitable puller. Remove thrust washer and plastic type washer.

NOTE: Earlier assemblies have one thick thrust washer, one thrust bearing and one thin washer. Discard these items.

4. Remove the gear and splined hub assembly (4, Figure 7-51) with the taper roller bearing.

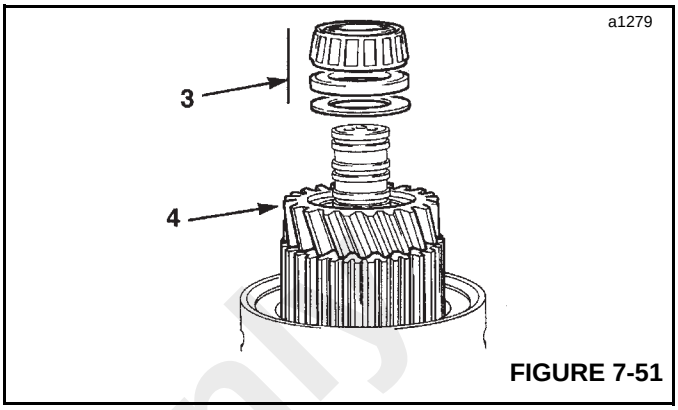

FIGURE 7-51

5. Remove plastic type washer and thrust washer (5, Figure 7-52).

NOTE: Earlier assemblies have one thick thrust washer, one thrust bearing and one thin washer. Discard these items.

6. Remove the clutch friction/counter plates retaining ring (6).

7. Remove pressure (end) plate (7).

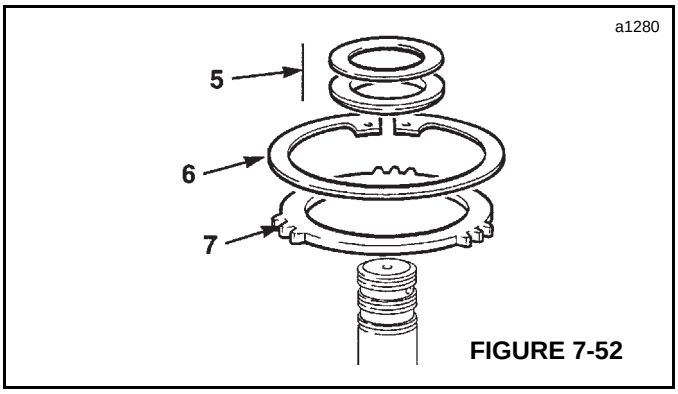

FIGURE 7-52

8. Remove the clutch friction/counter plates (8 and 9, Figure 7-53). Keep them together as sets. DO NOT mix the plates with those of other clutches.

9. Remove last counter plate (9).

10. Remove disc spring assembly (10).

NOTE: In earlier clutch housings **A**, pressure plates are installed (not shown). Later clutch housings **B** are installed with counter plates as shown.

Earlier and later clutch housings are fully interchangeable. When a later clutch housing is used to replace an earlier housing, the component assembly must be of the later type.

Reference Only

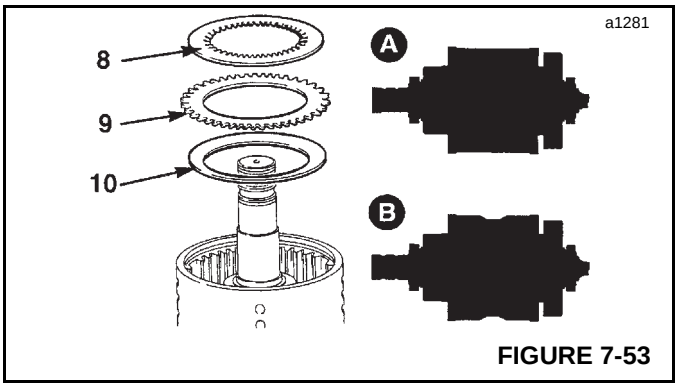

FIGURE 7-53

11. Position the clutch in a press to compress the piston spring, then remove the retaining ring (11, Figure 7-54).

12. Lift off spring retaining plate (12).

13. Remove spring (13).

NOTE: Earlier assemblies have an oil baffle plate (13A) installed.

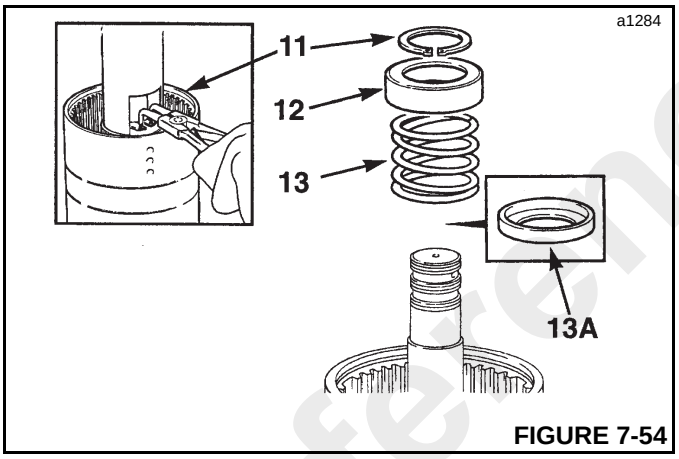

FIGURE 7-54

14. Knock the clutch shaft on a piece of wood (or aluminum) to remove the piston (see Figure 7-55).

NOTE: If the piston does not loosen when the clutch shaft is knocked on a piece of wood, then hand pump air down the shaft of the inlet hole.

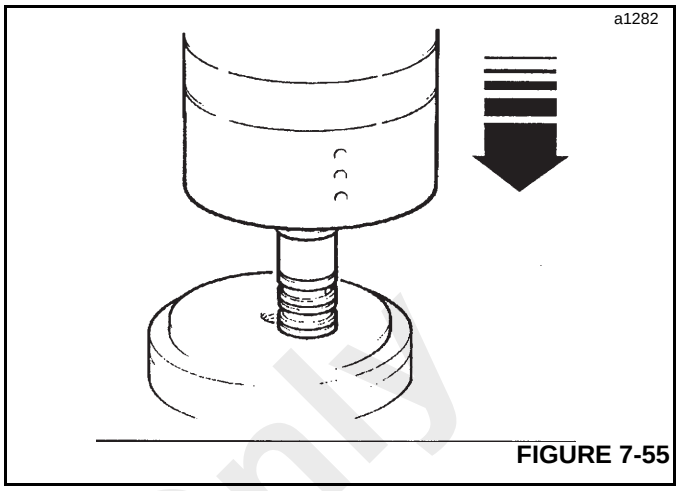

FIGURE 7-55

15. Remove and discard piston and shaft O-rings (15, Figure 7-56). Make sure the piston liner is secure. The liner must be tight on the piston.

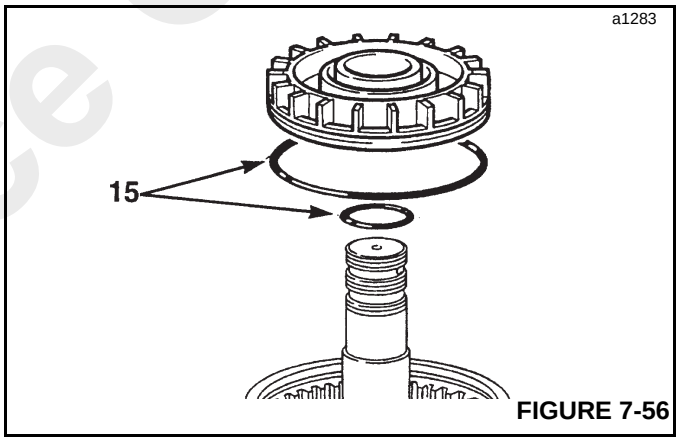

FIGURE 7-56

16. Repeat steps 2 through 15 to disassemble the opposite clutch.

Assembly

1. Install new O-rings (1, Figure 7-57) onto piston and shaft. Lubricate with oil and then press piston fully into bore of clutch housing.

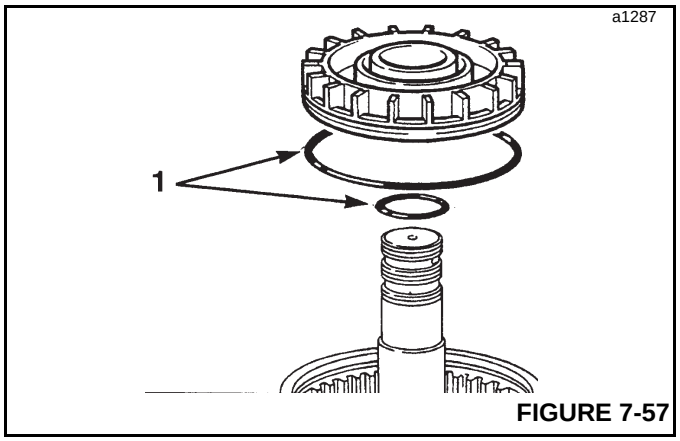

FIGURE 7-57

Reference Only

Published 2/23/2016, Control # 592-00

2. Install piston spring (2, Figure 7-58). Make sure the spring seats in the piston.

NOTE: Earlier assemblies installed with an aluminum piston must install with oil baffle (2A). Make sure that the baffle plate seats on the piston.

3. Install spring retainer plate (3).

4. Compress the spring and secure with retaining ring (4).

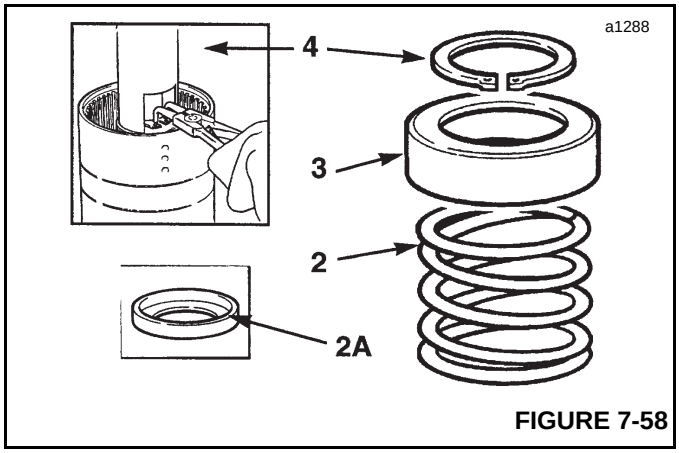

FIGURE 7-58

5. Install the disc spring assembly (5, Figure 7-59). Install the assembly so that the outer diameter curves away from the clutch piston.

NOTE: The disc spring is assembled within the liner (not shown) to protect the hub support spine.

6. First, install one counter plate (6).

7. Install one friction plate (7) followed by one counter plate (6).

8. Continue installing alternate friction and counter plates. Finish with a friction plate (7).

NOTE: In earlier clutch housings **A**, pressure plates are installed (not shown). Later clutch housings **B** are installed with counter plates (6) as shown.

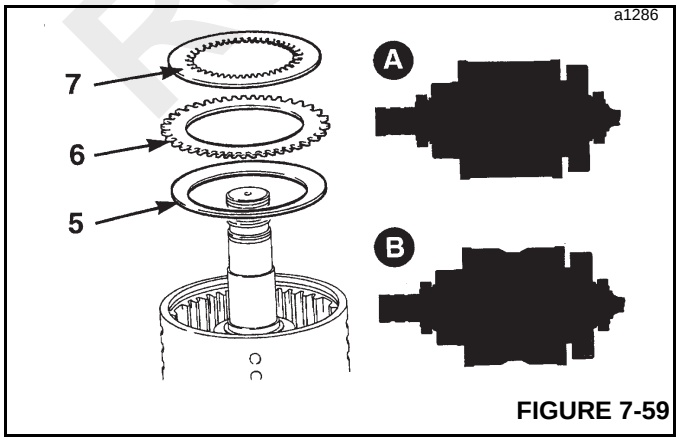

FIGURE 7-59

9. On earlier clutch housing, install the pressure (end) plate (9, Figure 7-60). Make sure that the prongs on the pressure plates DO NOT locate in the larger grooves in the hubs (the ones with drilled holes).

NOTE: In later clutch assemblies, pressure plates have been replaced by counter plates.

10. Install the clutch friction/counter plates retaining ring (10).

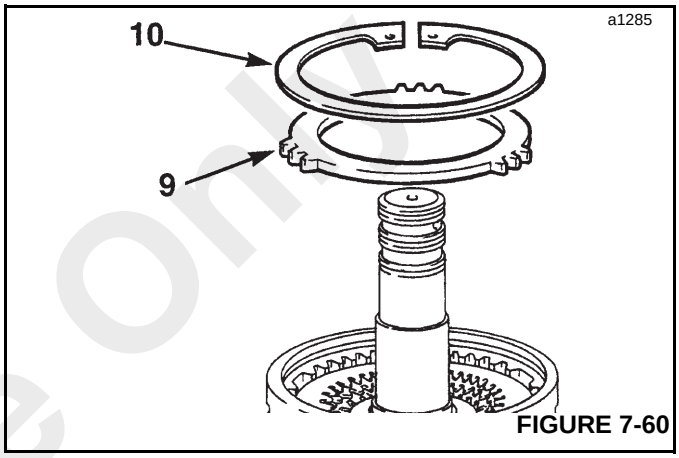

FIGURE 7-60

11. Using a dial test indicator as shown in Figure 7-61, measure the end play of the pressure (end) plate (counter plate on later assemblies), which should be 3.2 to 4.4 mm (0.126 to 0.173 in). If necessary, install a shim between the retaining ring and pressure (end) to correct end play inaccuracies.

NOTE: Later type shim has teeth on the outside of the diameter. The teeth inhibit it from spinning during operation. If the shim removed from the clutch does not have teeth, then discard it and use the new type shim.

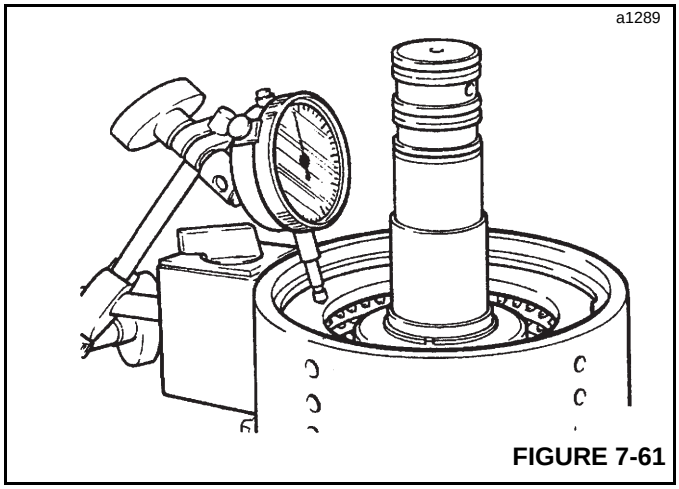

FIGURE 7-61

Reference Only

12. Install thrust washer and plastic type washer (12, Figure 7-62).

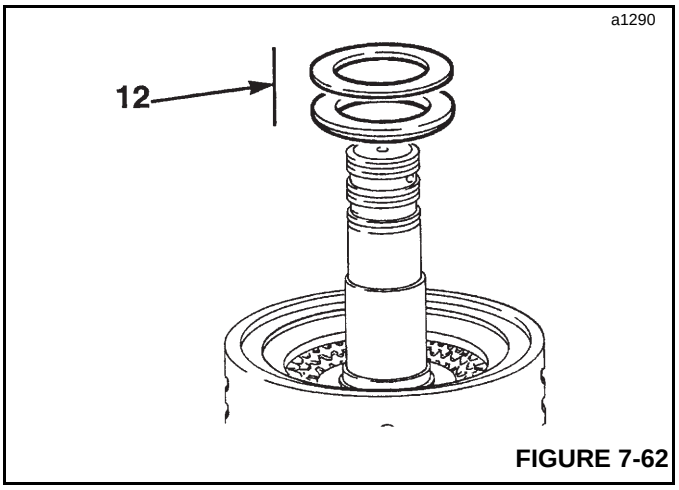

FIGURE 7-62

13. Install gear and splined hub assembly (13, Figure 7-63).

NOTE: Prior to installing the gear, align the teeth of the clutch plates using a thin rod or screw driver.

14. Install taper roller bearing (14).

15. Install plastic type washer and thrust washer (15).

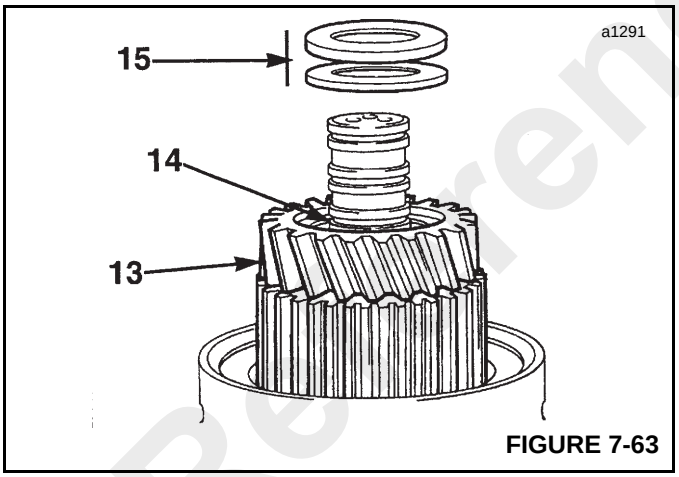

FIGURE 7-63

16. Coat the clutch end bearing (16, Figure 7-64) with grease and press the bearing onto the shaft.

17. Install piston rings.

NOTE: If the piston rings are the new polyetrafluoroethane (PTFE) type, see instructions below for installation instructions.

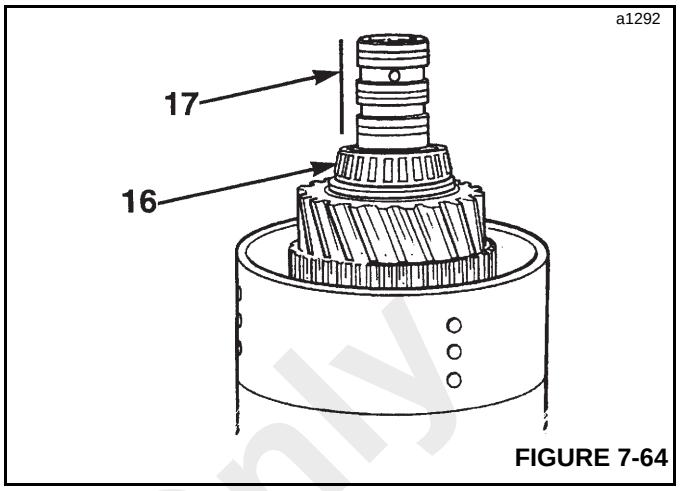

FIGURE 7-64

18. Repeat steps 1 through 16 for the opposite clutch. Make sure that the opposite clutch end taper roller bearing is packed with grease.

(PTFE) Piston Ring Seal Installation Procedure

1. Wind the PTFE piston ring around your finger, as shown in Figure 7-65, so that the seal forms a coil.

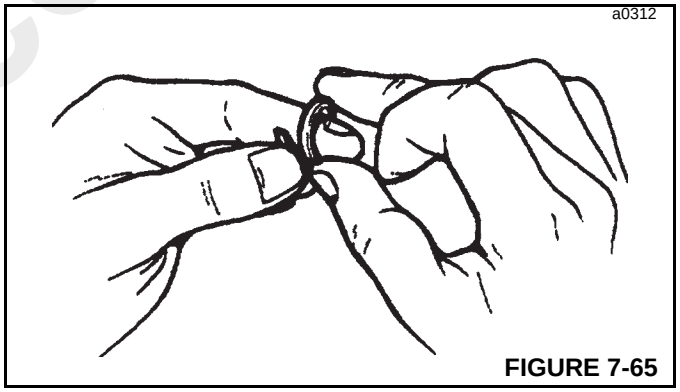

FIGURE 7-65

2. Coat the seal with grease and install the seal to the shaft (Figure 7-66).

Make sure that the seal sits below or flush with the outer diameter of the shaft. If necessary, use finger pressure as shown to make the seal flush with the shaft.

NOTE: If the seal is not set below or flush with the outer diameter of the shaft, then the seal will be cut when the shaft is installed to its mating component.

Reference Only

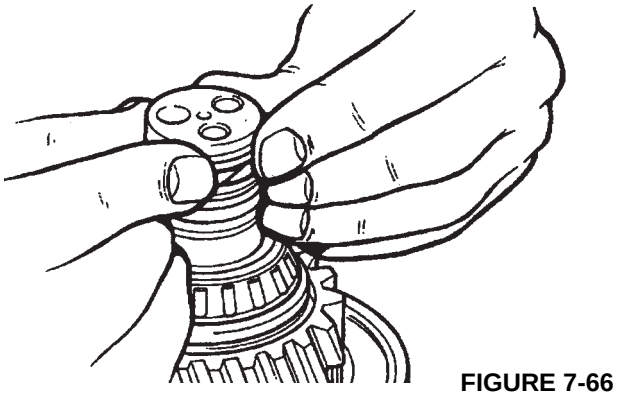

FIGURE 7-66

Solenoid Valve

Disassembly

1. Unscrew the knurled nut (2, Figure 7-67) and remove O-ring (3). Remove solenoid (4) and O-ring (5).
2. Hold the solenoid valve body (6) in a vice. Using the wrench flats (A), remove spindle (7) and O-ring (8).
3. Pull out actuating pin (9) spring (10), spring retainer (11) and spool (12).
4. Disassemble the other solenoid using steps 1 through 3.

Inspection

Inspect the spool and spool bore for signs of wear, nicks, scratches, etc.

Assembly

1. Assemble in reverse order of disassembly.
2. Replace all O-rings.
3. Apply a small amount of Loctite 243 to the threads in the knurled nut (2, Figure 7-67) before installing. Tighten to a torque of 10 to 15 Nm (8 to 10 lb-ft).
4. Lightly lubricate all parts with clean transmission fluid before assembling.
5. Check that electrical leads are secure and connectors are intact.

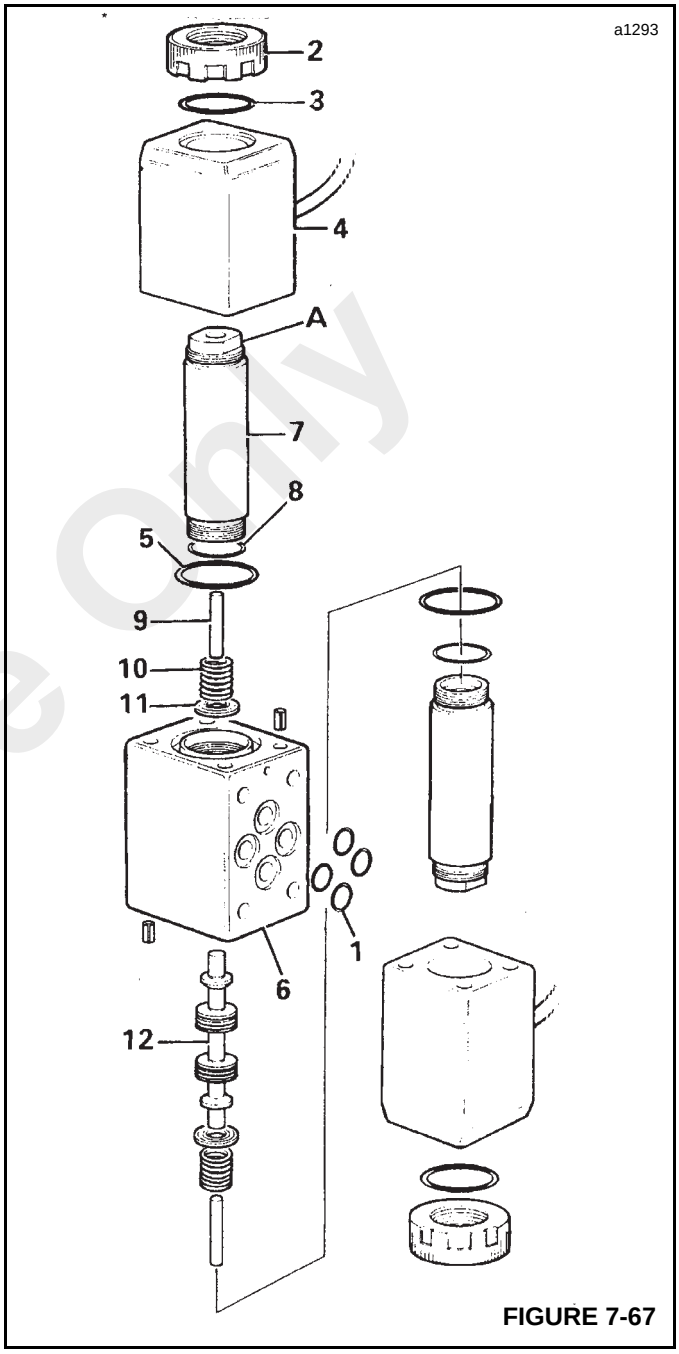

FIGURE 7-67

Reference Only

Reference Only

THIS PAGE BLANK

Published 2/23/2016, Control # 592-00

SECTION 8
AXLES/DRIVE SHAFTS/WHEELS AND TIRES

SECTION CONTENTS

Description 8-1
Front Axle 8-1
Rear Axle 8-2
Technical Data 8-2
Front Steering Drive Axle 8-2
Rear Steering Non-Drive Axle. 8-3
Toe-In/Steering Angle Alignment 8-4
Front Steering Axle 8-4
Rear Steering Axle 8-6
Front Drive Axle Problems and Diagnosis 8-7
Front Drive Axle Repair 8-8
Removal 8-8
Disassembly 8-8
Assembly 8-19
Toe-In Adjustment 8-31
Steer Angle Adjustment 8-31
Installation 8-31
Rear Steering Axle Repair 8-32
Removal. 8-32
Inspection 8-32
Assembly 8-34
Installation 8-35
Drive Shafts 8-35
Checking for Bearing Wear 8-35
Removal. 8-35
Disassembly 8-35
Inspection 8-36
Assembly 8-36
Installation 8-37
Lubrication Procedure 8-37
Wheels And Tires 8-37
Tire Inflation 8-38
Wheel Nut Torque 8-38

DESCRIPTION

Front Axle

The front axle (Figure 8-1) is a rigid-mounted steering drive axle, attached to the frame of the crane by eight bolts and nuts. The axle includes two axle beam trumpets, two reduction drive hubs, a three-piece spiral bevel input, a steering cylinder linkage assembly and inboard brakes.

Reference Only

Front Steering Drive Axle

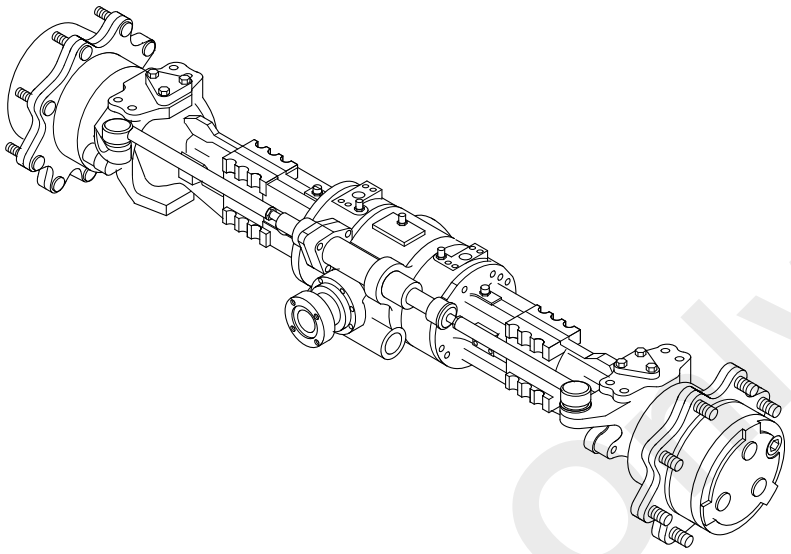

a0723

FIGURE 8-1

Rear Axle

The rear axle (Figure 8-2) is rigid-mounted steering non-drive axle, attached to the crane frame with eight bolts and self-locking nuts. The axle includes a steering beam, two steering knuckles, two wheel hubs, and a steering linkage including two steering cylinders.

Rear Steering Non-Drive Axle

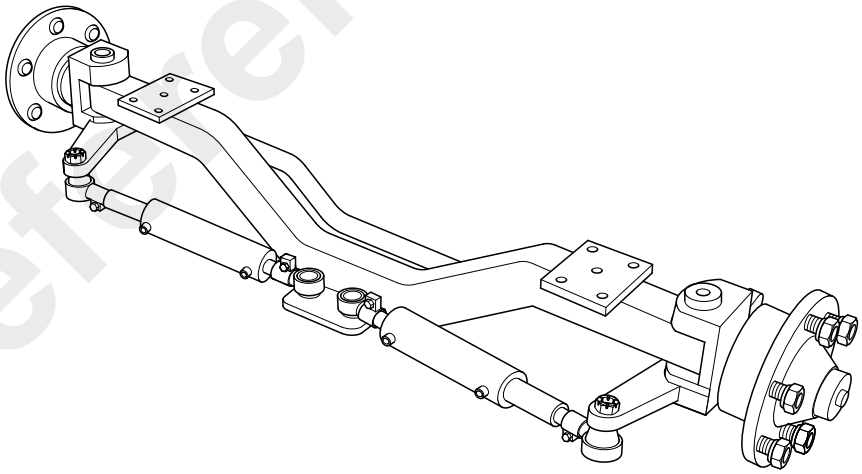

a0855

FIGURE 8-2

Reference Only

TECHNICAL DATA

Front Steering Drive Axle

Type	3-piece spiral bevel input with epicyclic hub reduction and inboard braking
Installation	Rigid pad mount
Number of steering cylinders	One
Weight (dry)	355 kg (783 lb)
Type of brakes	Wet disc brake

Number of brake discs (each side)	One
Number of brake counterdiscs (each side)	Two
Nominal brake disc thickness	4.83 mm (0.19 in)
Nominal brake counterdisc thickness	5.0 mm (0.197 in) 10.8 mm (0.425 in)
Maximum brake disc wear	0.15 mm (0.006 in)
Nominal brake piston stroke	1 mm (0.039 in)
Oil displacement for brake actuation	9 cc (0.3 oz)
Oil specification for brake actuation	Mobil Fluid 424 (ISO 46/68)
Pinion flange type	DIN 1410
Toe-in	0°
Steering Angle	35°
Bevel gear reduction	1.55:1
Hub reduction	6.00:1
Total Reduction	10.66:1
Bevel gear set backlash	0.15 - 0.20 mm (0.006 - 0.008 in)
Pinion bearings (measured D=34.8 mm without seal)	P = 9.2 divided by 13.8 daN
Total pinion ring gear bearing pull (measured D = 34.8 mm without seal)	T = (P+3.85) divided by (P+5.8) daN

Rear Steering Non-Drive Axle

Installation	Rigid pad mount
Weight	185 kg (408 lb)
Number of steering cylinders	Two
Brakes	None
Toe-In	0°
Toe-Out	0°

Reference Only

TOE-IN/STEERING ANGLE ALIGNMENT

Front Steering Axle

Toe-In Check and Adjustment

WARNING

A raised and badly supported machine can fall on you causing severe injury or death. Position the machine on a firm, level surface before raising one end. Ensure that the other end is securely chocked. Do not rely solely on the machine's hydraulics or outriggers to support the machine when working under it.

Disconnect the battery cables while you're under the machine to prevent the engine from being started.

Checking with Axle on Machine

1. Place the wheels in the straight forward position.
2. Take measurements from the tire to the crane frame at the four positions A, B, C and D indicated in Figure 8-3. All four dimensions must be equal.

Wheel Alignment, Axle Installed on Machine

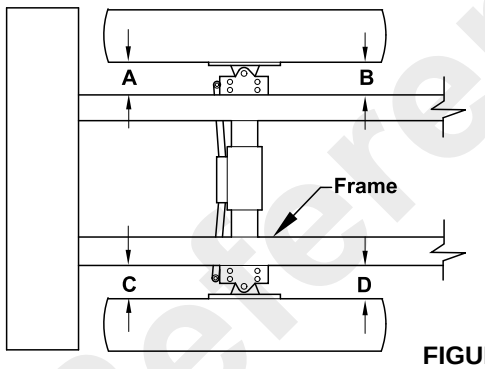

a0845 **FIGURE 8-3**

3. If tow-in is incorrect, loosen the jam nuts (Figure 8-4) securing the guide rods to the cylinder rod.

Loosening/Tightening Jam Nuts

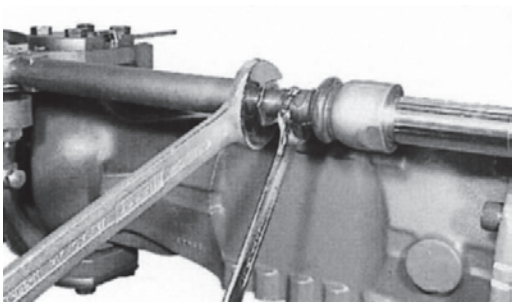

p0663 **FIGURE 8-4**

4. Using two wrenches on the guide rods (Figure 8-5), screw in or out the two tie rods equally until both dimensions are equal.

Adjusting Dimension

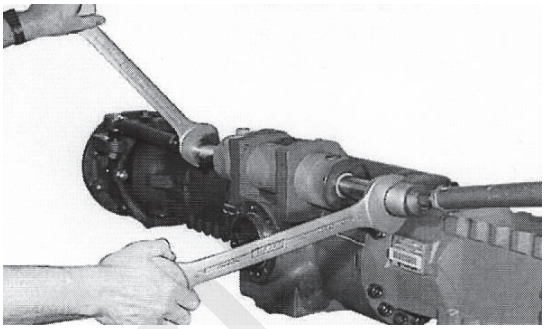

p0662 **FIGURE 8-5**

5. After the adjustment is correct, tighten the jam nuts (Figure 8-4) against the guide rods.

Checking with Axle Removed from Machine

1. Place two equal (one-meter) long linear bars on the wheel sides of the hubs and lock them in place with two nuts on the wheel stud bolt (Figure 8-6).

Attaching Linear Rods to Wheel Hub

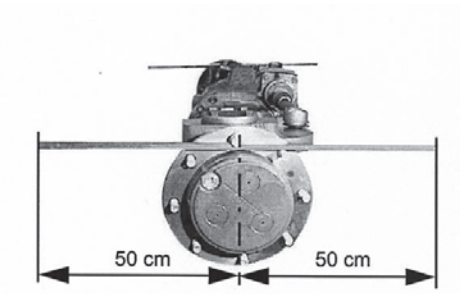

p0660 **FIGURE 8-6**

2. Measure the distance in millimeters between the bar ends (both ends) with a tape line (Figure 8-7).

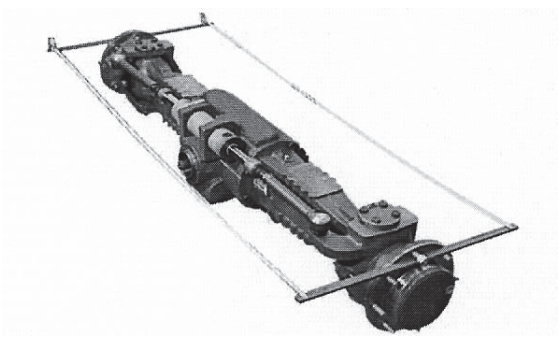

p0661 **FIGURE 8-7**

NOTE: *Record the minimum value, swinging the measurement point.*

Reference Only

3. Check that there is no difference in the measurements (Figure 8-8). Both measurements must be the same.

Checking Measurements

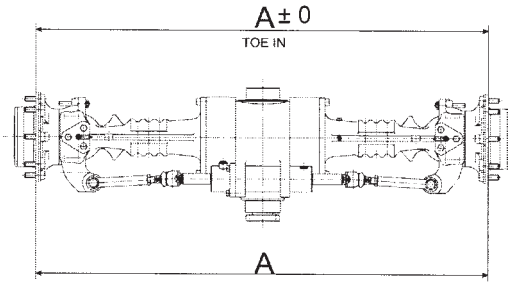

a0722 **FIGURE 8-8**

4. If tow-in is incorrect, loosen the jam nuts (Figure 8-9) securing the guide rods to the cylinder rod.

Loosen/Tighten Jam Nuts

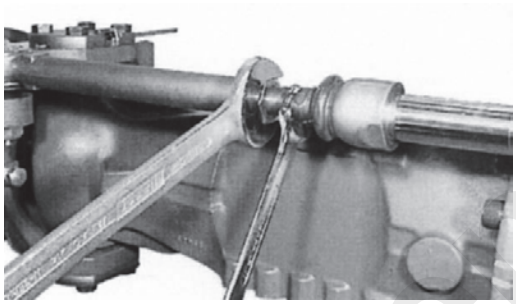

p0663 **FIGURE 8-9**

5. Using two wrenches on the guide rods (Figure 8-10), screw in or out the two tie rods equally until both dimensions are equal.

Adjusting Dimension

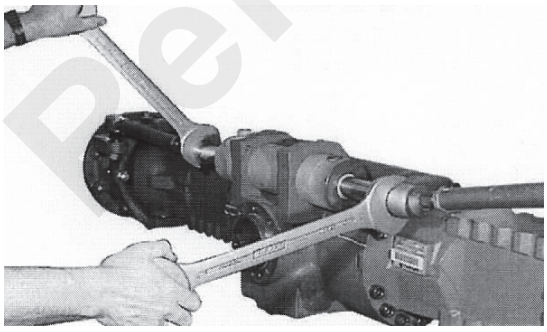

p0662 **FIGURE 8-10**

6. After the adjustment is correct, tighten the jam nuts (Figure 8-9) against the guide rods.

Steering Angle Check and Adjustment

NOTE: Some of the following figures do not show the exact axle used on your crane, but the procedure is the same.

1. Use the same bars assembled for the toe-in adjustment.
2. Steer the axle to maximum steering position.
3. Hold a long bar against the steering cylinder mounting brackets on the axle (Figure 8-11), so that the two bars form an acute angle.

Bar Held Against Axle

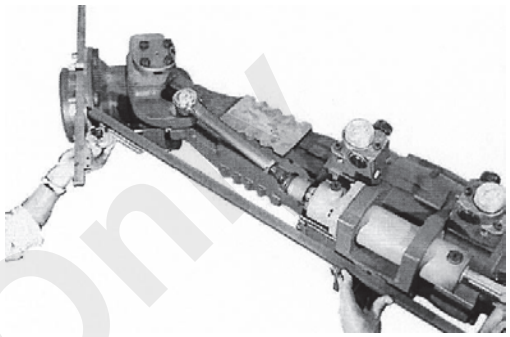

p0664 **FIGURE 8-11**

4. Adjust a protractor to 35° and position it on the long bar (Figure 8-12).

Checking Steering Angle

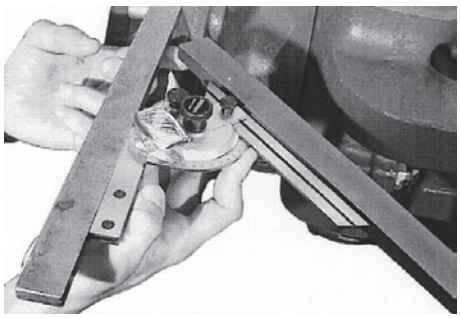

p0665 **FIGURE 8-12**

5. Check the angle between the two bars. If not 35° adjust the angle.
6. Loosen the lock nut on the steering angle screw (Figure 8-13).

Adjusting Steering Angle

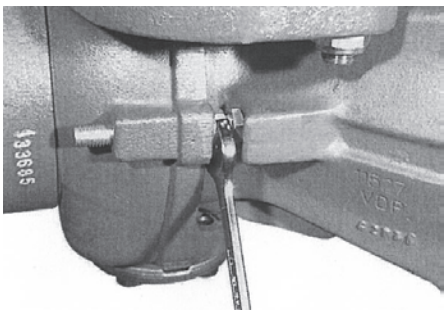

p0804 **FIGURE 8-13**

Reference Only

7. Screw the adjusting screw in or out until the correct angle is obtained.
8. When the angle is adjusted correctly, steer completely in the opposite direction and repeat steps 3 through 7.

Rear Steering Axle

WARNING

A raised and badly supported machine can fall on you causing severe injury or death. Position the machine on a firm, level surface before raising one end. Ensure that the other end is securely chocked. Do not rely solely on the machine's hydraulics or outriggers to support the machine when working under it.

Disconnect the battery cables while you're under the machine to prevent the engine from being started.

Checking / Adjusting Toe-In

Checking with Axle on Machine

1. Place the wheels in the straight forward position.
2. Take measurements from the tire to the crane frame at the four positions A, B, C and D indicated in Figure 8-3. All four dimensions must be equal.

NOTE: *If more than 6 mm (1/4 in) of adjustment is necessary, make the adjustment on both ends of the tie rod. Make sure both clamps on the tie rod are tight when finished.*

3. On one end of tie rod loosen the ball joint clamp (Figure 8-14).
4. Remove the cotter pin from the castle nut. Remove the castle nut.

Steering Ball Joint Parts

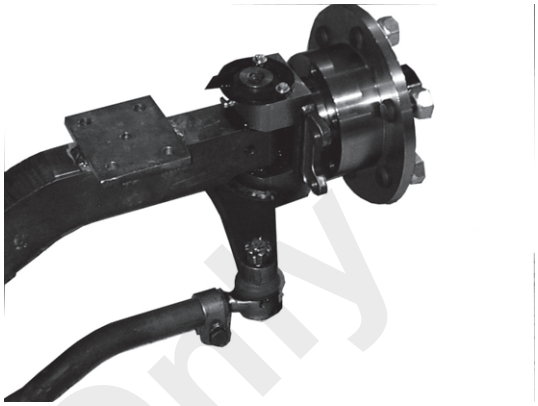

p0690 **FIGURE 8-14**

5. Remove the ball joint from the steering knuckle.
6. Either screw the ball joint in or out to obtain equal dimensions.
7. When the correct dimensions are obtained, tighten the castle nut and install the cotter pin.
8. Tighten the ball joint clamp.

Checking with Axle Removed from Machine

1. Align the wheel hubs in straight forward position.
2. Measure the distance between the hubs on both sides of the axle (Figure 8-15).
3. Both dimensions must be the same.
4. If incorrect, use steps 3 through 8 under "Checking With Axle On Machine" to adjust the measurements.

Measuring Distance Between Hubs

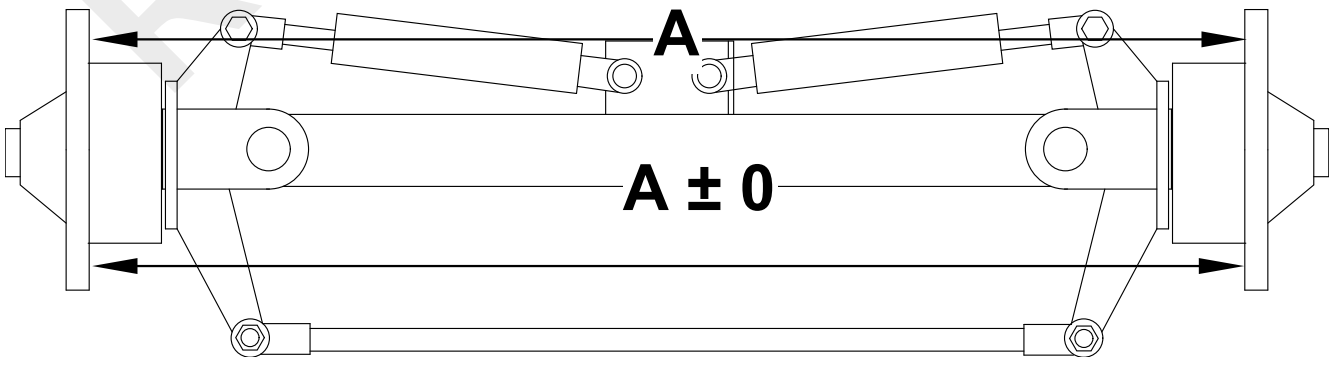

a0872 **FIGURE 8-15**

Reference Only

FRONT DRIVE AXLE PROBLEMS AND DIAGNOSIS

PROBLEM	CAUSE	RECOMMENDED REPAIR
Noise while driving	**1.** Excessive play between pinion and bevel gear	**1.** Adjust
	2. Worn pinion and bevel gear	**2.** Replace
	3. Worn pinion bearings	**3.** Replace
	4. Pinion bearing loose	**4.** Adjust
	5. Excessive axle pinion play	**5.** Adjust preload only
	6. Worn differential bearings	**6.** Replace
	7. Differential bearings loose	**7.** Adjust preload
	8. Bevel gear out of roundness	**8.** Replace
	9. Low lubricant level	**9.** Add lubricant
	10. Poor or wrong lubricant	**10.** Replace
	11. Bent halfshaft	**11.** Replace
Noise while moving in neutral	**1.** Noises coming from axle are usually heard when crane moves in neutral gear, but are not loud	**1.** Replace or adjust (see above)
	2. Incorrect play between pinion and bevel gear (sound heard while decelerating disappears while increasing speed)	**2.** Adjust
	3. Pinion or input flange worn out	**3.** Replace
Intermittent noise	**1.** Bevel gear damaged	**1.** Replace bevel gear set
	2. Differential housing bolts loose	**2.** Tighten to torque. See page 8-21
Constant noise	**1.** Bevel gear or pinion damaged	**1.** Replace bevel gear set
	2. Worn bearings	**2.** Replace
	3. Pinion spline worn	**3.** Replace
	4. Bent halfshaft	**4.** Replace
Noise while steering	**1.** Worn differential gears	**1.** Replace
	2. Worn differential housing or spider	**2.** Replace
	3. Differential thrust washers worn	**3.** Replace
	4. Half shaft spline worn	**4.** Replace

Reference Only

FRONT DRIVE AXLE REPAIR

WARNING

A raised and badly supported machine can fall on you causing severe injury or death. Position the machine on a firm, level surface before raising one end. Ensure that the other end is securely chocked. Do not rely solely on the machine's hydraulics or outriggers to support the machine when working under it.

Disconnect the battery cables while you're under the machine to prevent the engine from being started.

Removal

1. Lower the outriggers to raise the front axle. Place blocks under the front of the frame. Remove the front wheels and tires.
2. Disconnect the drive shaft from the axle flange.
3. Disconnect the brake lines from the axle. Cap the lines and plug the brake ports.
4. Disconnect the hydraulic hoses from the steering cylinder. Plug and cap the hoses and ports.
5. Place a wheel jack under the axle beam. Remove the axle mounting bolts and nuts. Carefully lower the axle. Remove the axle from under the machine.

Disassembly

Special Tools

NOTE: SPECIAL TOOLS are required to disassemble and assemble the axle. Do not attempt to repair the axle unless the tools listed, or equivalent, are present at the time of repair.

Wench for differential housing lock nut a0677

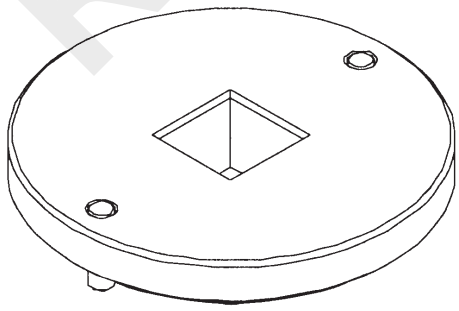

FIGURE 8-16

Interchangeable handle

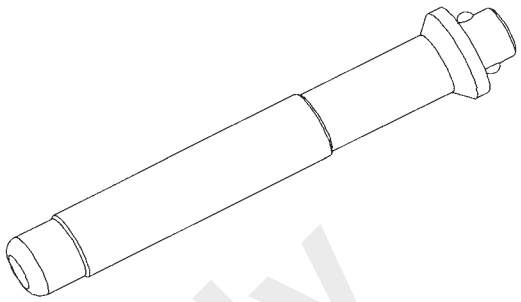

a0676 **FIGURE 8-17**

Driver for oil seal

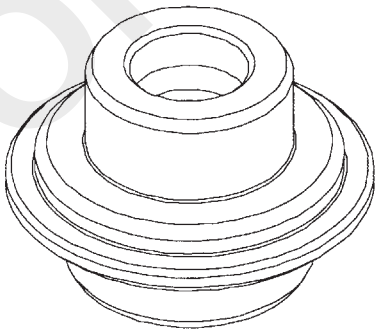

a0675 **FIGURE 8-18**

Driver for swivel bushing

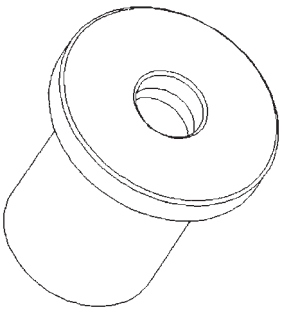

a0681 **FIGURE 8-19**

Driver for wheel hub oil seal a0680

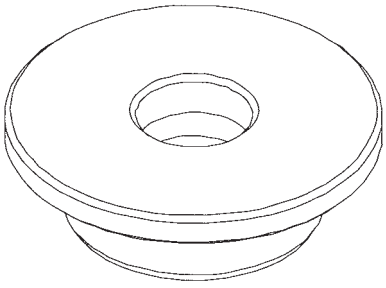

FIGURE 8-20

Reference Only

Wrench for pinion lock nut a0679

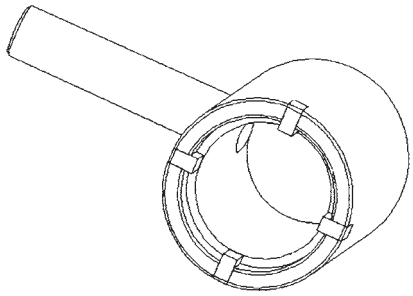

FIGURE 8-21

Pinion/crown wheel measurement bushing

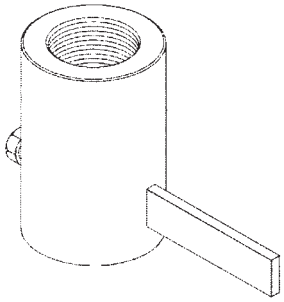

a0678 FIGURE 8-22

Driver for piston

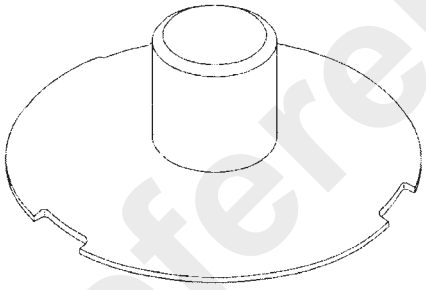

a0685 FIGURE 8-23

Driver for differential bearing cone

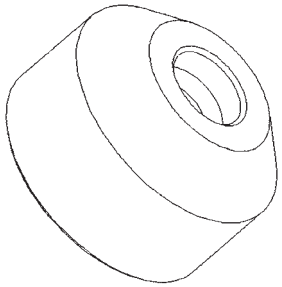

a0684 FIGURE 8-24

Driver for pinion bearing cone a0683

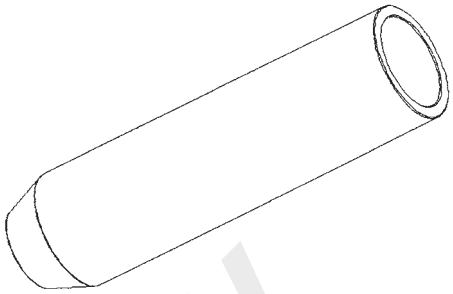

FIGURE 8-25

Pinion shaft lock wrench

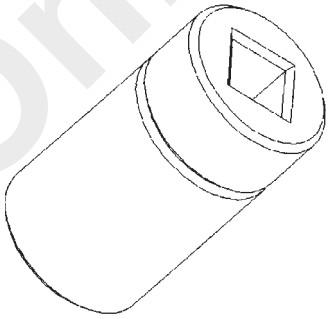

a0682 FIGURE 8-26

Driver for Bearing

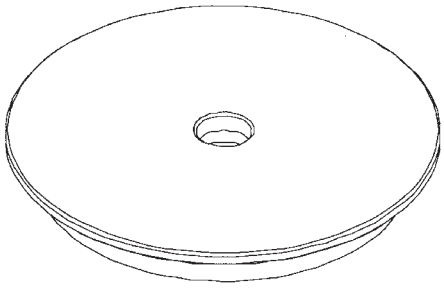

a0689 FIGURE 8-27

False Pinion

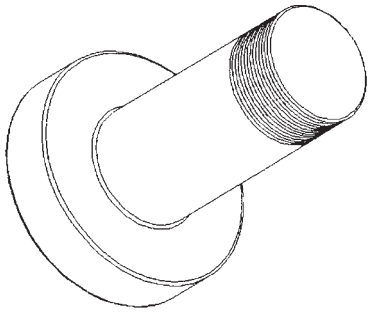

a0688 FIGURE 8-28

Reference Only

8

Driver for bushing

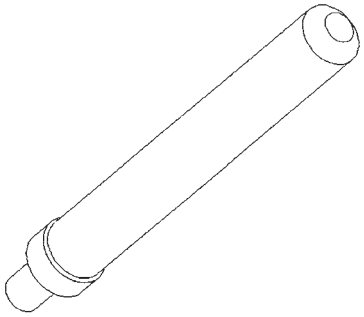

a0687 **FIGURE 8-29**

Driver for pinion oil seal

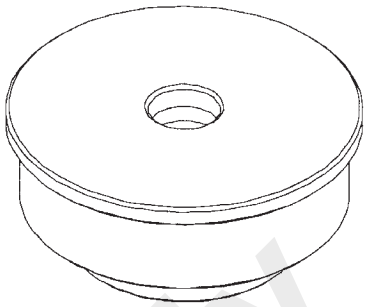

a0692 **FIGURE 8-32**

Driver for bushing

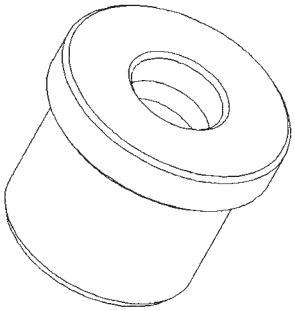

a0686 **FIGURE 8-30**

Driver for king pin bushing

Driver - king spherical joint

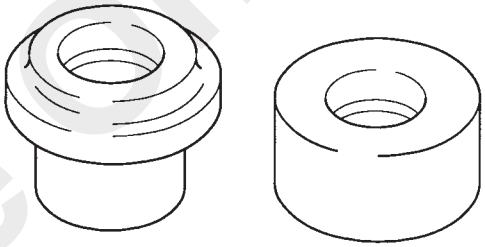

a0691 **FIGURE 8-33**

False differential box for distance measure with false pinion

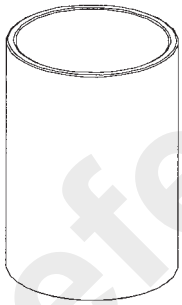

a0693 **FIGURE 8-31**

Kit for bearing cup assembly in center housing

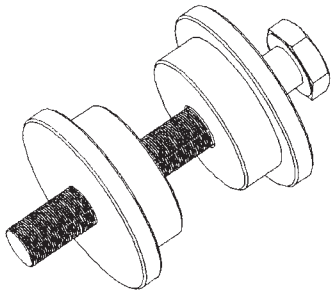

a0690 **FIGURE 8-34**

Reference Only

Flange Disassembly

1. Remove the retaining ring (Figure 8-35).
2. Remove the flange off of the input shaft.
3. Remove the O-ring and washer.

Removing the Flange

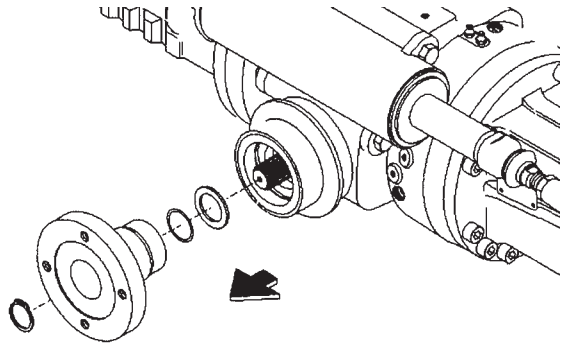

a0694 **FIGURE 8-35**

Steering Cylinder Removal

1. Loosen the hex nut (Figure 8-36) on one of cylinder tie rod ends until none of the threads on the tie rod end are exposed. Using a hammer, hit the nut to drive the tie rod end from the swivel housing. There is a possibility the nut could be damaged. An alternative is to use a tie rod end fork to remove the tie rod, less damage will occur.

Removing the Tie Rod End

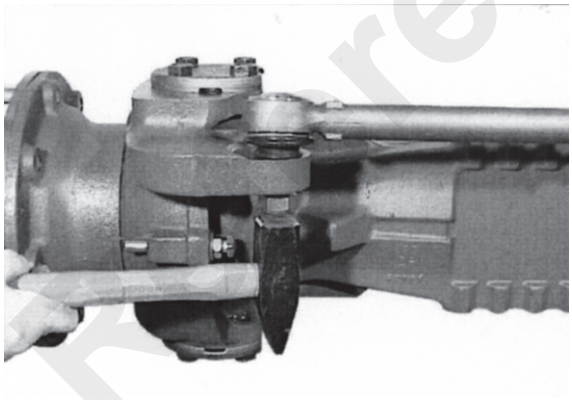

p0586 **FIGURE 8-36**

2. Mark the tie rod for identification during assembly. Remove tie rod from the cylinder rod. Be careful not to tamper with the length of the tie rod assembly. If measurement is changed, the axle will have to be checked for toe-in.
3. On the other end of the cylinder, repeat steps 1 and 2.
4. Remove three cap screws fastening the cylinder to the axle housing. Remove the cylinder. It may be necessary to drive the cylinder out of its mounting brackets using a rubber hammer.
5. Take the cylinder to a clean work area for disassembly. See *Steering System*, page 10-1.

Wheel Hub Disassembly

1. Position the hub with the drain plug to the top of hub (Figure 8-37). Loosen the drain plug slightly to remove any pressure that may have built-up in the hub.

Drain Plug

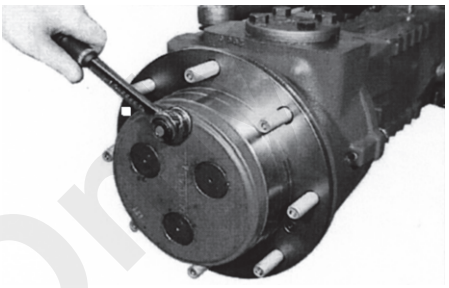

p0587 **FIGURE 8-37**

2. Position the drain plug at the bottom of the hub. Remove the plug and drain the lubricant into a suitable container.
3. Remove the two screws (Figure 8-38) fastening the planetary carrier to the wheel hub.

Removing Screws

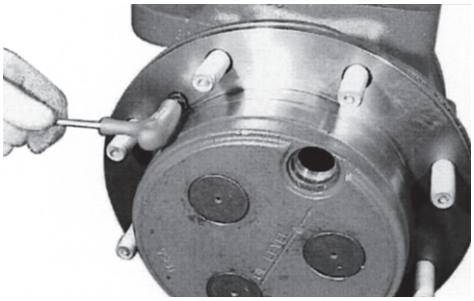

p0588 **FIGURE 8-38**

4. Remove the planetary carrier from the wheel hub. Place the planetary carrier on clean work bench and check for wear. Remove the O-ring (Figure 8-39) and check its condition.

Removing the Planetary Carrier O-ring

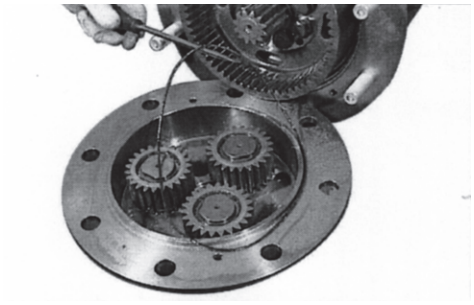

p0589 **FIGURE 8-39**

Reference Only

5. Should any of the planetary gears need replacement perform the following:

a. Remove the retaining ring (Figure 8-40) from the pin shaft.

Removing the Retaining Ring

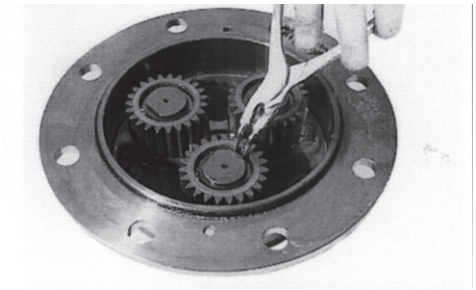

p0590 **FIGURE 8-40**

b. Remove the washer and planetary gear (Figure 8-41) from the pin shaft.

Removing the Planetary Gear

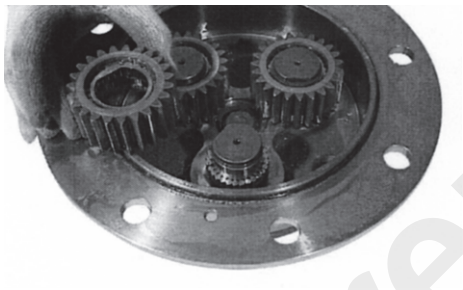

p0591 **FIGURE 8-41**

c. Remove all of the rollers (Figure 8-42) and check their condition. If any gear pin shaft is damaged, replace the entire planetary carrier assembly.



p0592 **FIGURE 8-42**

NOTE: Before disassembling the splined sleeve, it is advisable to secure it with a hoist or other supporting device to inhibit it from accidentally falling and injuring the mechanic or causing damage to the hub.

6. Remove the retaining ring (Figure 8-43) from the u-joint shaft using suitable pliers.

Removing the Retaining Ring

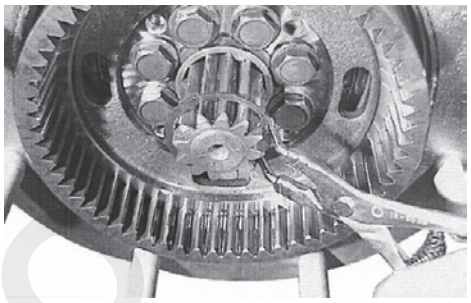

p0593 **FIGURE 8-43**

7. Remove the axle shaft washers (Figure 8-44).

Removing the Axle Shaft Washers

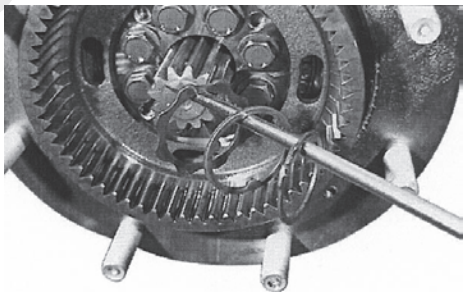

p0594 **FIGURE 8-44**

8. Unscrew and remove the nine fastening screws (Figure 8-45) from the hub-lock ring gear.

Removing Screws

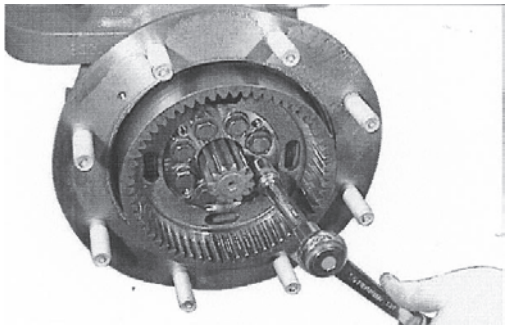

p0595 **FIGURE 8-45**

Reference Only

9. Remove the hub-lock gear from its housing by using two of the removed screws as jack screws. Screw the two screws into the threaded extraction holes (Figure 8-46).

Installing Extraction Screws

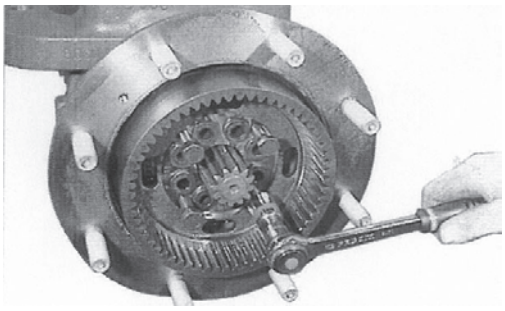

p0596 **FIGURE 8-46**

10. Remove the hub-lock ring gear together with the epicyclic ring gear (Figure 8-47).

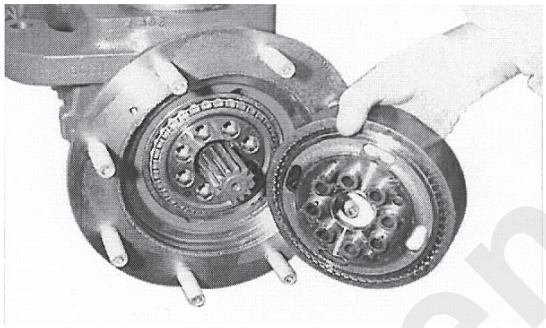

p0597 **FIGURE 8-47**

11. Remove the steel stop ring and disconnect the hub-lock ring gear from the epicyclic ring gear (Figure 8-48). Check the components for wear and damage. Only if necessary, use a hammer and SPECIAL TOOL (Figure 8-19) to remove the centering bushings from the hub-lock ring gear.

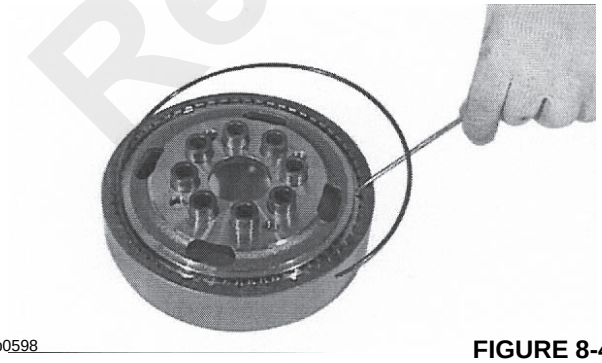

p0598 **FIGURE 8-48**

12. Using pry bars and a hammer, remove the hub (Figure 8-49). Remove the bearing cone.

Removing The Hub

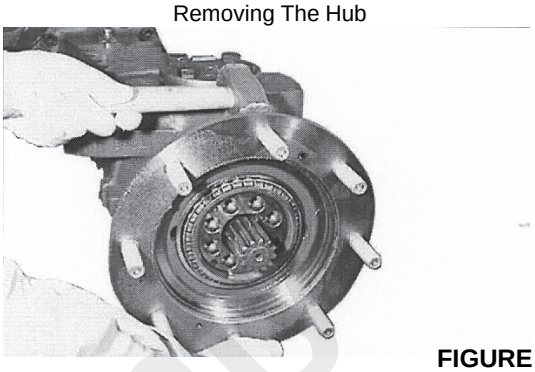

p0599 **FIGURE 8-49**

13. Place the hub on a flat surface and remove seal ring (A, Figure 8-50) with a pry bar. The seal will be damaged during removal. Remove bearing cups (B) from both sides of the hub using a driver and hammer. Remove the bearing cone from the swivel housing end, using a suitable puller.

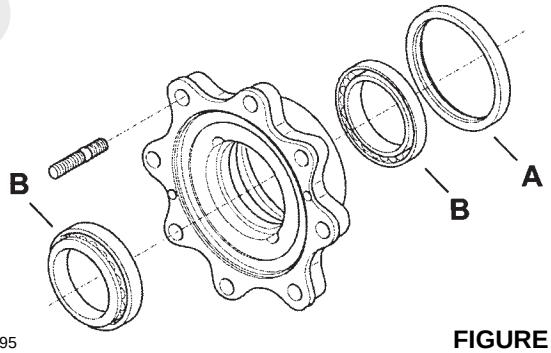

a0695 **FIGURE 8-50**

14. Unscrew and remove the screws from the upper and lower king pins (Figure 8-51).

Removing Screws from King Pin

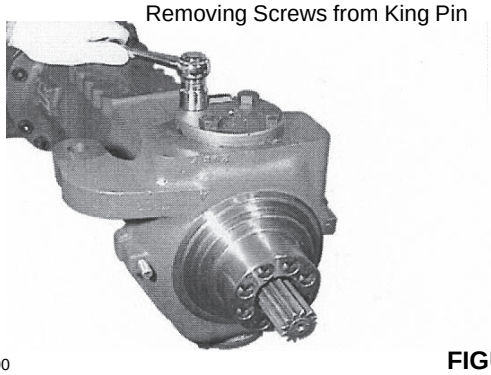

p0600 **FIGURE 8-51**

8

15. Secure the swivel housing with a rope or sling attached to a hoist before removing the king pins (Figure 8-52). Remove the king pins.

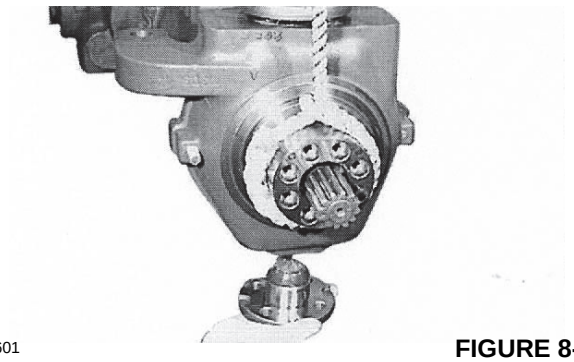

p0601 **FIGURE 8-52**

16. Remove the swivel housing from the axle beam and from the short axle shaft of the u-joint (Figure 8-53).

Removing the Swivel Housing

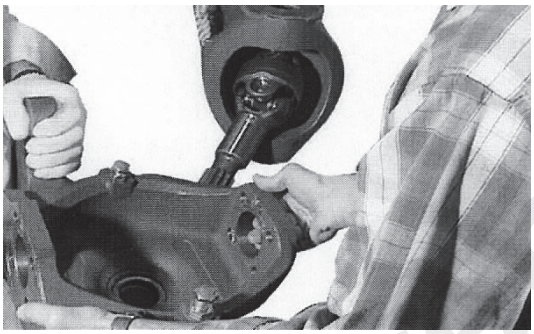

p0602 **FIGURE 8-53**

17. Remove the Belleville washers and shim from the upper and lower side of the axle beam (Figure 8-54).

Removing Belleville Washers and Shims

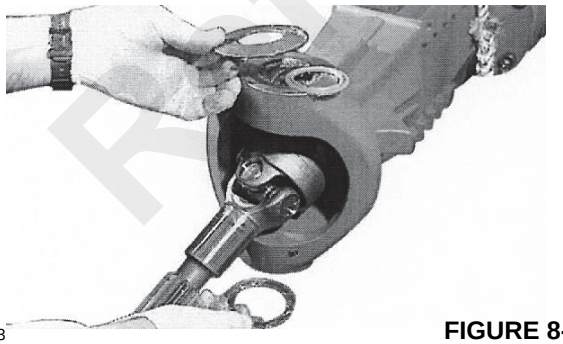

p0603 **FIGURE 8-54**

18. Place the swivel housing on a flat surface and pry out the oil seal ring (Figure 8-55). The seal ring will be damaged during this procedure.

Removing the Oil Seal

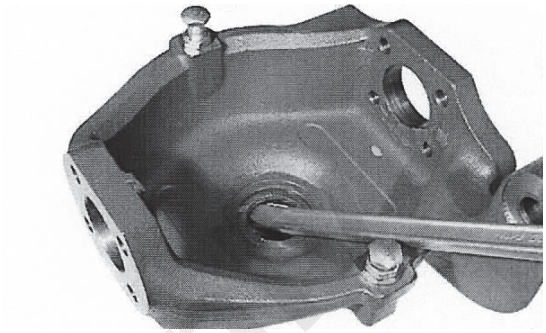

p0604 **FIGURE 8-55**

19. Turn the swivel housing over and using the SPECIAL TOOL (Figure 8-19) and hammer remove the bushing (Figure 8-56).

Removing the Bushing

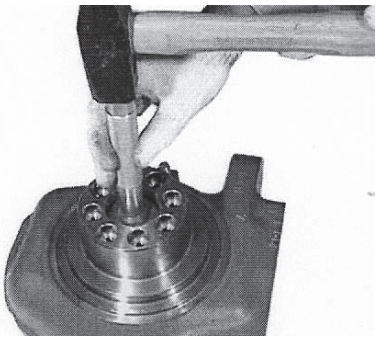

p0605 **FIGURE 8-56**

20. Using a suitable puller, remove the bushings from the king pins (Figure 8-57).

Removing King Pin Bushing

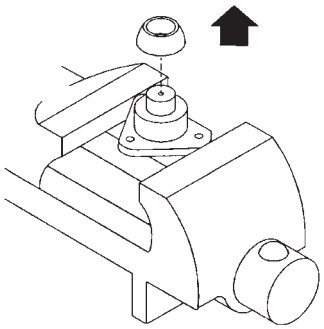

a0696 **FIGURE 8-57**

Reference Only

Axle Beam and Brake Disassembly

1. Pry the seal ring (A, Figure 8-58) from the axle beam. The seal ring will be damaged during the removal procedure. Using a chisel and hammer, remove bushing (B) from the axle beam. Using a suitable puller, remove bushings (C) from the king pin housings.

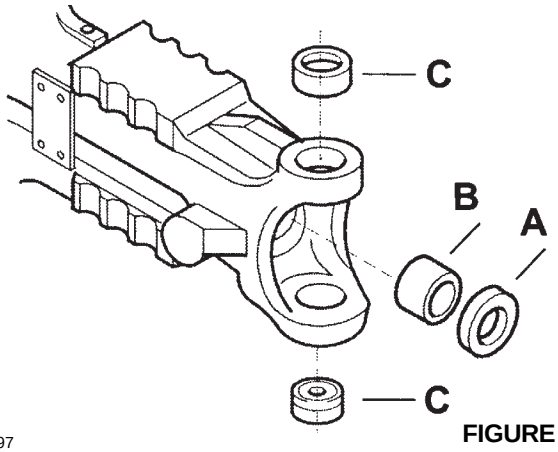

a0697 **FIGURE 8-58**

2. Put alignment marks on the axle beam and on the differential supporting flanges (Figure 8-59) to identify the right and left sides during assembly.

Alignment Marks

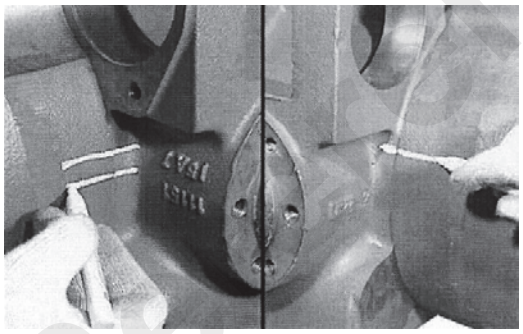

p0606 **FIGURE 8-59**

3. Place the axle on supports. The center housing and two axle beams must have their own supports, which must support each component during disassembly. If supports are not available, use a hoist and sling to support each part separately (Figure 8-60).

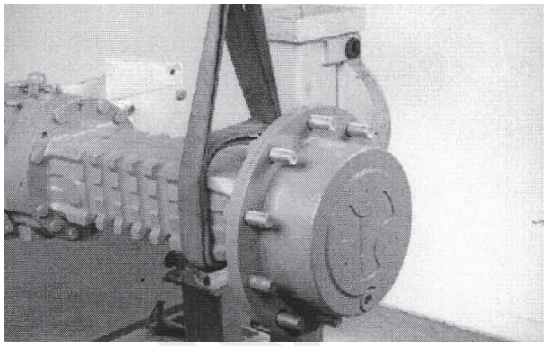

p0607 **FIGURE 8-60**

4. Unscrew the screws securing the axle beam to the center housing (Figure 8-61).

Removing Screws

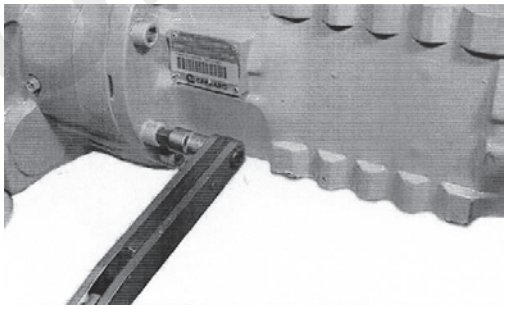

p0608 **FIGURE 8-61**

5. Remove the axle beam (Figure 8-62). When removing the axle beam be careful that the brake discs do not fall from the brake flange. Remove the O-ring from the axle beam.

Removing the Axle Beam

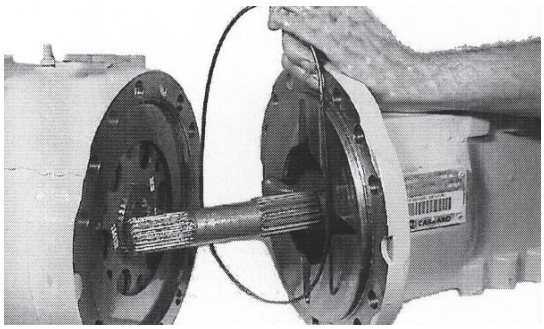

a0609 **FIGURE 8-62**

8

6. Remove brake counter disc (B, Figure 8-63). Remove retaining ring (A). Remove brake disc (C). Remove brake splined sleeve (D). Remove brake counter disc (E).

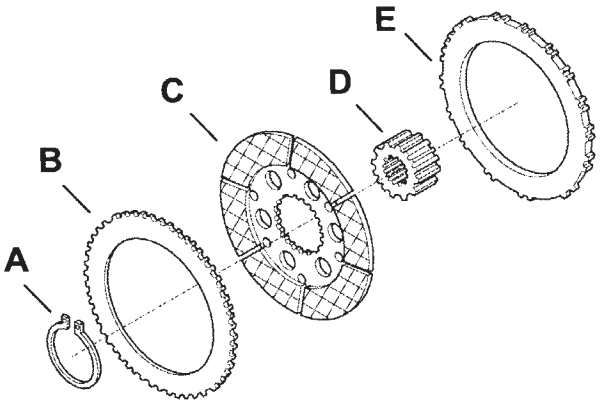

a0698 **FIGURE 8-63**

7. Secure the brake flange using a sling and hoist. Unscrew the upper screw and lower stud bolt (Figure 8-64). Remove the differential supporting flange from the center housing, together with the bevel gear backlash adjusting ring nut.

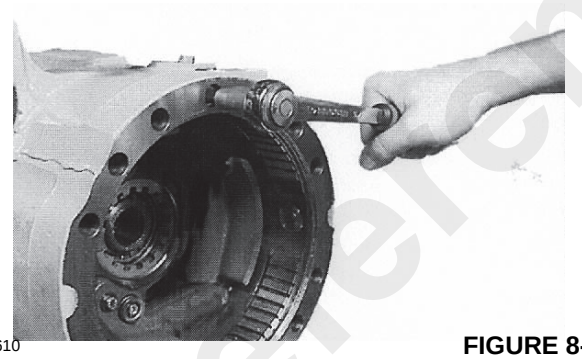

p0610 **FIGURE 8-64**

CAUTION

This procedure frees the differential housing, which could fall if not properly supported causing possible personal injury.

8. Remove the O-ring from the brake flange and the O-ring from the oil pipe hole (Figure 8-65). Check the O-rings for damage.

Remove the O-rings

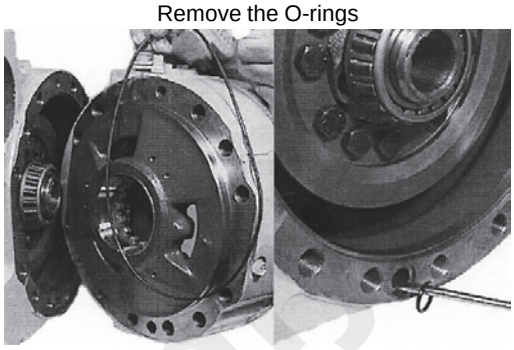

p0611 **FIGURE 8-65**

9. Place the brake flange on a workbench or place in a vise with soft jaws. Unscrew the upper self-adjust screws (Figure 8-66) and remove the springs and bushings.

Removing the Self-Adjust Screws

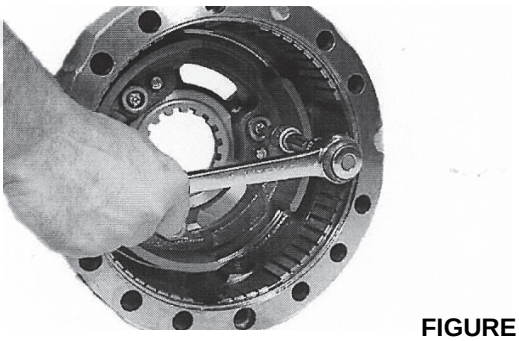

p0612 **FIGURE 8-66**

10. Remove the brake flange bleed screw (Figure 8-67). Remove the piston out from the front of the brake flange. If necessary, use compressed air through the bleed screw port to eject the piston. The piston may eject with force, be sure no part of your body or other persons are in the way of the ejecting piston.

CAUTION

When using compressed air to remove the piston, pressure is created behind the piston resulting in possible forcible ejection of the piston. Keep clear of the front of the brake flange. Possible personal injury could result from the ejected piston.

Reference Only

Removing the Bleed Screw

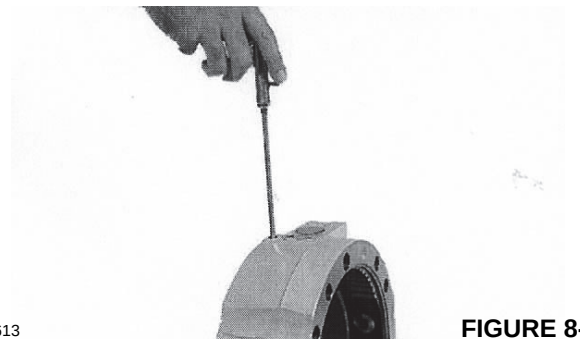

p0613 **FIGURE 8-67**

11. Remove the quad rings (Figure 8-68) from the piston and check their condition.

Removing the Quad Rings

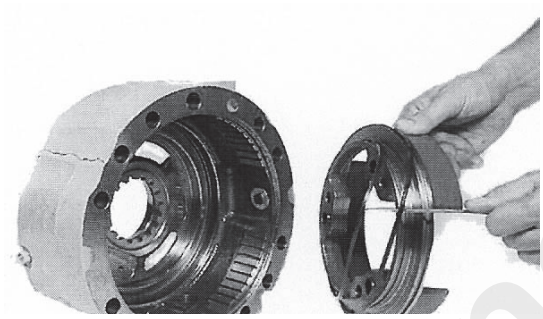

p0614 **FIGURE 8-68**

12. Remove the ring nut retainer by removing the fastening screw (Figure 8-69). Using SPECIAL TOOL (Figure 8-118), unscrew and remove the ring nut.

Removing the Ring Nut Retainer

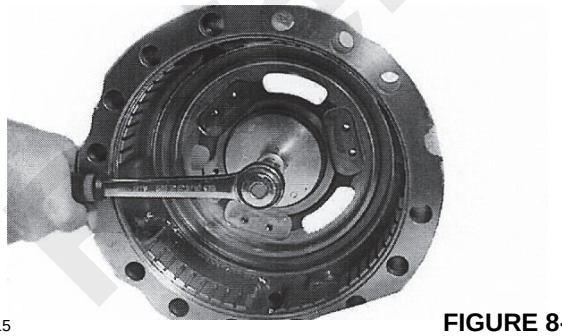

p0615 **FIGURE 8-69**

13. Using a hammer and driver, remove the bearing cup from the brake flange (Figure 8-70).

Removing the Bearing Cup

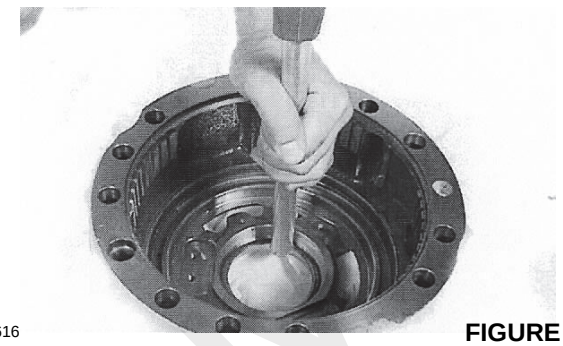

p0616 **FIGURE 8-70**

Differential Disassembly

1. Place the differential in a vice with soft jaws. Remove the bevel gear crown screws (Figure 8-71).

Removing Bevel Gear Crown Screws

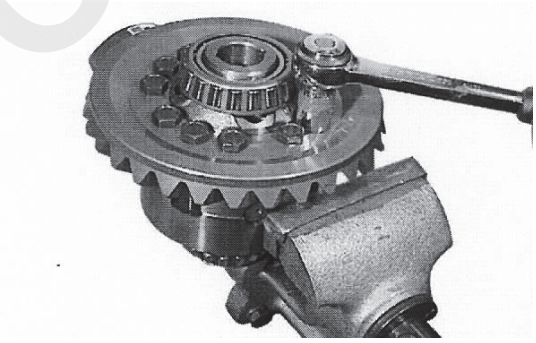

p0617 **FIGURE 8-71**

2. Mark the two differential housing halves to aid in correctly positioning the housing halves during assembly. Separate the two differential housing halves (Figure 8-72).

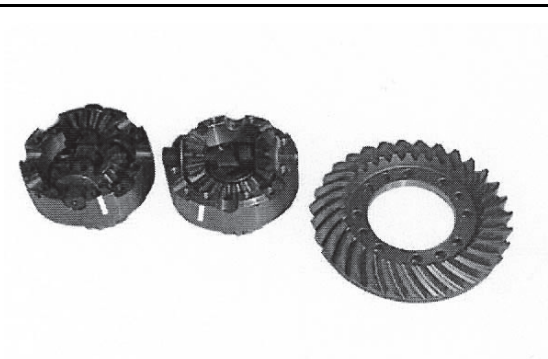

p0618 **FIGURE 8-72**

8

Reference Only

3. Disassemble the components (Figure 8-73). Check for proper operation and for any damage or wear to the components. Remove the bearings from the differential housing halves using a suitable puller.

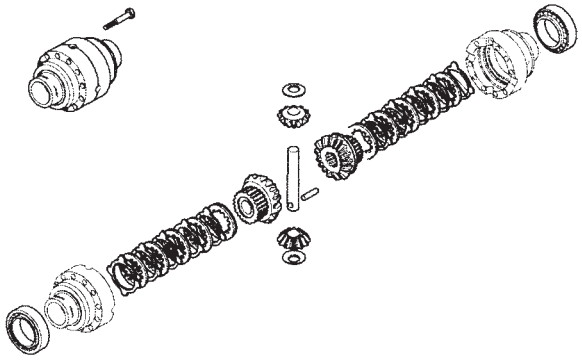

a0699 **FIGURE 8-73**

Pinion Disassembly

1. Using a puller, remove the seal ring (Figure 8-74) from the center housing. The seal ring will be damaged.

Seal Ring Removal

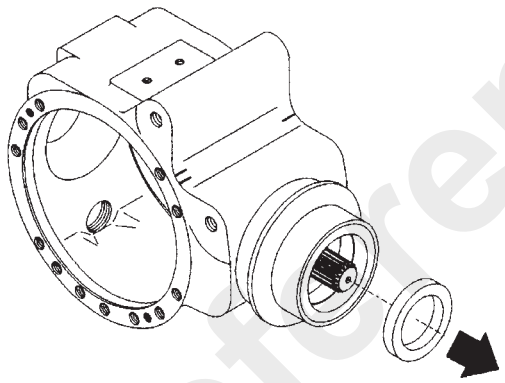

a0700 **FIGURE 8-74**

2. Position the center housing on a flat surface. Do not pry the ring nut out of housing (Figure 8-75). Damage to the bevel pinion threads will occur.

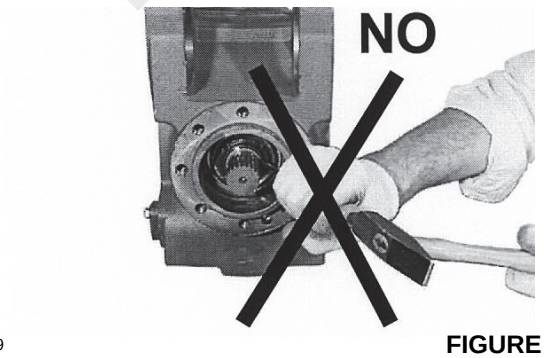

p0619 **FIGURE 8-75**

3. Remove the ring nut (Figure 8-76) with SPECIAL TOOLS (Figure 8-21 and Figure 8-26).

Ring Nut Removal

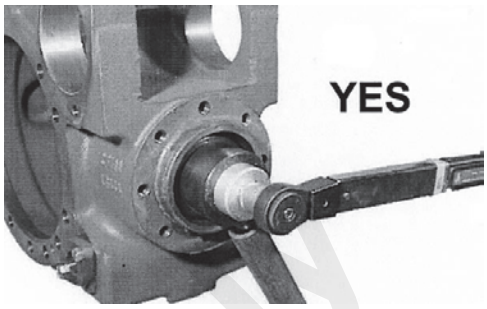

p0620 **FIGURE 8-76**

4. Using a soft hammer, strike the end of the splined end of the pinion to remove the pinion assembly from the housing (Figure 8-77).

Pinion Assembly Removal

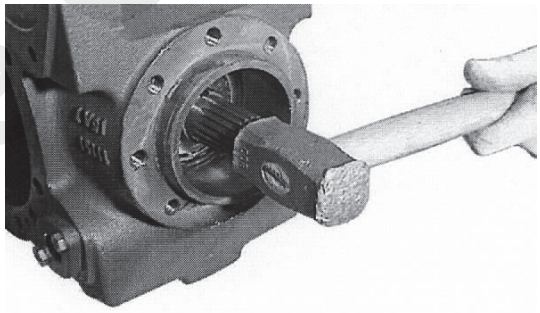

p0621 **FIGURE 8-77**

5. Remove the washers, elastic spacer and bearing cones from the pinion (Figure 8-78). The elastic spacer must be replaced with a new one.

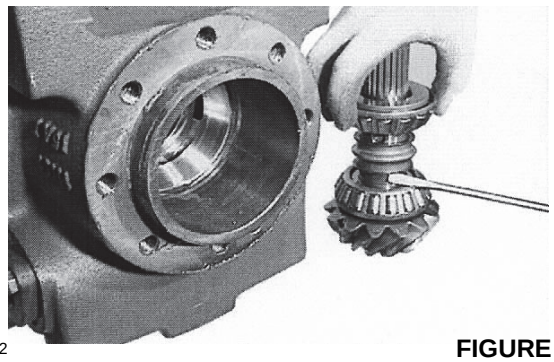

p0622 **FIGURE 8-78**

Reference Only

6. Using a suitable puller, remove the bearing cone from the bevel pinion (Figure 8-79). Remove the adjusting shim under the bearing and check for wear and damage.

Bearing Cone Removal

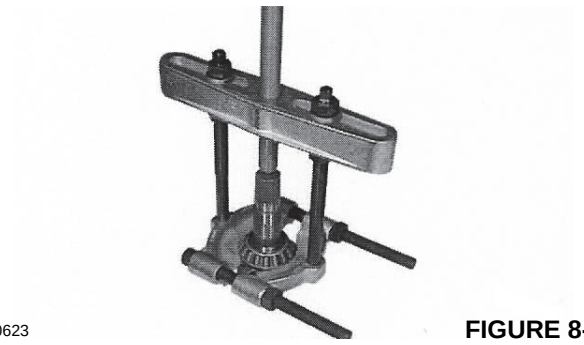

p0623 **FIGURE 8-79**

7. Using a chisel and hammer, remove the taper roller bearing cups from the center housing (Figure 8-80).

Bearing Cup Removal

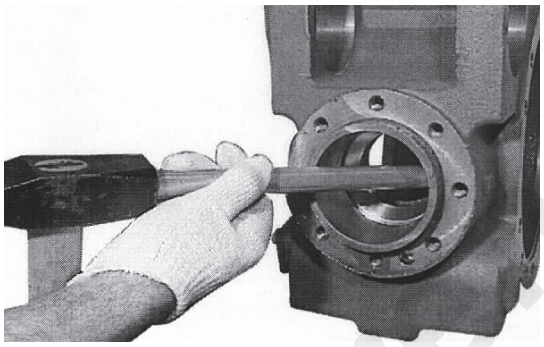

p0624 **FIGURE 8-80**

Assembly

Pinion Assembly

1. Place the center housing on a work bench. Using SPECIAL TOOL (Figure 8-34), press the taper roller bearing cups (Figure 8-81) into the center housing until they seat.

Bearing Cup Installation

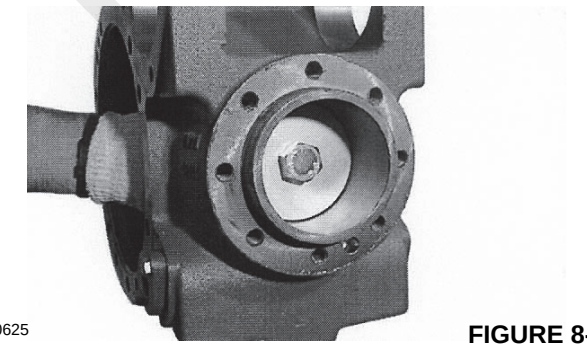

p0625 **FIGURE 8-81**

2. SPECIAL TOOL (Figure 8-28) (False Pinion) is needed for this procedure. Insert the false pinion, together with its bearings and ring nut, in the bearing cups in the housing (Figure 8-82) installed in step 1. Tighten the assembly to remove any play (backlash) in the assembly.

False Pinion Installed

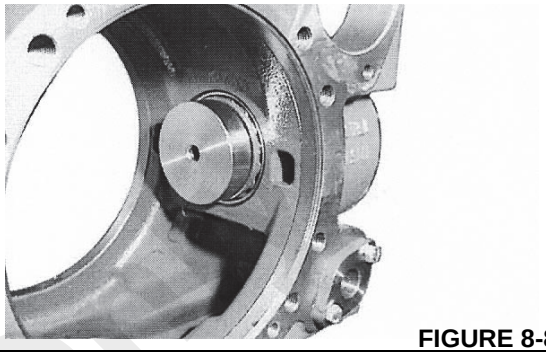

p0626 **FIGURE 8-82**

3. Check the correct positioning of the right and left brake flanges, using the reference marks on them and the center housing (Figure 8-83).

   Assemble the two brake flanges and secure them with their mounting screws (screw in at least two screws, diametrically opposed to each other in each flange).

Check Position of Brake Flanges

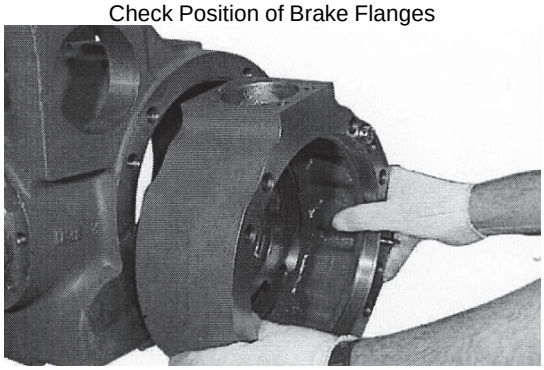

p0627 **FIGURE 8-83**

4. Insert special tool (Figure 8-31) (false differential box) into the center housing (Figure 8-84). Check that the false differential box is inserted into both brake flange housings.

Inserting the False Differential Box

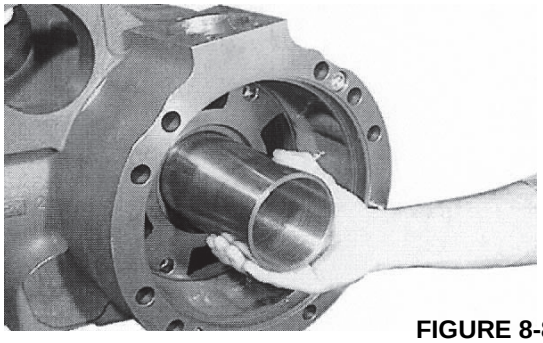

p0628 **FIGURE 8-84**

8

Reference Only

5. Measure the distance measurements described below using a depth gauge through the hole in the false pinion (Figure 8-85).

X = (conical distance to be measured)

A = (measured value)

B = (known value - **100 mm**)

C = (known value - **45 mm**)

Measured values all millimeters.

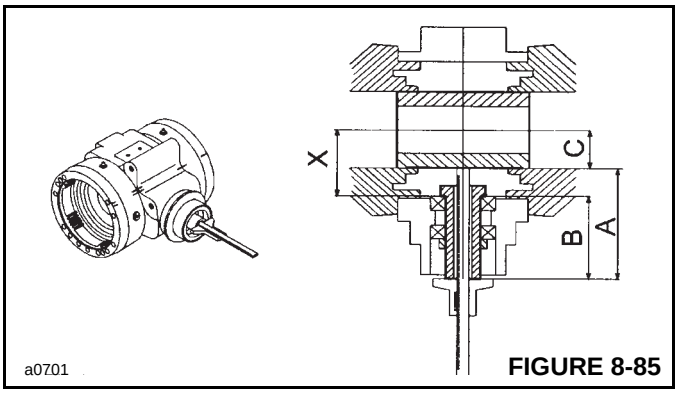

a0701 **FIGURE 8-85**

6. To determine the amount of shims (**S**) required between the pinion and bearing perform the following calculation:

a. Subtract the (**V** - requested conical distance) value stamped on the pinion head (Figure 8-86) from the measured (**X**) value.

S=X-V

b. (**X**) value is found by adding measurements (**A** and **C**) together and subtracting **B**.

X=(A+C)-B

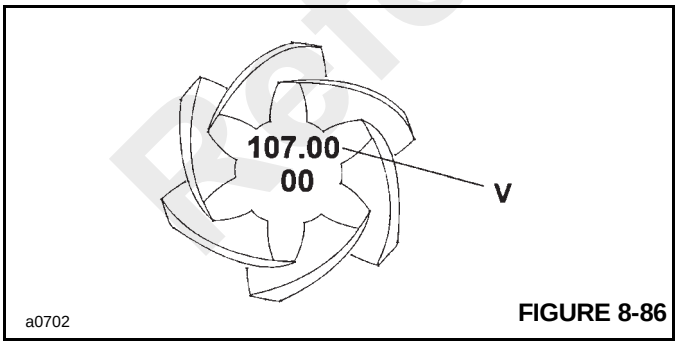

a0702 **FIGURE 8-86**

7. Choose the suitable shim from the available shims in Table 8-1. Shims may be found in the parts manual supplied with the crane.

Table 8-1

S = SHIM RANGE										
THICK (MM)	2.5	2.6	2.7	2.8	2.9	3.0	3.1	3.2	3.3	3.4

8. Remove the false pinion, the bearings and the ring nut from the center housing (Figure 8-87). Remove the false differential box from the center housing. Remove the two brake flanges from the center housing.

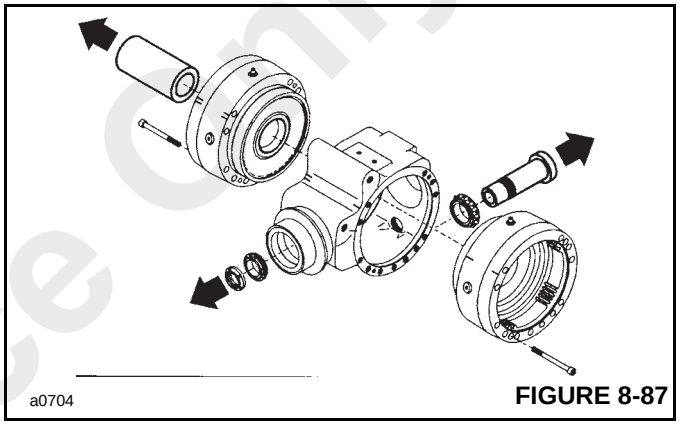

a0704 **FIGURE 8-87**

9. Insert the shims (S) chosen in step 7 on the pinion shaft with the chamfer edge against the gear (Figure 8-88). Using SPECIAL TOOL (Figure 8-25) press the bearing onto the pinion shaft. Be sure it is fully set. Install the washers and new elastic spacer onto the shaft.

NOTE: *Always use a* **new** *elastic spacer.*

Installing the Shim and Bearing

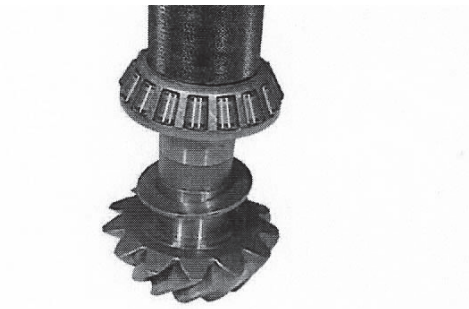

p0629 **FIGURE 8-88**

Reference Only

10. Insert the bevel pinion assembly into the center housing and the second bearing cone onto the pinion end (Figure 8-89).

In order to properly install the bearing use SPECIAL TOOL (Figure 8-25) and a hammer to drive the bearing into position. Hold a sledge hammer against the gear while driving the bearing.

Installing Bevel Pinion Assembly

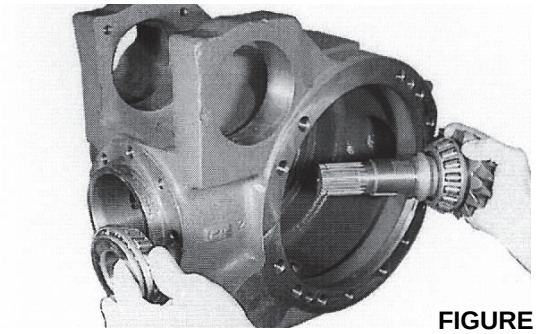

p0630 **FIGURE 8-89**

11. Assemble onto the pinion shaft a new ring nut washer and ring nut retainer.

Screw the ring nut in, using SPECIAL TOOLS (Figure 8-21 and Figure 8-26) (Figure 8-90).

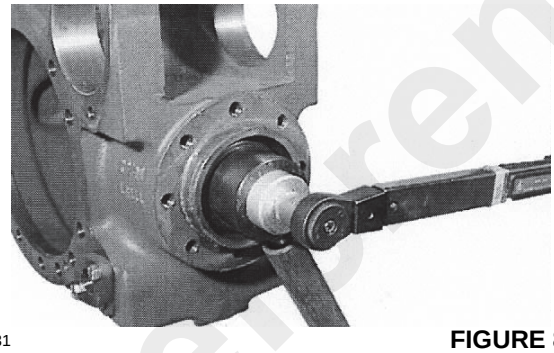

p0631 **FIGURE 8-90**

NOTE: *The torque setting is determined by the pre-loading measurement on the bearings. Tighten the ring nut step by step. If it is tightened too much, the elastic spacer should be replaced and the procedure repeated. When checking the pre-load, it is advisable to hit the pinion ends slightly with a soft hammer to set the bearings.*

12. To check the bearing pre-load, use a dynamiter and string. Wind the string around the spline end of special tool (Figure 8-25) inserted on the pinion shaft (Figure 8-91).

NOTE: *The pre-load measurement should be done without the seal ring installed*.

With the dynamiter attached to the string, pull the dynamiter and take a reading. Tighten or loosen the ring nut until 9.2 - 13.8 daN (20 - 31 pounds) of force is required to turn the pinion. When the correct turning force is obtained, peen the ring nut using a hammer and a chisel.

NOTE: *Record "P" value for use later to check preload on pinion-bevel gear system.*

P = 9.2 - 13.8 daN
(20 - 31 pounds)

Checking Pre-load

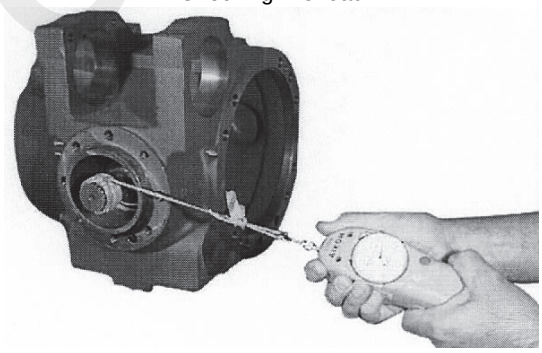

p0632 **FIGURE 8-91**

Differential Assembly

1. Install the bearing cones of the new taper roller bearings on the differential housing halves (Figure 8-92). Use SPECIAL TOOL (Figure 8-24) and a hammer.

Installing Bearing Cones

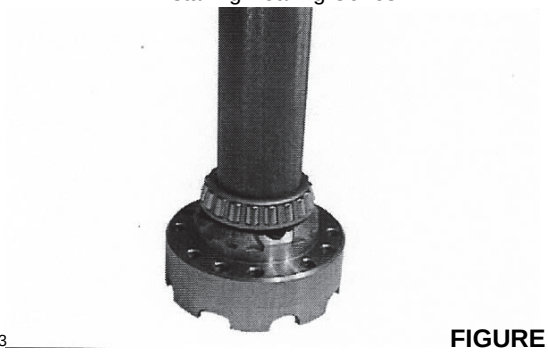

p0633 **FIGURE 8-92**

Reference Only

2. Place a housing half on a work bench and assemble all of its inner components (discs, counterdiscs, planetary gears, sun gears, thrust washers and pins) as shown in Figure 8-93.

   Join the two housing halves, aligning the reference marks made during disassembly.

Assembling Differential Housing

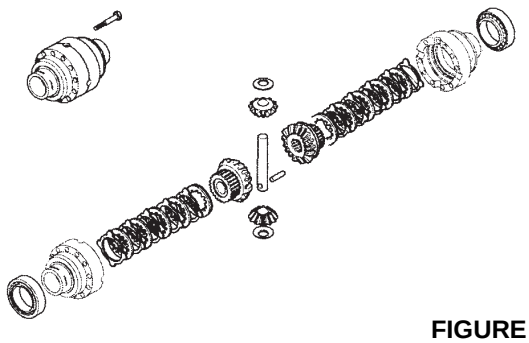

a0699 **FIGURE 8-93**

3. Position the ring bevel gear on the assembled differential housing (Figure 8-94). Apply Loctite 270 on the threads of screws. Install the screws and tighten to a torque of 95 Nm (70 lb-ft).

Installing the Ring Bevel Gear

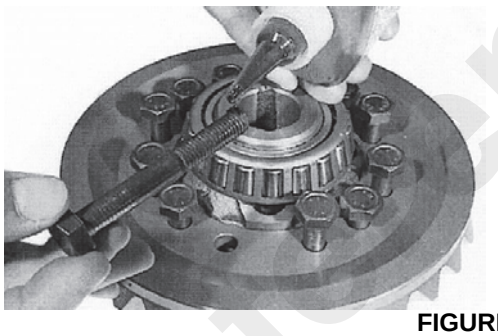

p0634 **FIGURE 8-94**

Brake Flange and Differential Housing Assembly

1. Place the brake flange on a flat surface. Install the cup of the taper roller bearing in position using SPECIAL TOOL (Figure 8-24), the interchangeable handle (Figure 8-17) and a hammer (Figure 8-95).

Installing Bearing Cup

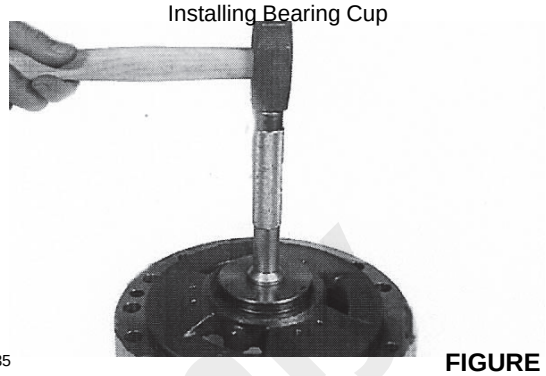

p0635 **FIGURE 8-95**

2. Install the washers into the self-adjust housings (Figure 8-96) of the brake piston. Push the washers into the holes until they align with the piston supporting inner surface.

   Install the quad rings on the piston and coat the quad ring surface of the piston with a light coat of grease.

Installing Washers



p0636 **FIGURE 8-96**

3. Install the piston into the brake flange and position SPECIAL TOOL (Figure 8-32) or a flat disc on the piston (Figure 8-97). With a lever anchored to an eyebolt, exert just enough pressure to insert the piston into the brake flange.

Installing Piston

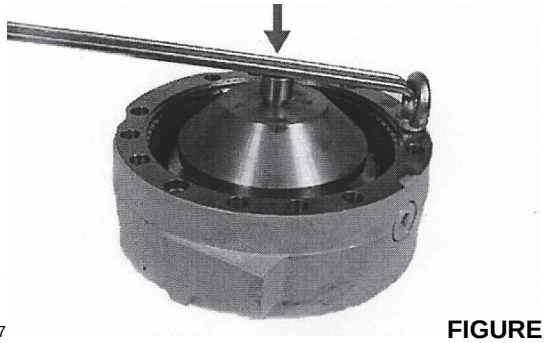

p0637 **FIGURE 8-97**

Reference Only

4. Install the self-adjust kit components in the correct sequence (Figure 8-98).

Install the first three self-adjusting groups (**A**) and tighten the screw to a torque of 10 Nm (7.35 lb-ft).

Install the remaining three groups (**B**) and tighten the screws to a torque of 10 Nm (7.35 lb-ft).

Installing Self-Adjust Kits

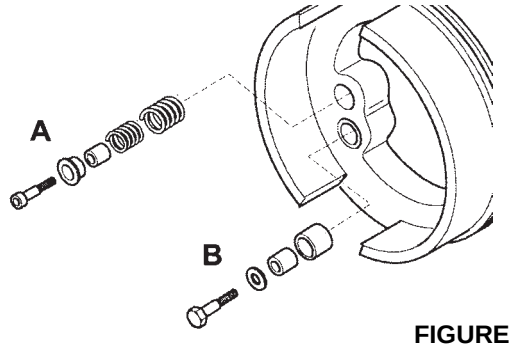

a0705 **FIGURE 8-98**

5. Install a new O-ring (Figure 8-99) in the oil pipe hole on the center housing. Lubricate the O-ring before installation.

Installing O-ring

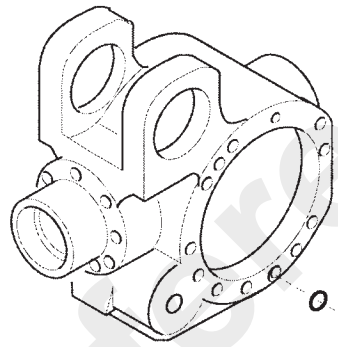

a0706 **FIGURE 8-99**

6. Install a new O-ring on the brake flange (Figure 8-100).

7. Repeat steps 1-6 for the second brake flange.

8. First, position the brake flange on the side of the ring bevel gear. Then, using a round bar inserted through the differential assembly install the assembly into the center housing. Check reference marks from disassembly for correct flange positioning.

NOTE: *Be sure the differential assembly is installed on the correct side of the center housing. It is possible to install it on the wrong side.*

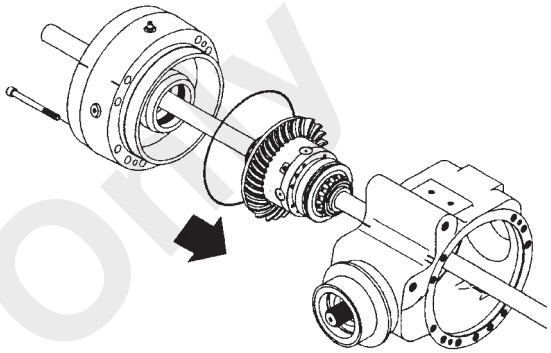

a0707 **FIGURE 8-100**

9. Install the upper screw and lower stud bolt to fasten the brake flange to the center housing (Figure 8-101). Tighten the upper bolt to a torque of 80 Nm (59 lb-ft). Tighten the lower stud bolt to 120 Nm (88 lb-ft).

Installing Brake Flange Hardware

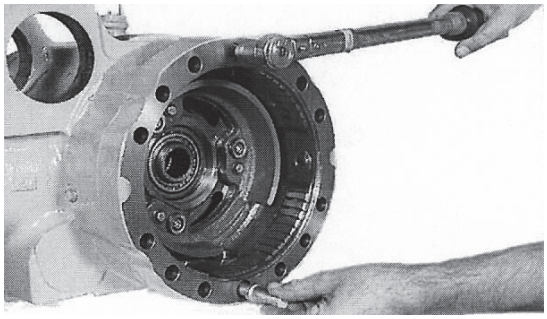

p0638 **FIGURE 8-101**

Reference Only

10. Install the second brake flange on the opposite side of the center housing. Install upper screw and lower stud as in step 9.

Install and hand tighten the two ring nuts (one each side of the differential housing). Using SPECIAL TOOL (Figure 8-16) tighten both ring nuts evenly until bearing backlash is eliminated (Figure 8-102). Then measure the pinion-ring gear backlash.

NOTE: *Tighten each ring nut in steps until tight. Do not overtighten.*

Tightening Ring Nuts

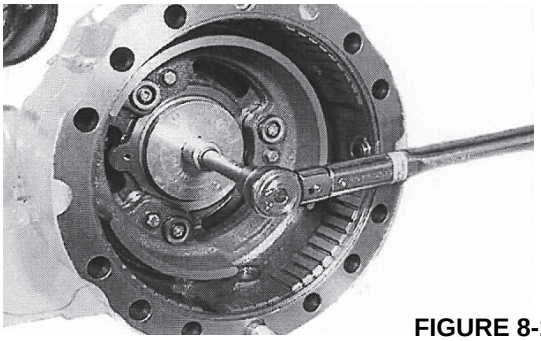

p0639 **FIGURE 8-102**

11. Install SPECIAL TOOL (Figure 8-22) to the end of the pinion shaft (Figure 8-103). Using a dial indicator mounted so that the feeler is in contact with the bracket surface of the SPECIAL TOOL at 90° Move the pinion shaft in both directions while holding the differential from moving and read the dial indicator. Check that the measured backlash is within the range of **0.15 - 0.20 mm (0.006 - 0.008 in)**.

Measuring Pinion-Bevel Gear Backlash

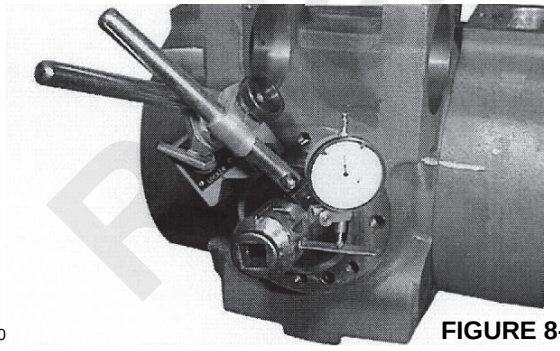

p0640 **FIGURE 8-103**

If the backlash in not correct, adjust the ring nuts using SPECIAL TOOL (Figure 8-16).

When adjusting the ring nuts, remember that:

- If **the measurement backlash is less** than the given tolerance range, screw in the ring nut from the side opposite the bevel gear and unscrew the ring nut on the bevel gear side the same amount.
- If **the measured backlash is higher** than the given tolerance range, screw in the ring nut on the side of the bevel gear and unscrew the side opposite the same amount.

12. When the pinion-bevel gear backlash has been adjusted, check that there is a minimum pre-loading on the differential housing bearings (Figure 8-104).

Differential Housing Bearings

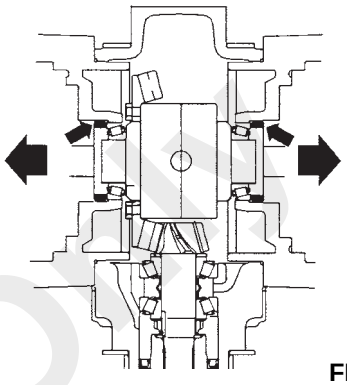

a0708 **FIGURE 8-104**

13. Measure the total pre-loading (T) of the bearing (pinion-bevel gear system), using a dynamiter whose cord is wound on the pinion spline end (Figure 8-105).

Checking Pre-load

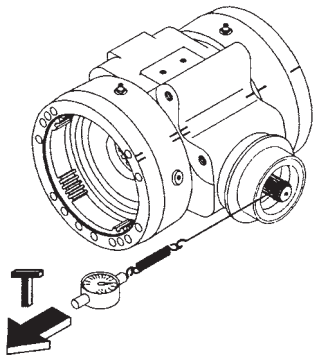

a0709 **FIGURE 8-105**

The measured value should be within the following range:

T=(P+1.72) - (P+2.58) POUNDS

T=(P+3.85) - (P+5.8) daN

P is the pre-loading measured on the pinion in Step 12, Pinion Assembly,

NOTE: *The Pre-load should be measured without the seal ring being installed.*

If the measurement is not within the tolerance range, check the assembly of each component and then adjust the pre-load using the two ring nuts on the differential.

- If **the total pre-load is less** than the given range, tighten the two ring nuts the same amount, keeping the pinion-bevel gear backlash value unchanged.

Reference Only

- If **the total pre-load is higher** than the given range, loosen the two ring nuts the same amount, keeping the pinion-bevel gear backlash value unchanged.

Recheck the backlash and preload.

14. To test the tooth contact of the pinion with the bevel gear, paint the teeth of the bevel gear with red lead paint (Figure 8-106). The test should always be performed on both sides of the bevel gear teeth.

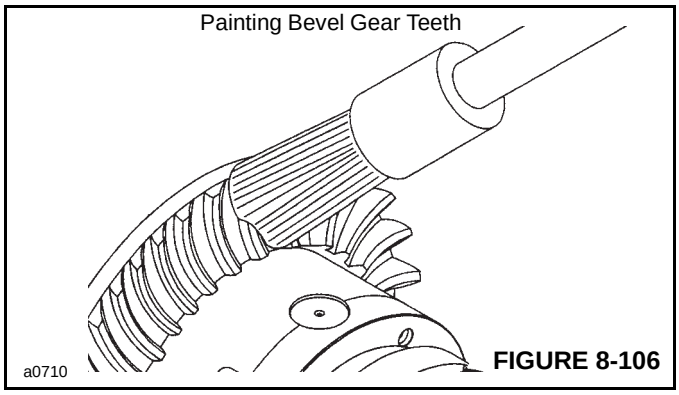

FIGURE 8-106

15. ***Correct Contact***. (Figure 8-107)

The bevel gear is adjusted correctly, the mark on the pinion teeth will be regular.

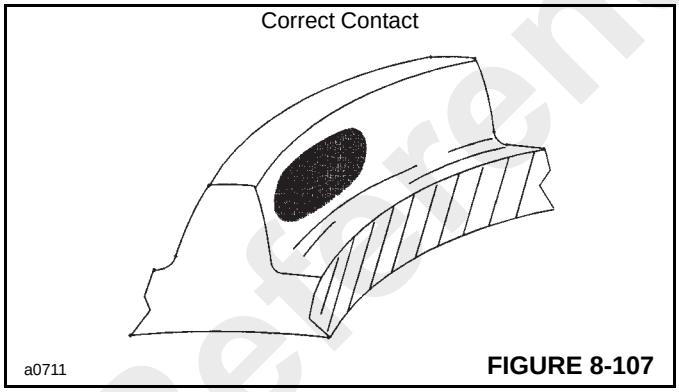

FIGURE 8-107

16. ***Excessive Contact On The Tooth Tip - Z contact***. (Figure 8-108)

Move the bevel gear away from the pinion to adjust the backlash. See Figure 8-108.

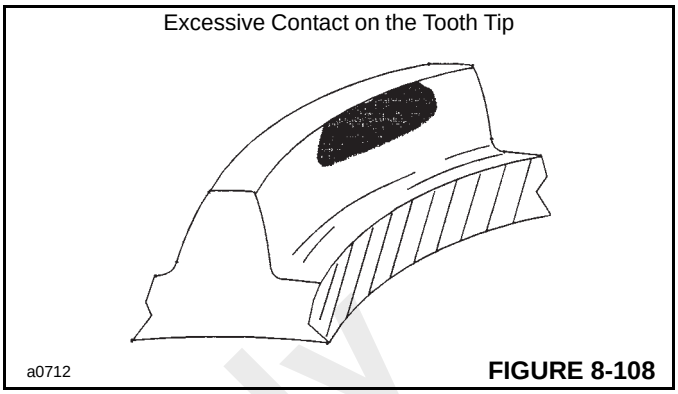

FIGURE 8-108

17. ***Excessive Contact At The Tooth Base - X contact***. (Figure 8-109)

Move the bevel gear toward the pinion to adjust the backlash. See Figure 8-109.

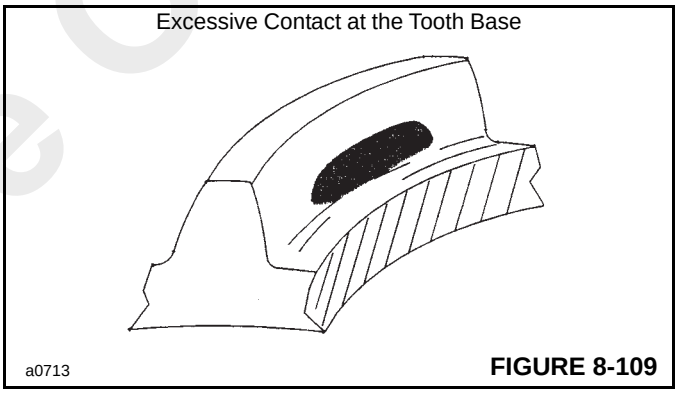

FIGURE 8-109

18. Movements to Correct Backlash (Figure 8-110):

a. Move the bevel gear for type **X** contact adjustment.

b. Move the bevel gear for type **Z** contact adjustment.

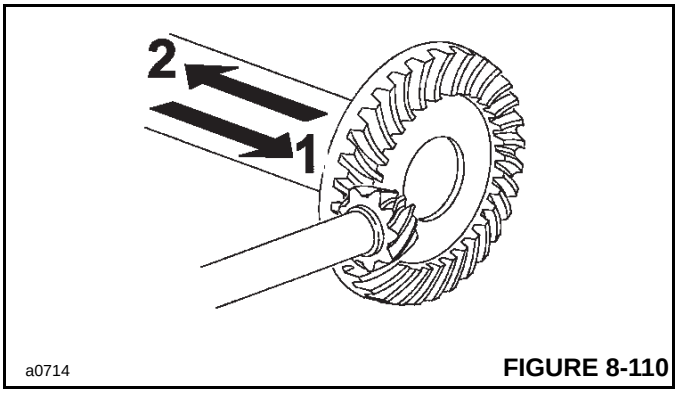

FIGURE 8-110

Reference Only

19. Install the ring nut retainer turning the ring nut slightly to align it with the retainer (Figure 8-111). Install the ring nut retainer screw and tighten to a torque of 13 Nm (9.5 lb-ft).

Installing Ring Nut Retainer

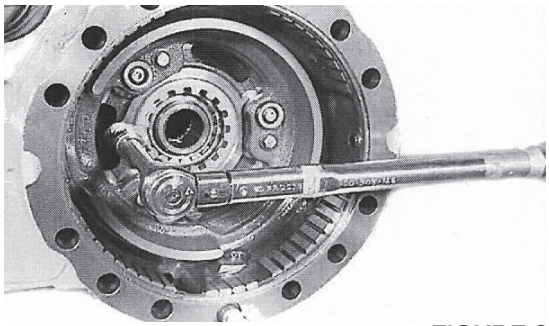

p0641 **FIGURE 8-111**

Axle Beam and Brake Assembly

1. Inspect the friction disc and counterdiscs for signs of burning. If burning is found, replace the discs. Also, check the discs for wear. See Technical Data for wear allowances. Replace any disc that is out of tolerance.

Assemble the components of the brake assembly inside the brake flange in the sequence shown in Figure 8-112: counterdisc (**E**), coupling (**D**) with the retainer ring groove outward, friction disc (**C**), retaining ring (**A**) and counterdisc (**B**).

NOTE: *If new brake discs are being used, dip them in Mobil Fluid 424 hydraulic oil before assembling.*

Brake Assembling

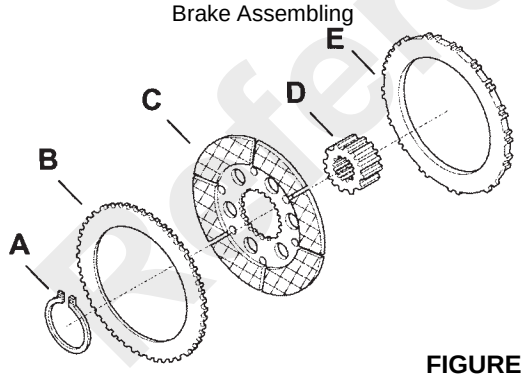

a0715 **FIGURE 8-112**

2. To ensure correct assembly of the axle beams, check the reference marks (Figure 8-113) made during disassembly.

Reference Marks

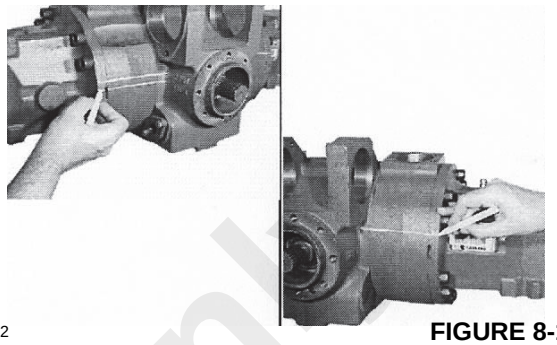

p0642 **FIGURE 8-113**

NOTE: *Be sure to properly support the axle beams and center housing during this assembly procedure.*

3. Install a new O-ring into the axle beam housing. Install the axle beam on the brake flange (Figure 8-114). Be careful to align the mounting holes.

Install the mounting bolts and tighten to a torque of 320 Nm (235 lb-ft).

Axle Beam Installation

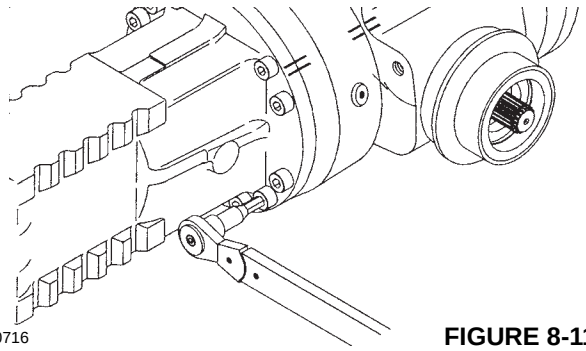

a0716 **FIGURE 8-114**

Reference Only

Axel Beam Group Assembly

1. Install the upper king bushing on the axle beam with SPECIAL TOOL (Figure 8-33) and a hammer (Figure 8-115).

Install the cup of the ball bearing on the lower part of the axle beam with SPECIAL TOOL (Figure 8-33) and a hammer.

NOTE: *To make the installation easier, cool the bearing.*

Installing Kingpin Bushing and Bearing Cup

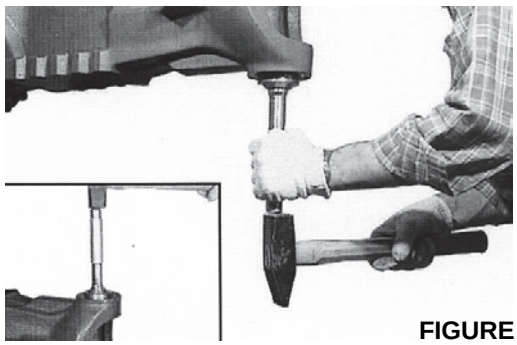

p0643 **FIGURE 8-115**

2. Install the bushing in the axle beam housing with SPECIAL TOOL (Figure 8-30) and a hammer (Figure 8-116).

Fill 3/4 of the seal ring cavity with grease and apply a sealing compound on seal ring's outer surface.

Install the seal ring in the axle beam with SPECIAL TOOL (Figure 8-18) and a hammer.

Installing Bushing and Ring Seal

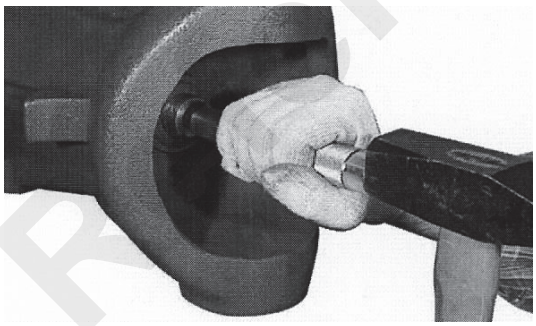

p0644 **FIGURE 8-116**

3. Lubricate the bushing and lips of the ring seal. Install the u-joint inside the axle beam (Figure 8-117).

NOTE: *Be careful not to damage the ring seal.*

Installing the U-Joint

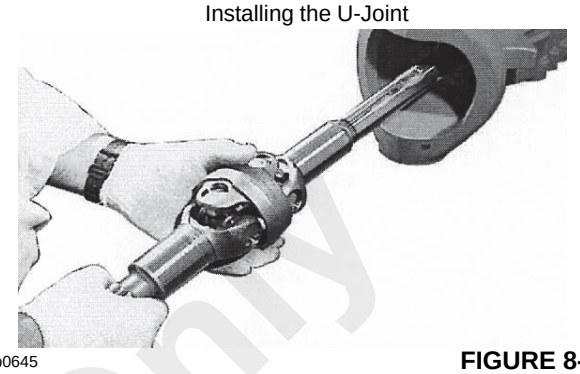

p0645 **FIGURE 8-117**

Wheel Hub Assembly

1. Install the bushing into the swivel housing with SPECIAL TOOL (Figure 8-19) and a hammer or press (Figure 8-118).

Fill 3/4 of the ring seal cavity with grease. Apply sealing compound on the outer metallic surface of the ring seal.

Install the ring seal into the swivel housing with SPECIAL TOOL (Figure 8-20) and a hammer.

Installing Bushing and Ring Seal

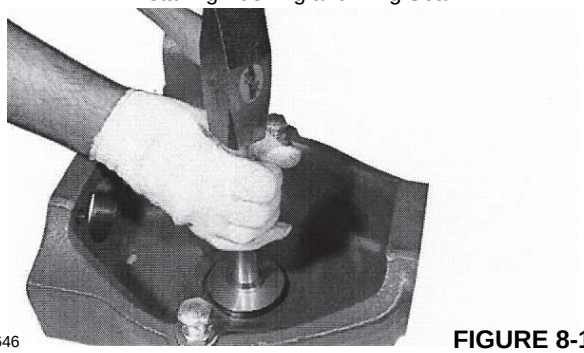

p0646 **FIGURE 8-118**

Reference Only

2. Grease the inside of the kingpin cavities of the swivel housing.

Place a shim under the Belleville washer and install this assembly in each kingpin cavity (Figure 8-119).

NOTE: *Be sure the shim is under the Belleville washer.*

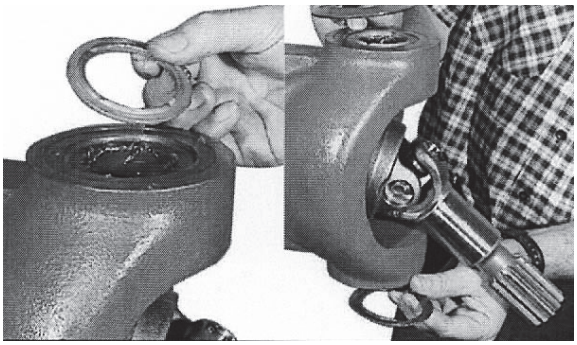

p0647 **FIGURE 8-119**

3. Place the lower kingpin on a workbench and install the bearing cone (Figure 8-120) with SPECIAL TOOL (Figure 8-33), using a press.

Installing the Kingpin Bearing Cone

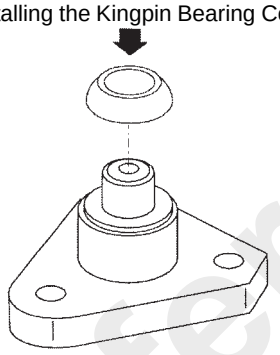

a0717 **FIGURE 8-120**

4. Secure the swivel housing with a rope and hoist (Figure 8-121).

NOTE: *Be sure the swivel housing is securely fastened before lifting it in place. Possible personal injury could result from a falling swivel housing.*

Lubricate the lips of the ring seal. Tape the splined end of the axle shaft to protect the ring seal during installation of the swivel housing. Install the swivel housing to the axle beam.

Position the upper and lower king pins to the swivel housing. Install the mounting screws and tighten to a torque of 140 lb-ft. (190 Nm).

Be sure the Belleville washers remain in position.

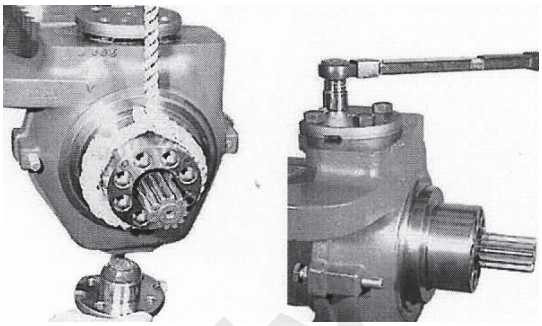

p0648 **FIGURE 8-121**

5. Place the wheel hub on a workbench and install the two taper roller bearing cups with SPECIAL TOOL (Figure 8-27) and a press or hammer (Figure 8-122).

Apply sealing compound on the ring seal outer surface and install the ring seal in the wheel hub with SPECIAL TOOL (Figure 8-27) and a hammer.

Installing Bearing Cups and Ring Seal

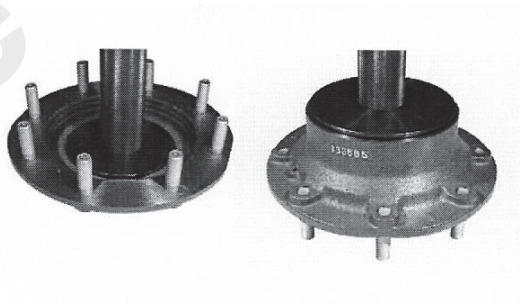

p0649 **FIGURE 8-122**

6. Install the bearing cone on the swivel housing end (Figure 8-123).

Install the wheel hub on the swivel housing and then install the other bearing cone in position.

Installing Bearing Cones

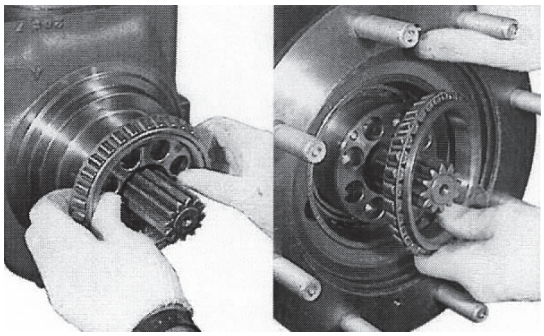

p0650 **FIGURE 8-123**

Reference Only

7. Place the wheel carrier on a workbench and install the bushings (Figure 8-124) level to the carrier surface using SPECIAL TOOL (Figure 8-29).

At least two bushings (diametrically opposed) should be set slightly higher than the carrier surface to be used as dowel pins.

Installing Bushings

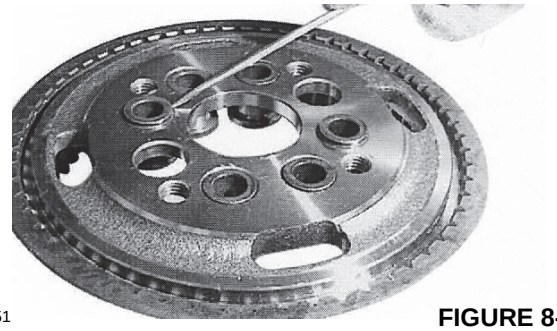

p0651 **FIGURE 8-124**

8. Pre-assemble the wheel carrier, epicyclic ring gear with the special lock ring (**X**) shown in Figure 8-125.

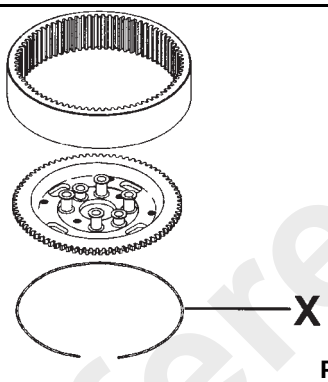

a0718 **FIGURE 8-125**

9. Install the wheel carrier assembly on the wheel hub using the two projecting bushings as dowel pins.

Installing the Wheel Carrier Assembly

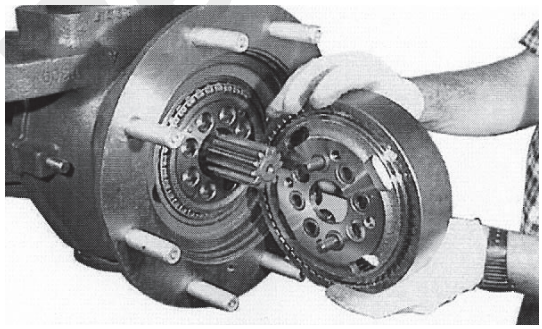

p0652 **FIGURE 8-126**

10. Drive the dowel bushings flush using SPECIAL TOOL (Figure 8-29) and a hammer (Figure 8-127).

Install the wheel carrier mounting screws and tighten to a torque of 120 Nm (88 lb-ft).

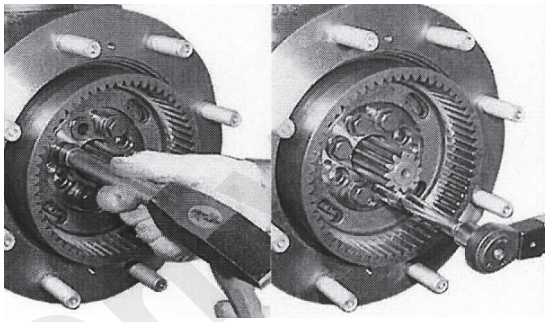

p0653 **FIGURE 8-127**

11. The installation of the wheel carrier does not require any pre-loading or backlash adjustments. Although, when installing new components check the dimensions shown in Figure 8-128.

A = 5.900 - 5.950 mm (0.232 - 0.234 in)

B = 52.229 - 52.279 mm (2.056 - 2.058 in)

C = 23.070 - 23.172 mm (0.908 - 0.912 in)

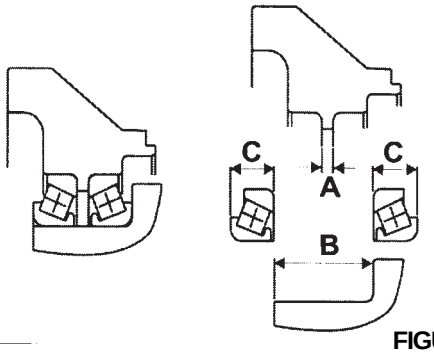

a0719 **FIGURE 8-128**

12. Install the rings and shim onto the axle shaft and lock with the retaining ring (Figure 8-129).

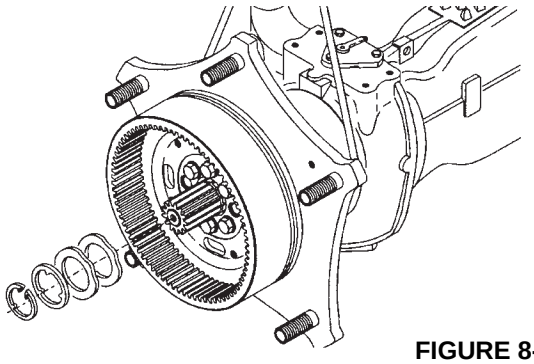

a0720 **FIGURE 8-129**

8

Epicyclic Reduction Gear Assembly

1. Gather all the components of the epicyclic planetary gear assembly (Figure 8-130). Be careful not to loose any of rollers.



p0592 **FIGURE 8-130**

2. Place the planetary carrier on a workbench.

   Install the epicyclic planetary gears onto the planetary pins (Figure 8-131). Then install the rollers inside the planetary gears.

   Install the washers.

   Install the retaining rings with a suitable pliers, to secure the gears.

Assembling the Planetary Gears p0654



FIGURE 8-131

3. Install a new O-ring on the planetary carrier (Figure 8-132).

   Position the epicyclic planetary gear assembly on the wheel hub.

   Install the mounting screws and tighten to a torque of 25 Nm (18 lb-ft).

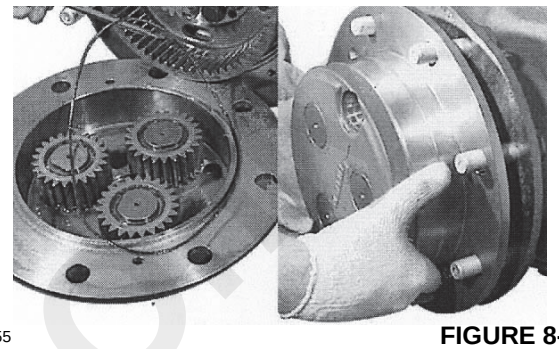

p0655 **FIGURE 8-132**

Flange Assembly

1. Install seal ring (**A**, Figure 8-134) in the center housing with SPECIAL TOOL (Figure 8-32) and a hammer.

   Insert washer (**B**) onto the splined pinion end. Install new O-ring (**C**) and flange (**D**). Secure the assembly with retaining ring (**E**).

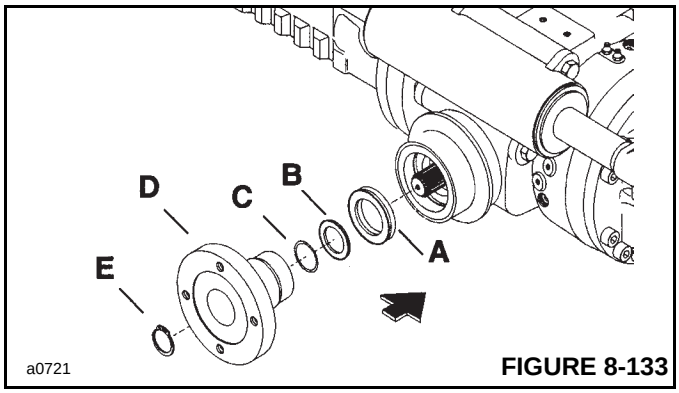

a0721 **FIGURE 8-133**

Reference Only

Steering Cylinder

1. Install the tie rods to the ends of the cylinder rod (Figure 8-135) and tighten to a torque of 300 Nm (221 lb-ft).

   Position the steering cylinder through the mounting flanges of the center housing with the tie rods attached.

   Install the three mounting screws and tighten to a torque of 120 Nm (88 lb-ft).

Steering Cylinder Mounting

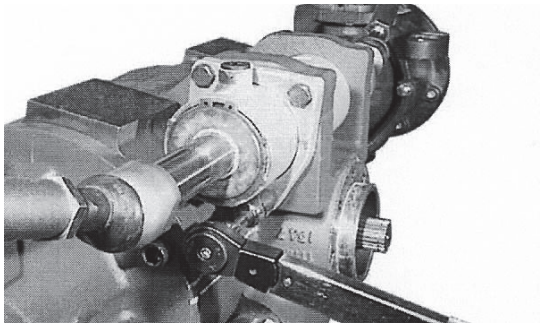

p0656 **FIGURE 8-134**

2. Loosen the jam nut on the guide rod and adjust the guide so that the ball joint can be inserted into the swivel housing (Figure 8-135).

Adjusting the Guide Rod

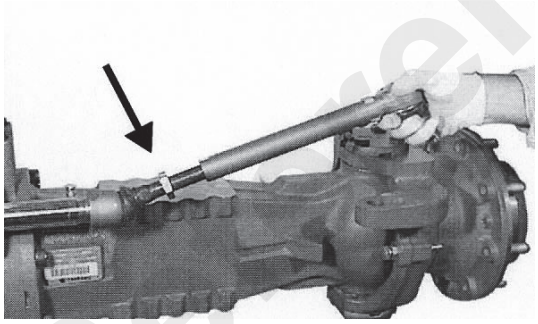

p0657 **FIGURE 8-135**

3. Insert the ball joint in the swivel housing (Figure 8-136). Install the lock nut and tighten to a torque of 220 Nm (162 lb-ft).

Tightening Lock Nut

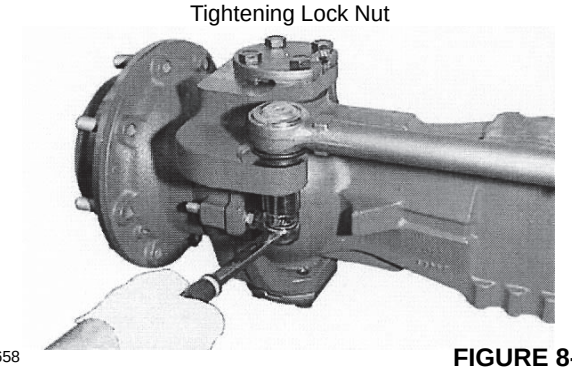

p0658 **FIGURE 8-136**

4. Tighten the jam nut only after the toe-in adjustment has been performed.

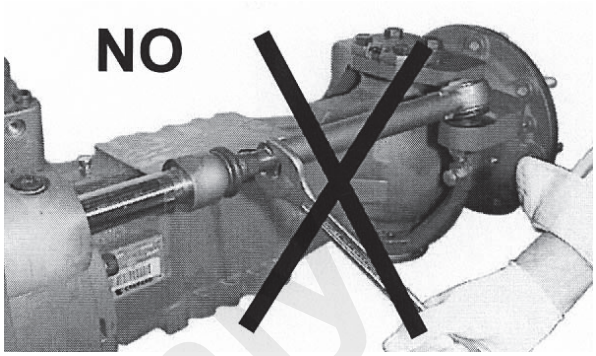

p0659 **FIGURE 8-137**

Toe-In Adjustment

See Toe-In/Steering Angle Alignment for toe-in adjustment procedures.

Steer Angle Adjustment

See Steering Angle Check and Adjustment for steering angle adjustment.

Installation

WARNING

A raised and badly supported machine can fall on you causing severe injury or death. Position the machine on a firm, level surface before raising one end. Ensure that the other end is securely chocked. Do not rely solely on the machine's hydraulics or outriggers to support the machine when working under it.

Disconnect the battery cables while you're under the machine to prevent the engine from being started.

1. Position the axle under the frame and install mounting bolts and nuts. Tighten to a torque of 362 Nm (266 lb-ft).
2. Connect the drive shaft to the axle flange.
3. Connect the hydraulic hoses to the steering cylinder
4. Connect the brake lines to the axle brake housings.
5. Fill the axle differential, brake housings and wheel hubs with proper lubricant. See Preventive Maintenance.
6. Install the rims and tires. Do not lower the tires to ground until the axle is tested for proper operation.
7. If the axle has been repaired, test the axle for proper operation:
   a. Set the parking brake to lock the pinion shaft.

Reference Only

b. With the help of another person, standing on the opposite side, begin rotating each wheel forward as much as possible (both wheels will become blocked after awhile).

c. Free the right wheel and rotate the left wheel forward. Rotate the right wheel in opposite direction. The left wheel will turn freely without difficulty and the right wheel will turn in the opposite direction if axle assembly has been performed correctly. Repeat the procedure in the opposite direction (reverse gear).

IF ONE OF THE WHEELS DOES NOT ROTATE FREELY IN BOTH DIRECTIONS, then check step by step all assembly procedures. Check that the brakes are installed properly and are functioning correctly.

8. Bleed the brakes. See *Brake System*, page 9-1.

9. Lower the wheels to the ground.

10. Bleed the steering lines, see *Steering System*, page 10-1.

REAR STEERING AXLE REPAIR

WARNING

A raised and badly supported machine can fall on you causing severe injury or death. Position the machine on a firm, level surface before raising one end. Ensure that the other end is securely chocked. Do not rely solely on the machine's hydraulics or outriggers to support the machine when working under it.

Disconnect the battery cables while you're under the machine to prevent the engine from being started.

Removal

1. Lower the outriggers to raise the rear axle. Place blocks under the rear of the frame. Remove the rear wheels and tires.

2. Disconnect the hydraulic hoses from the steering cylinder. Plug and cap the hoses and ports.

3. Place a wheel jack under the axle beam. Remove the axle mounting bolts (36, Figure 8-138) and self-locking nuts (35). Carefully lower the axle. Remove the axle from under the machine.Disassembly

Axle Hub

1. If axle is attached to the frame, remove the rear wheels and tires. See WARNING above.

2. Remove hub cap (20, Figure 8-138). Then remove the cotter pin (19), slotted nut (21), washer (22) and outer bearing cone (18).

3. Pull hub (24) from spindle (9 or 10).

4. Remove the inner bearing cone (15) from the hub.

5. Remove outer oil seal retainer (14) and felt seal (13). Do not remove inner oil seal retainer (12) and spacer (11) from the spindle unless replacement is necessary.

6. Repeat steps 2 though 5 on the other side.

Steering Knuckle

NOTE: *The steering knuckle can be removed without disassembling the axle hub.*

1. Disconnect the steering cylinder (3) from the one of the steering knuckles (9 or 10, Figure 8-138).

2. Remove cotter pin (1) and slotted nut (part of item 29). Disconnect ball joint (29) from the steering knuckle using a tie rod fork and hammer.

3. Using a hammer and soft punch, remove retainer pin (5).

4. Remove retainer ring (27). Remove pin (8) and thrust washers (6 and 31). Then remove steering knuckle (9 or 10). Use care not to damage shims (38 - 41) when removing the steering knuckle. Keep the shims together for assembly.

5. If necessary, repeat the steps 1 through 4 for the other steering knuckle.

Inspection

Clean all parts thoroughly. See Introduction.

Make a careful inspection of all bearing cups and cones; including those not removed. Replace if rollers or cups are worn or show indication of damage or distortion. Bearing cones and cups must be replaced as a set.

Replace all parts which have damage. Also, replace any bolts with rounded corners, and all lock washers and seals at time of assembly.

Reference Only

Rear Steering Axel

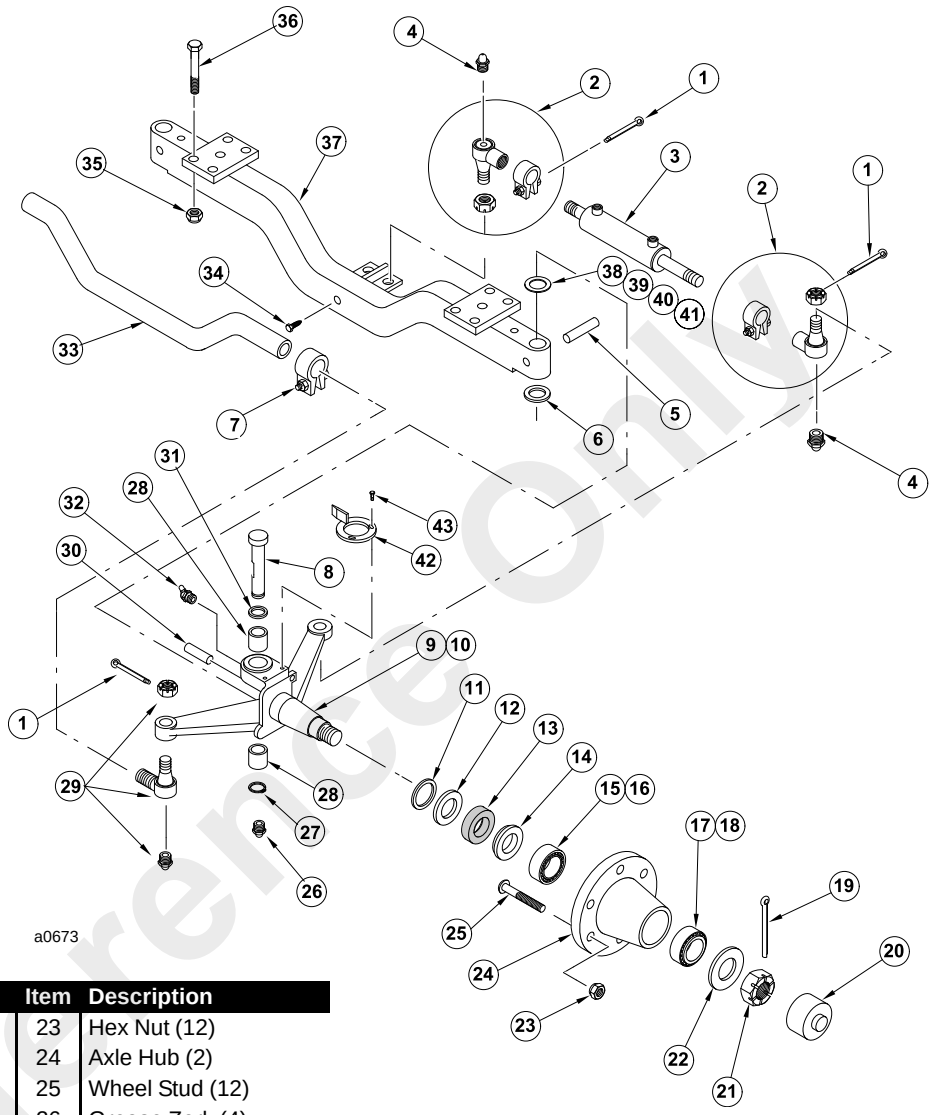

Item	Description	Item	Description
1	Cotter Pin (6)	23	Hex Nut (12)
2	Socket Assembly (4)	24	Axle Hub (2)
3	Steering Cylinder (2)	25	Wheel Stud (12)
4	Grease Zerk (4)	26	Grease Zerk (4)
5	Retainer Pin (2)	27	Retainer Ring (2)
6	Thrust Washer (2)	28	Bearing (4)
7	Clamp (2)	29	Tie Rod End (2)
8	Pin (2)	30	Stud (4)
9	Right Steering Knuckle	31	Thrust Washer (2)
10	Left Steering Knuckle	32	Grease Zerk (2)
11	Spacer (2)	33	Tie Rod
12	Oil Seal Retainer (2)	34	Tap Screw
13	Seal (2)	35	Self-Locking Nut (8)
14	Oil Seal Retainer (2)	36	Capscrew (8)
15	Bearing Cone (2)	37	Steering Axle Beam
16	Bearing Cup (2)	38	Shim (2)
17	Bearing Cup (2)	39	Shim (2)
18	Bearing Cone (2)	40	Shim (2)
19	Cotter Pin (2)	41	Shim (2)
20	Hub Cap (2)	42	Steering Bracket
21	Slotted Nut (2)	43	Capscrew (2)
22	Flat Washer (2)		

FIGURE 8-138

Reference Only

8

Axle Hub - Cross Section View

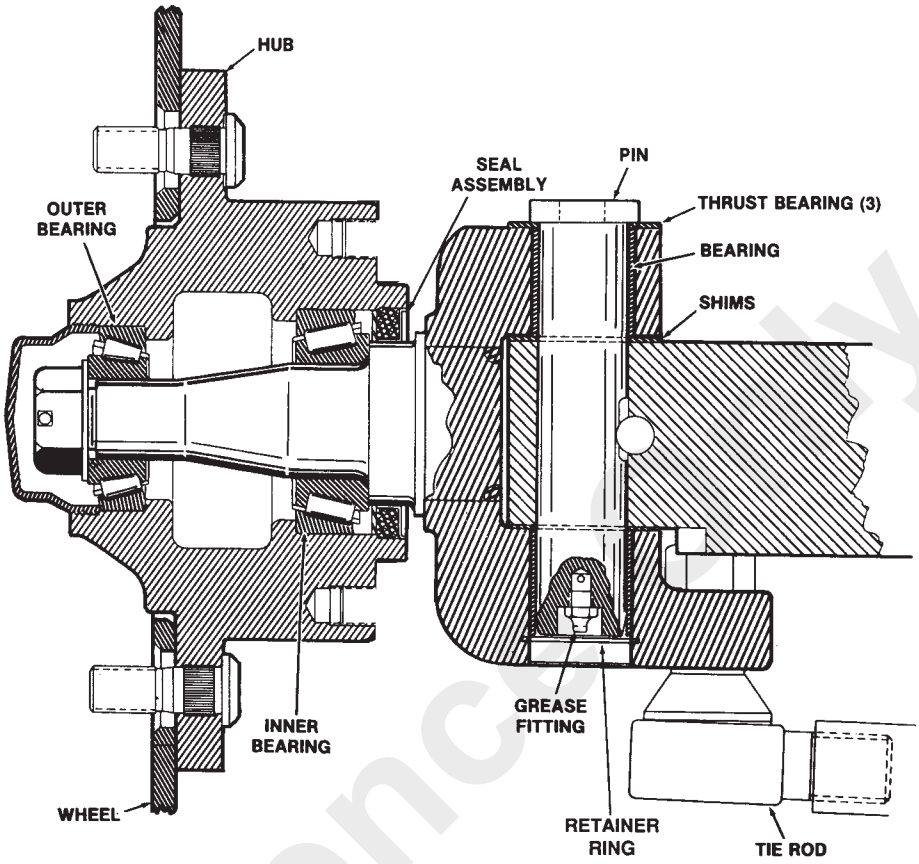

a0674

FIGURE 8-139

Assembly

WARNING

A raised and badly supported machine can fall on you causing severe injury or death. Position the machine on a firm, level surface before raising one end. Ensure that the other end is securely chocked. Do not rely solely on the machine's hydraulics or outrigger to support the machine when working under it.

Disconnect the battery cables while you're under the machine to prevent the engine from being started.

Steering Axle

1. If bearings (28, Figure 8-138) were removed, press new bearings into the pin bores of steering knuckles (9 and 10). The top of the bearings must be flush with the top of pin bore as shown in Figure 8-139.
2. Apply petroleum jelly to thrust washer (6, Figure 8-138) and install it on the axle beam (37).
3. Position the steering knuckle on the axle beam. By hand, lift the steering knuckle and install shims (38 - 41) until the steering knuckle fits tightly against the axle beam (minimum vertical movement). Shims are available in four sizes from 0.005 to 0.024 inch (0.127 - 0.601 mm).
4. Align the hole in the axle beam (37), thrust washer (6), shims (38 - 41) and steering knuckle (9 or 10). Install thrust washer (31) and pin (8). When installing the pin, be sure the machine flat for the retainer pin (5) is toward the axle center. Install retainer pin (5) using a soft punch and hammer. Install retainer ring (27).
5. Connect ball joint (29) to the steering knuckle with the slotted nut. Install cotter pin (1).
6. Connect the steering cylinder (3) to the steering knuckle.
7. Repeat steps 2 through 6 for the opposite steering knuckle (9 or 10).
8. Apply grease to grease zerks (4, 26 and 32) and grease zerk in item 29.

Reference Only

Axle Hub

1. Pack inner bearing cone (15, Figure 8-138) and outer bearing cone (18) with wheel bearing grease. Install the bearing cones into hub (24).
2. Install spacer (11) and inner oil seal retainer (12), if removed. Install felt seal (13) on spindle against inner oil seal retainer (12). Install outer oil seal retainer (14) on the spindle.
3. Install the assembled hub on the spindle of the steering knuckle.
4. Install washer (22) and slotted nut (21).
5. Rotate the hub while tightening the slotted nut (21) snug until tight to displace grease. Then, back off nut until the hub rotates free, usually 1/4-1/2 turn and install cotter pin (19).
6. Install hub cap (20).
7. Repeat steps 1 through 6 for the opposite axle hub.

Installation

WARNING

A raised and badly supported machine can fall on you causing severe injury or death. Position the machine on a firm, level surface before raising one end. Ensure that the other end is securely chocked. Do not rely solely on the machine's hydraulics or outriggers to support the machine when working under it.

Disconnect the battery cables while you're under the machine to prevent the engine from being started.

1. Use a wheel jack to move the steering axle into position under the crane. Raise the axle and install the eight mounting bolts (36, Figure 8-138) and eight self-locking nuts (35). Tighten the bolts to 245 Nm (180 lb-ft).
2. Connect the hydraulic lines to the steering cylinders.
3. Install the wheels and lower the tires to ground.
4. Bleed air from the steering lines. See *Steering System*, page 10-1.
5. Check wheel alignment, see Toe-In/Steering Angle Alignment.

DRIVE SHAFTS

Checking for Bearing Wear

At each trunnion, check the drive shaft for side movement. As wear in the bearings increases, the side movement will increase. Movement must be at a minimum to prevent vibration during operation.

Removal

NOTE: *Before removing the drive shaft mark both companion flanges and mark the sliding joint.*

Make note of which way the drive shaft is installed between the transmission and axle. Remove the attaching hardware and remove the drive shaft.

Disassembly

1. Place a flange yoke (1, Figure 8-140) in a vice. Using pliers, remove the two snap rings from the bearing caps in the flange yoke.
2. Apply force on the drive shaft in the direction of the bearings to push the bearings out of the flange yoke. When the bearings are removed, tilt the journal cross to permit removal of the universal joint.
3. Disassemble journal cross (2, Figure 8-140) from the drive shaft using the procedure in steps 1 and 2. After the snap rings are removed, use a hammer and soft drift with a flat face slightly smaller than the diameter of the bearing, to remove the bearings.
4. Repeat steps 1 through 3 for the other end.
5. To disassemble the slip tube (3) from the slip yoke (4), unscrew the dust cap and pull the two yokes apart.

Reference Only

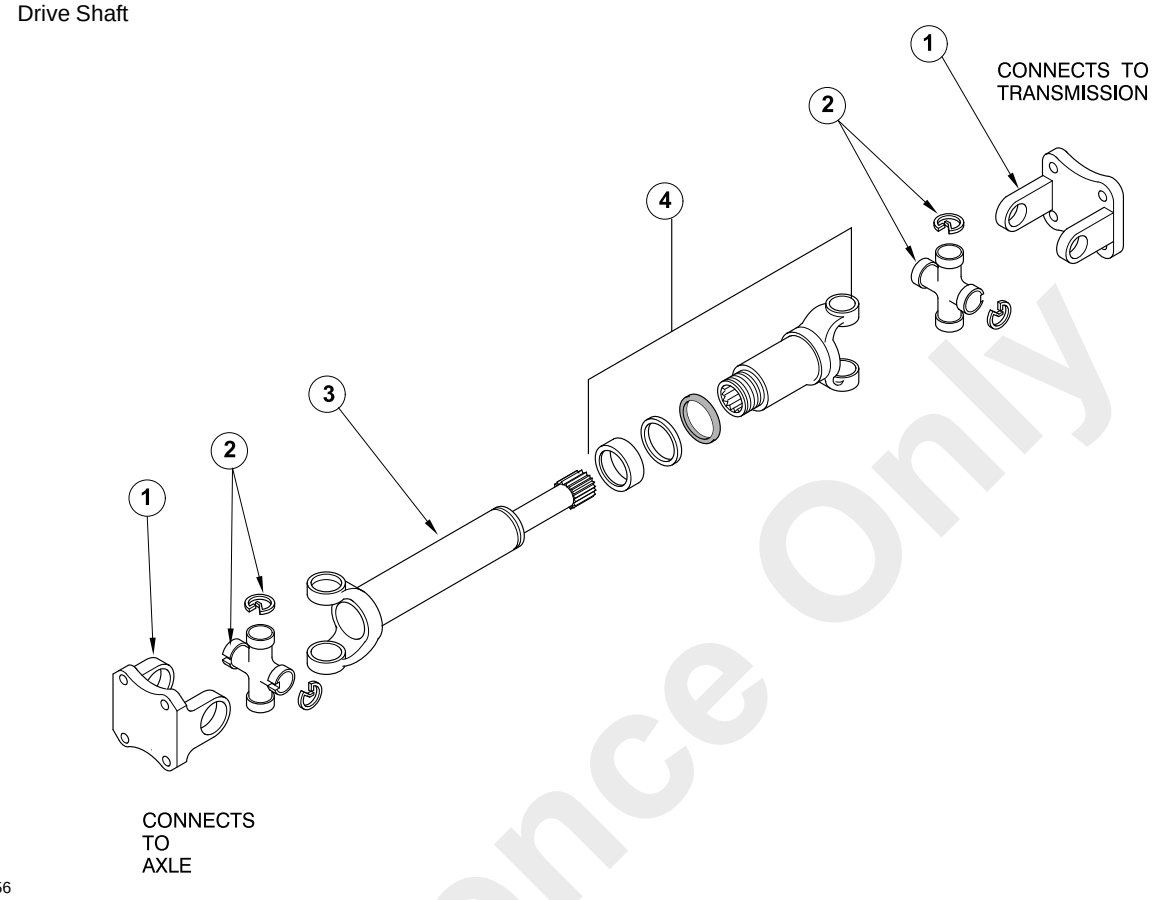

FIGURE 8-140

Inspection

Clean all parts in a suitable solvent. Remove all rough areas from any finished surfaces. Make sure the bearing surfaces on the journal crosses are smooth. Do not disassemble the needle bearings. Clean them with brush and apply a small amount of SAE 140 oil into each bearing cap and rotate the bearing on the trunnion to check for wear. If there is any indication of wear or damage to the needle bearings, bearing cap or journal crosses, replace the journal and bearings as an assembly.

Check for damage to the splines of the sleeve yoke. Make sure the splines are clean and smooth. Look for damage or distortion of the drive shaft tube. Damage can cause failure of the drive shaft under high torque loads. The drive shaft must be straight to inhibit vibration during operation. Replace the drive shaft if there is damage.

If new journal and bearings are not being installed, inspect the seals in the bearing caps. If they are damaged in any way, replace the complete journal and bearing assembly.

Assembly

1. Install the journal cross into the yoke of slip tube (3, Figure 8-140).
2. Apply a small amount of SAE 140 oil to the trunnions on the journal cross. Press the bearing cap assemblies into place. Use care not to cause damage to the bearings or caps. Install the snap rings. Make sure the snap rings are engaged fully into the grooves.
3. Repeat steps 1 through 3 on the opposite end of the drive shaft slip yoke end (4).
4. Repeat steps 1 through 3 and install a flange yoke (1) to each end of the drive shaft.

Reference Only

Published 2/23/2016, Control # 592-00

5. Apply SAE 140 oil to the splines on the slip tube (3). Assemble the dust cap assembly to the slip tube. Slide the slip tube into the slip yoke (4). Make sure both ends of the drive shaft are in the same plane. See “X” in Figure 8-141. Tighten the dust cap assembly.

NOTE: *The drive shaft must have both ends exactly on the same as shown in “X” of Figure 8-141. The yokes must not be at right angles as at “Y” or at an intermediate angle as in “Z”.*

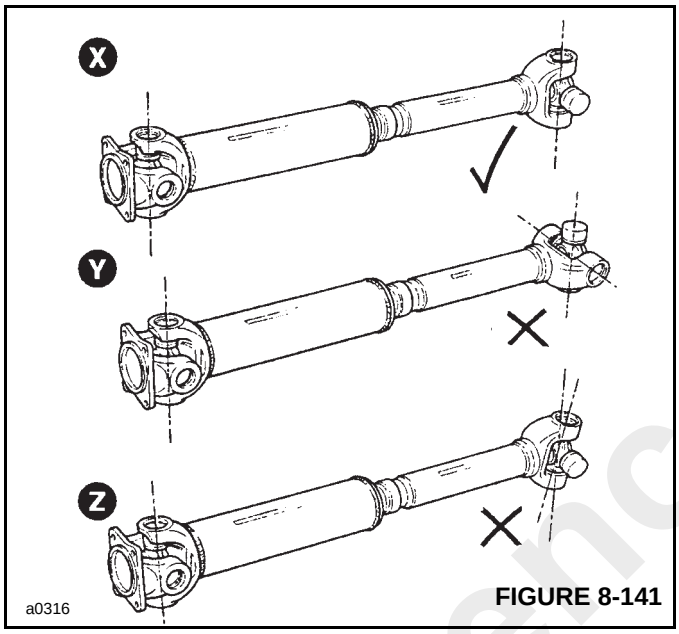

a0316 **FIGURE 8-141**

Installation

1. Fasten the flange yoke to the parking brake disc on the front axle with four caps crews and lock washers.
2. Fasten the other end to the transmission with four caps crews and self-locking nuts.
3. Apply a Lithium Base, E.P. No. 2 bearing grease to the three grease fittings on the drive shaft. One fitting on each journal cross and one on the slip yoke. Apply the grease until it exits through the seals. See Lubrication Procedure.
4. Check the drive shaft for correct balance before the machine is put into operation. Lower the outriggers to lift the wheels off the ground. Operate the drive train and check for vibration. If vibration is found, stop the engine and check the drive shaft. Make sure the drive shaft yokes are in the same plane. If they are the drive shaft needs to be balanced. Do not drive the crane with an unbalance drive shaft, possible damage to drive train could occur.

Lubrication Procedure

The drive shaft is an important part of the drive train and needs regular maintenance. There is a grease fitting on the slip joint and on each journal bearing cross. Apply grease to these fittings after every 50 hours of operation. Use a Lithium Base, E.P. No. 2 bearing grease. Always apply enough grease to remove the old grease. On the slip joint, apply grease to the grease fitting until grease comes through the hole in the end of the shaft. Put your finger over the hole (Figure 8-142) and continue to apply grease until the grease shows at the seal on the slip joint.

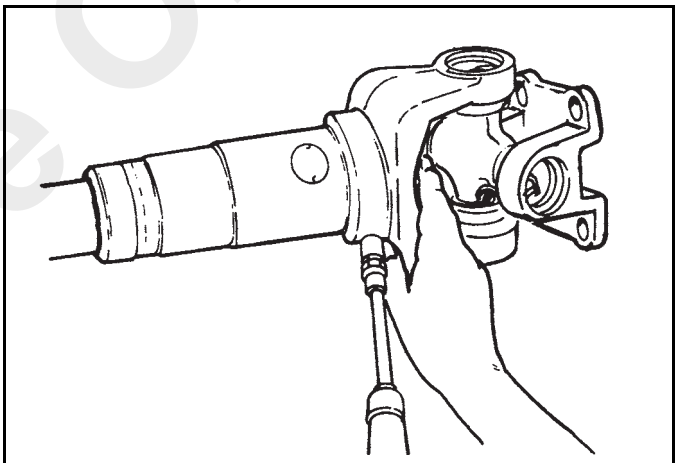

a0317 **FIGURE 8-142**

WHEELS AND TIRES

WARNING

Never try to disassemble the wheel until all air is released from the tire. The tire retaining ring and rim of the wheel can come off with explosive force and can cause serious injury or death. Be extremely careful when working with them. Always use a tire and rim cage guard when inflating tires.

Reference Only

Tire Inflation

Check the tire pressure daily before operation. Also, look for cuts and damage.

Table 8-2
Tire Pressures

Tire Size	Pressure
10:00 x 15, 14-ply rated	8.62 bar (125 psi)

Wheel Nut Torque

Tightening order of the studs is shown in Figure 8-143. Check the tightness of the lug nuts after every 50 hours of operation.

Proper wheel nut torque is 306 Nm (225 lb-ft.).

Torquing Sequence

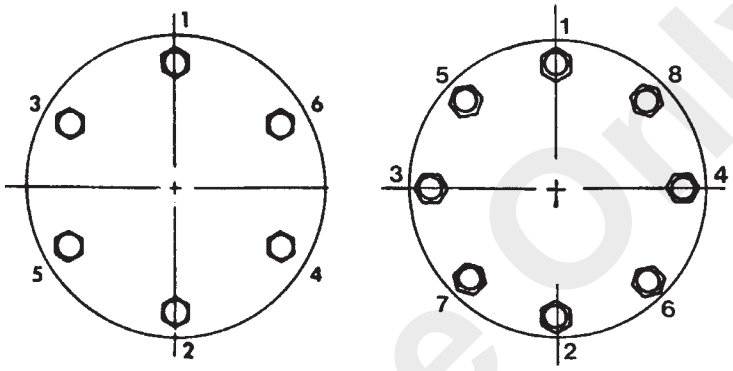

a0857

FIGURE 8-143

Reference Only

Published 2/23/2016, Control # 592-00

SECTION 9
BRAKE SYSTEM

SECTION CONTENTS

Technical Data 9-1
Front Axle Brakes 9-1
Accumulator 9-1
Accumulator Charging Valve 9-1
Priority Flow Control Valve 9-2
Description 9-2
Service Brake System. 9-2
Parking Brake System 9-4
Maintenance And Adjustments 9-5
Service Brake Bleeding 9-5
Parking Brake Bleeding 9-5
Parking Brake Adjustment 9-6
Accumulator Charging 9-6
Test 9-6
Brake Piston Seal Leakage Test 9-6
Service Brake Repair. 9-8
Parking Brake Repair 9-8
Lining Kit Replacement 9-8
Repair Kit Installation. 9-11
Seal Kit Installation 9-12
Brake Modulating Valve Repair 9-14
Removal. 9-14
Disassembly 9-14
Assembly 9-14
Installation 9-15
Troubleshooting 9-16
Service Brakes. 9-16
Parking Brake 9-16

TECHNICAL DATA

Front Axle Brakes

Type	Wet disc brake
Actuation	Hydraulic piston
Location	Inboard - Axle center casing (2 brake sets)
Brake discs	One each side
Counterdiscs	Two each side
Nominal brake disc thickness	4.83 mm (0.19 in)
Nominal counterdisc thickness	5 - 10.8 mm (0.196 - 0.425 in)
Maximum brake disc wear (each side)	0.15 mm (0.006 in)
Maximum brake counterdisc wear	NA
Nominal brake piston stroke	1 mm (0.030 in)
Oil displacement for brake actuation	8.9 ml (0.30 oz)

Accumulator

Type	Piston, Hydro-pneumatic
Volume	2632 cu. cm (120.63 cu. in)
Nitrogen Recharge Pressure	5171 ± 275 kPa (750 ± 40 psi).

Accumulator Charging Valve

Nominal Accumulator Charge Rate	10.2 ± 1.9 L/min (2.7 ± 0.5 gpm)
Nominal High Limit	13 790 ± 1034 kPa (2000 ± 150 psi)
Nominal Low Limit	11 376 ± 1034 kPa (1650 ± 150 psi)

Reference Only

Priority Flow Control Valve

Priority Flow Set At..... 12. 3 L/min (3.25 gpm)
Control Pressure ..... 758 kPa (110 psi)
Relief Valve Setting ..... 17 237 kPa (2500 psi)

DESCRIPTION

There are two brake systems used on the crane; the service brake system and the parking brake system.

Service Brake System

The service brake system (Figure 9-1 and 9-2) consists of the second section of the secondary hydraulic pump, a relief valve included in the priority flow control valve, an accumulator charging valve, a low pressure warning switch, an accumulator, a needle valve, a brake modulating valve, a brake light switch and the front axle service brakes.

Description of Operation (Figures 9-1 and 9-2)

Hydraulic Pump

The secondary hydraulic pump (Section No. 2) supplies hydraulic oil flow to the priority flow control valve (Figure 9-1).

Priority Flow Control Valve

The priority flow control valve in normal operation supplies oil to the accumulator charging valve. If oil is required for the steering operation the priority flow control valve shifts to furnish flow to the steering system. (See *Steering System*, page 10-1.) The priority flow control valve also includes the relief valve used to protect the steering and brake systems.

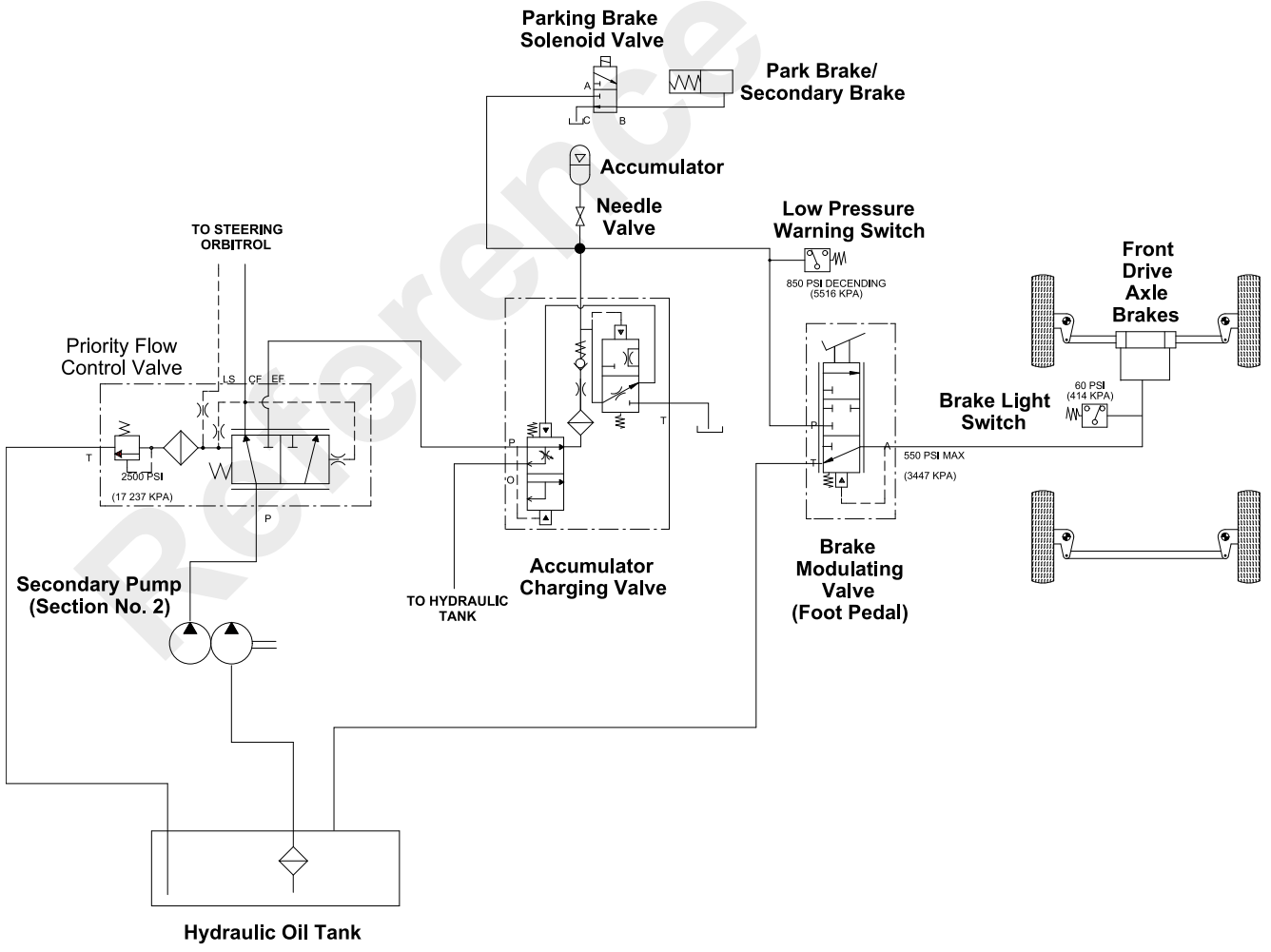

a1323

Typical Brake Circuit Schematic

FIGURE 9-1

Reference Only

Published 2/23/2016, Control # 592-00

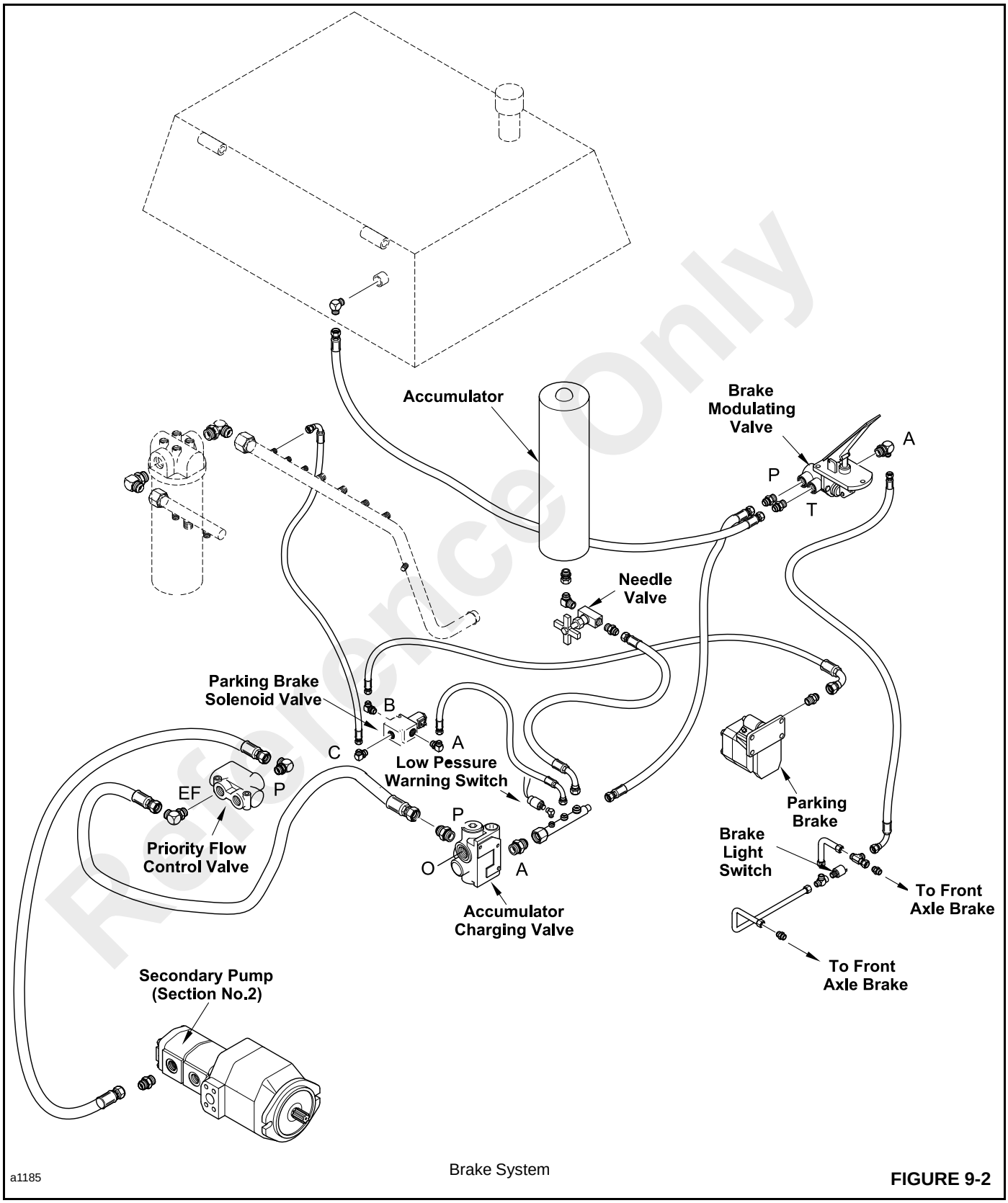

Brake System

FIGURE 9-2

Reference Only

9

Accumulator Charging Valve

The accumulator charging valve supplies oil to the accumulator on demand. This is accomplished at a preset rate at a selected pressure; neither of which is adjustable.

The flow to the downstream brake modulating valve will be reduced fractionally for a short time when the accumulator is charging. This does not noticeably affect the operation of these components. Full system pressure is available to the downstream components at all times, providing oil delivery and pressure from the pump and relief valve are not impeded.

The accumulator charging flow rates and upper and lower pressure limits are set at the time of manufacture and are not adjustable.

Low Pressure Warning Switch

The low pressure warning switch illuminates a red indicator light on the dash when the brake pressure goes below 5861 kPa (850 psi). When the red light illuminates, there still is enough pressure for brake application to stop the crane. After which, the brake system must be checked and repaired.

Accumulator

The accumulator is a hydro-pneumatic, piston-type accumulator. This means that the accumulator is charged with nitrogen and stores hydraulic fluid to a pressure of 13 790 kPa (2000 psi) for brake system usage.

Needle Valve

The needle valve is used during service of the brake system. When closed, It shuts off the hydraulic supply from the accumulator, holding a pressure in the accumulator. This eliminates the need to charge the accumulator after brake system service.

CAUTION

The needle valve must be in the open position for the brake system to operate properly. If it is not open, the charging pump will cycle every time the brake pedal is depressed and if the crane's engine stops there may not be enough pressure to stop the crane.

Brake Modulating Valve

The brake modulating valve is a closed-center spool design. When the valve is in non-applied position, brake port (A, Figure 9-1) is open to tank port (T). As the valve is initially actuated, tank port (T) is closed off from brake port (A). Additional actuation opens pressure port (P) to brake port (A). More input force will increase the pressure to brake port (A) until actuation effort and hydraulic reaction forces are balanced. When actuation is released, the valve returns to its non-applied position.

Brake Light Switch

The brake light switch illuminates the brake lights when the brake modulating valve builds system pressure to 414 kPa (60 psi).

Front Axle Brakes

The front axle brakes are self-adjusting oil immersed and are located on both sides of axle center housing (Figure 9-3). Each brake assembly consists of one brake disc and two counterdiscs. The brakes are applied when the brake modulating valve is actuated. Hydraulic fluid under pressure reacts against the brake pistons, forcing the brake counterdiscs against the brake disc, slowing and/or stopping the crane.

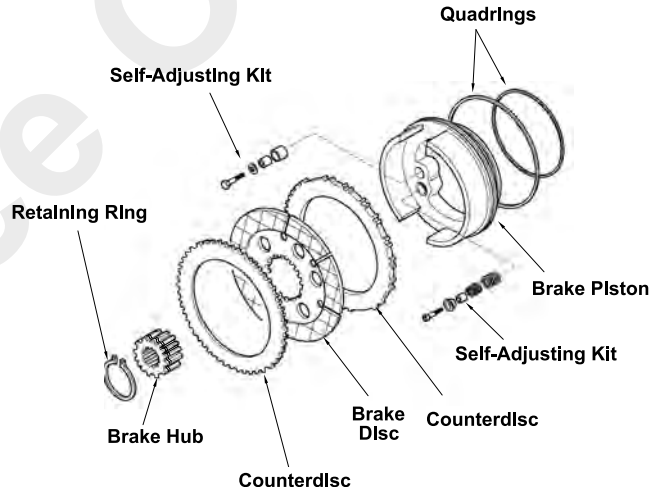

Front Axle Brake Assembly **FIGURE 9-3**

Parking Brake System

Description of Operation

The parking brake system consists of two-way switch in the instrument panel, a solenoid valve and a parking brake. The system connects into the service brake system (Figure 9-1 and 9-2) and uses the accumulator for system pressure.

Parking Brake

The parking brake is a disc-type brake (Figure 9-4). The brake disc is attached to the input shaft of the front axle. The brake is attached to the frame behind the front axle. When the parking brake switch is placed in the engage position, hydraulic supply is shut off to the parking brake and the springs in the parking brake apply the brake pads against the brake disc, holding the crane from moving.

Reference Only

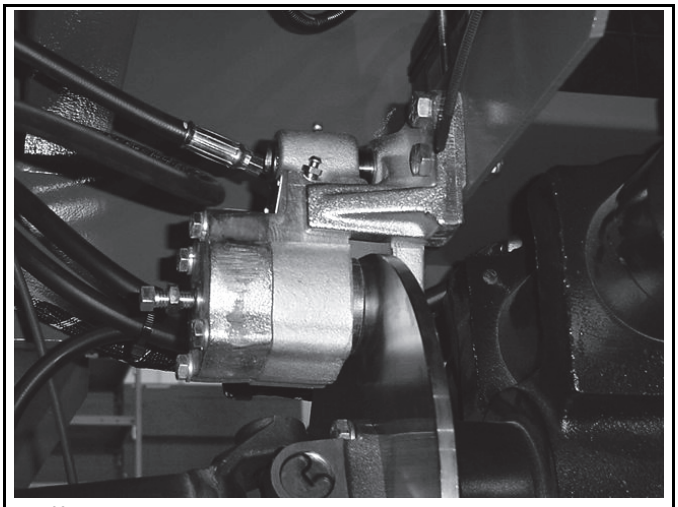

p1199 FIGURE 9-4

Parking Brake Solenoid Valve

The parking brake solenoid valve (Figure 9-5) is activated by the parking brake switch in the operator's instrument panel. It is a normally-closed solenoid valve. When the switch is placed in the ENGAGE position, no current is sent to the solenoid valve, thus the solenoid valve remains closed and the parking brake is engaged.

When the parking brake switch is placed in the DISENGAGE position, electrical current is sent to the solenoid valve. The solenoid shifts the spool in the valve to open the circuit to the parking brake. The hydraulic fluid, under pressure, disengages the brake pads from the brake disc. Even though the parking brake switch may be in the DISENGAGE position, in the event of a loss of pressure in the accumulator below what it takes to apply the service brakes, the parking brake will engage.

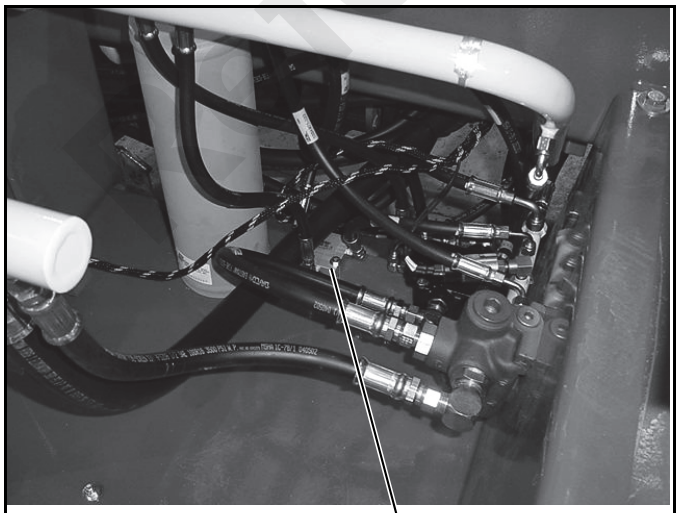

p1198 Parking Brake Solenoid Valve FIGURE 9-5

MAINTENANCE AND ADJUSTMENTS

Service Brake Bleeding

When ever a brake line is disconnected, the brake system must be bled to remove any trapped air. Air in the brake lines will cause the brakes to be spongy.

NOTE: Before working on the brake system, make sure the crane is on level ground and that all four wheels are chocked.

NOTE: The accumulator must be charged before this operation can be performed. If you are not sure the accumulator is charged, engage the parking brake, start the engine and let it run for several minutes.

1. Engage the parking brake and shut off the engine. Block all wheels on both sides.
2. There are two bleed screws; one for each set of brakes. Attach a tube to one of the brake bleed screws (Figure 9-6) and place the other end in a suitable container.

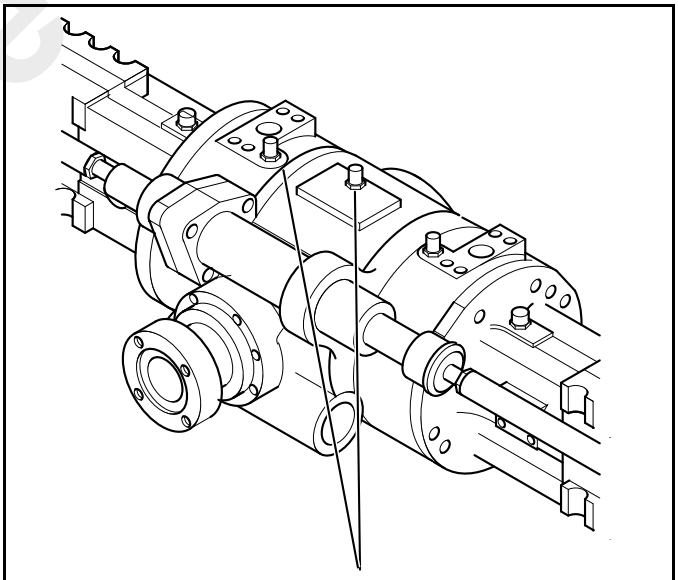

a0873 Front Axle Brake Bleed Screws FIGURE 9-6

3. Open the bleed screw and apply the brake foot pedal.
4. Observe the fluid exiting the hose. When there is no air being released, close the bleed screw with the pedal still being applied.
5. Repeat steps 2 through 4 using the other bleed screw.

Parking Brake Bleeding

NOTE: Before working on the brake system, make sure the crane is on level ground and that all four wheels are chocked.

Reference Only

NOTE: The accumulator must be charged before this operation can be performed. If you are not sure the accumulator is charged, engage the parking brake, start the engine and let it run for several minutes.

1. Engage the parking brake and shut off the engine. Block all wheels on both sides.
2. Attach a tube to the bleed screw on the parking brake (Figure 9-7) and place the other end in a suitable container.
3. Open the bleed screw, then disengage the parking brake.
4. Observe the fluid exiting the hose. When there is no air or fluid being released, close the bleed screw with the parking brake still disengaged.
5. Engage the parking brake.
6. Repeat steps 3-5 as needed until no air is release from the fluid.

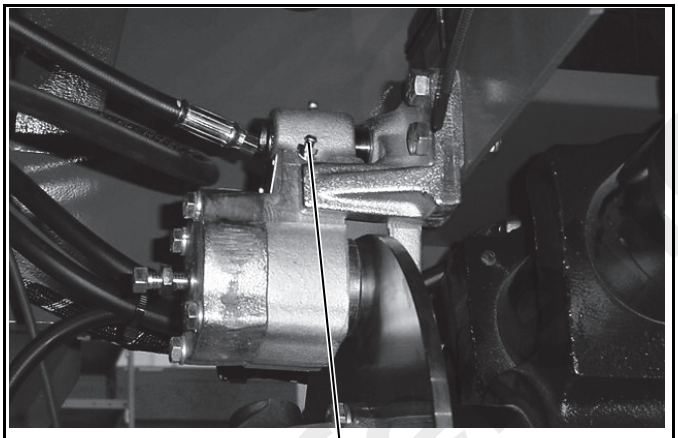

p1201 Parking Brake Bleed Screw **FIGURE 9-7**

Parking Brake Adjustment

CAUTION

Before adjusting the parking brake discs, make sure that the machine is on level ground. Place chocks on both sides of the four tires. Remove the ignition key. If these precautions are not adhered to, the crane could run you over while performing the adjustment.

When the parking brake is engaged and it will not hold the crane in position, it may be necessary to adjust the parking brake disc pads.

1. Shut off the engine and place chock blocks in front and behind all four wheels. Release the parking brake. Check that the brake moves freely on the guide/slide pin.
2. Loosen the lock nut and adjusting screw (Figure 9-8).
3. Place a 0.030 mm (0.012 in) feeler gauge between the disc and one of the linings.
4. Tighten the adjusting screw until it is just possible to remove the feeler gauge.
5. Tighten the jam nut while holding the adjusting screw with a wrench. Remove the feeler gauge.
6. Engage the parking brake. Then, release the parking brake and recheck that the brake moves freely on the guide/slide pin.

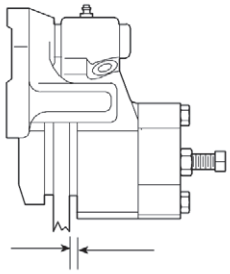

a0608 Brake Adjusting Screw **FIGURE 9-8**

Accumulator Charging

The accumulator must be charged with NITROGEN. Do not use compressed air. Remove the rubber cap over the charging valve on top of the accumulator and install nitrogen charging apparatus. Charge the accumulator to 5171 ± 275 kPa (750 ± 40 psi).

TEST

Brake Piston Seal Leakage Test

The following test procedure explains how to check if a brake piston is severely damaged/destroyed or if the seals have a small cut or nick. The test procedure must only be done when the axle is COLD.

NOTE: Before working on the brake system make sure the machine is on level ground and chock all four wheels.

NOTE: Do not drive the machine with any part of the brake system disconnected. When the test has been completed, reconnect all brake lines and bleed the

Reference Only

brake system using recommended procedures, (see *Service Brake Bleeding*, page 9-5).

1. With the engine shut off and the parking brake engaged, close the accumulator needle valve (Figure 9-9) to shut off hydraulic pressure to the service brakes.

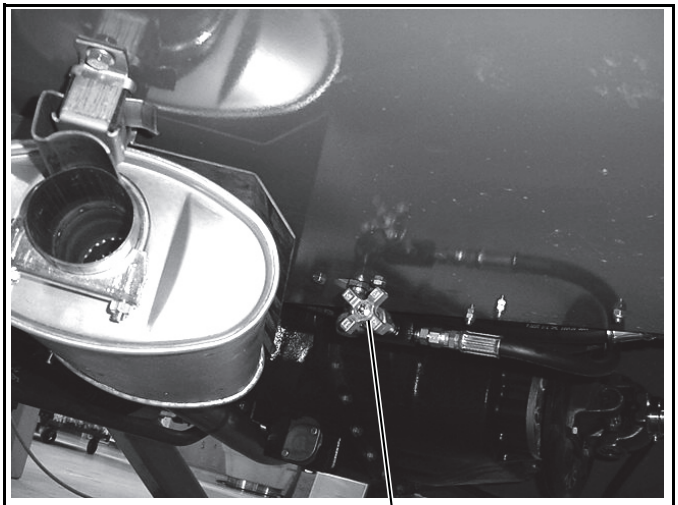

FIGURE 9-9

2. Actuate the brake foot pedal until no resistance is felt and the system pressure has been released.

NOTE: Do not disconnect any lines until the brake circuit pressure has been released.

3. Remove and cap the brake piston feed line (A, Figure 9-10).

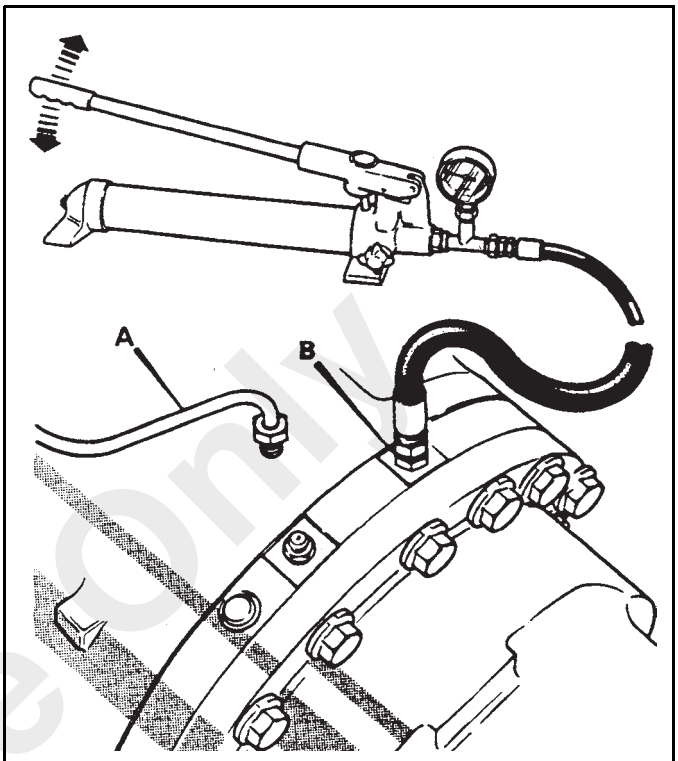

Hand Pump Installed on Typical Axle

FIGURE 9-10

4. To check for severe piston seal damage:

a. Fill the housing of a hand pump with recommended lubricant. See *Axles/Drive Shafts/Wheels and Tires*, page 8-1.

b. Install the hand pump fitted with a 0 to 6890 kPa (0 to 1000 psi) pressure gauge to port (B, Figure 9-10).

NOTE: The hand pump MUST be filled with recommended oil (see *Axles/Drive Shafts/Wheels and Tires*, page 8-1). System pressure is 3790 kPa (550 psi) DO NOT exceed 4134 kPa (600 psi).

c. Use the hand pump to generate a pressure in the brake piston housing.

d. If the pressure falls off rapidly, or if no pressure reading can be obtained, the seals are severely damaged and must be replaced.

5. If pressure falls off slowly, the piston seals may have small cuts or nicks.To verify for small cuts or nicks in the piston seals perform the following test:

a. Install an adapter fitted with a piece of clear tube (approximately 120 mm [4.75 in] long to the brake piston port [B, Figure 9-11]).

Reference Only

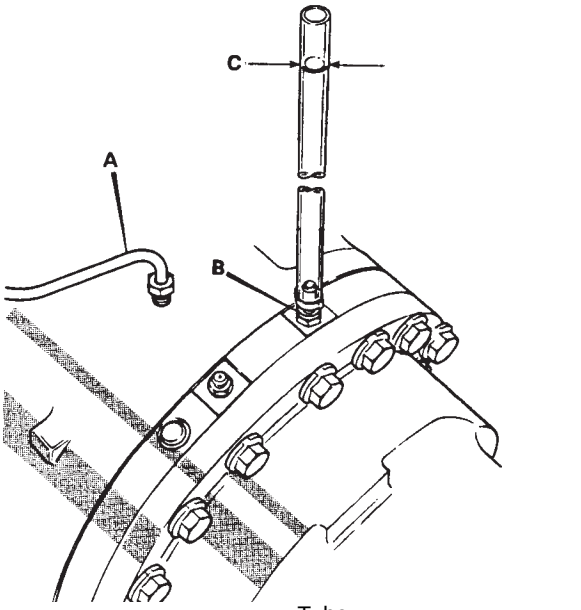

FIGURE 9-11

NOTE: The tube must be kept vertical during the test. Use tape to attach the tube to the side of machine.

b. Fill the tube with recommended oil (see *Axles/Drive Shafts/Wheels and Tires*, page 8-1) three quarters full.

c. Using a suitable pen, mark the level line (C) of the fluid in the tube.

d. After approximately 1/2 hour, check if the level has dropped below the original marked line. If it has then check the brake piston seals for slight nicks, cuts or general wear.

6. Repeat steps 3 through 5 for the opposite brake piston seals.

7. Reconnect all brake lines and bleed the brake system as recommended in *Service Brake Bleeding*, page 9-5).

SERVICE BRAKE REPAIR

See "*Front Drive Axle Repair*, page 8-8."

PARKING BRAKE REPAIR

Lining Kit Replacement

CAUTION

Before replacing the parking brake linings, make sure that the machine is on level ground. Place chocks on both sides of the four tires. Remove the ignition key. If these precautions are not adhered to, the crane could run over you while performing the replacement.

NOTE: The new linings must be kept free of grease, oil, etc.

The lining kit is indicated in Figure 9-12 with a n symbol.

1. Close the needle valve located under the accumulator (Figure 9-9). This will shut off accumulator hydraulic pressure to the parking brake. Release system pressure by actuating the service brake pedal until no resistance is felt. Then, engage and disengage the parking brake to release its pressure.

2. Slowly, loosen the hydraulic hose from the parking brake. Some pressure may still be present in the hydraulic hose. Let the pressure escape and then remove the hydraulic hose.

3. Cap the hydraulic hose to prevent contamination from entering the hydraulic system.

4. Loosen lock nut (8, Figure 9-12) and back off adjusting bolt (7).

5. Remove the bolts and nuts used to fasten the brake mounting bracket assembly to the crane. Remove the parking brake.

6. Separate the mounting bracket assembly (31, Figure 9-12) from the brake.

7. Clamp the brake in a vice with soft jaws with the clearance slot facing straight up.

NOTE: Clamping should be done on sides of the brake, not on machined surfaces.

8. Remove two screws (27) through access holes in housing (26). Using a thin blade tool, pry lining (25) from housing (26) and remove the lining and two bushings (24) through the disc clearance slot.

9. Rotate lining assembly (22) until screws (21) are aligned with the access holes in housing (26), see Figure 9-12. Remove the two flat head screws (21). Pry lining (20) from piston (19) and remove the lining through the disc clearance slot.

10. Install new lining (20) into piston (19) through the disc clearance slot. Install new flat head screws (21) and tighten to a torque of 3.4-4.5 Nm (30-40 lb-in).

Reference Only

11. Insert new bushings (24) into new lining (25). Install the new lining into housing (26) through the disc clearance slot. Line up the holes with the housing and fasten with two new screws (27). Tighten to a torque of 2.5-3.2 Nm (22-28 lb-in).

12. Assemble the brake assembly onto mounting bracket (31). Install the parking brake assembly onto the frame of the crane. Attach the hydraulic hose.

13. Adjust the lining clearance.

14. Open the accumulator needle valve and then bleed air from the system as described in *Parking Brake Bleeding*, page 9-5.

Reference Only

Parking Brake - Exploded View

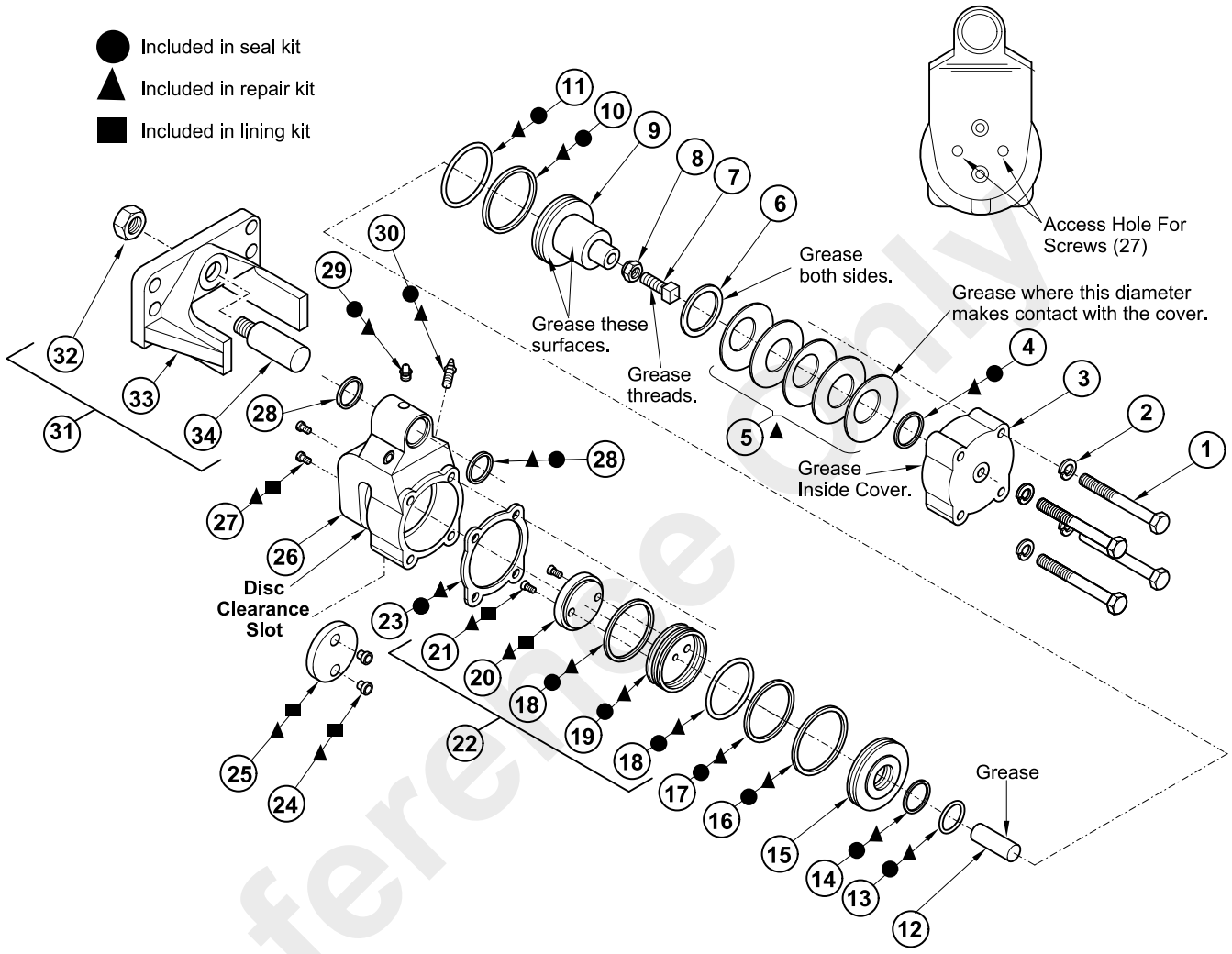

Item	Description	Item	Description	Item	Description	Item	Description
1	Capscrew (4)	10	Backup Ring	18	O-ring (2)	26	Housing
2	Lockwasher (4)	11	O-Ring	19	Piston	27	Screw (2)
3	Cover	12	Push Rod	20	Lining	28	Seal (2)
4	Seal	13	O-Ring	21	Screw (2)	29	Grease Zerk
5	Belleville Springs (5)	14	Backup Ring	22	Lining Assembly	30	Bleeder Screw
6	Washer	15	Piston	23	Gasket	31	Mounting Bracket Assembly
7	Adjusting Bolt	16	O-Ring	24	Bushing (2)	32	Nut
8	Lock Nut	17	Backup Ring	25	Lining	33	Bracket
9	Piston					34	Pin

a0779

FIGURE 9-12

Reference Only

Published 2/23/2016, Control # 592-00

CAUTION

The needle valve must be in the open position for the brake system to operate properly. If it is not open, the charging pump will cycle every time the brake pedal is depressed and if the crane's engine stops there may not be enough pressure to stop the crane.

Repair Kit Installation

The parking brake has a repair kit available. It includes all the parts necessary to rebuild the brake. These parts are indicated in Figure 9-12 with a ▲ symbol.

CAUTION

Before repairing the parking brake, make sure that the machine is on level ground. Place chocks on both sides of the four tires. Remove the ignition key. If these precautions are not adhered to, the crane could run you over while performing the repair.

NOTE: When removing seals and backup rings be careful not to scratch or mar the pistons.

The new linings must be kept free of grease, oil, etc.

1. Close the needle valve located under the accumulator (Figure 9-9). This will shut off hydraulic pressure to the parking brake. Release system pressure by actuating the service brake pedal until no resistance is felt. Then, engage and disengage the parking brake to release its pressure.
2. Slowly, loosen the hydraulic hose from the parking brake. Some pressure may still be present in the hydraulic hose. Let the pressure escape and then remove the hydraulic hose.
3. Cap the hydraulic hose to prevent contamination from entering the hydraulic system.
4. Loosen lock nut (8, Figure 9-12) and back off adjusting bolt (7).
5. Remove the bolts and nuts used to fasten the brake mounting bracket assembly to the crane. Remove the parking brake assembly.
6. Separate the mounting bracket assembly (31, Figure 9-12) from the brake assembly.
7. Clamp the brake in a vice with soft jaws with the cover (3) in a vertical position.

NOTE: Clamping should be done on sides of the brake, not on machined surfaces.

8. Remove bleeder screw (30).
9. Using a sharp bladed tool, carefully remove two seals (28) from housing 26). Note the direction the seals were installed.

WARNING

Cap (3) is under spring pressure. Use care when removing the cap to prevent personal injury.

10. Loosen but do not remove four capscrews (1). Loosen screws evenly in the order of A, B, C and D as shown in Figure 9-13 until spring preload is released.

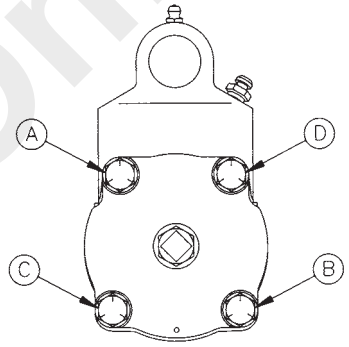

a0783 Capscrew Loosening Sequence **FIGURE 9-13**

11. Remove capscrews (1), lockwashers (2), cover (3) and gasket (23). Using a thin blade screw driver, remove seal (4) from cover (3).
12. Remove belleville springs (5) and if present, washer (6). When removing the belleville springs take note of the stacking sequence.
13. Remove piston (9) from housing (26) bore. Remove O-ring (11) and back-up ring (10) from the piston. Push rod (12) should also come out with piston (9).
14. Remove piston (15) from housing (26) bore. Remove O-rings (13 and 16) and back-up rings (14 and 17) from piston (15).
15. Remove lining and piston assembly (22) from housing (26) bore. Holding assembly on a flat surface, separate lining (20) and piston (19) by removing two flat head screws (21). Remove O-rings (18) from piston (19).
16. Loosen vice jaws and rotate the brake so that the disc clearance slot is facing upward. Remove pan head screws (27), lining (25) and bushings (24) from housing (26).
17. Lubricate all rubber components (NOT THE BRAKE LININGS) in clean hydraulic oil. Use the same type as used in the hydraulic system.

Reference Only

18. Clean all parts (EXCEPT LININGS) and housing bore thoroughly with a suitable solvent and then coat them with clean hydraulic oil of the same type used in the hydraulic system. Keep all parts free of contaminants, dirt and debris.

NOTE: Coat the surfaces indicated in Figure 9-12 with a Lithium Base, E.P. No. 2 bearing grease or equivalent.

19. Install new lining (25) in housing (26) using new bushings (24) and pan head screws (27). Tighten the screws to 2.5-3.3 Nm (22-28 lb-in).

20. Install new lining (20) on piston (19) using new flat head screws (21). Tighten screws to a torque of 3.4-4.5 Nm (30-40 lb-in). Install new O-rings (18) on piston (19) and insert lining and piston assembly (22) into housing (26) bore.

21. Carefully install two new seals (28) in housing (26). Be sure to install the seals the same direction as they were removed.

22. Install bleed screw (30). Tighten to a torque of 12.2-20.3 Nm (9-15 lb-ft).

23. Install new O-rings (13 and 16) and new backup rings (14 and 17) on piston (15). Be sure they are installed in the correct order.

24. Install piston (15) into housing (26) bore. Be sure piston is installed in the correct direction. Be careful not to pinch the O-rings on the inlet ports.

25. Install new backup ring (10) and new O-ring (11) on piston (9). Be sure they are installed in the proper order. Install push rod (12) in bore of piston (9). Install piston into housing (26) bore.

26. Fully lubricate the threads of adjusting screw (7) and lock nut (8) and install into cover (3).

27. Install washer (6), if used, and new springs (5) over end of piston (9). Follow the stacking sequence shown in Figure 9-14.

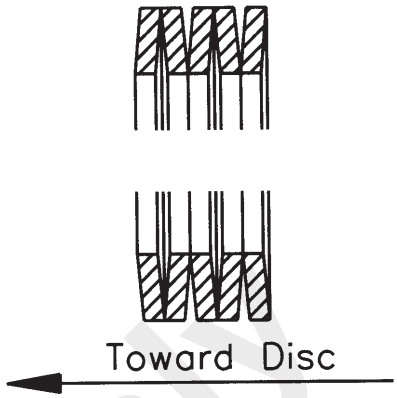

a0782 Belleville Spring Stacking Sequence **FIGURE 9-14**

28. Install new seal (4) in cover (3). Be sure inside of cover is coated with grease.

29. Install new gasket (23), cover (3), lockwashers (2) and capscrews (1). Tighten the screws evenly in the order of A, B, C and D as shown in Figure 9-13. When installed, tighten each screw to a torque of 29.8-36.6 Nm (22-27 lb-ft).

30. Assemble the brake assembly onto the mounting bracket (31).

31. Install the parking brake assembly onto the frame of the crane.

32. Attach the hydraulic hose.

33. Adjust the lining clearance.

34. Open the accumulator needle valve and then bleed air from the system.

CAUTION

The needle valve must be in the open position for the brake system to operate properly. If it is not open, the charging pump will cycle every time the brake pedal is depressed and if the crane's engine stops there may not be enough pressure to stop the crane.

Seal Kit Installation

The parking brake has a seal kit available. It includes all the parts necessary to replace all the seals in the brake. These parts are indicated in Figure 9-12 with a l symbol.

Reference Only

WARNING

Before replacing the parking brake seals, make sure that the machine is on level ground. Place chocks on both sides of the four tires. Remove the ignition key. If these precautions are not adhered to, the crane could run you over while performing the repair.

NOTE: When removing seals and back-up rings be careful not to scratch or mar the pistons.

The linings must be kept free of grease, oil, etc.

1. Close the needle valve located under the accumulator (Figure 9-9). This will shut off hydraulic pressure to the parking brake. Release system pressure by actuating the service brake pedal until no resistance is felt. Then, engage and disengage the parking brake to release its pressure.
2. Slowly, loosen the hydraulic hose from the parking brake. Some pressure may still be present in the hydraulic hose. Let the pressure escape and then remove the hydraulic hose.
3. Cap the hydraulic hose to prevent contamination from entering the hydraulic system.
4. Loosen lock nut (8, Figure 9-12) and back off adjusting bolt (7).
5. Remove the bolts and nuts used to fasten the brake mounting bracket to the crane. Remove the parking brake assembly.
6. Separate the mounting bracket (31, Figure 9-12) from the brake assembly.
7. Clamp the brake in a vice with soft jaws with the cover (3) in a vertical position.

NOTE: Clamping should be done on sides of the brake, not on machined surfaces.

8. Using a sharp bladed tool, carefully remove two seals (28) from housing 26). Note the direction the seals were installed.

WARNING

Cap (3) is under spring pressure. Use care when removing the cap to prevent personal injury.

9. Loosen but do not remove four capscrews (1). Loosen screws evenly in the order of A, B, C and D as shown in Figure 9-13 until spring preload is released.
10. Remove capscrews (1), lockwashers (2), cover (3) and gasket (23). Using a thin blade, remove seal (4) from cover (3).
11. Remove belleville springs (5) and if present, washer (6). When removing the belleville springs take note of the stacking sequence.
12. Remove piston (9) from housing (26) bore. Remove O-ring (11) and back-up ring (10) from piston. Push rod (12) should also come out with piston (9).
13. Remove piston (15) from housing (26) bore. Remove O-rings (13 and 16) and back-up rings (14 and 17) from piston (15).
14. Remove lining and piston assembly (22) from housing (26) bore. Remove O-rings (18) from the lining and piston assembly.
15. Lubricate all rubber components in clean hydraulic oil. Use the same type as used in the hydraulic system. KEEP THE LININGS FREE OF OIL, GREASE AND SOLVENTS.
16. Clean all parts and housing bore thoroughly with a suitable solvent and then coat them with clean hydraulic oil of the same type used in the hydraulic system. Keep all parts free of contaminants, dirt and debris.

NOTE: Coat the surfaces indicated in Figure 9-12 with a Lithium Base, E.P. No. 2 bearing grease or equivalent.

17. Install new O-rings (18) on lining and piston assembly (22) and insert the assembly into housing (26) bore.
18. Carefully install two new seals (28) in housing (26). Be sure to install the seals the same direction as they were removed.
19. Install new O-rings (13 and 16) and new back-up rings (14 and 17) on piston (15). Be sure they are installed in the correct order.
20. Install piston (15) into housing (26) bore. Be sure piston is installed in the correct direction. Be careful not to pinch the O-ring on the inlet ports.
21. Install new back-up ring (10) and new O-ring (11) on piston (9). Be sure they are installed in the proper order. Install push rod (12) in bore of piston (9). Install piston into housing (26) bore.
22. Fully lubricate the threads of adjusting screw (7) and lock nut (8) and install into cover (3).

NOTE: Completely lubricate belleville springs with a light coat of Lithium Base, E.P. No. 2 bearing grease.

23. Install washer (6), if used, and springs (5) over end of piston (9). Follow the stacking sequence shown in Figure 9-14.

Reference Only

24. Install new seal (4) in cover of (3). Be sure inside of cover is coated with grease.
25. Install new gasket (23), cover (3), lockwashers (2) and capscrews (1). Tighten the screws evenly in the order of A, B, C and D as shown in Figure 9-13. When installed, tighten each screw to a torque of 29.8-36.6 Nm (22-27 lb-ft).
26. Assemble the brake assembly onto the mounting bracket (31).
27. Install the parking brake assembly onto the frame of the crane.
28. Attach the hydraulic hose.
29. Adjust the lining clearance.
30. Open the accumulator needle valve and then bleed air from the system.

CAUTION

The needle valve must be in the open position for the brake system to operate properly. If it is not open, the charging pump will cycle every time the brake pedal is depressed and if the crane's engine stops there may not be enough pressure to stop the crane.

BRAKE MODULATING VALVE REPAIR

Removal

WARNING

A raised and badly supported machine can fall on you causing severe injury or death. Position the machine on a firm, level surface before raising one end. Ensure that the other end is securely chocked. Do not rely solely on the machine's hydraulics or jacks to support the machine when working under it.

Disconnect the battery cables while you're under the machine to prevent the engine from being started.

1. Raise the crane by lowering the outriggers. Place blocks under the frame ends.
2. Shut off the engine and set the parking brake.
3. Shut off the accumulator needle valve. See Figure 9-9.
4. Press the foot brake pedal (brake modulating valve) as many times as it takes to release any pressure remaining in the brake system.
5. From underneath the operator's cab, disconnect the hydraulic hoses from the fittings. Plug the hoses to inhibit contaminating the hydraulic system.
6. Remove the three capscrews and self-locking nuts securing pedal mounting plate to the cab floor. Remove the brake modulating valve and pedal assembly.

Disassembly

1. Remove the brake modulating valve from the pedal assembly, by removing two capscrews (13, Figure 9-15).
2. Remove boot (1) from piston (2) and housing (12).
3. Remove piston (2), springs (3, 4 and 5), shims (6) and retainer assembly (7) from housing (12).

NOTE: Observe and take note of the number of shims (6) being removed from the housing.

4. Carefully remove cup (14) and seal (15) from housing (12) bore. Be careful not to scratch or mar the bore.
5. Remove end plug (8) and spring (10) from housing (12). Remove O-ring (9) from plug (8).
6. Carefully remove spool (11) from end plug (8) end of housing (12).

NOTE: Be careful not to damage the spool or housing bore as they are a matched set and not sold separately.

Assembly

A seal kit is available for repair of the valve. It consists of the items indicates with a l in Figure 9-15.

NOTE: Lubricate all rubber components in repair kit with clean hydraulic oil of the same type used in the hydraulic system.

1. Clean all parts before assembling. Use a suitable solvent.
2. Lubricate spool (11, Figure 9-15) with clean hydraulic oil and carefully slide into plug end of housing (12).

NOTE: The spool must slide freely into the bore. If either part is damaged, a new valve assembly may be required.

3. Install new O-ring (9) on end plug (8).
4. Install spring (10) and end plug (8) into housing (12). Tighten to a torque of 54.2-67.8 Nm (40-50 lb-ft).
5. Carefully install new cup (14) and new seal (15) into bore of housing (12). Make sure they are installed in the proper order and direction. Take care when installing not to scratch or mar the housing bore.
6. Assemble springs (3, 4 and 5), shims (6) and retainer assembly (7) into piston (2).
7. Carefully install piston (2) assembly into bore of housing (12).
8. Install new boot (1) on housing (12) and piston (2).

Reference Only

9. Install the valve assembly onto the pedal assembly with new capscrews (13). Tighten to a torque of 24.4-29.8 Nm (18-22 lb-ft).

10. After final assembly, the valve must develop a pressure of 3792 ±345 kPa (550 ± 50 psi).

Installation

1. Place the brake modulating valve and pedal assembly in location in the operator's cab. Secure to the cab floor with three capscrews and self-locking nuts.

2. Connect the three hydraulic hoses to the valve.

3. Open the accumulator needle valve and then start the engine. Allow pressure to build in the brake system.

4. Bleed air from the brake system.

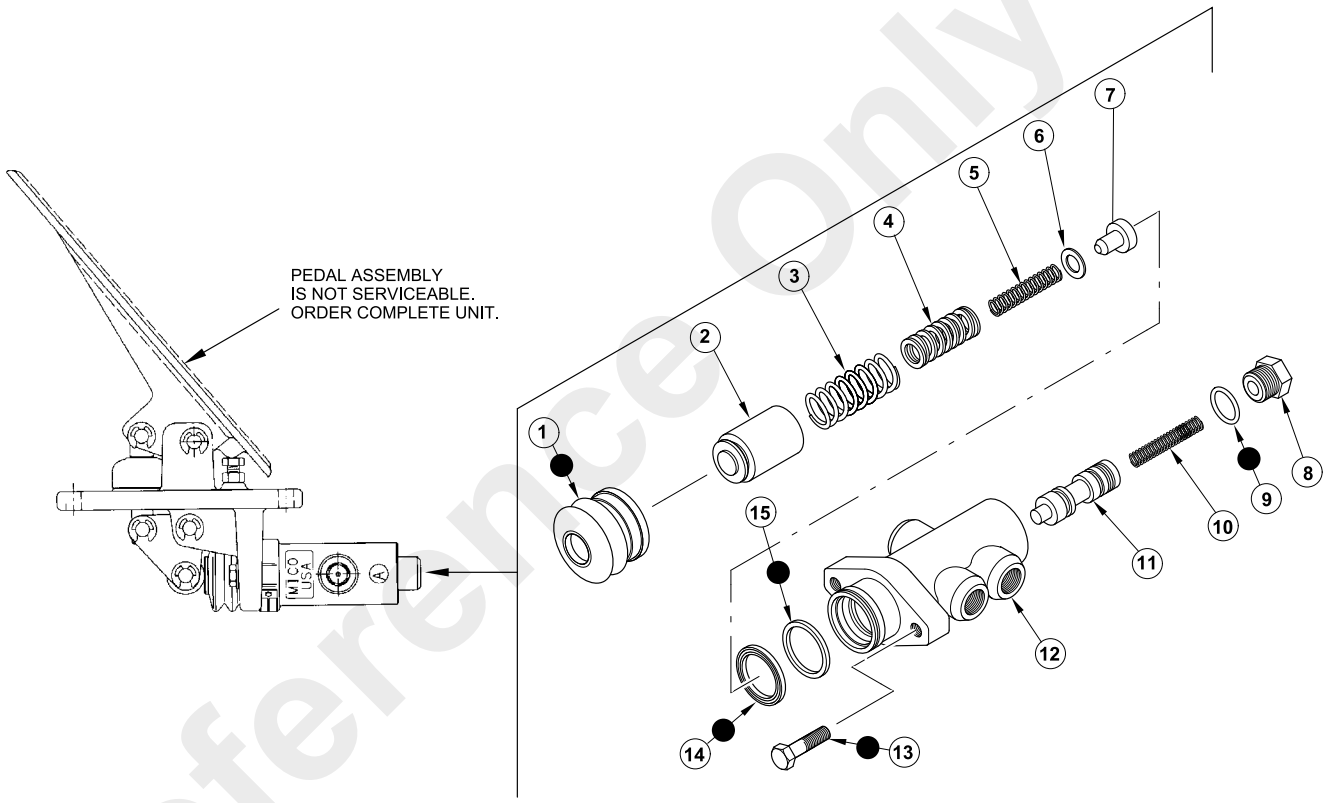

Item	Description	Item	Description
1	Boot	9	O-ring
2	Piston Assembly	10	Spring
3	Spring	11	Spool
4	Spring	12	Housing
5	Spring	13	Screw
6	Shim	14	Cup
7	Retainer Assembly	15	Seal
8	End Plug		

a0780

FIGURE 9-15

Reference Only

TROUBLESHOOTING

Service Brakes

PROBLEM	POSSIBLE CAUSE	REMEDY
Warning light on instrument panel illuminates	**1.** Loss of brake pressure.	**1.** Any cause under NO BRAKES.
No brakes	**1.** Faulty brake modulating valve.	**1.** Repair or replace.
	2. Faulty priority flow control valve.	**2.** Replace.
	3. Loss of fluid from broken line, loose fitting of hose.	**3.** Check all circuit lines, hoses and fittings. Tighten or replace.
	4. Leakage past both brake pistons.	**4.** Perform leakage test.
	5. Faulty pump section.	**5.** Replace pump.
	6. Faulty accumulator charging valve.	**6.** Replace valve.
Bad brakes (pedal fully applied, crane gradually stops)	**1.** Severe wear in service brake discs.	**1.** Replace brake discs. See *Axles/ Drive Shafts/Wheels and Tires*, page 8-1
	2. Leakage past one brake piston.	**2.** Perform leakage test on. Repair or replace. See *Axles/Drive Shafts/ Wheels and Tires*, page 8-1
Soft brake pedal	**1.** Air in system.	**1.** Bleed brake system.
	2. High pressure leaks - external.	**2.** Apply full brake pressure, inspect for leakage in lines, hoses and fittings.
Charging valve actuates every time foot pedal is pressed	**1.** Accumulator needle valve closed.	**1.** Open needle valve.
	2. Loss of nitrogen in accumulator.	**2.** Charge accumulator.
	3. Insufficient hydraulic pressure in accumulator.	**3.** Faulty accumulator charging valve. Replace.

Parking Brake

PROBLEM	POSSIBLE CAUSE	REMEDY
Parking brake will not release	**1.** Faulty solenoid valve.	**1.** Replace solenoid valve.
	2. Loss of fluid from broken line, loose fitting or hose.	**2.** Check all circuit lines, hoses and fittings. Tighten or replace.
	3. Faulty priority flow control valve.	**3.** Replace.
	4. Faulty parking brake switch.	**4.** Replace switch.
	5. Loose electrical connections.	**5.** Check and tighten.
	6. Faulty pump section.	**6.** Replace pump.
Brake will not hold	**1.** Improperly adjusted parking brake.	**1.** Adjust brake lining clearance.
	2. Severely worn brake linings.	**2.** Replace brake linings.
	3. Faulty parking brake assembly.	**3.** Repair or replace.

Reference Only

Published 2/23/2016, Control # 592-00

SECTION 10
STEERING SYSTEM

SECTION CONTENTS

Technical Data 10-1
General 10-1
Steering Modes 10-1
Two-Wheel Steering 10-3
Four-Wheel Steering 10-5
Crab Steering 10-7
Relief Valve Pressure Check 10-9
Troubleshooting 10-10
Steering Orbitrol 10-13
Description 10-13
Orbitrol Repair 10-13
Rear Steering Cylinder 10-20
Technical Data 10-20
Special Tools 10-20
Front Steering Cylinder 10-23
Cylinder Repair 10-23

TECHNICAL DATA

Rated pump output.....37.1 Lpm at 2500 rpm (9.8 gpm at 2500 rpm)
Relief valve setting .....17 237 ± 345 kPa (2500 ± 50 psi)

Description

General

The main components of the standard steering system are the second section of the secondary hydraulic pump (Figure 10-1), the priority flow control valve, the load sensing steering orbitrol, hydraulic tank, one front steering cylinder, two rear steering cylinders and the steering solenoid valve. When crab steering is installed, another solenoid valve is installed in the steering circuit.

When the steering wheel is turned, a pressure demand is sensed by the priority flow control valve through load sensing line between the priority flow control valve and the load sensing steering orbitrol.

Oil from the second section of the secondary hydraulic pump is then distributed through the priority flow control valve and a check valve to the steering orbitrol.

When a turn is made, oil is distributed from the steering orbitrol directly through the steering solenoid valve and/or to the steering cylinders.

When the steering orbitrol is neutral, the load sense signal is ceased, full pump flow is then distributed to the outrigger and brake circuits through the priority flow control valve.

Maximum steering system pressure is controlled by a relief valve in the priority flow control valve.

Steering Modes

The crane can be operated in two standard steering modes, and one optional mode. These modes are selected using the steering selector switch located on instrument panel. The three modes are:

- Two-wheel steering
- Four-wheel steering
- Crab steering

Performance Only

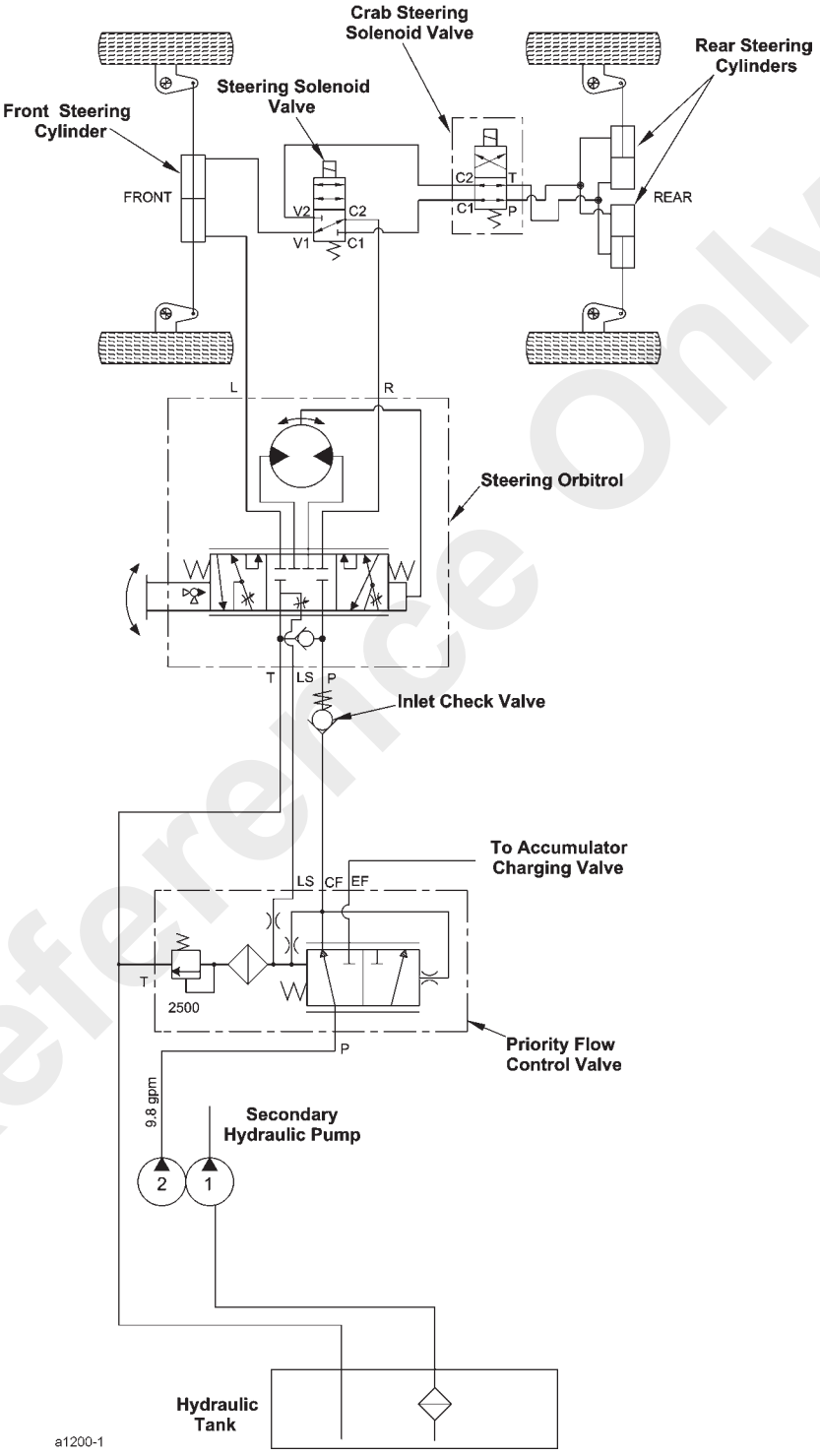

a1200

Steering System

FIGURE 10-1

Reference Only

Two-Wheel Steering

During two-wheel steering, the front wheels steer in the same direction that the steering wheel turns. The rear wheels remain in a fixed forward position.

When turning to the right (Figure 10-2), hydraulic oil under pressure from the steering pump flows through the priority flow control valve to the P port of the steering orbitrol in the operator's compartment. When the steering wheel is turned to the right, hydraulic fluid is directed through port R of the steering orbitrol to port C2 of the solenoid valve. This valve is activated by the steering select switch in the operators compartment. When the steering select switch is placed in the two-wheel steering mode, the solenoid is not actuated. Oil passes through the porting of the valve block V1 to the right end of the front axle steering cylinder. The piston moves to the left, extending the left cylinder rod and retracting the right cylinder rod, creating a right turn. Return oil from the steering cylinder flows into port L of the steering orbitrol and out port T, back to tank.

Reference Only

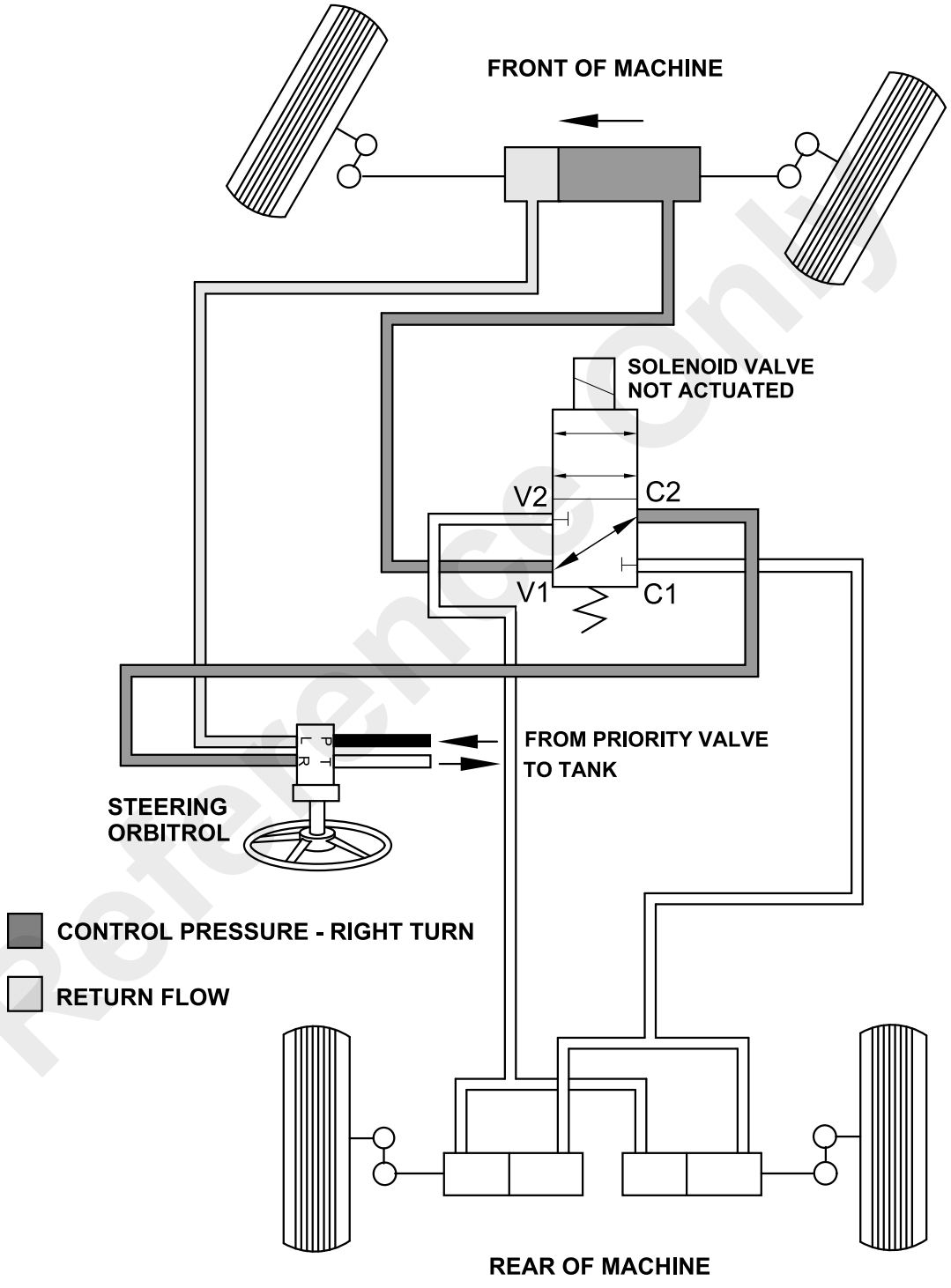

a1197

Right Turn in 2 Wheel Steer Mode

FIGURE 10-2

Reference Only

Four-Wheel Steering

During four-wheel steering, the front wheels steer in the direction that the steering wheel is turned, while the rear wheels turn in the opposite direction. This mode provides an extremely short turning radius. It allows the rear wheels to follow the track of the front wheels, which is an advantage in muddy or sandy conditions.

When turning to the right (Figure 10-3), hydraulic oil under pressure from the steering pump flows through the priority flow control valve to the P port of the steering orbitrol in the operator's compartment. When the steering wheel is turned to the right, hydraulic fluid is directed through port R of the steering orbitrol to port C2 of the solenoid valve. This valve is activated by the steering select switch in the operator's compartment. When the steering select switch is placed in the four-wheel steering mode the solenoid is actuated. Oil passes through the porting of the valve and out port V2 to the rear axle steering cylinders. Oil is directed to the rod end of the left steering cylinder and base end of the right cylinder, causing the rear wheels to turn to the left. Return oil under pressure from the rear steering cylinders flows into port C1 of the steering solenoid and out port V1 to the front steering cylinder. The left rod of the steering cylinder extends and the right rod retracts, turning the front wheels to the right. Return oil from the front steering cylinder flows into port L and out of port T of the steering orbitrol and back to tank.

Reference Only

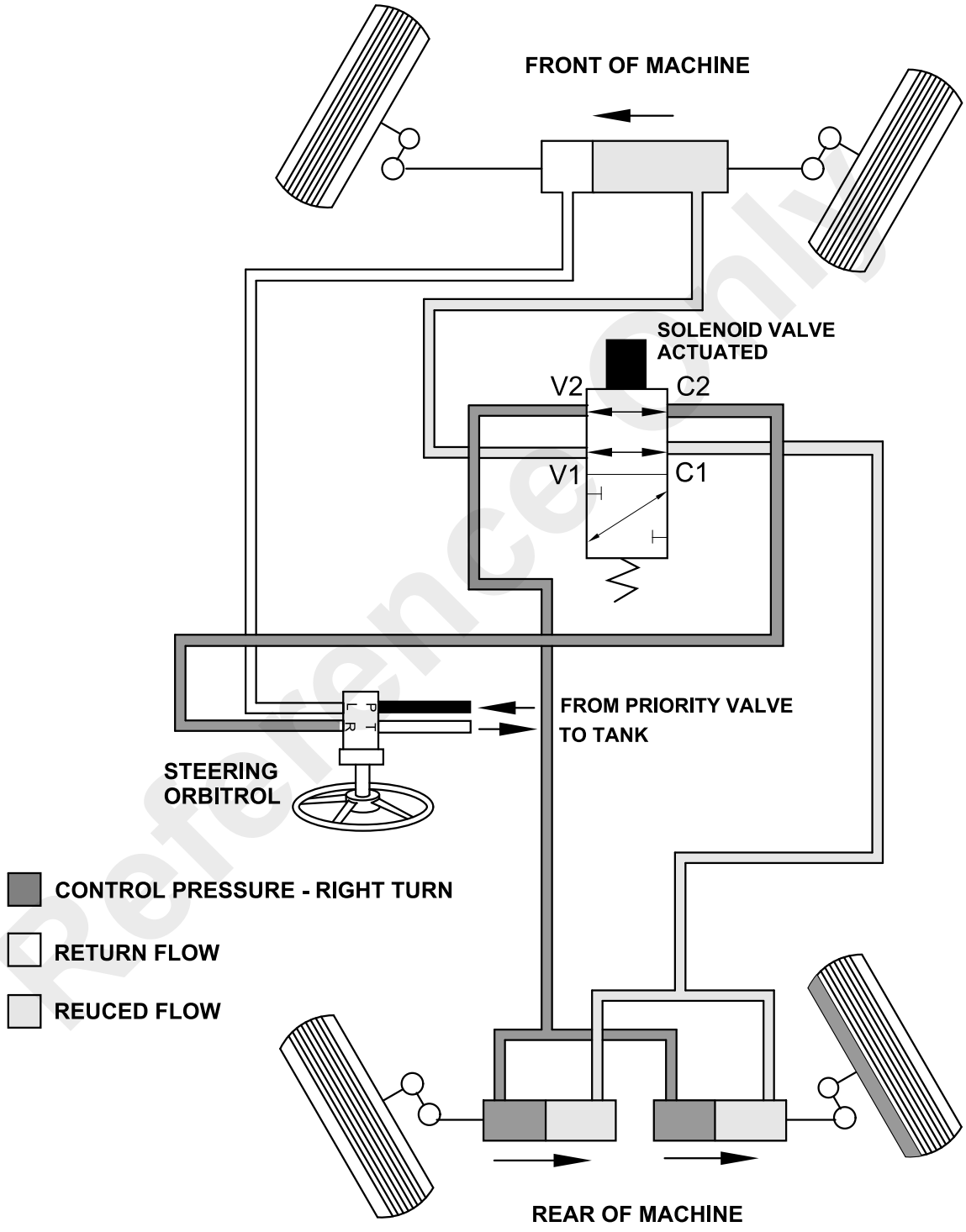

a1198

Right Turn in 4 Wheel Steer Mode

FIGURE 10-3

Reference Only

Crab Steering

During crab steering all the wheels steer in the same direction. This mode allows the operator to move the machine sideways. This is especially helpful in tight areas on the job.

When turning sideways to the right (Figure 10-4), hydraulic oil under pressure from the steering pump flows through the priority flow control valve to the P port of the steering orbitrol in the operator's compartment. When the steering wheel is turned to the right, hydraulic fluid is directed through port R of the steering orbitrol into port C2 of the solenoid valve. In addition to this solenoid valve, a second solenoid valve is installed in the steering circuit for crab steering function. These valves are activated by the steering select switch in the operator's compartment. When the steering select switch is placed in the crab-steering mode both solenoids are actuated. Oil passes through the port C2 of the first solenoid valve and out port V2. Oil is routed to the second solenoid valve port C1 and out port T. Oil is directed to the base end of the left steering cylinder and rod end of the right cylinder, causing the rear wheels to turn to the right. Return oil under pressure from the rear steering cylinders flows to Port P of the second solenoid valve and out port C2. Oil is routed to port C1 of the first solenoid and out port V1 to the front steering cylinder. The left rod of the steering cylinder extends and the right rod retracts, turning the front wheels to the right. Return oil from the front steering cylinder enters port L and out port T of the steering orbitrol on its way back to tank.

Reference Only

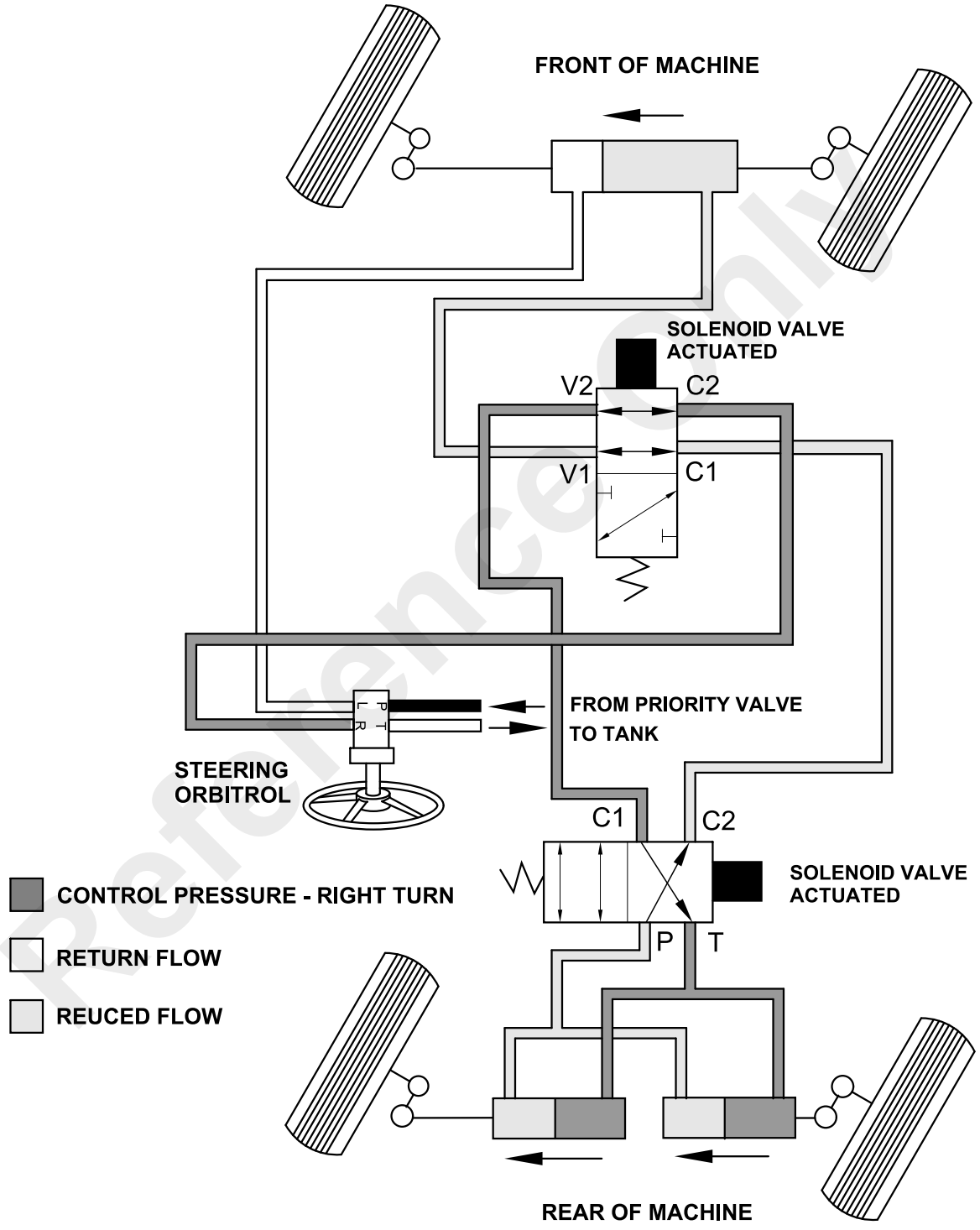

a1199

Right Side Ways in Crab Steer Mode

FIGURE 10-4

Reference Only

RELIEF VALVE PRESSURE CHECK

1. Shut off the engine and engage the parking brake.
2. At the hydraulic pump, install a tee and a 0 - 34 550 kPa (0 - 5000 psi) pressure gauge on outlet side of the steering pump section (Figure 10-5).
3. Start the engine allowing the hydraulic oil to reach operating temperature. Increase the engine speed to full RPM. Turn the steering wheel and put the wheels at the maximum angle. Continue to turn the steering wheel after the wheels are at their maximum angle. Read the pressure gauge and then release the steering wheel.
4. The correct pressure reading is 17 237 ± 345 kPa (2500 ± 50 psi).
5. The steering relief valve is located in the priority flow control valve and is not adjustable. If the pressure setting is wrong, replace the priority flow control valve.

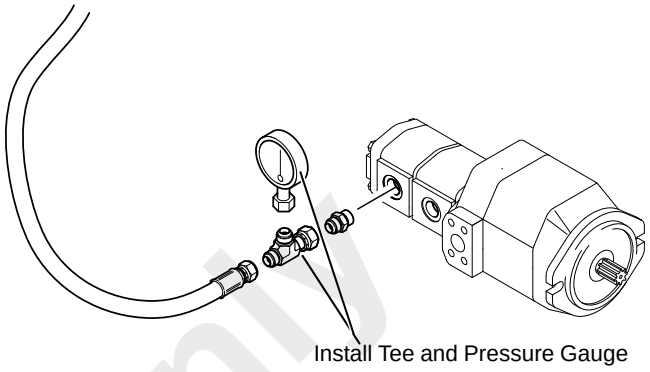

a1201 Steering Pressure Check **FIGURE 10-5**

Reference Only

TROUBLESHOOTING

Table 10-1
Steering Troubleshooting Guide

Symptom	Probable Cause	Action
Slow steering, hard steering, or loss of power assist	**1.** Worn or malfunctioning pump.	**1.** Repair or replace the pump.
	2. Priority valve not operating correctly.	**2.** Check for sticky spool. Repair or replace.
		Check load sense line for leaks or poor connection.
	3. Malfunctioning relief valve.	**3.** Replace the priority valve.
	4. Overloaded steering axle.	**4.** Reduce the load.
	5. Air in hydraulic system.	**5.** Bleed system - bleed the load sense line.
	6. Malfunctioning steering orbitrol.	**6.** Remove and inspect.
	7. Malfunction in steering mode valve.	**7.** Check if spools are sticking. Repair or replace.
		Check if solenoids are operating. Replace if needed.
	8. Mechanical failure.	**8.** Check for damaged axle components, such as cylinders, tie rods, linkages, etc.
Steering wheel turns on its own	**1.** Dirt in steering orbitrol (causing sleeves to stick open).	**1.** Clean and inspect unit.
	2. Steering orbitrol centering springs damaged or broken.	**2.** Check orbitrol. Repair or replace.
	3. Steering orbitrol - position of rotor to shaft slot incorrect.	**3.** Correct if required.

Reference Only

Published 2/23/2016, Control # 592-00

Symptom	Probable Cause	Action
Machine will not turn when the steering wheel is turned	**1.** Insufficient oil level.	**1.** Check for leaks and fill tank.
	2. Leaks in relevant hoses or component connections.	**2.** Check hoses and connections for leaks.
	3. Air in the hydraulic system.	**3.** Bleed system - bleed the load sense line.
	4. Low pump flow,	**4.** Check pump flow. If required repair or replace the pump.
	5. Malfunctioning steering relief valve.	**5.** Replace priority valve.
	6. Worn or damaged parts in the steering orbitrol.	**6.** Remove, inspect and repair.
	7. Priority valve not operating correctly.	**7.** Check if the priority valve is sticking, repair if necessary Check the load sense line for leaks or loose connections.
	8. Mechanical failure.	**8.** Check for damaged axle components, such as cylinders, tie rods, linkages, etc.
	9. Steering column splined shaft not fully engaged in orbitrol.	**9.** Check shaft engagement.
Steering fails to respond to selected mode	**1.** Selector switch faulty.	**1.** Replace switch.
	2. Solenoid valve(s) not operating properly	**2.** Repair, or replace.
	3. Leaks in relevant hoses or component connections.	**3.** Check hoses and connections for leaks. Tighten or replace.
Wander – Tendency of vehicle to deviate from course	**1.** Air in system.	**1.** Correct condition and add fluid. Bleed system and load sense line
	2. Worn steering linkage.	**2.** Repair or replace linkage.
	3. Loose or leaking steering cylinder piston.	**3.** Repair or replace the cylinder.
	4. Severe wear in steering orbitrol.	**4.** Repair or replace the orbitrol.
Slip – A slow movement of steering wheel fails to cause any movement in steering wheels	**1.** Leakage of cylinder piston seals.	**1.** Repair or replace cylinder.
	2. Worn steering orbitrol.	**2.** Repair or replace orbitrol.
Erratic steering	**1.** Air in system due to low level of hydraulic oil, cavitating pump, leaky fitting, pinched hose, etc.	**1.** Correct condition and add fluid. Bleed system and load sense line.
	2. Loose or leaking steering cylinder piston.	**2.** Repair or replace cylinder.
	3. Sticking check valve.	**3.** Clean or replace.
	4. Turning steering wheel too rapidly.	**4.** Slow movement.
“Spongy” or soft steering	**1.** Air in hydraulic system. Most likely air trapped in cylinders or lines.	**1.** Correct conditions. Bleed air out of system and load sense line.
	2. Low fluid level.	**2.** Add fluid and check for leaks.

Reference Only

Symptom	Probable Cause	Action
Free wheeling – Steering wheel turns freely with no feel of pressure and no action on steering wheels	**1.** Steering column upper shaft is loose or damaged	**1.** Tighten the steering wheel nut. Check shaft engagement to orbitrol.
	2. Lower splines of column may be disengaged or broken.	**2.** Repair or replace the column.
	3. Steering orbitrol meter has a lack of oil. This can happen on start up, after repair, or long down time intervals	**3.** Usually starting engine will cure the problem. Bleed system if necessary.
	4. Steering cylinders piston seals blown out.	**4.** Determine cause. Correct and replace the seal.
Excessive free play at steering wheel	**1.** Loose steering wheel nut.	**1.** Tighten the nut.
	2. Steering column shaft worn or damaged.	**2.** Repair or replace the steering wheel connection or column.
Excessive free play at steered wheels	**1.** Leaky steering cylinder seals.	**1.** Replace cylinder seals.
	2. Worn linkage.	**2.** Replace.
Binding or poor centering of steering wheel	**1.** Large dirt particles can cause binding between orbitrol spool and sleeve.	**1.** Clean the orbitrol. Repair or replace, if necessary. If another component has failed generating contaminants, flush the hydraulic system while bypassing the orbitrol.
Steering orbitrol locks up	**1.** Large particles of contamination in metering section.	**1.** Clean the orbitrol. Repair or replace, if necessary
	2. Severe wear and/or broken pin.	**2.** Repair or replace the orbitrol.

Reference Only

Published 2/23/2016, Control # 592-00

STEERING ORBITROL

Description

General

The steering orbitrol (Figure 10-7) provides directional control and metering of oil for precise steering control. In the neutral or balance position, when the steering wheel is not turned, the IN port (P) is connected to the OUT port (T) and oil from the pump returns to tank. See Figure 10-7. Oil is locked in the lines by the interacting spool and sleeve. Centering springs keep the spool and sleeve in relative position. The spool is coupled to the steering wheel and rotates inside the sleeve when the steering wheel is turned. Corresponding ports in the spool and sleeve align to meter oil from the pump into the steering circuit and also allow return to tank. When the sleeve catches up with the spool, oil flow is blocked to the steering cylinder lines, and the available supply from the pump is returned to tank.

Steering Left

When making a left turn, flow from the pump enters port P (Figure 10-7). The gerotor takes this flow and meters it to port L (left turn). Return flow from the steering cylinders, enters port R and is returned to tank through port T.

Steering Right

When making a right turn, flow from the pump enters port P (Figure 10-7). The gerotor takes this flow and meters to port R (right turn). Return flow from the steering cylinders, enters port L and is returned to tank through port T.

Emergency Manual Steering

The gerotor (Figure 10-7) in the orbitrol permits steering, with difficulty, when power is lost. A check valve between the IN and OUT ports allows for recirculation of the oil to prevent cavitation when steering without power.

Orbitrol Repair

Special Tools

A spring installation tool, is required to assemble the orbitrol. This tool is available under part number 1900476.

Removal

1. Remove the outside cover plate (Figure 10-6) in front of the operator's compartment.
2. Completely clean around the area of the steering orbitrol.
3. Put tags on the lines to the steering orbitrol for identification at installation.
4. Rotate the steering wheel a small amount in each direction several times, then release to get a balance of pressure in the steering circuit. Slowly loosen the hydraulics lines at ports L and R to release any remaining pressure. Disconnect the hydraulic lines from IN and OUT ports. Put plugs and caps in the ports and hydraulic lines.

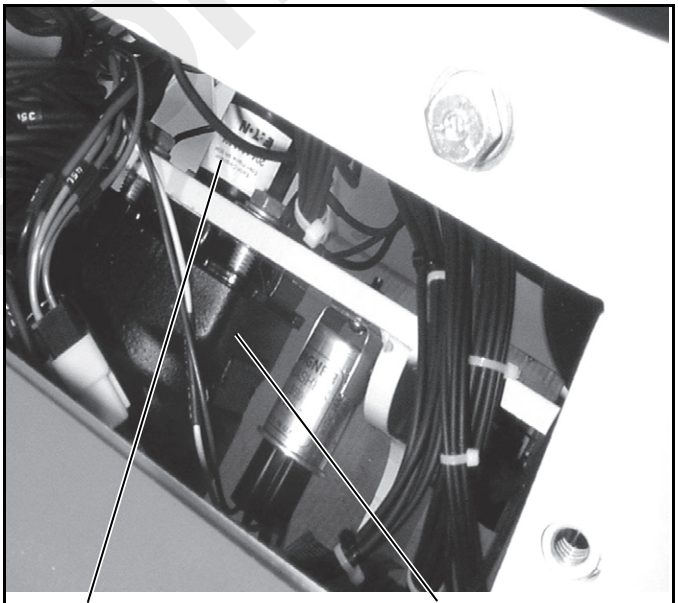

p0100 Typical **FIGURE 10-6**

Reference Only

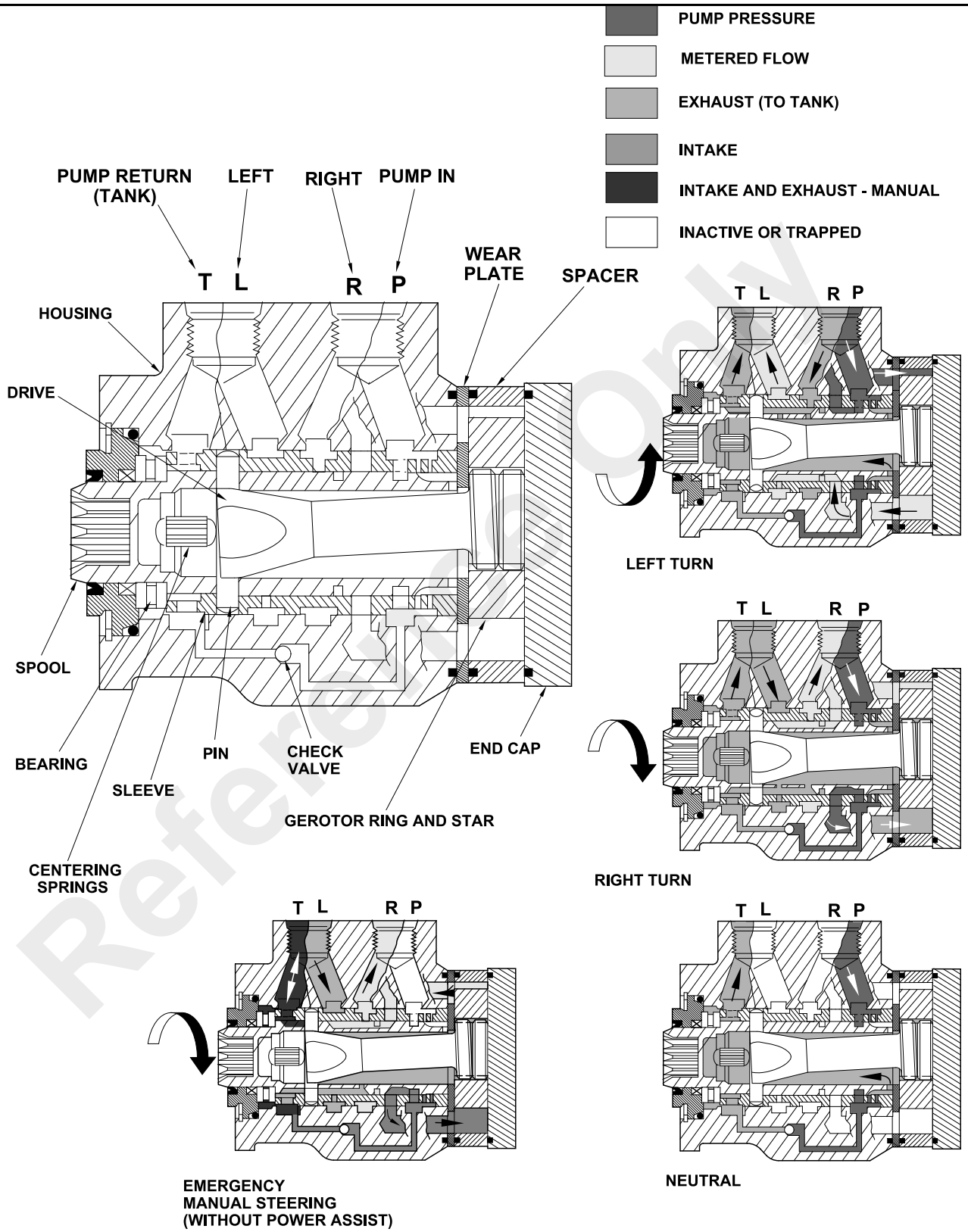

a0671

Steering Orbitrol

FIGURE 10-7

Reference Only

Published 2/23/2016, Control # 592-00

5. Remove the four bolts which fasten the steering column and orbitrol to the mounting bracket. Be sure to hold the steering orbitrol in position while the last bolt is being removed. Remove the steering orbitrol.

Disassembly

Cleanliness is extremely important when repairing a steering orbitrol. Work in a clean area. Use a wire brush to remove foreign materials and debris from around exterior joints of the unit.

NOTE: Although not all illustrations show the unit in a vice, we recommend that you keep the unit in a vice during disassembly. Follow the clamping procedures explained throughout the instructions.

1. Clamp the unit in a vice, meter end up. Clamp lightly on the edges of the mounting area (Figure 10-9). Use protective material on the vise jaws. Housing distortion could result if the vise jaws are overtightened.

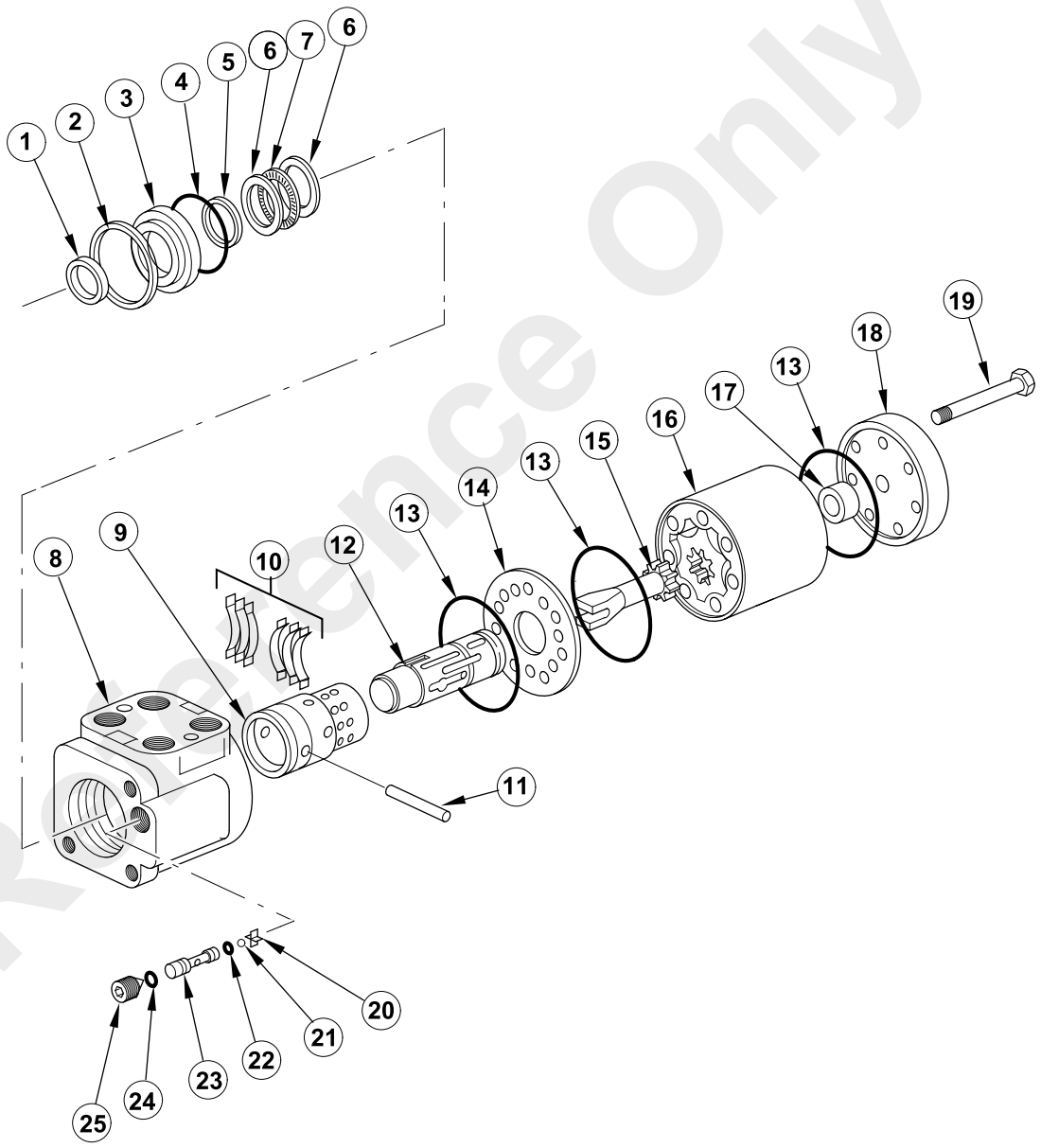

a0328 Steering Orbitrol Exploded View **FIGURE 10-8**

Reference Only

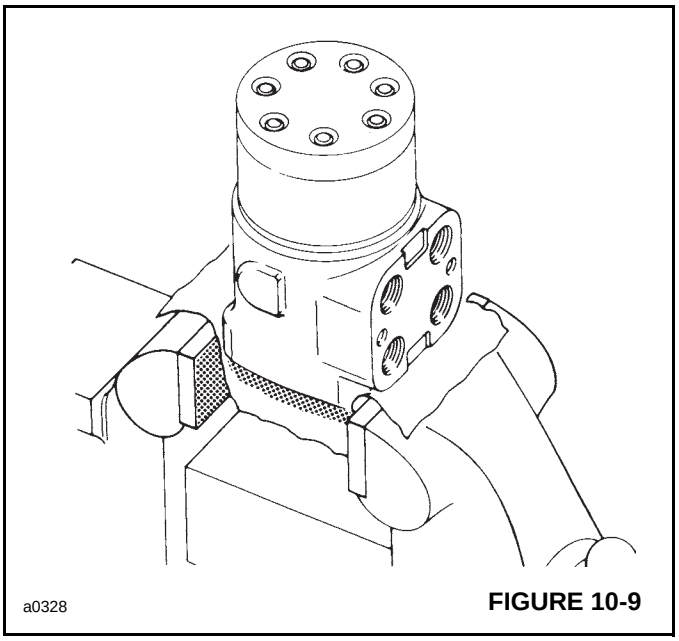
a0328

FIGURE 10-9

2. Remove the seven 6 pt. Torx Drive bolts (19, Figure 10-8). Remove end cap (18). Remove seal (13) from the end cap.

3. Remove the gerotor (16). Remove seal (13) from gerotor (16). Remove drive spacer(s) (17).

4. Remove drive (15). Remove spacer plate (14). Remove seal (13) from housing (8).

5. Remove housing (8) from the vise. Place it on a clean soft cloth to protect the surface finish. Use a thin bladed screwdriver (Figure 10-10) to pry retaining ring (2, Figure 10-8) from housing (8).

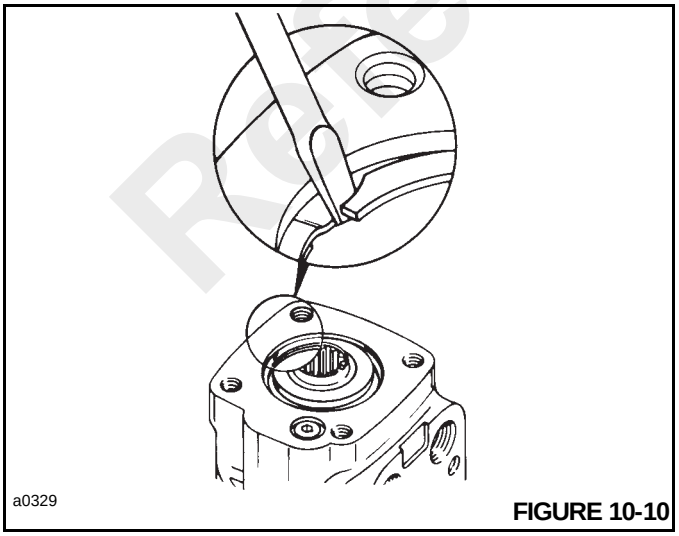
a0329

FIGURE 10-10

6. Rotate spool (12) and sleeve (9) until pin (11) is horizontal. Push the spool and sleeve assembly forward with your thumbs just far enough to free gland bushing (3) from the housing. Remove gland bushing (3).

7. Remove quad seal (5) from gland bushing (3).

8. Use a thin bladed screwdriver to pry dust seal (1) from gland bushing (3). Do not damage the gland bushing.

9. Remove needle bearing kit (6). The kit consists of two bearing races and a needle thrust bearing. See Figure 10-11.

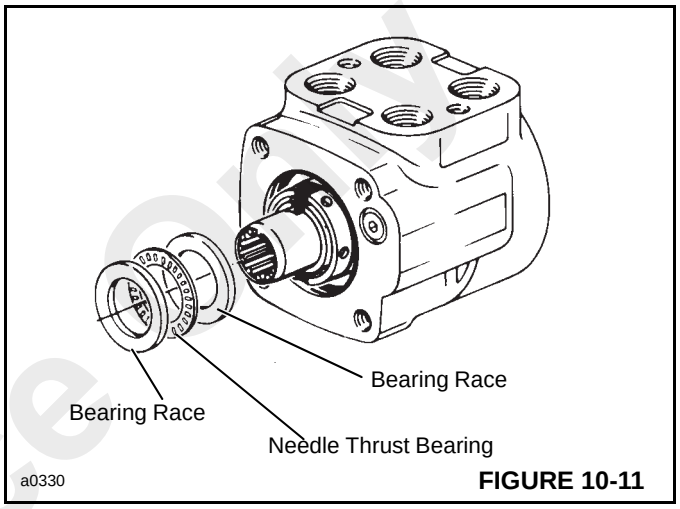

a0330

FIGURE 10-11

10. Remove spool and sleeve assembly (10 through 12, Figure 10-8). Remove from rear end of housing (Figure 10-12).

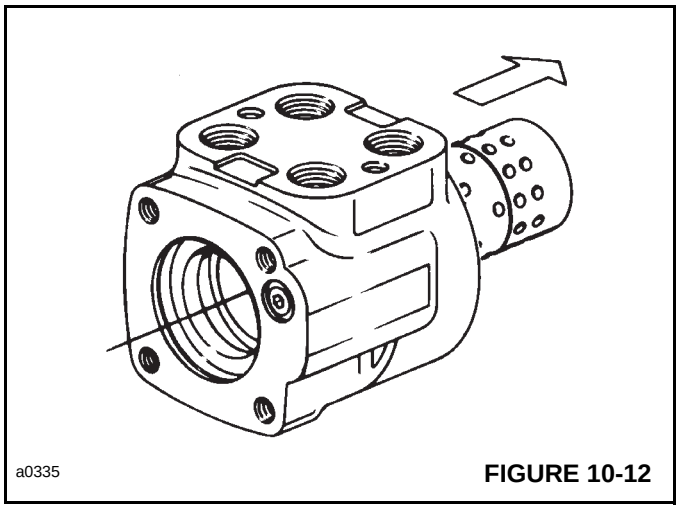
a0335

FIGURE 10-12

NOTE: Do not bind spool and sleeve in the housing. Rotate the spool and sleeve assembly slowly when removing from housing.

11. Push pin (11, Figure 10-8) from spool and sleeve assembly.

Reference Only

12. Push spool (12) partially from control end of sleeve (9). Remove six centering springs (10) from the spool carefully by hand. See Figure 10-13

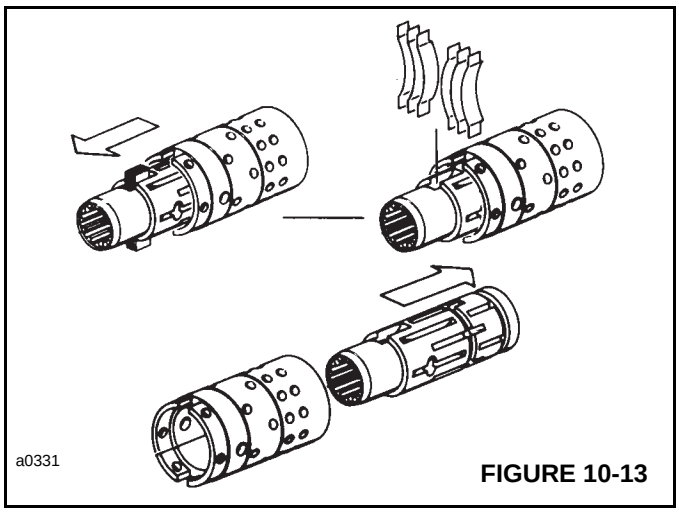

FIGURE 10-13

13. Push spool (12) back through and out of sleeve (9). Rotate spool slowly when removing from the sleeve. See Figure 10-13.

14. Remove seal (4, Figure 10-8) from housing (8).

15. Remove set screw (25).

16. Screw a No. 10-24 machine screw into the end of check ball seat (23). Then by pulling on the screw with a pliers, lift the seat out of the housing.

17. Remove two seals (22 and 24) from the check ball seat.

18. Tip the housing to remove check ball (21) and check ball retainer (20).

Inspection

Check all mating surfaces. Replace any parts that have scratches or burrs that could cause leakage or binding. Clean all metal parts in a clean solvent. Blow dry with air. Do not wipe dry with a cloth or paper towel, because lint or other matter can get into the hydraulic system and cause damage. Do not use a coarse grit emery cloth or try to file or grind any parts.

Replace all seals when assembling the unit. Lubricate all seals with clean petroleum jelly before assembling. DO NOT use excessive lubricant on seals for the meter section.

Assembly

1. Use a needle nose pliers to lower check ball retainer (20, Figure 10-8) into the check valve hole in housing (8).

2. Install check ball (21) into housing (8).

3. Lubricate seals (22 and 24) and install them on check ball seat (23).

4. Lubricate the check ball seat and seals thoroughly before installing into the housing. When installing the seat do not twist or damage the seals. Install the check ball seat into housing, insert open end first. Push the check ball seat to the shoulder of the hole.

5. Install set screw (25) and tighten to a torque of 100 lb-in (11.3 Nm). To prevent interference, make sure the top of the set screw is slightly below the housing mounting surface.

6. Lubricate the spool (12) and sleeve (9). Install spool (12) and sleeve (9) carefully so that the spring slots (Figure 10-14) line up at the same end. Rotate spool (12, Figure 10-8) while sliding the parts together. Some spools and sleeve sets have identification marks, align these marks as shown in Figure 10-14. Test for free rotation. The spool should rotate smoothly in the sleeve with finger tip force applied at splined end.

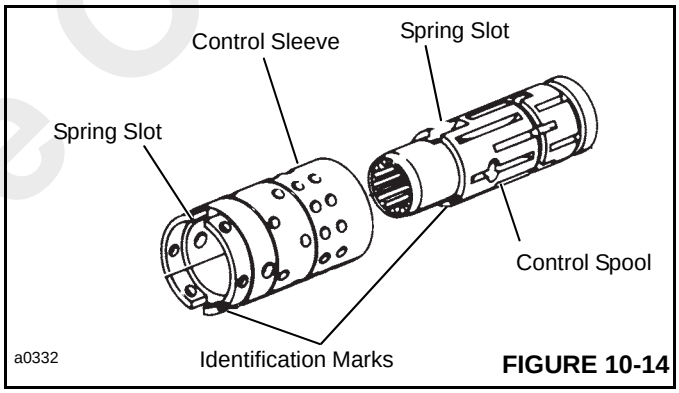

FIGURE 10-14

7. Bring spring slots of both parts in line and stand parts on end on the work bench (Figure 10-15). Insert special spring installation tool through the spring slots of both parts. Position centering springs (in 2 sets of 3 each) on bench so that the extended edge is down and arched center section is together. In this position, insert one end of the entire spring set (all six) into the spring installation tool, as shown in Figure 10-15, with spring notches facing the sleeve.

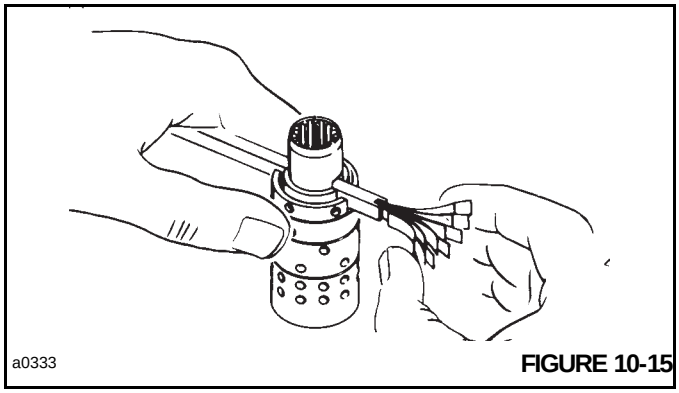

FIGURE 10-15

Reference Only

8. Compress the extended end of the centering spring set and push into the spool and sleeve assembly, withdrawing the installation tool at the same time.

9. Center the spring set in the parts so they push down evenly and flush with the outer surface of the sleeve.

10. Insert pin (11, Figure 10-8) through the spool and sleeve assembly until the pin becomes flush at both sides of the sleeve.

11. Lubricate the spool and sleeve assembly and position the assembly so that the splined end of the spool enters the meter end of housing (8, Figure 10-8). See Figure 10-16.

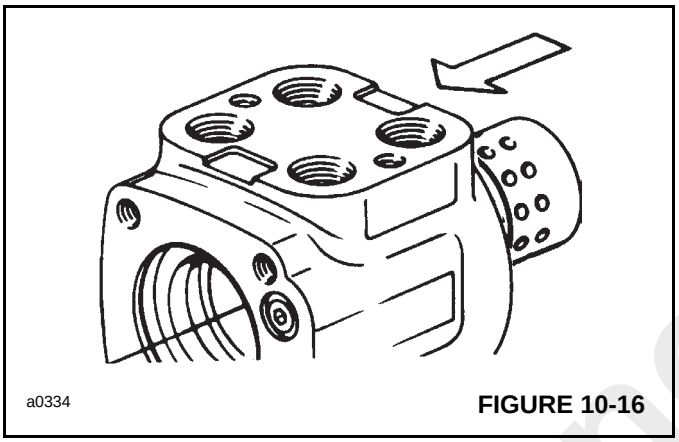

FIGURE 10-16

NOTE: Be extremely careful that the parts do not tilt out of position while inserting. Push parts gently into place with a slight rotation action; keep the pin horizontal. Bring the spool assembly entirely within the housing bore until the parts are flush at the meter end of the housing. Do not pull the spool and meter assembly beyond this point to prevent the cross pin from dropping into the discharge groove of the housing. With the spool assembly in this flush position, check for free rotation within the housing by turning with a light finger tip force at the splined end.

12. Place the housing on a clean, lint free cloth. Install seal (4, Figure 10-8) into housing (8).

13. Install needle bearing kit (6).

14. Install dust seal (1) into seal gland bushing (3). Flat or smooth side of the dust seal must face down towards the bushing. See Figure 10-17.

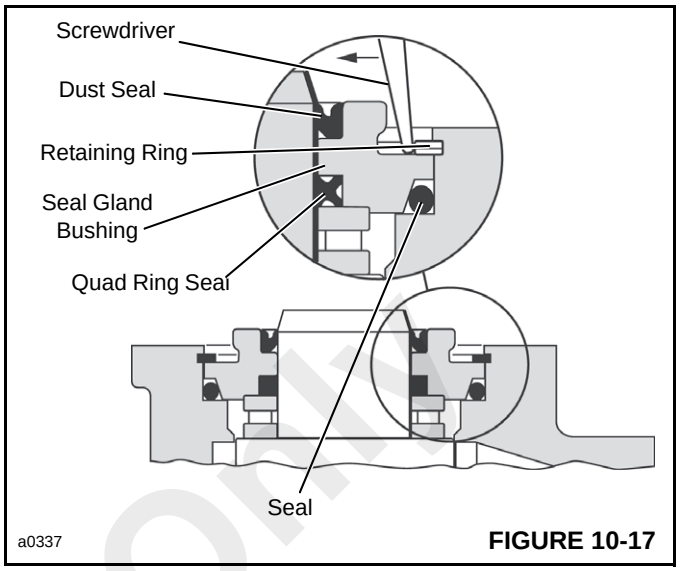

FIGURE 10-17

15. Install quad ring seal (5, Figure 10-8) into seal gland bushing (3). Smooth seal in place with your finger. Do not use any seal that falls freely into the pocket of the bushing. See Figure 10-17.

16. Install seal gland bushing (3, Figure 10-8) over the spool end with a twisting motion. Tap the bushing in place with a rubber hammer. Make sure the bushing is flush against the bearing race.

17. Install retaining ring (2, Figure 10-8) in the housing (see Figure 10-17). After installing the retainer ring, tap on ring end or pry with a screwdriver around entire circumference of the ring to properly seat the ring in the groove.

18. Clamp housing (8, Figure 10-8) in a vise. Clamp lightly on edges of mounting area. Do not over tighten the vise jaws.

NOTE: Check to ensure that the spool and sleeve assembly are flush or slightly below the mounting surface.

NOTE: Clean the upper surface of the housing by wiping with the palm of your hand. Clean each of the flat surfaces of the meter section parts in a similar way when ready for assembly. DO NOT USE cloth or paper to clean the surfaces.

19. Install seal (13) into groove in housing (8). Install spacer plate (14). Align bolt holes in spacer plate with tapped holes in the housing.

Reference Only

Published 2/23/2016, Control # 592-00

20. Rotate the spool and sleeve assembly until pin (11) is parallel with the port face (see Figure 10-18). Install drive (15, Figure 10-8), Make sure you engage the drive with pin (11). To ensure proper alignment, mark the drive as shown in Figure 10-19, Ref. B. Note relationship between the slotted end of the drive to the splined end of the drive when marking.

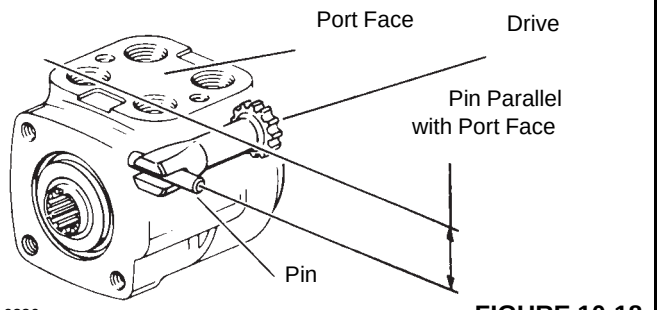

FIGURE 10-18

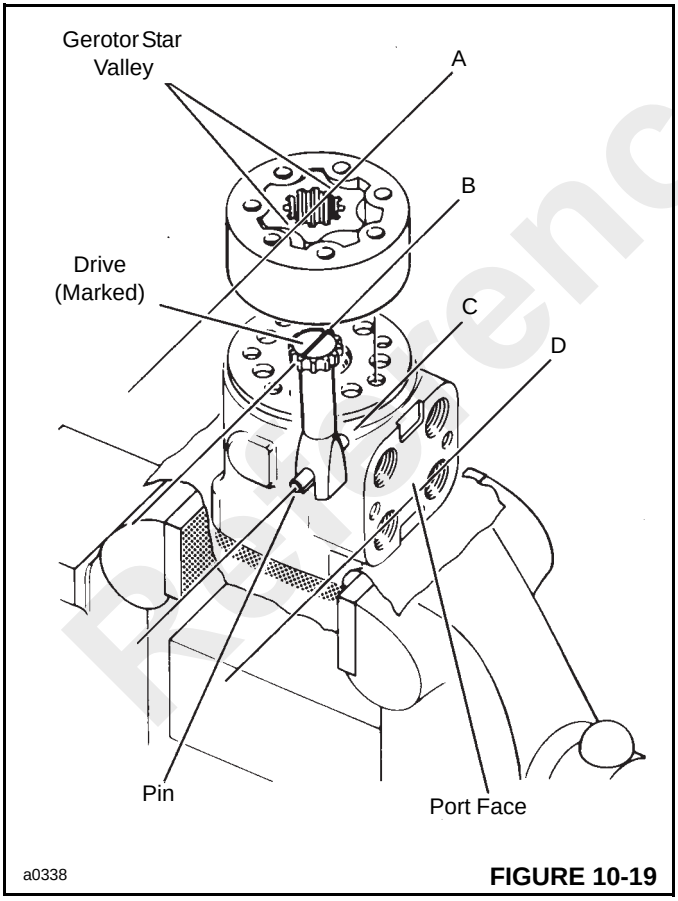

FIGURE 10-19

21. Install seal (13, Figure 10-8) into the gerotor (16).

22. With seal side of the gerotor toward spacer plate (14), align star valleys (Figure 10-19, Ref. A) on drive (Ref. B). Note the parallel relationship of reference lines A, B, C and D. Align bolt holes without disengaging the gerotor from the drive.

23. Install drive spacer (17, Figure 10-8) into the gerotor.

24. Install seal (13) into end cap (18). Install end cap (18) onto gerotor (16). Align the bolt holes.

25. Install the seven 6 pt. Torx Drive screws with new seal washers in the end cap. Tighten each screw to 150 lb-in., then tighten each screw in sequence shown in Figure 10-20 to a torque of 31 Nm (275 lb-in).

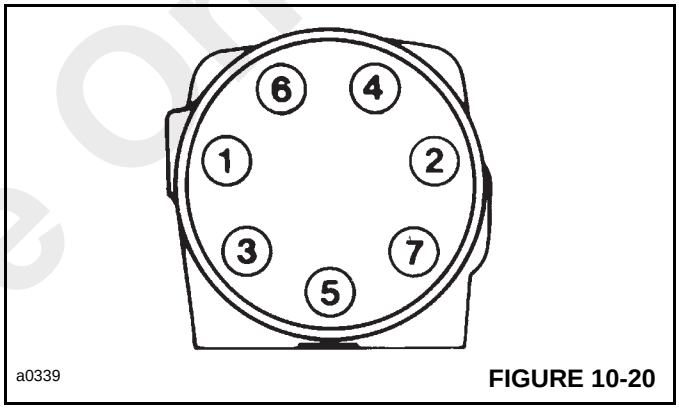

FIGURE 10-20

Installation

1. Locate the steering orbitrol and steering column in position on the mounting bracket under the instrument panel. Secure in place with four bolts and numerous flat washers.

2. Connect the hydraulic lines to the steering orbitrol.

3. Check the hydraulic oil level in the reservoir. Fill if necessary.

4. Start the engine and turn the steering wheel in both directions to fill the lines with hydraulic fluid and bleed air from the system. Check for leaks and repair if necessary.

5. Check the hydraulic oil level in the reservoir. Fill if necessary.

6. Install the outside cover to the operator's compartment.

Reference Only

REAR STEERING CYLINDER

Technical Data

Cylinder Bore ..... 57 mm (2.25 in)
Stroke ..... .187 mm (7.38 in)
Rod Diameter ..... 38 mm (1.50 in)

Special Torques

Piston Lock Nut ..... 136 Nm (100 lb-ft)

Special Tools

.

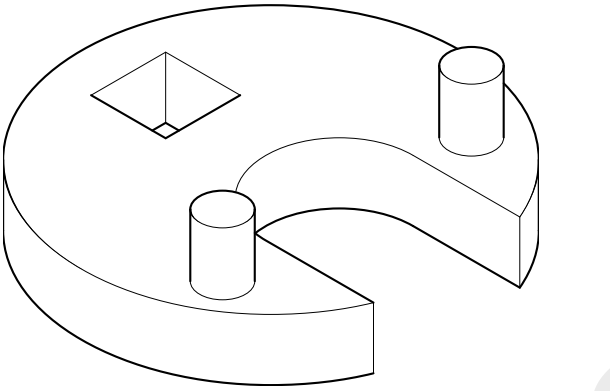

a0668

Spanner Wrench for Removal/ Installation of Cylinder Head **FIGURE 10-21**

Cylinder Repair

Removal

WARNING

A raised and badly supported machine can fall on you causing severe injury or death. Position the machine on a firm, level surface before raising one end. Ensure that the other end is securely chocked. Do not rely solely on the machine hydraulics or outriggers to support the machine when working under it.

Disconnect the battery cables while you are under the machine, to prevent the engine from being started.

1. Raise and support the machine to gain access to the steering cylinders.
2. With the engine not running, turn the steering wheel in both directions to release any pressure in the hydraulic lines to the steering cylinders.
3. Place a tag on the hoses for identification and correct assembly. Be prepared to collect the hydraulic oil as you remove steering lines. Slowly loosen the hydraulic hoses to release any remaining pressure. Install plugs in the hose ends and caps in the cylinder ports.
4. Make a reference mark to note the position of the clamps on the adjustable ends. The clamps must be installed in the same position at assembly.
5. Remove the cotter pins, slotted nuts and washers from the cylinder ends. Remove the cylinder and take it to a clean work area for disassembly.

Disassembly

1. Remove the caps from the cylinder ports and drain remaining oil from the cylinder.
2. Fasten the cylinder base in a vice; apply force only across clamp on the adjustable end. To prevent distortion or damage, do not apply force directly to cylinder tube. Use a chain wrench around the solid end of cylinder tube if necessary to prevent rotation of cylinder tube during removal of head.
3. Use a spanner wrench like the one shown in Figure 10-21 and loosen the cylinder head (8, Figure 10-22).
4. Pull the piston and rod (3 and 13) straight out of cylinder tube (1). If the cylinder rod and piston are hard to remove, install the cylinder head back into the cylinder tube and apply shop air to the base port to push the piston out to cylinder head.

CAUTION

If air or hydraulic pressure is used to force out the piston assembly, ensure that the piston head is securely installed in the cylinder tube.

5. Fasten the adjustable end of the rod in a vice. Do not clamp to the chrome part of the rod.

Reference Only

Published 2/23/2016, Control # 592-00

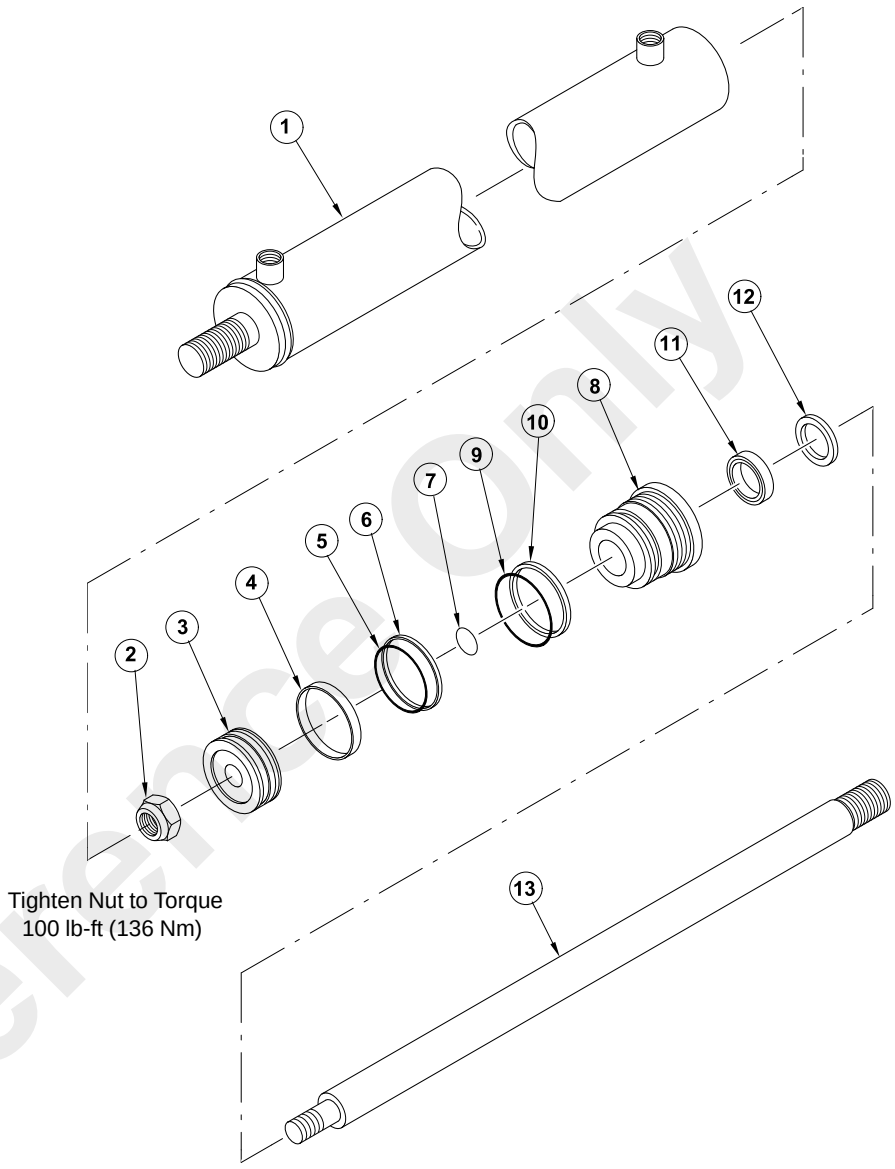

Item	Description
1	Cylinder Tube
2	Piston Nut
3	Piston
4	Piston Ring
5	O-ring
6	Piston Seal
7	O-ring
8	Cylinder Head
9	O-ring
10	Back-Up Ring
11	Rod Seal
12	Wiper Seal
13	Cylinder Rod

a0670

Steering Cylinder Exploded View **FIGURE 10-22**

Reference Only

6. Remove nut (2) from the cylinder rod (13).

7. Remove piston (3) and cylinder head (8) from cylinder rod (13).

8. Remove and discard the piston ring (4), O-rings (5 and 7) and seal (6) from piston (3).

9. Remove and discard the O-ring (9), backup ring (10), rod seal (11), and wiper (12) from cylinder head (8).

Inspection

1. Clean all parts in a suitable solvent. Dry with compressed air. Make sure threads of piston rod, piston, end cap and cylinder are thoroughly cleaned using a wire brush to remove grease, hydraulic oil and Loctite.

2. Inspect cylinder rod for rust, distortion, pitting or damage to the chrome. If there is damage to the cylinder rod, replace it. Do not try to straighten a bent cylinder rod.

3. Inspect inside of the cylinder barrel for grooves, distortion or other damage. Use a light to illuminate the cylinder bore for careful inspection. Replace any cylinder barrel if there is distortion or damage.

4. Inspect the piston for damage to the lands.

5. Replace all seals and rings.

Assembly

1. Install rod seal (11, Figure 10-22) in the bore of the cylinder head. Install wiper seal (12) in the front groove in the bore of the cylinder head. The lip of the wiper must be toward the outside of the cylinder. Install O-ring (9) and backup ring (10) in the groove on the outside of the head. The backup ring must be toward the outside of cylinder.
2. Apply petroleum jelly to the rod seal and wiper. Carefully slide the cylinder head assembly over the piston end of rod (13). Do not try to install the head over the threaded end of the rod. Damage can be caused to the wiper and rod seal by the threads.
3. Install O-ring (7) on piston rod (13). Be careful not to damage the O-ring on the threads.
4. Install piston (3) on piston rod (13) with the wear ring groove towards the rear.
5. Install piston nut (2) and tighten to a torque of 136 Nm (100 lb-ft).
6. Install split piston ring (4). Install O-ring (5) and seal (6) to piston (3).
7. Apply petroleum jelly to the cylinder tube threads and to the O-ring and seal on the piston. Carefully, slide the assembled piston rod into the cylinder tube. Use care to prevent damage to the piston ring and seals during installation. Work the piston rod straight into the cylinder tube.
8. Lubricate O-ring (9) on the outside of cylinder head (8). Slide the cylinder head into the cylinder tube and engage the cylinder head threads. Tighten the cylinder head with the spanner wrench until contact is made between the cylinder head flange and the cylinder tube. Continue to tighten the cylinder head until all turning movement stops and the cylinder head is secure.
9. Test the cylinder before installation.

Test

1. Use an external pump to test the cylinder.
2. Fill the cylinder with clean hydraulic oil. To test the piston seal ring, continue to push oil into the rod end after the cylinder has hit bottom. Test at a pressure of 24 132 kPa (3500 psi) in both directions.
3. Move the cylinder rod through two complete cycles at 5510 kPa (800 psi) to remove air from the cylinder. Look for external leaks. If the pressure differences between the cylinder ports is more than 689 kPa (100 psi) during the second stroke, the cylinder assembly is not acceptable. Disassemble and inspect for foreign materials or wrong assembly.
4. Wipe the cylinder rod clean. Then move the cylinder through four complete strokes at 5510 kPa (800 psi), but do not permit the cylinder to hit bottom on each stroke. After four strokes, extend the cylinder rod just far enough to see how much oil has collected on the rod during the four strokes. A thin layer of oil on the cylinder rod is normal. Excessive oil indicates rod seal leakage. Inspect and replace the seal.
5. Fully retract the cylinder rod. Keep the base port open. Apply a test pressure of 24 132 kPa (3500 psi) to the rod port. Hold this pressure for a minimum of 10 seconds. Visually check for internal and external leakage. No leakage is permitted.
6. Fully extend the cylinder rod. Keep the rod port open. Apply a test pressure of 24 132 kPa (3500 psi) to the base port. Hold this pressure for a minimum of 10 seconds. Visually check for internal and external leakage. No leakage is permitted.
7. Plug both ports to keep contamination out of the cylinder during installation.
8. If the ball joints were removed, install them to the cylinder ends. Turn the ball joint onto the threads 18 turns. Be sure to locate the ball joints as illustrated in Figure 10-23. Then measure the distance from center of one grease fitting to the center of other grease fitting. The dimension should be 504.8 mm (19-7/8 in).

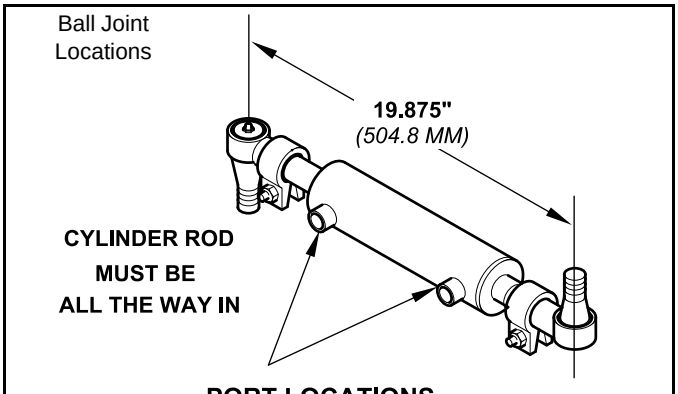

FIGURE 10-23

Installation

1. Install the cylinder with the cylinder ports facing out.
2. Be sure the ball joints are installed to the correct dimension. Tighten each castle nut and install the cotter pin.
3. Connect the hydraulic hoses to the cylinder ports. Make sure they are tight.
4. Lubricate the grease fittings with Lithium based, E.P. No. 2 bearing grease.

Reference Only

5. Check the hydraulic oil level and add oil if necessary.
6. Start the engine and operate the cylinder(s) through several complete cycles to remove air from the system. Operate the cylinders slowly and do not let them hit bottom until movement is positive in both directions. After the circuit is filled with oil, the cylinders can be operated normally.
7. Check for leaks and repair if necessary.
8. Check the hydraulic oil level and fill if necessary.

FRONT STEERING CYLINDER

NOTE: See Rear Steering Cylinder.

Cylinder Repair

Removal

WARNING

It is necessary to climb under the crane to replace the steering cylinder. Be sure engine is shut off, the ignition key is removed and chock blocks are in place before climbing under the crane.

1. Raise and support the machine to gain access to the steering cylinder.
2. With the engine not running, turn the steering wheel in both directions several times to release any pressure in the hydraulic lines to the steering cylinder.
3. Place a tag on the hoses for identification and correct assembly. Be prepared to collect the hydraulic oil as you remove steering lines. Slowly loosen the hydraulic hoses to release any remaining pressure. Install plugs in the hose ends and caps in the cylinder ports.

Reference Only

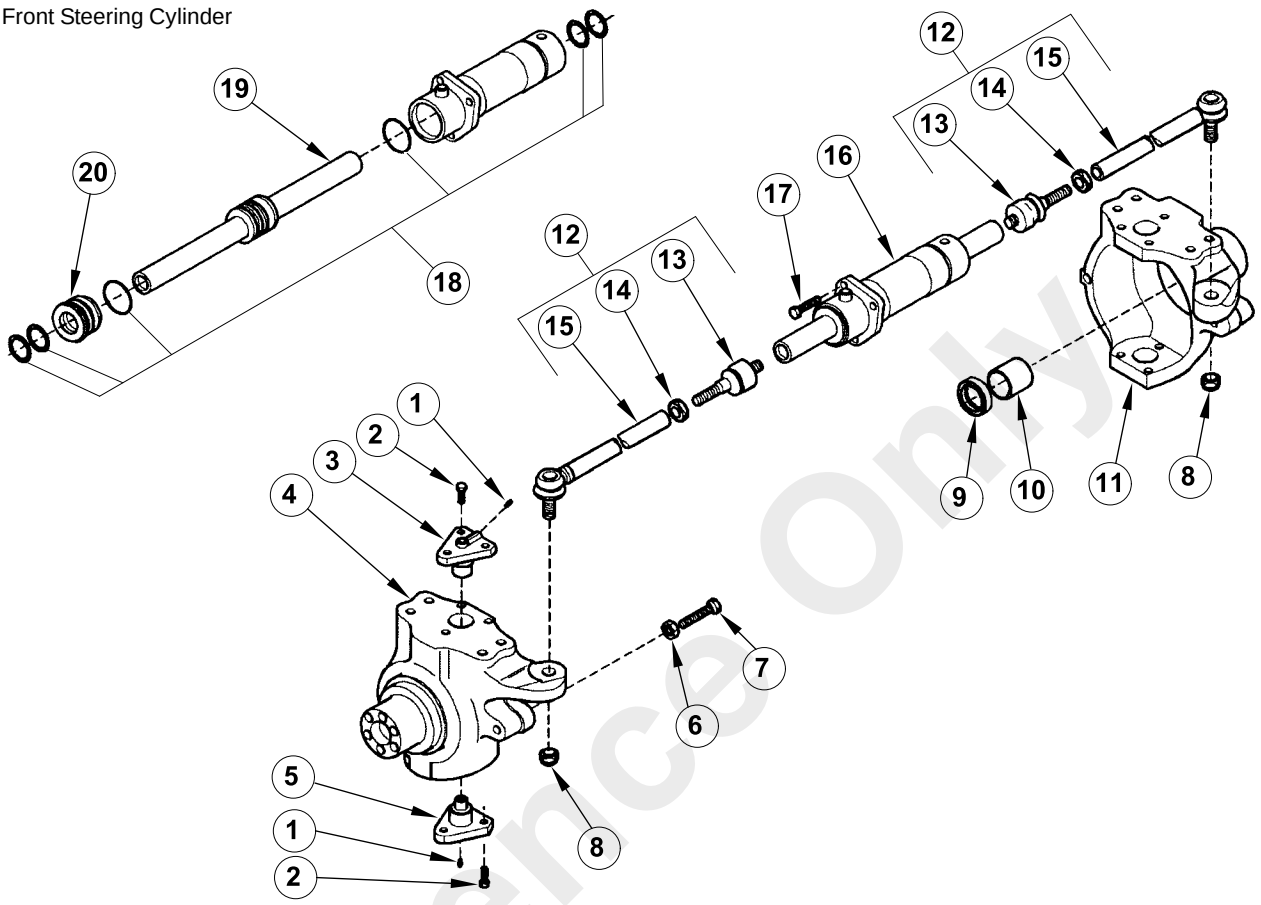

Item	Description	Item	Description
1	Grease Zerk (4)	11	Right Swivel Housing
2	Cap Screw (12)	12	Steering Tie Rod Assembly (2)
3	King Pin (2	13	Ball Joint (2)
4	Left Swivel Housing	14	Hex Nut (2)
5	King Pin (2)	15	Tie Rod (2)
6	Hex Nut (4)	16	Steering Cylinder Assembly
7	Cap Screw (4)	17	Cap screw (3)
8	Lock Nut (2)	18	Seal Kit
9	Seal Ring (2)	19	Rod
10	Bronze Bushing (2)	20	Cylinder Head

FIGURE 10-24

4. Loosen the hex nut (8, Figure 10-24) on one of the cylinder tie rod ends (12) until none of the threads on the tie rod are exposed. Using a hammer and a tie rod fork, remove the tie rod from the swivel housing.

5. Mark the tie rod for identification during assembly. Remove the tie rod assembly (12) from the cylinder rod. Do not loosen the hex nut (14), remove the tie rod at ball joint (13). Be careful not to tamper with the length of the tie rod assembly. If measurement is changed, the axle will have to be checked for toe-in.

6. On the other end of the cylinder, repeat steps 4 and 5.

7. Remove three cap screws (17) fastening the cylinder to the axle housing. Remove the cylinder. It may be necessary to drive the cylinder out of its mounting brackets using a rubber hammer.

8. Take the cylinder to a clean work area for disassembly.

Disassembly

1. Place the cylinder in a vice. Do not clamp on the cylinder tube. Clamp onto the square flange attached to the tube.

2. Separate the cylinder head (20) from the cylinder tube and remove it.

Reference Only

Published 2/23/2016, Control # 592-00

3. Pull the cylinder rod (19) out of the cylinder tube.
4. Remove and discard all seals from the cylinder rod piston, cylinder head and cylinder tube.

Assembly

1. Install new seal kit (18, Figure 10-24) to the cylinder rod, cylinder tube and cylinder head.
2. Install the cylinder rod (19) into the cylinder tube being careful not to damage any of the seals in the cylinder tube and on the cylinder rod piston.
3. Install the cylinder head (20) onto the cylinder rod (19), being careful not to damage any of the seals in the cylinder head.

Installation

1. Install the cylinder to the axle housing using three cap screws (17, Figure 10-24). Tighten the cap screws to a torque of 120 Nm (88 lb-ft).
2. Install the tie rod assemblies (12) to the ends of the cylinder rod (19). Check reference marks to make sure the tie rods are in the correct position. Tighten the tie rod assemblies to a torque of 300 Nm (220 lb-ft).
3. Install the ball joint of one of the tie rods (15) into the swivel housing. Install the lock nut (8) and tighten to a torque of 220 Nm (162 lb-ft).
4. Repeat step 3 for the other tie rod.
5. Connect the hydraulic hoses to the steering cylinder.
6. Start the engine and turn the steering wheel in both directions several times to release any air trapped in the steering cylinder and the hoses.
7. Check the steering cylinder and hydraulic lines for leaks.

Reference Only

Reference Only

THIS PAGE BLANK

Published 2/23/2016, Control # 592-00

SECTION 11
STRUCTURALS

SECTION CONTENTS

Booms 11-1
3-Section Boom Assembly 11-1
Maintenance 11-1
Adjustments 11-1
Boom Repair 11-4
Wire Rope, Sheaves And Hoist Blocks. 11-14
Wire Rope Description 11-14
Wire Rope Safety 11-14
Inspecting Wire Rope 11-15
Inspection of Sheaves 11-15
Wire Rope Lubrication 11-15
Wire Rope Installation. 11-16
Main Hoist 11-18
Theory of Operation. 11-18
Repair 11-20
Bearing, Mast and Related Parts 11-31
General 11-31
Mast Bearing 11-32
Mast Bearing Bolts. 11-32
Inspection for Bearing Wear 11-32
Replacing the Mast Bearing. 11-33
Swing Gearbox and Pinion 11-35
Swing Gearbox Repair. 11-36
Outriggers 11-38

Reference Only

BOOMS

3-Section Boom Assembly

Refer to three-section boom assembly diagram at the end of this manual for all part numbers in this section.

The three-section boom assembly includes three boom sections, a telescope cylinder and an extend/retract chain assembly.

Extending the Booms

The chain assembly used to retract and extend the 3rd boom section consists of an extend rod (24), chain end (23), two chains (20 and 26) connected together by a chain end (31) and an adjustable chain end (63). The top extend chain (20) wraps around a roller assembly (79) at the base end of the telescope cylinder, used to extend the 2nd boom section. Chain (20) is attached to the extend rod (24) with chain end (23). Extend rod (20) attaches to the rear end of the 1st boom section. The other end of chain (20) is attached to chain end (31), which is attached to the 3rd boom section with pin (11). The lower retract chain (26) is attached to the front end of the 1st boom section with chain end (63).

When extending the booms, the telescopic cylinder extends the 2nd boom section. When the cylinder extends it pulls on the upper chain, which extends the 3rd boom section at the same time.

Retracting the Booms

When retracting the booms, the telescope cylinder pulls the 2nd boom section into the 1st boom section. Since the chain assembly is attached to the 3rd boom section and anchored at both ends at the 1st boom section, when the telescope cylinder retracts, the lower retract chain pulls the 3rd section into the 2nd boom section.

Maintenance

Boom Wear Pads

See *Preventive Maintenance*, page 5-1 for lubrication intervals and instructions.

Boom Chains

See *Preventive Maintenance*, page 5-1 for lubrication and inspection intervals and instructions.

Adjustments

Boom Side-to-Side Adjustment

WARNING

When lifting at high boom angles with an extended boom, it is crucial to maintain proper side wear pad adjustment. Visually check the lateral straightness of the boom before raising the load. Lifting with a boom which is not visually straight may cause boom failure and could result in injury or death.

The boom side wear pads on the 1st and 2nd boom sections are adjustable to allow for wear on the pads. Shim pads must

be placed behind the wear pads to take up excessive slack in the side movement of the booms. When adding shims behind the wear pads, be sure to add them only behind the wear pads on the boom section to keep the sections centered.

Replace the wear pads when wear nears the bottom of the chamfer. If the wear extends down to the bolts, damage to the boom sections could occur.

Shims are available from your distributor.

P/N 1005522 = 1.02 mm (0.04 in)

P/N 1005475 = 1.78 mm (0.07 in)

To install the shims:

1. Extend the boom sections until the side wear pads are visible (Figure 11-1)

IMPORTANT!

Add shims behind one wear pad at a time.

2. At one wear pad, remove the two screws attaching the wear pad to the boom section. Slide the wear pad and existing shims, if used, out from between the boom sections. Place additional shims behind the wear pad and existing shims, if used. Install the wear pad and shims between the boom sections. Install the two screws to secure the wear pad and shim(s) to the boom section. Longer screws may be needed.
3. Repeat step 2 for the remaining wear pads.

Boom Chain Adjustment

Lower Retract Chain

1. Completely retract the boom sections.
2. It is most likely that the chain will be loose due to chain stretching during use. Scribe a line on the 2nd boom section next to the 1st boom section (Figure 11-2).
3. See Figure 11-2 and loosen the jam nut on the lower chain adjusting rod. Tighten the adjusting nut to remove the chain slack. Tighten the chain until the 2nd boom section just starts to move away from the 1st boom section, then stop. This will be indicated in movement of the scribed line on the 2nd boom section. Tighten the jam nut against the adjusting nut. Do not overtighten the chain.

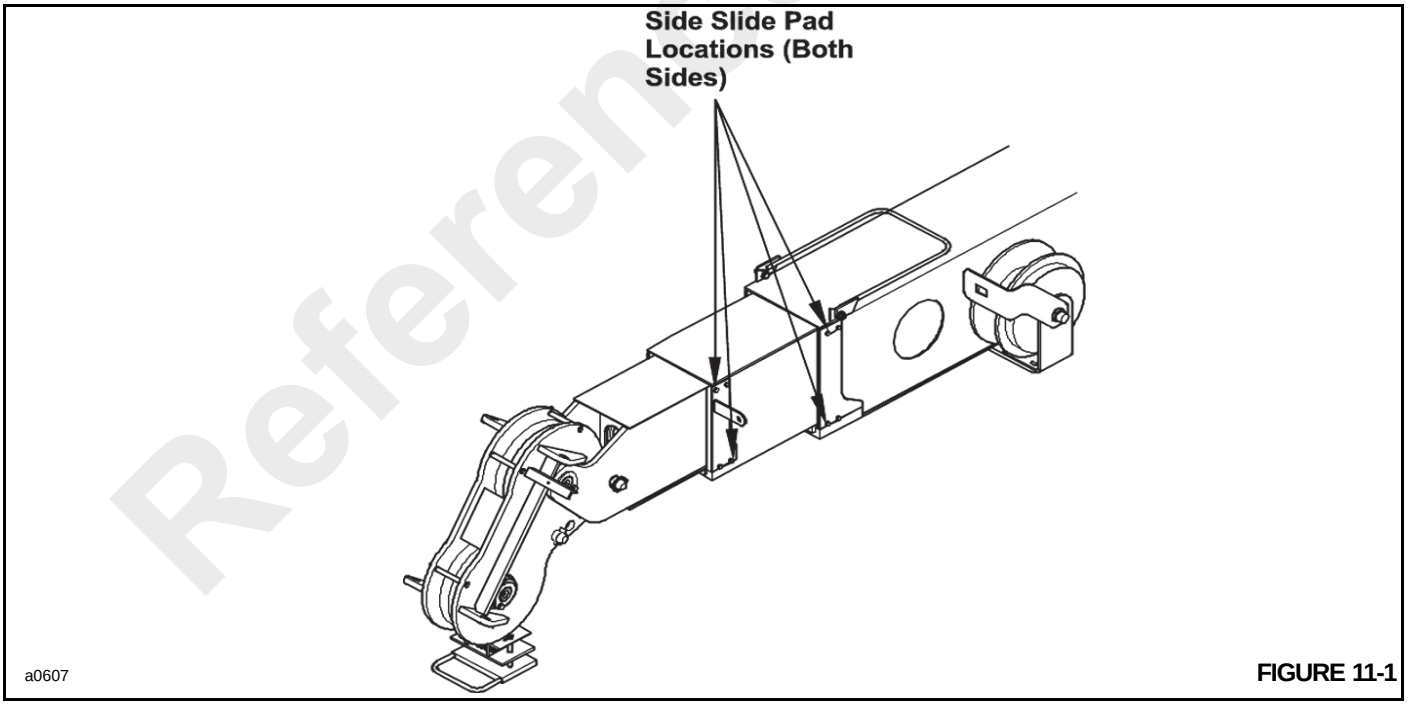

FIGURE 11-1

Reference Only

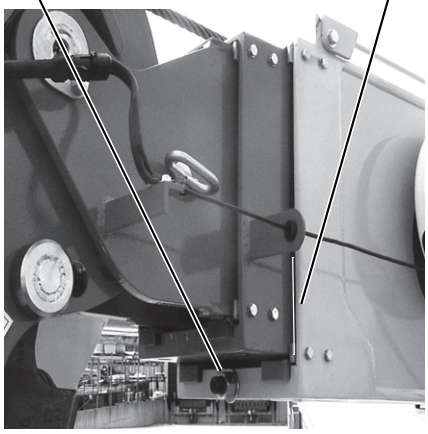

p0692 **FIGURE 11-2**

IMPORTANT!

Use the following procedure to check if the chain is too tight after adjusting: Remove the inspection cover from on top of the 1st boom section (Figure 11-3). Then retract the booms and check that the 3rd boom section has bottomed against the 2nd boom section. If the 3rd boom section has not bottomed, the chain is too tight and must be loosened.

4. If the chain is too tight, loosen the jam nut (Figure 11-2) and turn the adjusting nut to loosen the chain. Tighten the jam nut against the adjusting nut. Recheck for correct tightness as described in NOTE above.

Upper Extend Chain

1. Completely retract the boom sections.

2. Remove the inspection cover from on top of the 1st boom section (Figure 11-3) to expose the ends of 2nd and 3rd boom sections. The boom sections should be bottomed against each other.

3. If the chain is too loose DO NOT use the castle nut (Figure 11-4) to remove the slack. Instead, extend the booms until the extend rod is visible through the inspection opening. Scribe a line on the 3rd section to tell when the section moves. Attach a pipe wrench to the extend rod (Figure 11-5) and turn the rod into the chain end. While turning the extend rod observe the boom section to see when it moves out slightly.

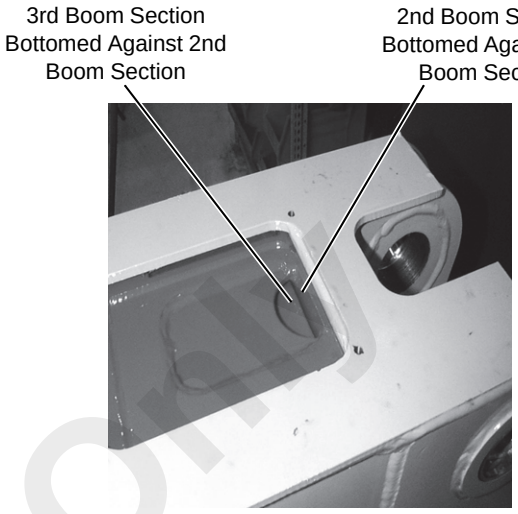

p0680 **FIGURE 11-3**

4. When the boom has extended slightly, remove the pipe wrench and fully retract the booms. Check that the 3rd boom section has bottomed against the 2nd boom section. Repeat steps 3 and 4 until the booms bottom against each other.

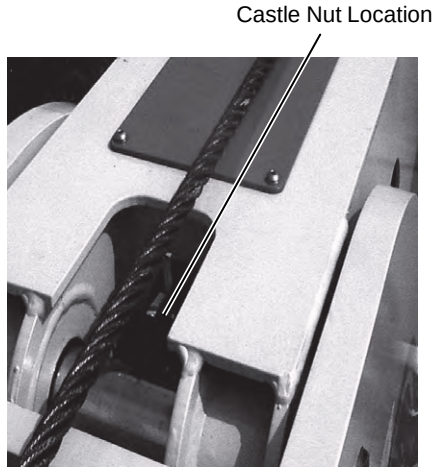

p0826 **FIGURE 11-4**

Reference Only



p0829 FIGURE 11-5

Boom Repair

Removal

1. Lower the boom to lowest position. Fully retract the booms.
2. Lower the drop block to the ground.
3. Disconnect the wedge assembly from the boom head to free the hoist wire rope.
4. Unwrap the wire rope from the drop block sheaves and the boom head sheaves. Wind the wire rope onto the hoist drum.
5. Disconnect the anti-double blocking system electrical wire from the electrical swivel on top of the hydraulic swivel, or if installed, disconnect the rated capacity limiter (RCL) wire from the electrical swivel.
6. Place a suitable container under the bulkhead fittings at the base of the boom assembly. Disconnect the two telescope cylinder hoses from underneath the boom at the bulkhead fittings and drain oil into the container.

NOTE: Use at least a 1.8 Metric Ton (2 Ton) overhead crane when lifting the boom assembly. Be sure slings and/or chains are capable of handling 1.8 Metric Ton (2 Ton).

7. Using an over head crane and sling or chain arrangement support the boom assembly.
8. Support the lift cylinder by placing a piece of 2 x 4 wood board between lift cylinder load hold valve block and the turntable base or support above with another overhead crane. This will support the cylinder when the rod end pin is removed.
9. Remove the cylinder rod end pin.
10. Remove the boom mounting pin and remove the boom assembly. Place boom on supports capable of handling the weight of the boom.
11. Disconnect the anti-double blocking wire or RCL wire, depending on which is installed, from the boom head and wind it onto the cord reel.
12. If the 1st boom assembly is to be replaced, remove all external components, i.e. double-blocking cable reel, boom angle indicator.

Special Tools

Two special tools are required to disassemble and assemble the 3-section boom. Each tool can be constructed using the dimensions in Figures 11-6 and 11-7.

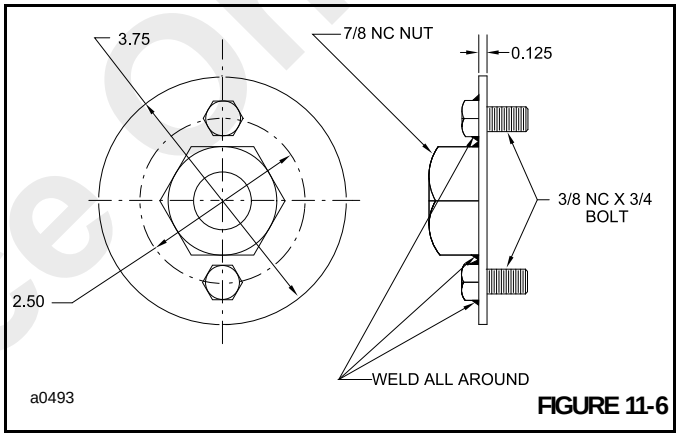

a0493 FIGURE 11-6

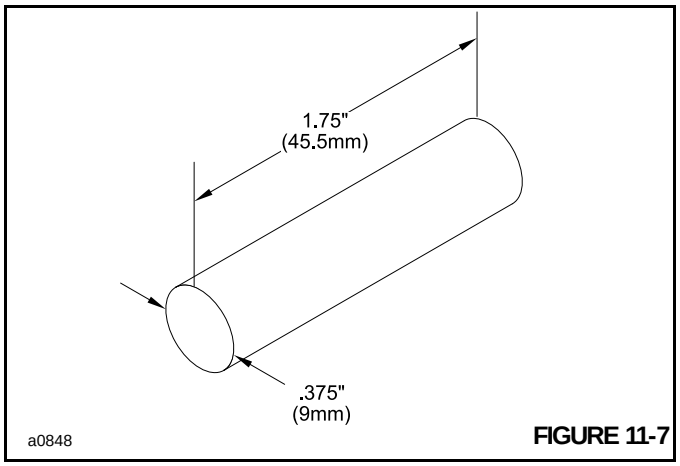

a0848 FIGURE 11-7

Disassembly

Refer to three-section boom assembly diagram at the end of this manual for all part numbers in this section.

1. At the base of the boom assembly, remove the hoses from the boom. Cap the fittings at the telescope cylinder and plug the hoses at the boom.
2. Attach a sling and overhead crane to the pivoting boom head (66). Remove lynch pin (5) and pin (4). Remove

Reference Only

capscrew (7) and lockwasher (8). Remove pin (6) and the pivoting boom head (66).

3. At the front end of the second boom assembly remove eight capscrews (42), lockwashers (41) and four bronze wear pads (40). If wear pads (40) are to be reinstalled, make note as to which wear pad, and shims (67), if installed, were removed from which location.

4. At the front of the 3rd boom assembly, remove eight capscrews (48), lockwashers (47) and four bronze wear pads (46). If wear pads are to be reinstalled, make note as to which wear pad, and shims (68), if installed, were removed from which location.

5. Remove nut (65) from threaded chain end (63). Slide chain end (63) out the 1st boom section and let it hang free.

6. At the base end of the 1st boom assembly, remove cotter pin (57) and castle nut (56) from extend rod (24). Remove cotter pin (58), castle nut (59) and washer (60) from end of cylinder. Do not turn extend rod (24) out of chain end (23) at this time.

WARNING

The next step requires pulling on the boom assembly. To inhibit the boom assembly from pulling off of the supports, secure the boom assembly. Should the boom be pulled off of the supports, personal injury could occur.

7. Secure the boom assembly so it does not pull off the supports. Attach an overhead crane and sling to the 2nd boom assembly. Pull the 2nd and 3rd boom sections out of the 1st boom section approximately half way. Remove four capscrews (51), lockwashers (50) and two boom wear pads (49). Continue pulling the 2nd and 3rd boom section out of the 1st boom section until it stops and retract roller assembly (37) is visible through the front access holes of the 1st boom section.

8. Remove two capscrews (39) and lockwashers (38) from retract roller assembly (37).

9. When the retract roller assembly is free, pull the 2nd boom section out the end of 1st boom section. When free, disconnect lower retract chain (26) from the chain end (31) by removing pin (28) and cotter pins (27).

10. Remove retract roller assembly (37) from the 1st boom section.

11. Place the 2nd boom assembly on supports capable of handling the weight.

12. With the 2nd boom assembly supported, remove the two capscrews (32) from eccentrics (33). Remove the eccentrics.

13. Attach an overhead crane and sling to the telescope cylinder as shown in Figure 11-8. Raise the 3rd boom assembly far enough to remove two capscrew (14) and lockwashers (13). Remove rear wear pad (12).

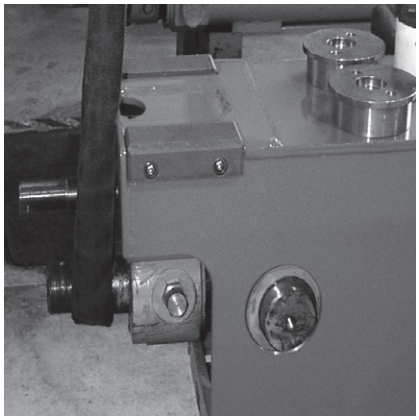

p0670 **FIGURE 11-8**

Reference Only

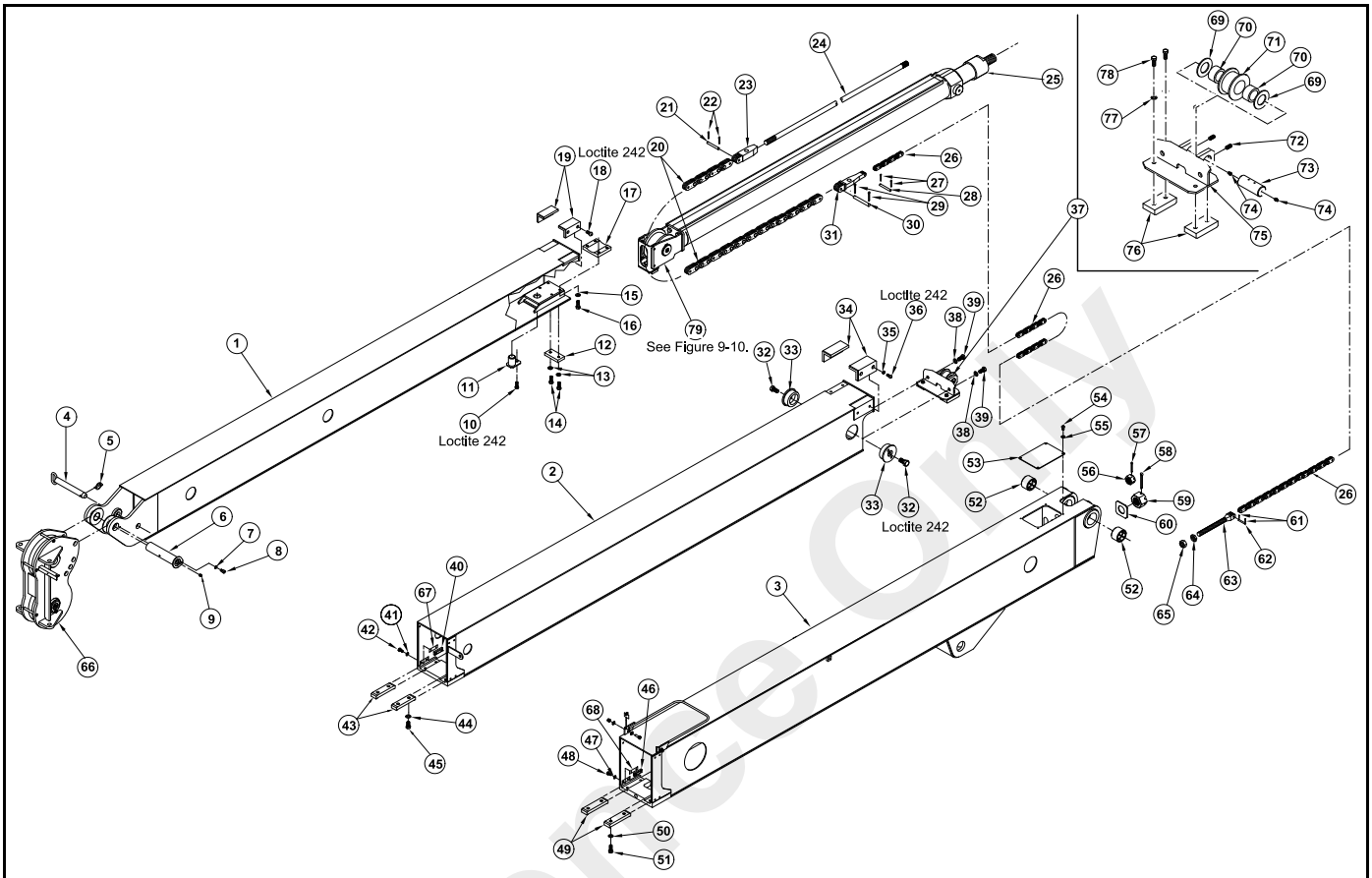

Item	Description
1.	3rd Boom Section
2.	2nd Boom Section
3.	1st Boom Section
4.	Pin
5.	Lynch Pin
6.	Pin
7.	Lockwasher
8.	Capscrew
9.	Grease Fitting
10.	Capscrew
11.	Pin
12.	Rear Wear Pad
13.	Lockwasher (2)
14.	Capscrew (2)
15.	Lockwasher (4)
16.	Capscrew (4)
17.	Guide Pad
18.	Capscrew (4)
19.	Top Wear Pad (2)
20.	Extend Chain
21.	Extend Chain Pin
22.	Cotter Pin (2)

Item	Description
23.	Top Extend Chain End
24.	Extend Rod
25.	Telescope Cylinder Assembly
26.	Retract Chain
27.	Cotter Pin (2)
28.	Retract Chain Pin
29.	Cotter Pin (2)
30.	Extend Chain Pin
31.	Bottom Extend Chain End
32.	Capscrew (2)
33.	Eccentric (2)
34.	Top Wear Pad (2)
35.	Lockwasher (4)
36.	Capscrew (4)
37.	Retract Roller Assembly
38.	Lockwasher (2)
39.	Capscrew (2)
40.	Bronze Wear Pad (4)
41.	Lockwasher (8)
42.	Capscrew (8)

Item	Description
43.	Bottom Wear Pad (2)
44.	Lockwasher (4)
45.	Capscrew (4)
46.	Bronze Wear Pad (4)
47.	Lockwasher (8)
48.	Capscrew (8)
49.	Lower Wear Pad (2)
50.	Lockwasher (4)
51.	Capscrew (4)
52.	Bushing (2)
54.	Capscrew (4)
55.	Lockwasher (4)
56.	Castle Nut
57.	Cotter Pin
58.	Cotter Pin
59.	Castle Nut
60.	Washer
61.	Cotter Pin (2)
62.	Retract Chain Pin
63.	Threaded Chain End
64.	Jam Nut
65.	Nut

Item	Description
66.	Pivoting Boom Head
67.	Shim
68.	Shim
69.	Nylatron Spacer (2)
70.	Roller Bearing (2)
71.	Retract Chain Roller
72.	Set Screw (2)
73.	Pin
74.	Grease Fitting (2)
75.	Roller Support Bracket
76.	Bottom Wear Pad (2)
77.	Lockwasher (4)
78.	Capscrew (4)
79.	Roller Assembly
80.	Lock Wire

a0846

FIGURE 11-9

Reference Only

Published 2/23/2016, Control # 592-00

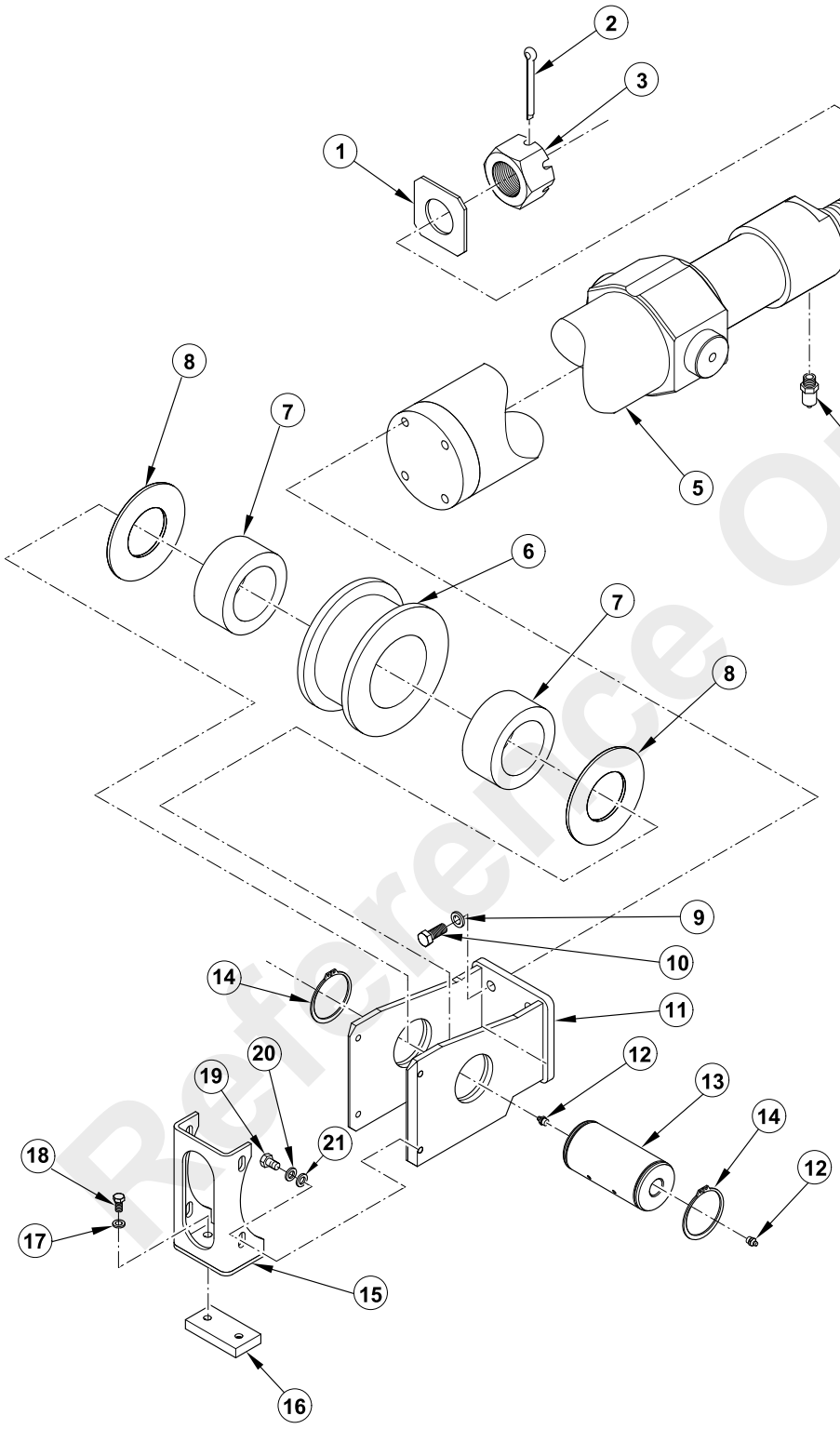

Item	Description
1	Washer
2	Cotter Pin
3	Castle Nut
4	Counterbalance Valve
5	Telescope Cylinder
6	Chain Sheave
7	Bearing (2)
8	Nylatron Spacer (2)
9	Lockwasher (4)
10	Capscrew
11	Extend Chain Roller Bracket
12	Grease Filling (2)
13	Chain Roller Pin
14	Retaining Ring (2)
15	End Guide Bracket
16	Cylinder End Wear Pad
17	Lockwasher (2)
18	Capscrew (2)
19	Capscrew (4)
20	Lockwasher (4)
21	Flat Washer (4)

Reference Only

FIGURE 11-10

a0847

14. See previous WARNING. Secure the 2nd boom section from pulling off the supports. Pull 3rd boom assembly out far enough to attach a sling and overhead crane. Pull the 3rd boom section about half way out. Remove four capscrews (45) and lockwashers (44). Remove two boom wear pads (43). Pull the 3rd boom assembly from the 2nd boom assembly. When the 3rd boom assembly is almost out, raise the boom tip end. This will allow the boom assembly to clear an internal plate that will prevent the boom from being pulled straight out.
15. Place the 3rd boom assembly on suitable supports.
16. Pull the telescope cylinder assembly (25) out, keeping tension on the extend chain, until the roller end of the telescope cylinder assembly is visible through the center access hole.
17. Through the access hole remove four capscrews (19), lockwashers (20) and flat washers (21). Remove end guide bracket (15). Check wear pad (16) and if excessively worn or damaged replace it.
18. Lift up on telescope cylinder assembly, remove four capscrews (16), lockwashers (15) and guide pad (17, Figure 11-10).
19. Pull the telescope cylinder assembly out of the 3rd boom section far enough to see chain end (23, Figure 11-10). Remove two cotter pins (22) and pin (21). Remove chain end (23) and extend rod (24) as an assembly. Note the distance from chain end (23) to end of extend rod (24) for base setting at assembly.
20. Continue pulling telescope cylinder assembly (25) out of the 3rd boom section.
21. Place the telescope cylinder assembly on suitable supports.
22. Remove capscrew (10, Figure 11-10) and pin (11). Remove extend chain (20) and chain end (31) from the 3rd boom assembly.
23. If the telescope cylinder extend roller assembly needs to be disassembled, use Figure 11-10 as a guide. For cylinder repair, see Section 4.

Inspection

Inspect all boom wear pads for wear and/or damage. Replace if necessary.

Inspect the extend and retract chains for damage. See chain inspection in Section 5.

Assembly

IMPORTANT!

If new boom sections are being installed the holes for threaded fasteners are tapped at the factory and covered with paint. Before assembling the boom sections, run a tap through all holes to remove the paint.

IMPORTANT!

Coat the threads of all fasteners with an anti-seize compound, except where use of Loctite 243 is indicated.

Assembling the Telescope Extend Roller Assembly

Refer to (Figure 11-10) Telescope Cylinder and Extend Roller Assembly.

The following procedure needs only be done if the telescope extend roller assembly was disassembled.

1. Attach the extend chain roller bracket (11) to the base end of telescope cylinder (5) using capscrews (10) and lockwashers (9). Make sure the holes for pin (13) are parallel to the eccentric hubs on telescope cylinder (5).
2. If bearings (7) were removed, install the bearings into extend chain roller (6) as follows:
   a. Remove the inner ring from the bearings (7) and coat the rollers with a Lithium Base, E.P. No. 2 bearing grease.
   b. Insert the inner rings into the bearings. Install the bearings in roller (6).
3. Using roller pin (13), install the extend chain roller assembly and two nylatron spacers (8) into the chain roller bracket (11).
4. Secure the extend roller pin (13) with two retaining rings (14).
5. If grease fittings (12) were removed, install them into the ends of pin (13). Apply Lithium Base, E.P. No. 2 bearing grease to the two grease fittings.
6. Install cylinder end wear pad (16) to end guide bracket (15) using two capscrews (18) and lockwashers (17).
7. Do not install end guide bracket assembly at this time. It will be installed later during the boom assembly procedure.

Assembling the Retract Roller Assembly

Refer to three-section boom assembly diagram at the end of this manual for all part numbers in this section.

The following procedure needs only be done if the retract roller assembly (37) was disassembled.

1. If bearings (70) were removed, install the bearings into retract chain roller (71) as follows:
   a. Remove the inner ring from the bearings (70) and coat the rollers with a Lithium Base, E.P. No. 2 bearing grease.
   b. Insert the inner rings into the bearings. Install the bearings in roller (71).

Reference Only

2. Using roller pin (73), install the extend chain roller assembly and two nylatron spacers (69) into roller support bracket (75).
3. Lock the pin in place with two set screws (72).
4. If grease fittings (74) were removed, install them into the ends of pin (73). Apply Lithium Base, E.P. No. 2 bearing grease to the two grease fittings.
5. Install the two bottom pads using four capscrews (78) and lockwashers (77).

Preparing the 2nd Boom Section for Assembly

Refer to three-section boom assembly diagram at the end of this manual for all part numbers in this section.

1. If the two top wear pads (34) were removed, install new pads using two capscrews (36) and lockwashers (35). Coat the thread of capscrew (36) with Loctite 243 before installation.

CAUTION

Lockwashers (35) must be installed with capscrews (36). If they are not, possible damage to the 3rd boom section could occur.

2. The bearing in retract roller assembly (37) must be lubricated with Lithium Base, E.P. No. 2 bearing grease. Apply the grease through the two grease fittings in the roller pin.
3. On new replacement boom sections, check that the bronze wear pads (40) align with the mounting holes. If they do not align, it is permissible to grind away some of the weld to align the holes. Do not install the wear pads at this time. Also, remove the paint from the eccentric mounting hole. If the paint is not removed the anti-double blocking system will not work properly.

Preparing the 1st Boom Section for Assembly

Refer to three-section boom assembly diagram at the end of this manual for all part numbers in this section.

1. If bushings (52) were removed, press new bushings into the boom section.
2. On new replacement boom sections, check that the bronze wear pads (46) align with the mounting holes. If they do not align, it is permissible to grind away some of the weld to align the holes. Do not install the pads at this time.

Assembling the 3rd Boom Section

Refer to three-section boom assembly diagram at the end of this manual for all part numbers in this section.

IMPORTANT!

Apply anti-seize to all capscrew threads, unless stated otherwise, before installation.

1. If boom wear pads (19) were removed, install new pads using two capscrews (18). Coat the threads of capscrew (18) with Loctite 243 before installation.
2. Install cylinder guide pad (17) using four capscrews (16) and lockwashers (15).
3. Attach chain end (31) to chain (20) with pin (30) and cotter pins (29).
4. From the boom tip end, thread the chain (20), chain end (31) first, into the boom section and fasten chain end to the boom using pin (11) and capscrew (10). Apply Loctite 243 to the threads of capscrew (10) before installation.
5. Attach chain end (23) to other end of chain (20) with pin (21) and two cotter pins (22).
6. Coat the bottom of the telescope cylinder with an anti-seize compound where it will slide on guide pad (17).
7. Using an overhead crane and sling, lift the telescope cylinder assembly (25) and align it with the rear of the 3rd boom section. Then, insert the telescope cylinder at least half way inside the 3rd boom section until the end of the cylinder appears in second access hole from the boom tip end.
8. Thread a puller wire through the 3rd boom section from the cylinder end. Attach the puller wire to chain end (23). Pull the chain through the boom section and onto the tray on top of the telescope cylinder until the chain is tight against the roller of the telescope cylinder assembly.
9. Through the access hole, install the end guide bracket (15) with four capscrews (19), lockwashers (20) and flat washers (21).
10. Extend rod (24) has threaded ends. On the end with the longer threads, coat the threads with an anti-seize compound.
11. Install extend rod (24) into chain end (23) approximately 19 mm (3/4 in). Do not install the rod all the way into the chain end. Fastening the rod to the 1st boom section will not be possible if the rod is threaded in too far.
12. Coat the bottom of the 3rd boom section, where the cylinder wear pad will slide, with an anti-seize compound.
13. Slide the telescope cylinder all the way into the 3rd boom section. When moving the cylinder assembly, pull on the extend chain rod (24) to keep the chain tight.

Reference Only

Installing the 3rd Boom Section Into the 2nd Boom Section

1. Coat the entire lower inside surface of the 2nd boom section with an anti-seize compound using a roller and rod (Figure 11-11). Coat the upper inside surface, where the 3rd section upper wear pads will slide, with anti-seize compound.

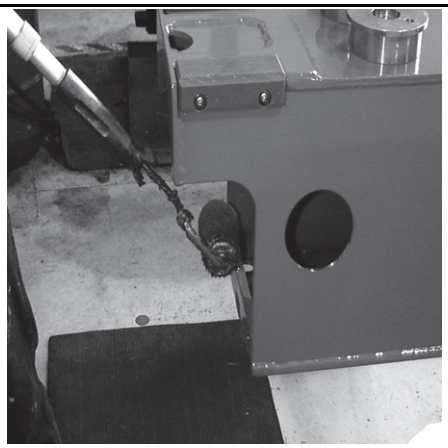

p0669 FIGURE 11-11

2. Using an overhead crane and sling, align the 3rd boom section with the end of the 2nd boom section.
3. Insert the 3rd boom section into the 2nd boom section, raising the boom tip end of the 3rd boom section slightly to clear an internal plate. Then lower tip and continue inserting the 3rd boom section until it is approximately half way in.
4. Coat the tops of the two lower wear pads (43) with an anti-seize compound. Install the two lower wear pads (43) with four capscrews (45) and lockwashers (44). Do not over tighten the capscrews. It is possible to pull the wear pad nuts through the wear pads.
5. Continue inserting the 3rd boom section into the 2nd boom section until it bottoms out.
6. Attach a sling and overhead crane to the threaded rod end of the telescope cylinder (Figure 11-8).
7. Using a pry bar (Figure 11-12), pry the 3rd boom section about 3.2 mm (1/8 in) away from the 2nd boom section.



p0671 FIGURE 11-12

8. Using the sling and overhead hoist, raise the 3rd boom section enough to install rear wear pad (12). Install the pad using two capscrews (14) and lockwashers (13). Lower the 3rd boom section.
9. Coat the inside surface of both eccentrics (33) with an anti-seize compound. Coat the threads of capscrew (32) with Loctite 243. Install both eccentrics using capscrew (32). Tighten capscrew (32) to seat the eccentric and then loosen the capscrew.
10. Install retract roller assembly (37) to the 2nd boom section using two capscrews (39). The assembly is installed temporarily to perform a centering measurement.
11. Using a spanner (see Special Tools on page 11-4), turn each eccentric (Figure 11-13) until the telescope cylinder assembly is centered in the 3rd boom section (Figure 11-14).

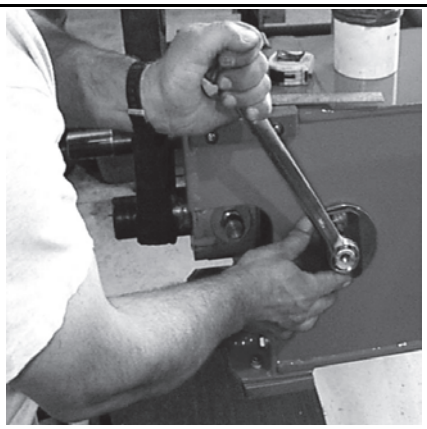

p0672 FIGURE 11-13

Reference Only

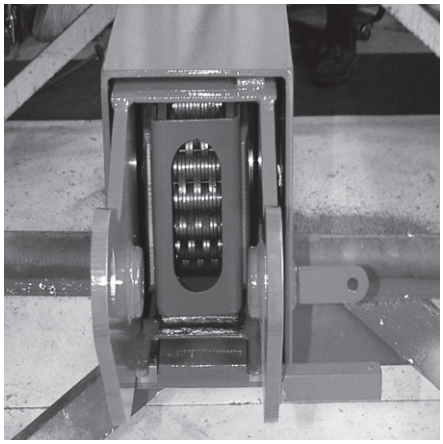

p0673 **FIGURE 11-14**

12. At the rear of the boom (Figure 11-15), check for proper height adjustment. Using a tape measure and straight edge, measure from the center of the telescope cylinder threaded rod to the bottom of the wear pad on retract roller assembly (37). It should be 187 mm (7.75 in). If it is not correct, turn the two eccentrics, while maintaining the centering of the telescope cylinder assembly, to either raise or lower the cylinder rod to correct measurement. When the dimension is correct, tighten the two eccentric retaining bolts.

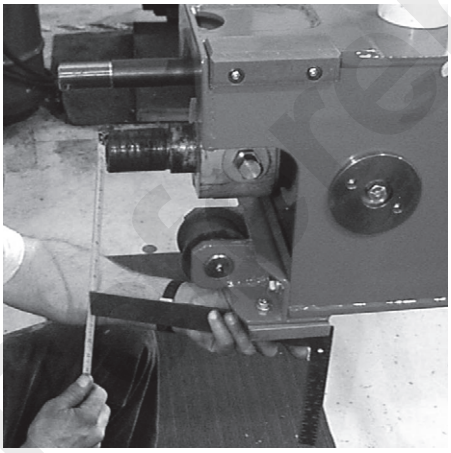

p0674 **FIGURE 11-15**

13. Check that the telescope cylinder assembly has remained centered. If it is not, adjust it using the eccentrics.

14. Remove retract roller assembly (37) that was temporarily installed in Step 10.

Installing the 2nd Boom Section into the 1st Boom Section

Refer to three-section boom assembly diagram at the end of this manual for all part numbers in this section.

1. Coat the internal slide areas on the 1st boom section with an anti-seize compound.

2. Position retract roller assembly (37) in the 1st boom section. See Figure 11-16.

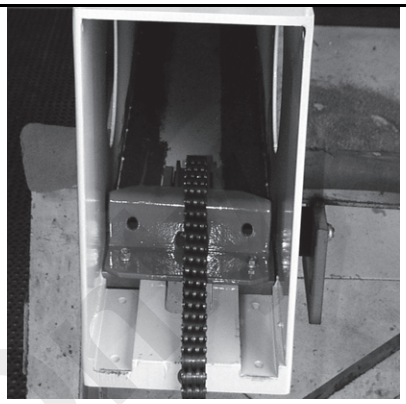

p0675 **FIGURE 11-16**

3. Place the lower retract chain (26, Figure 11-6) up through bottom access hole and over the roller of the retract roller assembly. See Figure 11-17.

4. Position the 2nd boom assembly in front of the 1st boom assembly close enough to connect the lower retract chain (26), (Figure 11-10) to the chain end (31) using pin (28) and cotter pins (27). See Figure 11-17.

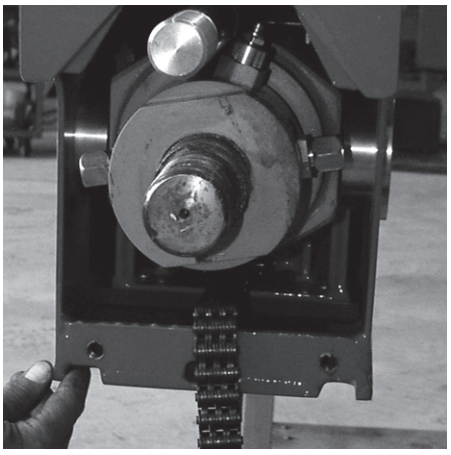

p0676 **FIGURE 11-17**

5. Insert the 2nd boom assembly into the 1st boom assembly far enough to attach the retract roller chain assembly to the 2nd boom assembly, through the first access hole.

6. Coat the tops of the two lower wear pads (49) with an anti-seize compound. Install the two lower wear pads (49) with four capscrews (51) and lockwashers (50). Do not over tighten the capscrews. It is possible to pull the wear pad nuts through the wear pads.

Reference Only

7. Slide the 2nd boom assembly into the 1st boom assembly far enough that the telescope cylinder hoses can be installed through the rear of the boom. If the 2nd boom assembly will not slide into the 1st boom section it is permissible to hook up a chain jack as shown in Figure 11-18 and jack the boom sections into the 1st boom section.

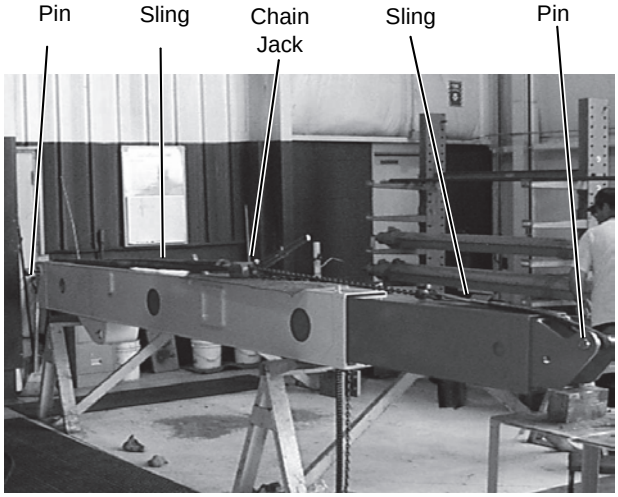

p0677 **FIGURE 11-18**

8. Install the two hoses to the telescope cylinder so they are hanging straight down (Figure 11-19). It may be necessary to rotate the cylinder to align the hose ports

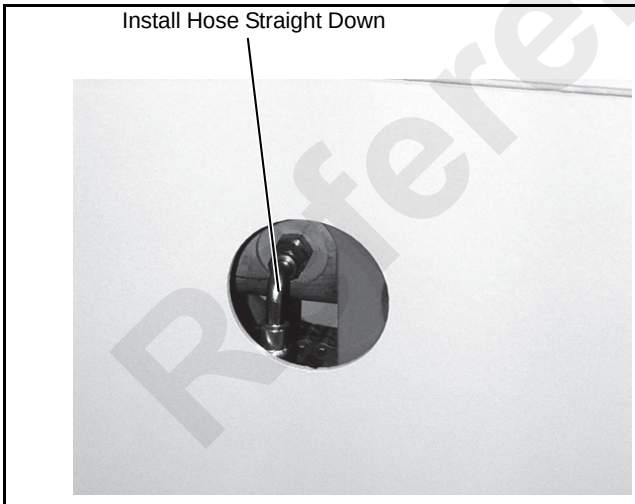

p0678 **FIGURE 11-19**

9. Pull the 2nd boom assembly into the 1st boom assembly until the eccentrics are visible in the access hole.

10. Check that the threaded end of the telescope cylinder aligns with and can be installed in the mounting hole in the boom section (Figure 11-20). If it can not be installed, it must be adjusted as follows:

a. Loosen the two eccentric mounting capscrews (32).

b. Using the special spanner turn the eccentrics until the rod can be installed in the mounting hole. There is a shoulder on the cylinder threaded rod that must also clear the hole. Be sure that the telescope cylinder assembly still is centered. Adjusting one eccentric too much may pull the telescope assembly to one side.

c. Tighten the two eccentric mounting capscrews.

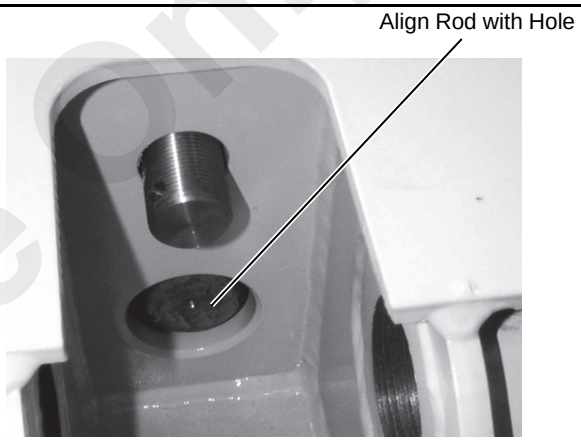

p0679 **FIGURE 11-20**

11. Install the cylinder rod end through the mounting hole. Install extend rod (24) through its mounting hole in the boom section and pull the rod tight.

12. Install washer (60) and castle nut (59). Using a 3-1/8 inch socket, tighten the nut until the cylinder is tight against the mounting plate. Then back off the nut until one of the slots in the nut aligns with the cotter pin hole. Install cotter pin (58).

13. Turn castle nut (56) onto extend rod (24) until the cotter pin hole shows in one of the nut slots. Insert special pin (Figure 11-7) into the cotter pin hole, while installing a 1-7/8" socket onto the nut. The socket will hold the pin in the cotter pin hole.

14. Tighten the nut, which will turn extend rod (24) into the chain end (23). Observe the 3rd boom section through the top access hole (Figure 11-21). When it starts to separate from the 2nd boom section, stop tightening the nut.

Reference Only

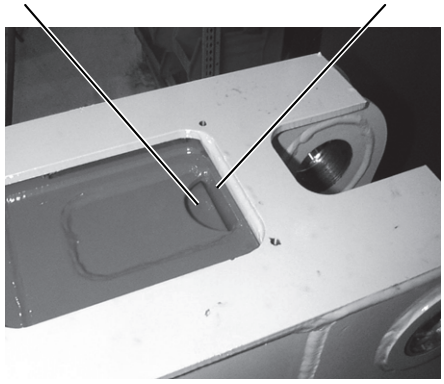

p0680

FIGURE 11-21

15. Remove the socket and special pin. Install cotter pin (57) in place of the pin.

16. Install lock wire (80) between cotter pins (57 and 58).

17. Turn jam nut (64) about 3/4 of the way onto threaded chain end (63).

18. At the front of the 1st boom section install the threaded chain end (63). Install nut (65).

19. Place a pencil mark on the 2nd boom section where the 1st boom section overlaps the 2nd (Figure 11-22).

20. Tighten nut (65) until the pencil mark starts to move away from the 1st boom section. Stop and tighten the jam nut against the boom bracket. Make sure that the chain is not twisted.

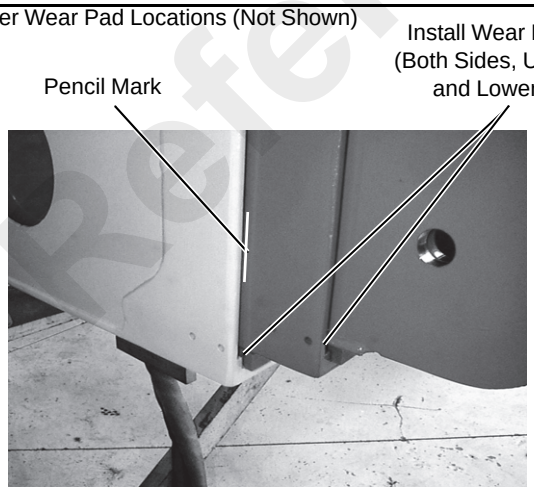

p0681

FIGURE 11-22

21. Install the hoses from the two telescope cylinder hoses to the bulkhead in the 1st boom section.

22. At the front of the second boom section (Figure 11-22), install brass wear pads (40) between the 2nd and 3rd boom sections.

Wear Pad (Units prior to S/N 100710-99)
P/N 1004468 = 11.18 mm (0.44 in)

Wear Pads (Units with S/N 100710-99 and After
P/N 1005703 = 6.35 mm (0.25 in)
P/N 1005524 = 7.87 mm (0.31 in)

Shims Units with S/N 100710-99 and After
P/N 1005522 = 1.02mm (0.04 in)
P/N 1005475 = 1.78 mm (0.07 in)

Install the wear pads and, if required, the shims at four places to center the 3rd boom assembly in the 2nd boom assembly.

23. Repeat Step 22 and install the wear pads between the 1st and 2nd boom sections.

24. Locate the pivoting boom head between the 3rd section ears. Install pin (6) and fasten with capscrew (8) and lockwasher (7).

25. Install pin (4) and fasten with lynch pin (5).

26. Install any components that were removed from the 1st boom section prior to disassembly, i.e. boom angle indicator, cord reel.

Installation

1. Connect the anti-double block system wire to the boom head wire.

NOTE: Use at least a 1.8 Metric Ton (2 ton) overhead crane when lifting the boom assembly. Be sure slings and/or chains are capable of handling 1.8 Metric Ton (2 ton).

2. Using a sling, or chains and overhead hoist, position the boom assembly between the ears of the mast. Install the mounting pin and fasten with a capscrew and lockwasher.

3. Attach the lift cylinder to the boom assembly.

4. Connect the hoses from the hydraulic swivel to the bulkhead fittings on the boom assembly.

5. Connect the anti-double block system electrical wire to the electrical swivel or connect the rated capacity limiter (RCL) electrical wire to the electrical swivel.

6. Install the wire rope over the boom head and reeve through boom head and drop block sheaves and dead end with wedge and socket. Connect the wedge socket to the pivoting boom head.

Reference only

WIRE ROPE, SHEAVES AND HOIST BLOCKS

Wire Rope Description

A wire rope is a machine, by definition: “An assemblage of parts, that transmit forces, motion and energy from one to another in some predetermined manner and to some desired end.”

A typical wire rope may contain dozens--even hundreds--of individual wires which are formed and fabricated to operate at close bearing tolerances one to another. When a wire rope bends, each of its many wires slide and adjust in the bend to accommodate the differences in length between the inside and the outside of the bend. The sharper the bend, the greater the movement.

Every wire rope has three basic components (Figure 11-23): (1) The wires which form the strands and collectively provide rope strength; (2) the strands, which are laid helical around the core, and (3) the core, which forms a foundation for the strands. The core used in the crane wire rope is an Independent Wire Rope Core (IWRC), which is actually a smaller rope, or a strand similar to the outer strands of the rope. The IWRC core adds about 7.5% to the nominal strength of the wire rope.

The greatest differences in wire ropes are found in the strands, which may vary widely in the pattern and number of wires which are laid together.

The wires of the rope may be made of various metals, including steel, iron, stainless steel, monel, and bronze. The materials of which wires are made is the primary determination of rope strength. High-carbon steel is used in the crane wire rope.

Carbon steel wire ropes come in various grades. The term “Grade” is used to designate the nominal strength of the wire rope. The most common grades are Traction Steel (TS), Plow Steel (PS), Improved Plow Steel (IPS), Extra Improved Plow Steel (EIPS) and Extra Extra Improved Plow Steel (EEIPS). The wire rope used on the crane is an EIPS Grade.

One cannot determine the grade of wire rope by its feel or appearance. To be sure you are using the proper rope, always obtain the wire rope from your distributor.

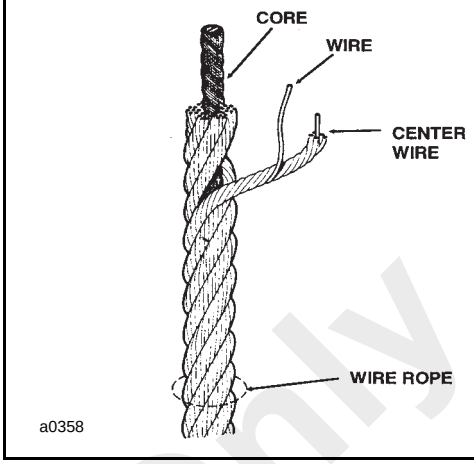

FIGURE 11-23

Wire Rope Safety

The following information is not a complete discussion of wire rope. What follows is a brief outline of the basic information required to safely use wire rope.

- Wire rope WILL FAIL IF WORN-OUT, OVERLOADED, MISUSED, DAMAGED or IMPROPERLY MAINTAINED.
- In service, wire rope looses strength and work capability. Abuse and misuse increases the rate of loss.
- The NOMINAL STRENGTH, sometimes called CATALOG strength, of a wire rope applies ONLY to a NEW, UNUSED rope.
- The Nominal Strength of a wire rope SHOULD BE CONSIDERED the straight line pull which will ACTUALLY BREAK a NEW UNUSED rope. The Nominal Strength of a wire rope SHOULD NEVER BE USED AS ITS WORKING LOAD.
- WIRE ROPES WEAR OUT. The strength of a wire rope begins to decrease when the rope is put to use and continues to decrease with each use.
- NEVER OVERLOAD A WIRE ROPE. This means NEVER use the wire rope where the load applied to it is greater than the working load determined by Manitowoc Cranes, Inc.
- NEVER “SHOCK LOAD” a wire rope. A sudden application of force or load can cause both visible external and internal damage. There is no practical way to estimate the force applied by shock loading a rope. The sudden release of a load can also damage a wire rope.
- Lubricant is applied to the wires and strands of a wire rope when it is manufactured. The lubricant is depleted when the rope is in service and should be replaced periodically. See Section 5, Preventive Maintenance, for lubrication intervals and procedures.

Reference Only

Published 2/23/2016, Control # 592-00

- In the U.S.A., regular INSPECTIONS of the wire rope and keeping of PERMANENT RECORDS SIGNED BY A QUALIFIED PERSON ARE REQUIRED BY OSHA FOR ALMOST EVERY WIRE ROPE APPLICATION. The purpose of the inspection is to determine whether or not a wire rope may continue to be safely used on the application. Inspection criteria, including number and location of broken wires, wear and elongation, have been established by OSHA, ANSI, ASME and similar organizations. Refer to inspection procedures.

  IF IN DOUBT, REPLACE THE ROPE. An inspection should include verification that none of the specified removal criteria for this usage are met by checking for such things as:

  - Surface wear; nominal and unusual.
  - Broken wires; number and location.
  - Reduction in diameter.
  - Rope stretch (elongation).
  - Integrity of end attachments.
  - Evidence of abuse or contact with another object.
  - Heat damage.
  - Corrosion.

  In addition, an inspection should include condition of sheaves, drums and other apparatus with which the wire rope makes contact.

- When a wire rope has been removed from service because it is no longer suitable for use, it must not be reused on another application.
- Every wire rope user should be aware of the fact that each type of fitting attached to a wire rope has a specific efficiency rating which can reduce the working load of the wire rope assembly or rope system, and this must be given due consideration.
- Some conditions that lead to problems in wire rope systems include:
  - Sheaves that are too small, worn or corrugated can cause damage to a wire rope.
  - Broken wires mean a loss in strength.
  - Kinks permanently damage a wire rope and must be avoided.
  - Wire ropes are damaged by knots. Wire rope with knots must never be used.
  - Environmental factors such as corrosive conditions and heat can damage a wire rope.
  - Lack of lubrication can significantly shorten the useful life of a wire rope.
  - Contact with electrical wires and resulting arcing will damage a wire rope.

Inspecting Wire Rope

Inspect entire length of wire rope for any conditions listed in Figure 11-24. If any of the conditions exist, replace the wire rope.

If the wire rope shows severe wear, make a full inspection of sheaves and drums for grooves, correct alignment, etc.

Inspection of Sheaves

Inspect all sheaves for wear and proper alignment.

For maximum life of the wire rope, the sheave grooves must be smooth and must be a little larger than the diameter of the wire rope.

As wear in the sheaves increases, the groove for the wire rope gets smaller, NOT larger. Tracks in the sheaves are caused by the wire rope, and the wire rope will continue to engage the tracks (example; like a chain engaging a sprocket). A twist in the wire rope or a small change of lay will prevent the wire rope from engaging the track in the sheave. The result will be a rapid wear on the wire rope and on the sheave.

Wire Rope Lubrication

Lubricate the wire rope with good grade of spray wire rope lubricant or a light weight oil. A more frequent lubrication (more than monthly) may be required due to operating conditions and usage.

Proper lubrication of the wire rope is just as important as lubrication of other components. The wire rope has many moving parts. Initial lubrication will not last throughout the life of the wire rope. Lubrication is essential to reduce wear and inhibit corrosion of the wires.

CAUTION

To prevent personal injury from compressed air, always wear safety glasses when using compressed air for cleaning.

Thoroughly clean the wire rope prior to application of the oil. Use a wire brush and compressed air to remove all foreign matter and old lubricant.

After cleaning, apply a good grade of wire rope spray lubricant. If not available, apply a light weight oil that will penetrate into the wire rope. Warming the oil before application will aid penetration. Apply the oil with a stiff brush. Penetration and thorough coverage are extremely important. Give the oil as much opportunity as possible to soak into the wire rope. Wipe off excess oil.

Reference Only

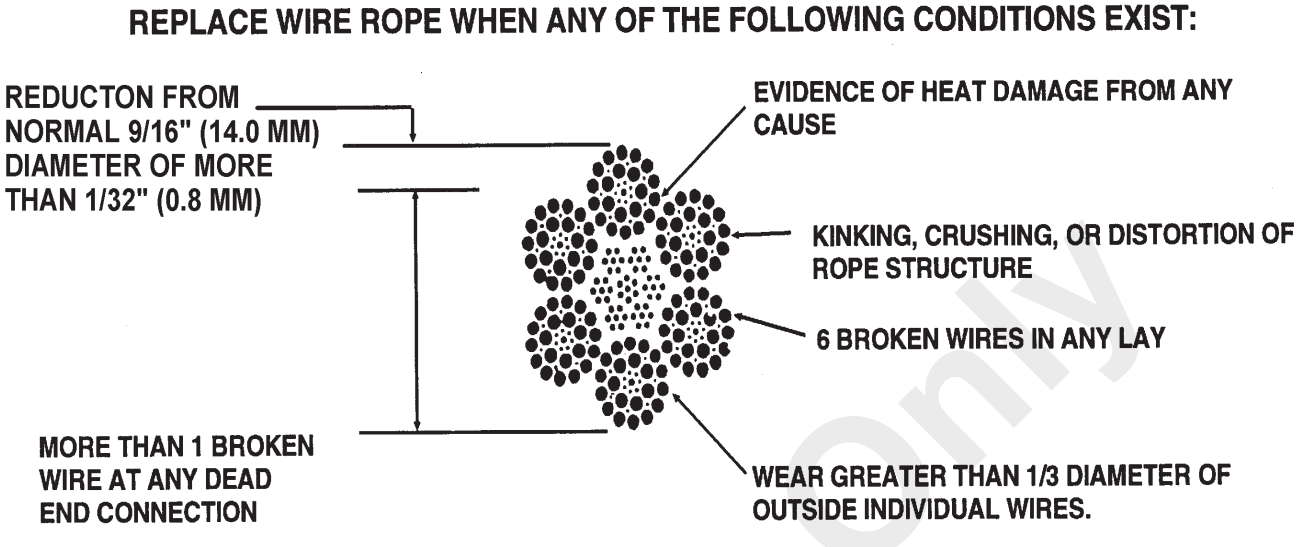

FIGURE 11-24

Wire Rope Installation

Anchoring Wire Rope

Take the free end of the wire rope and insert it through the small opening on the anchor pocket. Loop the wire rope and push the free end about 3/4 of the way through the pocket. Install the wedge, then pull the slack out of the wire rope. The wedge will slip into the pocket and secure the wire rope into the drum. The anchor is designed to fit several different sizes of wire rope. Make sure the anchor is installed large end first. See (Figure 11-25)

Refer to (Figure 11-26) and verify that the wedge is installed correctly.

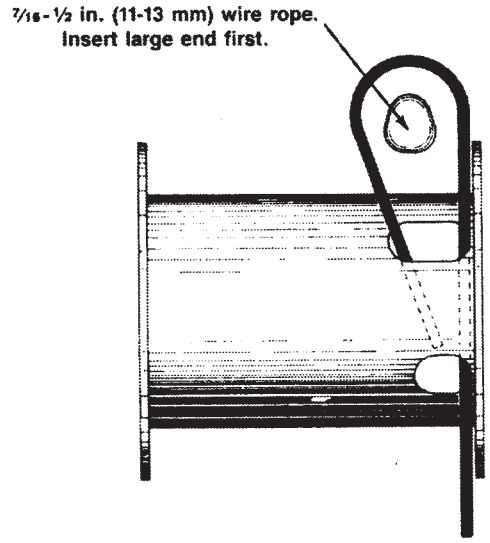

FIGURE 11-25

Reference Only

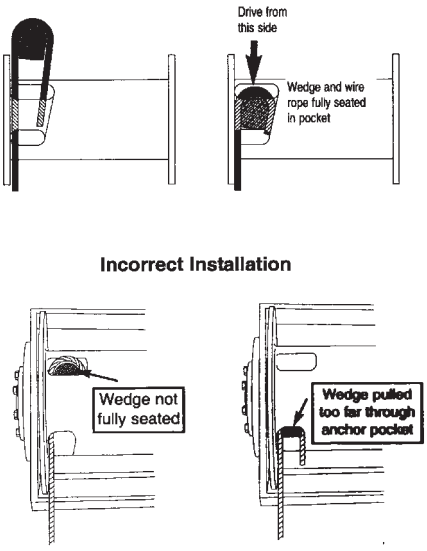

a2275 **FIGURE 11-26**

Installation of Socket and Wedge

Always connect the socket so that the load is pulled on the same line as the socket (See Figure 11-27).

When installing the wedge, hit the wedge several times with a hammer and wood block to make sure the wedge is fully engaged with the socket. Install cable clamp on the loose end of the wire rope as shown in Figure 11-27.

To properly seat the wedge, lift a load equal to the rated capacity of the crane.

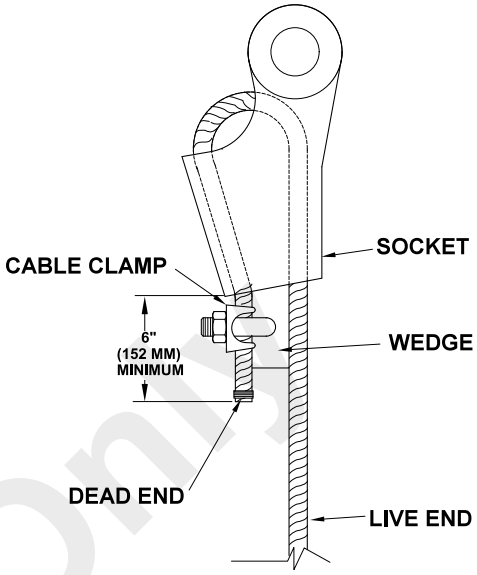

X = A minimum of 6 rope diameters, but not less than 6 inches (152 mm).

a0069 **FIGURE 11-27**

Installation of a New Wire Rope

The wire rope is given a natural bend or winding from the coil. If the wire rope is on a reel, unwind the wire rope from the reel or coil as shown in Figure 11-28. Use care to prevent reverse bend in the wire rope.

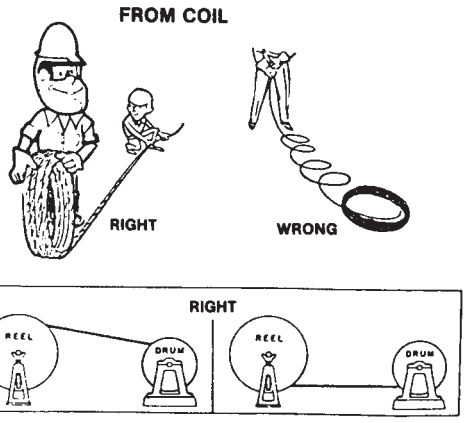

A0473 **FIGURE 11-28**

1. Make sure that the equipment (drum, sheaves, etc.) are in good condition.
2. Unwind enough rope from the reel to connect the wire rope to the hoist drum. Use care to prevent twists or sharp bends.
3. Operate the hoist slowly to move the wire rope directly from the reel to the hoist drum. Keep the wire rope under tension and make sure the wire rope winds correctly on

Reference Only

the drum. Loose windings will increase wear on the wire rope and cause bad performance.

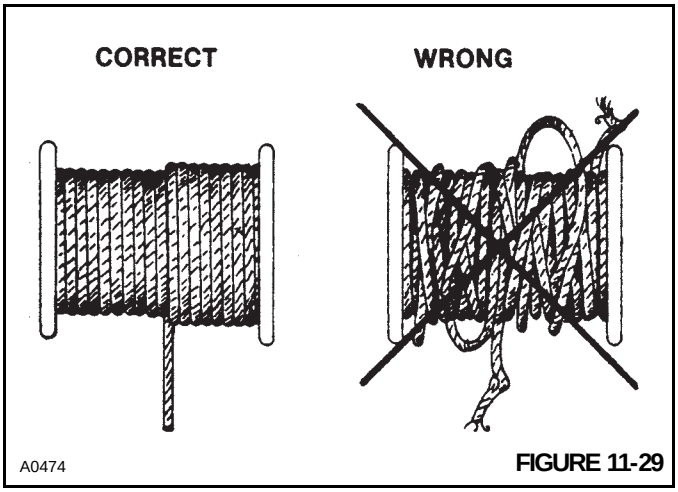

FIGURE 11-29

4. After installation, operate the hoist with a minimum load until you see the wire rope is moving easily over the sheaves and is winding correctly on the hoist drum.

5. Gradually increase the speed and load until the wire rope is moving at normal load and speed. This run-in period adjusts the moving parts to each other.

MAIN HOIST

Theory of Operation

The main hoist design is composed of high speed, low torque gerotor motor, driving through a multiple disc brake, and a pair of planet gear sets to the cable drum.

The multiple disc brake is spring applied and hydraulically released through a port in the brake housing. During inhaul (Figure 11-31) the brake is not released, since the load is driven through a one-way cam clutch, bypassing the brake. When the load comes to a stop, the cam clutch locks up and the load is prevented from moving by the brake.

During payout (Figure 11-32), a brake valve is used to prevent the load from moving faster than desired. This brake valve partially blocks the main line from the motor back to the control valve, allowing only a limited amount of oil through the motor. The brake valve modulates by sensing pressure on the other main line from the main control valve to the motor. Also, any time there is sufficient pressure to modulate the brake valve, this same pressure releases the multiple disc brake.

Reference Only

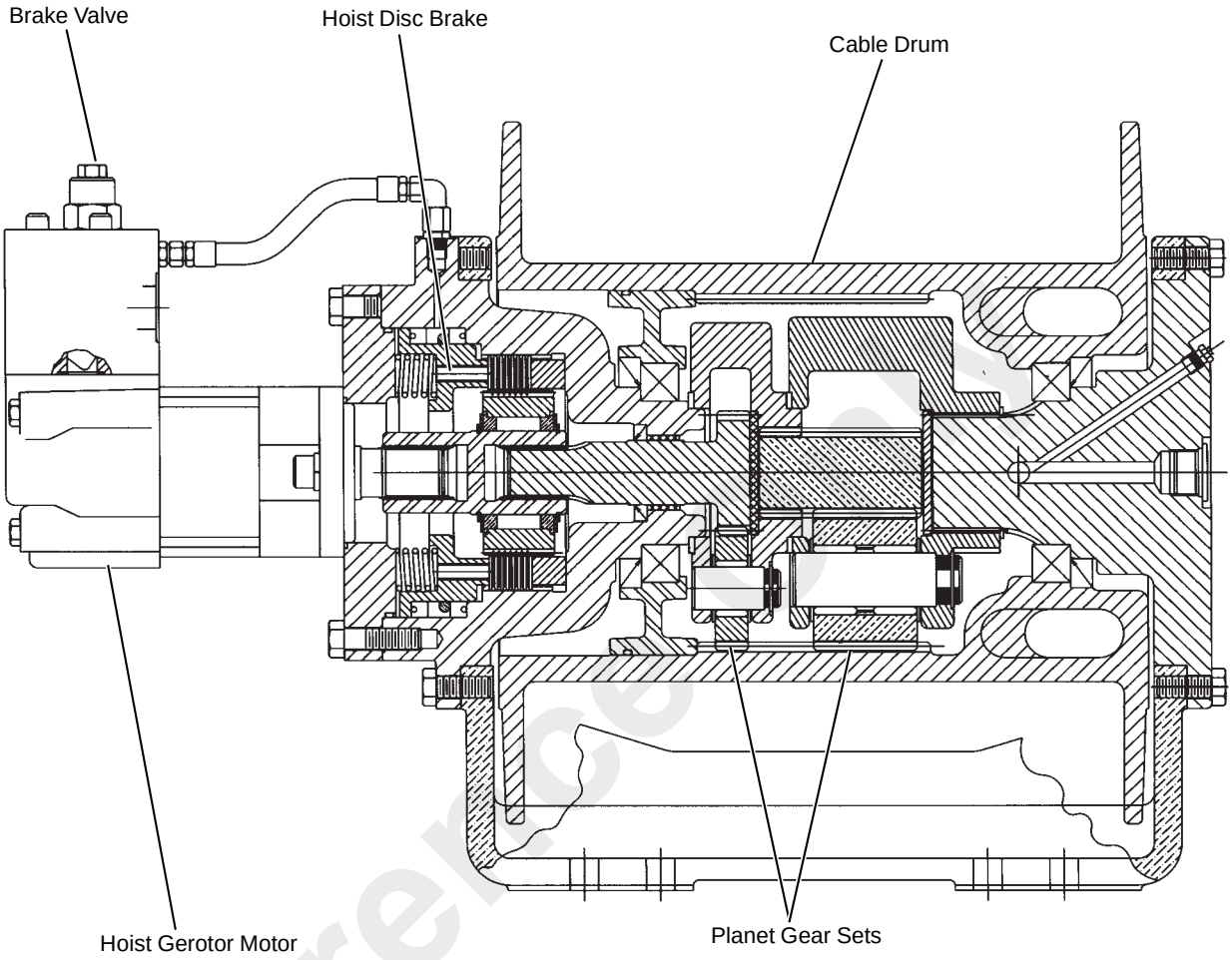

FIGURE 11-30

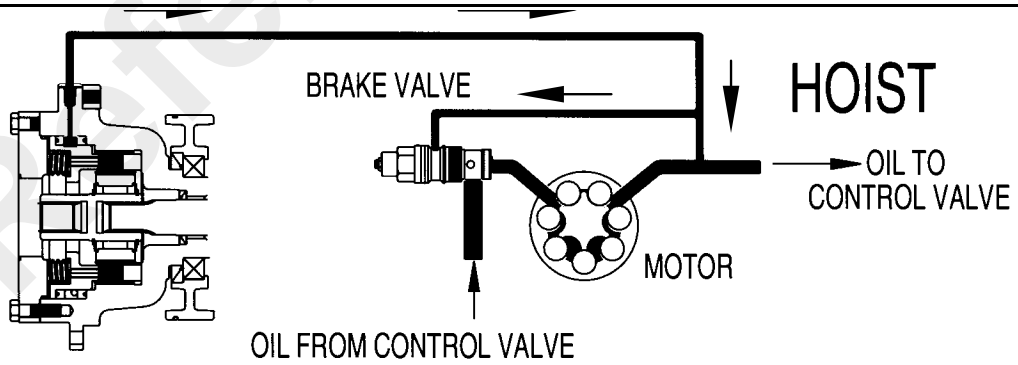

FIGURE 11-31

Preference

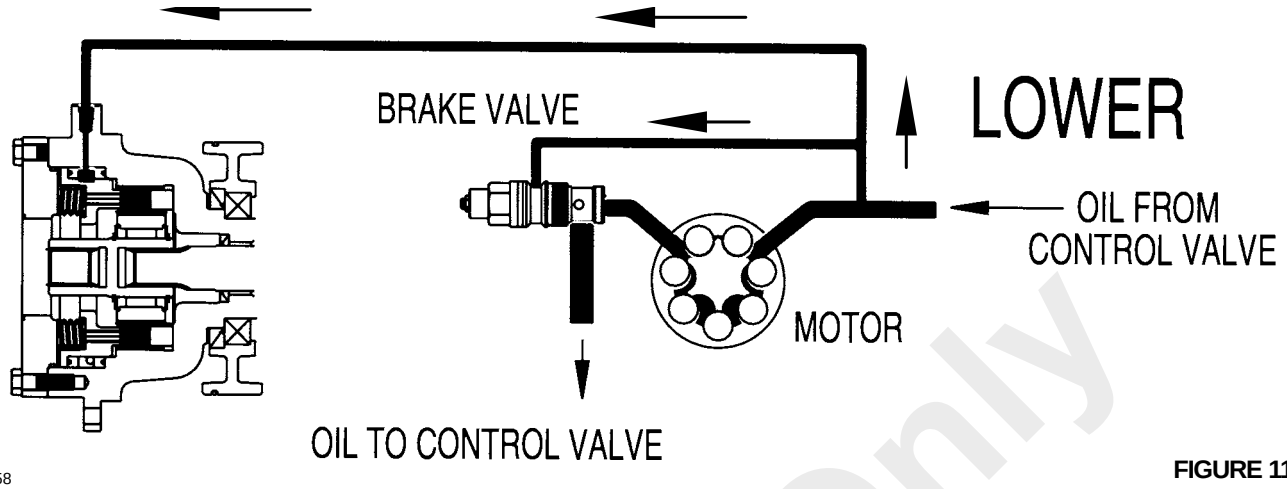

FIGURE 11-32

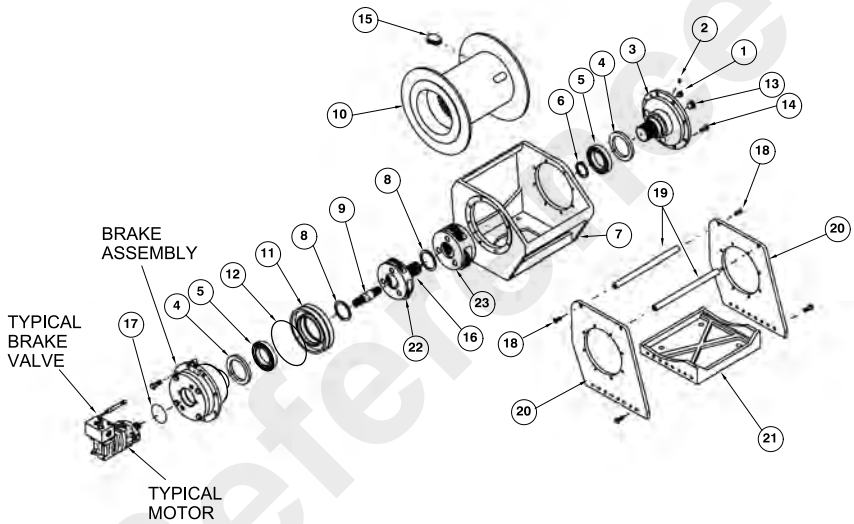

Item	Description
1.	Plug
2.	Breather
3.	Output Shaft
4.	Seal (2)
5.	Bearing (2)
6.	Snap Ring
7.	Mounting Bracket
8.	Thrust Washer (2)
9.	Input Sun Gear
10.	Cable Drum
11.	Bearing Carrier
12.	O-ring
13.	Plug
14.	Capscrew (8)
15.	Thimble
16.	Output Sun Gear
17.	O-ring
18.	Capscrew (20)
19.	Support Rod (2)
20.	Side Plate (2)
21.	Base
22.	Input Planet Set
23.	Output Planet Set

FIGURE 11-33

Reference Only

Repair

Removal

1. Remove the wire rope from the hoist drum.
2. Disconnect and cap or plug all hydraulic lines.
3. Attach an overhead hoist to the hoist and remove the four capscrews and flat washers that attach the hoist to the mast assembly. Remove the hoist.

Hoist Assembly

Disassembly

1. Stand the hoist on its end with the motor pointing up.
2. Remove the brake line from the brake valve to the brake port on hoist. See Motor Group. Remove the motor and brake valve from the hoist.
3. Remove the brake subassembly from the hoist by removing eight capscrews holding the brake housing to the mounting bracket. Install two of the capscrews into

the extra two tapped holes (Figure 11-34) and tighten them evenly until the brake housing has come loose from the mounting bracket. See Brake Section for repair instructions.

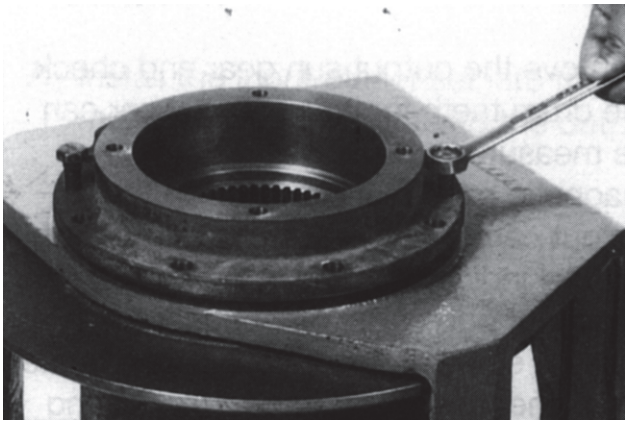

p0188 **FIGURE 11-34**

4. Using two crows foot pry bars (Figure 11-35), hook the bearing carrier (11, Figure 11-33) from inside and pull it out of the cable drum. Remove the bearing (5) and seal (4) from the bearing carrier (11).

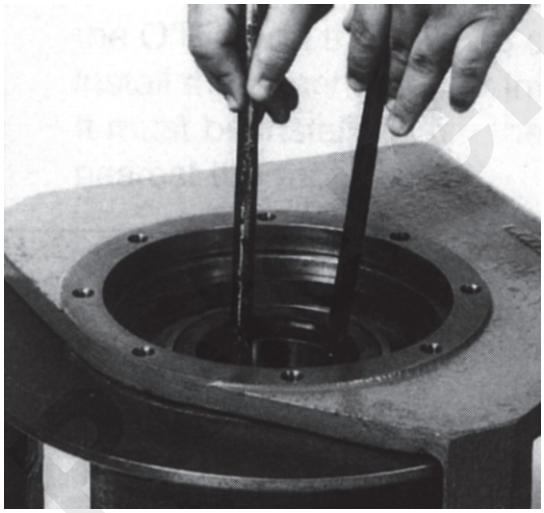

p0189 **FIGURE 11-35**

5. Remove the input sun gear (9, Figure 11-33) from the input planet set (22).

6. Install three 1/4 inch eyebolts (Figure 11-36) into the three planet pins in the input planet set (22, Figure 11-33). Use a piece of chain (Figure 11-36) to pull the planet set from the drum. Inspect the planet set for wear and repair as needed. See *Planet Sets*, page 11-29 for repair instructions.



p0190 **FIGURE 11-36**

7. Remove the output sun gear (16) and check drum (10) teeth for wear. This wear can be measured as follows:

a. Place a magnetic base dial indicator on the output carrier (8, Figure 11-33) and adjust the plunger of the dial indicator approximately at the middle of one of planet gear teeth.

b. Using a screwdriver or your finger, rotate the planet gear back and forth, reading the movement on the dial indicator. If the total movement is greater than 0.64 mm (0.025 in), then the drum should be replaced.

Using the same procedure as in Step 6, remove the output planet set (23, Figure 11-33) from the drum. Inspect the planet set for wear and repair as necessary. See *Planet Sets*, page 11-29 for repair instructions.

8. Turn the hoist over onto the motor end and remove the capscrews holding the output shaft (3, Figure 11-33) into the mounting bracket. Reference mark for proper assembly. Install two of the capscrews into the extra threaded holes in the output shaft (Figure 11-37) and evenly tighten them until the output shaft is free from the mounting bracket.

Service Only

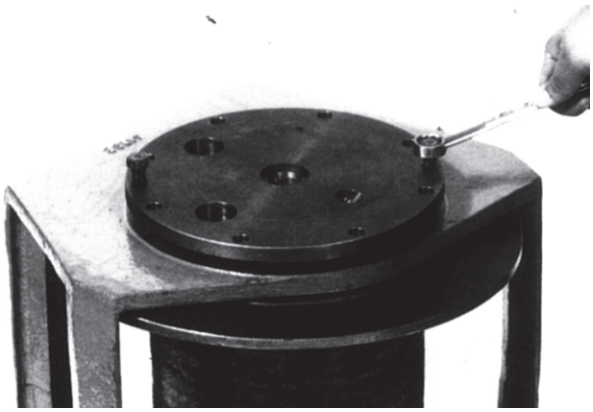

p0191 **FIGURE 11-37**

9. Reference mark for proper assembly and remove the drum from the mounting bracket.

10. Remove the bearing (5) and seal (4, Figure 11-33) from the drum (10) and inspect the bearing for signs of pitting and spalling.

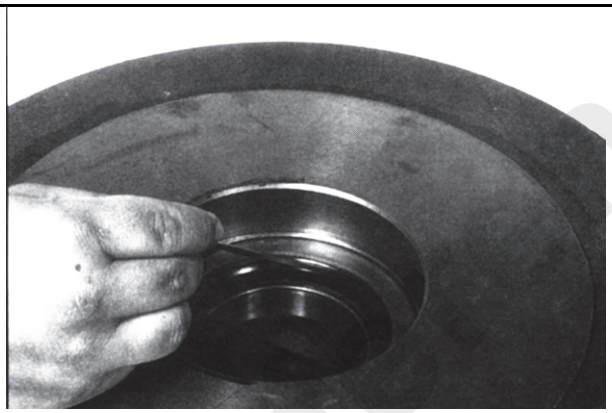

p0192 **FIGURE 11-38**

Assembly

1. Thoroughly clean all parts. Replace those which show wear.

2. After inspecting the drum for excessive wear in the gear teeth and both the drum and mounting bracket for structural integrity, install bearing (5, Figure 11-33) and seal (4) into the drum. Stand the mounting bracket up on the motor end and slide the drum into it. Make sure the drum is installed in the same direction as it was removed or the hoist assembly will be wrong when completed.

3. Check the snap ring (6, Figure 11-33) on output shaft (3) to ensure it is in its groove and not bent over (Figure 11-39). Replace if necessary.

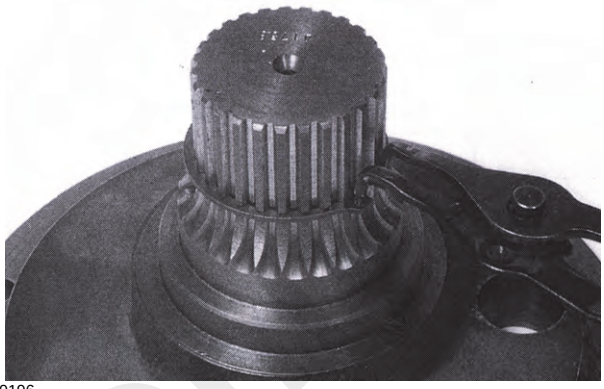

p0196 **FIGURE 11-39**

4. Install the output shaft (Figure 11-40) into the bracket and drum, making sure to align the shaft with the bearing in the drum. Make sure the alignment of the fill and drain holes is correct. Tighten the capscrews to 130 to 143 Nm (100 to 110 lb-ft).

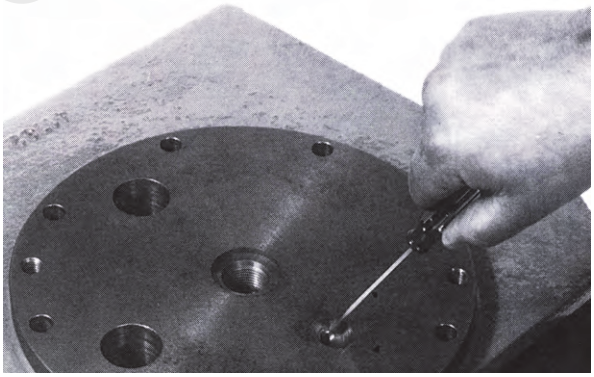

p0195 **FIGURE 11-40**

5. Turn the assembly over onto the output shaft side and install the output planet set (23, Figure 11-33). Use the same eyebolts and chain used to disassemble the unit (Figure 11-36).

6. Put a light coating of grease on the thrust washer (8, Figure 11-33) to keep it in place. Install it into the output planet set and insert the output sun gear (16) into the output planet set.

7. Install the input planet set (22, Figure 11-33) into the drum. Make sure it fits into the output sun gear.

8. Install the input sun gear (9) and thrust washer (8) into the input planet set. Again, coat the thrust washer with a light coat of grease.

Reference Only

9. Install a new seal (4), O-ring (12) into the bearing carrier (11). Install bearing (5) into the bearing carrier (Figure 11-41). Grease the O-ring on the bearing carrier (Figure 11-42) and install the bearing carrier into the drum. It must be installed with the O-ring nearest the motor end.

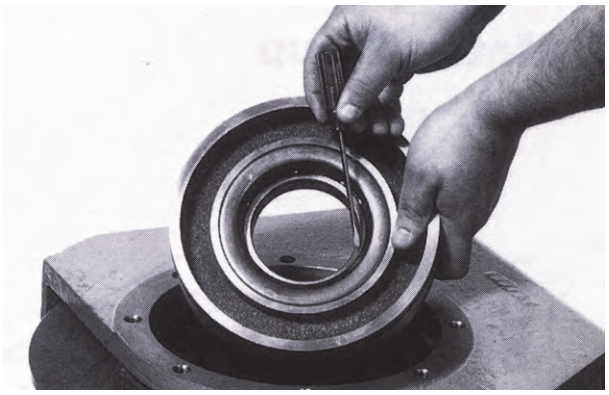

p0194 **FIGURE 11-41**



p0193 **FIGURE 11-42**

10. Place the brake section into the hoist bracket (Figure 11-43). Make sure that the pilot of the brake section aligns with the bore in the bearing carrier and that the bolts for the motor are aligned properly. Install the mounting capscrews and tighten to a torque of 130 to 143 Nm (100 to 110 lb-ft). Also, make sure that the level and vent plugs (Figure 11-43) in the cover are properly oriented.

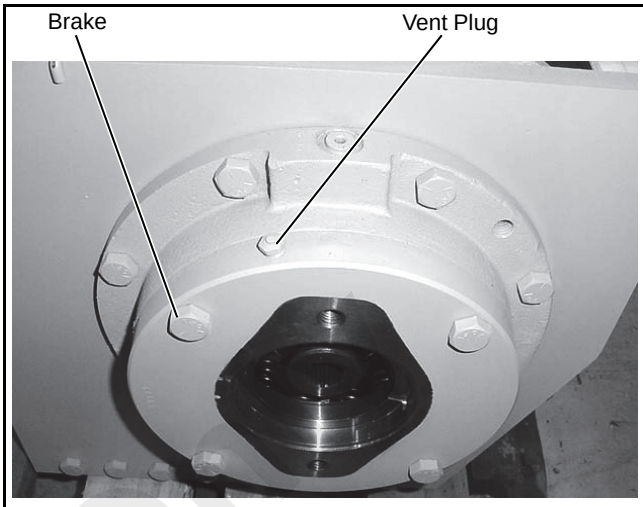

p0830 **FIGURE 11-43**

11. Install a new O-ring (17, Figure 11-33) on the face of the motor and install the motor/brake valve assembly and connect the hoses.

12. Fill both the gearbox and the brake section with the proper amount and type of lubricant. See *Preventive Maintenance*, page 5-1.

Motor Group

1. Tag the hoses for proper installation and remove them from the motor and brake valve.

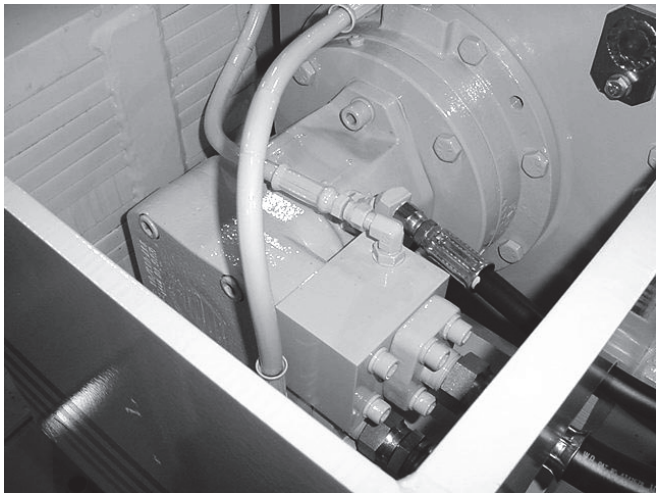

p0813 **FIGURE 11-44**

2. Remove the brake valve from the motor. See Figure 11-44.

3. Remove the cartridge from the brake valve and inspect the metering hole (Figure 11-45) to make sure it is not obstructed. Also, check the O-rings to ensure that they are not cut or flattened. Replace if necessary.

Reference Only

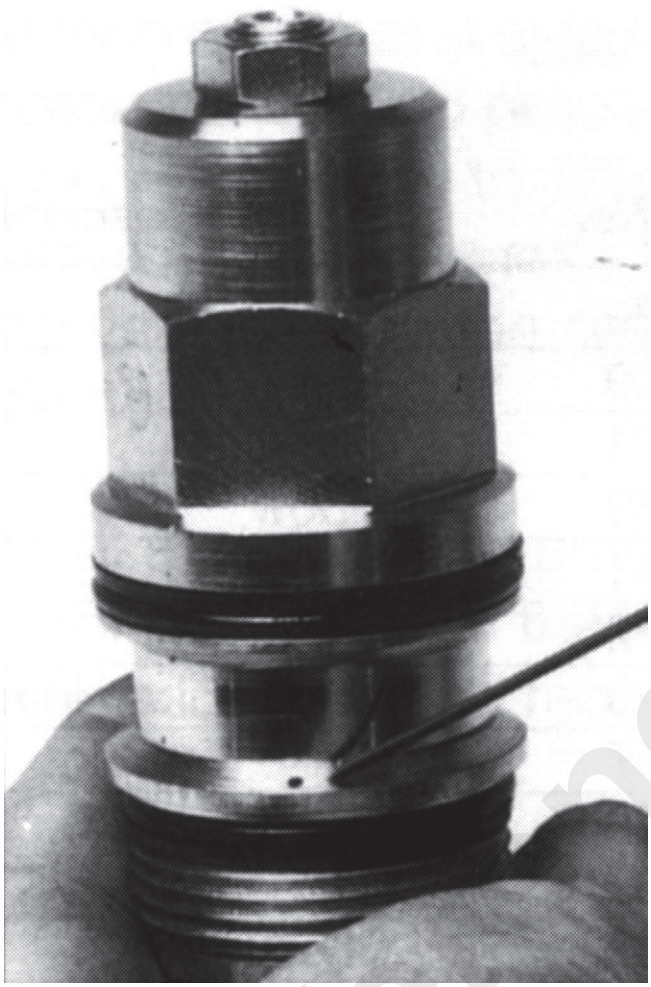

p0199 **FIGURE 11-45**

4. The motor and cartridge valve are not serviceable in the field.

Brake Section

Disassembly

1. Remove the capscrews (14, Figure 11-46) holding the motor cover (12) in place (Figure 11-47). Spring pressure will raise the cover as the capscrews are loosened. Carefully remove cover (12, Figure 11-46) from the brake housing (1).
2. Remove the springs (16, Figure 11-46) from the piston (10) (see Figure 11-48) and check them for free height. Each spring should be 30.5 mm (1.200 in) long with no force on them.
3. Remove the piston (10, Figure 11-46) by installing two pieces of 3/8 NC all-thread (Figure 11-48) in the bottom of two spring pockets. Using jam nuts, screw the all-thread pieces in evenly until the piston is clear of the housing. An alternate way of removing the piston is use a portable power unit or air pressure to pressurized the brake cavity and blow the piston out of the bore.

CAUTION

Be careful when using pressure to remove the piston. Piston could expel at a great speed and force causing personal injury.

Reference Only

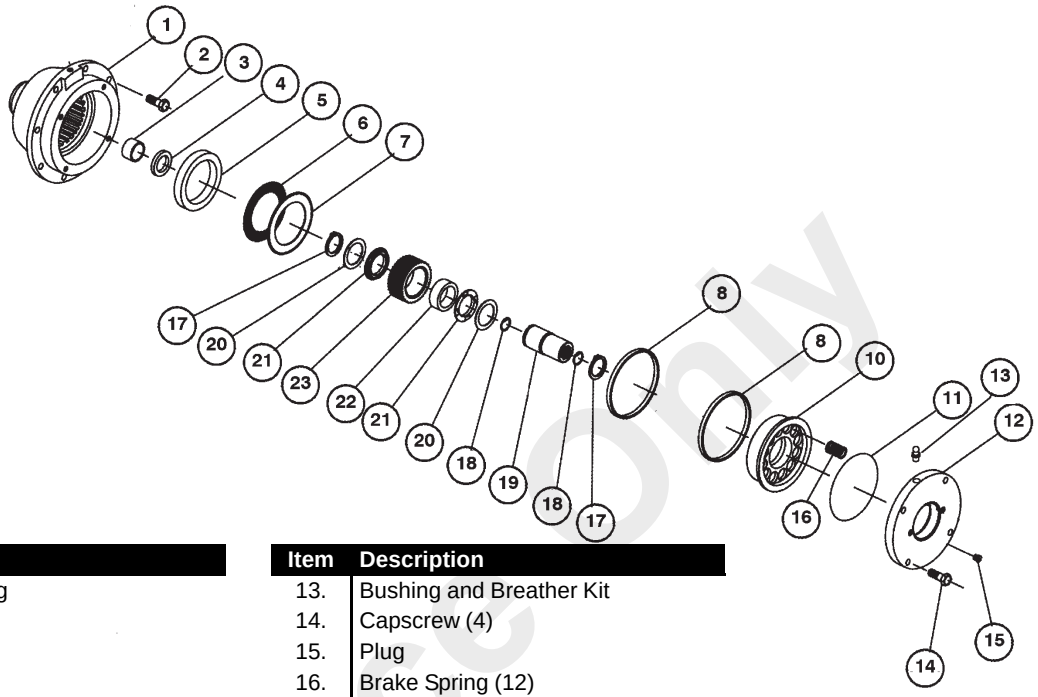

Item	Description
1.	Brake Housing
2.	Capscrew (8)
3.	Bushing
4.	Seal
5.	Spacer
6.	Friction Disc (7)
7.	Stator Plate (8)
8.	Seal (2)
10.	Piston
11.	O-ring
12.	Brake Cover

Item	Description
13.	Bushing and Breather Kit
14.	Capscrew (4)
15.	Plug
16.	Brake Spring (12)
17.	Snap Ring (2)
18.	Snap Ring (2)
19.	Brake Driver
20.	Race (2)
21.	Bushing (2)
22.	Clutch
23.	Input Shaft

a0478

FIGURE 11-46

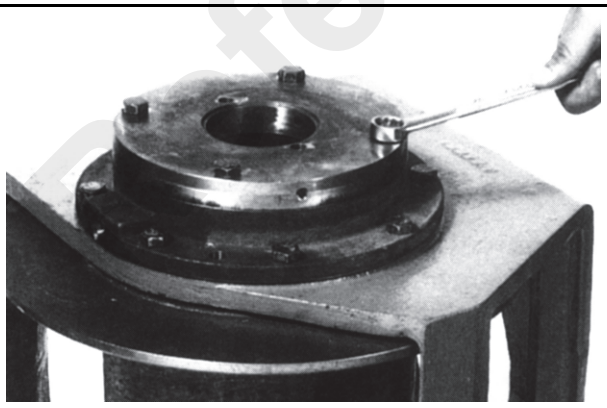

P0200

FIGURE 11-47

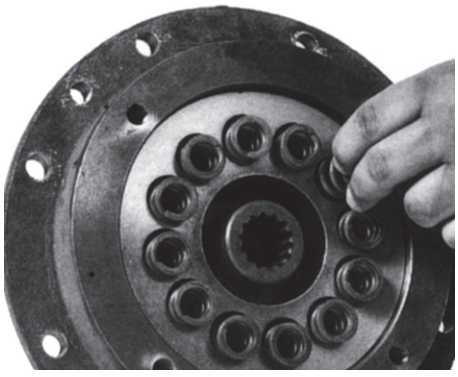

P0201

FIGURE 11-48

Reference Only

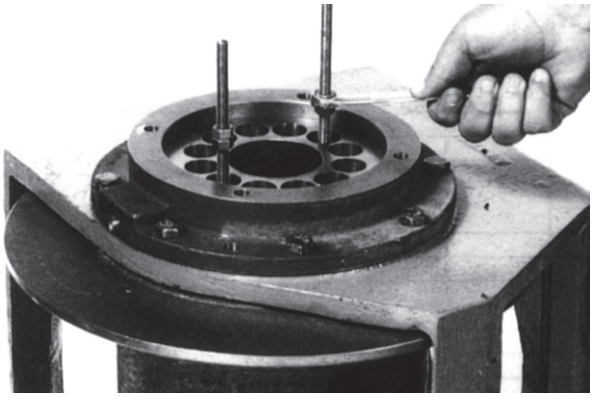

P0202 **FIGURE 11-49**

4. If one or both of the square seals (8, Figure 11-46) remain in the bore of the brake housing (1), remove them.

5. Grasp the brake driver/clutch assembly (items 17 through 23, Figure 11-46) and remove it from the brake housing.

6. Remove the stator plates (7) and friction discs (6) from the brake housing and check them for excessive wear. Replace if necessary. Be sure to check the top stator plate (Figure 11-50) for scoring caused by the removal tools and polish if necessary. Friction discs (6, Figure 11-46) should measure (Figure 11-51) no less than 1.40 mm (0.055 in) thickness and stator plates (7, Figure 11-46) should measure no less than 1.72 mm (0.068 in) thickness.



P0204 **FIGURE 11-50**

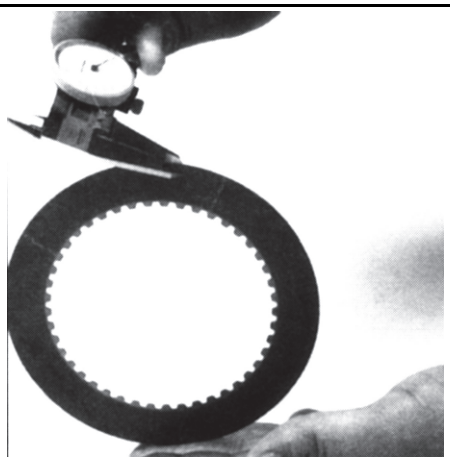

P0203 **FIGURE 11-51**

7. Remove the spacer (5, Figure 11-46) from the brake housing (Figure 11-52). With a hook (Figure 11-53) or pry bar, remove the seal (4).

Reference Only

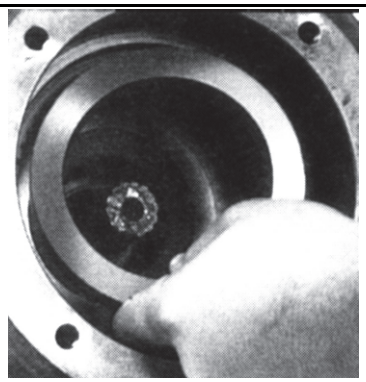

P0205 FIGURE 11-52

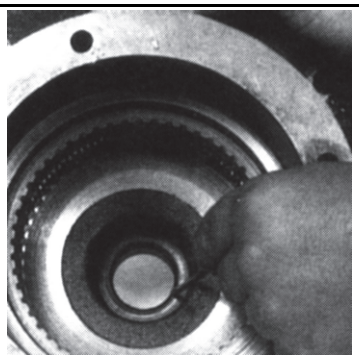

P0206 FIGURE 11-53

8. Examine the bushing (3, Figure 11-46) in the brake housing (1) for wear and if found replace it (Figure 11-54).

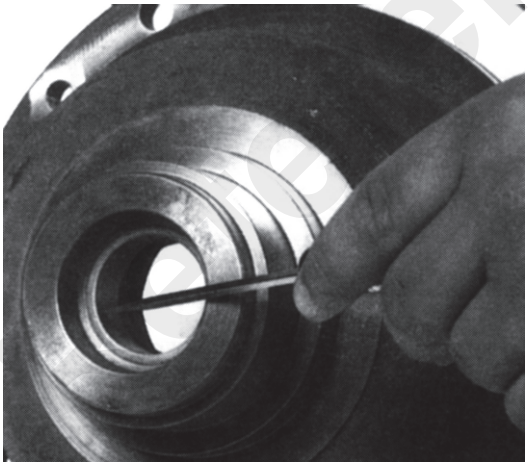

P0207 FIGURE 11-54

9. Examine the journal for wear on the brake housing (Figure 11-55) where the seal runs. If severely worn, replace the brake housing.

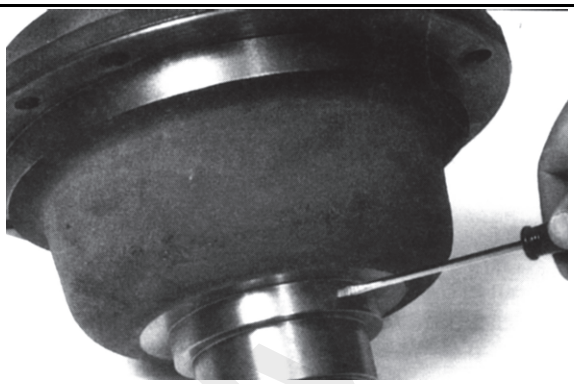

P0208 FIGURE 11-55

10. Carefully disassemble the brake driver/clutch assembly (17-23, Figure 11-46) noting the direction of lockup on the clutch. The clutch assembly must be assembled with the arrow pointing in the proper direction for the hoist to operate properly. Inspect the area on the driver where the clutch runs. If there is any pitting or spalling on the driver, it and the clutch must be replaced.

Assembly

1. Assemble the driver and clutch assembly. Make sure that the clutch is installed correctly.

2. Install a new seal (4, Figure 11-46) into the brake housing (1), temporarily install the hoist input sun gear, and slide the brake driver/clutch assembly onto the sun gear spline. Install the spacer (5) into the housing.

3. Install the stator plates and the friction discs into the housing starting with a stator plate (Figure 11-56) and followed by a friction disc (Figure 11-57). Alternate stator plates and friction discs until all are installed. There is one more stator plate than friction discs, so you will finish with a stator plate.

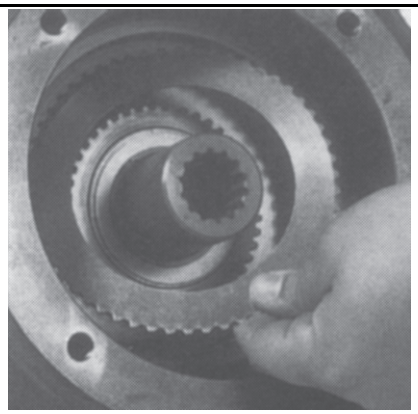

P0210 FIGURE 11-56

Reference Only

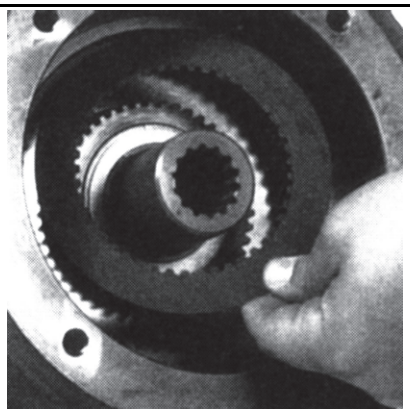

P0211 **FIGURE 11-57**

After installing plates and discs, set piston in place and check the brake stack-up to make sure that the dimensions are within the tolerance shown in Figure 11-58. If the measurement is greater than shown, either some friction plates have been left out, or the friction plate discs are worn beyond acceptable tolerances. If your measurement is less than shown, too many plates or discs have been inserted or they are not seated properly.

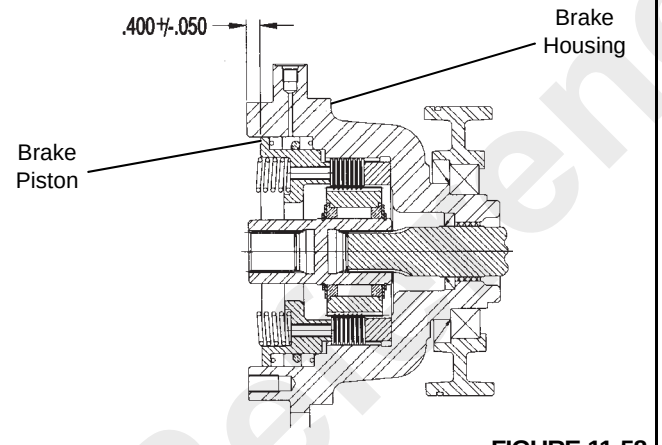

A0479 **FIGURE 11-58**

4. Inspect each new seal (8, Figure 11-46). Install one seal into the bore of the brake housing with grooves facing out Install the other seal with grooves facing in (Figure 11-59).

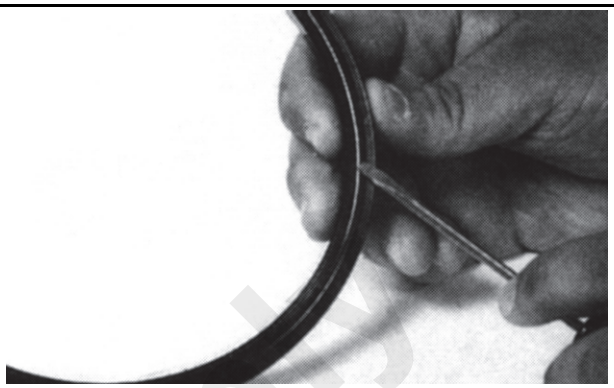

P0212 **FIGURE 11-59**

5. Install the piston into the brake housing and gently tap it down until it is seated.

6. Install the springs (Figure 11-60) into the spring pockets. If working in a horizontal position, coat the bottom of each spring with grease to keep them in place.

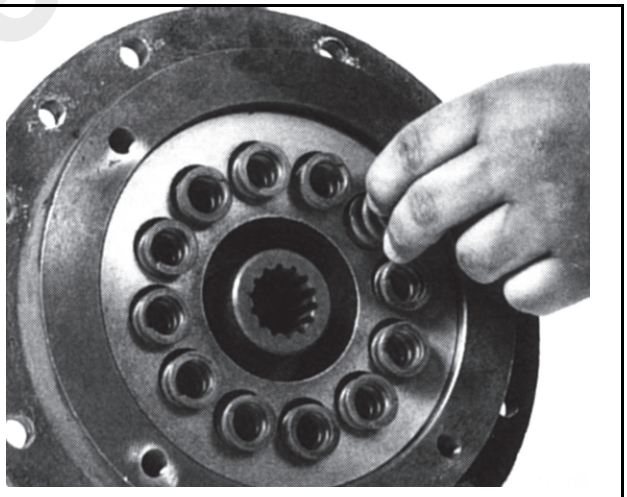

P0213 **FIGURE 11-60**

7. Coat a new O-ring (Figure 11-61) with light oil and install the O-ring into the groove on the brake cover.

Reference Only

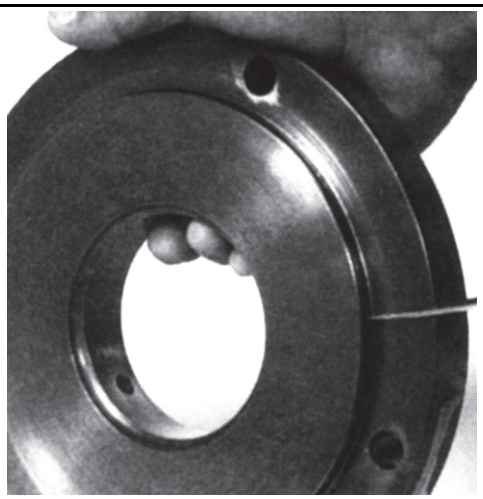

P0214

FIGURE 11-61

8. Install the cover onto the brake housing and draw it down evenly, alternating between opposite capscrews. Make sure that the cover is properly aligned with brake housing to orient the motor as it should be.
9. Check the brake release with a portable pump. Full release should be obtained at 1034 kPa (350 psi), plus or minus 138 kPa (20 psi). Also, check the brake for proper operation by applying 1929 kPa (280 psi) to the brake port and adapting a torque wrench to input shaft. The torque here in the payout direction should be 129.2 to 156.4 Nm (95 to 115 lb-in).

Planet Sets

1. Remove the retaining ring from the planet pins (Figure 11-63).
2. Remove pins (3) from the carrier by carefully tapping them out (Figure 11-64).

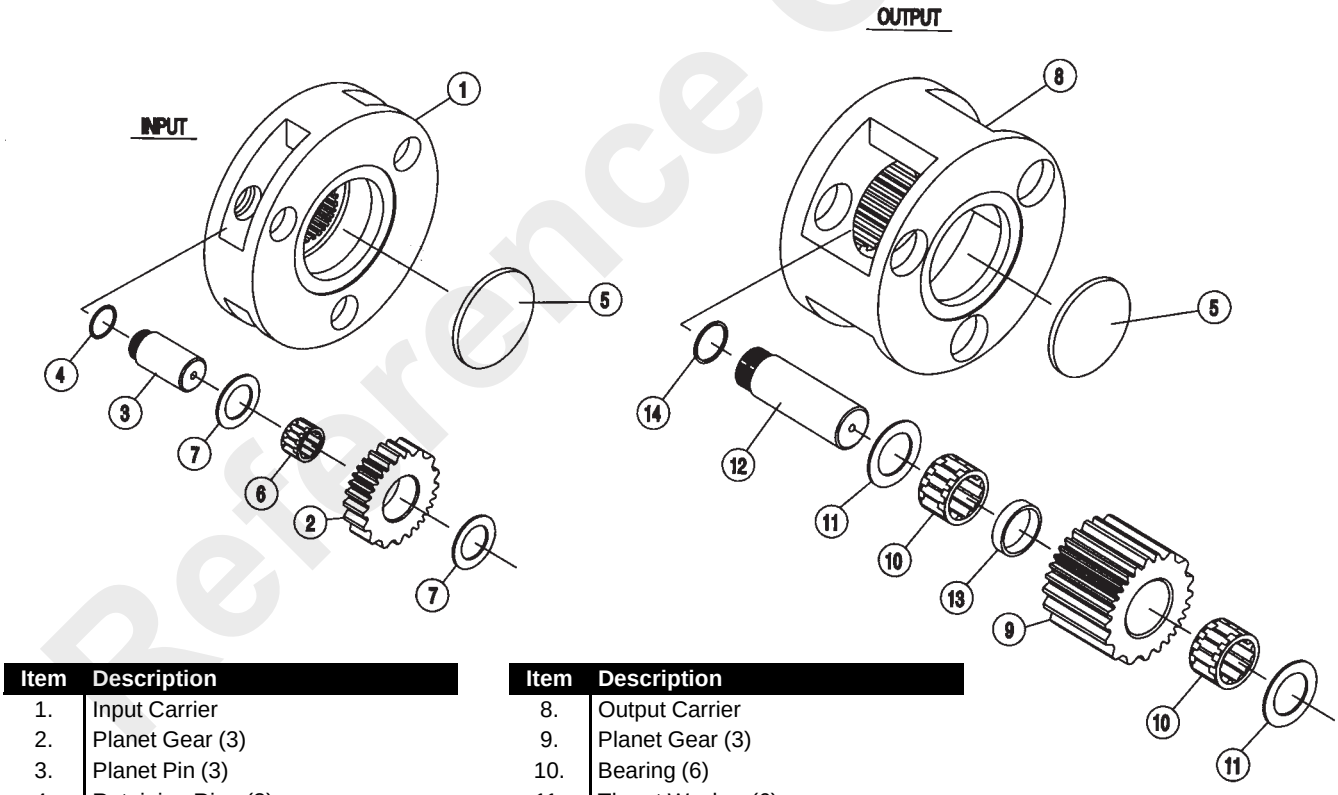

Item	Description
1.	Input Carrier
2.	Planet Gear (3)
3.	Planet Pin (3)
4.	Retaining Ring (3)
5.	Plug (2)
6.	Bearing (3)
7.	Thrust Washer (6)

Item	Description
8.	Output Carrier
9.	Planet Gear (3)
10.	Bearing (6)
11.	Thrust Washer (6)
12.	Planet Pin (3)
13.	Spacer (3)
14.	Retaining Ring (3)

a0480

FIGURE 11-62

Reference Only

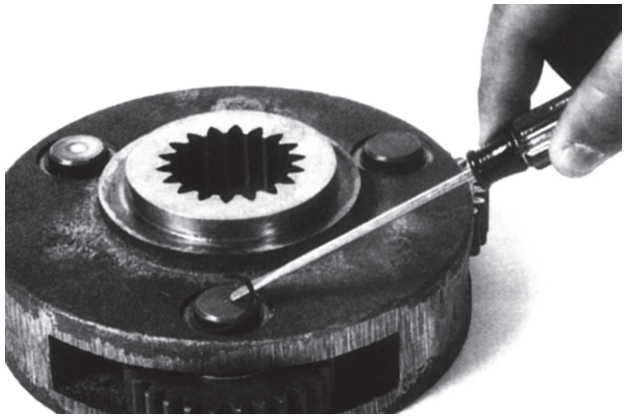

P0215 **FIGURE 11-63**



P0216 **FIGURE 11-64**

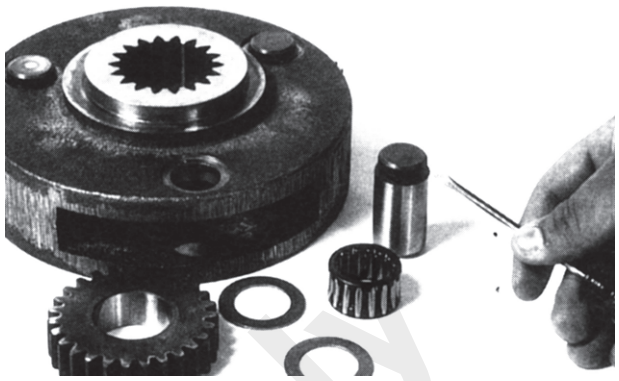

P0217 **FIGURE 11-65**

3. Remove the planet gears (2), thrust washers (7) and bearings (6) from the carrier (1). See Figure 11-65.
4. Inspect the pins, bearings and gear bores for evidence of wear and replace if necessary.
5. On the output planet sets, note that two bearings (10) with a spacer (13) between them are used.
6. Before assembling the planet sets. Be sure to insert the plugs in the carriers (Figure 11-66).



P0218 **FIGURE 11-66**

7. To assemble the planet sets, be careful to line up the planet pins with the thrust washers and bearing and then press the knurled part of the pin into the carrier. If the pins are not lined up properly, the thrust washers can be shattered during the pressing operation.

Reference Only

BEARING, MAST AND RELATED PARTS

General

The mast is fastened to the main frame of the crane through a bearing. The outer race of the bearing is fastened to the mast and the inner race of the bearing is fastened to the frame. See Figures 11-67 and 11-68.

The rotation of the mast is done by a gearbox which is mounted below the frame deck. A hydraulic motor connected to the gearbox provides power for rotation of the mast.



p0802

FIGURE 11-67

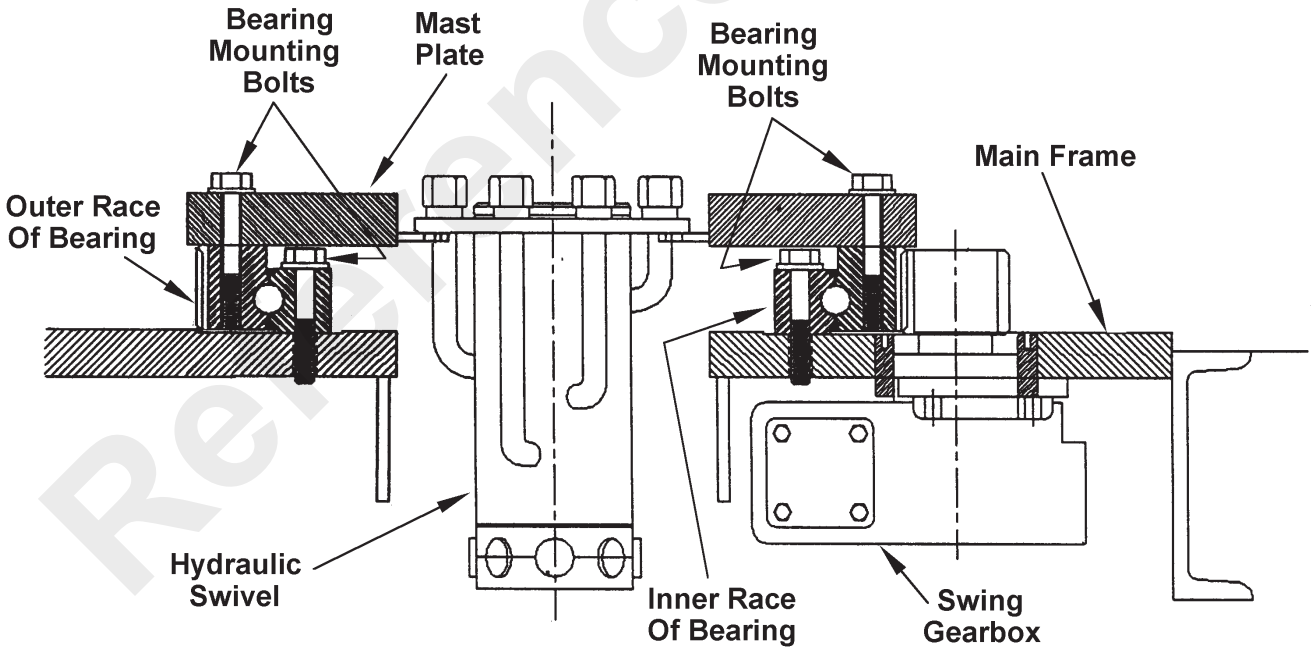

A0490

FIGURE 11-68

Reference Only

Mast Bearing

The mast bearing is a ball thrust bearing. The inner race rotates inside the outer race on a row of steel balls.

Apply grease after every 50 hours of operation. Use a Lithium based, E.P. No. 2 bearing grease or equivalent.

There are two grease fittings to grease the bearing and they are directly across from each other. Rotate the mast until the access hole (Figure 11-69) aligns with the grease fitting. Apply grease to the bearing. Rotate the mast through several rotation and then repeat the procedure with the other grease fitting. The old grease will be removed at the bottom of the bearing.



FIGURE 11-69

Mast Bearing Bolts

Very high stress is put on the mast bolts during crane operation. It is important that these bolts be checked at regular intervals.

Check the torque on the bolts after the first 50 hours of operation, and then after every 250 hours of operation. Make a record of any loose bolt. If any bolt does not hold to correct torque after the second check, remove and replace the bolt. A loose bolt indicates possible failure of the bolt.

The correct torque on each outside bolt (mast to swing bearing) should be 245 Nm (180 lb-ft). The correct torque on each inside bolt (swing bearing to frame) should be 384 Nm (282 lb-ft).

Use the torque sequence shown in Figure 11-70 when checking the torque on the bolts.

NOTE: Use only special hardened bolts for replacement of the mast bolts. Order the bolts from your distributor, see your parts manual.

NOTE: If a broken bolt is found, replace the bolt and also replace the bolt on each side of the broken bolt.

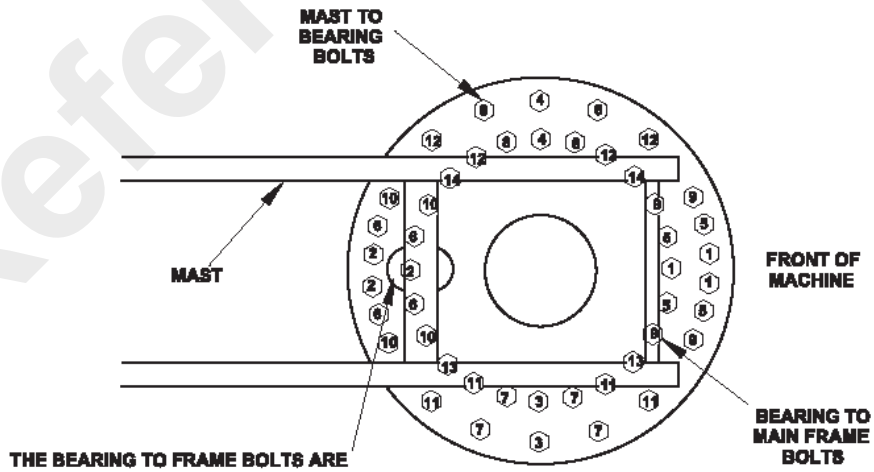

FIGURE 11-70

Inspection for Bearing Wear

Because of conservative design parameters, static loading and slow intermittent rotation, there are very few mast bearings that ever see their full design use.

However, the mast does have moving internal parts that are prone to wear if not properly maintained. As the bearing wears, there will be free-play or movement in the bearing.

Some of the symptoms of mast bearing wear are:

- Metal particles in the grease around the seal.

Reference Only

- Increased drive power required.
- Noisy rotation.
- Rough rotation.

If one or more of the above symptoms are evident, the following procedure should be used to check the bearing for excessive wear:

1. On a level, hard packed surface, set the crane up level on its outriggers.
2. Place the boom in forward horizontal position. Fully extend the booms.
3. Place a dial indicator on the swing gearbox cover and mast as shown in Figure 11-71.

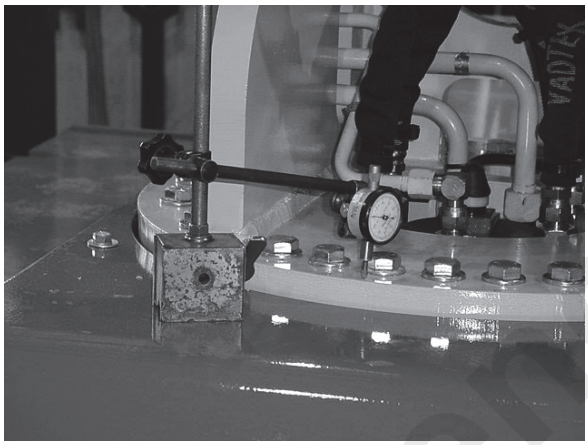

P0814

FIGURE 11-71

4. Set the dial indicator to zero.
5. Raise the boom to its full upright position and record the amount of movement on the dial indicator.
6. Rotate the boom 180° and repeat steps 2 thru 5.
7. Average the two readings. The maximum allowable movement is 0.91 mm (0.035 in). The mast bearing must be replaced if the movement is greater than the maximum allowable movement.

Replacing the Mast Bearing

Removal

1. See Boom Removal and remove the boom from the mast.
2. Disconnect the lift cylinder hoses. Plug/cap the hoses and cylinder ports. Remove the lift cylinder.
3. Put tags on the upper swivel hydraulic hoses and lines with the swivel port to which the hydraulic hose or line connects.
4. Disconnect the hydraulic hoses and lines from the upper swivel ports. Put caps or plugs on the fittings and hydraulic lines and hoses.
5. Remove swivel stop (39, Figure 11-72) from the bottom of hydraulic swivel (38) and support the swivel in place. Remove bolts (53) and washers (1).
6. Connect a hoist capable of handling the weight of the mast. Remove the 22 capscrews (18) and structural washers (19) that fasten mast (9) to mast bearing (30).
7. Remove the mast (9) and place on blocks.
8. Remove the 24 capscrews (31) and structural washers (6) and remove the mast bearing (30).

Reference Only

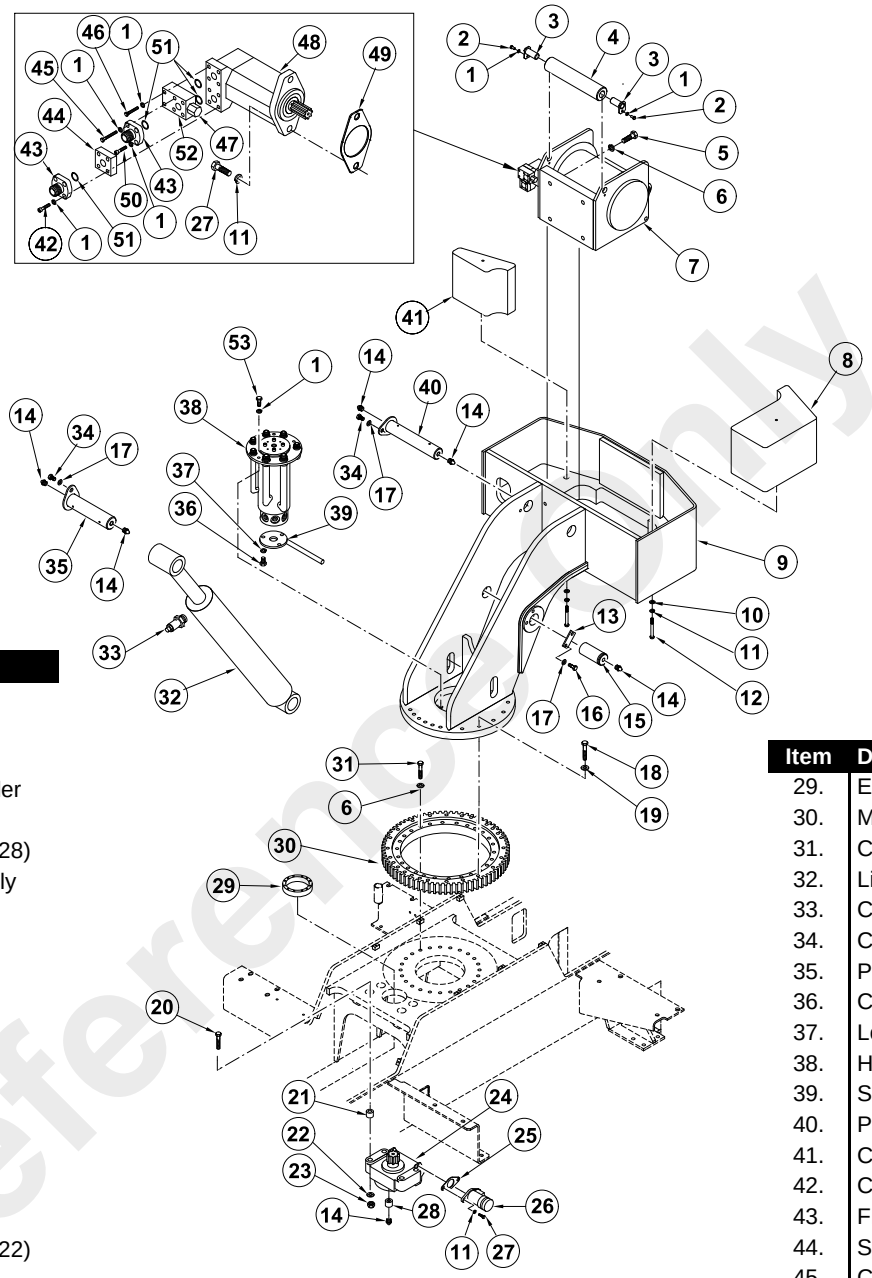

Item	Description
1.	Lockwasher (15)
2.	Capscrew (2)
3.	Pin Assembly (2)
4.	Rope Deflector Roller
5.	Capscrew (4)
6.	Structural Washer (28)
7.	Main Hoist Assembly
8.	Counterweight
9.	Mast
10.	Flat Washer (2)
11.	Lock Washer (4)
12.	Capscrew (2)
13.	Retainer Bar (2)
14.	Grease Fitting (6)
15.	Pin (2)
16.	Capscrew (4)
17.	Lockwasher (4)
18.	Capscrew (22)
19.	Structural Washer (22)
20.	Capscrew (4)
21.	Spacer (4)
22.	Flat Washer (4)
23.	Nut (4)
24.	Swing Gearbox
25.	Gasket
26.	Swing Motor
27.	Capscrew (4)
28.	Bushing

Item	Description
29.	Eccentric Ring
30.	Mast Bearing
31.	Capscrew (24)
32.	Lift Cylinder
33.	Counterbalance Valve
34.	Capscrew (2)
35.	Pin Assembly
36.	Capscrew (3)
37.	Lockwasher (3)
38.	Hydraulic Swivel
39.	Swivel Stop
40.	Pin Assembly
41.	Counterweight
42.	Capscrew (4)
43.	Flange Adapter (2)
44.	Spacer Block
45.	Capscrew (2)
46.	Capscrew (2)
47.	Counterbalance Valve
48.	Hoist Motor
49.	Gasket
50.	Capscrew (2)
51.	O-ring (4)
52.	Line Mount Body
53.	Capscrew (3)

P0314

FIGURE 11-72

Reference Only

Published 2/23/2016, Control # 592-00

Installation

1. Using a suitable solvent, clean the holes in the bearing plate on the main frame. Remove the residue with compressed air. Clean all dirt from the bearing plate.
2. Put the mast bearing (30, Figure 11-72) in place on the bearing plate.
3. Install the 24 capscrews (31) and structural washers (6) to fasten the mast bearing (30) to the bearing plate.
4. Figure 11-70 shows the order for tightening the capscrews. Each capscrew must first be tightened to a torque of 384 Nm (282 lb-ft) and then loosened a small amount. Next, tighten the bolts again to a torque of 384 Nm (282 lb-ft).
5. Make sure the top surface of the mast bearing and the bottom surface of the mast base are clean.
6. With a hoist, lower the mast into position over the mast bearing. Install 22 capscrews (18) and structural washers (19).
7. Figure 11-70 shows the order for tightening the bolts. Each bolt must first be tightened to a torque of 245 Nm (180 lb-ft) and then loosened a small amount. Next, tighten the bolts again to a torque of 245 Nm (180 lb-ft).
8. Install swivel stop (39, Figure 11-72) to the hydraulic swivel. Attach swivel to mast base with three capscrews (53) and lockwashers (1).
9. Connect the hydraulic lines and hoses to the hydraulic swivel.
10. Install lift cylinder to mast.
11. Install boom assembly to mast. See Installation earlier in this Section.

Swing Gearbox and Pinion

Maintenance

Gearbox

The swing gearbox has a worm gear set which rotates on taper roller bearings. The gears and bearings are given lubrication by grease in the gearbox. Gaskets inhibit external leakage of the grease.

Keep the gearbox filled with grease. See *Preventive Maintenance*, page 5-1.

Swing Gear/Pinion

The swing pinion and ring gear must be lubricated at regular intervals. See *Preventive Maintenance*, page 5-1 for maintenance intervals and instructions.

1. Slightly loosen the four capscrews securing the swing gearbox (Figure 11-74).

Adjustments

Checking Backlash

1. Remove the front cover to expose the swing pinion and ring gear.

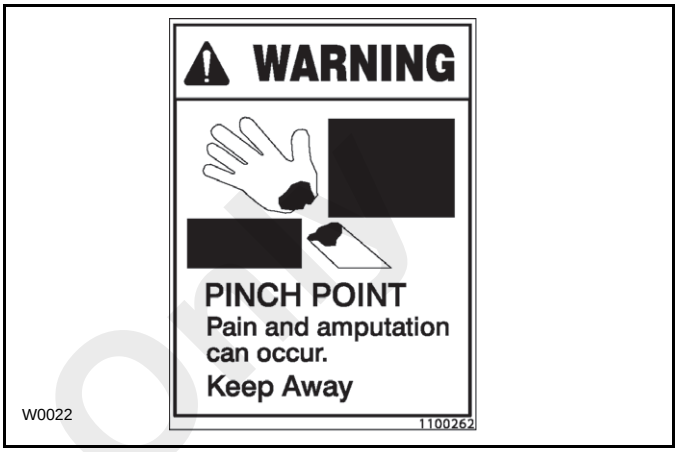

- Rotating gears can cause injury. Keep hands clear of rotating pinion and ring gear while mast is rotating.

2. Start the engine and rotate the mast until the high point (marked with a punch-mark on the edge of the mast base plate) is in alignment with the pinion. See Figure 11-73.

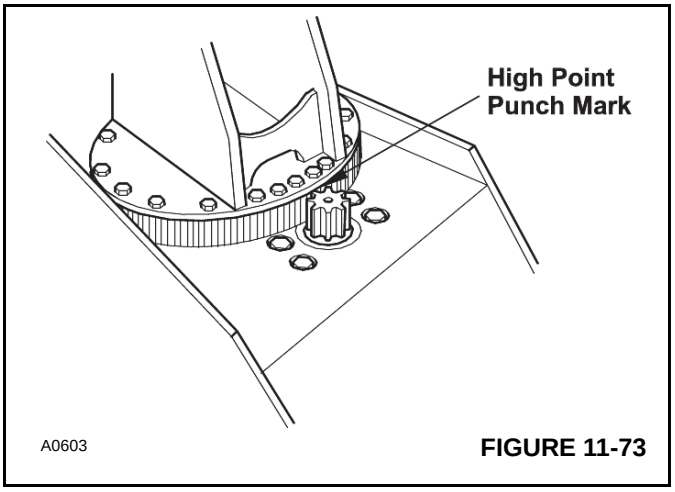

FIGURE 11-73

3. Using a feeler gauge, check the backlash between the gear and pinion. There should be no clearance between the swing gear tooth and the pinion tooth. If there is any clearance, adjust the backlash.

Adjusting Backlash

NOTE: Be sure the swing gear and pinion are aligned at the high spot on the swing gear.

2. With a spanner wrench, turn the eccentric ring until the pinion tooth comes in contact with ring gear tooth (zero backlash).

Reference Only

3. Tighten the four capscrews to proper torque.
4. Install the swing pinion cover.

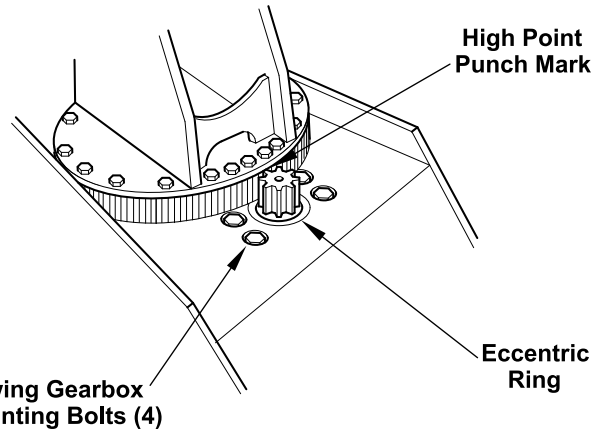

FIGURE 11-74

Swing Gearbox Repair

Removal

1. Rotate the boom slightly off center. Then, inhibit the mast from turning, by blocking the boom or attach an overhead crane.
2. Remove the front cover over the swing pinion.
3. Install an eyebolt with 1/2 NF threads into the tapped hole on top of the swing pinion. Attach an overhead crane and chain to the eyebolt.
4. Remove the swing motor (26, Figure 11-72) by removing two capscrews (27) and lockwashers (11). Remove gasket (25).
5. Clear any hoses or obstructions beneath the swing gearbox that would inhibit the gearbox from being lowered to the ground.
6. Remove four nuts (23, Figure 11-72), flat washers (22) and capscrews (20).
7. Using the overhead crane, lower the gearbox to the ground. Be sure to collect the four spacers (21) when the gearbox is lowered. The eccentric ring will be removed with the gearbox.

Disassembly

1. Remove the hydraulic motor.
2. Clean the outside of the gearbox before disassembly.
3. Loosen and remove capscrews (11, Figure 11-75). Remove cover (6) and O-ring (10). Discard the O-ring.
4. Clean as much grease out of the gearbox housing as possible. Properly discard the grease.
5. Remove two socket capscrews (19) and remove motor end cap (22).
6. Remove and discard O-ring (21) and oil seal(2).
7. Remove four capscrews (31) and then remove cap end (20) and shims (26, 29 and 30). Keep the shims together as a set.

NOTE: Tie the shim set together to prevent any shim from being lost.

8. Remove and discard O-ring (21) oil seal (28) from cap end (20).
9. Bend the tabs down on washer (23) to free lock nut (27). Remove lock nut (27), washer (23) and thrust washer (13).
10. Using a suitable puller, remove bevel gear (9). Remove two keys (14).
11. Remove pinion gear shaft (3) along with bearing cone (15) and oil seal (7) out of housing (4). It may be necessary to use a soft mallet to drive the pinion shaft from the housing. At the same time, remove worm gear and shaft (8) by removing it through the end cap opening on the housing. Bearing cone (17) will pull out with worm gear (8). Remove the bearing cones from the worm gear shaft and the pinion shaft. Remove oil seal (7) from the pinion shaft.
12. Remove bearing cone (15) from housing (4).
13. If necessary, using a suitable puller remove any damaged bearing cups from the housing and end caps.

Inspection

Remove breather (34, Figure 11-75) and clean it in a suitable solvent. Clean all other parts. See *Introduction*, page 1-1. Make careful inspection of all parts, including gears, shafts and bearings.

Replace all parts that have wear or damage. Make sure all parts are clean and smooth.

Replace all seals and gaskets.

Coat all seals with a Lithium Base, E.P. No. 2 bearing grease.

Assembly

1. If removed, press new bearing cups into housing (18) and end caps (20 and 22)
2. Coat a new oil seal (7) with grease and install it onto pinion gear shaft (3).

NOTE: Before installing any bearing cone, pack it with Lithium Base, E.P. No. 2 bearing grease.

3. Pack bearing cone (15) with grease and install it onto pinion gear shaft (3).

Reference Only

Published 2/23/2016, Control # 592-00

4. Install pinion gear shaft (3) into housing (4). Be sure to seat oil seal (2) into the housing, being careful not to damage it.
5. Pack the other bearing cone (15) with grease and install over pinion gear shaft (3) into housing (4).
6. Insert worm gear and shaft (8) into housing (18).
7. Pack both bearing cones (17) with grease and install them over the ends of the worm gear and shaft into housing (4).
8. Install thrust washer (13) over pinion shaft (3).

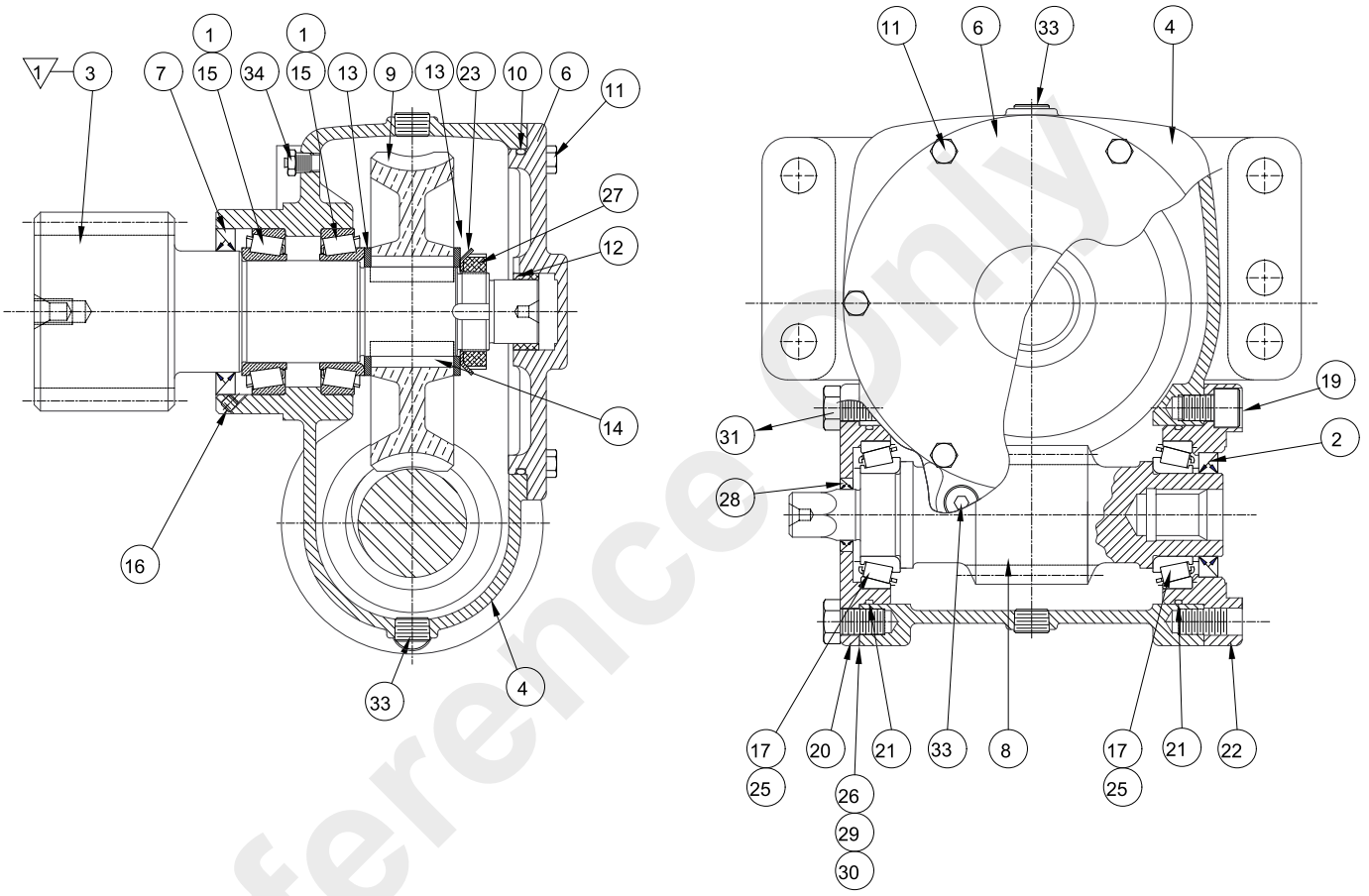

Item	Description
1.	Bearing Cup (2)
2.	Oil Seal
3.	Pinion Shaft
4.	Housing
6.	Cover
7.	Oil Seal
8.	Worm Shaft
9.	Worm Gear
10.	O-Ring
11.	Capscrew (6)
12.	Bushing
13.	Thrust Washer (2)

Item	Description
14.	Key (2)
15.	Bearing Cone (2)
16.	Set Screw
17.	Bearing Cone (2)
19.	SH Capscrew
20.	End Cap
21.	O-Ring (2)
22.	Motor End Cap
23.	Lock Washer
25	Bearing Cup (2)
26.	Shim (2)
27.	Lock Nut

Item	Description
28.	Oil Seal
29.	Shim (2)
30.	Shim (2)
31.	Capscrew (4)
33.	Pipe Plug (3)
34.	Breather

a2288

FIGURE 11-75

9. Install two keys (14) into the end of pinion gear shaft (3). Press bevel gear (9) onto pinion gear shaft (3). Align the teeth of the bevel gear with the teeth of the worm gear and shaft.

Reference Only

10. Apply Loctite 243 to the threads of pinion gear shaft (3). Install thrust washer (13), washer (23) and lock nut (27).
11. Tighten lock nut (27) to 68 Nm (50 lb-ft), then loosen the nut and tighten again it to a torque of 27.2 - 40.8 Nm (20 - 30 lb-ft). Bend tabs on washer (23) up to lock the nut in place.
12. Install a new oil seal (2) into motor end cover (22). Install a new O-ring (21) onto the motor end cover. Be sure to lubricate both before assembly
13. Install motor end cap (22) to housing (4) and worm shaft (8) using two socket head capscrews (19). Be sure not to damage oil seal (22) and O-ring (21).
14. Install a new oil seal (28) and O-ring (21) to end cap (20).
15. Align the gear teeth of the worm with teeth of the worm gear.
16. If the original bearing cones and cups were installed into the end caps and the worm, the existing shims (26, 29, and 30) may be installed between housing (4) and end cap (20). Install shims and end cap and fasten with four capscrews (31).
    If new bearings were installed, proper bearing preload must be determined before final installation of the end caps.
    a. Install end cap (20) without shims installed.
    b. Using a dial indicator, measure the amount of axial movement on the worm. Proper axial movement must be between -0.025 & +0.05 mm (-0.001 and +0.002 in). Determine the amount of shim spacing needed to acquire the proper axial moment, then install the shims between the housing and the end cap. After the axial movement is set, check the backlash between the worm and worm gear teeth. Backlash should be between 0.127 and 0.177 mm (0.005 and 0.007 in).
17. If bushing (12) was removed, press a new bushing into cover (6).
18. Install a new O-ring (10) into cover (6).
19. Using six capscrews (11), install cover (6) onto housing (4).
20. Install the hydraulic motor.
21. Remove setscrew (16). Fill the gearbox with a Lithium Base, E.P. No. 2 bearing grease through the grease fitting located on the housing. Fill gearbox until grease flows from the setscrew hole.

Installation

1. Install an eyebolt with 1/2 NF threads into the tapped hole on top of the swing pinion.
2. Install the eccentric ring onto the gearbox.
3. Using an overhead crane and chain attached to the eye bolt, lift the gearbox into place.
4. Between the gearbox and frame install four spacers (21, Figure 11-72). Fasten the gearbox to the frame with four capscrews (20), flat washers (22) and nuts (23).
5. Place a new gasket (25) between gearbox (24) and swing motor (26). Fasten the swing motor to the gearbox with two capscrews (27) and lockwashers (11).
6. Connect the two hydraulic hoses to the swing motor.
7. Remove the overhead crane and chain. Remove the eyebolt.
8. Adjust the backlash between the pinion gear and ring gear.
9. Coat the teeth of the swing pinion with a gear lubricant.
10. Install the front cover over the swing pinion.
11. Remove blocking from boom.
12. Start the engine and slowly rotate the boom and mast in both directions to remove any air that may have entered the hydraulic circuit.

Outriggers

Outrigger Monitoring System (OMS) (Optional—Standard in North America)

The Outrigger Monitoring System (OMS) proximity switches (if equipped) are mounted outside the outrigger housing tubes. The proximity switches identify whether an outrigger beam is at the fully extended position or at any position less than fully extended.

Removal

1. Disconnect switch cable (1) from harness.
2. Remove switch mounting bracket (2).
3. Remove jam nuts (3) and thread switch (4) out of the mounting bracket.

Reference Only

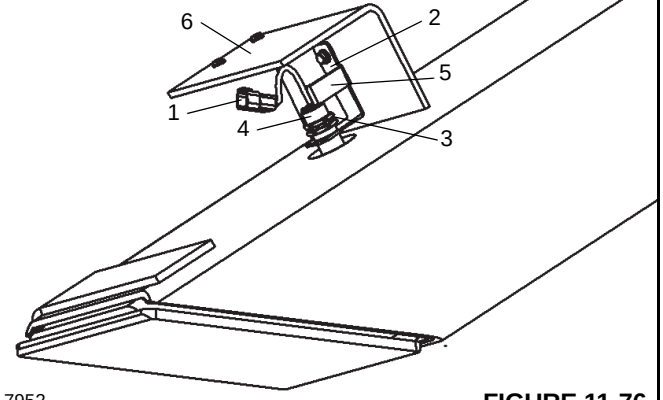

FIGURE 11-76

Installation

1. Feed cable through the mounting bracket and jam nuts.
2. Thread switch through mounting bracket.
3. Thread nuts on switch.
4. Thread switch up until it touches tab (5) of mounting bracket and LED is pointed away from the bracket.
5. Tighten jam nuts against mounting bracket.
6. Install bracket with switch onto outrigger angle bracket (6).
7. Adjust bracket and/or switch to have 3 to 10 mm (.12 to .38 in) gap between end of switch and outrigger beam.
8. Connect switch cable to wire harness.

Cylinder Removal

1. Position the crane so that the outrigger is over some sort of a pit. If a pit is not available, an overhead crane of sufficient capacity can be used to raise the end of the crane far enough to remove the outrigger. DO NOT use a jack to raise the crane, unless the crane can be blocked in position to inhibit the crane from falling when the outrigger is removed.
2. Engage the parking brake and place chock blocks at the wheels to inhibit machine movement.
3. Disconnect the hydraulic lines from the cylinder. Cap and plug the hoses and fittings.
4. Remove the counterbalance valve (Figure 11-77) from the outrigger cylinder.
5. Remove the cylinder base end pin.
6. Pull the outrigger beam and cylinder from the outrigger tube in the main frame.
7. Remove the cylinder rod end pin and remove the cylinder.

Cylinder Installation

1. Insert the outrigger cylinder into the outrigger beam and then install the rod end pin and retaining rings.
2. Install the outrigger beam (Figure 11-77) and cylinder into the outrigger tube on the main frame. Push the outrigger into tube until the cylinder base end pin can be installed.
3. Install the cylinder base end pin and retaining rings.
4. Install the counterbalance valve.
5. Connect the two hoses to the outrigger cylinder.
6. Apply a small amount of lubricant to the upper surface of the outrigger beam.
7. Using the outrigger control, extend and retract the outrigger several times to remove any air in the hydraulic lines.

Reference Only

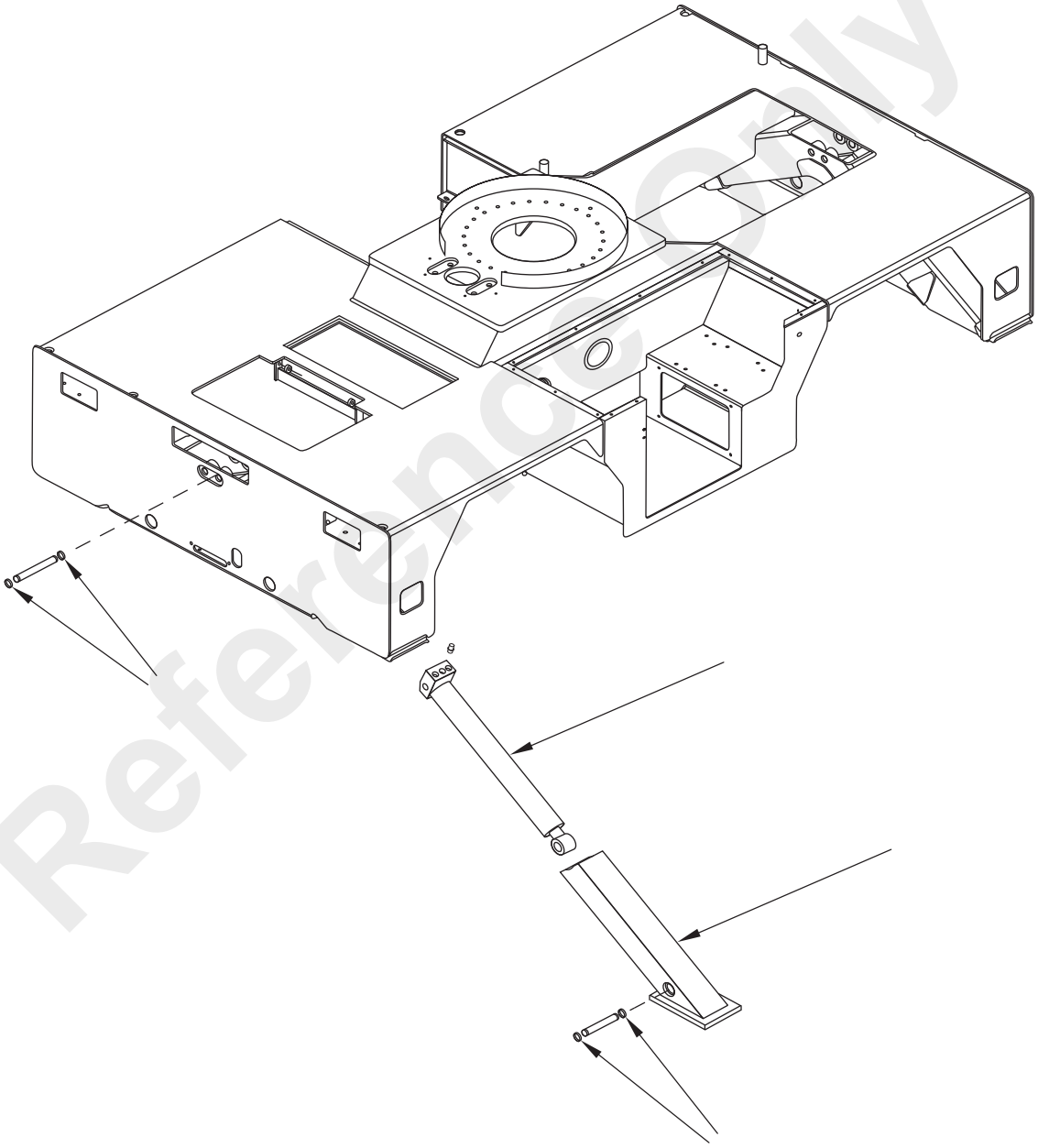

a2286

FIGURE 11-77

Reference Only

SECTION 12
SCHEMATICS/WIRING DIAGRAMS

Reference Only

Reference Only

THIS PAGE BLANK

Published 2/23/2016, Control # 592-00

ALPHABETICAL INDEX

Accessory Circuits . . . 3-8
Anti-Double Block System . . . 4-44
Axles/Drive Shafts/Wheels and Tires . . . 8-1
Bearing, Mast and Related Parts . . . 11-31
Booms . . . 11-1
Brake Modulating Valve Repair . . . 9-14
Brake System . . . 9-1
Carwell® Rust Inhibitor . . . 5-41
Charging System . . . 3-4
Component Repair . . . 4-49
Directional Reference . . . 1-1
Draining and Flushing . . . 4-3
Drive Shafts . . . 8-35
Electric System . . . 3-1
Engine Air Intake System . . . 6-5
Engine and Engine Systems . . . 6-1
Engine Cooling System . . . 6-2
Engine Crankcase System . . . 6-1
Engine Electrical System . . . 6-3
Engine Exhaust System . . . 6-5
Engine Fuel System . . . 6-3
Engine Performance . . . 6-1
Engine RPM . . . 6-1
Engine Type . . . 6-1
Environmental Protection . . . 5-1
Front Drive Axle Problems and Diagnosis . . . 8-7
Front Drive Axle Repair . . . 8-8
Front Steering Cylinder . . . 10-23
Hydraulic Swivel . . . 4-67
Hydraulic System . . . 4-1
Instrument and Light Circuits . . . 3-6
Introduction . . . 1-1
Introduction . . . 2-1
Introduction . . . 5-1
Lift Circuit . . . 4-28
Lubricants . . . 5-5
Lubrication Points . . . 5-6
Main Electrical System . . . 3-2
Main Hoist Circuit . . . 4-38
Main Hoist . . . 11-18
Maintenance and Adjustments . . . 9-5
O-Ring Face Seal (ORFS) Hydraulic Fittings . . . 1-9
Outrigger Circuits . . . 4-47
Parking Brake Repair . . . 9-8
Preventive Maintenance . . . 5-1
Rear Steering Axle Repair . . . 8-32
Rear Steering Cylinder . . . 10-20
Relief Valve Pressure Check . . . 10-9
Removal and Installation . . . 6-7
Removing Air from the Hydraulic System . . . 4-4
Safety Practices . . . 2-1
Scheduled Maintenance . . . 5-13
Schematics/Wiring Diagrams . . . 12-1
Serial Number Plate . . . 1-1
Service Brake Repair . . . 9-8

Reference Only

Signal Words 2-1
Special Maintenance 5-2
Specifications 1-2
Starting Circuit 3-5
Steering Orbitrol 10-13
Steering System 10-1
Structurals 11-1
Suction, Return and Pump Pressure Circuits 4-12
Swing Circuit. 4-42
Telescope Circuit 4-34
Toe-In/Steering Angle Alignment 8-4
Transmission and Torque Converter 7-1
Transmission Oil Cooler Motor Control Valve 7-13
Transmission Repair. 7-15
Weld Studs 1-16
Wheels and Tires 8-37
Wire Harnesses 3-7
Wire Rope. 1-17
Wire Rope, Sheaves And Hoist Blocks 11-14

Reference Only

Reference Only

Reference Only