RUTHZIL TRATOR COMERCIAL DE PEÇAS LTDA 11 97083-6812 ROLANDO CITRANGULO

DYNAPAC CG223HF

SPARE PARTS CATALOGUE

SCG223HF-2EN3

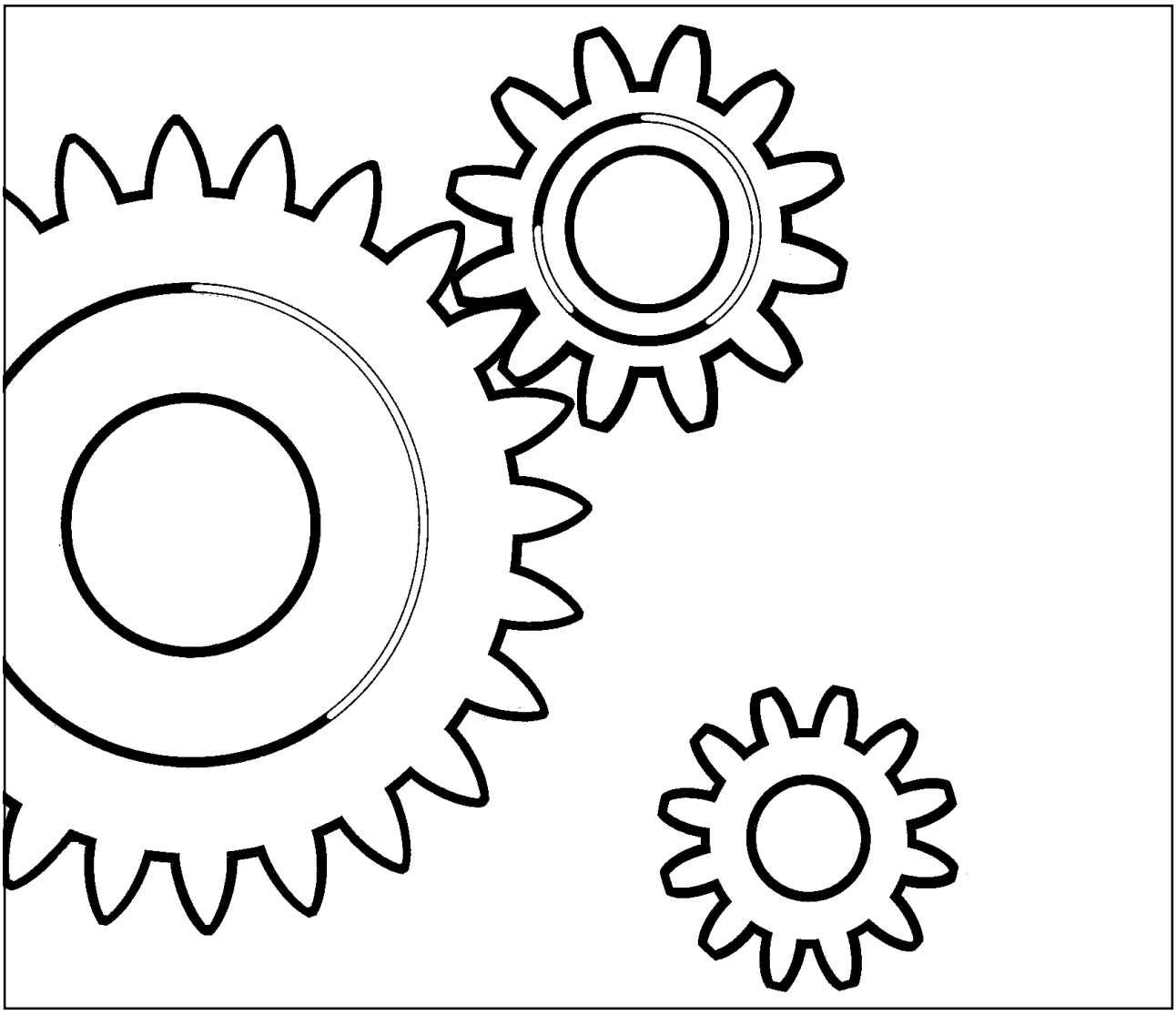

DYNAPAC
Part of the Atlas Copco Group

Box 504, SE-371 23 Karlskrona, Sweden
Phone: +46 455 30 60 00, Fax: +46 455 30 60 10
www.dynapac.com

DYNAPAC
Part of the Atlas Copco Group

Vibratory Roller
CG223HF

Spare Parts Catalogue
SCG223HF-2EN3

Valid from roller serial number:

85110280

Diesel engines:

Deutz BF4M 2011

Published catalogue issues valid for these rollers:

Catalogue	Issue date	Valid for serial numbers
SCG223HF-2EN1	2007-05	Replaced by SCG223HF-2EN2
SCG223HF-2EN2	2007-12	Replaced by SCG223HF-2EN3
SCG223HF-2EN3	2009-05	*85110280* -



We reserve the right to change specifications without notice.
Printed in Sweden.

DYNAPAC
Part of the Atlas Copco Group

RESERVDELSBESTÄLLNING

Följande uppgifter ska lämnas vid beställning av reservdelar för att undvika leveransfel:

1. Maskintyp.
2. Vältens serienummer.
3. Antal av önskad reservdel.
4. Reserdelens artikelnummer.
5. Reservdelens benämning.
6. Måttuppgifter vid beställning av metervara.

ORDERING SPARE PARTS

To avoid errors in delivery, please give the following information when ordering spare parts:

1. Type of machine.
2. Roller serial number.
3. Quantity required.
4. Part number.
5. Parts denomination.
6. Dimensions when ordering per length.

ERSATZTEILBESTELLUNG

Zur Vermeidung von Fehllieferungen sind bei der Bestellung von Ersatzteilen folgende Angaben zu machen:

1. Maschinentyp.
2. Herstellungsnummer.
3. Bestellmenge. (Quantity)
4. Ersatzteilnummer. (Part Nº)
5. Ersatzteilbenennung. (Denomination)
6. Massangaben bei Bestellung von Meterware.

ORDINI DI RICAMBI

Per evitare errori nelle consegne di ricambi, Vi preghiamo di comunicarci le seguenti informazioni al momento dell 'ordinazione:

1. Tipo di macchina.
2. Numero di serie della macchina.
3. Quantità dei pezzi desiderati. (Quantity)
4. Numero di codice del pezzo. (Part Nº)
5. Descrizione del pezzo di ricambio. (Denomination)
6. Misura, in caso di ordine per metro.

PEDIDO DE RECAMBIOS

Para evitar errores en las entregas, deberán indicarse los siguientes datos al hacer un pedido de recambios:

1. Tipo de máquina.
2. Número de serie.
3. Cantidad de piezas deseadas. (Quantity)
4. Número de artículo de la pieza de recambio. (Part Nº)
5. Denominación de la pieza. (Denomination)
6. Indíquese la medida al solicitar un artículo que se expide por metros.

COMMANDE DE PIECES DE RECHANGE

Les indications suivantes doivent être fournies lors de la commande de piéces de rechange, afin d'éviter toute erreur de livraison:

1. Type de machine.
2. Numéro de série.
3. Quantité désirée de pièce de rechange. (Quantity)
4. Numéro de la piéce de rechange. (Part Nº)
5. Dénomination de la piéce de rechange. (Denomination)
6. Longueur en cas de commande au mètre.

YOUR AGENT/DEALER:

Text pages

The text pages is structured as the picture on the right.

1. This is the remarks for specific items and the descriptions of the remarks is at the bottom of the parts list.

2. Parts indicated by a dot and moved to the right are included when buying the assembled unit above.

3. Spare parts and service code for a specific part, mainly for internal use at Dynapac. "A" = Service part, "B" = Fast moving part, "C" = Suggested exchanged part and "D" = Regular spare part.

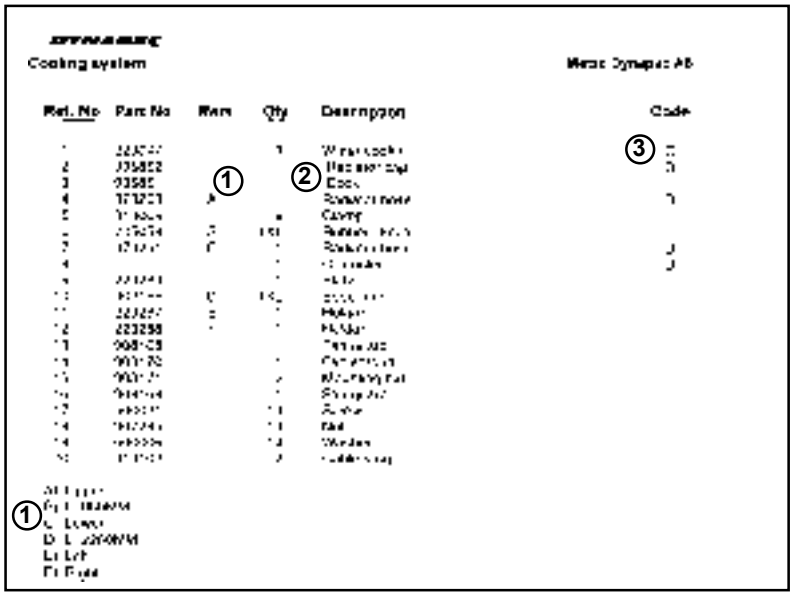

Changes

PARTS INFO	SERVICE INFO	GROUP	PAGE	NOTES

Notes

Notes

DYNAPAC
Part of the Atlas Copco Group

PÄRMETIKETT

För att undvika fel vid reservdelsbeställning finns här nedan två etiketter som passar i fickorna på pärmarnas ryggar. På dessa kan man se från vilket vältnummer av aktuell maskin reservdelskatalogen gäller. Gör så här:

1. Tag denna sida ur pärmen.
2. Klipp ut etiketten till **VÄNSTER** (1) och sätt in den i fickan på **DENNA** pärmens rygg.
3. Finns det en etikett till **HÖGER** (2), kan denna användas på pärmen för **FÖREGÅENDE** utgåva av denna katalog.
4. Kasta detta papper.

BINDER LABEL

To avoid errors when ordering spare parts use the labels below to identify the catalogues on the back of the binder. The label contain the serial number range for which the catalogue is valid. Do like this:

1. Remove this page from the binder.
2. Cut out the **LEFT** label (1) and put it on **THIS** binders back.
3. If there is a label to the **RIGHT** (2), it can be used on the binder for **PRECEDING** issue of this catalogue.
4. Throw away this paper.

KATALOG-BESCHRIFTUNG

Zur Vermeidung von Fehlen bei der Ersatzteilbestellung benutzen Sie bitte die unteren Beschriftungen, um die Kataloge auf der Rückseite zu kennzeichen. Auf der Beschriftung ist angegaben, für welche Maschinennummern der jeweilige Katalog gültig ist. Ablauf:

1. Nehmen Sie dieses Blatt aus dem Katalog.
2. Schneiden Sie die **LINKE** Beschriftung (1) aus. Schieben Sie die Beschriftung in die tasche auf **DEM** Katalogrücke.
3. Sollte die Beschriftung unten **RECHTS** (2) mitgeliefert werden, kennzeichen Sie damit bitte die **ÄLTERE** Ausführung dieses Kataloges.
4. Den Rest dieses Blattes bitte vernichten.

ETICHETTA POSTA SUL RACCOGLITORE

Per evitare errori quando ordinate pezzi di ricambio, usate le etichette in calce che servono ad identificare i cataloghi sul retro del raccoglitore. L'etichetta indica il numero di matricola delle maccine prese in considerazione nel catalogo.

1. Rimuovete questa pagina dal raccoglitore.
2. Ritagliate l'etichetta posta a **SINISTRA** (1) e ponetela sul retro **DEL** raccoglitore.
3. Se trovate anche un'etichetta sulla **DESTRA** (2), ritagliatela e ponetela sul raccoglitore relativo alla **PRECEDENTE** edizione del catalogo.
4. Distruggete questo foglio.

ETIQUETA PARA LA CARPETA

Para evitar errores al pedir repuestos utilicen las etiquetas abajo descritas para identificar los catálogos en la parte trasera de la carpeta. En la etiqueta se ven los números de referencia de la serie para la cual es válido el catálogo. Instrucciones:

1. Quitar esta página de la carpeta.
2. Corta la etiqueta **IZQUIERDA** (1) y ponerla est **ESTA** carpeta en la parte trasera.
3. Si hay una etiqueta en la parte **DERECHA** (2) se puede utilizar en la carpeta para el catálogo que **PRECEDE** a esta.
4. Tirar esta hoja.

ETIQUETAGE DU CATALOGUE

Afin d'éviter des erreurs lors de commandes de pièces de rechange, nous vous conseillons d'apposer les marquages ci-dessous à l'arrière du classeur, pour identifier les catalogues. Ce marquage indique les numéros de série pour lesquels le catalogue est adapté. Il convient de procéder de la façon suivante:

1. Retirez cette page du classeur.
2. Découpez l'étiquette de **GAUCHE** (1), et apposez-la à l'arrière de **CE** catalogue.
3. Si il y a une étiquette à **DROITE** (2), vous pourrez l'apposer sur le classeur de l'edition **PRECEDENTE** du catalogue.
4. Détruire cetta feuille.

1 .



CG223HF

Catalogue ***SCG223HF-2EN3***
Valid ***from*** *serial number:*
****85110280* -***

TABLE OF CONTENTS Page

CG223HF SN 85110280 - 2

Service kits 4

4700940592 Service kit 50h, Deutz 4cyl 2011 6
4700940238 Service kit 500h, Deutz 4cyl 2011 8
4700940593 Service kit 1000h, Deutz 4cyl 2011 10

Repair kits 12

4700945721 Eccentric shaft kit 14
4700938891 Drum rotation kit 16
4700945719 Scraper kit CC222/232, CG223/233 18
4700945717 Shock absorber kit, drum CC222/322,CG223 20

Frame 22

Frame and drum modules 24
Front drum module 26
Rear drum module 28
Covers, handrails, footsteps 30
4700389504 Cover left side, cpl 32
4700389548 Cover right side, cpl 34
4700389617 Service cover, cpl 36
Front scrapers 38
Rear scrapers 40
Sprinkler system 42
Front sprinkler box 46
Rear sprinkler box 48

Drum 50

Drum 52

Engine 54

Engine installation 56
Engine module BF4M 2011 58
Combustion air system 60
Exhaust system 62
Fuel system 64
Cooling system 66

Hydraulic system 68

Propulsion and brake system, pump 70
4700393337 Hydraulic pump Propulsion and vibration 74
Hydraulic pump Propulsion pump 76
Valve block Middle part 80
Hydraulic pump Vibration pump 82
Propulsion and brake system, motors 84
4700391329 Gear box 86
4700376721 Connection block 88
4700376723 Connection block 90
Vibration system, pump 92
4700359140 Valve Vibration 94
Vibration system, motors 96
Steering system 98
4700376912 Steering valve, cpl 102
4700392505 Steering cylinder, cpl 104
4700389451 Multifunction block 106

Electrical equipment 108

TABLE OF CONTENTS

Page

Electrical equipment 110
Frame wiring 112
Engine wiring 114
Instrument box 116
Instrument panel, main 118
Instrument panel, upper left 120
Instrument panel, upper right 122
Instrument panel, lower left 124
Instrument panel, lower right 126
Instrument panel, relay, fuses 128
Forward and reverse control EDC 130
Driving lights Direction & licenseplate light 132
Rotating beacon 134
Tachograph 136

Drivers platform 138

Drivers platform For cab 140
Drivers seat Turn-over in cab 142
4700359918 Steering column 144
4700391163 Steering column 146
Cross sliding Controls 148
Cross sliding Carrier 150
Control bracket EDS 152
Controls 154
Cab, asymmetric 156
Cab, interior 158
Cab, screens 160
Cab, inside panels 162
Cab, wipers, right side 164
Cab, wipers, front and rear 166
Cab, door, left side (3-split) 168
Cab, heater and, fan system 170
4700385769 Heater unit 172
Cab, electrical 174
Cab, symmetric 176
Cab, interior 178
Cab, screens 180
Cab Inside panels 182
Cab, wipers, front and rear 166
Cab, door, left side (3-split) 168
Cab, heater and, fan system 170
4700385769 Heater unit 172
Cab, electrical 174
Cab, equipment 184
Cab, water tank/s wipers 186
Radio and cassette/cd player 188
Exterior rear mirrors 190

Decals 192

Decals 194

Optional equipment 196

Noise suppression 198
Roof hatch 200
SMV-sign 202
Rear mirrors 204
Protecting cover, Headlight 206
Asphalt temperature meter 208
Air conditioning 210
4700385766 Heater/AC unit 212

TABLE OF CONTENTS

Page

4700383413 Condenser, cpl ---- 214
Edge cutter ---- 216
4700393869 Edge cutter, cpl ---- 218
Hydraulics, edge cutter ---- 220
Sprinkler system, edge cutter ---- 222


50
60
90
91
70
10
80
CG 233 HF
30
20

Item	Part No	Rem	Qty	Description	Code
				Service kits (Page 4)	
				Repair kits (Page 12)	
10				Frame (Page 22)	
20				Drum (Page 50)	
30				Engine (Page 54)	
50				Hydraulic system (Page 68)	
60				Electrical equipment (Page 108)	
70				Drivers platform (Page 138)	
80				Decals (Page 192)	
91				Optional equipment (Page 196)	

Service kits

Item	Part No	Rem	Qty	Description	Code
1	4700940592			Service kit (Page 6) 50h, Deutz 4cyl 2011	
2	4700940238			Service kit (Page 8) 500h, Deutz 4cyl 2011	
3	4700940593			Service kit (Page 10) 1000h, Deutz 4cyl 2011	

4700940592 Service kit 50h, Deutz 4cyl 2011

17423

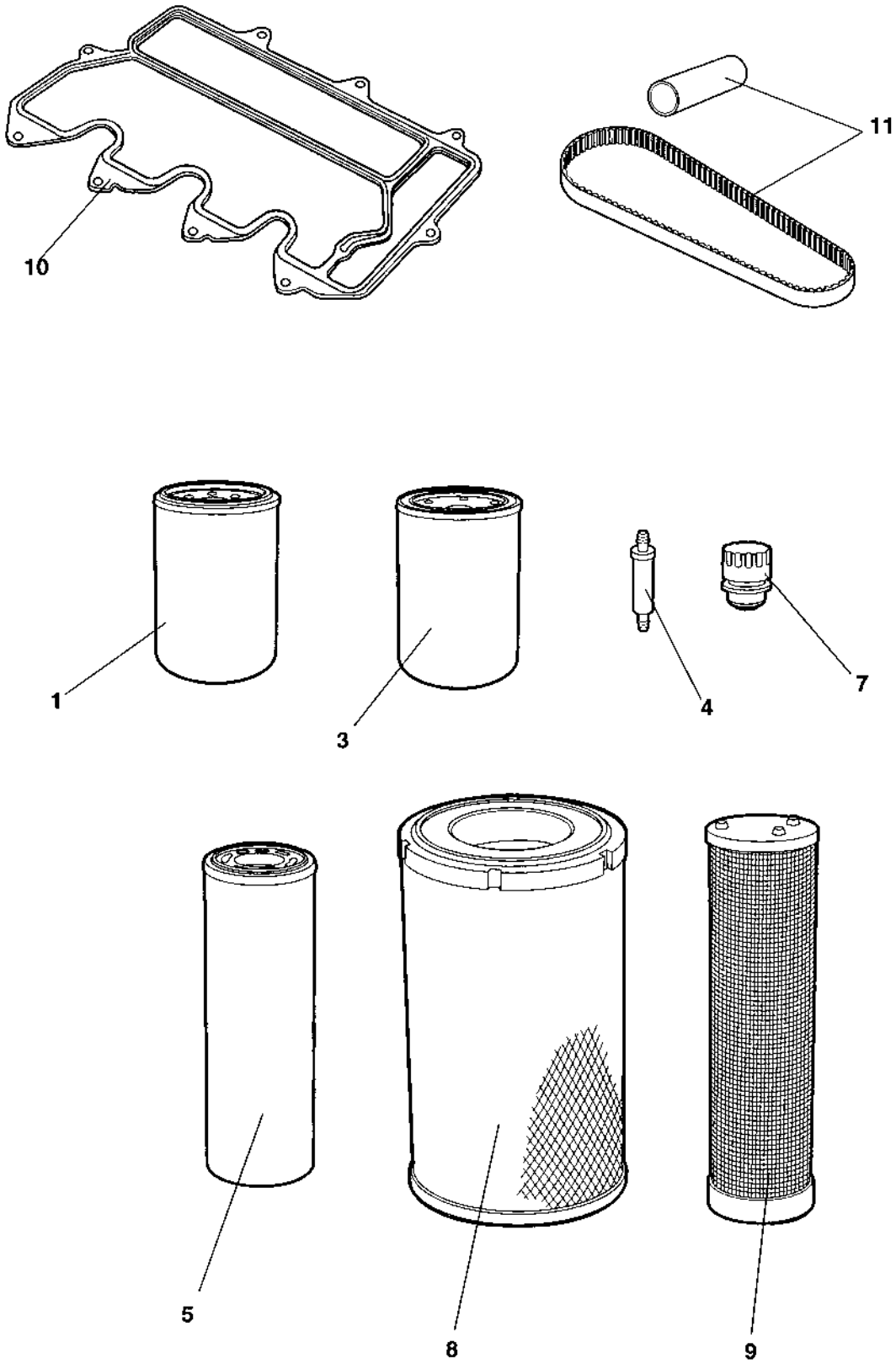

4700940592 Service kit 50h, Deutz 4cyl 2011

Item	Part No	Rem	Qty	Description		Code
	4700940592			Service kit (Page 6)	50h, Deutz 4cyl 2011	
1	4700939515		1	Oil filter		A
3	4700940570		1	Fuel filter		A
4	4700929322		1	Fuel strainer		A
5	4700372229		1	Hydraulic oil filter element		A

4700940238 Service kit 500h, Deutz 4cyl 2011

17423

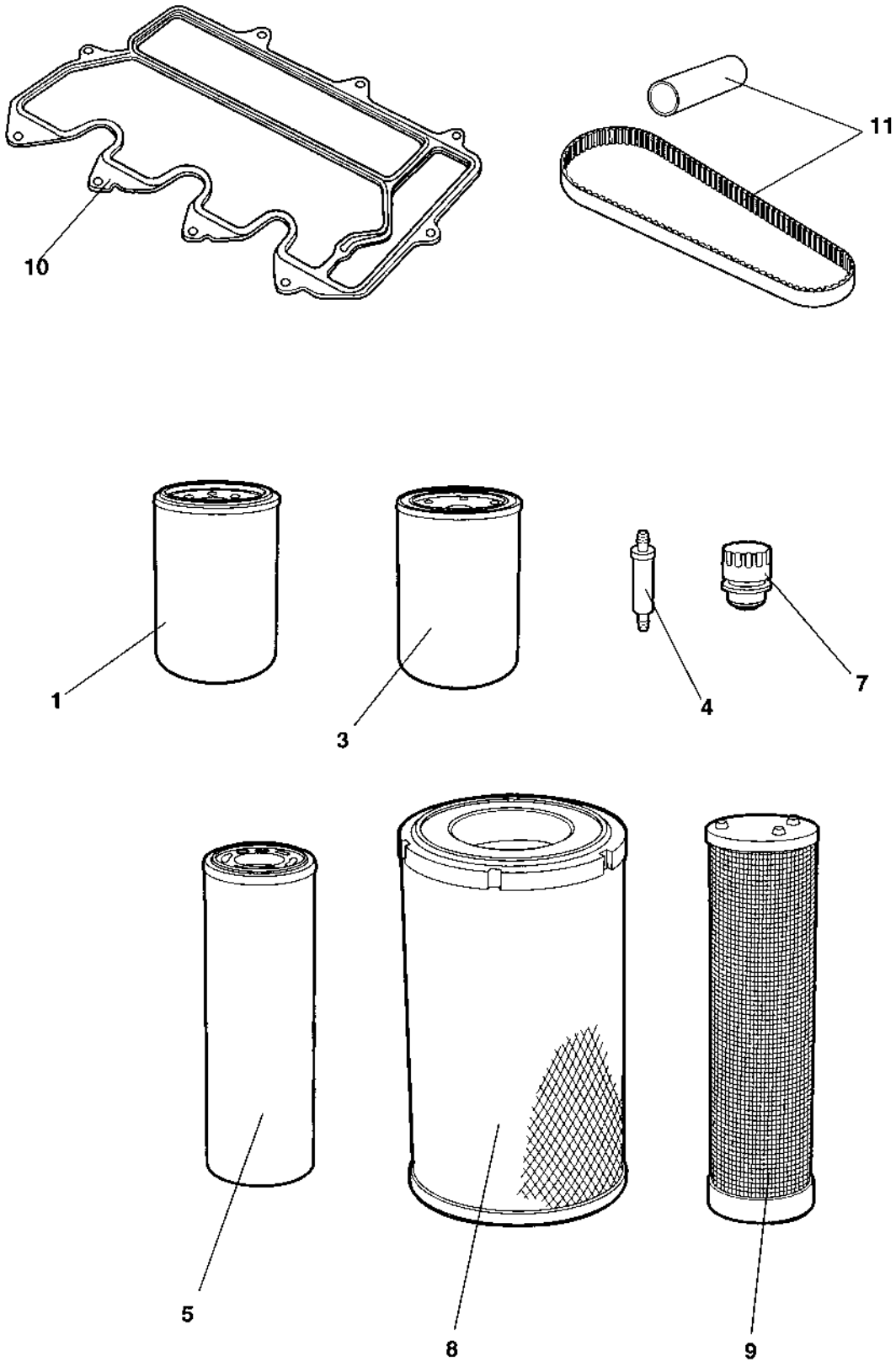

4700940238 Service kit 500h, Deutz 4cyl 2011

Item	Part No	Rem	Qty	Description		Code
	4700940238			Service kit (Page 8)	500h, Deutz 4cyl 2011	
1	4700939515		1	Oil filter		A

4700940593 Service kit 1000h, Deutz 4cyl 2011

18172

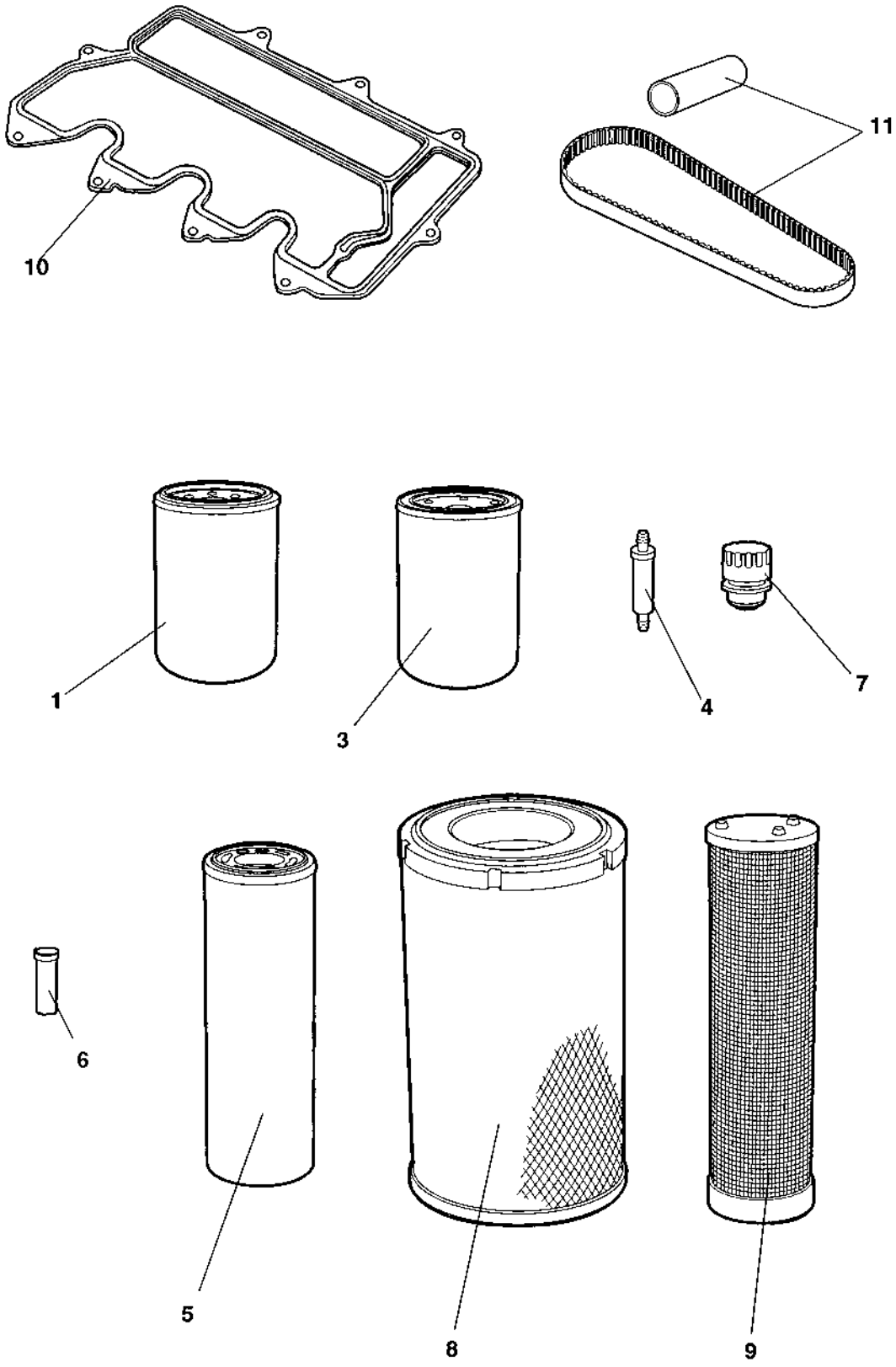

4700940593 Service kit 1000h, Deutz 4cyl 2011

Item	Part No	Rem	Qty	Description		Code
	4700940593			Service kit (Page 10)	1000h, Deutz 4cyl 2011	
1	4700939515		1	Oil filter		A
3	4700940570		1	Fuel filter		A
4	4700929322		1	Fuel strainer		A
5	4700372229		1	Hydraulic oil filter element		A
6	4700940304	A	1	Filter		
7	4700357138		1	Ventilating filter		A
8	4700394684		1	Main filter		A
9	4700394685		1	Safety filter		A
10	4700940235		1	Valve cover gasket		

A) Multifunction block

Repair kits

Item	Part No	Rem	Qty	Description	Code
1	4700945721		2	Eccentric shaft kit (Page 14)	
2	4700938891		2	Drum rotation kit (Page 16)	
3	4700945719			Scraper kit (Page 18)	CC222/232, CG223/233
4	4700945717		2	Shock absorber kit, drum (Page 20)	CC222/322,CG223

4700945721 Eccentric shaft kit

945721

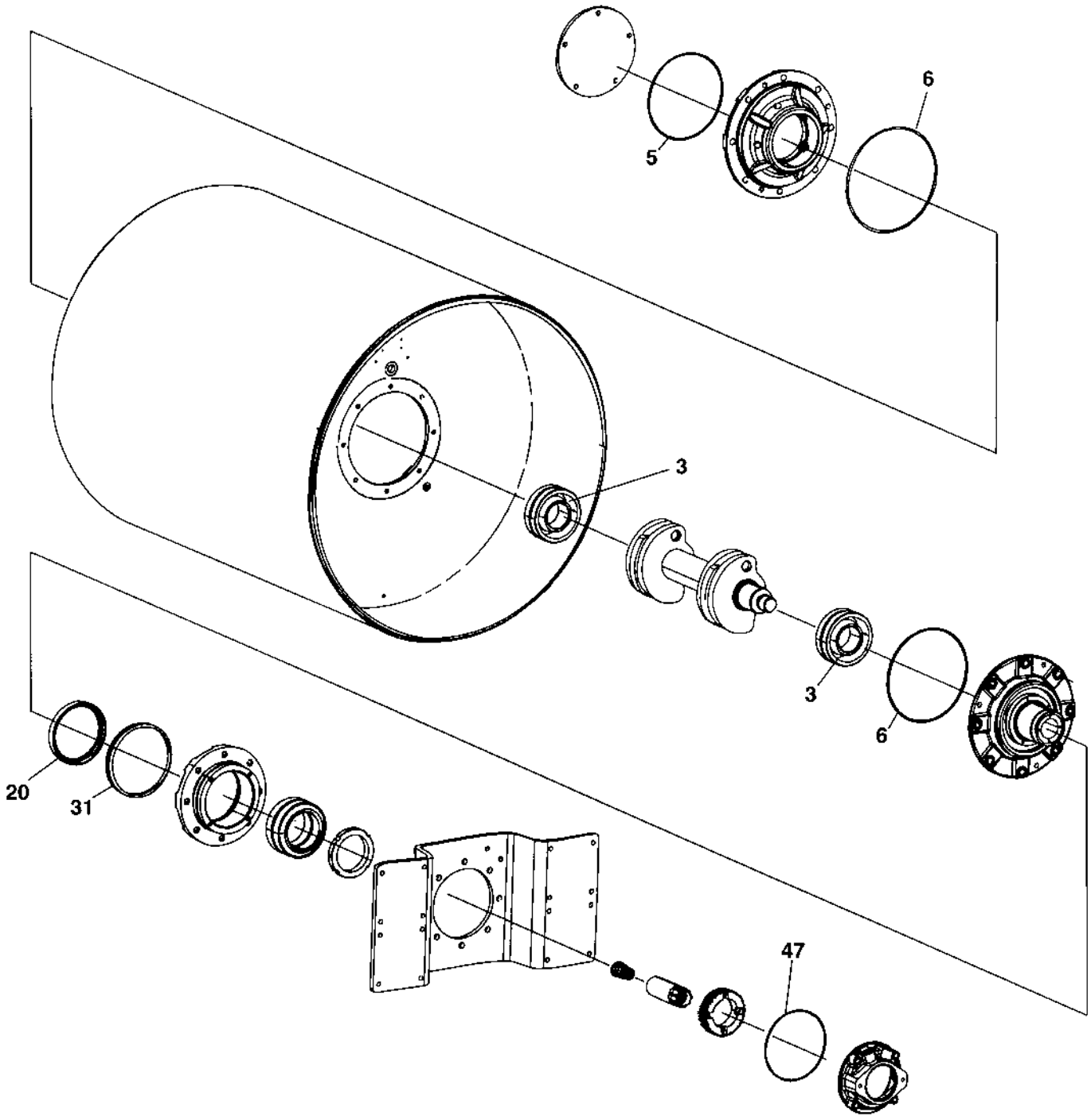

4700945721 Eccentric shaft kit

Item	Part No	Rem	Qty	Description	Code
	4700945721			Eccentric shaft kit (Page 14)	
3	4700114060		2	Spherical roller bearing	D
5	4700160045		1	O-ring 70	
6	4700160344		2	O-ring 70	D
20	4700386272		1	Sealing	D
31	4700929447		1	V-ring	D
47	4700160105		1	O-ring 70	D

4700938891 Drum rotation kit

RAMLAGER

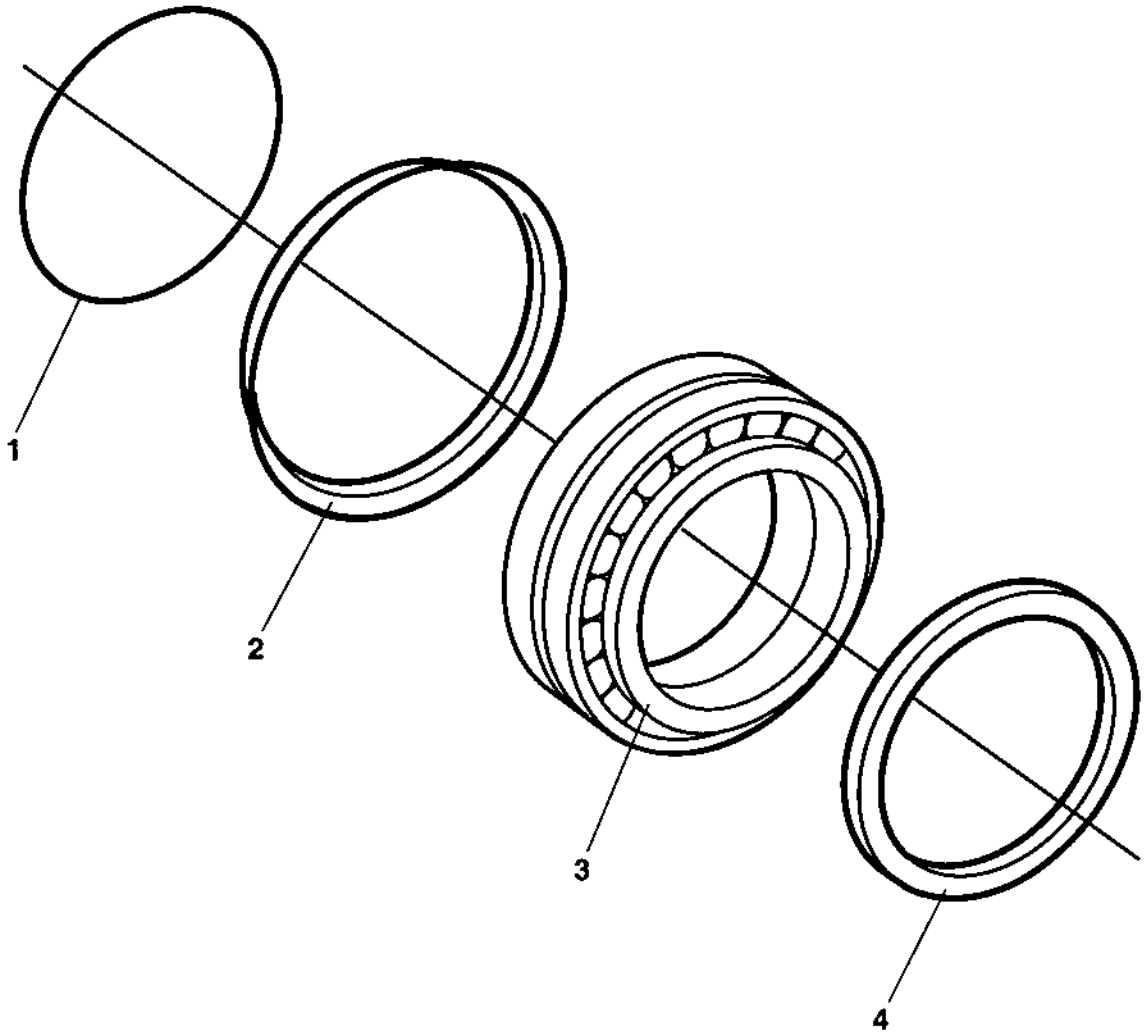

4700938891 Drum rotation kit

Item	Part No	Rem	Qty	Description	Code
	4700938891			Drum rotation kit (Page 16)	
1	4700160105		1	O-ring 70	D
2	4700929447		1	V-ring	D
3	4700116041		1	Taper roller bearing	D
4	4700386272		1	Sealing	D

4700945719 Scraper kit CC222/232, CG223/233

SCRAPER-2

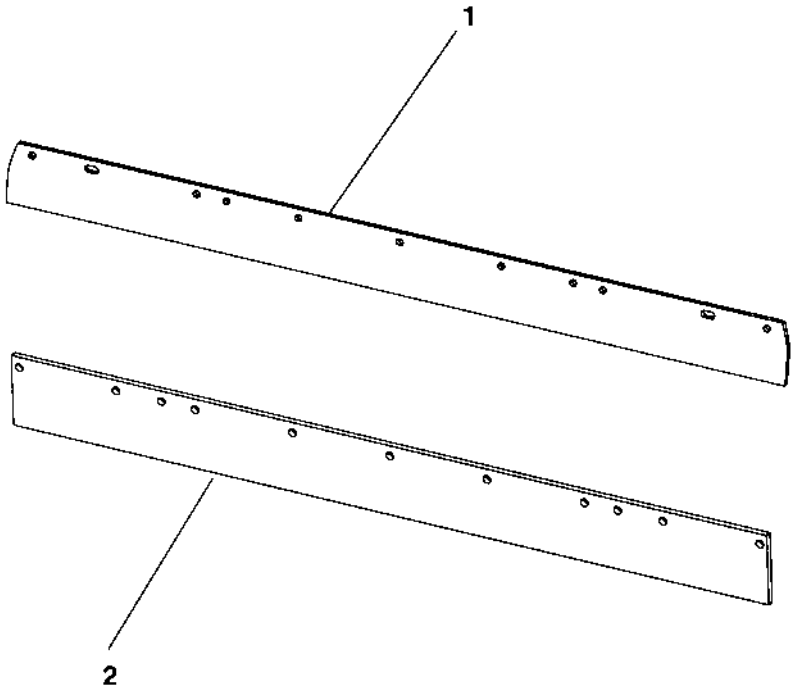

4700945719 Scraper kit CC222/232, CG223/233

Item	Part No	Rem	Qty	Description		Code
	4700945719			Scraper kit (Page 18)	CC222/232, CG223/233	
1	4700359351		2	Scraper		B
2	4700388489		2	Scraper		

4700945717 Shock absorber kit, drum CC222/322,CG223

945717

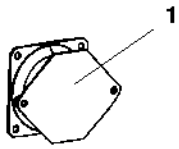

4700945717 Shock absorber kit, drum CC222/322,CG223

Item	Part No	Rem	Qty	Description		Code
	4700945717			Shock absorber kit, drum (Page 20)	CC222/322,CG223	
1	4700394250		6	Shock absorber		B
2	4700394251		4	Shock absorber		

Frame

Frame

Item	Part No	Rem	Qty	Description	Code
10				Frame and drum modules (Page 24)	
20				Covers, handrails, footsteps (Page 30)	
30				Front scrapers (Page 38)	
35				Rear scrapers (Page 40)	
40				Sprinkler system (Page 42)	

Frame and drum modules

18102

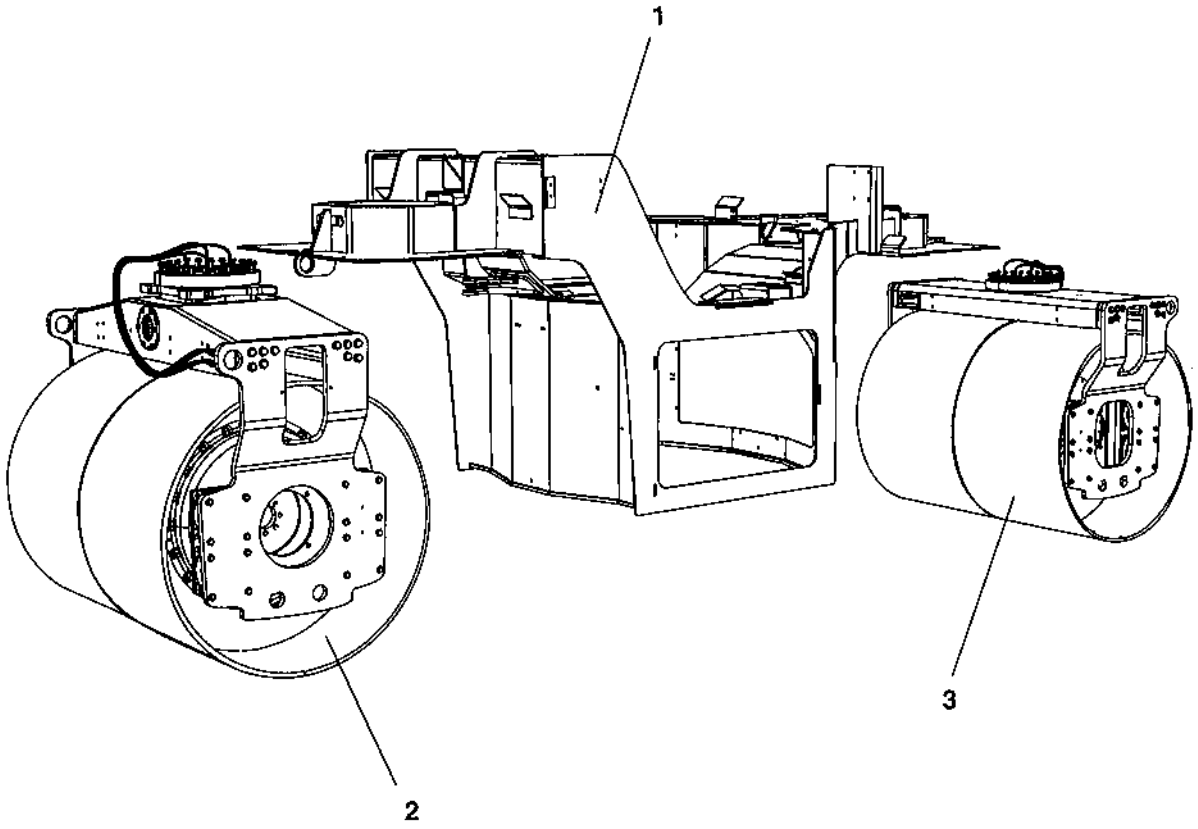

Frame and drum modules

Item	Part No	Rem	Qty	Description	Code
1	4700388233		1	Frame	
2			1	Front drum module (Page 26)	
3			1	Rear drum module (Page 28)	

Front drum module

18519

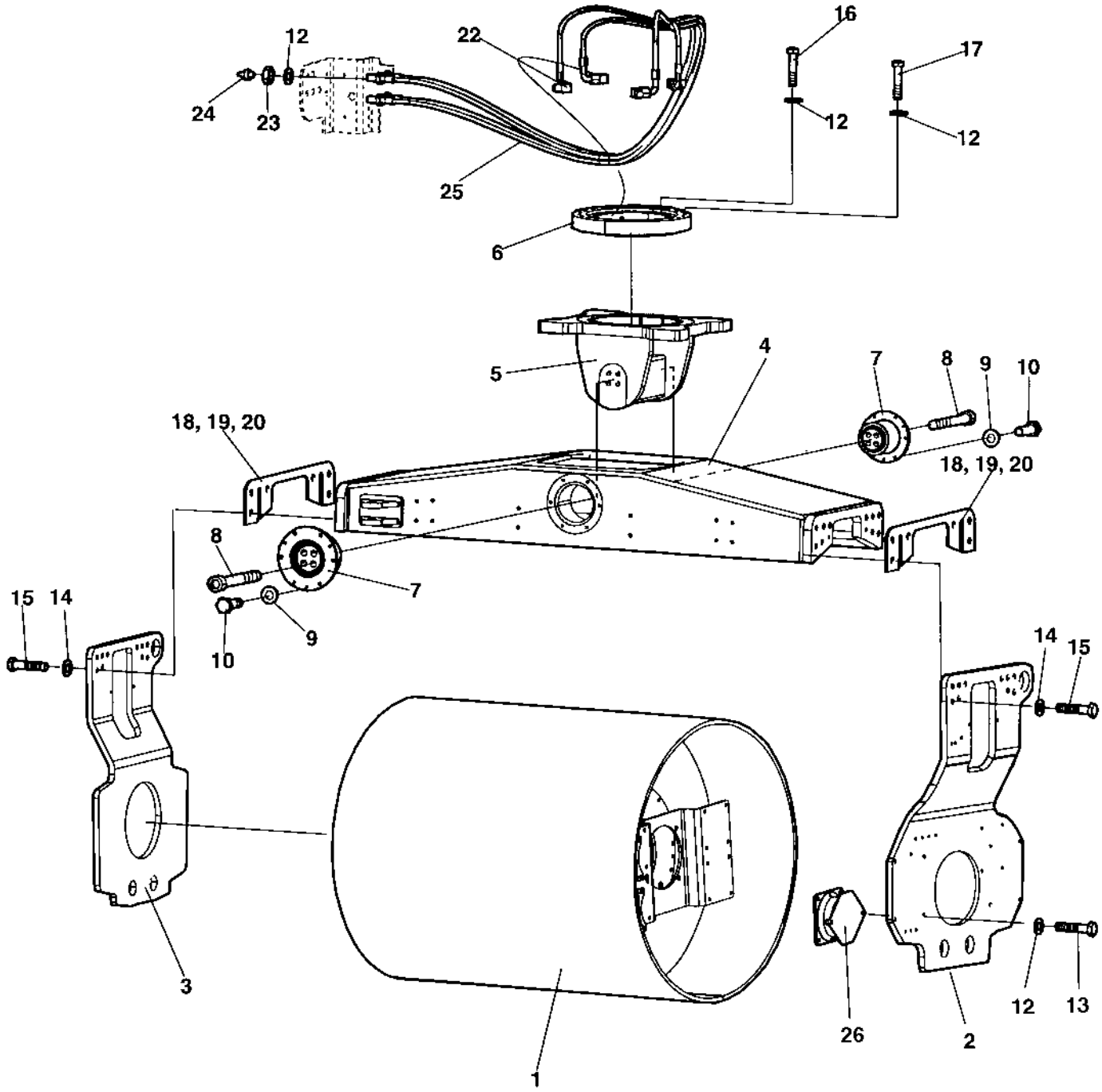

Front drum module

Item	Part No	Rem	Qty	Description		Code
1			1	Drum (Page 52)		
2	4700392093		1	Fork		
3	4700391289		1	Fork		
4	4700388824		1	Tilt yoke		
5	4700389236		1	Tilt holder		
6	4700359192		1	Bearing		
7	4700389233		2	Rubber bushing		
8	4700903745		8	Screw		
9	4700904229		12	Washer	8,4x16x1,5	
10	4700500022		12	Screw	M8x30H 8.8 A2K	
12	4700904231		63	Washer	13x24x2 300 HV	
13	4700500111		8	Screw	M12x55 8,8	
14	4700904232		20	Washer		
15	4700500134		20	Screw		
16	4700947712		27	Screw		
17	4700500269		24	Screw		
18	4700359515		N	Shim	T=5 mm	
19	4700359516		N	Shim	T=3 mm	
20	4700359517		N	Shim	T=1mm	
22	4700373183		4	Elbow 90		
23	4700903831		4	Nut		
24	4700926214		4	Grease fitting		D
25	4700903813		4	Hydraulic hose		
26		A	4	Shock absorber		

A) See section drum

Rear drum module

18518

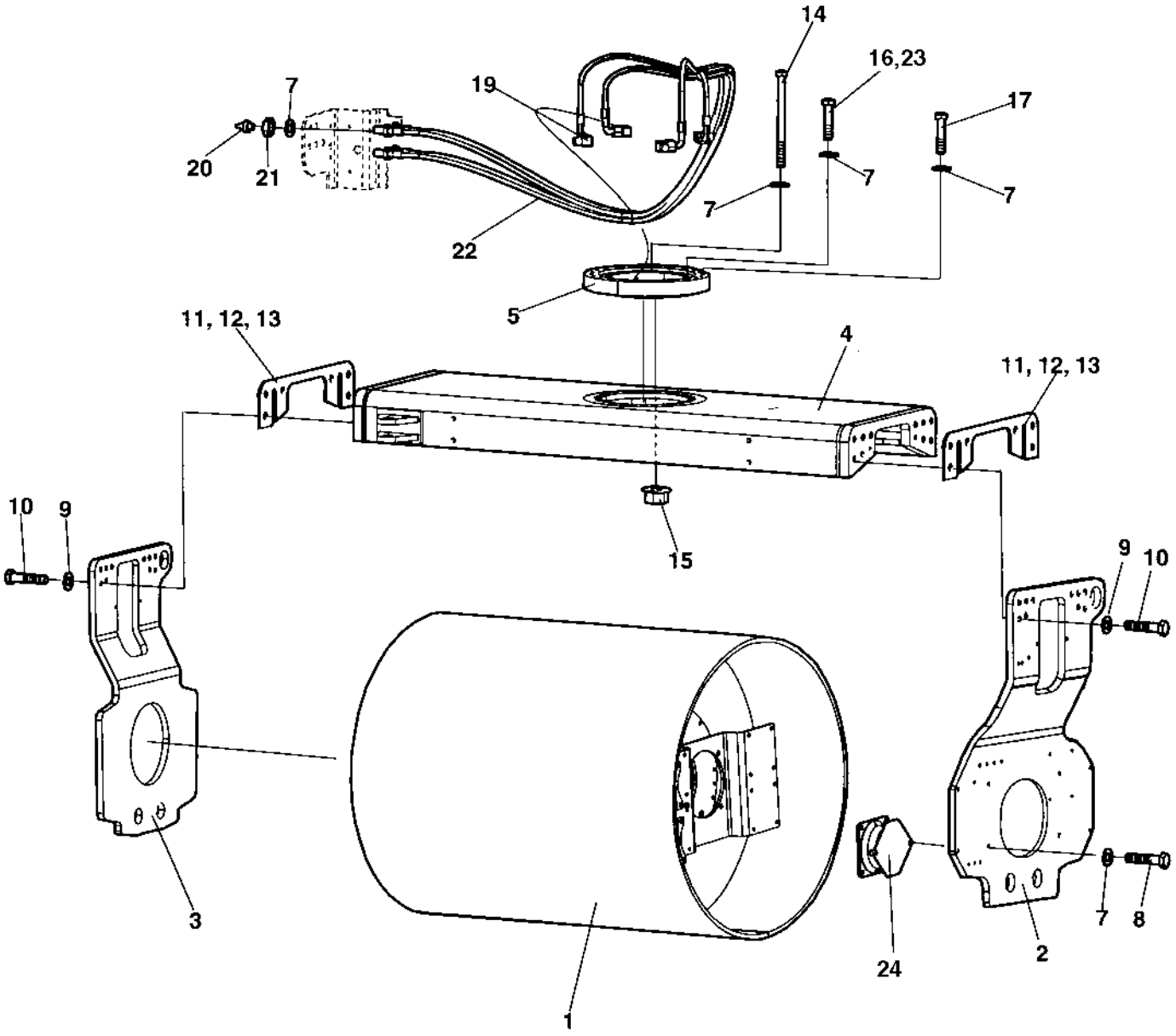

Rear drum module

Item	Part No	Rem	Qty	Description		Code
1			1	Drum (Page 52)		
2	4700392093		1	Fork		
3	4700391289		1	Fork		
4	4700377513		1	Yoke		
5	4700359192		1	Bearing		
6	4700383436		8	Holder		
7	4700904231		63	Washer	13x24x2 300 HV	
8	4700947690		8	Screw		
9	4700904232		20	Washer		
10	4700500134		20	Screw		
11	4700359515		N	Shim	T=5 mm	
12	4700359516		N	Shim	T=3 mm	
13	4700359517		N	Shim	T=1mm	
14	4700903366		10	Screw	M12x160 10,9	
15	4700570104		10	Nut	M12	
16	4700500175		15	Screw		
17	4700500269		24	Screw		
19	4700373183		4	Elbow 90		
20	4700926214		4	Grease fitting		D
21	4700903831		4	Nut		
22	4700903813		4	Hydraulic hose		
23	4700947712		2	Screw		
24		A	4	Shock absorber		

A) See section drum

Covers, handrails, footsteps

18103-1

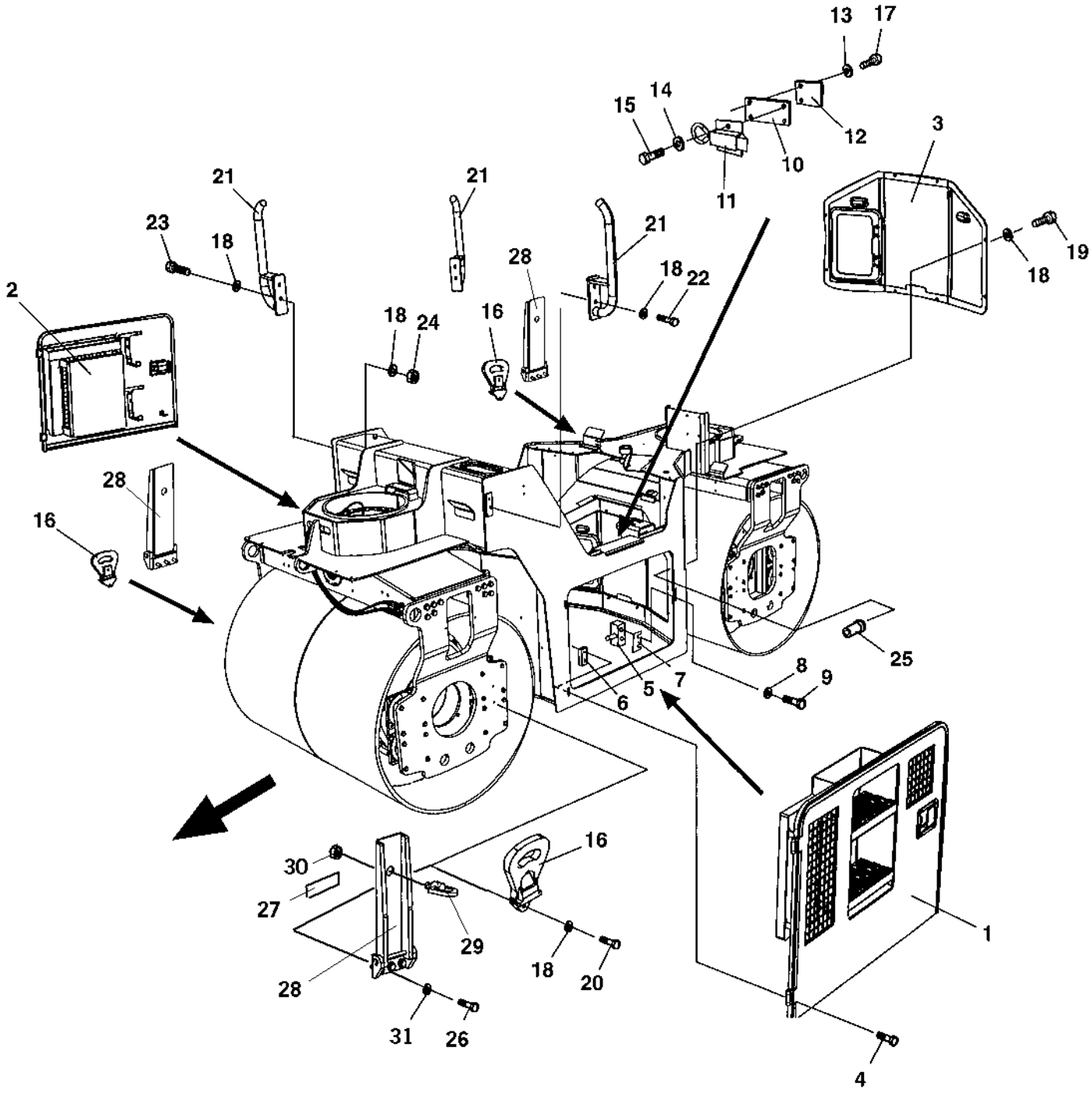

Covers, handrails, footsteps

Item	Part No	Rem	Qty	Description	Code
1	4700389504		1	Cover left side, cpl (Page 32)	
2	4700389548		1	Cover right side, cpl (Page 34)	
3	4700389617		1	Service cover, cpl (Page 36)	
4	4700928784		8	Screw	
5	4700389857		4	Threaded plate	
6	4700378310		2	Lock bracket	
7	4700389859		N	Shims	
8	4700904640		4	Washer	8,4x22x3
9	4700500047		4	Screw	
10	4700389630		1	Bracket	
11	4700389629		1	Lock	
12	4700377334		1	Spacer	
13	4700904735		2	Washer	
14	4700904281		2	Washer	
15	4700500003		2	Screw	
16	4700377458		3	Folding step	
17	4700500061		2	Screw	M6-1X35 8,8
18	4700904229		24	Washer	8,4x16x1,5
19	4700500021		8	Screw	M8-1,25x25 8.8
20	4700500023		6	Screw	M8-1,25x40 8,8
21	4700370806		3	Grab handle	
22	4700500053		2	Screw	M8x20H 8.8
23	4700500022		4	Screw	M8x30H 8.8 A2K
24	4700570005		4	Nut	M8
25	4700792103		8	Blind insert nut	
26	4700500030		9	Screw	
27	4700370820		3	Rubber cloth	
28	4700379416		3	Folding step	
29	4700475064		3	Lock	
30	4700927233		3	Nut	
31	4700904557		9	Washer	

4700389504 Cover left side, cpl

18105

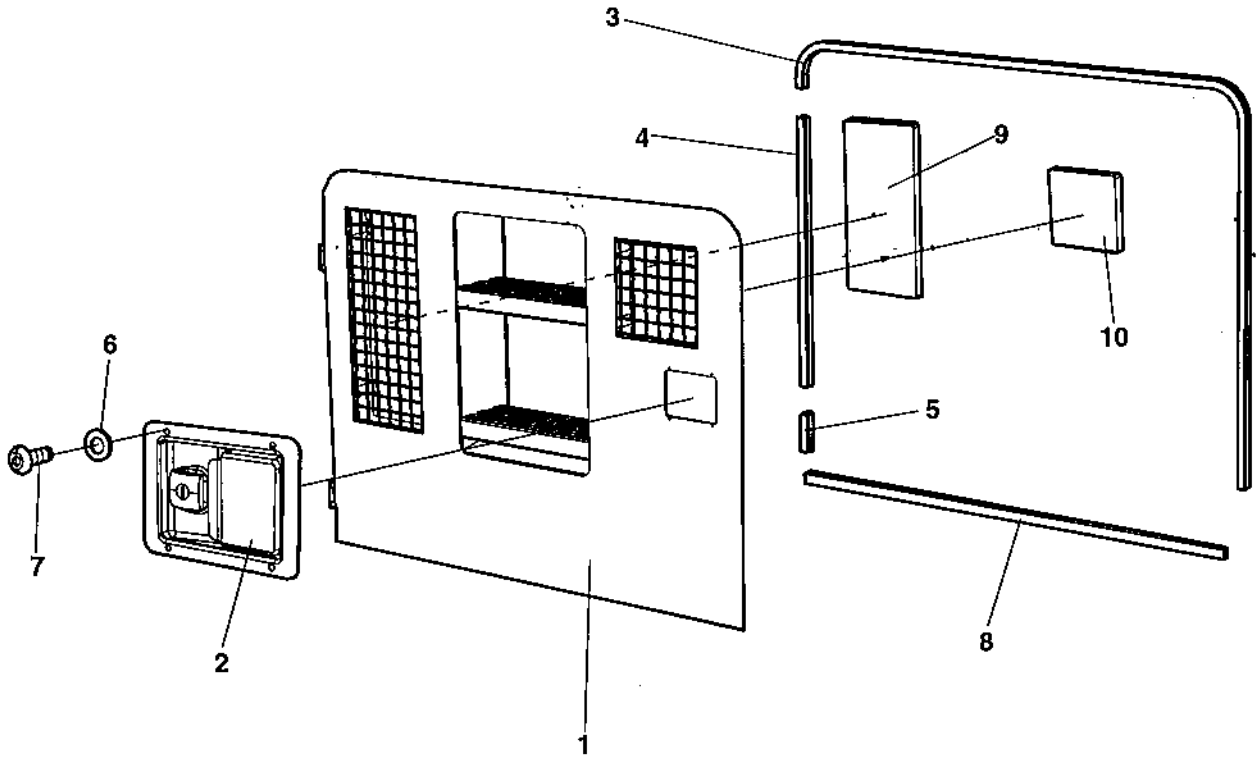

4700389504 Cover left side, cpl

Item	Part No	Rem	Qty	Description		Code
1	4700389569		1	Cover		
2	4700378309		1	Lock		
	4700902866		1	.Key	Marked "455"	D
3	4700202057		1XL	Edge trim		D
4	4700202057		1XL	Edge trim		D
5	4700202057		1XL	Edge trim		D
6	4700904698		4	Washer		
7	4700904289		4	Screw		
8	4700202041		1XL	Rubber strip		
9	4700389512		1	Absorbent		
10	4700389516		1	Absorbent		

4700389548 Cover right side, cpl

18106

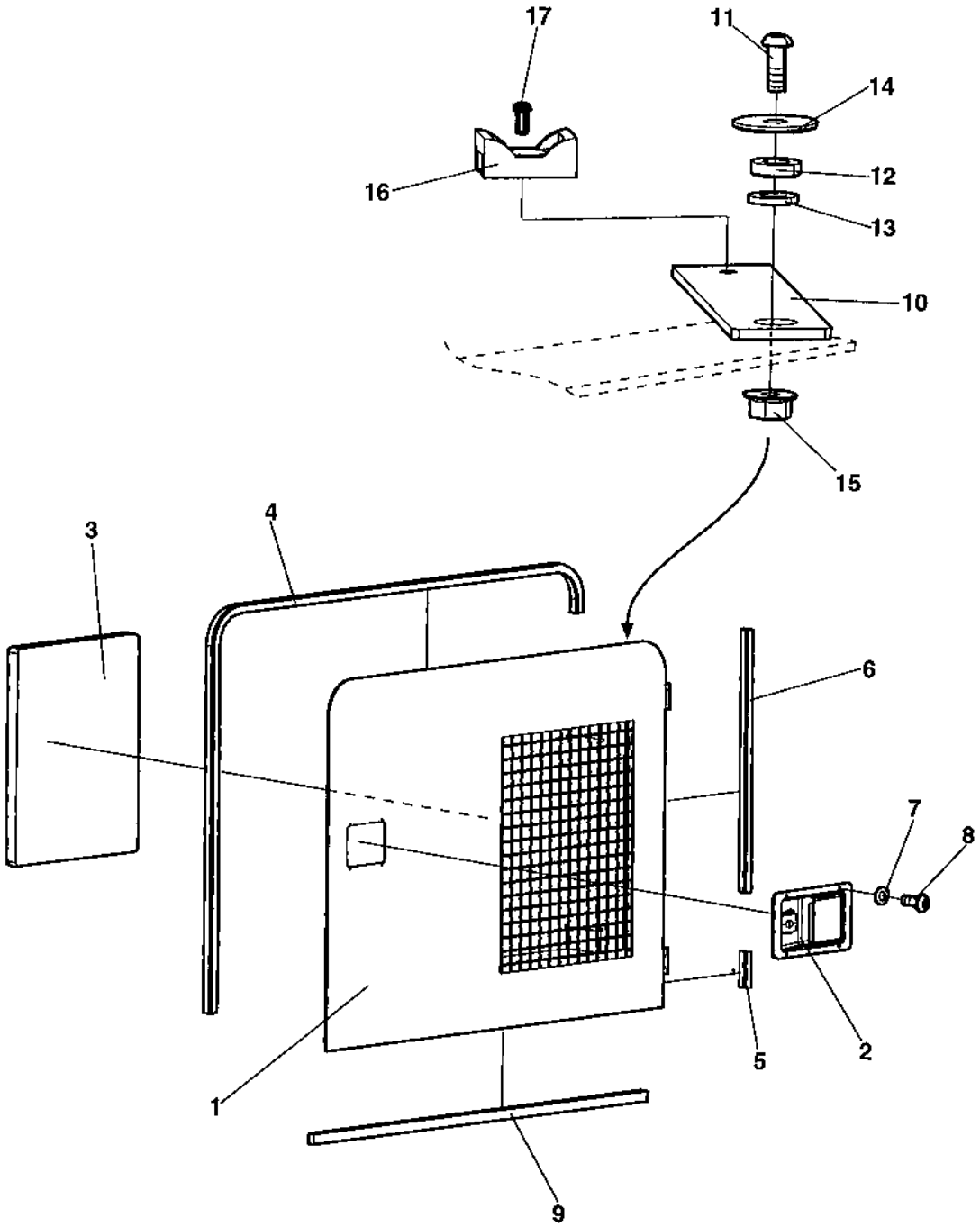

4700389548 Cover right side, cpl

Item	Part No	Rem	Qty	Description		Code
1	4700389583		1	Cover		
2	4700378309		1	Lock		
	4700902866		1	.Key	Marked "455"	D
3	4700389552		1	Absorbent		
4	4700202057		1XL	Edge trim		D
5	4700202057		1XL	Edge trim		D
6	4700202057		1XL	Edge trim		D
7	4700904698		4	Washer		
8	4700904289		4	Screw		
9	4700202041		1XL	Rubber strip		
10	4700378168		1	Cable holder		
11	4700904206		1	Screw		
12	4700603010		1	Washer	6,4X12X3	
13	4700904228		1	Washer		
14	4700615076		1	Washer	7,0x25x1,5	
15	4700570101		1	Nut	M6	
16	4700904543		1	Cable tie holder		
17	4700923253		1	Rivet		

4700389617 Service cover, cpl

18104

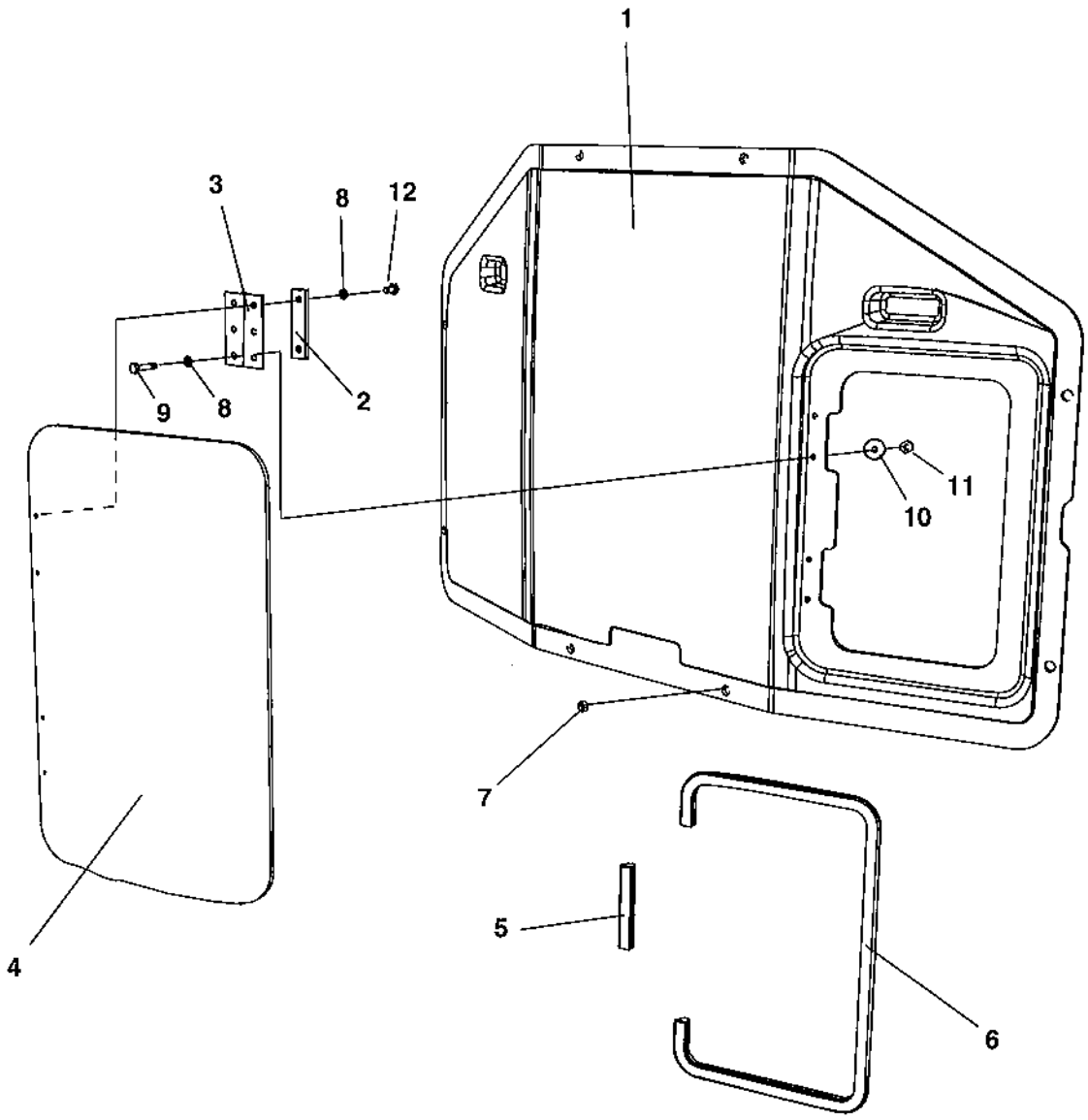

4700389617 Service cover, cpl

Item	Part No	Rem	Qty	Description	Code
1	4700389618		1	Cover	
2	4700389619		2	Spacer	
3	4700791804		2	Hinge	
4	4700389621		1	Cover	
5	4700792063	A	1XL	Edge trim	
6	4700792063	B	1XL	Edge trim	
7	4700389638		8	Spacer	
8	4700904698		8	Washer	
9	4700500258		4	Screw	M4-0,7x20 8,8
10	4700927974		4	Washer	
11	4700570002		4	Nut	M4
12	4700925784		4	Screw	

A) L= 0.10 m
B) L= 0.86 m

Front scrapers

18109

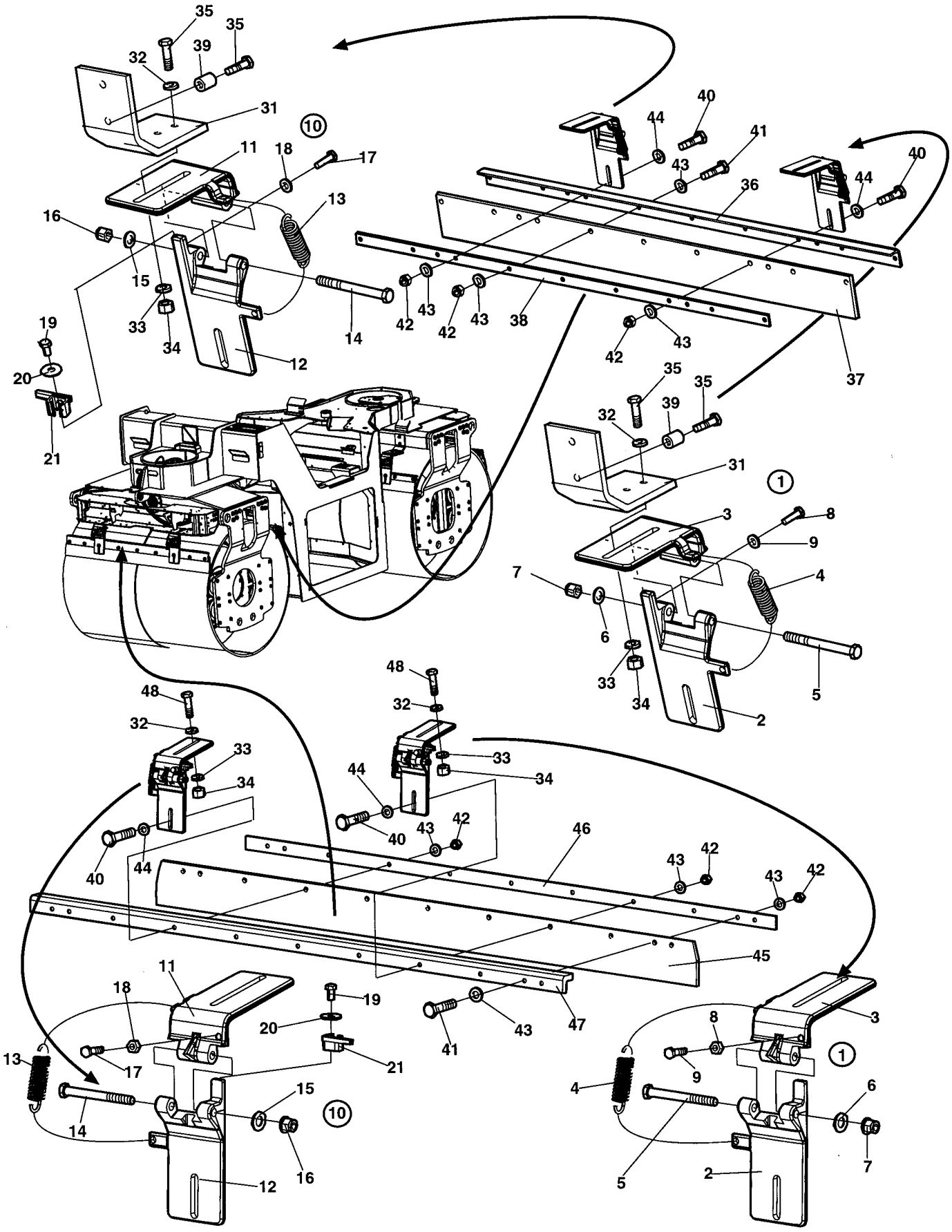

Front scrapers

Item	Part No	Rem	Qty	Description		Code
1	4700387693		2	Scraper bracket, cpl		
2			1	.Scraper bracket		
3			1	.Scraper bracket		
4	4700390809		1	.Extension spring		
5	4700500267		1	.Screw	M12x120 8,8 FZB	
6	4700904231		1	.Washer	13x24x2 300 HV	
7	4700586019		1	.Lock nut		
8	4700500240		1	.Screw	M10x40H 8,8	
9	4700570006		1	.Nut		
10	4700387690		2	Scraper bracket, cpl		
11			1	.Scraper bracket		
12			1	.Scraper bracket		
13	4700390809		1	.Extension spring		
14	4700500267		1	.Screw	M12x120 8,8 FZB	
15	4700904231		1	.Washer	13x24x2 300 HV	
16	4700586019		1	.Lock nut		
17	4700500240		1	.Screw	M10x40H 8,8	
18	4700570006		1	.Nut		
19	4700500003		1	.Screw		
20	4700928381		1	.Washer	6,4x18x1,6	
21	4700388490		1	.Release device		
30	4700570006		1	.Nut		
31	4700359455		2	Scraper bracket		
32	4700904230		8	Washer		
33	4700904557		8	Washer		
34	4700570006		8	Nut		
35	4700500031		8	Screw		
36	4700388487		1	Bracket		
37	4700388489		1	Scraper		
38	4700388488		1	Bracket		
39	4700359434		4	Spacer sleeve		
40	4700500049		4	Screw		
41	4700500056		14	Screw		
42	4700586019		18	Lock nut		
43	4700904231		32	Washer	13x24x2 300 HV	
44	4700904703		8	Washer		
45	4700359351		1	Scraper		B
46	4700359458		1	Scraper bracket		
47	4700388482		1	Sprinkler pipe		
48	4700500030		4	Screw		

Rear scrapers

18110

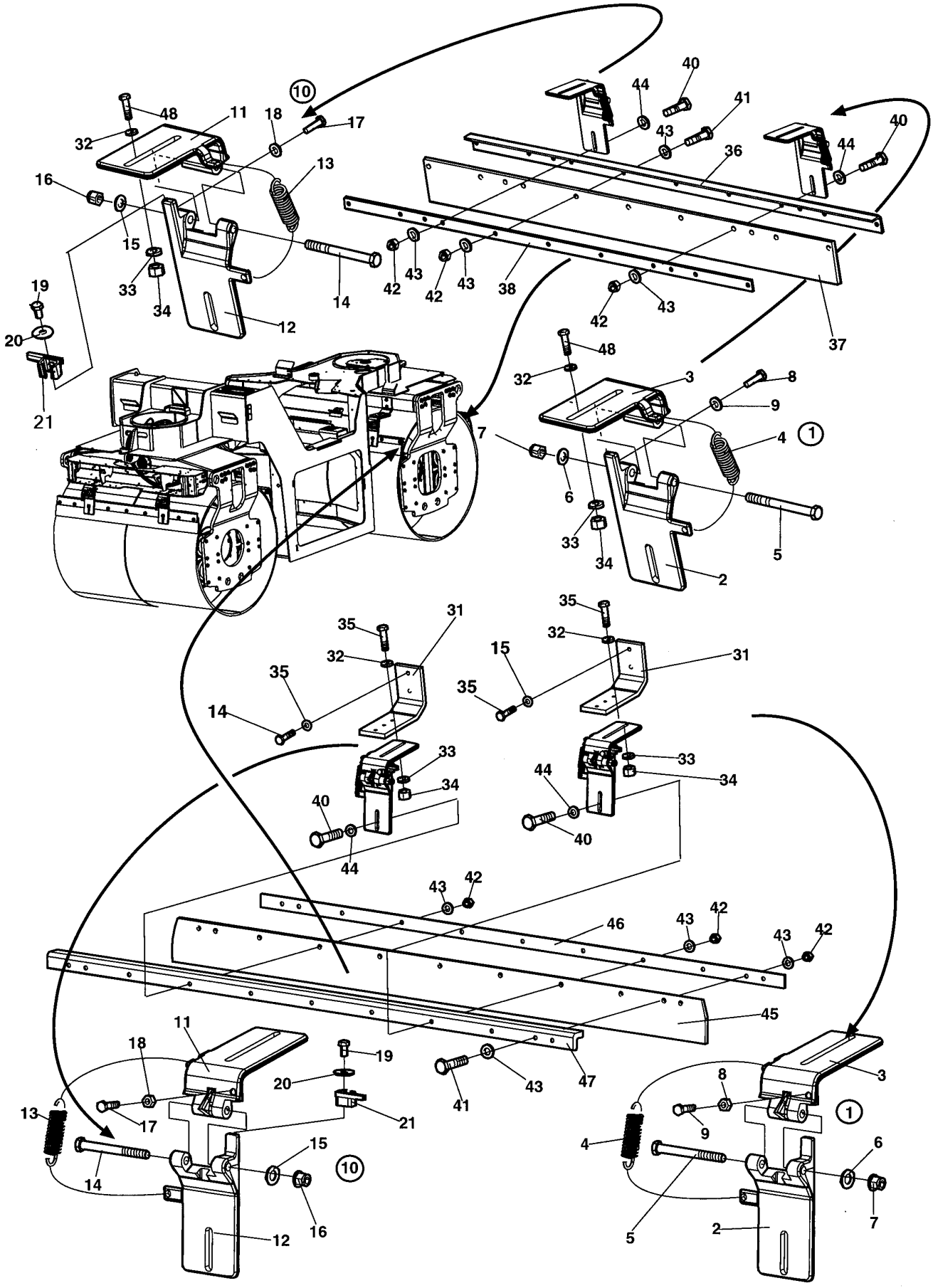

Rear scrapers

Item	Part No	Rem	Qty	Description		Code
1	4700387693		2	Scraper bracket, cpl		
2			1	.Scraper bracket		
3			1	.Scraper bracket		
4	4700390809		1	.Extension spring		
5	4700500267		1	.Screw	M12x120 8,8 FZB	
6	4700904231		1	.Washer	13x24x2 300 HV	
7	4700586019		1	.Lock nut		
8	4700500240		1	.Screw	M10x40H 8,8	
9	4700570006		1	.Nut		
10	4700387690		2	Scraper bracket, cpl		
11			1	.Scraper bracket		
12			1	.Scraper bracket		
13	4700390809		1	.Extension spring		
14	4700500267		1	.Screw	M12x120 8,8 FZB	
15	4700904231		1	.Washer	13x24x2 300 HV	
16	4700586019		1	.Lock nut		
17	4700500240		1	.Screw	M10x40H 8,8	
18	4700570006		1	.Nut		
19	4700500003		1	.Screw		
20	4700928381		1	.Washer	6,4x18x1,6	
21	4700388490		1	.Release device		
30	4700570006		1	.Nut		
31	4700359455		2	Scraper bracket		
32	4700904230		12	Washer		
33	4700904557		8	Washer		
34	4700570006		8	Nut		
35	4700500031		8	Screw		
36	4700388482		1	Sprinkler pipe		
37	4700359351		1	Scraper		B
38	4700359458		1	Scraper bracket		
40	4700500049		4	Screw		
41	4700500056		14	Screw		
42	4700586019		18	Lock nut		
43	4700904231		18	Washer	13x24x2 300 HV	
44	4700904703		8	Washer		
45	4700388489		1	Scraper		
46	4700388488		1	Bracket		
47	4700388487		1	Bracket		
48	4700500030		4	Screw		

Sprinkler system

18676

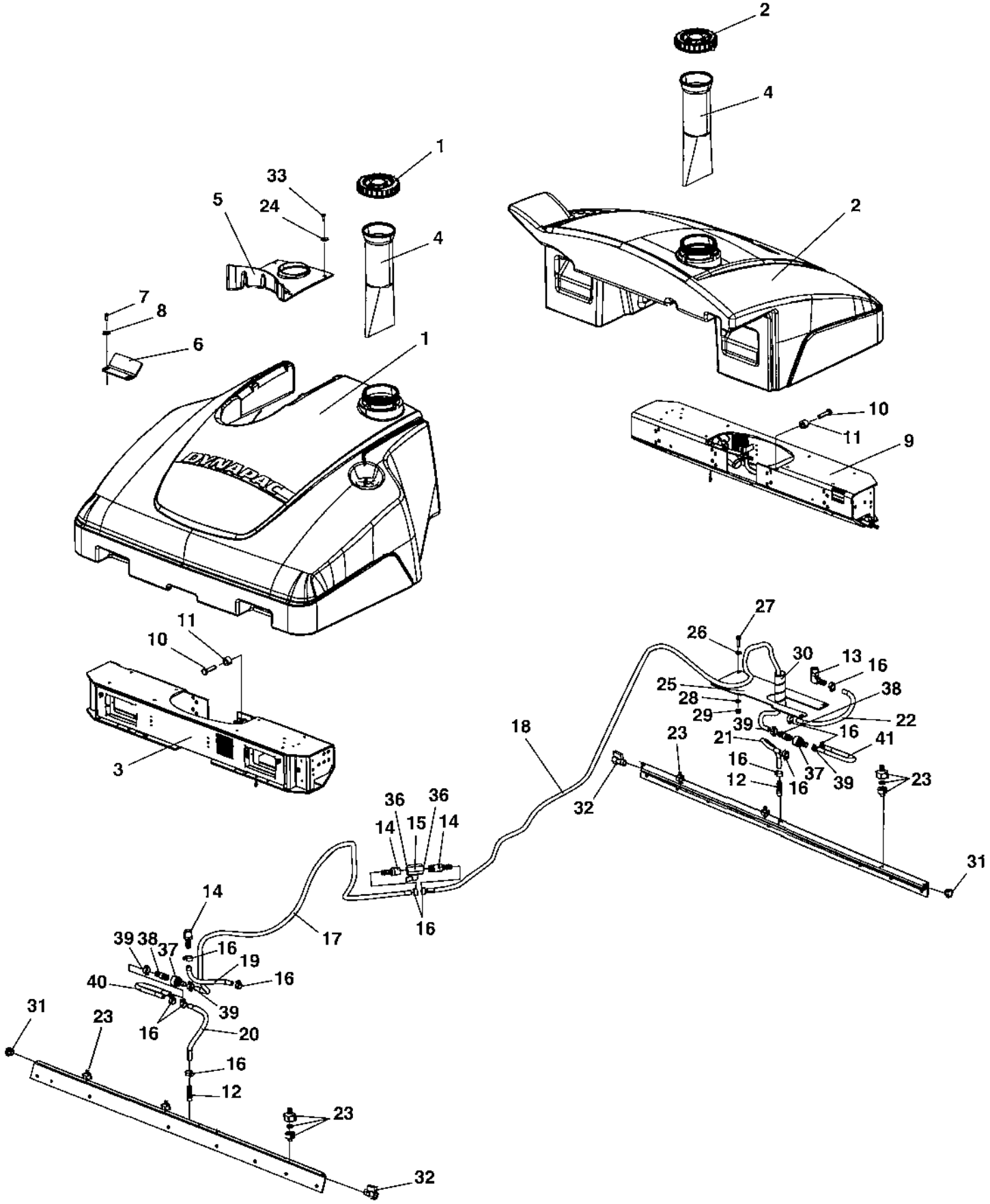

Sprinkler system

Item	Part No	Rem	Qty	Description		Code
1	4700389234		1	Water tank, cpl		
	4700359003		1	.Cap		D
	4700902916	G	1	.Adapter kit		
	4700902917	H	1	.Adapter kit		
	4700902918	H	1	.Plug kit		
2	4700389235		1	Water tank, cpl		
	4700359003		1	.Cap		D
	4700902916	G	1	.Adapter kit		
	4700902917	H	1	.Adapter kit		
	4700902918	H	1	.Plug kit		
3			1	Front sprinkler box (Page 46)		
4	4700358846		2	Strainer		D
5	4700376579		1	Cover		
6	4700389873		4	Bracket		
7	4700500048		8	Screw	M10-1,5x20 8,8	
8	4700904557		8	Washer		
9				Rear sprinkler box (Page 48)		
10	4700500031		16	Screw		
11	4700359434		16	Spacer sleeve		
12	4700791977		2	Hose connection		
13	4700924996		1	Hose connection		D
14	4700924544		3	Hose connection		
15	4700925599		1	Valve		
16	4700313002		12	Hose clamp	13-20 mm	
17	4700904878	A	1XL	Hose reinforced		
18	4700904878	A	1XL	Hose reinforced		
19	4700904878	B	1XL	Hose reinforced		
20	4700904878	C	1XL	Hose reinforced		
21	4700904878	C	1XL	Hose reinforced		
22	4700904878	D	1XL	Hose reinforced		
23	4700392011		6	Spraying nozzle, cpl		
	4700392508		1	.Housing		
	4700392510		1	.Gasket		
	4700392509		1	.Retainer, nozzle, strainer, yellow	0.8	
	4700393697		1	..Nozzle and strainer, yellow	0.8	
	4700390615	G	1	..Nozzle and strainer, blue	1.0	
	4700390616	G	1	..Nozzle and strainer, red	1.2	
	4700390619	G	1	..Nozzle and strainer, brown	1.3	
24	4700928467		4	Washer		
25	4700377428		1	Cover		
26	4700904556		4	Washer	8,4x16x3,0	
27	4700500021		4	Screw	M8-1,25x25 8.8	
28	4700904229		4	Washer	8,4x16x1,5	
29	4700791182		4	Lock nut	M8	
30	4700377661	E	1XL	Hose guard		
31	4700792072		2	End plug		
32	4700233215		2	Ball valve		
33	4700500013		4	Screw	M6-1x16 8,8	
36	4700379753		4	Gasket		
37	4700791126		2	Quick coupling		
38	4700791127		2	Quick coupling		
39	4700814071		4	Hose clamp		

A) L=2,8 m
B) L=0,52 m
C) L=0,38 m
D) L=0,41 m
E) L=1,0 m
G) Water connection
H) Draining

Sprinkler system

18676

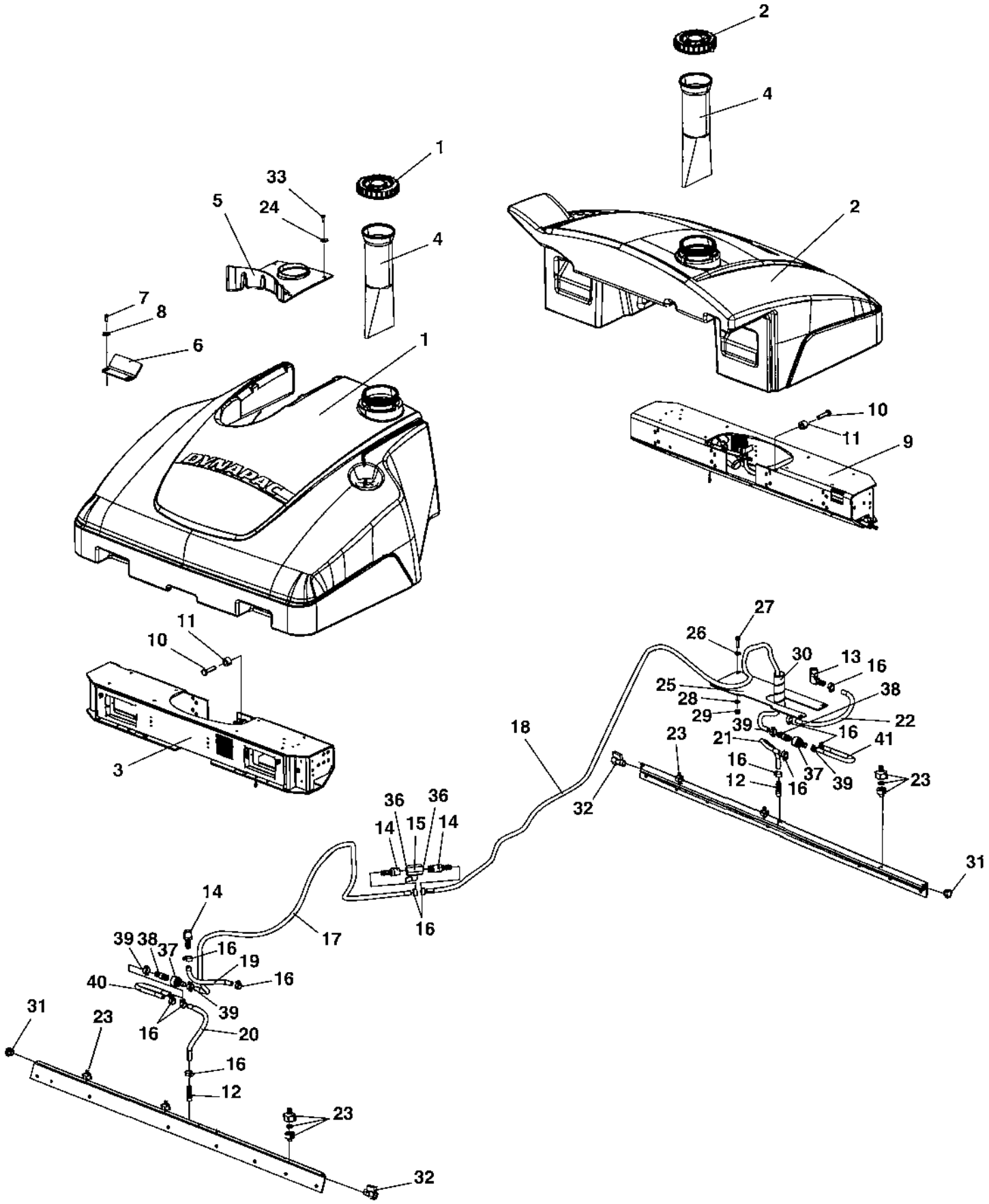

Sprinkler system

Item	Part No	Rem	Qty	Description	Code
40	4700904878	F	1XL	Hose reinforced	
41	4700904878	F	1XL	Hose reinforced	

F) L=0,3 m

Front sprinkler box

18673

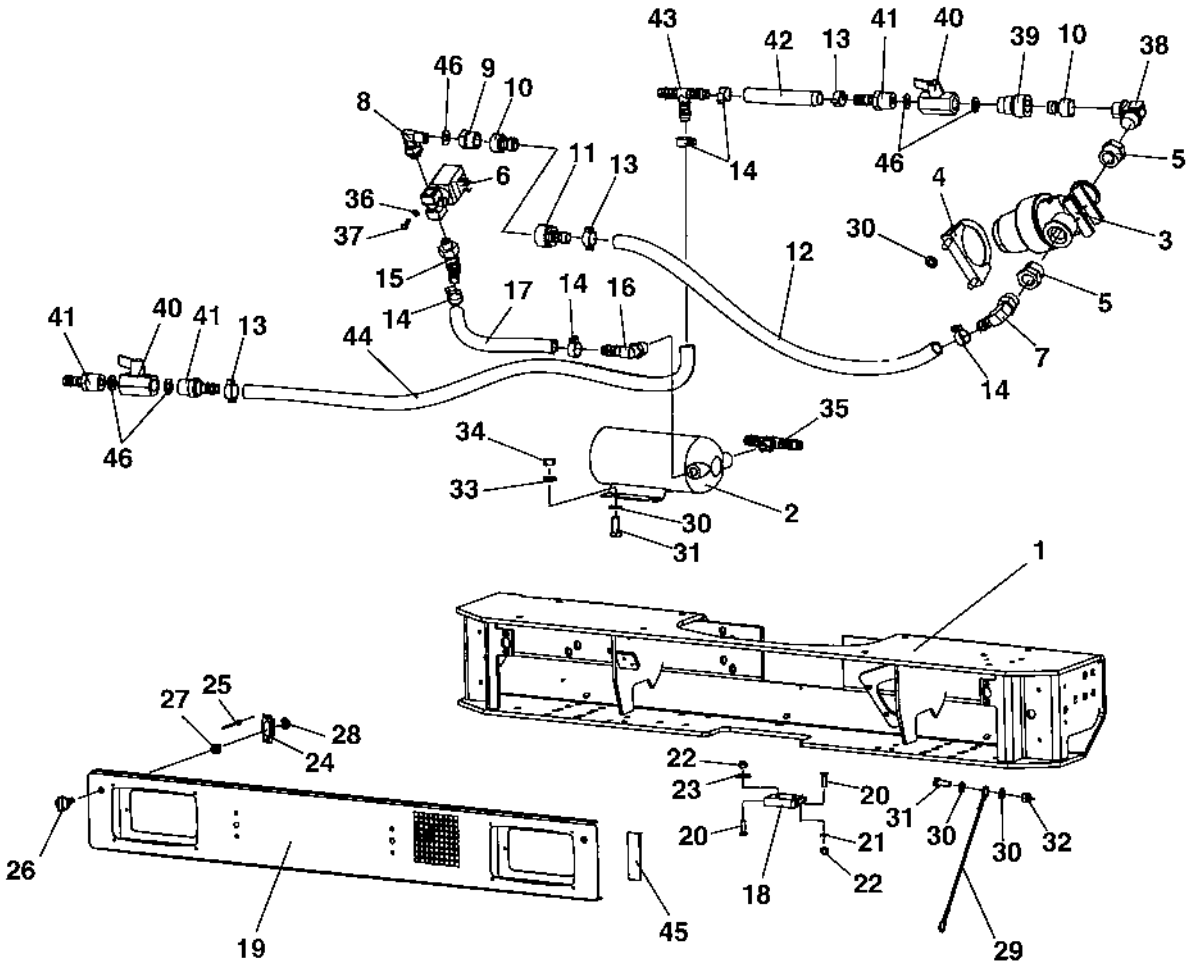

Front sprinkler box

Item	Part No	Rem	Qty	Description		Code
1	4700382425		1	Sprinkler box		
2	4700383697		1	Water pump		
3	4700393272		1	Strainer, cpl		
	4700791959		1	.O-ring		
	4700791949		1	.Filter element		B
4	4700313086		1	Clamp		
5	4700903886		2	Adapter		
6	4700287713		1	Solenoid valve		
7	4700924996		1	Hose connection		D
8	4700791134		1	Elbow 90		
9	4700791135		1	Connector		
10	4700791128		2	Quick coupling		
11	4700791126		1	Quick coupling		
12	4700904878	A	1XL	Hose reinforced		
13	4700814071		4	Hose clamp		
14	4700313002		5	Hose clamp	13-20 mm	
15	4700901431		1	Hose connection		
16	4700923734		1	Hose connection		
17	4700904878	B	1XL	Hose reinforced		
18	4700928041		2	Hinge		D
19	4700385339		1	Cover		
20	4700513012		10	Screw	M6x20 10,9	
21	4700904228		6	Washer		
22	4700586002		10	Lock nut		
23	4700928467		4	Washer		
24	4700903344		2	Lock		
25	4700923253		4	Rivet		
26	4700904914		2	Tap		
27	4700904913		2	Washer	Neopren	
28	4700903342		2	Retaining ring		
29	4700381619		1	Wire		
30	4700904229		9	Washer	8,4x16x1,5	
31	4700500053		6	Screw	M8x20H 8.8	
32	4700586003		2	Lock nut	M8	
33	4700904556		4	Washer	8,4x16x3,0	
34	4700570005		4	Nut	M8	
35	4700792289		1	Adapter		
36	4700904698		2	Washer		
37	4700500002		2	Screw	M4-0,7x12H 8.8	
38	4700901298		1	Connector		
39	4700791125		1	Quick coupling		
40	4700925599		2	Valve		
41	4700924544		2	Hose connection		
42	4700904878	C	1XL	Hose reinforced		
43	4700923735		1	Hose connection		
44	4700904878	D	1XL	Hose reinforced		
45	4700297018		1XL	Rubber strip		
46	4700379753		5	Gasket		

A) L=0,54 m
B) L=0,21 m
C) L=0,10 m
D) L=0,71 m

Rear sprinkler box

18674

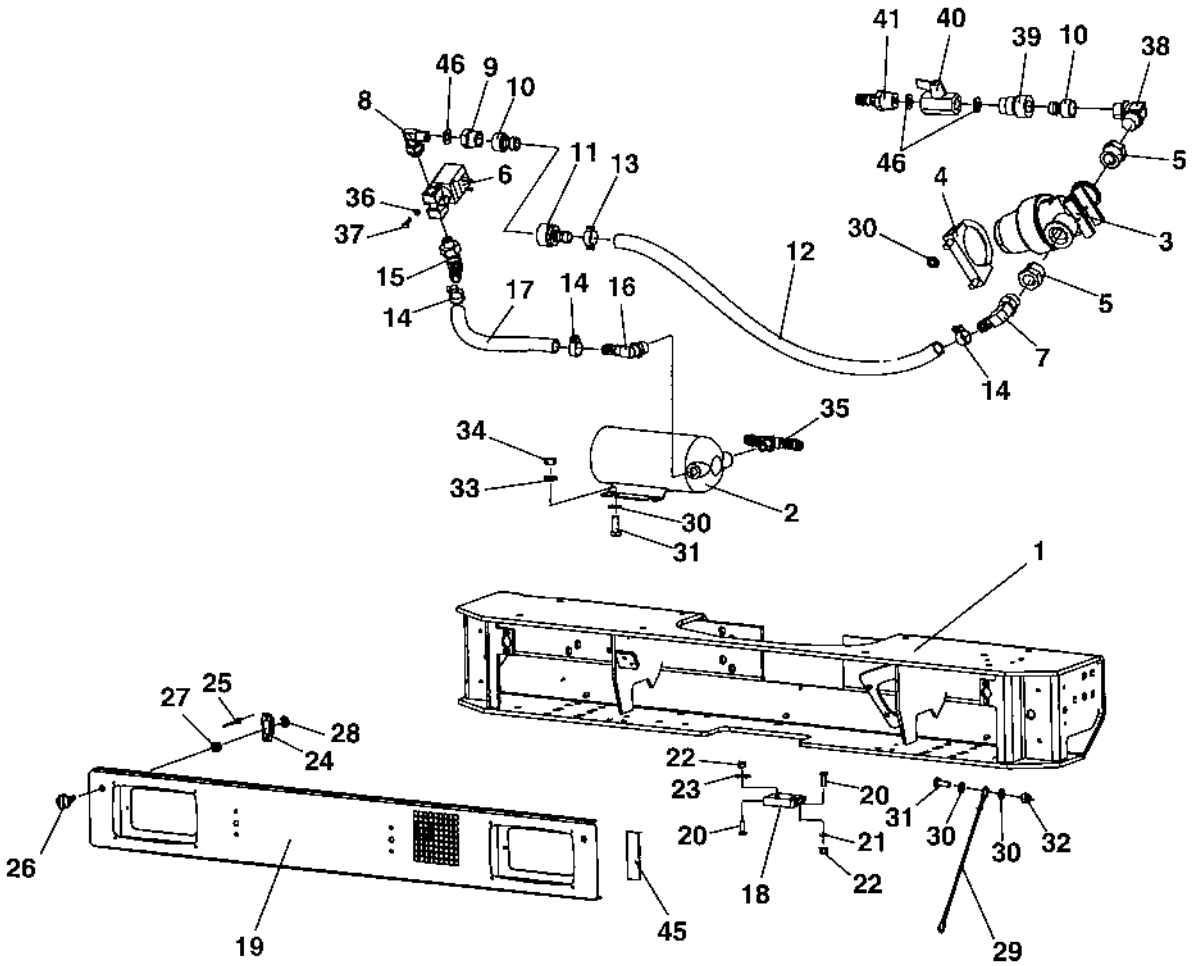

Rear sprinkler box

Item	Part No	Rem	Qty	Description		Code
1	4700382425		1	Sprinkler box		
2	4700383697		1	Water pump		
3	4700393272		1	Strainer, cpl		
	4700791959		1	.O-ring		
	4700791949		1	.Filter element		B
4	4700313086		1	Clamp		
5	4700903886		2	Adapter		
6	4700287713		1	Solenoid valve		
7	4700924996		1	Hose connection		D
8	4700791134		1	Elbow 90		
9	4700791135		1	Connector		
10	4700791128		2	Quick coupling		
11	4700791126		1	Quick coupling		
12	4700904878	A	1XL	Hose reinforced		
13	4700814071		1	Hose clamp		
14	4700313002		3	Hose clamp	13-20 mm	
15	4700901431		1	Hose connection		
16	4700923734		1	Hose connection		
17	4700904878	B	1XL	Hose reinforced		
18	4700928041		2	Hinge		D
19	4700385339		1	Cover		
20	4700513012		10	Screw	M6x20 10,9	
21	4700904228		6	Washer		
22	4700586002		10	Lock nut		
23	4700928467		4	Washer		
24	4700903344		2	Lock		
25	4700923253		4	Rivet		
26	4700904914		2	Tap		
27	4700904913		2	Washer	Neopren	
28	4700903342		2	Retaining ring		
29	4700381619		1	Wire		
30	4700904229		9	Washer	8,4x16x1,5	
31	4700500053		6	Screw	M8x20H 8.8	
32	4700586003		2	Lock nut	M8	
33	4700904556		4	Washer	8,4x16x3,0	
34	4700570005		4	Nut	M8	
35	4700792289		1	Adapter		
36	4700904698		2	Washer		
37	4700500002		2	Screw	M4-0,7x12H 8.8	
38	4700901298		1	Connector		
39	4700791125		1	Quick coupling		
40	4700925599		1	Valve		
41	4700924544		2	Hose connection		
45	4700297018		1XL	Rubber strip		
46	4700379753		3	Gasket		

A) L=0,54 m
B) L=0,21 m

Drum

Item	Part No	Rem	Qty	Description	Code
1			2	Drum (Page 52)	

Drum

18465

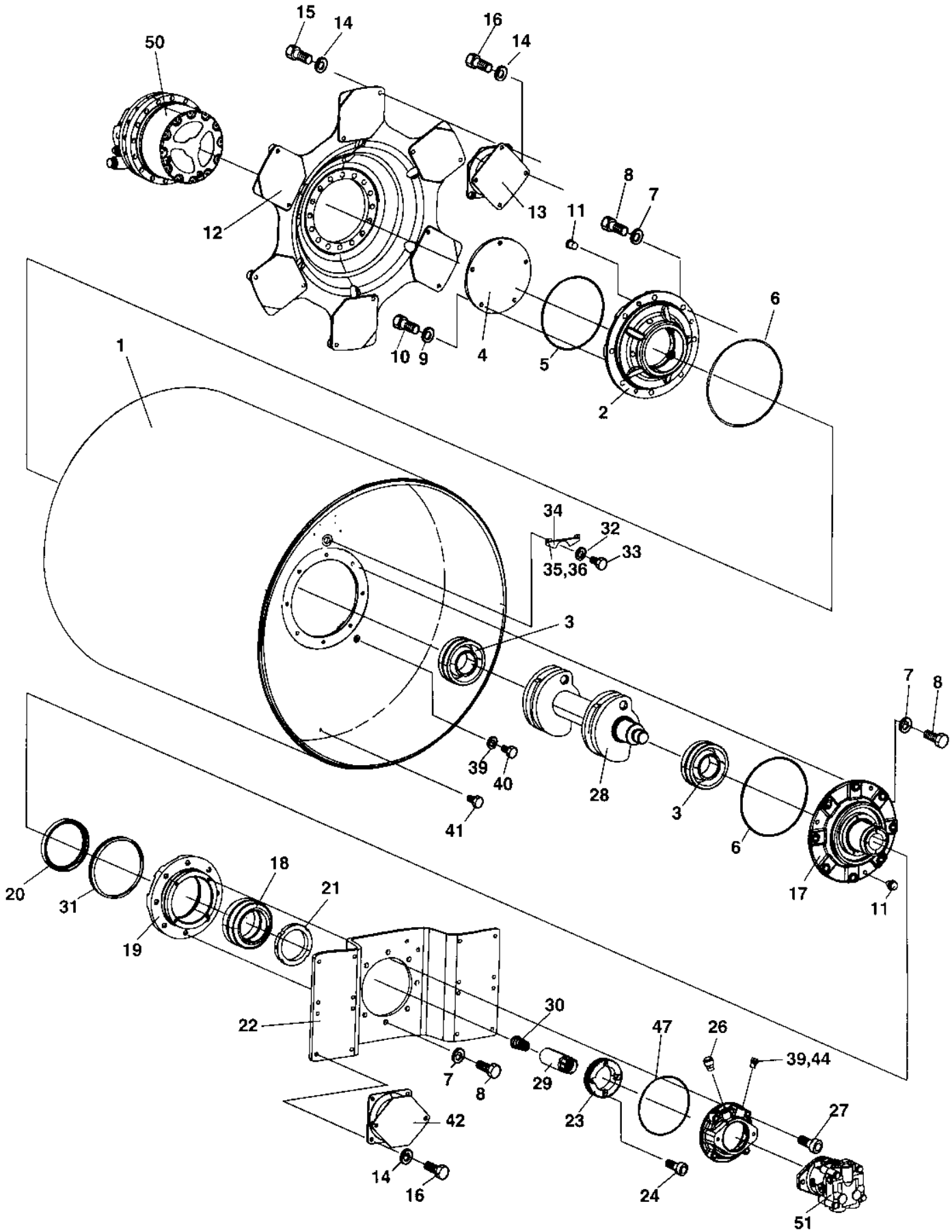
15
14
16
14
50
12
13
11
8
7
6
1
10
9
4
5
2
34
32
33
35,36
3
39
40
41
28
3
6
7
8
17
11
20
31
18
21
19
22
30
7
8
29
47
26
39,44
23
27
42
14
16
24
51

Drum

Item	Part No	Rem	Qty	Description		Code
1	4700392114		1	Drum		
2	4700391280		1	Bearing housing		
3	4700114060		2	Spherical roller bearing		D
4	4700391029		1	Cover		
5	4700160045		1	O-ring 70		
6	4700160344		2	O-ring 70		D
7	4700904232		24	Washer		
8	4700500076		24	Screw	M16x55	
9	4700904230		5	Washer		
10	4700500028		5	Screw		
11	4700900775		6	Plug		
12	4700391286		1	Drive disc		
13	4700394250		6	Shock absorber		B
14	4700904231		57	Washer	13x24x2 300 HV	
15	4700925519		12	Screw	M12x55 10.9 GEOMET	
16	4700500051		40	Screw	M12x25H 8.8 A3K	
17	4700391277		1	Bearing housing		
18	4700116041		1	Taper roller bearing		D
19	4700343318		1	Bearing housing		D
20	4700386272		1	Sealing		D
21	4700390897		1	Shaft nut		
22	4700392405		1	Holder plate		
23	4700391292	1	1	Gear wheel		
24	4700508048	1	4	Screw		
25	4700390160		1	Motor adapter		
26	4700926736		1	Breather		B
27	4700500049		4	Screw		
28	4700392120		1	Eccentric shaft		
29	4700381027		1	Splined sleeve		
30	4700349715		1	Spring		
31	4700929447		1	V-ring		D
32	4700162017		1	Seal ring		D
33	4700343744		1	Magnetic plug		D
34	4700359955		1	Drop plate		
35	4700904229		2	Washer	8,4x16x1,5	
36	4700500019		2	Screw	M8x16H 8.8 A2K	
37	4700343801		1	Sign plate		
38	4700527002		4	Drive screw		
39	4700162027		2	Sealing		D
40	4700344196		1	Plug	M12	D
41	4700500163		1	Screw	M12x16	
42	4700394251		4	Shock absorber		
44	4700903726		1	Steel plug threaded		
47	4700160105		1	O-ring 70		D
50			1	Drum gear		D
51			1	Vibration motor		D

1) Only on front drum.

Engine

Item	Part No	Rem	Qty	Description	Code
1				Engine installation (Page 56)	

Engine installation

CG223105300100

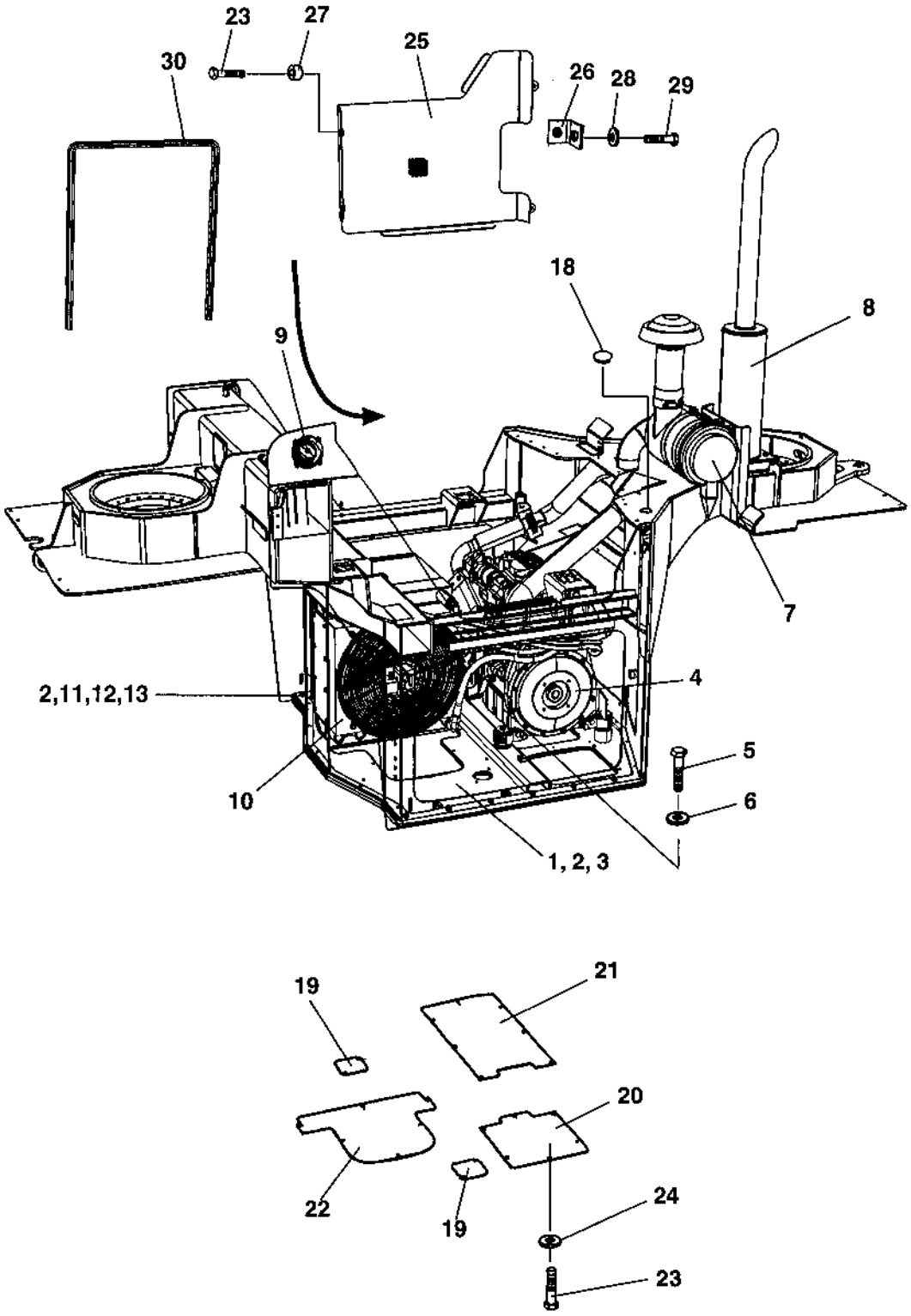

Engine installation

Item	Part No	Rem	Qty	Description	Code
1			1	Engine plate	
2	4700904557		33	Washer	
3	4700947684		24	Screw	
4				Engine module (Page 58)	BF4M 2011
5	4700500122		4	Screw	
6	4700904231		4	Washer	13x24x2 300 HV
7				Combustion air system (Page 60)	
8				Exhaust system (Page 62)	
9				Fuel system (Page 64)	
10				Cooling system (Page 66)	
11	4700500029		4	Screw	
12	4700500028		5	Screw	
13	4700904076		1XL	Edge trim	
18	4700902922		1	Plug	
19	4700381297		2	Cover	
20	4700377425		1	Cover	
21	4700377426		1	Cover	
22	4700377427		1	Cover	
23	4700500053		25	Screw	M8x20H 8.8
24	4700904229		23	Washer	8,4x16x1,5
25	4700378428		1	Belt guard	
26	4700378429		1	Bracket	
27	4700371728		2	Spacer sleeve	
28	4700904556		4	Washer	8,4x16x3,0
29	4700500021		4	Screw	M8-1,25x25 8.8
30	4700202028	A	1XL	Edge trim	

A) L = 0,4 m

Engine module BF4M 2011

18138

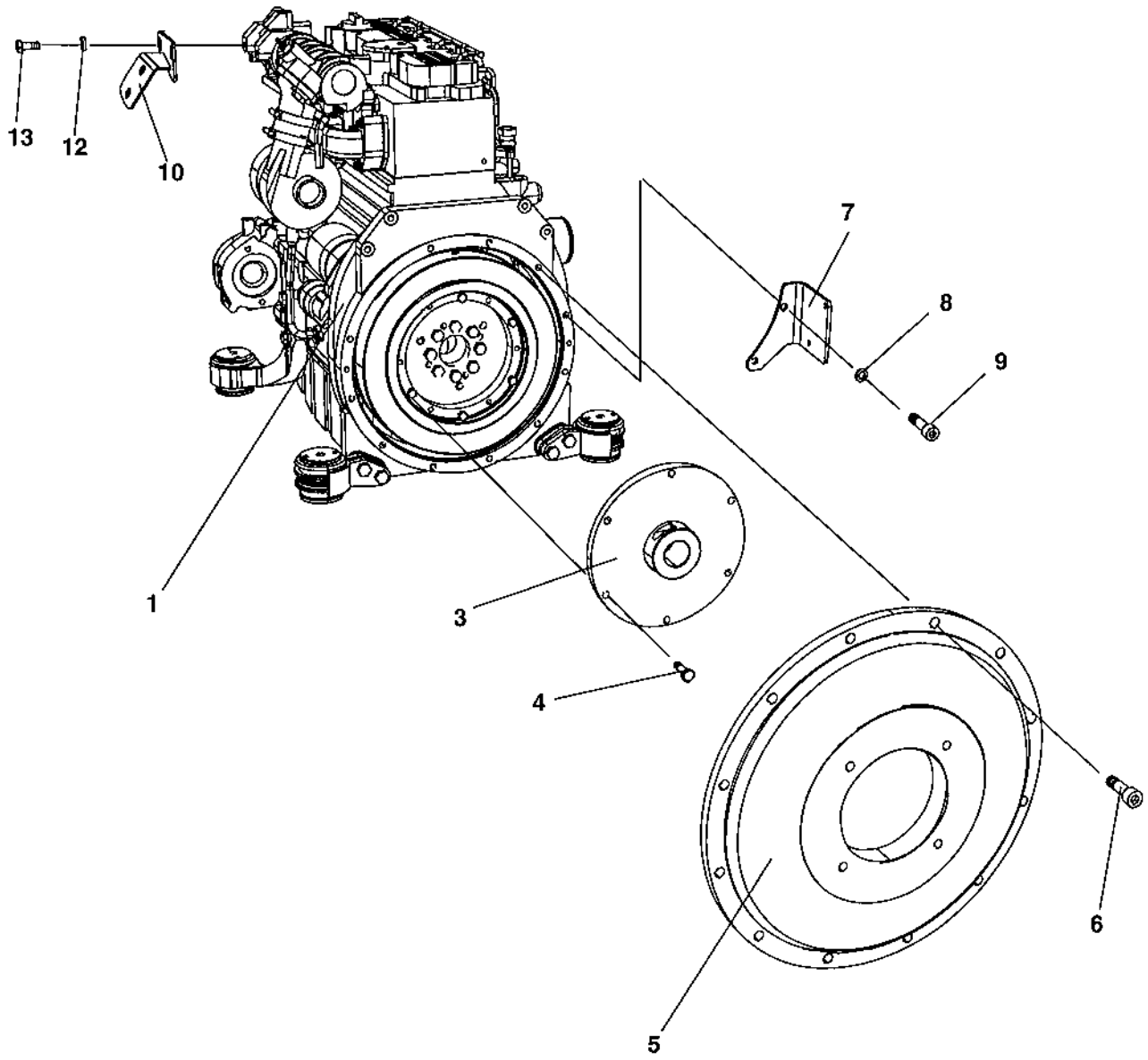

Engine module BF4M 2011

Item	Part No	Rem	Qty	Description		Code
1	4700388840		1	Diesel engine, cpl		
	4700395295	C	1	Diesel engine		
	4700395294	C	1	Diesel engine	CE	
	4700939515		1	.Oil filter		A
	4700945955		1	.Oil pressure switch		
	4700940570		1	.Fuel filter		A
	4700690030		1	.Alternator with relay	65A	
	4700940980		1	.Starter		
	4700902521	A	1	.V-belt		B
	4700909369		1	.Solenoid		D
	4700939840		1	.Toothed belt kit		B
	4700945107		1	.Oil temperature sender		
	4700939976	B	1	.Toothed belt		
3	4700359402		1	Coupling, cpl		
	4700902843		1	.Flange		D
	4700508095		1	.Screw		
4	4700500021		6	Screw	M8-1,25x25 8.8	
5	4700359403		1	Pump bracket		
6	4700508096		10	Screw		
7	4700376913		1	Bracket		
8	4700904637		2	Washer		
9	4700508053		2	Screw		
10	4700389571		1	Bracket		
12	4700904556		2	Washer	8,4x16x3,0	
13	4700500053		2	Screw	M8x20H 8.8	

A) Fan/Alternator
B) Pump drive
C) Exemption engine.

Combustion air system

18136

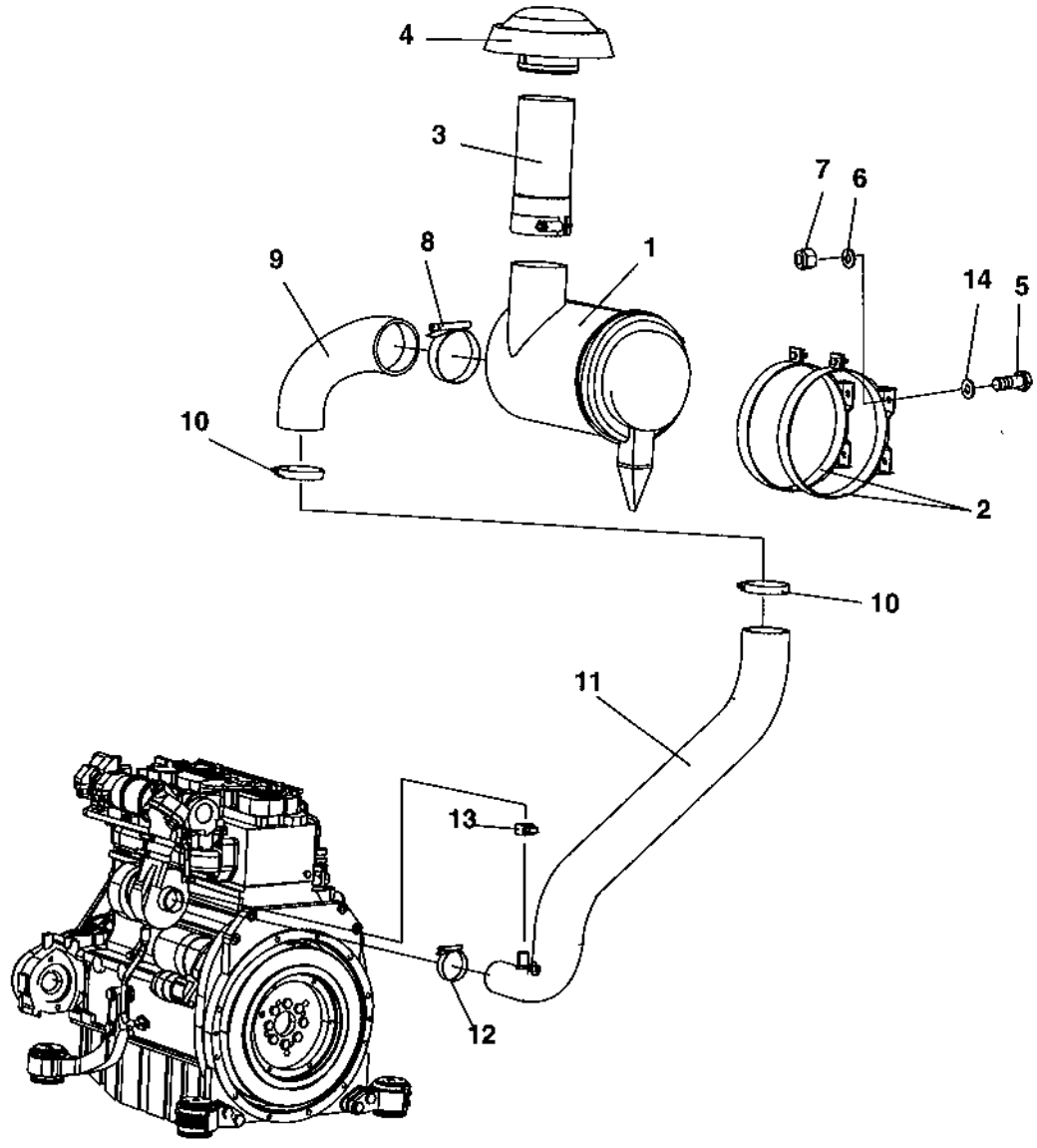

Combustion air system

Item	Part No	Rem	Qty	Description	Code
1	4700370878		1	Air cleaner, cpl	
	4700394685		1	.Safety filter	A
	4700394684		1	.Main filter	A
	4700908452		1	.Cover	
	4700908399		1	.Vacuator valve	D
2	4700813791		2	Mounting band	
3	4700388854		1	Extension pipe	
4	4700499266		1	Protection cover	
5	4700500029		4	Screw	
6	4700904637		4	Washer	
7	4700586018		4	Lock nut	
8	4700904060		1	Hose clamp	
9	4700388839		1	Air inlet hose	
10	4700904059		2	Hose clamp	
11	4700388837		1	Air inlet hose	
12	4700904104		1	Clamp	
13	4700313003		1	Hose clamp	D
14	4700904230		4	Washer	

Exhaust system

18140

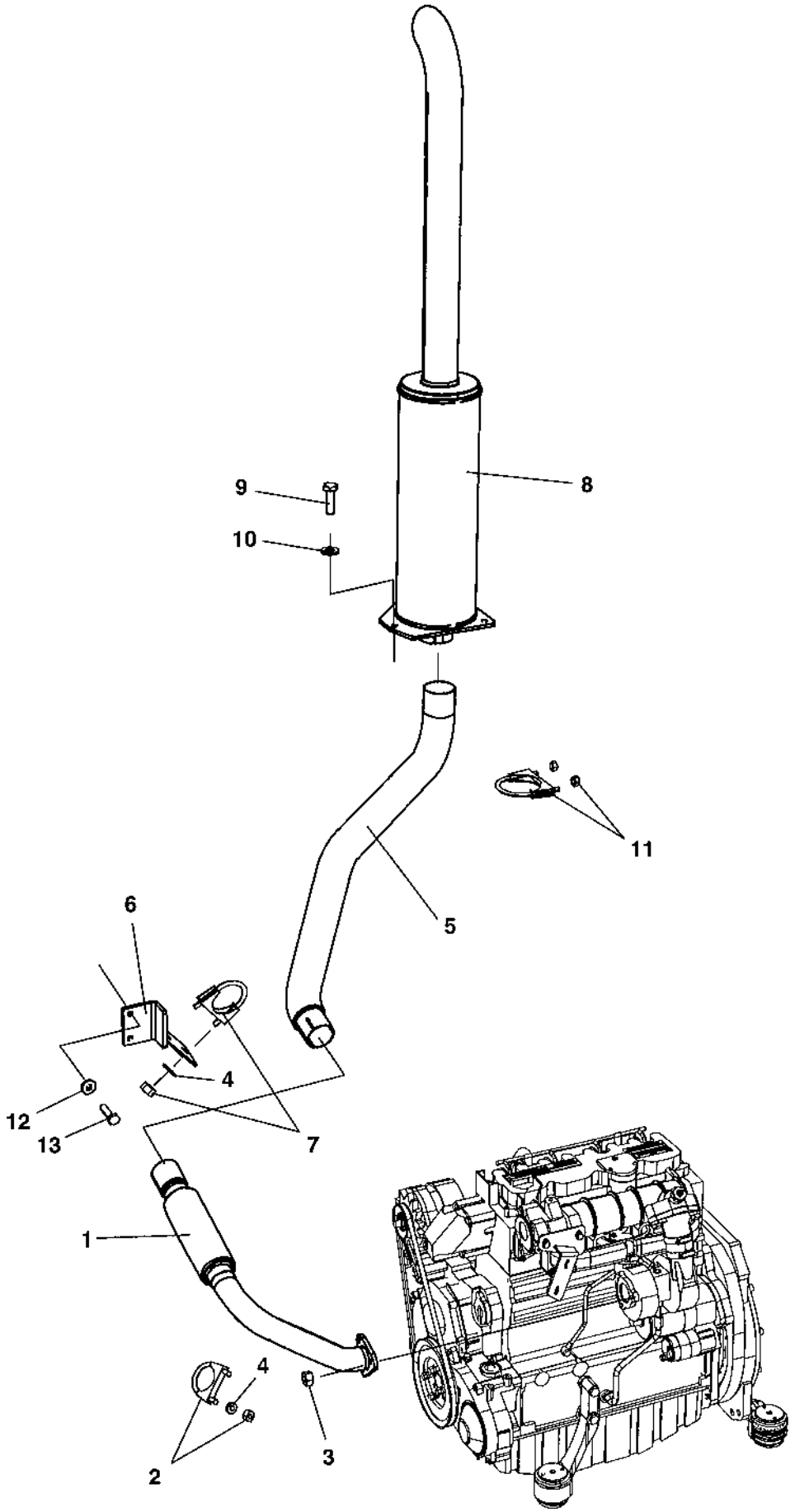

Exhaust system

Item	Part No	Rem	Qty	Description		Code
1	4700388675		1	Exhaust pipe		
2	4700313100		1	Clamp		
3	4700570005		9	Nut	M8	
4	4700904556		4	Washer	8,4x16x3,0	
5	4700388676		1	Exhaust pipe		
6	4700389842		1	Bracket		
7	4700313036		1	Clamp		D
8	4700388677		1	Muffler		
9	4700500029		3	Screw		
10	4700904230		3	Washer		
11	4700313094		1	Pipe clamp		
12	4700904640		2	Washer	8,4x22x3	
13	4700500022		2	Screw	M8x30H 8.8 A2K	

Fuel system

18460

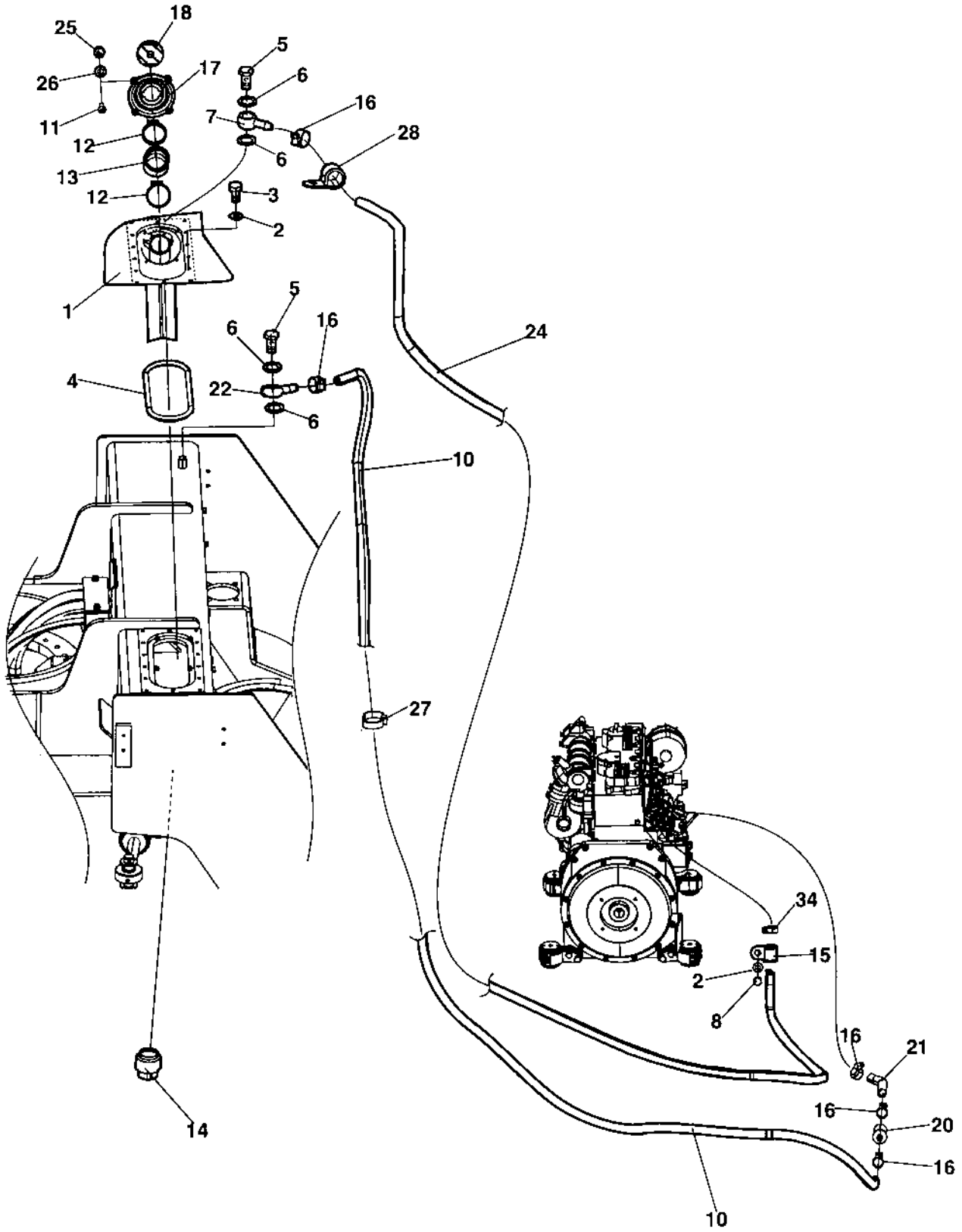

Fuel system

Item	Part No	Rem	Qty	Description		Code
1	4700389367		1	Cover		
2	4700904229		15	Washer	8,4x16x1,5	
3	4700500019		14	Screw	M8x16H 8.8 A2K	
4	4700389821		1	O-ring		
5	4700330171		2	Hollow screw		
6	4700747282		4	Copper washer		
7	4700330170		1	Banjo nipple		
8	4700500053		1	Screw	M8x20H 8.8	
10	4700378028	B	1	Fuel hose		
11	4700904206		4	Screw		
12	4700313010		2	Hose clamp		
13	4700376659		1	Filter hose		
14	4700813391		1	Magnetic plug		D
15	4700921080		1	Clamp		
16	4700313001		5	Hose clamp		
17	4700387682		1	Filler neck		
18	4700394253		1	Fuel cap		D
	4700945753		1	.Key	2pcs "921"	
20	4700929322		1	Fuel strainer		A
21	4700904985	C	1XL	Fuel hose		D
22	4700901121		1	Banjo fitting	14x6 Hose 8	
24	4700904984	A	1XL	Fuel hose		D
25	4700570004		4	Nut	M6X1,00 -8 A2K	
26	4700904228		4	Washer		
27	4700313102		N	Cable ties		
28	4700902558		1	Clamp		
34	4700313075		1	Hose clamp		

A) Return fuel line
B) Fuel feed line
C) Connected to fuel feed pump

Cooling system

18135

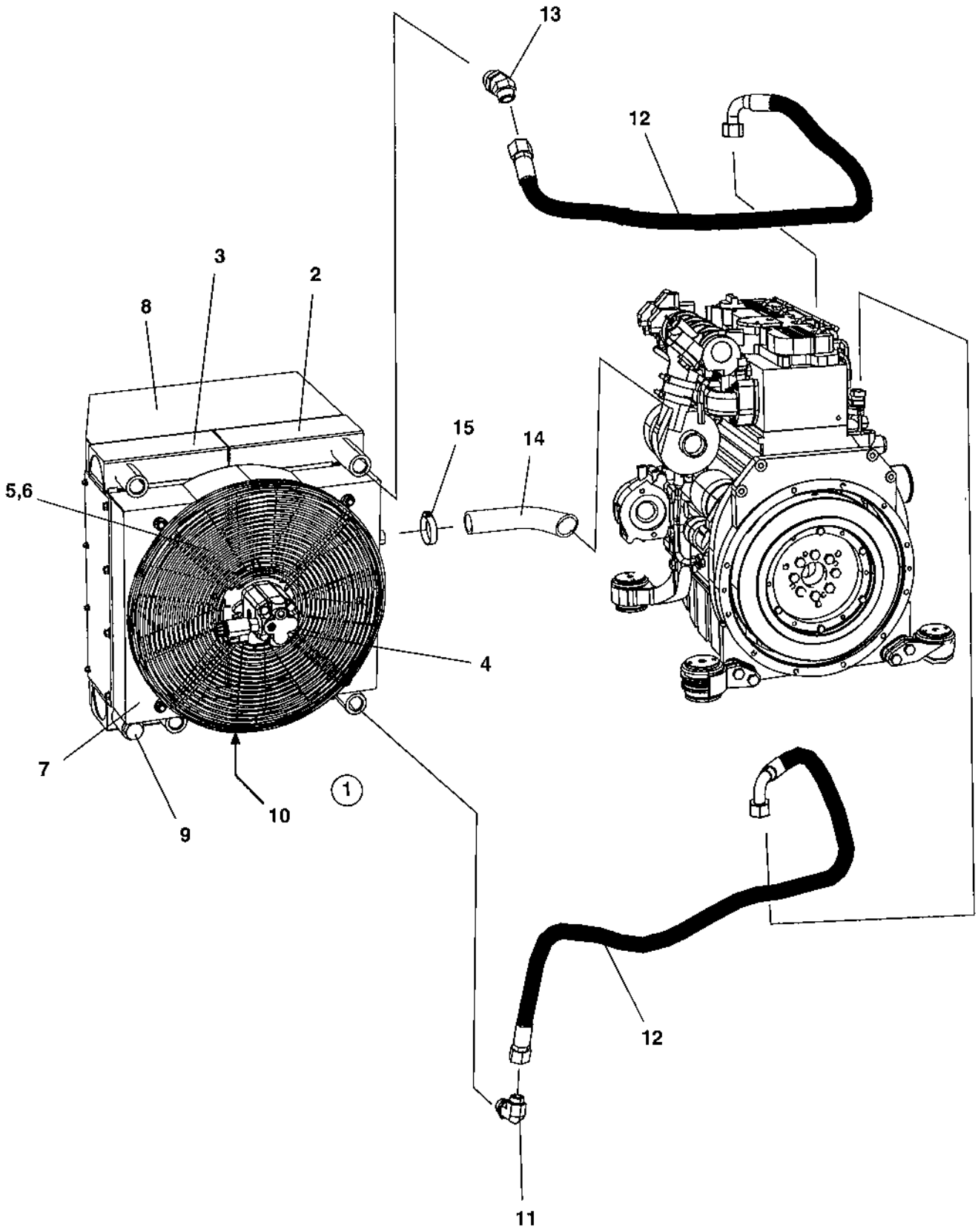

Cooling system

Item	Part No	Rem	Qty	Description	Code
1	4700388667		1	Cooler	
2	4700940333		1	.Engine cooler	
3	4700940334		1	.Hydraulic cooler	
4	4700940335		1	.Hydraulic motor	
	4700940973		1	.Valve	
	4700940974		1	..Coil	
5	4700940336		1	.Fan	
6	4700940337		1	.Fan guard	
7	4700940338		1	.Fan cover	
8	4700940339		1	.Cover	
9	4700940362		1	.Plug	
10	4700940361		1	.Drain plug	
11	4700791321		1	Elbow adapter 90	
12	4700389773		2	Coolant hose	
13	4700791859		1	Elbow 45 orfs	
14	4700377364		1	Hose	
15	4700313007		1	Hose clamp	

Hydraulic system

Item	Part No	Rem	Qty	Description	Code
10				Propulsion and brake system, pump (Page 70)	
20				Propulsion and brake system, motors (Page 84)	
30				Vibration system, pump (Page 92)	
40				Vibration system, motors (Page 96)	
60				Steering system (Page 98)	

Propulsion and brake system, pump

18521

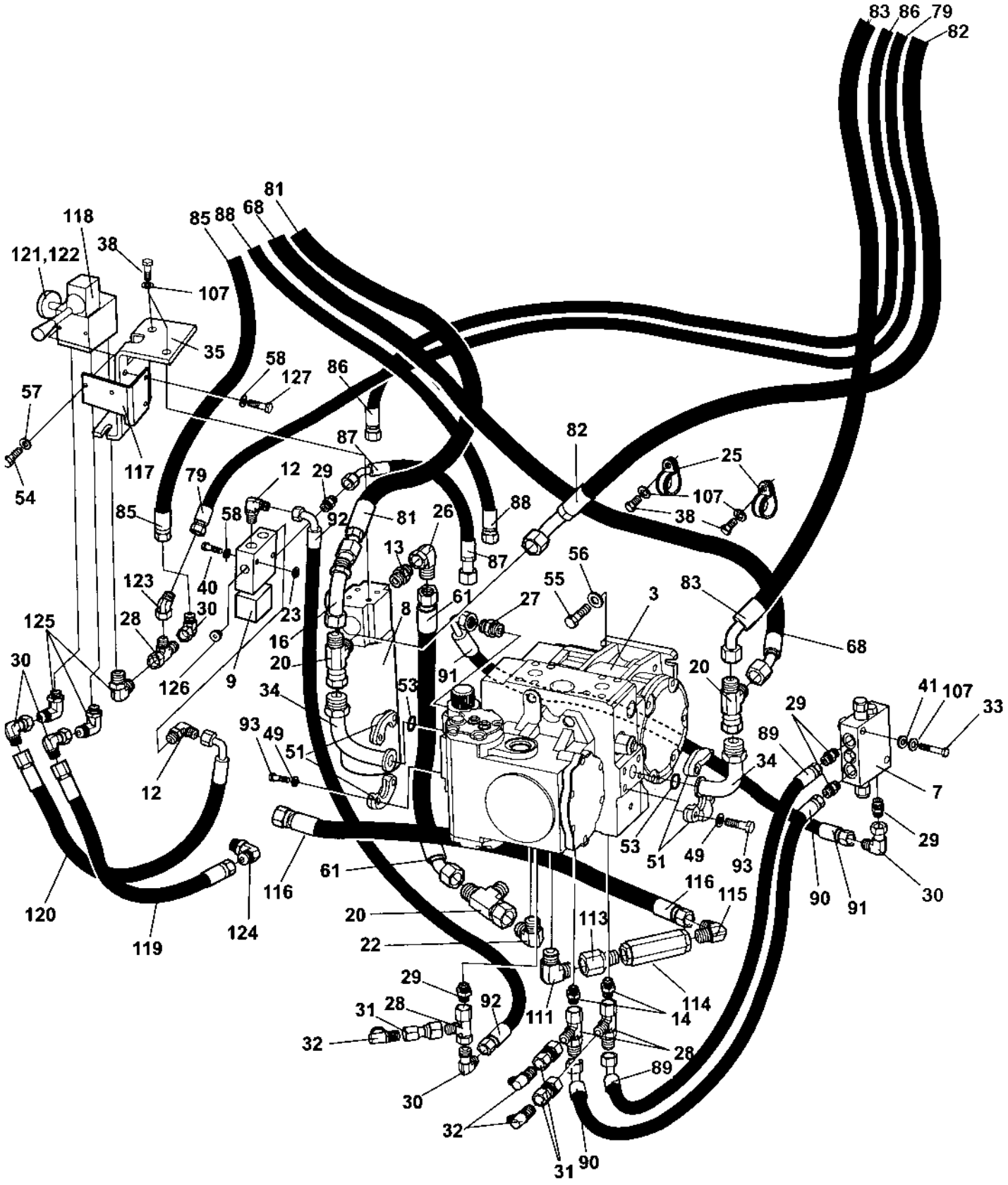

Propulsion and brake system, pump

Item	Part No	Rem	Qty	Description		Code
3	4700393337		1	Hydraulic pump (Page 74)	Propulsion and vibration	C
7	4700393339		1	Flushing valve		
8			1	Hydraulic oil filter, cpl		
	4700359551		1	.Filter head		
	4700372229	A	1	.Hydraulic oil filter element		A
	4700359552	B	1	Cleaning filter element	Maximum 50 hours use	
9	4700389447		1	Brake relief valve		
	4700940301		1	.Solenoid valve		
12	4700791846		2	Elbow 90, O-ring with swivel		
13	4700791318		1	Straight connector		
14	4700791825		2	Straight connector orfs		
16	4700376915		1	Connector		
20	4700904496		3	Connector		
22	4700791838		1	Elbow 90, O-ring with swivel		
23	4700603001		2	Washer		
25	4700921099		2	Clamp		
26	4700904584		1	Elbow connector 90		
27	4700791850		1	Straight connector		
28	4700791414		4	T-connection, O-ring with swivel		
29	4700791409		5	Straight connector orfs		
30	4700791401		5	Elbow 90, O-ring with swivel		
31	4700791847		3	Straight connector		
32	4700923405		3	Measuring nipple		D
33	4700500192		2	Screw	M10x80	
34	4700791819		2	Flange fitting 90		
35	4700389430		1	Bracket		
38	4700500028		4	Screw		
40	4700500186		2	Screw		
41	4700904557		4	Washer		
49	4700904637		8	Washer		
51	4700929226		4	Flange half		
53	4700904004		2	O-ring		D
54	4700500019		2	Screw	M8x16H 8.8 A2K	
55	4700500194		4	Screw		
56	4700904213		4	Washer		
57	4700904229		2	Washer	8,4x16x1,5	
58	4700904228		4	Washer		
61	4700483791		1	Hydraulic hose		
68	4700483782		2	Hydraulic hose		
79	4700483766		1	Hydraulic hose		
81	4700483776		1	Hydraulic hose		
82	4700483784		1	Hydraulic hose		
83	4700483333		1	Hydraulic hose		
85	4700483765		1	Hydraulic hose		
86	4700483718	C	1	Hydraulic hose		
87	4700483773	C	1	Hydraulic hose		
88	4700483720	C	1	Hydraulic hose		
89	4700483757		1	Hydraulic hose		
90	4700483758		1	Hydraulic hose		
91	4700483772		1	Hydraulic hose		
92	4700483771		1	Hydraulic hose		
93	4700502037		8	Screw	3/8"-16UNCx1.1/2" 8.8	
107	4700904230		6	Washer		
111	4700791231		1	Elbow 90		D
113	4700791824		1	Straight connector		
114	4700376922		1	Check valve		
115	4700791698		1	Elbow 90, O-ring with swivel		

A) Replacement
B) Cleaning
C) Hydraulic tank

Propulsion and brake system, pump

18521

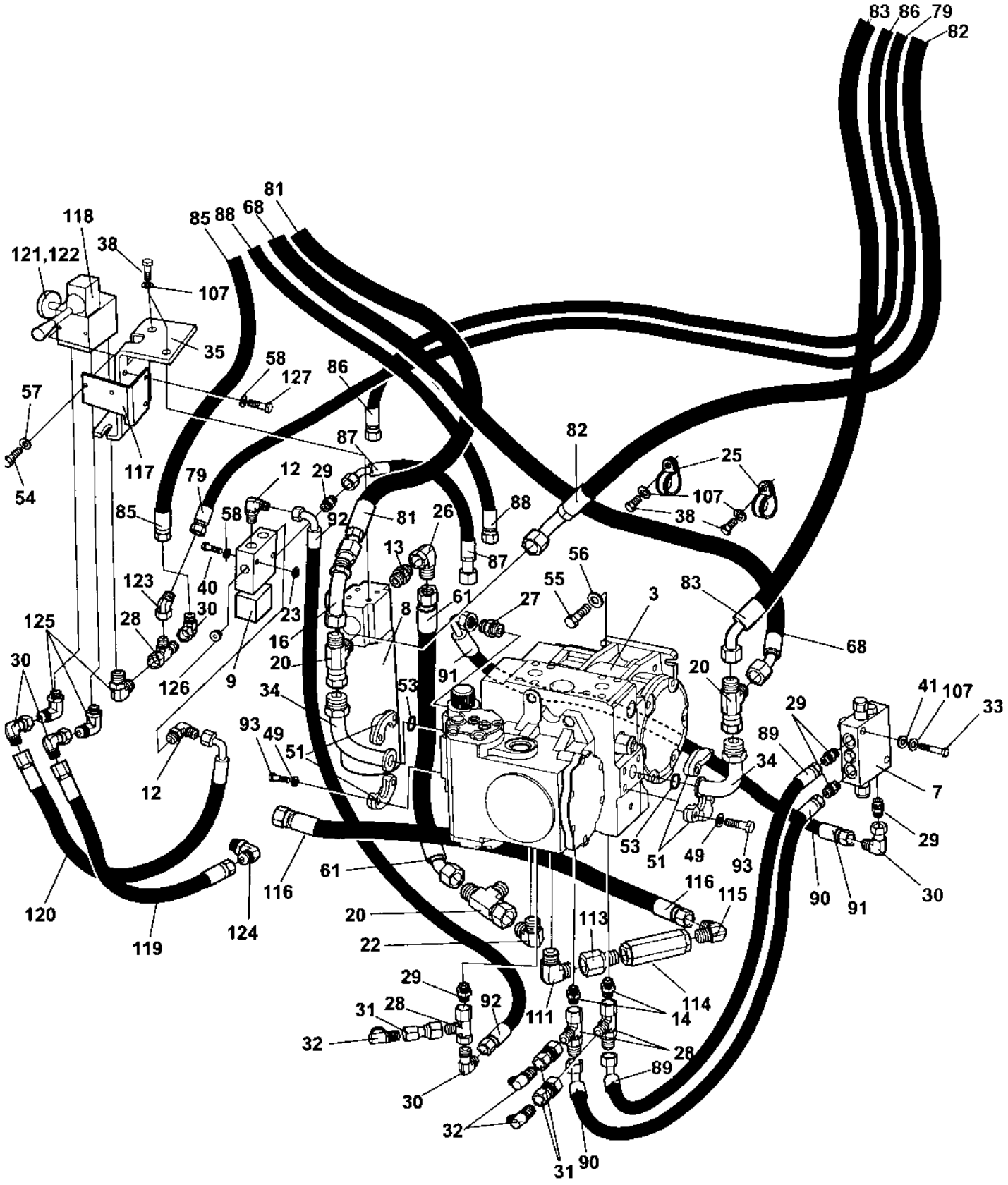

Propulsion and brake system, pump

Item	Part No	Rem	Qty	Description		Code
116	4700483730		1	Hydraulic hose		
117	4700392731		1	Bracket		
118	4700392743		1	Hand pump		
119	4700483772		1	Hydraulic hose		
120	4700483771		1	Hydraulic hose		
121	4700343775		1	Wire		
122	4700635061		2	Hair clip		D
123	4700791402		1	Elbow 45, O-ring with swivel		
124	4700791841		1	Elbow 90 orfs		
125	4700792246		3	Elbow 90 orfs		
126	4700792362		1	Steel plug		
127	4700500013		2	Screw	M6-1x16 8,8	

4700393337 Hydraulic pump Propulsion and vibration

18962

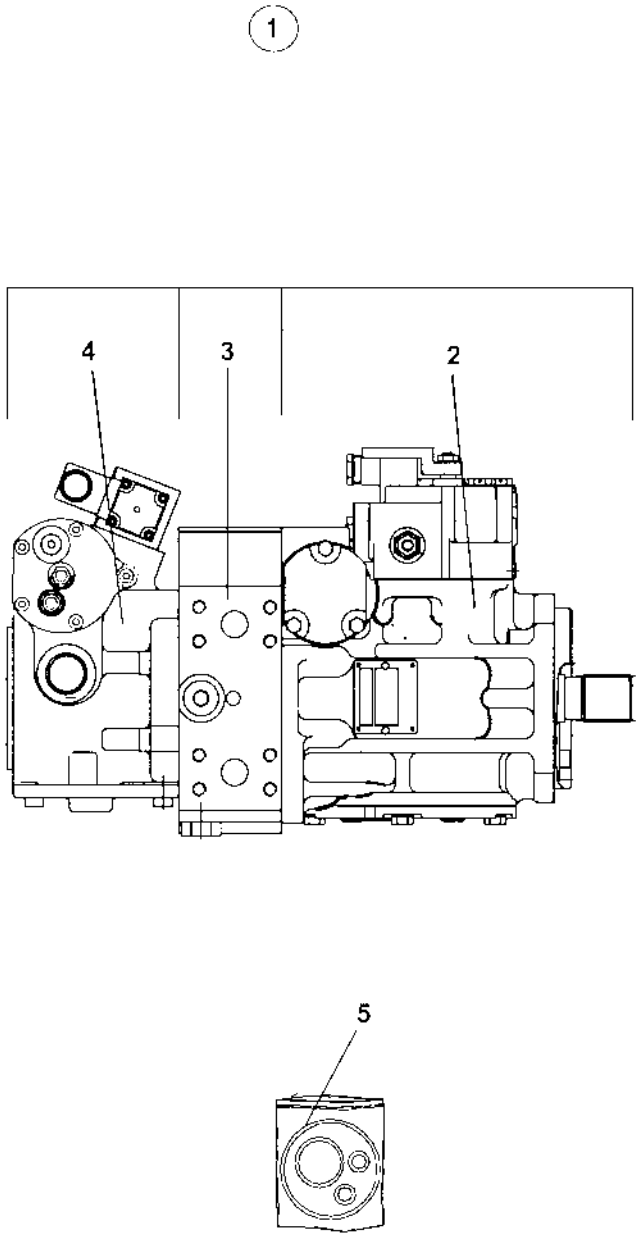

4700393337 Hydraulic pump Propulsion and vibration

Item	Part No	Rem	Qty	Description	Code
1			1	Hydraulic pump, Cpl	Propulsion and Vibration
2			1	.Hydraulic pump (Page 76)	Propulsion pump
3			1	.Valve block (Page 80)	Middle part
4			1	.Hydraulic pump (Page 82)	Vibration pump
5			1	Seal kit	

Hydraulic pump Propulsion pump

16942-2

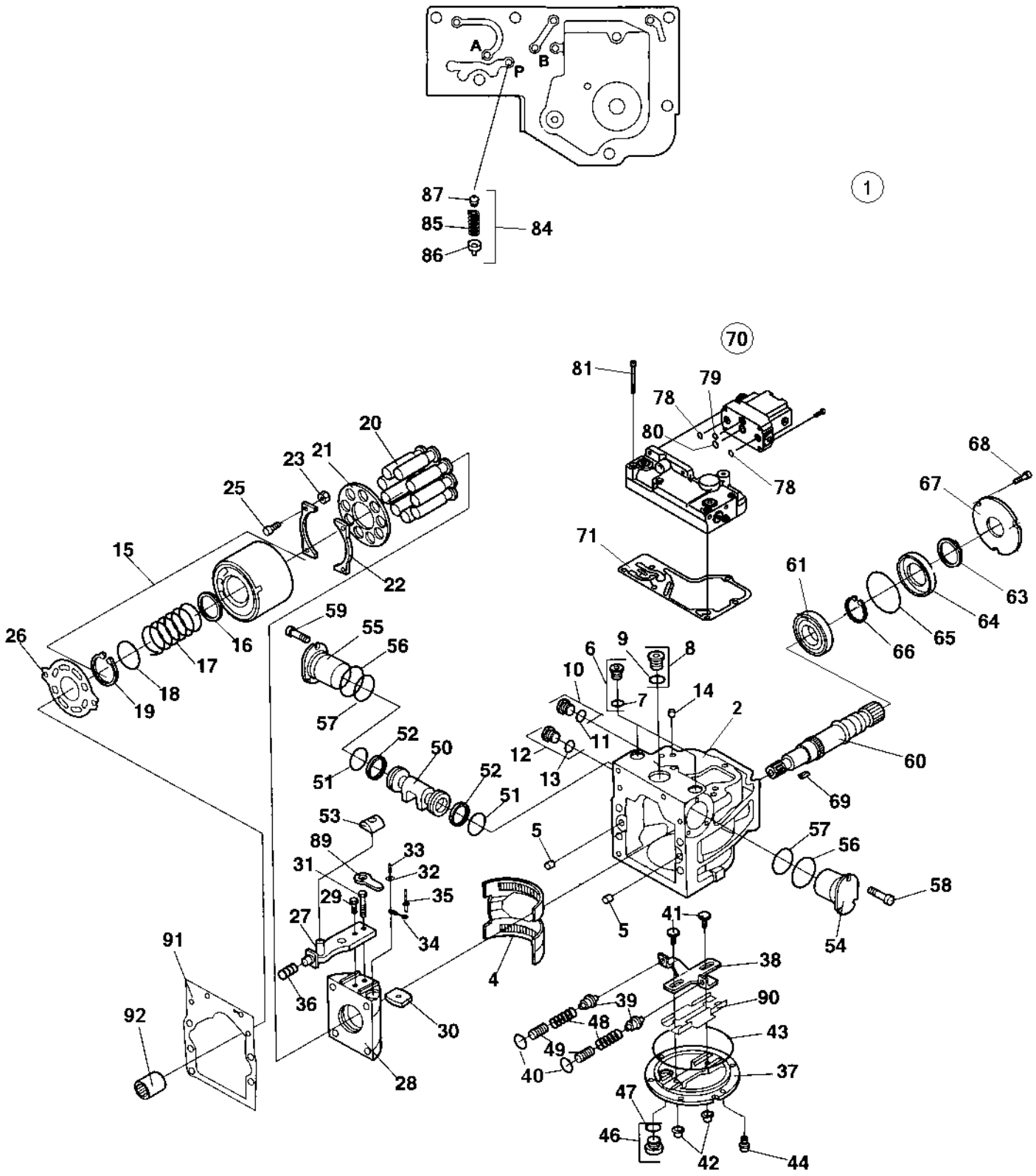

Hydraulic pump Propulsion pump

Item	Part No	Rem	Qty	Description	Code
1		1	1	Hydraulic pump	
2			1	.Housing	
4			1	.Bearing	
5			2	.Pin	
6			2	.Plug, cpl	
7		2	1	..O-ring	
8			1	.Plug	
9		2	1	..O-ring	
10			1	.Plug	
11		2	1	..O-ring	
12			1	.Plug	
13		2	1	..O-ring	
14			1	.Filter element	
15			1	.Rotating group, cpl	
16			1	..Spacer	
17			1	..Spring	
18			1	..Spring retainer	
19			1	..Retaining ring	
20	4700901720		9	.Piston	D
21	4700909246		1	.Retaining plate	
22			2	.Retainer guide	
23			4	.Spacer	
25			4	.Screw	
26			1	.Valve plate	
27	4700909384		1	.Servo arm, cpl	
28			1	.Swash plate	
29			1	.Screw	
30			1	.Guide	
31			1	.Screw	
32			1	.Washer	
33			1	.Pin	
34			1	.Link	
35	4700909392		1	.Pin	
36			1	.Spring	
37	4700937138		1	.Cover	
38			1	.Lever	
39	4700909396		2	.Spring retainer	
40			2	.Washer	
41	4700936552		2	.Guide post	
42		2	2	.Seal lock nut	
43		2	1	.O-ring	
44	4700936553		6	.Screw	
46			1	.Plug	
47		2	1	..O-ring	
48			2	.Spring	
49	4700909403		2	.Spring	
50	4700937140		1	.Piston, cpl	
51		2	2	..O-ring	
52		2	2	..Piston ring	
53	4700909407		1	.Guide	
54			1	.Servo sleeve	
55			1	.Servo sleeve	
56		2	2	.O-ring	
57		2	2	.O-ring	
58			3	.Screw	
59			3	.Screw	

1) This pump is an integrated part of pump PN 4700393337
2) Seals included in seal kit for cpl pump, PN 4700393337

Hydraulic pump Propulsion pump

16942-2

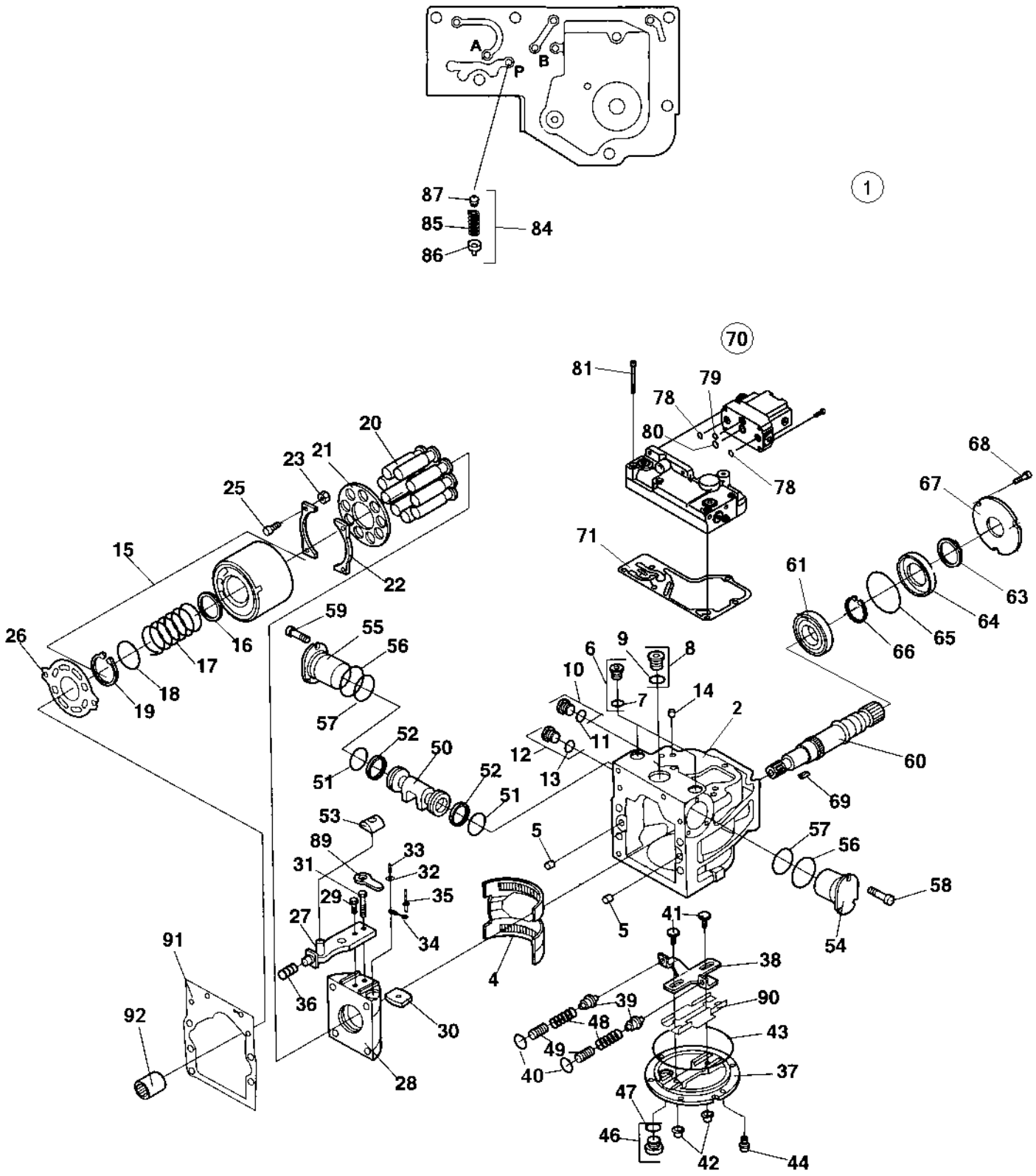

Hydraulic pump Propulsion pump

Item	Part No	Rem	Qty	Description	Code
60	4700909414	2	1	.Gasket	
61	4700901725		1	.Bearing	D
63	4700212346		1	.Shaft seal	D
64	4700909256		1	.Seal carrier	
65		2	1	.O-ring	
66	4700901727		1	.Snap ring	D
67			1	.Carrier seal	D
68			3	.Screw	D
69	4700909446		1	.Spring	
70	4700945656		1	.Control valve, cpl	
71		2	1	..Gasket	
78			2	..O-ring	
79			1	..O-ring	
80	4700909429		1	..O-ring	
81			6	..Screw	
83	4700909433		1	...O-ring	
84			1	.Orifice cpl	
85	4700909436		1	..Spring	
86	4700908448		1	..Spring retainer	
87	4700909435		1	..Orifice	
89			1	.Link	
90	4700937139		1	.Guide assy.	
91	4700909414		1	.Gasket	
92	4700909416		1	.Sleeve	

2) Seals included in seal kit for cpl pump, PN 4700393337

Valve block Middle part

17025-1

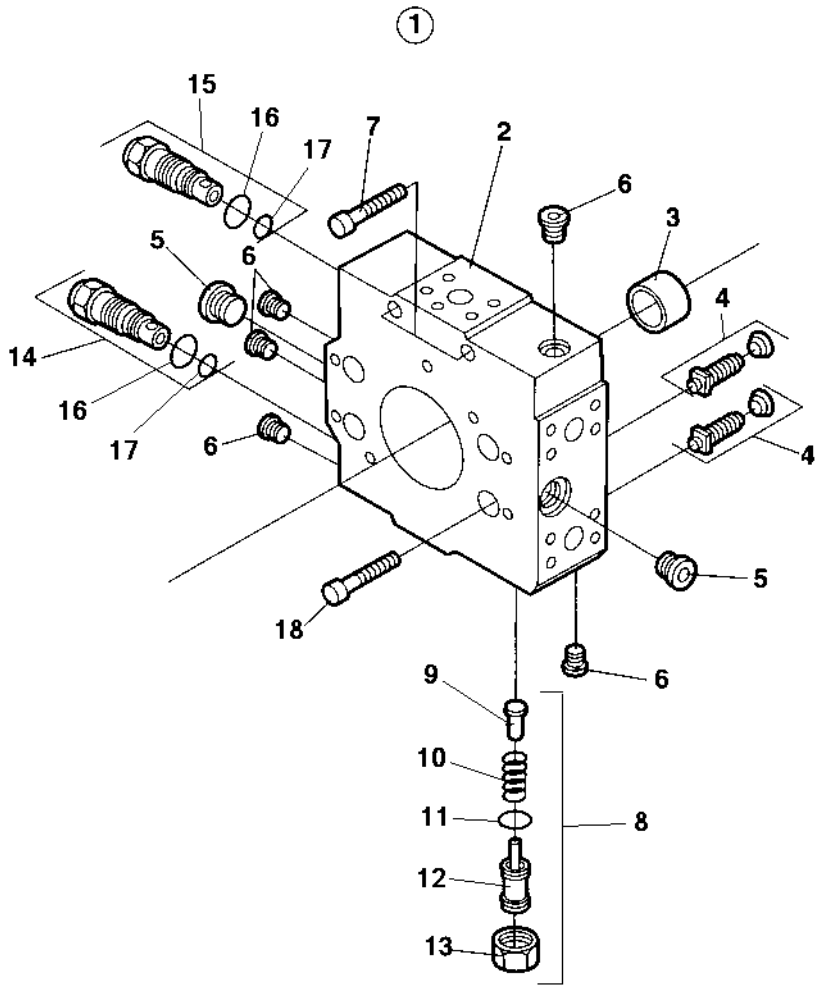

Valve block Middle part

Item	Part No	Rem	Qty	Description	Code
1		1	1	Valve block, cpl	
2	4700909412		1	.Valve block	
3	4700909413		1	.Bushing	
4	4700908455		2	.Relief valve	D
5	4700909243		2	.Plug	
6			5	.Plug	
7	4700909415		2	.Screw	
8			4	.Pressure relief valve	
9			1	..Valve cone	
10	4700937861		1	..Spring	D
11	4700813618	2	1	..O-ring	D
12	4700908428		1	..Adjustable screw, cpl	
13	4700902959		1	..Nut	
14	4700950605		1	.Valve	
15	4700950605		1	.Valve	
16	4700481126		2	.O-ring	D
17	4700936579		2	.O-ring	
18	4700909417		4	.Screw	

1) This valve block is an integrated part of pump PN 4700393337
2) Seals included in seal kit for cpl pump PN 4700393337

Hydraulic pump Vibration pump

17026

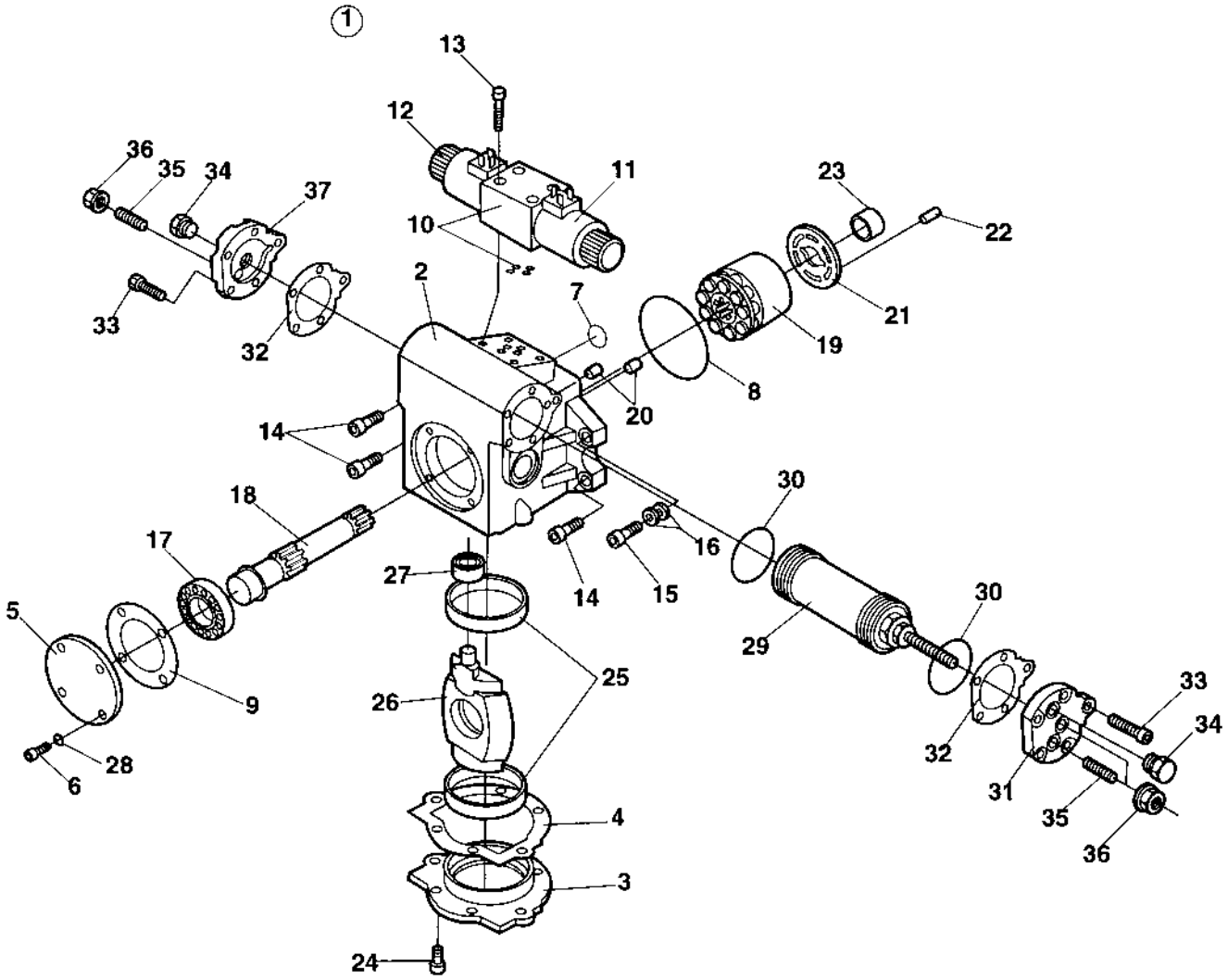

Hydraulic pump Vibration pump

Item	Part No	Rem	Qty	Description	Code
1		1	1	Hydraulic pump, vibration	
2			1	.Housing	
3	4700909439		1	.Cover	
4	4700909440	2	1	.Gasket	
5			1	.Valve plate	
6			4	.Screw	
7	4700910706	2	1	.O-ring	
8	4700909485	2	1	.O-ring	
9		2	1	.Gasket	
10	4700909215		1	.Solenoid valve	
11	4700940580		2	..Solenoid valve	
12			2	..Nut	
13	4700909204		4	.Screw	
14	4700902940		3	.Screw	
15	4700902940		1	.Screw	
16	4700909445		2	.Washer	
17	4700909448		1	.Bearing	
18			1	.Shaft	
19			1	.Cylinder block, cpl	
20			2	.Pin	
21	4700909471		1	.Valve plate	
22	4700909450		1	.Pin	
23	4700909344		1	.Needle roller bearing	
24	4700908773		6	.Screw	
25	4700909449		2	.Needle roller bearing	
26	4700909477		1	.Swash plate	
27	4700909472		1	.Needle roller bearing	
28		2	1	.Sealing ring	
29	4700909473		1	.Piston, cpl	
30	4700909474		2	.Seal ring	
31			1	.Cover	
32	4700908772	2	2	.Gasket	
33	4700908773		10	.Screw	
34			2	.Plug	
35	4700908775		2	.Screw	
36	4700908774	2	2	.Nut	
37			1	.Cover	

1) This pump is an integrated part of pump PN 4700393337
2) Seals included in seal kit for cpl pump PN 4700393337

Propulsion and brake system, motors

18522

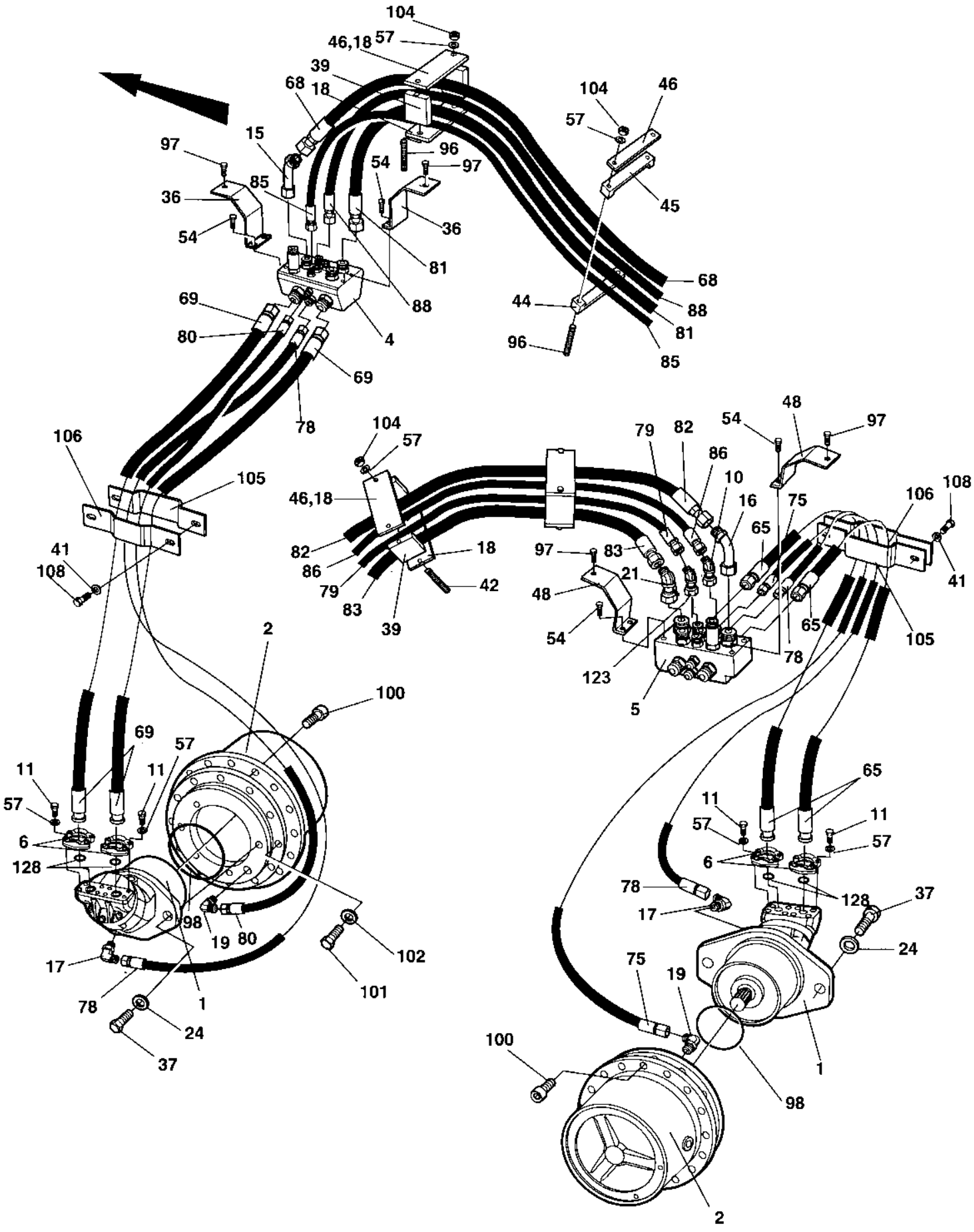

Propulsion and brake system, motors

Item	Part No	Rem	Qty	Description		Code
1	4700391330		2	Hydraulic motor		
2	4700391329		4	Gear box (Page 86)		
4	4700376721		1	Connection block (Page 88)		
5	4700376723		1	Connection block (Page 90)		
6	4700900430		8	Flange half		
10	4700791837		1	Elbow 45, O-ring with swivel		
	4700940970		1	.O-ring		
11	4700508048		16	Screw		
15	4700376914		1	Connector		
16	4700376915		1	Connector		
17	4700792333		2	Elbow 90 orfs		
18	4700373182		12	Hose clamp		
19	4700792094		2	Elbow 90		
21	4700904586		1	Elbow 45		
24	4700383023		4	Spacer sleeve		
36	4700389217		2	Bracket		
37	4700500056		4	Screw		
39	4700380084		6	Spacer		
41	4700904557		4	Washer		
42	4700791860		2	Stud		
44	4700382224		1	Hose clamp		
45	4700373181		1	Hose clamp		
46	4700373180		4	Bracket		
48	4700371986		2	Holder plate		
54	4700500019		8	Screw	M8x16H 8.8 A2K	
57	4700904229		24	Washer	8,4x16x1,5	
65	4700484009		2	Hydraulic hose		
68		1	2	Hydraulic hose		
69	4700484010		2	Hydraulic hose		
75	4700484011		1	Hydraulic hose		
78	4704840413		2	Hydraulic hose		
79		1	1	Hydraulic hose		
80	4700484012		1	Hydraulic hose		
81		1	1	Hydraulic hose		
82		1	1	Hydraulic hose		
83		1	1	Hydraulic hose		
85		1	1	Hydraulic hose		
86		1	1	Hydraulic hose		
88		1	1	Hydraulic hose		
96	4700791807		6	Stud		
97	4700500163		4	Screw	M12x16	
98	4700792387		2	O-ring		D
100	4700928022		32	Screw		
101	4700928371		24	Screw		
102	4700904214		24	Washer		
104	4700791182		8	Lock nut	M8	
105	4700383462		2	Hose clamp		
106	4700383461		2	Hose clamp		
108	4700500030		4	Screw		
123	4700791402		1	Elbow 45, O-ring with swivel		
128	4700904003		4	O-ring		

1) See section "Propulsion & brake system, pump".

4700391329 Gear box

391329

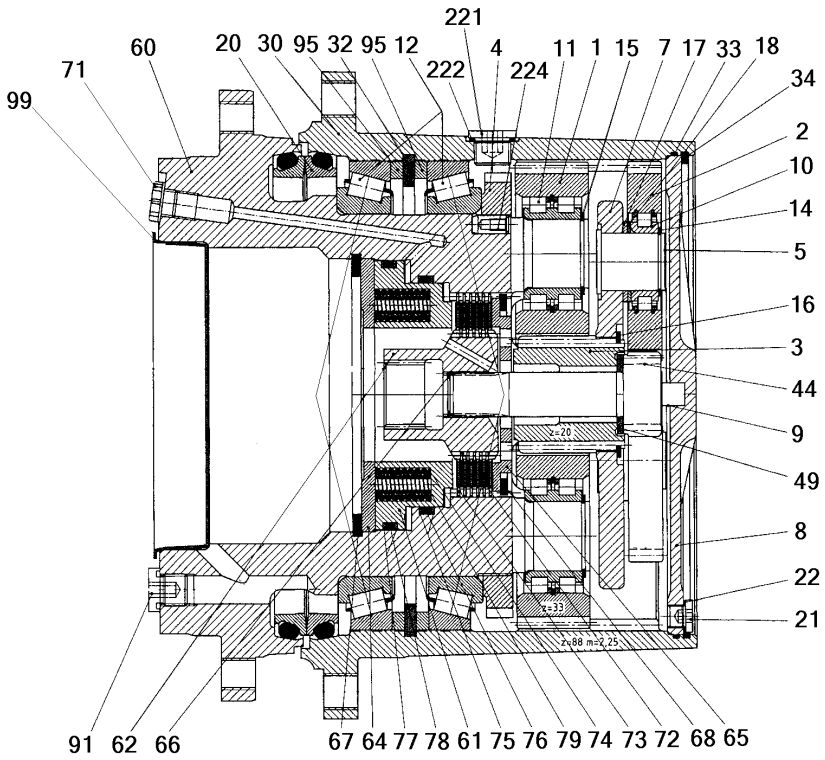

4700391329 Gear box

Item	Part No	Rem	Qty	Description	Code
	4700391329		1	Gear box (Page 86)	
1			4	.Planet gear	
2			3	.Planet gear	
3			1	.Sun gear	
4			1	.Shaft nut	
5			3	.Planet bolt	
7			1	.Planet carrier	
8			1	.Cover	
9			1	.Cylindrical roller	
10	4700950498		3	.Bearing	
11	4700950483		4	.Roller bearing	
12	4700950500		2	.Tapered roller bearing	
14			3	.Snap ring	
15			4	.Snap ring	
16			1	.Snap ring	
17			3	.Support disc	
18			3	.Shim	
20	4700950501		1	.Seal	
21	4700950502		2	.Plug	
22	4700950503		2	.Seal ring	
30			1	.Ring gear	
32			1	.Snap ring	
33	4700950353		1	.O-ring	
34			1	.Snap ring	
44			1	.Sun gear shaft	
49			1	.Washer	
60			1	.Spindle	
61			1	.Piston	
62			1	.Coupler	
64			1	.Disc	
65			1	.Disc	
66			1	.Snap ring	
67			1	.Snap ring	
68			1	.Snap ring	
71	4700950504		1	.Plug	
72	4700950505		5	.Inner disc	
73	4700950506		6	.Outer disc	
74			8	.Pressure spring	
75	4700950507		2	.Supporting ring	
76	4700950508		1	.Piston seal	
77	4700950509		2	.Supporting ring	
78	4700950510		1	.Piston seal	
79			8	.Pressure spring	
91	4700950511		3	.Plug	
95			2	.Spacer	
99	4700950512		1	.Plug	
221	4700212210		1	.Screw	
222	4700950513		2	.Seal ring	
224			2	.Dovel pin	

4700376721 Connection block

18837

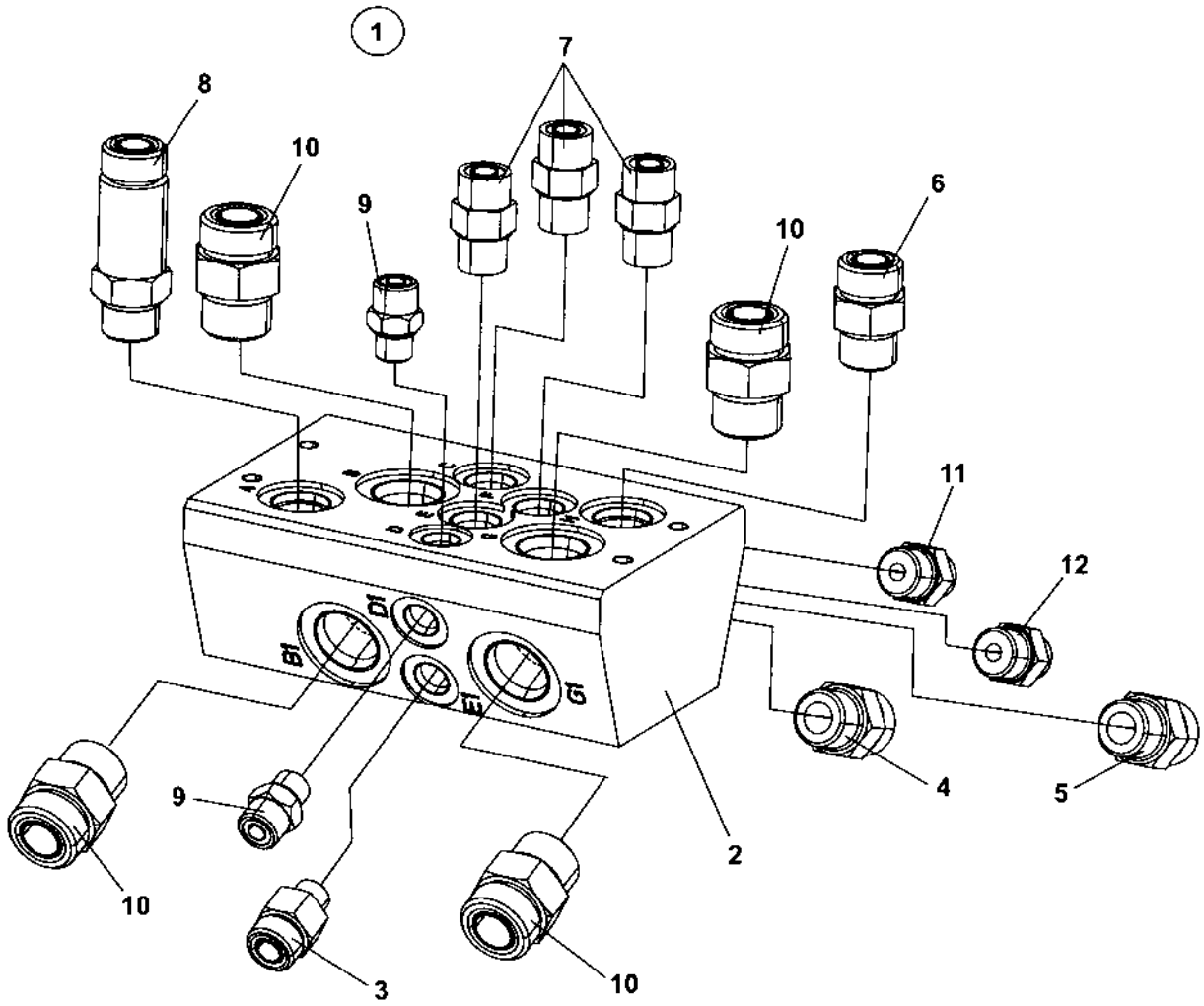

4700376721 Connection block

Item	Part No	Rem	Qty	Description	Code
1	4700376721		1	Connection block (Page 88)	
2	4700376722		1	.Connection block	
3	4700791540		1	.Straight connector	
4	4700791743	A	1	.Straight connector orfs	
5	4700791743	B	1	.Straight connector orfs	
6	4700791743		1	.Straight connector orfs	
7	4700791799		3	.Straight connector orfs	
8	4700791821		1	.Straight connector orfs	
9	4700791409		2	.Straight connector orfs	
10	4700791823		4	.Straight connector orfs	
11	4700791828	C	1	.Straight connector orfs	
12	4700791828	D	1	.Straight connector orfs	

A) Mounted in port A1
B) Mounted in port H1
C) Mounted in port C1
D) Mounted in port F1

4700376723 Connection block

18838

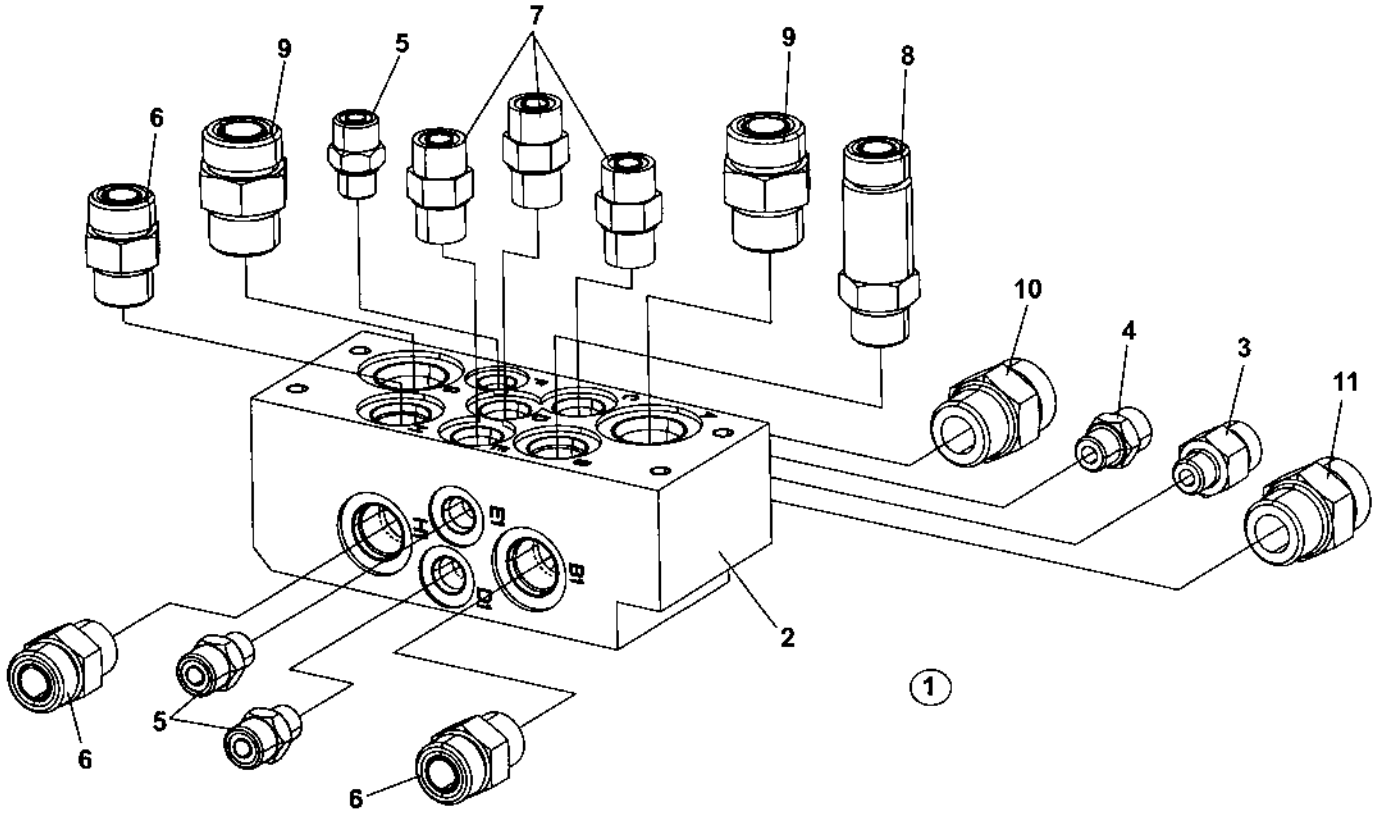

4700376723 Connection block

Item	Part No	Rem	Qty	Description	Code
1	4700376723		1	Connection block (Page 90)	
2	4700376724		1	.Connection block	
3	4700791540	A	1	.Straight connector	
4	4700791409	B	1	.Straight connector orfs	
5	4700791409		3	.Straight connector orfs	
6	4700791443		3	.Straight connector orfs	
7	4700791799		3	.Straight connector orfs	
8	4700791821		1	.Straight connector orfs	
9	4700791823		2	.Straight connector orfs	
10	4700791823	C	1	.Straight connector orfs	
11	4700791823	D	1	.Straight connector orfs	

A) Mounted in port C1
B) Mounted in port F1
C) Mounted in port G1
D) Mounted in port A1

Vibration system, pump

18207

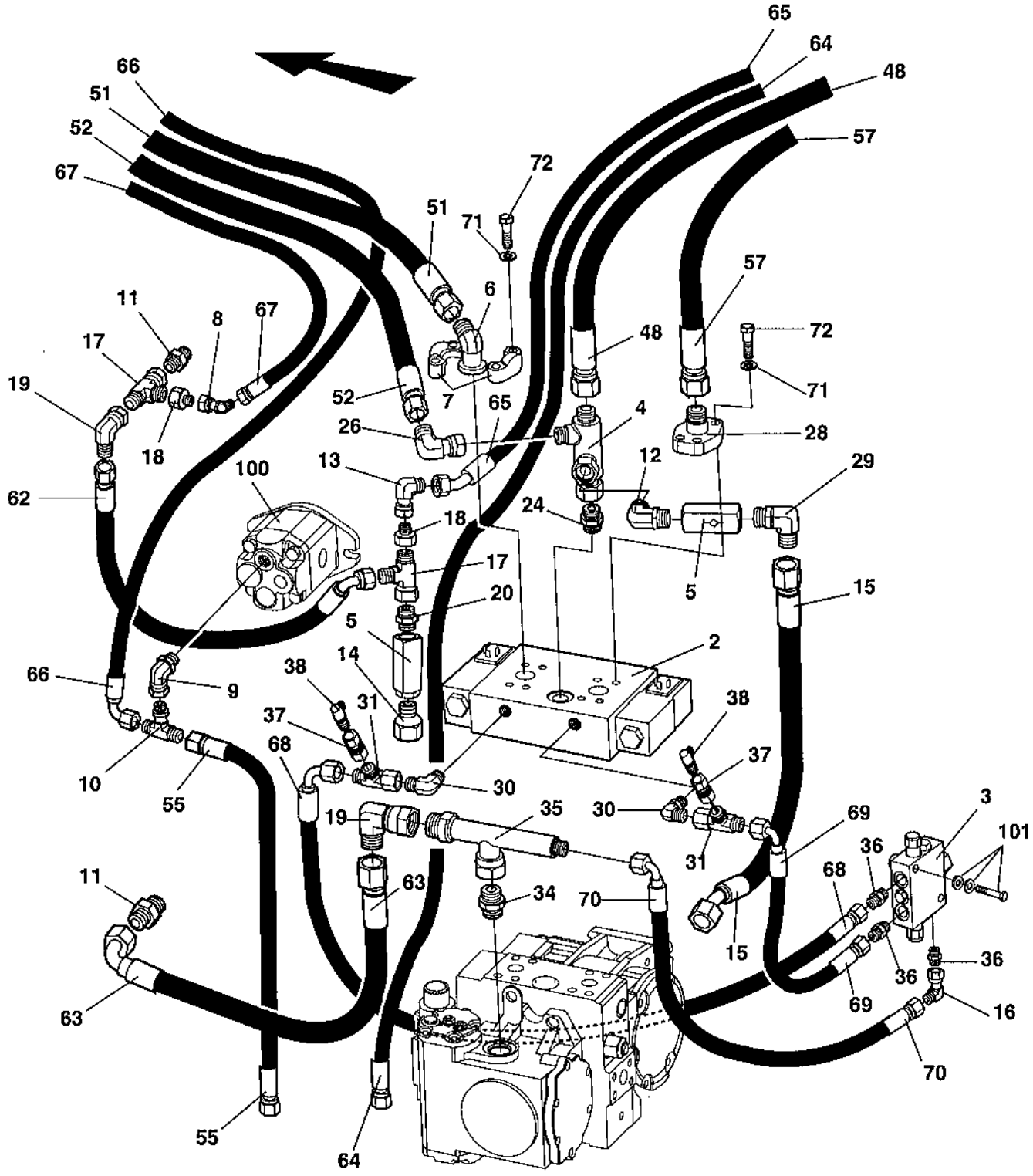

Vibration system, pump

Item	Part No	Rem	Qty	Description		Code
2	4700359140		1	Valve (Page 94)	Vibration	C
3	4700393339		1	Flushing valve		
4	4700376921		1	Connector		
5	4700903774		2	Check valve		
6	4700904690		1	Connector		
7	4700929226		2	Flange half		
8	4700791837		1	Elbow 45, O-ring with swivel		
	4700940970		1	.O-ring		
9	4700792111		1	Elbow 90, O-ring with swivel		
10	4700791797		1	Tee-connector orfs		
11	4700791318		2	Straight connector		
12	4700792068		1	Elbow 90		
13	4700791745		1	Elbow 90, O-ring with swivel		
14	4700791824		1	Straight connector		
15	4700483775		1	Hydraulic hose		
16	4700791401		1	Elbow 90, O-ring with swivel		
17	4700904496		2	Connector		
18	4700791791		2	Reducer		
19	4700904584		2	Elbow connector 90		
20	4700904728		1	Adapter		
24	4700791743		1	Straight connector orfs		
26	4700904766		1	Elbow adapter 90		
28	4700791857		1	Straight flange connector		
29	4700791698		1	Elbow 90, O-ring with swivel		
30	4700791846		2	Elbow 90, O-ring with swivel		
31	4700791414		2	T-connection, O-ring with swivel		
34	4700791823		1	Straight connector orfs		
35	4700376697		1	Connector		
36	4700791409		3	Straight connector orfs		
37	4700791847		2	Straight connector		
38	4700923405		2	Measuring nipple		D
48		1	1	Hydraulic hose		D
51	4700483755		1	Hydraulic hose		
52	4700483754		1	Hydraulic hose		
55	4700483909		1	Hydraulic hose		
57	4700483753		1	Hydraulic hose		
62	4700483731		1	Hydraulic hose		
63	4700483732		1	Hydraulic hose		
64	4700483719		1	Hydraulic hose		
65	4700483723		1	Hydraulic hose		
66	4700483724		1	Hydraulic hose		
67	4700483717		1	Hydraulic hose		
68	4700483759		1	Hydraulic hose		
69	4700483756		1	Hydraulic hose		
70	4700483770		1	Hydraulic hose		
71	4700904637		8	Washer		
72	4700502047		8	Screw		
100		2		Hydraulic motor		
101		3		Existing parts		

1) See section " Vibration system, motors "
2) See section " Cooling system"
3) See section "Propulsion and brake system, pump "

4700359140 Valve Vibration

15765-1

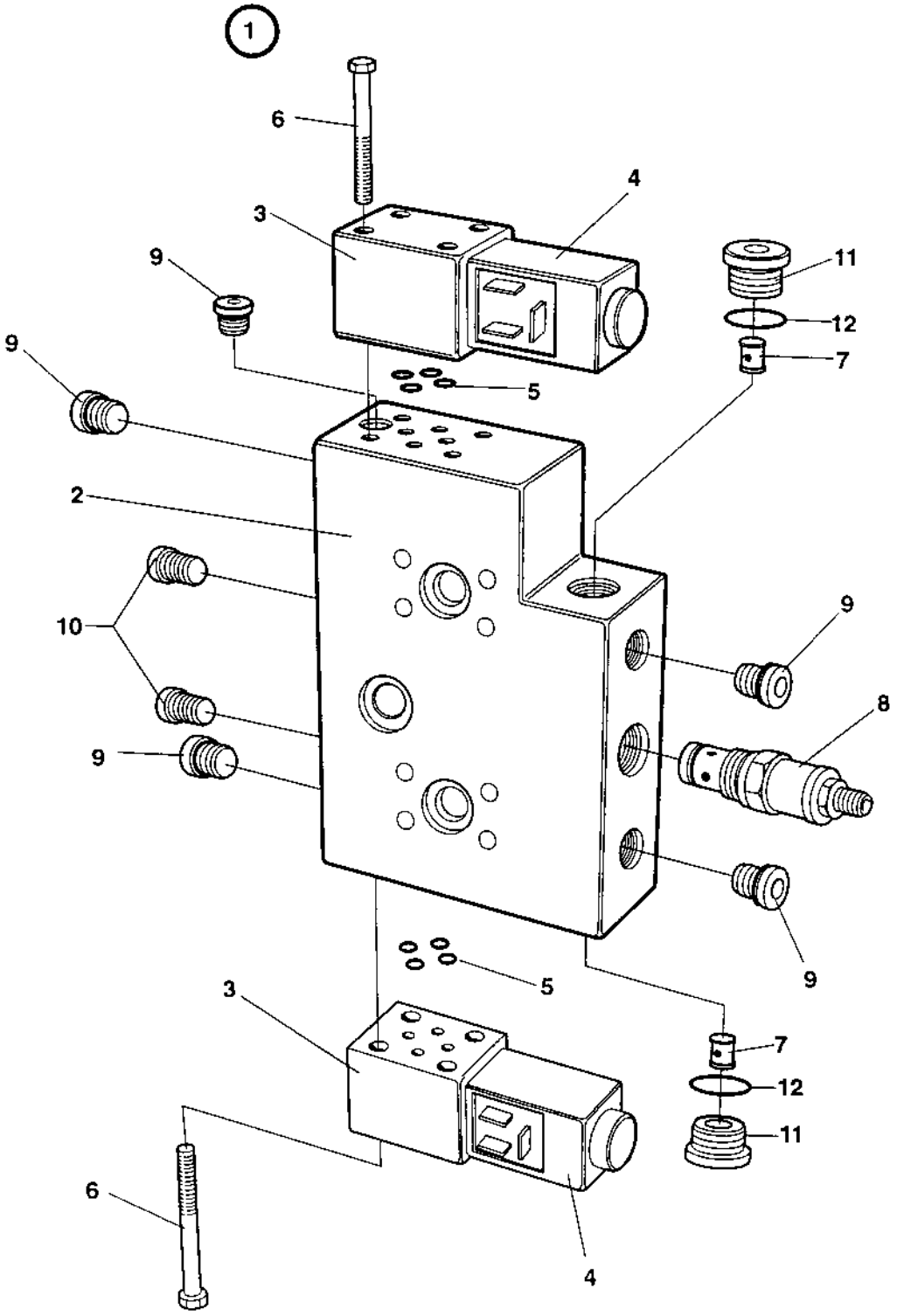

4700359140 Valve Vibration

Item	Part No	Rem	Qty	Description		Code
1			1	Valve, cpl	Vibration	
2	4700909201		1	.Valve block		
3	4700909202		2	.Solenoid valve		
5	4700909208		8	.O-ring		D
6	4700909204		8	.Screw		
7	4700909205		2	.Check valve		D
8	4700909206		1	.Pressure relief valve		D
9	4700909207		5	.Plug with sealing		
10	4700902937		2	.Plug		
11	4700909217		2	.Plug		
12	4700909216		2	.O-ring		

Vibration system, motors

18451

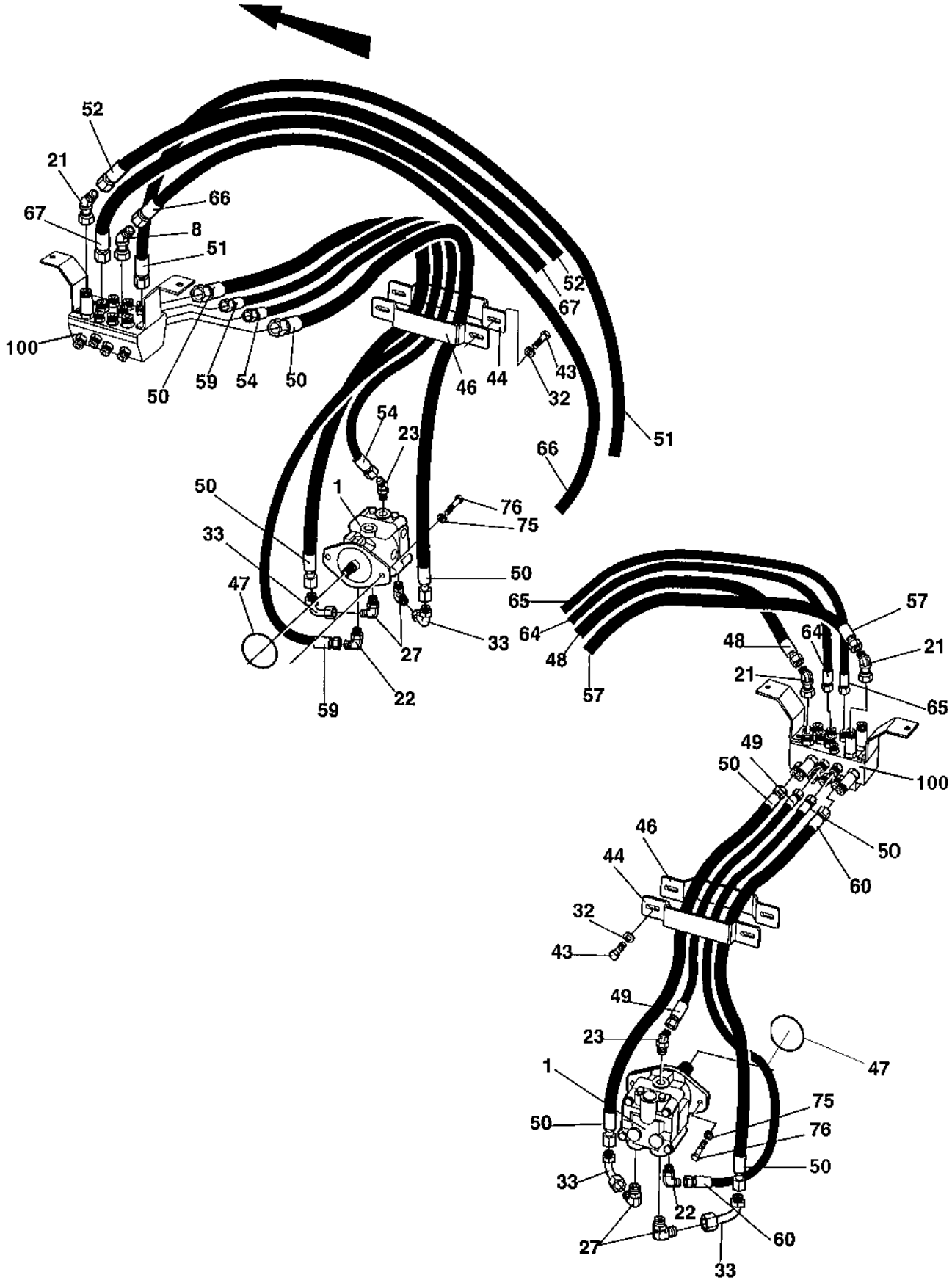

Vibration system, motors

Item	Part No	Rem	Qty	Description	Code
1	4700391331		2	Hydraulic motor, Cpl	C
8	4700791837		1	Elbow 45, O-ring with swivel	
	4700940970		1	.O-ring	
21	4700904781		3	Adapter	
22	4700791840		2	Elbow adapter 90, O-ring with swivel	
23	4700791796		2	Elbow 45, O-ring with swivel	
27	4700791843		4	Elbow 90, O-ring with swivel	
32	4700904557		4	Washer	
33	4700389446		4	Connector	
43	4700500030		4	Screw	
44	4700383460		2	Hose clamp	
46	4700383462		2	Hose clamp	
47	4700160279		2	O-ring	D
48	4700483750		1	Hydraulic hose	
49	4700483769		1	Hydraulic hose	
50	4700483751		4	Hydraulic hose	
51		1	1	Hydraulic hose	
52		1	1	Hydraulic hose	
54	4700483710		1	Hydraulic hose	
57		1	1	Hydraulic hose	
59	4700483763		1	Hydraulic hose	
60	4700483764		1	Hydraulic hose	
64		1	1	Hydraulic hose	
65		1	1	Hydraulic hose	
66		1	1	Hydraulic hose	
67		1	1	Hydraulic hose	
75	4700904213		4	Washer	
76	4700500049		4	Screw	
100		2		Existing parts	

1) See section " Vibration system, pump"
2) See section " Propulsion and brake system, motors ".

Steering system

18208

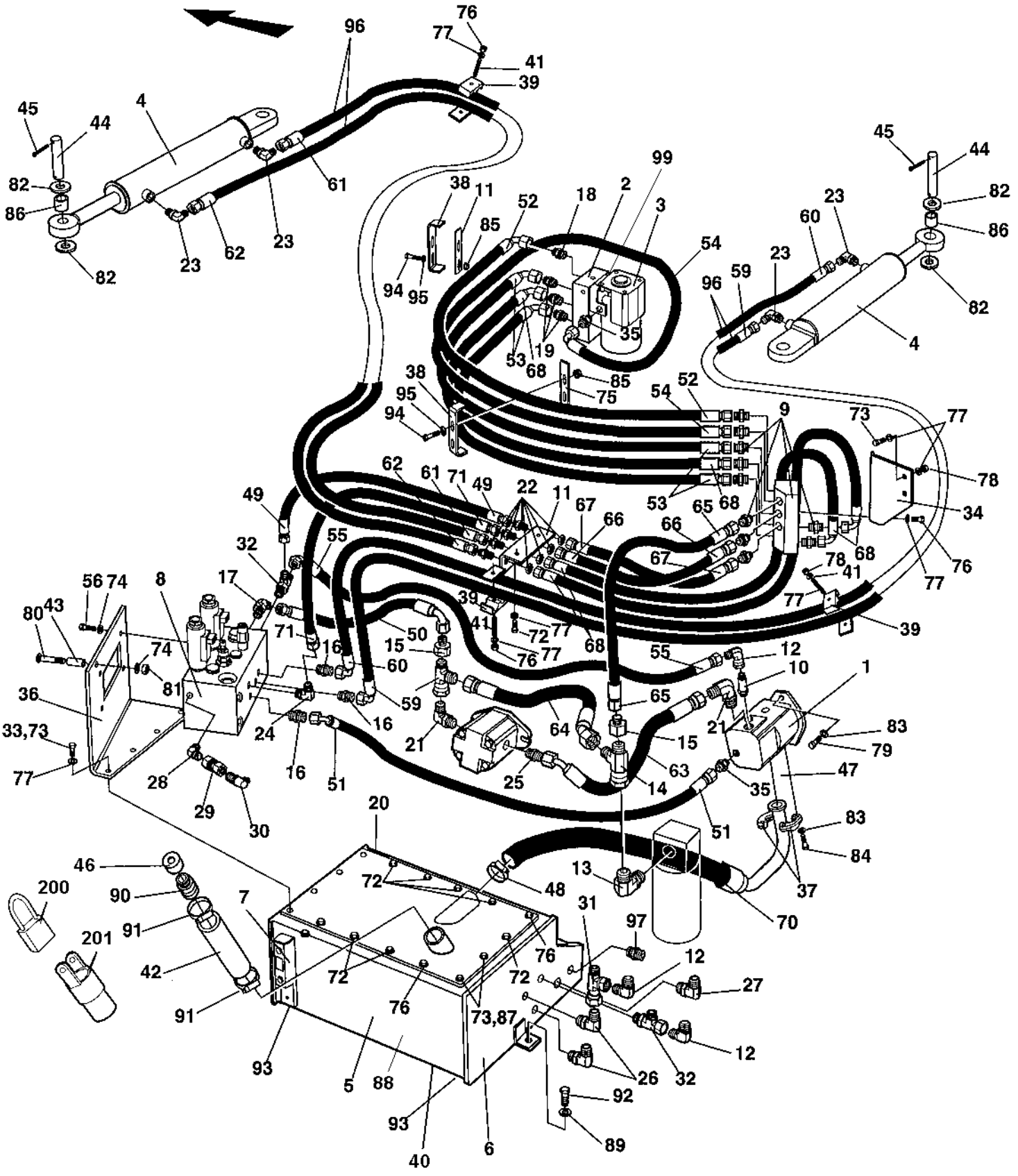

Steering system

Item	Part No	Rem	Qty	Description		Code
1	4700376916		1	Hydraulic pump		
2	4700370155		1	Valve block		
3	4700376912		1	Steering valve, cpl (Page 102)		
4	4700389426		2	Steering cylinder, cpl		
	4700392505		2	Steering cylinder w. linear sensor, cpl (Page 104)		
5	4700389427		1	Hydraulic oil tank		
6	4700389423		1	Tank cover		
7	4700989151		1	Oil level glass		D
8	4700389451		1	Multifunction block (Page 106)		
	4700940304		1	.Filter		
9	4700389448		1	Connection block		
10	4700791826		1	Straight connector orfs		
11	4700376574		1	Bracket		
12	4700791745		3	Elbow 90, O-ring with swivel		
13	4700791321		1	Elbow adapter 90		
14	4700904496		2	Connector		
15	4700791791		2	Reducer		
16	4700791409		3	Straight connector orfs		
17	4700791796		1	Elbow 45, O-ring with swivel		
18	4700791799		1	Straight connector orfs		
19	4700791828		3	Straight connector orfs		
20	4700357141		1	O-ring		
21	4700791838		2	Elbow 90, O-ring with swivel		
22	4700791830		4	Bulkhead union		
23	4700791398		4	Elbow 90, O-ring		
24	4700791846		1	Elbow 90, O-ring with swivel		
25	4700791539		1	Straight connector		
26	4700791841		2	Elbow 90 orfs		
27	4700791231		1	Elbow 90		D
28	4700791836		1	Elbow adapter 45		
29	4700791847		1	Straight connector		
30	4700923405		1	Measuring nipple		D
31	4700791798		1	T-connector		
32	4700791833		2	T-connector		
33	4700500022		2	Screw	M8x30H 8.8 A2K	
34	4700389450		1	Bracket		
35	4700791827		2	Straight connector orfs		
36	4700389421		1	Bracket		
37	4700232119		2	Split flange		
38	4700359649		2	Hose clamp		
39	4700904085		4	Pipe clamp		
40	4700892446		1	Plug		
41	4700791858		4	Stud		
42	4700205067		1	Rubber hose		
43	4700389784		1	Spacer sleeve		
44	4700357419		4	Shaft		D
45	4700630019		8	Cotter pin		D
46	4700357138		1	Ventilating filter		A
47	4700813443		1	O-ring		D
48	4700923378		1	Hose clamp		
49	4700483739		1	Hydraulic hose		
50	4700483725		1	Hydraulic hose		
51	4700483740		1	Hydraulic hose		
52	4700483727		1	Hydraulic hose		
53	4700483745		2	Hydraulic hose		
54	4700483741		1	Hydraulic hose		
55	4700483746		1	Hydraulic hose		
56	4700500048		4	Screw	M10-1,5x20 8,8	
59	4700483795		1	Hydraulic hose		

Steering system

18208

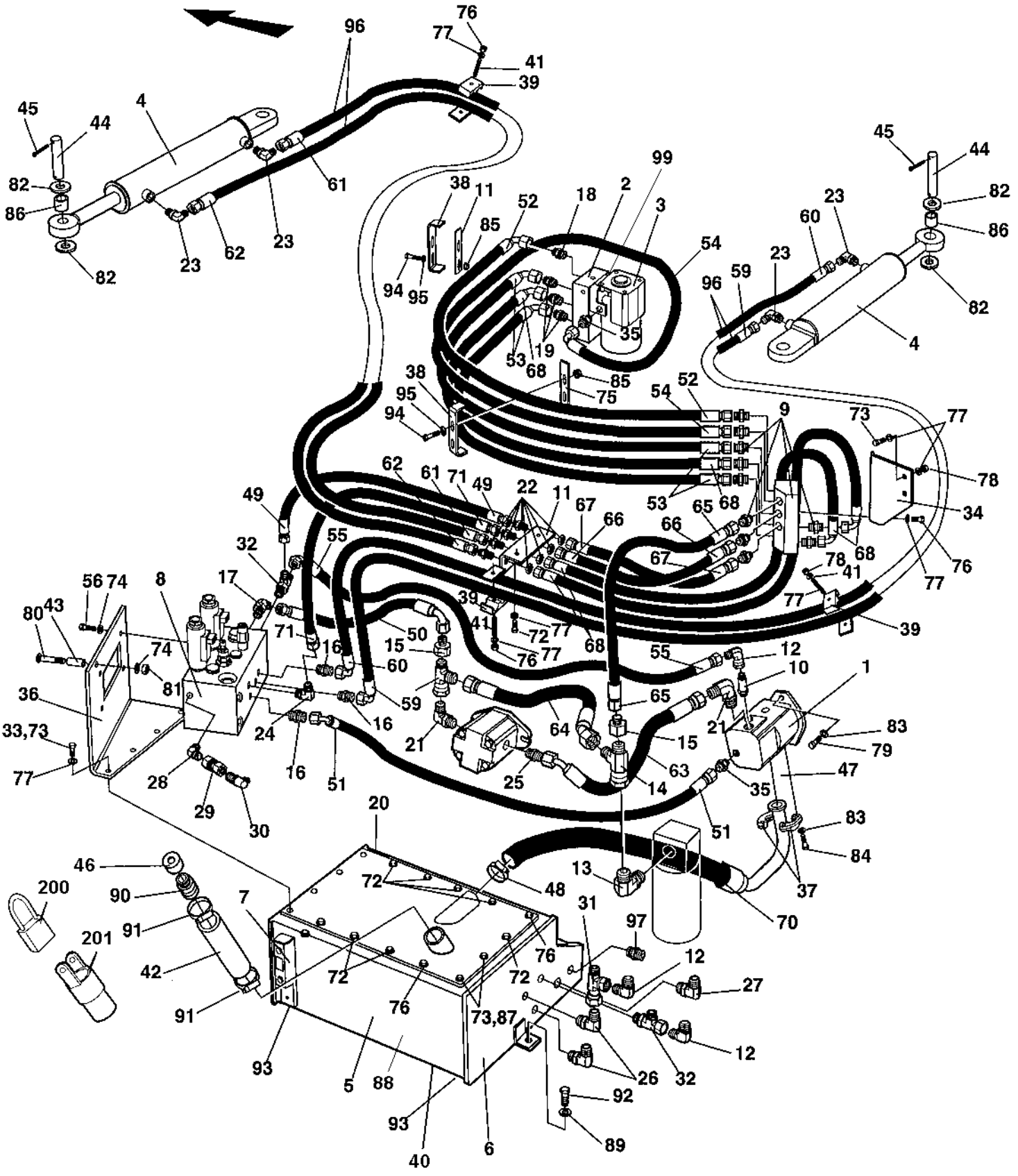

Steering system

Item	Part No	Rem	Qty	Description		Code
60	4700483796		1	Hydraulic hose		
61	4700483734		1	Hydraulic hose		
62	4700483735		1	Hydraulic hose		
63	4700483862		1	Hydraulic hose		
64	4700483730		1	Hydraulic hose		
65	4700483722		1	Hydraulic hose		
66	4700483737		1	Hydraulic hose		
67	4700483738		1	Hydraulic hose		
68	4700483744		3	Hydraulic hose		
70	4700389452		1	Hydraulic hose		
71	4700483736		1	Hydraulic hose		
72	4700500019		9	Screw	M8x16H 8.8 A2K	
73	4700500021		6	Screw	M8-1,25x25 8.8	
74	4700904230		5	Washer		
75	4700359650		2	Hose clamp		
76	4700500053		7	Screw	M8x20H 8.8	
77	4700904229		28	Washer	8,4x16x1,5	
78	4700791182		6	Lock nut	M8	
79	4700508096		2	Screw		
80	4700903524		1	Bolt		
81	4700791172		1	Lock nut		
82	4700600016		8	Washer	26x45x4	
83	4700904637		6	Washer		
84	4700500029		4	Screw		
85	4700902285		4	Lock nut	M6	
86	4700376779		6	Spacer		
87	4700904640		2	Washer	8,4x22x3	
88	4700376764		1	Rubber cloth		
89	4700904567		2	Washer	10,5x28x6 HB305	
90	4700357139		1	Connector		
91	4700313008		2	Hose clamp		D
92	4700500028		2	Screw		
93	4700357459		2	Rubber cloth		
94	4700500061		4	Screw	M6-1X35 8,8	
95	4700904228		4	Washer		
96	4700903082		NXL	Hose shield		
97	4700791823		1	Straight connector orfs		
99	4700160287		4	O-ring		D
200	4700904603	1	1	Pad lock		
201	4700376449	1	1	Connector		

1) Used when Bio-hydraulic oil.

4700376912 Steering valve, cpl

18884

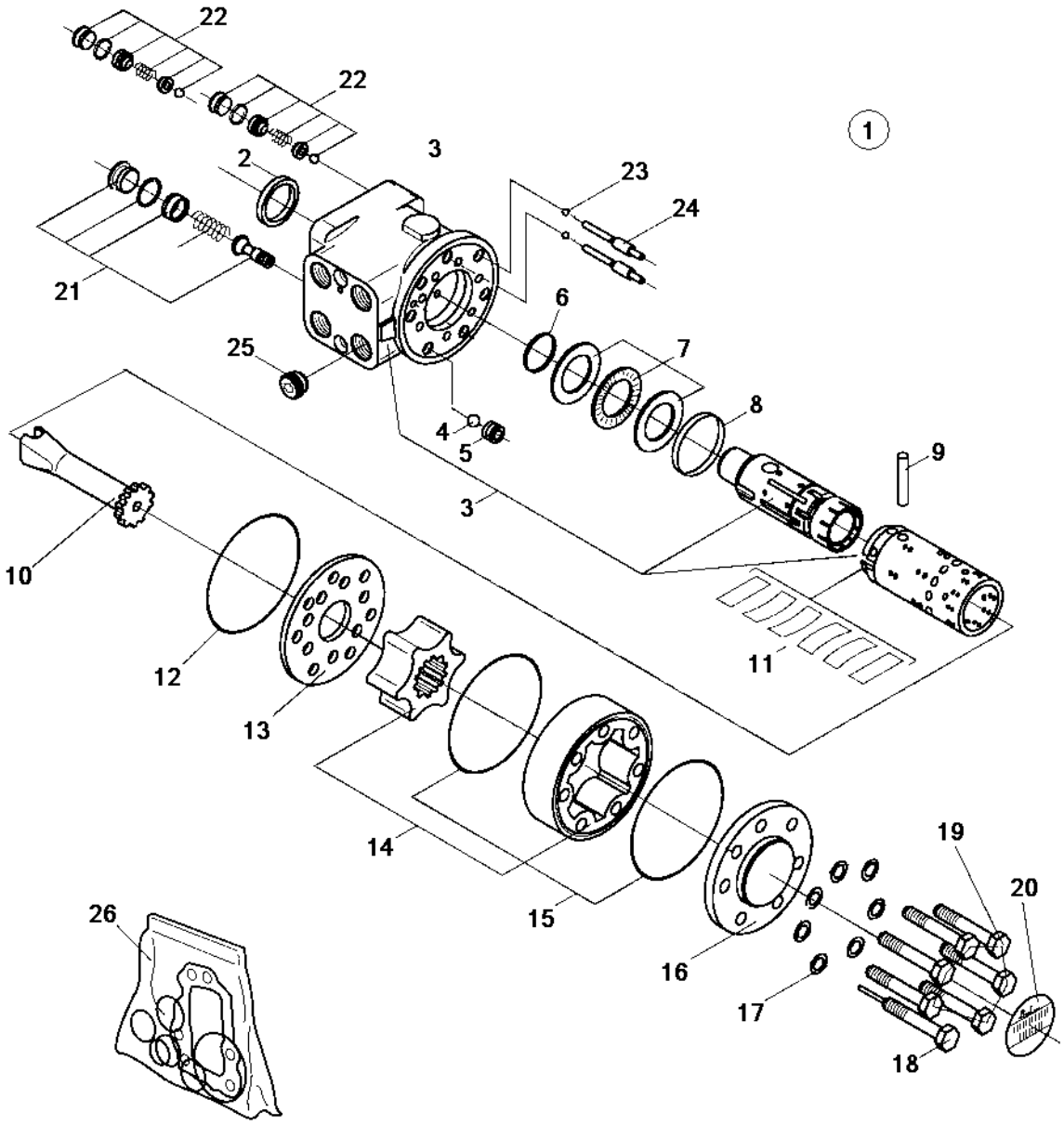

4700376912 Steering valve, cpl

Item	Part No	Rem	Qty	Description	Code
1	4700376912		1	Steering valve, cpl (Page 102)	
2		A	1	.Seal ring	
3			1	.Housing, seats and spool	
4			1	.Ball	
5			1	.Threaded bushing	
6		A	1	.O-ring	
7			1	.Bearing assembly	
8			1	.Ring	
9			1	.Cross pin	
10			1	.Cardan shaft	
11			1	.Set off springs	
12		A	1	.O-ring	
13			1	.Distributor plate	
14			1	.Gear wheel set	
15		A	2	.O-ring	
16			1	.End cover	
17		A	7	.Washer	
18			1	.Screw with pin	
19			6	.Screw	
20			1	.Name plate	
21			1	.Pilote relief valve	
22			2	.Shock valve	
23			2	.Ball	
24			2	.Bushing with pin	
25			1	.Check valve	
26	4700908783		1	.Seal kit	D

A) Included in seal kit, item 26

4700392505 Steering cylinder, cpl

18813

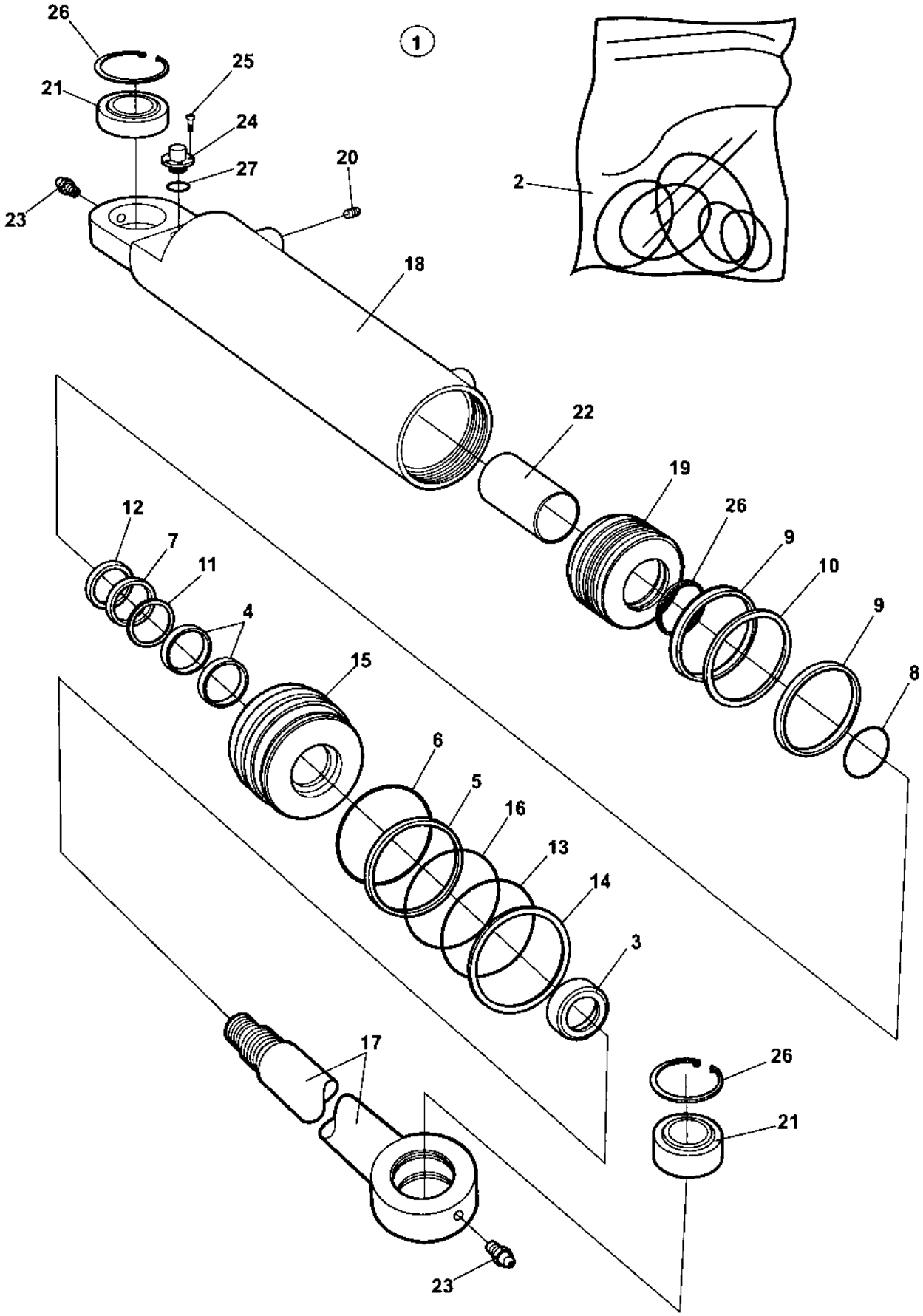

4700392505 Steering cylinder, cpl

Item	Part No	Rem	Qty	Description	Code
1	4700392505		1	Steering cylinder w. linear sensor, cpl (Page 104)	
2			1	.Seal kit	
3			1	..Seal	
4			2	..Retaining ring	
5			1	..Back-up ring	
6			1	..O-ring	
7			1	..Seal	
8			1	..O-ring	
9			1	..Seal	
10			1	..Seal	
11			1	..Back-up ring	
12			1	..Retaining ring	
13			1	..O-ring	
14			1	.Retaining ring	
15			1	.Steering	
16			1	.Retaining ring	
17			1	.Piston rod	
18			1	.Cylinder tube	
19			1	.Piston	
20			1	.Cylindet nut	
21	4700945935		2	.Slide bearing	
22			2	.Electrical travel	
23			2	.Grease fitting	
24			1	.Electrical contact	
25			5	.Screw	
26			1	.Retaining ring	
27			1	.O-ring	

4700389451 Multifunction block

18934

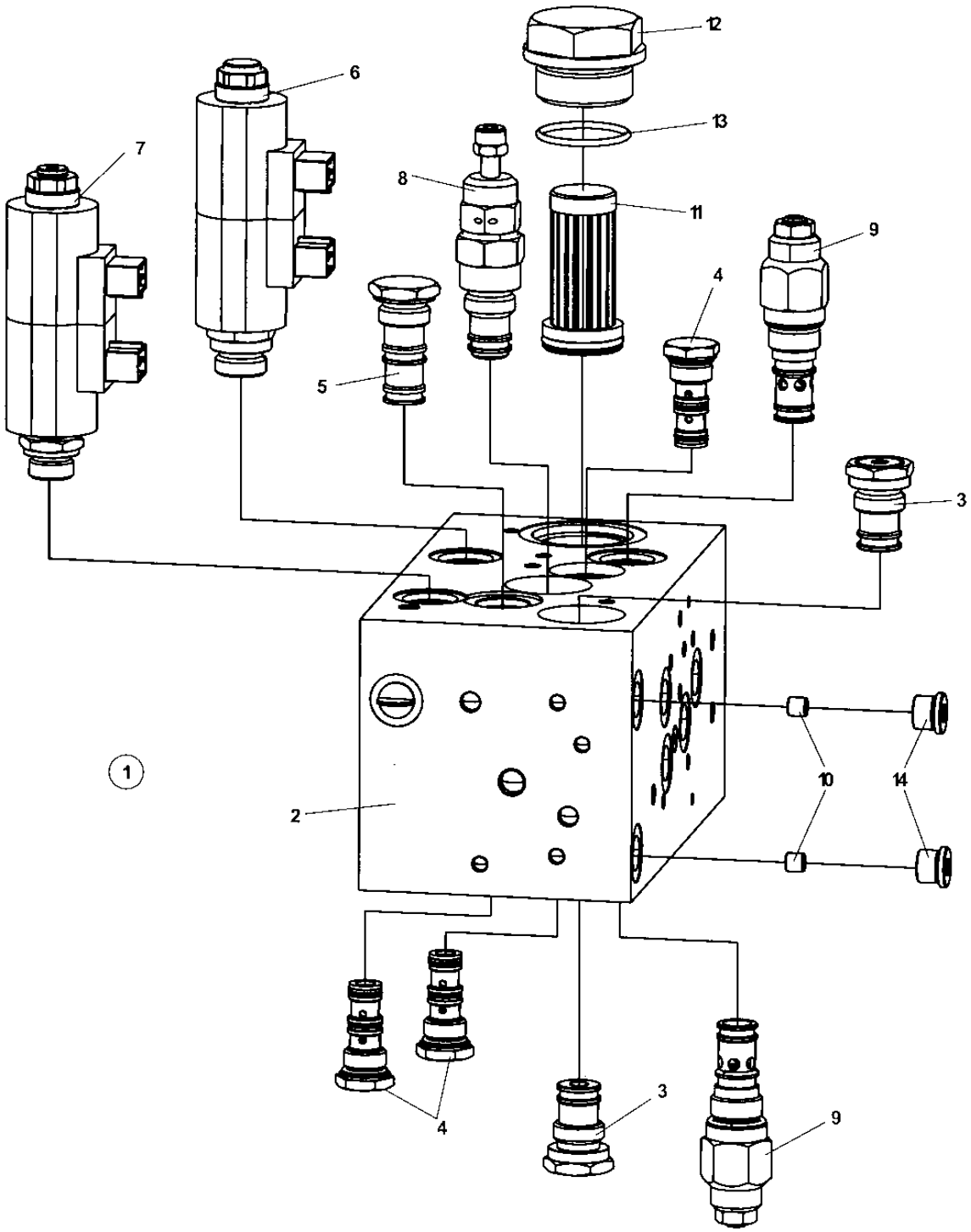

4700389451 Multifunction block

Item	Part No	Rem	Qty	Description	Code
1	4700389451		1	Multifunction block (Page 106)	
2			1	.Valve block	
3			2	.Valve	
4	4700940572		3	.Shuttle valve	
5			1	.Shuttle valve	
6	4700940302		1	.Valve	
7	4700940303		1	.Valve	
8			1	.Pressure relief valve	
9			1	.Pressure relief valve	
10			2	.Orifice	
11	4700940304		1	.Filter	
12	4700940305		1	.Filter cap	
13	4700940306		1	.Gasket	
14			2	.Plug	

Electrical equipment

Item	Part No	Rem	Qty	Description	Code
10				Electrical equipment (Page 110)	
20				Instrument box (Page 116)	
25				Instrument panel, main (Page 118)	
30				Instrument panel, upper left (Page 120)	
32				Instrument panel, upper right (Page 122)	
35				Instrument panel, lower left (Page 124)	
40				Instrument panel, lower right (Page 126)	
45				Instrument panel, relay, fuses (Page 128)	
50				Forward and reverse control (Page 130)	EDC
60				Driving lights (Page 132)	Direction & licenseplate light
62				Rotating beacon (Page 134)	
63				Tachograph (Page 136)	

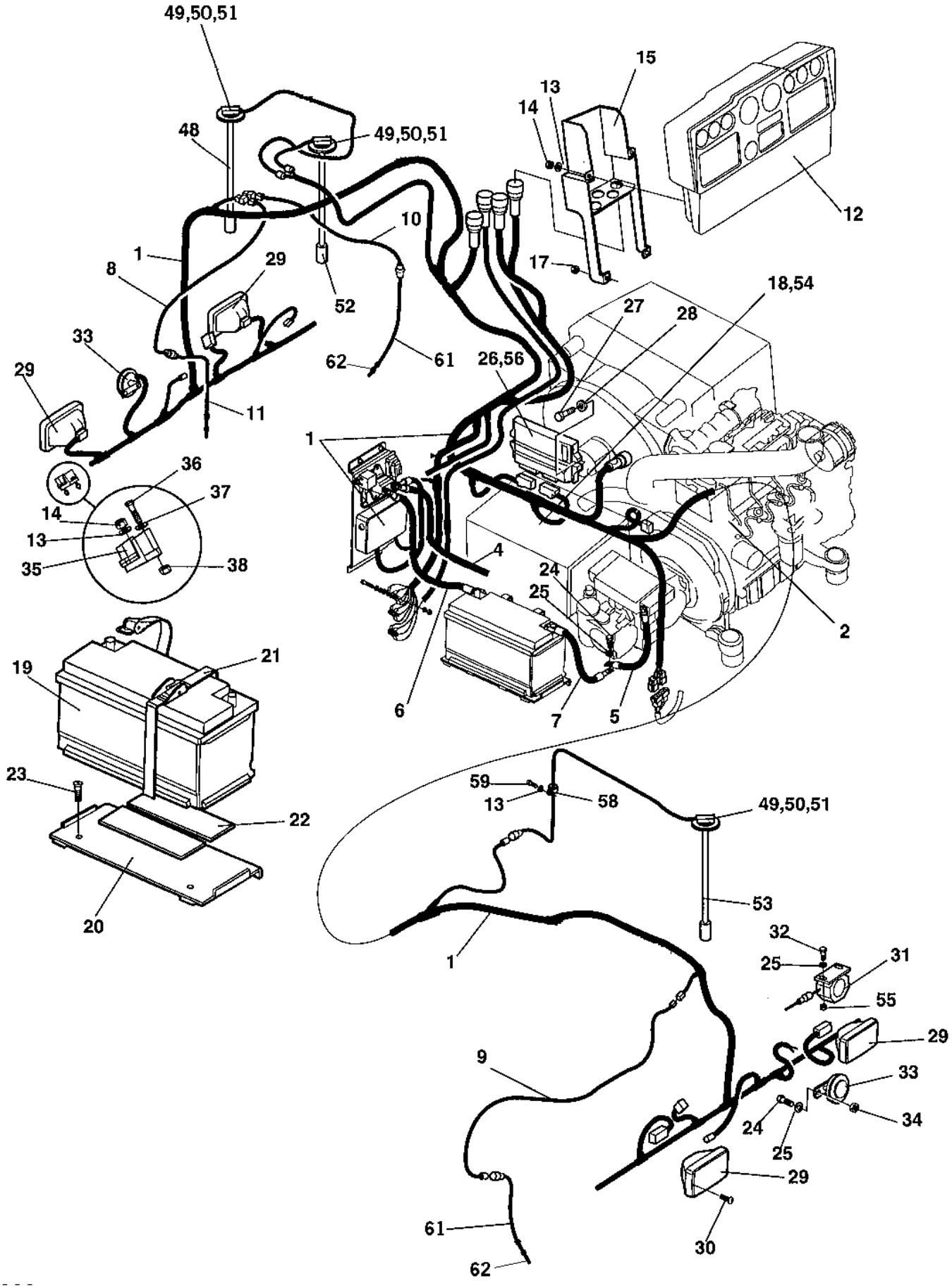
49,50,51
48
49,50,51
15
13
14
12
10
1
8
29
52
17
18,54
27
28
33
62
61
26,56
29
11
1
36
37
14
13
35
38
4
24
25
2
6
7
5
19
21
23
22
20
59
13
58
49,50,51
53
1
32
25
31
55
29
9
33
24
25
34
29
61
62
30

Electrical equipment

Item	Part No	Rem	Qty	Description		Code
1				Frame wiring (Page 112)		
2				Engine wiring (Page 114)		
4	4700791815		1	Connection cable, coarse		
5	4700791525		1	Connection cable, coarse		
6	4700791817		1	Battery cable		
7	4700791818		1	Battery cable		
8	4700389674		1	Cable harness		
9	4700392178		1	Cable harness		
10	4700392179		1	Cable harness		
11	4700376845		1	Sensor		
12			1	Instrument panel		
13	4700904228		7	Washer		
14	4700586002		6	Lock nut		
15	4700389660		1	Cable holder		
17	4700902286		4	Lock nut	M8	
18	4700313041		0	Cable ties		
19	4700791719		1	Battery		
20	4700389658		1	Battery holder		
21	4700389662		2	Strap		
22	4700357459		2	Rubber cloth		
23	4700513009		2	Screw		
24	4700500053		3	Screw	M8x20H 8.8	
25	4700904229		7	Washer	8,4x16x1,5	
26	4700389661	1	1	Control unit		
27	4700500023		2	Screw	M8-1,25x40 8,8	
28	4700904640		2	Washer	8,4x22x3	
29	4700902227		4	Work light		
30	4700791389		8	Drive screw		
31	4700904910		1	Back-up alarm		
32	4700500021		2	Screw	M8-1,25x25 8.8	
33	4700999027		2	Horn		D
34	4700570005		2	Nut	M8	
35	4700392930		2	Junction box		
36	4700500087		4	Screw		
37	4700904281		4	Washer		
38	4700586001		4	Lock nut		
48	4700389731		1	Level sender		
49	4700904206		15	Screw		
50	4700372718		3	Lid		
51	4700370745		3	Flange, cpl		
52	4700389730	A	1	Level sender		
53	4700389917		1	Level sender		
54	4700960727		3	Clamp		
55	4700791182		2	Lock nut	M8	
56			1	Installed software register file		
58	4700791388		1	Clamp		
59	4700902224		1	Screw	M6x10	
61	4700945169		2	Frequency sensor		
62	4700392221		2	Mount kit for sensor		

1) Machine model and serial number needed when order.
A) Fuel level

Frame wiring

18452

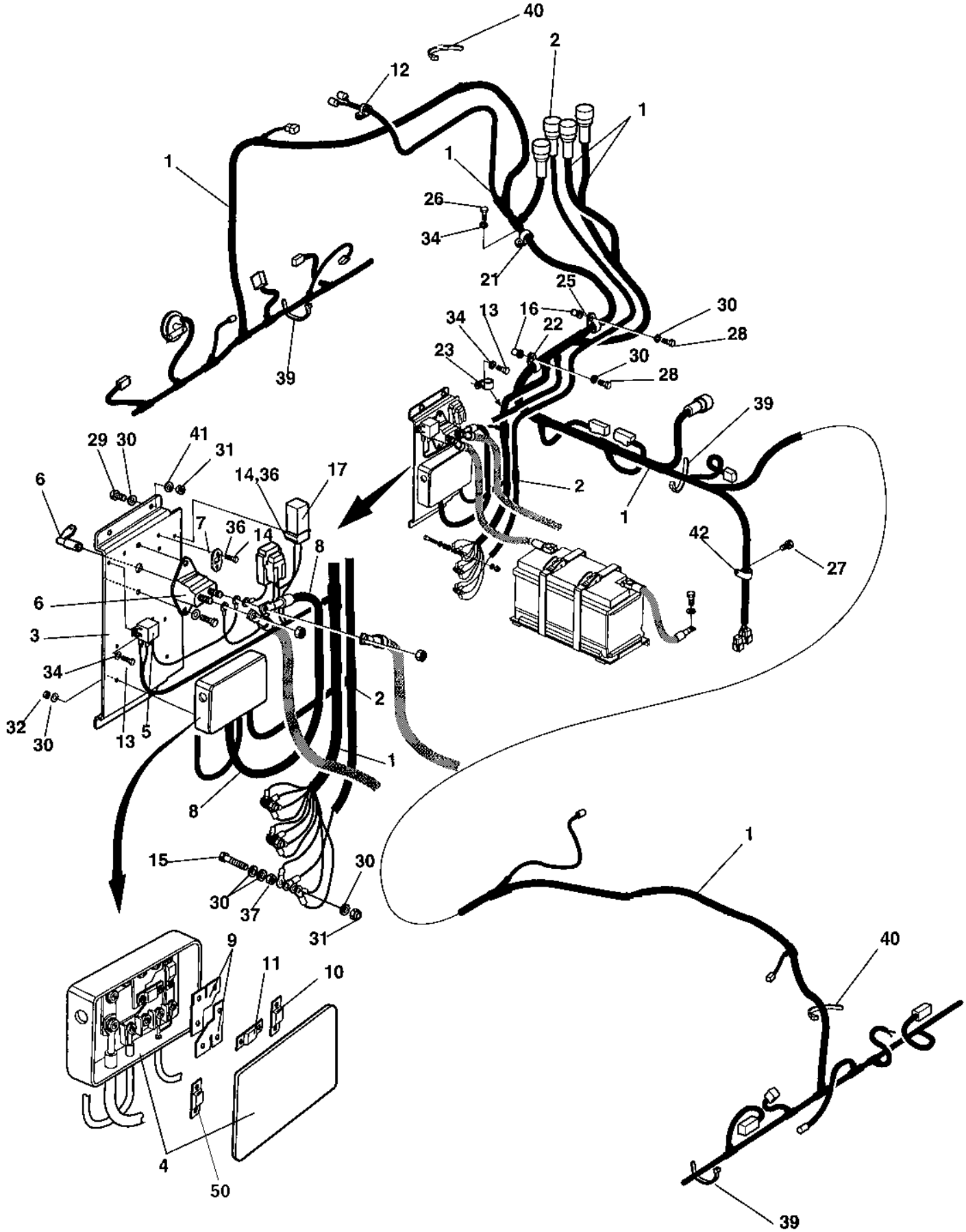

Frame wiring

Item	Part No	Rem	Qty	Description		Code
1	4700392177		1	Cable harness		
2	4700389733		1	Cable harness		
3	4700389659		1	Bracket		
4	4700791532		1	Fuse box		
5	4700904448		1	Relay		D
6	4700903640		1	Battery switch		D
	4700903641		1	.Key		D
7	4700904036		1	Fuse holder		
8	4700791816		1	Connection cable, coarse		
9	4700791814		2	Contact bridge		
10	4700791812		1	Fuse	30A - Pink	
11	4700791813		1	Fuse	50A - Red	
12	4700904346		1	Clamp		
13	4700500013		5	Screw	M6-1x16 8,8	
14	4700500184		3	Screw	M5-0,8x14 8,8	
15	4700500230		3	Screw	M8-1.25x35	
16	4700791569		4	Blind insert nut		
17	4700939958		1	Relay		
18	4700960037		5	Cable clip		
19	4700960069		1	Ring terminal		
21	4700921047		1	Clamp		
22	4700921050		1	Clamp		
23	4700921028		1	Clamp		
25	4700921056		1	Clamp		
26	4700500012		1	Screw	M6x12	
27	4700541708		1	Screw	M08x16	
28	4700500053		2	Screw	M8x20H 8.8	
29	4700500021		4	Screw	M8-1,25x25 8.8	
30	4700904229		19	Washer	8,4x16x1,5	
31	4700586003		7	Lock nut	M8	
32	4700791182		4	Lock nut	M8	
34	4700904228		6	Washer		
36	4700904281		3	Washer		
37	4700570005		3	Nut	M8	
39	4700313102		N	Cable ties		
40	4700313041		N	Cable ties		
41	4700904556		4	Washer	8,4x16x3,0	
42	4700960727		1	Clamp		
50	4700791557	A	1	Fuse	125A, green	

A) Main

Engine wiring

18203

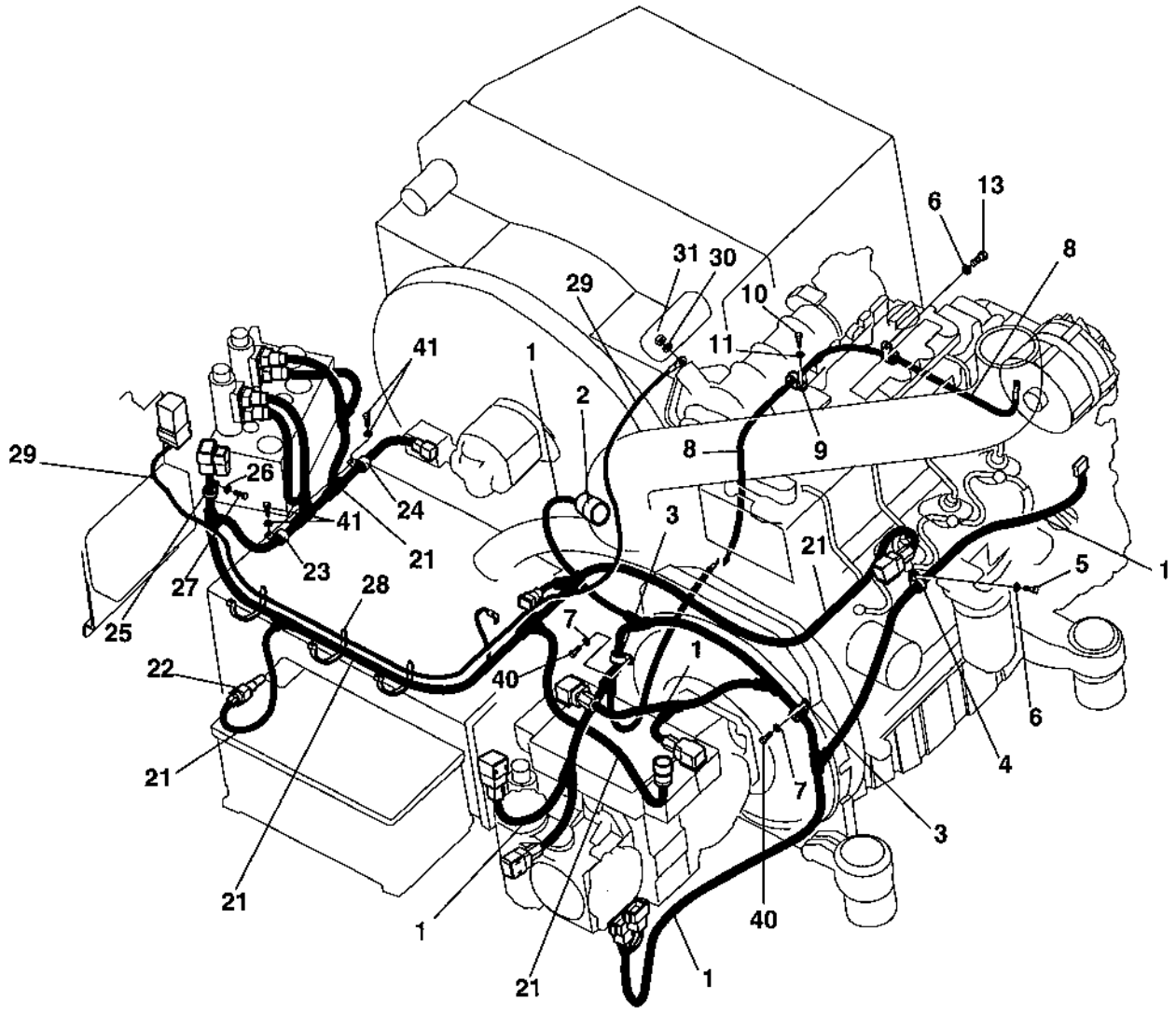

Engine wiring

Item	Part No	Rem	Qty	Description		Code
1	4700389664		1	Cable harness		
2	4700924737		1	Indicator		
3	4700921080		2	Clamp		
4	4700904346		1	Clamp		
5	4700500019		1	Screw	M8x16H 8.8 A2K	
6	4700904229		2	Washer	8,4x16x1,5	
7	4700904637		2	Washer		
8	4700791811		1	Connection cable, coarse		
9	4700921039		1	Pipe clamp		
10	4700500013		1	Screw	M6-1x16 8,8	
11	4700904228		1	Washer		
12	4700921072		1	Clamp		
13	4700500053		1	Screw	M8x20H 8.8	
21	4700389665		1	Cable harness		
22	4700903631		1	Temperature sensor	Hydraulic oil	D
23	4700904346		1	Clamp		
24	4700921072		1	Clamp		
25	4700921031		1	Clamp		
26	4700904228		1	Washer		
27	4700500185		1	Screw	M6-1x14 8,8	
28	4700313102		N	Cable ties		
29	4700377467		1	Cable harness		
30	4700904281		2	Washer		
31	4700570003		1	Nut	M5	
40		1		Existing parts		
41		2		Existing parts		

1) See section for "Engine module"
2) See section for "Steering system"

Instrument box

18246

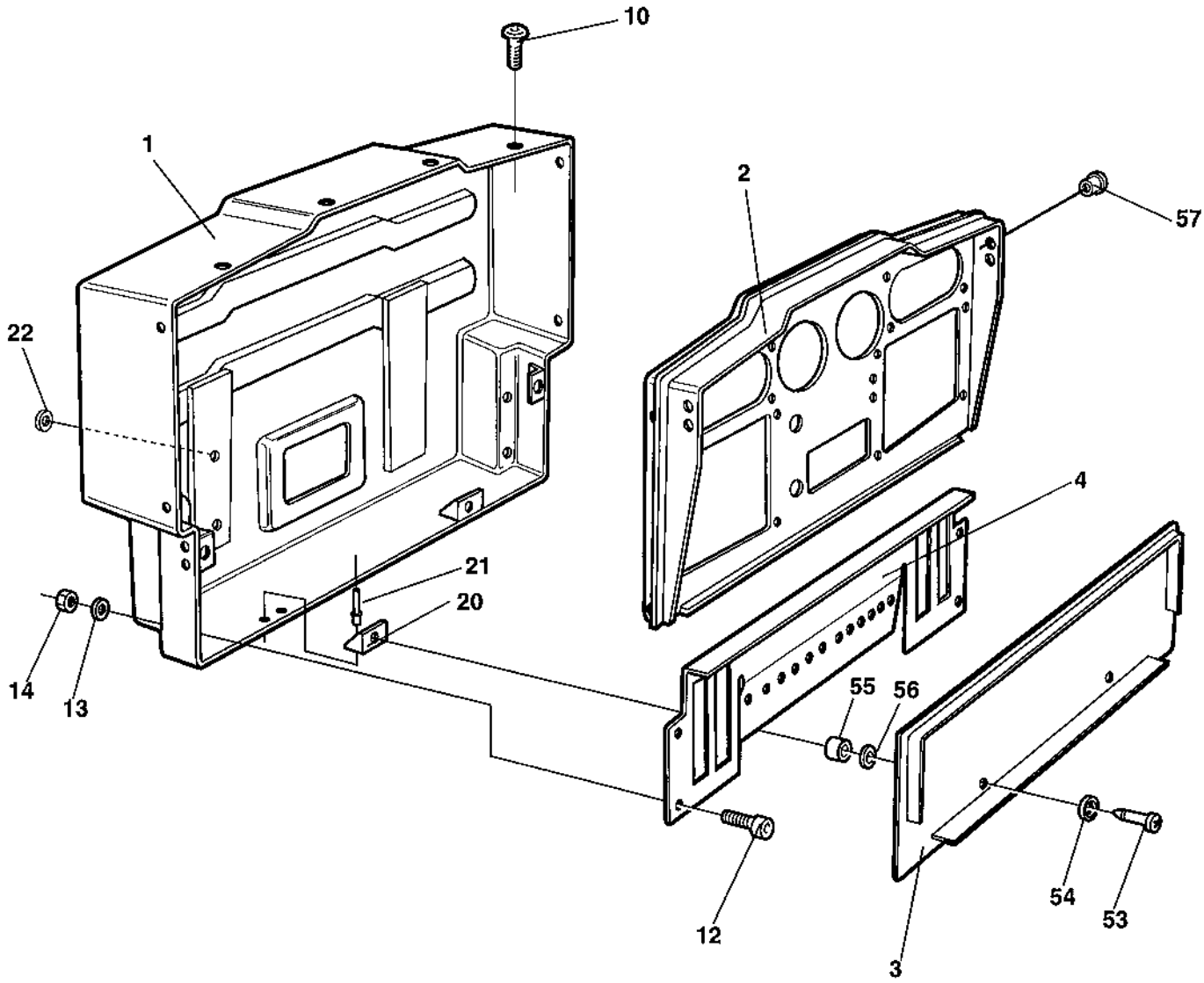

Instrument box

Item	Part No	Rem	Qty	Description	Code
1	4700374105		1	Instrument box	
2	4700374379		1	Control panel	
3	4700359845		1	Cover	
4	4700370165		1	Relay bracket	
10	4700903658		8	Screw	M5x10
12	4700500040		4	Screw	M6-1x20 8,8
13	4700904228		4	Washer	
14	4700902285		4	Lock nut	M6
20	4700903602	1	4	Locking device	
21	4700903436	1	8	Blind rivet	
22	4700903961	1	4	Washer	
53	4700903599		4	Trunnion	
54	4700903600		4	Rubber washer	
55	4700903601		4	Washer	
56	4700903678		4	Rubber washer	
57	4700903653		4	Plug	

1) Included in cpl. Instrument box, item 1.

Instrument panel, main

18247

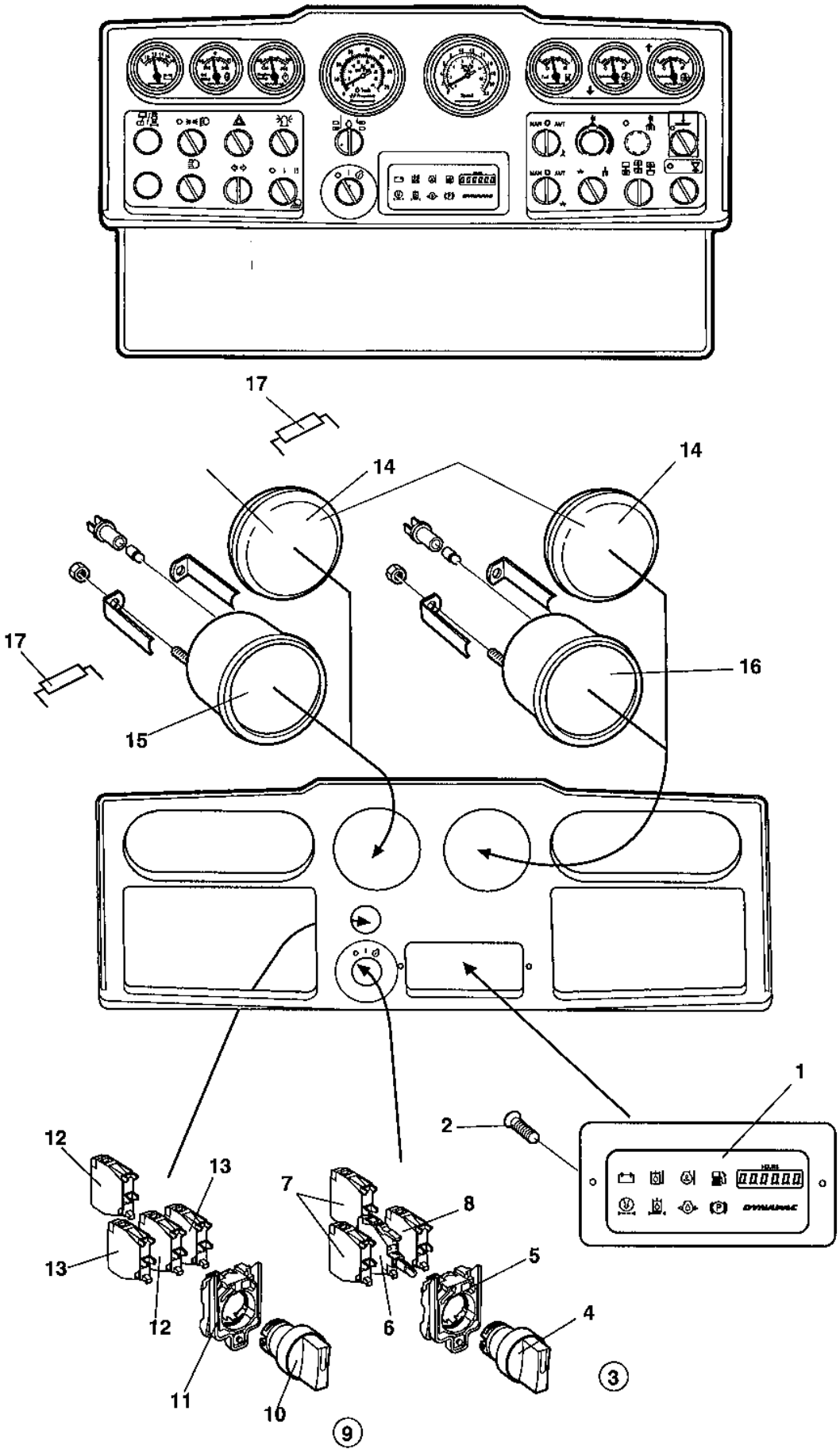

Instrument panel, main

Item	Part No	Rem	Qty	Description	Code
1	4700380660		1	Display	D
2	4700903657		2	Screw	
3		B	1	Switch, cpl	
4	4700791735		1	Illuminated switch, green	
5	4700791733		1	Fixing collar	
6	4700791729	F	1	Illuminated block	
7	4700791723		2	Connector	
8	4700791736		1	Connector	
9		C	1	Switch, cpl	
10	4700791725		1	Switch, black	
11	4700791733		1	Fixing collar	
12	4700791723		2	Connector	
13	4700791736		2	Connector	
14	4700345139		N	Hole plug	
15	4700389728		1	Tachometer and frequency meter	
	4700904889		1	.Bulb	
	4700904890		1	.Lamp holder	
		D	1	Sensor	
16	4700389729		1	Speedometer	
	4700904889		1	.Bulb	
	4700904890		1	.Lamp holder	
		D	1	Sensor	
17	4700904971		2	Reducer	
18	4700343550		1	Connection cable	

B) Start
C) Freq/tacho selector
D) See speed and frequency sensors
F) Green

Instrument panel, upper left

18248

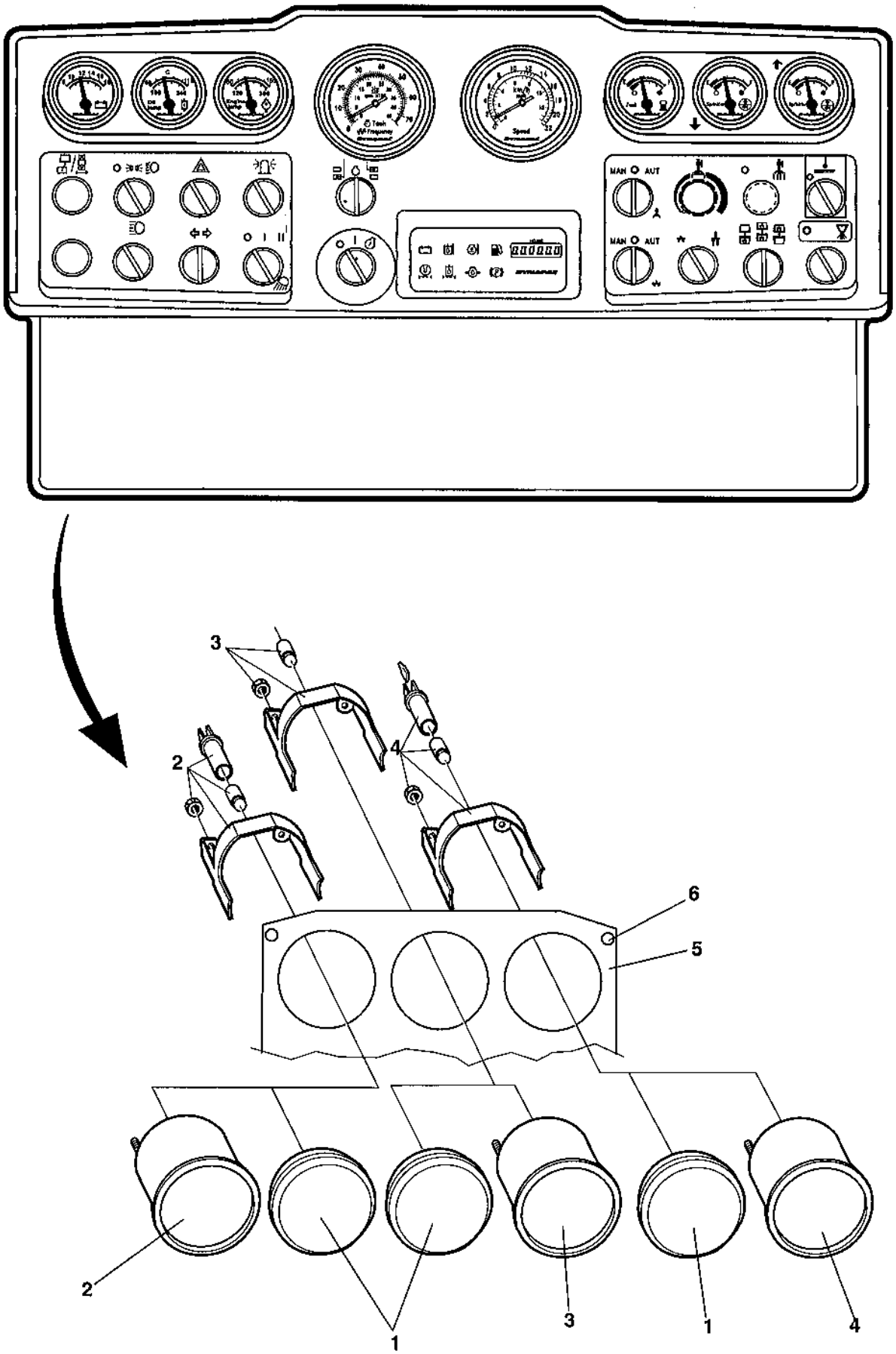

Instrument panel, upper left

Item	Part No	Rem	Qty	Description	Code
1	4700345870		N	Plug	
2	4700389721		1	Volt meter	
	4700904889		1	.Bulb	
	4700904890		1	.Lamp holder	
3	4700389722		1	Temperature meter, hydraulic oil	
	4700904889		1	.Bulb	
	4700904890		1	.Lamp holder	
		1	1	Temperature sender	
4	4700389723		1	Temperature meter, engine oil	
	4700904889		1	.Bulb	
	4700904890		1	.Lamp holder	
		2	1	Temperature sender	
5		3	1	Control panel plate	
6	4700903657		2	Screw	

1) See section " Electrical equipment "
2) See section " Engine "
3) See section " Instrument panel, lower left "

Instrument panel, upper right

18249

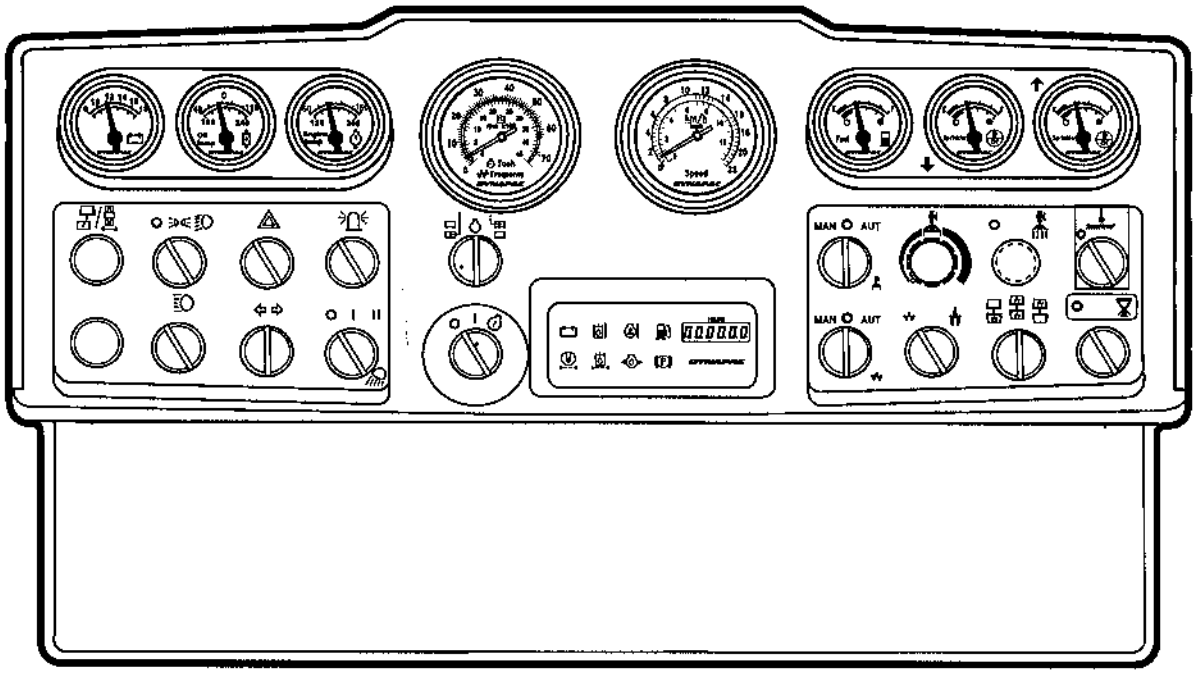

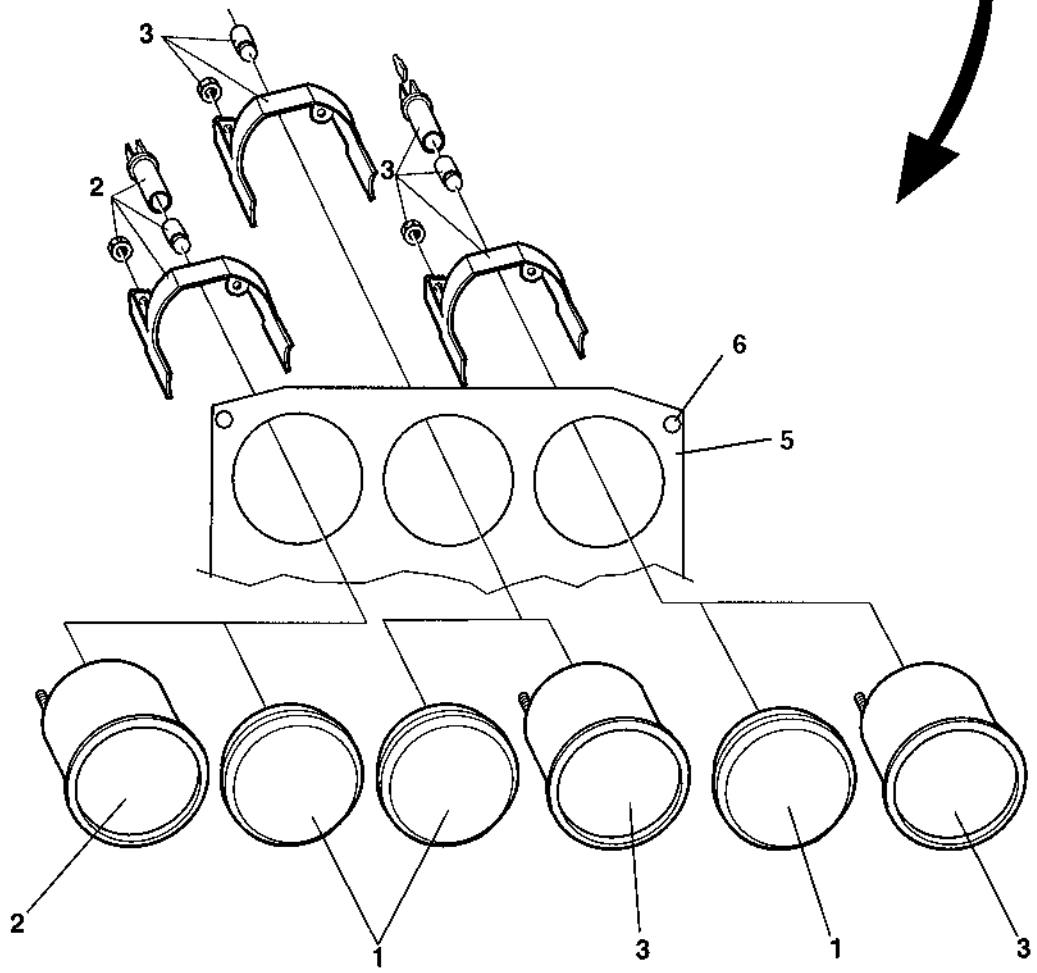

Instrument panel, upper right

Item	Part No	Rem	Qty	Description	Code
1	4700345870		1	Plug	
2	4700389725		1	Fuel gauge	
	4700904889		1	.Bulb	
	4700904890		1	.Lamp holder	
		1	1	Fuel level sender	
3	4700389726	A	2	Level gauge	
	4700904889		1	.Bulb	
	4700904890		1	.Lamp holder	
		2	2	Water level sender	
5		3	1	Control panel plate	
6	4700903657		2	Screw	

1) See section " Fuel system "
2) See section " Sprinkler system, tanks "
3) See section " Instrument panel, lower right "
A) Sprinkler tanks

Instrument panel, lower left

18250

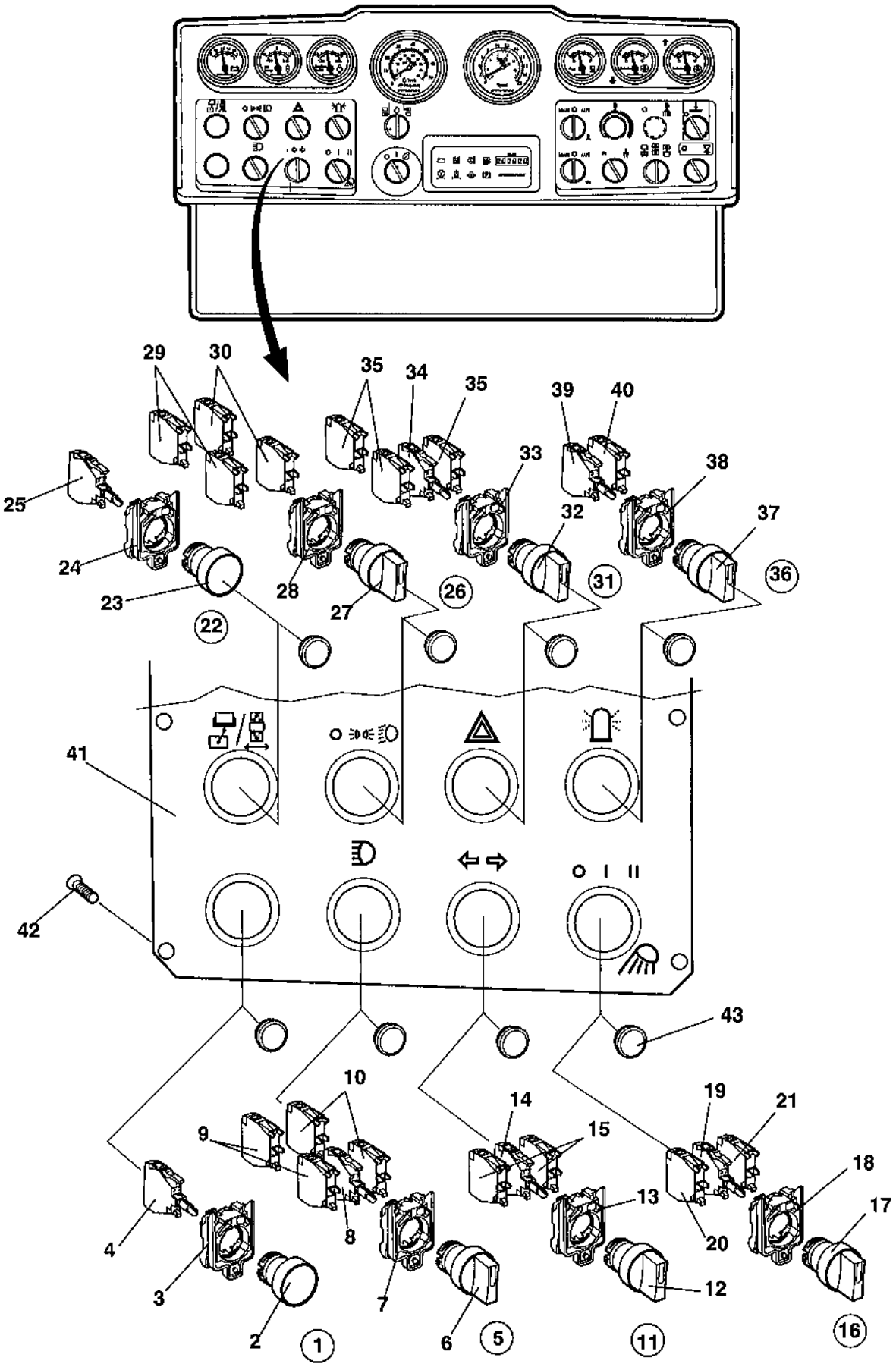

Instrument panel, lower left

Item	Part No	Rem	Qty	Description	Code
1		A	1	Switch, cpl	
2	4700791742		1	Pilot lamp, red	
3	4700791733		1	Fixing collar	
4	4700791728		1	Illuminated block	
5		B	1	Switch, cpl	
6	4700791727		1	Illuminated switch, blue	
7	4700791733		1	Fixing collar	
8	4700791726	C	1	Illuminated block	
9	4700791723		2	Connector	
10	4700791736		2	Connector	
11		D	1	Switch, cpl	
12	4700791740		1	Illuminated switch, green	D
13	4700791733		1	Fixing collar	
14	4700791729	E	1	Illuminated block	
15	4700791736		1	Connector	
16		F	1	Switch, cpl	
17	4700791741		1	Illuminated switch, yellow	
18	4700791733		1	Fixing collar	
19	4700791734	O	1	Illuminated block	
20	4700791723		1	Connector	
21	4700791736		1	Connector	
22		G	1	Lamp, cpl	
23	4700791732		1	Pilot lamp, yellow	
24	4700791733		1	Fixing collar	
25	4700791734	O	1	Illuminated block	
26		H	1	Switch, cpl	
27	4700791725		1	Switch, black	
28	4700791733		1	Fixing collar	
29	4700791723		2	Connector	
30	4700791736		2	Connector	
31		J	1	Switch, cpl	
32	4700791737		1	Illuminated switch, red	D
33	4700791733		1	Fixing collar	
34	4700791728	K	1	Illuminated block	
35	4700791736		3	Connector	
36		L	1	Switch, cpl	
37	4700791738		1	Illuminated switch, yellow	D
38	4700791733		1	Fixing collar	
39	4700791734	O	1	Illuminated block	
40	4700791736		1	Connector	
41	4700377030		1	Control panel plate	
42	4700903657		4	Screw	
43	4700911456	N	N	Hole plug	

A) Warning lamp (error codes)
B) Main beam
C) Blue
D) Direction indicator
E) Green
F) Working light
G) Control lamp, offset position, steering limit
H) Parking/dipped beam
J) Hazard flasher
K) Red
L) Rotating beacon
N) Quantity as required
O) Yellow

Instrument panel, lower right

18251

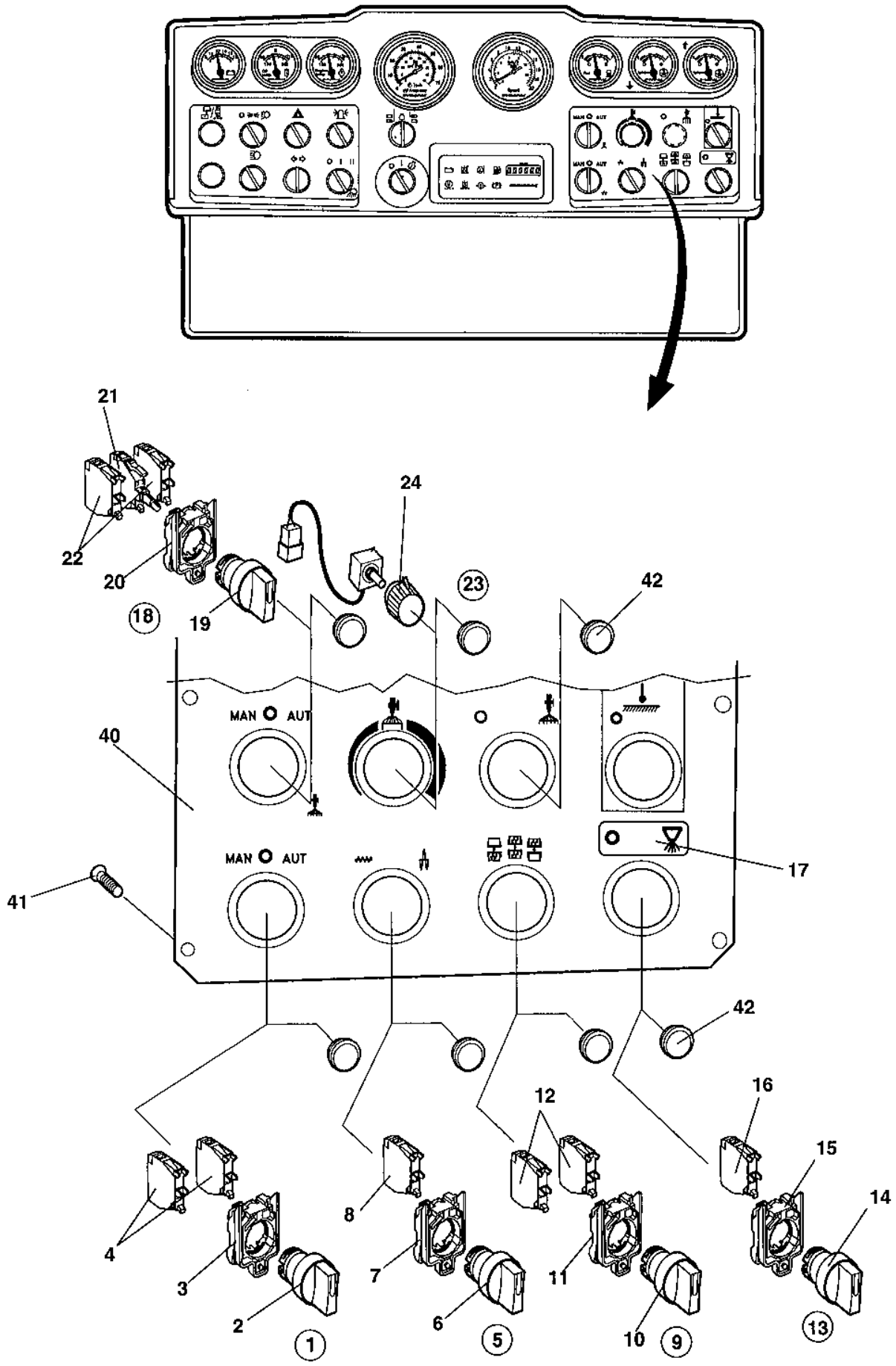

Instrument panel, lower right

Item	Part No	Rem	Qty	Description	Code
1		A	1	Switch, cpl	
2	4700791725		1	Switch, black	
3	4700791733		1	Fixing collar	
4	4700791736		2	Connector	
5		C	1	Switch, cpl	
6	4700791722		1	Switch, black	
7	4700791733		1	Fixing collar	
8	4700791736			Connector	
9		D	1	Switch, cpl	
10	4700791725		1	Switch, black	
11	4700791733		1	Fixing collar	
12	4700791736		2	Connector	
13		H	1	Switch, cpl	
14	4700791722		1	.Switch, black	
15	4700791733		1	.Fixing collar	
16	4700791736		1	.Connector	
17	4700377622		1	Decal	
18		F	1	Switch, cpl	
19	4700791724		1	Illuminated switch, blue	
20	4700791733		1	Fixing collar	
21	4700791726	G	1	Illuminated block	
22	4700791736		2	Connector	
23	4700388737		1	Potentiometer	
24	4700939826		1	.Knob	
40	4700388376		1	Control panel plate	
41	4700903657		4	Screw	
42	4700911456		N	Hole plug	

A) Vibration manual/automatic
C) Amplitude selector
D) Vibration selector
F) Sprinkler manual/automatic
G) Blue
H) Chip spreader

Instrument panel, relay, fuses

18456

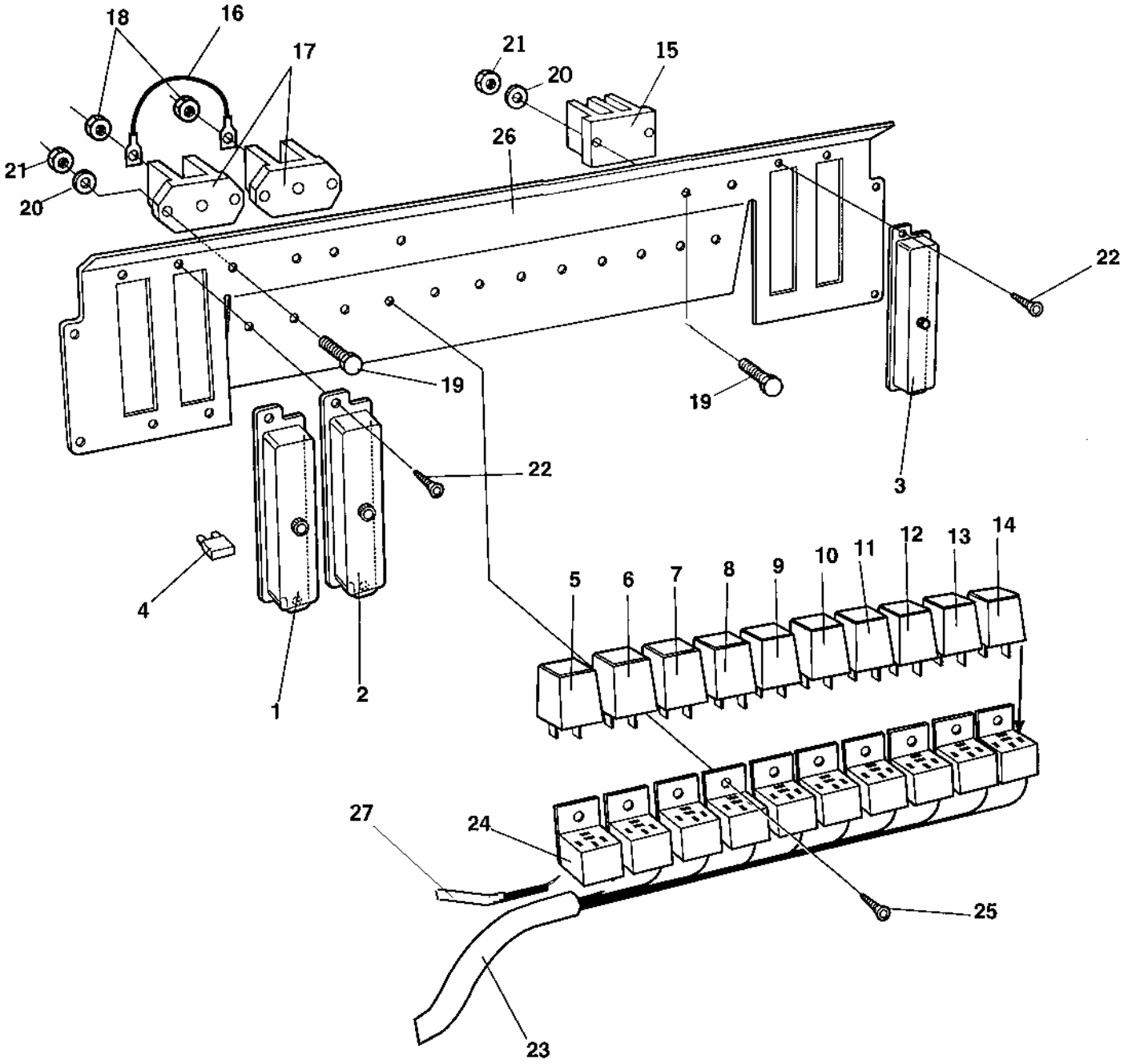

Instrument panel, relay, fuses

Item	Part No	Rem	Qty	Description		Code
1	4700791185	A	1	Fuse box		
2	4700791185		1	Fuse box		
3	4700791185		1	Fuse box		
4	4700901224	B	N	Fuse	3A	D
	4700901225	B	N	Fuse	5A	B
	4700901226	B	N	Fuse	7.5A	
	4700901227	B	N	Fuse	10A	B
	4700901228	B	N	Fuse	15A	
	4700903741	B	N	Fuse	20A Yellow Medium	B
	4700901229	B	N	Fuse	25A	B
5	4700393981		1	Frequency converter		
6	4700791138	C	1	Relay		
7	4700791138	D	1	Relay		
8	4700791138	E	1	Relay		
9	4700791138	F	1	Relay		
10	4700791138	G	1	Relay		
11	4700791138	H	1	Relay		
12	4700791138	I	1	Relay		
13	4700904989	J	1	Flash relay	Option	D
14	4700791138	K	1	Relay		
15	4700903625		1	Junction block		
16	4700903970		1	Cable		
17	4700392930		2	Junction box		
18	4700570004		2	Nut	M6X1,00 -8 A2K	
19	4700533013		6	Screw	M4x20	
20	4700904698		6	Washer		
21	4700923976		6	Nut		
22	4700901767		8	Screw	ST3,5x9,5 Black	
23	4700392180		1	Cable harness		
24	4700357562	P	10	Relay holder		
25	4700902223		10	Screw		
26		1	1	Plate		
27	4700392492		1	Cable harness		

1) See section " Instrument box "
A) Without fuses
B) As required
C) Main relay
D) Fuel cut off valve
E) Horn
F) Sprinkler
G) Main relay, lights
H) Working lights, cab
I) Working lights, frame
J) Direction indicators
K) Brake lights
P) In cable harnesses

Forward and reverse control EDC

18145

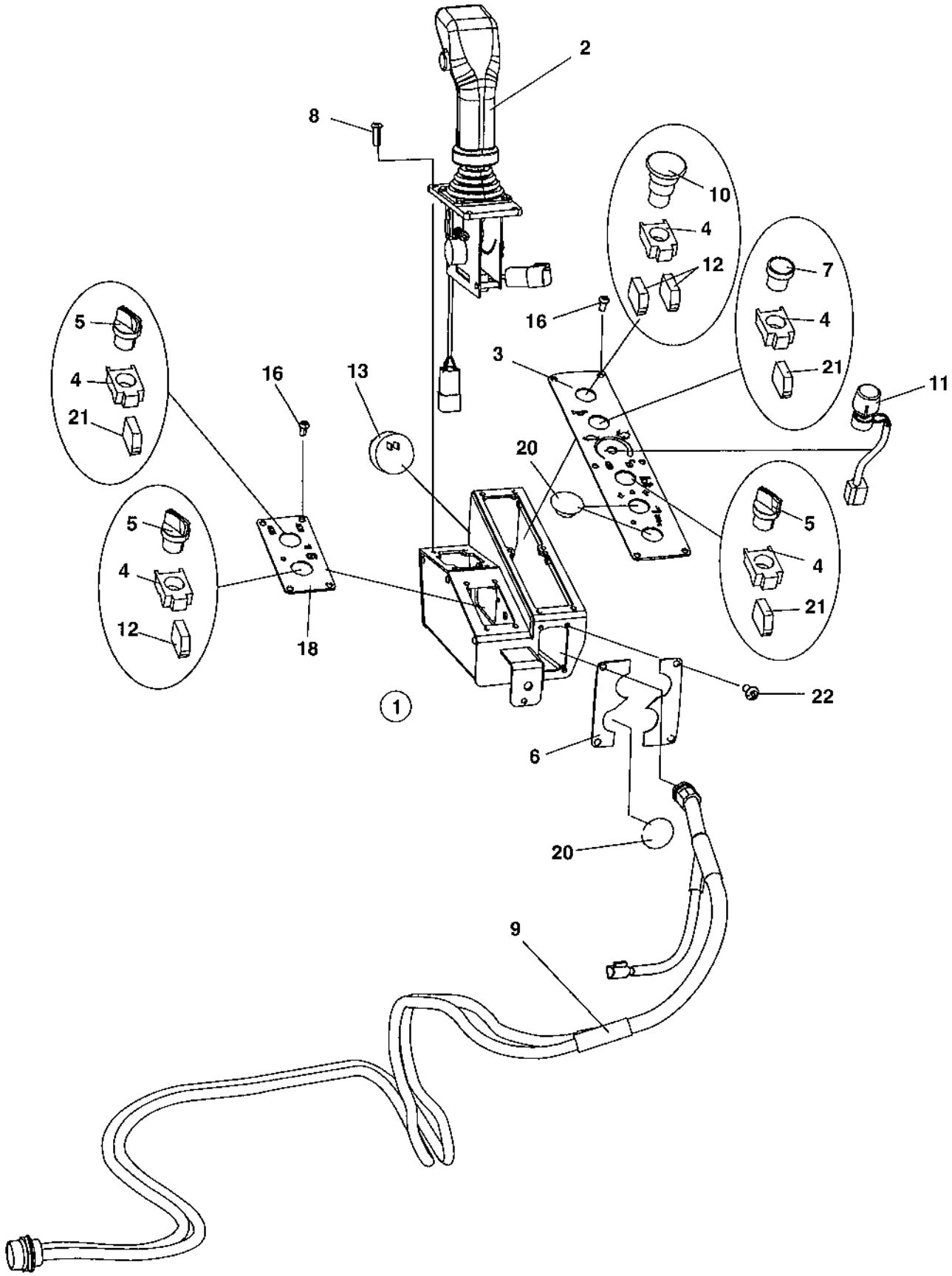

Forward and reverse control EDC

Item	Part No	Rem	Qty	Description	Code
1			1	Control box, cpl	
2	4700388204		1	Control handle, cpl	
	4700945409		3	.Push button	
	4700945410		1	.Potentiometer	
	4700945411		1	.Boot	
	4700945412		3	.Micro switch	
3	4700377029		1	Control panel plate	
4	4700791733		5	Fixing collar	
5	4700791722		3	Switch, black	
6	4700388121		2	Lead through plate	
7	4700791730		1	Push button	
8	4700904653		4	Screw	M5x16 A2-70
9	4700389666		1	Cable harness	
10	4700791739		1	Emergency stop	
11	4700388737		1	Potentiometer	
12	4700791723		3	Connector	
13	4700385599		1	Buzzer	
16	4700904650		19	Screw	
18	4700389020		1	Control panel plate	
20	4700911456		3	Hole plug	
21	4700791736		3	Connector	
22	4700903658		4	Screw	M5x10

Driving lights Direction & licenseplate light

18241

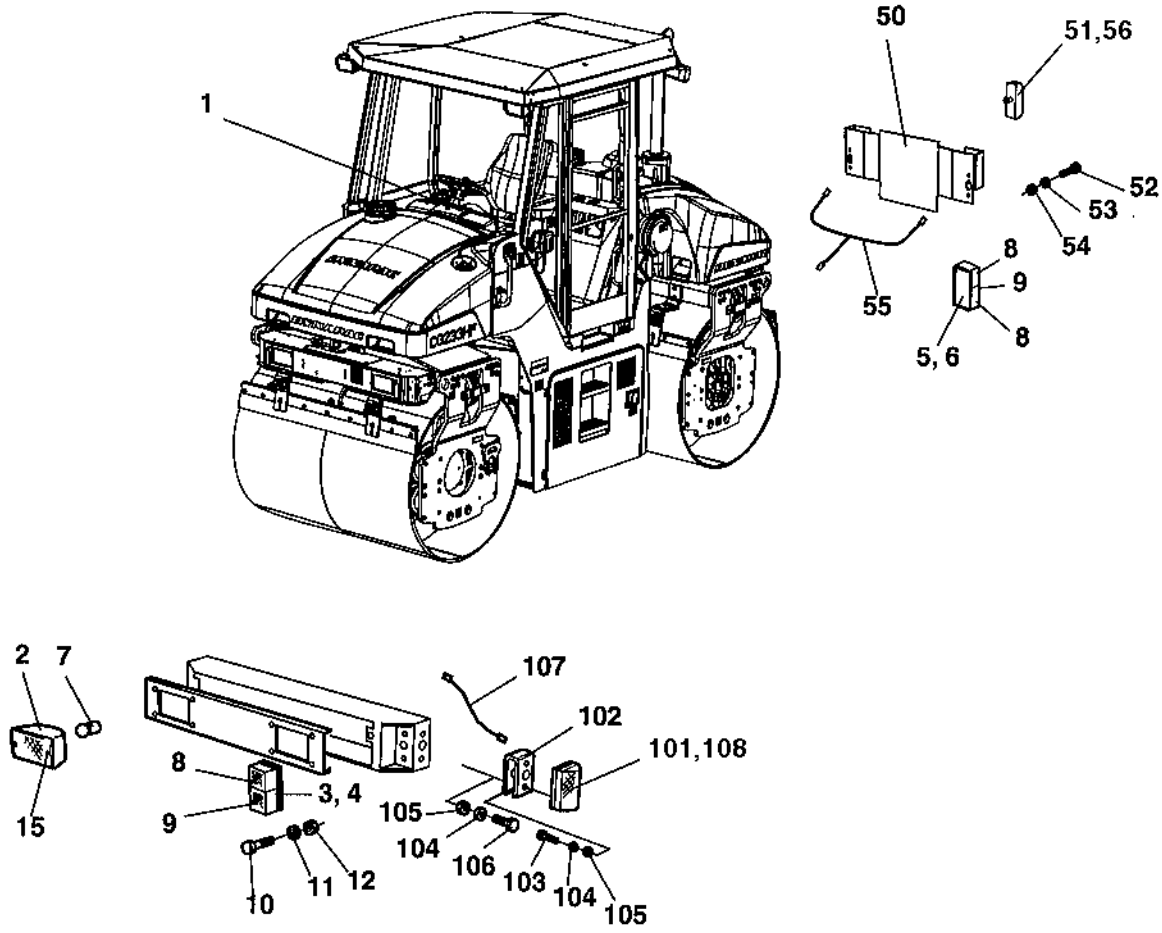

Driving lights Direction & licenseplate light

Item	Part No	Rem	Qty	Description		Code
1			1	Instrument panel, lower left		
2	4700902066	A	2	Headlight		
	4700904313	B	2	Headlight		
3	4700904315	D,H	1	Direction lamp		
	4700937106		1	.Lamp glass		
4	4700904316	D,I	1	Direction lamp		
	4700937107		1	.Lamp glass		
5	4700904317	C,F	1	Direction lamp		
	4700937108		1	.Lamp glass		
6	4700904318	C,G	1	Direction lamp		
	4700937109		1	.Lamp glass		
7	4700900790		2	Bulb	60/55w H4	B
8	4700928502		6	Bulb	21w	B
9	4700985014		4	Bulb	5w	B
10	4700533030		8	Screw		
11	4700601001		8	Washer		
12	4700586001		8	Lock nut		
15	4700791389		8	Drive screw		
50	4700381172		1	Bracket		
51	4700929455		2	Licence plate light		
52	4700500013		4	Screw	M6-1x16 8,8	
53	4700904228		8	Washer		
54	4700570004		4	Nut	M6X1,00 -8 A2K	
55	4700378964		1	Cable harness		
56	4700985013		2	Bulb	12V,5W	B
101	4700902064		2	Direction lights		
102	4700378872		2	Bracket		
103	4700533031		4	Screw		
104	4700904281		12	Washer		
105	4700586001		8	Lock nut		
106	4700500060		4	Screw	M5-0,8x20 8.8	
107	4700374526		2	Cable harness		
108	4700985013		2	Bulb	12V,5W	B

A) Right asym
B) Left asym
C) Yellow/red
D) Yellow/white
F) Rear, left
G) Rear, right
H) Front, left
I) Front, right

Rotating beacon

18240

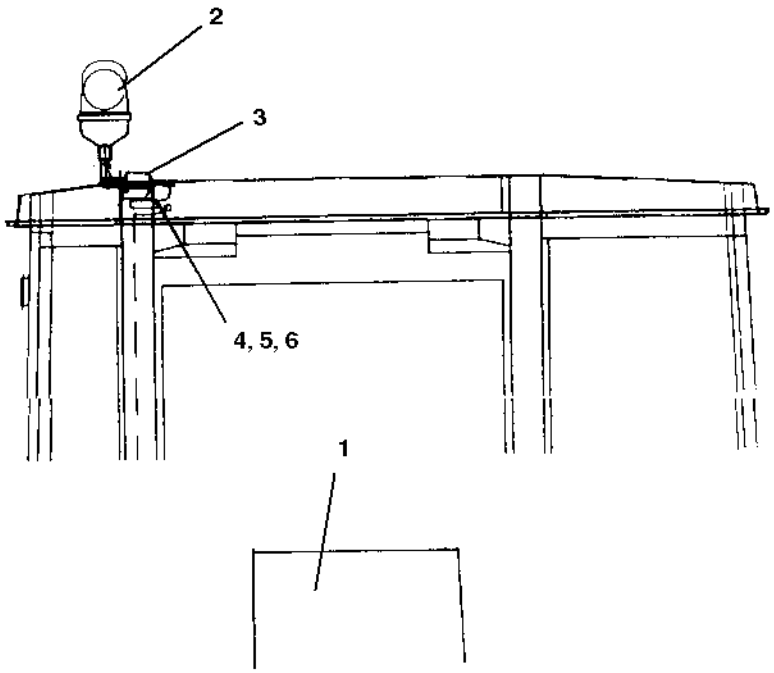

Rotating beacon

Item	Part No	Rem	Qty	Description		Code
1			1	Instrument panel, lower left		B
2	4700389577	A	1	Rotating beacon		D
3	4700358452		1	Lamp holder		
4	4700500021		2	Screw	M8-1,25x25 8.8	
5	4700586003		2	Lock nut	M8	
6	4700904229		2	Washer	8,4x16x1,5	

A) Orange

Tachograph

18466

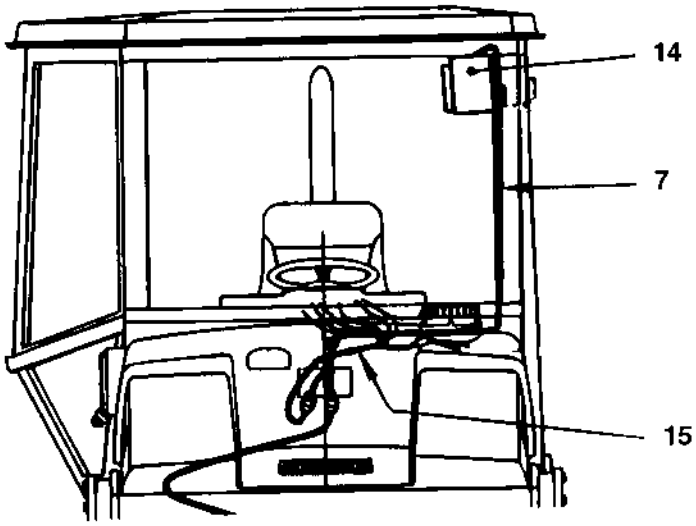

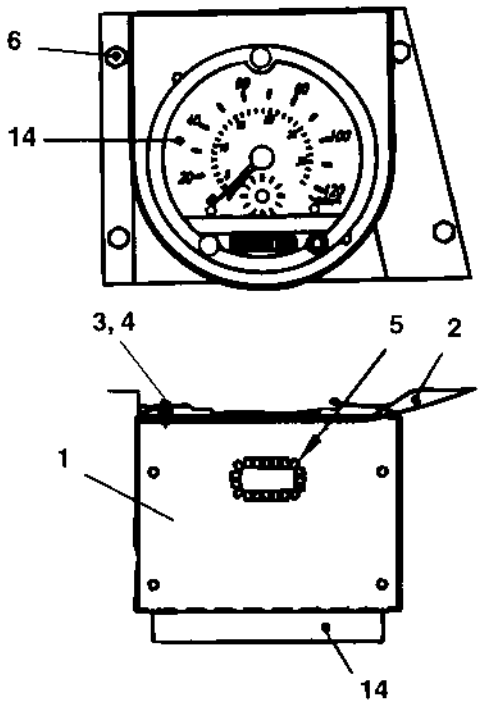

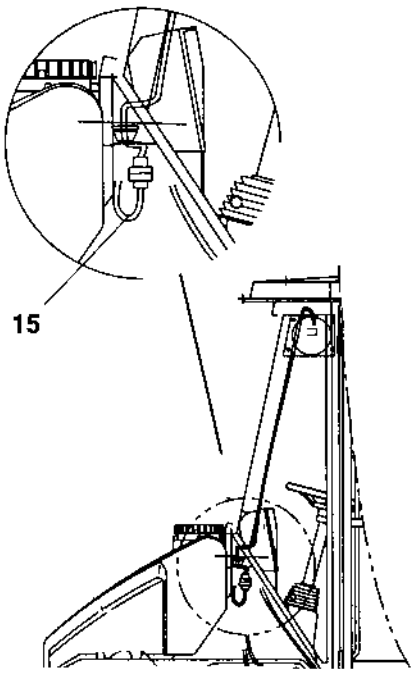

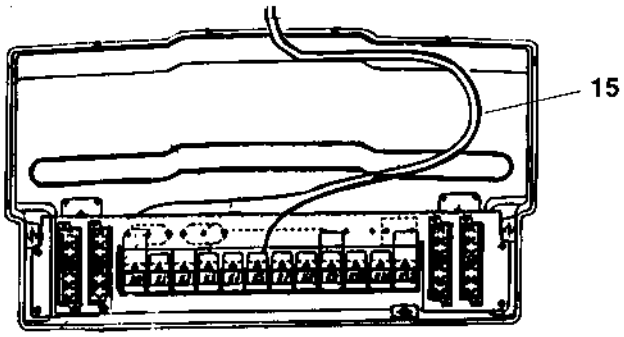

Tachograph

Item	Part No	Rem	Qty	Description	Code
1	4700371885		1	Instrument box	
2	4700370425		1	Support	
3	4700586002		2	Lock nut	
4	4700928381		2	Washer 6,4x18x1,6	
5	4700900904	A	1XL	Grommet	
6	4700541703		4	Screw M6x16	
7	4700385406		1	Cable harness	
14	4700901209		1	Tachograph	
15	4700392567		1	Cable harness	

A) L=200 mm

Drivers platform

Item	Part No	Rem	Qty	Description		Code
15				Drivers platform (Page 140)	For cab	
20				Drivers seat (Page 142)	Turn-over in cab	
50				Controls (Page 154)		
80				Cab, asymmetric (Page 156)		
85				Cab, symmetric (Page 176)		
90				Cab, equipment (Page 184)		
100				Cab, water tank/s wipers (Page 186)		
110				Radio and cassette/cd player (Page 188)		
120				Exterior rear mirrors (Page 190)		

Drivers platform For cab

18142

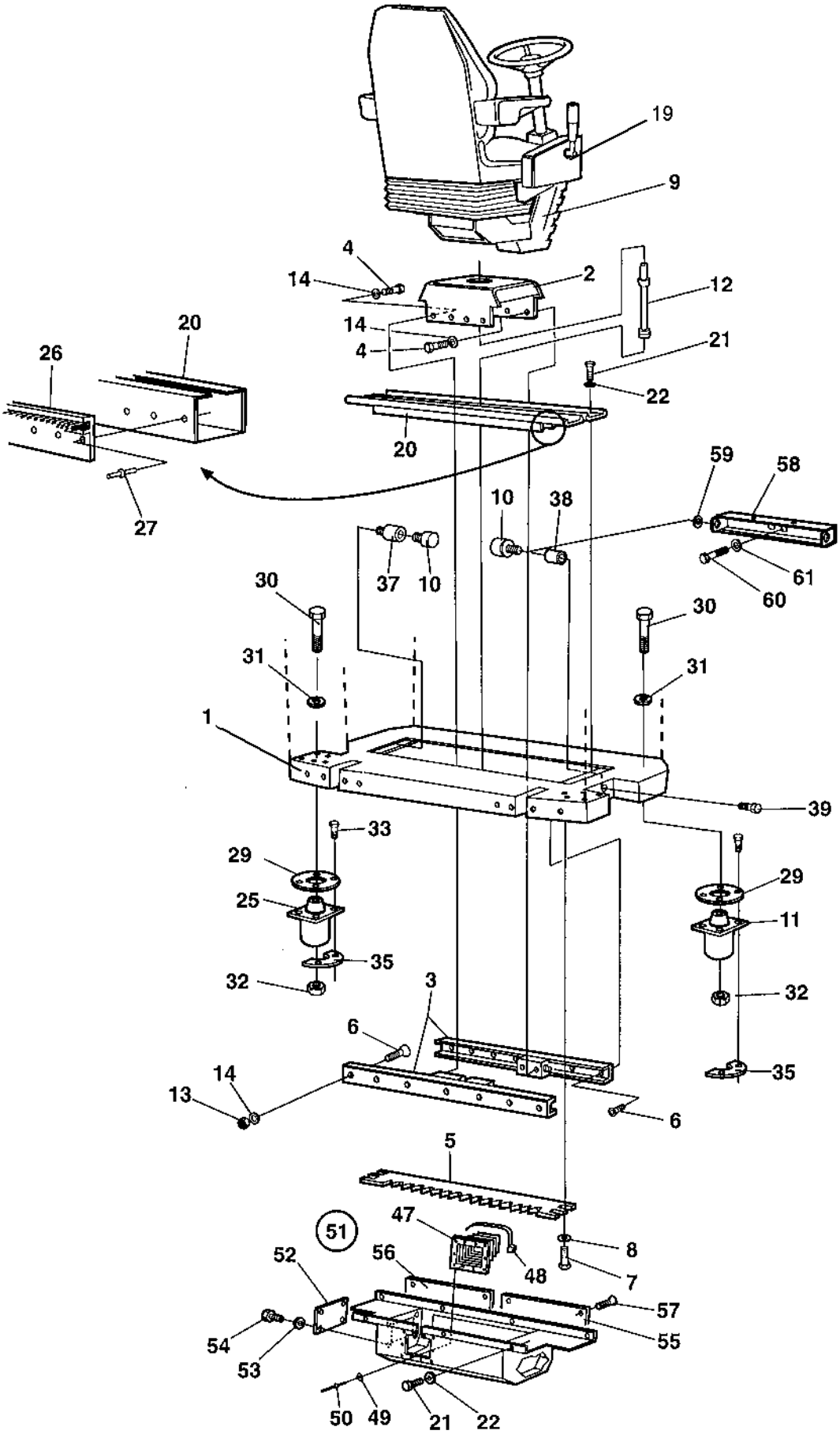

Drivers platform For cab

Item	Part No	Rem	Qty	Description		Code
1			1	Cab, interior		
2			1	Cross sliding (Page 150)	Carrier	
3	4700359418		1	Linear bearing		
4	4700500021		6	Screw	M8-1,25x25 8.8	
5	4700359885		1	Locking rail		
6	4700513013		13	Screw		
7	4700500029		4	Screw		
8	4700904557		4	Washer		
9			1	Drivers seat (Page 142)	Turn-over in cab	
10	4700359887	A	2	Shock absorber		
11	4700359888		2	Shock absorber	Red	
12	4700359889		1	Shaft		
13	4700570005		13	Nut	M8	
14	4700904556		19	Washer	8,4x16x3,0	
19			1	Controls (Page 154)		
20	4700359892		2	Cover plate		
21	4700500019		22	Screw	M8x16H 8.8 A2K	
22	4700904229		22	Washer	8,4x16x1,5	
25	4700359894		2	Shock absorber		D
26	4700359895		6	Brush profile		
27	4700903731		36	Blind rivet		
29	4700359998		4	Back-up ring		
30	4700500229		4	Screw	M20-2.5x150	
	4700924823	D	4	Screw	M20-2.5X160	
31	4700904233		4	Washer	21x36x3	
32	4700586022		4	Lock nut	M20-8	
33	4700500194		16	Screw		
	4700500195	D	16	Screw		
35	4700372704		8	Holder		
37	4700370662		1	Spacer		
38	4700373227	B	1	Spacer		
39	4700500013		1	Screw	M6-1x16 8,8	
47	4700371621		1	Bellows		
48	4700313041		4	Cable ties		
49	4700904698		11	Washer		
50	4700624004		11	Pop rivet		
51	4700371129		1	Noise suppression box, cpl		
52	4700371395		1	.Cover		
53	4700600004		6	.Washer		
54	4700500012		6	.Screw	M6x12	
55	4700371396		1	.Cover		
56	4700371599		1	.Cover		
57	4700513008		11	.Screw		
58	4700385932	C	1	Spacer bracket		
59	4700603009		1	Washer		
60	4700500047		1	Screw		
61	4700904556		1	Washer	8,4x16x3,0	

A) For carrier stop
B) For asymmetric cab.
C) For symmetric cab.
D) Used when item 29 is mounted.

Drivers seat Turn-over in cab

17627-1

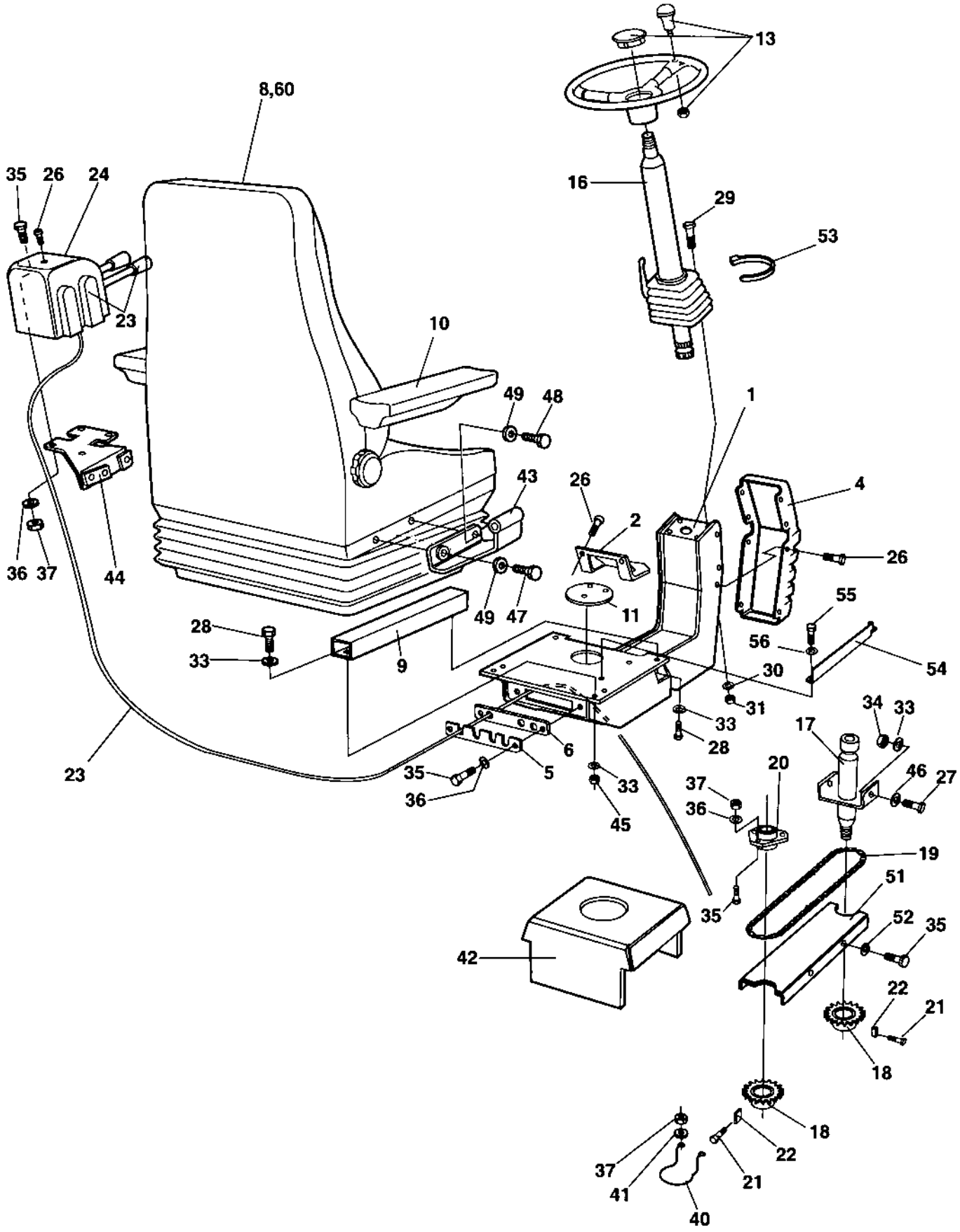

Drivers seat Turn-over in cab

Item	Part No	Rem	Qty	Description		Code
1	4700359900		1	Seat frame		
2	4700381400		1	Bearing cover		
4	4700359574		1	Cover		
5	4700359914		1	Cover		
6	4700359915		1	Grommet		
8	4700359917	A	1	Drivers seat		
	4700937892		1	.Seat switch		
9		B	1	.Slide rail		
10	4700937620		1	.Arm rest, right		
	4700937621		1	.Arm rest, left		
11	4700359920		1	Plug		
13	4700372964		1	Steering wheel, cpl		
			1	.Steering wheel and knob		
	4700935614		1	..Turning knob		D
	4700935613		1	.Cover		
16	4700359918		1	Steering column (Page 144)		C
	4700391163		1	Steering column (Page 146)		C
17	4700359919		1	Shaft		
18	4700359916		2	Chain wheel		D
19	4700359921		1	Chain		D
20	4700903917		1	Bearing outer		
	4700903918		1	Bearing inner		
21	4700516051		2	Set screw		
22	4700350009		2	Flat key		D
23			1	Cross sliding (Page 148)	Controls	
24	4700359419		1	Control cover		
26	4700904206		16	Screw		
27	4700500021		2	Screw	M8-1,25x25 8.8	
28	4700500053		6	Screw	M8x20H 8.8	
29	4700500028		3	Screw		
30	4700904557		3	Washer		
31	4700570006		3	Nut		
33	4700904229		8	Washer	8,4x16x1,5	
34	4700586003		2	Lock nut	M8	
35	4700500040		10	Screw	M6-1x20 8,8	
36	4700904228		7	Washer		
37	4700586002		7	Lock nut		
40	4700372672		1	Chain guard		
41	4700603001		2	Washer		
42			1	Cross sliding (Page 150)	Carrier	
43			1	Control bracket (Page 152)	EDS	
44	4700359972		1	Control cable holder		
45	4700570005		4	Nut	M8	
46	4700904734		2	Washer	8,4x26x4	
47	4700903914		2	Screw		
48	4700500031		3	Screw		
49	4700904638		5	Washer	12x22x2	
51	4700381403		1	Chain supporter		
52	4700904735		4	Washer		
53	4700313041		1	Cable ties		
54	4700386128		1	Stop		
55	4700541703		2	Screw	M6x16	
56	4700904228		4	Washer		
60	4700383200	C	1	Seat belt	3"	

A) With seat belt
B) One pair
C) Option, 3"

4700359918 Steering column

15944

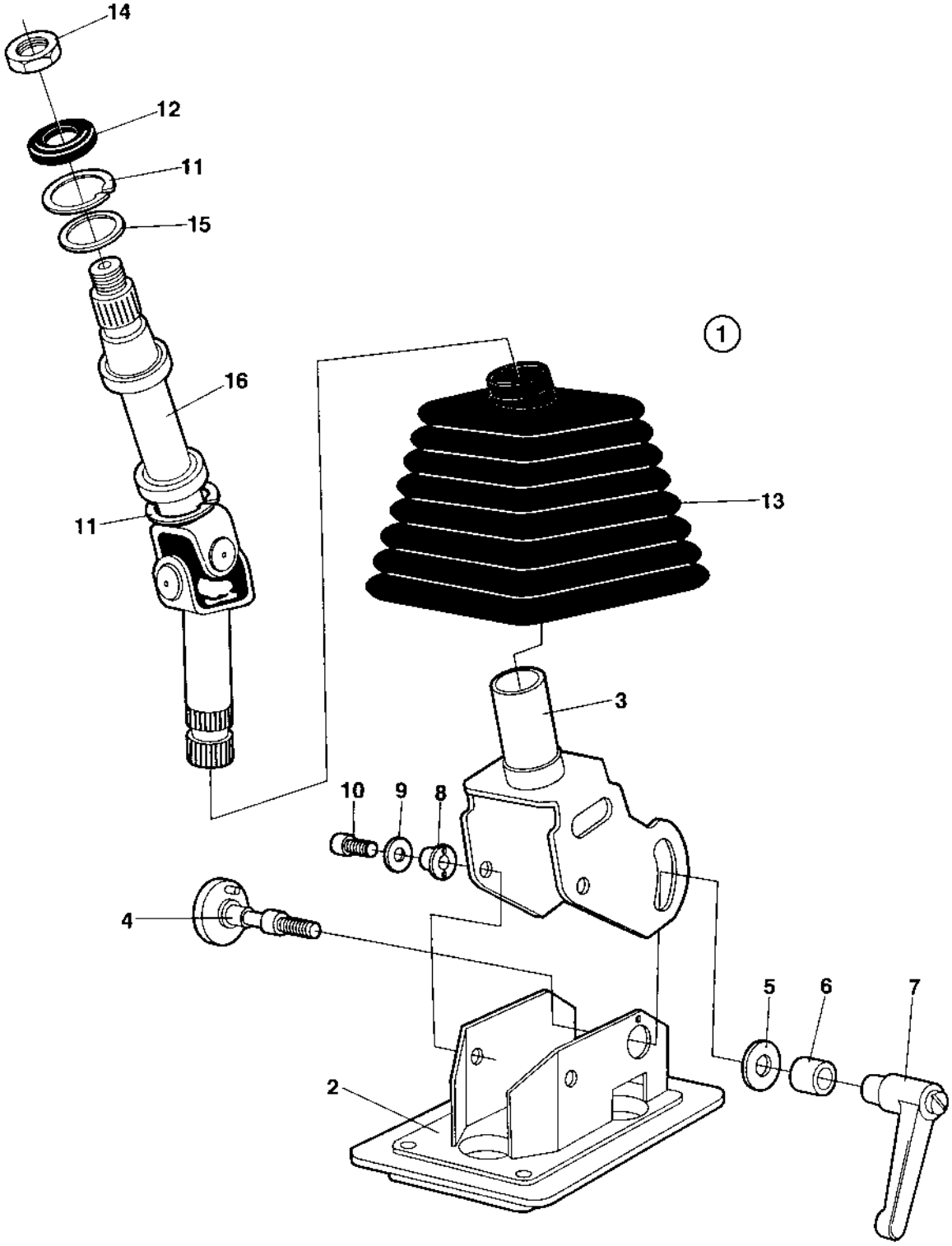

4700359918 Steering column

Item	Part No	Rem	Qty	Description	Code
1	4700359918		1	Steering column (Page 144)	C
2	4700935229	A	1	.Frame	
3	4700935230	B	1	.Frame	
4	4700935231		1	.Screw	
5	4700935232		1	.Washer	
6	4700935233		1	.Sleeve	
7	4700935234		1	.Lever	
8	4700935235		2	.Washer	
9	4700935236		2	.Washer	
10	4700935237		2	.Screw	
11	4700935238		2	.Retaining ring	
12	4700935239		1	.Seal	
13	4700935240		1	.Bellows	
14	4700935241		1	.Nut	
15	4700935242		1	.Washer	
16	4700935243		1	.Cardan shaft	

A) Lower
B) Upper

4700391163 Steering column

18412

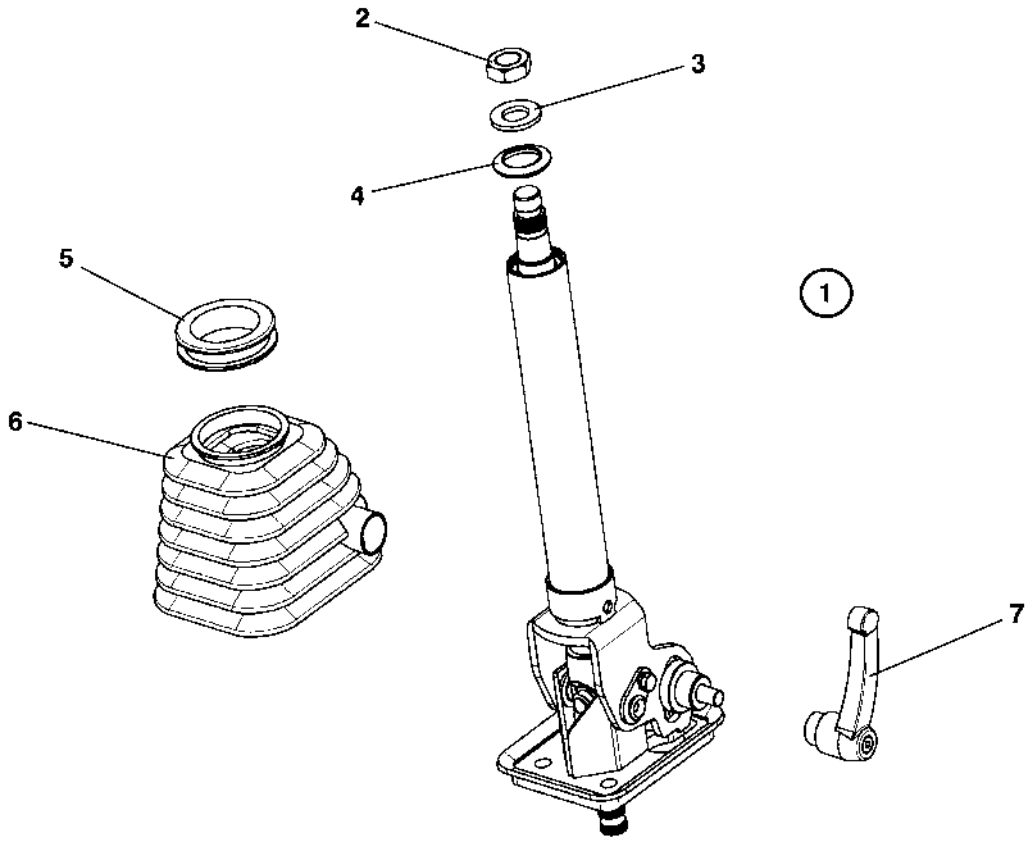

4700391163 Steering column

Item	Part No	Rem	Qty	Description	Code
1	4700391163			Steering column (Page 146)	C
2	4700945632		1	.Nut	
3	4700945633		1	.Washer	
4	4700945634		1	.Rubber cap	
5	4700945635		1	.Bellows ring	
6	4700945636		1	.Bellows	
7	4700945637		1	.Locking handle	

Cross sliding Controls

16119-1

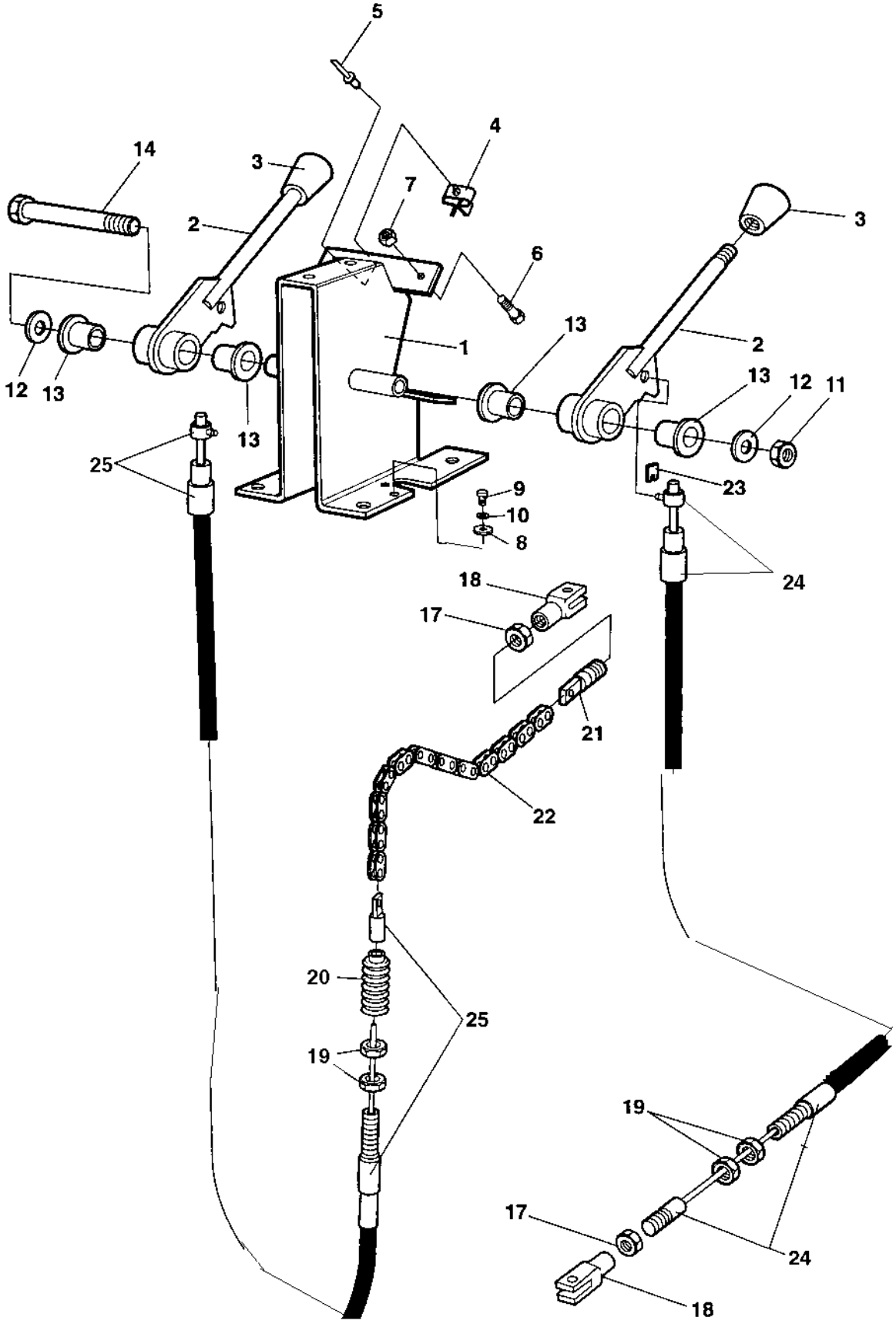

Cross sliding Controls

Item	Part No	Rem	Qty	Description	Code
1	4700935771		1	Framing	
2	4700909745		2	Lever	
3	4700908190		2	Ball knob	
4	4700908189		1	Lever lock	
5			1	Rivet	
6	4700500001		1	Screw	
7	4700923976		1	Nut	
8	4700909746		2	Washer	
9	4700533024		2	Screw	
10	4700615041		2	Washer	5,3x11
11	4700586002		1	Lock nut	
12	4700928381		2	Washer	6,4x18x1,6
13	4700908187		4	Plain bearing	
14	4700500169		1	Screw	
17	4700570004	A	2	Nut	M6X1,00 -8 A2K
18	4700416004	A	2	Fork	
19	4700927233	B	4	Nut	
20	4700908184	C	1	Protection bellow	
21	4700359822		1	Spring holder	
22	4700359924		1	Chain with links	
23	4700937958	B	1	Clips	
24	4700935773	D	1	Cable, cpl	
25	4700935772	E	1	Cable, cpl	

A) Incl in item 24
B) Incl in item 24,25
C) Incl in item 25
D) Sliding
E) Turning

Cross sliding Carrier

17245

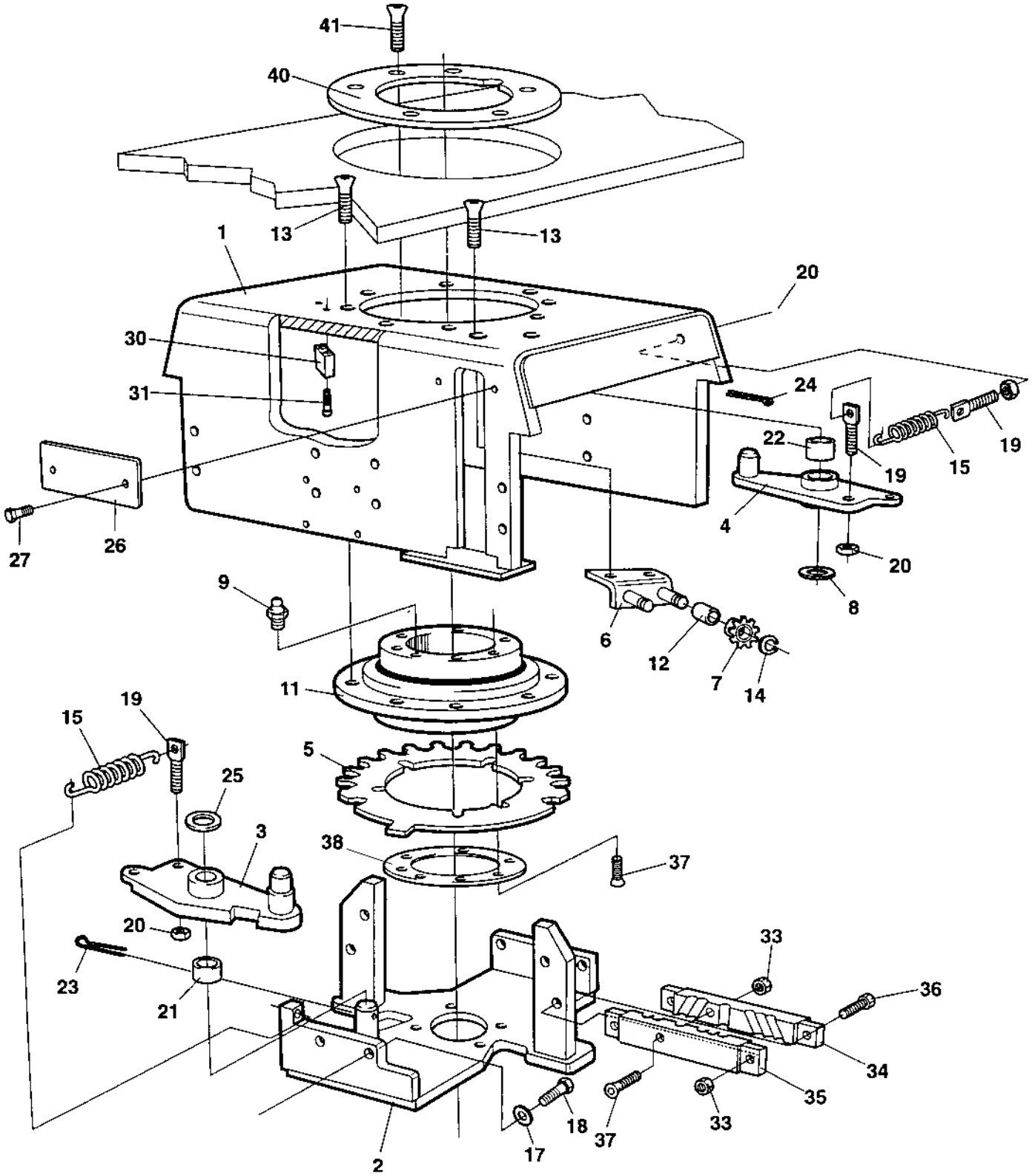

Cross sliding Carrier

Item	Part No	Rem	Qty	Description		Code
1	4700359788		1	Carrier		
2	4700359793		1	Bracket		
3	4700371101	A	1	Coupling link		
4	4700374417	B	1	Coupling link		
5	4700370955		1	Locking disc		
6	4700359810		1	Control bracket		
7	4700359813		2	Chain wheel		
8	4700904231		1	Washer	13x24x2 300 HV	
9	4700926214		1	Grease fitting		D
11	4700359125		1	Ball bearing		
12	4700359816		2	Bushing		
13	4700513003		10	Screw		
14	4700359817		2	Retaining ring		
15	4700359043		2	Spring		D
17	4700904556		4	Washer	8,4x16x3,0	
18	4700500021		4	Screw	M8-1,25x25 8.8	
19	4700359818		3	Spring collar		
20	4700573008		3	Nut	M8	
21	4700359819		1	Bushing		
22	4700359820		1	Bushing		
23	4700630008	A	1	Pin		D
24	4700630035	B	1	Split pin		D
25	4700904232		1	Washer		
26	4700359815		1	Cover		
27	4700926220		2	Screw		
30	4700359893	C	1	Stop		
31	4700508056	C	2	Screw	M8x40	
33	4700570005		3	Nut	M8	
34	4700389164		1	Clamp		
35	4700389163		1	Clamp		
36	4700500022		4	Screw	M8x30H 8.8 A2K	
37	4700902520		7	Screw		
38	4700372966		1	Lock ring		
40	4700372965		1	Lock ring		
41	4700902520		6	Screw		

A) For sliding
B) For turning
C) Only cab

Control bracket EDS

18143

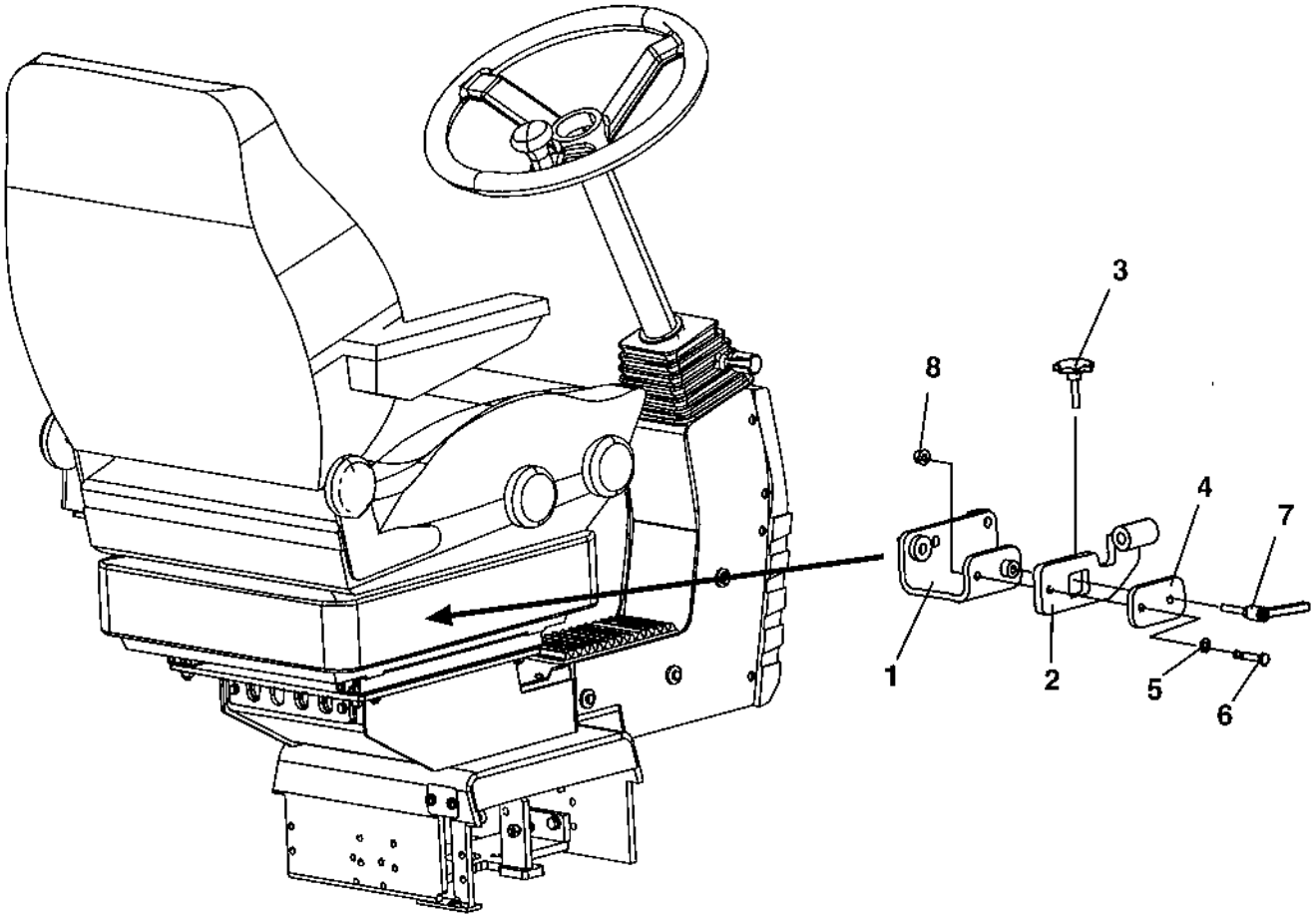

Control bracket EDS

Item	Part No	Rem	Qty	Description		Code
1	4700388122		1	Control bracket		
2	4700388537		1	Control arm		
3	4700791715		1	Hand knob		
4	4700388538		1	Holder plate		
5	4700904229		2	Washer	8,4x16x1,5	
6	4700500024		1	Screw	M8x45	
7	4700791716		1	Lock handle		
8	4700902286		1	Lock nut	M8	

Controls

18144

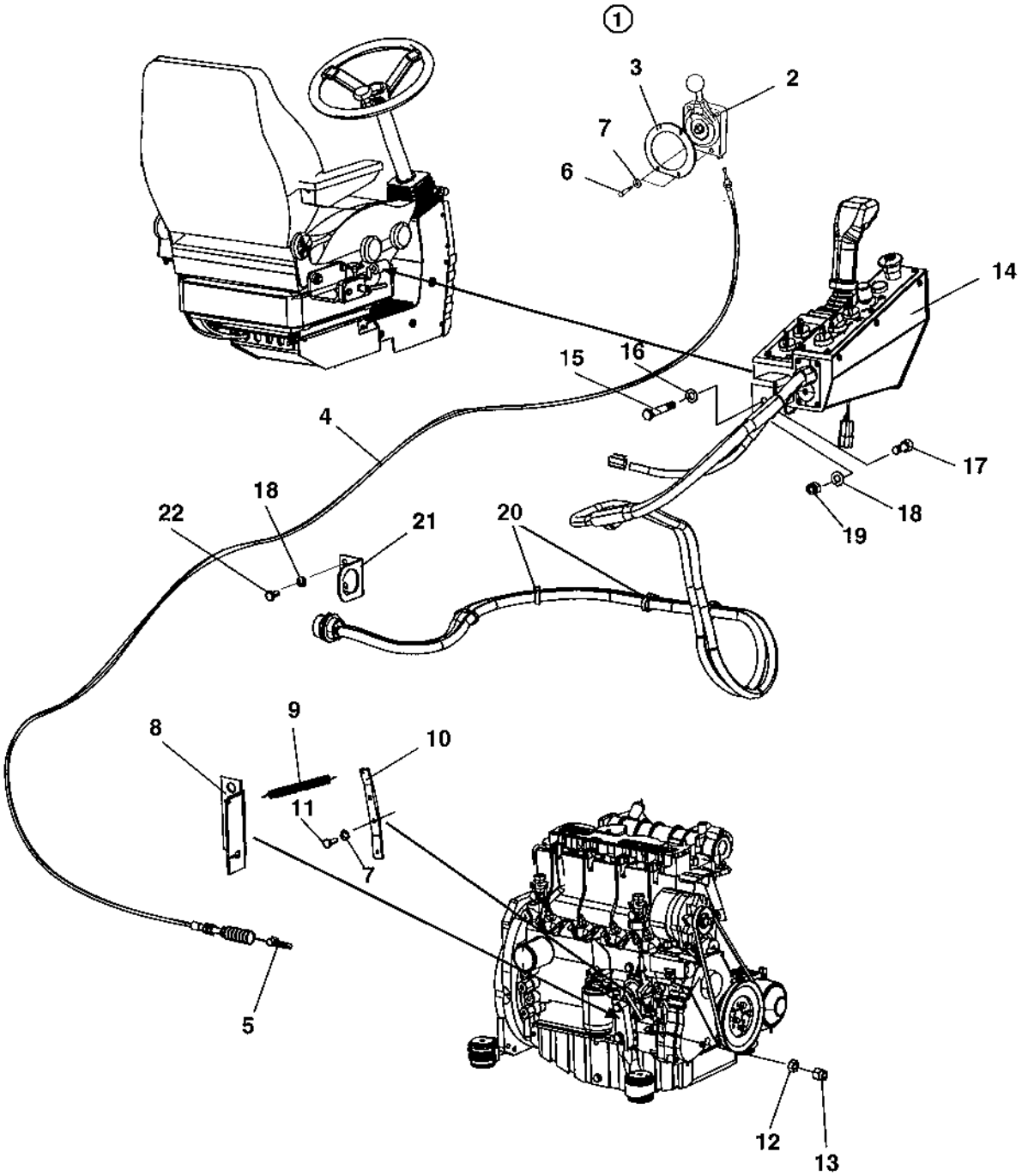

Controls

Item	Part No	Rem	Qty	Description		Code
1	4700389668		1	Throttle control, cpl		
2	4700389175		1	.Control		
3	4700389177		1	.Snap plate		
4	4700940283		1	.Cable		
5	4700940285		1	.Spring		
6	4700900485		2	Screw		D
7	4700904228		4	Washer		
8	4700359936		1	Control bracket		
9	4700357500		1	Spring		
10	4700357498		1	Control lever		
11	4700500013		2	Screw	M6-1x16 8,8	
12	4700570004		1	Nut	M6X1,00 -8 A2K	
13	4700377413		1	Adjusting nut		
14				Forward and reverse control (Page 130)	EDC	
15	4700500071		1	Screw	M12-1,75x75 8,8	
16	4700904231		1	Washer	13x24x2 300 HV	
17	4700508092		1	Screw		
18	4700904229		3	Washer	8,4x16x1,5	
19	4700586003		1	Lock nut	M8	
20	4700313102		N	Cable ties		
21	4700376789		1	Bracket		
22	4700500019		2	Screw	M8x16H 8.8 A2K	

Cab, asymmetric

Cab, asymmetric

Item	Part No	Rem	Qty	Description	Code
1				Cab, interior (Page 158)	
2				Cab, screens (Page 160)	
3				Cab, inside panels (Page 162)	
4				Cab, wipers, right side (Page 164)	
5				Cab, wipers, front and rear (Page 166)	
6				Cab, door, left side (3-split) (Page 168)	
7				Cab, heater and, fan system (Page 170)	
8				Cab, electrical (Page 174)	

Cab, interior

18149

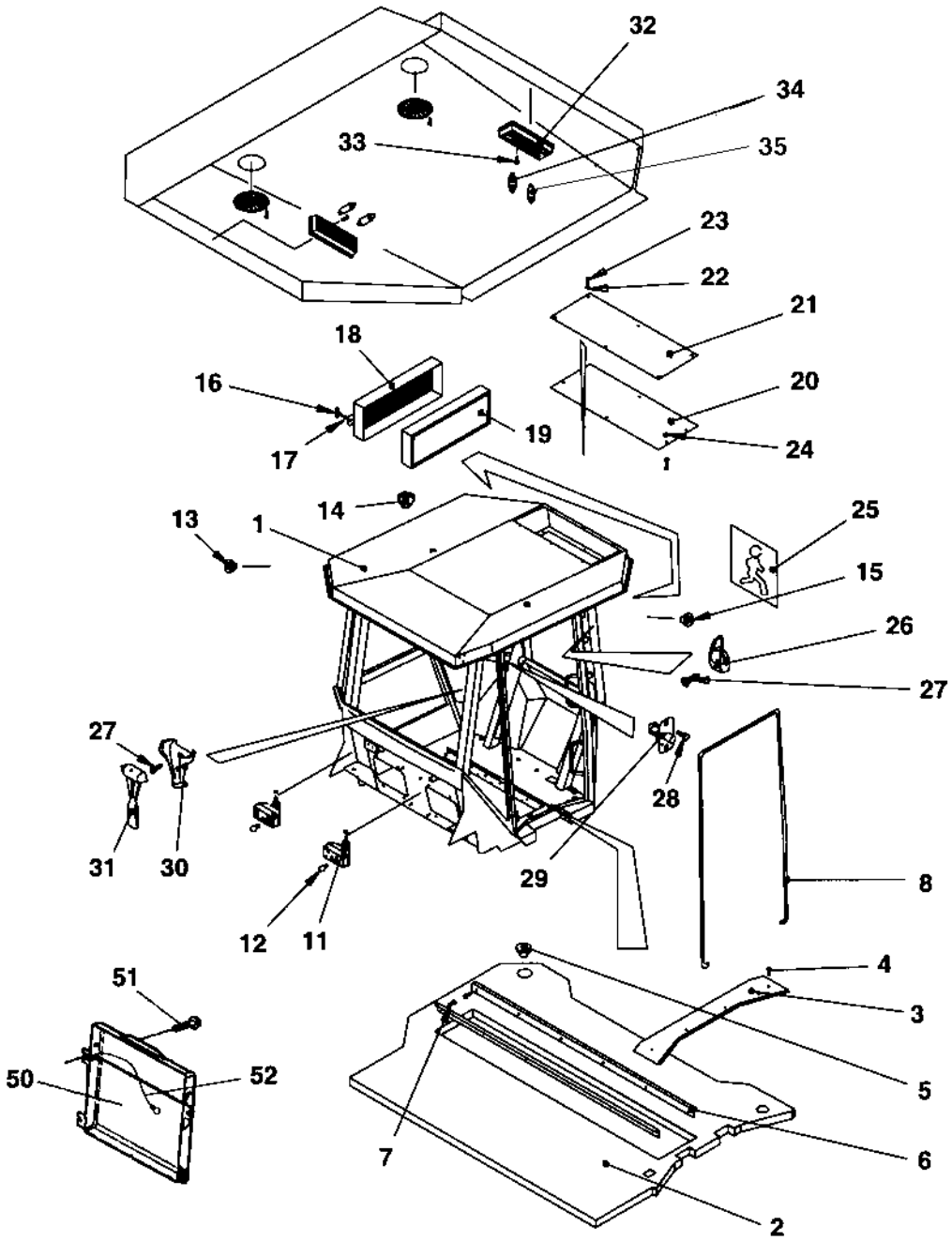

Cab, interior

Item	Part No	Rem	Qty	Description		Code
1	4700389671		1	Cab, cpl		
2	4700939927		1	.Floor carpet		
3	4700908511		1	.List left		
4	4700903808		4	.Screw		
5	4700939928		1	.Cover		
6	4700908510		2	.List		
7	4700535005		12	.Screw	M5x12	
8	4700938842	A	1XL	.Sealing strip		
11	4700908268		2	.Work light		
12	4700938845		2	.Bulb	10W 12V	
13	4700938660		8	.Grommet		
14	4700908497		12	.Grommet		
15	4700909510		3	.Grommet		
16	4700908504		4	.Handle		
17	4700908503		4	.O-ring		
18	4700938846		2	.Filter housing		
19	4700938847		2	.Air filter		
20	4700938678		1	.Cover		
21	4700938679		1	.Cover		
22	4700936277		12	.Washer		
23	4700500053		12	.Screw	M8x20H 8.8	
24	4700586003		8	.Lock nut	M8	
25	4700935589		1	.Decal		
26	4700908505		1	.Hook		
27	4700938676		4	.Screw		
28	4700901315		2	.Screw		
29	4700908500		1	.Door switch		
30	4700908506		1	.Holder		
31	4700908507		1	.Emergency hammer		
32	4700908515		2	.Inner light		
33	4700541535		4	.Screw		
34	4700985051		4	.Bulb	12V,10W	B
35	4700985013		2	.Bulb	12V,5W	B
50	4700383705		1	Instruction book holder		
51	4700791226		4	Screw		
52	4700357643		1	Wire		

A) L=5,0 m

Cab, screens

17621

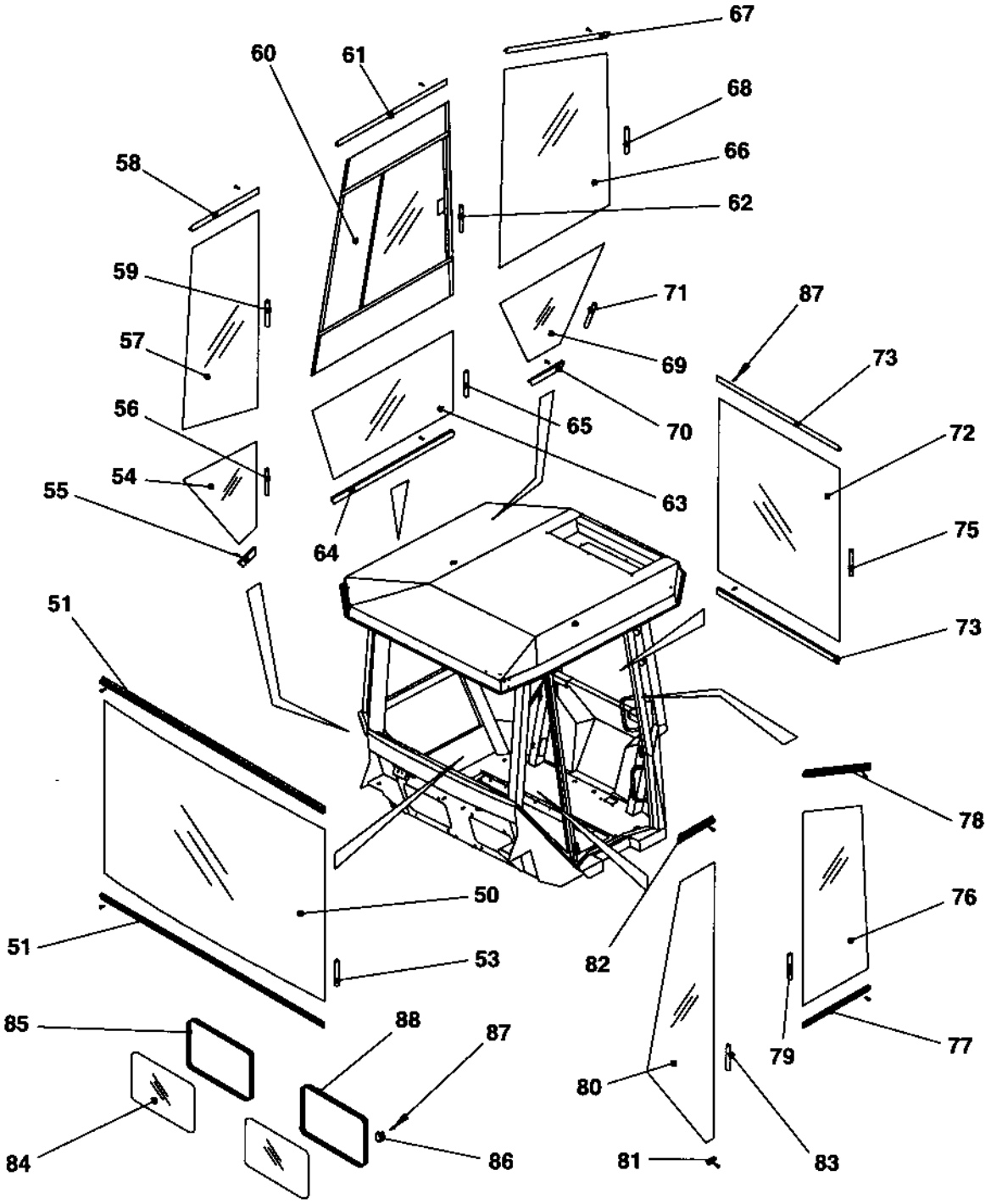

Cab, screens

Item	Part No	Rem	Qty	Description	Code
				Cab, cpl	
50	4700937395		1	.Front screen	Green
51	4700908546		1	.List	
53	4700938834	A	1XL	.Sealing strip	
54	4700937398		1	.Screen	Green
55	4700908549		1	.List	
56	4700938834	B	1XL	.Sealing strip	
57	4700937397		1	.Screen	Green
58	4700908548		1	.List	
59	4700938834	C	1XL	.Sealing strip	
60	4700937399		1	.Screen sliding	Green
	4700940784		1	..Handle	
61	4700908550		1	.List	
62	4700938834	D	1XL	.Sealing strip	
63	4700937400		1	.Screen	Green
64	4700908551		1	.List	
65	4700938834	A	1XL	.Sealing strip	
66	4700938565		1	.Screen	
67	4700938835		1	.List	
68	4700938834	E	1XL	.Sealing strip	
69	4700937402		1	.Screen	Green
70	4700908553		1	.List	
71	4700938834	B	1XL	.Sealing strip	
72	4700937403		1	.Screen	Green
73	4700908764		2	.List	
75	4700938834	A	1XL	.Sealing strip	
76	4700938566		1	.Screen	Green
77	4700908556		1	.List	
78	4700938836		1	.List	
79	4700938834	F	1XL	.Sealing strip	
80	4700937405		1	.Screen	Green
81	4700908993		1	.List	
82	4700908557		1	.List	
83	4700938834	G	1XL	.Sealing strip	
84	4700938567		1	.Screen	Green
85	4700938837	H	1XL	.Sealing strip	
86	4700938838		8	.List	
87	4700937932		57	.Screw	
88	4700938837	H	1XL	.Sealing strip	

A) L=1,8 m
B) L=1,6 m
C) L=2,4 m
D) L=2,9 m
E) L=2,5 m
F) L=2,1 m
G) L=3,0 m
H) L=1,3 m

Cab, inside panels

17622

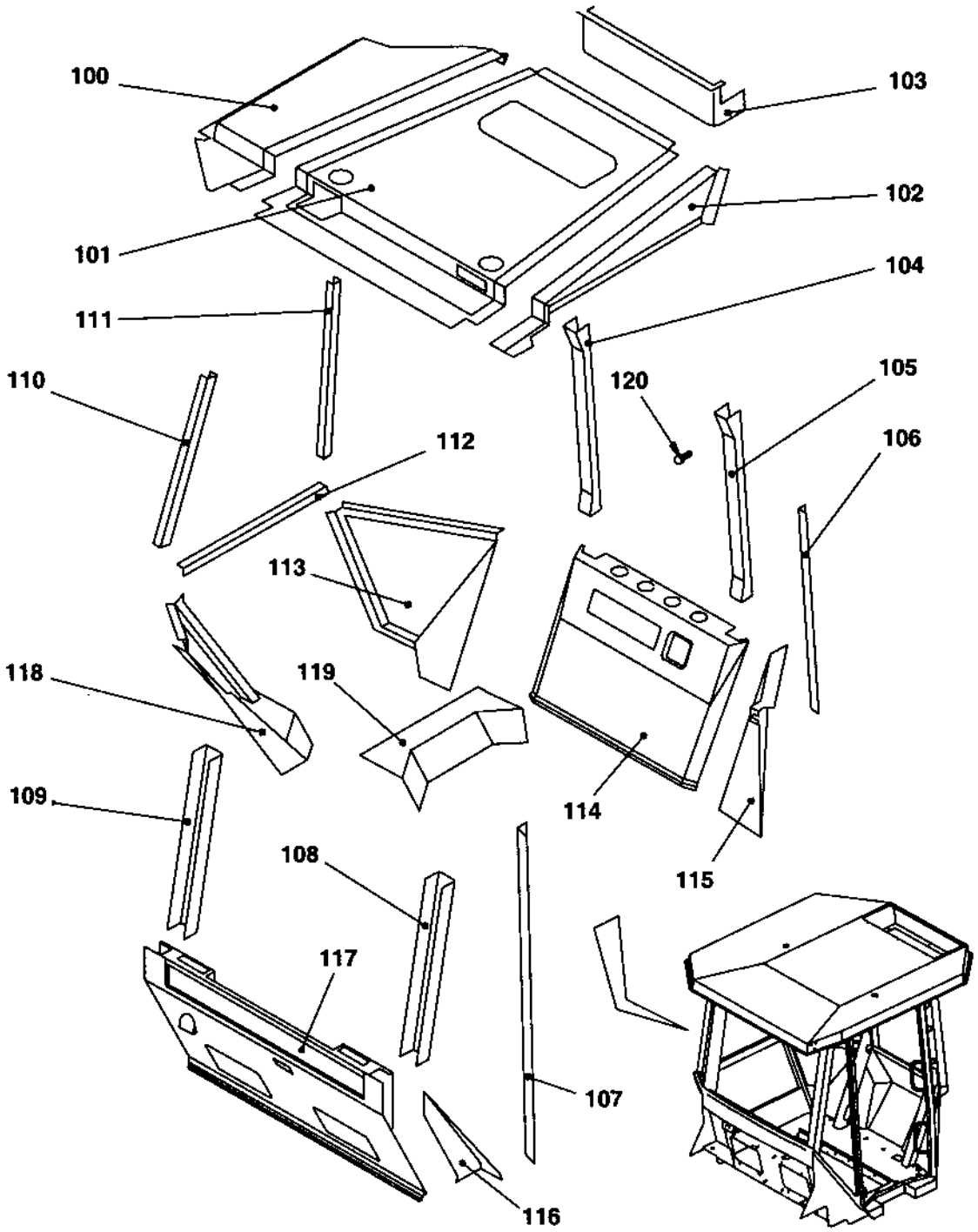

Cab, inside panels

Item	Part No	Rem	Qty	Description	Code
				Cab, cpl	
100	4700938806		2	.Panel	
101	4700938807		1	.Panel	
102	4700938808		1	.Panel	
103	4700938809		1	.Panel	
104	4700938810		1	.Panel	
105	4700938811		1	.Panel	
106	4700908535		1	.Panel	
107	4700908536		1	.Panel	
108	4700908529		1	.Panel	
109	4700908530		1	.Panel	
110	4700908531		1	.Panel	
111	4700908532		1	.Panel	
112	4700908540		1	.Panel	
113	4700908542		1	.Panel	
114	4700938812		1	.Panel	
115	4700908544		1	.Panel	
116	4700908537		1	.Panel	
117	4700938813		1	.Panel	
118	4700908539		1	.Panel	
119	4700908541		1	.Panel	
120	4700938677		50	.Screw	

Cab, wipers, right side

17623

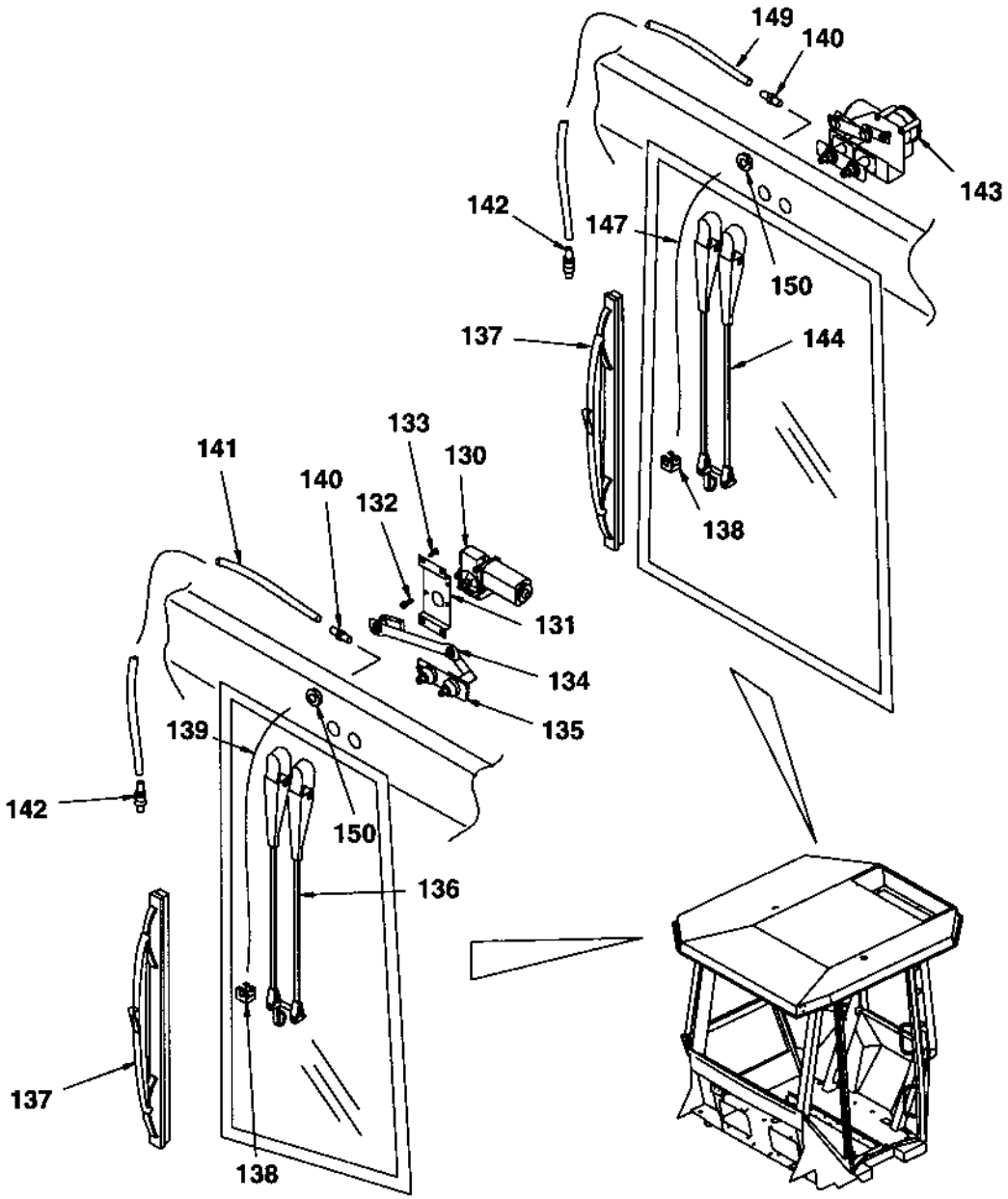

Cab, wipers, right side

Item	Part No	Rem	Qty	Description	Code
				Cab, cpl	
130	4700908269		1	.Wiper motor	
131	4700908565		1	.Bracket	
132	4700500012		3	.Screw	M6x12
133	4700541702		4	.Screw	M6x12
134	4700908363		1	.Transmission	
135	4700908364		1	.Intermediate shaft	
136	4700908270		1	.Wiper arm	
137	4700908271		2	.Wiper blade	
138	4700908559		2	.Nozzle	
139	4700908560	A	1XL	.Rubber hose	
140	4700908561		2	.Grommet	
141	4700908563	B	1XL	.Plastic hose	
142	4700908564		2	.Check valve	
143	4700908281		1	.Wiper motor	
144	4700908282		1	.Wiper arm	
147	4700908560	A	1XL	.Rubber hose	
149	4700908563	B	1XL	.Plastic hose	
150	4700908496		4	.Grommet	

A) L=1,0 m
B) L=6,0 m

Cab, wipers, front and rear

17615

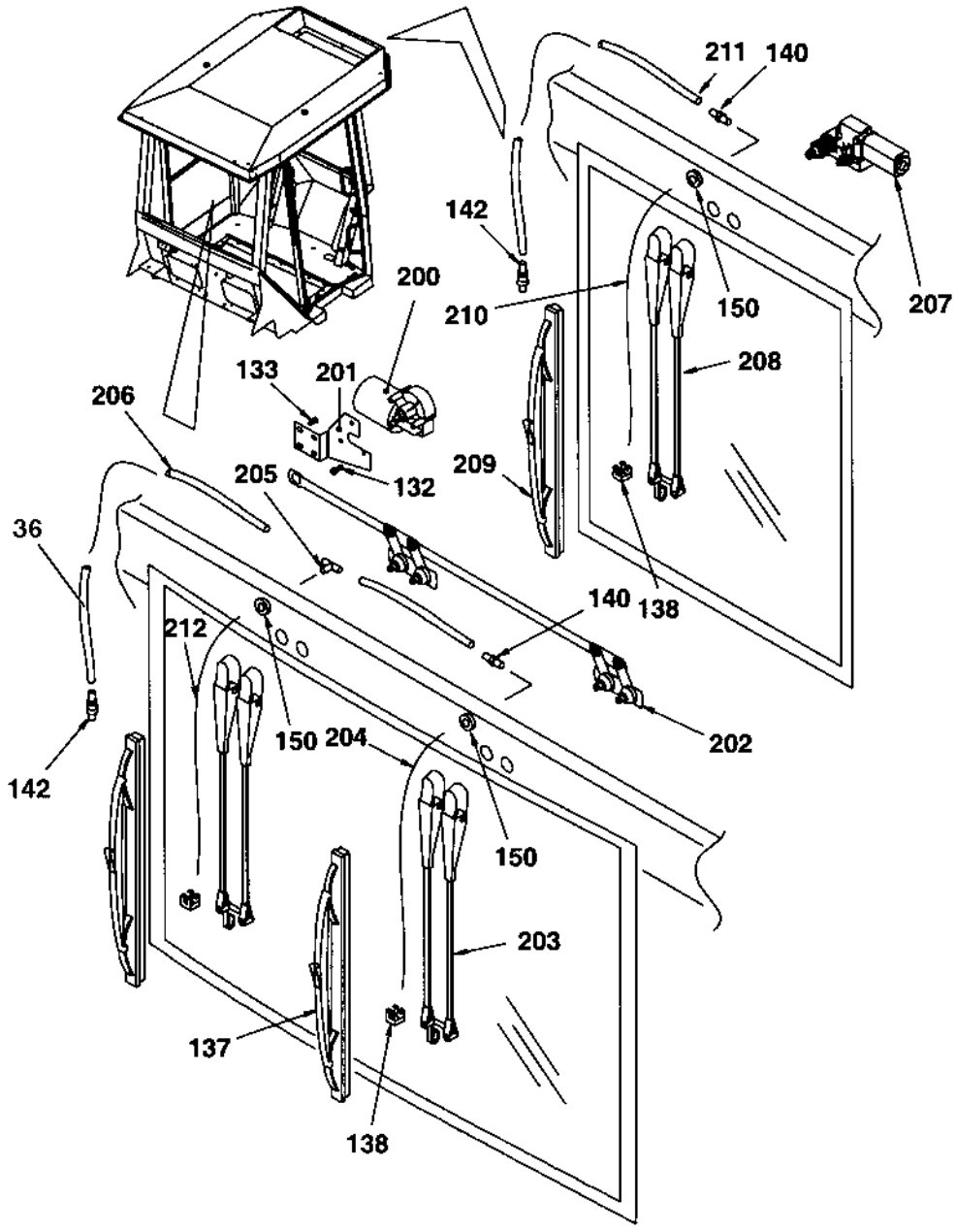

Cab, wipers, front and rear

Item	Part No	Rem	Qty	Description	Code
			1	Cab, cpl	
36	4700903082	C	1XL	.Hose shield	
132	4700500012		3	.Screw	M6x12
133	4700541702		4	.Screw	M6x12
137	4700908271		2	.Wiper blade	
138	4700908559		3	.Nozzle	
140	4700908561		2	.Grommet	
142	4700908564		2	.Check valve	
150	4700908496		3	.Grommet	
200	4700908272		1	.Wiper motor	
201	4700908558		1	.Bracket	
202	4700908362		1	.Transmission	
203	4700908273		2	.Wiper arm	
204	4700908560	A	1XL	.Rubber hose	
205	4700908562		1	.T-connection	
206	4700908563	B	1XL	.Plastic hose	
207	4700908278		1	.Wiper motor	
208	4700908279		1	.Wiper arm	
209	4700908280		1	.Wiper blade	
210	4700908560	A	1XL	.Rubber hose	
211	4700908563	B	1XL	.Plastic hose	
212	4700908560	A	1XL	.Rubber hose	

A) L=1,0 m
B) L=6,0 m
C) L=1,8 m

Cab, door, left side (3-split)

18167

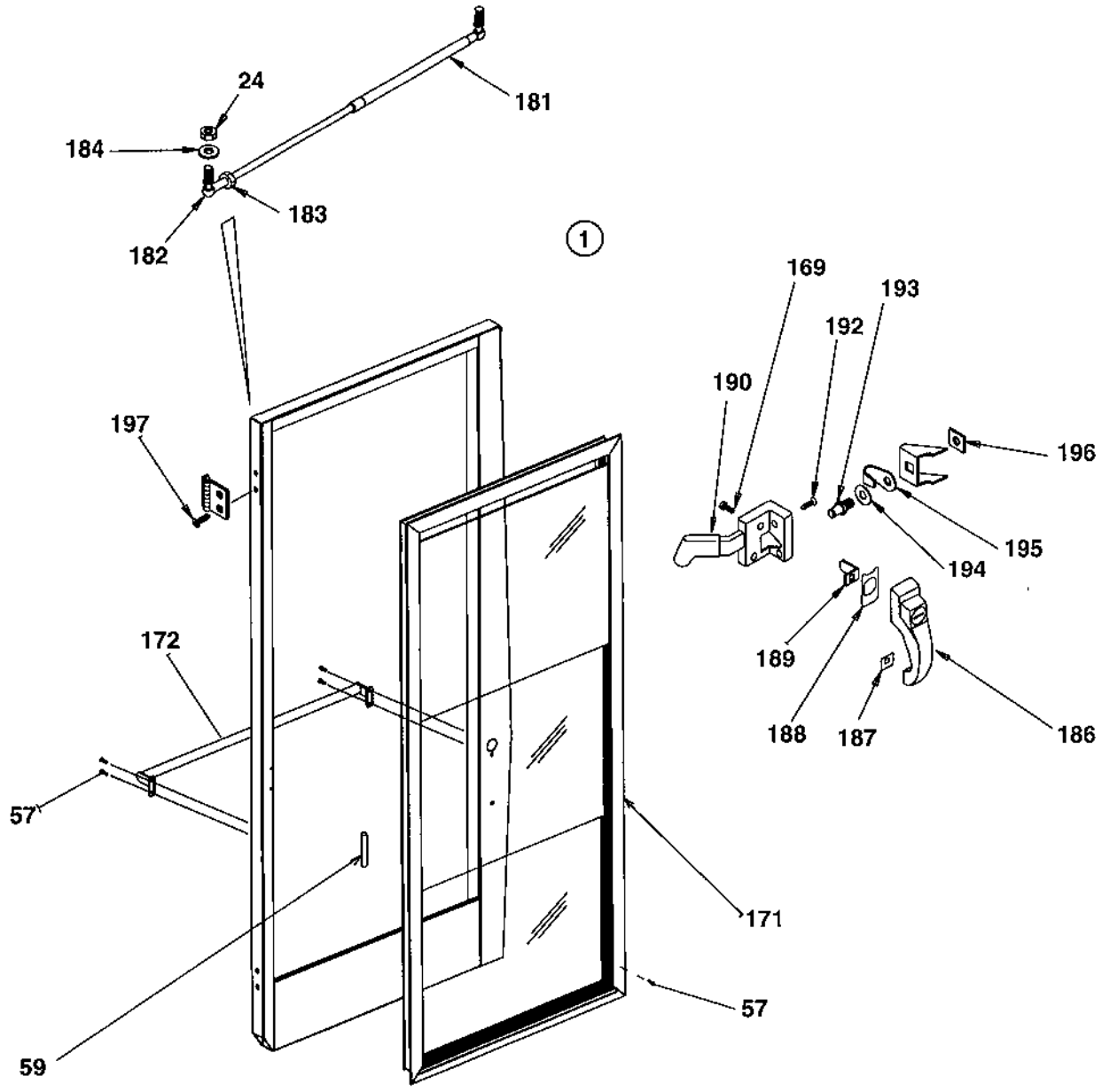

Cab, door, left side (3-split)

Item	Part No	Rem	Qty	Description		Code
			1	Cab, cpl		
1	4700940395		1	.Door, cpl		
24	4700586003		2	..Lock nut	M8	
57	4700940389		16	.Screw		
59	4700940391	A	1XL	..List		
169	4700903805		8	..Screw		
171	4700940394		1	..Door window		
	4700945264		1	...Screen cpl, top		
	4700945265		1	...Screen cpl, middle		
	4700945266		1	...Screen cpl, bottom		
172	4700940392		1	..Handle		
181	4700908284		1	..Gas spring		
	4700908354	1	1	..Mounting kit		
182	4700908576		1	..Ball joint		
183	4700570005		1	..Nut	M8	
184	4700904229		2	..Washer	8,4x16x1,5	
186	4700935244		1	..Door handle with key		
	4700902866		1	...Key	Marked "455"	D
187	4700908577		1	..Washer		
188	4700908578		1	..Washer		
189	4700908579		1	..Leader		
190	4700908287		1	..Lock		
192	4700903802		2	..Screw		
193	4700908580		1	..Lock pin		
194	4700908581		1	..Washer		
195	4700908582		1	..Cover		
196	4700908583		1	..Bracket		
197	4700513025		4	..Screw		

1) Inculdes item 24, 182,183 and 184.
A) L=3,9 m

Cab, heater and, fan system

17618

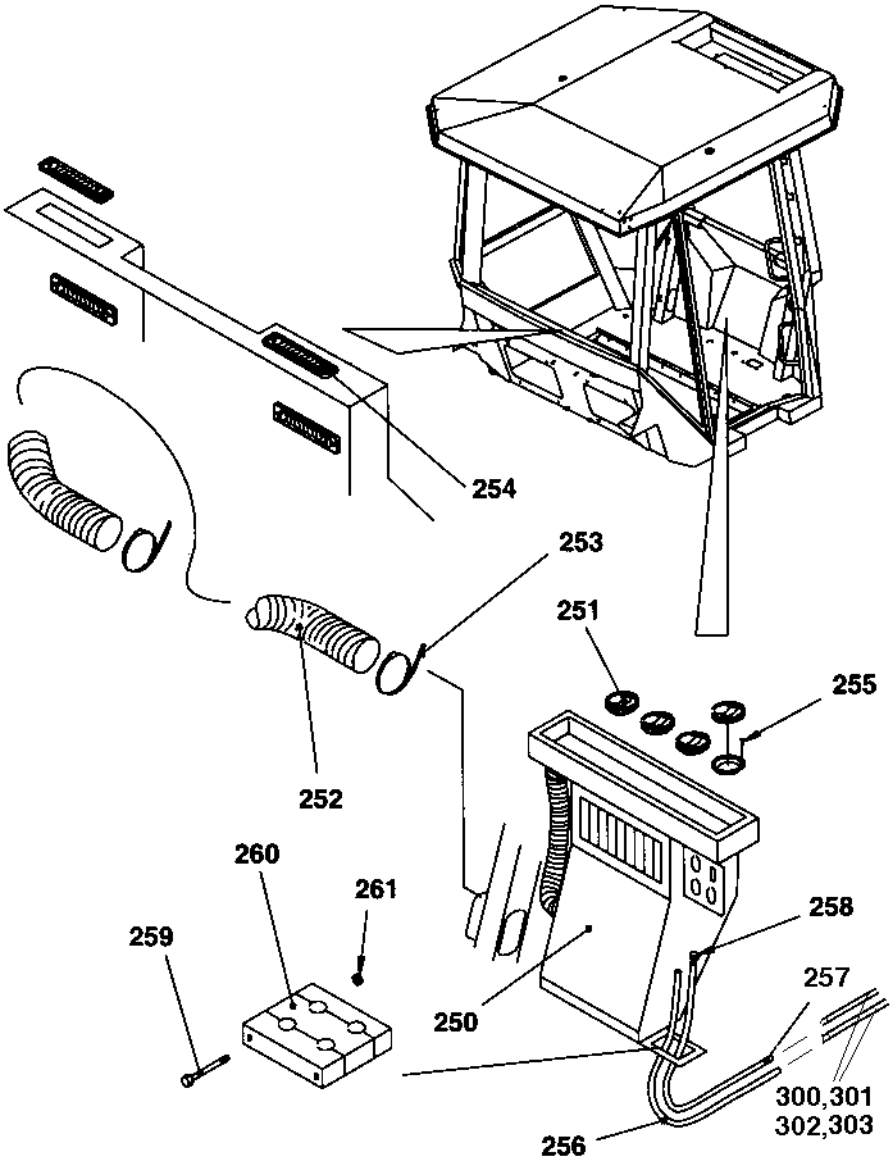

Cab, heater and, fan system

Item	Part No	Rem	Qty	Description	Code
			1	Cab, cpl	
250	4700385769		1	.Heater unit (Page 172)	
251	4700385442		4	.Air nozzle	
252	4700908599	A	1XL	.Hose	
253	4700908600		2	.Clamp	
254	4700908598		4	.Nozzle	
255	4700938691		16	.Screw	
256	4700938872	B	1XL	.Hose	
257	4700938873	C	1XL	.Hose	
258	4700938874		2	.Clamp	
259	4700500153		2	.Screw	
260	4700938871		1	.Hose clamp	
261	4700570004		2	.Nut	M6X1,00 -8 A2K
300	4700370761		2	Hose	
301	4700747691		2	Hollow screw	
302	4700330331		6	Washer	18,2x23,9x1,5
303	4700371727		4	Sleeve	

A) L=1,50 m
B) L=2,75 m
C) L=2,90 m

4700385769 Heater unit

17651

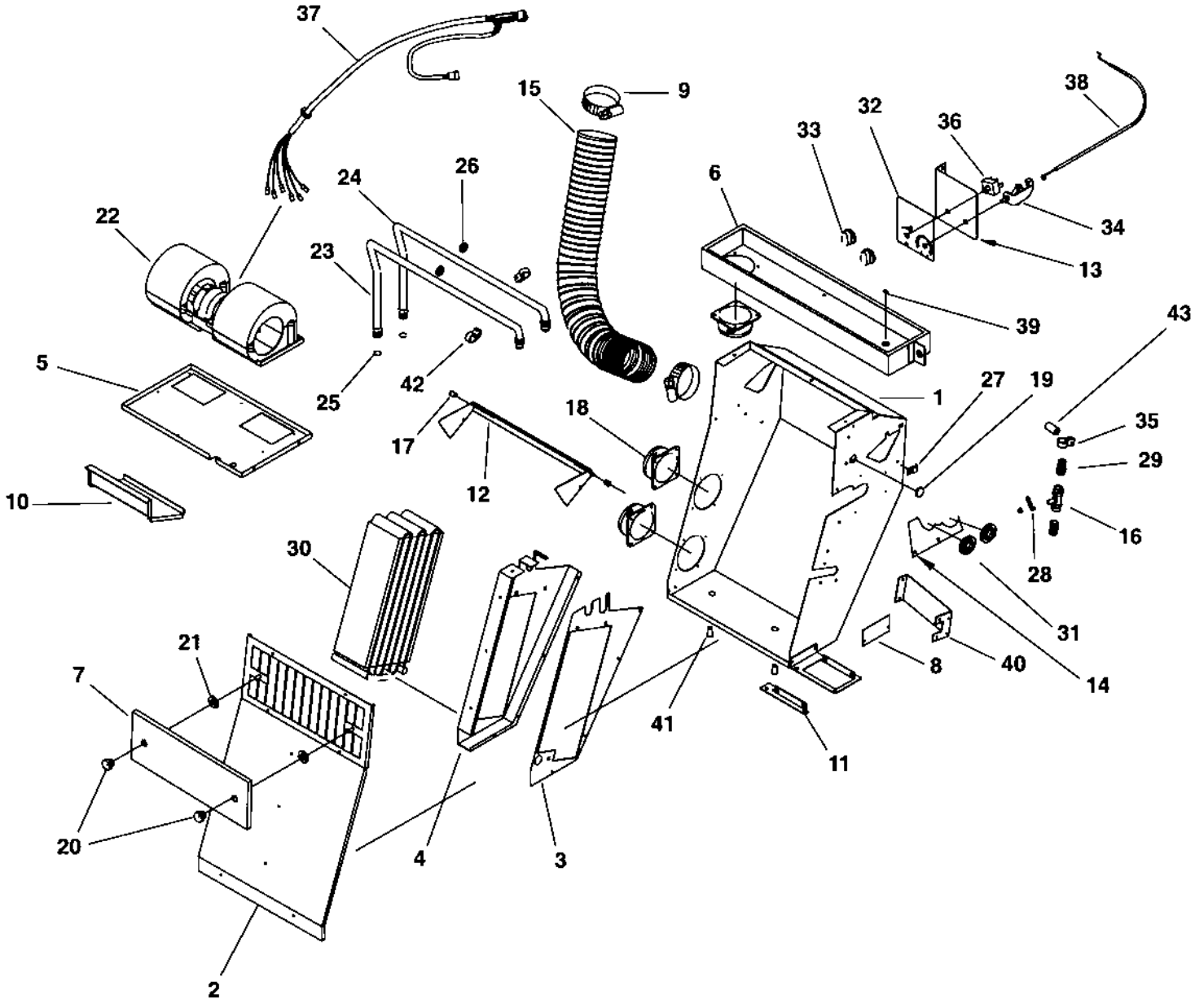

4700385769 Heater unit

Item	Part No	Rem	Qty	Description	Code
1	4700938938		1	Casing	
2	4700938939		1	Cover	
3	4700938940		1	Coil bracket	
4	4700938941		1	Coil bracket	
5	4700938942		1	Blower bracket	
6	4700938943		1	Air distributor	
7	4700938864		1	Recirculation cover	
8	4700938865		1	Block valve cover	
9	4700938789		2	Clamp	
10	4700938945		1	Air channel	
11	4700938779		1	Hose bracket	
12	4700938780		1	Flapper	
13	4700938781		1	Control panel	
14	4700938946		1	Cover plate	
15	4700938783		1	Air duct	
16	4700938953		1	Heater valve	
17	4700938784		2	Bushing	
18	4700938632		3	Hose adapter	
19	4700938644		1	Cap	
20	4700938634		2	Knob	
21	4700938611		2	Star lock	
22	4700938638		1	Fan	
23	4700938947		1	Copper tube	
24	4700938948		1	Copper tube	
25	4700384878		2	O-ring	
26	4700384927		2	Grommet	
27	4700384880		1	Wire clamp	
28	4700938949		1	Arm	
29	4700938950		2	Fitting	
30	4700384133		1	Coil	
31	4700938608		2	Grommet	
32	4700938955		1	Overlay	
33	4700938620		2	Knob	
34	4700938788		1	Rotary control	
35	4700938951		1	Clamp	
36	4700938622		1	Switch	
37	4700938647		1	Cable harness	
38	4700938954		1	Bowden cable	
39	4700938867		1	Hole plug	
40	4700938944		1	Heater valve bracket	
41	4700938636		2	Drain valve	
42	4700938790		2	Clamp	
43	4700938952		1	Spacer	

Cab, electrical

18171

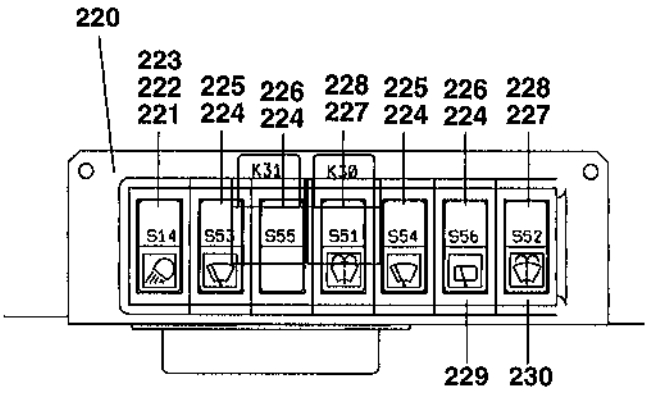

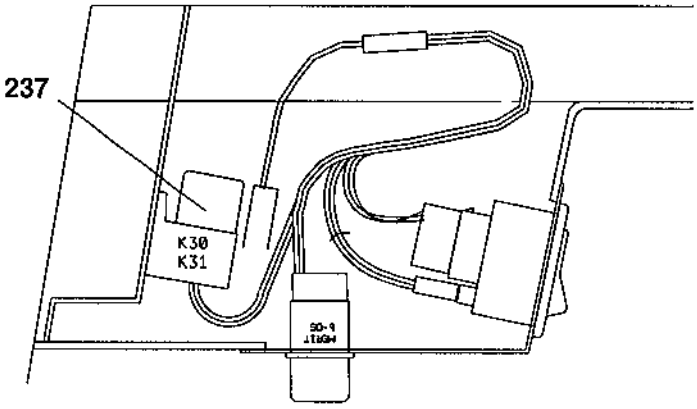

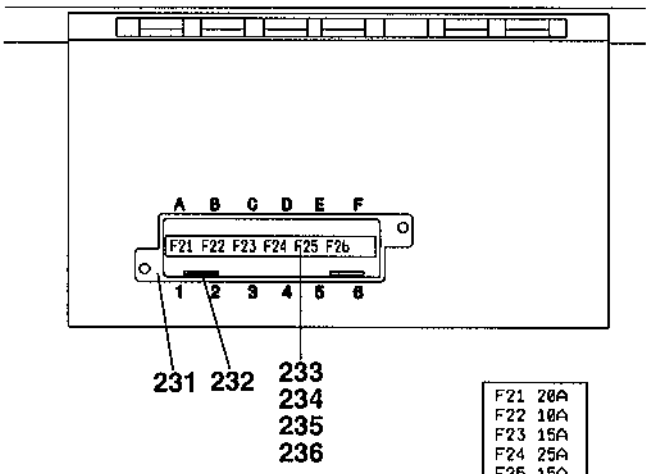

F21 20A
F22 10A
F23 15A
F24 25A
F25 15A
F26 15A

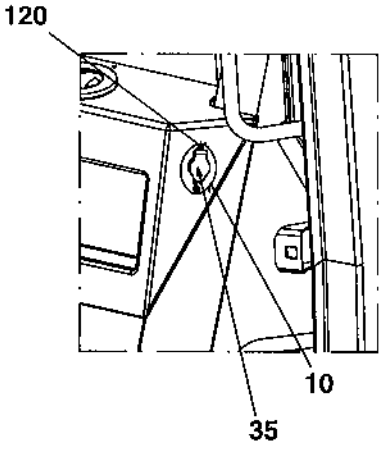

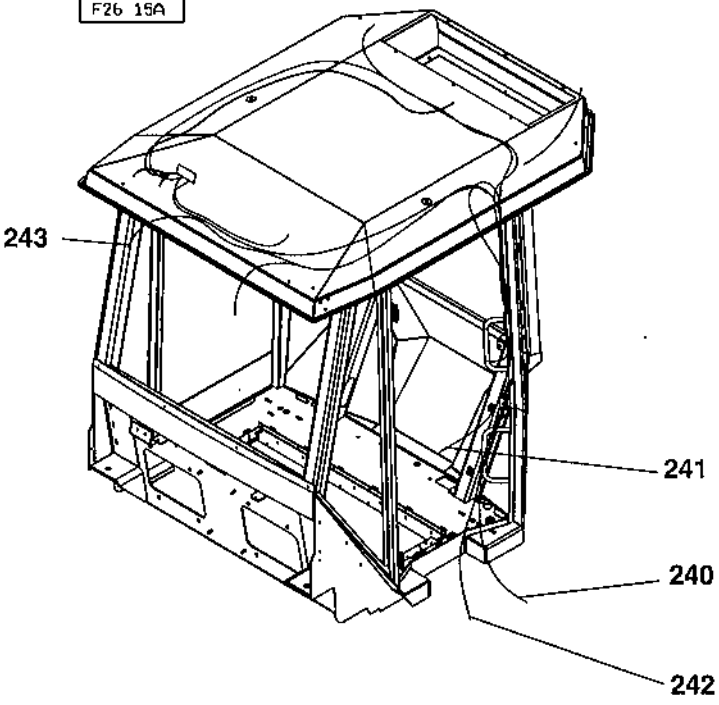

Cab, electrical

Item	Part No	Rem	Qty	Description		Code
			1	Cab, cpl		
10	4700939521		1	.Sign	12V	
35	4700939522		1	.Contact	12V	
120	4700938677		2	.Screw		
220	4700908611		1	.Bracket		
221	4700908602		1	.Switch		
222	4700908604		1	.Symbol, work lights		
223	4700908608		1	.Socket with bulb		
224	4700908617		4	.Switch		
225	4700908605		2	.Symbol, wiper		
226	4700938687		2	.Symbol, wiper		
227	4700908603		2	.Switch		
228	4700908618		2	.Symbol, washer		
229	4700908606		5	.Modular panel		
230	4700908610		2	.Modular panel		
231	4700908613		1	.Fuse box		
232	4700901240		2	.Connector		
233	4700901228		3	.Fuse	15A	
234	4700903741		1	.Fuse	20A Yellow Medium	B
235	4700901227		1	.Fuse	10A	B
236	4700901229		1	.Fuse	25A	B
237	4700287597		2	.Relay		D
240	4700938029		1	.Cable harness		
241	4700938854		1	.Cable harness	Roof	
242	4700377414		1	.Cable harness		
243	4700377415		1	.Cable harness		

Cab, symmetric

Cab, symmetric

Item	Part No	Rem	Qty	Description		Code
1				Cab, interior (Page 178)		
2				Cab, screens (Page 180)		
3				Cab (Page 182)	Inside panels	
4				Cab, wipers, front and rear (Page 166)		
6				Cab, door, left side (3-split) (Page 168)		
7				Cab, heater and, fan system (Page 170)		
8				Cab, electrical (Page 174)		

Cab, interior

18149

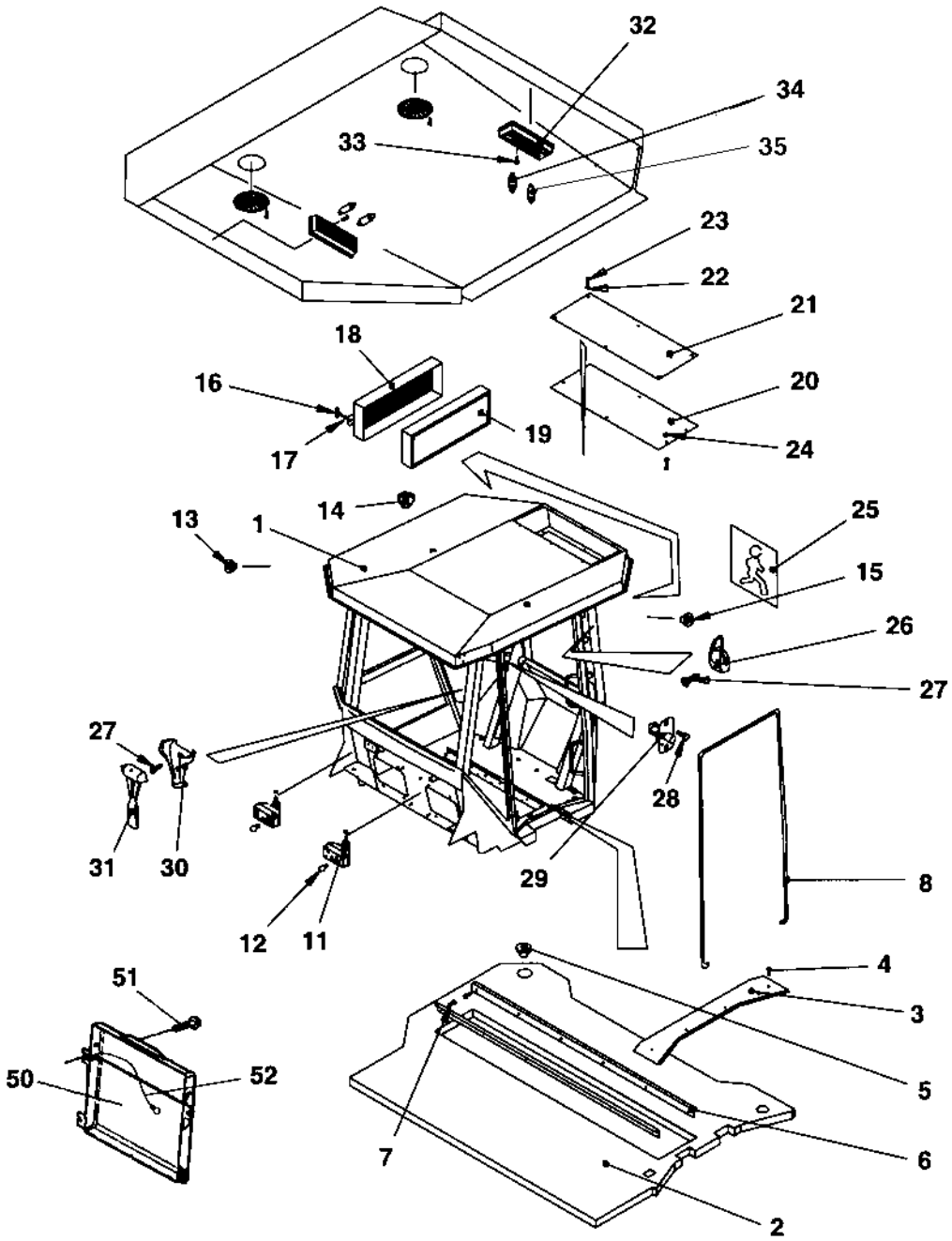

Cab, interior

Item	Part No	Rem	Qty	Description		Code
1	4700378058		1	Cab, cpl		
2	4700939927		1	.Floor carpet		
3	4700908511		1	.List left		
4	4700903808		4	.Screw		
5	4700939928		1	.Cover		
6	4700908510		2	.List		
7	4700535005		12	.Screw	M5x12	
8	4700938842	A	1XL	.Sealing strip		
11	4700908268		2	.Work light		
12	4700938845		2	.Bulb	10W 12V	
13	4700938660		8	.Grommet		
14	4700908497		12	.Grommet		
15	4700909510		3	.Grommet		
16	4700908504		4	.Handle		
17	4700908503		4	.O-ring		
18	4700938846		2	.Filter housing		
19	4700938847		2	.Air filter		
20	4700938678		1	.Cover		
21	4700938679		1	.Cover		
22	4700936277		12	.Washer		
23	4700500053		12	.Screw	M8x20H 8.8	
24	4700586003		8	.Lock nut	M8	
25	4700935589		1	.Decal		
26	4700908505		1	.Hook		
27	4700938676		4	.Screw		
28	4700901315		2	.Screw		
29	4700908500		1	.Door switch		
30	4700908506		1	.Holder		
31	4700908507		1	.Emergency hammer		
32	4700908515		2	.Inner light		
33	4700541535		4	.Screw		
34	4700985051		4	.Bulb	12V,10W	B
35	4700985013		2	.Bulb	12V,5W	B
50	4700383705		1	Instruction book holder		
51	4700791226		4	Screw		
52	4700357643		1	Wire		

A) L=5,0 m

Cab, screens

18168

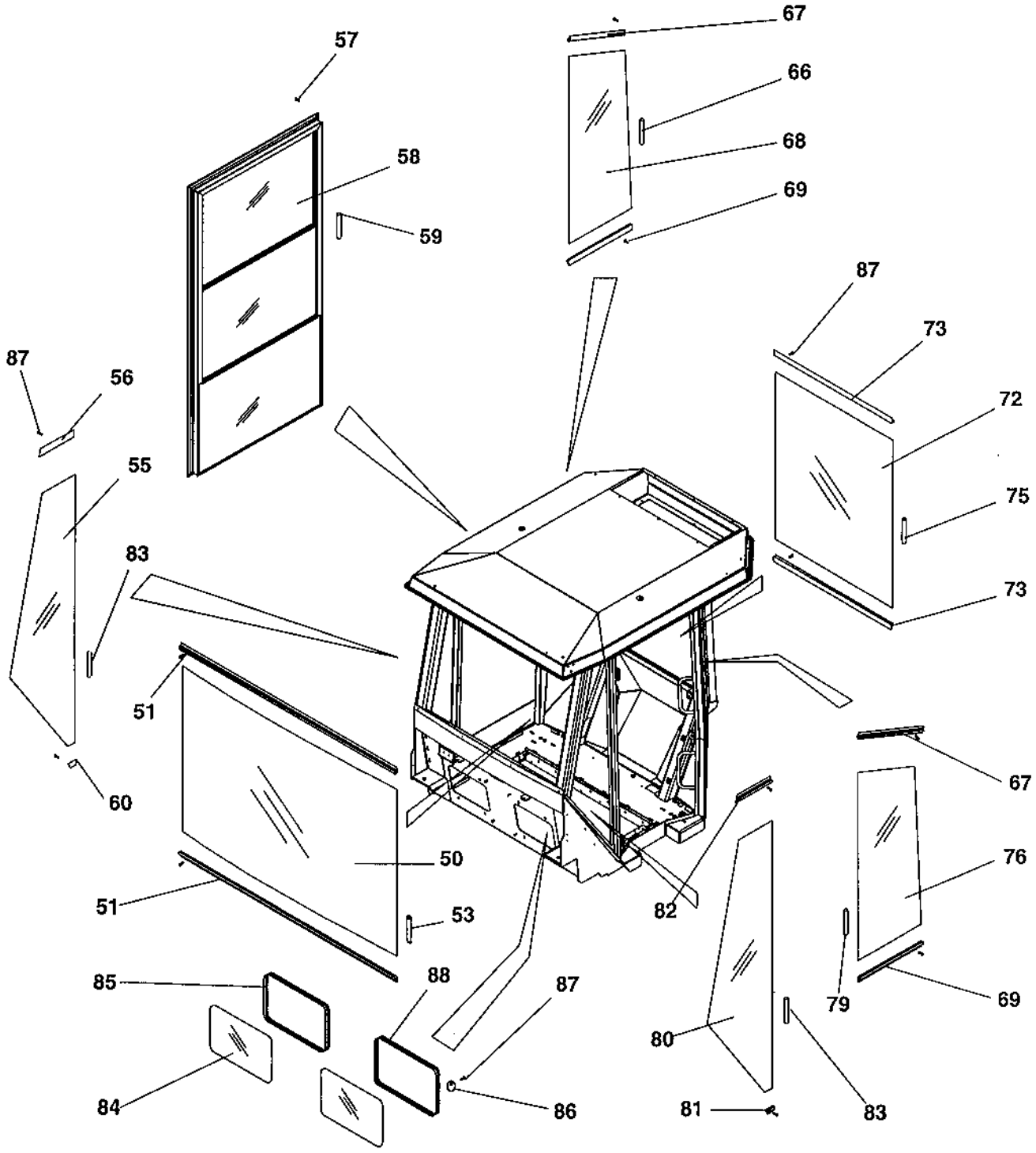

Cab, screens

Item	Part No	Rem	Qty	Description	Code
			1	Cab, cpl	
28	4700901315		8	.Screw	
50	4700937395		1	.Front screen	Green
51	4700908546		2	.List	
53	4700938834	A	1XL	.Sealing strip	
54	4700938616		1	.Screen	Green
55	4700937398		1	.Screen	Green
56	4700938840		1	.List	
57	4700940389		46	.Screw	
58	4700940390		1	.Side window, cpl	
59	4700940391	B	1XL	.List	
60	4700938839	C	1XL	.List	
66	4700908574	D	1XL	.Sealing	
67	4700938837	E	1XL	.Sealing strip	
68	4700938615		1	.Screen	Green
69	4700908556		2	.List	
72	4700937403		1	.Screen	Green
73	4700908764		2	.List	
75	4700938834	A	1XL	.Sealing strip	
76	4700938566		1	.Screen	Green
79	4700938834	G	1XL	.Sealing strip	
80	4700937405		1	.Screen	Green
81	4700908993		1	.List	
82	4700908557		1	.List	
83	4700938834	H	1XL	.Sealing strip	
84	4700938567		2	.Screen	Green
85	4700938837	E	1XL	.Sealing strip	
86	4700938838		8	.List	
87	4700937932		48	.Screw	
88	4700938835		1	.List	

A) L=1,8 m
B) L=4,1 m
C) L=1,0 m
D) L=1,4 m
E) L=1,3 m
G) L=2,1 m
H) L=3,0 m

Cab Inside panels

17614

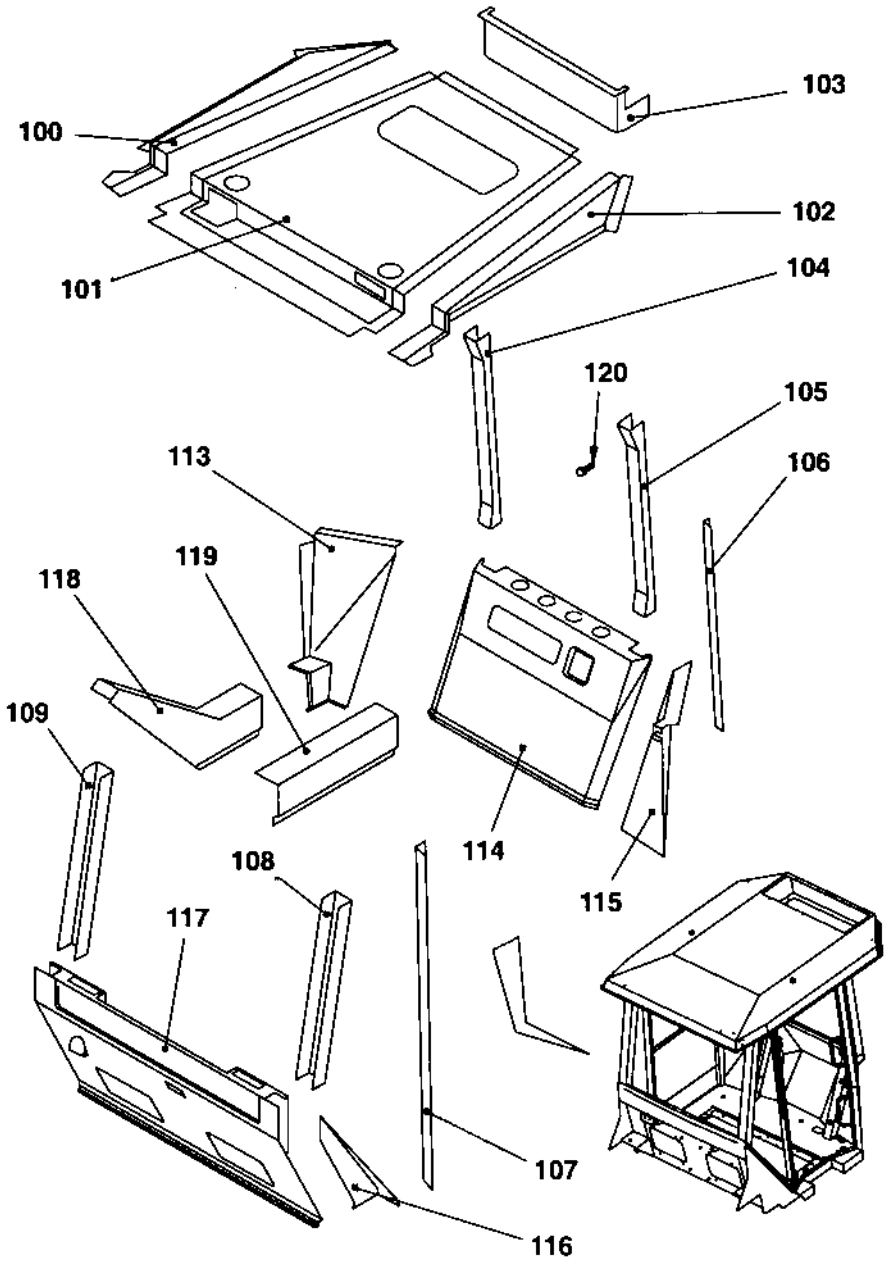

Cab Inside panels

Item	Part No	Rem	Qty	Description	Code
			1	Cab, cpl	
100	4700938814		1	.Panel	
101	4700938807		1	.Panel	
102	4700938808		1	.Panel	
103	4700938809		1	.Panel	
104	4700938810		1	.Panel	
105	4700938811		1	.Panel	
106	4700908535		1	.Panel	
107	4700908536		1	.Panel	
108	4700908529		1	.Panel	
109	4700938815		1	.Panel	
113	4700938816		1	.Panel	
114	4700938812		1	.Panel	
115	4700908544		1	.Panel	
116	4700908537		1	.Panel	
117	4700938813		1	.Panel	
118	4700938817		1	.Panel	
119	4700938818		1	.Panel	
120	4700938677		50	.Screw	

Cab, equipment

18166

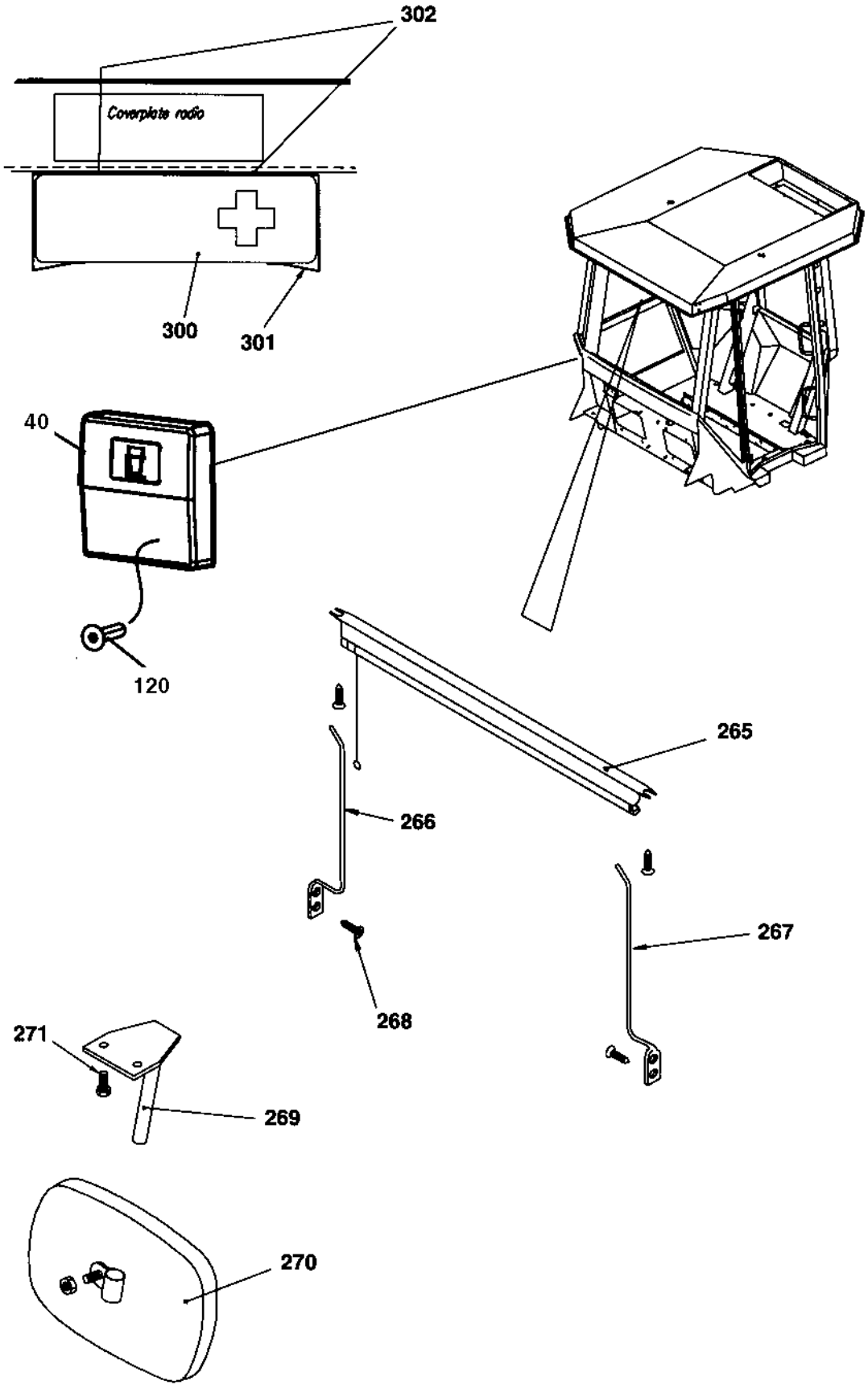

Cab, equipment

Item	Part No	Rem	Qty	Description	Code
				Cab, cpl	
40	4700377255		1	.Cup holder	
120	4700938677		6	.Screw	
265	4700908356		1	.Sun curtain	
266	4700908358		1	.Bar	
267	4700908357		1	.Bar	
268	4700903803		4	.Screw	
269	4700908623		1	.Bracket	
270	4700908624		1	.Rear mirror	
271	4700513008		1	.Screw	
300	4700902508		1	First aid kit	
301	4700371837		1	Holder	
302	4700903969		4	Screw	ST4,8x19 Black

Cab, water tank/s wipers

18770

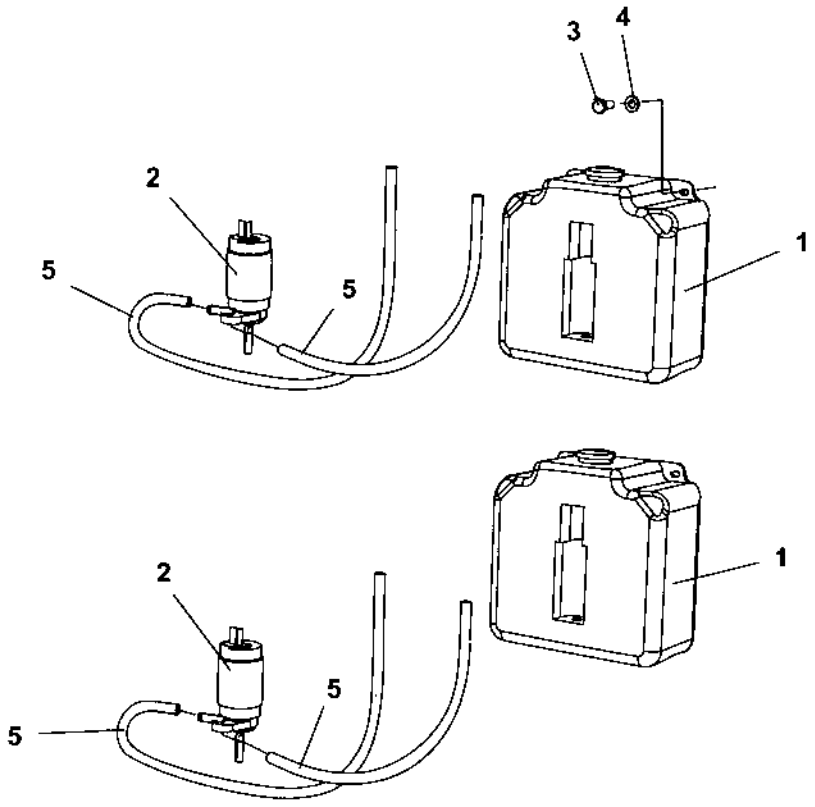

Cab, water tank/s wipers

Item	Part No	Rem	Qty	Description	Code
1	4700900998	A,1	2	Water reservoir	
	4700900998	A,2	1	Water reservoir	
2	4700900999	1	2	Pump	
	4700900999	2	1	Pump	
3	4700500185	1	4	Screw M6-1x14 8,8	
	4700500185	2	2	Screw M6-1x14 8,8	
4	4700904228	1	4	Washer	
	4700904228	2	2	Washer	
5		3	1	Hose	

1) Valid for asymmetric cab.
2) Valid for symmetric cab.
3) See sections for Cab, wipers.
A) Windshield washer

Radio and cassette/cd player

17972

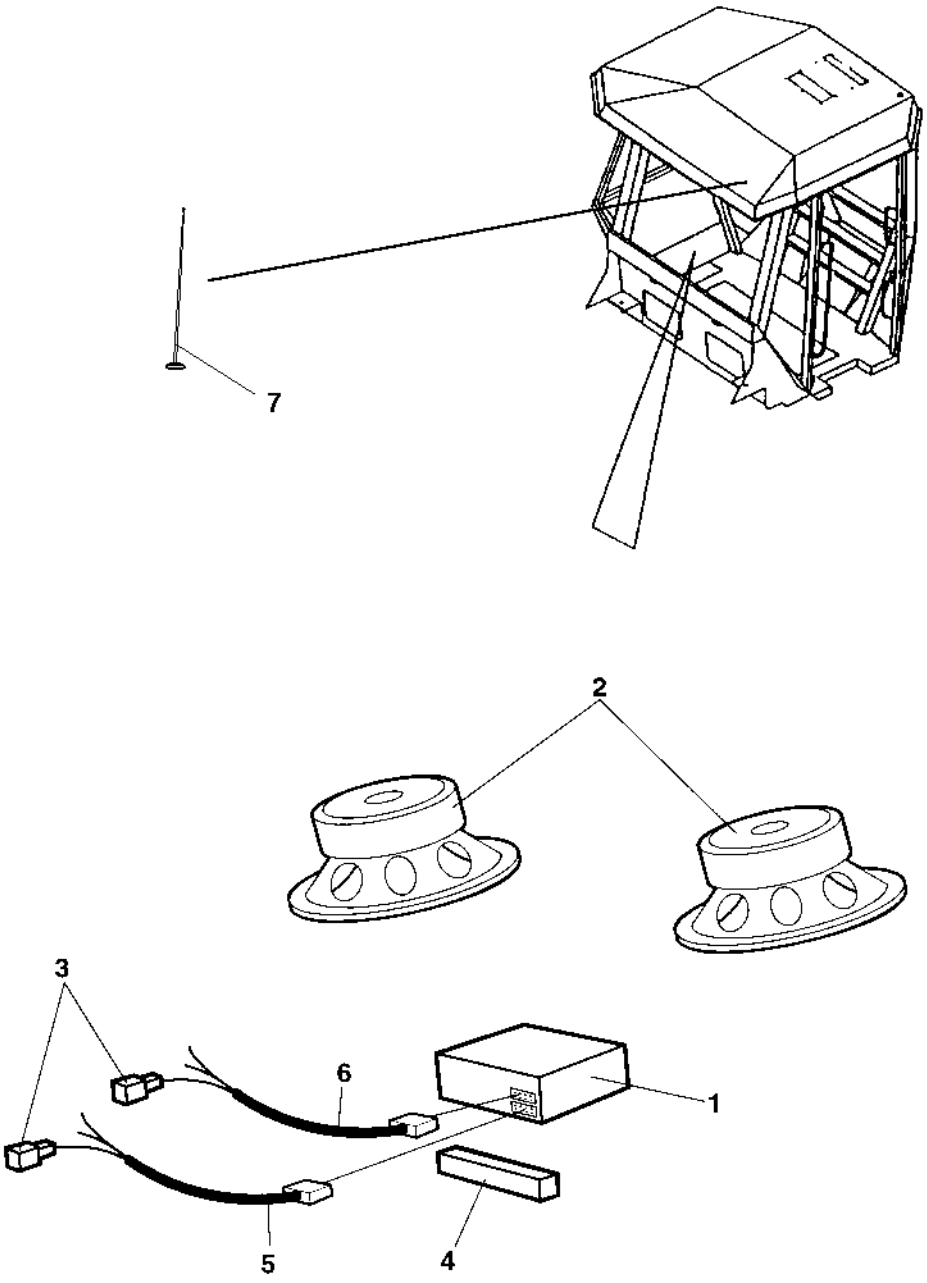

Radio and cassette/cd player

Item	Part No	Rem	Qty	Description	Code
1	4700904939		1	Radio and cassette player	
	4700791967		1	Radio and cd player	
2	4700791968	A	1	Loud speakers	
4	4700202043	C	1XL	Rubber strip	
7	4700937165	1	1	Antenna	

1) Included in cab.
A) 2 pcs
C) L=0,2 m

Exterior rear mirrors

15777

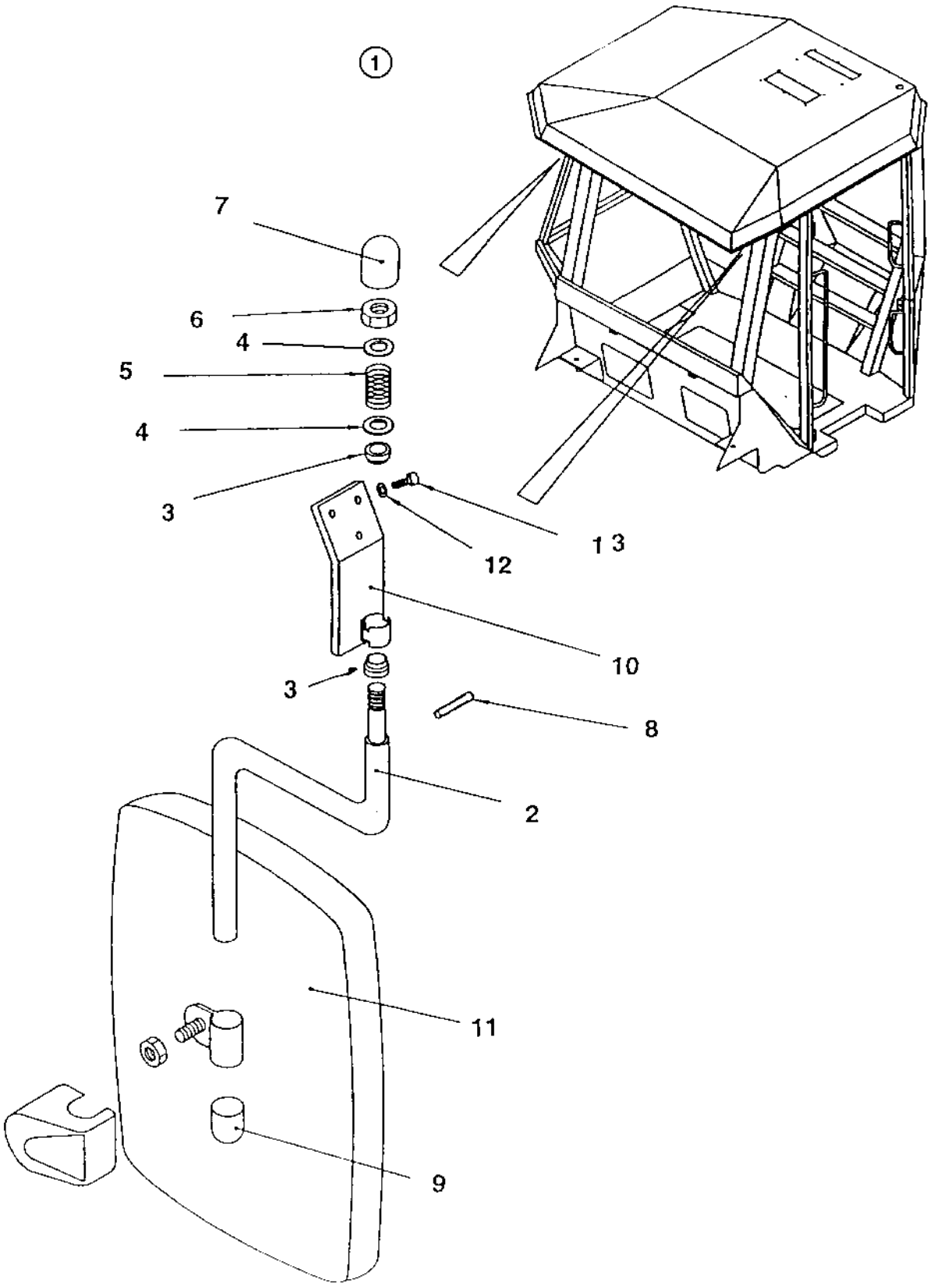

Exterior rear mirrors

Item	Part No	Rem	Qty	Description	Code
1	4700371730	A	1	Rear view mirror, cpl	
2	4700908355		1	.Arm	
3	4700908625		2	.Sleeve	
4	4700904232		2	.Washer	
5	4700908626		1	.Spring	
6	4700586021		1	.Nut	M16
7	4700908627		1	.Cap	
8	4700629066		1	.Spirol pin	
9	4700908623		1	.Bracket	
10	4700908361		1	.Bracket	
11	4700908265		1	.Rear view mirror	
12	4700904229		6	Washer	8,4x16x1,5
13	4700500019		6	Screw	M8x16H 8.8 A2K

A) Option

Decals

Item	Part No	Rem	Qty	Description	Code
10				Decals (Page 194)	

Decals

18148

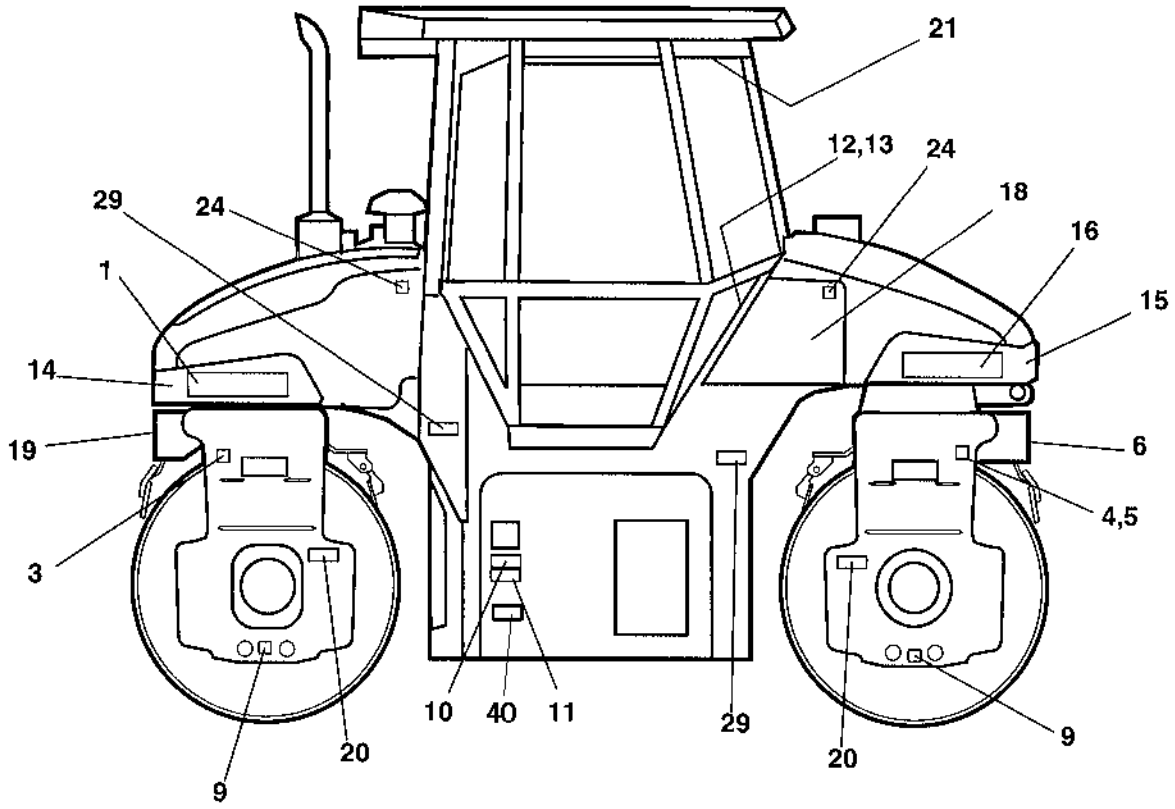

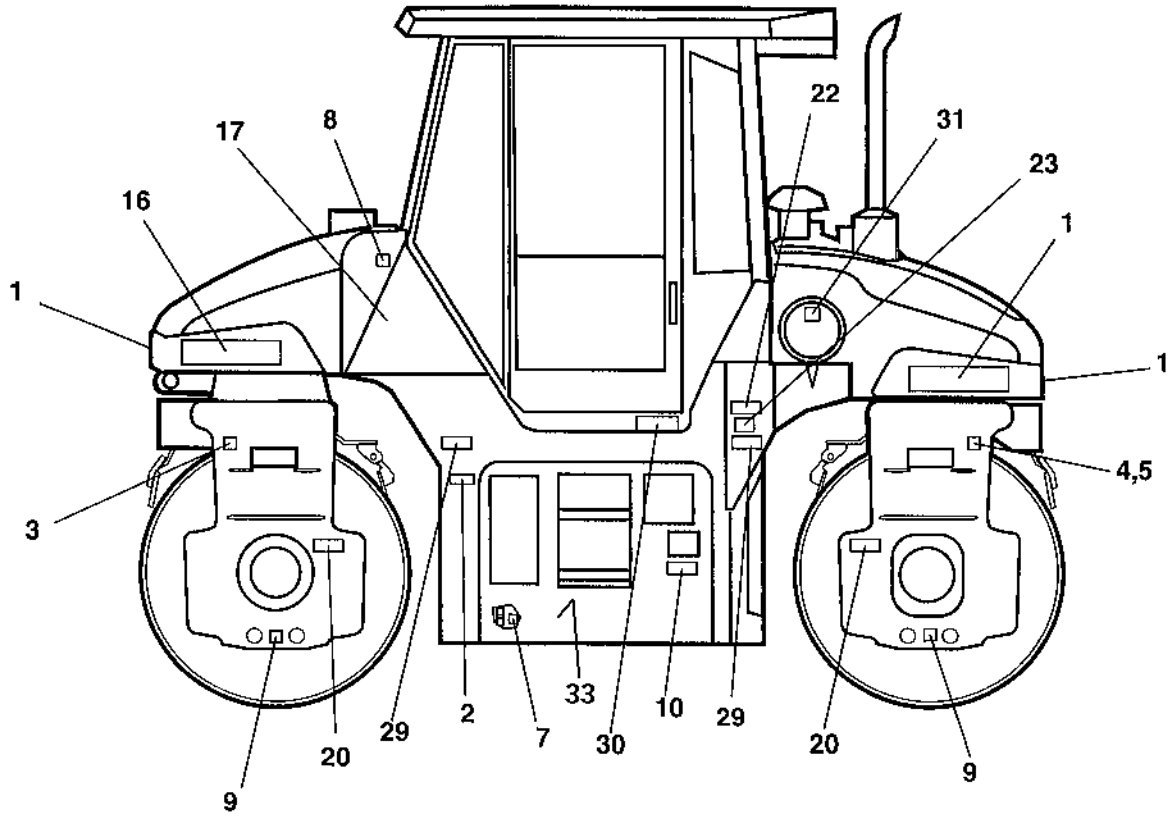

Decals

Item	Part No	Rem	Qty	Description		Code
1	4700904092		4	Decal "DYNAPAC"	L=590 mm	
2	4700904835		1	Decal "BATTERY POWER"		
3	4700357587		2	Decal "LIFT POINT"		
4	4700904870		2	Lifting sign		
5	4700624016		12	Blind rivet		
6	4700377743		2	Reflector, white		B
7	4700272373		1	Decal "HYDRAULIC OIL"		
	4700904601		1	Decal "BIO HYDRAULIC OIL"		
	4700792772		1	Decal "BIO HYDRAULIC OIL"	PANOLIN	
8	4700991658		1	Decal "FUEL"		
9	4700382751		4	Decal "TIE DOWN POINT"		
10	4700903424		2	Decal "HOT SURFACE"		
11	4700903423		1	Decal "SAFETY"		
12	47386084XX		1	Plate "Don`t leave platform"		
13	4700624017		2	Blind rivet		
14	4700377283		1	Decal		
15	4700377284		1	Decal		
16	4700792110		2	Decal "MODEL CODE"	CG223HF	
17	4700377298		1	Decal		
18	4700377299		1	Decal		
19	4700377742		2	Reflector, red		B
20	4700377744		4	Reflector, yellow		B
21	4700903425		1	Decal "SAFETY MANUAL"		
22			1	Product identification plate CE		
23	4700791279		1	Decal "Sound power level"	109dB	
	4700791276		1	Decal "Sound power level"	106dB	
24	4700991657		2	Decal "WATER"		
29	4700903422		4	Decal "SAFETY"		
30	4700903459		1	Decal "SAFETY"		
31	4700791642		1	Decal "WARNING"	Use of starting fluid prohib.	
33	4700392919		1	Decal "Brake release, hand pump"		
40	4700904165	A	1	Safety decal	Toxic gases	

A) Option, Air Condition

Optional equipment

Item	Part No	Rem	Qty	Description	Code
5				Noise suppression (Page 198)	
10				Roof hatch (Page 200)	
20				SMV-sign (Page 202)	
30				Rear mirrors (Page 204)	
40				Protecting cover, Headlight (Page 206)	
50				Asphalt temperature meter (Page 208)	
60				Air conditioning (Page 210)	
70				Edge cutter (Page 216)	

Noise suppression

18772

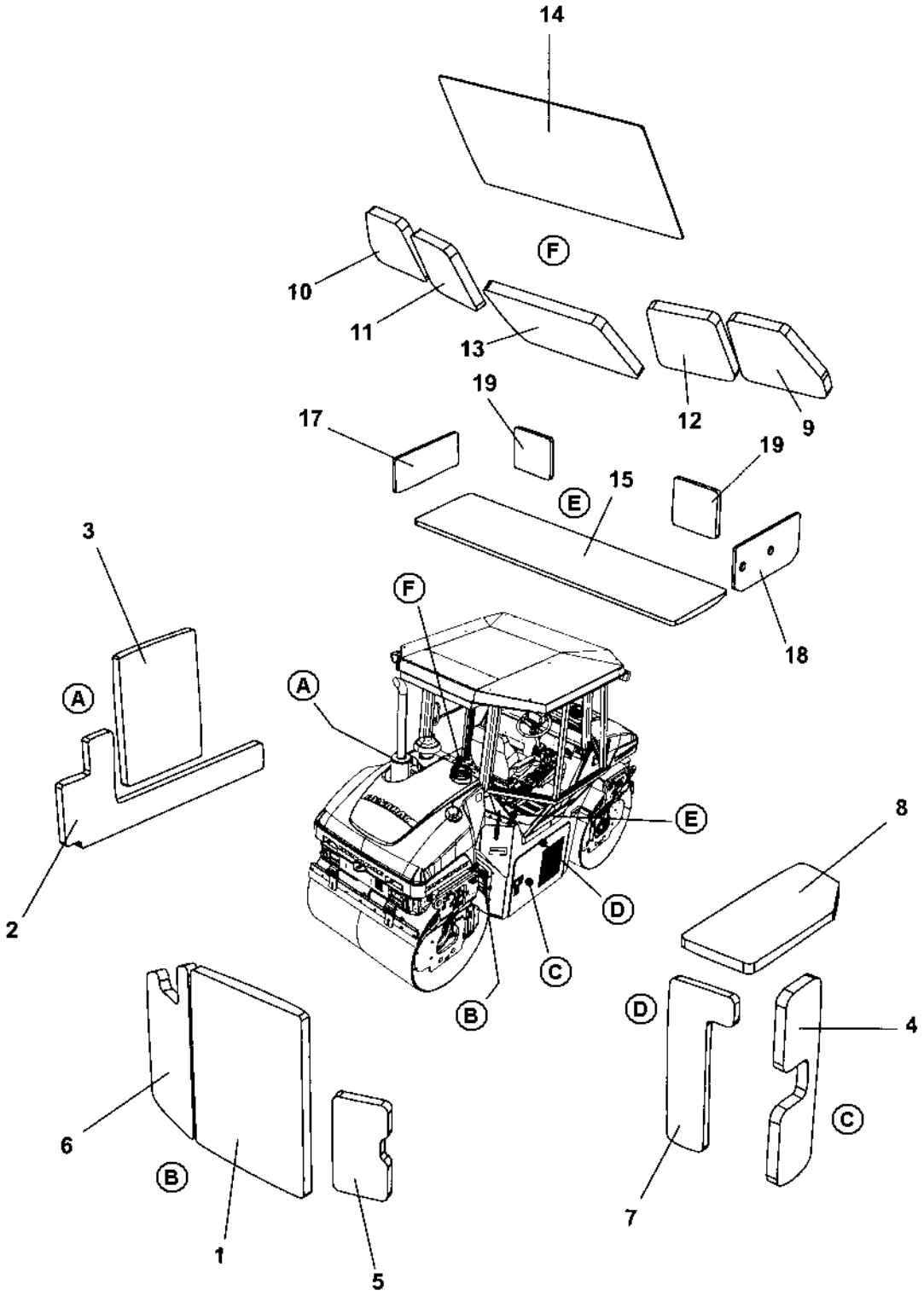

Noise suppression

Item	Part No	Rem	Qty	Description	Code
1	4700389625	B	1	Sound absorbent	
2	4700385919	A	1	Sound absorbent	
3	4700389520	A	1	Sound absorbent	
4	4700378557	C	1	Sound absorbent	
5	4700378558	B	1	Sound absorbent	
6	4700378559	B	1	Sound absorbent	
7	4700378560	D,G	1	Sound absorbent	
8	4700378561	D,G	1	Sound absorbent	
	4700396116	D,H	1	Sound absorbent	
9	4700378562	F	1	Sound absorbent	
10	4700378563	F	1	Sound absorbent	
11	4700378564	F	1	Sound absorbent	
12	4700378565	F	1	Sound absorbent	
13	4700378566	F	1	Sound absorbent	
14	4700378567	I	1	Sound absorbent	
15	4700378568	E	1	Sound absorbent	
17	4700378570	E	1	Sound absorbent	
18	4700378571	E	1	Sound absorbent	
19	4700378572	E	2	Sound absorbent	

A) Cover, left side
B) Service cover
C) Cover, right side
D) Radiator/Cooler
E) Noise suppression box
F) Cab, rear bottom
G) Tier II
H) Tier III
I) Plastic cover, cab

Roof hatch

17374

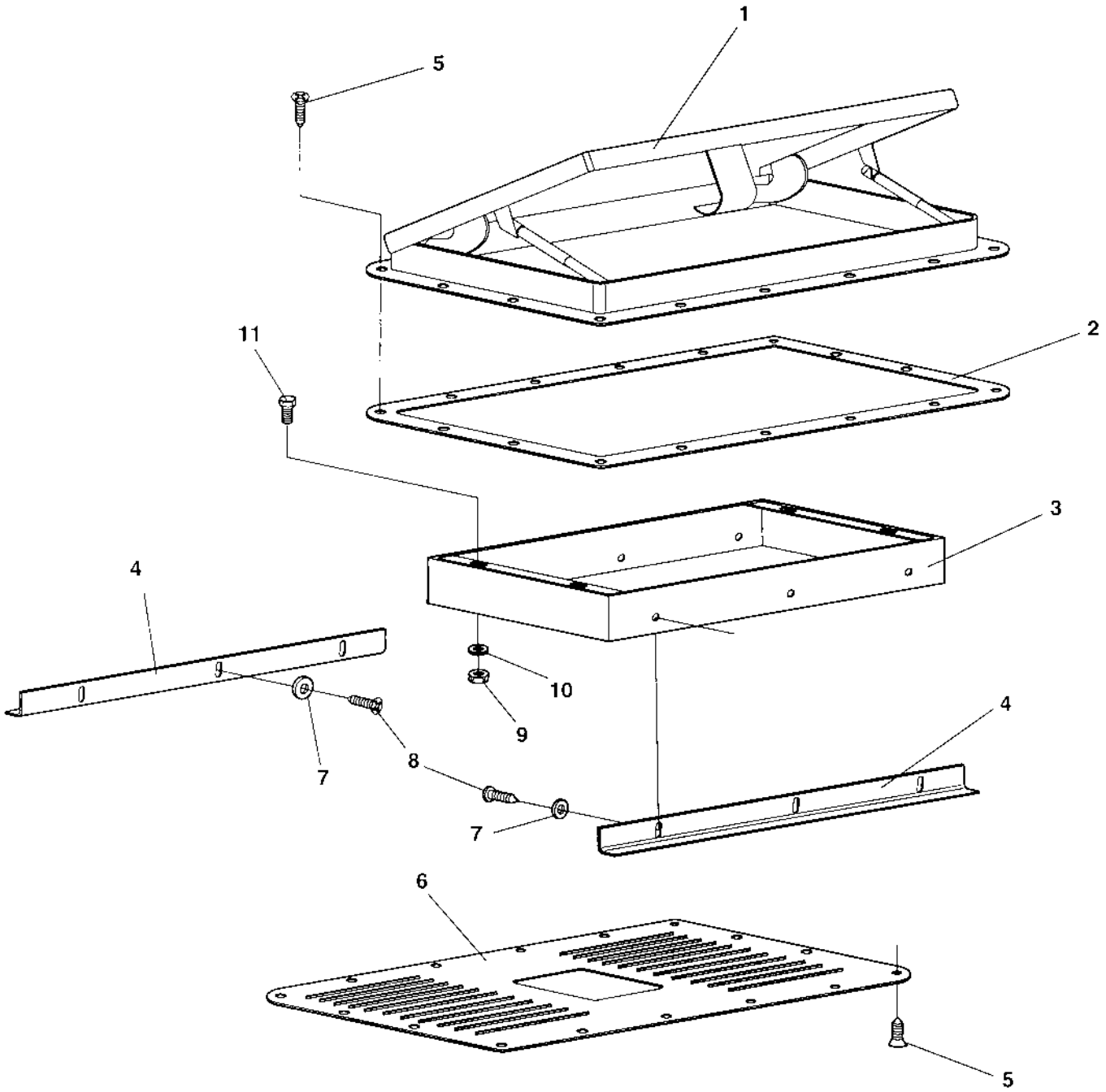

Roof hatch

Item	Part No	Rem	Qty	Description	Code
1	4700382702		1	Roof hatch	
	4700384958		1	Roof hatch	
2	4700382701		1	Gasket	
	4700384954		1	Support plate	
3	4700382699		1	Inner roof insert	
4	4700383002		2	Inner roof holder	
5	4700904906		32	Screw	
6	4700382700		1	Inner cover	
7	4700601001		6	Washer	
8	4700903852		6	Screw ST4,2x13	
9	4700570004		4	Nut M6X1,00 -8 A2K	
10	4700904228		4	Washer	
11	4700500040		4	Screw M6-1x20 8,8	

SMV-sign

18236

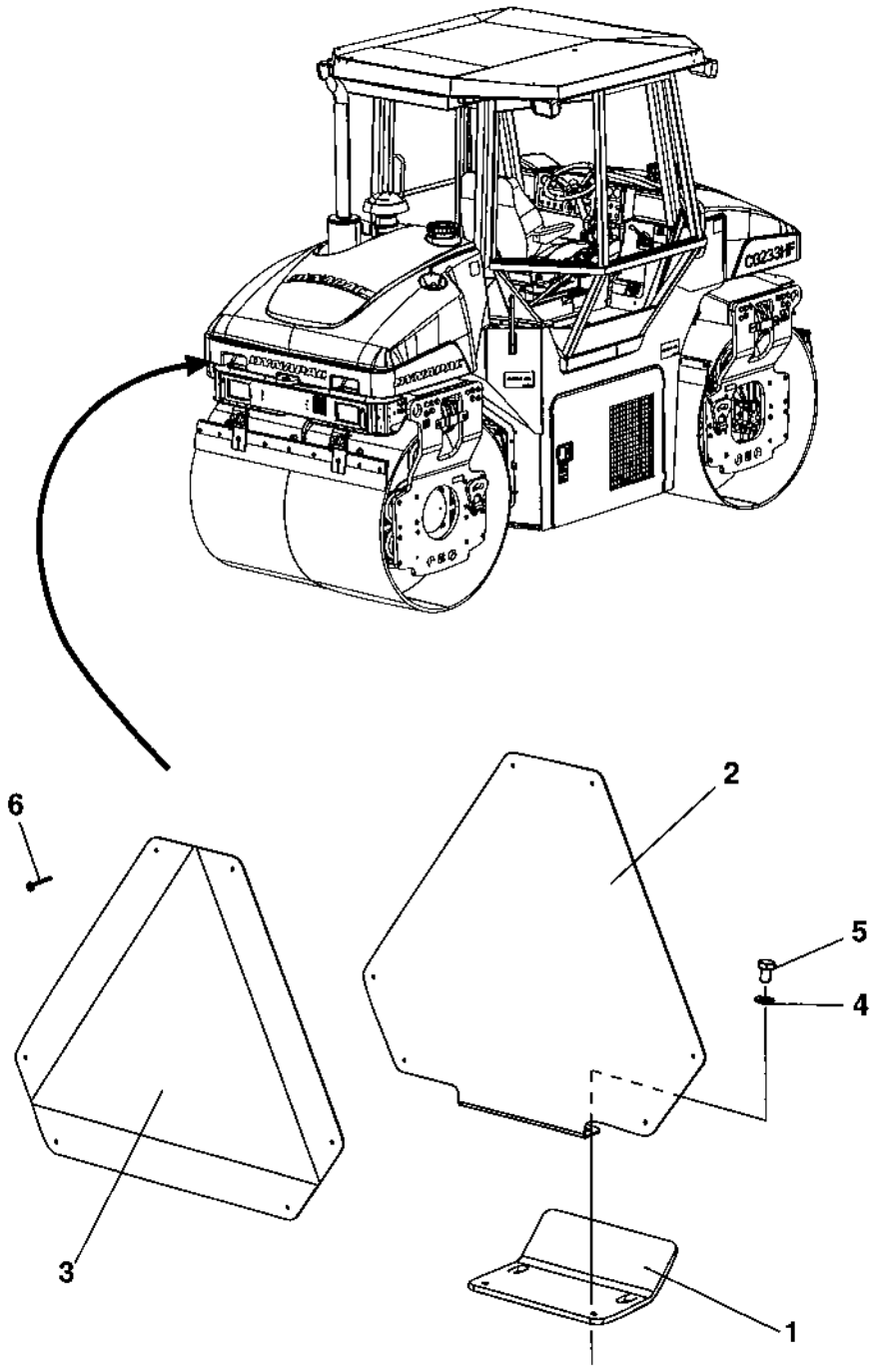

SMV-sign

Item	Part No	Rem	Qty	Description		Code
1	4700377267		1	Bracket		
2	4700377268		1	Sign holder		
3	4700476019		1	SMV-sign		D
4	4700904229		2	Washer	8,4x16x1,5	
5	4700500018		2	Screw	M8-1,25x12 8,8	
6	4700624011		6	Pop rivet		

Rear mirrors

18238

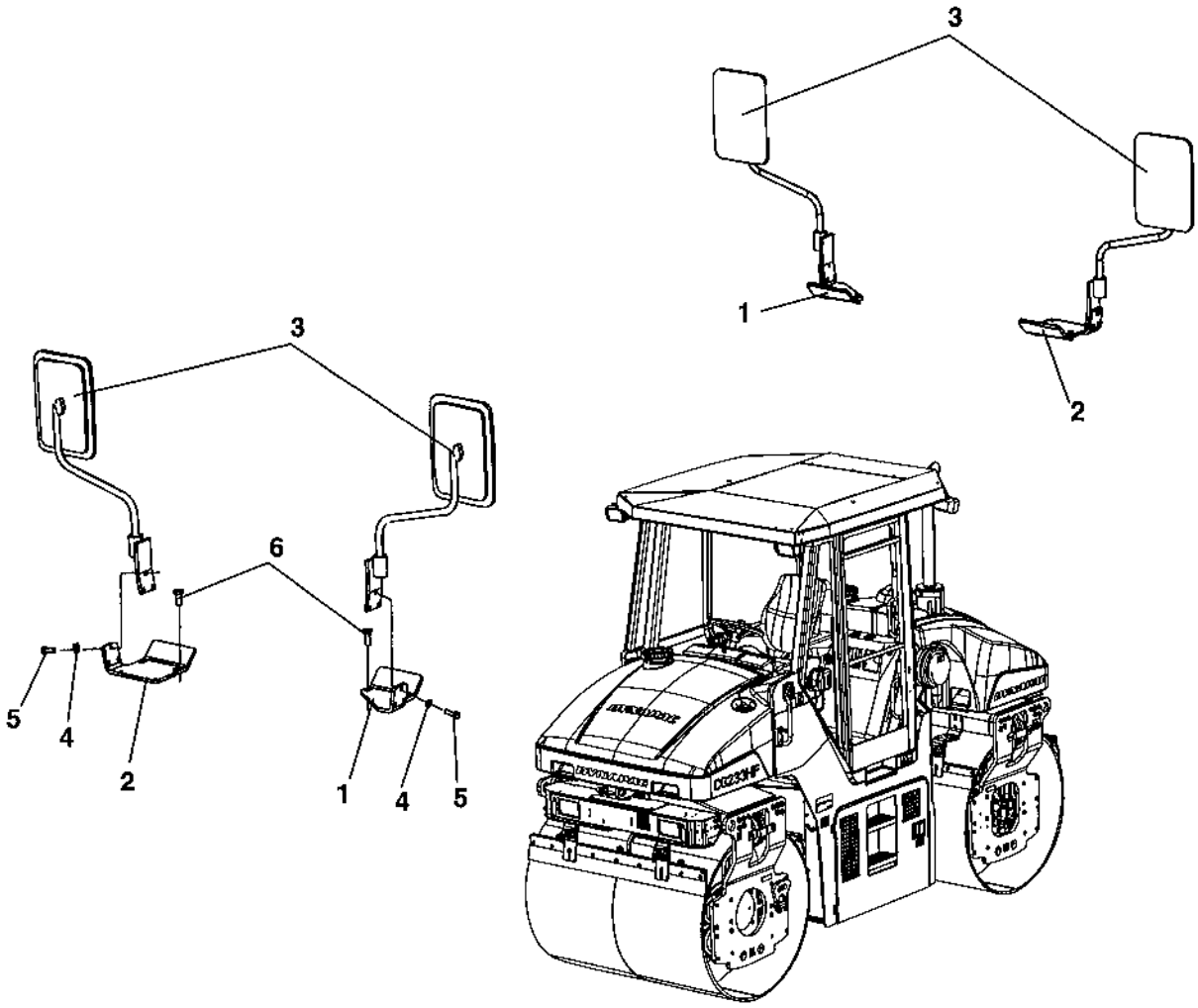

Rear mirrors

Item	Part No	Rem	Qty	Description	Code
1	4700377262	A	2	Bracket	
2	4700377263	B	2	Bracket	
3	4700371730		4	Rear view mirror, cpl	
	4700908265		1	.Rear view mirror	
4	4700600006		12	Washer	
5	4700500021		12	Screw M8-1,25x25 8.8	
6	4700500028		8	Screw	

A) Front left, Rear right
B) Front right, Rear left

Protecting cover, Headlight

17080

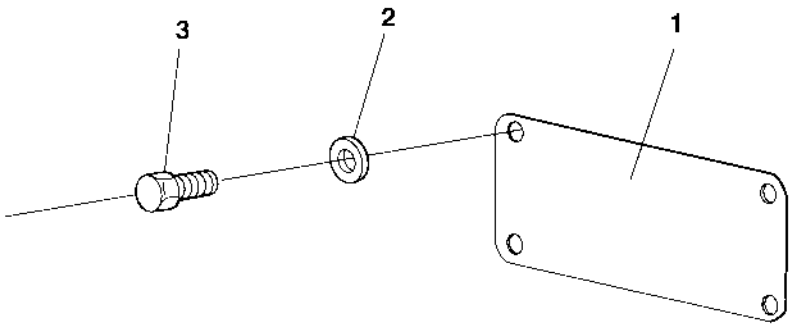

Protecting cover, Headlight

Item	Part No	Rem	Qty	Description	Code
1	4700374756		1	Protecting cover	
2	4700904281		4	Washer	
3	4700791916		4	Screw	

Asphalt temperature meter

18257

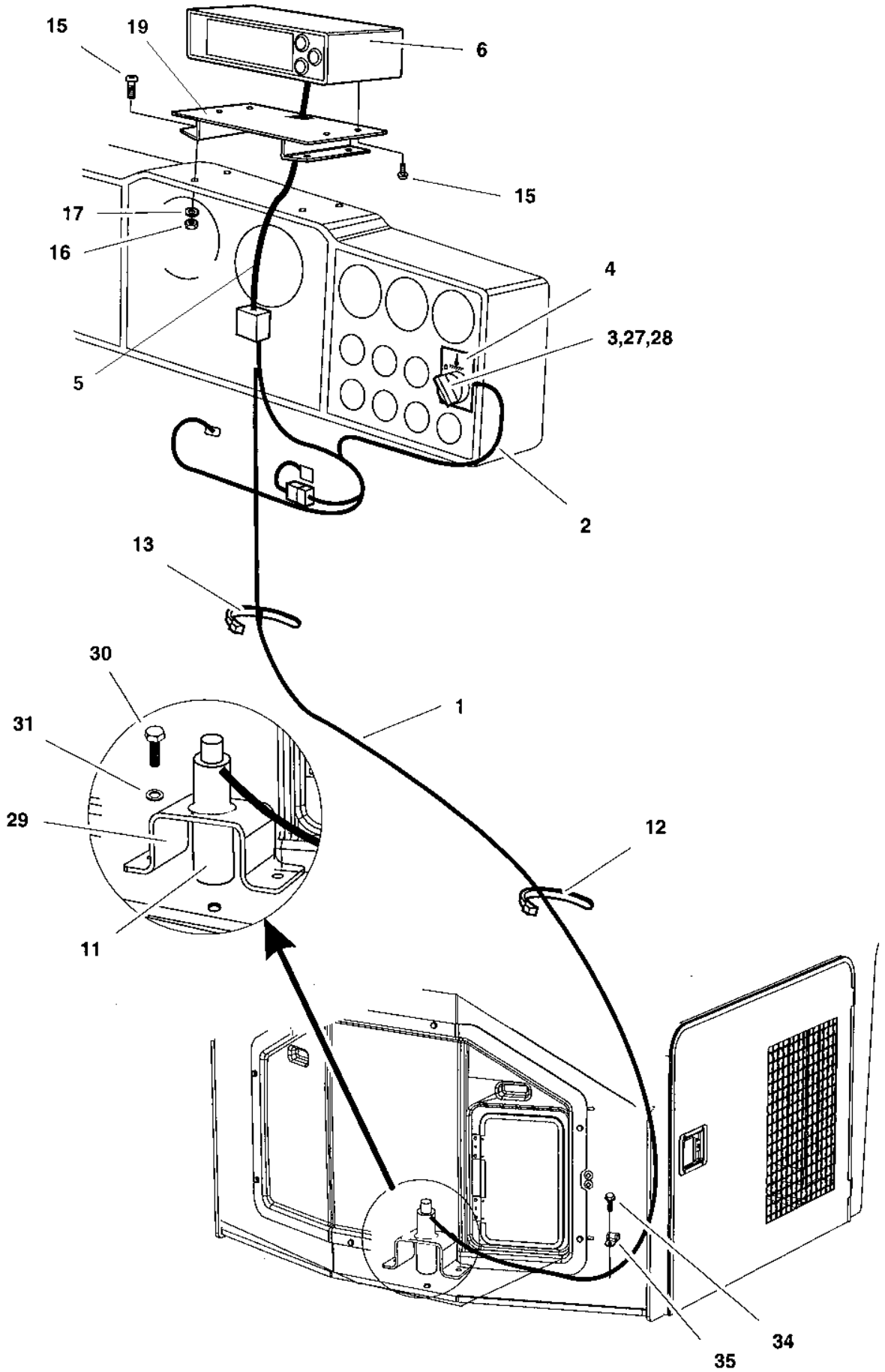

Asphalt temperature meter

Item	Part No	Rem	Qty	Description	Code
1	4700388522		1	Cable harness	
2	4700378116		1	Cable harness	
3	4700791722		1	Switch, black	
4	4700388561		1	Sign	
5	4700377819		1	Cable harness	
6	4700388775		1	Temperature meter	
11	4700387982		1	Temperature sender	
12	4700313068		N	Cable ties	L=92 mm
13	4700925802		N	Cable ties	L=142 mm
15	4700904653		8	Screw	M5x16 A2-70
16	4700586001		4	Lock nut	
17	4700904281		4	Washer	
19	4700387988		1	Bracket	
27	4700791733		1	Fixing collar	
28	4700791736		1	Connector	
29	4700377422		1	Bracket	
30	4700500053		2	Screw	M8x20H 8.8
31	4700904229		2	Washer	8,4x16x1,5
34	4700541702		5	Screw	M6x12
35	4700791341		5	Clamp	

Air conditioning

18677

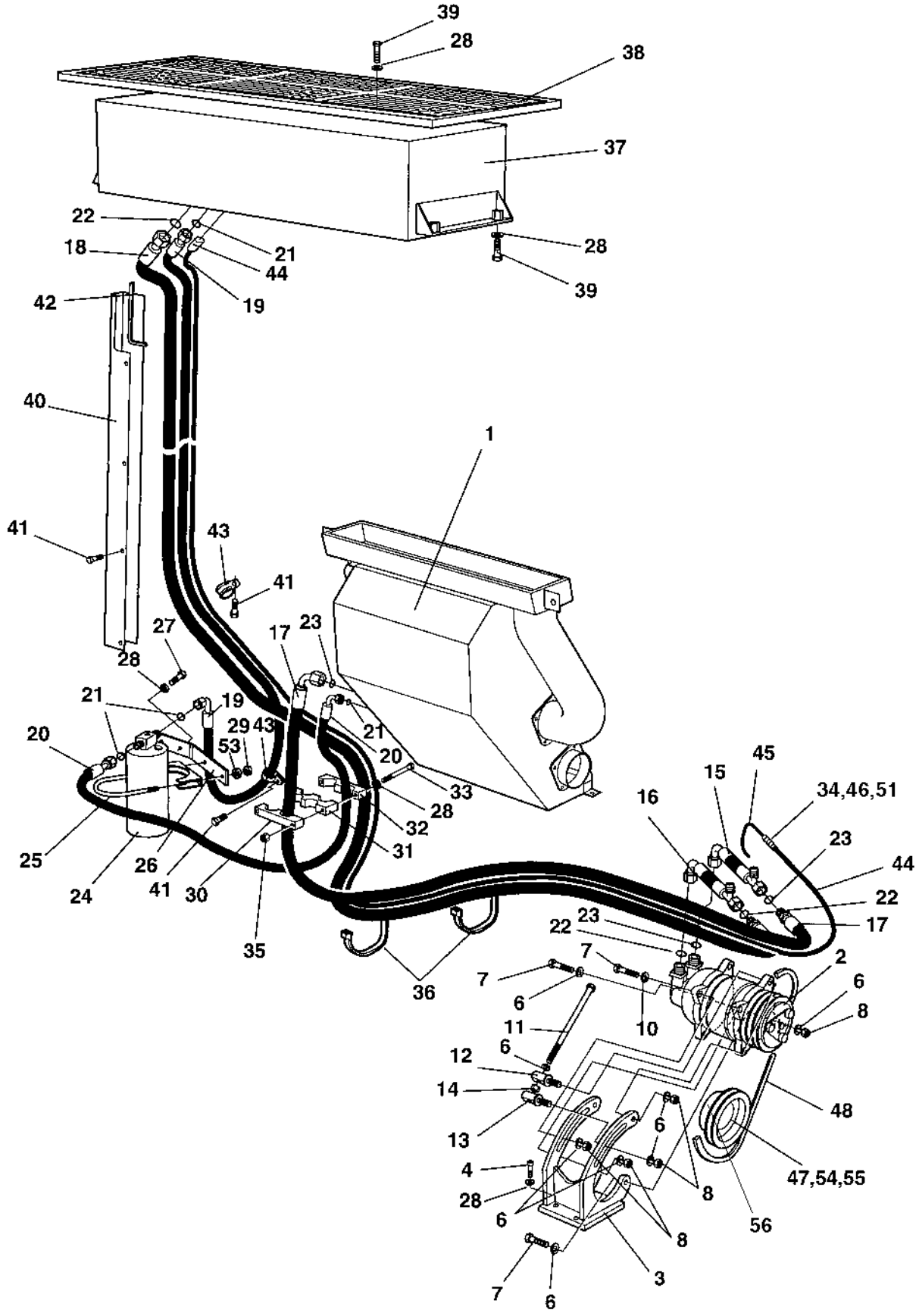

Air conditioning

Item	Part No	Rem	Qty	Description		Code
1	4700385766		1	Heater/AC unit (Page 212)		
2	4700384147		1	Compressor		
3	4700379623		1	Compressor bracket		
4	4700508048		4	Screw		
6	4700904230		8	Washer		
7	4700500031		3	Screw		
8	4700791172		5	Lock nut		
10	4700904557		1	Washer		
11	4700791665		1	Screw		
12	4700379812		1	Set screw		
13	4700379811		1	Set screw		
14	4700570006		1	Nut		
15	4700376689		1	Refrigerant hose		
16	4700376690		1	Refrigerant hose		
17	4700376533		1	Refrigerant hose		
18	4700376534		1	Refrigerant hose		
19	4700376535		1	Refrigerant hose		
20	4700376536		1	Refrigerant hose		
21	4700384877		4	O-ring		
22	4700384878		3	O-ring		
23	4700384879		3	O-ring		
24	4700383424		1	Drying filter		
25	4700313093		1	Pipe clamp		
26	4700377223		1	Bracket		
27	4700500021		2	Screw	M8-1,25x25 8.8	
28	4700904229		18	Washer	8,4x16x1,5	
29	4700570005		2	Nut	M8	
30	4700384672		1	Hose holder		
31	4700384673		1	Hose holder		
32	4700384674		1	Hose holder		
33	4700500090		2	Screw		
34	4700960124		1	Terminal, female		
35	4700791182		2	Lock nut	M8	
36	4700313102		N	Cable ties		
37	4700383413		1	Condenser, cpl (Page 214)		
38	4700384589		1	Cover		
39	4700500022		10	Screw	M8x30H 8.8 A2K	
40	4700385163		1	Hose protection		
41	4700541703		7	Screw	M6x16	
42	4700288128	A	1XL	Edge trim		
43	4700921036		3	Clamp		
44	4700385908		1	Cable harness		
45	4700902173	B	1XL	Conduit		
46	4700960123		1	Terminal, male		
47	4700384141		1	Pulley		
48	4700413074		1	V-belt		B
51	4700903998		N	Shrink hose		
53	4700904556		2	Washer	8,4x16x3,0	
54	4700500031		8	Screw		
55	4700904230		8	Washer		
56	4700391458		1	Spacer		

A) L= 0.24 m
B) L= 0.20 m

4700385766 Heater/AC unit

17705

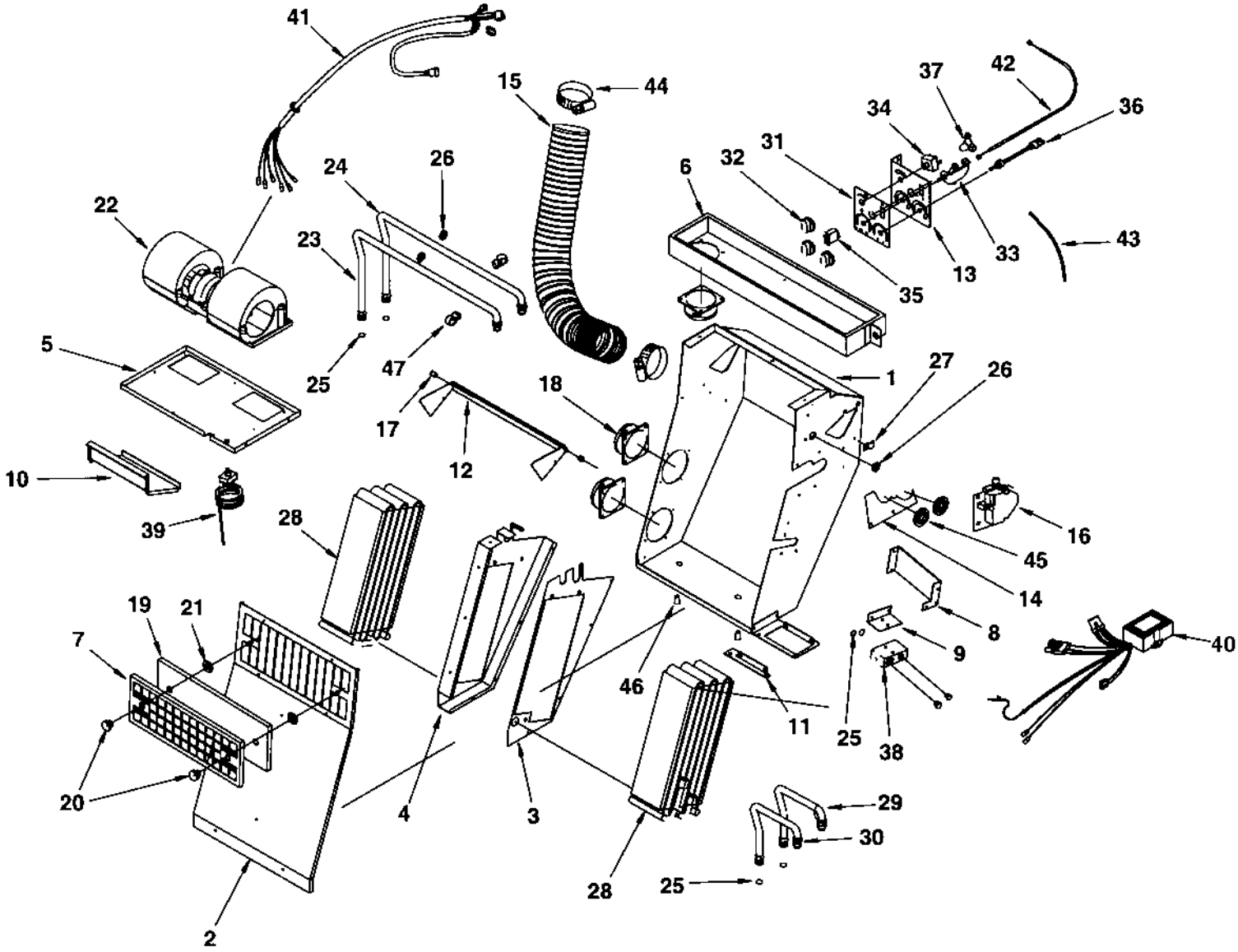

4700385766 Heater/AC unit

Item	Part No	Rem	Qty	Description	Code
1	4700938938		1	Casing	
2	4700938939		1	Cover	
3	4700938940		1	Coil bracket	
4	4700938941		1	Coil bracket	
5	4700938942		1	Blower bracket	
6	4700938943		1	Air distributor	
7	4700385590		1	Filter grill	
8	4700938944		1	Heater valve bracket	
9	4700384835		1	Bracket	
10	4700938945		1	Air channel	
11	4700938779		1	Hose bracket	
12	4700938780		1	Flapper	
13	4700938781		1	Control panel	
14	4700938946		1	Cover plate	
15	4700938783		1	Air duct	
16	4700384136		1	Heater valve	
17	4700938784		2	Bushing	
18	4700938632		3	Hose adapter	
19	4700385589		1	Recirculation filter	
20	4700938643		2	Plug	
21	4700938611		2	Star lock	
22	4700938638		1	Fan	
23	4700938947		1	Copper tube	
24	4700938948		1	Copper tube	
25	4700384878		6	O-ring	
26	4700384927		5	Grommet	
27	4700384880		1	Wire clamp	
28	4700384133		2	Coil	
29	4700385576		1	Copper tube	
30	4700385577		1	Copper tube	
31	4700938787		1	Overlay	
32	4700938620		3	Knob	
33	4700938788		1	Rotary control	
34	4700938622		1	Switch	
35	4700938619		1	Switch	
36	4700938623		1	Potentiometer	
37	4700938624		1	Sensor	
38	4700384176		1	Valve	
39	4700384897		1	Thermostat	
40	4700385907		1	Heater control	
41	4700938631		1	Cable harness	
42	4700385588		1	Bowden cable	
43	4700938637		1	Hose	
44	4700938789		2	Clamp	
45	4700938608		2	Grommet	
46	4700938636		2	Drain valve	
47	4700938790		2	Clamp	

4700383413 Condenser, cpl

18385

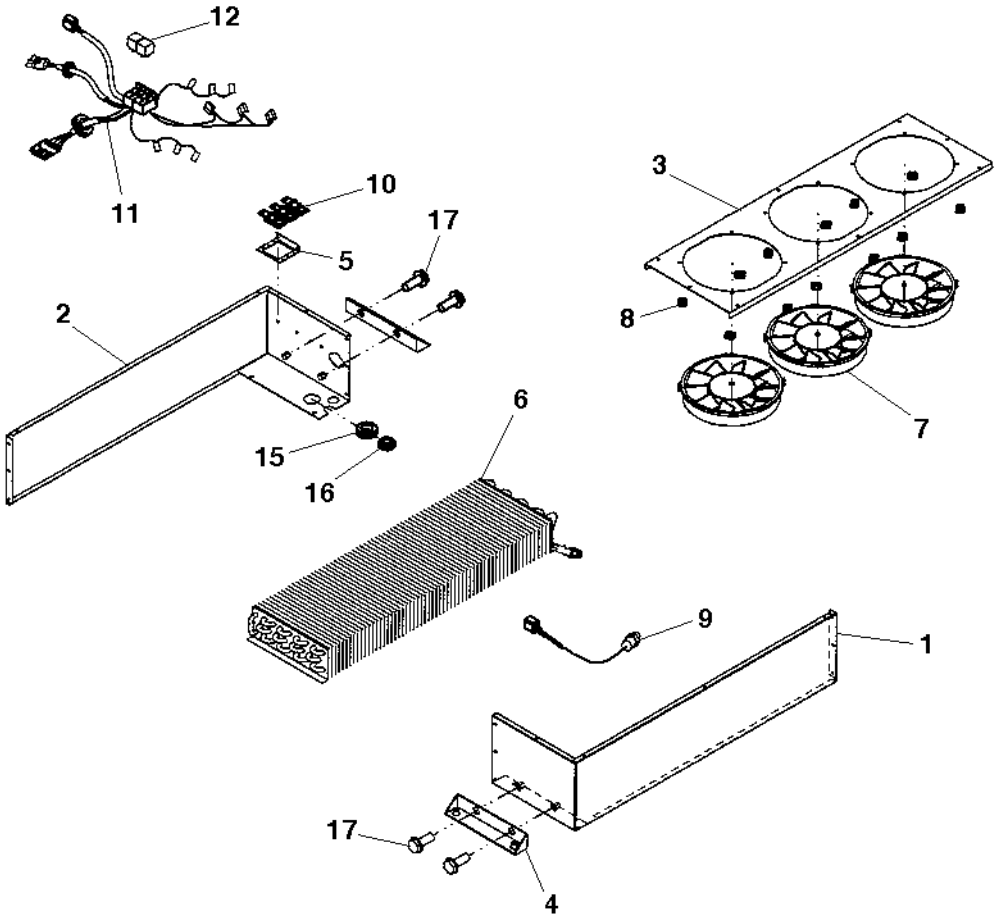

4700383413 Condenser, cpl

Item	Part No	Rem	Qty	Description	Code
1	4700938597		1	Cover	
2	4700938598		1	Cover	
3	4700938599		1	Fan bracket	
4	4700938600		2	Condensor bracket	
5	4700938601		1	Resistor bracket	
6	4700938602		1	Condensor Coil	
7	4700938603		3	Fan	
8	4700938604		12	Clip	
9	4700938605		1	Pressure switch	
10	4700938606		3	Resistor	
11	4700938607		1	Cable harness	
12	4700287598		2	Relay	12V-30A
15	4700938608		1	Grommet	
16	4700938609		1	Grommet	
17	4700901832		4	Screw	

Edge cutter

18694

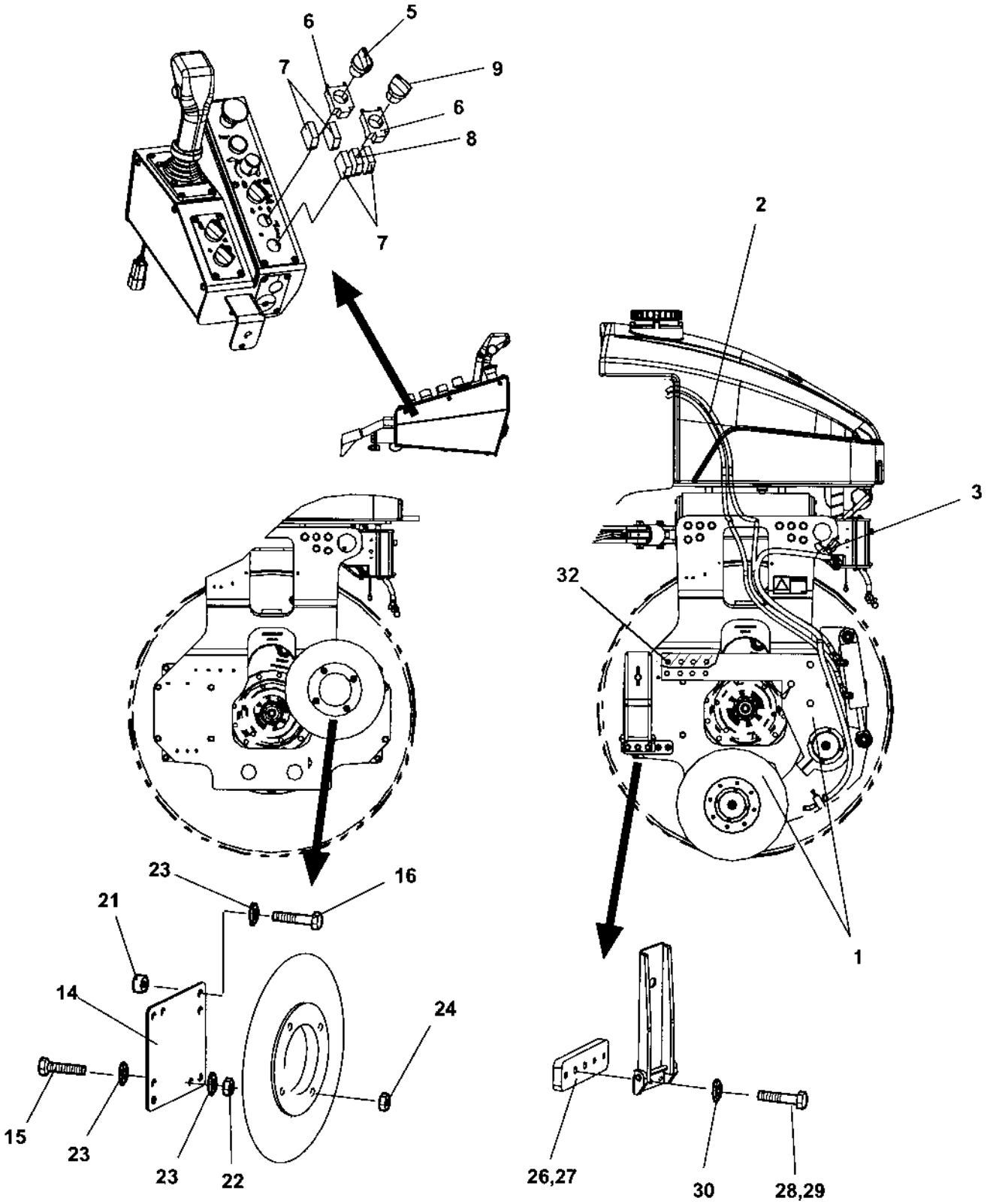

Edge cutter

Item	Part No	Rem	Qty	Description		Code
1	4700393869		1	Edge cutter, cpl (Page 218)		
2				Hydraulics, edge cutter (Page 220)		
3				Sprinkler system, edge cutter (Page 222)		
5	4700791731		1	Switch		
6	4700791733		2	Fixing collar		
7	4700791736		4	Connector		
8	4700791726		1	Illuminated block		
9	4700791727		1	Illuminated switch, blue		
14	4700394206		1	Holder plate		
15	4700500117		4	Screw	M12x80H 8,8	
16	4700500037		4	Screw		
21	4700359989		4	Spacer sleeve		
22	4700570007		4	Hexagon nut	M12	
23	4700904231		16	Washer	13x24x2 300 HV	
24	4700586019		4	Lock nut		
26	4700394702		1	Bracket		
27	4700370820		1	Rubber cloth		
28	4700500028		2	Screw		
29	4700500161		1	Screw		
30	4700904230		2	Washer		
32	4700792724		8	Screw		

4700393869 Edge cutter, cpl

393869

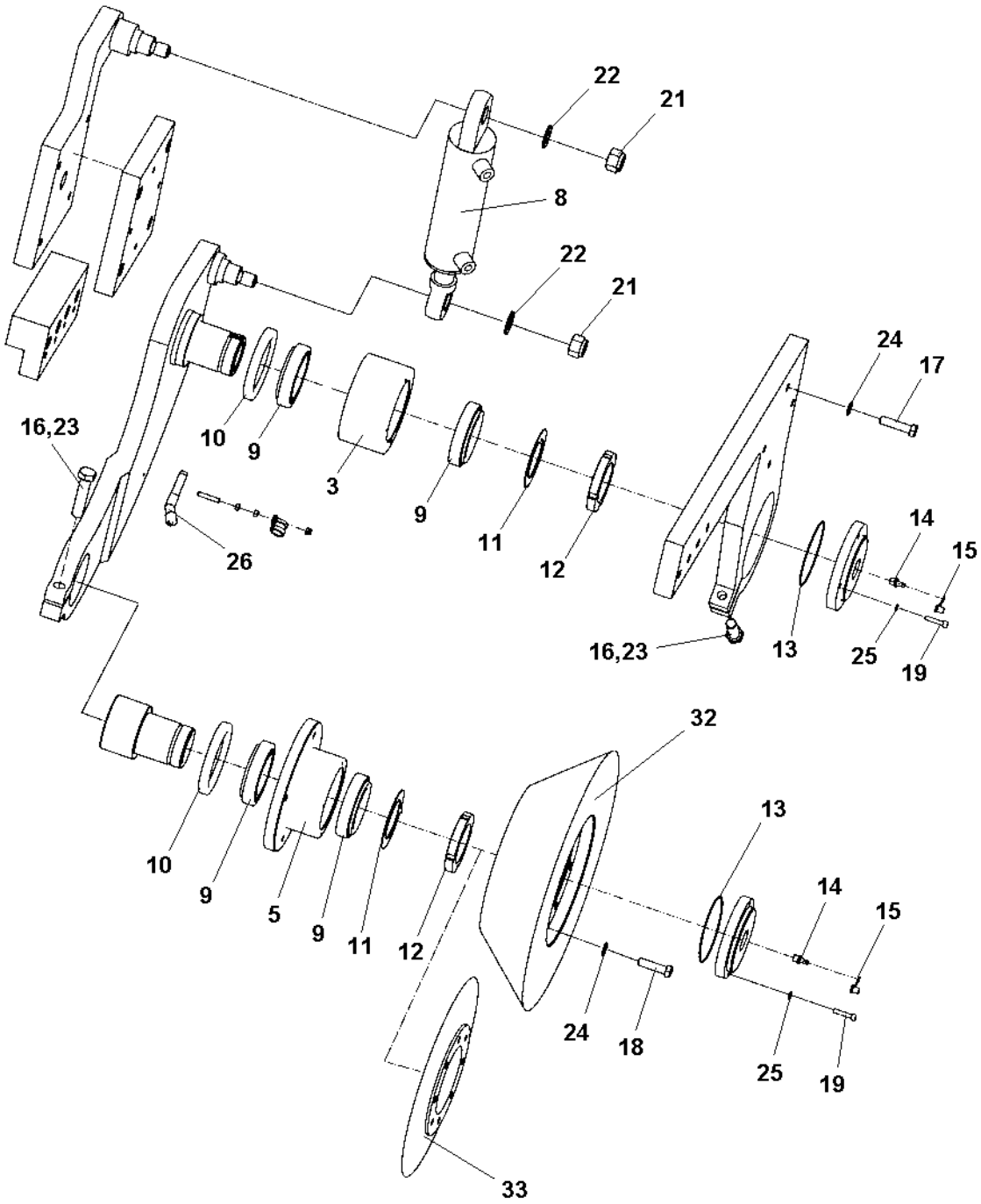

4700393869 Edge cutter, cpl

Item	Part No	Rem	Qty	Description	Code
2			1	Cutting arm	
3			1	Housing	
5	4700909303		1	Tool holder	
6	4700909307		1	Cover	
8			1	Cylinder	
9	4700909302		4	Bearing	
10	4700909301		2	Seal	
11	4700909304		2	Washer	
12	4700909305		2	Nut	
13	4700909306		2	O-ring	
14	4700909308		2	Grease nipple	
15	4700909309		2	Protection	
16			2	Screw	
17	4700500175		8	Screw	
18			4	Screw	
19	4700909310		8	Screw	
21	4700909288		2	Nut	
22	4700909289		2	Washer	
23			2	Snap ring	
24	4700904231		12	Washer	13x24x2 300 HV
25	4700909311		8	Retaining washer	
26	4700909274		1	Sprinkler pipe	
32	4700909237		1	Edge roller	
33	4700909236		1	Cutting disc	8cm

Hydraulics, edge cutter

18697

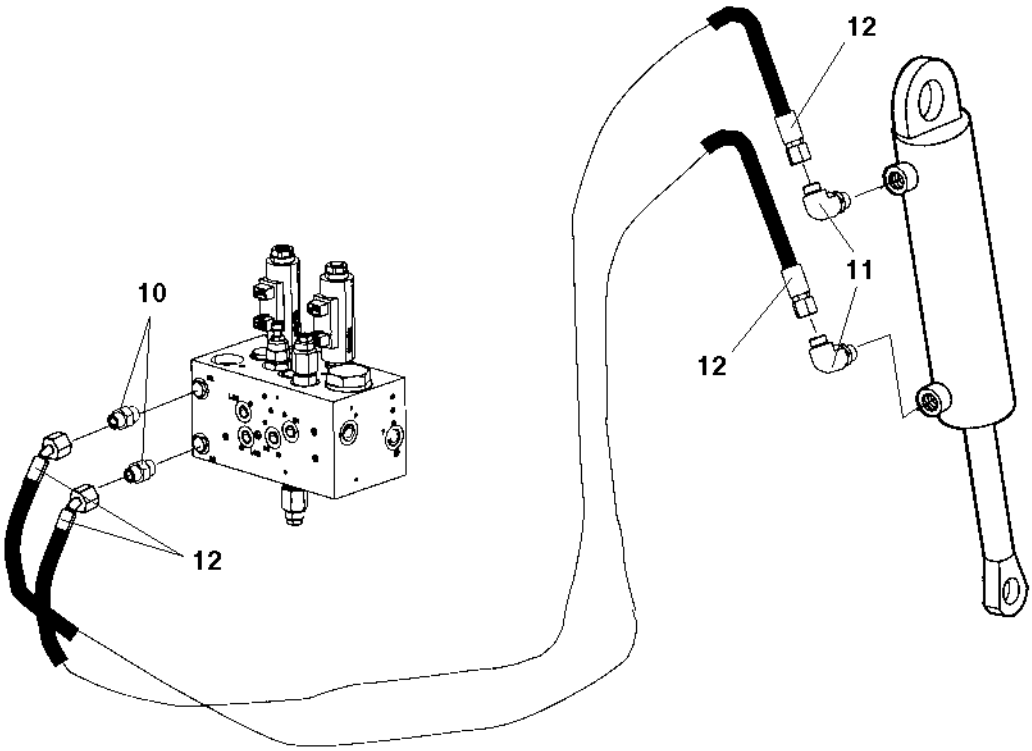

Hydraulics, edge cutter

Item	Part No	Rem	Qty	Description	Code
10	4700791914		2	Straight connector orfs	
11	4700791398		2	Elbow 90, O-ring	
12	4700483774		2	Hydraulic hose	

Sprinkler system, edge cutter

18695

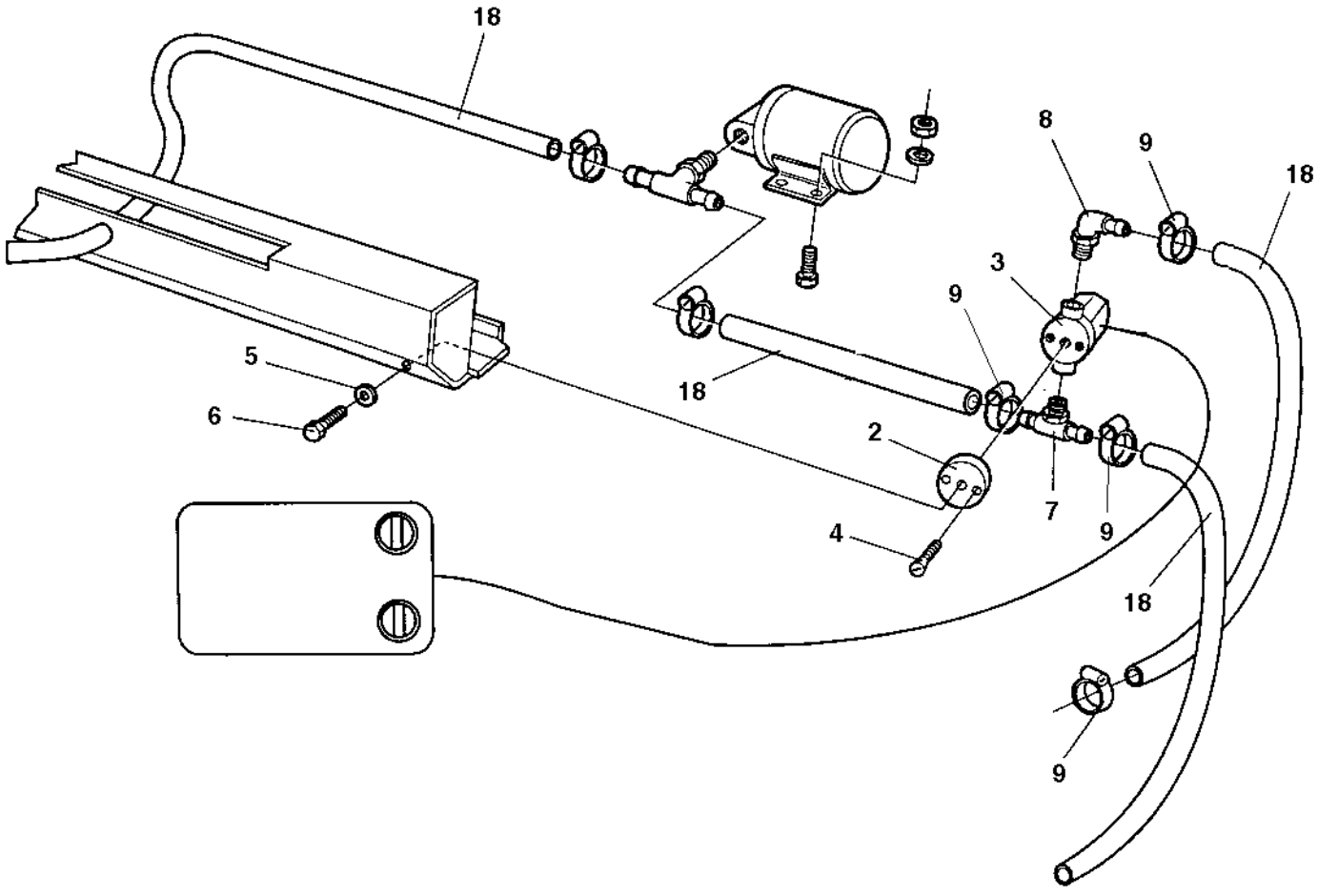

Sprinkler system, edge cutter

Item	Part No	Rem	Qty	Description		Code
2	4700372315		1	Bracket		
3	4700287713		1	Solenoid valve		
4	4700535003		2	Screw		
5	4700904228		1	Washer		
6	4700500013		1	Screw	M6-1x16 8,8	
7	4700792288		1	Hose connector		
8	4700901431		1	Hose connection		
9	4700313001		4	Hose clamp		
18	4700904878		1XL	Hose reinforced		

NUMERICAL INDEX

Part Number	Page	Part Number	Page	Part Number	Page
4700114060	15,53	4700357643	159,179	4700370662	141
4700116041	17,53	4700358452	135	4700370745	111
4700160045	15,53	4700358846	43	4700370761	171
4700160105	15,17,53	4700359003	43	4700370806	31
4700160279	97	4700359043	151	4700370820	31,217
4700160287	101	4700359125	151	4700370878	61
4700160344	15,53	4700359140	93,95	4700370955	151
4700162017	53	4700359192	27,29	4700371101	151
4700162027	53	4700359351	19,39,41	4700371129	141
4700202028	57	4700359402	59	4700371395	141
4700202041	33,35	4700359403	59	4700371396	141
4700202043	189	4700359418	141	4700371599	141
4700202057	33,35	4700359419	143	4700371621	141
4700205067	99	4700359434	39,43	4700371727	171
4700212210	87	4700359455	39,41	4700371728	57
4700212346	79	4700359458	39,41	4700371730	191,205
4700232119	99	4700359515	27,29	4700371837	185
4700233215	43	4700359516	27,29	4700371885	137
4700272373	195	4700359517	27,29	4700371986	85
4700287597	175	4700359551	71	4700372229	7,11,71
4700287598	215	4700359552	71	4700372315	223
4700287713	47,49,223	4700359574	143	4700372672	143
4700288128	211	4700359649	99	4700372704	141
4700297018	47,49	4700359650	101	4700372718	111
4700313001	65,223	4700359788	151	4700372964	143
4700313002	43,47,49	4700359793	151	4700372965	151
4700313003	61	4700359810	151	4700372966	151
4700313007	67	4700359813	151	4700373180	85
4700313008	101	4700359815	151	4700373181	85
4700313010	65	4700359816	151	4700373182	85
4700313036	63	4700359817	151	4700373183	27,29
4700313041	111,113,141,143	4700359818	151	4700373227	141
4700313068	209	4700359819	151	4700374105	117
4700313075	65	4700359820	151	4700374379	117
4700313086	47,49	4700359822	149	4700374417	151
4700313093	211	4700359845	117	4700374526	133
4700313094	63	4700359885	141	4700374756	207
4700313100	63	4700359887	141	4700376449	101
4700313102	65,113,115,155	4700359888	141	4700376533	211
	211	4700359889	141	4700376534	211
4700330170	65	4700359892	141	4700376535	211
4700330171	65	4700359893	151	4700376536	211
4700330331	171	4700359894	141	4700376574	99
4700343318	53	4700359895	141	4700376579	43
4700343550	119	4700359900	143	4700376659	65
4700343744	53	4700359914	143	4700376689	211
4700343775	73	4700359915	143	4700376690	211
4700343801	53	4700359916	143	4700376697	93
4700344196	53	4700359917	143	4700376721	85,89
4700345139	119	4700359918	143,145	4700376722	89
4700345870	121,123	4700359919	143	4700376723	85,91
4700349715	53	4700359920	143	4700376724	91
4700350009	143	4700359921	143	4700376764	101
4700357138	11,99	4700359924	149	4700376779	101
4700357139	101	4700359936	155	4700376789	155
4700357141	99	4700359955	53	4700376845	111
4700357419	99	4700359972	143	4700376912	99,103
4700357459	101,111	4700359989	217	4700376913	59
4700357498	155	4700359998	141	4700376914	85
4700357500	155	4700370155	99	4700376915	71,85
4700357562	129	4700370165	117	4700376916	99
4700357587	195	4700370425	137	4700376921	93

NUMERICAL INDEX

Part Number	Page	Part Number	Page	Part Number	Page
4700376922	71	4700380084	85	4700387682	65
4700377029	131	4700380660	119	4700387690	39,41
4700377030	125	4700381027	53	4700387693	39,41
4700377223	211	4700381172	133	4700387982	209
4700377255	185	4700381297	57	4700387988	209
4700377262	205	4700381400	143	4700388121	131
4700377263	205	4700381403	143	4700388122	153
4700377267	203	4700381619	47,49	4700388204	131
4700377268	203	4700382224	85	4700388233	25
4700377283	195	4700382425	47,49	4700388376	127
4700377284	195	4700382699	201	4700388482	39,41
4700377298	195	4700382700	201	4700388487	39,41
4700377299	195	4700382701	201	4700388488	39,41
4700377334	31	4700382702	201	4700388489	19,39,41
4700377364	67	4700382751	195	4700388490	39,41
4700377413	155	4700383002	201	4700388522	209
4700377414	175	4700383023	85	4700388537	153
4700377415	175	4700383200	143	4700388538	153
4700377422	209	4700383413	211,215	4700388561	209
4700377425	57	4700383424	211	4700388667	67
4700377426	57	4700383436	29	4700388675	63
4700377427	57	4700383460	97	4700388676	63
4700377428	43	4700383461	85	4700388677	63
4700377458	31	4700383462	85,97	4700388737	127,131
4700377467	115	4700383697	47,49	4700388775	209
4700377513	29	4700383705	159,179	4700388824	27
4700377622	127	4700384133	173,213	4700388837	61
4700377661	43	4700384136	213	4700388839	61
4700377742	195	4700384141	211	4700388840	59
4700377743	195	4700384147	211	4700388854	61
4700377744	195	4700384176	213	4700389020	131
4700377819	209	4700384589	211	4700389163	151
4700378028	65	4700384672	211	4700389164	151
4700378058	179	4700384673	211	4700389175	155
4700378116	209	4700384674	211	4700389177	155
4700378168	35	4700384835	213	4700389217	85
4700378309	33,35	4700384877	211	4700389233	27
4700378310	31	4700384878	173,211,213	4700389234	43
4700378428	57	4700384879	211	4700389235	43
4700378429	57	4700384880	173,213	4700389236	27
4700378557	199	4700384897	213	4700389367	65
4700378558	199	4700384927	173,213	4700389421	99
4700378559	199	4700384954	201	4700389423	99
4700378560	199	4700384958	201	4700389426	99
4700378561	199	4700385163	211	4700389427	99
4700378562	199	4700385339	47,49	4700389430	71
4700378563	199	4700385406	137	4700389446	97
4700378564	199	4700385442	171	4700389447	71
4700378565	199	4700385576	213	4700389448	99
4700378566	199	4700385577	213	4700389450	99
4700378567	199	4700385588	213	4700389451	99,107
4700378568	199	4700385589	213	4700389452	101
4700378570	199	4700385590	213	4700389504	31,33
4700378571	199	4700385599	131	4700389512	33
4700378572	199	4700385766	211,213	4700389516	33
4700378872	133	4700385769	171,173	4700389520	199
4700378964	133	4700385907	213	4700389548	31,35
4700379416	31	4700385908	211	4700389552	35
4700379623	211	4700385919	199	4700389569	33
4700379753	43,47,49	4700385932	141	4700389571	59
4700379811	211	4700386128	143	4700389577	135
4700379812	211	4700386272	15,17,53	4700389583	35

NUMERICAL INDEX

Part Number	Page	Part Number	Page	Part Number	Page
4700389617	31,37	4700392221	111	4700483755	93
4700389618	37	4700392405	53	4700483756	93
4700389619	37	4700392492	129	4700483757	71
4700389621	37	4700392505	99,105	4700483758	71
4700389625	199	4700392508	43	4700483759	93
4700389629	31	4700392509	43	4700483763	97
4700389630	31	4700392510	43	4700483764	97
4700389638	37	4700392567	137	4700483765	71
4700389658	111	4700392731	73	4700483766	71
4700389659	113	4700392743	73	4700483769	97
4700389660	111	4700392919	195	4700483770	93
4700389661	111	4700392930	111,129	4700483771	71,73
4700389662	111	4700393272	47,49	4700483772	71,73
4700389664	115	4700393337	71,75	4700483773	71
4700389665	115	4700393339	71,93	4700483774	221
4700389666	131	4700393697	43	4700483775	93
4700389668	155	4700393869	217,219	4700483776	71
4700389671	159	4700393981	129	4700483782	71
4700389674	111	4700394206	217	4700483784	71
4700389721	121	4700394250	21,53	4700483791	71
4700389722	121	4700394251	21,53	4700483795	99
4700389723	121	4700394253	65	4700483796	99
4700389725	123	4700394684	11,61	4700483862	101
4700389726	123	4700394685	11,61	4700483909	93
4700389728	119	4700394702	217	4700484009	85
4700389729	119	4700395294	59	4700484010	85
4700389730	111	4700395295	59	4700484011	85
4700389731	111	4700396116	199	4700484012	85
4700389733	113	4700413074	211	4700499266	61
4700389773	67	4700416004	149	4700500001	149
4700389784	99	4700475064	31	4700500002	47,49
4700389821	65	4700476019	203	4700500003	31,39,41
4700389842	63	4700481126	81	4700500012	113,141,165,167
4700389857	31	4700483333	71	4700500013	43,73,113,115
4700389859	31	4700483710	97		133,141,155,223
4700389873	43	4700483717	93	4700500018	203
4700389917	111	4700483718	71	4700500019	53,65,71,85,101
4700390160	53	4700483719	93		115,141,155,191
4700390615	43	4700483720	71	4700500021	31,43,57,59,101
4700390616	43	4700483722	101		111,113,135,141
4700390619	43	4700483723	93		143,151,205,211
4700390809	39,41	4700483724	93	4700500022	27,31,63,99,151
4700390897	53	4700483725	99		211
4700391029	53	4700483727	99	4700500023	31,111
4700391163	143,147	4700483730	71,101	4700500024	153
4700391277	53	4700483731	93	4700500028	53,57,71,101,143
4700391280	53	4700483732	93		205,217
4700391286	53	4700483734	101	4700500029	57,61,63,101,141
4700391289	27,29	4700483735	101	4700500030	31,39,41,85,97
4700391292	53	4700483736	101	4700500031	39,41,43,143,211
4700391329	85,87	4700483737	101	4700500037	217
4700391330	85	4700483738	101	4700500040	117,143,201
4700391331	97	4700483739	99	4700500047	31,141
4700391458	211	4700483740	99	4700500048	43,99
4700392011	43	4700483741	99	4700500049	39,41,53,97
4700392093	27,29	4700483744	101	4700500051	53
4700392114	53	4700483745	99	4700500053	31,47,49,57,59
4700392120	53	4700483746	99		65,101,111,113
4700392177	113	4700483750	97		115,143,159,179
4700392178	111	4700483751	97		209
4700392179	111	4700483753	93	4700500056	39,41,85
4700392180	129	4700483754	93	4700500060	133

NUMERICAL INDEX

Part Number	Page	Part Number	Page	Part Number	Page
4700500061	31,101	4700570104	29	4700791540	89,91
4700500071	155	4700573008	151	4700791557	113
4700500076	53	4700586001	111,133,209	4700791569	113
4700500087	111	4700586002	47,49,111,137	4700791642	195
4700500090	211		143,149	4700791665	211
4700500111	27	4700586003	47,49,113,135	4700791698	71,93
4700500117	217		143,155,159,169	4700791715	153
4700500122	57		179	4700791716	153
4700500134	27,29	4700586018	61	4700791719	111
4700500153	171	4700586019	39,41,217	4700791722	127,131,209
4700500161	217	4700586021	191	4700791723	119,125,131
4700500163	53,85	4700586022	141	4700791724	127
4700500169	149	4700600004	141	4700791725	119,125,127
4700500175	29,219	4700600006	205	4700791726	125,127,217
4700500184	113	4700600016	101	4700791727	125,217
4700500185	115,187	4700601001	133,201	4700791728	125
4700500186	71	4700603001	71,143	4700791729	119,125
4700500192	71	4700603009	141	4700791730	131
4700500194	71,141	4700603010	35	4700791731	217
4700500195	141	4700615041	149	4700791732	125
4700500229	141	4700615076	35	4700791733	119,125,127,131
4700500230	113	4700624004	141		209,217
4700500240	39,41	4700624011	203	4700791734	125
4700500258	37	4700624016	195	4700791735	119
4700500267	39,41	4700624017	195	4700791736	119,125,127,131
4700500269	27,29	4700629066	191		209,217
4700502037	71	4700630008	151	4700791737	125
4700502047	93	4700630019	99	4700791738	125
4700508048	53,85,211	4700630035	151	4700791739	131
4700508053	59	4700635061	73	4700791740	125
4700508056	151	4700690030	59	4700791741	125
4700508092	155	4700747282	65	4700791742	125
4700508095	59	4700747691	171	4700791743	89,93
4700508096	59,101	4700791125	47,49	4700791745	93,99
4700513003	151	4700791126	43,47,49	4700791791	93,99
4700513008	141,185	4700791127	43	4700791796	97,99
4700513009	111	4700791128	47,49	4700791797	93
4700513012	47,49	4700791134	47,49	4700791798	99
4700513013	141	4700791135	47,49	4700791799	89,91,99
4700513025	169	4700791138	129	4700791804	37
4700516051	143	4700791172	101,211	4700791807	85
4700527002	53	4700791182	43,85,101,111	4700791811	115
4700533013	129		113,211	4700791812	113
4700533024	149	4700791185	129	4700791813	113
4700533030	133	4700791226	159,179	4700791814	113
4700533031	133	4700791231	71,99	4700791815	111
4700535003	223	4700791276	195	4700791816	113
4700535005	159,179	4700791279	195	4700791817	111
4700541535	159,179	4700791318	71,93	4700791818	111
4700541702	165,167,209	4700791321	67,99	4700791819	71
4700541703	137,143,211	4700791341	209	4700791821	89,91
4700541708	113	4700791388	111	4700791823	89,91,93,101
4700570002	37	4700791389	111,133	4700791824	71,93
4700570003	115	4700791398	99,221	4700791825	71
4700570004	65,129,133,149	4700791401	71,93	4700791826	99
	155,171,201	4700791402	73,85	4700791827	99
4700570005	31,47,49,63,111	4700791409	71,89,91,93,99	4700791828	89,99
	113,141,143,151	4700791414	71,93	4700791830	99
	169,211	4700791443	91	4700791833	99
4700570006	39,41,143,211	4700791525	111	4700791836	99
4700570007	217	4700791532	113	4700791837	85,93,97
4700570101	35	4700791539	99	4700791838	71,99

NUMERICAL INDEX

Part Number	Page	Part Number	Page	Part Number	Page
4700791840	97	4700902064	133	4700903969	185
4700791841	73,99	4700902066	133	4700903970	129
4700791843	97	4700902173	211	4700903998	211
4700791846	71,93,99	4700902223	129	4700904003	85
4700791847	71,93,99	4700902224	111	4700904004	71
4700791850	71	4700902227	111	4700904036	113
4700791857	93	4700902285	101,117	4700904059	61
4700791858	99	4700902286	111,153	4700904060	61
4700791859	67	4700902508	185	4700904076	57
4700791860	85	4700902520	151	4700904085	99
4700791914	221	4700902521	59	4700904092	195
4700791916	207	4700902558	65	4700904104	61
4700791949	47,49	4700902843	59	4700904165	195
4700791959	47,49	4700902866	33,35,169	4700904206	35,65,111,143
4700791967	189	4700902916	43	4700904213	71,97
4700791968	189	4700902917	43	4700904214	85
4700791977	43	4700902918	43	4700904228	35,47,49,65,71
4700792063	37	4700902922	57		101,111,113,115
4700792068	93	4700902937	95		117,133,143,155
4700792072	43	4700902940	83		187,201,223
4700792094	85	4700902959	81	4700904229	27,31,43,47,49
4700792103	31	4700903082	101,167		53,57,65,71,85
4700792110	195	4700903342	47,49		101,111,113,115
4700792111	93	4700903344	47,49		135,141,143,153
4700792246	73	4700903366	29		155,169,191,203
4700792288	223	4700903422	195		209,211
4700792289	47,49	4700903423	195	4700904230	39,41,53,61,63
4700792333	85	4700903424	195		71,101,211,217
4700792362	73	4700903425	195	4700904231	27,29,39,41,53
4700792387	85	4700903436	117		57,151,155,217
4700792724	217	4700903459	195		219
4700792772	195	4700903524	101	4700904232	27,29,53,151,191
4700813391	65	4700903599	117	4700904233	141
4700813443	99	4700903600	117	4700904281	31,111,113,115
4700813618	81	4700903601	117		133,207,209
4700813791	61	4700903602	117	4700904289	33,35
4700814071	43,47,49	4700903625	129	4700904313	133
4700892446	99	4700903631	115	4700904315	133
4700900430	85	4700903640	113	4700904316	133
4700900485	155	4700903641	113	4700904317	133
4700900775	53	4700903653	117	4700904318	133
4700900790	133	4700903657	119,121,123,125	4700904346	113,115
4700900904	137		127	4700904448	113
4700900998	187	4700903658	117,131	4700904496	71,93,99
4700900999	187	4700903678	117	4700904543	35
4700901121	65	4700903726	53	4700904556	43,47,49,57,59
4700901209	137	4700903731	141		63,113,141,151
4700901224	129	4700903741	129,175		211
4700901225	129	4700903745	27	4700904557	31,39,41,43,57
4700901226	129	4700903774	93		71,85,97,141,143
4700901227	129,175	4700903802	169		211
4700901228	129,175	4700903803	185	4700904567	101
4700901229	129,175	4700903805	169	4700904584	71,93
4700901240	175	4700903808	159,179	4700904586	85
4700901298	47,49	4700903813	27,29	4700904601	195
4700901315	159,179,181	4700903831	27,29	4700904603	101
4700901431	47,49,223	4700903852	201	4700904637	59,61,71,93,101
4700901720	77	4700903886	47,49		115
4700901725	79	4700903914	143	4700904638	143
4700901727	79	4700903917	143	4700904640	31,63,101,111
4700901767	129	4700903918	143	4700904650	131
4700901832	215	4700903961	117	4700904653	131,209

NUMERICAL INDEX

Part Number	Page	Part Number	Page	Part Number	Page
4700904690	93	4700908507	159,179	4700908773	83
4700904698	33,35,37,47,49	4700908510	159,179	4700908774	83
	129,141	4700908511	159,179	4700908775	83
4700904703	39,41	4700908515	159,179	4700908783	103
4700904728	93	4700908529	163,183	4700908993	161,181
4700904734	143	4700908530	163	4700909201	95
4700904735	31,143	4700908531	163	4700909202	95
4700904766	93	4700908532	163	4700909204	83,95
4700904781	97	4700908535	163,183	4700909205	95
4700904835	195	4700908536	163,183	4700909206	95
4700904870	195	4700908537	163,183	4700909207	95
4700904878	43,45,47,49,223	4700908539	163	4700909208	95
4700904889	119,121,123	4700908540	163	4700909215	83
4700904890	119,121,123	4700908541	163	4700909216	95
4700904906	201	4700908542	163	4700909217	95
4700904910	111	4700908544	163,183	4700909236	219
4700904913	47,49	4700908546	161,181	4700909237	219
4700904914	47,49	4700908548	161	4700909243	81
4700904939	189	4700908549	161	4700909246	77
4700904971	119	4700908550	161	4700909256	79
4700904984	65	4700908551	161	4700909274	219
4700904985	65	4700908553	161	4700909288	219
4700904989	129	4700908556	161,181	4700909289	219
4700908184	149	4700908557	161,181	4700909301	219
4700908187	149	4700908558	167	4700909302	219
4700908189	149	4700908559	165,167	4700909303	219
4700908190	149	4700908560	165,167	4700909304	219
4700908265	191,205	4700908561	165,167	4700909305	219
4700908268	159,179	4700908562	167	4700909306	219
4700908269	165	4700908563	165,167	4700909307	219
4700908270	165	4700908564	165,167	4700909308	219
4700908271	165,167	4700908565	165	4700909309	219
4700908272	167	4700908574	181	4700909310	219
4700908273	167	4700908576	169	4700909311	219
4700908278	167	4700908577	169	4700909344	83
4700908279	167	4700908578	169	4700909369	59
4700908280	167	4700908579	169	4700909384	77
4700908281	165	4700908580	169	4700909392	77
4700908282	165	4700908581	169	4700909396	77
4700908284	169	4700908582	169	4700909403	77
4700908287	169	4700908583	169	4700909407	77
4700908354	169	4700908598	171	4700909412	81
4700908355	191	4700908599	171	4700909413	81
4700908356	185	4700908600	171	4700909414	77,79
4700908357	185	4700908602	175	4700909415	81
4700908358	185	4700908603	175	4700909416	79
4700908361	191	4700908604	175	4700909417	81
4700908362	167	4700908605	175	4700909429	79
4700908363	165	4700908606	175	4700909433	79
4700908364	165	4700908608	175	4700909435	79
4700908399	61	4700908610	175	4700909436	79
4700908428	81	4700908611	175	4700909439	83
4700908448	79	4700908613	175	4700909440	83
4700908452	61	4700908617	175	4700909445	83
4700908455	81	4700908618	175	4700909446	79
4700908496	165,167	4700908623	185,191	4700909448	83
4700908497	159,179	4700908624	185	4700909449	83
4700908500	159,179	4700908625	191	4700909450	83
4700908503	159,179	4700908626	191	4700909471	83
4700908504	159,179	4700908627	191	4700909472	83
4700908505	159,179	4700908764	161,181	4700909473	83
4700908506	159,179	4700908772	83	4700909474	83

NUMERICAL INDEX

Part Number	Page	Part Number	Page	Part Number	Page
4700909477	83	4700935244	169	4700938637	213
4700909485	83	4700935589	159,179	4700938638	173,213
4700909510	159,179	4700935613	143	4700938643	213
4700909745	149	4700935614	143	4700938644	173
4700909746	149	4700935771	149	4700938647	173
4700910706	83	4700935772	149	4700938660	159,179
4700911456	125,127,131	4700935773	149	4700938676	159,179
4700921028	113	4700936277	159,179	4700938677	163,175,183,185
4700921031	115	4700936552	77	4700938678	159,179
4700921036	211	4700936553	77	4700938679	159,179
4700921039	115	4700936579	81	4700938687	175
4700921047	113	4700937106	133	4700938691	171
4700921050	113	4700937107	133	4700938779	173,213
4700921056	113	4700937108	133	4700938780	173,213
4700921072	115	4700937109	133	4700938781	173,213
4700921080	65,115	4700937138	77	4700938783	173,213
4700921099	71	4700937139	79	4700938784	173,213
4700923253	35,47,49	4700937140	77	4700938787	213
4700923378	99	4700937165	189	4700938788	173,213
4700923405	71,93,99	4700937395	161,181	4700938789	173,213
4700923734	47,49	4700937397	161	4700938790	173,213
4700923735	47	4700937398	161,181	4700938806	163
4700923976	129,149	4700937399	161	4700938807	163,183
4700924544	43,47,49	4700937400	161	4700938808	163,183
4700924737	115	4700937402	161	4700938809	163,183
4700924823	141	4700937403	161,181	4700938810	163,183
4700924996	43,47,49	4700937405	161,181	4700938811	163,183
4700925519	53	4700937620	143	4700938812	163,183
4700925599	43,47,49	4700937621	143	4700938813	163,183
4700925784	37	4700937861	81	4700938814	183
4700925802	209	4700937892	143	4700938815	183
4700926214	27,29,151	4700937932	161,181	4700938816	183
4700926220	151	4700937958	149	4700938817	183
4700926736	53	4700938029	175	4700938818	183
4700927233	31,149	4700938565	161	4700938834	161,181
4700927974	37	4700938566	161,181	4700938835	161,181
4700928022	85	4700938567	161,181	4700938836	161
4700928041	47,49	4700938597	215	4700938837	161,181
4700928371	85	4700938598	215	4700938838	161,181
4700928381	39,41,137,149	4700938599	215	4700938839	181
4700928467	43,47,49	4700938600	215	4700938840	181
4700928502	133	4700938601	215	4700938842	159,179
4700928784	31	4700938602	215	4700938845	159,179
4700929226	71,93	4700938603	215	4700938846	159,179
4700929322	7,11,65	4700938604	215	4700938847	159,179
4700929447	15,17,53	4700938605	215	4700938854	175
4700929455	133	4700938606	215	4700938864	173
4700935229	145	4700938607	215	4700938865	173
4700935230	145	4700938608	173,213,215	4700938867	173
4700935231	145	4700938609	215	4700938871	171
4700935232	145	4700938611	173,213	4700938872	171
4700935233	145	4700938615	181	4700938873	171
4700935234	145	4700938616	181	4700938874	171
4700935235	145	4700938619	213	4700938891	13,17
4700935236	145	4700938620	173,213	4700938938	173,213
4700935237	145	4700938622	173,213	4700938939	173,213
4700935238	145	4700938623	213	4700938940	173,213
4700935239	145	4700938624	213	4700938941	173,213
4700935240	145	4700938631	213	4700938942	173,213
4700935241	145	4700938632	173,213	4700938943	173,213
4700935242	145	4700938634	173	4700938944	173,213
4700935243	145	4700938636	173,213	4700938945	173,213

NUMERICAL INDEX

Part Number	Page	Part Number	Page	Part Number	Page
4700938946	173,213	4700945412	131		
4700938947	173,213	4700945632	147		
4700938948	173,213	4700945633	147		
4700938949	173	4700945634	147		
4700938950	173	4700945635	147		
4700938951	173	4700945636	147		
4700938952	173	4700945637	147		
4700938953	173	4700945656	79		
4700938954	173	4700945717	13,21		
4700938955	173	4700945719	13,19		
4700939515	7,9,11,59	4700945721	13,15		
4700939521	175	4700945753	65		
4700939522	175	4700945935	105		
4700939826	127	4700945955	59		
4700939840	59	4700947684	57		
4700939927	159,179	4700947690	29		
4700939928	159,179	4700947712	27,29		
4700939958	113	4700950353	87		
4700939976	59	4700950483	87		
4700940235	11	4700950498	87		
4700940238	5,9	4700950500	87		
4700940283	155	4700950501	87		
4700940285	155	4700950502	87		
4700940301	71	4700950503	87		
4700940302	107	4700950504	87		
4700940303	107	4700950505	87		
4700940304	11,99,107	4700950506	87		
4700940305	107	4700950507	87		
4700940306	107	4700950508	87		
4700940333	67	4700950509	87		
4700940334	67	4700950510	87		
4700940335	67	4700950511	87		
4700940336	67	4700950512	87		
4700940337	67	4700950513	87		
4700940338	67	4700950605	81		
4700940339	67	4700960037	113		
4700940361	67	4700960069	113		
4700940362	67	4700960123	211		
4700940389	169,181	4700960124	211		
4700940390	181	4700960727	111,113		
4700940391	169,181	4700985013	133,159,179		
4700940392	169	4700985014	133		
4700940394	169	4700985051	159,179		
4700940395	169	4700989151	99		
4700940570	7,11,59	4700991657	195		
4700940572	107	4700991658	195		
4700940580	83	4700999027	111		
4700940592	5,7	4704840413	85		
4700940593	5,11	47386084XX	195		
4700940784	161				
4700940970	85,93,97				
4700940973	67				
4700940974	67				
4700940980	59				
4700945107	59				
4700945169	111				
4700945264	169				
4700945265	169				
4700945266	169				
4700945409	131				
4700945410	131				
4700945411	131				