RUTHZIL TRATOR COMERCIAL DE PEÇAS LTDA 11 97083-6812 ROLANDO CITRANGULO

LiuGong 柳工

201711000

NOVEMBRO 2017

CLG835H
WHEEL LOADER

SERVICE MANUAL

Applicable type and model: CLG835H T3 (CUMMINS Engine QSB6.7 + LIUGONG Wet Axle + ZF 4WG158 Gearbox)

Contents

General Information **1-1**
Power System **2-1**
Power Train System **3-1**
Hydraulic System **4-1**
Air Conditioning System **5-1**
Driver's Cab and Covering Parts **6-1**
Structure **7-1**
Electrical System **8-1**
Appendix **9-1**

General Information

How to Use the Manual **1-3**

Important Safety Information **1-4**

Manual Identification **1-5**

Engine Identification **1-6**

Cable Code Identification **1-7**

Coating Materials **1-9**

Weight Table **1-11**

Unit Conversion Table **1-12**

Standard Torque Table **1-13**

Torque Specifications--Metric Hardware 1-13

Oil Specifications **1-16**

Technical Specification of the Machine **1-20**

Application 1-20

Main Components 1-21

Performance Parameters 1-22

Machine Inspection Table **1-27**

How to Use the Manual

This manual is written for an experienced technician. Essential tools required in performing certain service work are identified in this manual and are recommended for use.



This is the safety-alert symbol. When you see this symbol on the machine or in this manual , be alert to the potential for person injury.

Technical manuals are divided in several parts : repair and test. Repair sections tell how to repair the components. Tests sections help you identify the majority of routine failures quickly.

Information is organized in groups for the various components requiring service instruction. At the beginning of each group are summary listings of all applicable essential tools, service equipment and tools, other materials needed to do the job, service part kit, specifications,wear tolerances, and torque values.

Technical Manuals are concise guides for specific machines. They are on-the-job containing only the vital information needed for diagnosis, analysis, testing, and repair .

Fundamental service information is available from other sources covering basic theory of operation, fundamentals of troubleshooting, general maintenance, and basic type of failures and their causes.

Other reference manuals

- Parts Manual
- Operation and Maintenance Manual
- Cummins Engine Parts Manual
- Cummins Engine Overhaul Manual
- ZF Gearbox Overhaul Manual

User's Guidance

- Because the influences from area or processing are different of the machine, it shall confirm which machine is applicable, and what work implements it has.
- Some accessories and optional parts in the Manual may not be transported to relevant areas, and consult your local LiuGong dealer if required.
- The materials and technical specifications in the Manual are changed with variation of products, and all information, diagrams and specifications in the Manual are the latest product information obtained at the time of publication. The company reserves the right to make modification without any notice. If it needs to obtain the latest technical information, please consult the dealer of LiuGong in local area or Service Department of LiuGong Wheel Loader Marketing Co., Ltd.

Important Safety Information

Most accidents involving product operation, maintenance and repair are caused by failure to observe safety rules or precautions. An accident can often be avoided by recognizing potentially hazardous situations before an accident occurs. A person must be alert to potential hazards. This person should also have the necessary training, skills and tools to perform these functions properly.

Improper operation, lubrication, maintenance or repair on this product can be dangerous and could result in injury or death.

Do not operate or perform any lubrication, maintenance or repair on this product, until you have read and understood the operation, lubrication, maintain and repair information.

Safety precautions and warnings are provided in this manual and on the product. If these hazard warnings are not heeded, bodily injury or death could occur to you or other persons.

The hazards are identified by the "Safety Alert Symbol" and followed by a "Signal Word" such as "WARNING" as shown following.

⚠WARNING

The meaning of this safety alert symbol is as follows:

Attention. Be alert. Your safety is involved.

The message that appears under the warning, explaining the hazard, can be either written or pictorially presented.

Operations that may cause product damage are identified by NOTICE labels on the product and in this publication.

LiuGong cannot anticipate every possible circumstance that might involve a potential hazard. The warnings in this publication and on the product are therefore not all inclusive. If a tool, procedure, work method or operating technique not specifically recommended by LiuGong is used, you must satisfy yourself that it is safe for you and others. You should also ensure that the product will not be damaged or made unsafe by the operation, lubrication, maintenance or require procedures you choose.

The information, specification, and illustrations in this publication are on the basis of information available at the time when it was written. The specification, torques, pressures, measurements, adjustments, illustrations, and other items can change at any time. These changes can affect the service given to the product. Obtain the complete and most current information before starting any job. LiuGong has the most current information available.

Manual Identification

IMPORTANT: Use only supporting manuals designed for your specific machine. If incorrect manual is chosen, improper service may occur. Verify product identification number (PIN) and engine model number when choosing the correct manual.

Choosing the Correct Supporting Manuals

LiuGong wheel loaders are available in different machine configurations based on the various markets into which they are sold. Different supporting manuals exist for different machine configurations.

When necessary, product serial numbers and engine model numbers are listed on the front covers of loader manuals. These numbers are used to identify the correct supporting manual for your machine.

Product Serial Number Identification

The product identification number (PIN) plate is located on right side of machine front frame under the pin of boom. Each machine has a 17-character PIN or shown on this plate and under this plate, The last 6 characters of the PIN represent the machine's product serial number.

PIN Plate Location



P28M00016

Pin Plate



P28100307

Engine Identification

The engine serial number plate is located on the top of engine. Each engine has two engine numbers (LIST NO. and SERIAL NO.) shown on this plate.

Engine Emission Level Identification

EMISSION CONTROL INFORMATION: In the U.S.,this engine is solely for export and is therefore exempt under 40 CFR 1068.230 from emission standards and related requirements. Outside the U.S., the engine may be subject to other emission regulations.

Engine serial number plate location

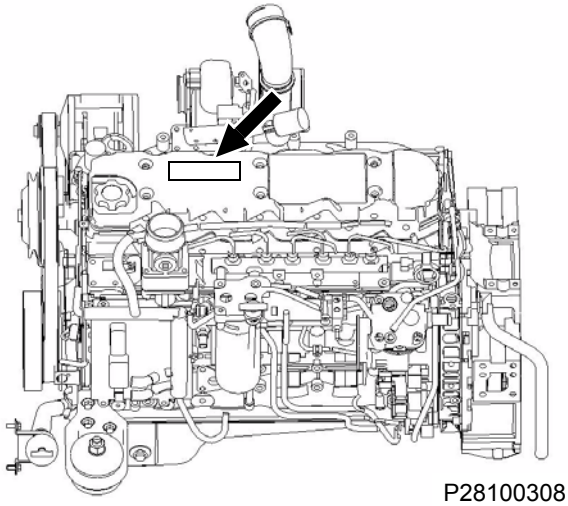

P28100308

Engine Serial Number Plate

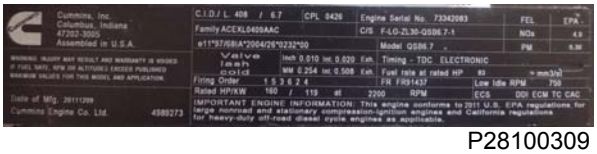

P28100309

Cable Code Identification

The wire in circuit diagram is marked in combination with wire No., wire categories, color abbreviation codes and wire gauge for maintenance. For example:

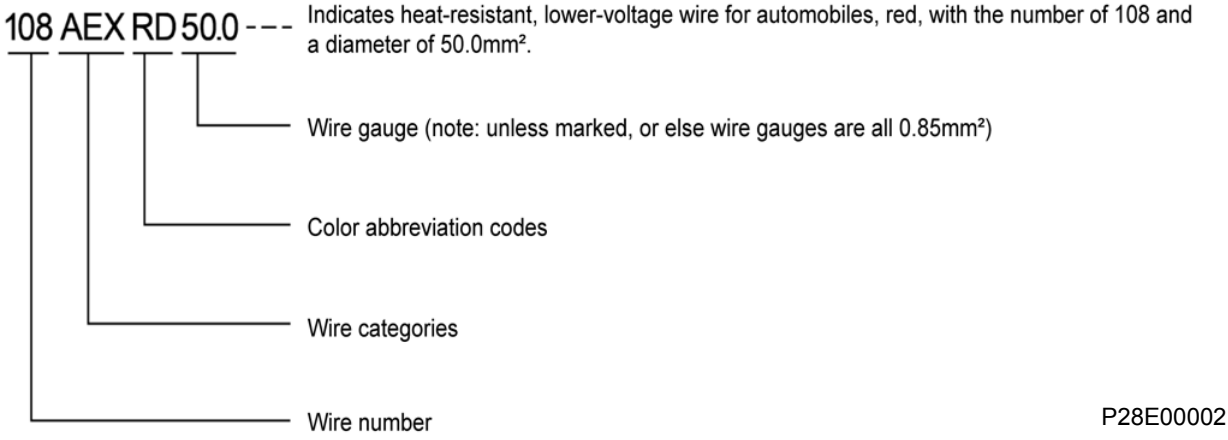

Wire No.

Wire No. is digital code for marking wire with three Arabic numbers in accordance with certain rules.

Wire categories

The wire categories selected for engineering machinery are AEX, AV, AVS, AVSS, and QVR in general. For applicable range of temperature environment of various wires, see following table.

S/N	Wire type	Wire name	Description	Heat resistance
1	QVR	Low voltage wire for road vehicles	70 °C (158°F) heat-resisting, copper core PVC-insulated	≤ 70°C(158°F)
2	AVSS	Thin-wall insulated low voltage wire for vehicles	The thickness of insulation layer is 0.30~0.40mm	≤ 80°C(176°F)
3	AVS	Thin-wall insulated low voltage wire for vehicles	The thickness of insulation layer is 0.50~0.70mm	≤ 80°C(176°F)
4	AV	Insulated low voltage wire for vehicles	The thickness of insulation layer is 0.60~2.0mm	≤ 80°C(176°F)
5	AEX	Heat-resisting low voltage wire for vehicles	Heat resistance and cross-linking polyethylene	≤ 110°C(230°F)

Color abbreviation codes

Color	English	Abbreviation	Color	English	Abbreviation
Black	BLACK	BK	Blue	BLUE	BU
Grey	GREY	GY	Green	GREEN	GN
Red	RED	RD	Yellow	YELLOW	YL
Brown	BROWN	BR	Pink	PINK	PK

Color abbreviation codes

Color	English	Abbreviation	Color	English	Abbreviation
Violet	VIOLET	VT	Orange	ORANGE	OR
White	WHITE	WH	Light blue	LIGHT BLUE	LTBU
Red/green	RED/GREEN	RD/GN	Yellow/blue	YELLOW/BLUE	YL/BU

Remark: The code composed of 2 colors indicates double-color wire.
For example: "RD/ GN" shows red-green wire.

Wire specifications

Allowable current and voltage drop of AV wire, and approximate performances of AVS, AVSS, and QVR shall be executed uniformly according to following table.

Ambient temperature		**30°C(86°F)**		**40°C(104°F)**		**50°C(122°F)**		**60°C(140°F)**		**70°C(158°F)**	
Allowable current/ voltage drop		**A**	**mV/m**	**A**	**mV/m**	**A**	**mV/m**	**A**	**mV/m**	**A**	**mV/m**
Nominal sectional area (mm^2)	0.85	18	463	16	412	14	360	11	283	8	206
	1.25	23	407	21	372	18	319	14	248	10	177
	2	31	338	28	305	24	262	20	218	14	153
	3	42	291	38	263	33	228	27	187	19	132
	5	57	248	51	222	44	192	36	157	25	109
	8	74	213	66	190	57	164	47	135	33	95
	15	103	176	92	157	30	137	65	111	46	79
	20	135	148	121	133	105	116	85	94	60	66
	30	188	121	168	108	146	94	119	77	84	54
	40	210	112	188	110	163	87	133	71	94	50
	50	246	103	220	92	190	60	155	65	110	46
	60	272	97	243	87	211	75	172	62	121	43
	85	335	90	300	80	260	70	212	57	150	40
	100	399	83	356	74	309	65	252	53	178	37

Circuit type and color abbreviation code

For general corresponding rules between circuit type and wire color, see the following table.

Circuit type	Color abbreviation codes
Power line	OR, RD
Signal line	WH
Earthing	BK, GY
Communication line	RD/ GN, YU/BU

Coating Materials

Name	Specification	Main features and purposes
1277 Thread locker	1277	1. Features: anaerobic and fast air drying. 2. Purposes: used for parts not frequently removed
1243 Thread locker	1243	Used for removable parts (speed sensor in general)
Long-term anti-rust agent	LONG#2 light yellow	1. Features: rust protection for a long time 2. Purposes: used for mounting face of pump, sensor, hydraulic fitting, etc
Efficient cleaning agent 1755	1755	1. Features: strong ability of cleaning 2. Purposes: used for pump and motor
Anaerobic pipe thread sealant	1567	1. Feature: it has features of high-temperature resistance, self-lubrication and medium resistance and is used for medium (sealing oil, air, vapor, water) pipeline cone/taper thread 2. Purposes: used for water temperature sensor and oil pressure sensor
Cleaning agent for electromechanical equipment	HD-10	Used for cleaning oil pipe connectors, etc.
Diesel engine sealant	1515	Used for mounting face of diesel engine flange
Polyurethane sealant	1924	Used for waterproof of start motor and assembling clearance
Mobilux EP	None	Used for rust protection of rear cover hinge

Paint standard:

There are two main kinds of colors that applied to this machine:

Yellow: matte (50%) RAL1006 yellow

Grey: matte (40%) RAL7021 grey

The standard of paint quality is as follows (for more information, see QJ/LG 08.44-2013):

S/N	Items	Indicator	Testing method	Remarks
1	Paint film appearance	Paint film shall be uniform color, and no blistering, crack, wrinkle, under screen, rust, damage, dirt and so on	Visual inspection	Refer to the requirements at all levels of surface for details of allowable defects
2	Paint film gloss	Meet the minimum requirements of paint film gloss at all levels of surface	Visual/gloss meter	For details, see the requirements at all levels of surface. For matte paint, refer to the special requirements
3	Paint film thickness	Meet the minimum requirements of paint film thickness at all levels of surface	Thickness gauge of paint film	For details, please see the requirements at all levels of surface

S/N	Items	Indicator	Testing method	Remarks
4	Adhesion of paint film	Good adhesion and no peeling in detection of paint film	Use single cutting edge or scriber to perform the cross cut on the paint film with five horizontal and vertical lines. The distance between the scribing lines is 1 mm~1.5 mm and the depth can reach the steel plate substrate. Then stick the transparent adhesive tape and compact, then tear off the tape	Approval standard: No the whole piece of grid film drops. (Little film drop around the scribing lines can be allowable.)
5	Color difference	Meet color difference requirements at all levels of surface	Visual inspection/Color difference meter	For details, please see the requirements at all levels of surface
6	Shield	There is no paint contamination, mechanical impurity, rust and dirts	Visual inspection	
7	Decal	The decal should be correct, complete, decorous, firm, smooth and no popping	Visual inspection	

Weight Table

The following table indicates the reference value of the weight of each component. When the lifting equipment is used, please refer to the following table to select the sling.

Components	Weight (kg \ lb)
Engine	485 kg\ 1069 lb
Radiator	291 kg\ 642 lb
Fuel tank	117 kg\ 258 lb
Front axle	766 kg\ 1689 lb
Rear axle	760 kg\ 1676 lb
Tire rim	228 kg\ 503 lb
Driven shaft	79 kg\ 174 lb
Gearbox & torque converter assembly(with oil)	480 kg\ 1058 lb
Cab assembly	685 kg\ 1510 lb
Seat	29 kg\ 64 lb
Engine hood as	210 kg\ 463 lb
Left front fender	15 kg\ 33 lb
Right front fender	15 kg\ 33 lb
Left rear fender	21 kg\ 46 lb
Right rear fender	21 kg\ 46 lb
A/C compressor	5 kg\ 11 lb
Working pump	20 kg\ 44 lb
Steering pump	25 kg\ 55 lb
Control valve	38 kg\ 84 lb
Fan drive motor	7 kg\ 15 lb
Hydraulic oil tank	170 kg\ 375 lb
Boom cylinder assembly (single)	101 kg\ 223 lb
Bucket tilting cylinder assembly	105.5 kg\ 233 lb
Secondary steering pump	20 kg\ 44 lb
Ride control accumulator	41 kg\ 90 lb
Rocker arm	140 kg\ 309 lb
Boom	700 kg\ 1544 lb
Front frame	912 kg\ 2011 lb
Rear frame	840 kg\ 1852 lb
LH battery box	170 kg\ 375 lb
RH battery box (with counterweight)	430 kg\ 948 lb
Linkage	37 kg\ 82 lb
Bucket	750 kg\ 1654 lb

Unit Conversion Table

The Manual uses ISO International System of Units, and ISO international units are converted into British units as shown in following figure:

Parameters	Metric unit	British unit	Multiple
Length	mm	In	0.03937
	mm	ft	0.003281
Capacity	L	US gal	0.2642
	L	US qt	1.057
	m^3	Yd3	1.308
Weight	kg	lb	2.205
Intensity	N	kgf	0.10197
	N	lbf	0.2248
Torque	Nm	kgf·m	0.10197
	Nm	lbf·ft	0.7375
Pressure	MPa	kgf/cm3	10.197
	MPa	psi	145.0
Power	kW	PS	1.360
	kW	HP	1.341
Temperature	°C	°F	°C×1.8+32
Speed	km/h	mph	0.6214
	min^{-1}	rpm	1.0
Flow	L/min	US gpm	0.2642
	mL/rev	cc/rev	1.0

Standard Torque Table

Torque Specifications--Metric Hardware

Use the following torques when specifications are not given.

These values apply to fasteners with coarse threads as received from supplier, plated or unplated, or when lubricated with engine oil. These values do not apply if graphite or Moly disulfide grease or oil is used.

Grade 8.8 Bolts, Nuts, and Studs	
Size	**N.m\ lbf•ft**
M6	7.7±1.1N.m \ 5.7±0.8lbf·ft
M8	19±2.9N.m \ 14±2.1lbf·ft
M10	38±5N.m \ 28±4lbf·ft
M12	66±9N.m \ 48±7lbf·ft
M14	107±15N.m \ 79±11lbf·ft
M16	166±26N.m \ 122±19lbf·ft
M18	229±33N.m \ 169±24lbf·ft
M20	302±37N.m \ 223±27lbf·ft
M22	443±59N.m \ 327±44lbf·ft
M24	561±74N.m \ 414±55lbf·ft
M27	811±111N.m \ 598±82lbf·ft
M30	1106±148N.m \ 816±109lbf·ft
M33	1512±221N.m \ 1115±163lbf·ft
M36	1955±258N.m \ 1442±190lbf·ft

Grade 10.9 /12.9 Bolts, Nuts, and Studs	
Size	**N.m\ lbf•ft**
M10	72±6N.m \ 53±4lbf·ft
M12	120±10N.m \ 89±7lbf·ft
M14	195±15N.m \ 144±11lbf·ft
M16	305±25N.m \ 225±18lbf·ft
M18	415±35N.m \ 306±26lbf·ft
M20	600±50N.m \ 443±37lbf·ft
M22	800±70N.m \ 590±52lbf·ft
M24	1020±100N.m \ 752±74lbf·ft
M27	1500±100N.m \ 1106±77lbf·ft
M30	1850±150N.m \ 1364±111lbf·ft
M33	2900±400N.m \ 2139±295lbf·ft
M36	3100±250N.m \ 2286±184lbf·ft

Tightening torque of 24° cone O-ring sealed connector

Series	Thread size	Hose inner diameter (mm)	Tightening torque	
			N.m	kgf.m
Light-type	M12×1.5	5	16±1	1.6±0.1
	M14×1.5	6.3	16±1	1.6±0.1
	M16×1.5	8	26±2	2.7±0.2
	M18×1.5	10	37±2	3.8±0.2
	M22×1.5	12.5	47±2	4.8±0.2
	M26×1.5	16	89±4	9.1 ±0.4
	M30×2	19	116±5	11.8±0.5
	M36×2	25	137±6	14.0±0.6
	M45×2	31.5	226±11	23.1±1.1
	M52×2	38	347±16	35.4±1.6
Heavy-type	M14×1.5	5	26±2	2.7±0.2
	M16×1.5	6.3	42±2	4.3±0.2
	M18×1.5	6.3	53±2	5.4±0.2
	M20×1.5	8	63±3	6.4±0.3
	M22×1.5	10	79±4	8.1 ±0.4
	M24×1.5	12.5	84±4	8.6±0.4
	M30×2	16	126±6	12.9±0.6
	M36×2	19	179±8	18.3±0.8
	M42×2	25	263±12	26.8±1.2
	M52×2	31.5	368±17	37.6±1.7

Tightening torque of flange-type sealed connector bolt

Series	Bolt	Bolt performance level	Tightening torque	
			N.m	kgf.m
Light-type	M8	8.8	25.2±1.2	2.57±0.12
	M10		52.5±2.5	5.35±0.25
	M12		96.6±4.6	9.85±0.47
	M16		220±10	22.5±1.07
	M8	10.9	33.6±1.6	3.42±0.16
	M10		73.5±3.5	7.5±0.35
	M12		136±6	12.8±0.6
	M16		310±15	31.6±1.5

Tightening torque of flange-type sealed connector bolt

Series	Bolt	Bolt performance level	Tightening torque	
			N.m	kgf.m
Heavy-type	M8	8.8	25.2±1.2	2.57±0.12
	M10		52.5±2.5	5.35±0.25
	M12		96.6±4.6	9.85±0.47
	M16		220±10	22.5±1.07
	M20		420±20	42.8±2.0
	M8	10.9	33.6±1.6	3.42±0.16
	M10		73.5±3.5	7.5±0.35
	M12		136±6	12.8±0.6
	M16		310±15	31.6±1.5
	M20		577±27	58.9±2.8

Tightening torque of thread angle type sealed connector

Material of fastenings	Carbon steel, alloy steel		Aluminum products	
Thread size	Tightening torque		Tightening torque	
	N.m	kgf.m	N.m	kgf.m
G1/8	8.75±1.25	0.90±0.12	/	/
G1/4	36±2	3.67±0.2	29.3±2.2	3.0±0.2
G3/8	73.5±4.5	7.5±0,46	49±3	5.0±0.3
G1/2	110±10	11.2±1.0	55±5	5.6±0.5
G3/4	165±15	16.8±1.5	74±4	7.5±0.4
G1	225±25	23.0±2.55	/	/
G1-1/4	275±25	28.0±2.55	/	/
G1-1/2	285±15	29.1±1.5	/	/

Joint tightening torque

Thread size	Tightening torque	
	N.m	kgf.m
M12	24±2	2.4±0.2
M14	30±2	3.1 ±0.2
M16	30±2	3.1 ±0.2
M18	30±2	3.1 ±0.2

English system thread tightening torque

Thread size	Tightening torque lb.ft (N•m)	Thread size	Tightening torque lb.ft (N•m)
1/4	9 ± 3 (12 ± 4)	9/16	110 ± 15 (150 ± 20)
5/16	18 ± 5 (25 ± 7)	5/8	148 ± 18 (200 ± 25)
3/8	33 ± 5 (45 ± 7)	3/4	266 ± 37 (360 ± 50)
7/16	52 ± 11 (70 ± 15)	7/8	420 ± 59 (570 ± 80)
1/2	74 ± 11 (100 ± 15)	1	645 ± 74 (875 ± 100)

Oil Specifications

Fluids and lubricants

Category		Name	Capacity	Application parts
Engine oil	≥-10°C(14°F)	★ SAE 15W/ 40CH-4	15L \3.96 US gal	Diesel engine
	≤-10°C(14°F)	SAE 5W/ 40CH-4		
Diesel fuel	≥-10°C(14°F)	★ 0# diesel	187L \49.41 US gal	Diesel engine
	≤-10°C(14°F)	-20# diesel		
Hydraulic oil	-15~40°C(5~104°F)	★ HM-46 anti-wear hydraulic oil	100L \26.42 US gal	Work hydraulic system, steering hydraulic system
	-25~40 ℃ (-13 ℉ ~104°F)	HV-46 low temperature anti-wear hydraulic oil		
Torque converter oil	≥-10°C(14°F)	★ SAE 15W-40 Mobil Delvac 1300	40L \10.57 US gal	Torque converter and power shift gearbox
	≤-10°C(14°F)	S4 TXM 10W-30		
Gear oil	≥-10°C(14°F)	★ SAE 80W-90/LS Heavy-load wheel gear oil	34L \9 US gal	Front and rear axle bevel gear and wheel reducer
	≤-10°C(14°F)	75W-90/LS Heavy-load wheel gear oil		
Refrigerant		★ R134a	1.1Kg\2.4 lb	Air conditioner
Grease	Manual lubrication	★ 2# Molybdenum disulfide lithium grease	2L \0.53 US gal	Roller bearing, slide bearing, pin shaft of work implement, pin shaft of steering cylinder, pin shaft of vehicle frame, swing frame of rear axle, spline of drive shaft, cardan joint, and water pump shaft
	≤-10°C(14°F)	0# Composite lithium base grease		
	Central lubrication	2# Composite lithium base grease		
Coolant		★ SHELL anti-freezing solution	32L \8.45 US gal	

Note: " ★ " used by the manufacturer after the machine is newly produced.

⚠CAUTION

DO NOT use an alternate oil in the axle, the transmission box, the engine. The parts could be damaged as a result of using an alternate oil.

SEE your dealer for winter fuel requirements in your area, if the temperature of fuel below the cloud point, will cause the engine lose power or not start.

Low sulfur fuel should be used. The wrong fuel used will cause the engine damaged as a result.

Maintenance schedule

Service Intervals	Service Points	Initial Service	Frequency in Hours						
			Check	Clean	Change	Drain	Lubricate	Replace	Adjust
As required	Radiator coolant level		★						
	Tires		★						
	Hydraulic filter		★						
	Air cleaner		★	★					
	Alternator, A/C, drive belt		★						
	Fire extinguisher		★						
	Check, replace cab fresh air filter		★					★	
	Check, replace A/C return air filter		★					★	
Every 10 hours	Check engine oil level		10						
Every 50 hours	Check engine coolant level		50						
	Check transmission oil level		50						
	Check hydraulic oil level		50						
	Grease bucket mounting fittings						50		
	Bleed fuel filter of condensation					50			
First 100 hours	Change engine oil and filters	100							
	Replace fuel filters	100							
	Change hydraulic filter	100							
	Change transmission oil and filter	100							
	Change oil in axles	100							
Every 100 hours	Grease front drive shaft support bearing						100		
	Grease steering cylinder pivots (4 fittings)						100		
	Grease lift & tilt cylinder pivots (6 fittings)						100		
	Grease articulation fittings						100		

Maintenance schedule

Service Intervals	Service Points	Initial Service	Frequency in Hours						
			Check	Clean	Change	Drain	Lubricate	Replace	Adjust
Every 250 hours	Check radiator coolant level		250						
	Check tire pressure & wheel torque		250						
	Check drive belts		250						
	Check air filter		250						
	Change engine oil and replace filter				250				
Every 500 hours	Check axle oil level		500						
	Check battery volt and nuts torque		500						
	Replace fuel water separator							500	
	Replace fuel filter							500	
Every 1000 hours	Replace hydraulic oil filter	500						1000	
	Replace pilot hydraulic oil filter	500						1000	
	Change front & rear axle oil				1000				
	Change transmission oil and filter	100			1000				
	Check accumulator nitrogen pressure	500	1000						
	Clean fuel tank	100		1000					
Every 2000 hours	Change hydraulic oil & filter				2000				
	Change coolant				2000				

Note: ★ means service as required.

Technical Specification of the Machine



P28100311

Application

This machine is a kind of engineering machinery mainly used for loading & unloading loose materials. It is mainly used for loading, unloading, bulldozing and traction operation etc. at mine areas, ports and docks, capital construction, road repair and steel & iron enterprises etc. It is a kind of multi-purpose and high efficiency engineering machinery.

This machine is a kind of general-purpose engineering machinery and is not suitable for the flammable, explosive, dusty and air poisonous environments.

Requirements of Work Environments

Altitude: ≤3000 m

Environmental temperature: -12°C~40°C (The cold starting Aid device is not available)

Water Depth: ≤ 630mm

⚠WARNING

Do not operate machine in conditions with rollover or falling object risk.

⚠CAUTION

Preventive measures for operation, maintenance and safety rules outlined on this manual are only suitable for the stipulated applications of the machine. Do not use the machine beyond the stipulated application scope, Guangxi LiuGong Machinery Co., Ltd will not bear any safety liability, and these safety liabilities will be born by users. Under any cases, do not use the forbidden operation outlined in this manual.

Main Components

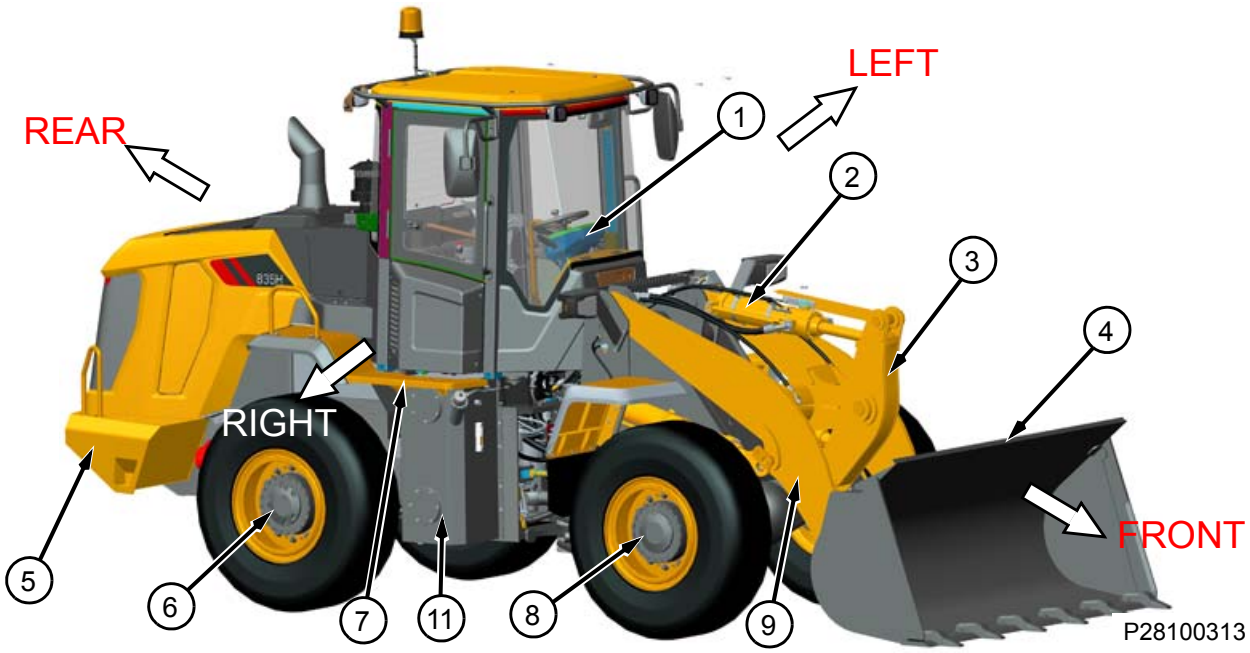

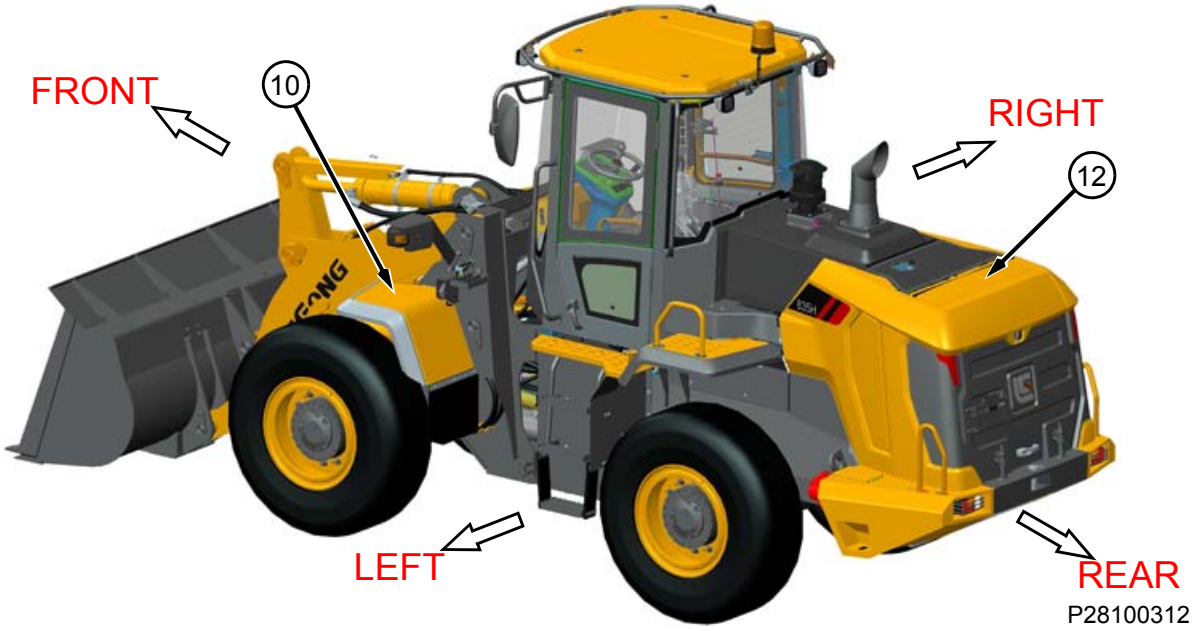

1. Cab
2. Tilting cylinder
3. Rocker arm
4. Bucket
5. Counterweight
6. Rear axle
7. Rear fender
8. Front axle
9. Boom
10. Front fender
11. Hydraulic oil tank
12. Engine hood

Performance Parameters

All rated lift capacities are based on the criteria of the machine being leveled on a hard and flat ground. When the machine is operated in conditions that deviate from these criteria (e. g. on soft or uneven ground, on a slope or when subject to slide loads), these conditions shall be taken into account by the operator.

The following table lists the specifications in standard collocation, please refer to the appendix of this section for the specification change parts of the other special collocations (such as larger bucket, longer boom, and side dump bucket).

Exterior Drawing

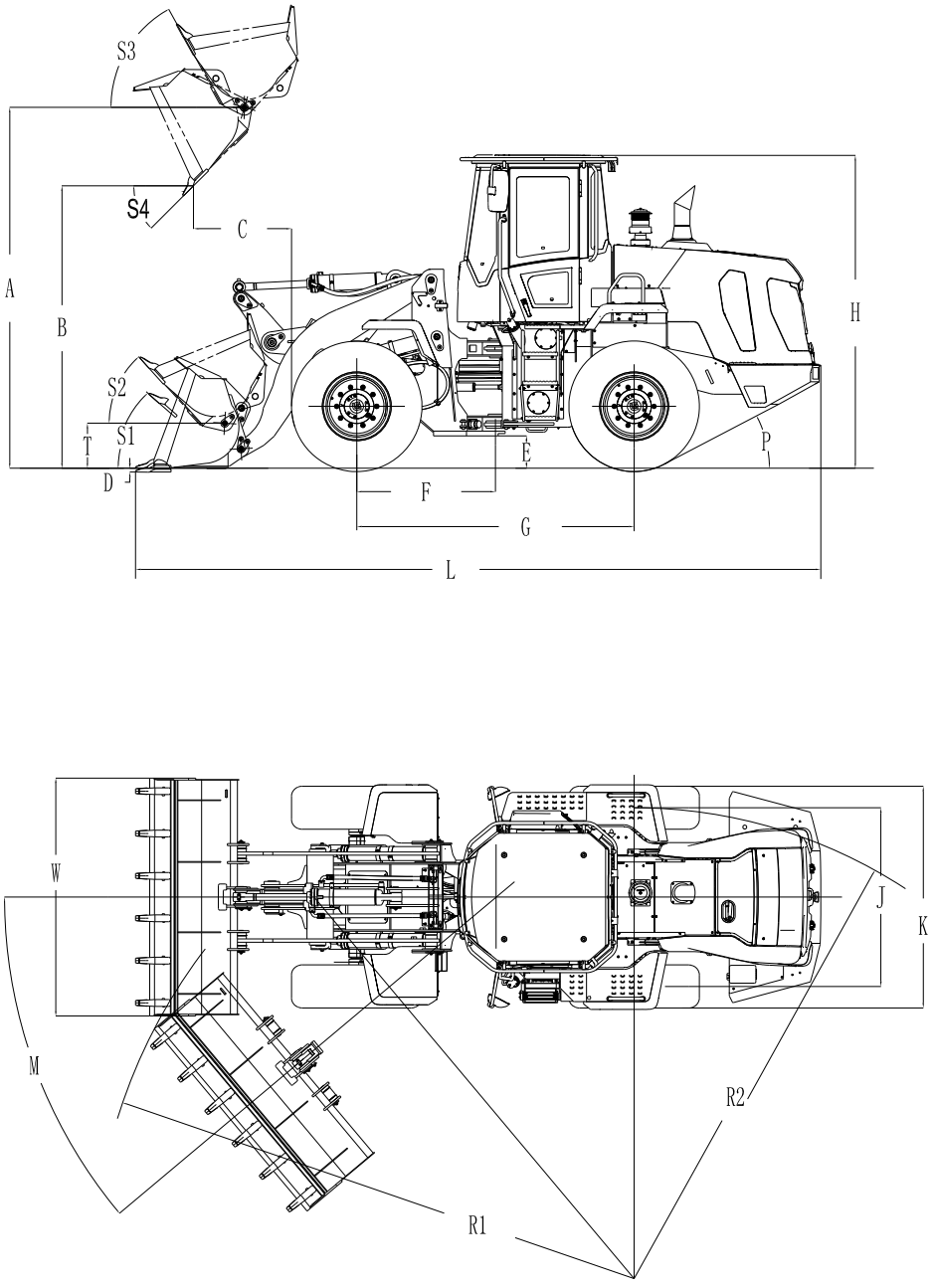

P18M00230

Machine Specifications

NO.	Item	Unit	CLG835H
1	Rated load weight	kg	3000
2	Rated power	KW	119
3	Operating mass	kg	10800
4	Rated bucket capacity	m^3	1.8
5	Dumping height	mm	2920
6	Max. breakout force (bucket tilting)	kN	105
7	Tipping load (aligning)	Kg	7900
8	Tipping load (full steering)	Kg	6800
9	Boom lifting time (full load)	s	5.06
10	Total time	s	9.27
11	Max. traveling speed	km/h	36
12	Max. gradeability	°	28
13	Min. turning radius (outside of front wheel)	mm	5090
Overall Dimensions			
1	A: Height to hinge pin, fully raised	mm	3730
2	B: Dumping height, fully raised	mm	2920
3	C: Dumping reach, fully raised	mm	1014
4	D: Max. digging depth	mm	40
5	E: Min. ground clearance (at articulation joint)	mm	335
6	F: Distance from centre of rotation to the centre of the front wheels	mm	1435
7	G: Wheel base	mm	2870
8	H: Overall height (top of cab)	mm	3232
9	J: Tread width	mm	1850
10	K: Overall width (outside of wheel)	mm	2295
11	L: Over length (bucket on ground)	mm	7060
12	M: Max. steering angle	°	40
13	W: Overall width (outside of bucket)	mm	2460
14	R1: Turning radius (outside of bucket)	mm	5600
15	R2: Turning radius (center of rear wheel)	mm	4867.5
16	P: Departure angle	°	28
17	S1: Bucket tilt back angle (on ground)	°	41
18	S2: Bucket tilt back angle (in transport position)	°	48
19	S3: Bucket tilt back angle (in highest position)	°	61
20	S4: Dumping angle (in highest position)	°	45
21	T: Bucket articulation height (in transport position)	mm	500

Main Components Specifications

Engine			
1	Manufacturer	/	CUMMINS Power
2	Model	/	QSB6.7
3	Type	/	Electronic fuel injection
4	Displacement	L	6.7
5	Rated power	kW	119
6	Emission level	/	U.S.EPA Tier3
7	Number of cylinders and arrangement	/	Straight-six cylinders
8	Intake type	/	Turbocharging & air-air inter-cooling
9	Rated speed	r/min	2200
10	Max. rotating speed (no-load)	r/min	2350
11	Min. rotating speed (no-load)	r/min	600
12	Rotating speed at max. torque	r/min	1400
13	Max. torque	Nm	732
14	Start motor	V-Kw	24V-7.5 KW
15	Alternator	V-A	24V- 70A
Power train system			
1	Torque converter	Type	Single turbine, three members
2	Transmission	Manufacturer	ZF
3		Model	4WG158
4		Type	Fixed shaft type, power shift
5		Number of gears	Four forward gears and three reverse gears
6		Operating pressure of shift oil pump (gear pump)	1.6~1.8MPa (232~261psi)
7	Drive axle	Manufacturer	LiuGong
8		Model	LiuGong 3T wet-type axle
9		Type	Wet-type alxe
10		Max. traction force	100kN (22480lbf)
11		Front & rear axle reduction ratio	20.267
12		Rear axle swing angle	11°
13	Wheels	Tire model	17.5-25PR12 TT
14	Traveling speed	F1/ R1	7/ 7km/h
15		F2/ R2	11.7/ 11.7km/h
16		F3/ R3	23.2/ 23.2km/h
17		F4	36km/h

Main Components Specifications

Work hydraulic system			
1	Work pump	Type	Gear pump
2	Work pump displacement	ml/r	50
3	System pressure	MPa	18
4	Control valve	/	Two spools (third spool is optional)
5	System flow	L/min	102
6	Lifting time (full load)	s	5.06
7	Dumping time	s	1.11
8	Float lowering time	s	3.1
9	Total time	s	9.27
Steering hydraulic system			
1	Steering angle	°	40
2	Steering pump	Type	Gear pump
3	Steering pump displacement	ml/r	52.2
4	System pressure	MPa	17.2
5	System flow	L/min	107
Brake hydraulic system			
1	Service brake	Type	Full hydraulic wet type brake
2	Brake pump	Type	Gear pump
3	Brake pressure	MPa	4.8
4	Nitrogen Pre-charge pressure of Accumulator	MPa	5.5
5	Parking brake	Type	Drum type parking brake
6	Parking brake control mode	/	Electro-hydraulic control
7	Nitrogen Pre-charge pressure of Accumulator	MPa	9.2
Air conditioner system			
1	Type	/	Cooling & heating A/C
2	Heating capacity	W	5800
3	Cooling capacity	W	5000
4	Refrigerant	Model	R134a
Electrical system			
1	System voltage	/	DC 24V
Refill capacities			
1	Fuel tank	L	187
2	Engine oil	L	15
3	Cooling system	L	32

Main Components Specifications

4	Transmission oil	L	45
5	Drive axle oil	L	Front: 28
			Rear: 28
6	Hydraulic oil	L	145

Note:

1. Continuing improvement and advancement are made to LiuGong products. All the specifications are the latest product information obtainable at the time of publication. LiuGong will reserve the right to make change without notice.
2. The above parameters are the theoretical values, the tolerance ranges during testing are provided by LiuGong standard.

Machine Inspection Table

Inspection item	S/N	Inspection method and acceptance criteria
Inspection before test run	1	**Machine information:** visually check the complete machine number for compliance with description of model.
	2	**Fastening bolt:** visually check whether the left and right mounting bolts of front axle are tightened firmly in place; visually check whether the left and right front rim bolts are installed and tightened.
	3	**Fastening bolt:** visually check the mounting bolts between front drive shaft and front axle, output flange of transmission and middle bearing fastened.
	4	**Fastening bolt:** visually check whether the emergency braking flexible shaft is connected reliably; brake cylinder for oil leakage and connected reliably.
	5	**Fastening bolt:** visually check whether mounting bolts of upper and lower hinge are tightened.
	6	**Fastening bolt:** visually check the left and right mounting bolts of rear axle are tightened; visually check the left and right rear rim bolts are installed and tightened.
	7	**Water level:** anti-freeze level shall be over the middle line in the level window of expansion tank.
	8	**Oil:** pull out the oil dipstick and the engine oil level shall be between the MIN and MAX marks of the dipstick, and the oil is not in white.
	9	**Hydraulic oil:** lay flat the bucket, lower the boom to the minimum at idling, and visually check the oil level of the hydraulic oil tank is within the green scale and the oil is not in white 5 min after the engine stalls.
	10	**Transmission oil:** when the engine is idling and the transmission fluid temperature is not more than 40°C, check that the level shall be between cold fluid MAX and MIN marks. Then, place the shift control lever at four gear and depress the brake, then the accelerator to run the transmission for 5~8min to make the transmission fluid temperature reach 100~110°C. Release the accelerator and place the shift control lever at neutral gear, then check that the level is between hot oil MAX and MIN marks when the transmission fluid reaches a temperature more than 80°C.
	11	**Air-tightness:** visually check each hydraulic line, cylinder, transmission, axle, oil tank, radiator, diesel engine for no leakage during inspection.
Climbing up the cab	1	Open and close the left and right doors of cab, and no seizing or abnormal sound should occur.
	2	Shake the interior of the cab by hand and no looseness should occur.
	3	Turn on/off the dome light, radio, front and rear sunshade, cigarette lighter, and they should function normally.
	4	**Inflatable seat (If equipped):** the height and front & rear adjustment distance of the seat is obvious; adjustment angle of left and right backrest armrest is obvious; move upward the handle at the front of suspension, the suspension rises, otherwise goes down. There is no abnormal sound and parts interference during air-filled detection.
	5	**Turning on the engine start switch:** turn on the front floodlight, work light, alarm light, parking light by order and get off the vehicle to check if they function normally.
	6	**Starting the machine:** operate the engine speed adjustment switch and visually check the corresponding change to the speed of the tachometer on the instrument panel.
	7	**Starting the machine:** operate the switch of LCD to switch the voltage and timing display.
	8	**Visual check:** timer displays and record the time.

Inspection item	S/N	Inspection method and acceptance criteria
Climbing up the cab	9	**Steering column:** it can be adjusted forward and backward, upward and downward normally; no looseness after locking. Lift the steering wheel upwards by hand and no axial runout occurs (≤3mm). If the machine is equipped with an immovable steering column, just need to check the steering column for stableness.
	10	**Horn:** press the horn button on the lever of the horn button/control lever on the combination lever horn button/steering wheel and listen, no abnormal sound and failure to the horn should occur.
Air conditioning system	1	The air volume switch, temperature setting switch, defrost setting switch, air mode switch, auto mode switch on the A/C panel functions normally and is indicated correspondingly on the LCD; the temperature, air volume, direction at the air outlet is the same with setting value on the panel.
Driving test	1	**Starting the machine:** it starts normally, and listen to the engine and air filter, no abnormal sound is heard, and it turns off normally without delay; observe the engine under the diesel engine idling and top speed, and it shall not stall.
	2	Starting the machine: adjust the machine operating idle speed to a level more than 950rpm and the engine does not stall with the bucket lifted.
	3	**Starting the machine:** visually check that no trouble code appears on the LCD of instrument panel, and no indicating identification, alarm and flashing appears on the instrument panel or normally on.
	4	**Backup monitor system (If equipped):** when placing the shift control lever at reverse, the backup monitor activates automatically and the image shall be clear.
	5	**Work implement control lever:** there is no seizing and interference with other parts when operating the pilot control lever to achieve lifting and lowering of boom and tilting back and dumping of the bucket.
	6	**Pilot shutoff function:** the pilot shutoff lever is at OFF position, operate the pilot lever and the work implement shall not act; the pilot shutoff lever is not installed reversely and has no interference with housing.
	7	**Detection of bucket automatic reset:** the bucket is unloaded, lift the boom to the highest position to make the bucket under discharging state and then take back the bucket and it should stop moving automatically and then control lever returns back to neutral position when the bucket comes near to the switch and bucket limitation magnet. Then lower the boom to place the bucket on the ground, at this time, check the bucket and it should be horizontal to the ground; and the engine is at full throttle during this process.
	8	**Detection of boom automatic reset: boom limitation:** lift the boom and it should stop rising when it reaches the setting highest position; the control lever returns back to neutral position automatically. The engine is at full throttle during this process.
	9	**Work implement limitation:** visual check that the bucket limit block contacts with boom and rocker arm limit block when the boom is lifted to the highest position for discharging; take back the bucket when the boom descends to a position that its front pin is about 500mm(19.7In) away from ground, visual check that boom limit block contacts after taking back the bucket and the clearance between boom and bucket is more than 5mm(0.197In).

Inspection item	S/N	Inspection method and acceptance criteria
Driving test	10	**Inspection of work implement running:** lift the boom during which no abnormal sound shall occur; no twisting to the bucket during taking and holding back the bucket when the boom is lifted to the highest position and lowest position.
	11	**Floating function and inner leakage detection:** when jacking up the bucket backward (the front wheels off the ground), visually check that the boom does not drop quickly; when the bucket is jacked up (the front wheels off the ground), push the control lever to the boom lowering and floating position, visually check that the boom shall be floating and lowering.
	12	**Ride control (If equipped):** park the machine on the level ground, disconnect the ride control system button, jack up the shovel head; after 5 seconds, connect the ride control system button, and the boom shall perform automatic lowering operation.
	13	**Visual check and listening:** when turning to the maximum left and right steering angle, the limit block contacts and no abnormal sound shall occur; visually check that there is no interference between the armrest of cab and front frame, front and rear frame when turning to the maximum left and right steering angle; there is no interference and pulling between hydraulic line&electrical circuit and other sharp edges.
	14	**With steering cushion:** turn the complete machine to the limit position, and the steering cushion is compressed (8-12) mm.
	15	**Secondary steering (If equipped):** turn on the electric lock without starting, the secondary steering indicator on the instrument panel comes on when the secondary steering switch is pressed, and the steering can be normally performed
	16	**Gear inspection (If equipped):** Manual shift. 1) Turn the manual/auto shift switch to "Manual"; 2) Start the machine and idle; 3) Release the parking brake; 4) Operate the shift control lever and all the gears shall be available freely.
	17	**Gear inspection (If equipped):** Semi-automatic shift 1) Place the manual/auto shift rocker switch at neutral position; 2) Start the machine and idle; 3) Release the parking brake; 4) Operate the shift lever, and place it at F1 position, and the gear to machine transmission shall be F1 5) Operate the shift lever, and place it at F2 position, and the gear to machine transmission shall be F2; 6) Operate the shift lever, and place it at F3 position, and the gear to machine transmission shall still be F2, depress the accelerator gradually to the maximum and hold it, increase the speed of machine, and when it reaches a certain value, the gear shall automatically shift up to F3; 7) Keep the opening of throttle, and continuously increase the vehicle speed and operate the shift lever and place it at F4, and when the speed reaches a certain value, the gear shall automatically shift up to F4 from F3; (the corresponding gear is displayed on the gear display during the above operation; and the corresponding speed is displayed on the LCD of instrument panel)
	18	**Gear inspection (If equipped):** Full-automatic shift. 1) Turn the manual/auto shift switch to "Auto" position; 2) Start the complete machine; 3) Release the parking brake; 4) Operate the shift control lever, and place it at F3 position, depress the accelerator gradually to the maximum and hold it, when speed reaches a certain value, the gear shall automatically shift up to F3 from F2; 5) Keep the opening of throttle, and continuously increase the vehicle speed and operate the shift control lever and place it at F4, and when the speed reaches a certain value, the gear shall automatically shift up to F4 from F3. (the corresponding gear is displayed on the gear display during the above operation; and the corresponding speed is displayed on the LCD of instrument panel)
	19	**KD function test (If equipped):** place the shift control lever at 2 with low speed, test the key KD on the shift control lever and FNR switch respectively, press the key KD and the gear is switched to first gear.
	20	**FNR control lever test (If equipped):** place the control lever at N2 firstly. And then push the key of FNR lever to N. The FNR function is activated after the enable key of the FNR lever is pressed. When the FNR function is activated, the FNR lever can be used to perform F(forward)\ N(neutral)\ R(reverse) and KD function operation.

Inspection item	S/N	Inspection method and acceptance criteria
Driving test	21	**Power shutoff function:** 1) place the power shutoff function selection switch at enable state; 2) release the parking brake; 3) operate the shift lever and place it at F1 or F2 and drive the vehicle; 4) depress the service brake pedal and when it reaches a certain level, the gear shall shift down to neutral; and the power shutoff indicator on the instrument panel comes on; 5) release the brake pedal, and the gear shall return back to F1 or F2; 6) the power shutoff fails when the shift lever is placed at F3 or F4.
	22	**Backup alarm:** when the shift control lever is placed at reverse, the reverse alarm begins to perform buzzing alarm immediately.
	23	**Brake system:** Drive the vehicle for 10 laps, during which depress the brake pedal and the complete machine is braked, two times per lap; no seizing shall be felt when depressing the accelerator and brake pedal during driving.
	24	**Fault alarm inspection:** observe that no axle oil pressure, oil pressure, service brake, emergency brake, transmission fluid pressure, hydraulic oil temperature alarm indicator on instrument panel indicates alarm during driving; visually check that torque converter oil temperature, engine water and oil temperature is displayed at green area.
	25	**Steering during driving:** no seizing and heavy, floating is felt when turning to the left and right during driving.
	26	**Power train system inspection:** listen to the diesel engine operation for abnormal sound; front and rear axle for abnormal sound; gearbox & torque converter assembly for abnormal sound during driving.
	27	**Emergency brake:** apply hand brake after climbing 15% of slope (for hand brake with lever, it needs to pull the hand brake latch for 2/3 travel), and then release the brake valve, the complete vehicle shall stay for 5 seconds and remain stationary.
	28	**Pressure maintaining of hydraulic system:** extend and retract all oil cylinders to the maximum with control lever remained open at each end of travel to obtain safety valve pressure, which is remained for about 5 seconds, continuously check it for 120 times with interval more than 10 seconds.
	29	**Fan's clockwise and counterclockwise rotation:** the engine is idling, press the fan reverse switch for less than 60 seconds, and then fan can be switched to rotate counterclockwise with indicator on; press the switch again for less than 60 seconds and the fan is switched to rotate clockwise with the indicator off, no abnormal sound occurs during switching.
	30	**Detection of rear axle swing angle:** reverse the complete vehicle with single wheel on the slope of vehicle inspection slot, visually check that the tire has no interference with frame, fender, rear cover (with clearance more than 20 mm) pipe on axle has no interference with diesel engine after stopping the vehicle.
	31	**Centralized lubrication line (If equipped):** 1) fastened to pin lubrication pipe joints without oil leakage; 2) centralized lubricator time is correctly set; 3) oil pipe is not bent and twisted; 4) oil pipe runs smoothly without interference with proper length and beautiful appearance; there is no pulling interference during turning and operation of work implement.

Inspection item	S/N	Inspection method and acceptance criteria
Static check	1	**Visual check:** gap of lapped surface at hinge between boom and frame, oil cylinder, rocker and tie rod light is ≤1mm.
	2	**Touch:** there is no oil leakage at big cavity and small cavity pipe and joint of left and right boom oil cylinder pipeline; visually check that there is no oil leakage at big cavity and small cavity pipe and joint of bucket tilting cylinder pipeline.
	3	**Touch:** there is no oil leakage at left and right front axle clamp; no oil leakage at front axle input flange; no oil leakage at axle housing and brake line joint on axle.
	4	**Touch:** ride control accumulator is installed firmly with the joint free of oil leakage.
	5	**Touch:** there is no oil leakage at transmission front output flange, transmission filler mounting face, shift control valve, level window, level mouth, breather and brake cylinder.
	6	**Touch:** there is no oil leakage at steering gear and joint, pressure regulating valve, flow amplifying valve, unload valve, combination valve, electric proportioning valve, steering pump, priority valve, pilot valve, charge valve, mounting face of working pump and pipe joint; there is no water leakage at heater pipe and water return pipe joints.
	7	**Touch:** there is no oil leakage at safety valve and oil inlet and return pipe joints to the boom, bucket tilting, control valve, pilot hose joint on the control valve; visually check that there is no interference between oil inlet and return pipe of control valve, pilot control pipe and other sharp edges, moving parts.
	8	**Touch:** there is no oil leakage at left and right steering oil cylinder pipe and joint; visually check that there is no interference between steering and brake pipe and other sharp edges, moving parts.
	9	**Touch:** there is no oil leakage at accumulator in transmission and brake pipe joint, pilot accumulator, transmission oil filter and its joint, charge valve and its joint and hydraulic rising mechanism.
	10	**Touch:** there is no oil leakage at bottom of hydraulic oil tank, flange, plug, level window, oil inlet and return pipe joint and flange face.
	11	**Touch:** there is no oil leakage at diesel fuel tank and outlet pipe joint, diesel fuel tank body and flange, plug.
	12	**Visual check:** the left and right semi-circles fender and rear fender is matched flush without shaking.
	13	**Visual check:** rear cover with lifting mechanism is raised smoothly during which there is no interference with other parts; there is no interference between lifting jack and frame, radiator baffle; there is no oil leakage at lifting cylinder joint.
	14	**Visual check:** rear cover is symmetrical at left and right sides; bottom of rear cover is attached with counterweight, rear frame, left and right plate.
	15	**Visual check:** there is no interference between hydraulic oil tank and cab; there is no interference between left and right hydraulic oil tank guard, foot pedal and driver.
	16	**Visual check:** diesel engine mounting bolt is fastened and there is no oil leakage at parts on left side and oil pan; there is no interference between diesel engine oil pan and sub frame, rear frame beam; no interference between diesel engine torque converter assembly oil return pipe joint and intermediate plate of frame.
	17	**Visual check+touch:** there is no water leakage at upper and lower water pipe, cool and warm water pipe and water valve; there is no oil leakage at pipe joints of filter, high pressure oil pump, flywheel housing cover.
	18	**Visual check:** there is no interference between brake line at left side of engine, filter and sharp edges (harness is far away from high temperature area and not interfered with fuel pipe); there is no interference between filters and sharp edges and other parts, and the hoses are not twisted.

Inspection item	S/N	Inspection method and acceptance criteria
Static check	19	**Visual check:** urea heating pipe, cool water pipe, post-processor water pipe runs smoothly without interference and is far away from high temperature area. **(If equipped)**
	20	**Visual check:** arrow of solenoid water valve shall face the urea tank. **(If equipped)**
	21	**Visual check:** harness at upper side of post-processor is far away from high temperature area. **(If equipped)**
	22	**Visual check:** A/C pipe runs smoothly and is not interfered with other parts, diesel engine high temperature area and the exposed A/C aluminium pipe is not interfered with other parts.
	23	**Visual check:** the pulley belt is not twisted and peeled off; and the A/C compressor pulley is in the same horizontal plane with diesel engine pulley.
	24	**Visual check:** clearance between engine fan and shroud is ≥10mm, fan guard ≥15mm; the pulley is not interfered with fan guard.
	25	**Visual check+touch:** there is no water and oil leakage at radiator assembly and its radiator pipe joint.
	26	**Visual check+touch:** there is no oil leakage at rear axle input flange, axle housing and plug, pipe on axle, left and right clamp, breather; axle brake hose joint is not interfered with oil pan.
	27	**Visual check+touch:** there is no oil leakage at radiator pipe at right side of engine, fuel pipe, brake pipe, filter; there is no interference between filters and sharp edges and other parts, and the hoses are not twisted.
	28	**Visual check+touch:** there is no oil leakage at radiator pipe, fan pump joint.
	29	**Inspection of quick coupler (If equipped):** lower the bucket to the ground, shut it off and close the pilot shutoff valve to OFF position. Turn the spool lever to COUPLER, start the machine, open the pilot shutoff valve to OPEN. Operate the multi-functional pilot lever, and check the quick coupler frame movable pin for free extending and retracting. Turn the engine off and close the pilot shutoff valve to OFF position. Turn the spool lever to Aux position.

Power System

Basic Information 2-3

Safety 2-3
Overview-Components and Position 2-5
Main Technical Parameters of Power System 2-8
Universal Tool, Tooling List 2-9

Structure and Function 2-10

Engine System 2-10
Intake and Exhaust Assembly 2-11
Air Pre-filter 2-14
Air Filter 2-14
Turbocharger 2-15
Fuel System 2-16
Fuel Line 2-16
Cooling System 2-17
Overview 2-17

Removal and Installation 2-21

Removal and Installation of Air Pre-filter 2-22
Removal of Air Pre-filter 2-22
Installation of Air Pre-filter 2-22
Removal and Installation of Air Filter 2-23
Removal of Air Filter 2-23
Installation of Air Filter 2-24
Air Filter--Maintain 2-25
Removal and Installation of Turbocharger 2-26
Removal and Installation of Fuel Lines 2-27
Removal of Fuel Lines 2-28
Installation of Fuel Lines 2-30
Removal and Installation of Fuel Tank Assembly 2-31
Removal of Fuel Tank Assembly 2-32
Cleaning of Fuel Tank 2-33
Installation of Fuel Tank 2-33
Removal and Installation of Radiator Pipelines 2-34
Removal of Radiator Pipelines 2-35

Installation of Radiator Pipelines 2-38
Removal and Installation of Radiator Assembly 2-39
Removal of Radiator Assembly 2-39
Installation of Radiator Assembly 2-43
Disassembly, Check and Assembly of Radiator Assembly 2-44
Disassembly of Radiator Assembly 2-45
Check of Radiator Assembly 2-47
Assembly of Radiator Assembly 2-47
Disassembly and Assembly of Radiator Group 2-48
Disassembly of Radiator Group 2-49
Refilling and Replacement of Coolant 2-50
Fault Diagnosis and Troubleshooting 2-51
Air Pre-filter Fault 2-51
Air Filter Fault 2-51
Turbocharger Fault 2-51

Basic Information

Safety

Compressed Air

Compressed air may cause personal injury. When using the compressed air for cleaning, wear the mask, protection suits and shoes. The maximum pressure of the compressed air for cleaning should be lower than 0.2MPa (29psi).

Safe Disposal of Waste Fluids

- Improper treatment of waste engine oil, waste diesel and waste DEF is harmful to environment and ecosystem. Treatment shall conform with the local laws and regulations.
- It is mandatory and necessary to collect the liquid with containers spattered during the inspection, maintenance, test, adjustment and repair of machine. Proper container shall be prepared well before opening any fluid cavity or disassembling the parts containing liquid. Use proper container when draining liquid.
- Do not use the food or drink containers because they may be drunk by others by mistake.

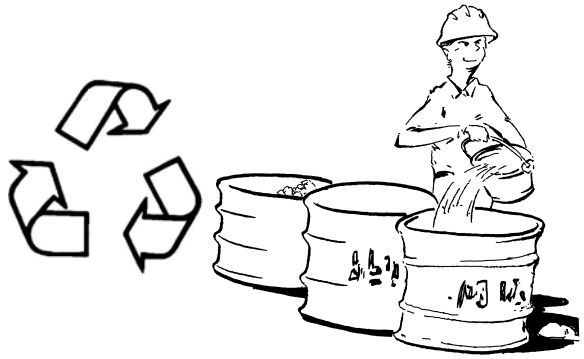

P19M00059

Preventing Burns

After running for some time, parts of the machine will be hot,such as, engine, DPF (Diesel Particulate Filter) and inter-cooler steel pipe, those parts which are cooled down later shall be inspected or repaired.

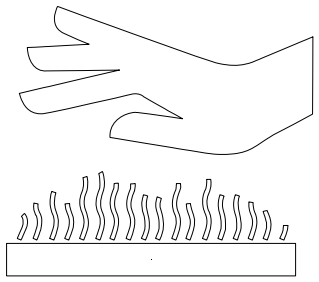

P11000148

Coolant

At working temperature, the coolant of the engine is at high temperature and has pressure, the radiator and all the pipes connected to the radiator contain hot water or vapor, if you touch them, serious burn would occur.

- When checking the coolant level, the engine shall be shut off and the filler cap shall be cooled to the extent that it can be opened by bare hands. Slowly loosen the filler cap of cooling system to release the pressure.
- Coolant contains alkali which may causing injury and do not let it contact your skin, eyes and mouth.

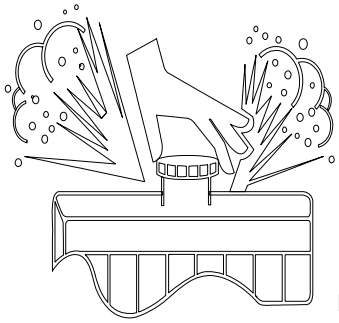

P11000147

Fire & Explosion Prevention

- All fuels, such as most of lubricants and some cooling agent are flammables.
- Fuel leaking onto the hot surface or electrical elements may cause fire.
- Do not smoke when refilling or within refiling area, and in the place storing flammables.

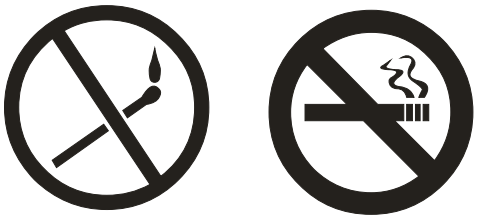

P11000157

- Store the fuel, lubricant into containers with relevant marks to avoid use by non-working personnel.
- Put the cleaning cloth or other combustible materials with oil soaked into protective container, and set it at a safe place.
- Do not perform welding or flame cutting onto the pipe containing flammable liquid. Before welding or cutting, it shall be shall be cleaned completely with flammable liquid.
- Accumulated flammable materials such as fuel, lubricant or other scattered materials on the machine shall be cleaned up.
- Diethyl ether (Warning: Do not use diethyl ether to start the engine)
- Any approach which attempts to start the engine by use of diethyl ether may cause serious damage to engine or casualties.



P11000158

Overview-Components and Position

Functions of power system

Supplying the machine with the mechanical energy converted from the chemical energy of fuel. Power system includes: engine system, cooling system and fuel tank assembly. Engine system is composed of engine mounting assembly, intake and exhaust assembly and fuel lines; cooling system is composed of radiator mounting assembly and radiator lines. Among them, the engine mounting assembly consists of engine, and the radiator mounting assembly consists of cooler components.

Module structure figure of power system

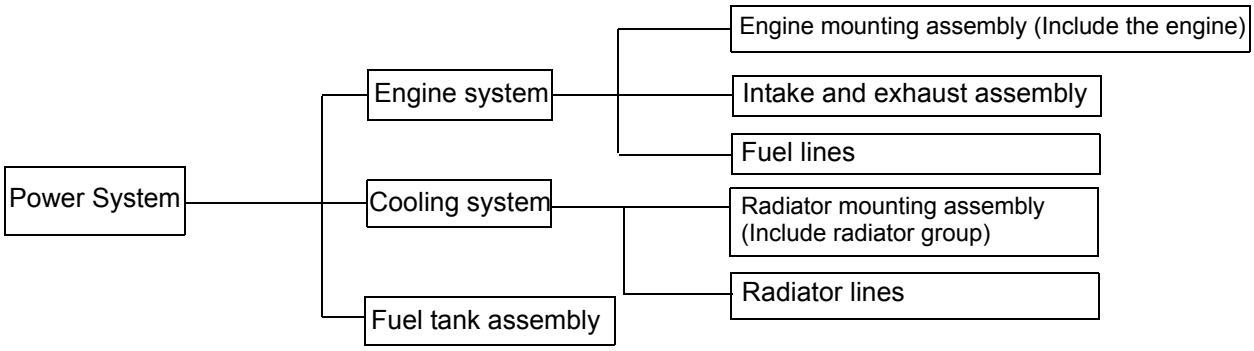

Position of power system in the machine

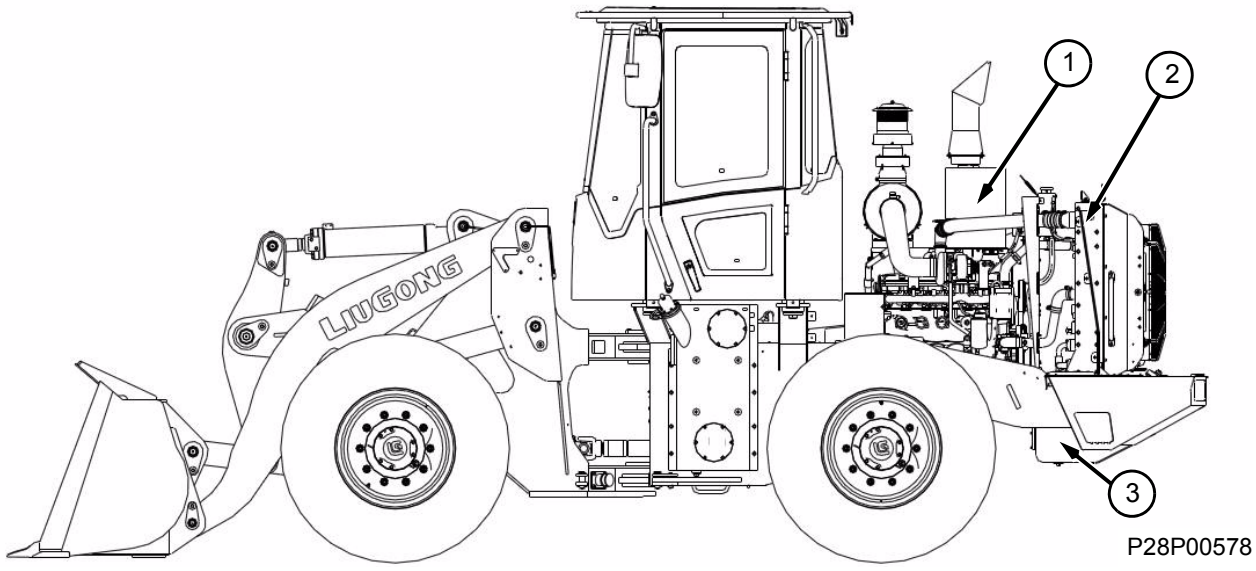

1. Engine system
2. Cooling system
3. Fuel tank assembly

Components of power system

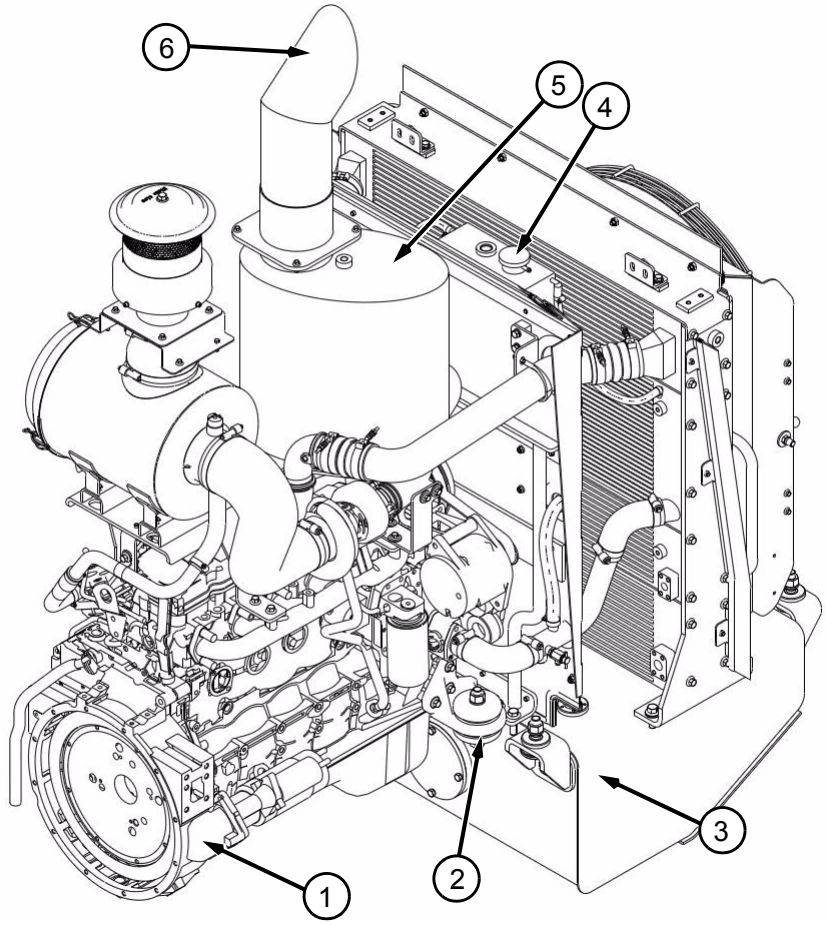

P28P00579

1. Engine
2. Engine mounting assembly
3. Fuel tank
4. Auxiliary water tank
5. Muffler
6. Exhaust pipe

Components of power system

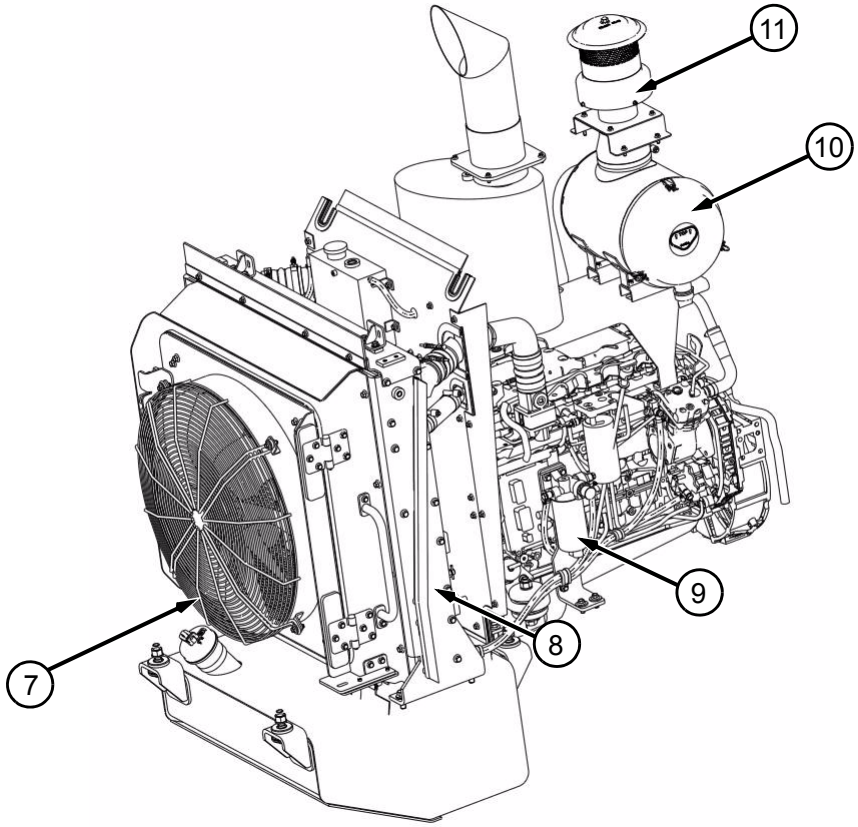

P28P00580

7. Fan
8. Radiator group
9. Fuel-water separator
10. Air filter
11. Air pre-filter

Main Technical Parameters of Power System

Engine	Model	CUMMINS QSB6.7
	Type	Six-cylinder in-line, four-stroke, turbocharged
	Emission	U.S.EPA Tier3
	*Rated power	160BHP(119kW)@2200r/min
	*Maximum idling speed	2376±50r/min
	*Minimum idling speed	750±50r/min
	Engine oil level	15L
	Rotation direction	Clockwise (viewed from the fan end to flywheel housing end)
Cooling system	Fan	Diameter 760mm, 9 blades, induced draft iron fan
	Drive ratio of fan belt pulley	0.87:1
	Thermostat	Opening temperature: 82°C (179.6°F) Fully open temperature: 95°C (203°F)
Engine oil system	Oil filter	Full flow type and replaceable (oil filter is rotatable)
Preheating system	Preheating method	/
Water radiator	Core type	Plate-fin type
	Core size (height × width × thickness)	1100mm X 409mm X 140mm (31.5 InX17.7 In X3.15In)
Hydraulic oil radiator	Core type	Plate-fin type
	Core size (height × width × thickness)	1100mm X 180mm X 140mm (31.5 InX 8.86InX3.15 In)
Torque converter oil radiator	Core type	Plate-fin type
	Core size (height × width × thickness)	1100mm X 195.5mm X 140mm (31.5 InX8.78 In X3.15In)

Note: Data marked with * is based on engine with fuel system and water pump under intake resistance of 250 mm H_2O (2.449Pa) and exhaust resistance of 50 mm Hg (7kPa) but not including alternator, fan, optional configurations and drive components.

Universal Tool, Tooling List

Name	Specifications
Open-end wrench	7#, 8#, 10#, 11#, 12#, 13#, 16#, 18#, 19#, 20#, 22#, 24#, 30#
Ratchet wrench and socket	Ratchet wrench, 10#, 11#, 12#, 13#, 16#, 18#, 19#, 20#, 22#, 24# and 30# socket
Torque wrench	120±6N.m, 1020±6N.m
Traveling crane	More than 2t
Wire rope with hooks	Weight bearing over 840Kg
Steel ruler	Steel ruler
Straight screwdriver	
Cross screwdriver	T25
Lifting eye	
Plastic sealing membrane	
Waste oil tank	
Remarks:	

Precautions on removal and installation:

1. Assembly and disassembly must be carried out when engine is cool. In general, open engine hood after engine is shut down, and wait for 15 minutes before the engine is cooled down.
2. Measurement equipment and tools such as torque wrench shall have compliance certificates issued by metrological department;
3. Because many other related components on the Machine are concerned during the removal and installation of each component, removed components (especially standard parts) shall be reasonably placed to avoid wrong installation, neglected installation, part missing, etc. during reassembly.
4. When other components are involved in the removal and installation of each component, please refer to the list of tools for removing and installing other components from/on the complete machine, these tools will not be listed in the tool list of this component;
5. If the expected effect can be reached in the ways of using open-end wrench, blower gun and socket as well as ratchet wrench and socket to remove and install, anyone can be chosen.

Structure and Function

Engine System

Overview--Components and position

Engine system consists of engine mounting assembly, intake and exhaust assembly and fuel pipeline.

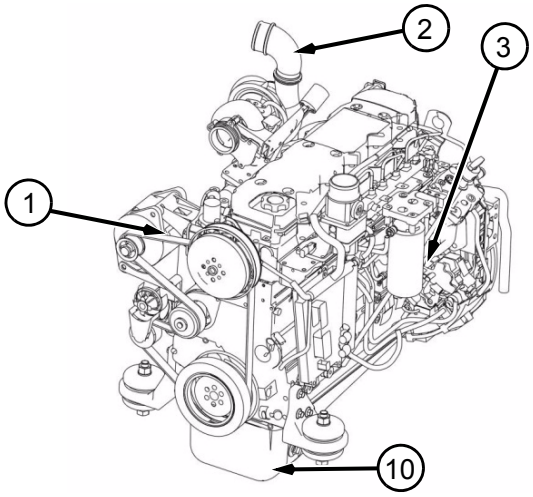

P28P00581

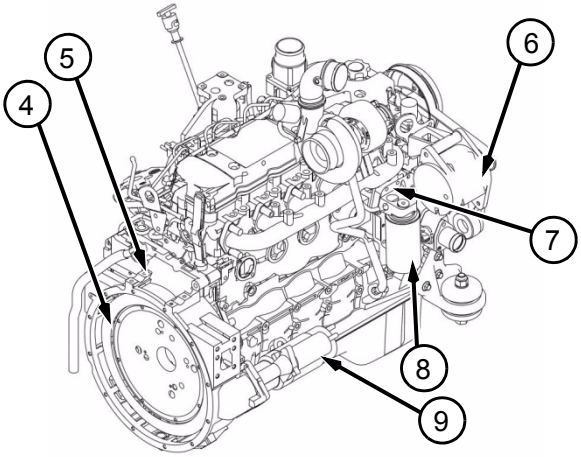

P28P00582

1. Belt pulley system
2. Turbocharger
3. Fuel filter
4. Flywheel housing
5. Ventilating device for crankcase
6. Alternator
7. Oil cooler
8. Oil filter
9. Start motor
10. Oil sump

Engine installed on this machine is Cummins engine QSB6.7. For working principles, maintenance and service information, refer to Operation and Maintenance Manual for Cummins Engine. Cummins Inc. still reserves the right for all information on the manual. During "warranty" period of engine, contact the Cummins dealer closest to the maintenance location for all maintenances.

LiuGong Machinery Co., Ltd. will assume no responsibility for any loss caused by the user violating these instructions.

Intake and Exhaust Assembly

Components and Position

Structural drawing of engien intake and exhaust system

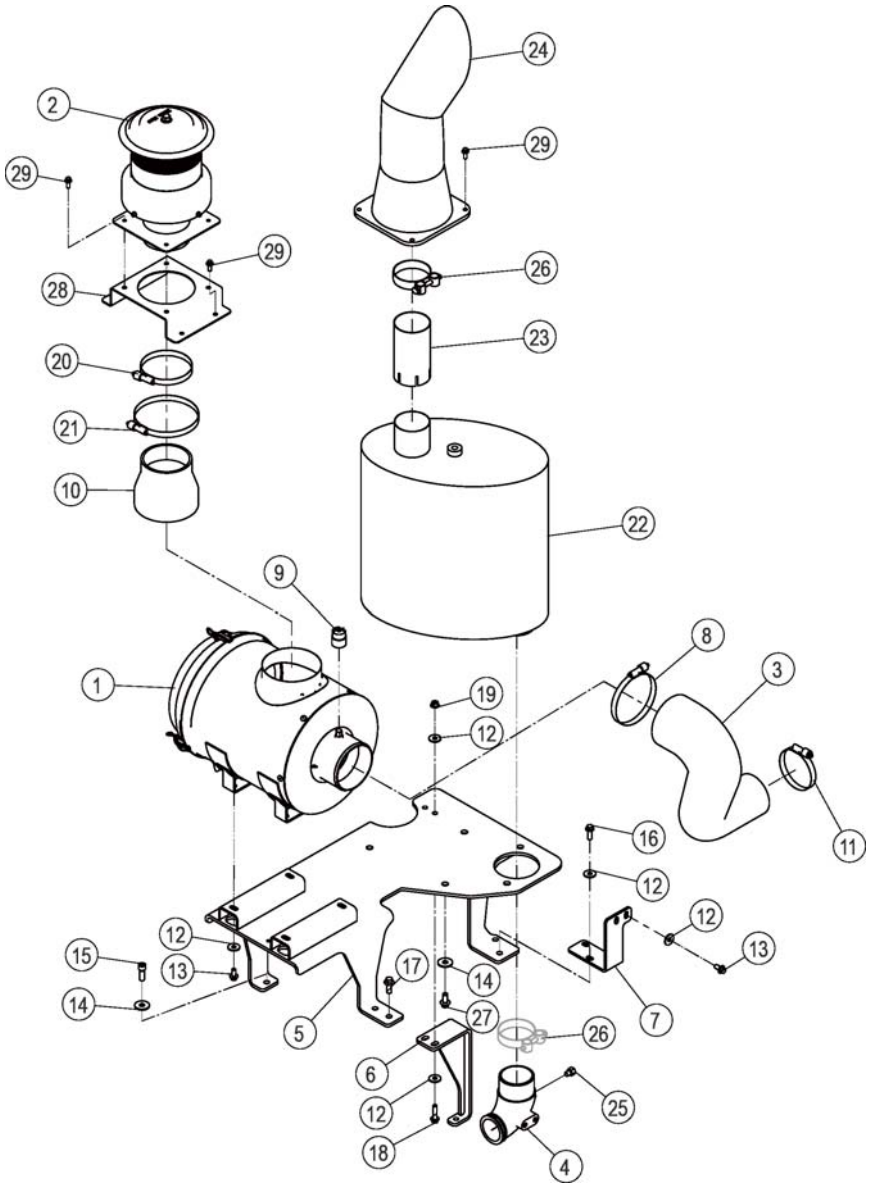

P28P00583

1. Air filter
2. Air pre-filter
3. Intake line
4. Exhaust pipe
5. Muffler support
6. Outrigger
7. Angle block
8. Clip
9. Electronic service indicator
10. Bellows
11. Clip
12. Washer
13. Bolt
14. Washer
15. Screw
16. Bolt
17. Bolt
18. Bolt
19. Nut
20. Clip
21. Clip
22. Muffler
23. Tube
24. Exhaust pipe
25. Plug
26. Clamp
27. Bolt
28. Bracket
29. Bolt

Working principle description

The functions of the intake and exhaust assembly are:

1. Supply clean and dry air with proper temperature for engine to burn so as to minimize engine wear and optimize engine performance;
2. Keep all exhaust gases safely away from engine and discharge them into atmosphere quietly while optimizing engine performance.

Working principle of the intake and exhaust assembly:

Air is taken in through air pre-filter. There are fixed whirling blades inside the air pre-filter, which can discharge big dust in intake air through the bye hole of air pre-filter. Intake air becomes clean and dry after removing small dust and moisture via the element in air filter and then be sent to turbocharger. Driven by engine exhaust, the turbocharger pressurize the air and increase intake density to ensure the fuel combusts sufficiently. Air coming out of turbocharger enters into the engine cylinder body to combust after being cooled by air-air inter cooler. Exhaust gas generated after combustion reaches turbocharger via exhaust manifold, drives turbocharger to pressurize intake air and then discharged to muffler to reduce exhaust noise, after which emitted into atmosphere quitely.

Air intake path figure of engine

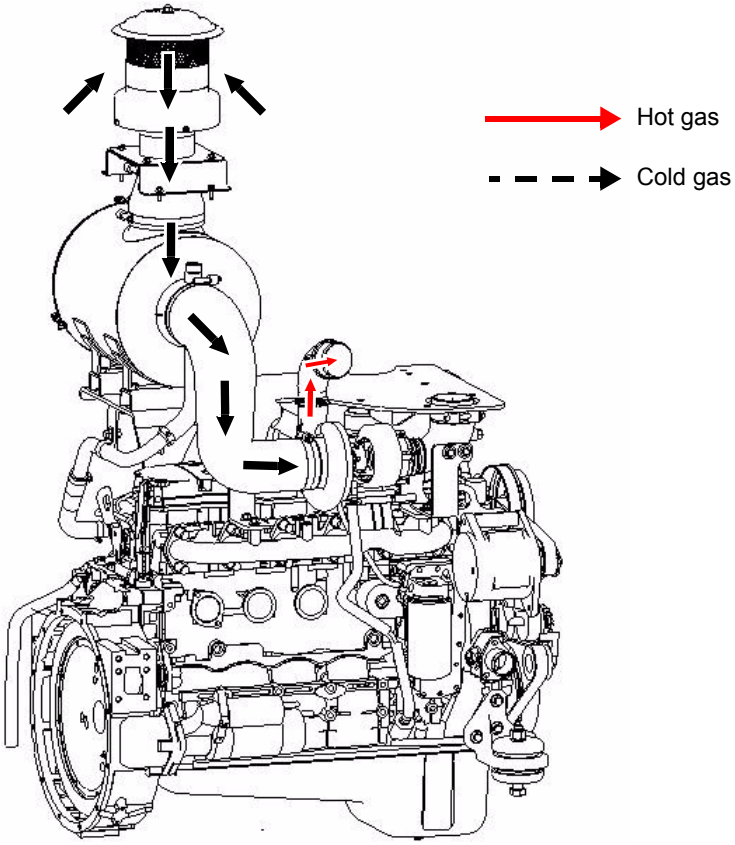

P28P00584

Exhaust path figure of engine

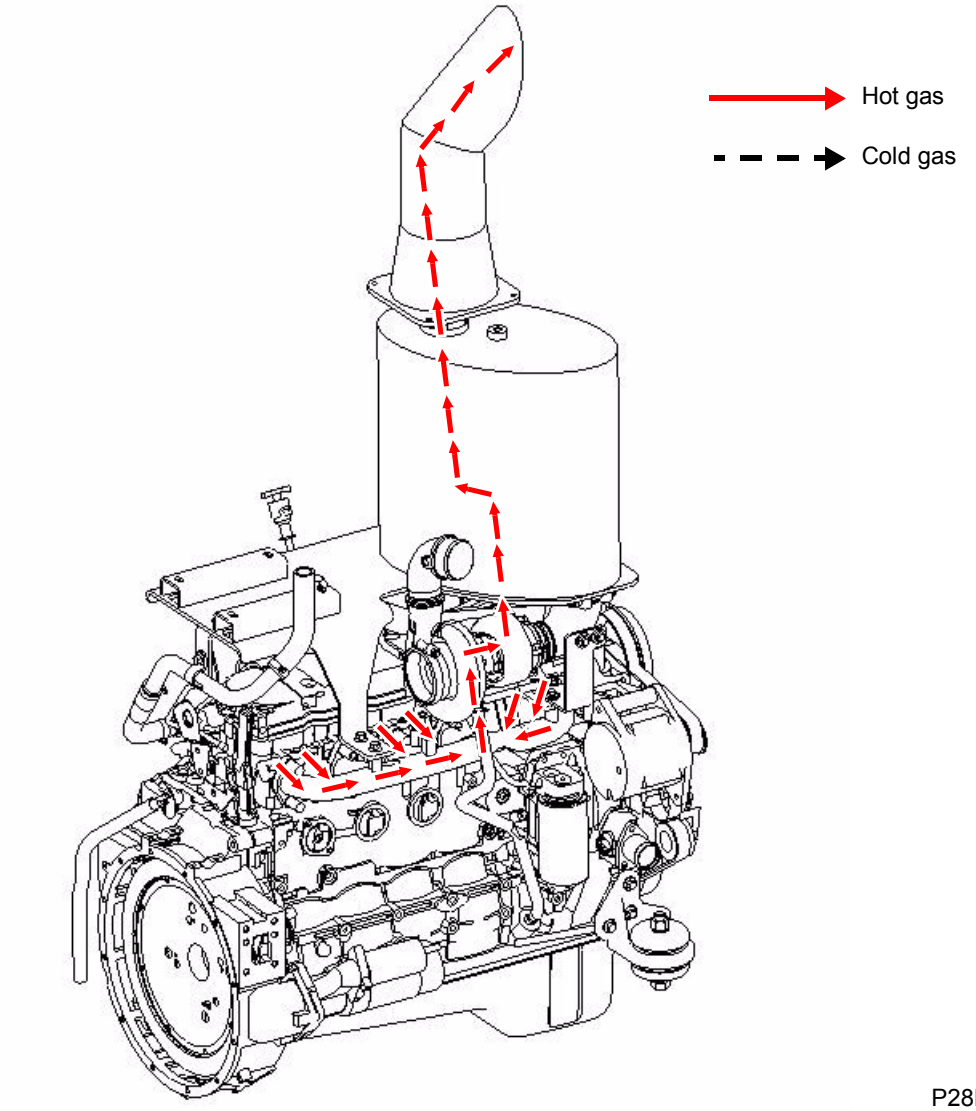

P28P00585

Air Pre-filter

Principle Introduction

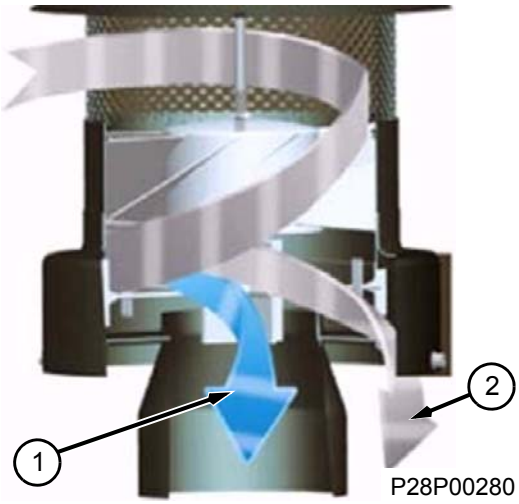

1. Clean air
2. Impurity

Air pre-filter is specially designed into rotary intake channel, and air passes through specially designed blade surfaces and rotates. When air rotates fast, it generates a certain centrifugal force to separate dust, water and other impurities from air. Dust and impurities are driven by intake air flow and blown to a special discharge outlet by a fast rotating rotator so as to achieve the action of air filtration.

Air Filter

Part structure and principle introduction

Air filter ensures clean and dry air to enter engine through main filter element and safety filter element.

When engine operates, air enters air filter through pre-filter, and is filtered by main filter element and is then secondarily filtered by safety filter element,as shown in figure below:

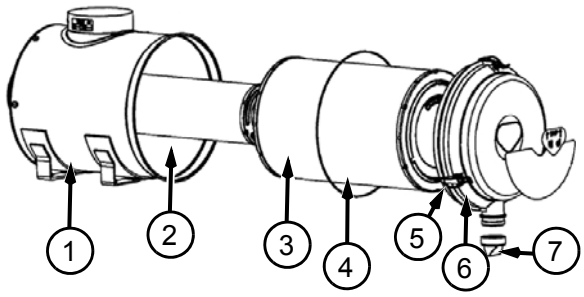

1. Housing
2. Safety filter element
3. Main filter element
4. Seal ring
5. Lock handle
6. End cover
7. Dust exhausting cap

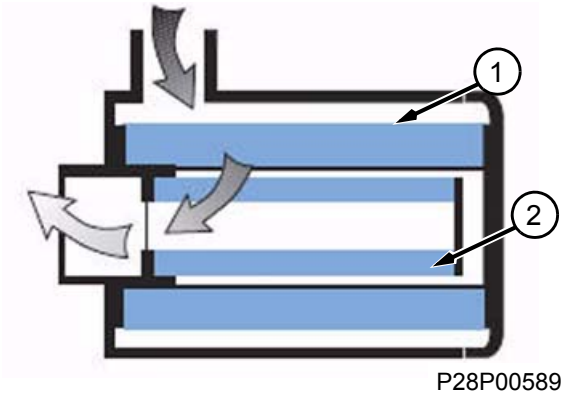

1. Main filter element
2. Safety filter element

Air filter blocked alert of this machine is the electronic induction type. When the filter works for a period of time, much dust is accumulated on filter element, and air resistance through filter is increased. When circulating air resistance is above 6.2KPa, air filter clogging sensor installed between air filter and turbocharger will transmit signal to air filter alert indicator on instrument panel. When the indicator goes on, air filter shall be maintained.

Turbocharger

Turbocharger is mainly used to increase intake pressure and improve intake quantity (intake density) so as to improve the power and economy of the engine.

Installation location of turbocharger and its illustration.

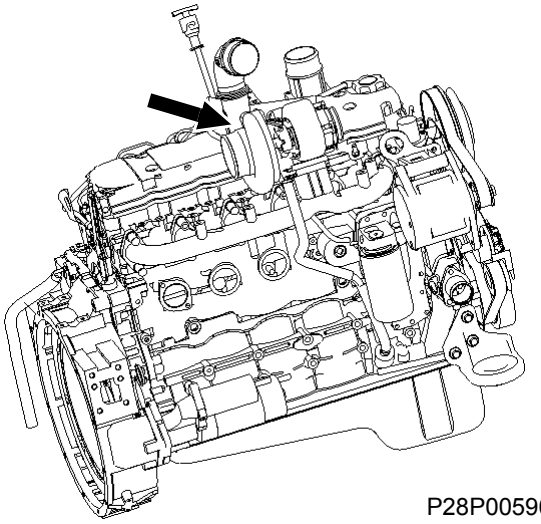

P28P00596

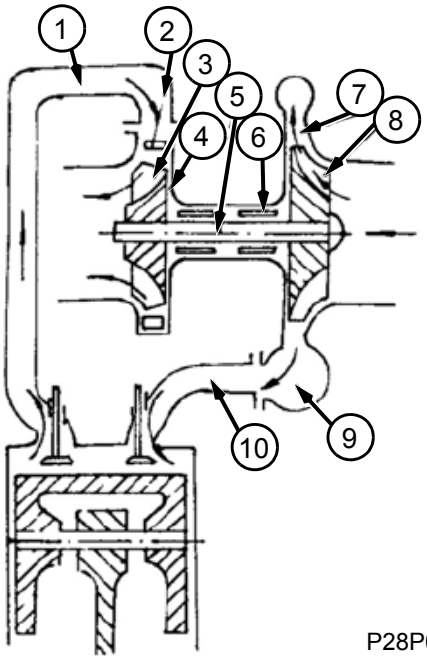

P28P00597

1. Exhaust pipe
2. Nozzle cup
3. Turbine
4. Turbine housing
5. Rotor shaft
6. Bearing
7. Diffuser
8. Compressor impeller
9. Compressor housing
10. Intake line

Maintenance

Turbocharger is a precision machine running at a high speed, and thus random removal is forbidden. If severe wear or damage is found during inspection, corresponding parts shall be adjusted, repaired or replaced. If turbocharger is damaged or improperly adjusted, it cannot function sufficiently, that is, it cannot deliver sufficient air to engine. In case of malfunction, contact Cummins maintenance center for repair.

Proper operation:

1. Before engine lubricant pressure is built, keep the engine in idling status.
2. Before engine is stopped, gradually lower its temperature and revolutions from maximum values (for approximately 5 minutes).
3. Pre-lubricate the turbocharger. After replacement of lubricant or any services (including draining lubricant), pre-lubrication is required for turbocharger. Turn the crankshaft disc several times before the engine starts. After engine starts and before it begins to run at a high speed, keep engine idling for a period so pressure of whole lubricant circulation can be built.
4. Be cautious when start the engine at low temperature. When the ambient temperature is too low or vehicle is not used for a long time, the engine’s ability to build proper lubricant pressure and flow will be affected. In that case, the engine can not work properly after starting until idles for several minutes.
5. Prevent the engine from running at idling speed for a long time. In addition, whenever lubricant is replaced, oil filter is washed or engine is rest for a long period (approximately more than a week), loosen oil inlet joint of turbocharger and inject clean lubricant so turbocharger lubrication system is filled with lubricant.
6. For other maintenance information on turbocharger, refer to the Accompanying Operation and Service Manual for Engine.

Fuel System

Fuel Line

Components and Position

The fuel line is mainly composed of fuel hose and fuel filter.

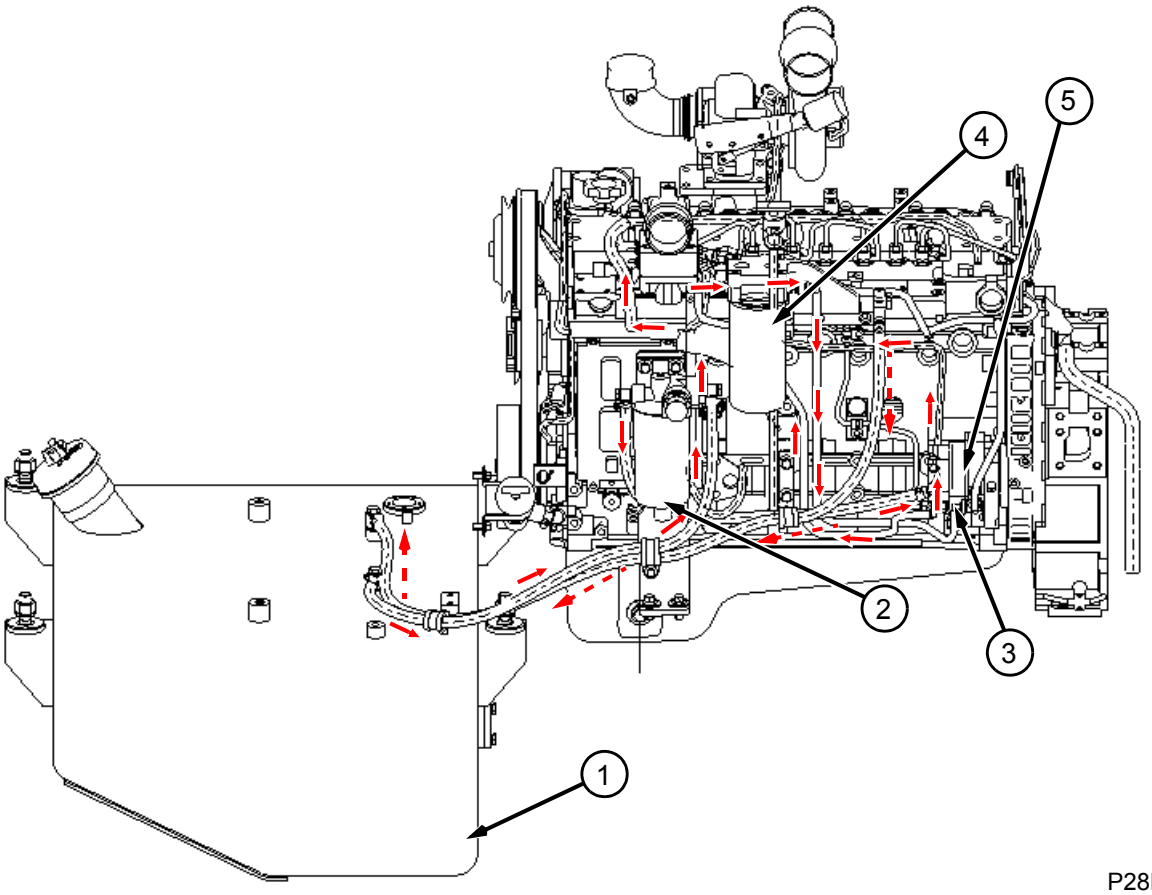

P28P00598

1. Fuel tank
2. Fuel-water separator
3. Fuel transfer pump
4. Fuel filter
5. High pressure pump

Working principle

The fuel system provides engine with clean and sufficient fuel, which thus ensures proper operation of engine. Its working principle is shown above: when engine works, fuel transfer pump sucks fuel from fuel tank, and eliminates water from fuel through fuel water separator, then eliminates impurities from fuel through fuel filter, and finally fuel enters high pressure pump. The fuel is pressurized by the high pressure pump and filled into high pressure common rail. Then, the fuel in the common rail enters into injector, while the spare fuel returns back to the outlet of high pressure pump. The injector is controlled by ECM. The diesel fuel is injected into combustion chamber, while the spare fuel returns back to the outlet of high pressure pump and then back to fuel tank after cooled.

Cooling System

Overview

Working principle

Heat dissipation system comprises radiators and corresponding connecting lines, where the radiators are composed of air-air intercooler, water,hydraulic oil and torque converter oil radiators. Its function is to radiate heat produced by each part (or system) into the air along with cooling air in order to ensure each part works properly in appropriate temperature range.

As shown below, diesel engine cooling system mainly comprises a radiator (water tank), a water pump, a fan, a thermostat, an engine oil cooler, water inlet and outlet pipes, etc.

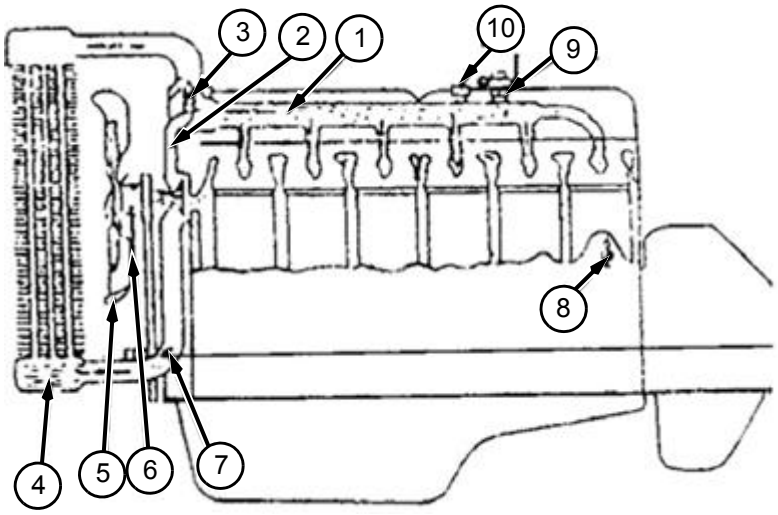

P28P00363

1. Water outlet pipe assembly
2. Small circulation
3. Thermostat
4. Radiator
5. Fan
6. Water pump
7. Engine oil radiator
8. Drain valve
9. Heating valve
10. Water temperature sensor

Cooling system of this machine adopts engine direct drive fan and cooled in the way of suction. The system adopts forced closed circulating water cooling system.

Working principle of system is as follows: water outlet at lower part of cooler is connected with water inlet of engine oil cooler via water hose, water outlet of engine oil cooler is connected with water pump via water hose, water pump pumps coolant into cylinder block water passage, coolant firstly cools cylinder through water jacket inside cylinder block, then flows up to cool cylinder head, and is collected by water outlet header pipe to reach thermostat. When coolant temperature is lower than 82°C, thermostat is closed, and all coolant is bypassed to water pump inlet. At the moment, the coolant is only circulating between cylinder block and head, so that warm-up can be quickly realized. When coolant temperature reaches 82 °C, thermostat starts to be opened, part of coolant flows to water inlet at upper part of cooler and enters radiator to be cooled by cooling fan. When coolant temperature is above 95°C, thermostat is totally opened, bypass hole is closed, and all coolant is cooled by radiator. The coolant flowing direction at the moment is shown in the figure.

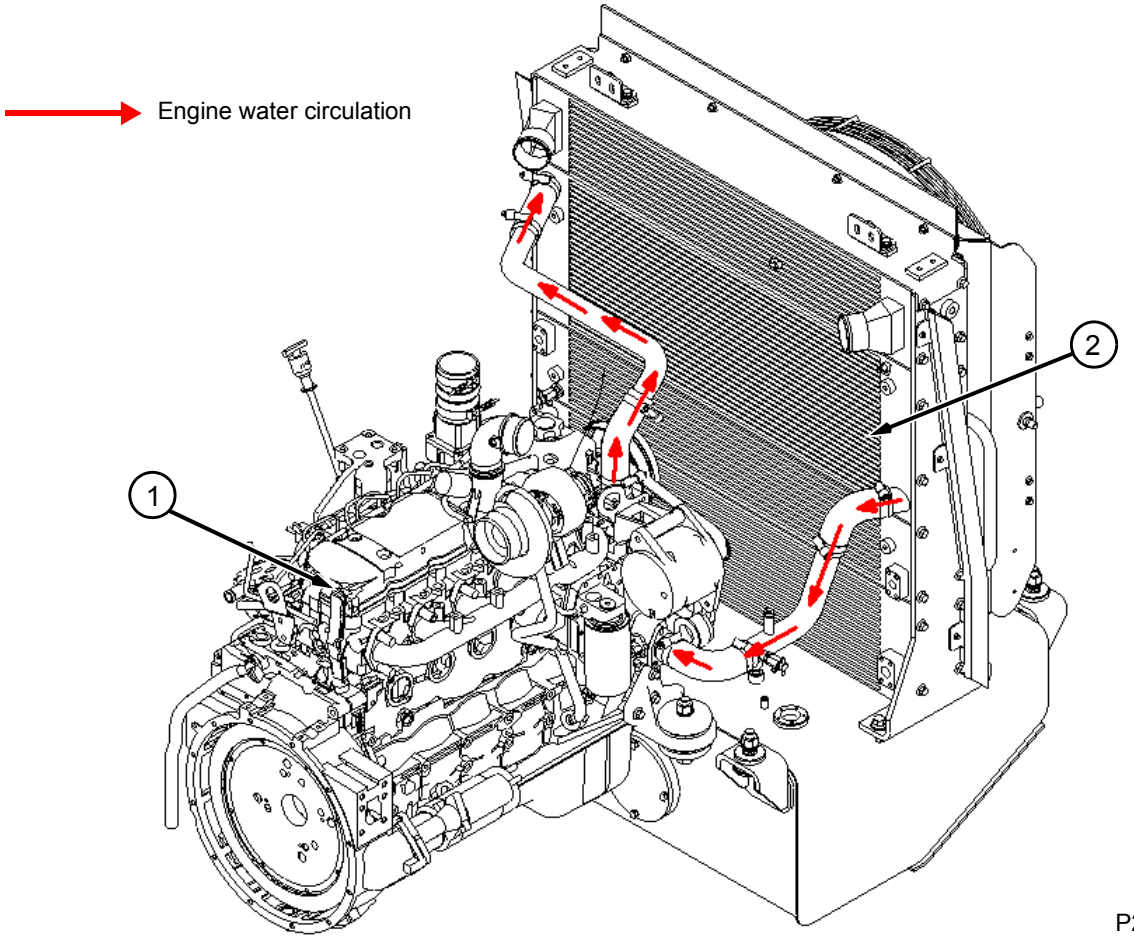

1. Engine
2. Water radiator

Air-air intercooler radiator

Air-air intercooler radiator has the main function of cooling high-temperature and high-pressure gas via turbocharger, reducing temperature of air entering engine combustion chamber to increase air density. Its working principle is shown in the figure below. After air is pressurized by turbocharger, temperature rises up sharply and pressure is increased. The air flows into air-air intercooler from left air pipe and passes across core of air-air intercooler. External cooling air flows by outside the core to bring away heat of air inside so as to reduce its temperature to lower than 80 °C (176°F), and then, the air flows into engine intake manifold and cylinder from right air pipe of air-air intercooler.

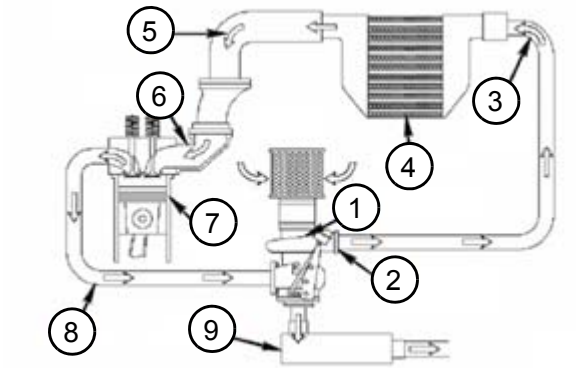

P28P00602

1. Turbocharger air inlet
2. Turbocharger air outlet
3. Pressurized hot air
4. Air-air intercooler radiator
5. Pressurized cold air
6. Intake manifold
7. Cylinder
8. Exhaust gas
9. Muffler

The air-air intercooler heat dissipation system of the vehicle arranged as the drawing below.

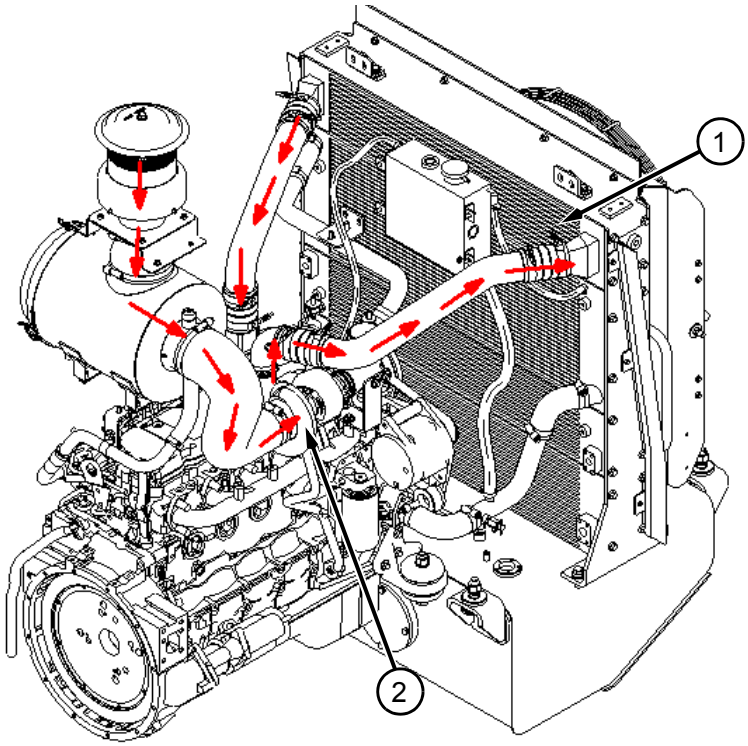

P28P00603

1. Air-air intercooler
2. Turbocharger

Hydraulic oil radiator

Hydraulic oil radiator has the main function of radiating heat generated by hydraulic oil during the working of hydraulic system to avoid temperature of hydraulic oil line from being too high.

Torque converter oil radiator

Torque converter oil radiator has the main function of radiating heat generated by torque converter oil during the working of transmission and torque converter to avoid temperature of torque converter and transmission from being too high and ensure normal working of machine.

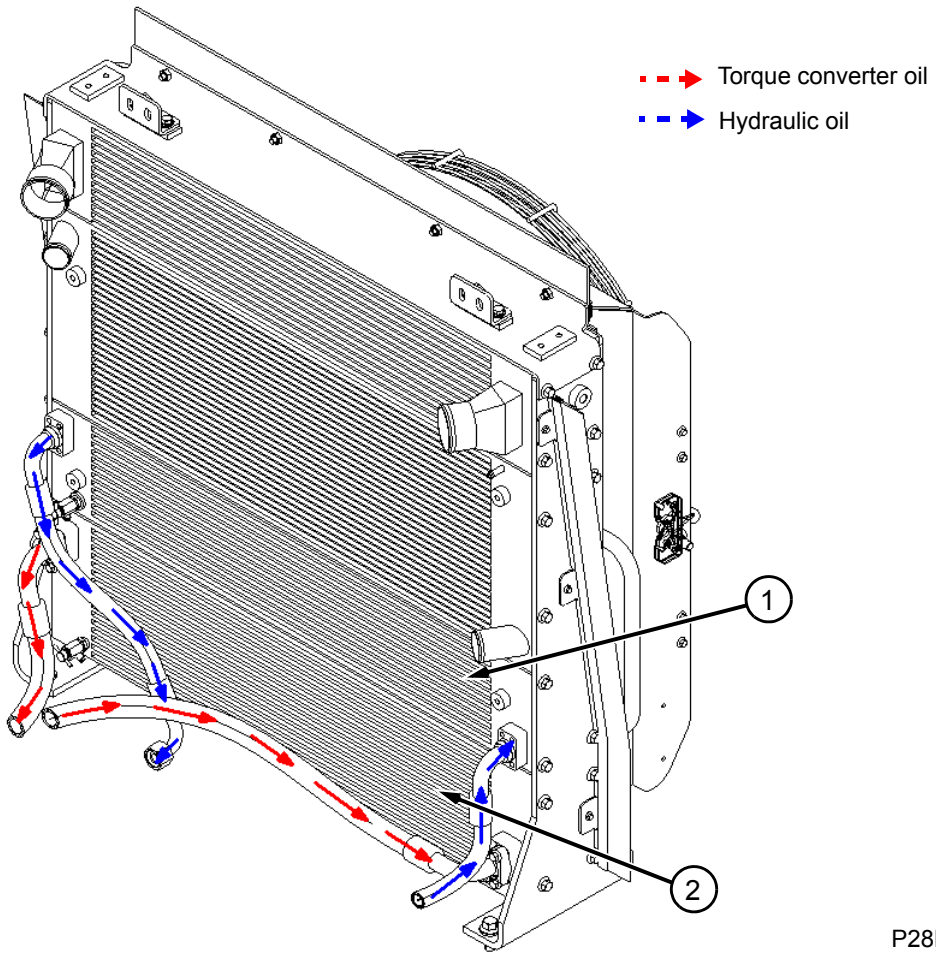

1. Hydraulic oil radiator
2. Torque converter oil radiator

Removal and Installation

Relevant preparation before starting:

See the section of Machine Placement, and park the machine well.

⚠CAUTION

Please keep clean. Thoroughly clean the outer surface of the components before removal. It will prevent foreign matters from entering the mechanism.

Stick label identification stickers on all pipelines, hoses, circuits and steel tubes for easier installation. Clog up all the pipelines, hoses and steel tubes. That will prevent fluid loss and prevent dirts from entering the system.

⚠CAUTION

The appropriate container shall be used to collect the liquid before removing any hydraulic oil lines or disassembling any components that contain liquid during the inspection, maintenance, test and adjustment of the machine. Dispose all the fluid in accordance with local laws and regulations.

⚠WARNING

Hydraulic oil pressure and hot oil can cause personal injury or even death.

There may be residual hydraulic oil with pressure in the hydraulic system after the engine stops. Release the residual pressure before repairing the hydraulic system, there is water vapor and hot water in the water radiator, wait until the water temperature drops to below 50°C during repair and then open the water tank cap, otherwise the serious personal injury or even death may be caused.

Make sure that all the work implements have been lowered down and the hydraulic oil has cooled before removing any component or pipe. The oil filter cover can not be removed until the engine stopped and the filter cover is cool enough that can be touched by hand.

Removal and Installation of Air Pre-filter

Removal of Air Pre-filter

Tools required			
Tool(s)	**Part description**	**Standard**	**Quantity**
1	Open-end wrench	8#, 13#	2
2	Steel ruler		1

Figures	Operation instructions
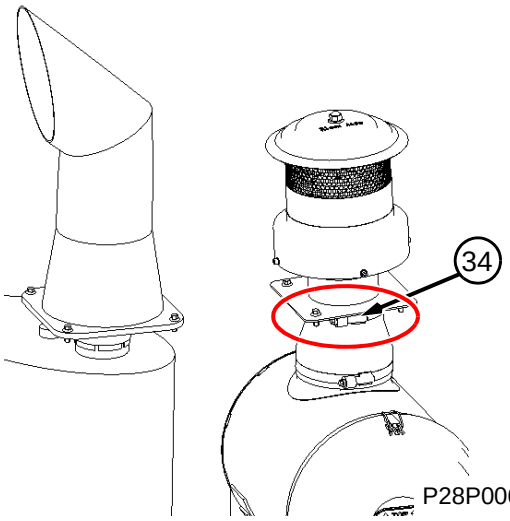 P28P00608	1. Unscrew the connecting clamp (34) of air pre-filter and bellows. Tool: Open-end wrench 8#
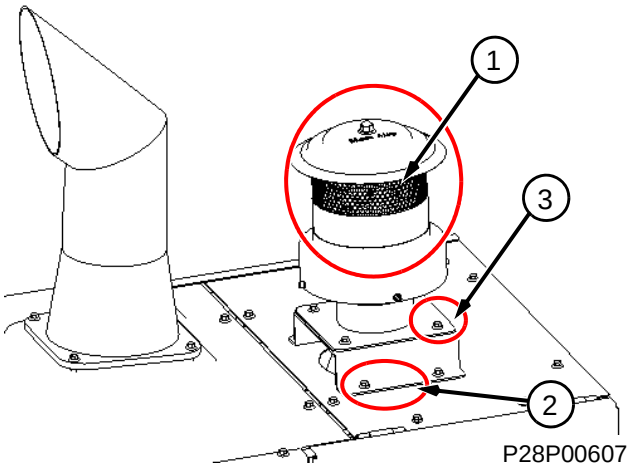 P28P00607	2. Remove 4 captive bolts (3) of the air pre-filter and remove pre-filter (1). 3. Remove 4 captive bolts (3) of the pre-filter bracket and remove pre-filter bracket (2). 4. Seal every port with plastic sealing membrane as required. Tool: Open-end wrench 13#

Installation of Air Pre-filter

Install the air pre-filter in reverse order of the removal steps.

Removal and Installation of Air Filter

Removal of Air Filter

Tools required			
Tool(s)	**Part description**	**Standard**	**Quantity**
1	Open-end wrench	8#, 13#, 16#	4
2	Straight screwdriver		1
3	Shielding film		1

⚠CAUTION

Please keep clean. Thoroughly clean the outer surface of the components before removal. It will prevent foreign matters from entering the mechanism.

Stick label identification stickers on all pipelines, hoses, circuits and steel tubes for easier installation. Clog up all the pipelines, hoses and steel tubes. That will prevent fluid loss and prevent dirts from entering the system.

Figures	Operation instructions
	1. Remove air pre-filter according to removal and installation requirements and steps of air filter hereinafter.
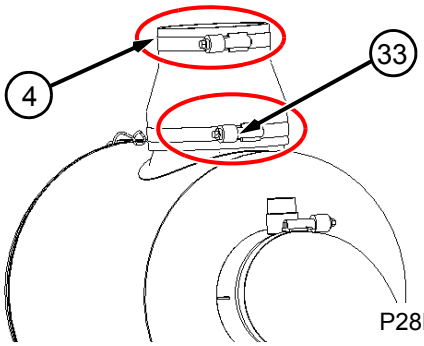 P28P00616	2. Loosen connecting clamp (33) of air filter and bellows with open-end wrench or blower gun (ratchet wrench) and socket, remove clamp and bellows (4), and seal each end with plastic sealing film as required. Tool: Open-end wrench 8#

Figures	Operation instructions
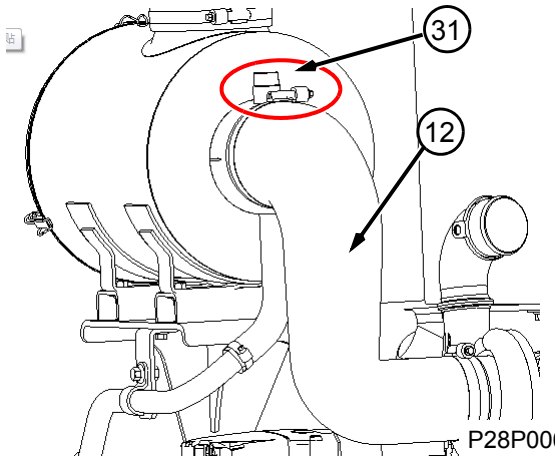	3. Loosen clamp (31) connecting air filter and intake pipe with open-end wrench or blower gun (ratchet wrench) and socket, plug intake pipe (12) out of air filter end, and seal each end with plastic sealing film as required. Tool: Open-end wrench 8#, 13#
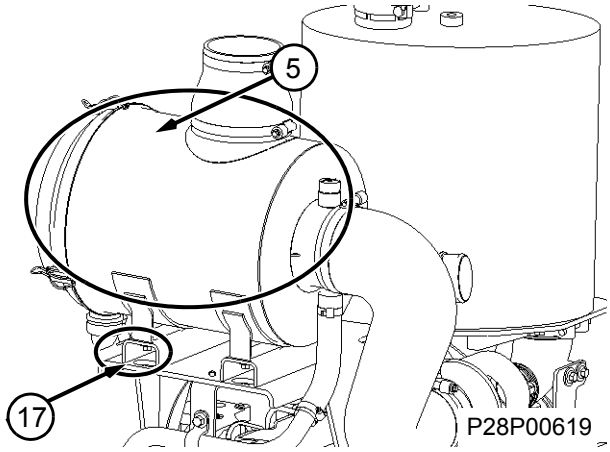	4. Remove captive bolts (5) of air filter with open-end wrench, and remove air filter (17). Tool: Open-end wrench 16#

Installation of Air Filter

Install the air filter in reverse order of the removal steps.

Air Filter--Maintain

Air filter ensures the air entered engine is clean and dry through main filter element and safety filter element.

⚠CAUTION

If the engine air filter alert indicator on the instrument panel is on, then maintain the engine air filter.

Engine air filter alert indicator

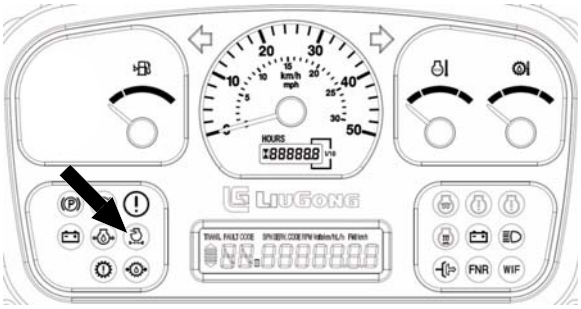

P18E00280

Air filter elements include main filter element and safety filter element, maintain the filter element according to the following steps:

1. Stop the engine and open the engine hood.
2. Remove outer cover of the air filter.

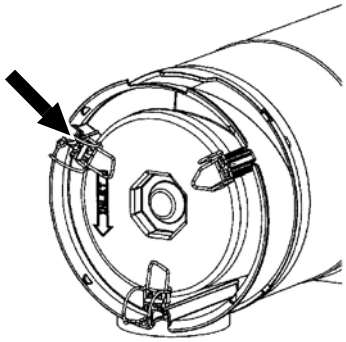

P18P00067

3. Take out the main filter element along with the housing direction.

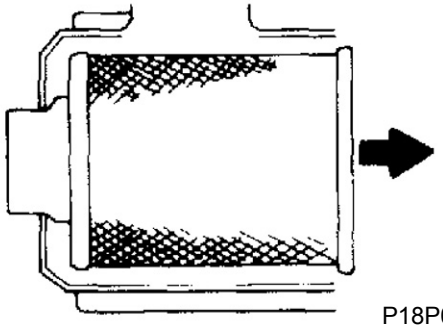

P18P00066

4. Check the main filter element.
   a) Replace the main filter element if any damage is found to pleats and gaskets.
   b) Clean the main filter element if it is not damaged.
5. Clean the inner wall of the air filter housing.

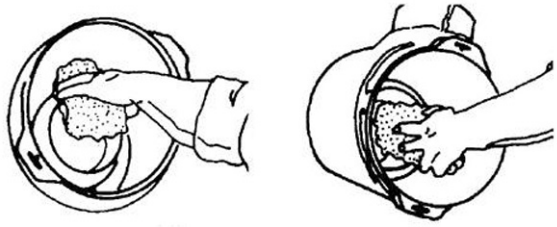

P18P00068

6. Clean the main filter element with compressed air (below 300kPa) from inside to outside.

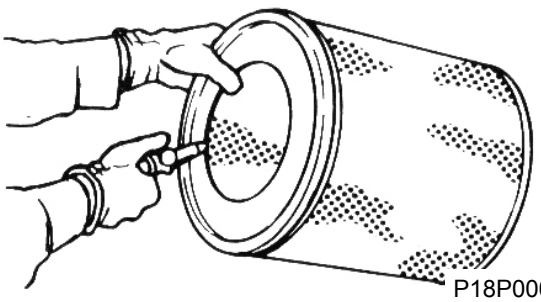

P18P00069

⚠CAUTION

It is not allowed to clean the main element from outside to inside with compressed air. Do not use oil or water to clean the main element.

Do not hit the main element when cleaning it. Otherwise the engine could be damaged.

7. After cleaning the main filter element, check with a bulb, if small holes and particles as well as damage of the washer and seal are found, replace with a new main filter element.

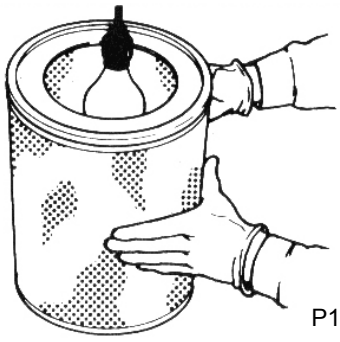

P18P00065

8. Install a clean main filter element into the air filter and ensure an even contact with the housing.
9. Clean and install the cap of the air filter, make sure that the inner cap gasket in the air filter contacts evenly with the air filter housing.

NOTICE

The main element should be replaced after being cleaned for 4-5 times. It is forbidden to remove the safety element when servicing the main element.

10. Close the engine hood. The maintenance steps of safety filter element is the same with the main filter element. The difference is that the safety filter element is only allowed to replace, it is forbidden to use after cleaning. Replace the main filter element at the same time when replacing the safety filter element.

Removal and Installation of Turbocharger

Refer to CUMMINS Engine Service Manual for the removal and installation of turbocharger.

Removal and Installation of Fuel Lines

Tools required			
Tool(s)	**Part description**	**Standard**	**Quantity**
1	Open-end wrench	7#, 16#, 18#, 19#	3
2	Oil container		1
3	Plastic seal bag		1
Note: The removed standard parts should be placed together with the relative matter in order to avoid confusion.			

Fuel lines comprise fuel inlet tube, fuel return tube, fuel water separator, etc., whose detailed composition is shown below and in detail list.

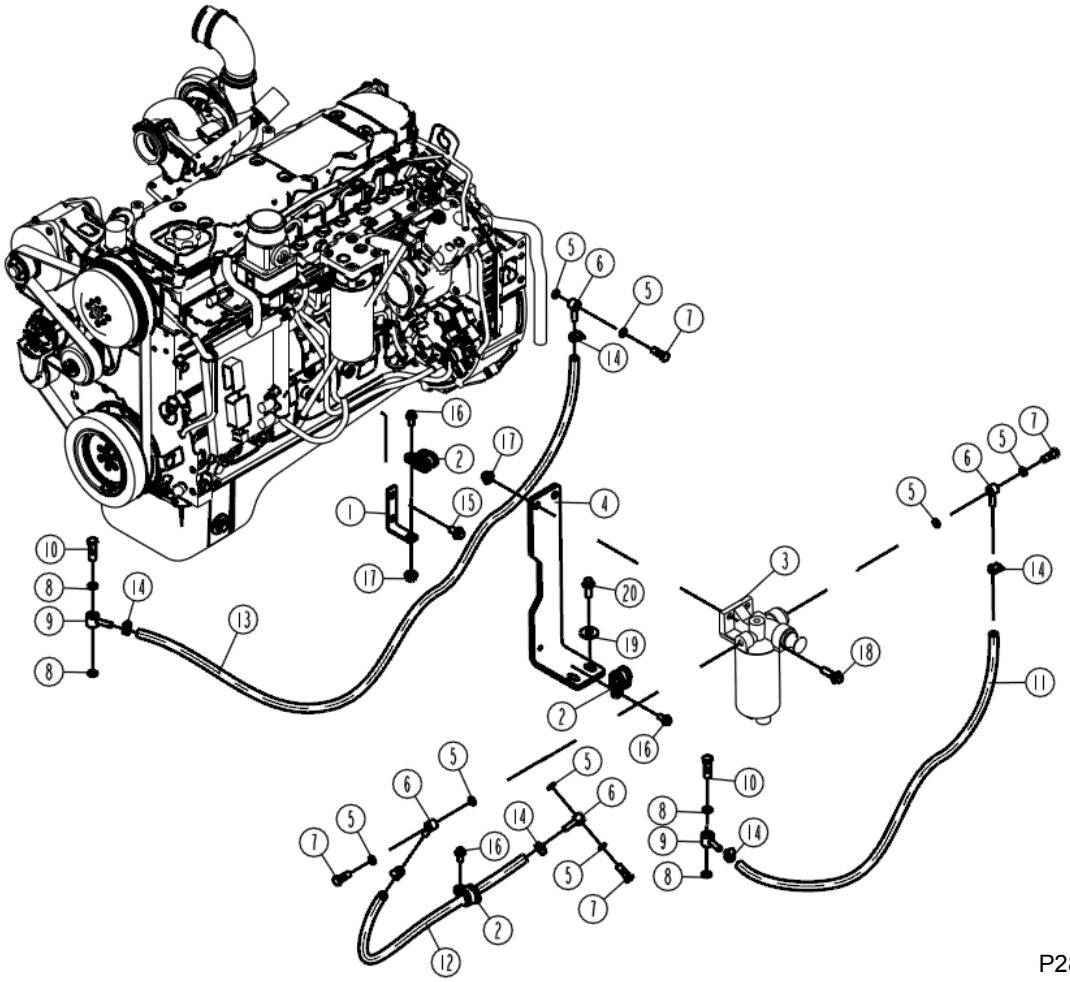

P28P00627

1. Angle block
2. Double clamp
3. Fuel filter
4. Angle block
5. Washer
6. Joint
7. Screw
8. Washer
9. Joint
10. Screw
11. Fuel hose
12. Fuel hose
13. Fuel hose
14. Clamp
15. Bolt
16. Bolt
17. Nut
18. Bolt
19. Washer
20. Bolt

Removal of Fuel Lines

Figures	Operation instructions	Tools
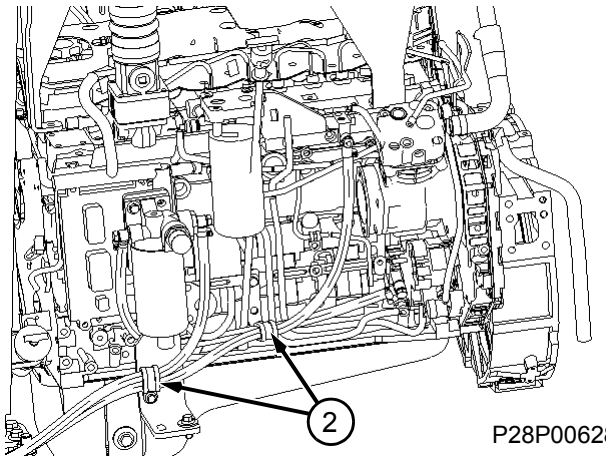 P28P00628	1. Remove fuel return tube (13) (line from fuel tank to fuel return joint of engine) (1) Remove the hose clamp (2) fixing the fuel pipe.	Open-end wrench 16#
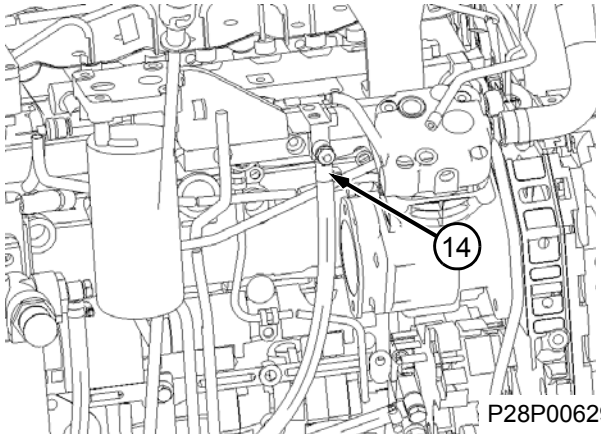 P28P00629	(2) Unscrew turbine worm clamp (14) connecting fuel tube and engine fuel return port, take down fuel tube here and recover fuel flowing out of line and engine fuel return port with waste fuel drum. (3) Block the engine return oil port with clean plastic bags.	Open-end wrench 7#, 19#, waste oil drum
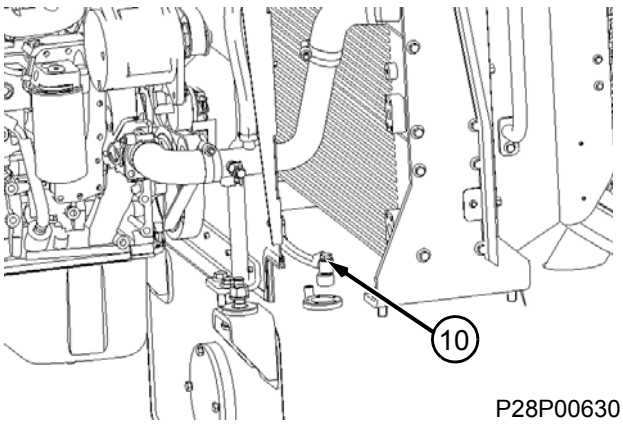 P28P00630	(4) Remove screw (10) connecting fuel tube and fuel tank end, take down fuel tube, and install screw back on fuel return port of fuel tank. Mask the fuel hose with a clean plastic bag.	Open-end wrench 7#, 19#, waste fuel drum

Figures	Operation instructions	Tools
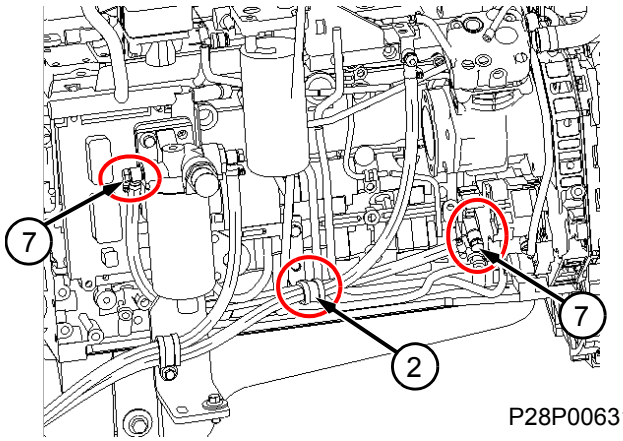 P28P00631	2. Remove fuel inlet tube (12) (fuel water separator to fuel tube of fuel transfer pump): (1) Remove the hose clamp (2) fixing the fuel tube. (2) Remove screw (7) of fuel tube at fuel transfer pump end, take down fuel tube, recover fuel in line with waste fuel drum and install screw back on fuel inlet of fuel transfer pump. (3) Remove screw (7) of fuel tube at fuel water separator end, install screw back on fuel water separator after taking down fuel tube, and mask fuel tube with clean plastic bag.	Open-end wrench 16#, 19#, waste fuel drum
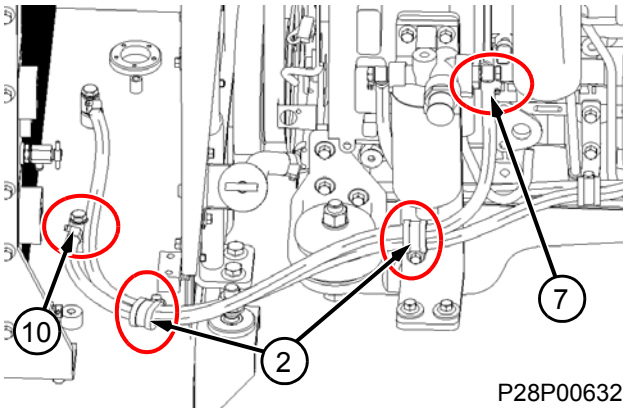 P28P00632	3. Remove fuel inlet tube (11) (fuel tank to fuel water separator fuel tube). (1) Remove the hose clamp (2) fixing the fuel tube. (2) Remove screw (7) of fuel tube at fuel water separator end, take down fuel tube, and recover fuel in line with waste fuel drum. Then put bolt back onto fuel water separator. (3) Remove screw (10) of fuel tube at fuel tank end, install screw back on fuel tank after taking down fuel tube, and mask fuel tube with clean plastic bag.	Open-end wrench 16#, 19#, waste fuel drum

Figures	Operation instructions	Tools
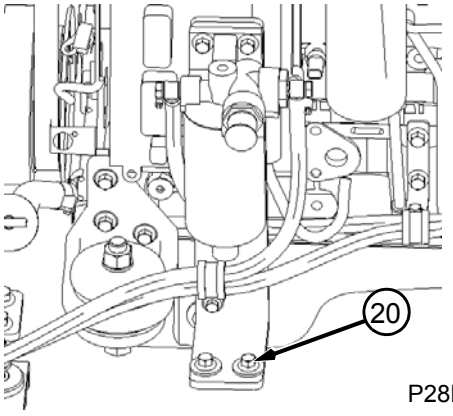 P28P00633	4. Remove fuel water separator (9): remove 2 bolts (20) on fuel water separator mounting bracket, take down fuel water separator and bracket, and put them away properly.	Open-end wrench 18#, waste fuel drum

Installation of Fuel Lines

Install the fuel lines in reverse order of the removal steps.

Removal and Installation of Fuel Tank Assembly

Tools required			
Tool(s)	**Part description**	**Standard**	**Quantity**
1	Open-end wrench	7#, 16#, 18#, 19#, 20#, 24#, 30#	7
2	Socket wrench, bushing	24#	2
3	Oil container, washcloth		2
4	Plastic seal bag		1
5	Forklift		1
Note: The removed standard parts should be placed together with the relative matter in order to avoid confusion.			

Fuel tank assembly

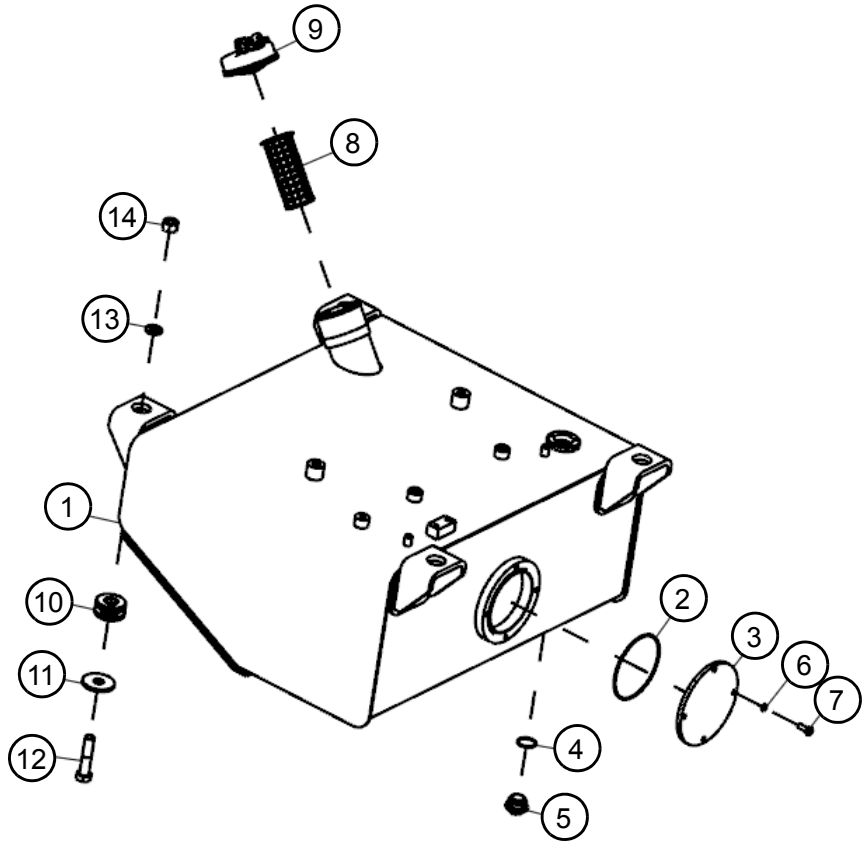

P28P00637

1. Housing
2. O-ring
3. Flange cover
4. O-ring
5. Drain plug
6. Washer
7. Bolt
8. Strainer
9. Tank cover assembly
10. Shock cushion
11. Washer
12. Bolt
13. Hard washer
14. Locknut

Removal of Fuel Tank Assembly

Figures	Operation instructions	Tools
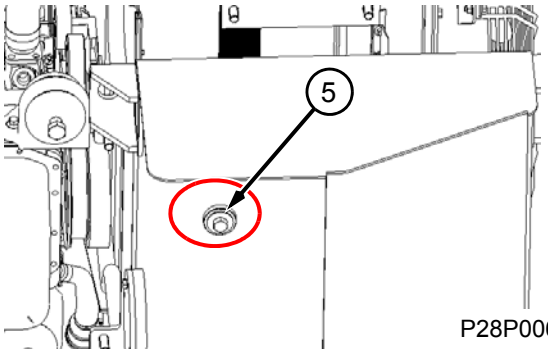 P28P00638	1. Drainage of diesel fuel: Clean drain hole of fuel tank, place a clean container under the fuel tank, and unscrew drain plug (5). After fuel is drained, fix drain plug back to fuel tank. Drained fuel should be strictly sealed for preservation to prevent pollution to fuel.	24# socket, socket wrench
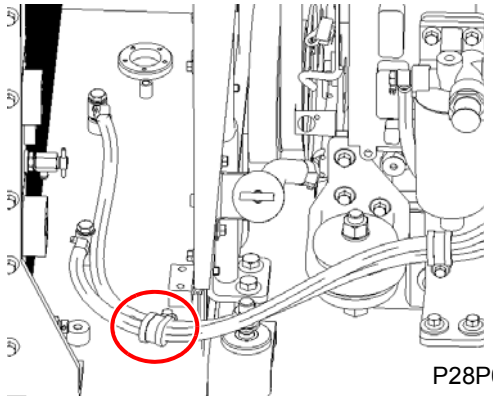 P28P00639	2. Removal of pipe clamp: Remove the clamp bolt on the fuel tank, and take off the hose clamp.	Open-end wrench 16# and 18#
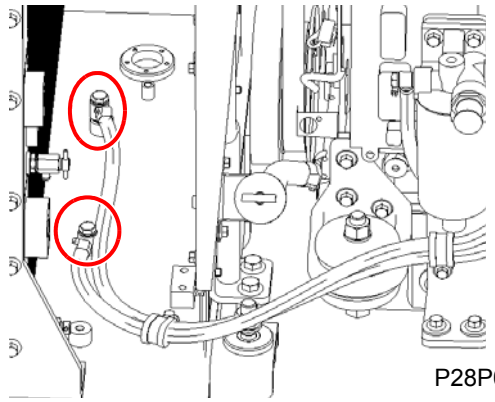 P28P00639	3. Remove the fuel lines of suction and return port: After fuel is drained, remove screw of fuel hose at fuel tank end, take down fuel hose of that end, and fix the screw back to fuel return hole. Mask the fuel hose with a clean plastic bag.	Open-end wrench 19#
 P28P00640	4. Removal of fuel sensor wire harness: Remove the wire harness connector of fuel tank level sensor.	

Figures	Operation instructions	Tools
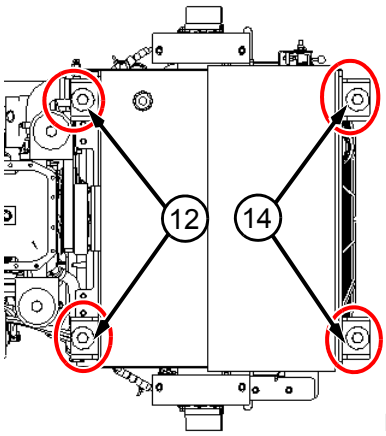 P28P00641	5. Removal of fuel tank (1): remove 4 mounting bolts (12) and nuts (14) on the fuel tank. **⚠ CAUTION: Fuel tank is connected to frame through bolts and nuts in four mounting points. After mounting bolts are loosened, fuel tank will separate from frame. Before removal, use a reliable tool (e.g., forklift) with sufficient bearing capacity to support fuel tank.** **Before step 5, make sure steps 2~4 have been done; otherwise, corresponding parts will be damaged, and even a safety accident will occur.**	Open-end wrench 30#, Carrier tool or tooling

Cleaning of Fuel Tank

Remove suction flange cover at upper end of fuel tank, and wash internal surface of fuel tank with clean fuel. Unscrew drain plug at bottom of fuel tank to drain fuel (use a proper container to collect fuel). Rinse it by fuel repeatedly until the drained fuel is clean. Put drain plug back onto the floor of fuel tank.

Installation of Fuel Tank

Install the fuel tank in reverse order of the removal steps.

⚠CAUTION

Tightening torque of the fuel tank mounting bolts is 600±50N.m.

Removal and Installation of Radiator Pipelines

Tools required			
Tool(s)	**Part description**	**Standard**	**Quantity**
1	Open-end wrench	7#, 8#, 12#, 16#	4
2	Clean container, hose		2
3	Plastic seal bag		1
4	Nipping pliers		1
Note: The removed standard parts should be placed together with the relative matter in order to avoid confusion.			

Radiator lines

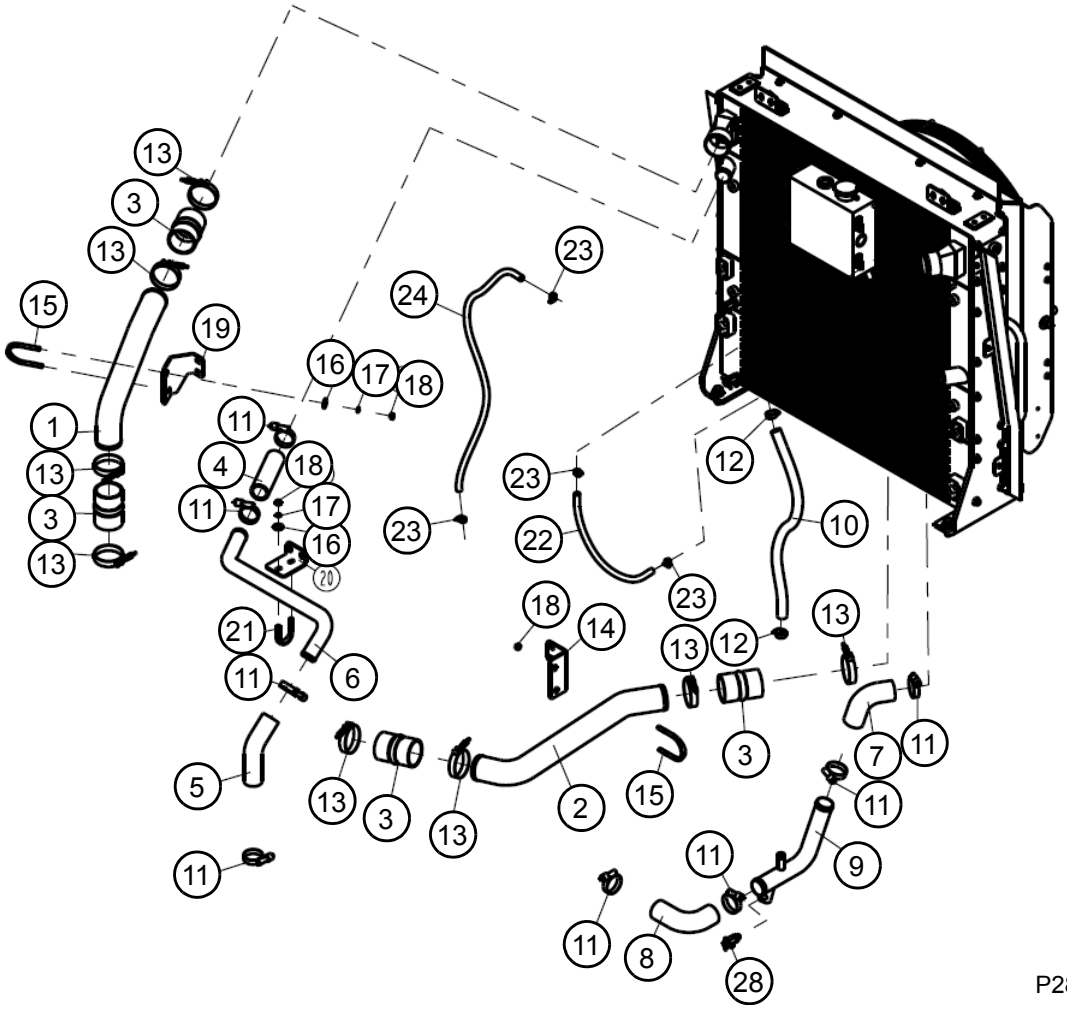

1. Intercooler tube
2. Intercooler tube
3. Intake hose
4. Upper hose
5. Upper hose
6. Upper water tube
7. Lower hose
8. Lower hose
9. Lower water tube
10. Refill water pipe
11. Clamp
12. Clamp of worm
13. Clamp
14. Angle block
15. U-clamp
16. Washer
17. Washer
18. Nut
19. Angle block
20. Angle block
21. U-clamp
22. Hose
23. Clamp of worm
24. Hose
25. Washer
26. Bolt
27. Hose
28. Water drain valve

Removal of Radiator Pipelines

Figures	Operation instructions	Tools
 P28P00643  P28P00609	1. Park the complete machine: (1) Park complete machine on flat ground, apply parking brake and shut down engine. Remove the anti-rotating bumper with a nipper plier, connect the bumper with the front and rear frames with its pin. (2) Open engine hood, and turn disconnect switch to "OFF" position.	Nipping pliers
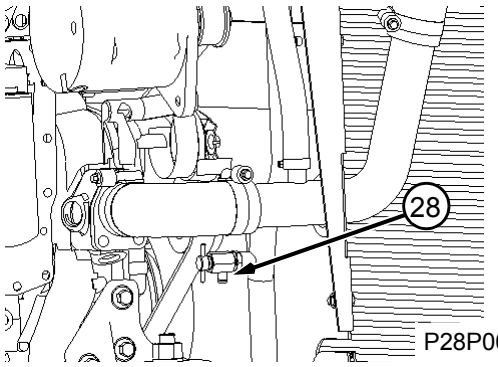 P28P00644	2. Draining (oil/water) (1) Loosen water drain valve (28), select a proper container to recover anti-freeze (total capacity of anti-freeze is about 45 L), or select a proper hose to introduce water flowing out of water drain valve into a container prepared in advance, and tighten water drain valve after emptying coolant.	Clean container, rubber tube
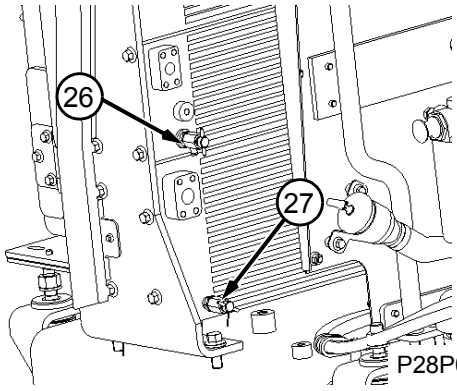 P28P00645	(2) Loosen hydraulic oil cooler drain valve (26) or torque converter oil cooler drain valve (27), select a proper container to recover oil (total capacity of hydraulic oil cooler is about 5 L/total capacity of torque converter oil cooler is about 7 L), or select a proper hose to introduce oil flowing out of drain valve into a container prepared in advance, and tighten drain valve after emptying oil.	Clean container, rubber tube

Figures	Operation instructions	Tools
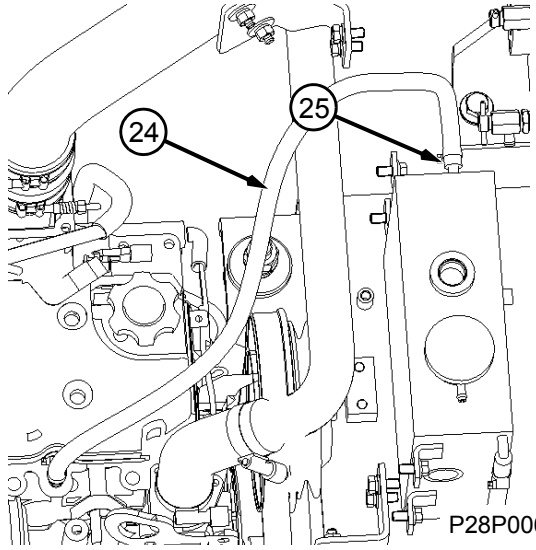	3. Remove the steam hose (25) from expansion tank to the engine, unscrew turbine worm clamps (24) at both ends of steam hose, and remove steam hose. Shield the port and steam hose with clean plastic bags.	Open-end wrench 7#
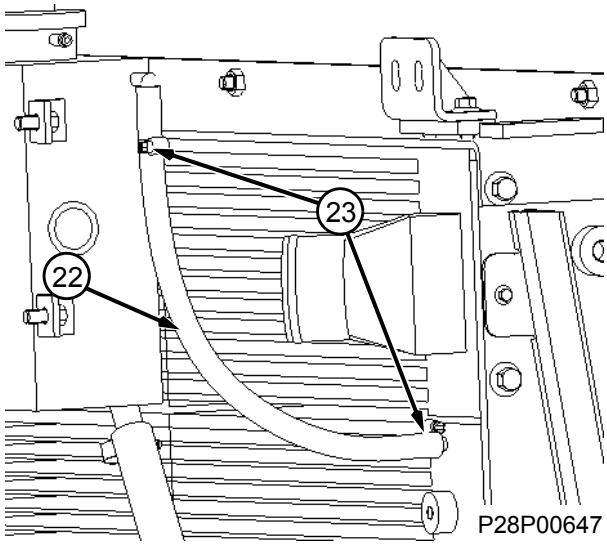	4. Remove the steam hose (22) from expansion tank to the water radiator, unscrew turbine worm clamps (23) at both ends of steam hose, and remove steam hose. Shield the port and steam hose with clean plastic bags.	Open-end wrench 7#, 16#
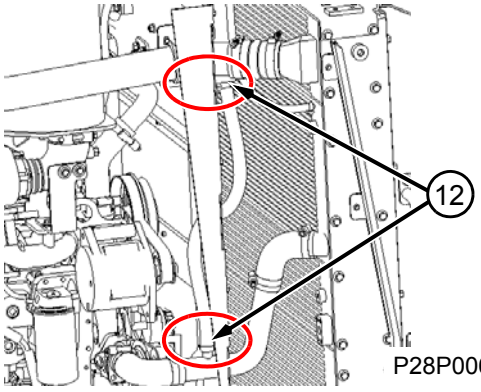	5. Remove the refill hose 10 from expansion tank to water hose, unscrew turbine worm clamps (12) at both ends of refill hose, and remove refill hose. Shield the port and water make-up pipe with clean plastic bags.	

Figures	Operation instructions	Tools
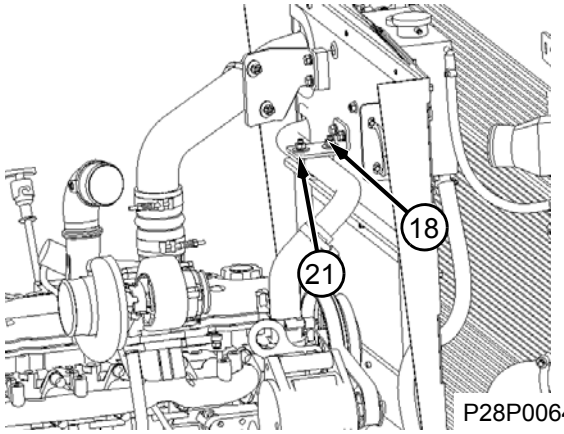 P28P00649	6. Remove the radiator water hose 6 and 9. (1) Unscrew captive bolt (18) of U-clamp, and remove U-clamp (21).	Open-end wrench 16#
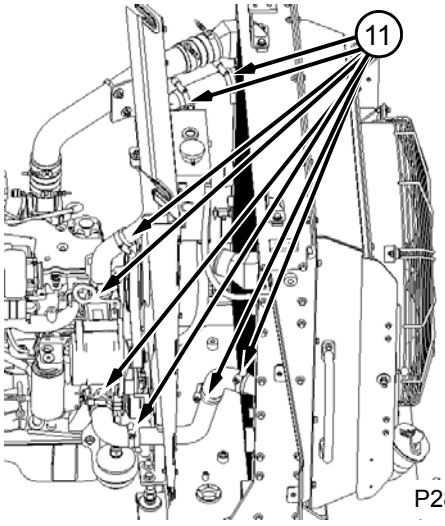 P28P00650	(2) Unscrew clamp (11) of water hose gasket, remove water hose, and shield ends and water hose with clean plastic bags.	Open-end wrench 8#
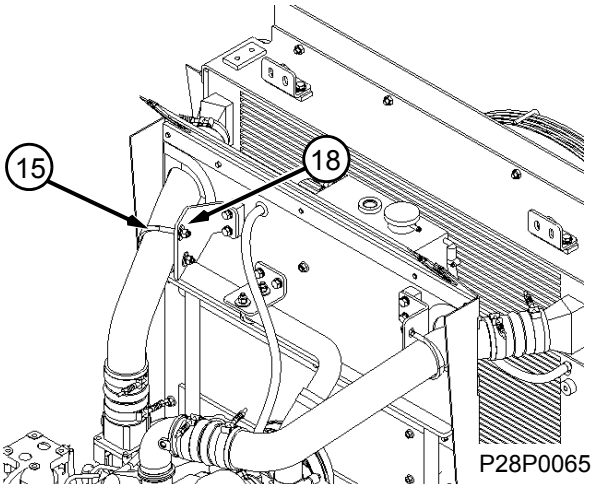 P28P00651	7. Remove the inter-cooler tubes 1 and 2. (1) Unscrew retaining nut (18) of U-clamp, and remove U-clamp (15).	Open-end wrench 16#

Figures	Operation instructions	Tools
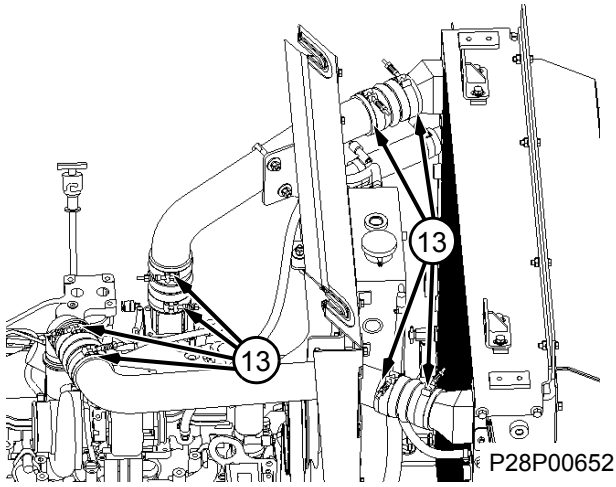	(2) Unscrew clamps 13 on intake hose connecting both ends of intercooler tube, remove intercooler tube and intake hose, and shield ends, intercooler tube and intake hose with clean plastic bags.	Open-end wrench 12#

Installation of Radiator Pipelines

Install the radiator pipelines in reverse order of the removal steps.

Removal and Installation of Radiator Assembly

Tools required		
Tool(s)	**Part description**	**Standard**
1	Open-end wrench	7#, 8#, 10#, 12#, 13#, 16#, 20#, 24#
2	Torque wrench	160~680 N•m
3	Inner hexagon spanner	8mm
4	Clean container, rubber tube, plastic sealing bag	
5	Nipper pliers, scissors, nylon ties and cross screwdriver	
6	Crane and sling	
Note: The removed standard parts should be placed together with the relative matter in order to avoid confusion.		

Removal of Radiator Assembly

Figures	Operation instructions	Tools
	1. Park the complete machine Refer to step 1 of removal and installation of radiator lines.	
	2. Draining (oil/water) Refer to step 2 of removal and installation of radiator lines.	
	3. Disassemble auxiliary radiator to steam hose of engine Refer to step 3 of removal and installation of radiator lines.	Open-end wrench 16# and 7#
	4. Disassemble the hose Refer to step 5 of removal and installation of radiator lines.	Open-end wrench 7#
	5. Remove the water hose mounting bracket Refer to step 6a of removal and installation of radiator lines.	Open-end wrench 8#
	6. Remove the water hose Refer to step 6b of removal and installation of radiator lines.	Open-end wrench 16#

Figures	Operation instructions	Tools
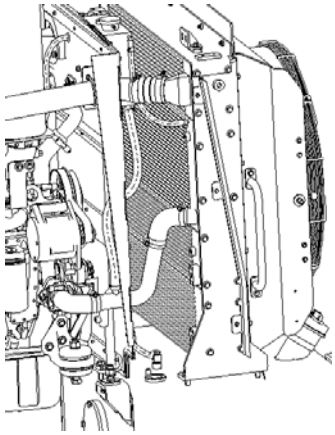 P28P00653 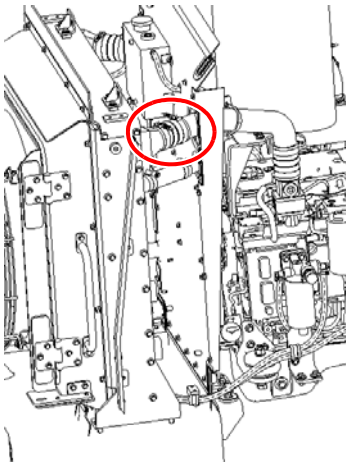 P28P00654	7. Disassemble air inlet hose connecting air-cooler Refer to Step 7b in removal and installation of cooling line (only intake hose at radiator end is removed).	Open-end wrench 12#

Figures	Operation instructions	Tools
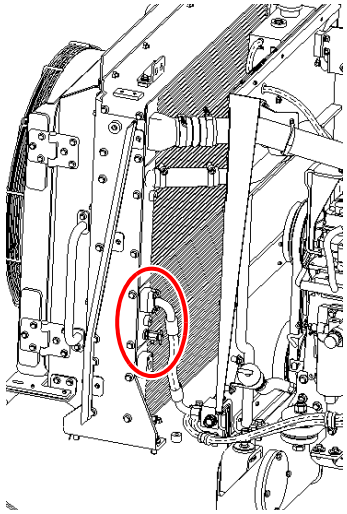 P28P00655 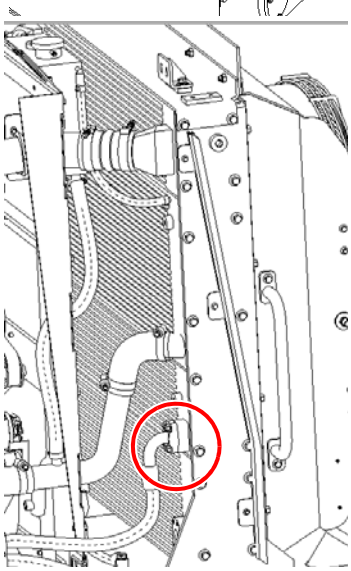 P28P00656	8. Remove of hose of oil cooler Loosen screws on press plate fixing hose, remove press plate and hose, and shield ends and hose with clean plastic bags.	Inner hexagon spanner 8mm

Figures	Operation instructions	Tools
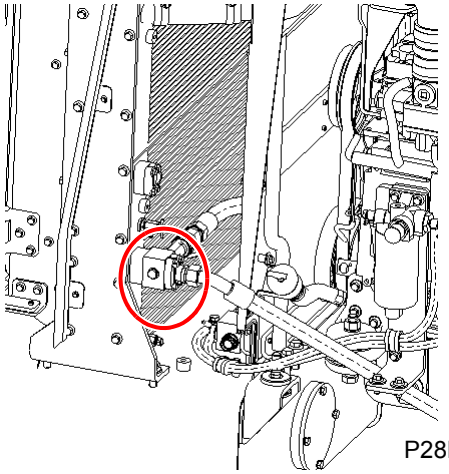 P28P00657 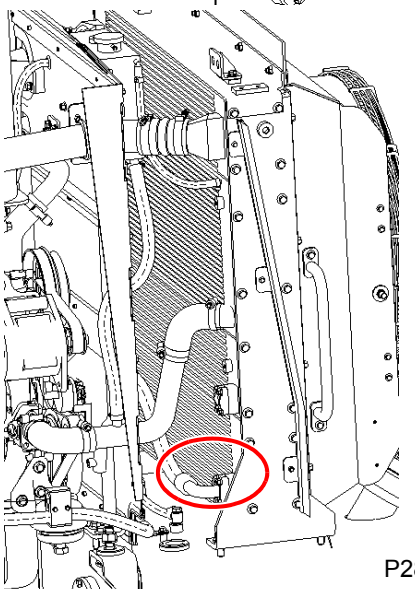 P28P00658	9. Remove the hose of transmission oil cooler Loosen screws on press plate fixing hose, remove press plate and hose, and shield ends and hose with clean plastic bags.	Inner hexagon spanner 8mm
	10. Remove the A/C compressor Remove the A/C compressor according to removal and installation requirements and steps of A/C compressor hereinafter.	Open-end wrench 10 # and 16#
	11. Remove upper cover Remove engine hood according to removal and installation requirements and steps of engine hood hereinafter.	Open-end wrench 12#, Traveling crane

Figures	Operation instructions	Tools
	12. Disassemble the protection shield Remove shield according to removal and installation requirements and steps of shield hereinafter.	Open-end wrench 13#
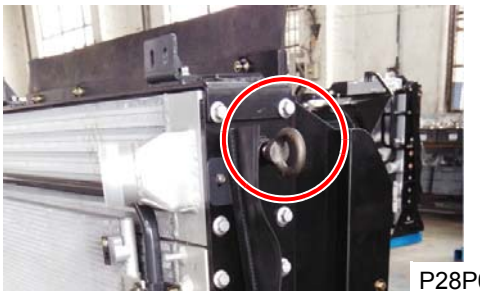 P28P00659	13. Remove the radiator (1) Install lifting eyes on lifting lugs on both sides of radiator, and screw them in at least by three turns. Splice and tighten the lifting tools to lifting eyes.	
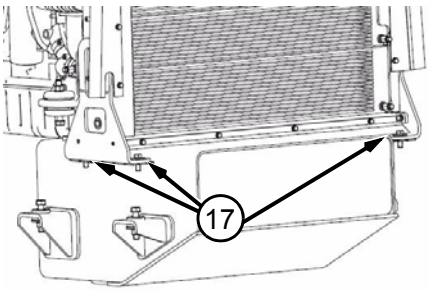 P28P00660	(2) Unscrew 4 mounting bolts (17) on the radiator. Slowly lift radiator onto special tool with traveling crane and lifting sling, and put away and collect shim.	Open-end wrench 24#

Installation of Radiator Assembly

Install the radiator assembly in reverse order of the removal steps.

NOTICE

Make sure radial clearance between engine fan and shroud is not less than 10 mm in assembly. Tightening torque of radiator mounting bolts is 305 ± 25 N•m.

Disassembly, Check and Assembly of Radiator Assembly

Tools required		
Tool(s)	**Part description**	**Standard**
1	Open-end wrench	10#, 16#, 21#
Note: The removed standard parts should be placed together with the relative matter in order to avoid confusion.		

Exploded view of radiator assembly

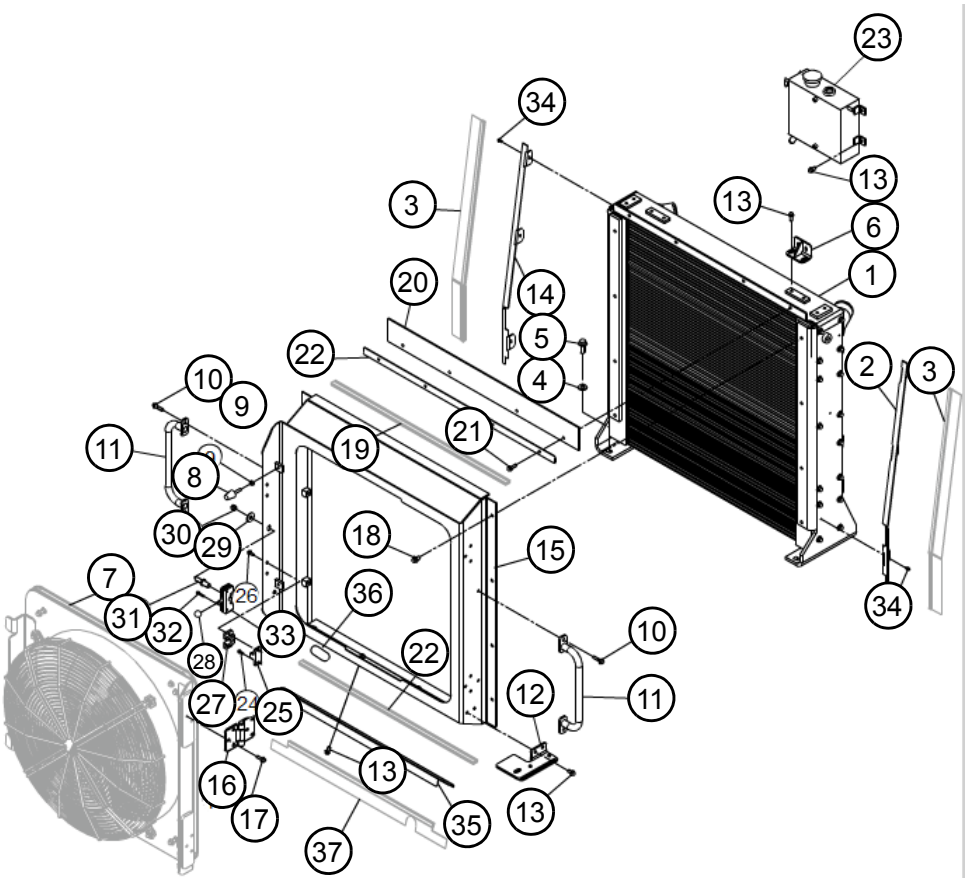

P28P00661

1. Radiator group
2. Angle block
3. Seal
4. Hard washer
5. Bolt
6. Bracket
7. Fan drive motor
8. Shock cushion
9. Nut
10. Bolt
11. Handrail
12. Retainer
13. Bolt
14. Angle block
15. Shroud
16. Self-lubricating hinge
17. Bolt
18. Bolt
19. Seal
20. Rubber plate
21. Bolt
22. Press plate
23. Auxiliary tank
24. Bolt
25. Baffle
26. Bolt
27. Baffle
28. Knob
29. Hard washer
30. Nylon locknut
31. Lock pin
32. Bolt
33. Lock
34. Bolt
35. Angle block
36. Adhesive tape
37. Seal

Disassembly of Radiator Assembly

Figures	Operation instructions	Tools
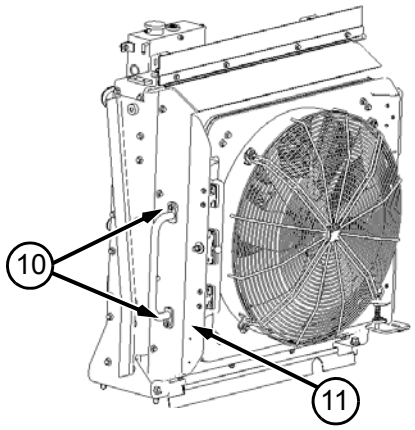 P28P00662	1. Remove the handle (11) Unscrew 4 captive bolts (10) at left and right ends of radiator, and remove the support.	Open-end wrench 16#
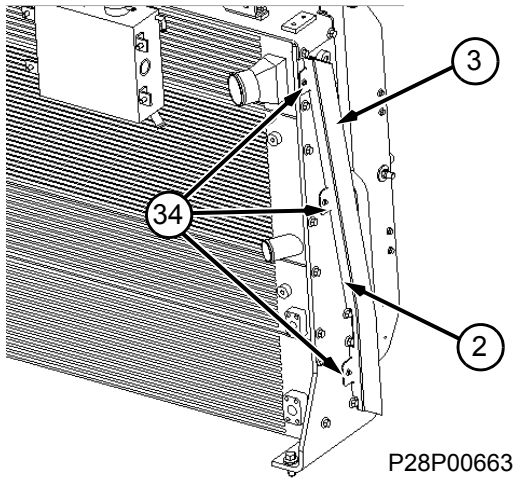 P28P00663	2. Remove the left and right plates (2) and rubber plates (3) Unscrew 6 mounting bolts of left and right plates and remove the plates and left and right rubber plates.	Open-end wrench 10#
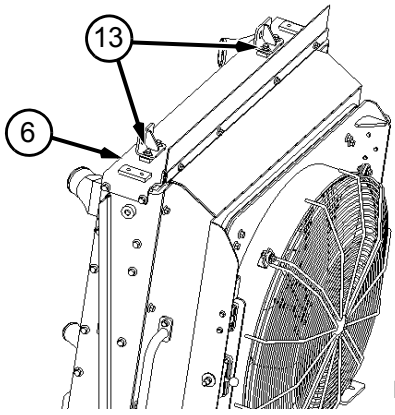 P28P00664	3. Remove the upper support (6) Unscrew the 4 mounting bolts (13) of the upper support, and remove the rubber plates.	Open-end wrench 16#

Figures	Operation instructions	Tools
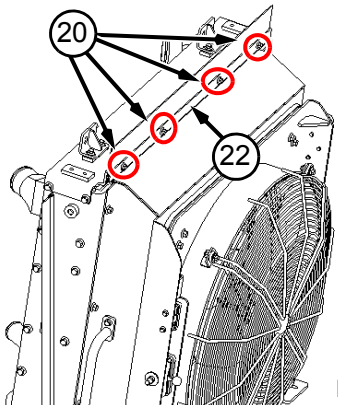 P28P00664	4. Remove the rubber plate (20) and press plate (22); unscrew 4 captive bolts for the rubber plate of the baffle and remove the rubber plate and press plate.	Open-end wrench 16#
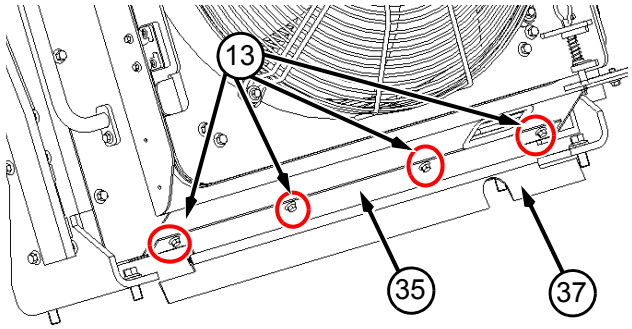 P28P00665	5. Remove the sealing strip (37) and plate (35).	
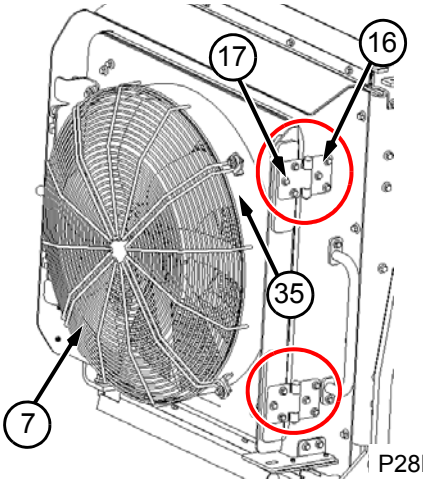 P28P00666	6. Remove the self-lubricating hinge (16) and fan drive motor (7). Unscrew 12 captive bolts of self-lubricating hinge and remove the self-lubricating hinge and fan drive motor.	Open-end wrench 16#

Figures	Operation instructions	Tools
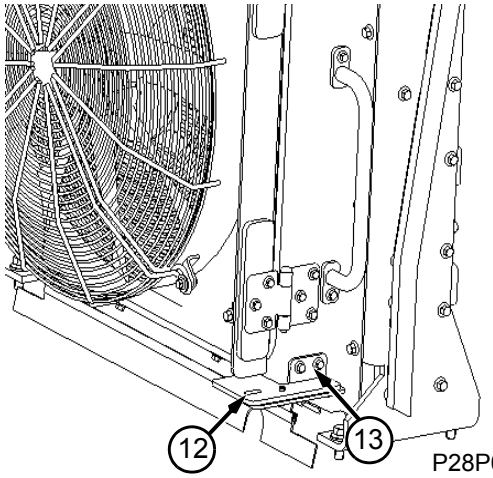 P28P00667	7. Remove the retainer-ball (12) Unscrew 2 mounting bolts (13) of retainer-ball, and remove retainer-ball.	Open-end wrench 16#
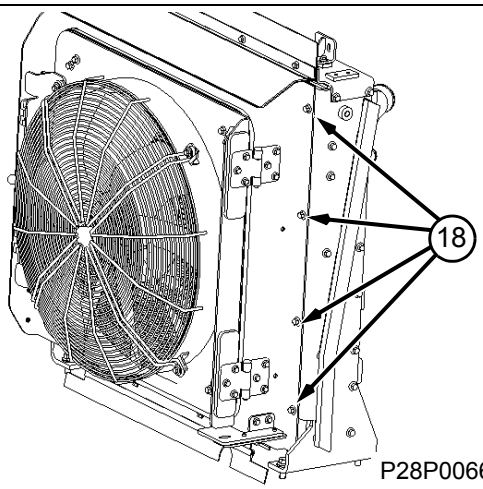 P28P00668	8. Remove the shroud 15 Unscrew 8 mounting bolts (18) of shroud, and remove shroud.	Open-end wrench 18#

Check of Radiator Assembly

Check the radiator passage wall for cracks, and if does, it is necessary to perform the repair welding and replace the radiator.

Check the radiator fin, and if the fin is bent for a large area and blocks the passage, it is necessary to flat the fin by the wind direction or replace the radiator.

Check the radiator passage for blocking by debris or impurities, and if does, it is necessary to blow and clean it with compressed air. Please notice that the direction of compressed air shall be inverse with that of air which passes through the radiator during normal operation of the machine.

Assembly of Radiator Assembly

Assemble the radiator assembly in reverse order of the disassembly steps.

Disassembly and Assembly of Radiator Group

Tools required		
Tool(s)	**Part description**	**Standard**
1	Open-end wrench	18#
Note: The removed standard parts should be placed together with the relative matter in order to avoid confusion.		

Exploded view of radiator group

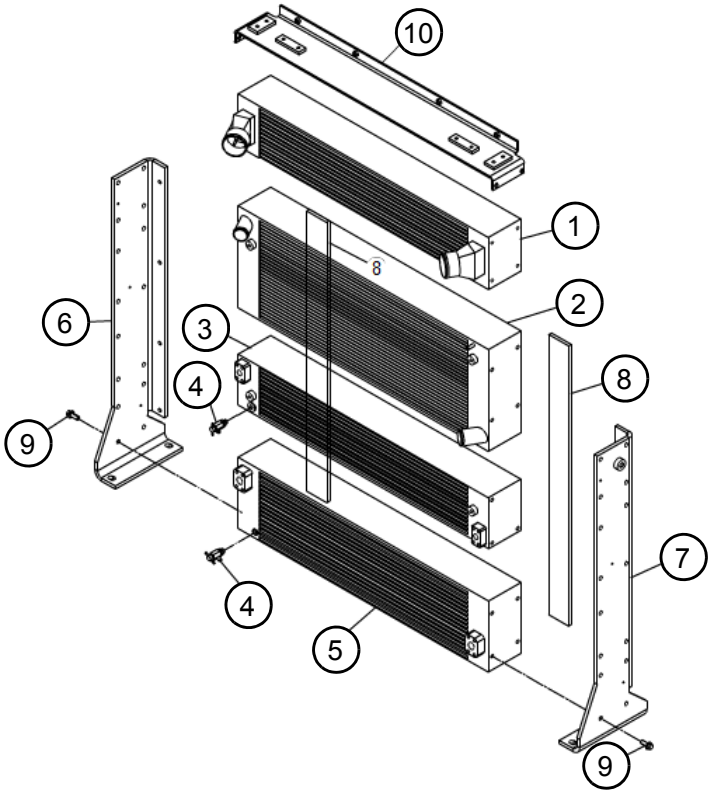

P28P00669

1. Air-air intercooler
2. Water radiator
3. Hydraulic oil radiator
4. Water drain valve
5. Torque converter oil radiator
6. Mounting plate-rh
7. Plate
8. Sponge
9. Bolt
10. Connecting bracket

Disassembly of Radiator Group

Figures	Operation instructions	Tools
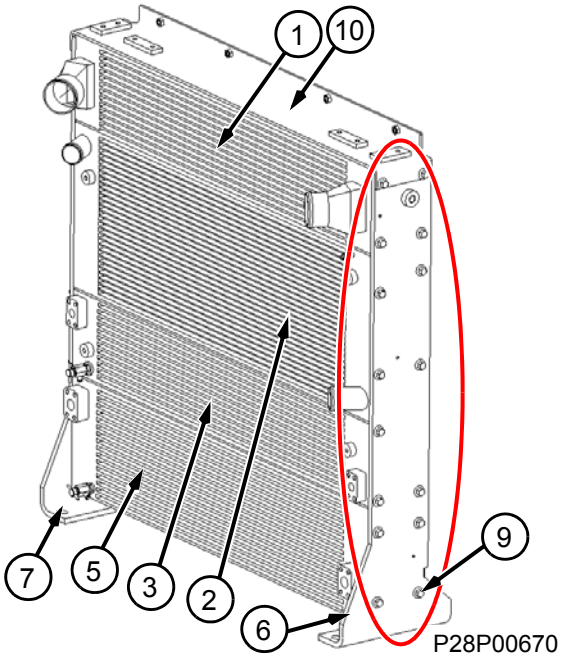 P28P00670	1. Remove the upper connecting plate (10), left mounting plate (7), right mounting plate (6), air-air intercooler (1), water radiator (2), hydraulic oil radiator (3) and torque converter oil radiator (5) Unscrew 30 bolts (9) at left and right sides of the radiator, remove the upper connecting plate, left mounting plate, right mounting plate, air-air intercooler, water radiator, hydraulic oil radiator, torque converter oil radiator, and collect the sponge (8) properly.	Open-end wrench 16#

Refilling and Replacement of Coolant

1. Completely mix water and anti-freeze in advance according to selected cooling proportion. (CUMMINS Power Company suggests to use mix-fluid with 50% pure soft water and 50% antifreeze solution or refrigerant with strict proportion when refilling cooling system. The antifreeze solution or refrigerant with strict proportion must meet the technical specification of TMC RP 329 or TMC RP 330.)
2. Park machine on flat ground, apply parking brake and shut down engine.
3. Turn on the battery disconnect switch; insert the key into the start switch and turn to 1st gear clockwise to power on the machine, pull the change-over switch of air conditioning system to heating position.
4. (Only operate this step in replacing coolant.) Put a container with the capacity of about 35 L at rear right side of machine, connect one hose into water drain valve of drain hose, unscrew auxiliary tank cover, loosen water drain valve so that coolant flows into the container, and tighten water drain valve after draining coolant.
5. Slowly open auxiliary tank cover (wait until engine coolant temperature drops to be below 50°C\122°F), slowly add coolant until coolant level is within 1 cm higher than wellhead bottom, and remain stable within ten minutes.

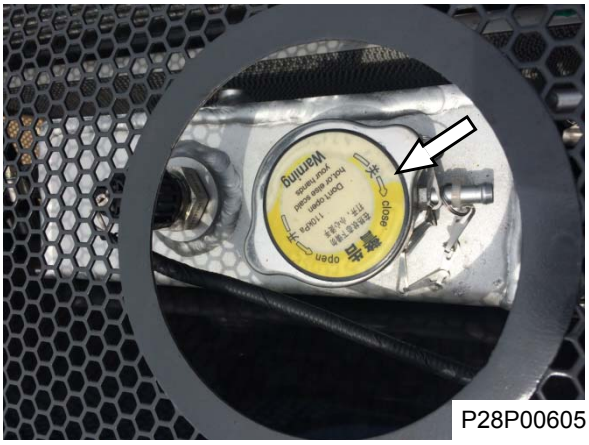

P28P00605

Base of the wellhead


P28P00247

6. Tighten auxiliary tank cover, start engine, firstly operate it for 5 minutes at low idle speed, then operate it for 5 minutes at high idle speed, and increase coolant temperature to be above 85°C(185°F).
7. After engine coolant temperature drops to below 50°C(122°F), continue to refill coolant until level is within the scope of 1 cm higher than wellhead bottom as necessary.
8. Close the engine hood.

⚠CAUTION

Do not use the water alone as coolant.

When filling coolant, air in engine cooling system pipe must be discharged.

Do not refill coolant into hot engine to avoid possible damages to engine body. Wait until engine temperature is below 50°C(122°F).

Fault Diagnosis and Troubleshooting

Air Pre-filter Fault

Fault cause	Troubleshooting methods
1. Dust blockage	Clear
2. The revolving shaft is stuck	Clean or replace

Air Filter Fault

Engine weakness and generating black smoke

Fault cause	Troubleshooting methods
1. Blockage of filter element	Blow and clean the filter element or replace the filter element
2. Air filter sucks in paper scrap or rag and other things	Clear

Early wear of the engine

Fault cause	Troubleshooting methods
1. Air intake short circuit	Check for error proofing
2. Filter element is damaged or fails	Replacement
3. The dusting bag fails	Replacement

Turbocharger Fault

Fault mode	Troubleshooting methods
1. Air intake system is blocked	Check lines between air filter and air compressor, lines between air compressor outlet and air intake pipe and the intake pipe, and keep them clean and clear
2. Air inlet leakage	Check lines between air filter and air compressor, lines between air compressor outlet and air intake pipe, and connection between air intake pipe and engine for leakage, tighten the fastening bolts and replace the gaskets and other parts
3. Exhaust system is blocked	Maintain or replace the related components
4. Air inlet leakage	Check connection between exhaust pipe and engine, between turbine inlet and exhaust pipe, between turbine housing and middle housing as well as between turbine outlet and exhaust pipe for leakage, if any, replace the sealing gaskets and tighten the fastening bolts.
5. Air compressor rotor collides with air compressor housing, and turbine collides with turbine housing;	Replace the assembly.
6. Fuel inlet line or fuel return line leaks;	Replace related parts.

Power Train System

Basic Information 3-3

Safety 3-3
System Composition and Position 3-4
System Technical Parameters 3-5
System Schematic Diagram and Working Principle Description 3-6
Overview of Transmission Fluid 3-7
Maintenance and Replacement of Gearbox and Drive Axle Oil 3-8
Universal Tool, Tooling List 3-9
Special Tool, Tooling List 3-9

Structure Function Principle 3-10

Torque Converter - Gearbox System 3-10
Drive axle system 3-16
Drive Shaft System 3-19
Tire & Rim System 3-21

Testing and adjustment 3-22

Power Train Test 3-22
Torque Converter - Gearbox System 3-23
Drive Axle System 3-24

Removal and Installation 3-25

Removal and Installation of Torque Converter-Gearbox System 3-25
  Removal of Torque Converter - Gearbox System 3-25
  Installation of Torque Converter-Gearbox System 3-30
Disassembly and Assembly of Torque Converter-Gearbox Assembly 3-35
Removal and Installation of Drive Shaft System 3-36
  Removal of Drive Shaft System 3-36
  Installation of Drive Shaft System 3-38
Removal and Installation of Front Wet Axle Assembly 3-41
  Removal of Front Wet Axle Assembly 3-41
  Installation of Front Wet Axle Assembly 3-43
Removal and Installation of Rear Wet Axle Assembly 3-44
  Removal of Rear Wet Axle Assembly 3-44
  Installation of Rear Wet Axle Assembly 3-49

Disassembly and Assembly of the Drive Axle 3-54

Fault Diagnosis and Troubleshooting 3-55

Common Failure Mode of Tire and Reasons 3-56

Basic Information

Safety

Many accidents in operation, maintenance, repair and other aspects are caused by fail to observe the basic safety rules and precautions. If the case of potential risk is fully aware in advance, these accidents usually can be avoided. The operators must pay attention to these potential risks, and be trained for relevant skills before properly and safely operating, maintaining and repairing the machine.

- Any improper operation, maintenance and repair methods may lead to hazardous condition, cause personal injury and even death.
- Be sure to read and understand the relevant security measures and precautions before operating, maintaining and repairing the machine.
- Please strictly obey the safety warning information listed in this Manual and on the machine during operating, maintaining and repairing the machine, otherwise heavy casualties will occur.

Safety warning information in the Manual is indicated by the following symbols:

⚠WARNING

This word means existing potential danger, and if no avoidance, it may cause death or serious personal injury.

⚠ DANGER

This word means danger will occurred immediately, and if no avoidance, it may cause death or serious personal injury.

⚠CAUTION

This word means existing potential danger, and if no avoidance, it may cause slight or medium personal injury.

"Caution" is also used for reminding the safety attentions of unsafe operation possibly causing personal injury. "Danger" represents the worst dangerous conditions. Safety sign of "danger" or "warning" is an attachment set at the specific dangerous location. General precautions are listed on the safety sign of "Caution".

In addition, please carefully follow the "Cautions" listed in this Manual, otherwise, it may result in great damage to the machine. We are unable to enumerate all the possible risks (including potential dangers), and the warnings in the Manual and product do not cover all the risks and dangers. If the tools, operation procedures, methods or techniques are not specially recommended by our company, it is necessary to ensure the personal safety of every one, and protect the machine against any damage.

The contents herein are provided based on the status of the machine at the time when the Manual was written, whereas, all products are updating, and this machine is no exception. Any modification will influence the operation, maintenance and repair of the machine, therefore, please contact the LiuGong dealers for latest and most comprehensive service information before operating, maintaining and repairing the machine.

System Composition and Position

The power train system is a critical part of a loader, like a heart, and it is located at portion between the engine and tire, as shown in red in the figure below. It mainly consists of three majority components: gearbox, drive shaft and drive axle.

Schematic diagram of position for wheel loader

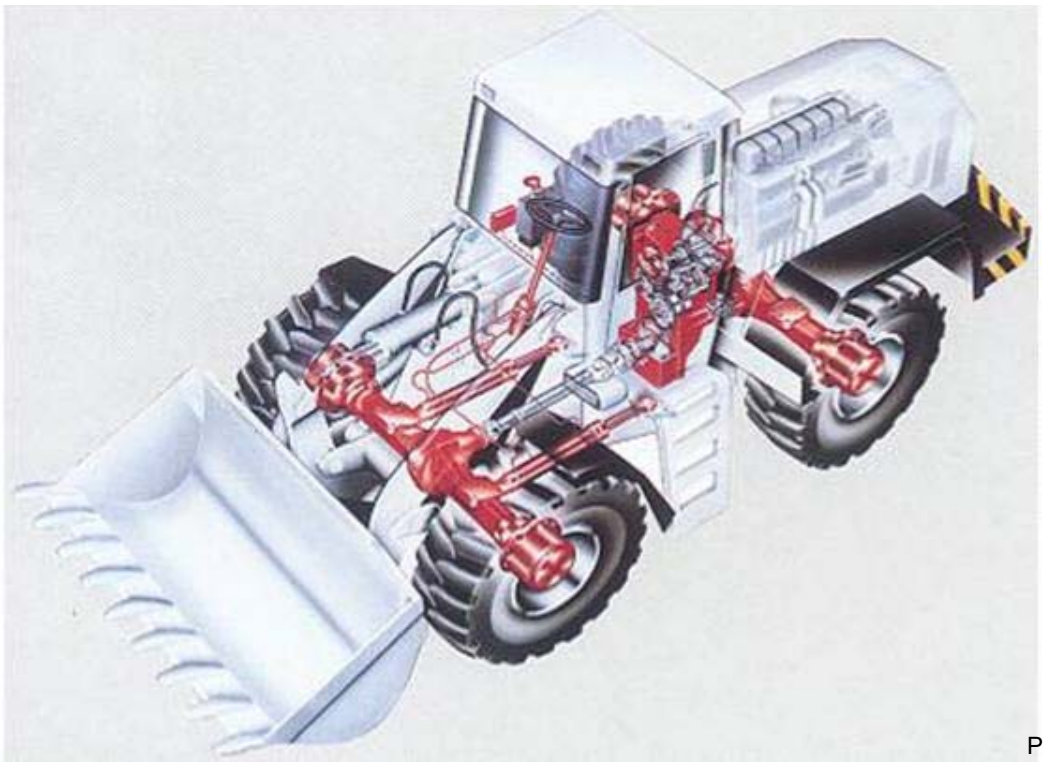

P18T00001

System Technical Parameters

Main technical parameters for the power train system of this machine are listed in Table below.

Main technical parameter table for power train system

System components	Items	Parameters	Remarks
Gear box	Model	ZF 4WG158	
	Type	Fixed shaft type	
	Control mode	Semi-auto electro hydraulic power shift	Full-auto electro hydraulic control is optional.
Torque converter	Type	Single-turbo, three-element	
Drive axle	Drive mode	Spiral gear level-I reduction, wheel planetary gear reduction	
	Brake mode	Wet-type brake	
Tire	Tire structure	Bias tire with an inner tube	Tubeless bias tire or tubed bias tire is optional
	Specification	17.5-25PR12 TT	
	Level	\	
	Type of tread	L-3	Ordinary block
Rim	Specification	25-14.00/1.5	

System Schematic Diagram and Working Principle Description

The torque converter -gearbox assembly equipped in this machine is ZF 4WG158 full auto type, and the drive axle is 30 wet axle, whose structure diagram are shown as below:

Diagram for gear box assembly composition

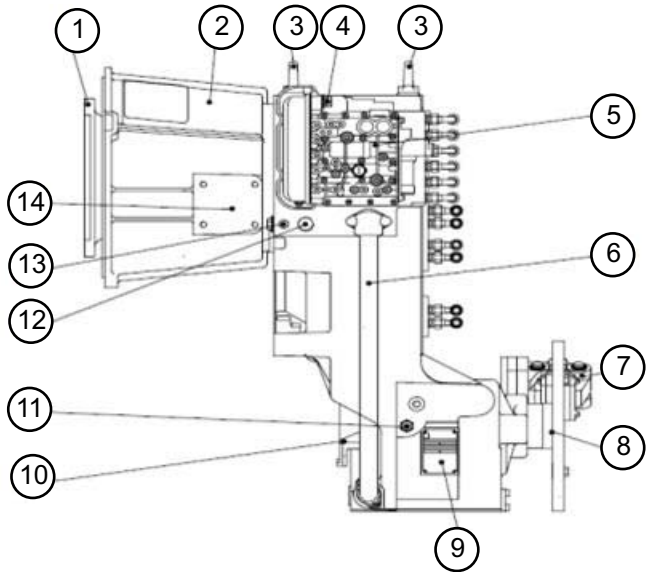

P18T00002

1. Coupling device
2. Torque converter housing
3. Lifting eye
4. Control harness interface
5. Electro-hydraulic shift control valve
6. Suction tube
7. Brake
8. Output plate
9. Nameplate
10. Output flange
11. Speed sensor
12. Oil outlet of torque converter
13. Torque converter outlet oil temperature sensor
14. Cover

Structure diagram for drive axle assembly

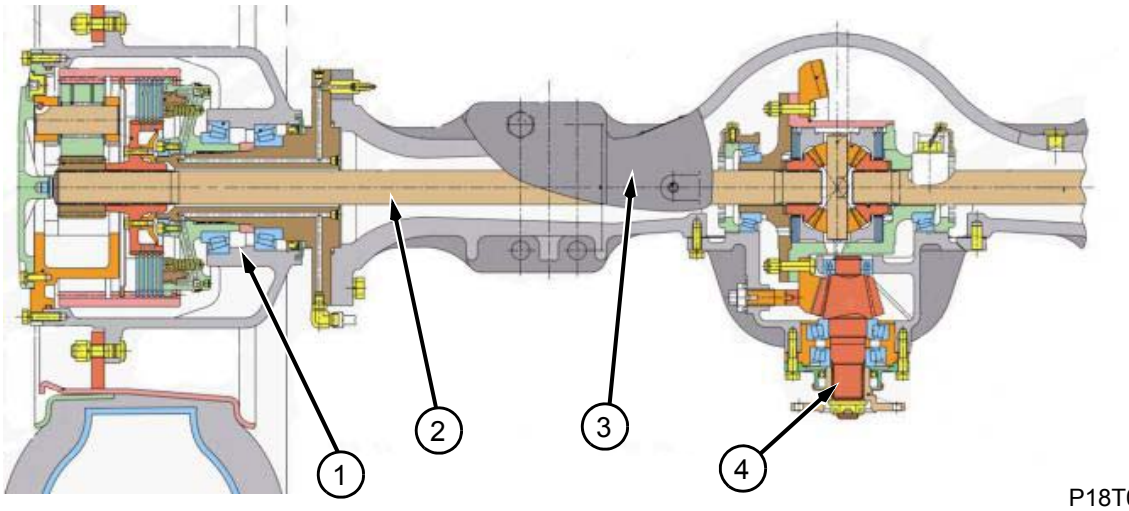

P18T00003

1. Wheel reduction gear
2. Axle shaft
3. Axle housing
4. Bevel gear

Overview of Transmission Fluid

The oil product used for wheel loader is divided into four categories, i.e. the lubricant, grease, brake fluid and fuel, each of which can play a different role in the use of loader.

The lubricant, used in the loader, has two effects , one is to lubricate the parts and reduce the pressure, so as to prolong the service life of parts; the other is to dissipate the heat of parts produced by friction, so as to make the parts work normally. The lubricant is composed of various petroleum-based additives. The wheel loader use a kind of lubricant which has four classes , i.e, diesel oil, gear oil, hydraulic drive shaft and hydraulic fluid. The applications of the lubricant used in the power train system of this machine are shown in the table below:

Table of lubricant application

Category	Ambient temperature										Recommended brand	Application parts
	-40	-30	-20	-10	0	10	20	30	40	50		
Torque converter - gearbox assembly											Mobil Delvac Super 1300 engine oil (-15°C~+50°C)\ (-5°F~122°F) Mobil ATF 220 (-35°C~+50°C)\ (-31°F~122°F)	ZF torque converter & transmission assembly uses SAE 15-40 in general areas and in hot desert areas; and uses Mobil ATF220 in arctic areas.
Gear oil											Mobil gear oil 80W-90/LS with additives (-15°C~+50°C)\ (-5°F~122°F); Mobil gear oil 424 (-40°C~+50°C) \ (-40°F~122°F)with additives Shell SPIAX S6 AXME 75W-90/LS (-40°C~+50°C)\ (-5°F~122°F)	LiuGong axle uses SAE 80W-90/LS in general and hot areas, and Mobil 424 with additives and Shell SPIAX S6 AXME 75W-90/LS in arctic areas. LS means the additives are inclusive

Maintenance and Replacement of Gearbox and Drive Axle Oil

The oil product added to the torque converter - gearbox assembly must be consistent with oil list TE-ML 03 recommended by ZF, the oil level shall be checked once a week by the following methods:

(1) Park the machine on level ground;

(2) Place the gear box gear in the neutral position;

(3) Torque converter - gearbox oil is at 80-95°C\ 176°F~203°F;

(4) The engine is idling 800rpm);

(5) Observe the oil level gauge of gearbox and it shall be in the "HOT" zone;

After the torque converter and gearbox assembly co-work for the first 100h, the oil shall be replaced every 1000h or at least once a year. Oil can be replaced by the methods as below:

(1) Unscrew the drain plug on the torque converter - gearbox assembly to drain the oil.

⚠CAUTION

The waste oil shall be collected in a container during oil drainage, in order to avoid environmental contamination;

The oil shall be fully cooled before oil drainage, in order to avoid personal injury due to hot oil splashing onto the body.

Gearbox drain plug

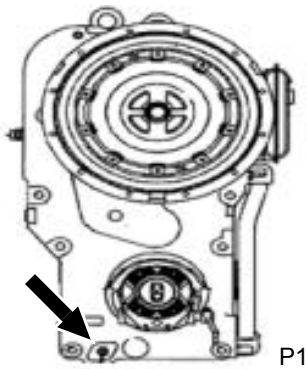

P18T00004

(2) After the Oil sump tank of the gear box completely gets empty, wipe clean the mating surface on drain plug and gearbox housing that contacting with O ring of the oil drain plug. After the O-ring of the oil drain plug is replaced, reassemble and tighten it.

(3) Add the oil in accordance with the oil list TE-ML 03 as recommended by ZF;

(4) Check the oil level by the method as specified for transmission.

The fine oil filter is also replaced every time the oil change is done for the gear box. The oil filter may be installed by the following method:

(1) Apply a small amount of the gear box oil on the oil seal of oil filter;

(2) The oil filter is screwed in until the oil seal of oil filter contacts the filter head, tighten it 1/3 to 1/2 turn by hand.

The oil product added in the drive axle must be in accordance with the oil list of 85W-90 heavy-load wheel gear oil (GL-5) recommended by LiuGong. The oil level of LiuGong axle may be checked by the following methods:

Wheel drain plug and oil level check plug

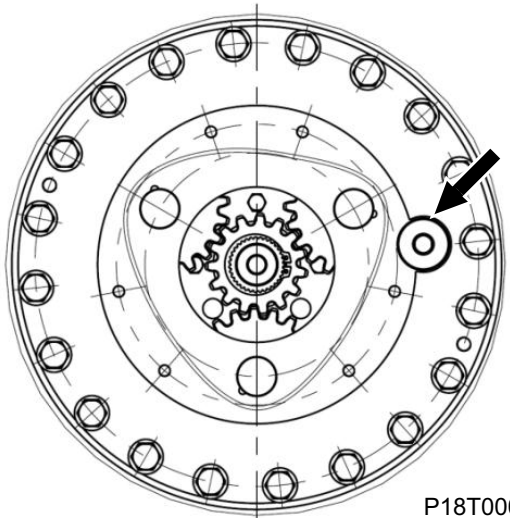

P18T00005

(1) Wheel reducer: place the axle according to the installation position, and turn the hub to keep the oil level in a horizontal position, fill oil from left and right hubs respectively until the oil overflows the oil level plug; park the reducer for ten minutes after the drive axle running, and then check the oil level, and add enough lubricating oil.

Bevel gear refuel plug and oil level check plug

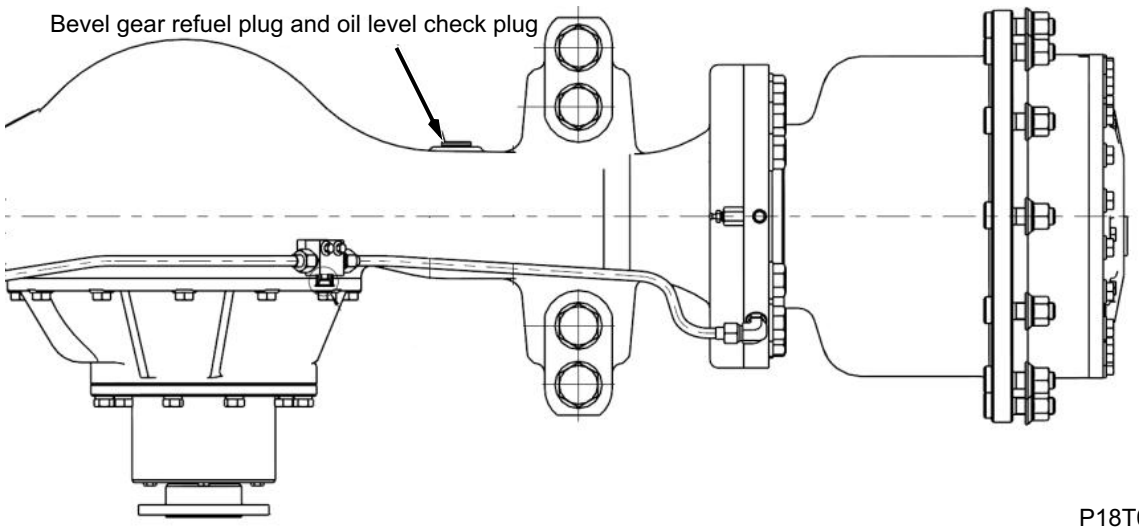

(2) Axle housing: the oil is added into axle housing until it overflows from the oil filler.

The axle oil shall be replaced at the first 500h, after that once every 1000h, or at least once a year.

Universal Tool, Tooling List

For the universal tools, tooling list, please see the torque converter-gear box system, drive axle system and drive shaft system.

Special Tool, Tooling List

For the special tool, tooling list, please see "ZF Box Overhaul Manual" for details.

Structure Function Principle

Torque Converter - Gearbox System

The torque converter -gearbox system equipped in this machine is ZF 4WG158 semi/ full auto type, which mainly consists of a three-element, single-turbo torque converter, mechanical gear box with four forward gears, three reverse gears and electro hydraulic shift control system, as shown below:

External view of torque converter -gear box assembly



P18T00007

Structural schematic diagram of torque converter - gear box assembly

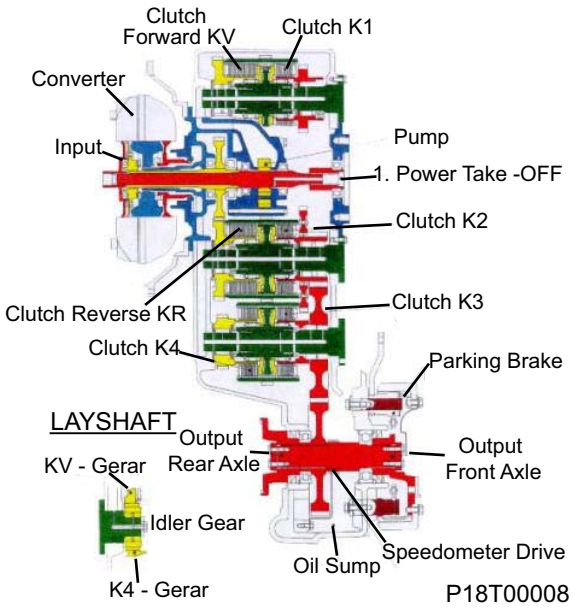

P18T00008

System technical parameters

The technical parameters of ZF 4WG158 torque converter - gear box assembly in this machine are listed in Table below.

Technical parameter table of torque converter - gear box assembly

Component	Items	Parameters	Remarks
Gearbox	Model	ZF 4WG158	
	Type	Fixed shaft type	
	Gears	Four forward gears, three reverse gears	
Torque converter	Model	WG300	
	Type	Single-turbo, three-element	
	Circulation circle diameter of torque converter/mm\In	300mm	
	Inlet pressure of torque converter/MPa\ psi	0.85\ 123.25	
	Outlet pressure of torque converter/MPa\ psi	0.50\ 72.5	
Shift control system	Shift control mode	Auto electro hydraulic power shift	
	System working pressure/MPa\ psi	(1.6~1.8)MPa(236~261)PSI	

System schematic diagram and working principle description

The torque converter of this system is a three-element with single-turbo structure, and the diagram for its structure and working principle is as follows:

Structure diagram for torque converter

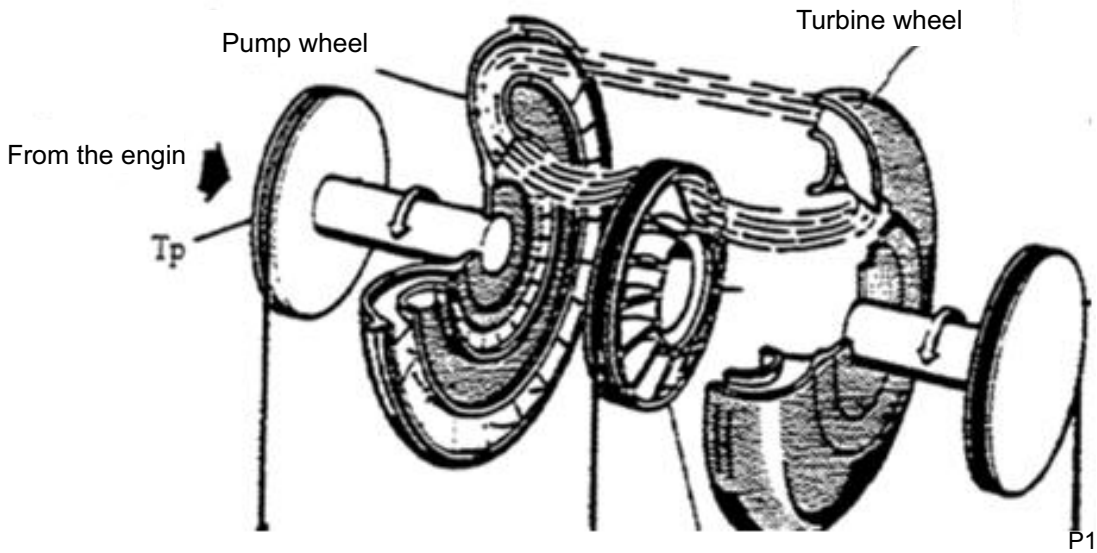

Schematic diagram for torque converter hydraulic

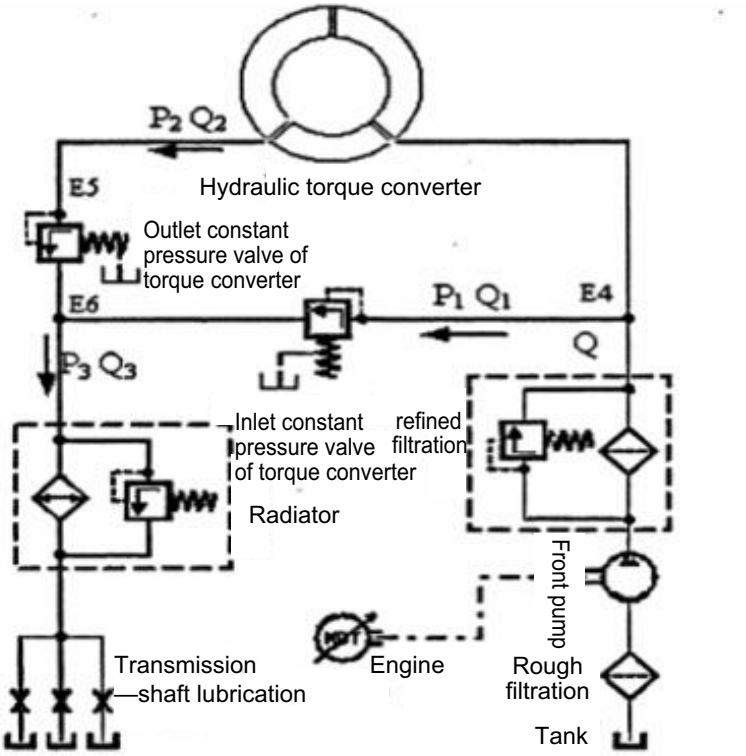

We can see from structure diagram for torque converter, a three-element, single-turbo torque converter mainly consists of pump wheel, guide wheel and a turbine. As the pump wheel of torque converter is directly coupled with and driven by the engine, the hydrodynamic drive oil between pump wheel and turbine forms complex flow under rotation of pump wheel. The mechanical energy is converted into kinetic energy of oil fluid. The fluid flow with kinetic energy strikes against the turbine at a high speed. The turbine absorbs its kinetic energy and restores it to mechanical energy for gearbox. The guide wheel is stationary. When the fluid flow(which is from the turbine and has some kinetic energy) passes through the curved blade of the guide wheel, the torque formed by the impact force and counterforce produced on the blade acts on the engine base, and equivalent to the sum of increased torque of turbine from counterforce and reduced torque of pump wheel from impact force. It is possible that the output torque of turbine is greater than input torque of pump wheel, based on which, the torque converter is variable.

The working oil of torque converter is imported into the torque converter through the coarse and fine filters from the oil tank by the variable pump. There is a constant pressure valve (safety valve) set at the inlet of torque converter, whose main role is to avoid excessive pressure in the torque converter to damage the parts. There is another constant pressure valve (back pressure valve) at the outlet of torque converter, whose main role is to ensure the torque converter is full of working oil in order to avoid cavitation appeared during operation and impact on the performance of torque converter.

An electro-hydraulic shift control valve is installed on the gear box assembly, see figure 1 and 2 for structure composition and operating hydraulic pressure schematic diagram.

Figure 1 Diagram for structure and composition of electro-hydraulic shift control valve

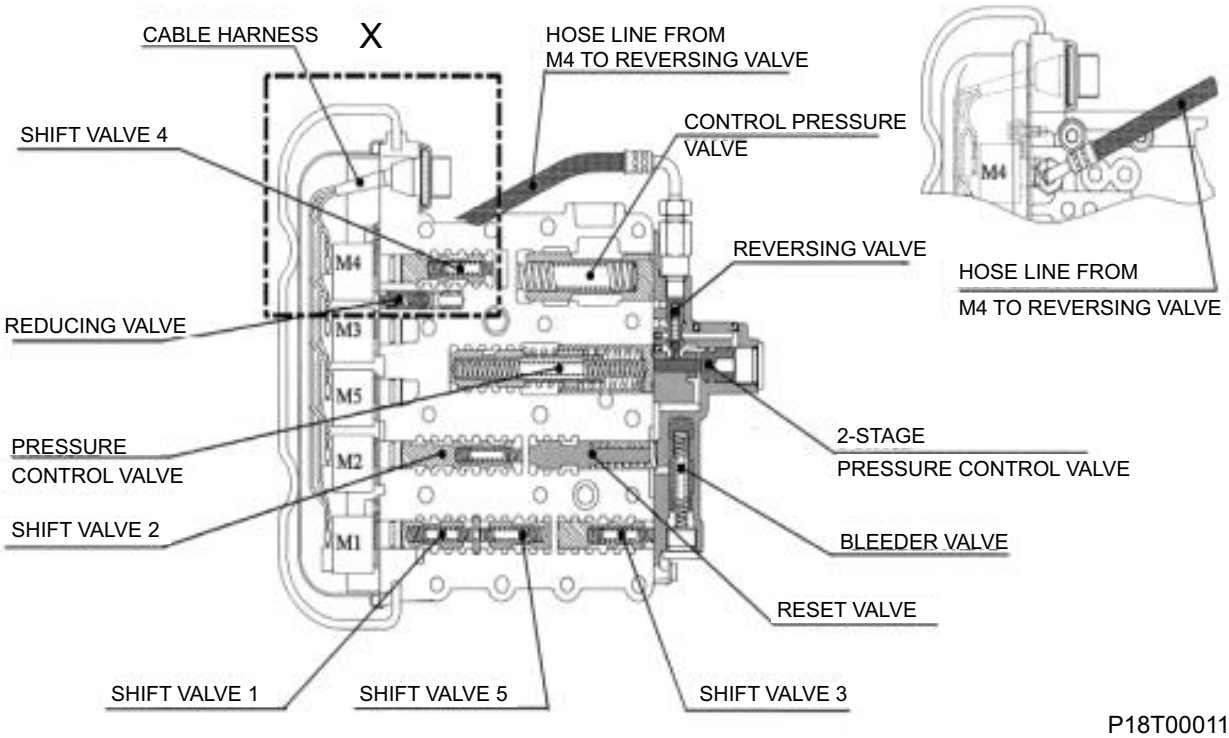

Figure 2 Schematic diagram for hydraulic pressure of torque converter - gear box assembly

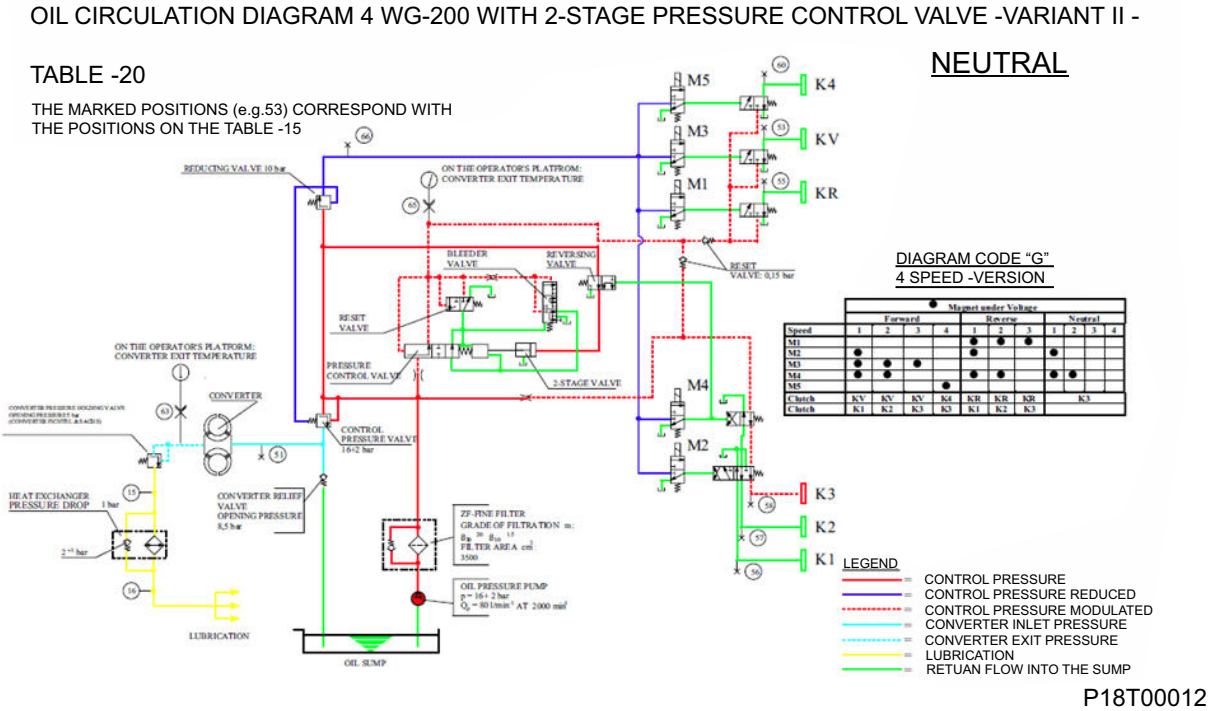

The electro-hydraulic shift control valve consists of solenoid valves M1, M2, M3, M4, M5, valve stem and body. When the electro-hydraulic shift control valve is operating, the fluid flow in the valve stem oil passage is controlled by the power of solenoid valves, which finally control the engagement and disengagement of clutch in the gear box, thus to make the gear box achieve different shifts. For the power transferring line and gear engagement with the gear box in different gears, please see the figure of the power transferring line for each gear as the following figure below.

Drive line of forward gear 1

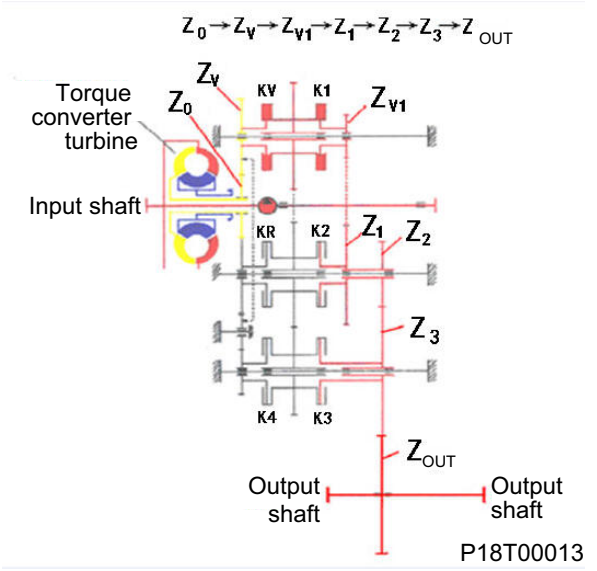

Drive line of forward gear 2

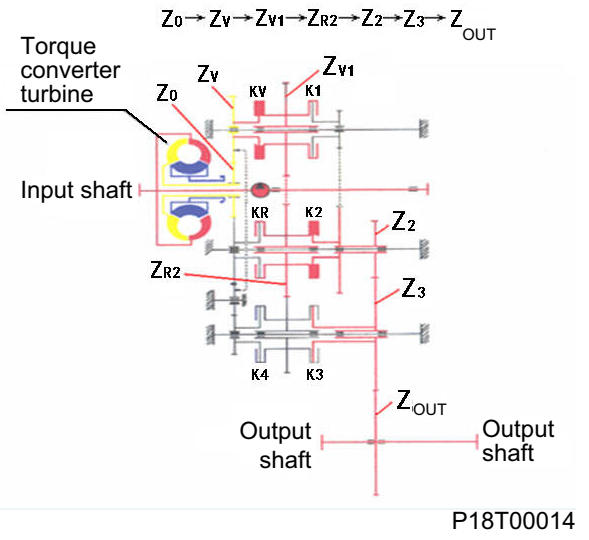

Drive line of forward gear 3

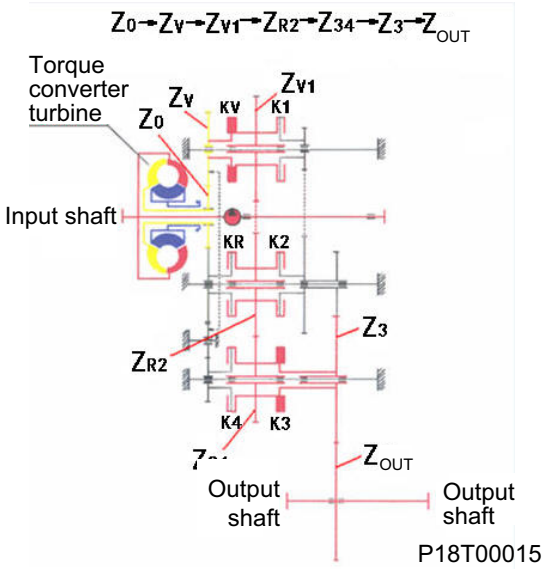

Drive line of forward gear 4

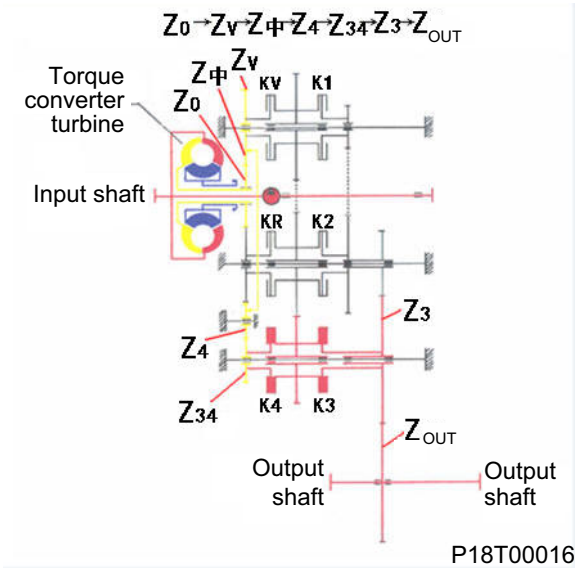

Drive line of reverse gear 2

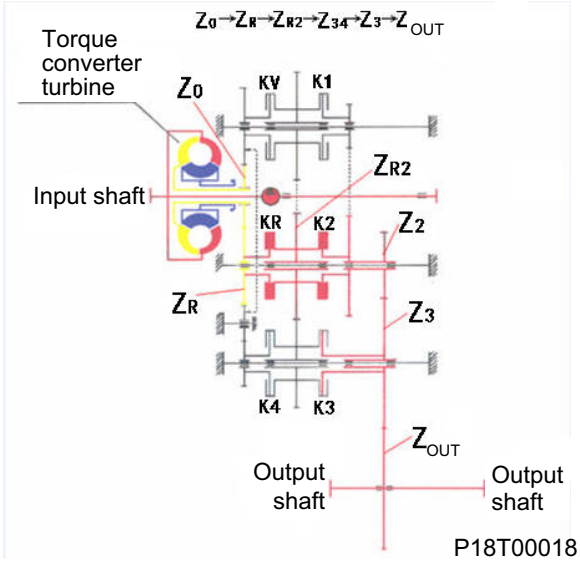

Drive line of reverse gear 1

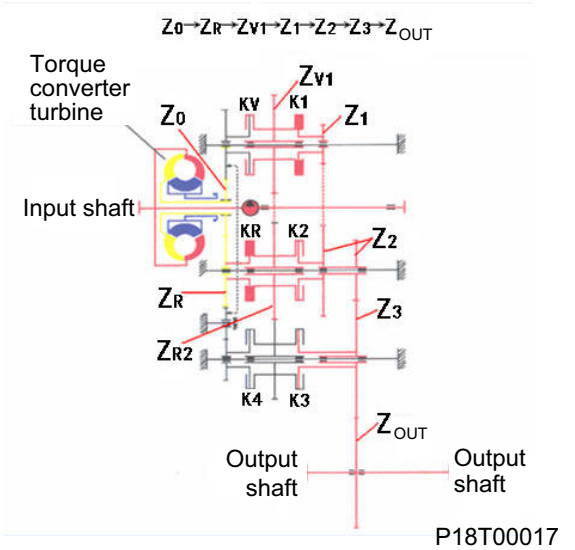

Drive line of reverse gear 3

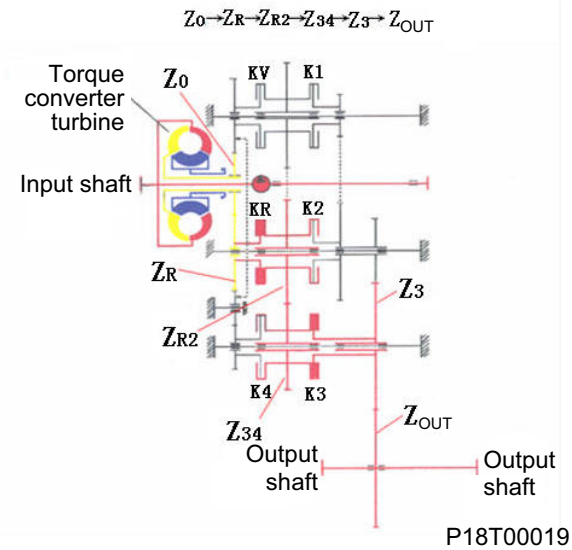

Drive axle system

Composition and position of drive axle system

The basic function of drive axle for wheel loader is to reduce the gear box input speed with main drive and wheel reducer and increase the torsion, thus to meet the requirements of driving, operating speed and traction of the base machine. And also, change the straight line motion to vertical-lateral motion via main drive, so that the drive wheel can be driven to rotate to make the base machine drive along the straight route. The differential helps balance the speeds of left and right tires to make sure the machine can still drive when the driving resistances on both sides are different.

In addition to basic features of drive axle for wheel loader, it is also a load-bearing unit for complete machine, a support device for road wheel and mounting & support device for service brake. The drive axle system mainly consists of front axle, rear axle and brake lines. The swing axle also includes front, rear swing brackets, support shaft and other parts.

Drive axle system assembly drawing

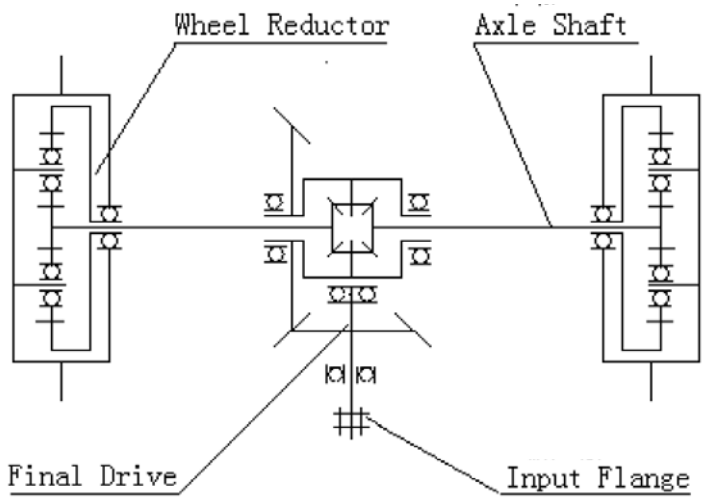

P28T00363

Drive axle system assembly drawing

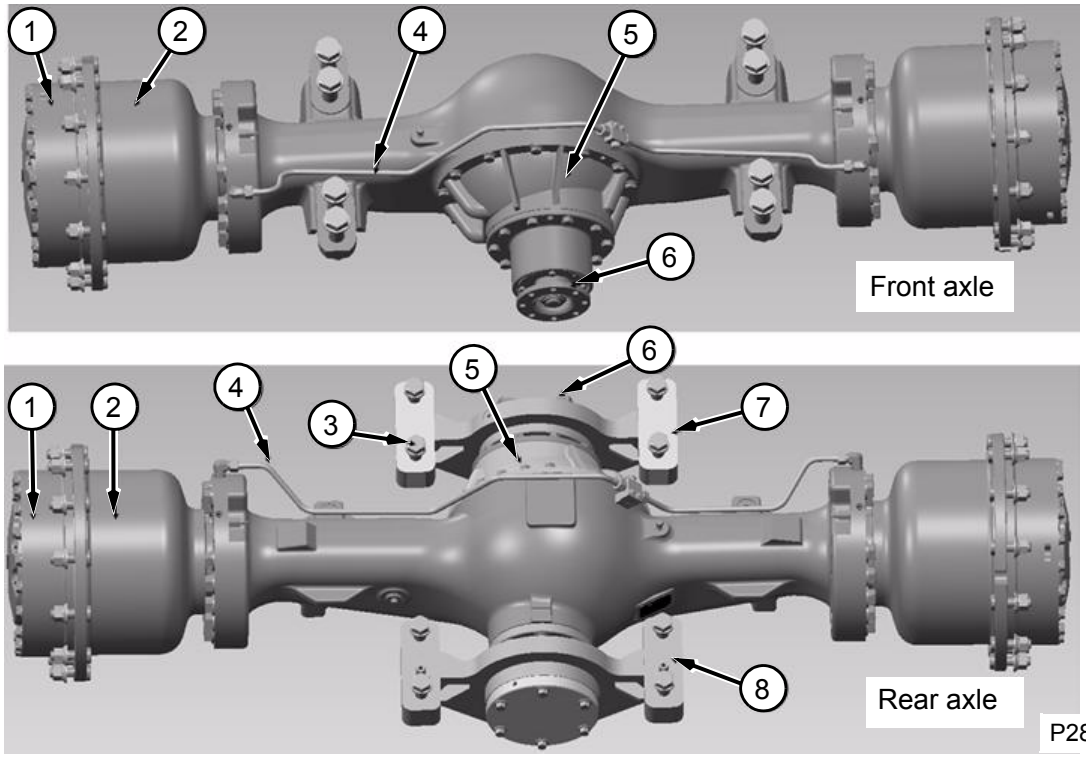

1. Wheel reduction gear assembly
2. Wet-type brake
3. Install bolt and nut
4. Brake line
5. Main speed reduction assembly
6. Input flange
7. Front swing frame
8. Rear swing frame

System technical parameters

Major technical parameters for the drive axle system of this machine are listed in Table below.

Main technical parameter table for drive axle

System components	Items	Parameters	Remarks
Front axle	Drive mode	Spiral gear level-I reduction, wheel planetary gear reduction	
	Brake mode	Built-in wet multi-plate type	
	Brake pressure /MPa\psi	4.8MPa (696Psi)	
Rear axle	Drive mode	Spiral gear level-I reduction, wheel planetary gear reduction	
	Brake mode	Built-in wet multi-plate type	
	Brake pressure /MPa\psi	4.8MPa (696Psi)	

System schematic diagram and working principle description

The drive axle for wheel loader is classified into two classes, i.e. front axle and rear axle, the main difference between which is the spiral directions of the spiral bevel gear pairs in the main drive. The driving spiral bevel gear of front axle is left-handed, and that of rear axle is right-handed. The bevel gear structure is shown in Figure below. The bevel gear includes two parts, one is the bevel gear composed of driving spiral bevel gear and large size spiral bevel gear; the other is the differential composed of cross axle and bevel gear. The power is transmitted to the driving spiral bevel gear by the gear box through drive shaft, thus to drive the large size spiral bevel gear with differential to rotate together. The half shaft gear of differential passes the power to left/right half shaft which is connected with the splines, and further to the wheel reducer. The power is then transmitted to hub and finally to drive the tire to rotate after further speed reduction, increasing torsion through wheel reducer.

Wet axle structure diagram

The structure diagram for bevel gear and wheel reducer of this machine is as shown in below figure.

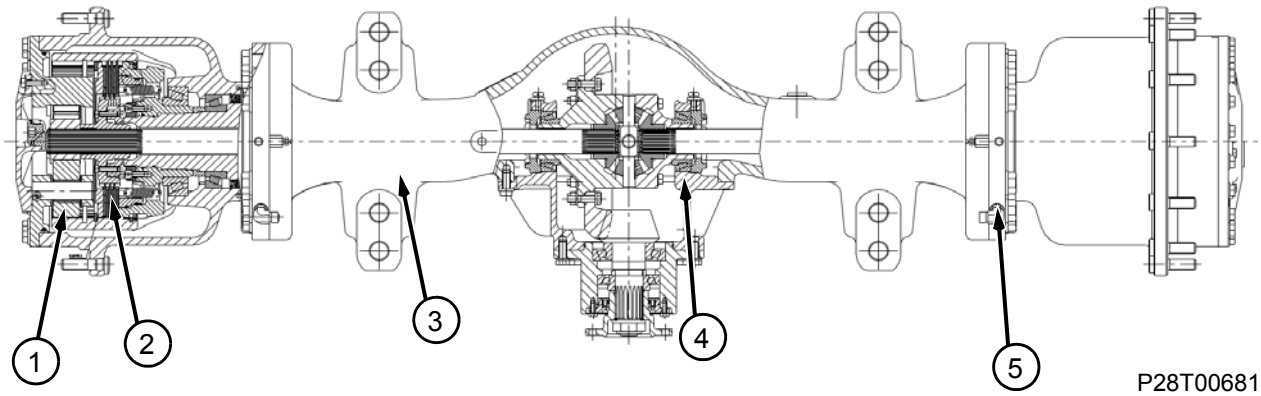

1. Wheel reduction gear
2. Wet brake
3. Axle housing
4. Final drive unit
5. Brake line joint

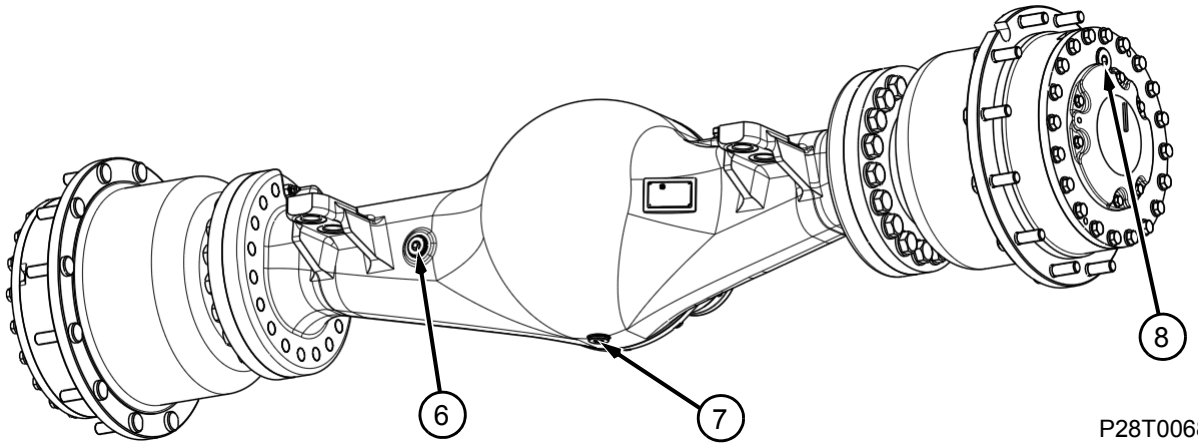

6. Fuel added hole
7. Oil drain hole
8. Wheel reduction differential gear fuel added hole and oil drain hole

Drive Shaft System

In the wheel loader, the drive shaft system is mainly used to deliver the power between the two connected shafts, of which the relative position changes constantly during operation. Because of the special transmission characteristics of universal joint, the drive shaft may connect two transmission parts with nominal concentric axial line. However, an error may occur during installation and axial line deviates from the original position when operating, the drive shaft is widely used in shoveling transportation machine.

System composition and position

The drive shaft system of wheel loader is composed by the following two structural types in accordance with its formal layout, the drive shaft system shown in Figure 1 consists of rear and front drive shafts, the one shown in Figure 2 consists of rear, front, intermediate shafts and support assembly.

Figure 1 Drive shaft system

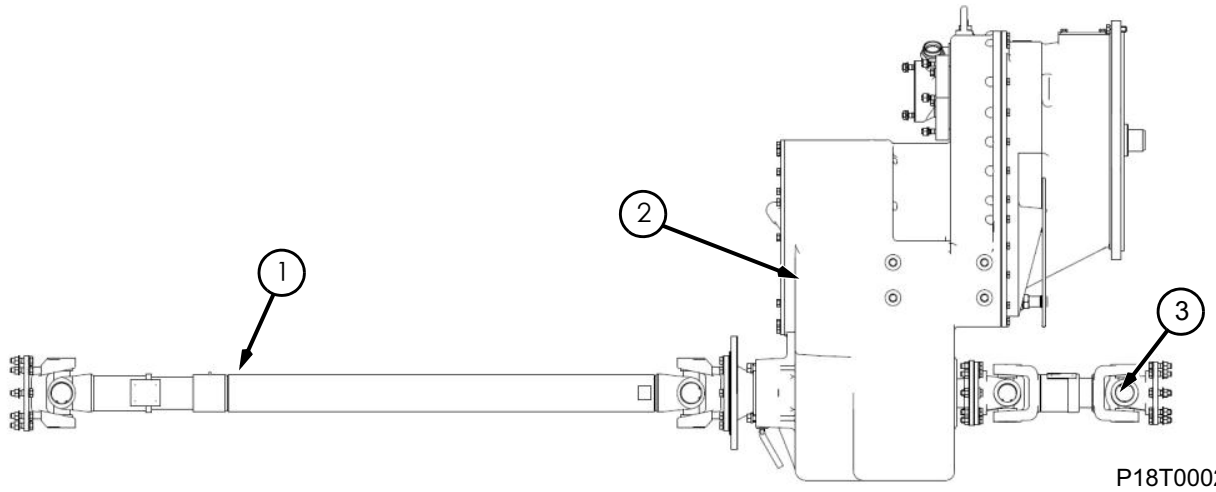

1. Front drive shaft
2. Torque converter-gear box assembly
3. Rear drive shaft

Figure 2 Drive shaft system

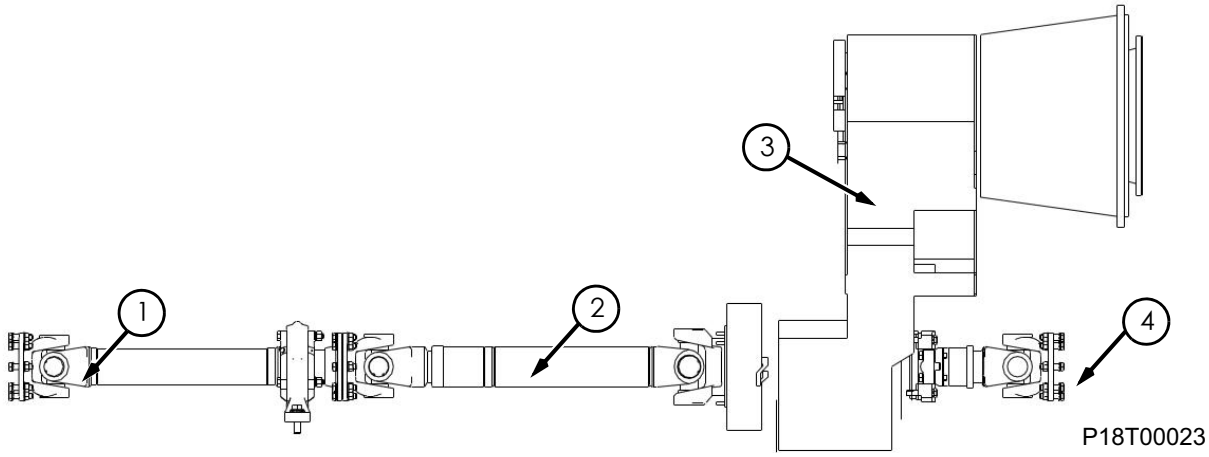

1. Front drive shaft&support assembly
2. Intermediate drive shaft
3. Torque converter-gear box assembly
4. Rear drive shaft

System technical parameters

The technical parameters for the drive shaft system are listed in Table below.

Technical parameter table for drive shaft system

Parts name	Input-end coupling type	Output-end coupling type
Front drive shaft	Round flange	Round flange
Intermediate drive shaft	Round flange	Round flange
Rear drive shaft	7C	Round flange
Dynamic unbalance test	⩾ G16	

⚠CAUTION

Transmission shaft fastener torque must be strictly guaranteed. Any bolt that has been loosened and tightened again must have corresponding torque.

Fastener part specification	Fastener part torque
M12 × 1.5	132 ± 10Nm (98 ± 7lbf · ft)
M12 × 1.25	132 ± 10Nm (98 ± 7lbf · ft)
M16	305 ± 25Nm(225 ± 18lbf · ft)

Tire & Rim System

System composition and position

Tire & rim system are both components bearing weight of a complete machine and direct components driving the complete machine to walk. Tires can be classified into bias tires with an inner tube, bias tires without an inner tube, radical tires, solid tires, etc. in accordance with it structural layouts. They can also be classified into block pattern tires, traction pattern tires, skidding tires, etc. according to pattern form.

System technical parameters

The technical parameters for the tire & rim system equipped in this machine are listed in Table below.

Technical parameters of tire& rim system

System components	Items	Parameters	Remarks
Tire	Tire structure	Tubed bias tire	Tubeless bias tire or radial tire is optional
	Specification	17.5-25PR12 TT	
	Level	PR12	
	Type of tread	L-3	Ordinary block
	Tire pressure (MPa)\(psi)	Front wheel: 0.35-0.38MPa (50.75~55.1Psi) Rear wheel: 0.32-0.35MPa (46.4~50.75Psi)	
Rim	Specification	25-14.00/1.5	

Testing and adjustment

Power Train Test

Detection point layout of torque converter - gear box assembly as is shown in Figure below, and names and parameters of each detection point can be found in Table below.

Measuring point layout

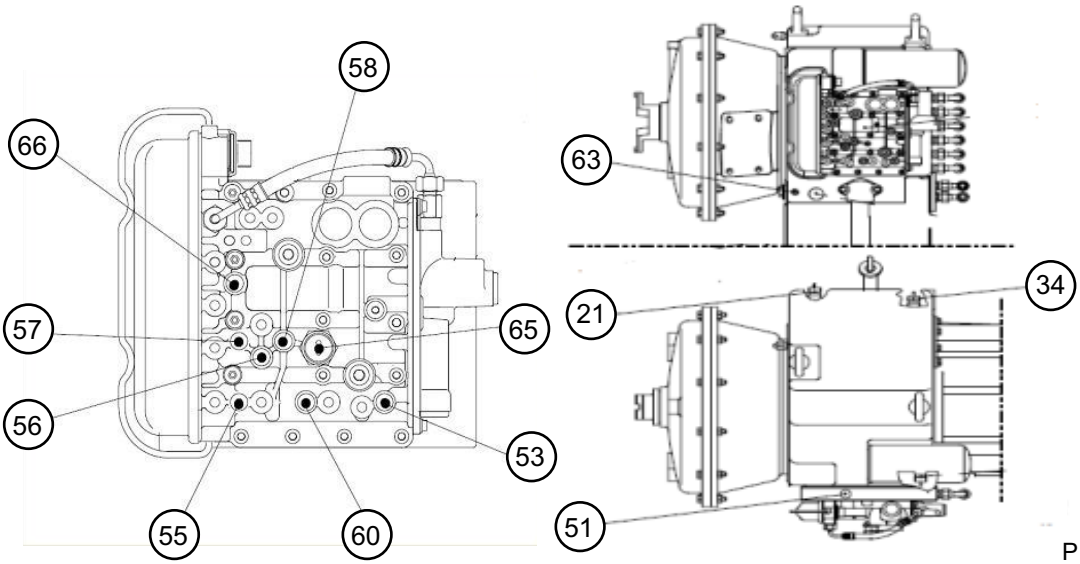

Parameter list of the measuring point

S/N of the measuring point	Name of the measuring point	Theoretical value	S/N of the measuring point	Name of the measuring point	Theoretical value
21	Input sensor of the gear box	\	55	Reverse gear clutch	1.6-1.8MPa
34	Output sensor of the gear box	\	58	Gear 3 clutch	1.6-1.8MPa
51	Inlet pressure of torque converter	Opening pressure: 0.85	56	Gear 1 Clutch	1.6-1.8MPa
53	Forward gear clutch	1.6-1.8MPa\232-261psi	57	Gear 2 Clutch	1.6-1.8MPa
65	Pressure of shift control system	1.6-1.8MPa\232-261psi	63	Outlet pressure of torque converter	Opening pressure: 0.5
60	Gear 4 Clutch	1.6-1.8MPa\232-261psi			

Logical relations between gear states and working conditions of shift control valve solenoid valve can be found in Table below.

Logical relations between gear states and working conditions of shift control valve solenoid valve

Solenoid valve	Electric condition of the solenoid valve										
	Forward gear				Reverse gear			Neutral gear			
	1	2	3	4	1	2	3	1	2	3	4
M1					●	●	●				
M2	●				●			●			
M3	●	●	●								
M4	●	●			●	●		●	●		
M5				●							
Clutch	KV	KV	KV	K4	KR	KR	KR	K3			
Clutch	K1	K2	K3	K3	K1	K2	K3				

Remarks: ● means the solenoid valve is energized;

Test Requirements:

Testing dynamic unbalance value

After the drive shaft is repaired, a professional dynamic unbalance test must be performed.Left unbalance volumn should not below balance quality level G16.

Torque Converter - Gearbox System

1. Leakage check

Start up the machine and operate it for several minutes, observe whether there is sign of leakage from the hose assembly coupled with gear box assembly, if so, re-tighten it.

2. Test of gear box shift pressure

Power on the machine, now the oil pressure warning light of gear box flashes on the instrument panel, and after startup of machine, the warning light shall go out, if not, inspect the oil level of gear box once again.

Drive Axle System

Leakage check

Start up the machine, step on the service brake pedal for several times after the air pressure of energy accumulator gets normal, observe whether there is sign of leakage at the joint of steel pipe of front axle brake and service brake hose.

Exhaust

Wash the ventilation plug at both sides of ventilation plug drive axle and bleed the air following the methods below before first use and replacing the lubricant within the lubricant replacement time interval. There are 2 exhaust points both on the front and rear drive axles which are respectively located at two wheel sides. Exhaust points on the same axle shall be operated separately to bleed the air.

Rear axle assembly ventilation plug location

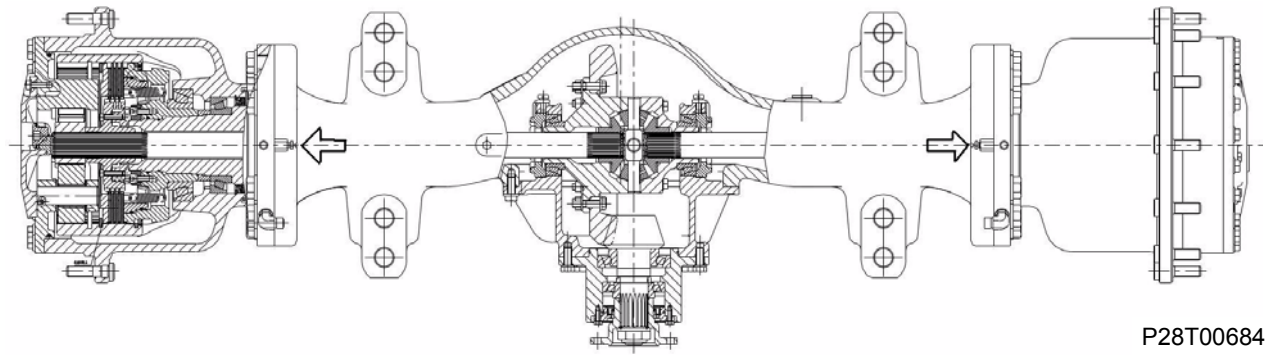

1. Park the machine on flat ground. Put the shift control lever at neutral position, and place wedges at front and rear wheels.
2. Loosen the exhaust plugs at both ends of axle.
3. Start the machine and depress the service brake pedal until the oil overflows from the ventilation plug.
4. Tighten the exhaust plug.

Try the operations above to exclude some influence factors when the brake system has abnormal sound and weak braking.

Removal and Installation

Removal and Installation of Torque Converter-Gearbox System

Removal of Torque Converter - Gearbox System

Reference picture	Operation step	Tools required
	1. Stop the machine on a level ground, put the work implement, bucket levelly, and pull up the emergency parking brake lever. 2. Turn off the engine and remove the key.	
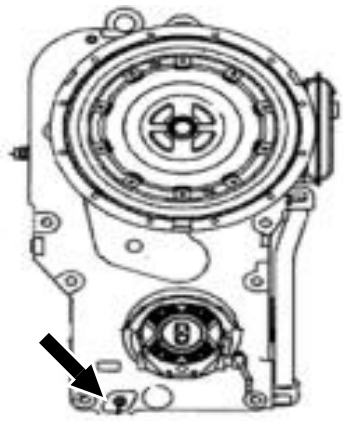 P18T00032	3. Remove the drain plug of gear box assembly to drain the oil. **⚠ CAUTION: The waste oil shall be recovered in a container during removal, in order to avoid environmental contamination. The removed hose is shielded to avoid contamination of parts.** **⚠ DANGER: It is sure that the hose pressure is fully discharged and the oil is cooled sufficiently before removal of hose, in order to avoid personal injury of hose pressure and hot oil during removal.**	34# socket, 13# socket, pneumatic impact wrench
	4. Remove the cab assembly of machine, see section “Removal and Installation of Cab” for removal steps.	

Reference picture	Operation step	Tools required
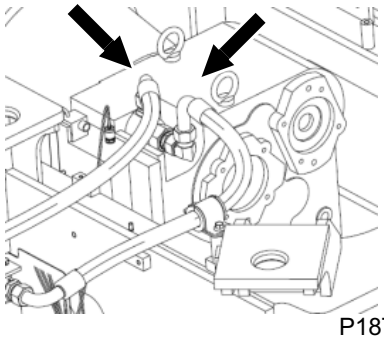 P18T00033	5. Remove the hose assembly connecting the oil filter pipe to the gear box assembly with wrench. **⚠ CAUTION: The waste oil shall be recovered in a container during removal, in order to avoid environmental contamination.The removed hose is shielded to avoid contamination of parts.**	41# wrench
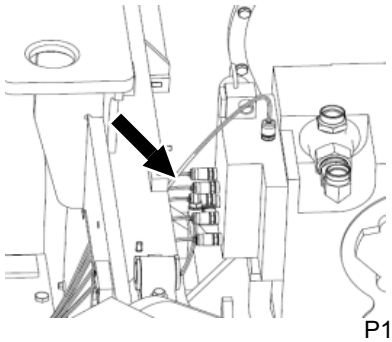 P18T00034	6. Remove the test line connected to gear box assembly and test hose.	18# Wrench
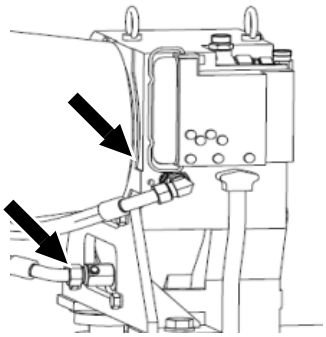 P18T00035	7. Remove the hose assembly with a wrench.	41# Wrench
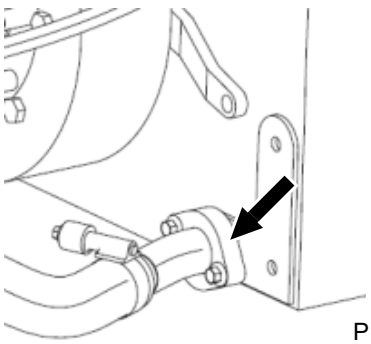 P18T00036	8. Remove the clamping bolt fixing the oil filler steel-pipe with a wrench.	10# Wrench

Reference picture	Operation step	Tools required
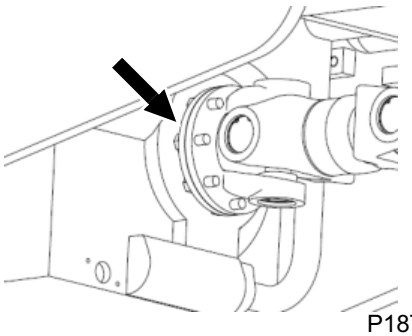 P18T00037	9. Remove the coupling locknut between rear drive shaft and rear output flange of gear box assembly. **⚠ CAUTION: The drive shaft assembly is composed of slidable spline sleeve, please take care to avoid personal injury caused by falling of slide shaft fork during removal.**	18# Wrench
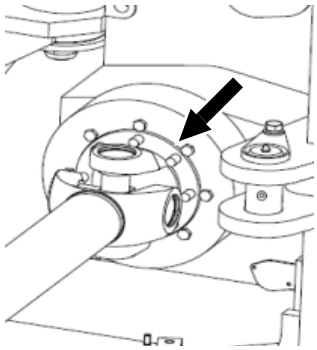 P18T00038	10. Remove the coupling locknut between intermediate drive shaft and front output flange of transmission assembly.	21# Wrench
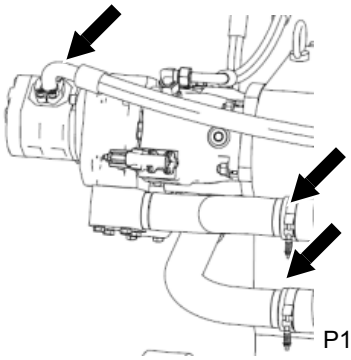 P18T00039	11. Remove the hose assembly or the hose connected with hydraulic pump from the gearbox assembly, and refer to removal of hydraulic system for detailed procedures.	
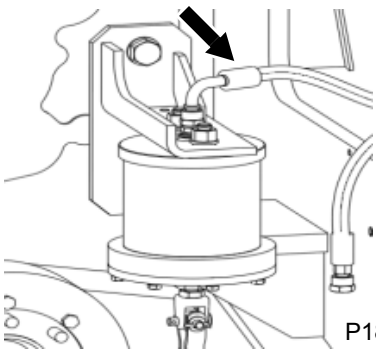 P18T00040	12. Remove the hose assembly connected with brake system from the emergency parking brake chamber.	24# Wrench

Reference picture	Operation step	Tools required
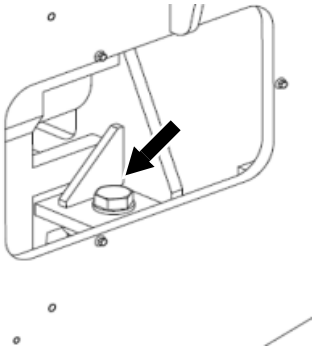 P18T00041	13. Remove the bolts and washer for attaching the transmission mount to the frame with an air gun.	46# wrench, 46# socket, pneumatic impact wrench
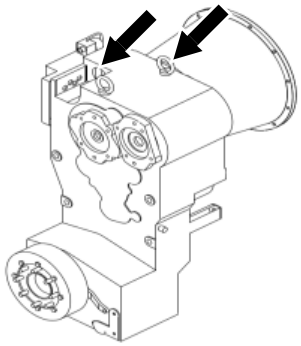 P18T00042	14. Pre-lift the gear box assembly through the lugs with lifting device.	Sling (2 tons)
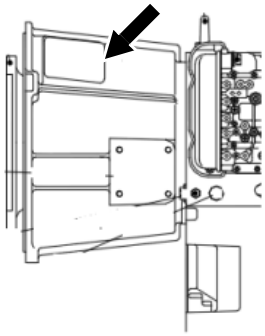 P18T00043	15. Remove the cover plate from the transmission assembly with a wrench.	13# Wrench
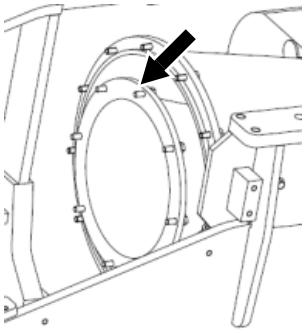 P18T00044	16. Remove the fastening bolts used to attach the gear box assembly to the engine flywheel with a wrench.	16# Wrench

Reference picture	Operation step	Tools required
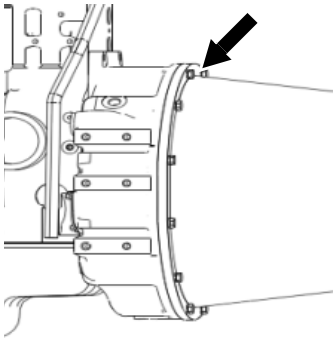 P18T00045	17. Remove the fastening bolts used for attaching the gear box assembly-torque converter case to the engine housing with an blower gun and socket.	16# socket, pneumatic impact wrench
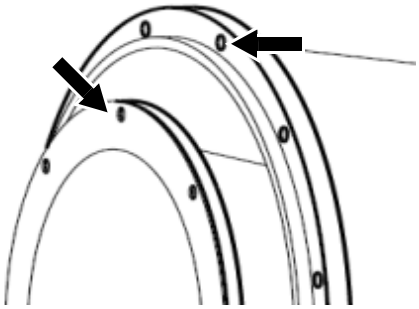 P18T00046	18. Separate the transmission assembly from the engine, and secure the torque converter case and core through the bolt holes with ropes and steel wires.	Steel wire
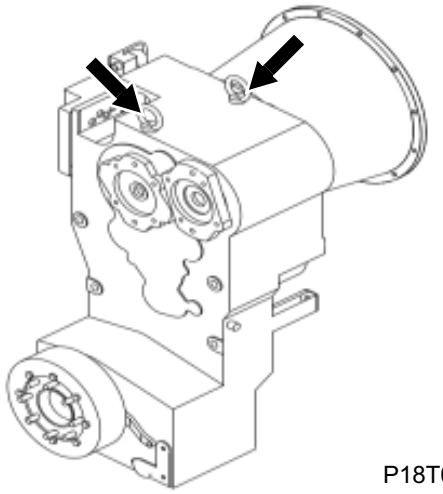 P18T00047	19. Lift up the gear box assembly from the machine through the lugs with the hoisting device and ropes and place it in a safe area.	Sling (2 tons)

Installation of Torque Converter-Gearbox System

Reference picture	Operation step	Tools required
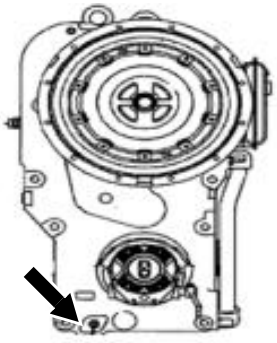 P18T00048	1. Wipe clean the drain plug of gear box, and then install it in the threaded hole of gear box and tighten it with a torque of 600±70Nm\ 442.5±51.6 lbf•ft.	34# socket, 13# socket, pneumatic impact wrench, open-end 34# fixed torque spanner
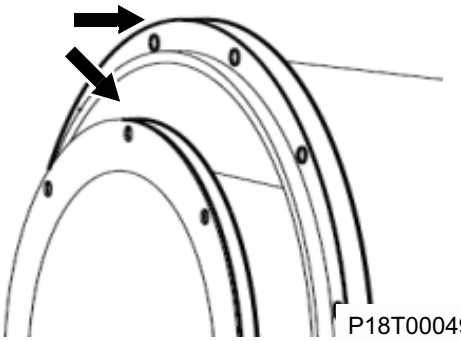 P18T00049	2. Secure the torque converter to its housing through threaded holes with the steel wire or ropes. **⚠ DANGER: The torque converter can slide freely on the guide wheel seat. When lifting up it, the torque converter and its housing must be secured firmly with the steel wire or ropes, in order to avoid personal injury due to falling of torque converter.**	Steel wire
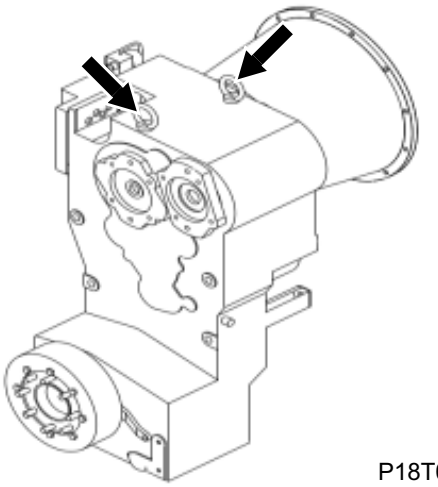 P18T00050	3. Lift up the gear box assembly onto the machine through the lugs of gear box assembly with the hoisting device and ropes.	Sling (2 tons)

Reference picture	Operation step	Tools required
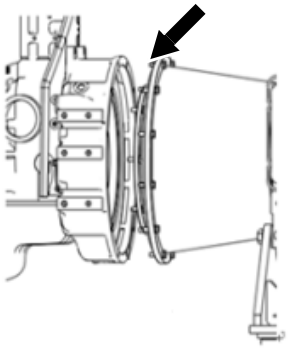 P18T00051	4. Move gear box assembly to fit it with engine flywheel housing, and install the bolts and hard washer used for tightening the torque converter case to the engine housing and then tighten them. Tightening torque: 72±6Nm\ 53.1±4.4 lbf•ft.	16# socket, pneumatic impact wrench, open-end 16# fixed torque spanner
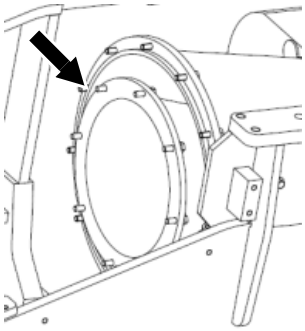 P18T00052	5. Crank the engine flywheel case to make the torque converter align with mounting threaded hole on the engine flywheel, screw and tighten the fastening bolts and washer for attaching the torque converter to the engine flywheel by hand with a torque of 60±5Nm\ 44.25±3.7 lbf•ft	16# socket, pneumatic impact wrench, open-end 16# fixed torque spanner
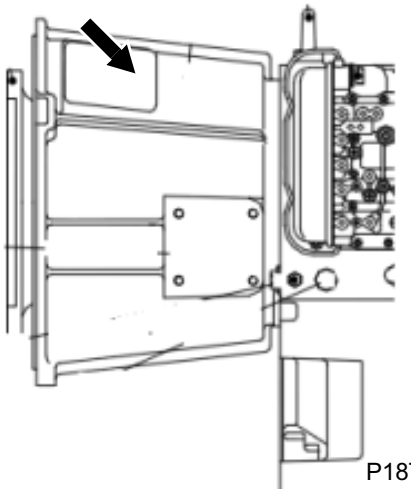 P18T00053	6. Install the mounting hole cover plate on the gear box.	13# Wrench

Reference picture	Operation step	Tools required
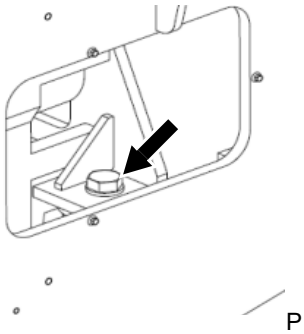 P18T00054	7. Screw and tighten the bolts and washer for fastening the gear box mount to the frame with the torque of 2035±170Nm\ 1500.8±125.38 lbf•ft.	46# wrench, 46# socket, pneumatic impact wrench, open-end 46# fixed torque spanner
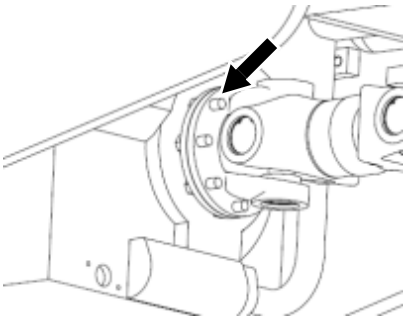 P18T00055	8. Attach the mounting end flanges of drive shaft and gear box to the rear output flange of gear box, and tighten the locknut to 132±10Nm\ 97.35±7.38 lbf•ft.	18# wrench or open-end 18# fixed torque spanner
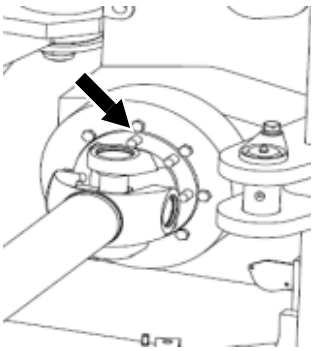 P18T00056	9. Attach the intermediate drive shaft to front output flange of gear box and tighten the locknut to 200±15Nm\ 147.5±11.06 lbf•ft.	21# wrench or open-end 21# fixed torque spanner
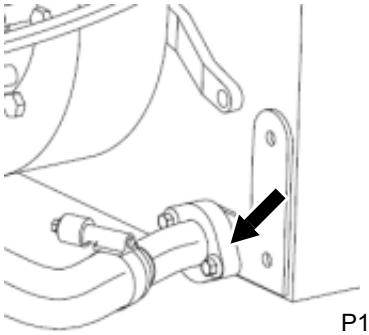 P18T00058	10. Install the oil filler steel-pipe on the gear box and tighten the set bolts with a torque of 26±3Nm\ 19.18±2.21 lbf•ft.	13# wrench or open-end 13# fixed torque spanner

Reference picture	Operation step	Tools required
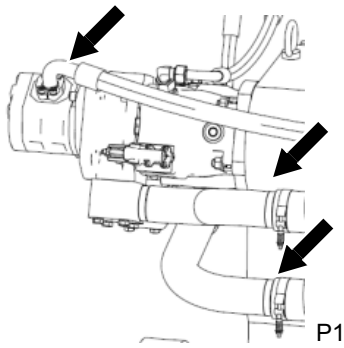 P18T00058	11. Install the hose referring to the hydraulic installation and hydraulic pump.	
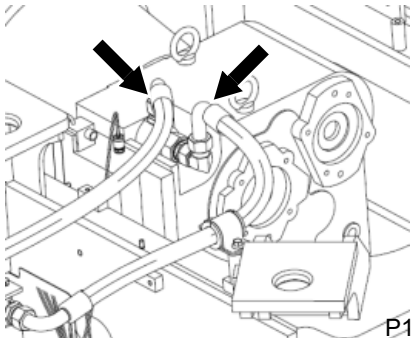 P18T00059	12. Install the hose assembly used for attaching the oil filter pipe to the gear box, and the tightening torque of hose joint is 137±6Nm\ 101.04±4.43 lbf•ft. **⚠ CAUTION: Two hose assemblies are respectively connected to the inlet, outlet of fine oil filter in directions as required, avoiding installation error.**	41# wrench or open-end 41# fixed torque spanner
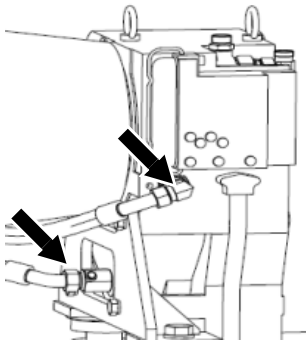 P18T00060	13. Install the hose assembly used for attaching the radiator pipe to the gear box, and the tightening torque of hose joint is 137±6Nm\ 101.04±4.43 lbf•ft.	41# wrench or open-end 41# fixed torque spanner

Reference picture	Operation step	Tools required
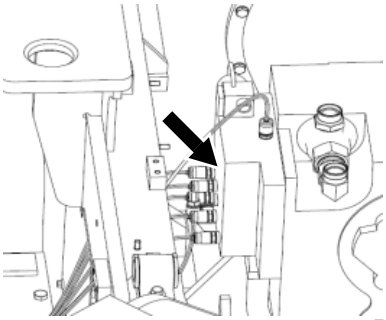 P18T00061	14. Install the hose assembly used for attaching the test pipe to the gearbox, as shown in the following figure and table.	18# Wrench

Layout of test points of shift control valve

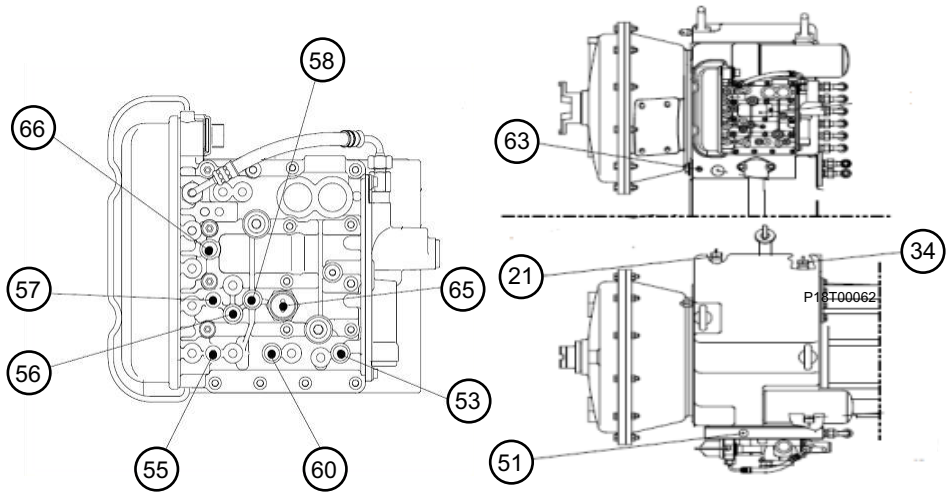

P18T00062

Logic diagram of test points and gear clutch

Decal marker	Meanings	Theoretical value	S/N in the corresponding valve
PRESSURE OF IN FRONT OF THE CONVERTER	Inlet pressure of torque converter	Opening pressure: 1.1 MPa	51
PRESSURE OF KV CLUTCH	KV clutch pressure	1.6-1.8MPa	53
PRESSURE OF KR CLUTCH	KR clutch pressure	1.6-1.8MPa	55
PRESSURE OF K1 CLUTCH	K1 clutch pressure	1.6-1.8MPa	56
PRESSURE OF K2 CLUTCH	K2 clutch pressure	1.6-1.8MPa	57
PRESSURE OF K3 CLUTCH	K3 clutch pressure	1.6-1.8MPa	58
PRESSURE OF K4 CLUTCH	K4 clutch pressure	1.6-1.8MPa	59

Reference picture	Operation step	Tools required
Mapping diagram of centralized measuring point mounting plate and measuring point 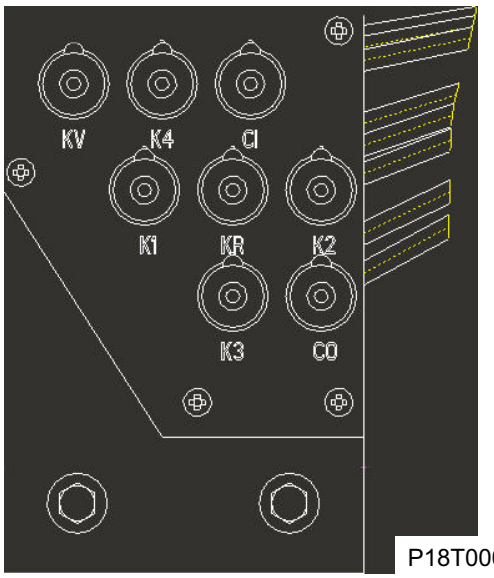 P18T00063		
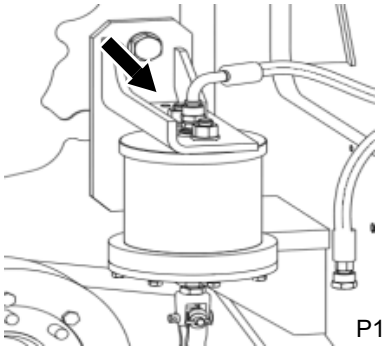 P18T00064	15. Install the hose assembly used for attaching emergence parking brake chamber to the brake system, the tightening torque is 37±2Nm\ 27.29±1.48 lbf•ft.	24# wrench or open-end 24# fixed torque spanner
	16. Fill the gear box by referring to the Operation Manual of this machine, and check the oil level according to the specified method.	

Disassembly and Assembly of Torque Converter-Gearbox Assembly

For disassembly and assembly of torque converter-gear box assembly in this machine, refer to "ZF Gear Box Overhaul Manual".

Removal and Installation of Drive Shaft System

Removal of Drive Shaft System

Reference picture	Operation step	Tools required
	1. Park the machine on a level ground, turn off the engine, and place the gear box handle in neutral position, pull up the emergency parking brake lever and place the wedges. **⚠ CAUTION: The drive shaft assembly is composed of slidable spline sleeve, please take care to avoid personal injury caused by falling of slide shaft fork during removal.**	
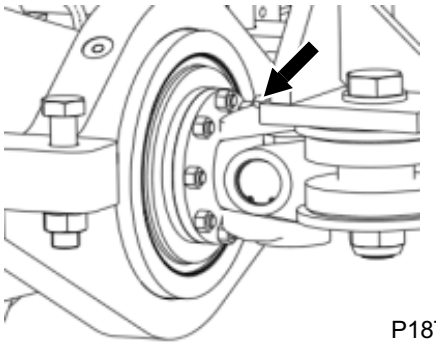 P18T00065	2. Remove the connecting locknut between the rear drive shaft and rear axle input flange with a wrench.	18# Wrench
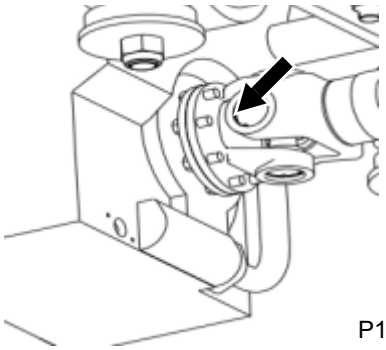 P18T00066	3. Remove the connecting locknut between rear drive shaft and rear output flange of gear box with a wrench, and place the rear drive shaft assembly in a safe area.	18# Wrench

Reference picture	Operation step	Tools required
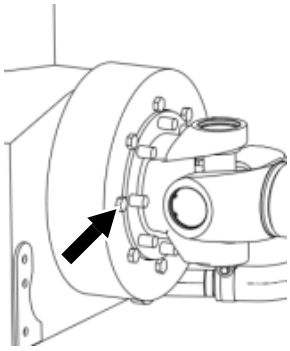 P18T00067	4. Remove the connecting locknut between intermediate drive shaft and front output flange of gear box assembly with a wrench.	21# Wrench
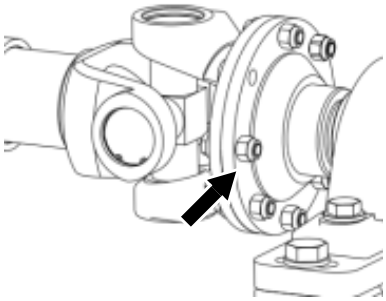 P18T00068	5. Remove tightening bolt and nut between intermediate drive shaft & bearing assembly, and remove the intermediate drive shaft from machine with a wrench.	18# Wrench
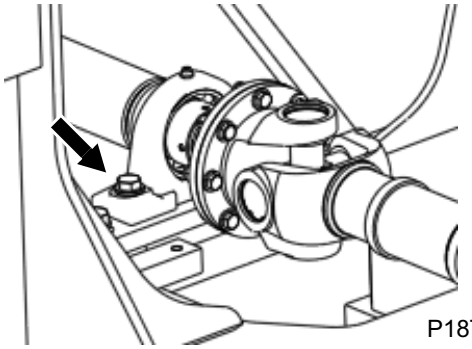 P18T00069	6. Remove the bolts and washer securely connecting the front drive shaft and support assembly to middle support plate with a wrench.	18# Wrench
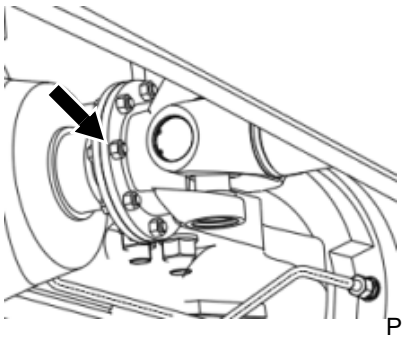 P18T00070	7. Remove the bolts and nuts securely connecting the front drive shaft and support assembly and front axle, and remove front drive shaft and support assembly from machine with a wrench.	18# Wrench

Reference picture	Operation step	Tools required
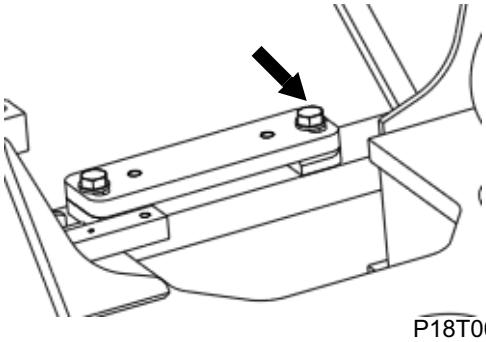 P18T00071	8. Remove the tightening bolts and washers of the support plate and frame with a blower gun or a wrench.	24# socket, pneumatic impact wrench or 24# wrench

Installation of Drive Shaft System

Reference picture	Operation step	Tools required (Remarks)
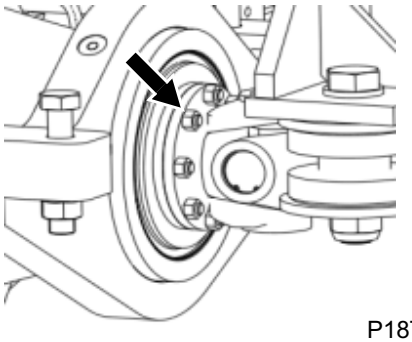 P18T00072	1. Wipe clean the surface, install rear drive shaft and rear axle input flange, and align the the mounting holes, then insert the tightening bolt and screw in the nut and tighten it with a torque of 132±10Nm\97.35±7.38 lbf•ft.	18# wrench or open-end 18# fixed torque spanner
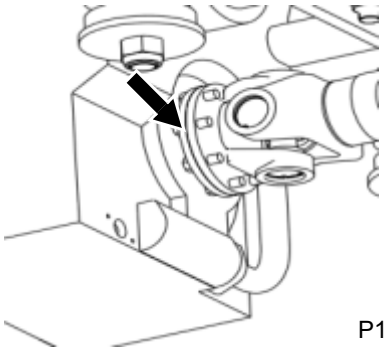 P18T00073	2. Wipe clean the surface, install the rear drive shaft and rear output flange of the gear box, and align the mounting holes, screw in the locknut and tighten it with a torque of 132±10Nm\ 97.35±7.38 lbf•ft. **⚠ CAUTION: When assembling, please make sure to pay attention to the white arrows on the identification of drive shaft, both of which must be aligned after assembly!**	18# wrench or open-end 18# fixed torque spanner

Reference picture	Operation step	Tools required (Remarks)
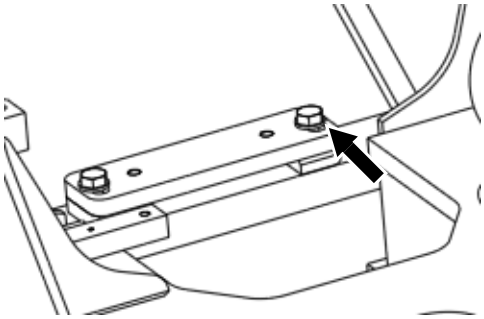 P18T00074	3. Wipe clean the two mounting surfaces of support plates, and then pre-install it onto the front frame. Set the front drive shaft and support assembly with middle support bearing on the front frame middle support bearing seat support plate.	
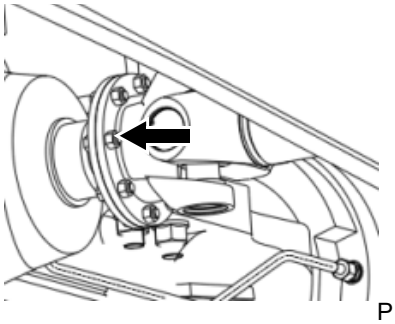 P18T00075	4. Wipe clean the surface, install the front drive shaft and support assembly with front axle input flange, and align the mounting hole, screw in the locknut and tighten it with a torque of 132±10Nm\97.35±7.38 lbf•ft.	18# wrench or open-end 18# fixed torque spanner
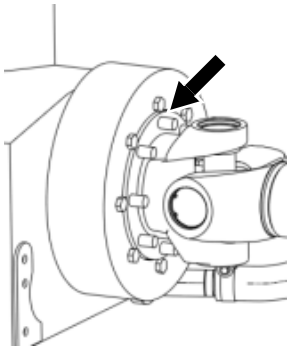 P18T00076	5. Wipe clean the mounting surfaces of front output flange of gear box and intermediate drive shaft flange, and install the intermediate drive shaft to the front output flange bolts of gear box, screw in the locknut and tighten it with a torque of 200±15Nm\ 147.5±11.06 lbf•ft.	21# wrench or open-end 21# fixed torque spanner

Reference picture	Operation step	Tools required (Remarks)
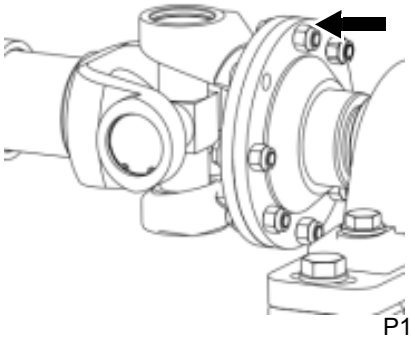 P18T00077	6. Install the middle drive shaft, front drive shaft and support assembly, and align the mounting holes. Insert the tightening bolt and screw in the locknut, and then tighten them to 132±10Nm\ 97.35±7.38 lbf•ft. **⚠ CAUTION: The intermediate drive shaft middle shaft fork must be aligned with the fork which is coupled with front axle on the front drive shaft and support assembly!**	18# wrench or open-end 18# fixed torque spanner
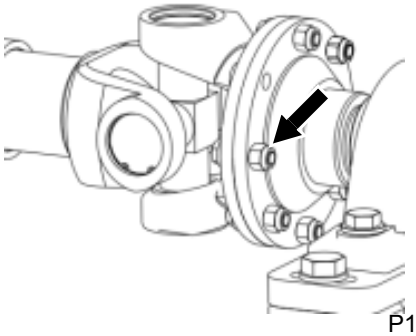 P18T00078	7. Adjust the front&rear, left&right positions of intermediate, front drive shafts and support assembly to make sure that the bolts between support plate and frame can be screwed in smoothly with torque of 132±10Nm\97.35±7.38lbf•ft.	Open-end 18# fixed torque spanner or 18# wrench
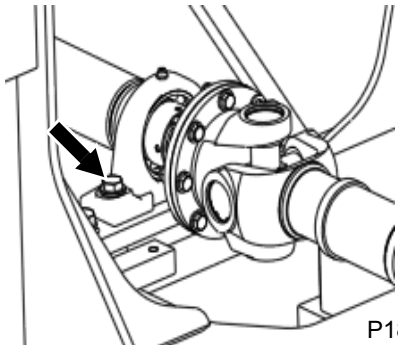 P18T00079	8. Install the tightening bolts and washer of the middle support bearing seat and support plate, and tighten them to 22494±18.44 lbf•ft.	24# socket, fixed torque blower gun or open-end 24# fixed torque spanner

Removal and Installation of Front Wet Axle Assembly

Removal of Front Wet Axle Assembly

Reference picture	Operation step	Tools required
	1. Stop the machine on a level ground, put the work implement, bucket levelly, and pull up the emergency parking brake lever. 2. Turn off the engine, step on the service brake pedal for several times, so as to release the pressures of energy accumulator and axle brake pipe. 3. Lift up the machine with a lifting device, and support it up with a supporting device with 4 tires off the ground	Sling (12 tons)
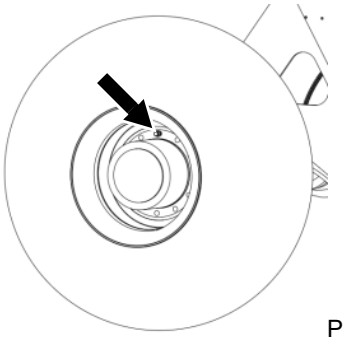 P18T00080	4. Pre-lift up the tires with a hoist, remove the bolts and nuts used for tightening the rim and axle. 5. Lift the tires away from machine and put them in a safe area. 6. Repeat steps (4), (5), remove another tire installed on the front axle.	Sling(2 tons)30# socket, pneumatic impact wrench or open-end 30# wrench

Reference picture	Operation step	Tools required
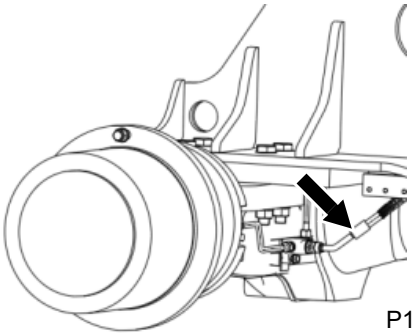 P18T00081	7. Remove the hose assembly connected to service brake system and the front axle. **⚠ CAUTION: The waste oil shall be recovered in a container during removal, in order to avoid environmental contamination. The removed hose is shielded to avoid contamination of parts.** **⚠ DANGER: It is sure that the hose pressure is fully discharged and the oil is cooled sufficiently before removal of hose, in order to avoid personal injury of hose pressure and hot oil during removal.**	24# Wrench
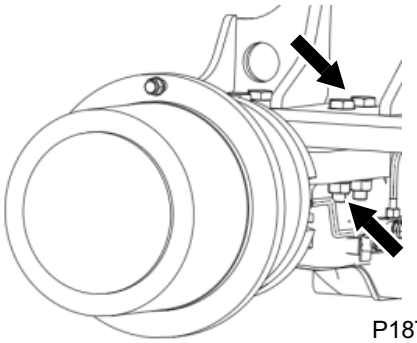 P18T00082	8. Pre-lift the front axle assembly with a sling. 9. Remove the bolts and nuts for connecting the front axle assembly to the front frame with a blower gun. 10. Put the axle assembly onto the ground slowly with a lifting device. 11. Remove the axle assembly from the bottom of machine with a handling equipment, and then put it on the appliance for axle assembly.	Sling(2 tons)40# socket, pneumatic impact wrench, 40# wrench

Installation of Front Wet Axle Assembly

Reference picture	Operation step	Tools required
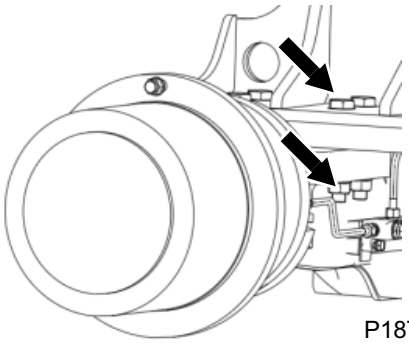 P18T00083	1. Take the front axle assembly out of placed area with a handling device, and position it under its mounting point. 2. Lift up the front axle assembly with a hoist, and install it on the frame. 3. Install the tightening bolts and nuts and tighten them with torque of 2035±170Nm\ 1500.8±125.38 lbf•ft.	Sling(2 tons) 46# socket, pneumatic impact wrench, open-end 46# fixed torque spanner
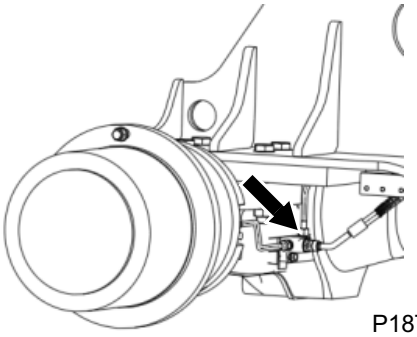 P18T00084	4. Install the front axle brake pipe and service brake hose. Tightening torque: 37±2Nm\ 27.29±1.48 lbf•ft.	Open-fixed 24# fixed torque spanner
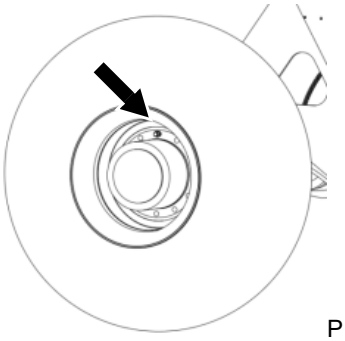 P18T00085	5. Lift up the tire with a hoist and install it onto the axle, and then install the rim nut and tighten it to 600±60Nm\ 442.5±44.25 lbf•ft.	Sling (2 tons)30# socket, pneumatic impact wrench, open-end 30# fixed torque spanner
	6. Lift the machine with a hoist, remove the support device, and put the machine onto the ground.	Sling (12 tons)

Removal and Installation of Rear Wet Axle Assembly

Removal of Rear Wet Axle Assembly

Reference picture	Operation step	Tools required
	1. Stop the machine on a level ground, put the work implement, bucket levelly, and pull up the emergency parking brake lever. 2. Turn off the engine, step on the service brake pedal for several times, so as to release the pressures of energy accumulator and axle brake pipe. 3. Lift up the machine with a lifting device, and support it up with a supporting device with 4 tires off the ground	Sling (12 tons)
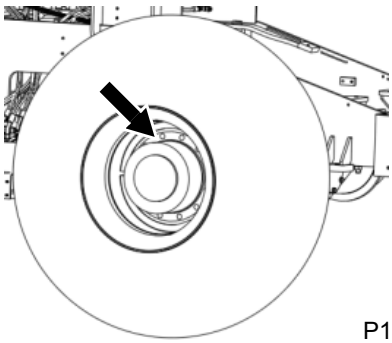 P18T00086	4. Pre-lift up the tires with a hoist, remove the bolts and nuts used for tightening the rim and axle. 5. Lift the tires away from machine and put them in a safe area. 6. Repeat steps (4), (5), remove another tire installed on the rear axle.	Sling (2 tons)30# socket, pneumatic impact wrench or open-end 30# wrench
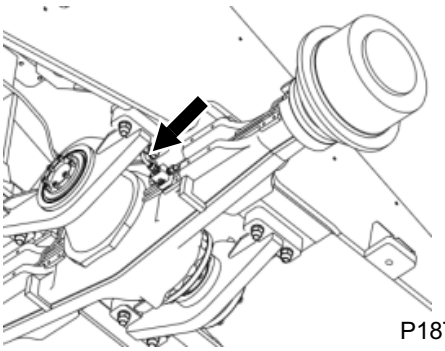 P18T00087	7. Remove the the rear axle and hose assembly connected to service brake system.	24# Wrench

Reference picture	Operation step	Tools required
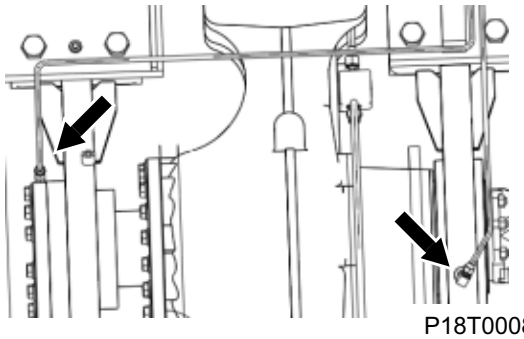 P18T00088	8. Remove the steel pipe connected to the rear axle and centralized lubricating system.	Open-end 16# wrench
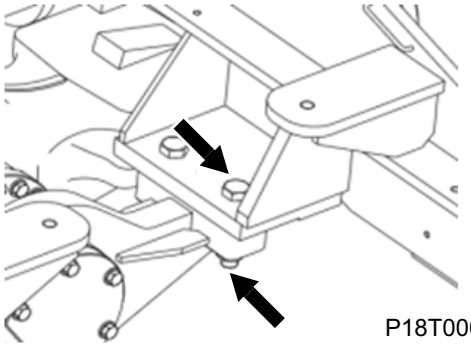 P18T00089	9. Pre-lift the rear axle assembly with a sling. 10. Remove the bolts and locknuts for connecting the rear axle assembly to the rear frame. 11. Put the axle assembly onto the ground slowly with a lifting device. 12. Remove the axle assembly from the bottom of machine with a handling equipment, and then put it on the appliance for axle assembly.	Sling (2 tons) 36# socket, pneumatic impact wrench, 36# wrench,
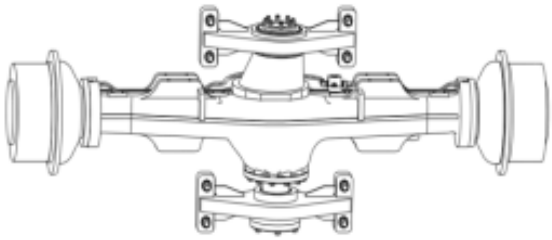 P18T00090	13. Place the axle assembly as shown in the left figure to make front swing frame support shaft upward, and rear swing frame support shaft downward.	

Reference picture	Operation step	Tools required
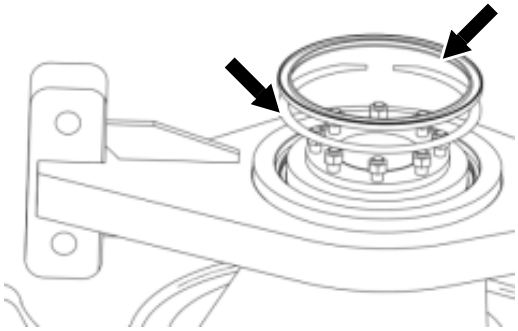 P18T00091	14. Remove the seal ring and snap ring from the front swing support rack with a screwdriver.	Straight screwdriver
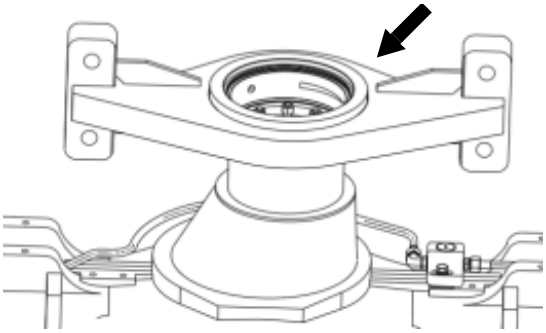 P18T00092	15. Remove the front swing support rack from axle assembly with a lifting device and place it in a safe area.	Sling (2 tons)
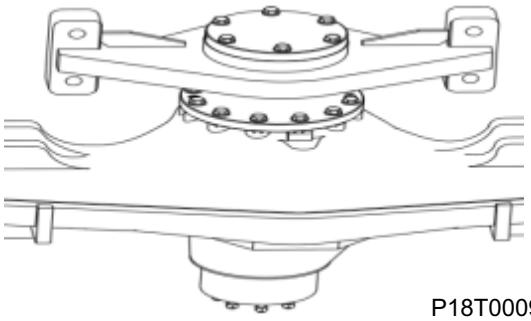 P18T00093	16. Place the axle assembly as shown in the left figure to make the rear swing support rack upward.	
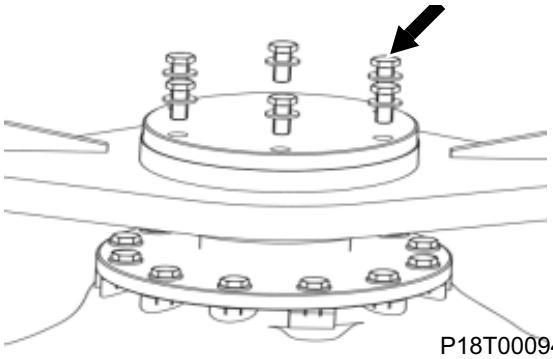 P18T00094	17. Remove the bolts, washers with a wrench or an pneumatic tool.	Open-end 18# wrench

Reference picture	Operation step	Tools required
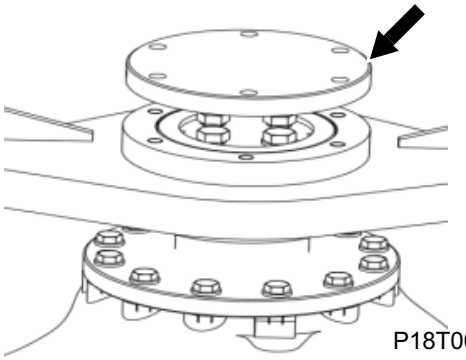 P18T00095	18. Remove the cover.	Open-end 18# wrench
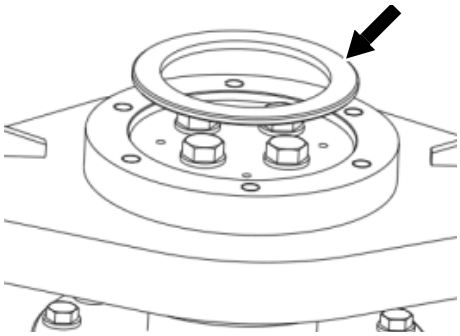 P18T00096	19. Remove the thrust washer.	Straight screwdriver
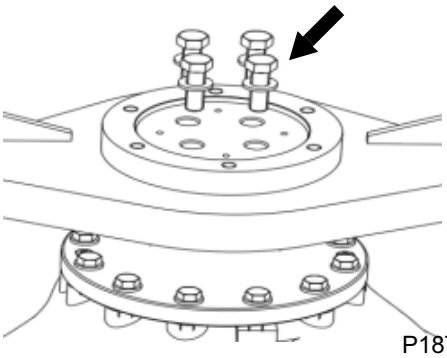 P18T00097	20. Remove the bolts and washer tightening the clamping plate.	Open-end 27# wrench or 27# socket, pneumatic impact wrench
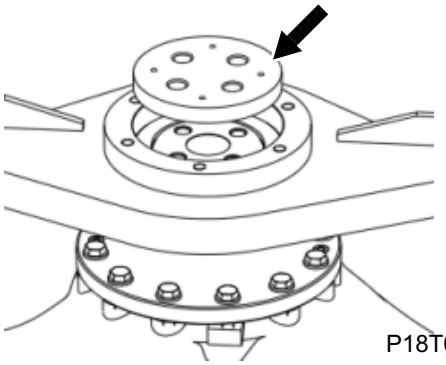 P18T00098	21. Remove the clamping plate.	Straight screwdriver

Reference picture	Operation step	Tools required
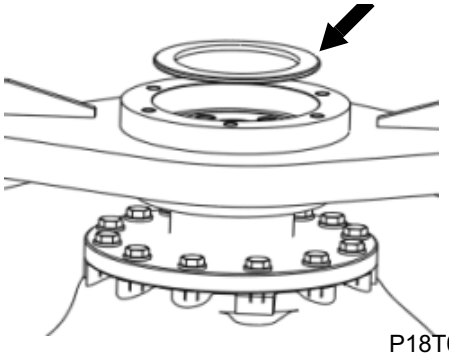 P18T00099	22. Remove the thrust washer.	Straight screwdriver
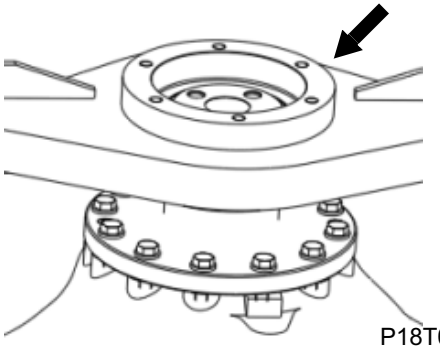 P18T00100	23. Remove the rear swing support rack with a lifting device.	Sling (2 tons)
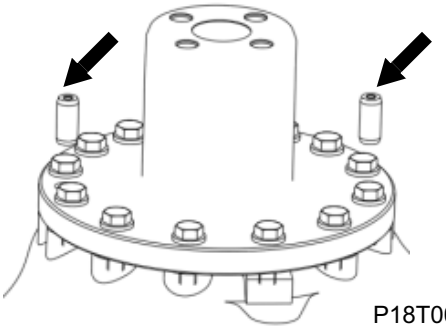 P18T00101	24. Screw the M8 bolt in the dowel and remove the dowel.	Open-end 13# wrench
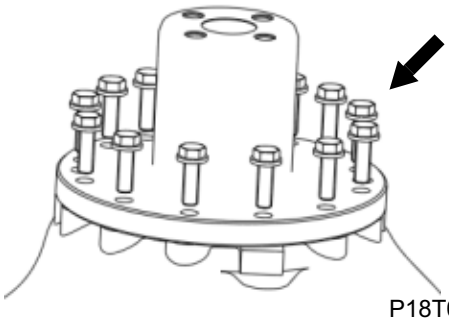 P18T00102	25. Remove the bolts and washers tightening the support shaft.	Open-end 21# wrench or 21# socket, pneumatic impact wrench

Reference picture	Operation step	Tools required
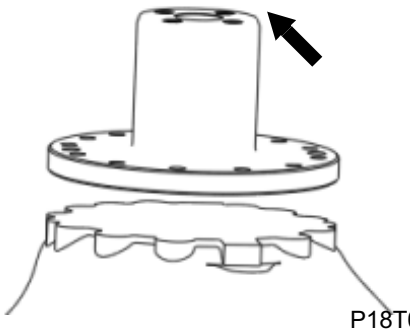 P18T00103	26. Remove the support shaft with a lifting device.	Sling (2 tons)

Installation of Rear Wet Axle Assembly

Reference picture	Operation step	Tools required
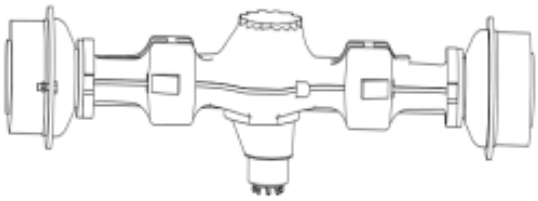 P18T00104	1. Lift up the axle assembly and position it as shown in the left figure onto a special assembly device.	
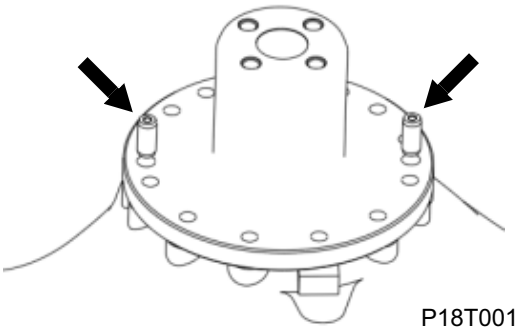 P18T00105	2. Wipe clean the mounting face between the support shaft and the axle case connected to it with a clean cloth, install the support shaft onto the axle and align two dowel pins accurately, strike it into the dowel pin with a copper bar.	Copper bar

Reference picture	Operation step	Tools required
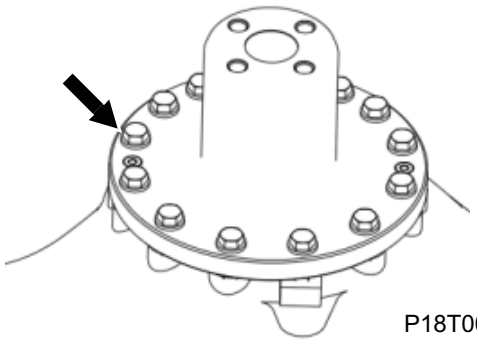 P18T00106	3. Apply thread lock sealant to thread portions of bolts, screw them into support thread holes by 2-3 threads by hand, and tighten them with an air gun. Tightening torque: 305±25Nm\ 22494±18.44 lbf•ft.	24# socket, pneumatic impact wrench, open-end 24# fixed torque spanner
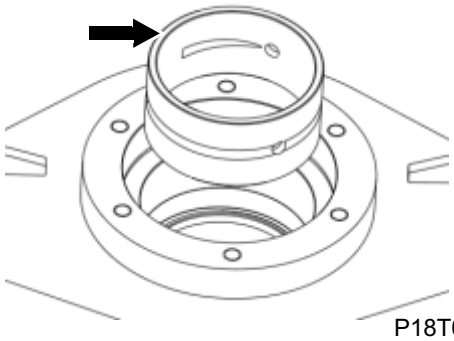 P18T00107	4. Horizontally place rear swing frame with the thread hole end upward, and install the bush into rear swing support rack.	
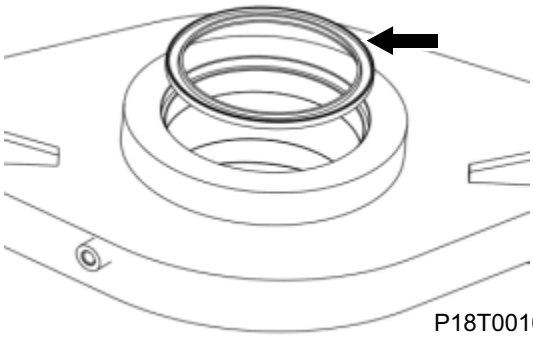 P18T00108	5. Turn over swing frame by 180°, install seal ring and knock it to the end with nylon hammer.	Nylon hammer
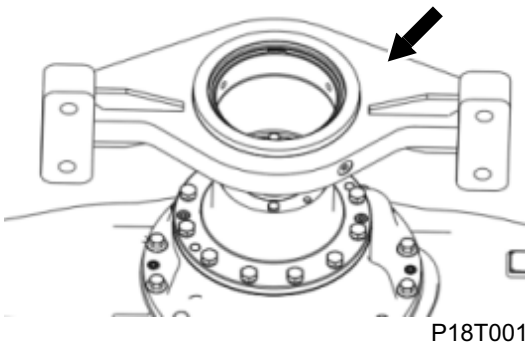 P18T00109	6. Turn over swing frame group by 180°, evenly apply molybdenum disulfide lithium base grease to bushing cone, and install rear swing frame group into spindle with lifting device.	

Reference picture	Operation step	Tools required
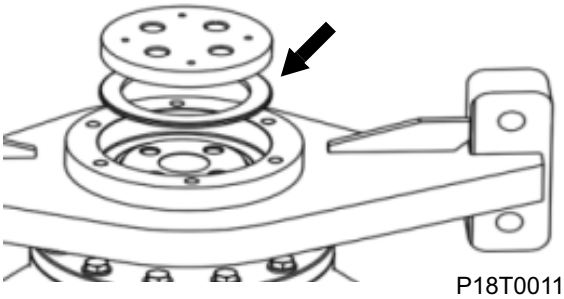 P18T00110	7. Install thrust washer and pressing plate and align the holes well.	
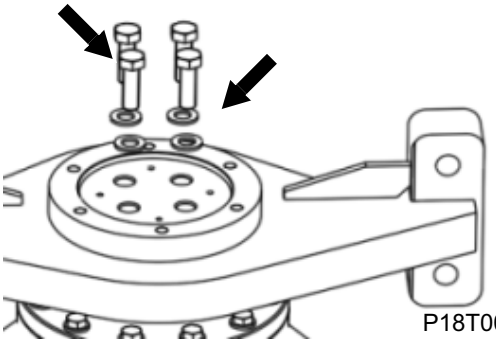 P18T00111	8. Apply thread lock sealant to thread portion of bolt, screw bolts and hard washers into the clamping plate thread holes by 2-3 teeth by hand, and drive them in symmetrically with pneumatic impact wrench with the tightening torque of 305±25Nm\ 224.94±18.44 lbf•ft.	24# socket, pneumatic impact wrench, open-end 24# fixed torque spanner
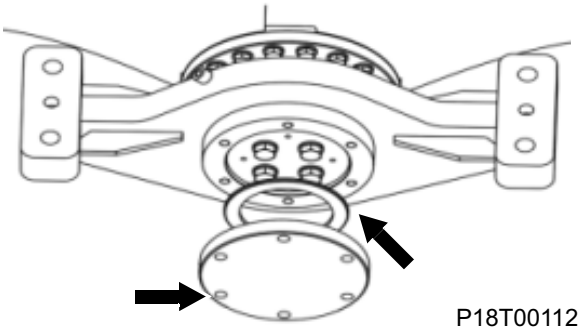 P18T00112	9. Put a thrust washer and cover and align the holes well.	
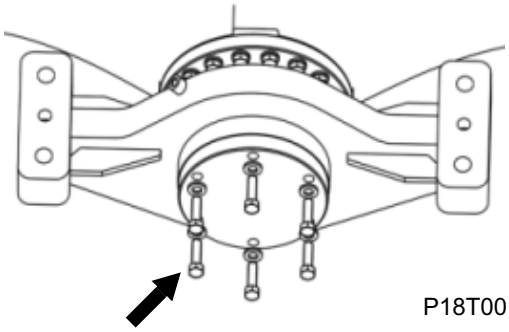 P18T00113	10. Apply thread lock sealant to thread of bolts, screw bolts and hard washers into cover thread holes by 2-3 teeth by hand, and drive them in symmetrically with pneumatic impact wrench with the tightening torque of 195±15Nm\ 143.81±11.06 lbf•ft.	21# socket, pneumatic impact wrench, open-end 21# fixed torque spanner

Reference picture	Operation step	Tools required
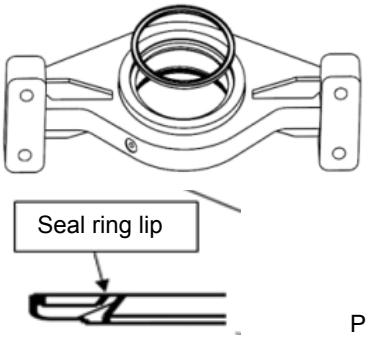 P18T00114	11. Horizontally place front swing frame, and knock seal ring into front swing frame mounting hole to the end with nylon hammer. **⚠ CAUTION: The seal ring lip faces outward.**	Nylon hammer
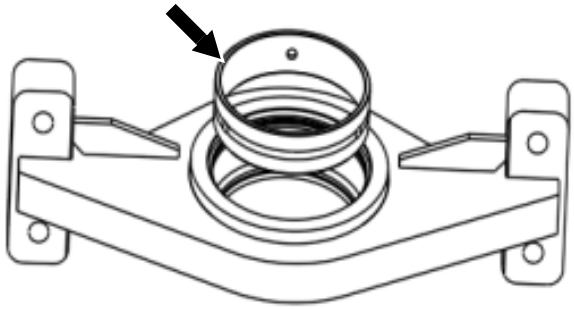 P18T00115	12. Press the bushing into the front swing frame to the bottom **⚠ CAUTION: The small hole of bushing must toward the lug end of front swing support.**	
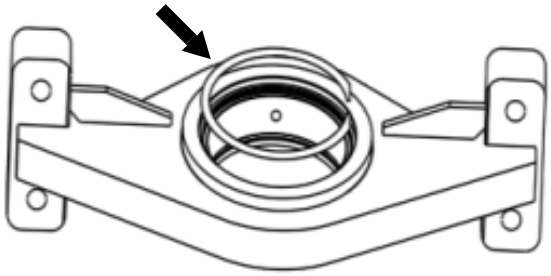 P18T00116	13. Install the snap ring into the groove with straight screwdriver.	Straight screwdriver
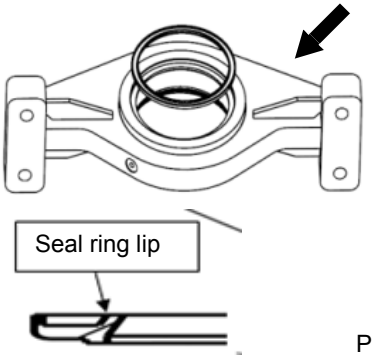 P18T00117	14. Knock seal ring into front swing frame mounting slot to the end with nylon hammer; **⚠ CAUTION:The seal ring lip faces outward.**	

Reference picture	Operation step	Tools required
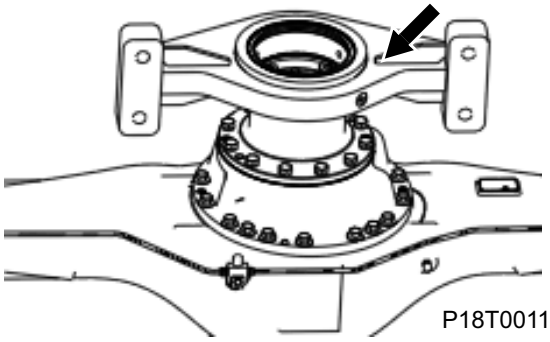 P18T00118	15. Evenly apply the molybdenum disulfide lithium base grease to bushing cone, and then lift and install the front swing support subassembly onto the bearing seat of the main transmission. 16. Place the axle assembly on a transport device with a lifting device, and right under mounting point of rear axle. 17. Install the axle assembly onto the rear frame with a lifting device and align the mounting holes.	Sling (2 tons)
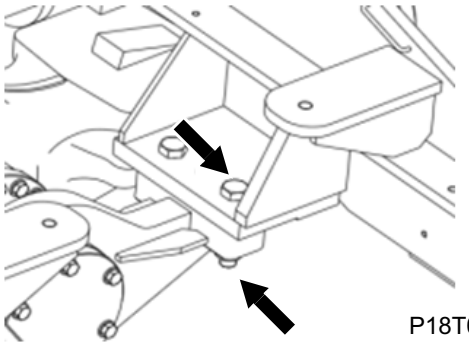 P18T00119	18. Install the mounting bolts, washers and nuts of the axle assembly and tighten them with an blower gun to 1122±90Nm\ 827.28±66.38 lbf•ft.	36# socket, pneumatic impact wrench, open-end 36# fixed torque spanner
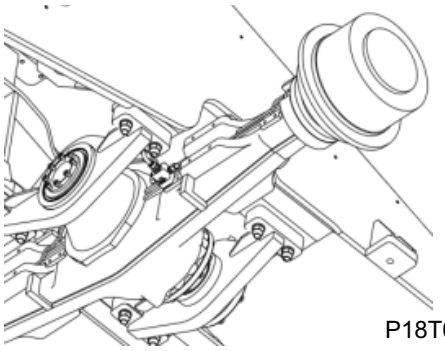 P18T00120	19. Install the axle and hose connecting the service brake pipe and tighten it to 37±2Nm\ 27.29±1.48 lbf•ft.	Open-end 24# wrench

Reference picture	Operation step	Tools required
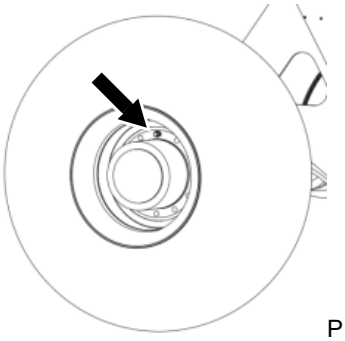 P18T00121	20. Lift up the tire with a hoist and install it onto the axle, and then install the rim nut and tighten it to 600±60Nm\ 442.5±44.25 lbf•ft.	30# socket, pneumatic impact wrench or open-end 30# fixed torque spanner
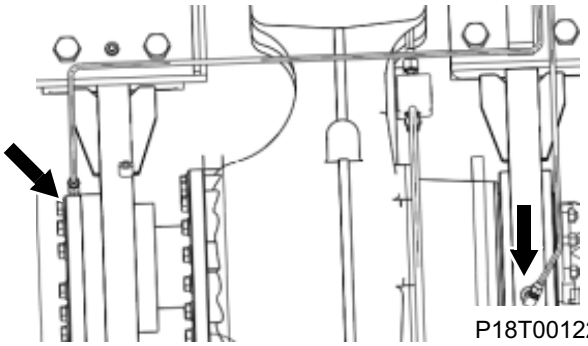 P18T00122	21. Install the steel pipe connecting the centralized lubricating system and axle.	Open-end 16# wrench
	22. Lift the machine with a hoist, remove the support device, and put the machine onto the ground.	Sling (12 tons)

Disassembly and Assembly of the Drive Axle

For disassembly and assembly of the drive axle in this machine, see "Wet-type Axle Service Manual" for details.

Fault Diagnosis and Troubleshooting

	Fault features	Main reasons	Fault inspection and troubleshooting
1	The engine can not Activation	1. Start circuit of the base machine (such as power voltage, electric lock, startup relay and startup motor) has faults.	1. Check the circuit of the base machine.
		2. The lever is not at the neutral position.	2. Shift the lever to neutral position.
		3. The fuse to the control circuit on the base machine is burnt.	3. Replace the fuse.
		4. Poor contact of handle plug or the handle is failed.	4. Organize the plugs.
		5. Poor contact of controller plug or the controller is failed.	5. Organize the plugs.
2	Low shift pressure at all gears Low pressure	1. Oil pressure gauge is failed.	1. Replace the oil pressure gauge
		2. Insufficient tightening torque for bolt of shift control valve.	2. Tightening torque for M8-8.8 bolt of shift control valve is 26Nm.
		3. Spring of main pressure valve is broken.	3. Replace it.
		4. Gear shift pump is worn	4. Replace the gear shift pump.
		5. Fragments enter into shift control valve or valve is stuck	5. Replace the filter, and clean the control valve.
3	Too short shifting time at all gears	1. O-ring in throttle plug is damaged	1. Replace the O-ring
		2. The tightening torque of pressure control valve bolts is out of specified range	2. Tightening torque for M8-8.8 bolt of shift control valve is 26Nm.
4	Too long shifting time at all gears	1. Throttle plug is blocked.	1. Clean and dredge.
		2. Pressure control valve is stuck.	2. Wash and check.
5	The oil temperature of the torque converter is high	1. Oil temp sensor is failed.	1. Replace the part.
		2. Oil temperature gauge is failed.	2. Replace the part.
		3. Insufficient oil level.	3. Check oil level following the correct method.
		4. Air found in torque converter oil radiator.	4. Exhaust.
		5. Oil line from torque converter to radiator is poor.	5. Check oil pipe from radiator to gear box and radiator for blockage.
6	The oil temperature of the torque converter is high	1. Poor cooling capability of radiator.	1. Check whether cooling capability is sufficient, such as checking the degree of tightness for engine fan belt and dirt attached to outer surface of radiator.
		2. Back pressure valve of torque converter stuck.	2. Be careful to check hose connector from gear box to radiator. If hose connector enters housing too deeply, pushes spool of pressure valve and cause valve to stick, oil line will be getting blocked.

	Fault features	Main reasons	Fault inspection and troubleshooting
7	Vehicle does not move at any gear	1. Insufficient oil level.	1. Check oil level and add the oil by following the right operation.
		2. Elastic plate connecting engine and torque converter is torn, or power connection from torque converter to gear box input gear has faults.	2. Replace the elastic plate or replace the related damaged parts.
		3. Circuit failure of the complete machine.	3. Check the power voltage for abnormal and the cable for damage.
		4. Shift pressure is too low.	4. Refer to the troubleshooting above.
		5. Solenoid valve is damaged.	5. Check if the rated current of solenoid valve is 830 mA.
		6. Shift lever is damaged.	6. Refer to the troubleshooting for lever. Replace it.
		7. Controller is damaged.	7. Refer to the fault inspection of controller. Replace it

Common Failure Mode of Tire and Reasons

Common failure mode of tire and reasons are as follows:

Failure mode	Typical pictures	Main reasons
Delaminating of crown	 P28T00060	**Reasons for manufacture:** there is impurities, oil stains or water in the tread rubber or cord ply or not firmly compressed when being molded, or gasoline does not fully volatilize. **Reasons for usage:** speed is too fast (beyond specified speed), and directive pattern is traveling in reverse direction.

Failure mode	Typical pictures	Main reasons
Shoulder delamination blasting	 P28T00061	**Reasons for manufacture:** there is impurities, oil stains or water in sidewall rubber or cord ply or not firmly compressed, or gasoline does not fully volatilize. **Reasons for usage:** traveling with insufficient air will intensify wear of tire shoulders and cause excessive heat, which will separate sidewall rubber from cord ply and cause an explosion when problem gets worse.
Delaminating of sidewall	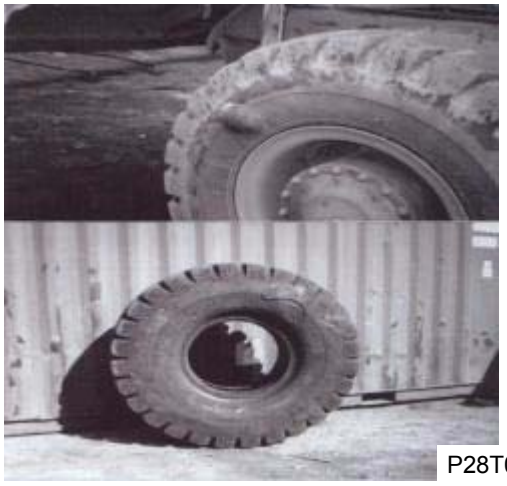 P28T00062	**Reasons for manufacture:** there is impurities, oil stains or water in sidewall rubber or cord ply or not firmly compressed when being molded or gasoline does not fully volatilize. **Reasons for usage:** traveling on uneven road with insufficient air or overload or operating in severe working conditions will cause tire body to deform badly and cause excessive heat in partial sidewall so that sidewall peels off or explodes.
Double skin	 P28T00063	Mixing of extruded tread compound is uneven, surfaces of semi-finished product have impurities, vulcanization mold has oil stains, and isolating agent is unevenly applied.

Failure mode	Typical pictures	Main reasons
Wearing of crown	 P28T00064	Traveling with too high pressure will cause earthed area reduction of tire crown, local load increase and wear intensification.
Trauma	 P28T00065	During traveling, outer tube is scratched by pointed objects or is stabbed evenly by pointed objects.
Side trauma	 P28T00066	The vehicle speeds up when steering, the tire side rubs the roadside obstacles; and installed tire is stuck with hard objects; the machinery is damaged during transportation, installation.

Hydraulic System

Basic Information 4-5

Safety Precautions for Hydraulic System 4-5
Overviews of Hydraulic System 4-8
Technical Parameters of Hydraulic System 4-11
Hydraulic System Principle Schematic 4-11
Universal Tools and Tooling for Hydraulic Maintenance 4-12
Special Tools and Tooling for Hydraulic Maintenance 4-13

Structure Function Principle 4-17

Work Hydraulic System 4-17
- Hydraulic Oil Tank 4-18
- Working Pump 4-19
- Boom Cylinder 4-20
- Bucket Cylinder 4-20
- Control valve 4-21
- Pilot Valve 4-26
- Pilot Supply Oil Valve 4-27
- Oil Filter 4-29

Steering Hydraulic System 4-30
- Steering Pump 4-31
- Metering Pump 4-32
- Priority Valve 4-33
- Steering Cylinder 4-34

Brake system 4-35
- Brake Pump 4-38
- Brake Valve 4-41
- Charge Valve 4-46
- Accumulator Assembly 4-52
- Brake Cylinder 4-54

Hydraulic Cooling System 4-56
- Cooling Pump 4-61
- Cooling Motor 4-63

Testing and Adjustment 4-65

Work Hydraulic System Test 4-65

Pressure Release of Work Hydraulic System 4-65
Pressure Test of Work Hydraulic System 4-66
Steering Hydraulic System Test 4-75
Pressure Testing and Adjustment of Steering Hydraulic System 4-76
Brake System Test 4-79
Removal and Installation 4-82
Work Hydraulic System 4-82
Removal and Installation of Hydraulic Oil Tank Assembly 4-82
Removal of Working Pump Assembly 4-86
Removal and Installation of Boom Cylinder 4-91
Disassembly and Assembly of The Boom Cylinder 4-95
Removal and Installation of Bucket Cylinder 4-98
Disassembly and Assembly of Bucket Cylinder 4-102
Removal and Installation of Control Valve Assembly 4-105
Removal and Installation of Pilot Valve Assembly 4-110
Removal and Installation of Pilot Oil Valve Assembly 4-112
Removal and Installation of Oil Filter 4-113
Steering Hydraulic System 4-114
Removal and Installation of Steering Pump Assembly 4-114
Removal and Installation of Metering Pump 4-119
Disassembly and Assembly of Metering Pump 4-122
Removal and Installation of Priority Valve 4-128
Disassembly and Assembly of the Priority Valve 4-131
Removal and Installation of Steering Cylinder 4-133
Disassembly and Assembly of Steering Cylinder 4-137
Brake System 4-140
Removal and Installation of Brake Pump 4-140
Removal and Installation of Brake Valve 4-140
Disassembly and Assembly of Brake Valve 4-143
Removal and Installation of Charge Valve 4-158
Disassembly and Assembly of Charge Valve 4-160
Removal and Installation of Accumulators 4-185
Removal and Installation of Brake Cylinder 4-187
Hydraulic Cooling System 4-188
Removal and Installation of Cooling Pump 4-188

Disassembly and Assembly of Cooling Pump0 4-190
Removal and Installation of Cooling Motor 4-194

Fault Diagnosis and Troubleshooting 4-197

Troubleshooting of Metering Pump 4-197
Common Troubleshooting for Brake System 4-199
Troubleshooting for Brake Pump 4-200
Troubleshooting for Cooling Pump 4-201

Basic Information

Safety Precautions for Hydraulic System

Compressed Air

Compressed air may cause personal injury. When using the compressed air for cleaning, wear the mask, protection suits and shoes. Do not point the compressed air at yourself or anyone. The compressed air may penetrate the skin and lead to severe injury or even death. The maximum pressure of the compressed air for cleaning should be lower than 0.2MPa (29psi).

High-pressure Solution

Prevent from being scalded by high-pressure oil. When overhauling or replacing the pipes of hydraulic system, check whether the pressure of system had been released. Hydraulic oil under pressure will damage your skin severely when it spattered on you.

Take care when remove the hydraulic pipelines or connectors. When the oil spouts, the released high-pressure oil may lead to the continuous movement of the hoses.

Please wear safety glasses and leather gloves when checking for leakages. Do not use bare hands to check the leakage but plate or paper plate.

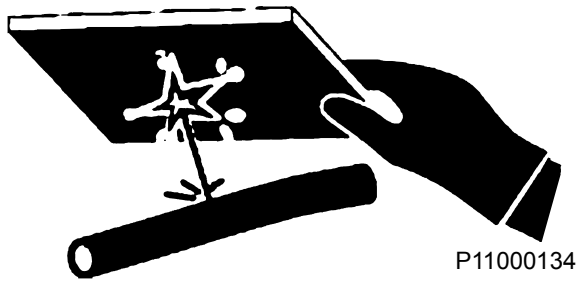

P11000134



P11000204

Even if the pressured liquid is leaked from a hole as small as a pin hole, it may penetrate the muscles and lead to death. If shot by the spouted high-pressure oil, please contact a doctor and take a medical treatment immediately.

Safe Disposal of Waste Liquid

Inappropriate disposal of waste liquid will endanger environment and ecology. Please observe local laws and regulations when dispose the waste liquid.

It is mandatory and necessary to collect the liquid with containers spattered during the inspection, maintenance, test, adjustment and repair of machine. Proper container shall be prepared well before opening any fluid cavity or disassembling the parts containing liquid. Use proper container when draining liquid.

Do not use the food or drink containers because they may be drunk by others by mistake.

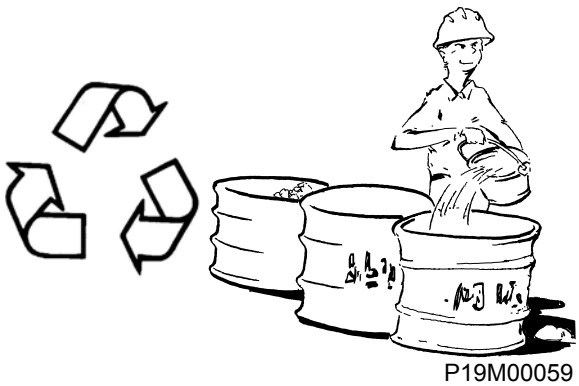

P19M00059

Precautions for Accumulator Application

The dangerous high-pressure nitrogen is contained in the accumulator, so read the following requirements and properly use the accumulator.

The accumulator shall be checked before charge of nitrogen. It is prohibited to charge the accumulator with gas if the accumulator does not have a nameplate, or the words on the nameplate are missed so that its type can not be identified, or if the steel seal marks are incomplete or cannot be read clearly, or if there is defect with the housing and therefore safe use cannot be ensured.

The accumulator can only be filled with nitrogen other than oxygen, compressed air or other flammable air to avoid explosion.

Slowly charge the nitrogen into the accumulator so as to avoid the breakage of the rubber bag.

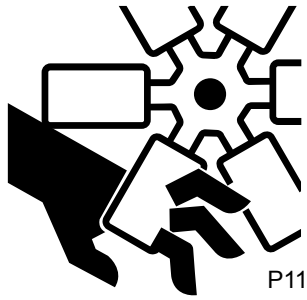

P11000190

The air valve of the accumulator shall be installed upward vertically. The accumulator shall be stably fixed on the bracket without being welded.

Do not drill any hole on the accumulator or carry open fire or heat sources close to the accumulator.

Do not conduct any welding operation on the accumulator.

Since the accumulator is a high-pressure container, it shall be replaced and repaired by professional operators.

Release the air before discarding the waste accumulator.

Preventing Extruding or Cut Off

Do not have your hands, arms or any other bodies placed between moving parts. For example, between work implement and cylinder, between machine and working implement.

When working under the work implement, you shall support the equipment properly. Do not support the work implement depending on hydraulic cylinder. If control mechanism moves or hydraulic oil line leaks, work implement will drop. If it is necessary to remove the shield, you shall fix it well after the repair.

Unless otherwise stated, any adjustment is not permitted to be performed when machine or engine is running. If the repair procedure must be performed when machine is running, do not let the machine stay in an unattended status. Arrange one operator seated in the seat and prepare to shut down the engine at any time.

Do not use twisted or worn wire rope. Wear gloves during operation and move.

When forcing to extrude the bayonet, you shall make sure no one is standing around it. You shall wear safety goggles in order to protect your eyes.

When knocking object with hammer, please make sure the flying debris will not hurt others.

Oil

Hot oil and parts will cause personnel injury, and do not let the hot oil and parts contact your skin.

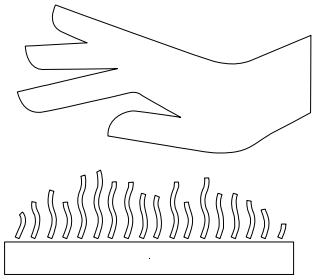

P11000148

At working temperature, the hydraulic oil tank is hot and contains pressure. When opening oil filler cap of hydraulic oil tank, shut off the engine and cool the filler cap down until it can be opened by bare hands. Remove the tank cover slowly to release the pressure of hydraulic oil tank so as to prevent from being scalded by hot oil.

Release pressure of the system before disassembling all pipes, connector, or relevant parts.

Pipeline, Pipe and Hose

Do not warp or knock the high-pressure pipeline, and do not install the abnormally warped or broken pipe or hose onto the machine.

Repair the loose or damaged pipe and hose of fuel and lubricant pipeline and hydraulic system in time. Leakage will cause fire hazard, and if repair or replacement is necessary, please contact the authorized dealer by LiuGong Machinery Co., Ltd.

If following problems occur, it shall be replaced.

- Damage or leakage of connector.
- The outer layer of hose is worn or cracked, and reinforced steel wires are exposed.
- Partial bulge of hose.
- The hose is twisted or flattened.
- The hose reinforcement steel has embedded to the outer layer.
- Misplacement of the end connectors.

Make sure all clamps, guard and heat shield are installed correctly to prevent shaking or overheating by friction with other parts.

Otherwise, it will generate toxic gases resulting in poisoning.

Precautions for Accessories

It shall be installed and commissioned by qualified personnel; the operator shall be trained, and his/her operation and maintenance shall be performed strictly according to the operation instructions for accessories.

When installing and using the spare accessory, please read related instructions, manuals and informations about the accessories.

Incorrect installation or purchase of accessories will not only cause safety issues, but also have the negative effect on service life and operation of the machine.

Do not use the accessories unauthorized by LiuGong. Using unauthorized accessories will cause safety issues, do harm on the normal operation of machine and influence its service life.

It is forbidden to make any refit on the accessories without permissions; otherwise you shall bear the responsibility.

LiuGong Machinery Co., Ltd will not be responsible for the injury, accident and damage of machine due to using unauthorized accessories.

Overviews of Hydraulic System

The hydraulic system is the actuator of the loader, mainly composed of four functional modules, i.e. a work implement hydraulic system, a steering hydraulic system, a brake system and a hydraulic cooling system. Where, the steering hydraulic system supplies oil for the steering circuit preferentially through the priority valve to ensure steering function; the work hydraulic system controls the coordinated actions of all oil cylinders through the control valve so that the loader can adapt to the requirements of different working conditions; the brake system can realize the function of service brake and parking brake; the hydraulic cooling system cools the hydraulic oil to ensure oil temperature within the reasonable scope of work. Layout of machine hydraulic system is as follows:

Work hydraulic system

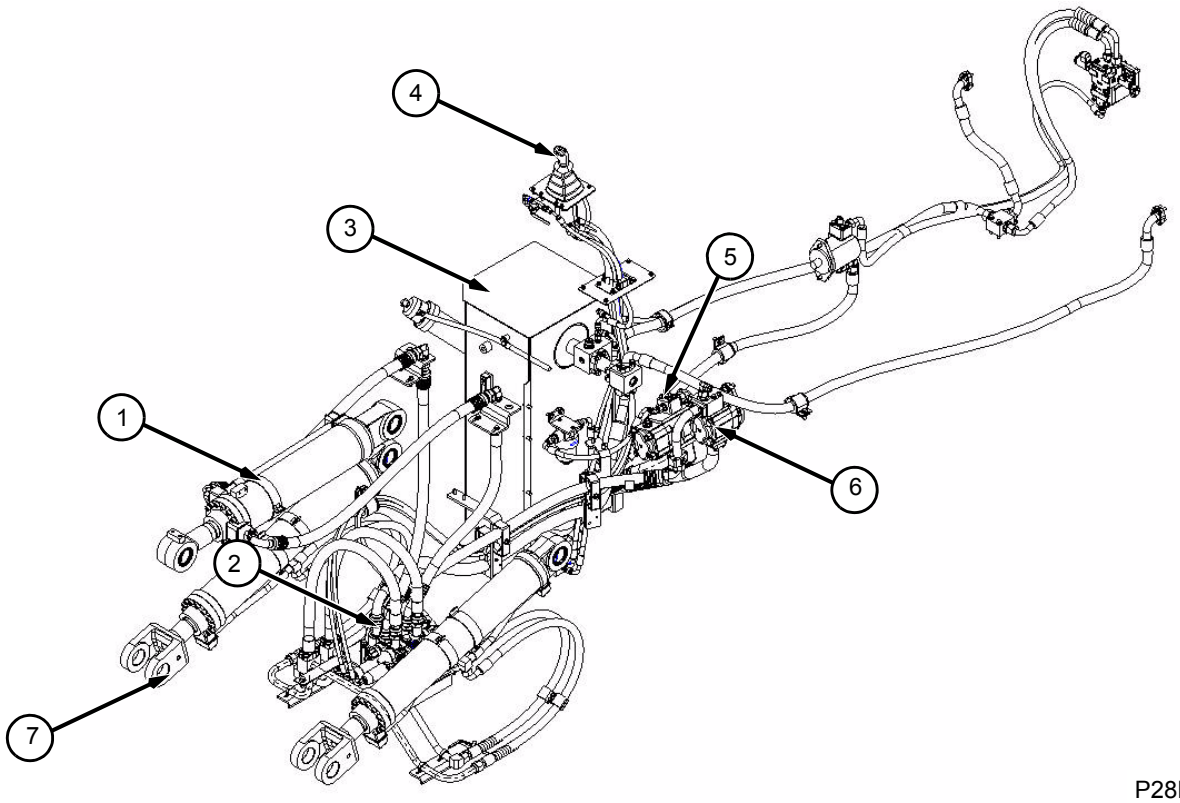

P28H00844

1. Bucket cylinder
2. Proportional pressure-reducing valve
3. Hydraulic oil tank
4. Pilot valve
5. Working pump
6. Steering pump
7. Boom cylinder

Steering hydraulic system

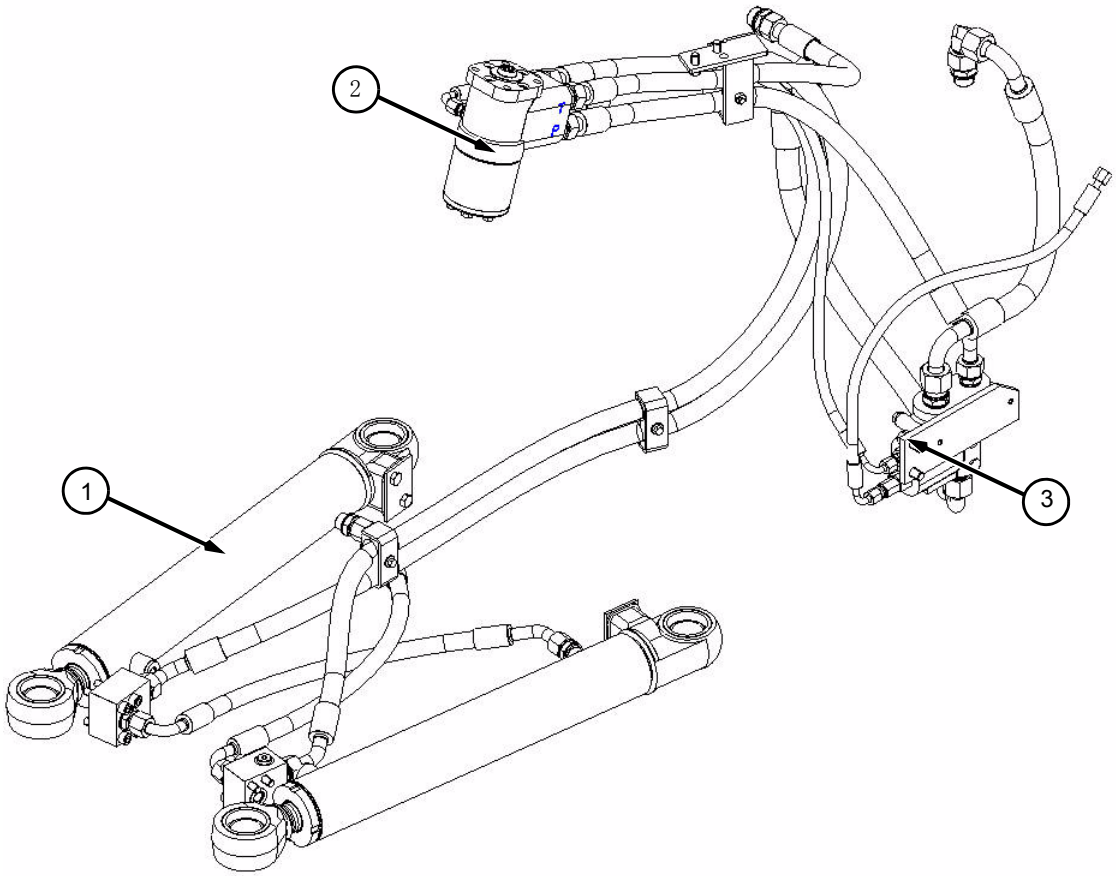

P28H00845

1. Steering cylinder
2. Metering pump
3. Priority valve

Brake system

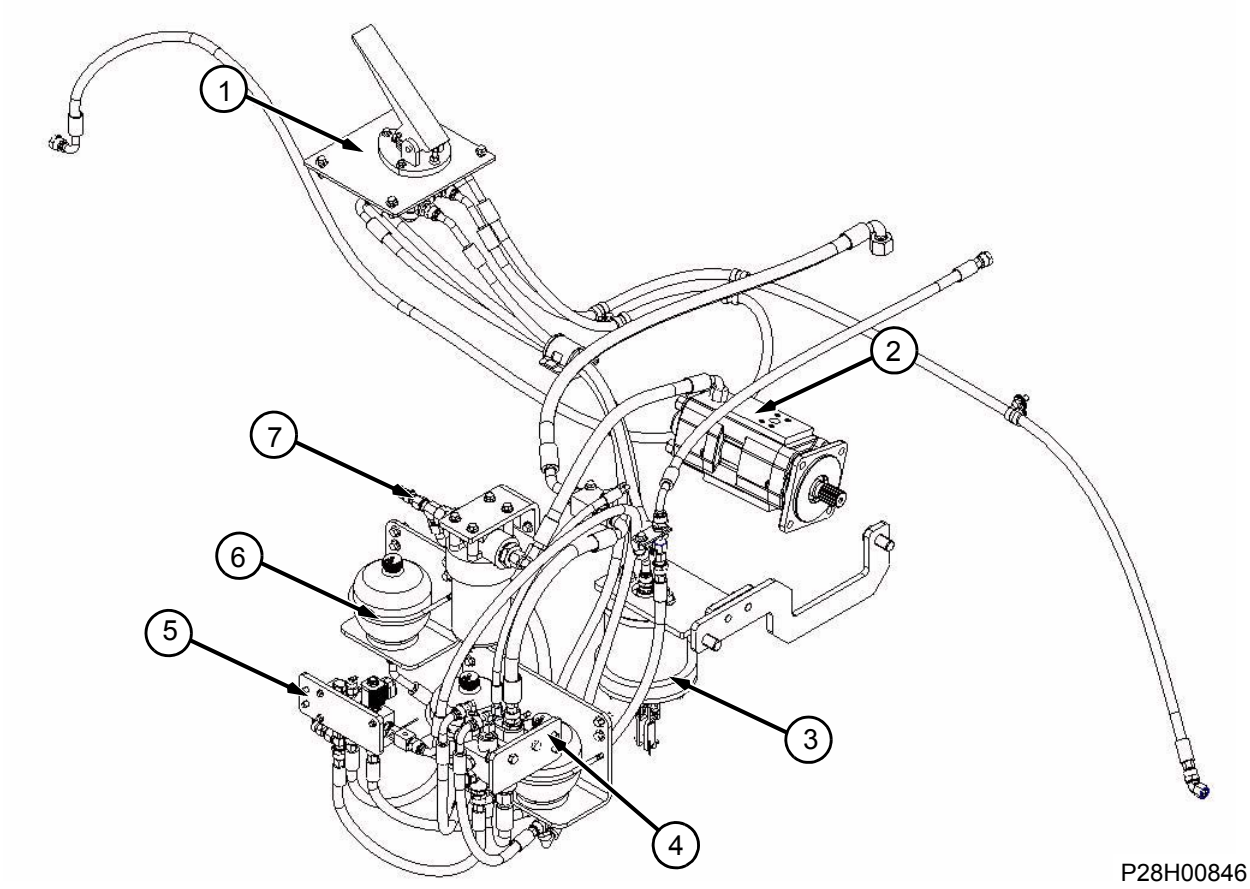

1. Brake valve
2. Gear pump
3. Brake cylinder
4. Charge valve
5. Brake valve assembly
6. Accumulator assembly
7. High-pressure oil filter

Technical Parameters of Hydraulic System

Main technical parameters of hydraulic system

	Items	Unit	Theoretical value
			ZF158 Gearbox
Work hydraulic system	Type		Dual-pump converging hydraulic system
	Working pressure of the system	Mpa	18
	Pilot working pressure	Mpa	3.5
	Displacement of working pump	ml/r	52.2
	Rated speed of the working pump	r/min	2200
	Proportional pressure-reducing valve		Pilot dual (triple) valve stem mood
	Boom cylinder (cylinder number -- cylinder bore × stroke)	mm\in	2-φ125×728\ 2-φ4.92×28.66
	Bucket cylinder (cylinder number - cylinder bore × stroke)	mm\in	1-φ140×520\ 1-φ5.51×20.47
Steering hydraulic system	Type		Articulation frame and full hydraulic steering system
	Working pressure of the system	Mpa	17.2
	Displacement of steering pump	ml/r	52.2
	Rated speed of the steering pump	r/min	2200
	Metering pump	ml/r	800
	Steering angle	°	40°± 1°
	Steering cylinder (cylinder number -- cylinder bore × stroke)	mm\in	2-φ70×420
Service brake system	Type		Dual-circuit full-hydraulic wet brake
	System oil pressure	Mpa	4.8± 0.4
Parking & emergency brake system	Type		Push-button hydraulic brake
	System oil pressure	Mpa	12.8
Working medium	Hydraulic oil	L	106
	Cleanliness	NAS1638	≤Grade 9

Hydraulic System Principle Schematic

Refer to attached drawing in Chapter 9 for schematic of hydraulic system.

Universal Tools and Tooling for Hydraulic Maintenance

Common tools table

Name	Specifications (Qty.)
Open-end wrench	8#, 13#, 15#, 17#, 19#, 21#, 22#, 24#, 27#, 30#, 32#, 36#, 41#, 44#, 46#
Straight screwdriver	
Cross screwdriver	
Pliers	
Torque wrench	20~100N•m (14.75~73.75lbf•bt), 90~300N•m (66.38~221.25lbf•bt), 160~680N•m (118~501.5lbf•bt)
Inner hexagon spanner	One set in metric standard and one set in British standard
Lifting equipment	2t
Sling	2t
⚠ Notice: The removed standard parts should be placed with relevant material together to avoid being mixed.	

Special Tools and Tooling for Hydraulic Maintenance

List of special tools and tooling for boom and bucket cylinder

S/N	LiuGong No.	Tool description	Figures	Purpose
1	SP130702	Pry bar		For assembling auxiliary tools
2	SP129313	Rubber hammer		For assembling dust ring of cylinder head
3	SP130917	Tooling for compressing dust ring		For compressing dust ring of cylinder head
4	SP130915	Guide sleeve		For assembling the O-ring of piston rod
5	SP130700	Guide sleeve	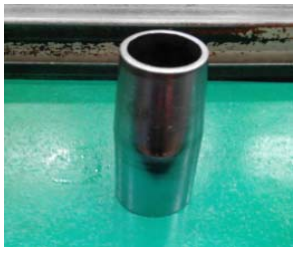	For assembling cylinder head assembly onto piston rod

List of special tools and tooling for boom and bucket cylinder

S/N	LiuGong No.	Tool description	Figures	Purpose
6	SP129308	Positioning tool		For aligning flange bolt hole with cylinder head trough hole
7	SP130698	Dowel pin		For aligning flange bolt hole with cylinder head trough hole
8	SP133205	Blower gun		For pre-tightening bolt
9	SP129309	Socket		For tightening bolt
10	SP130929	Steel wire scissors		For snap ring of cylinder head

List of special tools and tooling for steering cylinder

S/N	LiuGong No.	Tool description	Figures	Purpose
1	SP130702	Tooling for press fitting of friction ring		For pressing and fitting the friction ring onto piston
2	SP129313	Tooling for compressing friction ring		For compressing the friction ring
3	SP130917	Guide sleeve		For assembling cylinder head assembly onto piston rod
4	SP130915	Guide sleeve		For assembling the O-ring of piston rod
5	SP130700	Tooling for press fitting of bushing		For assembling the bushing onto cylinder block
6	SP129308	Cylinder block support		For supporting the cylinder block and pressing the bushing to the cylinder block

List of special tools and tooling for steering cylinder

S/N	LiuGong No.	Tool description	Figures	Purpose
7	SP130698	Bushing detection		For detecting the size of bushing which is assembled onto the cylinder block
8	SP133205	Blower gun		For tightening the nylon locknut
9	SP129309	Copper bar		For pressing the piston rod into the cylinder block
10	SP130929	Hook spanner		For pre-tightening the cylinder head assembly
11	SP129306	Socket		For locking the cylinder head assembly

Structure Function Principle

Work Hydraulic System

Components and Position

The work hydraulic system is used to control the actions of the boom and bucket of the loader work implement and other additional work implement. It is a single-pump load sensing system (see schematic diagram of work hydraulic system). It is composed of one hydraulic oil tank, one variable plunger pump, one load sensing control valve and oil cylinders and pipelines of all work implements. The hydraulic oil from the tank flows into the plunger pump, after passing through the priority valve, it flows into the control valve by which controls telescoping of all cylinders so as to further control the loader work implement's actions of tilting back and dumping of the bucket and raise, lowering and floating lowering of the boom.

Layout drawing of work hydraulic system is as follows:

Layout drawing of work hydraulic system

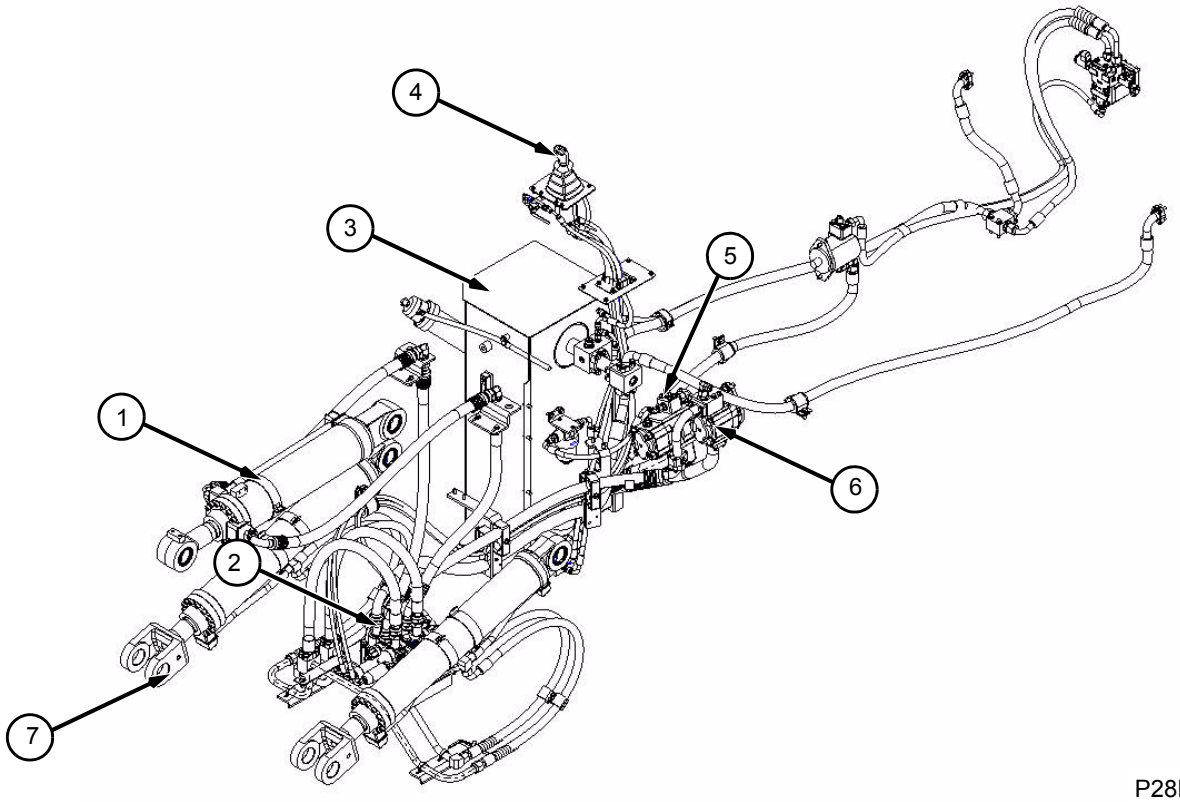

P28H00844

1. Bucket cylinder
2. Proportional pressure-reducing valve
3. Hydraulic oil tank
4. Pilot valve
5. Working cylinder
6. Steering bump
7. Boom cylinder

1. When there is no action in the work hydraulic system, i.e. boom reversing valve and bucket reversing valve in the control valve are in neutral position, and variable plunger pump is at minimum displacement position, the variable pump hardly has oil to output (only the minimum displacement required to keep self-running), oil passages of the control valve connected to both of big and small cavities of the boom cylinder and bucket cylinder are sealed, and boom and bucket are kept in original position.
2. Operate the boom reversing valve controlled by the pilot valve to lift, lower or float the boom and manipulate the bucket tilting reversing valve controlled by the pilot valve to tilt the bucket forward or backward. There is an automatic leveling device of bucket installed on bucket hydraulic cylinder.
3. Big and small cavities double-acting safety valves are installed in oil lines of the control valve connected with big and small cavities of the bucket cylinder to protect the big and small cavities of the bucket cylinder from overload and fill oil and play the role of stabilizing system work and protecting the relevant elements of the system.

Technical Parameters of Work System

Items	Parameters
System pressure	18±0.3MPa
System flow	210L/min@2200r/min
Steering cylinder big chamber overload valve pressure	20±0.3MPa
Steering cylinder small chamber overload valve pressure	14±0.3MPa
Pressure of main safety valve	18±0.3MPa

Hydraulic Oil Tank

Installation Position and Functional Structure

The hydraulic oil tank is side-sited type, which is located on the rear frame in the middle of a machine, the right side of a cab. The main function is to store the hydraulic oil required for work cycle of the hydraulic system and precipitate the pollutant of oil in hydraulic tank, separate the air from oil and cool the hydraulic oil. A return oil filter has been set in the oil tank to filter the pollutant in oil lines of the hydraulic system so as to guarantee the cleanliness of hydraulic oil. Structural diagram of hydraulic oil tank is as follows:

Structural diagram of hydraulic oil tank

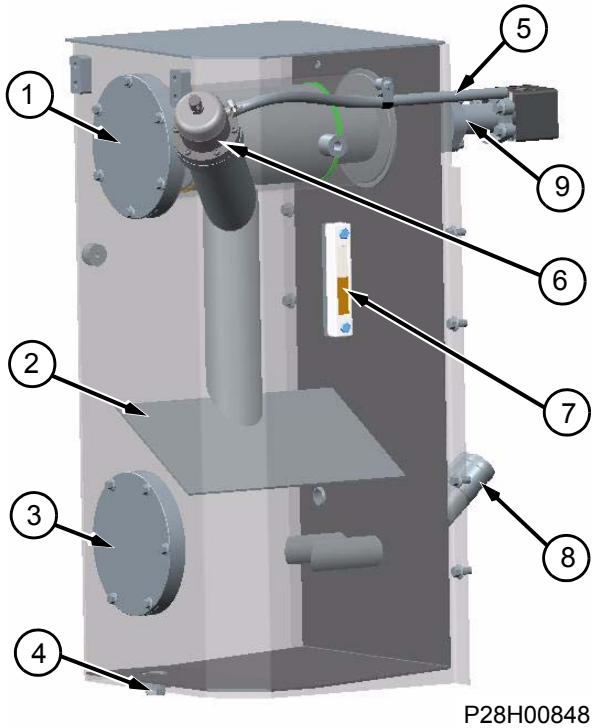

P28H00848

1. Oil return chamber and oil return filter
2. Baffle
3. Washing port
4. Oil drain hole
5. Ventilated oil conduit
6. Oil filler, oil filter element and breather
7. Sight glass
8. Oil suction port
9. Oil return flange

In which, the oil return chamber is used to temporarily store the hydraulic oil that returns from the system to effectively reduce the back-flow velocity so as to avoid bubbles in the hydraulic oil tank resulted from too fast oil return. The oil return filter mainly filters the oil returning to the hydraulic oil tank to prevent pollutant from entering into the system through the oil tank to cause pollution. The baffle is used to form isolation circulation for cold and hot oil in the oil tank to prevent oil shake from generating large quantities of bubbles and isolate oil suction port from oil return port to ensure gas separates out of hydraulic oil return. Washing port is used to clean the dirt in the oil tank. Oil drain hole is used to drain fluid out of oil tank when replace oil or clean oil tank. Oil suction port is used to supply oil for hydraulic pump. The ventilated oil conduit is used for exhalation of a breather and to lead the oil vapor exhaled by the breather to underbody. Hydraulic oil is filled from the oil filler after filtration by the oil filter vehicle. Oil filler filter element is used to prevent large particles from entering into oil tank when replacing and filling hydraulic oil. The function of the breather is that it sucks air from atmosphere to fill the air space when the air pressure in oil tank is negative and that exhaust extra air to realize the protection function when the air pressure in oil tank is out of limit. Oil level gauge is used to observe the oil level of oil tank. Oil suction port is used to supply oil for hydraulic pump.

Working Pump

Main Technical Parameters

Items	Parameters	Remarks
Rated pressure	20MPa	
Displacement	52.2mm/r	
Direction of rotation	Left rotation	
Rated speed	2200rpm	
Operating fluid	Anti-wear hydraulic oil	46#

Structure and working principle of plunger pump

Outline diagram and working principle of plunger pump

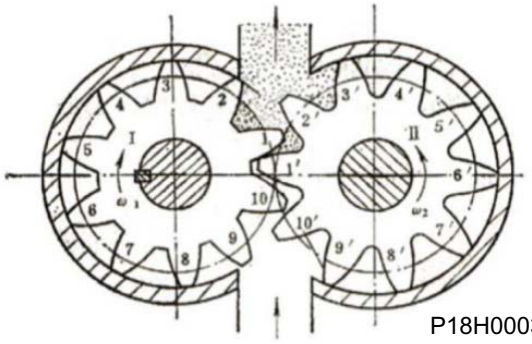

The gear pump works using the meshing movement of a pair of gears and causing volume changes in the suction and draining cavities. It is the suction port with a closed volume always in a growing state, and it is the outlet with a closed volume always in a reducing state. Generally, the side with larger port is the suction port, and the side with smaller port is the outlet.

Boom Cylinder

Main Technical Parameters

Items	Parameters	Remarks
Cylinder bore (mm\in)	125mm	
Rod diameter (mm\in)	70mm	
Stroke (mm\in)	728\28.66	
Minimum mounting distance (mm\in)	1287\50.67	

Structure and working principle of boom cylinder

The boom cylinder, which is installed at the articulated joint of boom cylinder on the front frame and the articulated joint of boom cylinder, is the actuator of the work hydraulic system. It realizes the raise and lowering of the bucket through pushing the boom to move up and down by piston rod telescoping actions of the boom oil cylinder.

Structure of boom cylinder

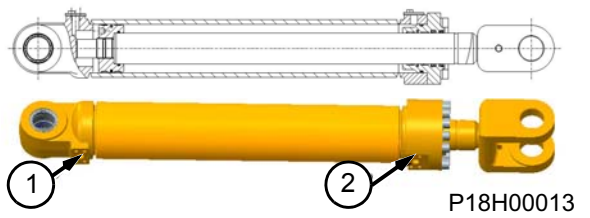

1. Oil port of big cavity
2. Oil port of small cavity

Bucket Cylinder

Main Technical Parameters

Items	Parameters	Remarks
Cylinder bore (mm\in)	140\5.51	
Rod diameter (mm\in)	70	
Stroke (mm\in)	520\20.47	
Minimum mounting distance (mm\in)	1110\43.70	

Structure and working principle of bucket cylinder

The bucket cylinder, which is installed at the articulated joint of the front frame and bucket cylinder and the articulated joint of bucket lever and cylinder, is the actuator of the work hydraulic system. It realizes the tilting forward and backward of the bucket through the movement of bucket lever pushed by piston rod actions of the bucket cylinder.

Structure of bucket cylinder

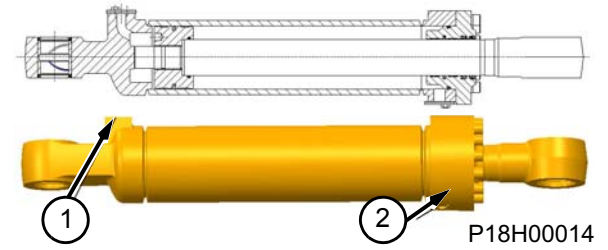

1. Oil port of big cavity
2. Oil port of small cavity

Control valve

Main Technical Parameters

Items	Parameters	Service conditions	Remarks
Rated flow (L/min\ US gpm)	220	/	/
Setting pressure of main safety valve (MPa\psi)	18	/	/
Pressure of safety valve of bucket cylinder small cavity (Mpa\ psi)	14	/	/
Pressure of safety valve of bucket cylinder big cavity (Mpa\ psi)	20	/	/
Operating fluid	Anti-wear hydraulic oil	HM46/HV46	/

Structure and Working Principle of Control Valve

Outline structure diagram of control valve

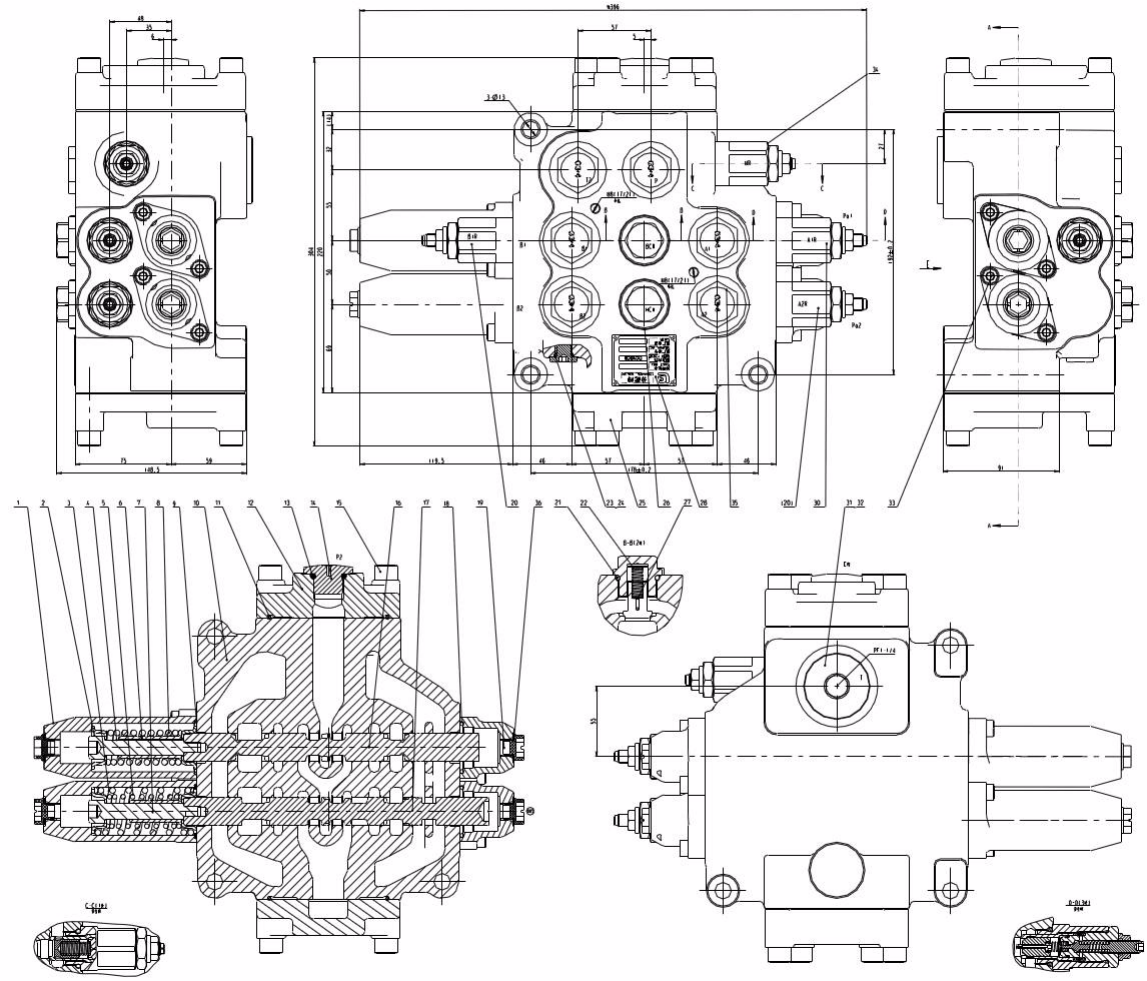

P28H00849

Structure of control valve

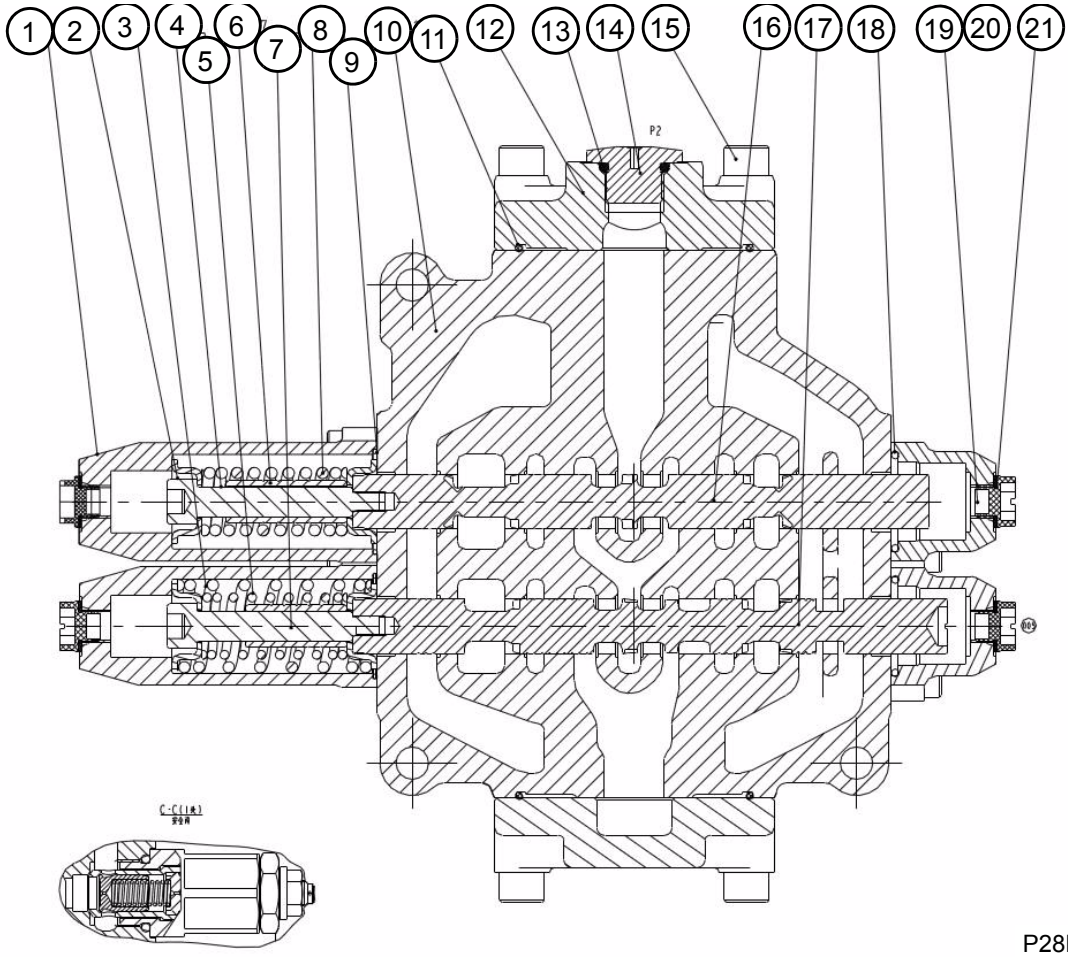

P28H00850

1. Cover
2. Spring seat
3. Spring
4. Screw-hex socket
5. Spring
6. Positioner sleeve
7. Positioner sleeve
8. Spring
9. O ring
10. Valve body
11. O ring
12. Cover
13. O ring
14. Plug
15. Screw
16. Control valve rod
17. Valve stem
18. O ring
19. Cover
20. Safety valve
21. Plug

Hydraulic schematic diagram of control valve

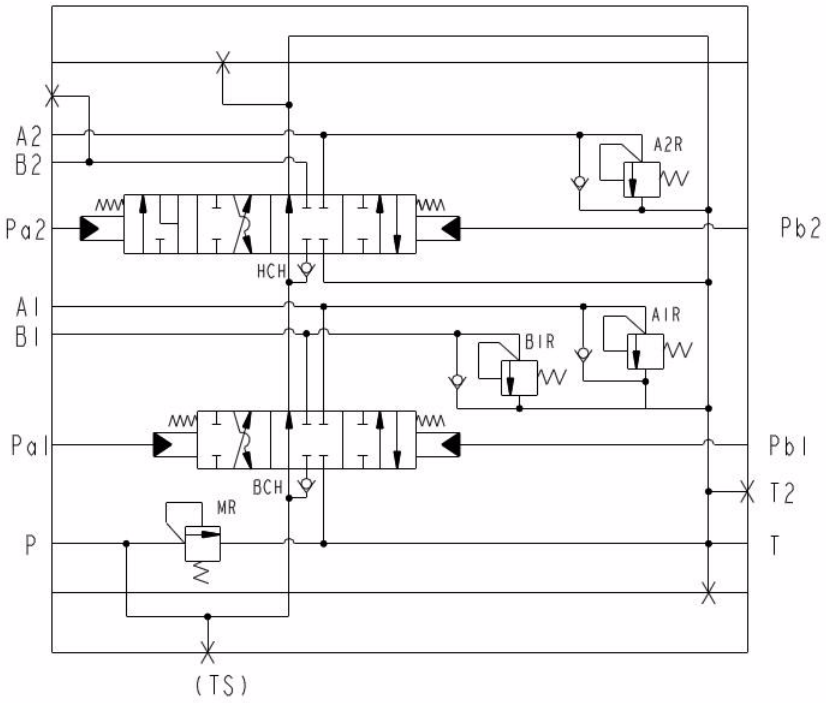

P28H00851

Working principle

There is boom valve rod and bucket valve rod in the banked direction control valve as the bucket valve rod has three positions of neutral position, upward tilting and downward tilting and the boom valve rod has four positions of neutral, lifting, lowering and floating. P is the oil inlet and T is the oil return port, A1 and B1 are connected respectively with bucket cylinder big and small cavities, A2 and B2 are connected respectively with boom cylinder big and small cavities.

1. Neutral position: see above hydraulic circuit schematic, when the bucket valve rod and boom valve rod are in neutral position, the oil of working pump communicates with oil return tank at T port through oil inlet P.

2. Tilting upward and downward of bucket: move the bucket valve rod rightwards, oil from the working pump opens the check valve and enters A1 cavity and then bucket cylinder big cavity to tilt the bucket upward, as the oil in small cavity returns through B1 cavity; also, move the bucket valve rod leftwards, oil from the working pump opens the check valve and enters B1 cavity and then the bucket cylinder small cavity to tilt the bucket downward, but the oil in big cavity returns through A1.

Hydraulic schematic diagram of control valve bucket block

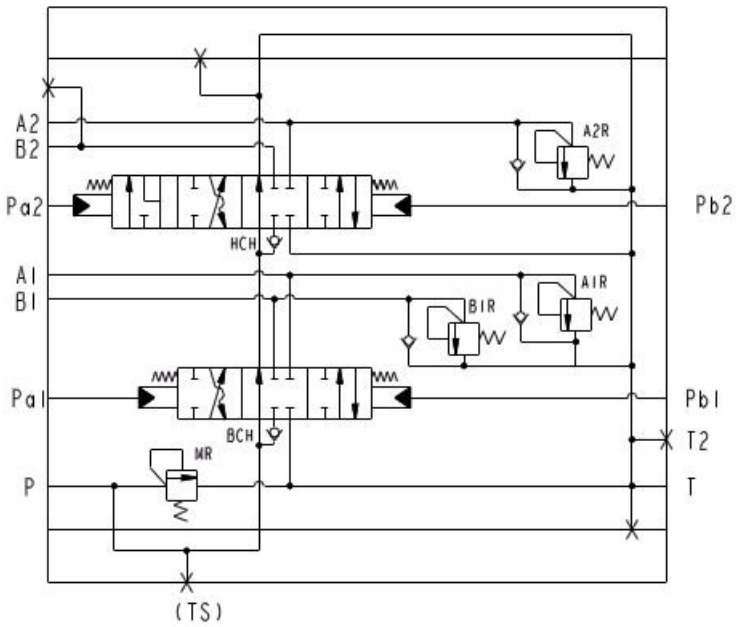

P28H00853

3. Lifting, lowering and floating of boom: move the boom valve rod rightwards, the oil from the working pump opens the check valve and enters A2 cavity and then the boom cylinder big cavity to lift the boom, meanwhile oil in small cavity returns through B2 cavity; also, move the boom valve rod leftwards, oil from the working pump opens the check valve and enters the B2 cavity and then boom cylinder small cavity to lower the boom, meanwhile oil in big cavity returns through A2 cavity; when the boom valve rod is at the lowering position, moving it leftwards will come into floating position, the oil inlet P and big and small cavities of cylinder communicate with oil return and stay at low pressure and thus the cylinder is at free floating state under the weight of work implement and the ground force.

Hydraulic schematic diagram of control valve boom block

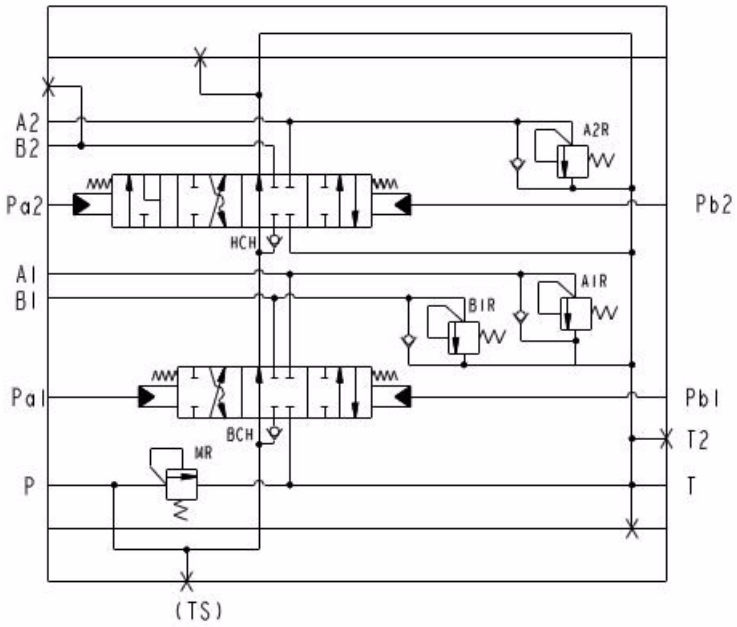

P28H00853

4. Functions of overload valve and oil refilling valve: when the bucket is interfered by exterior impact or other mechanism, the overload valve opens for protection. The oil refilling valve fills oil to prevent cylinder cavity from becoming empty.

Pilot Valve

Main Technical Parameters

Items	Parameters	Service conditions	Remarks
Working pressure (MPa)	2.5	/	/
Maximum pressure (MPa)	4.48	/	/
Flow (L/min)	7.6-19	/	/
Operating fluid	Anti-wear hydraulic oil	HM46/HV46	/

Schematic diagram of pilot valve

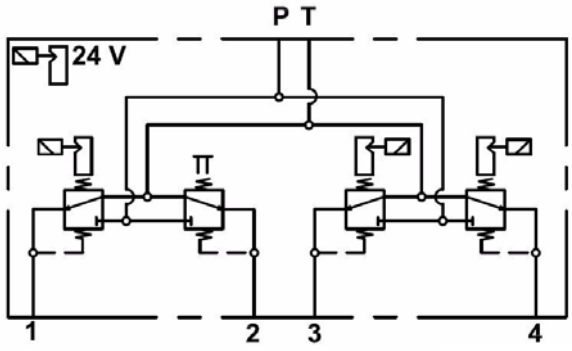

P28H00909

Outline diagram of pilot valve

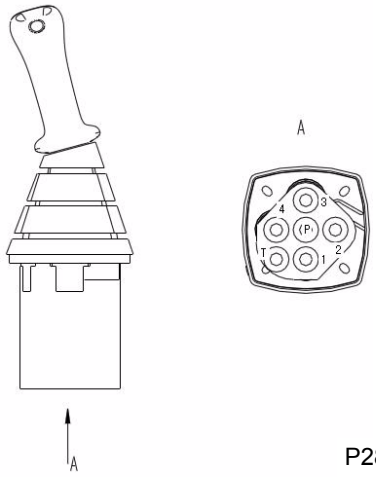

P28H00910

Structure and working principle of pilot valve

The pilot valve shall be installed on the handrail assembly in the cab and its position can be adjusted forwards and backwards with the handrail assembly. The standard configuration of the model is triplex pilot valve (boom and bucket way are hydraulically controlled and multi-functional way is electrically controlled), which consists of boom operating way, bucket operating way and multi-functional way. The boom operating way includes two metering valve groups, which are respectively used for raise, lowering and floating lowering of the boom. The bucket tilting operating way includes two metering valve groups, which are respectively used for bucket tilting back and dumping of the bucket. Multi-functional operating way includes two metering valve groups, which can be used to realize actions of multi-functional cylinder, for example, quick coupler, grapple device and other attachments. With controlling the handle of pilot operating valve, the action of each valve group in boom operating way, bucket operating way and multi-functional way can be controlled. In addition, in all metering valves, the displacement of the spool is in proportional relation with the operating angle displacement of the handle. The larger the operating angle of the handle is, the faster the action speed of the work implement is. Schematic diagram and outline diagram of pilot valve are as follows:

Pilot Supply Oil Valve

Main Technical Parameters

Items	Parameters	Service conditions	Remarks
Setting pressure (MPa)	3.5±0.2	/	/
Relief valve opening pressure (MPa)	4.5±0.2MPa	/	/
Accumulator charge pressure (MPa)	1.0		
Rated flow (L/min)	5	/	/
Check valve inner leakage (mL/min)	≤8		
Operating fluid	Anti-wear hydraulic oil	HM46/HV46	
Hydrauic oil working temperature	-20°C~80°C		
Accumulator pre-charge pressure	1.0MPa		Nitrogen gas

Working principle

1. The pilot oil valve is installed in the handrail box at the right side of the rear frame. It is to supply stable low-pressure small-flow oil sources for the metering pump and the pilot valve and control the on-off of all oil lines of the flow amplifying valve of the steering system and the control valve of the working system via the metering pump and the pilot valve so as to realize the steering and working function of the loader.
2. When the loader works normally, the oil inlet receives the oil from the steering pump and supplies oil for the metering pump and the pilot valve through the check valve after decompression by the pressure reducing valve (set pressure as 3.5MPa) and the accumulator simultaneously works for storing hydraulic energy.
3. When the loader stops working or shuts down abruptly, the accumulator will carry out energy conversion to release hydraulic energy so that it can still supply the pilot valve with oil for a certain time.
4. The relief valve is used to control system pressure and it is normally closed. When system pressure is higher than the set pressure of 4.5MPa, the spool opens to unload so as to prevent the system elements from being damaged. Principle diagram and outside diagram of pilot oil valve are as follows:

Schematic diagram of pilot supply oil valve

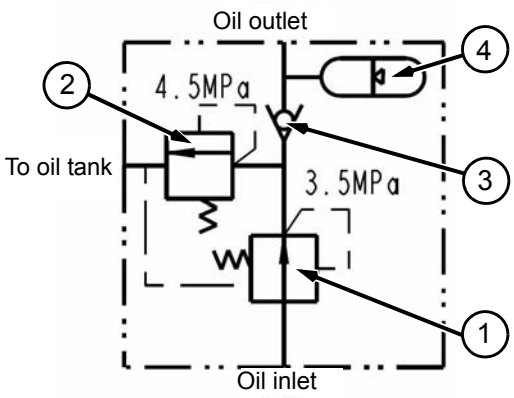

P28H00908

1. Pressure reducing valve
2. Relief valve
3. Check valve
4. Accumulator

outline of pilot supply oil valve

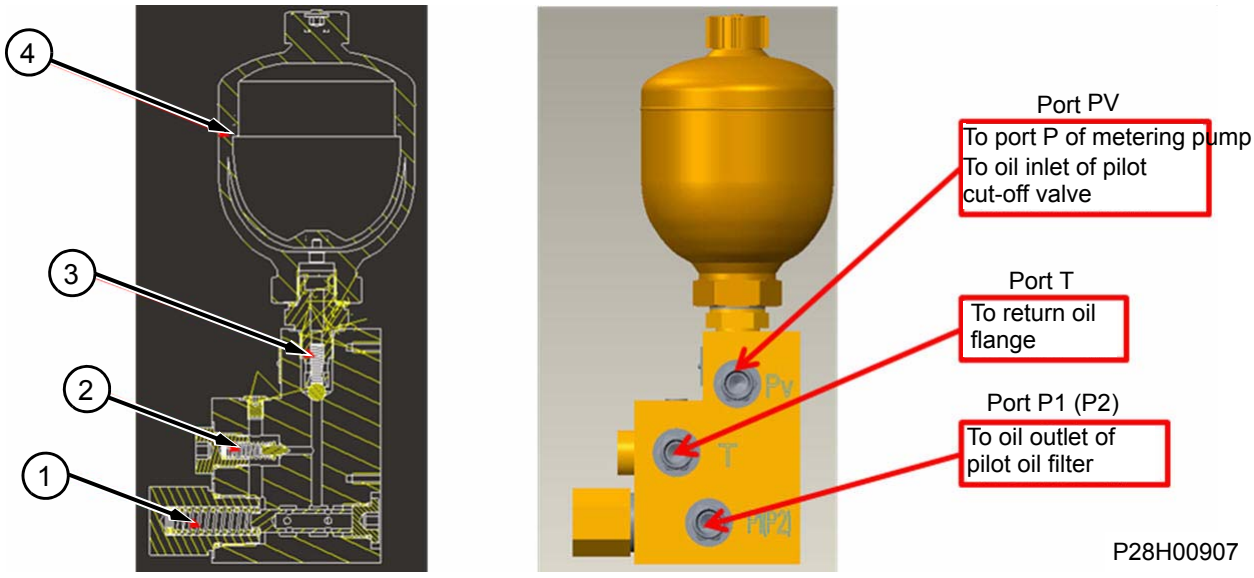

P28H00907

1. Pressure reducing valve
2. Relief valve
3. Check valve
4. Accumulator

Oil Filter

The oil filter is installed in the interior of right side of rear frame and it is mainly used to filter oil.

Main Technical Parameters

Items	Parameters	Service conditions	Remarks
By-pass valve opening pressure	0.4MPa	/	/
Rated pressure	3.5MPa	/	/
Rated flow	10L/min	/	/
Filter accuracy	10μm		
Operating fluid	Anti-wear hydraulic oil	HM46/HV46	

outline of oil filter

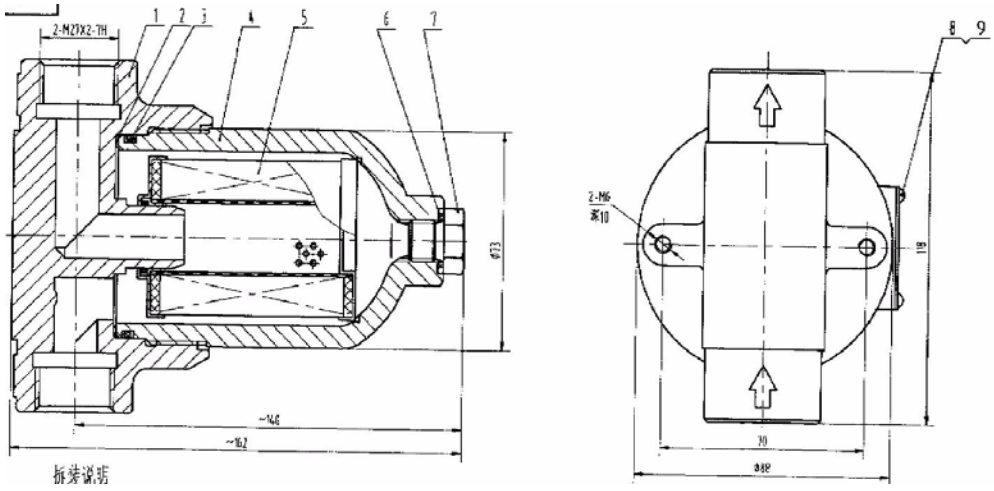

P28H00906

Oil Filter--Change

The high-pressure oil filter element is replaced at the interval of 2000 hours and the replacement procedures are as follows: screw the old filter element out of the bottom of the high-pressure oil filter assembly, and then screw the new oil filter into the high-pressure oil filter assembly.

⚠CAUTION

Pay attention to the arrow direction of the oil filter and do not connect the oil inlet and outlet hose in a wrong way while replacing the oil filter.

Steering Hydraulic System

Components and Position

Steering hydraulic system is used to control the vehicle traveling direction, for this configuration, the steering hydraulic system is a variable load sensing hydraulic system, which is mainly composed of variable plunger pump, shuttle valve, priority valve, metering pump, steering cylinder and other pipeline accessories. This system can realize steering priority function.

Steering priority refers that oil from the plunger pump will be supplied to steering system with priority and the surplus oil will be supplied to the work hydraulic system, which is realized by the priority valve. Priority valve, actually a floating spool, adjusts the flow of oil supply to steering system through sensing the load pressure of the steering system. The oil flow supplied to the steering system will adapt to the steering load and velocity.

Component layout

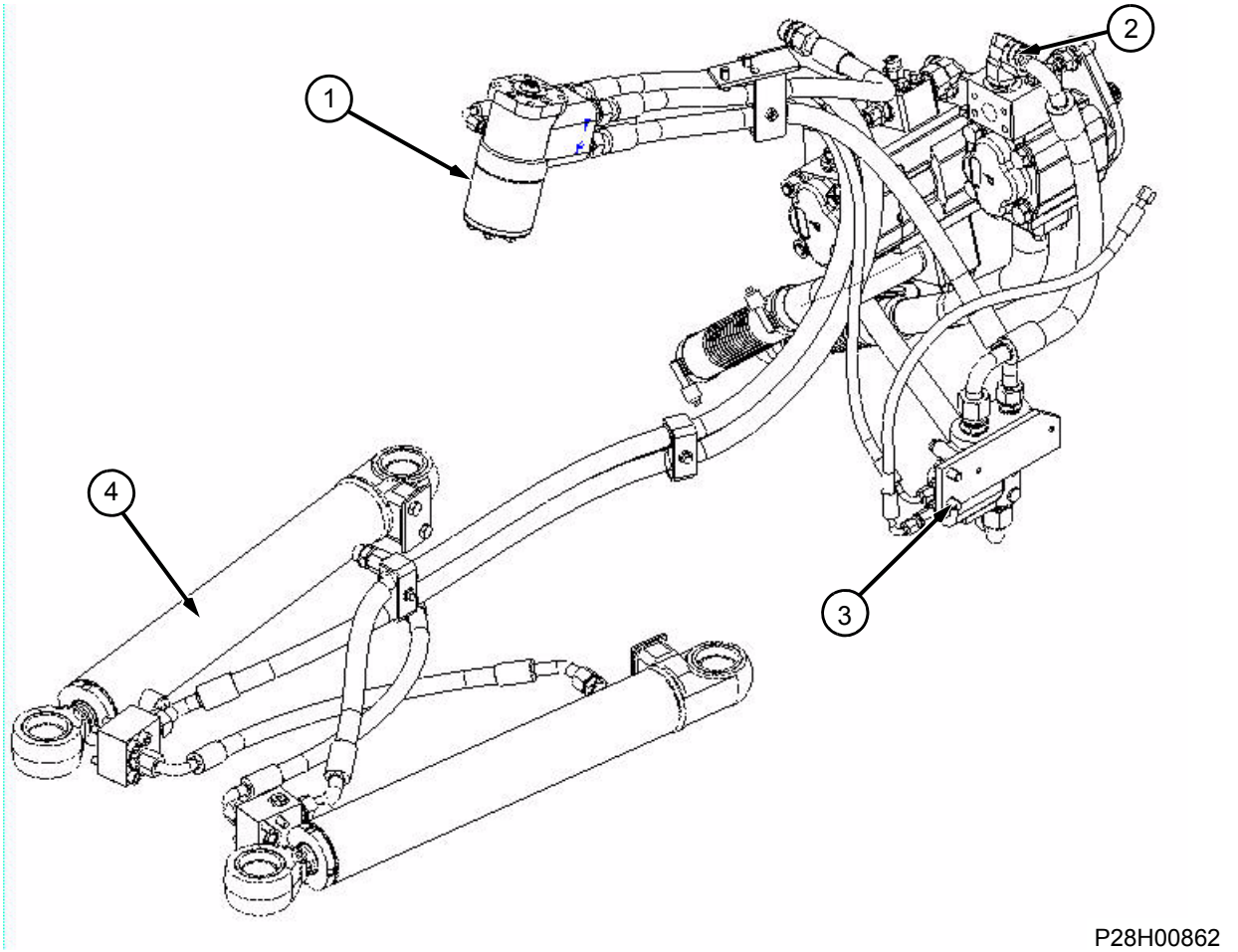

P28H00862

1. Steering pump
2. Metering pump
3. Pilot valve
4. Steering cylinder

Technical Parameters of Steering System

Items	Parameters
System pressure	17.2±0.3MPa
System flow	128L/min@2200r/min
Pressure of main safety valve	17.2±0.3MPa
Steering angle	40°±1°

Steering Pump

Main Technical Parameters

Items	Parameters	Remarks
Rated pressure	20Mpa	
Rated displacement	52.2mm/r	
Direction of rotation	Left rotation	Direction of rotation
Rated speed	2200rpm	
Operating fluid	Anti-wear hydraulic oil	#46

Structure and Working Principle of Steering Pump

The gear pump works using the meshing movement of a pair of gears and causing volume changes in the suction and draining cavities. It is the suction port with a closed volume always in a growing state, and it is the outlet with a closed volume always in a reducing state. Generally, the side with larger port is the suction port, and the side with smaller port is the outlet.

Schematic of metering pump

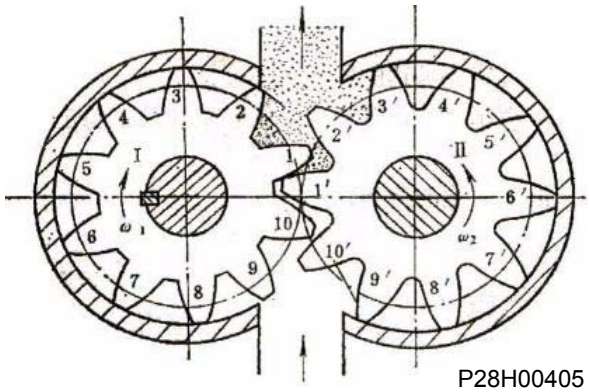

P28H00405

Metering Pump

Main Technical Parameters

Item	Parameters	Remarks
Rated displacement	800ml/r	
Amplification ratio	2	
Max pressure of the system	17.2MPa(2494psi)	
Max back pressure	2.1Mpa(304.5psi)	
Contamination degree of recommended hydraulic oil	ISO18/13	
Operating fluid	Anti-wear hydraulic oil	HM46/HV46

Structure and Working Principle

Outline structure diagram of metering pump

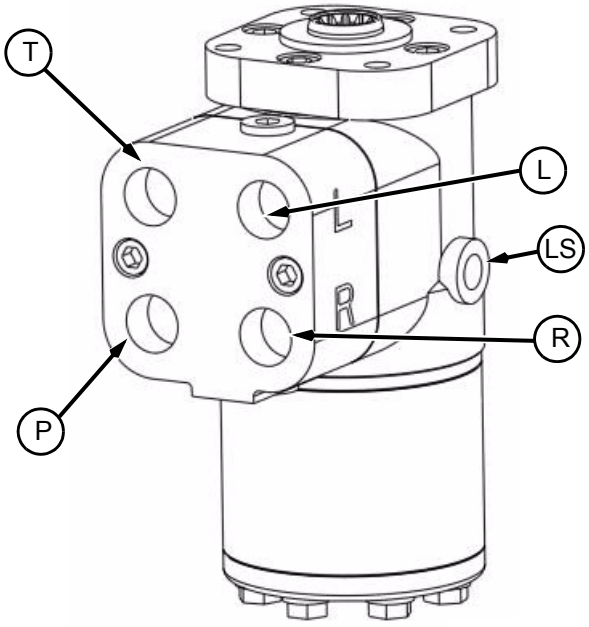

P28H00532

Schematic of metering pump

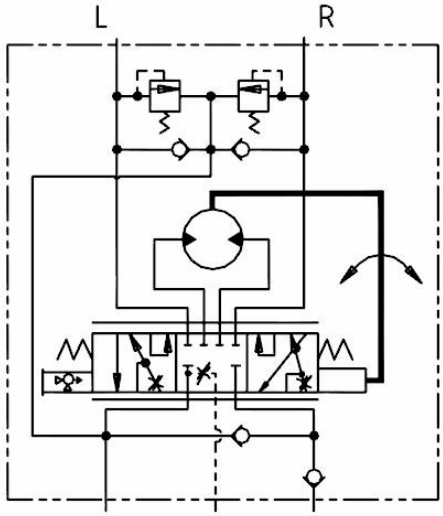

P28H00533

Working principle:

Metering pump is used to control the steering cylinder to realize left-right turning.

1. When the steering wheel is not turned, metering pump is in neutral position, LS port is connected with T port, and L, R ports are cut off.
2. When turning steering wheel to right (left), pressure oil of P port will be connected with R (L) port to control the action of steering cylinder to realize right (left) steering.
3. The pressure oil of LS port is fed back to LS port of variable pump.

(1) For power steering, pressure oil flows into stator and rotor pair in certain proportion (flow amplifying function) through spool and valve bushing pair to push rotor to rotate with steering wheel and oil from plunger pump flows into left cavity or right cavity of steering cylinder to realize steering.

(2) For manual steering, the stator and rotor pair of metering pump will play the role of oil pump to press the oil in one cavity of steering cylinder to another cavity. Oil cylinder piston rod will push the wheel to realize steering.

Priority Valve

Main Technical Parameters

Items	Parameters	Service conditions	Remarks
Flux	150L/min		
Pressure of safety valve	17.2Mpa		
Operating fluid	Anti-wear hydraulic oil	HM46/HV46	

Structure and Working Principle of Components

The priority valve is installed on the inner side of left web plate of rear frame and close to hinge position. Hydraulic oil from the plunger pump enters into metering pump via priority valve and then flows into steering cylinder to realize left-right turning. The priority valve realizes the steering priority function.

Schematic of priority valve

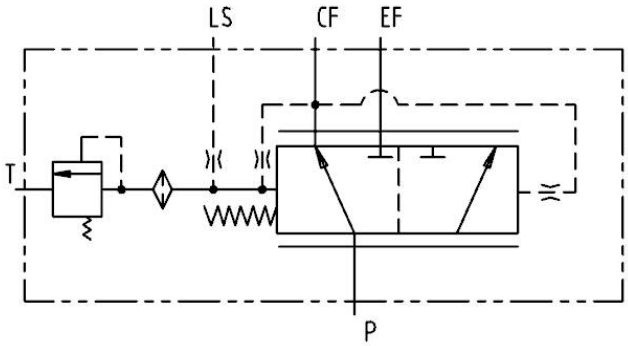

P18H00032

Working principle: during single steering, P port of metering pump communicates with L (or R) port, the channel from LS to T is closed and the channel from LS to L (or R) is open. LS oil pressure acts on left side of priority valve spool so that the spool moves rightwards, the opening of CF channel increases and the opening of EF channel decreases. This is steering priority.

Outline diagram of priority valve

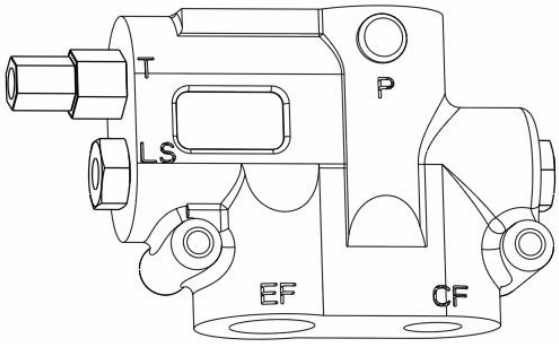

P28H00411

Steering Cylinder

Main Technical Parameters

Items	Parameters	Remarks
Cylinder	70 mm (2.76 In)	
Rod diameter	40mm (1.57 In)	
Stroke	420mm (16.53 In)	
Minimum mounting distance	728mm (28.66 In)	

Structure and Working Principle of Steering Cylinder

Steering cylinder, which is installed at the articulated joint of front & rear frame and cylinder, is the actuator of steering hydraulic system. It realizes the left-right steering by pushing the front and rear frame of left-right steering cylinder piston rod.

Structure of steering cylinder

Overall structure diagram of steering cylinder

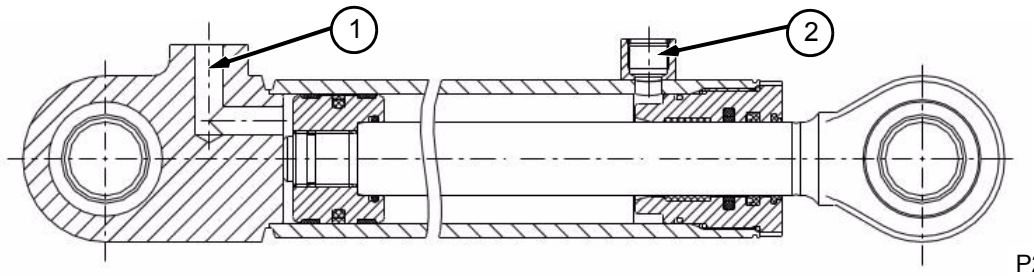

1. Oil port of big cavity
2. Oil port of small cavity

Brake system

Components and Position

Brake system consists of service brake system, emergency & parking brake system. Service brake system is used in speed control and parking in general traveling. Emergency & parking brake system is used for brake after parking, or emergency brake in case of service brake system failure.

Service brake system consists of brake pump, brake valve, charge valve, accumulator, wet brake (in the axle), pressure switch and pipeline. Emergency & parking brake system consists of parking brake accumulator, brake cylinder, brake valve block and pipeline.

This is a full-hydraulic brake system and its features are as follows:

1. Using wet-type wheel brake: the system circuit is fully closed so as to avoid the influence of external uncertain factors (for example: sand invasion and oily friction disc) on braking performance. Using oil-immersed cooling method by which the friction plate is immersed in oil to avoid reduction of braking performance caused by heat fading of friction material due to high temperature of friction plate, at the same time, to reduce the requirement for brake oil.
2. Using full-hydraulic brake system: cancel air line and simplify the system so as to avoid the corrosion of pipeline and brake components caused by water in the air line system, and the reliability and response speed of the system are improved.
3. Using dual-circuit brake: front and rear axle brake lines are independent so as to make them safer and more reliable

Component layout drawing of full-hydraulic brake system as follows:

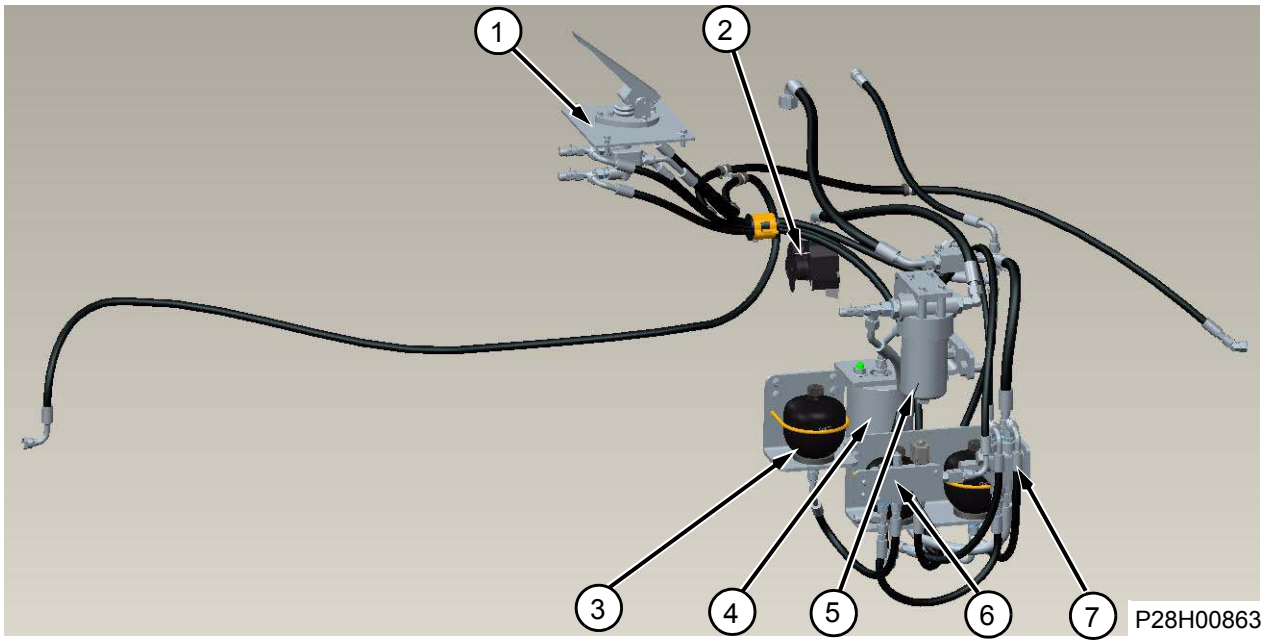

1. Brake valve
2. Gear pump
3. Accumulator assembly
4. Brake cylinder
5. High-pressure oil filter
6. Brake valve assembly
7. Charge valve

Technical Parameters of Brake System

Items	Parameters
Service brake system	Dual-circuit full-hydraulic wet brake
Parking brake system	Electronically controlled full hydraulic brake
Pressure of brake pump relief valve	17.2±0.3MPa
Output pressure of brake valve	4.8±0.35MPa
System flow	36L/min@2200r/min

Working Principles of Brake System

Working principle of full-hydraulic brake: the system pressure is kept by accumulator assembly and each brake circuit is equipped with accumulator independently. When oil pressure in the accumulator is lower than the setting minimum working pressure of the system (the pressure is 13.5MPa), the charge valve feeds the pressure oil of brake pump (brake pump and cooling pump form tandem pump and share one pump body) filtered and outputted by oil filter into the accumulator. When oil pressure in the accumulator reaches the setting maximum working pressure (the pressure is 16MPa), the charge valve stops supplying oil for the accumulator of brake system. The brake pump is unloaded by connecting S port of charge valve with oil tank. At the time of braking, depress the brake valve pedal, high pressure oil stored in the accumulator of service brake circuit enters into the axle via the service brake valve so as to push the brake piston in the axle, the piston compacts the wet-type friction plate and half shaft of wet-type brake axle to realize the service brake of the machine. After releasing the brake pedal and removing brake, oil in the axle returns to oil tank via the brake valve.

When applying the parking brake, emergency & parking brake system controls the brake valve block assembly using the parking brake solenoid valve switch in the cab to make the parking brake accumulator release pressure oil which controls the brake cylinder to realize emergency & parking brake function. In addition, the pressure control switch in electrical system can also realize the machine brake.

Power cut-off function (i.e. function of brake and spontaneous out-of-gear): when the shift control lever is in forward or backward I & II position and the clutch on/off switch is closed (i.e. push button lamp is on) during driving, once apply the foot brake, electric control box sends a command to the shift control valve to engage the transmission in N position and cut off power. When the shift control lever is in forward or backward I & II position and the clutch on/off switch is disconnected (i.e. push button lamp is off) during driving, once the brake is applied, the power will not be cut off.

Clutch on/off switch is a switch with self-locking function, refer to the electrical system in the manual for detail of using method.

The "function of brake and spontaneous out-of-gear" can work only in forward or backward I & II position. In order to guarantee safe driving, when load is in high-speed position, once the brake is applied, the electric control box will not sends the command of cutting off power no matter whether the clutch on/off switch is closed or disconnected, which is determined by driving properties of the loader.

⚠CAUTION

When the shift control lever is in forward or backward I & II position during driving, do not disconnect the clutch on/off switch easily,otherwise, the brake and power train system may be damaged. When the machine is in operation at the upslope or downslope of rough road and the brake is applied, the function can be selected in order to ensure safe driving.

Emergency brake button and clutch on/off switch

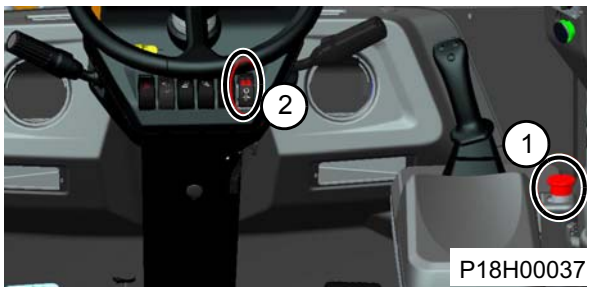

1. Emergency brake button
2. Clutch on/off switch

At short time of starting the machine, the service brake low pressure alarm light flashes and the alarm buzzer sounds. Because oil pressure in the accumulator of service brake circuit is still lower than the alarm pressure (11MPa\1595psi) at this time, and the alarm will stop automatically as pressure in the accumulator is higher than the alarm pressure. Press down the emergency brake button only after the alarm stops. During operation, if the system is faulty, resulting in oil pressure in the accumulator of service brake circuit lower than 11MPa\1595psi, the service brake low pressure alarm light flashes and the alarm buzzer sounds. At this time, stop operation and park the vehicle for inspection. During inspection, stop the machine on level ground and pull the emergency brake button.

When press down the emergency brake button, the solenoid valve is powered on, valve port is open, the pressure of oil outlet is 16MPa\2320psi, high pressure stored in the accumulator of parking & emergency brake circuit enters into parking brake cylinder via emergency brake solenoid valve to release the parking brake. At the moment of pressing down the emergency brake button, the parking & emergency brake low pressure alarm light flashes. Because oil pressure in the parking brake circuit is still lower than the alarm pressure (11MPa\ 1595psi) at this time. The machine can be started only when the emergency brake low pressure alarm light is off. When pull the emergency brake button, the solenoid valve is powered off, hydraulic oil in the parking brake cylinder flows back to oil tank via emergency brake solenoid valve and the parking brake is locked. During operation, if the parking & emergency brake circuit is faulty, resulting in oil pressure in the accumulator BR3 lower than 11MPa\1595psi, the emergency brake low pressure alarm light flashes. At this time, stop operation and park the vehicle for inspection. During inspection, stop the machine on level ground, pull the emergency brake button and chock the wheels with blocks to prevent the machine from moving.

If the service brake low pressure alarm fails and the system is faulty, which results in oil pressure in the accumulator of service brake circuit lower than 7MPa\1015psi, the clutch on/off switch of emergency brake in the system cuts off the power automatically to engage the transmission in N position. Simultaneously, the solenoid valve is powered off, hydraulic oil in the parking brake cylinder flows back to oil tank via emergency brake solenoid valve so that the parking brake is locked and the emergency parking of loader is achieved.

⚠WARNING

Unless in emergency, do not apply parking & emergency brake when the machine is running. Applying parking & emergency brake in normal operation will cause serious damage to the brake and power train system.

Brake Pump

Main Technical Parameters

Items	Parameters	Service conditions
Theoretical displacement (ml/r\cc/r)	15\2175	/
Rated speed (r/min)	2200	/
Maximum speed (r/min)	2500	/
Rated pressure (Mpa\psi)	18\2610	/
Maximum pressure(Mpa\psi)	25\3625	
Volume efficiency	0.92	/
Operating fluid	Anti-wear hydraulic oil	HM46/ HV46
Direction of rotation	Left rotation	/

Structure and Working Principle of Brake Pump

The brake pump is a gear pump and located under cab and installed on the left power take-off of the gearbox and tightened by stud and nut. It is driven by engine via hydraulic torque converter and gearbox to supply oil for brake hydraulic system.

Gear pump working principle schematic

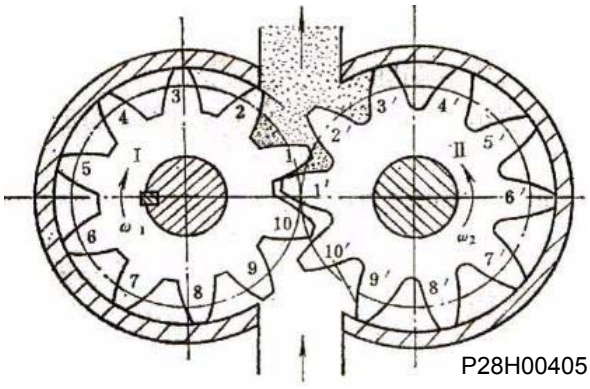

The gear pump works by using the meshing movement of a pair of gears and causing volume changes in the suction and discharge chambers. It is the suction port with a closed volume always in a growing state, and it is the outlet with a closed volume always in an ever-reduced state. Generally, the side with larger port is the suction port, and the side with smaller port is the outlet.

Overall structure of brake pump

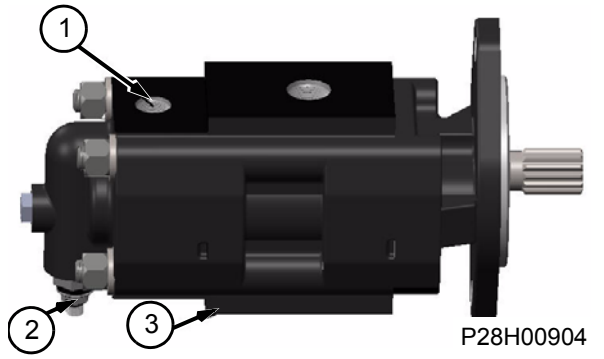

1. Oil outlet (for oil entering into high-pressure oil filter)
2. Safety valve of brake system
3. Oil inlet (to oil outlet steel tube of tank)

EXploded view of brake pump (cooling pump and brake pump form tandem pump)

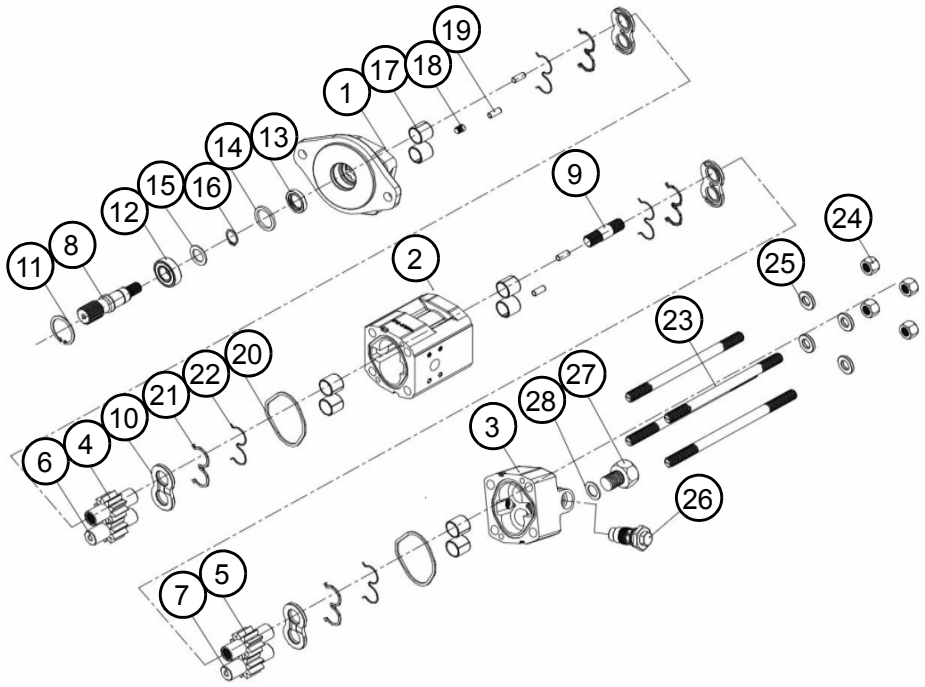

P28H00905

1. Front housing
2. Pump body
3. Pump body
4. Drive gear
5. Drive gear
6. Driven gear
7. Driven gear
8. Connecting shaft
9. Connecting shaft
10. Lateral plate
11. Internal circlip
12. Outboard ball bearing
13. Skeleton oil seal
14. Washer
15. Snap ring
16. Snap ring
17. Roller bearing
18. Oil blocking screw
19. Cylindrical pin
20. O-ring
21. Seal ring of side plate
22. Seal ring of side plate
23. Stud bolt
24. Nut
25. Washer
26. Relief valve
27. Plug
28. Washer

Internal maintenance instructions of brake pump

1. Maintenance of brake pump: brake pump is the power source of brake hydraulic system, and its volume efficiency will influence the speed and efficiency of actuator directly. It is not recommended to remove or install the brake pump by non-professionals as it is a precise hydraulic element, and the broken pump shall be returned to the manufacturer and repaired by professionals; after repair, brake pump shall perform the test of airtightness and volume efficiency in order to guarantee its performance and normal application.
2. Installation requirements for brake pump:

(1) You shall understand fully about rotating direction of brake pump and its compliance with the requirements of the entire machine before installation of the brake pump.

(2) Inlet and outlet port of brake pump shall be kept clean without dirts, and its surface shall have no injuries so as to guarantee the sealing effect of O-ring.

(3) Before assembling the brake pump, check whether the mounting hole depth of gearbox spline is larger than the pump's shaft extension length or not, in order to prevent from culmination phenomenon, pump burnt out. Installation of spline shaft and spline housing shall be free without stuck.

3. Precautions for maintenance of brake pump:

(1) Apply a moderate force during assembly and disassembly of brake pump, and rude operation is not allowed; user shall not open the brake pump without manufacturer's consent, otherwise they cannot guarantee their product performance.

(2) Pay attention to maintenance of brake pump during operation, replace the hydraulic oil and check all bolts at connections for looseness according to the maintenance manual.

(3) Oil inlet and outlet of brake pump shall be installed firmly and sealing device shall be secured, otherwise it may cause oil leakage or air suction and affect the pump's performance.

(4) It is not allowed to operate the brake pump under maximum pressure, maximum speed or overloaded circumstances, otherwise, it may influence the service life.

(5) Oil temperature is required to be kept lower than 80 °C/176°F, otherwise it may affect the viscosity of hydraulic oil and also accelerate the oxidation of fluid.

Brake Valve

Main Technical Parameters

Items	Parameters	Service conditions	Remarks
Maximum allowed system pressure	20.7±0.35MPa	\	\
Maximum brake pressure	4.8±0.35MPa	\	\
Pedal force under maximum pressure (about)	230N	\	\
Pedal stroke (about)	18°	\	\
Operating fluid	Anti-wear hydraulic oil	HM46/HV46	\

Adjustment of maximum brake pressure

If the maximum brake pressure value of dual-circuit brake valve is 4.8±0.35MPa and wrong, it can be adjusted by increasing or decreasing the gasket 12 shown in below..

⚠CAUTION

as the structure of dual-circuit brake valve is complex and the requirement for assembly and adjustment is high, the removal & installation and adjustment can not be conducted by non-professionals without authorization. Before the dual-circuit brake valve is delivered, its pressure value has been adjusted. If fault occurs or the maximum brake pressure value is wrong, please contact its factory or dealer.

Structure and working principle of brake valve

Brake valve (also called foot brake valve) is located on left floor of cab and its pedal can be controlled by left foot. Brake valve, which realizes the sensitive follow-up control during the brake and release process of service brake system, is one of the main parts of brake system.

Outline diagram of brake valve

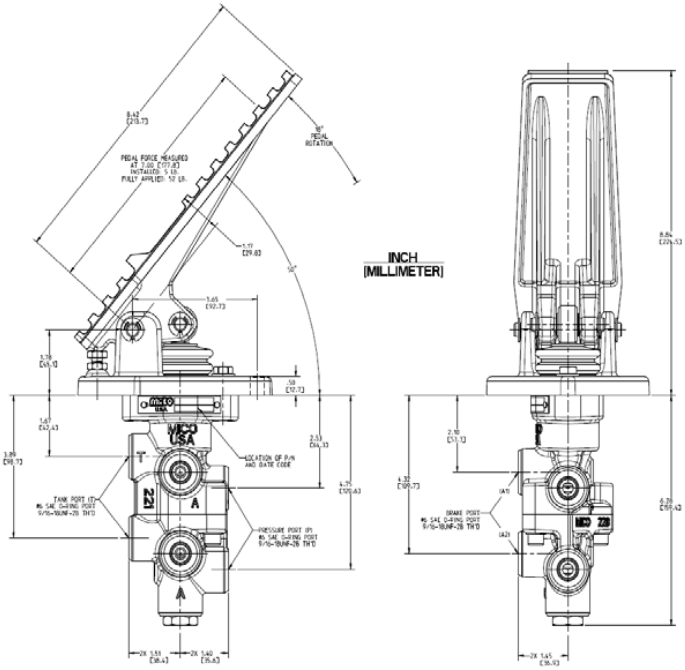

P18H00059

Structure drawing of brake valve

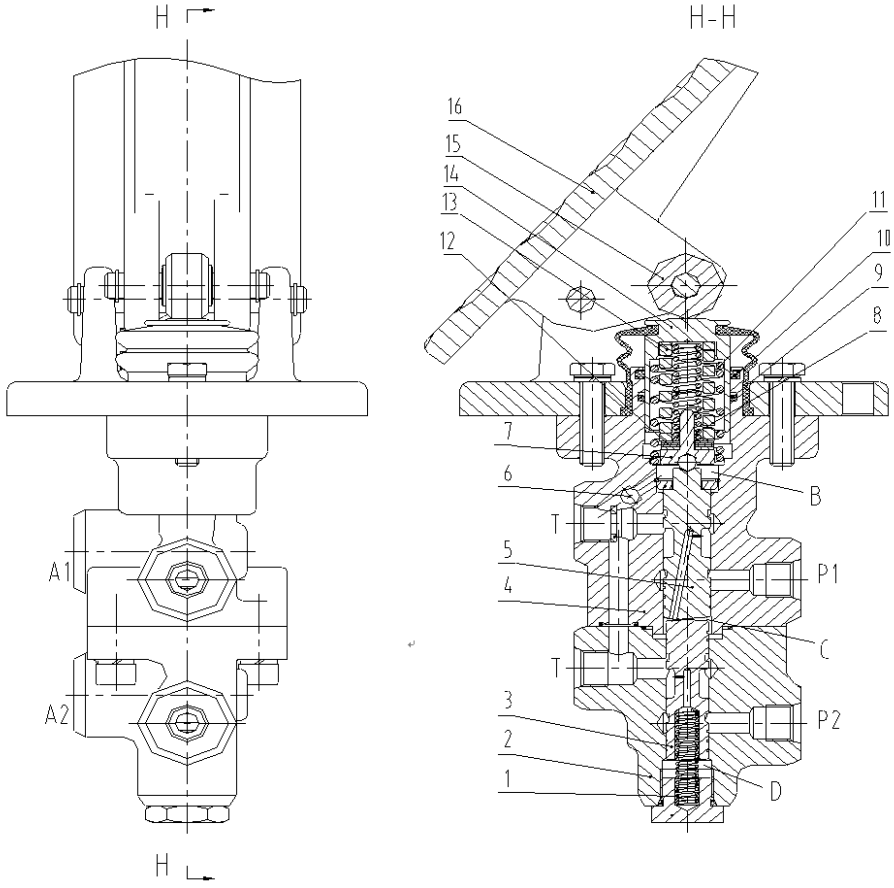

P18H00060

1. Spring
2. Valve body
3. Lower spool
4. Valve body
5. Upper spool
6. Steel ball
7. Spring holder
8. Balance spring
9. X-ring
10. Y-ring
11. Reset spring
12. Adjusting shim
13. Balance spring
14. Piston
15. Roller
16. Step

Hydraulic schematic of brake valve

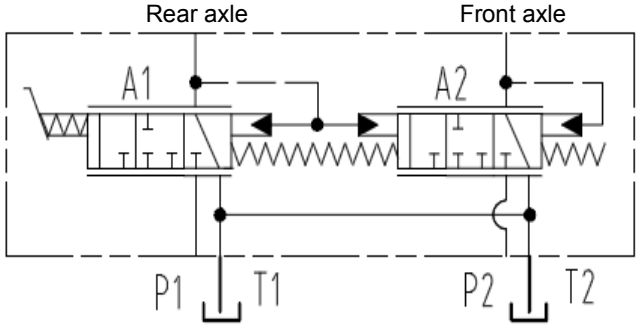

P18H00061

Main structure of brake valve is as shown above picture, P2 port and P1 port are connected with accumulator BR1 & BR2 respectively, A2 port and A1 port are connected with wheel brake of front and rear axle.

1. When the brake valve pedal is released, spool 5 & 3 are pushed to maximum position under the effect of spring 1, P1 port and P2 port are disconnected with A1 port and A2 port respectively, A1 port and A2 port are connected with T port and thus the machine is under non-brake state.

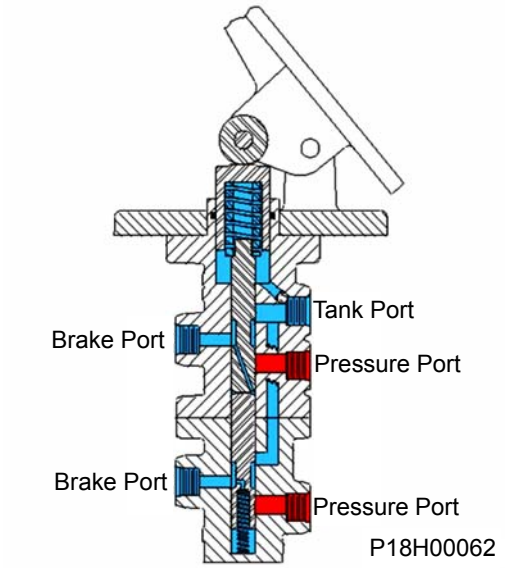

2. With the brake valve pedal depressed, apply certain force to balance spring 8 & 13 by piston 14 to push spool 5 & 3 to move downwards, A1 port and A2 port is disconnected with T port, and then P1 port is connected with A1 port, P2 port is connected with A2 port, high pressure oil stored in accumulator BR1 &BR2 enters into the wheel brake of front and rear axle to apply brake, at the same time, the brake switch acts and the brake light is on. Two circuits of dual-circuit are independent from each other, as one brake circuit is faulty, the other circuit can still work normally.

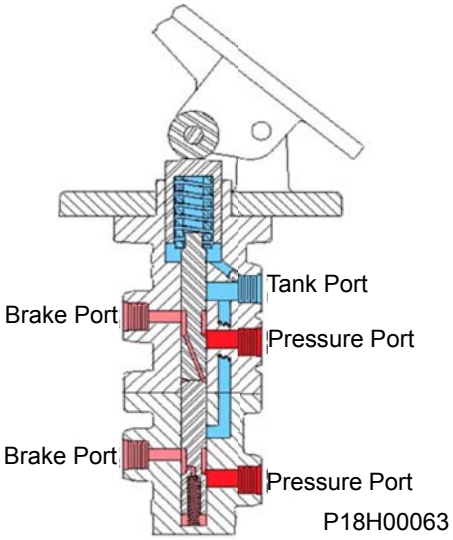

3. Under brake, the proportional relation of output oil pressure of brake valve with operating force applied on the brake pedal is realized by balance spring 8 & 13. When the pedal force is fixed, the pressure applied on the balance spring is also a fixed value. After P1 port and P2 port opening, pressure oil enters into C cavity and D cavity of the spool lower cavity. As the force which is applied on the spool by oil pressure of the spool lower cavity exceeds the tension force of balance spring, the balance spring is compressed and the spool moves upward until P1 and P2 are closed, at this time, the force applied on the spool by oil pressure is balanced with the pressure applied on the balance spring applied by the pedal and the oil pressure outputted by brake valve is at a certain value. When the pressure applied on the balance spring by the pedal rises, the spool moves downwards and P1 port and P2 port are open again. When oil pressure of the spool lower cavity rises up to a certain value, the force applied on the spool is balanced with the pressure applied on the balance spring by the pedal, P1 port and P2 port are closed again, the oil pressure outputted is kept at a certain value which is higher than previous one. That is, the oil pressure outputted by brake valve is in in proportion to the compression and deformation of the balance spring and also to the stroke of brake pedal.

Precautions for use and maintenance of brake valve

1. Be sure the connecting pipeline is clean, without any impurities;
2. Periodically check the connection and fastening condition of all parts and tighten timely if there is looseness;
3. Periodically check the working condition of pedal: whether it is stuck when depressing the pedal and whether it can return rapidly at the time release;
4. If it is necessary to remove and clean brake valve, do not clean seal ring, valve and other rubber parts using brake fluid, kerosene and other fluids which can corrode the rubber parts, they can only be wiped by blowing or clean cloth. Apply 3# lithium lubricating grease on the moving parts, such as valve and piston after being cleaned;

Charge Valve

Main Technical Parameters

Items	Parameters	Service conditions	Remarks
Shut-off pressure of charge valve	15.9±0.35MPa	\	\
Connecting pressure of charge valve	12.8±0.35MPa	\	\
Charging speed	10.2±1.9L/min	\	\
Operating fluid	Anti-wear hydraulic oil	HM46/HV46	\

If the maximum charging pressure of the charge valve is not in compliance with the setting value (15.9±0.35MPa) before the delivery of the complete machine, adjustments shall be made as follows:

1. Make sure that all external pipelines of dual-circuit charge valve are connected correctly;
2. Connect accurate pressure gauge at SW port;
3. Start the machine, it is permitted for the charge valve starting working after 1 minute around, stop oil supply as the pressure shown on the pressure gauge continues to increase.
4. Remove the plug 8 and O-ring 9 shown in the Figure below, turn the nut 10 slowly until the maximum reading of the pressure gauge up to 15.9±0.35MPa. The pressure can be set in the accurate position only by adjusting the nut 10 several times.

⚠CAUTION

As the structure of dual-circuit charge valve is complex and the requirement for assembly and adjustment is high, the removal & installation and adjustment can not be conducted by non-professionals without authorization. Before the dual-circuit charge valve is delivered, its pressure value has been adjusted. If fault occurs or charging pressure value is wrong, please contact its factory or dealer.

Exploded view of the charge valve pressure adjustment

● Items included in Repair Kit
✻ Not used on all models

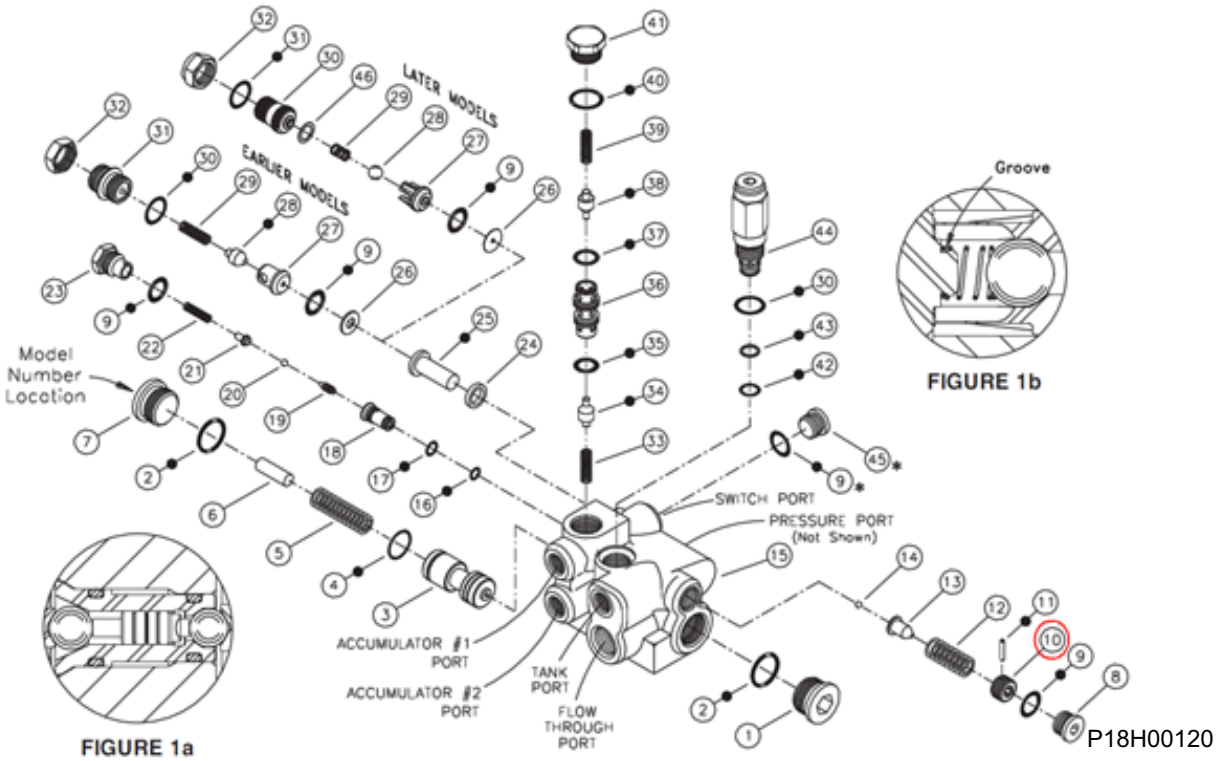

Structure and working principle of charge valve

Charge valve, located in left housing of rear frame, is used to charge the accumulator according to the pressure of brake system.

Structure diagram of charge valve

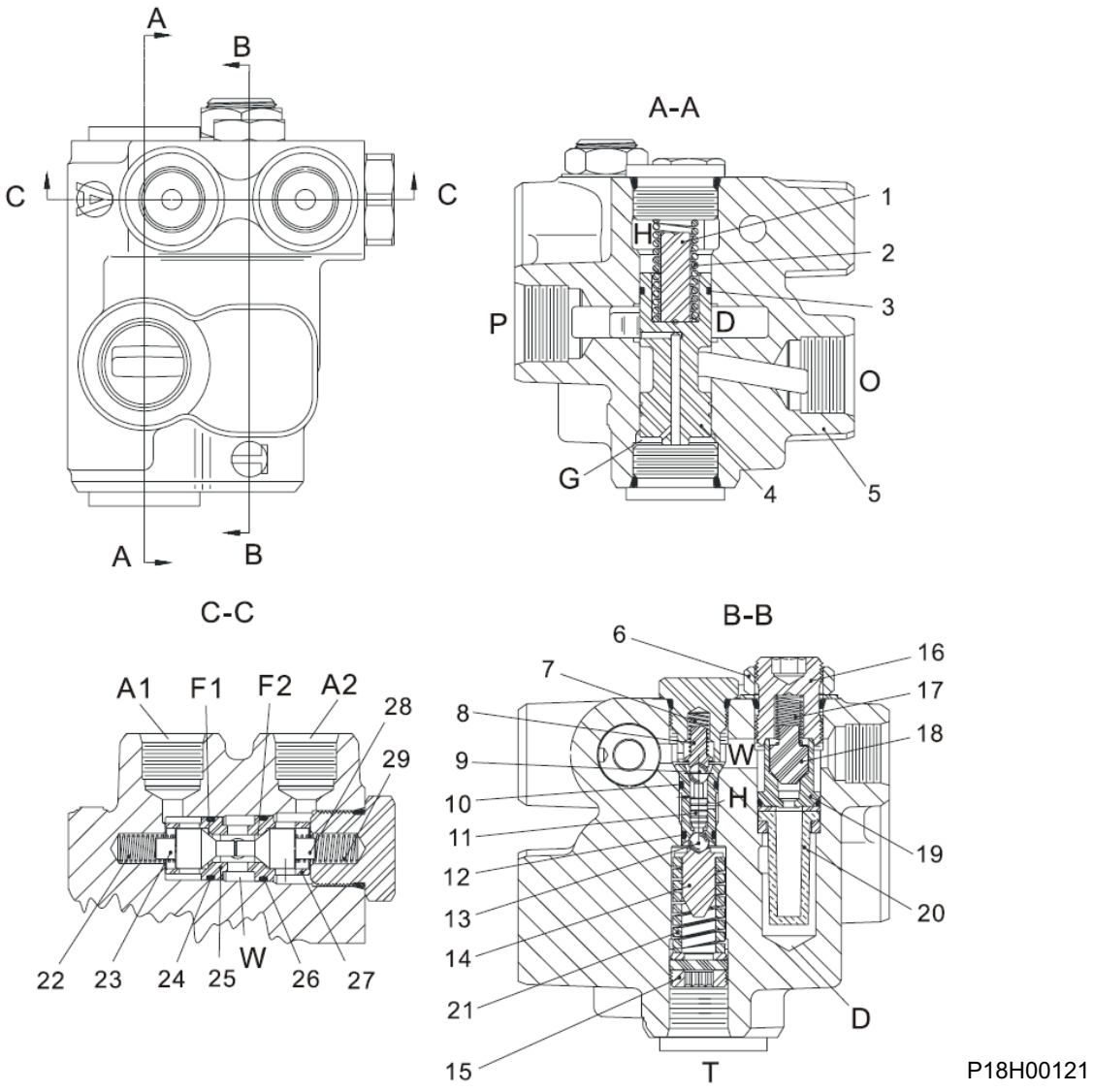

1. Rod
2. Spring
3. Seal ring
4. Spool
5. Valve body
6. Nut
7. Spring
8. Rod
9. Steel ball
10. Seal ring
11. Spool
12. Seal ring
13. Steel ball
14. Rod
15. Nut
16. Screw rod
17. Spring
18. Spool
19. Valve seat
20. Filter element
21. Spring
22. Spring
23. Spool
24. Seal ring
25. Valve seat
26. Seal ring
27. Valve seat
28. Spool
29. Spring

Hydraulic schematic of charge valve

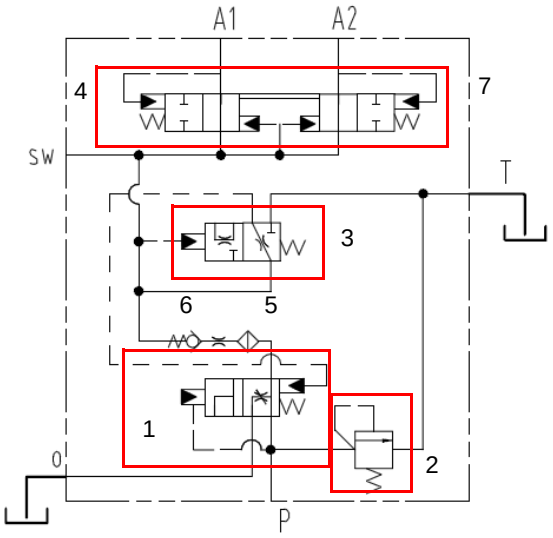

P28H00364

1. Priority valve (main spool)
2. Relief valve
3. Pilot spool
4. Shuttle valve one
5. Filter element
6. Check valve
7. Shuttle valve two

The priority valve 1 is used to supply oil for brake system preferentially and unload after meeting requirements for the accumulator of brake system; the relief valve 2 is used for limiting the maximum pressure of the charge valve import; the pilot valve spool is used for setting the pressure for connecting and shutting off charge valve; The shuttle valve 4 & 7 are used to protect brake circuit A1 & A2 from interference with each other.

Hydraulic schematic diagram of charge valve is shown in Figure above. P port is connected with pump, A1 & A2 ports are connecting with the accumulator for service brake, SW port is connected with P port of brake valve block, and then connected with parking brake accumulator, T port is connected to oil tank and O port is connected to oil tank.

When the pressure of working oil port of charge valve is lower than the connecting pressure of charge valve (12.8±0.35MPa), the spring 21 pushes the rod 14 to move upwards to close P port, W cavity is connected with H cavity; the spool 4 moves downwards under the effect of spring 2 to reduce the opening of P port and O port, one branch of oil from the pump enters into G cavity via small hole and the other branch props up the check valve spool 18 and enters into W cavity via spool 20 to push the spool 23 & 28 and open check valves F1 & F2 and starts charging the accumulator which reduces pressure of SW port. When the pressure of oil outlet SW of charge valve is higher than the pressure of shut-off pressure of charge valve (15.9±0.35MPa), the force of W cavity oil pressure and spring 7 is higher than the common force of spring 21, the spool 11 moves downwards to prop up the valve under the spool 11, oil of H cavity enters into oil tank, the pressure decreases, at this time, the pressure of G cavity is higher than common force of spring 2 and oil in H cavity, the spool 4 moves upwards, P port is connected with O port, charging is stopped, all of oil from the pump returns to oil tank via the O port. Recharging the accumulator as the pressure of accumulator is lower than that of connecting pressure of charge valve.

Oil line diagram in charging state

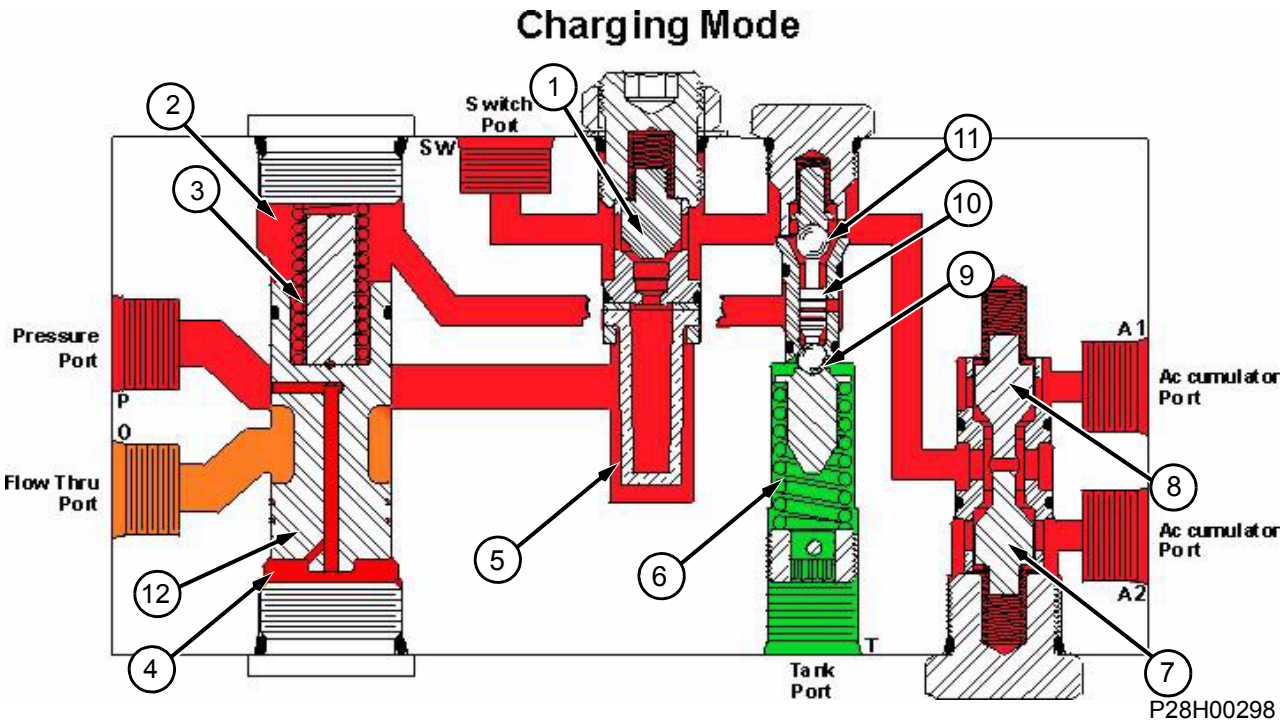

1. Check valve
2. Chamber 1
3. Spring
4. Chamber 2
5. Fliter
6. Spring
7. Shuttle valve 2
8. Shuttle valve1
9. Top dead center testing steel ball
10. Polit fliter
11. Bottom dead center testing steel ball
12. Mail valve

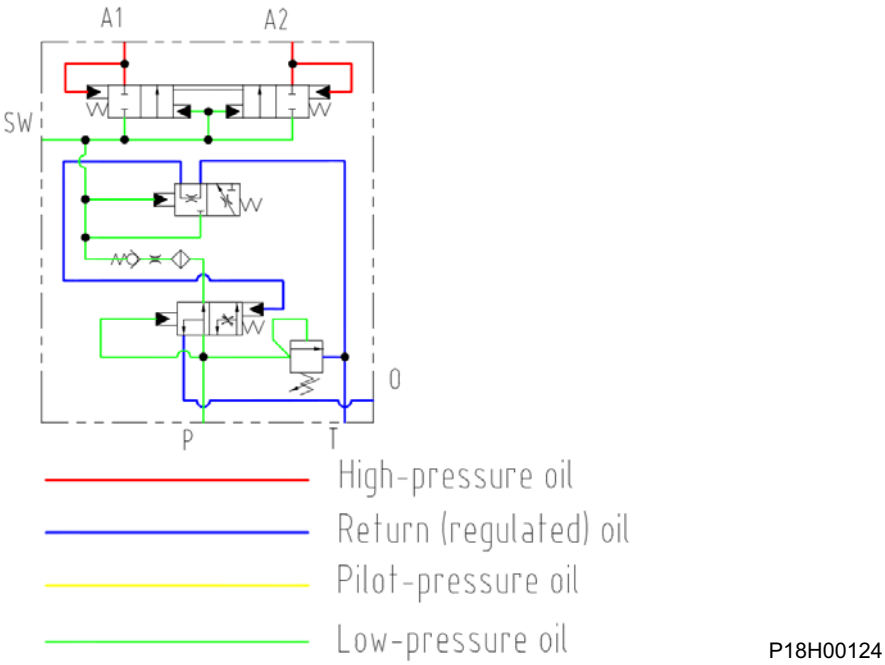

Oil line diagram in bypass state

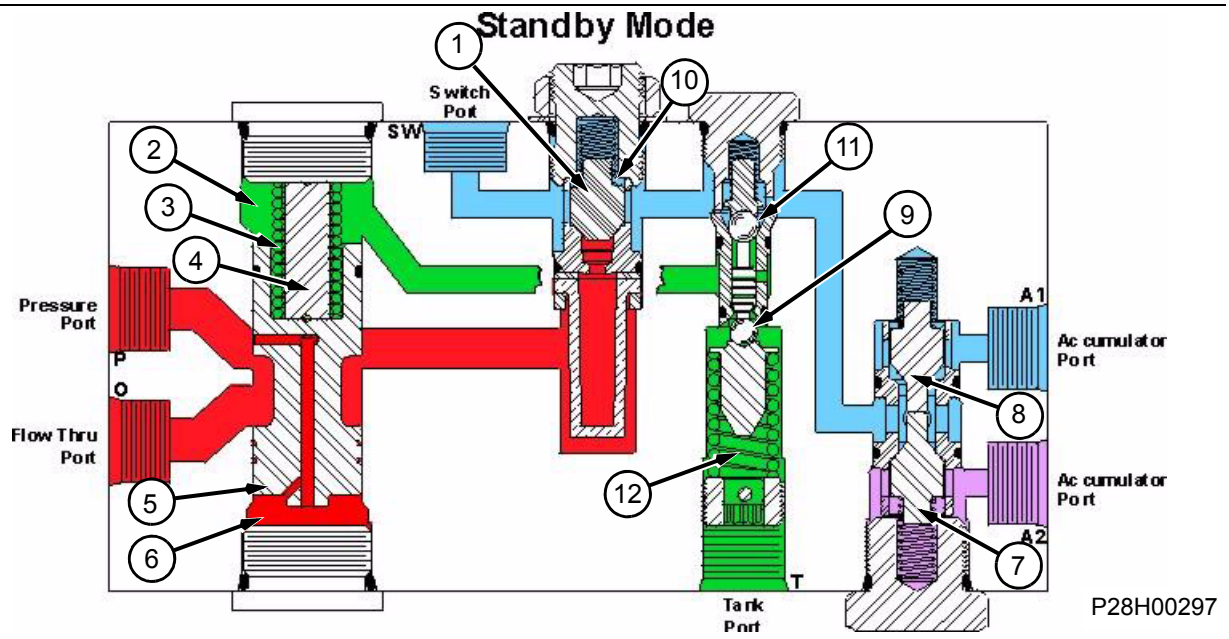

P28H00297

1. Check valve
2. Chamber
3. Spring
4. Shaft snap ring
5. Main valve core
6. Chamber 2
7. Shuttle valve 2
8. Shuttle valve 1
9. Top dead center testing steel ball
10. Check valve base
11. Bottom dead center testing steel ball
12. Spring

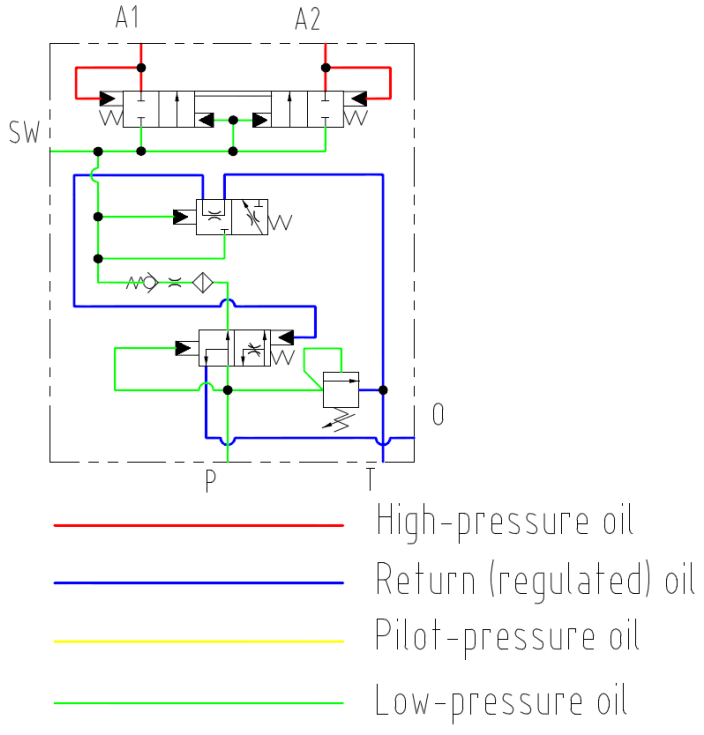

P18H00126

⚠CAUTION

The pressure change of SW port has the priority to that of A1 & A2, the pressure of SW port, through dual check valve, is the pressure of A1 & A2 port, therefore, the pressure of A1 & A2 port decreases, so dose the pressure of SW port.

Dual check valves F1 & F2 are used to guarantee two brake circuits are not interference with each other. When one of circuits fails, the pressure decreases, the valve (F1 or F1) corresponding to the port with higher pressure is closed under the effect of hydraulic force. Make sure that the brake circuit with zerofailure still realize braking function. At this time, the failed circuit is connected with the charge valve, the pressure of SW port decreases, low pressure alarm switch of service brake acts, the machine shall be stopped immediately for inspection.

Accumulator Assembly

The accumulator assembly, which is located in the housing at left side of complete machine and is fixed on rear frame, mainly consists of service brake accumulator and parking brake accumulator, i.e. service brake accumulator BR1 (rear axle), service brake accumulator BR2 (front axle) and parking brake accumulator BR3 in order from front to back.

Structure principle

Bladder type structure is adopted for the accumulator, as shown in Figure below.

Structure diagram of diaphragm type accumulator

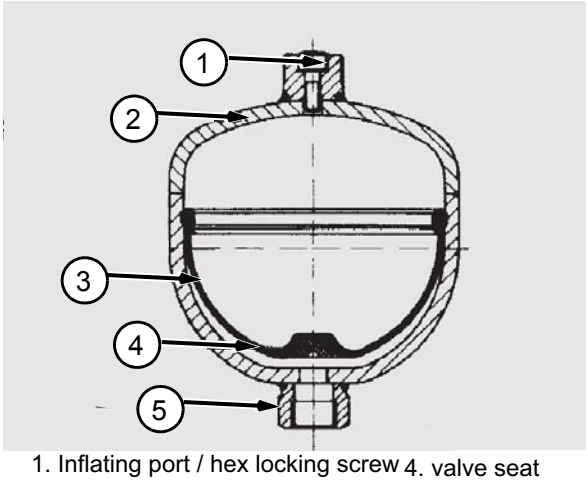

1. Inflating port / hex locking screw
2. Pressure vessel
3. Diaphragm
4. valve seat
5. Fluid side port

P18H00049

Diaphragm type accumulator is used to store pressure oil for braking and hold pressure of system. The operating principle is to isolate the fluid under pressure from the air volume chamber with pre-set pressure in the accumulator with diaphragm and store them in sealing housing. It absorbs and releases fluid for braking due to change of pressure. When the brake pump is operating, it inputs the pressurized fluid into the accumulator via charge valve to store energy, at this time, air in the air chamber is compressed so that the pressure of liquid is equal to air pressure to achieve energy storage. Nitrogen charged into the accumulator is non-flammable.

⚠CAUTION

The accumulator housing may be hot so as to cause burn.

Accumulator charging parameter

Items	Parame-ters	Items	Parameters
Rated capacity	1L\ 0.26US gal	Gas charging pressure of accu-mulator BR1 & BR2	Below 20°C\ 68°F 5.5MPa\ 797.5psi
Rated pressure	31.5MPa	Gas charging pressure of accu-mulator BR3	Below 20°C\ 68°F 9.2MPa\ 1334psi
Pre-charging gas	Nitrogen	Charging pres-sure of accumu-lator BR1 & BR2	12.8~15.9MPa
Working medium	Hydraulic oil	Charging pres-sure of accumu-lator BR3	15.9 MPa

Gas charging method of accumulator

1. Stop the machine, but do not turn off the electric lock. Depress the brake continuously for more than 20 times, and then press and release the button of manual solenoid valve for more than 20 times, drain high-pressure oil in the accumulator. Then, unscrew the plug of oil outlet at lower end of the accumulator slowly. At this time, there is residual pressure oil in the accumulator. Note that the residual pressure oil shall not splash onto person.
2. Remove the protective cap of gas charge valve from upper end of one accumulator.
3. Connect as shown in Figure Below.
4. Turn on the switch of the nitrogen cylinder, after reading of the pressure gauge is stable, turn on the switch on gas charge tool, that is, prop up the gas charge valve in the accumulator and conduct gas charging.
5. As pressure may reach the limit instantaneously, turn off the switch of nitrogen cylinder, check whether the pressure reaches limit after reading of pressure gauge is stable. If insufficient, recharging it. If the pressure is too high, conduct bleeding using the bleeding plug on the gas charge tool and reduce the pressure to a proper value.
6. After reaching the specified pressure, turn off the switch of the nitrogen cylinder, and then the switch on gas charge tool.
7. Remove gas charge tool.
8. If the accumulator leaks (apply oil onto head of the accumulator and check it for bubbles, if any, the accumulator leaks), knock down gas charge valve in the accumulator lightly using hammer or small screwdriver to make it move downwards and then return to its original position so that its sealing surface contacts completely.
9. Install the protective cap of accumulator gas charge valve.
10. Conduct gas charging for the other two accumulators according to above procedures.

Gas charge of accumulator

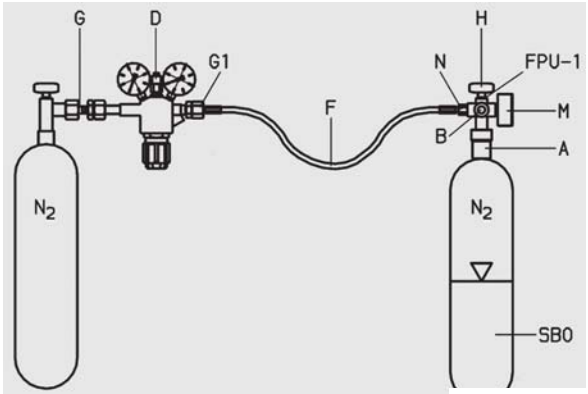

P18H00050

Precautions for safety use of accumulator

1. The accumulator shall be checked before charge of nitrogen. It is prohibited to charge the accumulator with gas if the accumulator does not have a nameplate, or the words on the nameplate are missed so that its type can not be identified, or if the steel seal marks are incomplete or cannot be read clearly, or if there is defect with the housing and therefore safe use cannot be ensured.
2. The accumulator can only be filled with nitrogen other than oxygen, compressed air or other flammable air to avoid explosion.

3. Slowly charge the nitrogen into the accumulator so as to avoid the breakage of the rubber bag.
4. The accumulator shall be installed vertically with the valve facing upwards. The accumulator shall be stably fixed on the bracket without being welded.
5. Before removal of the accumulator, drain the pressure oil, release nitrogen in accumulator using gas charge tool, and then remove parts.

Maintenance of accumulator

Check directly gas charging pressure in accumulator using gas charge tool. After the machine is delivered, check the pressure in plastic bag once a week; after a month, check it once a month, after half a year, check it once every three months; after one year, check it once half a year. Regular inspection is beneficial for keeping the accumulator in best service conditions, finding the leakage early and conducting repair in time.

Brake Cylinder

The brake cylinder, as key actuation component for emergency & parking brake system, is installed on the left side of front end of transmission housing.

Structural composition and working principle of brake cylinder

The structure of brake cylinder is shown as below, its working pressure is 15.9MPa\2305.5psi. The disengagement and engagement of emergency & parking brake are available with brake cylinder whose lever is coupled with cam handle. When the system has no oil pressure or the control knob of emergency & parking brake is pulled up, no pressure oil enters the left chamber of brake cylinder. The spring seat and piston are always pushed to the left side by force from spring, pull the parking brake lever to engage it, thus to achieve the brake performance.

When the system reaches the working pressure, and the control knob of emergency & parking brake is pressed down, the pressure oil flows into the left chamber of brake cylinder through solenoid valve to compress the spring, push the spring seat and piston to right side and the parking brake lever so as to release the brake and drive the vehicle. When the oil pressure of accumulator in the circuit of service brake is lower than 7MPa\1015psi, the cut-off switch of emergency brake acts to cut off the power of solenoid valve. The hydraulic oil in the parking brake cylinder returns to oil tank via manual solenoid valve. Force from spring pushes the spring seat and piston left side and pulls the parking brake lever to lock the brake, meanwhile, transmission shifts to the neutral position to achieve the emergency parking of loader.

The machine is equipped with parking brake which is released by hydraulic pressure based on spring action (working of brake cylinder). If the engine, hydraulic system or the brake system fails, the machine is braked and unable to drive. When the machine fails to drive and needs to be towed, the pin shaft in the brake cylinder as shown below is removed, tow the machine after the parking brake is released.

Structure diagram of brake cylinder

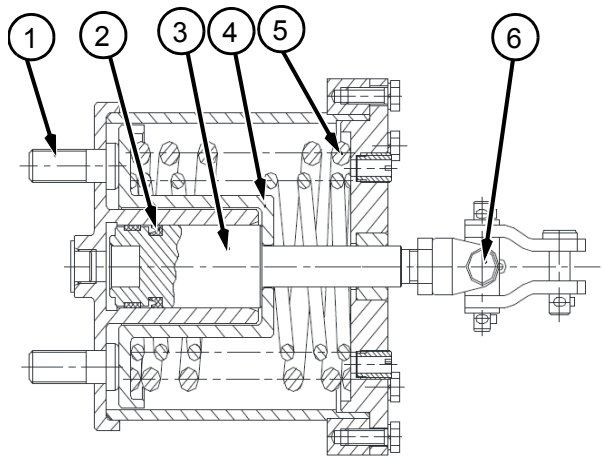

1. Tank body assembly
2. Seal ring
3. Piston
4. Spring holder
5. Spring
6. Pin

Main parameters of brake cylinder

Items	Parameters	Service conditions
Fully release the pressure	5.2MPa	\
Maximal spring force	6422N	\
Rated capacity	42ml	\
Working pressure	15.9MPa	
Operating fluid	Anti-wear hydraulic oil	HM46/HV46

Check the performance of service brake

CAUTION

Before checking the performance of service brake, you shall inspect the performance of parking brake so as to guarantee parking safety and the effects of emergency brake.

1. Adjust the tire pressure of machine to the specified value, and lay down the bucket levelly at approx. 300mm\ 11.8in from the ground. And confirm the machine have the performance of good service brake.
2. Start the engine, and drive the machine toward and on the 25% slope (14°2') and, the road surface shall be flat and dry.

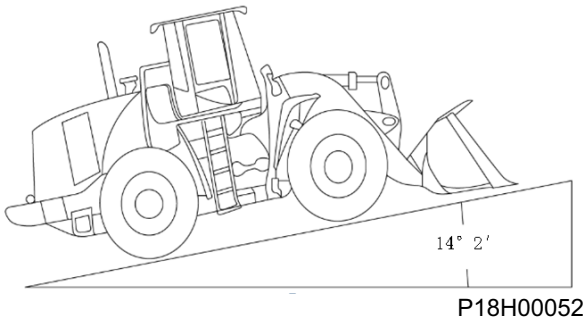

P18H00052

3. Depress the service brake pedal, stop the machine and place the shift control lever to neutral position, and engine won't cut-out.
4. Keep the service brake state and check whether machine will move.

CAUTION

If the machine moves during inspection, it may cause personal injury.

Exhaust of brake system

Bleeding position at front/rear axle

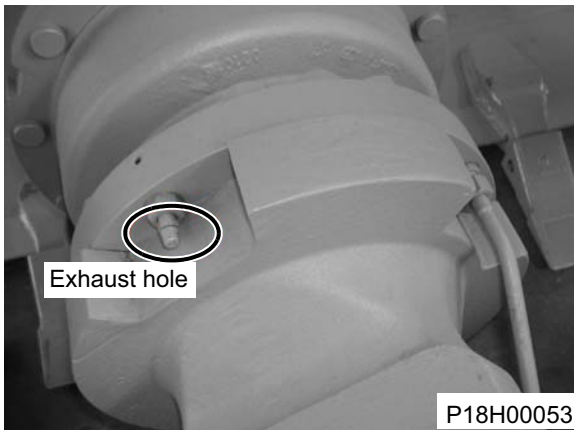

P18H00053

1. Stop the machine on a level and straight road.
2. Turn the shift lever to the neutral position, start up the engine and let it run at idle speed, activate the parking brake switch; switch off the low-pressure alarm lights for service brake and for parking brake, stall the engine and then activate the electric lock.
3. Put a transparent hose around the exhaust nozzle of the left/right wheel brake of front drive axle and the other end of the hose into the oil pan.
4. It needs the coordination of two persons, one is to loosen the exhaust nozzle to observe the exhaust situation; the other depresses the pedal firmly after stepping on it several times continuously until the the liquid column without bubbles is discharged, tighten the exhaust nozzle.
5. Repeat these steps to discharge the gas from the rear axle.

6. After the gas in the front/rear axles is discharged, continuously pull up and press down the switch of parking brake for 3-4 times, and discharge the gas out of parking brake.
7. Take care to and slowly loosen the drain plug under the energy accumulator until there are oil liquid and bubbles out of thread, Tighten the plug when no babbles emerge.

⚠WARNING

Since there is high pressure oil stored in the wheel brake, special care must be taken when bleeding. It is not allowed to loosen fully the bleeding valve. Keep the eyes and body away from the bleeding valve in order to avoid injuries caused by spraying oil liquid.

Check for the performance of parking brake

⚠CAUTION

You shall frequently inspect the performance of parking brake so as to guarantee parking safety and effect of emergency brake. Guarantee parking safety and effect of secondary brake.

1. Adjust the tire pressure of machine to the specified value, and lay down the bucket levelly at approx. 300mm\11.8in from the ground. And confirm the machine have the performance of good service brake.
2. Start the engine and load 5 tons weight and align the machine at 15% slope (8° 32') and the pavement shall be flat and dry.
3. Pull the parking brake button, stop the machine and place the shift control lever to neutral position, and the engine is not stalled.

Hydraulic Cooling System

Components and Position

This machine is equipped with separate hydraulic fan motor cooling system, which acquires oil, water temperature signals of torque converter and temperature signal of air-air inter-cooler, and control the speed of fan with program. This not only meets needs for system cooling, but also achieves the purpose of energy saving. The system consists of cooling pump, motor, solenoid directional valve and other pipes (refer to the maintenance manual of electrical system for electrical controls).

System's features:

1. Electric adjustment, by controlling pressure drop △P of the oil through fan motor, adjusts the speed of fan;
2. The proportional relief valve integrates the reversing valve, when the relief valve is closed normally, it guarantees the fan works at full speed in the case of no electrical signal;
3. The fan is driven in reverse direction to make fan work reversely, dredging the impurities deposited on the radiator;
4. Plunger motor with low noise and long service life;

The schematic and component layout drawing of this machine cooling system are as follows:

Schematic of the hydraulic cooling system

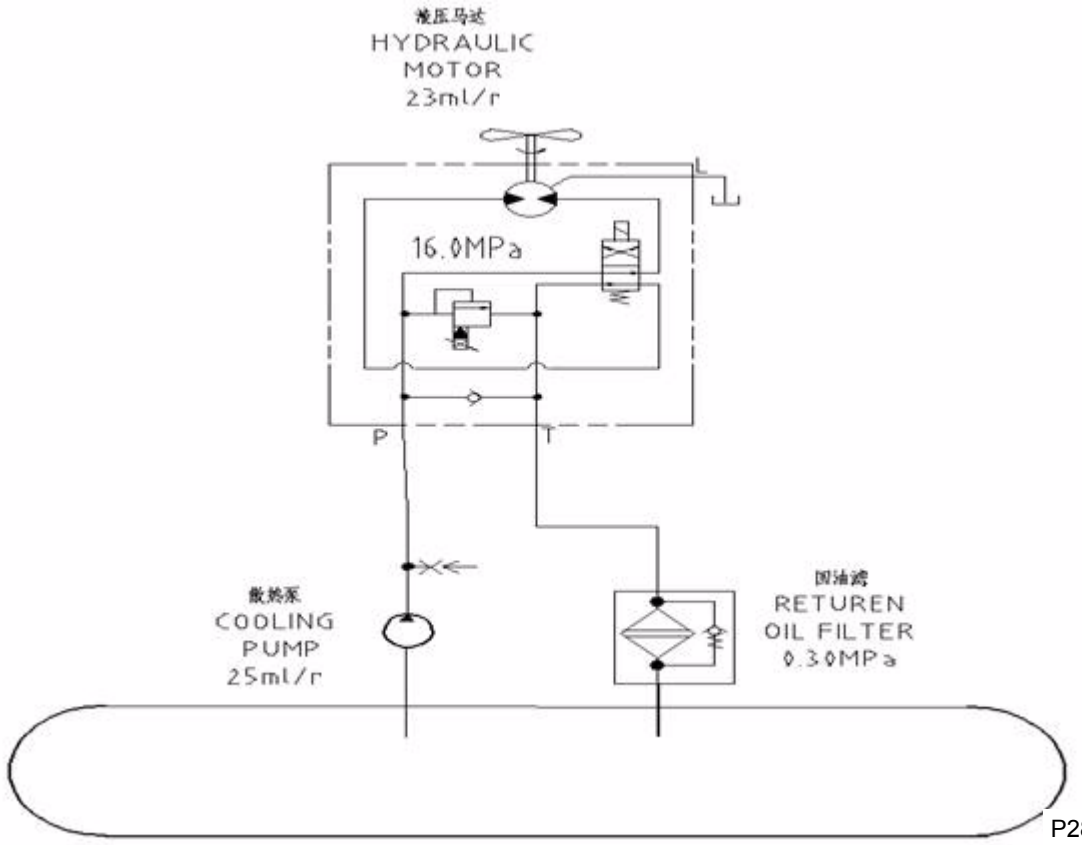

Layout drawing of hydraulic cooling system

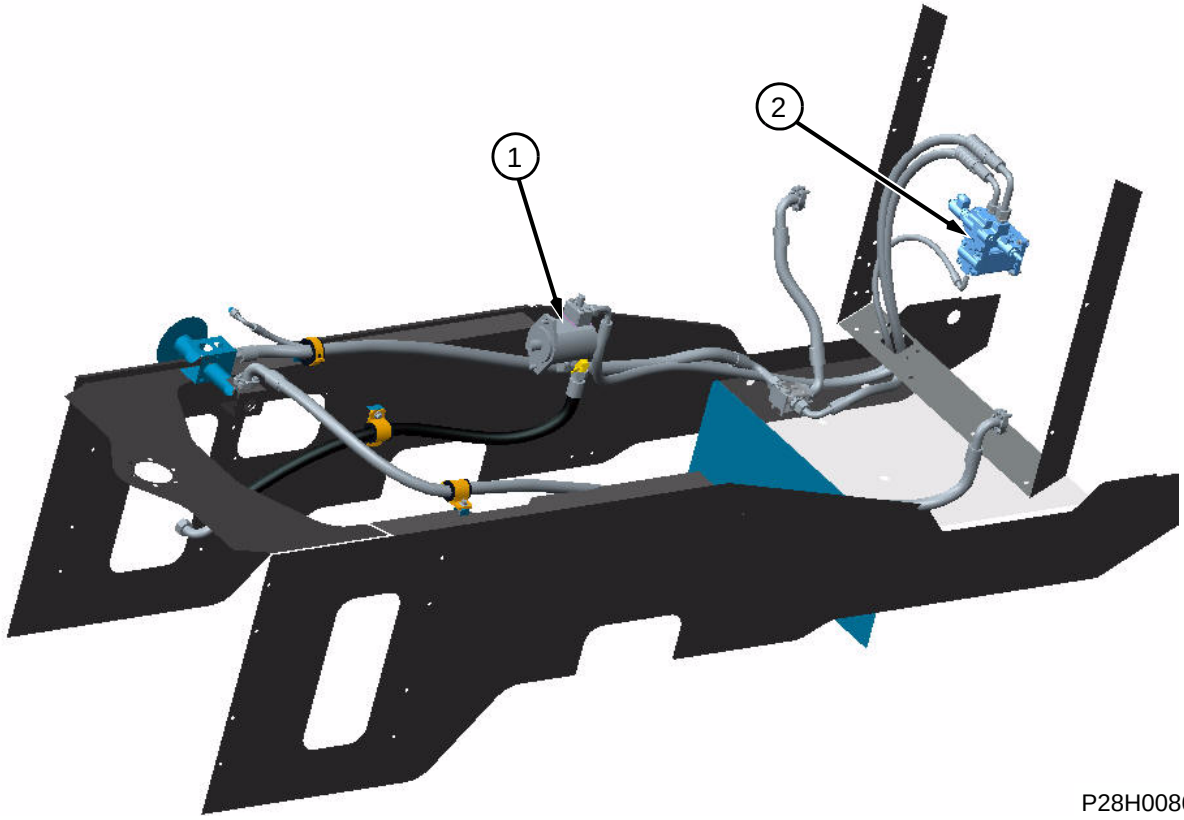

1. Cooling pump
2. Motor & solenoid directional valve

Technical parameters of hydraulic cooling system

Items	Parameters
System pressure	About 16±0.3MPa@1700rpm (fan speed)
System flow	55L/min@2200r/min

Working principle of hydraulic cooling system

Oil line of fan rotation clockwise

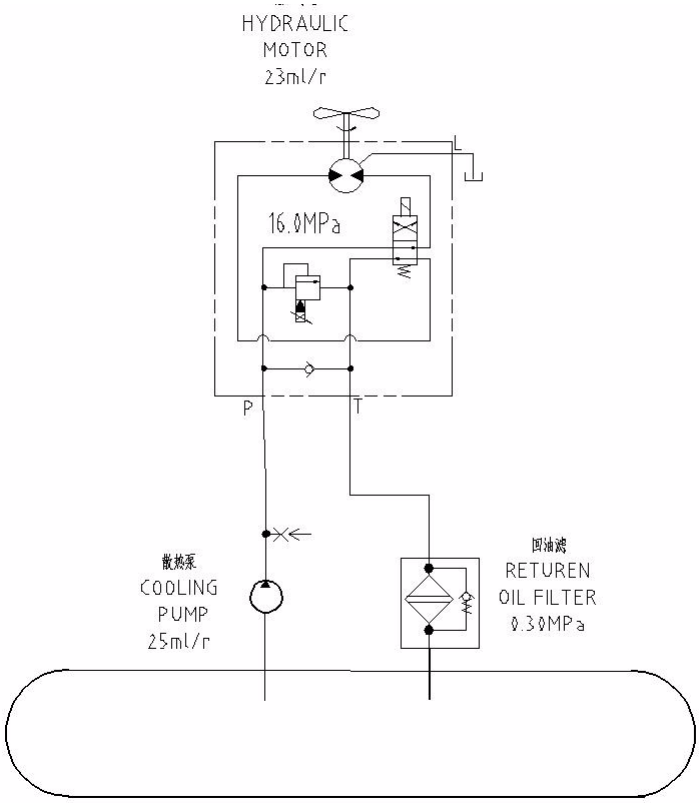

P28H00870

Working principle:

When the solenoid directional valve is not energized, under action of spring force, it works in lower position. One branch of high-press oil from cooling pump flows into the right oil port of cooling motor via solenoid directional valve. The left Port oil of cooling motor returns to oil tank via the solenoid directional valve to achieve clockwise rotation of fan.

Principle of fan reverse rotation

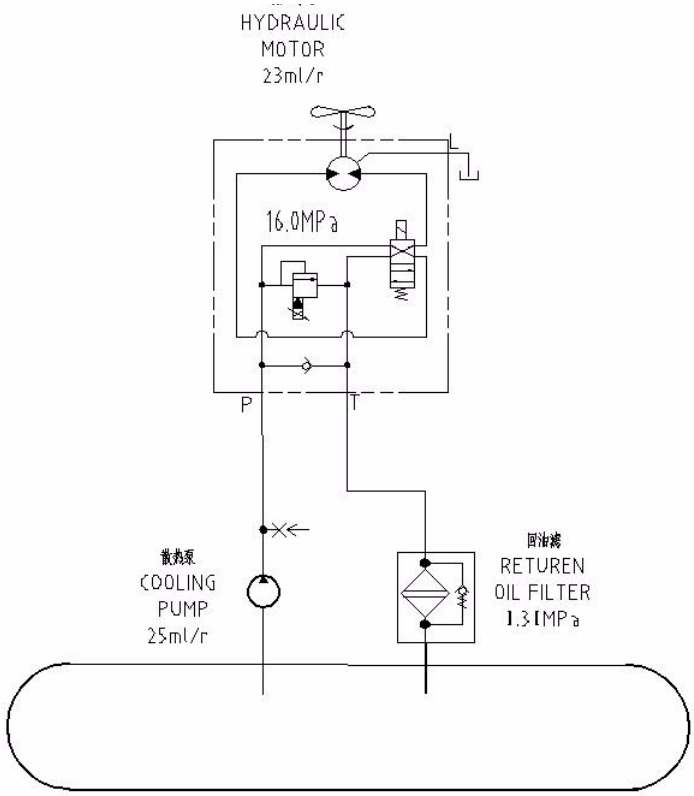

P28H00871

Working principle:

When the solenoid directional valve is energized, under action of spring force, it works to the upper position. One branch of high-press oil from cooling pump flows into the left oil port of cooling motor via solenoid directional valve. The right port oil of cooling motor returns to oil tank via the solenoid directional valve to achieve reverse rotation of fan.

In addition, the electric control system acquires the temp signal from air-air inter-cooler, oil and water temp signals from torque converter, to control the opening of proportional relief valve, so that the pressure difference between inlet and outlet of cooling motor, further to control motor flow and fan speed.

Cooling Pump

Main Technical Parameters

Items	Parameters	Service conditions	Remarks
Theoretical displacement	25ml/r	/	/
Rated speed	2200r/min	/	/
Max. speed	2350r/min		
Rated pressure	16MPa	/	/
Max. pressure	21MPa		
Volume efficiency	0.92	/	/
Operating fluid	Anti-wear hydraulic oil	HM46/HV46	/
Direction of rotation	Left rotation	/	/

Structure and Working Principle of Cooling Pump

Cooling pump is a gear type, installed on flywheel at left side of engine. It provides the cooling system with oil at the same speed as the engine works.

Gear Pump Working Principle Schematic

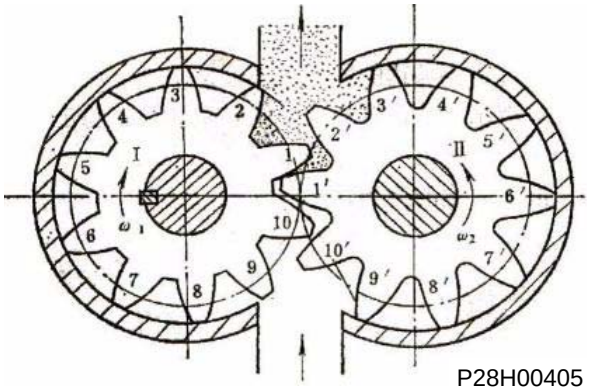

P28H00405

The gear pump works by using the meshing movement of a pair of gears and causing volume changes in the suction and discharge chambers. It is the suction port with a closed volume always in a growing state, and it is the outlet with a closed volume always in an ever-reduced state. Generally, the side with larger port is the suction port, and the side with smaller port is the outlet.

Outline of cooling pump

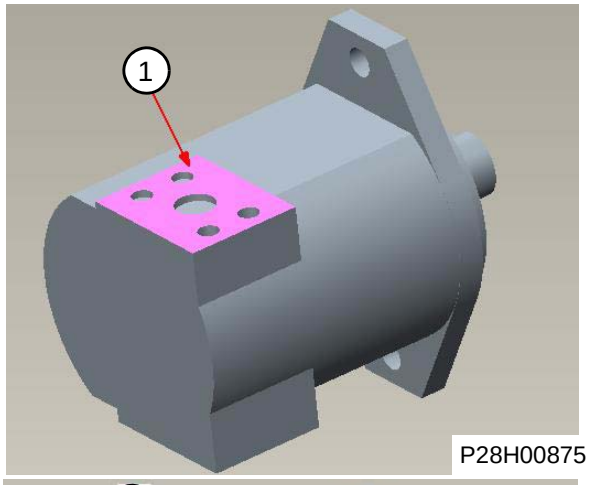

P28H00875

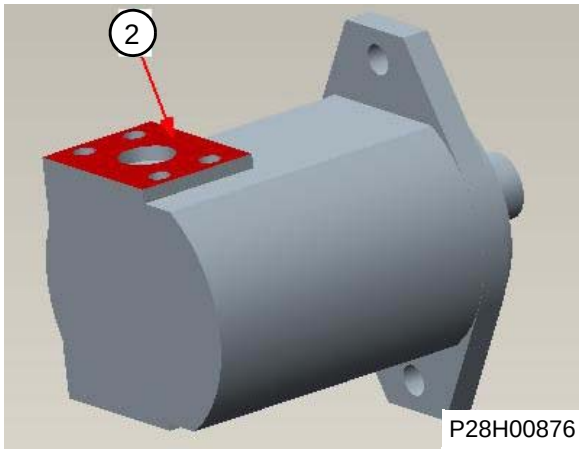

P28H00876

1. Oil outlet (to fan motor)
2. Oil inlet (to suction oil hose)

Maintenance Instruction for Cooling Pump

Maintenance of cooling pump:

the cooling pump is the power source of brake hydraulic system, and its volume efficiency will affect the speed and work efficiency of actuator directly. It is not recommended to remove or install the cooling pump by non-professionals as it is a precise hydraulic element, and the broken brake pump shall be returned to the manufacturer and repaired by professionals; after repair, cooling pump shall perform the test of airtightness and volume efficiency in order to guarantee its performance and normal application.

Installation requirements for brake pump:

1. You shall understand fully about rotating direction of cooling pump as per the requirements of the complete machine before installation of the cooling pump.
2. There is no debris at the inlet and outlet of radiator pump, and no damage on the flat surface of inlet and outlet so as to ensure the sealing performance of O-ring.
3. Before assembling the cooling pump, check whether the mounting hole depth of engine spline is larger than the pump's shaft extension length or not, in order to prevent from culmination phenomenon, pump burnt out. Installation of spline shaft and spline housing shall be free without stuck.

Precautions for maintenance of cooling pump:

1. Apply a moderate force during assembly and disassembly of cooling pump, and rude operation is not allowed; user shall not open the brake pump without manufacturer's consent, otherwise they cannot guarantee their product performance.
2. Pay attention to maintenance of cooling pump during operation, replace the hydraulic oil and check all bolts at connections for looseness according to the maintenance manual.
3. Oil inlet and outlet of cooling pump shall be installed firmly and sealing device shall be secured, otherwise it may cause oil leakage or air suction and affect the brake pump's performance.
4. It is not allowed to operate the cooling pump under maximum pressure, maximum speed or overloaded circumstances, otherwise, it may affect the service life.
5. Oil temperature is required to be kept lower than 80°C, otherwise it may affect the viscosity of hydraulic oil and also accelerate the oxidation of fluid.

Cooling Motor

Main Technical Parameters

Items	Parameters	Service conditions	Remarks
Theoretical displacement	23.76ml/r	/	/
Min. / max. speed	500r/min 2500r/min	/	Fan-set speed 1700r/min
Rated / max. pressure	17Mpa/21Mpa	/	/
Volume efficiency	0.92	/	/
Operating fluid	Anti-wear hydraulic oil	HM46/HV46	/
Direction of rotation	Turnable in both directions	/	/

Structure and Working Principle of Cooling Motor

The cooling motor, as an actuator of system, is used to pull the fan to rotate, so that the hydraulic pressure from cooling pump is converted into mechanical energy of fan. The motor used by this system is a swash plate and axial plunger type, which features high level of withstanding pressure, long service life and low noise and so on. Overall structure of motor:

Outline of cooling motor

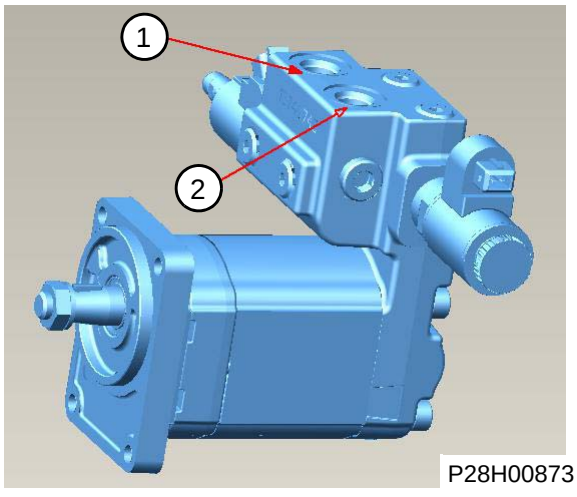

Outline of cooling motor

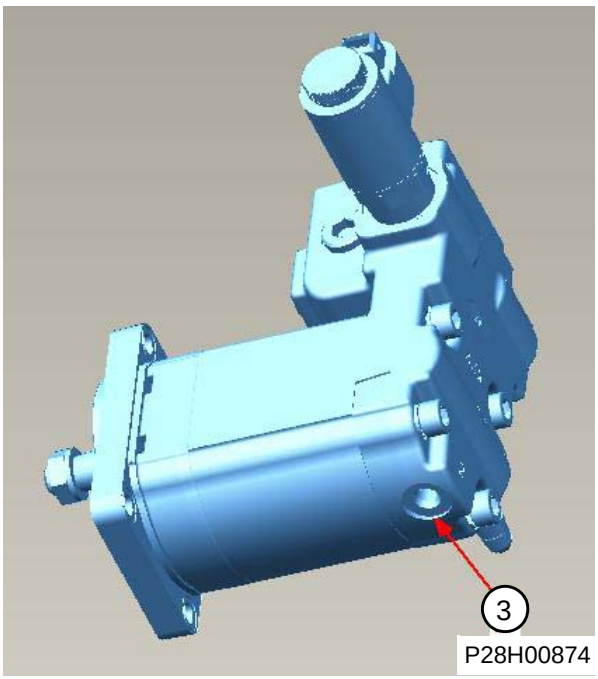

1. Oil return port
2. Oil inlet
3. Housing oil return port

Sectional drawing of cooling motor

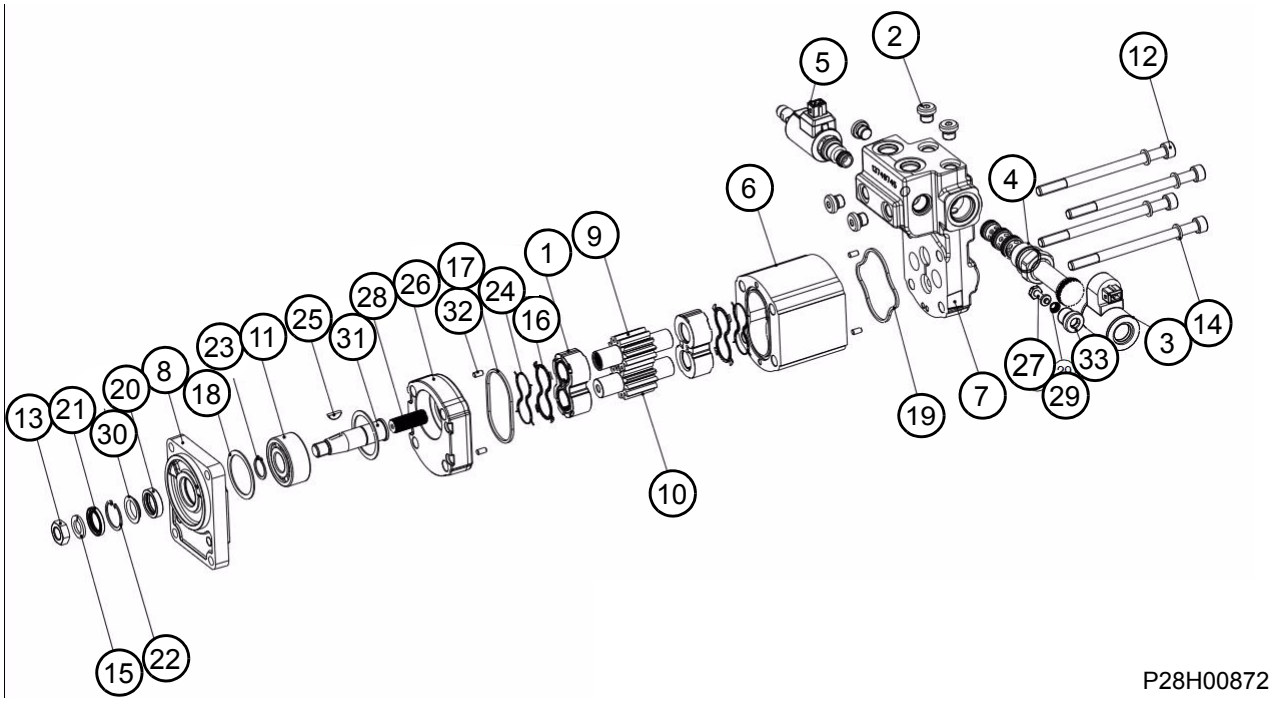

1. Bushing
2. Plug
3. Electromagnetic control parts
4. Valve spool
5. Solenoid valve control parts
6. Motor housing
7. Motor (lower)end face
8. Motor (upper)end face
9. Gear
10. Gear
11. Roller bearing
12. Bolt
13. Lock nut
14. Washer
15. Gasket
16. Shaft seal ring
17. Seal ring
18. Washer
19. Seal ring
20. Roller bearing
21. Bearing
22. Circlip
23. Circlip
24. Shaft seal ring
25. Wedge
26. Motor housing
27. Relief valve group
28. Shaft
29. Relief valve group
30. Guide ring
31. Drive shaft
32. Pin
33. Relief valve group

Testing and Adjustment

Work Hydraulic System Test

Pressure Release of Work Hydraulic System

⚠WARNING

Sudden movement of vehicle or release of oil pressure may cause injury to the persons around the vehicle.

Perform the following procedures to avoid the possible injury:

Figures	Operation instructions
 P18H00066  P18H00067	1. Park the vehicle on flat and level ground, transfer vehicles and workers working around, place the work implements on the ground, and pad the wheel and install the lock device of steering frame;
	2. Only operators other than other persons are allowed to work around vehicle;
	3. Pull up the emergency brake handle to apply parking brake;

Figures	Operation instructions
 P18H00069	4. Turn the starting switch to "OFF" position
	5. Operate the control lever of the work implement the floating lowering & lifting of boom and dumping and tilting back of bucket. Release pressure of work hydraulic system;

Pressure Test of Work Hydraulic System

Work hydraulic system for this model has set fast-connection pressure measuring connector or pressure measuring plug at all key points of circuits for the convenience to detect hydraulic system pressure and to understand the working condition and detection and maintenance of the fault on the hydraulic system. The followings are the detailed explanations and the instructions of these pressure measuring points.

⚠WARNING

When installing testing instruments for hydraulic system, perform the pressure detection and adjustment and the pressure release of hydraulic system. The pressure detection and adjustment shall be performed by professionals; non-professionals need consult from the professionals and adjust strictly in accordance with instructions from the professionals, or adjustment is prohibited.

Measuring point positions of work hydraulic system

Layout of the pressure measuring point position of the work hydraulic system

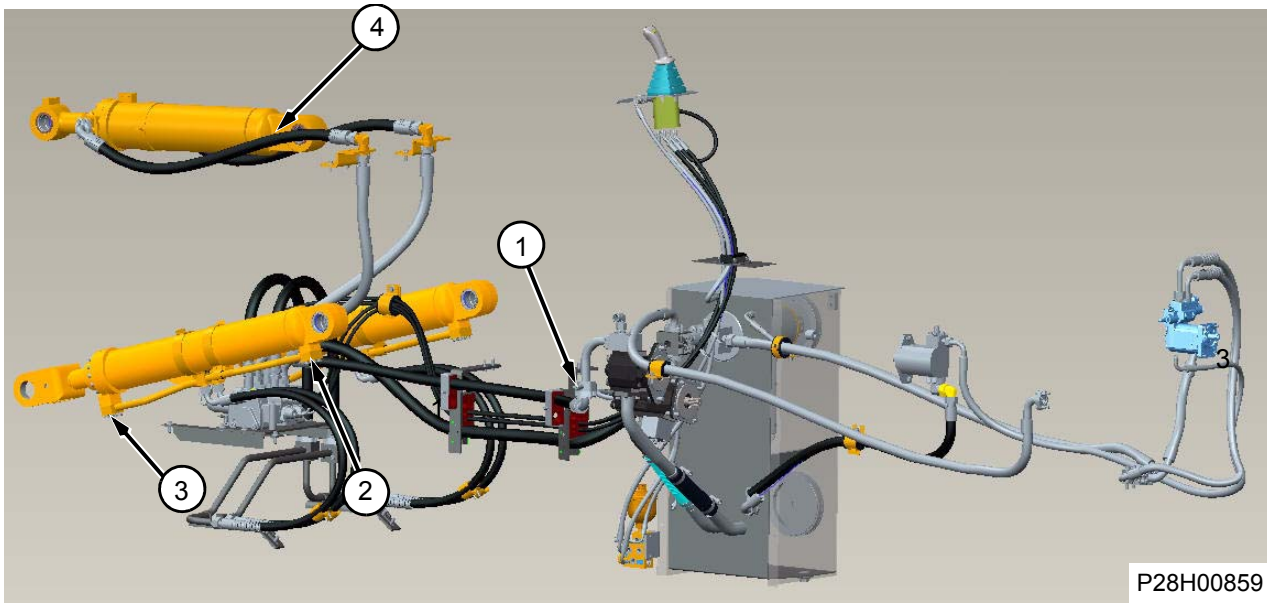

Description of measuring points of work hydraulic system

Pressure measuring points	Description of pressure measuring points	Theoretical pressure MPa(psi)	Port dimension	Brief introduction for test
Pressure measuring point 1	Pressure at the working pump port	18 (2610)	M14×1.5-6H	The pressure measuring point is installed with pressure measuring connector which can connect directly with the pressure gauge for measurement.
Pressure measuring point 2	Pressure of boom cylinder big cavity	18 (2610)	M14×1.5-6H	Remove the plug, install the pressure measuring connector 44C0022 and O-ring 12V0497 to take the test; after test, remove the pressure measuring connector and the O-ring and re-assemble the original plug.
Pressure measuring point 3	Pressure of boom cylinder small cavity	18 (2610)	M14×1.5-6H	Remove the plug, install the pressure measuring connector 44C0022 and O-ring 12V0497 to take the test; after test, remove the pressure measuring connector and the O-ring and re-assemble the original plug.
Pressure measuring point 4	Pressure of bucket cylinder big cavity	20 (2900)	M14×1.5-6H	Remove the plug, install the pressure measuring connector 44C0022 and O-ring 12V0497 to take the test; after test, remove the pressure measuring connector and the O-ring and re-assemble the original plug.

Inspection and adjustment for pressure of work hydraulic system

Test method

Tools required			
Tool(s)	**Part description**	**Standard**	**Quantity**
1	Measuring range of the pressure gauge	25MPa/3625psi	1
2	Pressure measuring connector	44C0022	1
3	O-ring	12V049	1

Figures	Operation instructions
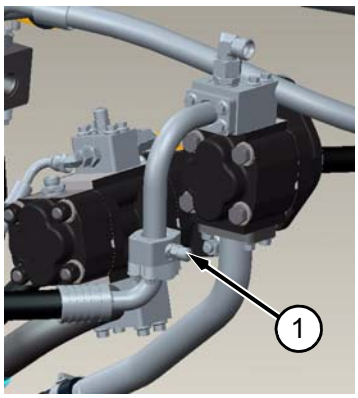 P28H00860	1. Connect the pressure gauge at pressure measuring point 1 (as shown in figure);
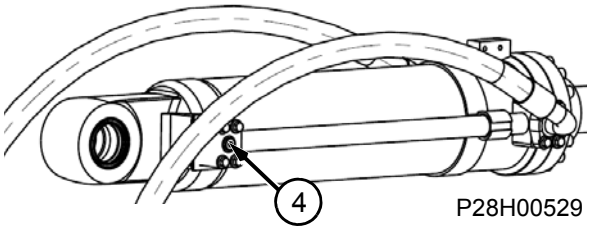 P28H00529	2. Disassemble the plug at the position of pressure measuring point 4, and install the pressure measuring connector 44C0022 and O-ring 12V049; connect the pressure gauge; 3. Start the machine with large throttle and operate the bucket control lever to tilt back the bucket with very slow speed till suppression; pay attention to the value on the pressure gauge of measuring point 4 during operation; 4. During step 3, when bucket is suppressed, the value on pressure gauge of pressure measuring point 1 & 4 shall be 18±0.3MPa (2610±43.5psi) constantly

⚠CAUTION

Generally, the pressure at oil outlet of working pump can be tested directly; at suppression, if the pressure reaches 18±0.3MPa (2610±43.5psi), the pressure of the work hydraulic system is considered to meet the requirements.

Work system pressure adjustment:

If value of pressure measuring point 1 is incorrect, adjust working pressure of the control valve main safety valve (see adjustment steps of the control valve main safety valve for specific adjustment) to make it reach 18 ± 0.3 MPa (2610±43.5psi).

Pressure test and adjustment of the control valve main safety valve

Control valve main safety valve location diagram

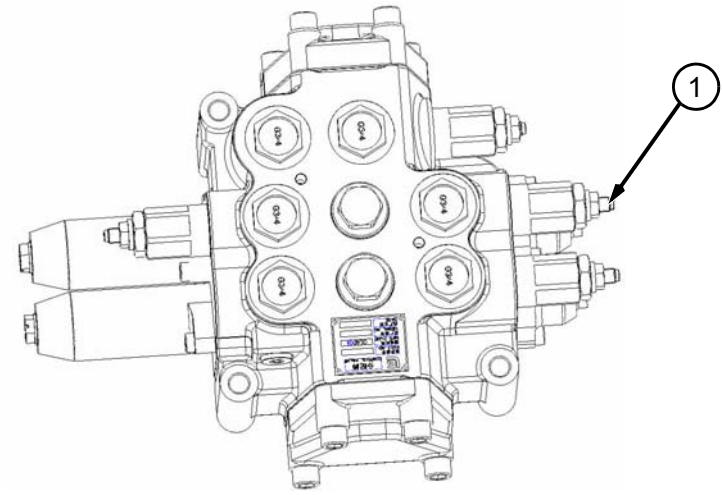

P28H00861

1. Main safety valve

Adjusting step:

If the pressure is nonconforming, adjust the control valve main safety valve by the following steps:

- Unscrew 1 main safety valve locknut.
- Rotate the adjusting stud for pressure adjustment (the adjusting stud rotates clockwise for pressure increase and counterclockwise for pressure decrease).
- After adjust the stud, tighten the locknut.
- Test the pressure value according to the pressure test steps of work system.

Repeat the above operations till reaching the correct system pressure.

Pressure inspection and adjustment of bucket big cavity overload valve

Control valve bucket overload valve diagram

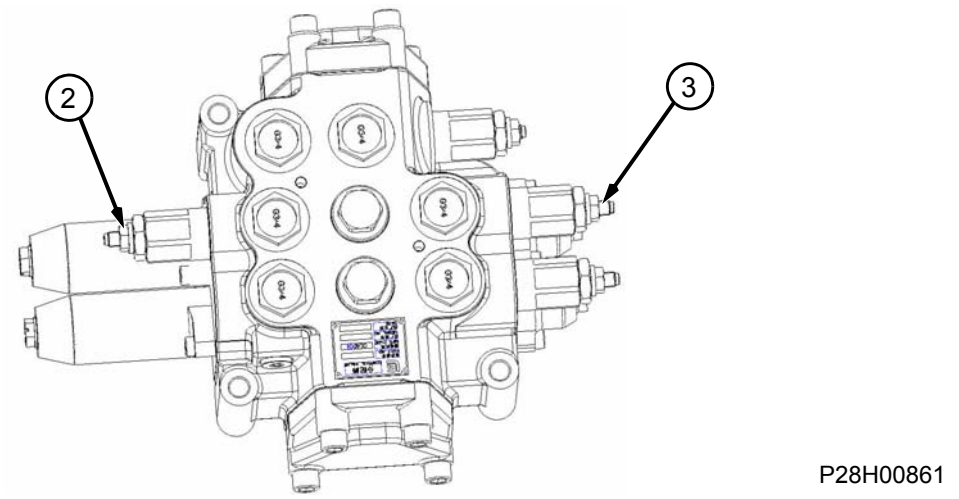

P28H00861

2. Bucket big cavity overload valve
3. Bucket small cavity overload valve

Test method

Tools required			
Tool(s)	**Part description**	**Standard**	**Quantity**
1	Measuring range of the pressure gauge	25MPa(3625psi)	1
2	Pressure measuring connector	44C0022	1
3	O-ring	12V049	1

Figures	Operation instructions
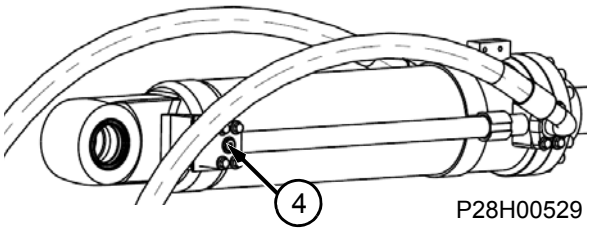 P28H00529	1. Disassemble the plug at the position of pressure measuring point 4, and install the pressure measuring connector 44C0022 and O-ring 12V049; connect the pressure gauge; 2. Start the machine and lift the boom to the maximum position (when diesel engine and hydraulic oil is under normal operating temperature, the diesel engine will be in idle running); 3. Operate the bucket control lever to make it in the bucket tilting back position so that the bucket will rotate to the maximum bucket tilting back position; 4. The lever returns to the neutral position; 5. Operate the boom control lever to make it in boom lowering position to lower the boom; check the pressure gauge at the same time; 6. When taking step 5, the maximum pressure value of pressure gauge at pressure measuring point 2 shall be 20±0.3MPa (2900±43.5psi).

Adjusting step:

If the pressure is nonconforming, adjust the control valve bucket big cavity overload valve by the following steps:

- Unscrew the locknut.
- Rotate the adjusting stud for pressure adjustment (the adjusting stud rotates clockwise for pressure increase and counterclockwise for pressure decrease).
- After adjustment, tighten the locknut.

Repeat the operation above to check the adjusting pressure for incorrectness.

Pressure Inspection and Adjustment of Bucket Small Cavity Overload Valve

Refer to control valve bucket overload valve diagram.

Test method

Tools required			
Tool(s)	**Part description**	**Standard**	**Quantity**
1	Measuring range of the pressure gauge	25MPa(3625psi)	1
2	Pressure measuring connector	44C0022	1
3	O-ring	12V049	1

Figures	Operation instructions
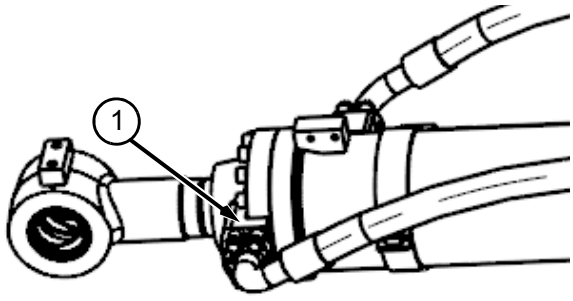 P28H00530	1. Install the test flange 04A2519 at the position of pressure measuring point 1, and install the pressure measuring connector 44C0022 and O-ring 12V049; connect the pressure gauge; 2. Start the machine, and operate the boom control lever to lift boom to horizontal position (when the diesel engine and hydraulic oil are under normal operating temperature, the diesel engine will be in idle running); 3. Operate the bucket control lever to make the bucket in maximum dumping position; 4. The control lever returns to the neutral position; 5. Operate the boom control lever to make it in boom lifting position to lift the boom; check the pressure gauge at the same time; 6. When taking step 5, the maximum pressure value of pressure gauge at pressure measuring point 1 shall be 14±0.3MPa (2030±43.5psi).

Adjusting step:

If the pressure is nonconforming, adjust the control valve bucket small cavity overload valve by the following steps:

- Unscrew the locknut.
- Rotate the adjusting stud for pressure adjustment (the adjusting stud rotates clockwise for pressure increase and counterclockwise for pressure decrease).
- After adjustment, tighten the locknut.

Repeat the operation above to check the adjusting pressure for incorrectness.

Boom Cylinder Test

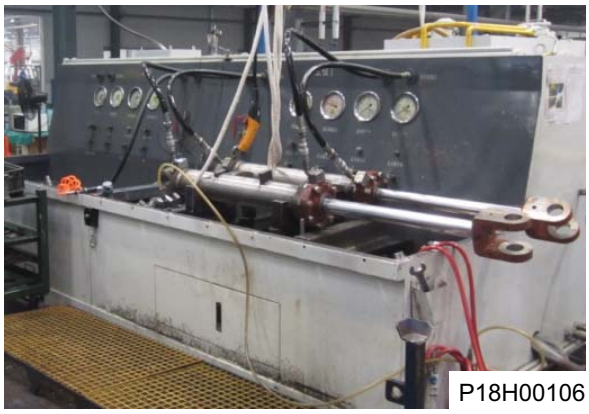

P18H00106

Temperature of test oil: 50±5°C

Test items	Test method	Criterion
Commissioning	Adjust the pressure of test system to make the tested hydraulic cylinder start without load condition, and conduct full stroke reciprocating motion for more than 3 times to exhaust the air from the hydraulic cylinder.	The hydraulic cylinder operates smoothly without being stuck.
Pressure test	Stop the tested hydraulic cylinder piston at both ends of stroke respectively (single-acting hydraulic cylinder stopped at the limit position of stroke), then apply 1.5 times rated pressure of oil to the working cavity and keep for 10s.	External leakage and damaged parts are not allowed.
Internal leakage test	Supply oil to the working cavity of tested hydraulic cylinder, then increase the pressure to the working pressure, measure the oil leakage at port of small cavity for 2min.	Internal leakage ≤0.28ml/min
Stroke test	Make the tested hydraulic cylinder piston stop at the limit positions at both ends of stroke respectively, then measure its stroke length.	727mm~729mm

Bucket Cylinder Test

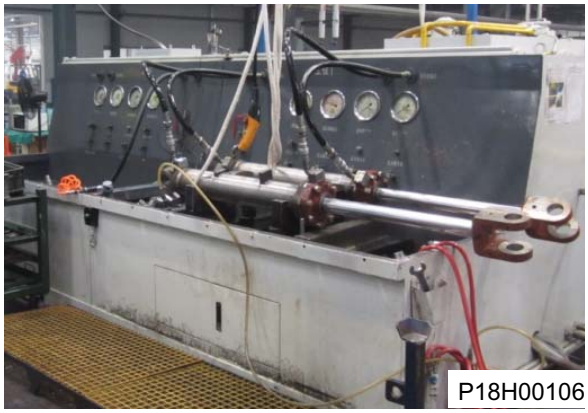
P18H00106

Temperature of test oil: 50±5°C

Test items	Test method	Criterion
Commissioning	Adjust the pressure of test system to make the tested hydraulic cylinder start without load condition, and conduct full stroke reciprocating motion for more than 3 times to exhaust the air from the hydraulic cylinder.	The hydraulic cylinder operates smoothly without being stuck.
Pressure test	Stop the tested hydraulic cylinder piston at both ends of stroke respectively (single-acting hydraulic cylinder stopped at the limit position of stroke), then apply 1.5 times rated pressure of oil to the working cavity and keep for 10s.	External leakage and damaged parts are not allowed.
Internal leakage test	Supply oil to the working cavity of tested hydraulic cylinder, then increase the pressure to the working pressure, measure the oil leakage at port of small cavity for 2min.	Internal leakage ≤0.30ml/min
Stroke test	Make the tested hydraulic cylinder piston stop at the limit positions at both ends of stroke respectively, then measure its stroke length.	519mm~521mm

Steering Hydraulic System Test

Loader steering hydraulic system has set fast-connection pressure measuring connector or pressure measuring plug at all key points of circuits for the convenience of detecting hydraulic system pressure and understanding the detection and maintenance of the steering condition and fault of the hydraulic system. The followings are the detailed explanation and the instructions of these pressure measuring points.

⚠WARNING

When installing testing instruments for hydraulic system, perform the pressure detection and adjustment, pressure release "mounting location and functional structure of hydraulic oil tank"should be operated. The pressure detection and adjustment shall be performed by professionals; non-professionals need consult from the professionals and adjust strictly in accordance with instructions from the professionals, or adjustment is prohibited.

Measuring Point Position of Steering Hydraulic System

Layout of all measuring point position of steering hydraulic system

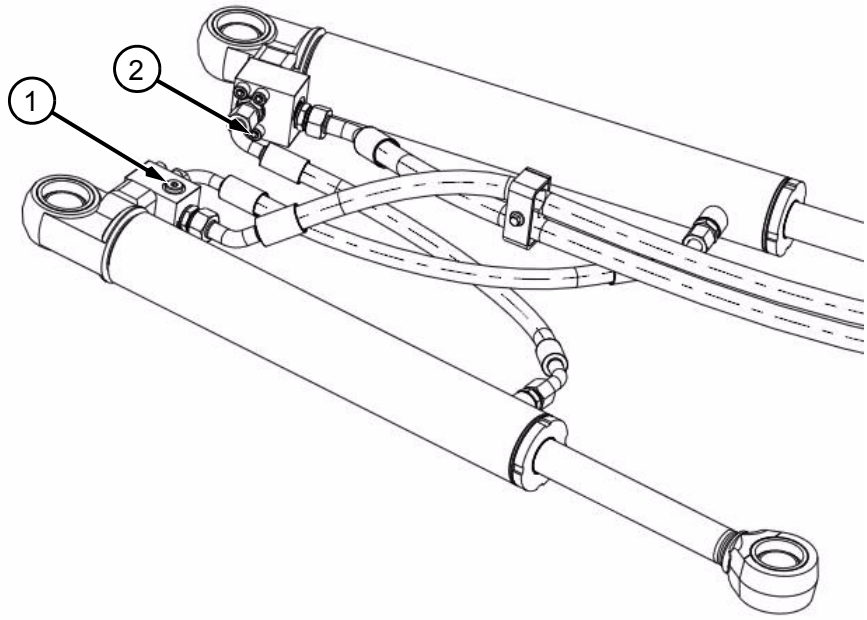

P28H00496

1. Right steering measuring point
2. Left steering measuring point

Description of Measuring Points Of Steering Hydraulic System

Pressure measuring points	Description of pressure measuring points	Theoretical pressure	Port dimension	Testing steps
Pressure measuring point 1	Right steering measuring point	17.2 MPa (2494psi)	M14×1.5-6H	Remove the plug, install the pressure measuring connector 44C0022 and O-ring 12V0497 to take the test; after test, remove the pressure measuring connector and re-assemble the original plug.
Pressure measuring point 2	Left steering measuring point	17.2 MPa (2494psi)	M14×1.5-6H	Remove the plug, install the pressure measuring connector 44C0022 and O-ring 12V0497 to take the test; after test, remove the pressure measuring connector and re-assemble the original plug.

Pressure Testing and Adjustment of Steering Hydraulic System

Testing method

Tools required			
Tool(s)	**Part description**	**Standard**	**Quantity**
1	Measuring range of the pressure gauge	25MPa/3625psi	1

Figures	Operation instructions
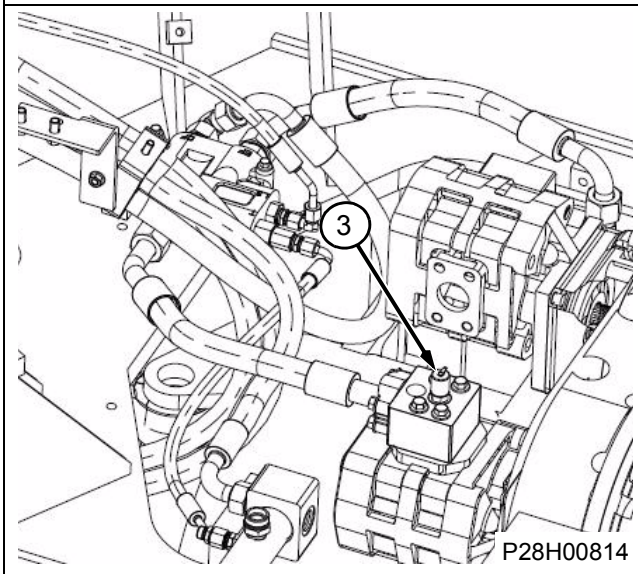 P28H00814	1. Install the pressure gauge in the pressure measuring point shown in the Figure; (pressure gauge (range 25MPa/3625psi))

Figures	Operation instructions
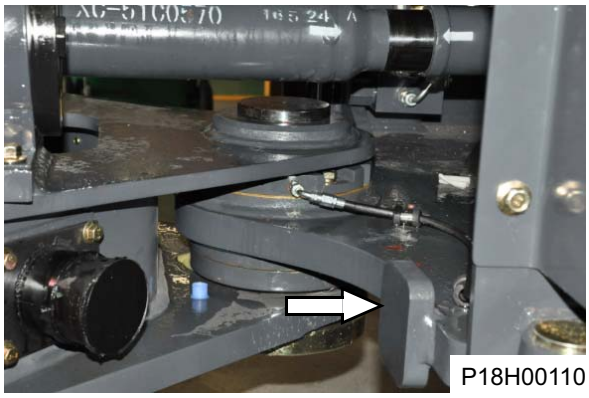 P18H00110  P18H00111	2. Start machine and operate the steering wheel to make machine turn to maximum steering angle slowly and suppress the steering.
 P18H00112	3. During the process of step 2 suppress steering, the pressure value of pressure gauge at pressure measuring point shall be 17.2±0.3MPa (2494±43.5psi) constantly.

Steering Cylinder Test

<table>
<tr><td colspan="2">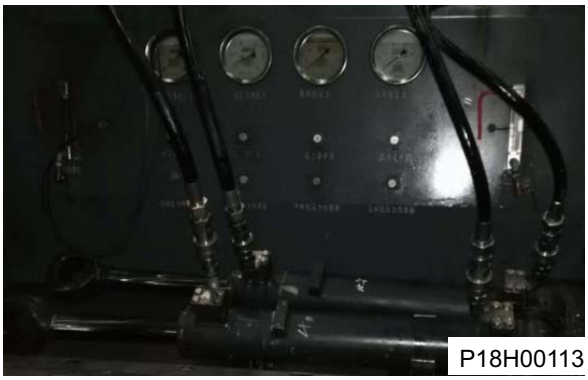
P18H00113</td><td>Temperature of test oil: 50±5°C</td></tr>
<tr><th>Test items</th><th>Test method</th><th>Criterion</th></tr>
<tr><td>Commissioning</td><td>Adjust the pressure of test system to make the tested hydraulic cylinder start without load condition, and conduct full stroke reciprocating motion for more than 3 times to exhaust the air from the hydraulic cylinder.</td><td>The hydraulic cylinder operates smoothly without being stuck.</td></tr>
<tr><td>Pressure test</td><td>Stop the tested hydraulic cylinder piston at both ends of stroke respectively (single-acting hydraulic cylinder stopped at the limit position of stroke), then apply 1.5 times rated pressure of oil to the working cavity and keep for 10s.</td><td>External leakage and damaged parts are not allowed.</td></tr>
<tr><td>Internal leakage test</td><td>Supply oil to the working cavity of tested hydraulic cylinder, then increase the pressure to the working pressure, measure the oil leakage at port of small cavity for 2min.</td><td>Internal leakage ≤0.13ml/min</td></tr>
<tr><td>Stroke test</td><td>Make the tested hydraulic cylinder piston stop at the limit positions at both ends of stroke respectively, then measure its stroke length.</td><td>419mm~421mm</td></tr>
</table>

Brake System Test

⚠WARNING

When installing testing instruments for brake system, the system pressure shall be released

The following pressure testing and adjustment shall be performed by professionals; non-professionals shall consult from the professionals and adjust in strict accordance with instructions from the professionals, or adjustment is prohibited.

Pressure Measuring Points Layout of Brake System

Brake system measuring points diagram

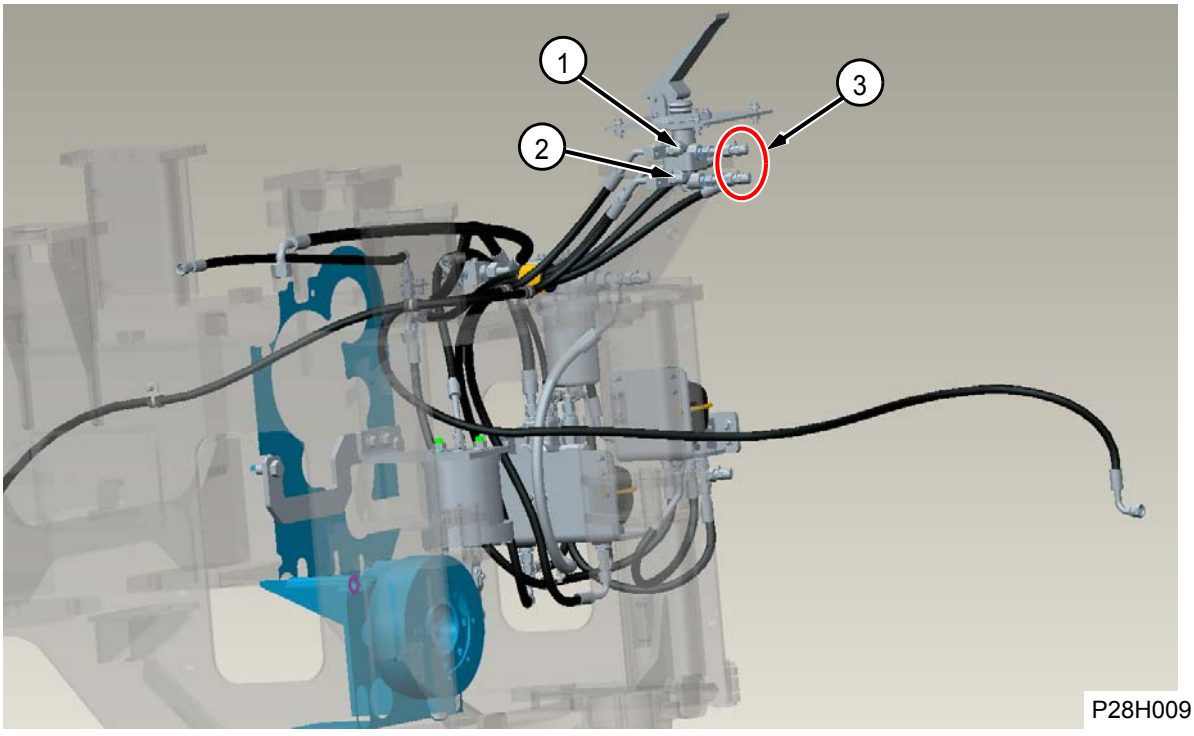

1. Front axle brake oil pressure output from foot brake valve
2. Rear axle brake oil pressure output from foot brake valve
3. Service brake accumulator oil pressure

Description of Pressure Measuring Points of Brake System

Pressure measuring point	Description of pressure measuring point	Theoretical pressure value	Interface dimension	Test specification
Pressure measuring point 1 & 2	Foot brake valve output pressure	4.8±0.4Mpa	R1/8×26	It can be measured directly by connecting the pressure gauge to the pressure measuring connector.
Pressure measuring point 3	Foot brake valve output pressure	12.8-15.9Mpa	24° cone M18×1.5 -6g	It can be measured directly by connecting the pressure gauge to the pressure measuring connector.

Brake Valve Test

Testing tools

One pressure gauge with range of 10MPa and one hydraulic stand.

Testing procedure

P port of brake valve is connected with power source of hydraulic stand, A port of brake valve is connected onto the brake (the pressure gauge (10MPa) is connected onto oil line between P port of brake valve and the brake), and T port of the brake valve is connected with the oil tank of hydraulic stand. Start the hydraulic stand, depress the brake valve pedal to the maximum travel after refilling the accumulator in the hydraulic stand, check whether the testing data of the pressure gauge is within the range of setting pressure of brake valve: 48.3±3.5 Bar and whether the brake valve is normal.

⚠CAUTION

Users can not remove and install the internal parts of brake valve on their own without authorization of manufacturer LiuGong, otherwise, LiuGong will not be liable for the service of quality assurance.

Charge Valve Test

Testing tools

One pressure gauge with range of 20MPa and one hydraulic stand.

Testing procedure

Connect the charge valve into the hydraulic system in hydraulic stand. Connect the pressure gauge 20MPa between A1 & A2 oil ports of charge valve and the connecting oil pipes of its corresponding accumulator. Start the hydraulic stand, check whether reading of the pressure gauge reaches range of 155.1±3.5bar and whether the upper charging pressure of the charge valve is correct; depress the brake valve pedal to release pressure of the accumulator, release the brake valve pedal after reading of pressure gauge decreases to 125.8±3.5bar. The lower charging pressure of the charge valve is correct as reading of the pressure gauge increases to 155.1±3.5bar continuously.

⚠CAUTION

Users can not remove and install the internal parts of charge valve on their own without authorization of manufacturer LiuGong, otherwise, LiuGong will not be liable for the service of quality assurance.

Removal and Installation

Work Hydraulic System

Removal and Installation of Hydraulic Oil Tank Assembly

Removal for Hydraulic Oil Tank Assembly

Tools required			
Tool(s)	**Part description**	**Standard**	**Quantity**
1	Wrench	13#, 15#, 17#, 22#, 24#, 30#, 36#, 41#	8
2	Sling	Set	1
3	Shielding film	Roll	1
4	Oil collecting basin	Piece	1
Other information			
Weight of oil tank		111kg	

Relevant preparation before starting:

See the section of Machine Placement for parking the machine.

⚠CAUTION

Please keep clean. Thoroughly clean the outer surface of the components before removal. It will prevent foreign matters from entering the mechanism.

Stick label identification stickers on all pipelines, hoses, circuits and steel tubes for easier installation. Clog up all the pipelines, hoses and steel tubes. That will prevent fluid loss and prevent dirts from entering the system.

The appropriate container shall be used to collect the liquid before removing any hydraulic oil lines or disassembling any components that contain liquid during the inspection, maintenance, test and adjustment of the machine. Dispose all the fluid in accordance with local laws and regulations.

⚠WARNING

Hydraulic oil pressure and hot oil may cause personal injury or even death.

There may be residual hydraulic oil with pressure in the hydraulic system after the engine stops. Release the residual pressure before repairing the hydraulic system, otherwise the serious personal injury or even death may be caused.

Make sure that all the work implements have been lowered down and the hydraulic oil has cooled before removing any component or pipe. The oil filter cover can not be removed until the engine stopped and the filter cover is cool enough that can be touched by bare hand.

Removal steps

Figures	Operation instructions
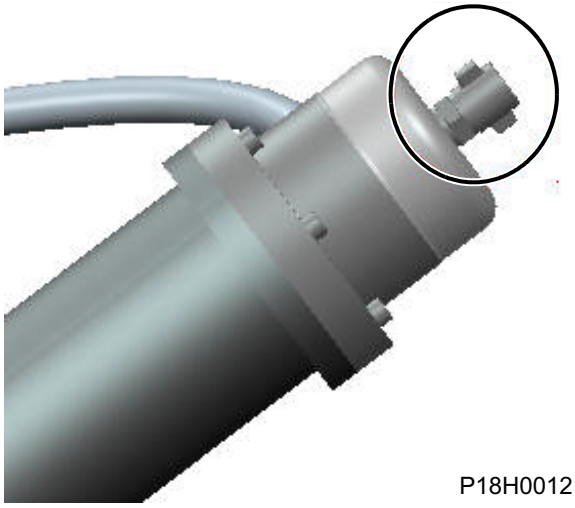 P18H00121	1. Loosen the plug at the top of hydraulic oil tank respirator and press the bleed screw in it to bleed the air;
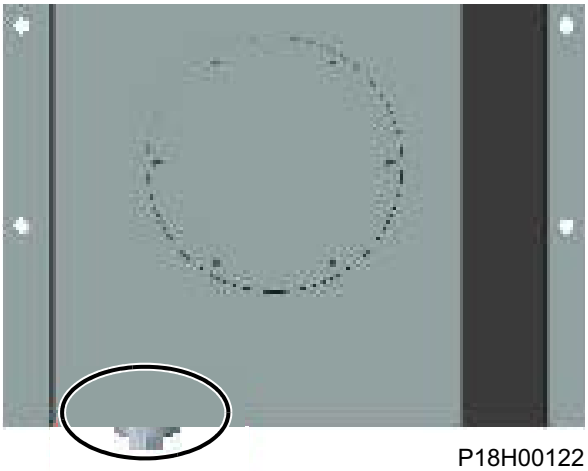 P18H00122	2. Find the drain plug at bottom of left oil tank at rear frame, and then wipe clean the circumference of drain plug; 3. Place a clean oil basin below the drain plug for collecting the hydraulic oil; screw off the drain plug; Tools: Oil basin, open-end wrench 30#
 P18H00123	4. After the hydraulic oil in the hydraulic oil tank is drained, hang the lug welded on both sides of the hydraulic oil tank with a lifting rope; Tools: Lifting rope

Figures	Operation instructions
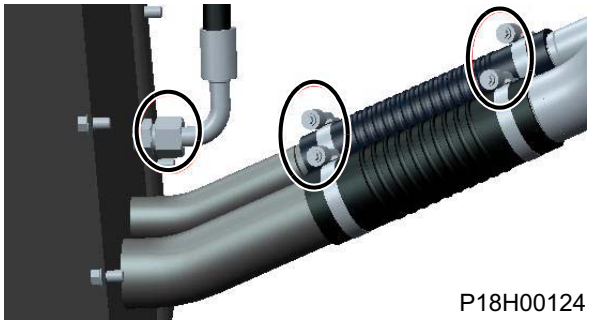 P18H00124	5. Loosen the oil suction hose clamp of the gear pump located at lower part of back of oil tank, remove the oil suction hose and mask the oil ports; remove the oil suction hose joint of secondary steering pump (option) and mask oil ports. Tools: Open-end wrench 8#, 36#
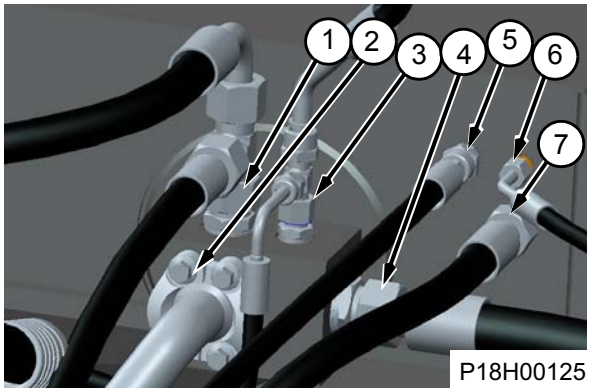 P18H00125	6. Remove the oil return hose located at upper part of back of oil tank, mask oil ports; Tools: Open-end wrench: 13#, 17#, 22#, 24#, 32#, 36#, 41#
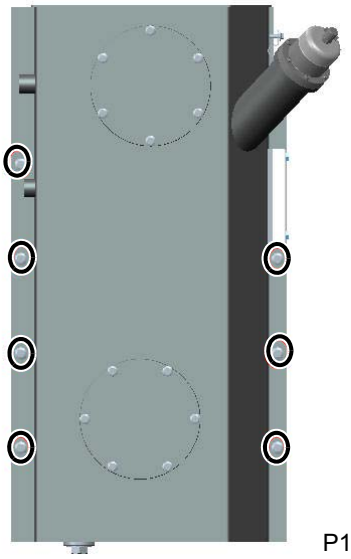 P18H00126	7. Unscrew out the 8 fastening bolts on both edges of the hydraulic oil tank side; Tools: Open-end wrench 15#
	8. Lift the hydraulic oil tank slowly away; note that the lifting process must be smooth, it is not allowed to damage the other areas of the Machine; Tools: 2T \4410lb traveling crane, lifting rope

Installation for Hydraulic Oil Tank Assembly

Figures	Operation instructions
	1. Check the oil tank for impurities, if any, it should be cleaned before installation
 P18H00127	2. Install one end of oil suction hose to the oil suction steel pipe with clamp and install the steel pipe to the oil suction of oil tank.
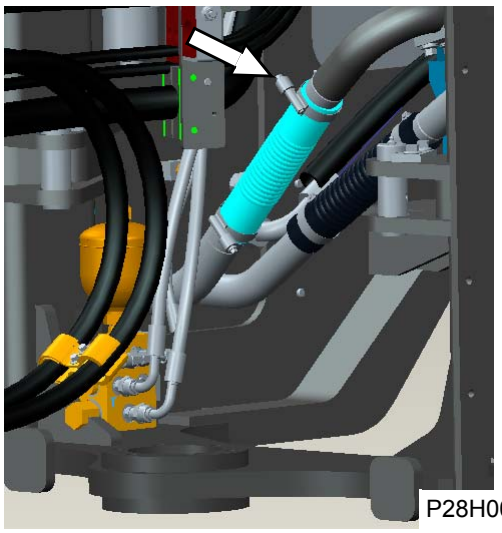 P28H00918	3. Hang the oil tank with traveling crane and install the other end of suction hose to the oil suction steel pipe of pump, meanwhile pre-tighten the mounting bolt of oil tank, and tighten the oil suction hose clamp. Tools: Open-end wrench 8#, 36#
	4. Connect hoses to the oil ports of oil tank according to the connection in the removal steps

Removal of Working Pump Assembly

Removal of Working Pump

Tools required			
Tool(s)	**Part description**	**Standard**	**Quantity**
1	Wrench	16#, 18#	2
2	Inner hexagon spanner	8#	1
3	Shielding film		1
4	Oil collecting basin		1
5	Sling		1
Other information			
Weight of working pump		26kg	

Relevant preparation before starting:

See the section of Machine Placement for parking the machine.

⚠CAUTION

Please keep clean. Thoroughly clean the outer surface of the components before removal. It will prevent foreign matters from entering the mechanism.

Stick label identification stickers on all pipelines, hoses, circuits and steel tubes for easier installation. Clog up all the pipelines, hoses and steel tubes. That will prevent fluid loss and prevent dirts from entering the system.

The appropriate container shall be used to collect the liquid before removing any hydraulic oil lines or disassembling any components that contain liquid during the inspection, maintenance, test and adjustment of the machine. Dispose all the fluid in accordance with local laws and regulations.

⚠WARNING

Hydraulic oil pressure and hot oil may cause personal injury or even death.

There may be residual hydraulic oil with pressure in the hydraulic system after the engine stops. Release the residual pressure before repairing the hydraulic system, otherwise the serious personal injury or even death may be caused.

Make sure that all the work implements have been lowered down and the hydraulic oil has cooled before removing any component or pipe. The oil filter cover can not be removed until the engine stopped and the filter cover is cool enough that can be touched by bare hand.

Removal steps

Figures	Operation instructions
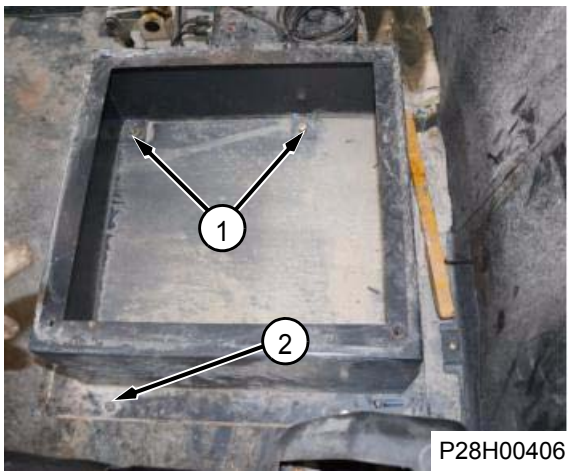 P28H00406 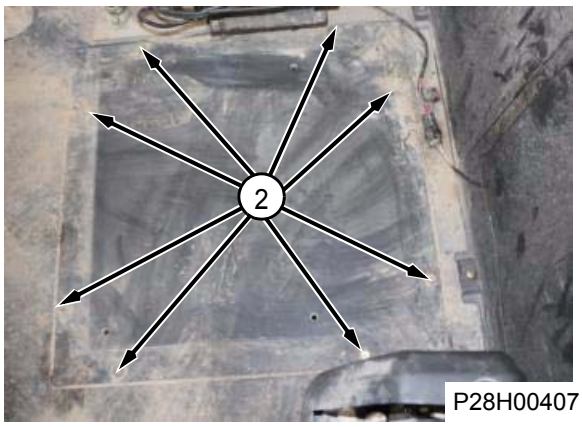 P28H00407	1. Park the complete vehicle and remove the seat by referring to the section of Removal and Installation of Cab Seat. 2. Remove 4 captive bolts (1) of the seat mounting bracket. Remove the bracket. 3. Remove 8 mounting bolts (2) of bottom plate. Remove the bottom plate.
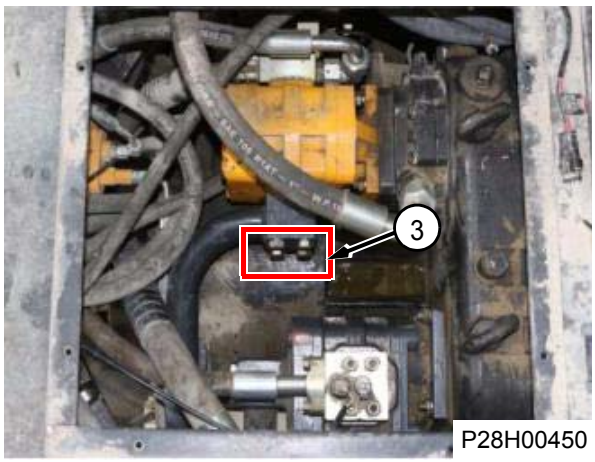 P28H00450	4. Remove the flange mounting bolt (3) of the oil inlet pipe joint at left of the pump, remove the oil pipe, mask the oil port and make mark on the oil pipe.

Figures	Operation instructions
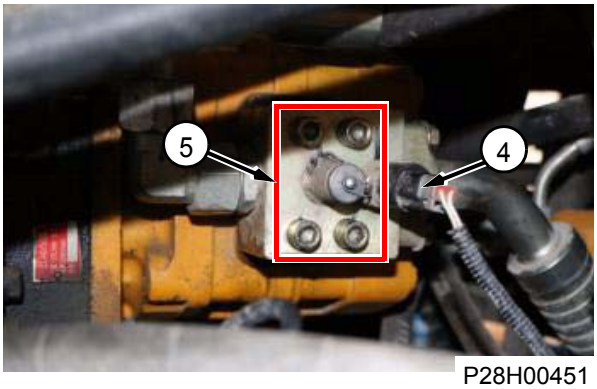 P28H00451	5. Remove the wire harness connector (4) at right of the pump and unplug the wire harness. 6. Remove the flange mounting hex bolt (5) of the oil outlet pipe joint at right of the pump, remove the oil pipe, mask the oil port and make mark on the oil pipe.
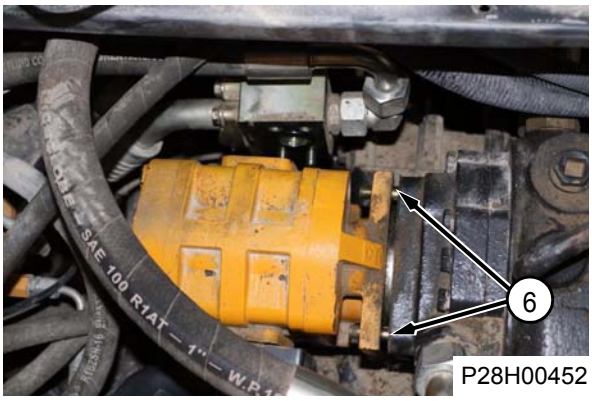 P28H00452	7. Remove mounting bolt (6) of the pump, lift out the working pump, mask the oil port and place it at a clean and safe place.

Installation of the Working Pump

⚠CAUTION

Please keep clean. All components shall be cleaned thoroughly with cleaning solution prior to assembly. The components are allowed for natural drying. Never wipe them dry with cloth. The fiber from the cloth will accumulate on the parts and cause fault. Check all components. If the components are worn or damaged, please replace them with new ones.

Figures	Operation instructions
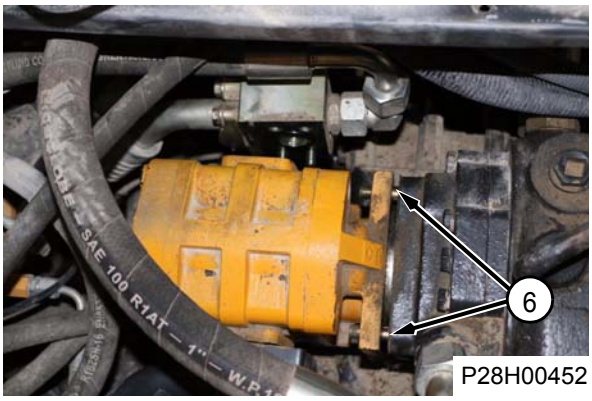 P28H00452	1. Check the pump for damage, rusting and if qualified, hang the pump to the mounting position and install the bolt (6) to the transmission, tighten the mounting bolt of the pump with torque 120±15Nm.
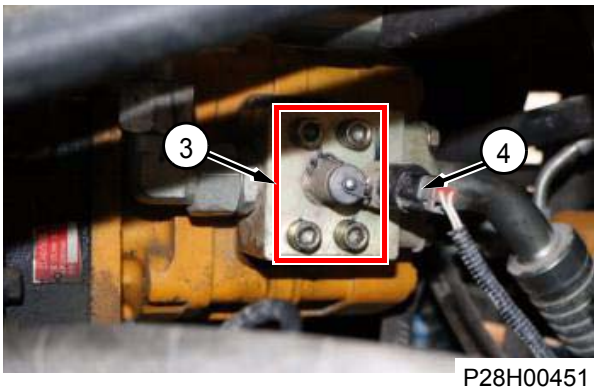 P28H00451	2. Install the flange mounting bolt (3) of the oil inlet pipe joint at left of the pump with tightening torque 90±12Nm. 3. Connect the wire harness connector (4) at right of the pump.
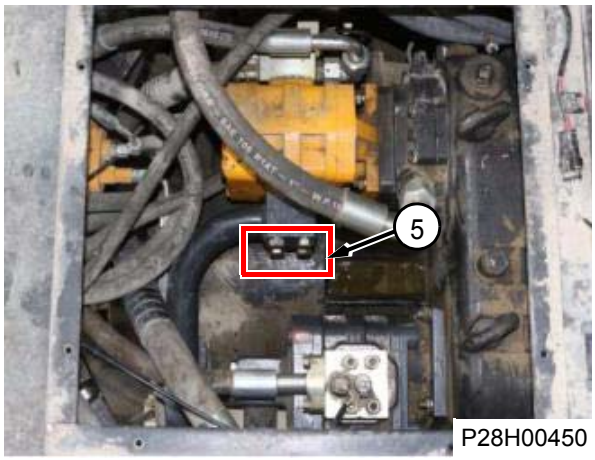 P28H00450	4. Install the flange mounting hex bolt (5) of the oil outlet pipe joint at right of the pump with tightening torque 90±12Nm.

Figures	Operation instructions
 P28H00407  P28H00406	5. Install the plate and seat frame.

Removal and Installation of Boom Cylinder

Removal of Boom Cylinder

Tools required			
Tool(s)	**Part description**	**Standard**	**Quantity**
1	Wrench	13#, 16#, 18#, 27#	4
2	Copper bar		1
3	Shielding film		1
4	Oil collecting basin		1
5	Sling		1
Other information			
Weight of boom cylinder		101kg	

Relevant preparation before starting:

See the section of Machine Placement for parking the machine.

⚠CAUTION

Please keep clean. Thoroughly clean the outer surface of the components before removal. It will prevent foreign matters from entering the mechanism.

Stick label identification stickers on all pipelines, hoses, circuits and steel tubes for easier installation. Clog up all the pipelines, hoses and steel tubes. That will prevent fluid loss and prevent dirts from entering the system.

The appropriate container shall be used to collect the liquid before removing any hydraulic oil lines or disassembling any components that contain liquid during the inspection, maintenance, test and adjustment of the machine. Dispose all the fluid in accordance with local laws and regulations.

⚠WARNING

Hydraulic oil pressure and hot oil may cause personal injury or even death.

There may be residual hydraulic oil with pressure in the hydraulic system after the engine stops. Release the residual pressure before repairing the hydraulic system, otherwise the serious personal injury or even death may be caused.

Make sure that all the work implements have been lowered down and the hydraulic oil has cooled before removing any component or pipe. The oil filter cover can not be removed until the engine stopped and the filter cover is cool enough that can be touched by bare hand.

⚠CAUTION

Park the machine in horizontal hard ground →lay flat the bucket →pull the hand brake →shut down→release the pressure in the boom cylinder

Removal steps (take the left boom cylinder as an example, and the removal steps of the right boom cylinder are the same as those of the left boom cylinder):

Figures	Operation instructions
	1. Place an oil collecting container under the bottom of vehicle to prevent hydraulic oil from polluting ground;
	2. Sleeve the lifting rope conforming to safety requirements on the boom cylinder and hang the boom cylinder with a traveling crane.
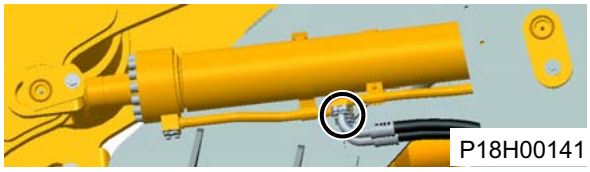 P18H00141	3. Loosen the hose clamp bolt connected with the steel tube below the boom cylinder big and small cavities, remove the hose assembly and mask the hose joint.
 P28H00509	4. Remove the fastening bolt of the rear pin shaft of the boom cylinder and knock out the pin shaft with a copper bar. ⚠**CAUTION: The boom shall be supported firmly before removing the oil cylinder to prevent the boom from falling.**
 P28H00510	5. Remove the bolt tightening the front pin shaft of the boom and knock out the pin shaft with a copper bar; 6. Lift out the boom cylinder from the frame and place it on a level ground; ⚠**CAUTION: The boom shall be supported firmly before removing the oil cylinder to prevent the boom from falling.**

Figures	Operation instructions
 P18H00142	7. Remove steel tube clamp of the boom cylinder big and small cavities and place it together with the removed bolts and nuts;
 P18H00143	8. Remove the fastening bolt of the steel tube of the boom cylinder big and small cavities and remove the steel tube; check whether the O-ring is aged or damaged and replace it in time, mask the oil ports of steel tube. 9. Mask the boom cylinder big and small cavities oil ports to avoid pollution.

Installation of Boom Cylinder

⚠CAUTION

Please keep clean. All components shall be cleaned thoroughly with cleaning solution prior to assembly. The components are allowed for natural drying. Never wipe them dry with cloth. The fiber from the cloth will accumulate on the parts and cause fault. Check all components. If the components are worn or damaged, please replace them with new ones.

Figures	Operation instructions
	1. Install the steel tube of the boom cylinder big and small cavities to the cylinder and tighten 8 mounting bolts with the tightening torque 52±6Nm.
	2. Install the steel tube clamp, fastening bolts, shims, nuts with the tightening torque: 26±4Nm.
	3. Lift and place the cylinder to the proper position with proper sling
 P28H00510	4. Align the pin hole of boom cylinder piston rod connecting fork with that of boom, and then insert the pin shaft into the pin hole, tighten mounting bolt of pin shaft with torque 310±45Nm.

Figures	Operation instructions
 P28H00509	5. Install rear pin shaft of boom cylinder, and tighten mounting bolt of pin shaft with torque 90±12Nm.
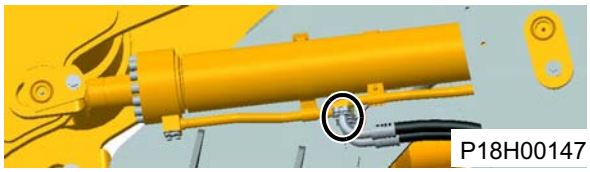 P18H00147	6. Connect the hoses of boom cylinder big and small cavity, tighten the clamp bolt to 72±6Nm.
	7. Start the machine, and run it at idle speed, slowly lift and lower the boom cylinder for 3-5 times to bleed the air in the cylinder and line.
	8. Fill lubricant for pin shaft.
	9. Check whether the hydraulic oil level is normal, and if not, please fill the hydraulic oil to the specified level.

Disassembly and Assembly of The Boom Cylinder

Disassembly of Boom Cylinder

Exploded view of boom cylinder

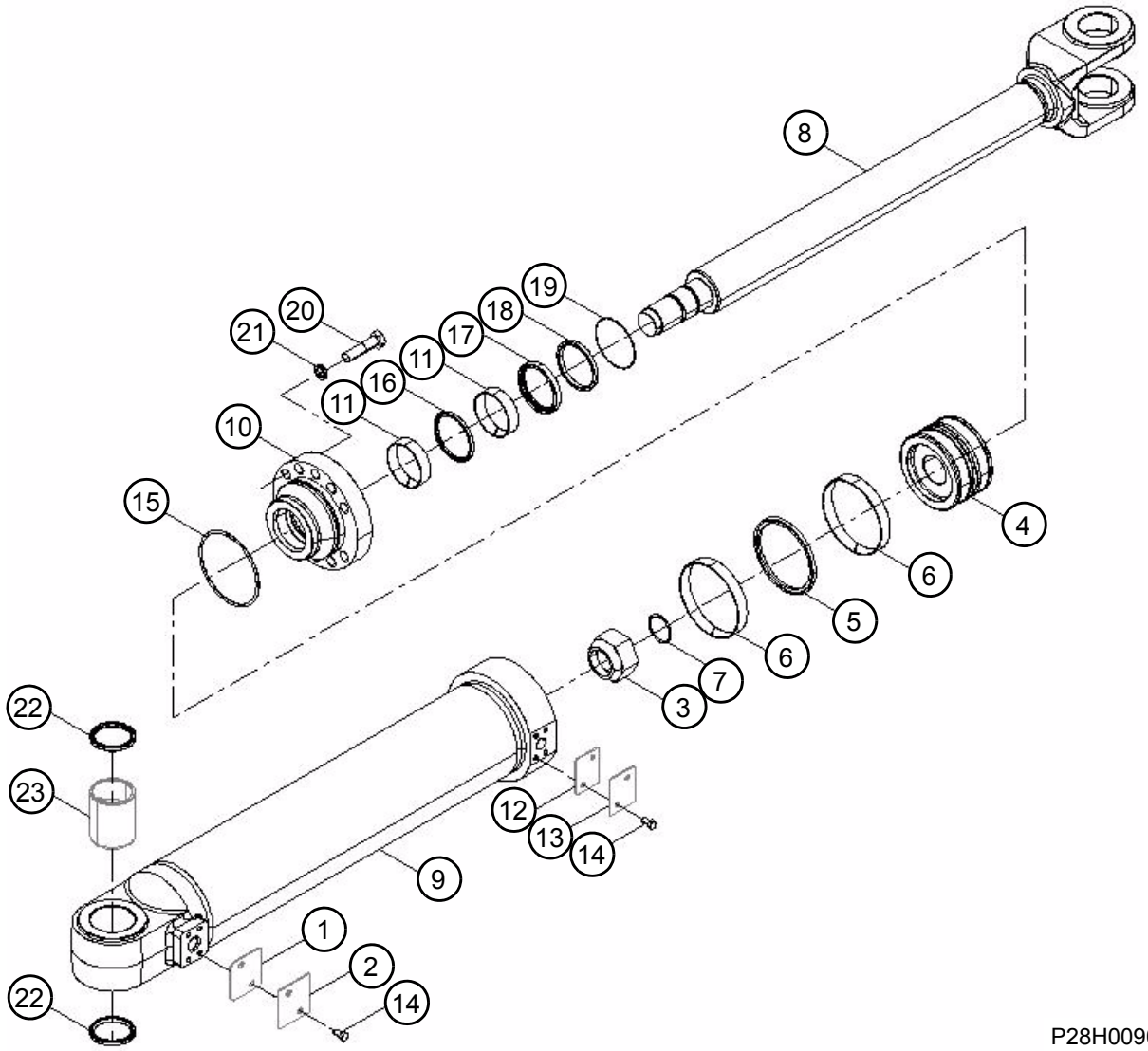

P28H00902

1. Cushion	6. Support ring	11.Support ring	16.Seal ring	21.Washer
2. Cover	7. O-ring	12.Cushion	17.Seal ring	22.Rubber ring
3. Locknut	8. Piston rod	13.Cover	18.Dust ring	23.Shaft bushing
4. Piston	9. Cylinder block	14.Bolt	19.Snap ring	
5. Seal ring	10.Cylinder head	15.O-ring	20.Bolt	

Disassembly procedures of boom cylinder

Figures	Operation instructions
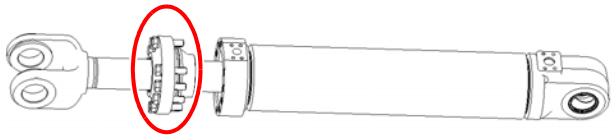 P28H00883	1. Pull out one notch of the piston rod (when the wrench and the rod do not interfere with each other), then screw off the connecting bolt 20 from the cylinder head 10 with wrench. **Note: Tightening torque for bolt 20: 150±20 N.m;** Tool: Open-end wrench: 30mm.
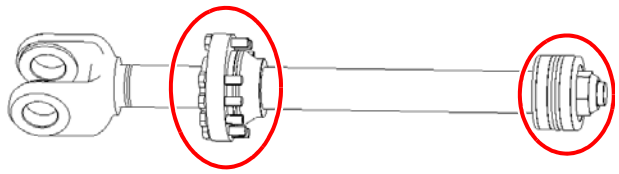 P28H00884	2. Pull out the piston rod 8 from the oil cylinder block 9 and remove the piston locknut 3 with wrench; remove the piston and the cylinder head. **Note: Tightening torque: 1400±100 N.m;**
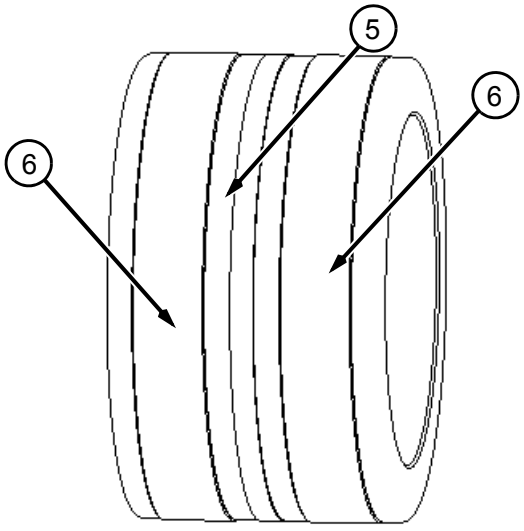 P28H00885	3. Remove the support ring (6) at both ends of piston 4 along the support ring notch, stretch the seal ring (5) with straight screwdriver to a deformed state and remove it, then remove the O-ring. (Removal of seal ring 5 is destructive). Tool: Straight screwdriver

Disassembly procedures of boom cylinder

Figures	Operation instructions
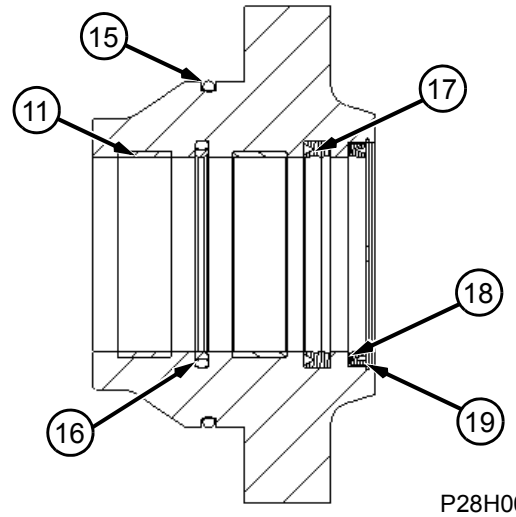 P28H00886	4. Remove the O-ring (15), support ring (11), seal ring (16) and (17), dust ring (18) and retainer (19) from the cylinder head 10.
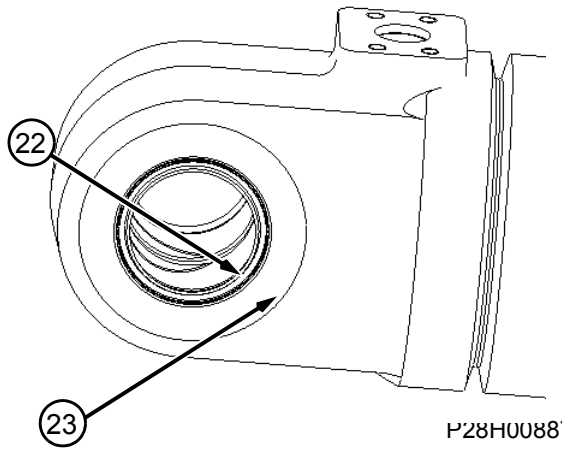 P28H00887	5. Remove rubber ring (22) and bushing (23) from the cylinder head.

Removal and Installation of Bucket Cylinder

Removal of Bucket Cylinder

Tools required			
Tool(s)	**Part description**	**Standard**	**Quantity**
1	Wrench	13#, 15#	2
2	Copper bar		1
3	Shielding film		1
4	Oil collecting basin		1
5	Sling		1
Other information			
Weight of bucket cylinder		105.5kg	

⚠CAUTION

Please keep clean. Thoroughly clean the outer surface of the components before removal. It will prevent foreign matters from entering the mechanism.

Stick label identification stickers on all pipelines, hoses, circuits and steel tubes for easier installation. Clog up all the pipelines, hoses and steel tubes. That will prevent fluid loss and prevent dirts from entering the system.

The appropriate container shall be used to collect the liquid before removing any hydraulic oil lines or disassembling any components that contain liquid during the inspection, maintenance, test and adjustment of the machine. Dispose all the fluid in accordance with local laws and regulations.

⚠WARNING

Hydraulic oil pressure and hot oil may cause personal injury or even death.

There may be residual hydraulic oil with pressure in the hydraulic system after the engine stops. Release the residual pressure before repairing the hydraulic system, otherwise the serious personal injury or even death may be caused.

Make sure that all the work implements have been lowered down and the hydraulic oil has cooled before removing any component or pipe. The oil filter cover can not be removed until the engine stopped and the filter cover is cool enough that can be touched by bare hand.

⚠CAUTION

Place the machine in horizontal hard ground →lay flat the bucket →pull the hand brake →shut down→release the pressure in the rotating bucket cylinder

See the section of Machine Placement for parking the machine.

Figures	Operation instructions
	1. Place an oil collecting container under the bottom of vehicle to prevent hydraulic oil from polluting ground; 2. Remove the bucket pin lubrication line; remove the harness line of front frame; 3. Hold the bucket cylinder with lifting rope and traveling crane;
 P28H00512	4. Loosen the hose clamp bolt connected with the bucket cylinder small cavity oil port, and remove the hose assembly and shield the hose joint.
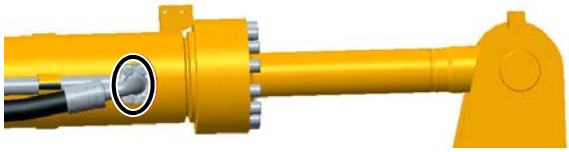 P18H00178	5. Loosen the hose clamp bolt connected with the steel tube of the bucket cylinder big cavity oil port and remove the hose assembly and shield hose joint.
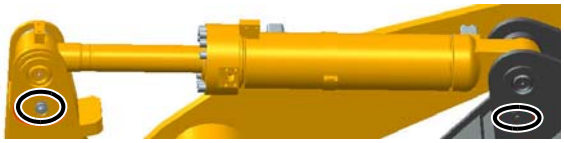 P18H00179	6. Remove the fastening bolt of the front and rear pin shaft of the bucket cylinder and knock out the pin shaft with a copper bar;
	7. Lift out the bucket cylinder from the frame to place it on a level ground.
 P18H00180	8. Remove the fixing clamp and fastening bolt of steel tube of the bucket cylinder big cavity and remove the steel tube; check whether the O-ring is aged or damaged and replace it in time, mask the oil ports of steel tube.
	9. Mask the oil ports of the bucket cylinder big and small cavity to avoid pollution.

Installation of Bucket Cylinder

⚠CAUTION

Please keep clean. All components shall be cleaned thoroughly with cleaning solution prior to assembly. The components are allowed for natural drying. Never wipe them dry with cloth. The fiber from the cloth will accumulate on the parts and cause fault. Check all components. If the components are worn or damaged, please replace them with new ones.

Figures	Operation instructions
 P18H00181	1. Install the steel tube of bucket cylinder big cavity and tighten the bolt to 52±6Nm; install the steel tube clamp and tighten the bolt to 52±6Nm; Check whether the O-ring is aged or damaged and replace it in time
	2. Hang the bucket cylinder to the mounting position with sling.
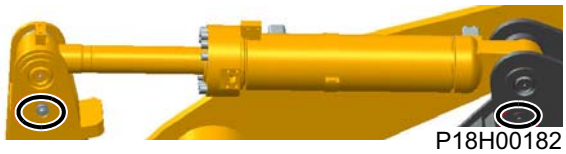 P18H00182	3. Install the rear pin of bucket cylinder, and tighten the pin shaft mounting bolt to 90±12Nm. 4. Install the front pin of bucket cylinder, and tighten the pin shaft mounting bolt to 90±12Nm.
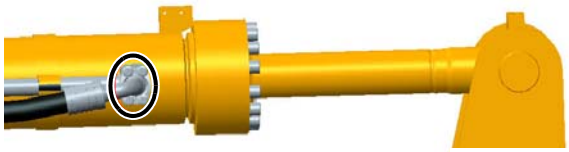 P18H00183 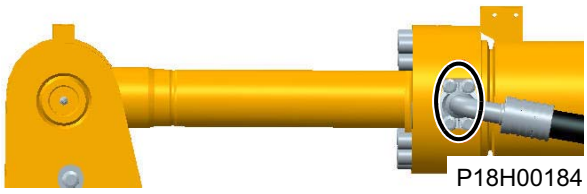 P18H00184	5. Connect the hoses of bucket cylinder big and small cavity, tighten the clamp bolt to 52±6Nm

Figures	Operation instructions
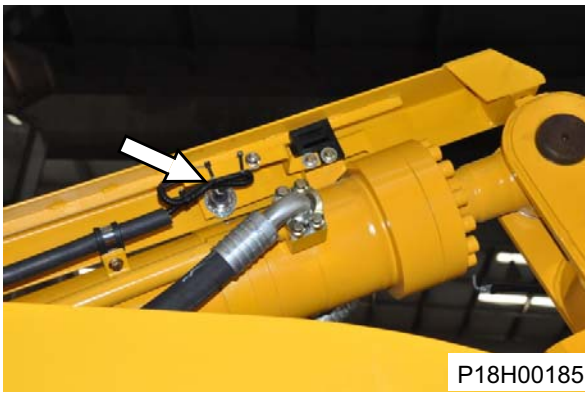 P18H00185	6. Install the proximity switch wire harness line of bucket cylinder.
 P18H00186	7. Install the centralized lubrication system joint.
	8. Start the machine, and run it at idle speed, slowly deploy and retract the bucket for 3-5 times to bleed the air in the cylinder and line.
	9. Check whether the hydraulic oil level is qualified, and if not, please fill the hydraulic oil to the specified level

Disassembly and Assembly of Bucket Cylinder

Disassembly of Bucket Cylinder

Exploded view of bucket cylinder

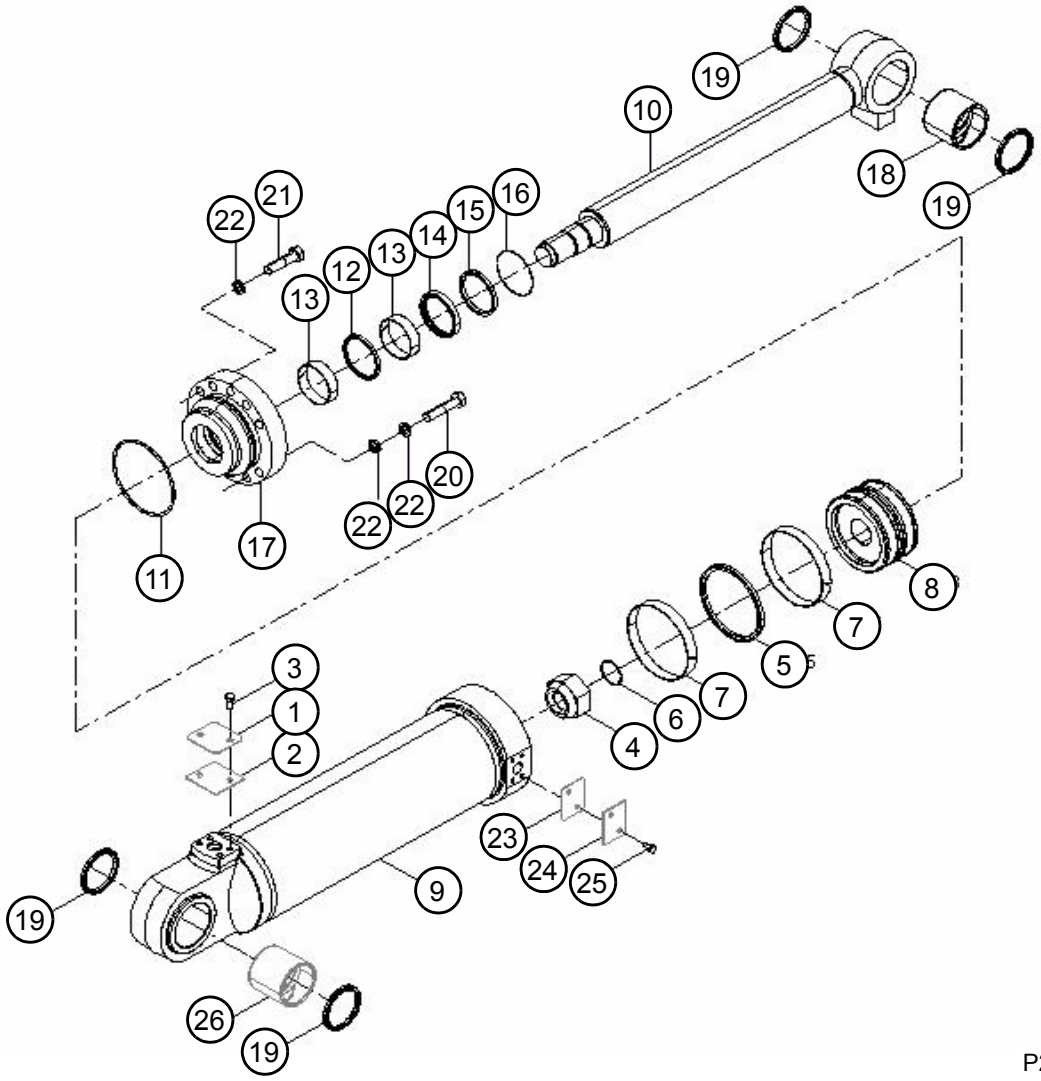

P28H00900

1. Cushion
2. Cover
3. Bolt
4. Locknut
5. Seal ring
6. O-ring
7. Support ring
8. Piston
9. Cylinder block
10. Piston rod
11. O-ring
12. Seal ring
13. Support ring
14. Seal ring
15. Dust ring
16. Snap ring
17. Cylinder head
18. Shaft bushing
19. Rubber ring
20. Bolt
21. Bolt
22. Washer
23. Cushion
24. Cover
25. Bolt
26. Shaft bushing

Removal procedures of bucket cylinder

Figures	Operation instructions
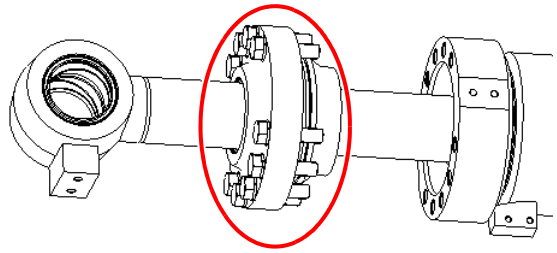 P28H00888	1. Pull out one notch of the piston rod (when the wrench and the rod do not interfere with each other), then screw off the connecting bolt 20 from the cylinder head 17 with wrench; **Note: Tightening torque for bolt 20: 150±20N.m;** Tool: Open-end wrench 30mm
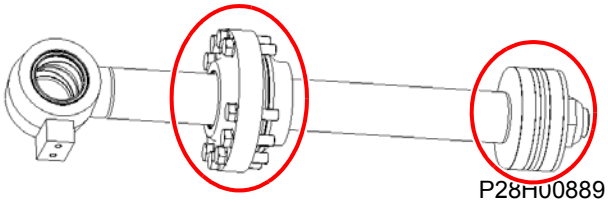 P28H00889	2. Pull out the piston rod 10 from the oil cylinder block 9 and remove the piston locknut 4 with torque wrench; remove the piston and the cylinder head; **Note: Tightening torque for locknut 4: 1400±100 N.m.**
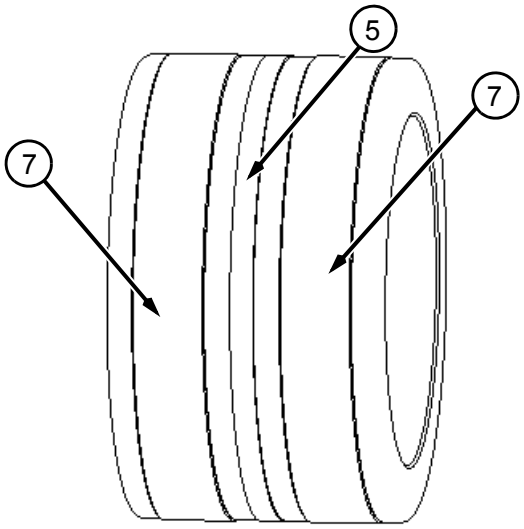 P28H00885	3. Remove the support ring (7) at both ends of piston 8 along the support ring notch, stretch the seal ring (5) with straight screwdriver to a deformed state and remove it, then remove the O-ring. (Removal of seal ring 5 is destructive). Tool: Straight screwdriver

Removal procedures of bucket cylinder

Figures	Operation instructions
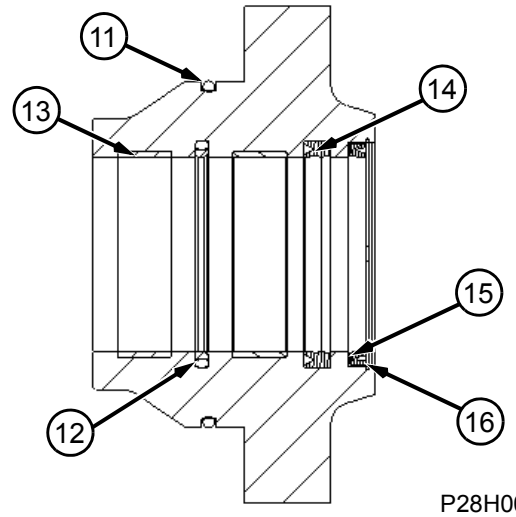 P28H00886	4. Remove the O-ring (11), support ring (13), seal ring (12) and (14), dust ring (15) and retainer (16) from the cylinder head.
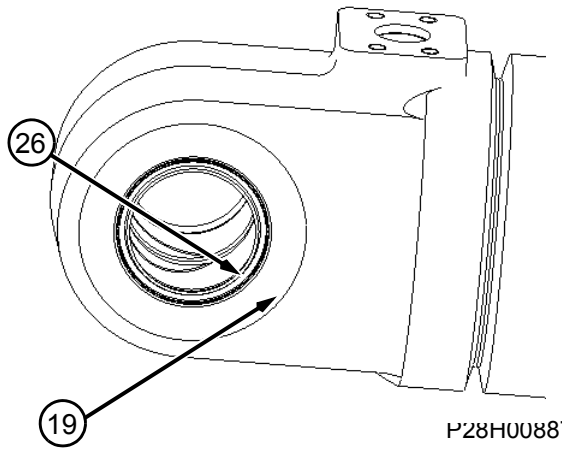 P28H00887	5. Remove rubber ring (19) and bushing (26) from the cylinder head.

Removal and Installation of Control Valve Assembly

Removal of Control Valve Assembly

Tools required			
Tool(s)	**Part description**	**Standard**	**Quantity**
1	Wrench	13#, #16#, 18#	3
2	Inner hexagon spanner	8#	1
3	Wire cutter		1
4	Shielding film		1
5	Oil collecting basin		1
Other information			
Weight of control valve		48kg	

Relevant preparation before starting:

See the section of Machine Placement for parking the machine.

⚠CAUTION

Please keep clean. Thoroughly clean the outer surface of the components before removal. It will prevent foreign matters from entering the mechanism.

Stick label identification stickers on all pipelines, hoses, circuits and steel tubes for easier installation. Clog up all the pipelines, hoses and steel tubes. That will prevent fluid loss and prevent dirts from entering the system.

The appropriate container shall be used to collect the liquid before removing any hydraulic oil lines or disassembling any components that contain liquid during the inspection, maintenance, test and adjustment of the machine. Dispose all the fluid in accordance with local laws and regulations.

⚠WARNING

Hydraulic oil pressure and hot oil may cause personal injury or even death.

There may be residual hydraulic oil with pressure in the hydraulic system after the engine stops. Release the residual pressure before repairing the hydraulic system, otherwise the serious personal injury or even death may be caused.

Make sure that all the work implements have been lowered down and the hydraulic oil has cooled before removing any component or pipe. The oil filter cover can not be removed until the engine stopped and the filter cover is cool enough that can be touched by bare hand.

Removal steps:

Figures	Operation instructions
 P28H00419	1. Lift the boom and jack up the boom cylinder with its support. 2. Operate the handle for unloading the boom cylinder and the bucket cylinder.
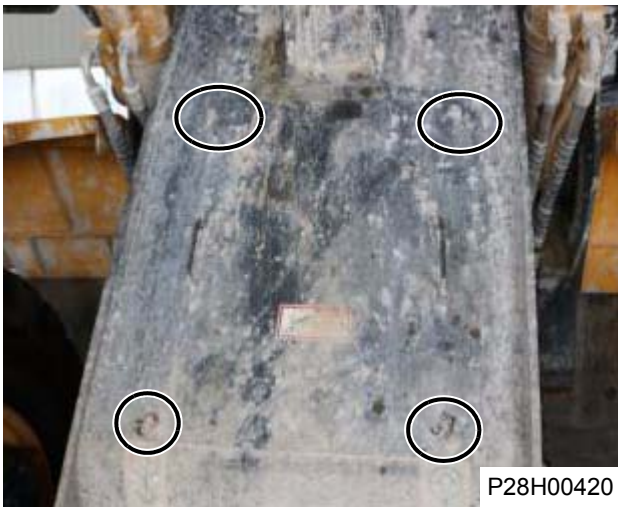 P28H00420	3. Remove 4 mounting bolts of the cover plate. Remove the cover plate.
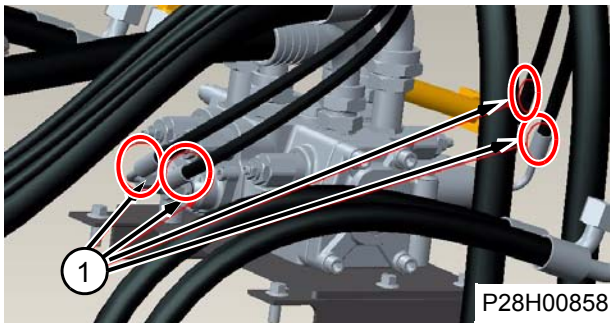 P28H00858	4. Remove 4 pilot oil pipes and correctly make corresponding marks. Wrap the oil pipes and control valve corresponding to the pilot oil ports with clean plastic bags.

Figures	Operation instructions
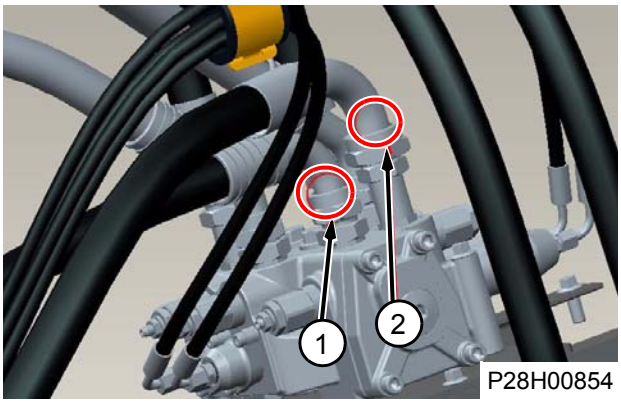 P28H00854	5. Remove the control valve oil inlet pipe (1), move away the oil pipe, make marks and mask the oil ports. 6. Remove the control valve oil return pipe (2), move away the oil pipe and mask the oil ports.
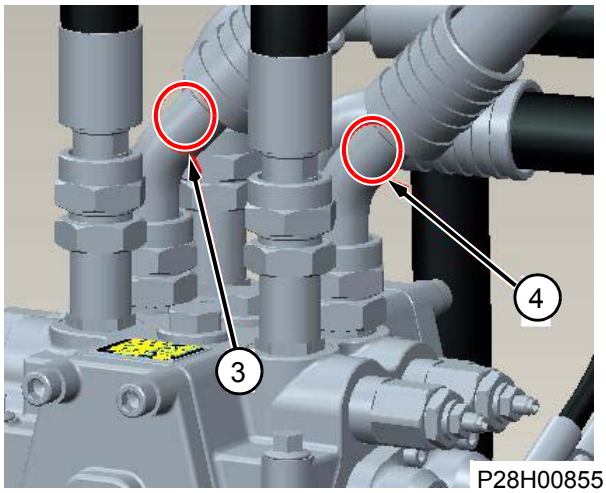 P28H00855	7. Remove oil pipes (3) and (4) from the control valve to bucket cylinder big and small cavities, move away the oil pipes, mask the oil ports and make marks.
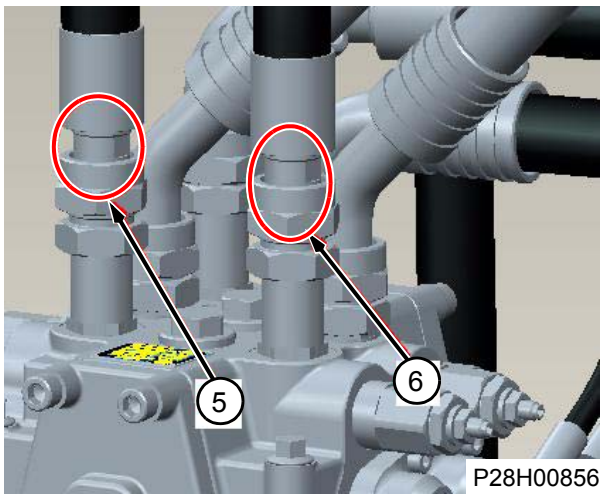 P28H00856	8. Remove the tubes (5) and (6) from the control valve to the boom cylinder big and small cavities.

Figures	Operation instructions
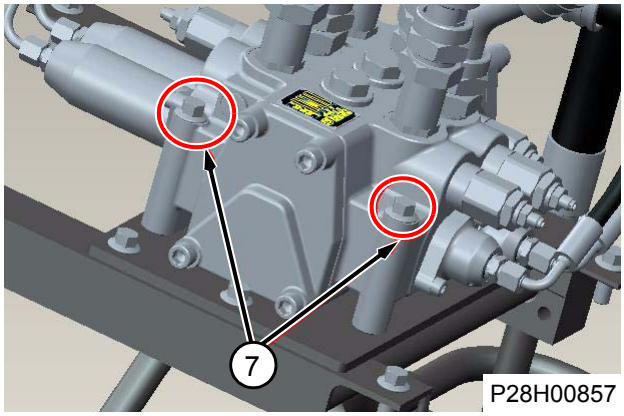 P28H00857	9. Remove the retaining nut (7) of the control valve and take out the control valve. Place it at a clean and safe place.

Installation of Control Valve Assembly

⚠CAUTION

Please keep clean. All components shall be cleaned thoroughly with cleaning solution prior to installation. The components are allowed for natural drying. Never wipe them dry with cloth. The fiber from the cloth will accumulate on the parts and cause fault. Check all components. If the components are worn or damaged, please replace them with new ones.

Figures	Operation instructions
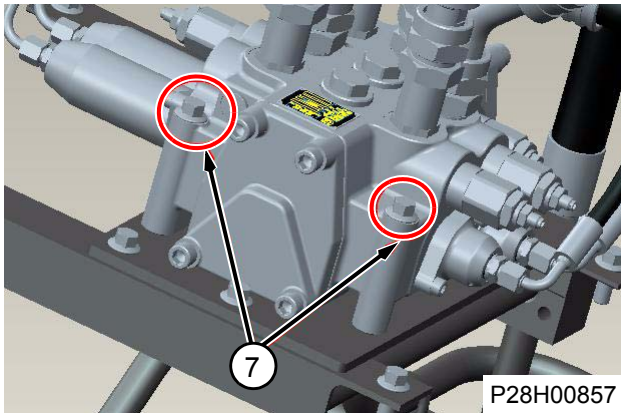 P28H00857	1. Install the captive bolt (7) of control valve. 2. Install the hoses from the control valve to the boom cylinder big and small cavities.

Figures	Operation instructions
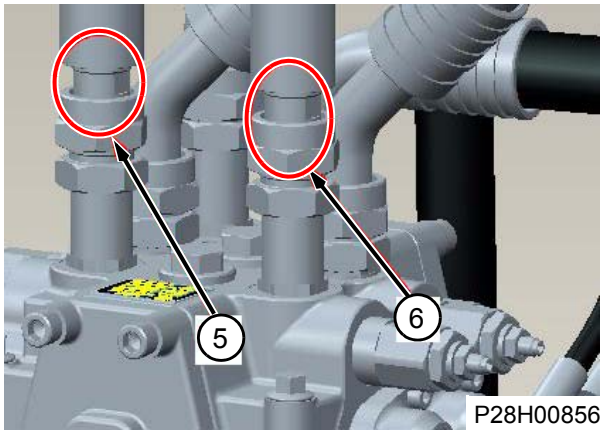	3. Install the oil inlet pipe (3) and oil return pipe (4) the control valve. 4. Install the oil pipes (5) and (6) from the control valve to the bucket cylinder big and small cavities.
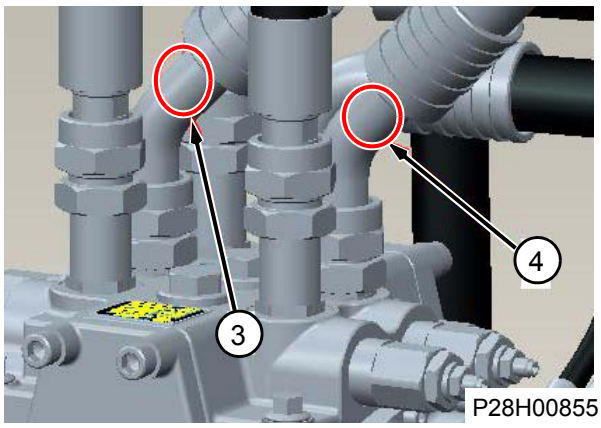	
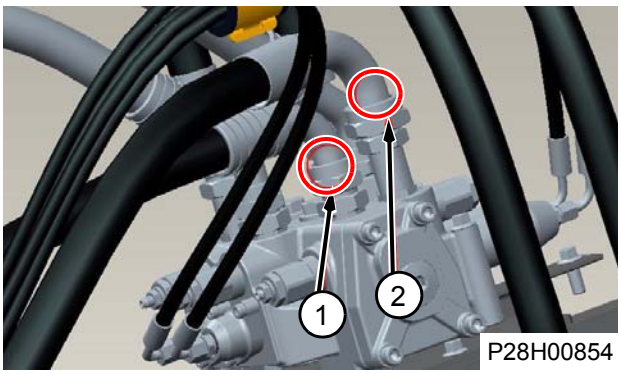	5. Install the control valve oil inlet pipe (1). 6. Install the control valve oil return pipe (2).
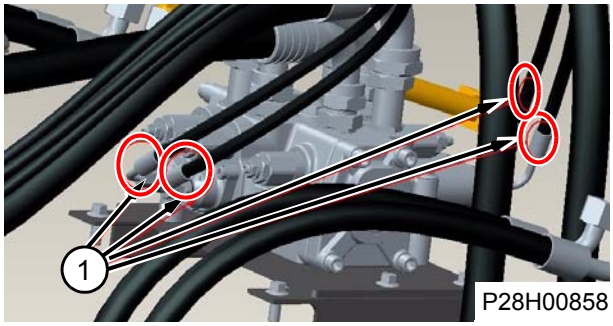	7. Respectively connect 4 pilot pipes (1) with the corresponding oil ports according to the marks.

Removal and Installation of Pilot Valve Assembly

Removal of Pilot Valve Assembly

Tools required			
Tool(s)	**Part description**	**Standard**	**Quantity**
1	Open-end wrench	10#, 13#, 17#, 21#, 24#	5

Figures	Operation instructions
	1. Before removal, release the system pressure, place the boom at the lowest position, and lay the bucket on the ground.
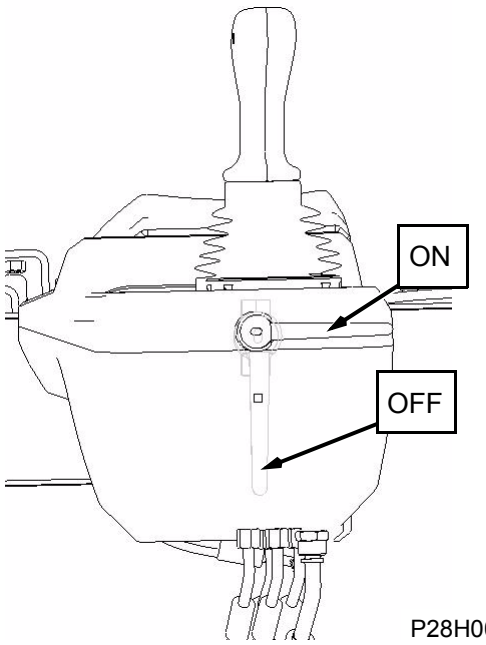 P28H00911	2. Turn the pilot shut-off valve to the off-position (vertical position). **⚠ CAUTION: When turning the handle to the vertical position, the work implement will not work when the driver operates the pilot lever. Thus it can prevent accidents caused by mis-operation of the work implement control lever.** 3. Remove the cover plate of the handrail assembly.
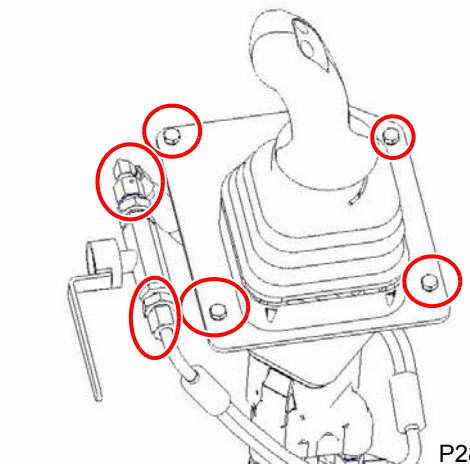 P28H00912	4. Unscrew the retaining nuts around the pilot shut-off valve, remove the pilot shut-off valve with joint and hose assembly from the U-base, and place them well to spare. 5. Unscrew off 4 fastening bolts of the pilot valve mounting board. Tool: Open-end wrench 10#, 21#

Figures	Operation instructions
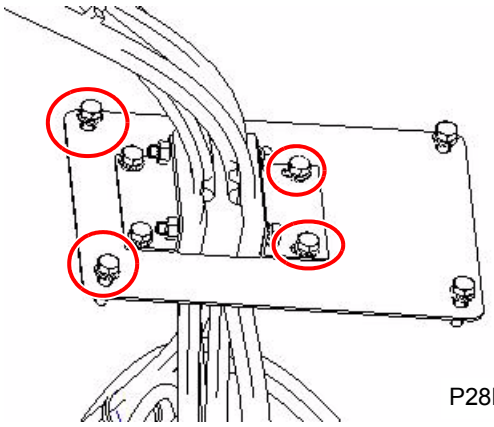 P28H00913	6. Unscrew the bolts from the mounting board of the clamps of pilot valve hoses on the rear right side of the driver seat. Tool: Open-end wrench 13#
	7. Remove the pilot valve, mounting board, pilot shut-off valve, hose assembly and hose joint together from the cover hole of the hose clamp mounting board, and place them to the bottom of the cab.
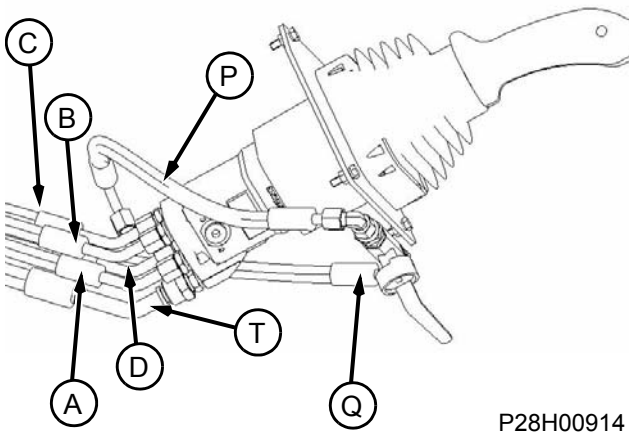 P28H00914	8. Please mark the hose assembly connected to the pilot valve and pilot shut-off valve respectively with: "Q_oil inlet of shut-off valve", "P_oil inlet of pilot valve", "T_return oil of pilot valve", "A_port A of pilot valve", "B_port B of pilot valve", "C_port C of pilot valve", "D_port D of pilot valve", the marks should be firm. 9. Remove the above hose assembly; mask oil ports; Tool: Open-end wrench 17#, 24#
	10. Remove the pilot valve from the bottom of the cab and place it on the ground; shield the oil ports.

Installation of Pilot Valve Assembly

Install the pilot valve assembly in reverse order of the removal steps of pilot valve assembly.

Removal and Installation of Pilot Oil Valve Assembly

Removal of Pilot Oil Valve Assembly

Figures	Operation instructions
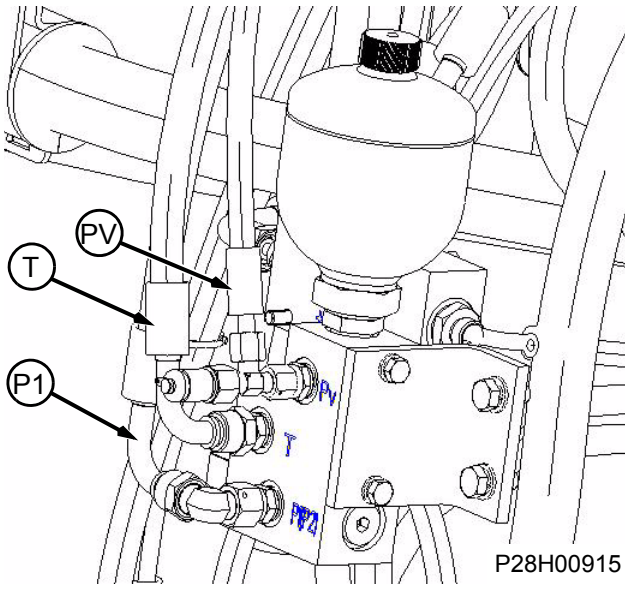	1. Respectively mark symbols "P1 port", "T port", "PV port" on all the hose assemblies connected with the pilot oil valve; the symbols shall be firm.
	2. Removal of 3 hoses: After screwing out the hose by 1-2 circles with the open-end wrench, knock down the joint position with the wrench to completely relieve pressure of hydraulic oil, screw out the hose, and shield the oil port. Tools: Open-end wrench 17#, 24#
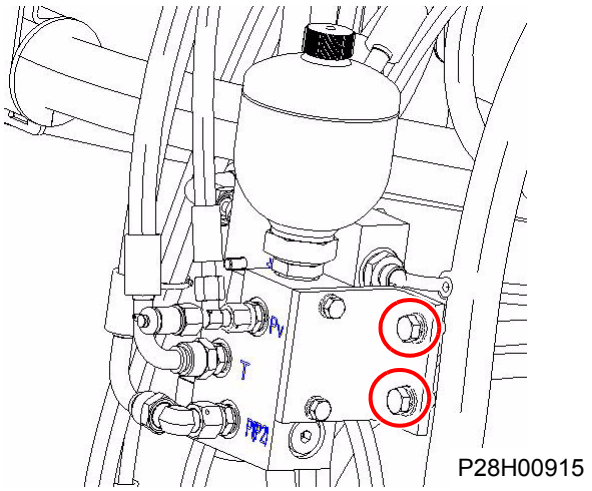	3. Screw off two bolts which fix the mounting plate of the pilot oil valve mounting assembly on the vehicle frame. 4. Take the pilot oil valve mounting assembly out of the handrail box and shield the oil port.

Installation of Pilot Oil Valve Assembly

Install the pilot oil valve assembly in reverse order of the removal steps, in which, the assembling part of hose shall be connected with 3 joints of the pilot oil valve according to the hose symbols without connection in a wrong way.

Removal and Installation of Oil Filter

Removal of Oil Filter

Figures	Operation instructions
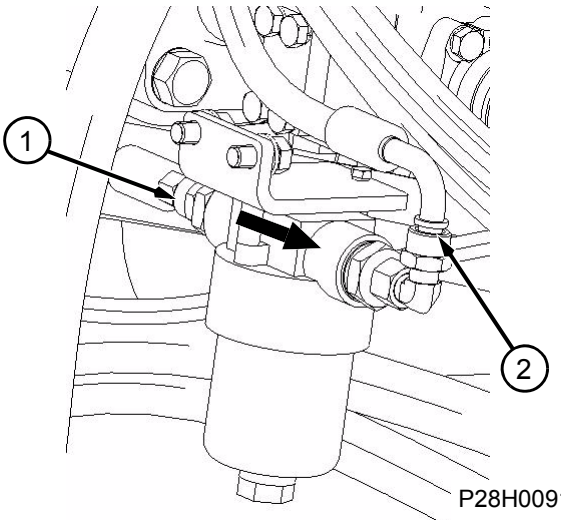	1. Respectively mark the symbol "oil inlet 1" , "oil outlet 2” on hose assemblies at both ends of oil filter; the symbols shall be firm;
	2. Removal of hose: after screwing out the hose by 1-2 circles with the open-end wrench, knock down the joint position with the wrench to completely relieve pressure of hydraulic oil, screw out the hose, and shield the oil port; Tool: Open-end wrench 24#
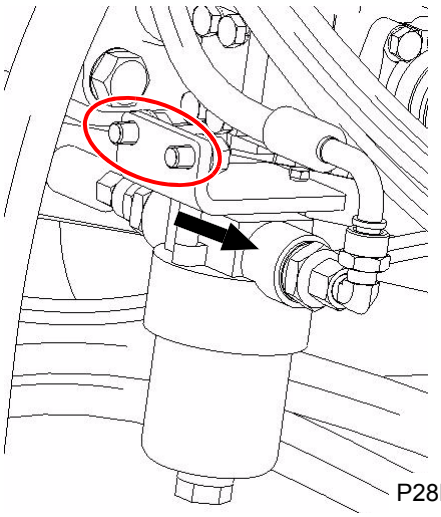	3. Screw off the 2 fastening bolts of the high-pressure oil filter mounting assembly; 4. Take out the high-pressure oil filter mounting assembly and shield the oil port.

Installation of Oil Filter

Install the oil filter in reverse order of the removal steps. When assembling, make sure that the arrow direction of oil filter is consistent with oil lines. Assembling part of hose shall be connected with the 2 joints of high-pressure oil filter according to the hose symbols without connection in a wrong way.

Steering Hydraulic System

Removal and Installation of Steering Pump Assembly

Tools required			
Tool(s)	**Part description**	**Standard**	**Quantity**
1	Wrench	16#, 18#	2
2	Inner hexagon spanner		1
3	Shielding film		1
4	Oil collecting basin		1
5	Sling		1
Other information			
Weight of the steering pump		26kg	

Removal of Steering Pump Assembly

Relevant preparation before starting:

See the section of Machine Placement for parking the machine.

⚠CAUTION

Please keep clean. Thoroughly clean the outer surface of the components before removal. It will prevent foreign matters from entering the mechanism.

Stick label identification stickers on all pipelines, hoses, circuits and steel tubes for easier installation. Clog up all the pipelines, hoses and steel tubes. That will prevent fluid loss and prevent dirts from entering the system.

The appropriate container shall be used to collect the liquid before removing any hydraulic oil lines or disassembling any components that contain liquid during the inspection, maintenance, test and adjustment of the machine. Dispose all the fluid in accordance with local laws and regulations.

⚠WARNING

Hydraulic oil pressure and hot oil may cause personal injury or even death.

There may be residual hydraulic oil with pressure in the hydraulic system after the engine stops. Release the residual pressure before repairing the hydraulic system, otherwise the serious personal injury or even death may be caused.

Make sure that all the work implements have been lowered down and the hydraulic oil has cooled before removing any component or pipe. The oil filter cover can not be removed until the engine stopped and the filter cover is cool enough that can be touched by bare hand.

Figures	Operation instructions
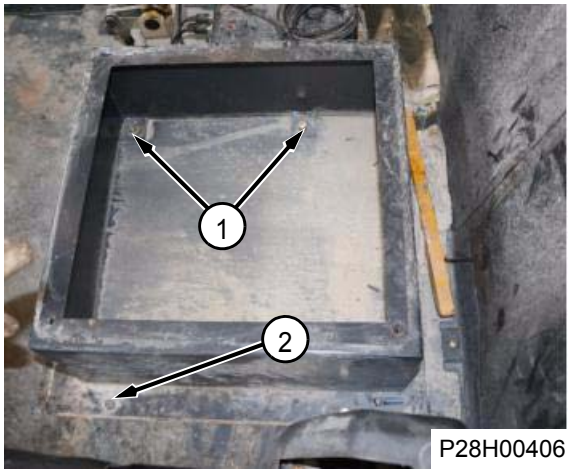 P28H00406	1. Park the complete vehicle and remove the seat by referring to the section of Removal and Installation of Cab Seat. 2. Remove 4 captive bolts (1) of the seat mounting bracket. Remove the bracket.
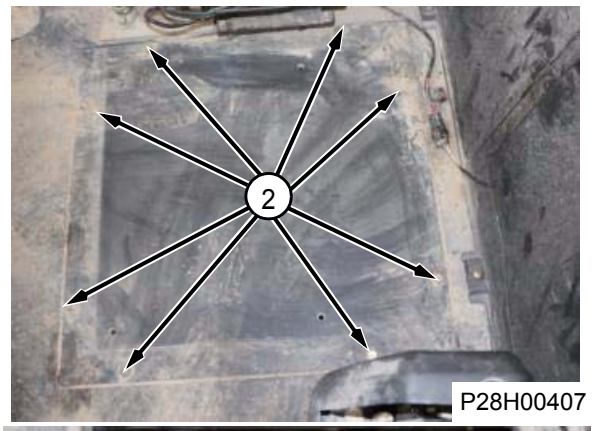 P28H00407  P28H00450	3. Remove 8 mounting bolts (2) of bottom plate. Remove the bottom plate.

Figures	Operation instructions
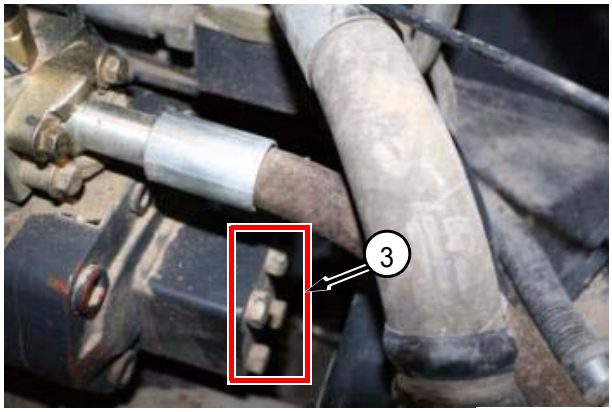 P28H00408	4. Remove the flange mounting bolt (3) of the oil inlet pipe joint of the pump, remove the oil pipe, mask the oil port and make mark on the oil pipe.
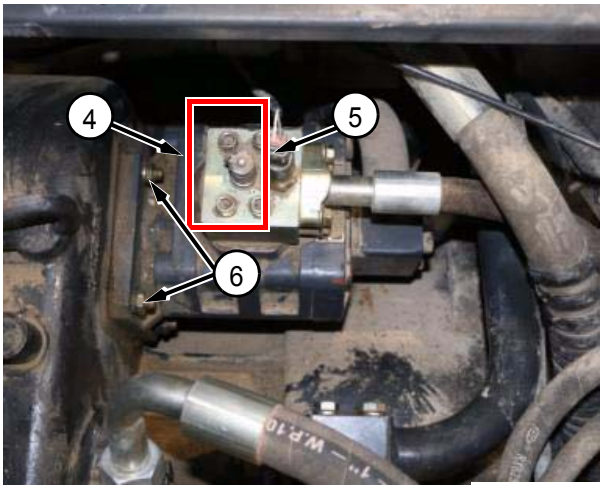 P28H00409	5. Remove the flange mounting hex bolt (4) of the oil outlet pipe joint of the pump, remove the oil pipe, mask the oil port and make mark on the oil pipe. 6. Remove the wire harness connector (5) on the steering pump and unplug the wire harness. 7. Remove mounting bolt (6) of the pump, lift out the steering pump, mask the oil port and place it at a clean and safe place.

Installation of Steering Pump Assembly

⚠CAUTION

Please keep clean. All components shall be cleaned thoroughly with cleaning solution prior to assembly. The components are allowed for natural drying. Never wipe them dry with cloth. The fiber from the cloth will accumulate on the parts and cause fault. Check all components. If the components are worn or damaged, please replace them with new ones.

Figures	Operation instructions
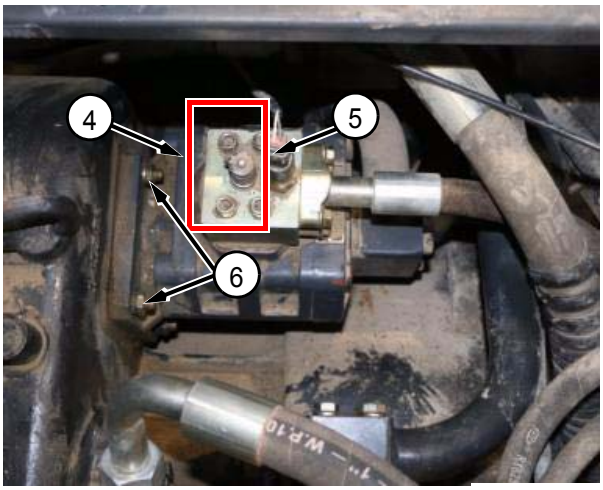 P28H00409	1. Install the mounting bolt (6) of pump. 2. Install the flange mounting bolt (4) of the oil outlet pipe joint of the pump with tightening torque 52±7N m. 3. Install the harness connector (5).
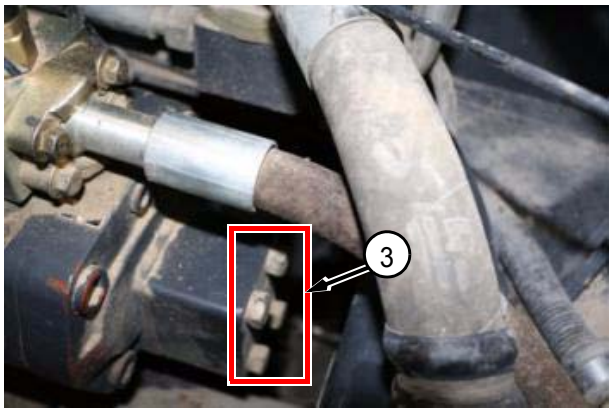 P28H00408	4. Install the flange mounting bolt (3) of the oil inlet pipe joint of the pump with tightening torque 90±12N m.

Figures	Operation instructions
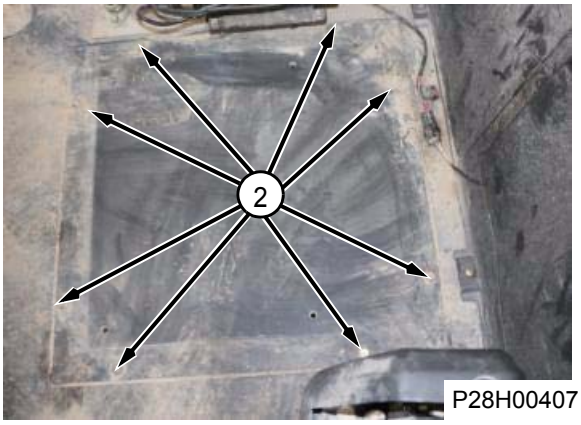 P28H00407 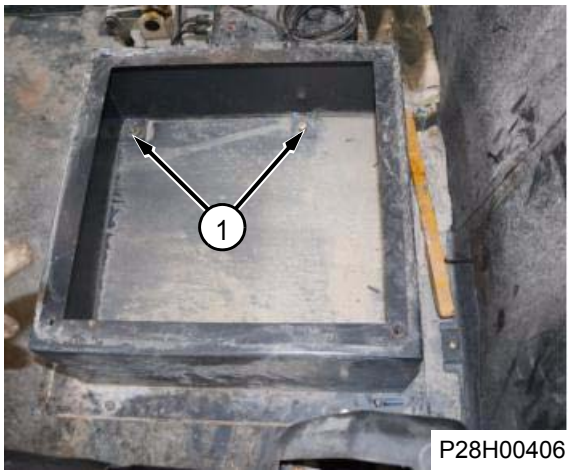 P28H00406	5. Install 8 mounting bolts (2) of bottom plate. 6. Install 4 captive bolts (1) of the seat mounting bracket. 7. Install the seat by referring to the section of Removal and Installation of Seat.

Removal and Installation of Metering Pump

Removal of Metering Pump

Tools required			
Tool(s)	**Part description**	**Standard**	**Quantity**
1	Wrench	13#, 16#, 18#, 27#, 32#	5
2	Cross screwdriver		1
3	Shielding film		1
Other information			
Weight of the metering pump		8.52kg	

Relevant preparation before starting:

See the section of Machine Placement for parking the machine.

⚠CAUTION

Please keep clean. Thoroughly clean the outer surface of the components before removal. It will prevent foreign matters from entering the mechanism.

Stick label identification stickers on all pipelines, hoses, circuits and steel tubes for easier installation. Clog up all the pipelines, hoses and steel tubes. That will prevent fluid loss and prevent dirts from entering the system.

The appropriate container shall be used to collect the liquid before removing any hydraulic oil lines or disassembling any components that contain liquid during the inspection, maintenance, test and adjustment of the machine. Dispose all the fluid in accordance with local laws and regulations.

⚠WARNING

Hydraulic oil pressure and hot oil may cause personal injury or even death.

There may be residual hydraulic oil with pressure in the hydraulic system after the engine stops. Release the residual pressure before repairing the hydraulic system, otherwise the serious personal injury or even death may be caused.

Make sure that all the work implements have been lowered down and the hydraulic oil has cooled before removing any component or pipe. The oil filter cover can not be removed until the engine stopped and the filter cover is cool enough that can be touched by bare hand.

Removal steps

Figures	Operation instructions
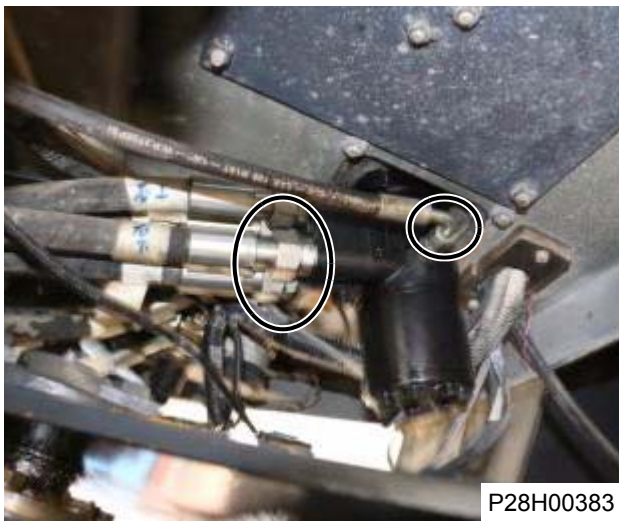 P28H00383	1. Remove the hose joints from the metering pump (After screwing out the hose by 1-2 circles with the wrench, knock the joint position with the wrench to completely relieve pressure of hydraulic oil, remove the hose), make marks and mask the oil ports, remove the hose.
 P28H00384	2. Remove the mounting screw of the steering column trim cover and remove the trim cover.
 P28H00385	3. Remove bolts fixing the metering pump on the steering column. Remove the metering pump and place it in a safe and clean space.

Installation of Metering Pump

Figures	Operation instructions
 P28H00385	4. Install the metering pump assembly on the complete vehicle and tighten the mounting bolts at bottom of the metering pump and steering column. **⚠ CAUTION: When installing, make sure that metering pump is concentric with steering column and there shall be clearance in axial direction to avoid jacking of spool. Check whether it is turned flexibly after installation.**
 P28H00384	5. Install the mounting screw of the steering column trim cover.
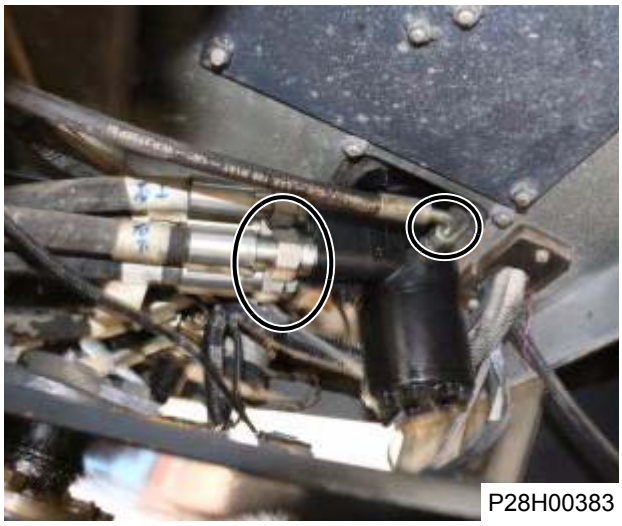 P28H00383	6. Install hose joints on the metering pump and the tightening torque of bolt is 63±3Nm.

Disassembly and Assembly of Metering Pump

Disassembly of Metering Pump

Tools required			
Tool(s)	**Part description**	**Standard**	**Quantity**
1	Wrench	13#	1
2	Inner hexagon spanner		1
3	Vise		1

Figures	Operation instructions
 P28H00386  P28H00387	1. Fix the metering pump on the vise. 2. Remove 7 bolts at the bottom.

Figures	Operation instructions
 P28H00388  P28H00389  P28H00390	3. Take out the part (1). 4. Take out the part (2).

Figures	Operation instructions
 P28H00391	
 P28H00392  P28H00393	5. Loosen the metering pump, after adjustment, fix the metering pump with vise. 6. Unscrew the captive bolt using the inner hexagon spanner. Take down the cover plate.

Figures	Operation instructions
 P28H00394  P28H00395 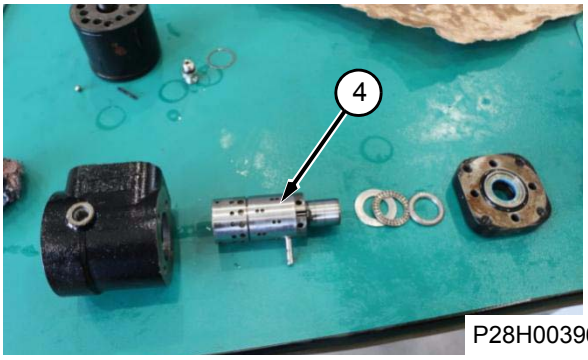 P28H00396  P28H00397	7. Remove the metering pump from the vise. Take out gasket group (3). 8. Take out the part (4).

Assembly of Metering Pump

⚠CAUTION

Please keep clean. All components shall be cleaned thoroughly with cleaning solution prior to assembly. The components are allowed for natural drying. Never wipe them dry with cloth. The fiber from the cloth will accumulate on the parts and cause fault. Check all components. If the components are worn or damaged, please replace them with new ones.

Figures	Operation instructions
 P28H00398  P28H00399  P28H00400	1. Install parts and components of the metering pump in the reverse order of removal. Tightening torque of bolt is: 52±7N m.

Figures	Operation instructions
 P28H00401  P28H00402  P28H00403 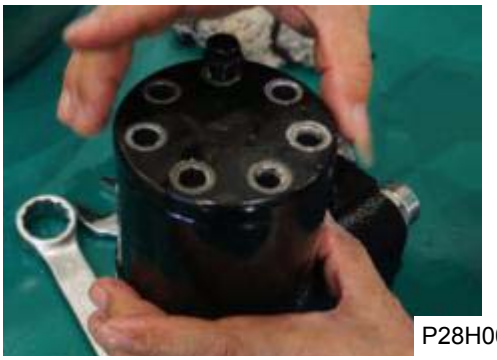 P28H00404	

Removal and Installation of Priority Valve

Removal of Priority Valve

Tools required			
Tool(s)	**Part description**	**Standard**	**Quantity**
1	Wrench	13#, 18#, 27#, 32#, 36#	5
2	Shielding film		1
3	Oil collecting basin		1
Other information			
Weight of the priority valve		2.3kg	

Relevant preparation before starting:

See the section of Machine Placement for parking the machine.

⚠CAUTION

Please keep clean. Thoroughly clean the outer surface of the components before removal. It will prevent foreign matters from entering the mechanism.

Stick label identification stickers on all pipelines, hoses, circuits and steel tubes for easier installation. Clog up all the pipelines, hoses and steel tubes. That will prevent fluid loss and prevent dirts from entering the system.

The appropriate container shall be used to collect the liquid before removing any hydraulic oil lines or disassembling any components that contain liquid during the inspection, maintenance, test and adjustment of the machine. Dispose all the fluid in accordance with local laws and regulations.

⚠WARNING

Hydraulic oil pressure and hot oil may cause personal injury or even death.

There may be residual hydraulic oil with pressure in the hydraulic system after the engine stops. Release the residual pressure before repairing the hydraulic system, otherwise the serious personal injury or even death may be caused.

Make sure that all the work implements have been lowered down and the hydraulic oil has cooled before removing any component or pipe. The oil filter cover can not be removed until the engine stopped and the filter cover is cool enough that can be touched by bare hand.

Removal steps

Figures	Operation instructions
 P28H00412	1. Start the complete vehicle and turning the vehicle right to the limit state. Place the oil collecting basin under the vehicle.
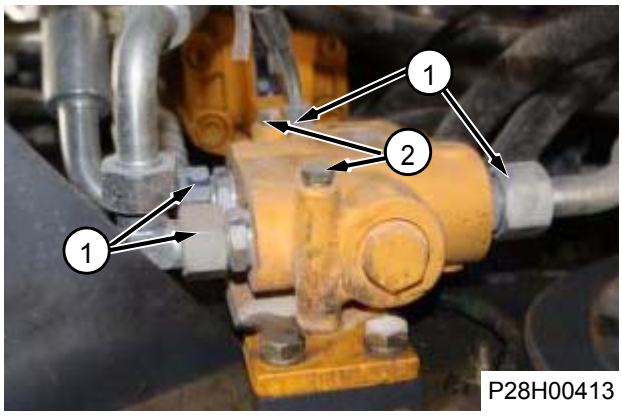 P28H00413  P28H00414	2. Remove 5 oil port joints (1) from the priority valve. Remove the oil pipe, make marks and mask the oil ports. 3. Remove the mounting bolts (2) from the priority valve. Remove the priority valve. Place it at a clean and safe place.

Installation of Priority Valve

⚠CAUTION

Please keep clean. All components shall be cleaned thoroughly with cleaning solution prior to assembly. The components are allowed for natural drying. Never wipe them dry with cloth. The fiber from the cloth will accumulate on the parts and cause fault. Check all components. If the components are worn or damaged, please replace them with new ones.

Figures	Operation instructions
 P28H00415	1. Install 5 oil port joints of the priority valve.
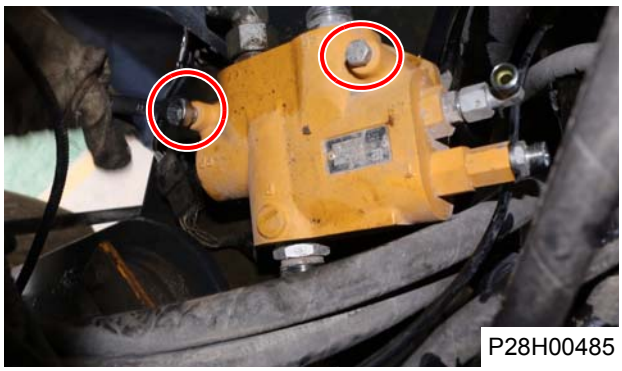 P28H00485	2. Install the mounting bolts of the priority valve.
 P28H00484	3. Install the joint hoses of the priority valve, the tightening torque is 52±5Nm.

Disassembly and Assembly of the Priority Valve

Disassembly of the Priority Valve

Tools required			
Tool(s)	**Part description**	**Standard**	**Quantity**
1	Wrench	24#, 27#, 32#	3

Figures	Operation instructions
 P28H00415  P28H00416	1. Screw off all joints on the valve.
 P28H00417	2. Remove the spool plug, take out the spool, spring, etc.

Figures	Operation instructions
 P28H00418	

Assembly of the Priority Valve

⚠CAUTION

Please keep clean. All components shall be cleaned thoroughly with cleaning solution prior to assembly. The components are allowed for natural drying. Never wipe them dry with cloth. The fiber from the cloth will accumulate on the parts and cause fault. Check all components. If the components are worn or damaged, please replace them with new ones.

Figures	Operation instructions
 P28H00418	1. Install the spring, spool and spool plug in sequence.
 P28H00415	2. Install 5 oil port joints of the priority valve.

Removal and Installation of Steering Cylinder

Removal of Steering Cylinder

Tools required			
Tool(s)	**Part description**	**Standard**	**Quantity**
1	Wrench	13#, 15#, 27#	3
2	Copper bar		1
3	Shielding film		1
4	Oil collecting basin		1
5	Sling		1
Other information			
Weight of steering cylinder		23kg	

Relevant preparation before starting:

See the section of Machine Placement for parking the machine.

⚠CAUTION

Please keep clean. Thoroughly clean the outer surface of the components before removal. It will prevent foreign matters from entering the mechanism.

Stick label identification stickers on all pipelines, hoses, circuits and steel tubes for easier installation. Clog up all the pipelines, hoses and steel tubes. That will prevent fluid loss and prevent dirts from entering the system.

The appropriate container shall be used to collect the liquid before removing any hydraulic oil lines or disassembling any components that contain liquid during the inspection, maintenance, test and adjustment of the machine. Dispose all the fluid in accordance with local laws and regulations.

⚠WARNING

Hydraulic oil pressure and hot oil may cause personal injury or even death.

There may be residual hydraulic oil with pressure in the hydraulic system after the engine stops. Release the residual pressure before repairing the hydraulic system, otherwise the serious personal injury or even death may be caused.

Make sure that all the work implements have been lowered down and the hydraulic oil has cooled before removing any component or pipe. The oil filter cover can not be removed until the engine stopped and the filter cover is cool enough that can be touched by bare hand.

⚠CAUTION

Place the machine in horizontal hard ground →lay flat the bucket →pull up the hand brake →shut down→fix the front and rear frame by bumper

Removal steps (Take right steering cylinder as example, and the removal steps of left steering cylinder is the same)

Figures	Operation instructions
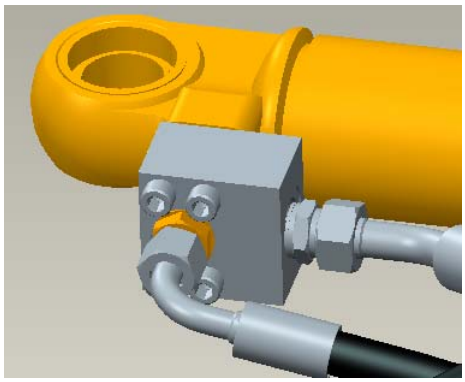 P28H00535	1. Loosen and remove steering cylinder big cavity hose and mask the oil ports;
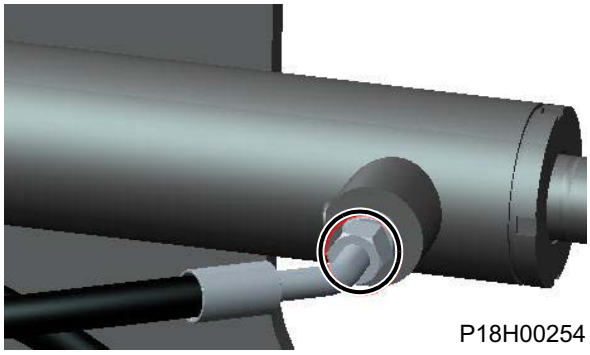 P18H00254	2. Loosen the steering cylinder small cavity hose joint by wrench and remove the hose joint by gentle knockdown; mask the oil ports;
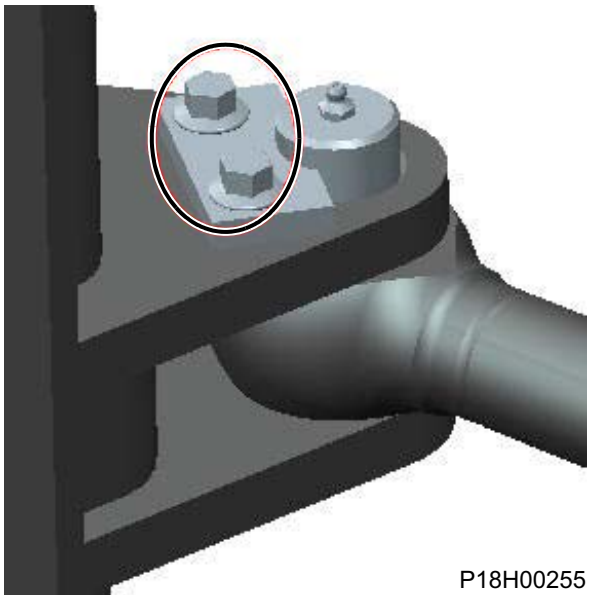 P18H00255	3. Remove the fastening bolt of rear pin shaft of steering cylinder and knock out the pin shaft by copper bar;

Figures	Operation instructions
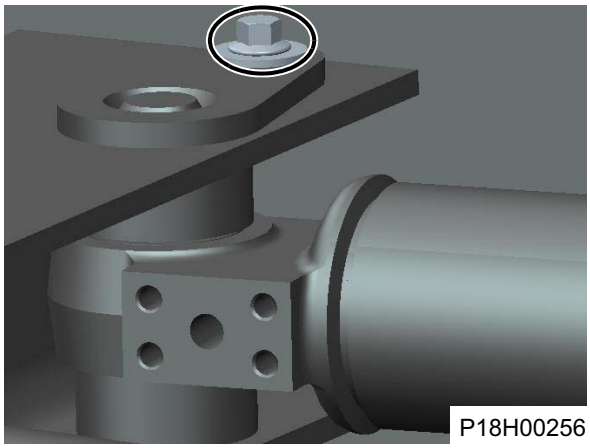 P18H00256	4. Tie the steering cylinder with lifting rope, remove the fastening bolt of front pin shaft of steering cylinder and knock the pin shaft out with copper bar;
	5. Lift the steering cylinder out of the frame using traveling crane and place it on a level ground.
	6. Mask the oil ports of the steering cylinder big and small cavity to avoid pollution.

Installation of Steering Cylinder

⚠CAUTION

Please keep clean. All components shall be cleaned thoroughly with cleaning solution prior to assembly. The components are allowed for natural drying. Never wipe them dry with cloth. The fiber from the cloth will accumulate on the parts and cause fault. Check all components. If the components are worn or damaged, please replace them with new ones.

Figures	Operation instructions
	1. Hang the steering cylinder to the mounting position with proper sling.
	2. Install the front pin of steering cylinder and tighten the pin shaft captive bolt to 90±10Nm.
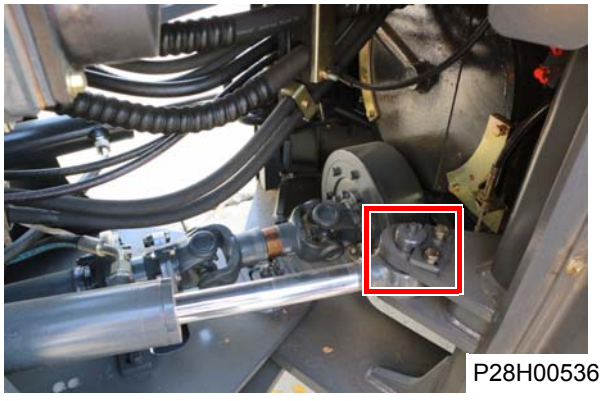 P28H00536	3. Install the rear pin of steering cylinder and tighten the pin shaft captive bolt to 90±10Nm.

Figures	Operation instructions
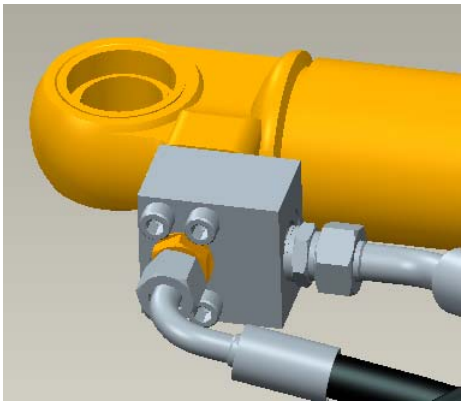 P28H00535 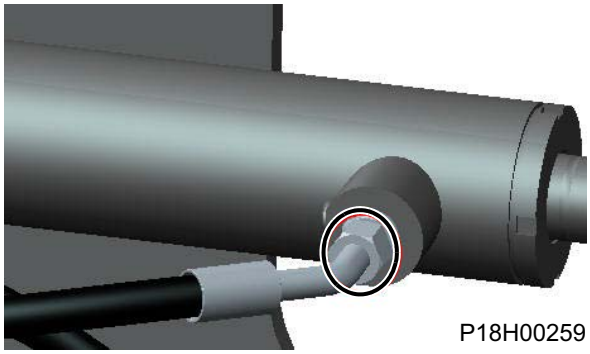 P18H00259	4. Connect the steering cylinder small cavity hose and the tightening torque of hose joint is: 47±2Nm. 5. Connect the steering cylinder big cavity hose joint. 6. Fill the hydraulic oil, start the machine and idle it for 5min. 7. Turn slowly for at least 10 times and bleed the air in the line. 8. Stop the machine and check it for leakage. 9. Check whether the hydraulic oil level is qualified, and if not, please fill the hydraulic oil to the specified level.

Disassembly and Assembly of Steering Cylinder

Disassembly of Steering Cylinder

Exploded view of steering cylinder

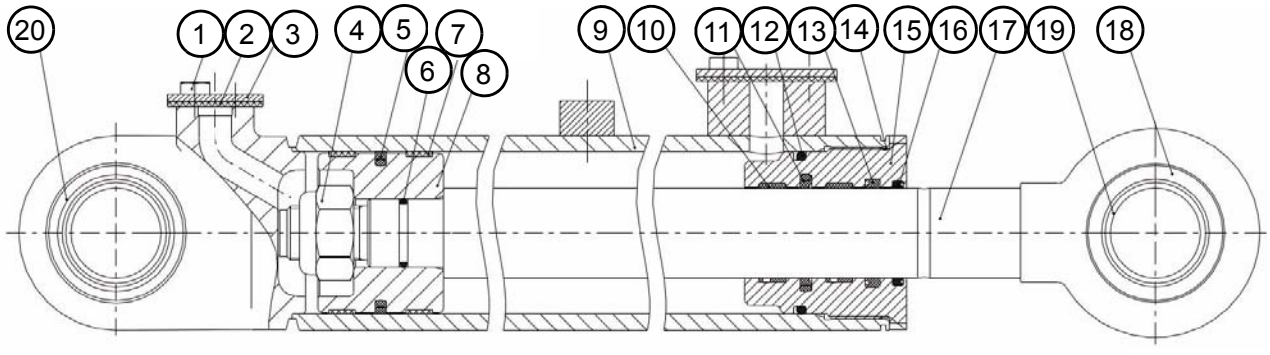

P28H00901

1. Bolt
2. Cushion
3. Cover
4. Nylon locknut
5. Glyd ring
6. O-ring
7. Support ring
8. Piston
9. Cylinder block
10. Support ring
11. Seal ring
12. O-ring
13. Seal ring
14. O-ring
15. Cylinder head
16. Dust ring
17. Piston rod
18. Retainer
19. Radial knuckle bearing
20. Retainer

Figures	Operation instructions
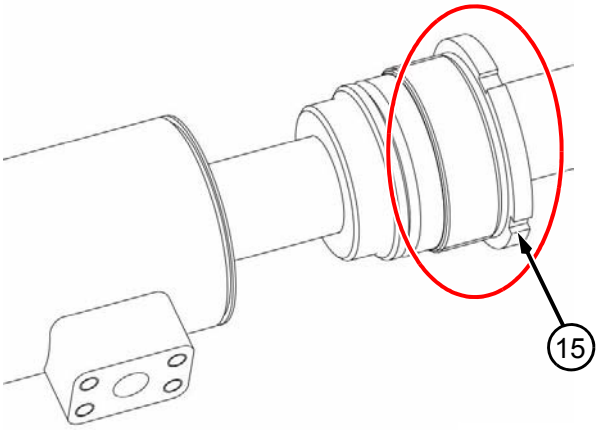 P28H00892	1. Remove the oil cylinder head (15). **Note: Tightening torque for cylinder head 15: 380±20 N.m;**
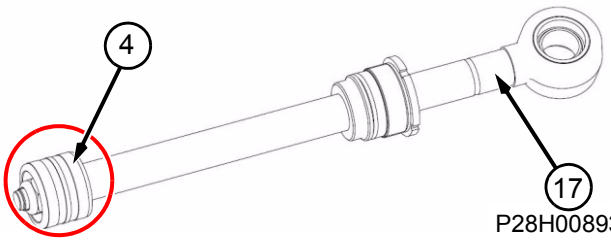 P28H00893	2. Pull out the piston rod (17) from cylinder block 9 and remove the piston nylon locknut (4). **Note: Tightening torque for locknut (4): 650±60N.m.**

Figures	Operation instructions
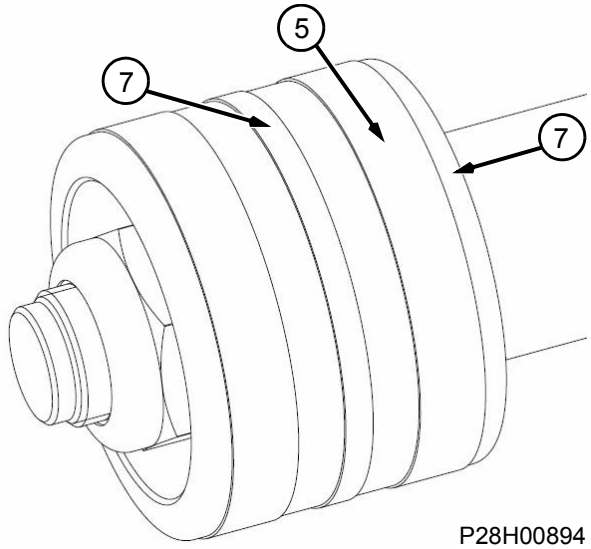 P28H00894	3. Remove support ring (7) and Glyd ring (5) from the piston (8).
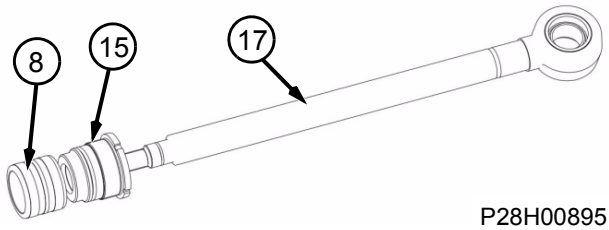 P28H00895	4. Remove the piston (8) and push out the cylinder head (15) from piston rod (17).
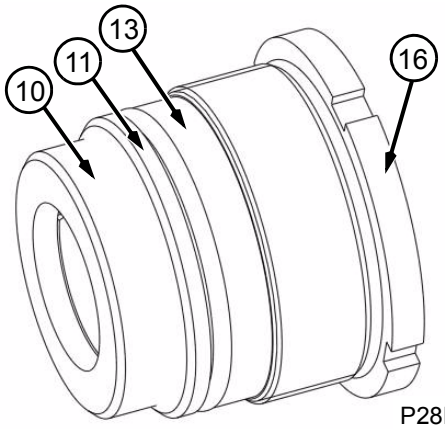 P28H00896	5. Remove the support ring (10), seal ring (11) and (13), and dust ring (16) from the cylinder head 15.

Figures	Operation instructions
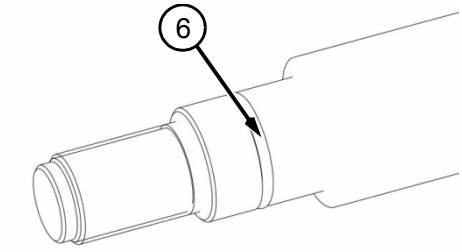 P28H00897	6. Remove the O-ring (6) from the piston rod 17.
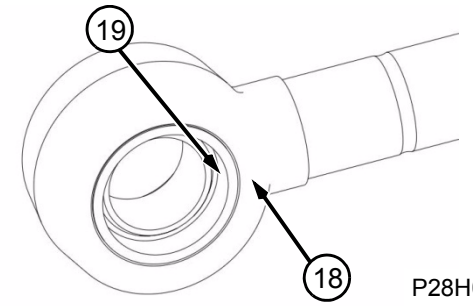 P28H00898	7. Remove the retainer (18) and the knuckle bearing (19) from the piston rod 17.
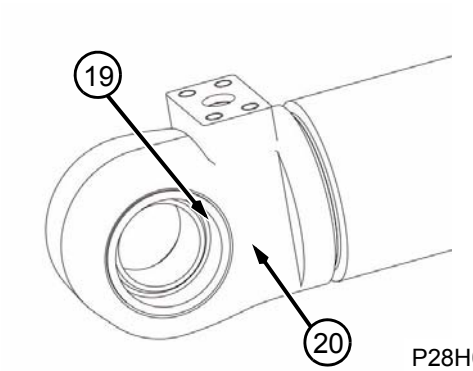 P28H00899	8. Remove the retainer (20) and the knuckle bearing (19) from the cylinder head.

Brake System

Removal and Installation of Brake Pump

⚠CAUTION

Refer to “Pressure Release of Hydraulic System” to release the pressure of service brake system and parking brake system before removing the brake pump.

Since the brake pump is an integrated tandem pump with steering pump, its removal steps are same as that of steering pump.

Removal and Installation of Brake Valve

Removal of Brake Valve

⚠CAUTION

Refer to “Pressure Release of Hydraulic System” to release the pressure of service brake system and parking brake system before removing the brake valve.

Figures	Operation instruction
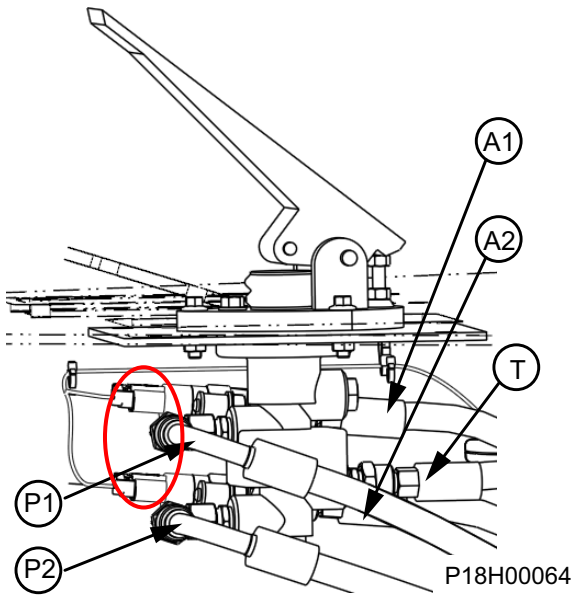	Remove the brake light switch or clutch on/off switch in the electrical system. 1. Mark 5 hoses connected with brake valve respectively with "P1_charge valve", "P2_charge valve", "T_ pilot joint block", "A1_ rear axle" and "A2_ front axle" and note that the markings shall be firm; 2. Remove the joints of 5 hoses and shield the oil ports; Tool: Open-end wrench 27#

Figures	Operation instruction
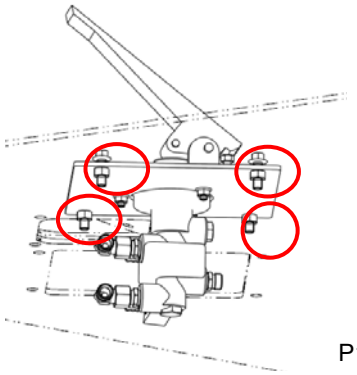 P18H00065	3. Unscrew the 4 bolts tightening the brake valve; Tool: Open-end wrench 13#
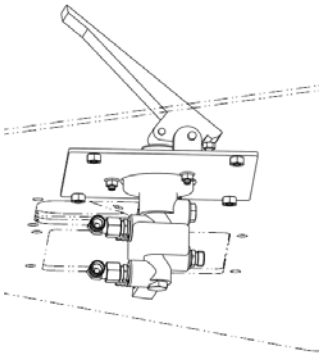 P18H00066	4. Take out the brake valve from the bottom of cab; 5. Shield the port of brake valve and store it in dry and clean place.

Installation of Brake Valve

Figures	Operation instruction
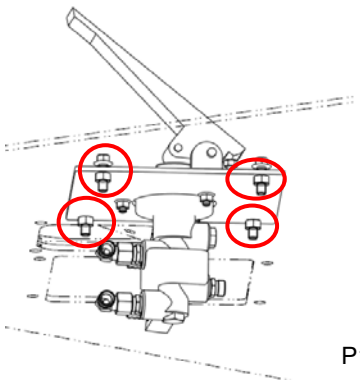 P18H00067	1. Install the brake valve onto the cab floor from the bottom, tighten the bolt. Tightening torque of bolt: 52±6Nm; Tool: Open-end wrench 13#
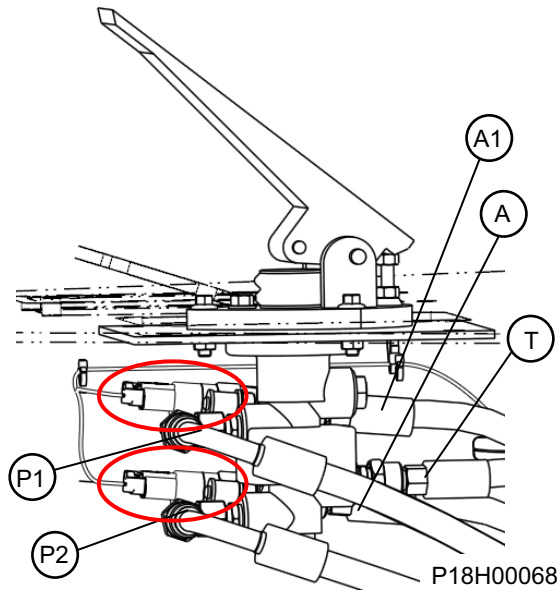 P18H00068	2. Tighten the joints of 5 hoses "P1_charge valve", "P2_charge valve", "T _ pilot joint block", "A1_ rear axle" and "A2 _ front axle". Tightening torque: 51±8Nm 3. Connect the brake light switch and clutch on/off switch well in the electrical system by referring to Electrical System Overhaul Manual. Tool: Open-end wrench 24#

Disassembly and Assembly of Brake Valve

Disassembly of Brake Valve

Figures	Operation instruction
 P18H00069	Place the brake valve on the inside of operation platform. Tool: Clean operation platform, 06-466-245 MICO brake valve
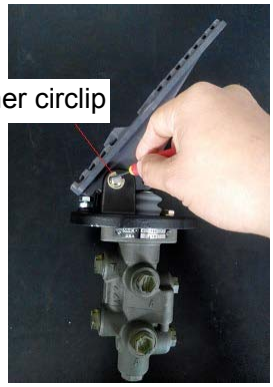 P18H00070	1. Remove the inner circlip on one side of the pedal using small straight screwdriver. Tool: Small straight screwdriver
 P18H00071	2. Pull out the pin shaft by hand.

Figures	Operation instruction
 P18H00072	3. Remove the pedal.
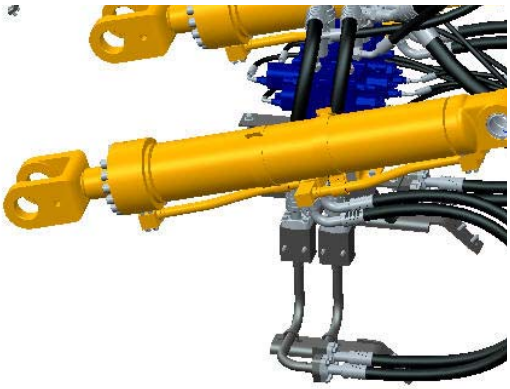	4. Place the valve body on the vise. Tool: Vise
 P18H00074  P18H00075	5. Remove two hexagon connecting bolts from the base using the socket wrench, record the direction of the pedal base and the valve body and remove the pedal base. Tool: 5/16 Socket wrench

Figures	Operation instruction
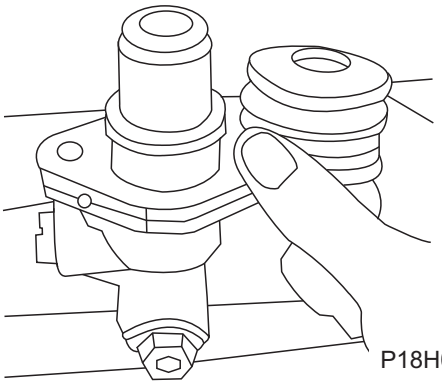 P18H00076	6. Remove the toe clip by hand.
 P18H00077	7. Pull out the piston in vertical direction by hand
 P18H00078	8. Take out the internal spring and the gasket seat
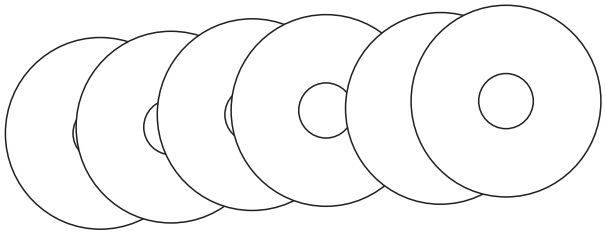 P18H00079	**CAUTION: record the number of gaskets.**

Figures	Operation instruction
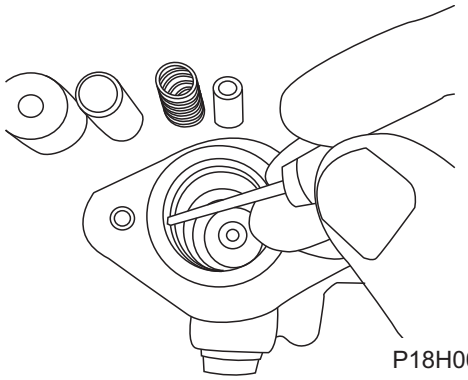 P18H00080	9. Take out V-ring and seal ring from inner valve body (caution: inner valve body and seal can not be scratched)
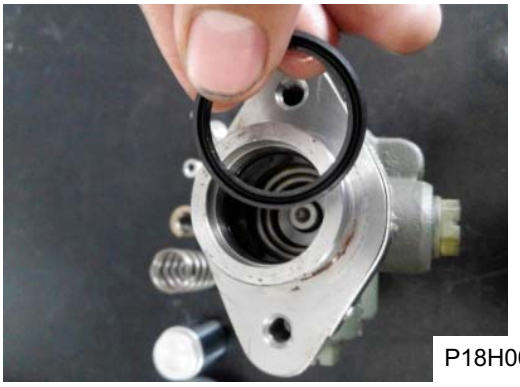 P18H00081	
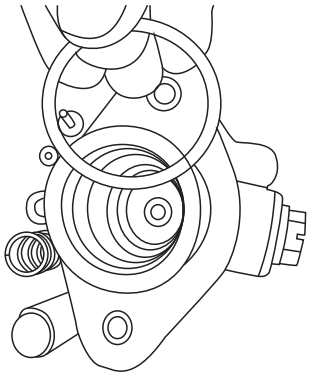 P18H00082	

Figures	Operation instruction
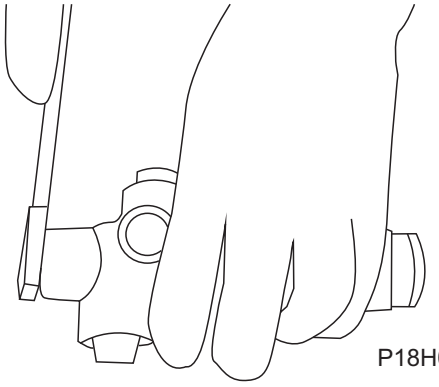 P18H00083	10. Take out the plug and spring from inner valve body and remove O-ring from the plug. Tool: 7/8 open-end wrench in in British system
 P18H00084	
 P18H00085	

Figures	Operation instruction
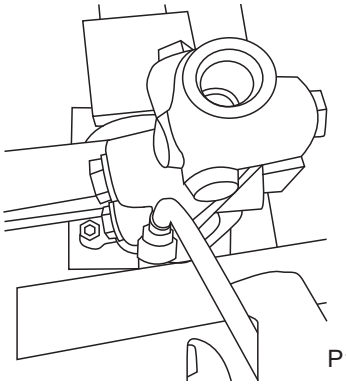 P18H00086	11. Unscrew inner hexagon connecting bolts on both sides using the inner hexagon spanner and remove the plain washer. Tool: 1/4 inner hexagon spanner
 P18H00087	
 P18H00088	
O ring 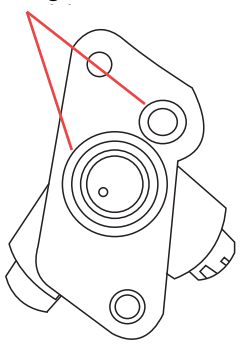 P18H00089	12. Separate two valve bodies from each other and remove two O-rings from valve bodies.

Figures	Operation instruction
 P18H00090	13. Take out spools respectively from upper and lower valve body and place them in order. **⚠ CAUTION: protect the spool and the inner valve body from being damaged. Do not mix spools and pay attention to their directions.**
 P18H00091	14. After completion of disassembly, check the number of each component.

Inspection and Cleaning of Brake Valve

Figures	Operation instruction
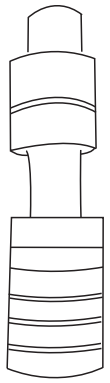 P18H00092	1. Check whether the spool is worn.
 P18H00093	
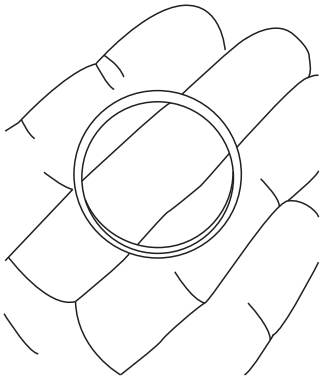 P18H00094	2. Check whether all seal rings are damaged.

Figures	Operation instruction
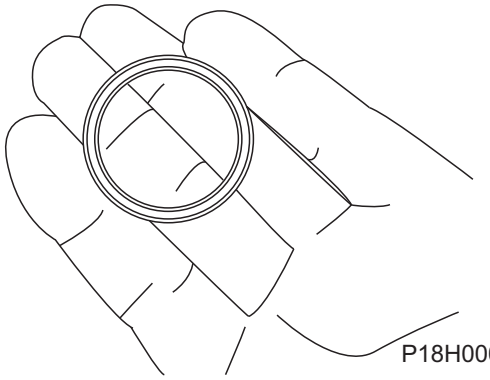 P18H00095	
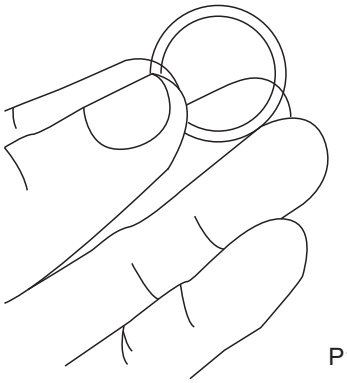 P18H00096	
 P18H00097 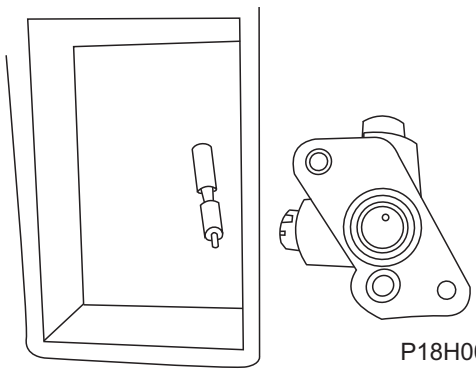 P18H00098	3. Clean all seals and spools & valve holes using clean lubricant and exterior surface of other elements before installation.

Assembly of Brake Valve

Figures	Operation instruction
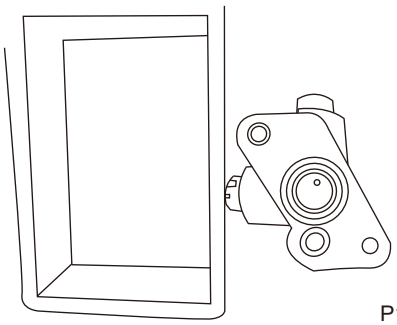 P18H00099	1. Install the O-ring between valve bodies.
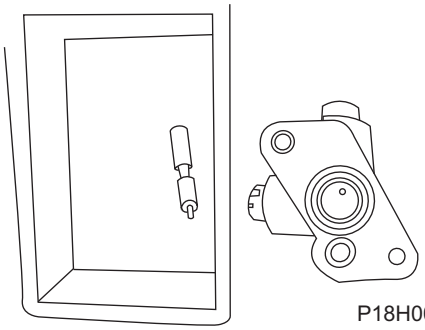 P18H00100	2. Lubricate the upper spool using clean lubricant and slide it into valve body cavity carefully, pay attention to the direction of installation. **⚠ CAUTION: the spool shall be free for sliding into valve cavity, replace new spools and valve bodies if one of spools is damaged.**
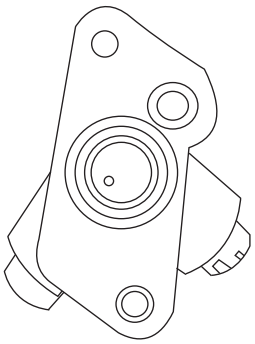 P18H00101	

Figures	Operation instruction
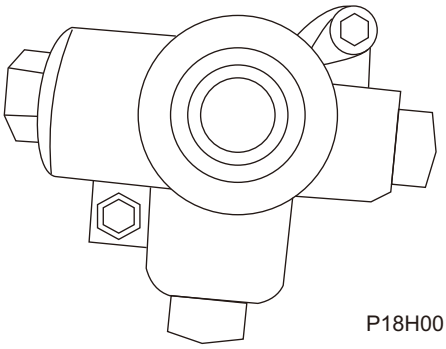 P18H00102	3. Re-assemble two parts of valve bodies using the connecting bolts of end cap and washer. Torque: 29.8-33.9Nm. **⚠ CAUTION: make sure that valve bodies are installed in correct order and the O-ring is always in the groove during installation.** Tool: 1/4 inner hexagon torque wrench
 P18H00103	
 P18H00104	4. Lubricate the spool using clean lubricant and slide it into valve body cavity carefully, pay attention to the direction of installation. **⚠ CAUTION: the spool shall be free for sliding into valve cavity, replace new spools and valve bodies if one of spools is damaged.**
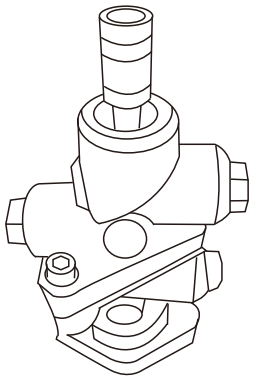 P18H00105	

Figures	Operation instruction
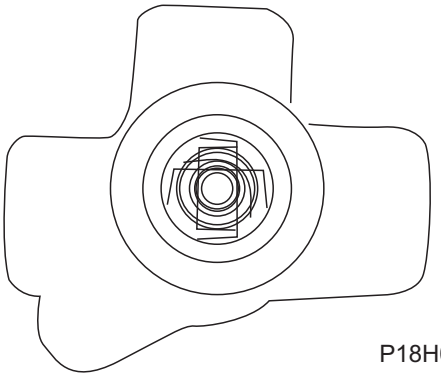 P18H00106	
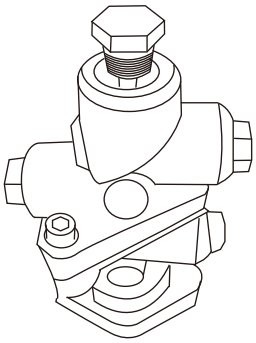 P18H00107	5. Install new O-ring on the end of plug, and the spring and plug into valve body. Torque: 47.5-54.2Nm. Tool: 7/8 Open-end torque wrench
 P18H00108	

Figures	Operation instruction
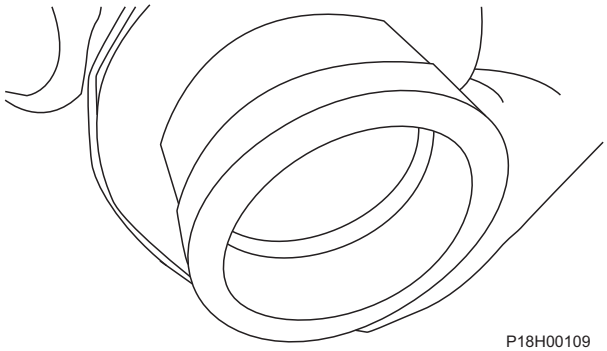 P18H00109	6. Install new V-ring and seal ring into valve body cavity carefully and pay attention to the order and direction of installation. **⚠ CAUTION: the inner cavity of valve body can not be scratched and damaged**
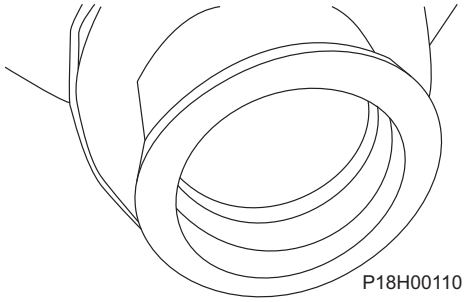 P18H00110	
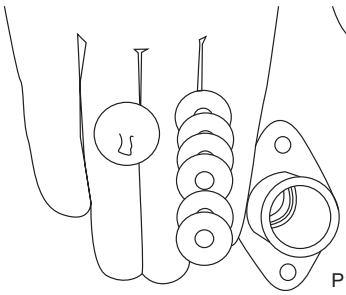 P18H00111	7. Install the gasket, gasket seat and spring into the valve body in sequence.
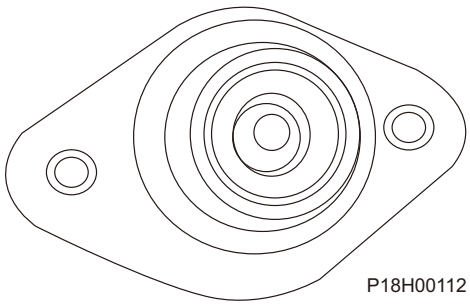 P18H00112	

Figures	Operation instruction
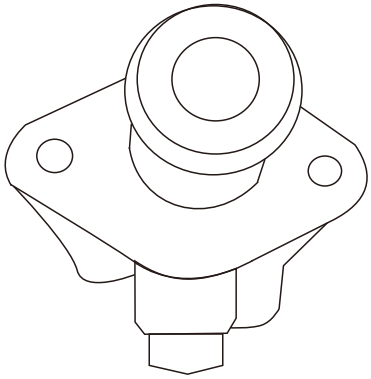 P18H00113	8. Install the piston。
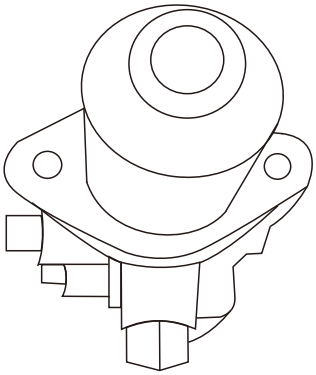 P18H00114	9. Install new protective cover onto valve body and piston.
 P18H00115	10. Install the pedal base onto the valve body. Torque: 24.4-29.8Nm. 11. Install the pedal. Tool: 5/16 inner hexagon socket torque wrench
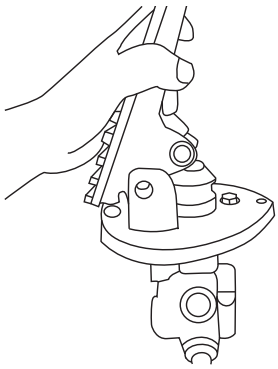 P18H00116	

Figures	Operation instruction
 P18H00117	
 P18H00118	
 P18H00119	12. After completion of assembly, check direction of the pedal and whether parts are ready.

Removal and Installation of Charge Valve

Removal of Charge Valve

⚠CAUTION

Refer to “Pressure Release of Hydraulic System” to release the pressure of service brake system and parking brake system before removing the charge valve.

Figures	Operation instruction
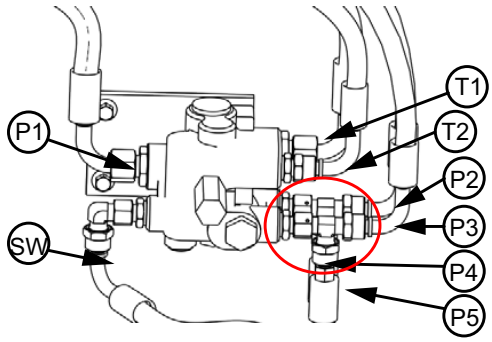 P18H00127	1. Mark 4 hoses connected with charge valve respectively with "P1_oil filter", "SW_ brake valve block", "P2_ brake valve A2", "P3_ brake valve A1" and "P4_ accumulator BR2", "P5_ accumulator BR1" , "T1_ joint block", "T2_ joint block"and note that the markings shall be firm. 2. Loosen the joint of 8 hoses; remove tee nut end; shield the oil port. Tool: Open-end wrench 27#
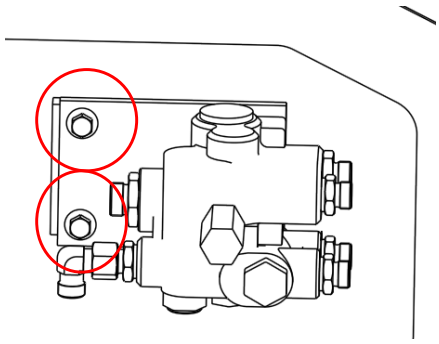 P18H00128	3. Unscrew the 2 bolts tightening the charge valve. Tool: Open-end wrench 13#
	4. Take the charge valve out of left housing; 5. Shield the joint of charge valve and store it in dry and clean place.

Installation of Charge Valve

Figures	Operation instruction
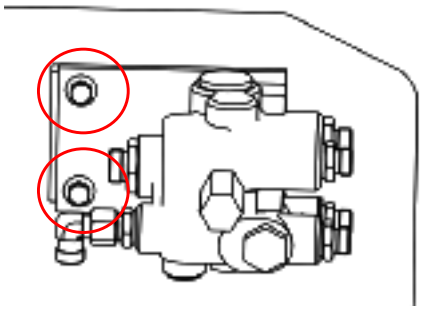 P18H00129	1. Tighten bolts, install the charge valve onto the box, tightening torque of bolts: 52±6Nm. Tool: Open-end wrench 13#
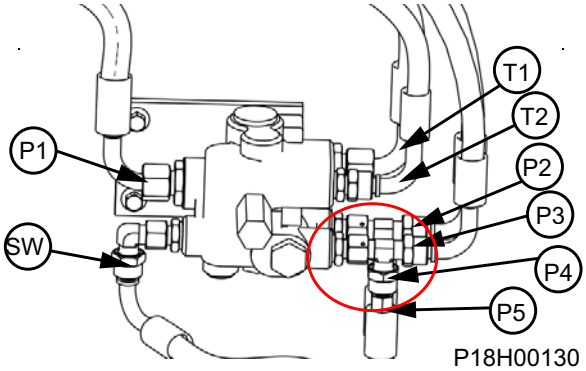 P18H00130	2. Assemble 2 tees. 3. Assemble the joint of hoses "P1_oil filter", "SW_ brake valve block", "P2_ brake valve A2", "P3_ brake valve A1" and "P4_ accumulator BR2", "P5_ accumulator BR1" , "T1_ joint block", "T2_ joint block", tighten joints and their tightening torque: 51±8Nm. Tool: Open-end wrench 22#, 24#, 27#

Disassembly and Assembly of Charge Valve

Disassembly of Charge Valve

Figures	Operation instruction
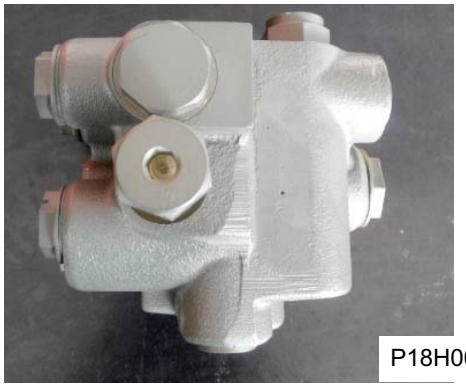 P18H00131	Place the charge valve on the inside of operation platform. Tool: Clean operation platform, 06-463-432 MICO charge valve
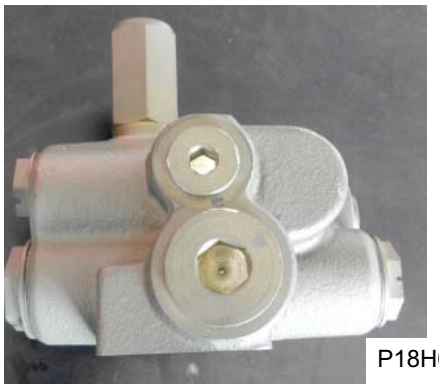 P18H00132	
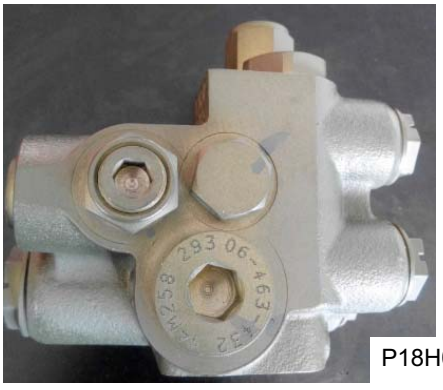 P18H00133	

Figures	Operation instruction
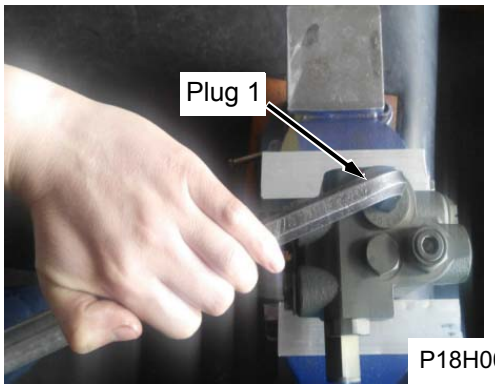 P18H00134 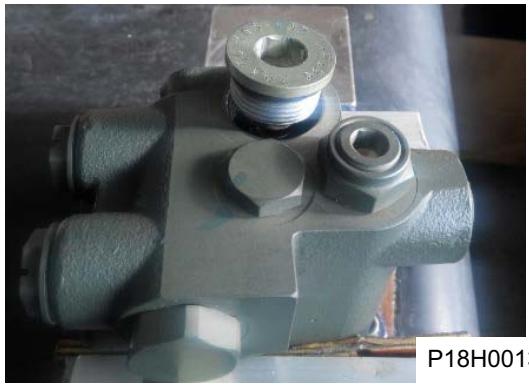 P18H00135	1. Remove plug 1 using inner hexagon spanner. Tool: 9/16 Inner hexagon
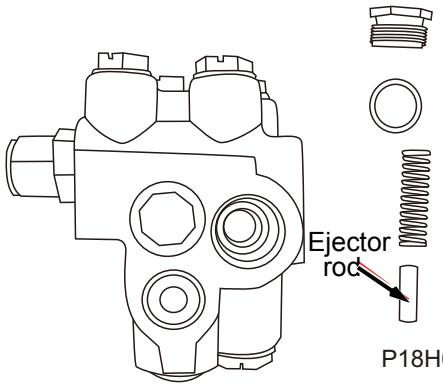 P18H00136	2. Remove plug 1 and O-ring and take out the spring and ejector rod

Figures	Operation instruction
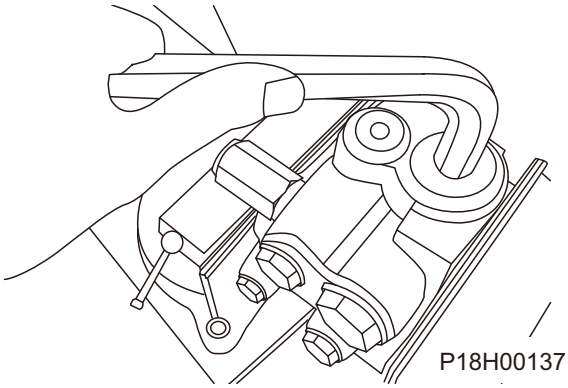 P18H00137 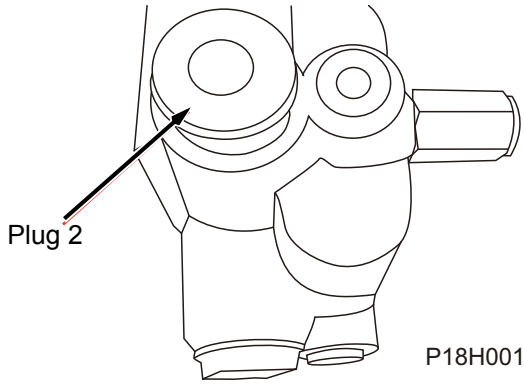 P18H00138	3. Remove plug 2 and O-ring. Tool: 9/16 Inner hexagon
 P18H00139	

Figures	Operation instruction
 P18H00140	4. Take the spool out of plug 1 (only can be taken out from this end).
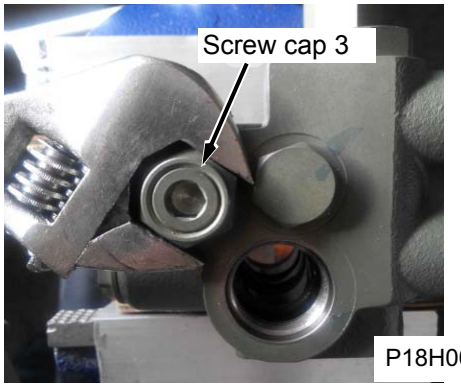 P18H00141	5. Loosen screw cap 3. Tool: Monkey wrench
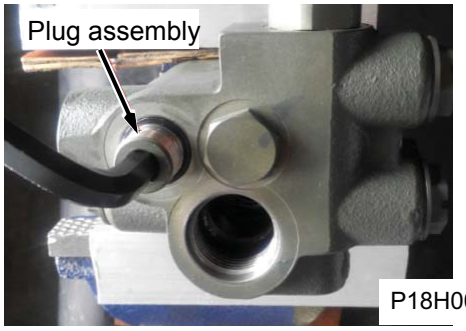 P18H00142	6. Unscrew plug assembly. Tool: 3/8 inner hexagon spanner
 P18H00143	7. Take down the O-ring from plug assembly, take gasket, spring, steel ball, O-ring of valve seat and washer from valve body and remove filter screen and washer.

Figures	Operation instruction
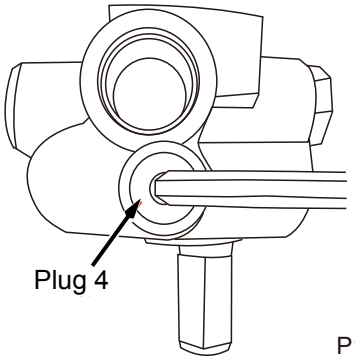 P18H00144	8. Remove plug 4. Tool: 5/16 inner hexagon spanner
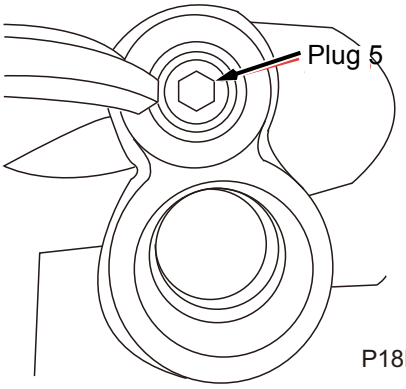 P18H00145	9. Measure and record the depth from plug to bottom of valve body accurately for installation, and then remove plug 5. Tool: 5/16 inner hexagon spanner
 P18H00146	

Figures	Operation instruction
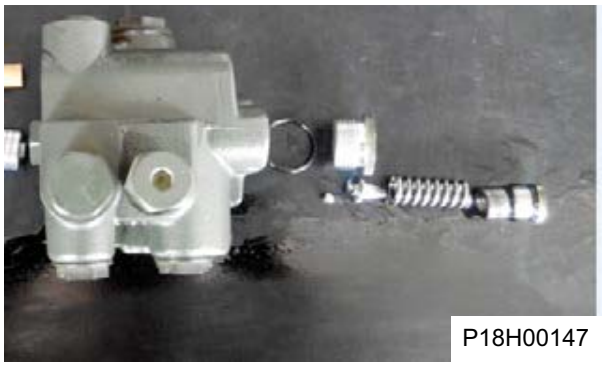 P18H00147	10. Remove spring, ball retainer and ball (do not mix two balls)
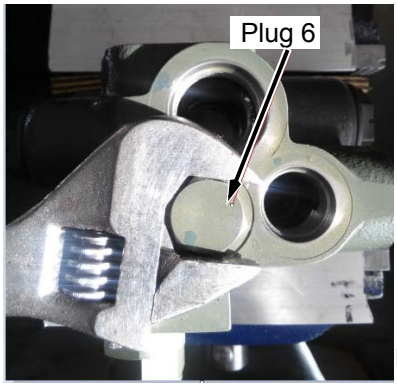 P18H00148	11. Remove plug 6 and O-ring.
 P18H00149	12. Remove spring, ejector rod and ball.

Figures	Operation instruction
 P18H00150	13. Screw the plug 6, take the bushing and spool out from valve body trough hole of plug 4 using wood bar or plastic bar with diameter 6.35-7.87mm and the bushing and spool can fall from plug 6.
 P18H00151	
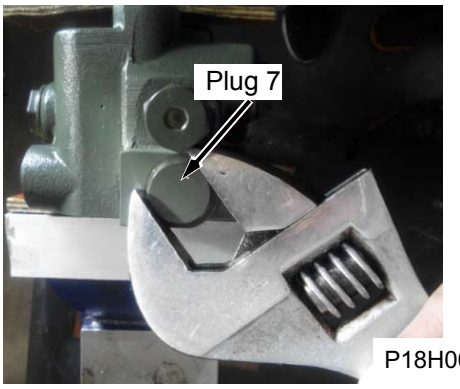 P18H00152	14. Remove plug 7 and O-ring. Tool: Monkey wrench

Figures	Operation instruction
 P18H00153	15. Take spring, poppet, shuttle valve bushing, poppet and spring out from the valve body. A special tool shall be made at the time of removing the valve bushing.
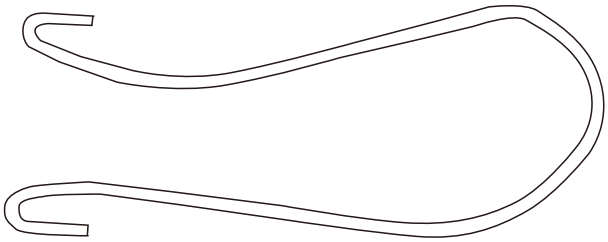 P18H00154	
 P18H00155	

Figures	Operation instruction
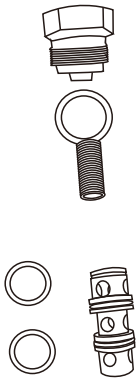 P18H00156	16. Remove O-ring of shuttle valve bushing.
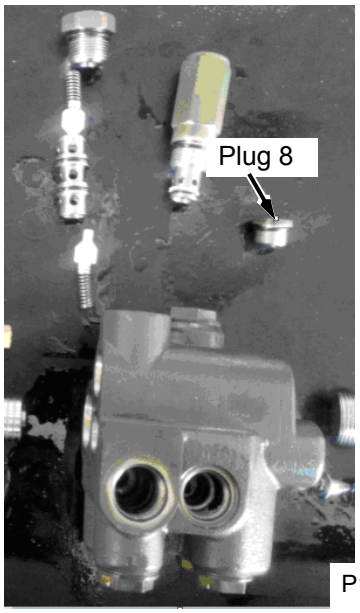 P18H00157	17. Remove relief valve, O-ring and support ring. 18. Remove plug 8.
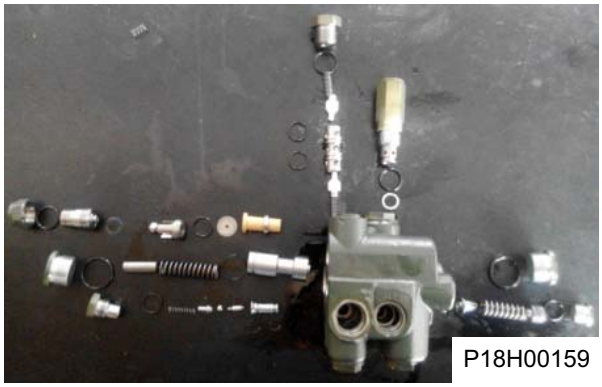 P18H00159	19. The removal is completed.

Check and Clean of Charge Valve

Figures	Operation instruction
 P18H00160 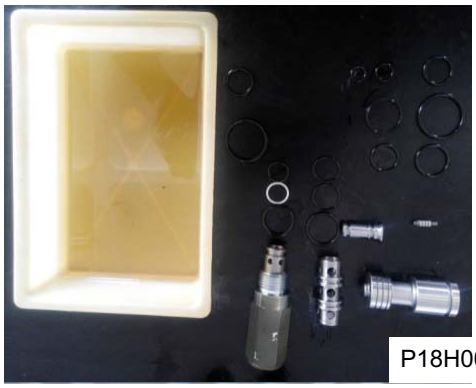 P18H00161	1. Check whether all rubber seal rings and spools are damaged and conduct sufficient lubrication with lubricant.
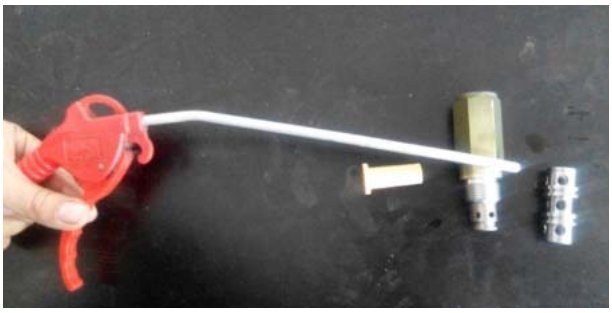 P18H00162	2. Clean filter element, relief valve and shuttle valve bushing.

Assembly of Charge Valve

Figures	Operation instruction
 P18H00163	Place all parts respectively and check the quantity
 P18H00164	1. Install new O-ring on plug 2 and assemble plug 2 on valve body. Torque: 67.8-81.4Nm. Tool: 9/16 inner hexagon spanner
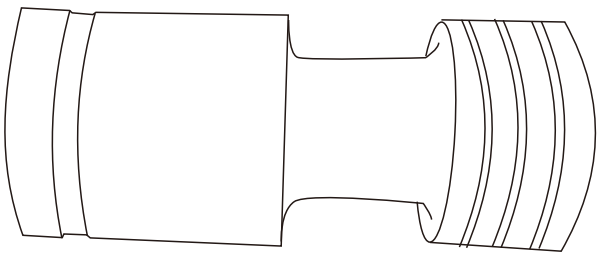 P18H00165	2. Install new seal ring on spool and ensure that the seal ring in the groove is not bent.

Figures	Operation instruction
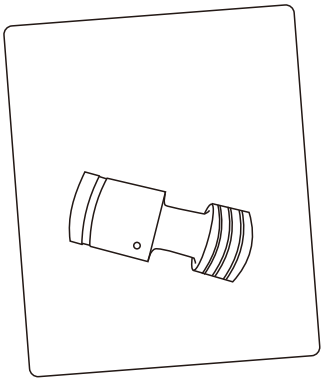 P18H00166  P18H00167	3. Lubricate the spool sufficiently and install it into the valve body
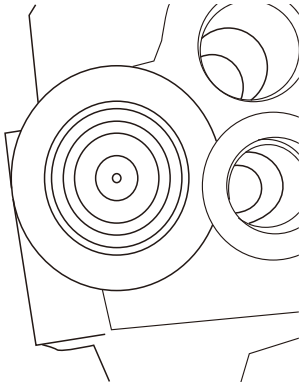 P18H00168	4. Install spring and ejector rod into the valve.

Figures	Operation instruction
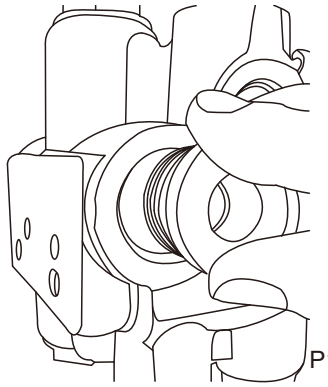 P18H00169 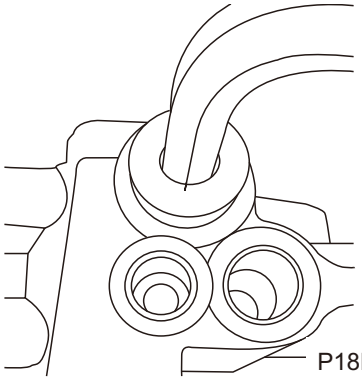 P18H00170	5. Install new O-ring on plug 1 and assemble it on the valve body. Torque: 67.8-81.4Nm. Tool: 9/16 inner hexagon spanner
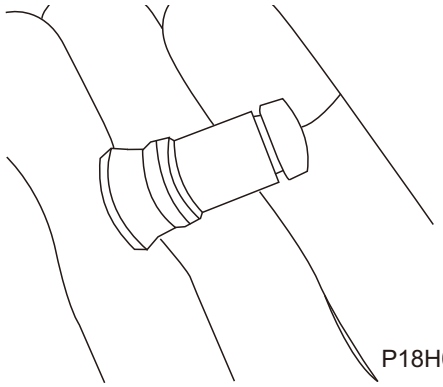 P18H00171	6. Install new O-ring on bushing and assemble it into the valve. Pay attention to the direction of installation. Wood bar or plastic bar with diameter 12.7mm shall be used for installation of the bushing. Tool: Nylon rod with diameter 12.7

Figures	Operation instruction
 P18H00172 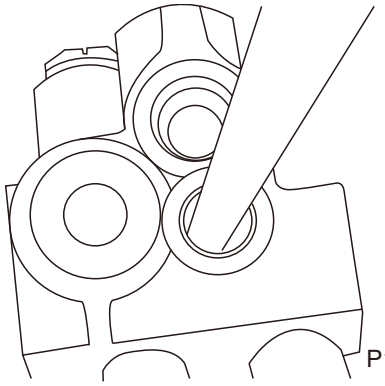 P18H00173	
 P18H00174	7. Install the spool into the valve and note that the upper end of the spool shall be aligned with plug 6.

Figures	Operation instruction
 P18H00175 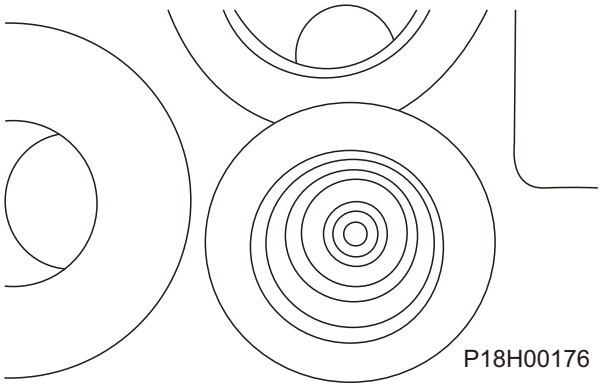 P18H00176	8. Install steel ball onto the spool.
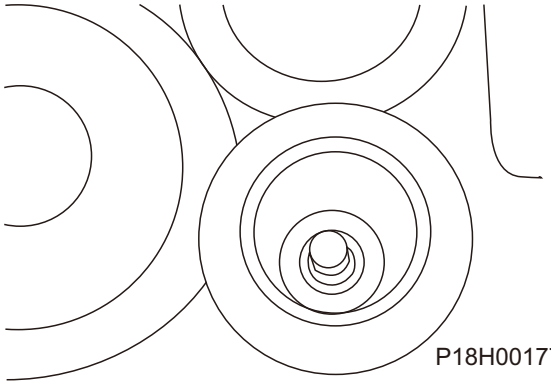 P18H00177	9. Place the ejector rod on the ball.

Figures	Operation instruction
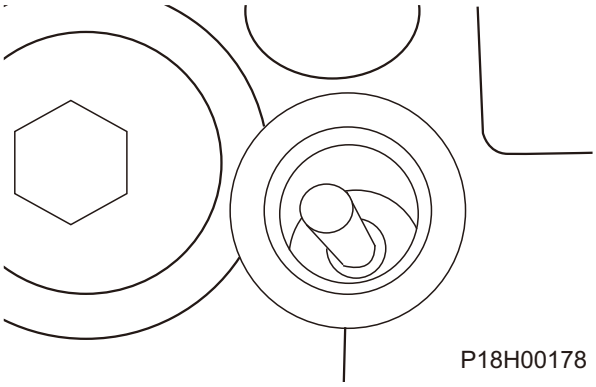 P18H00178	10. Place the spring on the ejector rod.
 P18H00179	11. Install O-ring on plug 6, and then install the plug on the valve. Torque: 47.5-54.2Nm. Tool: Torque wrench
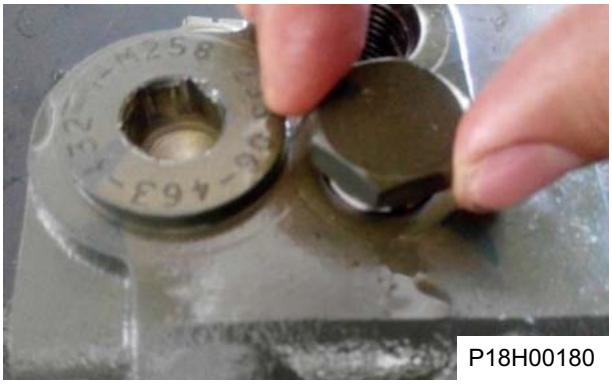 P18H00180	
 P18H00181	

Figures	Operation instruction
 P18H00182	12. Reverse the valve body, place plug 2 vertically upwards, install the ball into valve body and ensure that the ball is located at center of inner hole bottom of the valve body.
 P18H00183	
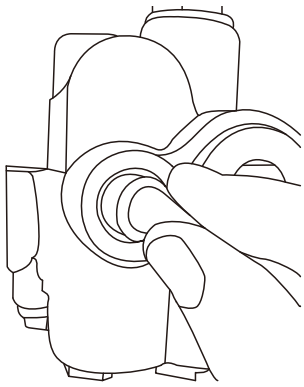 P18H00184	13. Place the ball retainer into the valve body.

Figures	Operation instruction
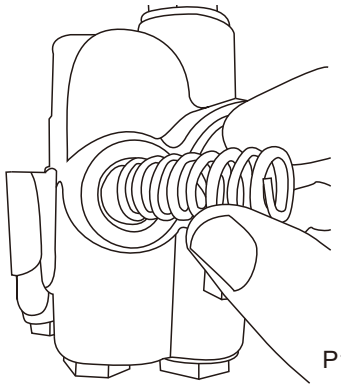 P18H00185	14. Place the spring into the valve body.
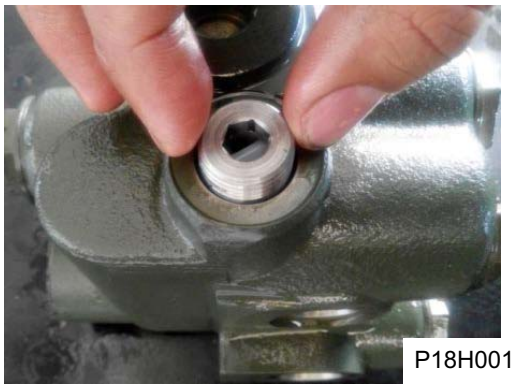 P18H00186	15. Screw plug 5 on the valve body again according to the depth recorded before removal. Tool: 5/16 inner hexagon spanner
 P18H00187	

Figures	Operation instruction
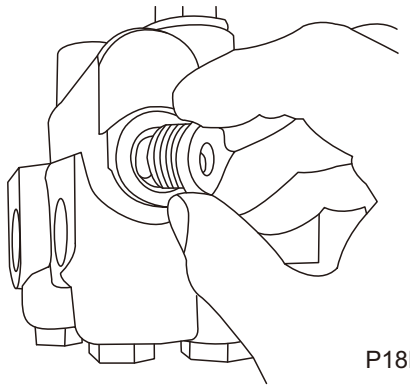 P18H00188	16. Install O-ring on plug 4 and assemble it on the valve body. Torque: 47.5-54.2Nm. Tool: Torque wrench
 P18H00189	
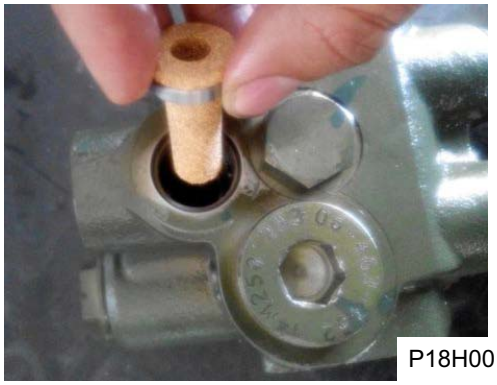 P18H00190	17. Install new filter and snap ring into the valve body.
 P18H00191	18. Install gasket, new O-ring, valve seat, steel ball, gasket, spring, and plug assembly into the valve body. Torque: 24.4-29.8Nm.

Figures	Operation instruction
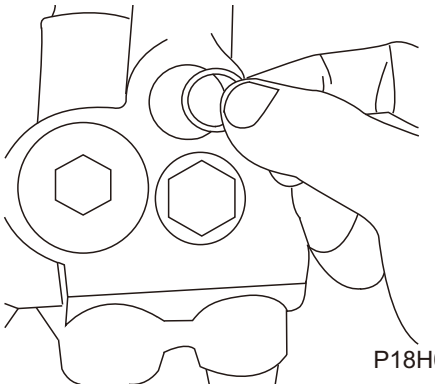 P18H00192	
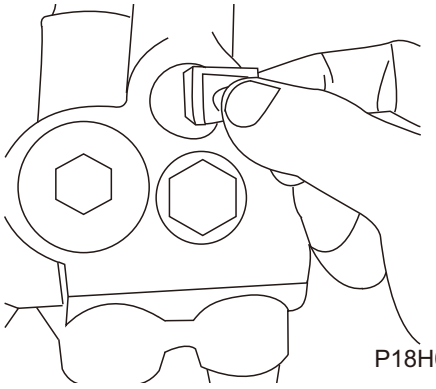 P18H00193	
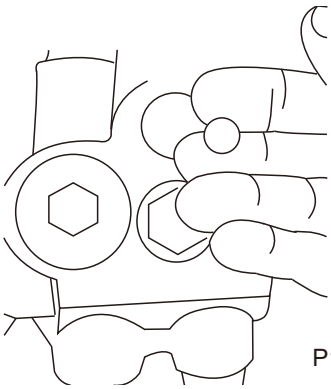 P18H00194	

Figures	Operation instruction
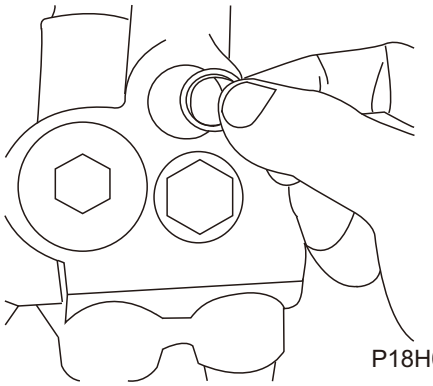 P18H00195	
 P18H00196	
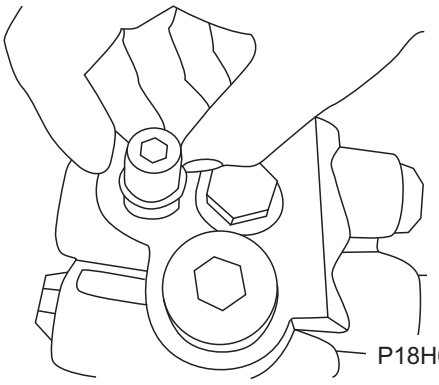 P18H00197	

Figures	Operation instruction
 P18H00198	19. Tighten screw cap 3 onto the plug assembly. Torque: 43.5-51.5. Tool: Torque wrench
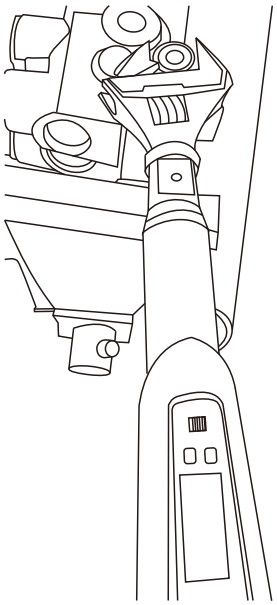 P18H00199	
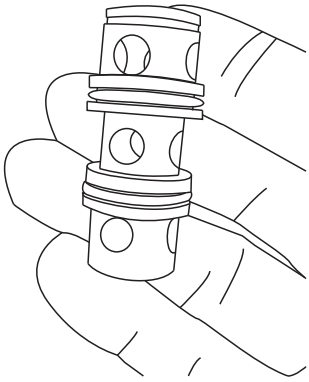 P18H00200	20. Install new O-ring on shuttle valve bushing

Figures	Operation instruction
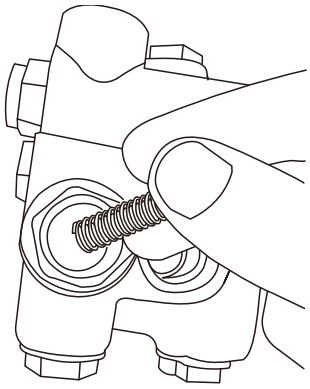 P18H00201	21. Install the spring, poppet, shuttle valve bushing, new poppet, spring into the valve body.
 P18H00202	
 P18H00203	

Figures	Operation instruction
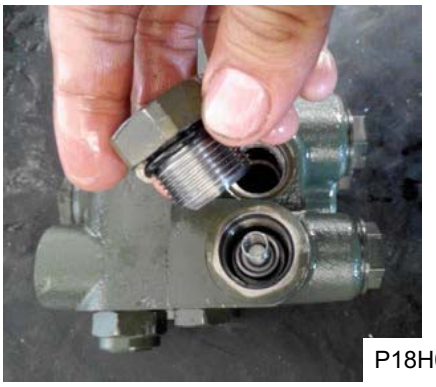 P18H00204	22. Install O-ring on plug 7 and assemble it on the valve body. Torque: 67.8-81.4Nm
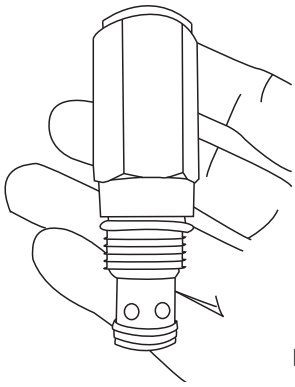 P18H00205	23. Install 2 new O-rings and support ring on relief valve
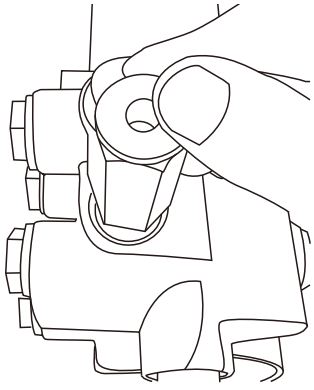 P18H00206	24. Install relief valve on valve body. Torque: 47.5-54.2Nm. Tool: Torque wrench

Figures	Operation instruction
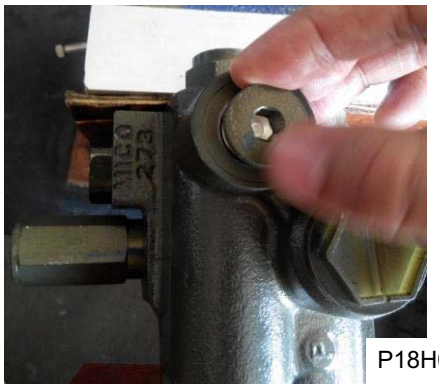 P18H00207	25. Install plug 8 on the valve body.
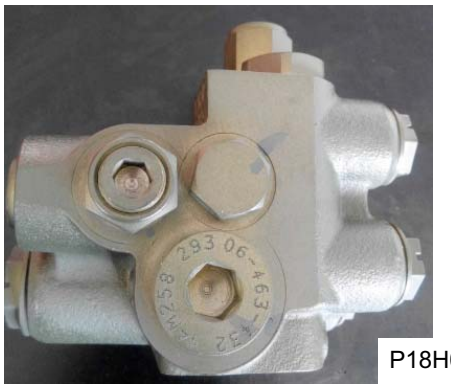 P18H00208	Re-assembly of charge valve is completed

Removal and Installation of Accumulators

Removal of Accumulators

⚠CAUTION

Refer to “Pressure Release of Hydraulic System” to release the pressure of service brake system and parking brake system before removing the accumulator.

Figures	Operation instruction
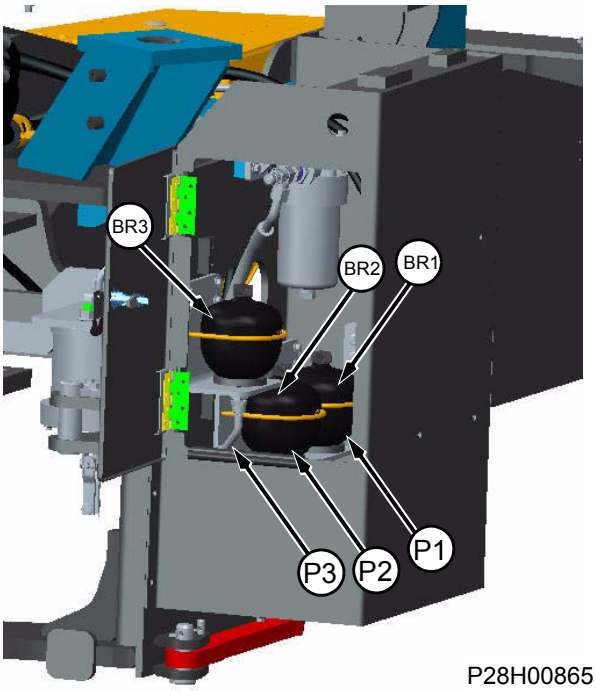 P28H00865	Open door of left housing, remove four bolts of the left housing roof plate: 1. Mark accumulators respectively as BR1, BR2 and BR3 and hoses connecting with their lower parts as P1(hose of charge valve port A1), P2 (hose of charge valve port A2) and P3 (hose of valve assembly port A), note that markings shall be firm. 2. Remove hoses and joints under accumulators and mask oil ports. Tools: Open-end wrench 10#, 22#, 24#
 P28H00866	3. Remove 3 U-bolts from the accumulators. Tools: Open-end wrench 13#

Figures	Operation instruction
 P28H00867	4. Take the accumulators out of left housing; 5. Shield the joint of accumulator and store it in dry and clean place.

Installation of Accumulators

Install the accumulators in reverse order of the removal steps of the accumulators.

Removal and Installation of Brake Cylinder

Removal of Brake Cylinder

⚠CAUTION

Refer to “Pressure Release of Hydraulic System” to release the pressure of service brake system and parking brake system before removing the brake cylinder.

Figures	Operation instruction
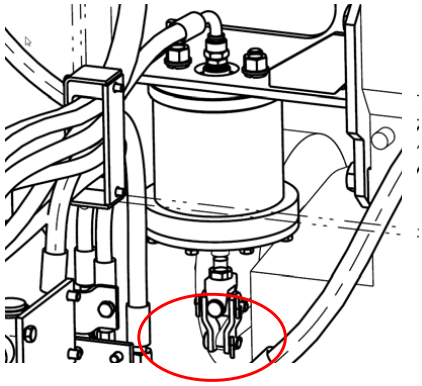 P18H00215	1. Remove the pin shaft between the brake cylinder and manual brake. Tools: Open-end wrench 27#
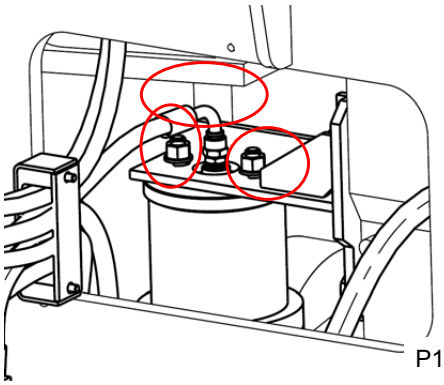 P18H00216	2. Remove the hose from the brake cylinder, and then loosen the nuts from the above end of brake cylinder. Tools: Open-end wrench 13#
	3. Take out brake cylinder. 4. Shield the port of brake cylinder and store it in dry and clean place.

Installation of Brake Cylinder

Install the brake cylinder in reverse order of the removal steps of the brake cylinder.

Hydraulic Cooling System

Removal and Installation of Cooling Pump

Removal of Cooling Pump

Figures	Operation instruction
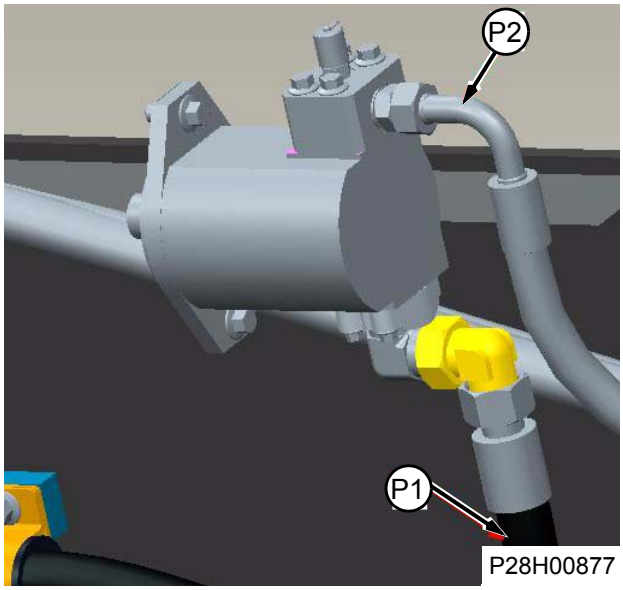 P28H00877	1. Mark hoses with "P1_oil inlet hose of brake pump", "P2_oil outlet hose of brake pump". The markings shall be clear, firm, and not easy get off. Tool: Open-end wrench 15#
	2. Unscrew "P1_oil inlet hose of brake pump", "P2_oil outlet hose of brake pump". Unscrew the hose connector, and take out the connector after few slightly heat off. Masking oil ports properly. Tool: Open-end wrench 27#, 36#, 50#
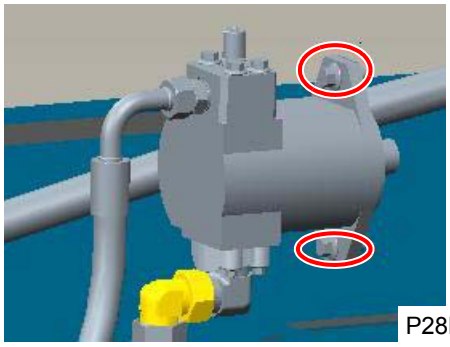 P28H00878	3. Remove brake pump fixing bolt, and place it into clean container. Please avoid cashing or bumping, and ensure personel safety. Tool: Open-end wrench 15#
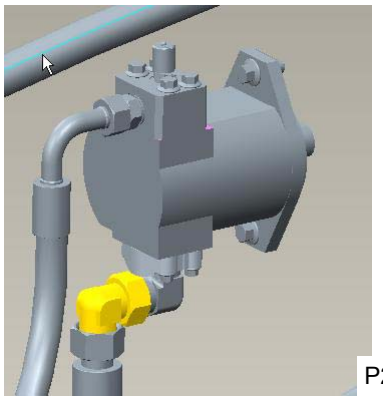 P28H00879	4. Remove pump port flange, connector. Please avoid pollution by masking the pump port properly. Tool: Open-end wrench 13#

Installation of Cooling Pump

⚠CAUTION

Ensure that the oil ports of the hose joints are connected correctly and ensure the cleanness of hose lines and parts during removal and installation. Check O-rings for ageing and damage etc. simultaneously and replace in time.

Figures	Operation instruction
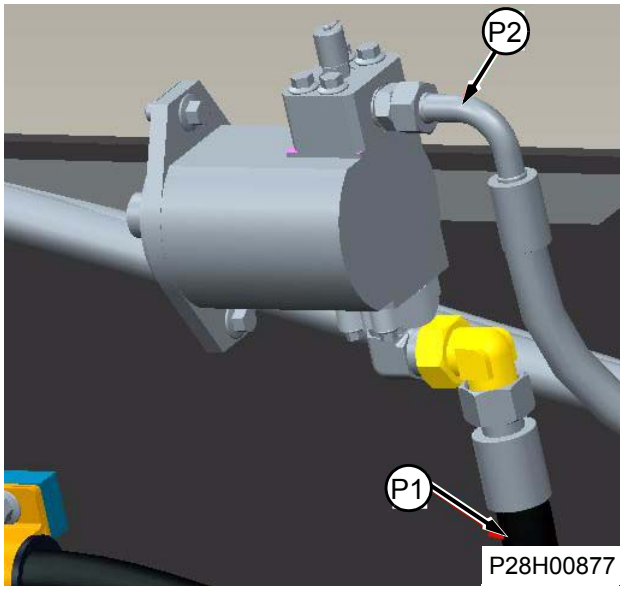P28H00877 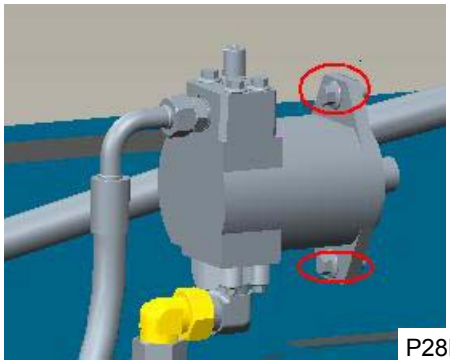P28H00878	1. Install the oil suction port joint, oil outlet flange of the radiator pump with the tightening torque of bolt 52±6Nm. 2. Hang the cooling pump to the mounting position with proper sling. 3. Install the cooling pump, seal gasket to the engine with the torque of bolt 120±10Nm. 4. Connect the P1_oil inlet hose with the tightening torque of hose joint 135±20Nm. 5. Connect the P2_oil outlet hose with the tightening torque of hose joint 330±50Nm.
	6. Fill the hydraulic oil, start the machine and idle it for 5min to bleed the air in the line. 7. Stop the machine and check it for leakage. 8. Check the hydraulic oil level for normal, and if not, please fill the hydraulic oil to the specified level.

Disassembly and Assembly of Cooling Pump0

Disassembly of Cooling Pump

Figures	Operation instruction
 P18H00410	1. Fasten the front cover of the pump downward to the workbench or vise, draw a straight line (the line is for guidance during the process of assembly) from the back cover to the pump body and front cover with a marker. Measure tightening torque with torque wrench (tightening torque is 271N.m) and record it. Use manual or pneumatic wrench to loosen the fastening bolt. Tools: Marker and torque wrench
 P18H00411	2. Insert screwdriver slightly into port of pump body, separate rear cover from pump body forcibly (take care not to damage the joint surface), and decide whether to replace parts according to part replacement criterion; take out the rear side plate subassembly from the pump body (making marks) and check it carefully to decide whether to replace parts according to part replacement criterion. Tools: Screw driver
 P18H00412	3. Take the driving and driven gears from the pump body, make the marks to avoid confusion during the assembly. Decide whether to replace spare parts in accordance with the spare part replacement principle. **⚠ CAUTION: worn condition of gear engagement surface, end surface and tooth top.**

Figures	Operation instruction
 P18H00413	4. Take out front side plate subassembly (side plate shall be marked), check it carefully, and decide whether to replace parts according to part replacement criterion. Take out the outboard bearing and decide whether to replace the it according to part replacement criterion, and the motor is provided with a leakage oil plug; both of the oil drain hole are provided with check valves (apply thread sealant at the thread); see figure for details.

Check and Cleaning of Cooling Pump

Figures	Operation instruction
 P18H00414	Check the wear of gear engagement surface, end surface and addendum, chamber sweeping of pump body, matching of cylindrical pin, sealing condition of square seal ring.

Assembly of Cooling Pump

Figures	Operation instruction
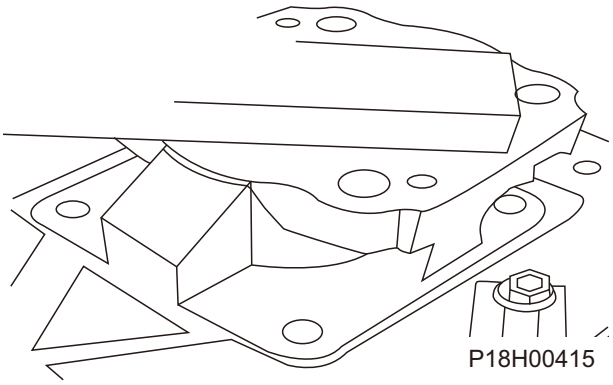 P18H00415	1. Check the joints of the parts. Apply the flat oil stone to the processed joints and grind higher.
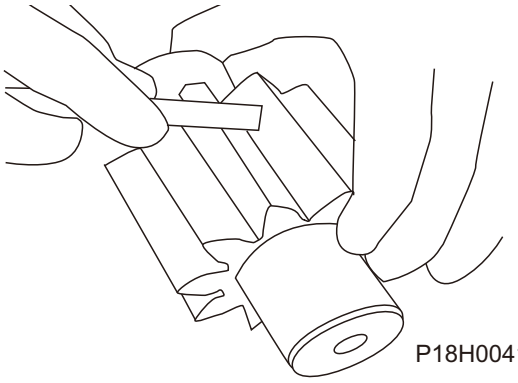 P18H00416	2. Check the front oil drain passage and ensure the smoothness of the oil drain. **⚠ CAUTION: Check the front cover of motor for complete two check valves.**
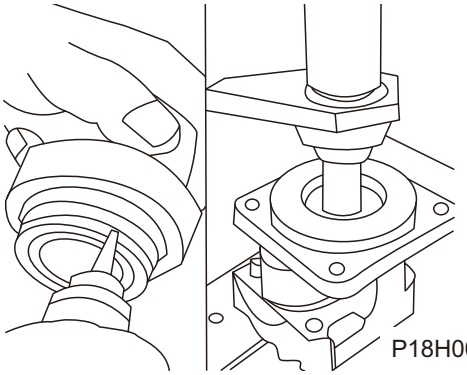 P18H00417	3. Eliminate high point and burr on the gear end face with triangular oil stone.
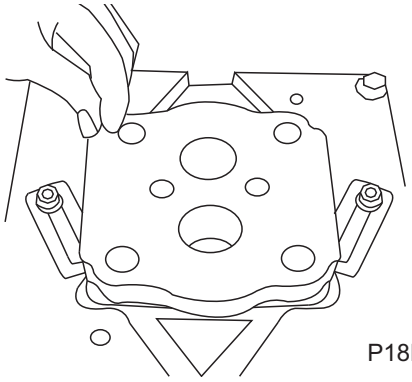 P18H00418	4. Use washing detergent or diesel oil to washing these parts, and use high-pressure air to dry them.

Figures	Operation instruction
 P18H00419  P28H00239	5. Open the outboard bearing at both ends. Clean the lubricant in the outboard bearing and blow it dry with high pressure air. Apply molybdenum disulfide grease evenly in the bearing and install the bearing covers at both ends. 6. The large plane of the front cover faces downward, and apply anaerobic sealant to the excircle of oil seal, and then press it directly into the front cover oil seal hole with special tool (the lip is placed downward), press the outboard bearing. 7. Turn the direction of front cover, make the big plane of front cover upward, and press two special tools for slide bearing into bearing hole respectively; it requires that the oil groove of slide bearing is assembled at 6 o'clock and 12 o' clock position, and see assembly schematic of oil groove of slide bearing for details. 8. Install the elastic snap ring for holes into the backup ring slot. If a new front cover is used, the assembly is the same as above. **⚠ CAUTION: if the front cover oil drain hole is double, it needs to block the oil drain hole of the high pressure area with oil plug (apply thread sealant at the thread).** 9. Install the E-seal ring and the E-snap ring into the side plate seal grooves respectively, and apply a little molybdenum disulfide grease. 10. During the assembly, keep the straight line marked across the front cover, the valve body and the back cover in the same horizontal position; pay attention to conducting the assembly according to the mark position of the gear side plate.

Removal and Installation of Cooling Motor

Removal of Cooling Motor

Figures	Operation instructions
	1. Remove fan guard and bracket by referring to the Power System - Radiator Service Manual;
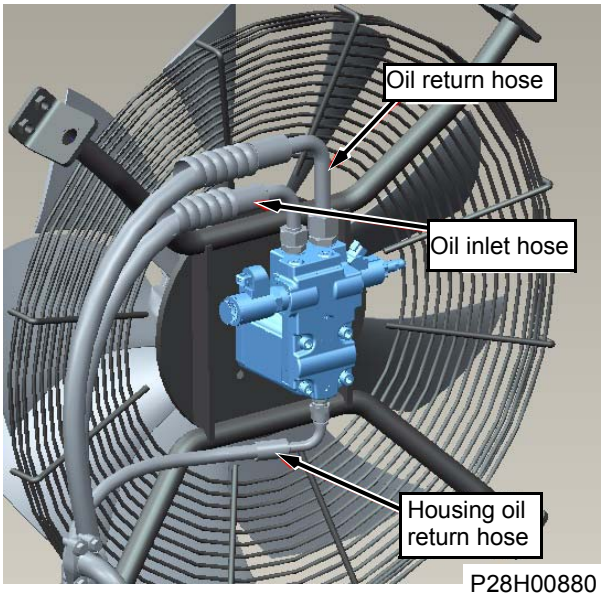 P28H00880	2. Respectively mark the hoses on the pump as: oil inlet hose, oil return hose and housing oil return hose. The identification should be clear, firm and not fall off. 3. Remove the oil inlet hose, oil return hose and housing oil return hose; loosen the T port hose joint with wrench and remove the hose joint after gentle knockdown. Properly mask the hose joints; unscrew the plate bolts of A port hose and B port hose with wrench, place plate and bolt and washer well after putting them together and properly mask the hose joints. Tools: Open-end wrench 24#, 32#, 36#
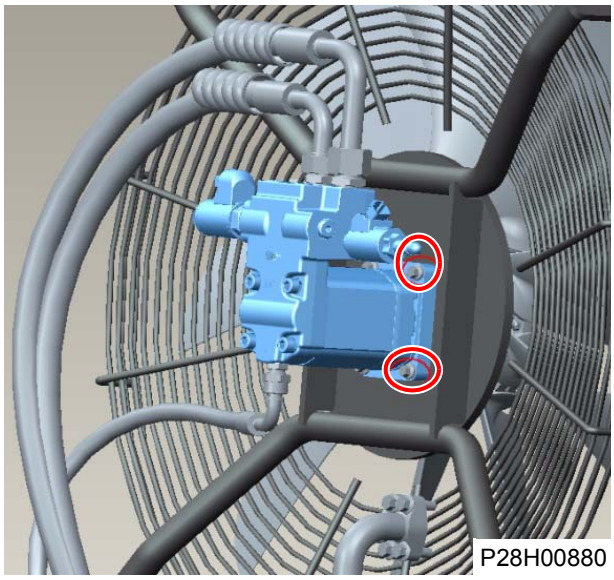 P28H00880	4. Remove the captive bolt and the locknut from the motor, and hang them to the clean container; avoid collisions to ensure the personnel security during removal; Tools: Open-end wrench 10#

Installation of Cooling Motor

Figures	Operation instructions
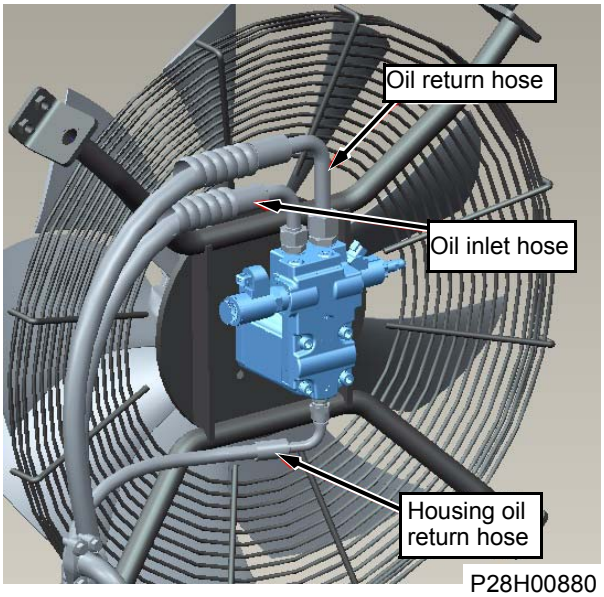 P28H00880	1. Install the joint of housing oil return port, the tightenig torque is: 110±17Nm. 2. Install the cooling motor onto the bracket, the bolt tightening torque is: 120±10Nm. Install the fan, and screw two nuts, tightening torque is: 225±25Nm. 3. Connect T port hose, the tightening torque of hose joint is: 51±8Nm. 4. Connect A port hose and B port hose, and tighten the bolt with torque: 52±6Nm. 5. Install fan guard and bracket by referring to the Power System - Radiator Service Manual. 6. Add hydraulic oil, start the machine and idling for 5 minutes, and exhaust air in the pipelines. 7. Stop the machine, check for leakage. 8. Check the hydraulic oil level, and add hydraulic oil to specified position if it is not enough.

Cooling Motor Test

Tachometer and pressure gage with range 25MPa.

1. Check whether the previously assembled hoses are tightened.
2. Turn the battery disconnect switch to “I” position.
3. Connect the pressure gage (with range 25MPa) to the oil outlet of the pump and paste label “Test the speed” on the fan vane.

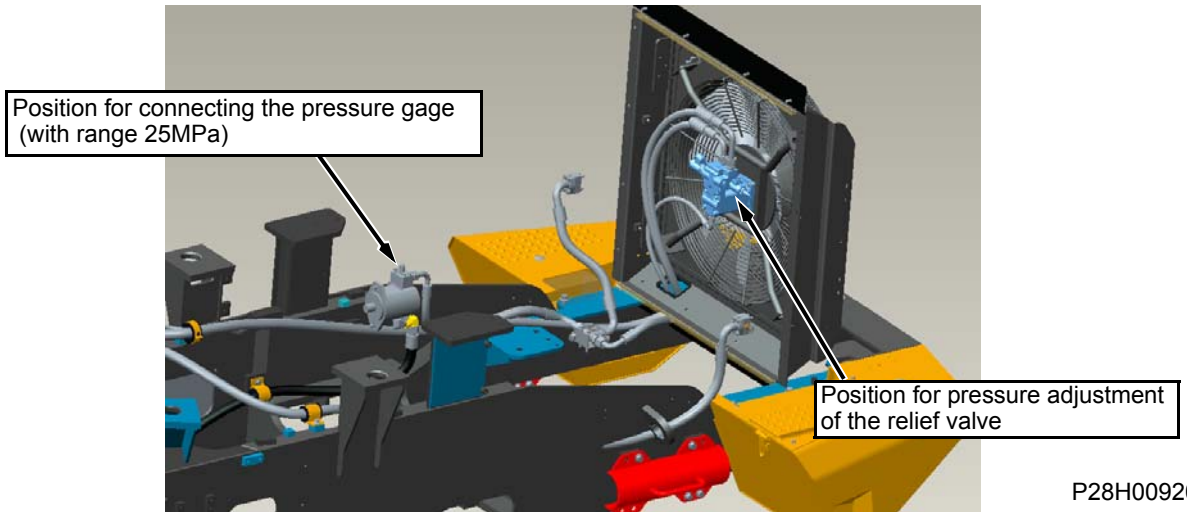

4. Press the horn, start the machine, accelerate gradually the engine speed to the maximum and observe the reading on the pressure gage and the speed reading of the tachometer, it is proper if the pressure is 16MPa and the speed is about 1700. If the pressure dose not conform to the requirement, adjust the pressure of the motor relief valve.

Fault Diagnosis and Troubleshooting

Troubleshooting of Metering Pump

Faults	Symptom	Cause	Troubleshooting methods
Oil leakage	Oil leakage in joint surface of parts	Dirt in joint surface	Check the joint surface and clean it up
	Oil leakage at front cover	Shaft seal ring is damaged	Replace the seal ring
	Bolt (plug) leaks	Bolt (plug) is tightened with insufficient torque	Tightening bolt (plug)
Heavy steering	Steering wheel is heavy when turned quickly	Oil supply is insufficient	Check the oil pump and oil supply line
	Steering wheel is light when turned slowly	Main priority valve spool is stuck	Check whether the main priority valve spool is flexible
	Cylinder crawling	Air in steering system	Bleed air in the system and check oil pump inlet for air leakage
	Foam in oil		
	Irregular noise		
	Heavy steering, no action on the steering cylinder	Manual steering check valve failure	Check whether the steel ball exists and whether it is chocked by impurities
	No-load steering is light, heavy load steering is heavy	Safety valve is chocked to leak or safety valve spring fails	Clean and check the safety valve in priority valve
	Heavy steering	High hydraulic oil viscosity	
Steering failure	No steering back to neutral position	Leaf spring failure	Replace leaf spring
	Pressure oscillation is significantly increased, even no steering	Pull pin bend or broken Rupture at linkage shaft pin slot	Replace the pull pin or linkage shaft
	When you turn the steering wheel, it immediately rotates in the opposite direction or swings from side to side	Incorrect mutual alignment of linkage shaft and rotor	Reassembly
	No turning	Priority valve is stuck, no oil at port CF and port LS blocked	
Steering wheel does not automatically return to the neutral position	When the pressure drop in the neutral position increases and steering wheel stops turning, the metering pump is not unloaded (vehicle off tracking occurs)	Steering column axially abuts the spool to the bottom	Troubleshooting in accordance with specific conditions
		High resistance of steering column	
		Leaf spring is broken	
		The installation of steering column is not concentric to that of spool	
No steering to the extreme position	No steering of steering cylinder to the extreme position, steering is heavy as reflected	Low pressure of safety valve	Increase the pressure of safety valve properly

Faults	Symptom	Cause	Troubleshooting methods
No manual steering	During power steering, the cylinder piston moves to the extreme position, the driver does not have obvious feel of end point; during manual steering, the steering wheel rotates but the cylinder is still	Large radial or axial clearance of stator and rotor pair	Replace the stator and rotor pair

Common Troubleshooting for Brake System

Due to the various reasons, we cannot list all of them, and only phenomena and possible causes for common failures will be listed. If any question during using our product, please contact service provider or dealer nearby.

⚠CAUTION

When removing the hose and joint,confirm the residual pressure inside is totally eliminated before operation.

S/N	Fault features	Reason	Troubleshooting methods
1	Insufficient foot braking force	1. Air in brake line	1. Bleed the brake line
		2. Brake valve fault	2. Check the brake valve and measure the pressure at port BR1, BR2
		3. Pump failure	3. Check the pump
		4. Leakage in brake line	4. Check the brake line
		5. Accumulator damaged	5. Check the pressure of the accumulator
		6. Wheel brake friction plate worn to limit	6. Replace the friction plate
2	Incapable of putting into gear	1. Brake valve fault	1. Check the brake valve and measure the pressure at port S3
		2. Pressure switch fault	2. Check the pressure switch under the accumulator BR3
3	No normal release of parking brake	1. Brake valve fault	1. Check the brake valve and measure the pressure at port BR3
		2. Parking brake cylinder leakage	2. Replace cylinder oil seal parts
4	Insufficient parking braking force	1. Large clearance between brake drum and brake shoe	1. Readjust the clearance according to the requirements of use
		2. Oil on brake shoe	2. Clean up brake shoe
5	Accumulator doesn't work	1. Air valve leakage	1. Check air valve, and supplement nitrogen
		2. Rubber bag is broken, nitrogen leakage in rubber bag	2. Remove and check the rubber bag or replace it
6	No inching braking	Brake valve fault	Check the pressure at port BR1, BR2
7	Service or emergency brake low pressure alarm light comes on	1. Insufficient system oil pressure in a short period of time for machine starting	1. Please wait
		2. The machine has system failure and oil pressure drop during operation	2. Inspection after stopping machine
		3. Air leakage in rubber bag of accumulator	3. Check the pressure of rubber bag of accumulator

Troubleshooting for Brake Pump

Fault features	Reason	Troubleshooting methods
Oil pump is noisy	Air enters the system	Tighten all joints
	Oil supply is insufficient	Refill the oil to a proper level
	Oil is cold	Operating in a low speed
	Oil suction tube is blocked	Remove the blocking object
	Air filter in tank is blocked	Clean or replace the air filter
	Bad right alignment between pump and input shaft	Check
	Resonance is serious (resonance of pump with peripheral components of oil tank and pipeline)	Check if mounting bolts of pipeline and components are tightened
Pump is slow at response or has no response	Oil supply is insufficient	Refill the oil to a proper level
	Setting pressure of relief valve is insufficient	Readjust the pressure of relief valve
	Pump is worn or broken	Repair or replace
	Valve is worn or stuck or leaks	Repair or replace
Oil temperature rises	Setting pressure of relief valve is too low	Adjust the pressure or replace the relief valve
	Low viscosity of fluid	Replace with recommended hydraulic oil
	Oil is dirty	Replace the hydraulic oil
	Low oil level	Refill hydraulic oil properly
	Pump is worn or broken	Repair or replace
Oil foaming	Air enters the system through oil suction tube	Tighten all joints
	Low oil level	Refill hydraulic oil properly
	Lip type seal ring (oil seal) of main revolving shaft is worn or damaged	Replace the lip type seal ring (oil seal) of main revolving shaft
The flow or pressure of pump is insufficient	Side plate is broken	Replace side plate
	Relief valve fails	Replace relief valve
	Air enters the system	Tighten all joints
Oil still leaks after replacing the lip type seal (oil seal)of main revolving shaft	Worn lip type seal ring (oil seal) of revolving shaft causes damage to the sealing area of drive gear shaft	Replace the drive gear shaft
	Seal ring is worn or damaged	Replace the seal ring

Troubleshooting for Cooling Pump

Fault phenomenon of oil pump	Possible cause	Handling method
Oil pump is noisy	Air enters the system	Tighten all joints
	Oil supply is insufficient	Refill the oil to a proper level
	Oil is cold	Operating in a low speed
	Oil suction tube is blocked	Remove the blocking object
	Air filter in tank is blocked	Clean or replace the air filter
	Bad right alignment between pump and input shaft	Check
	Resonance is serious (resonance of pump with peripheral components of oil tank and pipeline)	Check if mounting bolts of pipeline and components are tightened
Pump is slow at response or has no response	Oil supply is insufficient	Refill the oil to a proper level
	Setting pressure of relief valve is insufficient	Readjust the pressure of relief valve
	Pump is worn or broken	Repair or replace
	Valve is worn or stuck or leaks	Repair or replace
Oil temperature rises	Setting pressure of relief valve is too low	Adjust the pressure or replace the relief valve
	Low viscosity of fluid	Replace with recommended hydraulic oil
	Oil is dirty	Replace the hydraulic oil
	Low oil level	Refill hydraulic oil properly
	Pump is worn or broken	Repair or replace
Oil foaming	Air enters the system through oil suction tube	Tighten all joints
	Low oil level	Refill hydraulic oil properly
	Lip type seal (oil seal)of main revolving shaft is worn or damaged	Replace the lip type seal (oil seal)of main revolving shaft
The flow or pressure of pump is insufficient	Side plate is broken	Replace side plate
	Relief valve fails	Replace relief valve
	Air enters the system	Tighten all joints
Oil still leaks after replacing the lip type seal (oil seal)of main revolving shaft	Worn lip type seal (oil seal) of revolving shaft causes damage to the sealing area of drive gear shaft	Replace the drive gear shaft
	Seal ring is worn or damaged	Replace the seal ring

Air Conditioning System

Basic Information 5-3

Safety 5-3
Universal Tool, Tooling List 5-3
Special Tool, Tooling List 5-3

Structure Function Principle 5-4

Components and Position 5-4
System Technical Parameters 5-5
Description of Principle Diagram and Working Principle 5-5

Test and Adjustment 5-8

A/C System Test 5-8

Removal and Installation 5-10

Main Components Introduction of A/C System 5-10
Removal and Installation of A/C Components 5-11
- Removal and Installation of Compressor 5-11
- Removal and Installation of Evaporator Mounting Assembly 5-17
- Evaporator Assembly 5-22
- Replacement of A/C Control Panel 5-23
- Inspection and Replacement of A/C Fuse 5-23
- Removal and Replacement of Reservoir 5-24
- Removal and Installation of Condenser 5-25
- Removal and Installation of Pressure Switch 5-26
- Removal and Installation of Expansion Valve 5-27
- Removal and Installation of Servo Electrical Motor of Air Inlet 5-28
- Removal and Installation of Evaporator Blower 5-29
- Removal and Installation of Solenoid Water Valve 5-30

Fault Diagnosis and Judgment 5-31

Classification of Common Faults 5-31
Overhauling Method 5-31
- Maintenance Method When Backlight of A/C Panel is Not On and the Button Does Not Work 5-31
- Maintenance Method When No Air Comes Out of Air Conditioner or Air Outlet Volume is Obviously Smaller Than the Normal Volume 5-32
- Maintenance Method for Natural Air Comes Out When Heating is Switched On 5-38

System Maintenance 5-39

A/C System Regular Maintenance 5-39
Cleaning of Recirculating Air Strainer 5-39
Cleaning of Fresh Air Strainer 5-40
Adjustment of Compressor Belt 5-41
A/C Refrigerant Filling Method 5-43

Basic Information

Safety

Drain refrigerant in air conditioning system as required in “Refrigerant Release (Recycle) in Air Conditioning System” before removing compressor, condenser, reservoir, pressure switch, air conditioner coils, etc. Seal up the removed pipe joints through a reliable method to prevent moisture in the air from entering air conditioning system.

⚠WARNING

If liquid refrigerant splashing into eyes may lead to blind; and spraying on the skin may cause frostbite. In addition, the container for storing refrigerant can neither be exposed to ambient temperature above 50°C or placed near a heat radiating device or object, nor be exposed to direct sunlight. In this case, the temperature of the refrigerant easily rises to cause increase in pressure in the container. When the pressure reaches high enough, the container may have leakage explosion.

The refrigerant itself is non-toxic, but it cannot be in direct contact with open flames or heated metal, otherwise toxic gases will be produced.

In order to avoid the injury from refrigerant, the goggles and gloves should be worn and open fire or smoking is prohibited.

Universal Tool, Tooling List

Specifications	Main functions
10# Open-end wrench	It is used for removal and installation of captive bolts of the pipeline, joint box and cover plate
13# Open-end wrench	It is used for removal and installation of captive bolts (nuts) of the compressor
14# Open-end wrench	It is used for removal and installation of hold-down nuts (screw rods) of tension pulley
19# Open-end wrench	It is used for removal and installation of air conditioning pipe joint in the evaporator assembly
21# Open-end wrench	It is used for removal and installation of air conditioning pipe joint in the evaporator assembly
24# Open-end wrench	It is used for removal and installation of air conditioning pipe joint in the evaporator assembly
27# Open-end wrench	It is used for removal and installation of water hose joint of the evaporator
Cross screwdriver	It is used for removal and installation of evaporator mounting assembly
Ratchet wrench	It is used for removal and installation of captive bolts of evaporator
13# Socket	It is used for removal and installation of captive bolts of evaporator
Extended rod	It is used for removal and installation of captive bolts of evaporator
Plastic bag, tape	It is used for sealing up the pipe joints
Marking pen	It is used for marking the removed joints

Special Tool, Tooling List

Specifications	Main functions
Manifold gauge	It is used for the drainage and filling of refrigerant
Vacuum pump	It is used for the filling of refrigerant

Structure Function Principle

Components and Position

(1) Compressor

Compressor is installed on the fan side of engine, at upper rear right side of the machine, and is driven by engine through belt to operate.

(2) Evaporator assembly

A/C evaporator assembly of this machine is located on the right of seat, parts inside evaporator assembly include expansion valve, air door and servo motor, blower unit, and pressure switch.

(3) Air duct assembly and inlet and outlet air vents

Air conditioner of this machine has 2 front vents, 2 rear vents, 4 defroster vents and 2 foot vents, and vents are connected with evaporator via air duct assembly. Meanwhile, air duct assembly also comprises the fresh air vent, strainers and accessories. They are located in the front, side and rear decorations of cab.

(4) Control panel

The A/C control panel lies on the right side of the cab's roof.

(5) Condenser reservoir assembly is located behind the radiator.

The compressor keeps rotating, and the above refrigeration process cycles continuously. The heat in the car is taken away by refrigerant in the evaporator, so as to complete cooling and dehumidification of the complete vehicle.

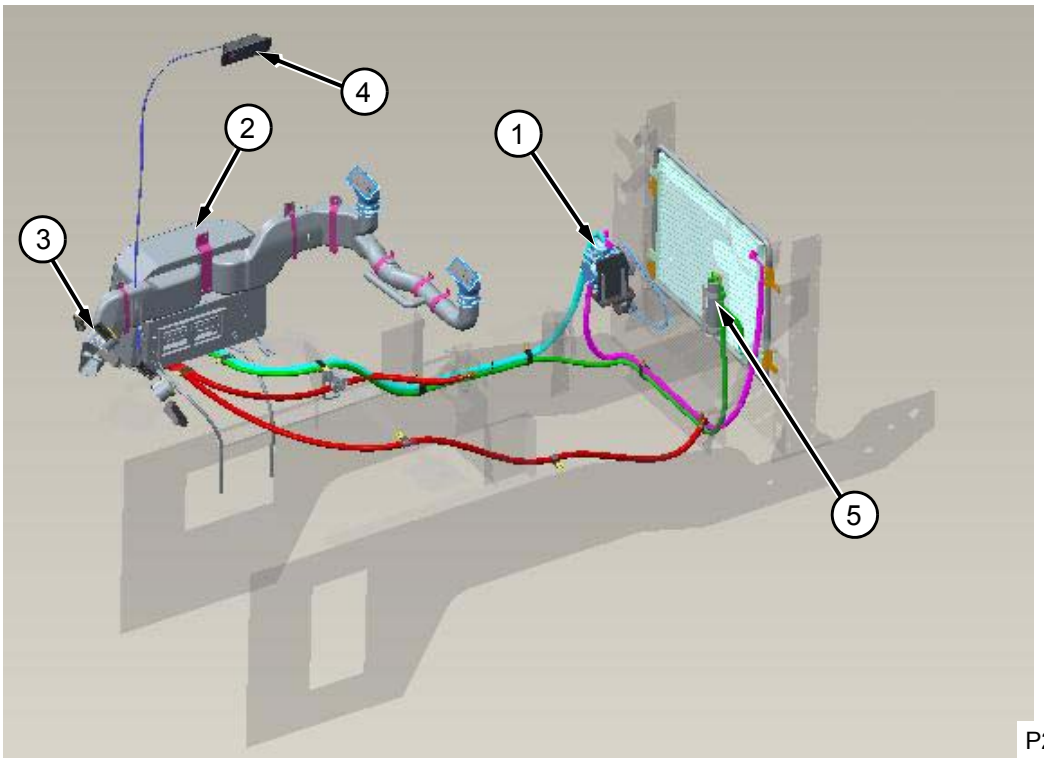

P28A00193

System Technical Parameters

Heating module	Working medium	Engine cooling water
	Heating capacity	5800W / 7.89PS
Air conditioner module	Refrigerant	R134a
	Refrigerating capacity	5000W / 6.80PS
	Refrigerant filling quantity	1100±30g / 2.43±0.07lb
	Voltage	24V

Description of Principle Diagram and Working Principle

A/C of this machine is vapor compression type refrigeration A/C, and its working process and principle are shown as follows:

(1) Compression process

Refrigerant absorbs heat in the evaporator and then changes into low-temperature and low-pressure gaseous refrigerant, which is sucked into the compressor and compressed into high-temperature high-pressure gaseous refrigerant, and then discharged into the condenser.

(2) Condensing process

After high-temperature and high-pressure gaseous refrigerant enters the condenser, the air, driven by the engine radiator fan, is forced to pass across condenser surface and bring away heat of refrigerant. The refrigerant is condensed into medium-temperature and high-pressure liquid type.

(3) Throttling process

Medium-temperature and high-pressure liquid refrigerant is filtered by dryer and then throttled through the expansion valve (refrigerant is sprayed from the pores of expansion valve and expanded suddenly). It changes into low-temperature and low-pressure refrigerant mist to enter the evaporator.

(4) Evaporator process

Low-temperature and low-pressure liquid refrigerant formed by the throttling of expansion valve is vaporized in the evaporator, and the air in the car is driven by the evaporator blower to flow through the evaporator surface. The refrigerant absorbs the heat of air in the car to reduce the air temperature, and dissolve out condensate water. Refrigerant absorbing heat is evaporated into low-temperature and low-pressure gaseous refrigerant, which is sucked into the compressor and compressed again, so that one refrigeration cycle is completed.
The compressor keeps rotating, and the above refrigeration process cycles continuously. The heat in the car is taken away by refrigerant in the evaporator, so as to complete cooling and dehumidification of the complete vehicle.

Schematic diagram for A/C system

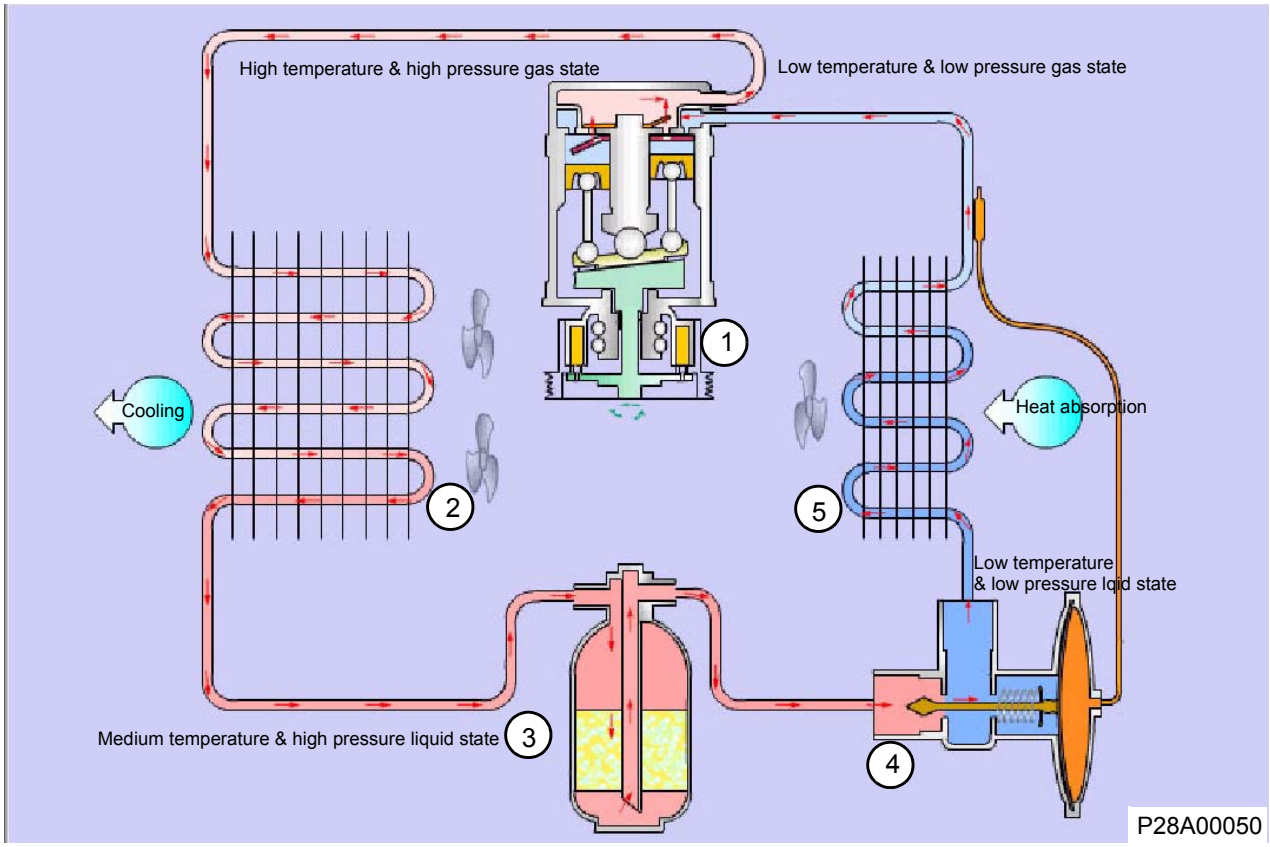

1. Compressor
2. Condenser
3. Receiver dryer
4. Expansion valve
5. Evaporator

Refer to the appendix schematic diagram in Chapter 9 for the A/C system electrical principle.

Transition harness of control panel to evaporator

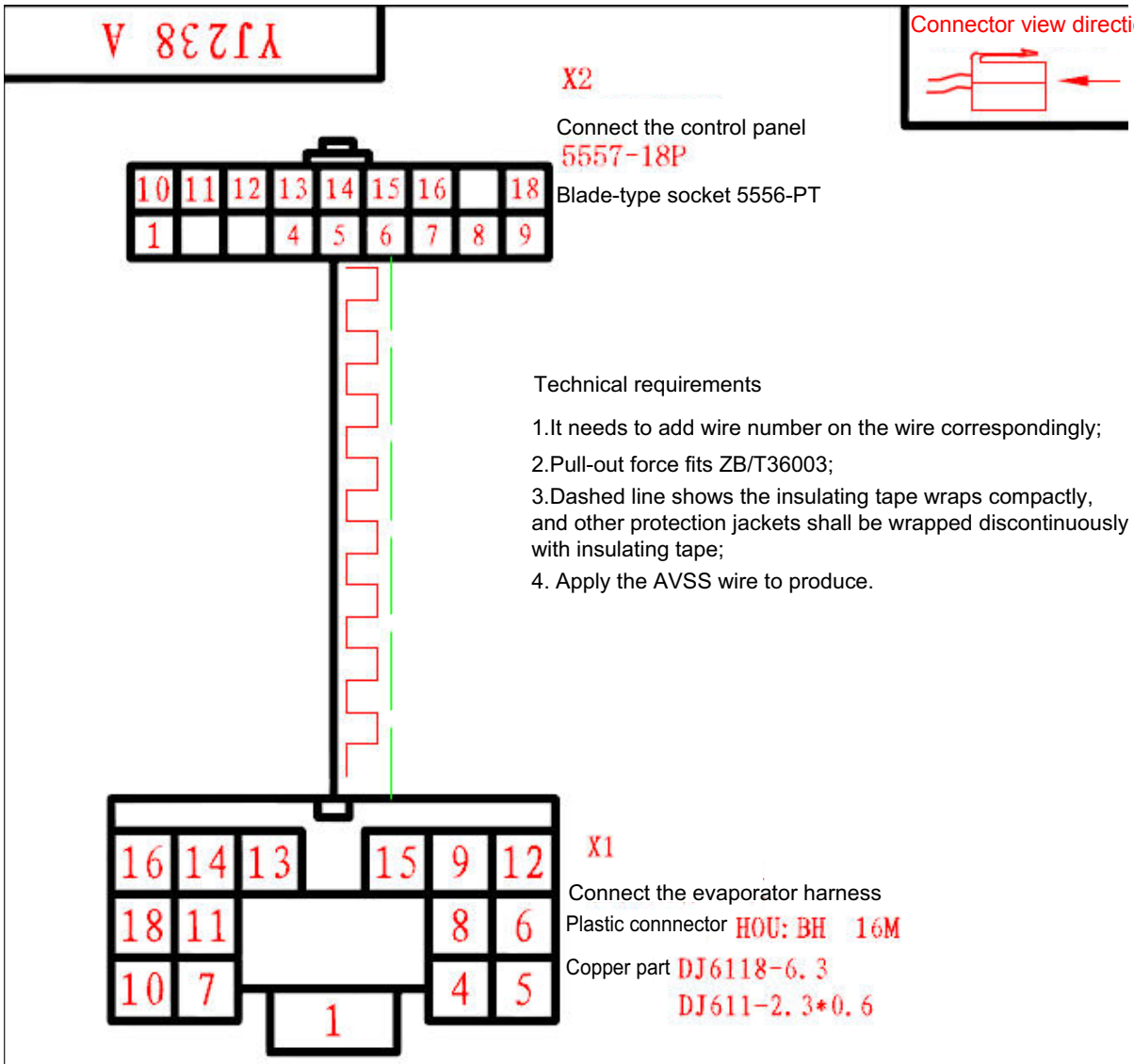

Wire No.	1	4	5	6	7	8	9	10	11	12	13	14	15	16	18
Terminal1	X1	X1	X1	X1	X1	X1	X1	X1	X1	X1	X1	X1	X1	X1	X1
Terminal2	X2	X2	X2	X2	X2	X2	X2	X2	X2	X2	X2	X2	X2	X2	X2
Wire length	2700	2700	2700	2700	2700	2700	2700	2700	2700	2700	2700	2700	2700	2700	2700
Section	0.85	0.85	0.85	0.85	0.85	0.85	0.85	0.85	0.85	0.85	0.85	0.85	0.85	0.85	0.85
Color	Red	Black	Brown	Red/ gray	White	Black/ yellow	Gray	White	Blue/ black	Gray	Blue	Yellow	Green	White	Blue/ green

Test and Adjustment

A/C System Test

⚠CAUTION

It is suggested to check A/C system at temperature above 28°C (82.4°F), since A/C system may can not be started normally at too low air temperature.

The above steps are repeated to simply judge whether A/C system works normally and is in good conditions. If possible, it is more accurate to connect the pressure gauge for judgement. If it is obvious that A/C system operates abnormally, refer to section "Fault Diagnosis and Judgment" in this manual for treatment methods.

Step 1

Park the machine on a flat ground, and check it to make sure the parking brake is applied. Start the engine, and let a companion depress the accelerator, so as to make the engine operate at high idle speed.

Step 2

Turn on the A/C switch, adjust the A/C to the cooling mode, and control the air supply speed at high speed by adjusting the air speed switch. Select the minimum temperature.

Step 3

Keep the A/C system operating steadily for 2 minutes. Observe the end face of A/C compressor belt pulley. In normal circumstances, the clutch shall be engaged, and the end face of belt pulley shall rotate along with belt. If the end face of the pulley is still, it indicates that the compressor is out of operation. Confirm the operating state of the compressor, and then perform the following steps.

Step 4

Check whether the refrigeration function is normal according to the following steps

1. Check whether outlet air temperature of cab is obviously lower than outside air temperature. If not, the A/C system operates abnormally.
2. Observe the sight glass beside refrigerant reservoir. In normal circumstances, no air bubbles or only few air bubbles can be seen through sight glass. If a large amount of air bubbles can be seen, or foam-like appears, it means A/C system is out of order.
3. Respectively touch the air inlet part near upper part of condenser and air outlet part near lower part, as shown in the figure below. In normal circumstances, the air inlet part shall be hot to some extent, and the air outlet part shall be at a temperature close to air. The temperature near air inlet is not high, which means the refrigerant is insufficient, or compressor doesn't work normally; If the temperature in normal temperature zone is not obviously different from that in high temperature zone, it means the condenser has poor cooling. Please clean up the dirt on condenser surface.

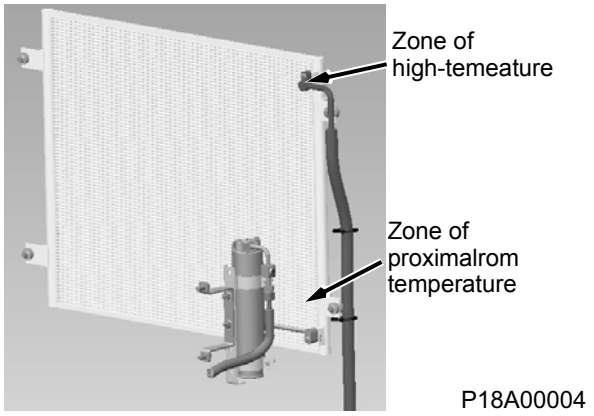

4. Observe the sight glass beside refrigerant reservoir, and touch lower end of reservoir. If the lower end of reservoir is cold while bubbles appear under the sight glass, it means strainer inside the reservoir is clogged. In normal circumstances, the temperatures at all parts of refrigerant reservoir are basically the same to that of condenser outlet.
5. Touch air intake pipe fitting (the thicker one) of compressor. If it is not cold, it means refrigerant is insufficient or refrigerating system is blocked or compressor valve plate is damaged. Further inspection is needed.
6. If air cooler is switched on for about 20~50 minutes, air at the outlet is getting warmer, air volume becomes smaller. The cooling capacity and air volume return to normal state when the cooler is switched off (but air switch is ON) and then switched on 10~15 minutes later, it means defrosting sensor in evaporator fails.
7. If the refrigeration is operated normally for several minutes, and stops for several minutes, and then restores to normal for several minutes, so repeatedly, please observe the operation condition of compressor: If compressor operates in both cases of refrigeration and no, refrigeration, it means there is too much water in the system; If compressor only operates in the condition of refrigeration and does not operate in the condition of no refrigeration, the reason may be that the air temperature at that time is lower than or close to set temperature, or control panel is out of order.
8. If the refrigeration operates for several seconds to tens of seconds, and stops for several seconds to tens of seconds, so repeatedly, it means there is too much refrigerant or air is mixed in refrigerating system, or the condenser is too dirty, the system enters automatic protection mode due to overhigh pressure, so that further check and treatment are needed.

Removal and Installation

Main Components Introduction of A/C System

1. Compressor

The compressor is a core component of the air conditioning system. It is used to compress low-temperature and low-pressure refrigerant vapor into high-temperature and high-pressure refrigerant vapor. The compressor used for the system is a swash plate one. Model: 10P17, displacement: 178cm³, and refrigerant oil brand: PAG46.

2. Evaporator

The evaporator is used to allow throttled low-temperature and low-pressure refrigerant to absorb large heat from the surrounding air during evaporation therein, so as to realize the purpose of cooling or dehumidification in the vehicle. The evaporator of air conditioning system is a double laminated type evaporator.

3. Receiver dryer

The receiver drier is a unit as required to ensure the normal operation of compressor and refrigerating system. Its functions includes: 1. storage, 2. filtration, 3. drying.

4. Condenser

The condenser is a heat-exchange unit which absorbs the heat of high-pressure overheated refrigerant vapor from the compressor, condenses into liquid type for over cool heat exchanger. The air conditioner of the vehicle adopts parallel-flow type condenser and others.

5. Expansion valve

The expansion valve is a throttling unit, used for throttling and step-down as well as flow adjustment; meanwhile, it can also prevent wet compression, liquid impact and abnormal overheating. The air conditioning of this machine adopts the H-type thermal expansion valve.

6. A/C pipe

The connection lines of air conditioning system include high-pressure pipes and low-pressure pipes. Among them, compressor-to-condenser hose and reservoir-to-evaporator hose are high pressure hoses, and evaporator-to-compressor hose is low pressure hose.

7. Pressure switch

The engagement and disengagement of compressor clutch are controlled by pressure of pressure switch monitoring system to realize the purpose of protecting refrigerating system. A high/low-pressure combination switch is used in this system, the upper limit of high pressure is 3.14 Mpa (455.3psi), and the lower limit of low pressure is 0.196 Mpa (28.42psi).

8. A/C control panel

It has the action of controlling the ventilation, air change, refrigeration, heating, defrosting and other functions of air conditioning system. Automatically switch on/off air conditioner or heater through internal control program so as to maintain temperature inside cab to be around setting temperature.

Removal and Installation of A/C Components

Removal and Installation of Compressor

Release (Recover) Refrigerant in A/C System

Only the release of refrigerant is described in this manual. It is recommended to use special equipment to recover and reuse the refrigerant if available.

Incorrect release of refrigerant will cause adverse effect on A/C system, especially for the service life of compressor.

Figures	Operation instructions
 P11000175	1. Stop the machine or switch off the A/C system for at least one hour, then close the negative switch, and put up "DO NOT OPERATE" warning decal.
 P28A00005	2. First close the high and low pressure valves at the place of manifold gauge. Tool: Manifold gauge
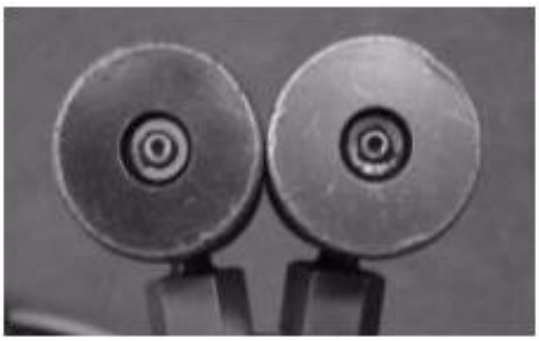 P28A00006	3. Close the valve of high and low pressure joints.

Figures	Operation instructions
 P28A00118	4. Open the rear cover to sufficiently exposing compressor and lines thereof.
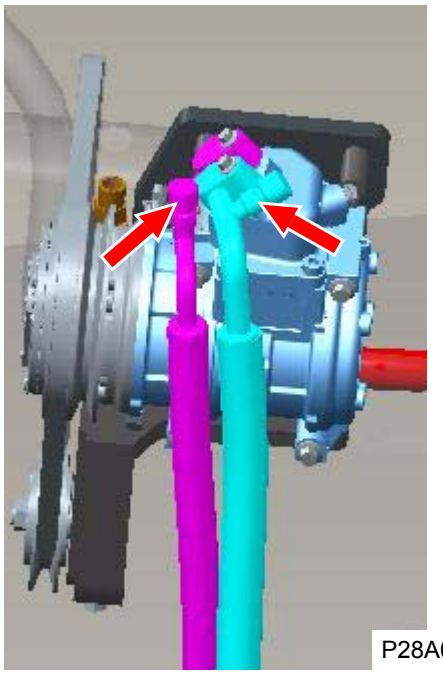 P28A00194	5. Unscrew the plugs from the high and low-pressure fillers of compressor, and connect the high and low-pressure valves of manifold meter respectively to the fillers of high and low-pressure pipes. Open the joint valve after they are connected properly. **Note:** The one with thicker pipeline and thinner interface is low pressure pipe; the one has thinner pipeline and thicker interface is high pressure pipe. This is error proof interface, it can't be connected with wrong method.

Figures	Operation instructions
 P28A00121  P28A00122	6. Slowly loosen low pressure valve on manifold gauge so as to make the refrigerant slowly eject . Note the opening of control valve. Too large flow rate may easily cause refrigerant oil to be ejected out along with refrigerant. Control the flow rate to the extent that no refrigerant oil is ejected out (the refrigerant is released in a gaseous state, and refrigerant oil is liquid. Align the refrigerant outlet with one piece of white paper, and observe whether there are liquid droplets to be ejected out). After 10 minutes, slowly open high pressure valve, and continue to control flow rate to avoid refrigerant oil from escaping. The whole process should keep 15-30 minutes. **⚠ WARNING: It is forbidden to release refrigerant from high pressure end at the beginning, since at high pressure end it is easy to cause the refrigerator oil to be ejected out along with refrigerant.**
	7. Close the high and low pressure joint and remove it.

Remove Lines Connecting the Compressor and Compressor

⚠CAUTION

If the interiors of compressor are damaged or the refrigerator oil gets gray or black, the fluid reservoir must be replaced together with the compressor. Otherwise it will shorten the service life of compressor.

Figures	Removal and installation
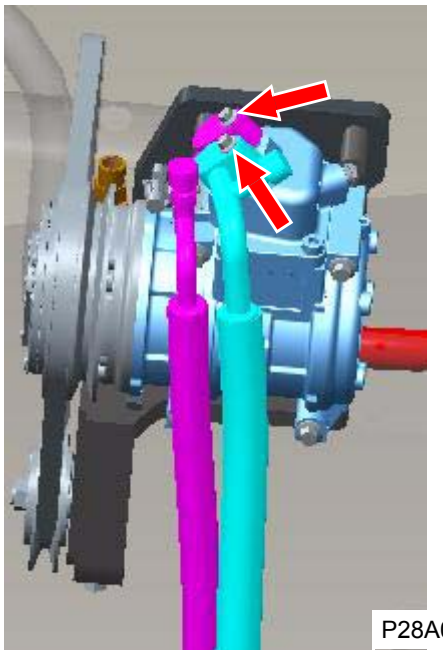 P28A00194	1. Loosen M6 captive bolts of compressor line with a wrench, and remove the line. Tool: Open-end wrench 10#
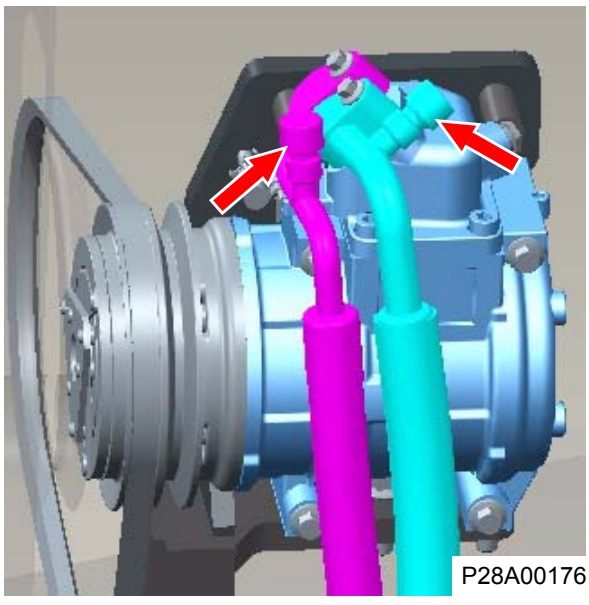 P28A00176	2. Wrap two removed line connectors with clean and unbroken plastic bags, tie them up with adhesive tapes to prevent air and foreign matter from entering the line. 3. Disassemble the harness connector of compressor clutch. 4. Remove belt as specified in Removal and Installation of Belt and Tension Pulley. Loosen the idler disassembly belt first. Tools: Plastic bag, tape, open-end wrench 13#

Figures	Removal and installation
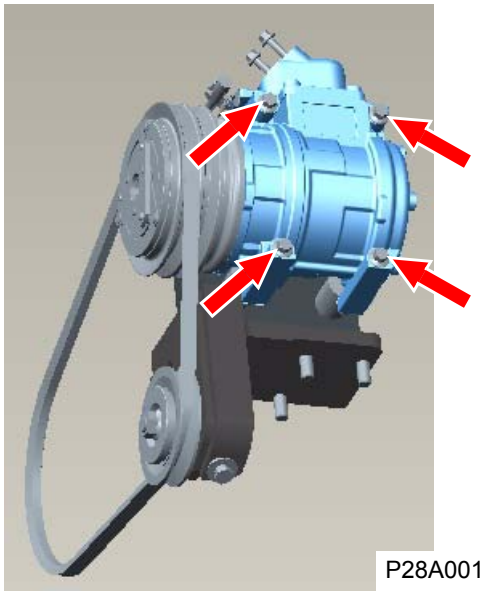 P28A00177	5. Remove 4 M8 bolts fixing compressor, and remove compressor.
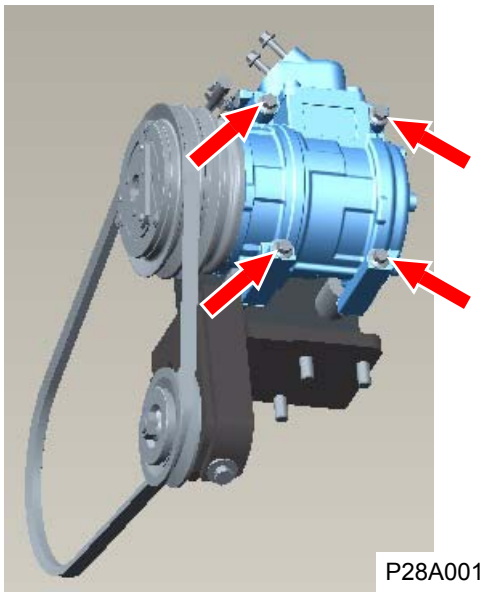 P28A00177	Installation method: 1. Tighten 4 M8 captive bolts of A/C compressor with torque spanner, and control the torque to 22~30Nm. 2. Install the belt as specified in Removal and Installation of Belt and Tension Pulley of the book. 3. Connect the compressor clutch connectors, and fix the compressor line on the A/C compressor with the bolts of M6X30-8.8. Tools: Torque spanner, open-end wrench 10#

Removal and Installation of Belt and Tension Pulley

Figures	Operation instructions
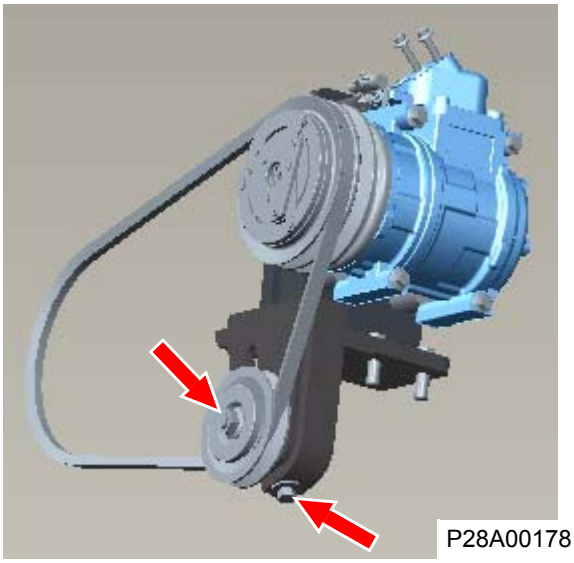 P28A00178	1. Loosen the hold-down nut of tension pulley with a wrench. 2. Loosen tension screw rod, and remove A/C compressor belt. 3. Continue to loosen hold-down nut and tension screw rod of tension pulley until it is disengaged, and remove the tension pulley. Tools: open-end wrench 13#, 10#, 14#
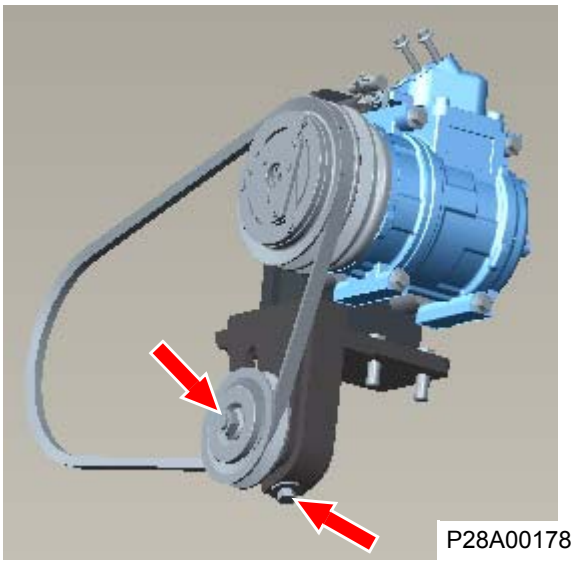 P28A00178	**Installation method:** 1. Tighten the tension pulley fixing nut and tension screw rod of tension pulley with wrench first, and fix the tension pulley at a position. 2. Install A/C compressor belt among tension pulley, A/C compressor belt pulley and engine belt pulley, and then adjust gradually tension screw rod and tighten fixing nut to preliminarily fix belt. 3. Adjust the belt tension according to the Adjustment of Compressor Belt.

Removal and Installation of Evaporator Mounting Assembly

⚠CAUTION

The following sequence of operations is used for removing evaporator assembly from cab assembly. Most actual failures occur in certain components (such as fan, circuit, etc.) of evaporator, so it is suggested to carry out selective removal, repair and replacement after these failures are identified in accordance with this manual in order to avoid unnecessary operations.

Figures	Removal and installation
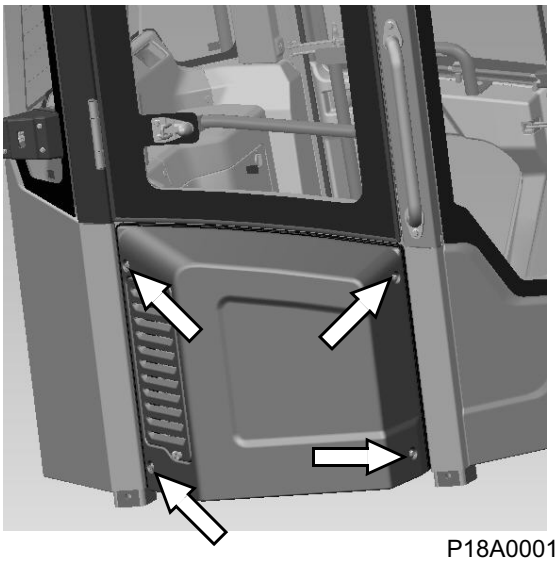 P18A00017	1. Drain refrigerant in air conditioning system as required in Release (Recover) Refrigerant in Air Conditioning System. 2. Remove the cab-rh cover (install flange bolt whose bolt is M8). Tool: #13 Open-end wrench
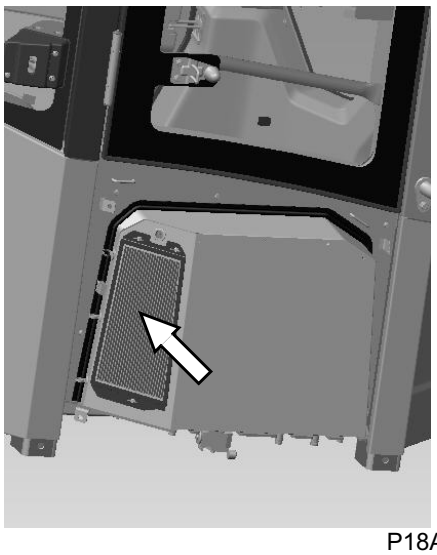 P18A00018	3. Remove the left evaporator fresh air filter which is fixed by three butterfly bolts.

Figures	Removal and installation
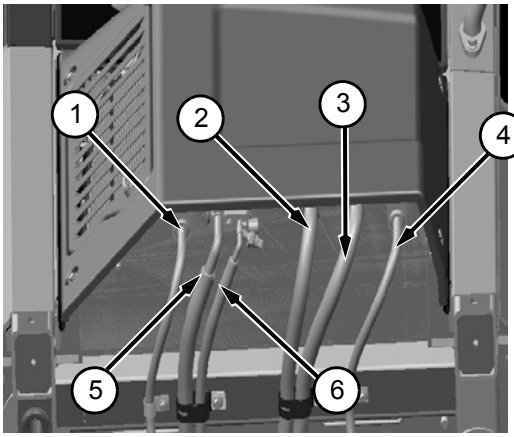 1. Water drain pipe 2. Warm water inlet pipeline 3. Warm water return pipeline 4. Water drain pipe 5. The hose from evaporator to compressor 6. The hose from resevior bottle to evaporator P18A00019	4. Remove the pipelines under evaporator and mark that with marker. Seal the connectors with plastic bags and adhesive tape after removal, in order to prevent foreign matter from entering the line. Tools: Open-end wrenches 19#, 21#, 24#, 27#; plastic bags, marker and adhesive tape
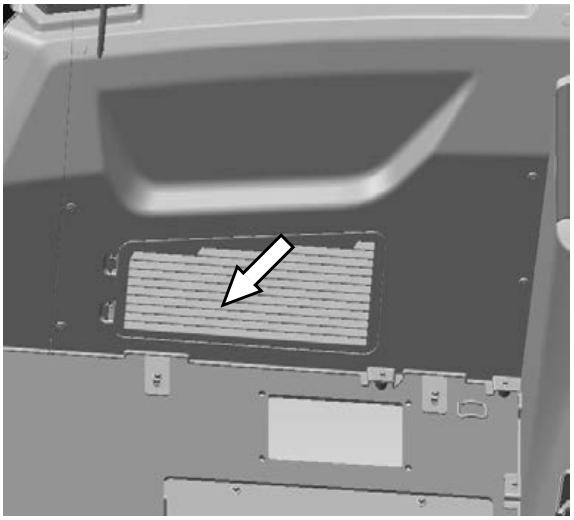 P18A00020	5. Open the cover plate of right shutter inside cab.

Figures	Removal and installation
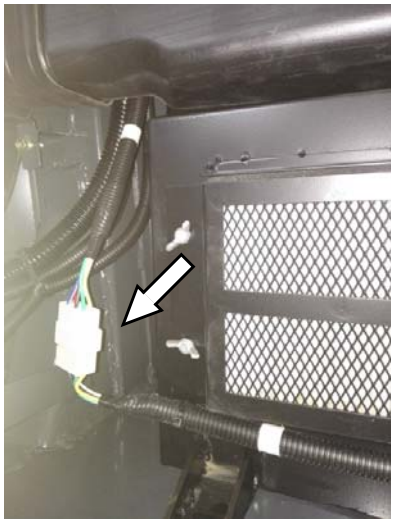 P18A00021  P18A00022	6. Remove two connectors, which connected with evaporator and electrical system One connector lies behind the shutter of recirculating air filter element, and the other lies beside fresh air filter.

Figures	Removal and installation
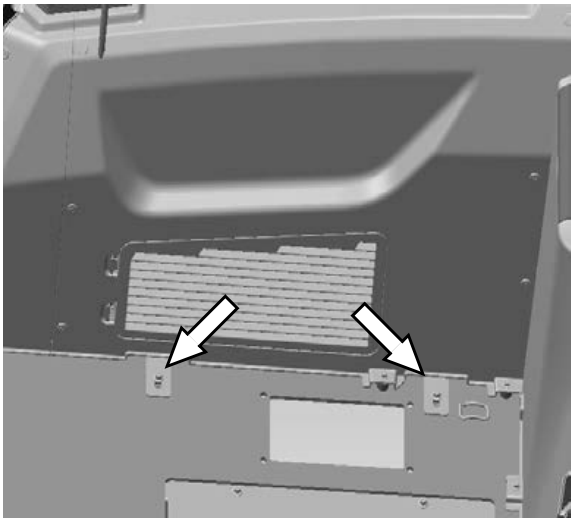 P18A00023 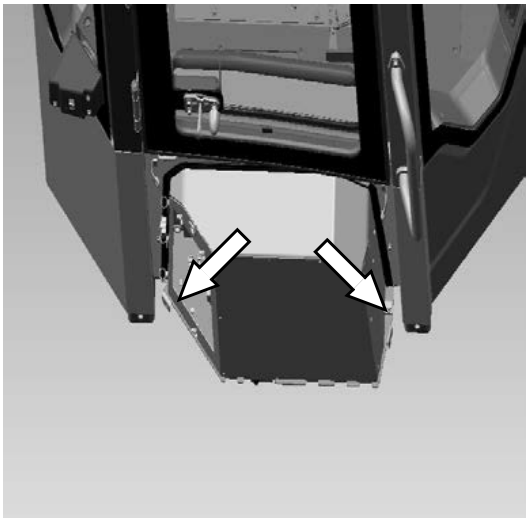 P18A00024	7. Remove 4 M8 mounting bolts, two of which are in inner cab, another two are in the cab's right. Tool: Open-end wrench 13#

Figures	Removal and installation
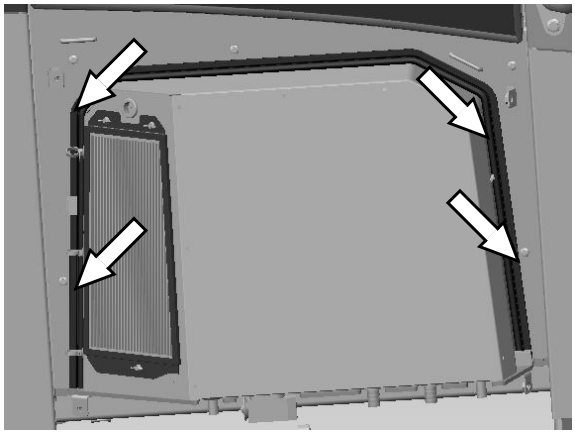 P18A00025	8. Remove the the seal plate outside the evaporator. (4 M6 bolts) Tool: Open-end wrench 10#
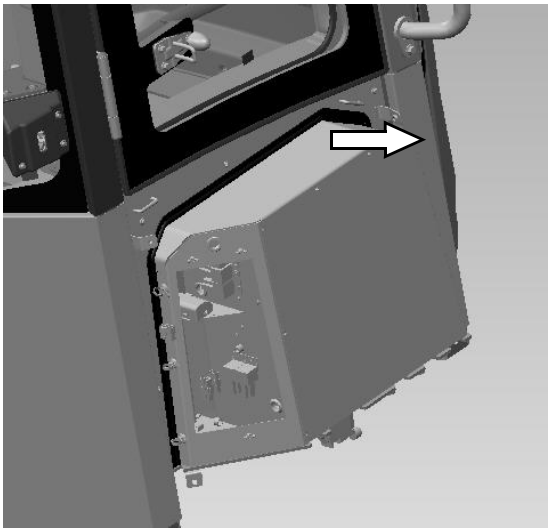 P18A00026	9. Take out the entire evaporator from left to right, and finish the removal. Installation sequence is in reverse order of removal sequence. The pipe connector torque should be based on the tightening torque requirements of the respective A/C pipe connector.

Each Lower Part Location of Evaporator Assembly

During the actual use, the motor, circuit and other faults of evaporator assembly generally appear. Therefore, please make an analysis on them and then disassemble the evaporator according to the Fault Diagnosis in this manual. Each lower part location of evaporator assembly will be provided in the following, so that it is easy to remove and install them.

Evaporator Assembly

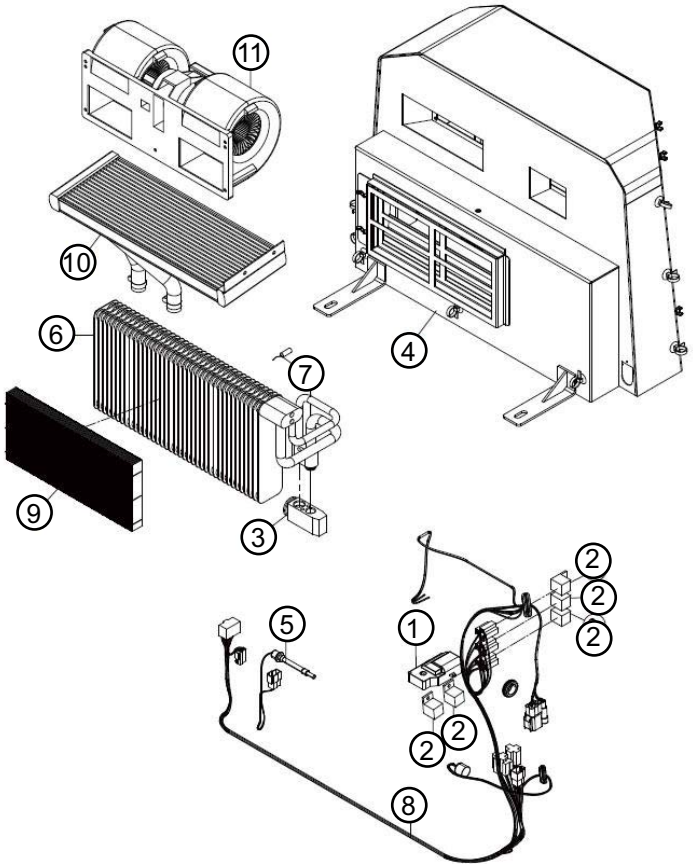

P18A00027

1. Damper motor
2. Relay
3. Expansion valve
4. Housing
5. Temperature sensor
6. Evaporator core
7. Temperature sensor
8. A/C harness
9. Strainer
10. Heater core
11. Evaporator blower

Replacement of A/C Control Panel

Figures	Operation instructions
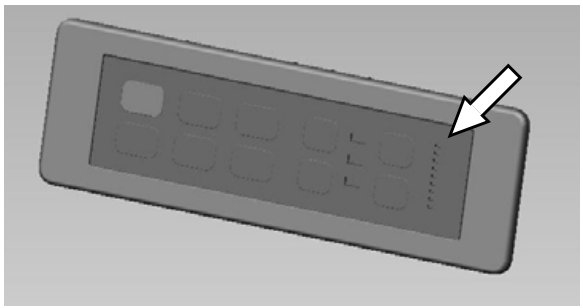 P18A00028	1. Remove the cover of control panel. (Cover is buckled on decoration through plastic buckle and can be directly plugged out.)
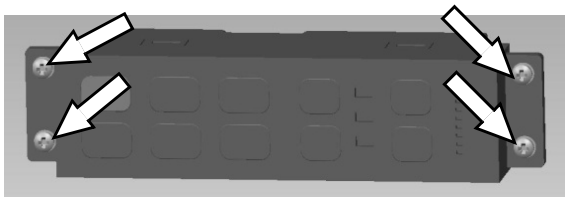 P18A00029	2. Remove four bolts fixing control panel. 3. Pull out the connector on the control panel and then take off the control panel. Tool: Cross screwdriver

Inspection and Replacement of A/C Fuse

When there is no display on A/C panel and A/C is inoperative after starting the machine, check whether A/C fuse is burned out. Refer to the part of electric appliance in this manual for detail.

Removal and Replacement of Reservoir

Figures	Operation instructions
	1. Open the rear cover. 2. Discharge the refrigerant in the A/C system as required in Discharge (recover) the Refrigerant out of A/C System.
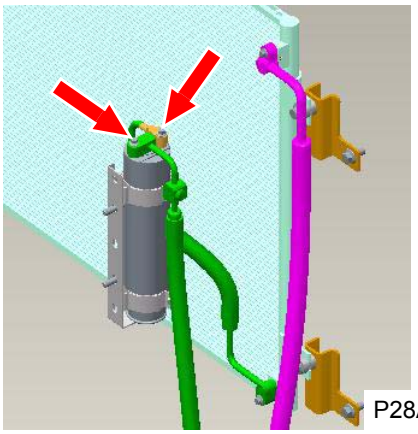 P28A00179	3. Remove the captive bolt of the hose from condenser to refrigerant reservoir, and the captive bolt of the hose from refrigerant reservoir to evaporator. Remove the pipe from condenser to liquid reservoir, and the pipe from liquid reservoir to evaporator. Seal up the opening fittings with plastic bags and adhesive tapes. Tools: Wrench 10#, plastic bag, tape
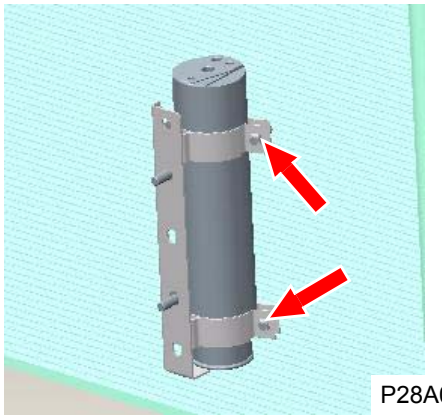 P28A00180	4. Loosen the captive bolt on the refrigerant reservoir bracket clamp. The refrigerant reservoir can be removed.
	Installation method: 1. Place liquid reservoir in the bracket, and tighten the bolts on the bracket with a wrench. 2. Install the hose from condenser to liquid reservoir and the hose from liquid reservoir to evaporator onto the liquid reservoir, and control the torque to 4~7Nm (3~5.2lbf·ft). Tool: Wrench 10#

Removal and Installation of Condenser

Figures	Operation instructions
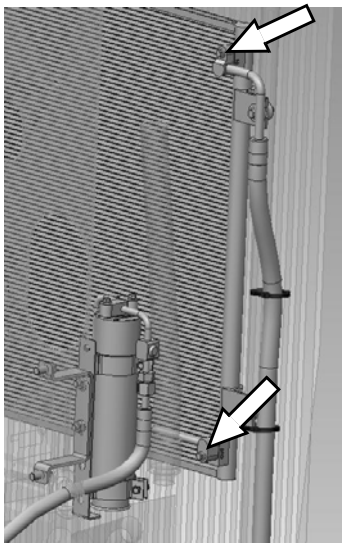 P18A00031	1. Open the rear cover by operating the step 1-3 of Removal and Replacement of Reservoir. 2. Remove captive bolts of the hose from compressor to condenser and the hose from condenser to refrigerant reservoir, and seal up the open joints with plastic bags and adhesive tapes. Tools: Wrench 10#, plastic bag, tape
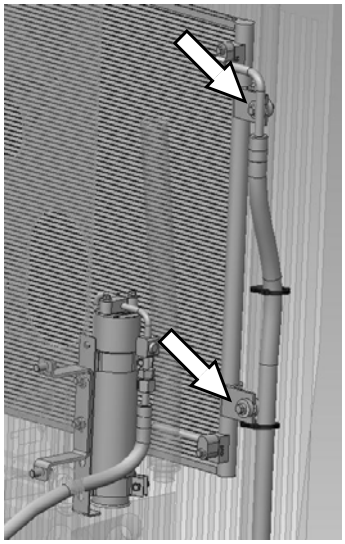 P18A00031	3. Remove the captive bolts of condenser (4 in total on left and right sides). Tool: Wrench 13#

Removal and Installation of Pressure Switch

Figures	Operation instructions
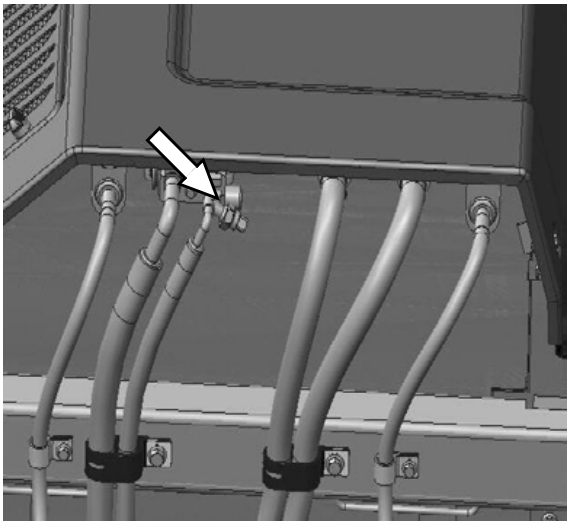 P18A00032	1. Discharge the refrigerant in the A/C system as required in Discharge (recover) the Refrigerant out of A/C System. 2. Pull out connector of pressure switch.
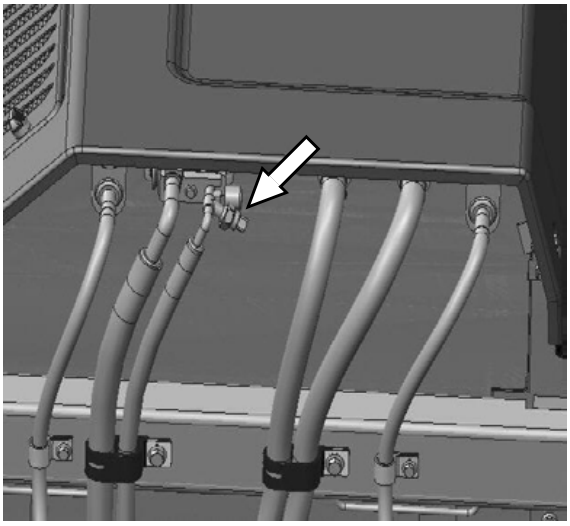 P18A00032	3. Turn off the pressure switch. Tool: Wrench 27# The installation is in reverse order of removal sequence.

Removal and Installation of Expansion Valve

Figures	Operation instructions
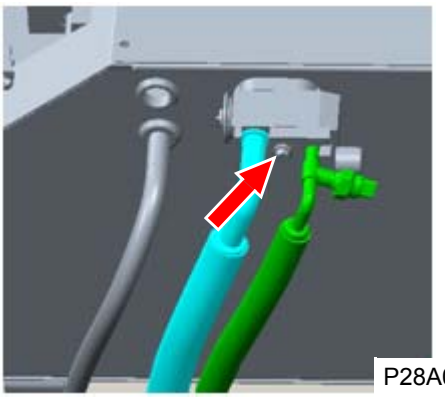 P28A00182	1. Discharge the refrigerant in the A/C system as required in Discharge (recover) the Refrigerant out of A/C System. 2. Remove the bolt on the stop plate of the expansion valve, remove the A/C hose and seal up the open joints with plastic bags and adhesive tapes. Tools: Sleeve 8#, electric gun, 100mm link bar, plastic bag, tape
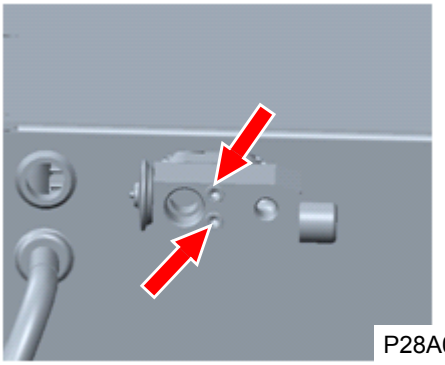 P28A00183	3. Remove the mounting bolts of the expansion valve, and then remove the expansion valve. Tool: Internal hex wrench 4# The installation is in reverse order of removal sequence.

Removal and Installation of Servo Electrical Motor of Air Inlet

Figures	Operation instructions
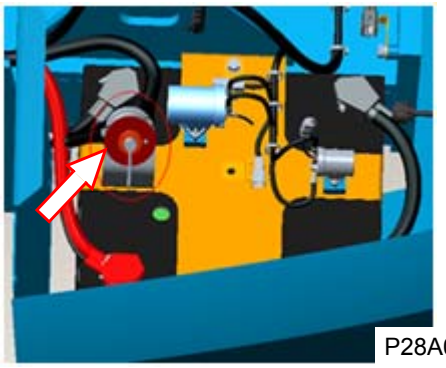 P28A00184	1. Remove the decorative plate and fresh air stainer on the right side of the cab. 2. Turn off the battery disconnect switch.
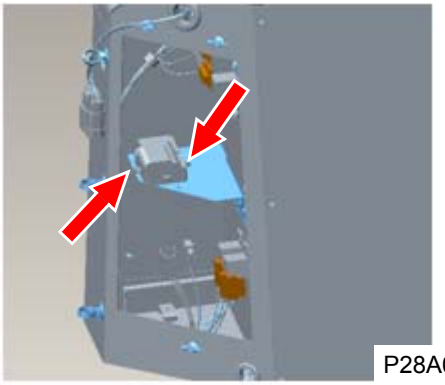 P28A00185	3. Remove two mounting bolts of the air inlet electrical motor, and pull out the harness connectors, then remove the electrical motor. Tool: Cross screwdriver The installation is in reverse order of removal sequence.

Removal and Installation of Evaporator Blower

Figures	Operation instructions
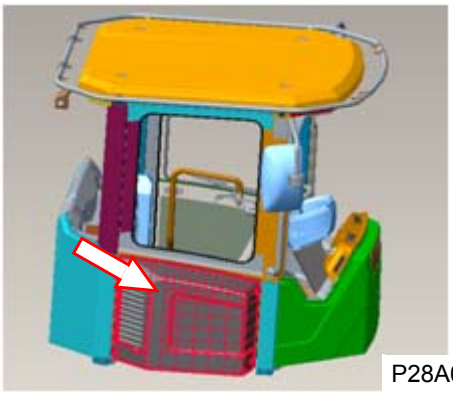 P28A00186	1. Remove four mounting bolts on the right side decorative plate of the cab, and then remove the decorative plate. Tool: Sleeve 10#, electric gun
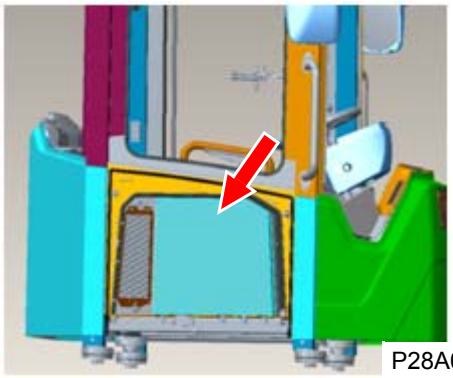 P28A00187	2. Remove 11 mounting screws on the side cover plate of the evaporator, and then remove the side cover plate. 3. Turn off the battery disconnect switch, and pull out the harness connectors of the evaporator blower. Tool: Cross screwdriver
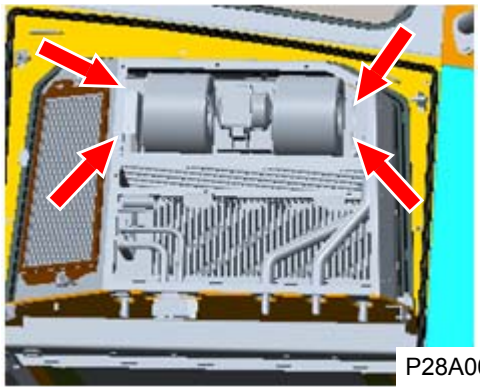 P28A00188	4. Remove four mounting bolts of the evaporator blower, and then remove the evaporator blower. Tool: Cross screwdriver The installation is in reverse order of removal sequence.

Removal and Installation of Solenoid Water Valve

Figures	Operation instructions
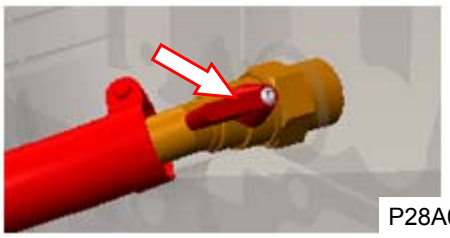 P28A00189 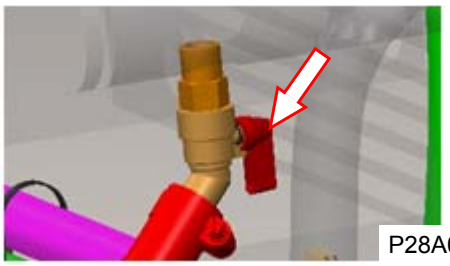 P28A00190	1. Close two warm water valves, the valve handle should be in vertical direction with the water valve. Turn off the battery disconnect switch. Tool: Cross screwdriver
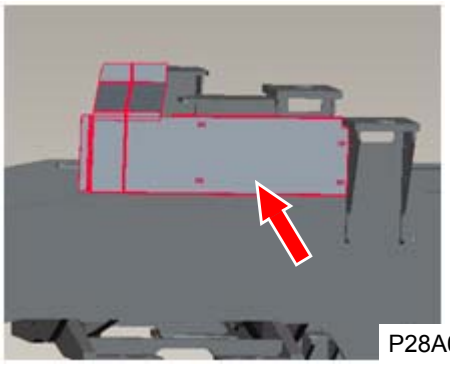 P28A00191	2. Remove 4 mounting bolts on the right side seal plate under the cab on the right side of the rear frame, and then remove the right side seal plate. Tool: Wrench 13#
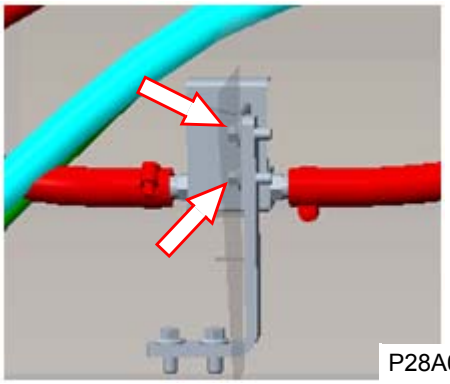 P28A00192	3. Remove two mounting bolts of the solenoid water valve. 4. Move the solenoid water valve to proper position, remove the water hose fixed clips on two ends. Pull out the hose and seal up the open joints with plastic bags and adhesive tapes. 5. Pull out the harness connectors of the solenoid water valve air duct, and then take out the solenoid water valve. Tool: Wrench 10#, straight screwdriver, plastic bag, tape The installation is in reverse order of removal sequence.

Fault Diagnosis and Judgment

Classification of Common Faults

Common faults of A/C system include:

1. The A/C panel neither displays nor functions.
2. No air comes out of A/C or air volume of A/C is small (in the case that the position is selected correctly).
3. It generates heating or natural wind under cooling mode.
4. It generates natural wind under heating mode.

Overhauling Method

Maintenance Method When Backlight of A/C Panel is Not On and the Button Does Not Work

Note: If the first item is normal, go to the second one, and the like.

Item	Inspection items	Description	Troubleshooting methods
1	Whether the machine is started	The A/C cannot be used until the machine is started	Use the A/C when the machine is started
2	Whether the A/C fuse is burned	If fuse is burned, check whether wiring and each load are short-circuited	Replace and repair short circuit elements or parts
3	Whether connector XL8 is connected properly Whether the connectors at both ends of control panel harness is properly connected	Whether there are problems such as poor contact and exit of contact pin	Repair the damaged parts
4	Pull out connector X18and check each pin with a multimeter	Wire # 220 (gray) should be earthed Wire # 138 (orange) should be high level Wire # 800 (white) should be high level Wire # 484 (white) should be suspended	If any abnormality occurs, it indicates that the circuit of the machine is problematic. Refer to the part of electric appliance in this manual for maintenance
5			Replace the control panel

If failed to eliminate faults by the above steps, it means the harness of control panel or evaporator is out of order, and refer to schematic diagram of A/C system for troubleshooting.

Maintenance Method When No Air Comes Out of Air Conditioner or Air Outlet Volume is Obviously Smaller Than the Normal Volume

Firstly, set air outlet volume to maximum, and listen whether there is a sound of blower operation.

If the blower is out of work, overhaul it according to the following procedures.

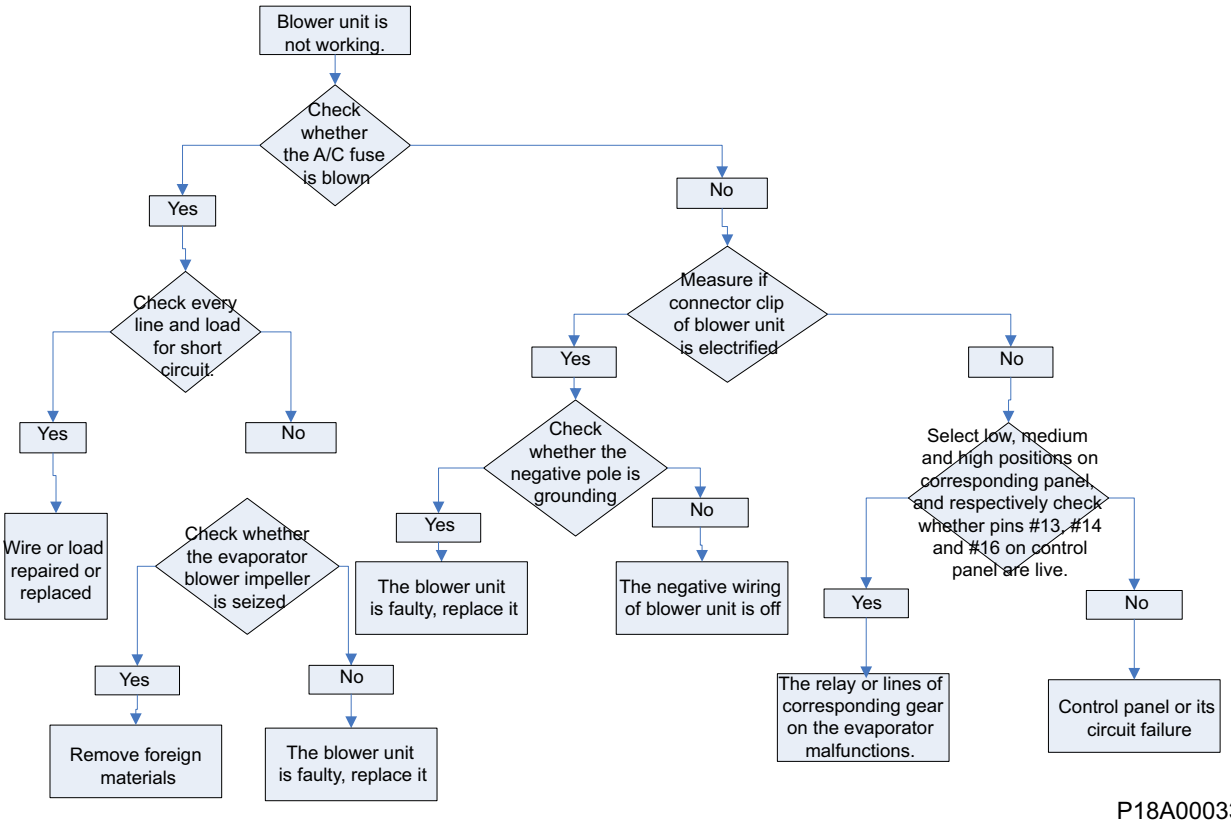

P18A00033

If the blower operates normally, overhaul it according to the following procedures

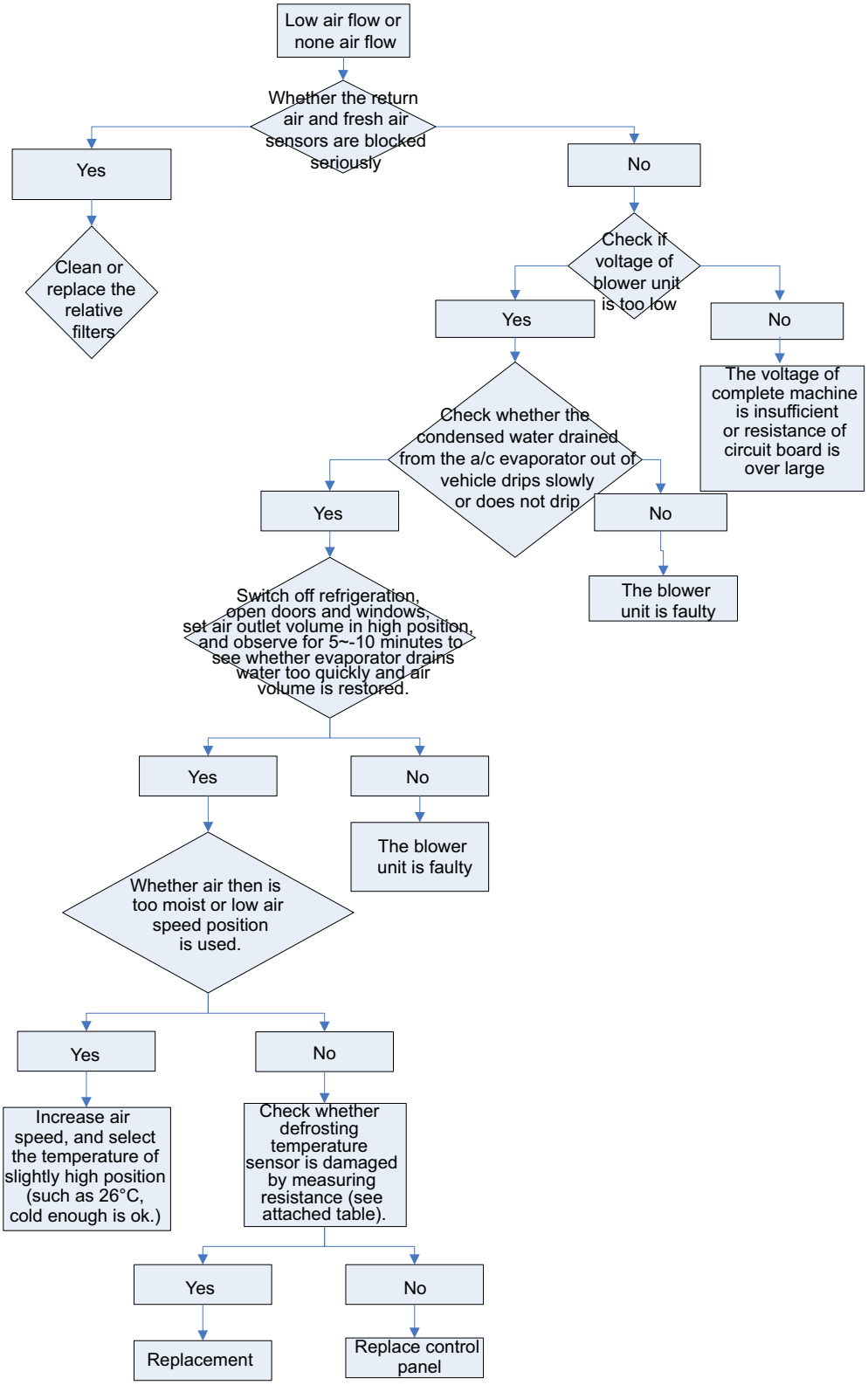

P18A00034

Maintenance method when warm air or natural air comes out when refrigeration is switched on

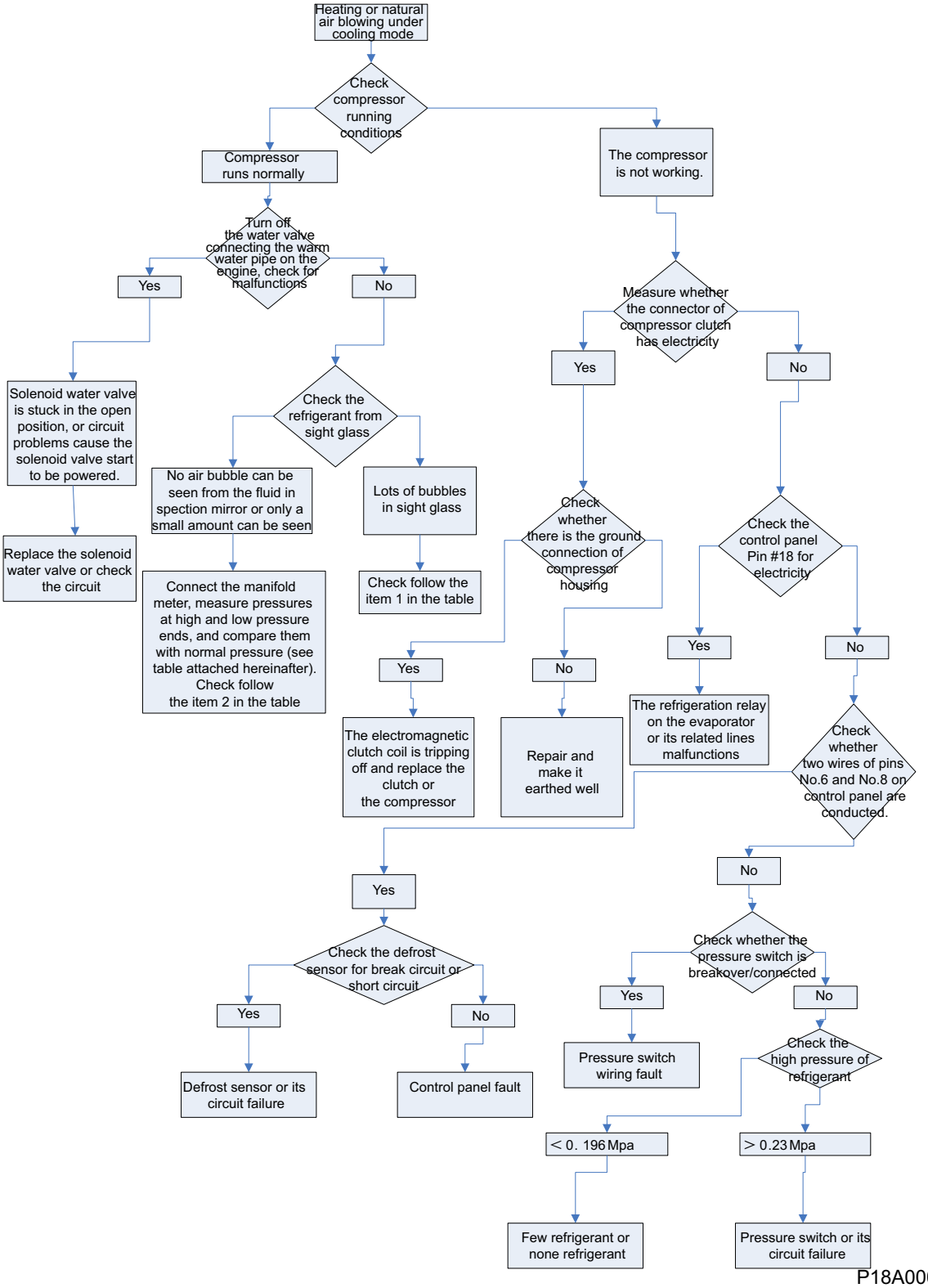

P18A00035

Item	Fault conditions		Judged reasons	Troubleshooting methods
1	Air bubbles persistently exist in sight glass, compressor air intake hose joint is not cold enough and even warm, the upper end and lower end of refrigerant reservoir do not have temperature difference, and temperature is higher than or equal to ambient temperature		1. Refrigerant leakage. 2. Insufficient refrigerant filling amount.	Check and repair the leakage parts, and refill refrigerant by referring to refrigerant refilling method
2	Compare the high and low pressures of A/C system when it is operating, and compare them with normal pressures (see table attached hereinafter)			
	Pressure of low pressure side and high pressure side are both low	1. Normally refrigerate for several minutes, stop refrigerating for several minutes, and normally refrigerate for several minutes…repeat like this. 2. Compressor is operating continuously. 3. The pressure at the beginning of refrigeration is normal, and pressures at low pressure side and high pressure side when refrigeration stops are obviously low.	There is too much water in refrigerating system and causes ice blockage in expansion valve (orifice is frozen due to water accumulation to block orifice)	Replace the reservoir, vacuum pumping for more than 1 h, and refill refrigerant again according to the section “A/C Refrigerant Filling Method” in this manual
		1. Touch compressor air intake hose joint (thicker joint) by hand to feel no cold. 2. There are no big differences in temperature of the high temperature zone and the low temperature zone of a condenser. 3. The temperature of each part of refrigerant reservoir is basically the same to that of condenser outlet and close to ambient temperature.	The interior of refrigerating system is very dirty, and the expansion valve orifice is blocked by dirts	1. Switch on refrigeration for about 1 minute and switch off refrigeration for about 3~5 minutes with doors and windows open under high engine speed (engine can be at idle speed but air volume shall be in highest position), then step on accelerator to refrigerate for about 1 minute…repeat like this for three times so that contamination and blockage may be eliminated. 2. If the above methods are ineffective, clean or replace expansion valve; If gray black or brown black color appears in sight glass, please make sure to replace refrigerant reservoir.
			The expansion valve control head leaks air making the valve hole smaller automatically	Replace the expansion valve. If gray black or brownish black color appears in sight glass, please make sure to replace refrigerant reservoir altogether.

Item	Fault conditions		Judged reasons	Troubleshooting methods
	Pressure of low pressure side and high pressure side are both low	1. Touch compressor air intake hose joint (thicker joint) by hand to feel no cold. 2. There are no big differences in temperature of the high temperature zone and the low temperature zone of a condenser. 3. The temperature of each part of refrigerant reservoir is basically the same to that of condenser outlet and close to ambient temperature. 4. There is obvious temperature difference at both ends of the blocked part.	Line between sight glass outlet and compressor air intake port is blocked or crushed by foreign matter	Remove blocked pipelines, blow out foreign matters or release the one being pressed to flat; If gray black or brownish black color appears in sight glass, please make sure to replace refrigerant reservoir.
		1. Touch compressor air intake hose joint (thicker joint) by hand to feel no cold. 2. There are no big differences in temperature of the high temperature zone and the low temperature zone of a condenser. 3. There is obvious temperature difference at both ends of the blocked part. 4. Bubble is visible in sight glass.	Line between condenser outlet and sight glass inlet is blocked by foreign matter	
		1. Touch compressor air intake hose joint (thicker joint) by hand to feel no cold. 2. There are no big differences in temperature of the high temperature zone and the low temperature zone of a condenser. 3. Bubble is visible in sight glass. 4. The bottom of the refrigerant reservoir is cold and even has condensing dew.	Filter of refrigerant reservoir is blocked by dirt	Replace the refrigerant reservoir

Item	Fault conditions		Judged reasons	Troubleshooting methods
	Pressures of low pressure side and high pressure side are both high	1. Bubble is visible in sight glass. 2. Touch compressor air intake hose joint (thicker joint) by hand to feel no cold. 3. The upper end and lower end of reservoir do not have temperature difference, and temperature is higher than or equal to ambient temperature.	Less refrigerant	Detect leakage, repair and fill refrigerant
		1. Observe sight glass in the case of compressor operation, and no air bubble in sight glass within 5~10 seconds after refrigeration is switched off. 2. Temperature in the condenser normal temperature zone almost has no difference with ambient temperature. 3. The condenser high temperature zone is hotter than normal situation.	Redundant refrigerant	Release or recycle some refrigerant
		1. There are bubbles in sight glass in the case of compressor operation. 2. The pointer of high pressure gauge vibrates sharply and frequently.	The refrigerating system has non-condensing gas such as air	Discharge the refrigerant, vacuumize, and fill refrigerant again according to the section “A/C Refrigerant Filling Method” in this manual
		High temperature zone of condenser is hotter than that in normal circumstance, and normal temperature zone of condenser is hotter than that in normal circumstance.	Dirty surface of the condenser	Clean the surface of the condenser
		1. There is too much condensing dew on surface of low pressure pipe, and middle housing of condenser is not hot or cold and even has condensing dew. 2. There are bubbles in sight glass.	Expansion valve has too large opening degree or is stuck in large opening degree position by foreign matter	Clean or replace expansion valve
	Pressure of low pressure side is high, but pressure of low pressure side is low	1. The air intake hose joint of compressor is under normal temperature or warm. 2. The pointer of low pressure gauge swings.	Compressor air suction valve block is damaged or cylinder body, piston or piston ring leaks air due to wear	Replace the compressor
		1. The compressor exhaust pipe joint is hotter than usual. 2. The pointer of high pressure gauge vibrates sharply.	The exhaust valve plate of compressor is damaged	Replace the compressor

Maintenance Method for Natural Air Comes Out When Heating is Switched On

Note: Please check warm water valve on engine has been opened, and engine coolant temperature has been far above air temperature first. Or it is common to have no warm wind, it is not a malfunction.

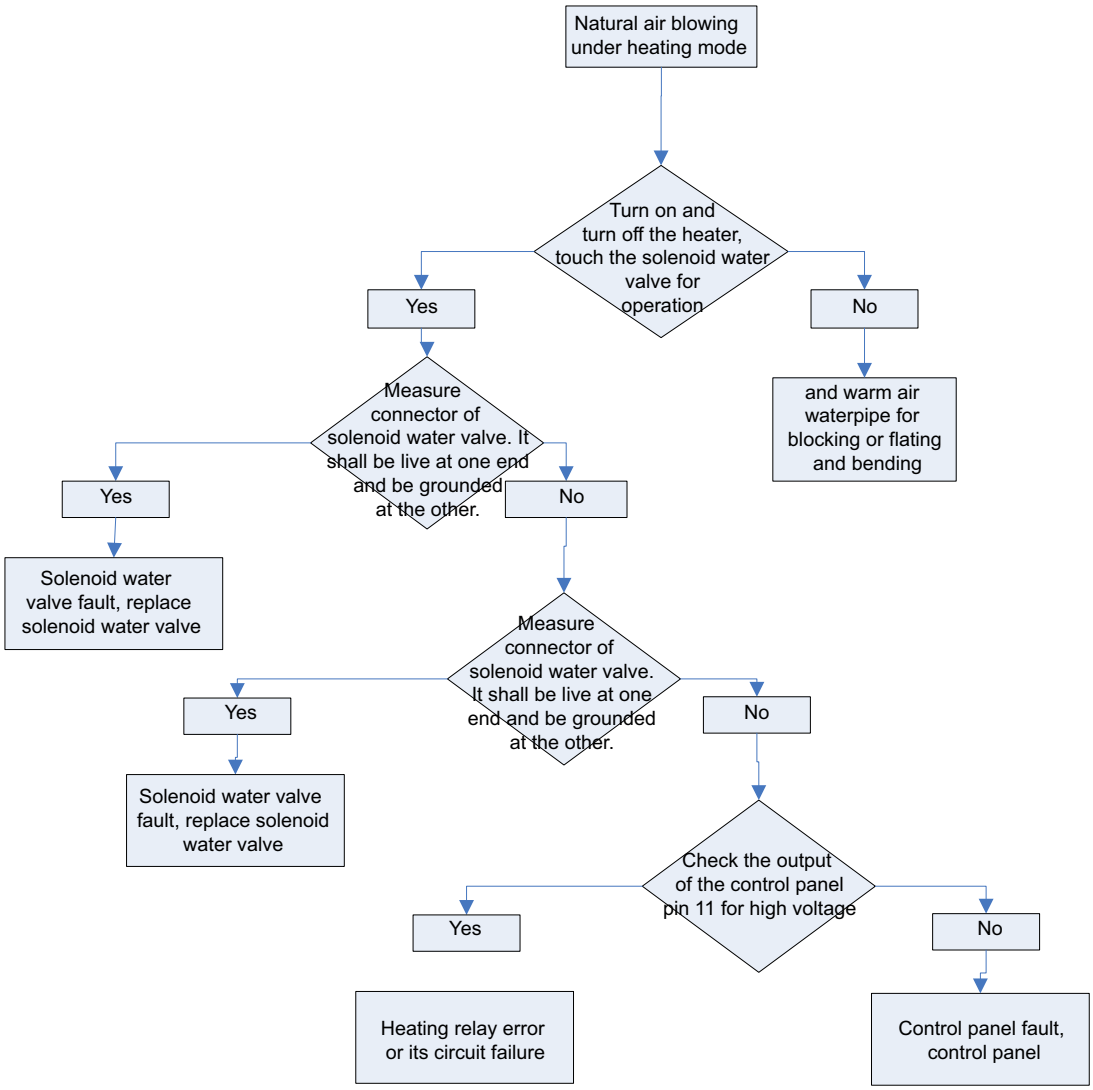

P18A00036

System Maintenance

A/C System Regular Maintenance

Cleaning of Recirculating Air Strainer

Figures	Operation instructions
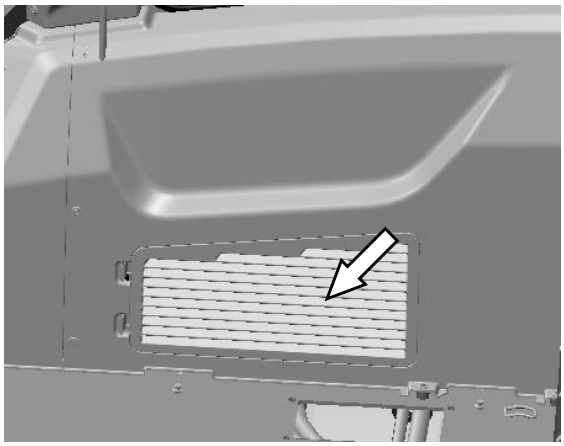 P18A00037	1. Open the shutter on the right of inner cab's plate.
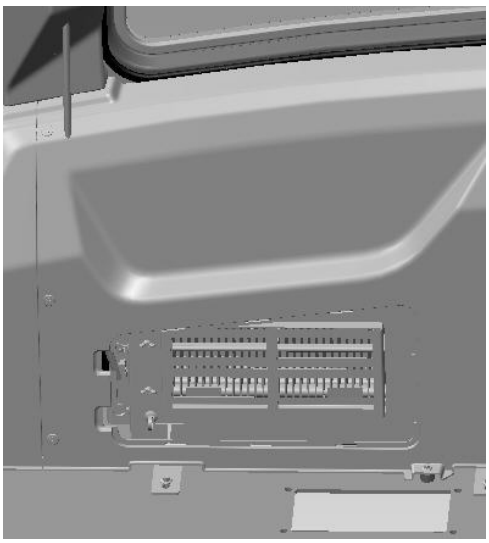 P18A00038	2. Screw off the two butterfly bolts of the filter, and then remove the recirculating air strainer. 3. Blow off dust from air outlet surface to air inlet surface of recirculating air strainer with compressed air.

Cleaning of Fresh Air Strainer

Figures	Operation instructions
 P18A00039	1. Remove the shutters on the right of the cab's cover.
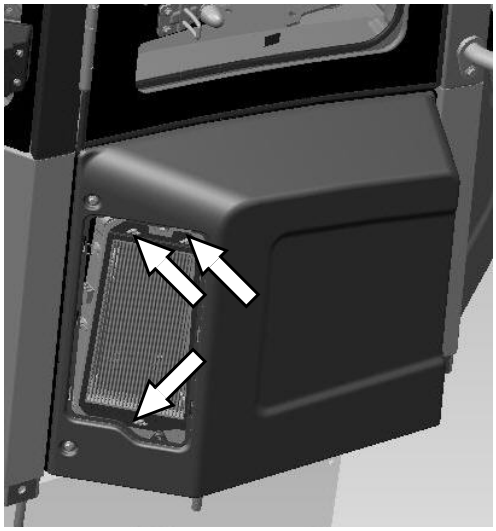 P18A00040	2. Unscrew the three butterfly bolts fixing the new air filter of A/C.

Figures	Operation instructions
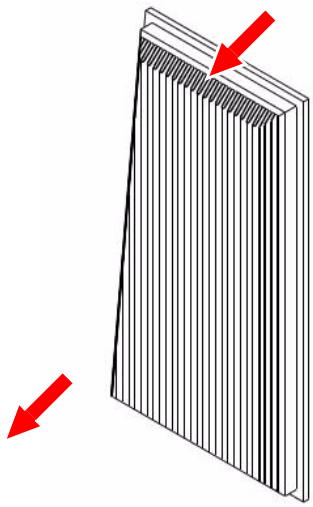 P28A00084	3. Remove the fresh air strainer 4. Blow off dust from air outlet surface to air inlet surface of fresh air strainer with compressed air. (The arrow in the Figure is the air intake direction)

Adjustment of Compressor Belt

Figures	Operation instructions
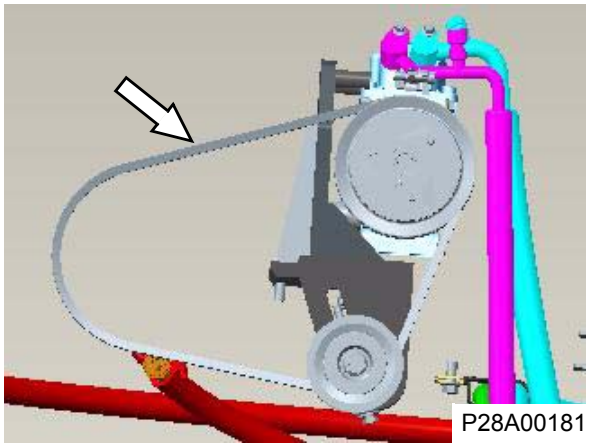 P28A00181	1. When a load W=1.5Kg (3.3lb) is applied to perpendicular belt edge at neutral point of tangential edge between belt and two belt pulleys (A/C compressor belt pulley and belt pulley on engine) by hand, the deflection f of belt shall be 5±1mm (0.2±0.04In). If belt deformation is too large or too small, it means belt has inappropriate tension and needs to be adjusted.

Figures	Operation instructions
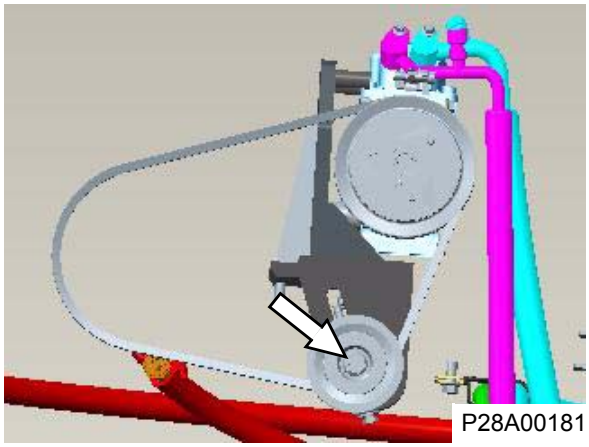 P28A00181	2. Loosen the captive bolts of idler. Tool: Wrench 14#
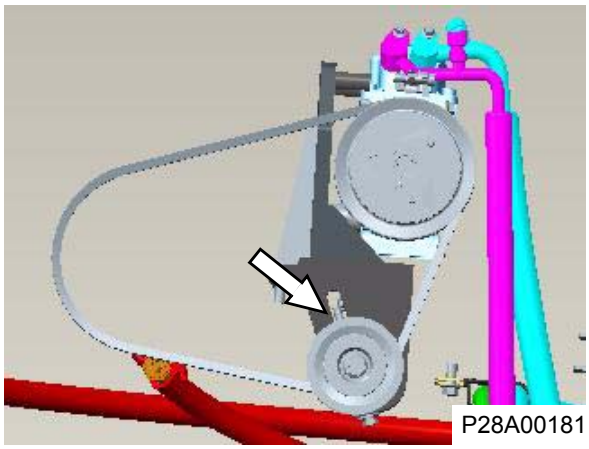 P28A00181	3. Tighten tension bolt, and belt becomes taut; While loosen tension bolt, the belt becomes loose. Constantly adjust tension bolt, and test belt deformation until belt tension becomes appropriate. Tool: Wrench 14#
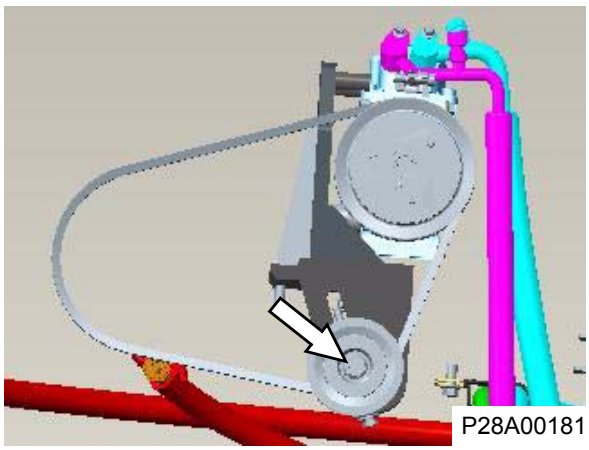 P28A00181	4. Tighten the fixing nuts of idler. Tool: Wrench 14#

A/C Refrigerant Filling Method

⚠CAUTION

Even though there is only little water in A/C system, water vapor at low temperature part may be frozen to cause refrigerant circulation blockage or compressor valve corrosion, etc. Therefore, when refrigerant is refilled after parts are replaced or A/C system is reinstalled in machine, strictly vacuumize and maintain pressure to check leakages and continue to refill refrigerant after system airtightness is confirmed to be good.

Because A/C system is not an absolutely airtight system, the problem of deficient refrigerant may occur after it is used for a period of time. At the moment, if refrigerant in the system is confirmed not to be completely lost, start the operation of refilling refrigerant according to the section “A/C Refrigerant Filling Method” in this manual.

Figures	Operation instructions
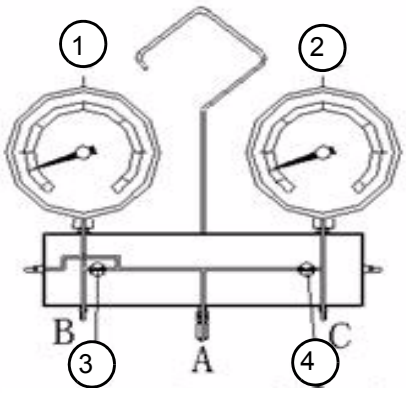 1. Low pressure gauge 2. High pressure gauge 3. Low pressure valve(LO) 4. High pressure valve(HI) P28A00044	1. Connect manifold gauge and A/C filler according to the sequence specified in Release (Recover) Refrigerant in Air Conditioning System, and make sure there is no refrigerant in the system.
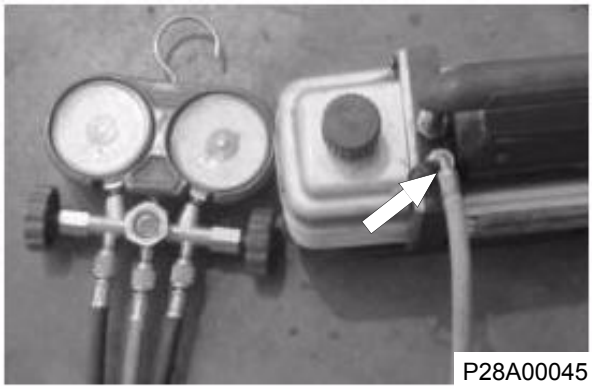 P28A00045	2. Connect the hose connecting port A on the manifold gauge to vacuum pump. Tools: Vacuum pump, manifold meter

Figures	Operation instructions
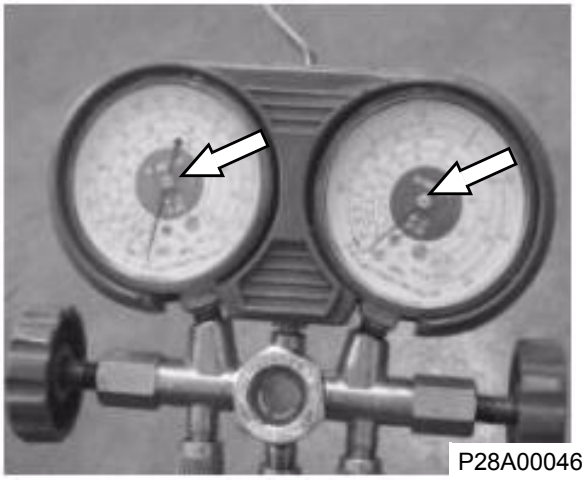 P28A00046	3. Start vacuum pump to vacuumize for 5 minutes, and make sure indications of high and low pressure gauges are about -750 mm Hg or -0.1 MPa (14.5psi). **Note:** In general, high pressure gauge and its connectors are red, and low pressure gauge and its connectors are blue. 4. First close high pressure valve (HI) and low pressure valve (LO) of line pressure testing device, and then turn off vacuum pump. 5. Wait for 5 minutes in this status, and observe that the reading of low pressure gauge shall have no change. If the pressure is picked up, it indicates there is a leakage in the system. Check and repair leaking areas, and repeat the steps 3-5.
 P28A00047	The steps 6-8 below are operations for the portable canned refrigerant is used. It may change as the packaging type of refrigerant changes. Please confirm that the refrigerant container is properly connected to the manifold gauge. 6. Install the plug clock to refrigerant container. 7. Connect the hose at connecting point A of manifold gauge to the interface mounted on screw plug of refrigerant container.
 P28A00048	8. Rotate handle of screw plug clockwise so that pintle injector punctures refrigerant container, and then rotate screw plug handle counterclockwise so that the pintle injector exits.

Figures	Operation instructions
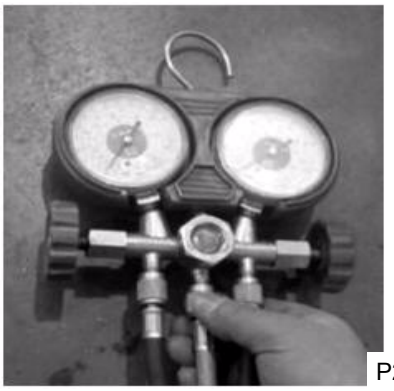 P28A00049	9. Loosen nut on manifold gauge connecting refrigerant receiver connecting hose, drain air in the filling hose by using refrigerant pressure, and tighten nut immediately after listening "Hissing" sound.
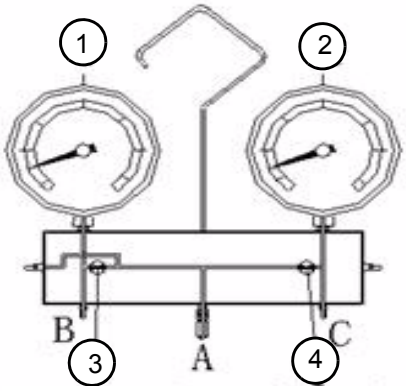 1. Low pressure gauge 2. High pressure gauge 3. Low pressure valve(LO) 4. High pressure valve(HI) P28A00044	10. Open high pressure valve (4) so that refrigerant enters high pressure side of A/C system. 11. Observe high pressure gauge, and close high pressure valve (4) until pressures does not rise any more. **⚠ CAUTION: At the moment, make sure that high pressure valve has been closed, or else subsequent operations may cause damages to compressor.**
	12. Start the engine to idle state and open the cab's door and window. And turn on the A/C to cooling mode. Adjust to the maximum wind. 13. Open low pressure valve (3), depress accelerator with the aid of a companion, maintain the accelerator to be 80% or so, and observe high pressure gauge and sight glasses until the pressure reaches an appropriate value (refer to attached table). And there is no bubble in sight glass. 14. First turn off all the valves, then remove the inflating unit.

The table below gives reference values about corresponding relation between pressure and temperature. Because the actual working pressure of A/C system is related to compressor speed, sunlight intensity, evaporator air volume and other factors, data in the table below is only for reference:

Ambient temperature		**Indicating range of the high pressure gauge**		**Indicating range of the low pressure gauge**	
Celsius degree (°C)	**Fahrenheit degree (°F)**	**Kg.f/cm^2**	**psi**	**Kg.f/cm^2**	**psi**
15.5	59.9	8.4-10.5	121.8-152.3	1.57-1.9	22.8-27.6
21.1	70	10.5-12.6	152.3-182.7	1.57-1.9	22.8-27.6
26.2	79.2	12.6-14	182.7-203	1.67-2.1	24.2-30. 5
32.2	90	14-15.5	203-224.8	1.67-2.1	24.2-30. 5
35	95	15.5-16.5	224.8-239.3	1.77-2.1	25.7-30. 5
37.7	99.9	16.1-17.5	233.5-253.8	1.77-2.1	25.7-30.45
40.5	104.9	17.5-19.3	253.8-279.9	1.9-2.4	27.6-34.8
43.3	109.9	18.2-21.8	263.9-316.1	1.9-2.6	27.6-37.7

Driver's Cab and Covering Parts

Structure Function Principle 6-3

Driver Cab System 6-3
Engine Hood 6-3
Engine Hood Assembly 6-3
Opening and Closing of Engine Hood 6-5
Lifting Mechanism of Engine Hood Torsion Bar 6-7

Removal and Installation 6-11

Installation Requirements for Shock Cushion of Cab 6-11
Removal and Installation of Cab 6-11
Disassembly Order of Cab Lifting 6-11
Removal of Air Conditioning Components in Cab 6-11
Disassembly of Hydraulic Components in Cab 6-11
Disassembly of Power Components in Cab 6-17
Replacement and Installation for Lifting Rings of Head Cover 6-21
Removal of Shock Cushion 6-21
Lift 6-22
Removal of the Seat 6-22
Removal of the Seat 6-24
Removal of Console 6-27
Removal of Decoration 6-31
Removal of the Rear Right Positioning Lock Trim Cover in the Cab 6-31
Removal of Left Decoration of Cab 6-32
Removal of Right Decoration of Cab 6-34
Removal of Decoration of Rear Plate 6-35
Removal of Decoration and Platform and Attachment 6-37
Top Decorations of Cab 6-38
Assemble the Glass of Cab 6-39
Installation of the Left Door Lock in Cab 6-42
Removal and Installation of Engine Hood 6-45
Removal and Installation of the Engine Hood Torque Mechanism 6-52

Structure Function Principle

Driver Cab System

The cab system mainly consists of cab assembly, steering column assembly, driver seat assembly, protective cover console, console assembly and rear view mirror assembly. Among which some parts of hydraulic system, electrical system and air conditioning system are assembled on cab assembly.

Engine Hood

Engine Hood Assembly

Overview of engine hood assembly

The engine hood mainly consists of two parts: one part is that can open round the engine hood hinge; and the other part is that fixed on the frame and radiator. The engine hood is front-hinged. The lifting mechanism mainly includes air spring and torsion spring. The maximum opening angle of engine hood is about 50°.

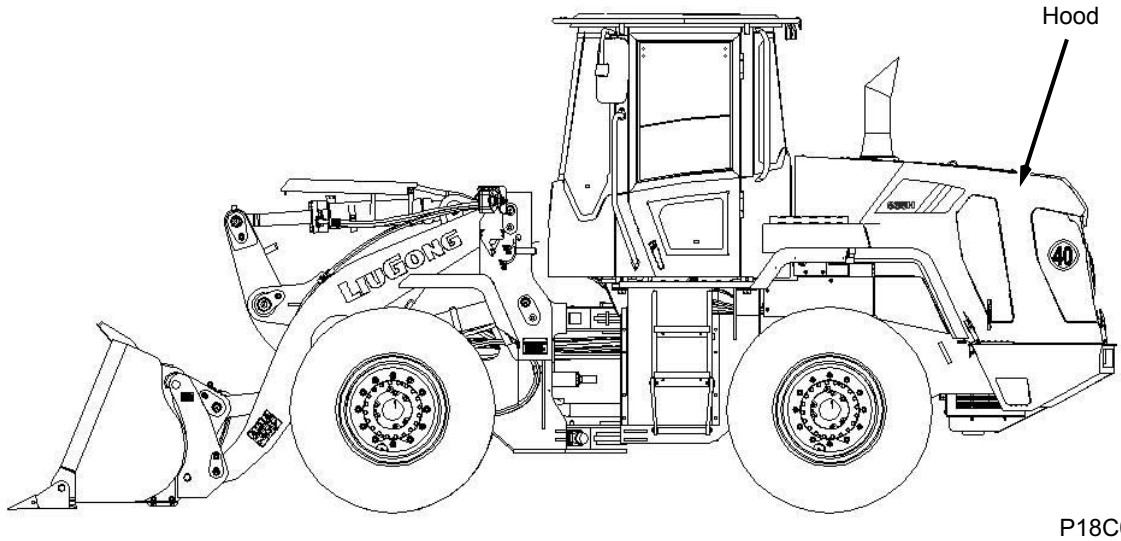

P18C00001

Main components of engine hood

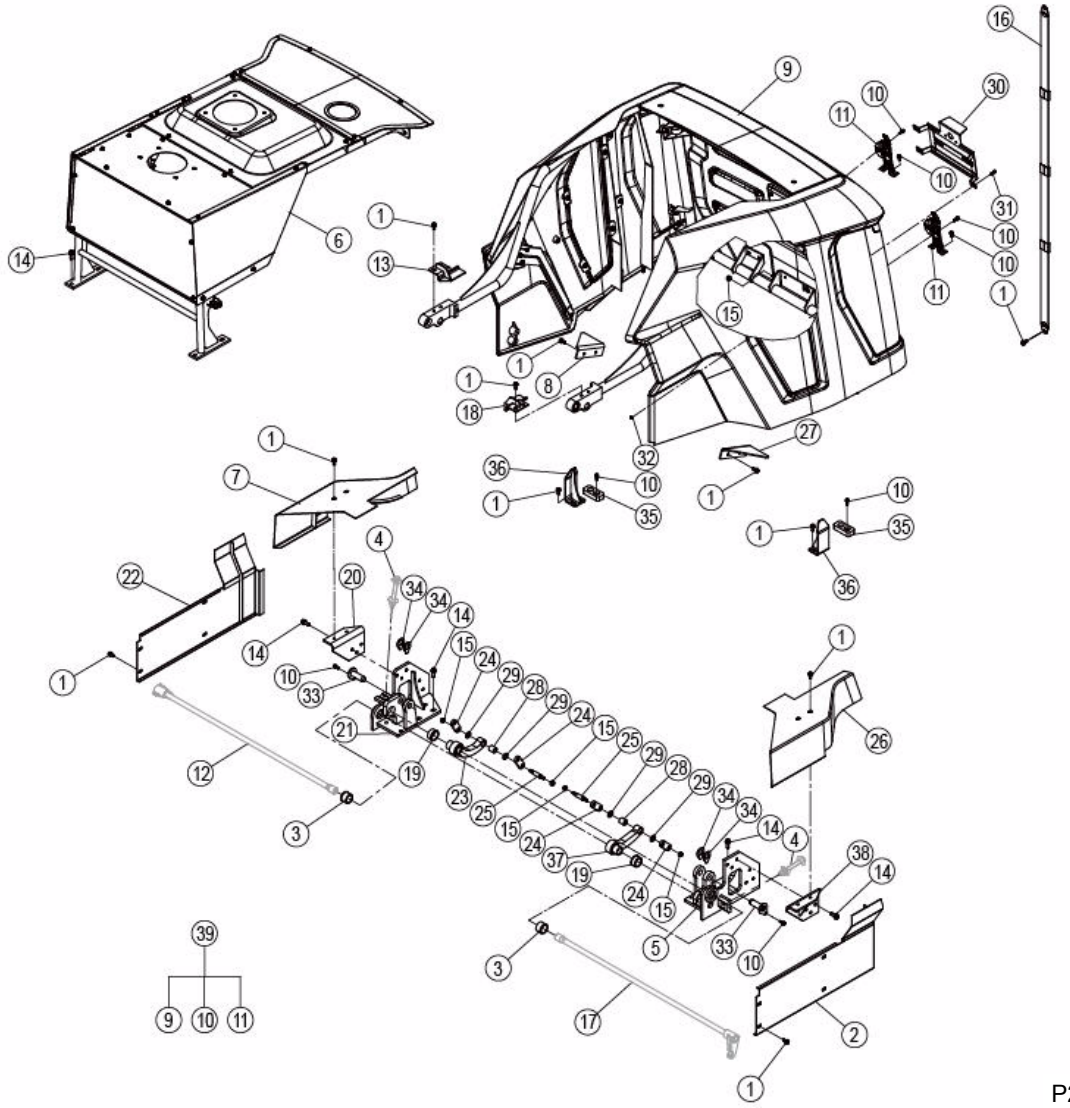

P28S00228

1. Bolt
2. Side plate-LH
3. Bushing
4. Rod as
5. Bracket
6. Bracket
7. Side plate-RH
8. Plate
9. Rear cover
10. Bolt
11. Lock
12. Torsion spring
13. Angle block
14. Bolt
15. Nut
16. Rope
17. Torsion spring
18. Angle block
19. Bushing
20. Bracket
21. Bracket
22. Side plate-RH
23. Push rod
24. Plate
25. Shaft
26. Side plate-LH
27. Plate
28. Bushing
29. Washer
30. Mounting plate
31. Bolt
32. Nut
33. Pin
34. Washer
35. Rubber plate
36. Supporting seat
37. Push rod
38. Bracket

Precautions on removal and installation:

1. The operator for special equipments shall have corresponding operation certificate.
2. The measuring equipment and tools shall be provided with inspection certificates from metrological service;
3. Because many other related components on the complete machine are concerned during the removal and installation of each component, removed components (especially standard parts) shall be reasonably placed to avoid wrong installation, neglected installation, part missing, etc. during reassembly.
4. If the removal and installation of other components on the complete machine are concerned in the removal and installation of each component, tools are referred to the tool list for the removal and installation of other components and not listed in the tool list of this component;
5. If the expected effect can be reached in the ways of using open-end wrench, blower gun and socket as well as ratchet wrench and socket to remove and install, anyone can be chosen.

Opening and Closing of Engine Hood

Opening of engine hood

Reference picture	Operation step
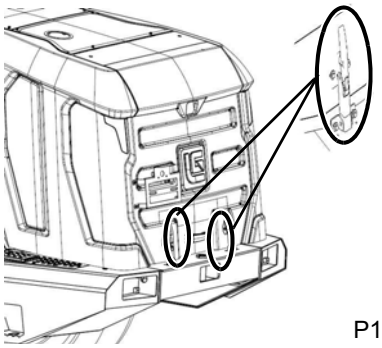 P18C00003	1. Open the lock on both sides of engine rear hood by hand.
 P18C00004	2. Grab and lift the bottom handrail of rear hood

Reference picture	Operation step
 P18C00005	3. After the hood rises automatically, hold the rope at the hood bottom with hand to control the hood opening speed until it opens completely.

Closing of engine hood

Reference picture	Operation step
 P18C00006	1. Grab and pull down the rope until the hood bottom matches with the counterweight.
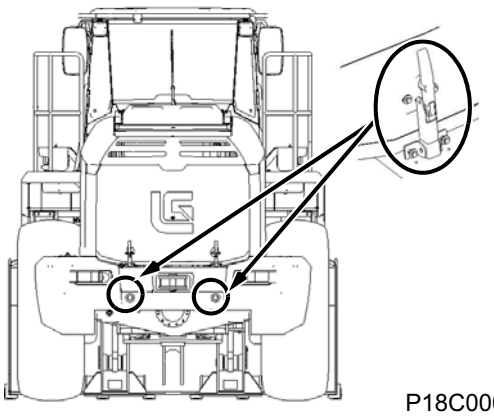 P18C00007	2. Tighten the locks on the both sides.

Lifting Mechanism of Engine Hood Torsion Bar

1. Overview-components and position

The components and position of lifting mechanism of engine hood torsion bar used in complete machine are as shown in the figure below and mainly composed of rear cover, bracket and torsion spring. The torsion bar-assist type turnover mechanism involved in the mechanism is able to solve effectively the problem of difficult closing caused by large turning torque during the turning of torsion bar turnover mechanism, and the provided torsion bar-assist type turnover mechanism includes the base and the turning parts hinged on the base. The base is provided with torsion bar, which is mutual parallel to the center of rotation of mentioned turning parts with its one end permanently connected to the base, while the other end rotates relative to base and permanently connected to lever arm; moreover, it includes link, one end of which is hinged with lever arm, while the other end hinged with turning parts. The base, lever arm, link and turning parts in the torsion bar turnover mechanism forms four-bar mechanism.

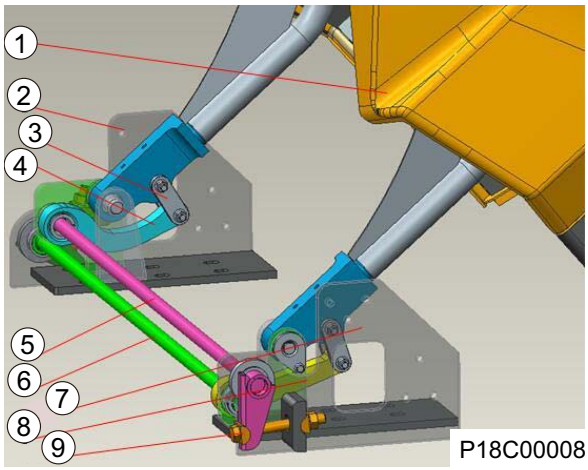

P18C00008

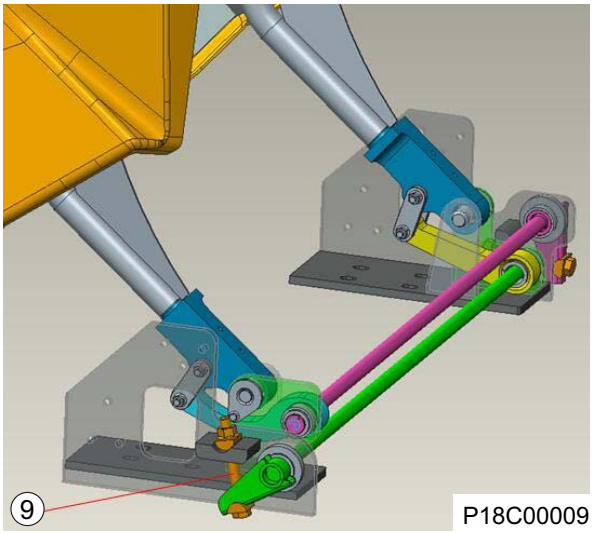

P18C00009

1. Rear cover
2. Bracket
3. Plate
4. Push rod
5. Torsion spring - right
6. Torsion spring - left
7. Bracket
8. Push rod
9. Rod as

2. Overview - part working principle

When the torsion bar-assist type turnover mechanism used in this model is used on the engine hood of machine,the base acts as frame and the turning parts act as hood; the base, lever arm, link and turning parts forms four-bar mechanism; the distance between point A and C increases gradually to improve the torque in the later stage during the turning process for opening the hood; while the distance between point A and C decreases gradually to reduce the torque of the torsion bar against the turning part, i.e reducing the tensile force necessary for closing the engine hood to make easy closing of hood during the turning process for closing the hood.

Figure 1 is the structure diagram that the torsion bar-assist type turnover mechanism is used on the hood of machine

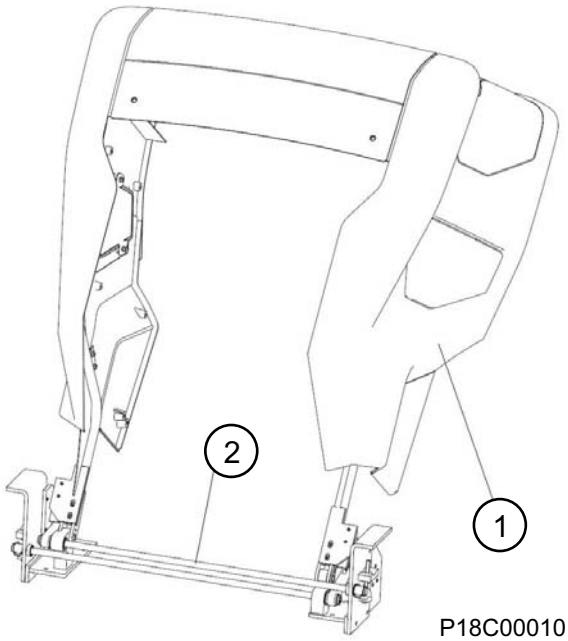

P18C00010

1. Rear cover
2. Torsion bar

Figure 2 The structure diagram of the torsion bar-assist type turnover mechanism

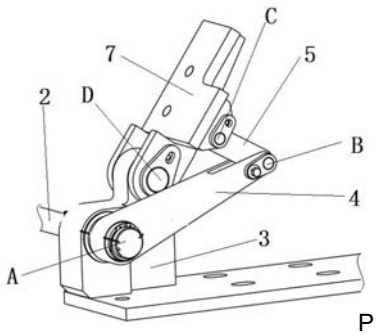

P18C00011

2. Torsion bar
3. Base
4. Lever arm
5. Link
7. Turnover mechanism

Figure 3 The structure diagram of link with adjustable length

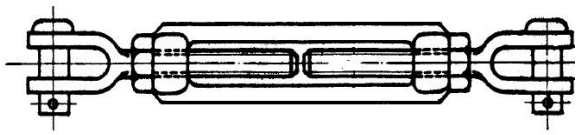

P18C00012

Figure 4 The relation diagram of rear cover opening angle vs required torque

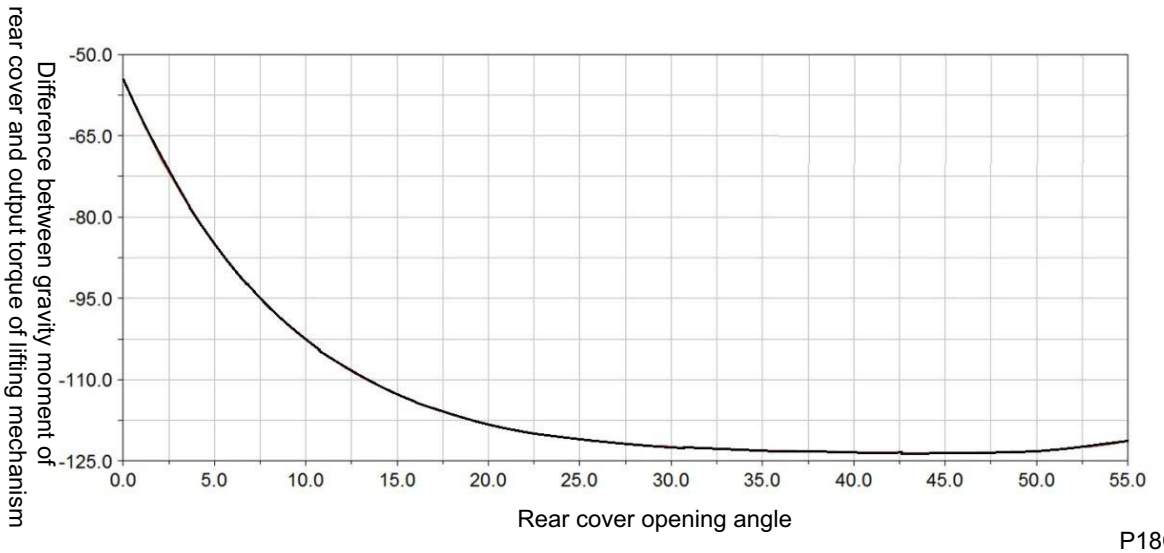

As shown in the figure 2, the torsion bar-assist type turnover mechanism includes base 3, the turning part 7 hinged on the base 3, which is provided with torsion bar2, which is mutual parallel to the center of rotation of turning part 7, one end of torsion bar 2 is permanently connected to base 3, and the device for adjusting the initial torque of torsion bar can be installed at this end, while the other end rotates relative to base and is provided with spline by which permanently connected to lever arm 4; the link 5 is connected between the free end of lever arm 4 and turning part 7, one end of link 5 is hinged with lever arm 5 and the other end is hinged with turning part 7.

As shown in figure 2, the connection point of torsion bar 2 and lever arm 4 is point A, the articulated joint of lever arm 4 and link 5 is point B, articulated joint of link 5 and turning part 7 is point C, articulated joint of turning part 7 and base 3 is point D, and this four points form convex quadrangle. The included angle formed by link 5 and lever arm 4 is acute angle. When the lever arm 4 rotates counterclockwise around the point A, i.e the hood is being opened, the distance between point A and C increases gradually, and included angle formed between CB and DC is reduced gradually to right angle from obtuse angle and thus to improve the torque in the later stage during the turning process for opening the hood; when the lever arm rotates clockwise around point A, i.e the hood is being closed, the distance between point A and C decreases gradually, and included angle formed between CB and DC is increased gradually from obtuse angle to reduce the torque of the torsion bar against the turning part, i.e reducing the tensile force necessary for closing the engine hood to make easy closing of hood. When the rear cover is opened and closed, the torsion bar-assist type turnover mechanism can provide the turning part of stable torque, whose curve has the good consistency of matching with gravity moment of turning part.

In this example, under the condition that the specification of torsion bar is not changed, several opening and closing force requirements of rear cover can be met through changing the effective length of lever arm, and in case of used for opening the different weight of rear cover, the change of effective length of lever arm can be achieved through the two methods below.

First method: the size of lever arm can be changed through changing the length of link 5 and if the link 5 uses screw mouth, whose structure is as shown in figure 3, the distance L between left U screw rod (left-handed thread) and right U screw rod (right-handed thread) of the thread can be adjusted by rotating the screw bushing and thus to change the length of link 5.

Second method: the adjusting mechanism is provided with long round hole at end of lever arm and locking mechanism, the length direction of long round hole is the same with that of lever arm, articulated shaft of link and lever arm is located in the mentioned long round hole and can move along the length direction of long round hole, and the mentioned locking mechanism is used for locking the position of positioning articulated shaft in the long round hole.

The Figure 4 shows the difference between gravity moment of rear cover and output torque of lifting mechanism, and the difference refers to the force applied by operator when opening or closing the rear cover. 0°indicates the close state of rear cover, 55° indicates the open state of rear cover. As can be seen from the figure, when the rear cover is closed from 55° to 0°, the difference between both is decreased gradually to make easy closing of engine hood.

Removal and Installation

Installation Requirements for Shock Cushion of Cab

The cushion of cab is installed with M30 bolts and #46 torque wrench, torque value: tightening torque (dry state) = 1055 N·m.

Removal and Installation of Cab

Disassembly Order of Cab Lifting

1. Remove A/C components →remove hydraulic components → remove power components → remove electrical components → replace lifting rings of head cover → remove cushion → lift.
2. Step of installing cab onto machine: install it by the opposite steps of removal.

Removal of Air Conditioning Components in Cab

Disassembly of air conditioning connector

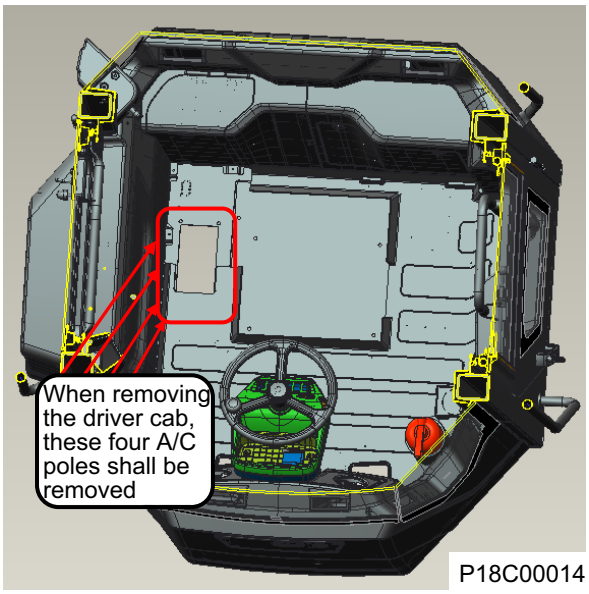

P18C00014

Fluoridation of air conditioning

For fluoridation of air conditioning, refer to the section of air conditioning in this manual.

Disassembly of Hydraulic Components in Cab

Remove brake pedal

1. Removal steps of brake valve from the machine:

⚠CAUTION

Before removing brake valve, make sure that the machine is in parking brake state.

Figures	Operation step	Tools
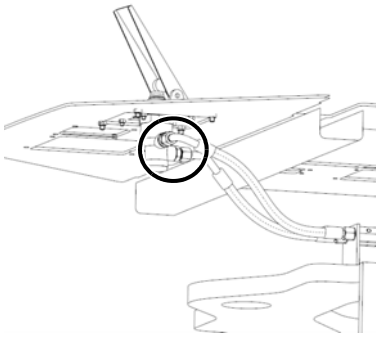 P18C00015	1. Mark the two hoses connecting brake valve as "P1" and "P2" respectively. Pay attention to that the markings shall be firm. 2. Loosen the joints of two hoses.	Tool: Open-end wrench 27#
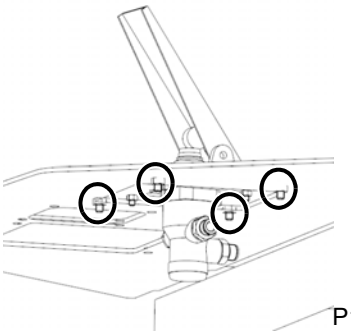 P18C00016	3. Unscrew the 4 bolts tightening the brake valve.	Tool: Wrench 16#
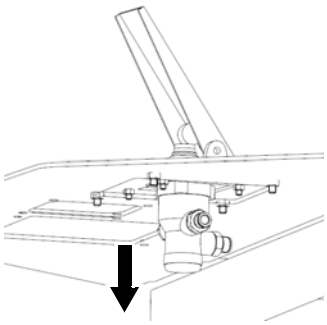 P18C00017	4. Take out the brake valve from the bottom of cab. 5. Shield the port of brake valve and store it in dry and clean place.	

2. Step of installing brake valve onto machine: install it by the opposite steps of removal.

Remove console hydraulic system

1. Steps to remove the pilot valve from the machine:

First, remove all the pilot lines.

Figures	Operation step	Tools
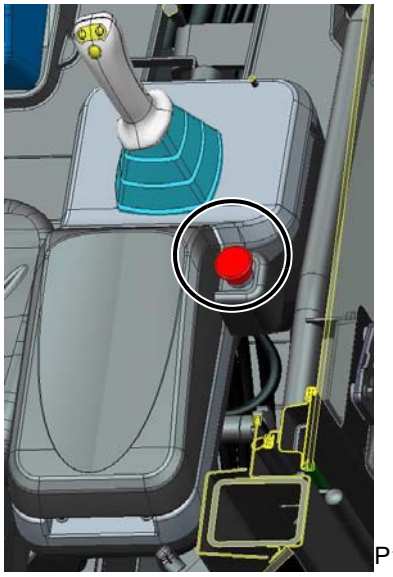 P18C00018	1. Pull out the housing	
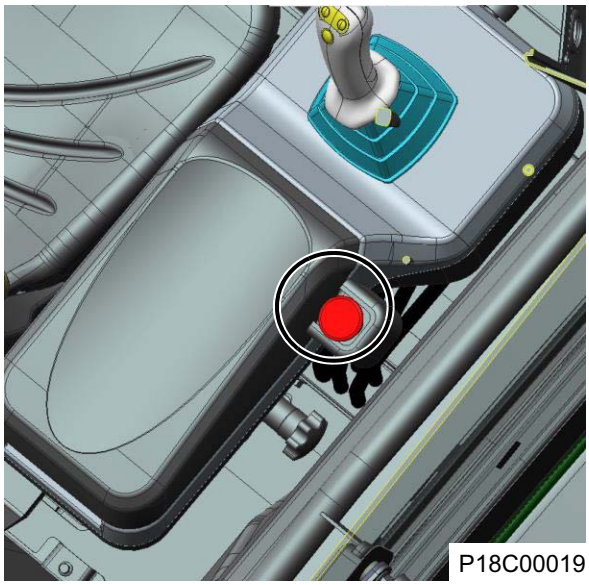 P18C00019	2. Remove the parking brake solenoid switch	

Figures	Operation step	Tools
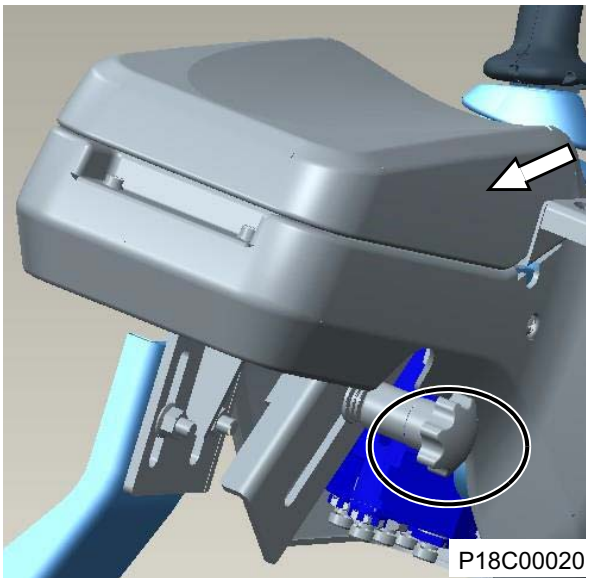 P18C00020	3. Remove the operating handle and take out the armrest upward	
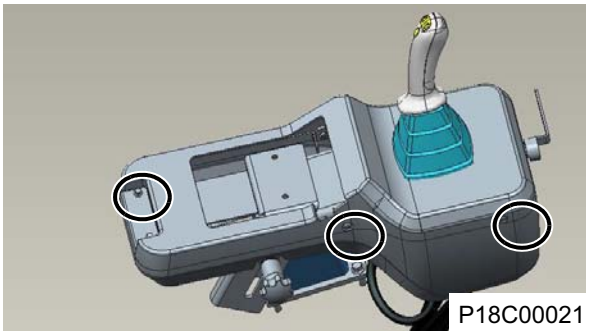 P18C00021	4. Screw off 4 screws and 2 bolts, and then remove the upper housing.	Tool: cross screwdriver, M6 inner hexagon spanner
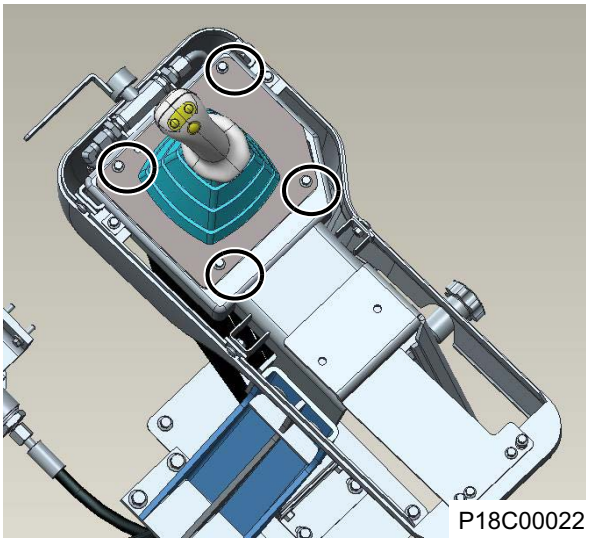 P18C00022	5. Remove 4 M6 captive bolts with #10 open-end wrench, and remove the pilot valve from the console housing.	Tool: Wrench 10#

Figures	Operation step	Tools
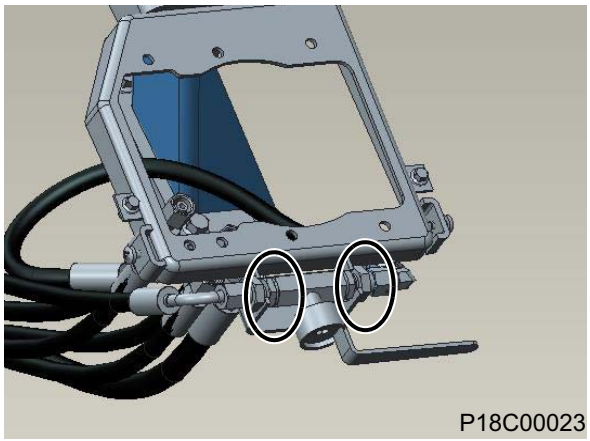 P18C00023	6. Screw out pilot shutoff valve nuts as tightened in the left lower figure, and remove shut-off valve.	Tool: Wrench 21#

2. Step of installing pilot operating valve onto machine: install it by the opposite steps of removal.

Removal of metering pump

Figures	Operation step	Tools
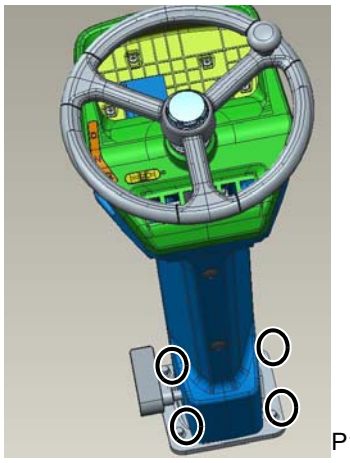 P18C00024	1. Screw out 4 M10 bolts tightening metering pump, remove the metering pump and move it out of cab.	Tool: Wrench 16#

Maintenance of hydraulic parts

Seat needs to be removed for maintenance of hydraulic parts. The procedures are as follows:

Figures	Operation step	Tools
 P18C00025	1. Screw out 4 M8 bolts tightening seat and remove seat.	Tool: Wrench 13#
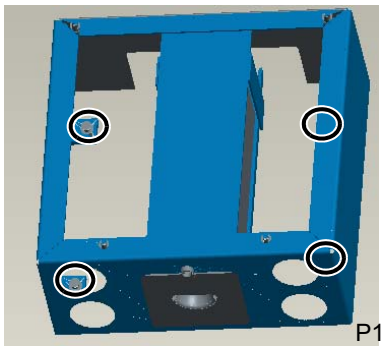 P18C00026	2. Screw out 4 M10 bolts tightening shield and remove the shield.	Tool: Wrench 16#
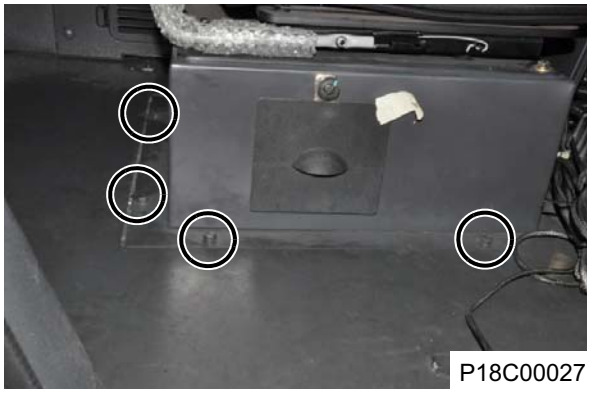 P18C00027	3. Screw out 8 M8 bolts tightening shield and remove the bottom plate.	Tool: Wrench #13

Figures	Operation step	Tools
 P18C00028	4. Repair the hydraulic components	

Disassembly of Power Components in Cab

Removal of accelerator control system

Figures	Operation step	Tools
 P18C00029	1. Unplug the harness connector of electronic accelerator	
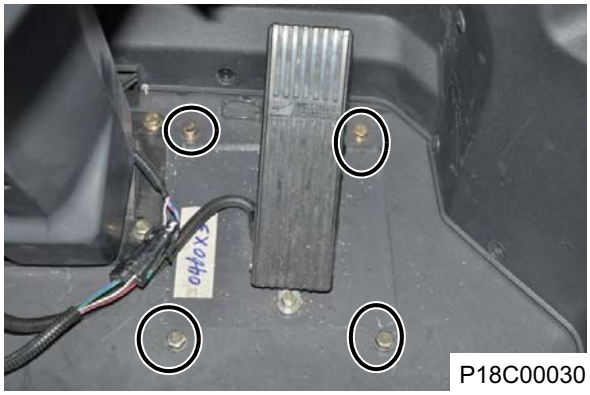 P18C00030	2. Lift up floor mat, remove 4 captive bolts on accelerator control system, and remove the accelerator control system.	Tool: Open-end wrench 16#

Installation of accelerator control system

Installation of accelerator control system: install it by the opposite steps of removal.

Adjustment of accelerator control system

Normally, after the accelerator pedal is installed, the accelerator pedal can be operated smoothly and the normal operating condition of engine can be guaranteed. For the cases that the accelerator pedal is difficult to operate, the accelerator pedal cannot reach its maximum position or accelerator pedal does not return, check the installation procedures above until it can be operated smoothly.

Removal of electric appliance components in cab

⚠CAUTION

The power of vehicle must be turned off before disassembling the electric appliance components. The power (-) of the whole machine is disconnected when the negative switch is turned to "O" (OFF). The power (-) of the whole machine is connected when the negative switch is turned to "I" (ON).

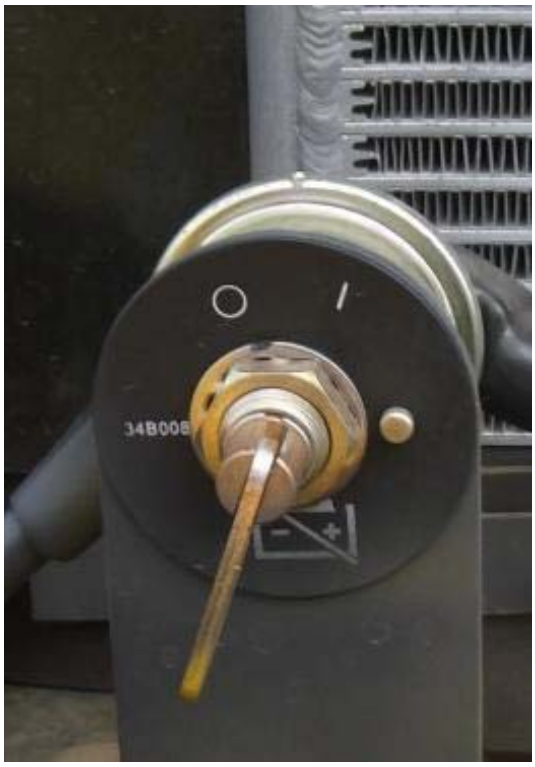

P18C00031

Figures	Operation step	Tools
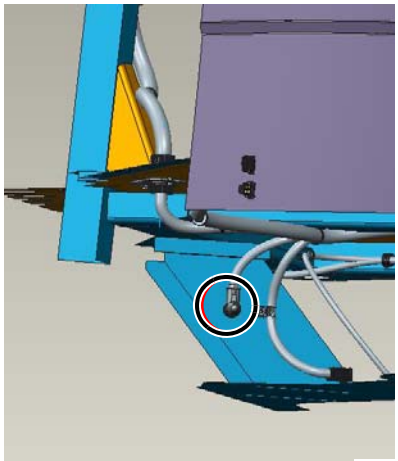 P18C00032	1. Screw out the earthing cable on the front cab mounting bracket-rh.	
 P18C00033	2. Pull out the ZF transmission speed sensor on the transmission-lh.	
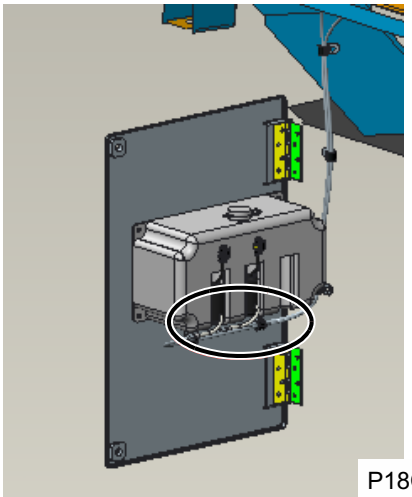 P18C00034	3. Pull out the connecting water pipe of the washer reservoir at the left ladder case.	

Figures	Operation step	Tools
 P18C00035	4. Pull out the shift control solenoid connector on the transmission-rh.	
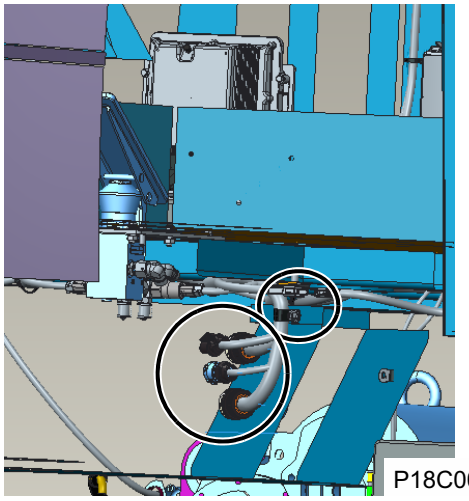 P18C00036	5. Unplug the 4 rear frame harness connectors on the left mounting bracket of cab and loosen the fixing ring nut fixing the harness.	Tool: Open-end wrench 16#
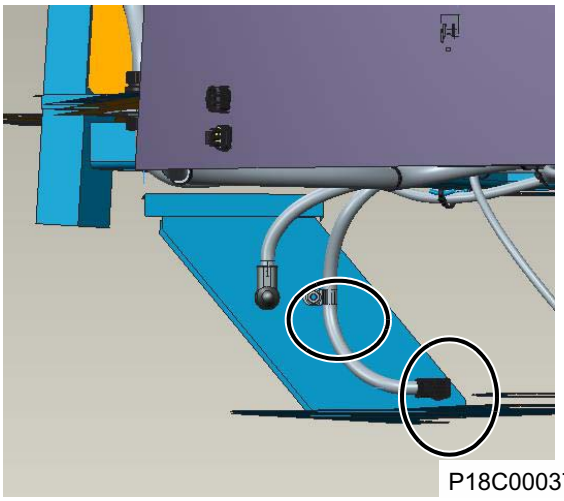 P18C00037	6. Unplug the 1 front frame harness connectors on the right mounting bracket of cab and loosen the fixing ring nut fixing the harness.	Tool: Open-end wrench 16#

Replacement and Installation for Lifting Rings of Head Cover

Figures	Operation step	Tools
 P18C00038	Loosen 4 M16 bolts and replace and install M16 lifting rings.	Tool: Open-end wrench 24#

Removal of Shock Cushion

1. Steps to removing the shock cushion from the machine:

⚠CAUTION

Before removing cushion, make sure that the machine is in parking brake state.

Figures	Operation step	Tools
 P18C00039	The cushion of cab is installed with M30 bolts which are screwed out with #46 torque wrench. Mounting torque value: tightening torque (dry state) = 1055 N.m.	Tool: Open-end wrench 46#

2. Step of installing shock cushion onto machine: install it by the opposite steps of removal.

Lift

Install M16 lifting rings on the cover of cab and lift the cab.

Removal of the Seat

Exploded view of driver seat

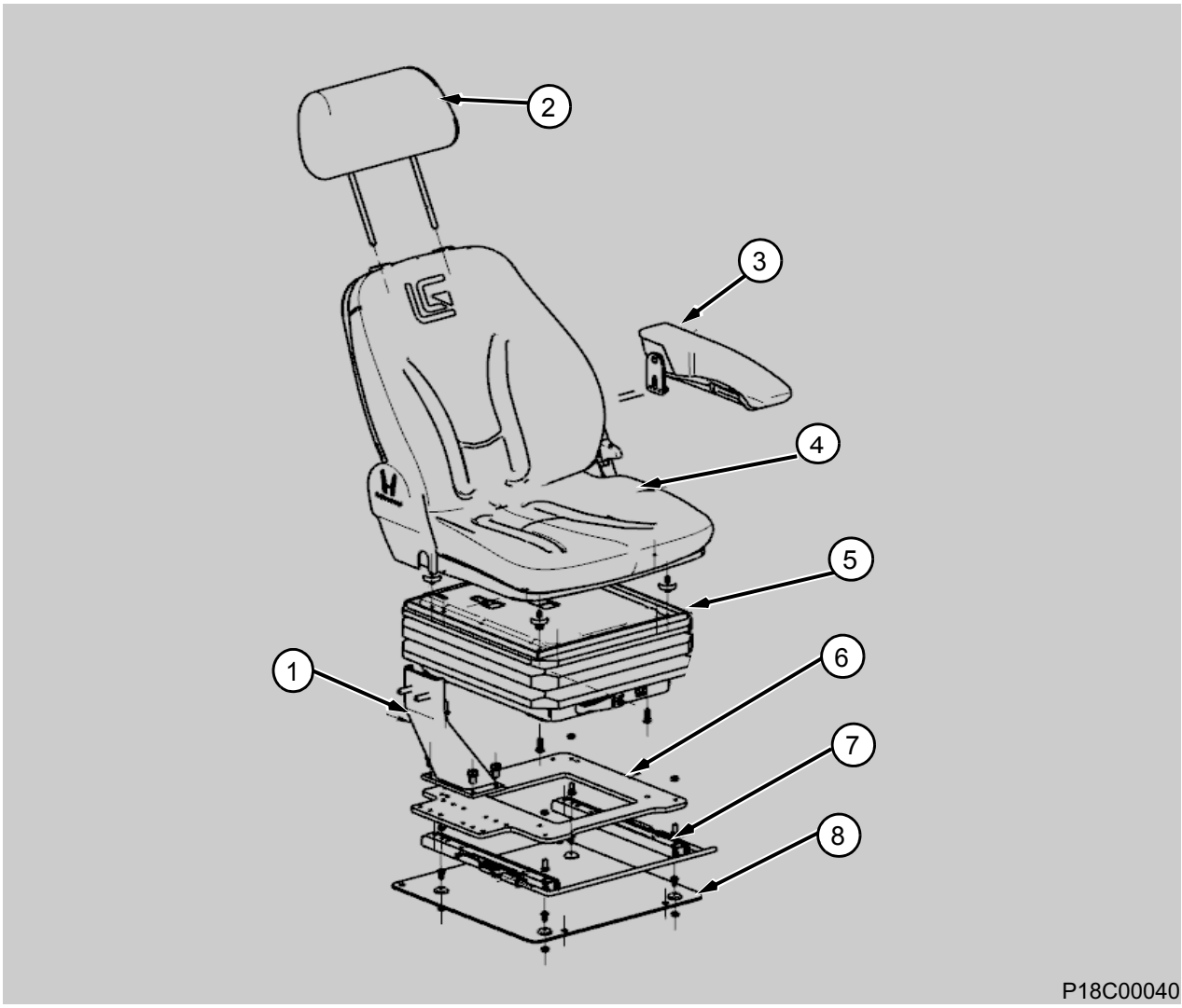

1. Bracket(14A7068)
2. Headrest(35C0877)
3. Handrail(34C3671)
4. Backrest as(14A7067)
5. Shock absorption frame(47C1358)
6. Bracket bottom plate(14A7069)
7. Slide rail(2048536)
8. Install the floor mat(LZY-LG6804001-1)



P18C00041

The seat consists of headrest, handrail, base assembly, shock mount, bracket, bracket bottom plate, slide rail and mounting bottom plate.

Removal of the Seat

1. Removal steps of the seat:

Figures	Operation step	Tools
 P18C00042	1. As the headrest is not limited by any fasteners and bayonets, so it can be removed by pulling out by hands directly. 2. Insert the rod of headrest aligning with the hole during assembly.	
 P18C00043	3. Screw out two M8 cap nuts on the side of handrail, and the handrail can be removed.	Tool: Wrench 13#

Figures	Operation step	Tools
 P18C00044 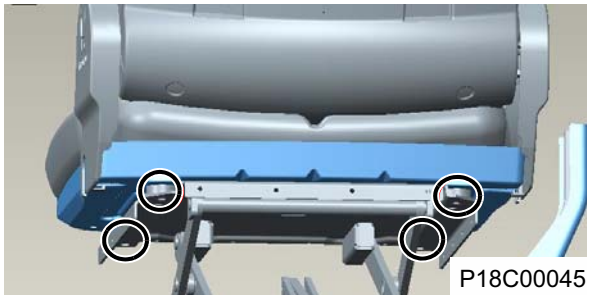 P18C00045	4. Remove the clamp from the dust cover by hand. 5. Remove four M8 bolts from shock mount with #13 wrench and the backrest assembly can be removed.	Tool: Wrench 13#
 P18C00046	6. Slide the seat forward; remove the two M8 inner hexagon bolts from the shock mount lower part. 7. Slide the seat rearward; remove the two M8 inner hexagon bolts from the shock mount lower part. The shock mount can be removed then.	Tool: M8 inner hexagon spanner

Figures	Operation step	Tools
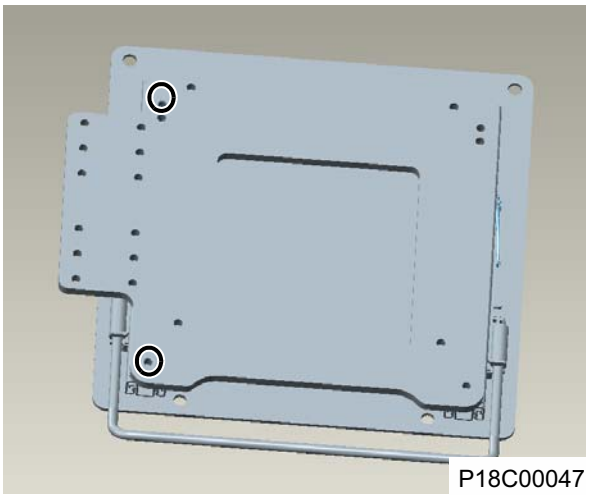 P18C00047	8. Unscrew the upper bolts of slide rail. (Slide the slide rail forward and remove the two front bolts; slide backward and remove the two rear bolts.)	Tool: Wrench 13#
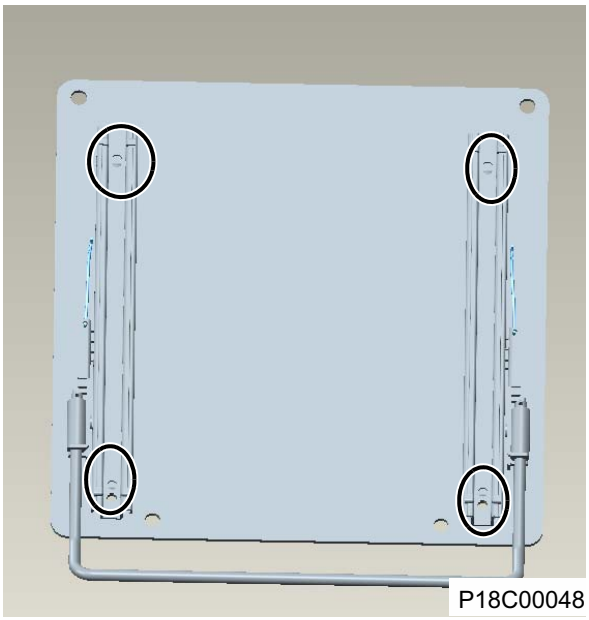 P18C00048	9. Unscrew the lower bolts of slide rail. (Bolt head is under mounting base plate)	Tool: Inner hexagon spanner #5

Figures	Operation step	Tools
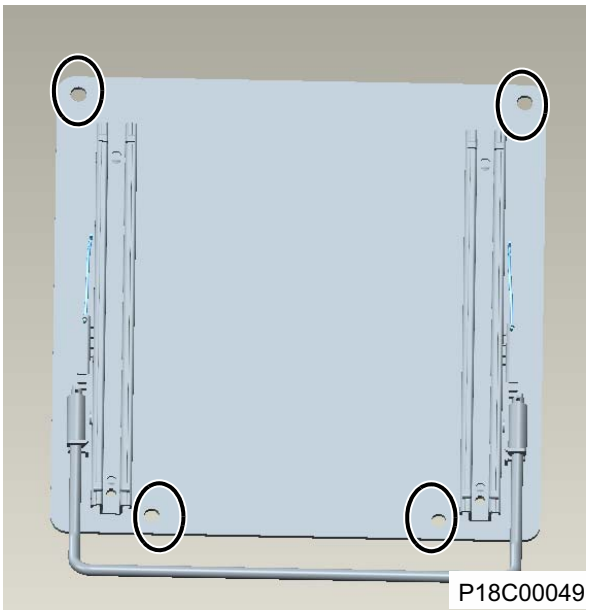 P18C00049	10. Unscrew the upper M12 bolts of slide rail. (Slide the slide rail forward and remove the two front bolts; slide backward and remove the two rear bolts.)	Tool: Socket wrench 18#

2. Step of installing seat onto machine: install it by the opposite steps of removal.

Removal of Console

1. Removal steps of armrest:

Figures	Operation step	Tools
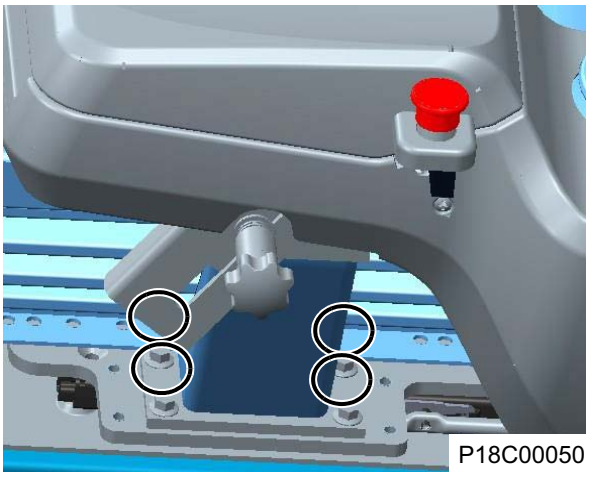 P18C00050	1. Remove the M10 bolts on seat support and the console can be removed entirely.	Tool: Wrench 13#

Figures	Operation step	Tools
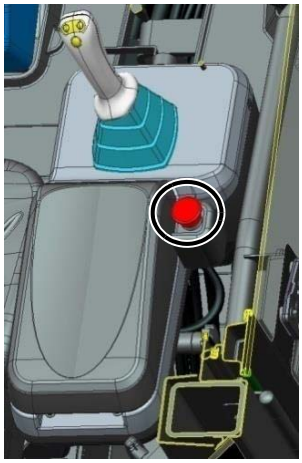 P18C00051 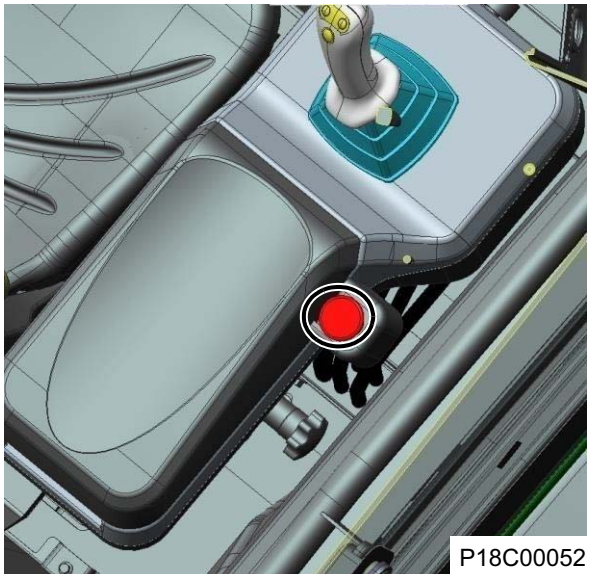 P18C00052	2. Pull out the housing, 3. Remove the parking brake solenoid	

Figures	Operation step	Tools
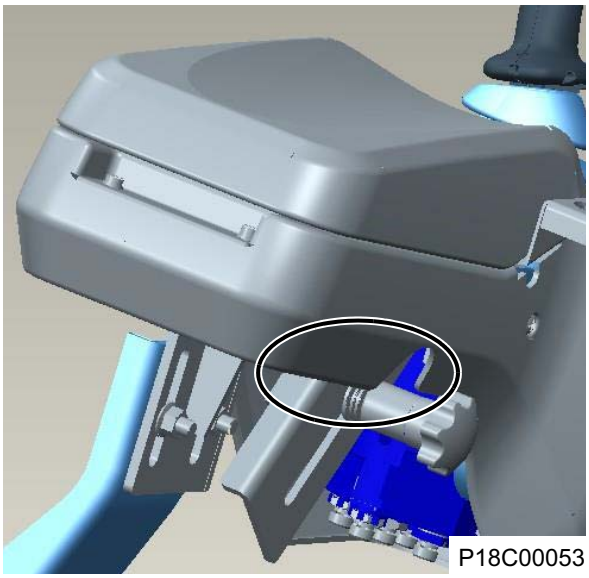 P18C00053	4. Remove adjusting lever on the side of console and then the armrest cushion can be removed by pulling upward.	
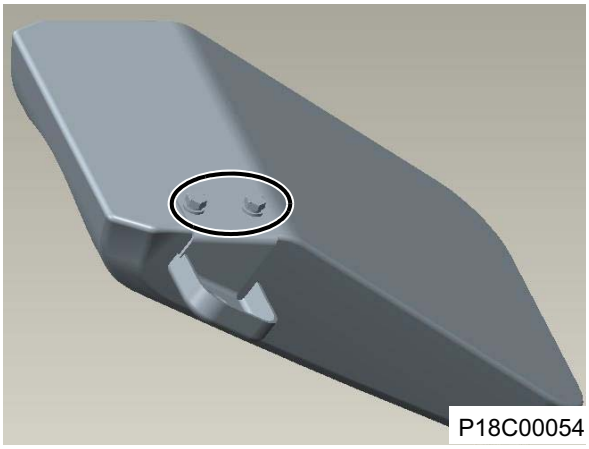 P18C00054	5. Screw out two M6 bolts on support angle block of hand-rail.	Tool: Wrench 10#
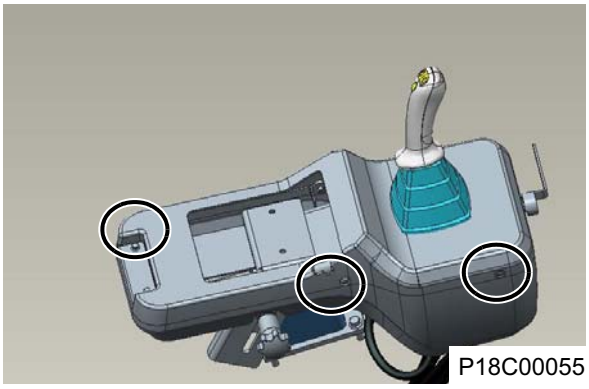 P18C00055	6. Remove the 4 screws and 2 bolts around housing, and then the upper housing can be removed.	Tool: cross screw-driver, M6 inner hexagon span-ner

Figures	Operation step	Tools
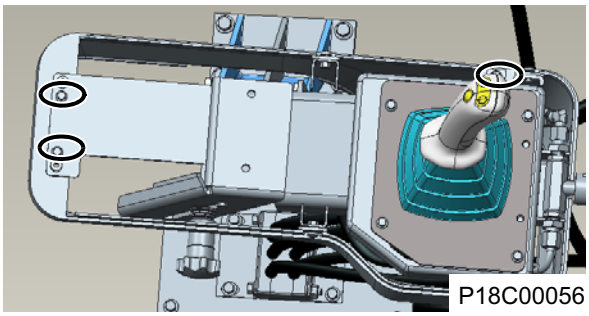 P18C00056	7. Screw out the 4 screws on the lower housing and the lower housing can be removed.	Tool: M6 inner hexagon spanner, open-end wrench 8#
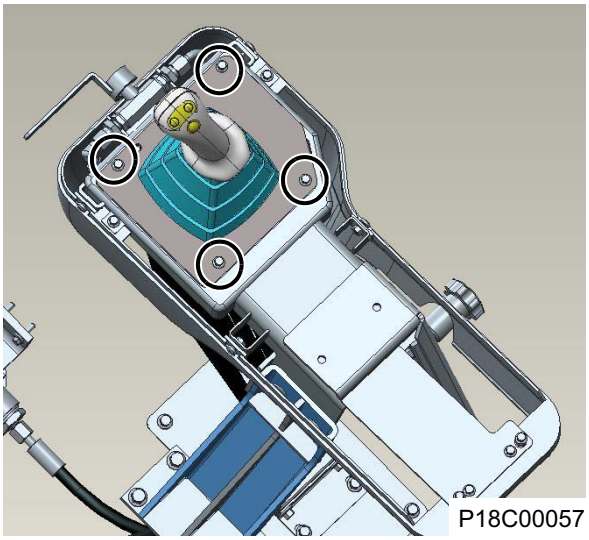 P18C00057	8. Screw out 4 M6 bolts as tightened in the left figure, and then remove the pilot lever.	Tool: Open-end wrench 10#
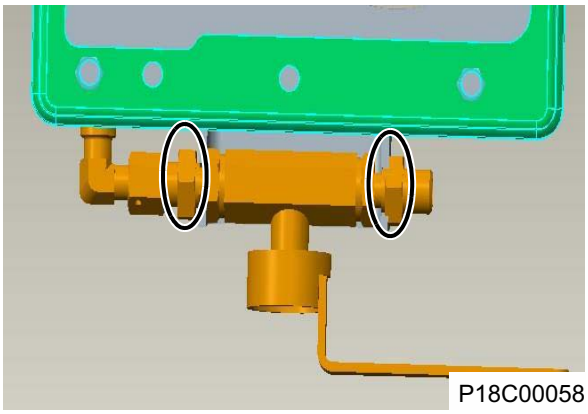 P18C00058	9. Screw out pilot shutoff valve nuts as tightened in the left lower figure.	Tool: Open-end wrench 21#

2. Step of installing console onto machine: install it by the opposite steps of removal.

Removal of Decoration

Removal of the Rear Right Positioning Lock Trim Cover in the Cab

Figures	Operation step	Tools
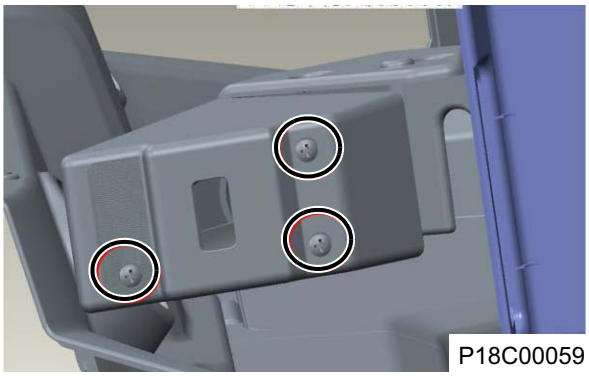 P18C00059	1. Screw out three setscrews on window-rh fixing lock cover and remove the cover.	Tool: Cross-screw-driver 2 100P QB/T2564.5-2002
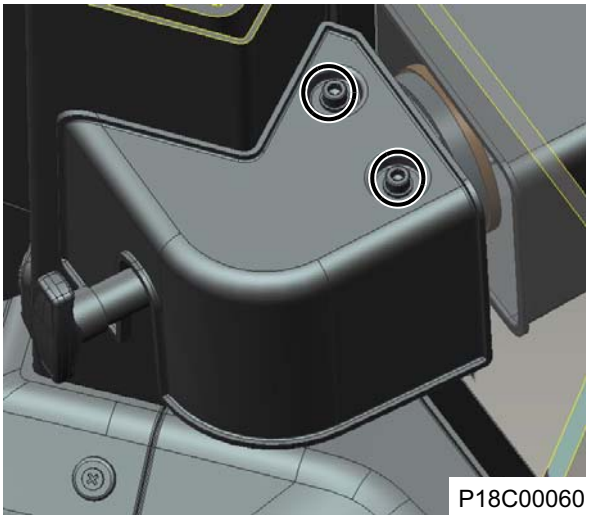 P18C00060	2. Screw out two countersunk bolts on window-rh position-ing lock cover.	Tool: Screwdriver for countersunk bolt 2 100P QB/ T2564.5-2002
 P18C00061	3. Screw out the set inflating screws on cover and remove the cover.	Tool: Cross-screw-driver 2 100P QB/T2564.5-2002

Removal of Left Decoration of Cab

Figures	Operation step	Tools
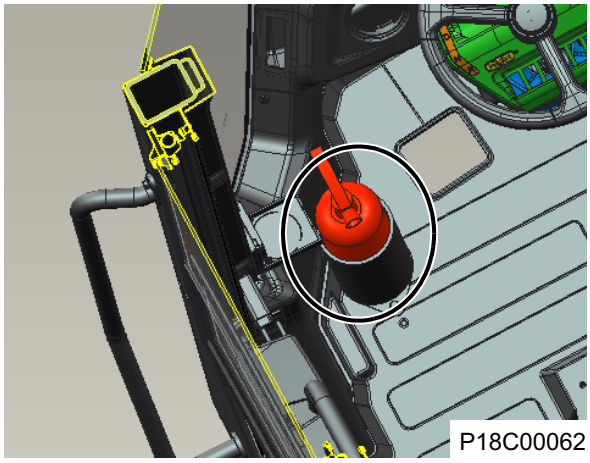 P18C00062	1. Loosen and remove the mounting bolt of fire extinguisher.	Tool: Wrench 10#
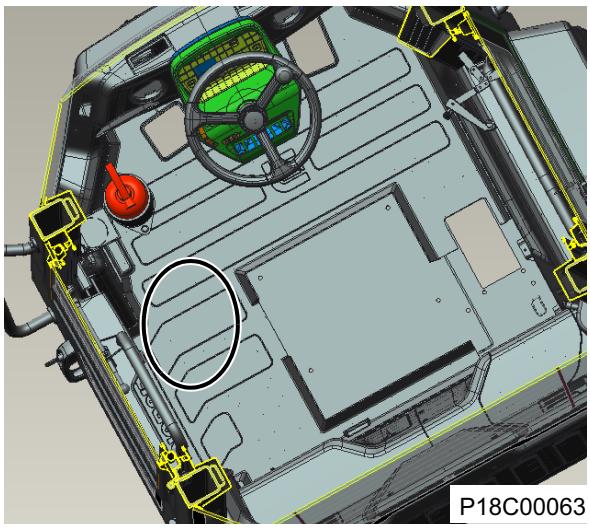 P18C00063	2. Remove the floor mat directly from the cab.	

Figures	Operation step	Tools
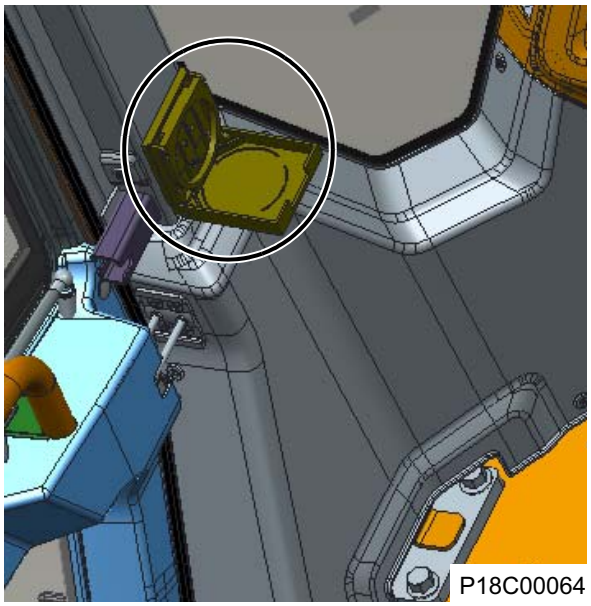 P18C00064	3. Screw off the 2 cross recessed screws from the cup mounting support.	Tool: Cross-screw-driver 2 100P QB/T2564.5-2002
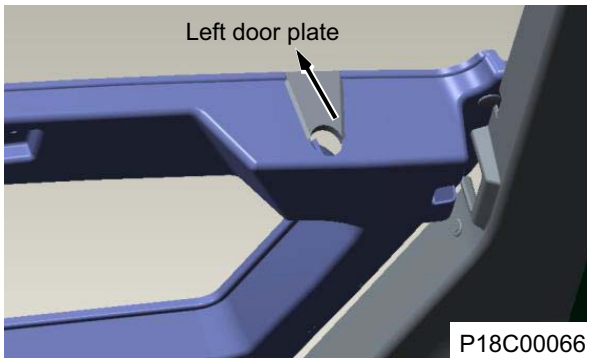 P18C00066	4. Remove the left door plate.	Tool: Cross-screw-driver 2 100P QB/T2564.5-2002
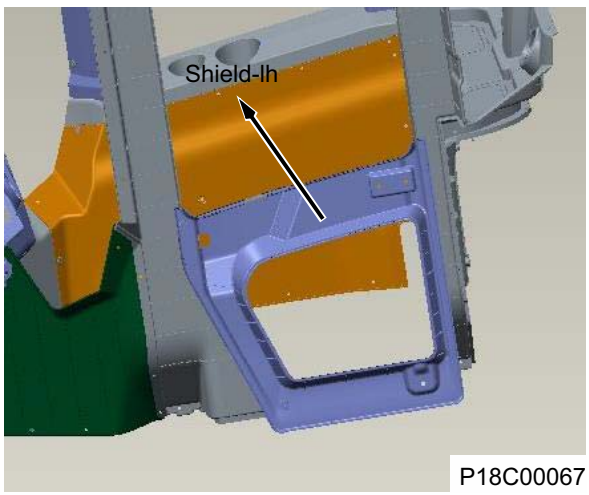 P18C00067	5. Remove the set inflating screws and setscrews on door shield-lh and remove the shield-lh.	Tool: Cross-screw-driver 2 100P QB/T2564.5-2002

Removal of Right Decoration of Cab

Figures	Operation step	Tools
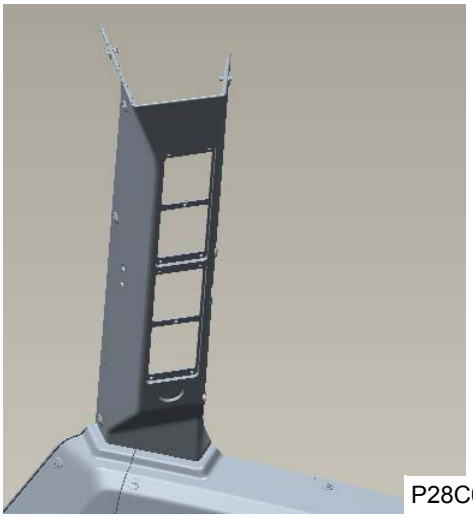 P28C00302	1. Remove the set inflating screws on right front decorations and remove the right front decorations.	Tool: Cross-screw-driver 2 100P QB/T2564.5-2002
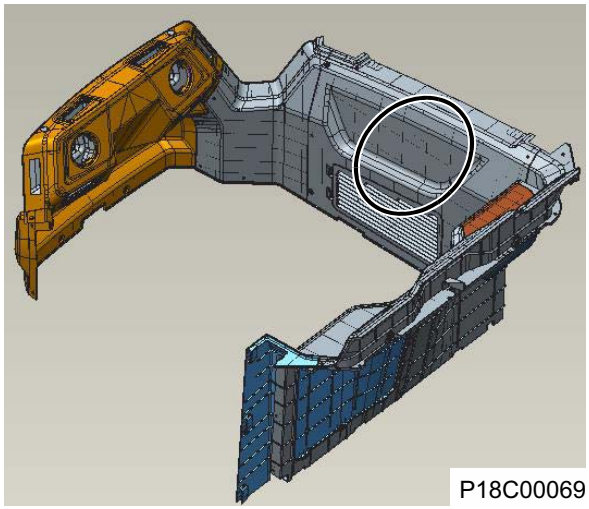 P18C00069	2. Remove the set inflating screws and mounting bolts on the right side decorations and remove the right side decorations.	Tool: Cross-screw-driver 2 100P QB/T2564.5-2002, 6# Open-end wrench
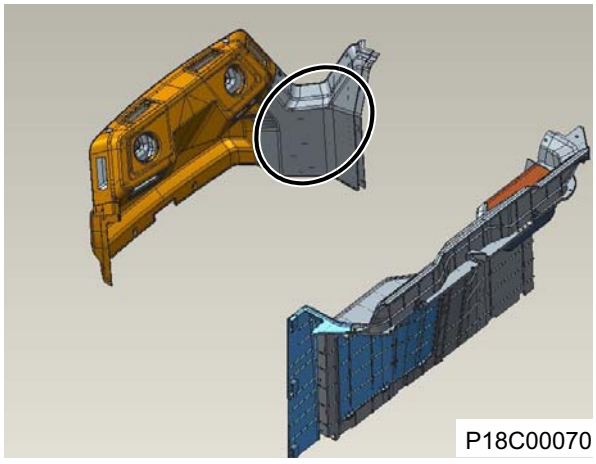 P18C00070	3. Remove the set inflating screws on the right front side decorations and remove the right side decorations.	Tool: Cross-screw-driver 2 100P QB/T2564.5-2002

Removal of Decoration of Rear Plate

Figures	Operation step	Tools
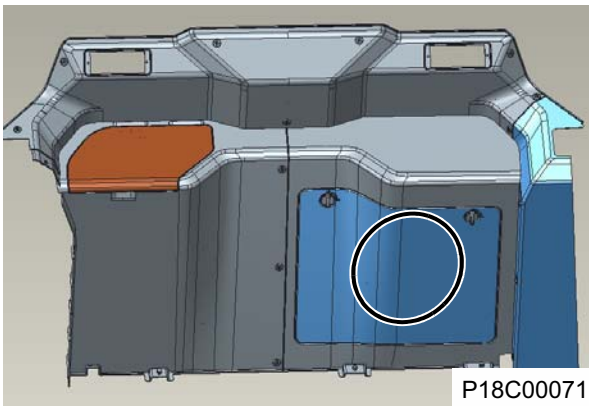 P18C00071	1. Remove two setscrews on access door by hands and remove the access door.	
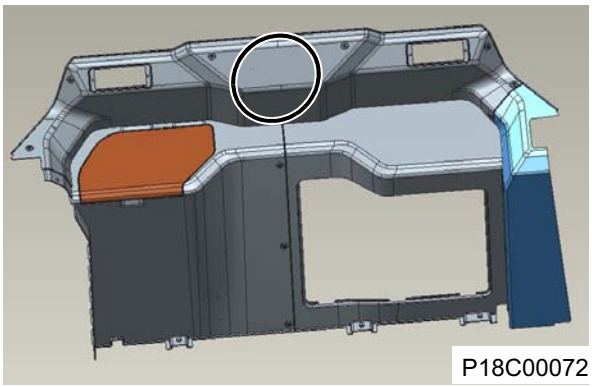 P18C00072	2. Remove the 8 inflating screws on the rear wall guard plate decoration and remove the rear wall guard plate decoration.	Tool: Cross-screw-driver 2 100P QB/T2564.5-2002
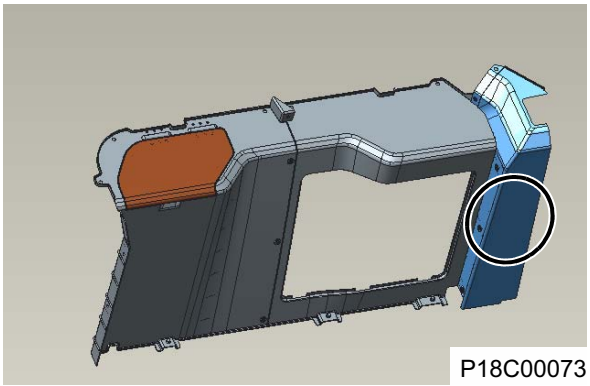 P18C00073	3. Remove the 3 set inflating screws on the decorations of rear plate-lh and remove the decorations of rear plate-lh.	Tool: Cross-screw-driver 2 100P QB/T2564.5-2002

Figures	Operation step	Tools
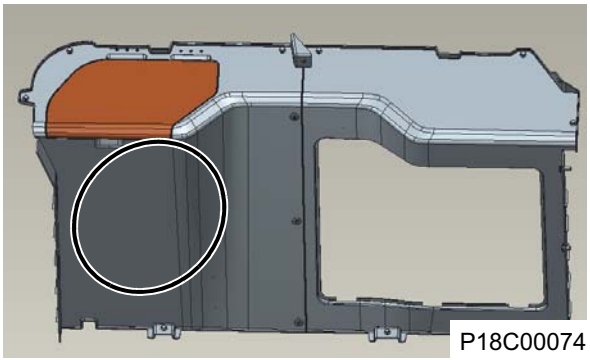 P18C00074	4. Remove the 4 bolts and 3 inflating screws on the decorations of rear plate-rh and remove the decorations of rear plate-rh.	Tool: Cross-screwdriver 2 100P QB/T2564.5-2002, 6# Open-end wrench
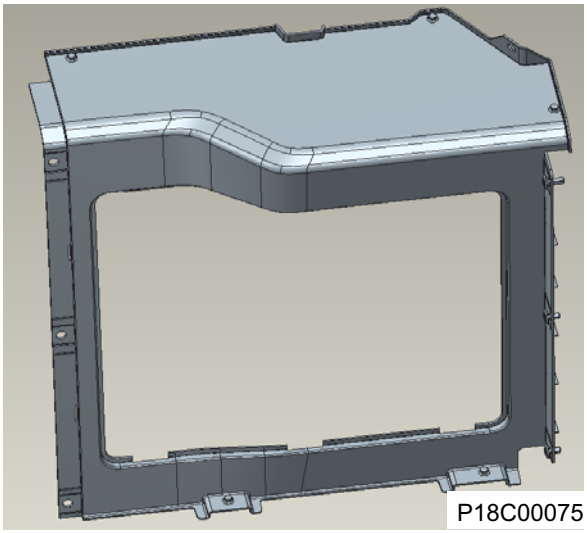 P18C00075	5. Remove the 5 bolts and 3 inflating screws on the decorations of rear plate-lh and remove the decorations of rear plate-lh.	Tool: Cross-screwdriver 2 100P QB/T2564.5-2002, 6# Open-end wrench

Removal of Decoration and Platform and Attachment

Figures	Operation step	Tools
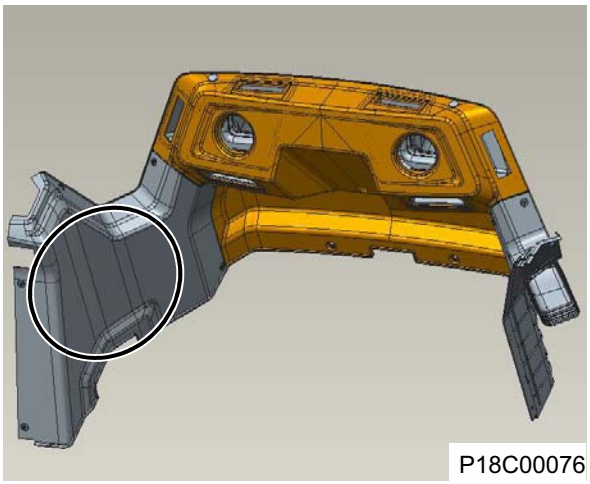 P18C00076	1. Remove the 7 set inflating screws on front decorations-lh and remove the front decorations-lh.	Tool: Cross-screwdriver 2 100P QB/T2564.5-2002
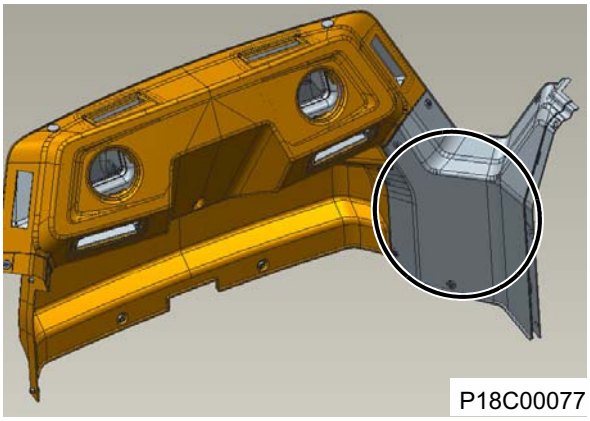 P18C00077	2. Remove the 6 set inflating screws on front decorations-rh and remove the front decorations-rh.	Tool: Cross-screwdriver 2 100P QB/T2564.5-2002
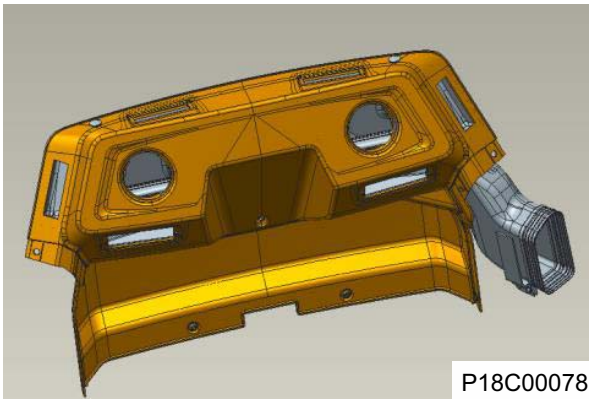 P18C00078	3. Remove the captive bolts on the platform decoration and remove the platform.	Tool: Screwdriver for countersunk bolt

Top Decorations of Cab

Figures	Operation step	Tools
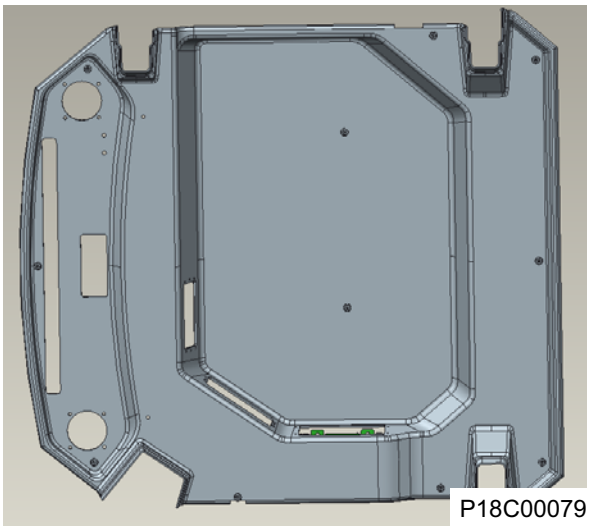 P18C00079	Remove the 12 setscrews on the top decorations and remove the top decorations.	Tool: Cross-screw-driver 2 100P QB/T2564.5-2002 Tool: Clean non-woven, Sika primer.

Assemble the Glass of Cab

Installation steps for glass:

⚠CAUTION

Before installing the glass, be sure that the machine is in parking brake state.

Figures	Operation step
 Clean and apply the base coat on it. P18C00080	1. Cleaning: dip a few amount of special activating agent with clean non-woven fabrics, and wipe the bonding position of steel window frame in one direction. 2. Prime coat: Shake the Sika primer sufficiently until the rolling of small ball inside the bottle can be heard, and continue shaking for another one minute. Wear protective gloves and apply a circle of primer evenly on the glass-bonded surface of window frame with a clean brush free of dead hairs. Tools: Clean non-woven, sika primer.
 Gluing P18C00081	3. Apply adhesive: wear protective gloves, apply Sika adhesive evenly to the glass bonding position or the bonding position of steel window frame with the surface treated along glass border, and make continuous triangular adhesive bead. Tool: Sika glue

Figures	Operation step
 Limit gommures Assist to affix the glass with sucker P18C00082	4. Put rubber blocks: insert rubber blocks at the inside of adhesive applying layer along the bottom at an interval of 30~35cm. Tool: Rubber limit block
 Fix with adhesive tape after stickup P18C00083	5. Check the glass if it is in good condition. 6. Bond glass: assist in installing the side glass with glass sucker and then installing the middle glass. Bond the glass to the steel window frame symmetrically, and apply pressure to bond glass, rubber blocks and steel window frame together closely. Pay attention that the gap between middle glass and side glass shall be about 8mm. Meanwhile fix all the glass with adhesive tape until the viscose dries. Tools: Glass sucker, seal **⚠ CAUTION: The glass rim and angle should not contact with the metal plate of cab, there should be a clearance of 3~5mm.**

Figures	Operation step
 Glass gap filling sealant: One line each on left and right for both front and rear glasses P18C00084	7. Glass joint filler: bond the color separation paper on both sides of adjacent glass edge, about 5mm away from the glass edge, and keep the spacing formed by color separation papers on both sides consistent from up to down; Meanwhile, seal the inside of glass joint with color separation paper to avoid rugged adhesive on the back when filling adhesive. After applying adhesive, flatten with self-made rubber plate. Tool: Seal **⚠ CAUTION: The speed of applying adhesive shall be even and the triangular adhesive bead shall be uniform without lumps or breakpoints. Insertion depth is 2mm. The rubber limit blocks shall not be placed within the scope of 10cm from corner point. The block shall not separate the adhesive bead. Flatten excessive glue of sheet metal side not receiving filler treatment, and no excessive adhesive shall remain.**

Installation of the Left Door Lock in Cab

⚠CAUTION

Before installing the left door lock, be sure that the machine is in parking brake state.

Figures	Operation step	Tools
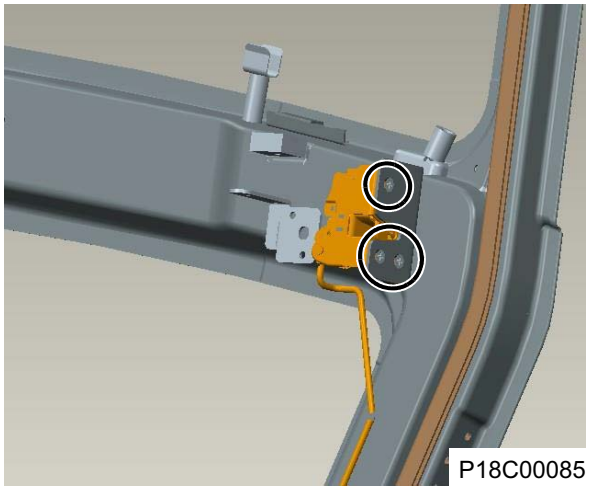 P18C00085	1. Check: check whether the left door lock parts are complete and in good condition or not. 2. Installation of lock block: Install lock block in the appropriate location of the door, and fix it with M6×16 screw. **⚠CAUTION: The setscrews must be tightened without looseness.**	Tool: Cross screwdriver
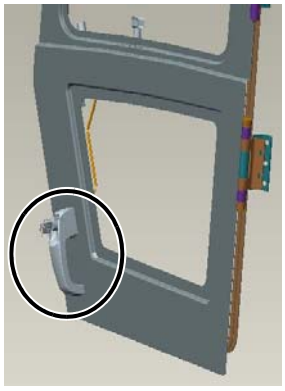  P18C00086	3. Installation of outside handle, mounting plate and pad: Install outside handle and mounting plate, pad in the appropriate location of the door together, and then fix them with M6×20 screw. The setscrews must be tightened without looseness.	Tool: Cross screwdriver

Figures	Operation step	Tools
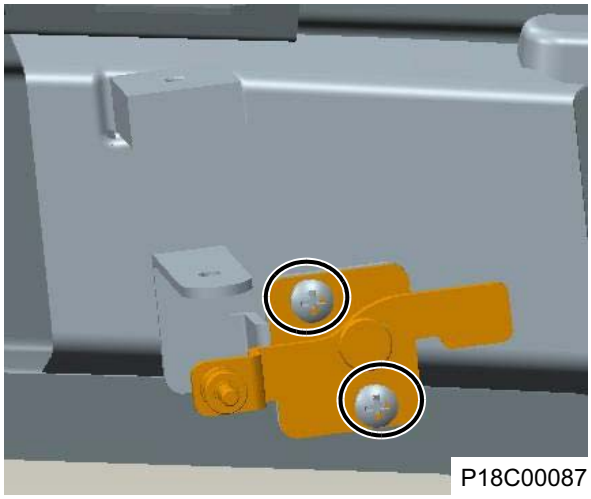 P18C00087	4. Installation of adapter plate: Fix it with M6×16 screw, and setscrews must be tightened without looseness.	Tool: Cross screwdriver
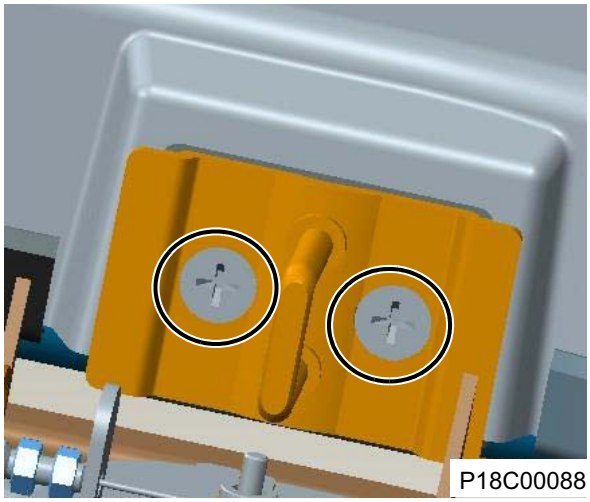 P18C00088	5. Installation of shim and lock buckle: Fix it with M8×20 screw after adjusting the lock buckle to the best locking position. Setscrews must be tightened without looseness.	Tool: Cross screwdriver
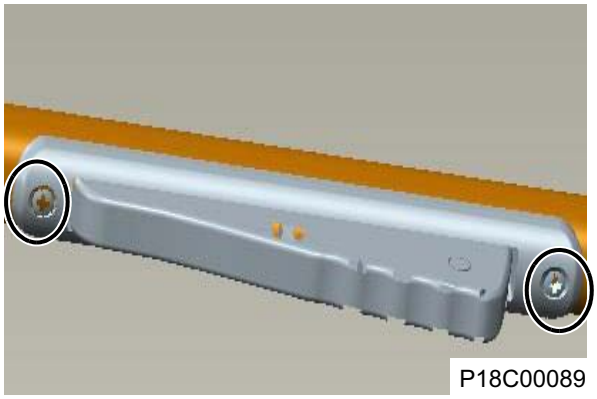 P18C00089	6. Installation of inside handle in the left door locating lock: Fix it with screw, and setscrews must be tightened without looseness.	Tool: Cross screwdriver

Figures	Operation step	Tools
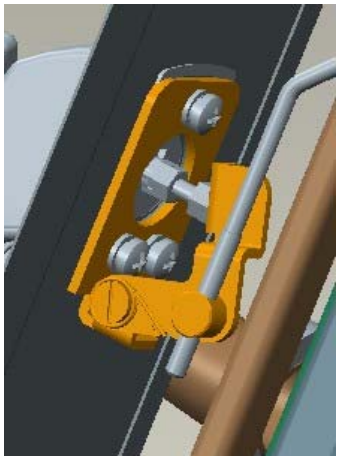 P18C00090	7. Adjust the mounting plate: Install the link in natural state into the mounting plate. **⚠ CAUTION: Adjust the screw cap to the best position, and install it into the mounting plate. The link needs to be left the movement clearance as 1-1.5mm.** **After installing the link, test the opening flexibility of outside handle by hand, and locking and opening in natural state should be flexible and spontaneous.**	
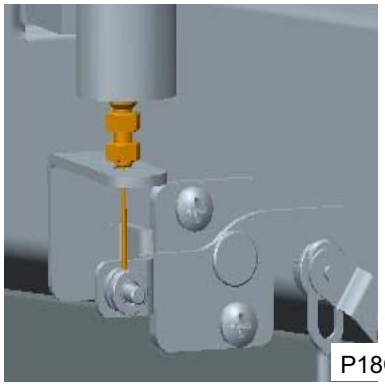 P18C00091	8. Adjustment of the inside handle in the left door locating lock: Connect the inside handle cable with the left door locating lock with adapter plate. **⚠ CAUTION: The setscrews must be tightened without looseness.** **After fixing the cable and adapter plate, the adapter plate should be left the natural movement clearance as 1-2mm.**	
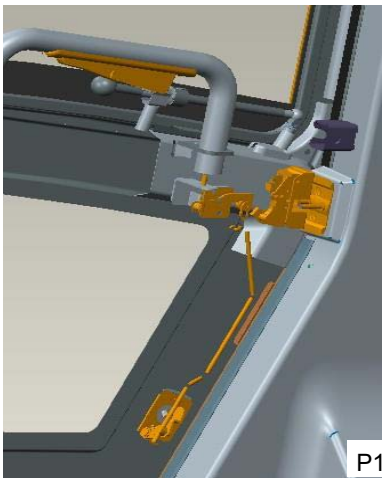 P18C00092	9. After installation, thoroughly check whether transmission, opening and locking of each parts of door lock are flexible or not.	

Removal and Installation of Engine Hood

Removal of engine hood:

Reference picture	Operation step	Tools required
 P18C00093 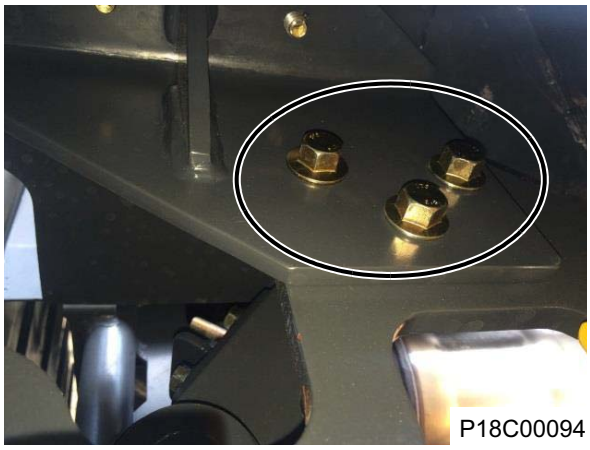 P18C00094	1. Remove the mounting bolts of the left/right shield (symmetrical on both sides, 6 in total) with wrench, remove the left/right shield and place them on the level ground.	Tool: Wrench 16#
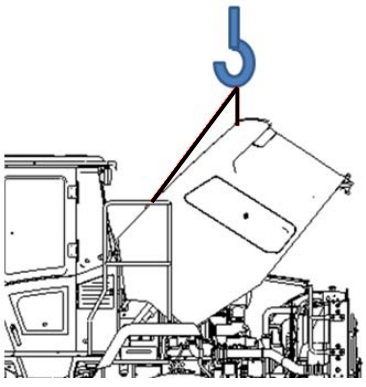 P18C00095	2. Open the engine hood to the maximum angle, remove the harness connectors of license plate light, rear view camera. Hold the rear lifting points of rear cover with crane, lifting rings, etc.	Tool: Sling (1t), lifting ring (2×M16)

Reference picture	Operation step	Tools required
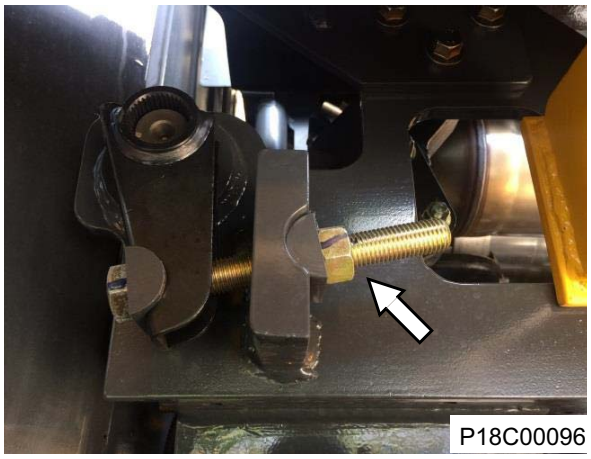 P18C00096 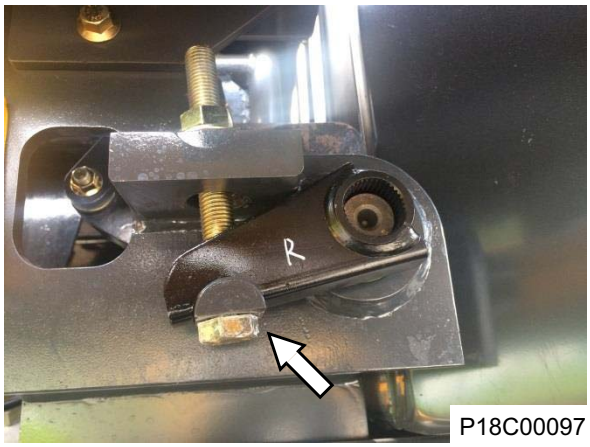 P18C00097	3. Remove the bolt assembly of torsion spring at left and right sides of engine hood.	Tool: Wrench 24#
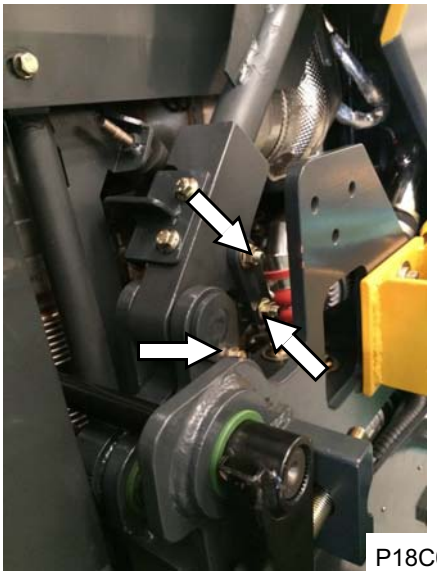 P18C00098	4. Remove the link bolts at left and right sides of engine rear hood and 4 in total. Remove the captive bolts (2 in total) of hinge pin at left and right sides of engine rear hood and knock out the pin.	

Reference picture	Operation step	Tools required
 P18C00099	5. Lift the engine rear hood out slowly and place it on the level ground.	Tool: Traveling crane Sling
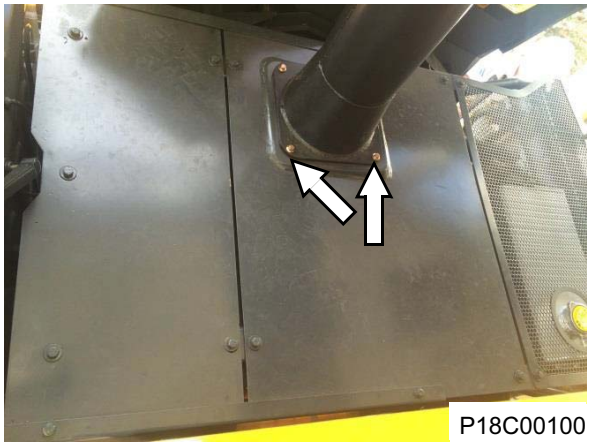 P18C00100	6. Remove the 4 captive bolts from exhaust pipe tail section and remove the exhaust pipe.	Tool: Open-end wrench 13#
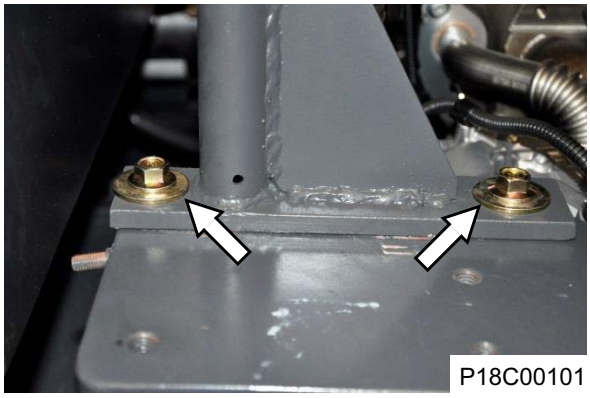 P18C00101	7. Remove the anchor bolts (4 in total) at left front and right front sides of engine upper hood bracket.	Tool: Open-end wrench 19#

Reference picture	Operation step	Tools required
 P18C00102	8. Remove the captive bolts (4 in total) at left rear and right rear sides of engine upper hood bracket.	Tool: Open-end wrench 19#
 P18C00103	9. Lift up the upper hood slowly and place it on the level ground	Tool: Traveling crane Sling

Installation of engine hood

Step of installing engine hood onto machine: install it by the opposite steps of removal.

Reference picture	Operation step	Tools required
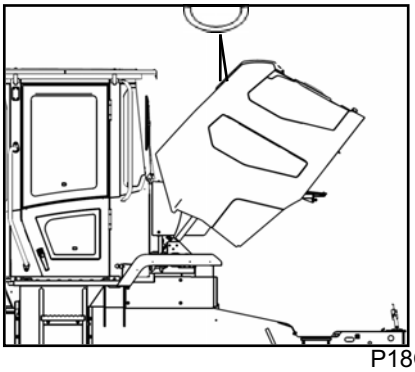 P18C00104	1. Lift and install the rear hood and hinge support together to the complete machine with a sling, a overhead crane, etc.	Sling (1t)
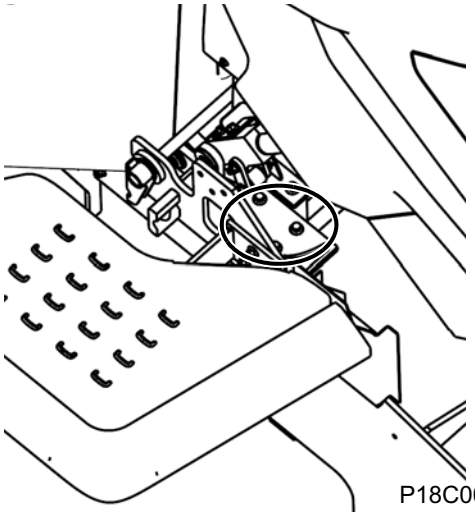 P18C00105	2. After adjusting the position of hood, install the bolts of hood hinge support to the brackets on the left and right sides of hood with 16# wrench and tighten them.	Wrench 16#
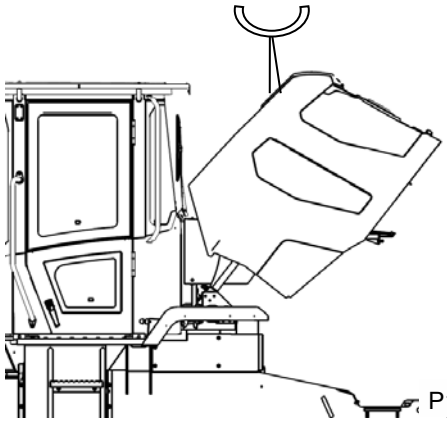 P18C00106	3. Operate the overhead crane to lift and open the rear hood to an angle about 50°	Sling (1t)

Reference picture	Operation step	Tools required
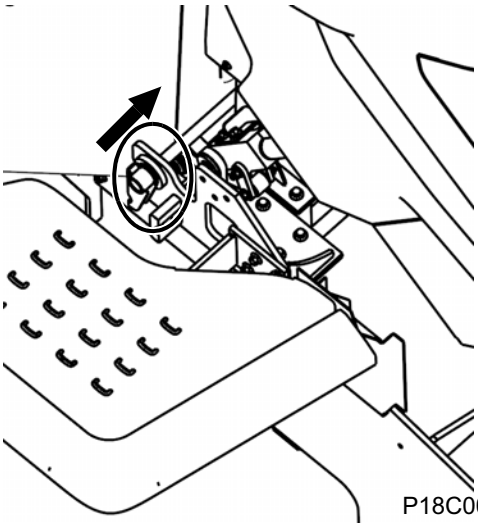 P18C00107	4. Pass the torsion spring through the hinge support from both sides respectively,where the torsion spring- left is at bottom while the torsion spring - right is at top.	/
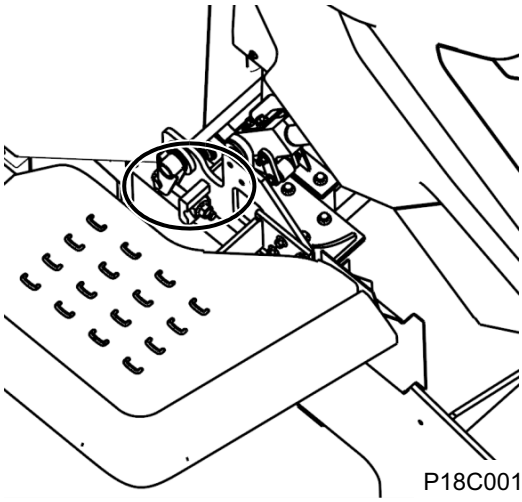 P18C00108	5. Adjust the position of torsion spring and slowly lock the torsion spring with bolts and nuts, during which try to loosen the lifting point and the overhead crane can be removed when the opening angle of hood is kept between 50°-52° without changing.	Wrench

Reference picture	Operation step	Tools required
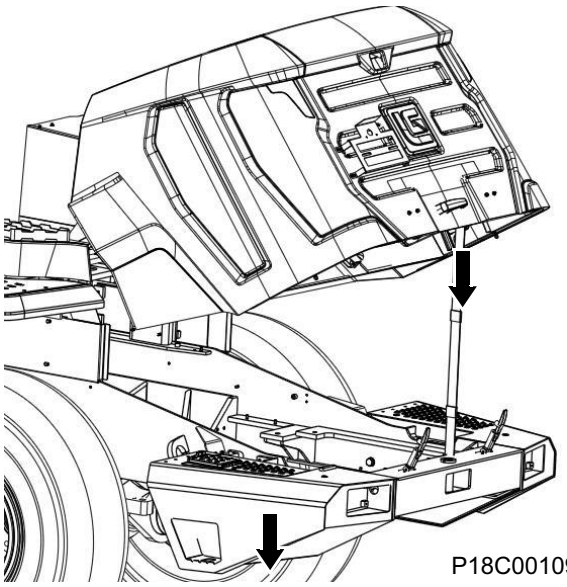 P18C00109 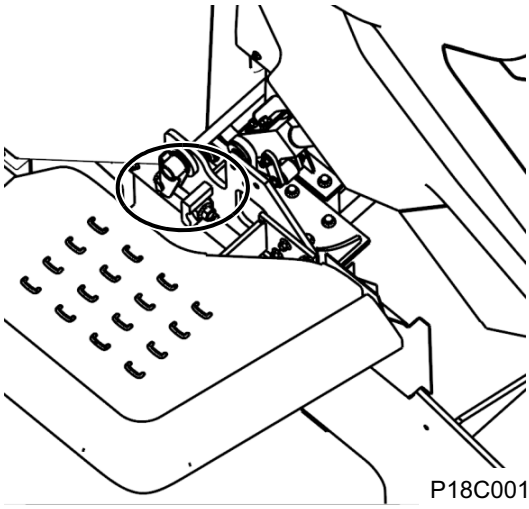 P18C00110	6. Pull down the lock along with the direction of arrow to close the engine hood slowly until the pull force is nearly the same with that of hood before removal and installation and the hood adjustment is completed, and if the pull force is too large, the nut and bolt locking the torsion spring can be properly loosened under the condition of ensuring about 50° opening of engine hood and if the hood is opened less than 50°, the nut and bolt locking the torsion spring can be further tightened	Wrench

Reference picture	Operation step	Tools required
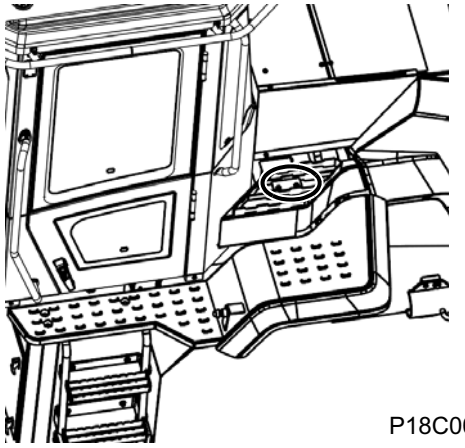 P18C00111	7. Install the pedals-lh and rh and shields-lh and rh and tighten the mounting bolts with 13# wrench (symmetrical on both sides, 4 in total).	Wrench 13#

Removal and Installation of the Engine Hood Torque Mechanism

Disassembly of lifting mechanism of torsion bar

Reference picture	Operation step	Tools required
	1. Refer toRemoval of engine hood:	
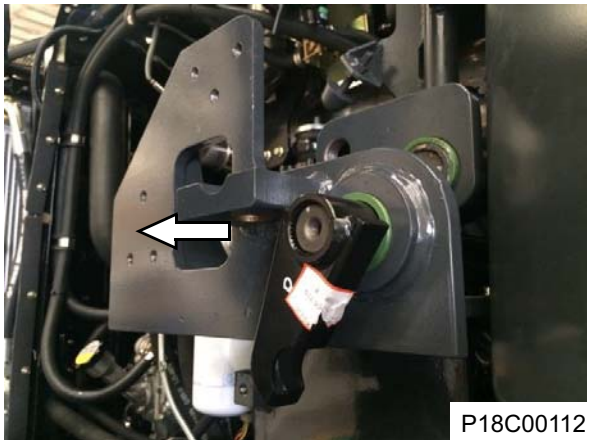 P18C00112	2. Remove the left and right torsion spring from both sides respectively.	

Reference picture	Operation step	Tools required
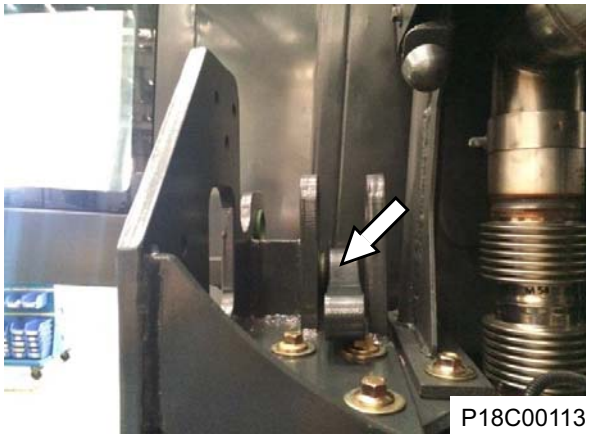 P18C00113	3. Remove the push rod at left and right sides	
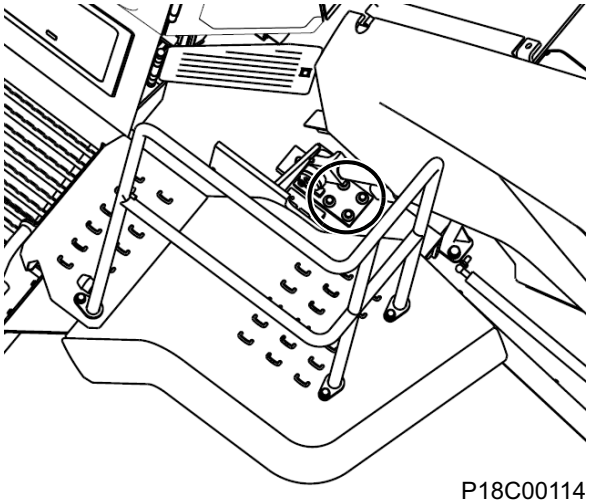 P18C00114	4. Remove the bolts from the engine hood hinge support with 16# wrench (symmetrical on both sides, 10 in total).	Wrench 16#
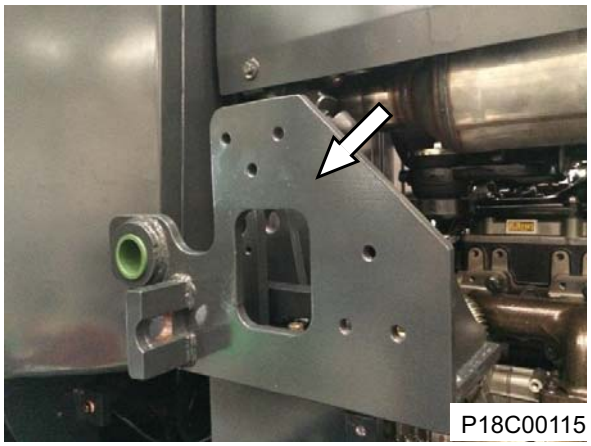 P18C00115	5. Lift and place the left and right support on the level ground with overhead crane.	Overhead crane (1t), Manila rope

Installation of lifting mechanism of torsion bar

Reference picture	Operation step	Tools required
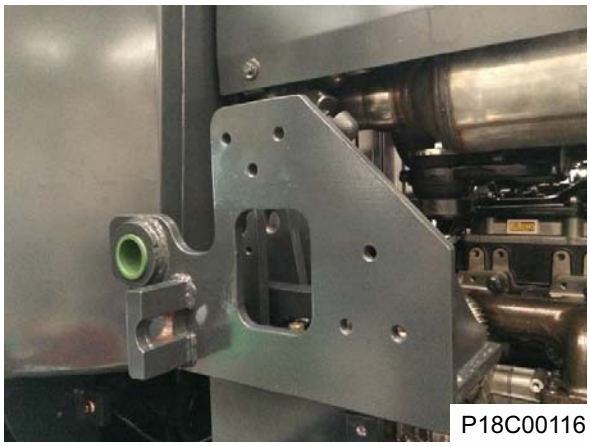 P18C00116	1. Lift and place the left and right support on the mounting position with overhead crane.	Overhead crane (1t), Manila rope
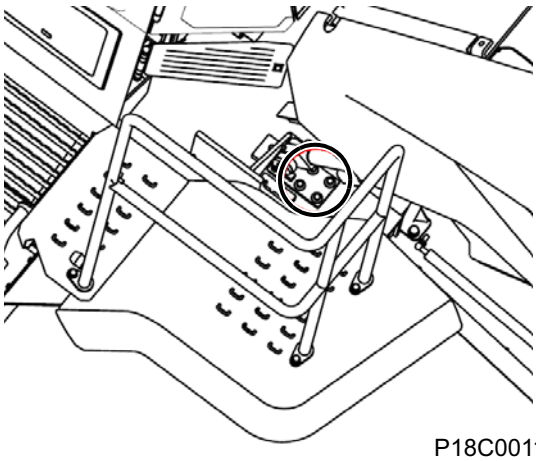 P18C00117	2. Tighten the bolts of the engine hood hinge support with 16# wrench (symmetrical on both sides, 10 in total).	Wrench 16#
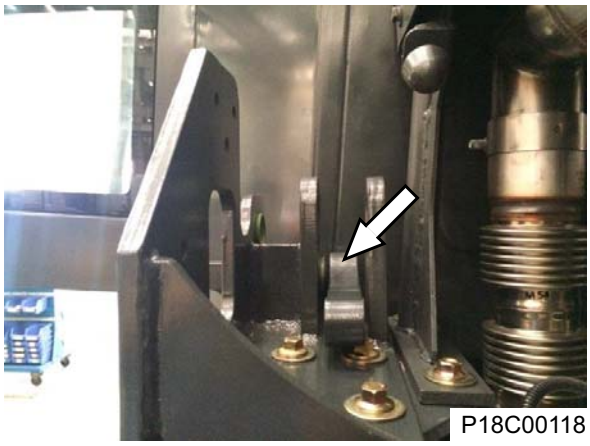 P18C00118	3. Place the left and right push rods at the mounting position.	

Reference picture	Operation step	Tools required
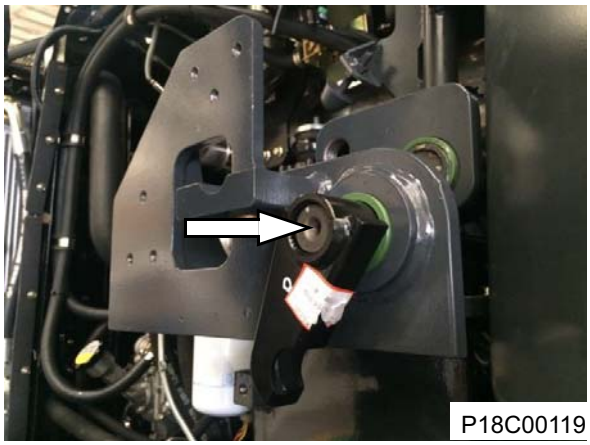 P18C00119	4. Pass the torsion spring through the hinge support from left and right sides respectively,where the torsion spring- left is at bottom while the torsion spring - right is at top.	Copper bar
	5. Refer toInstallation of engine hood	Wrench 16#

Structure

Structure Function Principle 7-3

Frame System 7-3
Hinge Assembly 7-4
Counterweight Assembly 7-5
Work Device 7-6
Work Implement Parameters 7-6
Overview and Configuration Scheme of Work Implement System 7-6
Work Implement Limit System 7-8

Removal and Installation 7-9

Removal and Installation of Hinge Assembly 7-9
Removal of Hinge Assembly 7-9
Installation of Hinge Assembly 7-13
Removal and Installation of Counterweight Assembly 7-20
Removal of Left and Right Battery Boxes (take left battery box as an example) 7-21
Installation of Left and Right Battery Boxes (take left battery box as an example) 7-24
Removal and Installation of Work Implement System 7-25
Removal and Installation of Linkage 7-25
Removal and Installation of Rocker Arm 7-28
Removal and Installation of the Boom 7-31
Replacement of Work Implement Bushing 7-36
Removal and Installation of Accessory System 7-38
Removal and Installation of Bucket 7-38
Replacement of Bucket Movable Blade, Movable Tooth and Tip 7-41
Optional Work Implement and Accessory System 7-43
Option of Work Implement System 7-43
Option of Accessory System 7-43

Structure Function Principle

Frame System

Frame Overview

The frame system includes front frame and rear frame. Front frame is of a welded frame structure, and installed with front axle system, work implement system, etc. Rear frame is of a welded frame structure, and mainly consists of engine system, transmission & torque converter system, rear axle assembly, cooling system, engine hood assembly, counterweight, etc.

Frame Structure Diagram

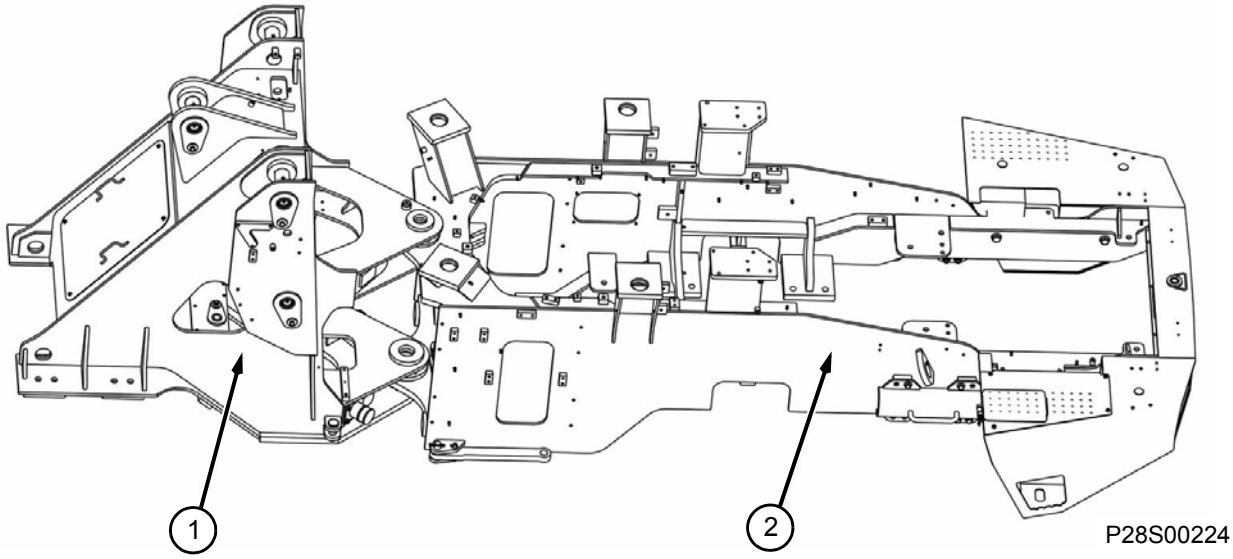

1. Front frame
2. Rear frame

Hinge Assembly

Overview and configuration scheme of hinge assembly

The hinge assembly is the key part to connect front frame and rear frame and make front and rear frames to function in relatively steering.

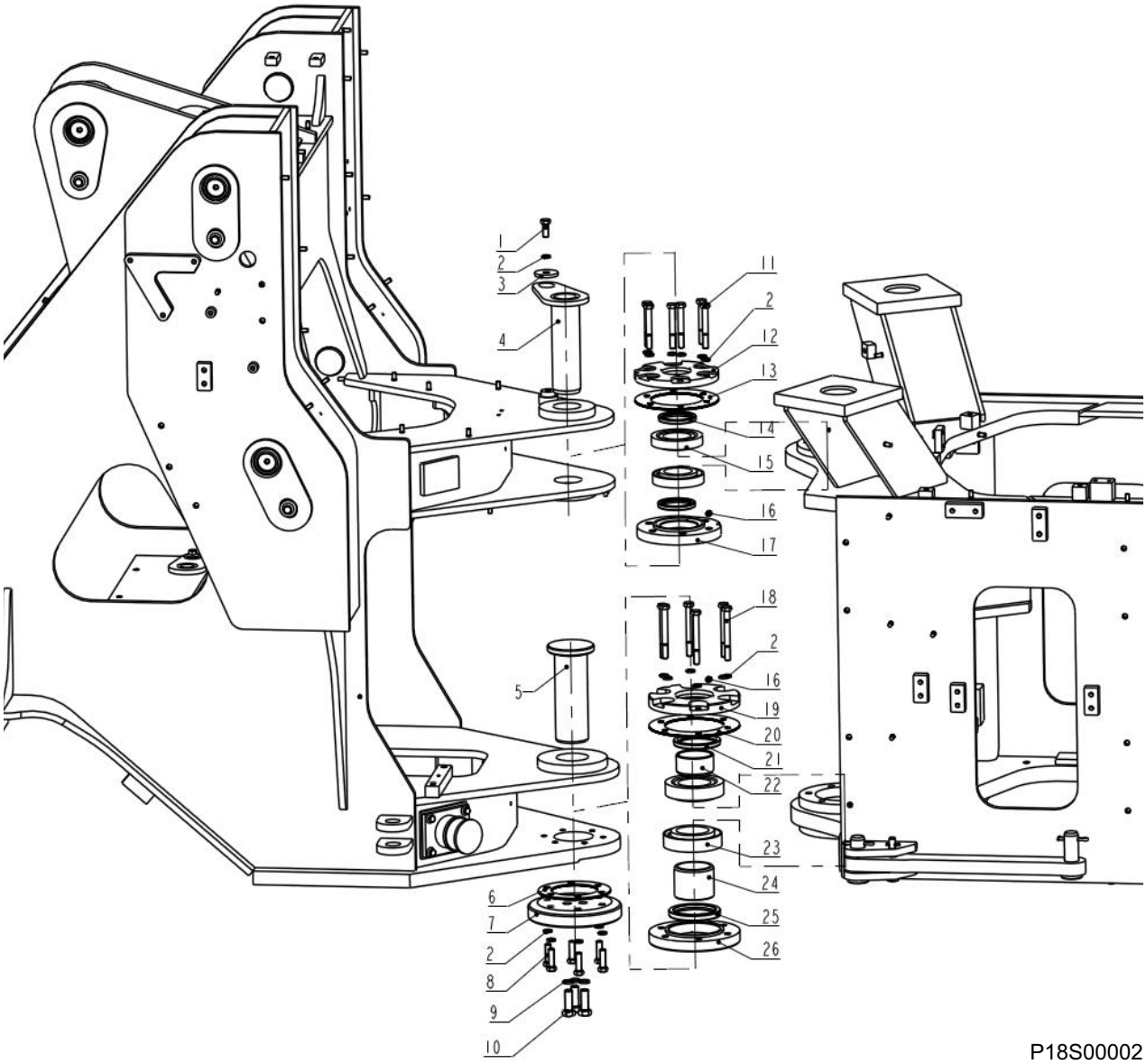

P18S00002

1. Bolt
2. Washer
3. Plate
4. Lower hinge pin
5. Hinge pin
6. Shim
7. Pin-on-disk
8. Bolt
9. Washer
10. Bolt
11. Bolt
12. Bearing cover
13. Shim
14. Seal ring
15. Tapered roller bearing
16. Grease fitting
17. Bearing cover
18. Bolt
19. Bearing cover
20. Shim
21. Seal ring
22. Spacer sleeve
23. Tapered roller bearing
24. Spacer sleeve
25. Seal ring
26. Bearing cover

Counterweight Assembly

Overview and Structure Diagram of Counterweight Assembly

Counterweight assembly is mainly connected and installed on both sides of rear frame tail by bolts, and mainly used for installing the battery, disconnect switch, rear floodlight, etc.

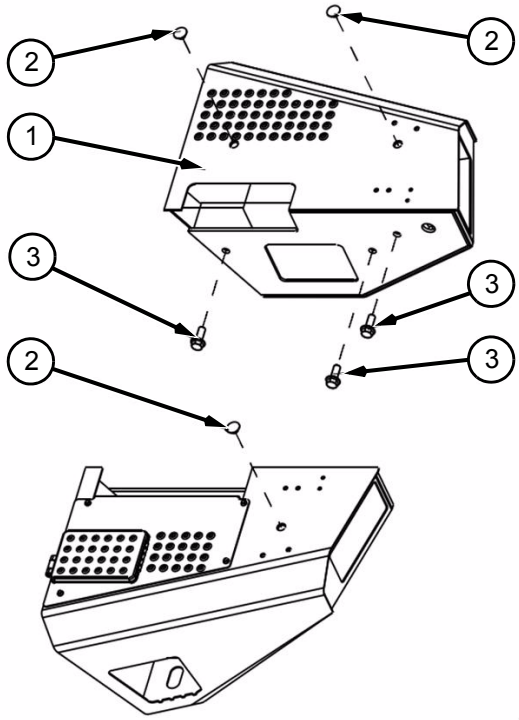

P28S00225

1. Counterweight assembly
2. Plug
3. Bolt

Note: If it is necessary to remove or install left and right battery boxes, first take out plug, and then install three M24 lifting ring screws, which are used for lifting the left and right battery boxes. When lifting the battery box, the lifting ring screw and the lifting eye need match up nicely.

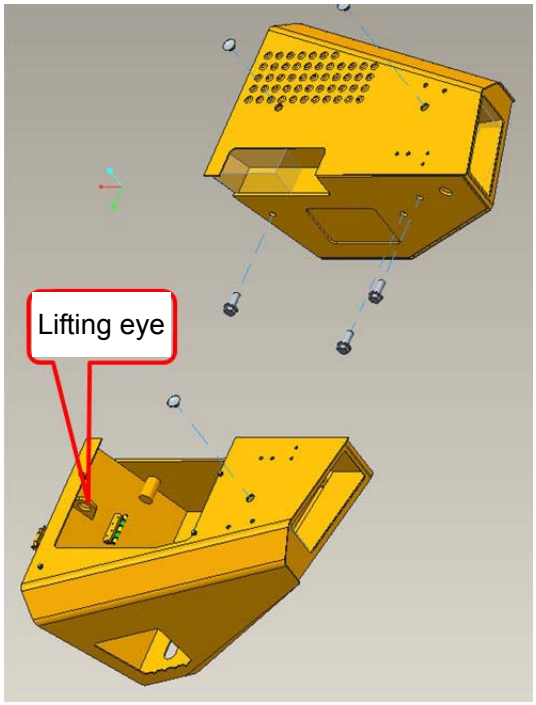

P28S00226

Work Device

Work Implement Parameters

Item	Standard boom+1.8 cube bucket		Extension boom+1.8 cube bucket		Ultra-long jib +3.0 cubic bucket	
	Metric system	British system	Metric system	British system	Metric system	British system
Dumping height	2920mm	114.96In	3200mm	125.98 In	3644mm	143.46 In
Dumping reach	1014mm	39.92In	1004mm	39.53 In	1394mm	54.88 In
Breakout force of the bucket	105000N	23604lbf	100000N	22480 lbf	71500N	16073 lbf
Breakout force of the boom	71600N	16096 lbf	65400N	14702 lbf	49900N	11217 lbf

Overview and Configuration Scheme of Work Implement System

As a reverse six-link mechanism, work implement is the critical part for the whole loader to load, transport and dump, etc. Bucket is installed on the front end of work implement, and the rear end is connected to front frame by the pin.

Work implement system

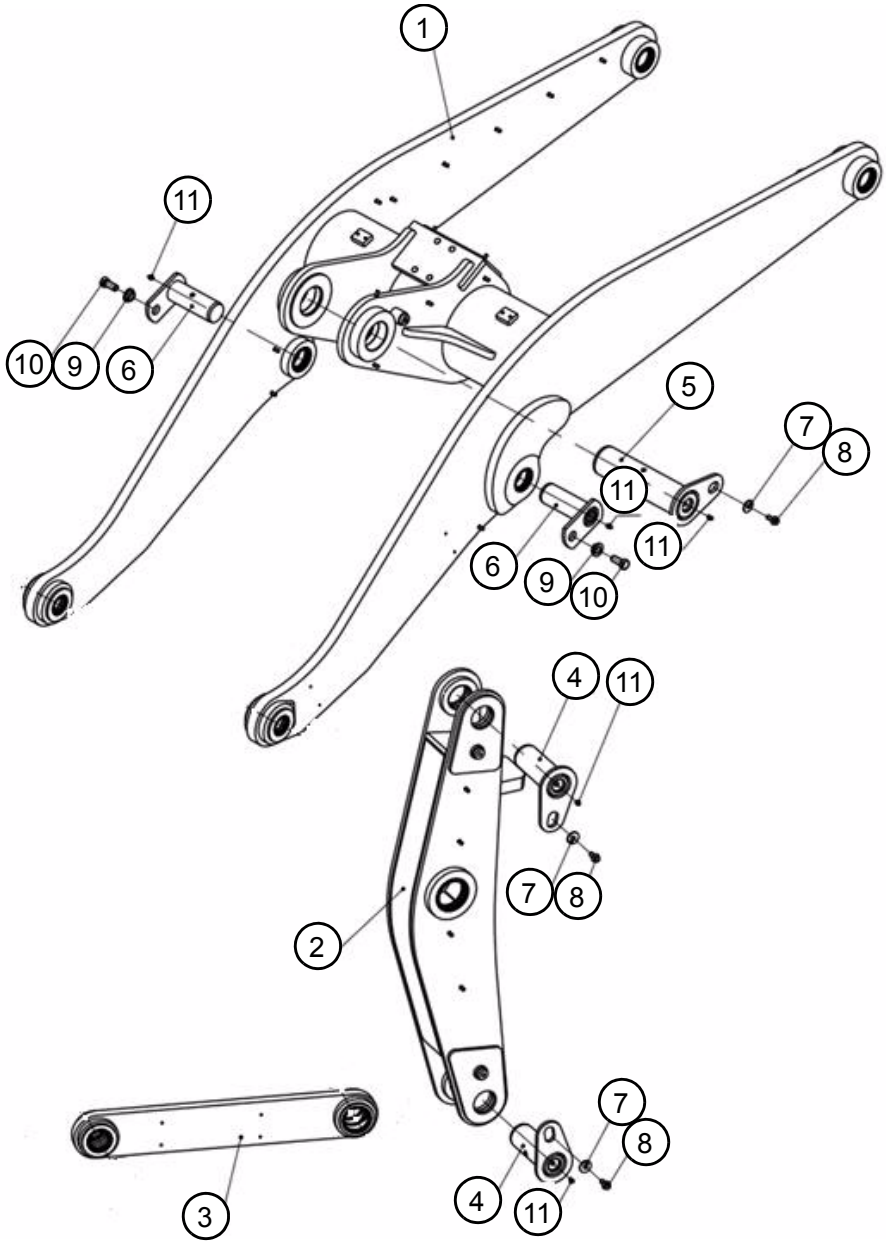

P28S00112

1. Boom
2. Rocker arm
3. Linkage
4. Link pin
5. The middle pin of rocker arm
6. Pin assembly
7. Washer
8. Bolt
9. Cushion cover
10. Bolt
11. Oil cup

Note: At each hinge pin shaft of work implement, the adjustable shim with appropriate thickness shall be selected according to assembly clearance to make sure that the unilateral clearance is less than 1mm.

Work Implement Limit System

Work implement limit system is mainly used to limit cylinder stroke so as to protect the cylinder and whole work implement.

Schematic diagram of standard boom limit system

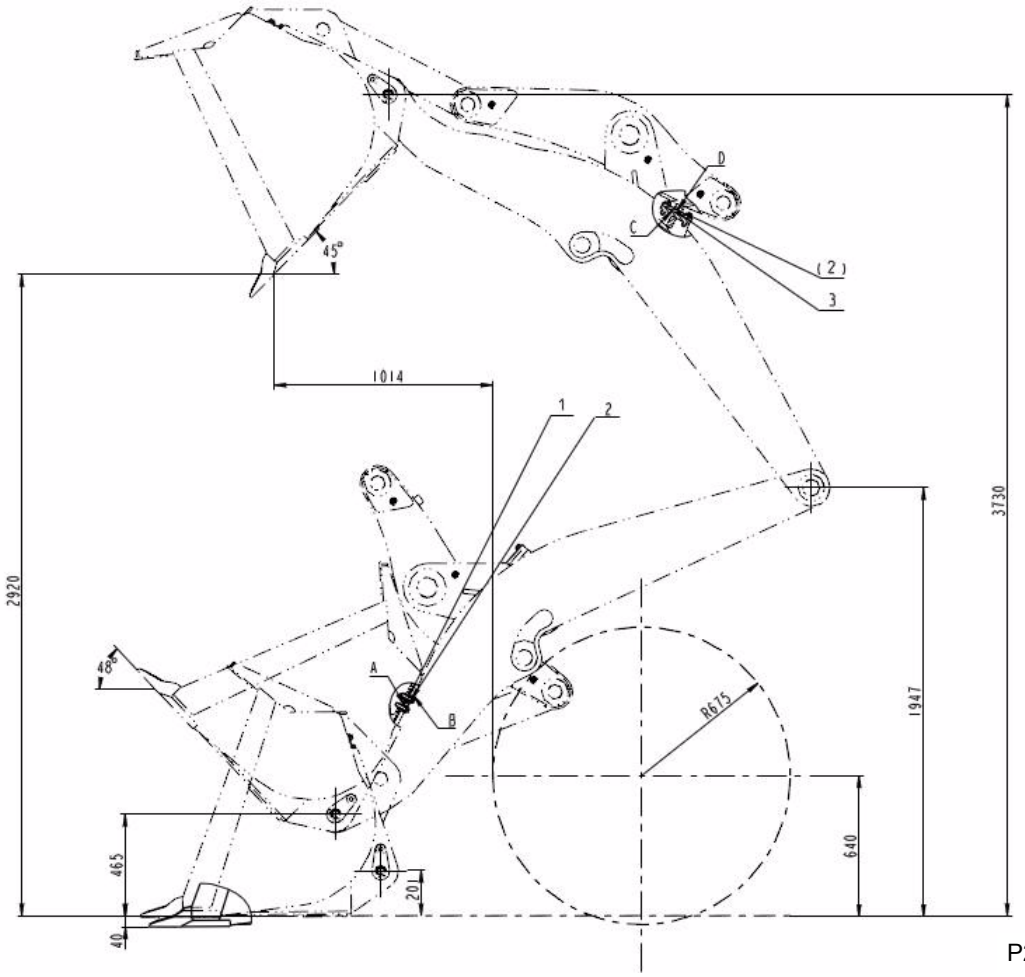

P28S00113

1. Block group
2. Bolt
3. Block grou

Requirements for work implement limit system assembly (Note: take standard boom as an example here):

1. When the pin is 465mm from the ground, turn up the bucket to form an angle of 48° with horizontal plane, then select the block with appropriate thickness in block components (1) to install it on plane A according to the clearance between planes A and B, and guarantee it clings with plane B.
2. When the pin is 3,730mmmm from the ground, and the discharge angle is 45°, select block with appropriate thickness in block components (3) to install it on plane C according to the clearance between planes C and D, and guarantee it clings with plane D.

Removal and Installation

Removal and Installation of Hinge Assembly

Removal of Hinge Assembly

Removal description: Before removing the hinge assembly, please remove bucket assembly, work implement assembly, front axle assembly, cab assembly, engine assembly, transmission assembly, radiator assembly, cover assembly, counterweight assembly, hydraulic system and electrical system, etc., and only reserve front frame, rear frame, rear axle assembly and tire.

Figures	Operation instruction	Tools
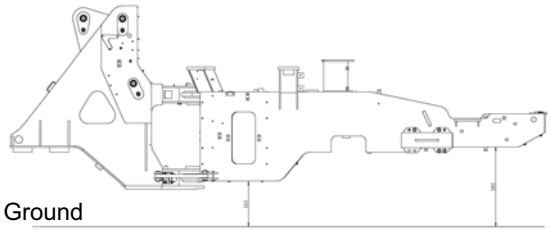 P18S00006	1. Pad the front and rear ends of rear frame with special firm tooling to make sure rear frame is in level, safe and steady state (the front end of rear frame is 660mm/ 25.98in from the ground, and the rear end is 980mm/ 38.58in from the ground).	
	2. Hook the front frame by a lifting appliance and tighten the hanger slightly. **⚠CAUTION: The personnel operating lifting equipment shall have relevant qualifications, and only can operate on the premise that equipment and lifting sling are normal and safety is guaranteed!**	Hoisting equipment (over 5ton)
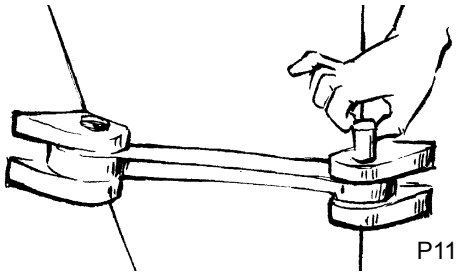 P11000188	3. Install steering fixed link to prevent front and rear frames rotating.	Nipping pliers

Figures	Operation instruction	Tools
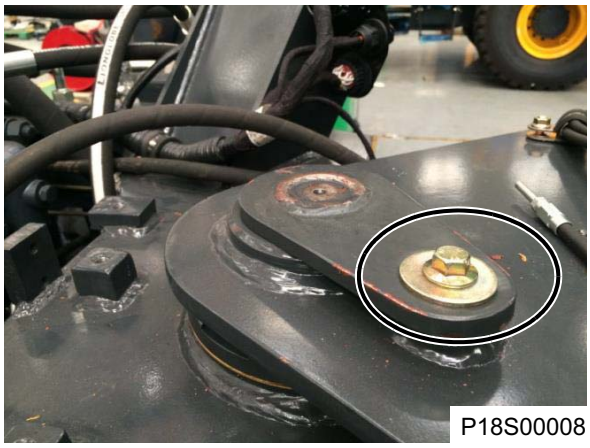 P18S00008	4. Remove upper hinge pin. 1) Remove the upper hinge captive bolt and take down the cover plate.	18# Wrench
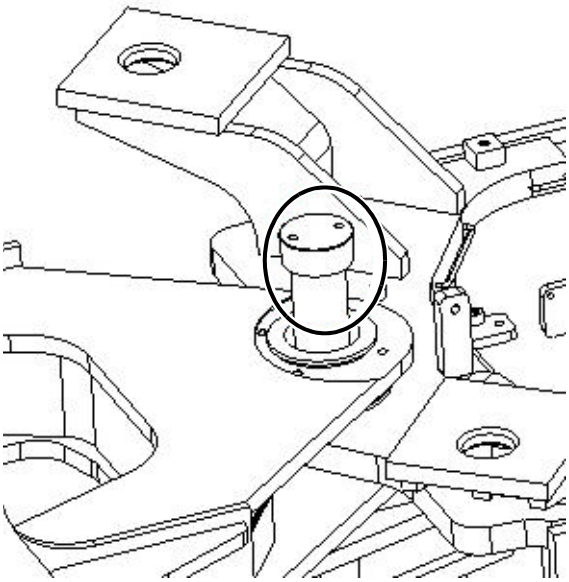 P18S00009	2) Knock out the upper hinge pin with pin knocking tooling and sledge hammer.	Pin knocking tooling and sledge hammer
 P18S00010	5. Remove lower pin. 1) Remove the captive bolt of the lower hinge lock plate and take off the plate.	18#, 24# Wrench

Figures	Operation instruction	Tools
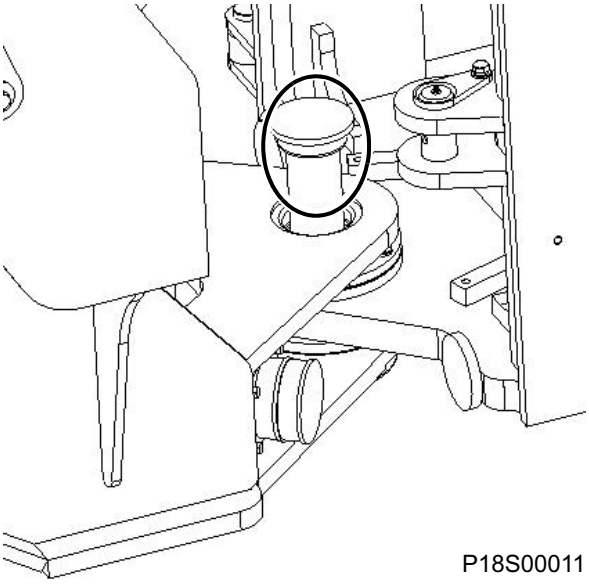 P18S00011	2) Knock out the lower hinge pin with pin knocking tooling and sledge hammer.	Pin knocking tooling and sledge hammer
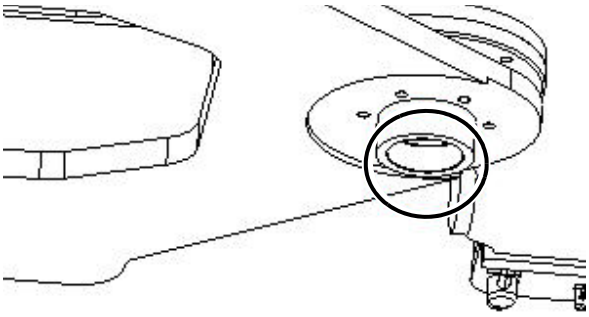 P18S00012	3) Remove the spacer sleeve.	Removal tooling of spacer sleeve
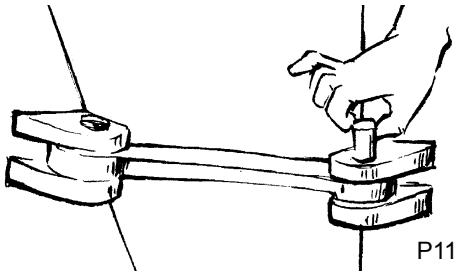 P11000188	6. Remove steering fixed link, and lift the front frame out with lifting equipment and place on firm ground. **⚠CAUTION: The personnel operating lifting equipment shall have relevant qualifications, and only can operate on the premise that equipment and lifting sling are normal and safety is guaranteed!**	Hoisting equipment (over 5ton)

Figures	Operation instruction	Tools
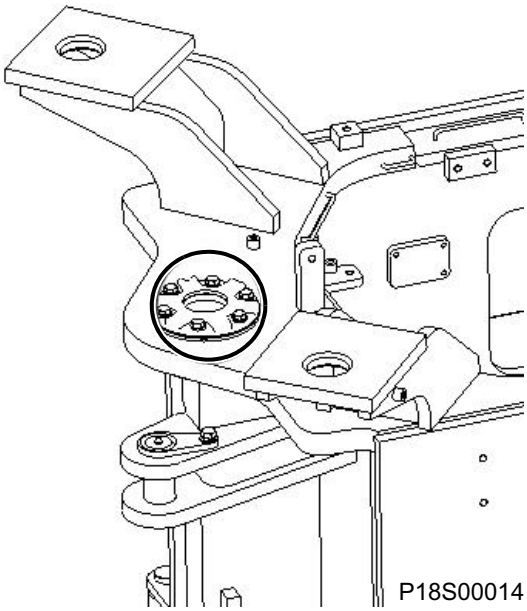 P18S00014	7. Remove 6 captive bolts from upper hinge and remove the upper and lower end cover.	18# Wrench
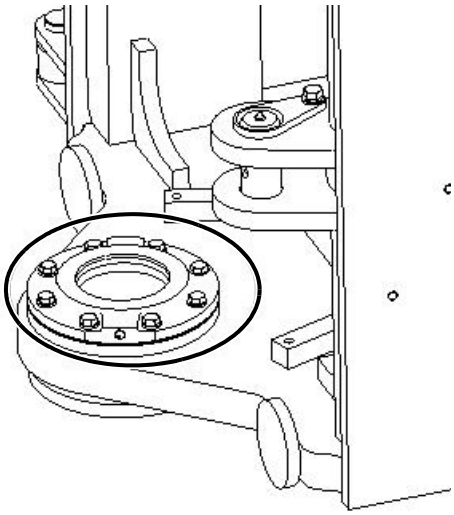 P18S00015	8. Remove eight captive bolts from lower hinge, and remove upper cover and lower end cover.	18# Wrench

Figures	Operation instruction	Tools
 P18S00016	9. Knock out the bearings of upper and lower hinge with bearing knocking tooling and sledge hammer.	Bearing knocking tooling and sledge hammer

Installation of Hinge Assembly

Figures	Operation instruction	Tools
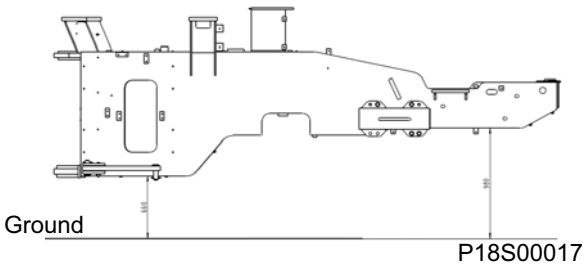 P18S00017	1. Lift rear frame with lifting equipment and put it on special firm tooling to make sure it is in level, safe and steady state (the front end of rear frame is about 660mm/25.98in from the ground, and the rear end is about 980mm/38.58in from the ground). **⚠CAUTION: The personnel operating lifting equipment shall have relevant qualifications, and only can operate on the premise that equipment and lifting sling are normal and safety is guaranteed!**	Hoisting equipment (over 5ton)
	2. Put two pairs of bearing cone cups into liquid nitrogen for freezing until there is not a lot of smoke coming out.	Liquid nitrogen, hook fixture

Figures	Operation instruction	Tools
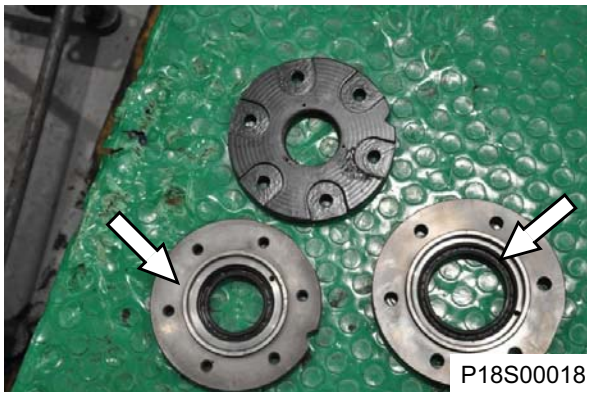 P18S00018	3. Install dust rings into upper and lower covers respectively, and apply grease to the lip of dust ring and the inner walls of upper and lower hinge hole.	Copper bar
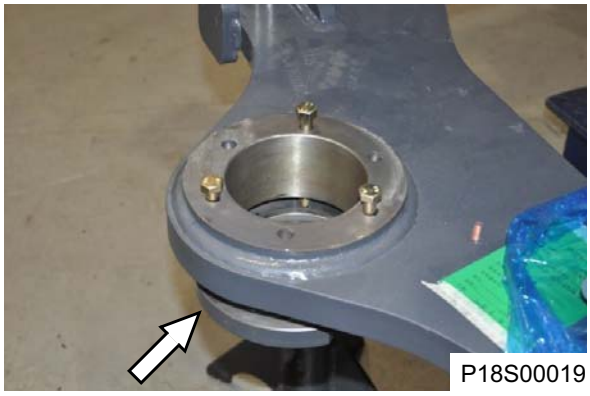 P18S00019	4. Fix the lower hinge lower cover on the rear frame with bolts.	18# Wrench

Figures	Operation instruction	Tools
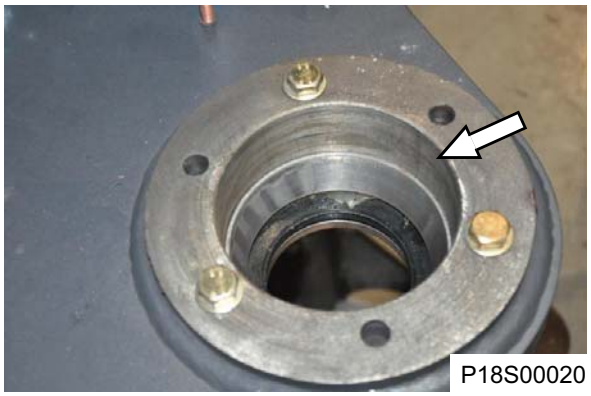 P18S00020	5. Install one frozen tapered roller bearing cone cup into lower hinge hole.	Copper bar and bearing knocking tooling
	6. Install two tapered roller bearing cones into lower hinge holes, and pay attention that two tapered roller bearing cones are in opposite directions.	Copper bar
 P18S00021	7. Install another frozen taper roller bearing cone cup into lower hinge hole.	Copper bar and bearing knocking tooling
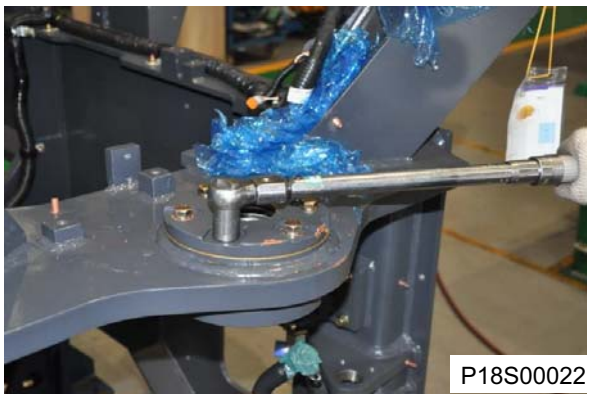 P18S00022	8. Select the shim with appropriate thickness, install the shim and upper and lower covers, tighten mounting bolts, and tightening torque is: 120±10N.m/ 88.5±7.375 lbf·ft.	18# Wrench Torque wrench

Figures	Operation instruction	Tools
 P18S00023	9. Install the tooling for measuring bearing torque.	Bearing torque tooling
	10. Measure the torque needed to rotate upper hinge bearing, and normal torque is: 2.3~13.6N.m/ 1.7~10.03 lbf·ft. If the torque is not within the scope, it can decrease or increase the shims to reach normal rotating torque.	Torque wrench, 18# wrench
	11. Install the lower hinge referring to Steps 4~10.	
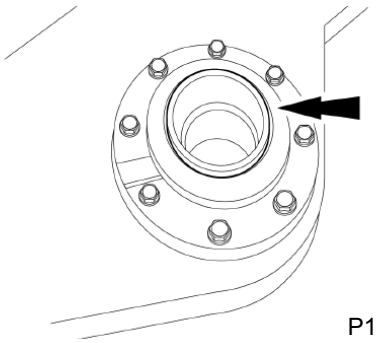 P18S00024	12. Install the lower hinge spacer sleeve	Copper bar
	13. Measure the torque needed to rotate lower hinge bearing, and normal torque is: 7.9~22.6N.m/ 5.83~16.67 lbf·ft. If the torque is not within the scope, it can decrease or increase the shims to reach normal rotating torque.	Torque wrench

Figures	Operation instruction	Tools
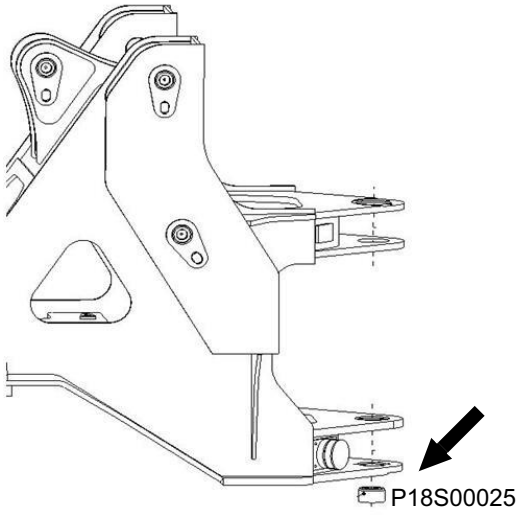 P18S00025	14. Install the lower bushing.	Copper bar
	15. Lift front frame to mounting position with lifting equipment, and align the hinge hole of front frame with that of rear frame. **⚠WARNNING: Fingers cannot be put into the hole when aligning with the hole, otherwise it may cause personal injury!** **⚠CAUTION: The personnel operating lifting equipment shall have relevant qualifications, and only can operate on the premise that equipment and lifting sling are normal and safety is guaranteed!**	Hoisting equipment (over 5ton)

Figures	Operation instruction	Tools
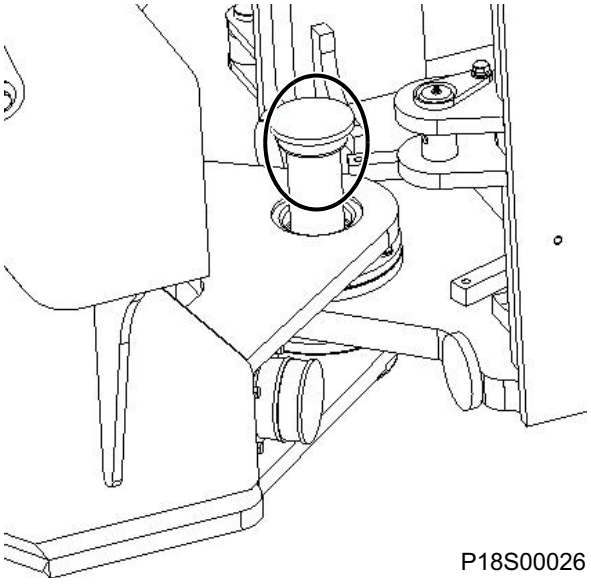 P18S00026	16. Install lower hinge pin.	Copper bar
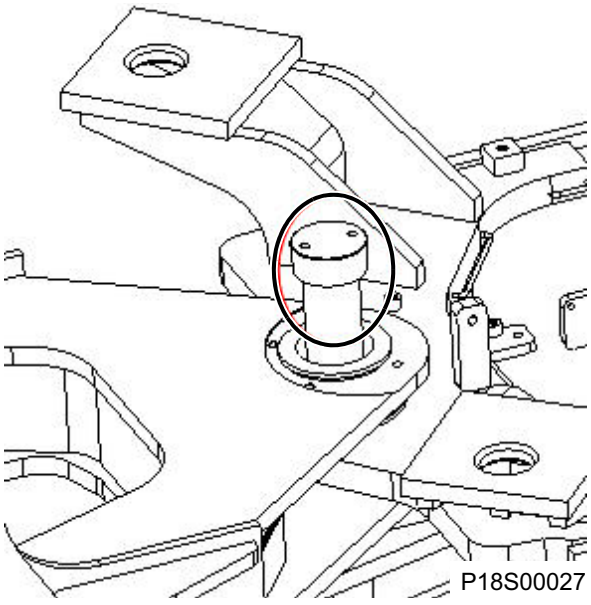 P18S00027	17. Install upper hinge pin.	Copper bar

Figures	Operation instruction	Tools
 P18S00028	18. Select the shim with appropriate thickness, install the shim and lock plate, tighten mounting bolts and the torque of bolts fixing the hinge pin is 68±14Nm/ 50.15±10.325lbf·ft.	18#, 24# spanner, torque spanner
 P18S00029	19. Install the upper hinge cover, tighten mounting bolt, and tightening torque is: 90±12N.m/ 66.375±8.85 lbf·ft.	18# Wrench,torque wrench
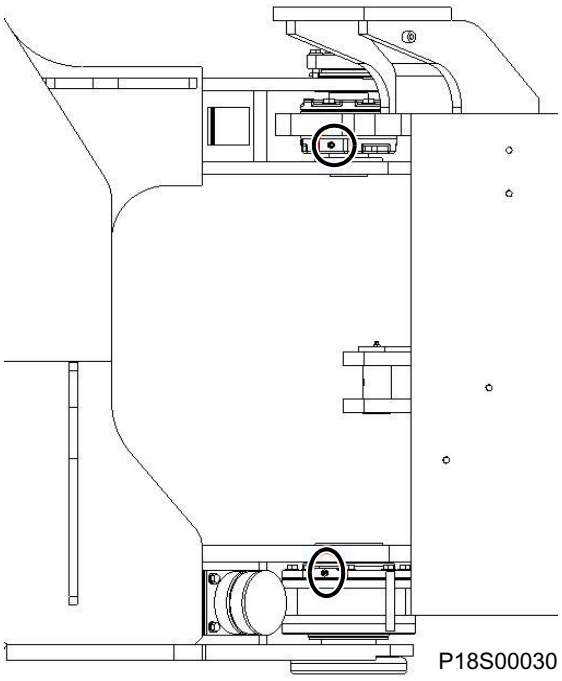 P18S00030	20. Install the joint of lubrication pipe.	

Removal and Installation of Counterweight Assembly

Tools required			
Tool(s)	**Part description**	**Standard**	**Quantity**
1	Wrench	13#, 16#	2
2	Sleeve	32#	1
3	Lifting ring	M20	1
4	Cross screwdriver		1
5	Sling		1
Other information			
Weight of left counterweight		180kg	
Weight of right counterweight		400kg	

Relevant preparation before starting:

See the section of Machine Placement for parking the machine.

⚠CAUTION

Please keep clean. Thoroughly clean the outer surface of the components before removal. It will prevent foreign matters from entering the mechanism.

Stick label identification stickers on all pipelines, hoses, circuits and steel tubes for easier installation. Clog up all the pipings, hoses and steel tubes. That will prevent fluid loss and prevent dirts from entering the system.

The appropriate container shall be used to collect the liquid before removing any hydraulic oil lines or disassembling any components that contain liquid during the inspection, maintenance, test and adjustment of the machine. Dispose all the fluid in accordance with local laws and regulations.

Removal of Left and Right Battery Boxes (take left battery box as an example)

Removal description: Before removing left and right battery box, please remove radiator system and fuel tank assembly.

Figures	Operation instructions
 P28S00129	1. Park the Machine and lift up the hood to the top end. 2. Remove the diesel tank by referring to the relevant chapter.
 P28S00130	3. Remove the left counterweight 3.1 Remove 4 mounting bolts from the upper cover plate and remove the cover plate.

Figures	Operation instructions
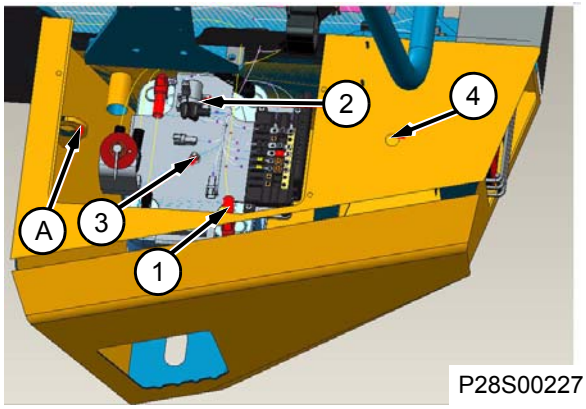 P28S00227 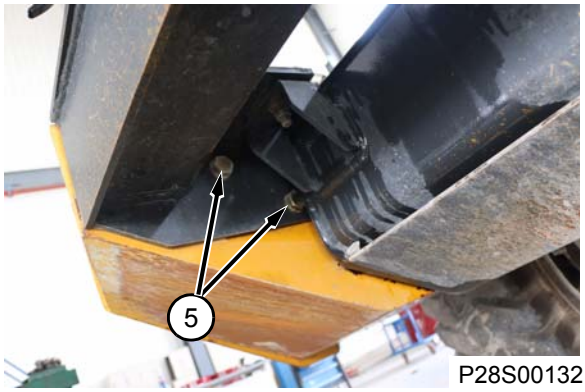 P28S00132	3.2 Remove the harness connector (1) from the battery. 3.3 Remove the relay mounting screw (2) from the press plate and remove the relay. 3.4 Remove the press plate captive bolt (3) and remove the press plate. 3.5 Take out the plug (2) from the lifting hole and install a lifting ring. The lifting ring needs match up the lifting eye (A) to lift the counterweight. 3.6 Hang the left counterweight with crane and remove the counterweight mounting bolt (5). Lift out the counterweight slowly, and place it at a clean and safe place.
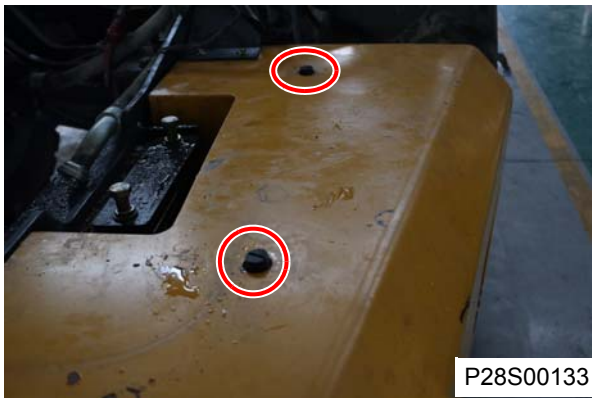 P28S00133	4. Take out the plug from the lifting hole of right counterweight and install the lifting ring.

Figures	Operation instructions
 P28S00134	4.1 Remove the harness of the tail lamp.
 P28S00135	4.2 Hang the counterweight with lifting rope, remove the right counterweight captive bolt, lift out the counterweight slowly and move it to a clean and safty place.

Installation of Left and Right Battery Boxes (take left battery box as an example)

Figures	Operation instructions
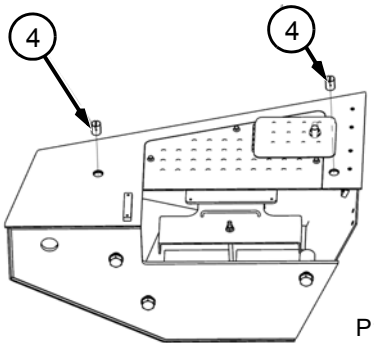 P18S00031	1. First take out plug (4), and then install two M24 lifting screws
	2. Hang lug screws with hoisting equipment, lift up the counterweight to mounting position, and align with bolt mounting hole **⚠CAUTION: Do not put your fingers into the holes when aligning, otherwise it may cause personal injury!** **The hoisting device operator shall have relevant qualifications, and only when the equipment and the lifting device work normally for the sake of safety can they operate!**
 P28S00136	3. Install 3 mounting bolts and shims. Tightening torque is 410±50N.m.

Removal and Installation of Work Implement System

Removal and Installation of Linkage

Tools required			
Tool(s)	**Part description**	**Standard**	**Quantity**
1	Wrench	15#, 18#	1
2	Copper bar		1
3	Sling		1
Other information			
Linkage weight		35.5kg	

Removal of Linkage

See the section of Machine Placement for parking the machine.

⚠CAUTION

Please keep clean. Thoroughly clean the outer surface of the components before removal. It will prevent foreign matters from entering the mechanism.

Stick label identification stickers on all pipelines, hoses, circuits and steel tubes for easier installation. Clog up all the pipelines, hoses and steel tubes. That will prevent fluid loss and prevent dirts from entering the system.

Figures	Operation instructions
	1. Remove front pin of link Remove the linkage front pin by referring to the steps for removing linkage front pin in removal of bucket.
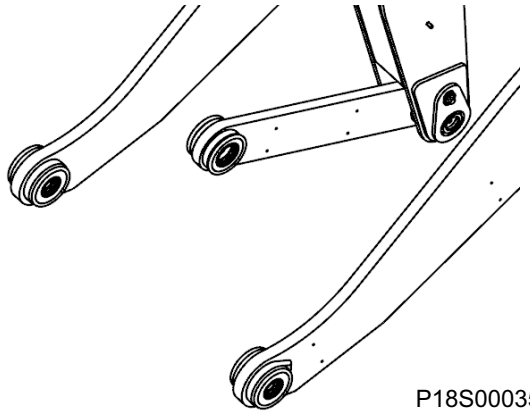 P18S00035	2. Remove rear link pin 1) Remove captive bolt of rear pin of link.

Figures	Operation instructions
	2) Hang the link by a hoisting equipment and tighten the hanger slightly. **⚠CAUTION: The hoisting device operator shall have relevant qualifications, and only when the equipment and the lifting device work normally for the sake of safety can they operate!**
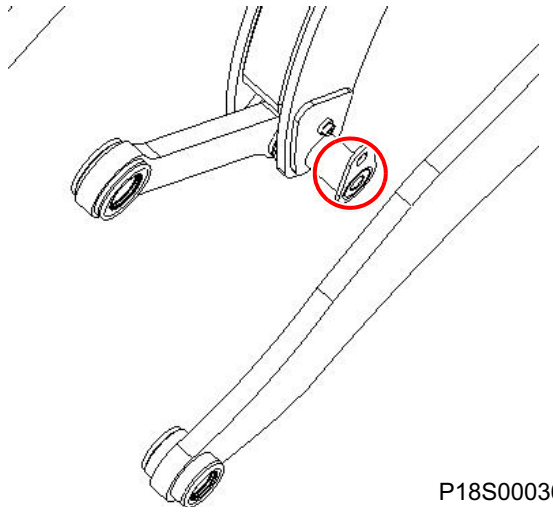 P18S00036	3) Knock out the rear pin of link with pin knocking tool and sledge.
	4) Lift the link off to the firm ground with the hoisting equipment. **⚠CAUTION: The hoisting device operator shall have relevant qualifications, and only when the equipment and the lifting device work normally for the sake of safety can they operate!**

Installation of Linkage

Figures	Operation instructions
	1. Install rear link pin 1) Lift the linkage off to mounting position with hoisting equipment, and align the front end hole of rocker arm with the rear end hole of linkage. **⚠WARNING: Do not put your fingers into the holes when aligning, otherwise it may cause personal injury!** **⚠CAUTION: The hoisting device operator shall have relevant qualifications, and only when the equipment and the lifting device work normally for the sake of safety can they operate!**
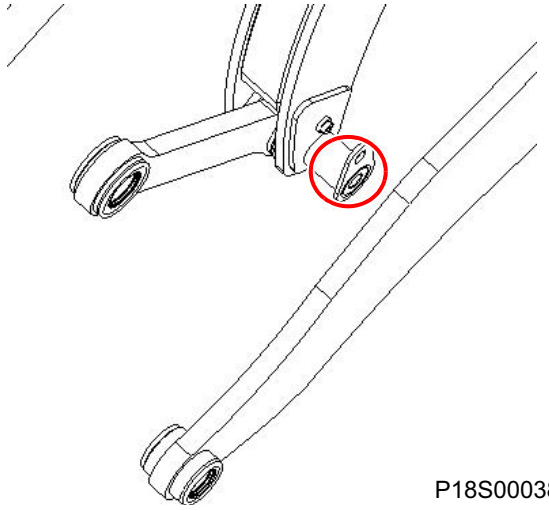 P18S00038	2) Install rear link pin, and simultaneously select the shim with appropriate thickness according to clearance of rocker arm and link to make sure the clearance at one side is less than 1mm.
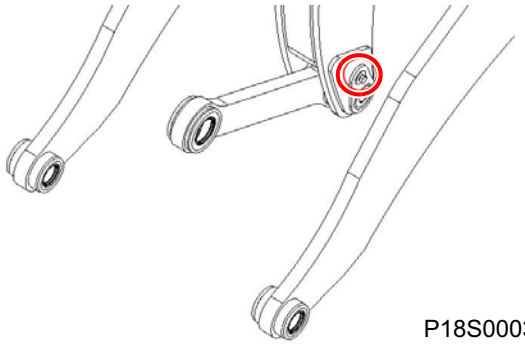 P18S00039	3) Install captive bolt
	2. Install front link pin By referring to the steps for installing front link pin in installation of bucket (P7.4.2), install front link pin.

Removal and Installation of Rocker Arm

Tools required			
Tool(s)	**Part description**	**Standard**	**Quantity**
1	Wrench	15#	1
2	Copper bar		1
3	Sling		1
Other information			
Rocker arm weight		140kg	

Removal of Rocker Arm

Figures	Operation instructions
	1. Remove the linkage. Remove linkage by referring to the steps for installing and removing linkage.
	2. Remove bucket tilting cylinder. By referring to the steps for removing bucket tilting cylinder in hydraulic system, remove the bucket tilting cylinder from the machine.
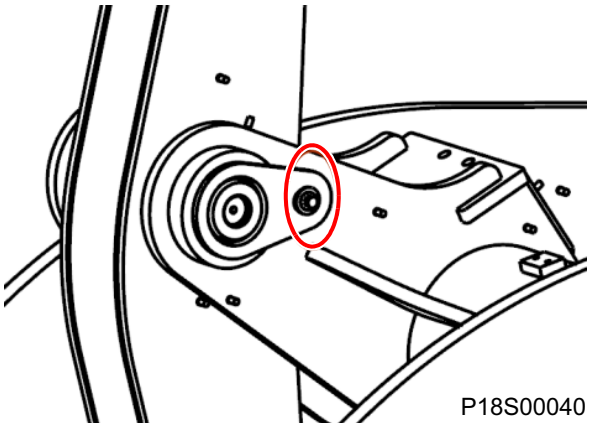 P18S00040	3. Remove the middle pin of rocker arm. 1) Remove middle pin captive bolt of rocker arm.
	2) Hook the rocker arm by a hoisting equipment and tighten the hanger slightly. **⚠CAUTION: The hoisting device operator shall have relevant qualifications, and only when the equipment and the lifting device work normally for the sake of safety can they operate!**

Figures	Operation instructions
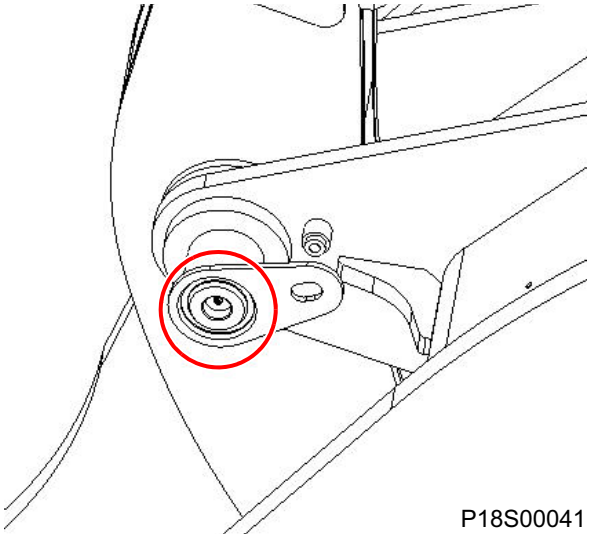 P18S00041	3) Knock out the middle pin of rocker arm with pin knocking tool and sledge.
	4) Lift the rocker arm off to the firm ground with the hoisting equipment. **⚠CAUTION: The hoisting device operator shall have relevant qualifications, and only when the equipment and the lifting device work normally for the sake of safety can they operate!**

Installation of Rocker Arm

Figures	Operation instructions
	1. Lift rocker arm off to mounting position with hoisting equipment, and align the middle pin hole of rocker arm with arm mounting hole on the boom. **⚠WARNING: Do not put your fingers into the holes when aligning, otherwise it may cause personal injury!** **⚠CAUTION: The hoisting device operator shall have relevant qualifications, and only when the equipment and the lifting device work normally for the sake of safety can they operate!**
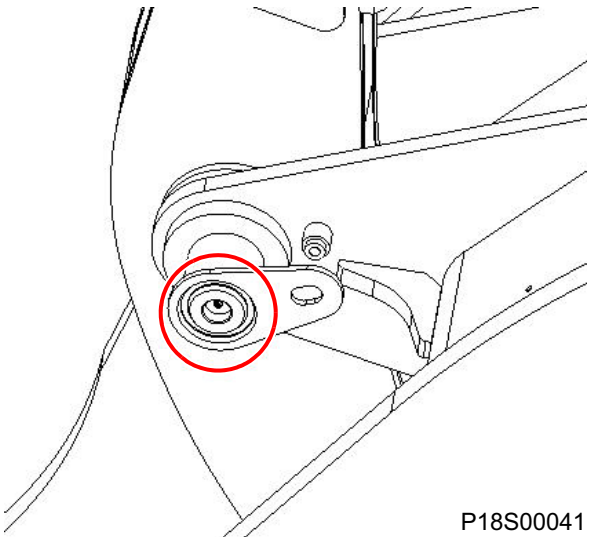 P18S00041	2. Install the middle pin of rocker arm, and simultaneously select the shim with appropriate thickness according to clearance of rocker arm and boom to make sure clearance at one side is less than 1mm.
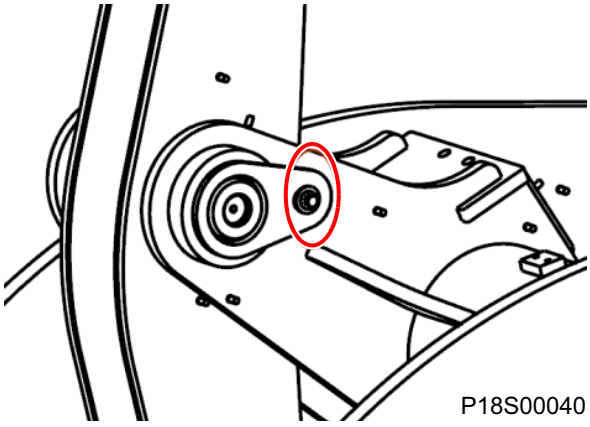 P18S00040	3. Install captive bolt.

Removal and Installation of the Boom

Tools required			
Tool(s)	**Part description**	**Standard**	**Quantity**
1	Wrench	16#	1
2	Wrench	18#	1
3	Copper bar		
4	Sling		1
Other information			
Boom weight		700kg	

Removal of Boom

Relevant preparation before starting:

See the section of Machine Placement for parking the machine.

⚠CAUTION

Please keep clean. Thoroughly clean the outer surface of the components before removal. It will prevent foreign matters from entering the mechanism.

Stick label identification stickers on all pipelines, hoses, circuits and steel tubes for easier installation. Clog up all the pipelines, hoses and steel tubes. That will prevent fluid loss and prevent dirts from entering the system.

The appropriate container shall be used to collect the liquid before removing any hydraulic oil lines or disassembling any components that contain liquid during the inspection, maintenance, test and adjustment of the machine. Dispose all the fluid in accordance with local laws and regulations.

Figures	Contents
	1. Remove the bucket By referring to steps for removal of bucket, remove the bucket. 2. Remove the linkage By referring to the steps for removing the link in removal and installation of link, remove the link 3. Remove the rocker arm By referring to the steps for removing the rocker arm in removal and installation of rocker arm, remove the rocker arm

Figures	Contents
	4. Remove bucket tilting cylinder By referring to the steps for removing bucket tilting cylinder in hydraulic system, remove bucket tilting cylinder 5. Remove boom cylinder By referring to the steps for removing boom cylinder in hydraulic system, remove boom cylinder
 P28S00136	6. Remove lubrication pipe.
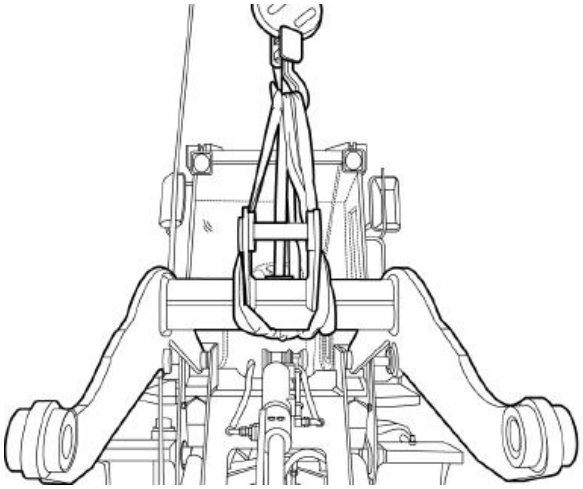 P18S00048	7. Remove the boom pin. 1) Lift by boom beam with hoisting equipment, and strain lifting sling for holding the boom. **⚠CAUTION: The hoisting device operator shall have relevant qualifications, and only when the equipment and the lifting device work normally for the sake of safety can they operate!**

Figures	Contents
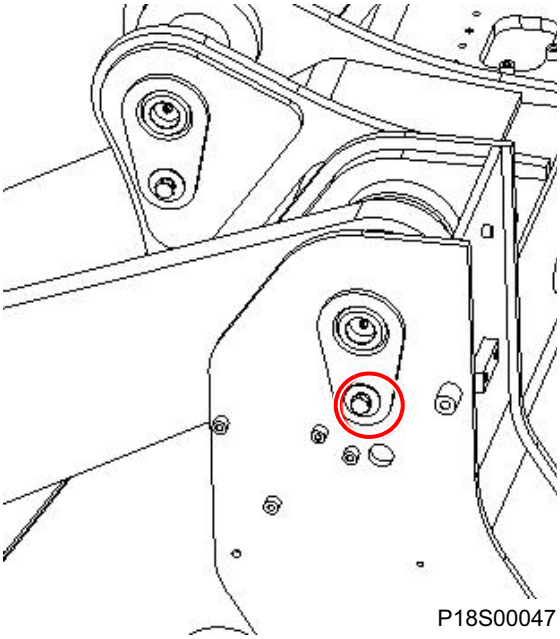 P18S00047	2) Remove the captive bolts of boom pin at left and right sides.
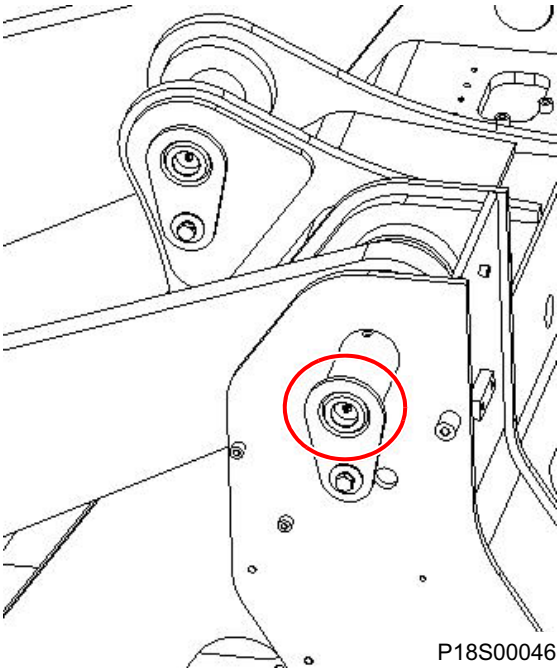 P18S00046	3) Knock out boom pins on right and left sides with pin knocking tooling and sledge.
	4) Lift out the boom with hoisting equipment gently and place it on firm ground **⚠CAUTION: The hoisting device operator shall have relevant qualifications, and only when the equipment and the lifting device work normally for the sake of safety can they operate!**

Installation of Boom

⚠CAUTION

Please keep clean. All the components shall be cleaned thoroughly with cleaning solution prior to assembly. The components are allowed for natural drying. Never wipe them dry with cloth. The fiber from the cloth will accumulate on the parts and cause fault. Check all the components. If the components are worn or damaged, please replace them with new ones.

Figures	Contents
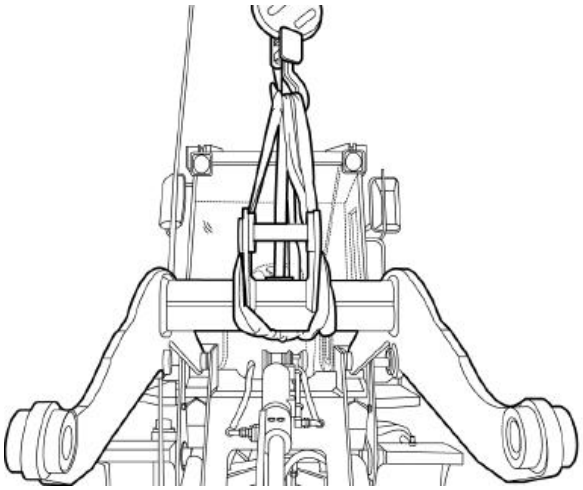 P18S00048	1. Lift the boom off to mounting position with hoisting equipment, and align boom hole with the boom mounting hole on front frame. **⚠WARNING: Do not put your fingers into the holes when aligning, otherwise it may cause personal injury!** **⚠CAUTION: The hoisting device operator shall have relevant qualifications, and only when the equipment and the lifting device work normally for the sake of safety can they operate!**
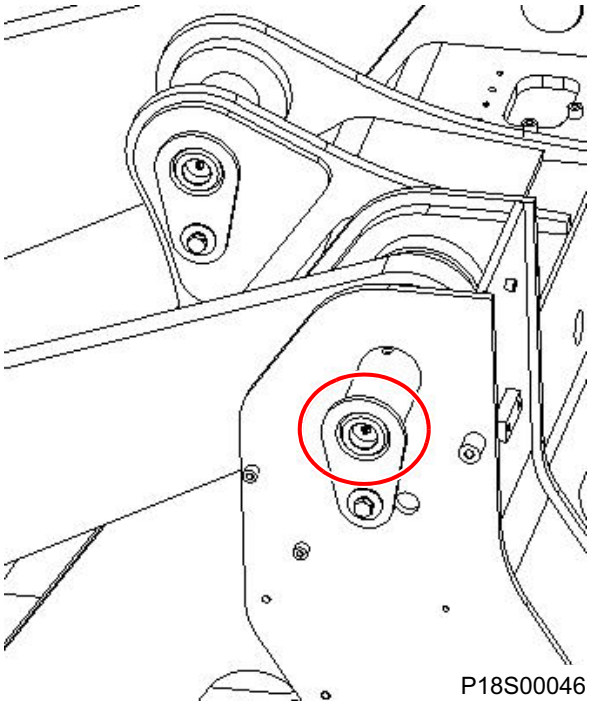 P18S00046	2. Install boom pin, and simultaneously select the shim with appropriate thickness according to clearance of boom and front frame to make sure clearance at one side is less than 1mm.

Figures	Contents
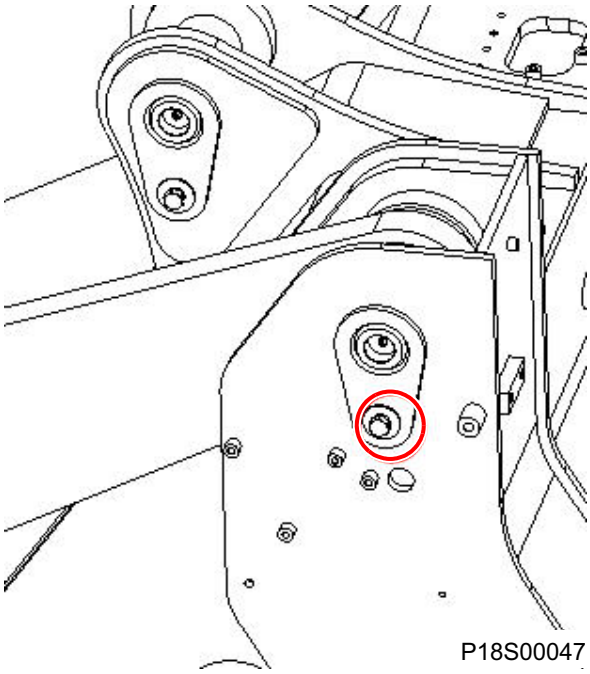	3. Install captive bolt.

Replacement of Work Implement Bushing

Tools required			
Tool(s)	**Part description**	**Standard**	**Quantity**
1	Wrench	16#, 18#	2
2	Straight screwdriver	Piece	1
3	Copper bar	Piece	1
4	Sling	Set	1
5	Liquid nitrogen	Tank	1

Replacement of Linkage Bushing

Figures	Operation instructions
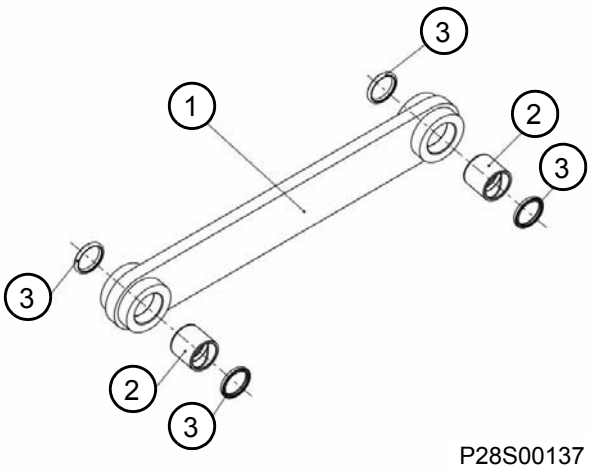 P28S00137	**Replace the linkage bushing** 1. Remove the seal ring (3) with a flat head screwdriver. 2. Knock out the linkage bushing (2) with bushing knocking tooling and sledge hammer. 3. Put new linkage bushing (2) into liquid nitrogen for freezing until there is not a lot of smoke coming out. 4. Install frozen linkage bushing (2) into linkage (1) with bushing knocking tooling and sledge hammer , and reserve mounting position for seal rings on both sides. 5. Knock new seal ring (3) into linkage (1) gently with copper bar.

Replacement of Rocker Arm Bushing

Figures	Operation instructions
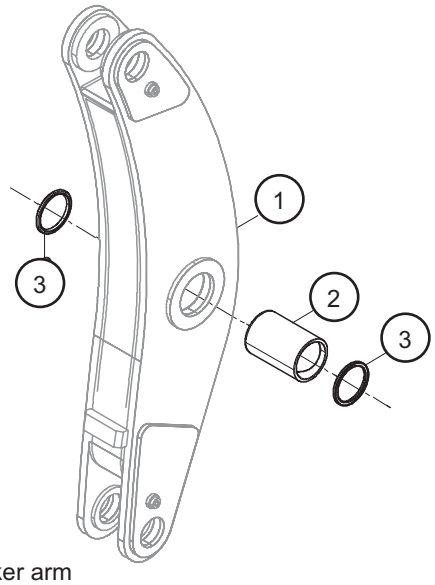 1. Rocker arm 2. Rocker arm bushing 3. Seal ring P18S00052	**Replace the rocker arm bushing** 1. Remove the seal ring (3) with a flat head screwdriver 2. Knock out rocker arm bushing (2) with bushing knocking tool and sledge 3. Put new rocker arm bushing (2) into liquid nitrogen for freezing until there is not a lot of smoke coming out 4. Install frozen rocker arm bushing (2) into rocker arm (1) with special striking tool and sledge, and reserve mounting position for seal rings on both sides 5. Knock seal ring (3) into rocker arm (1) gently with copper bar

Replacement of Boom Bushing

Figures	Operation instructions
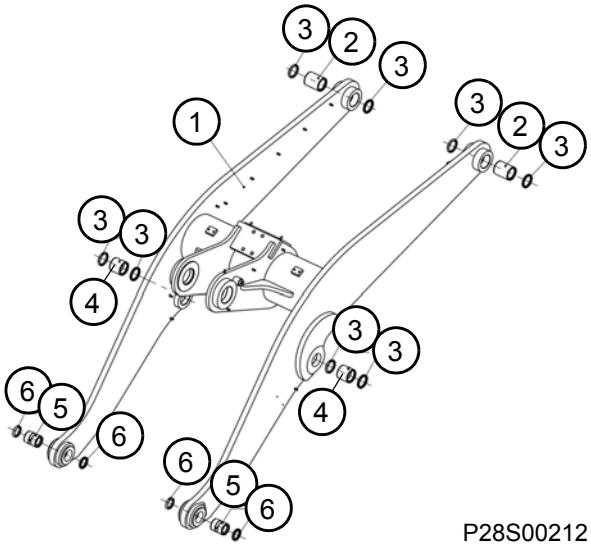 P28S00212	**Replace the boom bushing** 1. Remove seal rings (3, 6) with a flat head screwdriver 2. Knock frame bushing (2), boom bushing (4) and bushing (5) out in sequence with bushing knocking tooling and sledge hammer 3. Put new frame bushing (2), boom bushing (4) and bushing (5) into liquid nitrogen for freezing until there is not a lot of smoke coming out 4. Install frozen frame bushing (2), boom bushing (4) and bushing (5) into the boom (1) in sequence with bushing knocking tooling and sledge hammer, and reserve mounting position for seal rings on both sides 5. Knock seal rings (3, 6) into the boom (1) gently with copper bar.

Removal and Installation of Accessory System

Removal and Installation of Bucket

Tools required			
Tool(s)	**Part description**	**Standard**	**Quantity**
1	Wrench	18#	1
2	Wrench	15#	1
3	Copper bar	Piece	1
4	Sling	Set	1
Other information			
Weight of bucket		715kg	

Bucket removal

Relevant preparation before starting:

See the section of Machine Placement for parking the machine.

⚠CAUTION

Please keep clean. Thoroughly clean the outer surface of the components before removal. It will prevent foreign matters from entering the mechanism.

Stick label identification stickers on all pipelines, hoses, circuits and steel tubes for easier installation. Clog up all the pipelines, hoses and steel tubes. That will prevent fluid loss and prevent dirts from entering the system.

Figures	Operation instructions
	1. Remove front pin of link 1) Start the machine, put the boom in the lowest position; lay flat the bucket and then switch off.
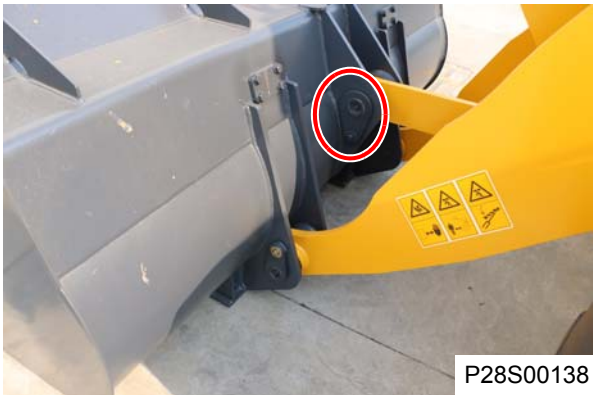 P28S00138	2) Disassemble the captive bolt of front link pin.

Figures	Operation instructions
	3) Lift by front end of link with hoisting equipment, strain lifting tool gently, and remove front link pin with sledge and pin knocking tooling. **⚠CAUTION: The hoisting device operator shall have relevant qualifications, and only when the equipment and the lifting device work normally for the sake of safety can they operate!**
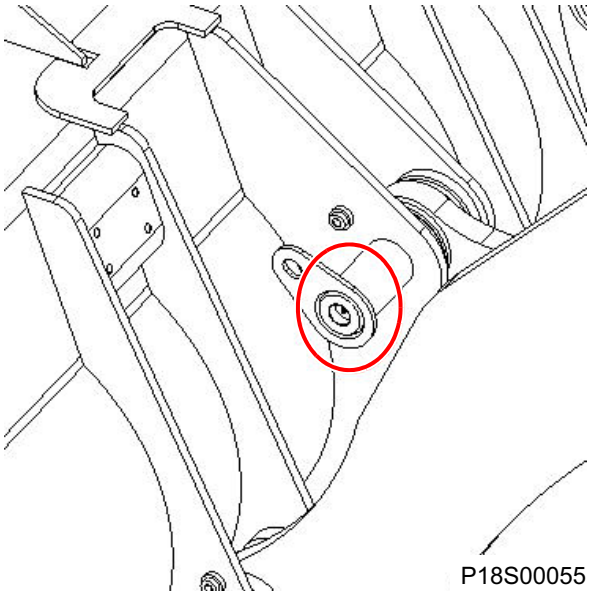 P18S00055	4) Gently put front linkage end to ground with hoisting equipment, and pad the ground contact with rubber or paperboard to prevent bumping against the ground. **⚠CAUTION: The hoisting device operator shall have relevant qualifications, and only when the equipment and the lifting device work normally for the sake of safety can they operate!**

Installation of Bucket

⚠CAUTION

In order to guarantee the traceability of the machine and bucket, the bucket cannot be replaced when installed!

Please keep clean. All the components shall be cleaned thoroughly with cleaning solution prior to assembly. The components are allowed for natural drying. Never wipe them dry with cloth. The fiber from the cloth will accumulate on the parts and cause fault. Check all the components. If the components are worn or damaged, please replace them with new ones.

Figures	Contents
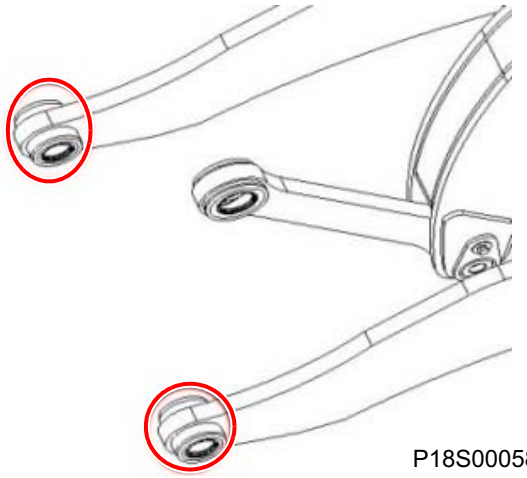 P18S00058	1. Install the lower pin of the bucket 1) Install front O-ring of boom.
	2) Lift the bucket off to mounting position with hoisting equipment, and align the lower pin hole of bucket with the front end hole of boom. **⚠WARNING: Do not put your fingers into the holes when aligning, otherwise it may cause personal injury!** **⚠CAUTION: The hoisting device operator shall have relevant qualifications, and only when the equipment and the lifting device work normally for the sake of safety can they operate!**

Figures	Contents
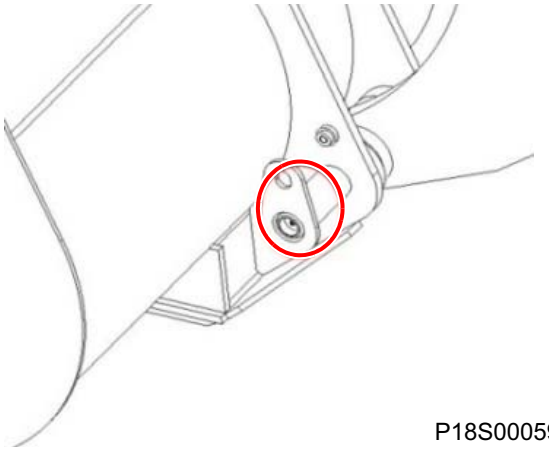 P18S00059	3) Install the lower bucket pin on left and right sides, and simultaneously select the shim with appropriate thickness according to the clearance of bucket and boom to make sure the clearance at one side is less than 1mm.
 P28S00139	4) Install captive bolts at left and right sides.

Replacement of Bucket Movable Blade, Movable Tooth and Tip

Tools required			
Tool(s)	**Part description**	**Standard**	**Quantity**
1	Wrench	50#	1
2	Copper bar		1
3	Sling	Set	1

Figures	Operation instructions
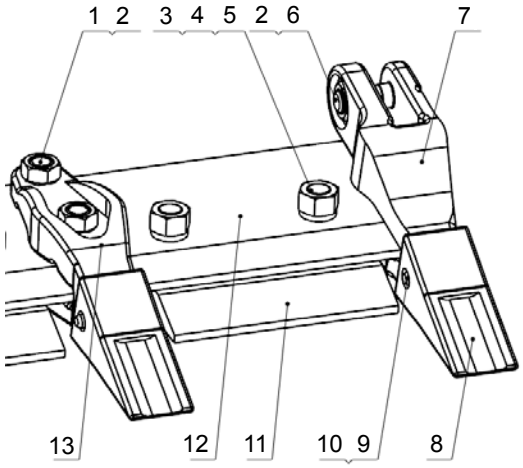 1. Lock bolt 2. Nut 3. Nut 4. Washer 5. Bolt 6. Lock bolt 7. Side gear body 8. Gear sleeve 9. Pin 10.Retainer 11.Movable Blade 12.Cutting edge 13.Gear body P18S00080	1. Replace the tip: 1) Use the hammer and pin knocking tooling to remove the pin (9) connecting the tip and tooth body. 2) Take out the tip (8) and the retainer (10). 3) Install new retainer (10) and tip (8). 4) Align the tip with tip mounting hole, and install new pin (9). 2. Replace the middle tooth of bucket: 1) Remove the nut (2) and lock bolt (1) of fixing tooth. 2) Take out the tooth (13). 3) Install new tooth (13) on main cutting board (12). 4) Install new lock bolt (1) and nut (2). 3. Replace the side tooth of bucket: 1) Remove the nut (2) and lock bolt (6) of fixing side tooth. 2) Take out the side tooth (7). 3) Install new side tooth (7) on main cutting board (12). 4) Install new lock bolt (6) and nut (2). 4. Replace the movable blade: 1) Remove nut (3), washer (4) and bolt (5) from fixing movable blade. 2) Take down movable blade (11). 3) Place new movable blade (11) on corresponding position of main cutting board. 4) Align the mounting holes of movable blade and main cutting board, and install new bolt (5), washer (4) and nut (3).

Optional Work Implement and Accessory System

Option of Work Implement System

Work implement system has standard boom, extension jib and ultra-long jib for selection, please refer to "Work Implement Parameters", and select it according to practical use and working conditions.

Option of Accessory System

Procedure for bucket selection:

1. Identify the target condition.
2. According to working condition, select suitable bucket type according to Attached Table 1 - Bucket Classification Table.
3. Look up the attached table 3 Bulk Density of Bulk Materials to obtain the corresponding density of material under working conditions.
4. According to material density value, select corresponding bucket capacity by checking Attached Table 2 - Recommendation List for Bucket Selection.

Attached table 1: The bucket classification

Type of Buckets	Acceptable density range	Main purposes
GP bucket	1.2~1.9t/m^3	It is applicable to various working conditions, provided with excellent insertion performance and material holding performance
Light loading hopper	0.8~1.25t/m^3	It is mainly used under conditions of loose light loading material
Rock bucket	1.8~2.0t/m^3	It is used under conditions of heavy load, such as rocks, etc.

Attached table 2:

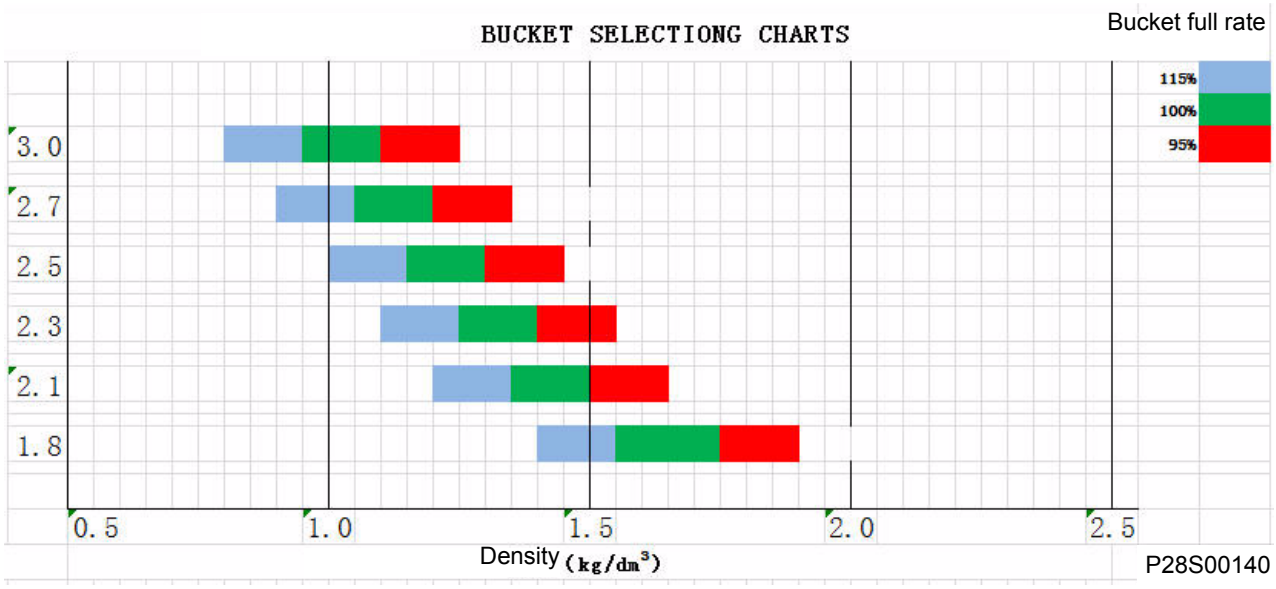

Attached table 3:

Bulk density and repose angle of loose materials

Material	Bulk density /t·m-3	Repose angle		Material	Bulk density /t•m-3	Repose angle	
		Motion	Rest			Motion	Rest
Anthracite (Dry and small)	0.7~1.0	27°~30°	27°~45°	Zinc flue dust	0.7~1.5		
Bitumite	0.8	30°	35°~45°	Pyrite cinder	1.7~1.8		
Lignite	0.6~0.8	35°	35°~50°	Plumbum-zinc briquette	1.3~1.8		
Peat	0.29~0.5	40°	45°	Pyrite pellet	1.2~1.4		
Peat (damp)	0.55~0.65	40°	45°	Slag of the open hearth furnace (coarse)	1.6~1.85		45°~50°
Coke	0.36~0.53	35°	50°	Blast furnace slag	0.6~1.0	35°	50°
Charcoal	0.2~0.4			Lead and zinc granulated slag (wet)	1.5~1.6		42°
Anthracite culm	0.84~0.89		37°~45°	Dry coal ash	0.64~0.72		35°~45°
Bitumite powder	0.4~0.7		37°~45°	Coal ash	0.70		15°~20°
Graphite powder	0.45		40°~45°	Grit (dry)	1.4~1.9		50°
Magnet ore	2.5~3.5	30°~35°	40°~45°	Silver sand (dry)	1.4~1.65	30°	
Hematite	2.0~2.8	30°~35°	40°~45°	Silver sand (damp)	1.9~2.1		30°~35°
Limonite	1.2~2.1	30°~35°	40°~45°	Modeling sand	0.8~1.3	30°	45°
Manganese ore	1.7~1.9		35°~45°	Limestone (large block)	1.6~2.0	30°~35°	40°~45°
Magnesia (agglomerate)	2.2~2.5		40°~42°	Limestone (medium block)	1.2~1.5	30°~35°	40°~45°
Magnesia powder	2.1~2.2		45°~50°	Quicklime	1.7~1.8	25°	45°~50°
Copper ore	1.7~2.1		35°~45°	Gravel	1.32~2.0	35°	45°
Copper concentrate	1.3~1.8		40°	Dolomite (block)	1.2~2.0	35°	
Plumbum concentrate	1.9~2.4		40°	Dolomite fragment	1.8~1.9	35°	
Zinc concentrate	1.3~1.7		40°	Gravel	1.5~1.9	30°	30°~45°
Plumbum-zinc concentrate	1.3~2.4		40°	Clay (small block)	0.7~1.5	40°	50°
Sintered iron	1.7~2.0		45°~50°	Clay (wet)	1.7		27°~45°
Sinter fragment	1.4~1.6	35°		Concrete	0.9~1.7	35°	40°~45°
Lead sinter	1.8~2.2			Slaked lime (powder)	0.5		
Lead-zinc sinter cake	1.6~2.0			Slaked lime (block)	2.0		

Electrical System

Basic Information 8-3

Instructions of Service Manual 8-3
Cautions for Welding Operation 8-4
The Introduction of Signs on the Electrical Schematic 8-5

Structure Function Principle 8-7

Power System 8-7
- Function Introduction 8-7
- Engine Start Switch 8-9
- Fuse 8-11
- Battery Disconnect Switch 8-13
- Battery 8-14
- Contactor and Relay 8-16

Starting Module 8-19
- Start Contactor 8-23
- Starting Motor 8-24
- Alternator 8-25

Monitoring System 8-27
- Circuit for Engine Water Temperature Indication 8-27
- Circuit for Torque Converter Oil Temperature Indication 8-27
- Circuit for Engine Oil Pressure Alarm 8-29
- Circuit for Transmission Oil Pressure Alarm 8-29
- Circuit for Fuel Level Indication 8-31
- Circuit for Vehicle Speed Indication 8-33
- Service Brake Indication Circuit 8-33
- Circuit for Parking Brake 8-35
- Circuit for Parking Brake Power Cut-off 8-36
- Circuit for Service Brake Clutch ON/OFF 8-38
- Circuit for Air Filter Blockage Alarm 8-39
- Circuit for Alternator Charging Indication 8-39
- Circuit for Voltage Indication 8-40
- Circuit for Seatbelt Indicator 8-41
- Circuit for Lubrication System Failure Indicator 8-41
- Circuit for Lubrication System Activated Indicator 8-42

Circuit for Steering System Failure Indicator 8-42
Circuit for Secondary Steering Indicator 8-43
Circuit of Ride Control Indicator 8-46
Circuit for Radiator Fan Reverse Indicator 8-48
Circuit for Engine Indicator 8-49
Instrument 8-50
Audible and Visual Alarm System 8-54
Circuit for Electric Horn 8-54
Circuit for Backup Alarm 8-56
Wiper and Washer System 8-57
Circuit Diagram for Wiper and Cleaning System 8-57
Wiper Motor 8-58
Washer Reservoir 8-59
Positioner and Kickout System 8-60
Principle for Auto Reset System 8-60
Lighting System 8-62
Circuit for Front Frame Illumination 8-62
Circuit for Cab Lighting 8-65
Circuit for Rear Frame Illumination 8-68
Shift Control System 8-70
Principle for Shift Control 8-71
Electronic Control Unit 8-74
Shift Selector 8-74
Audio System 8-76
Audio System Principle 8-76
Radio 8-77
Speaker 8-77
Antenna 8-77
Engine Electric Control Module 8-78
Electronic Throttle Line 8-78
Radiator Fan Control Module 8-78
Control Strategy 8-78
Seat Heater 8-79
Appendix 8-80

Basic Information

Instructions of Service Manual

The Manual is written by introducing the different modules divided by the main functions of electrical system, whereby, the maintenance operations of maintenance technicians are facilitated as they are enabled to promptly find the chapters and sections corresponding to the failure at any time. Besides, the professional descriptions are compiled to be accessible in the Manual, nonetheless, the maintenance personnel shall be provided with necessary professional knowledge to understand the Maintenance Manual.

When dividing the modules, the Manual starts from introducing the functions of the module, then presents the main components of the functions, including the principles, functions an electrical diagrams of main components. Whereafter, operation of module function and the diagnosis and test of module failure are introduced.

The component symbols on the schematic diagram indicate the representing methods of components on the diagram. The majority of component symbols signify the actual schematic diagram of the components, whereas, the exceptions are specified when introducing the components. It will help to judge the failure symptom of components.

The component failure detection methods are also included in the component descriptions herein. In particular, such methods are only for the components, whereby, the failures are detected through dismounting the components from the complete machine. As it is unfeasible to detect the failures in accordance with the above-mentioned methods if the components are mounted on the complete machine. Then determine in line with the failure detection methods described behind the system, or disassemble the components if necessary, to judge the condition of components based on the component troubleshooting method.

The module failure diagnosis and test introduced in the Manual does not cover all the faults, thus please rack your brain and focus on the accumulation of experience during the troubleshooting.

In order to describe the electrical principles intuitively, colored filling lines are applied to present the current flow when introducing the electrical system principles in the Manual.

Full consideration to the relationship between the general and the individual (system and component) when determining the failures will contribute to the rapid, accurate and facilitated troubleshooting.

On condition that digital multimeter (hereinafter referred to as DMM) is applied to detect faults, the inherent measuring errors might result in a value slightly differing from that described in the Manual. For instance, when selecting the 200Ω of Ω gear of DMM, the values described in the Manual are comparable through shorting out the red and black probes, measuring the lead resistance and subtracting such lead resistance from the measured resistance of other circuits.

Cautions for Welding Operation

Be sure to comply with the correct welding procedures, so as to safeguard the electrical components and bearings against potential damages. When welding on a loader or diesel engine equipped with electrical components, please follow the operating steps below:

1. Park the machine on flat ground.
2. Turn the engine start switch to "OFF" position to shut down the diesel engine.
3. Engage the parking brake.
4. Turn off the battery disconnect switch, and shut off the connection between battery and frame.
5. Clamp the parts to be welded with the grounding cable of the welder tightly. The closer the grounding position with the welding, the better. Check from earthing cable to circuit of welding assembly, to verify any of the below components has not been passed through:

- Bearings
- Hydraulic cylinders
- Internal circuits of the controller or other electrical units.

Doing in this way is to keep the following parts away from the possible damage:

- Bearings
- Hydraulic parts
- Electronic components
- Other available components of the machine

6. Keep the inflammables away from the welding site while protect the cables, to safeguard them against the loss and damage resulted from the fire caused by splashing sparks and welding slag.
7. Perform the weldment according to the normal welding safe performing procedure.

⚠WARNING

During welding, the earthing point of welder on the frame shall be close to the welding point to the greatest extent, for which a reliable large-area earthing shall be guaranteed.

Do not use the earth point of any electric component on the machine as the earth point of the welding machine!

For welding near the earth point of the electric appliance, you must not perform welding operation until you disconnect the earth point of the electric appliance and make sure that the welding circuit of the welding machine does not pass through the electric appliance. Otherwise, it will damage the components of the electric appliance, and even lead to a fire!

To prevent possible losses, for the machine equipped with electronic control components, such as the control unit EST-117 of ZF, control box, instrument, and engine ECM etc., ensure that the welding circuit is disconnected from that of the aforementioned electronic control components before weldment, while the connectors closest to such control components shall be unplugged to cut the circuit off.

The Introduction of Signs on the Electrical Schematic

Graphic symbol of the control switch				Graphic symbol of double position manual control switch			
S/N	Name	Graphic symbol	Description	S/N	Name	Graphic symbol	Description
1	Pressure switch	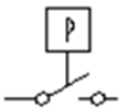	Normally open	1	Emergency stop switch		Keeping
2	Pressure switch		Normally closed	2	Button switch	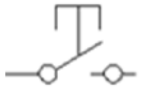	Instantaneous acting
3	Temperature switch	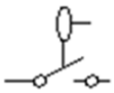		3	Knob switch	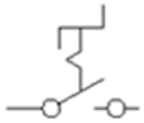	Keeping
4	Liquid level switch	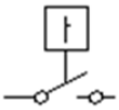		4	Knob switch	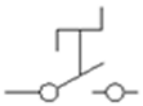	Instantaneous acting
5	Induction proximity switch	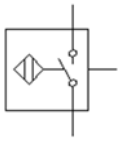					
6	Magnetic induction proximity switch	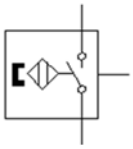					

Graphic symbol of the relay				Graphic symbol of the electromagnet			
S/N	Name	Graphic symbol	Description	S/N	Name	Graphic symbol	Description
1	GP relay	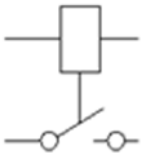	One group of normally-open contacts	1	Electromagnet of the switch		

Graphic symbol of the relay				Graphic symbol of the electromagnet			
S/N	**Name**	**Graphic symbol**	**Description**	**S/N**	**Name**	**Graphic symbol**	**Description**
2	With contact relay normally closed	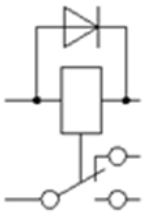	A group of break-before-make changeover contacts, coil in parallel to restrain diode	2	Proportional electromagnet		
				3	Double-coil electromagnet	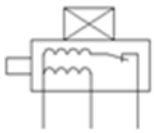	

Light and signal graphic symbol				Graphic symbol of the sensor			
S/N	**Name**	**Graphic symbol**	**Description**	**S/N**	**Name**	**Graphic symbol**	**Description**
1	Lamp			1	Rheostat sensor	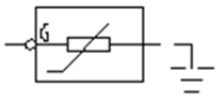	
2	Rotating beacon			2	Temp sensor with alarm switch	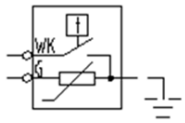	
3	Electric horn	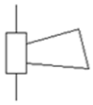		3	Pressure sensor with alarm switch	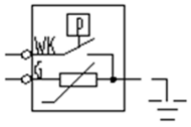	
4	Buzzer			4	Inductive speed sensor		
5	Speaker						
6	Flash relay	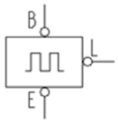					

Structure Function Principle

Power System

Function Introduction

The power system equipped in this machine supplies power to the electrical appliances of the complete vehicle. The diesel engine is powered by battery separately before starting, which is then jointly powered by battery and alternator during running.

Under normal operating circumstances, the normal power supply is available through switching on the engine start switch or starting the diesel engine.

The electrical components, including dome lights, rotating beacons, hazard flashers, clearance light and electric horn work properly once the negative switch is closed.

Other than the backup alarm and air conditioning function module, the electrical components are ready for normal use once the engine start switch is turned to position ON.

Schematic diagram of Power System

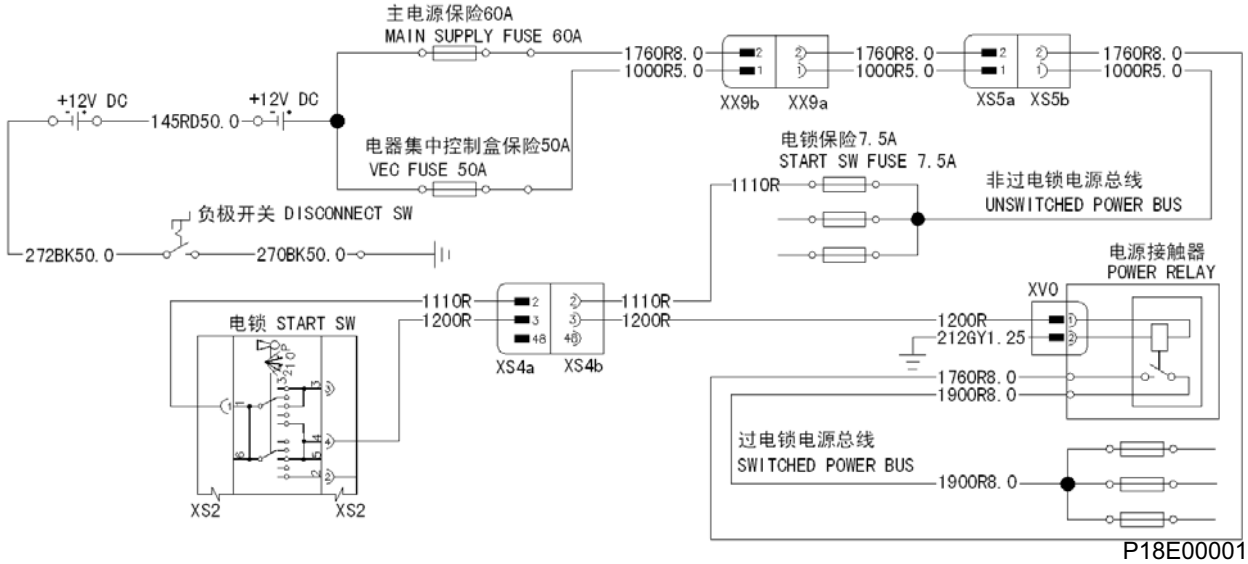

P18E00001

Analysis of the electrical schematic diagram

1. After closing the negative switch, the circuit is shown as below. The bus fuse, which does not pass through the engine start switch, is powered. Red part represents the powered section, while the arrows indicate the current directions, the same representing methods are applied to the sections below.

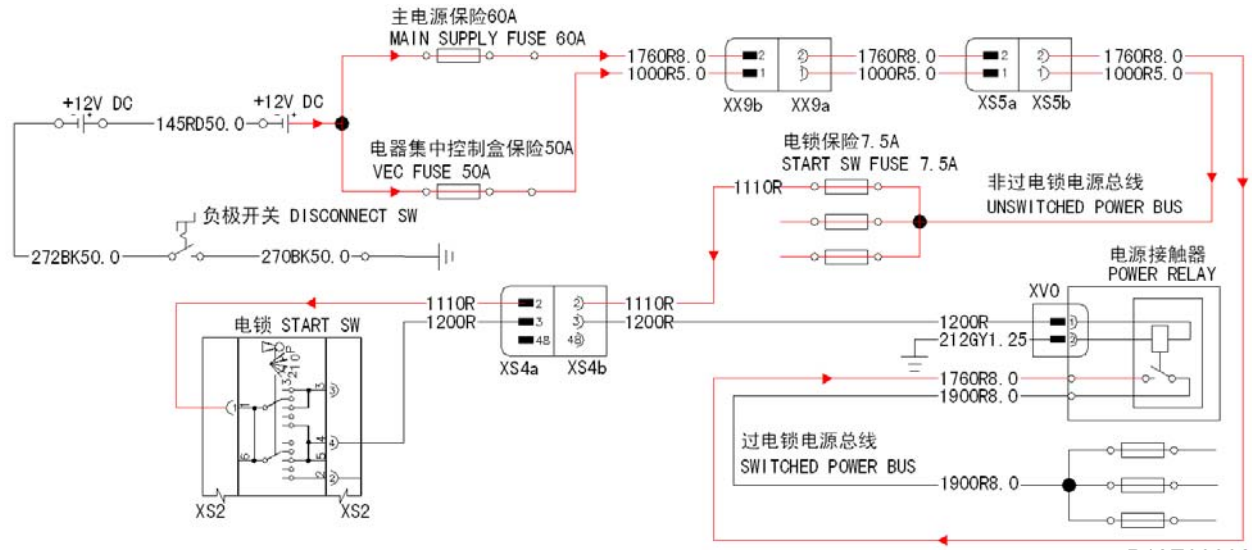

P18E00002

2. The power relay contacts turn on once the engine start switch is turned to Position ON, and the bus fuse, which passes through the engine start switch, is powered.

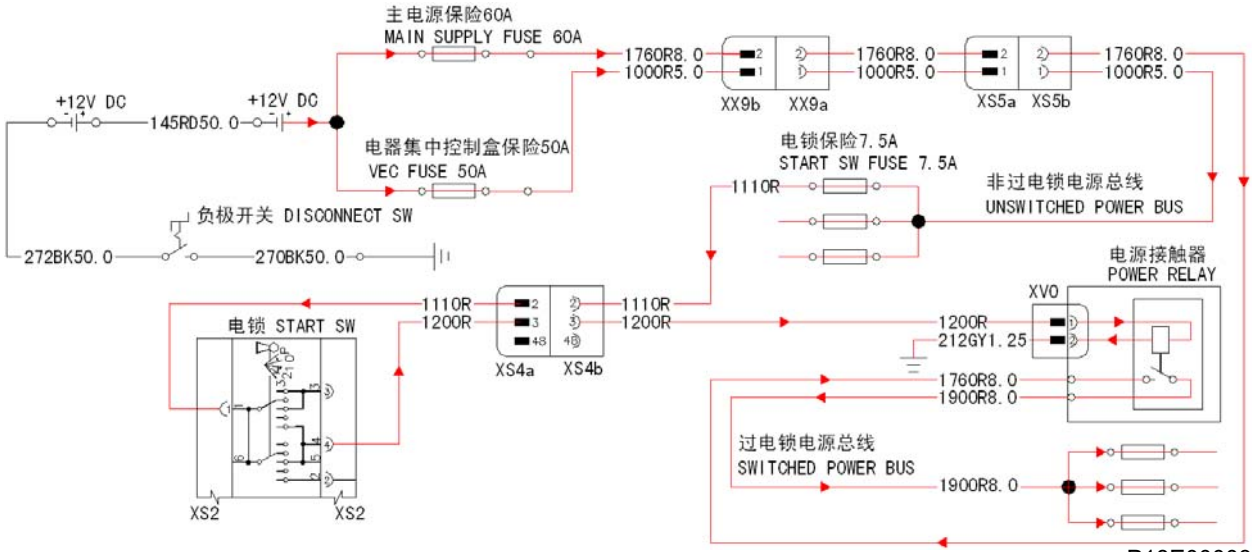

P18E00003

Engine Start Switch

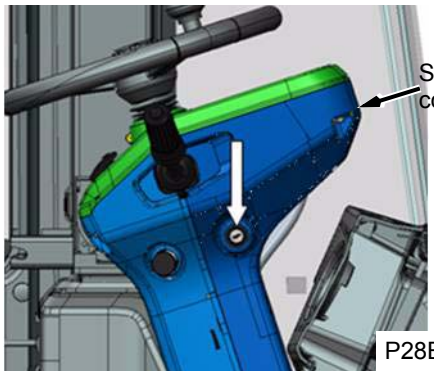

P28E00151

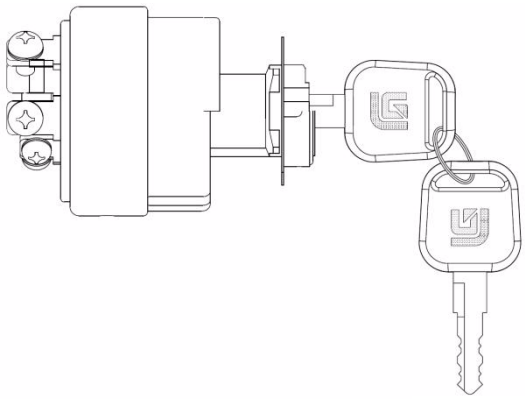

P28E00152

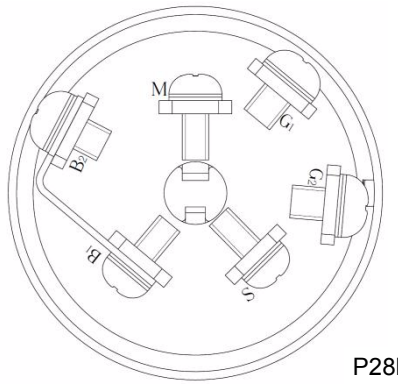

P28E00153

Circuit power-on diagram

Connector code / Gears	B1	B2	M	S	G1	G2
OFF	○	○				
ON	○	○	○			
START	○	○	○	○		○
HEAT	○	○			○	

P28E00154

Specification of the positions of the engine start switch

"HEAT"-The first gear of the clockwise rotating key after inserting the key to the engine start switch. This gear is generally used for the air intake preheating control of the complete machine of non-electronic fuel injection engine and incapable of self-hold, after releasing, the engine start switch key returns automatically to "OFF" position.

"OFF"-the position to insert and extract the electrical lock key. At this gear, cut off the power the electrical equipment on the vehicle. Except for some electrical equipment (such as dome light), which are controlled by the battery disconnect switch instead of the engine start switch.

"ON"-The first gear of the clockwise rotating key after inserting the key to engine start switch. "ON" connects the powers of electrical equipment throughout the machine, which are powered by battery.

"START"-the second gear of the clockwise rotating key after inserting the key to the engine start switch. This gear starts the diesel engine, which is incapable of self-hold. The key to the engine start switch returns automatically to "ON" once it is loosened.

Precautions

After starting the oil engine, loosen the key of the electrical lock immediately to make it return to its position. Otherwise it will lead to serious electrical fault.

Switch off the engine start switch if it fails to start for the first time, then proceed on to second starts. First turn the electrical lock key to "OFF" position. Second, turn it to the "ON" position; Finally to "START" position, which completes a startup circle.

If the diesel engine fails to start within 15S, switch off the engine start switch. Continual starting should be less than three times. Each start time shall be controlled within 15S, or else power loss may be resulted in for the continuous high-power output of battery.

If the diesel engine fails to start in three consecutive trials, switch off the engine start switch, and implement the second starting round after 30 minutes. Inspect the battery and start circuit, if necessary, to see whether there are failures in the way of starting.

A majority of the start difficulties happen outdoors in the cold winter, where the ambient temperature may be even lower than 5°C. If possible, try to start the diesel engine indoors instead, or improve the start with auxiliary heating.

For the disassembly of other components of the machine induced by the engine start switch removal or installation, please refer to the corresponding tool lists which are excluded from the section hereof.

Procedures of failure detection for the engine start switch

1. Unplug the connectors connected with the engine start switch, thus to separate the engine start switch from the machine circuit.
2. Turn the digital multimeter to 200 Ω of Ω position.
3. According to the engine start switch gear logical table, pins with " " in each gear should be connected, and the display value of multimeter should be "0" when measuring; pins with " " and without " " should be disconnected, and the value of multimeter should be "1" when measuring. Otherwise, it can be judged as the engine start switch fault.

Note: "0" indicates the resistance between the two pins is measured as zero; "1" indicates the resistance between the two pins is infinite.?

Circuit power-on diagram

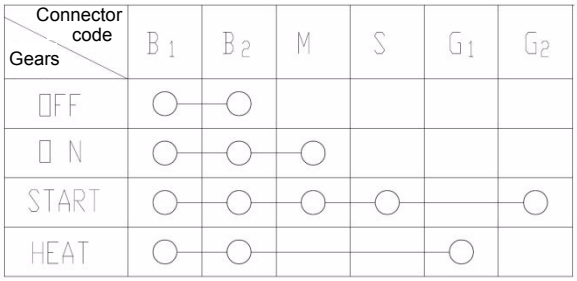

P28E00154

Fuse

Fuse acts as protecting terminal equipment during short circuit or overcurrent. Different series of fuses are applied in the power system, such as plug-in fuse and bolt fuse. The specifications of plug-in fuse diversified from 20A to 15A, 10A, 7.5A and 5A, for the branch circuits. The specifications of bolt fuse ranges from 30A, 50A, 60A, 80A, 150A, for the main circuit.

Location diagram of complete bolt type fusing machine

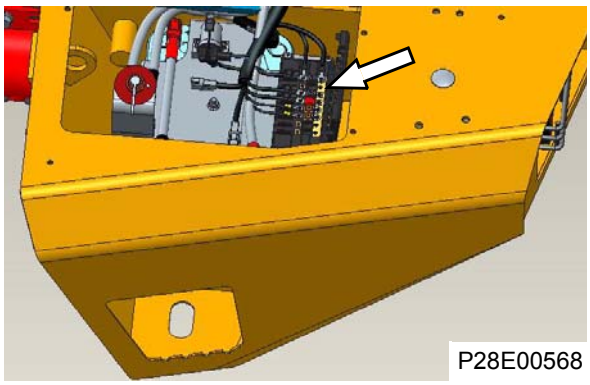

P28E00568

Location diagram of complete inserting disk fusing machine

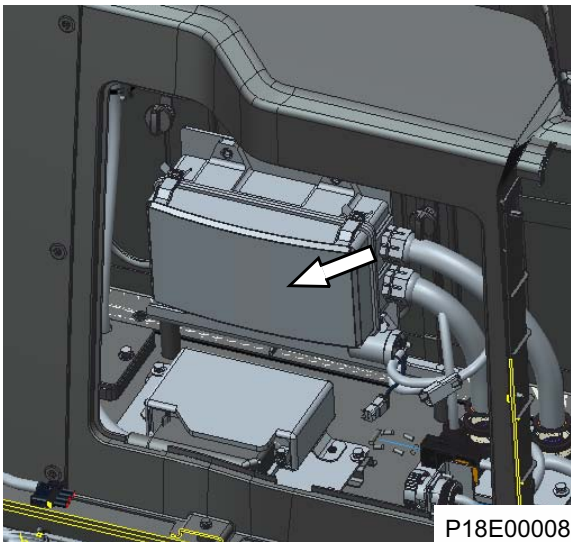

P18E00008

The colors of plug-in fuse vary in accordance with the specifications, the specifications and colors of plug-in fuses applied in the machine, together with the corresponding LiuGong part numbers are listed in the table below for reference only.

LiuGong component number	Specification	Color
37B2023	5A	Brown
37B2024	7.5A	Brown
37B2025	10A	Red
37B2026	15A	Blue
37B2027	Running time	Yellow

Definition table for function of plug-in fuse is as follows:

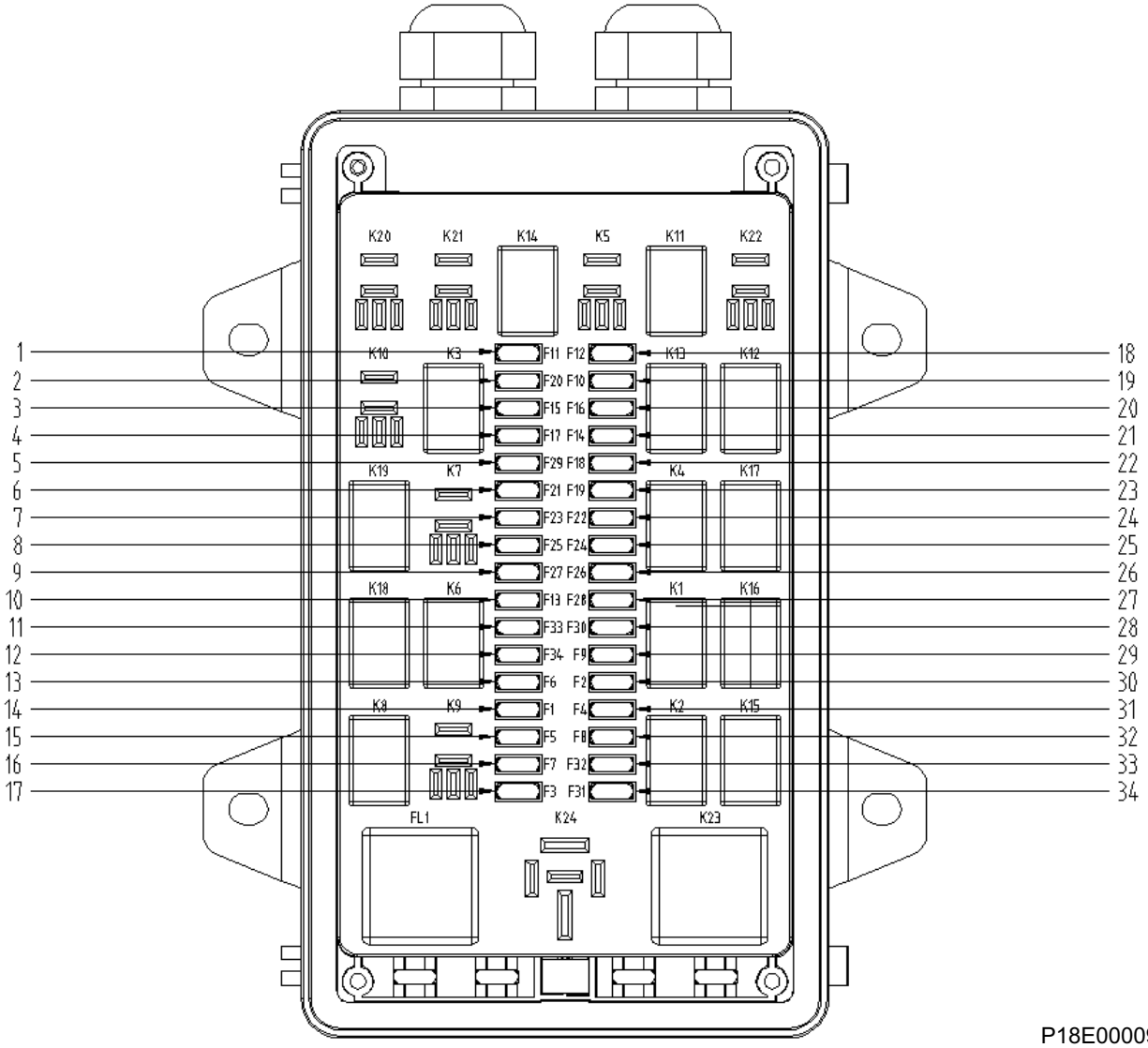

P18E00009

1. Aux control 4
2. DC-DC
3. Aux control 2
4. Headlight
5. Standby 6
6. Seats
7. Front work light
8. Standby 2
9. Standby 4
10. ECM power
11. Left small lamp
12. Right small lamp
13. Standby 12
14. Engine start switch
15. Fuel lift pump
16. Aux control 1
17. Flasher/small lamp
18. Emergency steering system
19. Radio and tape player/cigar Lighter
20. Aux control 3
21. Instrument
22. Rear work light
23. Defroster
24. Wiper system
25. Standby 1
26. Standby 3
27. Standby 5
28. Standby 7
29. Electric horn / backup alarm
30. ECM power
31. Standby 13
32. Brake light
33. Right brake light
34. Left brake light

Precautions

The specifications of different fuses are available from calculation during the circuit design, accordingly, the blown fuse shall be replaced with that of the same series and specifications. Don't replace the fuse with a fuse of different specifications.

On condition that the replacement of blown fuse break down again, proceed on replacing after inspecting the circuit under the jurisdiction of the fuse and troubleshooting.

The troubleshooting method of fuse

Remove the plug-in fuse from the fuse holder, to determine the condition of fuse visually. The inspection methods of bolt fuses can also be applied in the judgment.

Adjustment steps for blowout of bolting type fuse:

1. Turn the digital multimeter to 200 Ω of Ω position.
2. Connect both terminals of the fuse with the DMM probes respectively.
3. The indicated value "1" of the DMM signifies that the fuse is blown and replacement is needed, while the value "0" displayed on the DMM indicates the good service condition of fuse.

Battery Disconnect Switch

Battery disconnect switch regulates the connection between battery (-) and the machine frame. The power (-) of the whole machine is disconnected when the battery disconnect switch is turned to "O" (OFF). The complete vehicle electrical equipment cannot work even turn on the electrical lock. Turn the battery disconnect switch to "I" (ON), the power (-) of the whole machine is connected. Whereby, the engine start switch controls the connections between the electrical components and powers throughout the machine, as well as starts the diesel engine.

Battery Disconnect Switch

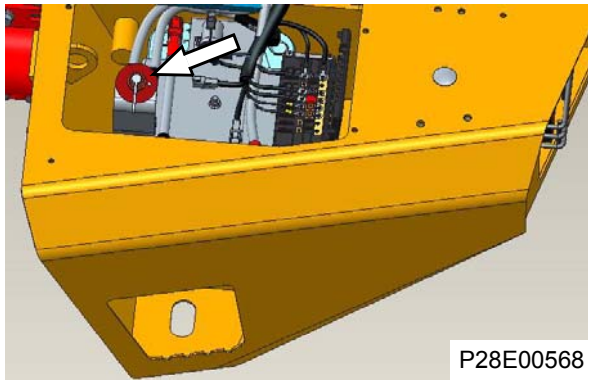

Precautions

1. Be sure to turn off the negative switch at the end of each operation or driving, or else severe consequences (such as electric leakage) might be resulted in;
2. Don't close the negative electrode switch during engine's running. Such error has a severe influence on the electrical systems of the complete machine.
3. Turn off the engine start switch and then the negative switch to halt the machine.
4. Turn on the negative switch and then the engine start switch to start the machine.
5. Be sure to turn off the negative switch before connecting battery cable, fastening the pile tip of battery cable or disassembling battery cable.
6. Be sure to turn off the negative switch before implementing welding operation on the whole machine.

Battery

The machine obtains +24 V power through the series connection of 2 batteries. The rate capacity is 55Ah, and cold-starting current is 850CCA.

As reversible DC (direct current), the battery connects in parallel with the alternator to jointly power the electrical equipments of the complete machine. Battery supplies great current in a short time, to start the motor and further drive the diesel engine to start. Besides, the battery serves as an electrical appliance, which safeguards electrical equipment of the machine through absorbing the overvoltage arising from the circuit at any moment.

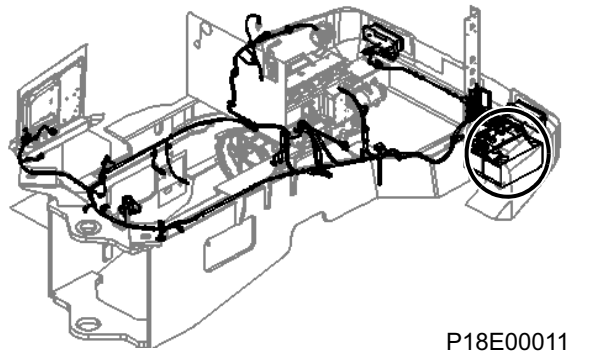

P18E00011

State detection of battery

Observe the built-in hydrometer of the battery cover in well-lighted condition, to figure out the charge state of battery or take appropriate measures in accordance with the color displayed in the hydrometer, in particular:

Indicator color	Green	Black	Transparent
State or solution	Good	Need be charged	Need be replaced

Battery charging

For the batteries whose hydrometer is black, recharging is required.

For the batteries whose hydrometer has transparently light color, there might be bubbles in the hydrometer. Whereupon, remove all the battery connecting cables and shake the battery gently after it is fully cooled. The battery shall be scrapped, provided that the above-mentioned transparently light color remains.

1. Turn the negative switch to state "0". Turn the electrical lock to "OFF", and extract the key.
2. Disassemble the battery from the machine. Turn off the battery cable (-) and battery cable (+) successively before disassembling the battery.
3. Wipe the battery terminal and surface with a clean cloth, to remove the oxide scale on the surface.
4. Connect the charger positive (+) clip to the battery positive (+) terminal, while charger negative (-) clip to the battery negative (-) terminal at room temperature. Confirm that the battery terminals are clean, and the charging circuit is in good connection.
5. Charge the battery with the charger of 16.0V (within 16.2V) constant voltage until the battery hydrometer turns green. The green hydrometer indicates that the battery is fully charged.
6. On condition that constant voltage is unavailable, use constant current instead. Charge the battery with 12A charging current until the battery hydrometer turns green. The green hydrometer indicates that the battery is fully charged.

The relative relationship of auxiliary charging time with voltage of battery:

Battery voltage	12.45~ 12.55V	12.45~ 12.35V	12.45~ 12.20V	12.45~ 12.05V
Recharging time	2 hours	3 hours	4 hours	5 hours
Battery voltage	12.45~ 11.95V	11.95~ 11.80V	11.80~ 11.65V	11.65~ 11.50V
Recharging time	6 hours	7 hours	8 hours	9 hours
Battery voltage	11.50~ 11.30V	11.30~ 11.00V	Below 11.00V	
Recharging time	10 hours	12 hours	14 hours	

7. For the battery suffering severe power loss, it may be non-chargeable at the beginning of charging. As battery charging proceeds, the charging current of battery can return to normal gradually. It takes about 14 hours to complete the charging process.
8. If the battery temperature gets too high (approximately 45 °C) during the charging process, stop charging the battery until the battery is cooled to room temperature, then recharge it through halving the charging current.
9. Check the hydrometer state once every hour during battery charging. The green battery hydrometer indicates that the battery has been fully charged, and stops charging at this time.
10. Coat the terminal with Vaseline after the charging is completed, to prevent galvanic corrosion.

Precautions for battery charging

1. Never charge two batteries in series.
2. Maintain a ventilated environment during charging, and charge at a normal temperature.
3. If acid is sprayed from the battery vent during charging, the charging shall be stopped immediately.
4. Charge the battery in well-ventilated area, and pay attention to the electrical safety.
5. Any battery that leaks or has a broken housing, shall rather be scrapped than recharged.
6. Any battery that has a broken terminal, shall rather be scrapped than recharged.
7. Any battery that is inflated or bulged for over-discharge or overcharge, shall rather be scrapped than recharged.
8. If the hydrometer remains black after being charged for a period of time, check whether the charging cable is well connected, the joint point is clean, or the charging voltage reaches 16V.

Steps of battery troubleshooting

The machine is in braking state, while the shift control lever is in neutral position. The densimeter mounted inside the battery cover is green. The test in this step need assist of partner.

1. Turn the negative switch to position "0".
2. Turn the digital multimeter to 50 V of voltage position.
3. Connect the red probe of DMM to the positive terminal of one battery, while the black probe to the negative terminal of the other battery. Be sure not to connect them to the cable terminals. The value displayed on the DMM shall be controlled within "24" to "32" V.
4. Keep the two pointers of the digital multimeter still. Put disconnect switch in the position of "I". Switch on the electrical lock and start the diesel engine.
5. The value displayed on the DMM is between "20" to "24"V at the moment the cranking motor starts running. The value returns to that described in step 3 once the diesel engine starts smoothly.

Any battery that is capable of completing the above steps and successfully starting the diesel engine, is in good service condition; otherwise, test by following steps.

1. Disconnect all the battery connecting cables, thereby, two batteries are completely disconnected.
2. Turn the digital multimeter to 50 V of voltage position.
3. Connect the red probe of DMM to the positive terminal of one battery, while the black probe to the negative terminal, the value displayed on the DMM is around "12" to "16" V.
4. Inspect the other battery according to step3. The displayed value is the same as the step 3. Any battery that fails to implement the test procedures, shall be charged or replaced.

Contactor and Relay

The machine is equipped with a contactor for power control, besides, other than normally closed contacts, a group of normally open contacts is also provided. Both the contactor parameters and internal schematics are labeled on the contactor housing. The rated current of normally open contacts on the contactor contact circuit is 100A. Apply +24V voltage to the contactor coil, then the electromagnetic force generated by the energized attracts the armature inside the contactor, whereby, the normally open contracts switch on.

The contactor is assembled around the centralized control box of electric appliance.

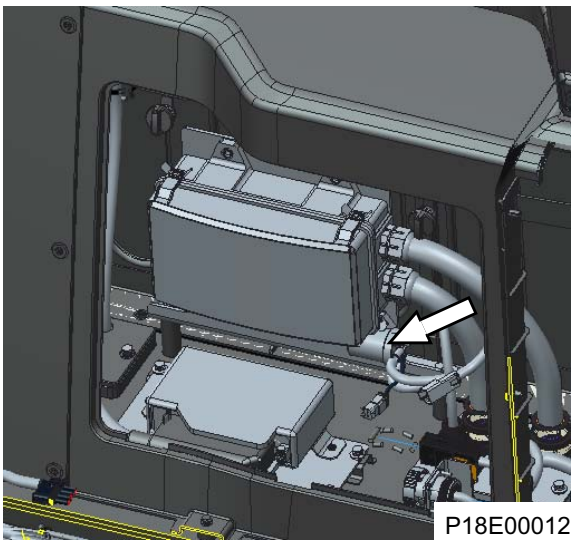

P18E00012

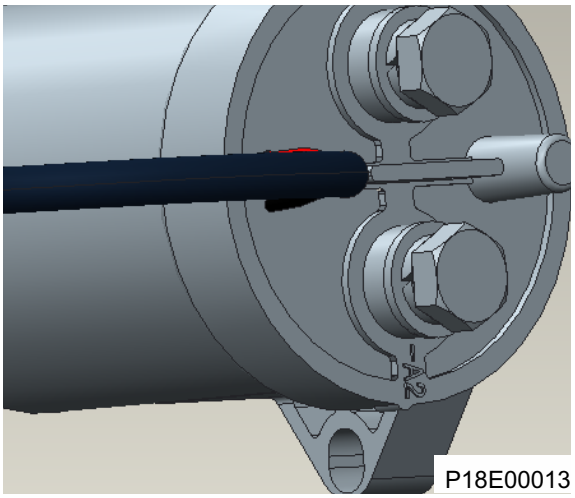

P18E00013

Precautions

+A1 indicates the current input direction, and -A2 shows the current output direction. In the case of connection error, the inoperative magnetic blowout function of contactor will shorten its service life.

Socket relay is concentrated on the control box, of which the location schematic and function diagram are as shown below. The location and function definitions of socket relay will not appear hereinafter.

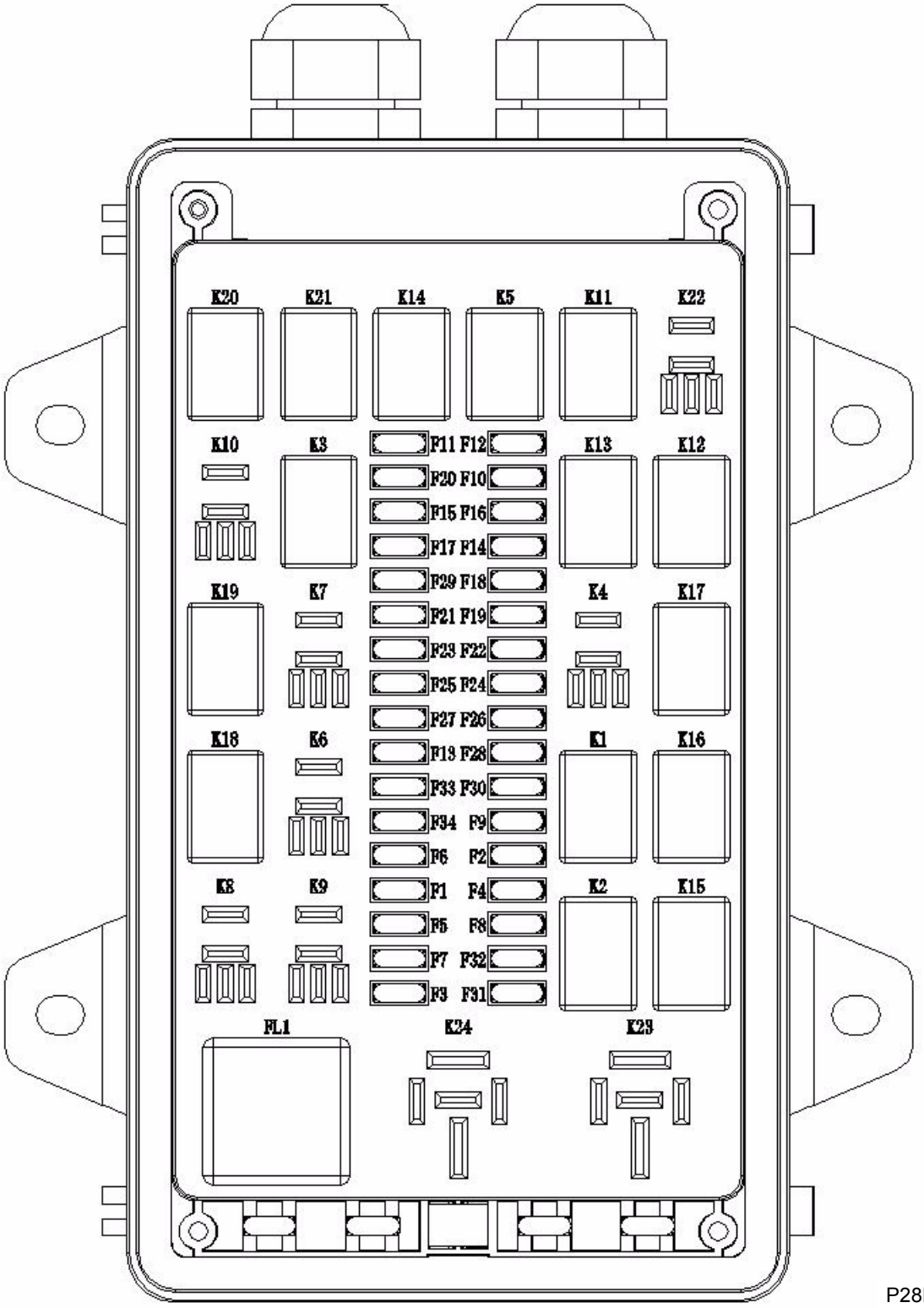
K20
K21
K14
K5
K11
K22
K10
K3
F11 F12
F20 F10
F15 F16
F17 F14
F29 F18
F21 F19
F23 F22
F25 F24
F27 F26
F13 F28
F33 F30
F34 F9
F6 F2
F1 F4
F5 F8
F7 F32
F3 F31
K13
K12
K19
K7
K4
K17
K18
K6
K1
K16
K8
K9
K2
K15
FL1
K24
K23

P28E00569

S/N	Definition	PDM number	S/N	Definition	PDM number
K1	Electric horn	31B0173	K13	Front window washer	31B0173
K2	Brake light	31B0173	K14	Auto swing arm shock absorber	31B0173
K3	Fan reversing	31B0173	K15	Back-up Alarm	31B0173
K4	Defroster	31B0173	K16	G Relay	31B0173
K5	Secondary steering	31B0173	K17	D Relay	31B0173
K6	Standby	31B0173	K18	Starting protection	31B0173
K7	Standby	31B0173	K19	Neutral startup interlock	31B0173
K8	Ready to regenerate	31B0173	K20	Boom limit	31B0173
K9	Fuel lift pump	31B0173	K21	Bucket positioning	31B0173
K10	Standby	31B0173	K22	Standby	31B0173
K11	Wiper Position 2	31B0173	K23	DCU power	31B0095
K12	Wiper Position 1	31B0173	K24	Heating valve	31B0095
			FL1	Flasher	31B0005

Troubleshooting procedures of power relay

1. Remove the relay from the relay socket.
2. Turn the digital multimeter to 200 Ω of Ω position.
3. Connect the red probe of DMM to the relay terminal "86", while the black probe to terminal "85", the value displayed on DMM shall be around 250Ω thereby.
4. Turn the digital multimeter to 200 Ω of Ω position.
5. Connect the one probe of DMM to the relay terminal "30", while the other to terminal "87", the value displayed on DMM shall be "1" thereby;
6. Apply +24V external power (+) to the terminal "86" of relay, while (-) to terminal "85"; on the other hand, connect one probe of DMM to the terminal "30" of relay, the other probe to terminal "87", thereby, the DMM displayed value shall be "0".

After completing the above steps, if the values displayed on DMM conform to that described in the steps, the relay is in good service condition.

The above steps are inapplicable to the operating contacts where the abrasion is very severe.

Mini-relay

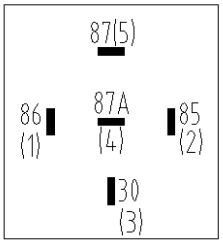

Micro-relay

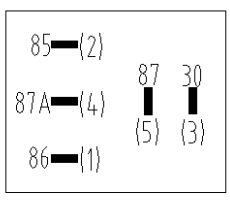

Starting Module

Schematic diagram of starting module

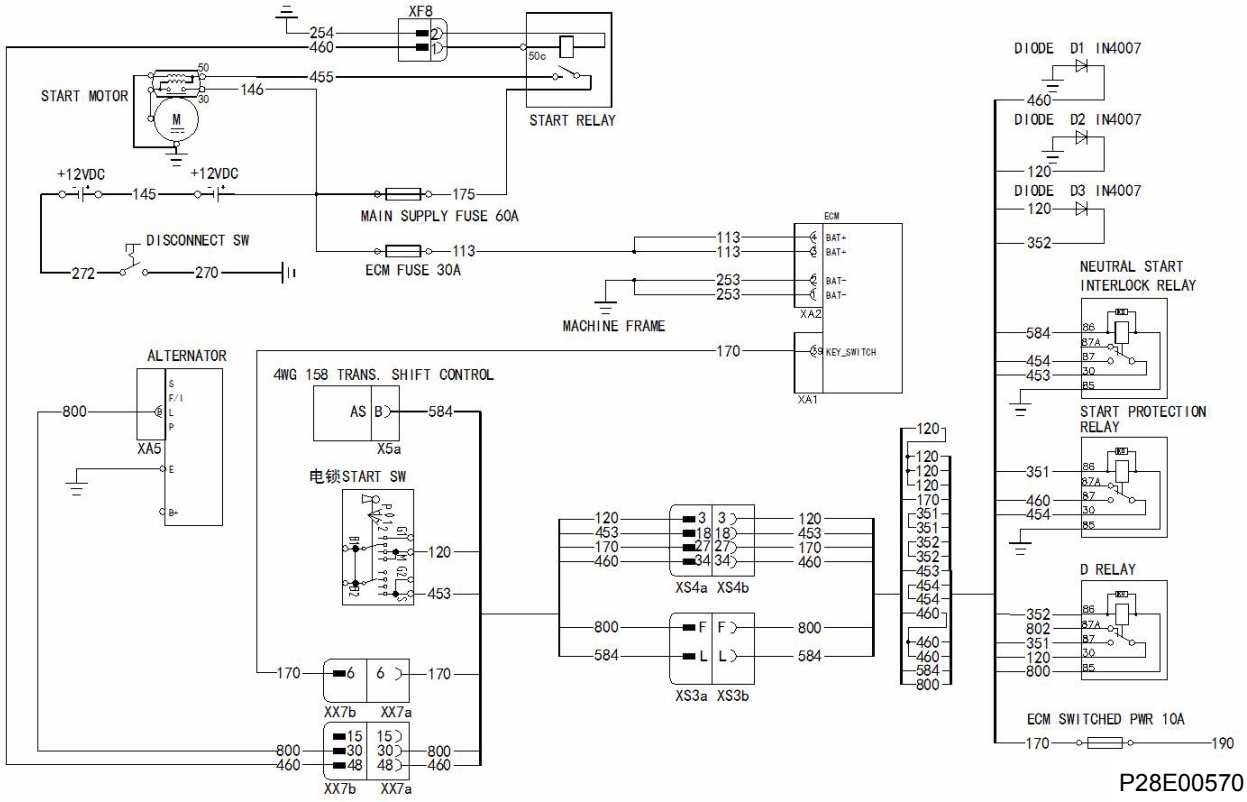

Analysis of the electrical schematic diagram

1. Turn on negative switch and turn the engine start switch to "ON", the analysis of the schematic diagram hereof can be found in the power supply system;
2. Turn the shift control lever to neural position, No.584 wire of the ZF shift controller outputs a high level signal of (+24V); No.800 wire of engine D+ outputs a low level;

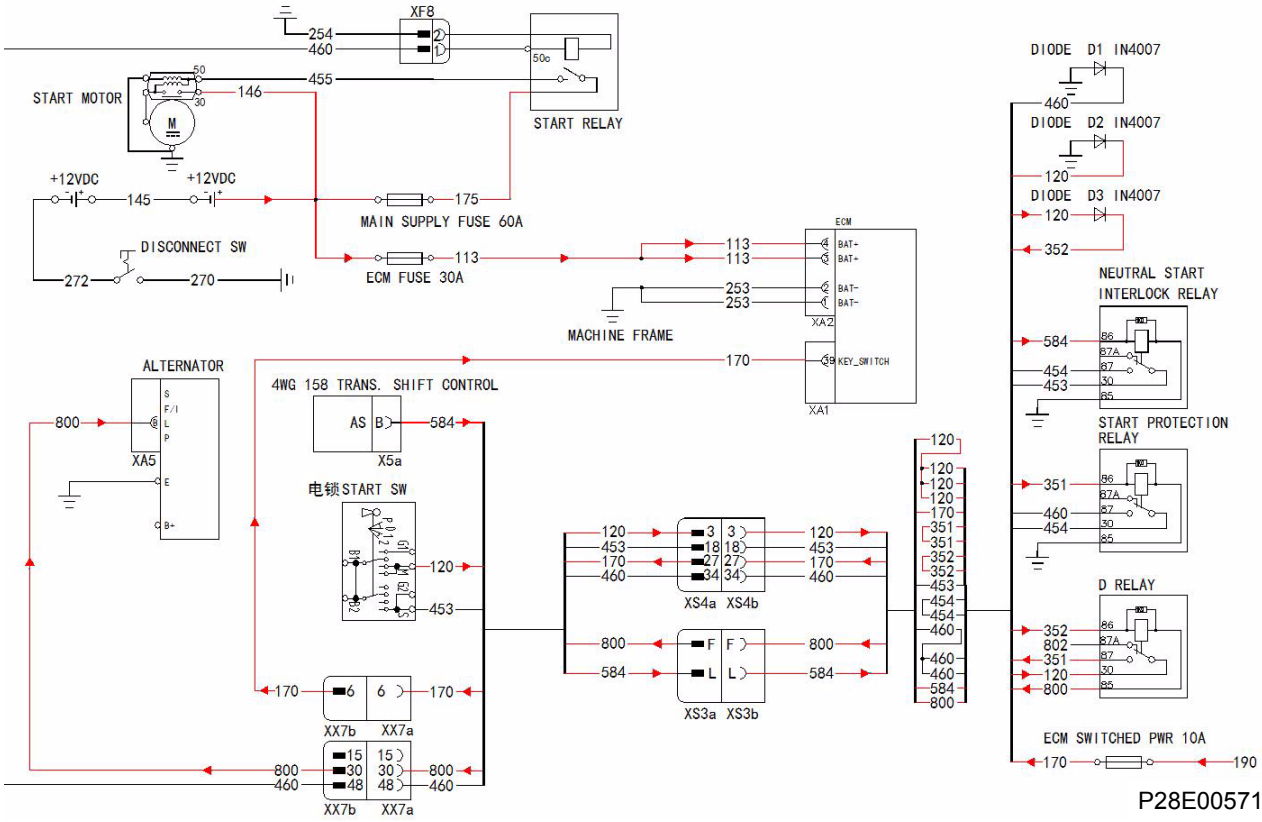

3. After the engine start switch is rotated to START;

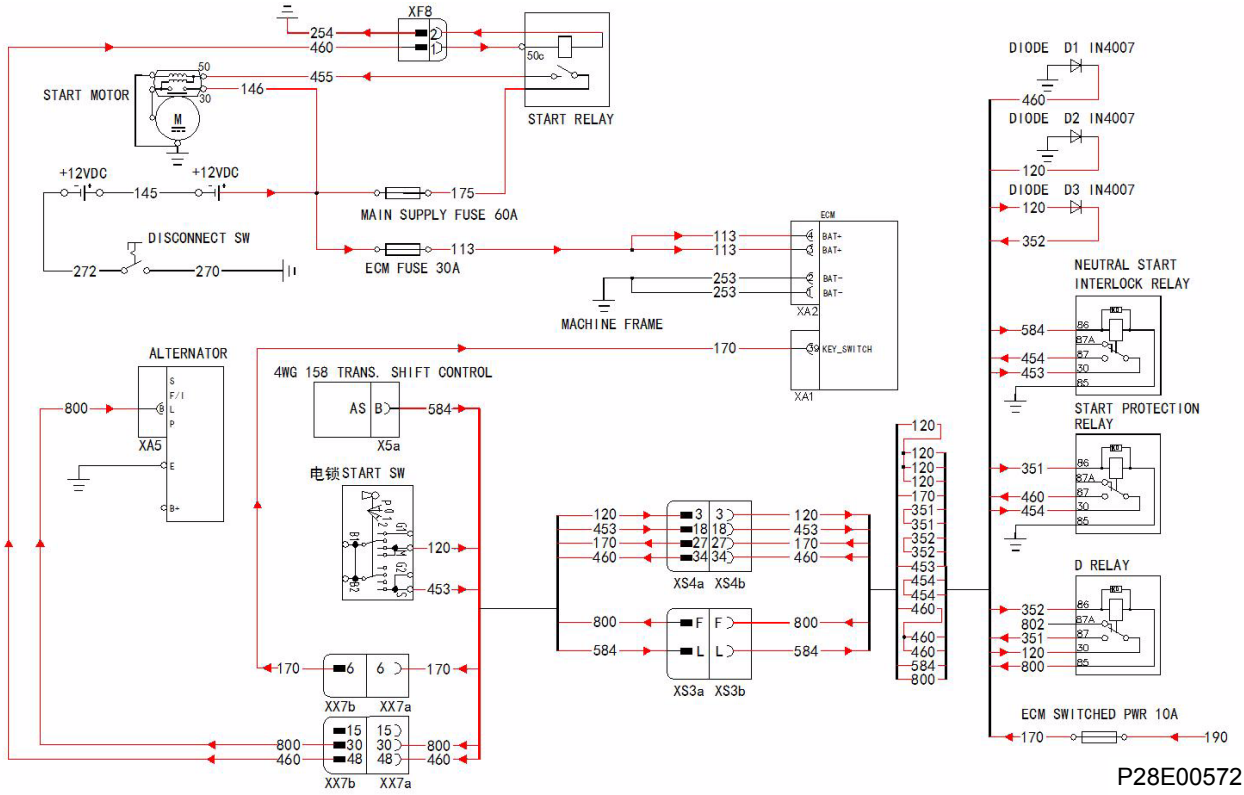

4. After the machine starts, No.800 wire of alternator D+ outputs high level signal, and starter protection function is enabled, at the same time release the engine start switch from "START" to "ON".

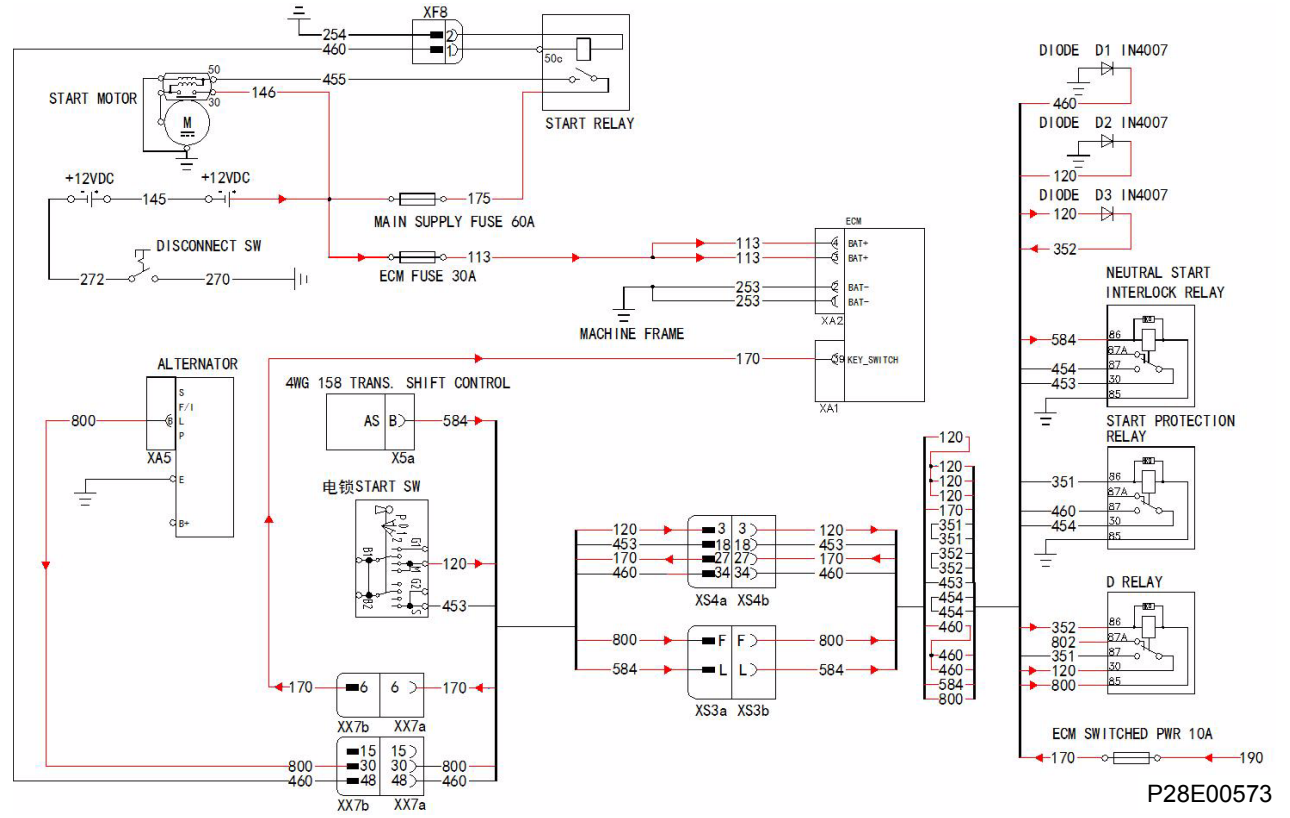

Start Contactor

A contactor of 100A is equipped in the machine to control the start. The rated load current of the contactor contact circuit is 100A, only a group of operating contacts are provided as normally open contacts. Apply +24V voltage to the contactor coil, and the generated electromagnetic force drives the internal armature to switch on the operating contact-normally open contact against the spring force. Whereby, the external circuit, of which the rated load current is 100A, is connected. Disconnect +24V applied voltage to the contactor coil, the contactor recovers to reset condition.

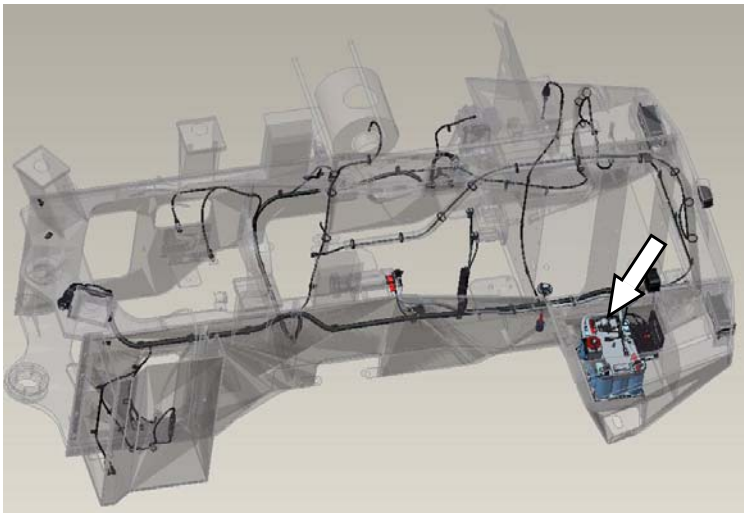

P28E00575

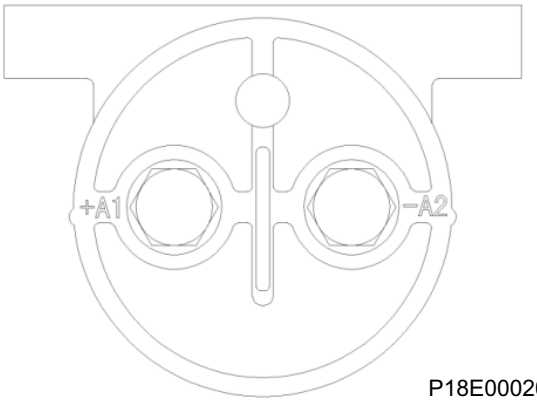

P18E00020

Precautions

A1+ indicates the current input direction, and A2- shows the current output direction. In the case of connection error, the inoperative magnetic blowout function of contactor will shorten its service life.

Troubleshooting procedures of contactor

1. Turn the digital multimeter to 200 Ω of Ω position.
2. Connect both probes of DMM to the connector terminals of the contactor respectively, the value displayed on DMM shall be around "96Ω" thereby.
3. Connect both probes of DMM to the bolts (the operating contact terminals) of the contactor respectively, the value displayed on DMM shall be around "1" thereby.
4. Apply +24 V power to the connector (coil terminal) of contactor, while connect both probes of DMM to the bolts of contactor respectively, the value displayed on DMM shall be around "0" thereby.

After completing the above steps, if the values displayed on DMM conform to that described in the steps, the contactor is in good service condition. The above steps are inapplicable to the operating contacts (normally open) where the abrasion is very severe.

Starting Motor

The starter motor equipped in the machine is configured for 24V/4.8KW. The DC motor within the starter motor translates the electrical energy of battery into mechanical energy, whereby the internal transmission gear drives the motor flywheel to start the engine.

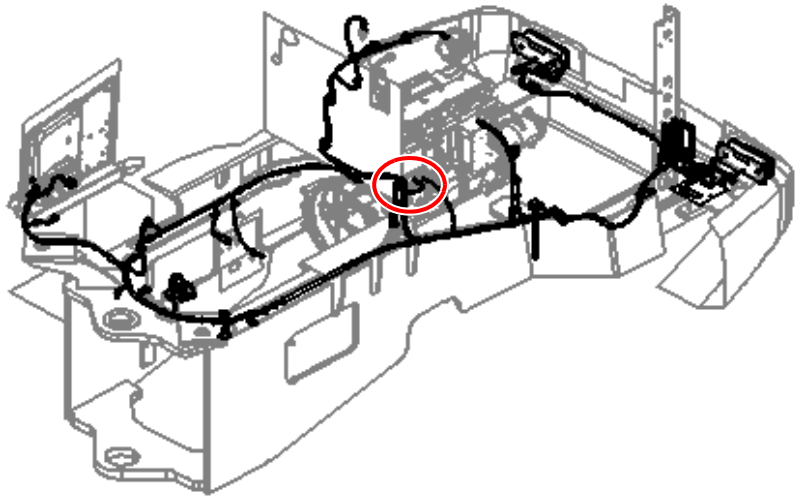

P18E00022

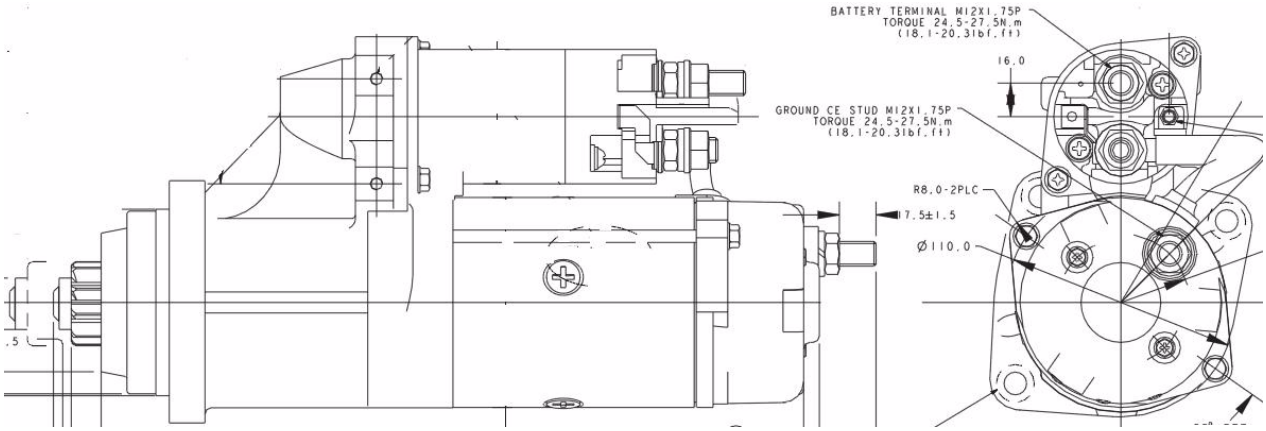

P28E00584

Alternator

As the main power unit of the machine, the alternator translates the energy from diesel engine into serviceable electric energy of electrical equipment. The electrical components are configured for 24V/ 70A, with electronic voltage regulator equipped inside. The alternator is connected in parallel with the battery to power the machine. The battery supplies power to the electrical components before the diesel engine starts; then after it starts, alternator powers the electrical components while charging the battery. Once the energy of alternator fails to meet the needs of the electrical components, the alternator and battery jointly power the machine.

This machine uses three terminals of generator, i,e. 1. Battery Positive; 2. Ground; 3. D+.

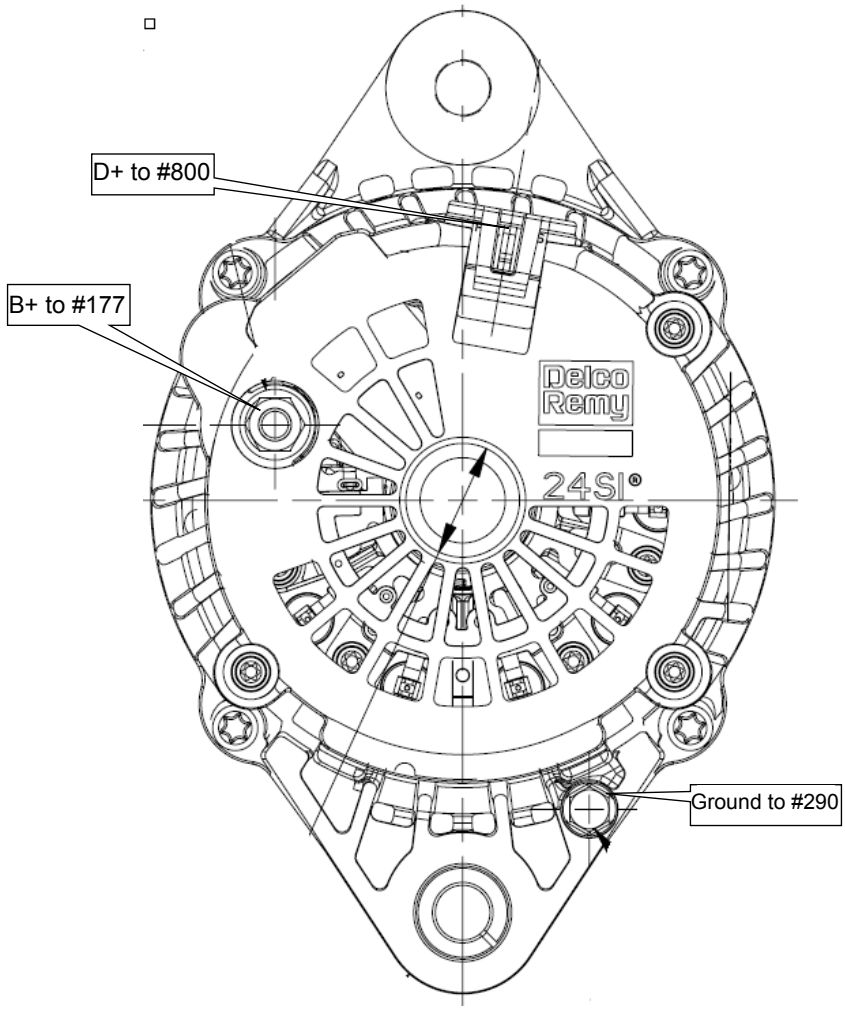

P18E00176

Precautions

The alternator of the machine is strictly prohibited to power the electrical equipments on the machine separately in the absence of battery.

Metal tools or other metal conductors shall be kept away from the "B +" (Battery Positive) terminal and "Ground" terminal of generator during operating the diesel engine. In order to avoid short-circuit. Short circuit on the engine will lead serious results.

Troubleshooting procedures of alternator

Differing from the introduced fault detection methods for other components, the alternator fault detection is implemented on the entire machine, which shall not be removed for individual inspection.

The following detection steps are inapplicable to the cases where the battery is fully charged and the terminal voltage reaches 25V or above.

1. Turn the digital multimeter to 200V of voltage position.
2. Turn on disconnect switch of the machine, do not start the diesel engine, put red probe of a digital multimeter over "B+" end of an alternator, put black probe over "Ground" terminal of the alternator, and write down displayed value of the digital multimeter. The normal value is about 24-25 V.
3. Start diesel engine, step on accelerator, follow the measuring method described in step 2, and note down the value on DMM again. Such value shall be higher than the measured value in step 2, whereby, the alternator is in normal condition.

The above test procedures shall be implemented on unloaded machine (unload: the condition that the engine start switch is switched on, yet all the electrical switches or components on the machine are switched off).

If the value on DMM is unchanged through the tests in steps 2 and 3, switch off the engine start switch to inspect the alternator as per the following steps.

1. Inspect the transmission belt of alternator in accordance with the methods introduced in the specification. Readjust if it is too loose.
2. Check the security of alternator terminal, and fasten it with a wrench if necessary.

If the above-mentioned methods fail to solve the problem, please contact maintenance service sites of LiuGong and CUMMINS.

Monitoring System

Circuit for Engine Water Temperature Indication

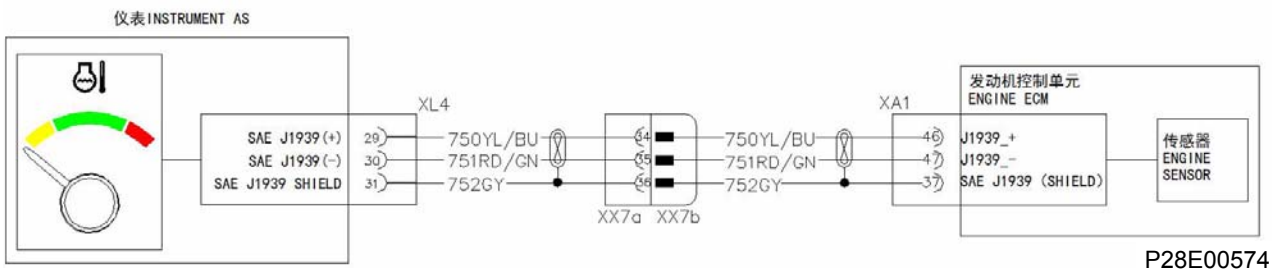

P28E00574

This machine uses electric injection engine whose ECM sends the water temperature (WT) signal to the meter by CAN bus. The meter microcontroller processes information after reading WT data, and finally to actuate the engine water-thermometer.

Circuit for Torque Converter Oil Temperature Indication

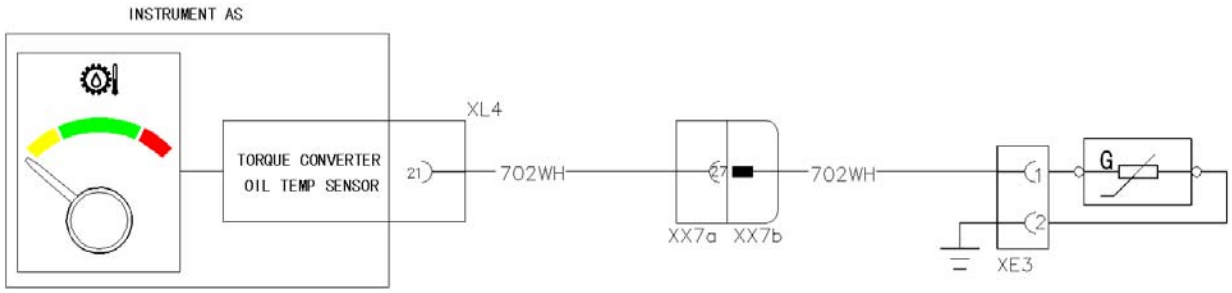

P18E00026

The temperature sensor used in the machine is resistance thermometer of contact type and negative temperature coefficient. The resistance of its internal temperature sensitive elements changes along with the temperature variation of measured medium, and the higher temperature of measured medium, the lower resistance of temperature sensitive elements. Once the circuit is connected, the characteristics of resistance changing with temperature are converted to that of voltage varying with temperature. The changing voltage signal enters into the microcontroller of combination instrument, which outputs signal through the operation processing of microcontroller, to drive the stepping motor-type instrument for temperature indication.

Torque converter oil temp sensor

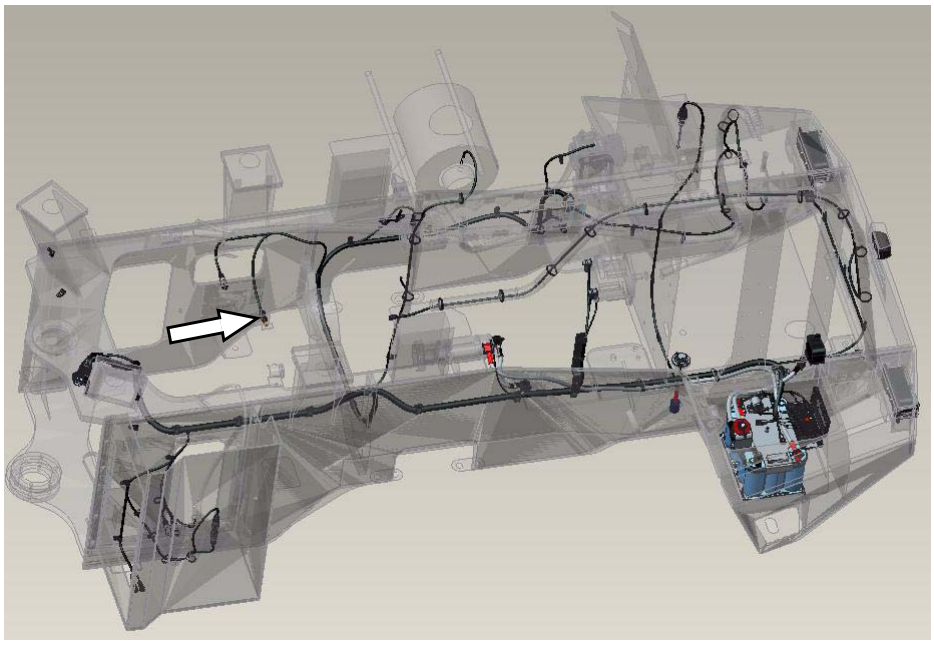

P28E00575

Precautions

Switch off the engine start switch, and replace the temperature sensor until the machine is completely cooled if necessary. Therein, measured liquid overflows once the temperature sensor is loosened, which shall be supplemented timely after the replacement.

The detection of torque converter oil temp sensor

1. Unplug the connector, through which the rear frame harness connects to the temperature sensor;
2. Disassemble the temperature sensor from the complete machine;
3. Place the temperature probe of temperature sensor into the liquid (water/ torque converter oil), and heat the liquid, to evaluate the temperature sensor performance based on the parameters below.

Temperature(°C)	Resistance (Ω)	Error± %	Min value	Max value
0	33650	8.8	30700	36600
25	10000	7	9304	10700
90	865.5	2.1	847.3	883.7

Circuit for Engine Oil Pressure Alarm

This machine uses electric injection engine whose oil pressure signal is acquired and processed by ECM. If ECM decides the oil pressure falls below a specified value after processing, it will send alarm signal to the meter by CAN bus. The microcontroller actuates the appropriate alarm indicator light to ON after reading this signal.

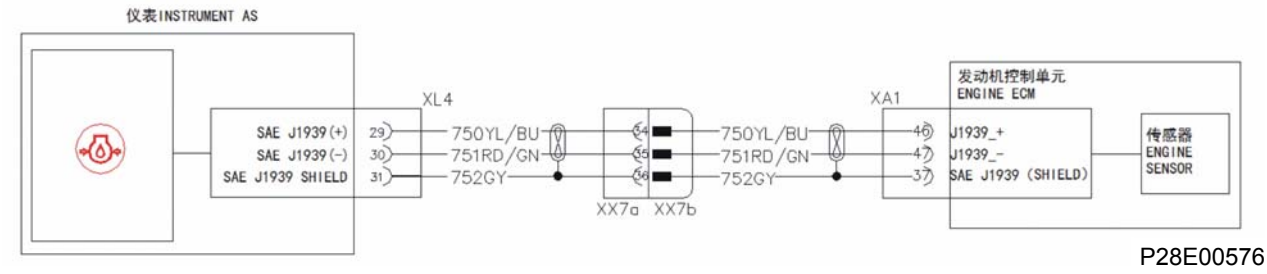

P28E00576

Circuit for Transmission Oil Pressure Alarm

For monitoring the pressure of shift control valve, the shifting oil pressure alarm indicator is lit once the pressure of shift control valve is lower than 1.45Mpa.

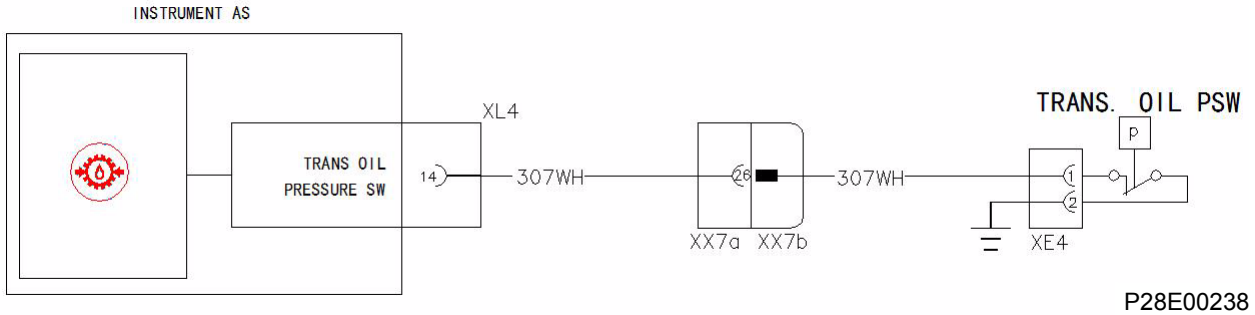

P28E00238

Transmission oil pressure switch

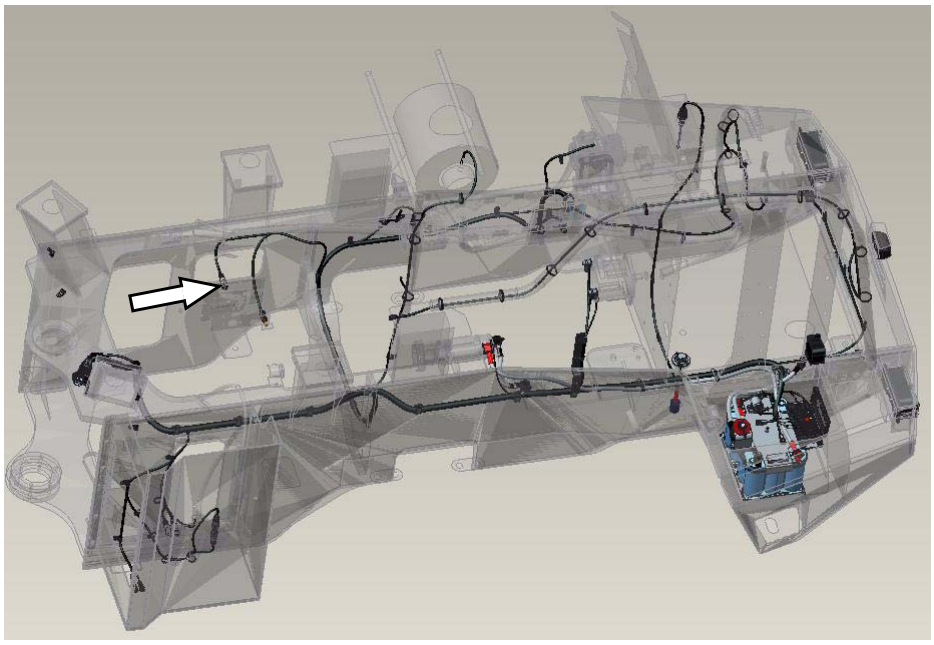

P28E00575

Precautions

Be sure to switch off the engine start switch and wait until the machine is fully cooled, to replace the pressure switch if necessary.

Therein, measured liquid overflows once the pressure switch is loosened, which shall be supplemented timely after the replacement.

Test on pressure switch failures

1. Unplug the connector, through which the rear frame harness connects to the engine oil pressure switch;
2. Remove the pressure switch from the complete machine;
3. Assess the operating value of pressure switch with pressure test bed, and the operating value of its normally closed contact is 1.45Mpa.

Circuit for Fuel Level Indication

It is used to monitor the oil quantity of diesel tank.

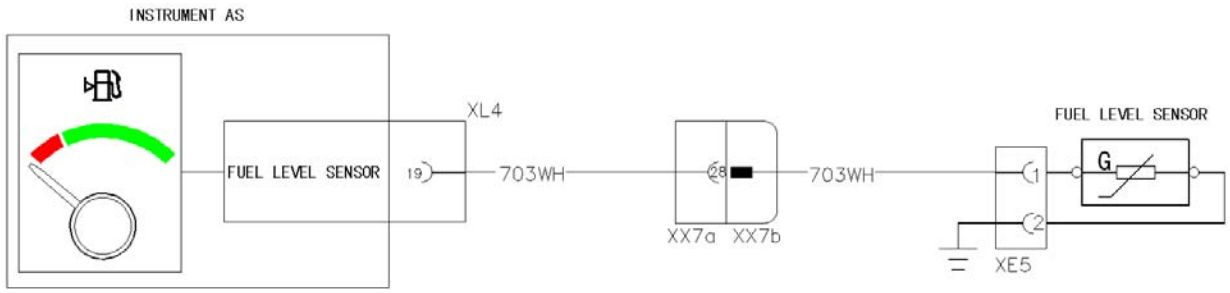

P18E00031

Fuel level sensor

Floaters are applied in the sensor, which shift up and down along with the oil level of the fuel tank. The floater influences the resistance value passing through the sensor. Once the circuit is connected, the characteristics of resistance changing with oil level are converted to that of voltage varying with oil level. The changing voltage signal enters into the microcontroller of combination instrument, which outputs signal through the operation processing of microcontroller, to drive the stepping motor-type instrument for oil level indication.

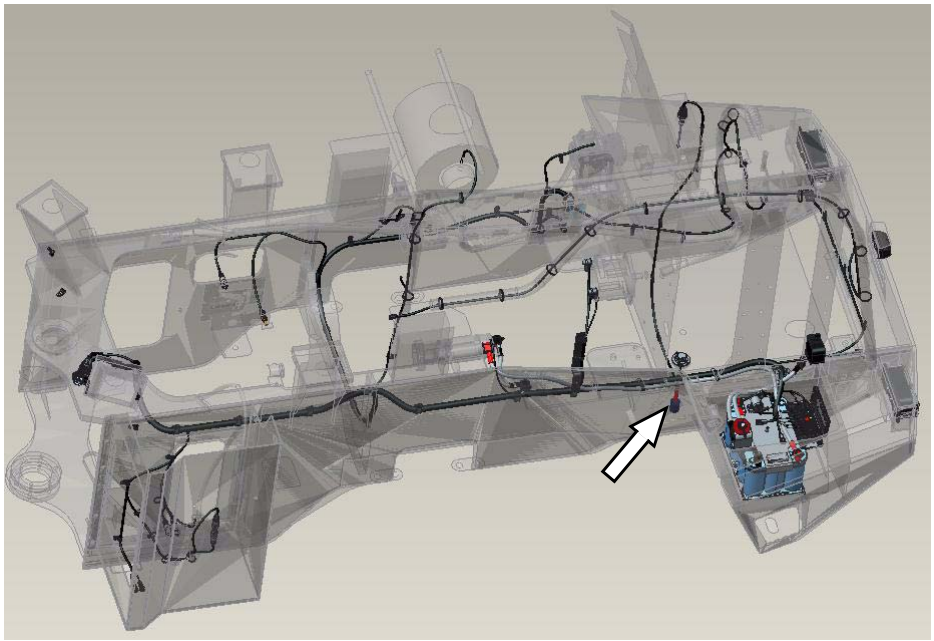

P28E00575

Precautions

Switch off the engine start switch, and replace the fuel level sensor until the machine is completely cooled if necessary. When replacing, prevent foreign matters from getting into the diesel tank.

Test steps of fuel level sensor faults

1. Disconnect the wiring harness of fuel level sensor and the wiring harness of the complete vehicle.
2. Remove the fuel level sensor from the fuel tank.
3. Turn the digital multimeter to 1000Ω of Ω position.
4. Connect the red probe to the terminal at #1 hole site of the sensor connector, while black probe to #2 hole site.
5. Measure the varied resistance values of fuel level sensor corresponding to the different positions of the floater.

Technical Parameters (After floater drops to the bottom, then rises to test)		
Fuel level surface position (H)	**Gear**	**Resistance (Ω)**
35	Full level	68
85	9/10	136
112.5	8/10	187
140	7/10	255
167.5	6/10	306
195	5/10	374
222.5	4/10	442
250.5	3/10	493
279	2/10	561
310	1/10	612
>310	0 level	680

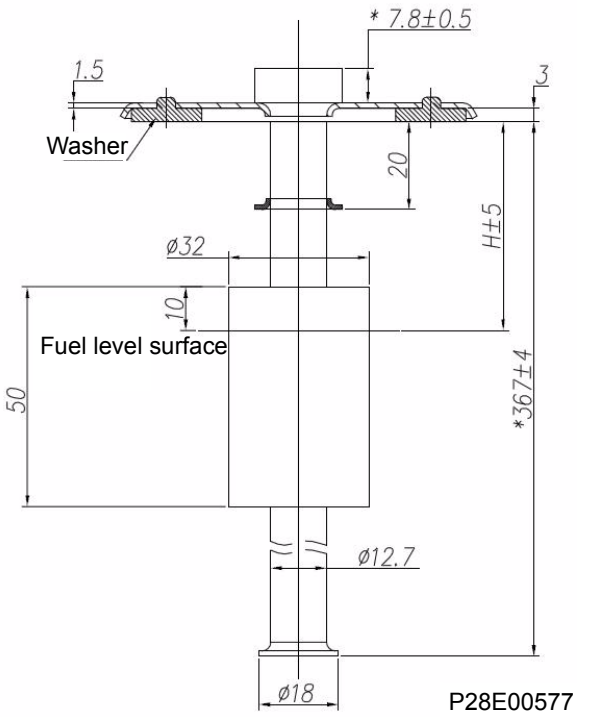

P28E00577

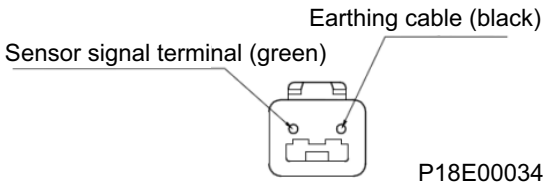

P18E00034

Circuit for Vehicle Speed Indication

For monitoring the machine speed condition. The output speed sensor, installed on the gearbox housing, is used to detect the speed of gearbox output gear. The speed sensor consists of coil, permanent magnet and pole. The coil is wound outside the pole, and the pole is connected with the permanent magnet. The magnetic field is formed around the permanent magnet, magnetic lines of force pass through air gap and act on the teeth of gear, forming a closed magnetic circuit. When the gear is rotating, the magnetic field acts on the tooth gap and tooth repeatedly, so the change in air gap is sometimes big and sometimes small; the flux changes with the air gap, and the changing flux induces sinusoidal signal in the coil, which is in proportion to speed. Connect to ZF harness, followed by being processed in the electrical control unit, the processed signal therefrom is sent to the instrument.

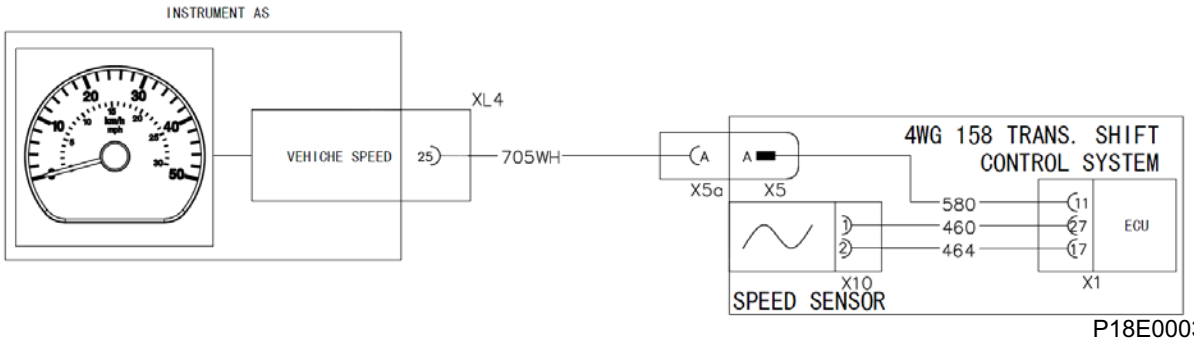

P18E00036

Service Brake Indication Circuit

When sercive brake pressure is less than 9MPa, the pressure switch turns on and brake low pressure indicator turns on.

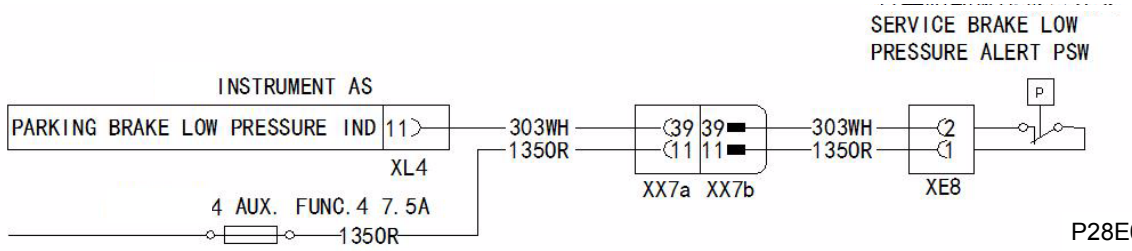

P28E00578

Low pressure alarm pressure switch of service brake



P28E00579

Test on pressure switch failures

1. Unplug the connector connected to pressure switch in the rear frame harness;
2. Remove the pressure switch from the complete machine;
3. Assess the action value of pressure switch with pressure test bed, and its contact type is normally closed with action value up to 9Mpa.

Circuit for Parking Brake

When parking brake switch is pressed down, connect pin 3 and 4. When brake pressure is less than 11MPa, the low pressure alarm switch of parking brake turns on and indicator turns on.

When brake pressure is less than 7MPa, control pressure switch of parking brake turns off, parking brake valve is outage and the output shaft of transmission is locked by action of brake.

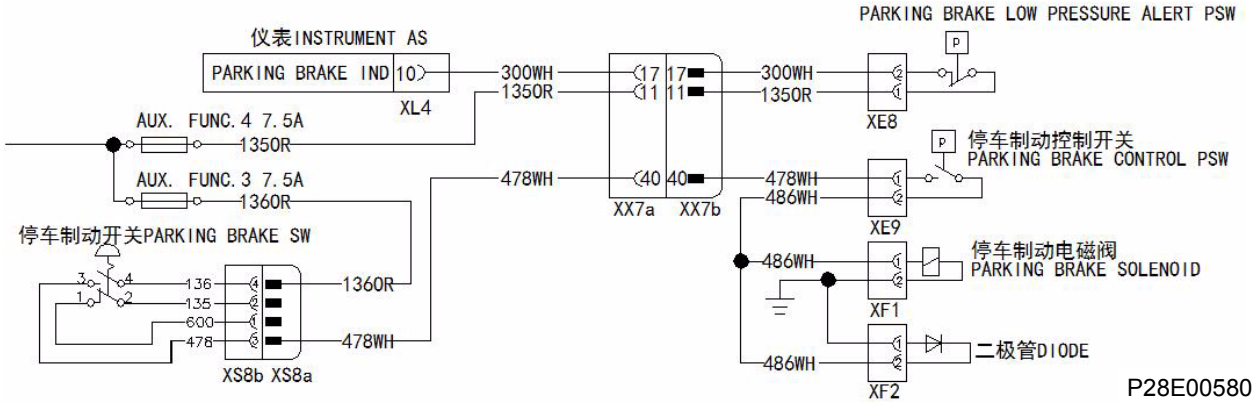

Parking brake low pressure alarm switch



Test on pressure switch failures

1. Unplug the connector connected to pressure switch in the rear frame harness;
2. Remove the pressure switch from the complete machine;
3. Assess the action value of pressure switch with pressure test bed, and its contact type is normally closed with action value up to 11Mpa.

Parking brake control pressure switch



Test on pressure switch failures

1. Unplug the connector connected to pressure switch in the rear frame harness;
2. Remove the pressure switch from the complete machine;
3. Assess the action value of pressure switch with pressure test bed, and its contact type is normally open with action value up to 7Mpa.

Circuit for Parking Brake Power Cut-off

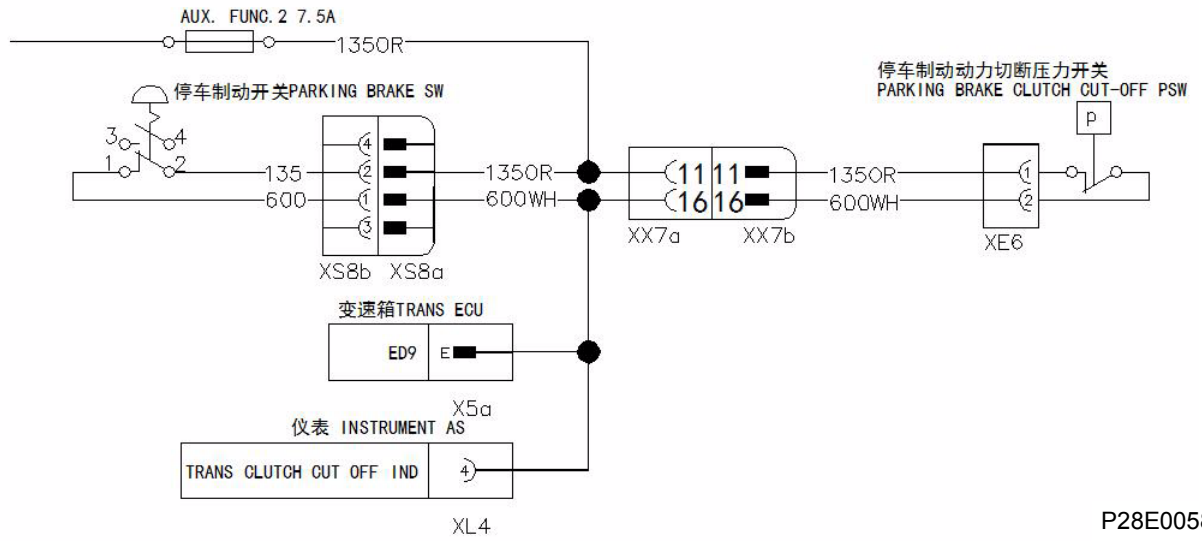

P28E00581

When the parking brake switch is pulled up, pin 1 and 2 is connected, the input signal of gearbox power cut-off is high, and the complete machine lie in the status of power cut-off, at the same time power cut-off indicator turns on.

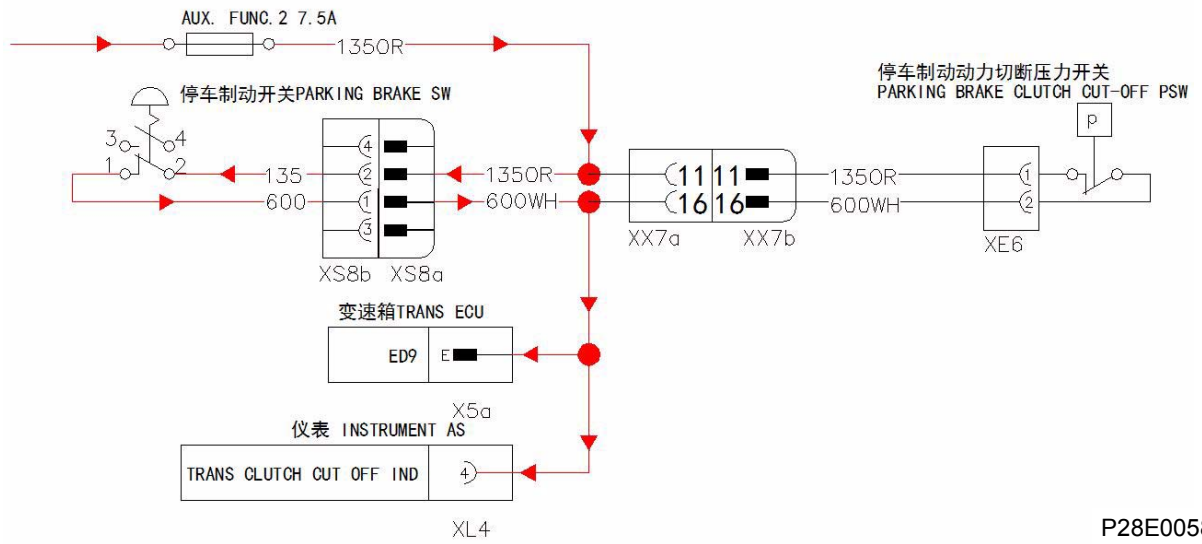

P28E00582

When the brake pressure is less than 6MPa, parking brake clutch on/off switch turns on, the input signal of gearbox power cut-off is high, and the complete machine lie in the status of power cut-off, at the same time power cut-off indicator turns on.

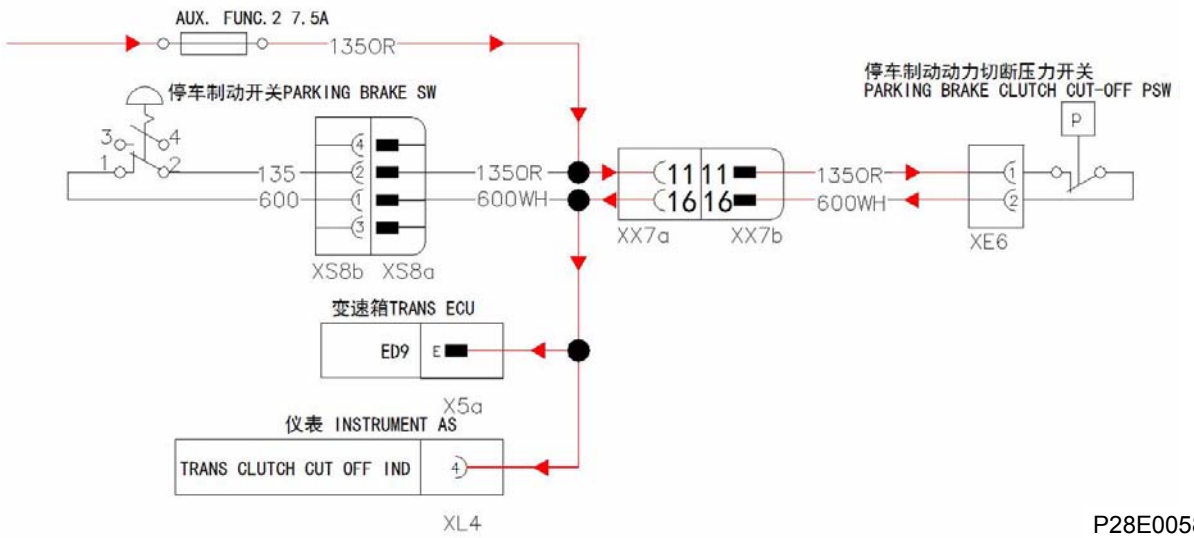

P28E00583

Parking brake power cut-off Switch



P28E00579

Test on pressure switch failures

1. Unplug the connector connected to pressure switch in the rear frame harness;
2. Remove the pressure switch from the complete machine;
3. Assess the action value of pressure switch with pressure test bed, and its contact type is normally closed with action value up to 6Mpa.

Parking brake button

This switch includes a button and two contact modules (one is normally open, the other is normally closed). Press up the button, the normally-closed contact (1,2) is active, the normally-open contact (3,4) is inactive. When pressing down the button, the normally-closed contact is in active and normally-open contact active.

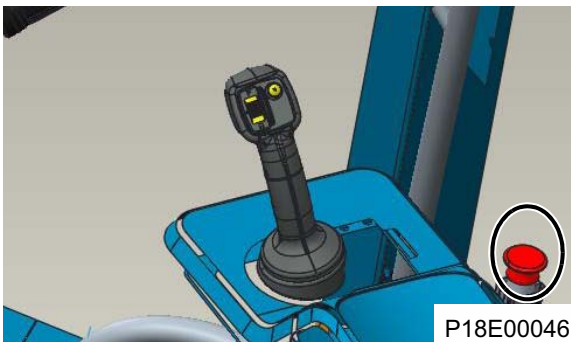

P18E00046



P18E00047

Circuit for Service Brake Clutch ON/OFF

Turn the clutch on/off switch to "on/off", the service clutch shutoff pressure switch is turned on once the brake pedal is pressed during the service, and the indicator of clutch shutoff switch on instrument is lit. This function is active only when the position selector is at I or II position.

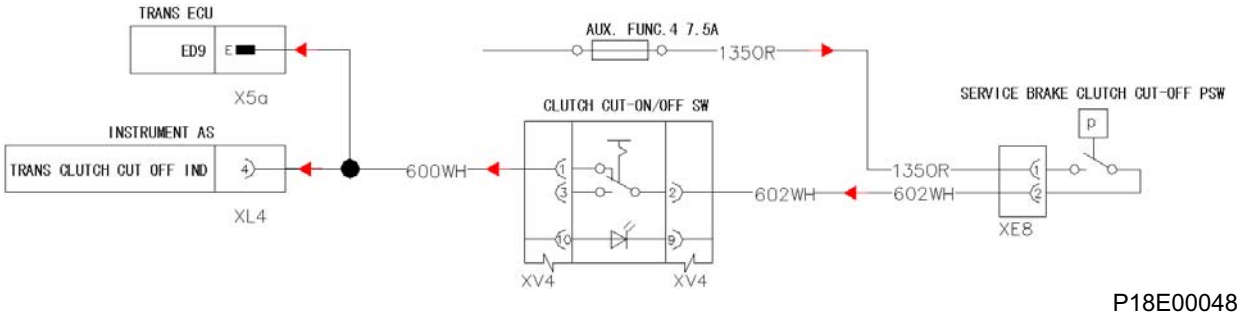

P18E00048

Pressure switch for service power cutoff

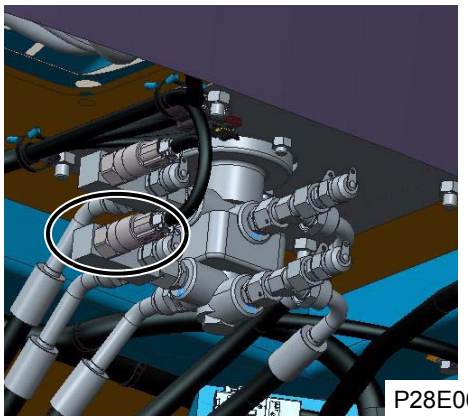

P28E00585

Precautions

Be sure to switch off the engine start switch and wait until the machine is fully cooled, to replace the pressure switch if necessary.

Test on pressure switch failures

1. Unplug the connector connected to pressure switch in the cab harness;
2. Remove the pressure switch from the complete machine;
3. Assess the action value of pressure switch with pressure test bed, and its contact type is normally open with action value up to 1.5Mpa.

Clutch on/off switch

POS3 indicates to select the service clutch shutoff function, while on the other hand, POS1 signifies not to select such function.



P18E00050

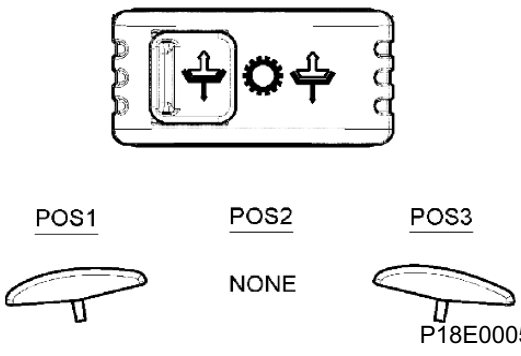

P18E00051

Circuit for Air Filter Blockage Alarm

The intake air filter alert indicator is lit if the intake resistance exceeds 6.3KPa. The type of air filter blockage alarm switch is normally open.

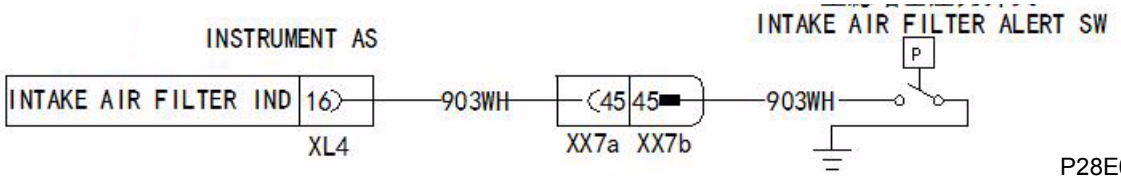

P28E00586

Circuit for Alternator Charging Indication

It is used for monitoring whether the alternator supplies power to the external circuit after the machine starts. The indicator goes out, which means the engine is in the state of supplying power outward.

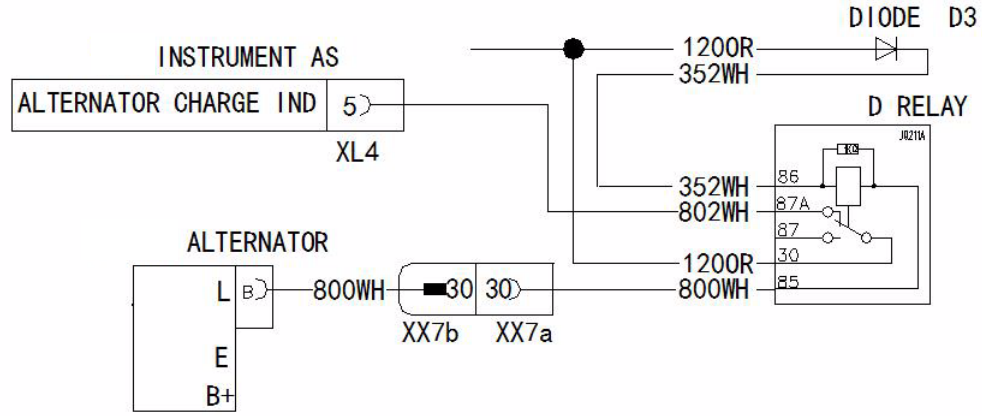

P28E00587

Analysis of the schematic diagram

1. When the complete vehicle is energized but not started, D+ terminal of alternator is under low level, at which the relay acts due to the voltage difference at the end 85 and 86, pin 30 and 87 of relay is connected to make No.802 wire suspend and indicator turns on.

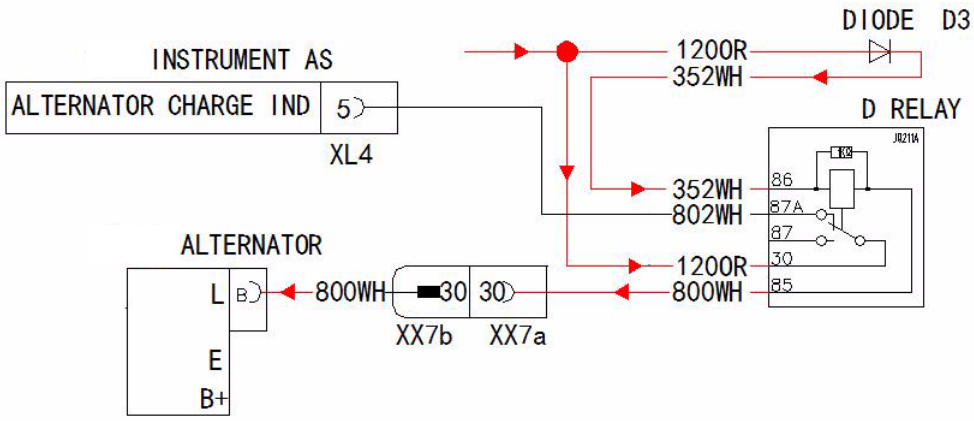

P28E00588

2. After entire vehicle starts, if engine is normal, D+ terminal should output high level, at which the relay stays at normally-closed contact due to "Zero" voltage difference at the end 85 and 86, pin 30 and 87a is connected to make No.802 wire energize and indicator turns off.

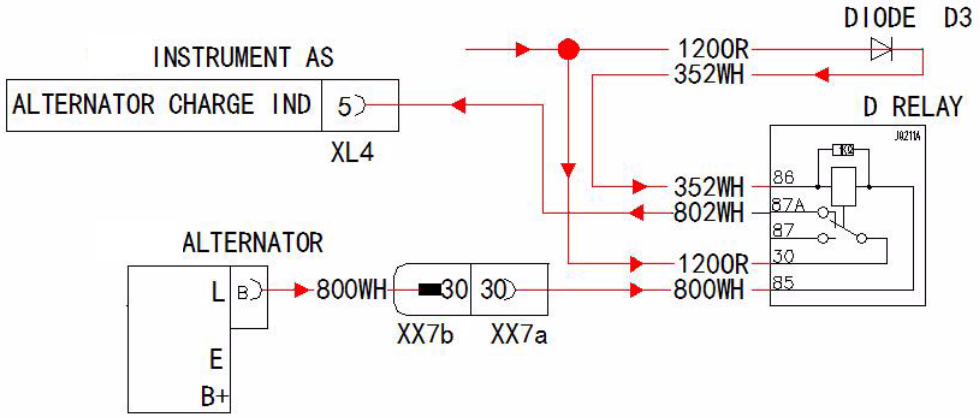

P28E00589

Circuit for Voltage Indication

For monitoring the machine system voltage, lights when the machine power voltage is lower than 24.8V, extinguishes when within 24.8-29.5 V, lights when within 29.5-31.5 V, and blinks when greater than 31.5V.

The machine uses electric injection engine whose ECM sends the voltage parameter of complete machine to the meter by CAN bus after monitoring and reading. The meter judge the range of voltage by analysis of CAN agreement, eventually to control the ON/OFF of voltage indicator.

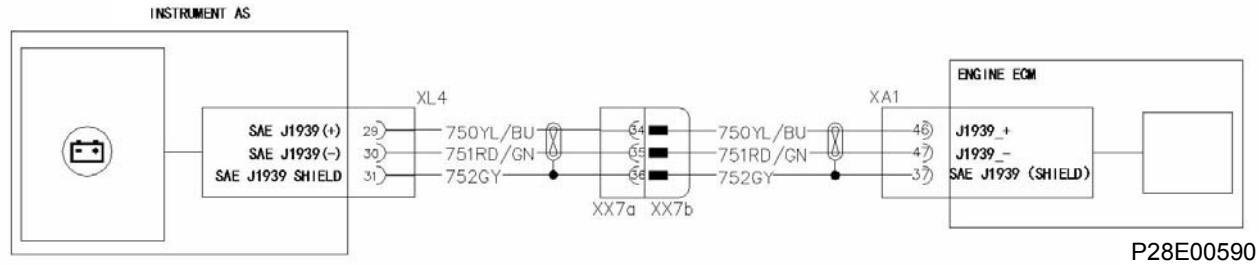

P28E00590

Circuit for Seatbelt Indicator

When the seatbelt is not buckled up, this indicator is active.

When the seatbelt is buckled up, this indicator turns off. At the same time, the rear seatbelt indicator of cab roof turns on.

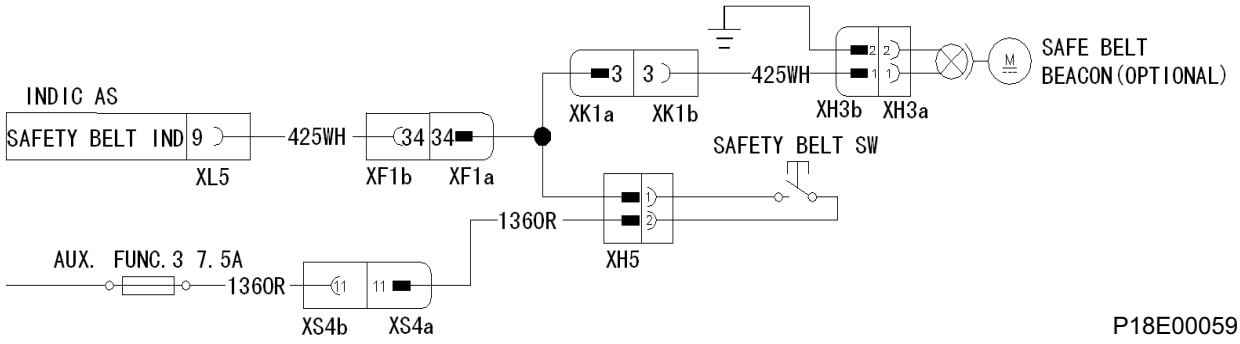

P18E00059

Circuit for Lubrication System Failure Indicator

When the failure occurs in the lube system, the appropriate indicator light is active.

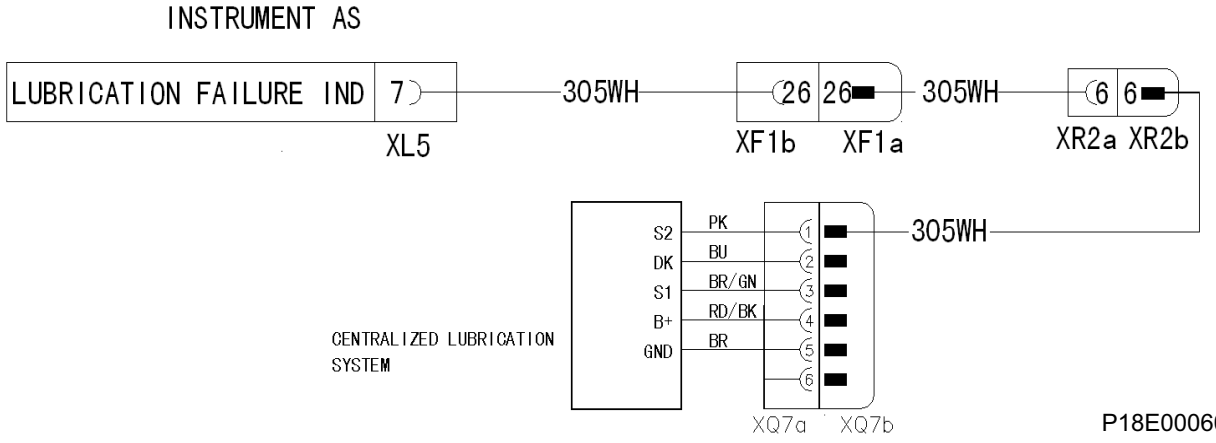

P18E00060

Circuit for Lubrication System Activated Indicator

When the centralized lube function is activated, this indicator light is ON.

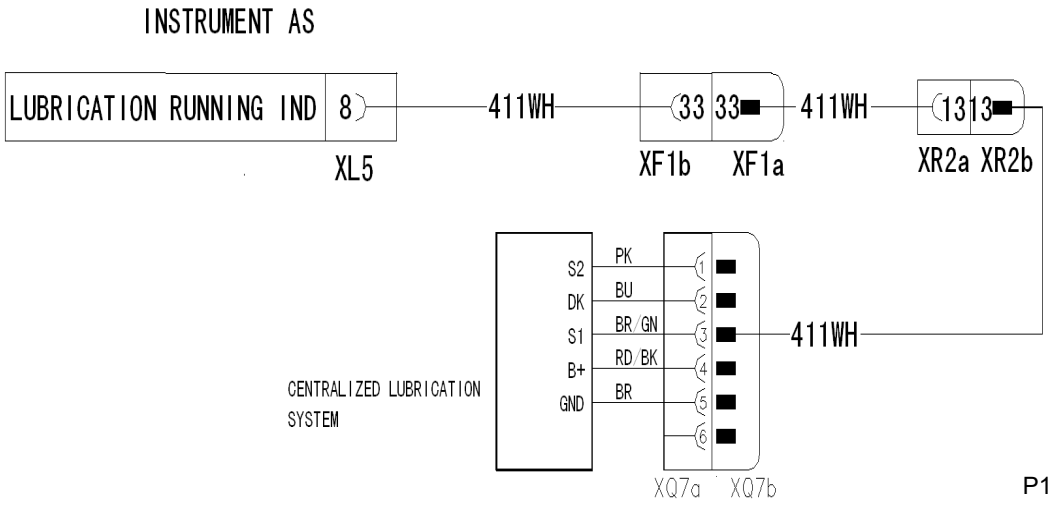

Circuit for Steering System Failure Indicator

When the pressure of steering system is less than 0.6Mpa, the pressure switch contact is closed. If the instrument indicator is active. it indicates the steering system failure.

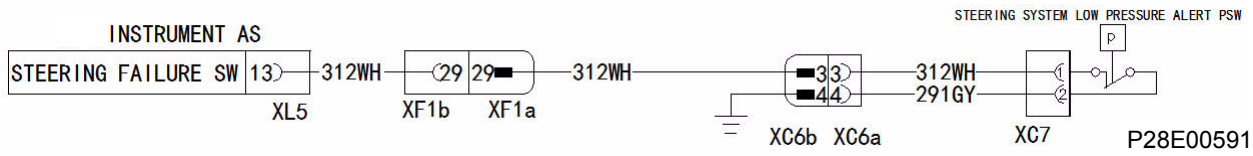

Failure detection for steering system low-voltage alarm switch

1. Unplug the connector connected to pressure switch in the rear frame harness;
2. Remove the pressure switch from the complete machine;
3. Assess the action value of pressure switch with pressure test bed, and its contact type is normally closed with action value up to 0.6Mpa.

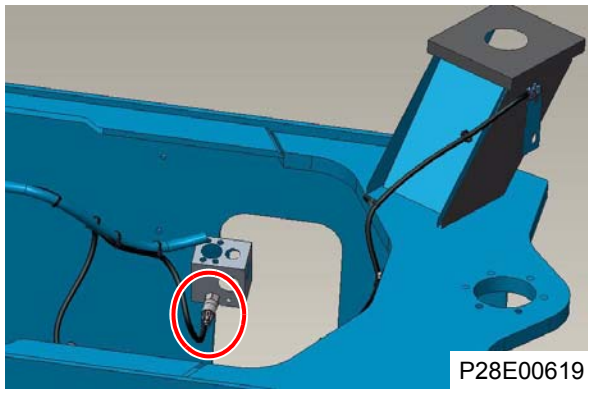

Circuit for Secondary Steering Indicator

When the secondary steering function is active, this indicator light is ON. The secondary steering function has two kinds of enabled methods: manual and automatic.

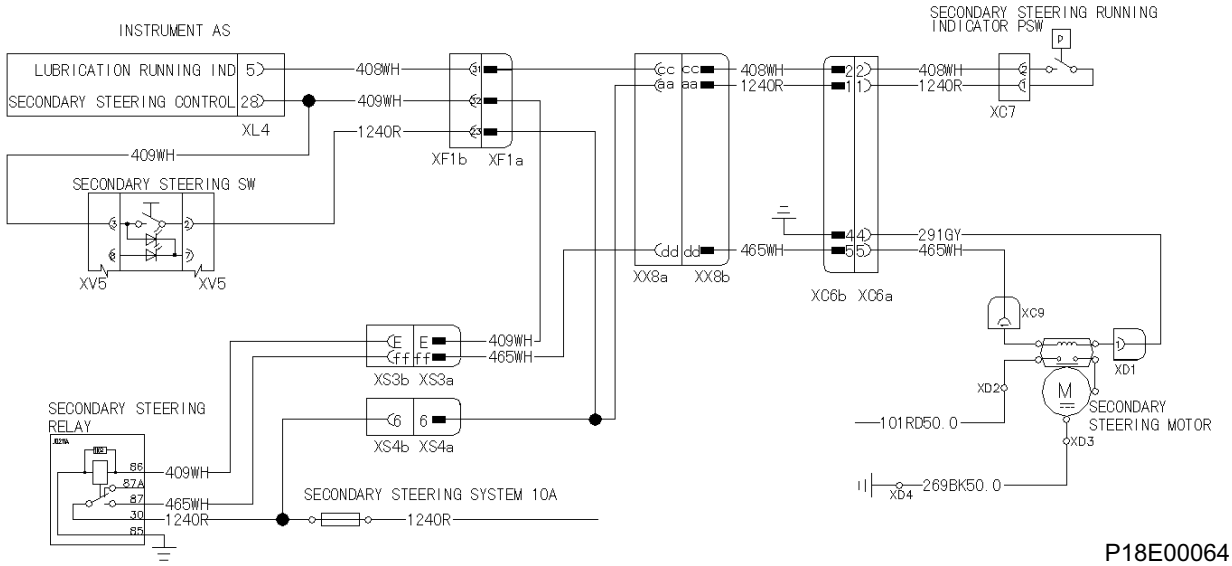

P18E00064

Manual method is controlled by secondary steering switch, schematic analysis:

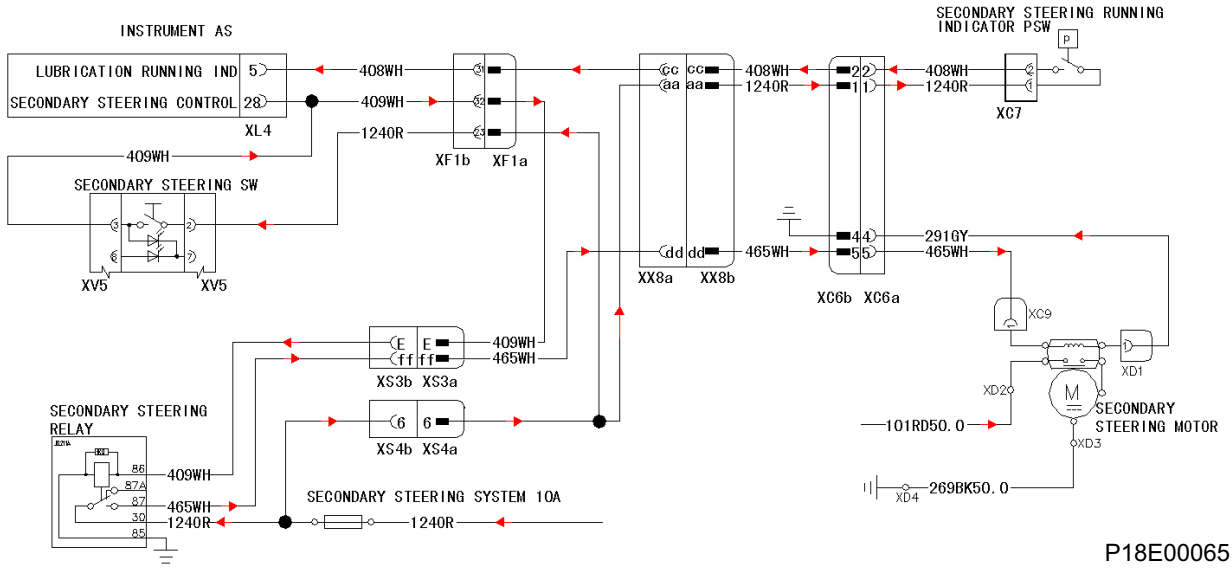

P18E00065

Automatic method controls signal by instrument output, schematic analysis:

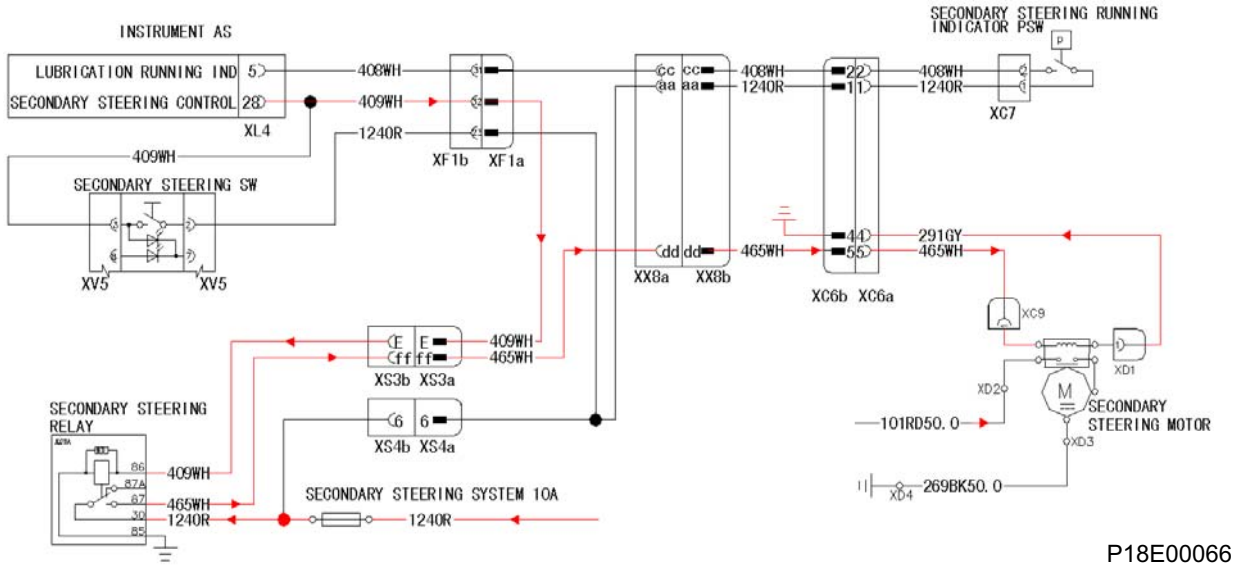

Timing diagram of secondary steering control signal output by instrument:

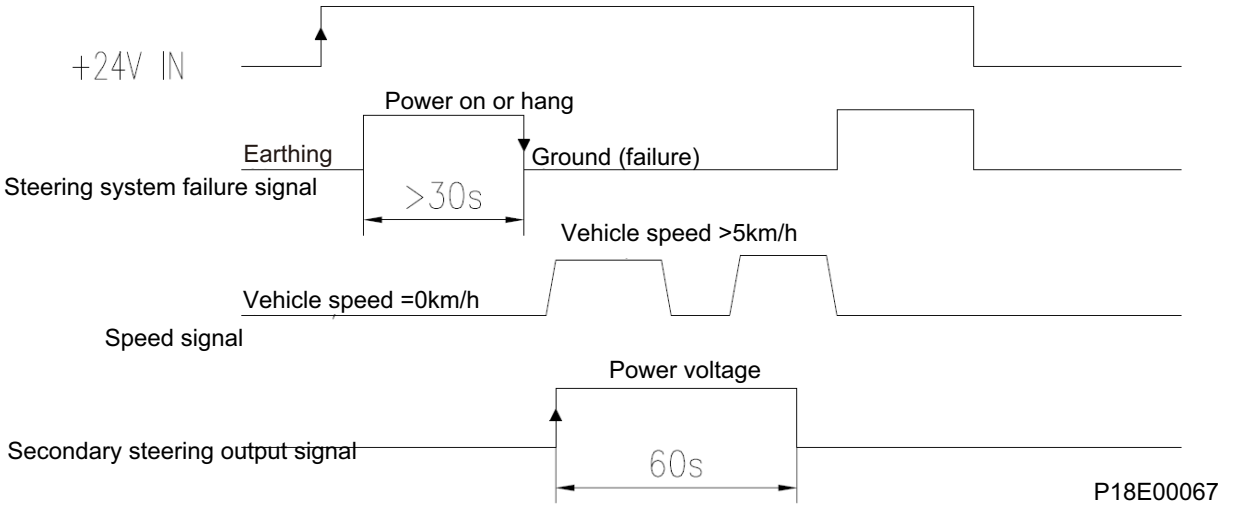

Troubleshooting for secondary steering pressure switch

1. Unplug the connector connected to pressure switch in the rear frame harness;
2. Remove the pressure switch from the complete machine;

3. Assess the action value of pressure switch with pressure test bed, and its contact type is normally open with action value up to 0.6Mpa.

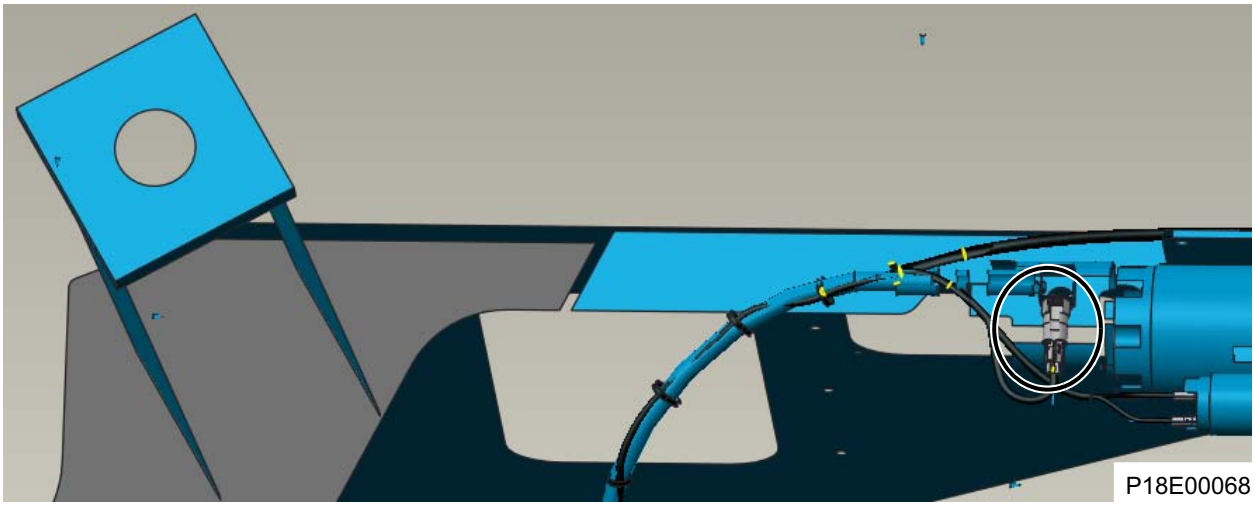

P18E00068

Circuit of Ride Control Indicator

You can select manual and automatic methods according to actual situations. In auto mode, it is active when the speed is greater than 7 km/h.

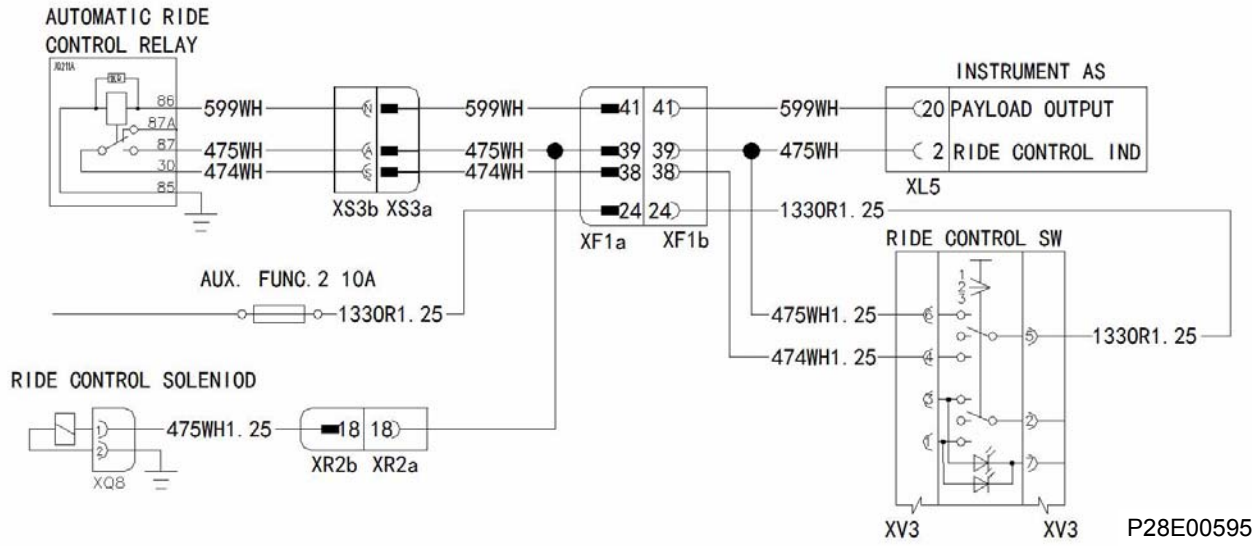

Manual method, move the ride control switch to manual gear, schematic analysis:

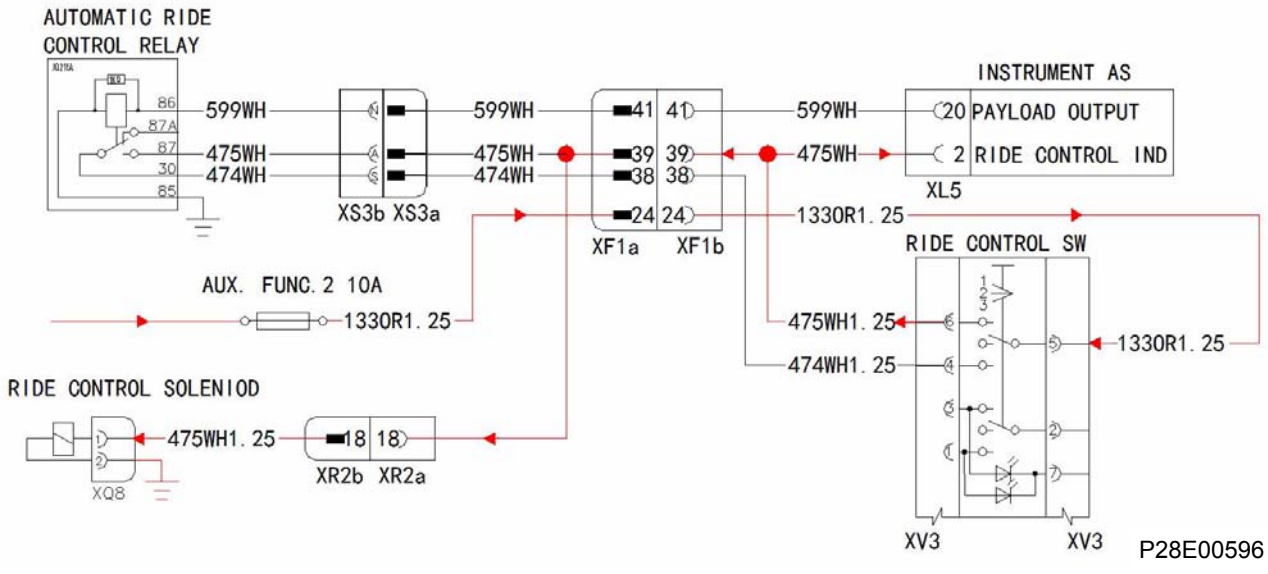

Automatic method, move the ride control switch to automatic gear and instrument output control signal according to vehicle speed, schematic analysis:

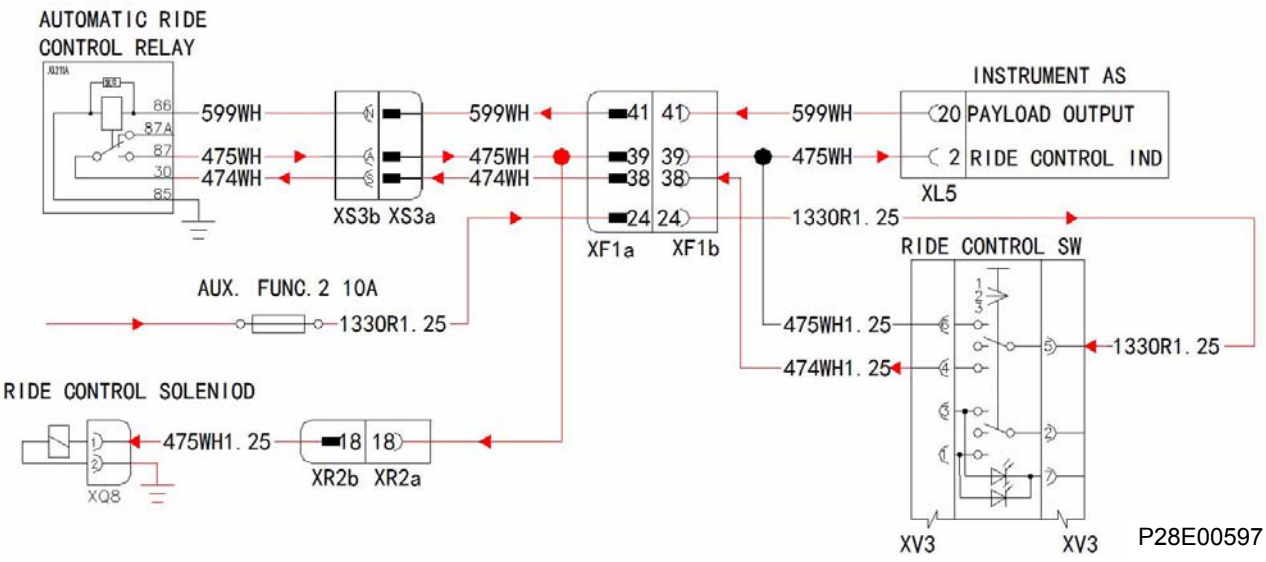

Ride control switch

POS1 is in manual mode, while POS3 is in auto mode.



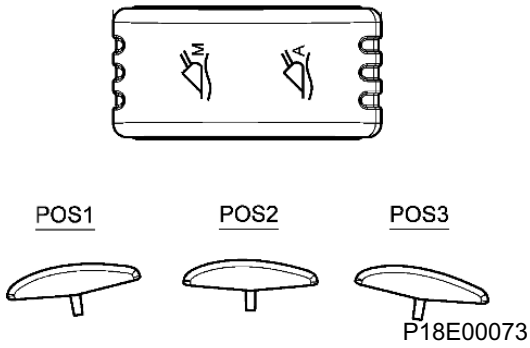

Circuit for Radiator Fan Reverse Indicator

When the radiator fan reverse indicator switch is pressed down, this indicator is ON. If the reverse signal is not received within 1 s, this indicator is out.

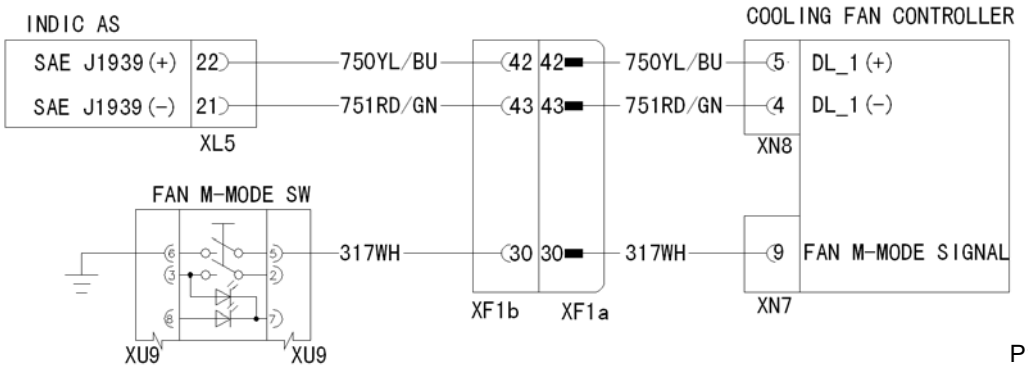

P18E00074

Fan reversing switch, manual

This switch is active instantly. When in POS1 mode, the fan reverse function is active.



P18E00075

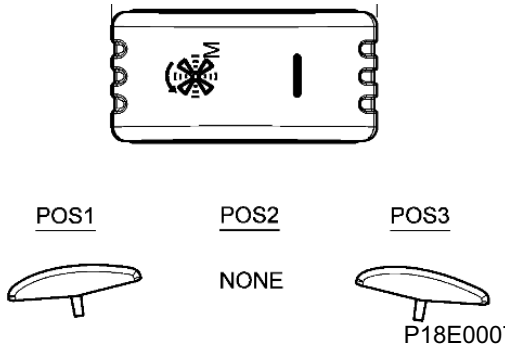

P18E00076

Circuit for Engine Indicator

The electric injection engine equipped in this machine, whose ECM transports to failure indicator, stop indicator, preheating indicator, and alarm indicator of low fuel pressure to the meter by CAN bus, and the meter drive indicator to be active.

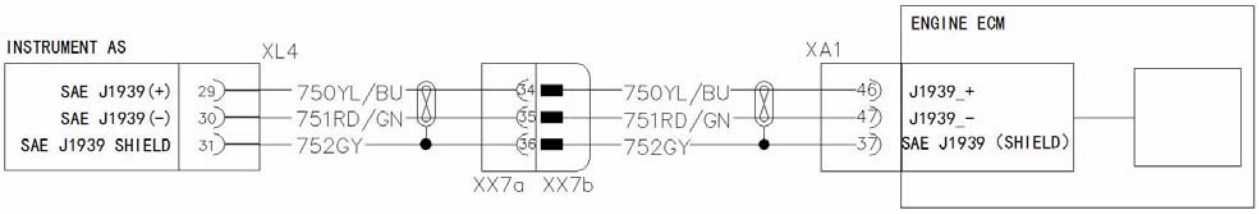

P28E00598

Instrument

Two instruments equipped in this machine are main instrument and accessory instrument (indicator module), which both are electronic combination instrument.

Main instrument

Main instrument is divided into three indicator zones: pointer type instrument zone, indicator alarm zone and LCD display zone.

Pointer type instrument zone

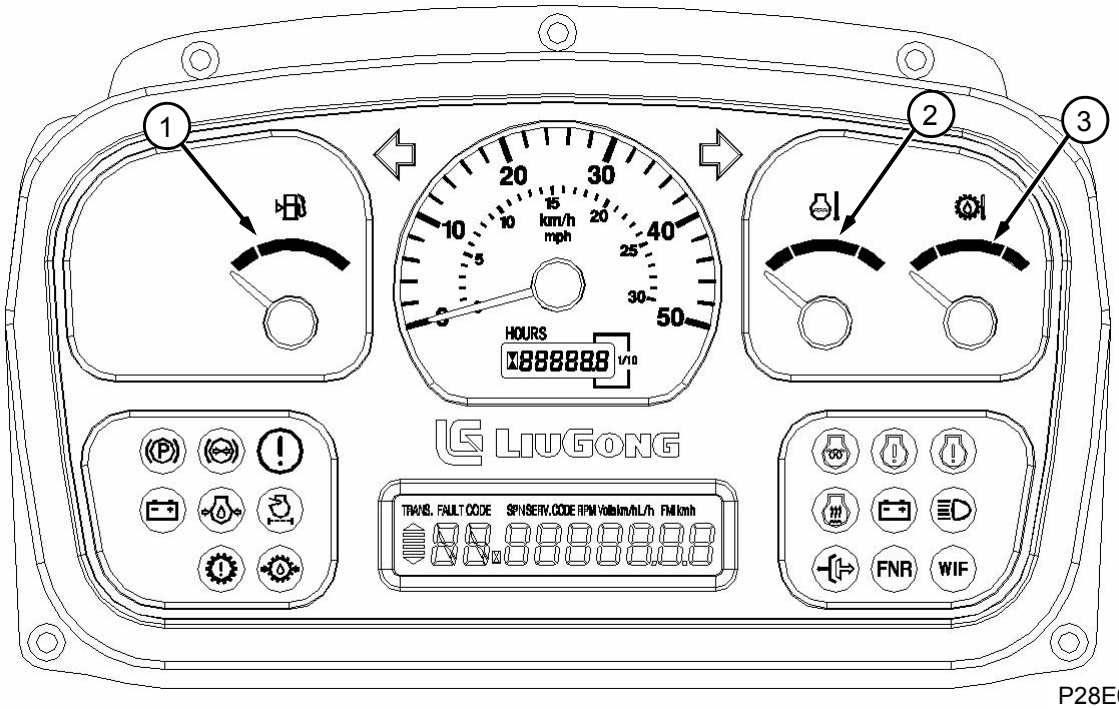

P28E00599

1. Fuel level gauge
2. Engine water temperature gauge
3. Torque converter oil temperature guage

Items	Indicating area		
	The first region	The second area (green)	The third area (red)
Engine water temp gauge	40-70°C(Yellow)	70-101°C	101-120°C
Torque converter oil temperature gauge	40-60°C(Yellow)	60-116°C	116-140°C
Fuel level gauge	0-0.2(red)	0.2-1	

Indicator alarm zone

S/N	Name	Color of the warning light	Whether it flashes or not	The input signal level under normal state	The input signal level under alarm state	Icon
1	Left turn indicator	Green	Yes	Hang	Flashing and intermittent signal	
2	Right turn indicator	Green	Yes	Hang	Flashing and intermittent signal	
3	Front floodlight high beam indicator	Blue	No	Hang	+24V	
4	Power-off indicator	Yellow	No	Hang	+24V	
5	Parking brake indicator	Red	No	Hang	+24V	
6	Engine oil pressure alarm lights	Red	No	CAN bus actuated		
7	Brake low pressure warning lights	Red	No	Hang	+24V	
8	Transmission oil pressure warning lights	Red	No	Hang	Earthing	
9	Engine air filter blockage indicator	Red	No	Hang	Earthing	
10	Alternator charging indicator	Red	No	Set the D+ or L terminals of the alternator as charging indicating control		
11	Preheating indicator lamp	Amber	No	CAN bus actuated		
12	Heater activated indicator	Yellow	No	Hang	+24V	

Indicator alarm zone

S/N	Name	Color of the warning light	Whether it flashes or not	The input signal level under normal state	The input signal level under alarm state	Icon
13	State indicator	Red	Yes			
14	Transmission alert indicator	Red	No	Hang	+24V	
15	FNR state indicator	Yellow	No	Hang	+24V	FNR
16	Voltage indicator	Yellow	Yes	CAN bus actuated		
17	Stop indicator	Red	No	CAN bus actuated		
18	Warning indicator	Amber	No	CAN bus actuated		
19	Water in fuel indicator	Amber	No	CAN bus actuated		WIF

Sub instrument

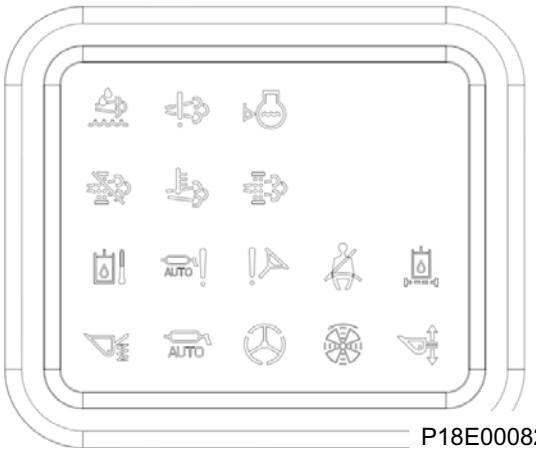

P18E00082

S/N	Name	Color of the warning light	Whether it flashes or not	The input signal level under normal state	The input signal level under alarm state	Icon
1	Lube system activated indicator	Green	No	Hang	+24V	
2	Lube system fault indicator	Red	No	Hang	Earthing	
3	DPF regeneration disabled indicator	Amber	No	CAN bus actuated		
4	DPF regenerating indicator	Amber	Yes	CAN bus actuated		
5	DPF regeneration activated indicator	Amber	No	CAN bus actuated		
6	DEF low indicator	Red	No	CAN bus actuated		
7	Seatbelt warning light	Red	No	+24V	Hang	
8	Steering system failure indicator	Red	No	Hang	Earthing	
9	Secondary steering indicator	Yellow	No	Hang	+24V	
10	Ride control activated indicator	Green	No	Hang	+24V	
11	Radiator fan reverse indicator	Yellow	No	CAN bus actuated		
12	Hydraulic oil temp alarm light	Red	No	Hang	Earthing	

S/N	Name	Color of the warning light	Whether it flashes or not	The input signal level under normal state	The input signal level under alarm state	Icon
13	Emission system failure indicator	Red	No	CAN bus actuated		

If any one of the parking brake, brake low pressure, engine oil pressure, engine air filter blockage, lube system failure, gearbox oil pressure and gearbox failure alert indicators is active, the state indicator flickers; when and one of the parking brake, brake low pressure and engine oil pressure alarm indicators is active, and the signal that the engine is activated is detected, the buzzer sounds.

Audible and Visual Alarm System

Circuit for Electric Horn

Three horn buttons are connected in parallel in the machine, locating on the steering column, combination lever and pilot-operated lever.

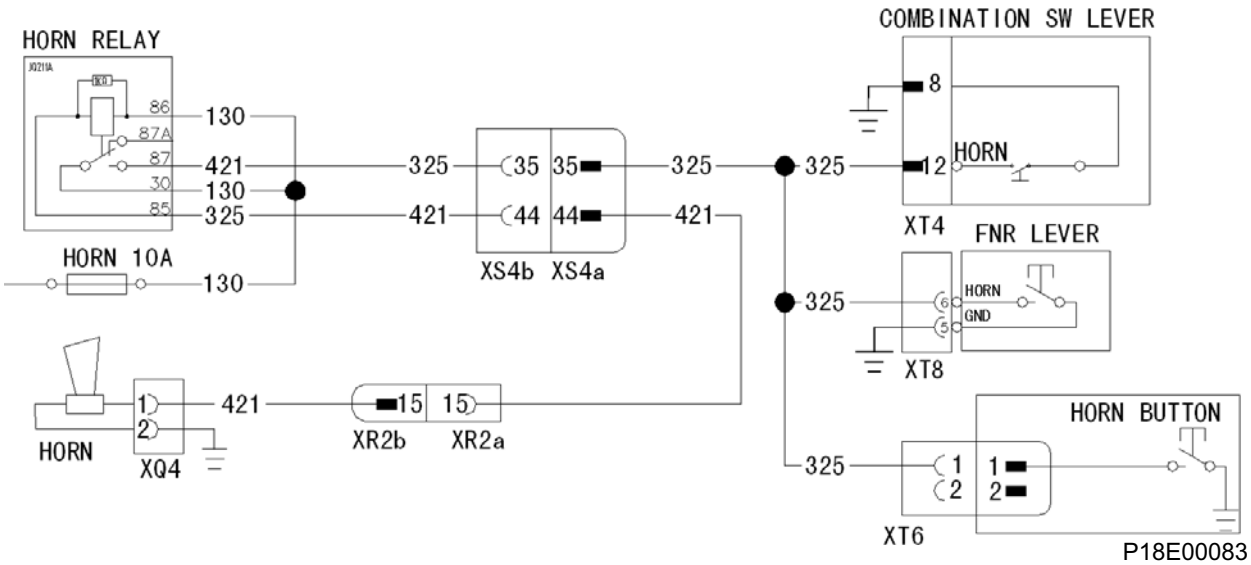

Electric horn

Electrical parameters: 1. rated voltage 24V; 2. maximum working current 3A; 3. basic frequency 400±20Hz; 4. sound level 105dB-118dB(A)

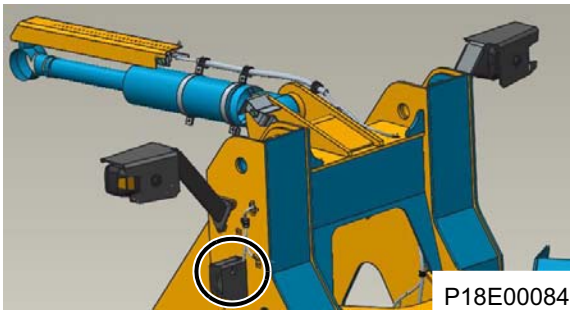

P18E00084

Steps of electric horn troubleshooting

1. Connect the 24V DC power (+) to the terminal at #1 hole bit of the horn, thereby, while DC power (-) to the terminal at #2 hole bit;
2. Turn on the DC power;
3. The horn alarms at a sound level within 105dB-118dB(A).

Combination lever

It integrates the functions of horn, front wiper, front washer, turn signal light and dimmer switch.

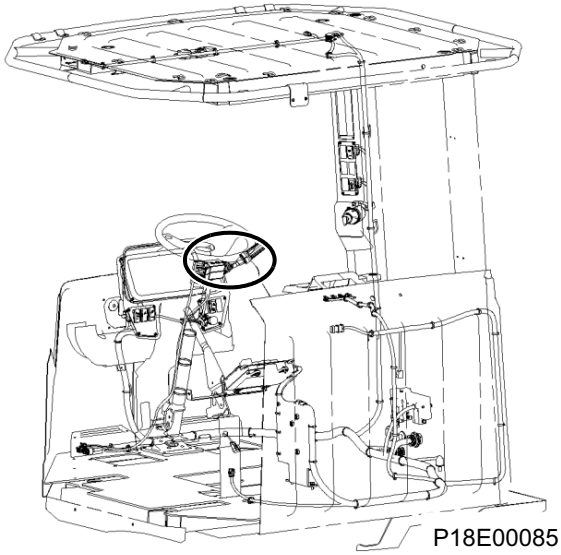

P18E00085

Detection procedure of combination lever

1. Disconnect the wiring harness of the combination lever and the cab;
2. Separate the combination lever from the steering column;
3. Turn the digital multimeter to 200Ω of Ω position.
4. Measure whether the pins are energized corresponding to the different function positions of the lever based on the function wiring diagram;

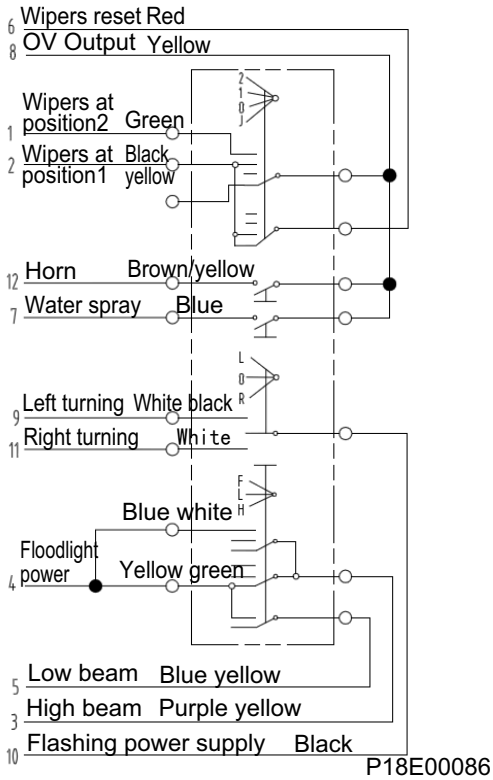

P18E00086

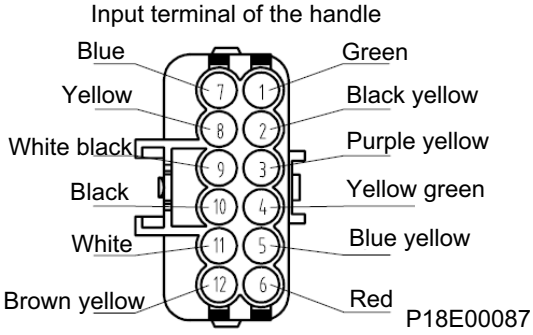

P18E00087

Circuit for Backup Alarm

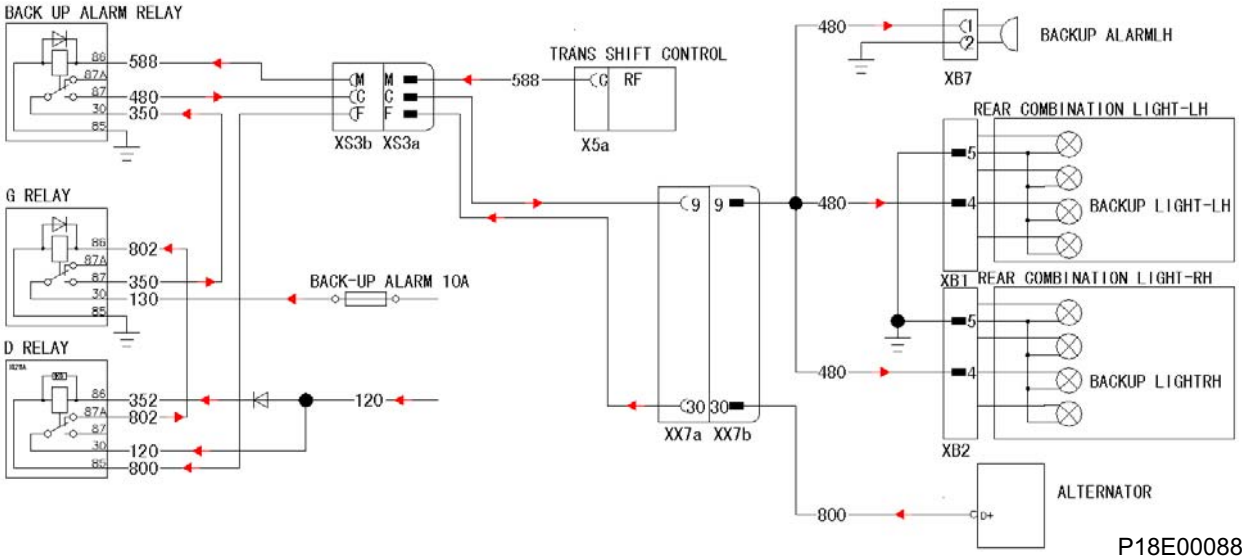

Backup alarm

An intermittent buzzer is applied as the backup alarm, which works together with the backup light during the operator's backup operation.

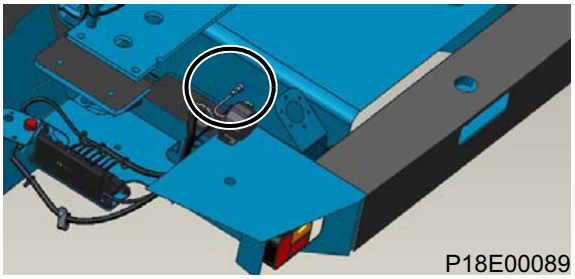
P18E00089


P28E00239

The electrical parameters of backup alarm

1. Rated voltage 24V;
2. Working current 0.3A;
3. Sound level 107dB±4dB(A).

The detection procedures of backup alarm

1. Connect the 24V DC power (+) to the terminal at #1 hole site of the backup alarm, while the (-) to the terminal at #2 hole site;
2. Turn on the DC power;
3. Back up alarm makes alarm sound and the sound level is in the range of 107dB±4dB(A).

Wiper and Washer System

Circuit Diagram for Wiper and Cleaning System

The functions of front wiper and front washer are implemented through the combination lever.

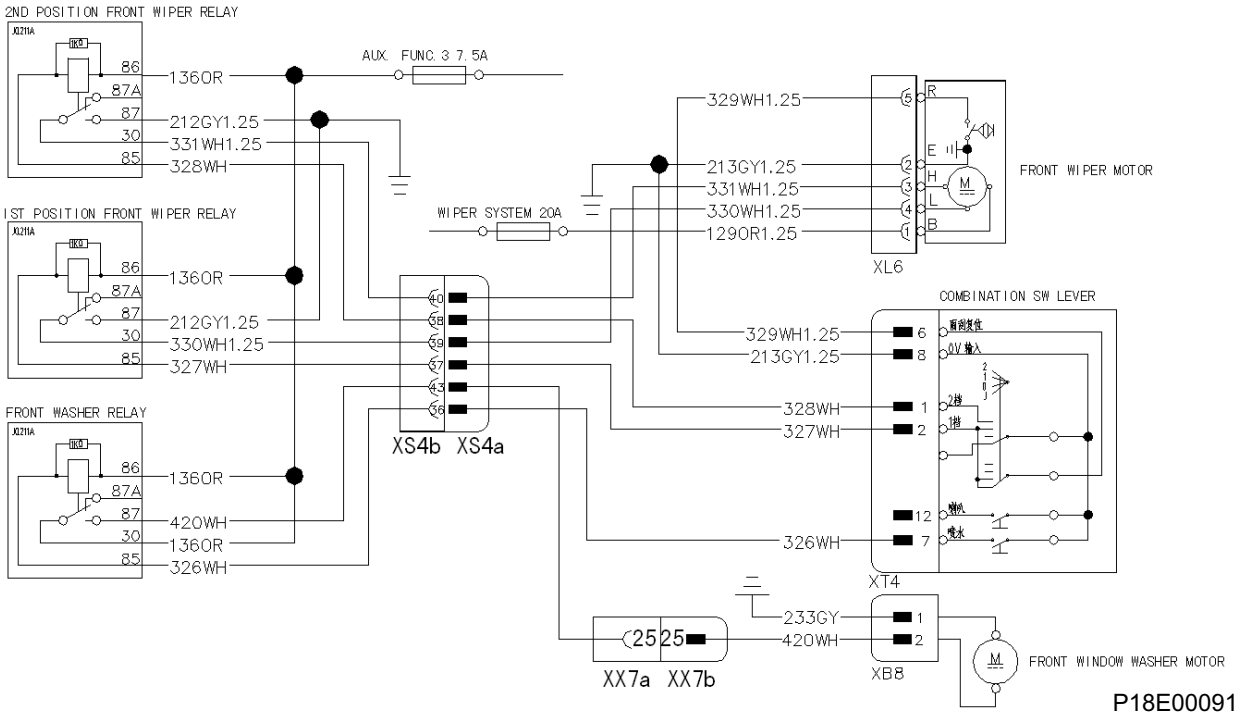

Rear wiper, rear window washer are all enabled by rocker switch.

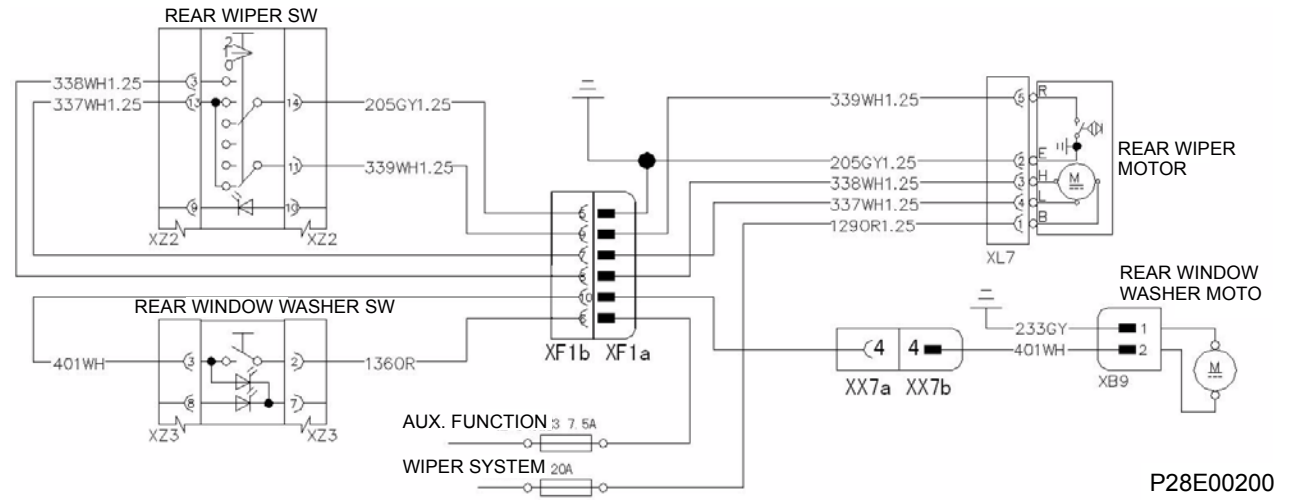

Wiper Motor

Front wiper motor

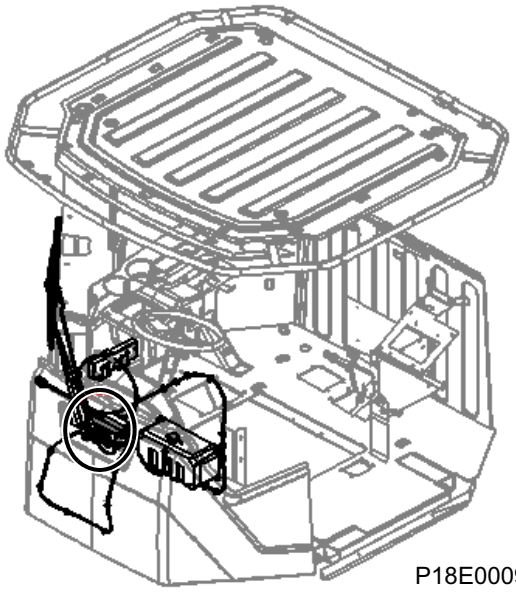

P18E00093

Surface of the connector

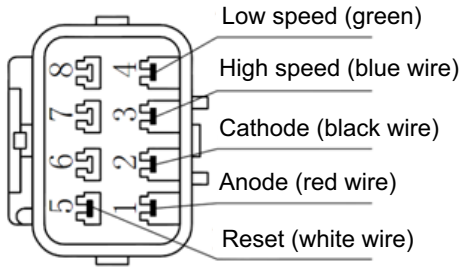

P18E00094

Rear wiper motor

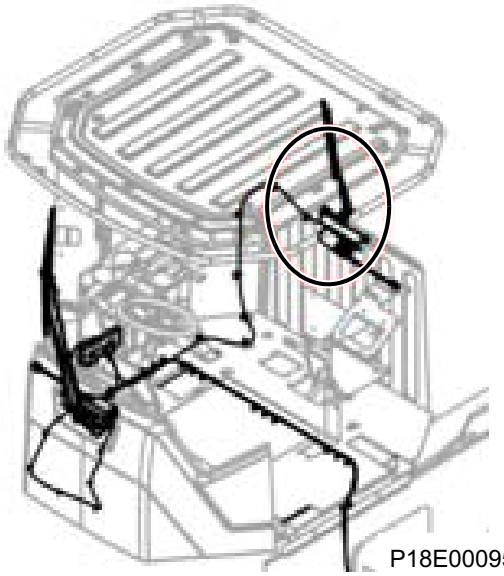

P18E00095

Surface of the connector

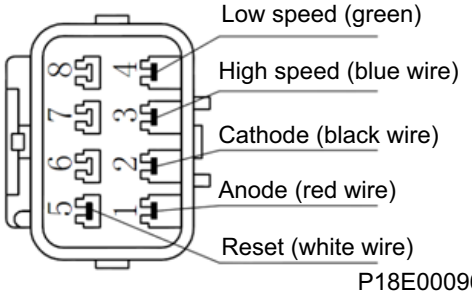

P18E00096

Washer Reservoir

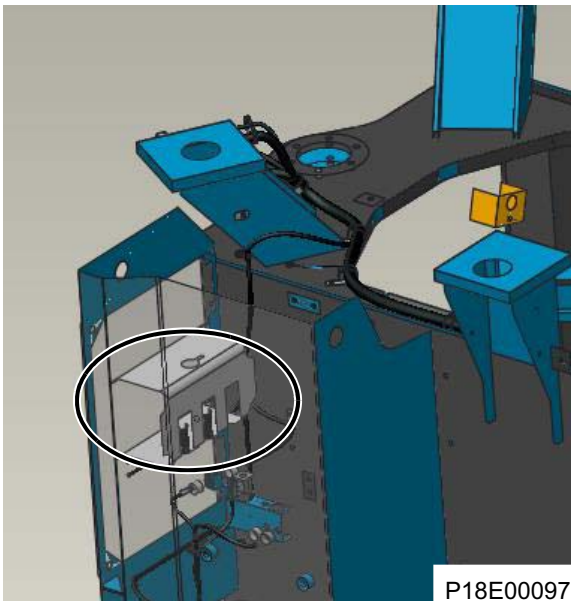

P18E00097

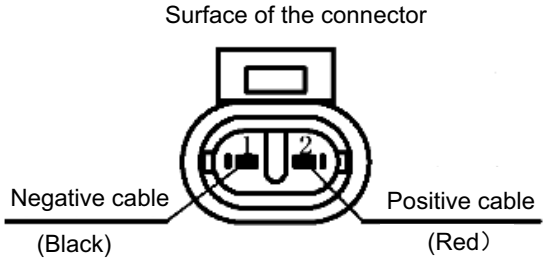

P18E00098

Positioner and Kickout System

No matter the operator lower or lift the boom through pushing the control lever forward or backward, the control lever remains automatically in a forward or backward position, which returns to the neutral position automatically if the boom is lifted to the limit; on the other hand, when the boom is lowered to the limit, it requires the operator to move the control lever back to the neutral position instead of its automatic return. If the operator withdraws the bucket by pushing the control handle to the left, the control handle will remain in the position towards the left, which returns to the neutral position automatically once the bucket is leveled.

Principle for Auto Reset System

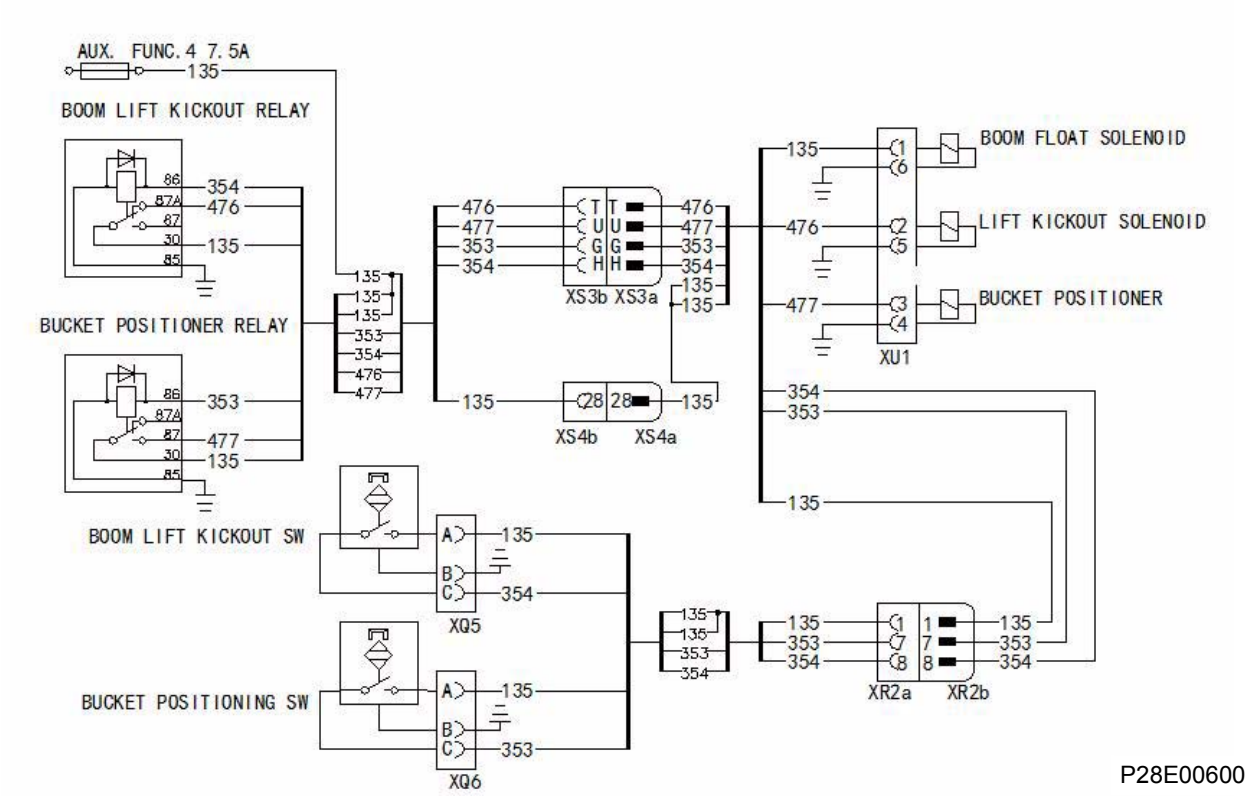

P28E00600

Approach switch

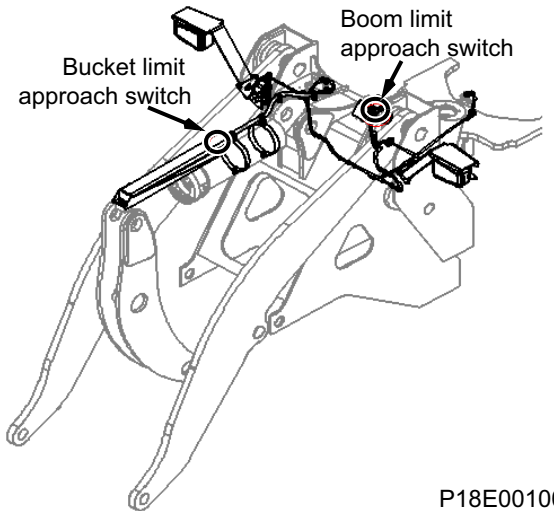

P18E00100

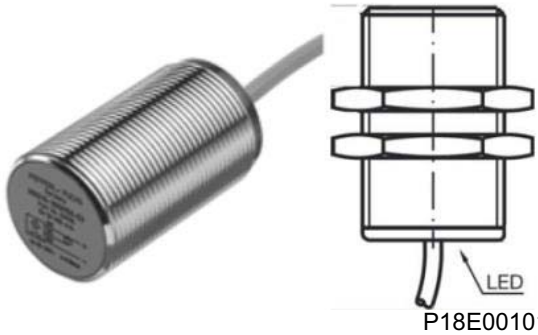

P18E00101

Test on bucket and boom proximity switches

1. Connect the 24V DC power (+) to the terminal at #1 hole of the proximity switch, while the (-) to the terminal at #2 hole;
2. Turn on the DC power;
3. Draw the metal induction board to the inductive surface of proximity switch, the proximity distance shall be less than or equal to 12mm, while the induction area shall be equal or greater than 2/3;
4. At this moment, the LED at the end of the switch is lighted up;
5. Turn the digital multimeter to 200V of voltage position.
6. Connect the black probe to the DC power (-), while the red probe to the terminal at #3 hole site of the parking brake switch, thereby, the value displayed on the DMM shall be 24V.

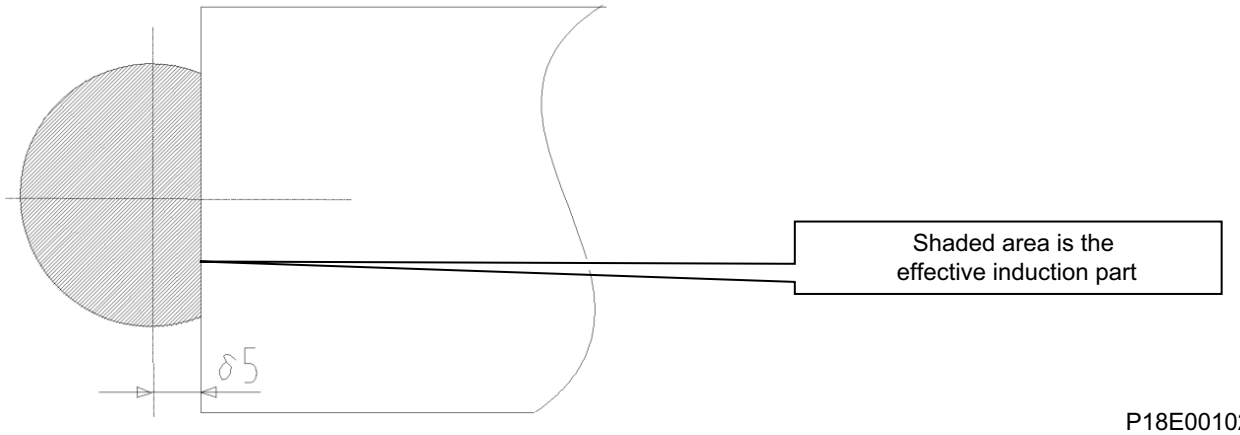

P18E00102

Lighting System

The reverse light is used to illuminate the area behind the vehicle when reversing. The machine is equipped with backup alarm, which works together with the backup light during backup operation. The brake light is used to alarm vehicles behind that this vehicle is braking.

The turn signal light indicates the direction to that the vehicle is turning, and the potential danger signals (when used as parking light).

The position lights are used for driving or operating at night, which indicate the relative location of the machine. The front headlamp and the rear headlamp are used to illuminate for the whole vehicle driving and working. The working light is mainly applied to lighting of complete machine. Dome light is used for illuminating and reading in the cab at night.

Circuit for Front Frame Illumination

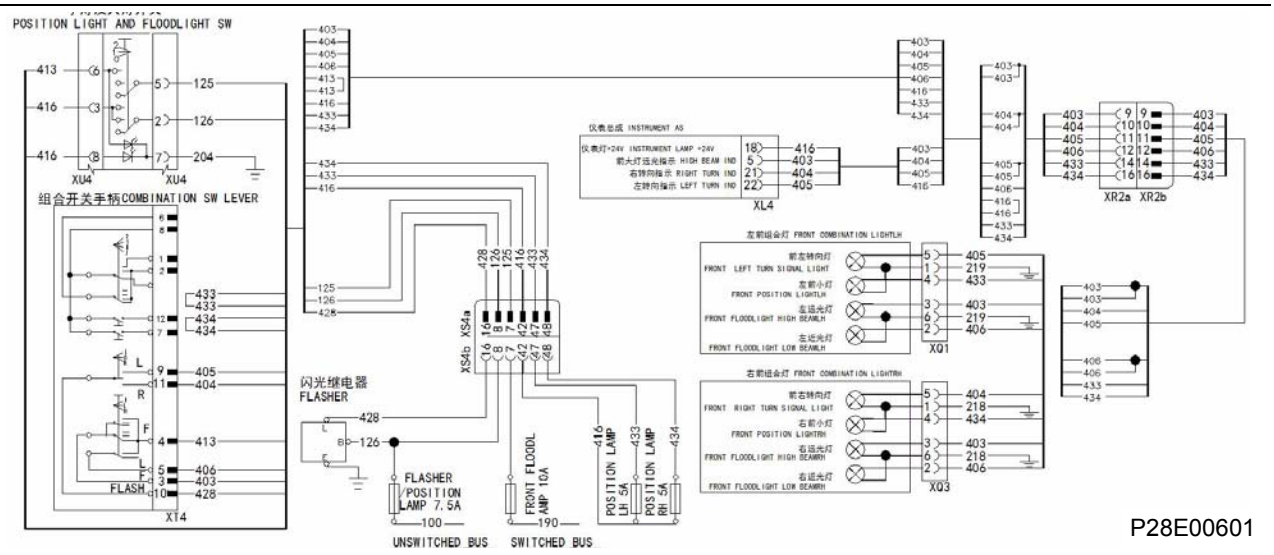

Position light & floodlight sw

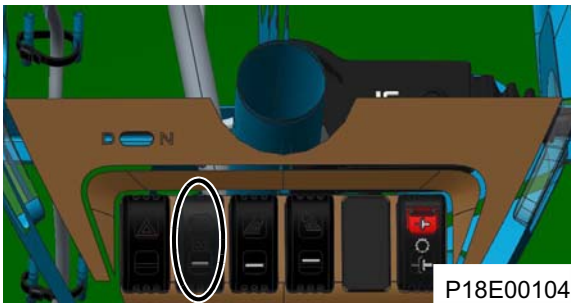

P18E00104

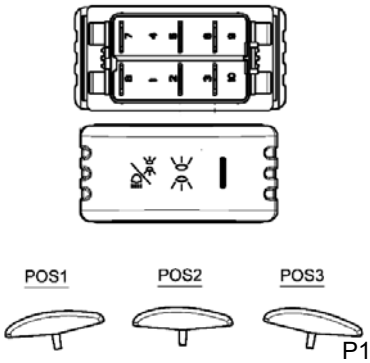

P18E00105

1. Turn the switch to POS3, the lighting function of combination light is shut down;
2. Turn the switch to POS2, the switch beacon, instrument backlight, and the front and rear position lights are lit.
3. Turn the switch to POS1, in addition to the functions in the above-mentioned step 2, the front floodlight is lit. At this moment, select high/low beam through operating the combination lever.

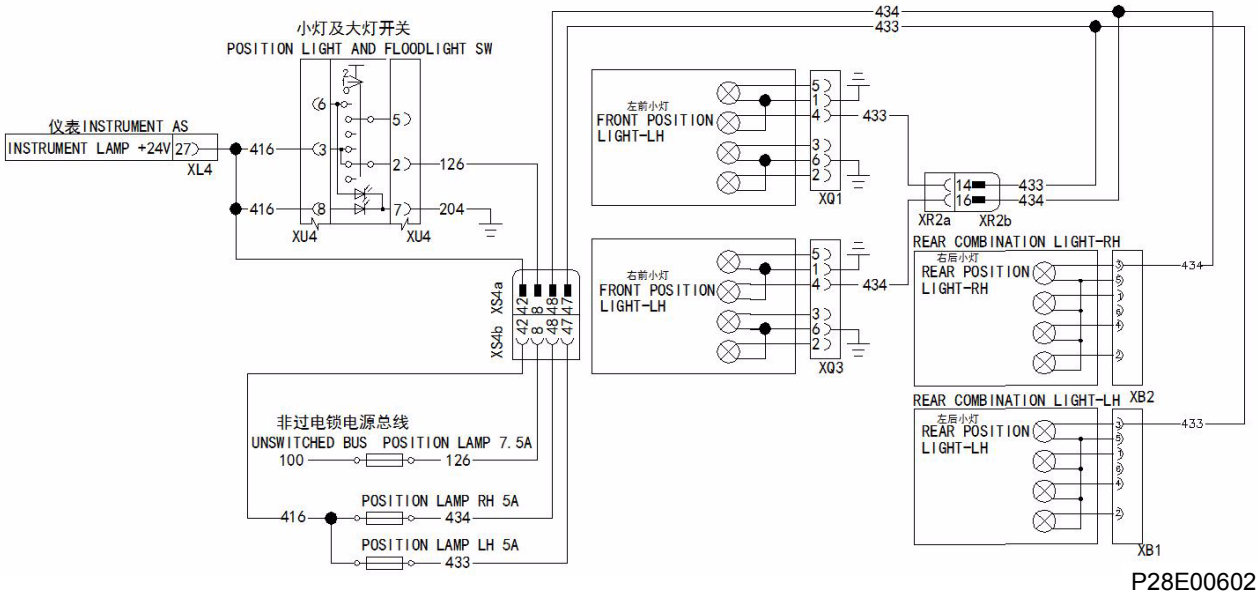

P28E00602

Hazard flasher switch



P18E00107

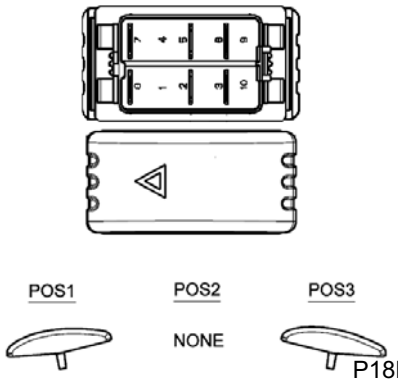

P18E00108

POS3 indicates the closed parking function, while POS1 signifies the enabled parking function.

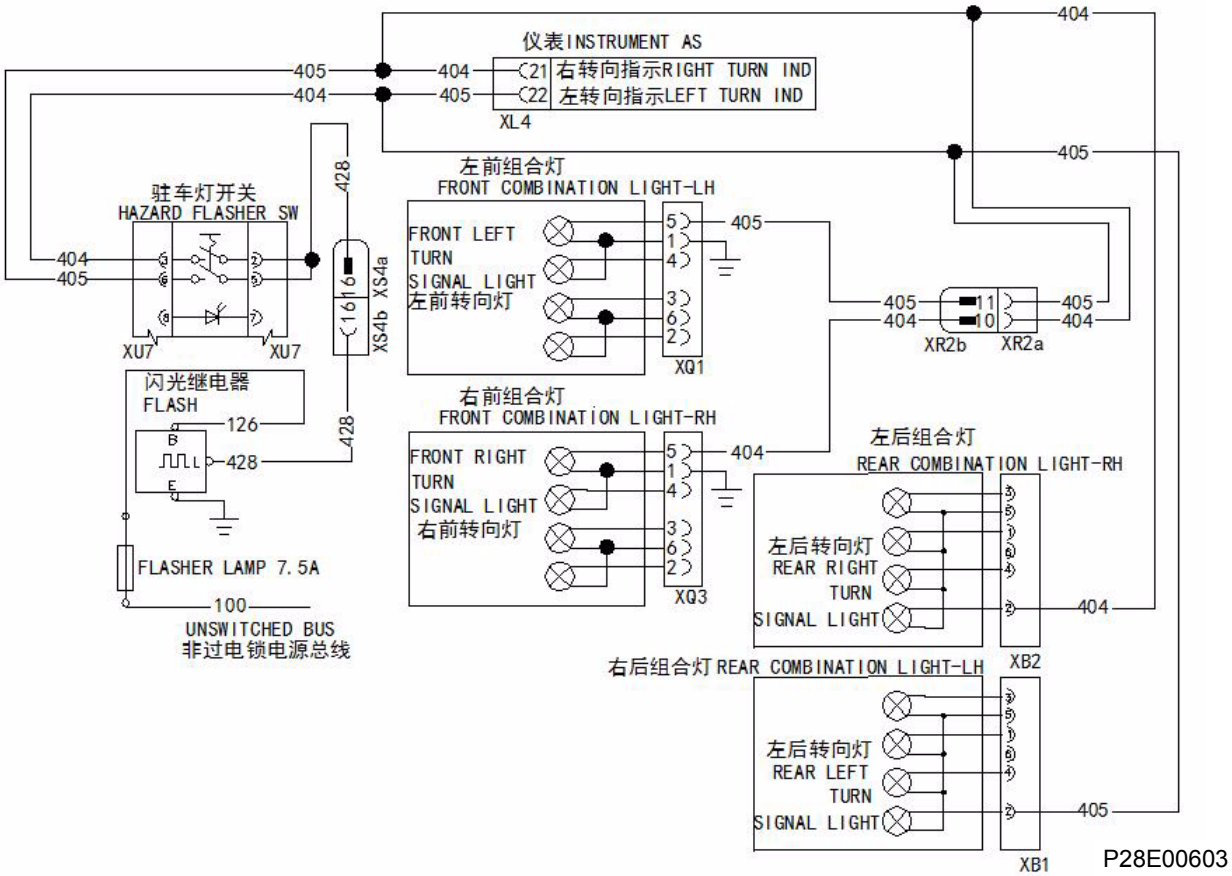

P28E00603

Front combination light

Function of integrated steering, high/low beam and clearance light.

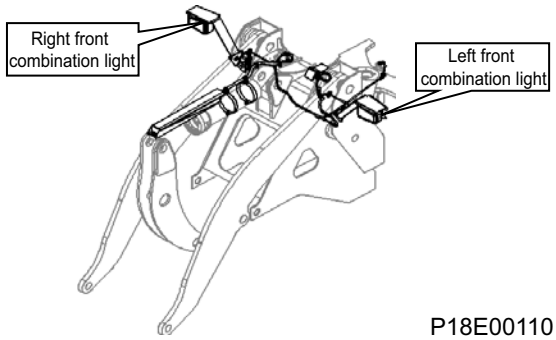

P18E00110

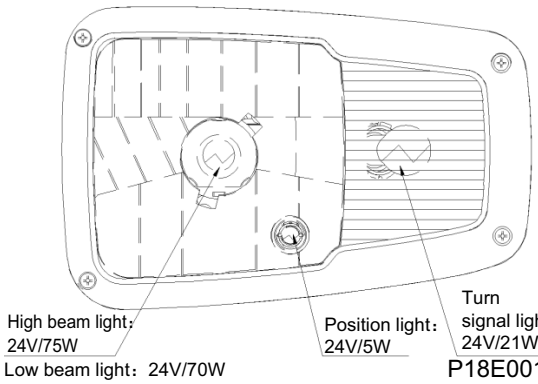

P18E00111

Circuit for Cab Lighting

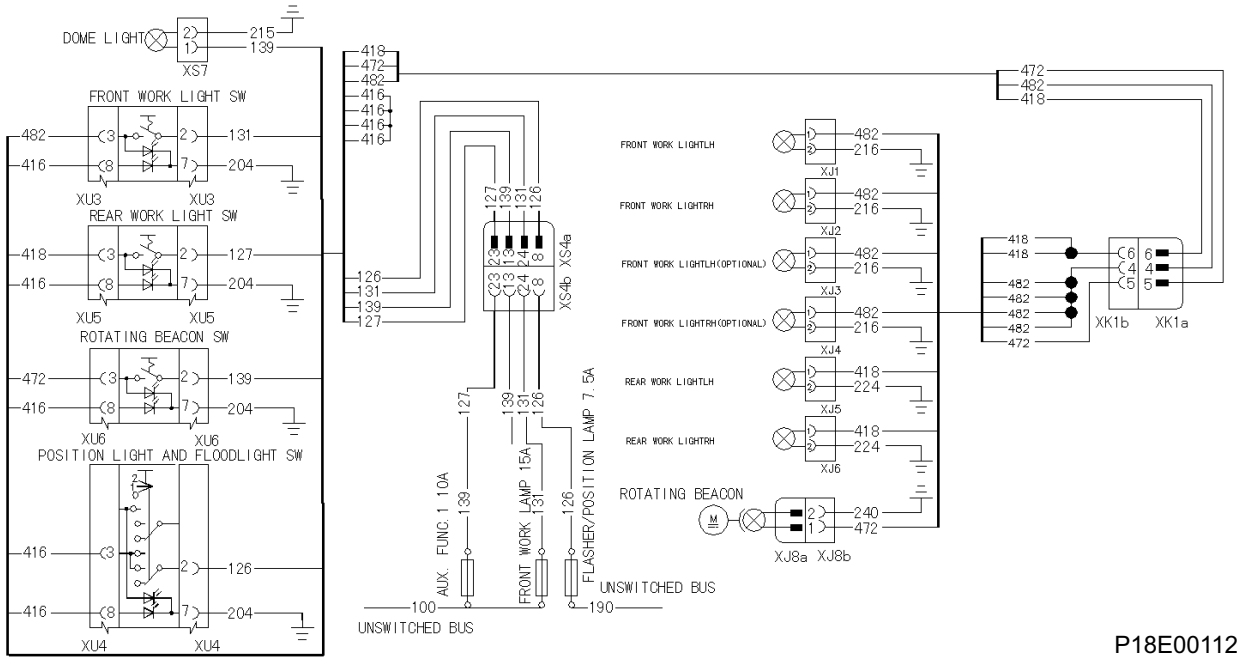

P18E00112

Work light switch

Front working light switch: POS3 means the working light is turned Off; POS1 means the working light is turned ON.

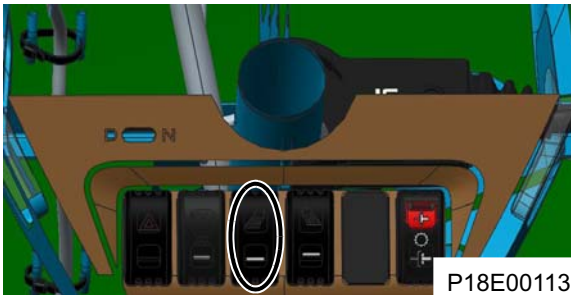

P18E00113

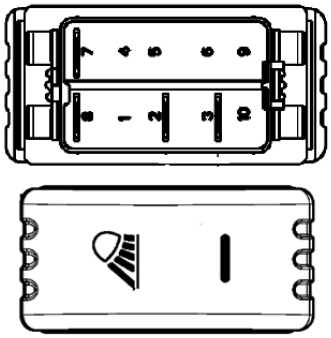

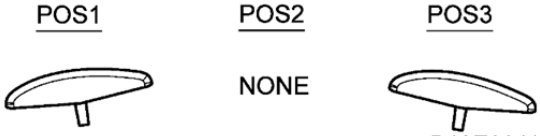

P18E00114

Rear working light switch: POS3 means the working light is turned OFF; POS1 means the working light is turned ON.

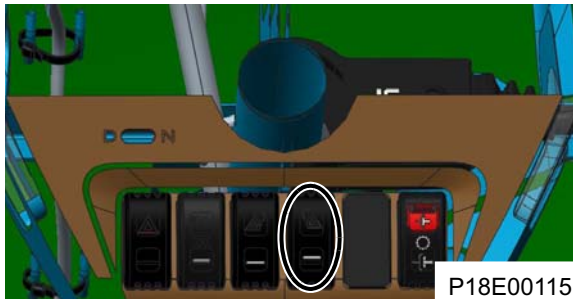

P18E00115

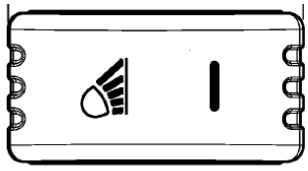

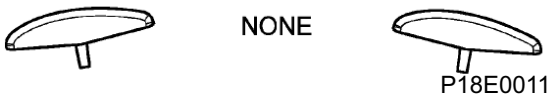

P18E00116

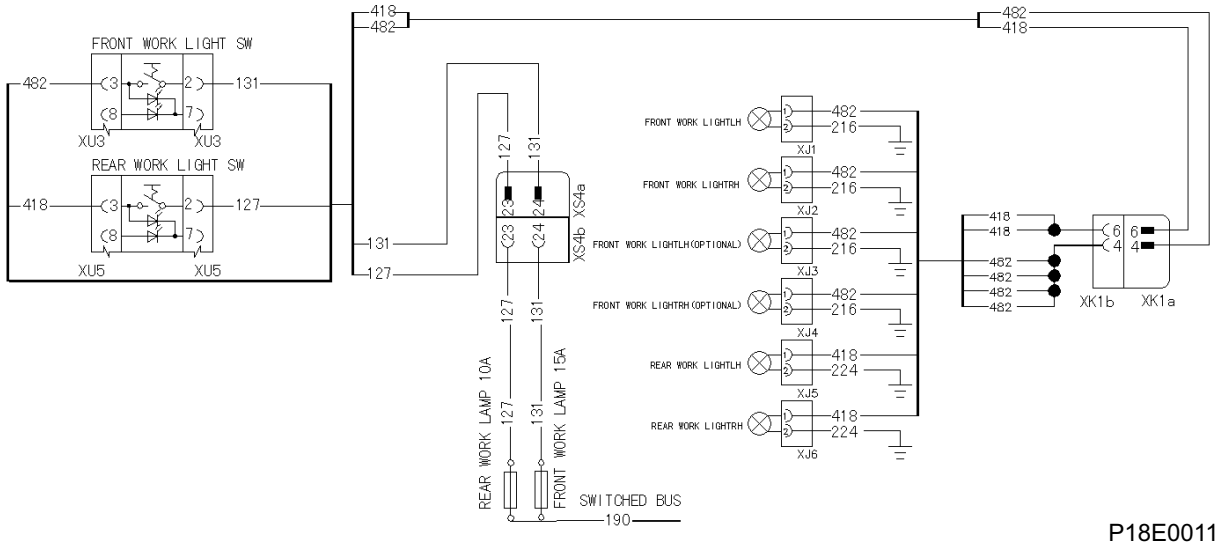

P18E00117

Work light

This machine is equipped with four work lights, front: two lights, rear: two lights.

Electrical equipment parameters:

1. Rated working voltage is 24 V;
2. Rated power 70W.

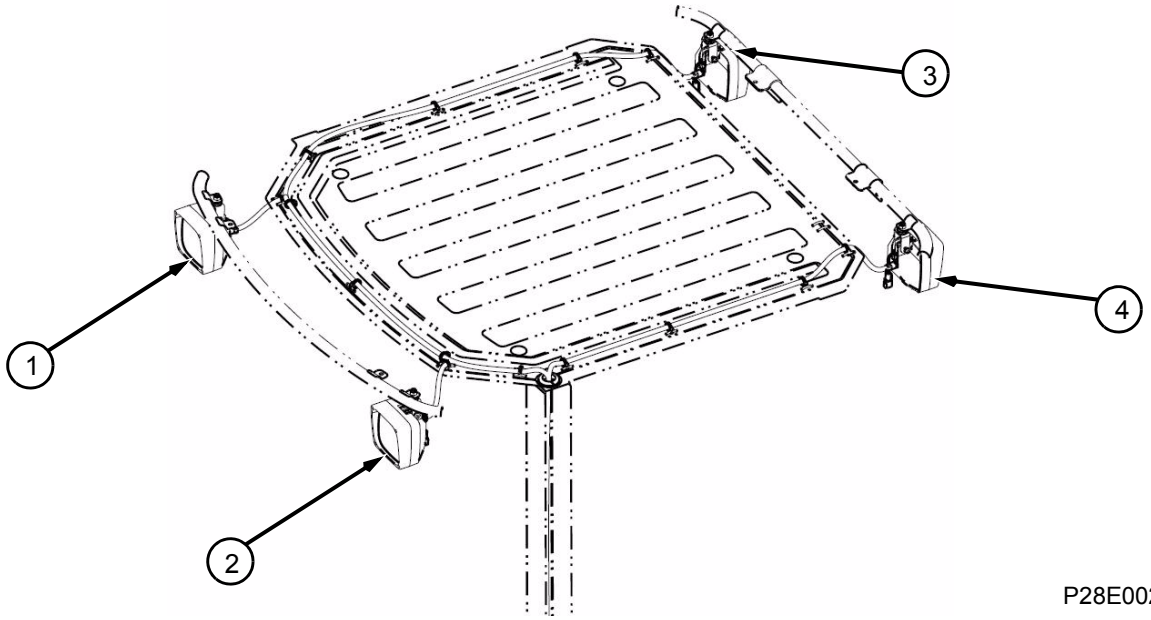

P28E00218

1. Front work light
2. Front work light
3. Rear work light
4. Rear work light

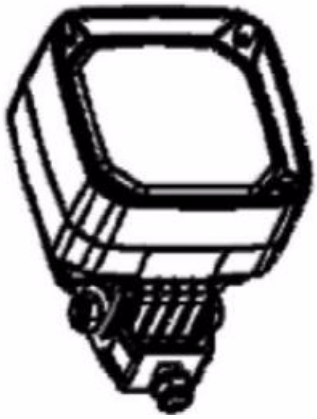

P28E00604

Dome light

Electrical equipment parameters:

1. Rated working voltage is 24 V; 2. Rated power 10W.

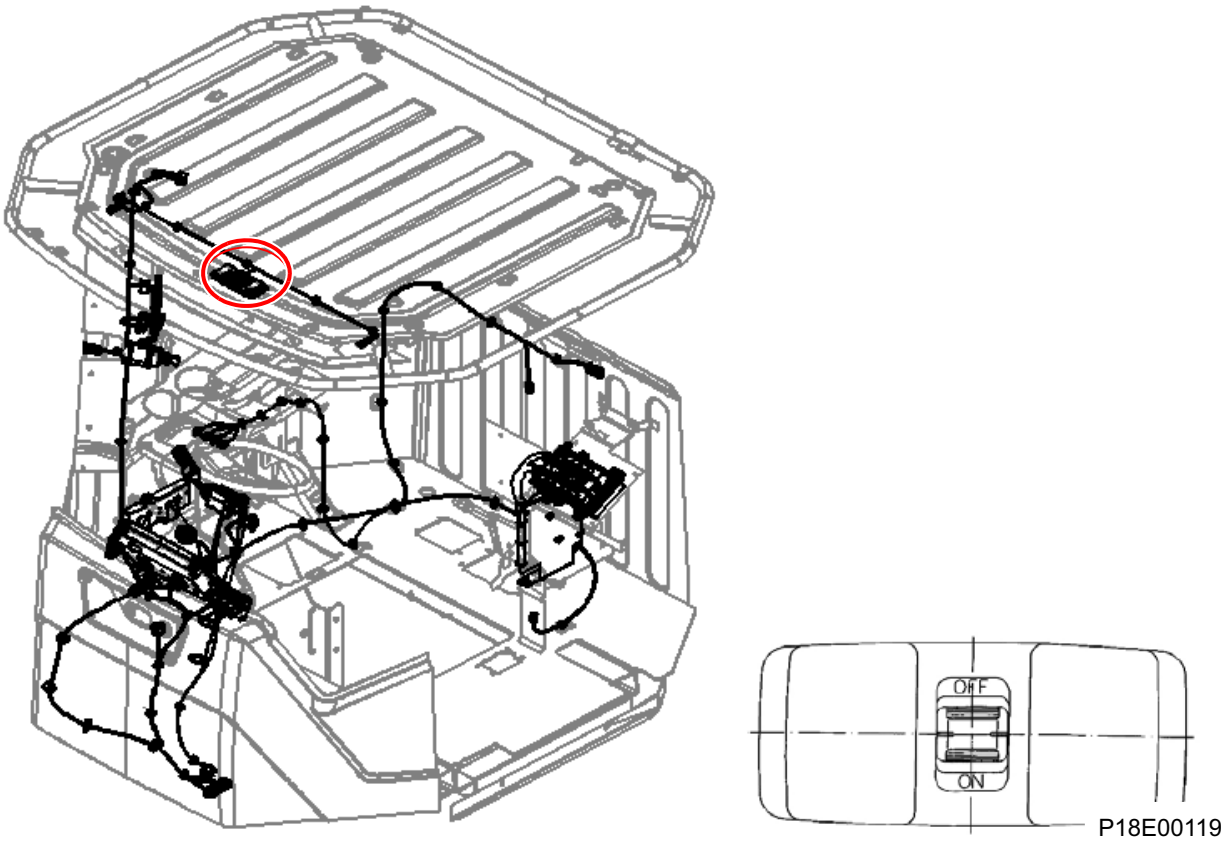

P18E00119

Circuit for Rear Frame Illumination

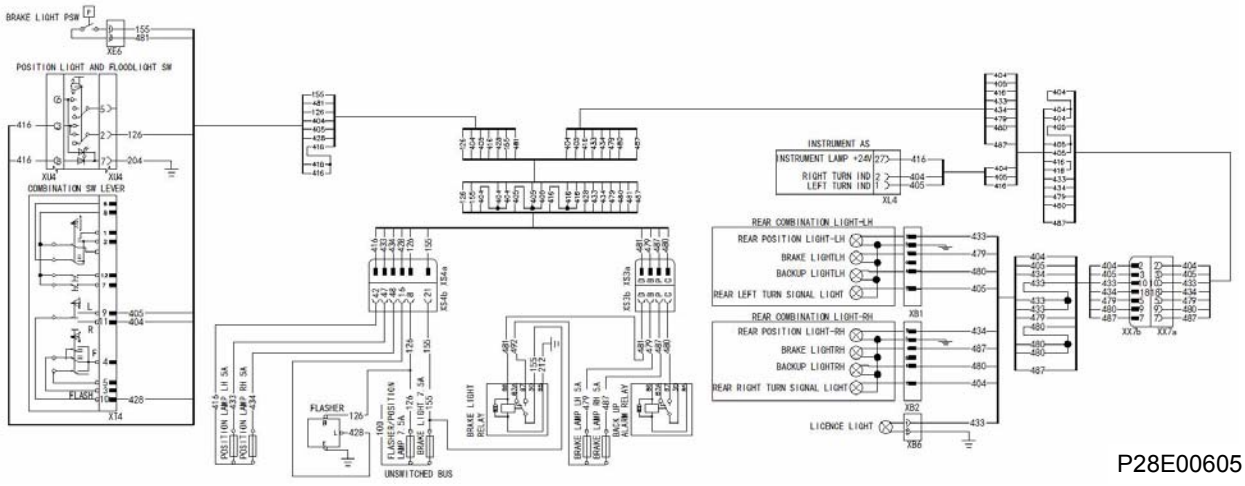

P28E00605

Brake light switch

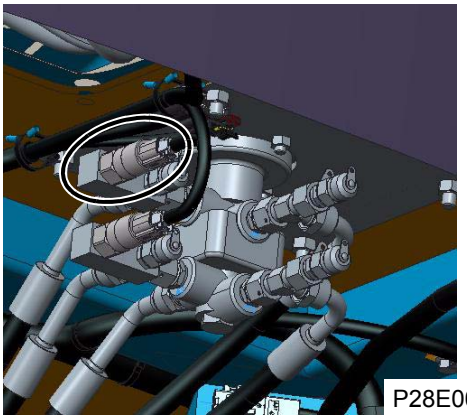

P28E00585

After pressing the brake pedal, 1. The brake light switch acts, 2. Brake light is lit, 3. Brake light is lit.

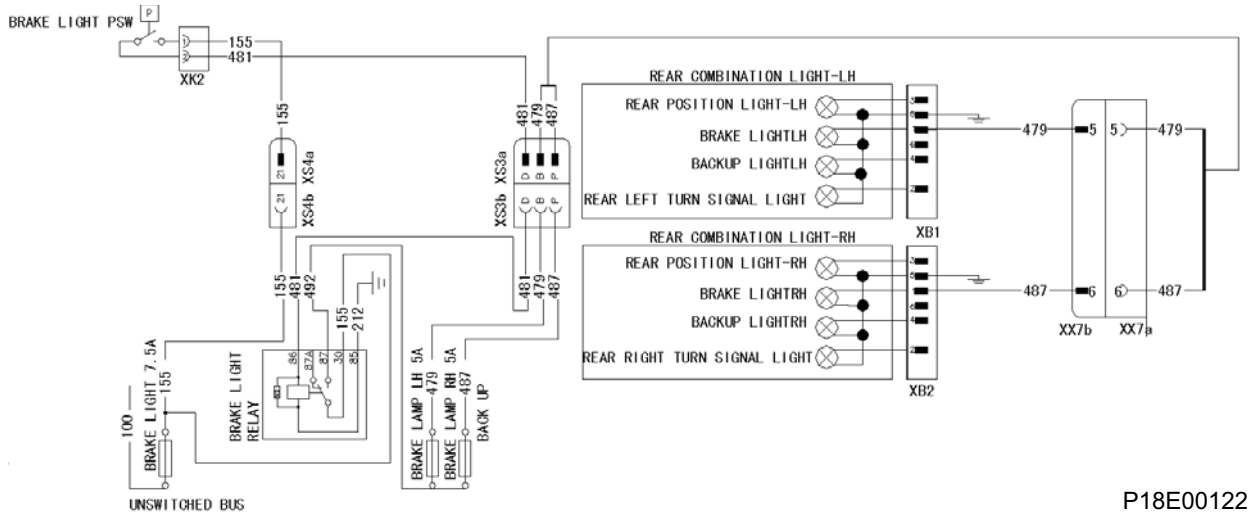

P18E00122

Precautions

Be sure to switch off the engine start switch and wait until the machine is fully cooled, to replace the pressure switch if necessary. Therein, measured liquid overflows once the pressure switch is loosened, which shall be supplemented timely after the replacement.

Test on pressure switch failures

1. Unplug the connector, through which the rear frame harness connects to the engine oil pressure switch;
2. Remove the pressure switch from the complete machine;
3. Assess the action value of pressure switch with pressure test bed, and its contact type is normally open with action value up to 0.5Mpa.

Rear combination light

Integrate functions of steering, driving/braking and backup light.

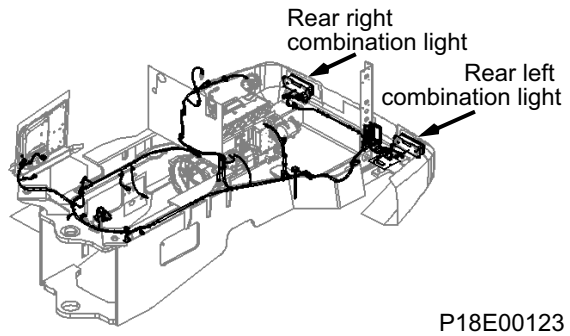

P18E00123

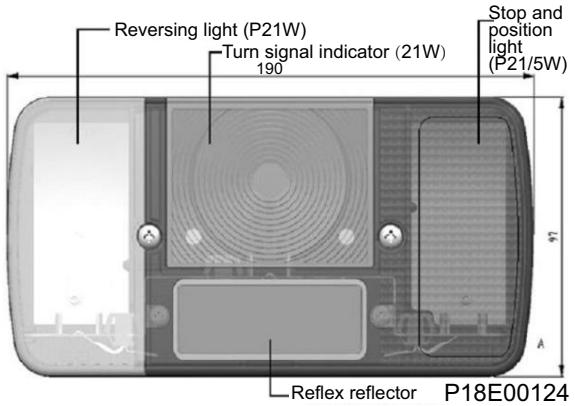

P18E00124

Shift Control System

The electronic control unit of the shift control system receives the external signals from gear selector, speed sensor and KD button, process such signals and send them to CPU for computing. Eventually, CPU drives the shift control valve combination located on the transmission by virtue of the output circuit, to get the operator selected gear.

The transmission assembled in the machine is 4-speed transmission, with 4 gears for forward and 3 for reverse. DW-3 gear selector shifts reverse 4 gears, the electronic control unit actually outputs the control signal of reverse 3 gears.

The electronic control unit of the shift control system receives the external signals from gear selector, speed sensor and KD button, process such signals and send them to CPU for computing, where the driving state of vehicle is determined by comparison signal between the two speed sensors and other signals. Eventually, CPU drives the shift control valve combination located on the transmission by virtue of the output circuit, to get the operator selected gear. Certainly, as required by driving speed, this gear is possibly lower than that selected by the operator, but not higher than it.

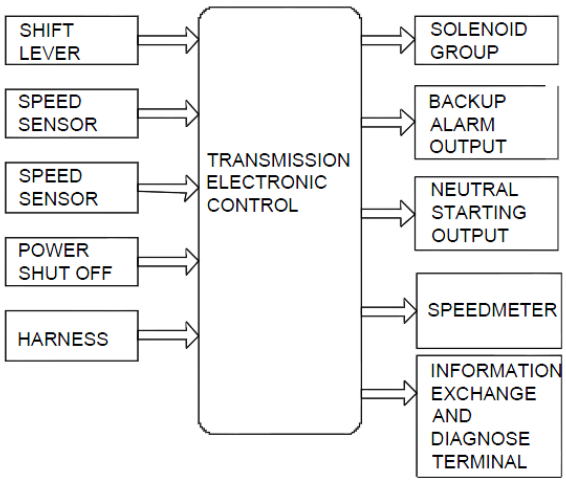

P18E00125

Principle for Shift Control

Shift control system is provided with the functions of neutral start interlock, clutch shutoff, backup alarm, KD, FNR (optional) & speed displays and manual/ automatic shift (full-auto gearbox).

Neutral start interlock function

If the DW-3 gear selector is shifted to gear N, the electronic control unit will output a high level (24V) of #584, and the neutral interlock relay enabled. The exploded electrical schematic as follows:

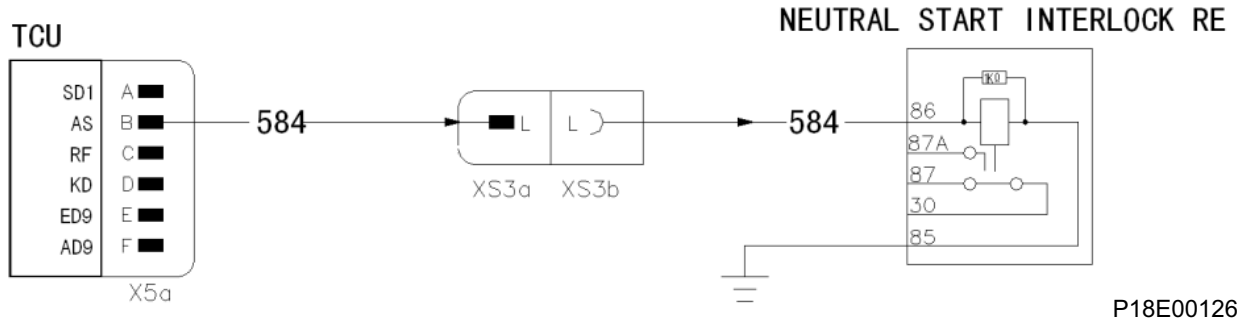

KD functions

Apart from the KD button on DW-3 gear selector, another KD button is assembled on the pilot-operated lever of the machine. The exploded electrical schematic as follows:

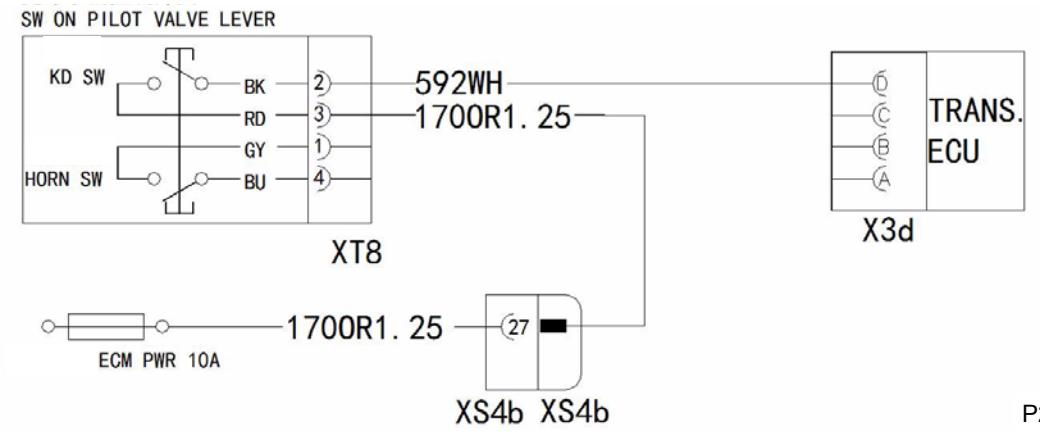

Function of backup alarm

If the DW-3 gear selector is shifted to gear R, #588 outputs a high level, and the backup alarm relay enabled. The exploded electrical schematic as follows:

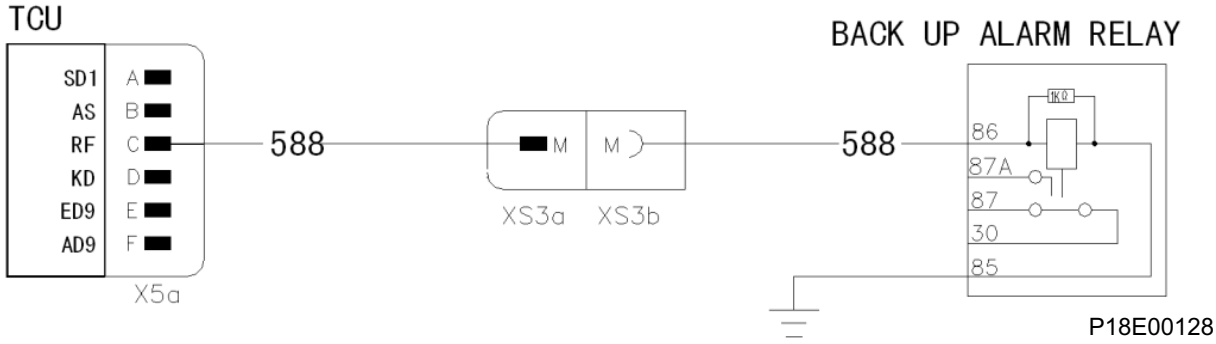

Power cut-off function

The power shutoff consists of parking clutch shutoff and service clutch shutoff, both of which shut off the powers at gear I and II of the transmission. The parking power cutoff system is started once the stop brake switch is pulled up, as shown below:

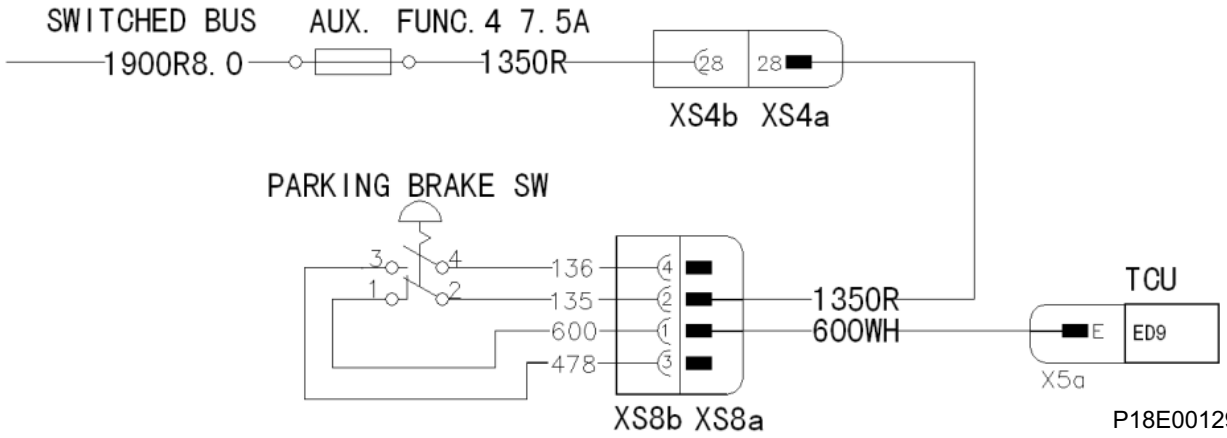

If the clutch on/off switch is turned on, the service clutch shutoff will start through press the brake pedal during the service, schematics as follows:

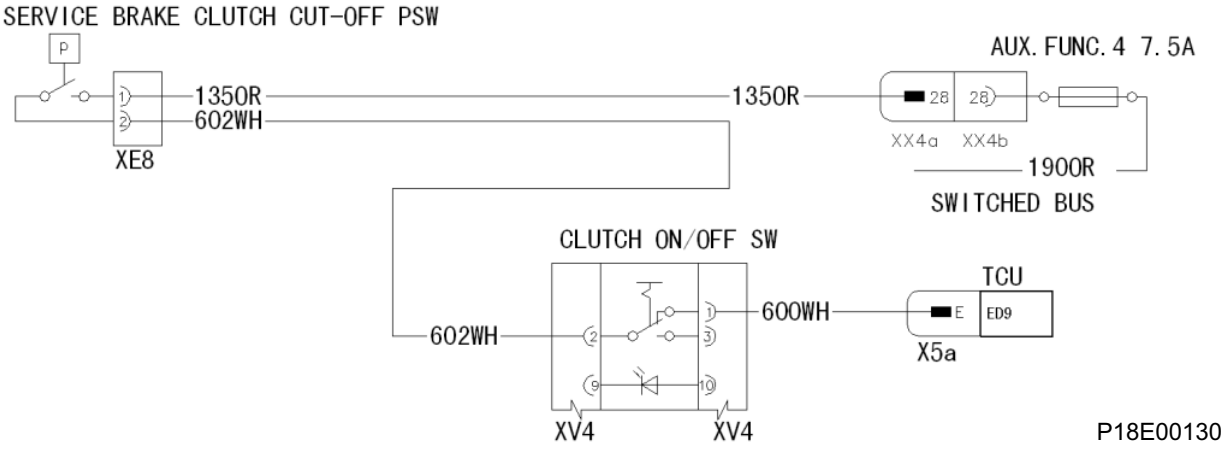

Function of indicating the speed

For the circuit of this part, please refer to Vehicle Speed Indicating Line Schematic Diagram.

Manual/ automatic shift function

When the rocker switch is pressed down, turning on switch indicates automatic shift mode, and turning off switch indicates manual shift mode.

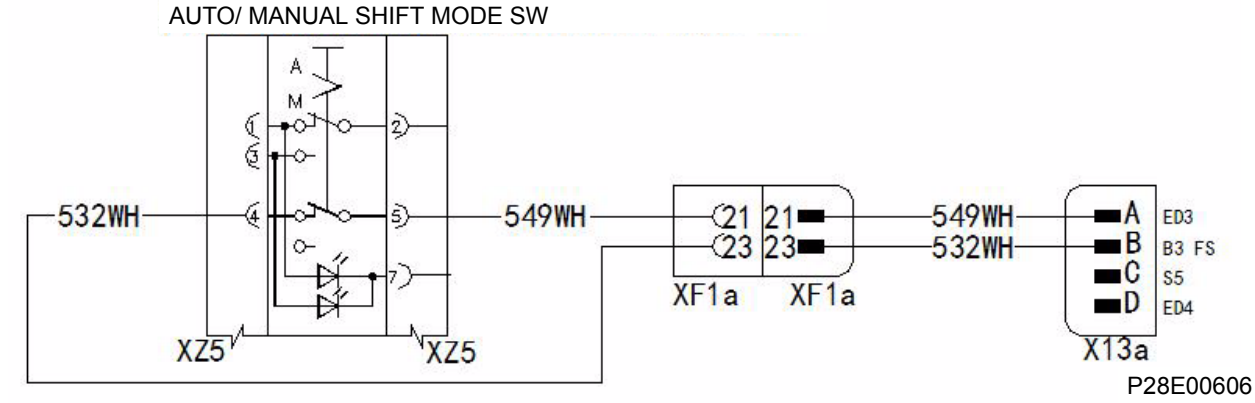

Manual/ automatic shift rocker switch

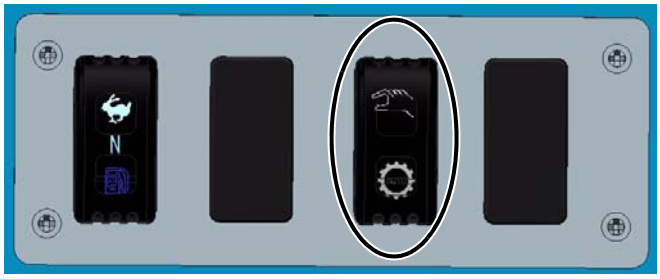

Electronic Control Unit

As the core of the shift control system, the electronic control unit processes and operates the signals of operator-selected gear, speed sensor, KD and engine shutoff. Whereby, the electronic control unit drives the solenoid valve group combination through outputting control signals, to implement the gear selection and shift of transmission. Besides, the electronic control unit also outputs neutral signals, to drive the gear/neutral interlock relay to act when the DW-3 gear selector is in neutral position. Output the reversing alarm signal and drive the reversing alarm relay to work.

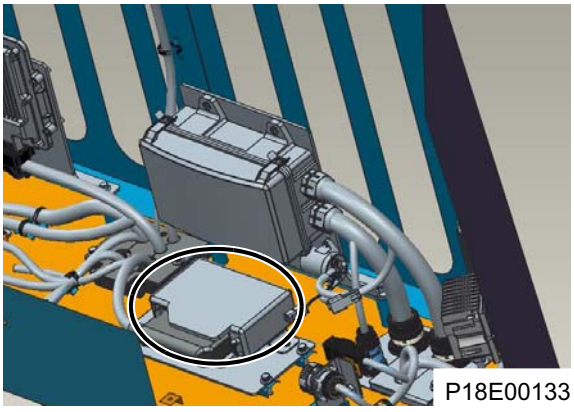

P18E00133

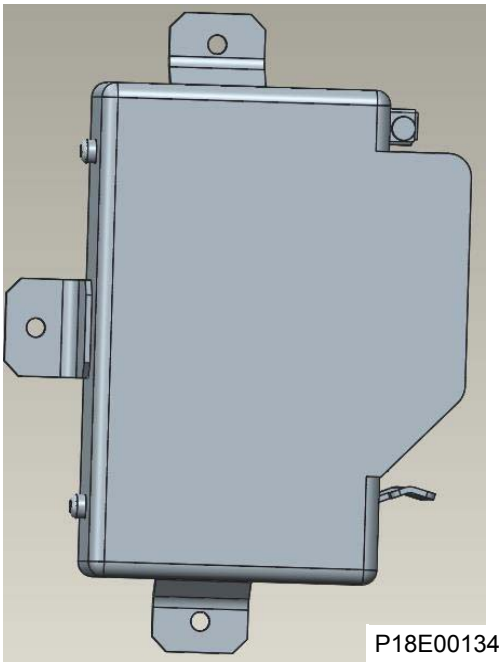

P18E00134

Shift Selector

The internal part of a gear selector consists of many mini switches. When the operator selects gears and directions, the internal micro switch works, and the changed gear and direction signals ultimately enter into the electronic control unit through the connecting of harness.

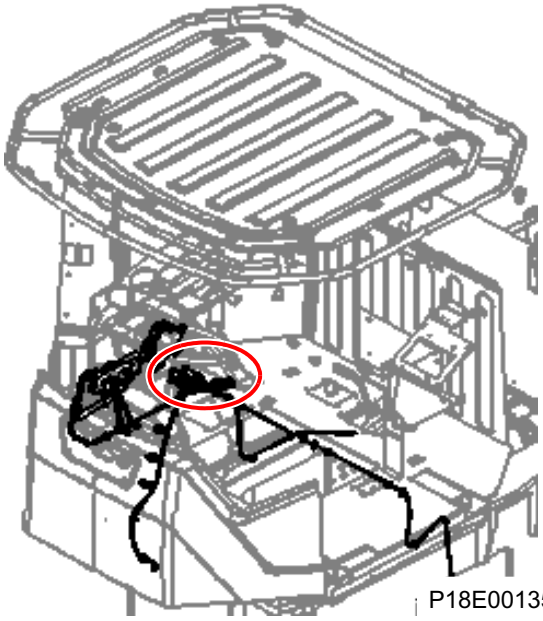

P18E00135

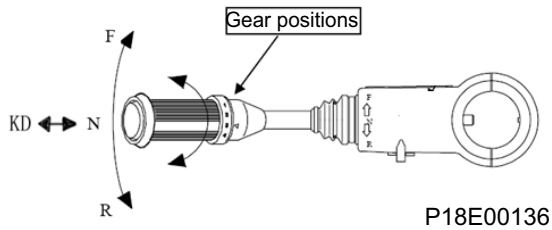

P18E00136

Fault detection procedures of DW-3 shift selector

1. Turn the digital multimeter to 200 Ω of Ω position.
2. Move DW-3 gear selector to N1 position;
3. Test if only [B1, B3], [B1, AS], [B3, AS] are pairwise energized;
4. Shift the gear selector to other appropriate gears, and check the parallelism in accordance with the gear logic diagram;

5. The gear selector is in normal condition, provided that all the gears conform to the gear logic diagram.

AUSGABE		OUTPUT SIGNAL												
GANG GEAR		YOWAERTS FORWARD				RUECKWAERTS REVERS				NEUTRAL				
		1	2	3	4	1	2	3	4	1	2	3	4	KD
AD1	B1	●			●	●			●	●			●	
AD2	B2			●	●			●	●			●	●	
AD3	B3	●	●	●	●	●	●	●	●	●	●	●	●	
AD4	V	●	●	●	●									
AD5	R					●	●	●	●					
AD6	AS									●	●	●	●	
AD7	KD													●

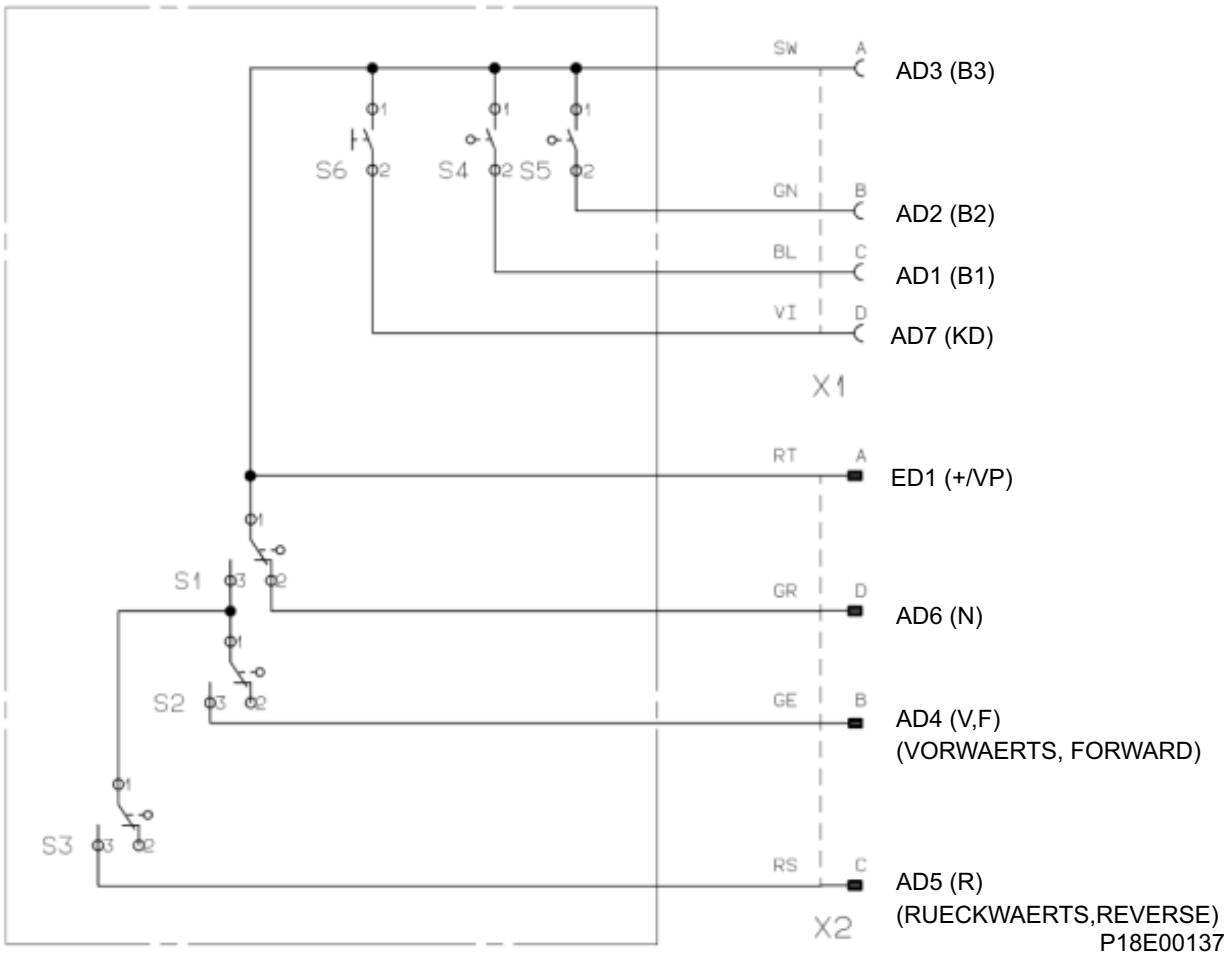

P18E00137

Audio System

Audio System Principle

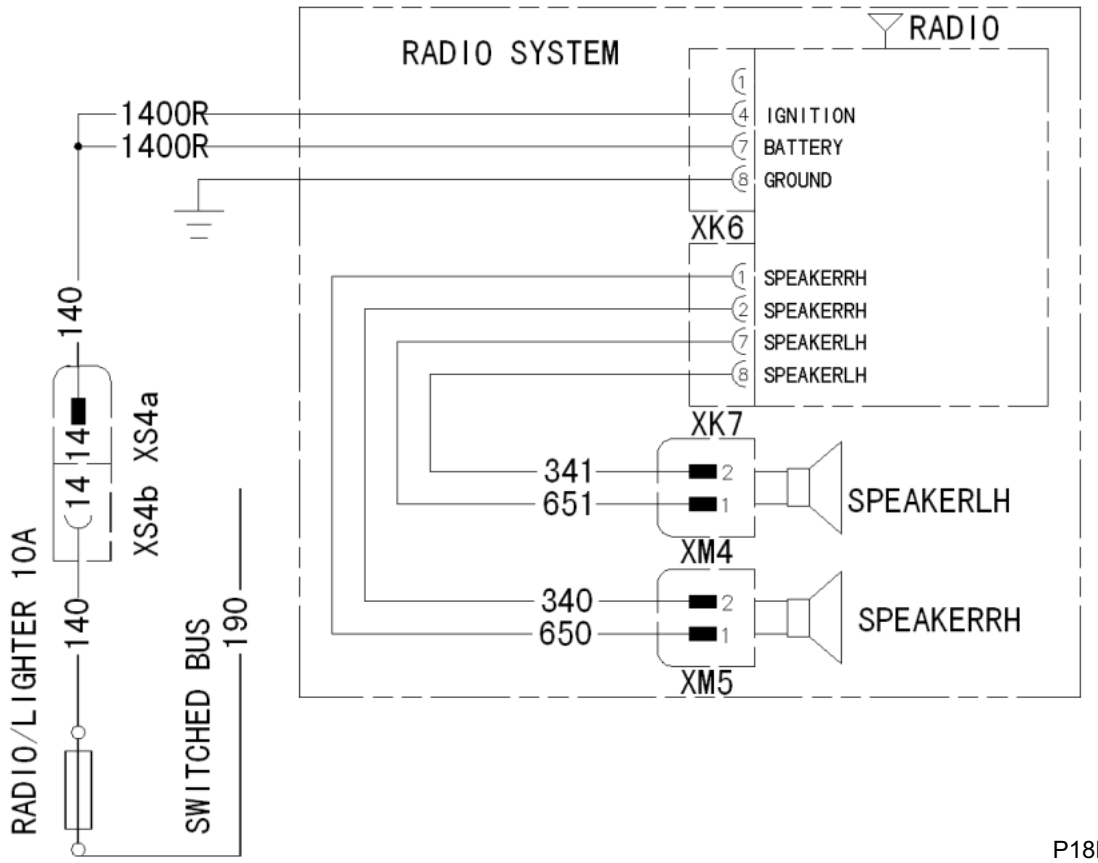

P18E00138

Radio

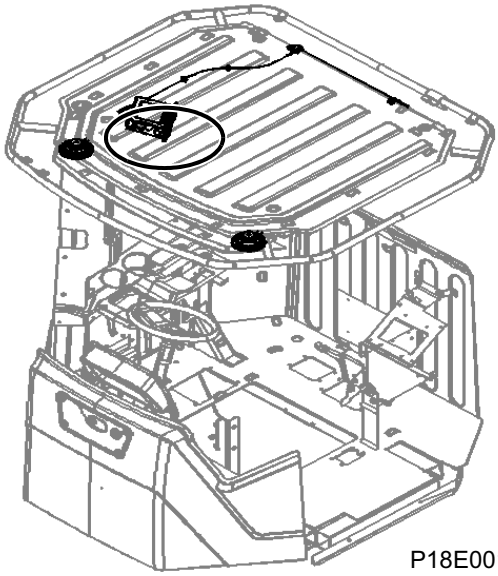

P18E00139

Speaker

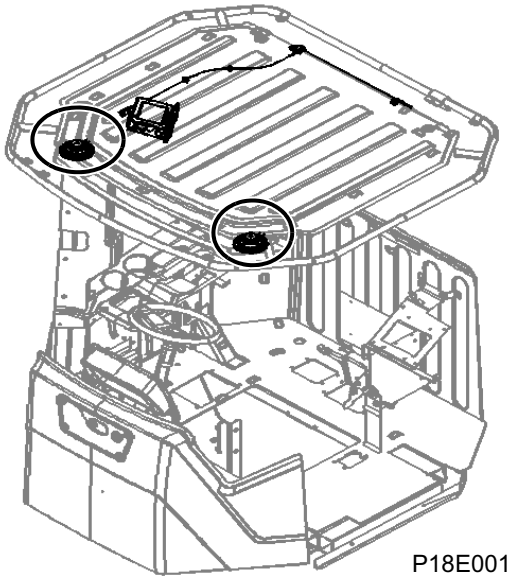

P18E00140

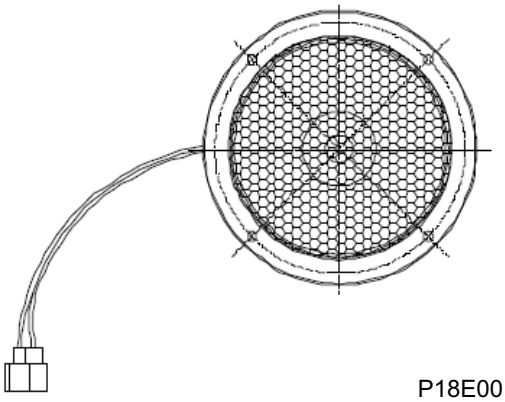

P18E00141

Antenna

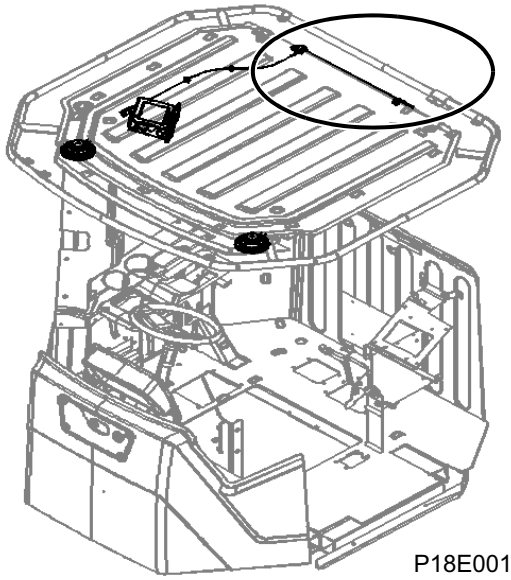

P18E00142

Engine Electric Control Module

Electronic Throttle Line

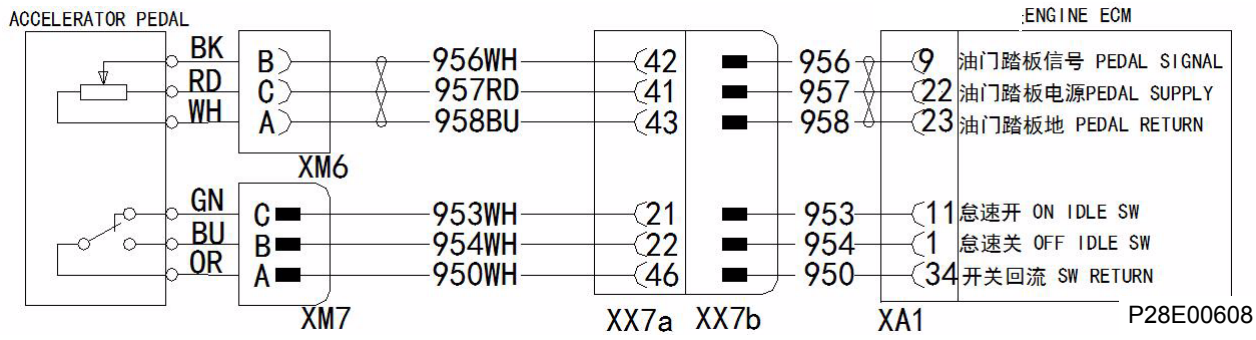

Radiator Fan Control Module

Control Strategy

Water temperature: 90°C~100°C, target temperature: 95°C, PID regulation, i.e. fan begins to accelerate when the temperature is more than 95°C, or vice versa

Torque oil temperature: 105°C~110°C, linear adjustment, i.e. fan operates at the minimum speed when the temperature is not more than 105°C and other temperatures are not in the adjustable range; fan operates at the maximum speed when the temperature is more than 110°C; when the temperature is between 105°C~110°C, an corresponding speed can be achieved through linear scale calculation.

Air-air intercooler: temperature control node: 40, Fmin; 55, F80%; 70, 80%; 75, Fmax;

Electrical schematic diagram

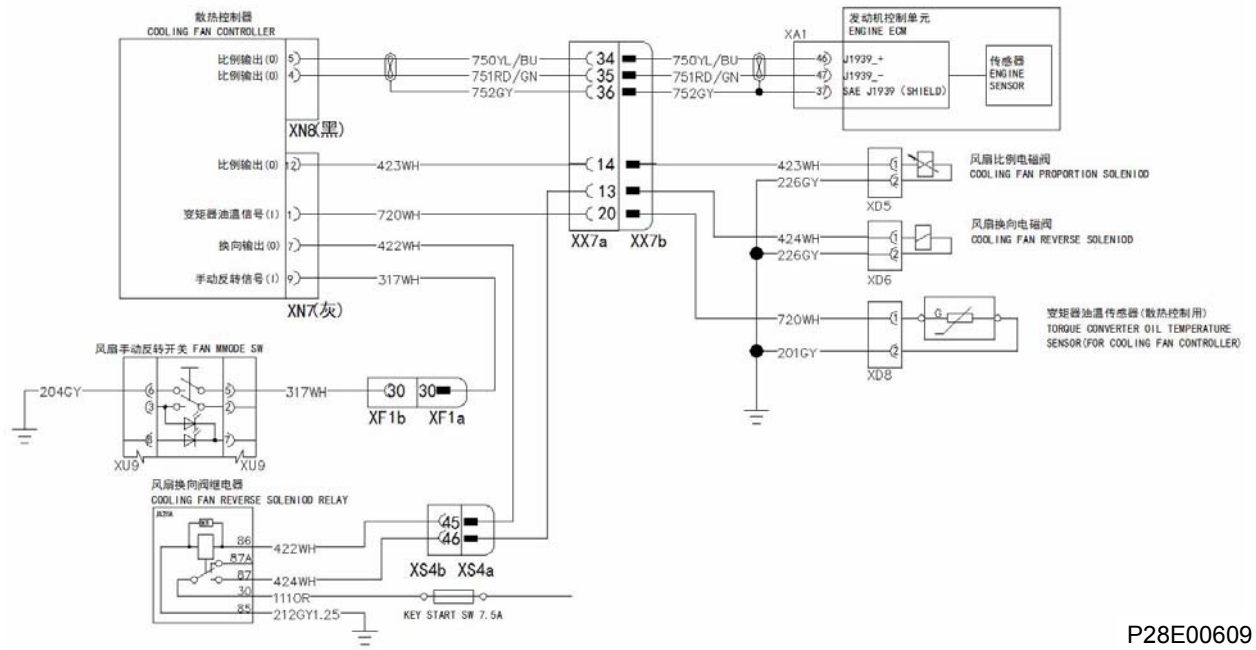

Seat Heater

Supply power to the sear after the complete machine is energized, and seat heater is controlled the ON/OFF by the switch on the seat.

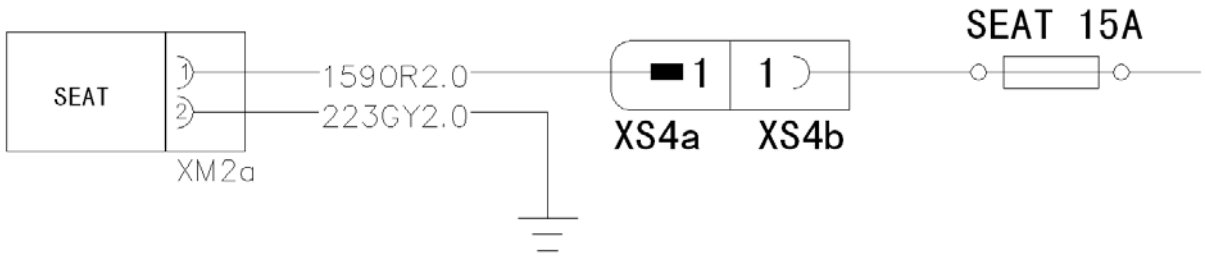

P18E00152

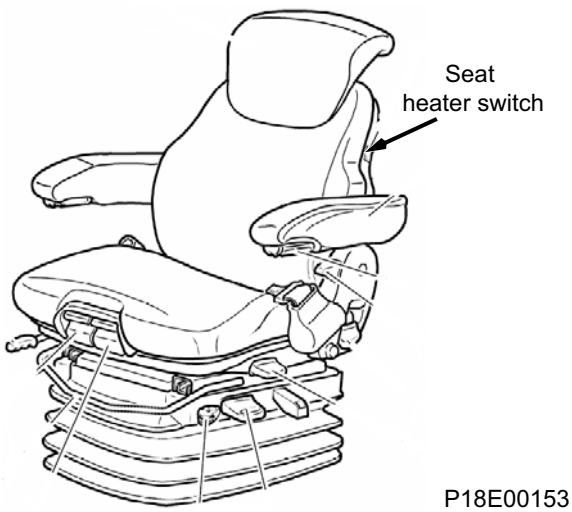

P18E00153

Appendix

Distribution diagram of front frame harness connector

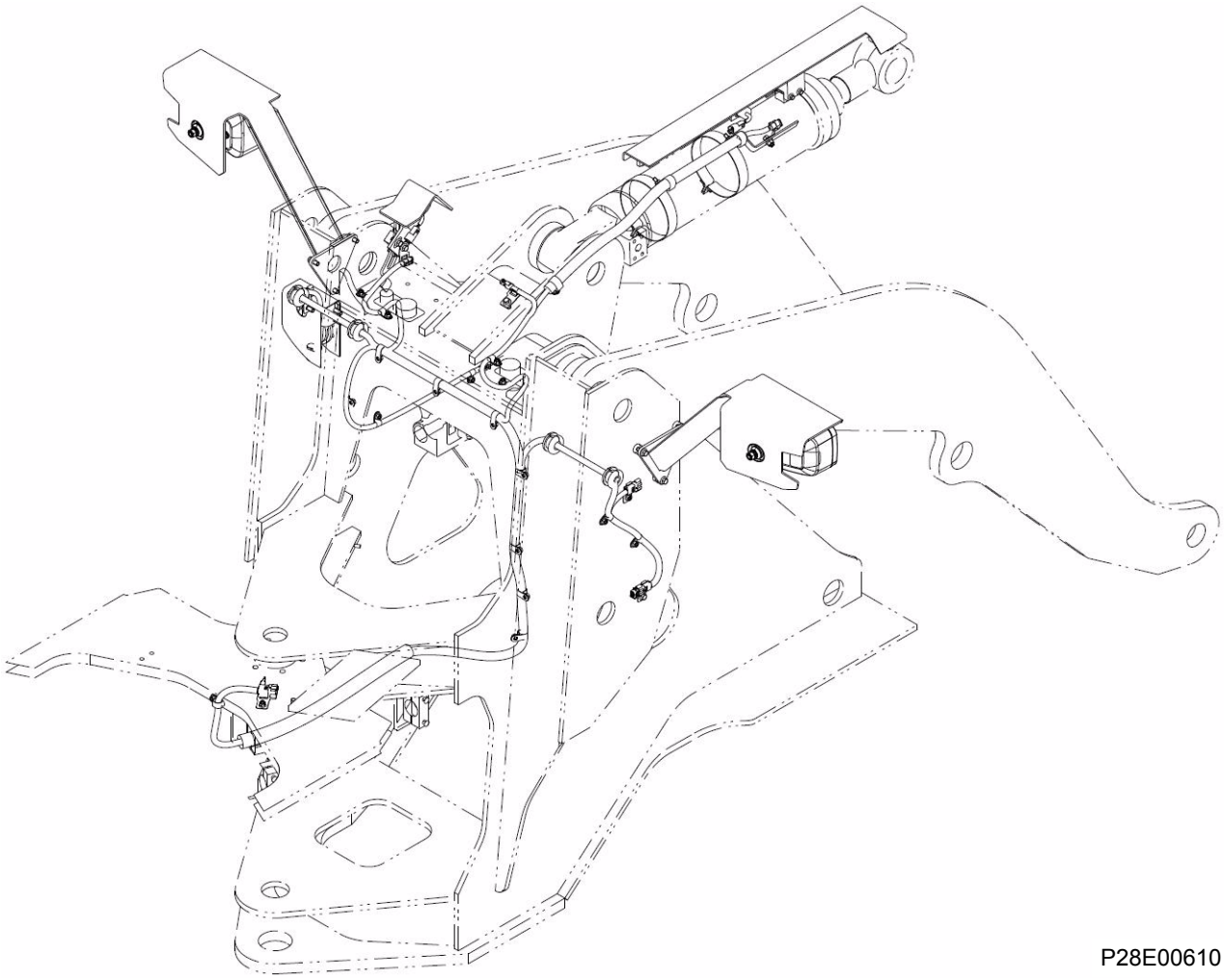

P28E00610

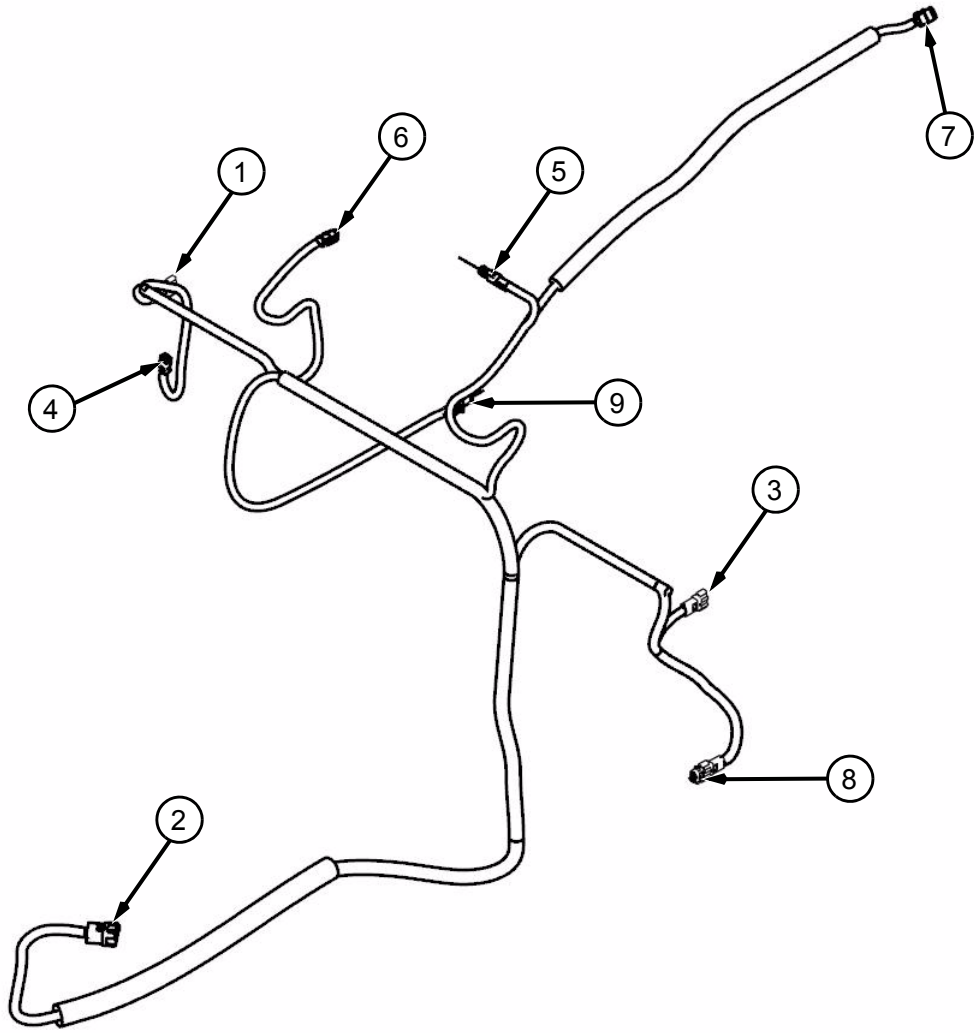

P28E00611

1. XQ1
2. XR2b
3. XQ3
4. XQ4
5. XR4b
6. XQ5
7. XQ6
8. XQ7b
9. XQ8

Distribution diagram of work light harness connector

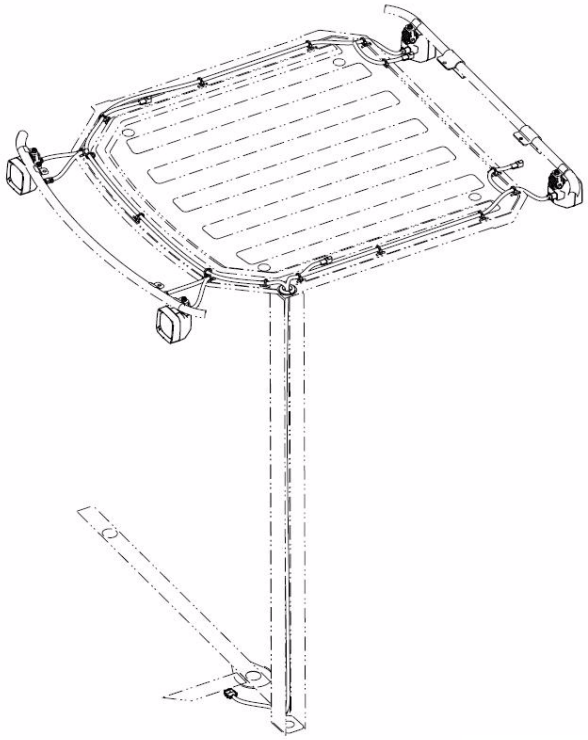

P28E00612

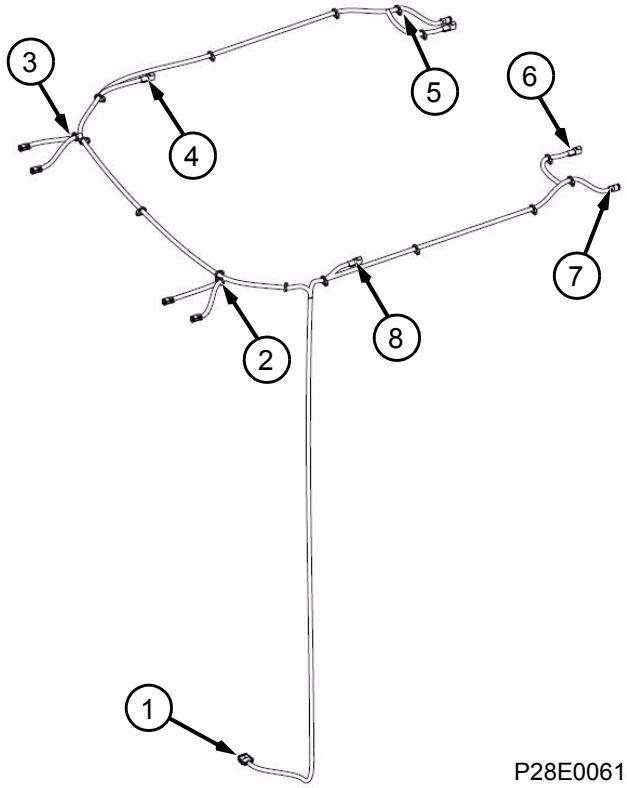

P28E00613

1. XK1b
2. XJ1, XJ3
3. XJ2, XJ4
4. XK5b
5. XJ6, XJ0, XH3b
6. XJ8b
7. XJ5
8. XK4b

Distribution diagram of cab harness connector

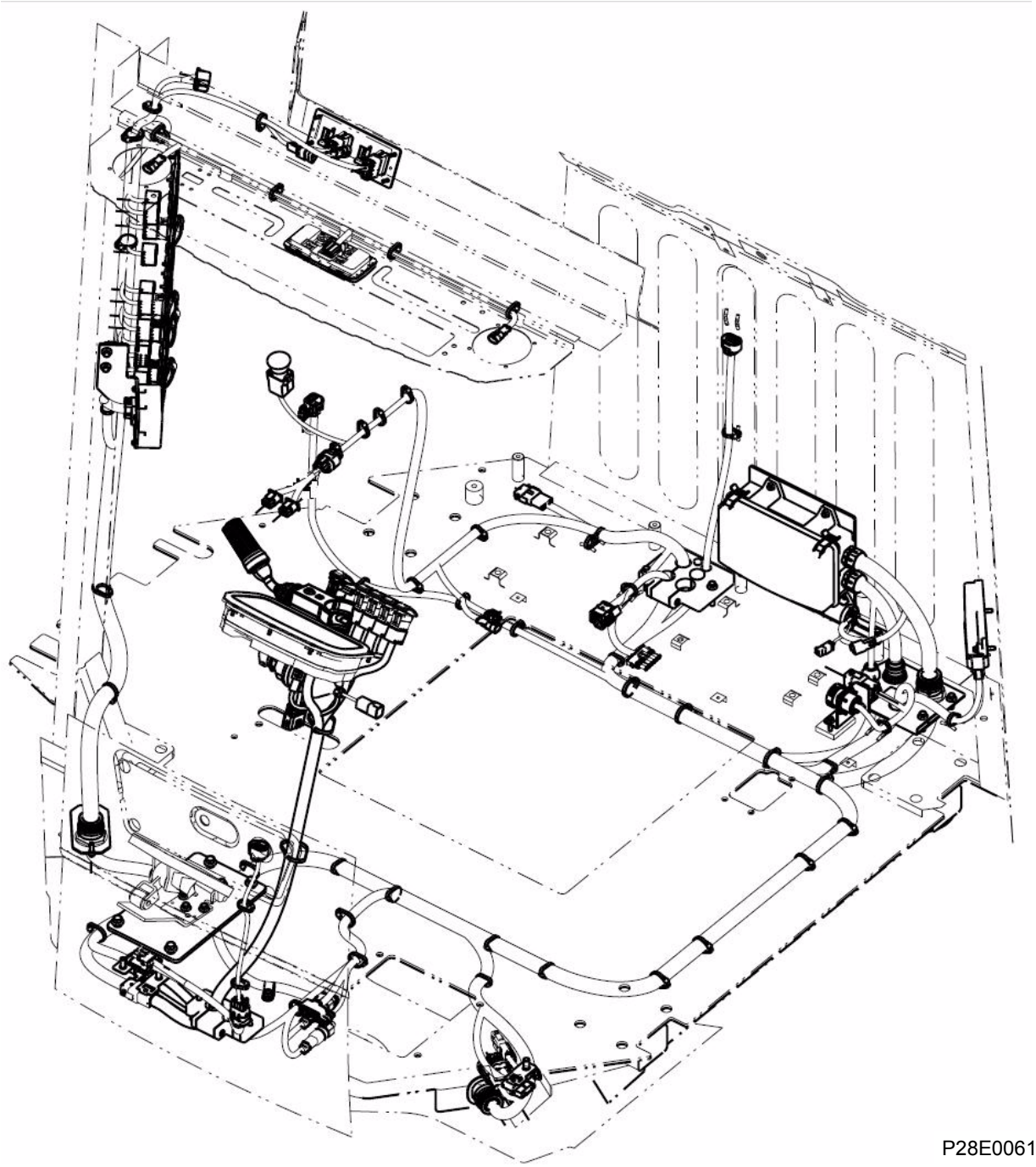

P28E00614

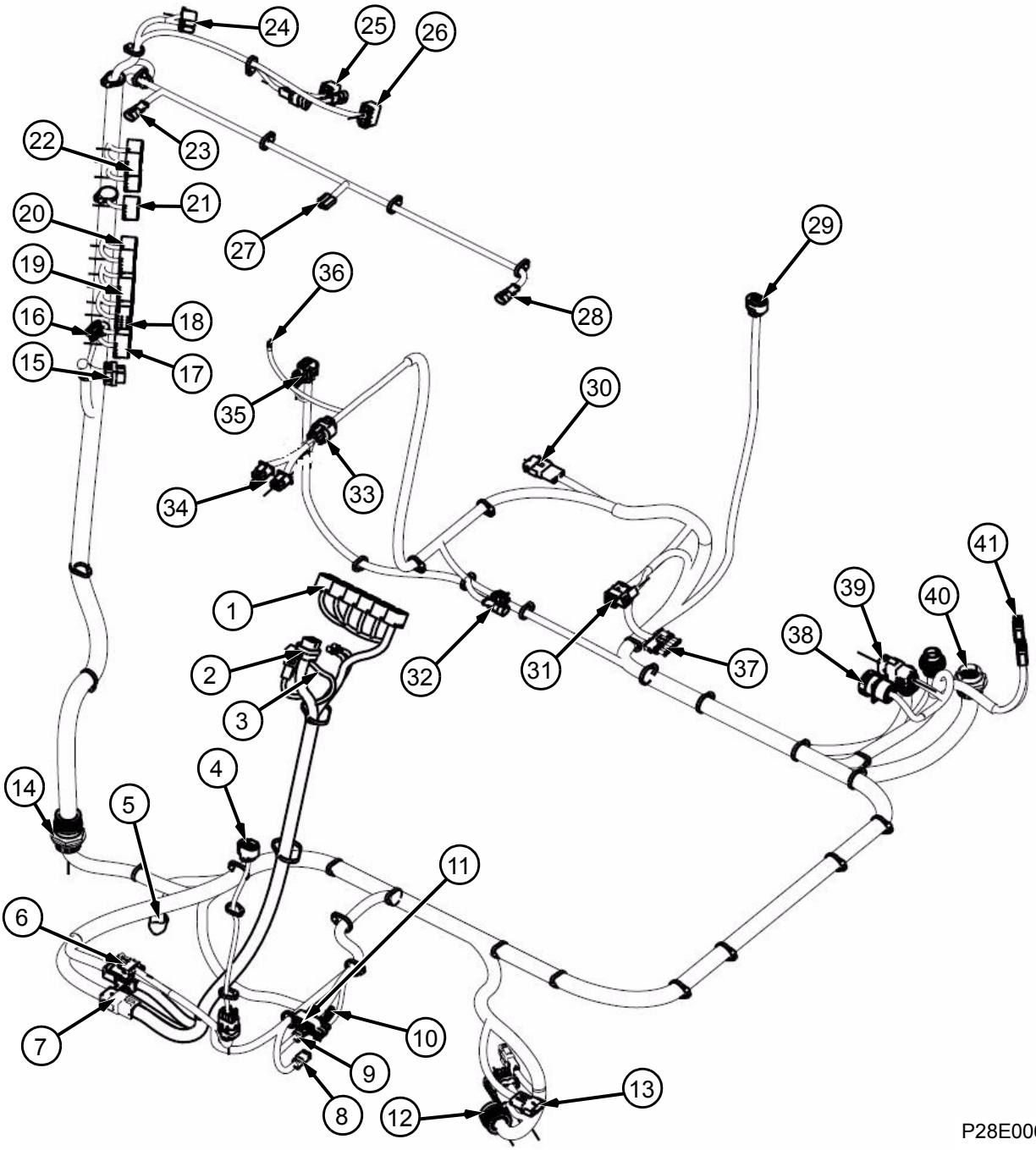

P28E00615

1. XV4, XU6, XU5, XU3, XU4, XU7
2. XL4
3. XS2
4. XL6
5. XN1
6. XM6, XM7
7. X6a, X7a
8. XE8
9. XE6
10. XR2a
11. XT4, XT6, X2b, X3b
12. XX7a, XX8a, XC6b, XX9a
13. XK1a
14. XF1b, XF1a
15. XL5
16. XM1a
17. XV2, XV3
18. XZ2, XZ3
19. XV8, XV9
20. XV6
21. YV5
22. YS5, XU9
23. XM5
24. XK6, XK7
25. XZ5, XB10
26. YS6
27. XS7
28. XM4
29. XL7
30. X9a
31. XL2, XM3
32. XM2a, XH5
33. XT9a
34. XT8, XT9
35. XL8a, XL8b
36. XS8a
37. X2, X3, X4, X7, X5a, X12a, X13a
38. XM9
39. XN6b
40. XS3a, XS4a, XS5a
41. XN7, XN8

Distribution diagram of rear frame harness connector

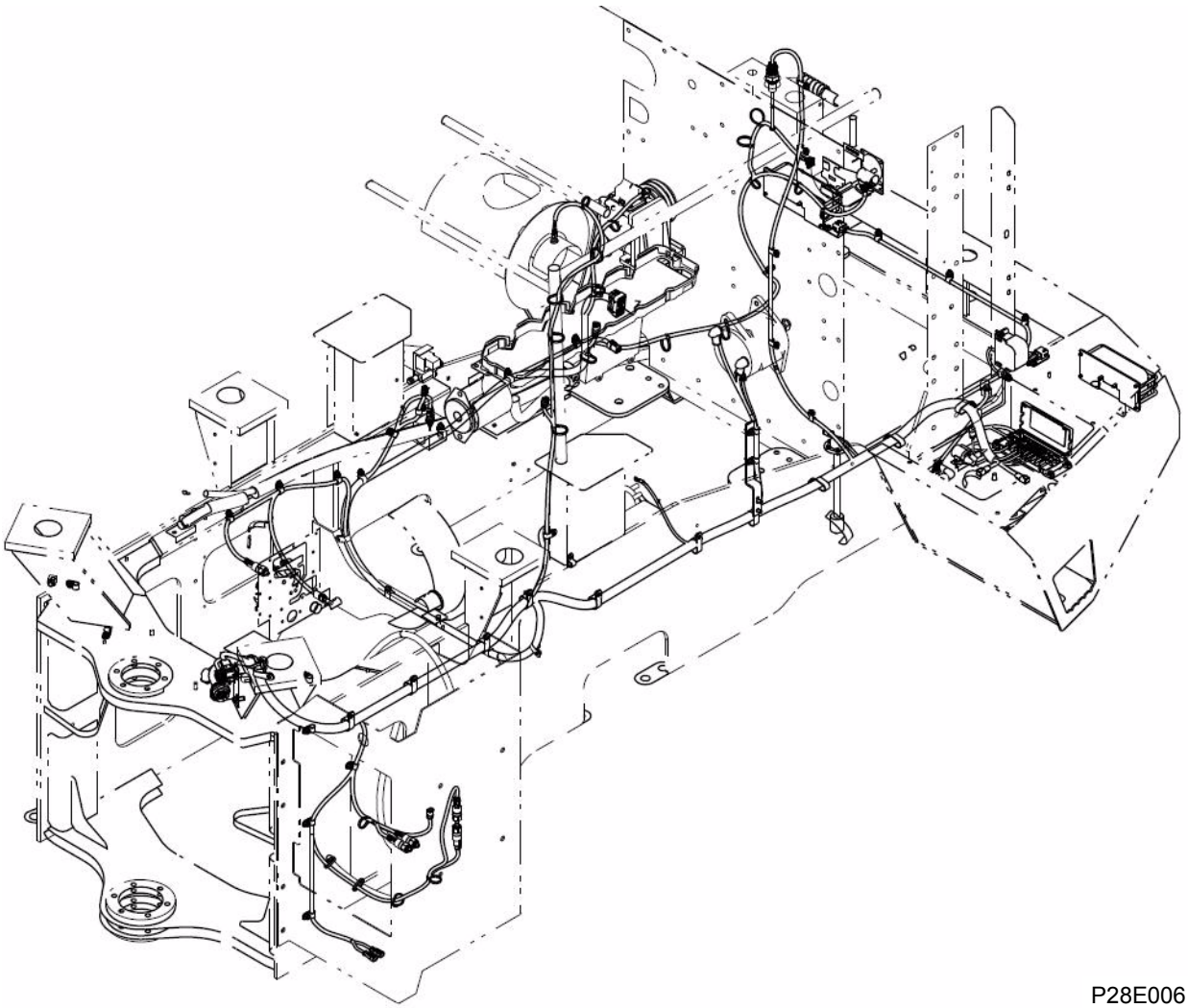

P28E00616

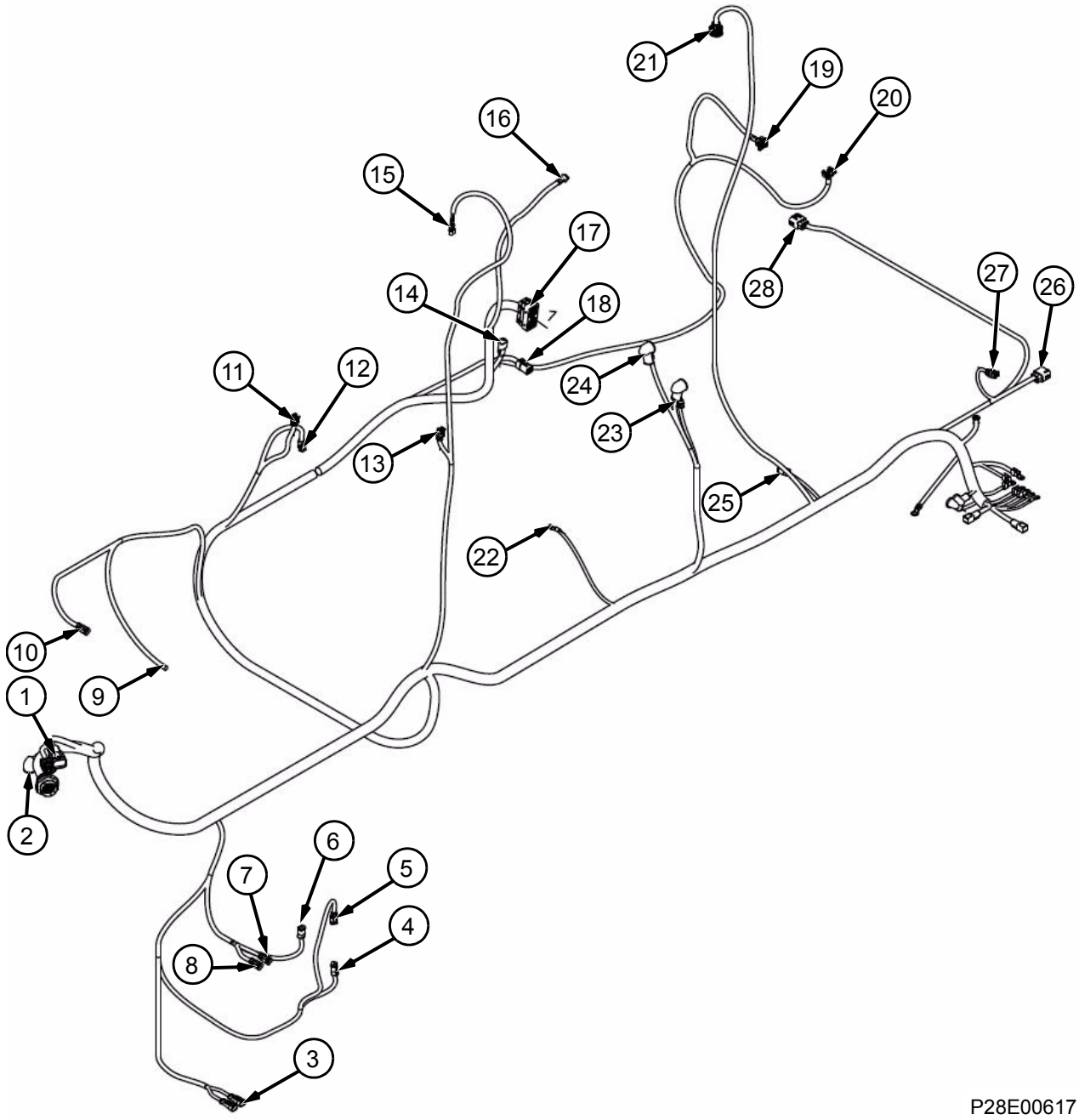

P28E00617

1. XX7b, XX8b, XX9b
2. XY3
3. XB8, XB9
4. XE6
5. XE7
6. XF1
7. XE9
8. XE8
9. XE3
10. XE4
11. XW3
12. XD8
13. XB6
14. XA3
15. XA8, XA9
16. XC1
17. XA1
18. XA2
19. XD5
20. XD6
21. XB4
22. XG1
23. XA5, XA7
24. XA6
25. XE5
26. XB1
27. XB7
28. XB2

Appendix

Schematic Diagram of Hydraulic System.....9-3

A/C System Schematic Diagram 9-4

Schematic Diagram of Electrical System 9-5

Schematic Diagram of Hydraulic System

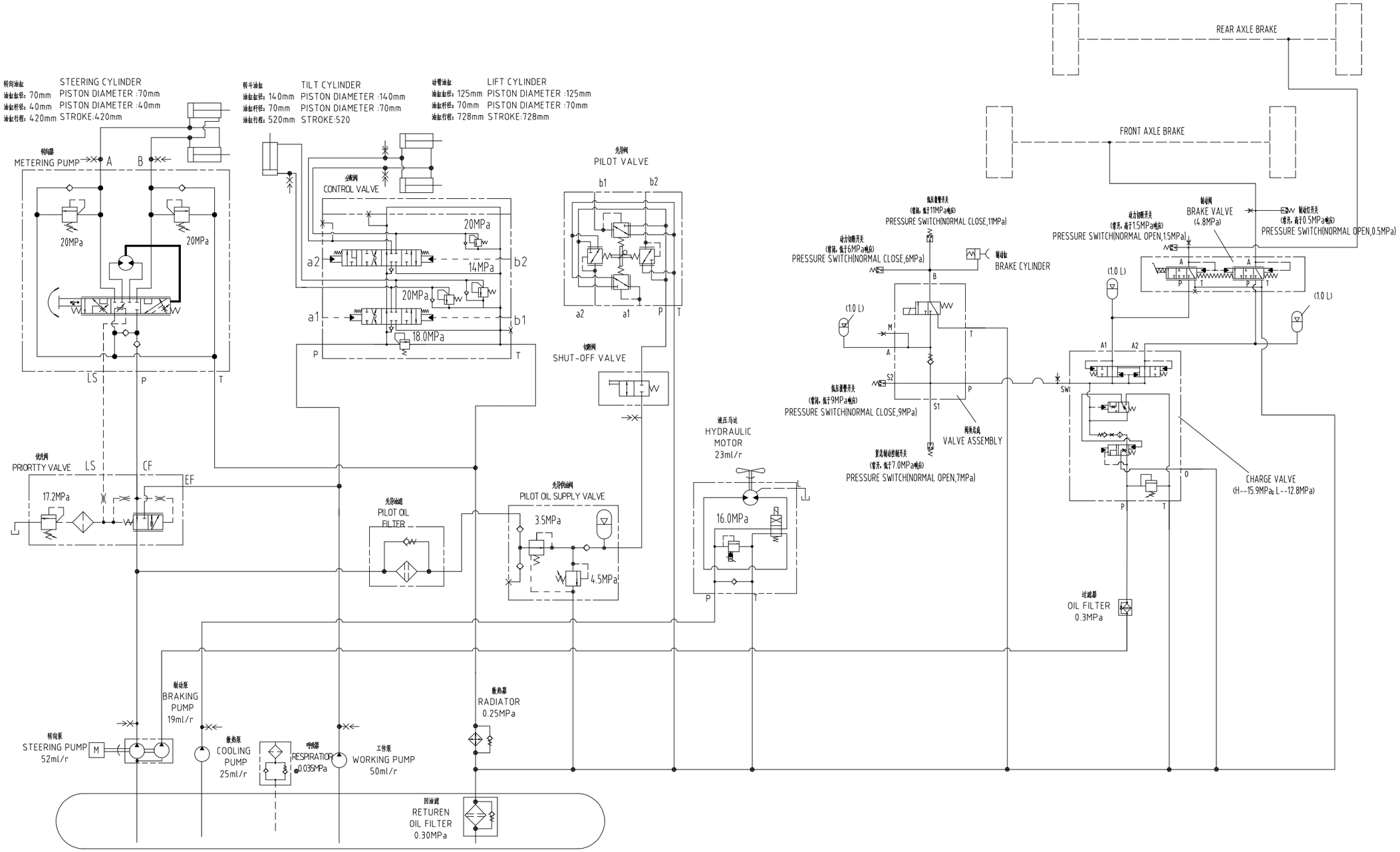

50Y1275

A/C System Schematic Diagram

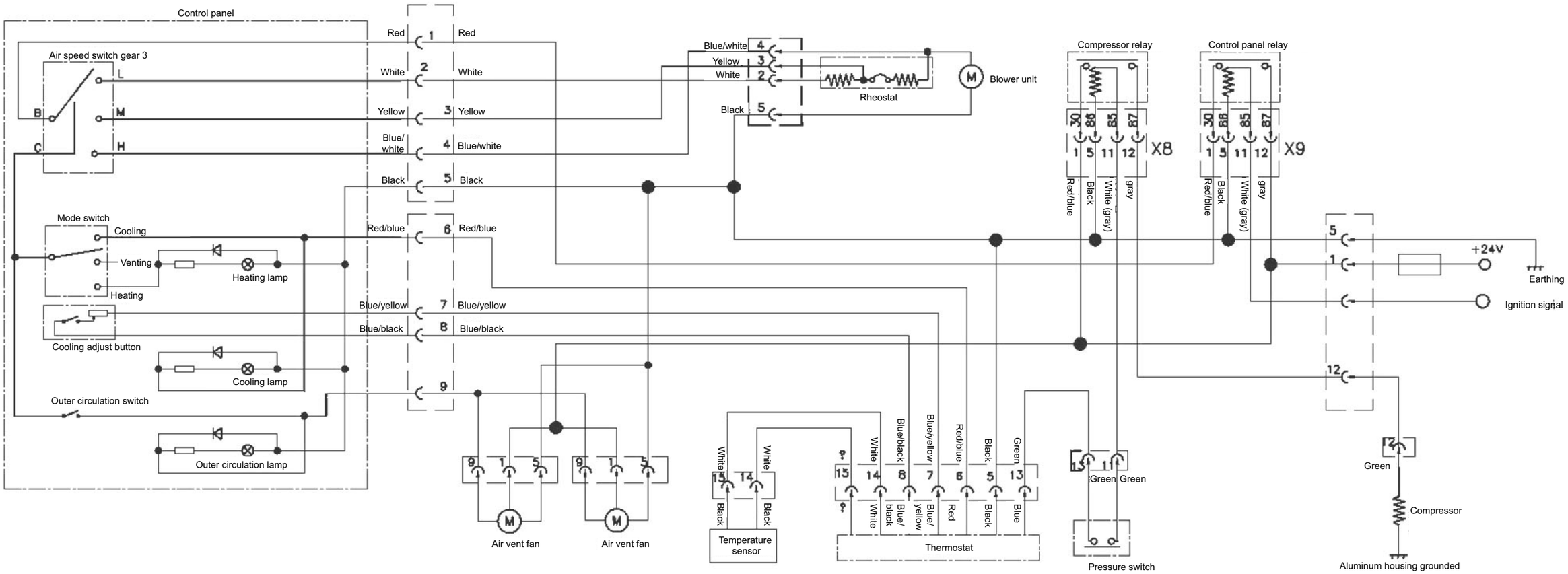

P28A00115

Schematic Diagram of Electrical System

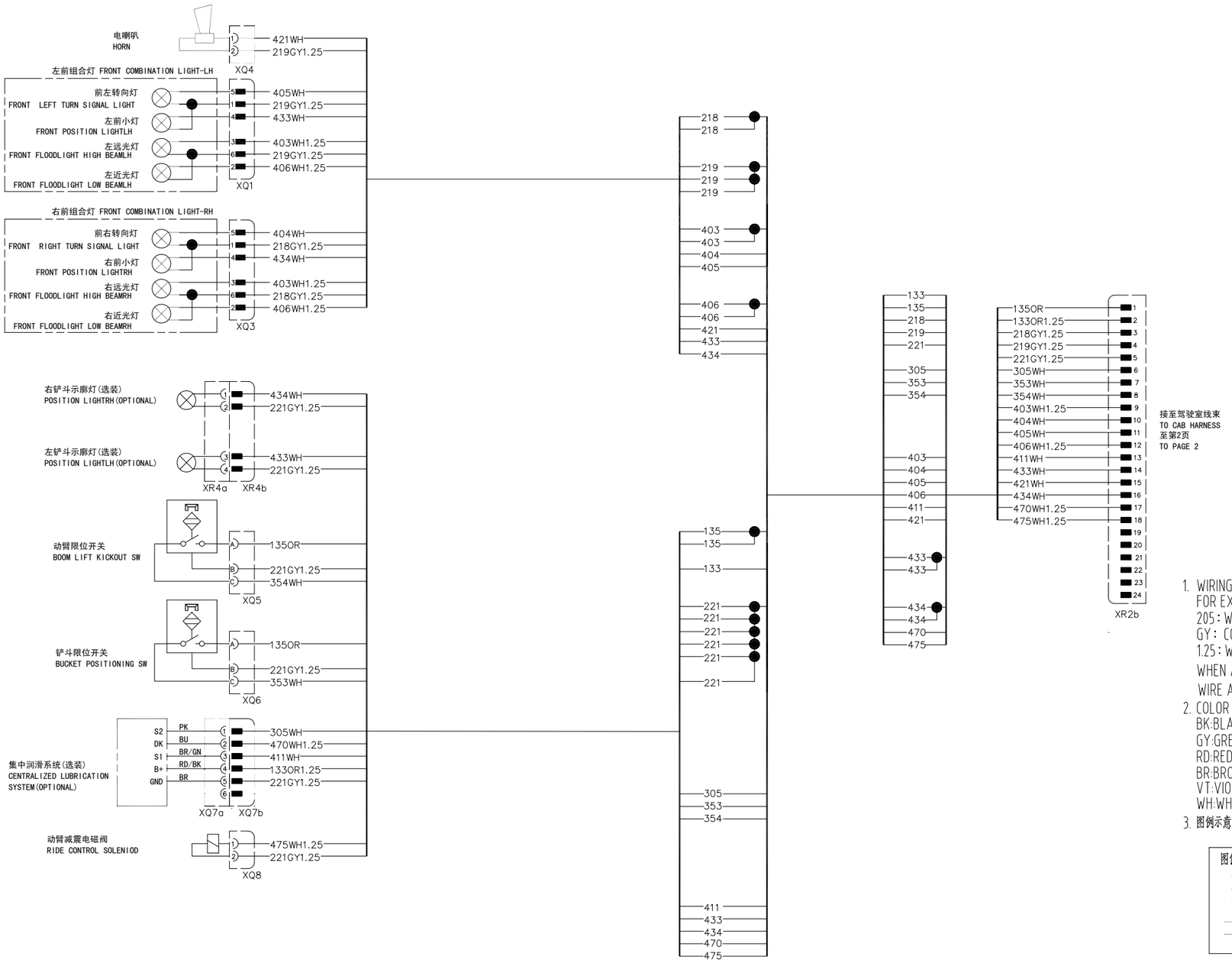

技术要求

1. WIRING IDENTIFICATION: 电缆识别:
   FOR EXAMPLE: 205 GY1.25 例如: 205 GY1.25
   205: WIRE NUMBER 线号
   GY: COLOR 颜色
   1.25: WIRE AREA(mm²) 线规
   WHEN AREA IS OMITTED, IT MEANS THE
   WIRE AREA IS 0.85mm² 线规未标注者, 均为0.85mm²
2. COLOR CODE ABBREVIATION:颜色简写代码:
   BK:BLACK (黑色) BU:BLUE (蓝色)
   GY:GREY (灰色) GN:GREEN (绿色)
   RD:RED (红色) YL:YELLOW (黄色)
   BR:BROWN (棕色) PK:PINK (粉红色)
   VT:VIOLET (紫色) OR:ORANGE (橙色)
   WH:WHITE (白色) LTBU:LIGHTBULE(浅蓝)
3. 图例示意:

图例:

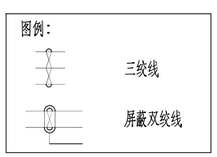

50Y1268-1

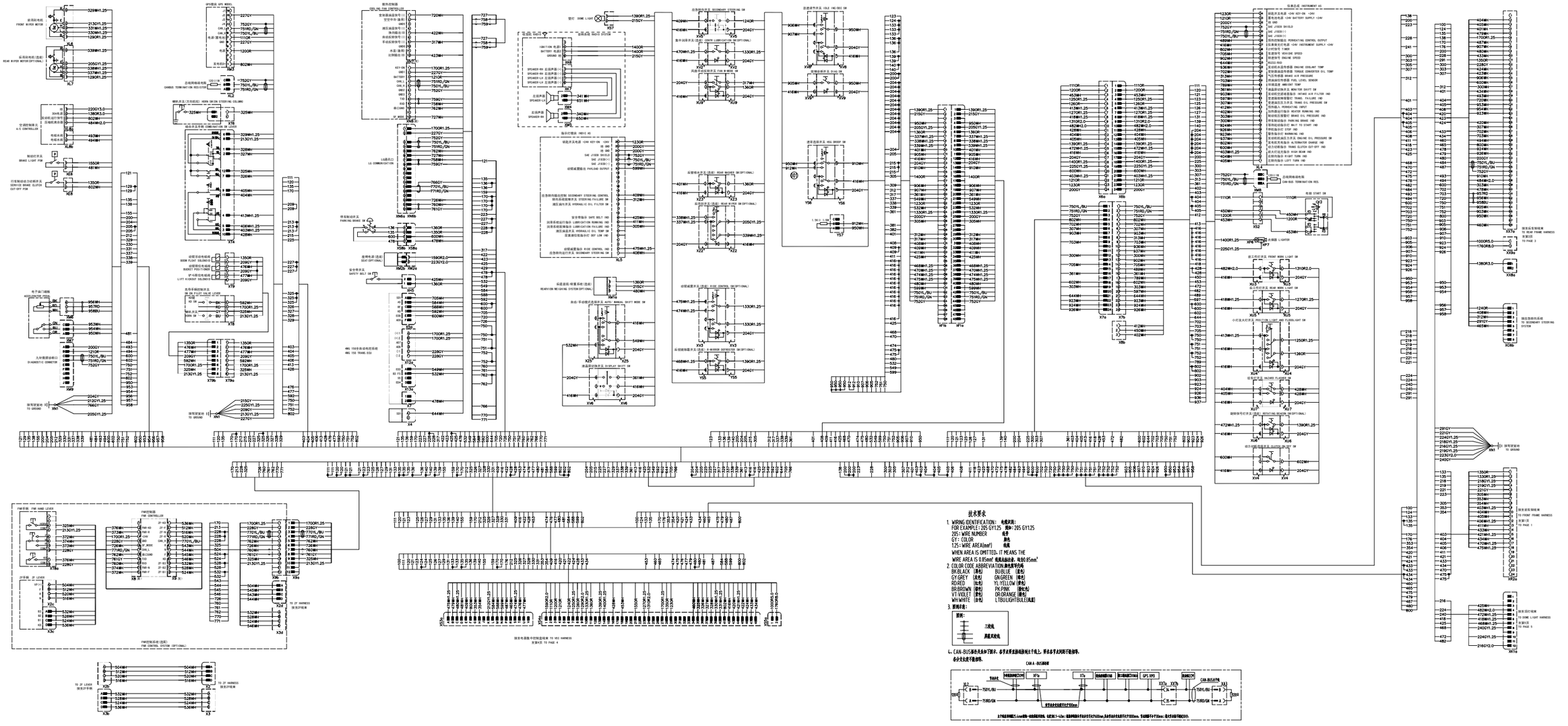

技术要求

1. WIRING IDENTIFICATION: 电缆识别:
FOR EXAMPLE: 205 GY1.25 例如: 205 GY1.25
205: WIRE NUMBER 线号
GY: COLOR 颜色
1.25: WIRE AREA(mm²) 线径
WHEN AREA IS OMITTED, IT MEANS THE
WIRE AREA IS 0.85mm². 线径未标注者, 均为0.85mm².
2. COLOR CODE ABBREVIATION 颜色简写代码
BK:BLACK (黑色) BU:BLUE (蓝色)
GY:GREY (灰色) GN:GREEN (绿色)
RD:RED (红色) YL:YELLOW (黄色)
BR:BROWN (棕色) PK:PINK (粉红色)
VT:VIOLET (紫色) OR:ORANGE (橙色)
WH:WHITE (白色) LTBU:LIGHT BLUE (浅蓝)
3. 图例符号:
图例: 三线线
屏蔽双绞线
4. CAN-BUS驱动关头和T接头. 各节点要连接电器时走T线上, 要求各节点时间不能超长.
各分支长度不能超长.

CAN A -BUS网络

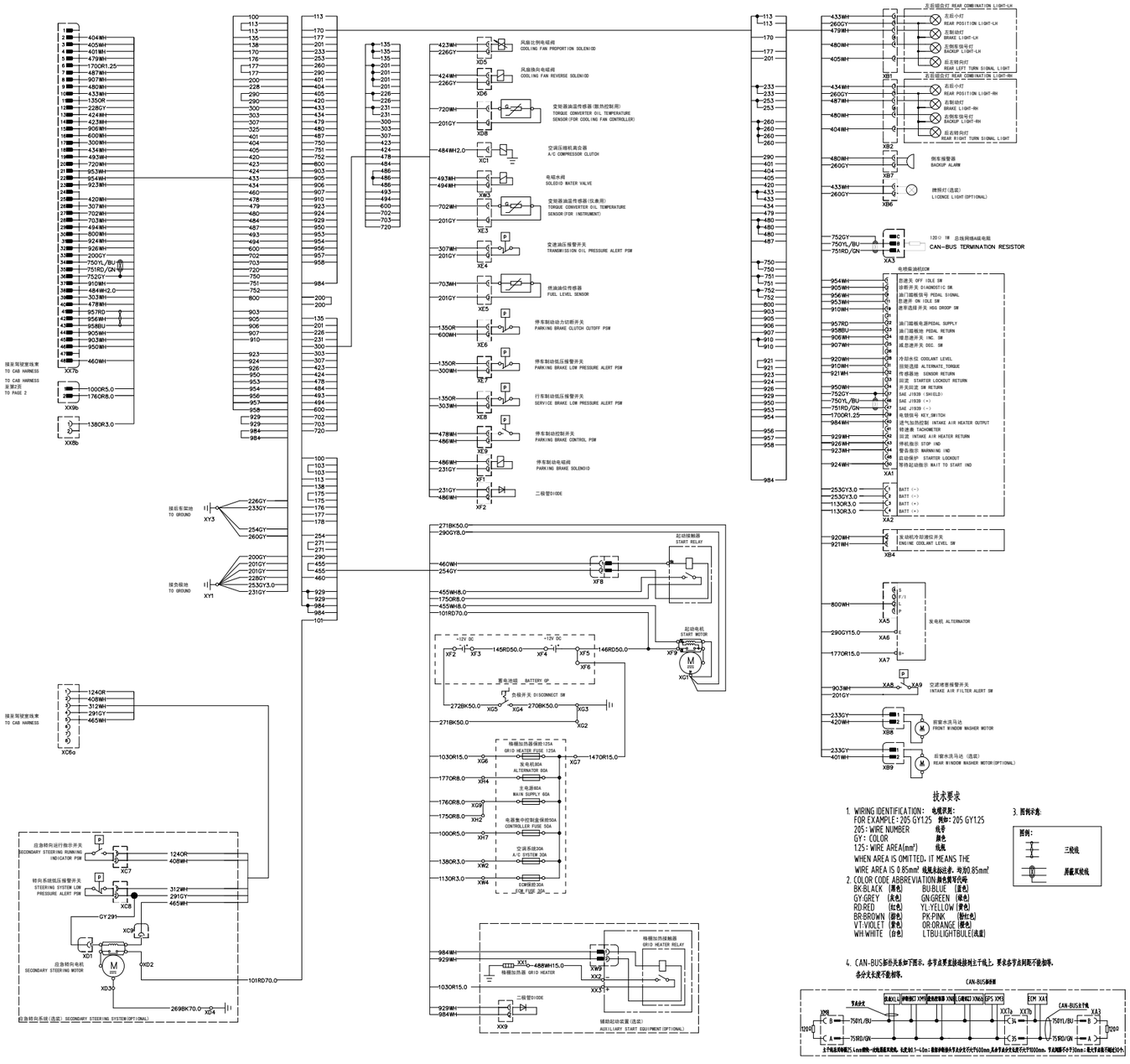
技术要求
1. WIRING IDENTIFICATION: 电缆识别:
FOR EXAMPLE:205 GY1.25 例如:205 GY1.25
205:WIRE NUMBER 线号
GY:COLOR 颜色
1.25:WIRE AREA(mm²) 线规
WHEN AREA IS OMITTED, IT MEANS THE
WIRE AREA IS 0.85mm² 线规未标注者,均为0.85mm²
2. COLOR CODE ABBREVIATION:颜色缩写代码:
BK:BLACK (黑色) BU:BLUE (蓝色)
GY:GREY (灰色) GN:GREEN (绿色)
RD:RED (红色) YL:YELLOW (黄色)
BR:BROWN (棕色) PK:PINK (粉红色)
VI:VIOLET (紫色) OR:ORANGE (橙色)
WH:WHITE (白色) LTBU:LIGHTBULE(浅蓝)
3. 图例示意:
图例:
二线线
屏蔽双绞线
4. CAN-BUS部分关系如下图示。各节点要直接连接到主干线上,要求各节点间距不能相等,
各分支长度不能相等。
CAN-BUS部件图
节点分支
CAN-BUS主干线
ECM XA1
XK8
XK7a
XK7b
XK3
XA5
XA6
XA7
XA8
XA9
XB8
XB9
发电机 ALTERNATOR
空滤堵塞报警开关 INTAKE AIR FILTER ALERT SW
前窗水洗马达 FRONT WINDOW WASHER MOTOR
后窗水洗马达(选装) REAR WINDOW WASHER MOTOR(OPTIONAL)
上下线总长6000,0.5mm线径一对线距最大间隔,长度为1~4m;最新参数最小节点分支尺寸不小于600mm,其余节点分支长度尺寸为300mm。节点间隔尺寸≥25mm;最大节点数不超过30个。

50Y1268-3

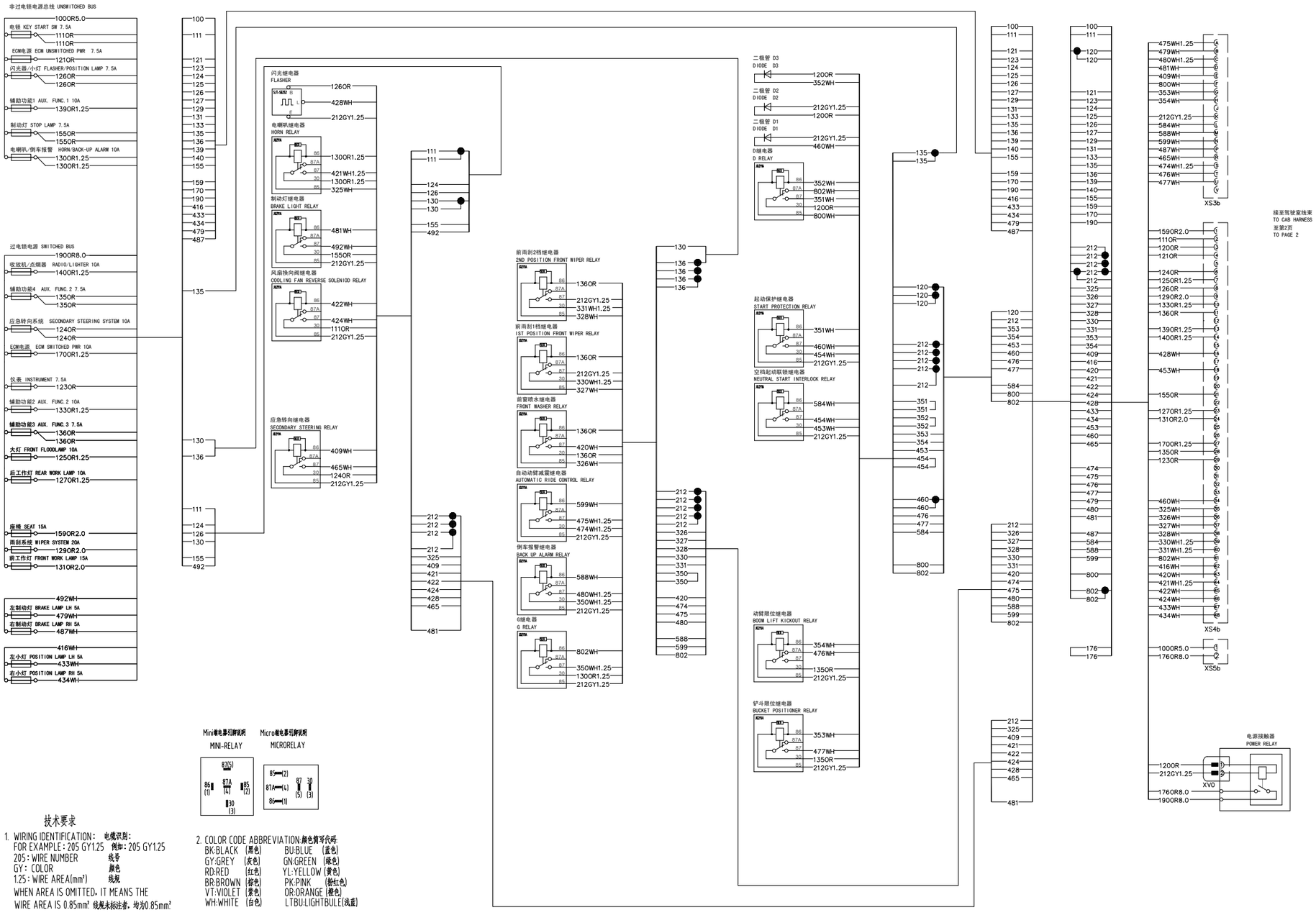

技术要求

1. WIRING IDENTIFICATION: 电缆识别:
   FOR EXAMPLE: 205 GY1.25 例如: 205 GY1.25
   205: WIRE NUMBER 线号
   GY: COLOR 颜色
   1.25: WIRE AREA(mm²) 线规
   WHEN AREA IS OMITTED, IT MEANS THE
   WIRE AREA IS 0.85mm² 线规未标注者, 均为0.85mm²

2. COLOR CODE ABBREVIATION:颜色简写代码:
   BK:BLACK (黑色) BU:BLUE (蓝色)
   GY:GREY (灰色) GN:GREEN (绿色)
   RD:RED (红色) YL:YELLOW (黄色)
   BR:BROWN (棕色) PK:PINK (粉红色)
   VT:VIOLET (紫色) OR:ORANGE (橙色)
   WH:WHITE (白色) LTBU:LIGHTBULE(浅蓝)

50Y1268-4

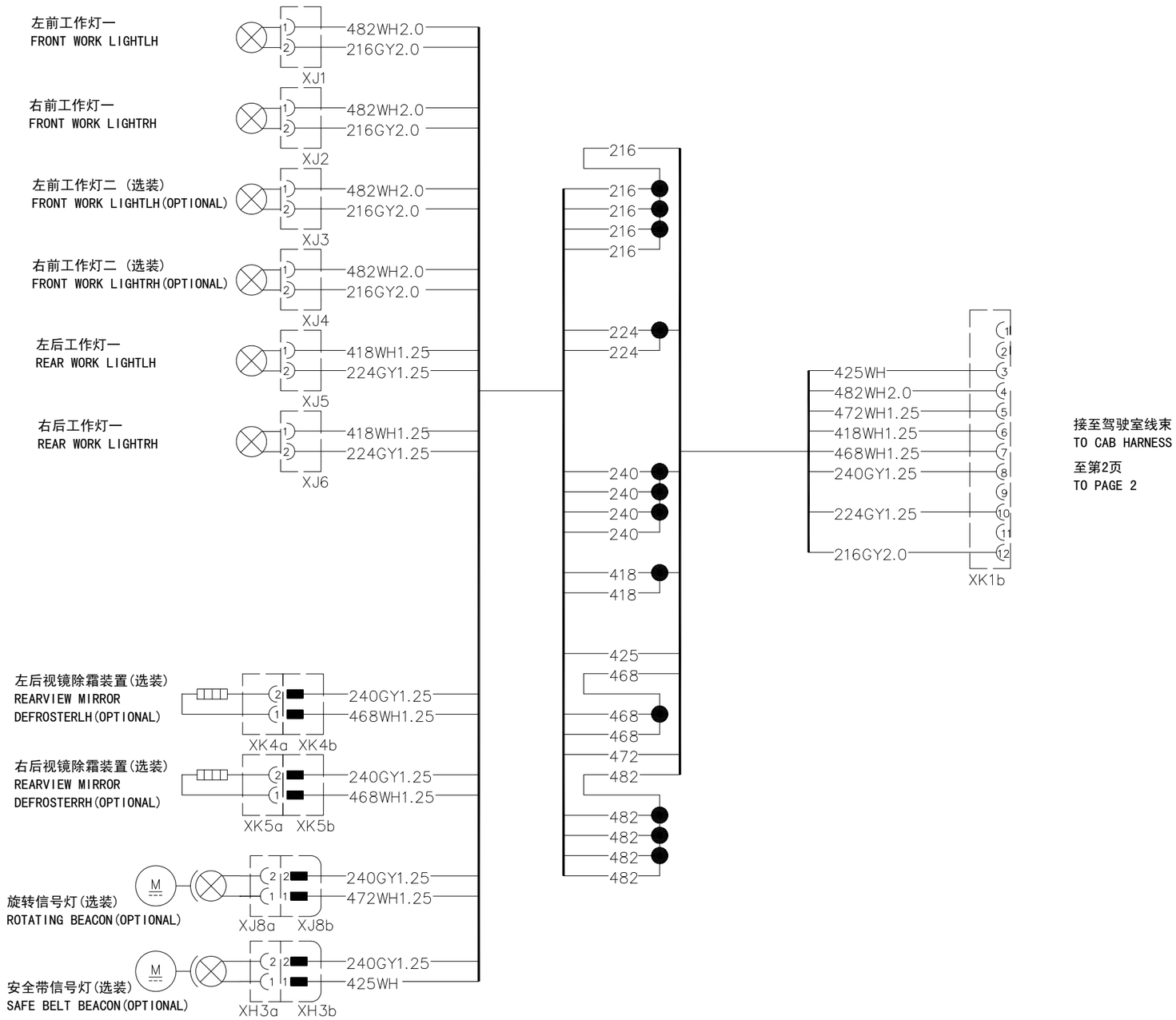
左前工作灯一
FRONT WORK LIGHTLH
482WH2.0
216GY2.0
XJ1
右前工作灯一
FRONT WORK LIGHTRH
482WH2.0
216GY2.0
XJ2
左前工作灯二（选装）
FRONT WORK LIGHTLH(OPTIONAL)
482WH2.0
216GY2.0
XJ3
右前工作灯二（选装）
FRONT WORK LIGHTRH(OPTIONAL)
482WH2.0
216GY2.0
XJ4
左后工作灯一
REAR WORK LIGHTLH
418WH1.25
224GY1.25
XJ5
右后工作灯一
REAR WORK LIGHTRH
418WH1.25
224GY1.25
XJ6
左后视镜除霜装置(选装)
REARVIEW MIRROR
DEFROSTERLH(OPTIONAL)
240GY1.25
468WH1.25
XK4a XK4b
右后视镜除霜装置(选装)
REARVIEW MIRROR
DEFROSTERRH(OPTIONAL)
240GY1.25
468WH1.25
XK5a XK5b
旋转信号灯(选装)
ROTATING BEACON(OPTIONAL)
240GY1.25
472WH1.25
XJ8a XJ8b
安全带信号灯(选装)
SAFE BELT BEACON(OPTIONAL)
240GY1.25
425WH
XH3a XH3b
216
216
216
216
216
224
224
240
240
240
240
418
418
425
468
468
468
472
482
482
482
482
482
425WH
482WH2.0
472WH1.25
418WH1.25
468WH1.25
240GY1.25
224GY1.25
216GY2.0
XK1b
接至驾驶室线束
TO CAB HARNESS
至第2页
TO PAGE 2