SVEDALA COMPACTION AND PAVING

Return

RUTHZIL TRATOR COMERCIAL DE PEÇAS LTDA 11 97083-6812 ROLANDO CITRANGULO

DYNAPAC
CP 132
SPARE PARTS CATALOGUE

SCP132-2EN1

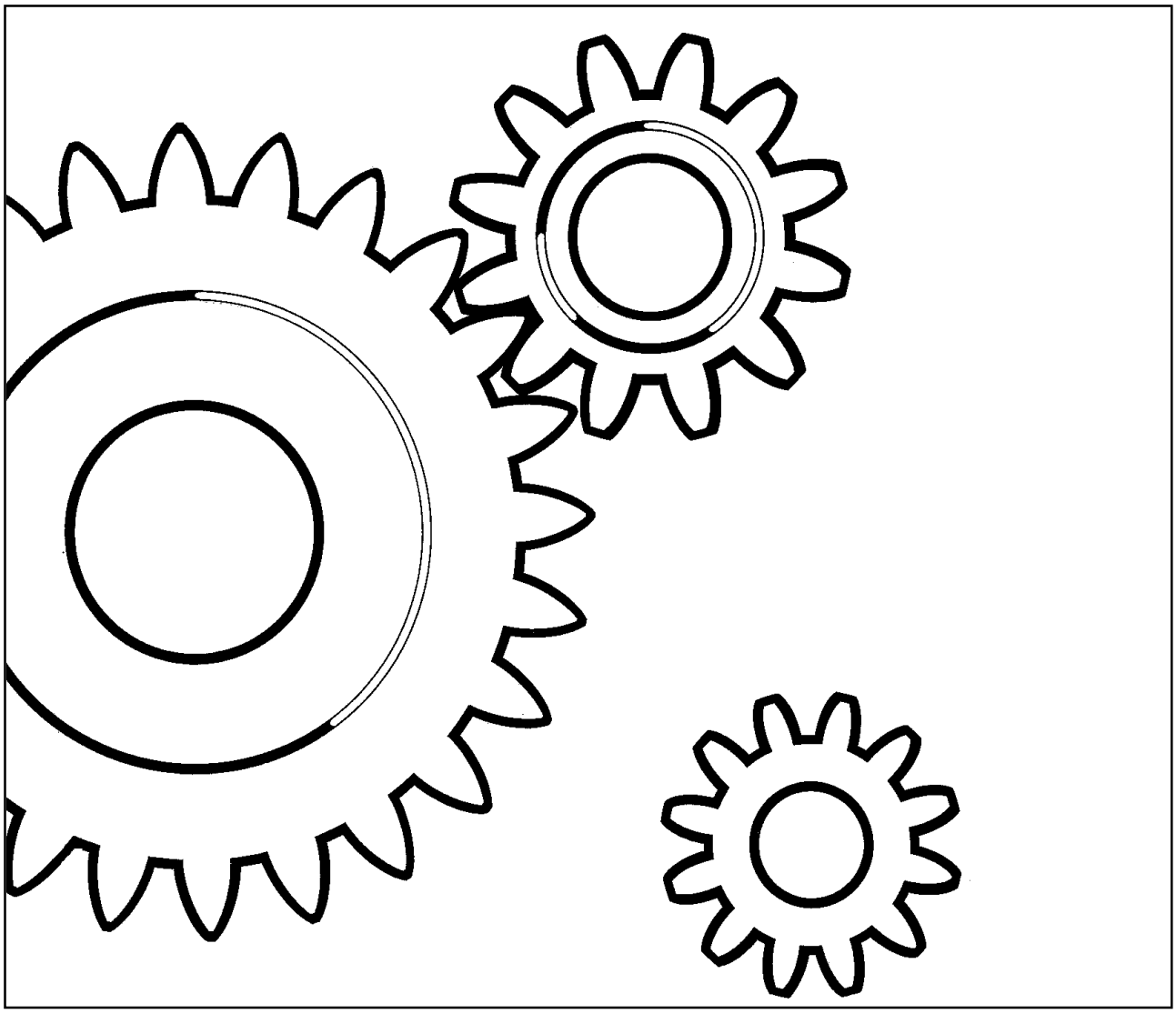

SVEDALA DYNAPAC
Svedala Compaction Equipment AB
Box 504, SE-371 23 Karlskrona, Sweden
Telephone +46 455 30 60 00
Telefax +46 455 30 60 10
Telex 43041 dynkar s

SVEDALA DYNAPAC

Pnumatic tire roller
CP 132

Spare Parts Catalogue
SCP132-2EN1

Valid from roller serial number:

CP 132: *21620331*

Diesel engine:

CUMMINS 4BT 3.9 - C ELITE

Published catalogue issues valid for these rollers:

Catalogue	Issue date	Valid for serial numbers
SCP132-2EN1	2000 - 10	See above



We reserve the right to change specifications without notice.
Printed in Sweden.

SVEDALA DYNAPAC

RESERVDELSBESTÄLLNING

Följande uppgifter ska lämnas vid beställning av reservdelar för att undvika leveransfel:

1. Maskintyp.
2. Vältens serienummer.
3. Antal av önskad reservdel.
4. Reserdelens artikelnummer.
5. Reservdelens benämning.
6. Måttuppgifter vid beställning av metervara.

ORDERING SPARE PARTS

To avoid errors in delivery, please give the following information when ordering spare parts:

1. Type of machine.
2. Roller serial number.
3. Quantity required.
4. Part number.
5. Parts denomination.
6. Dimensions when ordering per length.

ERSATZTEILBESTELLUNG

Zur Vermeidung von Fehllieferungen sind bei der Bestellung von Ersatzteilen folgende Angaben zu machen:

1. Maschinentyp.
2. Herstellungsnummer.
3. Bestellmenge. (Quantity)
4. Ersatzteilnummer. (Part Nº)
5. Ersatzteilbenennung. (Denomination)
6. Massangaben bei Bestellung von Meterware.

ORDINI DI RICAMBI

Per evitare errori nelle consegne di ricambi, Vi preghiamo di comunicarci le seguenti informazioni al momento dell 'ordinazione:

1. Tipo di macchina.
2. Numero di serie della macchina.
3. Quantità dei pezzi desiderati. (Quantity)
4. Numero di codice del pezzo. (Part Nº)
5. Descrizione del pezzo di ricambio. (Denomination)
6. Misura, in caso di ordine per metro.

PEDIDO DE RECAMBIOS

Para evitar errores en las entregas, deberán indicarse los siguientes datos al hacer un pedido de recambios:

1. Tipo de máquina.
2. Número de serie.
3. Cantidad de piezas deseadas. (Quantity)
4. Número de artículo de la pieza de recambio. (Part Nº)
5. Denominación de la pieza. (Denomination)
6. Indíquese la medida al solicitar un artículo que se expide por metros.

COMMANDE DE PIECES DE RECHANGE

Les indications suivantes doivent être fournies lors de la commande de piéces de rechange, afin d'éviter toute erreur de livraison:

1. Type de machine.
2. Numéro de série.
3. Quantité désirée de pièce de rechange. (Quantity)
4. Numéro de la piéce de rechange. (Part Nº)
5. Dénomination de la piéce de rechange. (Denomination)
6. Longueur en cas de commande au mètre.

YOUR AGENT/DEALER:

Text pages

The text pages is structured as the picture on the right.

1. This is the remarks for specific items and the descriptions of the remarks is at the bottom of the parts list.
2. Parts indicated by a dot and moved to the right are included when buying the assembled unit above.
3. Spare parts and service code for a specific part, mainly for internal use at Svedala Dynapac. "A" = Service part, "B" = Fast moving part, "C" = Suggested exchanged part and "D" = Regular spare part.

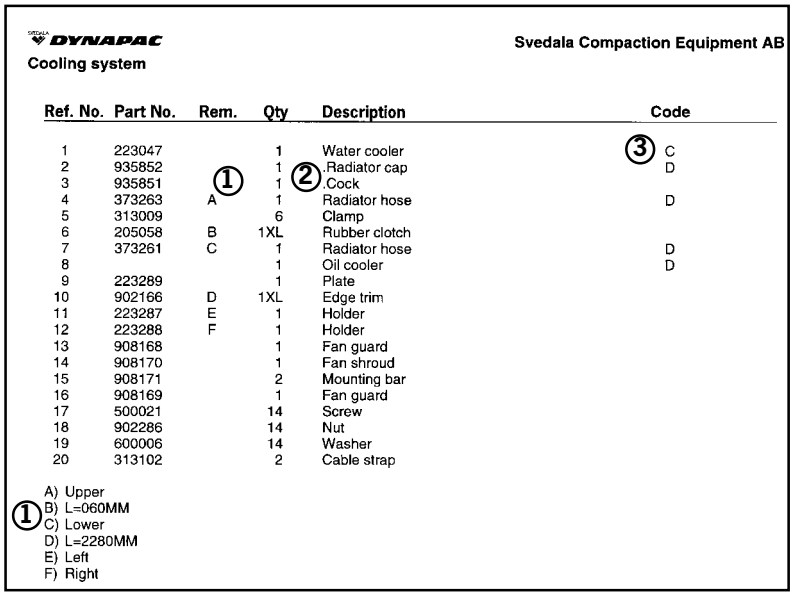

DYNAPAC — Svedala Compaction Equipment AB

Cooling system

Ref. No.	Part No.	Rem.	Qty	Description	Code
1	223047		1	Water cooler	③ C
2	935852		1	Radiator cap	D
3	935851	①	1	②Cock	
4	373263	A	1	Radiator hose	D
5	313009		6	Clamp	
6	205058	B	1XL	Rubber clotch	
7	373261	C	1	Radiator hose	D
8			1	Oil cooler	D
9	223289		1	Plate	
10	902166	D	1XL	Edge trim	
11	223287	E	1	Holder	
12	223288	F	1	Holder	
13	908168		1	Fan guard	
14	908170		1	Fan shroud	
15	908171		2	Mounting bar	
16	908169		1	Fan guard	
17	500021		14	Screw	
18	902286		14	Nut	
19	600006		14	Washer	
20	313102		2	Cable strap	

A) Upper
①B) L=060MM
C) Lower
D) L=2280MM
E) Left
F) Right

Changes

PARTS INFO	SERVICE INFO	GROUP	PAGE	NOTES

Notes

Notes

PÄRMETIKETT

För att undvika fel vid reservdelsbeställning finns här nedan två etiketter som passar i fickorna på pärmarnas ryggar. På dessa kan man se från vilket vältnummer av aktuell maskin reservdelskatalogen gäller. Gör så här:

1. Tag denna sida ur pärmen.
2. Klipp ut etiketten till VÄNSTER (1) och sätt in den i fickan på DENNA pärmens rygg.
3. Finns det en etikett till HÖGER (2), kan denna användas på pärmen för FÖREGÅENDE utgåva av denna katalog.
4. Kasta detta papper.

BINDER LABEL

To avoid errors when ordering spare parts use the labels below to identify the catalogues on the back of the binder. The label contain the serial number range for which the catalogue is valid. Do like this:

1. Remove this page from the binder.
2. Cut out the LEFT label (1) and put it on THIS binders back.
3. If there is a label to the RIGHT (2), it can be used on the binder for PRECEDING issue of this catalogue.
4. Throw away this paper.

KATALOG-BESCHRIFTUNG

Zur Vermeidung von Fehlen bei der Ersatzteilbestellung benutzen Sie bitte die unteren Beschriftungen, um die Kataloge auf der Rückseite zu kennzeichen. Auf der Beschriftung ist angegaben, für welche Maschinennummern der jeweilige Katalog gültig ist. Ablauf:

1. Nehmen Sie dieses Blatt aus dem Katalog.
2. Schneiden Sie die LINKE Beschriftung (1) aus. Schieben Sie die Beschriftung in die tasche auf DEM Katalogrücke.
3. Sollte die Beschriftung unten RECHTS (2) mitgeliefert werden, kennzeichen Sie damit bitte die ÄLTERE Ausführung dieses Kataloges.
4. Den Rest dieses Blattes bitte vernichten.

ETICHETTA POSTA SUL RACCOGLITORE

Per evitare errori quando ordinate pezzi di ricambio, usate le etichette in calce che servono ad identificare i cataloghi sul retro del raccoglitore. L'etichetta indica il numero di matricola delle maccine prese in considerazione nel catalogo.

1. Rimuovete questa pagina dal raccoglitore.
2. Ritagliate l'etichetta posta a SINISTRA (1) e ponetela sul retro DEL raccoglitore.
3. Se trovate anche un'etichetta sulla DESTRA (2), ritagliatela e ponetela sul raccoglitore relativo alla PRECEDENTE edizione del catalogo.
4. Distruggete questo foglio.

ETIQUETA PARA LA CARPETA

Para evitar errores al pedir repuestos utilicen las etiquetas abajo descritas para identificar los catálogos en la parte trasera de la carpeta. En la etiqueta se ven los números de referencia de la serie para la cual es válido el catálogo. Instrucciones:

1. Quitar esta página de la carpeta.
2. Corta la etiqueta IZQUIERDA (1) y ponerla est ESTA carpeta en la parte trasera.
3. Si hay una etiqueta en la parte DERECHA (2) se puede utilizar en la carpeta para el catálogo que PRECEDE a esta.
4. Tirar esta hoja.

ETIQUETAGE DU CATALOGUE

Afin d'éviter des erreurs lors de commandes de pièces de rechange, nous vous conseillons d'apposer les marquages ci-dessous à l'arrière du classeur, pour identifier les catalogues. Ce marquage indique les numéros de série pour lesquels le catalogue est adapté. Il convient de procéder de la façon suivante:

1. Retirez cette page du classeur.
2. Découpez l'étiquette de GAUCHE (1), et apposez-la à l'arrière de CE catalogue.
3. Si il y a une étiquette à DROITE (2), vous pourrez l'apposer sur le classeur de l'edition PRECEDENTE du catalogue.
4. Détruire cetta feuille.

1.



Catalogue issue
SCP132-2EN1
Valid **from** serial number:
21620331

TABLE OF CONTENTS

Page

CP132 21620331 - 2

Frame 4

Frame and hood 6
Scrapers 8
Scrapers and mat 10
Sprinkler system One pump 12
Sprinkler system Two pumps 14

Suspension 16

Front suspension 18
Rear suspension 20
Wheel and tyre 22
Spare wheel 24

Engine 26

Engine 28
Cooling system 30
Air cleaner 32
Fuel system 34
Exhaust system 36

Hydraulic system 38

Hydraulic drive 40
381280 Hydraulic pump 42
938237 Rotary group 44
938238 Control unit 46
938242 Positioning piston 48
936295 Valve block 50
936296 Charge pump 52
938239 Control module 54
938248 Control module 56
Drain system 58
Speed hydraulic system 60
Steering hydraulic 62
925536 Steering unit 64
Hydraulic brake 66
Solenoid valve brake 68

Electrical equipment 70

Electrical equipment 72
Driving & working lights 74
Instrument panel, relay, fuses 76

Drivers platform 80

Drivers platform 82
Rops and seat belt 84
Engine controls 86

Decals 88

Plates and decals 90

Optional equipment 92

Canopy 94
Rotating beacon 96
Sign smv 98

CP132 21620331 -

CP132100



Ref. No.	Part No.	Rem.	Qty	Description	Code
10				Frame (Page 4)	
20				Suspension (Page 16)	
30				Engine (Page 26)	
50				Hydraulic system (Page 38)	
60				Electrical equipment (Page 70)	
70				Drivers platform (Page 80)	
80				Decals (Page 88)	
91				Optional equipment (Page 92)	

Frame

Ref. No.	Part No.	Rem.	Qty	Description	Code
10				Frame and hood (Page 6)	
20				Scrapers (Page 8)	
25				Scrapers and mat (Page 10)	
30				Sprinkler system One pump (Page 12)	
40				Sprinkler system Two pumps (Page 14)	

Frame and hood

17100

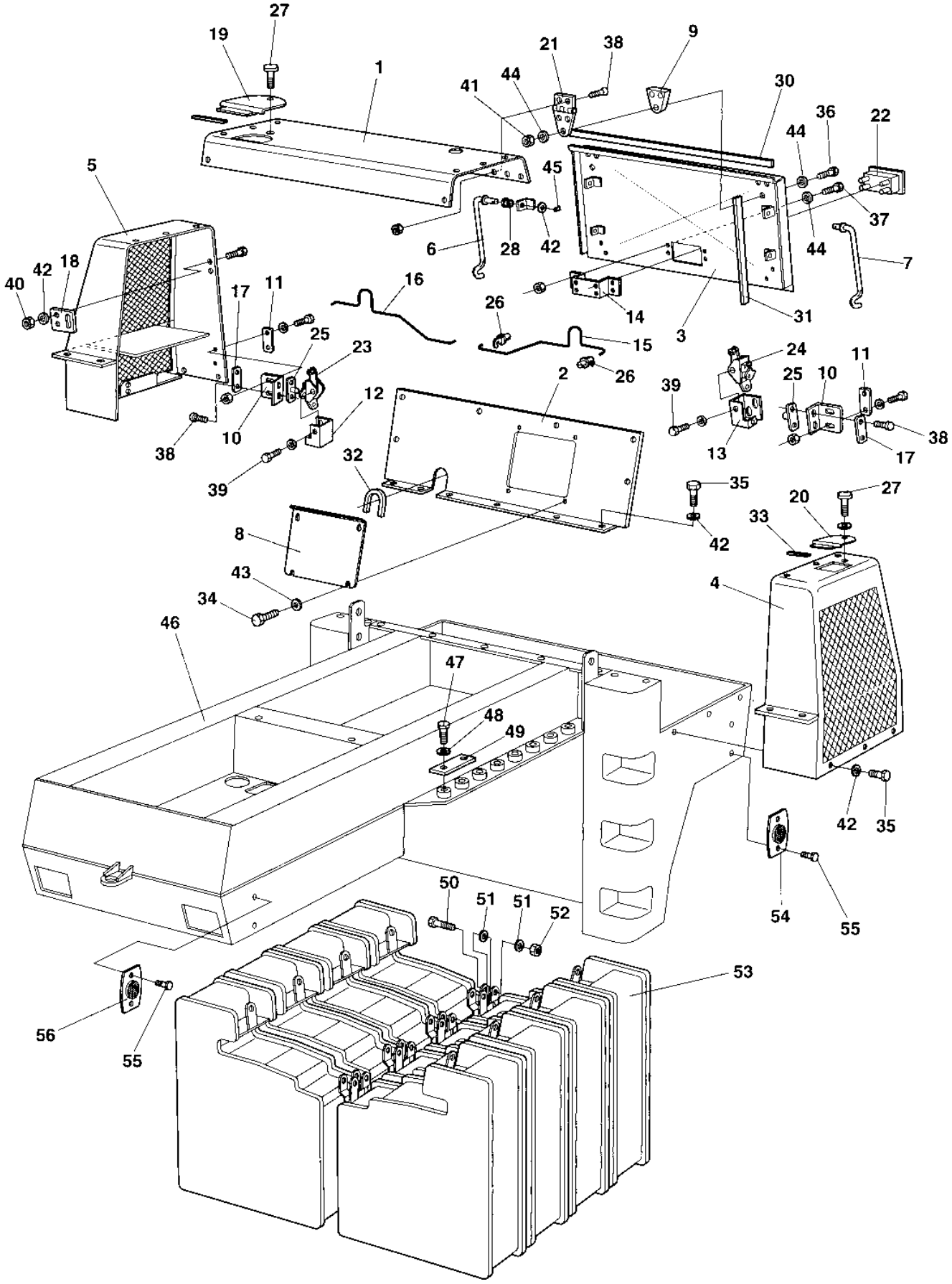

Frame and hood

Ref. No.	Part No.	Rem.	Qty	Description	Code
1	381878		1	Hood	
2	381686		1	Cover	
3	380426		1	Rear cover	
4	193689		1	Air cover	
5	193690		1	Air cover	
6	192940		1	Rod, right	
7	192941		1	Rod, left	
8	380394		1	Cover	
9	380400		2	Shim	
10	380399		2	Bracket	
11	381781		4	Lock plate	
12	381779		1	Lockbracket, right	
13	381780		1	Lockbracket, left	
14	380427		1	Stirrup	
15	382017		1	Rod, left	
16	382018		1	Rod, right	
17	382061		1	Lock plate	
18	381851		1	Bracket	
19	193740		1	Cover	
20	193745		1	Cover	
21	928041		2	Hinge	D
22	904850		1	Handle	
23	904851		1	Forked lock, right	
24	904852		1	Forked lock, left	
25	904853		2	Control pin	
26	904854		4	Lock fitting	
27	499162		2	Wing screw	
28	192939		2	Grommet	
29	192938		2	Clamp	
30	202056	A	N	Edge trim	
31	202056	B	N	Edge trim	
32	902166	C	N	Edge trim	
33	202028	D	N	Edge trim	
34	500053		8	Screw	
35	500021		41	Screw	
36	500015		6	Screw	
37	500013		8	Screw	
38	513008		8	Screw	
39	500012		4	Screw	
40	570005		10	Nut	
41	570004		10	Nut	
42	904640		45	Washer	
43	904229		16	Washer	
44	904228		28	Washer	
45	630007		2	Split pin	
46	193407		1	Frame	
47	500134		16	Screw	
48	904232		16	Washer	
49	193580		8	Plate	
50	193581		8	Screw	
51	904559		16	Washer	
52	570016		8	Nut	
53	193557		8	Ballast box	
54	195063		2	Reflector, red	B
55	616003		4	Rivet	
56	195064		1	Reflector, white	B

A) L=1300 mm
B) L=653 mm
C) L=270 mm
D) L=100 mm

16140

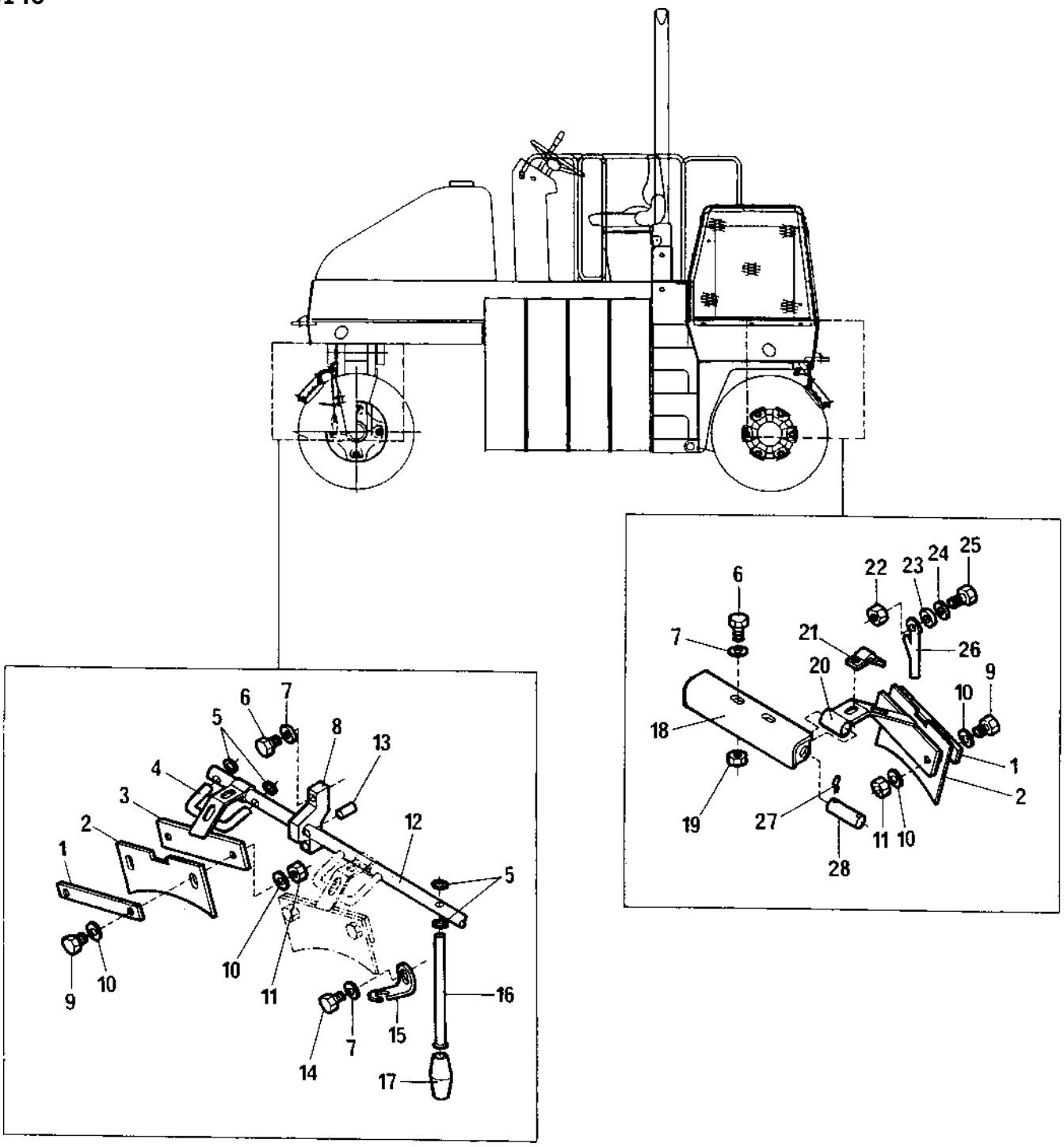

Ref. No.	Part No.	Rem.	Qty	Description	Code
1	193590		9	Bracket	
2	193591		9	Scraper	B
3	194149		5	Bracket	
4	194080		5	Bracket	
5	194092		23	Retaining ring	
6	500046		8	Screw	
7	600009		14	Washer	
8	194079		2	Bearing housing	
9	500047		18	Screw	
10	600006		36	Washer	
11	586003		18	Lock nut	
12	194083		1	Shaft	
13	629019		2	Expanding pin	
14	500046		2	Screw	
15	194082		1	Lock	
16	194081		1	Lever	
17	192828		1	Handle	
18	193592		2	Bracket	
19	570007		4	Nut	
20	194150		4	Bracket	
21	194018		4	Bracket	
22	570006		4	Nut	
23	252793		4	Bushing	
24	600008		16	Washer	
25	500030		4	Screw	
26	194078		4	Hook	
27	630008		8	Pin	D
28	251729		4	Shaft	

Scrapers and mat

16141

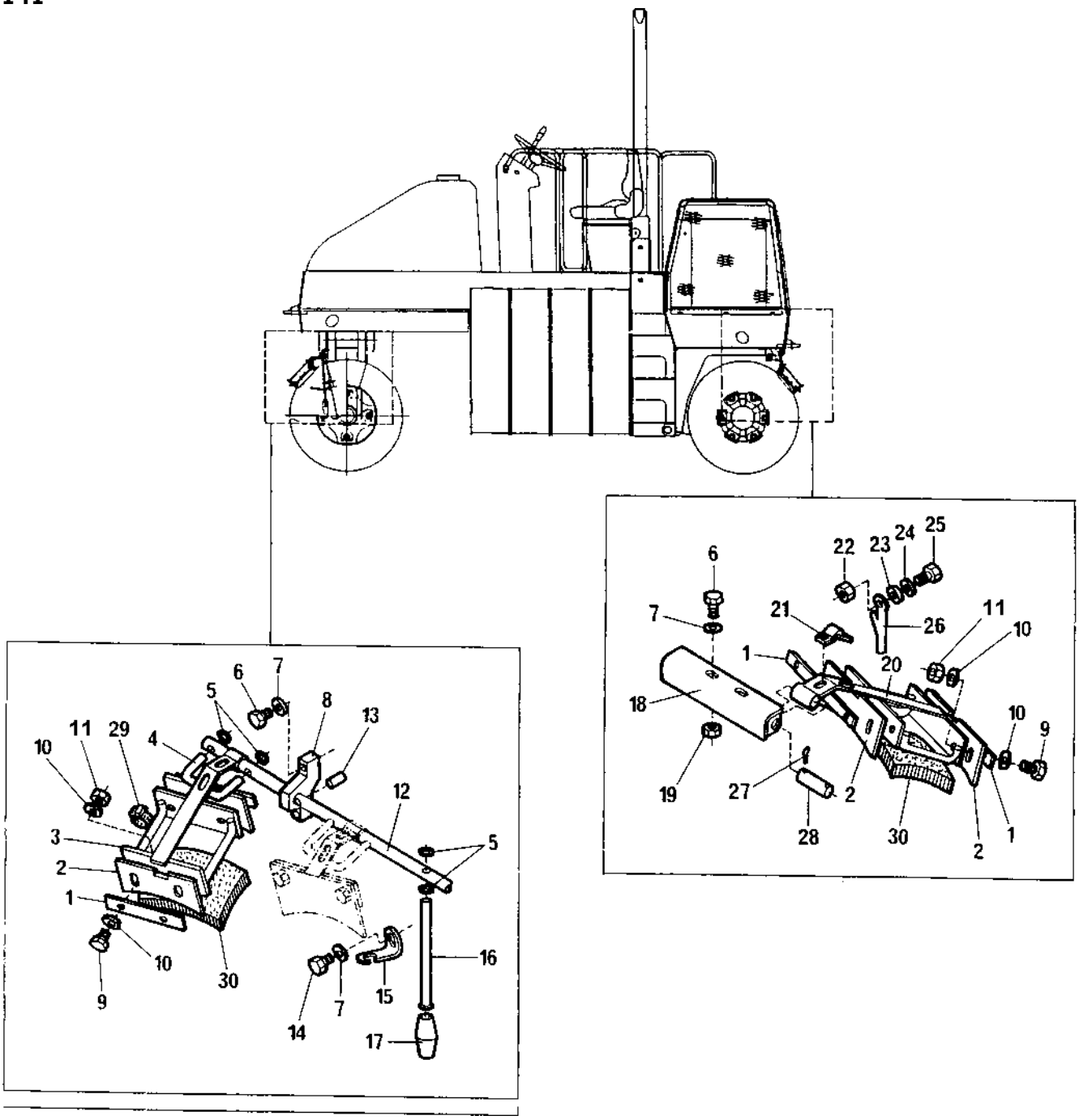

Scrapers and mat

Ref. No.	Part No.	Rem.	Qty	Description	Code
1	193590		18	Bracket	
2	193591		18	Scraper	B
3	194019		5	Bracket	
4	194080		5	Bracket	
5	194092		23	Retaining ring	
6	500046		8	Screw	
7	600009		14	Washer	
8	194079		2	Bearing housing	
9	500047		36	Screw	
10	600006		72	Washer	
11	586003		36	Lock nut	
12	194083		1	Shaft	
13	629019		2	Expanding pin	
14	500046		2	Screw	
15	194082		1	Lock	
16	194081		1	Lever	
17	192828		1	Handle	
18	193592		2	Bracket	
19	570007		4	Nut	
20	193586		4	Bracket	
21	194018		4	Bracket	
22	570006		4	Nut	
23	252793		4	Bushing	
24	600008		16	Washer	
25	500030		4	Screw	
26	194078		4	Hook	
27	630008		8	Pin	D
28	251729		4	Shaft	
29	313041		72	Cable ties L=186 mm	
30	193600		9	Mat	B

Sprinkler system One pump

17165

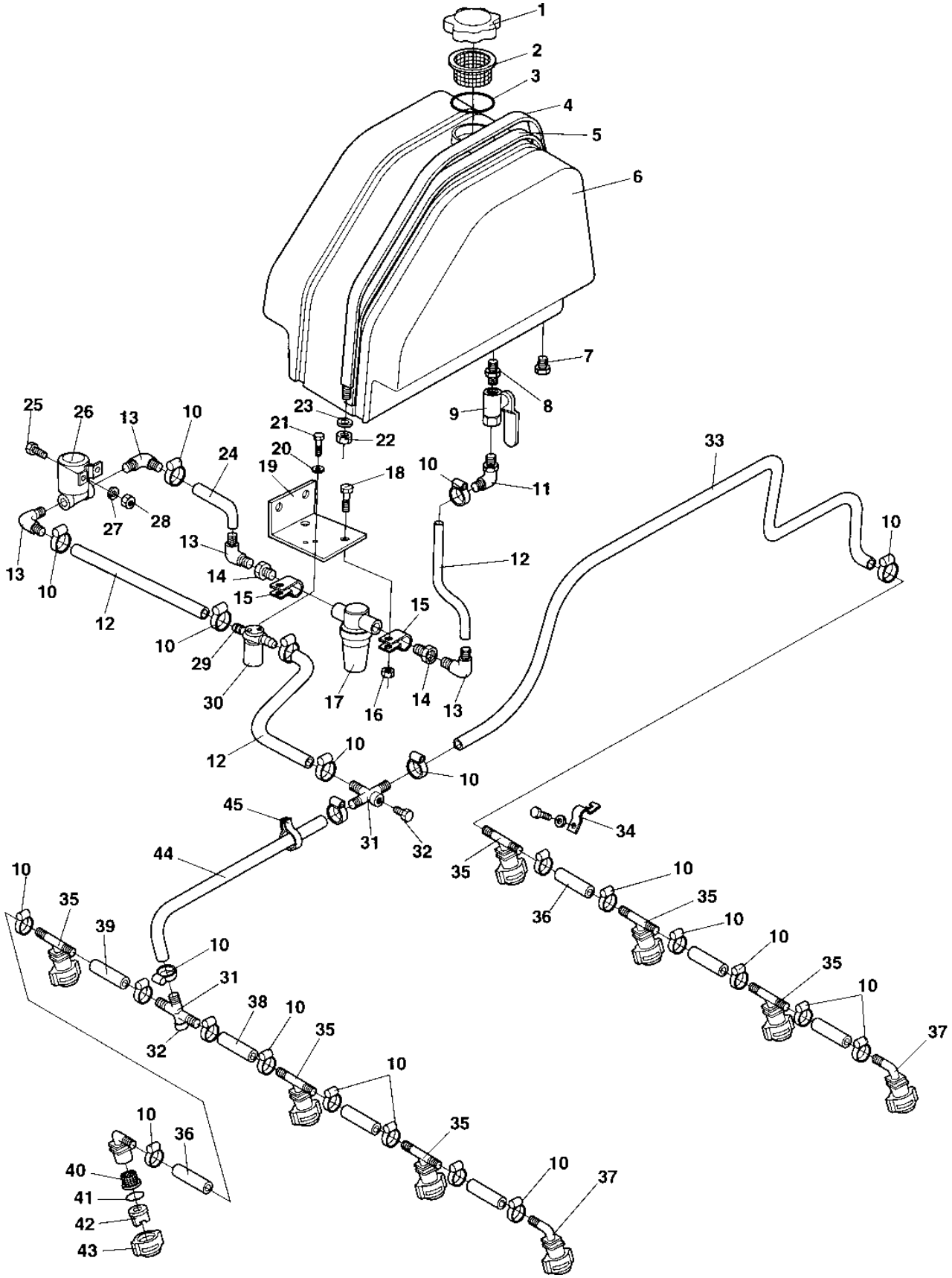

Sprinkler system One pump

Ref. No.	Part No.	Rem.	Qty	Description	Code
1	333228		1	Cap	
2	358846		1	Strainer	D
3	194093		1	O-ring	D
4	193571		2	Clamp	
5	202007	A	1	Rubber strip	
6	193472		1	Tank	
7	813422		1	Plug	
8	375569		1	Nipple	
9	904501		1	Ball valve	
10	313002		26	Hose clamp	
11	904502		1	Connection	
12	244054	B	3	Hose reinforced	
13	268607		4	Hose connector	
14	248491		2	Reducer	
15	927568		2	Clamp	
16	570004		2	Nut	
17	248513		1	Water filter	A
18	500075		2	Screw	
19	380784		1	Bracket	
20	904698		2	Washer	
21	500086		2	Screw	
22	506019		4	Lock nut	
23	904231		4	Washer	
24	244054	C	1	Hose reinforced	
25	500075		2	Screw	
26	904808		1	Water pump	
27	904228		4	Washer	
28	570004		2	Nut	
29	901432		2	Hose connection	
30	287713		1	Solenoid valve	
	381012		1	Wiring harness	
31	194088		2	Tee-connector	
32	194087		2	Plug	
33	244054	D	N	Hose reinforced	
34	194018		9	Bracket	
35	194085		6	Sprinkler	D
36	244054	E	N	Hose reinforced	
37	194084		3	Sprinkler	D
38	244054	F	N	Hose reinforced	
39	244054	G	N	Hose reinforced	
40	903541		9	Strainer	D
41	904116		9	Gasket	D
42	923679		9	Nozzle body	D
43	923681		9	Coupling, black	D
44	244054	H	N	Hose reinforced	
45	313041		7	Cable ties L=186 mm	

A) L=4.33 m
B) L=300 mm
C) L=180 mm
D) L=3,5 m
E) L=2,22 m
F) L=65 mm
G) L=290 mm
H) L=1500 mm

Sprinkler system Two pumps

17166

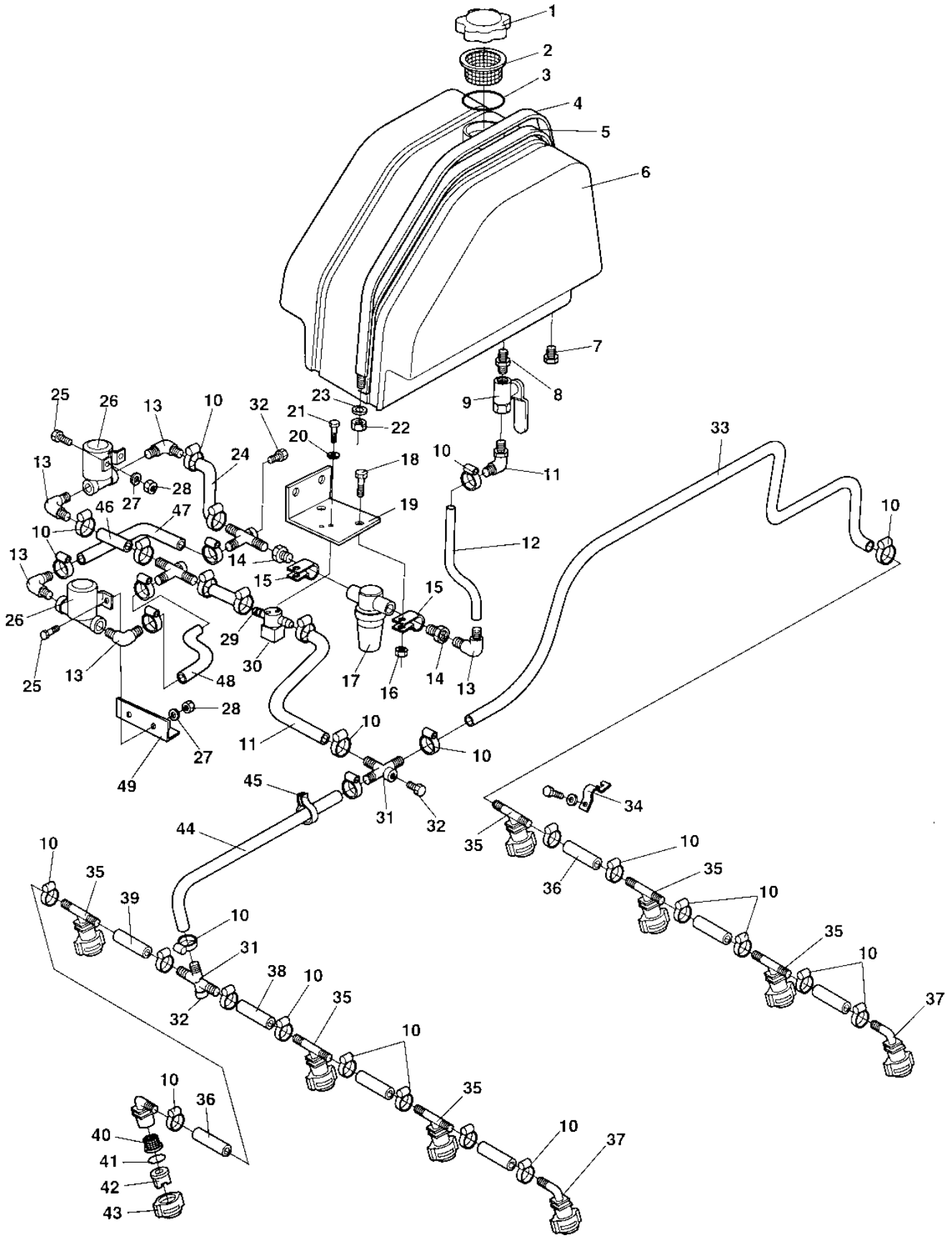

Sprinkler system Two pumps

Ref. No.	Part No.	Rem.	Qty	Description	Code
1	333228		1	Cap	
2	358846		1	Strainer	D
3	194093		1	O-ring	D
4	193571		2	Clamp	
5	202007	A	1	Rubber strip	
6	193472		1	Tank	
7	813422		1	Plug	
8	375569		1	Nipple	
9	904501		1	Ball valve	
10	313002		26	Hose clamp	
11	904502		1	Connection	
12	244054	B	1	Hose reinforced	
13	268607		6	Hose connector	
14	248491		2	Reducer	
15	927568		2	Clamp	
16	570004		2	Nut	
17	248513		1	Water filter	A
18	500075		2	Screw	
19	380784		1	Bracket	
20	904698		2	Washer	
21	500086		2	Screw	
22	506019		4	Lock nut	
23	904231		4	Washer	
24	244054	C	1	Hose reinforced	
25	500075		4	Screw	
26	904808		2	Water pump	
27	904228		6	Washer	
28	570004		4	Nut	
29	901432		2	Hose connection	
30	287713		1	Solenoid valve	
	381012		1	Wiring harness	
31	194088		4	Tee-connector	
32	194087		4	Plug	
33	244054	D	N	Hose reinforced	
34	194018		9	Bracket	
35	194085		6	Sprinkler	D
36	244054	E	N	Hose reinforced	
37	194084		3	Sprinkler	D
38	244054	F	N	Hose reinforced	
39	244054	G	N	Hose reinforced	
40	903541		9	Strainer	D
41	904116		9	Gasket	D
42	923679		9	Nozzle body	D
43	923681		9	Coupling, black	D
44	244054	H	N	Hose reinforced	
45	313041		7	Cable ties L=186 mm	
46	244054	I	1	Hose reinforced	
47	244054	J	1	Hose reinforced	
48	244054	K	1	Hose reinforced	
49	380785		1	Bracket	

A) L=4.33 m
B) L=300 mm
C) L=160 mm
D) L=3,5 m
E) L=2,22 m
F) L=65 mm
G) L=290 mm
H) L=1500 mm
I) L=100 mm
J) L=230 mm
K) L=250 mm

Suspension

Ref. No.	Part No.	Rem.	Qty	Description	Code
10				Front suspension (Page 18)	
20				Rear suspension (Page 20)	
30				Wheel and tyre (Page 22)	
40				Spare wheel (Page 24)	

Front suspension

16147

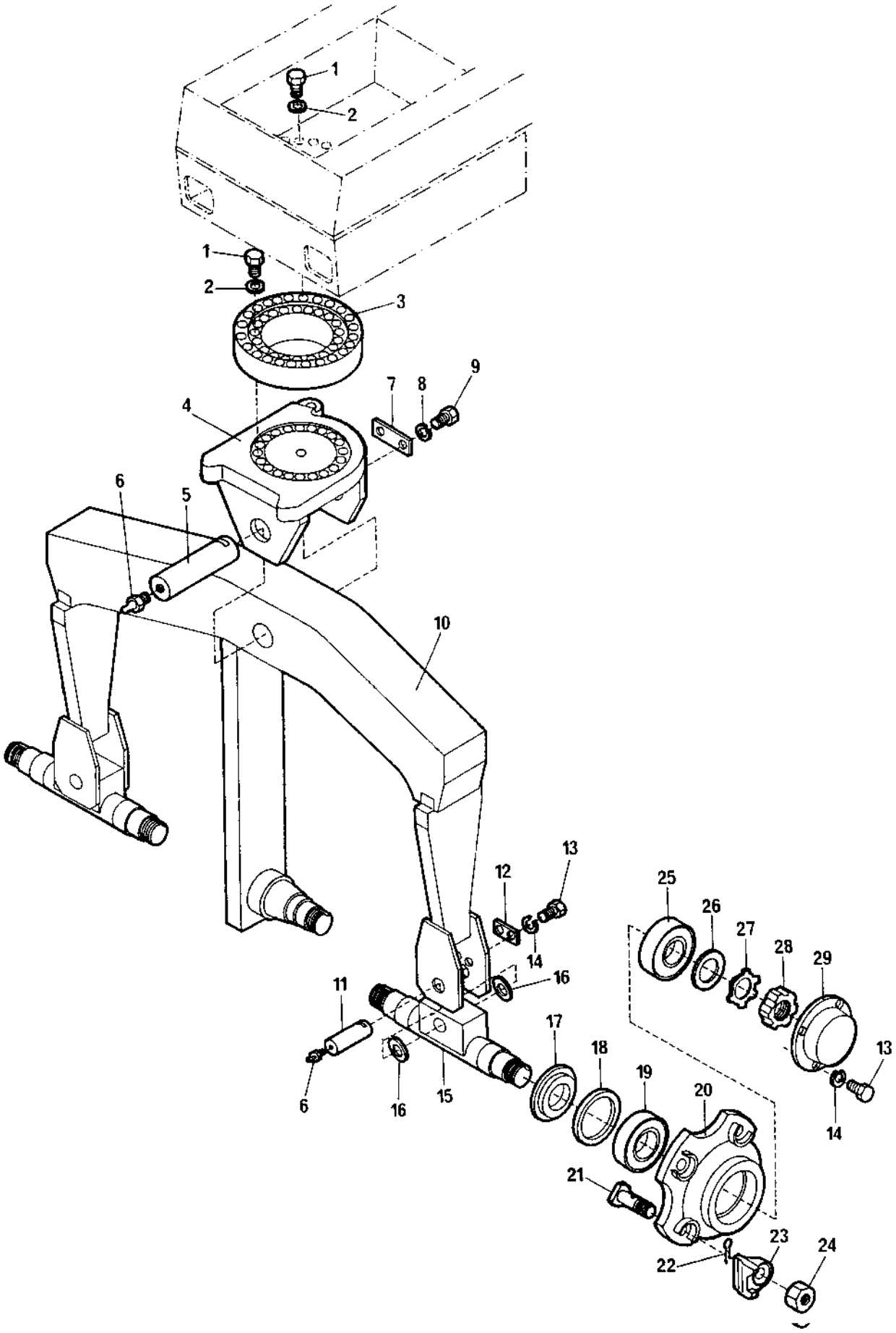

Front suspension

Ref. No.	Part No.	Rem.	Qty	Description	Code
1	500082		44	Screw	
2	600011		44	Washer	
3	192831		1	Bearing	D
4	193487		1	Guide ring	
5	193512		1	Shaft	
6	310037		3	Grease nipple	D
7	259211		1	Snap plate	
8	615045		2	Conical spring washer	
9	500035		2	Screw	
10	193459		1	Front suspension	
11	264488		2	Shaft	
12	193513		2	Snap plate	
13	500014		19	Screw	
14	615042		19	Conical spring washer	
15	193520		2	Shaft	
16	264486		4	Spacer	
17	193521		5	Spacer	
18	928351		5	Seal ring	D
19	116009		5	Bearing	B
20	193469		5	Wheel nut	
21	193886		20	Screw	
22	630008		20	Pin	D
23	193887		20	Lock wheel	
24	192424		20	Wheel nut	
25	924696		5	Bearing	B
26	193517		5	Spacer	
27	136010		5	Washer	
28	135010		5	Nut	
29	193465		5	Bearing cover	

Rear suspension

16148

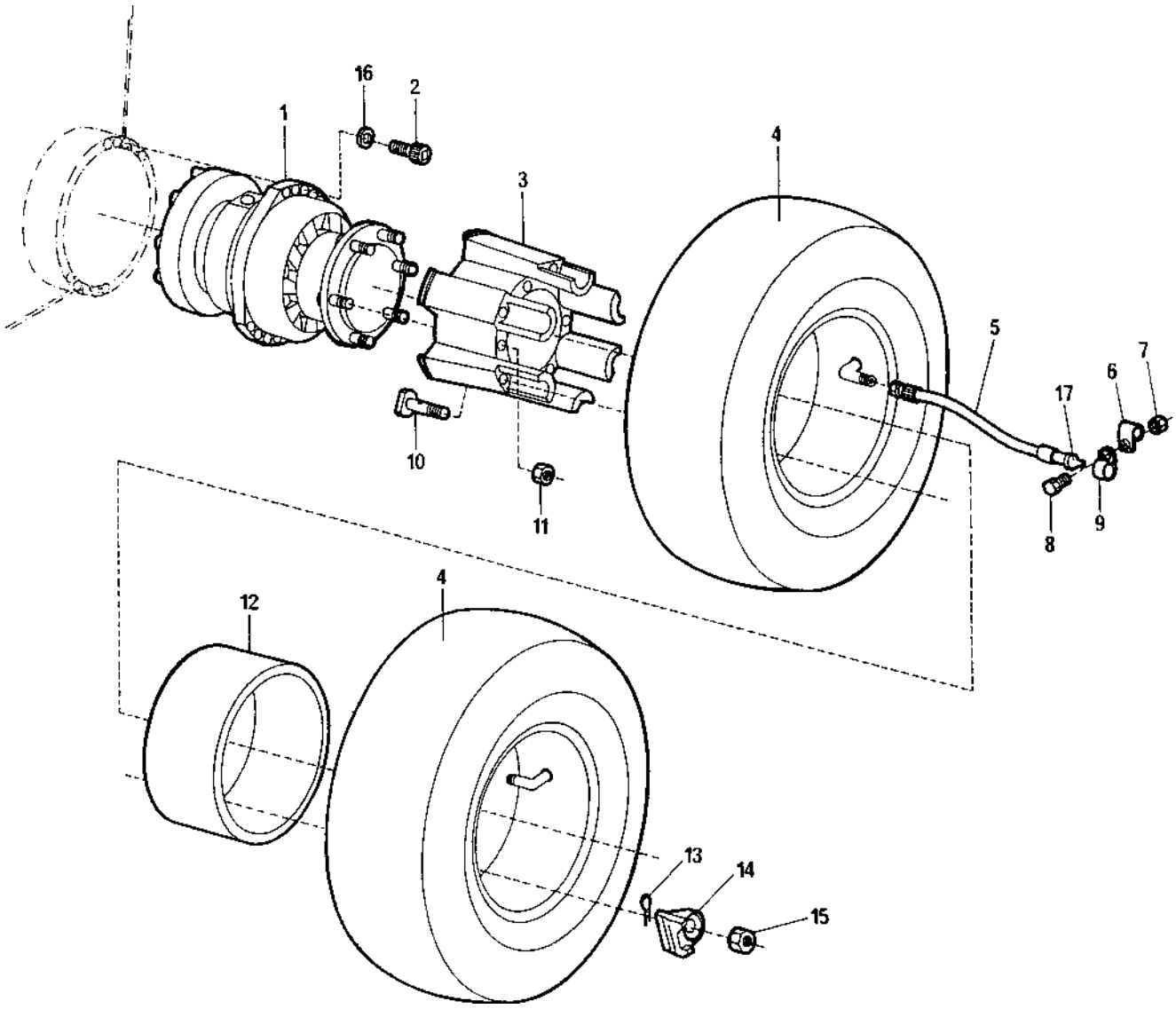

Rear suspension

Ref. No.	Part No.	Rem.	Qty	Description	Code
1	375538		2	Hydraulic pump	
2	927479		20	Screw	
3	193467		2	Hub	
4	193505		4	Wheel and tyre	D
	194659	A	4	Wheel and tyre	D
5	193573		2	Air hose	D
6	921058		2	Clamp	
7	586002		2	Lock nut	
8	500185		2	Screw	
9	921058		2	Clamp	
10	193886		12	Screw	
11	194011		12	Nut	
12	193565		2	Spacer	
13	630008		12	Pin	D
14	193887		12	Lock wheel	
15	192424		12	Wheel nut	
16	600011		20	Washer	
17	195214		2	Valve	D

A) 14ply

Wheel and tyre

16149

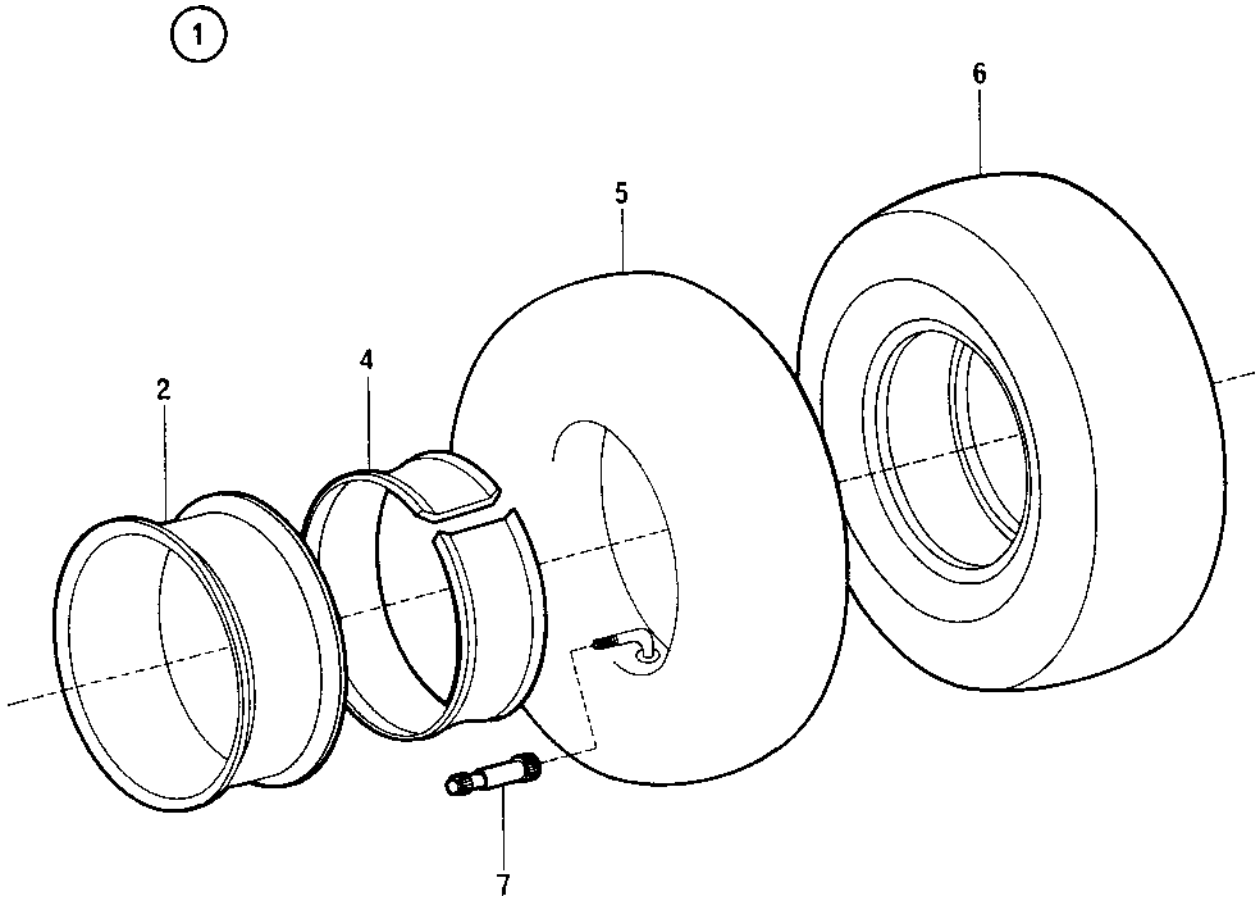

Wheel and tyre

Ref. No.	Part No.	Rem.	Qty	Description	Code
1	193505		9	Wheel and tyre	D
	194659	A	9	Wheel and tyre	D
2	194308		1	.Rim	
4	194325		1	.Rim liner	
5	374474		1	.Tube	D
	193124	A	1	.Hose	D
6	924635		1	.Tyre	B
	194265	A	1	.Tyre	B
7	195214		5	Valve	D

A) 14ply

Spare wheel

16163

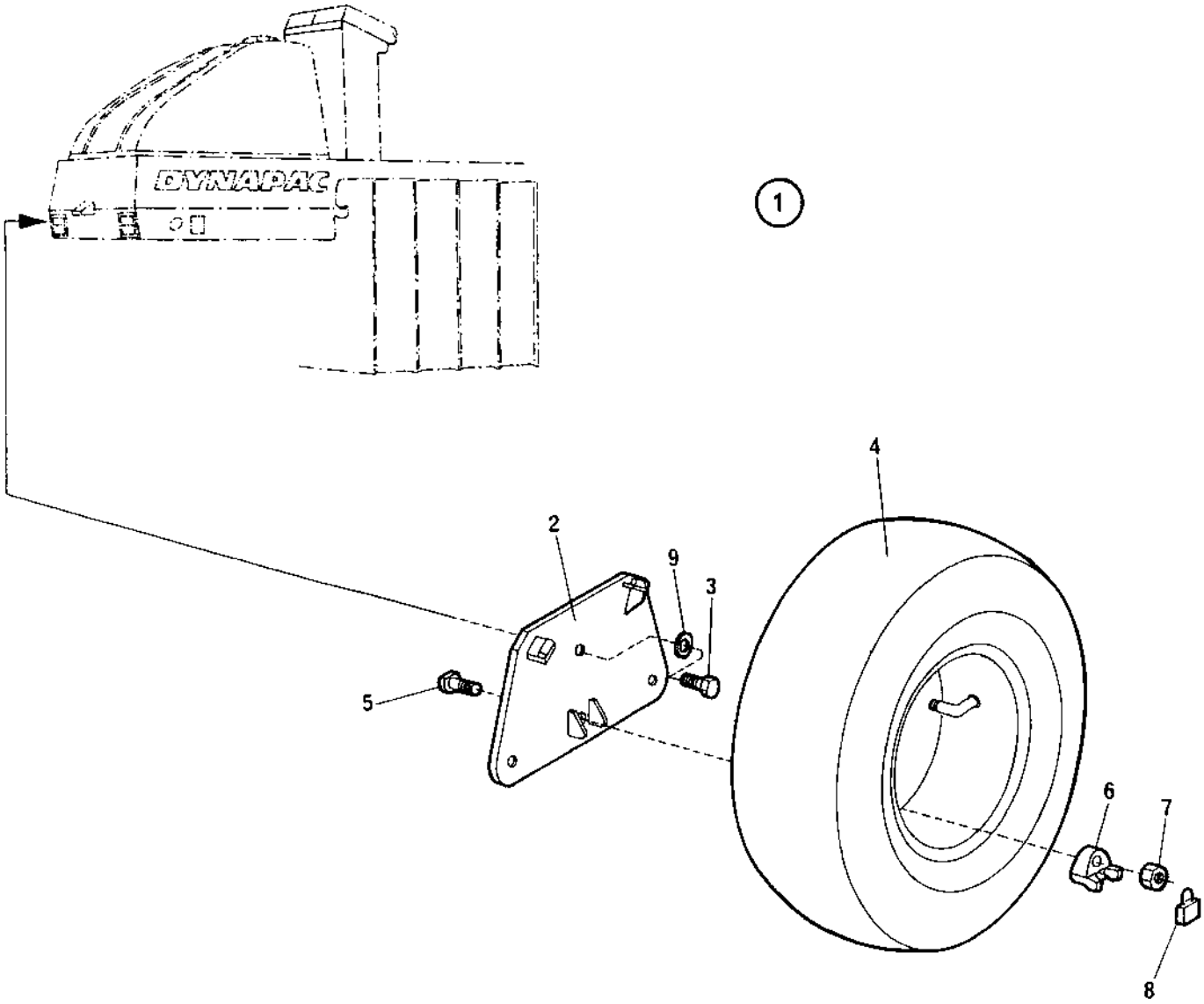

Spare wheel

Ref. No.	Part No.	Rem.	Qty	Description	Code
1	194658		1	Spare wheel 14ply	
2	194647		1	Holder plate	
3	500047		3	Screw	
4	194659	B	1	Wheel and tyre	D
5	194657		1	.Wheel stud	
6	193887		1	.Lock wheel	
7	192424		1	.Wheel nut	
8	266799		1	.Pad lock	
9	615043		3	.Conical spring washer	

B) 14ply

Ref. No.	Part No.	Rem.	Qty	Description	Code
10				Engine (Page 28)	
20				Cooling system (Page 30)	
35				Air cleaner (Page 32)	
45				Fuel system (Page 34)	
60				Exhaust system (Page 36)	

Engine

17176

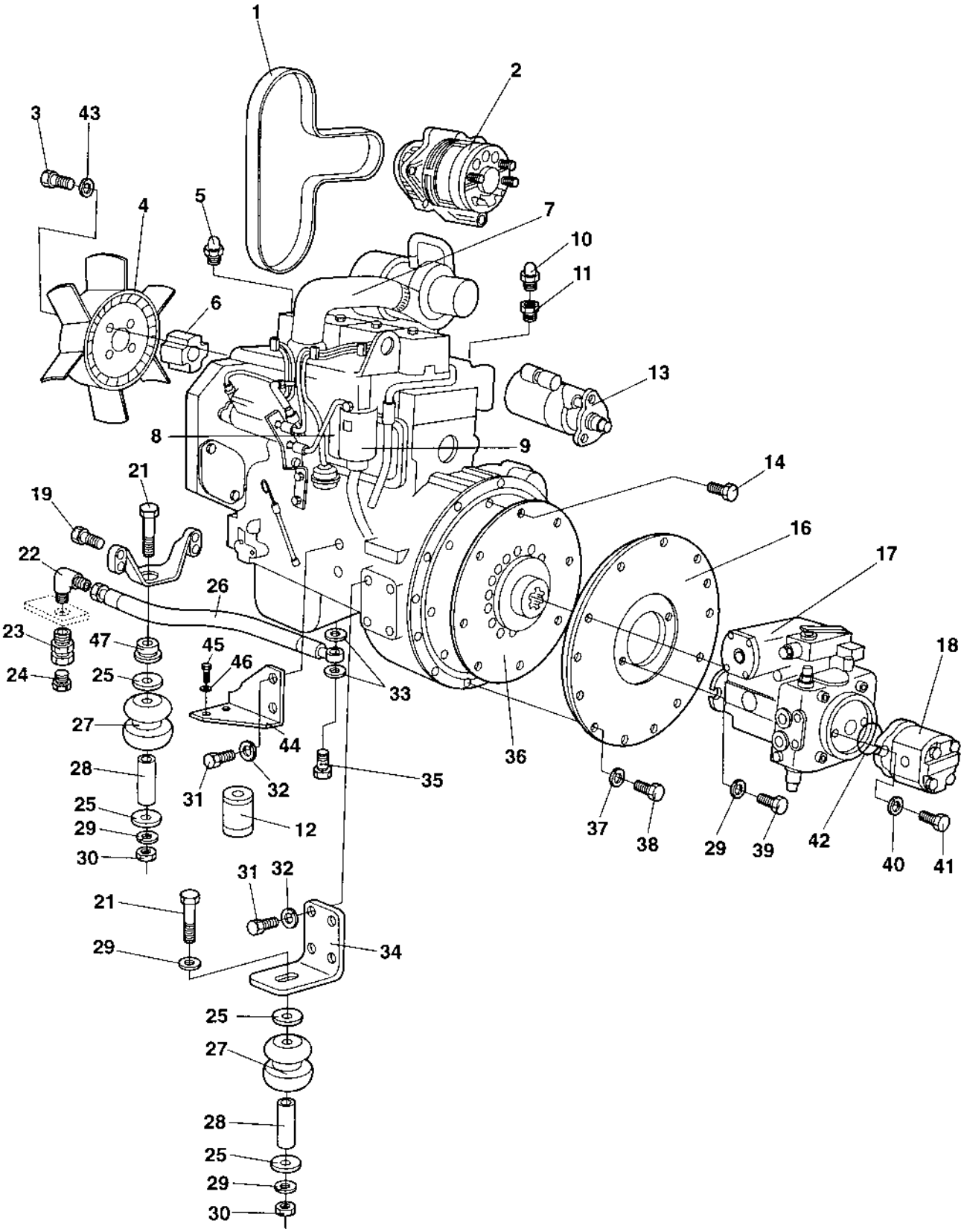

Ref. No.	Part No.	Rem.	Qty	Description	Code
1	192273		1	Belt	D
2	901350		1	Alternator	C
3	500026		4	Screw	
4	348996		1	Fan	
5	258307		1	Temperature sender	D
6	193849		1	Spacer	
7	374542		1	Diesel engine	
8	900829		1	Fuel filter	A
9	900827		1	Fuel filter	A
10	930139		1	Oil pressure switch	D
11			1	Adapter	D
12	212373		1	Oil filter	A
13	901448		1	Starter	C
14	509025		8	Screw	
16	193556		1	Cover plate	
17			1	See Propulsion system	
18			1	See Propulsion system	
19	191630		4	Screw	
21	500150		3	Screw	
22	813435		1	Adapter	
23	240154		1	Connector	
24	813422		1	Plug	
25	191803		6	Washer	
26	191808		1	Hose	
27	191801		6	Shock absorber	D
28	191799		3	Pipe	
29	904558		7	Washer	
30	570008		3	Nut	
31	500046		8	Screw	
32	904231		8	Washer	
33	330331		2	Washer	
34	193572		2	Motor bracket	D
35	267465		1	Hollow screw	D
36	374183		1	Drive plate	D
37	904230		12	Washer	
38	500030		12	Screw	
39	500093		2	Screw	
40	603023		2	Washer	
41	502035		2	Screw	
42	160229		1	O-ring	D
43	904556		4	Washer	
44	374809		1	Bracket	
45	500053		2	Screw	
46	904229		2	Washer	
47	374661		1	Bushing	D

Cooling system

17178

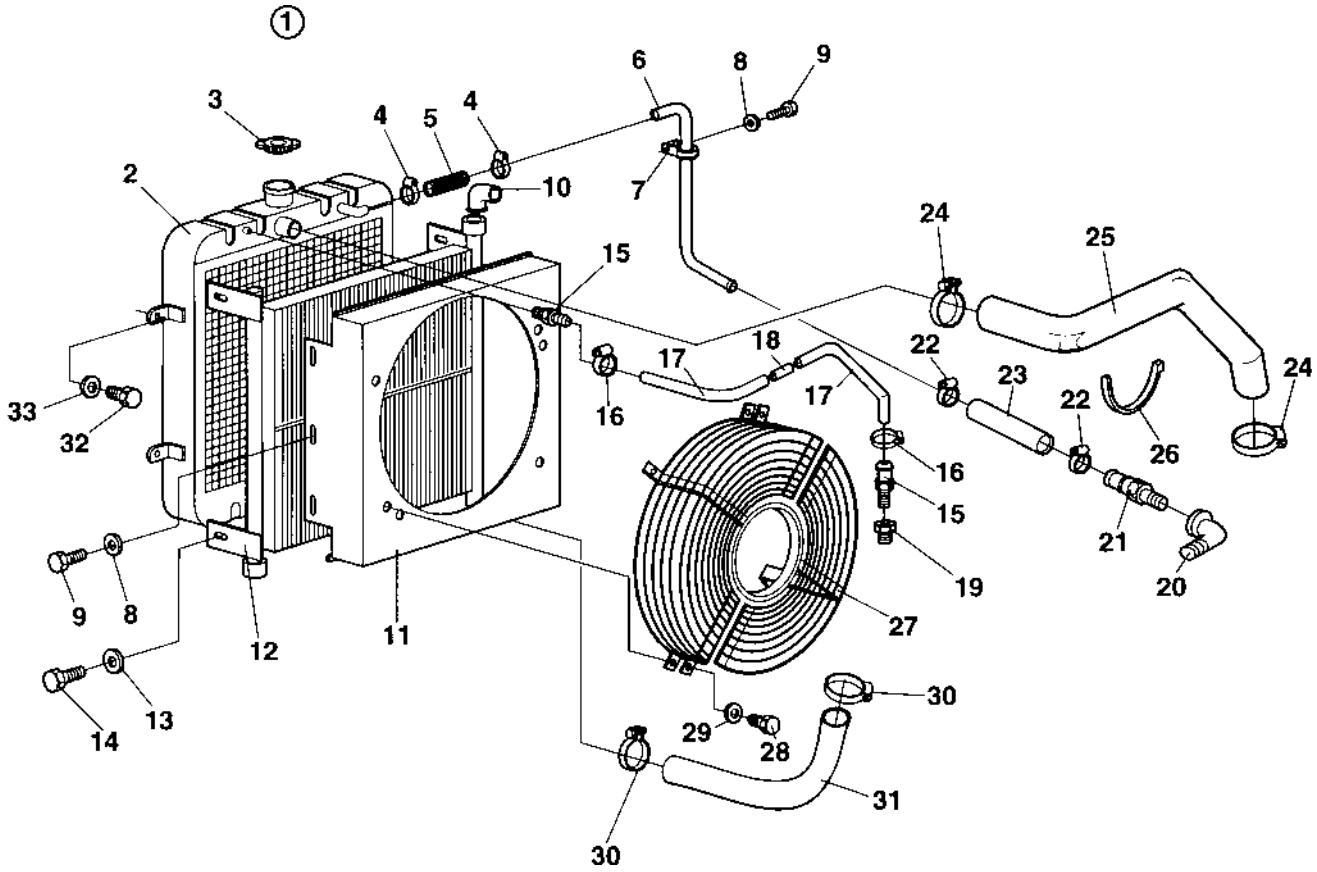

Cooling system

Ref. No.	Part No.	Rem.	Qty	Description	Code
1	374561		1	Radiator, cpl	
2	376054		1	.Radiator	
3	376073		1	.Cooler cap	
4	313006		2	.Hose clamp	
5	904547		1	.Coolant hose	
6	376056		1	.Pipe	
7	921063		2	.Clamp	
8	904228		8	.Washer	
9	500012		8	.Screw	
10	813426		1	.Adapter	
11	374521		1	.Cooling air cover	
12	374511		1	.Oil cooler	
13	904229		4	.Washer	
14	500188		4	.Screw	
15	904550		2	Hose connector	
16	313108		4	Hose clamp	
17	193810		1	Hydraulic hose	
18	376108		1	Orifice	
19	960753		1	Reducer	
20	331104		1	Elbow 90	
21	192914		1	Hose connector	
22	313004		2	Hose clamp	
23	194738		1	Hydraulic hose	
24	313010		2	Hose clamp	
25	194889		1	Coolant hose	D
26	313102		3	Cable ties L=388 mm	
27	193784		2	Fan guard	
28	500020		6	Screw	
29	615043		6	Conical spring washer	
30	313023		2	Hose clamp	
31	193471		1	Hose	
32	500028		4	Screw	
33	615044		4	Conical spring washer	D

Air cleaner

16338

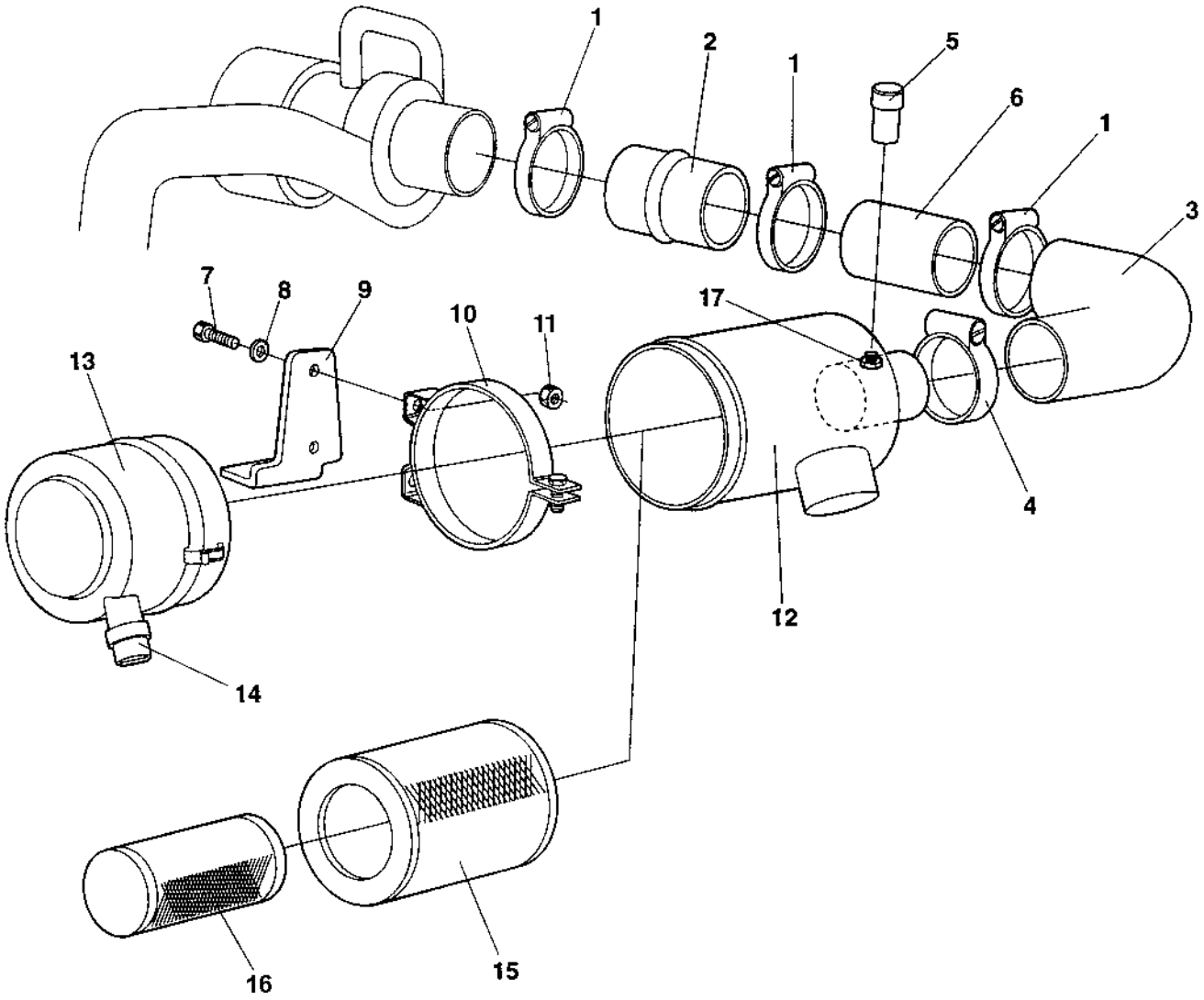

Air cleaner

Ref. No.	Part No.	Rem.	Qty	Description	Code
1	313038		3	Hose clamp	
2	745057		1	Adapter	
3	927048		1	Rubber elbow	D
4	313033		1	Hose clamp	D
5	801981		1	Indicator	D
6	375021		1	Pipe	
7	500053		2	Screw	
8	904229		2	Washer	
9	375001		1	Bracket	
10	374745		1	Bracket	
11	902286		2	Nut	
12	374727		1	Air filter, cpl	
13	375023		1	.Cover	
14	374905		1	.Vacuator valve	
15	374771		1	.Main filter	A
16	374772		1	.Safety filter	A
17	375113		1	.Nipple	

Fuel system

16335

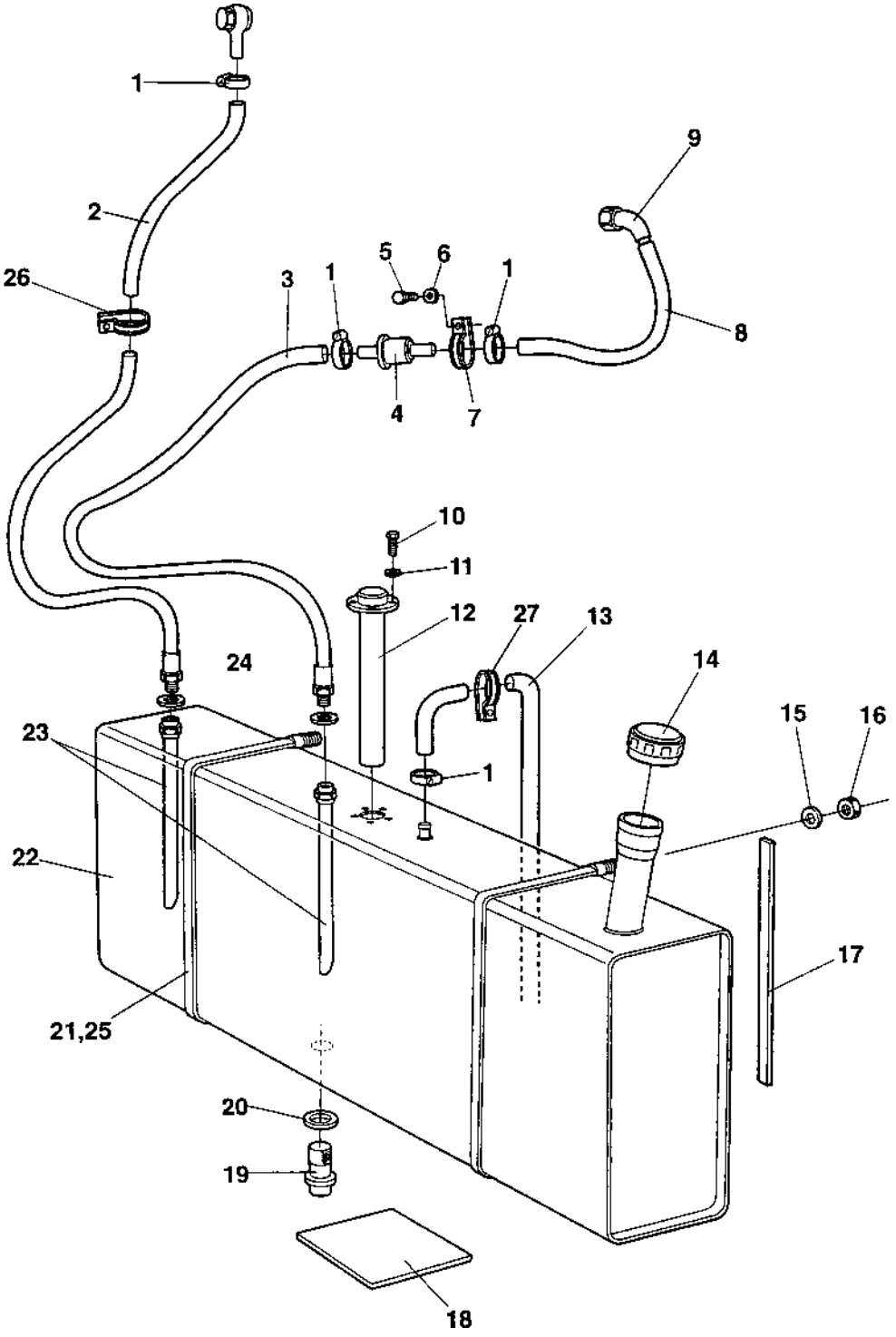

Fuel system

Ref. No.	Part No.	Rem.	Qty	Description	Code
1	313001		5	Clamp	
2	246069	A	1	Fuel hose	
3	246069	B	1	Fuel hose	
4	929322		1	Fuel strainer	A
5	500053		2	Screw	
6	904229		1	Washer	
7	921161		1	Clamp	
8	374857		1	Fuel hose	
9	234619		1	Adapter	
10	500184	E,F	5	Screw	
	500258	I,J	5	Screw	
11	615041	E,G	5	Washer	D
	904698	I,K	5	Washer	
12	193516	E,H	1	Fuel sender	D
	374631	I,L	1	Fuel sender	
13	246057	C		Hose	
14	195593		1	Cap	D
15	904231		4	Washer	
16	586019		4	Lock nut	
17	194312		2	Shim	
18	194311		1	Shim	
19	264389		1	Fuel filter	A
20	925966		1	Rubber sealing	D
21	191824		2	Clamp, cpl	
22	193507		1	Fuel tank	
23	193527		2	Pipe	
24	330330		2	Washer	
25	297018	D		Rubber strip	
26	921031		1	Clamp	
27	313041		2	Cable ties L=186 mm	

A) L=1600 MM
B) L=1700 MM
C) L=1300 MM
D) L=1640 MM
E) Old version
F) M5 screw
G) Together with M5 screw
H) Together with screw 500184 and washer 615041
I) New version
J) M4 screw
K) Together with M4 screw
L) Together with screw 500258 and washer 904698

Exhaust system

16337

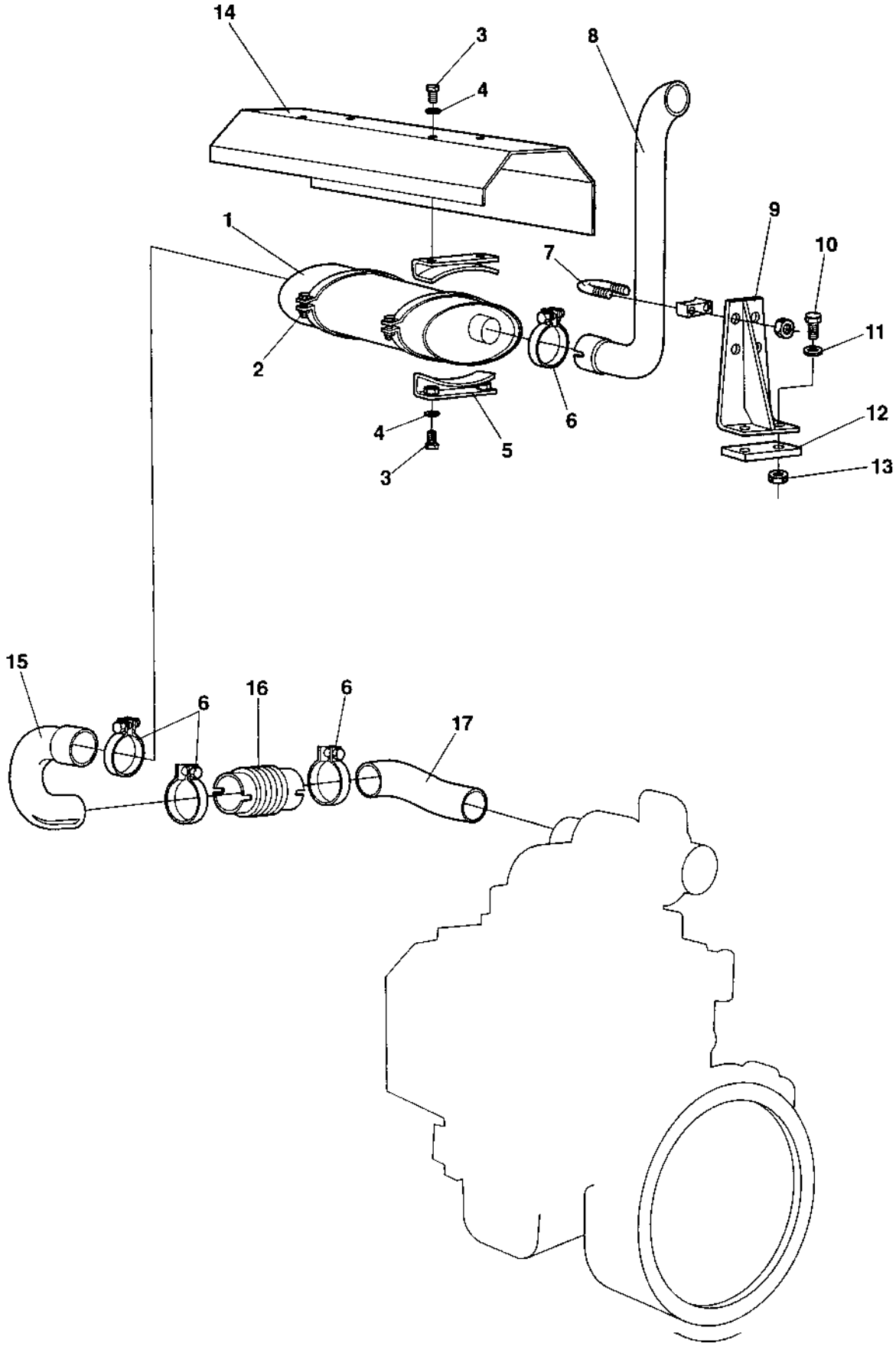

Exhaust system

Ref. No.	Part No.	Rem.	Qty	Description	Code
1	374997		1	Muffler	D
2	374992		2	Clamp	
3	500020		4	Screw	
4	904229		4	Washer	
5	374962		4	Bracket	
6	904359		4	Pipe clamp	D
7	313036		2	Clamp	D
8	194183		1	Exhaust tube	D
9	194195		1	Bracket	
10	500029		2	Screw	
11	904230		2	Washer	
12	194216		1	Bracket	
13	586018		2	Lock nut	
14	374825		1	Thermal guard	
15	374823		1	Exhaust pipe	D
16	194287		1	Flexible pipe	D
17	374824		1	Exhaust pipe	D

Ref. No.	Part No.	Rem.	Qty	Description	Code
20				Hydraulic drive (Page 40)	
25	381280			Hydraulic pump (Page 42)	
30	938237			Rotary group (Page 44)	
35	938238			Control unit (Page 46)	
40	938242			Positioning piston (Page 48)	
45	936295			Valve block (Page 50)	
50	936296			Charge pump (Page 52)	
55	938239			Control module (Page 54)	
60	938248			Control module (Page 56)	
70				Drain system (Page 58)	
80				Speed hydraulic system (Page 60)	
90				Steering hydraulic (Page 62)	
100	925536			Steering unit (Page 64)	C
120				Hydraulic brake (Page 66)	
130				Solenoid valve brake (Page 68)	

Hydraulic drive

17159

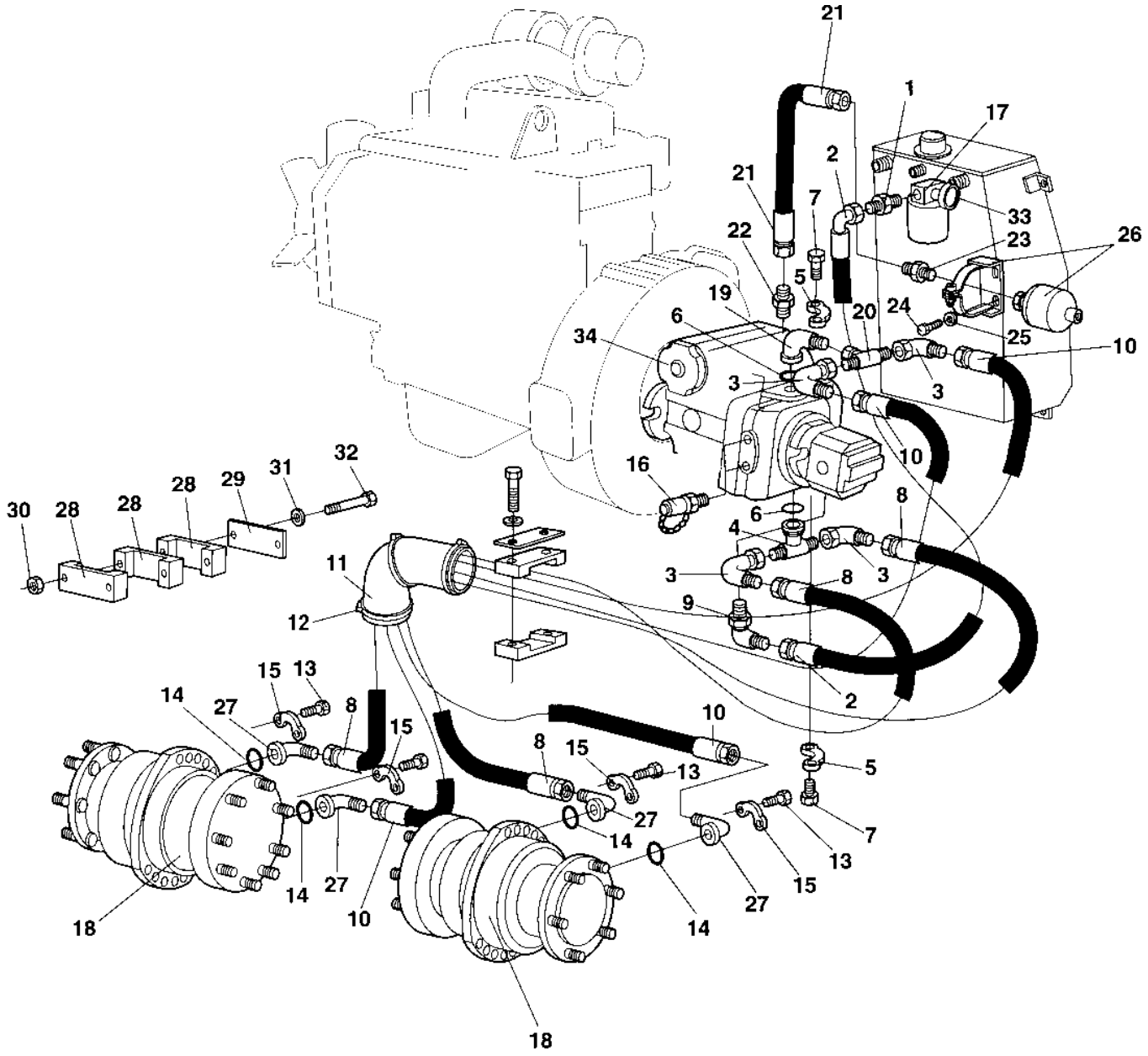

Ref. No.	Part No.	Rem.	Qty	Description	Code
1	193775		1	Nipple	
2	193772		1	Hydraulic hose	
3	334155		4	Elbow 90	
4	193773		1	Connection-T	
5	923384		4	Flange half	
6	813429		2	O-ring	
7	194211		8	Screw	
8	483413		2	Hydraulic hose	
9	193776		1	Elbow 90	
10	483414		2	Hydraulic hose	
11	252285		1	Rubber elbow 90deg	
12	313102		3	Cable ties L=388 mm	
13	508067		16	Screw	
14	813443		4	O-ring	D
15	929226		8	Flange half	
16	910162		2	Measure nipple	D
17	902807		1	Suction filter	
	902900		1	Hydraulic oil filter	A
18	376123		2	Hydraulic motors	
19	903750		1	Elbow	
20	234900		1	T-connector	
21	483415		1	Hydraulic hose	
22	334122		1	Adapter	
23	234390		1	Connector	
24	500188		2	Screw	
25	904229		2	Washer	
26	380168		1	Ackumulator	
27	900455		4	Flange adapter	
28	343732		3	Hose clamp	
29	355914		1	Hose clamp	
30	570006		2	Nut	
31	904230		4	Washer	
32	928664		2	Screw	
33	814118		1	Indicator	
34	381280		1	Hydraulic pump (Page 42)	

381280 Hydraulic pump

17167

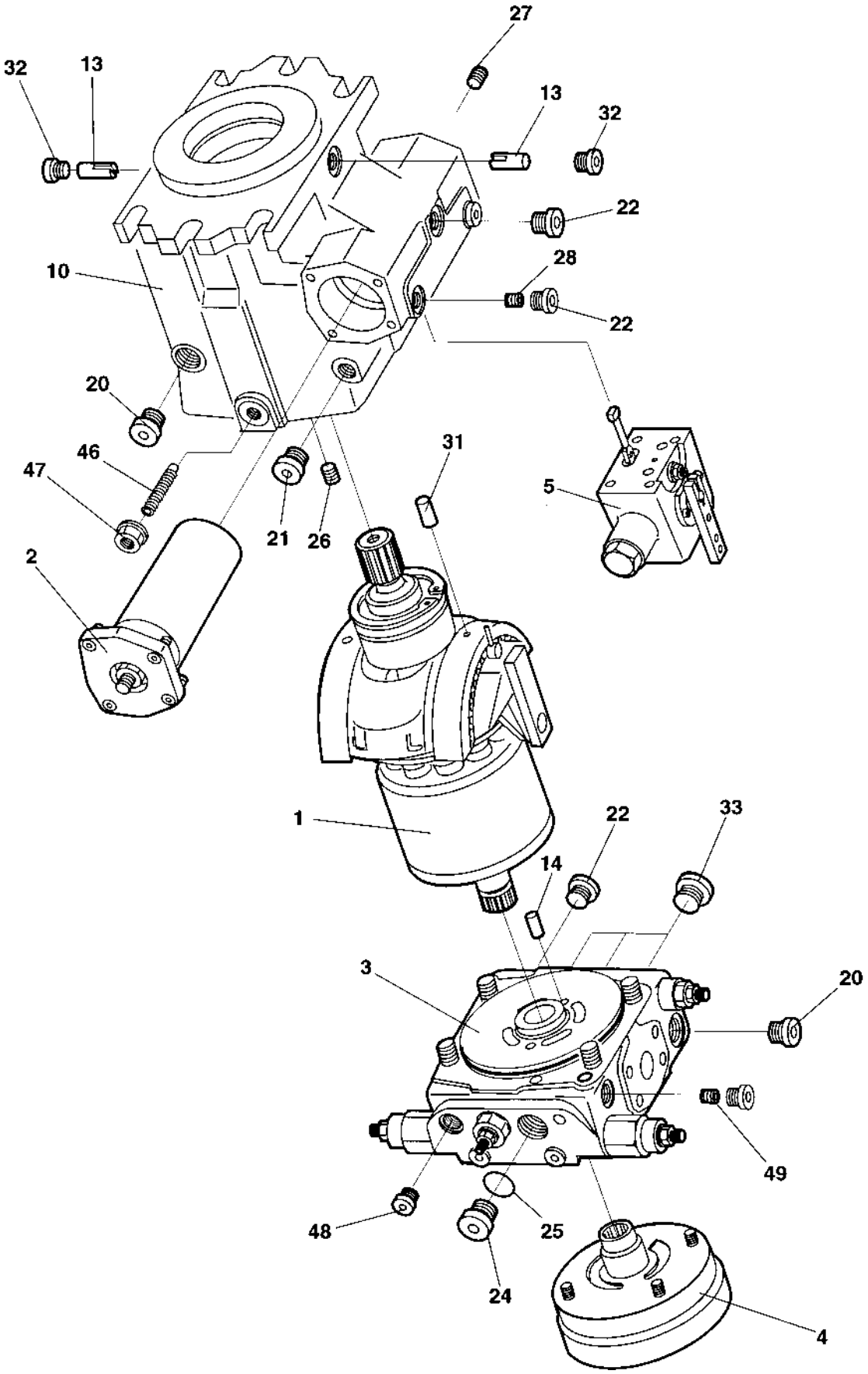

381280 Hydraulic pump

Ref. No.	Part No.	Rem.	Qty	Description	Code
1	938237		1	Rotary group (Page 44)	
2	938238		1	Control unit (Page 46)	
3	936295		1	Valve block (Page 50)	
4	936296		1	Charge pump (Page 52)	
5	938239		1	Control module (Page 54)	
10	938250		1	Housing	
13	936299		2	Joint pin	
14	936300		1	Dowel pin	
20	936301		2	Lock screw	
21	936302		1	Lock screw	
22	936303		4	Lock screw	
24	936304		1	Lock screw	
25	936305		1	O-ring	D
26	909514		1	Pin	
27	936307		1	Double break-off pin	D
28	936308		2	Orifice	
31	902792		2	Pin	
32	902624		2	Screw	
33	935219		3	Plug	
46	936310		1	Threaded pin	
47	936311		1	Seal lock nut	
48	936312		1	Lock screw	
49	936313		1	Orifice	D

938237 Rotary group

16441

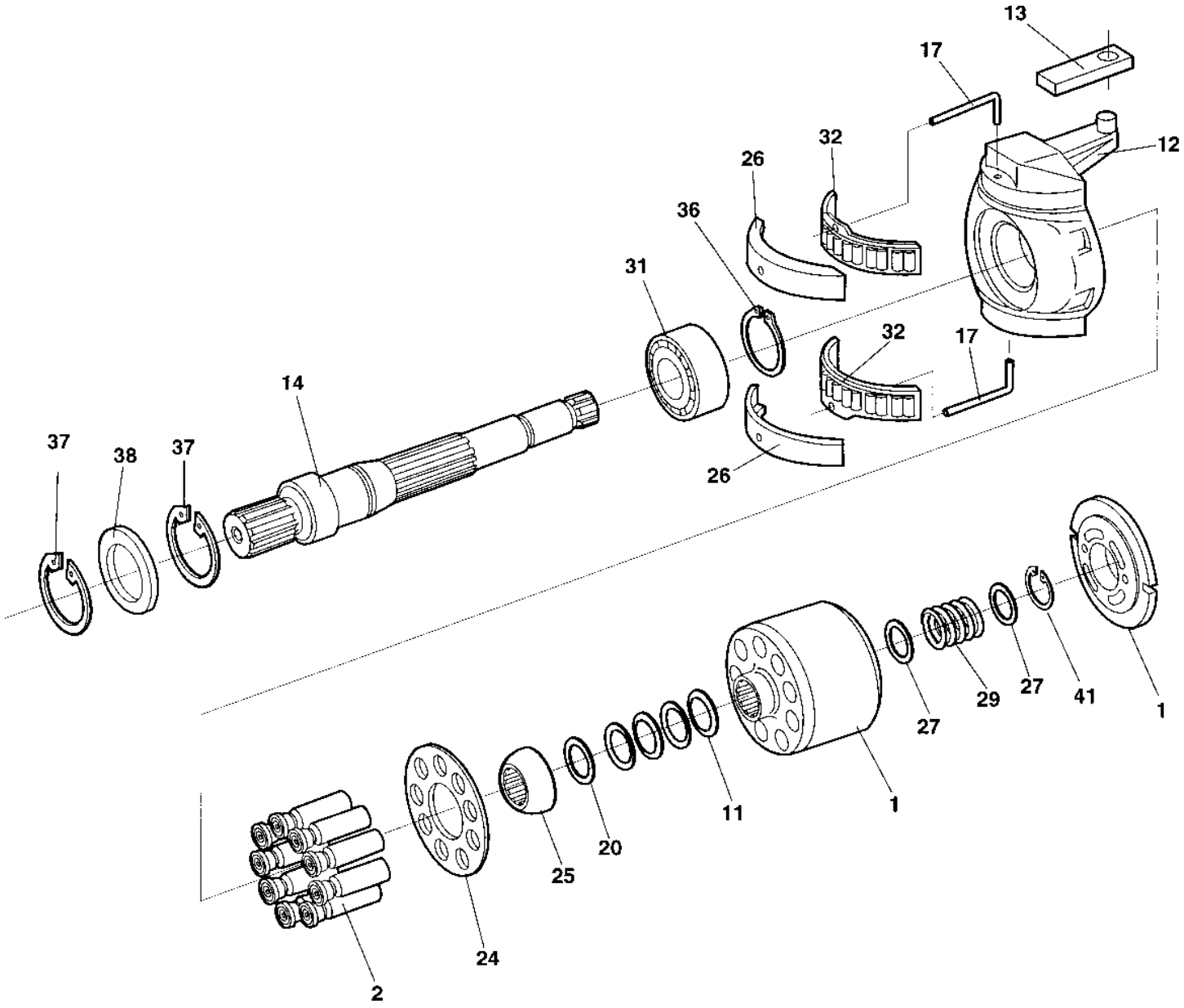

938237 Rotary group

Ref. No.	Part No.	Rem.	Qty	Description	Code
1	936314		1	Cylinder with piston	
2	936315		9	Piston ,slipper pad	
11	936316		1	Cup-spring stack	
12	936317		1	Cradle	
13	938240		1	Slide ring	
14	936319		1	Shaft	
17	936320		2	Wire	
20	936321		1	Shim 1,20	D
	936322		1	Shim 1,00	D
	936323		1	Shim 0,80	D
	936324		1	Shim 0,60	D
24	936325		1	Retaining ring	
25	936326		1	Retaining ball	
26	936327		1	Bearing liner	D
27	936328		2	Washer	
29	936329		1	Pressure spring	
31	936330		1	Plain roller bearing	D
32	936331		1	Cradle bearing assy	D
36	936332		1	Retaining ring	
37	936333		2	Retaining ring	
38	938241		1	Shaft seal ring	
41	936335		1	Retaining ring	

938238 Control unit

17168

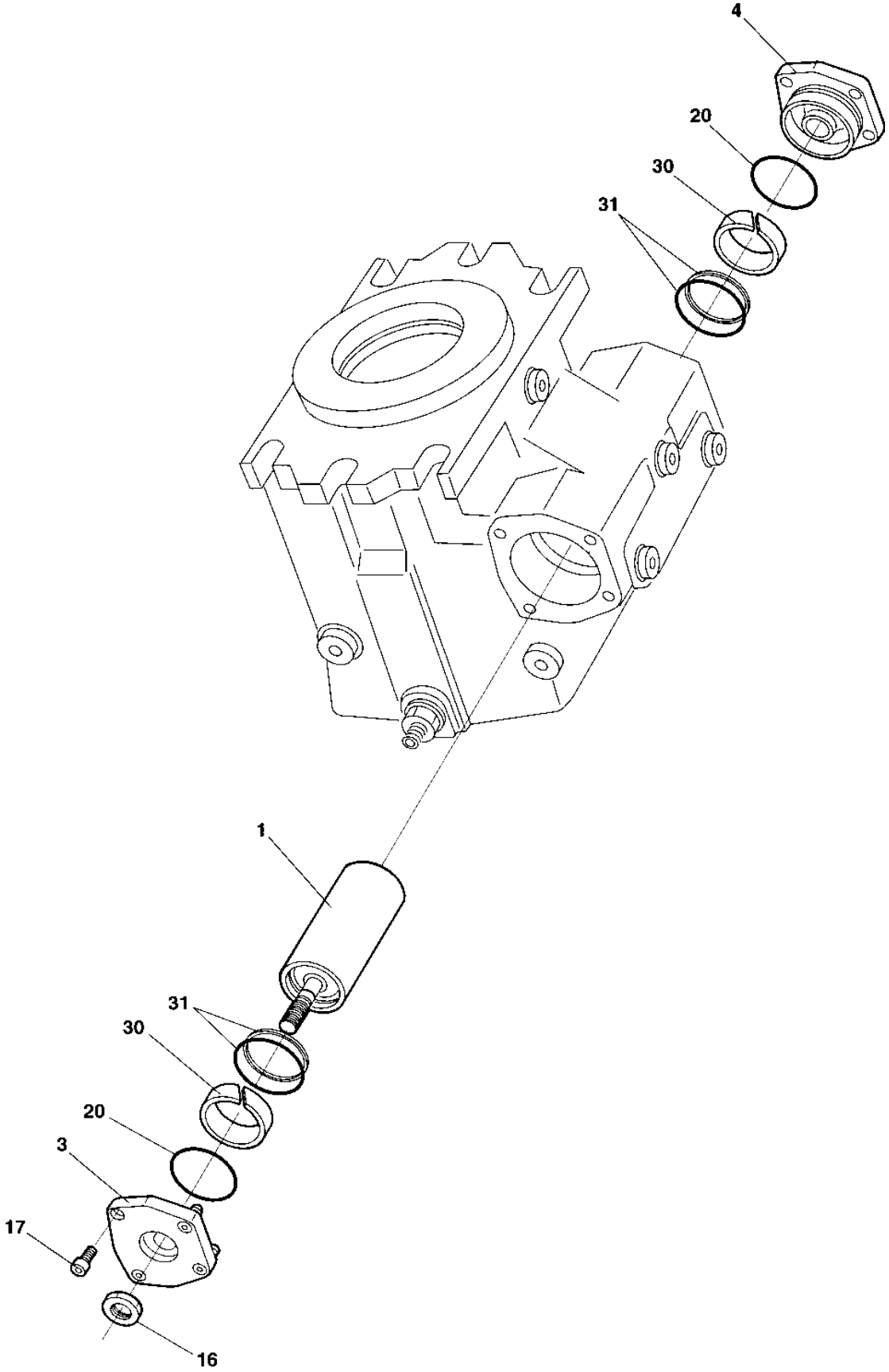

938238 Control unit

Ref. No.	Part No.	Rem.	Qty	Description	Code
1	938242		1	Positioning piston (Page 48)	
3	938243		1	Cover	
4	938244		1	Cover	
16	936340		1	Nut	
17	936341		8	Screw	
20	936342		2	O-ring	D
30	938245		2	Guide ring	
31	938246		2	Ring	

938242 Positioning piston

17169

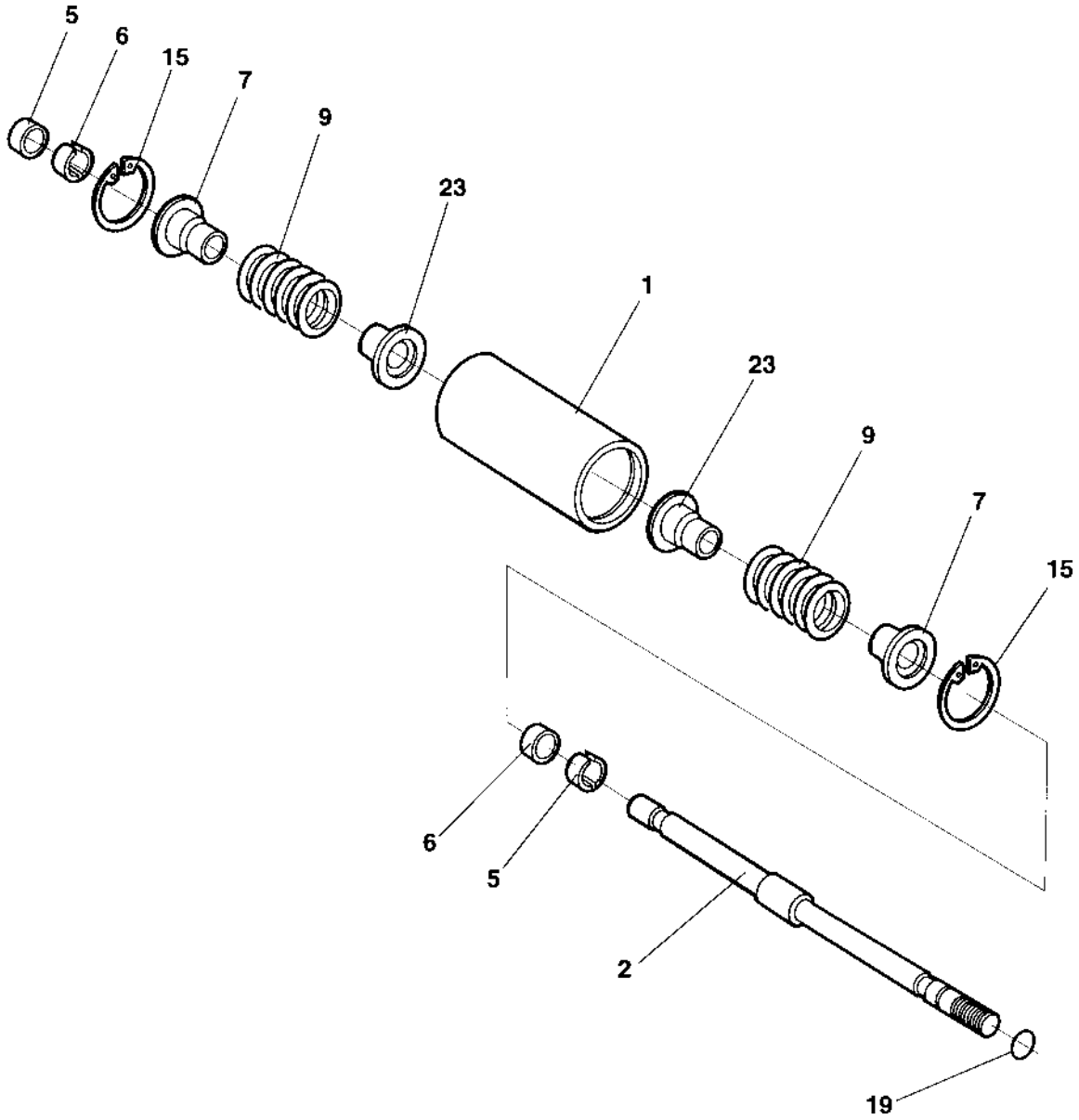

938242 Positioning piston

Ref. No.	Part No.	Rem.	Qty	Description	Code
1	938247		1	Positioning piston	
2	936344		1	Rod	
5	938006		2	Ring 5,77	
	938007		2	Ring 5,82	
	938008		2	Ring 5,87	
	938009		2	Ring 5,92	
	938010		2	Ring 5,97	
	938011		2	Ring 6,02	
	938012		2	Ring 5,67	
	938013		2	Ring 5,72	
6	938014		2	Sleeve	
7	936354		2	Spring collar	
9	936355		2	Pressure spring	
15	936356		2	Seeger v-ring	D
19	936371		1	O-ring	D
23	936358		2	Spring collar	

936295 Valve block

16444

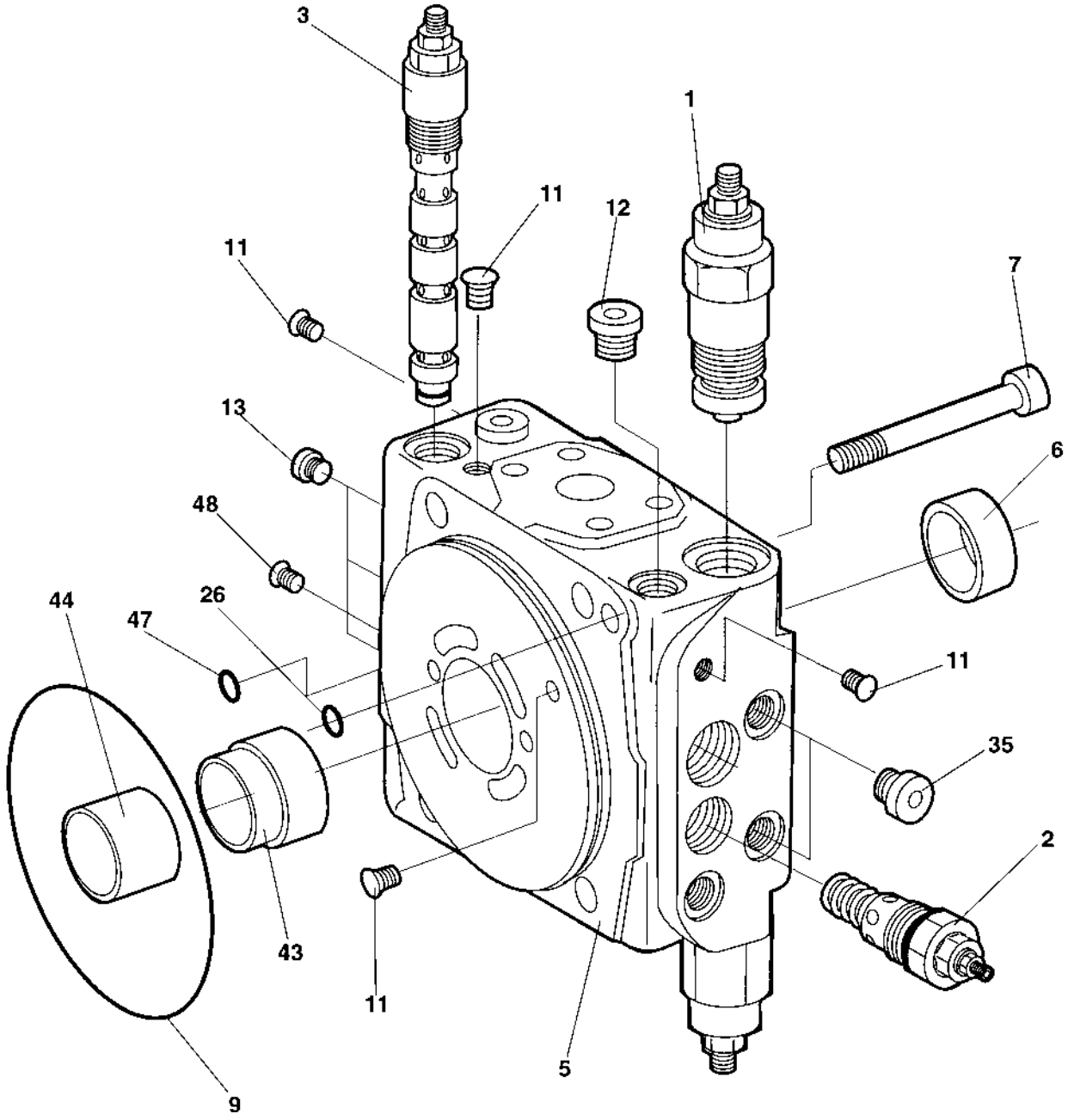

936295 Valve block

Ref. No.	Part No.	Rem.	Qty	Description	Code
			1	Valve block, cpl	
1	936359		2	.Relief valve	D
	936374		1	..Seal kit	D
	936375		1	..Cap	
2	936360		1	.Relief valve	D
3	936361		1	.Relief valve	
5	936362		1	.Valve block	
6	936363		1	.Bearing bushing	D
7	936366		4	.Screw	
9	936367		1	.O-ring	D
11	936368		2	.Double break-off pin	D
12	936369		1	.Lock screw	
13	936370		3	.Lock screw	
26	936371		2	.O-ring	D
35	936372		2	.Lock screw	
43	936364		1	.Bushing	D
44	936365		1	.Bearing bushing	D
47	936373		2	.O-ring	D
48	935212		1	.Pin	

936296 Charge pump

16447

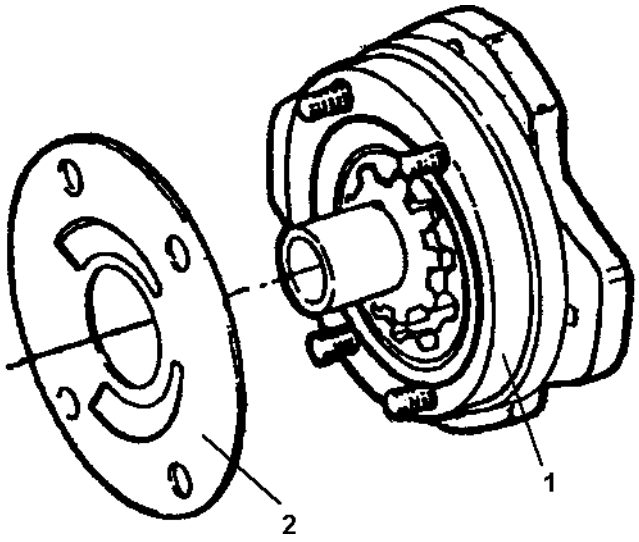

936296 Charge pump

Ref. No.	Part No.	Rem.	Qty	Description	Code
1	936395		1	.Charge pump	
2	936396		1	Wear plate	D
	936406		1	.Wear plate	
	936407		1	.O-ring	

938239 Control module

16449

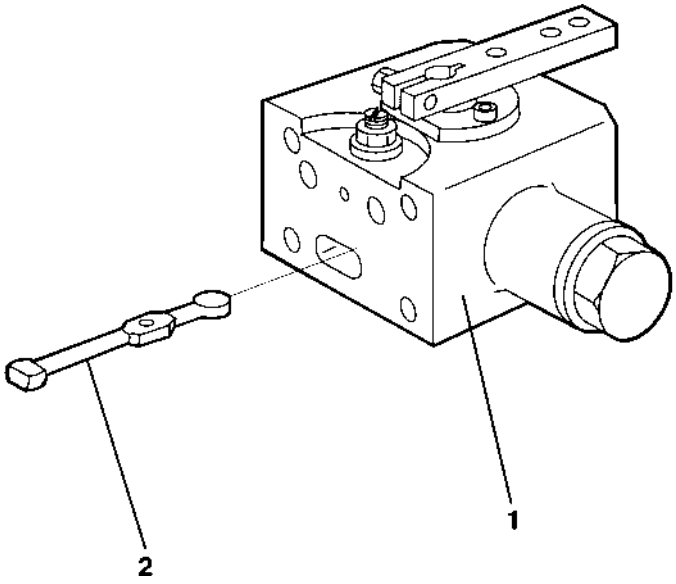

938239 Control module

Ref. No.	Part No.	Rem.	Qty	Description	Code
1	938248		1	Control module (Page 56)	
2	936408		1	Feedback lever	

938248 Control module

16440

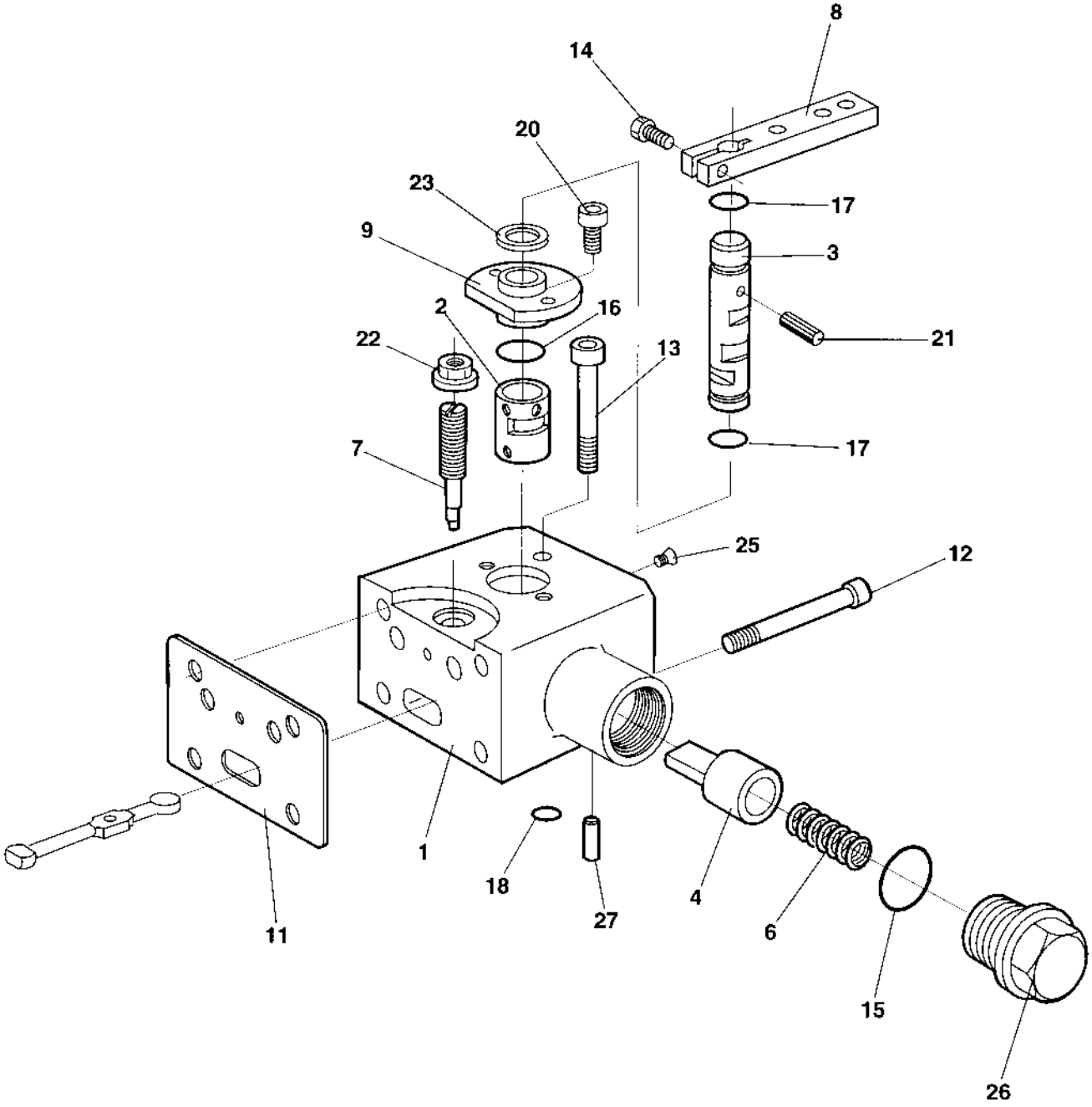

938248 Control module

Ref. No.	Part No.	Rem.	Qty	Description	Code
1	935196		1	Housing	
2	935197		1	Bush	
3	935198		1	Shaft	
4	936411		1	Spring bush	D
6	935202		1	Pressure spring	
7	935203		1	Eccentric pin	
8	936412		1	Lever	
9	935204		1	Cover	
11	935218		1	Gasket	D
12	936413		4	Screw	
13	935211		1	Screw	
14	936414		1	Screw	
15	936415		1	O-ring	D
16	938249		1	O-ring	
17	902641		2	O-ring	D
18	936418		1	O-ring	D
20	902771		2	Screw	
21	902767		1	Needle roller	
22	936421		1	Seal lock nut	
23	902773		1	Shim	
25	935212		1	Pin	
26	936423		1	Lock screw	
27	935190		1	Cylinder pin	

Drain system

17106

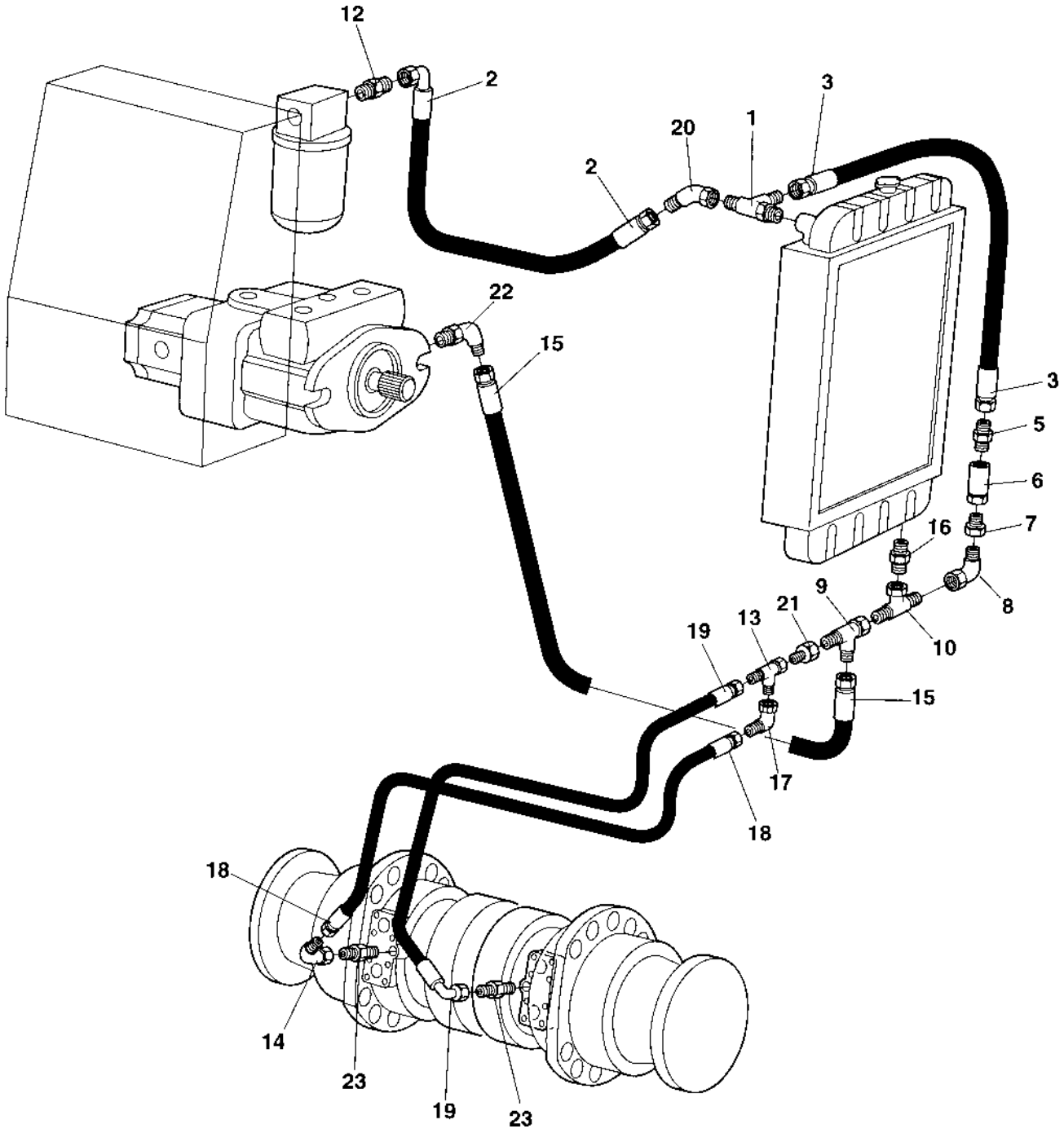

Drain system

Ref. No.	Part No.	Rem.	Qty	Description	Code
1	891950		1	Tee-connector	
2	482260		1	Hydraulic hose	D
3	483478		1	Hydraulic hose	
5	334156		1	Adapter	
6	904882		1	Check valve	
7	330438		1	Straight connector	
8	334155		1	Elbow 90	
9	234243		1	Adapter	
10	234900		1	T-connector	
12	334227		1	Adapter	
13	334135		1	T-connector	
14	234662		1	Elbow 45	
15	482045		1	Hydraulic hose	
16	334240		1	Nipple	
17	334197		1	Elbow 90	
18	483416		1	Hydraulic hose	
19	338486		1	Hydraulic hose	
20	234624		1	Adapter	
21	234667		1	Reducer	
22	813499		1	Adapter	D
23	334121		2	Adapter	

Speed hydraulic system

16162-1

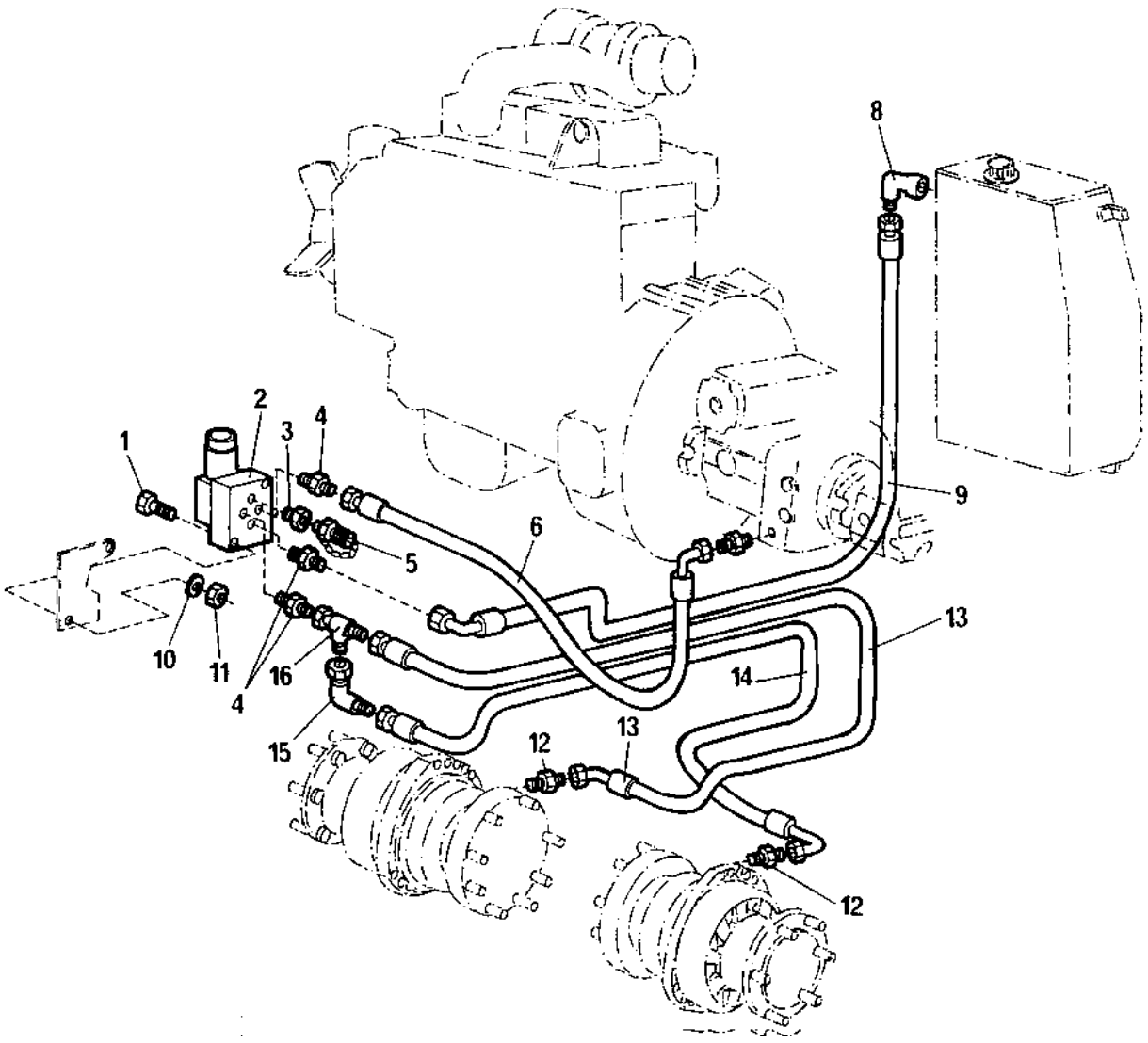

Speed hydraulic system

Ref. No.	Part No.	Rem.	Qty	Description	Code
1	500079		2	Screw M6x50	
2	192833		1	Reversing valve	C
3	334447		1	Reducing nipple	
4	234349		3	Connector	
5	910161		1	Measuring nipple	D
6	482013		1	Hydraulic hose	
8	334174		1	Adapter	
9	482497		1	Hydraulic hose	
10	904228		2	Washer	
11	570004		2	Nut	
12	234233		2	Adapter	
13	483419		1	Hydraulic hose	
14	483420		1	Hydraulic hose	
15	334524		1	Connector	
16	334234		1	Tee-connector	

Steering hydraulic

17104

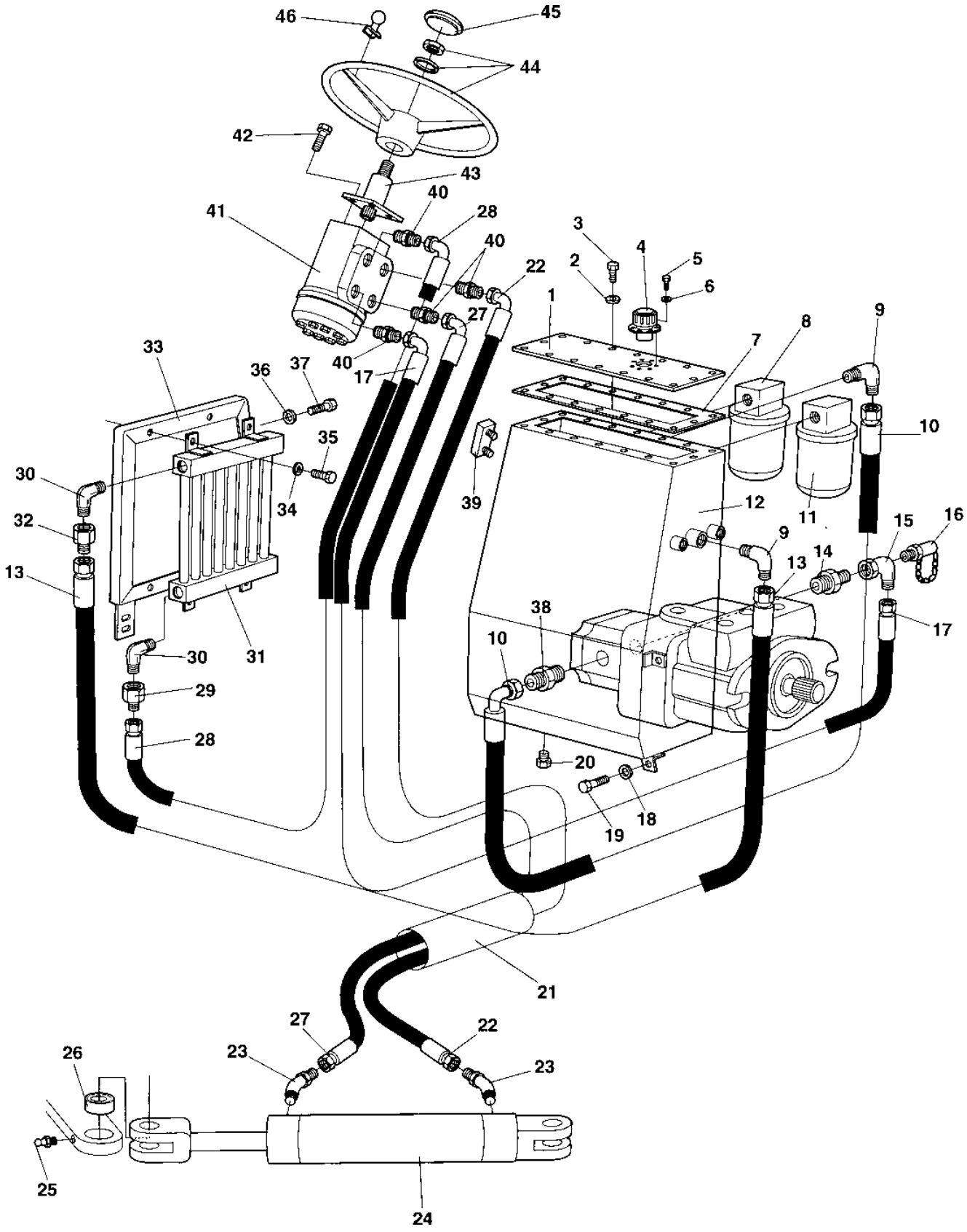

Ref. No.	Part No.	Rem.	Qty	Description	Code
1	193500		1	Cover	
2	904229		15	Washer	
3	500022		15	Screw	
4	813388		1	Filler cap	
5	500004		6	Screw	
6	904281		6	Washer	
7	193499		1	Gasket	D
8	902807		1	Suction filter	
	902900		1	.Hydraulic oil filter	A
9	814251		2	Adapter	
10	193771		1	Hose	
11	903754		1	Hydraulic oil filter	
	903588	A	1	.Hydraulic oil filter	A
	902900	B	1	Hydraulic oil filter	A
12	193497		1	Hydraulic oil tank	
13	482401		1	Hydraulic hose	
14	334124		1	Connector	
15	193774		1	Connector	
16	910161		1	Measuring nipple	D
17	483313		1	Hydraulic hose	
18	904230		4	Washer	
19	500048		3	Screw	
20	813784		1	Pipe plug	
21	255672		1	Hose	
22	482582		1	Hydraulic hose	
23	813500		2	Elbow 45, O-ring	
24	375111		1	Hydraulic cylinder	C
25	310038		2	Lubricant nipple	
26	813316		2	Ball bushing	D
27	194196		1	Hydraulic hose	
28	482986		1	Hydraulic hose	
29	334142		1	Nipple	
30	234279		2	Elbow	
31	374252		1	Oil cooler	
32	334141		1	Adapter	
33	381415		1	Cooler frame	
34	904230		6	Washer	
35	500048		6	Screw	
36	904229		3	Washer	
37	500053		3	Screw	
38	334138		1	Adapter	
39	989151		1	Oil level gauge	D
40	334116		4	Adapter	
41	925536		1	Steering unit (Page 64)	C
42	195139		2	Screw	
43	195271		1	Steering column	
44	372964		1	Steering wheel	
45	935613		1	.Cover plate	
46	935614		1	.Turning knob	D

A) Cleaning, Must be changed after 50 hours of operation.
B) Replacement

925536 Steering unit

16478

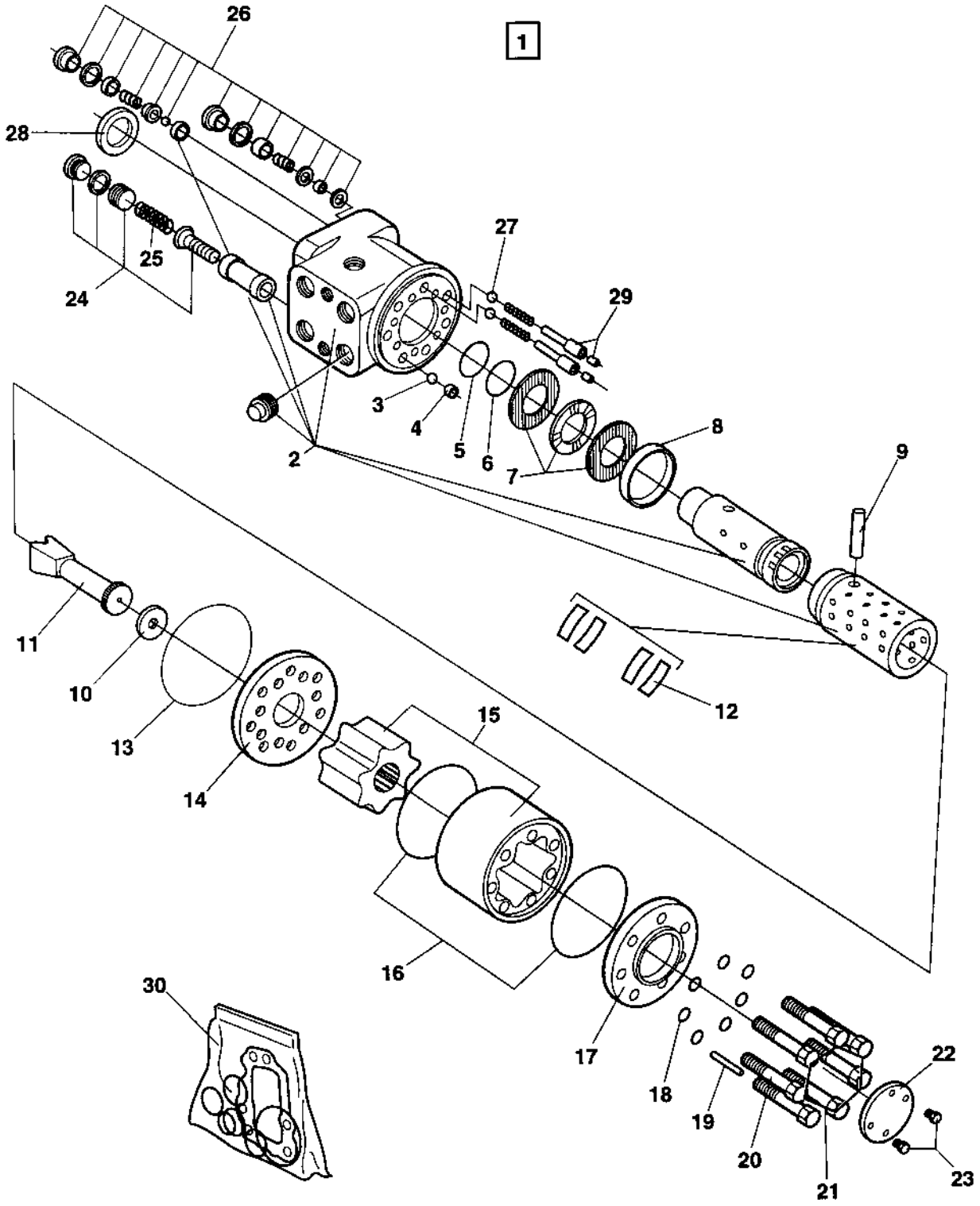

925536 Steering unit

Ref. No.	Part No.	Rem.	Qty	Description	Code
2			1	.Spool and sleeve	D
3	480468		1	.Ball	
4	480446		1	.Threaded bushing	D
5	480461		1	.O-ring	D
6	480463		1	.Kin-ring	D
7	911620		1	.Bearing	D
8	480449		1	.Ring	
9	480447		1	.Cross pin	
10	929006		1	.Spacer	
11	480454		1	.Drive shaft	
12	911618		1	.Spring kit	D
13	480460		1	.O-ring	D
14	480445		1	.Distributor plate	
15	929007		1	.Gear set	
16	480459		2	.O-ring	D
17	480450		1	.End cap	
18	480467		7	.Washer, sealing	
19	480466		1	.Rolled pin	
20	929008		1	.Screw with bore	
21	929009		6	.Screw	
22	481303		1	.Name plate	
23	480464		2	.Drive screw	
24	929010		1	.Relief valve 17,0-17,5MPa	D
25	929011		1	.Spring	
26	929012		2	.Shock valve 22,5-24,0 MPa	
27	929013		2	.Ball	
28	480462		1	.Seal ring	D
29	929014		2	.Rolled pin	
30	480457	A	1	Spare parts kit	D

A) Consists of item 13,16,18 and 28

Hydraulic brake

17109

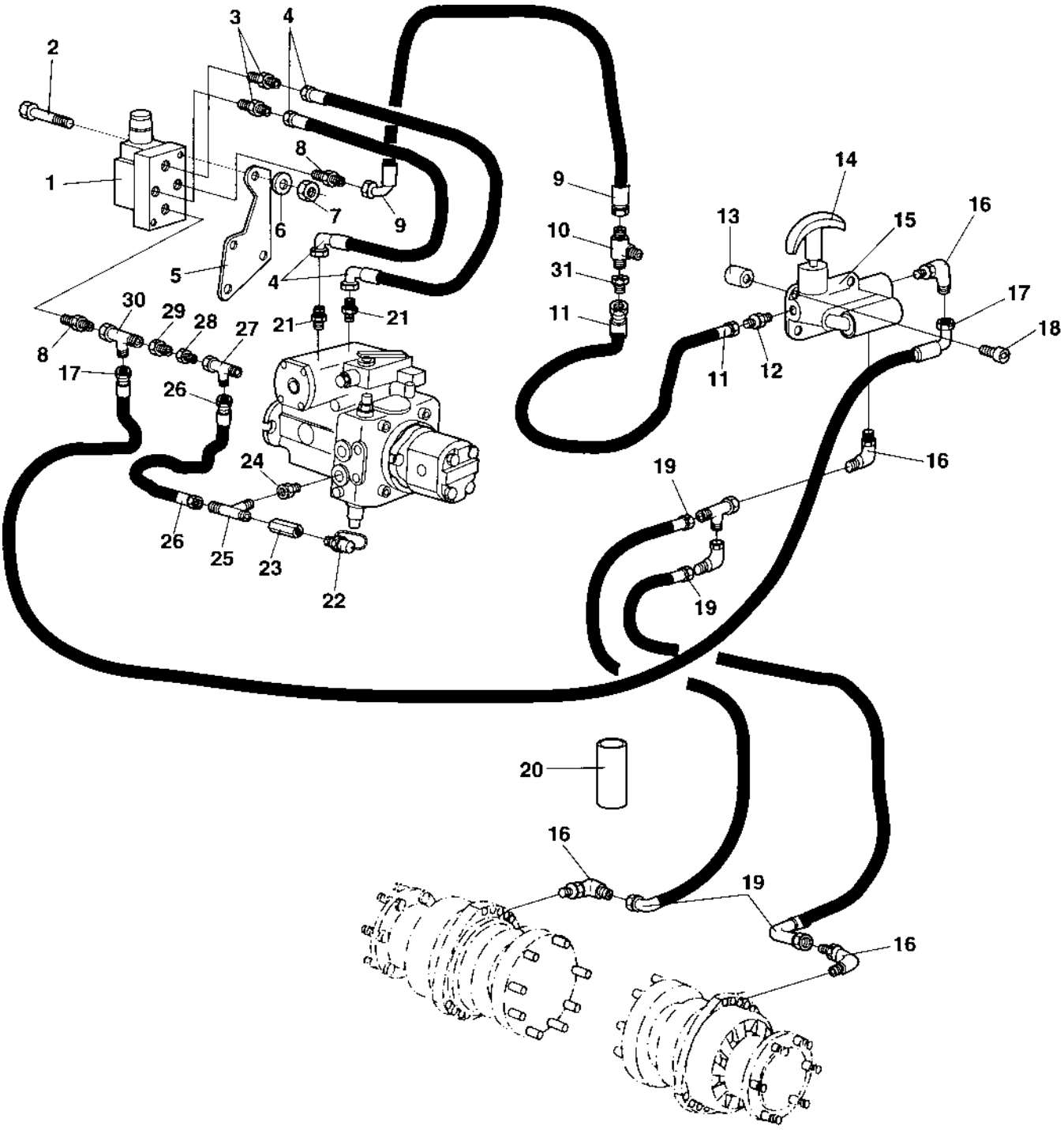

Hydraulic brake

Ref. No.	Part No.	Rem.	Qty	Description	Code
1	260761		1	Solenoid valve	C
2	500073		2	Screw	
3	234349		2	Connector	
4	482399		2	Hydraulic hose	D
5	194579		1	Bracket	
6	904228		2	Washer	
7	570004		2	Nut	
8	234457		2	Adapter	
9	851648		1	Hydraulic hose	D
10	923294		1	Tee-connector	
11	482257		1	Hydraulic hose	
12	334143		1	Adapter	
13	348659		3	Sleeve	
14	193790		1	T-handle	D
15	415329		1	Hand pump	
16	334445		4	Connector	
17	338486		1	Hydraulic hose	
18	508074		3	Screw	
19	483417		2	Hydraulic hose	
20	903082	A	1	Hose shields	
21	334232		2	Adapter	
22	910161		1	Measuring nipple	D
23	433830401		1	Connector	
24	924731		1	Connector	
25	234888		1	Tee-connector	
26	482399		1	Hydraulic hose	D
27	334234		1	Tee-connector	
28	380183		1	Orifice	
29	334461		1	Reducing	
30	334135		1	T-connector	
31	334264		1	Reducing	

A) L=200 mm

Solenoid valve brake

16160

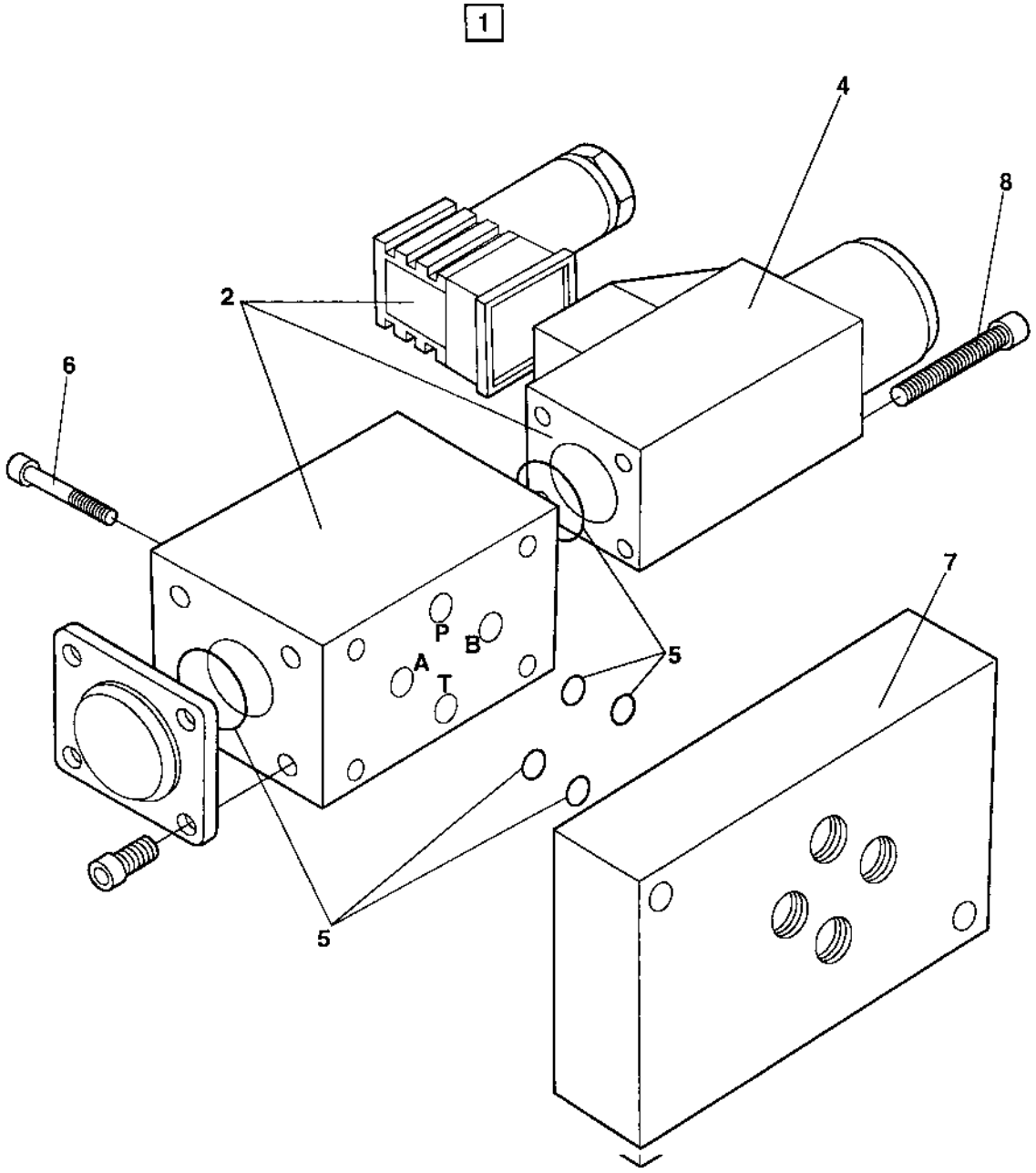

Solenoid valve brake

Ref. No.	Part No.	Rem.	Qty	Description	Code
1	260761		1	Solenoid valve	C
2	920924		1	.Solenoid valve	C
3	243458		1	.Plug	
4	243457		1	.Solenoid	D
5	243459		1	.Seal kit	D
6	508098		4	Screw	
7	920925		1	Plate	
8				Screw	

Ref. No.	Part No.	Rem.	Qty	Description	Code
10				Electrical equipment (Page 72)	
20				Driving & working lights (Page 74)	
30				Instrument panel, relay, fuses (Page 76)	

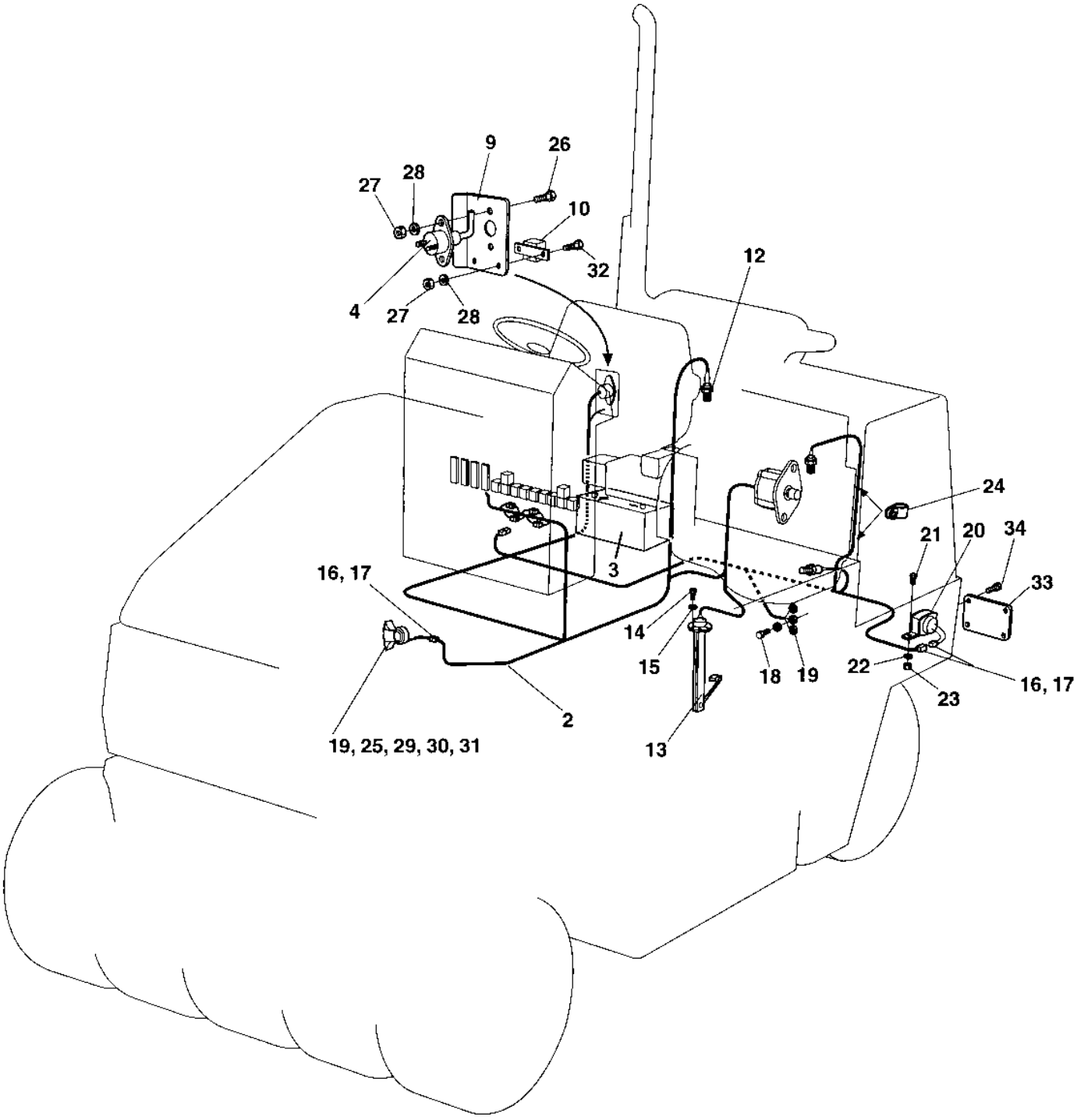
9
26
27
28
10
32
12
4
27
28
24
21
20
34
33
16, 17
3
14
15
18
19
22
23
16, 17
2
19, 25, 29, 30, 31
13

Ref. No.	Part No.	Rem.	Qty	Description	Code
2	380286		1	Wiring harness	
3	470029		1	Battery	C
	904748		1	Battery cable negative	
	904749		1	Battery cable	
4	903640		1	Battery switch	D
7	904750		1	Cable	
8	904751		1	Cable	
9	380211		1	Holder plate	
10	904448		2	Relay	D
12	903631		1	Temperature sensor	D
13	374631		1	Fuel sender	
14	500258		5	Screw	
15	904698		5	Washer	
16	901766		2	Connector 2-POL	D
17	960273		4	Terminal	
18	500021		5	Screw	
19	586003		3	Lock nut	
20	900798		1	Back-up alarm	
21	500087		2	Screw	
22	601001		2	Washer	
23	586001		2	Lock nut	
24	921072		2	Clamp	
25	904229		2	Washer	
26	500040		2	Screw	
27	586002		4	Lock nut	
28	904228		6	Washer	
29	999027		1	Horn	D
30	348902		1	Bracket	
31	500053		1	Screw	
32	500075		2	Screw	
33	374545		4	Cover	
34	904696		4	Screw	

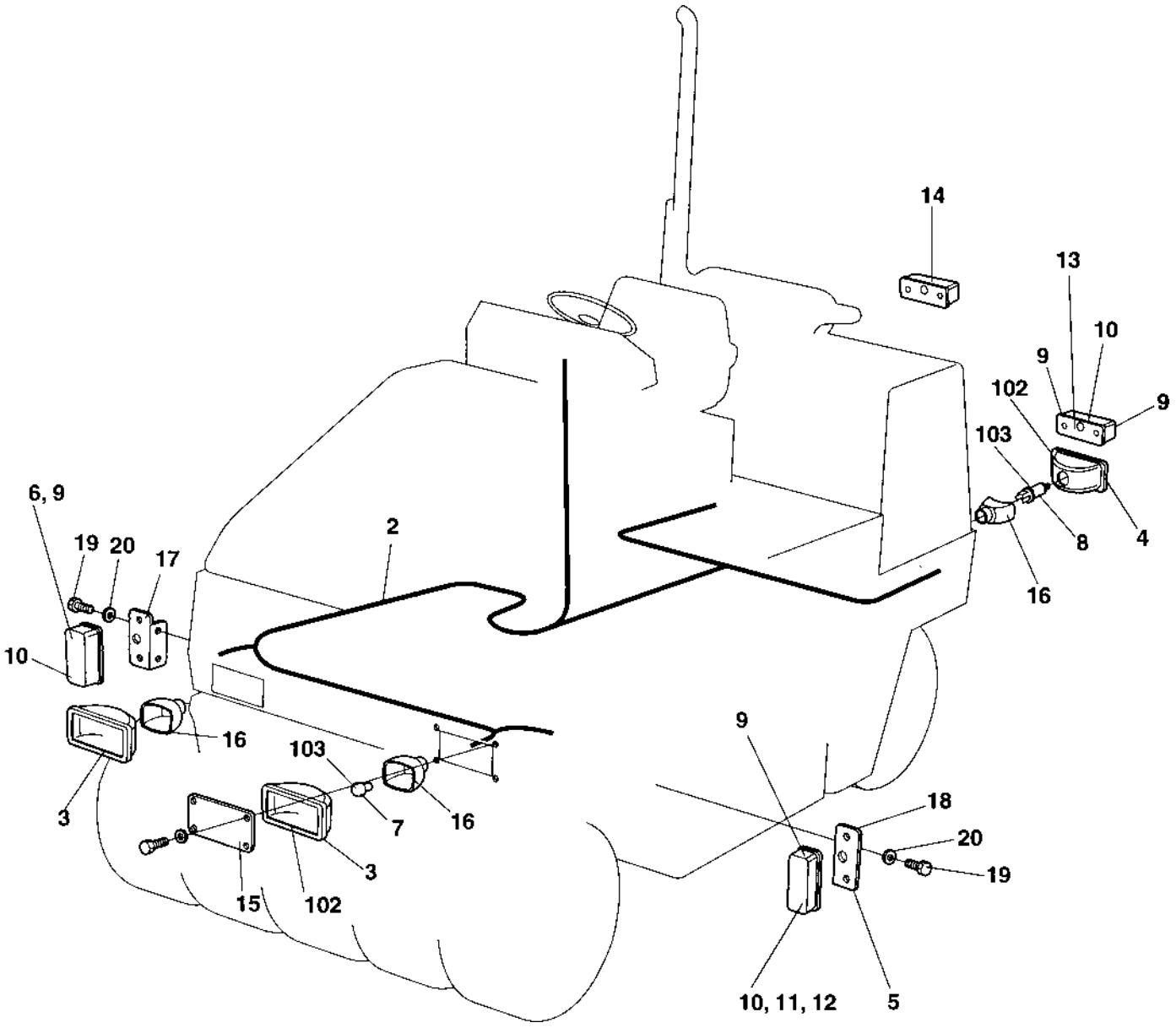
14
13
10
9
102
9
103
6, 9
19
20
17
2
8
4
16
10
16
103
9
3
7
16
18
20
19
3
15
102
10, 11, 12
5

Ref. No.	Part No.	Rem.	Qty	Description	Code
2	380671		1	Wiring harness	
3	902066		2	Head light	
4	902227		2	Head light	
5	904315		1	Direction lamp	
6	904316		1	Direction lamp	
7	900790		2	Bulb 60/55w H4	B
8	901369		2	Bulb 55w H3	B
9	928502		6	Bulb 21w	B
10	985014		4	Bulb 5w	B
11	533013		8	Screw	
12	904698		8	Washer	
13	904317		1	Direction lamp	
14	904318		1	Direction lamp	
15	374545		4	Cover	
16	904792		4	Rubber cap	
17	380824		1	Holder plate, Right	
18	380825		1	Holder plate, Left	
19	500053		4	Screw	
20	904229		4	Washer	
102	902227	A	4	Head light	
103	901369	A	4	Bulb 55w H3	B

A) Working light

Instrument panel, relay, fuses

17150

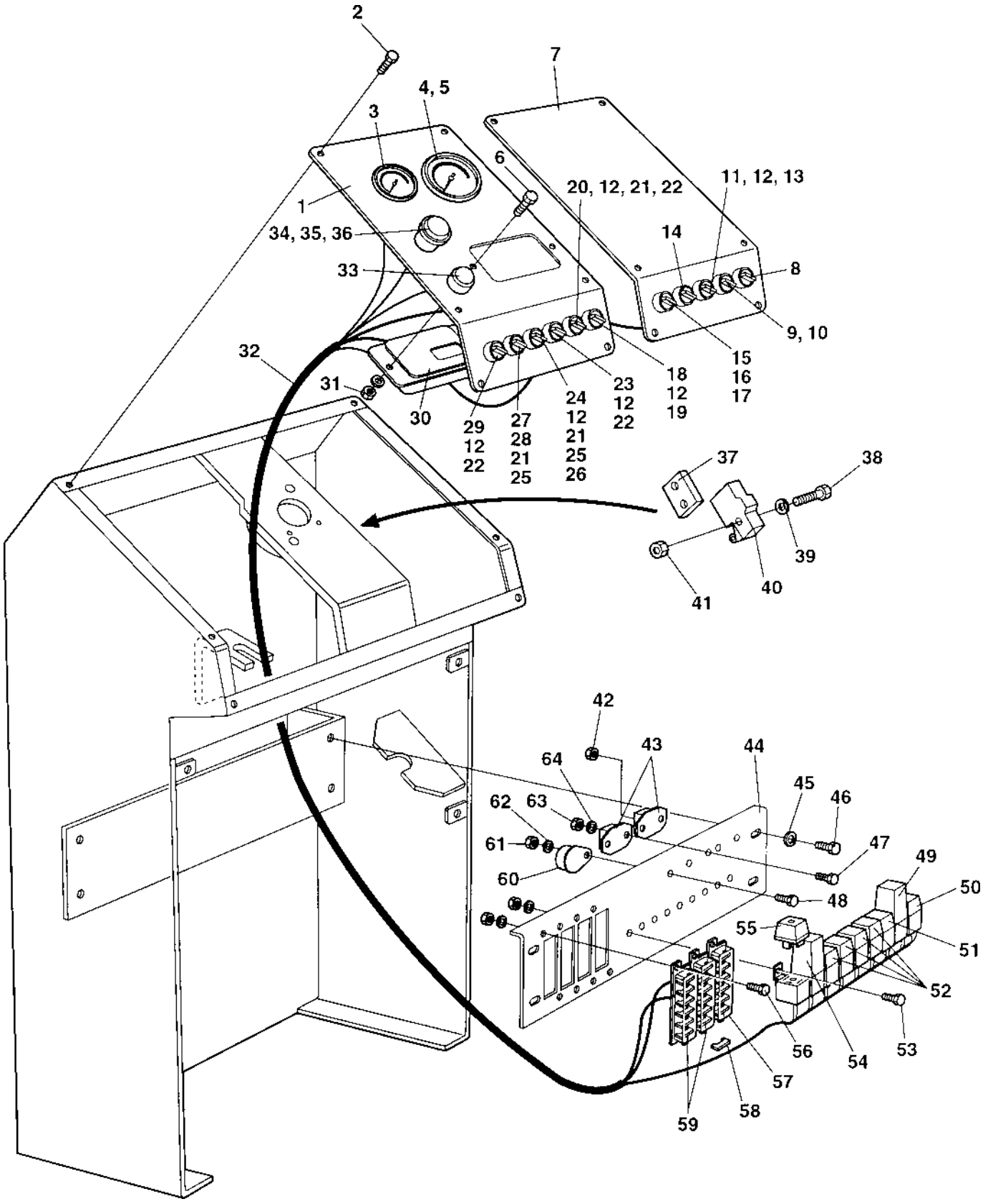

Instrument panel, relay, fuses

Ref. No.	Part No.	Rem.	Qty	Description	Code
1	380215		1	Control panel left	
2	902224		12	Screw	
3	374630		1	Fuel gauge	
4	345139		1	Hole plug	
5	359345	A	1	Tachometer	
6	902224		2	Screw	
7	380214		1	Control panel right	
8	370644	B	1	Switch cpl	
9	930151	C	1	Switch	D
10	930163		1	Contact piece	D
11	926989		1	Switch	
12	985012		5	Bulb	D
13	930162		1	Connector	
14	930151		1	Switch	D
15	932050		1	Switch	
16	930182		1	Contact block	D
17	930154		1	Connector	
18	930166	D	1	Switch	D
19	930165		1	Contact block	D
20	932056		1	Switch	D
21	930163		3	Contact piece	D
22	930162		3	Connector	
23	930161		1	Switch	D
24	932057		1	Switch	
25	930154		2	Connector	
26	930198		1	Contact piece	
27	932058		1	Switch	D
28	930182		1	Contact block	D
29	930166		1	Switch	D
30	380660		1	Display	D
31	586002		2	Lock nut	
32	380272		1	Wiring harness	
33	932032		1	Push button	D
34	930200		1	Emergensy stop	D
35	930163		1	Contact piece	D
36	930154		1	Connector	
37	345905		3	Plate	
38	923901		2	Screw	
39	904697		2	Washer	
40	930046		1	Micro switch	D
41	928927		2	Lock nut	
42	570004		2	Nut	
43	903627		2	Junction block	
44	375417		1	Distribution control plate	
45	904228		4	Washer	
46	500012		4	Screw	
47	533013		4	Screw	
48	533030		1	Screw	
49	975062		1	Flash relay	D
50	287598		1	Relay	D
51	287598		1	Relay	D
52	287597		4	Relay	D
53	902223		9	Screw	
54	348485		1	Relay unit	
55	287598		1	Relay	D
56	901767		4	Screw	
57	901256	E	1	Fuse box	
	901225		N	Fuse 5A	D

A) Option
B) Timer
C) Sprinkler pump
D) Rotating beacon
E) Driving light

Instrument panel, relay, fuses

17150

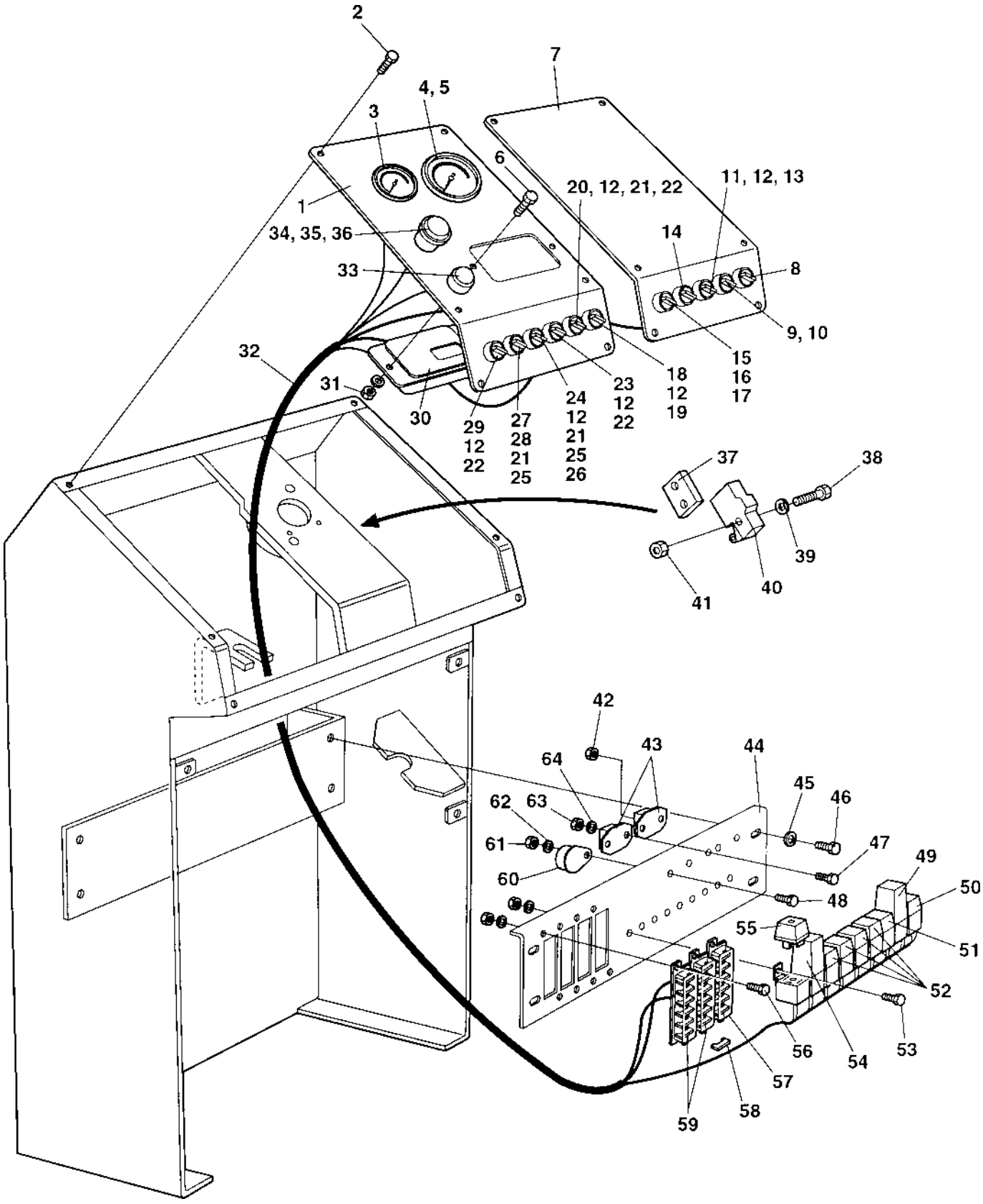

Instrument panel, relay, fuses

Ref. No.	Part No.	Rem.	Qty	Description	Code
57	901226	N		Fuse 7,5A	D
	901227	N		Fuse 10A	D
58	901240		12	Connector	
59	901256		1	Fuse box	
	901224	N		Fuse 3A	D
	901226	N		Fuse 7,5A	D
	901227	N		Fuse 10A	D
	901228	N		Fuse 15A	B
60	355301		1	Buzzer	D
61	586001		1	Lock nut	
62	904281		1	Washer	
63	923976		4	Nut	
64	904698		4	Washer	

Ref. No.	Part No.	Rem.	Qty	Description	Code
10				Drivers platform (Page 82)	
15				Rops and seat belt (Page 84)	
20				Engine controls (Page 86)	

Drivers platform

16173-1

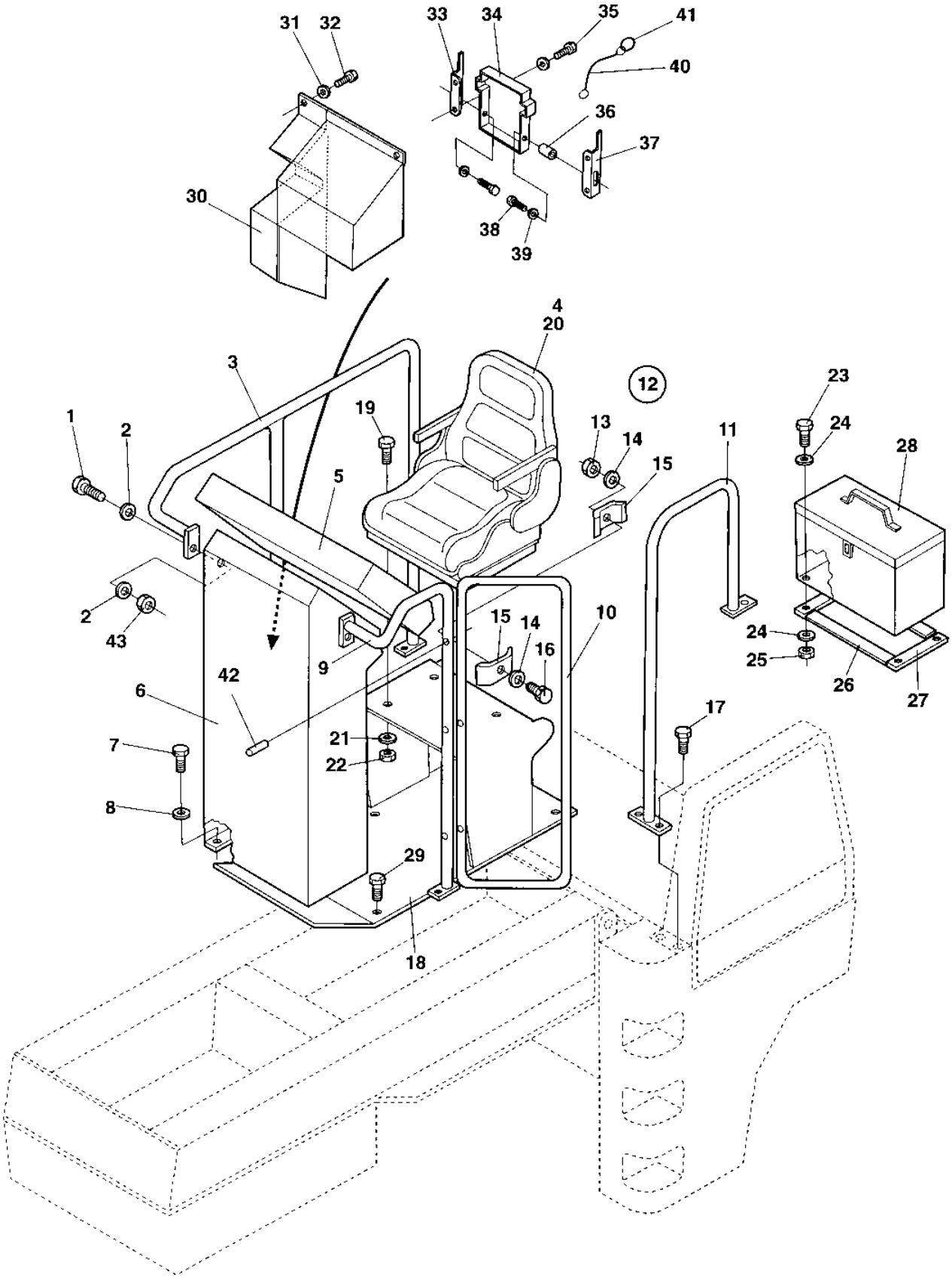

Drivers platform

Ref. No.	Part No.	Rem.	Qty	Description	Code
1	500020		2	Screw	
2	904229		4	Washer	
3	381009		1	Hand rail	
4	247741		1	Seat	
	194185	A	1	Seat	
5			1	Instrument board	
6	195136		1	Platform cpl	
7	500193		4	Screw	
8	600009		4	Washer	
9	381004		1	Hand rail	
10	381008		1	Hand rail	
11	381006		1	Hand rail	
12	193738		2	Clamp	
13	570008		1	.Nut	
14	600011		2	.Washer	
15	193737		2	.Clamp	
16	500082		1	.Screw	
17	500022		12	Screw	
18	193463		1	Floor	
19	500020		4	Screw	
20	348331		1	Seat cover	D
21	904229		4	Washer	
22	586003		4	Lock nut	
23	500060		4	Screw	
24	904281		8	Washer	
25	586001		4	Lock nut	
26	247350		2	Gasket	D
27	247350		2	Gasket	D
28	193736		1	Tool box	
29	927026		6	Screw	
30	374792		1	Cover	
31	603020		4	Washer	
32	508001		4	Screw	
33	382163		1	Cover holder, right	
34	357425		1	Instruction book holder	
35	624021		4	Pop rivet	
36	902163		2	Parallel pin	
37	382162		1	Cover holder, left	
38	902164		2	Screw	
39	904697		2	Washer	
40	357643		1	Wire	
41	358254		1	Key-ring	
42	629019		3	Expanding pin	
43	586003		2	Lock nut	

A) Optional

Rops and seat belt

16176

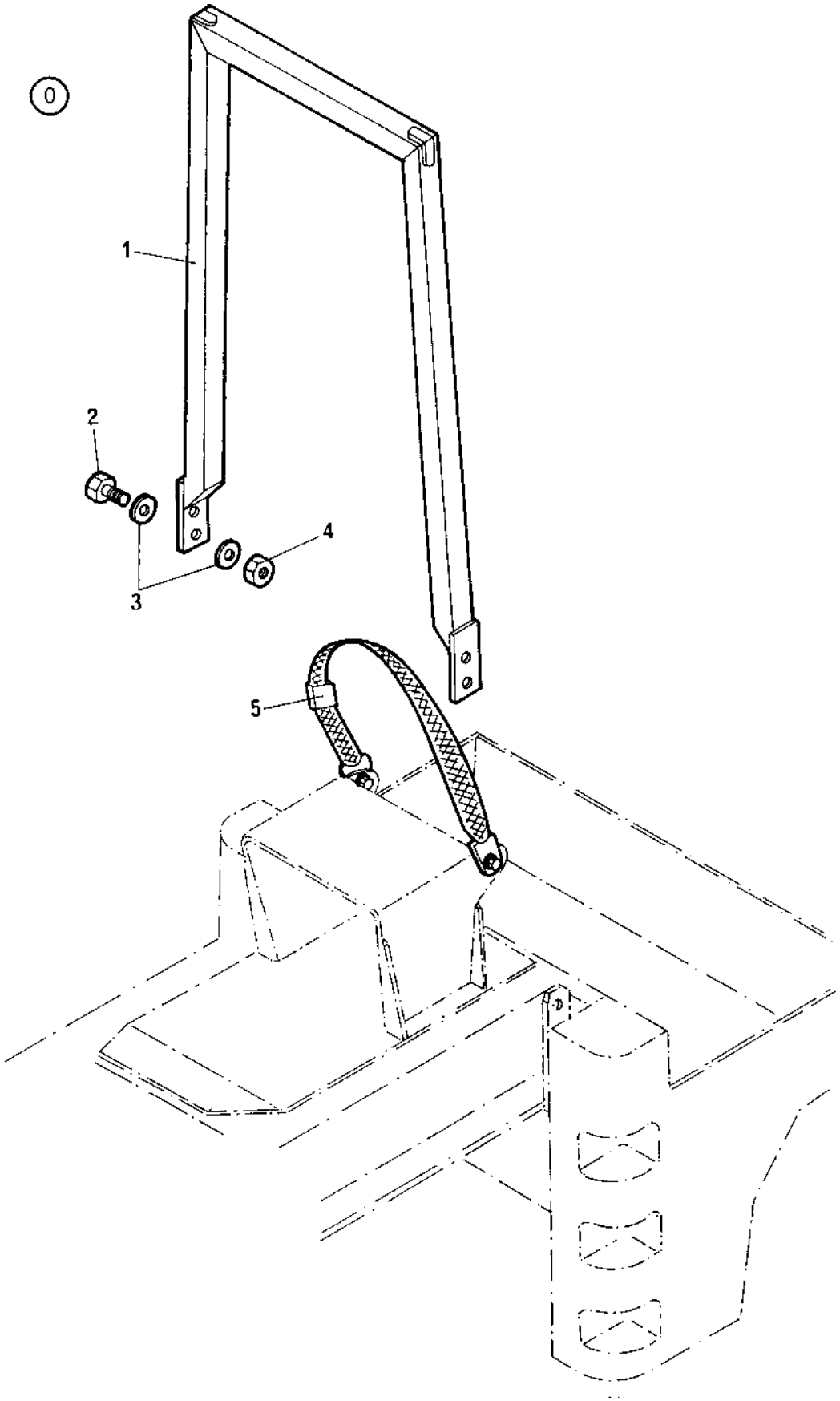

Rops and seat belt

Ref. No.	Part No.	Rem.	Qty	Description	Code
	194284		1	Roll bar cpl	
1	193650		1	.Rops	
2	903792		4	.Screw	
3	603005		8	.Washer	
4	903736		4	.Nut	
5	345972		1	.Safety belt	

Engine controls

17210

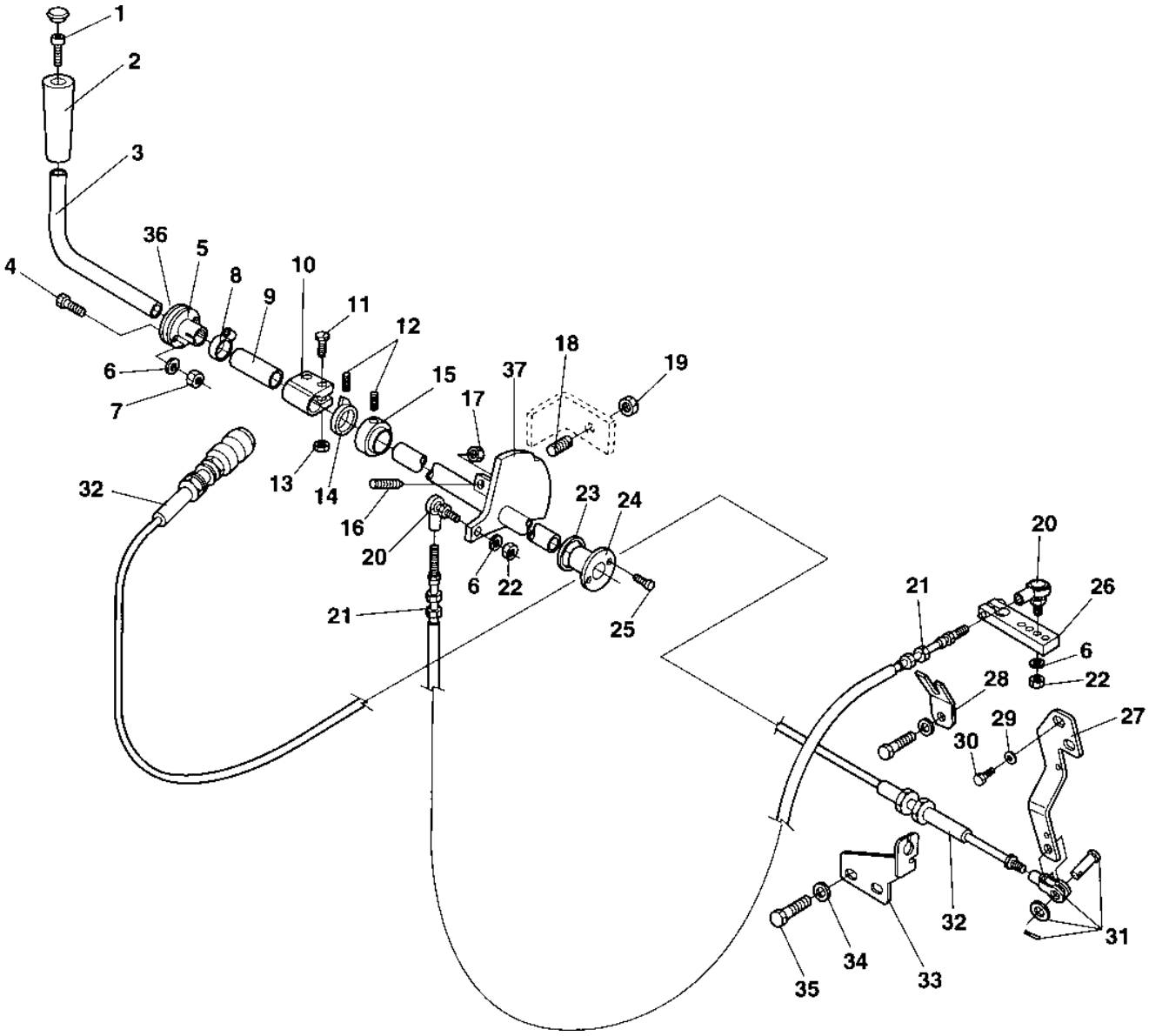

Ref. No.	Part No.	Rem.	Qty	Description	Code
1	508060		1	Screw	
2	192828		1	Handle	
3	193403		1	Pipe	
4	923927		2	Screw	
5	345992		1	Bushing	D
6	904639		4	Washer	
7	586002		2	Lock nut	
8	313004		1	Hose clamp	
9	193405		1	Pipe	
10	346420		1	Coupling	
11	500047		2	Screw	
12	923988		2	Stop screw	
13	586003		2	Lock nut	
14	346417		1	Cam ring	D
15	241214		1	Bushing	D
16	923987		2	Stop screw	
17	570004		2	Nut	
18	922325		1	Spring loaded pin	D
19	570008		1	Nut	
20	268964040		2	Ball joint	
21	193404		1	Control cable	D
22	572001		2	Nut	
23	600021		2	Washer	
24	345640		1	Bushing	
25	533038		2	Screw	
26		A	1		
27	374411		1	Control lever	
28	193406		1	Bracket	
29	904228		2	Washer	
30	500012		2	Screw	
31	813361		1	Yoke	
32	455095		1	Throttle cable	D
33	373471		1	Bracket	
34	904231		2	Washer	
35	500046		2	Screw	
36	346421		1	Washer	D
37	195167		1	Shaft	

A) To supply with pump

Ref. No.	Part No.	Rem.	Qty	Description	Code
10				Plates and decals (Page 90)	

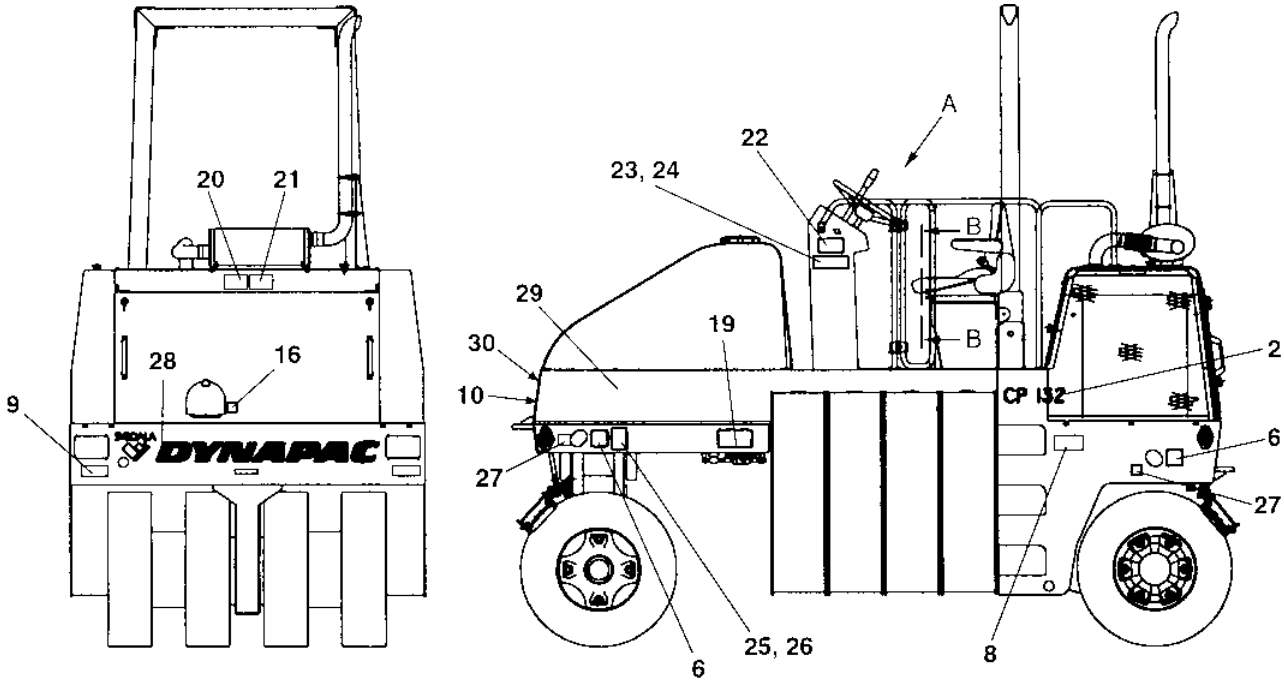
20
21
28
16
9
DYNAPAC
A
22
23, 24
B
B
29
19
30
10
27
6
25, 26
8
2
CP 132
6
27

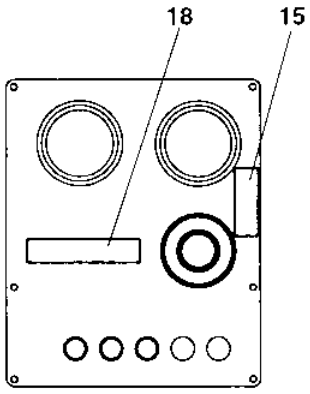
18
15

A

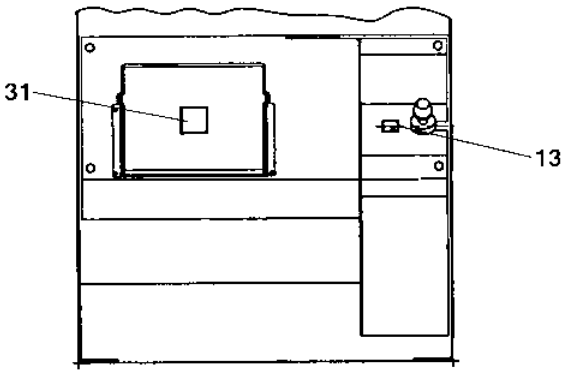
31
13

B - B

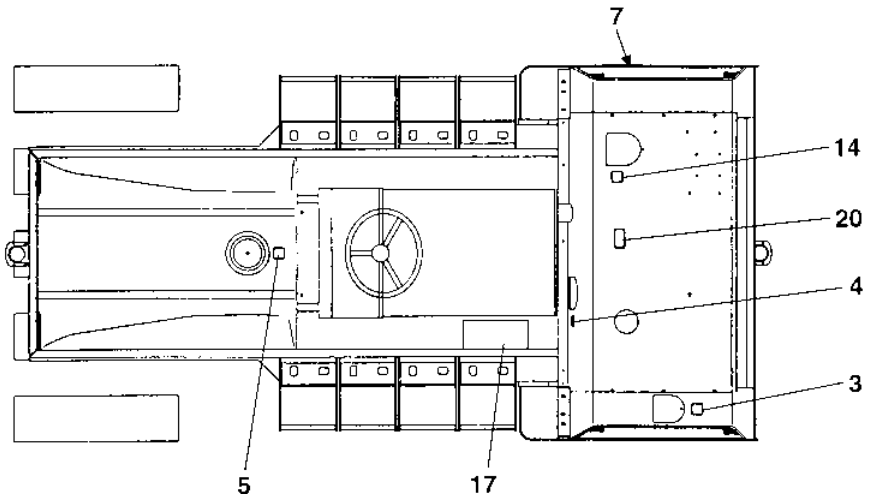
7
14
20
4
3
5
17

Ref. No.	Part No.	Rem.	Qty	Description	Code
2	192988		2	Decal "MODEL"	
3	192987		1	Decal "COOLANT"	
4	192985		1	Decal "OIL FILTER"	
5	991657		1	Decal "WATER"	
6	588176		4	Decal "LIFT POINT"	
7	991658		1	Decal "FUEL"	
8	801183		2	Reflector, yellow	
9	901182		2	Reflector, red	B
10	901187		2	Reflector, white	B
13	342045		1	Decal "THROTTLE CONTROL"	
14	272372		1	Decal "HYDRAULIC OIL"	
	904601		1	Decal "BIO HYDRAULIC OIL"	
15	991650		1	Decal "DIRECTION"	
16	193882		1	Decal "ENGINE OIL LEVEL"	
17	373363		1	Slip protection	D
18	DECWAR		1	Decal "WARNING"	
	349248		1	.Decal "WARNING" Swedish	
	349249		1	.Decal "WARNING" English	
	349250		1	.Decal "WARNING" German	
	349251		1	.Decal "WARNING" Italian	
	349252		1	.Decal "WARNING" Spanish	
	349253		1	.Decal "WARNING" French	
19	903422		2	Decal "SAFETY"	
20	903424		2	Decal "SAFETY"	
21	903423		1	Decal "SAFETY"	
22	903459		2	Decal "SAFETY"	
23	900989	A	1	Identification plate	
24	902915		4	Screw	
25	343017		2	Lifting sign	
26	624016		8	Blind rivet	
27	374765		4	Decal "TYRE PRESSURE"	
28	900679	B	1	Decal "DYNAPAC"	
29	900678	C	2	Decal "DYNAPAC"	
30	900676	D	1	Decal "DYNAPAC"	
31	903425		1	Decal "SAFETY MANUAL"	

A) 175 x 63
B) 1200 x 105
C) 1050 x 90
D) 580 x 050

Optional equipment

Ref. No.	Part No.	Rem.	Qty	Description	Code
10				Canopy (Page 94)	
20				Rotating beacon (Page 96)	
30				Sign smv (Page 98)	

Canopy

16433

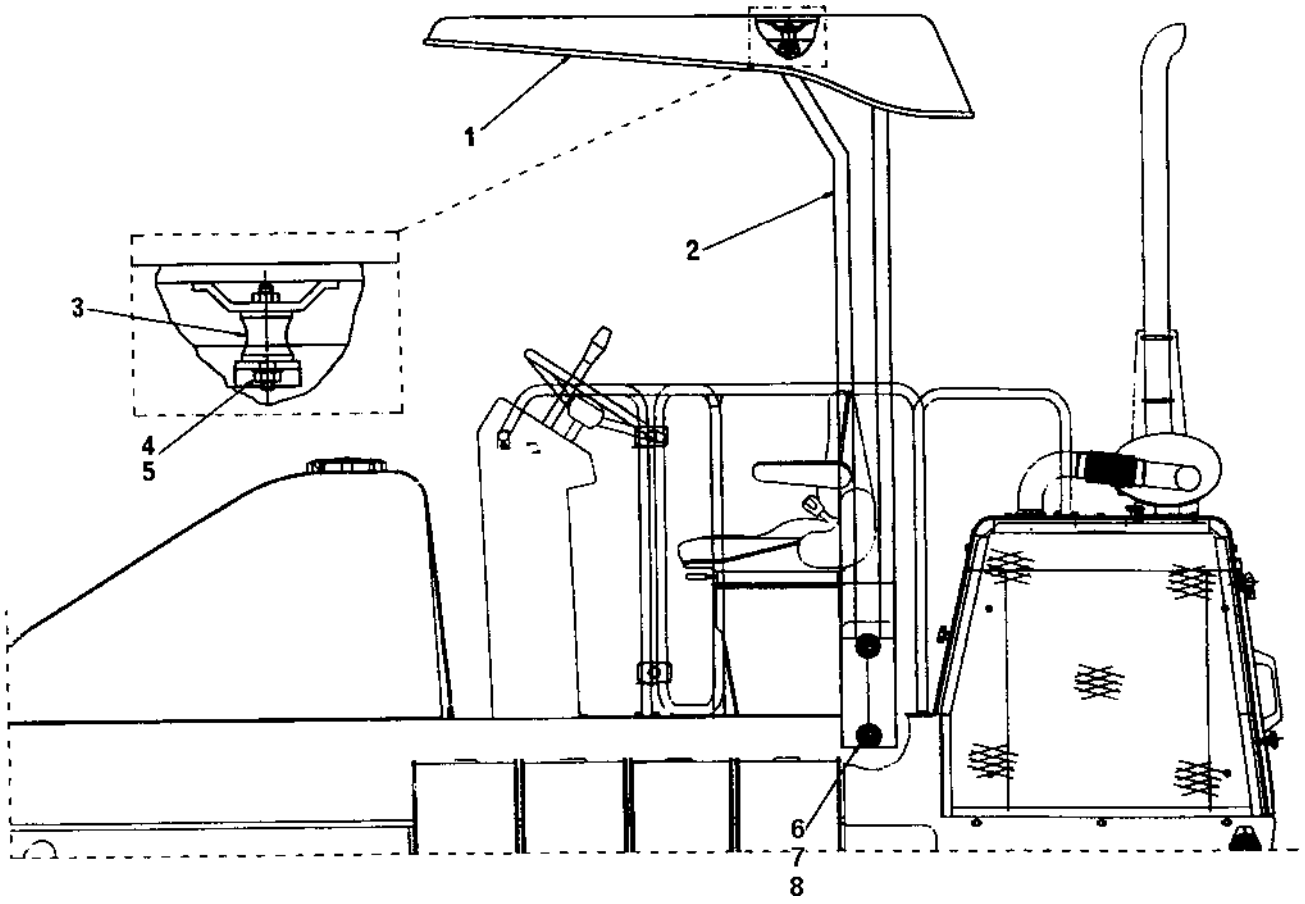

Canopy

Ref. No.	Part No.	Rem.	Qty	Description	Code
1	261152		1	Canopy	
2	194678		1	Frame	
3	450089		4	Shock absorber	D
4	615044		4	Conical spring washer	D
5	570006		4	Nut	
6	500297		4	Screw	
7	603005		8	Washer	
8	570016		4	Nut	

Rotating beacon

17172

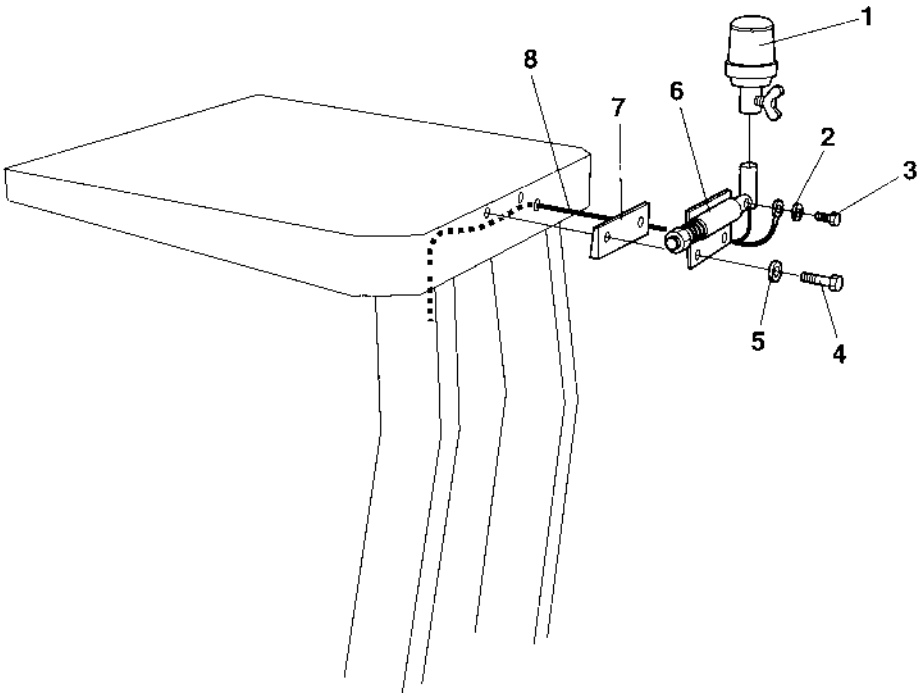

Rotating beacon

Ref. No.	Part No.	Rem.	Qty	Description	Code
1	999011		1	Rotating beacon	D
2	904229		2	Washer	
3	500021		2	Screw	
4	500013		1	Screw	
5	904228		1	Washer	
6	358452		1	Lamp holder	
7	372674		1	Spacer	
8	374398		1	Cable harness	

Sign smv

17190

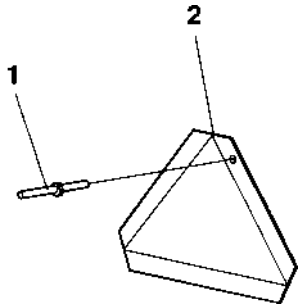

Sign smv

Ref. No.	Part No.	Rem.	Qty	Description	Code
1	624011		6	Pop rivet	
2	476019		1	Sign smv	D

NUMERICAL INDEX

Part Number	Page	Part Number	Page	Part Number	Page
116009	19	193784	31	244054	13,15
135010	19	193790	67	246057	35
136010	19	193810	31	246069	35
160229	29	193849	29	247350	83
191630	29	193882	91	247741	83
191799	29	193886	19,21	248491	13,15
191801	29	193887	19,21	248513	13,15
191803	29		,25	251729	9,11
191808	29	194011	21	252285	41
191824	35	194018	9,11,13	252793	9,11
192273	29		,15	255672	63
192424	19,21	194019	11	258307	29
	,25	194078	9,11	259211	19
192828	9,11,87	194079	9,11	260761	67,69
192831	19	194080	9,11	261152	95
192833	61	194081	9,11	264389	35
192914	31	194082	9,11	264486	19
192938	7	194083	9,11	264488	19
192939	7	194084	13,15	266799	25
192940	7	194085	13,15	267465	29
192941	7	194087	13,15	268607	13,15
192985	91	194088	13,15	268964040	87
192987	91	194092	9,11	272372	91
192988	91	194093	13,15	287597	77
193124	23	194149	9	287598	77
193403	87	194150	9	287713	13,15
193404	87	194183	37	297018	35
193405	87	194185	83	310037	19
193406	87	194195	37	310038	63
193407	7	194196	63	313001	35
193459	19	194211	41	313002	13,15
193463	83	194216	37	313004	31,87
193465	19	194265	23	313006	31
193467	21	194284	85	313010	31
193469	19	194287	37	313023	31
193471	31	194308	23	313033	33
193472	13,15	194311	35	313036	37
193487	19	194312	35	313038	33
193497	63	194325	23	313041	11,13
193499	63	194579	67		,15,35
193500	63	194647	25	313102	31,41
193505	21,23	194657	25	313108	31
193507	35	194658	25	330330	35
193512	19	194659	21,23	330331	29
193513	19		,25	330438	59
193516	35	194678	95	331104	31
193517	19	194738	31	333228	13,15
193520	19	194889	31	334116	63
193521	19	195063	7	334121	59
193527	35	195064	7	334122	41
193556	29	195136	83	334124	63
193557	7	195139	63	334135	59,67
193565	21	195167	87	334138	63
193571	13,15	195214	21,23	334141	63
193572	29	195271	63	334142	63
193573	21	195593	35	334143	67
193580	7	202007	13,15	334155	41,59
193581	7	202028	7	334156	59
193586	11	202056	7	334174	61
193590	9,11	212373	29	334197	59
193591	9,11	234233	61	334227	59
193592	9,11	234243	59	334232	67
193600	11	234279	63	334234	61,67
193650	85	234349	61,67	334240	59
193689	7	234390	41	334264	67
193690	7	234457	67	334445	67
193736	83	234619	35	334447	61
193737	83	234624	59	334461	67
193738	83	234662	59	334524	61
193740	7	234667	59	338486	59,67
193745	7	234888	67	342045	91
193771	63	234900	41,59	343017	91
193772	41	240154	29	343732	41
193773	41	241214	87	345139	77
193774	63	243457	69	345640	87
193775	41	243458	69	345905	77
193776	41	243459	69	345972	85

NUMERICAL INDEX

Part Number	Page	Part Number	Page	Part Number	Page
345992	87	380399	7	500020	31,37
346417	87	380400	7		,83
346420	87	380426	7	500021	7,73,97
346421	87	380427	7	500022	63,83
348331	83	380660	77	500026	29
348485	77	380671	75	500028	31
348659	67	380784	13,15	500029	37
348902	73	380785	15	500030	9,11,29
348996	29	380824	75	500035	19
349248	91	380825	75	500040	73
349249	91	381004	83	500046	9,11,29
349250	91	381006	83		,87
349251	91	381008	83	500047	9,11,25
349252	91	381009	83		,87
349253	91	381012	13,15	500048	63
355301	77	381280	39,41	500053	7,29,33
355914	41		,43		,35,63
357425	83	381415	63		,73,75
357643	83	381686	7	500060	83
358254	83	381779	7	500073	67
358452	97	381780	7	500075	13,15
358846	13,15	381781	7		,73
359345	77	381851	7	500079	61
370644	77	381878	7	500082	19,83
372674	97	382017	7	500086	13,15
372964	63	382018	7	500087	73
373363	91	382061	7	500093	29
373471	87	382162	83	500134	7
374183	29	382163	83	500150	29
374252	63	415329	67	500184	35
374398	97	433830401	67	500185	21
374411	87	450089	95	500188	31,41
374474	23	455095	87	500193	83
374511	31	470029	73	500258	35,73
374521	31	476019	99	500297	95
374542	29	480445	65	502035	29
374545	73,75	480446	65	506019	13,15
374561	31	480447	65	508001	83
374630	77	480449	65	508060	87
374631	35,73	480450	65	508067	41
374661	29	480454	65	508074	67
374727	33	480457	65	508098	69
374745	33	480459	65	509025	29
374765	91	480460	65	513008	7
374771	33	480461	65	533013	75,77
374772	33	480462	65	533030	77
374792	83	480463	65	533038	87
374809	29	480464	65	570004	7,13,15
374823	37	480466	65		,61,67
374824	37	480467	65		,77,87
374825	37	480468	65	570005	7
374857	35	481303	65	570006	9,11,41
374905	33	482013	61		,95
374962	37	482045	59	570007	9,11
374992	37	482257	67	570008	29,83
374997	37	482260	59		,87
375001	33	482399	67	570016	7,95
375021	33	482401	63	572001	87
375023	33	482497	61	586001	73,77
375111	63	482582	63		,83
375113	33	482986	63	586002	21,73
375417	77	483313	63		,77,87
375538	21	483413	41	586003	9,11,73
375569	13,15	483414	41		,83,87
376054	31	483415	41	586018	37
376056	31	483416	59	586019	35
376073	31	483417	67	588176	91
376108	31	483419	61	600006	9,11
376123	41	483420	61	600008	9,11
380168	41	483478	59	600009	9,11,83
380183	67	499162	7	600011	19,21
380211	73	500004	63		,83
380214	77	500012	7,31,77	600021	87
380215	77		,87	601001	73
380272	77	500013	7,97	603005	85,95
380286	73	500014	19	603020	83
380394	7	500015	7	603023	29

NUMERICAL INDEX

Part Number	Page
615041	35
615042	19
615043	25,31
615044	31,95
615045	19
616003	7
624011	99
624016	91
624021	83
629019	9,11,83
630007	7
630008	9,11,19 ,21
745057	33
801183	91
801981	33
813316	63
813361	87
813388	63
813422	13,15 ,29
813426	31
813429	41
813435	29
813443	41
813499	59
813500	63
813784	63
814118	41
814251	63
851648	67
891950	59
900455	41
900676	91
900678	91
900679	91
900790	75
900798	73
900827	29
900829	29
900989	91
901182	91
901187	91
901224	77
901225	77
901226	77
901227	77
901228	77
901240	77
901256	77
901350	29
901369	75
901432	13,15
901448	29
901766	73
901767	77
902066	75
902163	83
902164	83
902166	7
902223	77
902224	77
902227	75
902286	33
902624	43
902641	57
902767	57
902771	57
902773	57
902792	43
902807	41,63
902900	41,63
902915	91
903082	67
903422	91
903423	91
903424	91
903425	91
903459	91
903541	13,15
903588	63
903627	77
903631	73
903640	73
903736	85
903750	41
903754	63
903792	85
904116	13,15
904228	7,13,15 ,31,61 ,67,73 ,77,87 ,97
904229	7,29,31 ,33,35 ,37,41 ,63,73 ,75,83 ,97
904230	29,37 ,41,63
904231	13,15 ,29,35 ,87
904232	7
904281	63,77 ,83
904315	75
904316	75
904317	75
904318	75
904359	37
904448	73
904501	13,15
904502	13,15
904547	31
904550	31
904556	29
904558	29
904559	7
904601	91
904639	87
904640	7
904696	73
904697	77,83
904698	13,15 ,35,73 ,75,77 ,79
904748	73
904749	73
904750	73
904751	73
904792	75
904808	13,15
904850	7
904851	7
904852	7
904853	7
904854	7
904882	59
909514	43
910161	61,63 ,67
910162	41
911618	65
911620	65
920924	69
920925	69
921031	35
921058	21
921063	31
921072	73
921161	35
922325	87
923294	67
923384	41
923679	13,15
923681	13,15
923901	77
923927	87
923976	77
923987	87
923988	87
924635	23
924696	19
924731	67
925536	39,63 ,65
925966	35
926989	77
927026	83
927048	33
927479	21
927568	13,15
928041	7
928351	19
928502	75
928664	41
928927	77
929006	65
929007	65
929008	65
929009	65
929010	65
929011	65
929012	65
929013	65
929014	65
929226	41
929322	35
930046	77
930139	29
930151	77
930154	77
930161	77
930162	77
930163	77
930165	77
930166	77
930182	77
930198	77
930200	77
932032	77
932050	77
932056	77
932057	77
932058	77
935190	57
935196	57
935197	57
935198	57
935202	57
935203	57
935204	57
935211	57
935212	51,57
935218	57
935219	43
935613	63
935614	63
936295	39,43 ,51
936296	39,43 ,53
936299	43
936300	43
936301	43
936302	43
936303	43

NUMERICAL INDEX

Part Number	Page
936304	43
936305	43
936307	43
936308	43
936310	43
936311	43
936312	43
936313	43
936314	45
936315	45
936316	45
936317	45
936319	45
936320	45
936321	45
936322	45
936323	45
936324	45
936325	45
936326	45
936327	45
936328	45
936329	45
936330	45
936331	45
936332	45
936333	45
936335	45
936340	47
936341	47
936342	47
936344	49
936354	49
936355	49
936356	49
936358	49
936359	51
936360	51
936361	51
936362	51
936363	51
936364	51
936365	51
936366	51
936367	51
936368	51
936369	51
936370	51
936371	49,51
936372	51
936373	51
936374	51
936375	51
936395	53
936396	53
936406	53
936407	53
936408	55
936411	57
936412	57
936413	57
936414	57
936415	57
936418	57
936421	57
936423	57
938006	49
938007	49
938008	49
938009	49
938010	49
938011	49
938012	49
938013	49
938014	49
938237	39,43 ,45
938238	39,43 ,47
938239	39,43 ,55
938240	45
938241	45
938242	39,47 ,49
938243	47
938244	47
938245	47
938246	47
938247	49
938248	39,55 ,57
938249	57
938250	43
960273	73
960753	31
975062	77
985012	77
985014	75
989151	63
991650	91
991657	91
991658	91
999011	97
999027	73
DECWAR	91