RUTHZIL TRATOR COMERCIAL DE PEÇAS LTDA 11 97083-6812 ROLANDO CITRANGULO

DYNAPAC
CP142

SPARE PARTS CATALOGUE

SCP142-1EN2

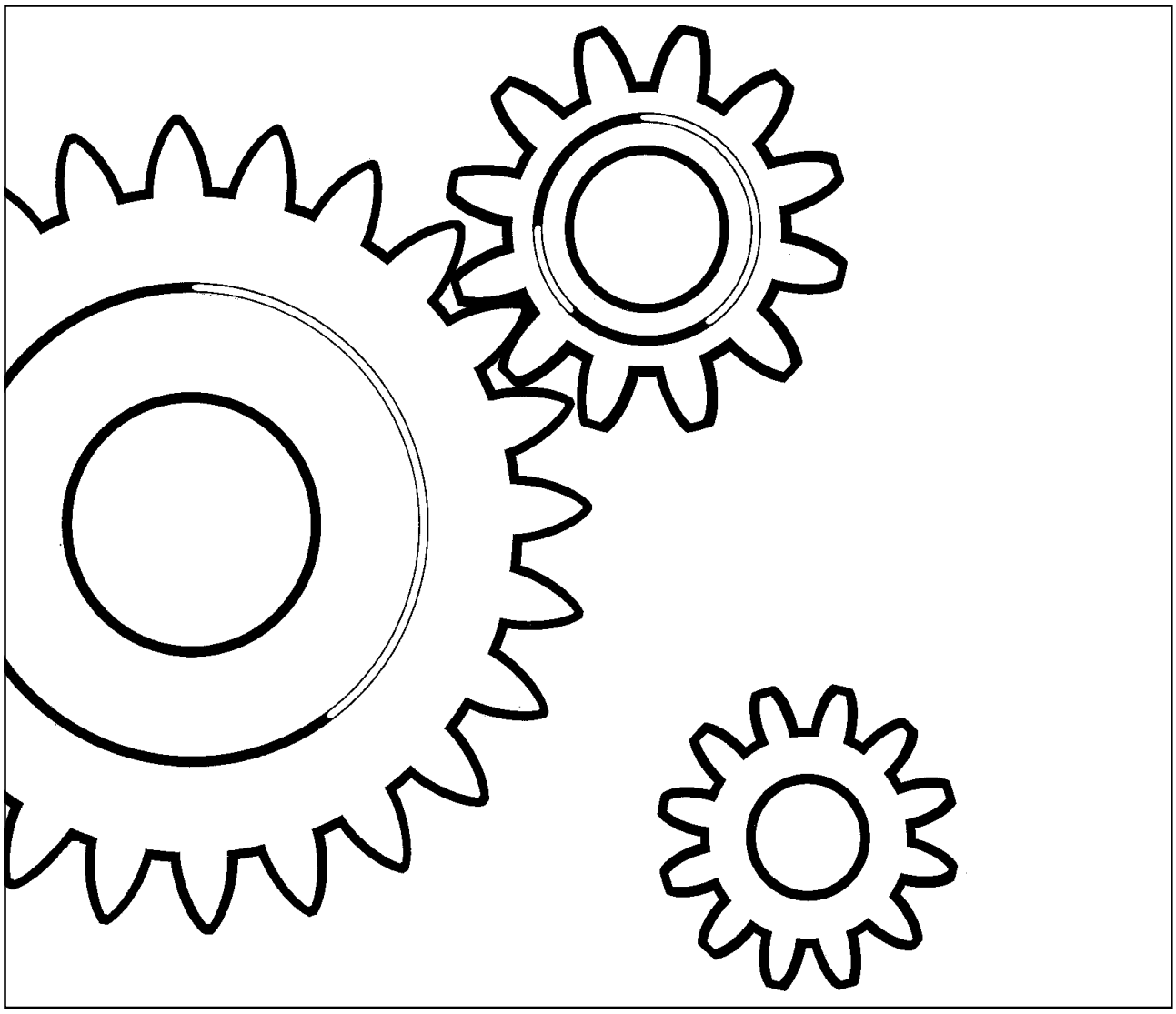

DYNAPAC

Box 504, SE-371 23 Karlskrona, Sweden
Phone: +46 455 30 60 00, Fax: +46 455 30 60 10
www.dynapac.com

DYNAPAC

Pneumatic Tire Roller
CP142

Spare Parts Catalogue
SCP142-1EN2

Valid from roller serial number:

**2163BR2000* -*

Diesel engines:

CUMMINS 4B4.5 - 99C

Published catalogue issues valid for these rollers:

Catalogue	*Issue date*	*Valid for serial numbers*
SCP142-1EN0.5	*2004-06*	*Replaced by SCP142-1EN1*
SCP142-1EN1	*2004-07*	*Replaced by SCP142-1EN2*
SCP142-1EN2	*2005-05*	*See above*



We reserve the right to change specifications without notice.
Printed in Sweden.

DYNAPAC

RESERVDELSBESTÄLLNING

Följande uppgifter ska lämnas vid beställning av reservdelar för att undvika leveransfel:

1. Maskintyp.
2. Vältens serienummer.
3. Antal av önskad reservdel.
4. Reserdelens artikelnummer.
5. Reservdelens benämning.
6. Måttuppgifter vid beställning av metervara.

ORDERING SPARE PARTS

To avoid errors in delivery, please give the following information when ordering spare parts:

1. Type of machine.
2. Roller serial number.
3. Quantity required.
4. Part number.
5. Parts denomination.
6. Dimensions when ordering per length.

ERSATZTEILBESTELLUNG

Zur Vermeidung von Fehllieferungen sind bei der Bestellung von Ersatzteilen folgende Angaben zu machen:

1. Maschinentyp.
2. Herstellungsnummer.
3. Bestellmenge. (Quantity)
4. Ersatzteilnummer. (Part Nº)
5. Ersatzteilbenennung. (Denomination)
6. Massangaben bei Bestellung von Meterware.

ORDINI DI RICAMBI

Per evitare errori nelle consegne di ricambi, Vi preghiamo di comunicarci le seguenti informazioni al momento dell 'ordinazione:

1. Tipo di macchina.
2. Numero di serie della macchina.
3. Quantità dei pezzi desiderati. (Quantity)
4. Numero di codice del pezzo. (Part Nº)
5. Descrizione del pezzo di ricambio. (Denomination)
6. Misura, in caso di ordine per metro.

PEDIDO DE RECAMBIOS

Para evitar errores en las entregas, deberán indicarse los siguientes datos al hacer un pedido de recambios:

1. Tipo de máquina.
2. Número de serie.
3. Cantidad de piezas deseadas. (Quantity)
4. Número de artículo de la pieza de recambio. (Part Nº)
5. Denominación de la pieza. (Denomination)
6. Indíquese la medida al solicitar un artículo que se expide por metros.

COMMANDE DE PIECES DE RECHANGE

Les indications suivantes doivent être fournies lors de la commande de piéces de rechange, afin d'éviter toute erreur de livraison:

1. Type de machine.
2. Numéro de série.
3. Quantité désirée de pièce de rechange. (Quantity)
4. Numéro de la piéce de rechange. (Part Nº)
5. Dénomination de la piéce de rechange. (Denomination)
6. Longueur en cas de commande au mètre.

YOUR AGENT/DEALER:

DYNAPAC

Text pages

The text pages is structured as the picture on the right.

1. This is the remarks for specific items and the descriptions of the remarks is at the bottom of the parts list.
2. Parts indicated by a dot and moved to the right are included when buying the assembled unit above.
3. Spare parts and service code for a specific part, mainly for internal use at Dynapac. "A" = Service part, "B" = Fast moving part, "C" = Suggested exchanged part and "D" = Regular spare part.

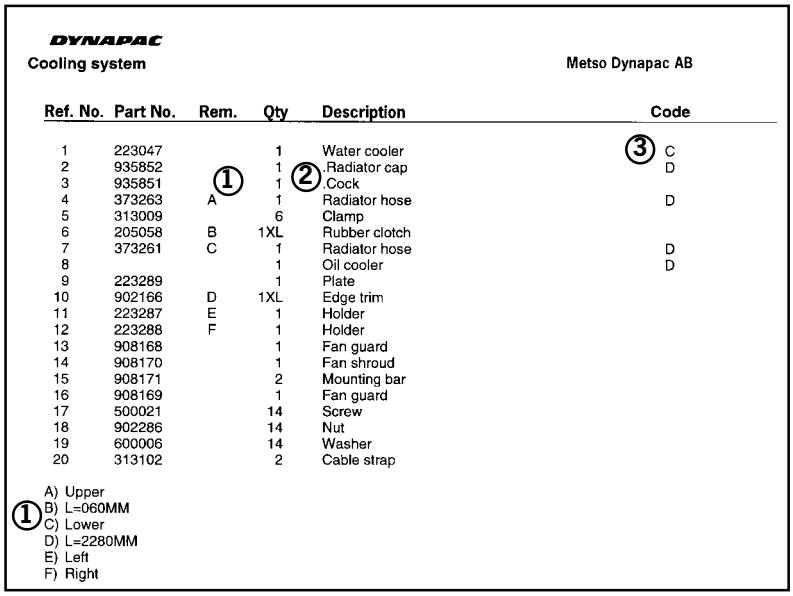

DYNAPAC

Cooling system — Metso Dynapac AB

Ref. No.	Part No.	Rem.	Qty	Description	Code
1	223047		1	Water cooler	③ C
2	935852		1	Radiator cap	D
3	935851	①	1	② Cock	
4	373263	A	1	Radiator hose	D
5	313009		6	Clamp	
6	205058	B	1XL	Rubber clotch	
7	373261	C	1	Radiator hose	D
8			1	Oil cooler	D
9	223289		1	Plate	
10	902166	D	1XL	Edge trim	
11	223287	E	1	Holder	
12	223288	F	1	Holder	
13	908168		1	Fan guard	
14	908170		1	Fan shroud	
15	908171		2	Mounting bar	
16	908169		1	Fan guard	
17	500021		14	Screw	
18	902286		14	Nut	
19	600006		14	Washer	
20	313102		2	Cable strap	

① A) Upper
B) L=060MM
C) Lower
D) L=2280MM
E) Left
F) Right

Changes

PARTS INFO	SERVICE INFO	GROUP	PAGE	NOTES

Notes

Notes

DYNAPAC

PÄRMETIKETT

För att undvika fel vid reservdelsbeställning finns här nedan två etiketter som passar i fickorna på pärmarnas ryggar. På dessa kan man se från vilket vältnummer av aktuell maskin reservdelskatalogen gäller. Gör så här:

1. Tag denna sida ur pärmen.
2. Klipp ut etiketten till **VÄNSTER** (1) och sätt in den i fickan på **DENNA** pärmens rygg.
3. Finns det en etikett till **HÖGER** (2), kan denna användas på pärmen för **FÖREGÅENDE** utgåva av denna katalog.
4. Kasta detta papper.

BINDER LABEL

To avoid errors when ordering spare parts use the labels below to identify the catalogues on the back of the binder. The label contain the serial number range for which the catalogue is valid. Do like this:

1. Remove this page from the binder.
2. Cut out the **LEFT** label (1) and put it on **THIS** binders back.
3. If there is a label to the **RIGHT** (2), it can be used on the binder for **PRECEDING** issue of this catalogue.
4. Throw away this paper.

KATALOG-BESCHRIFTUNG

Zur Vermeidung von Fehlen bei der Ersatzteilbestellung benutzen Sie bitte die unteren Beschriftungen, um die Kataloge auf der Rückseite zu kennzeichen. Auf der Beschriftung ist angegaben, für welche Maschinennummern der jeweilige Katalog gültig ist. Ablauf:

1. Nehmen Sie dieses Blatt aus dem Katalog.
2. Schneiden Sie die **LINKE** Beschriftung (1) aus. Schieben Sie die Beschriftung in die tasche auf **DEM** Katalogrücke.
3. Sollte die Beschriftung unten **RECHTS** (2) mitgeliefert werden, kennzeichen Sie damit bitte die **ÄLTERE** Ausführung dieses Kataloges.
4. Den Rest dieses Blattes bitte vernichten.

ETICHETTA POSTA SUL RACCOGLITORE

Per evitare errori quando ordinate pezzi di ricambio, usate le etichette in calce che servono ad identificare i cataloghi sul retro del raccoglitore. L'etichetta indica il numero di matricola delle maccine prese in considerazione nel catalogo.

1. Rimuovete questa pagina dal raccoglitore.
2. Ritagliate l'etichetta posta a **SINISTRA** (1) e ponetela sul retro **DEL** raccoglitore.
3. Se trovate anche un'etichetta sulla **DESTRA** (2), ritagliatela e ponetela sul raccoglitore relativo alla **PRECEDENTE** edizione del catalogo.
4. Distruggete questo foglio.

ETIQUETA PARA LA CARPETA

Para evitar errores al pedir repuestos utilicen las etiquetas abajo descritas para identificar los catálogos en la parte trasera de la carpeta. En la etiqueta se ven los números de referencia de la serie para la cual es válido el catálogo. Instrucciones:

1. Quitar esta página de la carpeta.
2. Corta la etiqueta **IZQUIERDA** (1) y ponerla est **ESTA** carpeta en la parte trasera.
3. Si hay una etiqueta en la parte **DERECHA** (2) se puede utilizar en la carpeta para el catálogo que **PRECEDE** a esta.
4. Tirar esta hoja.

ETIQUETAGE DU CATALOGUE

Afin d'éviter des erreurs lors de commandes de pièces de rechange, nous vous conseillons d'apposer les marquages ci-dessous à l'arrière du classeur, pour identifier les catalogues. Ce marquage indique les numéros de série pour lesquels le catalogue est adapté. Il convient de procéder de la façon suivante:

1. Retirez cette page du classeur.
2. Découpez l'étiquette de **GAUCHE** (1), et apposez-la à l'arrière de **CE** catalogue.
3. Si il y a une étiquette à **DROITE** (2), vous pourrez l'apposer sur le classeur de l'edition **PRECEDENTE** du catalogue.
4. Détruire cetta feuille.

1.



CP142

Catalogue **SCP142-1EN2**
Valid **from** serial number:
***2163BR2000* -**

TABLE OF CONTENTS

Page

CP142 SN 2163BR2000 - 2

Frame 4

Frame and ballast 6
Hood and covers 8
Scrapers 10
Scrapers and mat 12
Sprinkler system One pump 14
Sprinkler system Two pumps, Option 16

Suspension 20

Front suspension 22
Rear suspension 24
Wheel 26

Engine 28

Engine 30
Cooling system 34
Air cleaner 36
374727 Air filter, cpl 38
Fuel system 40
Exhaust system 42

Hydraulic system 44

Propulsion system 46
381280 Hydraulic pump 48
938237 Rotary group 50
938238 Control unit 52
938242 Positioning piston 54
936295 Valve block, cpl 56
936360 Relief valve 58
936361 Relief valve 60
936296 Charge pump 62
936395 Charge pump 64
938239 Control module 66
938248 Control module 68
Drain system 70
Speed system 72
Steering system 74
193807 Steering cylinder 76
925536 Steering unit 78
Brake system 80
260761 Solenoid valve 82

Electrical equipment 84

Electrical equipment 86
Driving & working lights 88
Instrument panel, relay, fuses 90

Drivers platform 94

Drivers platform 96
Rops and safety belt 98
Engine controls 100

Decals 102

Decals ---- 104

Standard equipment ---- 106

Standard equipment ---- 108

Optional equipment ---- 110

Canopy ---- 112
Rotating beacon ---- 114
SMV sign ---- 116
Tool equipment ---- 118

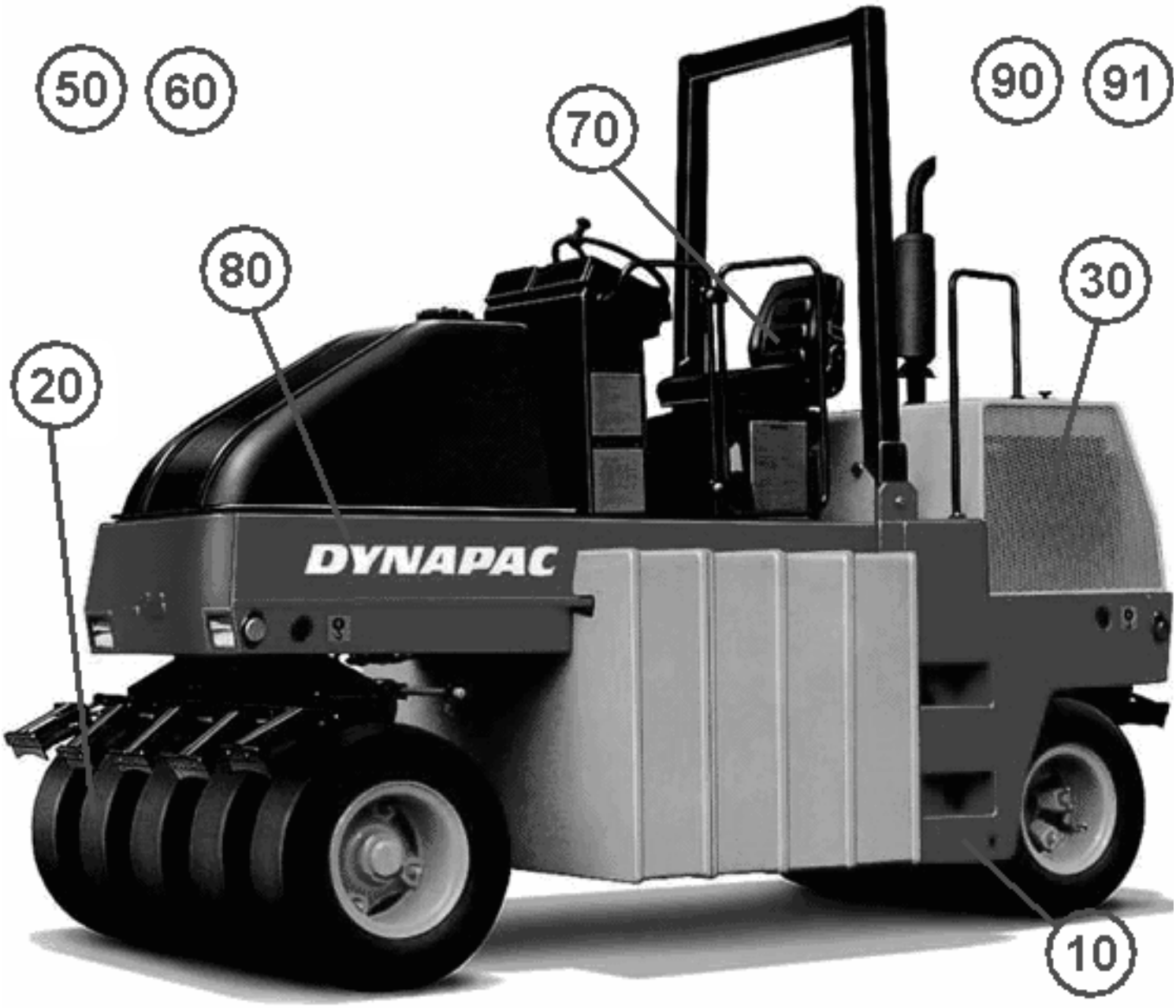
50
60
70
90
91
80
30
20
DYNAPAC
10

Ref. No.	Part No.	Rem.	Qty	Description	Code
10				Frame (Page 4)	
20				Suspension (Page 20)	
30				Engine (Page 28)	
50				Hydraulic system (Page 44)	
60				Electrical equipment (Page 84)	
70				Drivers platform (Page 94)	
80				Decals (Page 102)	
90				Standard equipment (Page 106)	
91				Optional equipment (Page 110)	

Ref. No.	Part No.	Rem.	Qty	Description	Code
10				Frame and ballast (Page 6)	
15				Hood and covers (Page 8)	
20				Scrapers (Page 10)	
25				Scrapers and mat (Page 12)	
30				Sprinkler system One pump (Page 14)	
40				Sprinkler system Two pumps, Option (Page 16)	

Frame and ballast

18051

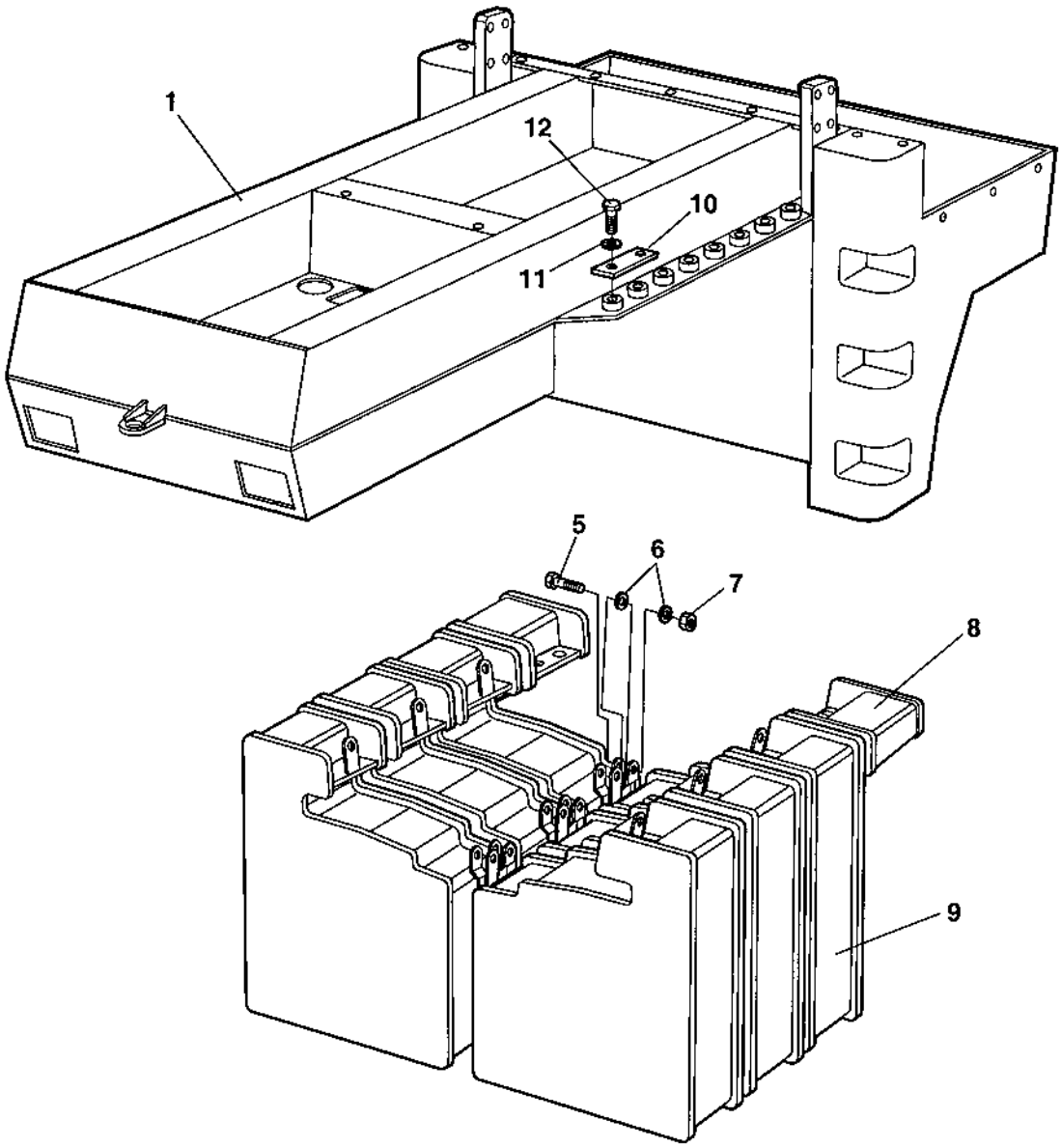

Frame and ballast

Ref. No.	Part No.	Rem.	Qty	Description	Code
1	388896		1	Frame	
5	193581		8	Screw	
6	904559		16	Washer 25x45x8	
7	570016		8	Nut M24	
8	388939	A	2	Step	
9	193557	B	6	Ballast box	
10	193580		8	Plate	
11	904232		16	Washer 17x30x3	
12	500134		16	Screw M16x60	

A) Only in use together with 6 or less ballast boxes
B) STD = 6 ballast boxes, Option = 8 ballast boxes

Hood and covers

18048

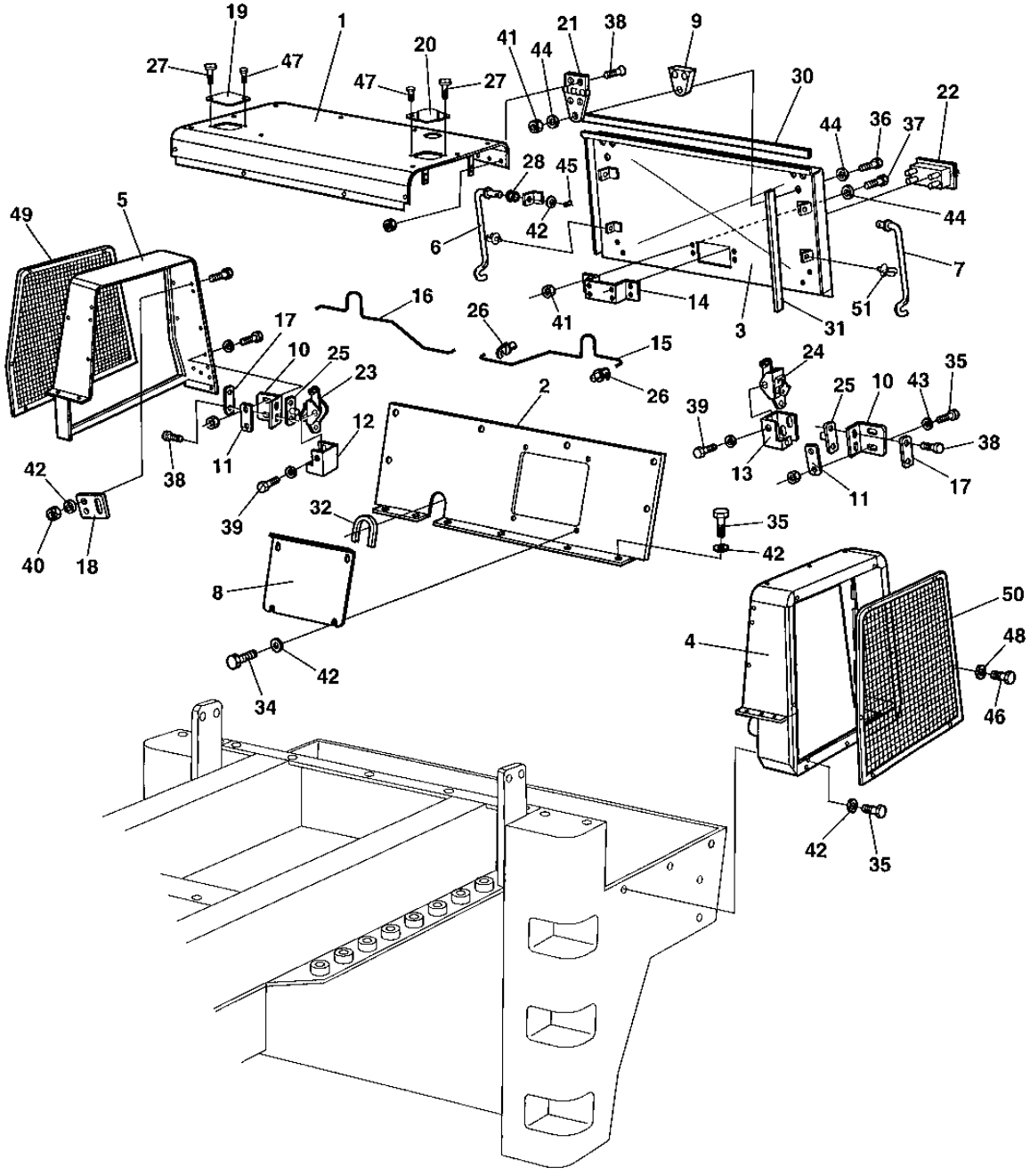

Hood and covers

Ref. No.	Part No.	Rem.	Qty	Description	Code
1	388870		1	Hood	
2	381686		1	Cover	
3	380426		1	Rear cover	
4	388880		1	Air cover, left	
5	388912		1	Air cover, right	
6	192940		1	Rod, right	
7	192941		1	Rod, left	
8	380394		1	Cover	
9	380400		2	Shim	
10	380399		2	Bracket	
11	381781		4	Lock plate	
12	381779		1	Lock bracket, right	
13	381780		1	Lock bracket, left	
14	380427		1	Stirrup	
15	382017		1	Rod, left	
16	382018		1	Rod, right	
17	382061		2	Lock plate	
18	381851		1	Bracket	
19	381297		1	Cover	
20	388932		1	Cover	
21	928041		2	Hinge	D
22	904850		1	Handle	
	938176		1	.Key	
23	904851		1	Forked lock, right	
24	904852		1	Forked lock, left	
25	904853		2	Control pin	
26	904854		4	Lock fitting	
27	499162		2	Hand knob	
28	192939		2	Grommet	
29	192938		2	Clamp	
30	202056	A	N	Edge trim	
31	202056	B	N	Edge trim	
32	902166	C	N	Edge trim	
34	500053		8	Screw M8-1,25x20 8,8	
35	500021		53	Screw M8-1,25x25 8,8	
36	500015		6	Screw M6-1x30 8,8	
37	500013		8	Screw M6-1x16 8,8	
38	513008		8	Screw	
39	500012		4	Screw M6x12	
40	570005		10	Nut M8	
41	570004		10	Nut M6	
42	904640		41	Washer 8,4x22x3	
43	904229		12	Washer 8,4x16x1,5	
44	904228		20	Washer 6,4x12x1,5	
45	630007		2	Split pin	
46	500027		12	Screw M10x22	
47	500505		2	Screw M8x20 8,8	
48	904230		12	Washer 10,5x22x2	
49	388921		1	Grid, right	
50	388910		1	Grid, left	
51	192938		2	Clamp	

A) L=1300 mm
B) L=653 mm
C) L=1000 mm

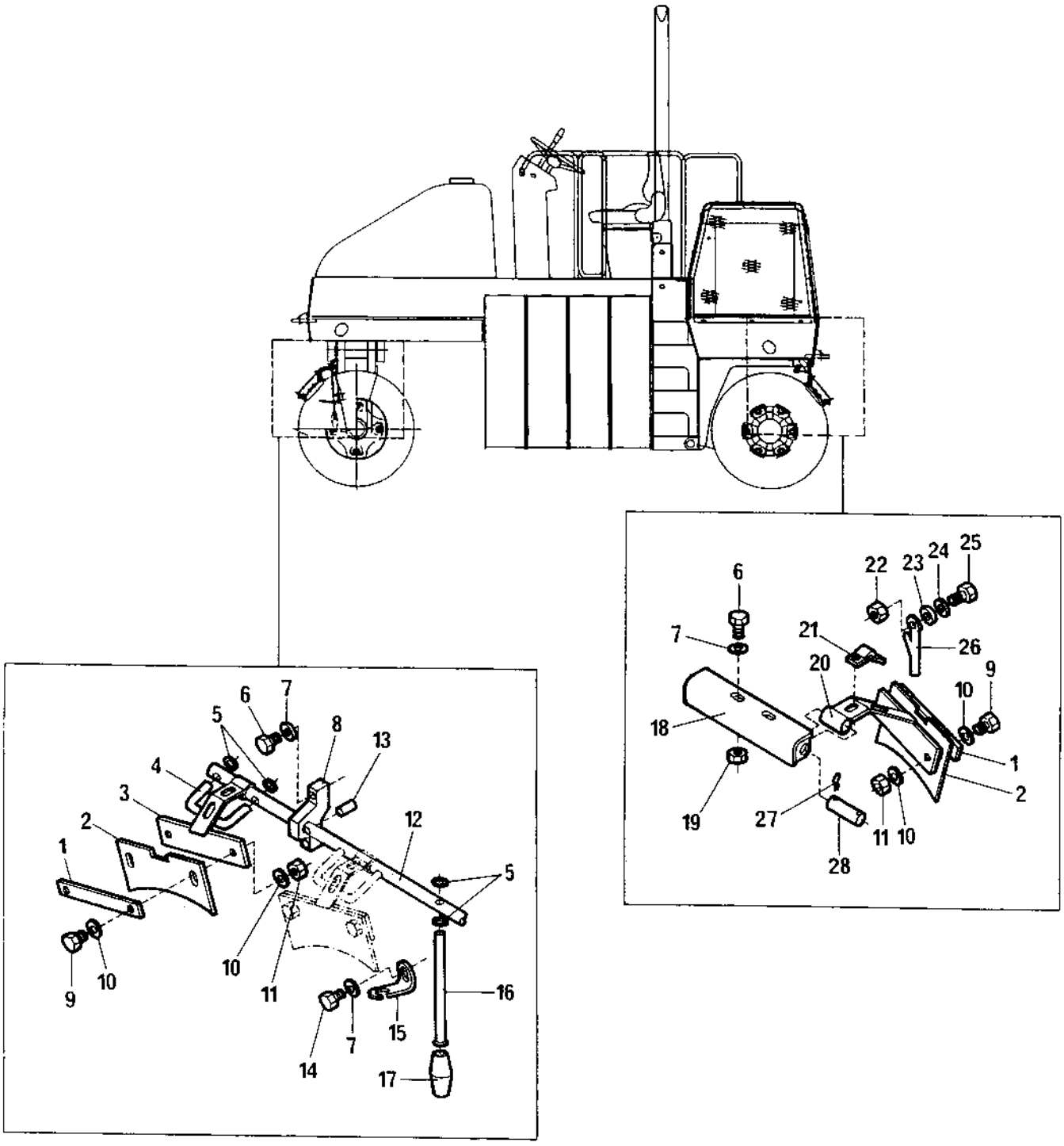
1
2
3
4
5
6
7
8
9
10
11
12
13
14
15
16
17
18
19
20
21
22
23
24
25
26
27
28

Ref. No.	Part No.	Rem.	Qty	Description	Code
1	193590		9	Bracket	
2	193591		9	Scraper	B
3	194149		5	Bracket	
4	194080	A	5	Bracket	
5	194092	B	23	Retaining ring	
	152001	C	23	Retaining ring	
6	500046		8	Screw M12x30H 8,8 FZB	
7	600009		14	Not used on this model	
8	194079		2	Bearing housing	
9	500047		18	Screw M8-1,25x35 8,8	
10	904229		36	Washer 8,4x16x1,5	
11	586003		18	Lock nut M8	
12	194083		1	Shaft	
13	629019		2	Expanding pin	
14	500046		2	Screw M12x30H 8,8 FZB	
15	194082		1	Lock	
16	194081	A	1	Lever	
17	192828		1	Handle	
18	193592		2	Bracket	
19	570007		4	Lock nut M12	
20	194150		4	Bracket	
21	194018		4	Bracket	
22	570006		4	Nut M10	
23	252793		4	Bushing	
24	600008		16	Washer	
25	500030		4	Screw M10-1,5x35H 8,8	
26	194078		4	Hook	
27	630008		8	Pin	D
28	251729		4	Shaft	

A) New design has grooves and is used together with 152001, item 5

B) In use together with the old design of item 4 and 16, which doesn't have any grooves

C) Only in use together with the new design of item 4 and 16

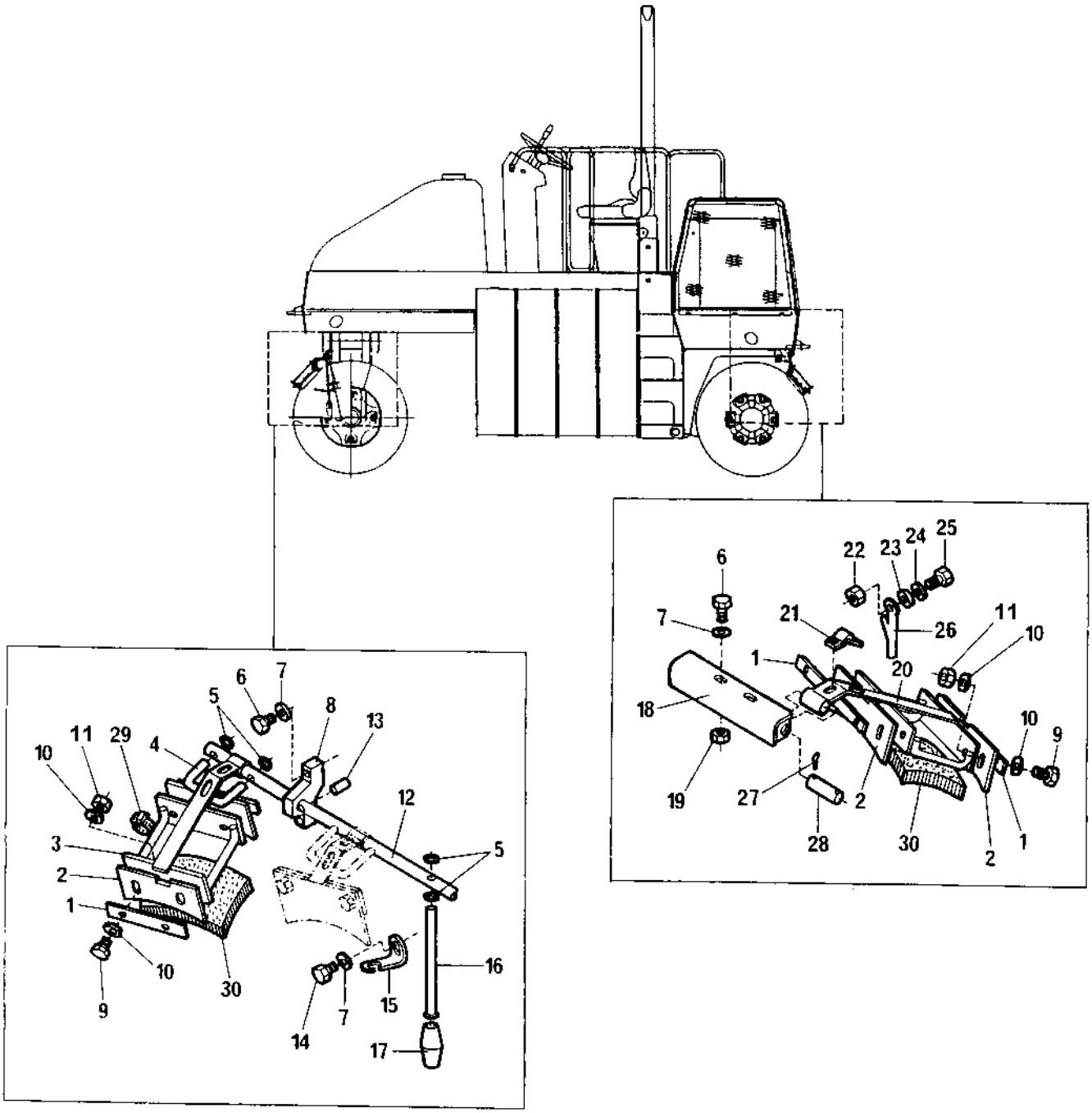
6
7
22
23
24
25
21
26
11
10
1
20
18
10
9
19
27
2
28
30
2
1
6
7
5
8
13
11
29
4
10
12
3
5
2
1
10
30
9
16
7
15
14
17

Ref. No.	Part No.	Rem.	Qty	Description	Code
1	193590		18	Bracket	
2	193591		18	Scraper	B
3	194019		5	Bracket	
4	194080	A	5	Bracket	
5	194092	B	23	Retaining ring	
	152001	C	23	Retaining ring	
6	500046		8	Screw M12x30H 8,8 FZB	
7	600009		14	Not used on this model	
8	194079		2	Bearing housing	
9	500047		36	Screw M8-1,25x35 8,8	
10	904229		72	Washer 8,4x16x1,5	
11	586003		36	Lock nut M8	
12	194083		1	Shaft	
13	629019		2	Expanding pin	
14	500046		2	Screw M12x30H 8,8 FZB	
15	194082		1	Lock	
16	194081	A	1	Lever	
17	192828		1	Handle	
18	193592		2	Bracket	
19	570007		4	Lock nut M12	
20	193586		4	Bracket	
21	194018		4	Bracket	
22	570006		4	Nut M10	
23	252793		4	Bushing	
24	600008		16	Washer	
25	500030		4	Screw M10-1,5x35H 8,8	
26	194078		4	Hook	
27	630008		8	Pin	D
28	251729		4	Shaft	
29	313041		72	Cable ties L=186 mm	
30	193600		9	Mat	B

A) New design has grooves and is used together with 152001, item 5

B) In use together with the old design of item 4 and 16, which doesn't have any grooves

C) Only in use together with the new design of item 4 and 16

Sprinkler system One pump

17165

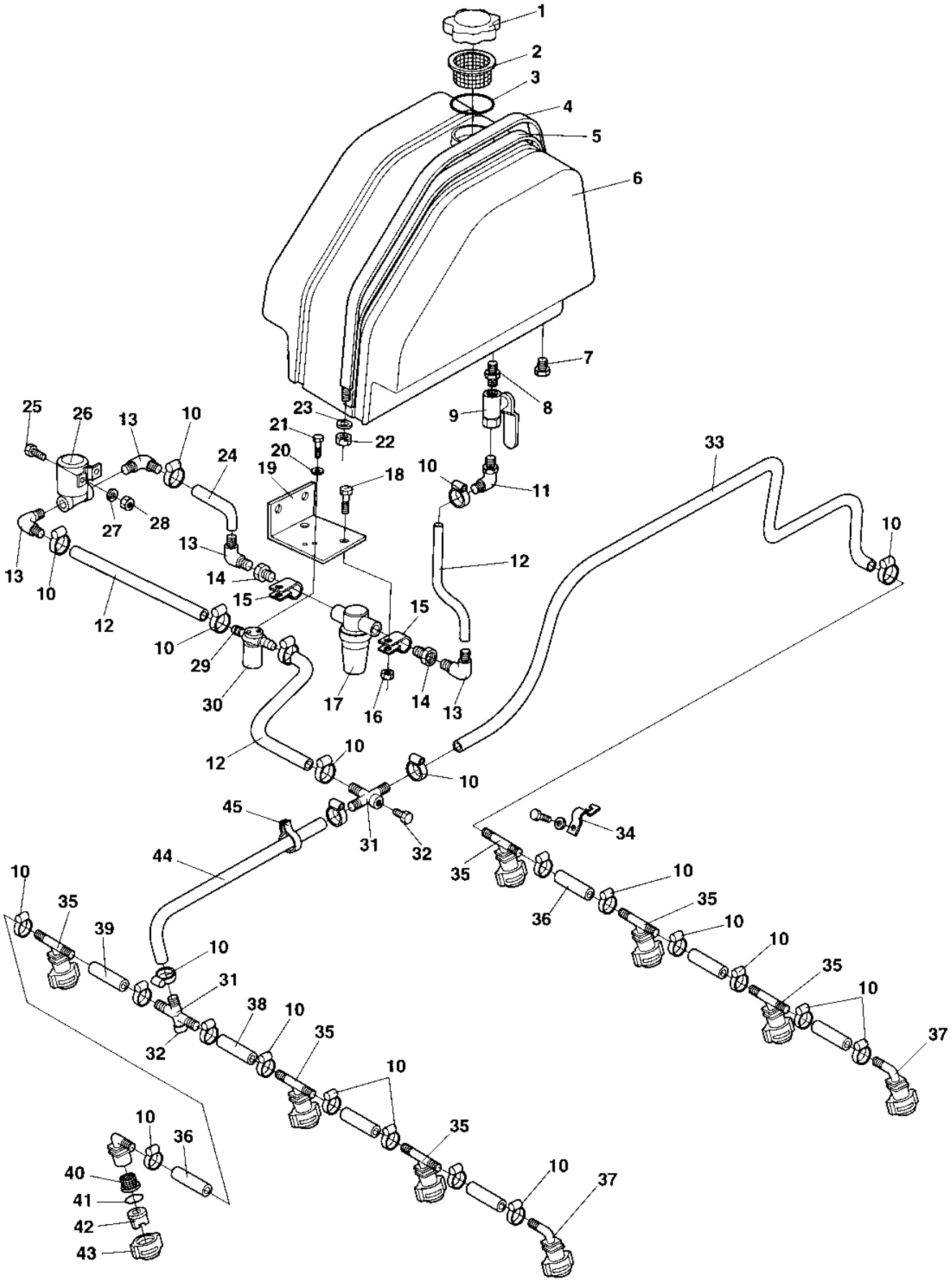

Sprinkler system One pump

Ref. No.	Part No.	Rem.	Qty	Description	Code
1	333228		1	Cap	
2	358846		1	Strainer	D
3	194093		1	O-ring	D
4	193571		2	Clamp	
5	297018	A	1	Rubber strip	
6	193472		1	Tank	
7	813422		1	Plug	
8	375569		1	Nipple	
9	904501		1	Ball valve	
10	313002		28	Hose clamp	
11	904502		1	Connection	
12	244054	B	N	Hose reinforced 0,65 m	
13	923734		4	Hose connection	
14	248491		2	Reducer	
15	927568		2	Clamp	
	374584	K	2	Spacer	
16	570004		2	Nut M6	
17	248513		1	Water filter	A
18	500075		2	Screw M6-1x25 8,8	
19	380784		1	Bracket	
20	904698		2	Washer 4,3x8x0,8	
21	500002		2	Screw M4-0,7x12H 8.8	
22	506019		4	Lock nut	
23	904231		4	Washer 13x24x2	
24	244054	C	N	Hose reinforced 0,65 m	
25	500075		2	Screw M6-1x25 8,8	
26	383697		1	Water pump	
27	904228		4	Washer 6,4x12x1,5	
28	570004		2	Nut M6	
29	901432		2	Hose connection	
30	287713		1	Solenoid valve	
31	194088		2	Tee-connector	
32	194087		2	Plug	
33	244054	D	N	Hose reinforced 0,65 m	
34	194018		9	Bracket	
35	194085		6	Nozzle body	D
36	244054	E	N	Hose reinforced 0,65 m	
37	901175		3	Nozzle body	D
38	244054	F	N	Hose reinforced 0,65 m	
39	244054	G	N	Hose reinforced 0,65 m	
40	903541		9	Strainer with valve	D
41	904116		9	Gasket	D
42	923679		9	Nozzle	D
43	923681		9	Quick coupling, black	D
44	244054	H	N	Hose reinforced 0,65 m	
45	313041		7	Cable ties L=186 mm	

A) L=4.33 m
B) L=900 mm
C) L=180 mm
D) L=3.5 m
E) L=2.22 m
F) L=65 mm
G) L=290 mm
H) L=1.5 m
K) Not illustrated

Sprinkler system Two pumps, Option

17166-1

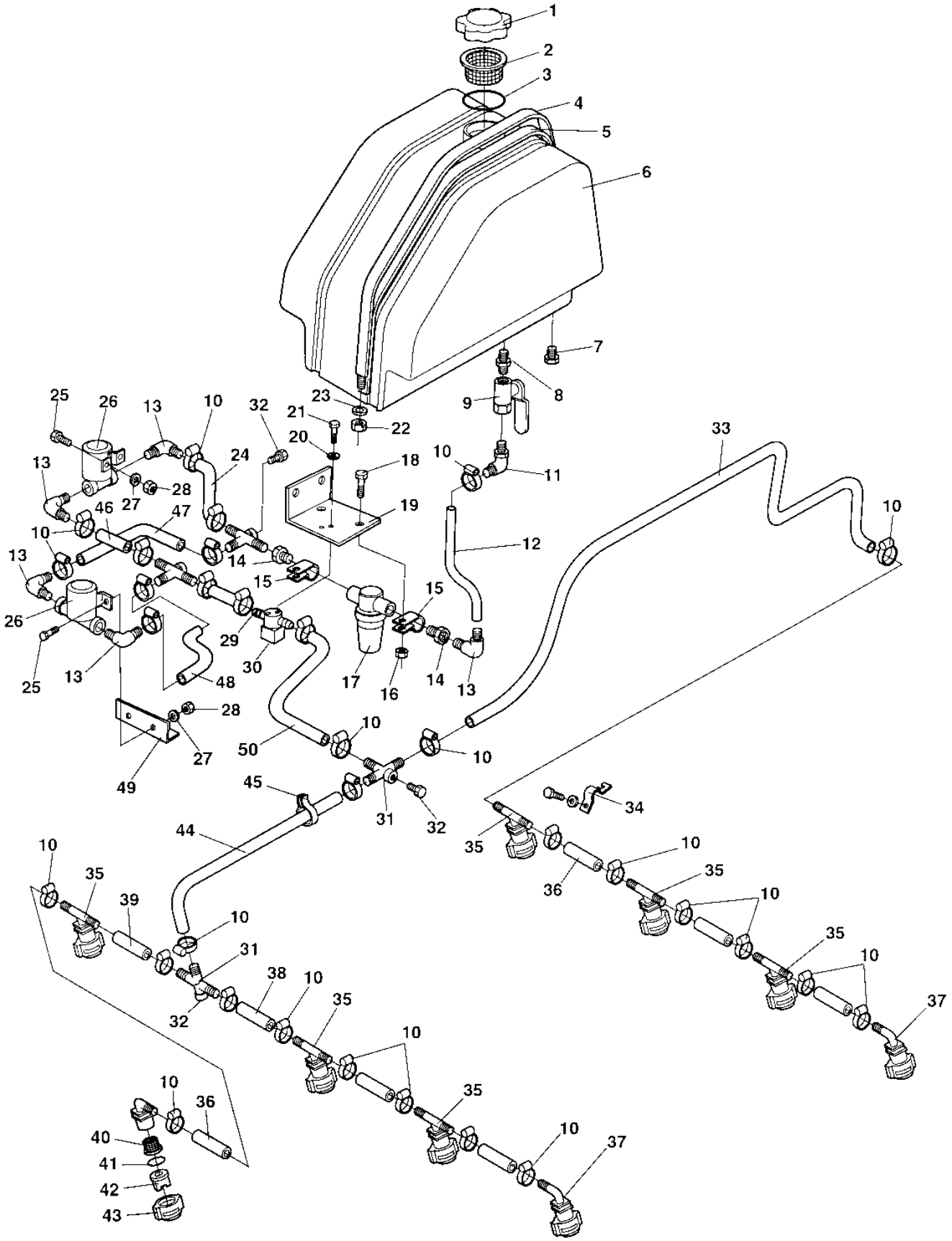

Sprinkler system Two pumps, Option

Ref. No.	Part No.	Rem.	Qty	Description	Code
1	333228		1	Cap	
2	358846		1	Strainer	D
3	194093		1	O-ring	D
4	193571		2	Clamp	
5	297018	A	1	Rubber strip	
6	193472		1	Tank	
7	813422		1	Plug	
8	375569		1	Nipple	
9	904501		1	Ball valve	
10	313002		36	Hose clamp	
11	904502		1	Connection	
12	244054	B	N	Hose reinforced 0,65 m	
13	923734		6	Hose connection	
14	248491		2	Reducer	
15	927568		2	Clamp	
	374584	P	2	Spacer	
16	570004		2	Nut M6	
17	248513		1	Water filter	A
18	500075		2	Screw M6-1x25 8,8	
19	380784		1	Bracket	
20	904698		2	Washer 4,3x8x0,8	
21	500002		2	Screw M4-0,7x12H 8.8	
22	506019		4	Lock nut	
23	904231		4	Washer 13x24x2	
24	244054	C	N	Hose reinforced 0,65 m	
25	500075		4	Screw M6-1x25 8,8	
26	383697		2	Water pump	
27	904228		6	Washer 6,4x12x1,5	
28	570004		4	Nut M6	
29	901432		2	Hose connection	
30	287713		1	Solenoid valve	
	384326		1	Cable harness	
31	194088		4	Tee-connector	
32	194087		4	Plug	
33	244054	D	N	Hose reinforced 0,65 m	
34	194018		9	Bracket	
35	194085		6	Nozzle body	D
36	244054	E	N	Hose reinforced 0,65 m	
37	901175		3	Nozzle body	D
38	244054	F	N	Hose reinforced 0,65 m	
39	244054	G	N	Hose reinforced 0,65 m	
40	903541		9	Strainer with valve	D
41	904116		9	Gasket	D
42	923679		9	Nozzle	D
43	923681		9	Quick coupling, black	D
44	244054	H	N	Hose reinforced 0,65 m	
45	313041		7	Cable ties L=186 mm	
46	244054	I	N	Hose reinforced 0,65 m	

A) L=4.33 m
B) L=900 mm
C) L=160 mm
D) L=3.5 m
E) L=2.22 m
F) L=65 mm
G) L=290 mm
H) L=1.5 m
I) L=100 mm
P) Not illustrated

Sprinkler system Two pumps, Option

17166-1

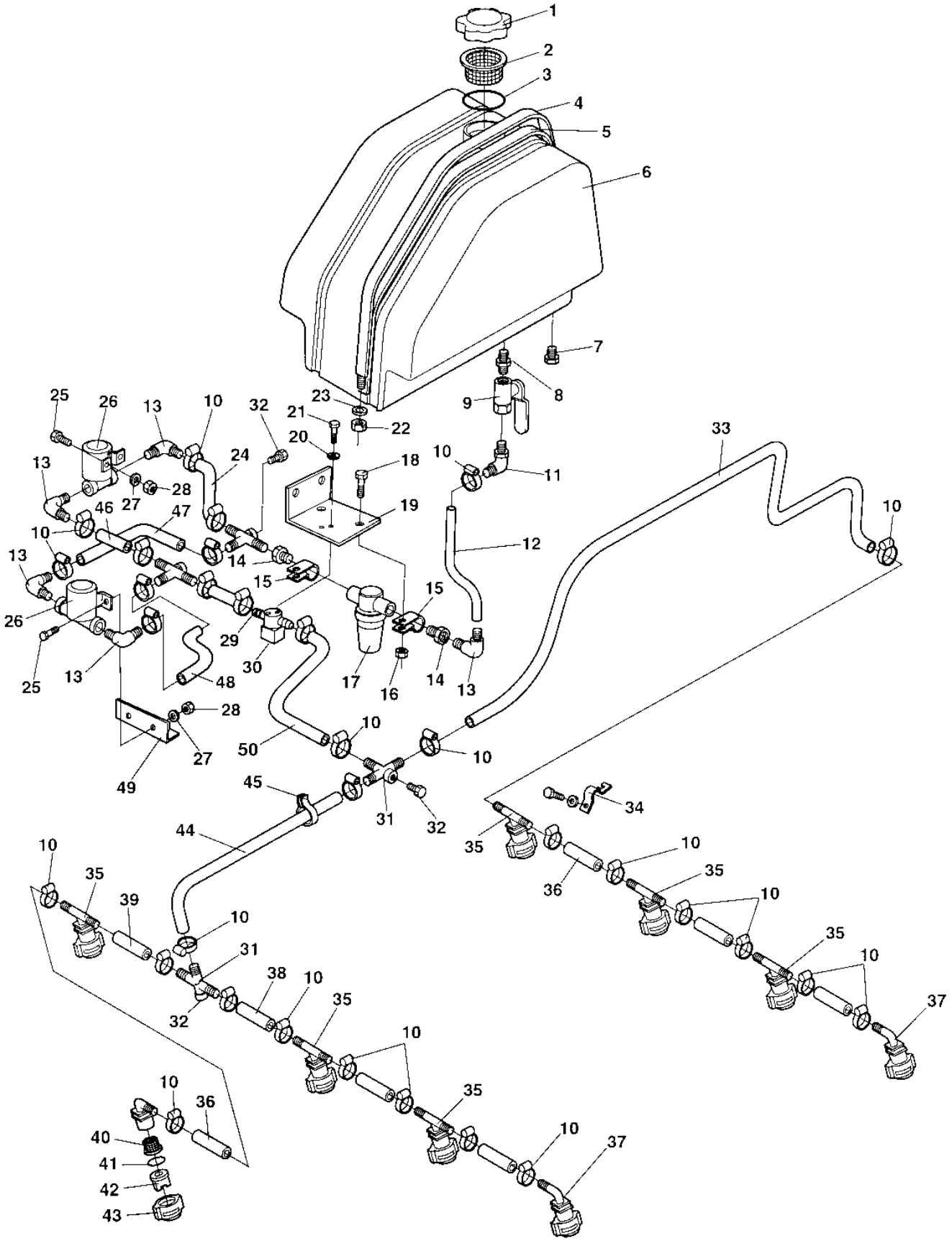

Sprinkler system Two pumps, Option

Ref. No.	Part No.	Rem.	Qty	Description	Code
47	244054	J	N	Hose reinforced 0,65 m	
48	244054	K	N	Hose reinforced 0,65 m	
49	380785		1	Bracket	
50	244054	Q	N	Hose reinforced 0,65 m	

J) L=230 mm
K) L=250 mm
Q) L=400 mm

Ref. No.	Part No.	Rem.	Qty	Description	Code
10				Front suspension (Page 22)	
20				Rear suspension (Page 24)	
30				Wheel (Page 26)	

Front suspension

16147

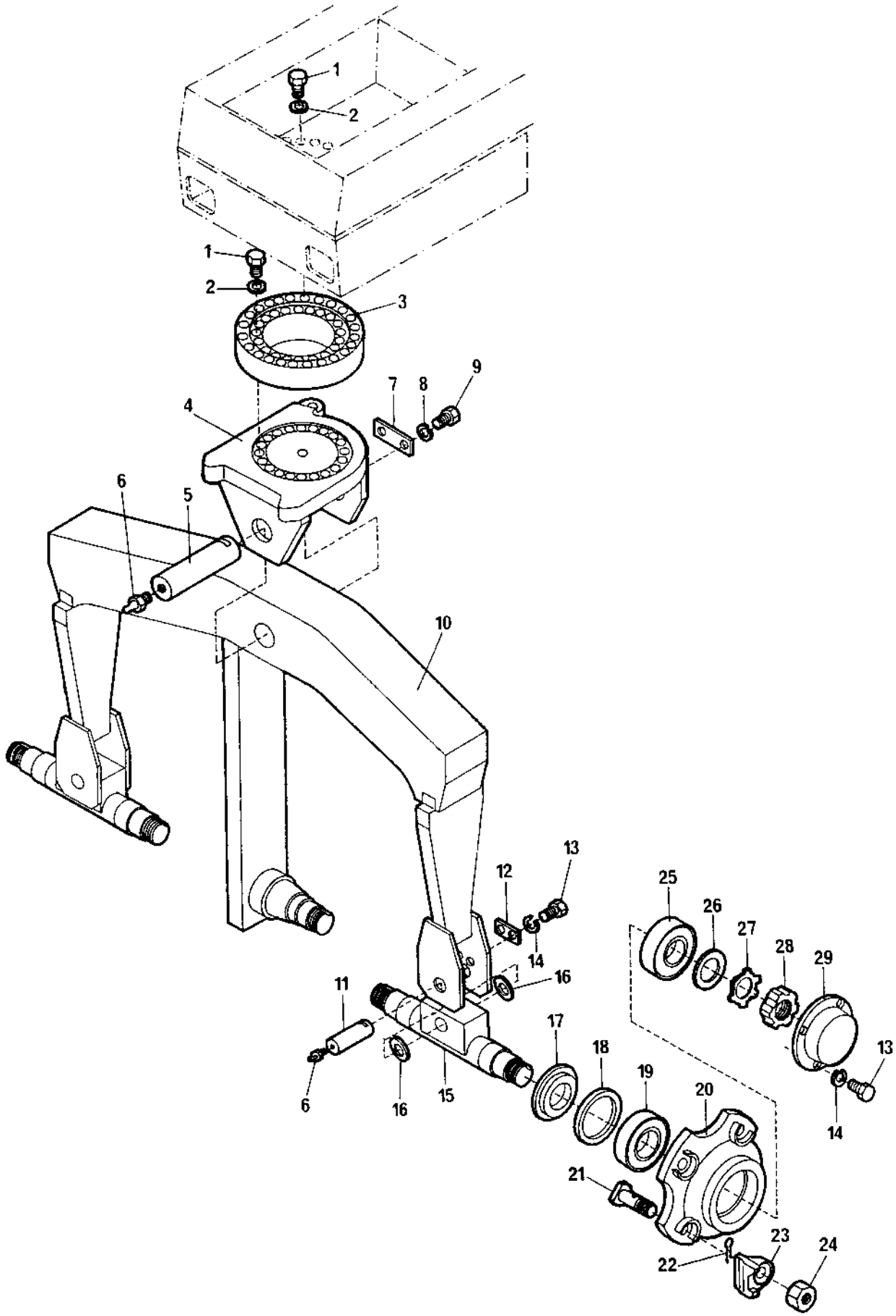

Front suspension

Ref. No.	Part No.	Rem.	Qty	Description	Code
1	500082		44	Screw M16x70	
2	904232		44	Washer 17x30x3	
3	192831		1	Bearing	D
4	193487		1	Guide ring	
5	193512		1	Shaft	
6	310037		3	Grease nipple	D
7	259211		1	Snap plate	
8	904231		2	Washer 13x24x2	
9	500035		2	Screw M12x020H	
10	193459		1	Front suspension	
11	264488		2	Shaft	
12	193513		2	Snap plate	
13	500075		19	Screw M6-1x25 8,8	
14	904228		19	Washer 6,4x12x1,5	
15	193520		2	Shaft	
16	264486		4	Spacer	
17	193521		5	Spacer	
18	928351		5	Seal ring	D
19	116009		5	Bearing	B
20	193469		5	Wheel nut	
21	193886		20	Screw	
23	193887		20	Lock wheel	
24	192424		20	Wheel nut	
25	924696		5	Bearing	B
26	193517		5	Spacer	
27	136010		5	Washer	
28	135010		5	Nut	
29	193465		5	Bearing cover	

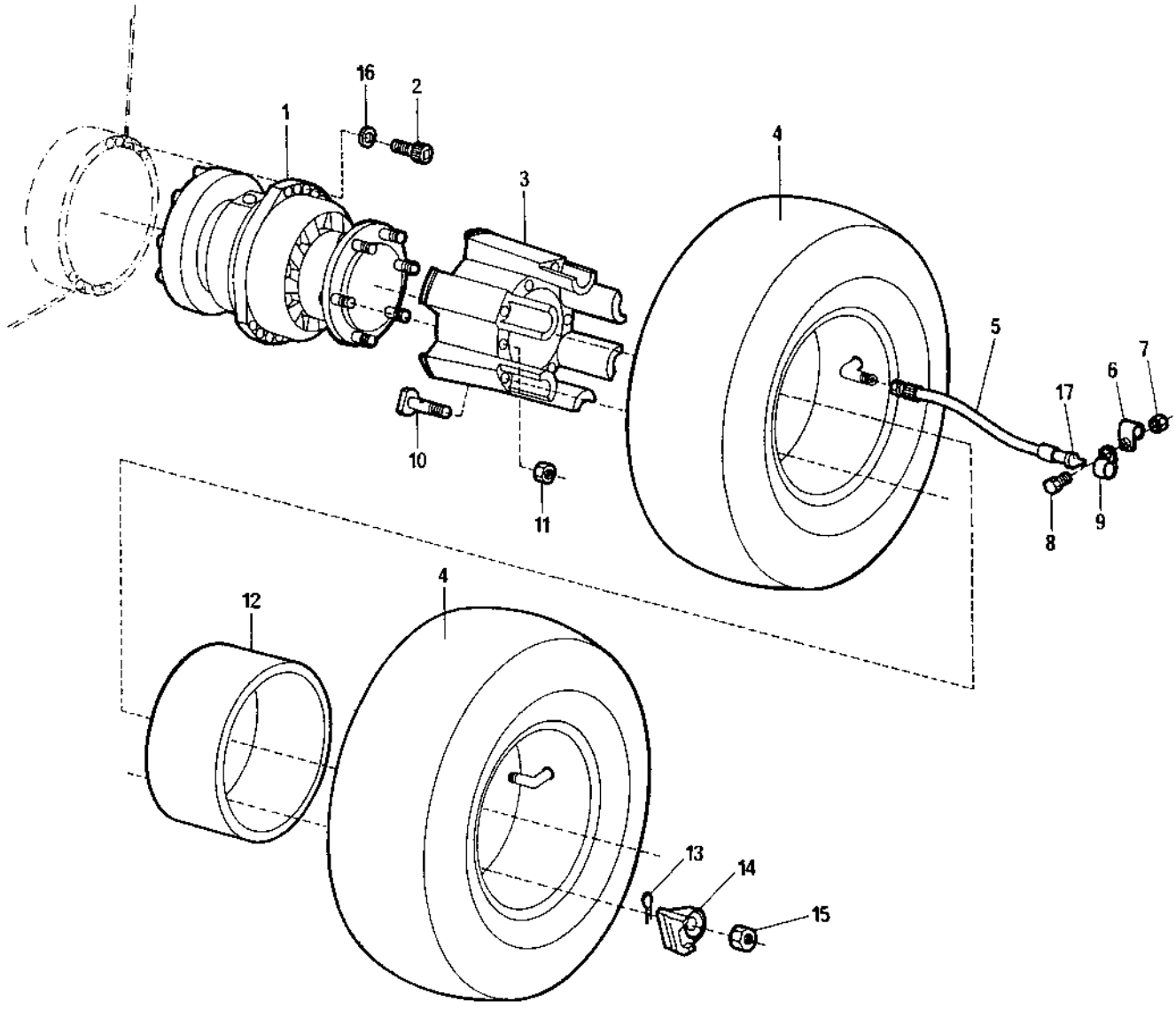
16
2
1
3
4
5
7
6
17
10
11
8
9
4
12
13
14
15

Rear suspension

Ref. No.	Part No.	Rem.	Qty	Description	Code
1	376123		2	Hydraulic motor	
	198247		2	Seal kit	
2	927479		20	Screw	
3	193467		2	Hub	
4			4	See section "Wheel"	
5	193573		2	Air hose	D
6	921058		2	Clamp	
7	586002		2	Lock nut M6	
8	500185		2	Screw M6-1x14 8,8	
9	921058		2	Clamp	
10	193886		12	Screw	
11	194011		12	Nut	
12	193565		2	Spacer	
13	630008		12	Pin	D
14	193887		12	Lock wheel	
15	192424		12	Wheel nut	
16	600011		20	Washer	
17	195214		2	Valve	D

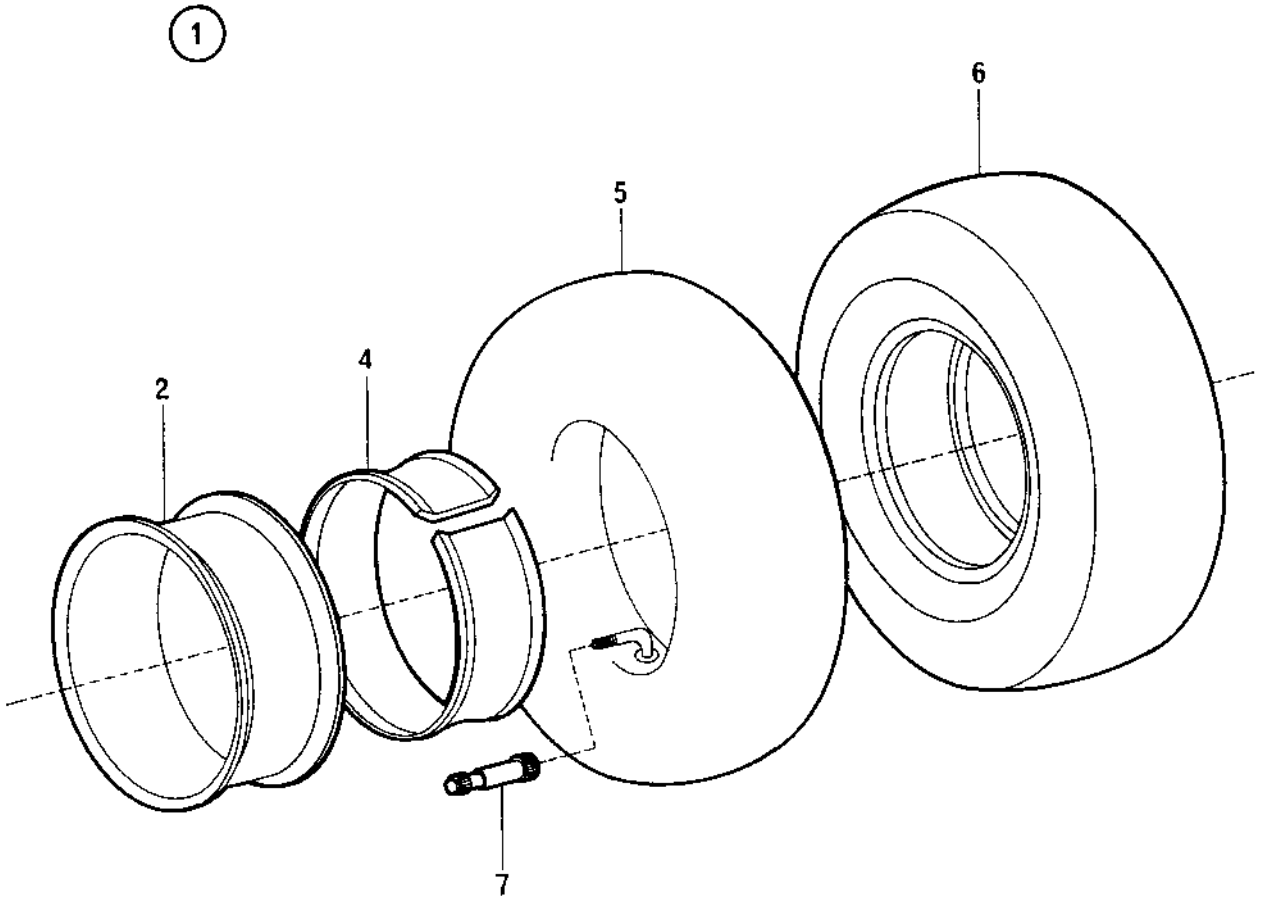
1
6
5
4
2
7

Wheel

Ref. No.	Part No.	Rem.	Qty	Description	Code
1	376578		9	Wheel, cpl	
2	194308		1	.Rim	
4	194325		1	.Rim liner	
5	374474		1	.Hose	D
6	194265	A	1	.Tyre	B
7	195214		1	Valve	D

A) 14 ply

Ref. No.	Part No.	Rem.	Qty	Description	Code
10				Engine (Page 30)	
20				Cooling system (Page 34)	
35				Air cleaner (Page 36)	
45				Fuel system (Page 40)	
60				Exhaust system (Page 42)	

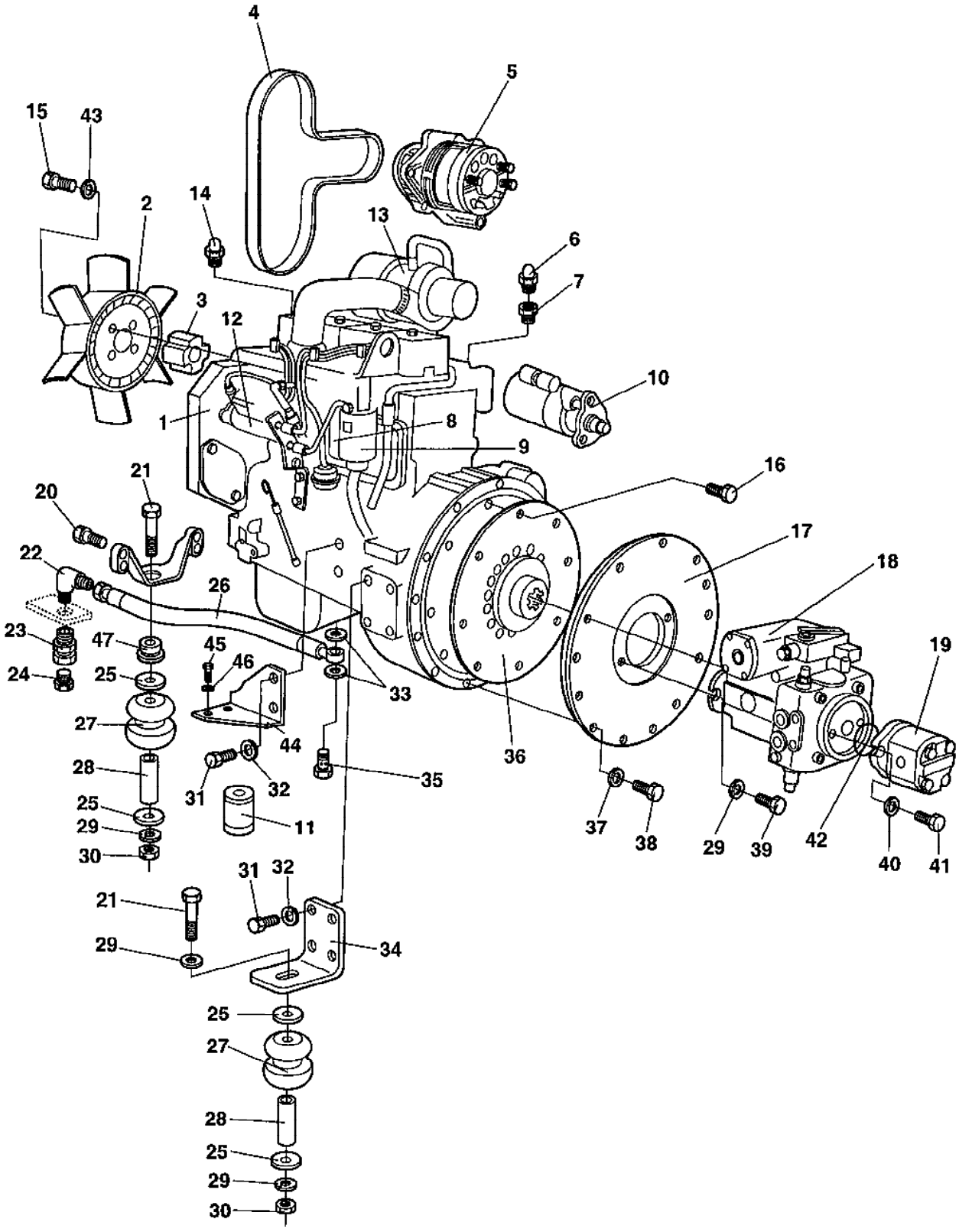
4
5
15
43
2
14
13
6
7
3
12
10
1
8
9
16
21
20
17
22
18
26
23
47
45
46
19
24
25
33
27
44
36
28
31
32
35
25
11
29
37
38
29
39
42
30
40
41
31
32
21
29
34
25
27
28
25
29
30

Ref. No.	Part No.	Rem.	Qty	Description	Code
1	388856		1	Diesel engine Cummins 4B4,5 - 99C	
		B,G	1	.Fuel solenoid	
	939371	B	1	.Thermostat, cpl	
	939956	B	1	.Water pump, cpl	
		B,G	1	.Fuel pump, cpl	
		B,G	4	.Injector	
		B,G	4	..Nozzle	
2	938137		1	.Fan	
3	940276		1	.Spacer	
4	939373		1	.Belt	B
5	935950		1	.Alternator	C
6		G	1	.Oil pressure switch	C
7		G	1	.Adapter	C
9	939372		1	.Fuel filter element	A
10	939504		1	.Starter	C
11	939480		1	.Oil filter element	A
12	940277		1	.Injection pump	
13	940278		1	.Turbo, cpl	
	940279		1	..Gasket, turbo	
	940280		1	..Gasket, oil drain	
14	940262	A	1	.Temperature sensor	
	903632	E	1	Temperature sensor Engine	D
15	500034		4	Screw M10-1,5x100 8,8	
	902541		1	Lock fluid Loctite 243, 50 ml	
16	509025	F	8	Screw 3/8-16UNCx32 8,8	
17	193566		1	Cover plate	
18		C	1	See Propulsion system	
19		C	1	See Steering system	
20	191630		4	Screw	
21	500150		3	Screw	
22	813435		1	Adapter	
23	240154		1	Connector	
24	813422		1	Plug	
25	191803		6	Washer	
26	191808		1	Hose	
27	191801		6	Shock absorber	D
28	191799		3	Pipe	
29	904558		7	Washer 17x30x6	
30	570008		3	Nut	
31	500046		10	Screw M12x30H 8,8 FZB	
32	904231		10	Washer 13x24x2	
33	330331		2	Washer 18,2x23,9x1,5	
34	193572		2	Engine bracket	D
35	267465		1	Hollow screw	D
36	374183		1	Drive plate	D
		D	1	.Hub	D
37	904230		12	Washer 10,5x22x2	
38	500030		12	Screw M10-1,5x35H 8,8	
39	500093		2	Screw M16x40	
40	904557		2	Washer 10,5x22x4	
41	502035		2	Screw	
42	160229		1	O-ring	D
43	904230		4	Washer 10,5x22x2	

A) Pre heater
B) Not illustrated
C) Hydraulic system
D) Not sold separately
E) Colant
F) Use lock fluid; see item 15
G) PN is missing due to short release date

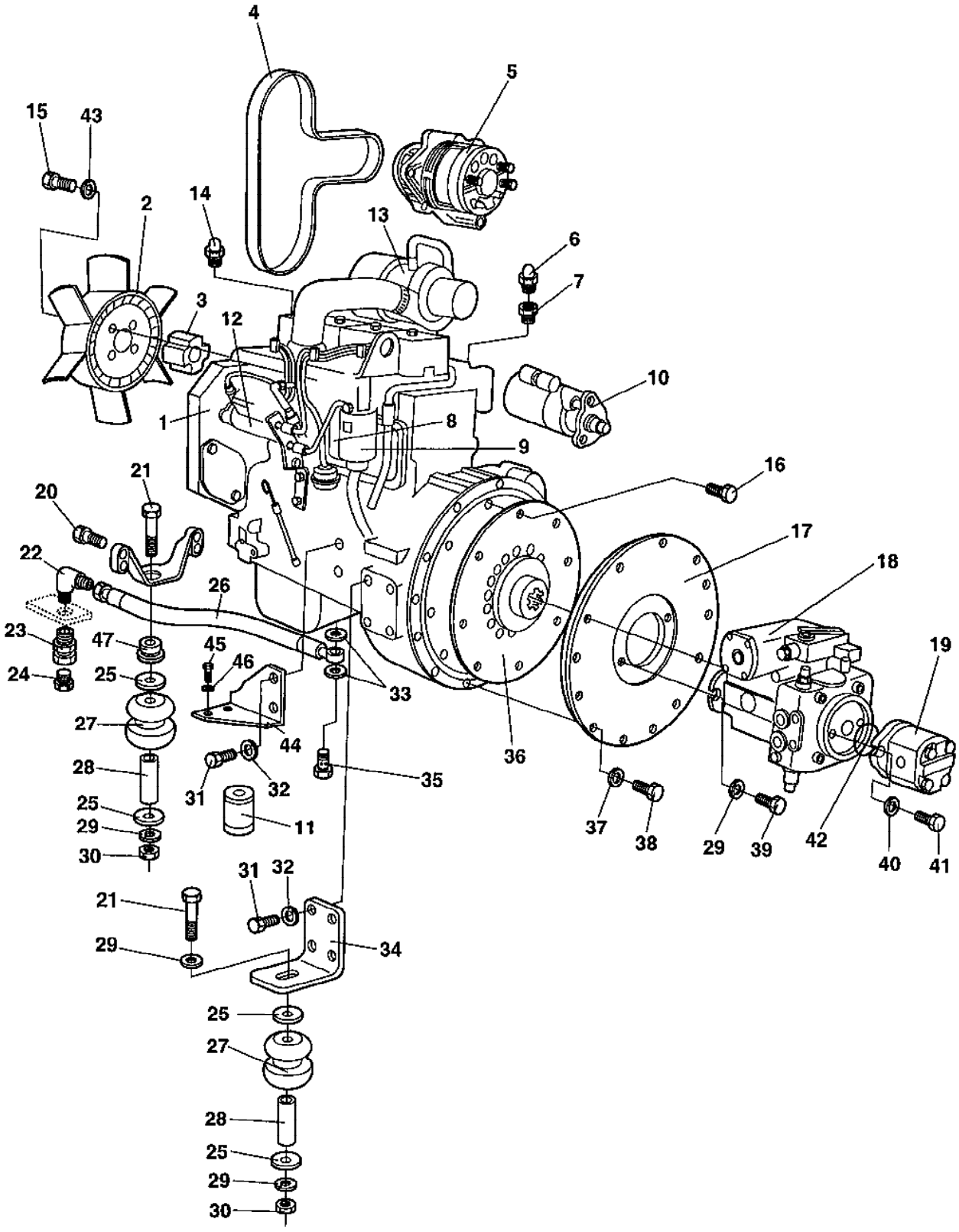
4
5
15
43
2
14
13
6
7
3
12
10
1
8
9
16
21
20
17
22
18
26
23
47
45
46
19
24
25
33
27
44
36
28
31
32
35
25
11
29
30
37
38
29
39
42
40
41
31
32
21
29
34
25
27
28
25
29
30

Ref. No.	Part No.	Rem.	Qty	Description	Code
44	374809		1	Bracket	
45	500053		2	Screw M8-1,25x20 8,8	
46	904229		2	Washer 8,4x16x1,5	
47	374661		1	Bushing	D

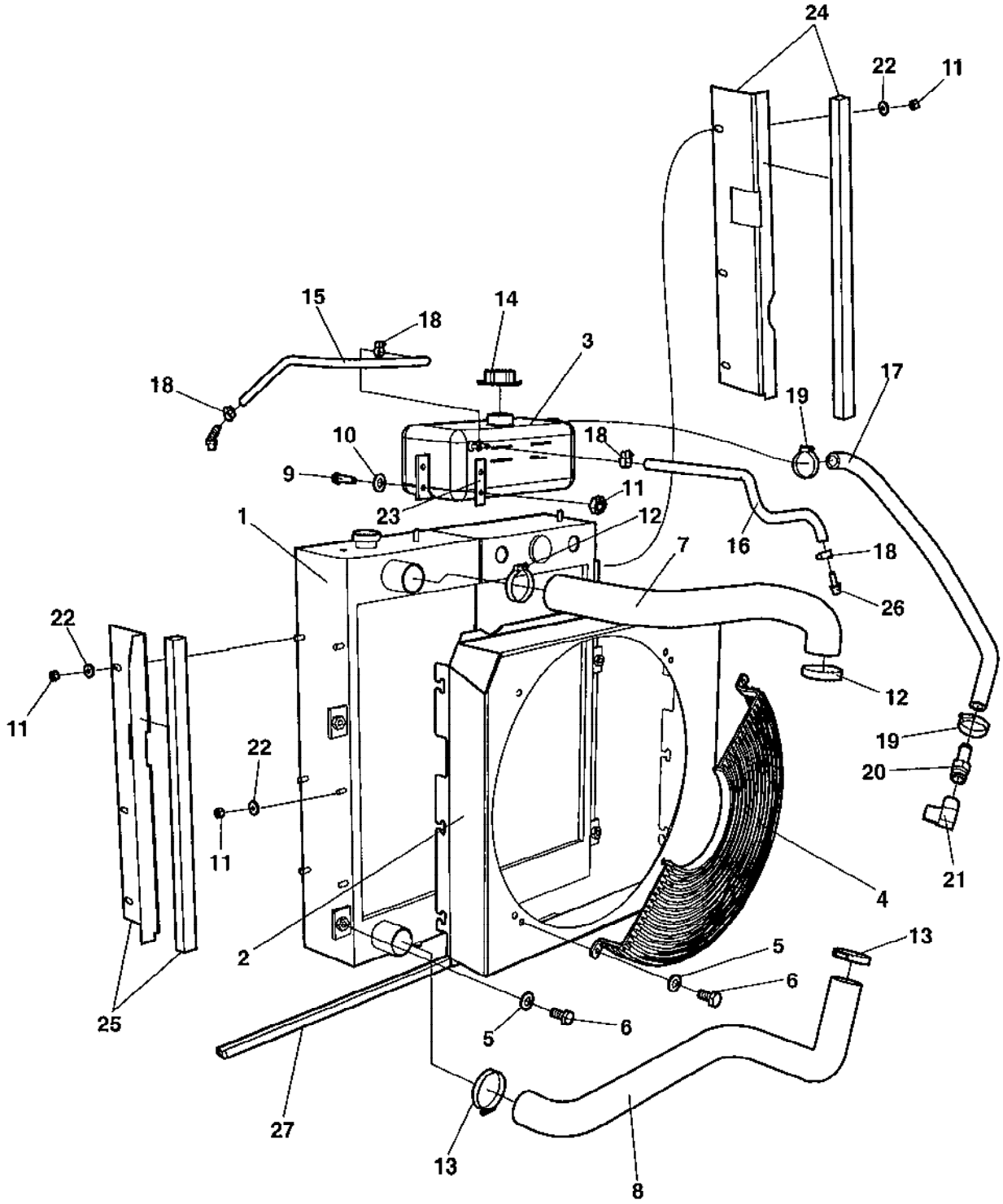
24
22
11
15
18
14
3
18
17
19
10
18
9
11
23
12
1
16
18
7
26
22
12
11
19
22
20
11
21
4
2
13
5
6
25
5
6
27
13
8

Ref. No.	Part No.	Rem.	Qty	Description	Code
1	388902		1	Radiator	
2	388868		1	Fan shroud	
3	388922		1	Expansion tank	
4	193784		2	Fan guard	
5	904230		10	Washer 10,5x22x2	
6	500027		10	Screw M10x22	
7	377942		1	Coolant hose	
8	388884		1	Coolant hose	
9	500022		4	Screw M8-1,25x30 8,8	
10	904229		4	Washer 8,4x16x1,5	
11	570005		16	Nut M8	
12	313010		2	Hose clamp	
13	313023		2	Hose clamp	
14	903714		1	Cap	D
15	380372		1	Rubber hose	
	903192	C	1	Grommet	
16	903382		1	Rubber hose	
17	388927		1	Coolant hose	
18	313001		4	Hose clamp	
19	313035		2	Hose clamp	
20	241172		1	Hose connector	
21	813448		1	Elbow 90	
22	904640		12	Washer 8,4x22x3	
23	381413		2	Washer	
24	198300		1	Cover right, cpl	
	198298		1	.Cover plate, right	
	791597	B	1	.Rubber strip	
25	198299		1	Cover left, cpl	
	198297		1	.Cover plate, left	
	791597	B	1	.Rubber strip	
26	904550		1	Hose connector	
27	902166	A	1	Edge trim	

A) L=850 mm
B) L=520 mm
C) Not illustrated

Air cleaner

18025

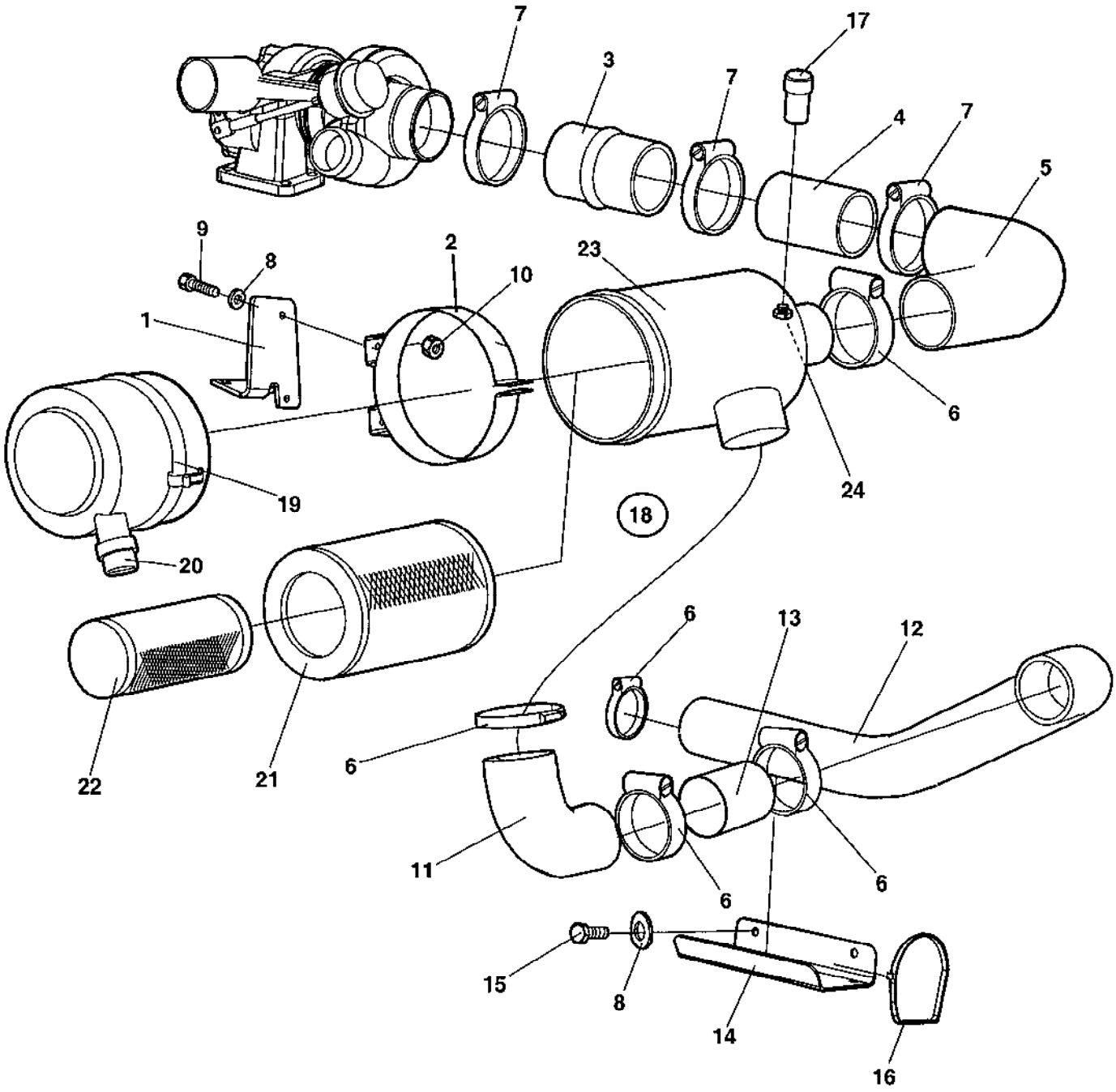

Air cleaner

Ref. No.	Part No.	Rem.	Qty	Description	Code
1	888930		1	Bracket	
2	374745		1	Bracket	
3	745057		1	Rubber muff	
4	377598		1	Steel tube	
5	927048		1	Rubber elbow	D
6	313033		6	Hose clamp	D
7	313038		3	Hose clamp	
8	904229		4	Washer 8,4x16x1,5	
9	500053		2	Screw M8-1,25x20 8,8	
10	902286		2	Lock nut M8	
11	499347		1	Rubber elbow	
12	388888		1	Air inlet hose	
13	388889		1	Steel tube	
14	388933		1	Bracket	
15	500021		2	Screw M8-1,25x25 8,8	
16	313102		2	Cable ties	
17	904575		1	Indicator	
18	374727		1	Air filter, cpl (Page 38)	
19	375023		1	.Cover	
20	374905		1	.Vacuator valve	
21	374771		1	.Main filter	A
22	374772		1	.Safety filter	A
23			1	.Not Sold Separately	A
24	375113		1	Nipple	

374727 Air filter, cpl

16699-1

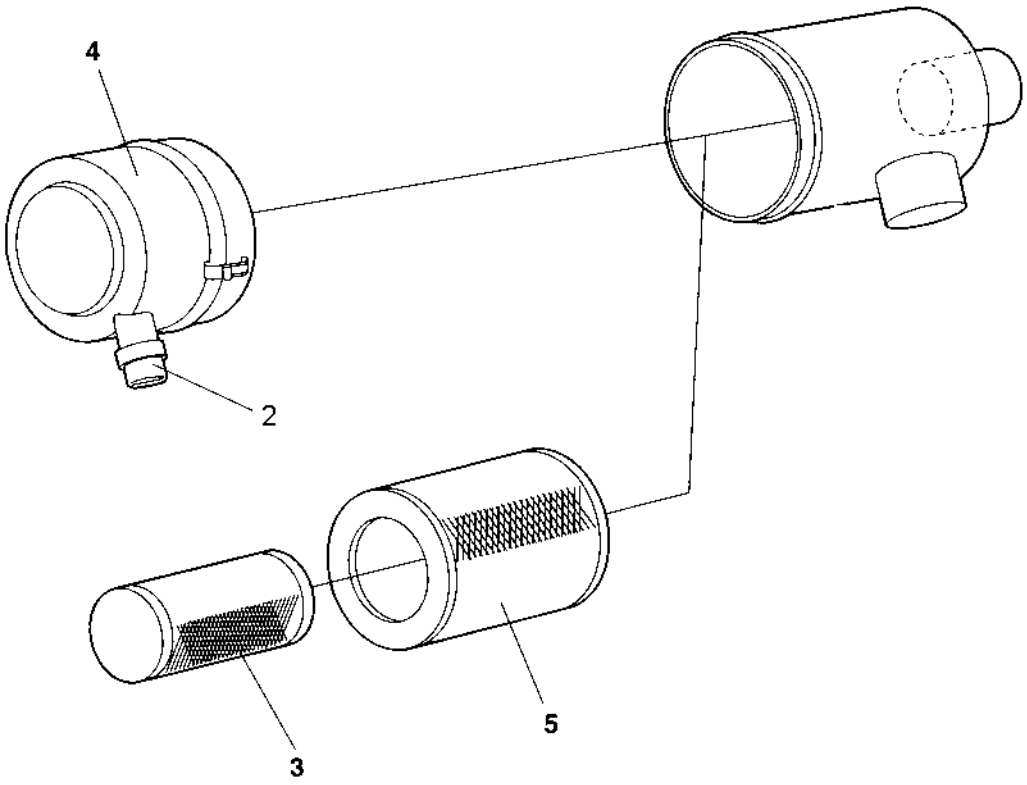

374727 Air filter, cpl

Ref. No.	Part No.	Rem.	Qty	Description	Code
			1	Air filter, cpl	
2	374905		1	.Vacuator valve	
3	374772		1	.Safety filter	A
4	375023		1	.Cover	
5	374771		1	.Main filter	A

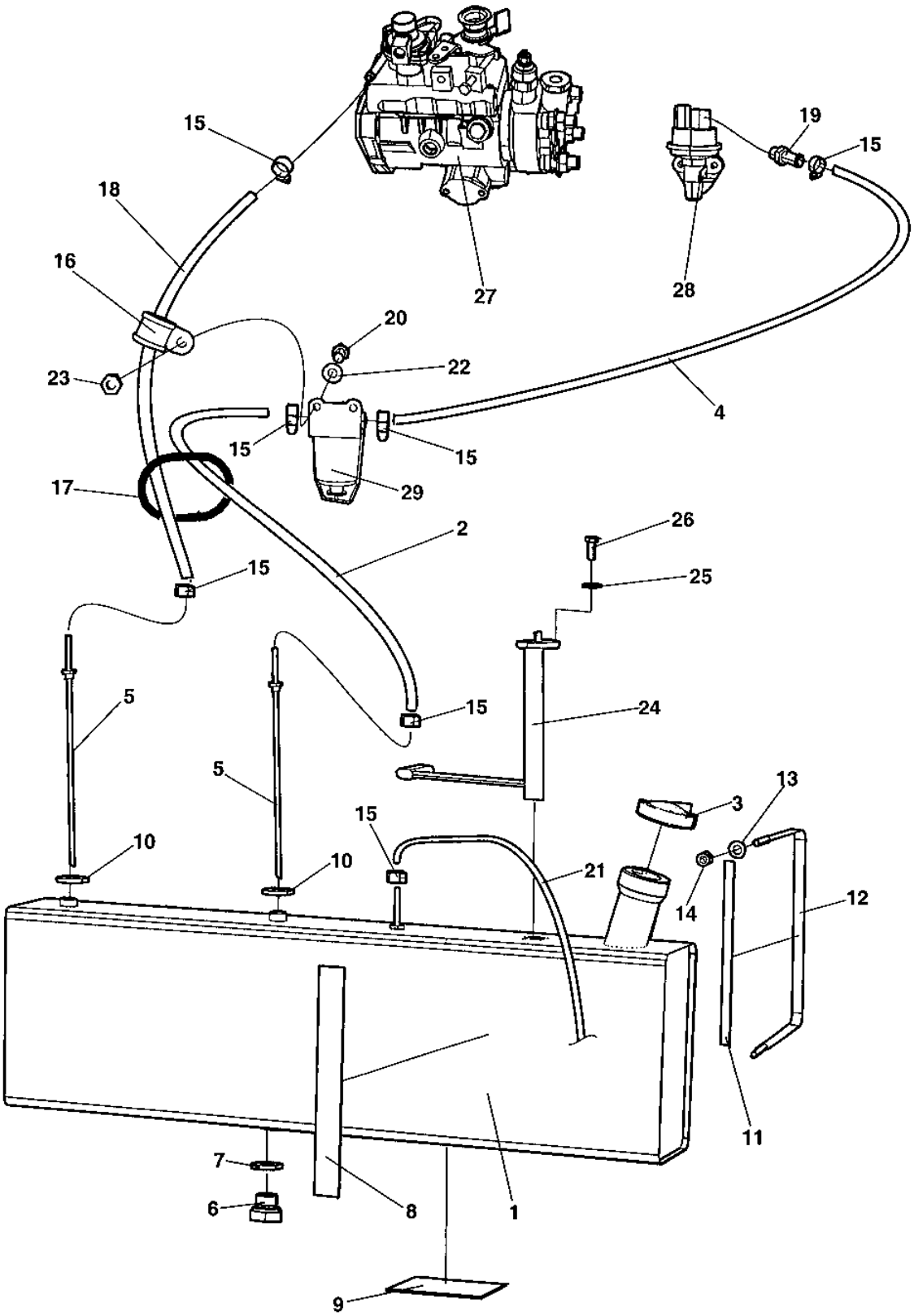
15
18
16
23
27
19
15
28
20
22
4
15
15
17
29
2
26
25
15
5
15
24
5
13
3
15
10
10
21
14
12
7
6
8
1
11
9

Fuel system

Ref. No.	Part No.	Rem.	Qty	Description	Code
1	388879		1	Fuel tank	
2	246069	A	1	Fuel hose	
3	195593		1	Cap	D
4	904984	B	1	Fuel hose	D
5	193527		2	Pipe	
6	374764		1	Plug	
7	925966		2	Rubber sealing	D
8	194312		2	Shim	
9	194311		2	Shim	
10	330330		2	Washer	
11	297018	C	1	Rubber strip	
12	191824		2	Clamp, cpl	
13	904231		4	Washer 13x24x2	
14	586019		4	Nut M12	
15	313001		7	Hose clamp	
16	921031		1	Clamp	
17	902379	D	1	Edge trim	
18	904984	A	1	Fuel hose	D
19	791427		1	Hose connection	
20	500075		2	Screw M6-1x25 8,8	
21	246057	E	1	Hose	
22	904228		4	Washer 6,4x12x1,5	
23	570004		2	Nut M6	
24	791129		1	Fuel level sender	
25	904698		5	Washer 4,3x8x0,8	
26	500258		5	Screw M4-0,7x20 8,8	
27		F	1	Injection pump	
28		F	1	Fuel pump	
29	900247		1	Fuel pre-filter	A

A) L=1700 mm
B) L=850 mm
C) L=1640 mm
D) L=160 mm
E) L=1300 mm
F) Placed on the engine

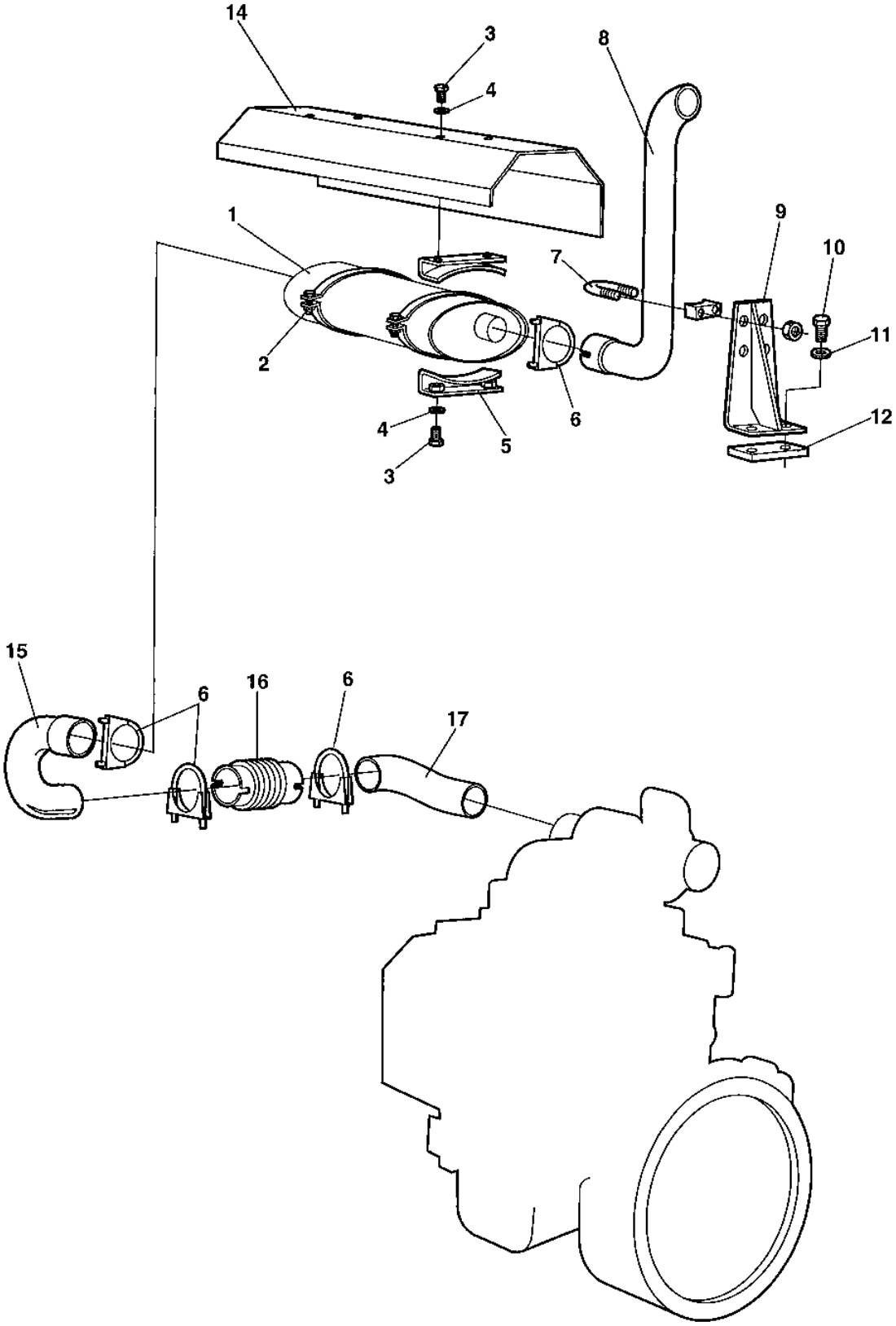
14
3
8
4
1
9
10
7
11
2
6
4
5
12
3
15
6
16
6
17

Exhaust system

Ref. No.	Part No.	Rem.	Qty	Description	Code
1	374997		1	Muffler	D
2	374992		2	Clamp	
3	500053		8	Screw M8-1,25x20 8,8	
4	904229		8	Washer 8,4x16x1,5	
5	374962		4	Bracket	
6	904359		4	Pipe clamp	D
7	313036		2	Clamp	D
8	388871		1	Exhaust tube	D
9	194195		1	Bracket	
10	500029		2	Screw M10-1,5x30 8,8	
11	904230		2	Washer 10,5x22x2	
12	194216		1	Bracket	
14	374825		1	Thermal guard	
15	388907		1	Exhaust pipe	D
16	194287		1	Flexible pipe	D
17	388866		1	Exhaust pipe	D
	378109	A,B	1	Insulation From 2163BR2067	
	313023	A	1	Hose clamp From 2163BR2067	
	313038	A	1	Hose clamp From 2163BR2067	

A) Not illustrated
B) Introduced to reduce heat

Ref. No.	Part No.	Rem.	Qty	Description	Code
30				Propulsion system (Page 46)	
70				Drain system (Page 70)	
80				Speed system (Page 72)	
90				Steering system (Page 74)	
120				Brake system (Page 80)	

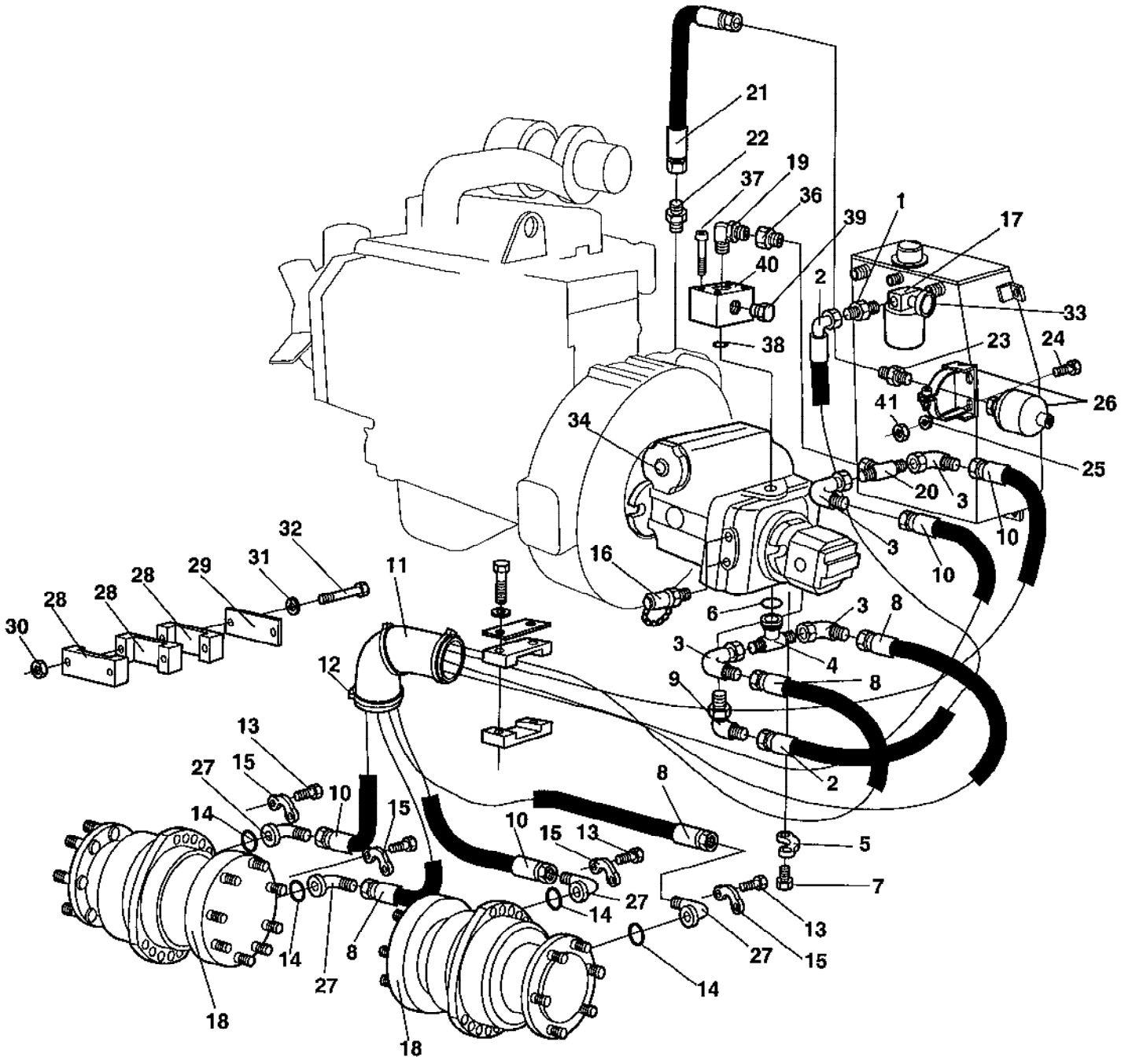
21
22
19
37
36
39
1
17
40
2
33
38
23
24
26
41
34
25
20
3
10
3
10
32
31
29
28
28
28
30
16
11
6
3
8
3
4
12
9
8
13
27
15
10
2
14
15
8
10
15
13
5
7
27
14
13
14
8
27
15
27
14
18
18

Ref. No.	Part No.	Rem.	Qty	Description	Code
1	334227		1	Straight connector	
2	193772		1	Hydraulic hose	
3	334155		4	Connector	
4	193773		1	Connection-T	
5	923384		2	Flange half	
6	813429		1	O-ring	
7	791103		4	Screw	
8	483413		2	Hydraulic hose	
9	892273		1	Elbow 90	
10	483414		2	Hydraulic hose	
11	252285		1	Rubber elbow 90deg	
12	313102		3	Cable ties	
13	508067		16	Screw	
14	813443		4	O-ring	D
15	929226		8	Flange half	
16	910162		2	Measuring nipple	D
17	902807	C	1	Hydraulic oil filter, cpl (Suction filter)	
	902900	A	1	.Filter element, cannot be used with Bio oil	A
18	376123		2	Hydraulic motor	
	198247		2	Seal kit	
19	234810		1	Elbow 90, O-ring	
20	234900		1	T-connector	
21	483474		1	Hydraulic hose	
22	334122		1	Adapter	
23	234390		1	Connector	
24	500021		2	Screw M8-1,25x25 8,8	
25	904640		2	Washer 8,4x22x3	
26	380168		1	Accumulator	
27	900455		4	Flange adapter	
28	343732		3	Hose clamp	
29	335914		1	Cover plate	
30	570006		2	Nut M10	
31	904230		4	Washer 10,5x22x2	
32	928664		2	Screw	
33	814118		1	Indicator	
34	381280		1	Hydraulic pump (Page 48)	
37	791087		4	Screw	
38	904005		1	O-ring	
39	232222		1	Plug	
40	349933		1	Flange coupling	
41	570005		2	Nut M8	

A) Spare part for ordinary service
C) Without by-pass in filter head

381280 Hydraulic pump

17167

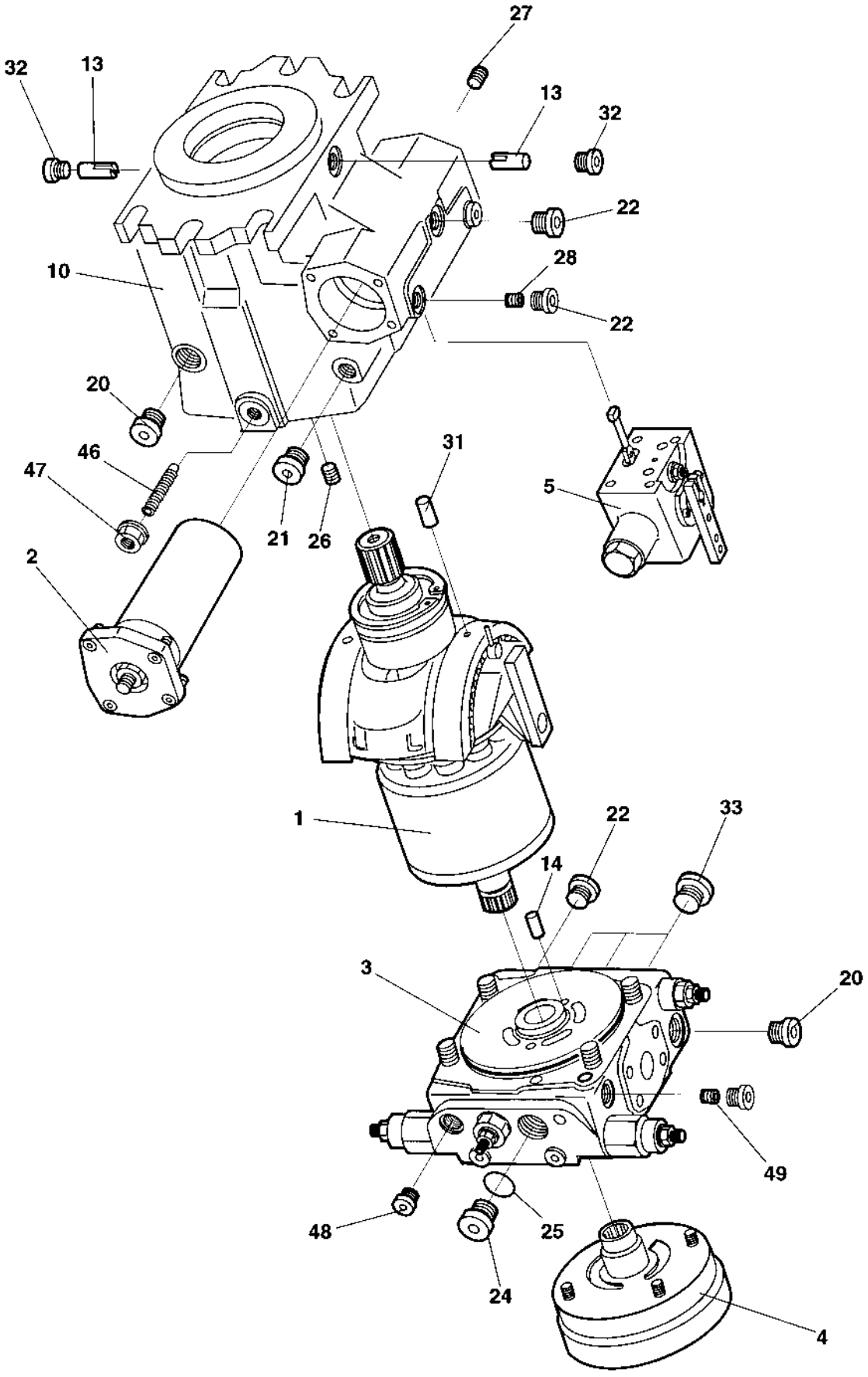

381280 Hydraulic pump

Ref. No.	Part No.	Rem.	Qty	Description	Code
1	938237		1	Rotary group (Page 50)	
2	938238		1	Control unit (Page 52)	
3	936295		1	Valve block, cpl (Page 56)	
4	936296		1	Charge pump (Page 62)	
5	938239		1	Control module (Page 66)	
10	938250		1	Housing	
13	936299		2	Joint pin	
14	936300		1	Dowel pin	
20	936301		2	Lock screw	
21	936302		1	Lock screw	
22	936303		4	Lock screw	
24	936304		1	Lock screw	
25	936305		1	O-ring	D
26	909514		1	Pin	
27	936307		1	Double break-off pin	D
28	936308		2	Orifice	
31	902792		2	Pin	
32	902624		2	Screw	
33	935219		3	Plug	
46	936310		1	Threaded pin	
47	936311		1	Seal lock nut	
48	936312		1	Lock screw	
49	936313		1	Orifice	D

938237 Rotary group

16441

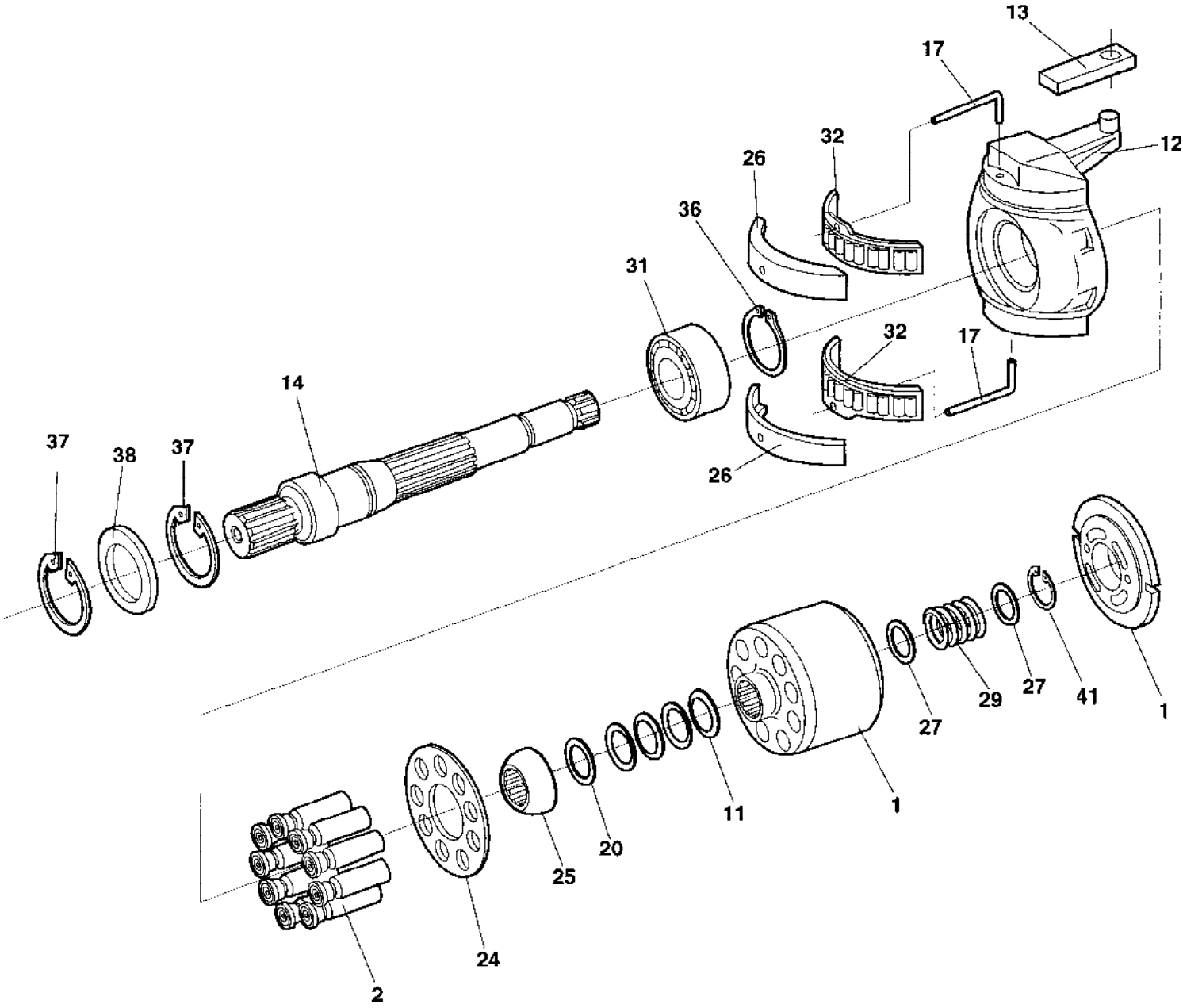

938237 Rotary group

Ref. No.	Part No.	Rem.	Qty	Description	Code
1	936314		1	Cylinder with piston	
2	936315		9	Piston ,slipper pad	
11	936316		1	Cup-spring stack	
12	936317		1	Cradle	
13	938240		1	Slide ring	
14	936319		1	Shaft	
17	936320		2	Wire	
20	936321		1	Shim 1,20	D
	936322		1	Shim 1,00	D
	936323		1	Shim 0,80	D
	936324		1	Shim 0,60	D
24	936325		1	Retaining ring	
25	936326		1	Retaining ball	
26	936327		1	Bearing liner	D
27	936328		2	Washer	
29	936329		1	Pressure spring	
31	936330		1	Plain roller bearing	D
32	936331		1	Cradle bearing assy	D
36	936332		1	Retaining ring	
37	936333		2	Retaining ring	
38	938241		1	Shaft seal ring	
41	936335		1	Retaining ring	

938238 Control unit

17168

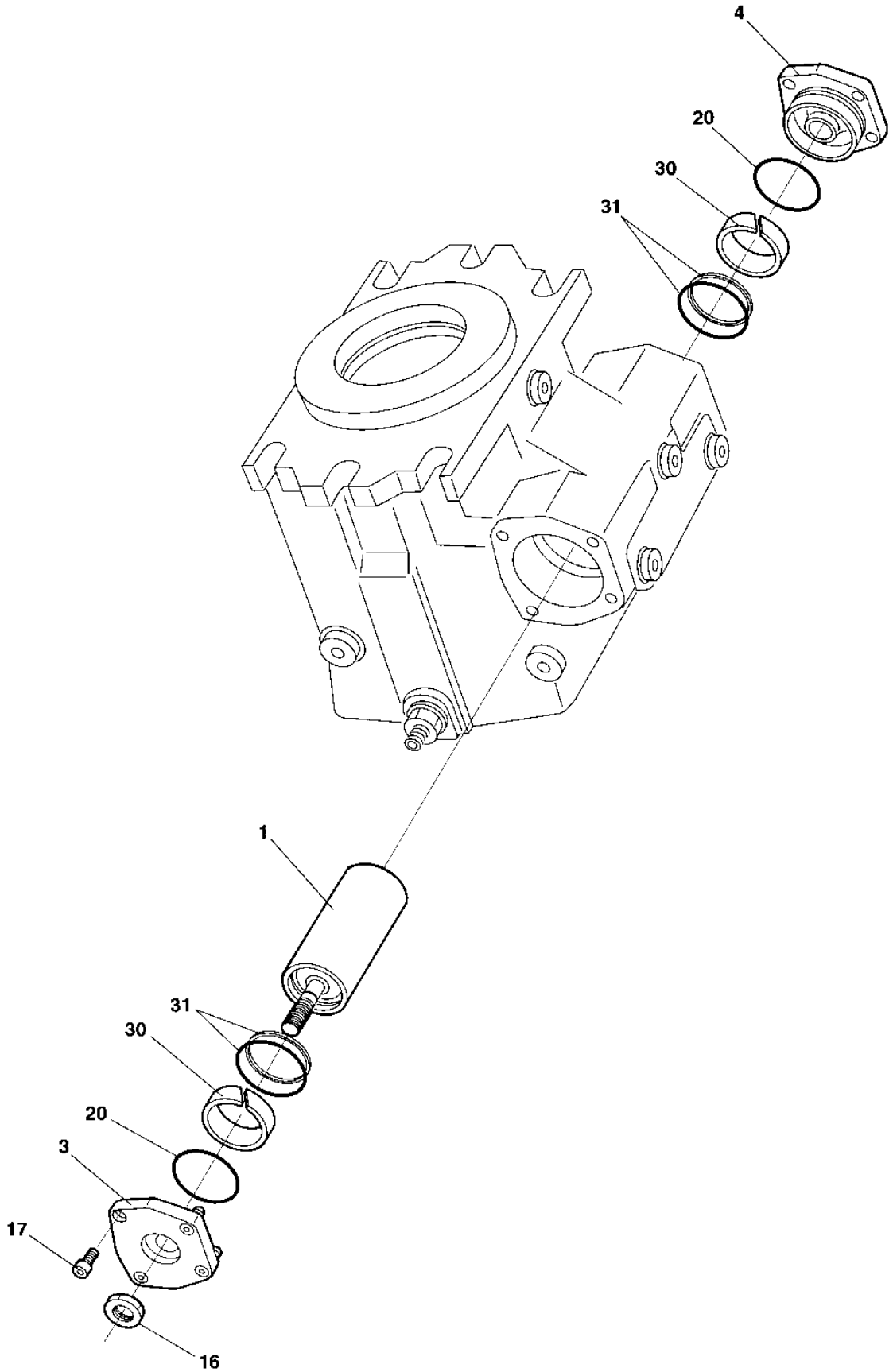

938238 Control unit

Ref. No.	Part No.	Rem.	Qty	Description	Code
1	938242		1	Positioning piston (Page 54)	
3	938243		1	Cover	
4	938244		1	Cover	
16	936340		1	Nut	
17	936341		8	Screw	
20	936342		2	O-ring	D
30	938245		2	Guide ring	
31	938246		2	Ring	

938242 Positioning piston

17169

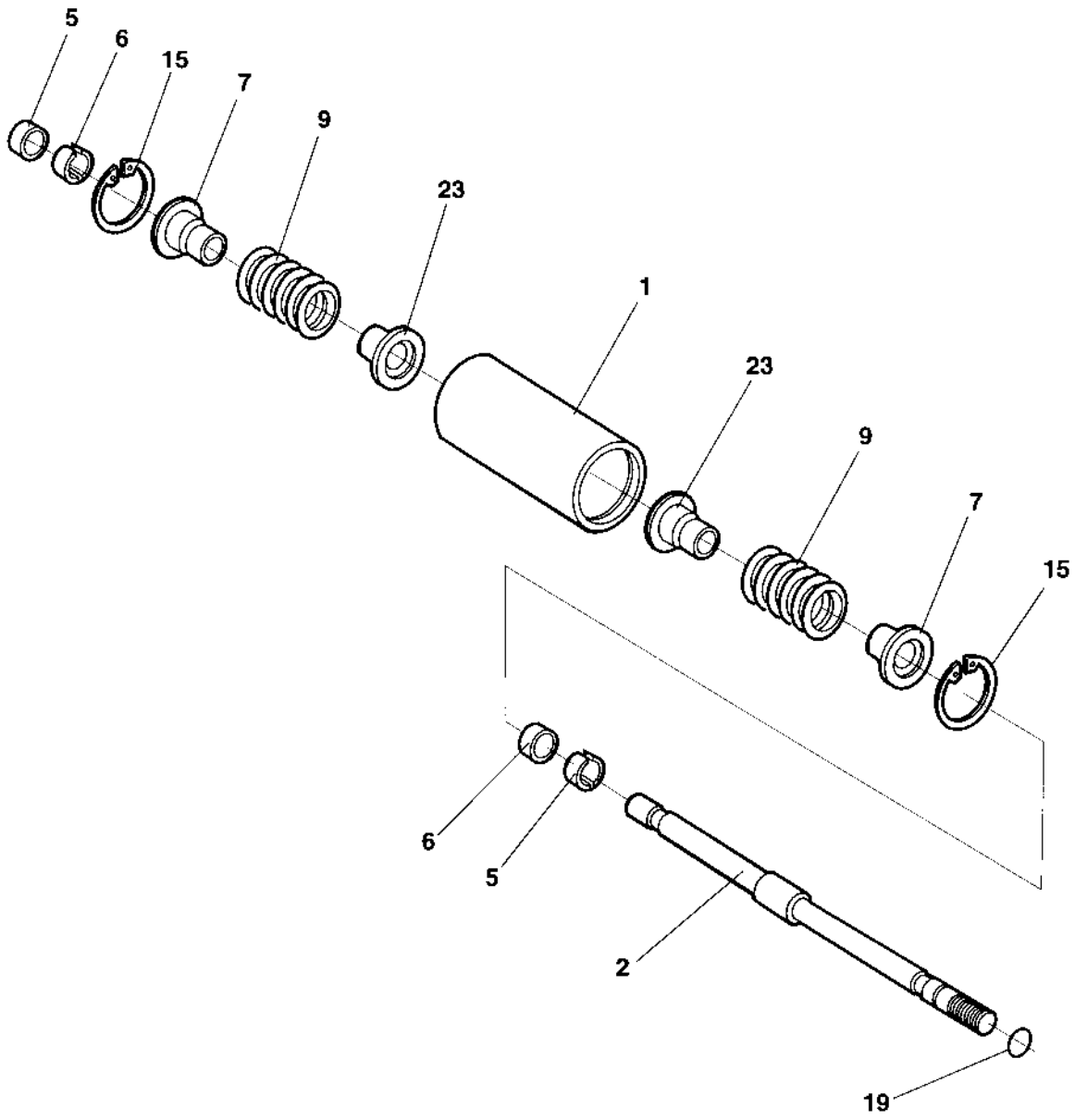

938242 Positioning piston

Ref. No.	Part No.	Rem.	Qty	Description	Code
1	938247		1	Positioning piston	
2	936344		1	Rod	
5	938006		2	Ring 5,77	
	938007		2	Ring 5,82	
	938008		2	Ring 5,87	
	938009		2	Ring 5,92	
	938010		2	Ring 5,97	
	938011		2	Ring 6,02	
	938012		2	Ring 5,67	
	938013		2	Ring 5,72	
6	938014		2	Sleeve	
7	936354		2	Spring collar	
9	936355		2	Pressure spring	
15	936356		2	Seeger v-ring	D
19	936371		1	O-ring	D
23	936358		2	Spring collar	

936295 Valve block, cpl

16444

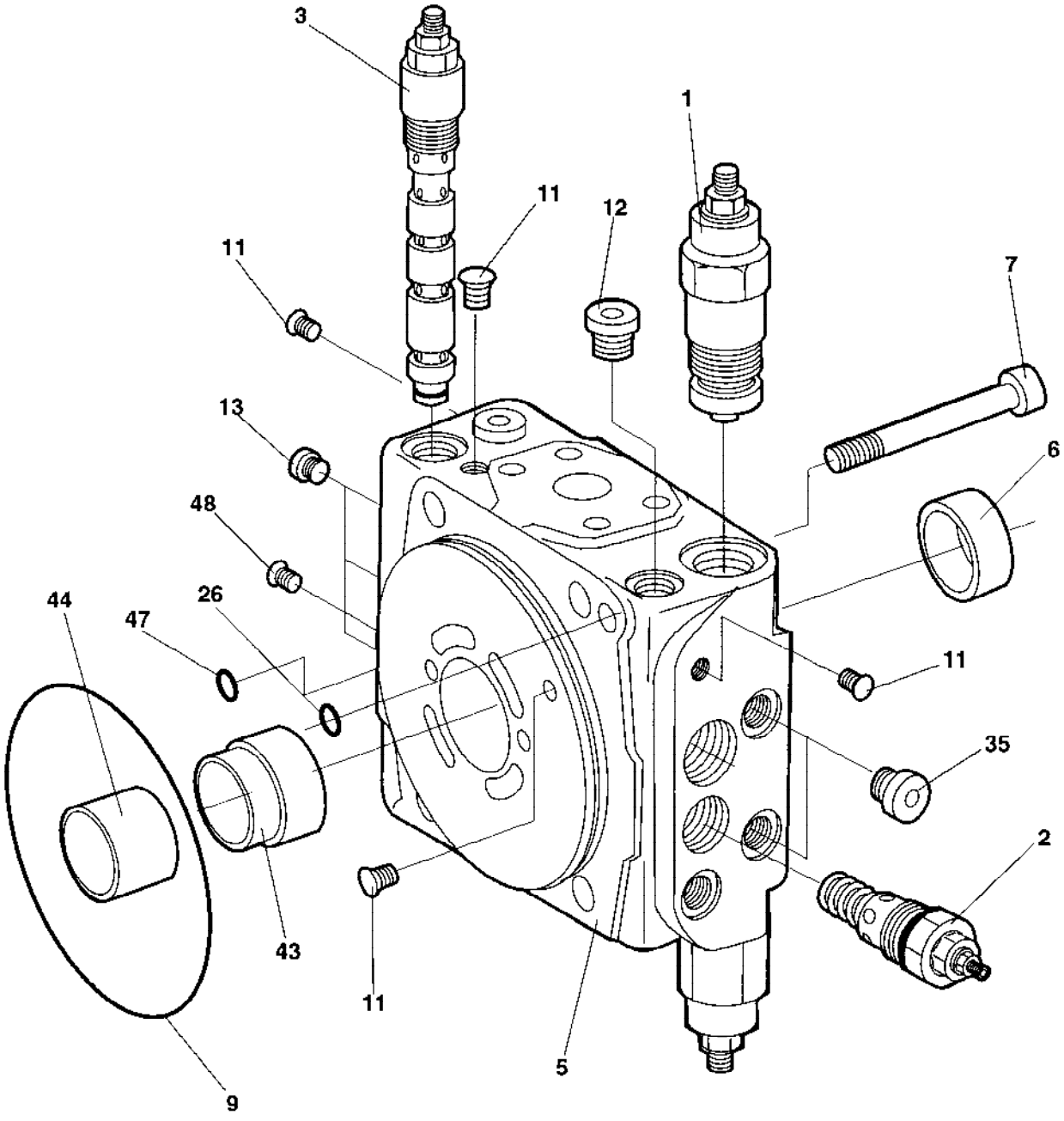

936295 Valve block, cpl

Ref. No.	Part No.	Rem.	Qty	Description	Code
1	936359		2	Relief valve	D
	936374		1	.Seal kit	D
	936375		1	.Cap	
2	936360		1	Relief valve (Page 58)	D
3	936361		1	Relief valve (Page 60)	
5	936362		1	Valve block	
6	936363		1	Bearing bushing	D
7	936366		4	Screw	
9	936367		1	O-ring	D
11	936368		2	Double break-off pin	D
12	936369		1	Lock screw	
13	936370		3	Lock screw	
26	936371		2	O-ring	D
35	936372		2	Lock screw	
43	936364		1	Bushing	D
44	936365		1	Bearing bushing	D
47	936373		2	O-ring	D
48	935212		1	Pin	

936360 Relief valve

16445

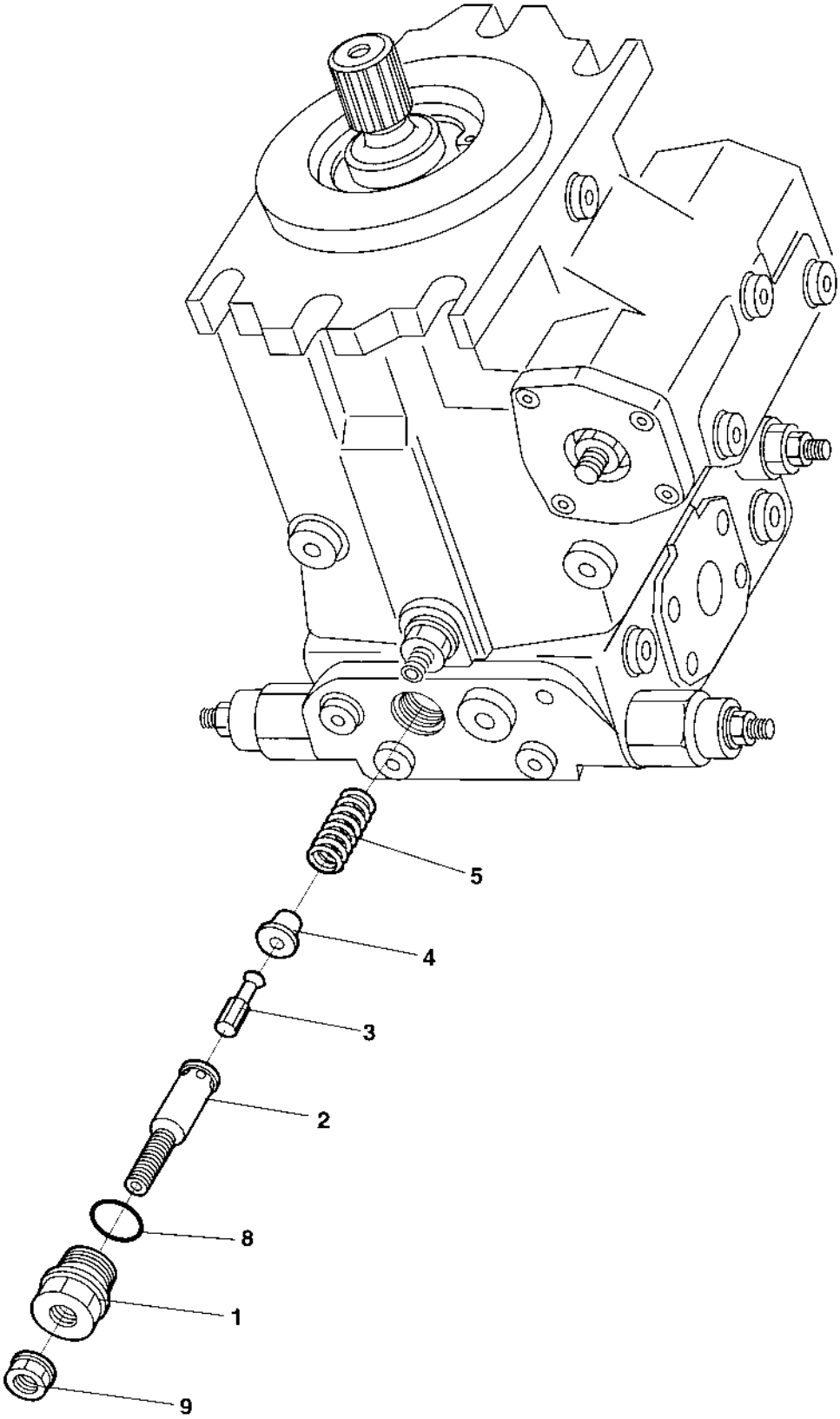

936360 Relief valve

Ref. No.	Part No.	Rem.	Qty	Description	Code
1			1	Lock screw	
2	936377		1	Adjusting screw	
3	936378		1	Valve piston	
4	936379		1	Spring collar	
5	936380		1	Pressure spring	
8	936381		1	O-ring	D
9	936382		1	Seal lock nut	

936361 Relief valve

16446

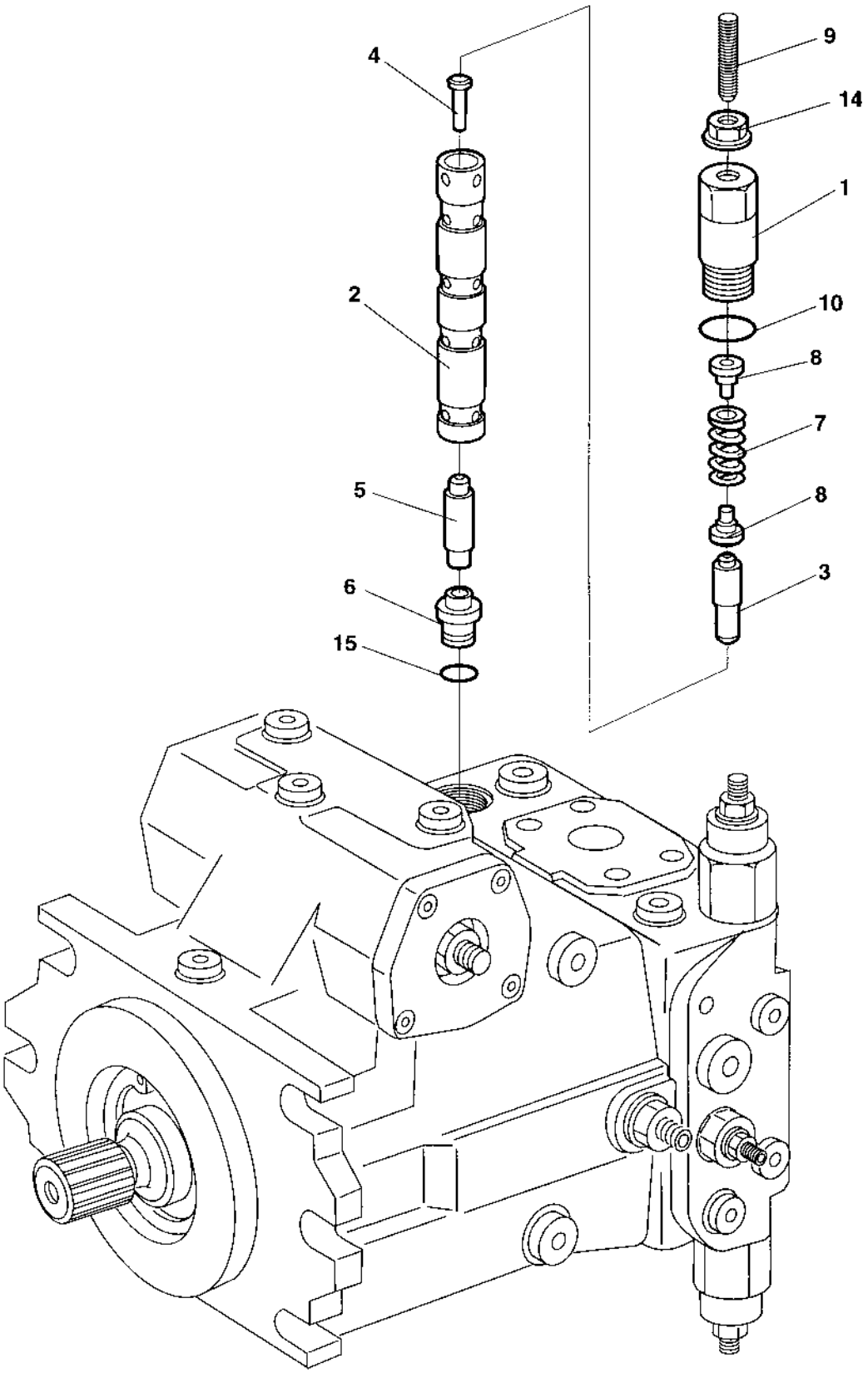

936361 Relief valve

Ref. No.	Part No.	Rem.	Qty	Description	Code
1	936383		1	Lock screw	
2	936384		1	Valve bushing	
3	936385		1	Control piston	
4	936386		1	Piston	
5	936387		1	Valve piston	
6	936388		1	Poppet seat	
7	936389		1	Pressure spring	
8	936390		2	Spring collar	
9	936391		1	Adjusting screw	D
10	936392		1	O-ring	D
14	936393		1	Seal lock nut	
15	936394		1	O-ring	D

936296 Charge pump

16447

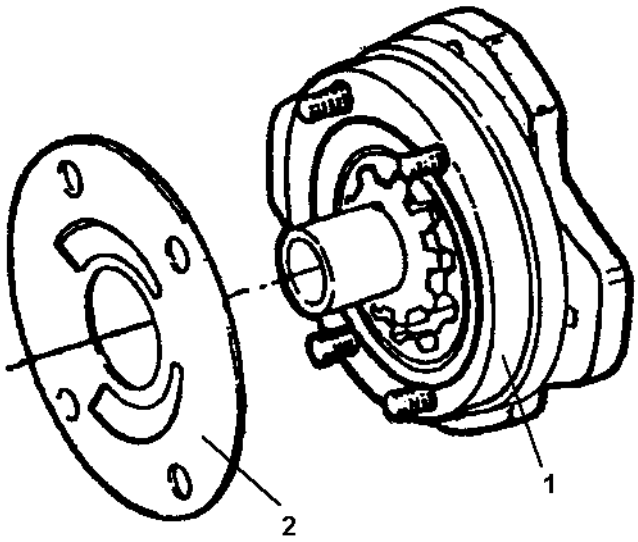

936296 Charge pump

Ref. No.	Part No.	Rem.	Qty	Description	Code
1	936395		1	Charge pump (Page 64)	
2	936396		1	Wear plate	D
	936406		1	.Wear plate	
	936407		1	.O-ring	

936395 Charge pump

16448

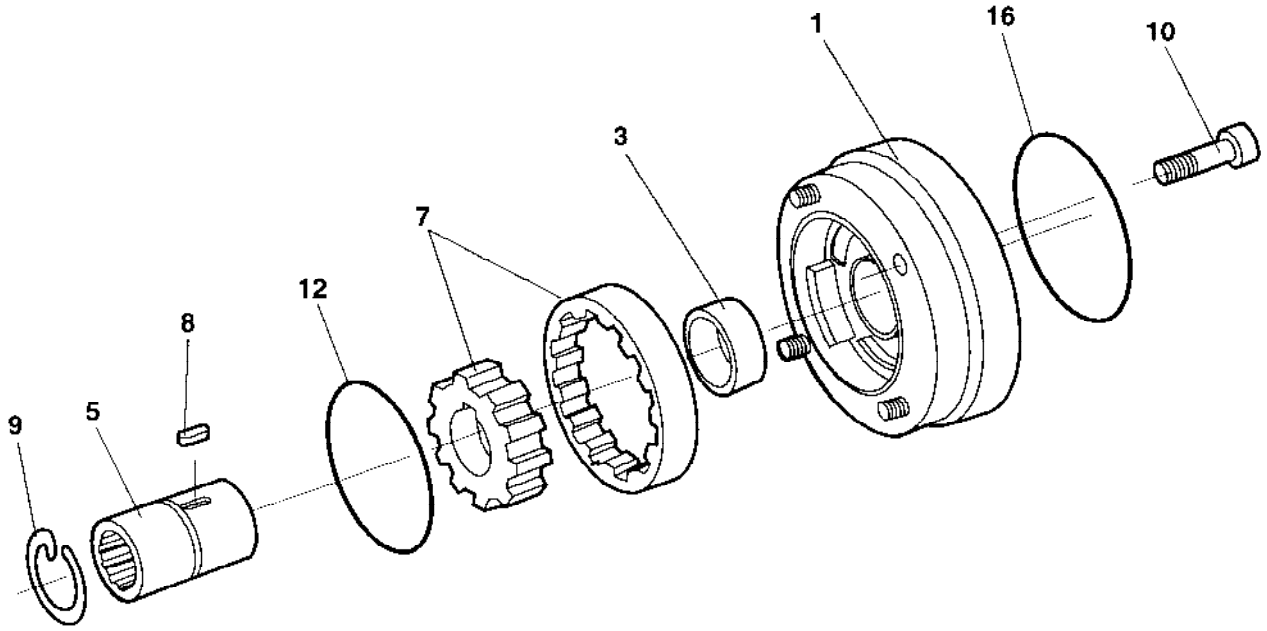

936395 Charge pump

Ref. No.	Part No.	Rem.	Qty	Description	Code
1	936398		1	Intermediate flange	
3	936399		1	Bearing bushing	D
5	936400		1	Through-drive shaft	
7	936397		1	Wheel set	
8	936401		1	Shaft key	
9	936402		1	Snap ring	
10	936403		4	Screw	
12	936404		1	O-ring	D
16	936405		1	O-ring	D

938239 Control module

16449

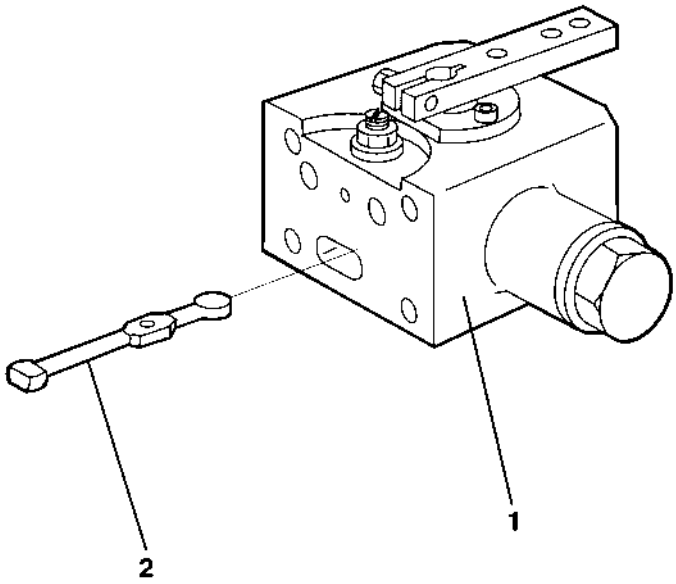

938239 Control module

Ref. No.	Part No.	Rem.	Qty	Description	Code
1	938248		1	Control module (Page 68)	
2	936408		1	Feedback lever	

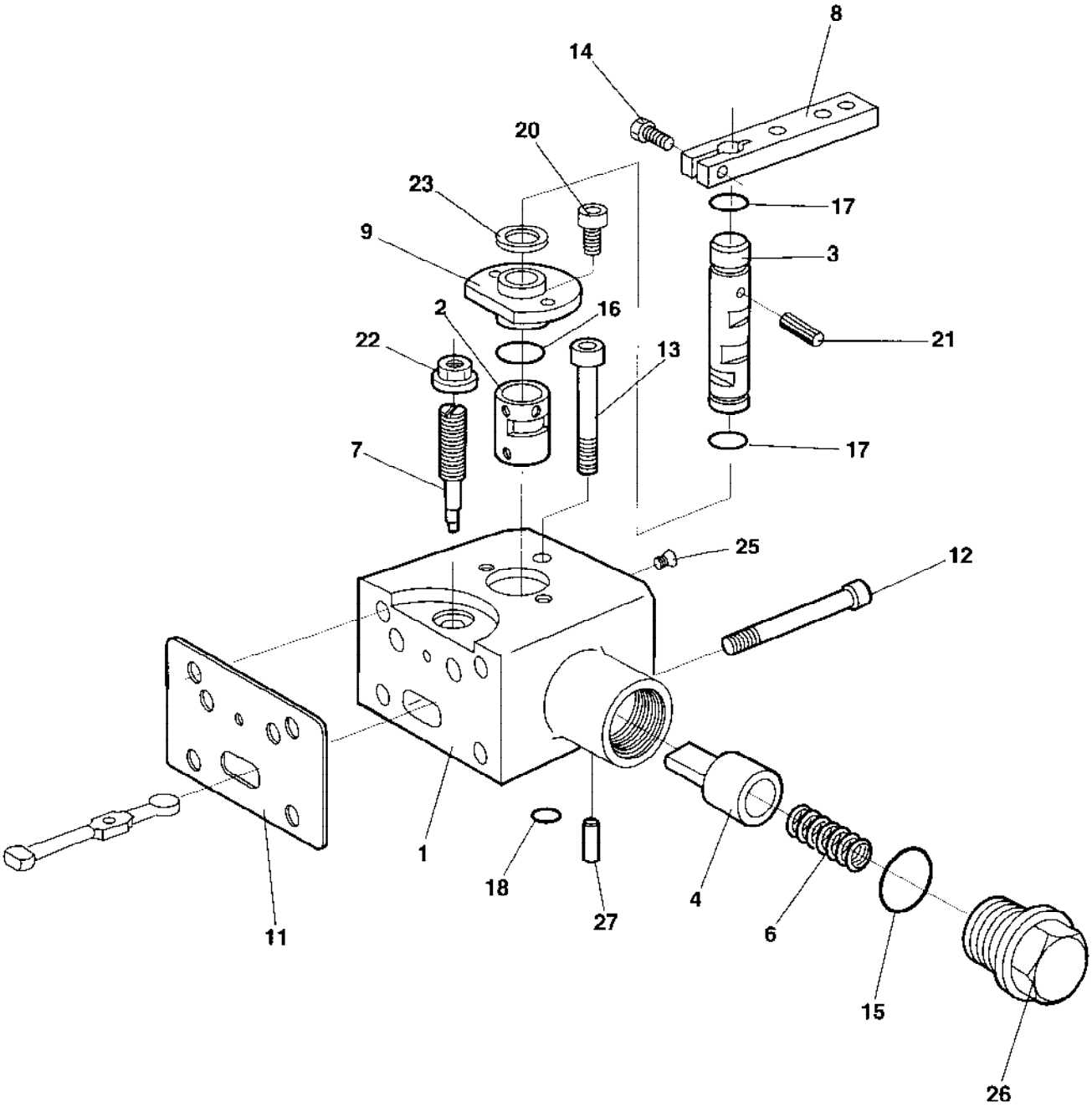
8
14
20
23
17
9
3
2
16
21
22
13
17
7
25
12
1
18
27
4
6
15
11
26

938248 Control module

Ref. No.	Part No.	Rem.	Qty	Description	Code
1	935196		1	Housing	
2	935197		1	Bushing	
3	935198		1	Shaft	
4	936411		1	Spring bush	D
6	935202		1	Pressure spring	
7	935203		1	Eccentric pin	
8	936412		1	Lever	
9	935204		1	Cover	
11	935218		1	Gasket	D
12	936413		4	Screw	
13	935211		1	Screw	
14	936414		1	Screw	
15	936415		1	O-ring	D
16	938249		1	O-ring	
17	902641		2	O-ring	D
18	936418		1	O-ring	D
20	902771		2	Screw	
21	902767		1	Needle roller	
22	936421		1	Seal lock nut	
23	902773		1	Shim	
25	935212		1	Pin	
26	936423		1	Lock screw	
27	935190		1	Cylindrical pin	

Drain system

18058

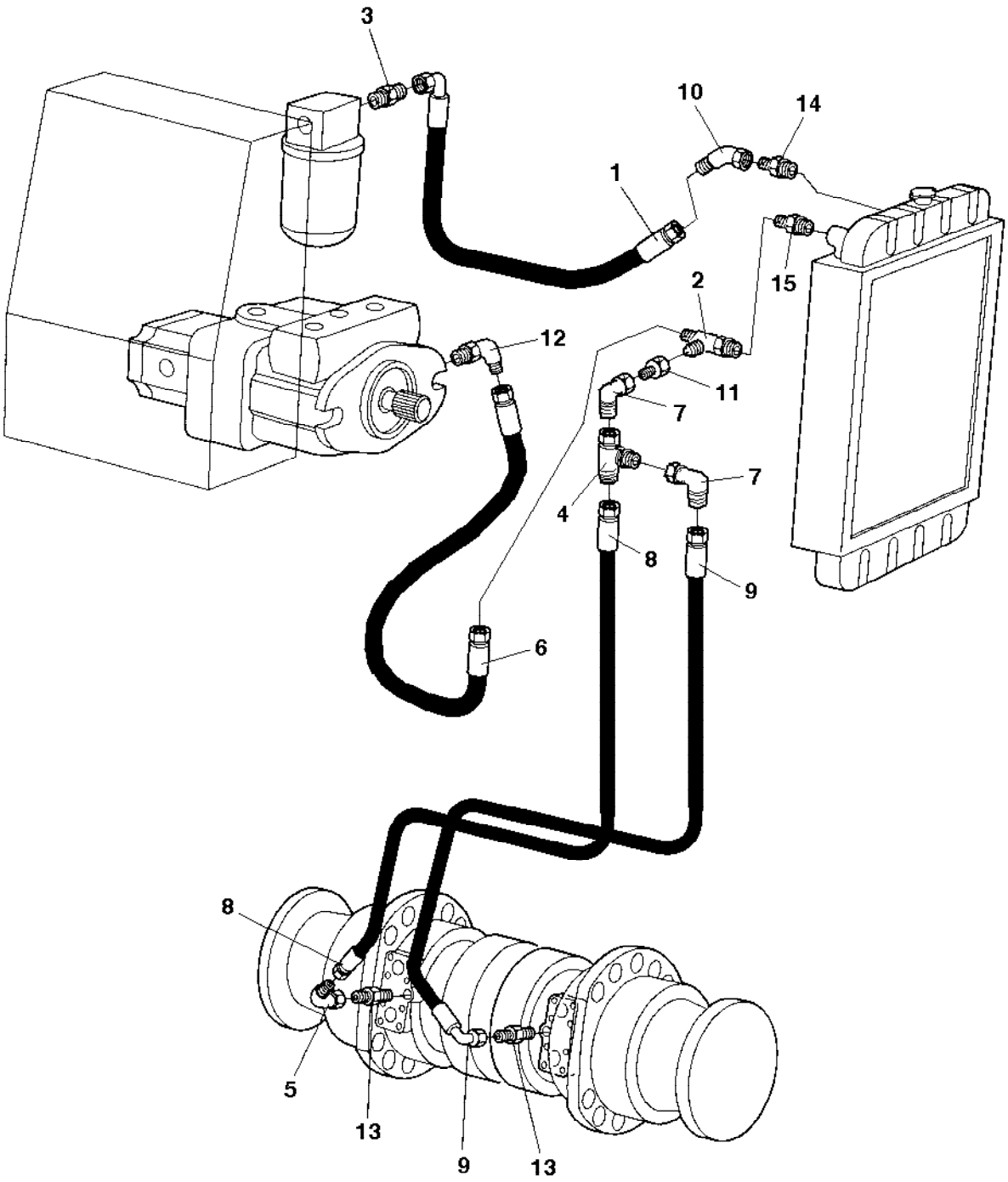

Drain system

Ref. No.	Part No.	Rem.	Qty	Description	Code
1	482260		1	Hydraulic hose	D
2	234243		1	T-connector	
3	334227		1	Straight connector	
4	334135		1	T-connector	
5	234662		1	Elbow 45	
6	482381		1	Hydraulic hose	
7	334197		2	Elbow 90	
8	483416		1	Hydraulic hose	
9	338486		1	Hydraulic hose	
10	234624		1	Elbow 45	
11	234667		1	Reducer	
12	813499		1	Elbow 90, O-ring	D
13	334121		2	Straight connector	
14	234909		1	Straight connector	
15	334157		1	Straight connector	

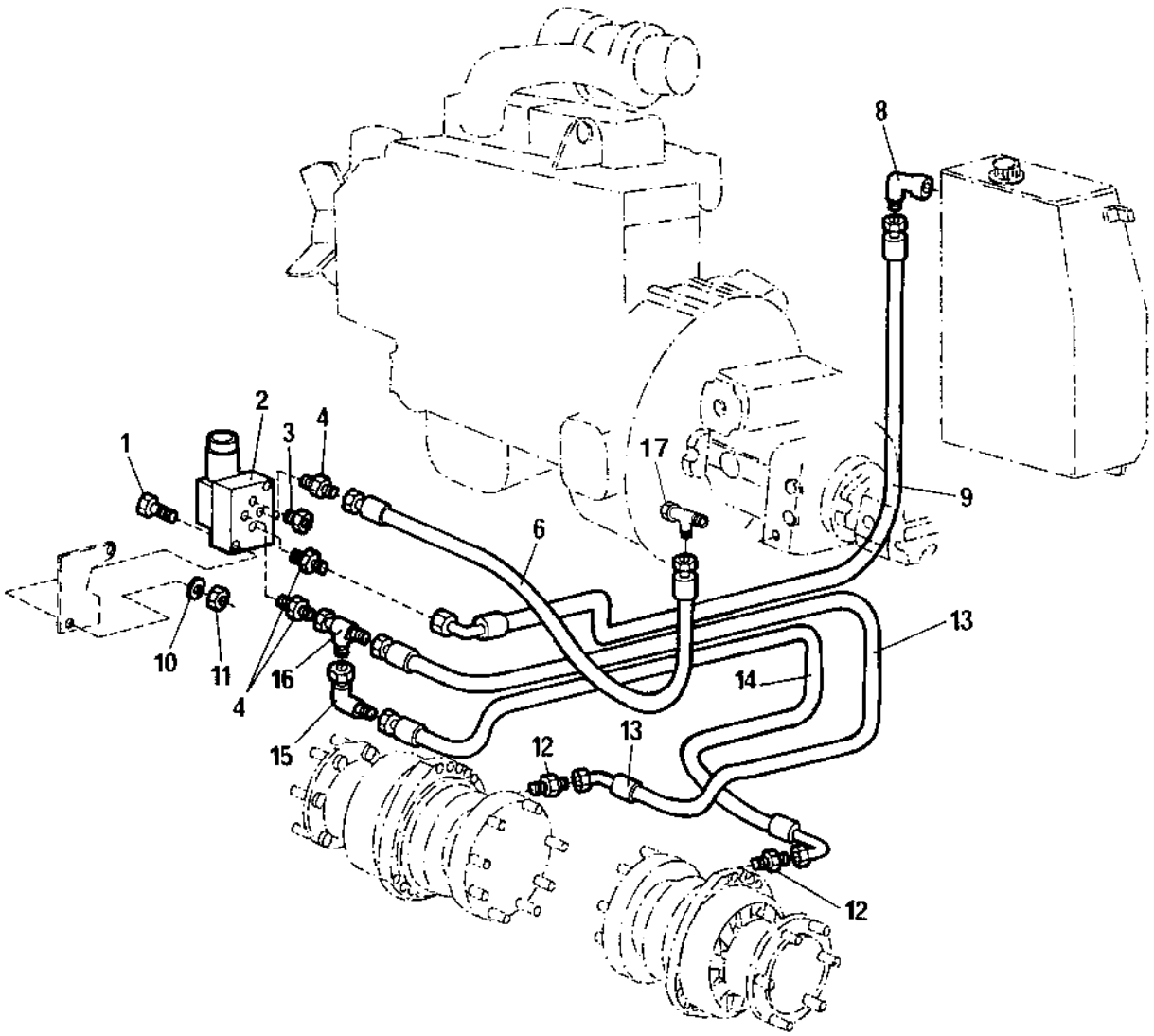
1
2
3
4
4
4
6
8
9
10
11
12
12
13
13
14
15
16
17

Ref. No.	Part No.	Rem.	Qty	Description	Code
1	500079		2	Screw M6-1x50 8,8	
2	192833		1	Reversing valve	C
3	892446		1	Plug	
4	234349		3	Connector	
6	483069	B	1	Hydraulic hose	
8	334174		1	Adapter	
9	482497		1	Hydraulic hose	
10	904228		2	Washer 6,4x12x1,5	
11	570004		2	Nut M6	
12	234233		2	Adapter	
13	483419		1	Hydraulic hose	
14	483420		1	Hydraulic hose	
15	334524		1	Connector	
16	334234		1	Tee-connector	
17		A		See Brake system	

A) Item 32 in Brake system
B) Replaces earlier used 482013

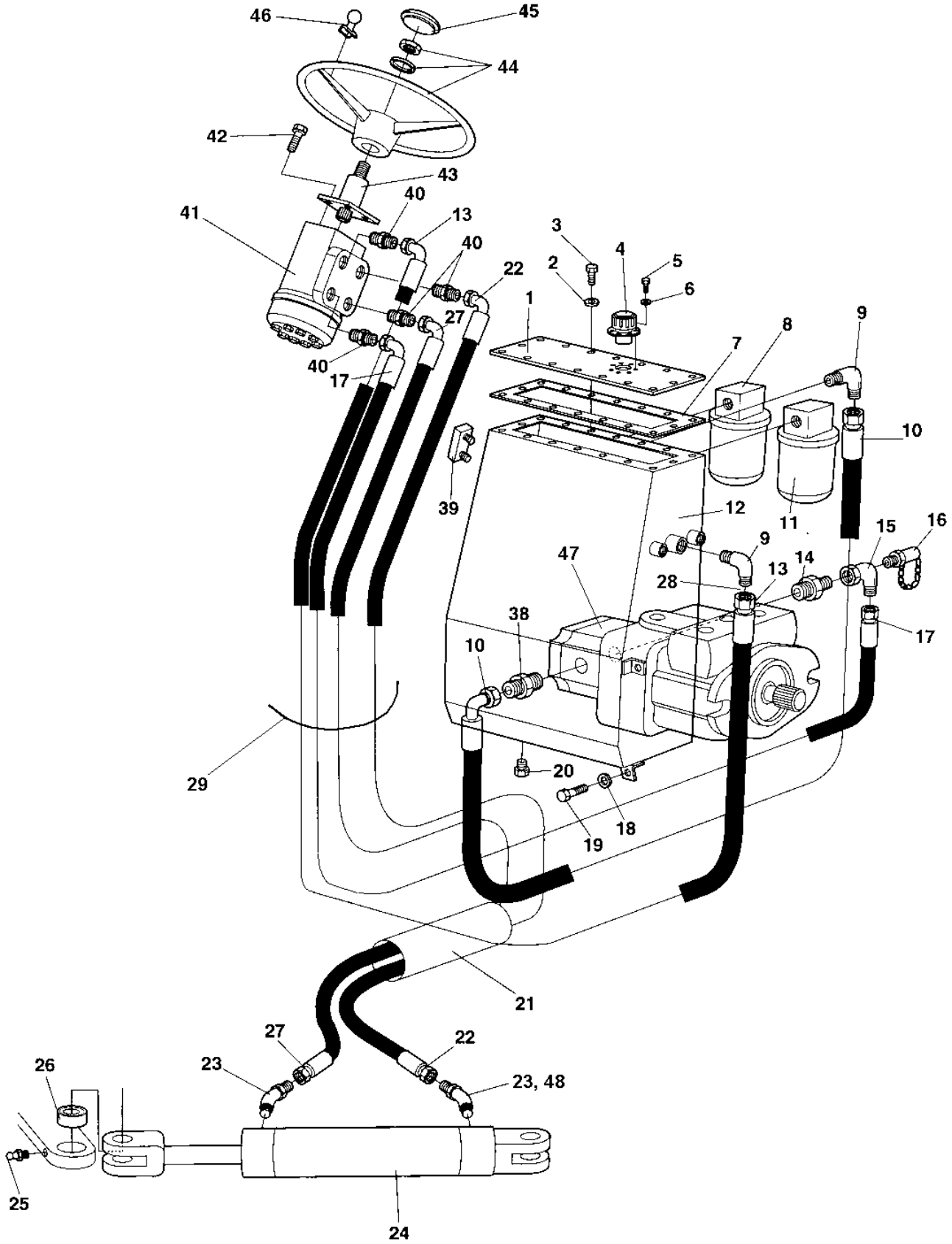
46
45
44
42
43
40
41
13
40
22
27
40
17
3
2
4
5
6
1
7
8
9
10
39
12
11
15
16
9
47
14
13
28
38
17
10
29
20
18
19
21
27
22
26
23
23, 48
25
24

Ref. No.	Part No.	Rem.	Qty	Description	Code
1	193500		1	Cover	
2	904229		15	Washer 8,4x16x1,5	
3	500022		15	Screw M8-1,25x30 8,8	
4	382052	K	1	Cap	
	938061		1	.Gasket	
5	500004		6	Screw M5 0,8x12 8,8	
6	904281		6	Washer 5,3x10x1	
7	193499		1	Gasket	D
8	902807		1	Hydraulic oil filter, cpl (Suction filter)	
	902900		1	.Filter element, cannot be used with Bio oil	A
9	814251		2	Adapter	
10	193771		1	Hose	
11	903754		1	Hydraulic oil filter (Return filter)	
	903588	A	1	.Cleaning filter element , maximum 50 hours use	A
	902900	B	1	Filter element, cannot be used with Bio oil	A
12	193497		1	Hydraulic oil tank	
13	482986		1	Hydraulic hose	
14	334124		1	Connector	
15	193774		1	Connector	
16	910161		1	Measuring nipple	D
17	483313		1	Hydraulic hose	
18	904230		4	Washer 10,5x22x2	
19	500048		3	Screw M10-1,5x20 8,8	
20	813784		1	Plug	
21	255672		1	Hose	
22	482528		1	Hydraulic hose	D
	903082	G	1	Hose shield	
23	801198		2	Elbow 90	
24	193807		1	Steering cylinder (Page 76)	
25	310043		2	Grease nipple	D
26	813316		2	Ball bushing	D
27	194196		1	Hydraulic hose	
28	234667	C	1	Reducer	
29	815079	C	2	Holder	
	500028	C	4	Screw M10-1,5x25 8,8	
	904230	C	4	Washer 10,5x22x2	
	570006	C	4	Nut M10	
38	334138		1	Adapter	
39	989151		1	Oil level gauge	D
40	334116		4	Straight o-ring connector	
41	925536		1	Steering unit (Page 78)	C
42	195139		2	Screw	
43	195271		1	Steering column	
44	372964		1	Steering wheel, cpl	
45	935613		1	.Cover	
46	935614		1	.Turning knob	D
47	376545		1	Hydraulic pump	C

A) Attention: May only be used as Return filter!
B) For regulary maintenance
C) Not illustrated
G) L=200 mm
K) Cpl. model without strainer underneath the cap

193807 Steering cylinder

16152

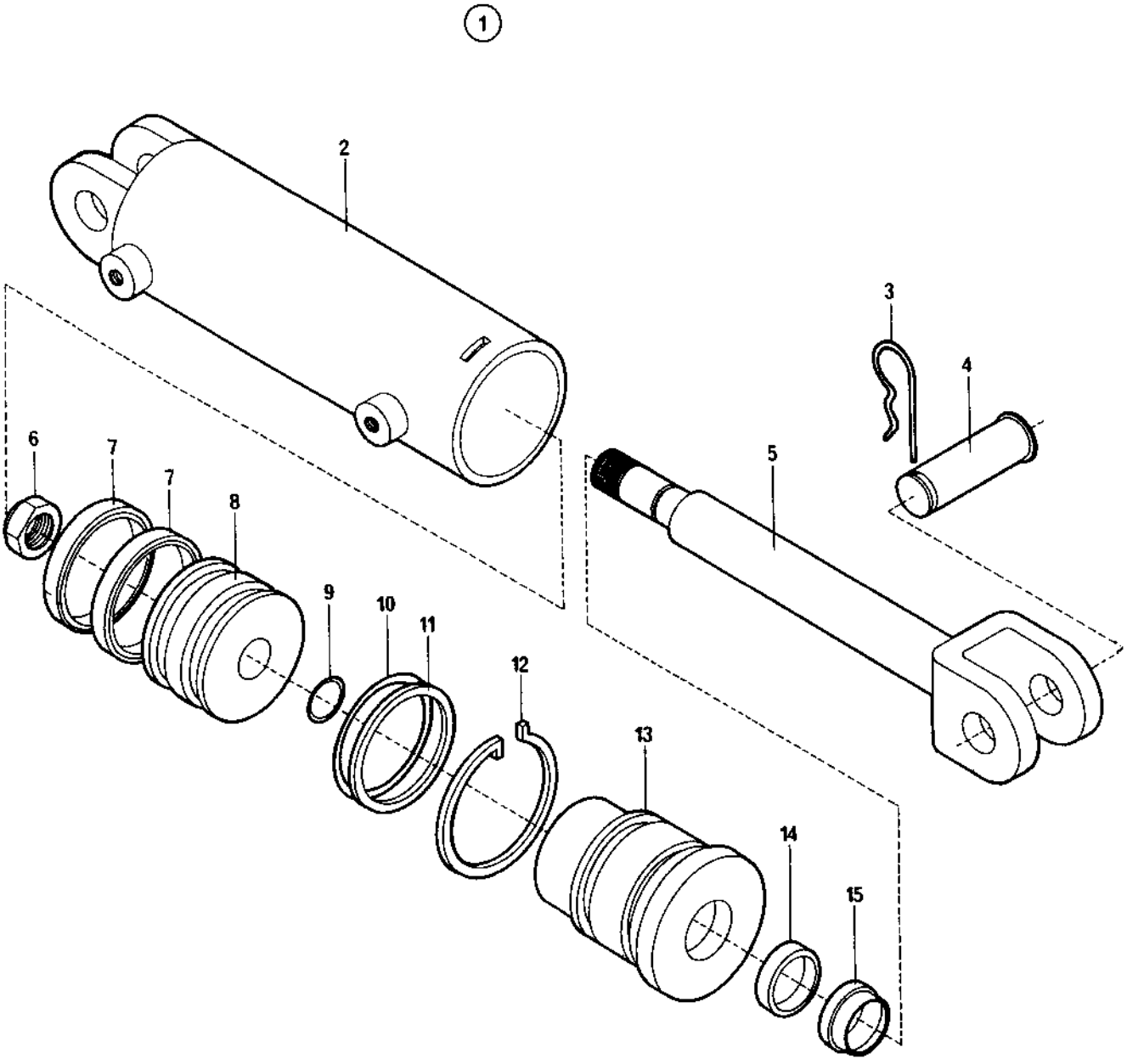

193807 Steering cylinder

Ref. No.	Part No.	Rem.	Qty	Description	Code
1			1	Hydraulic cylinder, cpl	C
2	193863		1	.Liner	
3	635061		2	.Hair clip	D
4	193859		2	.Pin	
5	193862		1	.Rod mounting	
6	813745		1	.Nut	
7	193858		2	.Gasket	D
8	193861		1	.Piston	
9	193856		1	.O-ring	D
10	193855		1	.O-ring	D
11	195854		1	.Ring	D
12	193864		1	.Lock ring	
13	193860		1	.Rod guide	D
14	193857		1	.Gasket	D
15	193853		1	.Ring	D

925536 Steering unit

16478

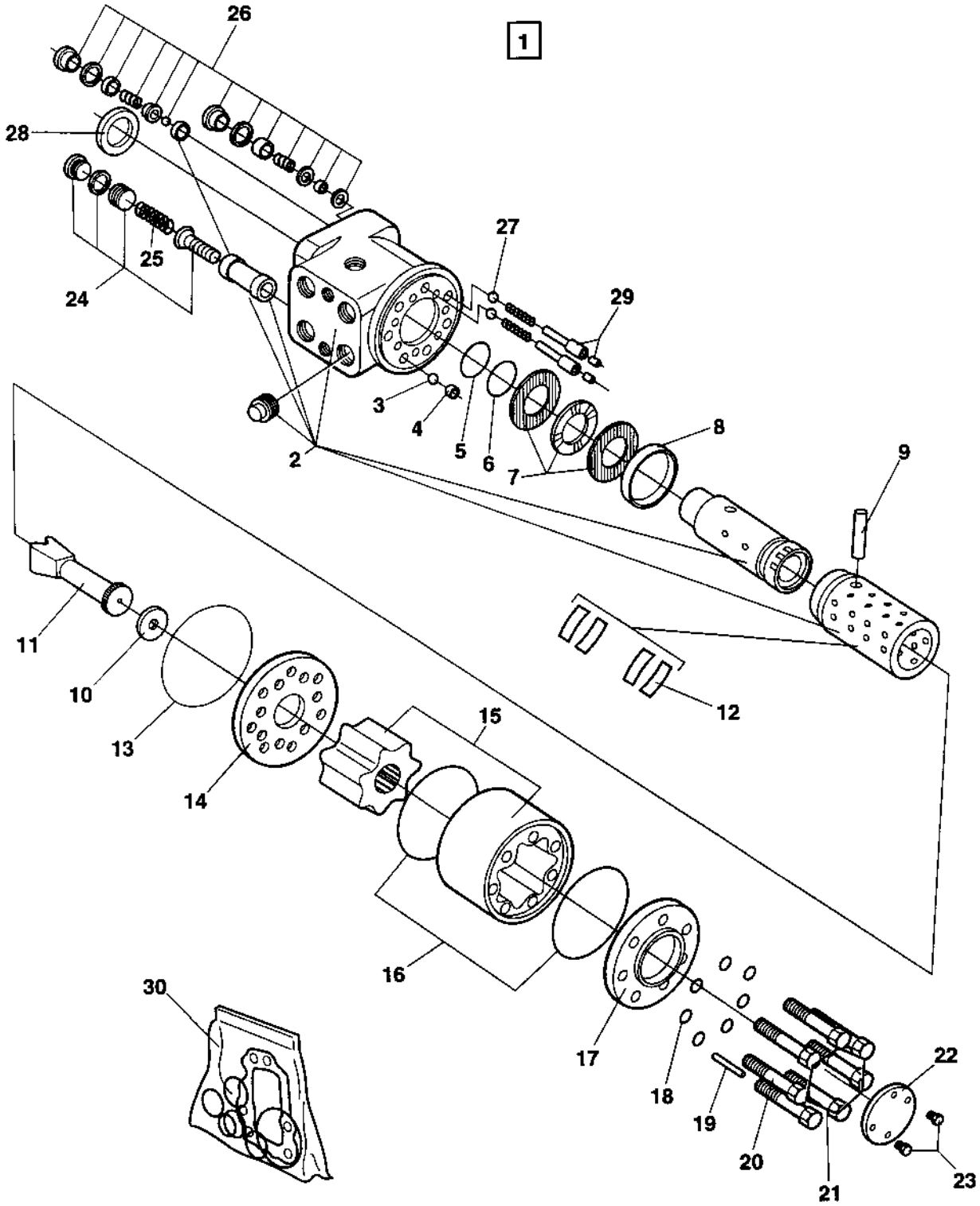

925536 Steering unit

Ref. No.	Part No.	Rem.	Qty	Description	Code
2			1	.Spool and sleeve	D
3	480468		1	.Ball	
4	480446		1	.Threaded bushing	D
5	480461		1	.O-ring	D
6	480463		1	.Kin-ring	D
7	911620		1	.Bearing	D
8	480449		1	.Ring	
9	480447		1	.Cross pin	
10	929006		1	.Spacer	
11	480454		1	.Drive shaft	
12	911618		1	.Spring kit	D
13	480460		1	.O-ring	D
14	480445		1	.Distributor plate	
15	929007		1	.Gear set	
16	480459		2	.O-ring	D
17	480450		1	.End cap	
18	480467		7	.Washer, sealing	
19	480466		1	.Rolled pin	
20	929008		1	.Screw with bore	
21	929009		6	.Screw	
22	481303		1	.Name plate	
23	480464		2	.Drive screw	
24	929010		1	.Relief valve 17,0-17,5MPa	D
25	929011		1	.Spring	
26	929012		2	.Shock valve 22,5-24,0 MPa	
27	929013		2	.Ball	
28	480462		1	.Seal ring	D
29	929014		2	.Rolled pin	
30	480457	A	1	Spare parts kit	D

A) Consists of item 13,16,18 and 28

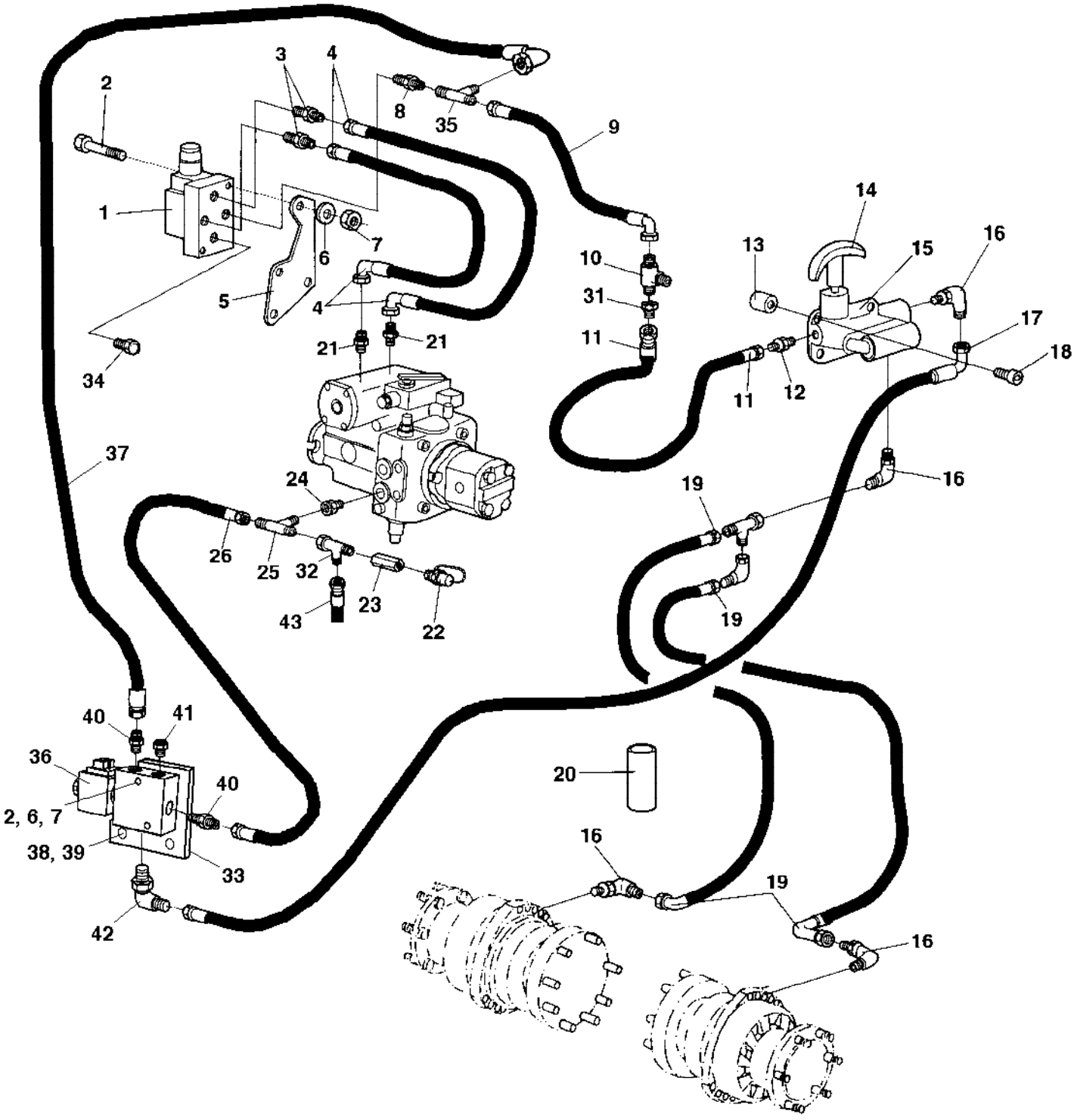
1
2
3
4
5
6
7
8
9
10
11
12
13
14
15
16
17
18
19
20
21
22
23
24
25
26
31
32
33
34
35
36
37
38, 39
40
41
42
43
2, 6, 7

Ref. No.	Part No.	Rem.	Qty	Description	Code
1	260761		1	Solenoid valve (Page 82)	C
2	500079		4	Screw M6-1x50 8,8	
3	234349		2	Connector	
4	482399		2	Hydraulic hose	D
5	194579		1	Bracket	
6	904228		4	Washer 6,4x12x1,5	
7	570004		4	Nut M6	
8	234457		1	Adapter	
9	483550	B	1	Hydraulic hose	D
10	923294		1	Tee-connector	
11	482257		1	Hydraulic hose	
12	334143		1	Straight connector	
13	348659		3	Sleeve	
14	193790		1	T-handle	D
15	415329		1	Hand pump	
16	334445		4	Connector	
17	338486		1	Hydraulic hose	
18	508074		3	Screw	
19	483417		2	Hydraulic hose	
20	903082	A	1	Hose shield	
21	334232		2	Adapter	
22	910161		1	Measuring nipple	D
23	338304		1	Connector	
24	924731		1	Connector	
25	234888		1	Tee-connector	
26	482399		1	Hydraulic hose	D
31	334264		1	Reducing	
32	334234		1	Tee-connector	
33	377963		1	Bracket	
34	892446		1	Plug	
35	334135		1	T-connector	
36	389447	D	1	Brake relief valve	
37	482328		1	Hydraulic hose	
38	500046		2	Screw M12x30H 8,8 FZB	
39	904231		2	Washer 13x24x2	
40	234233		2	Adapter	
41	903515		1	Plug	
42	904706		1	Elbow 90, O-ring	
43		C		See Speed system	

A) L=200 mm
B) Replaces earlier used 851648
C) Item 6 in Speed system
D) Introduced from SN 2163BR2072. Upgrading earlier CP142 is possible with Rebuilding kit 378055, add 1 pc 483069
Hydraulic hose which replaces item 6 in Speed system

260761 Solenoid valve

16160-1

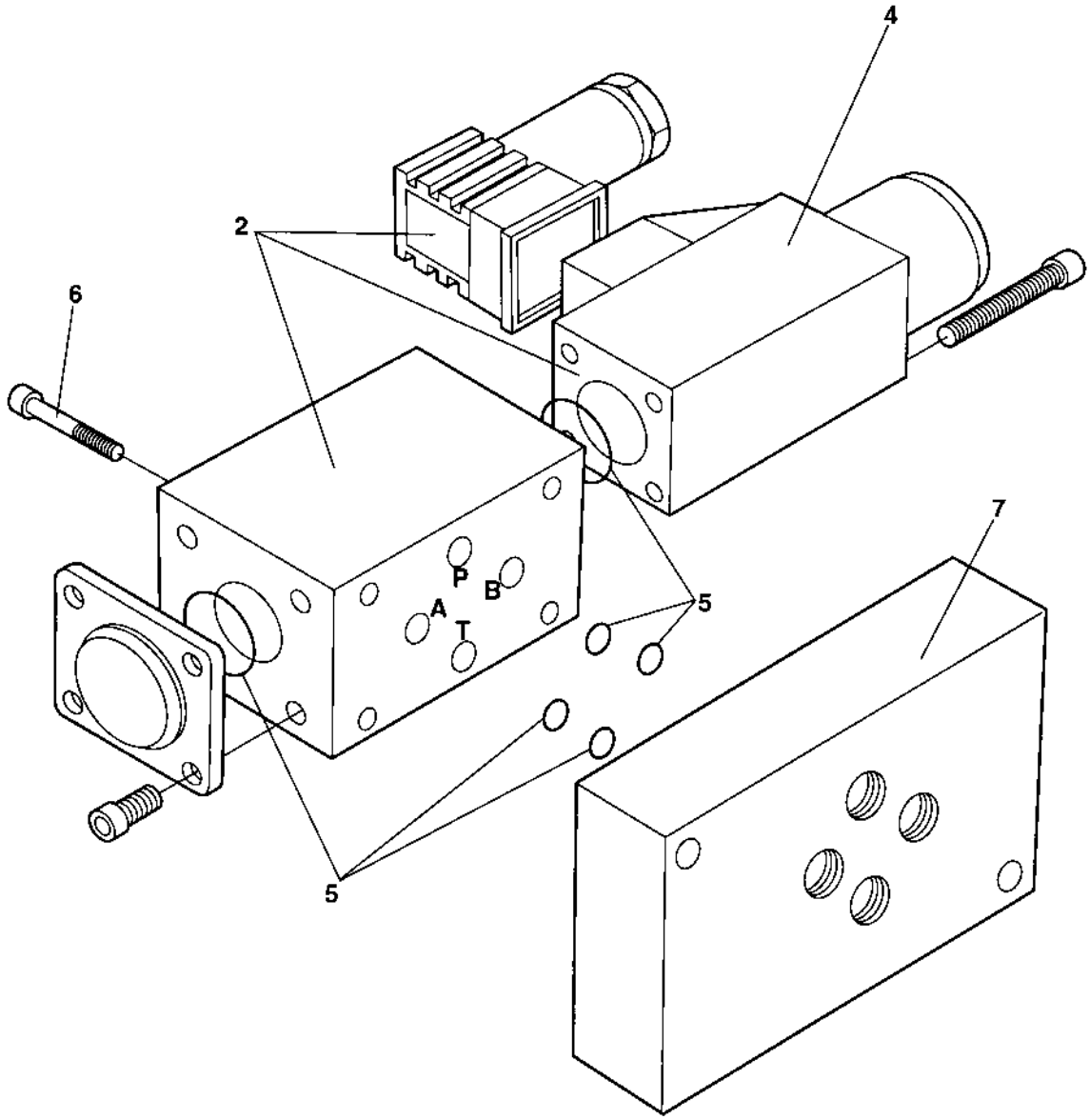

260761 Solenoid valve

Ref. No.	Part No.	Rem.	Qty	Description	Code
2	920924	A	1	Solenoid valve	C
4	243457	B	1	Solenoid	D
	198311	C	1	Solenoid	
5	243459		1	Seal kit	D
6	508098		4	Screw	
7	920925		1	Plate	

A) Attention: Two models existing; one with the Solenoid in square shape and another one in round shape
B) Square shape
C) Round shape

Ref. No.	Part No.	Rem.	Qty	Description	Code
10				Electrical equipment (Page 86)	
20				Driving & working lights (Page 88)	
30				Instrument panel, relay, fuses (Page 90)	

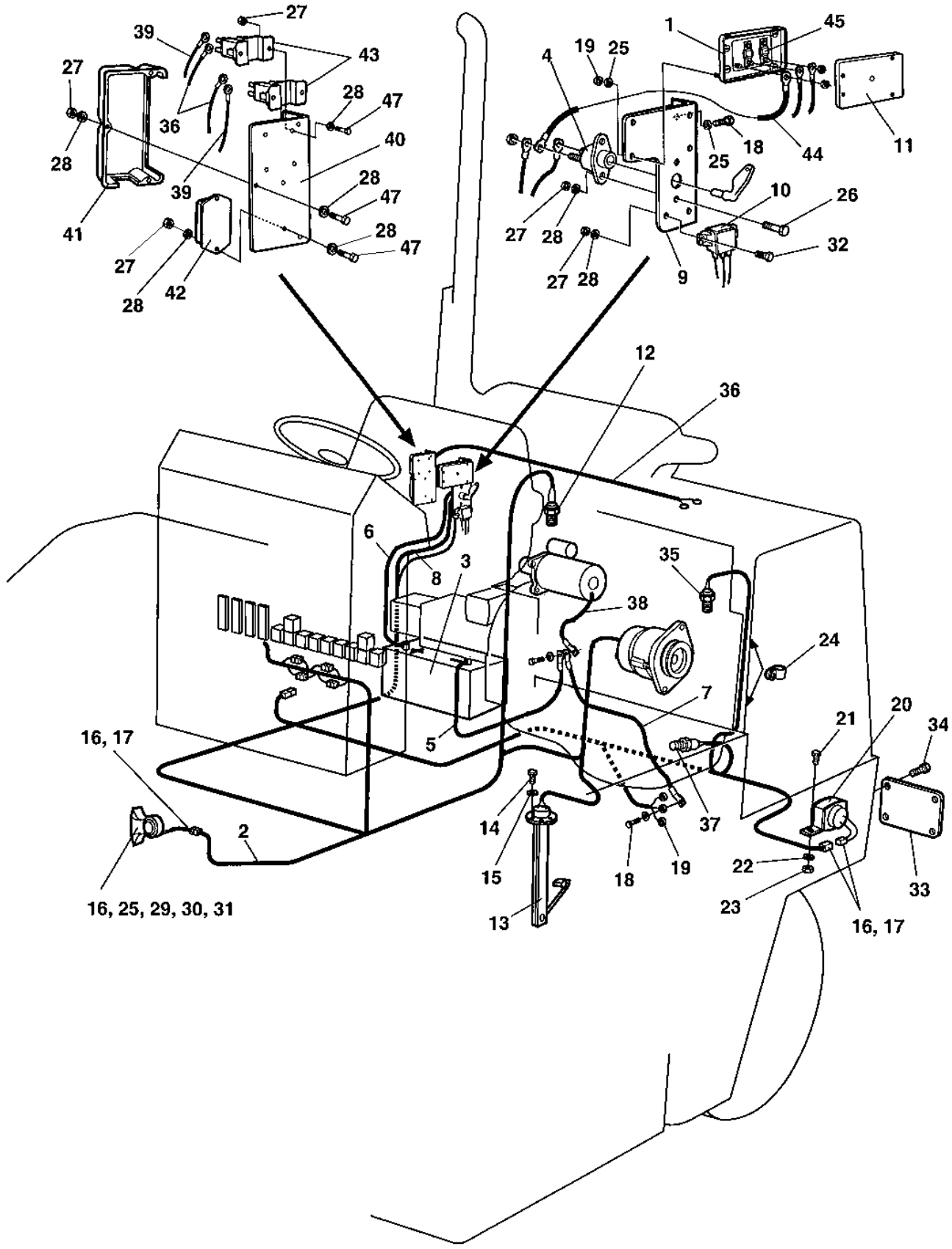
27
39
43
27
28
47
36
40
28
39
28
47
41
28
47
27
28
42
1
45
4
19
25
18
44
11
25
10
26
27
28
32
27
28
9
12
36
6
8
3
35
38
24
7
20
21
34
16, 17
5
37
14
2
15
18
19
22
33
16, 25, 29, 30, 31
13
23
16, 17

Ref. No.	Part No.	Rem.	Qty	Description	Code
1	791532		1	Fuse box	
2	388890		1	Cable harness	
3	470029		1	Battery	C
	264650	A	2	Rod	
	904230	A	2	Washer 10,5x22x2	
	571003	A	2	Nut UNC 3/8 - 16	
	193569	A	1	Battery holder	
	193574	A	1	Shim 360x45 mm	
	193575	A	1	Shim 360x180 mm	
4	903640		1	Battery switch	D
5	904748	C	1	Battery cable, negative	
6	904919	C	1	Battery cable, positive	
7	904750	E	1	Connection cable, coarse	
8	791531	F	1	Connection cable, coarse	
9	388934		1	Holder plate	
10	904448		1	Relay	D
11		B	1	Cover	D
12	903631		1	Temperature sensor Hydraulic oil	D
13	791129		1	Fuel level sender	
14	500258		5	Screw M4-0,7x20 8,8	
15	904698		5	Washer 4,3x8x0,8	
16	901766		2	Connector 2-POL	D
17	960273		4	Terminal	
18	500021		5	Screw M8-1,25x25 8,8	
19	586003		4	Lock nut M8	
20	900798		1	Back-up alarm	
21	500087		2	Screw	
22	601001		2	Washer	
23	586001		2	Lock nut M5	
24	921072		2	Clamp	
25	904229		10	Washer 8,4x16x1,5	
26	500040		2	Screw M6-1x20 8,8	
27	586002		4	Lock nut M6	
28	904228		6	Washer 6,4x12x1,5	
29	999027		1	Horn	D
30	348902		1	Bracket	
31	500053		1	Screw M8-1,25x20 8,8	
32	500075		2	Screw M6-1x25 8,8	
33	374545		4	Cover	
34	904696		16	Screw	
35	903632		1	Temperature sensor Engine	D
36	387723		1	Cable harness Pre-heater	
	960727	A	1	Clamp	
37		B	1	Oil pressure switch	
38	792056		1	Connection cable, coarse	
39	791518		2	Connection cable, coarse	
40	388924		1	Bracket	
41	388946		1	Hood	
42		B	1	Control unit	
43		B	2	Relay	
44	791520		1	Connection cable, coarse	
45	791557		2	Fuse 125A, green	
47	500013		9	Screw M6-1x16 8,8	

A) Not illustrated
B) PN is missing due to short release date
C) L=500 mm
E) L=400 mm
F) L=2500 mm

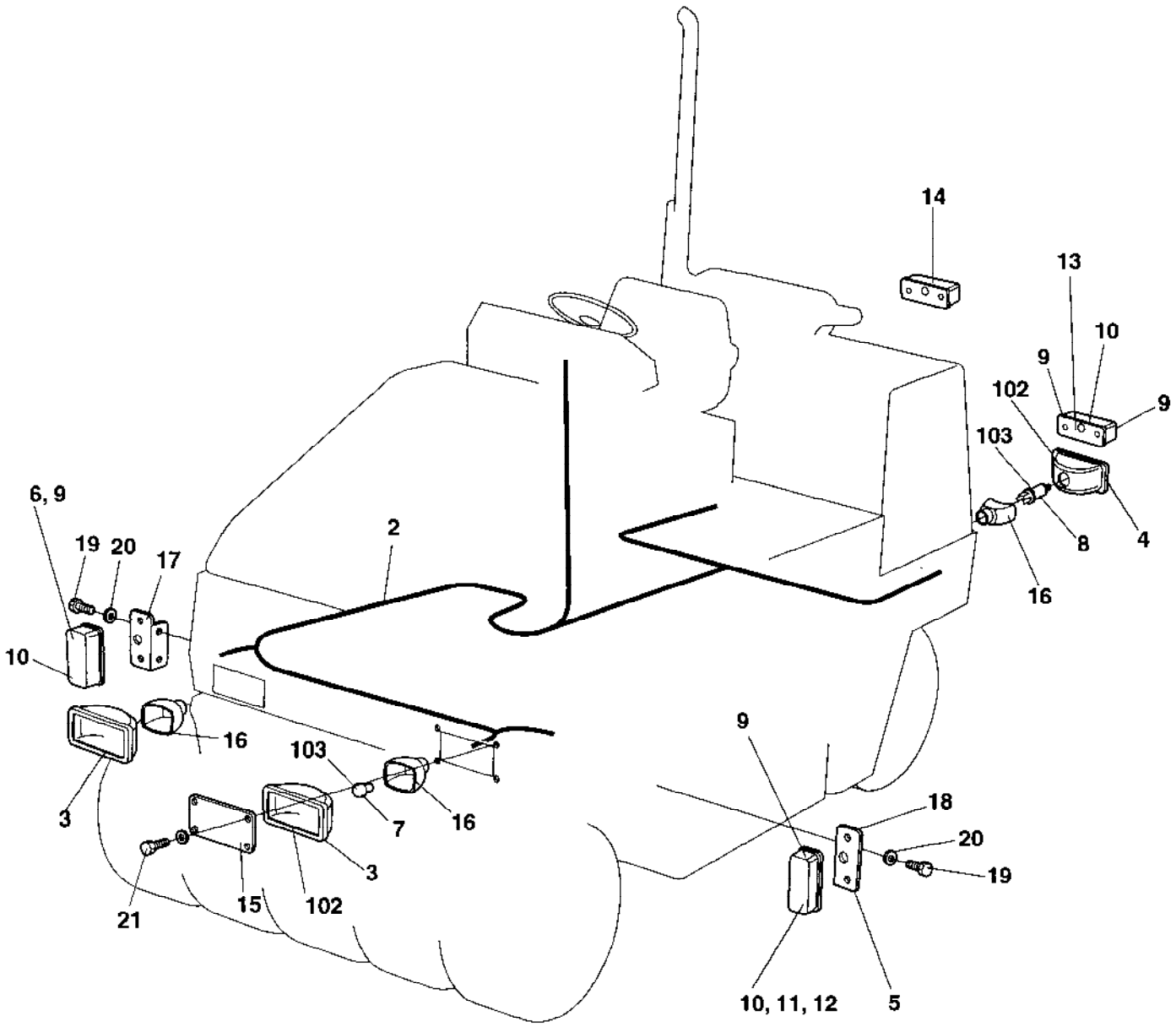
14
13
10
9
9
102
103
9
8
4
16
6, 9
19
20
17
2
10
16
103
7
16
3
3
21
15
102
9
18
20
19
10, 11, 12
5

Ref. No.	Part No.	Rem.	Qty	Description	Code
2	380671		1	Cable harness	
3	902066		2	Head light	
4	902227		2	Work light	
5	904315		1	Direction lamp	
6	904316		1	Direction lamp	
7	900790		2	Bulb 60/55w H4	B
8	901369		2	Bulb 55w H3	B
9	928502		6	Bulb 21w	B
10	985014		4	Bulb 5w	B
11	533013		8	Screw M4x20	
12	904698		8	Washer 4,3x8x0,8	
13	904317		1	Direction lamp	
14	904318		1	Direction lamp	
15	374756		4	Protecting cover	
16	904792		4	Rubber cap	
17	380824		1	Holder plate, Right	
18	380825		1	Holder plate, Left	
19	500053		4	Screw M8-1,25x20 8,8	
20	904229		4	Washer 8,4x16x1,5	
21	904696		16	Screw	
102	902227	A	4	Work light	
103	901369	A	4	Bulb 55w H3	B

A) Working light

Instrument panel, relay, fuses

18054

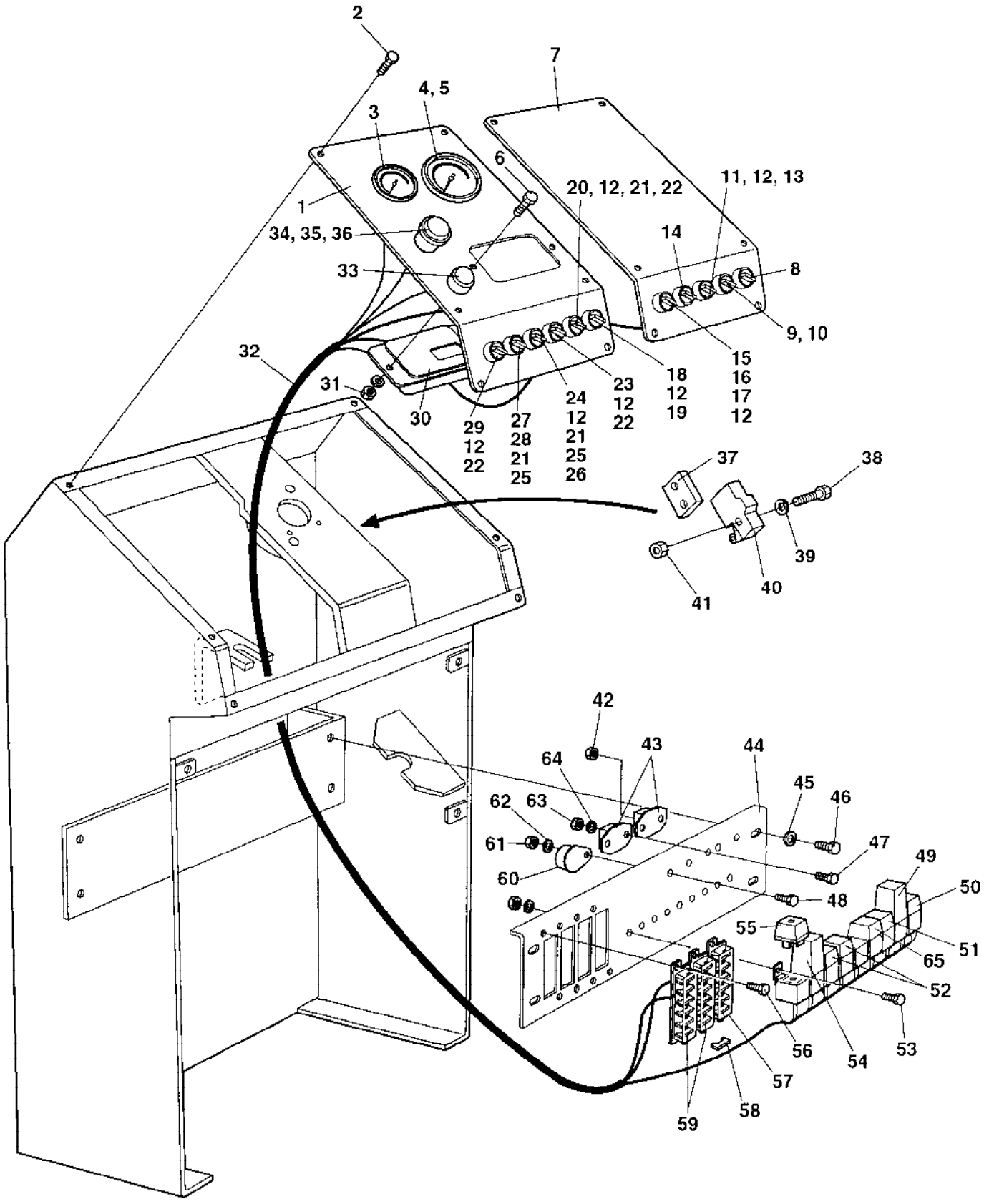

Instrument panel, relay, fuses

Ref. No.	Part No.	Rem.	Qty	Description	Code
1	380215		1	Control panel left	
2	902224		12	Screw M6x10	
3	374630		1	Fuel gauge	
4	345139		1	Hole plug	
5	359345	A	1	Tachometer	
6	902224		2	Screw M6x10	
7	380214		1	Control panel right	
8	370644	B	1	Switch, cpl	
9	930151	C	1	Switch	D
10	930154		1	Contact piece	
11	926989		1	Switch	
12	985012		7	Bulb	D
13	930162		1	Connector	
14	930151		1	Switch	D
15	791489		1	Switch	
16	930198		1	Contact block	
17	930154		1	Contact piece	
18	930166	D	1	Switch	D
19	930165		1	Contact block	D
20	932056		1	Switch	D
21	930163		3	Contact piece	D
22	930162		3	Connector	
23	930161		1	Switch	D
24	932057		1	Switch	
25	930154		2	Contact piece	
26	930198		1	Contact block	
27	932058		1	Switch	D
28	930182		1	Contact block	D
29	930166		1	Switch	D
30	380660		1	Display	D
31	586002		2	Lock nut M6	
32	388950		1	Cable harness	
33	932032		1	Push button	D
34	930200		1	Emergency stop	D
35	930163		1	Contact piece	D
36	930154		1	Contact piece	
37	345905		3	Plate	
38	923901		2	Screw	
39	904697		2	Washer 3,2x6x0,5	
40	930046		1	Micro switch	D
41	928927		2	Lock nut	
42	570004		2	Nut M6	
43	903627		2	Junction block	
44	375417		1	Distribution control plate	
45	904228		4	Washer 6,4x12x1,5	
46	500012		4	Screw M6x12	
47	533013		4	Screw M4x20	
48	533030		1	Screw	
49	904989		1	Flash relay Option	D
50	791138		1	Relay	
51	791138		1	Relay	
52	903956		2	Relay	
53	902223		9	Screw	
54	348485		1	Relay unit	
55	791138		1	Relay	
56	901767		6	Screw	

A) Option
B) Timer, Option
C) Sprinkler pump, Option
D) Rotating beacon, Option

Instrument panel, relay, fuses

18054

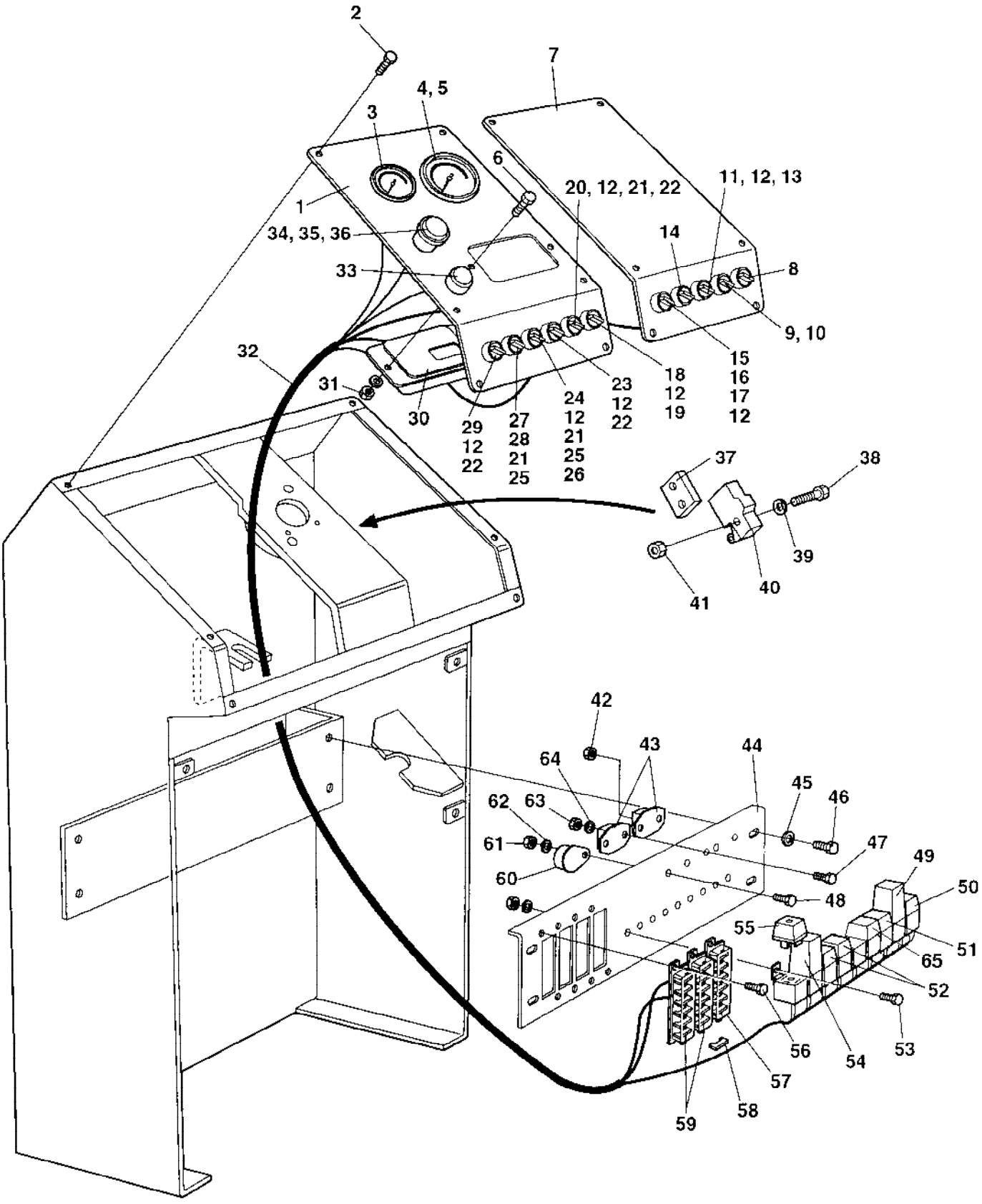

Instrument panel, relay, fuses

Ref. No.	Part No.	Rem.	Qty	Description	Code
57	901256	E	1	Fuse box	
	901225		N	Fuse 5A	D
	901226		N	Fuse 7.5A	D
	901227		N	Fuse 10A	D
58	901240		11	Connector	
59	901256		2	Fuse box	
	901224		N	Fuse 3A	D
	901226		N	Fuse 7.5A	D
	901227		N	Fuse 10A	D
	901228		N	Fuse 15A	B
60	355301		1	Buzzer	D
61	586001		1	Lock nut M5	
62	904281		1	Washer 5,3x10x1	
63	923976		4	Nut	
64	904698		4	Washer 4,3x8x0,8	
65	903956		1	Relay	
	374213	A	1	Time relay	D

A) Option
E) Driving light

Drivers platform

Ref. No.	Part No.	Rem.	Qty	Description	Code
10				Drivers platform (Page 96)	
15				Rops and safety belt (Page 98)	
20				Engine controls (Page 100)	

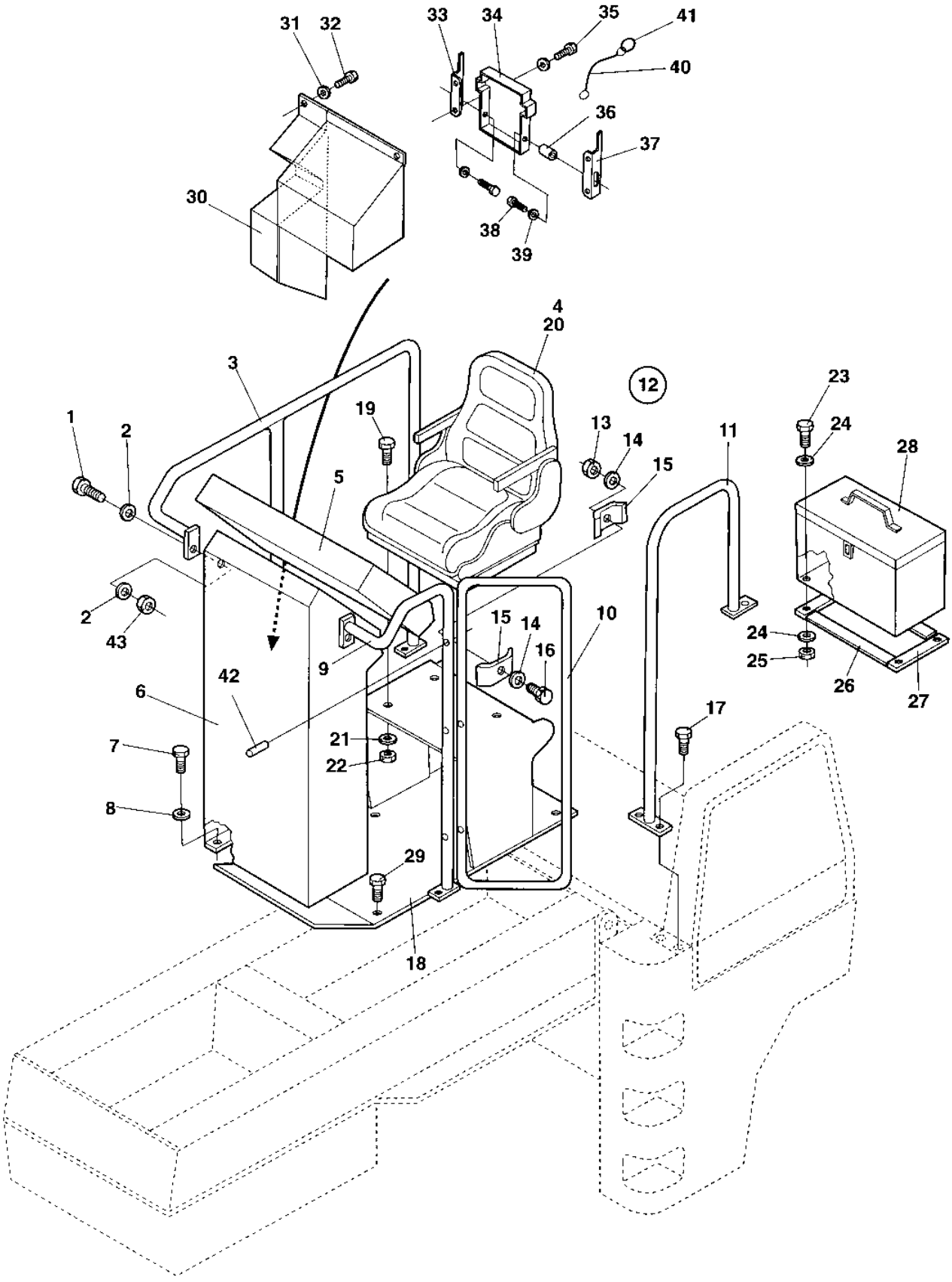
31
32
33
34
35
41
40
36
37
30
38
39
4
20
3
12
23
1
2
19
13
14
11
24
28
5
15
2
43
15
14
10
24
25
16
9
42
26
27
6
17
21
7
22
8
29
18

Drivers platform

Ref. No.	Part No.	Rem.	Qty	Description	Code
1	500020		2	Screw M8-1,25x22 8,8	
2	904229		4	Washer 8,4x16x1,5	
3	381009		1	Hand rail	
4	344374	C	1	Drivers seat, black galon	
5			1	Instrument board	
6	195136		1	Platform cpl	
7	500046		4	Screw M12x30H 8,8 FZB	
8	904231		4	Washer 13x24x2	
9	381004		1	Hand rail	
10	381008		1	Hand rail	
11	381006		1	Hand rail	
12	193738		2	Clamp	
13	570008		1	.Nut	
14	600011		2	.Washer	
15	193737		2	.Clamp	
16	500082		1	.Screw M16x70	
17	500022		12	Screw M8-1,25x30 8,8	
18	388905		1	Floor	
19	500020		4	Screw M8-1,25x22 8,8	
20	348331		1	Seat cover	D
21	904229		4	Washer 8,4x16x1,5	
22	586003		4	Lock nut M8	
23	500060		4	Screw	
24	904281		8	Washer 5,3x10x1	
25	586001		4	Lock nut M5	
26	247350		2	Gasket	D
27	247350		2	Gasket	D
28	193736		1	Tool box	
29	927026		6	Screw	
30	374792		1	Cover	
31	603020		4	Washer	
32	508001		4	Screw	
33	382163		1	Cover holder, right	
34	357425		1	Instruction book holder	
35	624021		4	Pop rivet	
36	902163		2	Parallel pin	
37	382162		1	Cover holder, left	
38	902164		2	Screw	
39	904697		2	Washer 3,2x6x0,5	
40	357643		1	Wire	
41	358254		1	Key-ring	
42	629019		3	Expanding pin	
43	586003		2	Lock nut M8	

C) With arm rests

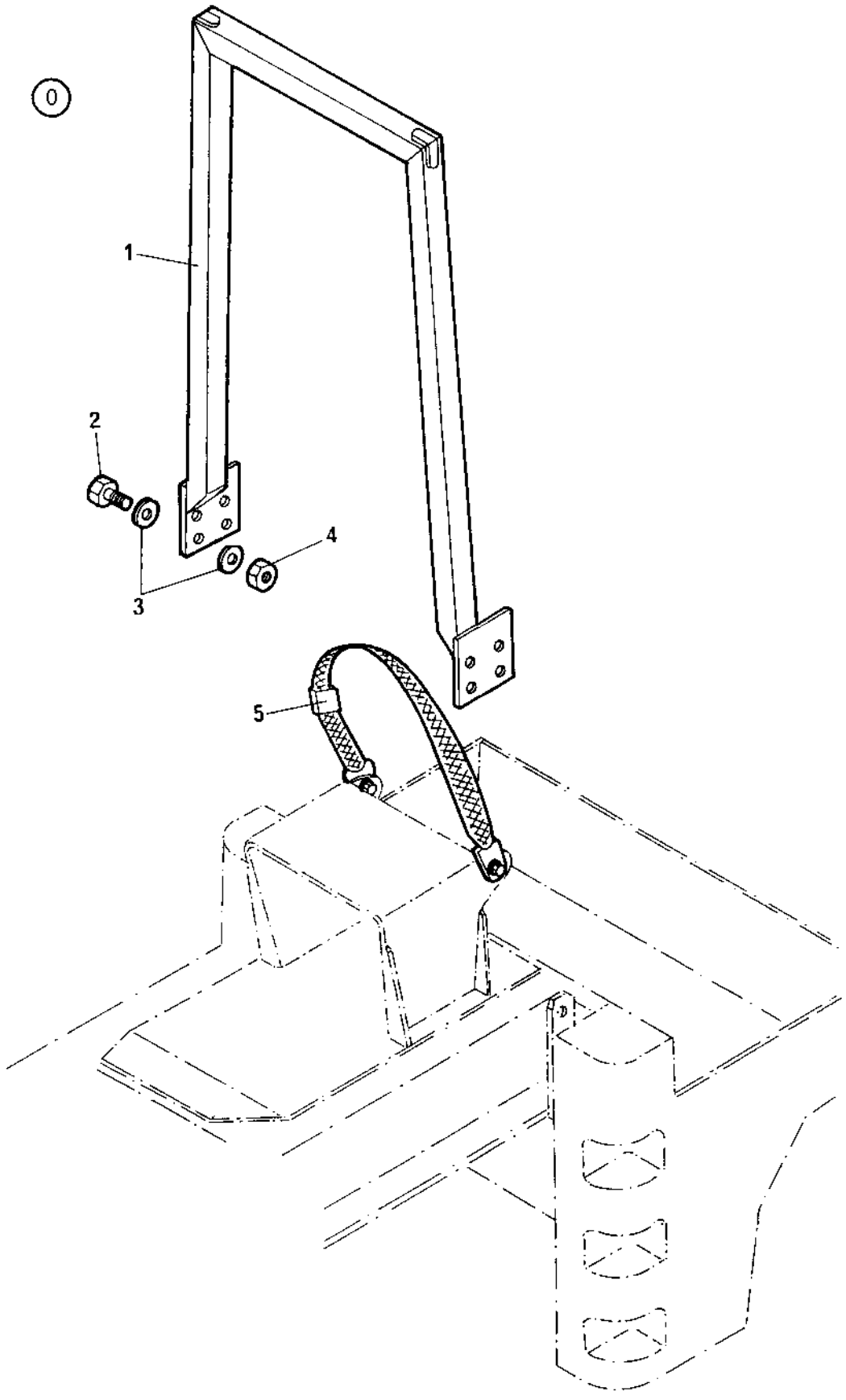
0
1
2
3
4
5

Rops and safety belt

Ref. No.	Part No.	Rem.	Qty	Description	Code
	388901		1	Rops kit	
1		A	1	.Rops	
2	904487		8	.Screw M20x140 10,9 FZB	
3	904233		16	.Washer 21x36x3	
4	925867		8	.Nut M20-10	
5	939972		1	.Seat belt kit	

A) Not sold separately due to safety regulations. Only available as a complete ROPS kit

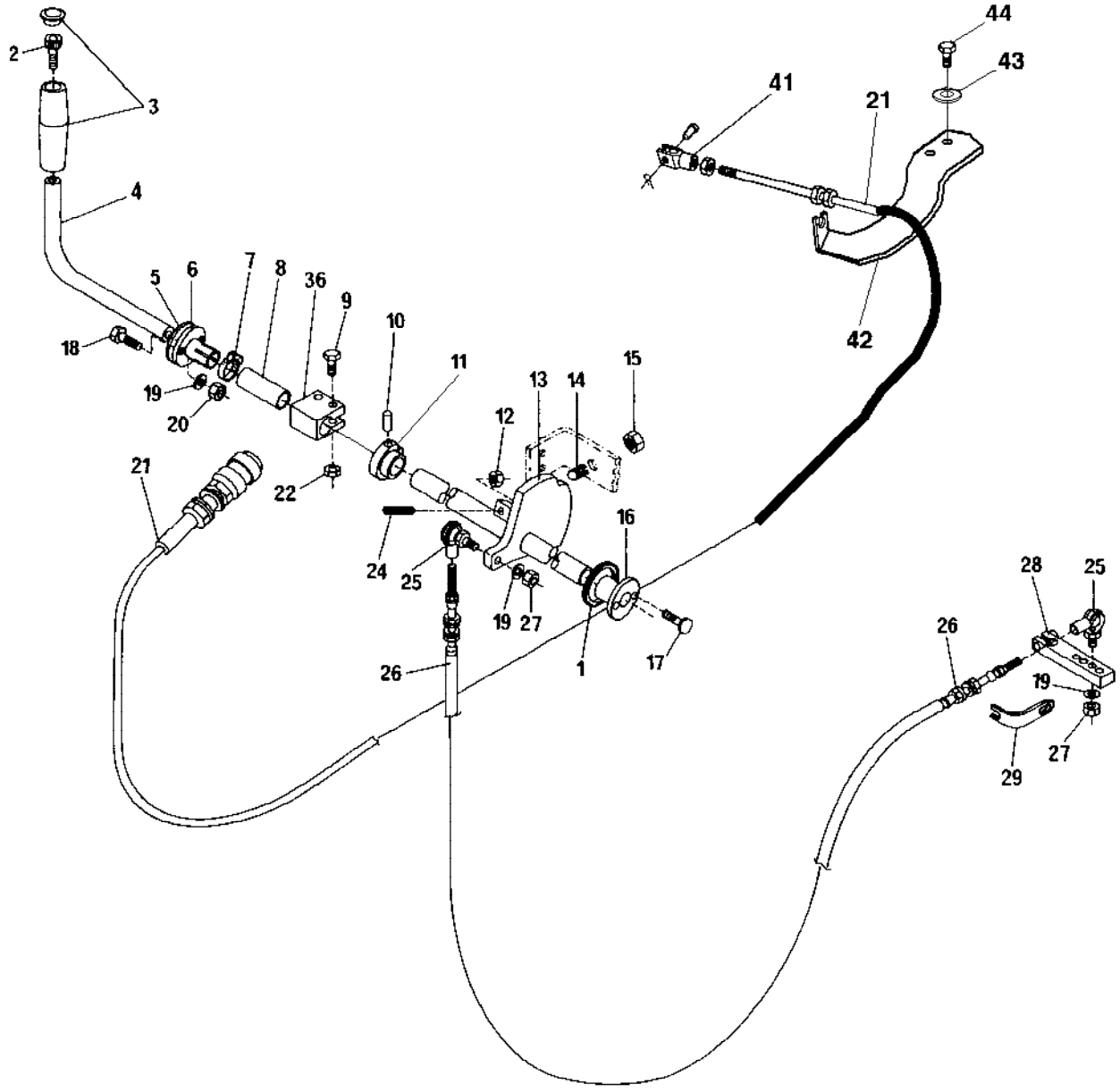
2
3
4
5
6
7
8
36
9
10
11
12
13
14
15
16
17
18
19
20
21
22
24
25
26
1
27
41
21
42
44
43
28
25
26
19
27
29

Ref. No.	Part No.	Rem.	Qty	Description	Code
1	600021		2	Washer	
2	508060		1	Screw	
3	192828		1	Handle	
			1	Cover	
4	193403		1	Pipe	
5	346421		1	Washer	D
6	345992		1	Bushing	D
7	313004		1	Hose clamp	
8	193405		1	Pipe	
9	500047		2	Screw M8-1,25x35 8,8	
10	923988		1	Stop screw	
11	346417		1	Cam ring	D
12	570004		2	Nut M6	
13	195167		1	Shaft	
14	922325		1	Spring ball plunger	D
15	570008		1	Nut	
16	345640		1	Bushing	
17	533038		2	Screw	
18	923927		2	Screw	
19	904639		4	Washer 6,7x14x1,5	
20	586002		2	Lock nut M6	
21	455095		1	Throttle cable	D
22	586003		2	Lock nut M8	
24	928005		2	Stop screw	
25	268964040		2	Ball joint	
26	193404		1	Control cable	D
27	572001		2	Nut	
28		A	1	Lever	
29	193406		1	Bracket	
36	346420		1	Coupling	
41	813361		1	Yoke	
42	376615		1	Bracket	
43	904231		2	Washer 13x24x2	
44	500194		2	Screw M12x40	
	902541		1	Lock fluid Loctite 243, 50 ml	

A) Supplied with hydraulic pump

Ref. No.	Part No.	Rem.	Qty	Description	Code
10				Decals (Page 104)	

Decals

18027

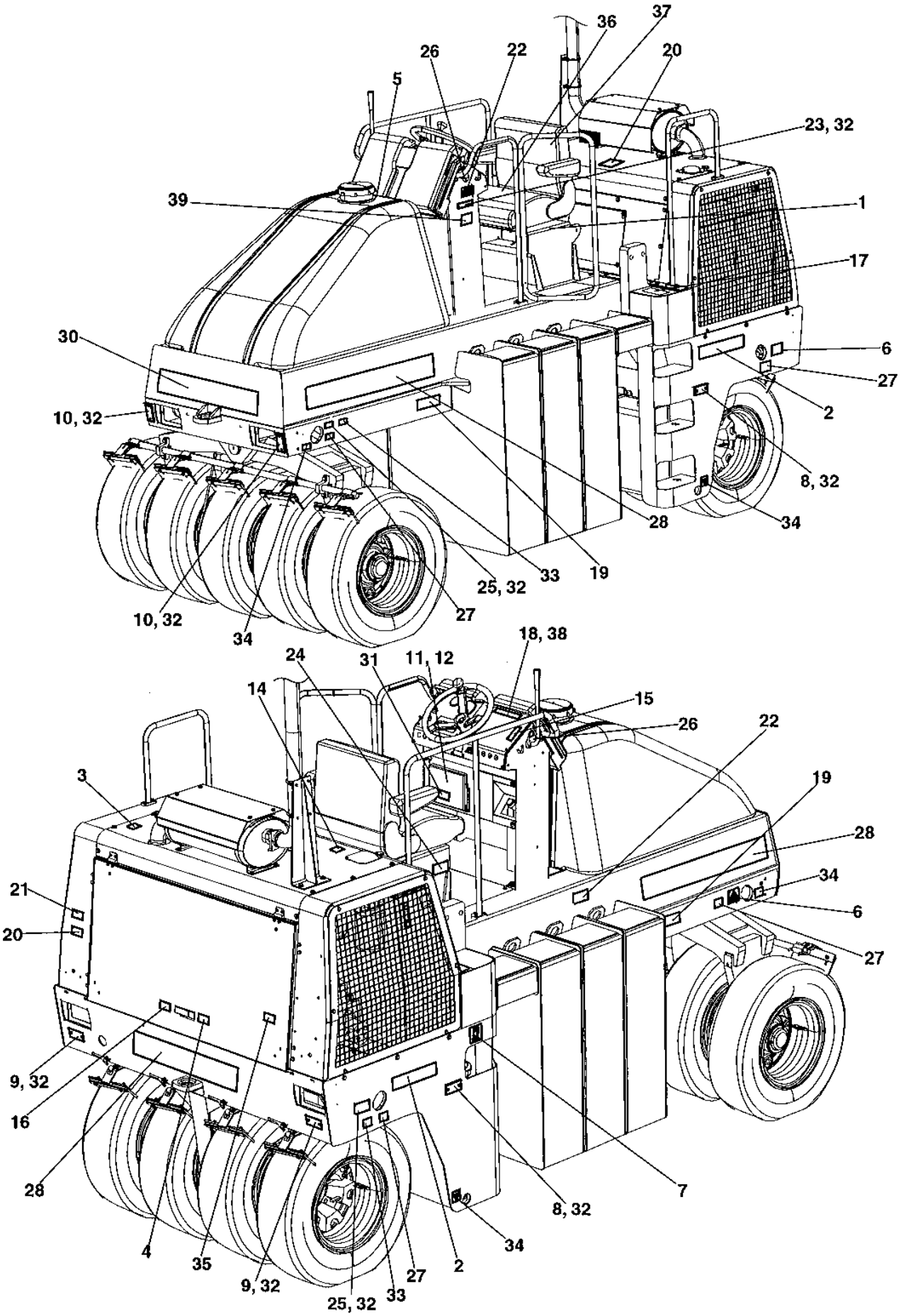

Decals

Ref. No.	Part No.	Rem.	Qty	Description	Code
1		A		Documentation	
2	791915		2	Decal "CP142"	
3	388449		1	Decal "Engine coolant fill"	
4	192985		1	Decal "OIL FILTER"	
5	991657		1	Decal "WATER"	
6	588176		2	Decal "LIFT POINT"	
7	991658		1	Decal "FUEL"	
8	383859		2	Reflector, yellow	B
9	929076		2	Reflector, red	B
10	383860		2	Reflector, white	B
11		A		Documentation	B
12		A		Documentation	B
14	272372		1	Decal "HYDRAULIC OIL"	
15	991650		1	Decal "DIRECTION"	
16	193882		1	Decal "ENGINE OIL LEVEL"	
17	373363		1	Slip protection	D
18	386084XX		1	Plate "Don't leave platform"	
19	903422		2	Decal "SAFETY"	
20	903424		2	Decal "HOT SURFACE"	
21	903423		1	Decal "SAFETY"	
22	903459		2	Decal "SAFETY"	
23	960787		1	Product identif. decal "Dynapac"	
24	904895		1	Safety decal "Brake release"	
25	904870		2	Lifting sign	
26		A		Padlock	
27	378529		4	Decal "TYRE PRESSURE"	
28	904093		3	Decal "DYNAPAC" L=1010 mm	
30	904095		1	Decal "DYNAPAC" L=880 mm	
31	903425		1	Decal "SAFETY MANUAL"	
32	624015		24	Blind rivet 4,0x8,5	
33	908229		2	Safety decal	
34	382751		4	Decal "TIE DOWN POINT"	
35	904835		1	Decal "BATTERY POWER"	
36	348331		1	Seat cover	D
37	384154		1	Loading/Unloading instruction	
38	624017		2	Blind rivet	
39	791275		1	Decal "Sound power level" 105dB, Option	

A) See section: Standard equipment

Ref. No.	Part No.	Rem.	Qty	Description	Code
1				Standard equipment (Page 108)	

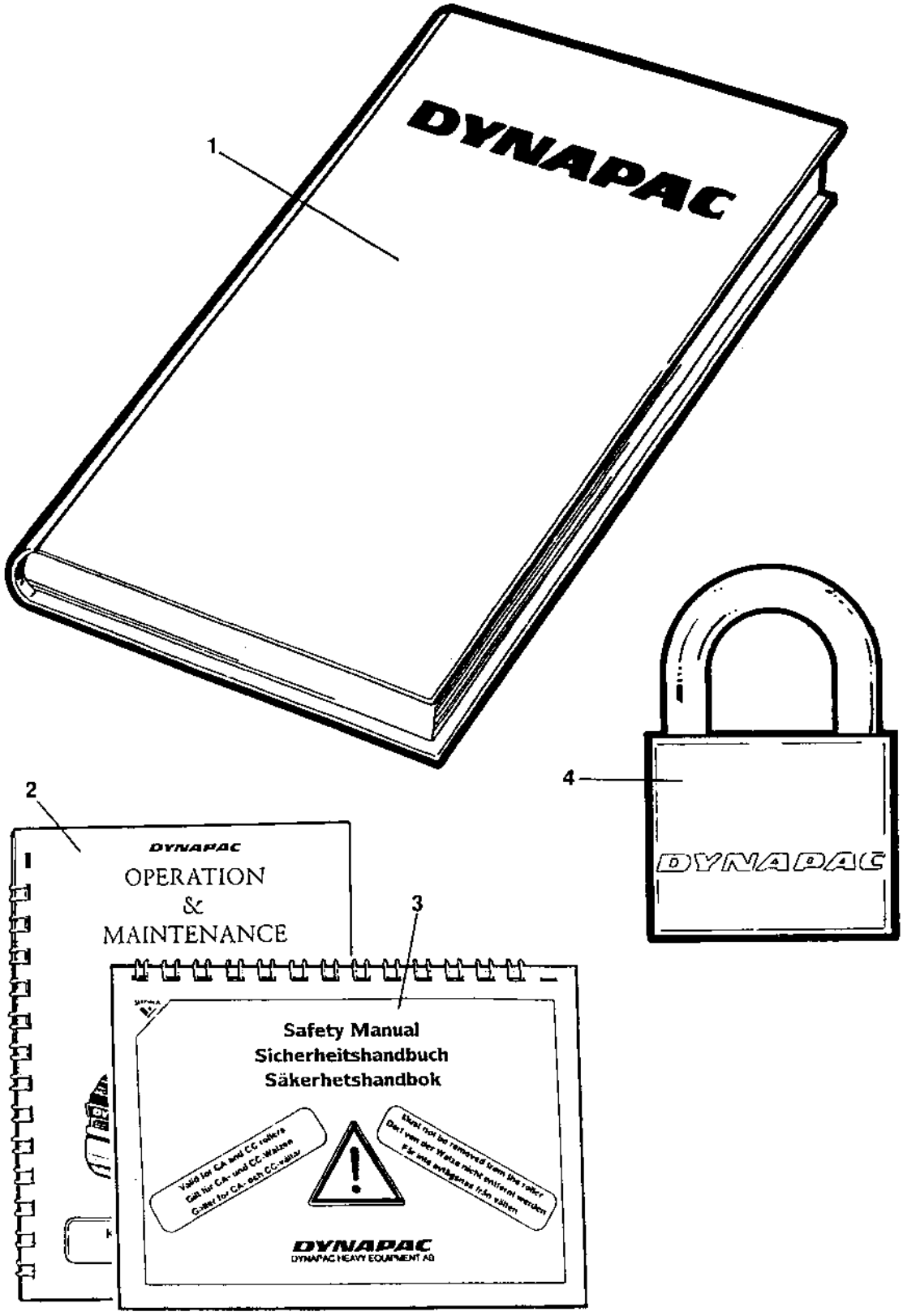
1
DYNAPAC
2
DYNAPAC
OPERATION
&
MAINTENANCE
3
Safety Manual
Sicherheitshandbuch
Säkerhetshandbok
DYNAPAC
DYNAPAC HEAVY EQUIPMENT AB
4
DYNAPAC

Ref. No.	Part No.	Rem.	Qty	Description	Code
1			1	Documentation, cpl. OMS142xx	
			1	.Warranty registration card	
			1	.Operating instruction O142xx	
			1	.Maintenance instruction M142xx	
			1	.Spare parts catalogue SCP142-xxxx	
2			1	.Operating / maintenance instruction OM142xx	
3			1	.Safety manual RSAFExx	
4			3	Padlock	

Ref. No.	Part No.	Rem.	Qty	Description	Code
10				Canopy (Page 112)	
20				Rotating beacon (Page 114)	
30				SMV sign (Page 116)	
40				Tool equipment (Page 118)	

Canopy

16433

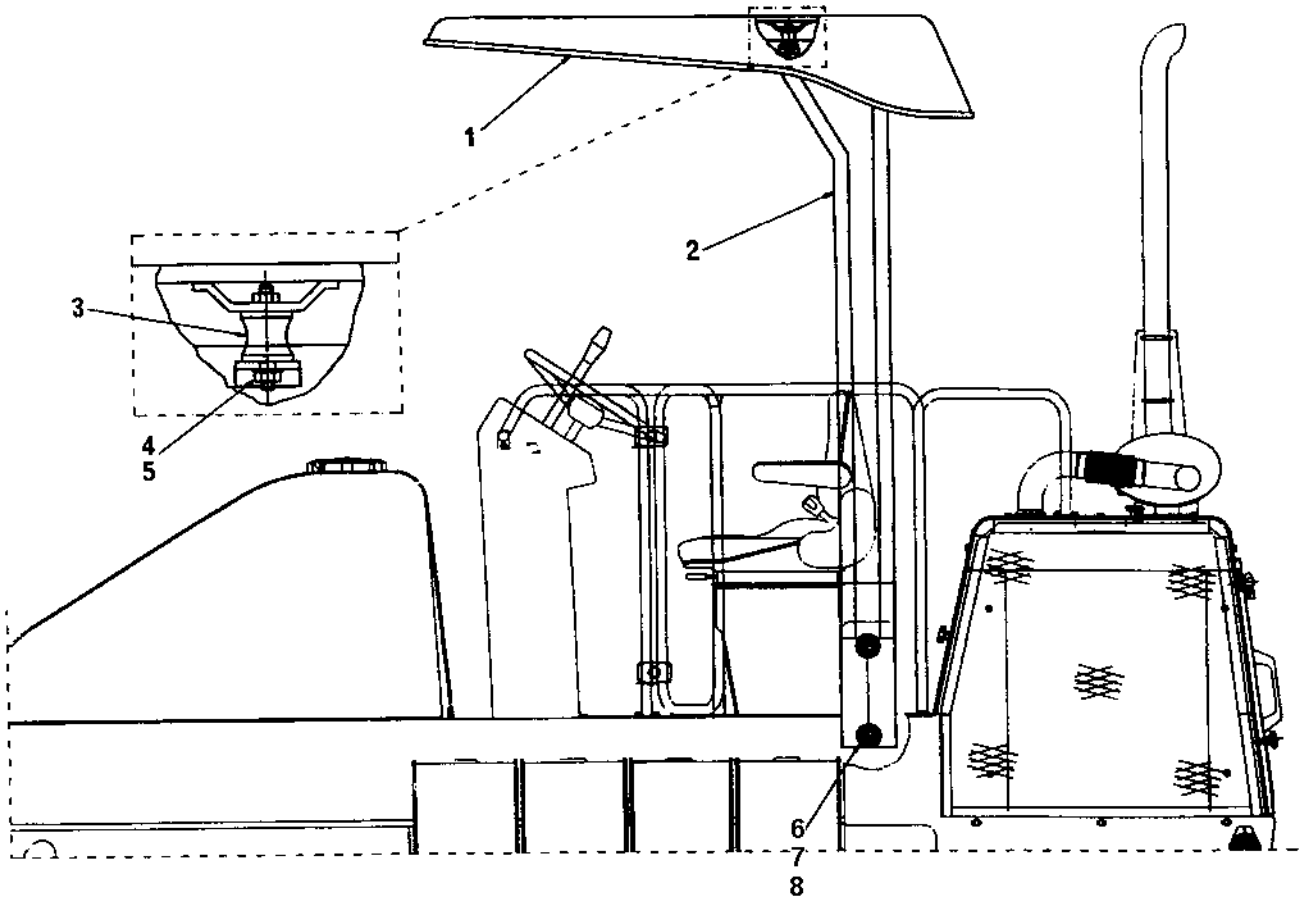

Canopy

Ref. No.	Part No.	Rem.	Qty	Description	Code
1	261152		1	Canopy	
2	198190	A	1	Frame	
3	450089		4	Shock absorber	D
4	615044		4	Conical spring washer	D
5	570006		4	Nut M10	
6	900235		8	Screw M18x120	
7	904793		16	Washer 19x34x3	
8	925206		8	Nut M18	

A) With 4 lower mounting holes on each side instead of the 2 illustrated

Rotating beacon

17172

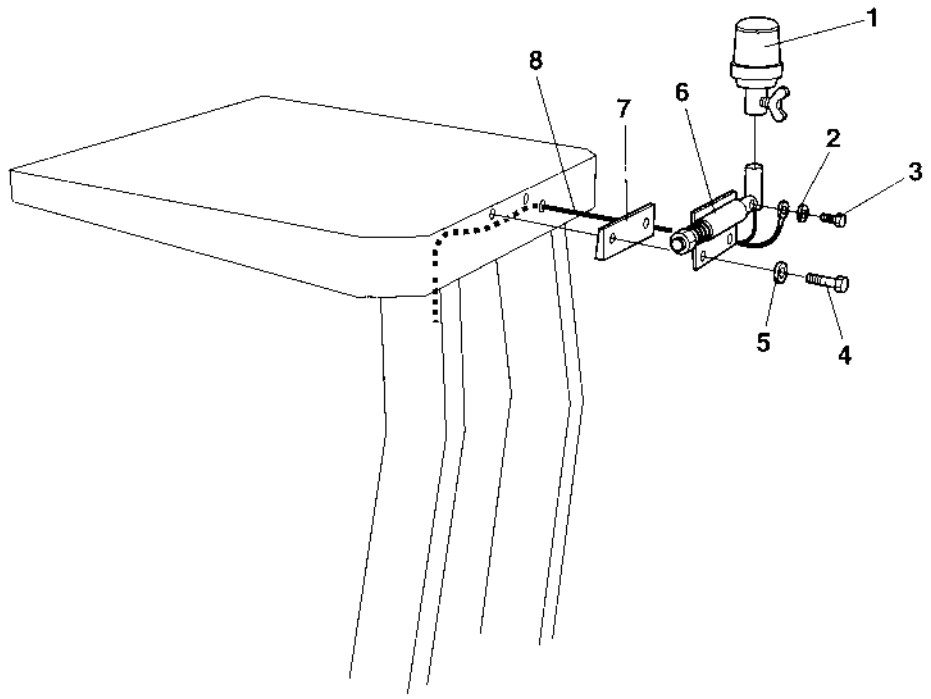

Rotating beacon

Ref. No.	Part No.	Rem.	Qty	Description	Code
1	389577		1	Rotating beacon	D
2	904228		1	Washer 6,4x12x1,5	
3	500013		1	Screw M6-1x16 8,8	
4	500021		2	Screw M8-1,25x25 8,8	
5	904229		2	Washer 8,4x16x1,5	
6	358452		1	Lamp holder	
7	372674		1	Spacer	
8	374398		1	Cable harness	

SMV sign

17190

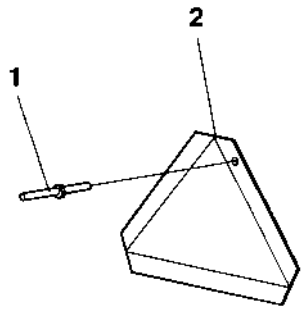

SMV sign

Ref. No.	Part No.	Rem.	Qty	Description	Code
1	624011		6	Pop rivet	
2	476019		1	SMV sign	D

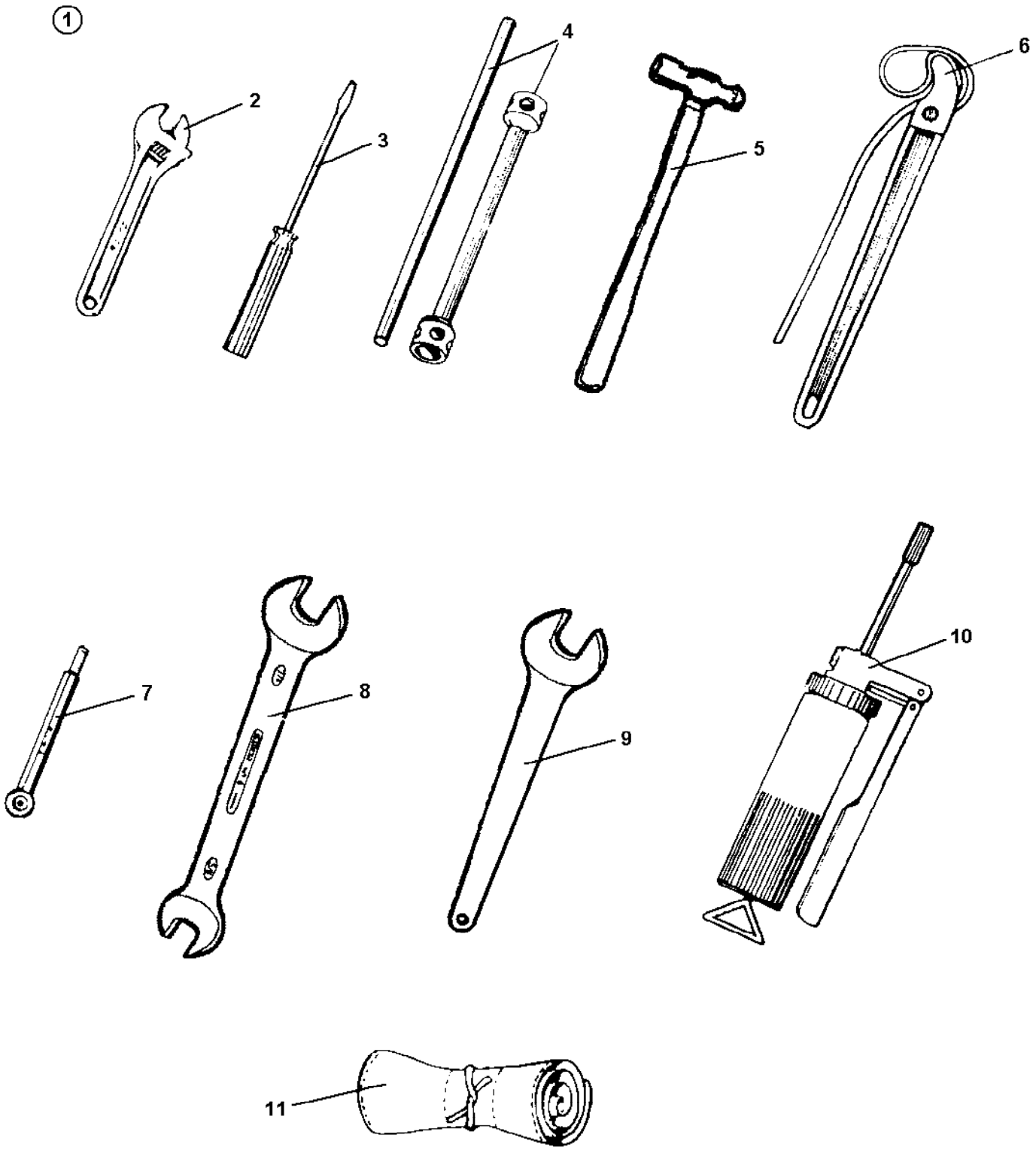
1
2
3
4
5
6
7
8
9
10
11

Tool equipment

Ref. No.	Part No.	Rem.	Qty	Description	Code
1	196029		1	Tool kit	
2	485011		1	.Adjustable wrench	
3	268964001		1	.Screw driver 1/8" x 3"	
	268964002		1	.Screw driver 1/8" x 5"	
	268964003		1	.Screw driver 1/4" x 8"	
	268964004		1	.Screw driver 3/8" x 12"	
4	926040		1	.Wheel nut spanner 24/27MM	
5	268964017		1	.Ball pan hammer	
6	485075		1	.Strap spanner	
7	485060		1	.Air pressure gauge	
8	904809		1	.Spanner 16/17MM	
	904810		1	.Spanner 18/19MM	
9	485183		1	.Spanner 10MM	
	485186		1	.Spanner 13MM	
10	311016		1	.Grease gun	
11	277992		1	.Tool bag	

NUMERICAL INDEX

Part Number	Page	Part Number	Page	Part Number	Page
116009	23	193886	23	267465	31
135010	23	193887	23	268964001	119
136010	23	194011	25	268964002	119
152001	11,13	194018	11	268964003	119
160229	31	194019	13	268964004	119
191630	31	194078	11	268964017	119
191799	31	194079	11	268964040	101
191801	31	194080	11	272372	105
191803	31	194081	11	277992	119
191808	31	194082	11	287713	15
191824	41	194083	11	297018	15
192424	23,25	194085	15	310037	23
192828	11,101	194087	15	310043	75
192831	23	194088	15	311016	119
192833	73	194092	11	313001	35
192938	9	194093	15	313002	15
192939	9	194149	11	313004	101
192940	9	194150	11	313010	35
192941	9	194195	43	313023	35
192985	105	194196	75	313033	37
193403	101	194216	43	313035	35
193404	101	194265	27	313036	43
193405	101	194287	43	313038	37
193406	101	194308	27	313041	13
193459	23	194311	41	313102	37
193465	23	194312	41	330330	41
193467	25	194325	27	330331	31
193469	23	194579	81	333228	15
193472	15,17	195136	97	334116	75
193487	23	195139	75	334121	71
193497	75	195167	101	334122	47
193499	75	195214	25	334124	75
193500	75	195271	75	334135	71
193512	23	195593	41	334138	75
193513	23	195854	77	334143	81
193517	23	196029	119	334155	47
193520	23	198190	113	334157	71
193521	23	198247	25	334174	73
193527	41	198297	35	334197	71
193557	7	198298	35	334227	47
193565	25	198299	35	334232	81
193566	31	198300	35	334234	73
193569	87	198311	83	334264	81
193571	15	202056	9	334445	81
193572	31	232222	47	334524	73
193573	25	234233	73	335914	47
193574	87	234243	71	338304	81
193575	87	234349	73	338486	71
193580	7	234390	47	343732	47
193581	7	234457	81	344374	97
193586	13	234624	71	345139	91
193590	11	234662	71	345640	101
193591	11	234667	71	345905	91
193592	11	234810	47	345992	101
193600	13	234888	81	346417	101
193736	97	234900	47	346420	101
193737	97	234909	71	346421	101
193738	97	240154	31	348331	97
193771	75	241172	35	348485	91
193772	47	243457	83	348659	81
193773	47	243459	83	348902	87
193774	75	244054	15,19	349933	47
193784	35	246057	41	355301	93
193790	81	246069	41	357425	97
193807	75,77	247350	97	357643	97
193853	77	248491	15	358254	97
193855	77	248513	15	358452	115
193856	77	251729	11	358846	15
193857	77	252285	47	359345	91
193858	77	252793	11	370644	91
193859	77	255672	75	372674	115
193860	77	259211	23	372964	75
193861	77	260761	81	373363	105
193862	77	261152	113	374183	31
193863	77	264486	23	374213	93
193864	77	264488	23	374398	115
193882	105	264650	87	374474	27

NUMERICAL INDEX

Part Number	Page	Part Number	Page	Part Number	Page
374545	87	388879	41	500020	97
374584	15	388880	9	500021	9
374630	91	388884	35	500022	35
374661	33	388888	37	500027	9
374727	37,39	388889	37	500028	75
374745	37	388890	87	500029	43
374756	89	388896	7	500030	11
374764	41	388901	99	500034	31
374771	37	388902	35	500035	23
374772	37	388905	97	500040	87
374792	97	388907	43	500046	11
374809	31	388910	9	500047	11
374825	43	388912	9	500048	75
374905	37	388921	9	500053	9
374962	43	388922	35	500060	97
374992	43	388924	87	500075	15
374997	43	388927	35	500079	73
375023	37	388932	9	500082	23
375113	37	388933	37	500087	87
375417	91	388934	87	500093	31
375569	15	388939	7	500134	7
376123	25	388946	87	500150	31
376545	75	388950	91	500185	25
376578	27	389447	81	500194	101
376615	101	389577	115	500258	41
377598	37	415329	81	500505	9
377942	35	450089	113	502035	31
377963	81	455095	101	506019	15
378109	43	470029	87	508001	97
378529	105	476019	117	508060	101
380168	47	480445	79	508067	47
380214	91	480446	79	508074	81
380215	91	480447	79	508098	83
380372	35	480449	79	509025	31
380394	9	480450	79	513008	9
380399	9	480454	79	533013	89
380400	9	480457	79	533030	91
380426	9	480459	79	533038	101
380427	9	480460	79	570004	9
380660	91	480461	79	570005	9
380671	89	480462	79	570006	11
380784	15	480463	79	570007	11
380785	19	480464	79	570008	31
380824	89	480466	79	570016	7
380825	89	480467	79	571003	87
381004	97	480468	79	572001	101
381006	97	481303	79	586001	87
381008	97	482257	81	586002	25
381009	97	482260	71	586003	11
381280	47,49	482328	81	586019	41
381297	9	482381	71	588176	105
381413	35	482399	81	600008	11
381686	9	482497	73	600009	11
381779	9	482528	75	600011	25
381780	9	482986	75	600021	101
381781	9	483069	73	601001	87
381851	9	483313	75	603020	97
382017	9	483413	47	615044	113
382018	9	483414	47	624011	117
382052	75	483416	71	624015	105
382061	9	483417	81	624017	105
382162	97	483419	73	624021	97
382163	97	483420	73	629019	11
382751	105	483474	47	630007	9
383697	15	483550	81	630008	11
383859	105	485011	119	635061	77
383860	105	485060	119	745057	37
384154	105	485075	119	791087	47
384326	17	485183	119	791103	47
386084XX	105	485186	119	791129	41
387723	87	499162	9	791138	91
388449	105	499347	37	791275	105
388856	31	500002	15	791427	41
388866	43	500004	75	791489	91
388868	35	500012	9	791518	87
388870	9	500013	9	791520	87
388871	43	500015	9	791531	87

NUMERICAL INDEX

Part Number	Page	Part Number	Page	Part Number	Page
791532	87	904095	105	927479	25
791557	87	904116	15	927568	15
791597	35	904228	9	928005	101
791915	105	904229	9	928041	9
792056	87	904230	9	928351	23
801198	75	904231	15	928502	89
813316	75	904232	7	928664	47
813361	101	904233	99	928927	91
813422	15	904281	75	929006	79
813429	47	904315	89	929007	79
813435	31	904316	89	929008	79
813443	47	904317	89	929009	79
813448	35	904318	89	929010	79
813499	71	904359	43	929011	79
813745	77	904448	87	929012	79
813784	75	904487	99	929013	79
814118	47	904501	15	929014	79
814251	75	904502	15	929076	105
815079	75	904550	35	929226	47
888930	37	904557	31	930046	91
892273	47	904558	31	930151	91
892446	73	904559	7	930154	91
900235	113	904575	37	930161	91
900247	41	904639	101	930162	91
900455	47	904640	9	930163	91
900790	89	904696	87	930165	91
900798	87	904697	91	930166	91
901175	15	904698	15	930182	91
901224	93	904706	81	930198	91
901225	93	904748	87	930200	91
901226	93	904750	87	932032	91
901227	93	904792	89	932056	91
901228	93	904793	113	932057	91
901240	93	904809	119	932058	91
901256	91	904810	119	935190	69
901369	89	904835	105	935196	69
901432	15	904850	9	935197	69
901766	87	904851	9	935198	69
901767	91	904852	9	935202	69
902066	89	904853	9	935203	69
902163	97	904854	9	935204	69
902164	97	904870	105	935211	69
902166	9	904895	105	935212	57
902223	91	904919	87	935218	69
902224	91	904984	41	935219	49
902227	89	904989	91	935613	75
902286	37	908229	105	935614	75
902379	41	909514	49	935950	31
902541	31	910161	75	936295	49
902624	49	910162	47	936296	49,63
902641	69	911618	79	936299	49
902767	69	911620	79	936300	49
902771	69	920924	83	936301	49
902773	69	920925	83	936302	49
902792	49	921031	41	936303	49
902807	47	921058	25	936304	49
902900	47	921072	87	936305	49
903082	75	922325	101	936307	49
903192	35	923294	81	936308	49
903382	35	923384	47	936310	49
903422	105	923679	15	936311	49
903423	105	923681	15	936312	49
903424	105	923734	15	936313	49
903425	105	923901	91	936314	51
903459	105	923927	101	936315	51
903515	81	923976	93	936316	51
903541	15	923988	101	936317	51
903588	75	924696	23	936319	51
903627	91	924731	81	936320	51
903631	87	925206	113	936321	51
903632	31	925536	75	936322	51
903640	87	925867	99	936323	51
903714	35	925966	41	936324	51
903754	75	926040	119	936325	51
903956	91	926989	91	936326	51
904005	47	927026	97	936327	51
904093	105	927048	37	936328	51

NUMERICAL INDEX

Part Number	Page	Part Number	Page	Part Number	Page
936329	51	938012	55		
936330	51	938013	55		
936331	51	938014	55		
936332	51	938061	75		
936333	51	938137	31		
936335	51	938176	9		
936340	53	938237	49		
936341	53	938238	49		
936342	53	938239	49		
936344	55	938240	51		
936354	55	938241	51		
936355	55	938242	53		
936356	55	938243	53		
936358	55	938244	53		
936359	57	938245	53		
936360	57,59	938246	53		
936361	57,61	938247	55		
936362	57	938248	67		
936363	57	938249	69		
936364	57	938250	49		
936365	57	939371	31		
936366	57	939372	31		
936367	57	939373	31		
936368	57	939480	31		
936369	57	939504	31		
936370	57	939956	31		
936371	55	939972	99		
936372	57	940262	31		
936373	57	940276	31		
936374	57	940277	31		
936375	57	940278	31		
936377	59	940279	31		
936378	59	940280	31		
936379	59	960273	87		
936380	59	960727	87		
936381	59	960787	105		
936382	59	985012	91		
936383	61	985014	89		
936384	61	989151	75		
936385	61	991650	105		
936386	61	991657	105		
936387	61	991658	105		
936388	61	999027	87		
936389	61				
936390	61				
936391	61				
936392	61				
936393	61				
936394	61				
936395	63,65				
936396	63				
936397	65				
936398	65				
936399	65				
936400	65				
936401	65				
936402	65				
936403	65				
936404	65				
936405	65				
936406	63				
936407	63				
936408	67				
936411	69				
936412	69				
936413	69				
936414	69				
936415	69				
936418	69				
936421	69				
936423	69				
938006	55				
938007	55				
938008	55				
938009	55				
938010	55				
938011	55				