Parts Catalogue

DYNAPAC
FAYAT GROUP

JANEIRO 2010

CP2100

Pneumatic Roller

CP2100 s/n 10000511xxB004940 –

Engine: Cummins QSF 3.8 IIIB/T4 (89kW)

RUTHZIL TRATOR COMERCIAL DE PEÇAS LTDA 11 97083-6812 ROLANDO CITRANGULO

© 2020 Dynapac do Brasil Industria e Comercio de Maquinas Ltda | No. 4812325103| 2020 - 01



Your Partner on the Road Ahead

dynapac.com

Service, repair and wear part kits

Service Kit 50h, QSF2.8 & 3.8 . . . 1
Service kit 500h, QSF3.8 . . . 3
Service kit 500h AOR, QSF3.8 . . . 5
Service kit 1000h, QSF3.8 . . . 7
Service kit 1000h AOR, QSF3.8 . . . 9
Scraper kits . . . 11
4812155698 Sprinkler kit . . . 13
4812155752 Air on the run kit Front . . . 15
4812155751 Air on the run kit Rear . . . 17

Mechanical

Frame assy module

Frame assy module . . . 19
Cover assy . . . 22
Cover . . . 25
Steering cylinder . . . 27
Filter bracket . . . 29
Accumulator . . . 31
Manifold assy . . . 33
Manifold . . . 35
Cover . . . 37
Cover . . . 39
Cover . . . 41

Sprinkler tank module

Sprinkler tank module . . . 43
Sprinkler tank mount . . . 45
Level sensor module . . . 47

Fuel tank module

Fuel tank . . . 49
Cover module . . . 51
Grab handle module . . . 53
Step module . . . 55
Steering cylinder . . . See page 27
Air leading cover . . . 57
Fuel hose kit . . . 59

Engine hood

Engine Hood Module . . . 61
Engine hood assy . . . 63
Locking device (CP2700 From SN 10000512AJB005570) . . . 65
Compressed Air Pipe Kit . . . 67

Operator platform

Forward-reverse control module

Forward-reverse control module . . . 70
Drive control . . . 73
Control handle . . . 75

Display module

Display module . . . 77
Display unit assy . . . 79
Control module, rotating/sliding . . . 81
Seat frame . . . 83
4700391163 Steering column . . . 86

4700395462 Brake pedal . . . 89
Seat frame adapter module . . . 91
391087 Cross sliding . . . 93
Fire extinghisher . . . 95
4812114766 Rear view mirror module . . . 97
Rear View Mirror Module . . . 99
4812115420 Bracket module . . . 101

Platform, no cab
Platform, no cab . . . 103

Rops module
Rops module . . . 105
Rops . . . 107
Manual box . . . 109

Platform module
Platform module . . . 111
Manual box . . . See page 109
Platform . . . 113

Hand rail, right
Hand rail, right . . . 116
Hand rail . . . 119
Hand rail . . . 121

Hand rail, left
Hand rail, left . . . 123
Hand rail . . . 125

Cab module
Cab module . . . 127

Cab assembly
Cab assy . . . 129
Manual box . . . 131

Cab
Cab . . . 133

Assembly left side
Assembly left side . . . 135
Accessories left side . . . 137
Glasswork door side . . . 139
Rear plastics assembly . . . 141
Cabin frame . . . 143
Glasswork windscreen . . . 145
Door assembly . . . 147
General installation accessories . . . 149
Cab, electrics . . . 151
Windscreen wipersystem . . . 154
Rear glass wiper set . . . 157
Washer equipments . . . 159

Assembly heater unit
Heater mount . . . 161
Heater controls . . . 163
Heater . . . 165
Air channel assy . . . 167

Mounting right side
Protective frame asymmetric . . . 169

Cover assy, right side
Cover assy, right side . . . 171
Glasswork right side . . . 173

Wiper system right side
Wiper system right side . . . 175
Windshield wiper, assymetric side . . . 177
Windshield washer reservoir assy . . . 179
Fastener kit, right side ceiling . . . 181

Standard AC
Condensor module . . . 183
Condensor . . . 185
Hose kit AC . . . 187
Protection cover . . . 189
Compressor module . . . 191
Compressor assy . . . 193
4700393584 Evaporator unit . . . 195
Compressor module . . . 197

Cab Module (from SN xxB005060)
Cab assy . . . 199
Door assy . . . 202
Window LH . . . 205
Window RH . . . 207
Roof . . . 209
Roof assy . . . 211
Washer assy . . . 213
Condensor assy . . . 215
Evaporator unit / accessories . . . 217
Evaporator assy . . . 219
Inner panel . . . 221
Covers assy . . . 223
Compressor module . . . See page 197
Wiring Harness Kit - Power Supply Cab . . . 225

Canopy option
Canopy option . . . 228
Canopy assy . . . 231
Bracket . . . 233

ROPS Module
ROPS Module . . . 235
Rops assy . . . 237
Back Panel assy . . . 243
Roof . . . 245
Internal Roof . . . 247

Engine

Air cleaner module
Air cleaner module . . . 249
Air cleaner assy . . . 251

Exhaust system module
Exhaust pipe . . . 253

Engine module 89kW
Engine module 89kW . . . 255
Engine QSF 3.8 T4F assy . . . 257

Engine module 97kW
Engine module 97kW . . . 259
Engine QSF 3.8 T4F assy . . . 261
Expansion tank module . . . 263
Expansion Tank Hose Kit . . . 265

SCR Module
SCR Module . . . 267
Bracket Assy . . . 269

DEF Reservoir module
DEF Reservoir module . . . 273
Reservoir assy . . . 275
DEF hose assy . . . 277
DEF Supply module . . . 279
Supply module . . . 281

DOC & DTR Module
DOC & DRT Module . . . 283
DOC & DRT assy . . . 285
Air intake hose kit . . . 287
Coolant hose Assy Kit . . . 289
Charge Air Hose Assy Kit . . . 291

Drive

Gear module
Gear module . . . 293
Negative multidisc brake repair kit . . . 295
Gear module sealing kit . . . 297
Gearbox repair kit . . . 299
Gear module repair kit . . . 301

Front suspension
Front suspension . . . 303
Front suspension . . . 305
Hub . . . 307

Wheel module, option Michelin
Wheel module, option Michelin . . . 309

Wheel Michelin
Wheel Michelin . . . 311

4812100082 Wheel module Otani
Wheel module Otani . . . 313

4812100081 Wheel Otani
Wheel Otani . . . 315

Hydraulic system

Hydraulic motor module
Hydraulic motor module . . . 317
Hydraulic motor . . . 319

Control kit . . . 321
Hose assy kit . . . 323
Hydraulic pump module . . . 325
4812118386 Hydraulic valve module overspeed protection . . . 327
Brake valve dynamic valve . . . 329
Thermobypass valve kit . . . 331

Hydraulic oil tank module
Hydraulic oil tank module . . . 333
Hydraulic oil tank assy . . . 335
Bracket assy . . . 337
Bracket assy . . . 339
Bracket module . . . 341
Bracket assy . . . 343

Hydraulic valve module
Hydraulic valve module . . . 345
Hydraulic valve Hydac . . . 347

Hydraulic steering, sliding seat
Hydraulic steering, sliding seat . . . 349
Steering, slideable . . . 351
Carrier . . . 353
Hose bracket . . . 355

Sun valve
Reducing valve . . . 357

Hydraulic pump module
Hydraulic pump module . . . 359
Hydraulic pump assy . . . 361
Hydraulic pump . . . 363

Fan drive module
Fan drive module . . . 365
Fan drive assy . . . 367
4812116000 Hydraulic oil cooler module . . . 369
4812116002 Charge air cooler . . . 371
4812116001 Water cooler module . . . 373

4812100001 Hydraulic valve module, hard start optional
4812100001 Hydraulic valve module, hard start optional . . . 375

4812315442 Bracket module
4812315442 Bracket module . . . 377

4812315441 Valve
4812315441 Valve . . . 379

Electric system
Battery module . . . 381
Horn module . . . 383
Back-up alarm module . . . 385

Disconnector battery
Battery disconnector module . . . 387
Disconnector battery . . . 389

ECU module
Standard ECU module . . . 391

Standard ECU . . . 393
Wiring harness kit . . . 395

Options / Accessories

Air on the run

Air dryer (up to SN xxB005120)
Air dryer kit . . . 397
Pipe and hose kit, Front Air on the run . . . 399
Field kit to dryer (add purge) . . . 401
Field kit for water separator (From SN xxB005121 to xxB005379) . . . 403

Air control Kit (from SN xxB005380)
Air control kit (from SNxxB005380) . . . 405
Pneumatic valve assy . . . 407
Air dryer assy . . . 409
Compressed air pipe kit . . . 411
Hydraulic valve module Air on the run . . . 413
Pipe and hose kit, Rear Air on the run . . . 415
Cover module . . . 417
Hose assy kit . . . 419
Wiring harness kit . . . 421

Compressor module
Compressor module . . . 423
4700396598 Compressor . . . 425
Compressor assy (from SN xxB005539) . . . 427

Hose assy kit
Hose kit . . . 429

Ballast module
Ballast module 8 plates - 3500 Kg . . . 431
Ballast module 16 Plates - 6600 Kg . . . 433

DCA asphalt temp option
4812110250 Bracket module . . . 435
Cable harness Asphalt temp DCA, front Option . . . 437
Cable harness Asphalt temp DCA, rear Option . . . 439
Asphalt temperatur module . . . 441

Edge cutter
Edge cutter . . . 443

Edge cutter, module
Edge cutter, module . . . 445

4700390998 Edge cutter, cpl
4700390998 Edge cutter, cpl . . . 447

4700390999 Holder
4700390999 Holder . . . 450

4700391009 Bearing unit
4700391009 Bearing unit . . . 453

4700387275 Hydraulic cylinder
4700387275 Hydraulic cylinder . . . 455

Cutting disc module
Cutting disc module . . . 457

Hydraulic valve module
Hydraulic valve module . . . 459

Hydraulic valve
Hydraulic valve . . . 461

4700391018 Hydraulic valve
4700391018 Hydraulic valve . . . 463

Bracket module
Bracket module . . . 465

Disc/Roller holder
Disc/Roller holder . . . 467
Wiring harness . . . 469

Cocoa mats
Hose assy kit . . . 471
Wiring harness kit sprinkler . . . 473

Scraper bracket module
Scraper bracket module . . . 475
Bracket . . . 477

Scraper module
Scraper module . . . 479
Scraper assy . . . 481

Sprinkler pipe module
Sprinkler pipe module . . . 483
Sprinkler pipe . . . 485

Sprinkler module
Sprinkler module . . . 487
Sprinkler pipe . . . 489
Sprinkler pump module . . . 491

Sprinkler pump From SN xxB4621
Sprinkler pump module . . . 493
Sprinkling pump mount . . . 495

Driving lights RH
Steering column switch module . . . 497
4812115521 Wiring Harness Kit . . . 499
Driving lights module . . . 501
Driving lights module rear . . . 503
Direction Light Module . . . 505
Wiring harness kit . . . 507
Wiring harness kit . . . 509

Eyelet module, option
Eyelet module, option . . . 511

Heat cover wheels

Heat cover wheels, rear

Protective cover module, Rear . . . 513
Rear apron . . . 515
Bracket Assy - Rear . . . 517

Heat cover wheels, front
Protective cover module, Front . . . 519
Protective cover mount . . . 521
Bracket assy . . . 523

Lock module
4700394121 Water tank Lock Module . . . 525

Night worklight LED
Switch module - Night light . . . 527
Reading light module . . . 529
Wiring Harness Kit - Lightning . . . 531
Working lights module . . . 533
Bracket module . . . 535
Bracket module . . . 537

Rotate beacon
Rotating beacon module . . . 539

Rotate Beacon From SN 10000511KKB005913
Rotating Beacon Module . . . 541
Rotating Beacon assy . . . 543
Connection Cable Kit . . . 545

Radio and CD Player
Radio and cd player . . . 547
Radio and cd player module . . . 549
Loud Speaker Module . . . 551

Rear view Camera
Camera Wiring Harness . . . 553
Display Rear Camera Assy . . . 555
Backup Camera module . . . 557

Scraper (simple)
Scraper module . . . 559

Seat belt
Seat belt module . . . 561
Seat belt 3" . . . 563

Seat comfort
Seat, fabric suspensioned (option) . . . 565

Seat STD
Seat, galon suspensioned . . . 567

SMV-sign
4812110250 Bracket module . . . See page 435
SMV-sign . . . 569

Sprinkler pump back up
Sprinkler pump back-up . . . 572

Steering valve
Steering valve . . . 575

Vandal cover

Control panel cover 577

Working lights LED

Working lights LED 579

Service, repair and wear part kits Service Kit 50h, QSF2.8 & 3.8

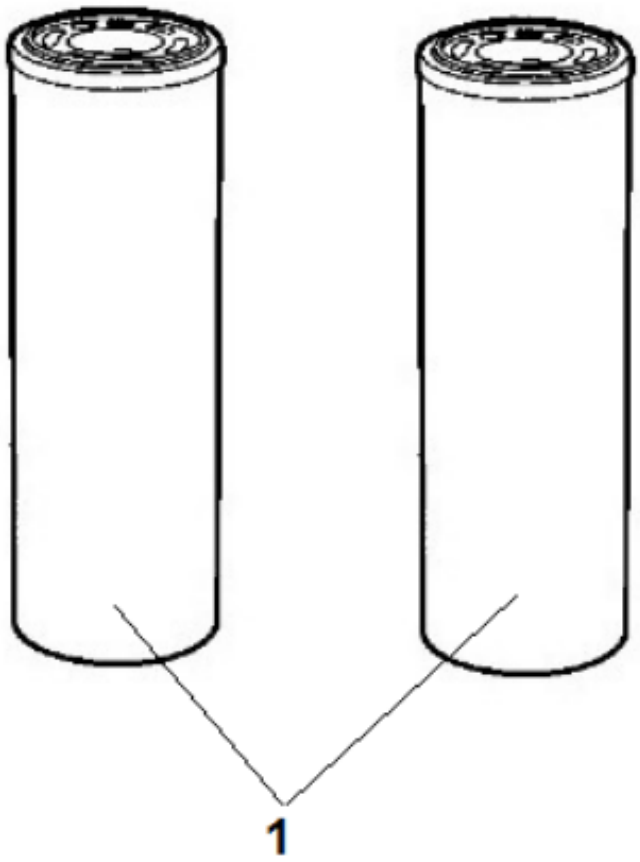

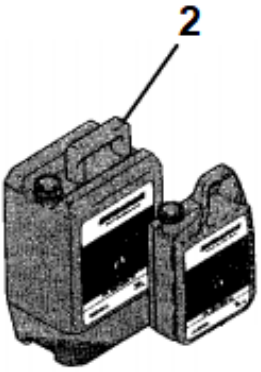

Elemento	N.º de pieza	Nombre	Cant.	L
1	4700372229	Hydraulic oil filter element	2	
2	4812325403	Dynapac gear oil extra / 20 ltrs.	1	

Service, repair and wear part kits Service kit 500h, QSF3.8

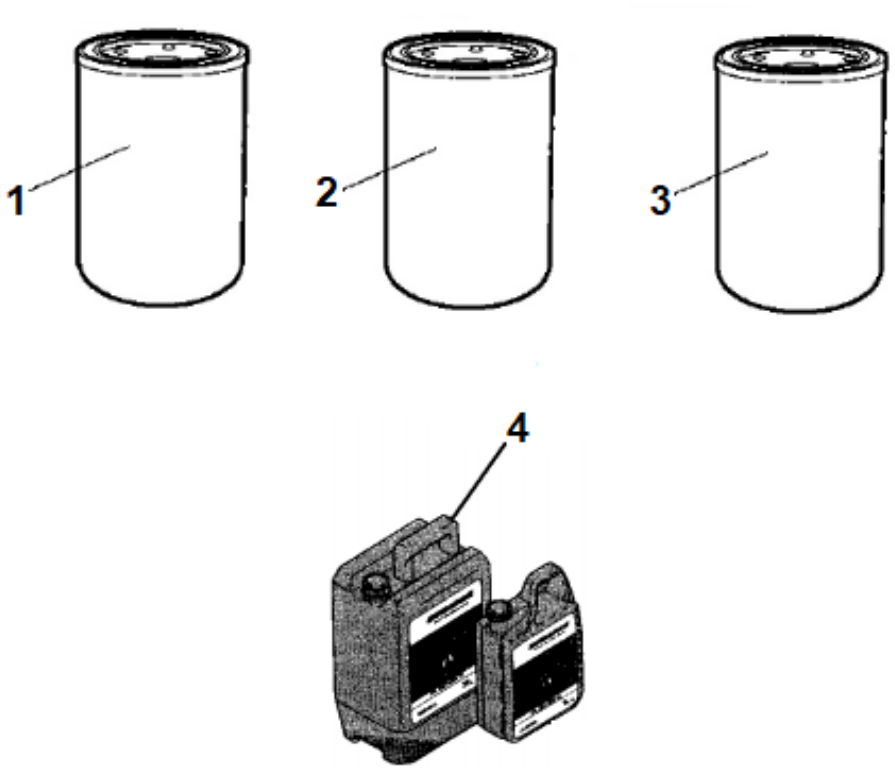

Elemento	N.º de pieza	Nombre	Cant.	L
0	4812325061	Service Kit 500h, QSF3.8	1	
1	4700945145	Oil filter element	1	
2	4812317429	Fuel filter	1	
3	4812160783	Water separator	1	
4		See operation and maintenance manual	7.4 ltrs.	

Service, repair and wear part kits Service kit 500h AOR, QSF3.8

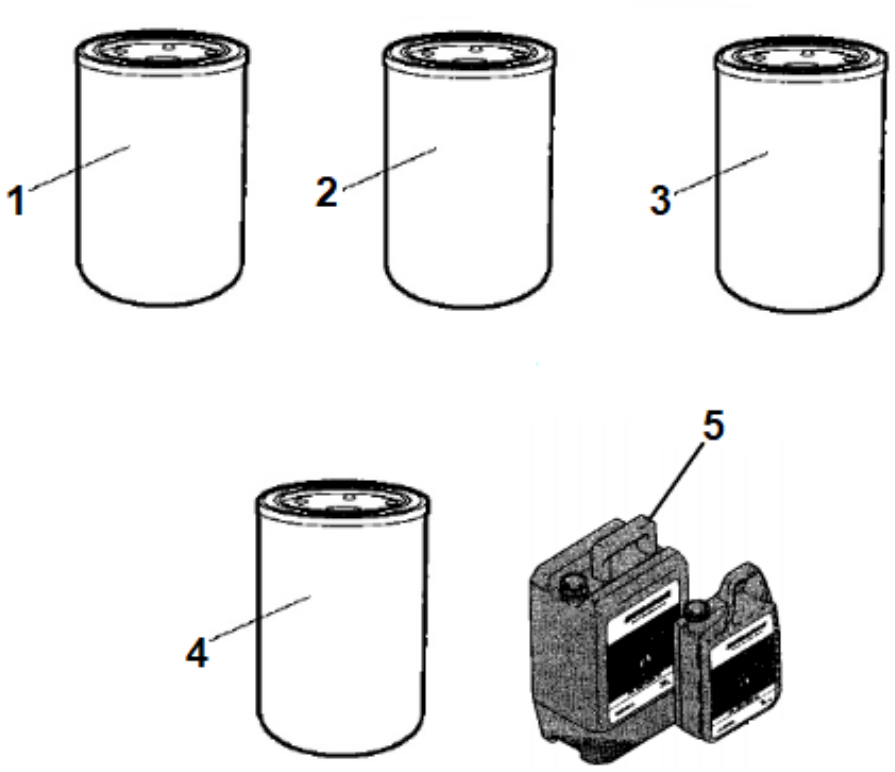

Elemento	N.º de pieza	Nombre	Cant.	L
0	4812325062	Service Kit 500h AOR, QSF3.8	1	
1	4700945145	Oil filter element	1	
2	4812317429	Fuel filter	1	
3	4812160783	Water separator	1	
4	4812100497	Air dryer filter element	1	
5		See the operation and maintenance manual.	7.4 ltrs.	

Service, repair and wear part kits Service kit 1000h, QSF3.8

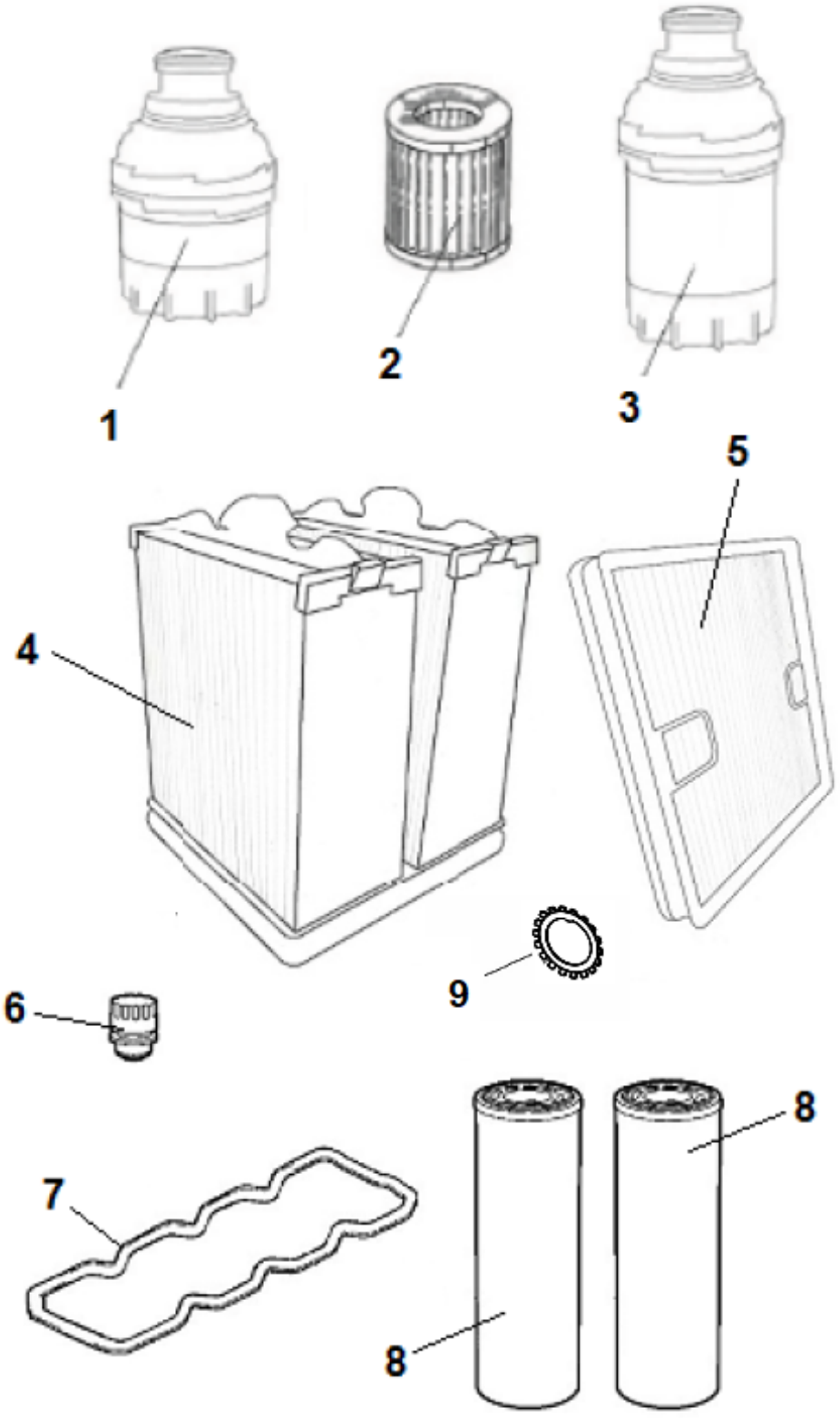

Elemento	N.º de pieza	Nombre	Cant.	L
0	4812326012	Service Kit 1000h, QSF3.8	1	
1	4700945145	Oil filter element	1	
2	4812317429	Fuel filter	1	
3	4812160783	Water separator	1	
4	4812325055	Air filter element	1	
5	4812325056	Safety filter element	1	
6	4700391026	Ventilating filter	1	
7	4812160896	Gasket, valve cover	1	
8	4700372229	Hydraulic oil filter element	2	
9	4700136011	Lock washer	3	

Service, repair and wear part kits Service kit 1000h AOR, QSF3.8

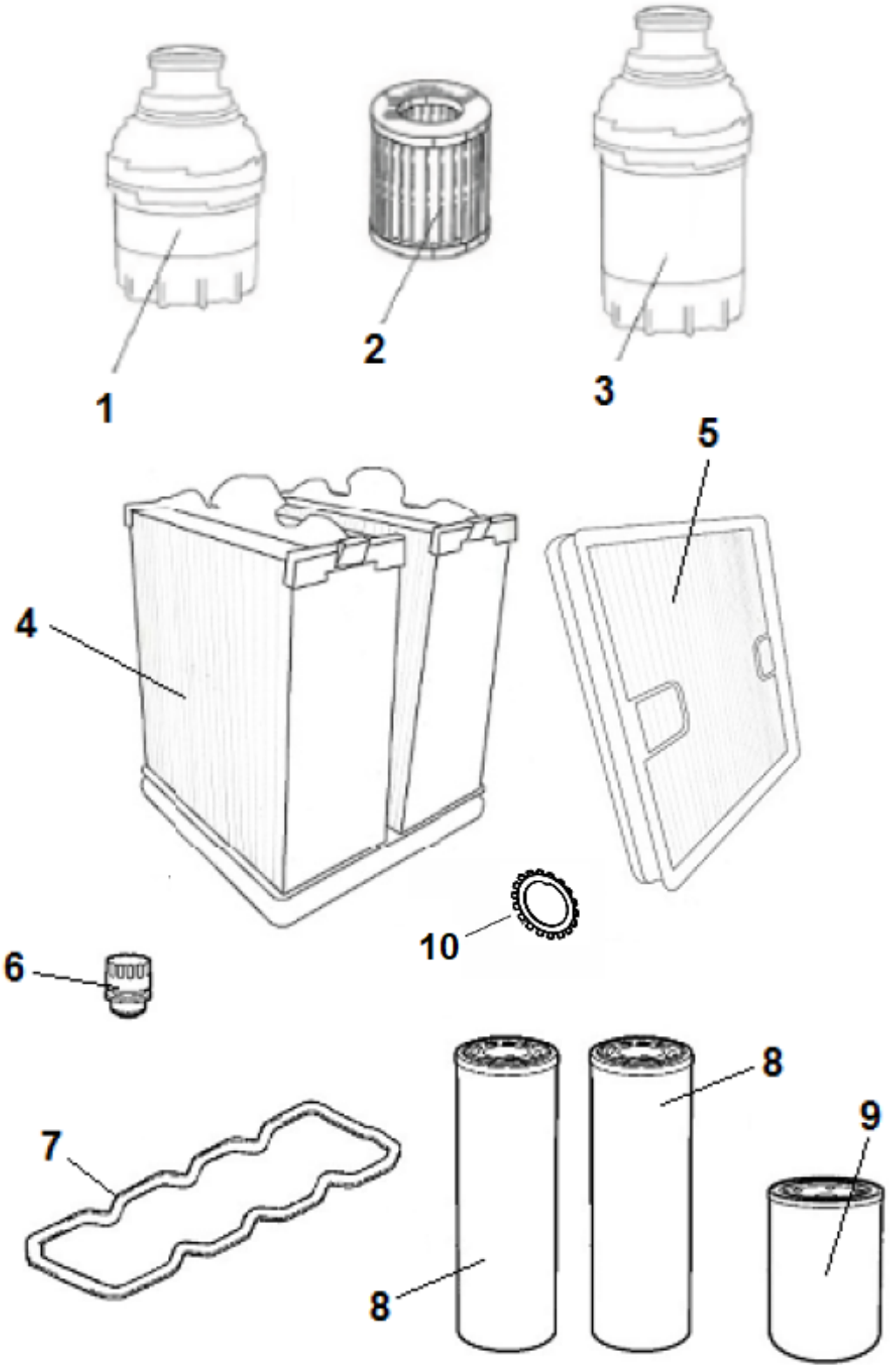

Elemento	N.º de pieza	Nombre	Cant.	L
0	4812326013	Service Kit 1000h AOR, QSF3.8	1	
1	4700945145	Oil filter element	1	
2	4812317429	Fuel filter	1	
3	4812160783	Water separator	1	
4	4812325055	Air filter element	1	
5	4812325056	Safety filter element	1	
6	4700391026	Ventilating filter	1	
7	4812160896	Gasket, valve cover	1	
8	4700372229	Hydraulic oil filter element	2	
9	4812100497	Air dryer filter element	1	
10	4700136011	Lock washer	3	

Service, repair and wear part kits Scraper kits

CP2100 - CP224

Scrapers with cocoa mat

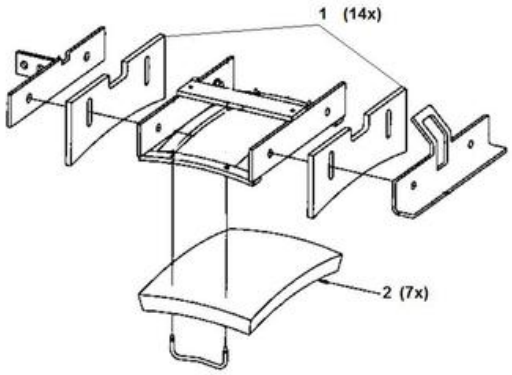

Scrapers simple

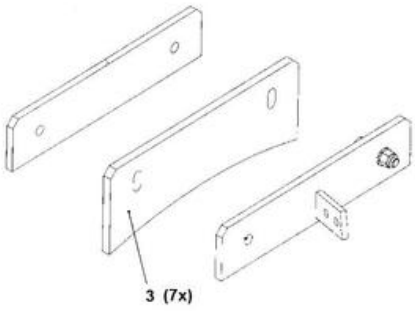

Elemento	N.º de pieza	Nombre	Cant.	L
1	4812325416	Scraper kit	1	
1.1.	4700383390	Scraper	14	
2	4812325417	Cocoa mat kit	1	
2.2	4700263772	Cocoa mat	7	
3	4812325418	Blade kit (simple)	1	
3.3	4700170294	Blade	7	

Service, repair and wear part kits 4812155698 Sprinkler kit

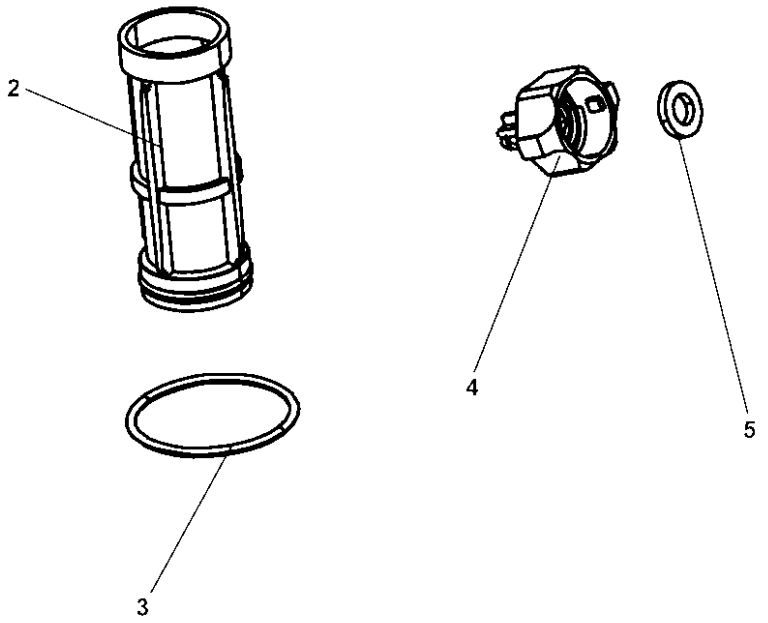

Elemento	N.º de pieza	Nombre	Cant.	L
1	4812155698	Sprinkler kit	1	
2	4700791949	Filter element	1	
3	4700791959	O-ring	9	
4	4700392509	Retainer, nozzle, strainer, yellow	9	
Comentarios sobre el número de pieza 4700392509 Replace complete spraying nozzle with P/N 4812124321.				
5	4700392510	Gasket	9	
Comentarios sobre el número de pieza 4700392510 Replace complete spraying nozzle with P/N 4812124321.				

Service, repair and wear part kits 4812155752 Air on the run kit Front

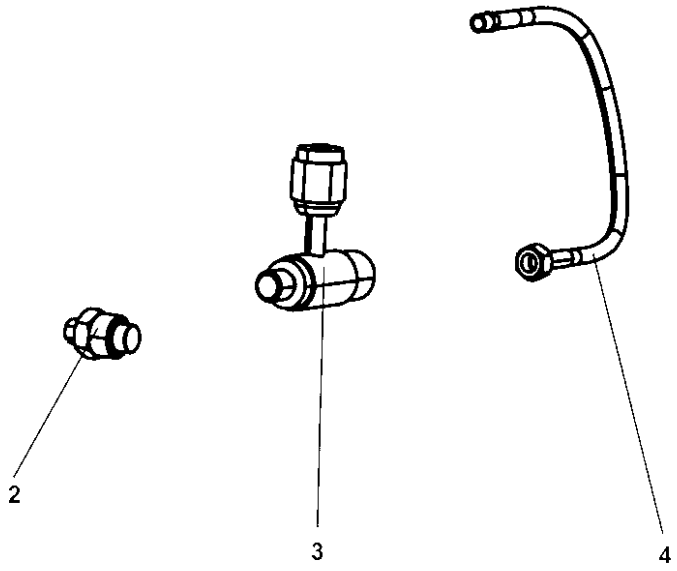

Elemento	N.º de pieza	Nombre	Cant.	L
1		Air on the run kit Front	1	
2	4700257198	Rotating nipple	5	
3	4700258298	Valve	5	
4	4700170545	Hose	5	

Service, repair and wear part kits 4812155751 Air on the run kit Rear

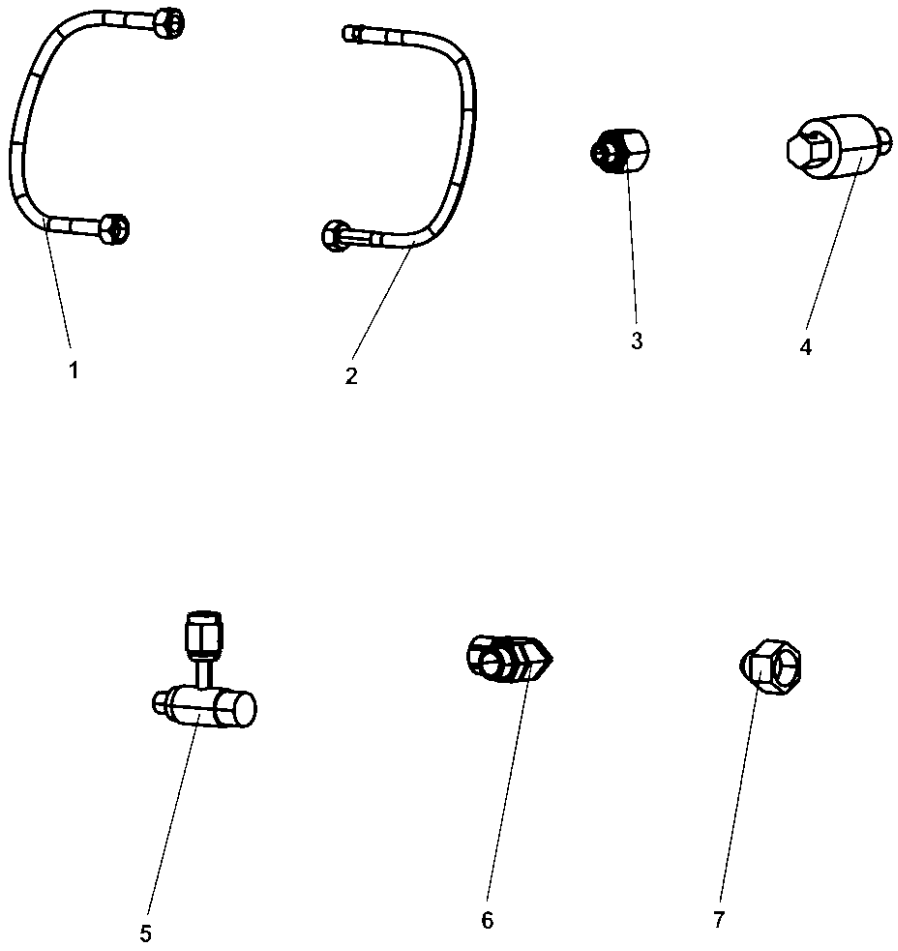

Elemento	N.º de pieza	Nombre	Cant.	L
0	4812155751	Air on the run kit Rear	1	
1	4700170571	Hose	2	
2	4700170545	Hose	2	
3	4700170259	Adapter	2	
4	4700195172	Rotor	2	
5	4700258298	Valve	4	
6	4700928908	Adapter	2	
7	4700334461	Reducing	2	

Frame assy module Frame assy module

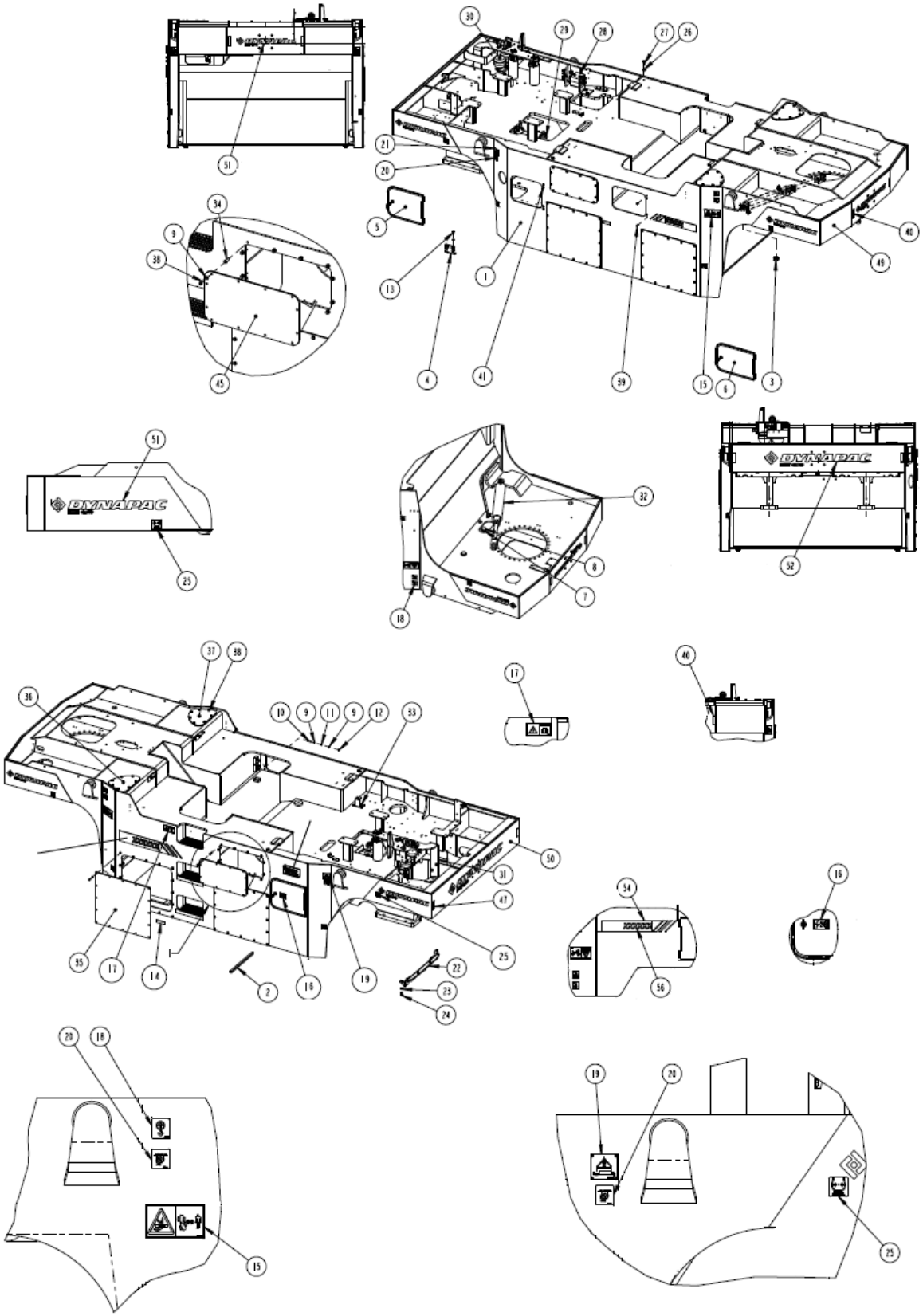

Elemento	N.º de pieza	Nombre	Cant.	L
1	4812317732	Frame	1	
2	4700395864	Slide rail	2	
3	4700792554	Radial spherical plain bearing	1	
4	4700170144	Bracket	1	
5		Cover	2	
6		Cover	1	
7	4700162014	Washer sealing	4	
8	4700232248	Plug	8	
9	4700904229	Steel plain washer 8.4X16X1.5	120	
10	4700903768	Threaded stud	8	
11	4700570005	Hexagon nut M	8	
12	4700586003	Lock nut M8	8	
13	4700500019	Hexagon head screw M	2	
14	4700377744	Reflector, yellow	2	
15	4700903422	Safety decal "HAZARDOUS AREA"	2	
16	4700393959	Decal "BATTERY VOLTAGE 24V"	1	
17	4700903459	Decal "SAFETY"	1	
18	4700357587	Label lifting point	2	
19	4700904870	Lifting data plate	2	
20	4700382751	Decal "SECURING POINT/TIE DOWN"	8	
21	4700624005	Blind rivet	8	
22	4812316452	Scraper bracket	2	
23	4700904703	Plain washer 13x24x4 mm	8	
24	4700500051	Hexagon screw M	8	
25	4700374765	Decal "TYRE PRESSURE"	4	
26	4700904232	Washer 15x30x4 300 HV	2	
27	4700500057	Screw	2	
28		Manifold	1	
29		Manifold assy	1	
30		Accumulator	1	
31		Filter bracket assy	1	
32		Steering cylinder	1	
33	4812110840	Grommet	1	
34	4700900634	Blind insert nut	78	

Elemento	N.º de pieza	Nombre	Cant.	L
35		Cover	4	
36		Cover	1	
37		Cover	1	
38	4700500022	Hexagon screw M8X30 8.8 A2K	102	
39	4700513008	Hexagon socket countersunk screw M	8	
40	4700377743	Reflector white	2	
41	4700925785	Hex. socket screw M06x012H	4	
45		Cover assy	2	
47	4700377742	Reflector, red	2	
48	4812318399	Decal "Ecomode"	1	
49	4812319131	Decal	1	
50	4812319129	Decal	1	
51	4812127718	Decal FAYAT DYNAPAC 600 WH	5	
52	4812127722	Decal FAYAT DYNAPAC 1100 WH	1	
53	4812127731	Decal graphic element, right	1	
54		Decal "GRAPHIC ELEMENT" Left version	1	
55	4812127918	Decal Model Code, 60 WH	1	
56	4812127905	Decal Model Code, 40 WH	1	

Esta página se ha dejado en blanco de forma intencionada

Frame assy module Cover assy

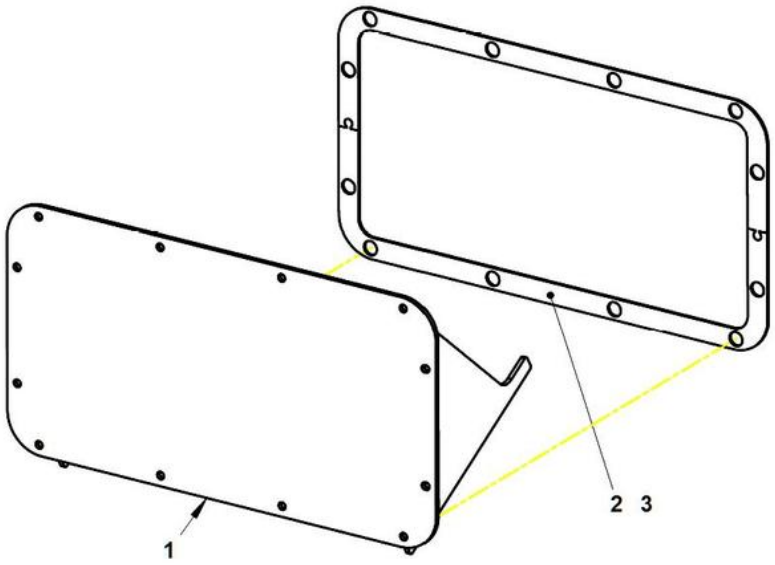

Elemento	N.º de pieza	Nombre	Cant.	L
1	4812316112	Cover	1	
2	4700170231	Gasket	2	
3	4700929141	Loctite 330 50ML	1	

Frame assy module Cover

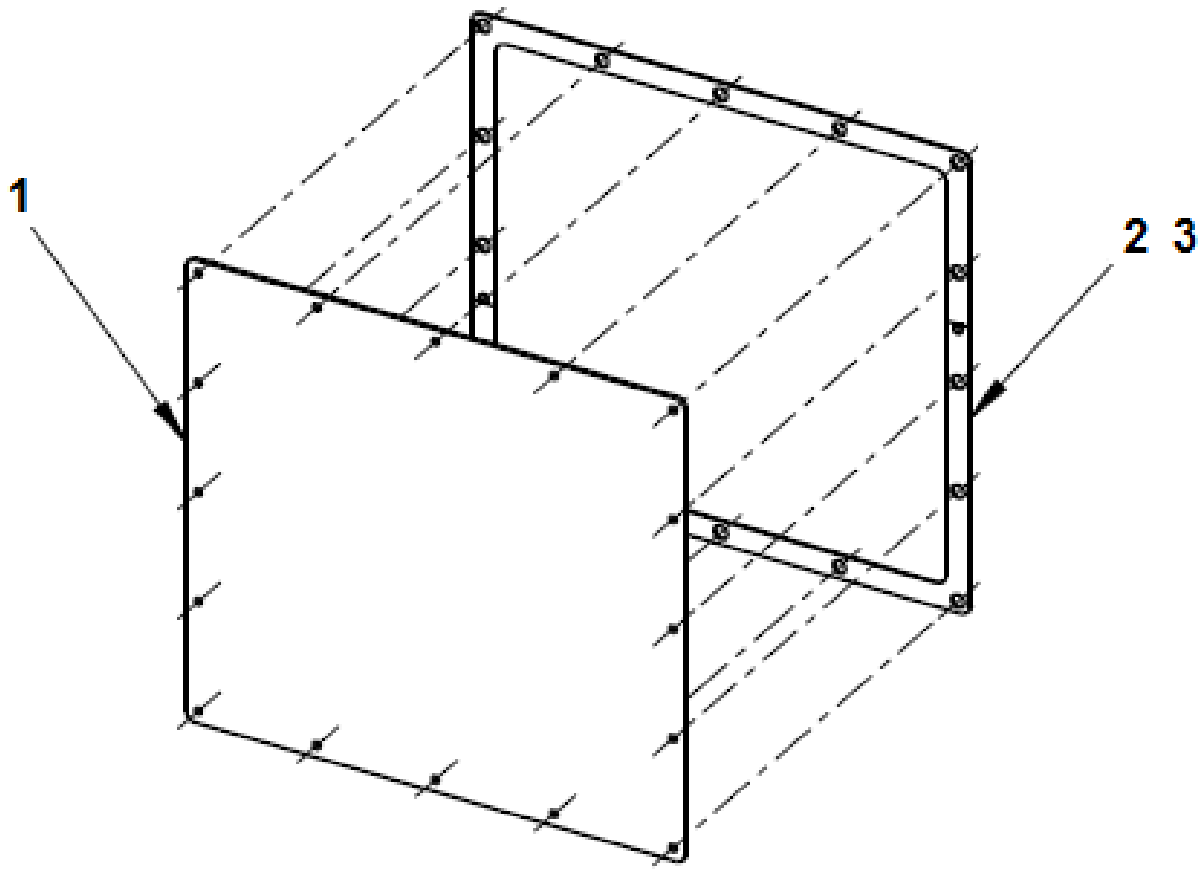

Elemento	N.º de pieza	Nombre	Cant.	L
1	4812315613	Cover	1	
2	4812315614	Gasket	2	
3	4700929141	Loctite 330 50ML	1	

Frame assy module Steering cylinder

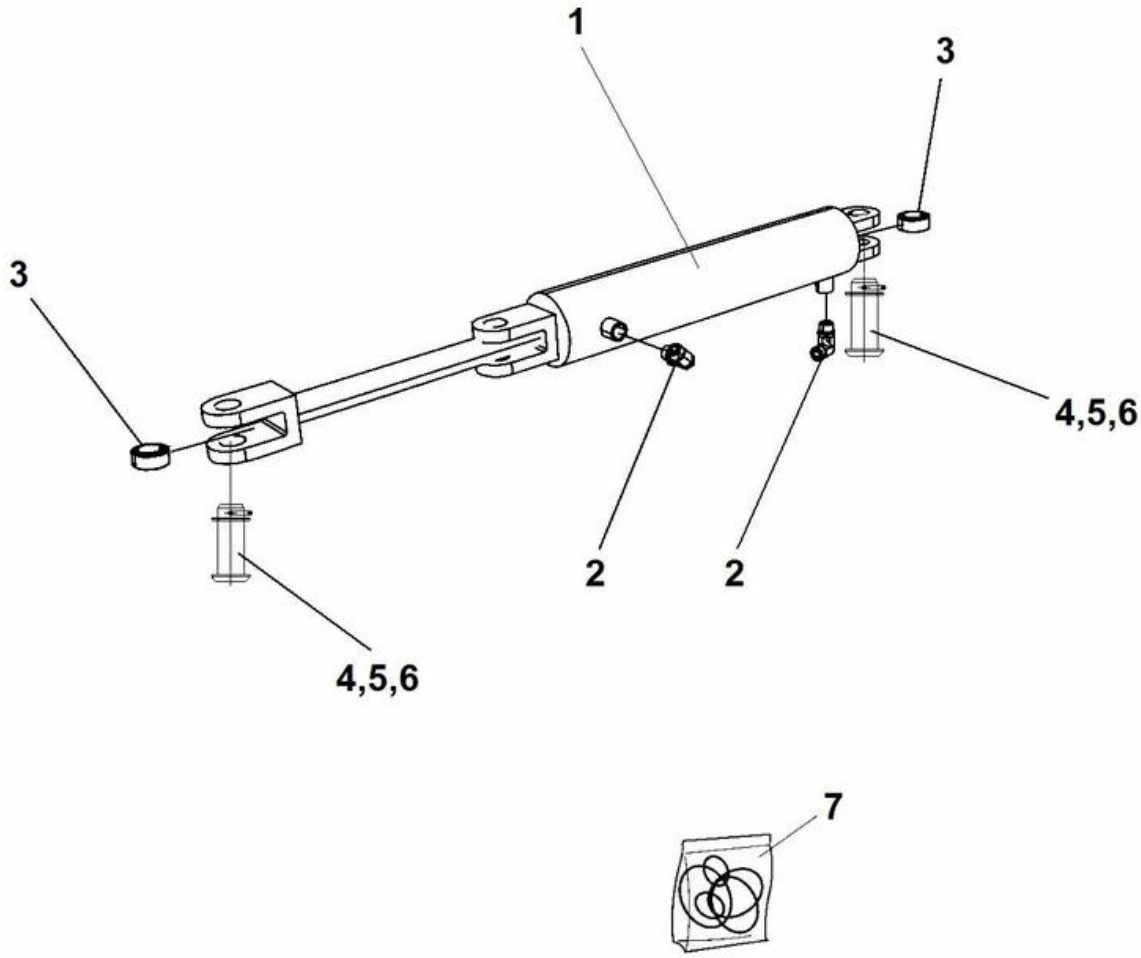

Elemento	N.º de pieza	Nombre	Cant.	L
1	4700396098	Hydraulic cylinder	1	
2	4700791841	Connector elbow 90 ORFS	2	
3	4700792554	Radial spherical plain bearing	2	
4	4812101695	Clamp	2	
5	4812101696	Washer	2	
6	4812101697	Pin	2	
7	4812101384	Seal kit	1	

Frame assy module Filter bracket

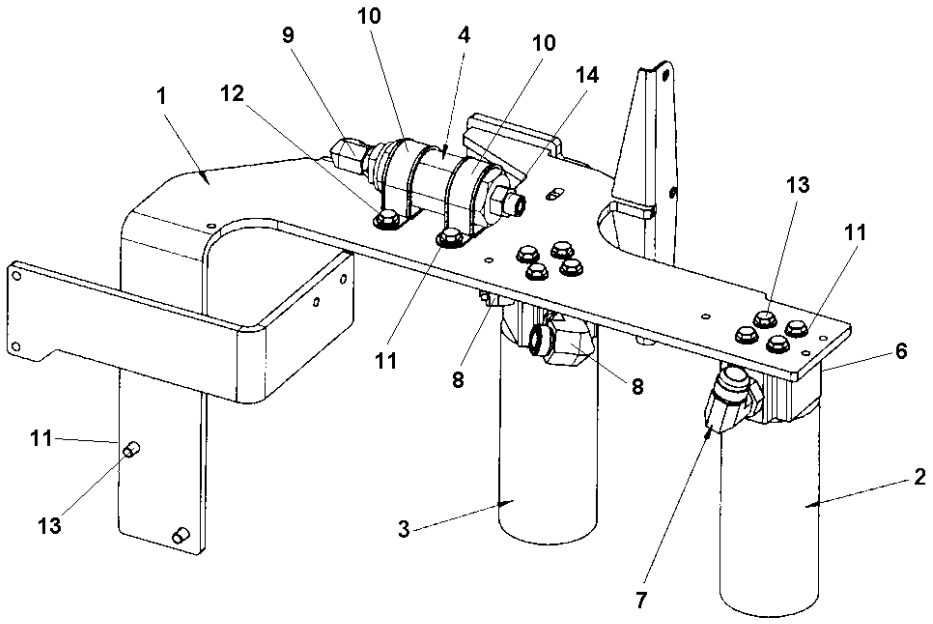

Elemento	N.º de pieza	Nombre	Cant.	L
1	4700395936	Bracket	1	
2	4700372435	Hydraulic oil filter, cpl	1	
2	4700359552	Cleaning filter element Maximum 50 hours use	1	
2	4700372229	Hydraulic oil filter element	1	
2	4700372436	Filter head	1	
2	4700936899	Sensor Green (G)	1	
3	4700359550	Hydraulic oil filter, cpl	1	
3	4700359552	Cleaning filter element Maximum 50 hours use	1	
3	4700372229	Hydraulic oil filter element	1	
3	4700359551	Filter head	1	
3	4700936898	Sensor Red (RW)	1	
4	4700396274	Hydraulic oil filter	1	
6	4700792339	Straight connector ORFS	1	
Comentarios sobre el número de pieza 4700792339 ORFS o-ring (OR73-23 - 1,7/16-12") p/n 4812161467				
7	4700314163	Elbow adapter 90	1	
8	4700791321	Elbow connector 90 ORFS	2	
9	4700791699	Adapter	1	
10	4700904352	Pipe clamp covered	2	
11	4700904230	Plain washer M10 10.5X22X2.0	14	
12	4700500043	Screw M10x16	2	
13	4700500028	Arandela 6,4x12x1,5	12	
14	4700791407	Straight o-ring connector	1	

Frame assy module Accumulator

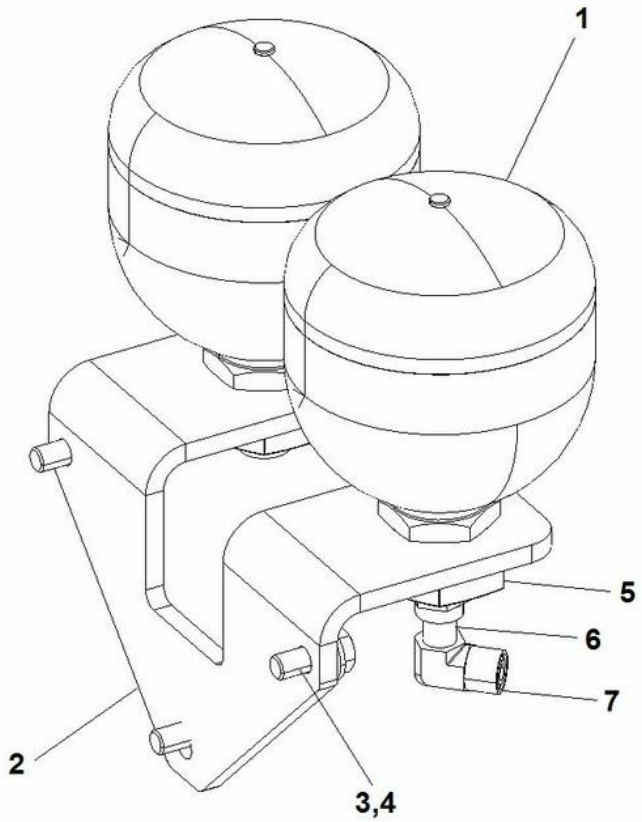

Elemento	N.º de pieza	Nombre	Cant.	L
1	4700396171	Accumulator	2	
2	4700395521	Bracket	1	
3	4700500028	Arandela 6,4x12x1,5	3	
4	4700904230	Plain washer M10 10.5X22X2.0	3	
5	4700396349	Nut	2	
6	4700791405	Straight o-ring connector	2	
7	4700791401	Elbow 90, O-ring with swivel	1	

Frame assy module Manifold assy

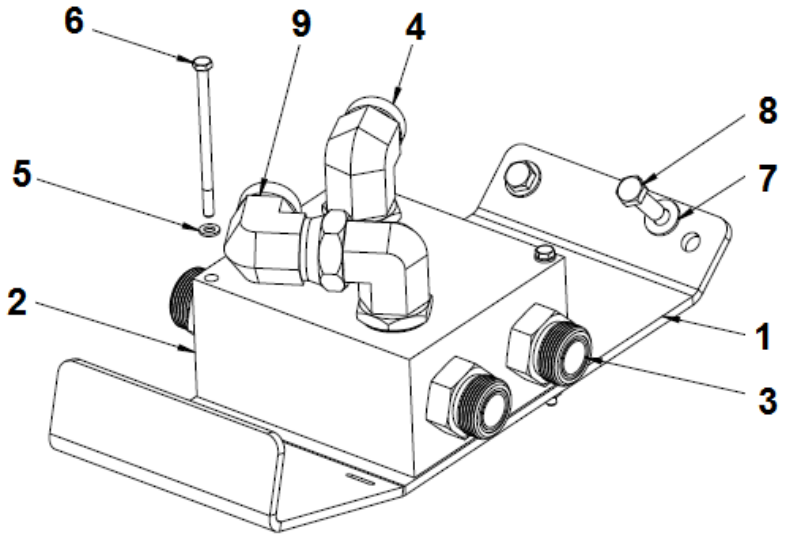

Elemento	N.º de pieza	Nombre	Cant.	L
1	4812316261	Bracket	1	
2	4700395028	Manifold	1	
3	4700792339	Straight connector ORFS	4	
Comentarios sobre el número de pieza 4700792339 ORFS o-ring (OR73-23 - 1,7/16-12") p/n 4812161467				
4	4700792299	Connector elbow 90 ORFS	2	
5	4700904228	Arandela 6,4x12x1,5	2	
6	4700500095	Screw	2	
7	4700904567	Washer, 10.5x28x6 mm	2	
8	4700500029	Hexagon head screw M	2	
9	4700904495	Elbow 90°	1	

Frame assy module Manifold

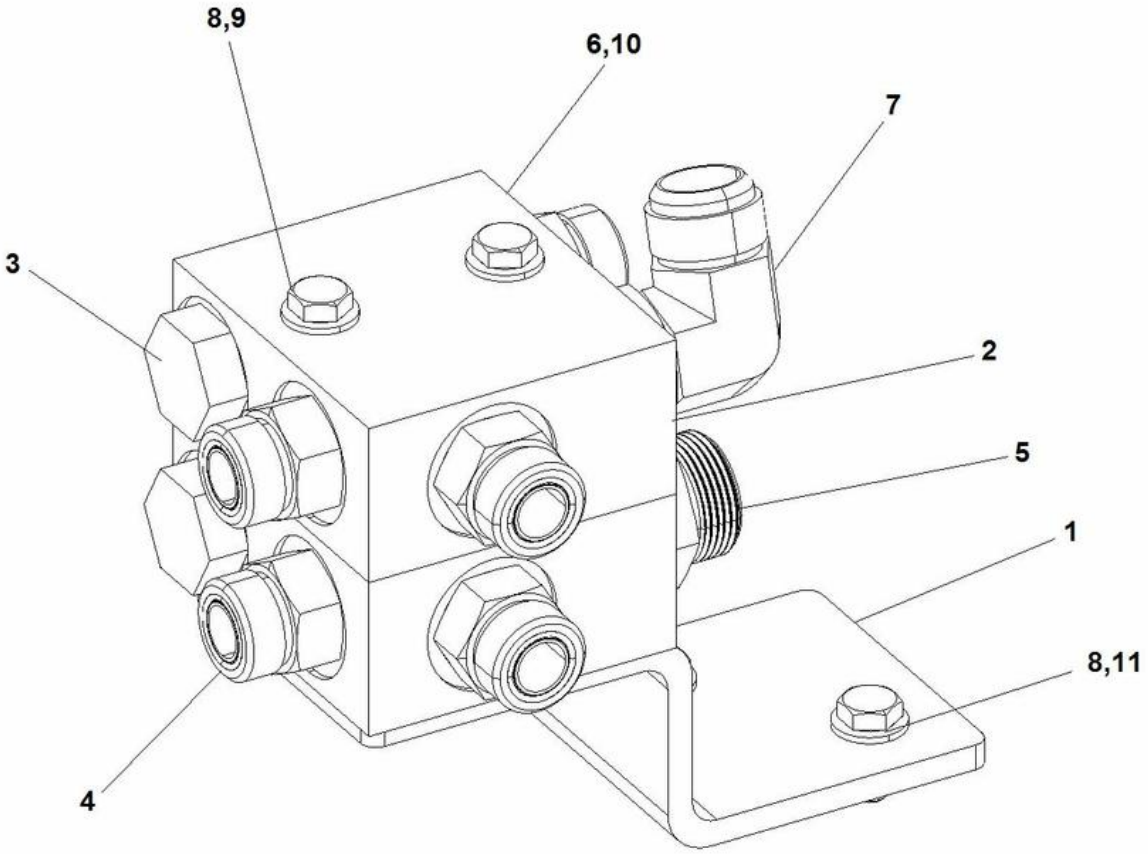

Elemento	N.º de pieza	Nombre	Cant.	L
1	4700396279	Bracket	1	
2	4700345243	Connection block	2	
3	4700232222	Plug threaded	2	
4	4700791823	Straight connector ORFS	5	
5	4700792339	Straight connector ORFS	1	
Comentarios sobre el número de pieza 4700792339 ORFS o-ring (OR73-23 - 1,7/16-12") p/n 4812161467				
6	4700234983	Adapter	1	
7	4700334163	Connector elbow 90°	1	
8	4700904230	Plain washer M10 10.5X22X2.0	4	
9	4700500055	Screw	2	
10	4700903632	Temperature sensor Engine	1	
11	4700500028	Arandela 6,4x12x1,5	2	

Frame assy module Cover

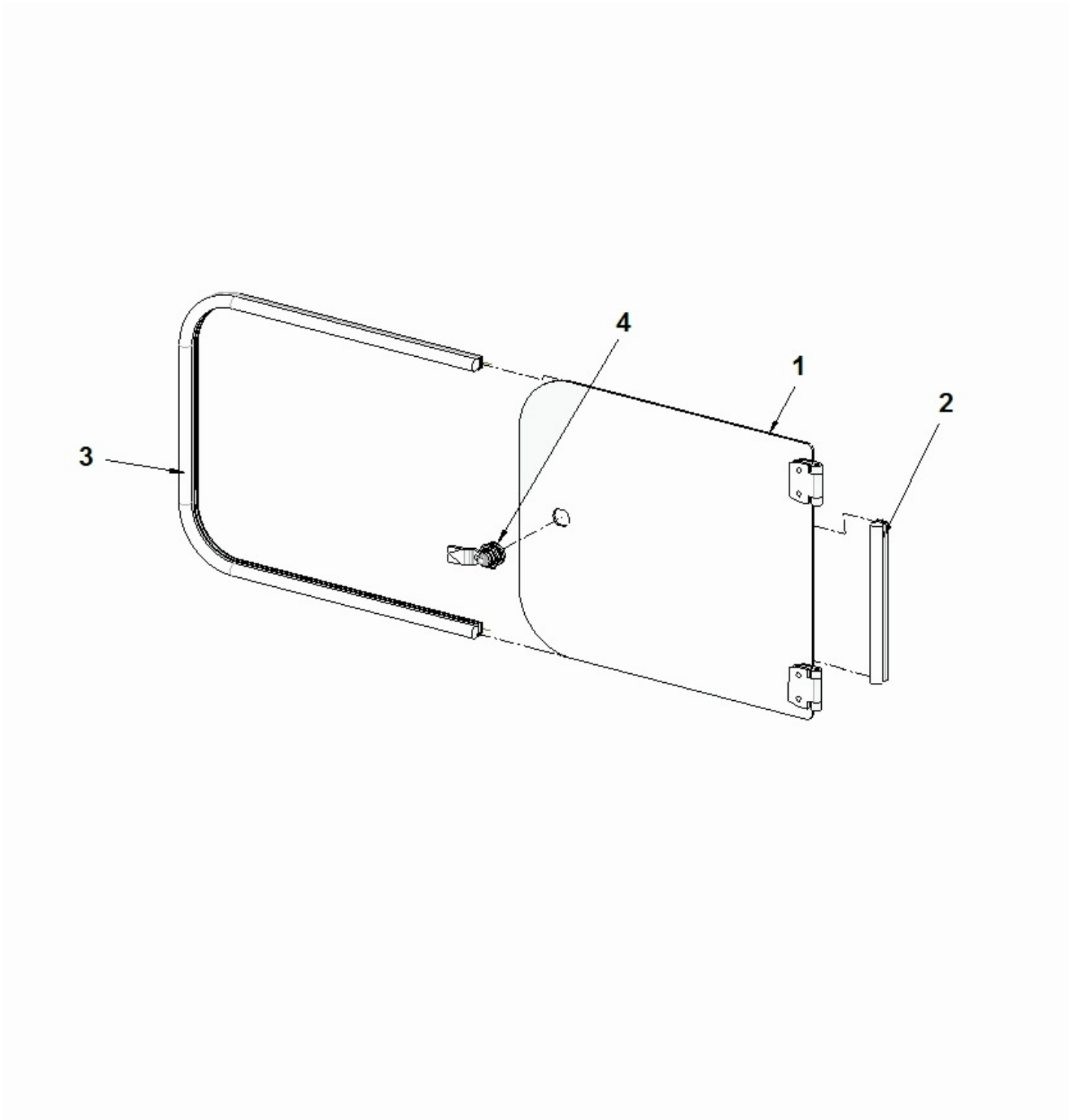

Elemento	N.º de pieza	Nombre	Cant.	L
1	4812315721	Cover	1	
2	4700202057	Edge trim	1	
3	4700202057	Edge trim	1	
4	4812113939	Lock Ø28, T-key	1	
5	4812113949	T-Key	1	

Comments for Page: Cover

2 - L = 0,17 m

3 - L = 1,137 m

Frame assy module Cover

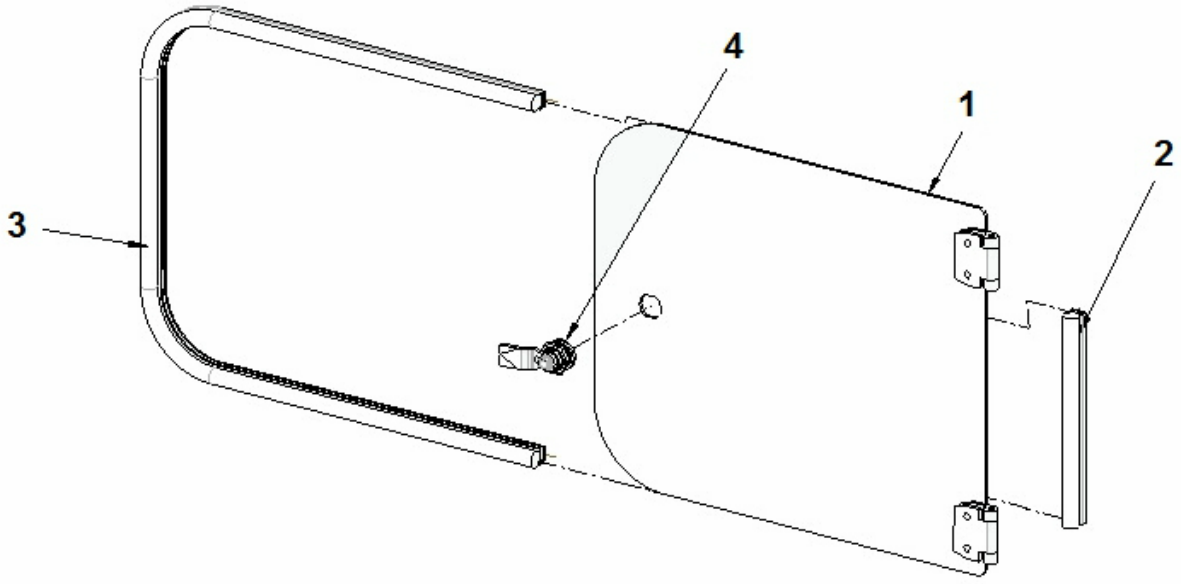

Elemento	N.º de pieza	Nombre	Cant.	L
1	4812315718	Cover	1	
1	4812325954	Yellow Cover	1	
2	4700202057	Edge trim	1	
3	4700202057	Edge trim	1	
4	4812113939	Lock Ø28, T-key	1	
5	4812113949	T-Key	1	

Comments for Page: Cover

2 - L = 0,2m

3 - L = 1,13m

Frame assy module Cover

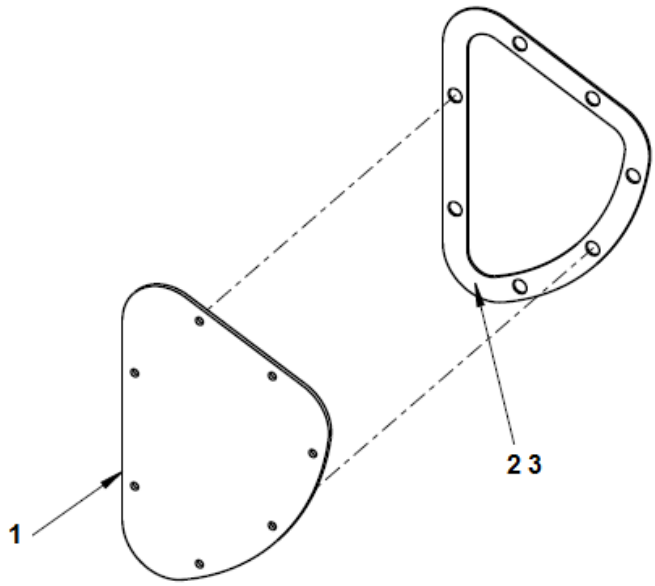

Elemento	N.º de pieza	Nombre	Cant.	L
1	4812315617	Cover	1	
2	4812315618	Gasket	1	
3	4700929141	Loctite 330 50ML	1	

Sprinkler tank module Sprinkler tank module

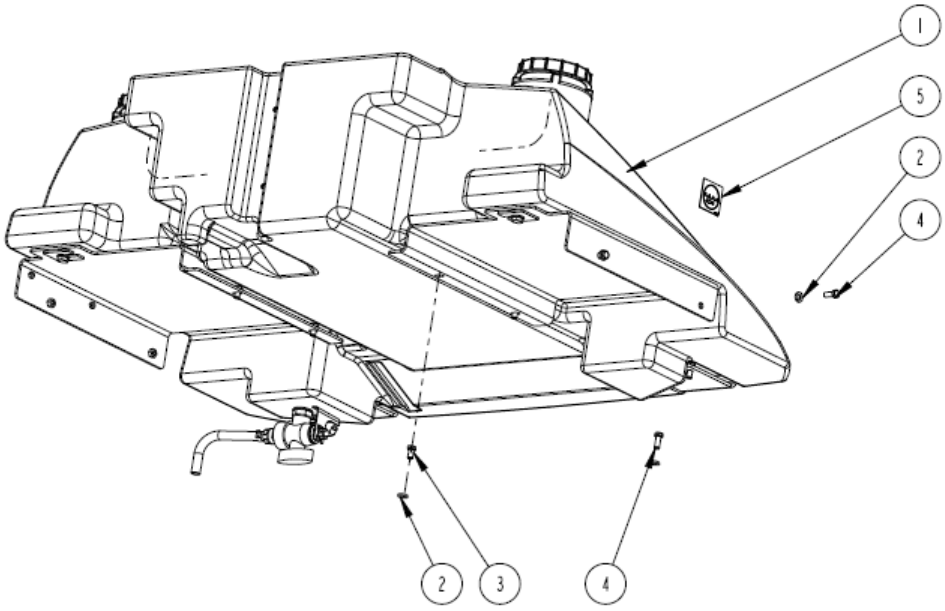

Elemento	N.º de pieza	Nombre	Cant.	L
1	-	Sprinkler tank mount	1	
2	4700904703	Plain washer 13x24x4 mm	12	
3	4700500036	Screw	4	
4	4700500046	Hex. head screw M12x030H	8	
5	4700991657	Decal "WATER"	2	

Sprinkler tank module Sprinkler tank mount

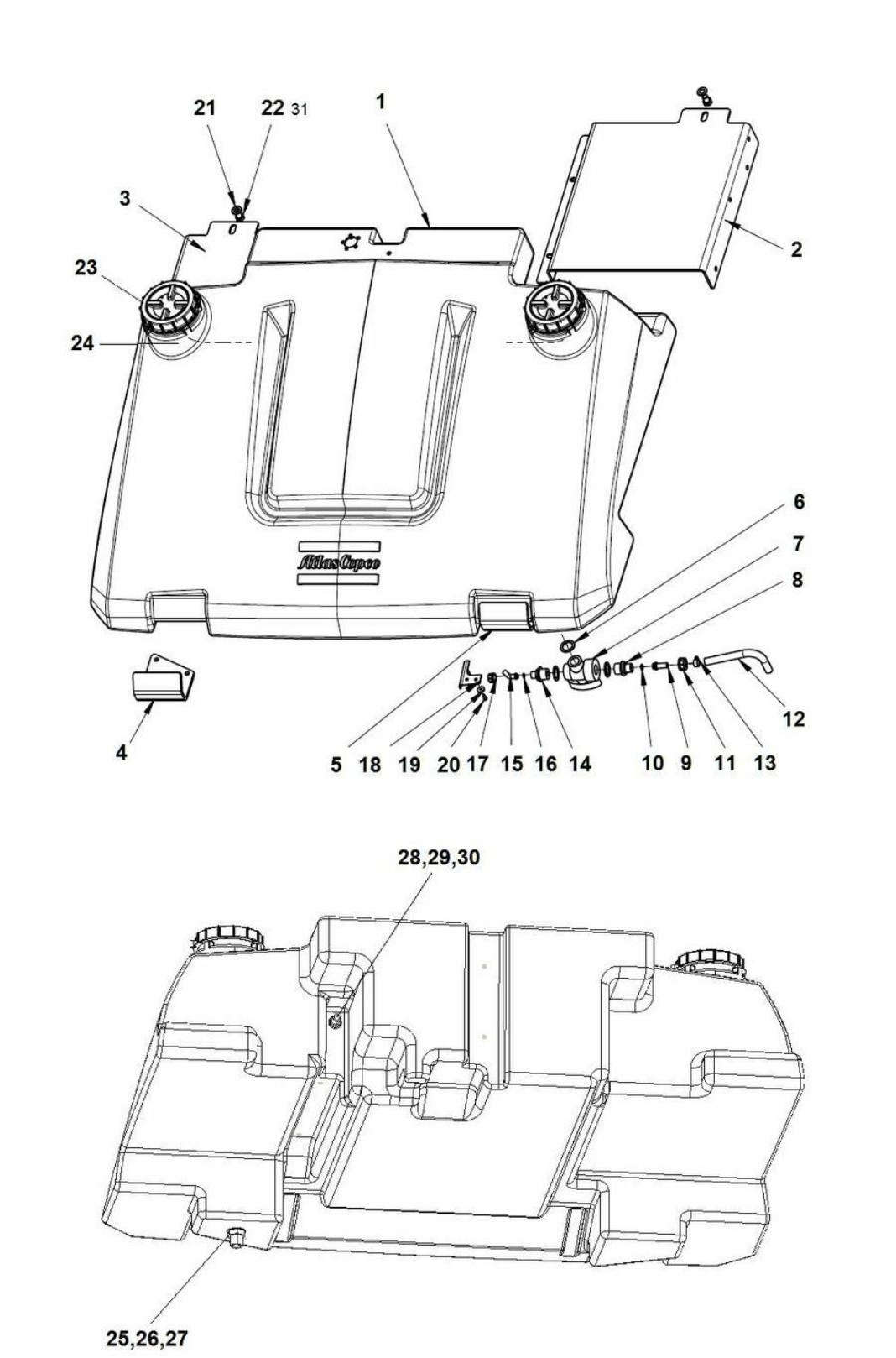

Elemento	N.º de pieza	Nombre	Cant.	L
1	4812315447	Water tank	1	
2	4812316081	Left bracket	1	
3	4812316080	Right bracket	1	
4	4812317027	Bracket	1	
5	4812317028	Bracket	1	
6	4700392223	Plane gasket	4	
7	4812120706	Ball valve	1	
8	4700792781	Reducer nipple	1	
9	4700792780	Hose connection swivel	1	
10	4700480852	O-ring 70	1	
11	4700792779	Swivel nut	1	
12	4700792073	Hose reinforced	1XL	
13	4700313003	Hose clamp	1	
14	4700392226	Reducer nipple	1	
15	4700393542	Hose connection	1	
16	4700792600	O-ring 70	1	
17	4700392227	Swivel nut	1	
18	4700396176	Bracket	1	
19	4700904735	Steel plain washer	2	
20	4700500013	Hexagon head screw M	2	
21	4700904232	Washer 15x30x4 300 HV	2	
22	4700500057	Screw	2	
23	4700359003	Tank Cap	2	
24	4700358846	Strainer, polyamide	2	
25	4700392223	Plane gasket	1	
26	4700392222	Grommet	1	
27	4700392224	Lock nut	1	
28	4700392231	Plane gasket	2	
29	4700392230	Grommet	1	
30	4700392232	Nut	1	
31	4812318366	Shim	2	

Sprinkler tank module Level sensor module

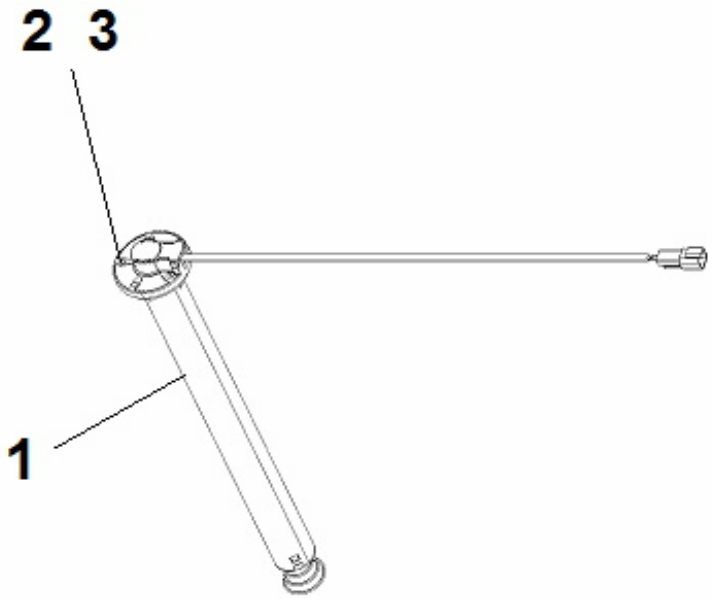

Elemento	N.º de pieza	Nombre	Cant.	L
1	4812315404	Level sender	1	
2	4700904698	Plain washer	5	
3	4700903386	Screw	5	

Fuel tank module Fuel tank

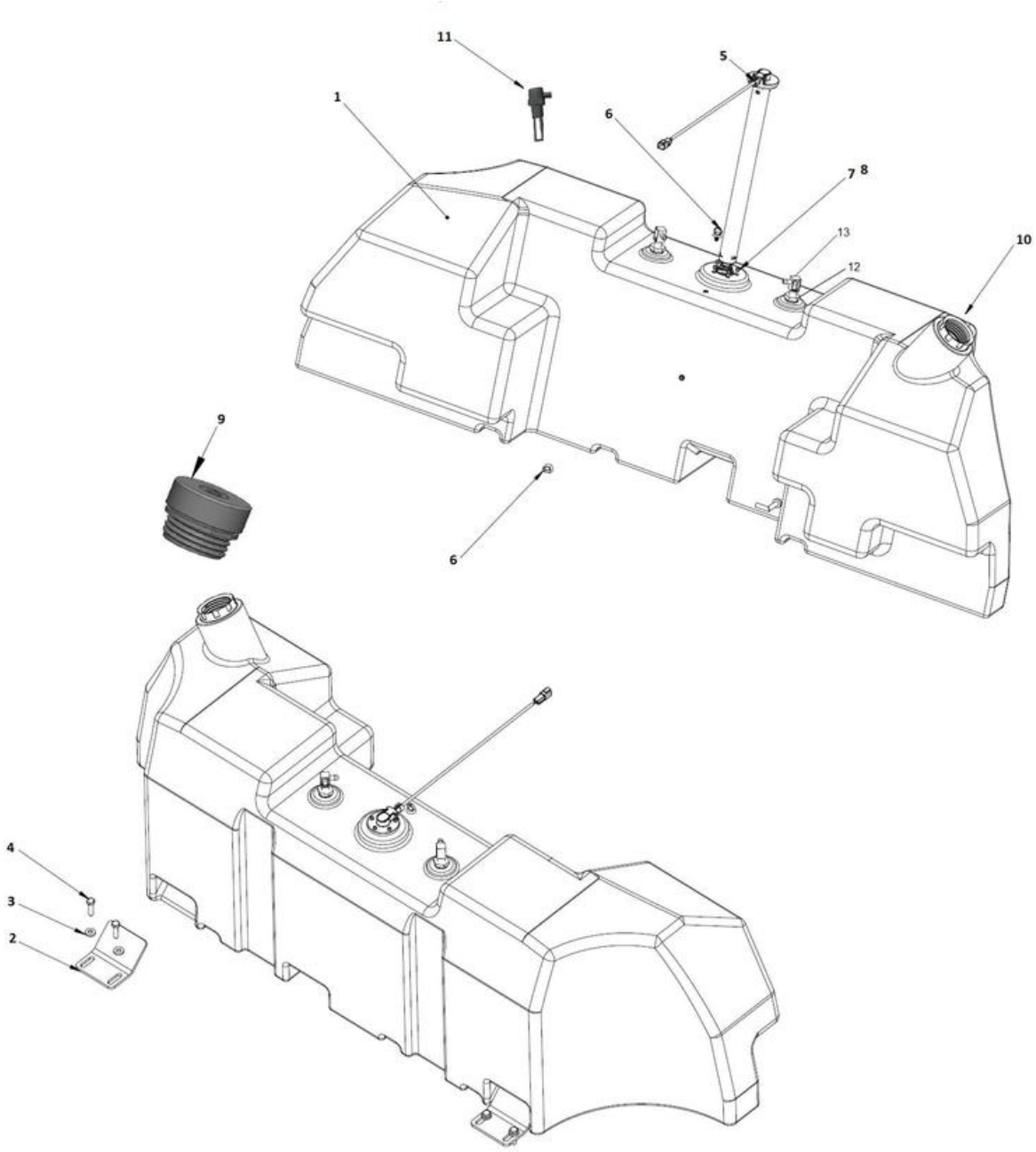

Elemento	N.º de pieza	Nombre	Cant.	L
1	4812315446	Fuel tank	1	
2	4812315453	Bracket	2	
3	4700904557	Steel plain washer	4	
4	4700500030	Hexagon screw M	4	
5	4812316556	Level sender	1	
6	4700792441	Cable tie with holder	2	
7	4700904698	Plain washer	5	
8	4700903386	Screw	5	
9	4812317307	Cover and keys	1	
10	4812325771	Threaded adapter	1	
11	4812318968	Breather device	1	
12	4812325952	Hose Connection	2	
13	4812156393	Quick Connector	2	

Mechanical Cover module

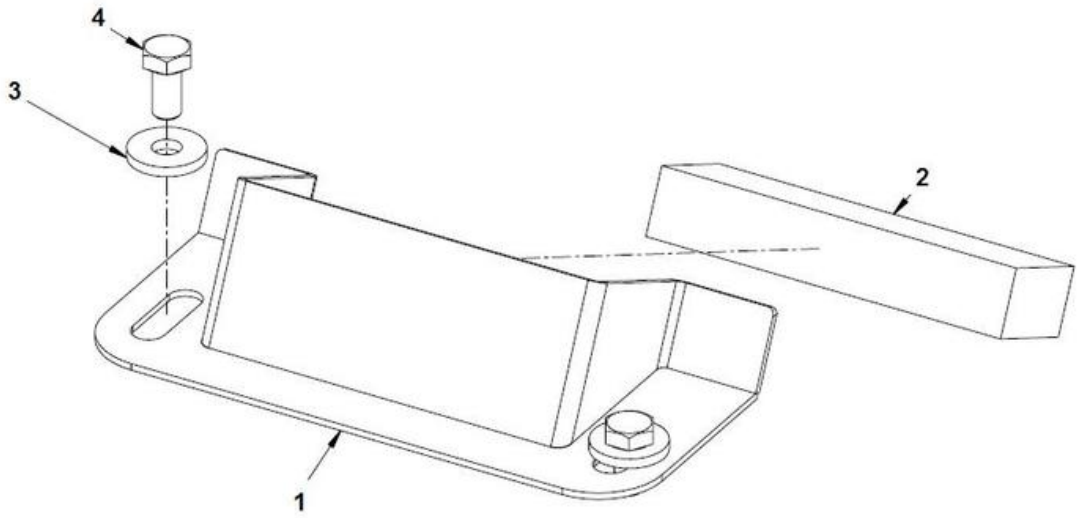

Elemento	N.º de pieza	Nombre	Cant.	L
1	4700396923	Cover plate	1	
2	4700792796	Rubber strip 25x20	1	A
3	4700904640	Steel plain washer	2	
4	4700500019	Hexagon head screw M	2	

Comments for Page: Cover module

2 - L = 0,112 m

Mechanical Grab handle module

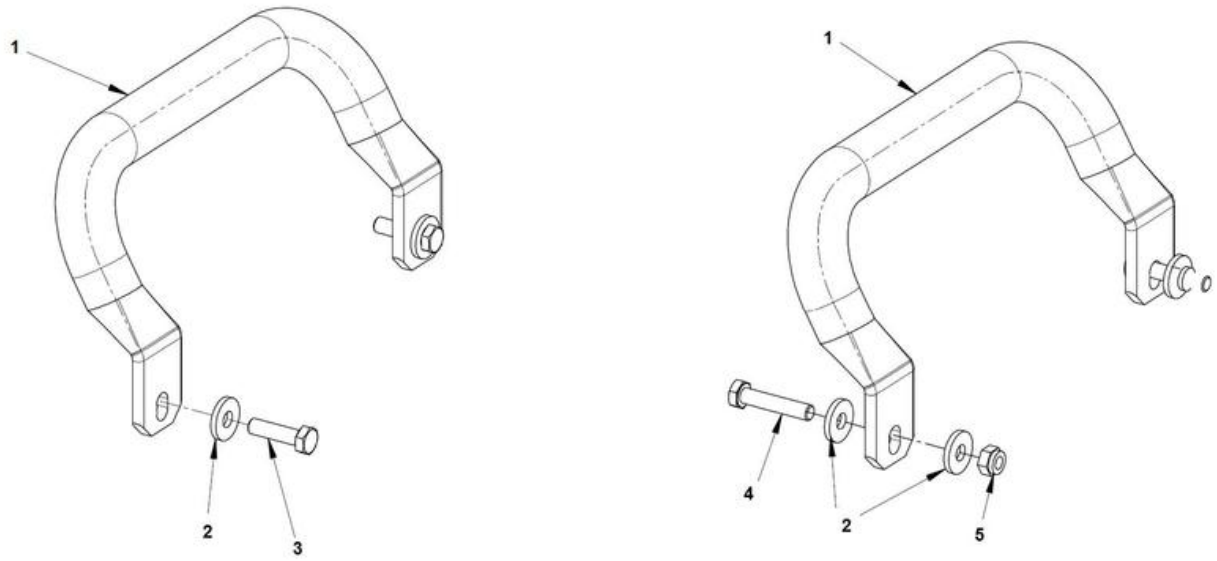

Elemento	N.º de pieza	Nombre	Cant.	L
1	4700394545	Grab handle	1	
2	4700904640	Steel plain washer	4	
3	4700500022	Hexagon screw M8X30 8.8 A2K	2	
4	4700500023	Screw M8x45	2	
5	4700791182	Nut, M8 -8 DIN985	2	

Mechanical Step module

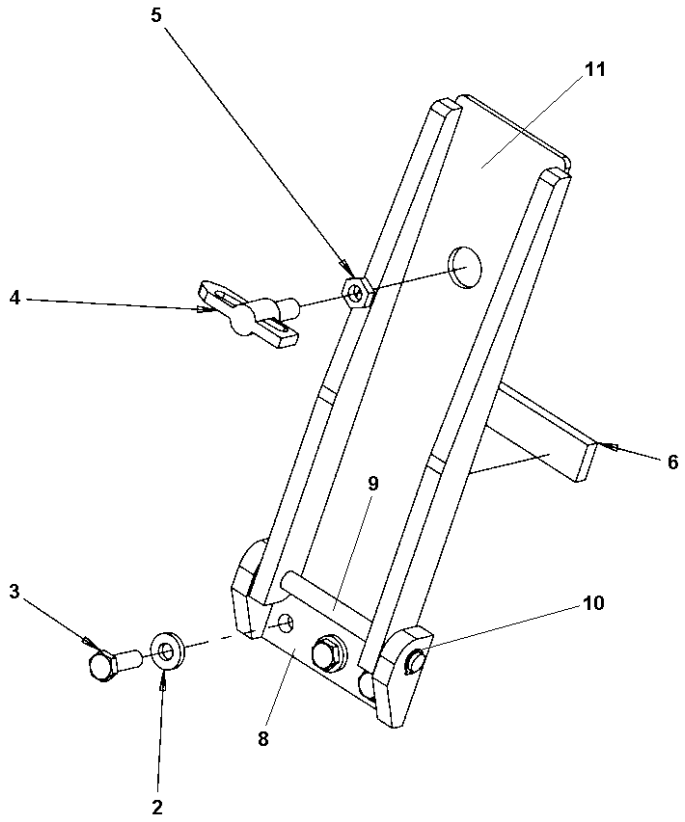

Elemento	N.º de pieza	Nombre	Cant.	L
2	4700904557	Steel plain washer	3	
3	4700500029	Hexagon head screw M	3	
4	4700475064	Lock	1	
5	4700927233	Nut	1	
6	4700370820	Rubber cloth	1	
7	4700929141	Loctite 330 50ML	N	
8	4700370303	Bracket	1	
9	4700370685	Shaft	1	
10	4700150003	Retaining ring for shaft	2	
11	4700379417	Sheet metal part	1	

Mechanical Air leading cover

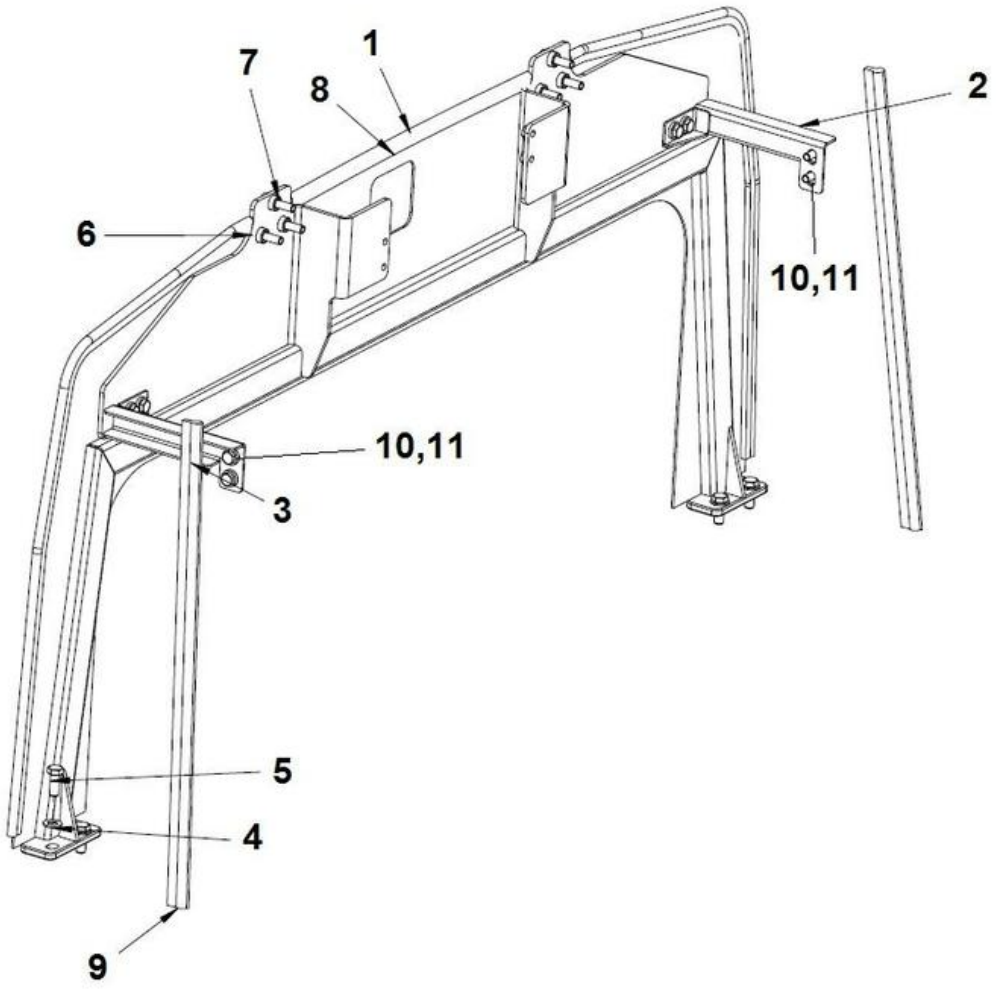

Elemento	N.º de pieza	Nombre	Cant.	L
1	4812315532	Bracket	1	
2	4812315541	Bracket	1	
3	4812315543	Bracket	1	
4	4700904231	Steel plain washer	4	
5	4700500046	Hex. head screw M12x030H	4	
6	4700904230	Plain washer M10 10.5X22X2.0	6	
7	4700500031	Hexagon head screw M	6	
8	4700902166	Rubber edge trim	1	
9	4700902166	Rubber edge trim	1	
10	4700904557	Steel plain washer	8	
11	4700500048	Hex. Head screw	8	

Comments for Page: Air leading cover

8 - L = 3 m

9 - L = 1,3 m

Mechanical Fuel hose kit

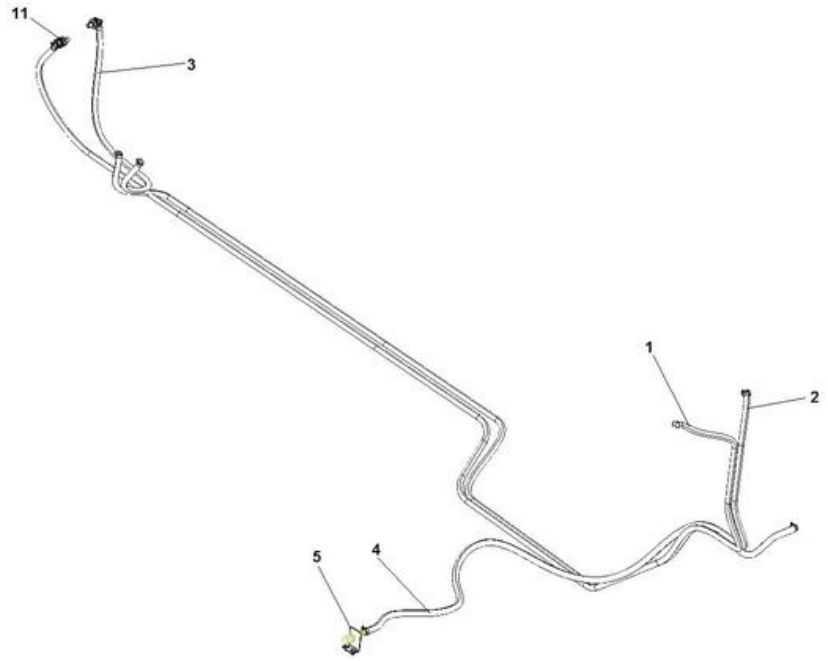

Elemento	N.º de pieza	Nombre	Cant.	L
1	4700904985	Fuel hose	5.1	
2	4700904985	Fuel hose	4.5	
3	4700904985	Fuel hose	1.1	
4	4812112074	Plastic hose (x m)	2.5	
5	4812315722	Bracket	1	
6	4700904229	Steel plain washer 8.4X16X1.5	2	
7	4700500019	Hexagon head screw M	2	
8	4700230515	Bulkhead union straight JIC	1	
9	4700330383	Plug JIC	1	
10	4812118501	Hose connection	1	
11	4812118953	Quick coupling	2	
12	4700792547	Quick connect coupling	2	
13	4700313002	Hose clamp	2	
14	4700313002	Hose clamp	6	

Engine hood Engine Hood Module

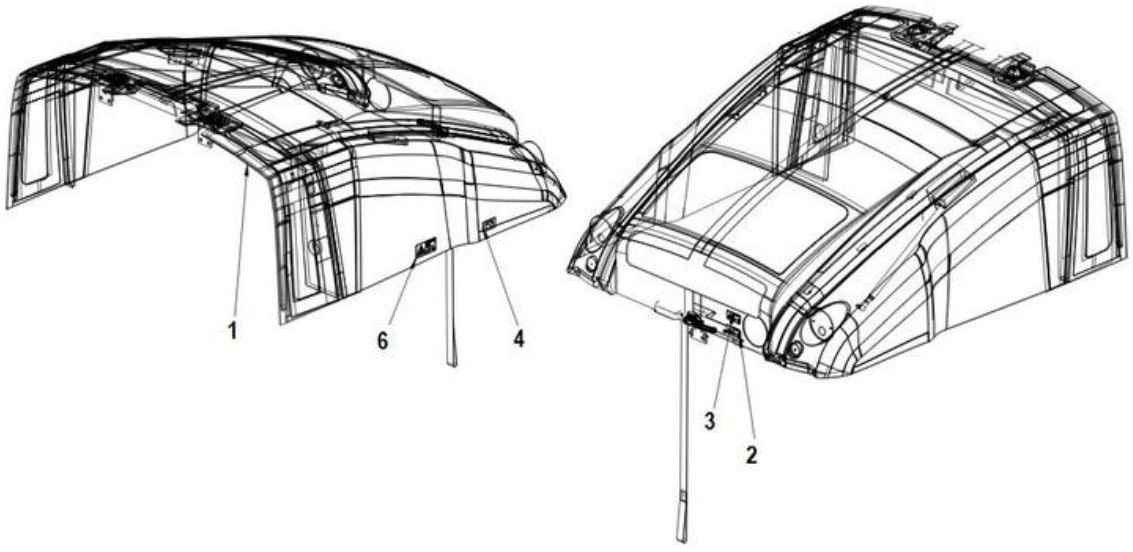

Elemento	N.º de pieza	Nombre	Cant.	L
1		Engine hood assy	1	
2	4700903424	Decal hot surface	1	
3	4700903423	Safety decal, Rotating engine components	1	
4	4700904835	Decal Battery power-disconnect	1	
5	4700397286	Safety decal High pressure fluid	1	
6	4700904895	Safety decal, Brake release	1	

Engine hood Engine hood assy

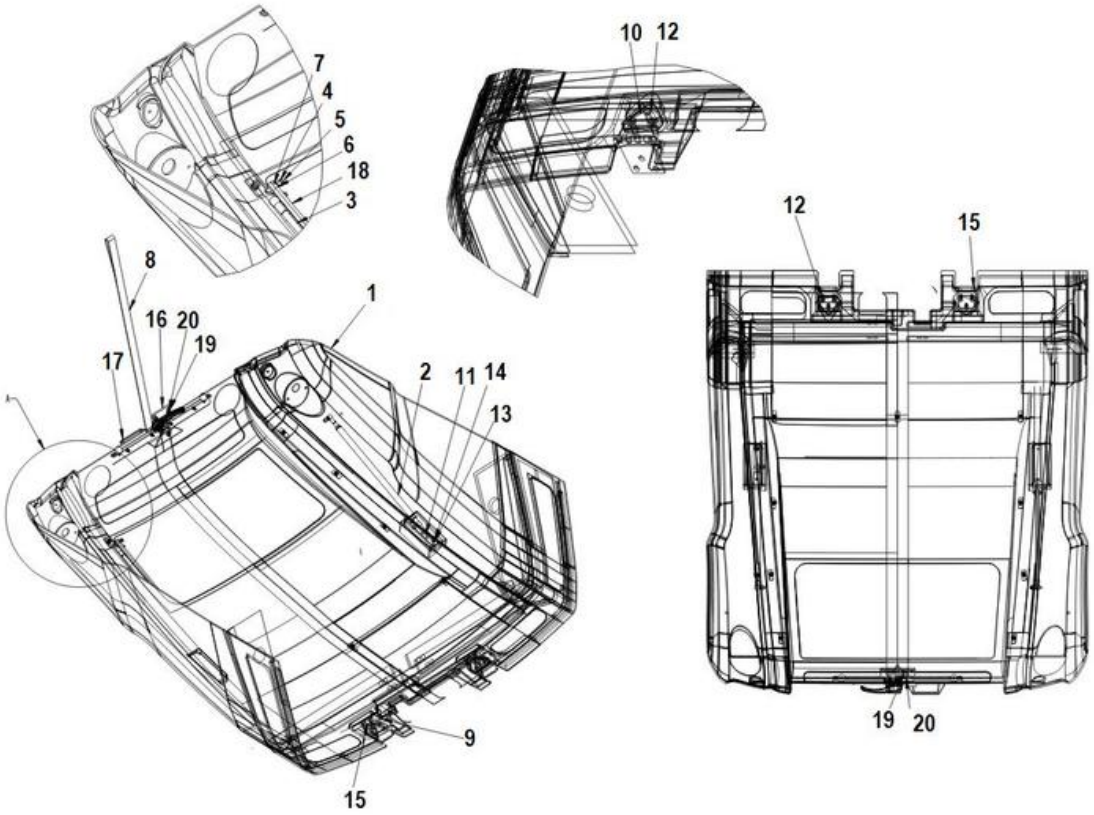

Elemento	N.º de pieza	Nombre	Cant.	L
1	4812319222	Engine hood	1	
2	4700904879	Gas spring	1	
3	4700382384	Gas spring	1	
4	4700904229	Steel plain washer 8.4X16X1.5	2	
5	4700500024	Screw M8x45	1	
6	4700570005	Hexagon nut M	1	
7	4700904556	Steel plain washer	1	
8	4700396317	Grab handle	1	
9	4812317291	Hinge	2	
10	4700396201	Washer	2	
11	4812316064	Bracket	2	
12	4700500149	Screw	6	
13	4700904230	Plain washer M10 10.5X22X2.0	4	
14	4700500028	Arandela 6,4x12x1,5	4	
15	4700374799	Holder plate	4	
16	4812316057	Lock clamp	1	
17		Locking device	1	
18	4700382382	Safety rod	1	
19	4700904640	Steel plain washer	2	
20	4700500021	Perno	2	

Engine hood Locking device (CP2700 From SN 10000512AJB005570)

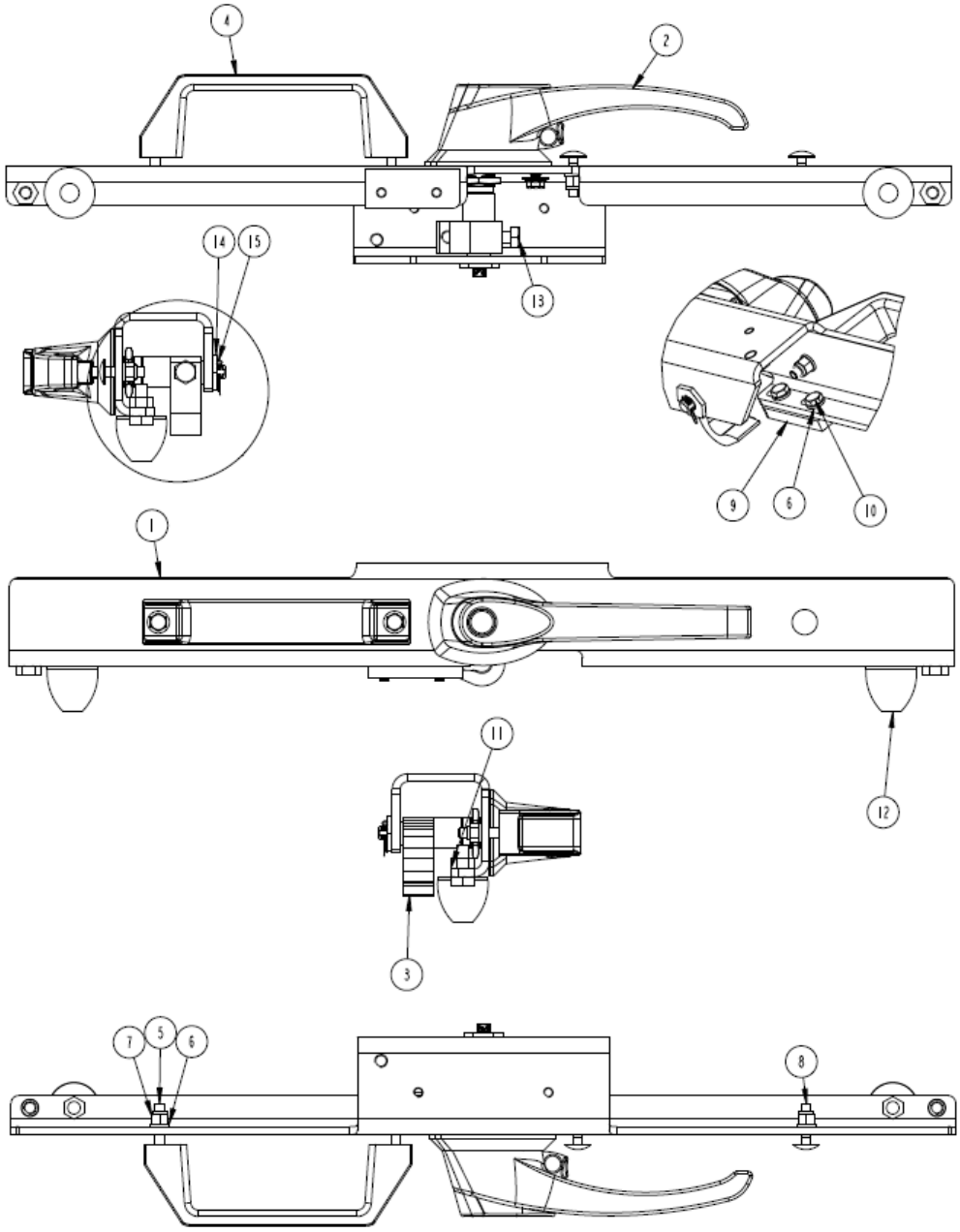

Elemento	N.º de pieza	Nombre	Cant.	L
1	4812315693	Bracket	1	
2	4812112403	Lock handle	1	
3	4812315795	Hook	1	
4	4812112404	Grab handle	1	
5	4700500015	Hexagon head screw M	2	
6	4700904228	Arandela 6,4x12x1,5	6	
7	4700586002	Lock nut M	4	
8	4700903923	Cup square neck bolt	2	
9	4700382336	Sheet metal part	1	
10	4700500013	Hexagon head screw M	2	
11	4700570005	Hexagon nut M	2	
12	4700925629	Shock absorber	2	
13	4700500019	Hexagon head screw M	1	
14	4812316054	Spacer sleeve	1	
15	4700630003	Split pin	1	

Mechanical Compressed Air Pipe Kit

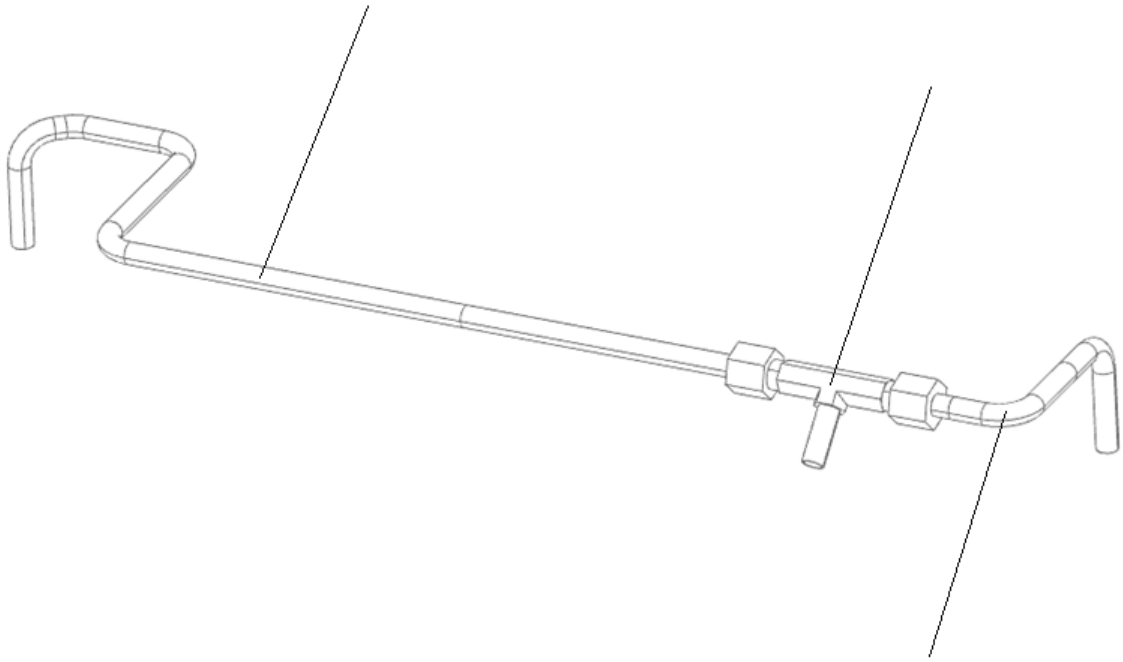

Elemento	N.º de pieza	Nombre	Cant.	L
1	4812319294	Aluminium tube 9,52x2,76 - 6060 T5	1	
2	4812319295	Aluminium tube 9,52x2,76 - 6060 T5	1	
3	4812319156	Connector T	1	

Referenced Pages

Steering cylinder 27

Esta página se ha dejado en blanco de forma intencionada

Forward-reverse control module Forward-reverse control module

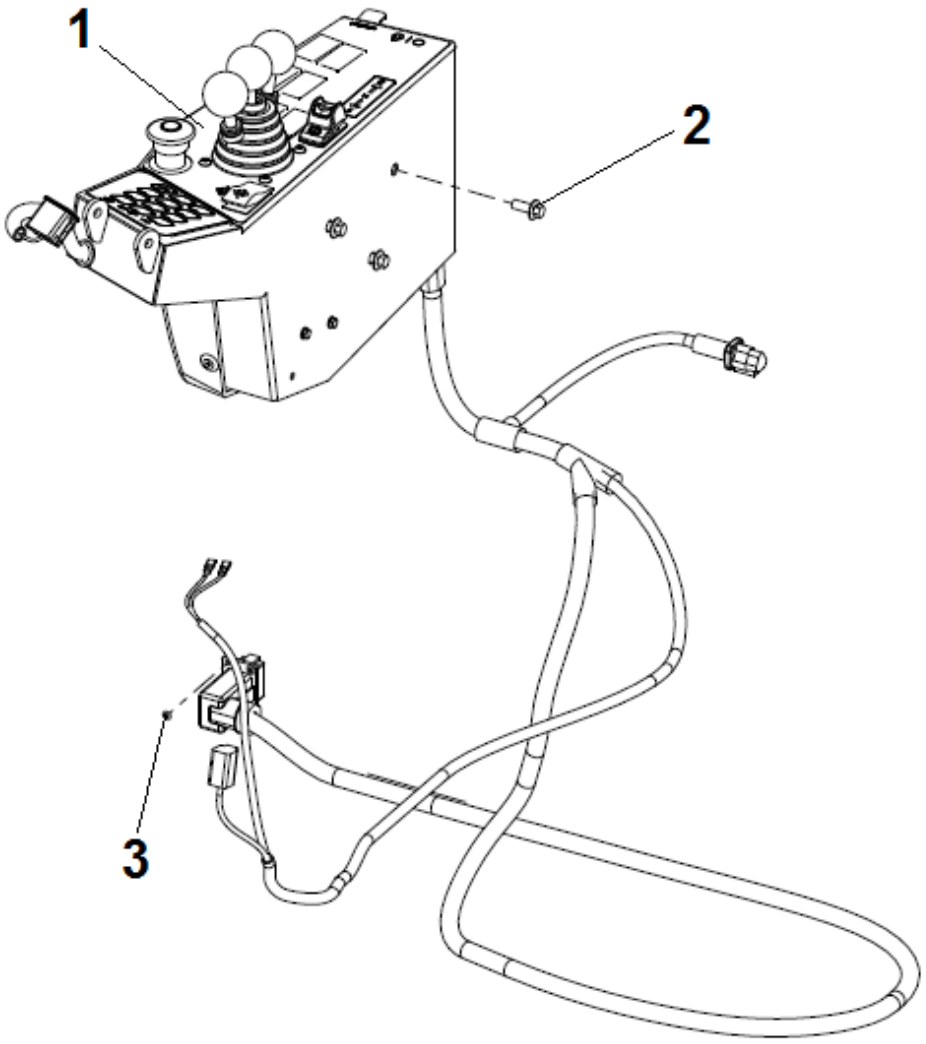

Elemento	N.º de pieza	Nombre	Cant.	L
1		Drive control	1	
2	4700500505	Hexagon screw M8X20 8.8 A2K	3	
3	4700791709	Blind rivet	4	

Forward-reverse control module Drive control

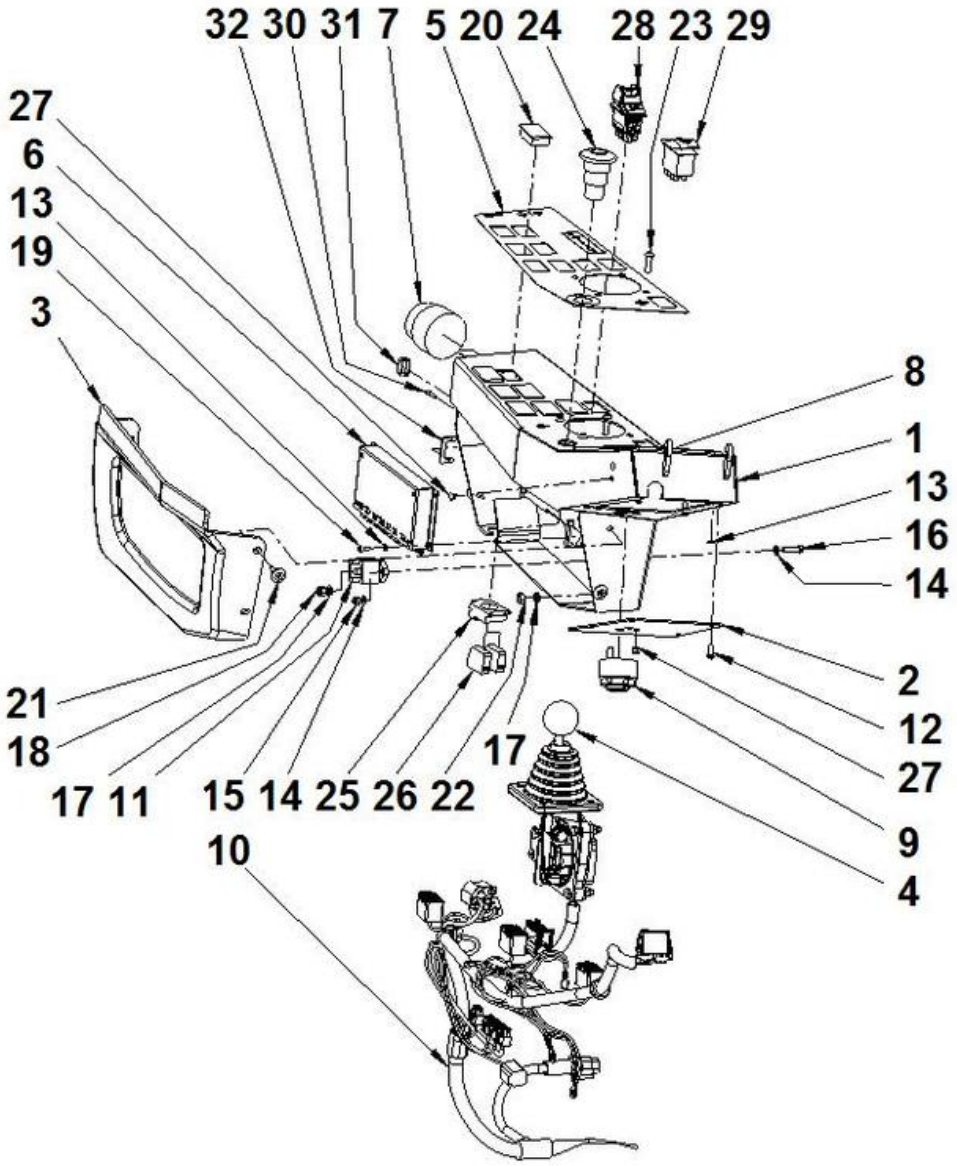

Elemento	N.º de pieza	Nombre	Cant.	L
1	4812110886	Control box	1	
2	4700391396	Cover	1	
3	4700396662	Cover	1	
4		Control	1	
5	4812113814	Decal	1	
6	4812113875	Control unit, I/O A12	1	
7	4812110901	Ignition switch	1	
7	4700940451	Ignition key	1	
8	4812317321	Membrane switch panel	1	
9	4700385599	Buzzer	1	
10	4812116071	Wiring Harness	1	
11	4700392930	Junction box	1	
12	4812119227	Thread rolling screw	4	
13	4700904698	Plain washer	8	
14	4700904281	Steel plain washer	4	
15	4700586001	Lock nut M	2	
16	4700500060	Hexagon head screw M	2	
17	4700904228	Arandela 6,4x12x1,5	3	
18	4700586002	Lock nut M	2	
19	4700508017	Cylinder screw	4	
20	4700791588	Panel plug	7	
21	4700395785	Expansion rivet	4	
22	4700570004	Hexagon nut M	1	
23	4700791524	Hex.sock.button h.cap screw M	4	
24	4700791739	Emergency stop	1	
25	4700791733	Fixing collar	1	
26	4700791723	Connector	2	
27	4700902804	Plug	5	
28	4812118697	Switch, Parking brake	1	
29	4811000271	Switch, Brake test	1	
30	4812114213	Lock screw	2	
31	4812114214	Protective cap	1	
32	4812119317	Holder	1	

Forward-reverse control module Control handle

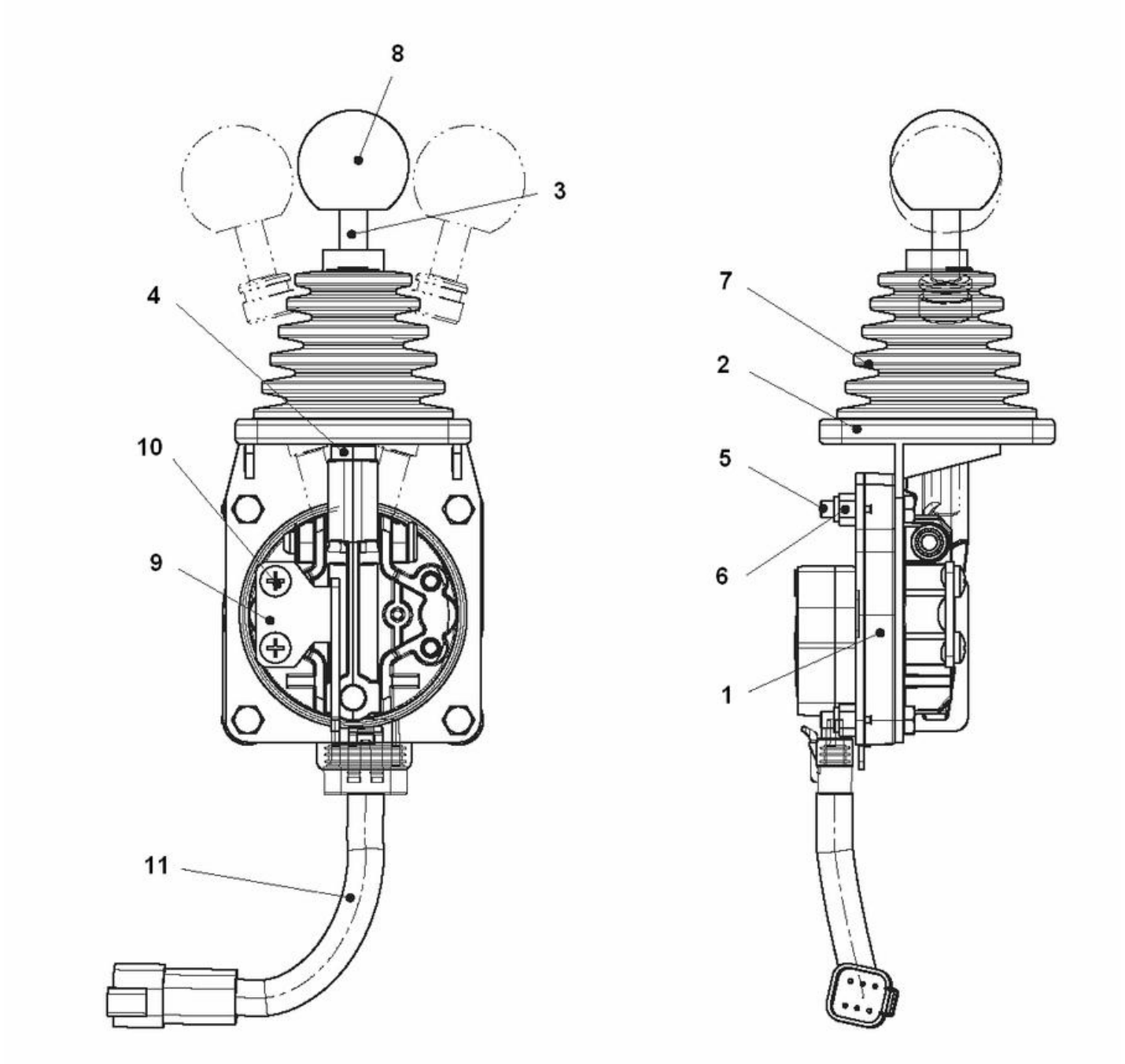

Elemento	N.º de pieza	Nombre	Cant.	L
1	4812114262	Control	1	
1	4812113874	Control	1	A
2	4812113850	Bracket	1	
3	4812113988	Control rod	1	
4	4700573005	Hexagon thin nut M	1	
5	4700500015	Hexagon head screw M	4	
6	4700586002	Lock nut M	1	
7	4812114281	Bellow	1	
8	4811000413	Ball knob Ø40 M8	1	
9	4812113989	Moviment limiter	1	
10	4811000390	Screw ST5,5X16 A2K	2	
11	4812114251	Wiring Harness	1	B

Comments for Page: Control handle

(L)OCAL REMARKS

A | en_US | From S/N K0B001388 (CP224), P0B001387 (CP224W) and C0B001380 (CP274)

B | en_US | Used only with 4812113874

Display module Display module

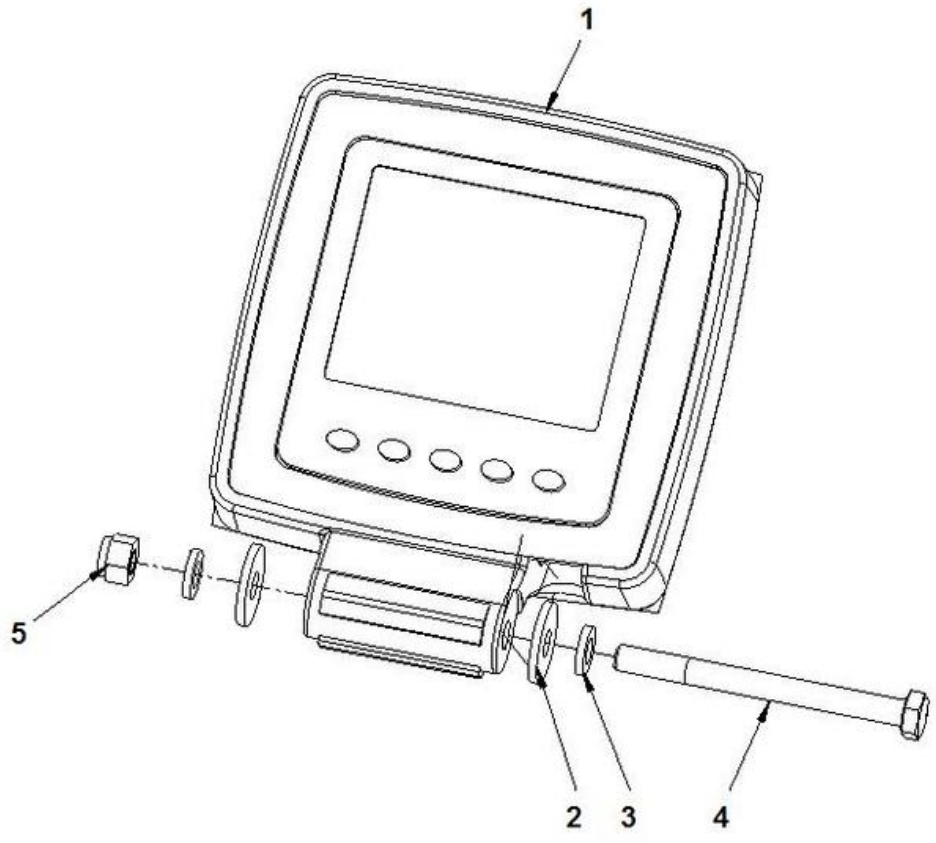

Elemento	N.º de pieza	Nombre	Cant.	L
1		Display unit assy	1	
2	4700903662	Washer	2	
3	4700606004	Plastic washer	2	
4	4700500115	Screw	1	
5	4700586003	Lock nut M8	1	

Display module Display unit assy

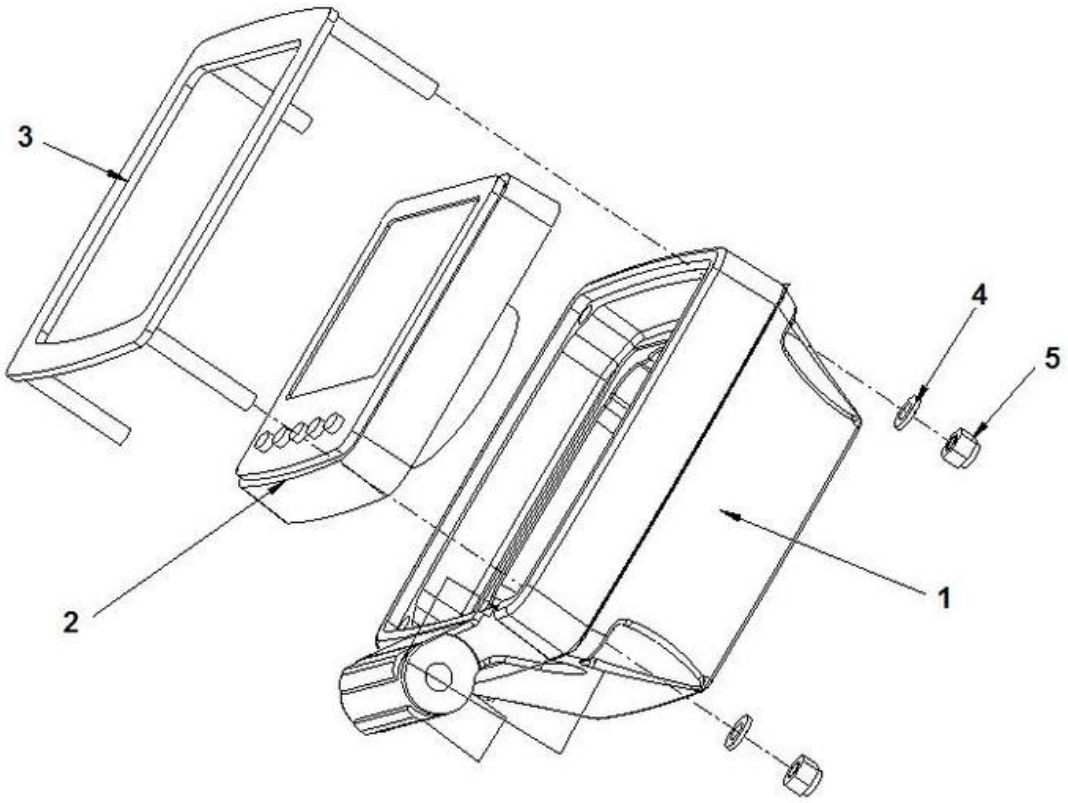

Elemento	N.º de pieza	Nombre	Cant.	L
1	4700392717	Display holder	1	
2	4812113786	Display unit	1	
3	4700392719	Cover	1	
4	4700904228	Arandela 6,4x12x1,5	4	
5	4700586002	Lock nut M	4	

Operator platform Control module, rotating/sliding

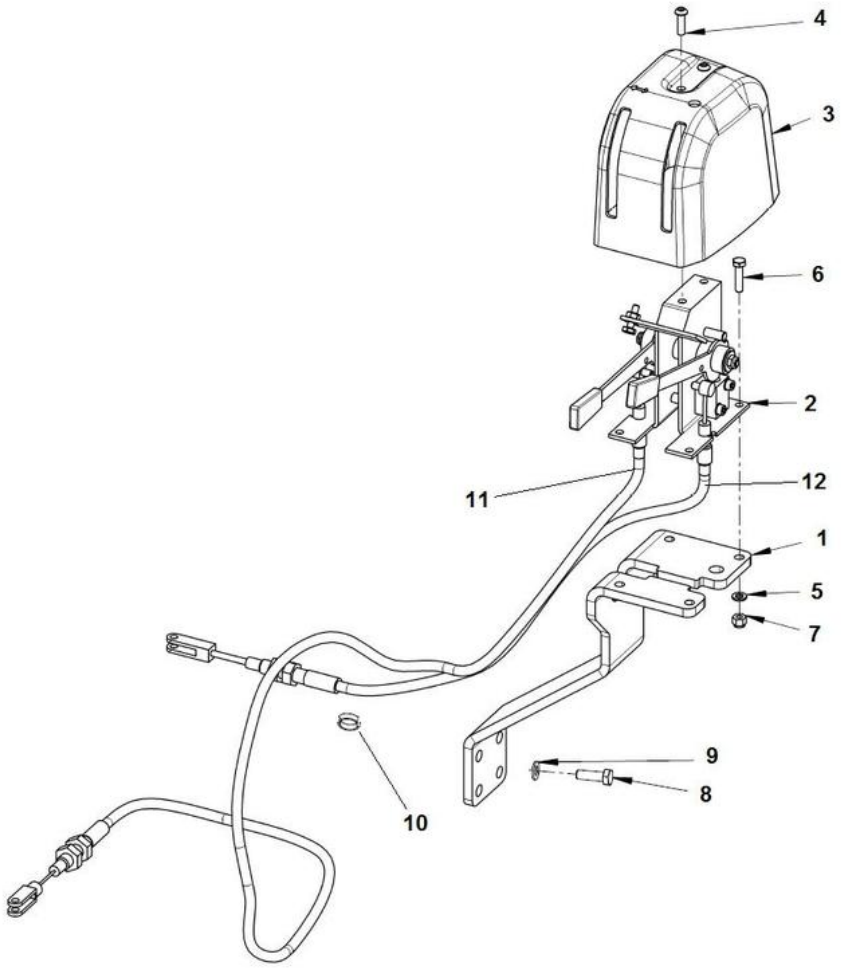

Elemento	N.º de pieza	Nombre	Cant.	L
1	4812118312	Bracket	1	
2	4812121328	Control	1	
3	4700392965	Control cover	1	
4	4700791524	Hex.sock.button h.cap screw M	2	
5	4700904228	Arandela 6,4x12x1,5	4	
6	4700500075	Screw, M6-1,0x25 mm 8.8	4	
7	4700586002	Lock nut M	4	
8	4700500021	Perno	4	
9	4700904229	Steel plain washer 8.4X16X1.5	4	
10	4700313041	Cable tie	1	
11	4812121330	Cable, sliding	1	
12	4812121331	Cable	1	

Operator platform Seat frame

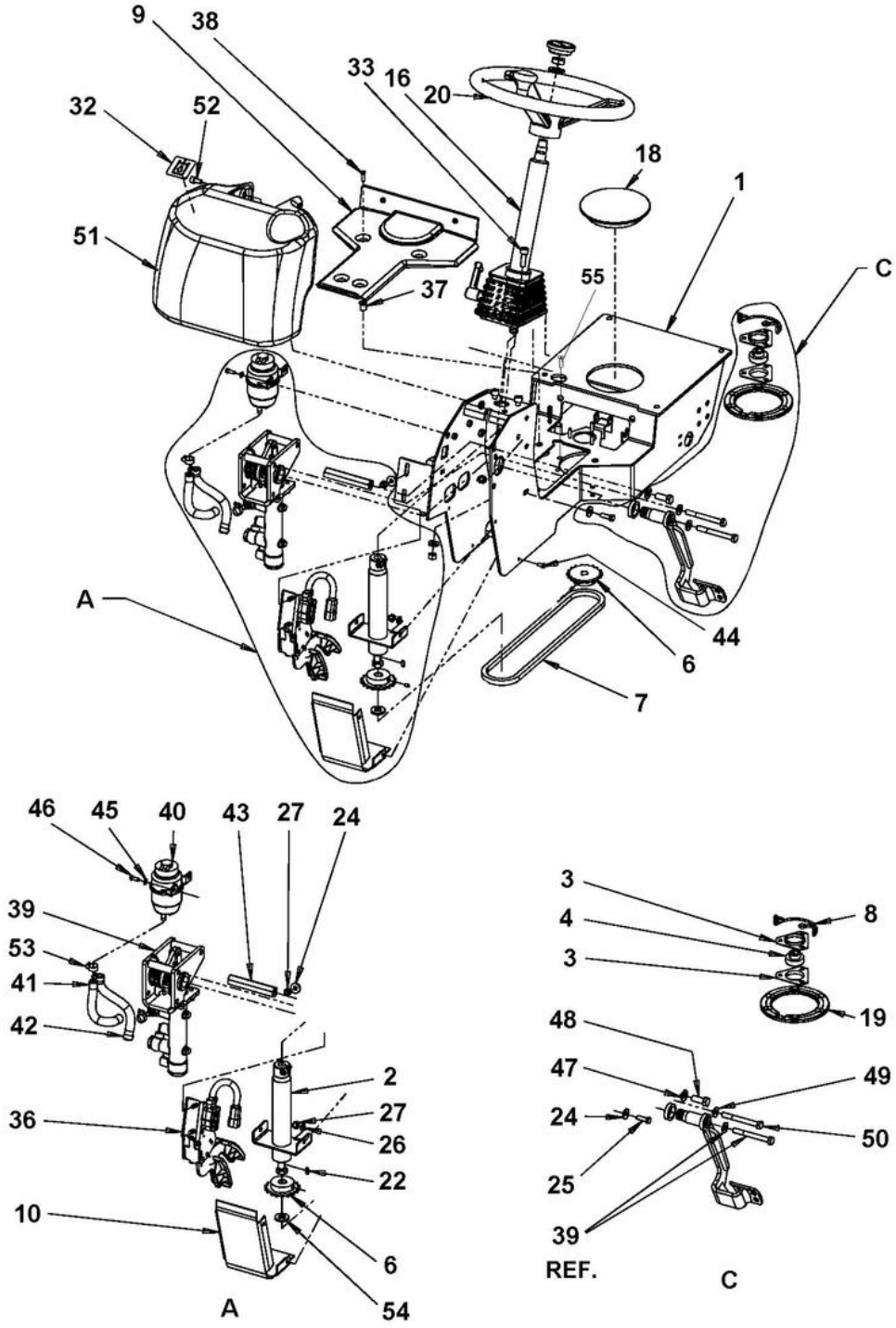

Elemento	N.º de pieza	Nombre	Cant.	L
1	4700395530	Seat frame	1	
2	4700359919	Shaft	1	
3	4700903917	Bearing outer	1	
4	4700903918	Bearing inner	1	
6	4812119330	Chain wheel assembly	2	
7	4700379718	Chain and connecting link	1	
8	4700372672	Chain guard	1	
9	4700392839	Cover	1	
10	4700395536	Cover	1	
16	-	Steering column	1	
18	4700359920	Plug	1	
19	4700372965	Lock ring	1	
20	4700372964	Steering wheel	1	
22	4700350009	Flat key	1	
24	4700904640	Steel plain washer	4	
25	4700500021	Perno	2	
26	4700904229	Steel plain washer 8.4X16X1.5	2	
27	4700586003	Lock nut M8	4	
32	4700272372	Decal, hydraulic oil	1	
33	4700508029	Cylinder screw	3	
36	4700395471	Throttle control Eletric	1	
37	4700792539	Rubber nut	6	
38	4700791524	Hex.sock.button h.cap screw M	6	
39	-	Brake pedal	1	
40	4700396327	Reservoir	1	
41	4700904984	Fuel hose	1	
42	4700904984	Fuel hose	1	
43	4700395534	Spacer	1	
44	4700904650	Button head socket screw, M6x12	4	
45	4700904228	Arandela 6,4x12x1,5	2	
46	4700500013	Hexagon head screw M	2	
47	4700904231	Steel plain washer	2	
48	4700500046	Hex. head screw M12x030H	2	
49	4700904230	Plain washer M10 10.5X22X2.0	3	

Elemento	N.º de pieza	Nombre	Cant.	L
50	4700500077	Hexagon head screw M10x90	3	
51	4812110538	Cover	1	
52	4700508005	Hexagon socket head cap screw M	4	
53	4700313001	Hose clamp	4	
54	4700904214	Washer 15x30x4 300 HV	1	
55	4700902520	Screw	6	

Comments for Page: Seat frame

41 - L = 0,16m

42 - L = 0,18m

Esta página se ha dejado en blanco de forma intencionada

Operator platform 4700391163 Steering column

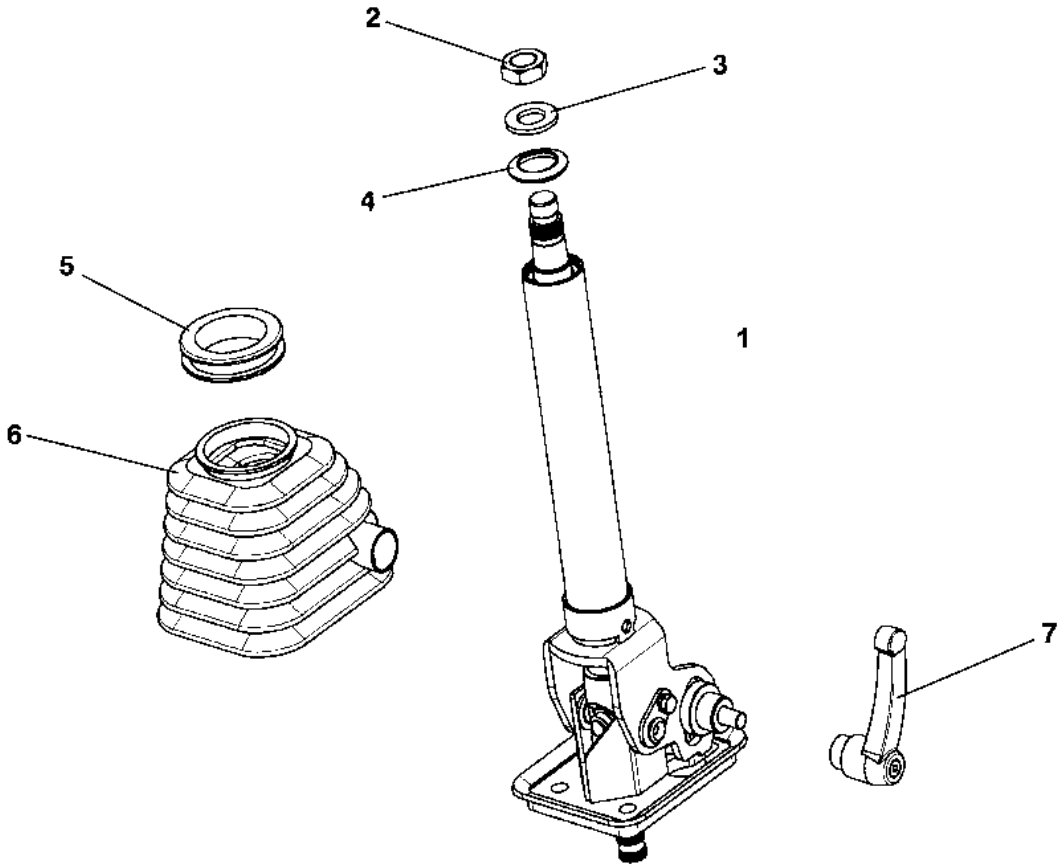

Elemento	N.º de pieza	Nombre	Cant.	L
1	4700391163	Steering column	1	
2	4700945632	Nut	1	
3	4700945633	Washer	1	
4	4700945634	Rubber cap	1	
5	4700945635	Bellows ring	1	
6	4700945636	Bellows	1	
7	4700945637	Locking handle	1	

Operator platform 4700395462 Brake pedal

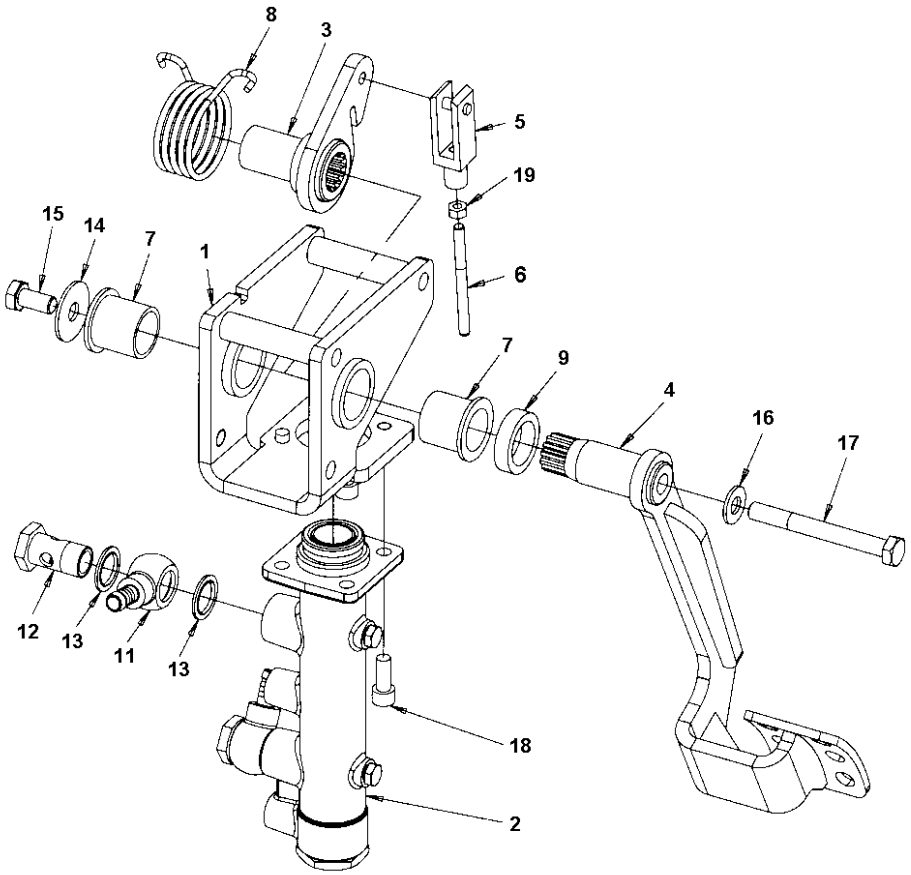

Elemento	N.º de pieza	Nombre	Cant.	L
1	4700395463	Bracket	1	
2	4700395470	Brake cylinder	1	
3	4700395464	Lever	1	
4	4700395465	Pedal	1	
5	4700900445	Fork	1	
6	4700395466	Pin	1	
7	4700395468	Bushing	2	
8	4700395467	Torsion spring	1	
9	4700395469	Spacer	1	
11	4700792759	Banjo fitting	2	
12	4700904292	Hollow screw	2	
13	4700162015	Seal ring	4	
14	4700615061	Steel plain washer	1	
15	4700500048	Hex. Head screw	1	
16	4700904230	Plain washer M10 10.5X22X2.0	1	
17	4700500077	Hexagon head screw M10x90	1	
18	4700508009	Screw	4	
19	4700570004	Hexagon nut M	1	

Operator platform Seat frame adapter module

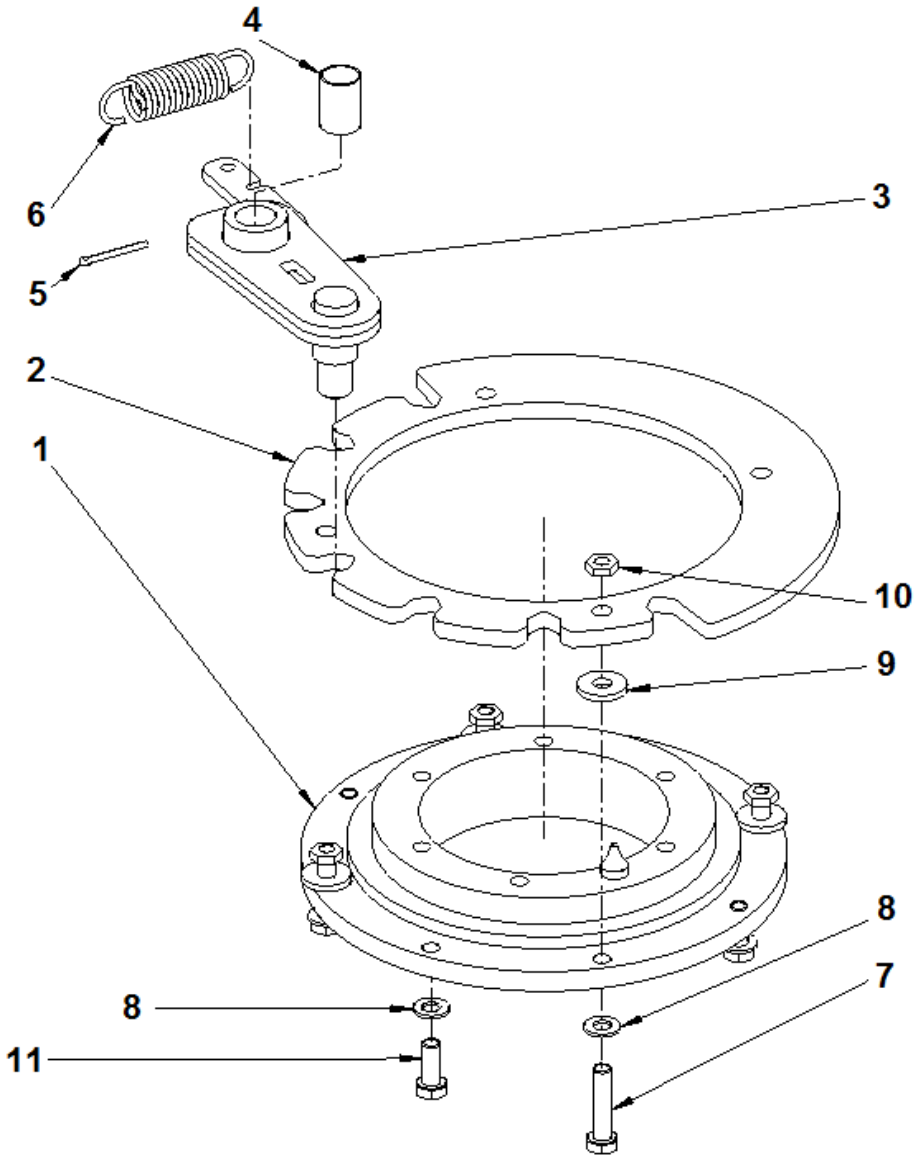

Elemento	N.º de pieza	Nombre	Cant.	L
1	4700359125	Ball bearing	1	
2	4700379728	Locking disc	1	
3	4812119788	Coupling link	1	
4	4700359819	Bushing	1	
5	4700630008	Pin	1	
6	4700359043	Spring	1	
7	4700792678	Screw	4	
8	4700904229	Steel plain washer 8.4X16X1.5	8	
9	4700904640	Steel plain washer	4	
10	4700573008	Nut M8	4	
11	4700947679	Hexagon head screw	4	

Operator platform 391087 Cross sliding

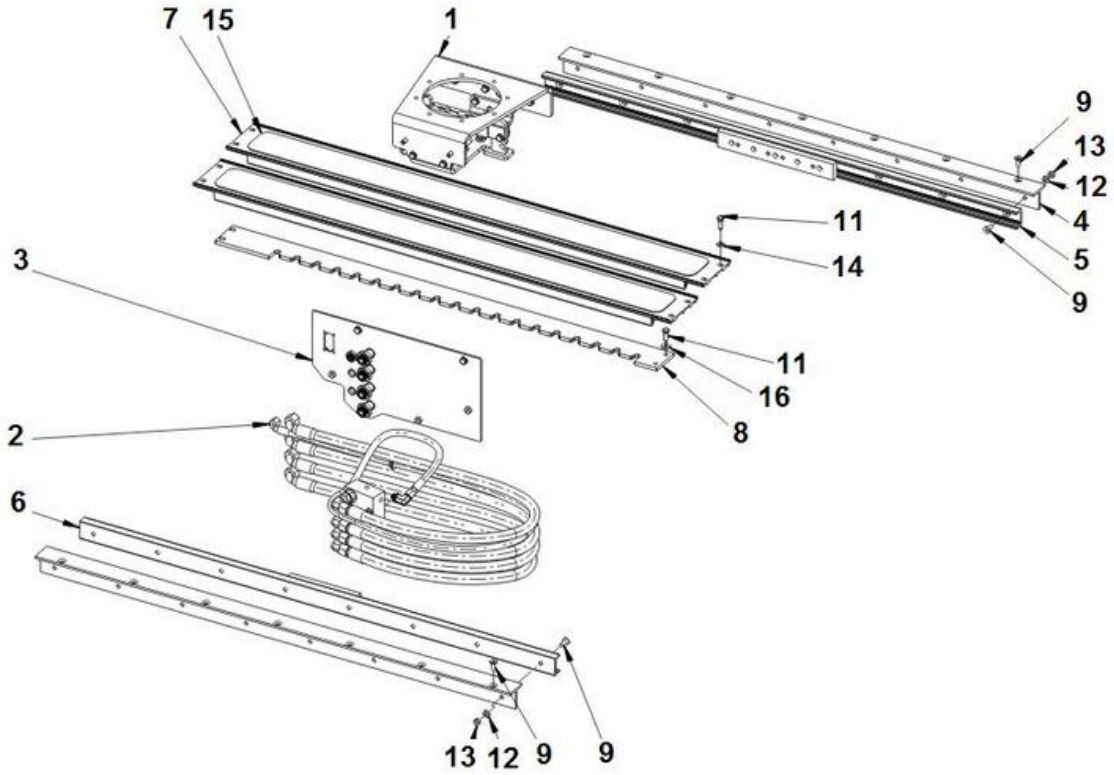

Elemento	N.º de pieza	Nombre	Cant.	L
1		Carrier	1	
2	4700391098	Steering, slideable	1	
3	4700391096	Hose bracket	1	
4	4812119750	Holder	2	
5	4700391082	Linear bearing	1	
6	4700391083	Linear bearing	1	
7	4812119753	Cover	2	
8	4700379729	Locking rail	1	
9	4700513003	Screw	30	
11	4700500020	Hex. screw	12	
12	4700904556	Steel plain washer	16	
13	4700393978	Slip protection	16	
14	4700791304	Steel plain washer	8	
15	4700393978	Slip protection	2	
16	4700791304	Steel plain washer	4	

Operator platform Fire extinghisher

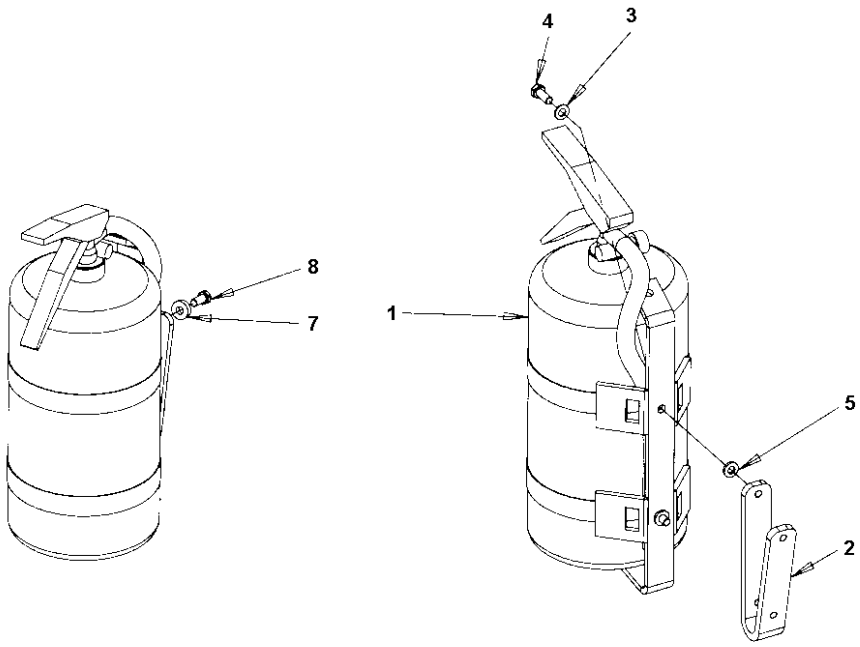

Elemento	N.º de pieza	Nombre	Cant.	L
1	-	Fire exinguisher	1	
2	4812110202	Bracket	1	
3	4700904229	Steel plain washer 8.4X16X1.5	2	
4	4700500053	Perno	2	
5	4700904556	Steel plain washer	2	
7	4700394301	Spacer sleeve	2	
8	4700500053	Perno	2	

Operator platform 4812114766 Rear view mirror module

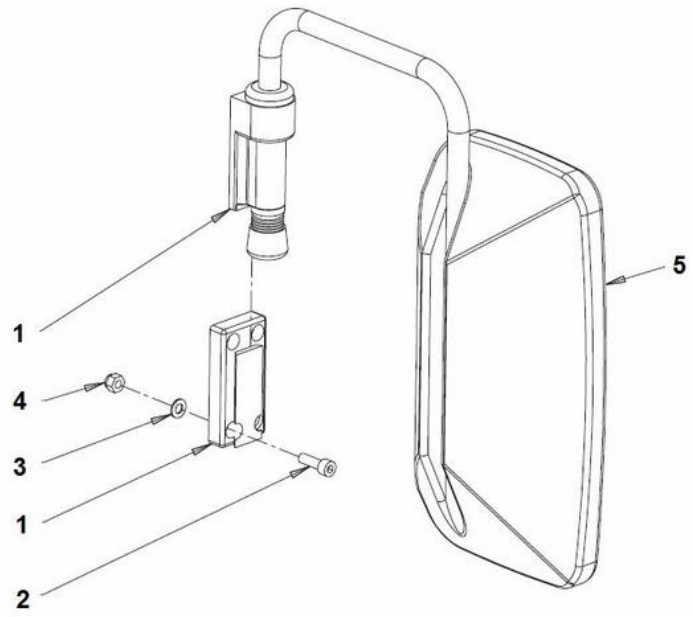

Elemento	N.º de pieza	Nombre	Cant.	L
1	4812110367	Bracket	1	
2	4700508019	Cylinder screw	4	
3	4700904229	Steel plain washer 8.4X16X1.5	4	
4	4700586003	Lock nut M8	4	
5	4700381943	Mirror	1	

Operator platform Rear View Mirror Module

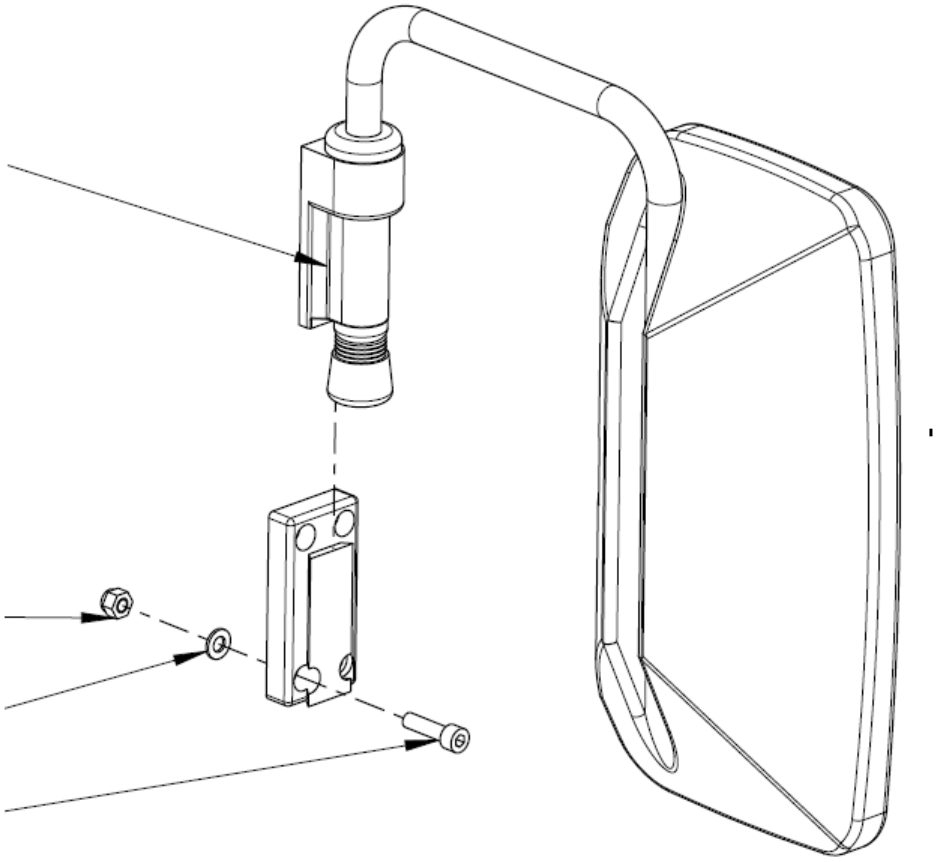

Elemento	N.º de pieza	Nombre	Cant.	L
1		Rear view mirror mount	1	
2	4700508048	Hexagon socket head cap screw M	4	
3	4700904229	Steel plain washer 8.4X16X1.5	4	
4	4700586003	Lock nut M8	4	

Operator platform 4812115420 Bracket module

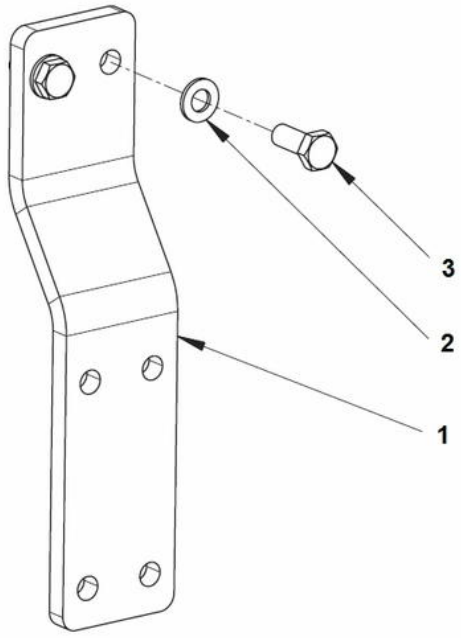

Elemento	N.º de pieza	Nombre	Cant.	L
1	4812115053	Bracket	1	
2	4700904229	Steel plain washer 8.4X16X1.5	1	
3	4700500053	Perno	1	

Platform, no cab Platform, no cab

Elemento	N.º de pieza	Nombre	Cant.	L
1	-	Rops module	1	
2	-	Platform module	1	
3	-	Hand rail, right	1	
4	-	Hand rail, left	1	

Rops module Rops module

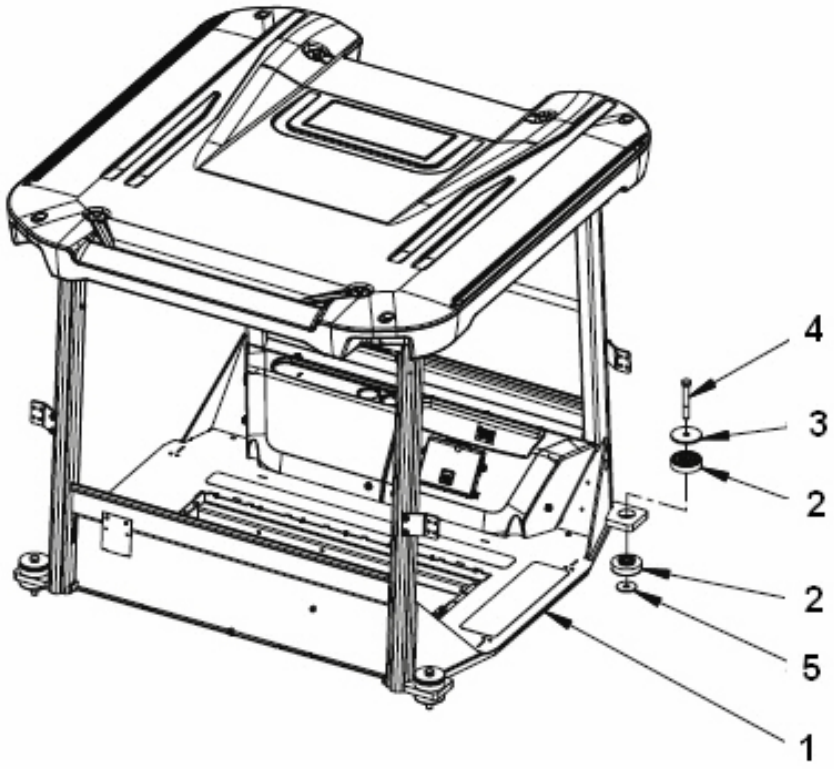

Elemento	N.º de pieza	Nombre	Cant.	L
1	-	ROPS	1	
2	4812110585	Shock absorber	8	
3	4700391788	Steel spacer	4	
4	4700904487	Screw M20x140 10.9	4	
5	4700347512	Spacer washer	4	

Rops module Rops

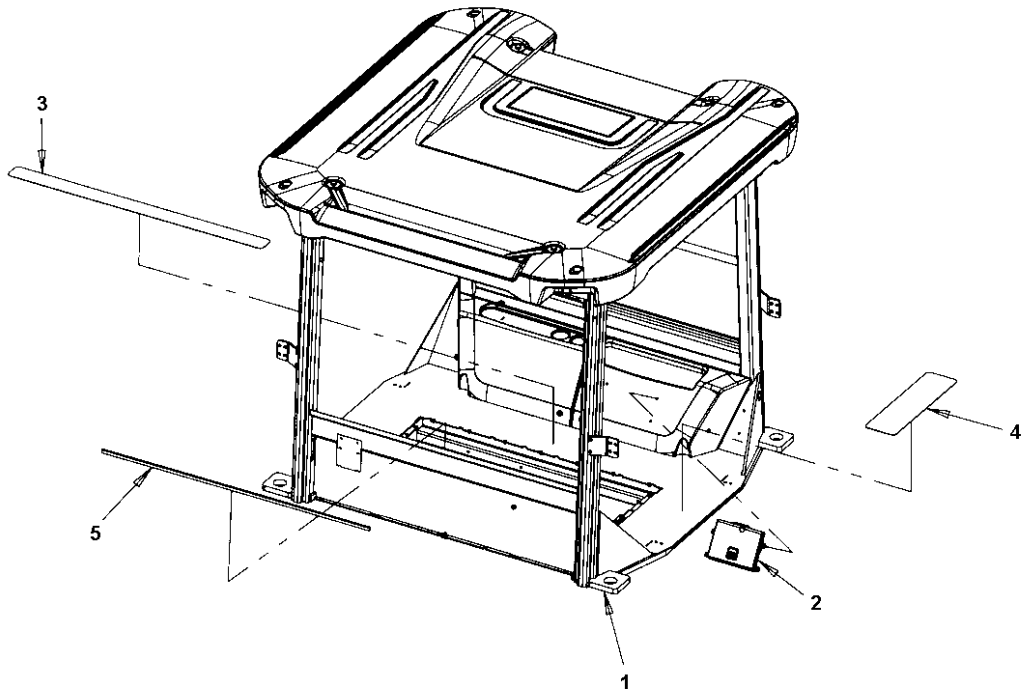

Elemento	N.º de pieza	Nombre	Cant.	L
1	4812113431	Rops	1	B, C
2	-	Manual Box	1	
3	4700372121	Protection	3	
4	4700396828	Protection	1	
5	4700902379	Edge trim	1XL	A

Comments for Page: Rops

(L)OCAL REMARKS

A | en_US | L = 2,65 m

B | en_US | From SN L0B001925 (CP-274)

C | en_US | From SN V0B001931 (CP-224/CP224W)

Rops module Manual box

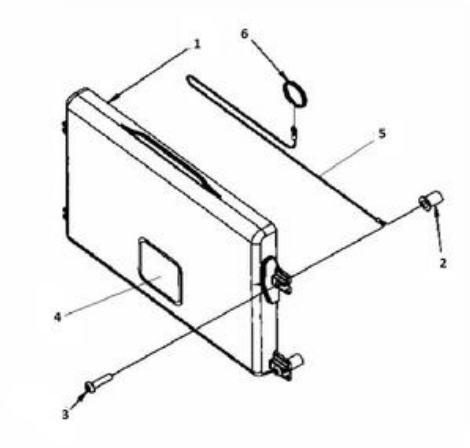

Elemento	N.º de pieza	Nombre	Cant.	L
1	4700383705	Instruction manual box	1	
2	4700792536	Rubber nut	4	
3	4700792589	Hex.sock.button h.cap screw M	4	
4	4700903425	Decal "SAFETY MANUAL"	1	
5	4700384584	Wire	1	
6	4700358254	Key-ring	1	

Platform module Platform module

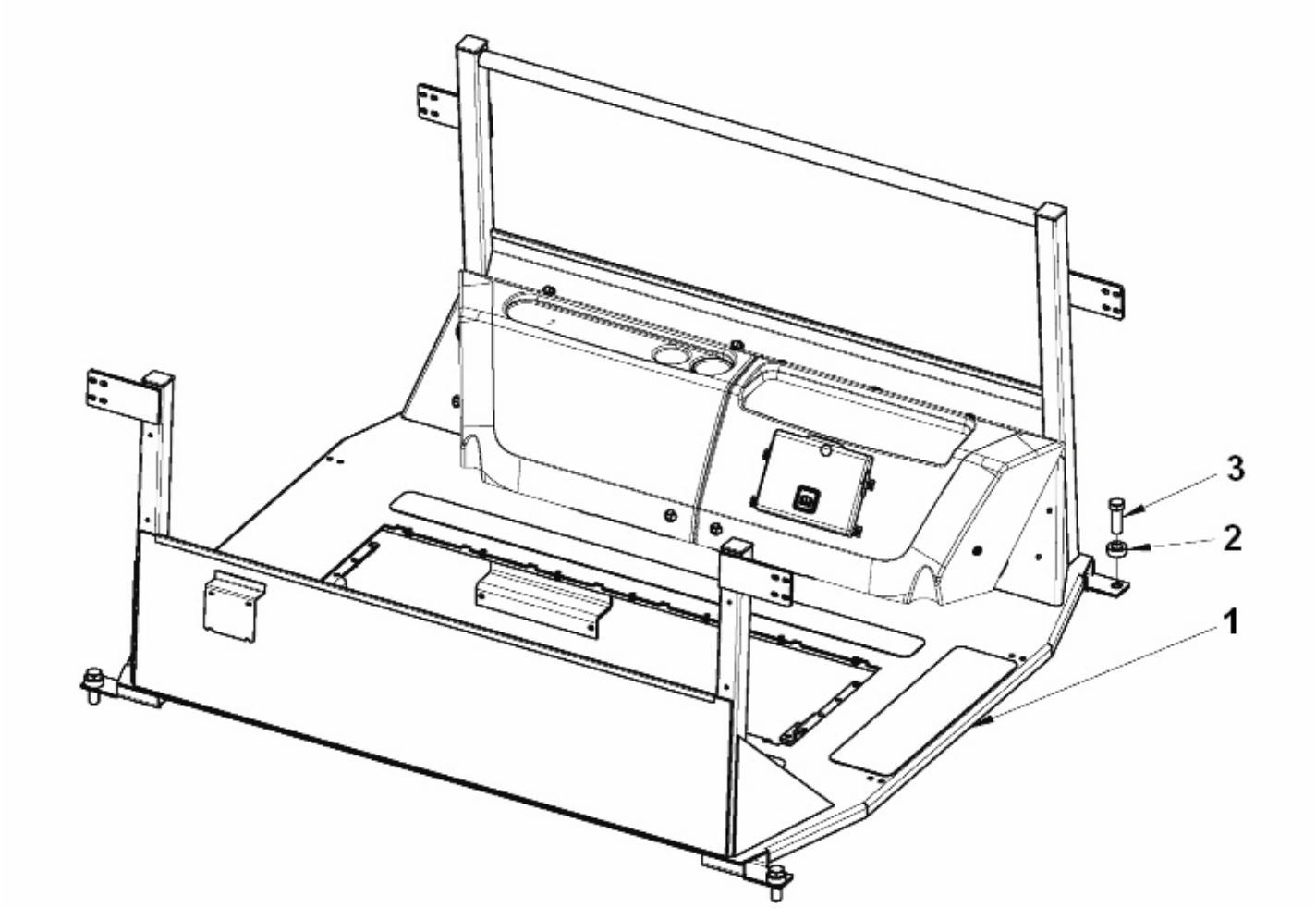

Elemento	N.º de pieza	Nombre	Cant.	L
1	-	Platform	1	
2	4700370258	Washer 40X22X15	4	
3	4700500206	Hexagon screw M20x60	4	

Platform module Platform

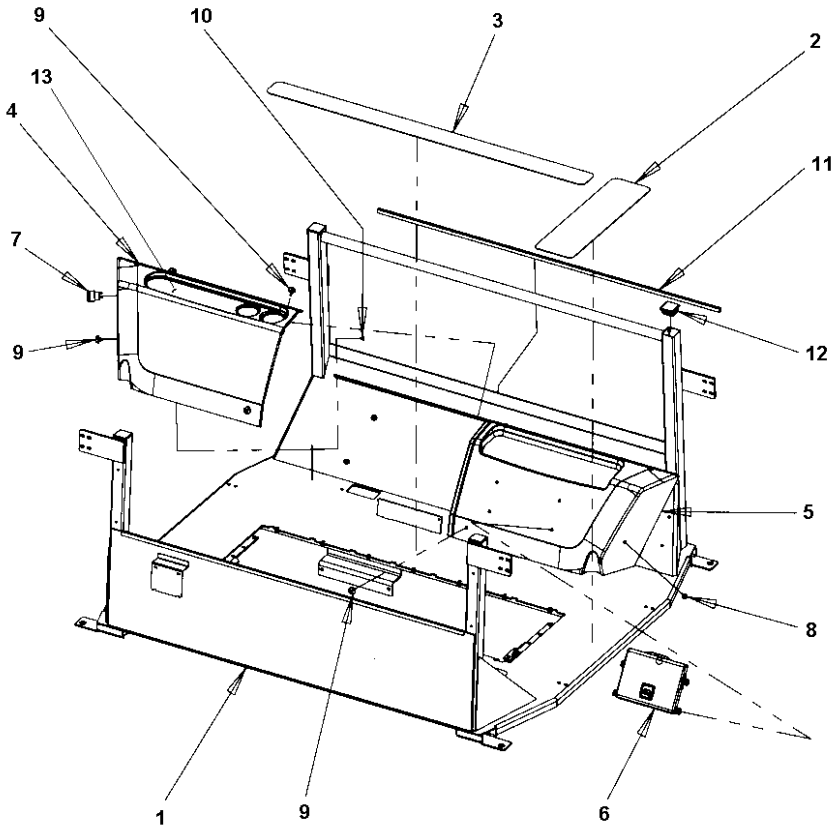

Elemento	N.º de pieza	Nombre	Cant.	L
1		Platform	1	
2	4700396828	Protection	1	
3	4700372121	Protection	3	
4	4812110322	Cover	1	
5	4812110323	Cover	1	
6	-	Manual Box	1	
7	4700395816	Plug socket 24V	1	
8	4700395785	Expansion rivet	4	
9	4700395786	Knob	5	
10	4812110586	Cage nut	1	
11	4700902379	Edge trim	1	A
12	4812110588	Plug	4	
13	4700902804	Plug	2	

Comments for Page: Platform

(L)OCAL REMARKS

A | en_US | L = 2,7 m

Referenced Pages

Manual box 109

Esta página se ha dejado en blanco de forma intencionada

Hand rail, right Hand rail, right

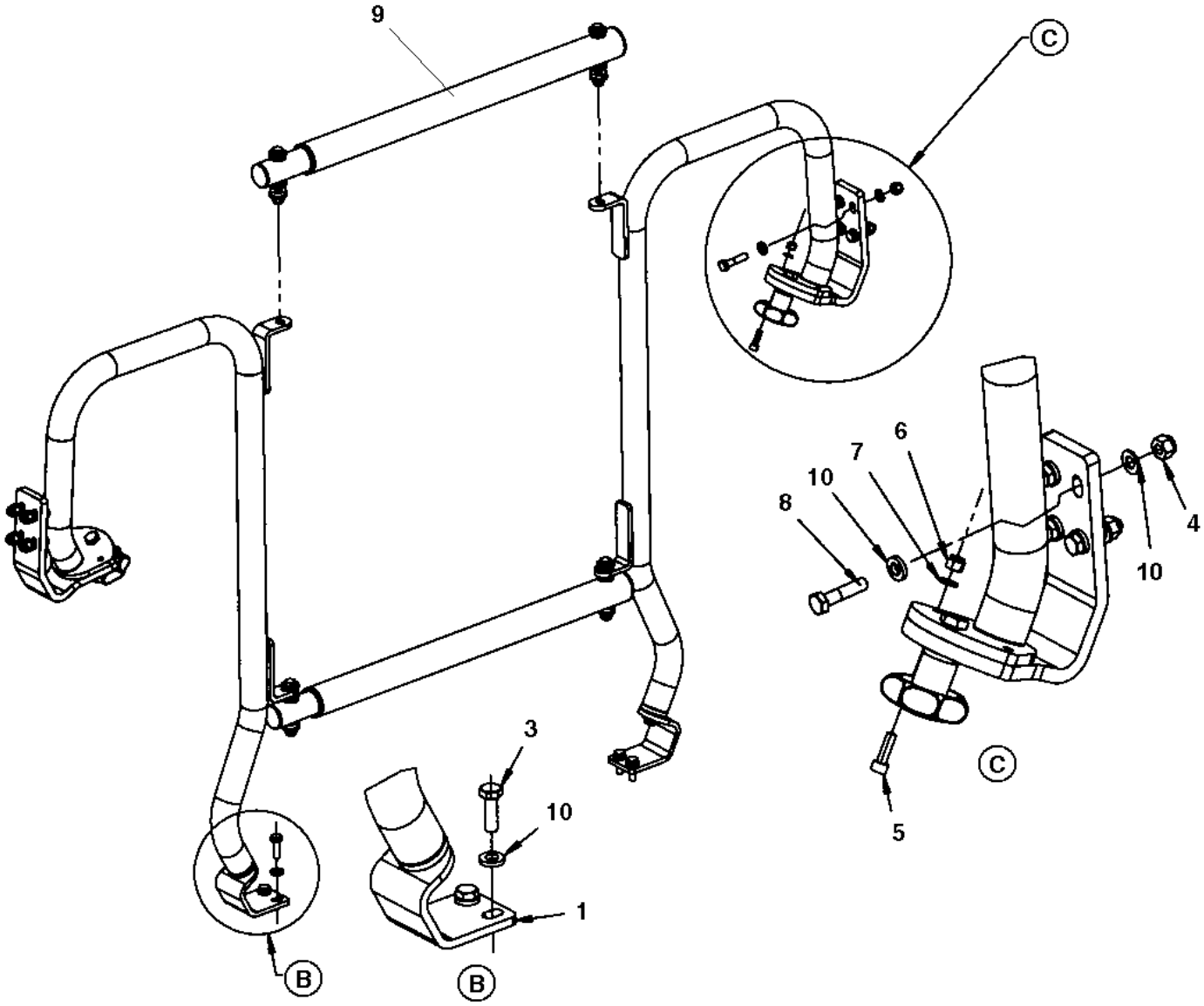

Elemento	N.º de pieza	Nombre	Cant.	L
1	-	Hand rail	2	
3	4700500021	Perno	4	
4	4700586003	Lock nut M8	8	
5	4700508025	Screw, M6x20 mm 8.8 A2K	2	
6	4700586002	Lock nut M	2	
7	4700904228	Arandela 6,4x12x1,5	2	
8	4700500023	Screw M8x45	8	
9	-	Hand rail	2	
10	4700904556	Steel plain washer	20	

Hand rail, right Hand rail

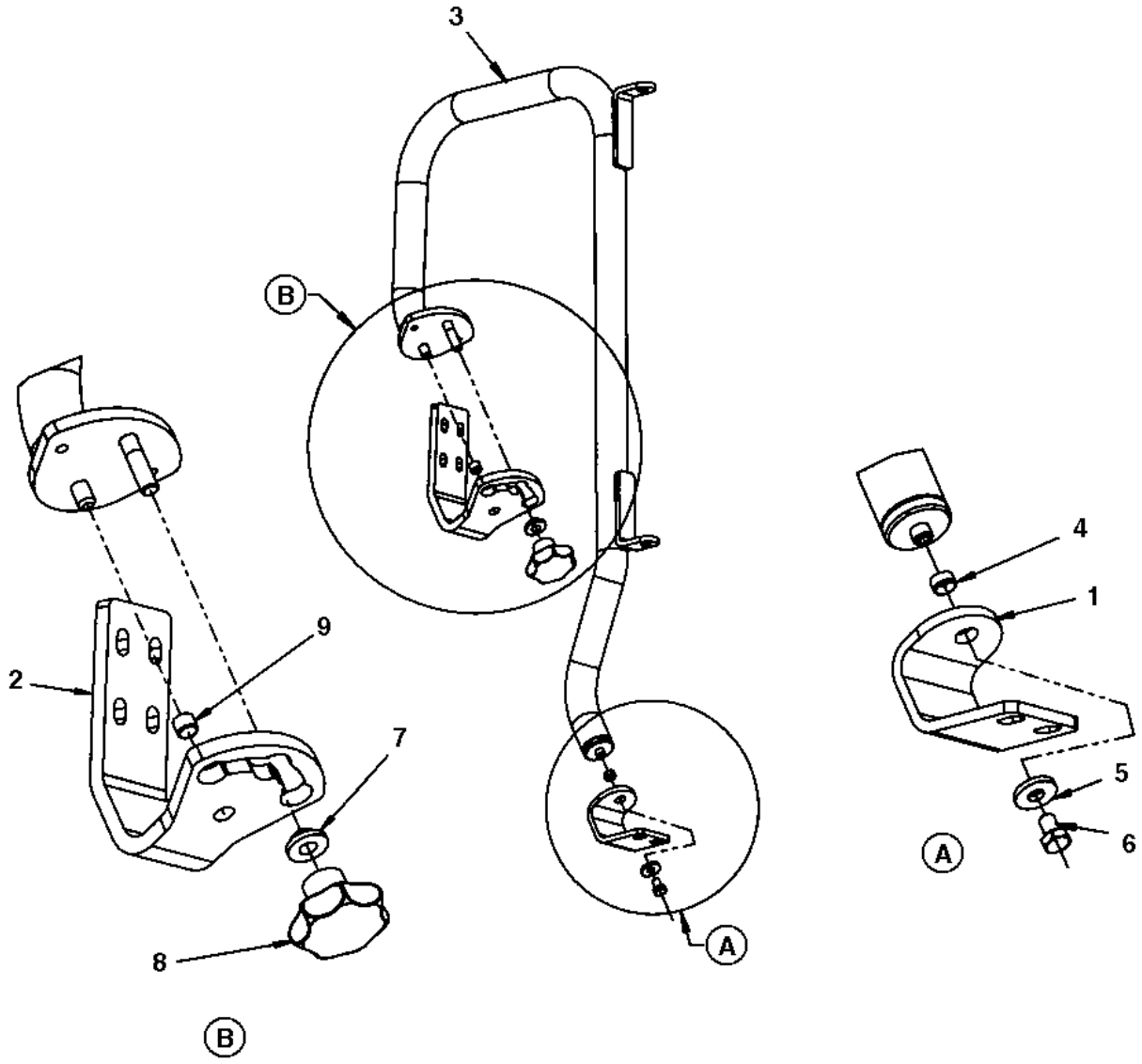

Elemento	N.º de pieza	Nombre	Cant.	L
1	4700381936	Bracket	1	
2	4700381935	Bracket	1	
3	4700381934	Hand rail	1	
4	4700792448	Plastic bushing	1	
5	4700904640	Steel plain washer	1	
6	4700500018	Hexagon screw	1	
7	4700370286	Washer	1	
8	4700499174	Knob	1	
9	4700792447	Plastic bushing	1	

Hand rail, right Hand rail

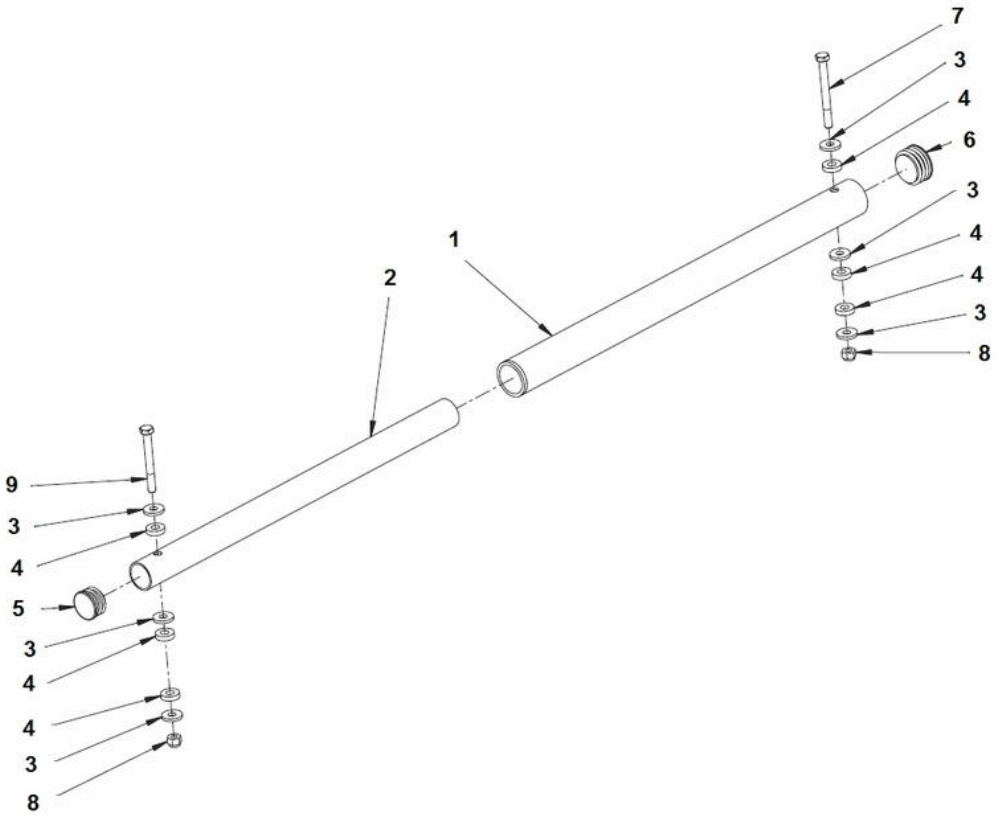

Elemento	N.º de pieza	Nombre	Cant.	L
1		Handrail assy	1	
1	4700391675	Steel tube	1	
1	4700391678	Bushing	1	
2	4700391676	Steel tube	1	
3	4700904640	Steel plain washer	6	
4	4700391674	Rubber washer	6	
5	4700926216	Protective plug	1	
6	4700792449	Protective plug	1	
7	4700500190	Hexagon head screw M	1	
8	4700586003	Lock nut M8	2	
9	4700500189	Screw	1	

Hand rail, left Hand rail, left

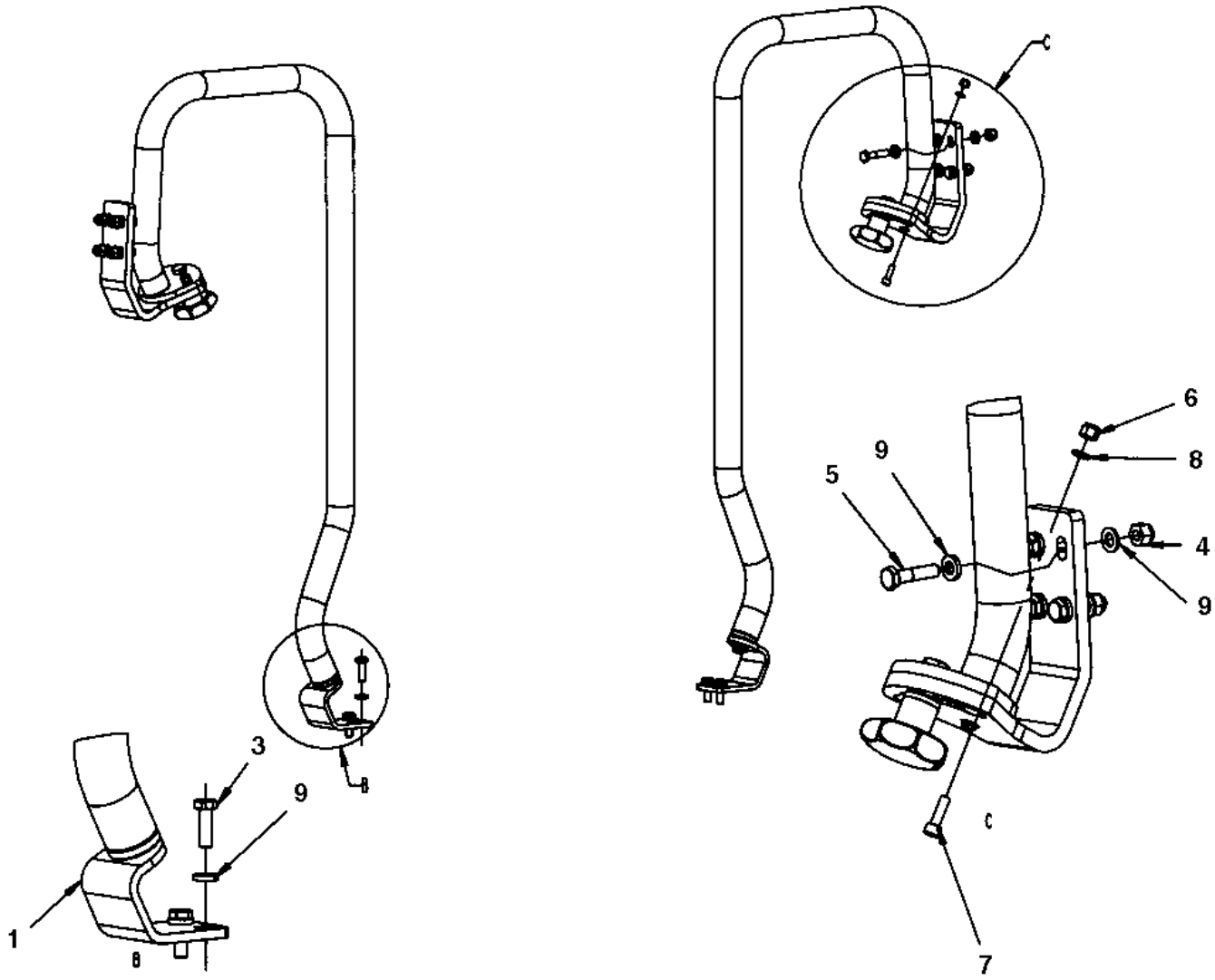

Elemento	N.º de pieza	Nombre	Cant.	L
1	-	Hand rail	2	
3	4700500021	Perno	4	
4	4700586003	Lock nut M8	8	
5	4700500023	Screw M8x45	8	
6	4700586002	Lock nut M	2	
7	4700508025	Screw, M6x20 mm 8.8 A2K	2	
8	4700904228	Arandela 6,4x12x1,5	2	
9	4700904556	Steel plain washer	20	

Hand rail, left Hand rail

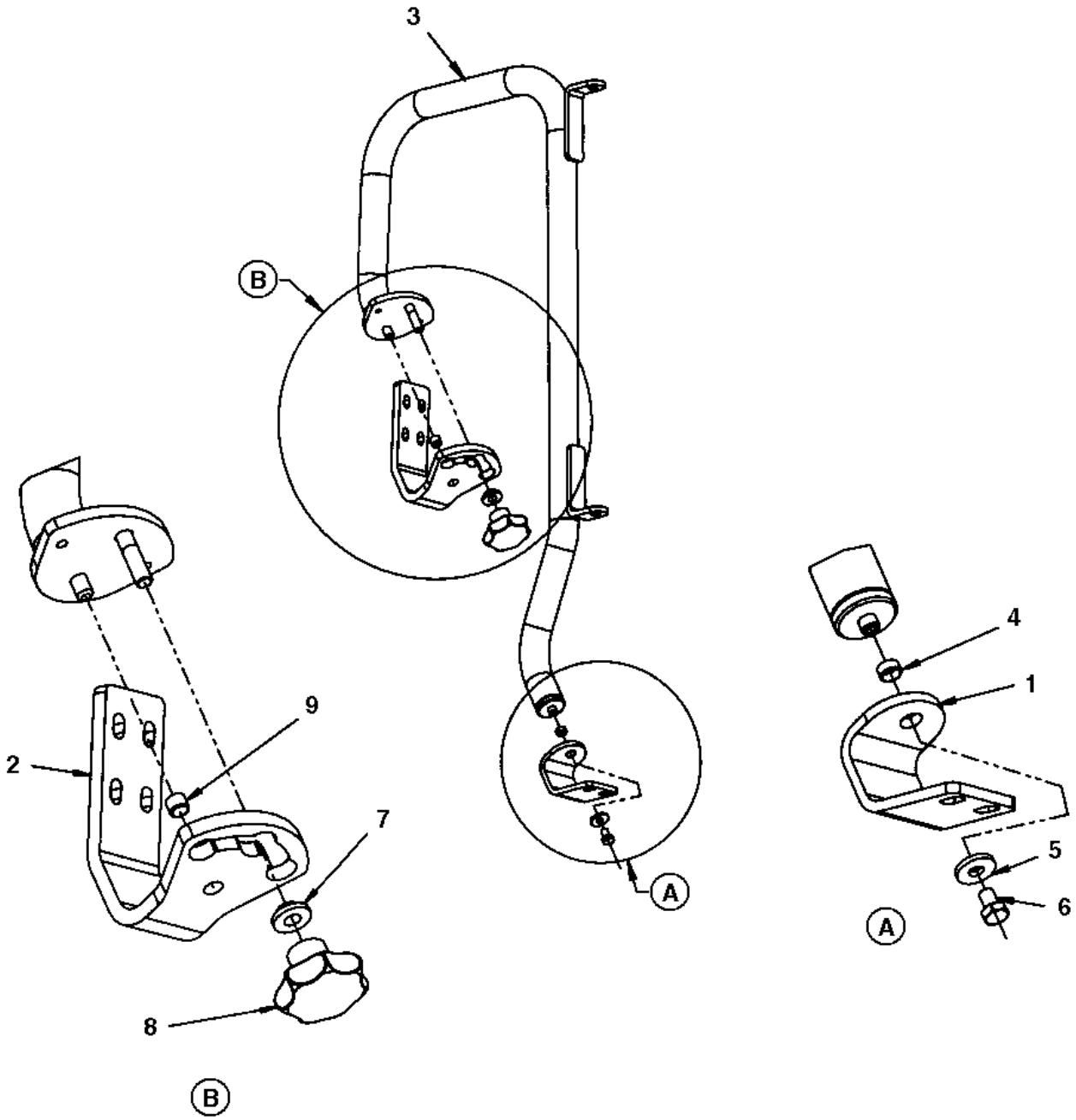

Elemento	N.º de pieza	Nombre	Cant.	L
1	4700381936	Bracket	1	
2	4700381935	Bracket	1	
3	4700390155	Hand rail	1	
4	4700792448	Plastic bushing	1	
5	4700904640	Steel plain washer	1	
6	4700500018	Hexagon screw	1	
7	4700370286	Washer	1	
8	4700499174	Knob	1	
9	4700792447	Plastic bushing	1	

Cab module Cab module

Elemento	N.º de pieza	Nombre	Cant.	L
1		Cab, assy	1	
2	4812110585	Shock absorber	8	
3	4700391788	Steel spacer	4	
4	4700904487	Screw M20x140 10.9	4	

Cab assembly Cab assy

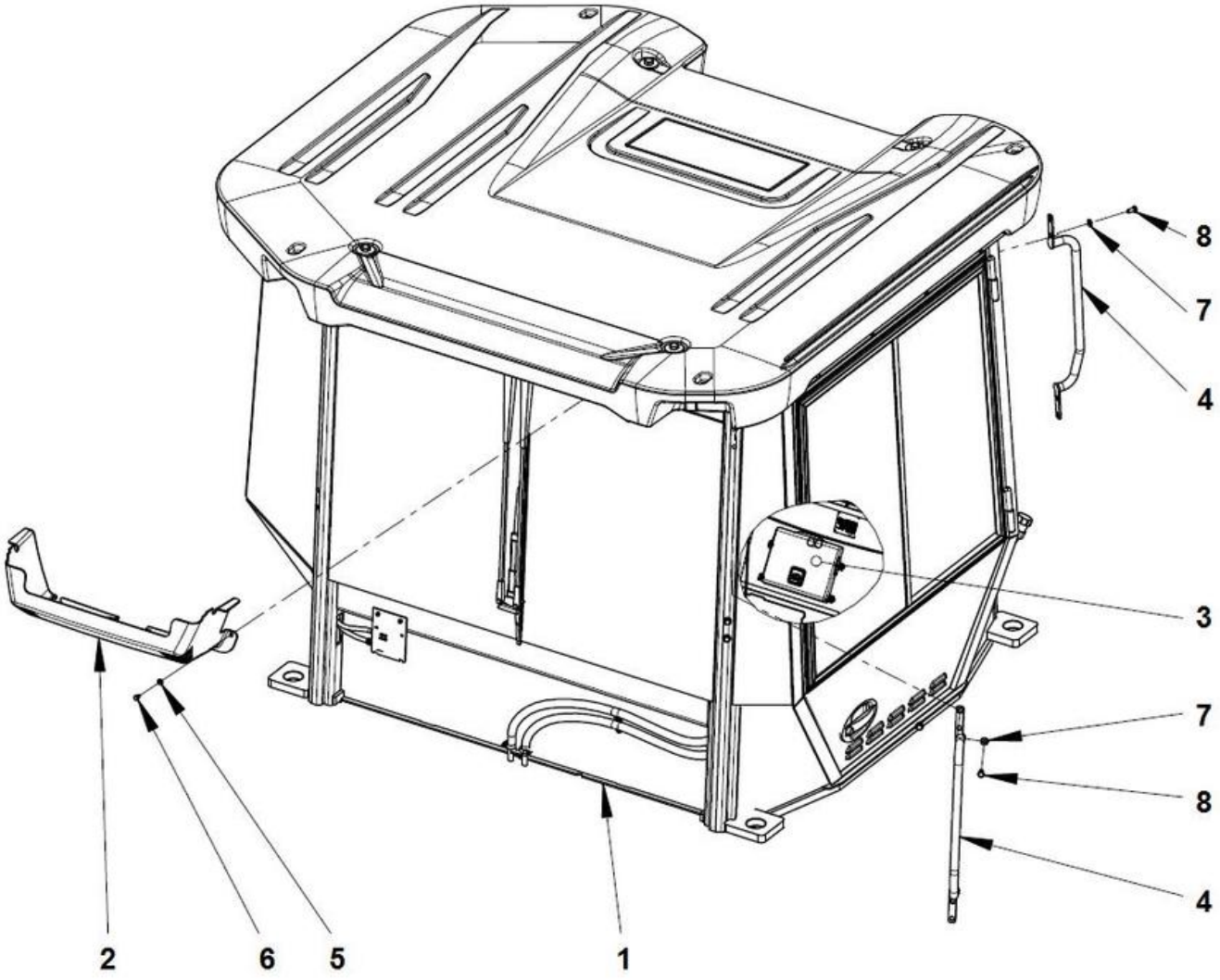

Elemento	N.º de pieza	Nombre	Cant.	L
1		Cab	1	
2	4700393582	Cover	1	
3		Manual box	1	
4	4812110295	Handrail	2	
5	4700904556	Steel plain washer	2	
6	4700500018	Hexagon screw	2	
7	4700904557	Steel plain washer	8	
8	4700500048	Hex. Head screw	8	

Cab assembly Manual box

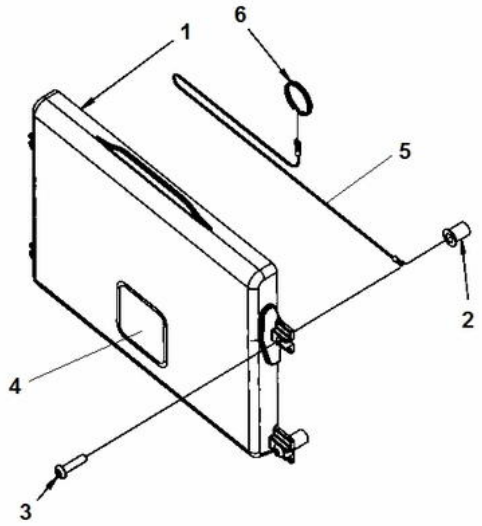

Elemento	N.º de pieza	Nombre	Cant.	L
1	4700383705	Instruction manual box	1	
2	4700792536	Rubber nut	4	
3	4700792589	Hex.sock.button h.cap screw M	4	
4	4700903425	Decal "SAFETY MANUAL"	1	
5	4700384584	Wire	1	
6	4700358254	Key-ring	1	

Cab Cab

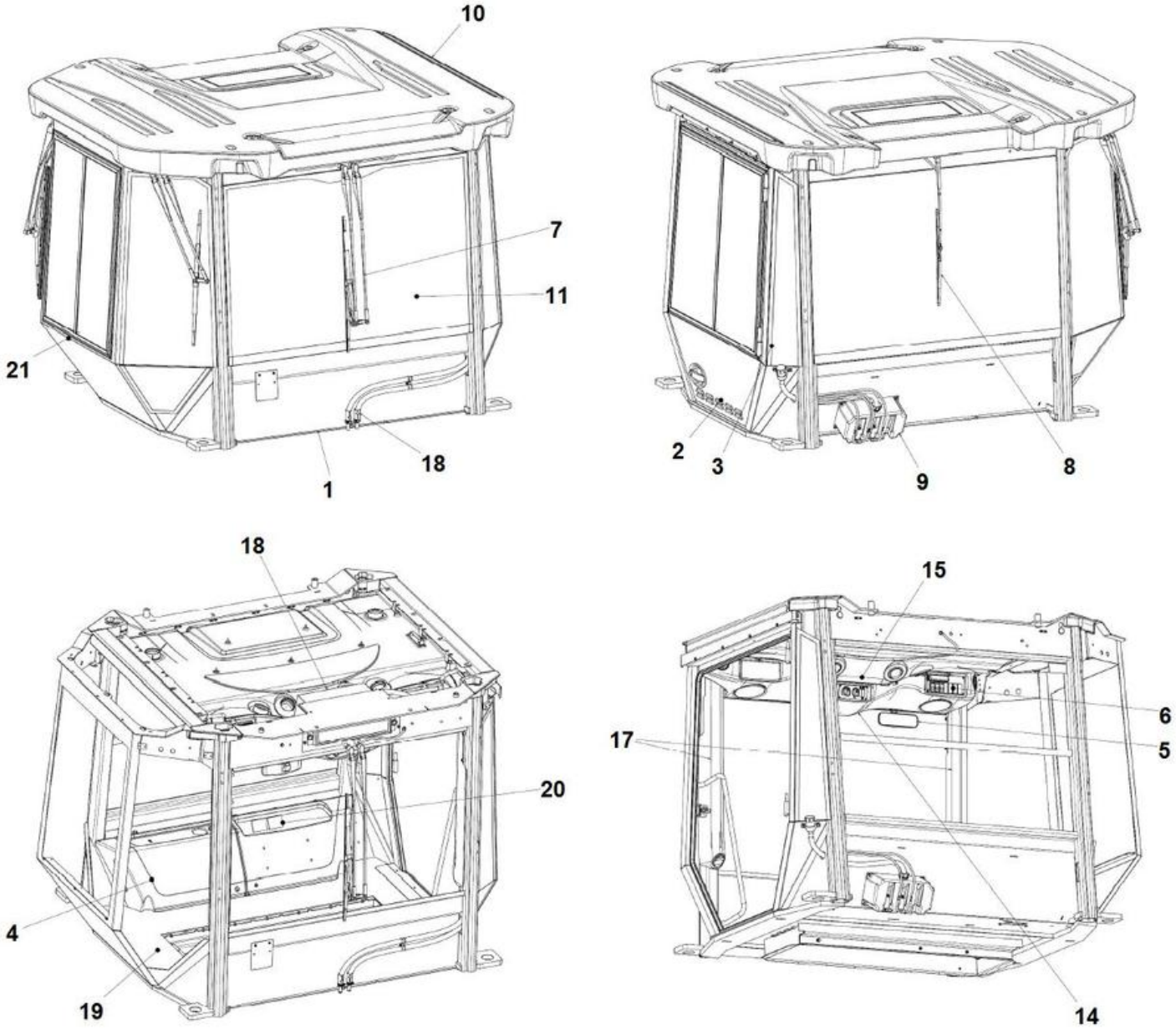

Elemento	N.º de pieza	Nombre	Cant.	L
1		Cabin frame		
2	4812110753	Door assembly		
3	-	Assembly left side		
4		Rear plastics assembly		
5		General installation accessories		
6		Electric assembly cabin		
7		Windscreen wipersystem		
8		Rear glass wiper set		
9		Washer equipments		
10		Roof wide assymetric		
11		Glasswork windscreen		
13		Glass gluing installation		
14		Mounting front panel		
15		Roofing felt assembly		
17		Air channel assy		
18		Heater mount		
19		Floor carpet		
20		ROPS and FOPS sign assembly		
21		Protective frame asymmetric		

Assembly left side Assembly left side

Elemento	N.º de pieza	Nombre	Cant.	L
1		Accessories left side	1	
2		Glasswork door side	1	

Assembly left side Accessories left side

Elemento	N.º de pieza	Nombre	Cant.	L
1	-	Covering plate	1	
2	-	Screw M4x10 DIN7985 Zn	4	
3	-	Plate	1	
4	4700908580	Lock pin	1	
5	4700908583	Bracket	1	
6	4700908581	Washer	1	
7	4700908582	Cover	1	
8	-	Bracket	1	
9	4700908505	Hook	1	
10	4700908506	Emergency hammer hook	1	
11	4700908507	Emergency hammer	1	
12	-	Blind cover	4	
13	4700395830	Screw	4	
14	4700938676	Screw	6	
15	-	Blind cover	6	
16	4700938842	Sealing strip	4,5	
17	-	Junta tórica	1	

Assembly left side Glasswork door side

Elemento	N.º de pieza	Nombre	Cant.	L
1	4700393252	Screen	1	
2	4700393253	Screen	1	

Cab Rear plastics assembly

Elemento	N.º de pieza	Nombre	Cant.	L
1	4812110322	Cover	1	
2	4812110323	Cover	1	
3	4700395785	Expansion rivet	3	
4	4700395786	Knob	6	
5	-	Tapón	2	
6	4700395816	Plug socket 24V	1	

Cab Cabin frame

Elemento	N.º de pieza	Nombre	Cant.	L
1	4700396821	Rops frame	1	
2		Oriel frame	1	
3		Frame	1	

Cab Glasswork windscreen

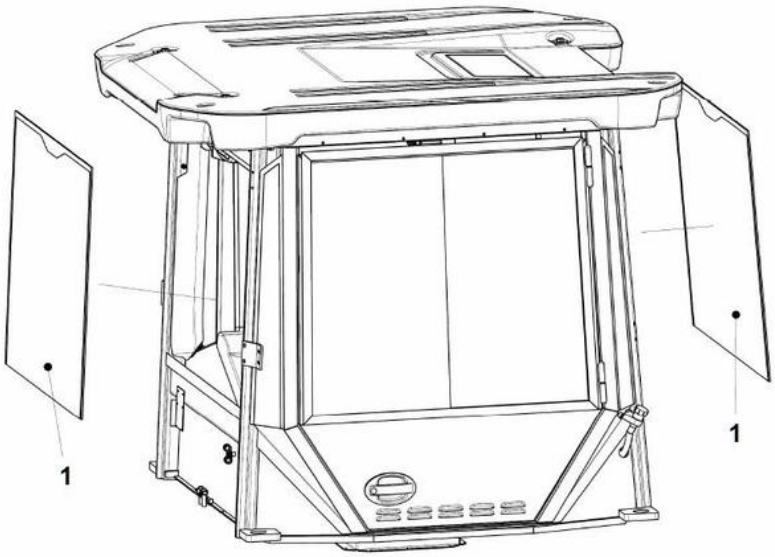

Elemento	N.º de pieza	Nombre	Cant.	L
1	4700393250	Windscreen	2	

Cab Door assembly

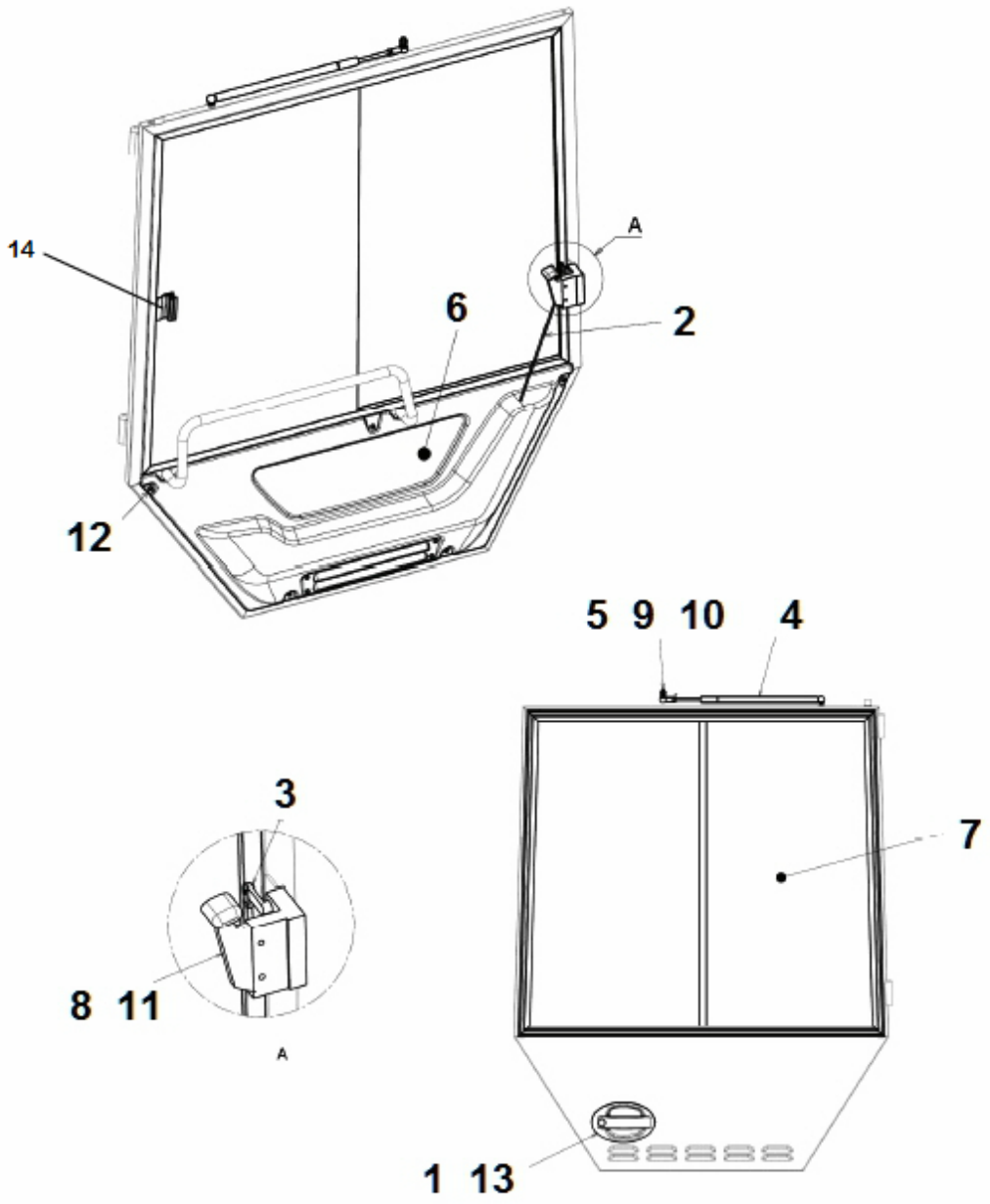

Elemento	N.º de pieza	Nombre	Cant.	L
1	4700395833	Handle, outer	1	
1	4700902866	Key "455"	1	
2	4812159096	Connecting rod	1	
3	4812159155	Joint	1	
4	4700908284	Gas spring	1	
5	-	Esgrima	1	
6		Door panel	1	
7	4812155164	Sliding screen	1	
8	4700395834	Handle, inner	1	
9	-	PRIMAVERA	1	
10	-	PRIMAVERA	1	
11	4812159157	Socket screw	2	
12	-	Blind cover	5	
13	-	Blind cover	3	
14	4812317475	Window latch	1	

Cab General installation accessories

Elemento	N.º de pieza	Nombre	Cant.	L
1	4700395792	Rear view mirror	1	
3	4700935589	Decal	1	
3	4700903590	Decal emergency exit	1	
4	4700926215	Protective plug	6	
5	-	Tapón	18	
6	4812159157	Socket screw	1	
7	4812157763	Nut cap	1	
8	-	Tapón	1	
9	-	Tapón	1	
10	-	Tapón	2	
14		Mounting plate	1	
16	-	Blind cover	2	

Cab Cab, electrics

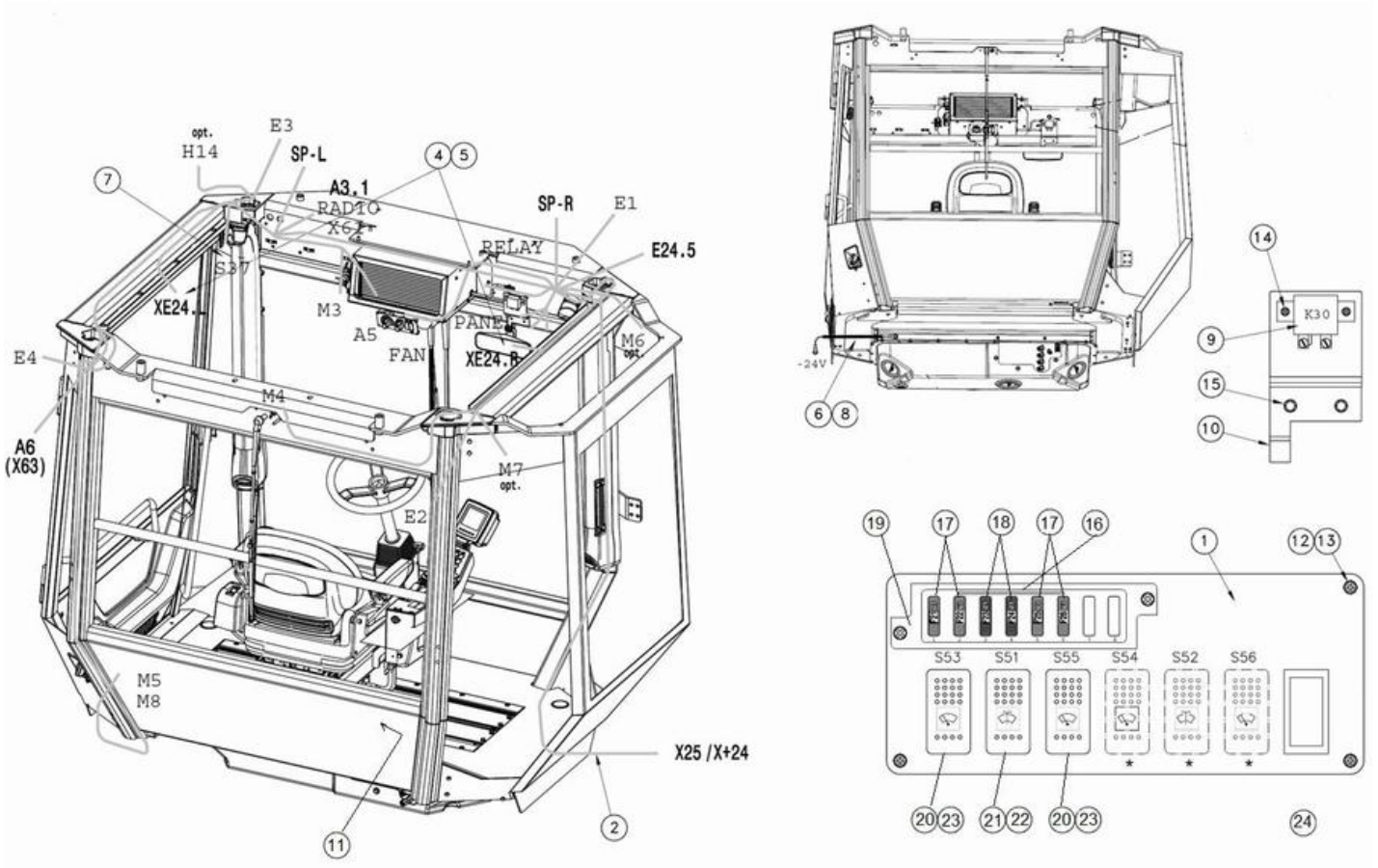

Elemento	N.º de pieza	Nombre	Cant.	L
1	4812325659	Control panel plate	1	
2	-	Cable harness	1	
4	4700395800	Interior light	2	
5	4700792715	Bulb, 10W	2	
6	-	Blind cover	1	
7	4700908500	Door switch	1	
8	4700395799	Cable harness	1	
9	4700792309	Relay 50A	1	
10	4812325660	Mounting plate	1	
11	4700395816	Plug socket 24V	1	
12	4812157188	Rubber nut	5	
13	4812157189	Screw	5	
14	4812325661	Screw	2	
15	4812325662	Screw	2	
16	4700791211	Contact bridge	4	
17	4700901227	Fuse 10A Red	4	
18	4700901228	Fuse 15A Blue	2	
19	4700791185	Fuse box	1	
20	-	Lock ring	2	
21	-	Lock ring	1	
22	4700792504	Switch, Windshield wiper	1	A
23	4700792505	Switch, Windshield washer	2	B
24	4700791588	Panel plug	4	

Comments for Page: Cab, electrics

(L)OCAL REMARKS

A | en_US | Windshield washer

B | en_US | Windshield wiper

(L)OCAL REMARKS

A | en_US | Windshield washer

B | en_US | Windshield wiper

Esta página se ha dejado en blanco de forma intencionada

Cab Windscreen wipersystem

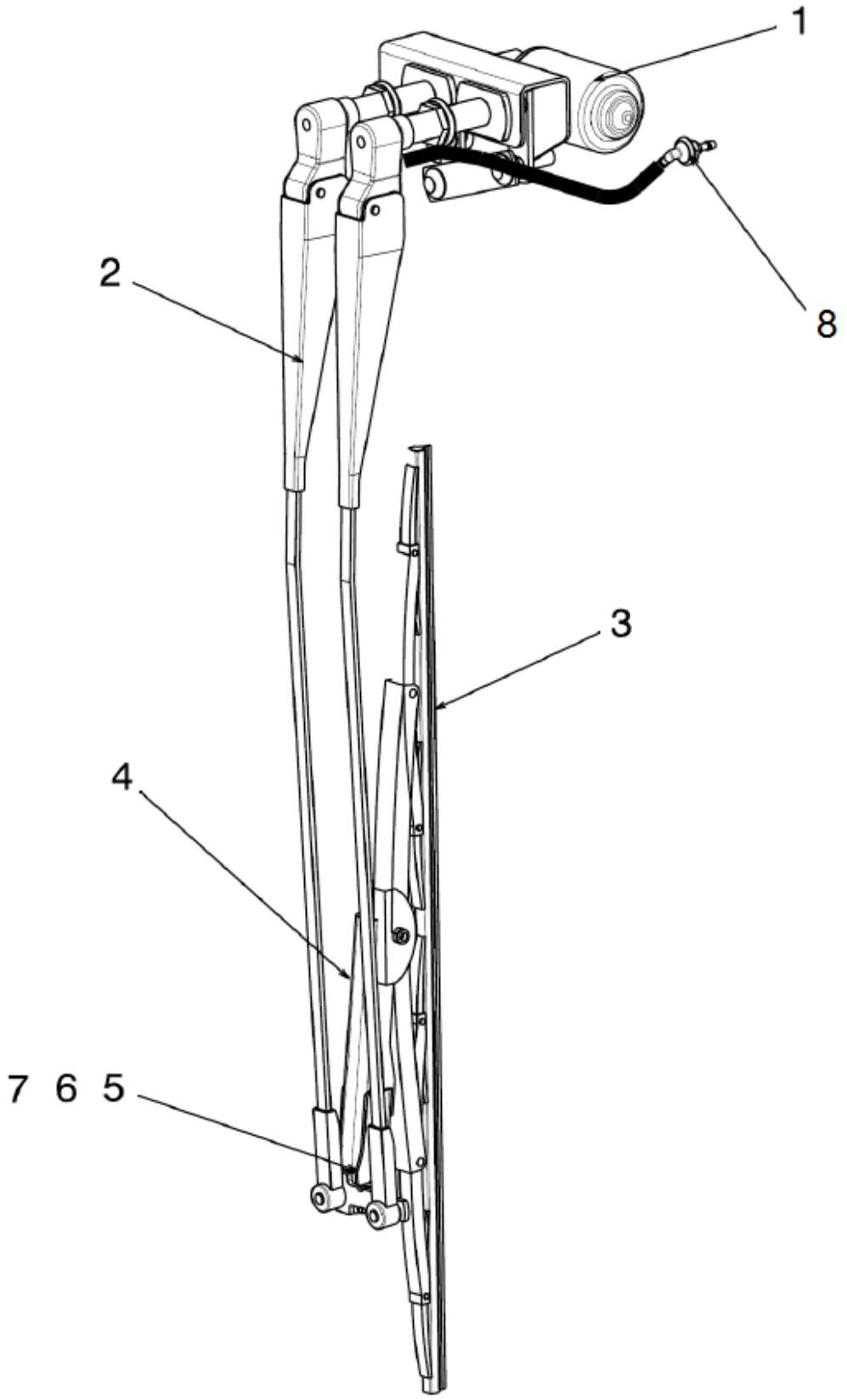

Elemento	N.º de pieza	Nombre	Cant.	L
1	4700395810	Wiper motor	1	
2	4700395811	Wiper arm	1	
3	4700905306	Wiper blade	1	
4	4700395796	Mounting plate	1	
5	4700508021	Screw, M8 x 50 mm 8.8 A2K	1	
6	4700904229	Steel plain washer 8.4X16X1.5	1	
7	4700586003	Lock nut M8	1	
8	4700908561	Grommet	1	

Cab Rear glass wiper set

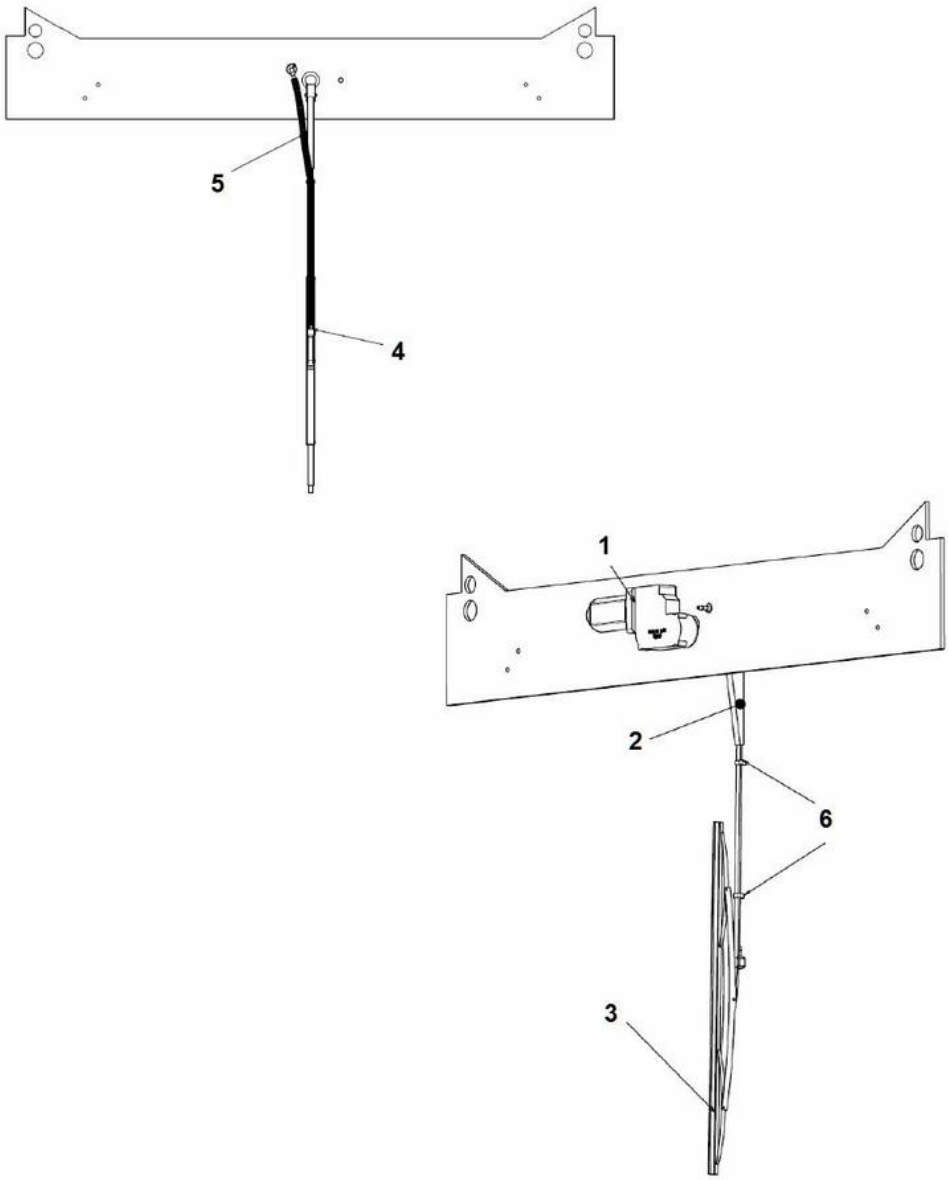

Elemento	N.º de pieza	Nombre	Cant.	L
1	4700945897	Wiper motor	1	
2	4700395813	Wiper arm	1	
3	4700395814	Wiper blade	1	
4	4700938256	Nozzle	1	
5	-	Hose	1XL	A
6	-	Fasterner for rubber hose	2	

Comments for Page: Rear glass wiper set

(L)OCAL REMARKS

A | en_US | L = 0,6 m

(L)OCAL REMARKS

A | en_US | L = 0,6 m

Cab Washer equipments

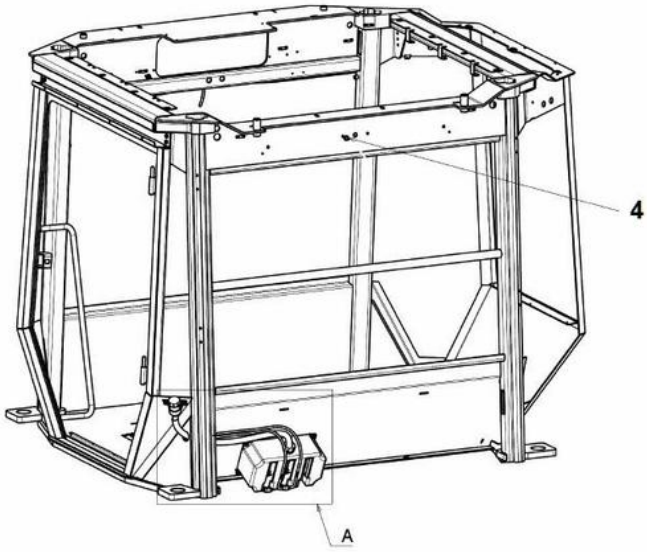

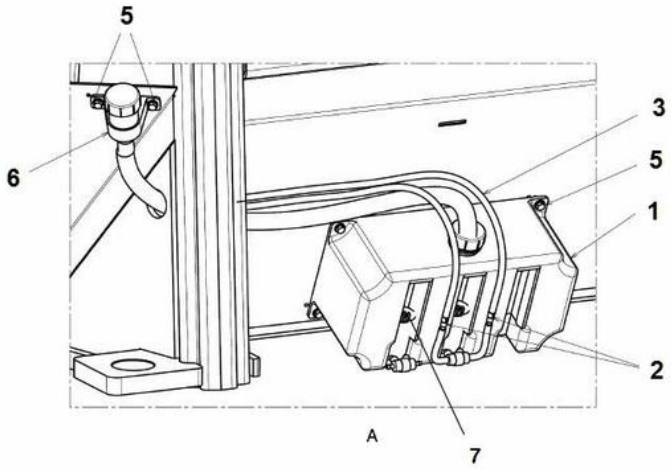

Elemento	N.º de pieza	Nombre	Cant.	L
1	4812317244	Tank asssembly	1	
2	4700908564	Check valve	2	
3	4700908563	Plastic hose	1XL	A
4	4700908561	Grommet	2	
5	4700395830	Screw	6	
6	4812110619	Filling pipe	1	
7	4812110618	Water pump	2	

Comments for Page: Washer equipments

(L)OCAL REMARKS

A | en_US | L = 12 m

Assembly heater unit Heater mount

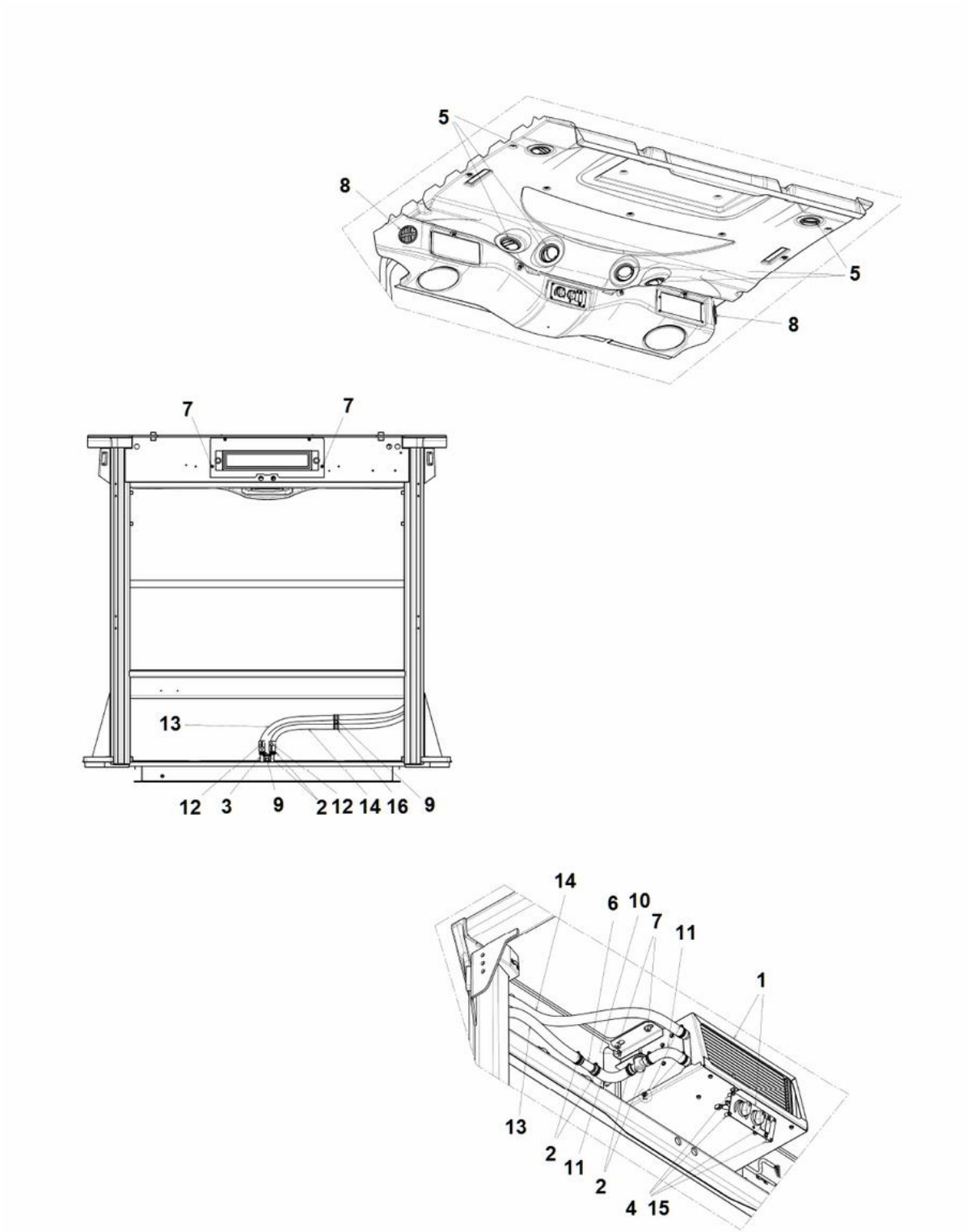

Elemento	N.º de pieza	Nombre	Cant.	L
1	4700393617	Heater	1	
2	4812155992	Hose clamp	8	
3	-	Hose holder	1	
4	-	Rubber nut	4	
5	4700395757	Air nozzle	6	
6	-	Connector tube	1	
7	-	Blind cover	6	
8	4700395759	Air nozzle	2	
9	-	Blind cover	2	
10	-	Socket screw	2	
11	-	Hose elbow	2	
12	-	making tape	2	
13	-	Hose	1	
14	-	Hose	1	
15	-	Socket screw	4	
16	-	Pipe clamp	2	

Assembly heater unit Heater controls

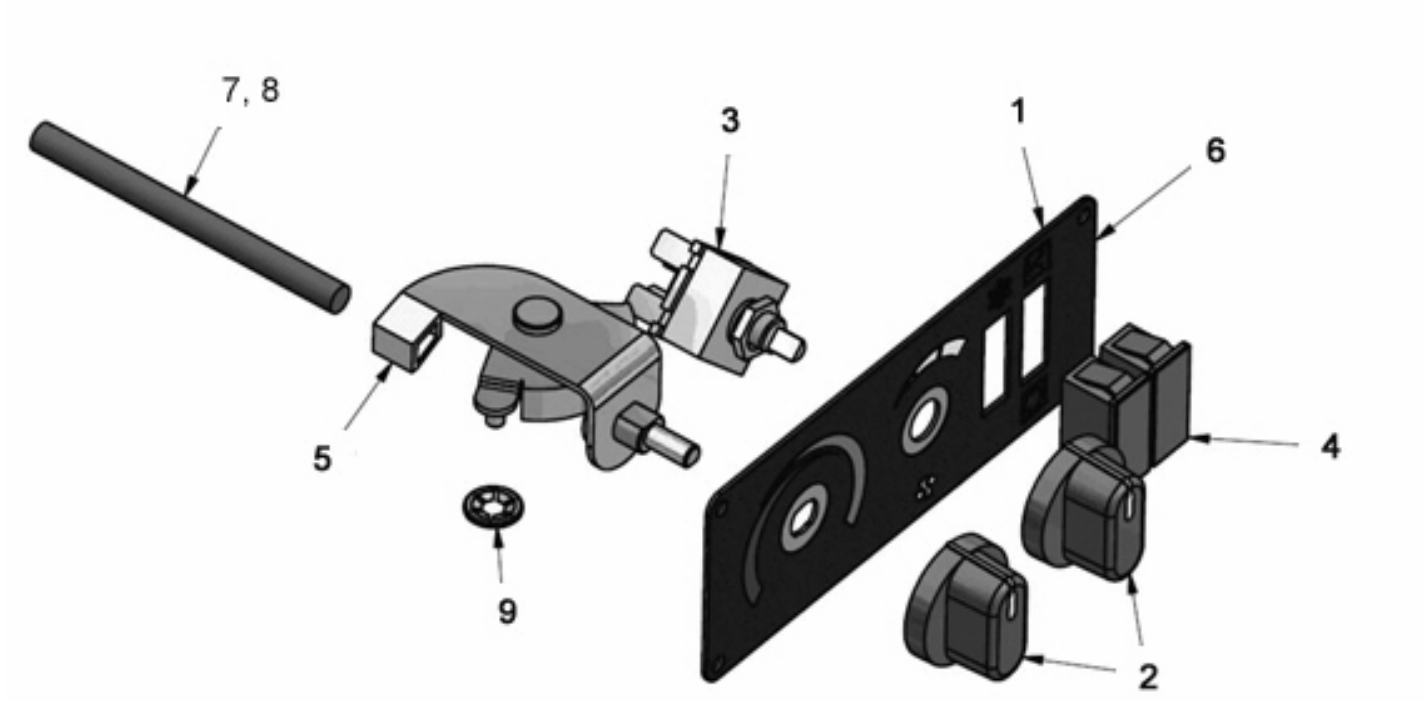

Elemento	N.º de pieza	Nombre	Cant.	L
1	-	Panel plate	1	
2	4700377508	Knob	2	
3	4700938622	Switch	1	
4	-	Cover	2	
5	4700377507	Rotary control	1	
6	-	Overlay	1	
7	4700395841	Wire clips	1	
8	4700395842	Wire	1	
9	4700395843	Lock washer	2	

Assembly heater unit Heater

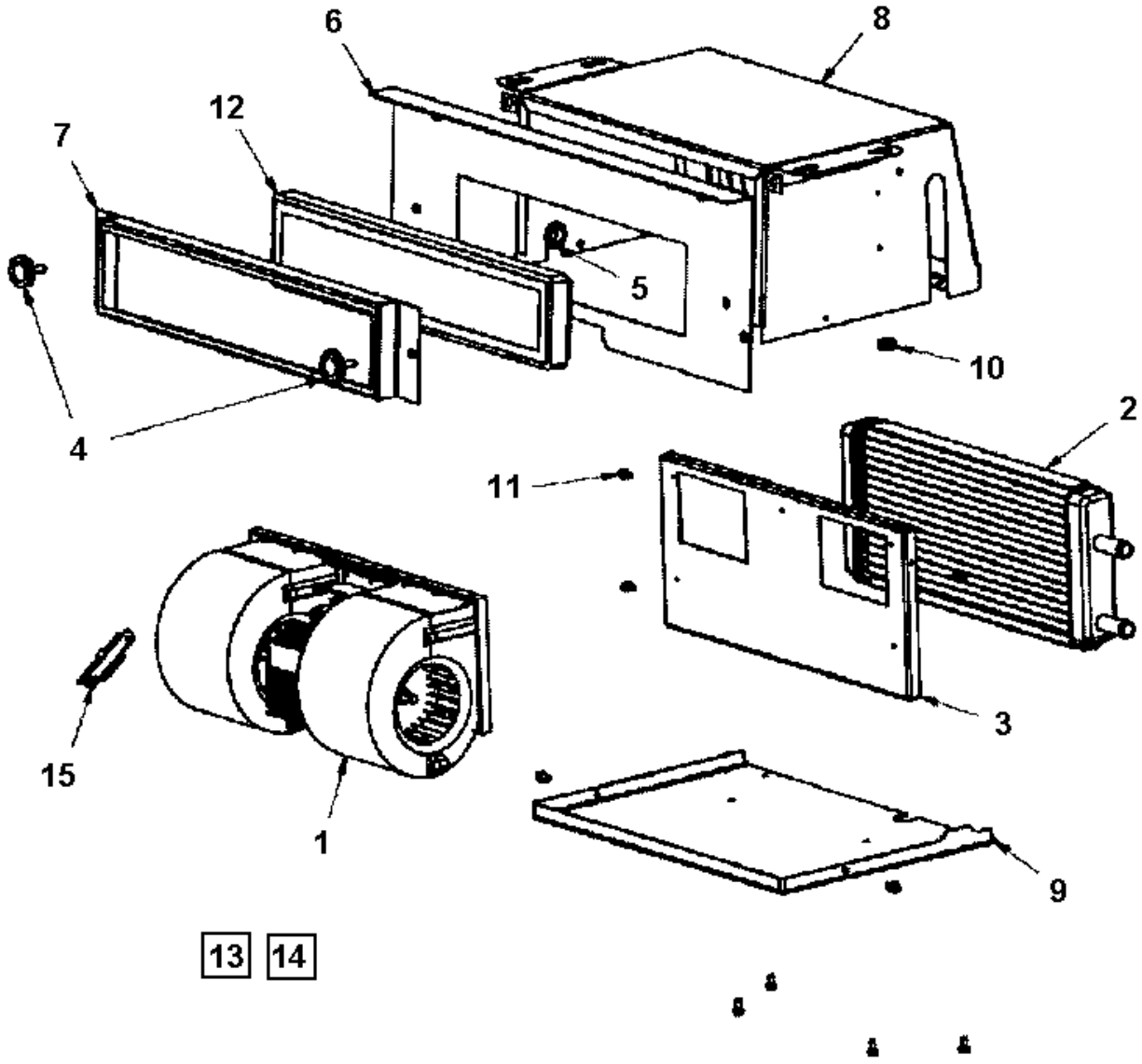

Elemento	N.º de pieza	Nombre	Cant.	L
1	4700395761	Blower 24V	1	
2	4700395762	Heater coil	1	
3	-	Blower bracket	1	
4	4700395774	Knob	2	
5	4700938609	Grommet	1	
6	-	Front plate	1	
7	4700395775	Filter bracket	1	
8	-	Casing	1	
9	-	Cover plate	1	
10	-	Grommet	1	
11	-	Screw M5x10	11	
12	4700395818	Filter	1	
13	4700395819	Cable harness	1	
14	4700395828	Panel cable	1	
15	4700395820	Resistor assy	1	

Cab Air channel assy

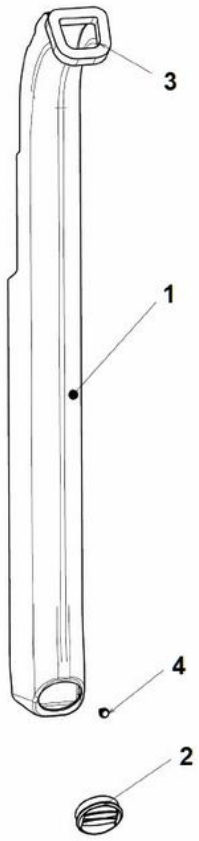

Elemento	N.º de pieza	Nombre	Cant.	L
1	-	Air gate	1	
2	4700395832	Air nozzle	1	
3	-	Esgrima	1	
4	4700395830	Screw	1	

Mounting right side Protective frame asymmetric

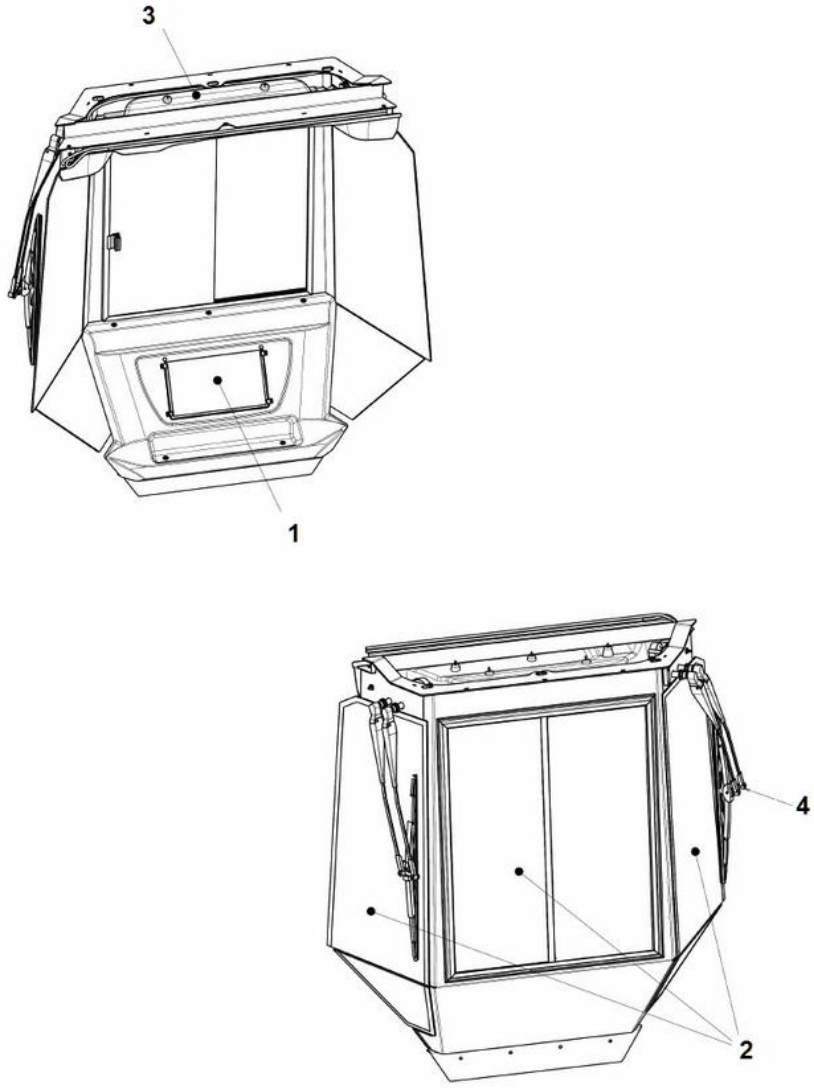

Elemento	N.º de pieza	Nombre	Cant.	L
1		Panel assembly	1	
2		Glasswork right	1	
3		Blanket assembly	1	
4		Wiper system	1	

Cover assy, right side Cover assy, right side

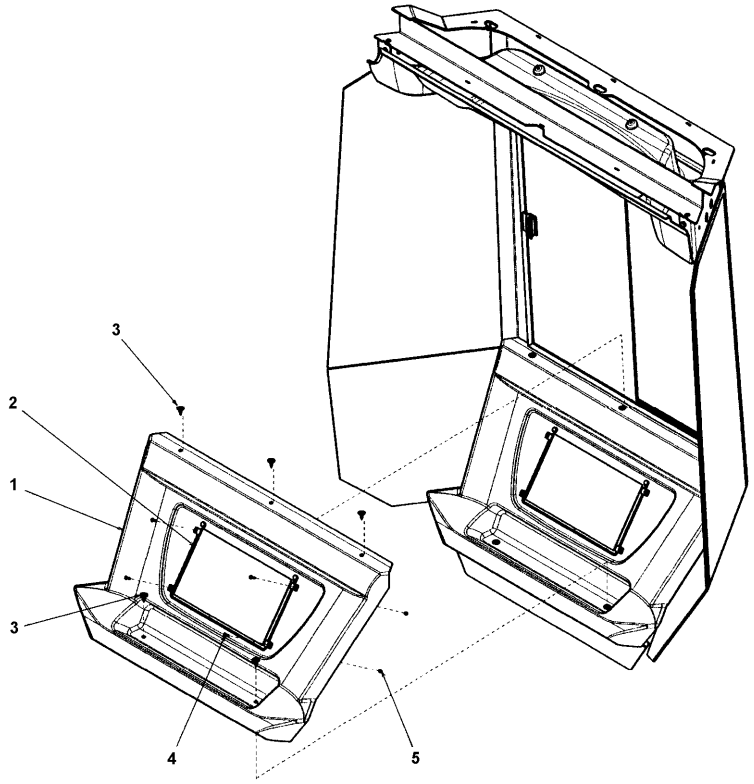

Elemento	N.º de pieza	Nombre	Cant.	L
1	-	Plastic part	1	
2	-	Document pocket	1	
3	-	Fastener	5	
4	-	Blind cover	4	
5	-	PRIMAVERA	4	

Cover assy, right side Glasswork right side

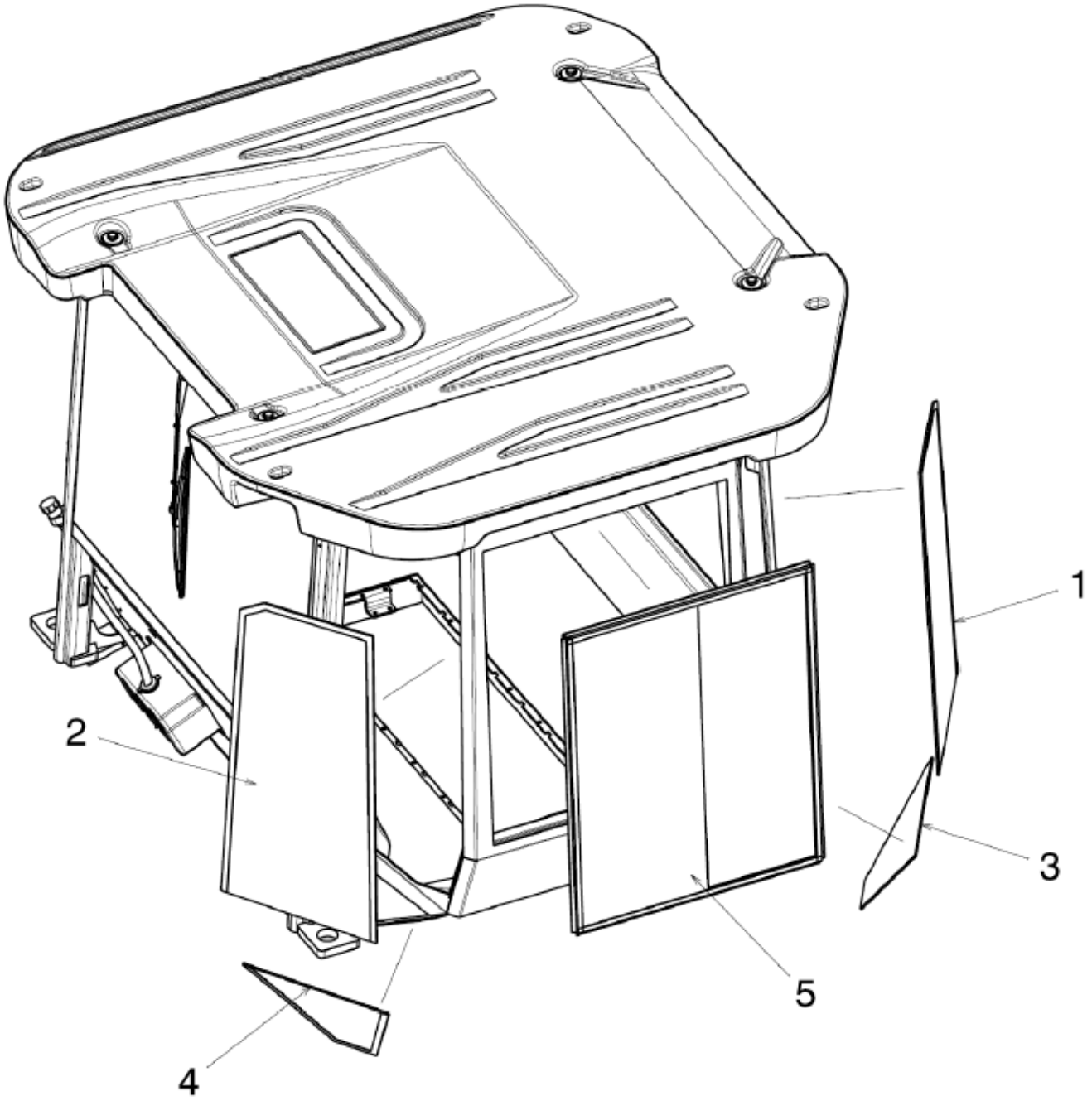

Elemento	N.º de pieza	Nombre	Cant.	L
1	4700396955	Screen	1	
2	4700396956	Screen	1	
3	4700396957	Screen	1	
4	4700396958	Screen	1	
5	4700395790	Sliding screen	1	
5	4812317475	Window latch	1	

Wiper system right side Wiper system right side

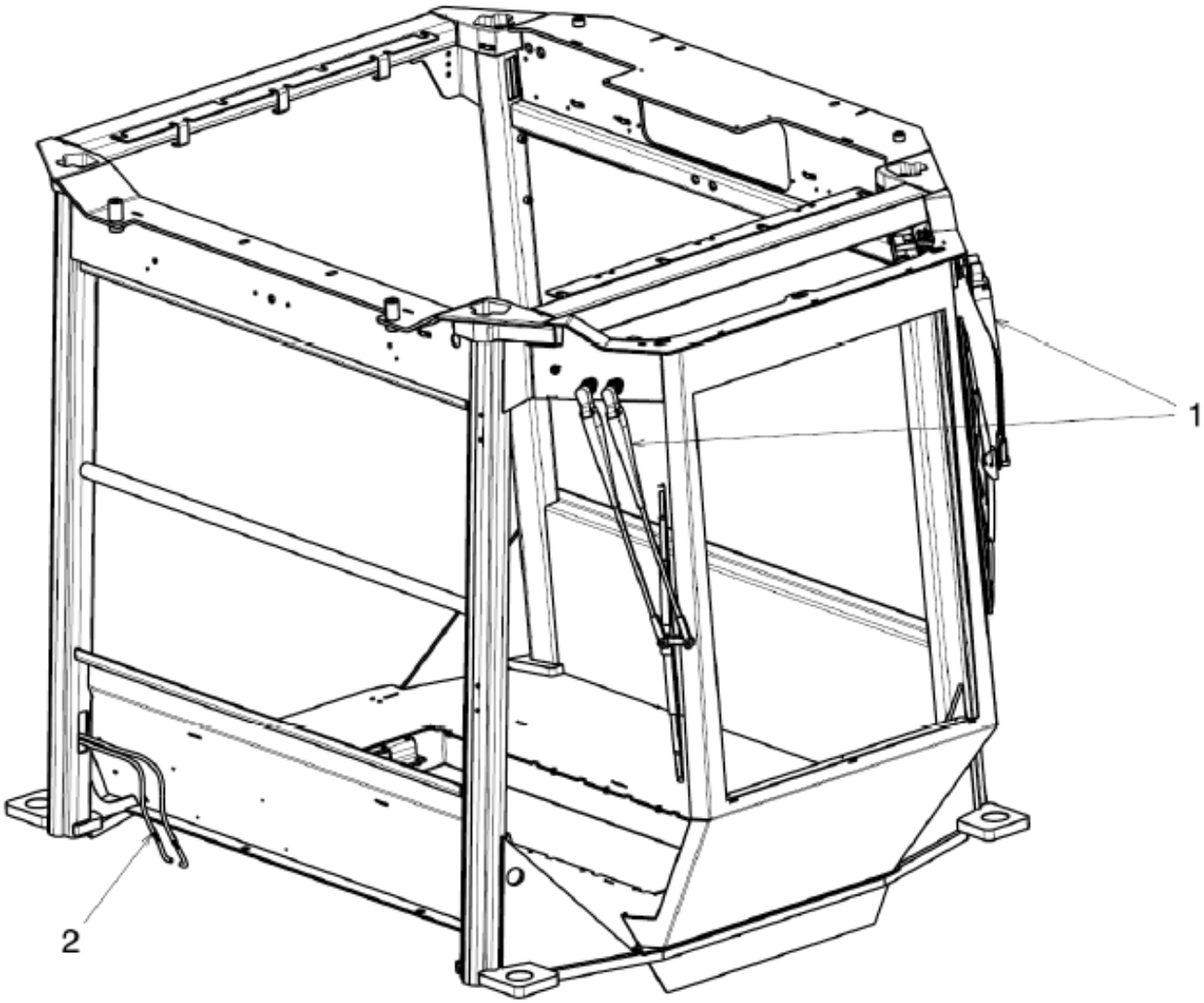

Elemento	N.º de pieza	Nombre	Cant.	L
1		Wiper assy assymetric side	2	
2		Windshield washer reservoir assy	1	

Wiper system right side Windshield wiper, assymetric side

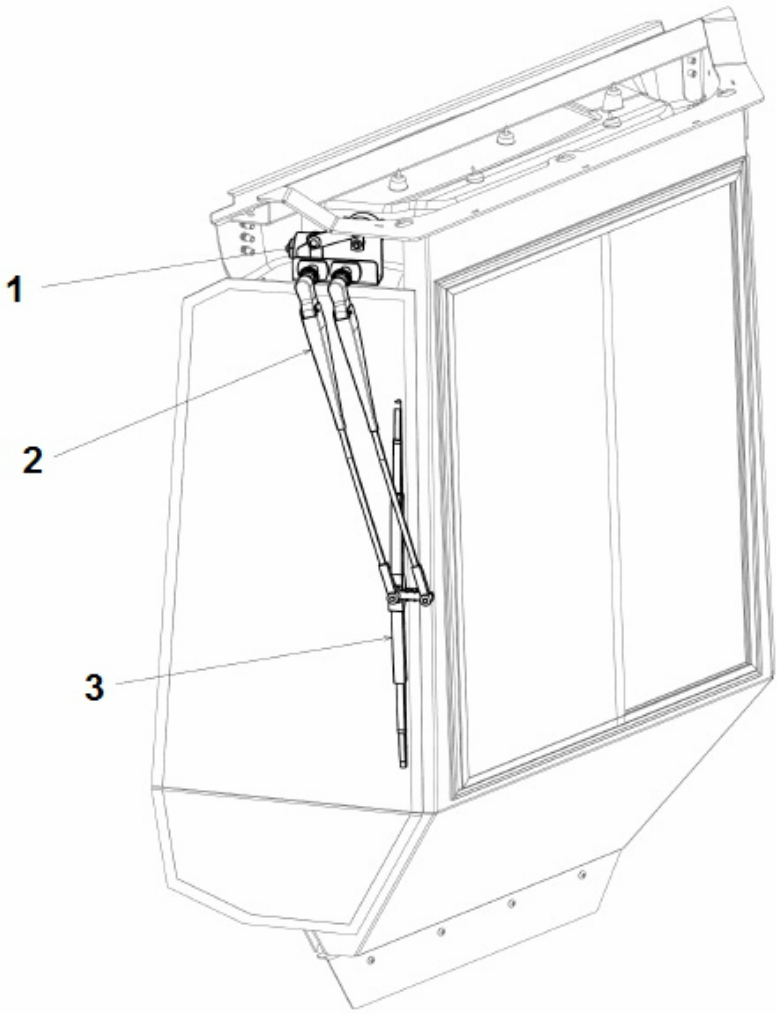

Elemento	N.º de pieza	Nombre	Cant.	L
1	4812158895	Wiper motor	1	
2	4812158099	Wiper arm	1	
3	4700905306	Wiper blade	1	

Wiper system right side Windshield washer reservoir assy

Elemento	N.º de pieza	Nombre	Cant.	L
1	4700908561	Grommet	2	
2	4700908563	Plastic hose	10	
3	4700908564	Check valve	2	

Mounting right side Fastener kit, right side ceiling

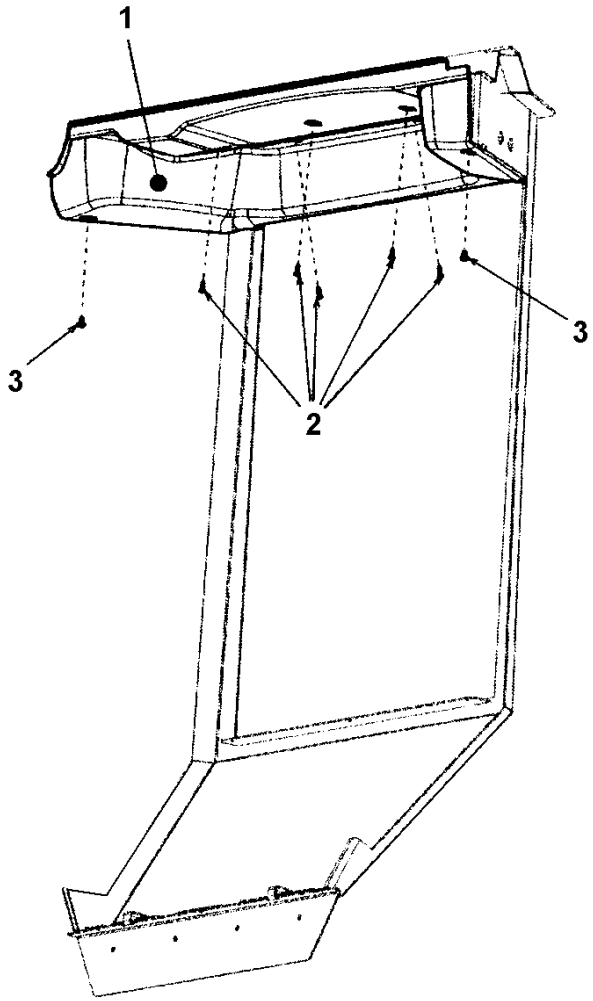

Elemento	N.º de pieza	Nombre	Cant.	L
1	-	Right side ceiling	1	
2	4700395829	Screw	5	
3	4700923934	Screw	2	

Standard AC Condensor module

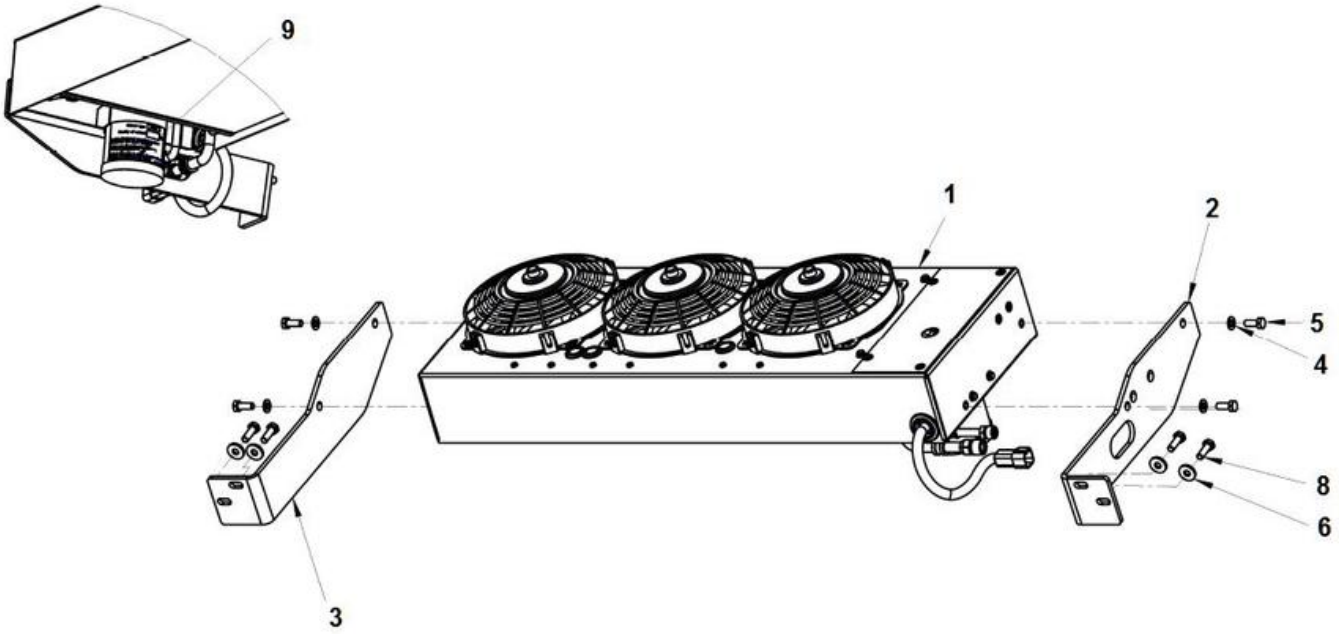

Elemento	N.º de pieza	Nombre	Cant.	L
1	4700393529	Condenser unit	1	
2	4700393222	Bracket	1	
3	4700393223	Bracket	1	
4	4700904229	Steel plain washer 8.4X16X1.5	4	
5	4700500053	Perno	4	
6	4700904640	Steel plain washer	4	
8	4700500021	Perno	4	
9	4812126833	Decal, Flourinated gas	1	
10	4812126918	Declaration of conformity	1	

Standard AC Condensor

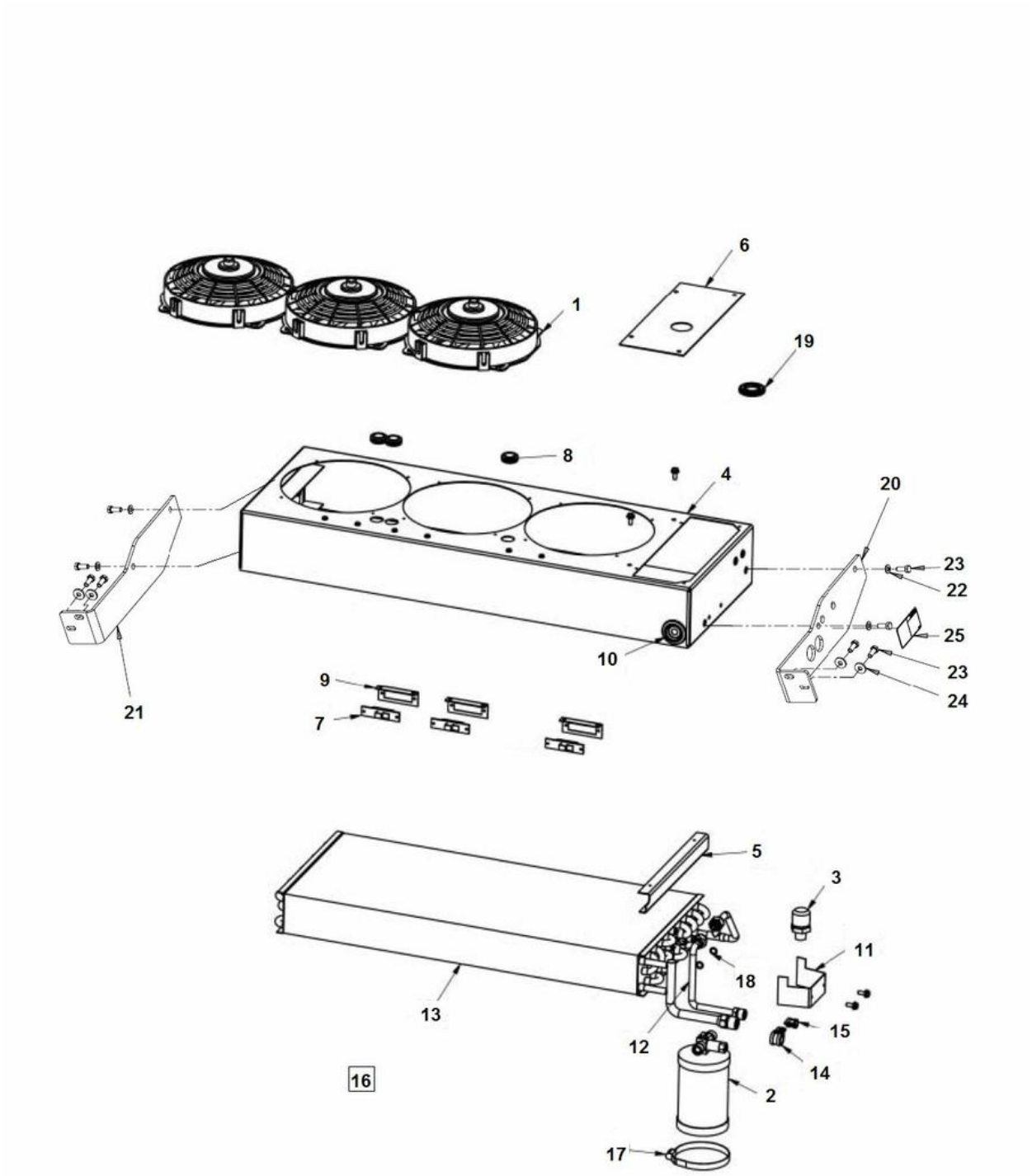

Elemento	N.º de pieza	Nombre	Cant.	L
1	4700950372	Fan	3	
2	4700950373	Dryer	1	
3	4700938605	Pressure switch	1	
4	-	Casing	1	
5	-	Bracket	1	
6	-	Cover	1	
7	4700938606	Resistor	3	
8	4700938609	Grommet	3	
9	4812155658	Resistor bracket	3	
10	-	Grommet	1	
11	-	Bracket	1	
12	-	Copper tube	1	
13	4700950374	Condensor Coil	1	
14	-	Clamp	1	
15	-	Clamp	1	
16	4700950375	Cable harness	1	
17	4700938789	Clamp	1	
18	-	Junta tórica	2	
19	-	Grommet	1	
20	4700393222	Bracket	1	
21	4700393223	Bracket	1	
22	4700904229	Steel plain washer 8.4X16X1.5	4	
23	4700500053	Perno	8	
24	4700904640	Steel plain washer	4	
25	4700904165	Safety decal "Toxic gases"	1	

Standard AC Hose kit AC

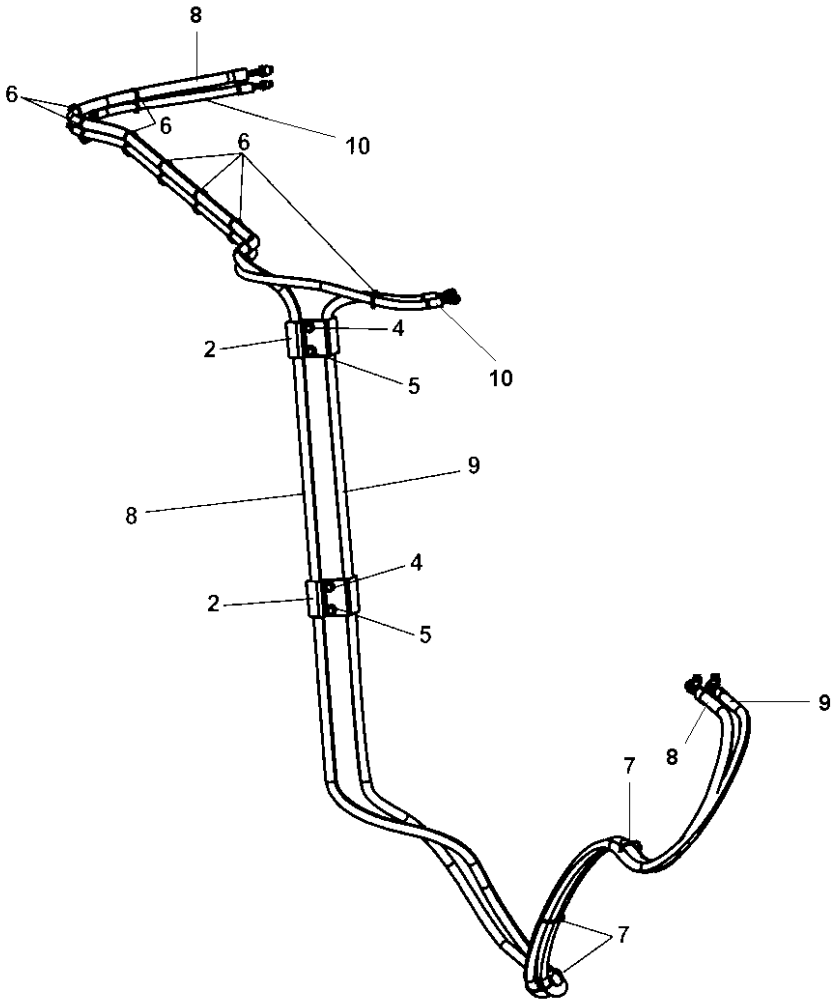

Elemento	N.º de pieza	Nombre	Cant.	L
2	4700393418	Bracket	2	
4	4700904557	Steel plain washer	4	
5	4700500048	Hex. Head screw	4	
6	4700792686	Cable tie with holder	N	
7	4700313041	Cable tie	N	
8	4700396705	Refrigerant hose	1	
9	4700396706	Refrigerant hose	1	
10	4700393594	Refrigerant hose	1	

Standard AC Protection cover

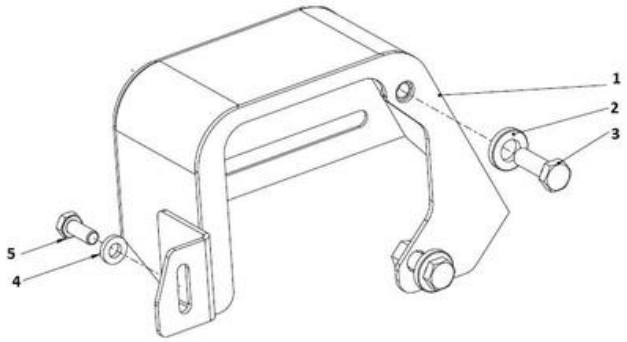

Elemento	N.º de pieza	Nombre	Cant.	L
1	4812318314	Protection cover	1	
2	4700603012	Washer	2	
3	4700500029	Hexagon head screw M	2	
4	4700904556	Steel plain washer	1	
5	4700500053	Perno	1	

Standard AC Compressor module

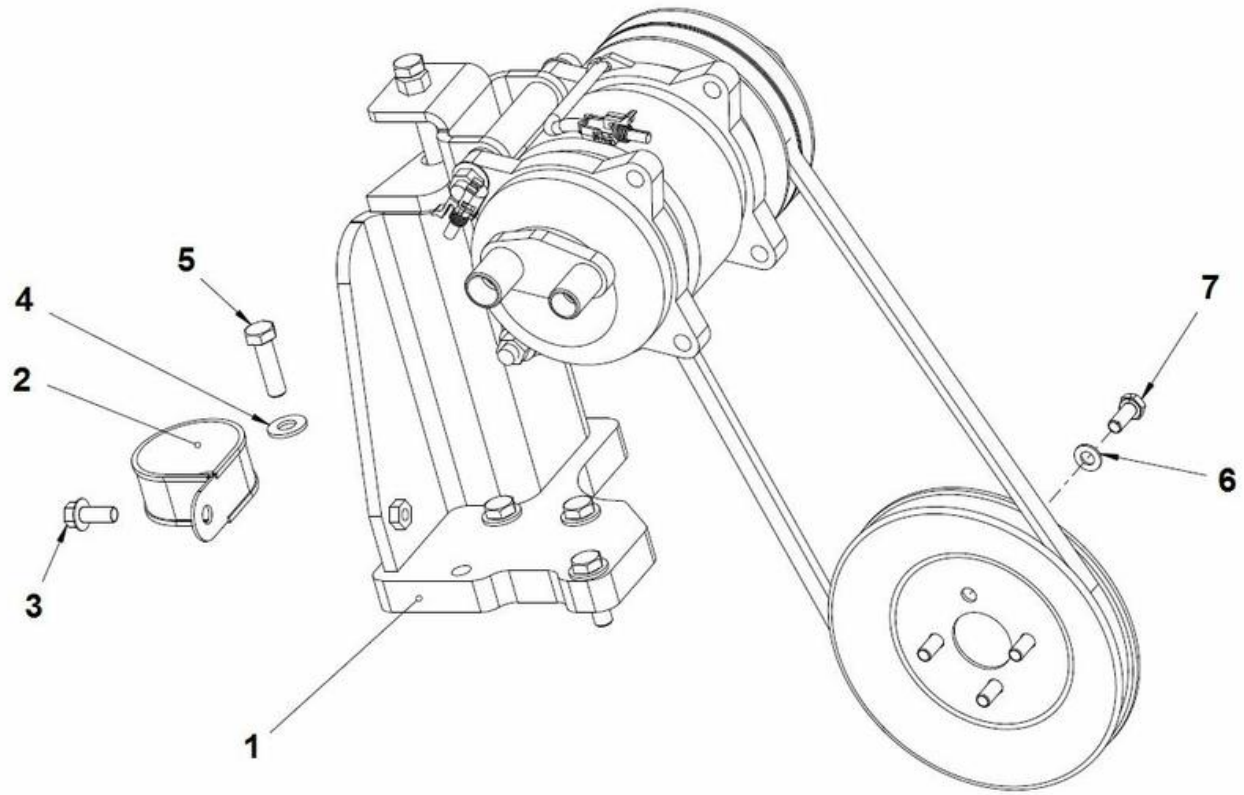

Elemento	N.º de pieza	Nombre	Cant.	L
1	-	Compressor Assy	1	
2	4700904352	Pipe clamp covered	1	
3	4700500505	Hexagon screw M8X20 8.8 A2K	1	
4	4700904230	Plain washer M10 10.5X22X2.0	4	
5	4700500030	Hexagon screw M	4	
6	4700904229	Steel plain washer 8.4X16X1.5	4	
7	4700500053	Perno	4	

Standard AC Compressor assy

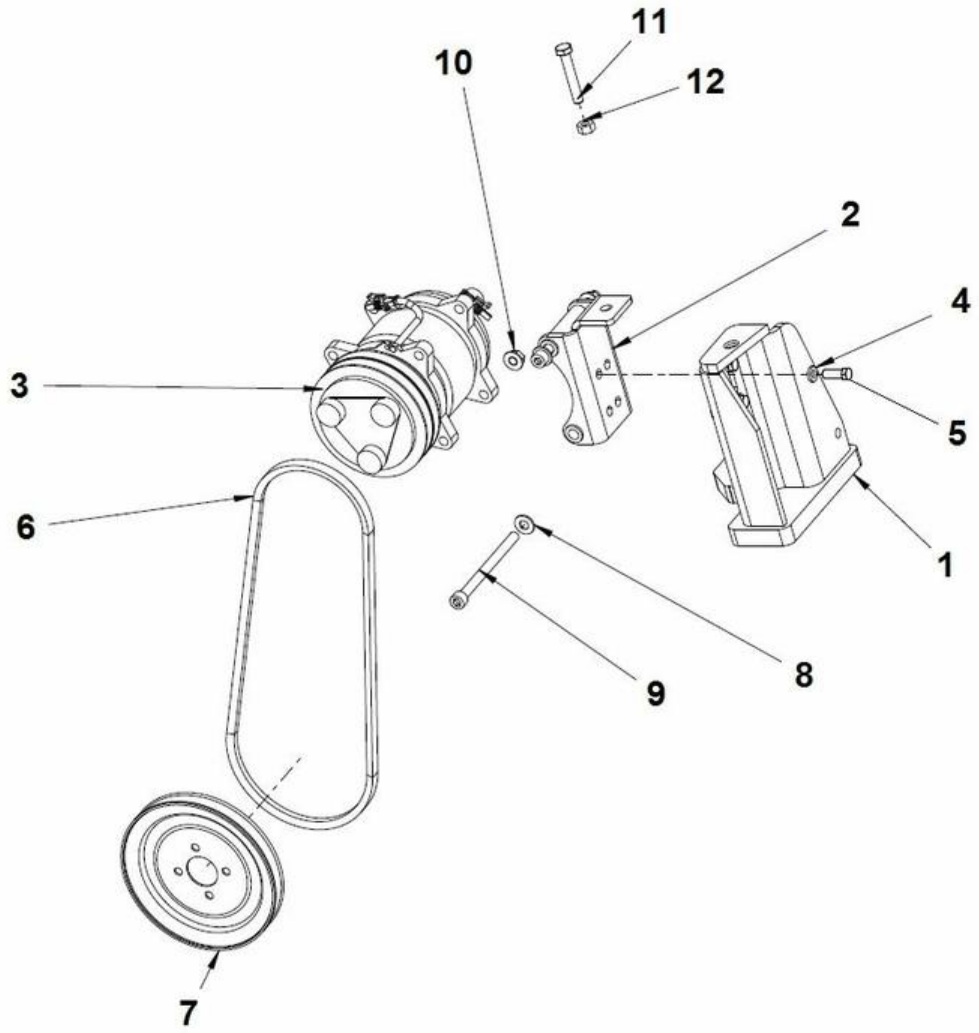

Elemento	N.º de pieza	Nombre	Cant.	L
1	4812116079	Compressor bracket	1	
2	4812316133	Bracket	1	
3	4700396034	Compressor	1	
4	4700904556	Steel plain washer	4	
5	4700500021	Perno	4	
6	4700410012	V-belt	1	
7	4700395192	V-belt pulley	1	
8	4700904230	Plain washer M10 10.5X22X2.0	2	
9	4700792797	Hexagon socket head cap screw m	2	
10	4700570103	Nut, M10 x 1.5 mm GEOMET®	2	
11	4700500279	Screw	1	
12	4700570006	Hexagon nut	1	

Standard AC 4700393584 Evaporator unit

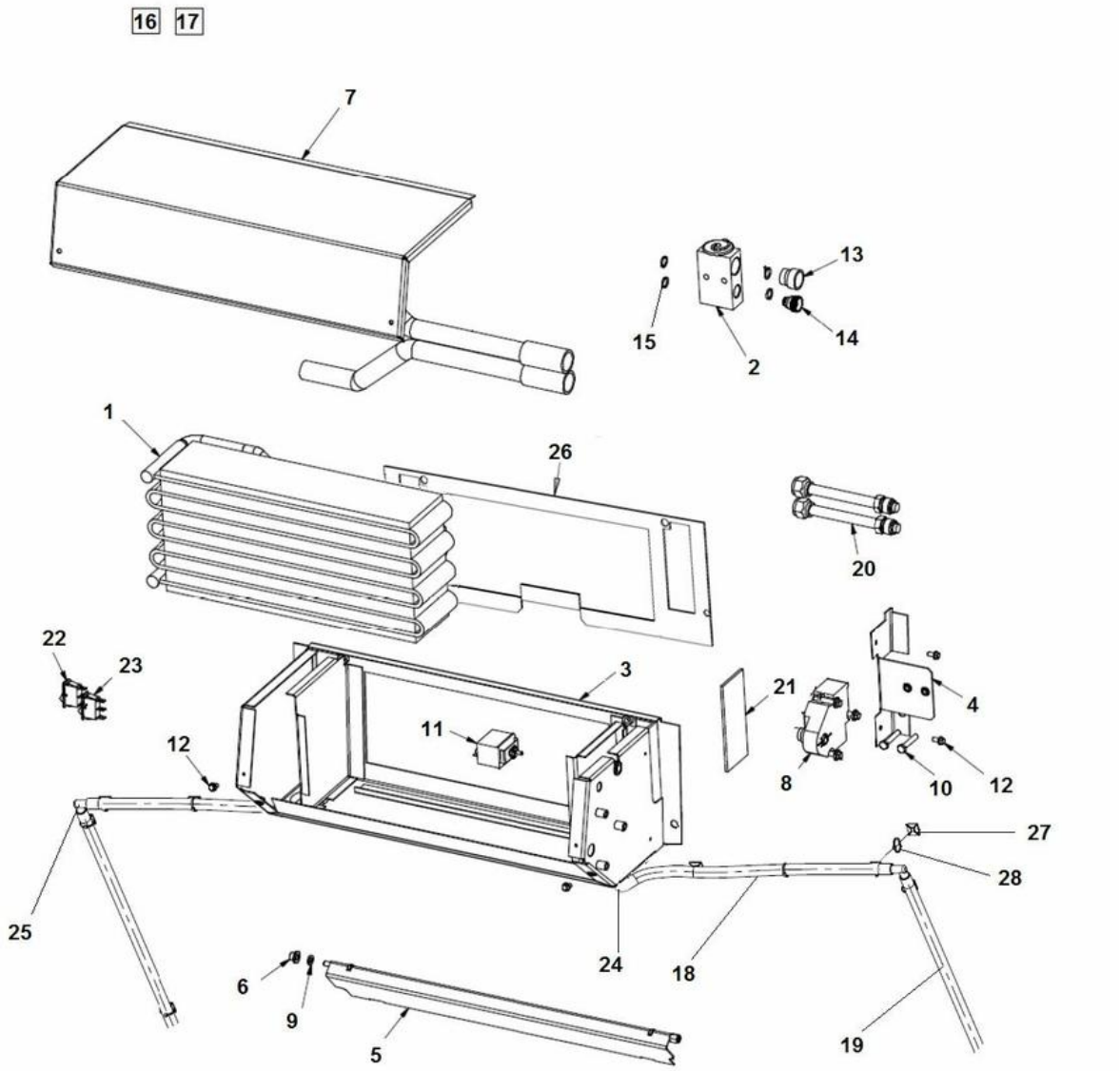

Elemento	N.º de pieza	Nombre	Cant.	L
1	4700950310	Evaporator coil	1	
2	4700950342	Block valve	1	
3	-	Casing	1	
4	-	Bracket	1	
5	-	Recicurlation cover	1	
6	-	Casquillo	1	
7	-	Cover	1	
8	4700950343	Actuator motor	1	
9	-	Arandela de estanqueidad	1	
10	-	Blind cover	2	
11	4700950344	Thermostat	1	
12	-	Blind cover	4	
13	-	Tapón	1	
14	-	Tapón	1	
15	4700950345	O-ring	2	
16	4700950346	Cable harness, recirc.	1	
17	4700950347	Cable harness, panel	1	
18	-	Drain hose	1	
19	-	Drain hose	1	
20	-	Connect tube	2	
21	-	Insulation tape	2	
22	4700950348	Switch, air condition	1	
23	4700950349	Switch, recirculation	1	
24	4700950350	Drain valve	2	
25	4700950380	Drain elbow	2	
26	4700297018	Rubber strip	1XL	
27	4700395352	Cable Tie Holder, 19x19 Black	14	
28	4700313068	Cable tie	14	

Standard AC Compressor module

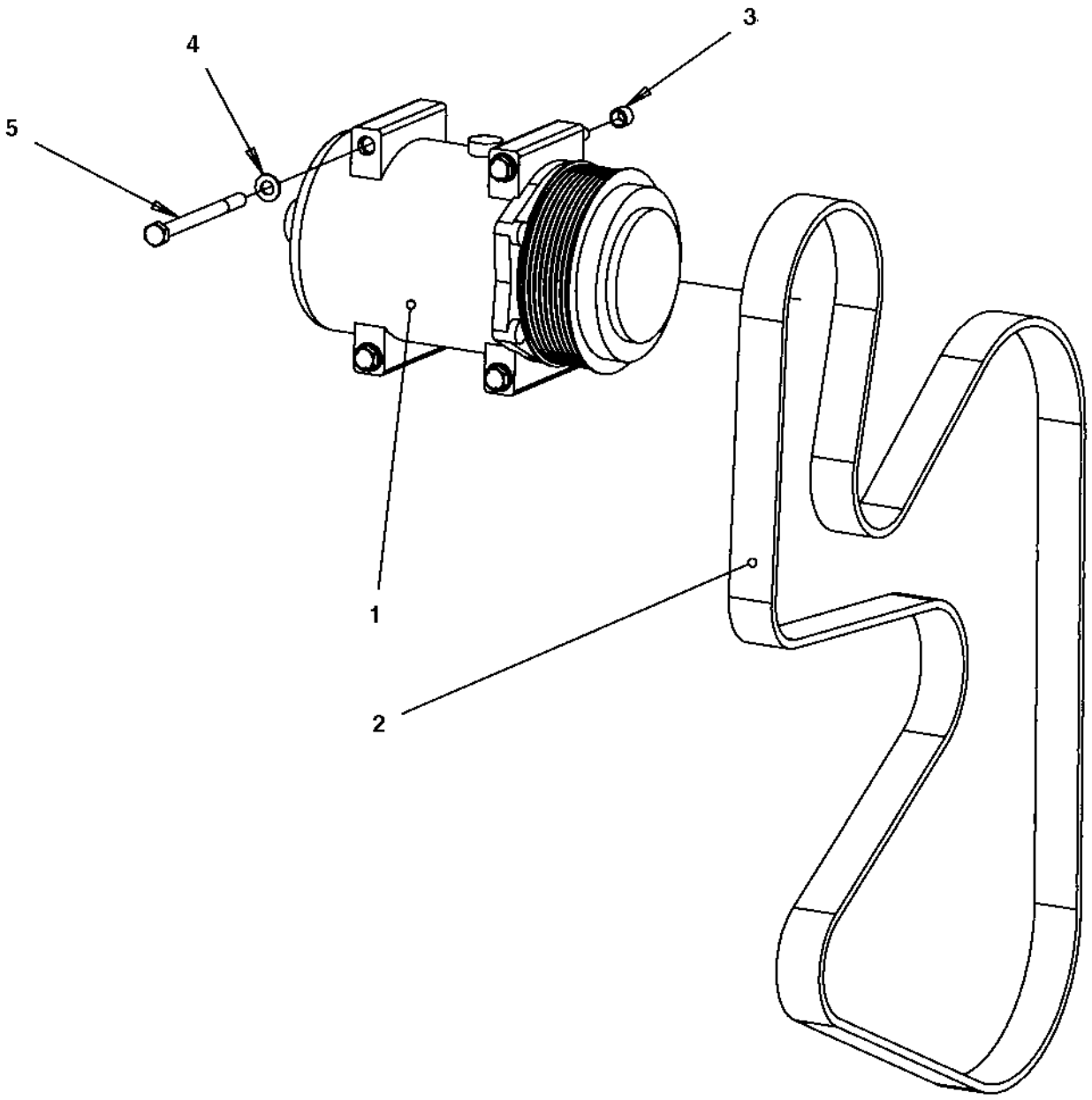

Elemento	N.º de pieza	Nombre	Cant.	L
1	4700391621	Compressor	1	
2	4700391622	V-belt for Cab	1	
3	4700945314	Guide ring	2	
4	4700904229	Steel plain washer 8.4X16X1.5	4	
5	4700500096	Screw	4	
6	4812113010	Belt guard	1	
7	4700904229	Steel plain washer 8.4X16X1.5	2	
8	4700500180	Hexagon head screw M8x110	2	

Cab Module (from SN xxB005060) Cab assy

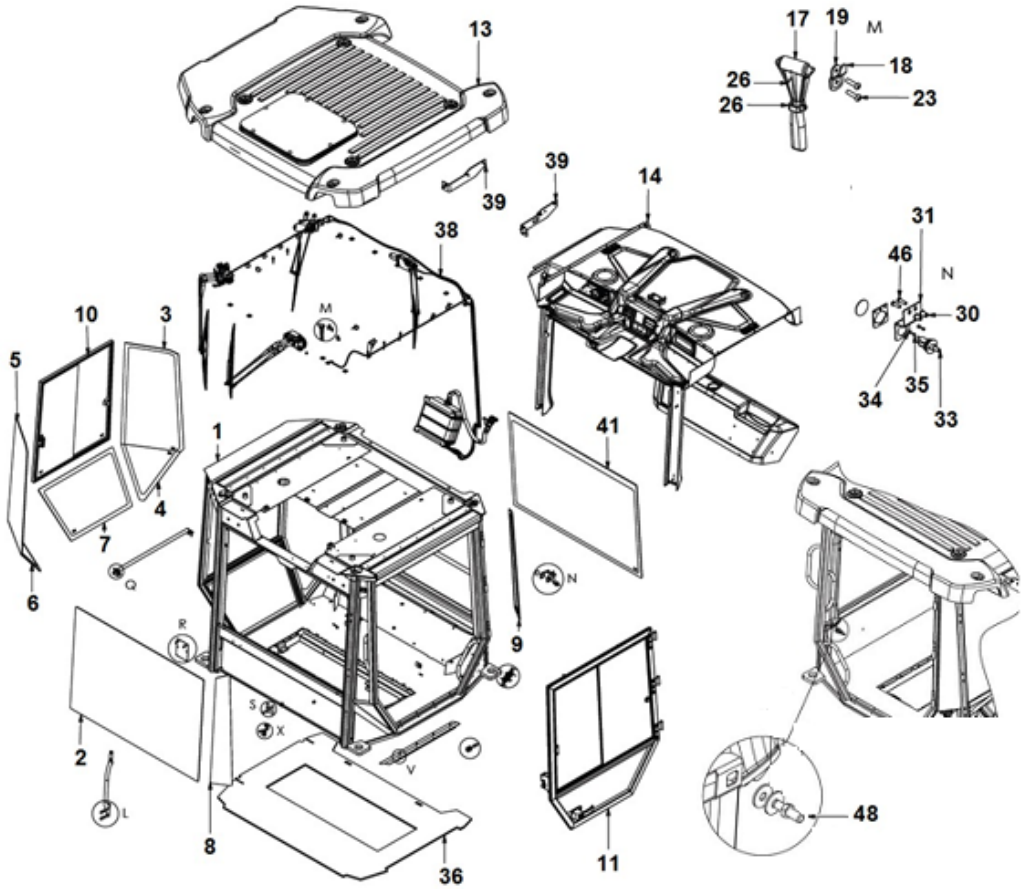

Elemento	N.º de pieza	Nombre	Cant.	L
1	-	Structure	1	
2	4812119403	Screen	1	
3	4812318527	Screen	1	
4	4812318530	Screen	1	
5	4812119398	Screen	1	
6	4812318529	Screen	1	
7	4812325700	Screen	1	
8	4812119392	Front screen top lh	1	
9	4812119393	Rear screen rh top	1	
10	4812325243	Window assy	1	
11	4812325244	Door assy	1	
12	-	Cover	1	
13	4812325245	Roof assy	1	
14	-	Covers assy	1	
15	-	Plate	1	
16	-	Plate	1	
17	4812325246	Emergency hammer	1	
18	4812325247	Hook	2	
19	4812325248	Bracket	2	
20	-	Fixation	1	
21	-	Holder	1	
22	-	Paraf.sext. M8x35	2	
23	-	Paraf.sext. M8x35	8	
24	-	Stop	1	
25	-	Arandela de estanqueidad	2	
26	-	Rivet	10	
27	-	Bar	1	
28	-	Plate	1	
29	-	Paraf.sext. M8x35	2	
30	4812325249	Rivet	2	
31	4812325250	Bracket	1	
32	-	Protection	1	
33	4812325251	Light switch	1	
34	4812325252	Nut	2	

Elemento	N.º de pieza	Nombre	Cant.	L
35	4812325253	Screw	2	
36	4812325254	Carpet	1	
37	-	Paraf.sext. M8x35	4	
38	-	Washers assy	1	
39	4812325255	Condenser bracket	1	
40	-	Paraf.sext. M8x35	16	
41	4812318630	Screen	1	
42	-	Arandela de estanqueidad	2	
43	-	Arandela de estanqueidad	2	
44	-	Paraf.sext. M8x35	4	
45	-	Arandela de estanqueidad	4	
46	-	Paraf.sext. M8x35	2	
47	-	Clamp	2	
48	4812101486	Stop sleeve	1	

Esta página se ha dejado en blanco de forma intencionada

Cab Module (from SN xxB005060) Door assy

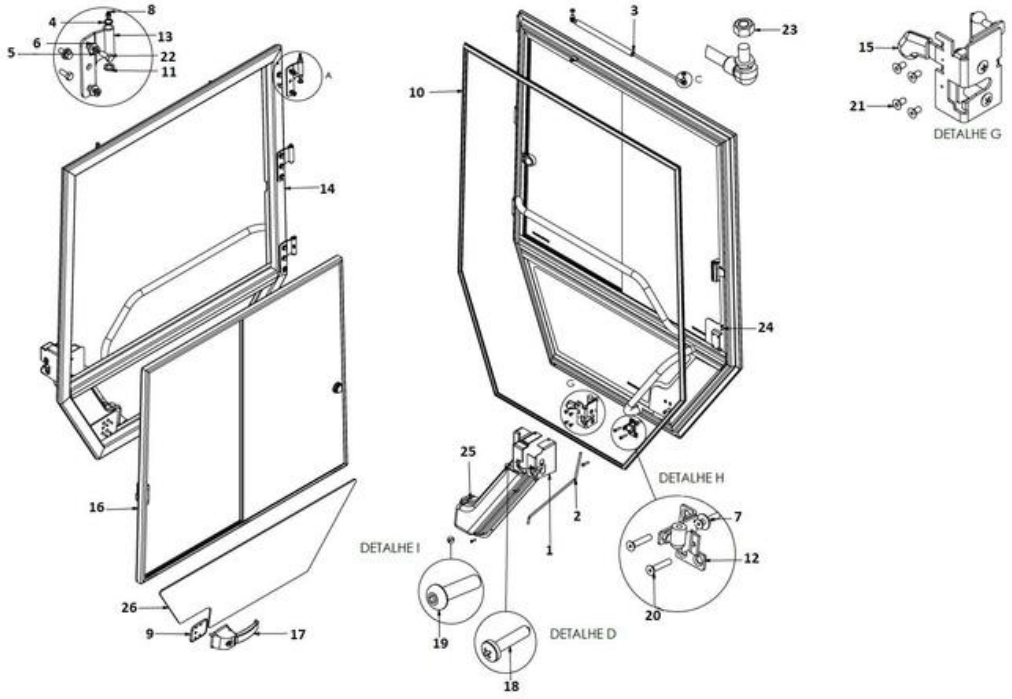

Elemento	N.º de pieza	Nombre	Cant.	L
1	4812325171	Lock cover	1	
2	4812325172	Rod	1	
3	4812325173	Gas spring	1	
4	4812325760	Ring	3	
5	4812325174	Washer	9	
6	4812325761	Washer	9	
7	4812325175	Washer	1	
8	4812325177	Grease nipple	3	
9	4812325766	Rubber	1	
10	4812325178	Gasket	1	
11	4812325179	Bushing	3	
12	4812325180	Bracket	1	
13	4812325181	Hinge	3	
14	4812325190	Door	1	
15	4812325182	Lock	1	
16	4812325183	Window assy	1	
17	4812325184	Handle lock	1	
17.1	4812325193	Key		
18	4812325759	Screw	1	
19	4812325186	Screw	4	
20	4812325767	Screw	4	
21	4812325768	Screw	4	
22	4812325769	Screw	9	
23	4812325189	Nut	2	
24	4812325770	Rivet	1	
25	4812325191	Lock cover	1	
26	4812325192	Glass	1	

Cab Module (from SN xxB005060) Window LH

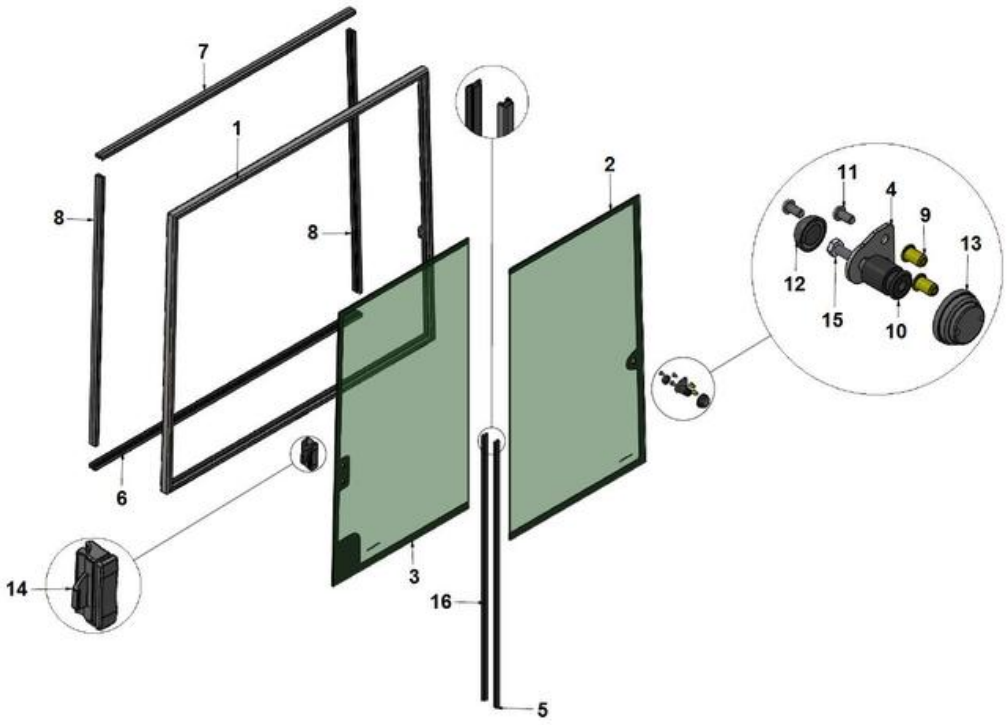

Elemento	N.º de pieza	Nombre	Cant.	L
1	4812325199	Window bracket	1	
2	4812318524	Window glass	1	
3	4812318523	Window glass	1	
4	4812325202	Bracket	1	
5	4812325704	Rubber list	1	
6	4812325204	Rubber list	1	
7	4812325205	Rubber list	1	
8	4812325206	Rubber list	2	
9	4812325207	Rivet	2	
10	4812325208	Rubber	1	
11	4812325209	Screw	2	
12	4812325210	Screw cover	1	
13	4812325211	Cover	1	
14	4812325212	Window latch	1	
15	4812325213	Screw	1	
16	4812325704	Rubber list	1	

Cab Module (from SN xxB005060) Window RH

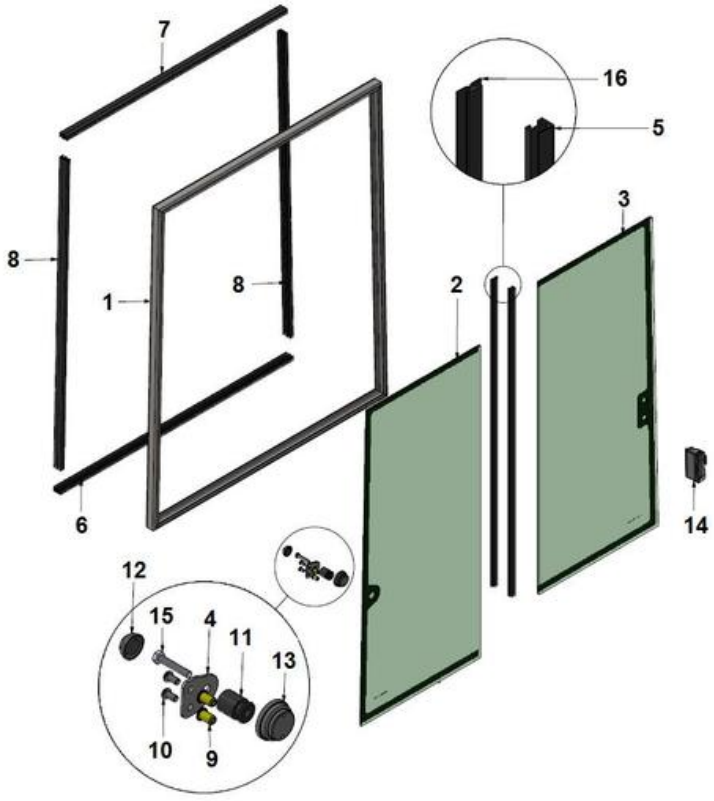

Elemento	N.º de pieza	Nombre	Cant.	L
1	4812325215	Window bracket	1	
2	4812318526	Window glass	1	
3	4812318525	Window glass	1	
4	4812325202	Bracket	1	
5	4812325704	Rubber list	1	
6	4812325219	Rubber list	1	
7	4812325220	Rubber list	1	
8	4812325221	Rubber list	2	
9	4812325207	Rivet	2	
10	4812325209	Screw	2	
11	4812325208	Rubber	1	
12	4812325210	Screw cover	1	
13	4812325211	Cover	1	
14	4812325212	Window latch	1	
15	4812325213	Screw	1	
16	4812325704	Rubber list	1	

Cab Module (from SN xxB005060) Roof

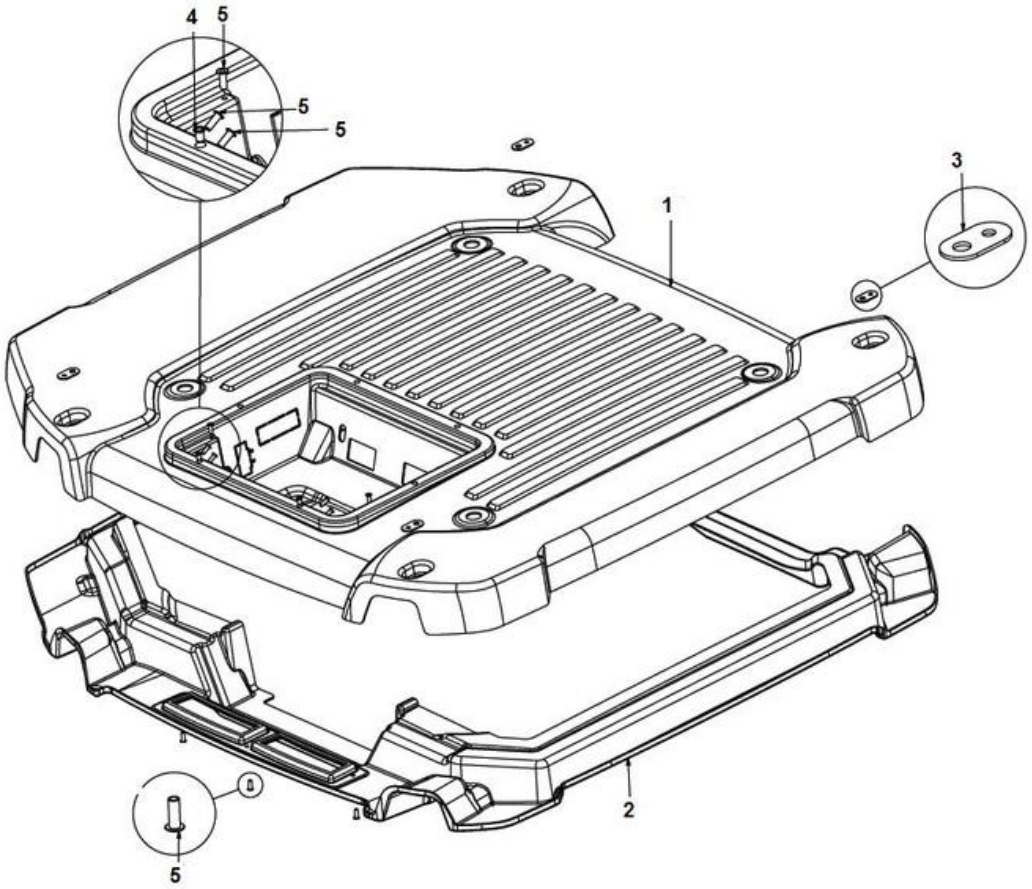

Elemento	N.º de pieza	Nombre	Cant.	L
1	4812325223	Roof	1	
2	4812325224	Roof	1	
3	4812325225	Bracket	4	
4	4812325226	Rivet	2	
5	4812325227	Rivet	9	

Cab Module (from SN xxB005060) Roof assy

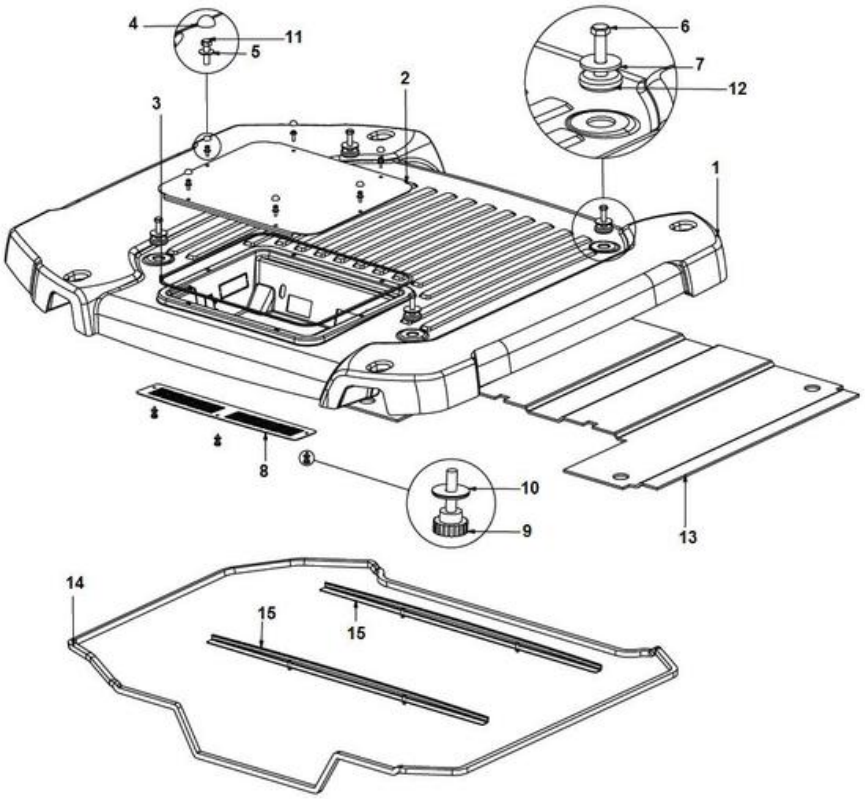

Elemento	N.º de pieza	Nombre	Cant.	L
1	4812325228	Roof	1	
2	4812325229	Cover	1	
3	4812325230	Gasket	1	
4	4812325210	Screw cover	6	
5	4812325232	Washer plan	6	
6	4812325233	Screw	4	
7	4812325234	Washer	4	
8	4812325235	Filter cover	1	
9	4812325236	Knob	3	
10	4812325237	Arandela	3	
11	4812325238	Screw	6	
12	4812325239	Rubber	4	
13	4812325240	Thermal blanket	1	
14	4812325241	Gasket	1	
15	4812325242	Roof bracket	2	

Cab Module (from SN xxB005060) Washer assy

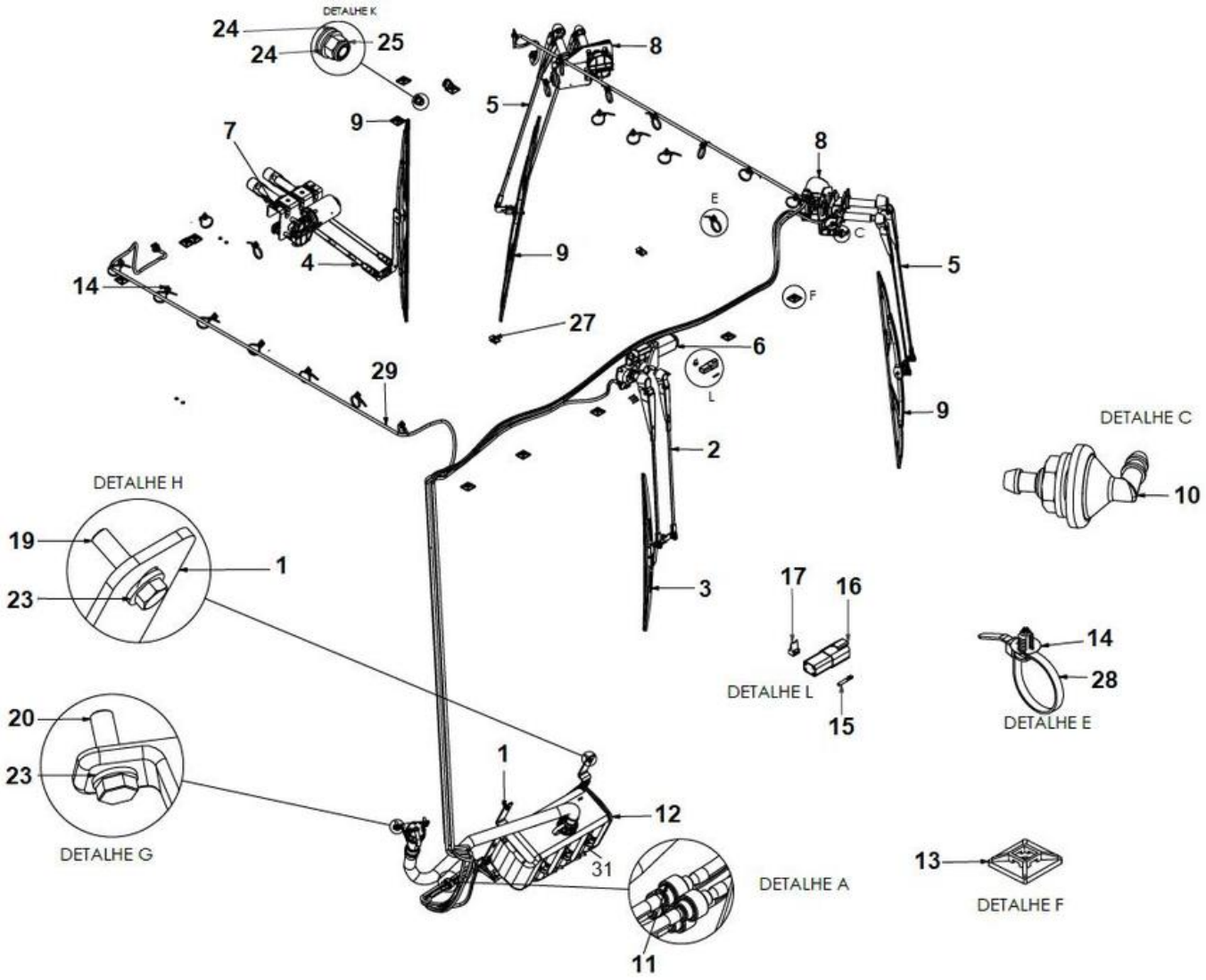

Elemento	N.º de pieza	Nombre	Cant.	L
1	4812326072	Bracket	1	
2	4812325262	Wiper arm	1	
3	4812325263	Wiper blade	1	
4	4812325257	Wiper arm	1	
5	4812325260	Wiper arm	2	
6	4812325261	Wiper motor	1	
7	4812325256	Wiper motor	1	
8	4812325259	Wiper motor	2	
9	4812325258	Wiper blade	3	
10	4812325265	Reservoir	4	
11	4812325268	Valve	4	
12	4812325796	Water tank	1	
13	4812325271	Clamp	12	
14	4812325269	Plug	22	
15	4812326154	Terminal	4	
16	4812326155	Connector	1	
17	4812326156	Lock wedge	1	
18	4812325947	Screw	4	
19	4812325273	Screw	4	
20	4812325272	Screw	2	
21	4812326157	Washer	4	
22	4812325175	Washer	8	
23	4812325274	Washer	6	
24	4812325176	Washer	4	
25	4812326158	Nut	2	
26	4812325948	Nut	4	
27	4812326159	Nut	2	
28	4812325270	Clamp	31	
29	4812325267	Hoses assy	1	
30	4812325266	Filling pipe	1	
31	4812326162	Water pump 24V	2	

Cab Module (from SN xxB005060) Condensor assy

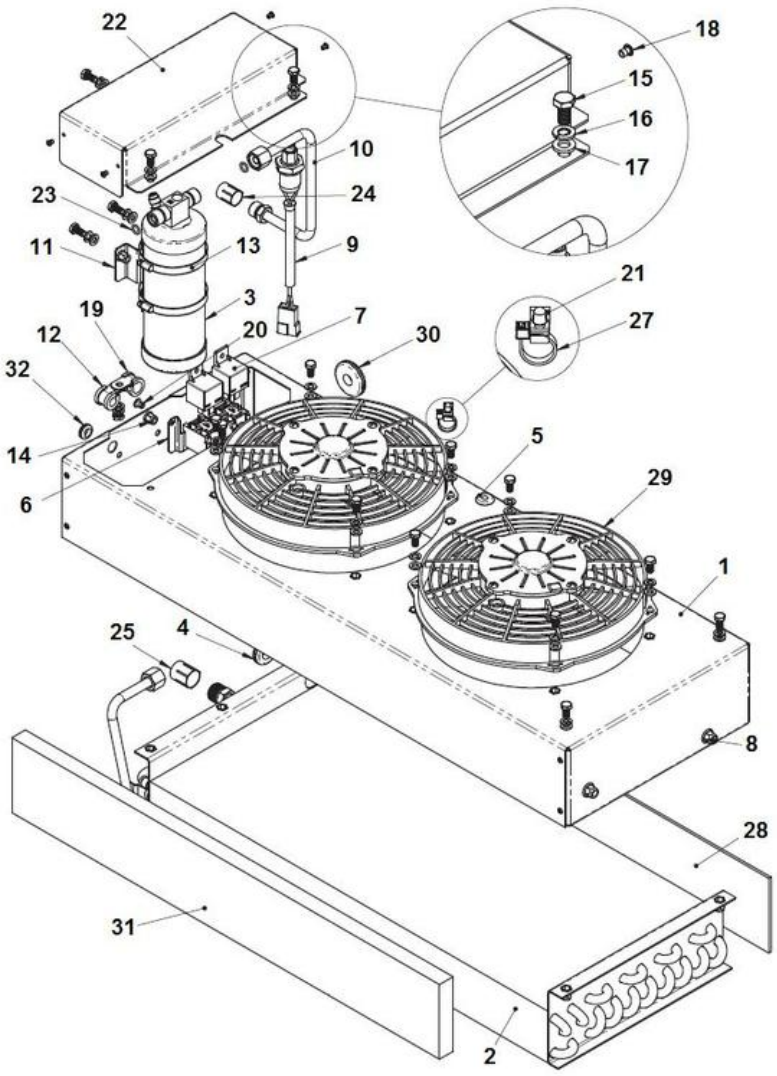

Elemento	N.º de pieza	Nombre	Cant.	L
1	4812325277	Bracket	1	
2	4812325278	Condenser	1	
3	4812325279	Air dryer	1	
4	4812325280	Grommet	1	
5	4812325126	Eyelet	2	
6	4812325282	Bracket	1	
7	4812325283	Relay 24V	2	
8	4812325284	Nut	4	
9	4812325285	Pressure switch	1	
10	4812325286	Connector	1	
11	4812325287	Bracket	1	
12	4812325288	Clamp	1	
13	4812325289	Clamp	2	
14	4812325290	Rivet nut	12	
15	4812325291	Screw	17	
16	4812325292	Washer	17	
17	4812325293	Washer	17	
18	4812325294	Rivet	12	
19	4812325295	Clamp	1	
20	4812325296	Rivet	2	
21	4812325297	Bracket	1	
22	4812325298	Cover	1	
23	4812325299	O-ring	2	
24	4812325300	Cover	1	
25	4812325301	Cover	1	
26	4812325302	Wiring harness	1	
27	4812325303	Clamp	1	
28	4812325304	Foam	0,023	
29	4812325305	Fan	2	
30	4812325306	Grommet	1	
31	4812325307	Foam	0,06	
32	4812325308	Grommet	1	

Cab Module (from SN xxB005060) Evaporator unit / accessories

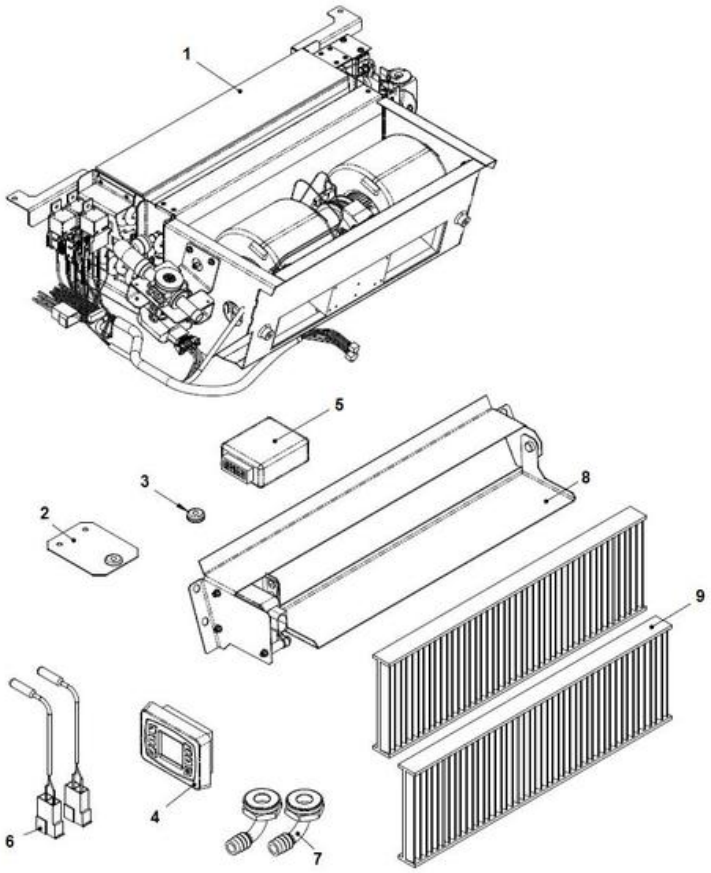

Elemento	N.º de pieza	Nombre	Cant.	L
1	-	Evaporator assy	1	
2	4812325123	Bracket	1	
3	4812325126	Eyelet	2	
4	4812325131	A/C Control	1	
5	4812325130	A/C Control module	1	
6	4812325127	Temperature sensor	2	
7	4812318117	Elbow	2	
8	4812317229	Air inlet	1	
9	4812318120	Air filter cab	2	

Cab Module (from SN xxB005060) Evaporator assy

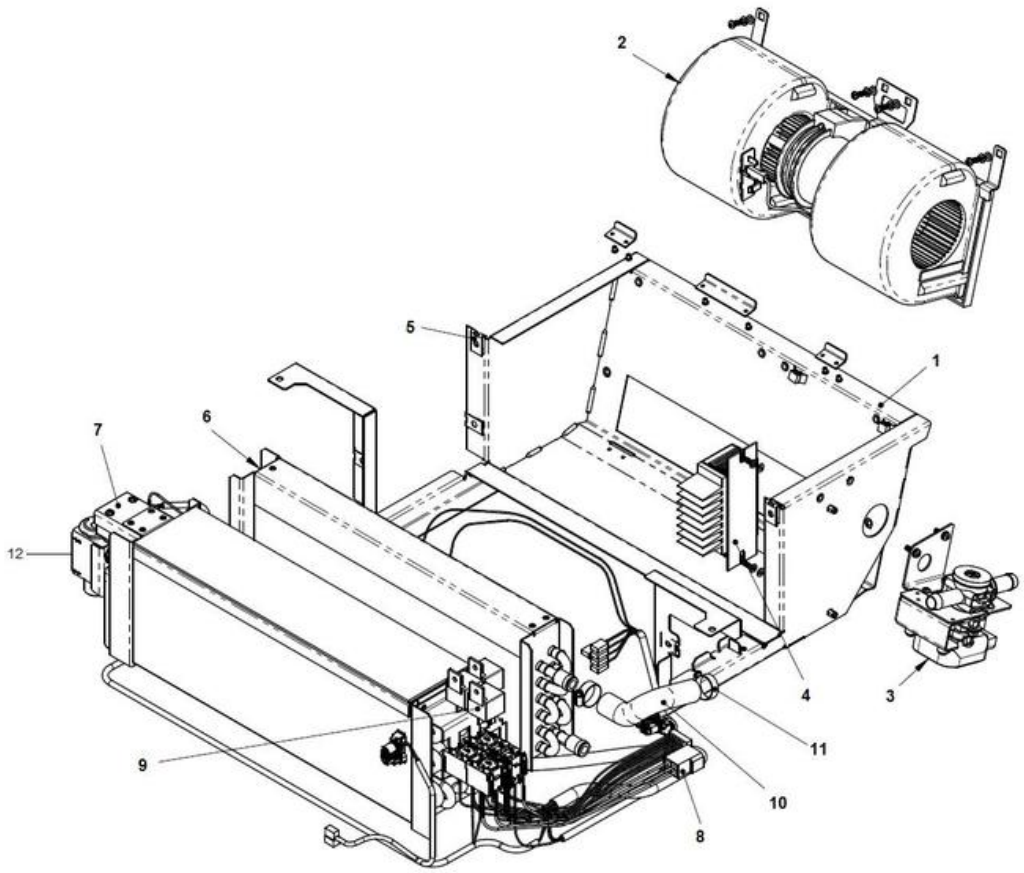

Elemento	N.º de pieza	Nombre	Cant.	L
1	-	Structure	1	
2	4812325281	Fan	1	
3	4812325132	Valve	1	
4	4812325129	Module	1	
5	-	PRIMAVERA	5	
6	4812325309	Heater	1	
7	4812325310	Evaporator	1	
8	4812325125	Wiring harness	1	
9	4812325283	Relay 24V	3	
10	4812318118	Hose	1	
11	-	Clamp	2	
12	4812325672	Expansion valve	1	

Cab Module (from SN xxB005060) Inner panel

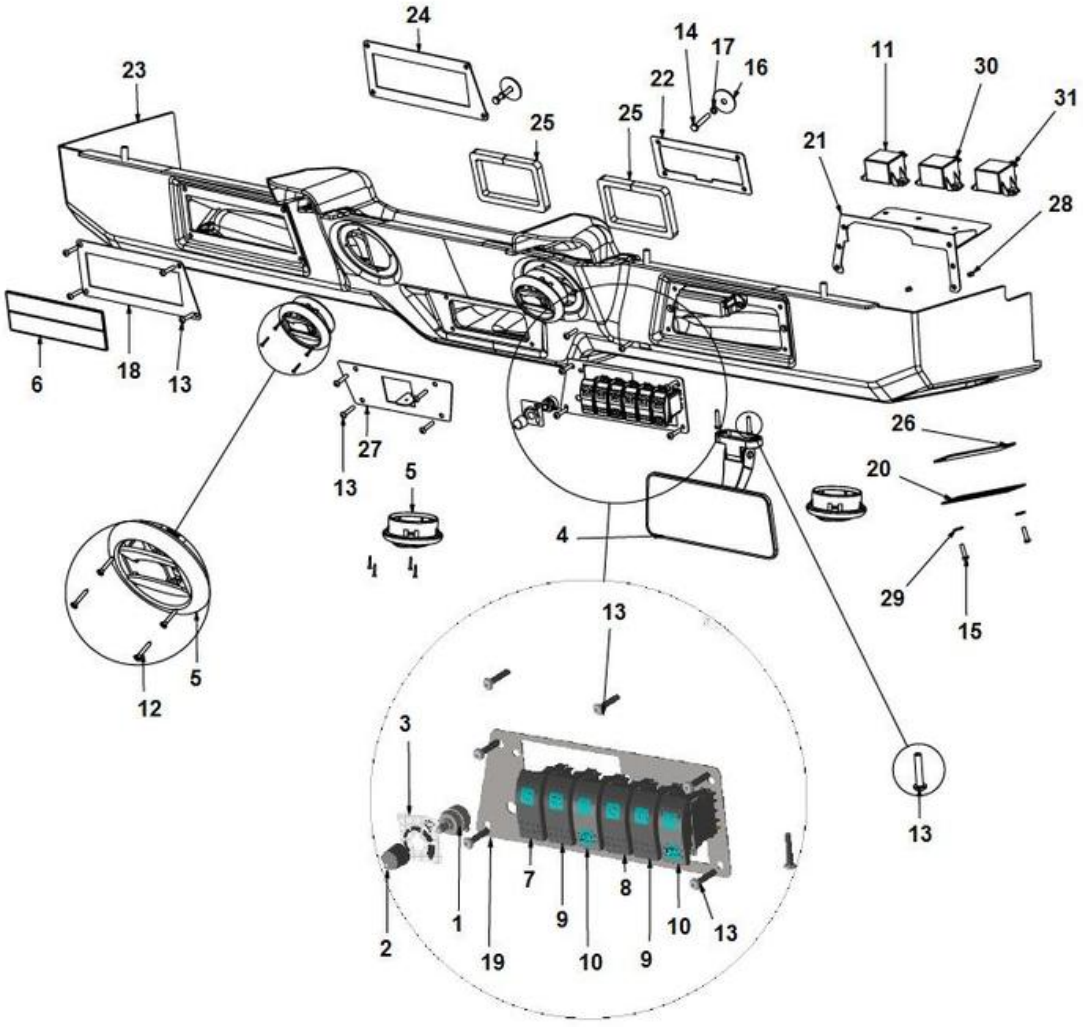

Elemento	N.º de pieza	Nombre	Cant.	L
1	4812325462	Potentiometer	1	
2	4812325463	Knob	1	
3	4812325464	Decal	1	
4	4812325465	Rear view mirror	1	
5	4812325466	Air outlet	4	
6	4812325467	Cover	1	
7	4812325441	Switch	1	
8	4812325442	Switch	1	
9	4812325443	Switch	2	
10	4812325444	Switch	2	
11	4812325468	Relay ignition	1	
12	-	Paraf.sext. M8x35	16	
13	-	Paraf.sext. M8x35	16	
14	-	Paraf.sext. M8x35	2	
15	-	Paraf.sext. M8x35	4	
16	-	Arandela	2	
17	-	Arandela	2	
18	4812325469	Bracket	1	
19	4812325470	Bracket	1	
20	4812325471	Inlet	2	
21	4812325472	Bracket	1	
22	4812325473	Bracket	1	
23	4812325474	Panel	1	
24	4812325475	Bracket	1	
25	-	2	2	
26	4812325476	Filter	2	
27	4812325477	Bracket	1	
28	-	PRIMAVERA	4	
29	-	Arandela	4	
30	4812325478	Timer relay	1	
31	4812325479	Washer relay	1	
32	-	Ground cable	1	
33	4812325480	Wiring harness cab	1	

Cab Module (from SN xxB005060) Covers assy

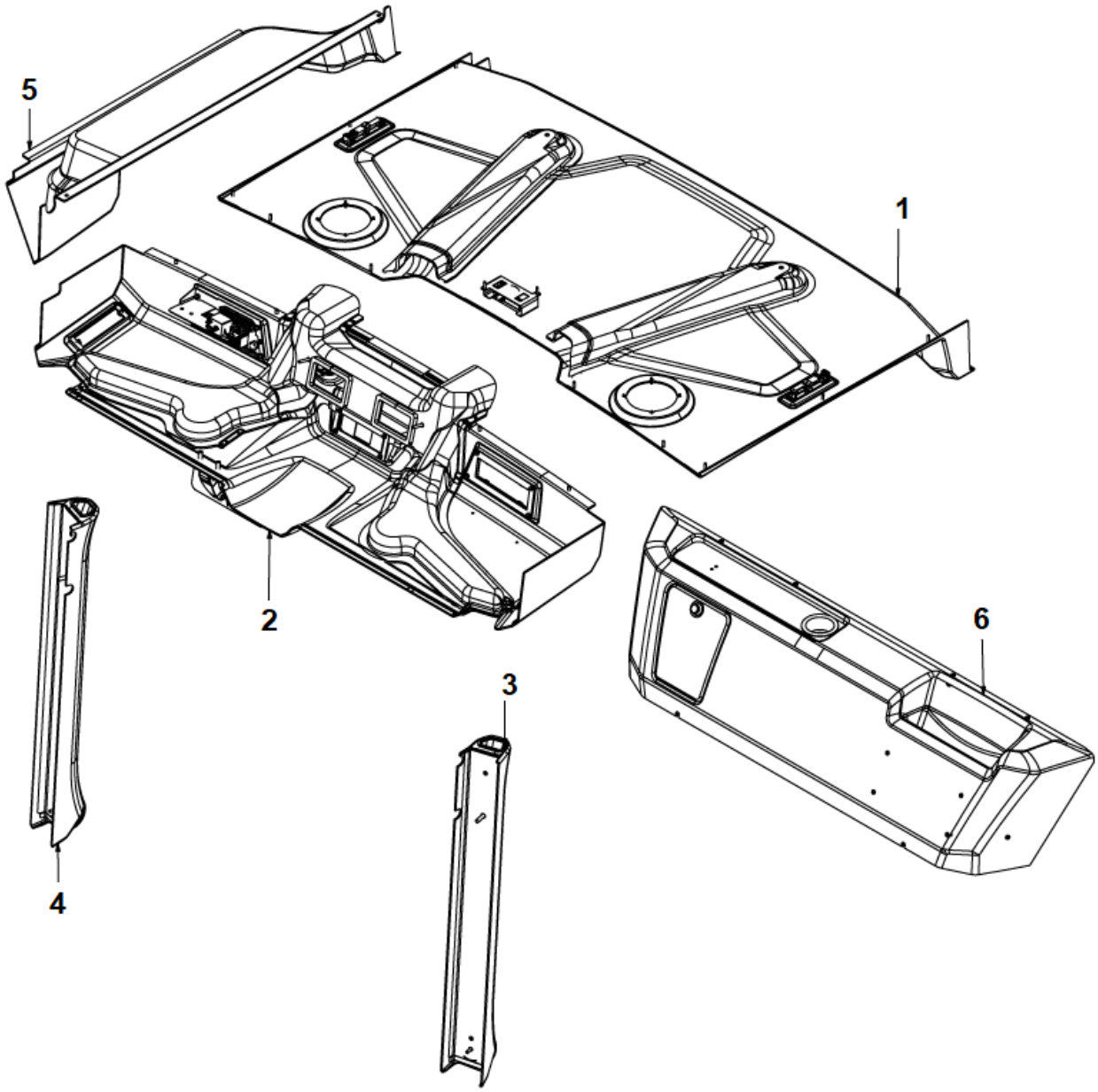

Elemento	N.º de pieza	Nombre	Cant.	L
1	4812325673	Inner panel	1	
2	4812325674	Panel	1	
3	4812325675	Column lh	1	
4	4812325676	Column rh	1	
5	4812325677	Side inner panel	1	
6	4812325678	Back panel	1	

Cab Module (from SN xxB005060) Wiring Harness Kit - Power Supply Cab

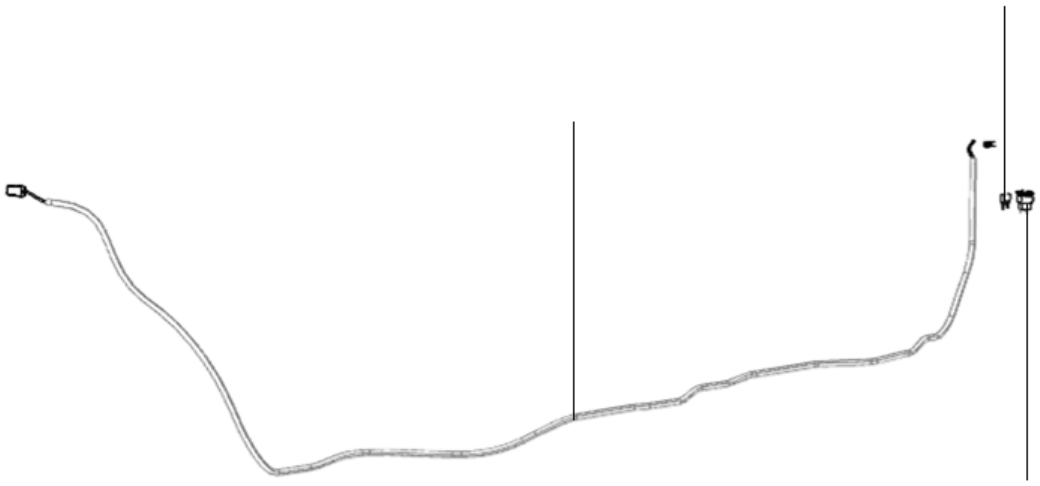

Elemento	N.º de pieza	Nombre	Cant.	L
1	4812100076	Wiring harness	1	
2	4700904039	Fuse 50A Red	1	
3	4700395816	Plug socket 24V	1	

Referenced Pages

Compressor module 197

Esta página se ha dejado en blanco de forma intencionada

Canopy option Canopy option

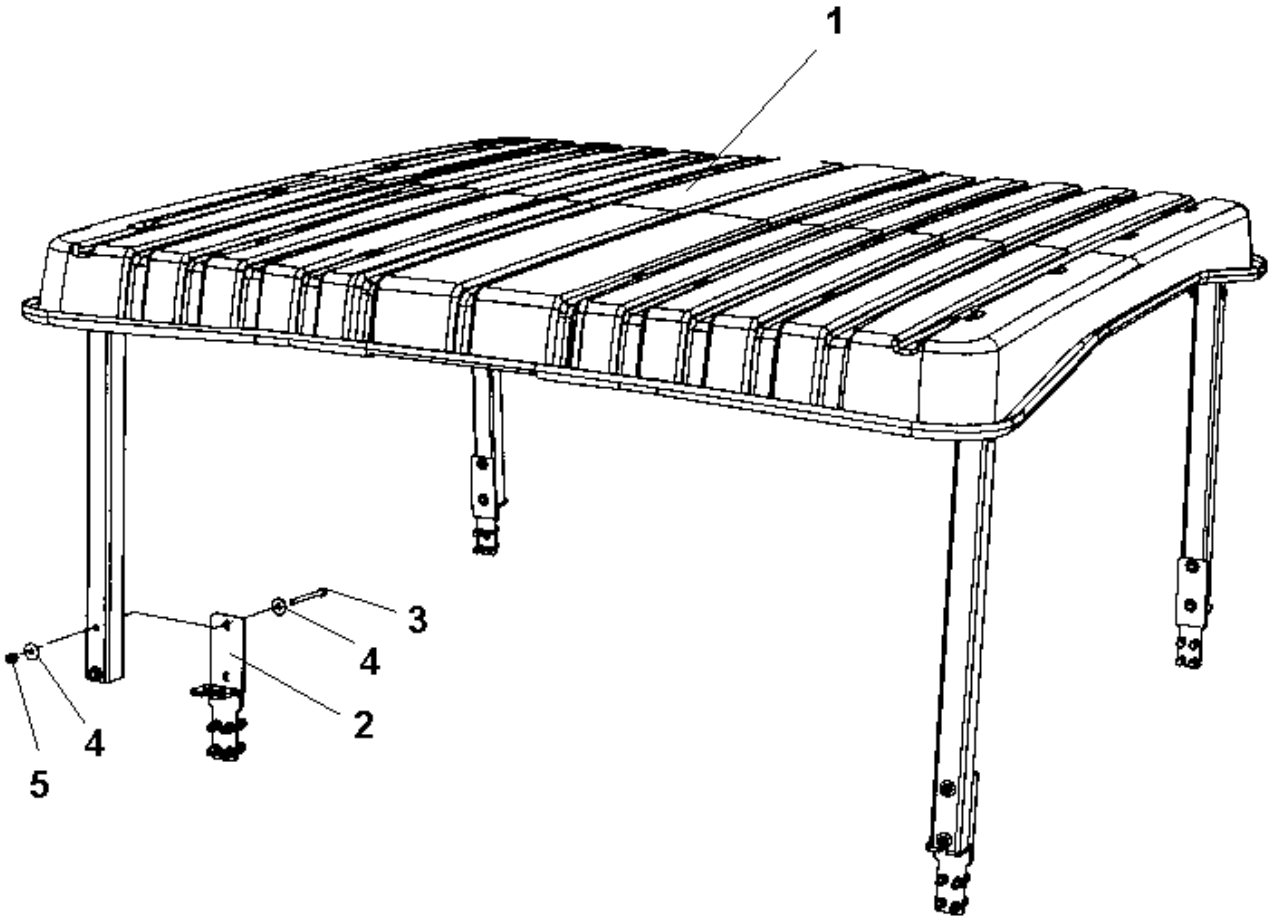

Elemento	N.º de pieza	Nombre	Cant.	L
1	-	Canopy assy	1	
2	-	Bracket	4	
3	4700500190	Hexagon head screw M	8	
4	4700601003	Washer, 8,4x25x2 mm	16	
5	4700586003	Lock nut M8	8	

Canopy option Canopy assy

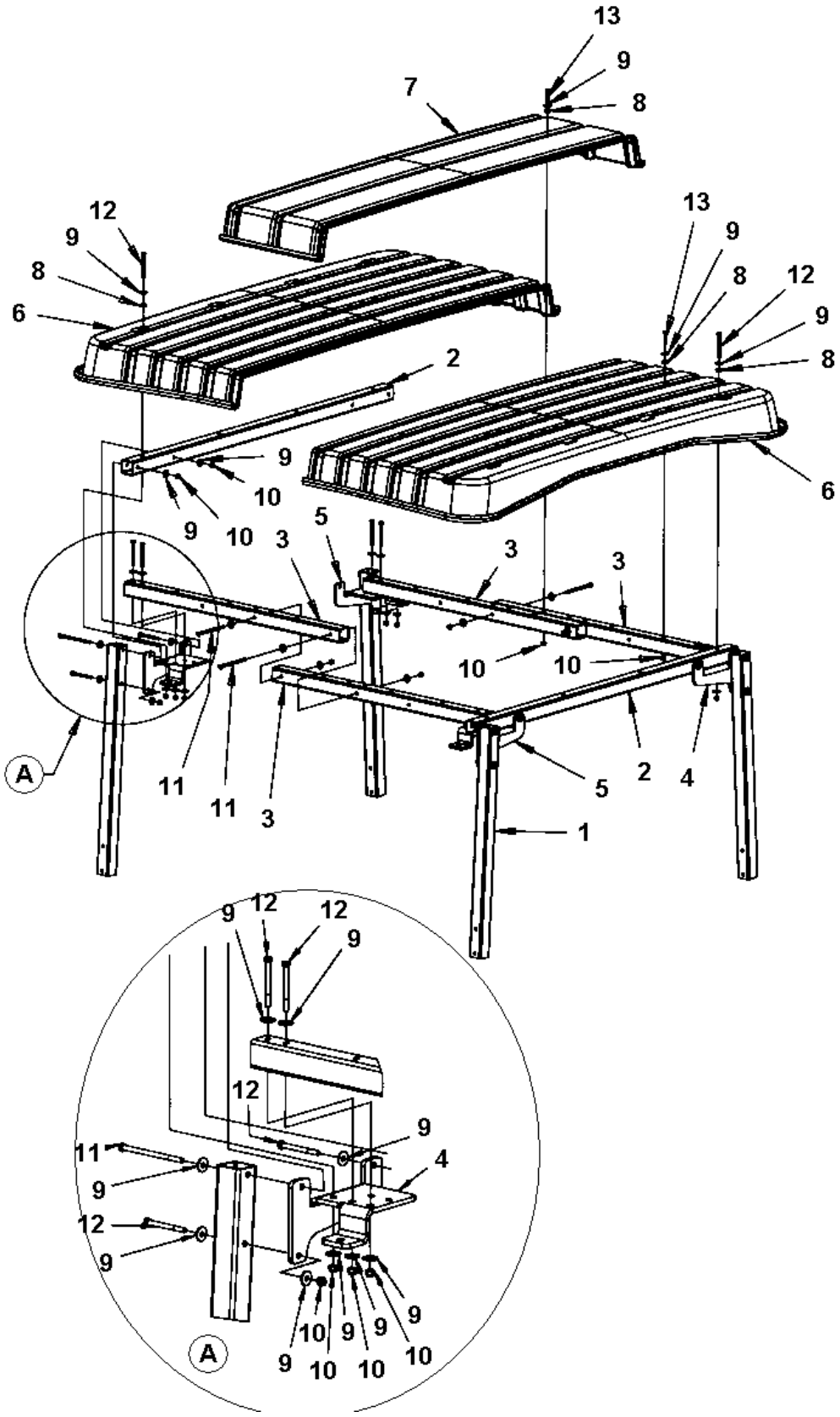

Elemento	N.º de pieza	Nombre	Cant.	L
1	4700393640	Pillar	4	
2	4700393641	Roof beam	2	
3	4700393642	Cross beam	4	
4	4700393645	Bracket	2	
5	4700393646	Bracket	2	
6	4700394139	Plastic roof	2	
7	4700394140	Plastic roof	1	
8	4700391674	Rubber washer	22	
9	4700601003	Washer, 8,4x25x2 mm	74	
10	4700586003	Lock nut M8	46	
11	4700500143	Screw	8	
12	4700500190	Hexagon head screw M	20	
13	4700904241	Hexagon head screw M	18	

Canopy option Bracket

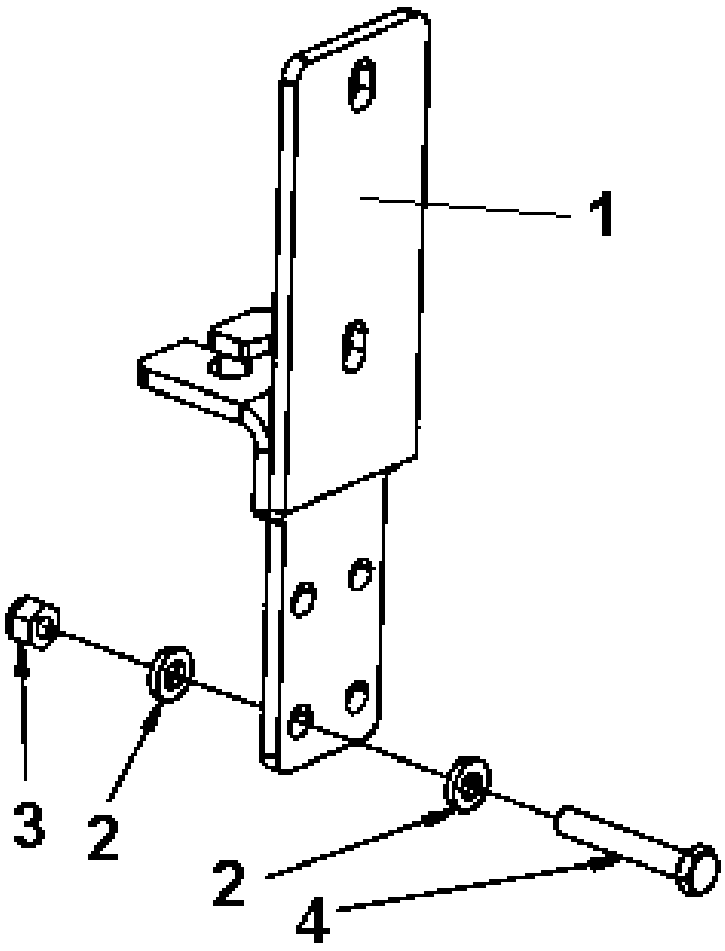

Elemento	N.º de pieza	Nombre	Cant.	L
1	4700393639	Bracket	1	
2	4700904556	Steel plain washer	8	
3	4700586003	Lock nut M8	4	
4	4700500239	Hex. head screw	4	

ROPS Module ROPS Module

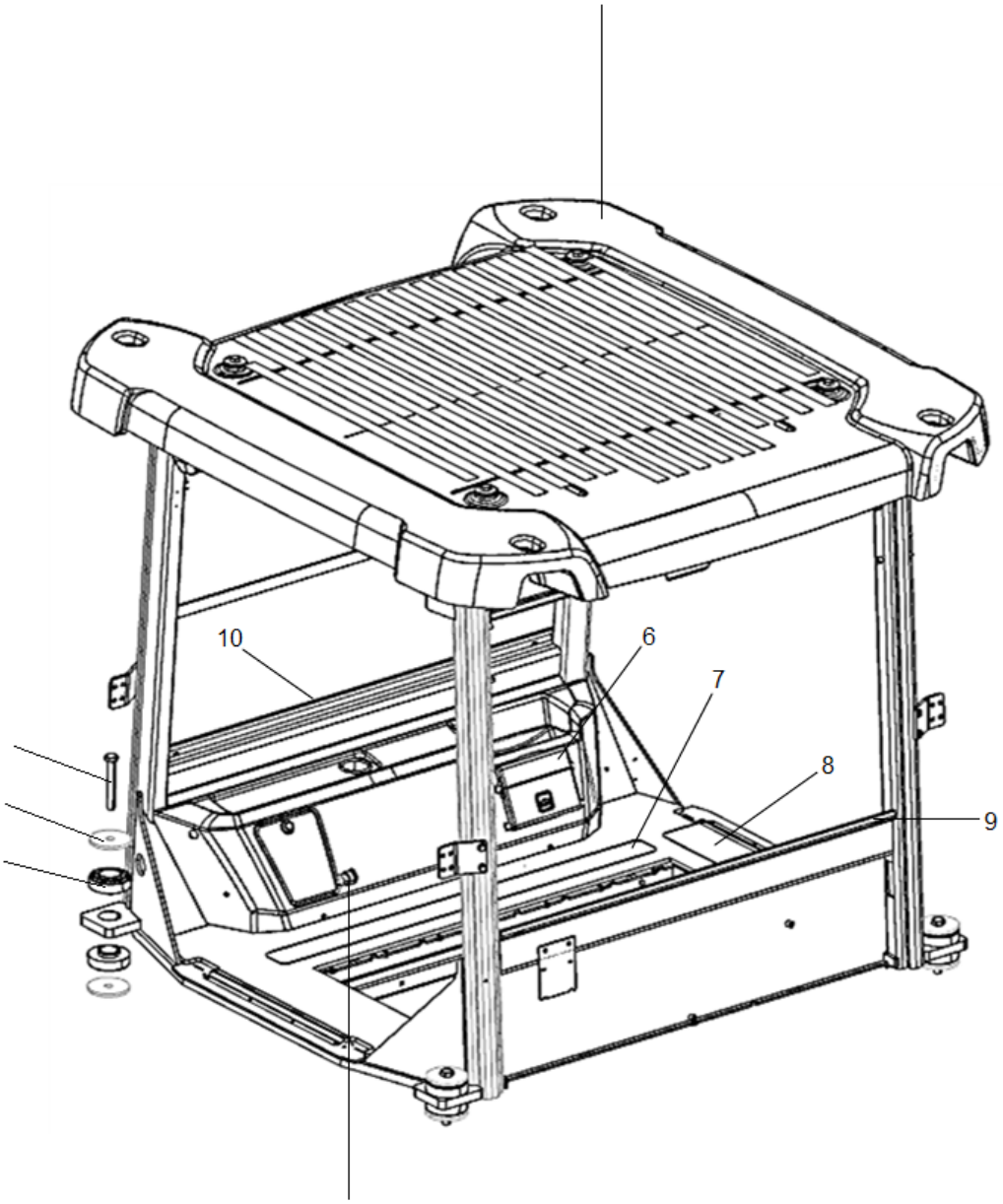

Elemento	N.º de pieza	Nombre	Cant.	L
1	4812318466	ROPS assy	1	
2	4812110585	Shock absorber	8	
3	4700391788	Steel spacer	8	
4	4700904487	Screw M20x140 10.9	4	
5	4700395816	Plug socket 24V	1	
6		Manual box	1	
7	4700372121	Protection	3	
8	4700396828	Protection	1	
9	4700902379	Edge trim	1.4	
10	4700902379	Edge trim	1.4	

ROPS Module Rops assy

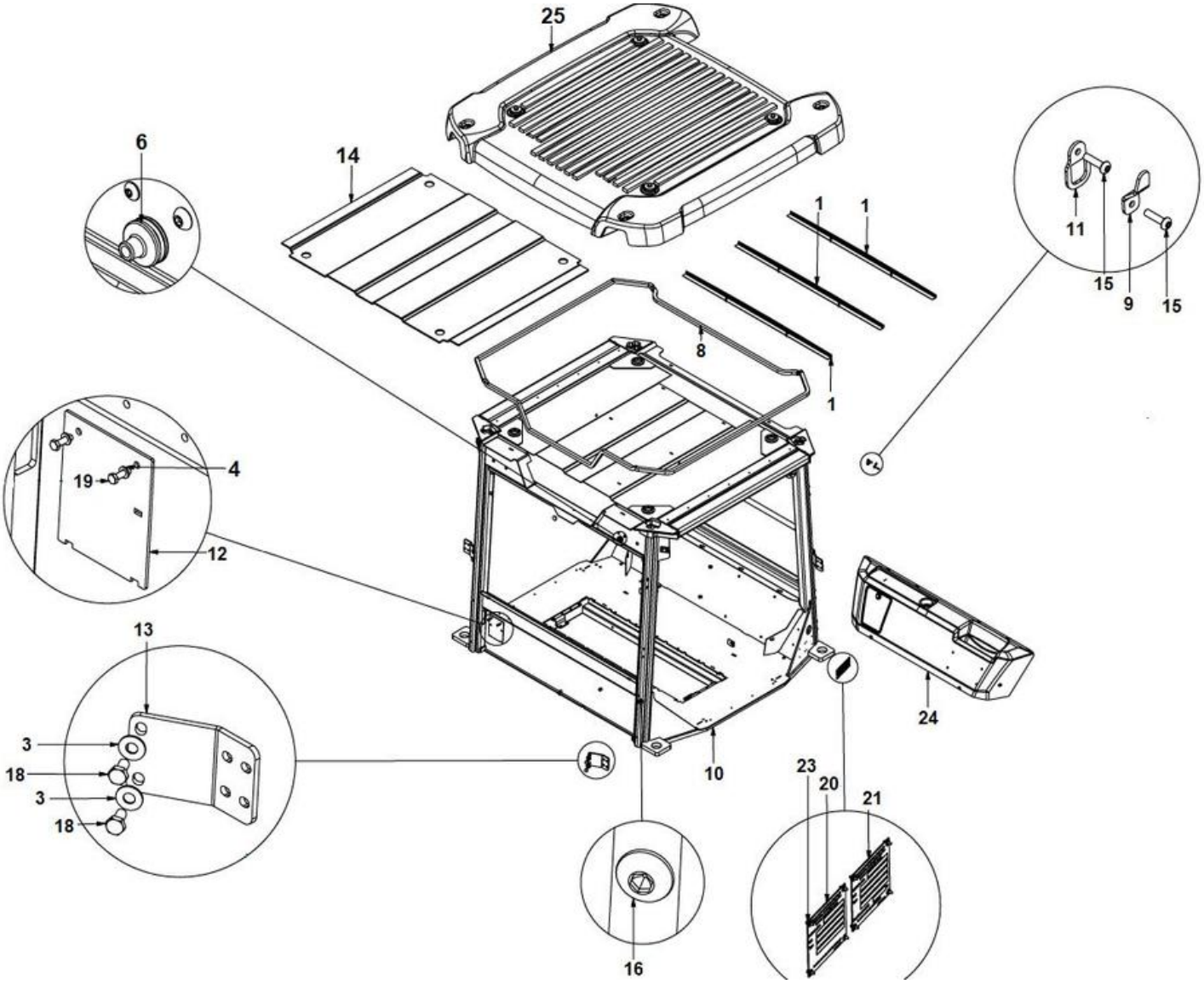

Esta página se ha dejado en blanco de forma intencionada

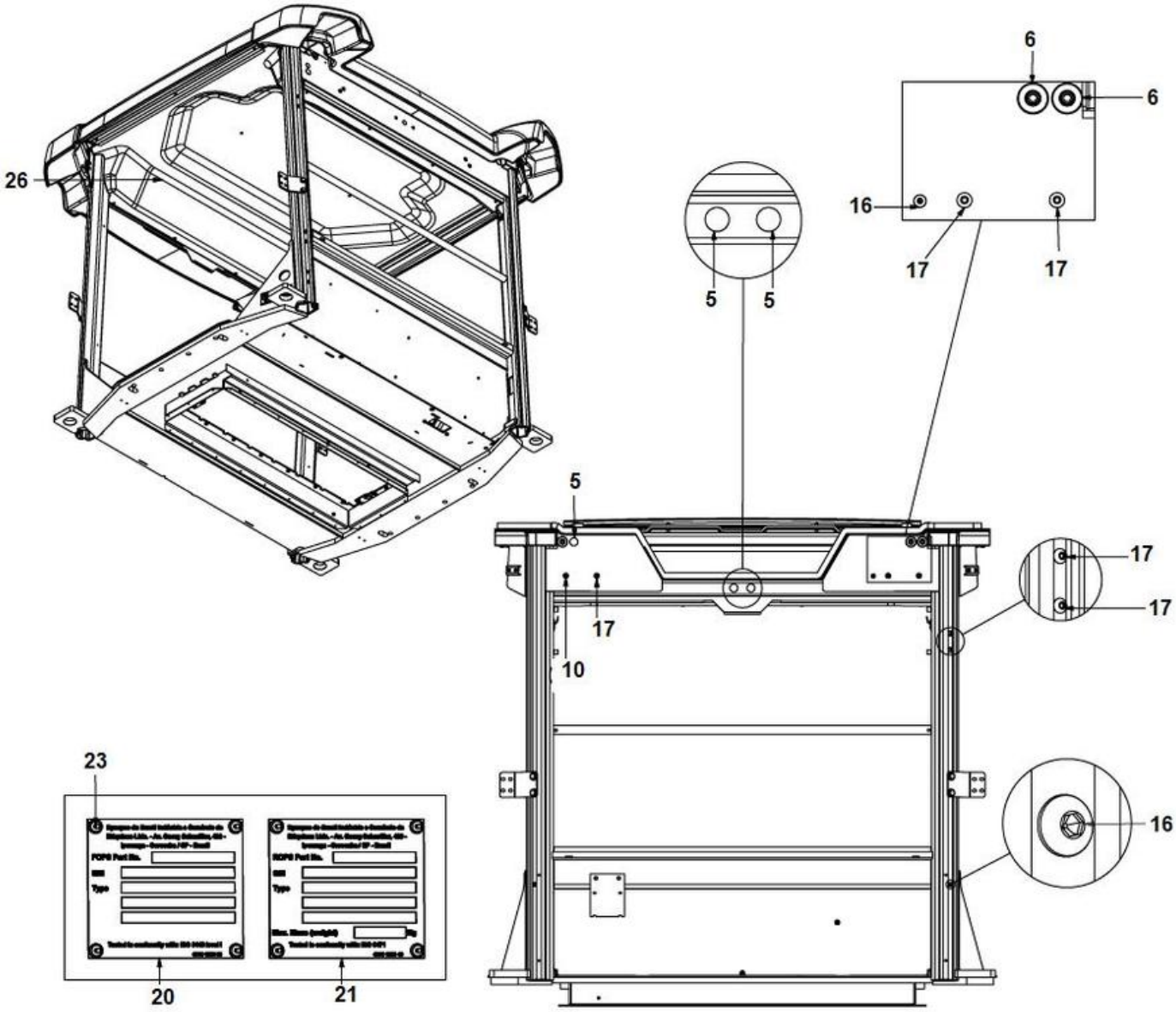
26
6
6
16
17
17
5
5
5
17
17
10
17
17
23
16
20
21

Esta página se ha dejado en blanco de forma intencionada

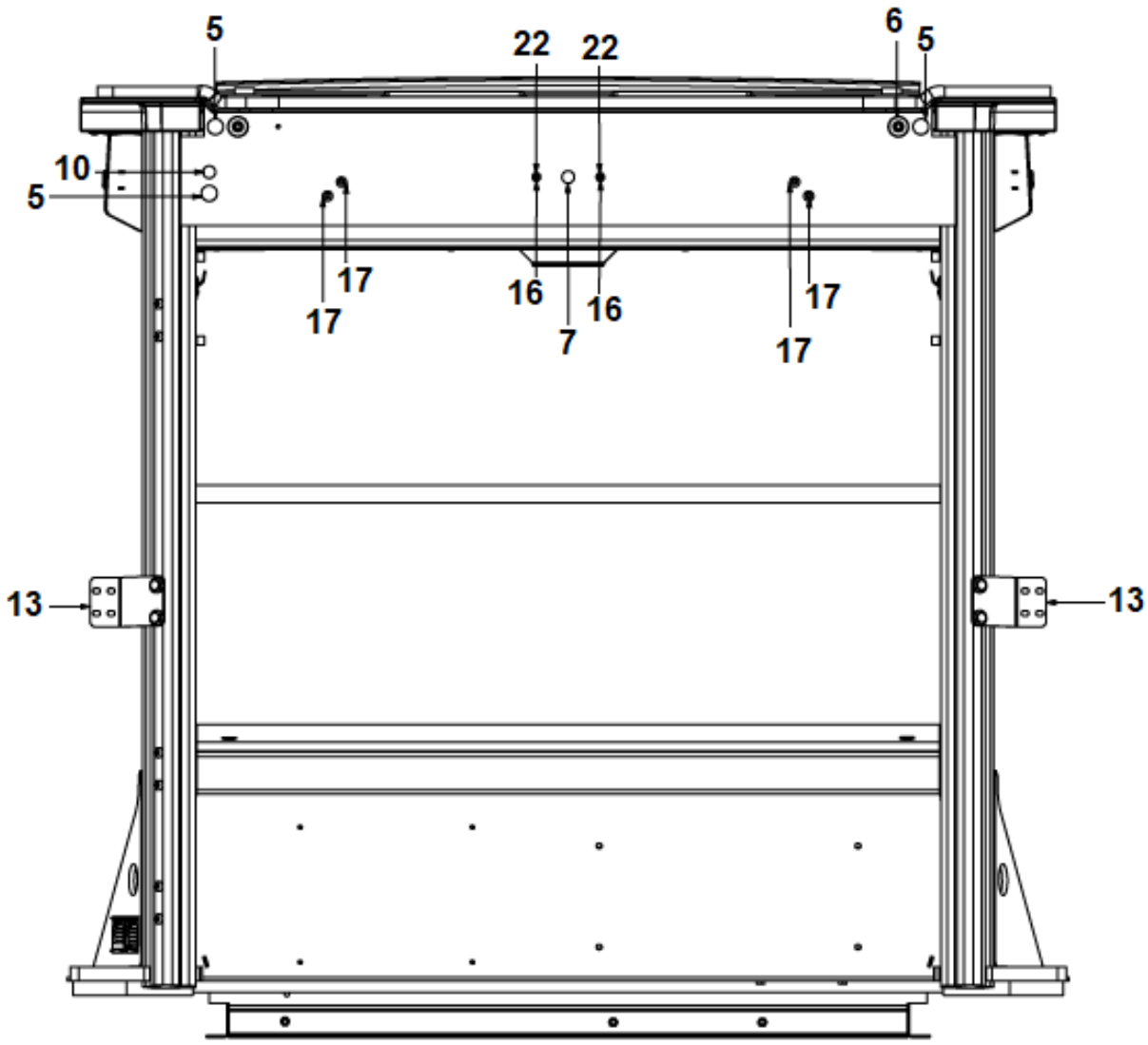
5
22
22
6
5
10
5
17
17
16
16
7
17
17
13
13

Elemento	N.º de pieza	Nombre	Cant.	L
1	4812325242	Roof bracket	3	
2		Roof bracket	4	
3		Casquillo	8	
4	4812325274	Washer	2	
5	-	Rubber Tap	7	
6		Grommet	5	
7		Rubber	2	
8	4812325935	Roof seal	1	
9	4812325247	Hook	2	
10		Rops structure	1	
11	4812325248	Bracket	2	
12		Plate	1	
13	4812325936	Bracket	4	
14	4812325937	Thermic plate	1	
15	4812325276	Screw	4	
16	4812325187	Screw	5	
17	4812325938	Screw	16	
18	4812325939	Screw	8	
19	4812325272	Screw	2	
20		Rops plate	1	
21		Rops plate	1	
22		Chaveta	3	
23		Rivet	8	
24	4812325678	Back panel	1	
25	4812325933	Roof	1	
26	4812326020	Internal Roof	1	

ROPS Module Back Panel assy

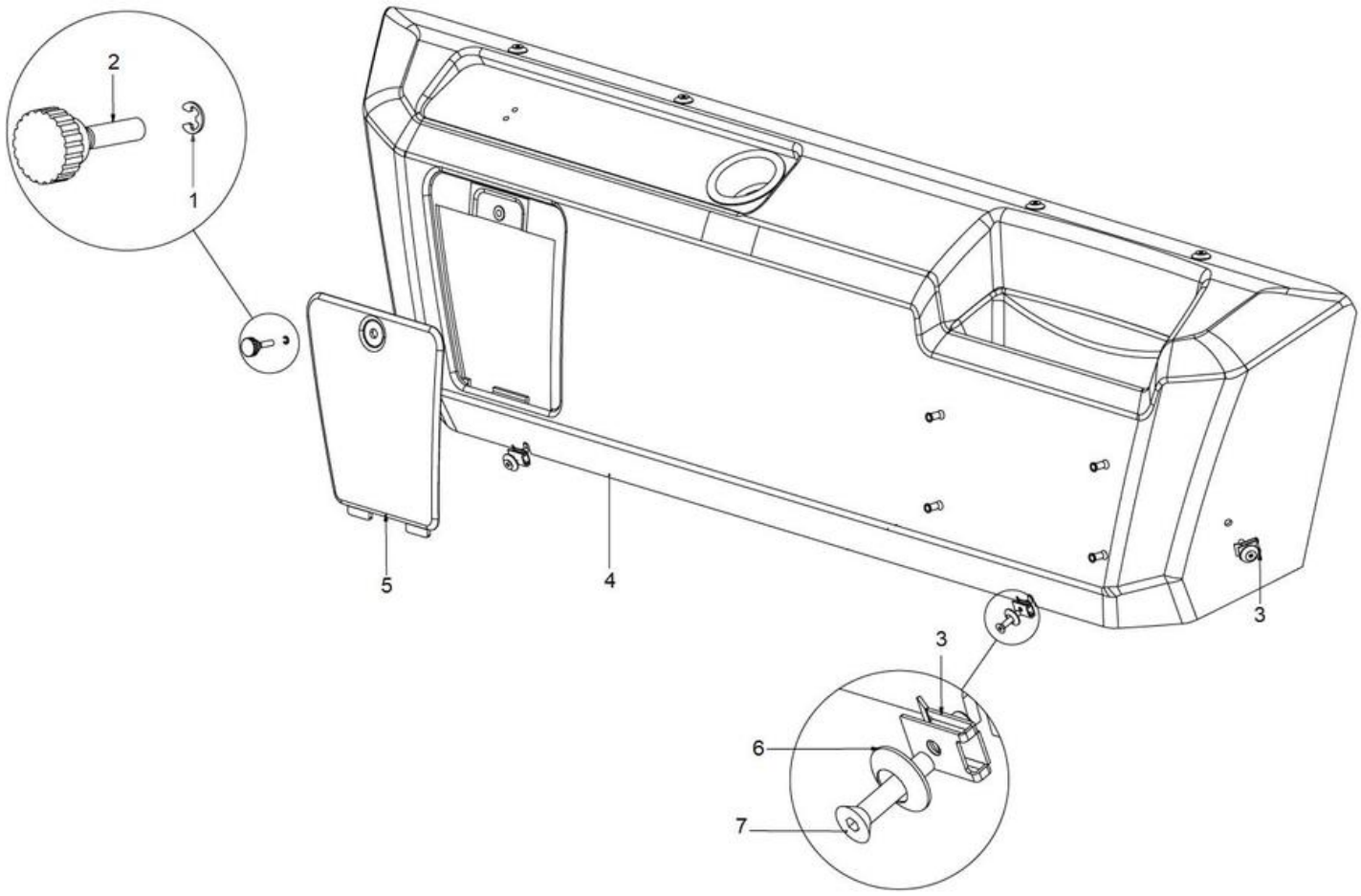

Elemento	N.º de pieza	Nombre	Cant.	L
1	-	Junta tórica	1	
2	-	Knob	1	
3	482325809	Nut	8	
4	-	Rear Cover	1	
5	-	Coating	1	
6	4812325904	Washer	8	
7	4812325905	Screw	8	

ROPS Module Roof

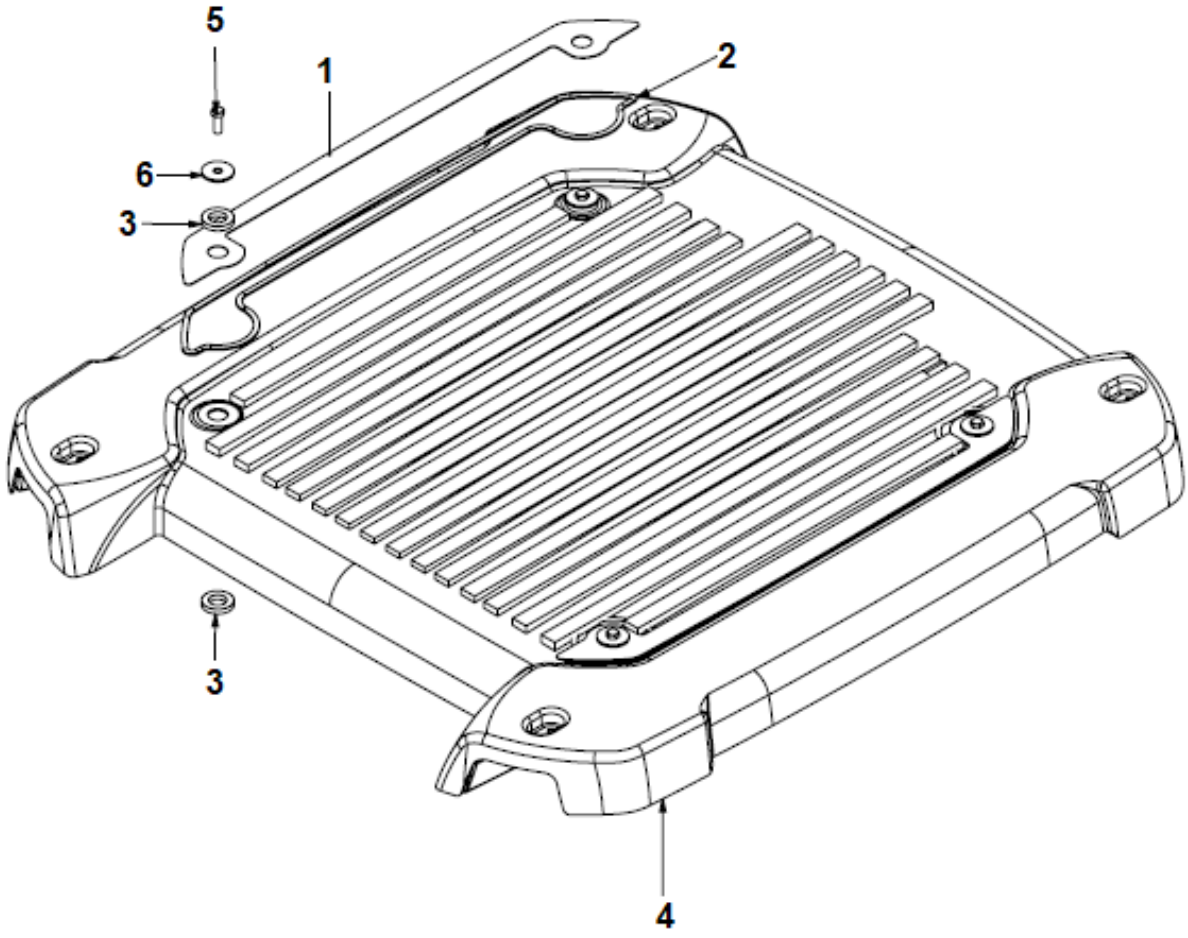

Elemento	N.º de pieza	Nombre	Cant.	L
4	4812325933	Roof	1	
1	4812326061	Roof plate	2	
2	4812326062	Rubber trip	2	
3	4812325239	Rubber	8	
5	4812325233	Screw	4	
6	4812325234	Washer	4	

ROPS Module Internal Roof

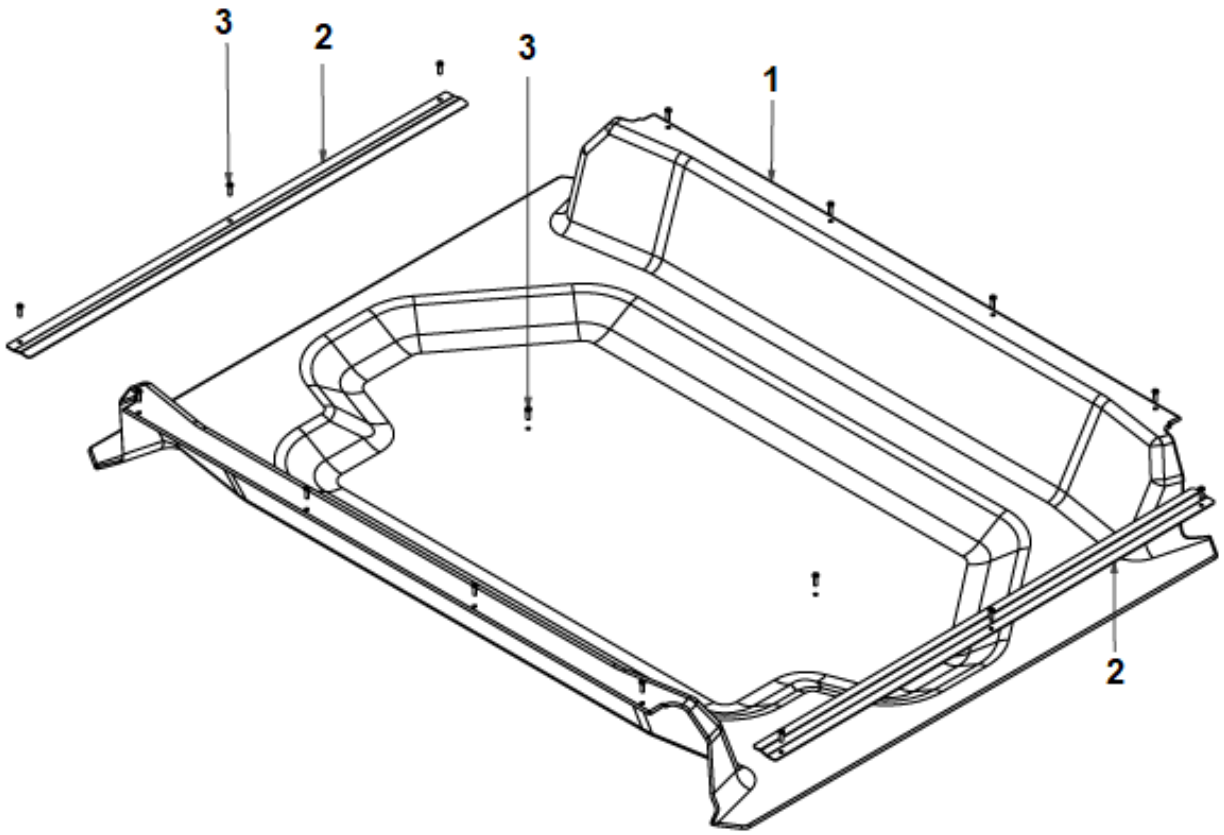

Elemento	N.º de pieza	Nombre	Cant.	L
1	4812326058	Internal Roof	1	
2	4812326059	Roof bracket	2	
3	4812326060	Screw	16	

Air cleaner module Air cleaner module

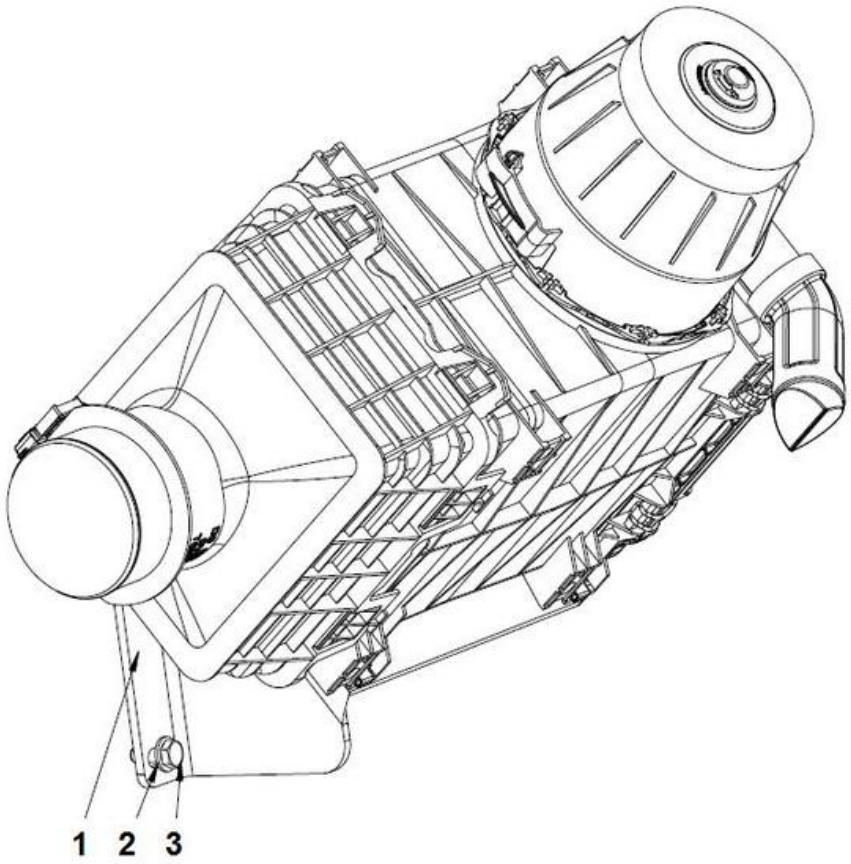

Elemento	N.º de pieza	Nombre	Cant.	L
1		Air cleaner assy	1	
2	4700904557	Steel plain washer	2	
3	4700500028	Arandela 6,4x12x1,5	2	

Air cleaner module Air cleaner assy

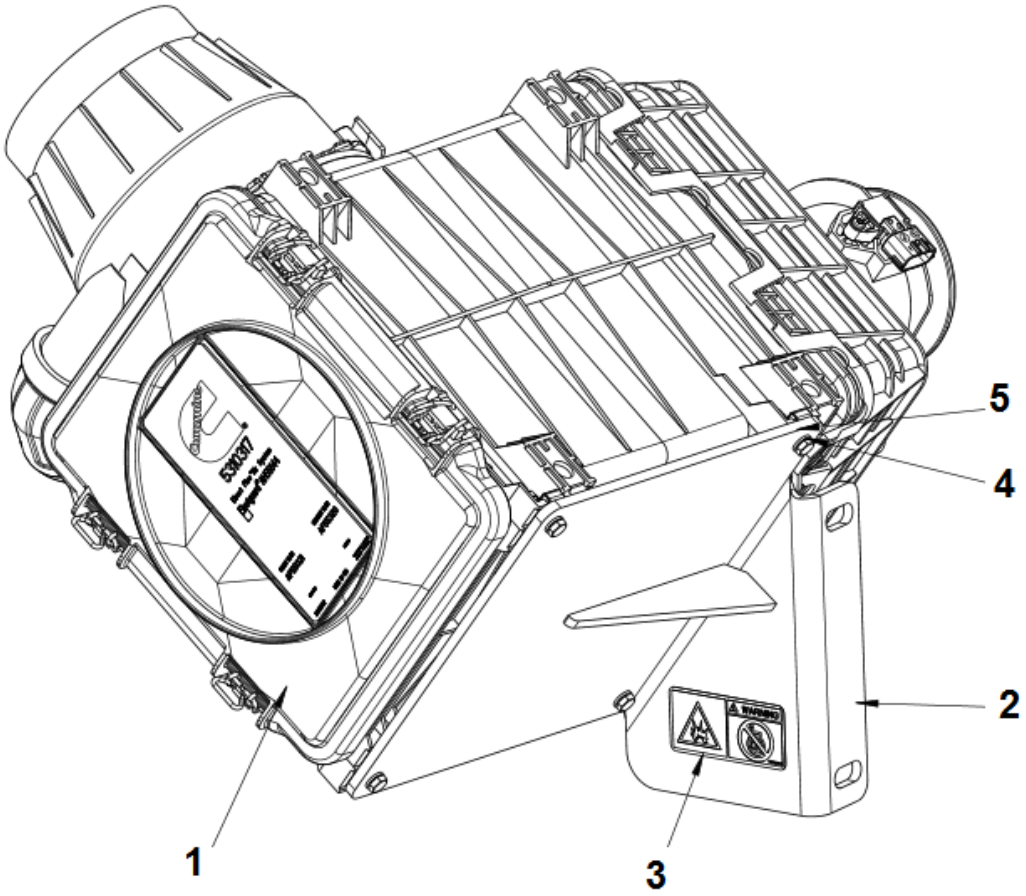

Elemento	N.º de pieza	Nombre	Cant.	L
1	4812317149	Air cleaner	1	
1	4812325055	Air filter element	1	
1	4812325056	Safety filter element	1	
2	4812317261	Air cleaner bracket	1	
3	4700791642	Safety decal, Use of starting fluid prohib.	1	
4	4700904228	Arandela 6,4x12x1,5	4	
5	4700500075	Screw, M6-1,0x25 mm 8.8	4	

Exhaust system module Exhaust pipe

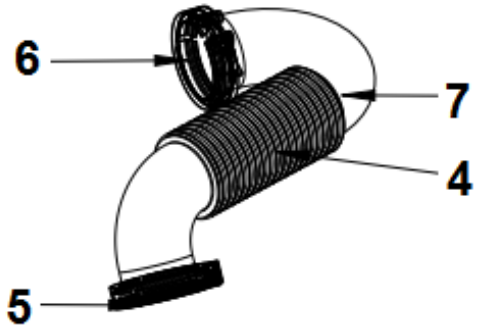

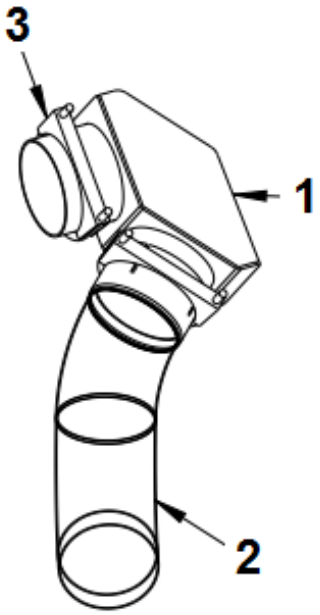

Elemento	N.º de pieza	Nombre	Cant.	L
1	4812317128	Exhaust connection	1	
2	4812317127	Exhaust pipe	1	
3	4812318954	Clamp 4 1/8"	2	
4	4812318273	Exhaust pipe	1	
5	4812317138	Pipe clamp	2	
6	4812317139	Gasket	2	
7	4812318355	Thermal insulator	1	

Engine module 89kW Engine module 89kW

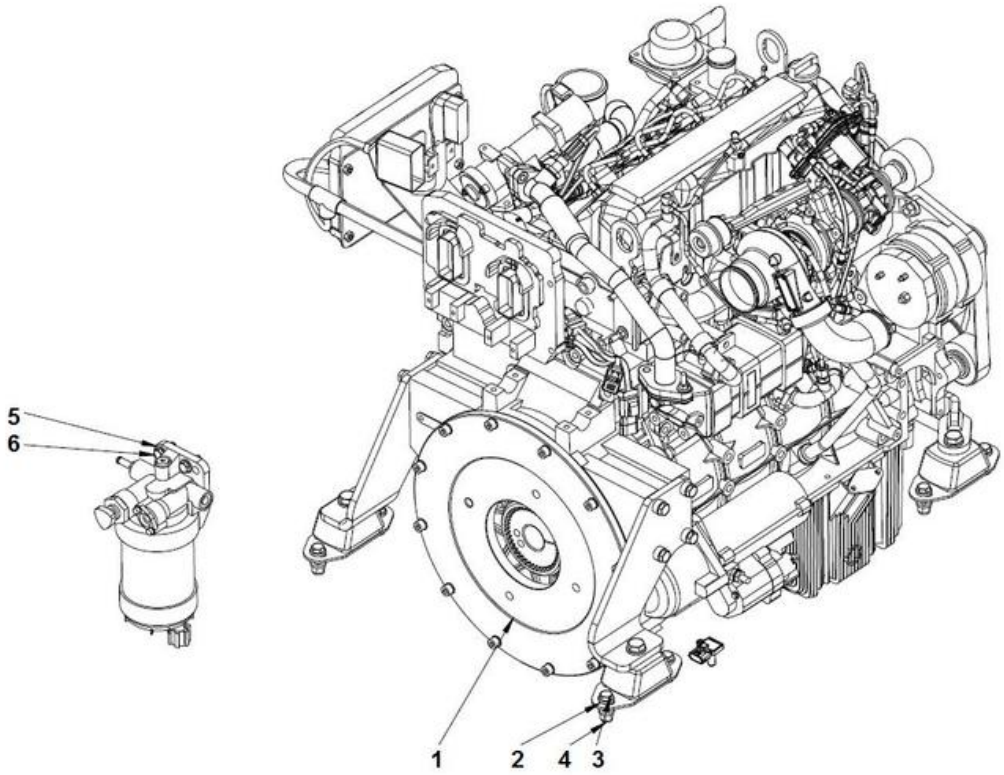

Elemento	N.º de pieza	Nombre	Cant.	L
1		Engine QSF 3.8 T4F assy	1	
2	4700904703	Plain washer 13x24x4 mm	16	
3	4700500194	Hexagon head screw M	8	
4	4700586019	Lock nut M12	8	
5	4700904230	Plain washer M10 10.5X22X2.0	4	
6	4700500029	Hexagon head screw M	4	

Engine module 89kW Engine QSF 3.8 T4F assy

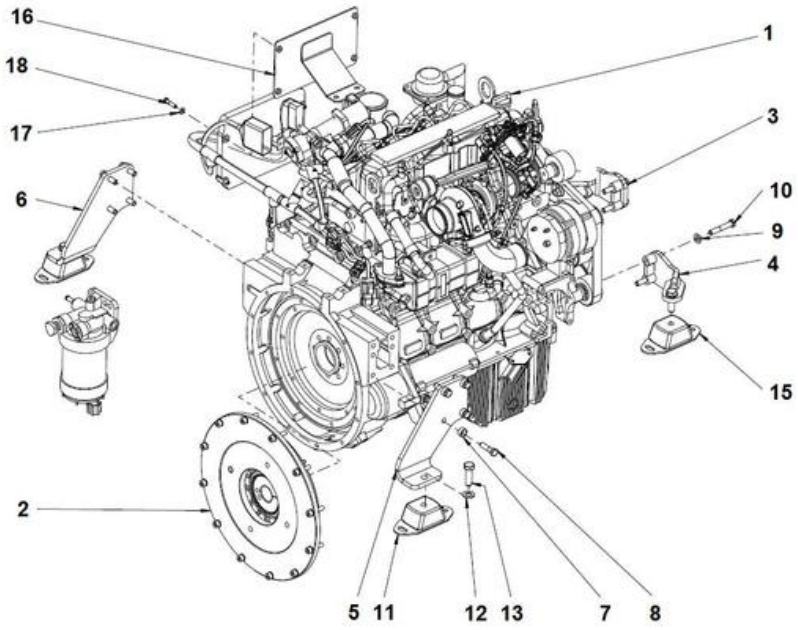

Elemento	N.º de pieza	Nombre	Cant.	L
1	4812318336	Diesel engine T4F	1	
1	4812160892	Alternator	1	
1	4812313512	V-belt	1	
1	4812159499	Starter motor	1	
2		Coupling module	1	
3	4812317281	Engine bracket	1	
4	4812317280	Engine bracket	1	
5	4812317282	Engine bracket	1	
6	4812317283	Engine bracket	1	
7	4700375132	Spacer	8	
8	4700500056	Screw, M12x45 mm 8.8 A3K	8	
9	4700904703	Plain washer 13x24x4 mm	7	
10	4700500133	Screw	4	
11	4700387128	Shock Absorber	2	
12	4700904232	Washer 15x30x4 300 HV	4	
13	4700500070	Hexagon head screw M	4	
14	4700902541	Lock fluid Loctite 243, 50 ml	1	
15	4812315362	Shock Absorber	2	
16	4812317990	Bracket	1	
17	4700904229	Steel plain washer 8.4X16X1.5	4	
18	4700500047	Hexagon screw M	4	

Engine module 97kW Engine module 97kW

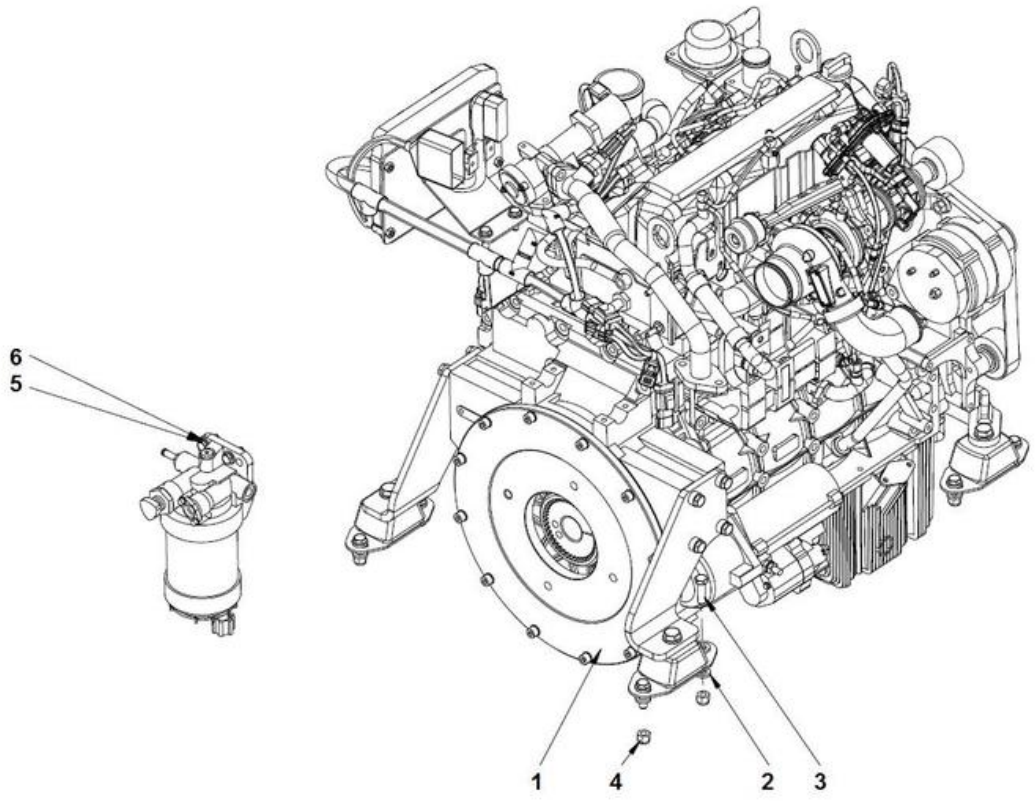

Elemento	N.º de pieza	Nombre	Cant.	L
1		Engine QSF 3.8 T4F assy	1	
2	4700904703	Plain washer 13x24x4 mm	16	
3	4700500194	Hexagon head screw M	8	
4	4700586019	Lock nut M12	8	
5	4700904230	Plain washer M10 10.5X22X2.0	4	
6	4700500029	Hexagon head screw M	4	

Engine module 97kW Engine QSF 3.8 T4F assy

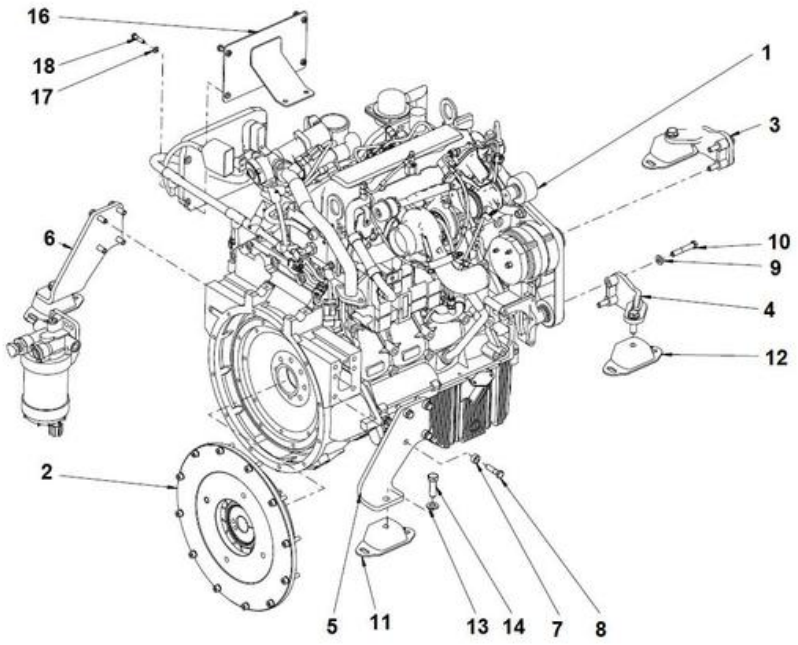

Elemento	N.º de pieza	Nombre	Cant.	L
1	4812318337	Diesel engine 97kW T4F	1	
1	4812160892	Alternator	1	
1	4812313512	V-belt	1	
1	4812159499	Starter motor	1	
2		Coupling module	1	
3	4812317281	Engine bracket	1	
4	4812317280	Engine bracket	1	
5	4812317282	Engine bracket	1	
6	4812317283	Engine bracket	1	
7	4700375132	Spacer	8	
8	4700500056	Screw, M12x45 mm 8.8 A3K	8	
9	4700904703	Plain washer 13x24x4 mm	7	
10	4700500133	Screw	4	
11	4700387128	Shock Absorber	2	
12	4812315362	Shock Absorber	2	
13	4700904232	Washer 15x30x4 300 HV	4	
14	4700500070	Hexagon head screw M	4	
15	4700902541	Lock fluid Loctite 243, 50 ml	1	
16	4812317990	Bracket	1	
17	4700904229	Steel plain washer 8.4X16X1.5	2	
18	4700500047	Hexagon screw M	1	

Engine Expansion tank module

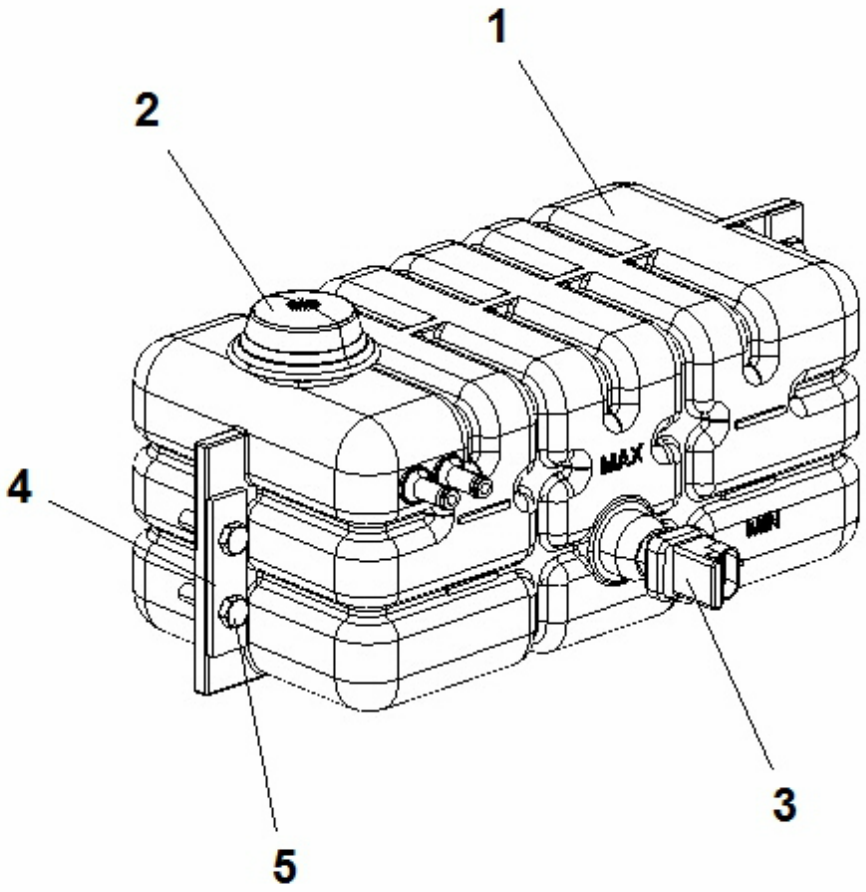

Elemento	N.º de pieza	Nombre	Cant.	L
1	4812120846	Expansion tank	1	
2	4700903714	Cooler cap	1	
3	4812114098	Level sensor	1	
4	4700381413	Washer	2	
5	4700500022	Hexagon screw M8X30 8.8 A2K	4	

Engine Expansion Tank Hose Kit

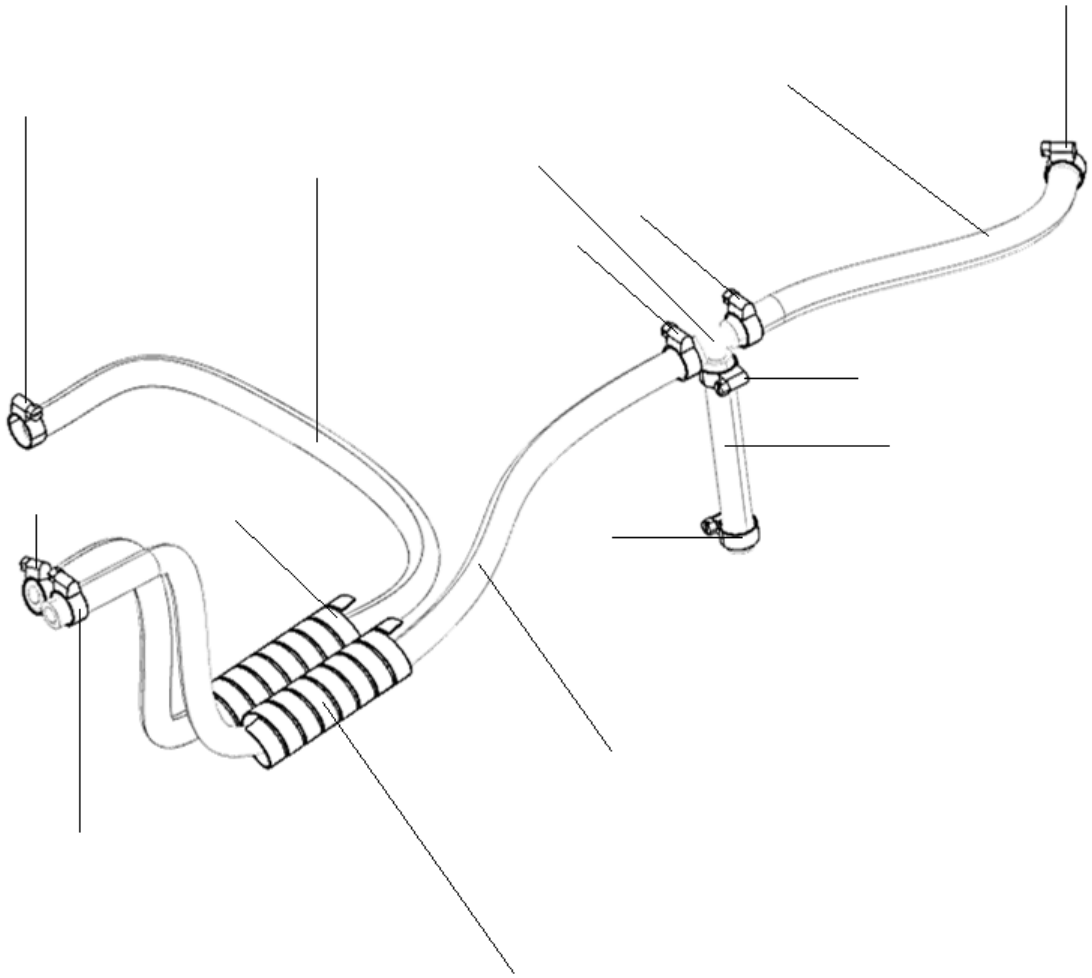

Elemento	N.º de pieza	Nombre	Cant.	L
1	4700246069	Coolant hose	0,750	
2	4700246069	Coolant hose	0,800	
3	4700246069	Coolant hose	0,250	
4	4700246069	Coolant hose	0,120	
5	4700791267	Hose connection	1	
6	4700313002	Hose clamp	8	
7	4700903082	Hose shield	0,200	

SCR Module SCR Module

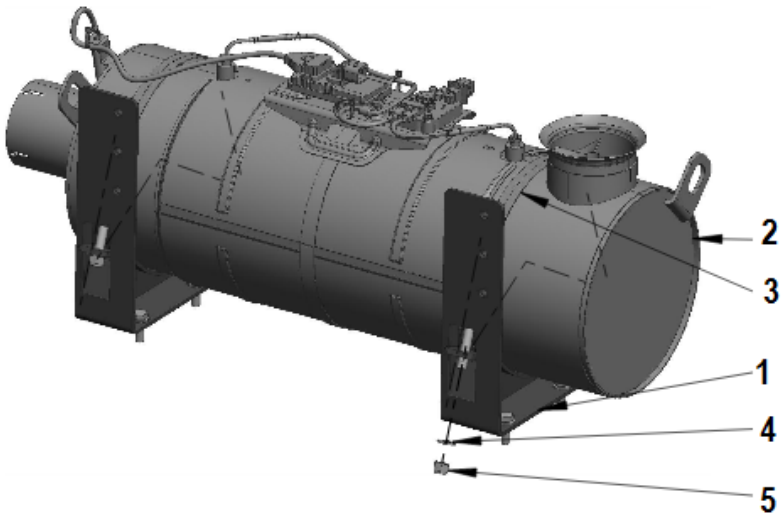

Elemento	N.º de pieza	Nombre	Cant.	L
1		Bracket Assy	1	
2	4812318277	Selective Catalytic Reduction	1	
3	4812317269	Clamp	2	
4	4700904230	Plain washer M10 10.5X22X2.0	2	
5	4700586018	Hex bolt M06X020H 8.8 A2K	2	

SCR Module Bracket Assy

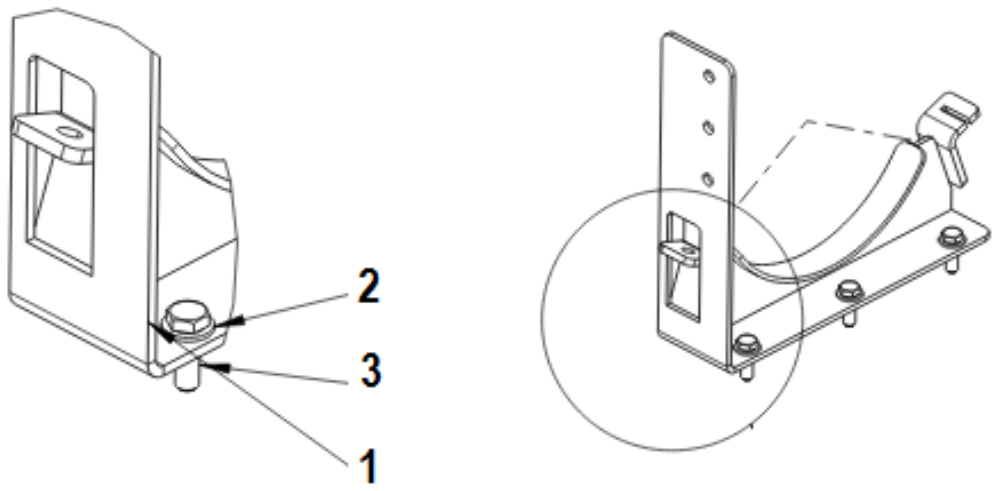

Esta página se ha dejado en blanco de forma intencionada

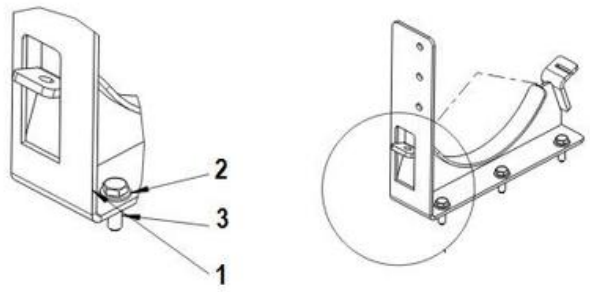
2
3
1

Elemento	N.º de pieza	Nombre	Cant.	L
1	4812318289	Bracket	2	
2	4700904230	Plain washer M10 10.5X22X2.0	6	
3	4700500029	Hexagon head screw M	6	

DEF Reservoir module DEF Reservoir module

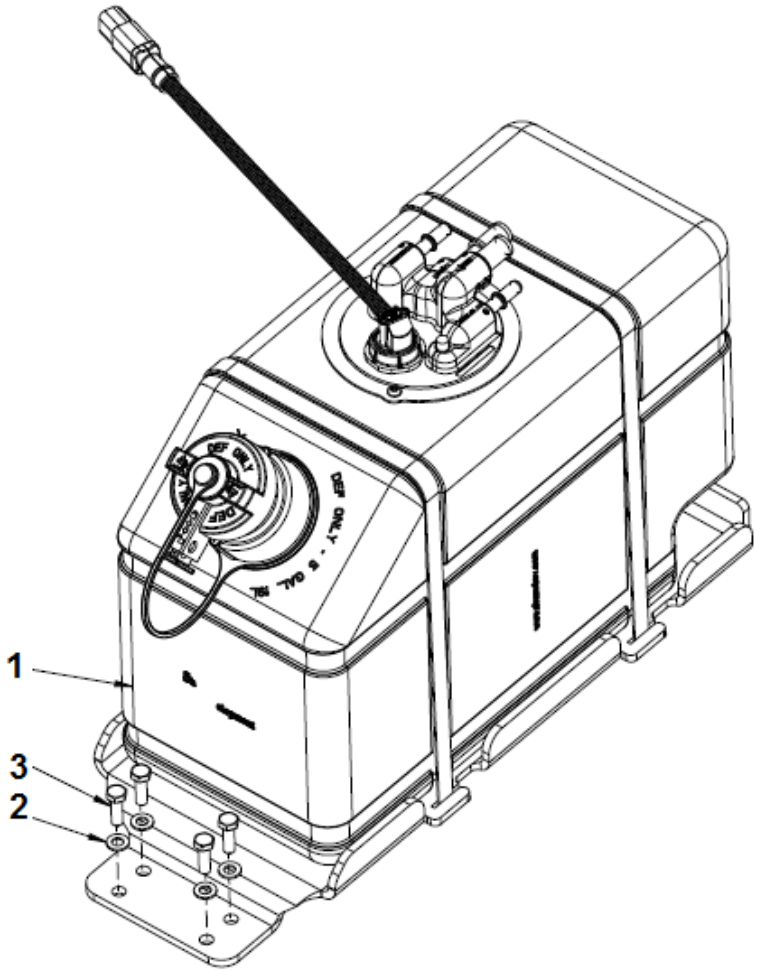

Elemento	N.º de pieza	Nombre	Cant.	L
1		Reservoir assy	1	
2	4700904229	Steel plain washer 8.4X16X1.5	4	
3	4700500021	Perno	4	

DEF Reservoir module Reservoir assy

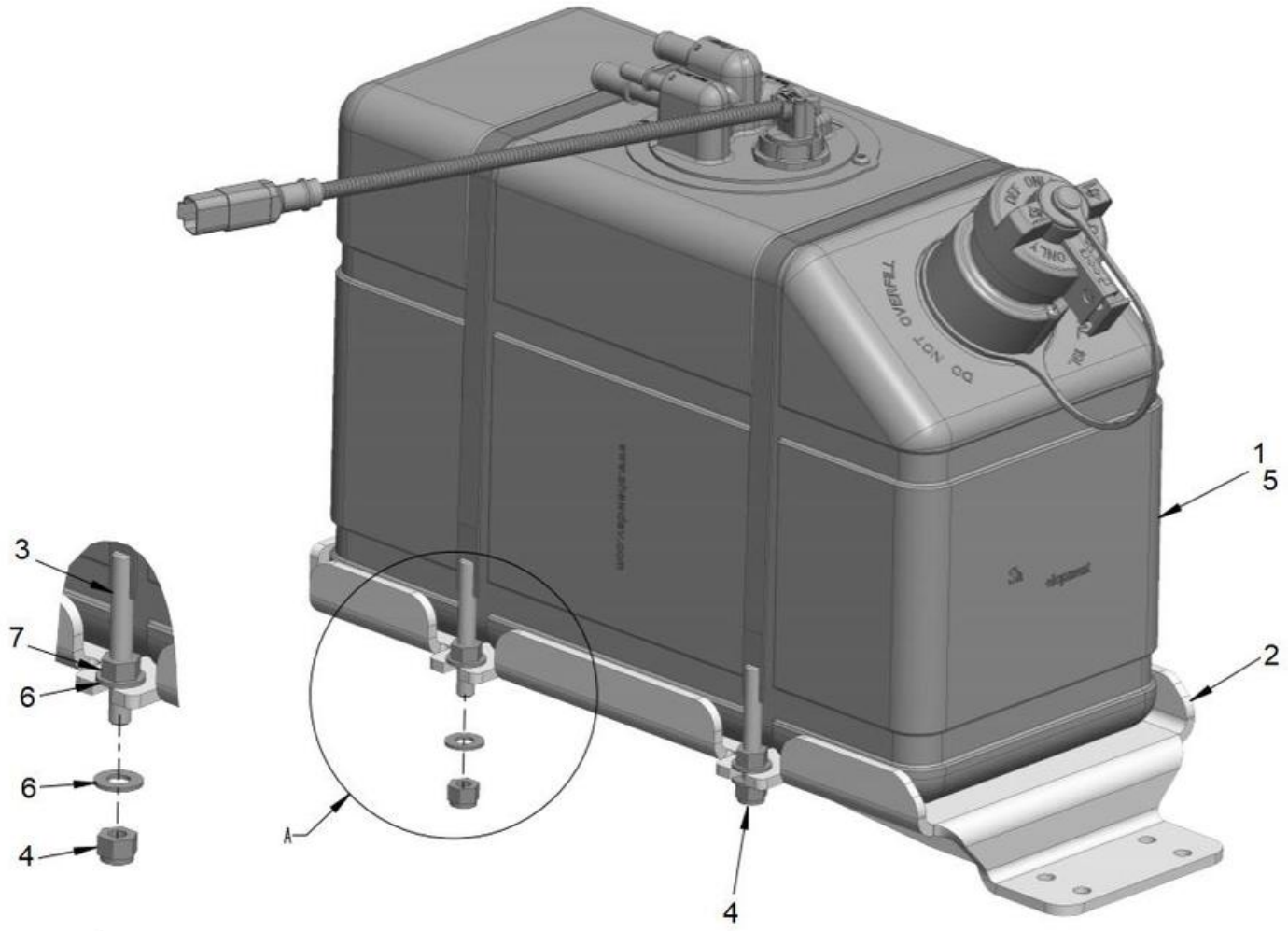

Elemento	N.º de pieza	Nombre	Cant.	L
1	4812317152	DEF Reservoir	1	
1	4812011099	Multifunctional head	1	
1	4812011100	Ring & Screws	1	
1		Level sensor kit	1	
1	4812011102	Suction strainer	1	
1	4812011103	Tank & adapter	1	
1	4812011104	DEF cap	1	
1	4812011105	Drain plug	1	
1	4812011106	Multifunctional head o-ring	1	
2	4812317254	Bracket	1	
3	4812317259	Clamp	2	
4	4700586018	Hex bolt M06X020H 8.8 A2K	2	
5	4812122934	Adblue	4000L	
6	4700904230	Plain washer M10 10.5X22X2.0	4	
7	4700570006	Hexagon nut	2	

DEF Reservoir module DEF hose assy

Elemento	N.º de pieza	Nombre	Cant.	L
1	4812317157	DEF heated line	1	
2	4812317157	DEF heated line	1	
3	4812317156	DEF heated line	1	
4	4812317542	Bracket	2	
5	4700902558	Pipe clamp covered	6	
6	4700904229	Steel plain washer 8.4X16X1.5	8	
7	4700500019	Hexagon head screw M	8	
8	4700313041	Cable tie	5	

DEF Reservoir module DEF Supply module

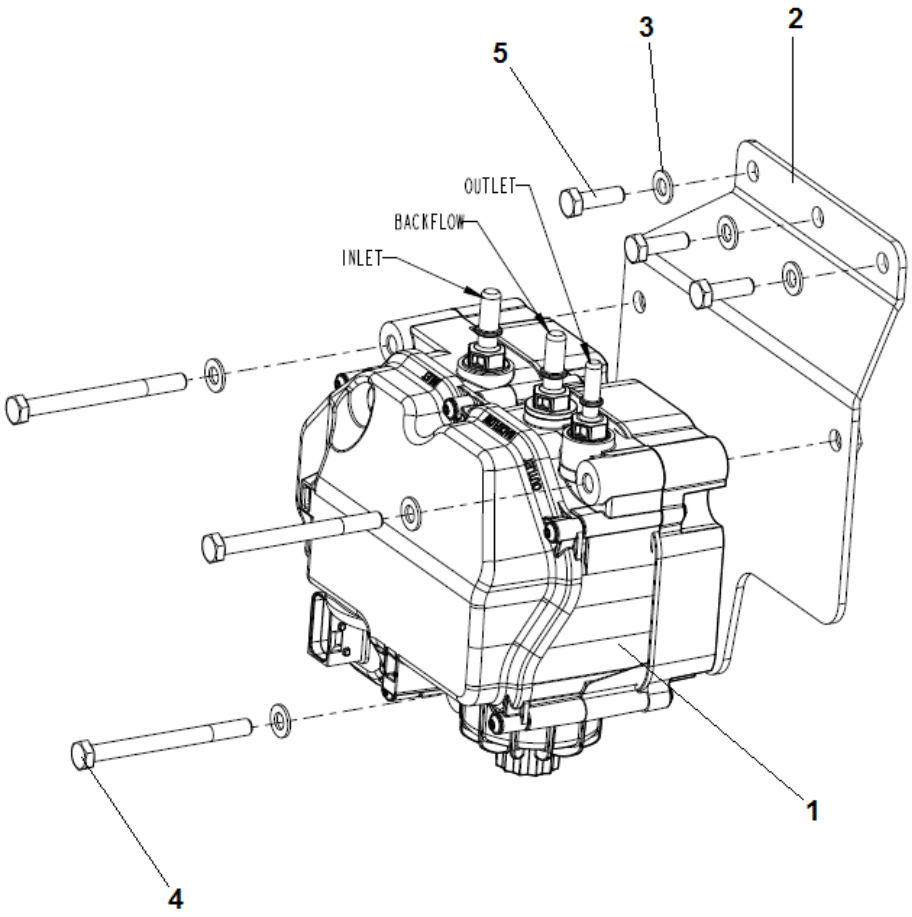

Elemento	N.º de pieza	Nombre	Cant.	L
1	4812100140	DEF supply	1	
2	4812317253	Bracket	1	
3	4700904229	Steel plain washer 8.4X16X1.5	6	
4	4700500115	Screw	3	
5	4700500021	Perno	3	

DEF Reservoir module Supply module

Elemento	N.º de pieza	Nombre	Cant.	L
1	4812012168	Filter	1	

DOC & DTR Module DOC & DRT Module

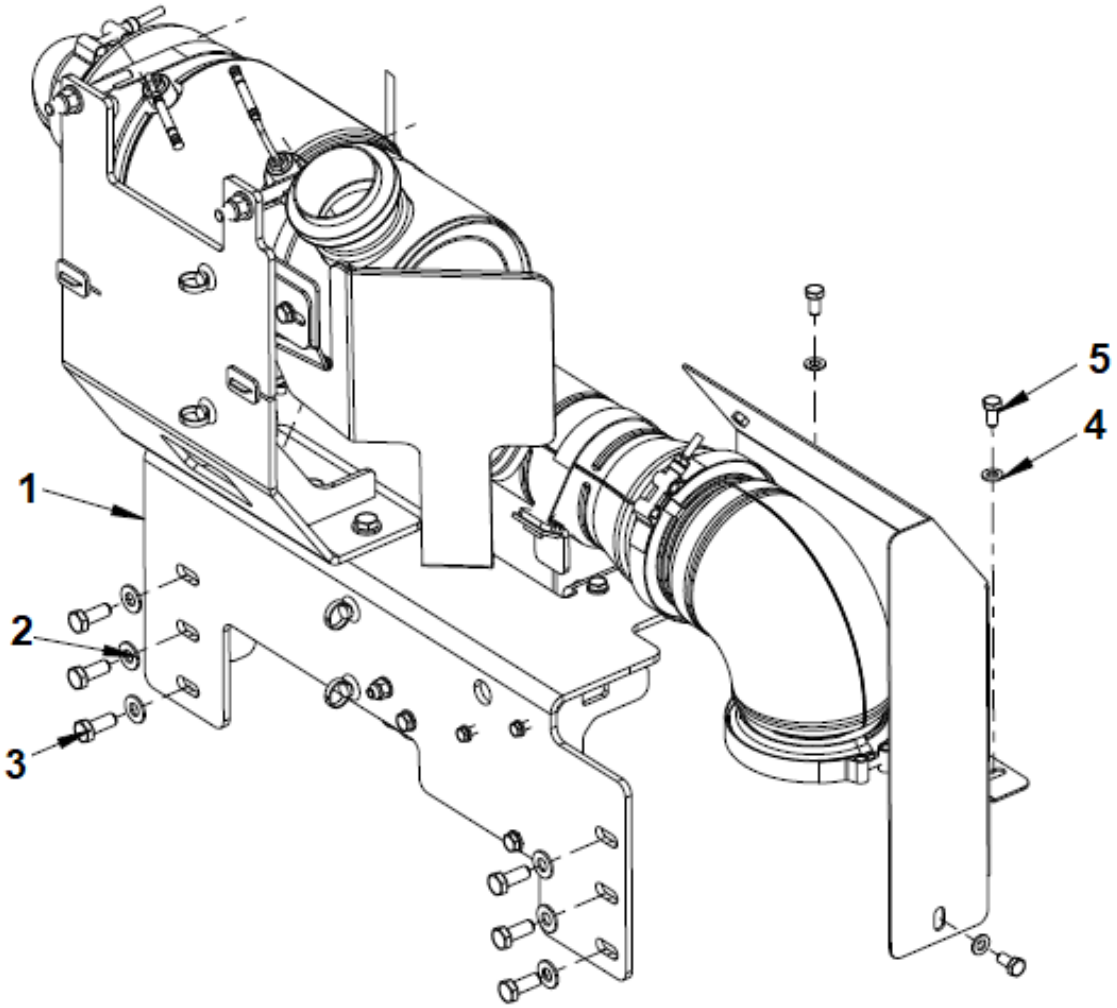

Elemento	N.º de pieza	Nombre	Cant.	L
1		DOC & DRT assy	1	
2	4700904230	Plain washer M10 10.5X22X2.0	6	
3	4700500028	Arandela 6,4x12x1,5	6	
4	4700904229	Steel plain washer 8.4X16X1.5	3	
5	4700500019	Hexagon head screw M	3	

DOC & DTR Module DOC & DRT assy

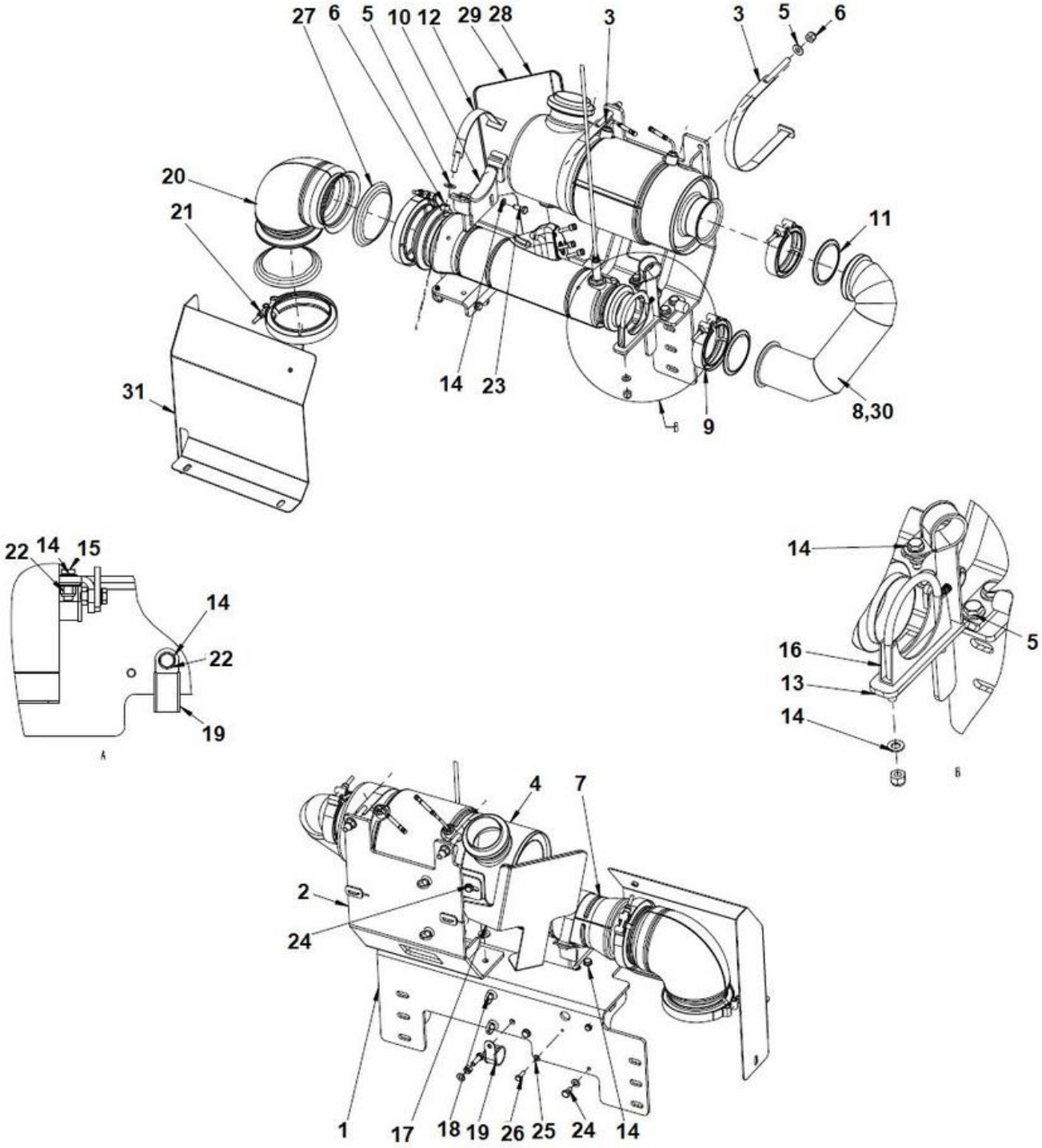

Elemento	N.º de pieza	Nombre	Cant.	L
1	4812318294	Bracket	1	
2	4812318293	Bracket	1	
3	4812318297	Clamp	2	
4	4812318275	Diesel oxidation catalyst	1	
4	4812325335	Diesel oxidation catalyst	1	
4	4812325336	Temperature sensor	1	
4	4812325337	Clamp wire tie	3	
5	4700904230	Plain washer M10 10.5X22X2.0	8	
6	4700586018	Hex bolt M06X020H 8.8 A2K	3	
7	4812317130	Decomposition reactor tube	1	
8	4812318274	Exhaust pipe	1	
9	4812317138	Pipe clamp	2	
10	4812317268	Bracket	1	
11	4812317139	Gasket	2	
12	4812317270	Clamp	1	
13	4812318345	Bracket	1	
14	4700904229	Steel plain washer 8.4X16X1.5	14	
15	4700500021	Perno	3	
16	4700313093	Pipe clamp	1	
17	4700500028	Arandela 6,4x12x1,5	5	
18	4700792441	Cable tie with holder	6	
19	4700921050	Pipe clamp covered	3	
20	4812317135	Exhaust connection	1	
21	4812315411	Pipe clamp	2	
22	4700586003	Lock nut M8	5	
23	4700500053	Perno	3	
24	4700500019	Hexagon head screw M	3	
25	4700904228	Arandela 6,4x12x1,5	2	
26	4700500040	Hex bolt M06X020H 8.8 A2K	2	
27	4812315414	Gasket	2	
28	4812318353	Thermal insulator	1	
29	4812318346	Bracket	1	
30	4812318354	Thermal insulator	1	
31	4812319901	Protection cover	1	

Engine Air intake hose kit

Elemento	N.º de pieza	Nombre	Cant.	L
1	4812317140	Air intake hose	1	
2	4812317141	Air intake hose	1	
3	4700389600	Clamp	2	
4	4700392810	Clamp	1	
5	4700379214	Clamp	1	
6	4700396391	Rubber Cover	1	
7	4700313035	Hose clamp	1	
8	4812317584	Air intake pipe	1	
9	4812317293	Clamp	1	

Engine Coolant hose Assy Kit

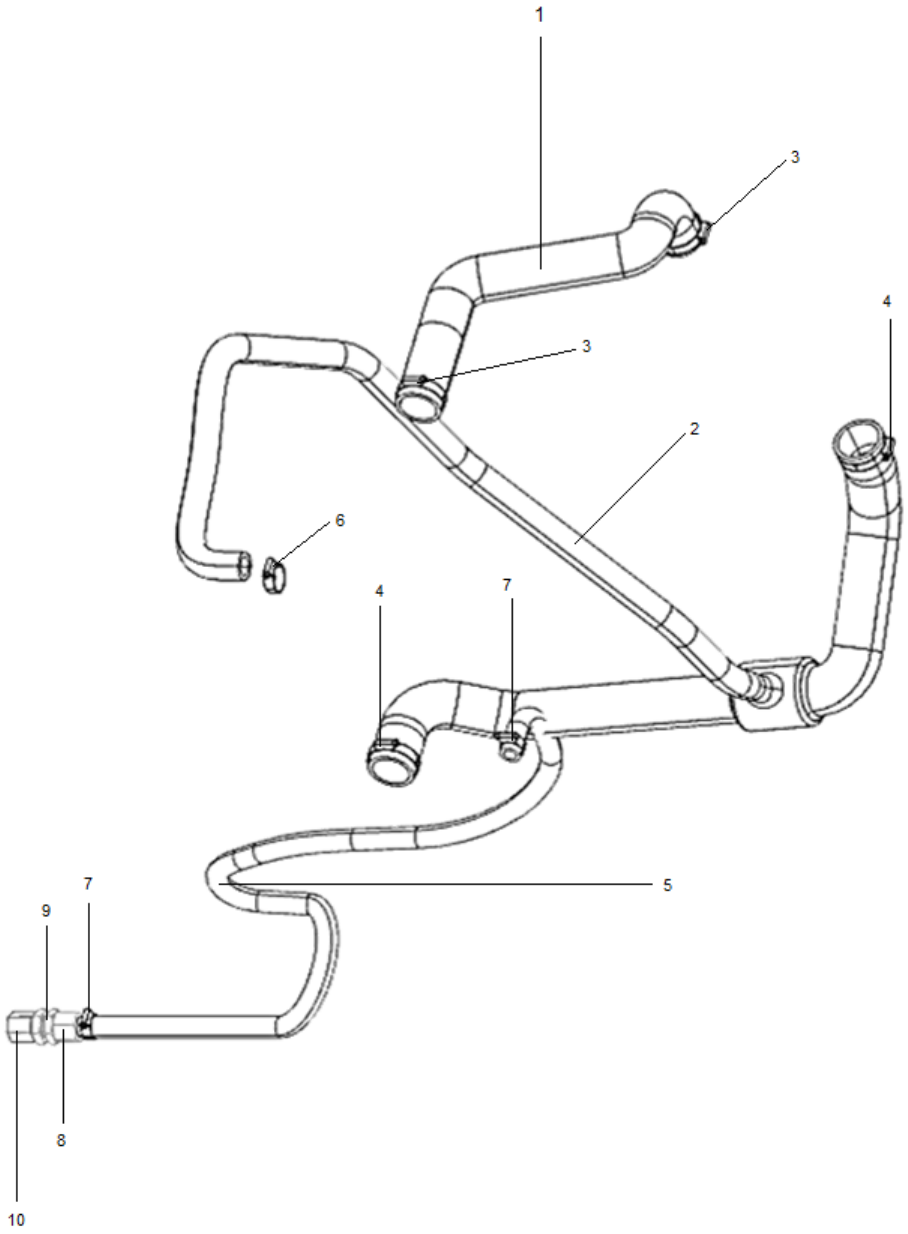

Elemento	N.º de pieza	Nombre	Cant.	L
1	4812317173	Coolant hose	1	
2	4812317147	Coolant hose	1	
3	4700313010	Hose clamp	2	
4	4700313010	Hose clamp	2	
5	4700205112	Coolant hose	1,80	
6	4700313010	Hose clamp	1	
7	4700313004	Hose clamp 19-29mm	2	
8	4700792788	Hose connection	1	
9	4700230456	Straight connector	1	
10	4700230401	Plug	1	

Engine Charge Air Hose Assy Kit

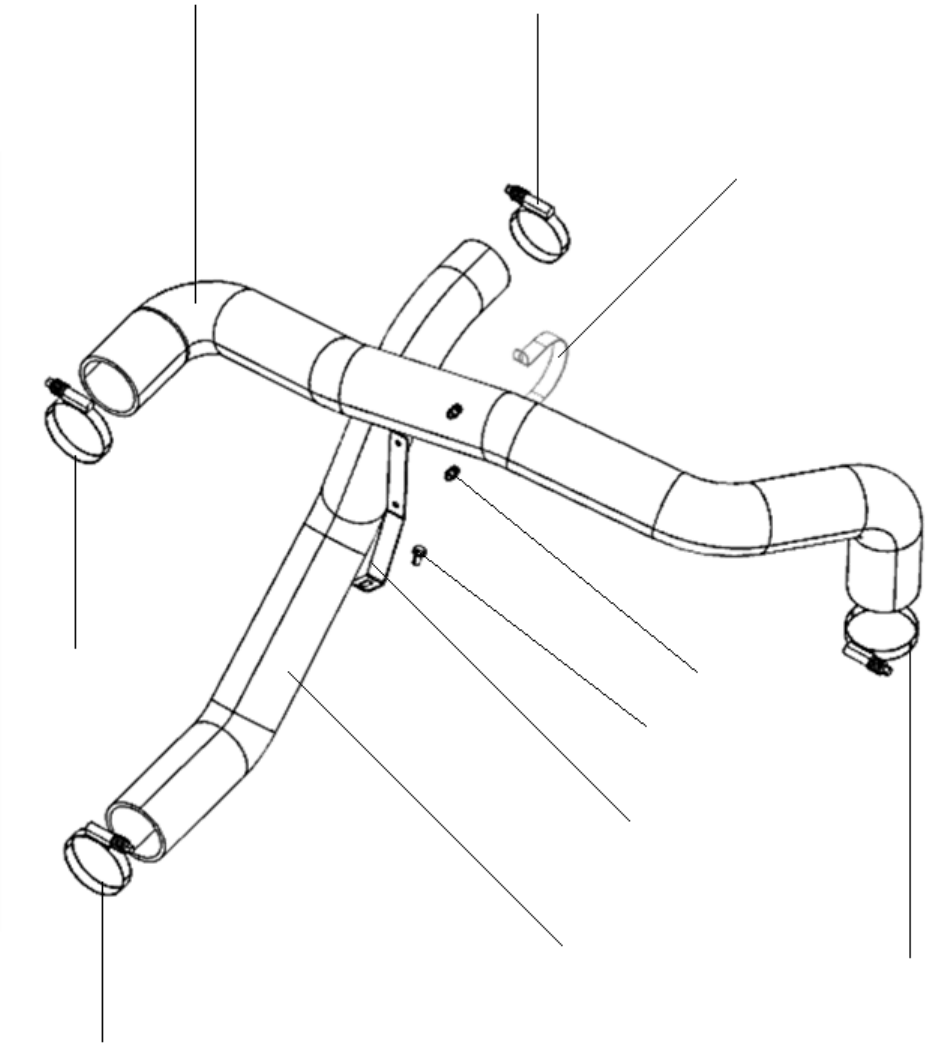

Elemento	N.º de pieza	Nombre	Cant.	L
1	4812317171	Charge air hose	1	
2	4812317172	Charge air hose	1	
3	4700386966	Clamp	3	
4	4700386966	Clamp	1	
5	4812317583	Bracket	1	
6	4700392742	Clamp	1	
7	4700904228	Arandela 6,4x12x1,5	2	
8	4700500185	Hexagon head screw M	2	
9	4700904229	Steel plain washer 8.4X16X1.5	1	
10	4700500188	Hexagon head screw M	1	

Gear module Gear module

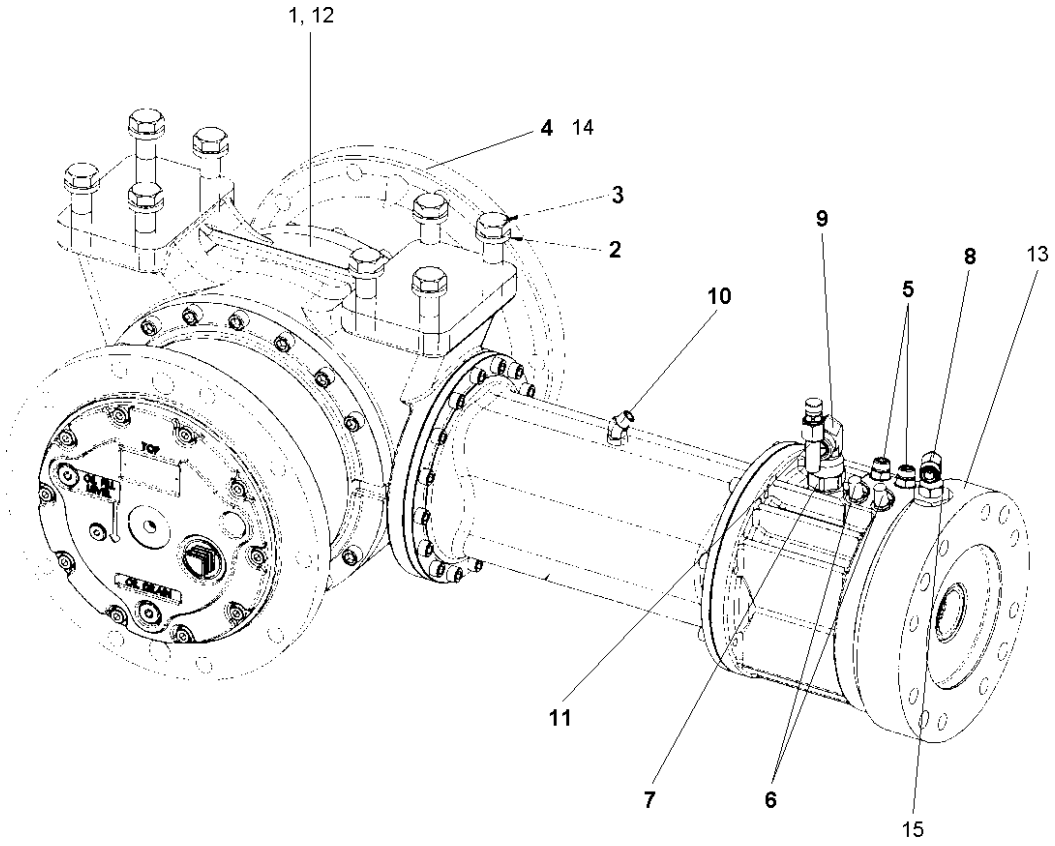

Elemento	N.º de pieza	Nombre	Cant.	L
1	-	Brake flange	1	
2	4700903290	Steel plain washer 21x36x6	8	
3	4700947706	Hex. screw	8	A
4	4700395139	Gear	1	
5	4700792177	Straight connector	2	
6	4700923405	Measuring fitting	2	
7	4700904728	Straight connector orfs	1	
8	4700904766	Connector elbow 90 ORFS	1	A
9	4700904584	Connector elbow 90 ORFS	1	
10	4700792443	Elbow connector 45	1	
11	4700396338	Connector	1	
12	-	Gear module sealing kit	1	
13	-	Negative multidisc brake repair kit	1	
14	-	Gearbox repair kit	1	
15	0570702503	Straight connector	1	A

Comments for Page: Gear module

(L)OCAL REMARKS

A | en_US | From SN J0B000915 (CP-274), C0B000916 (CP-224) and K0B000922 (CP-224W)

Gear module Negative multidisc brake repair kit

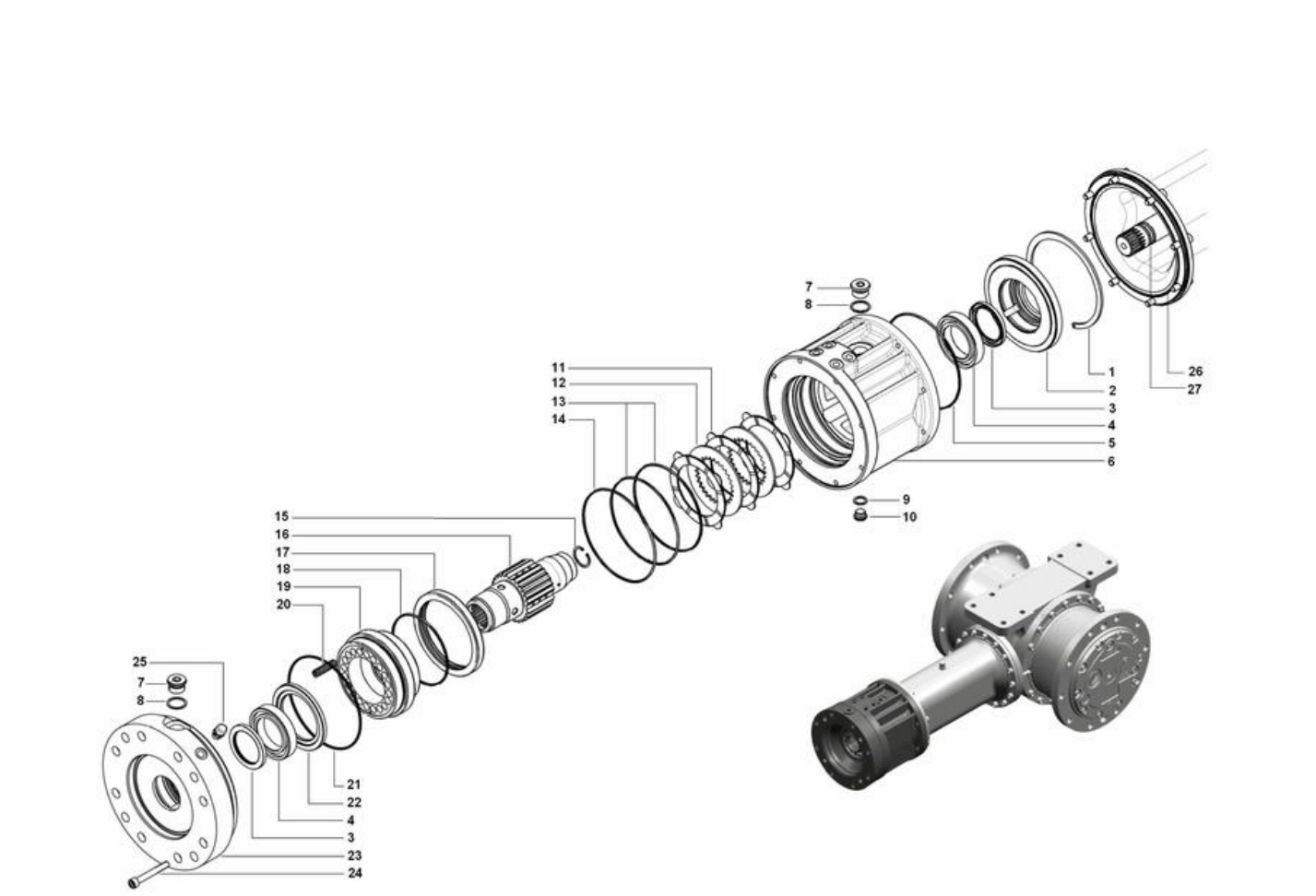

Elemento	N.º de pieza	Nombre	Cant.	L
1	4812100874	Circlip	1	
2	4812100875	Spring	1	
3	4812100446	Seal ring 60x80x7	2	
4	4812100447	Bearing	2	
5	4812100448	O-ring 171,00x3,53	1	
6	4812100878	Brake housing	1	
7	4812100879	Plug	2	
8	4812100880	Washer 27x33x1,5	2	
9	4812100881	Washer 17x23x1,5	1	
10	4812100882	Plug	1	
11	4812100449	Sintered disc	9	
12	4812100450	Steel disc	8	
13	4700480622	O-ring 3,53x151,99	2	
14	4700160048	O-ring 164,69x3,53	1	
15	4812100883	Circlip	1	
16	4812100884	Brake shaft	1	
17	4812100885	Spacer	1	
18	4700813647	O-ring 3,53x126,59	1	
19	4812100886	Brake piston	1	
20	4812100887	Spring	17	
21	4812100451	O-ring 3,53x142,47	1	
22	4812100452	Spacer	1	
23	4812100888	Motor adapter	1	
24	4812100889	Screw	8	
25	4812100453	Breather plug M14x1.5	1	
26	4812100422	O-ring 2,62x202,87	1	
27	4812100425	O-ring 32,93x3,53	2	

Gear module Gear module sealing kit

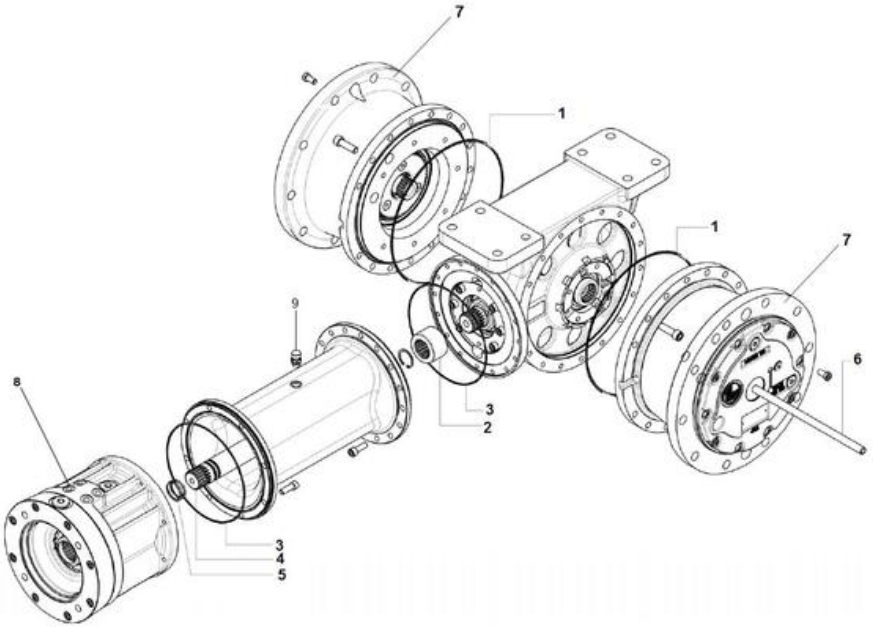

Elemento	N.º de pieza	Nombre	Cant.	L
1	4700160107	O-ring 3,53X291,69	2	
2	4812100423	Coupling 40X36X20 DIN5482	1	
3	4812100422	O-ring 2,62x202,87	2	
4	4812100424	Splined shaft 40X36X20 DIN5482	1	
5	4812100425	O-ring 32,93x3,53	2	
6	4812325145	Tube	1	
7	4812325341	Gearbox	2	
8	4812325686	Brake kit	1	
9	4812100453	Breather plug M14x1.5	1	

Gear module Gearbox repair kit

Elemento	N.º de pieza	Nombre	Cant.	L
1	4812100439	Sun gear	1	
2	4812100440	Reduction assy	1	
3	4812101607	Hub	1	
4	4812100441	Lifetime seal	1	
5	4812101608	Circlip	1	
6	4812101609	Gearbox housing + Main bearing	1	
7	4812101610	Nut	1	
8	4812100442	Planet gear	4	
9	4812101611	Circlip	4	
10	4812100443	Sun gear	1	
11	4812100444	O-ring	1	
12	4812101612	Screw	4	
13	4812101613	Pad	1	
14	4812100445	Gasket	1	
15	4812101614	Cover assembly	1	
16	4812101615	Washer	1	
17	4812101616	Plug	1	
18	4812101617	Plug	2	

Gear module Gear module repair kit

Elemento	N.º de pieza	Nombre	Cant.	L
1	4812325049	Nut	2	
2	4812325048	Bearing	2	
3	4812100426	Nut	2	
4	4812100427	Bearing	2	
5	4812100428	Bevel gear (pair)	1	
6	-	Housing	1	
7	4812100429	Hub	1	
8	4812100430	Spacer	1	
9	-	Cover	1	
10	4812100431	Spacer	1	
10.1	4812100432	Spacer	1	
11	4812100433	Bearing	1	
12	4812100434	Spacer	1	
13	4812100435	Spacer	2	
13.1	4812100436	Spacer	2	
14	4812325527	Cover	1	
15	-	Blind cover	6	
16	4812100437	Bearing	1	
17	4812100438	Nut	1	

Front suspension Front suspension

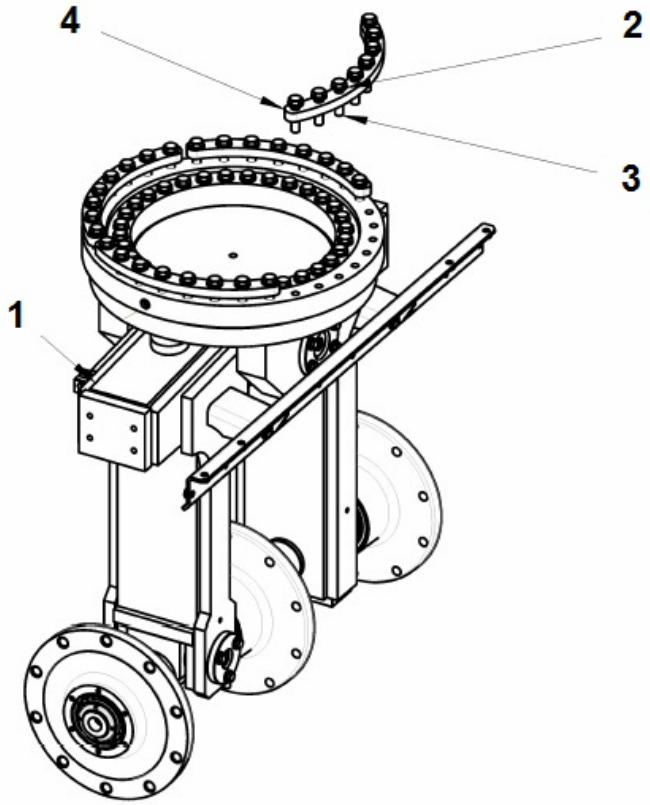

Elemento	N.º de pieza	Nombre	Cant.	L
1		Front suspension	1	
2	4700904232	Washer 15x30x4 300 HV	32	
3	4700500058	Screw M16-2,0x65 8,8	32	
4	4812315462	Spacer	4	

Front suspension Front suspension

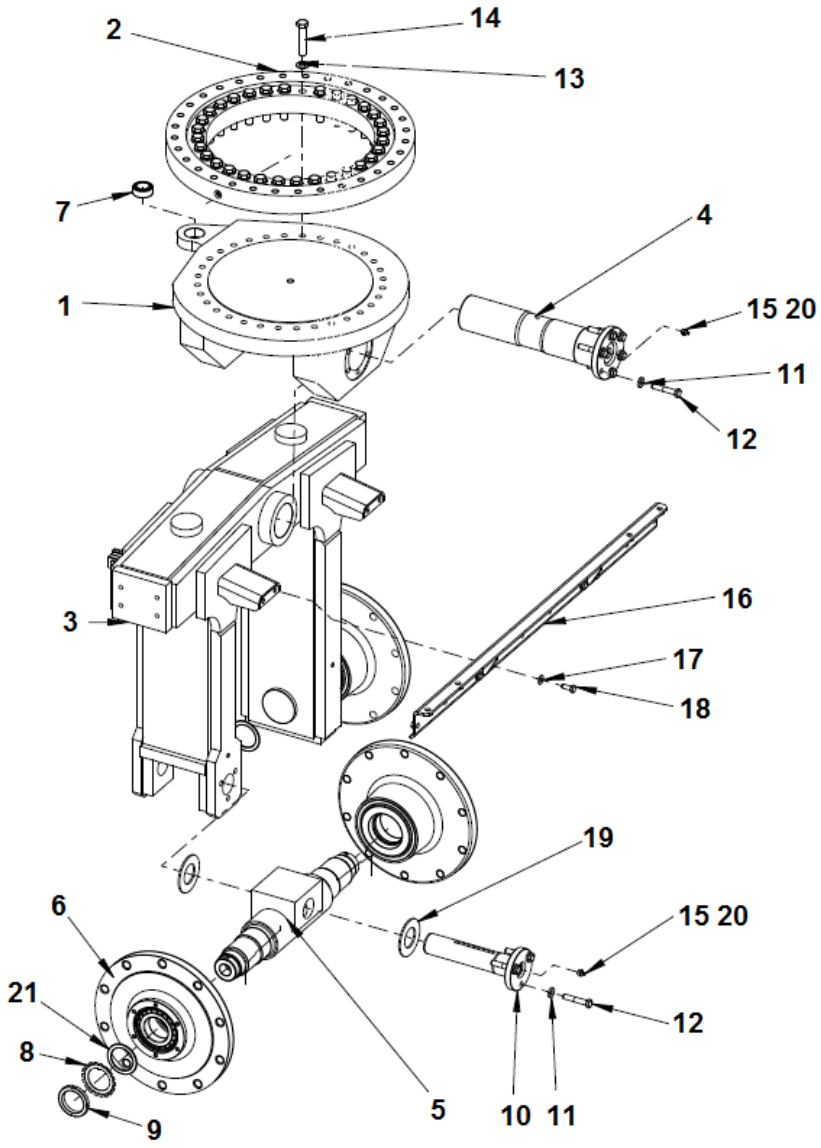

Elemento	N.º de pieza	Nombre	Cant.	L
1	4812315457	Tilt holder	1	
2	4812266355	Slewing bearing	1	
3	4700170143	Yoke	1	
4	4700170136	Tilt shaft cpl.	1	
5	4700170117	Wheel shaft cpl.	1	
6		Hub	3	
7	4700792554	Radial spherical plain bearing	1	
8	4700136011	Lock washer	3	
9	4700135011	Lock nut	3	
10	4700170125	Tilt shaft cpl.	1	
11	4700904703	Plain washer 13x24x4 mm	9	
12	4700947712	Hexagon head screw M	9	
13	4700904232	Washer 15x30x4 300 HV	32	
14	4700500135	Hex. screw	32	
15	4811000106	Grease nipple	2	
16	4812316454	Scraper bracket	1	
17	4700904230	Plain washer M10 10.5X22X2.0	4	
18	4700500028	Arandela 6,4x12x1,5	4	
19	4700397437	Spacer	2	
20	4700490039	Lube grease	1XL	
21	4812318397	Spacer	3	

Front suspension Hub

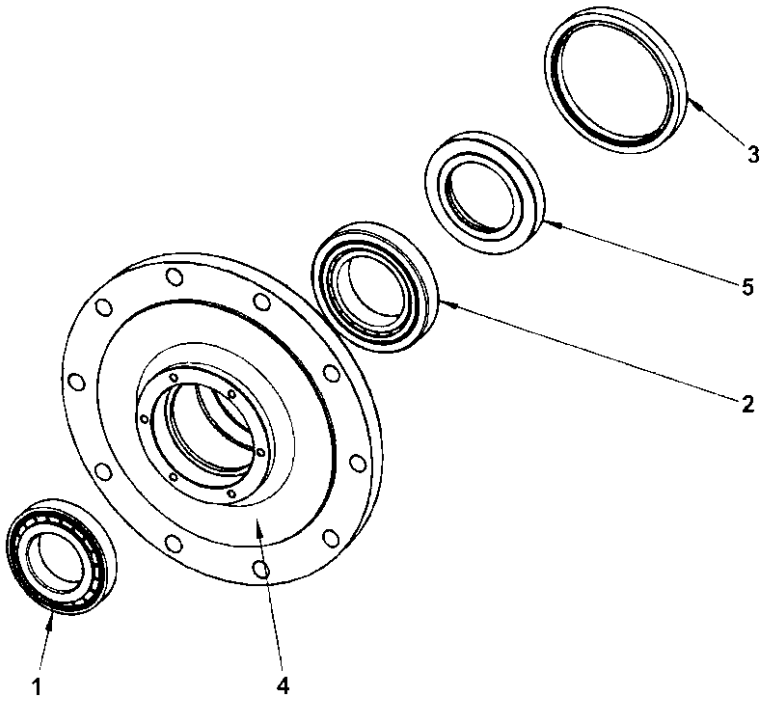

Elemento	N.º de pieza	Nombre	Cant.	L
1	4700116009	Bearing	1	
2	4700116016	Bearing	1	
3	4700163108	Seal ring	1	
4	4700170122	Hub	1	
5	4700255658	Ring	1	

Wheel module, option Michelin Wheel module, option Michelin

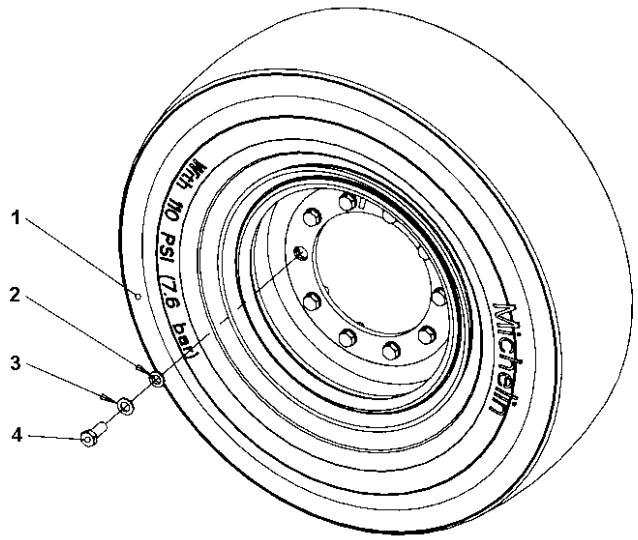

Elemento	N.º de pieza	Nombre	Cant.	L
1	-	Wheel Michelin	1	
2	4700902252	Washer	10	
3	4700904233	Steel plain washer	10	
4	4700792683	Screw	10	

Wheel Michelin Wheel Michelin

Elemento	N.º de pieza	Nombre	Cant.	L
1	4700170130	Rim	1	
1	4812316450	Rim (grey)	1	
2	4700170558	Air tube	1	
3	4700901317	Tyre, smooth Michelin	1	
4	4700170550	Valve	1	
5	4700198243	Flap	1	
6	4700264984	Washer	1	

4812100082 Wheel module Otani Wheel module Otani

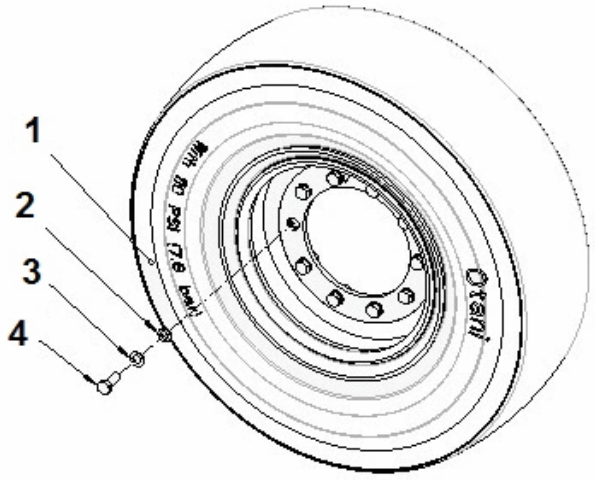

Elemento	N.º de pieza	Nombre	Cant.	L
1		Wheel Otani	1	
2	4700902252	Washer	10	
3	4700904233	Steel plain washer	10	
4	4700792683	Screw	10	

4812100081 Wheel Otani Wheel Otani

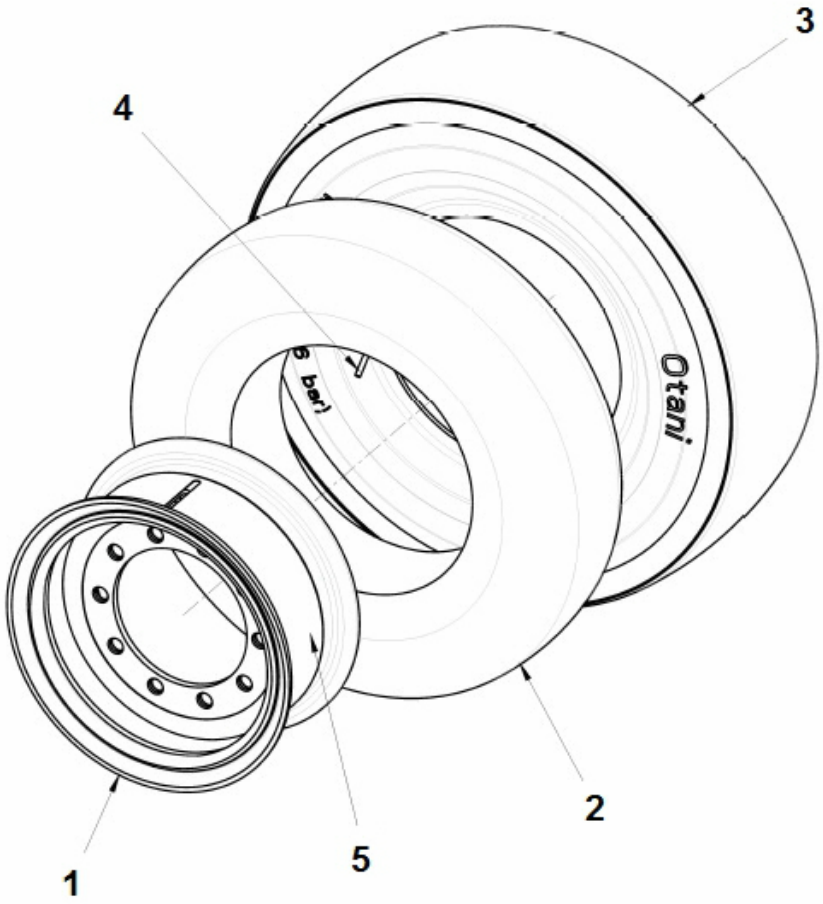

Elemento	N.º de pieza	Nombre	Cant.	L
1	4812316450	Rim (grey)	1	
2	4700170558	Air tube	1	
3	4812100864	Tyre, smooth	1	
4	4700170550	Valve	1	
5	4700198243	Flap	1	
6	4700264984	Washer		

Hydraulic motor module Hydraulic motor module

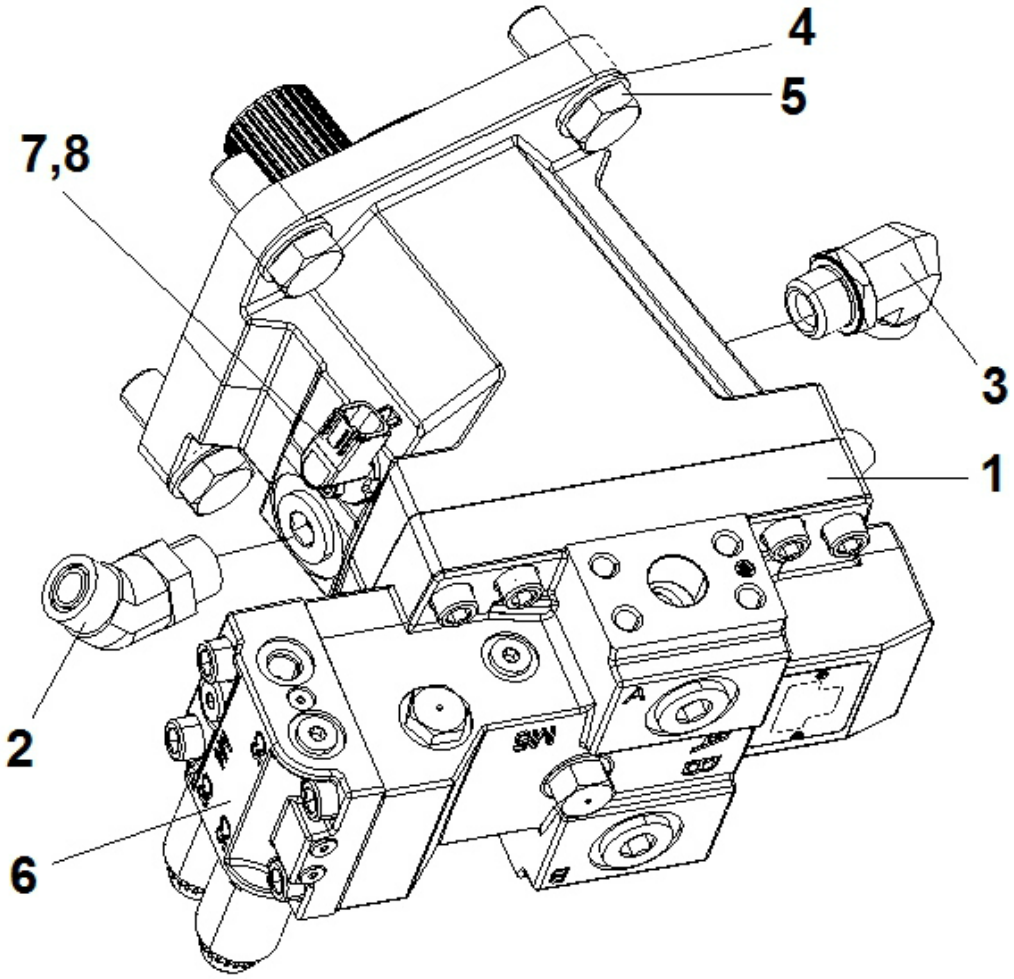

Elemento	N.º de pieza	Nombre	Cant.	L
1	4700396445	Hydraulic motor	1	
2	4700791230	Adapter	1	
3	4700791231	Connector elbow 90 ORFS	1	
4	4700904233	Steel plain washer	4	
5	4700500101	Screw M20 x 50 mm	4	
6	4812101635	Control kit	1	
7	4700396601	Pulse sensor (6-pol)	1	
8	4700508001	Screw M6x12	1	

Hydraulic motor module Hydraulic motor

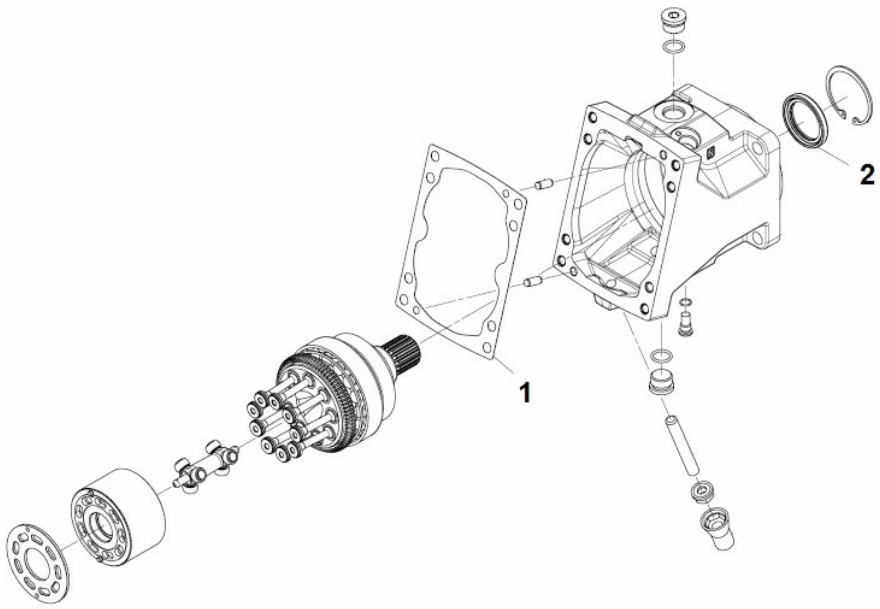

Elemento	N.º de pieza	Nombre	Cant.	L
1	4812315797	Gasket	1	
2	4812315788	Seal lip	1	
3	4812315787	Overhaul seal kit	1	

Hydraulic motor module Control kit

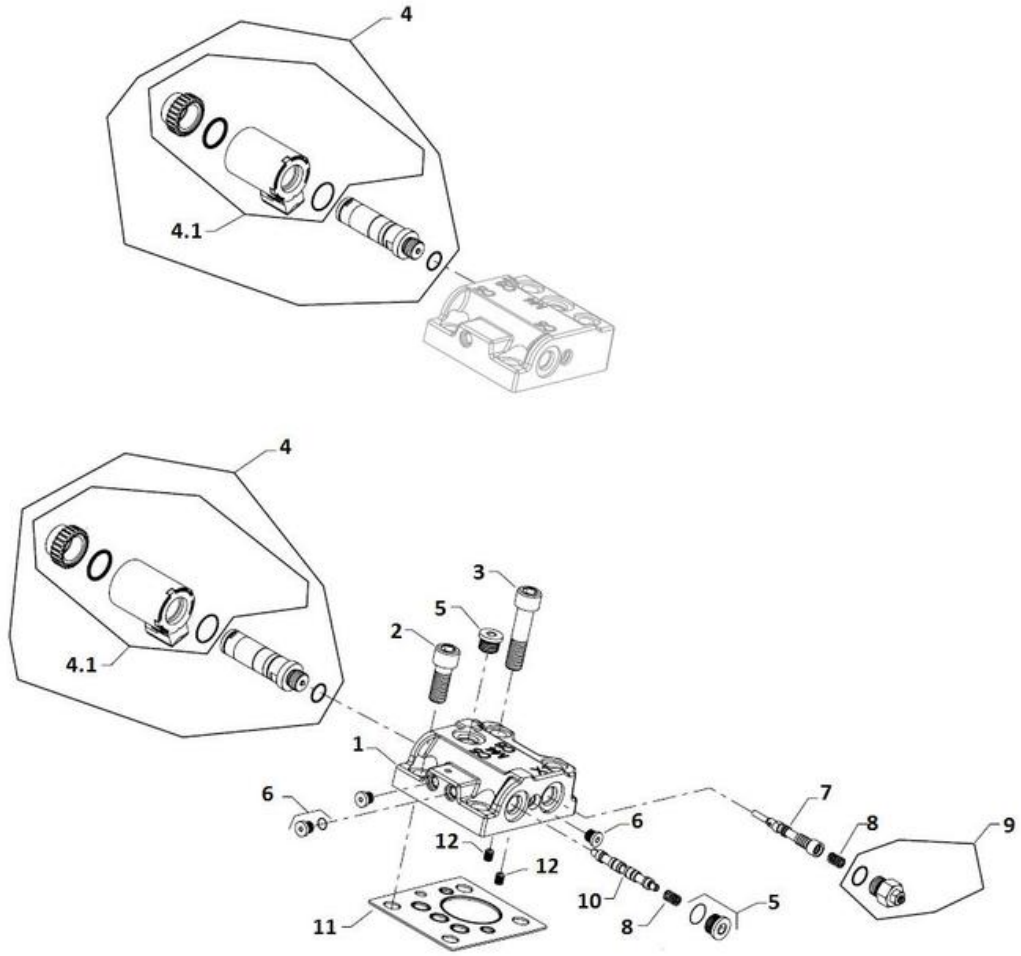

Elemento	N.º de pieza	Nombre	Cant.	L
1	4812157481	Housing control	1	
2	4812158452	Screw	2	
3	4700902944	Screw	2	
4	4812157074	Solenoid On/off, 24 volt	2	
4.1	4812315798	Coil kit	1	
5	4700908432	Plug	2	
6	4812315799	Plug socket	3	
7	4812158399	Spool	1	
8	4812315800	Spring	2	
9	4812158451	Adjuster	1	
10	4812158397	Spool	1	
11	4812157053	Control seal	1	
12	4812159785	Orifice plug 0.6mm	2	

Hydraulic system Hose assy kit

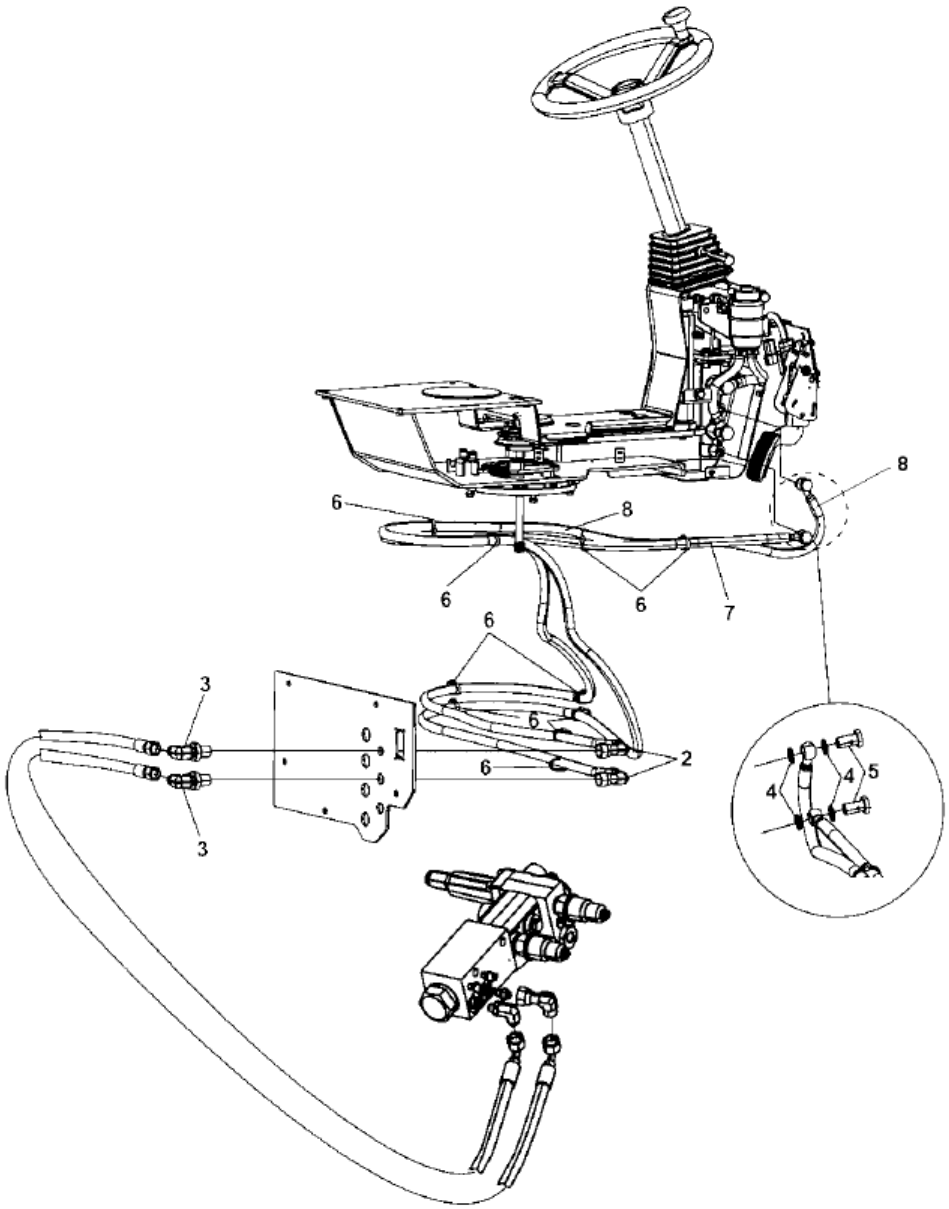

Elemento	N.º de pieza	Nombre	Cant.	L
2	4700791401	Elbow 90, O-ring with swivel	2	
3	4700792744	Bulkhead union elbow 90	2	
4	4700162027	Sealing	4	
5	4700792760	Screw M12	2	
6	4700313041	Cable tie	10	
7	4700396719	Hose	1	
8	4700396720	Hose	1	

Hydraulic system Hydraulic pump module

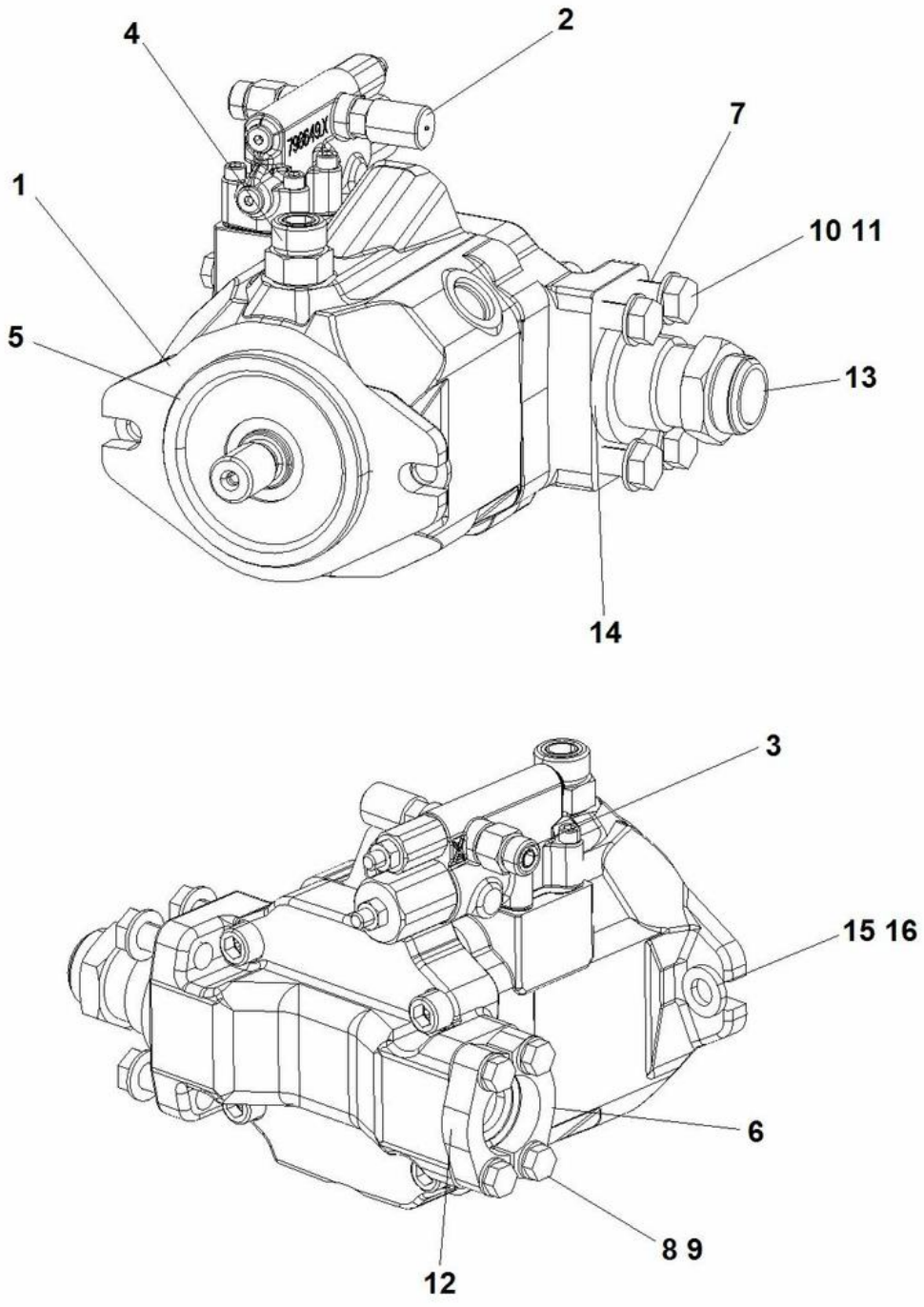

Elemento	N.º de pieza	Nombre	Cant.	L
1	4812100192	Hydraulic pump	1	
2	4700910162	Measuring nipple	1	
3	4700791827	Straight connector orfs	1	
4	4700791743	Straight connector ORFS	1	
5	4700160279	O-ring 70	1	
6	4700232097	Split flange	2	
7	4700232118	Flange	2	
8	4700904637	Steel plain washer	4	
9	4700502036	Screw 3/8"-16UNC	4	
10	4700904231	Steel plain washer	4	
11	4700502059	Screw 1/2"-13UNCx1.1/2" 8.8	4	
12	4700813429	O-ring 70	1	
13	4700160191	O-ring	1	
14	4812100897	Flange fitting 90	1	
15	4700904703	Plain washer 13x24x4 mm	2	
16	4700502058	Screw	2	

Hydraulic system 4812118386 Hydraulic valve module overspeed protection

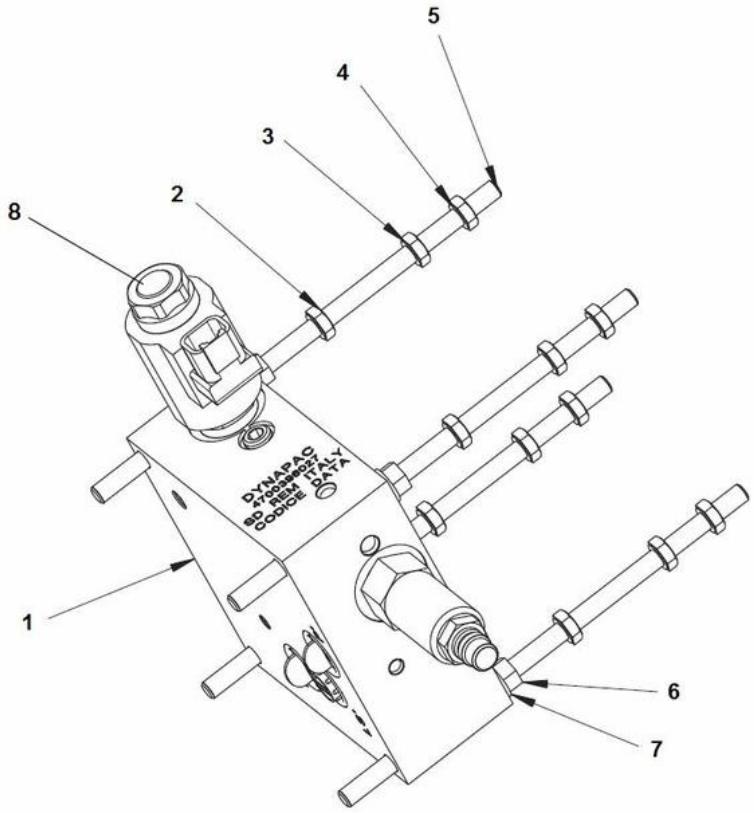

Elemento	N.º de pieza	Nombre	Cant.	L
1	4812113942	Hydraulic valve block overspeed pretection	1	A
2	4700500189	Screw	4	A
3	4700500143	Screw	4	A
4	4700500170	Screw M8x140 8.8	4	A
5	4700791550	Threaded stud	4	A
6	4700570005	Hexagon nut M	6	A
7	4700904556	Steel plain washer	4	A
8	4812158858	Coil	1	

Hydraulic system Brake valve dynamic valve

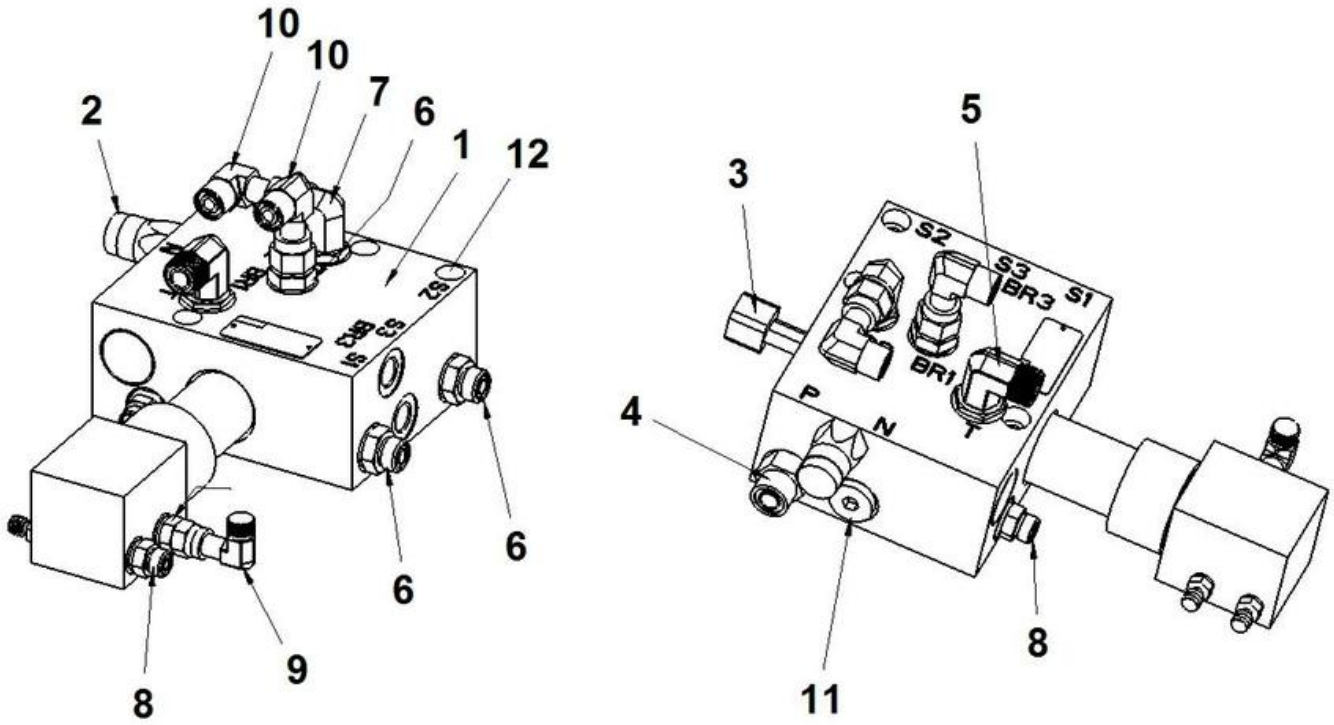

Elemento	N.º de pieza	Nombre	Cant.	L
1	4812100002	Brake valve	1	
2	4812100008	Pressure switch	1	
2	4812326160	Pressure switch	1	
3	4812100009	Pressure transmitter	1	
4	4700791412	Straight o-ring connector	1	
5	4700792333	Elbow 90 orfs	1	
6	4700791535	Straight connector	3	
7	4700791544	Connector elbow	1	
8	4700791538	Straight connector	3	
9	4812113110	Adapter	1	
10	4700791401	Elbow 90, O-ring with swivel	2	
11	4700792295	Steel plug	1	
12	4700508078	Screw	3	

Hydraulic system Thermobypass valve kit

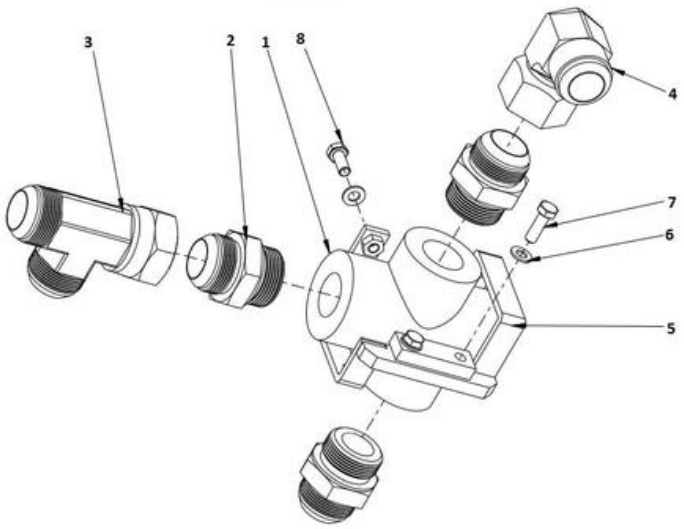

Elemento	N.º de pieza	Nombre	Cant.	L
1	4812319429	Thermo bypass valve	1	
2	4700234629	Straight o-ring connection	3	
3	4700334189	Adapter	1	
4	4700234152	Connection	1	
5	4812319409	Bracket	1	
6	4700904229	Steel plain washer 8.4X16X1.5	4	
7	4700500021	Perno	2	
8	4700500053	Perno	2	

Hydraulic oil tank module Hydraulic oil tank module

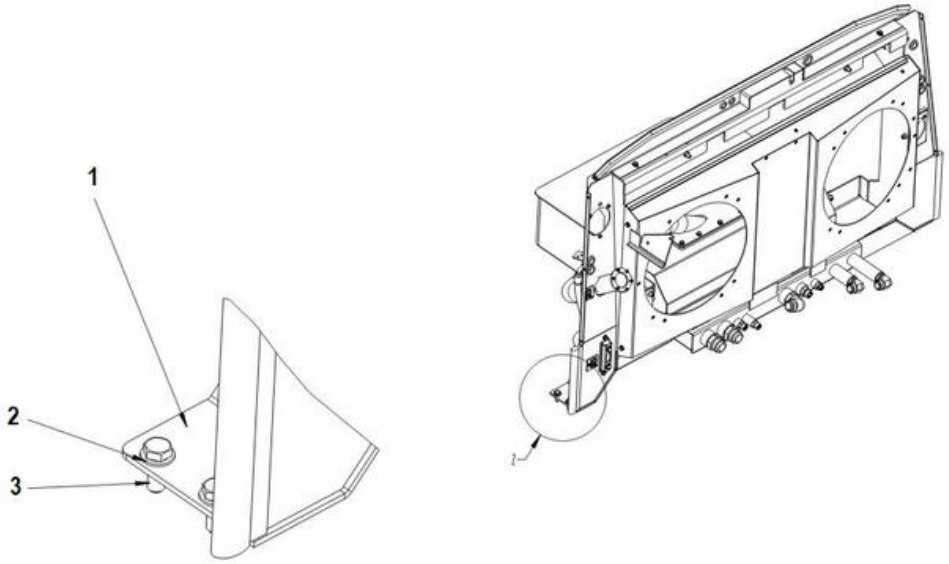

Elemento	N.º de pieza	Nombre	Cant.	L
1		Hydraulic oil tank assy	1	
2	4700904231	Steel plain washer	4	
3	4700500046	Hex. head screw M12x030H	4	

Hydraulic oil tank module Hydraulic oil tank assy

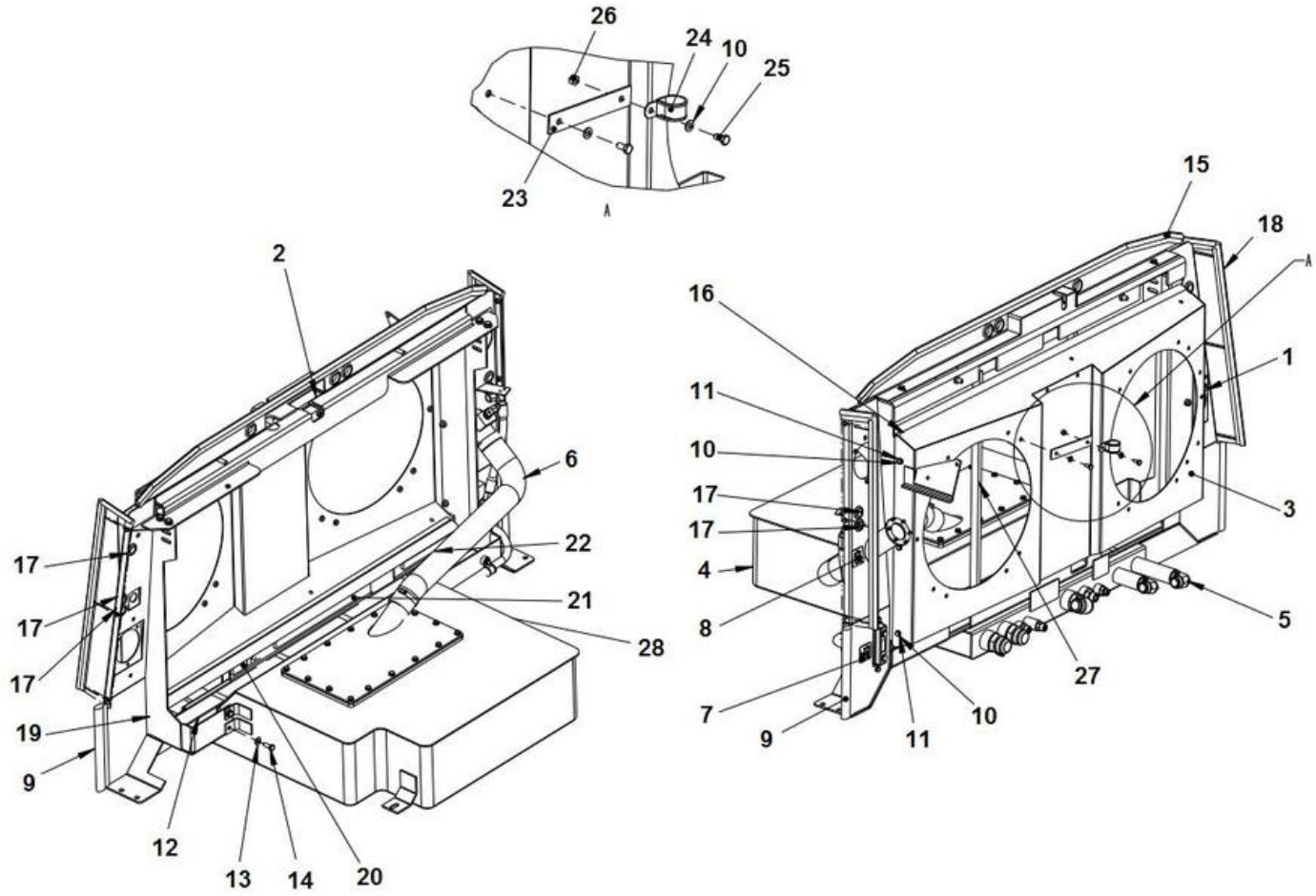

Elemento	N.º de pieza	Nombre	Cant.	L
1	4812318237	Cooler bracket	1	
2		Bracket assy	1	
3	4812317221	Fan shoroud	1	
4	4812317342	Hydraulic oil tank	1	
4.1	4700357141	O-ring	1	
5		Adapter kit	1	
6		Hose kit	1	
7	4700272373	Decal, hydraulic oil level	1	
8	4700272372	Decal, hydraulic oil	1	
9	4811000455	Edge trim	0,6	
10	4700904229	Steel plain washer 8.4X16X1.5	8	
11	4700500021	Perno	6	
12	4700357819	Rubber cloth	9	
13	4700904230	Plain washer M10 10.5X22X2.0	3	
14	4700500028	Arandela 6,4x12x1,5	3	
15		Bracket assy	1	
16	4811000455	Edge trim	1,315	
17	4700909131	Grommet	5	
18	4812318991	Bracket	1	
19	4700202046	Rubber strip 25x10	0,06	
20	4700202046	Rubber strip 25x10	0,06	
21	4700202046	Rubber strip 25x10	0,36	
22	4700202046	Rubber strip 25x10	0,2	
23	4700379184	Washer	1	
24	4700921050	Pipe clamp covered	1	
25	4700500019	Hexagon head screw M	2	
26	4700570005	Hexagon nut M	1	
27	4700791597	Rubber strip	0,770	
28	4812100026	Temperature sensor	1	

Hydraulic oil tank module Bracket assy

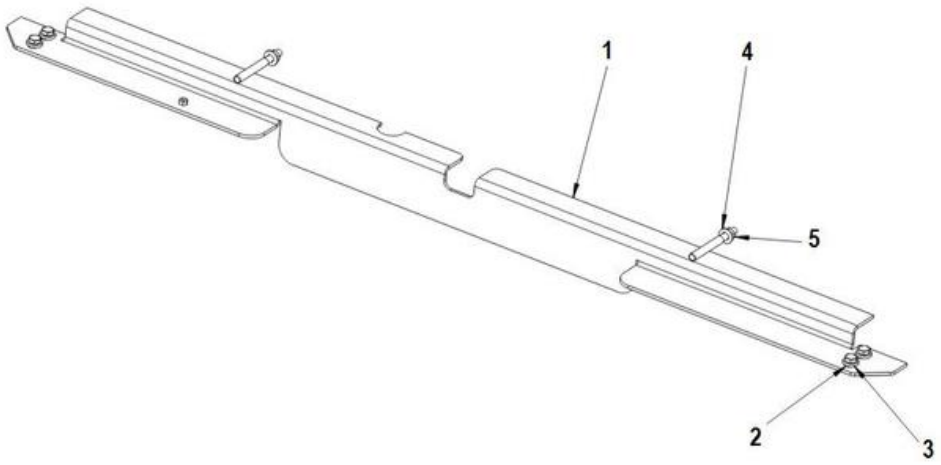

Elemento	N.º de pieza	Nombre	Cant.	L
1	4812318238	Bracket	1	
2	4700904557	Steel plain washer	4	
3	4700500048	Hex. Head screw	4	
4	4700904230	Plain washer M10 10.5X22X2.0	2	
5	4700570006	Hexagon nut	2	

Hydraulic oil tank module Bracket assy

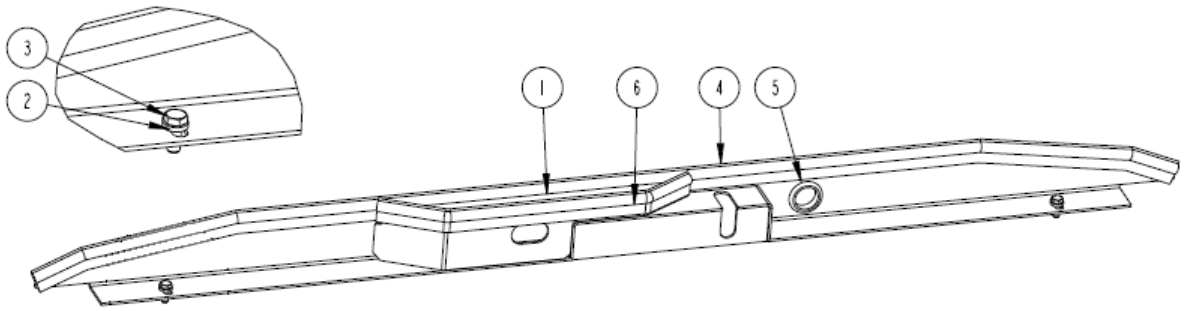

Elemento	N.º de pieza	Nombre	Cant.	L
1	4812316059	Bracket	1	
2	4700904556	Steel plain washer	2	
3	4700500053	Perno	2	
4	4700902166	Rubber edge trim	1,5	
5	4700909127	Grommet	2	
6	4700902166	Rubber edge trim	0,42	

Hydraulic oil tank module Bracket module

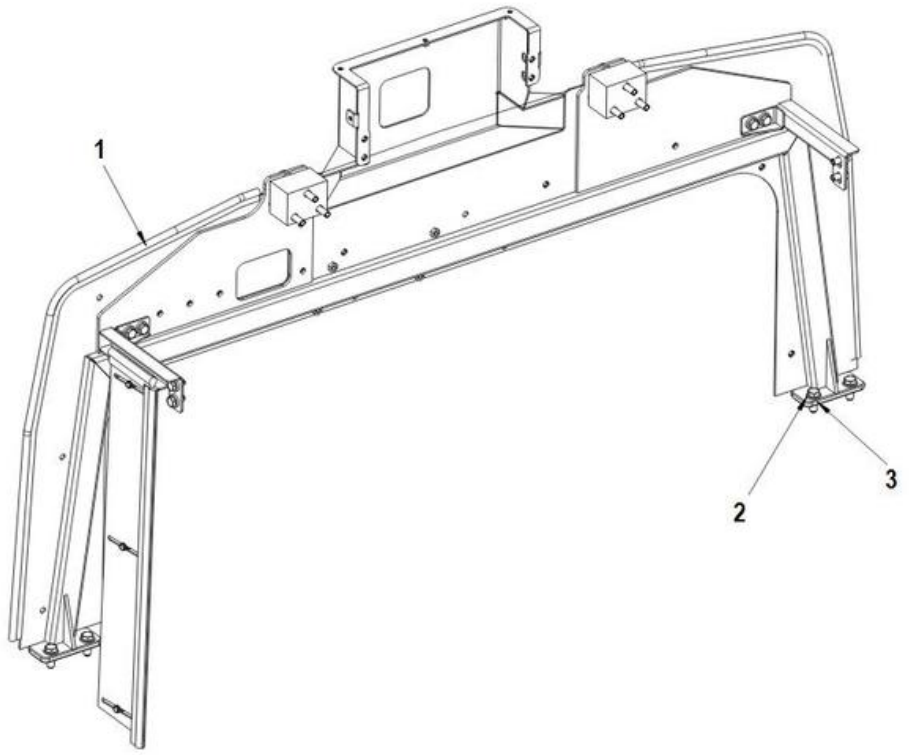

Elemento	N.º de pieza	Nombre	Cant.	L
1		Bracket assy	1	
2	4700904231	Steel plain washer	4	
3	4700500046	Hex. head screw M12x030H	4	

Hydraulic oil tank module Bracket assy

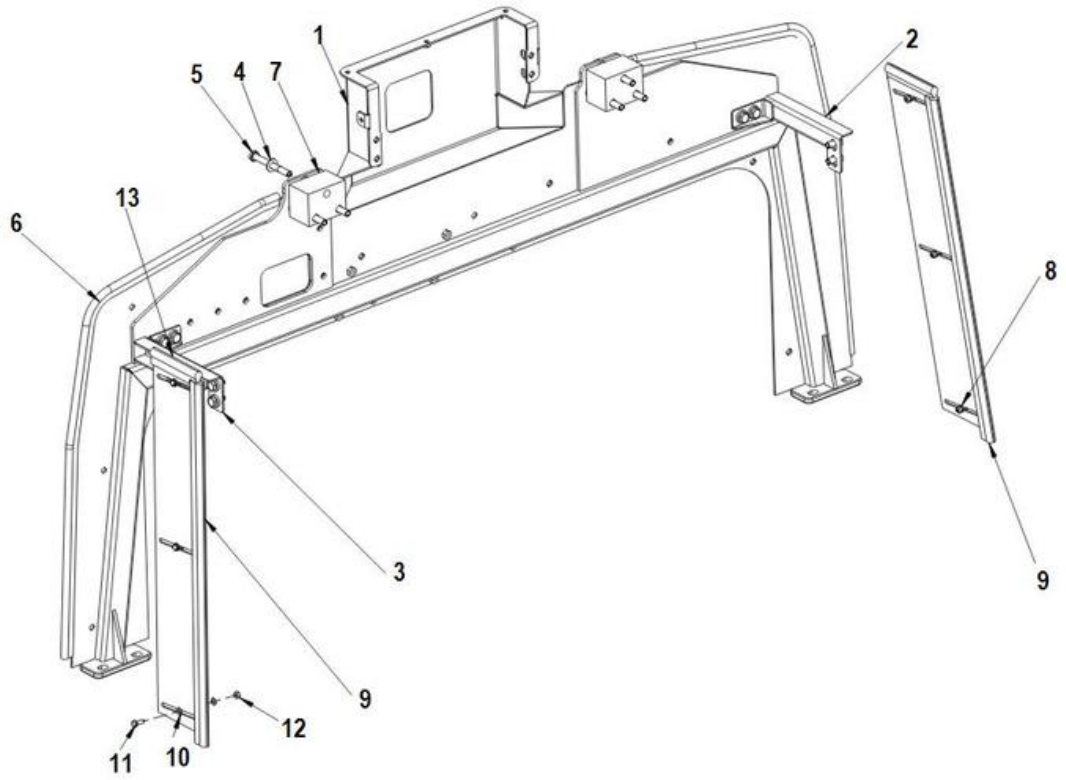

Elemento	N.º de pieza	Nombre	Cant.	L
1	4812318239	Bracket	1	
2		Bracket	1	
3		Bracket	1	
4	4700904230	Plain washer M10 10.5X22X2.0	6	
5	4700500077	Hexagon head screw M10x90	6	
6	4700902166	Rubber edge trim	2.1	
7	4812315657	Spacer	2	
8	4812318259	Sheet metal part	2	
9	4700902166	Rubber edge trim	1.3	
10	4700904228	Arandela 6,4x12x1,5	12	
11	4700500013	Hexagon head screw M	6	
12	4700570004	Hexagon nut M	6	
13	4700902166	Rubber edge trim	0.3	

Hydraulic valve module Hydraulic valve module

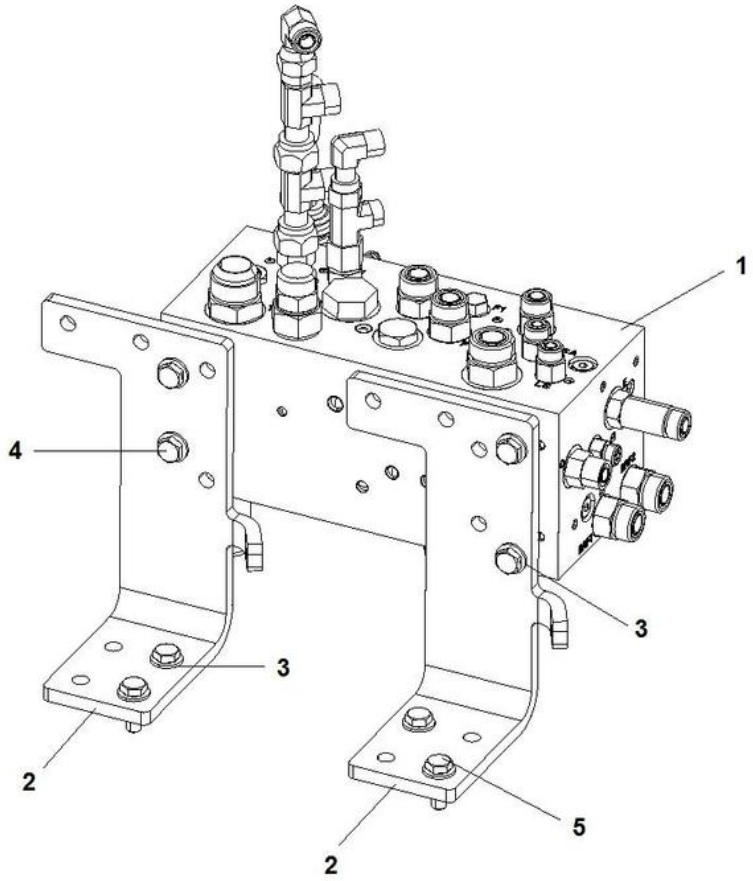

Elemento	N.º de pieza	Nombre	Cant.	L
1	-	Hydraulic valve assy	1	
1	-	Hydraulic valve	1	
2	4700396275	Bracket	2	
3	4700904230	Plain washer M10 10.5X22X2.0	8	
4	4700500028	Arandela 6,4x12x1,5	4	
5	4700500029	Hexagon head screw M	4	

Comments for Page: Hydraulic valve module

1 - 4812315649 - from SN x0B003995

1 - 4700396773 - up to SN x0B003994

Hydraulic valve module Hydraulic valve Hydac

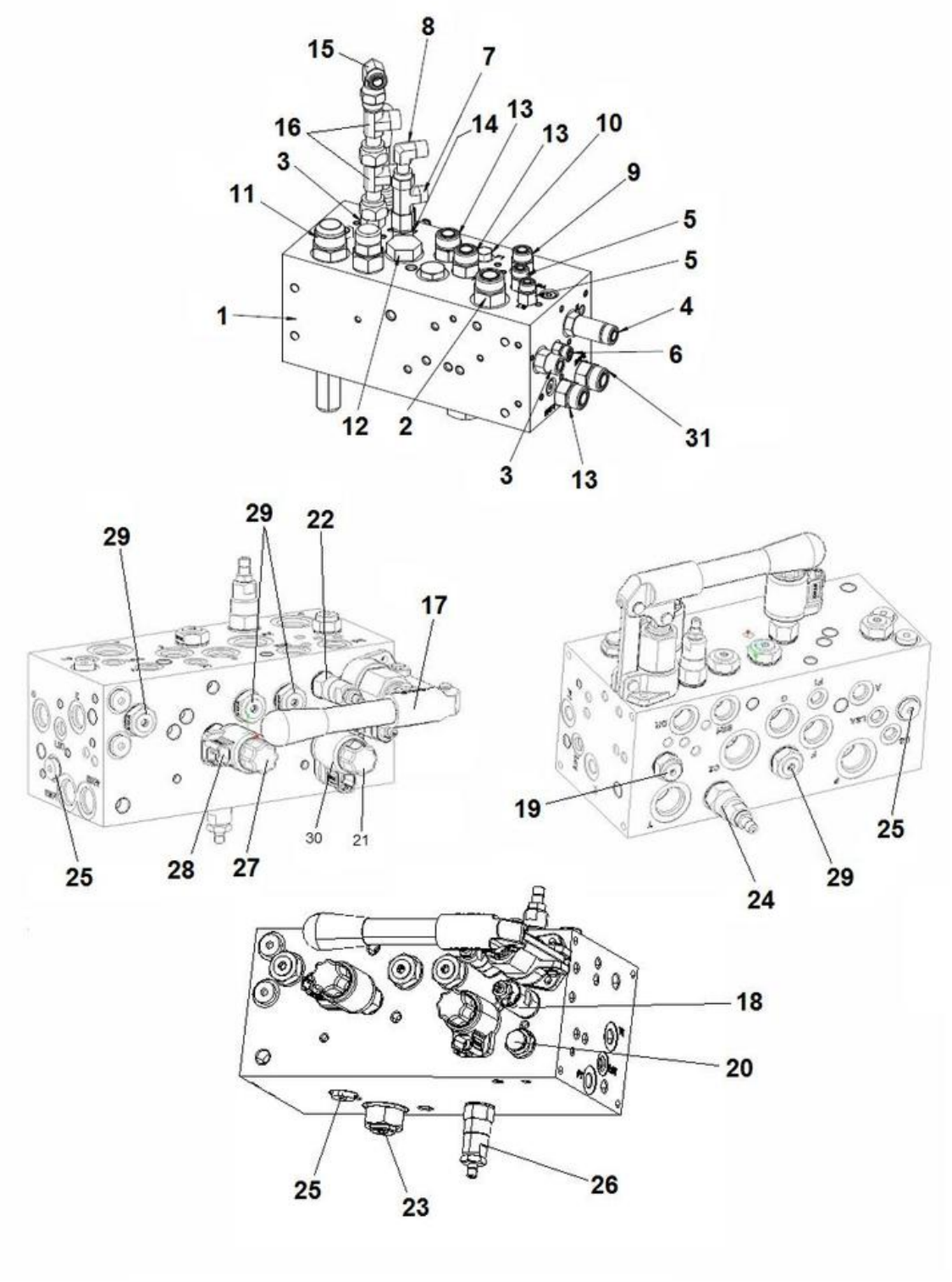

Elemento	N.º de pieza	Nombre	Cant.	L
1	4812100004	Hydraulic block	1	
2	4700791823	Straight connector ORFS	1	
3	4700791799	Straight connector ORFS	2	
4	4700791826	Straight connector orfs	1	
5	4700791827	Straight connector orfs	2	
6	4700791744	Adapter	1	
7	4700791414	Tee-connector ORFS	1	
8	4700791401	Elbow 90, O-ring with swivel	1	
9	4700791540	Adapter	1	
10	4700232061	Plug	1	
11	4700234435	Adapter	1	
12	4700232222	Plug threaded	1	
13	4700791743	Straight connector ORFS	3	
14	4700791828	Adapter	2	
15	4700791745	Connector	1	
16	4700791798	Adapter	2	
17	4812315887	Manual pump	1	
18	4812315888	Relief valve	1	
19	4812315889	Check valve pilot	1	
20	4812315890	Sequence valve	1	
21	4812315891	Hydraulic valve	1	
22	4812315892	Pressure reducing valve	1	
23	4812315893	Logic element cart	1	
24	4812315894	Relief valve	1	
25	4812315895	Shuttle valve	3	
26	4812315896	Relief valve	1	
27	4812315897	Hydraulic valve	1	
28	4812315898	Coil	1	
29	4812315899	Check valve	1	
30	4812315900	Coil	1	
31	4700791821	Straight connector orfs	1	

Hydraulic steering, sliding seat Hydraulic steering, sliding seat

Elemento	N.º de pieza	Nombre	Cant.	L
1	-	Carrier	1	
2	-	Steering, slideable	1	
3	4700396328	Steering valve	1	
3	4812120733	Pilot valve, (emergency steering CC)	1	
4	4700904557	Steel plain washer	4	
5	4700502035	Screw 3/8"-16UNCx1 8.8	4	

Hydraulic steering, sliding seat Steering, slideable

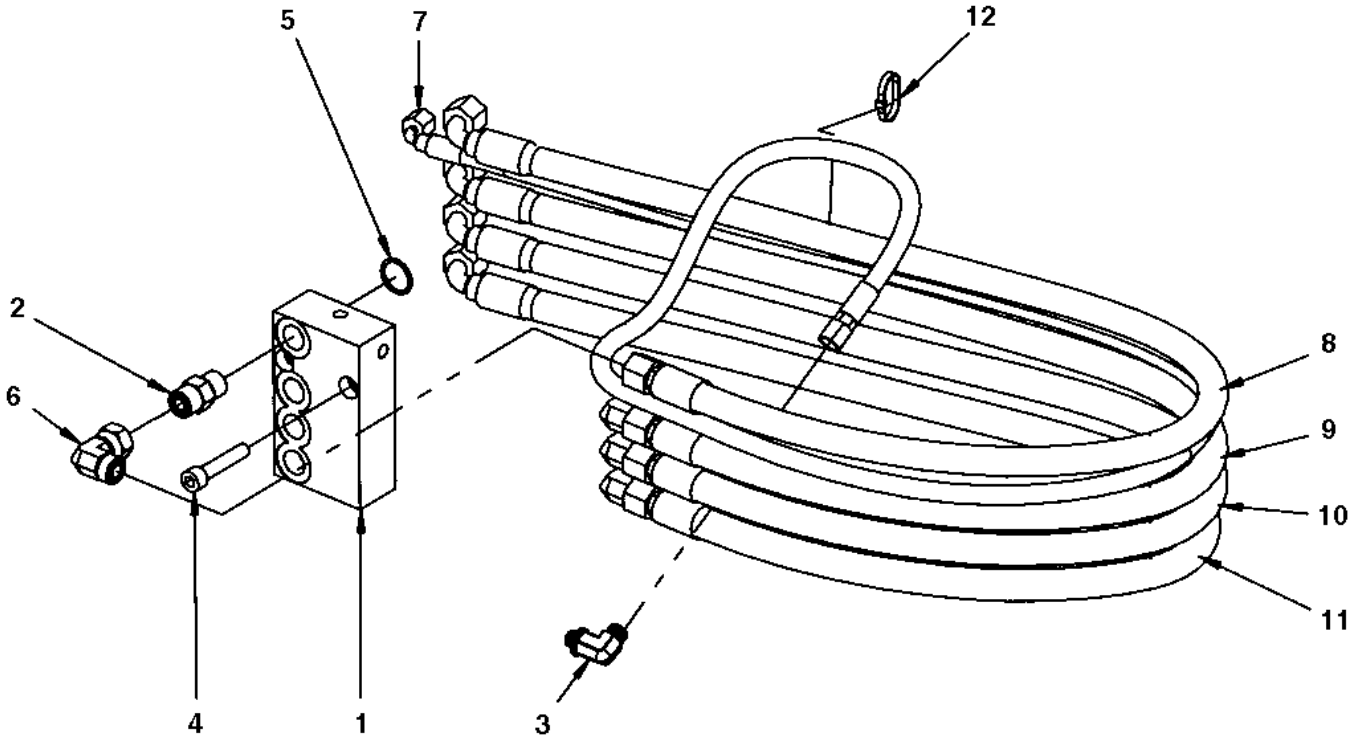

Elemento	N.º de pieza	Nombre	Cant.	L
1	4700370155	Valve block	1	
2	4700791799	Straight connector ORFS	4	
3	4700792334	Elbow 90 orfs	1	
4	4700903773	Screw M10x1x50 8,8	2	
5	4700160287	O-ring	4	
6	4700791745	Connector	4	
7	4700484006	null	1	
8	4700484007	null	1	
9	4700484007	null	1	
10	4700484007	null	1	
11	4700484007	null	1	
12	4700313041	Cable tie	N	

Hydraulic steering, sliding seat Carrier

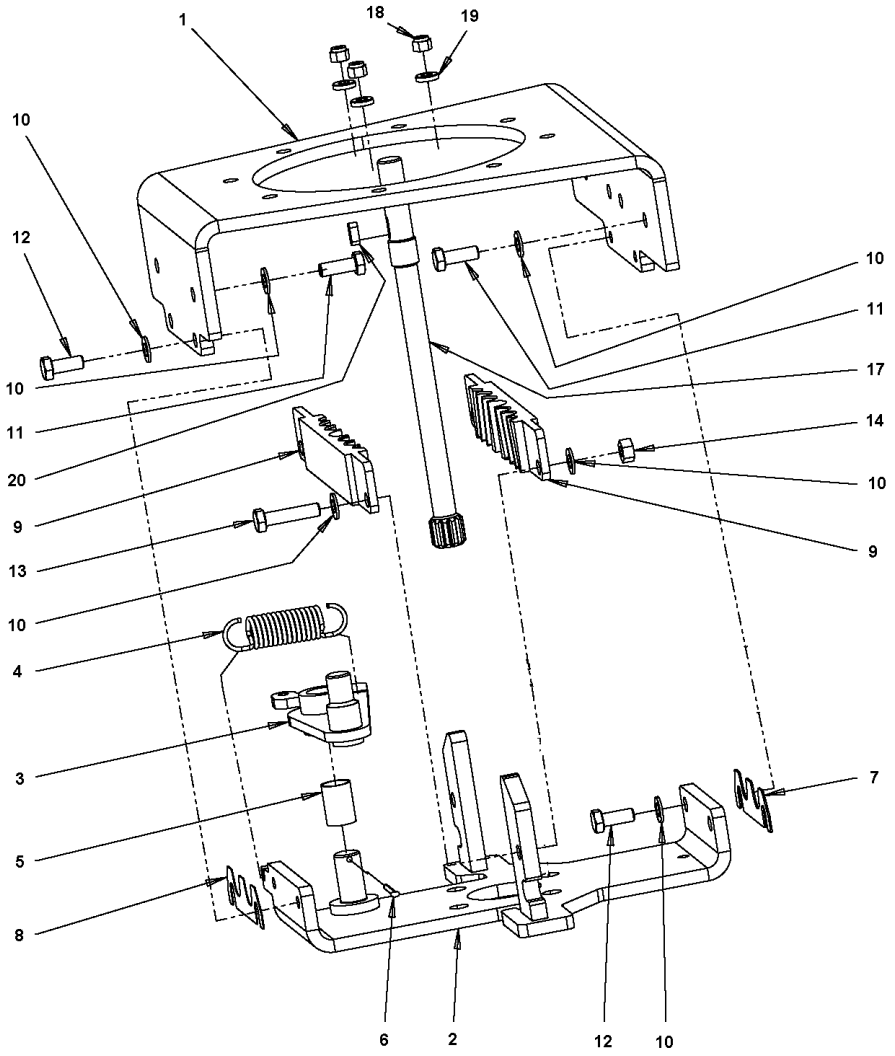

Elemento	N.º de pieza	Nombre	Cant.	L
1	4700379715	Carrier	1	
2	4700391478	Steering valve bracket	1	
3	4700393347	Coupling link	1	
4	4700359043	Spring	1	
5	4700359819	Bushing	1	
6	4700630008	Pin	1	
7	4812115060	Shim	6	
8	4812115061	Shim	6	
9	4812110896	Clamp	2	
10	4700904229	Steel plain washer 8.4X16X1.5	14	
11	4700500020	Hex. screw	6	
12	4700500053	Perno	4	
13	4700500047	Hexagon screw M	2	
14	4700570005	Hexagon nut M	2	
17	4700391770	Shaft	1	
18	4700586002	Lock nut M	3	
19	4700603001	Washer	3	
20	4700350009	Flat key	1	

Hydraulic steering, sliding seat Hose bracket

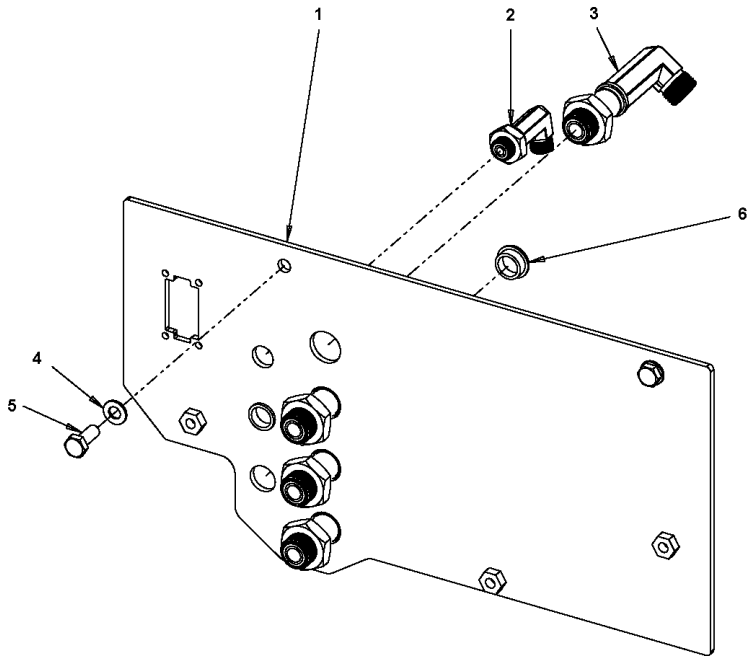

Elemento	N.º de pieza	Nombre	Cant.	L
1	4700391192	Hose bracket	1	
2	4700792343	Adapter	1	
3	4700792342	Bulkhead elbow	4	
4	4700904229	Steel plain washer 8.4X16X1.5	2	
5	4700500053	Perno	2	
6	4700791396	Air breather	2	

Sun valve Reducing valve

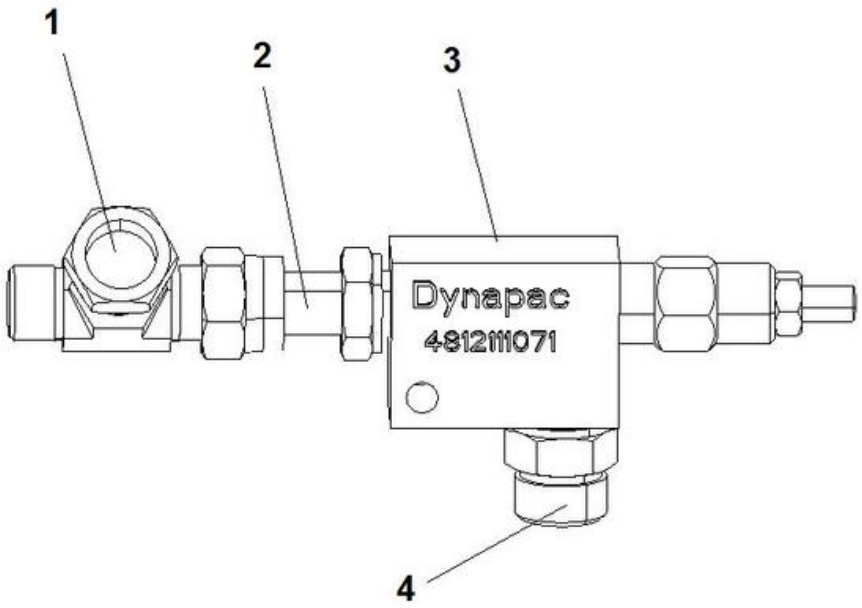

Elemento	N.º de pieza	Nombre	Cant.	L
1	4700792561	T-connector	2	
2	4811000374	Straight adapter	2	
3	4812111071	Reducing valve	2	
4	4700904727	Adapter	2	

Hydraulic pump module Hydraulic pump module

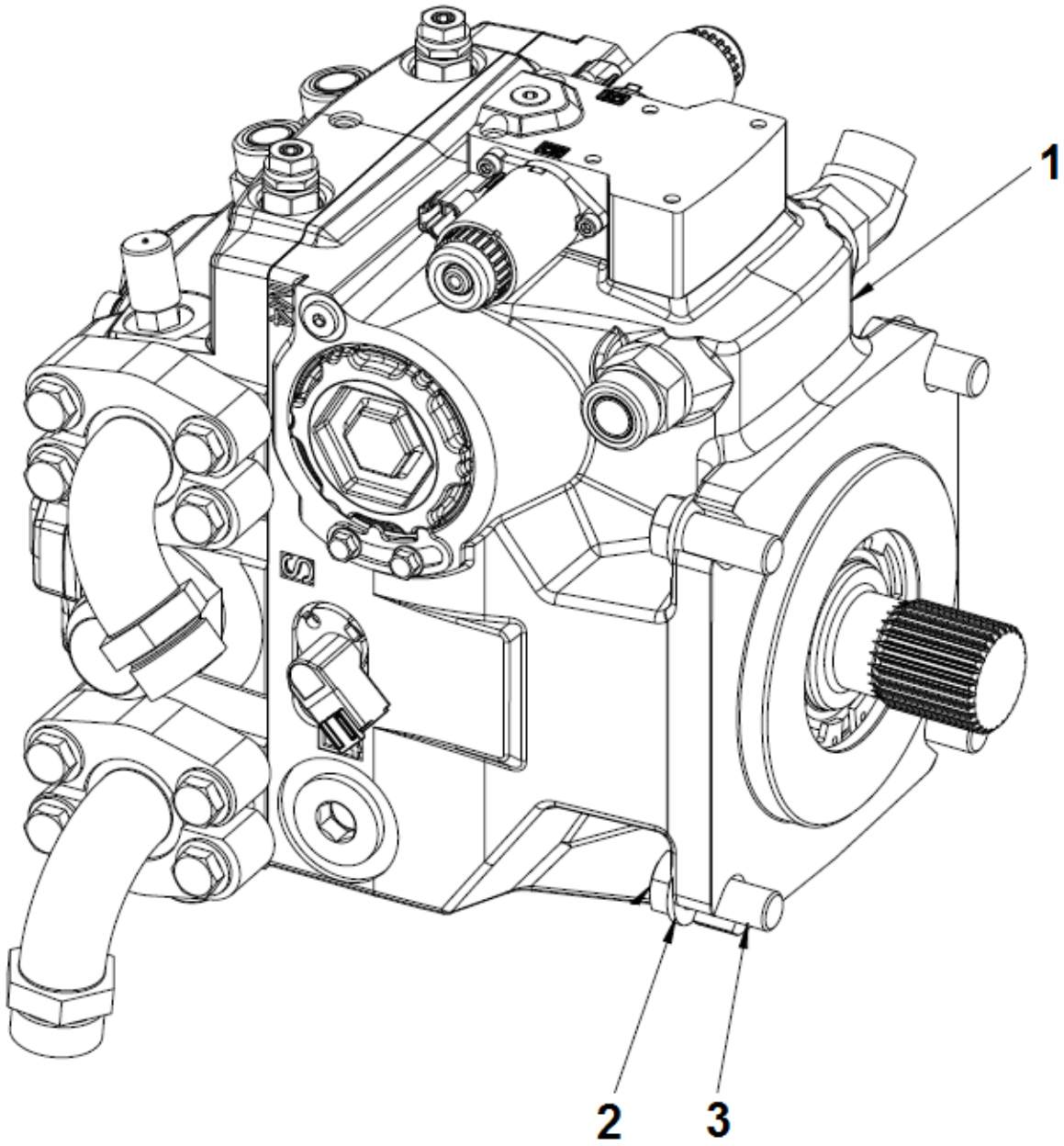

Elemento	N.º de pieza	Nombre	Cant.	L
1		Hydraulic pump assy	1	
2	4700904232	Washer 15x30x4 300 HV	4	
3	4700500093	Hex. screw	4	

Hydraulic pump module Hydraulic pump assy

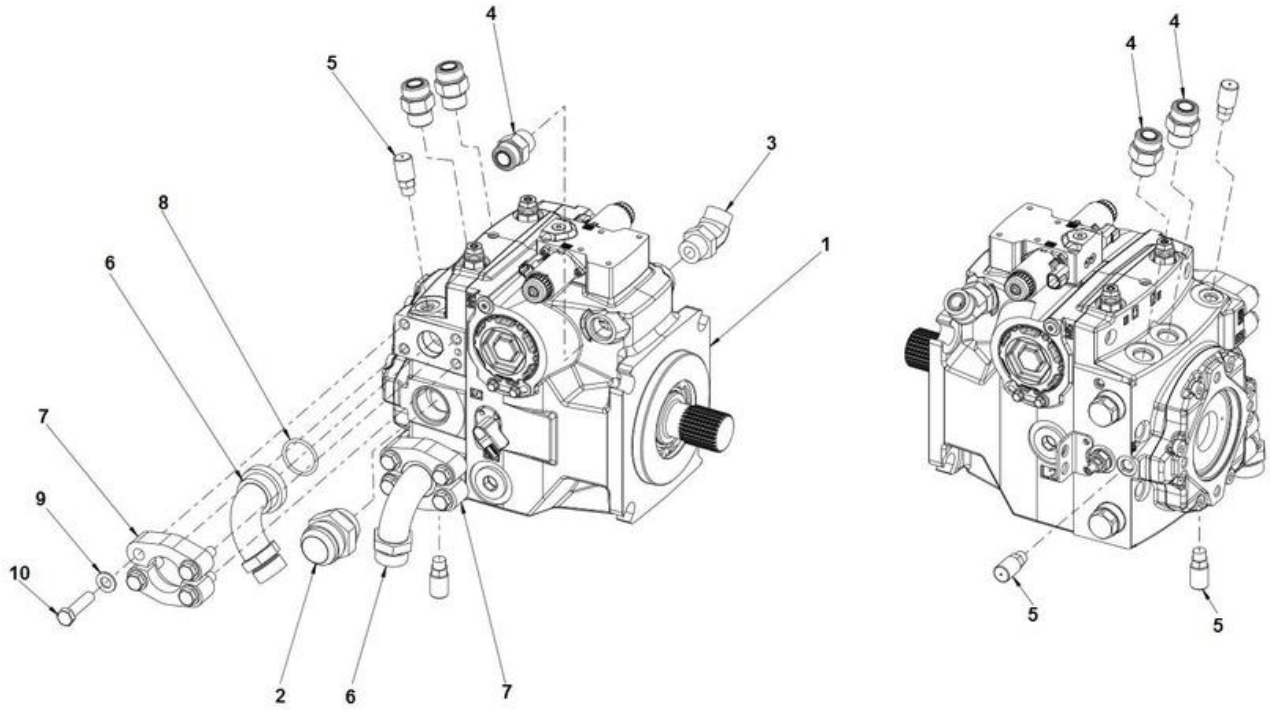

Elemento	N.º de pieza	Nombre	Cant.	L
1	4812100003	Hydraulic pump	1	
2	4700334169	Connector	1	
3	4700791230	Adapter	1	
4	4700791823	Straight connector ORFS	3	
5	4700900229	Measuring fitting	3	
6	4700904689	Flange fitting 90	2	
7	4700900342	Split flange	4	
8	4700904171	O-ring	2	
9	4700904231	Steel plain washer	8	
10	4700500195	Screw	8	

Hydraulic pump module Hydraulic pump

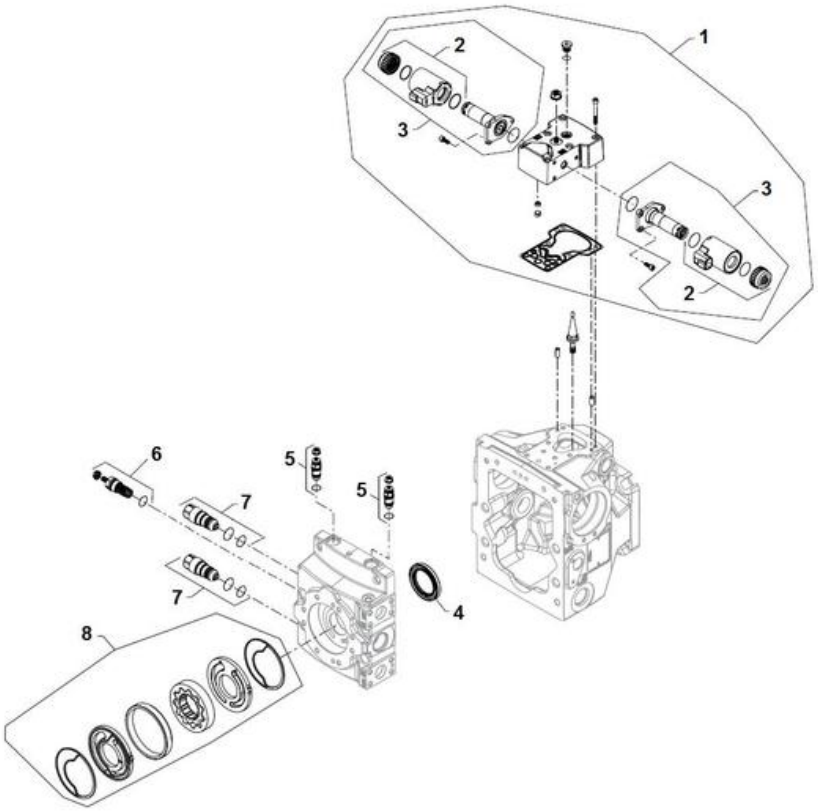

Elemento	N.º de pieza	Nombre	Cant.	L
1	4812325068	Control kit	1	
2	4812157372	Coil kit 24V	2	
3	4812157370	Solenoid	2	
4	4812159298	Seal lip	1	
5	4812325066	Pressure limiter	2	
6	4812158361	Charge relief valve kit	1	
7	4812325067	High pressure relief valve	2	
8	4812325342	Charge pump kit	1	
9	4812159297	Seal kit	1	

Fan drive module Fan drive module

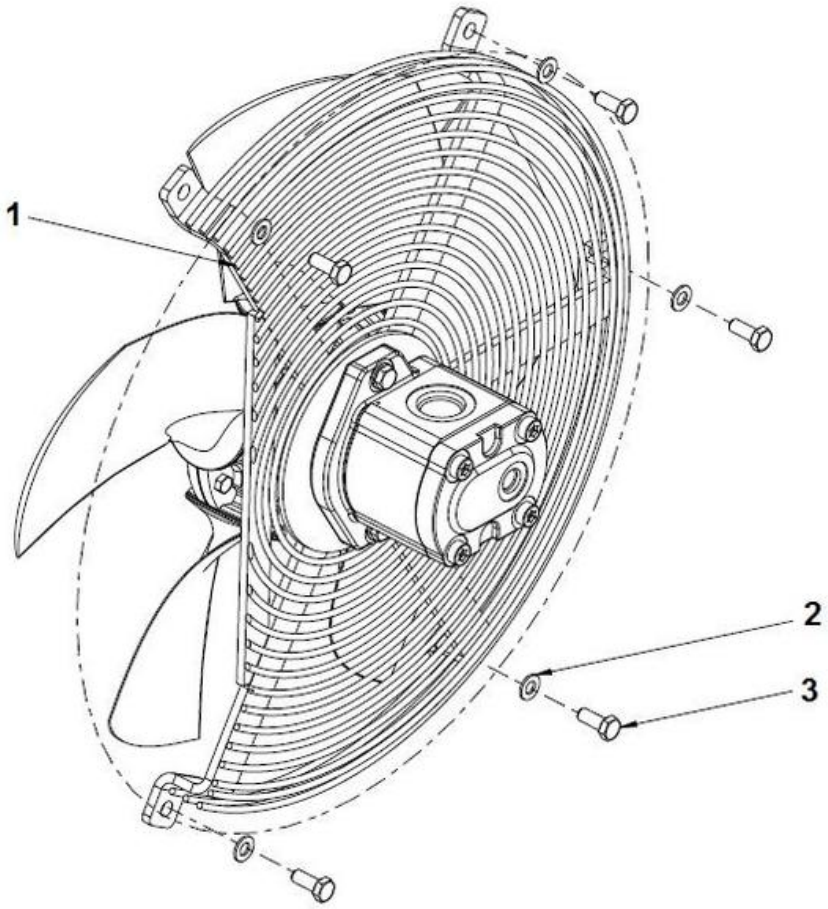

Elemento	N.º de pieza	Nombre	Cant.	L
1		Fan drive assy	1	
2	4700904229	Steel plain washer 8.4X16X1.5	5	
3	4700500053	Perno	5	

Fan drive module Fan drive assy

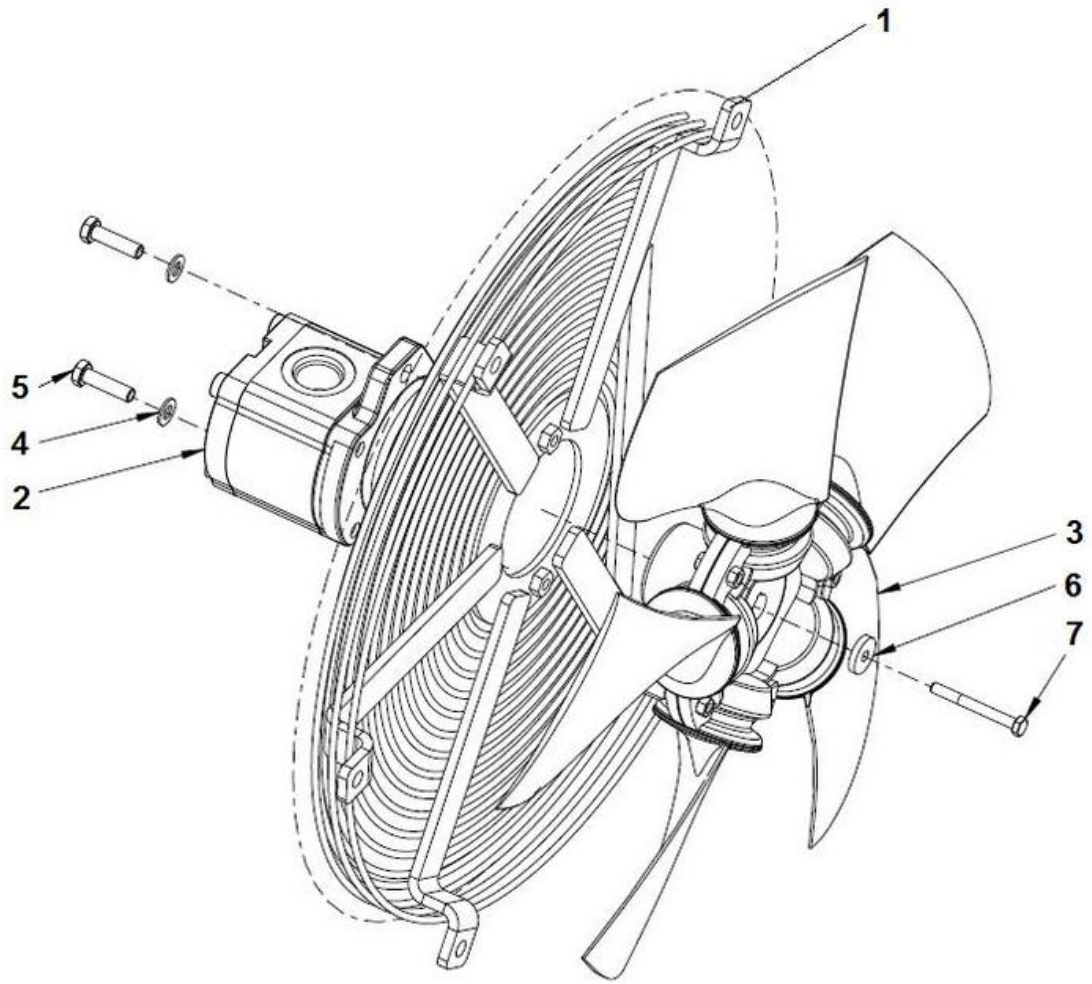

Elemento	N.º de pieza	Nombre	Cant.	L
1	4812317240	Fan guard	1	
2	4812100190	Hydraulic motor	1	
3	4812117664	Fan	1	
4	4700904229	Steel plain washer 8.4X16X1.5	2	
5	4700500022	Hexagon screw M8X30 8.8 A2K	2	
6	4700904735	Steel plain washer	1	
7	4700500016	Hexagon head screw M	1	

Hydraulic system 4812116000 Hydraulic oil cooler module

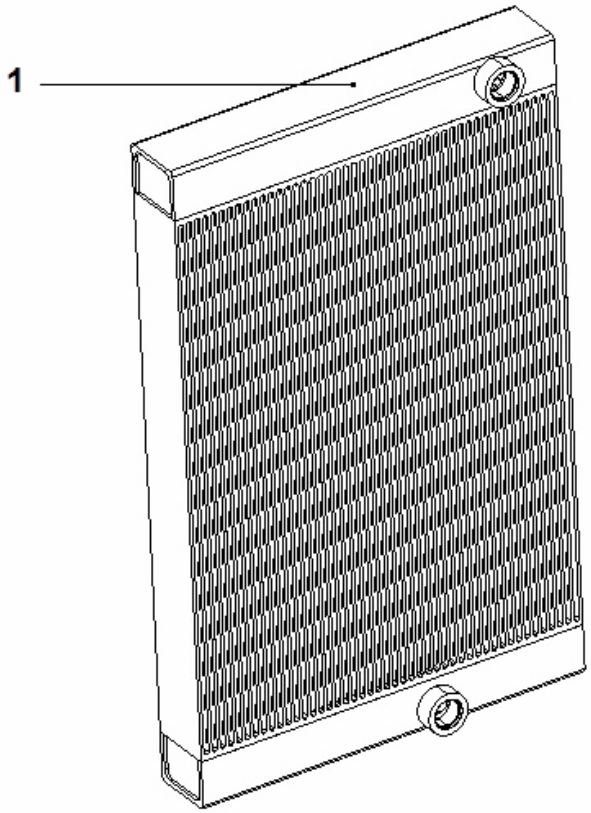

Elemento	N.º de pieza	Nombre	Cant.	L
1	4812116004	Hydraulic oil cooler	1	

Hydraulic system 4812116002 Charge air cooler

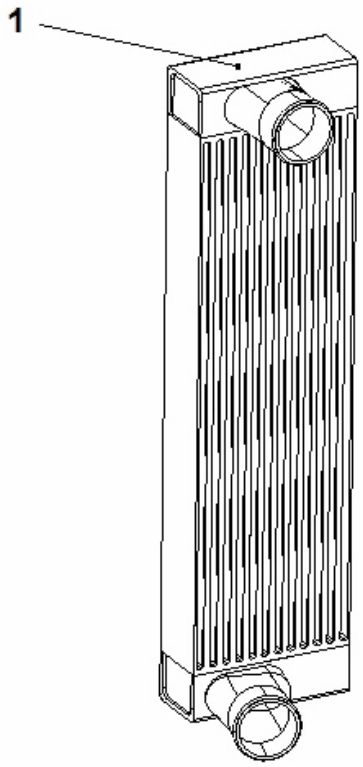

Elemento	N.º de pieza	Nombre	Cant.	L
1	4812116006	Charge air cooler	1	

Hydraulic system 4812116001 Water cooler module

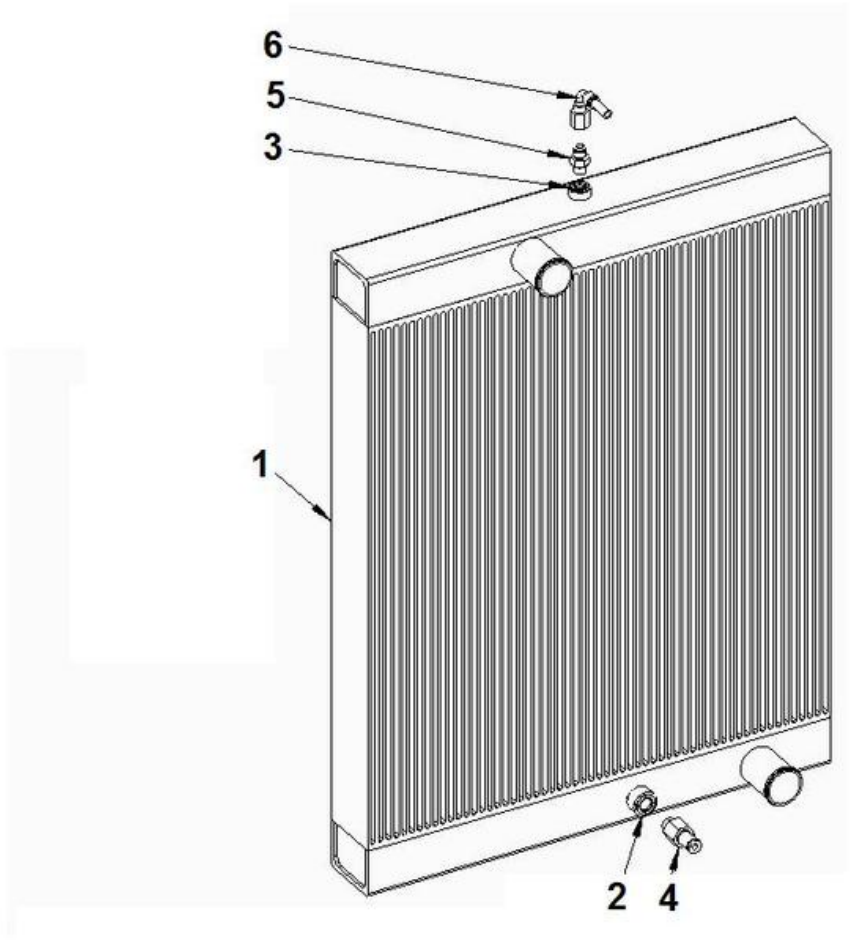

Elemento	N.º de pieza	Nombre	Cant.	L
1	4812116005	Water cooler	1	
2	4700162011	Washer, 16.7x24x1.5 mm Type A M16	1	
3	4700162004	Sealing	1	
4	4700391303	Hose connection	1	
5	4700334520	Adapter	1	
6	4700792099	Connector	1	

4812100001 Hydraulic valve module, hard start optional 4812100001 Hydraulic valve module, hard start optional

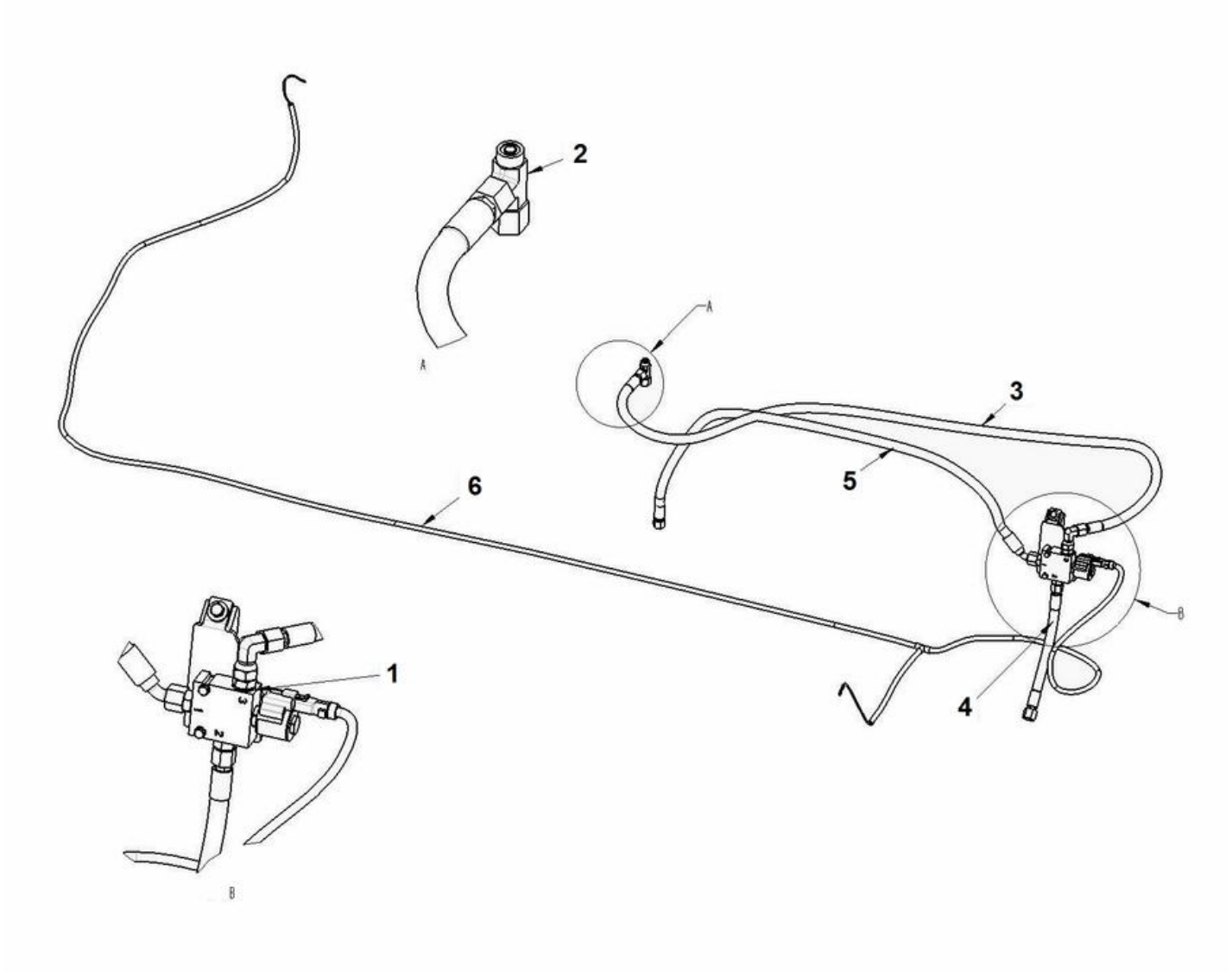

Elemento	N.º de pieza	Nombre	Cant.	L
1	4812315442	Bracket module	1	
2	4700791414	Tee-connector ORFS	1	
3	4700484313	Hydraulic hose	1	
4	4812315329	Hydraulic hose	1	
5	4812315330	Hydraulic hose	1	
6	4812315435	Wiring Harness	1	

4812315442 Bracket module 4812315442 Bracket module

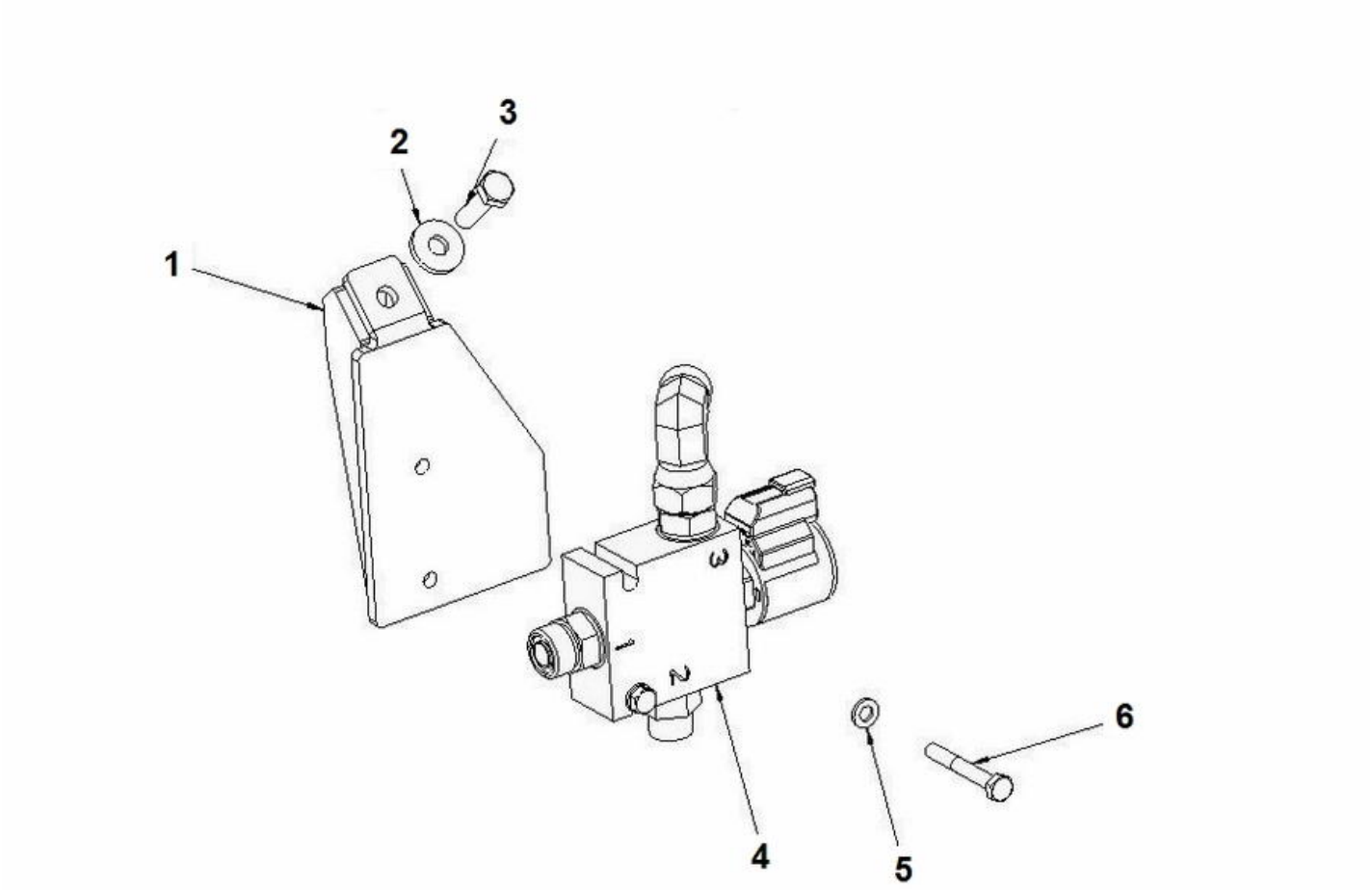

Elemento	N.º de pieza	Nombre	Cant.	L
1	4812315467	Bracket	1	
2	4700904640	Steel plain washer	1	
3	4700500022	Hexagon screw M8X30 8.8 A2K	1	
4		Valve	1	
5	4700904228	Arandela 6,4x12x1,5	2	
6	4700500186	Screw	2	

4812315441 Valve 4812315441 Valve

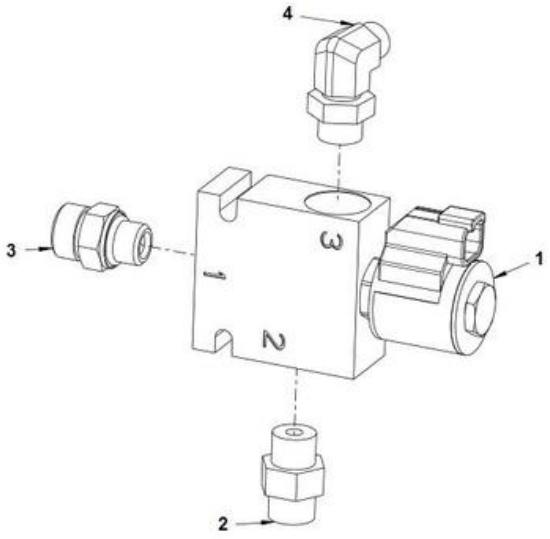

Elemento	N.º de pieza	Nombre	Cant.	L
1	4812119255	Hydraulic valve	1	
2	4700791404	Straight o-ring connector	1	
3	4700904727	Adapter	1	
4	4700792676	Elbow 90 orfs	1	

Electric system Battery module

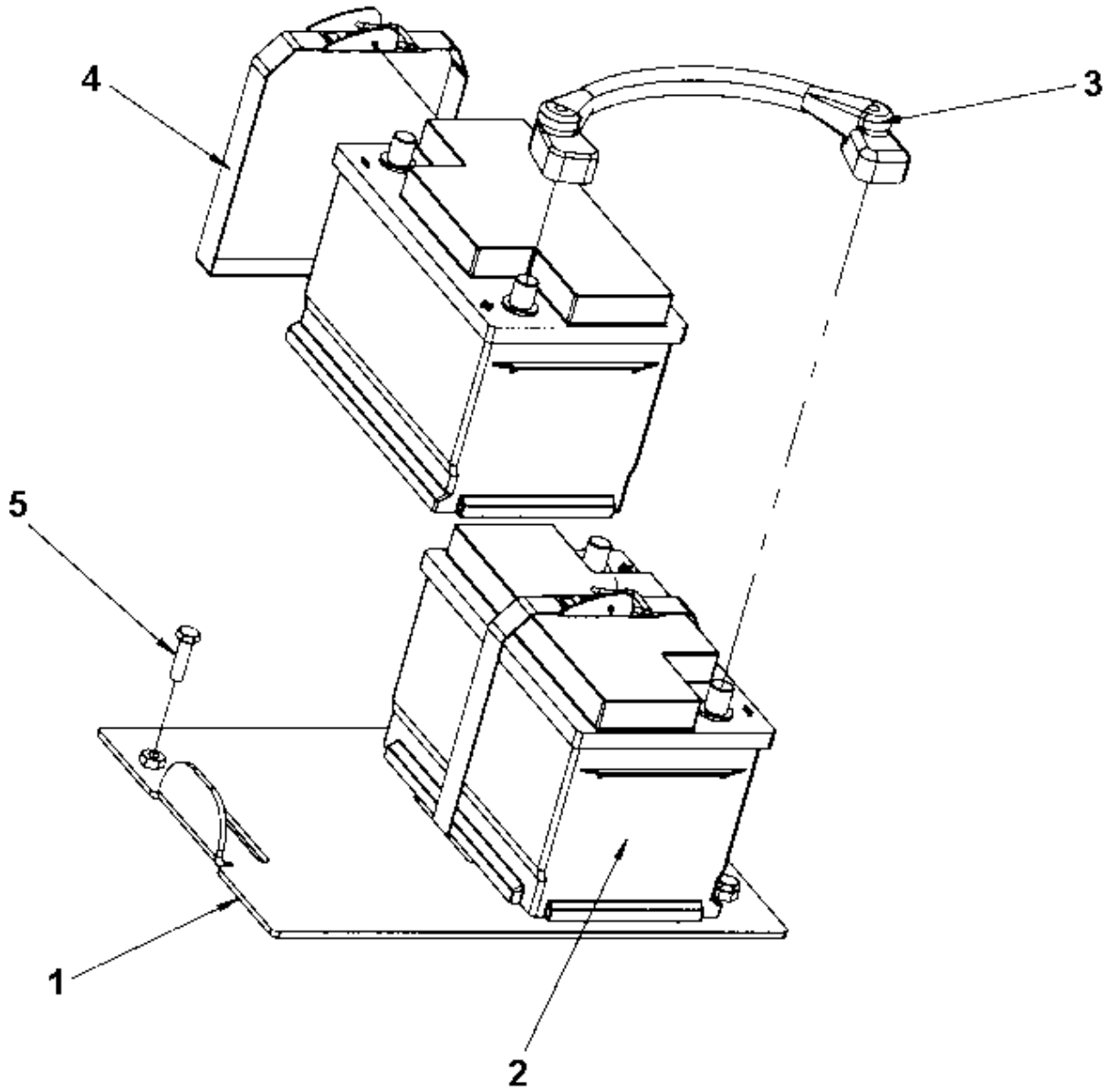

Elemento	N.º de pieza	Nombre	Cant.	L
1	4700395861	Battery holder	1	
2		Battery, 12V 74Ah (278x175x190mm)	2	
3	4700792768	Connection cable	1	
4	4700389662	Strap	2	
5	4700500030	Hexagon screw M	2	

Electric system Horn module

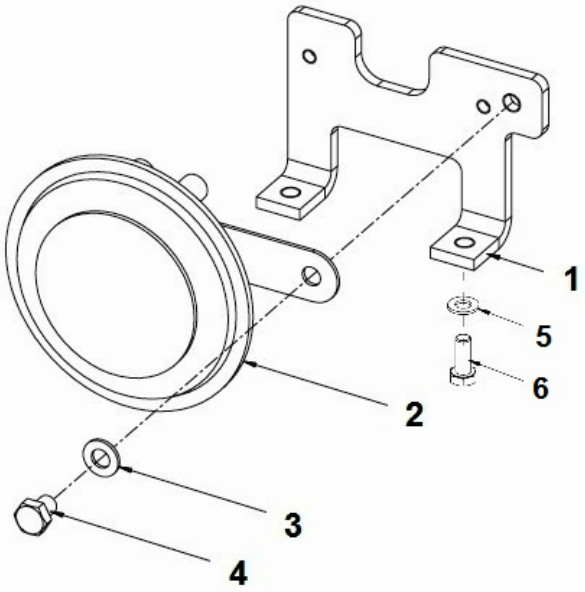

Elemento	N.º de pieza	Nombre	Cant.	L
1	4700396768	Bracket	1	
2	4700999014	Horn	1	
3	4700904229	Steel plain washer 8.4X16X1.5	1	
4	4700500042	Hex. head screw M8	1	
5	4700904229	Steel plain washer 8.4X16X1.5	2	
6	4700500053	Perno	2	

Electric system Back-up alarm module

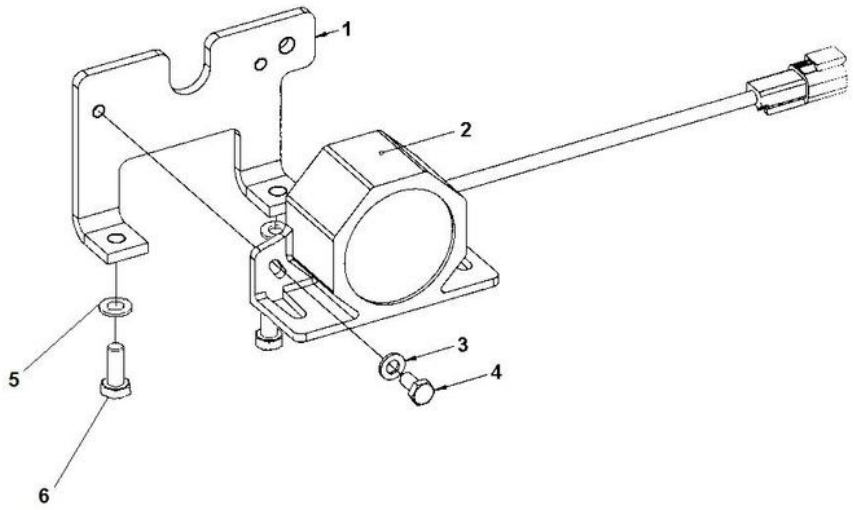

Elemento	N.º de pieza	Nombre	Cant.	L
1	4700396768	Bracket	1	
2	4700904911	Back-up alarm	1	
3	4700904228	Arandela 6,4x12x1,5	2	
4	4700500012	Hexagon head screw M	2	
5	4700904229	Steel plain washer 8.4X16X1.5	2	
6	4700500053	Perno	2	

Disconnector battery Battery disconnector module

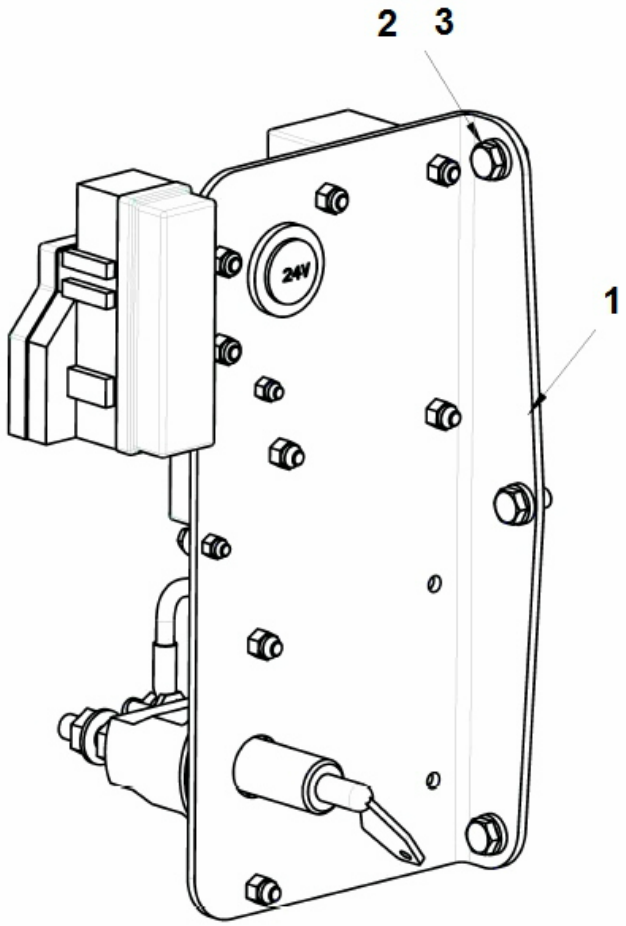

Elemento	N.º de pieza	Nombre	Cant.	L
1	-	Disconnector battery	1	
2	4700904556	Steel plain washer	3	
3	4700500019	Hexagon head screw M	3	

Disconnector battery Disconnector battery

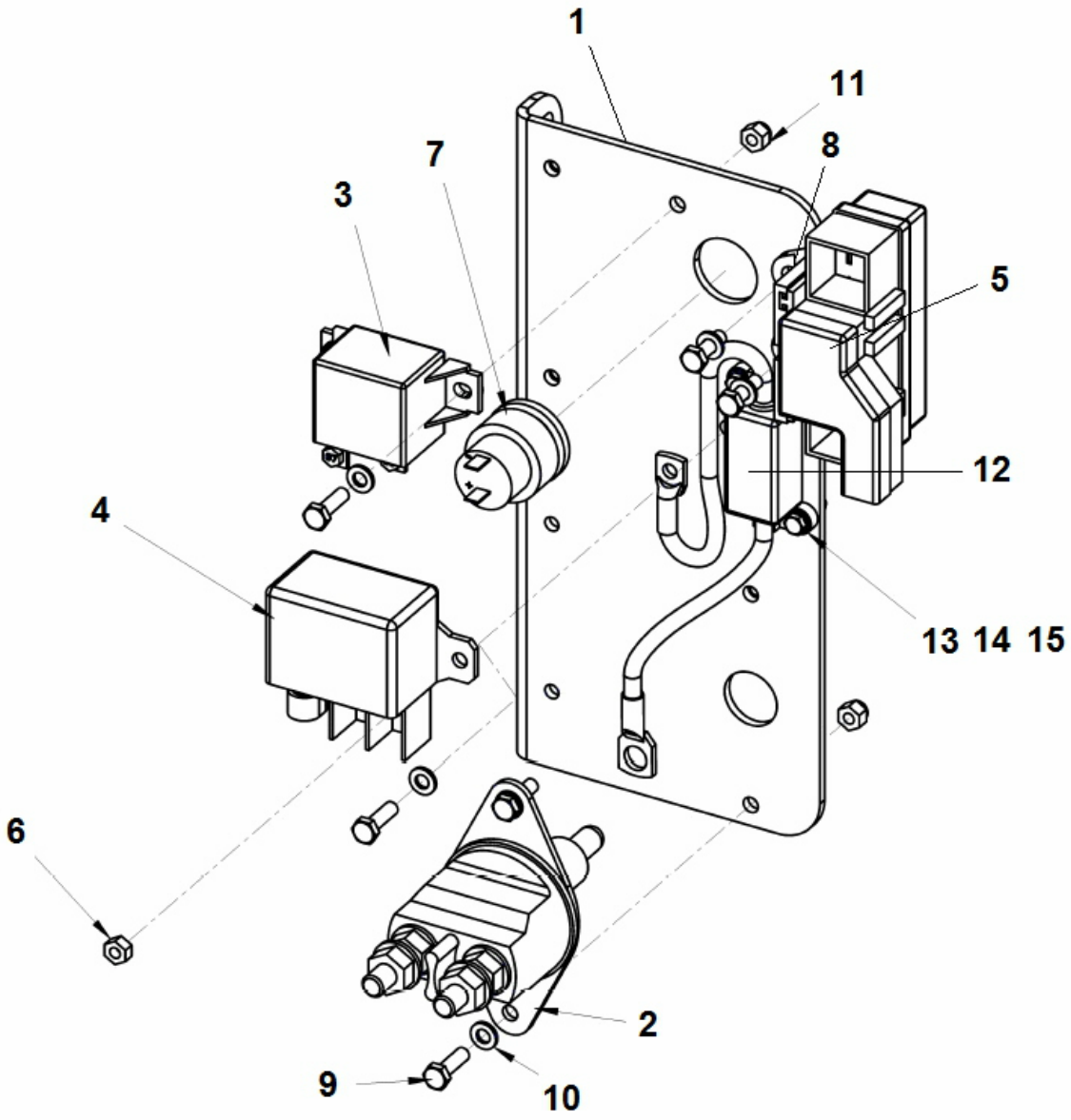

Elemento	N.º de pieza	Nombre	Cant.	L
1	4812100087	Holder	1	
2	4700903640	Battery disconnector	1	
3	4700792309	Relay 50A	1	
4	4700792310	Relay 120A	1	
5	4812111981	Fuse holder	1	
6	4700570004	Hexagon nut M	1	
7	4700395816	Plug socket 24V	1	
8	4812112000	Fuse holder	2	
9	4700500040	Hex bolt M06X020H 8.8 A2K	8	
10	4700904228	Arandela 6,4x12x1,5	8	
11	4700586002	Lock nut M	8	
12	4700391585	Cable harness	1	
13	4700904281	Steel plain washer	2	
14	4700500060	Hexagon head screw M	2	
15	4700586001	Lock nut M	2	

ECU module Standard ECU module

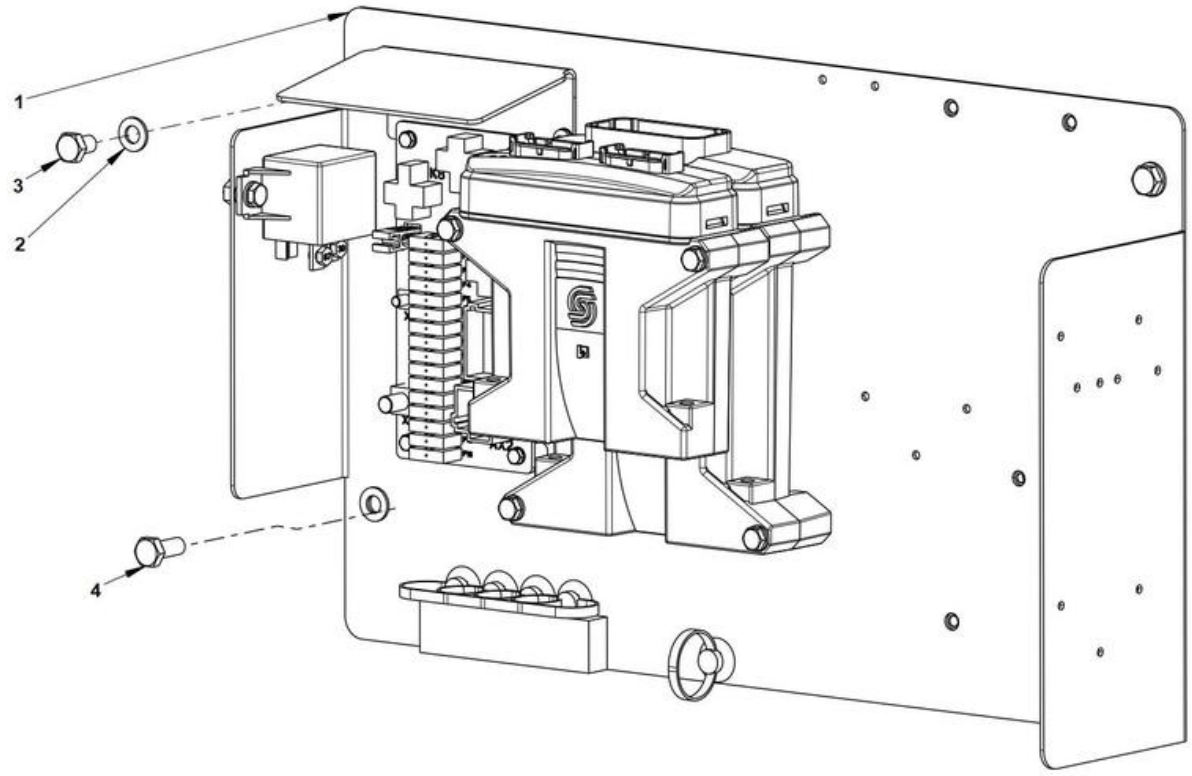

Elemento	N.º de pieza	Nombre	Cant.	L
1		ECU mount	1	
2	4700904229	Steel plain washer 8.4X16X1.5	4	
3	4700500018	Hexagon screw	3	
4	4700500053	Perno	1	

ECU module Standard ECU

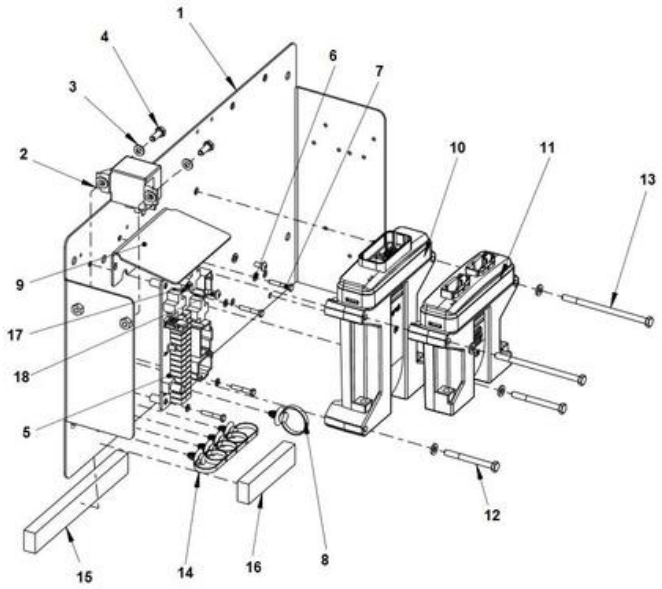

Elemento	N.º de pieza	Nombre	Cant.	L
1	4812100079	Bracket	1	
2	4700792309	Relay 50A	1	
3	4700904228	Arandela 6,4x12x1,5	6	
4	4700500013	Hexagon head screw M	2	
5	4812114655	Circuit board	1	
6	4700904698	Plain washer	4	
7	4700904312	Screw	4	
8	4700792441	Cable tie with holder	2	
9	4812318485	Bracket	1	
10	4812315395	Control unit	1	
11	4812315393	Expansion module	1	
12	4700500187	Hexagon head screw M6x60	2	
13	4700792340	Tee-connector orfs	2	
14	4700792441	Cable tie with holder	4	
15	4700791597	Rubber strip	0.2	
16	4700791597	Rubber strip	0.1	
17	4700904281	Steel plain washer	2	
18	4700792210	Screw torx	2	

Electric system Wiring harness kit

Elemento	N.º de pieza	Nombre	Cant.	L
1	4812317325	Wiring harness	1	
2	4812317255	Wiring harness	1	
3	4812100075	Wiring harness air filter	1	
4	4812100085	Wiring harness power supply	1	
5	4812100072	Wiring harness	1	
6	4700792767	Battery cable	1	
7	4700792627	Connection cable coarse	1	
8	4700792766	Battery cable	1	
9	4700792770	Connection cable, coarse	1	
10	4700792769	Connection cable, coarse	1	
11	4700904037	Fuse 30A Green	1	
12	4700904039	Fuse 50A Red	1	
13	4700792602	Cable Tie with Holder, Nylon Black	20	
14	4700904231	Steel plain washer	2	
15	4700500046	Hex. head screw M12x030H	1	
16	4700904281	Steel plain washer	1	
17	4700570003	Hex. nut	1	
18	4700904229	Steel plain washer 8.4X16X1.5	1	
19	4700570005	Hexagon nut M	1	
20	4700313041	Cable tie	2	
21	4700792441	Cable tie with holder	4	
22	4700335607	Connection cable, coarse	1	
23	4700792210	Screw torx	2	
24	4700500051	Hexagon screw M	1	
25	4812318276	Wiring harness	1	
26	4700921072	Pipe clamp covered	2	

Air dryer (up to SN xxB005120) Air dryer kit

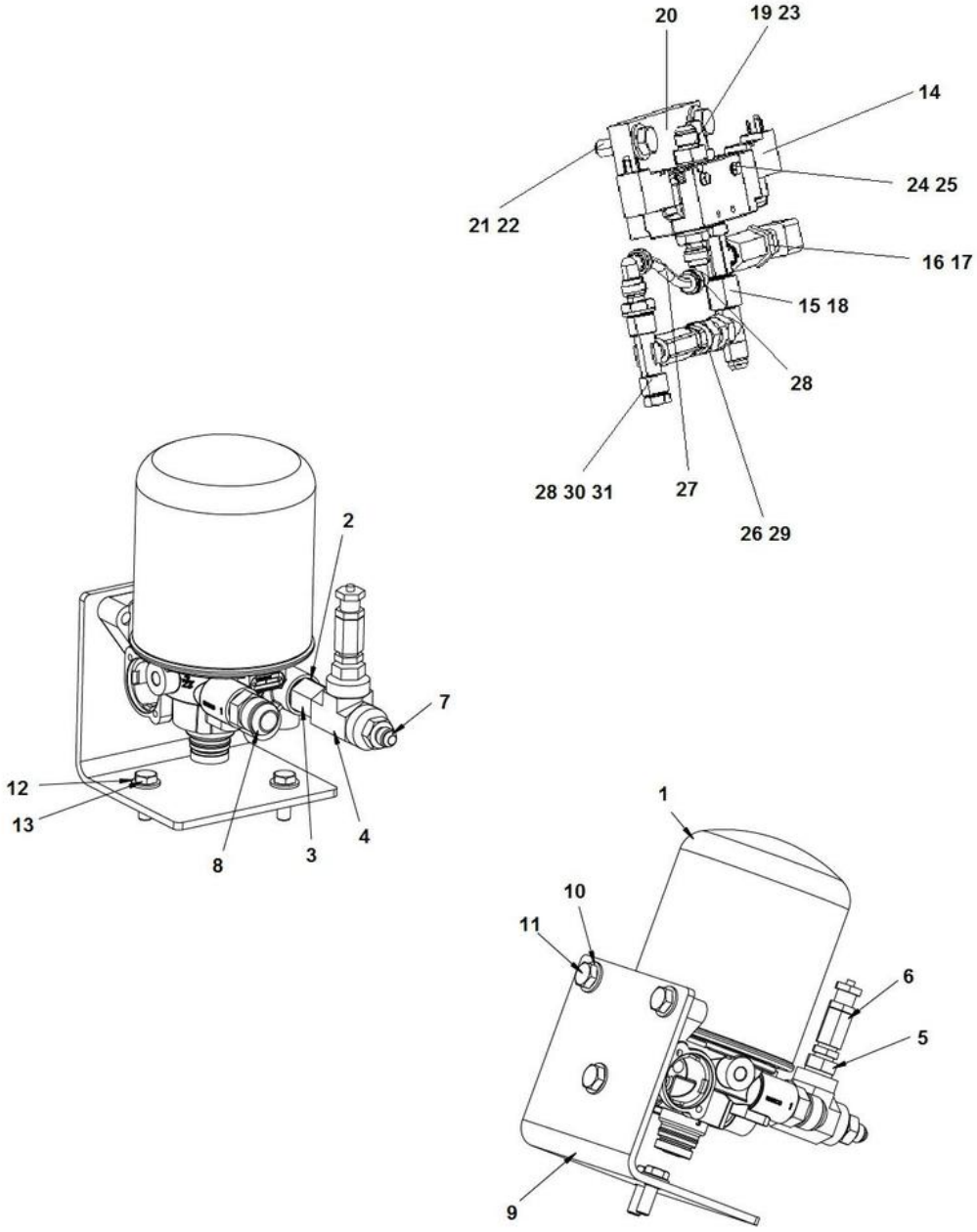

Elemento	N.º de pieza	Nombre	Cant.	L
1	4700396714	Air dryer	1	
1	4812100497	Air dryer filter element	1	
2	4700330333	Copper washer	1	
3	4700234729	Reducing nipple	1	
4	4700334425	Tee-connector	1	
5	4700334603	Bushing	1	
6	4700333062	Safety valve	1	
7	4700234840	Connector	1	
8	4700235003	Connector	1	
9	4700396973	Bracket	1	
10	4700904231	Steel plain washer	3	
11	4700500046	Hex. head screw M12x030H	3	
12	4700904230	Plain washer M10 10.5X22X2.0	2	
13	4700500029	Hexagon head screw M	2	
14	4700396342	Pneumatic valve	1	
15	4700334538	Tee-connector	1	
16	4700338304	Adapter	1	
17	4700396341	Pressure sender	1	
18	4700334234	Tee-connector	1	
19	4700334520	Adapter	1	
20	4700396992	Bracket	1	
21	4700904230	Plain washer M10 10.5X22X2.0	2	
22	4700500029	Hexagon head screw M	2	
23	4812111234	Silencer	1	
24	4700904698	Plain washer	2	
25	0147117903	Screw	2	
26	4700901425	Straight o-ring connector	1	
27	4700925502	Tube	1XL	
28	4812111249	Bend 90, push in	2	
29	4812112485	Checkvalve	1	
30	4811000196	Adapter	1	
31	4812112768	Plug	1	
32	4700791317	Filter plug	1	

Air dryer (up to SN xxB005120) Pipe and hose kit, Front Air on the run

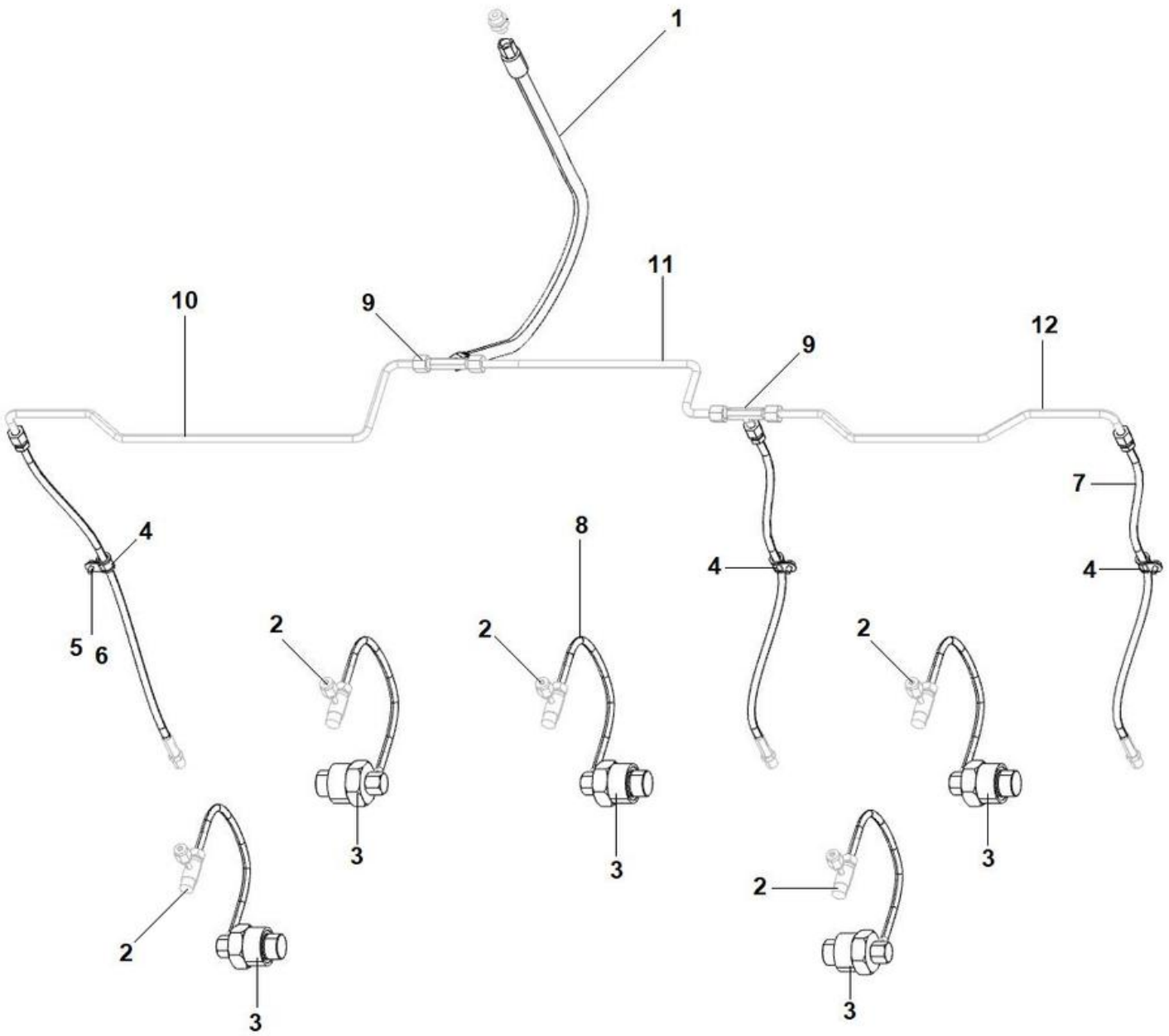

Elemento	N.º de pieza	Nombre	Cant.	L
1	4812315748	Hose	1	
2	4700258298	Valve	5	
3	4700257198	Rotating nipple	5	
4	4700921039	Pipe clamp	3	
5	4700904228	Arandela 6,4x12x1,5	3	
6	4700500012	Hexagon head screw M	3	
7	4700170544	Hose	3	
8	4700170545	Hose	5	
9	4812319156	Connector T	2	
10	4812319298	Aluminium tube	1	
11	4812319297	Aluminium tube	1	
12	4812319296	Aluminium tube	1	

Air dryer (up to SN xxB005120) Field kit to dryer (add purge)

Elemento	N.º de pieza	Nombre	Cant.	L
Not Shown	4812319072	Field kit to dryer (add purge)		
1	4812319069	Plug with hole	1	
2	4700334520	Adapter	2	
3	4700334234	Tee-connector	1	
4	4700903268	Connector	2	
5	4812318624	Straight connector	1	
6	4812112485	Checkvalve	1	
7	4812100497	Air dryer filter element	1	
8	4812318077	Hose	1	
9	4812318077	Hose	1	
10	-	Software update	1	

Air on the run Field kit for water separator (From SN xxB005121 to xxB005379)

Elemento	N.º de pieza	Nombre	Cant.	L
Not Shown	4812319071	Field kit for separator	1	
1		Air dryer assy	1	
2	4700397130	Cover	1	
3	4700397140	Compressed air pipe	1	
4	4812319069	Plug with hole	1	
5	4700334520	Adapter	1	
6	4700334234	Tee-connector	1	
7	4812318077	Hose	1	
8	4812318077	Hose	1	
9	-	Software	1	

Air control Kit (from SN xxB005380) Air control kit (from SNxxB005380)

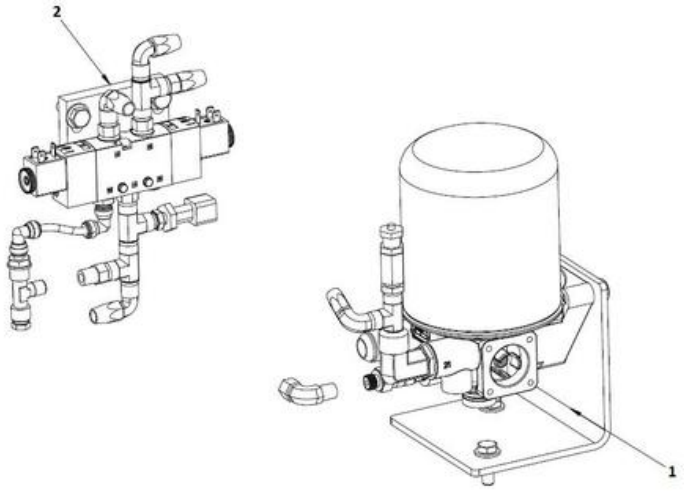

Elemento	N.º de pieza	Nombre	Cant.	L
1		Pneumatic valve assy	1	
2		Air Dryer Assy	1	

Air control Kit (from SN xxB005380) Pneumatic valve assy

Elemento	N.º de pieza	Nombre	Cant.	L
1	4812325951	Solenoid valve	1	
2	4700334538	Tee-connector	1	
3	4812318613	Bracket	1	
4	4700334520	Adapter	2	
5	4700904698	Plain washer	2	
6	4700334234	Tee-connector	2	
7	433830401	Connector	1	
8	4700396341	Pressure sender	1	
9	4700791317	Filter plug	1	
10	0147117903	Screw	2	
11	4700904230	Plain washer M10 10.5X22X2.0	2	
12	4700500029	Hexagon head screw M	2	
13	4812318369	Solenoid	2	
14	4812318624	Straight connector	1	
15	4812112485	Checkvalve	1	
16	4811000196	Adapter	1	
17	4812319069	Plug with hole	1	
18	4812111249	Bend 90, push in	2	
19	4700925502	Tube	1	

Air control Kit (from SN xxB005380) Air dryer assy

Elemento	N.º de pieza	Nombre	Cant.	L
1	4700396714	Air dryer	1	
1	4812100497	Air dryer filter element	1	
2	4700396973	Bracket	1	
3	4700500046	Hex. head screw M12x030H	3	
4	4700904231	Steel plain washer	3	
5	4700235003	Connector	11	
6	4700330333	Copper washer	1	
7	4700234729	Reducing nipple	1	
8	4700334425	Tee-connector	1	
9	4700334603	Bushing	1	
10	4812118345	Safety valve	1	
11	4700234840	Connector	1	
12	4700903268	Connector	2	
13	4812318624	Straight connector	1	
14	4812112485	Checkvalve	1	
15	4700334520	Adapter	1	
16	4700904230	Plain washer M10 10.5X22X2.0	2	
17	4700500029	Hexagon head screw M	2	

Air control Kit (from SN xxB005380) Compressed air pipe kit

Elemento	N.º de pieza	Nombre	Cant.	L
1	4812315664	Compressed air pipe	1	
2	4700397140	Compressed air pipe	1	
3	4700397139	Compressed air pipe	1	
4	4700397141	Compressed air pipe	1	
5	4812101999	Compressed air pipe	1	
6	4700397143	Compressed air pipe	1	
7	4812101949	Hose	1	
8	4812318077	Hose	1	
9	4812318077	Hose	1	

Air on the run Hydraulic valve module Air on the run

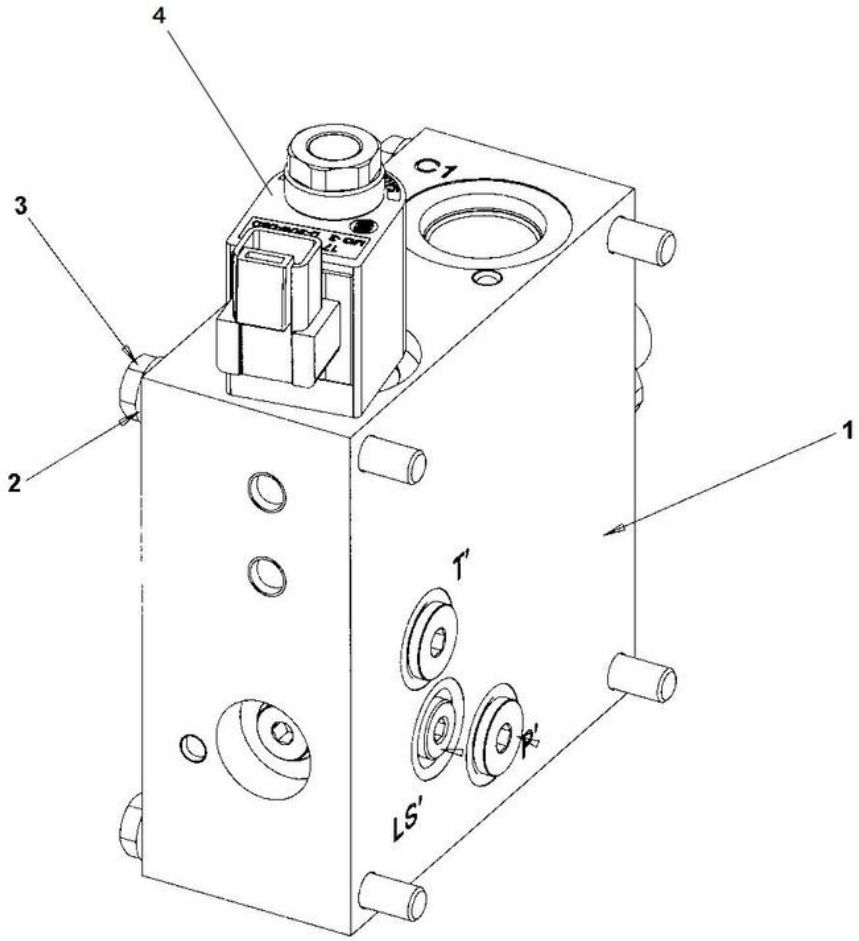

Elemento	N.º de pieza	Nombre	Cant.	L
1	4700396027	Hydraulic valve	1	
2	4700904229	Steel plain washer 8.4X16X1.5	4	
3	4700500189	Screw	4	
4	4812162299	Solenoid Valve	1	
4.1	4812158858	Coil	1	

Air on the run Pipe and hose kit, Rear Air on the run

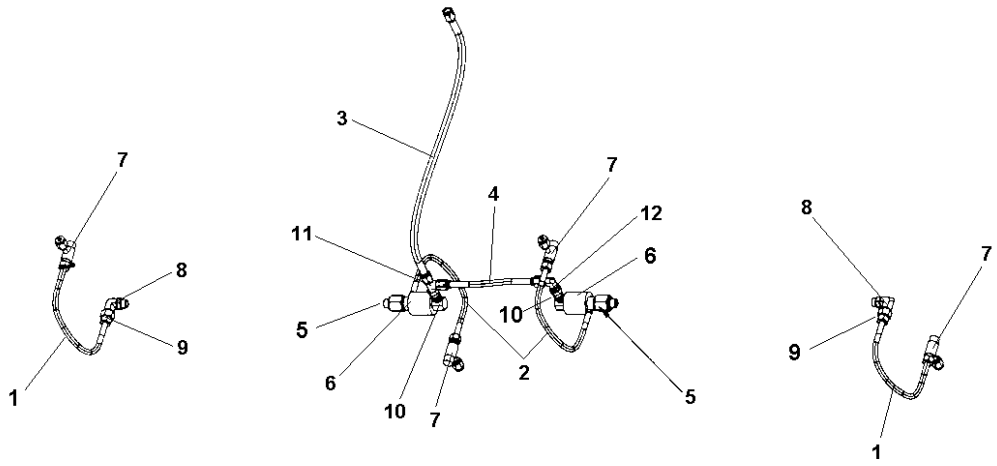

Elemento	N.º de pieza	Nombre	Cant.	L
1	4700170571	Hose	2	
2	4700170545	Hose	2	
3	4700397353	Hose	1	
4	4700170572	Hose	1	
5	4700170259	Adapter	2	
6	4700195172	Rotor	2	
7	4700258298	Valve	4	
8	4700928908	Adapter	2	
9	4700334461	Reducing	2	
10	4700792816	Adapter	2	
11	4700234804	Connector	1	
12	4700923295	Connector	1	

Air on the run Cover module

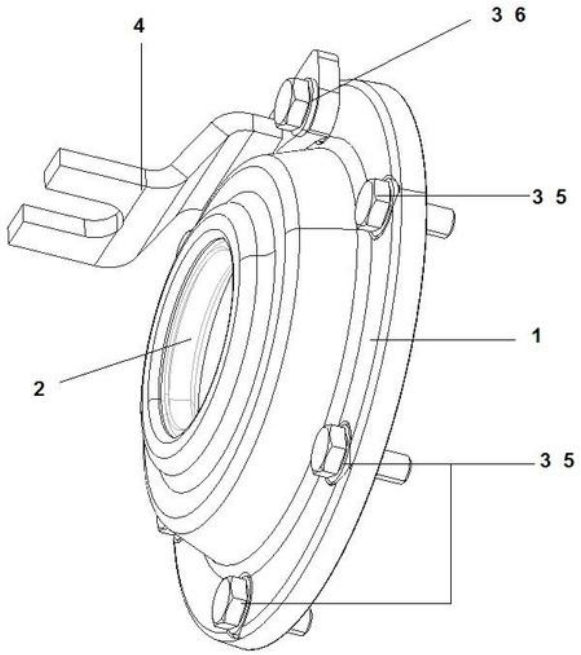

Elemento	N.º de pieza	Nombre	Cant.	L
1	4700170139	Cover	1	
2	4700161023	Radial lip-type seal	1	
3	4700904229	Steel plain washer 8.4X16X1.5	8	
4	4700381475	Holder	1	
5	4700500053	Perno	4	
6	4700500021	Perno	2	

Air on the run Hose assy kit

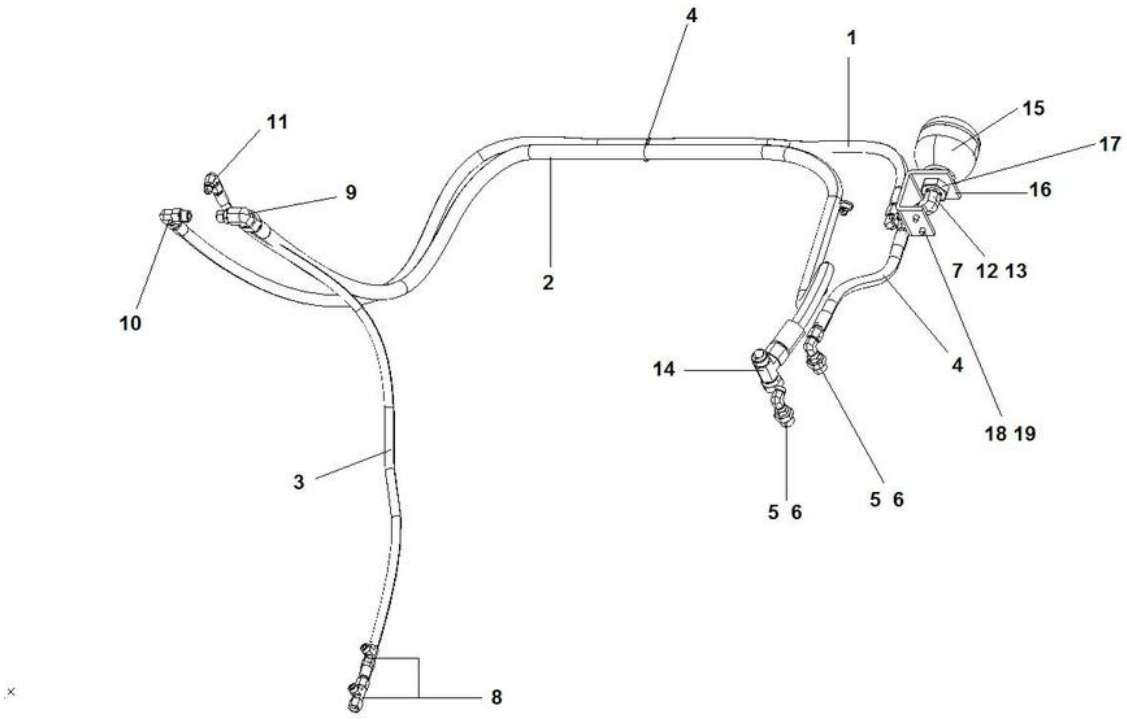

Elemento	N.º de pieza	Nombre	Cant.	L
1	4700484316	Hydraulic hose	1	
2	4811000148	Hydraulic hose	1	
3	4700484330	Hydraulic hose	1	
4	4811000147	Hydraulic hose	1	
5	4700792602	Cable Tie with Holder, Nylon Black	3	
6	4700791850	Adapter	1	
7	4700791745	Connector	1	
8	4700791414	Tee-connector ORFS	2	
9	4700791846	Elbow 90 ORFS	1	
10	4700792133	Adapter	1	
11	4700791838	Adapter	1	
12	4700791699	Adapter	1	
13	4700791798	Adapter	1	
14	4700334504	Elbow	1	
15	4700396171	Accumulator	1	
16	4812111834	Bracket	1	
17	4700396349	Nut	1	
18	4700904230	Plain washer M10 10.5X22X2.0	2	
19	4700947682	Screw M10x1,5x20 10.9	2	

Air on the run Wiring harness kit

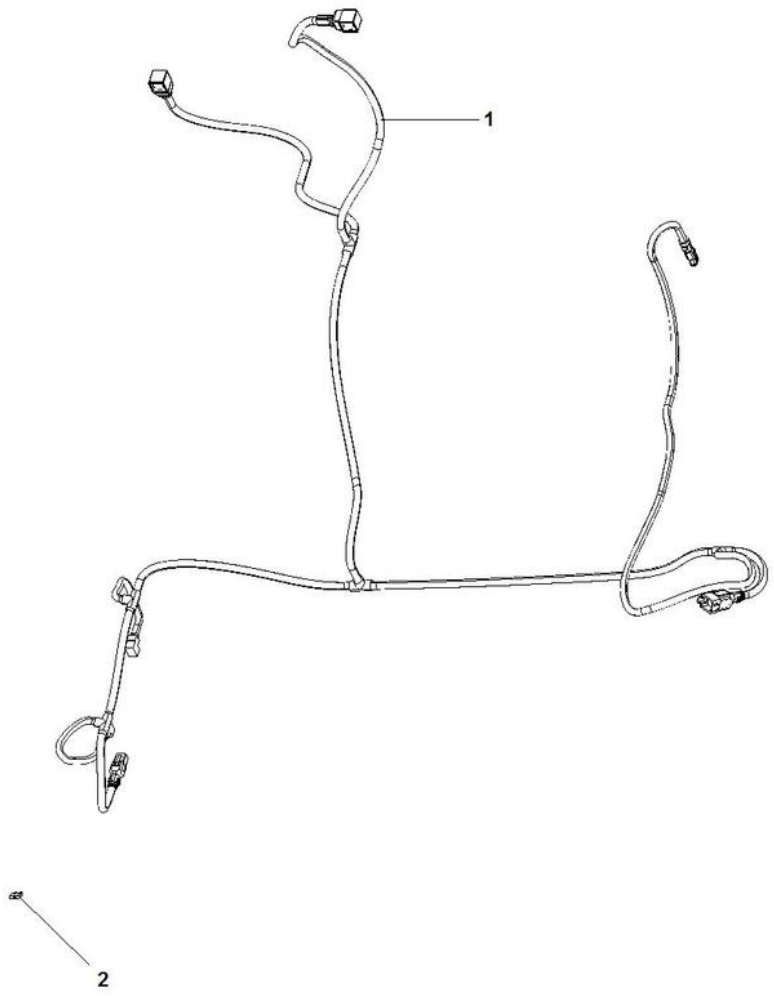

Elemento	N.º de pieza	Nombre	Cant.	L
1	4812112678	Wiring harness	1	
2	4700901225	Fuse 5A Tan	1	

Compressor module Compressor module

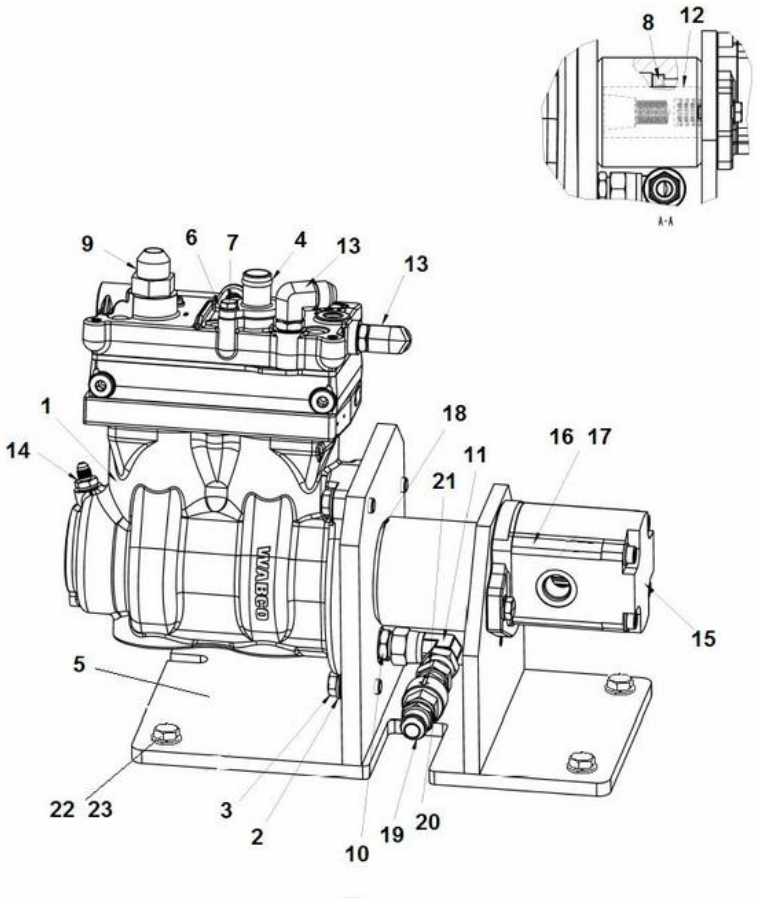

Elemento	N.º de pieza	Nombre	Cant.	L
1	-	Aceite de motor	1	
2	4700904231	Steel plain washer	3	
3	4700500037	Hexagon head screw M12X035H 8.8 A3K	3	
4	4700397000	Connection	1	
5	4812114458	Bracket	1	
6	4700904229	Steel plain washer 8.4X16X1.5	2	
7	4700500053	Perno	2	
8	4700397022	Radial lip-type seal	1	
9	4700902126	Adapter	1	
10	4700234382	Adapter	1	
11	4700334198	Connector Elbow 90	1	
12	4700397021	Splined sleeve	1	
13	4700791575	Elbow 45, O-ring	2	
14	4700902125	Connector	1	
15	4812100191	Hydraulic motor	1	
16	4700904570	Steel plain washer	2	
17	4700500029	Hexagon head screw M	2	
18	4700160048	O-ring 164,69x3,53	1	
19	4700334137	Adapter	1	
20	4812113145	Check valve	1	
21	4700924717	Stright connector	1	
22	4700904231	Steel plain washer	4	
23	4700500037	Hexagon head screw M12X035H 8.8 A3K	4	

Compressor module 4700396598 Compressor

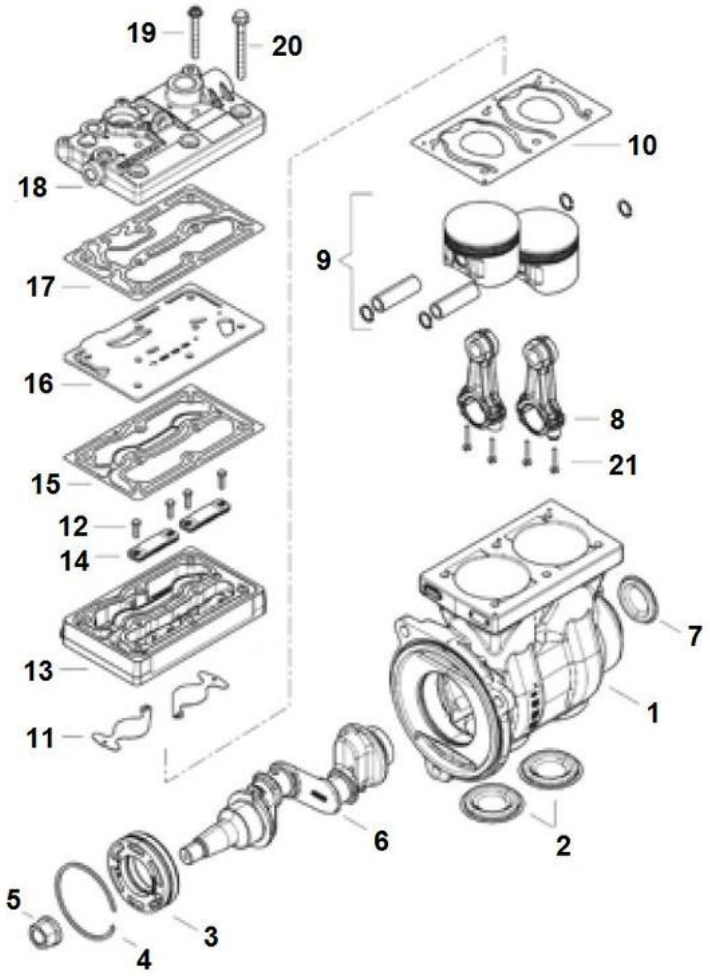

Elemento	N.º de pieza	Nombre	Cant.	L
1	4700396598	Compressor	1	
1.1	4812317894	Block replacement kit	1	
10	-	Válvula	1	
11	-	Válvula	2	
12	-	Screw, M8 x 30 mm, 8.8, A2K	4	
13	-	Block displacement	1	
14	-	Válvula	2	
15	-	Junta	1	
16	-	Junta	1	
17	-	Junta	1	
18	-	Block head		
20	-	Screw, M8 x 30 mm, 8.8, A2K	6	
1.2	4812317895	Piston and connection rod kit	1	
2	-	Cover	1	
8	-	Connection rod	2	
9	-	El pistón de la deretencao valv	2	
21	-	Screw, M8 x 30 mm, 8.8, A2K	2	
1.3	4812317896	Crankshaft kit	1	
2	-	Cover	1	
3	-	Adapter	1	
4	-	Retaining ring	1	
6	-	Crankshaft	1	
7	-	Cover	1	
21	-	Screw, M8 x 30 mm, 8.8, A2K	2	

Compressor module Compressor assy (from SN xxB005539)

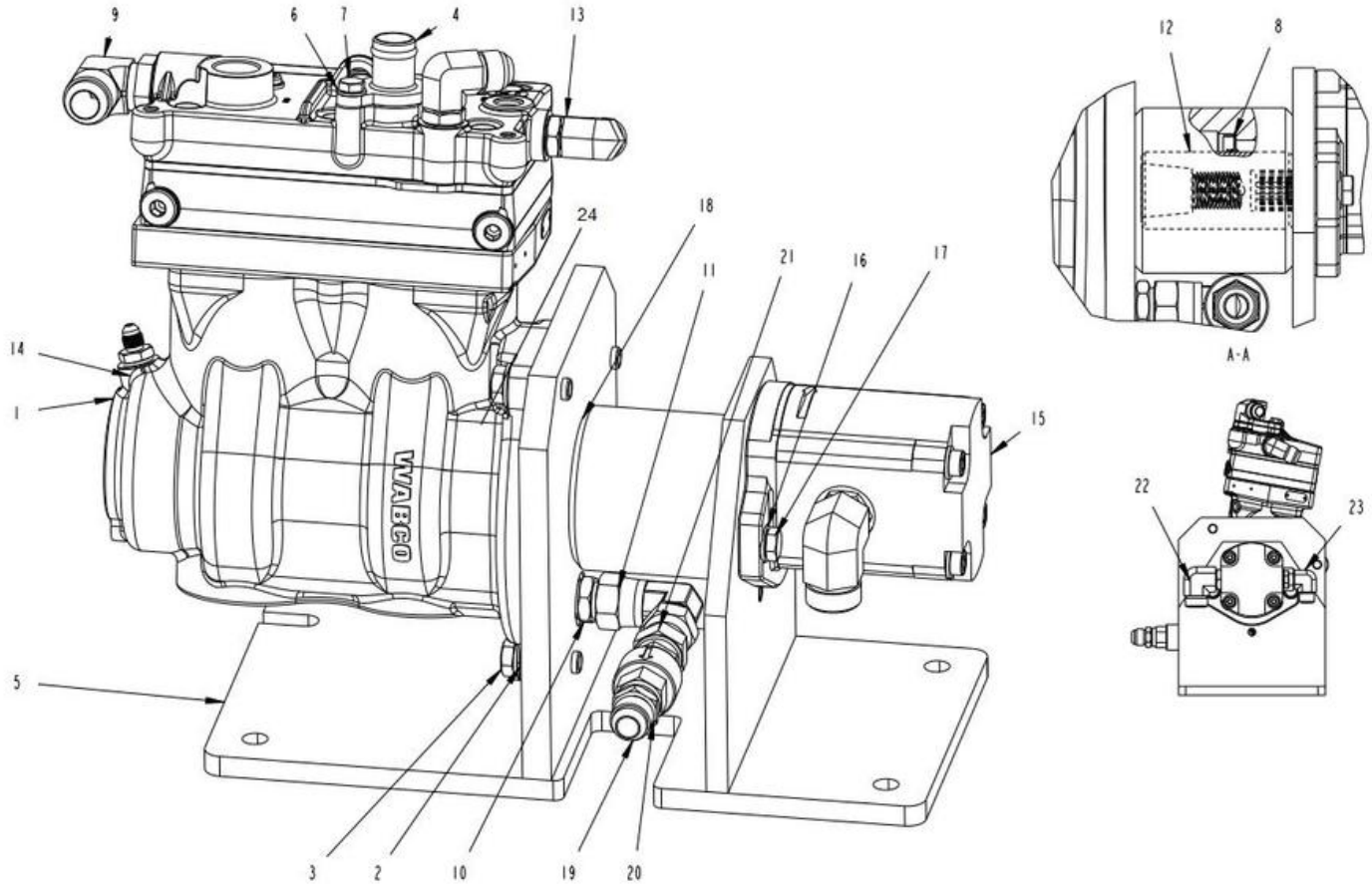

Elemento	N.º de pieza	Nombre	Cant.	L
1	4812101298	Compressor	1	
2	4700904231	Steel plain washer	3	
3	4700500037	Hexagon head screw M12X035H 8.8 A3K	3	
4	4700397000	Connection	1	
5	4812114458	Bracket	1	
6	4700904229	Steel plain washer 8.4X16X1.5	2	
7	4700500053	Perno	2	
8	4700397022	Radial lip-type seal	1	
9	4812319029	Elbow 90 Oring	1	
10	4700234382	Adapter	1	
11	4700334198	Connector Elbow 90	1	
12	4700397021	Splined sleeve	1	
13	4700791575	Elbow 45, O-ring	2	
14	4700902125	Connector	1	
15	4812100191	Hydraulic motor	1	
16	4700904570	Steel plain washer	2	
17	4700500029	Hexagon head screw M	2	
18	4700160048	O-ring 164,69x3,53	1	
19	4700334137	Adapter	1	
20	4812113145	Check valve	1	
21	4700924717	Stright connector	1	
22	4700791838	Adapter	1	
23	4700792133	Adapter	1	
24	4812319731	Glove	1	

Hose assy kit Hose kit

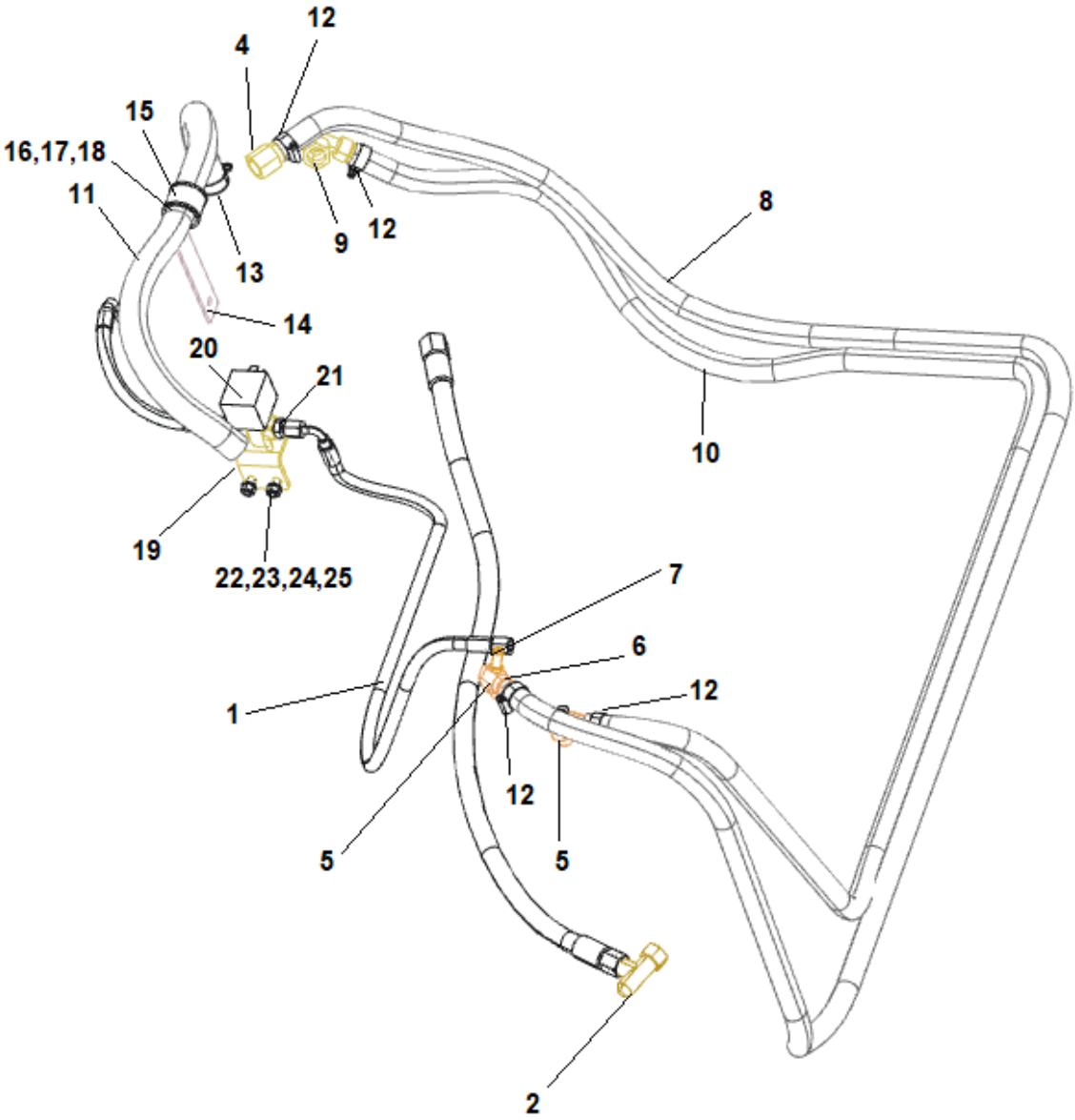

Elemento	N.º de pieza	Nombre	Cant.	L
1	4700397008	Hydraulic hose	1	
2	4700334135	Tee-connector	1	
3	4700928819	Straight connector	1	
4	4700792502	Hose connection	1	
5	4700395174	Connector	2	
6	4700379607	Hose connector	2	
7	4700395175	Hose connection	1	
8	4700205112	Coolant hose	2,85	
9	4700792499	Hose connection	1	
10	4700205112	Coolant hose	2,7	
11	4700205027	Coolant hose	0,73	
12	4700313004	Hose clamp 19-29mm	4	
13	4700313035	Hose clamp	1	
14	4700379184	Washer	1	
15	4700923008	Pipe clamp covered	1	
16	4700904229	Steel plain washer 8.4X16X1.5	4	
17	4700500053	Perno	1	
18	4700570005	Hexagon nut M	3	
19	4812112795	Bracket	1	
20	4812112800	Solenoid valve AOR	1	
21	4812319004	Connector	2	
22	4700500021	Perno	2	
23	4700904698	Plain washer	2	
24	4700500002	Screw M4-0,7x12H 8.8	2	
25	4700332127	Plug	1	

Ballast module Ballast module 8 plates - 3500 Kg

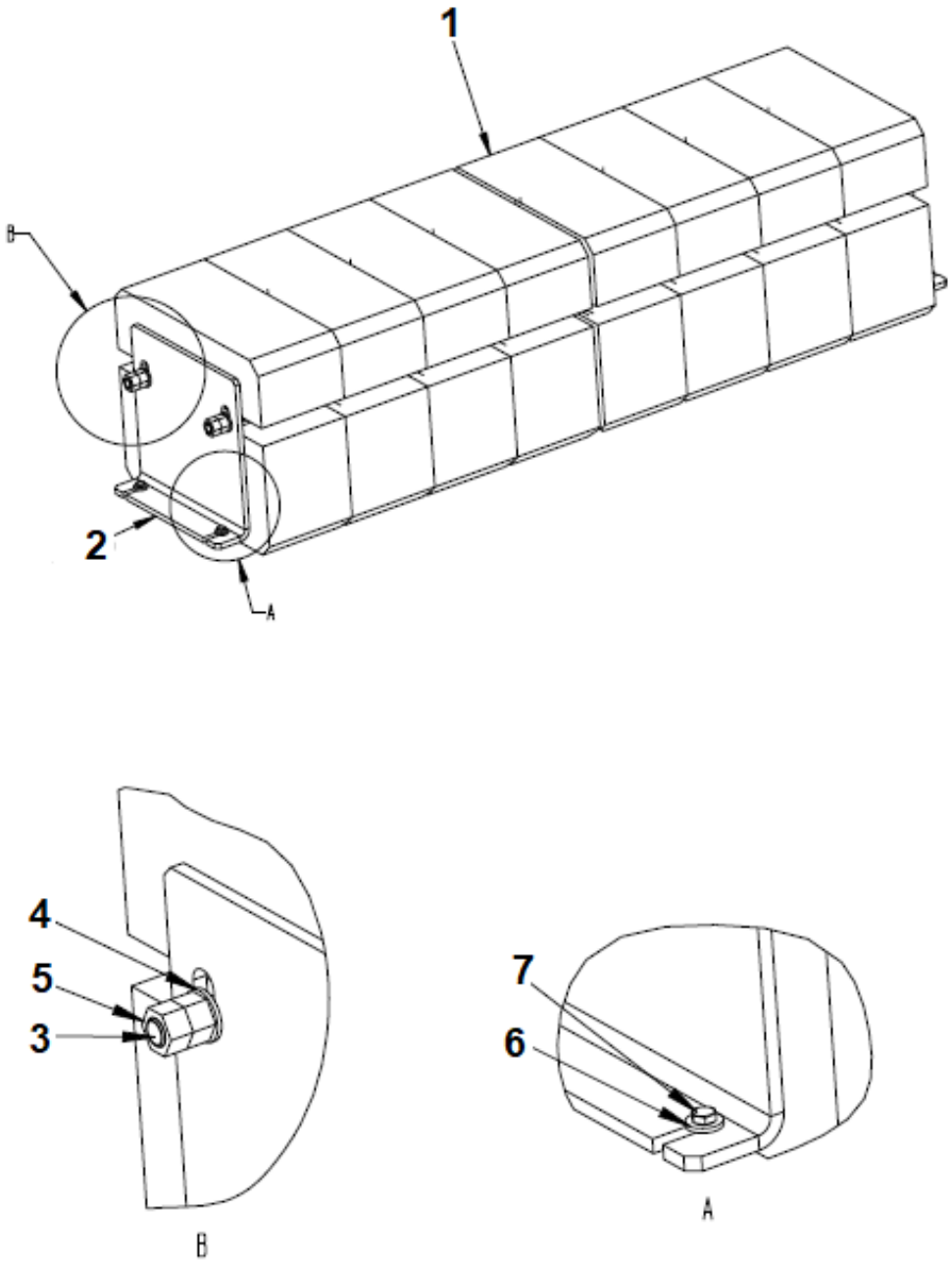

Elemento	N.º de pieza	Nombre	Cant.	L
1	4812319444	Ballast	8	
2	4812315628	Sheet metal part	2	
3	4812315626	Rod	2	
4	4700904234	Steel plain washer	4	
5	4700903736	Hex. nut M24x3	8	
6	4700904213	Steel plain washer, 13x30x4 mm HV	4	
7	4700500037	Hexagon head screw M12X035H 8.8 A3K	4	

Ballast module Ballast module 16 Plates - 6600 Kg

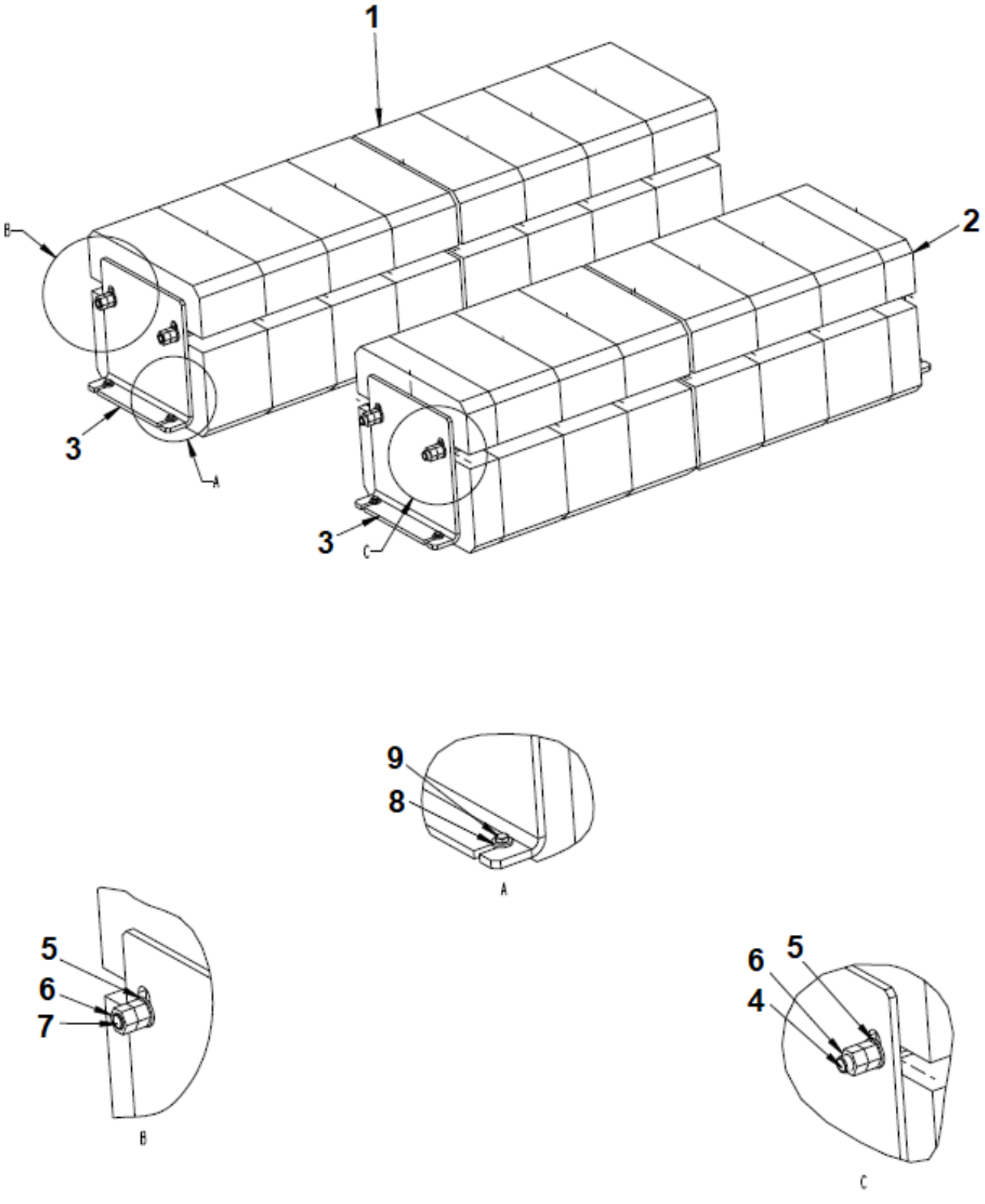

Elemento	N.º de pieza	Nombre	Cant.	L
1	4812319444	Ballast	14	
2	4812315651	Ballast	2	
3	4812315628	Sheet metal part	4	
4	4812315627	Rod	2	
5	4700904234	Steel plain washer	8	
6	4700903736	Hex. nut M24x3	16	
7	4812315626	Rod	2	
8	4700904213	Steel plain washer, 13x30x4 mm HV	8	
9	4700500037	Hexagon head screw M12X035H 8.8 A3K	8	

DCA asphalt temp option 4812110250 Bracket module

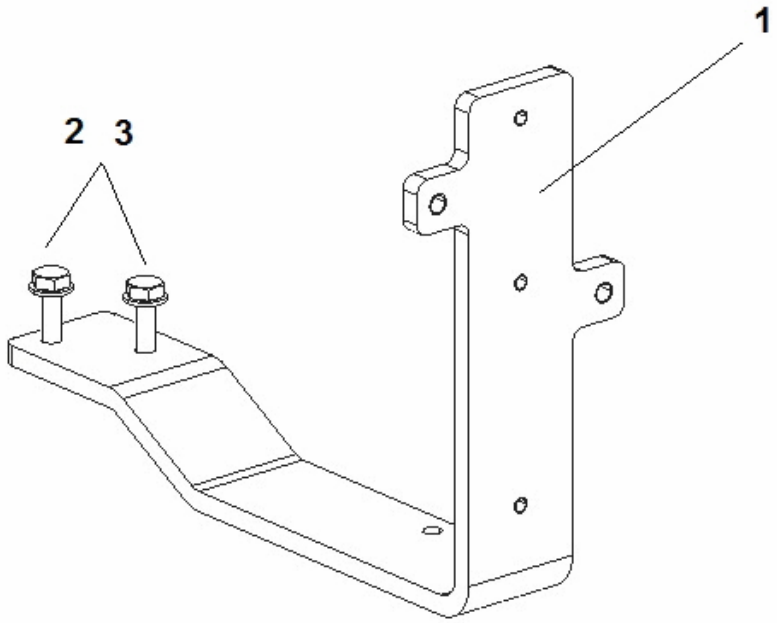

Elemento	N.º de pieza	Nombre	Cant.	L
1	4700397260	Bracket	1	
2	4700904229	Steel plain washer 8.4X16X1.5	2	
3	4700500230	Hexagon head screw M	2	

DCA asphalt temp option Cable harness Asphalt temp DCA, front Option

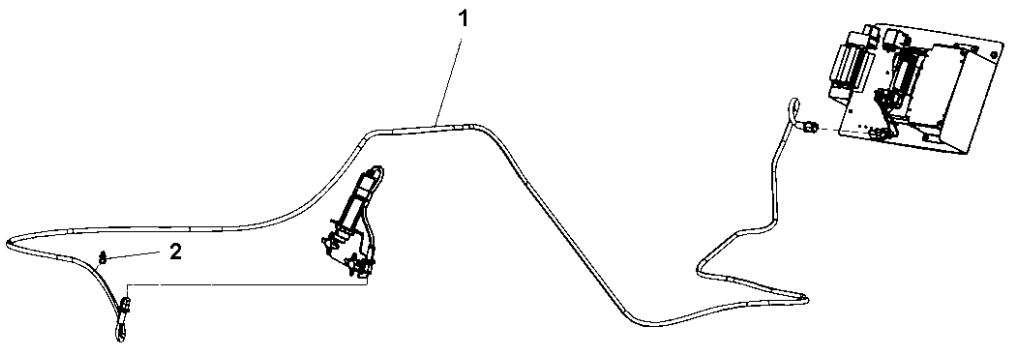

Elemento	N.º de pieza	Nombre	Cant.	L
1	4700393971	Cable harness	1	
2	4700792602	Cable Tie with Holder, Nylon Black	1	

DCA asphalt temp option Cable harness Asphalt temp DCA, rear Option

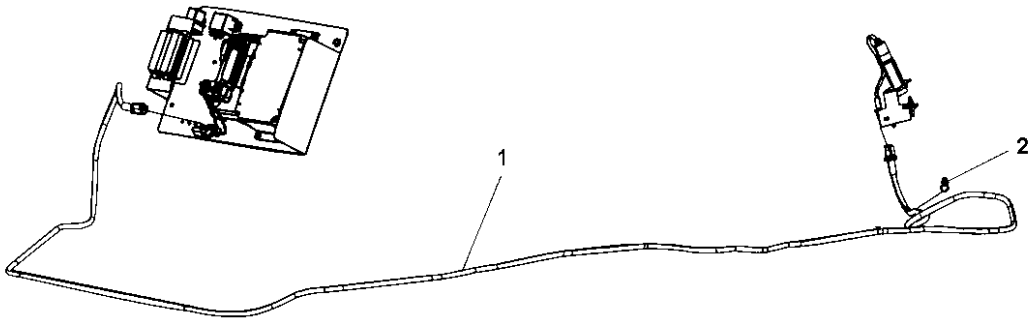

Elemento	N.º de pieza	Nombre	Cant.	L
1	4700393971	Cable harness	1	
2	4700792602	Cable Tie with Holder, Nylon Black	1	

DCA asphalt temp option Asphalt temperatur module

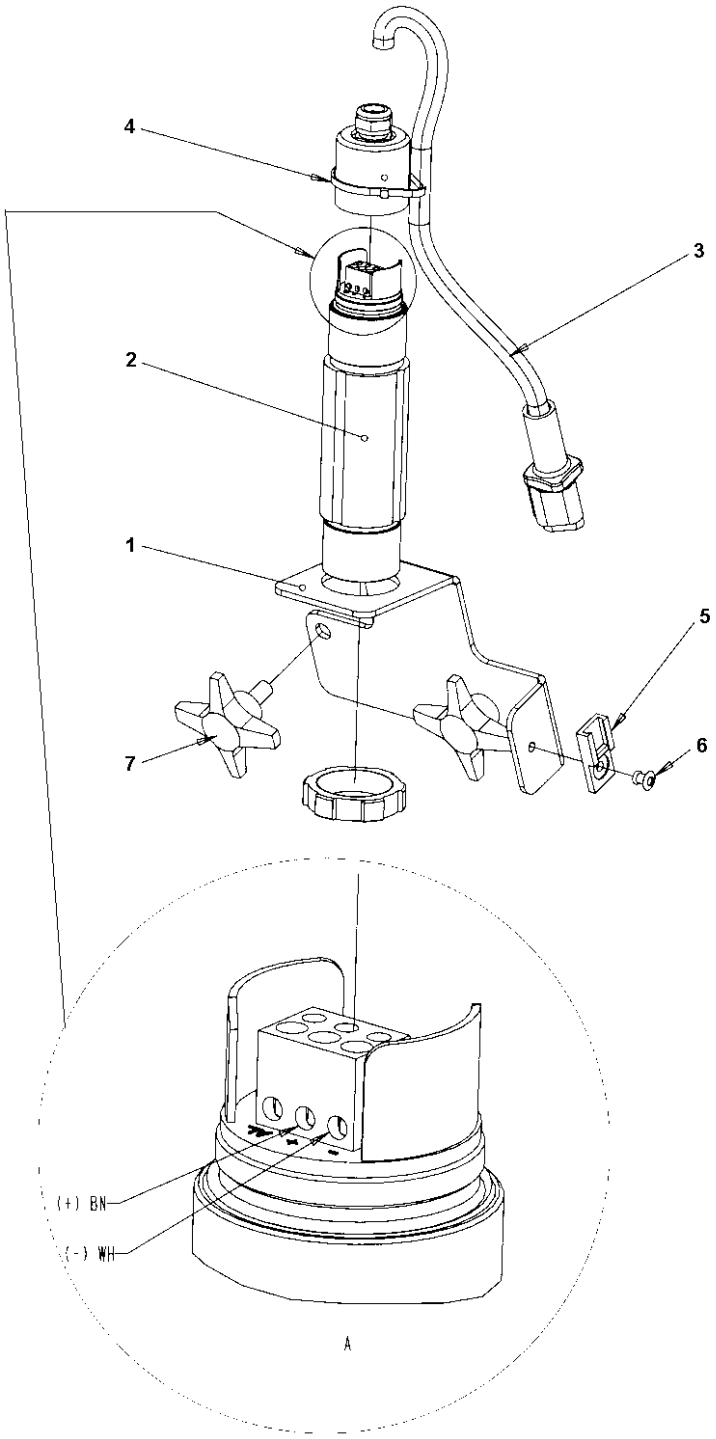

Elemento	N.º de pieza	Nombre	Cant.	L
1	4700394004	Bracket	1	
2	4700387982	Temperature sender	1	
3	4700393951	Cable harness	1	
4	4700313041	Cable tie	1	
5	4700904218	Holder	1	
6	4700792669	Blind rivet	1	
7	4700904596	Hand knob	2	

Edge cutter Edge cutter

NO DRAWING AVAILABLE FOR THIS BOM

Elemento	N.º de pieza	Nombre	Cant.	L
1	-	Edge cutter, module		
2	-	Cutting disc module		
3	-	Hydraulic valve module		
4	-	Bracket module		
5	-	Disc/Roller holder		

Edge cutter, module Edge cutter, module

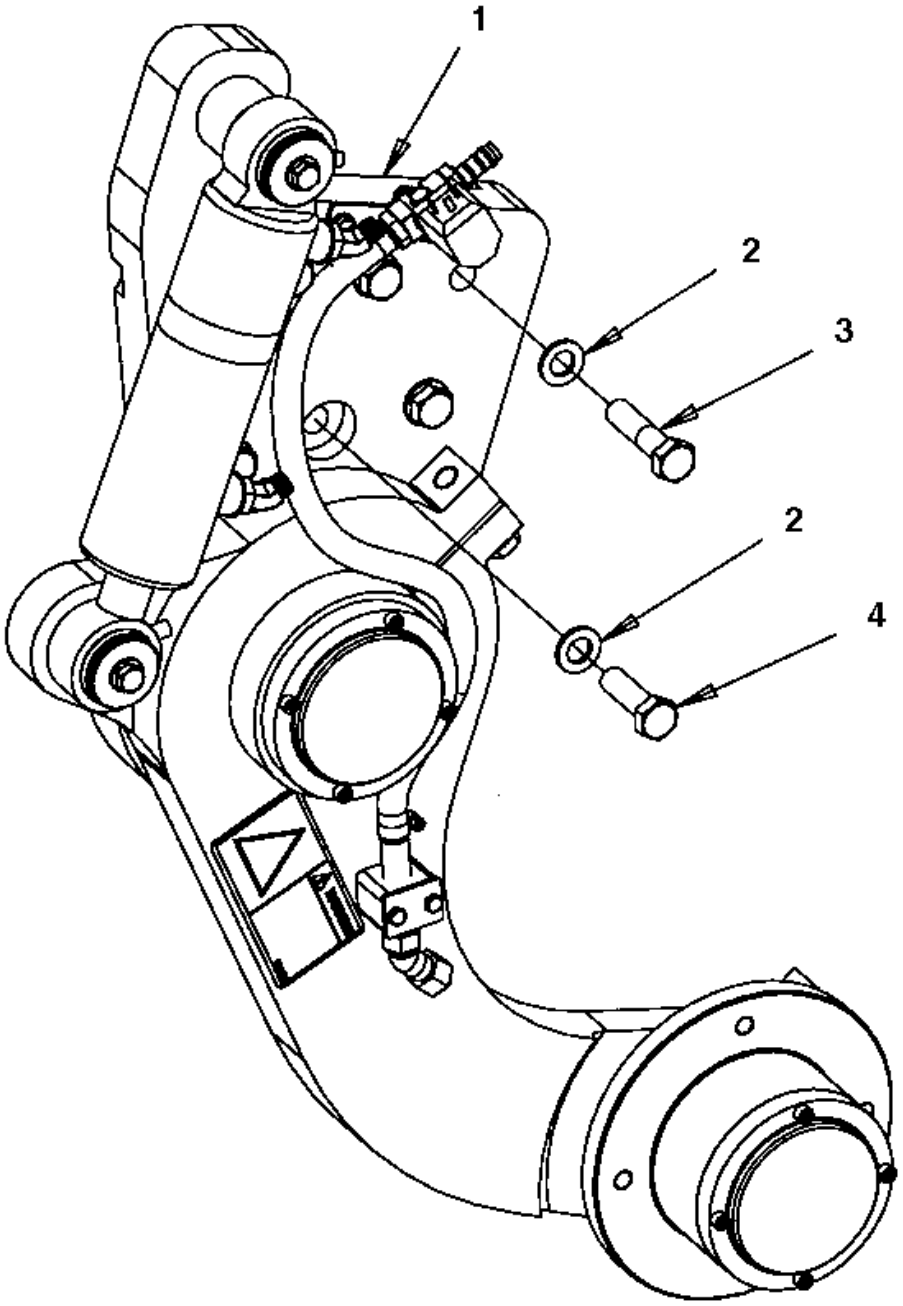

Elemento	N.º de pieza	Nombre	Cant.	L
1	4700390998	Edge cutter, cpl	1	
2	4700904232	Washer 15x30x4 300 HV	6	
3	4700500058	Screw M16-2,0x65 8,8	5	
4	4700500070	Hexagon head screw M	1	

4700390998 Edge cutter, cpl 4700390998 Edge cutter, cpl

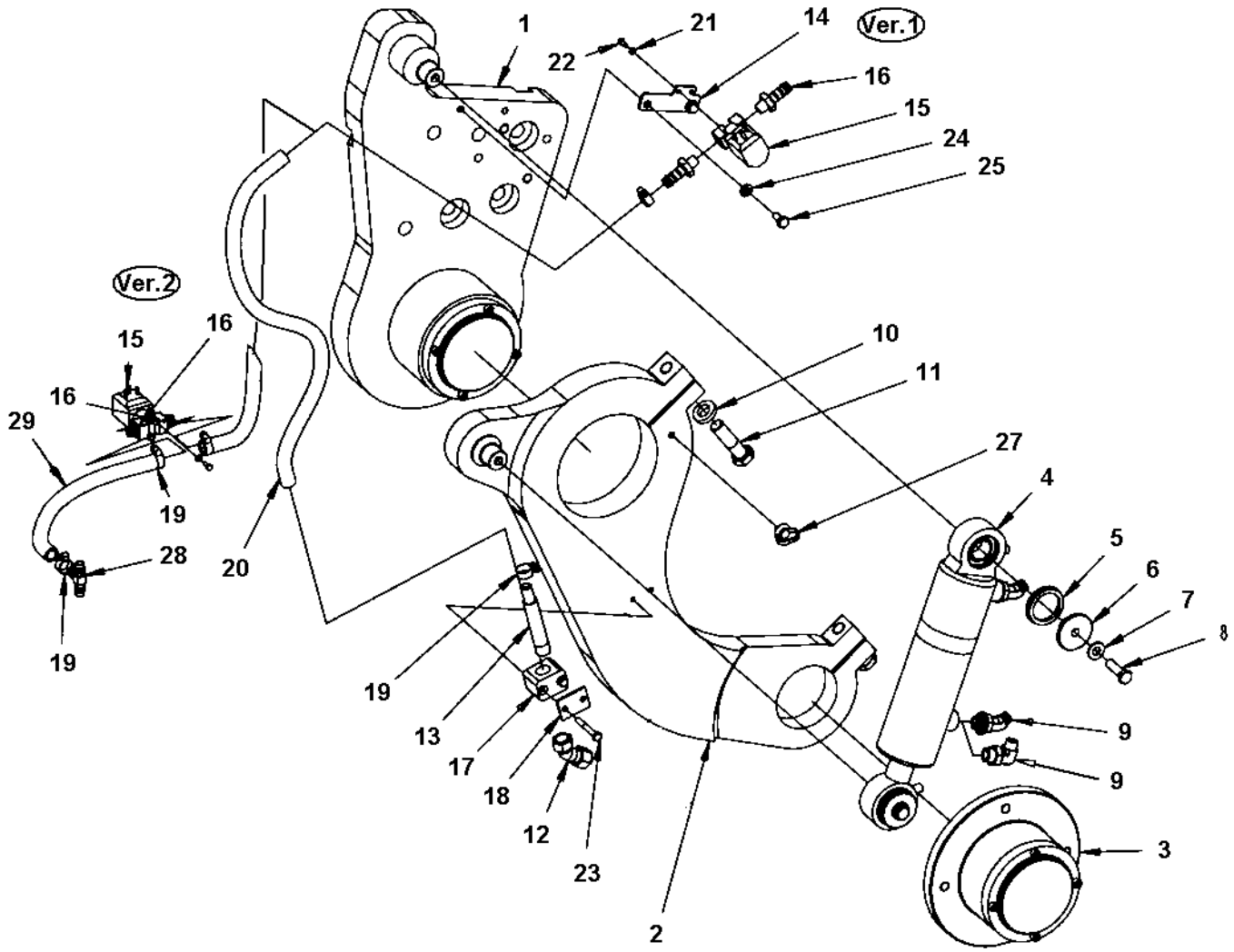

Elemento	N.º de pieza	Nombre	Cant.	L
-	4700390998	Edge cutter, cpl		
1	4700390999	Holder	1	
2	4700391000	Lever	1	
3	4700391009	Bearing unit	1	
4	4700387275	Hydraulic cylinder	1	
4	4700945526	Bearing	2	
5	4700791565	Sealing	2	
6	4700376861	Washer	2	
7	4700904230	Plain washer M10 10.5X22X2.0	2	
8	4700947684	Screw	2	
9	4700792389	Elbow 45 orfs	2	
9	4700792676	Elbow 90 orfs	1	
10	4700904558	Steel plain washer 17x30x6 mm 300 HV	2	
11	4700500134	Hex. screw	2	
12	4700392123	Nozzle body	1	
13	4700392058	Pipe	1	
14	4700392059	Bracket	1	
15	4700391438	Solenoid valve	1	
16	4700901432	Hose connection	2	
17	4700791453	Pipe clamp	1	
18	4700791454	Cover plate	1	
19	4700313002	Hose clamp	4	
20	4812112074	Plastic hose (x m)	1XL	A
21	4700904698	Plain washer	2	
22	4700925784	Screw	2	
23	4700500186	Screw	2	
24	4700904229	Steel plain washer 8.4X16X1.5	2	
25	4700500019	Hexagon head screw M	2	
27	4700792441	Cable tie with holder	1	
28	4700791362	T-adapter	1	
29	4812112074	Plastic hose (x m)	1XL	B

Comments for Page: 4700390998 Edge cutter, cpl

(L)OCAL REMARKS

A | en_US | Length as required.

B | en_US | L= 0.3 m

Esta página se ha dejado en blanco de forma intencionada

4700390999 Holder 4700390999 Holder

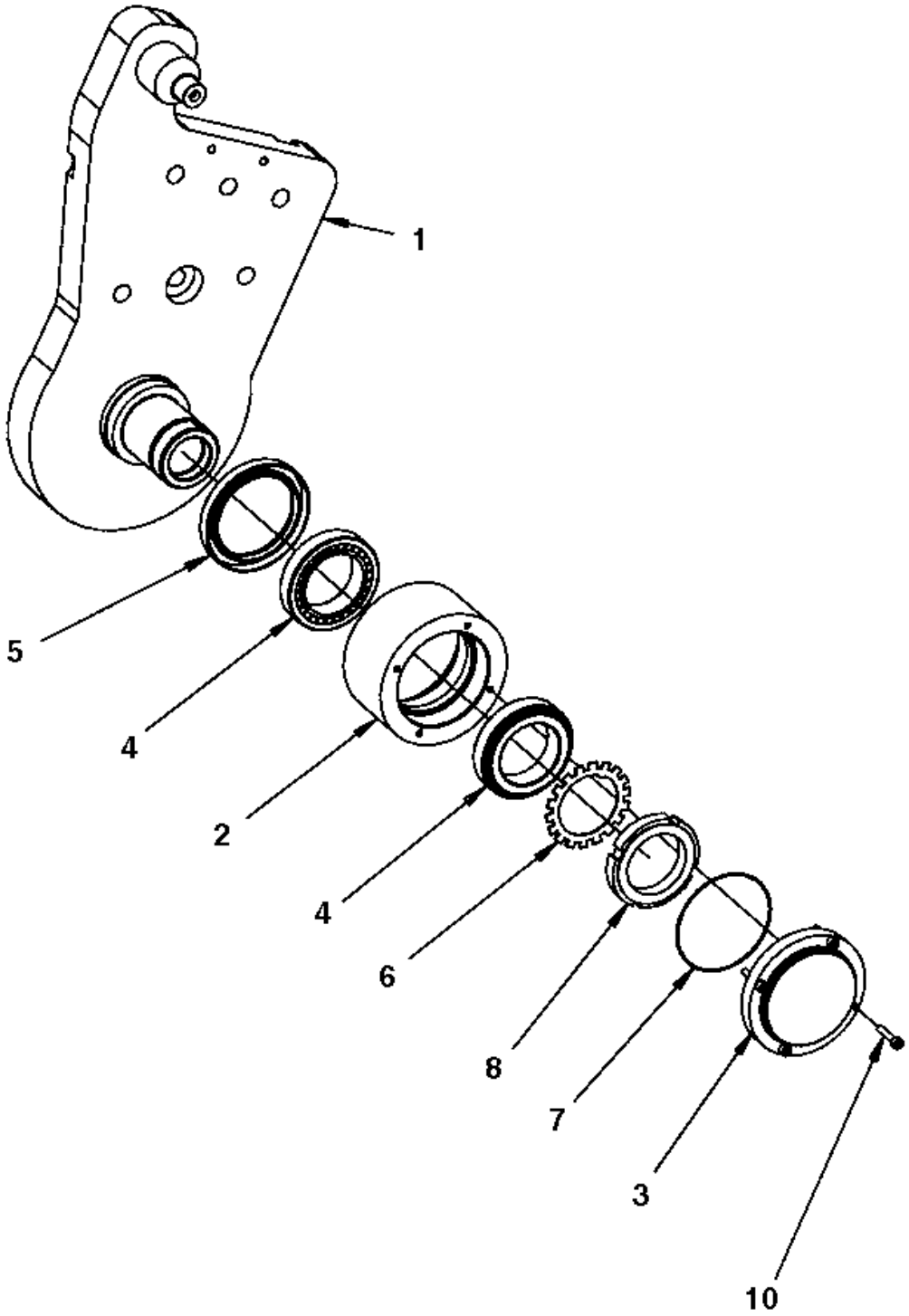

Elemento	N.º de pieza	Nombre	Cant.	L
1	4700391001	Holder	1	
2	4700391008	Bearing housing	1	
3	4700391010	Bearing cover	1	
4	4700792385	Taper roller bearing	2	
5	4700792384	Radial lip-type seal	1	
6	4700136012	Lock washer	1	
7	4700900512	O-ring	1	
8	4700135012	Shaft nut	1	
10	4700508018	Screw	4	

4700391009 Bearing unit 4700391009 Bearing unit

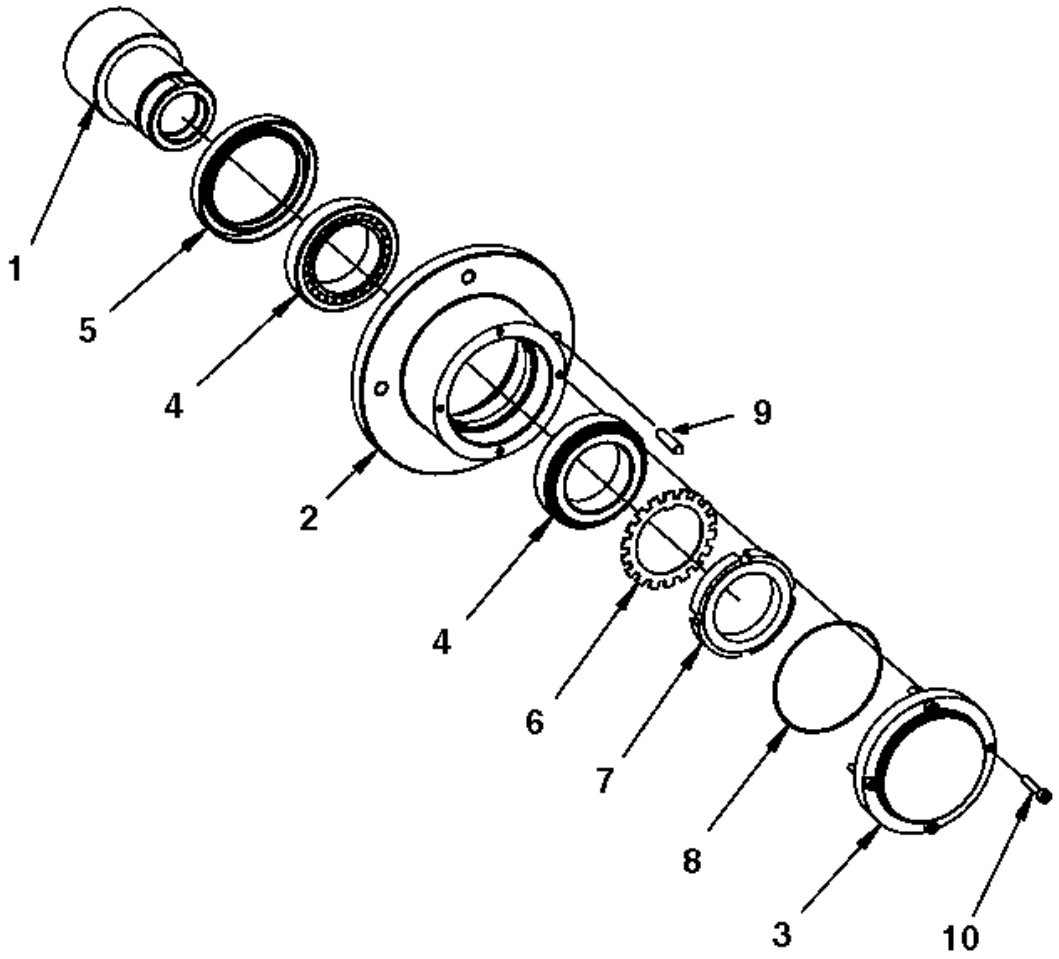

Elemento	N.º de pieza	Nombre	Cant.	L
-	4700391009	Bearing unit		
1	4700391011	Shaft	1	
2	4700391012	Bearing housing	1	
3	4700391010	Bearing cover	1	
4	4700792385	Taper roller bearing	2	
5	4700792384	Radial lip-type seal	1	
6	4700136012	Lock washer	1	
7	4700135012	Shaft nut	1	
8	4700900512	O-ring	1	
9	4700903891	Stud	4	
10	4700508018	Screw	4	

4700387275 Hydraulic cylinder 4700387275 Hydraulic cylinder

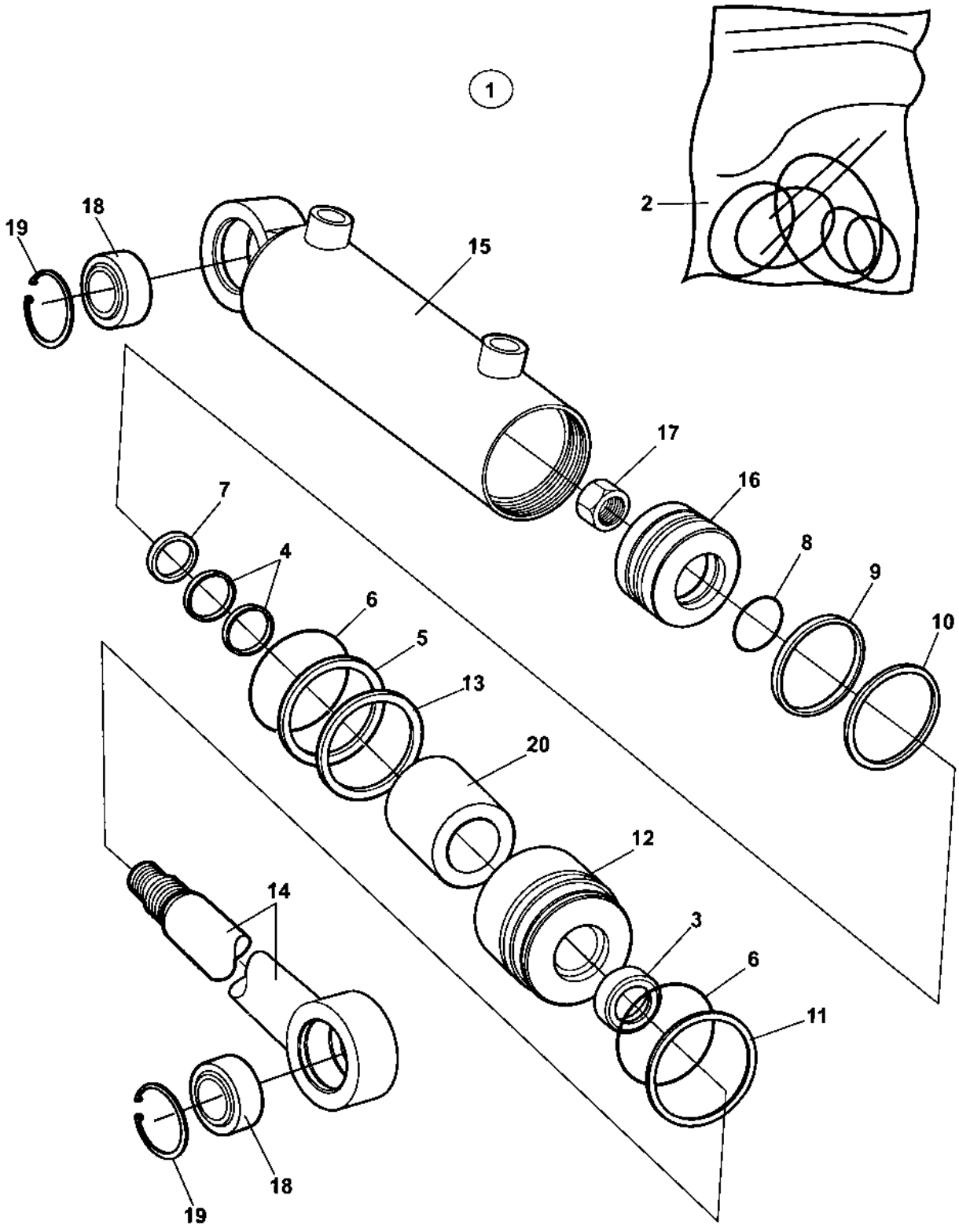

Elemento	N.º de pieza	Nombre	Cant.	L
1	4700387275	Hydraulic cylinder	1	
2	4700945668	Seal kit	1	
3	-	Esgrima	1	
4	-	Esgrima	2	
5	-	Back-up ring	1	
6	-	Junta tórica	2	
7	-	Esgrima	1	
8	-	Junta tórica	1	
9	-	Esgrima	1	
10	-	Esgrima	1	
11	-	Retaining ring	1	
12	-	Steering	1	
13	-	Retaining ring	1	
14	-	ROD SEAL	1	
15	-	Cylinder	1	
16	-	Piston block	1	
17	-	Aro	1	
18	4700945526	Bearing	1	
19	-	Retaining ring	1	
20	-	Spacer	1	A

Comments for Page: 4700387275 Hydraulic cylinder

(L)OCAL REMARKS

A | en_US | Not valid for this model

Cutting disc module Cutting disc module

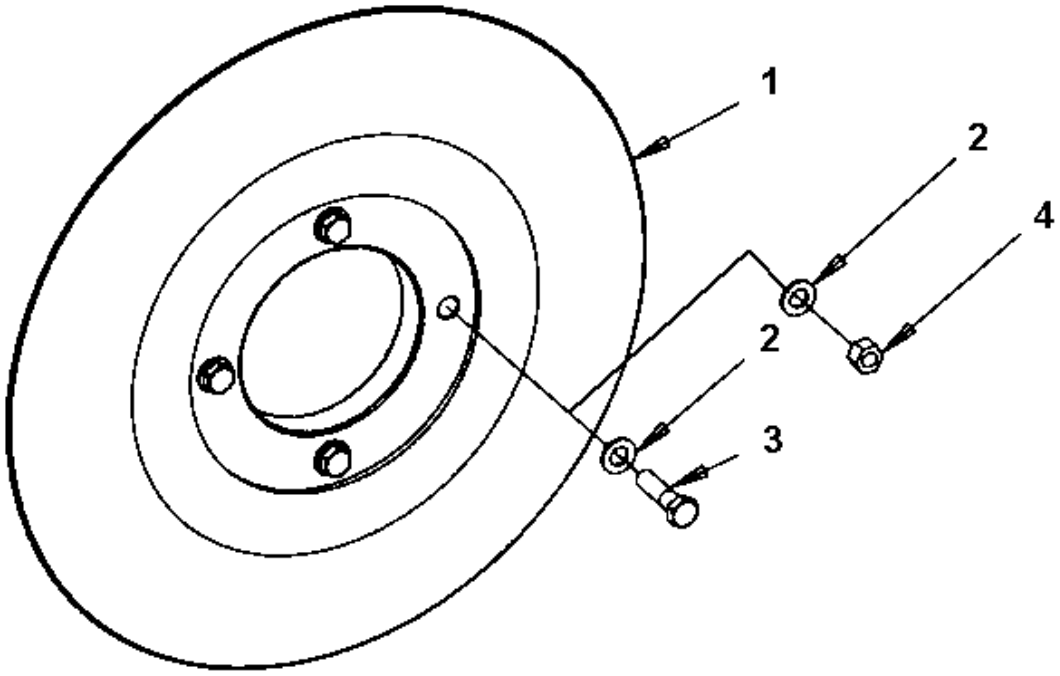

Elemento	N.º de pieza	Nombre	Cant.	L
1	4700390805	Cutting disc 80mm	1	
1	4700390806	Cutting disc 120mm	1	
1	4700390807	Cutting disc 150mm	1	
2	4700904231	Steel plain washer	4	
3	4700570007	Nut	4	

Hydraulic valve module Hydraulic valve module

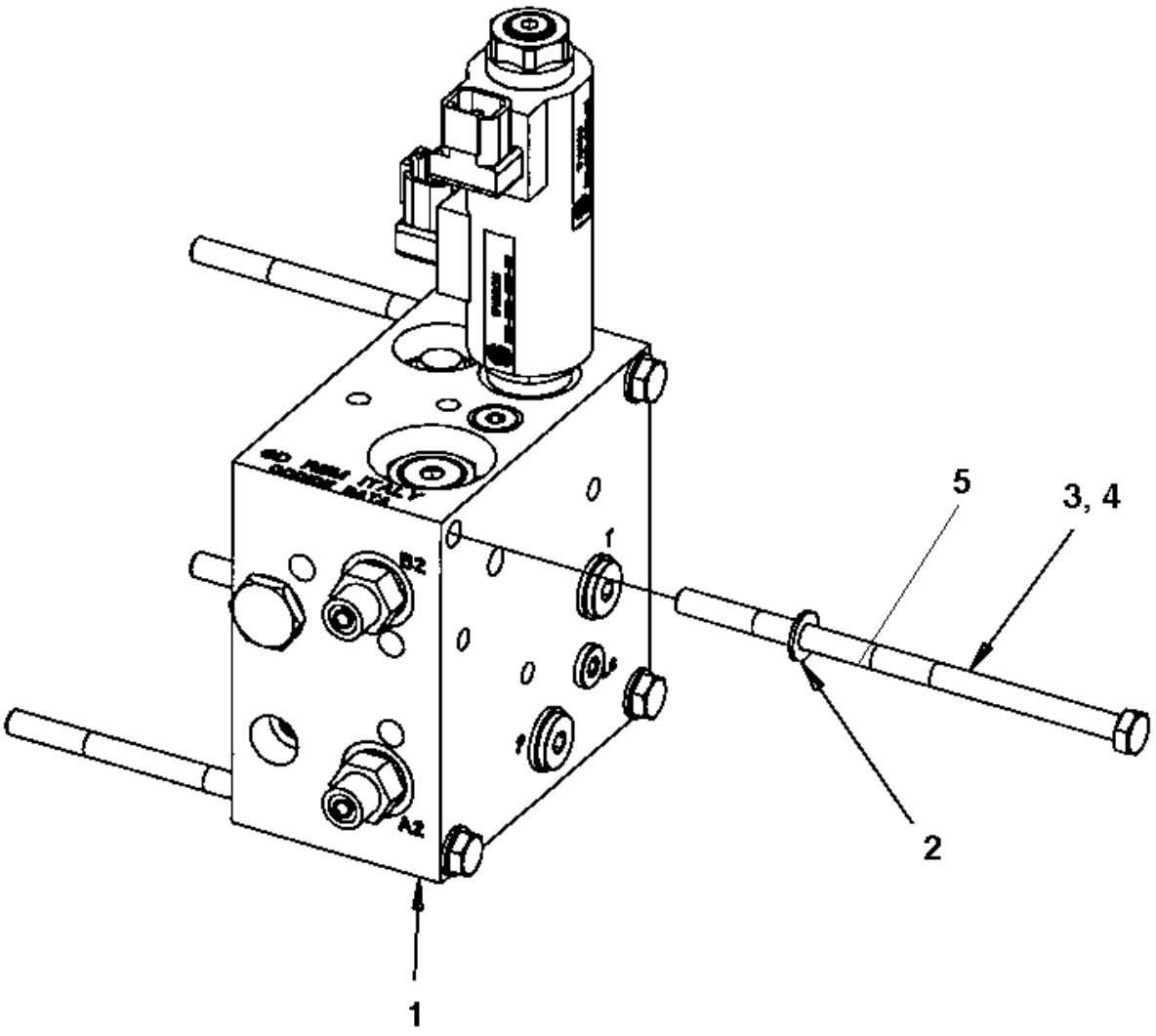

Elemento	N.º de pieza	Nombre	Cant.	L
1	-	Hydraulic valve	1	
2	4700904229	Steel plain washer 8.4X16X1.5	4	
3	4700792359	Screw M8x160 8.8	4	1
4	4700500115	Screw	4	2
5	4700500170	Screw M8x140 8.8	4	

Comments for Page: Hydraulic valve module

(L)OCAL REMARKS

1 | en_US | Used when option valve is mounted.

2 | en_US | Used when mounted on base valve.

Hydraulic valve Hydraulic valve

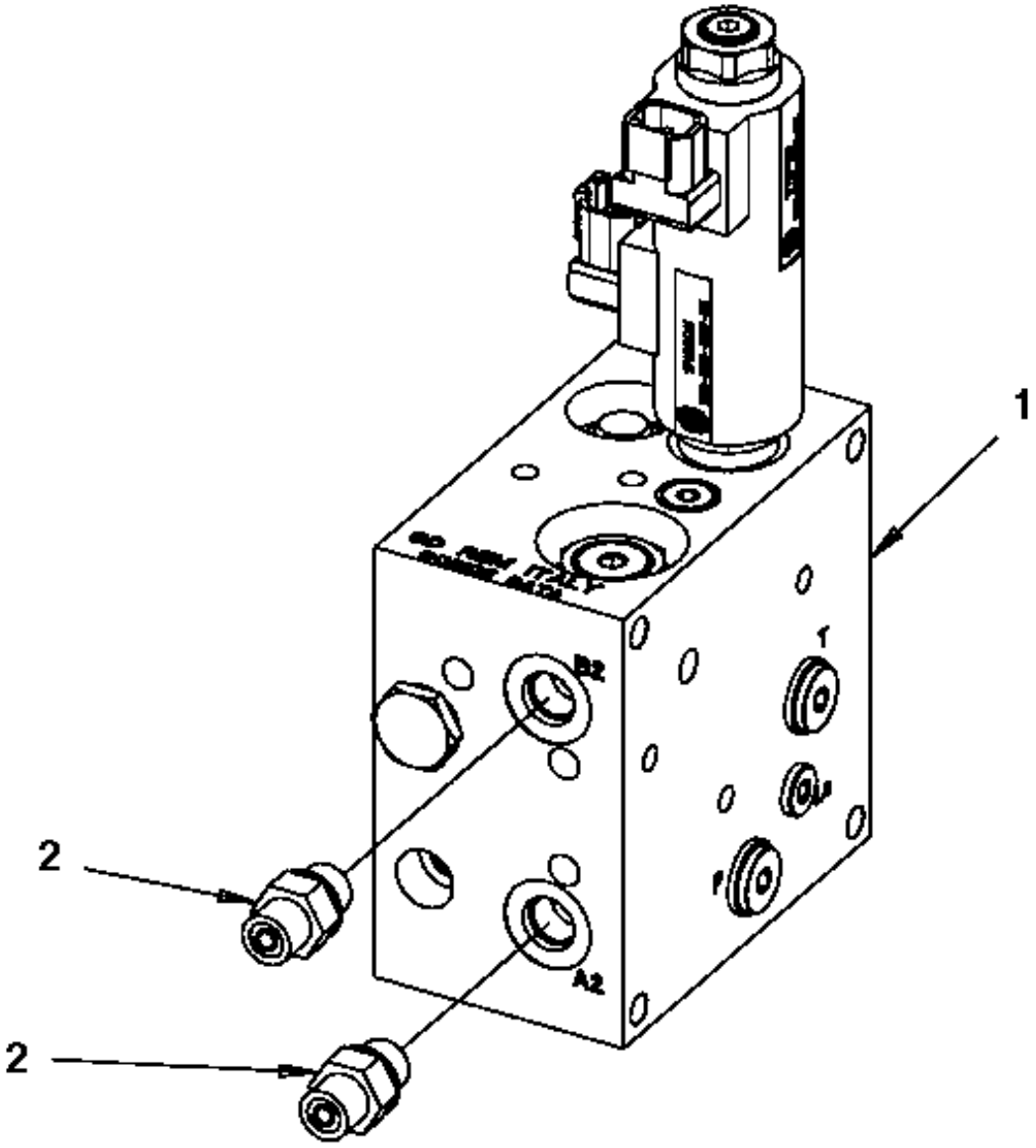

Elemento	N.º de pieza	Nombre	Cant.	L
1	4700391018	Hydraulic valve	1	
2	4700791914	Adapter	2	

4700391018 Hydraulic valve 4700391018 Hydraulic valve

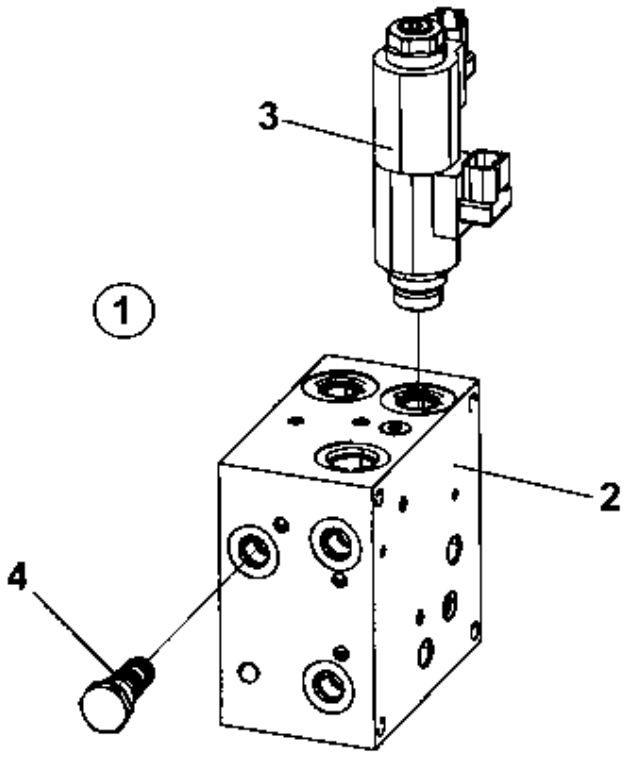

Elemento	N.º de pieza	Nombre	Cant.	L
1	-	Hydraulic valve	1	
2	-	Control Block	1	
3	4700950587	Proportional valve	1	
4	4700940572	Shuttle valve	1	

Bracket module Bracket module

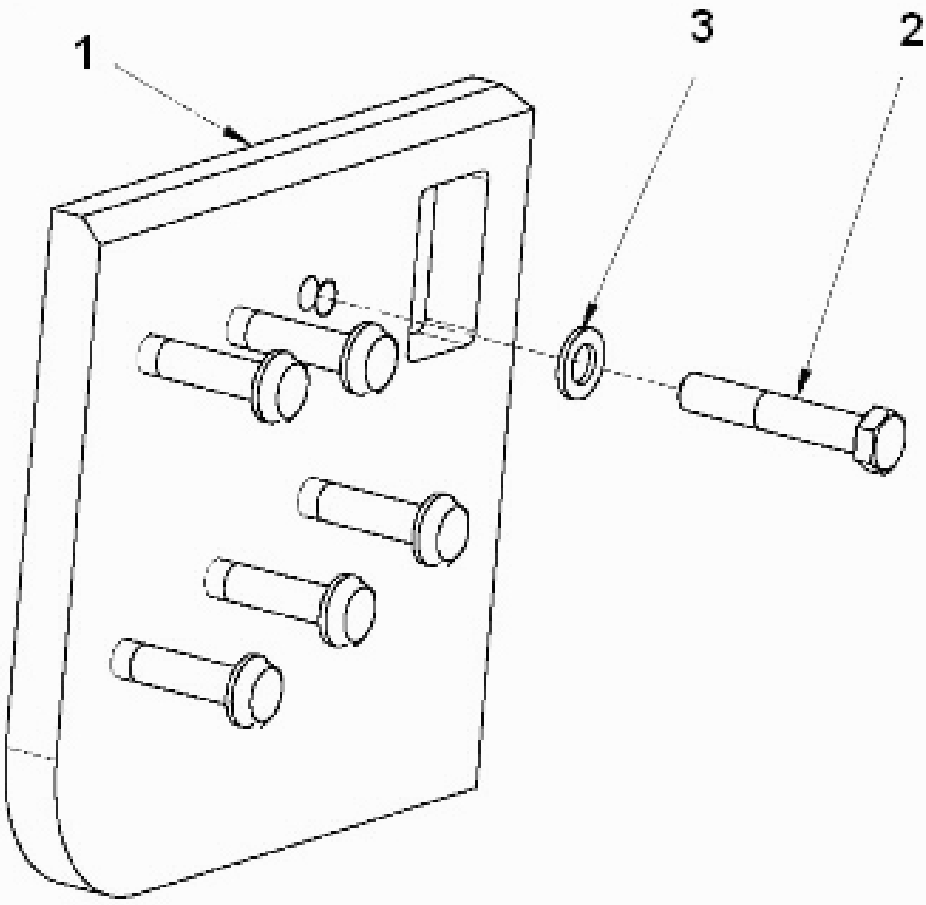

Elemento	N.º de pieza	Nombre	Cant.	L
1	4700396977	Bracket	1	
2	4700500094	Hex. screw	6	
3	4700904232	Washer 15x30x4 300 HV	6	

Disc/Roller holder Disc/Roller holder

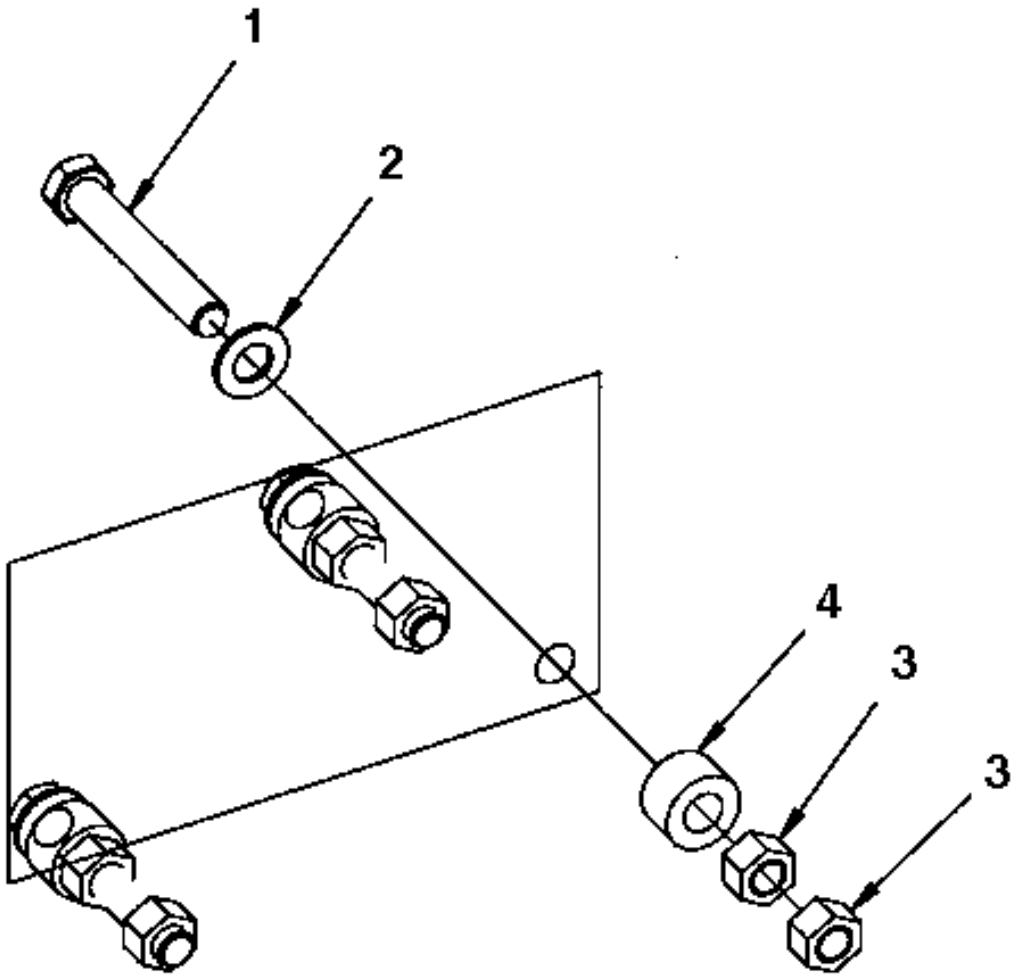

Elemento	N.º de pieza	Nombre	Cant.	L
1	4700903898	Screw	3	
2	4700904231	Steel plain washer	3	
3	4700570007	Nut	6	
4	4700791572	Spacer washer	3	

Edge cutter Wiring harness

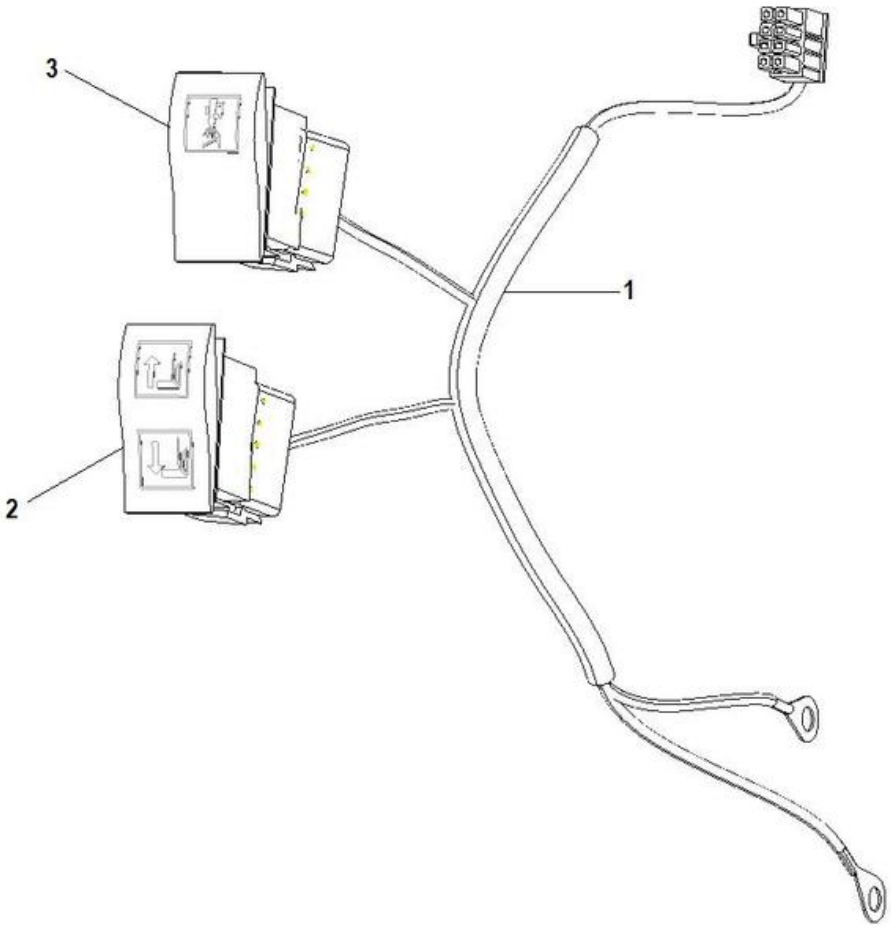

Elemento	N.º de pieza	Nombre	Cant.	L
1	4812317394	Wiring Harness	1	
2	4700792395	Switch, Edge cutter	1	
3	4700792396	Switch, Sprinkler - Edge cutter	1	

Cocoa mats Hose assy kit

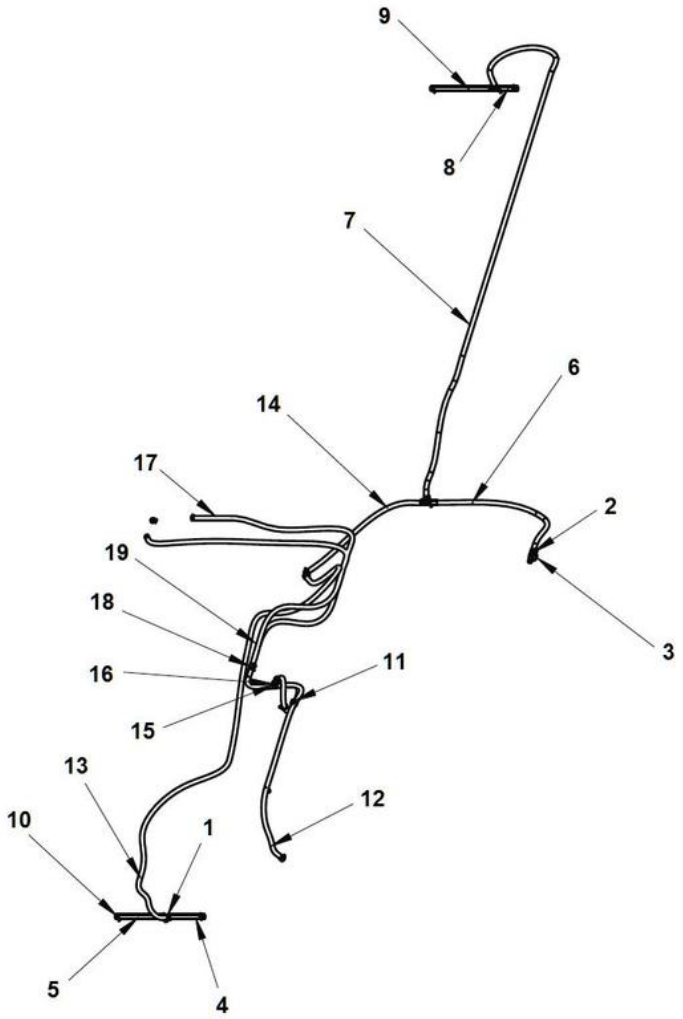

Elemento	N.º de pieza	Nombre	Cant.	L
1	4700923735	Hose connection	3	
2	4700234931	Adapter	1	
3	4700233215	Ball valve	1	
4	4812112074	Plastic hose (x m)	1	
5	4812112074	Plastic hose (x m)	1	
6	4812112074	Plastic hose (x m)	1	
7	4812112074	Plastic hose (x m)	1	
8	4812112074	Plastic hose (x m)	1	
9	4812112074	Plastic hose (x m)	1	
10	4700313002	Hose clamp	22	
11	4700792441	Cable tie with holder	3	
12	4812112074	Plastic hose (x m)	1	
13	4812112074	Plastic hose (x m)	1	
14	4812112074	Plastic hose (x m)	1	
15	4700393542	Hose connection	1	
16	4700392227	Swivel nut	1	
17	4812112074	Plastic hose (x m)	1	
18	4812316058	Hose connection	1	
19	4812112074	Plastic hose (x m)	1	

Comments for Page: Hose assy kit

4 - L = 0,17m

5 - L = 0,25m

6 - L = 0,9m

7 - L = 3,0m

8 - L = 0,1m

9 - L = 0,32m

12 - L = 4,0m

13 - L = 3,5m

14 - L = 0,7m

17 - L = 3,05m

19 - L = 2,4m

Cocoa mats Wiring harness kit sprinkler

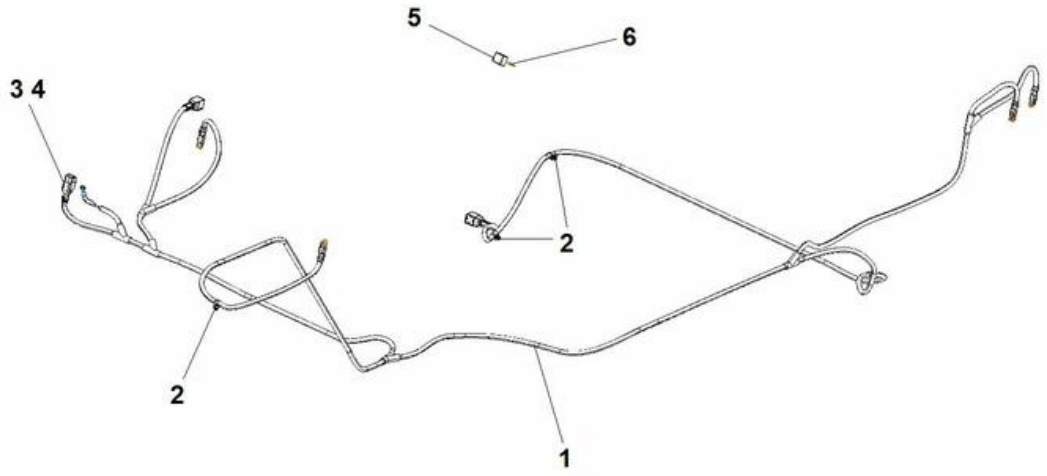

Elemento	N.º de pieza	Nombre	Cant.	L
1	4812315600	Wiring harness	1	
2	4700792602	Cable Tie with Holder, Nylon Black	3	
3	4700904218	Holder	1	
4	4700792669	Blind rivet	1	
5	4700792422	Relay, 24V 20A	1	
6	4700901226	Fuse 7.5A Brown	1	

Scraper bracket module Scraper bracket module

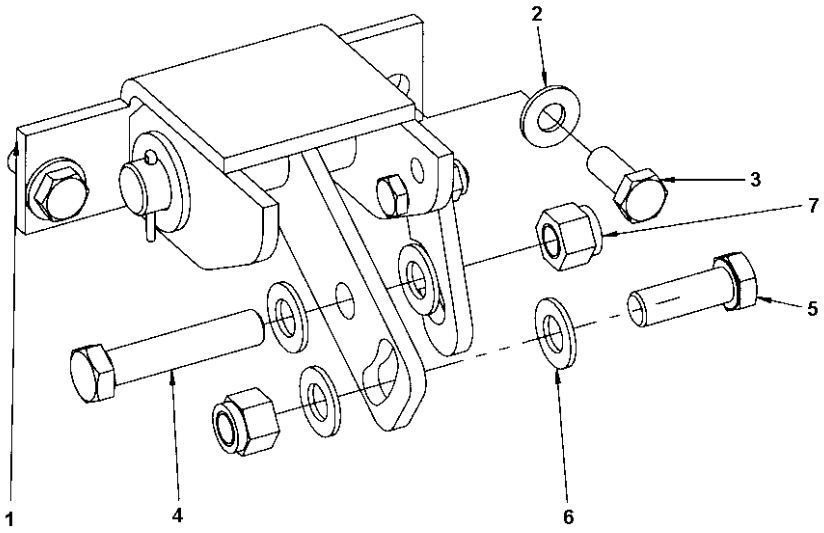

Elemento	N.º de pieza	Nombre	Cant.	L
1	-	Bracket	1	
2	4700904230	Plain washer M10 10.5X22X2.0	2	
3	4700500028	Arandela 6,4x12x1,5	2	
4	4700500103	Screw M12x60H 8,8	1	
5	4700500037	Hexagon head screw M12X035H 8.8 A3K	1	
6	4700904231	Steel plain washer	4	
7	4700586019	Lock nut M12	2	

Scraper bracket module Bracket

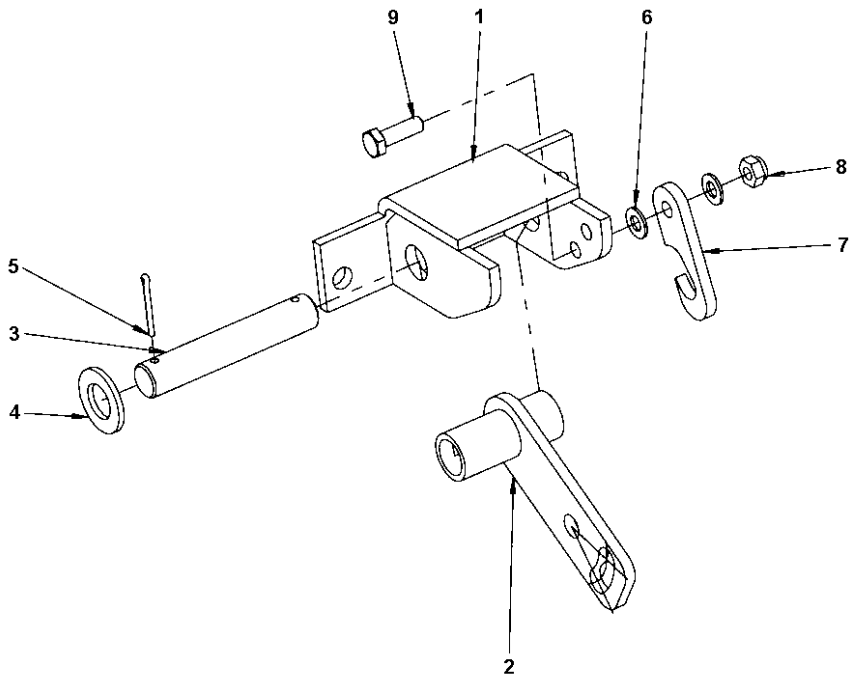

Elemento	N.º de pieza	Nombre	Cant.	L
1	4700170279	Bracket	1	
2	4700170281	Arm	1	
3	4700170282	Pin	1	
4	4700904793	Steel plain washer	2	
5	4700630008	Pin	2	
6	4700904229	Steel plain washer 8.4X16X1.5	2	
7	4700170304	Holding bar	1	
8	4700791182	Nut, M8 -8 DIN985	1	
9	4700500021	Perno	1	

Scraper module Scraper module

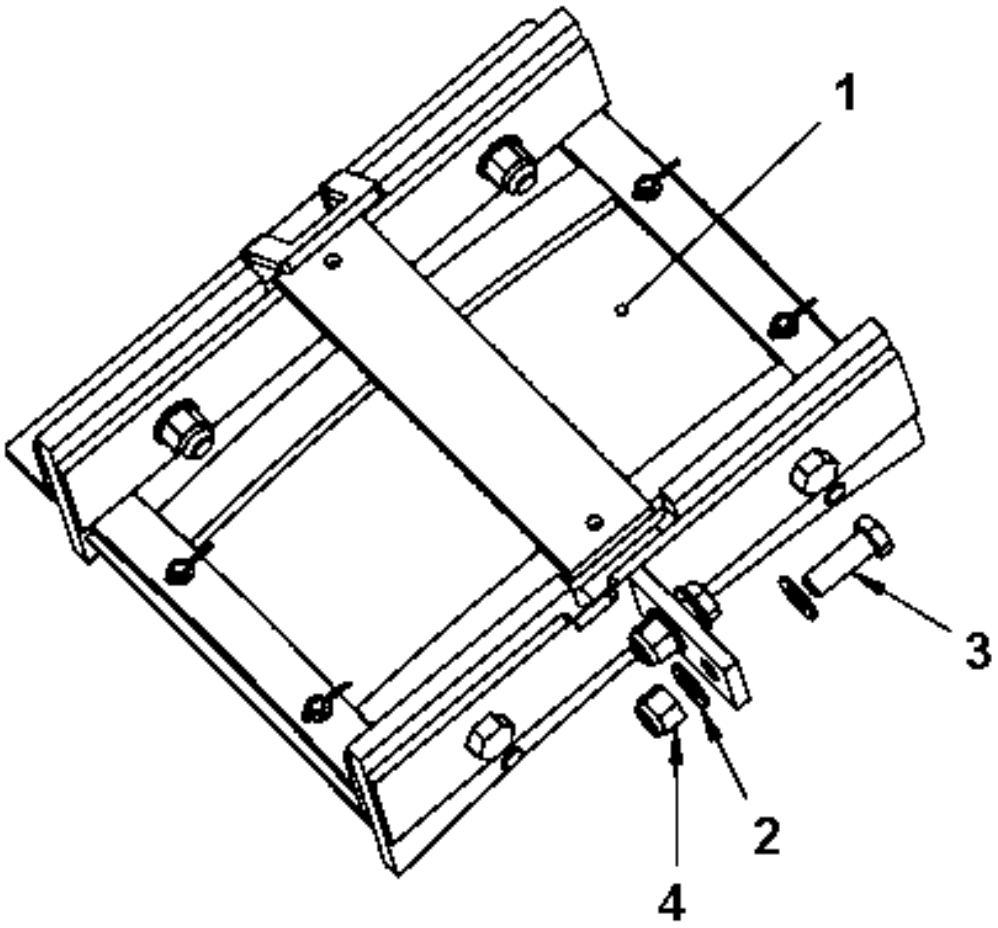

Elemento	N.º de pieza	Nombre	Cant.	L
1	-	Scraper assy	1	
2	4700904231	Steel plain washer	4	
3	4700500037	Hexagon head screw M12X035H 8.8 A3K	2	
4	4700586019	Lock nut M12	2	

Scraper module Scraper assy

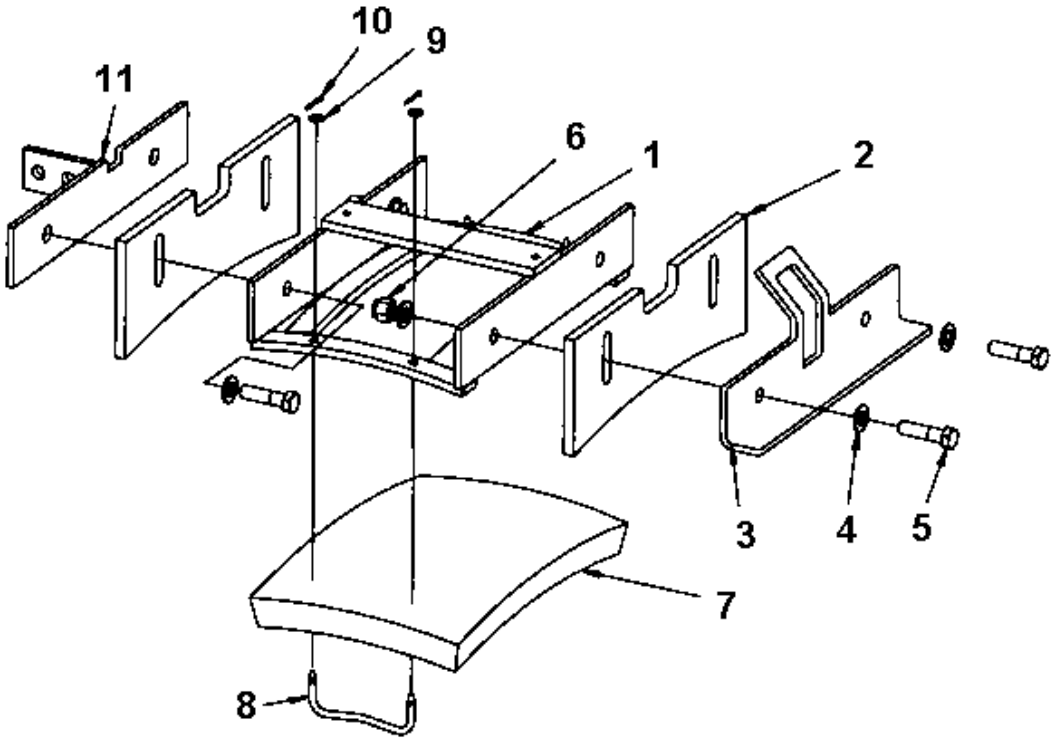

Elemento	N.º de pieza	Nombre	Cant.	L
1	4700395067	Scraper holder	1	
2	4700383390	Scraper	2	
3	4700383263	Bracket	1	
4	4700904231	Steel plain washer	6	
5	4700500056	Screw, M12x45 mm 8.8 A3K	4	
6	4700586019	Lock nut M12	2	
7	4700263772	Cocoa mat	1	
8	4700267791	Mat holder	2	
9	4700904228	Arandela 6,4x12x1,5	4	
10	4700630035	Split pin	4	
11	4700396546	Bracket	1	

Sprinkler pipe module Sprinkler pipe module

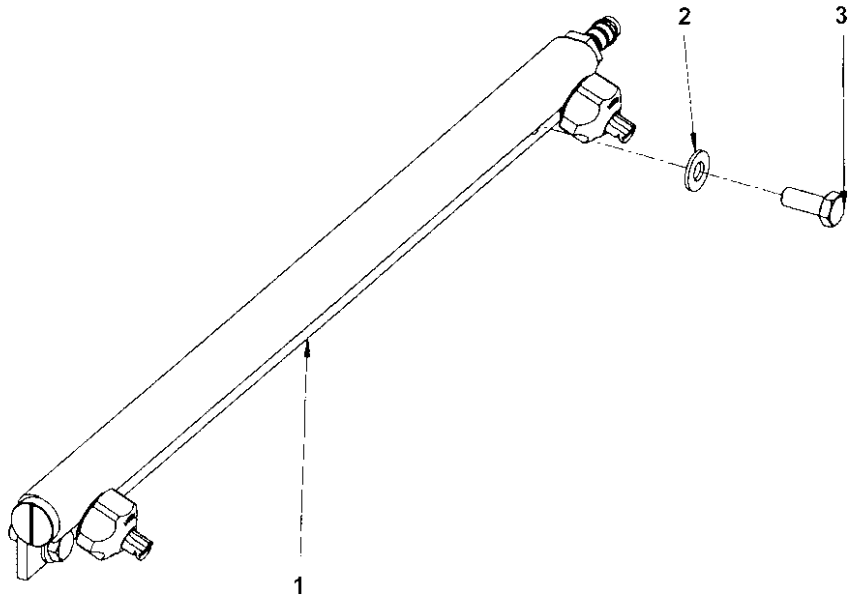

Elemento	N.º de pieza	Nombre	Cant.	L
1	-	Sprinkler pipe	1	
2	4700904230	Plain washer M10 10.5X22X2.0	2	
3	4700500028	Arandela 6,4x12x1,5	2	

Sprinkler pipe module Sprinkler pipe

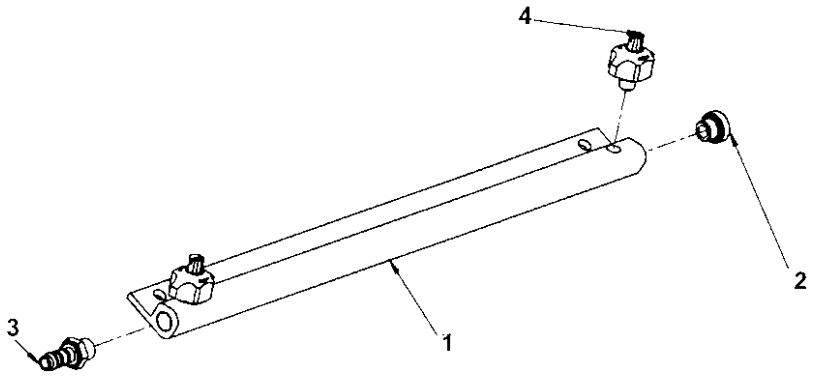

Elemento	N.º de pieza	Nombre	Cant.	L
1	4700396448	Sprinkler pipe	1	
2	4700792072	End plug	1	
3	4700234931	Adapter	1	
4	4700392011	Spraying nozzle, cpl	2	

Sprinkler module Sprinkler module

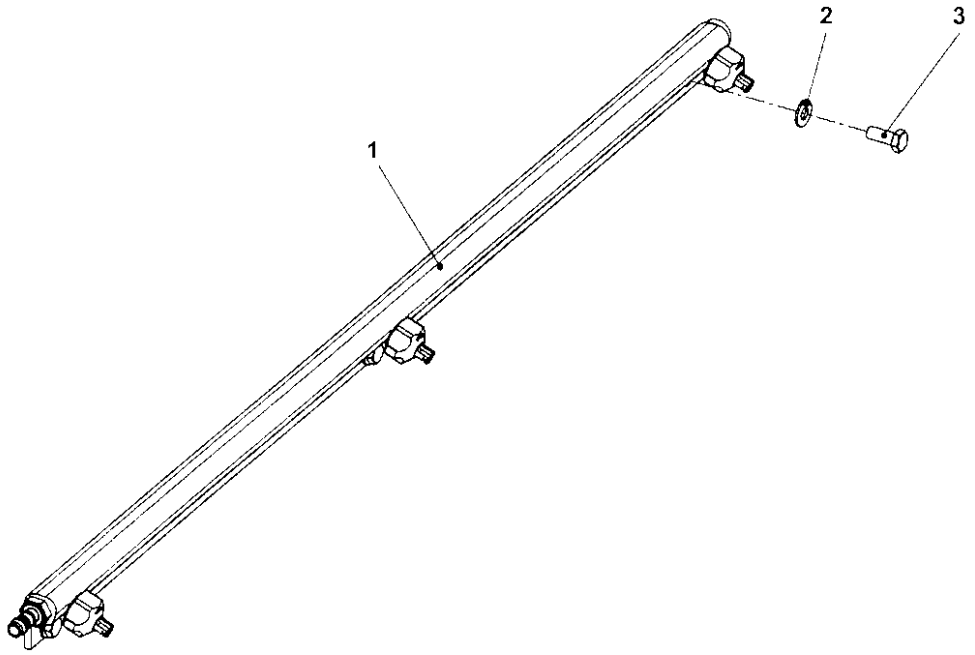

Elemento	N.º de pieza	Nombre	Cant.	L
1	-	Sprinkler pipe	1	
2	4700904230	Plain washer M10 10.5X22X2.0	3	
3	4700500028	Arandela 6,4x12x1,5	3	

Sprinkler module Sprinkler pipe

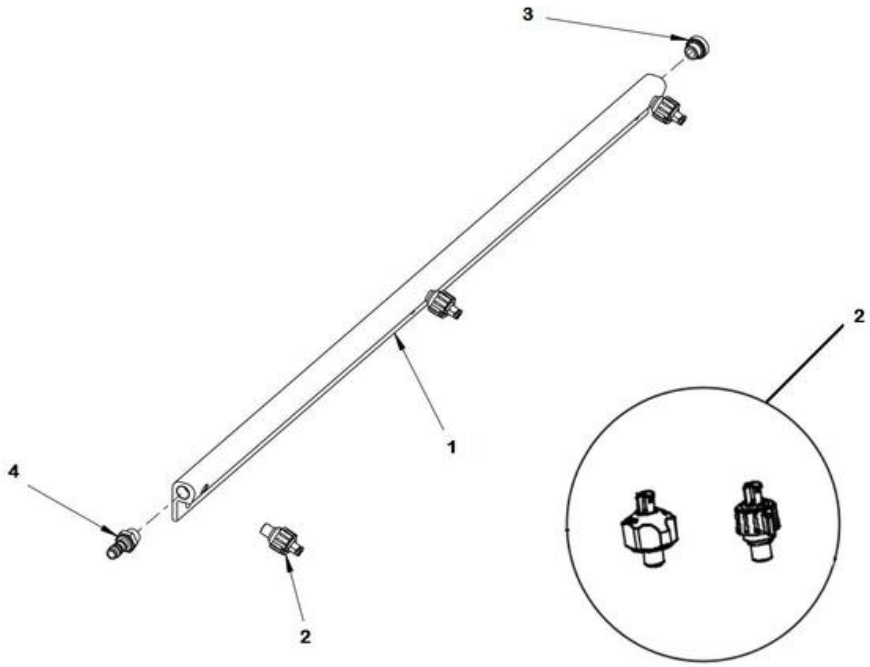

Elemento	N.º de pieza	Nombre	Cant.	L
1	4700396449	Sprinkler pipe	1	
2	4700392011	Spraying nozzle, cpl	3	
Not Shown	4700392509	Retainer, nozzle, strainer, yellow	1	
Comentarios sobre el número de pieza 4700392509 Replace complete spraying nozzle with P/N 4812124321.				
Not Shown	4700392510	Gasket	1	
Comentarios sobre el número de pieza 4700392510 Replace complete spraying nozzle with P/N 4812124321.				
Not Shown	4700393697	Nozzle and strainer, yellow 0.8	1	
Comentarios sobre el número de pieza 4700393697 Replace complete spraying nozzle with P/N 4812124321.				
2	4812124321	Spraying nozzle	3	
Not Shown	4812124327	Nozzle, yellow 0.8	1	
Not Shown	4700160268	O-ring	1	
Not Shown	4812124325	Gasket	1	
Not Shown	4812124324	Strainer	1	
Not Shown	4812124323	Cap, blue	1	
3	4700792072	End plug	1	
4	4700234931	Adapter	1	

Cocoa mats Sprinkler pump module

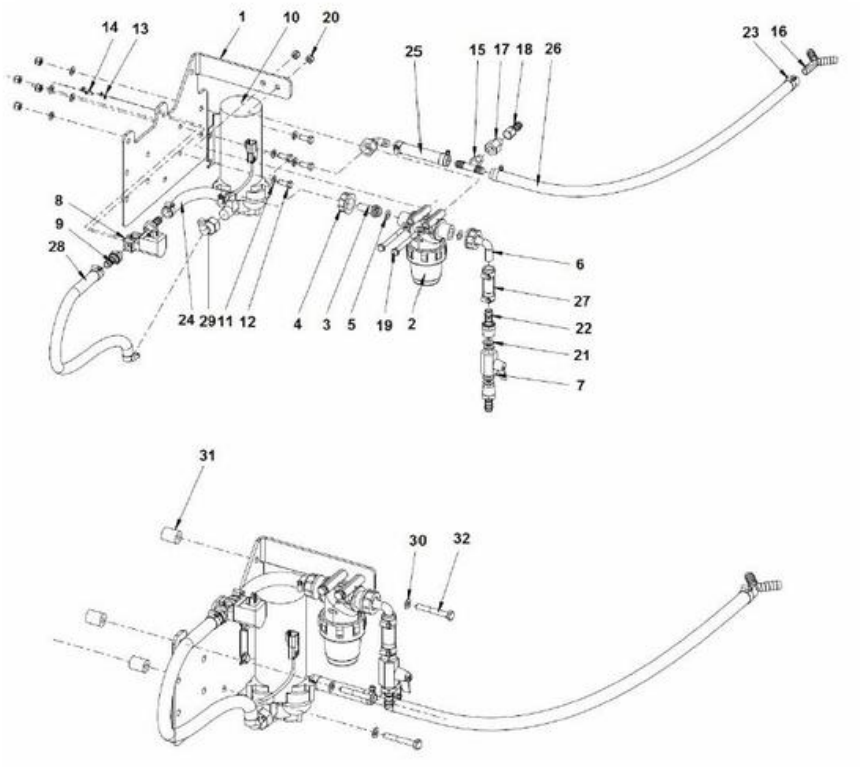

Elemento	N.º de pieza	Nombre	Cant.	L
1	4812315633	Sprinkler plate	1	
2	4812111328	Water filter	1	
2	4700791949	Filter element	1	
2	4700791959	O-ring	1	
3	4812111329	Hose connebtion swivel	1	
4	4700792779	Swivel nut	2	
5	4700480852	O-ring 70	2	
6	4812111330	Hose connection	1	
7	4700925599	Ball valve	1	
8	4700391438	Solenoid valve	1	
9	4700901432	Hose connection	2	
10	4812110394	Sprinkler pump	1	
11	4700904229	Steel plain washer 8.4X16X1.5	10	
12	4700500053	Perno	4	
13	4700904698	Plain washer	2	
14	4700500002	Screw M4-0,7x12H 8.8	2	
15	4700903879	Connector	1	
16	4811000107	Hose connection	1	
17	4700792813	Bypass valve	1	
18	4811000085	Hose connection	1	
19	4700500090	Screw	2	
20	4700586003	Lock nut M8	6	
21	4700379753	Gasket	4	
22	4700924544	Hose connection	2	
23	4700313002	Hose clamp	10	
24	4812112074	Plastic hose (x m)	1XL	
25	4812112074	Plastic hose (x m)	1XL	
26	4812112074	Plastic hose (x m)	1XL	
27	4812112074	Plastic hose (x m)	1XL	
28	4812112074	Plastic hose (x m)	1XL	
29	4700391595	Hose connection	2	
30	4700904229	Steel plain washer 8.4X16X1.5	3	
31	4700355704	Spacer sleeve	3	
32	4700500067	Screw	3	

Sprinkler pump From SN xxB4621 Sprinkler pump module

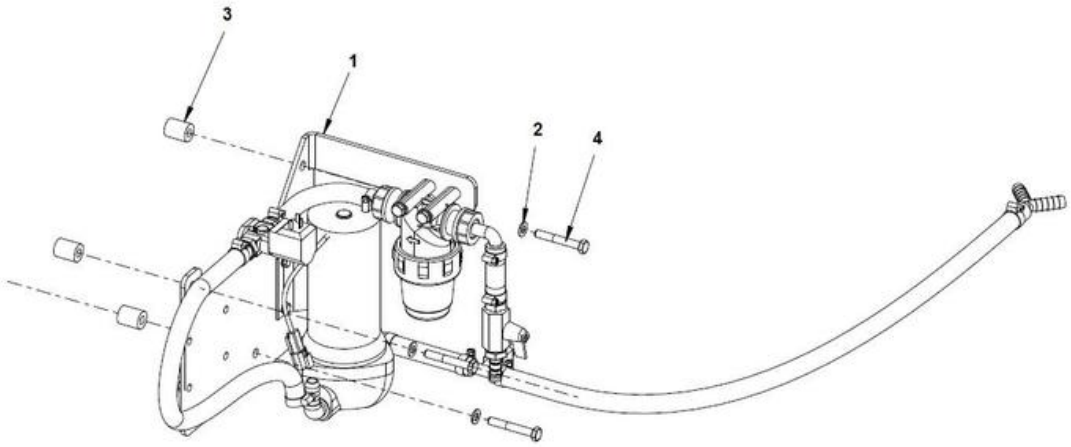

Elemento	N.º de pieza	Nombre	Cant.	L
1		Sprinkler pump mount	1	
2	4700904229	Steel plain washer 8.4X16X1.5	3	
3	4700355704	Spacer sleeve	3	
4	4700500067	Screw	3	

Sprinkler pump From SN xxB4621 Sprinkling pump mount

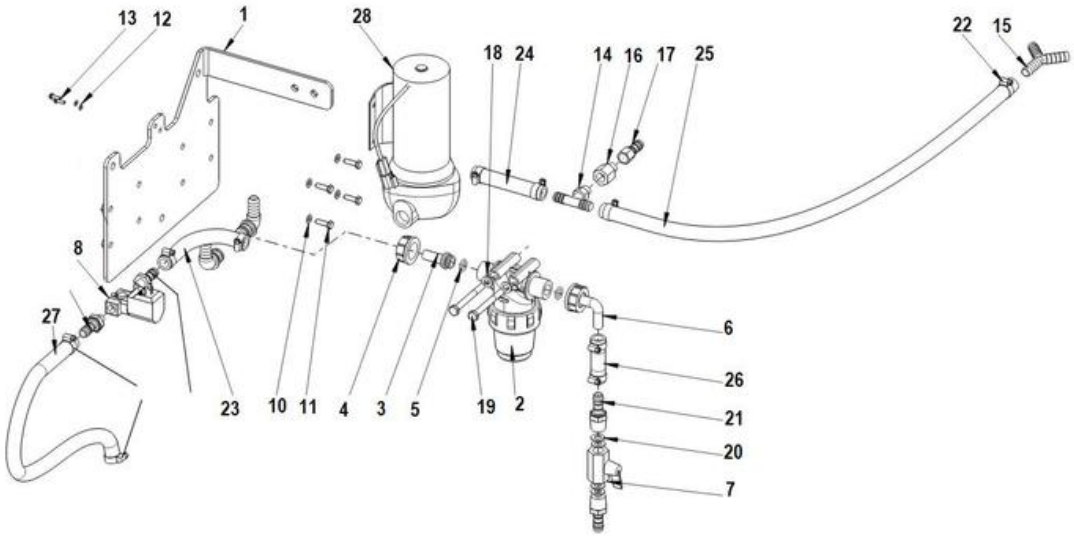

Elemento	N.º de pieza	Nombre	Cant.	L
1	4812317952	Bracket	1	
2	4812111328	Water filter	1	
2	4700791949	Filter element	1	
2	4700791959	O-ring	1	
3	4812111329	Hose connebtion swivel	1	
4	4700792779	Swivel nut	2	
5	4700480852	O-ring 70	2	
6	4812111330	Hose connection	1	
7	4700925599	Ball valve	1	
8	4700391438	Solenoid valve	1	
9	4700901432	Hose connection	1	
10	4700904228	Arandela 6,4x12x1,5	4	
11	4700500040	Hex bolt M06X020H 8.8 A2K	4	
12	4700904698	Plain washer	2	
13	4700500002	Screw M4-0,7x12H 8.8	2	
14	4700903879	Connector	1	
15	4811000107	Hose connection	1	
16	4700792813	Bypass valve	1	
17	4811000085	Hose connection	1	
18	4700904229	Steel plain washer 8.4X16X1.5	2	
19	4700500090	Screw	2	
20	4700379753	Gasket	4	
21	4700924544	Hose connection	2	
22	4700313002	Hose clamp	8	
23	4812112074	Plastic hose (x m)	0.16	
24	4812112074	Plastic hose (x m)	0.11	
25	4812112074	Plastic hose (x m)	0.835	
26	4812112074	Plastic hose (x m)	0.6	
27	4812792073	Plastic hose (x m)	0.4	
28	4812121289	Sprinkler pump	1	
29	4812279981	Plastic adapter	1	
30	4700313003	Hose clamp	2	

Driving lights RH Steering column switch module

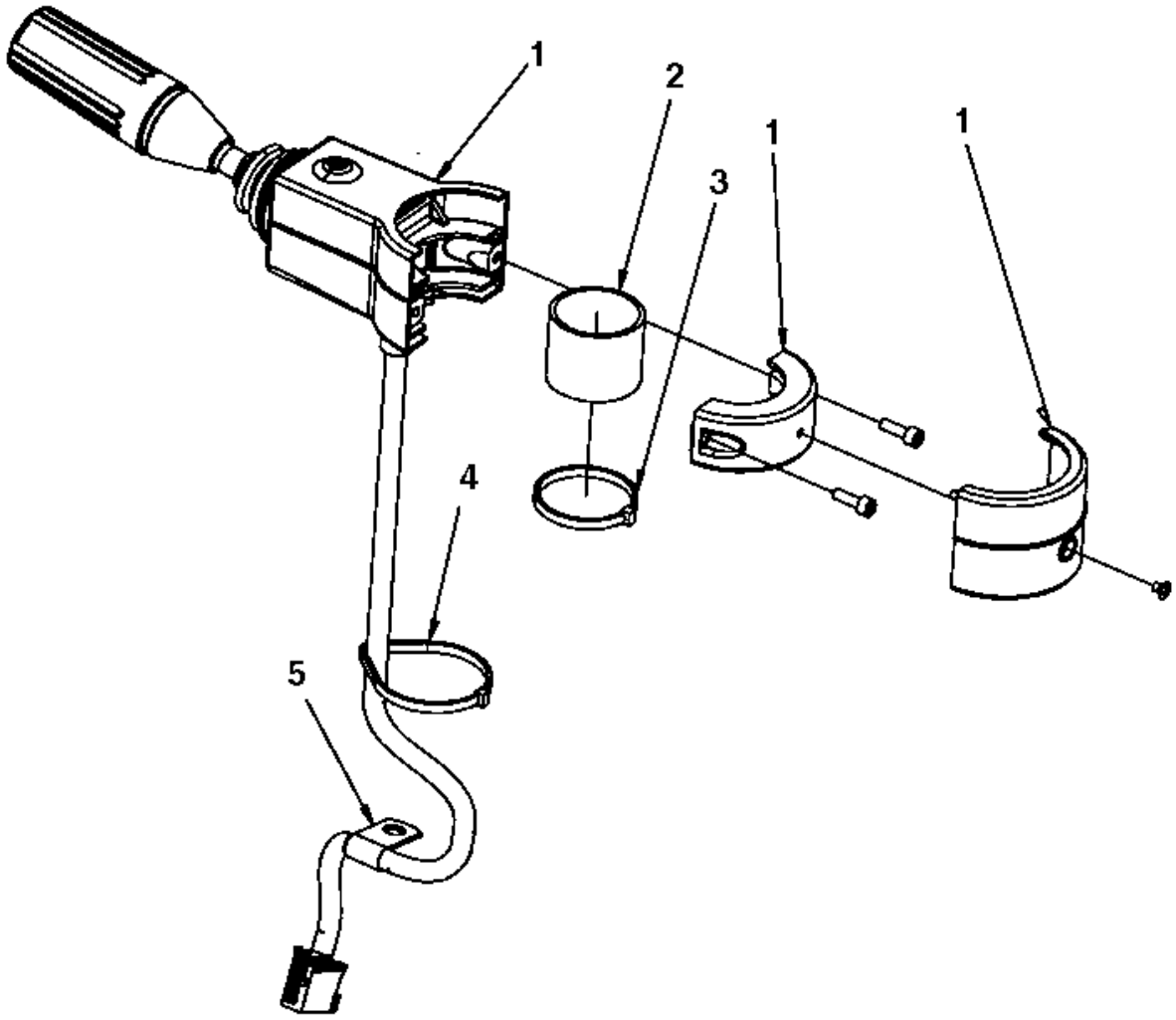

Elemento	N.º de pieza	Nombre	Cant.	L
1	4700392450	Steering column switch	1	
2	4700392451	Rubber cloth	1	
3	4700313041	Cable tie	1	
4	4700792609	Cable tie	1	
5	4700921080	Clamp	1	

Driving lights RH 4812115521 Wiring Harness Kit

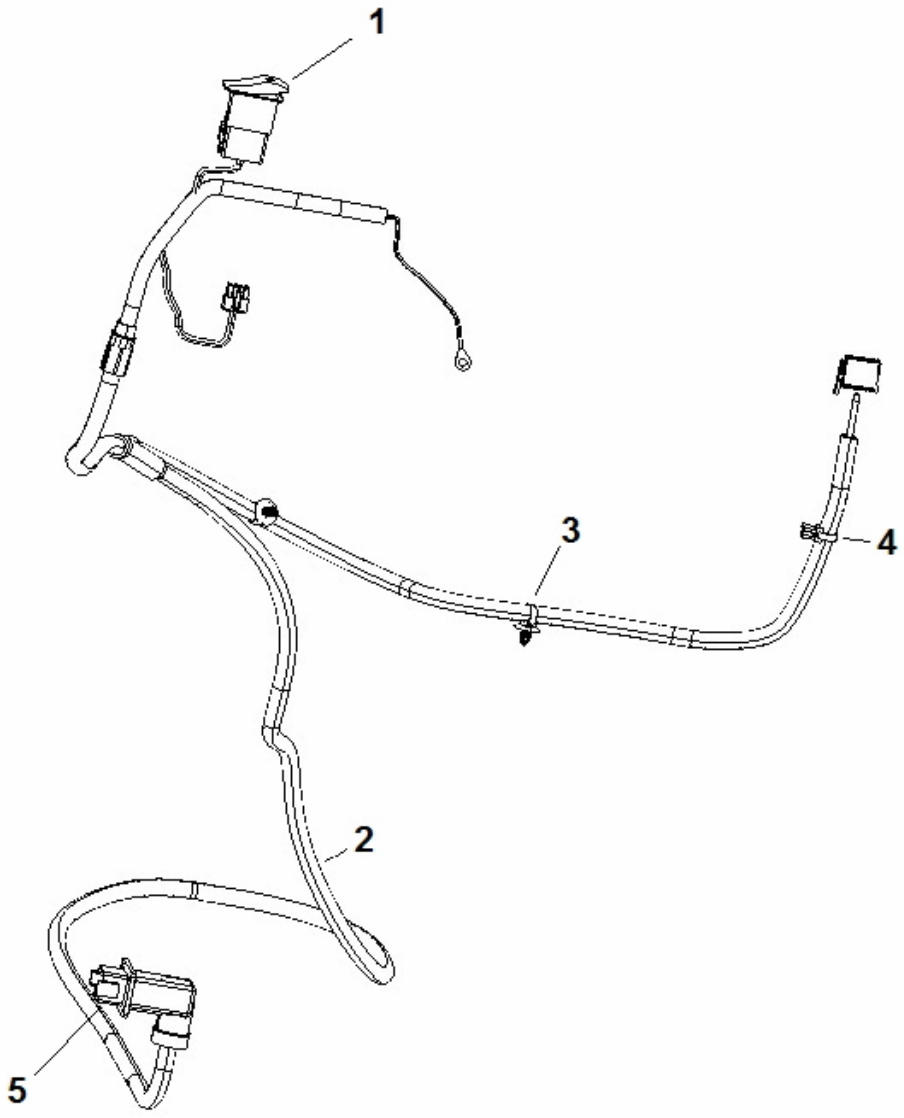

Elemento	N.º de pieza	Nombre	Cant.	L
1	4700792398	Switch, Hazard	1	
2	4812115522	Wiring Harness	1	
3	4700792441	Cable tie with holder	2	
4	4700792537	Cable tie with holder	1	
5	4700791709	Blind rivet	4	

Driving lights RH Driving lights module



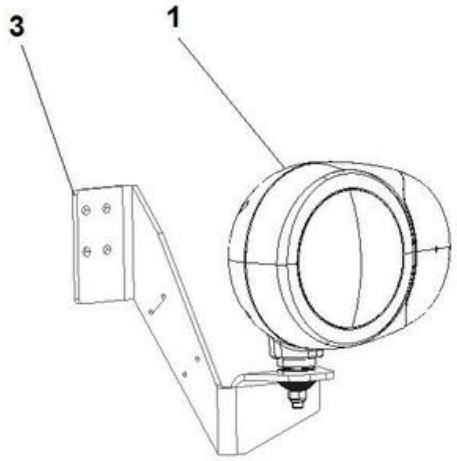

Elemento	N.º de pieza	Nombre	Cant.	L
1	4812100099	Head light	1	
Not Shown	4700792353	Bulb 24V 75/70W H4	1	
2	4812100100	Head light	1	
Not Shown	4700792353	Bulb 24V 75/70W H4	1	
3	4812315711	Bracket right	1	
4	4812315712	Bracket left	1	

Driving lights RH Driving lights module rear

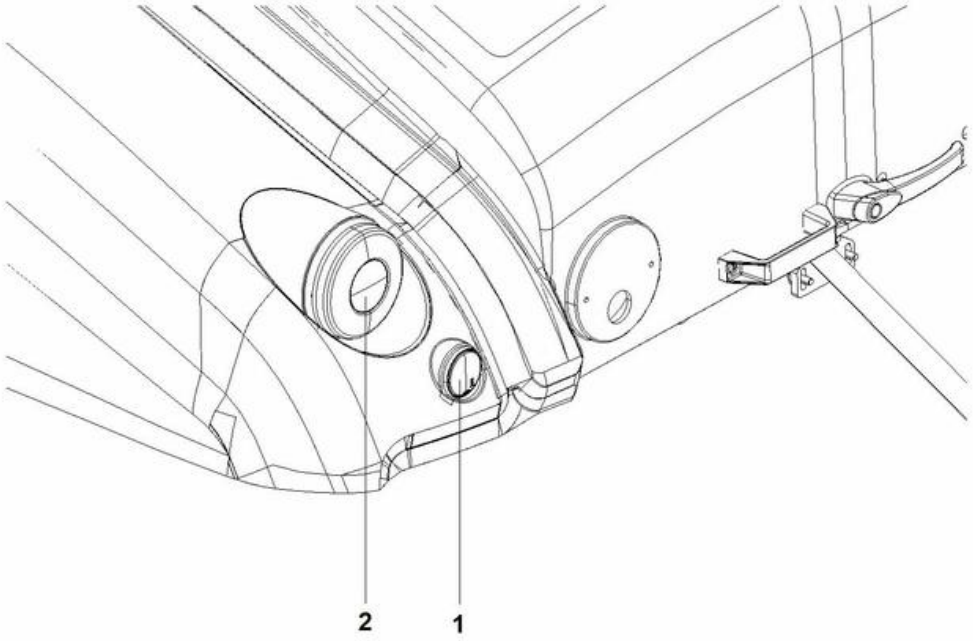

Elemento	N.º de pieza	Nombre	Cant.	L
1	4812100115	Reflector	1	
2	4812319618	Direction/Brake/Position light	1	

Driving lights RH Direction Light Module

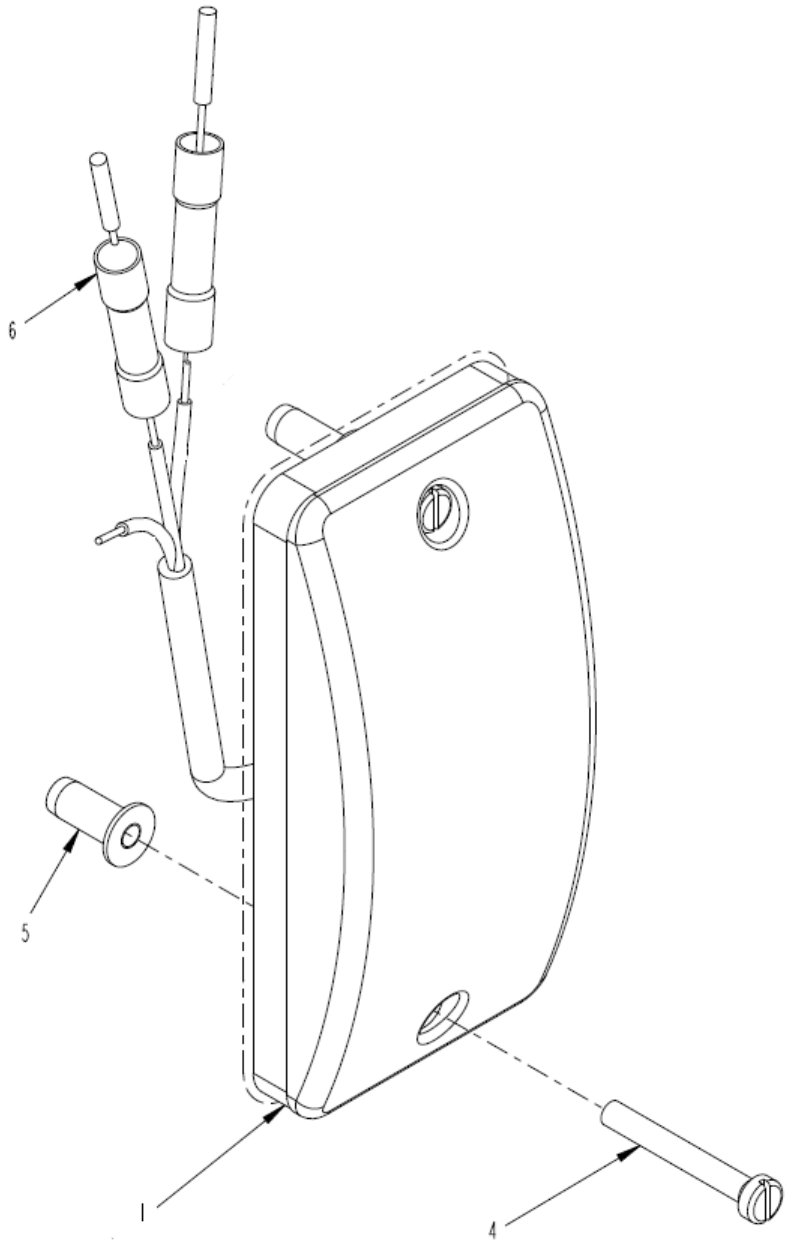

Elemento	N.º de pieza	Nombre	Cant.	L
1	4812130936	Direction lights	1	
4	4700533018	Socket head cap screw	2	
5	4812130937	Rivet nut M4x14	2	
6	4700904023	Sealed cable	2	

Driving lights RH Wiring harness kit

Elemento	N.º de pieza	Nombre	Cant.	L
1	4812100084	Wiring harness	1	
2	4700792422	Relay, 24V 20A	1	
3	4700792602	Cable Tie with Holder, Nylon Black	6	
4	4700395352	Cable Tie Holder, 19x19 Black	8	
5	4700313068	Cable tie	8	
6	4700901227	Fuse 10A Red	1	
7	4812315326	Flash relay	1	
8	4700901226	Fuse 7.5A Brown	1	
9	4812315999	Wiring harness	1	
10	4700904218	Holder	1	
11	4700792669	Blind rivet	1	

Driving lights RH Wiring harness kit

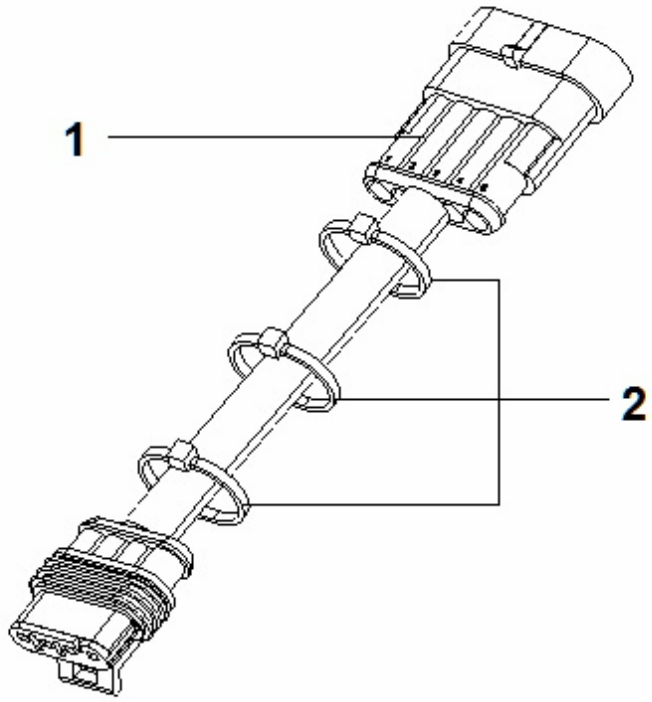

Elemento	N.º de pieza	Nombre	Cant.	L
1	4812315920	Wiring harness	1	
2	4700313068	Cable tie	3	

Eyelet module, option Eyelet module, option

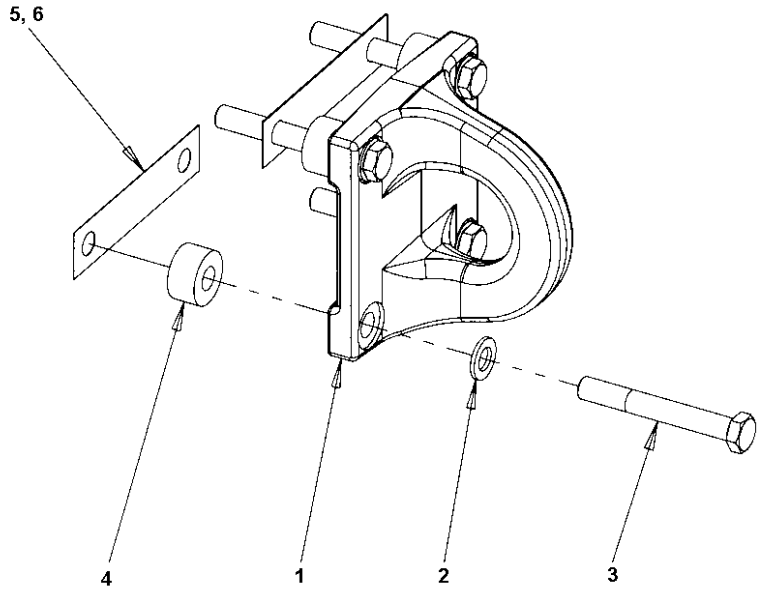

Elemento	N.º de pieza	Nombre	Cant.	L
1	4700397234	Eyelet	1	
2	4700904232	Washer 15x30x4 300 HV	4	
3	4700927633	Screw	4	
4	4700170557	Spacer	4	
5	4812110654	Shim	N	
6	4812110655	Shim	N	

Heat cover wheels, rear Protective cover module, Rear

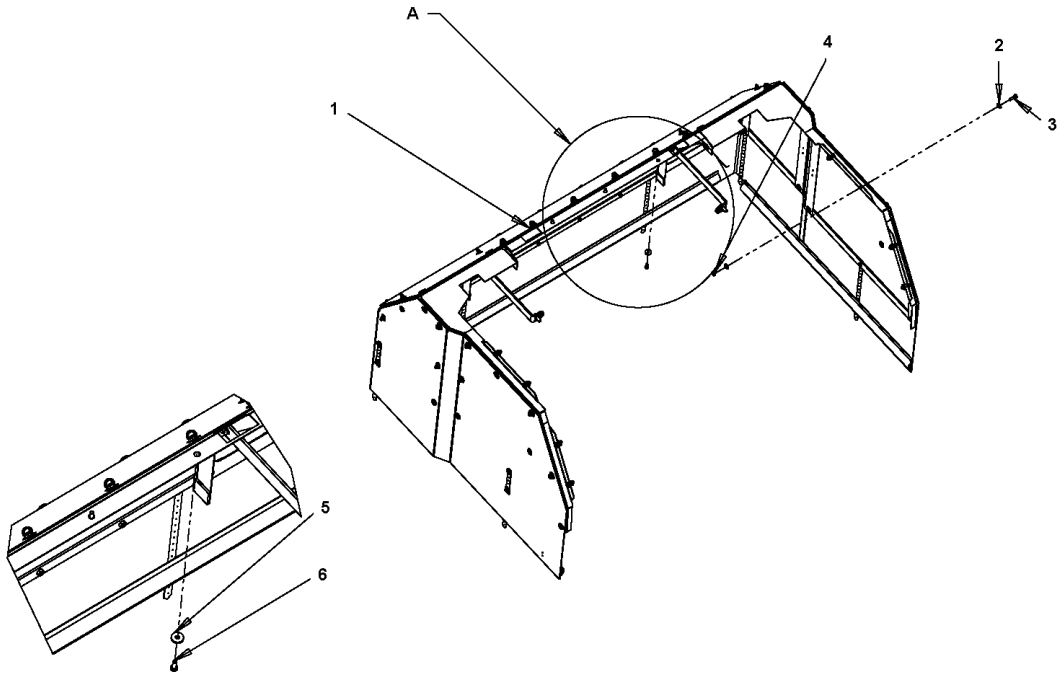

Elemento	N.º de pieza	Nombre	Cant.	L
1	-	Rear apron	1	
2	4700904640	Steel plain washer	16	
3	4700500022	Hexagon screw M8X30 8.8 A2K	8	
4	4700570005	Hexagon nut M	8	
5	4700904734	Steel plain washer	3	
6	4700500053	Perno	3	

Heat cover wheels, rear Rear apron

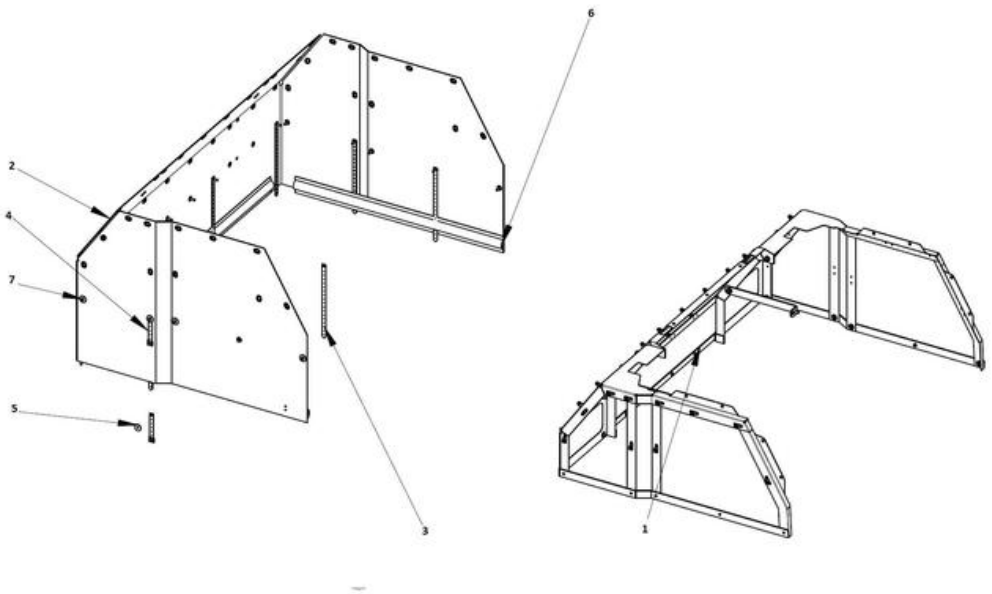

Elemento	N.º de pieza	Nombre	Cant.	L
1		Protective cover mount	1	
2	4812110871	Plastic cloth	1	
3	4811000112	Catching belt	8	
4	4811000113	Catching belt	8	
5	4700615050	Washer	16	
6	4700397399	Bar	4	
7	4700500022	Hexagon screw M8X30 8.8 A2K	16	

Heat cover wheels, rear Bracket Assy - Rear

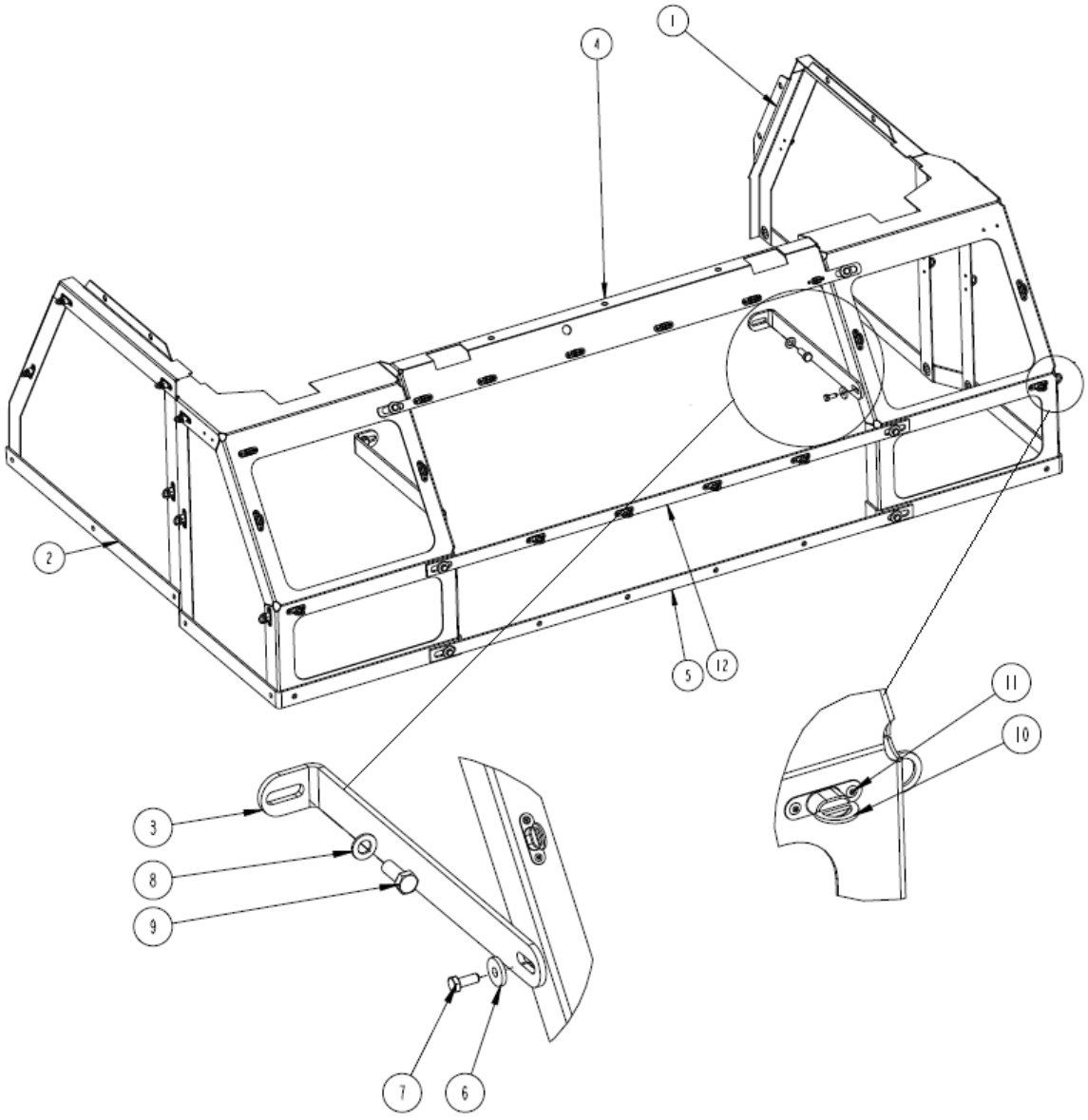

Elemento	N.º de pieza	Nombre	Cant.	L
1		Bracket	1	
2		Bracket	1	
3	4812110950	Bracket	2	
4	4812110963	Bracket	1	
5	4812110964	Bracket	1	
6	4700904734	Steel plain washer	10	
7	4700500053	Perno	10	
8	4700904231	Steel plain washer	2	
9	4700500046	Hex. head screw M12x030H	2	
10	4700792801	Turn fastener	33	
11	4700624005	Blind rivet	62	
12	4812319488	Bracket	1	

Heat cover wheels, front Protective cover module, Front

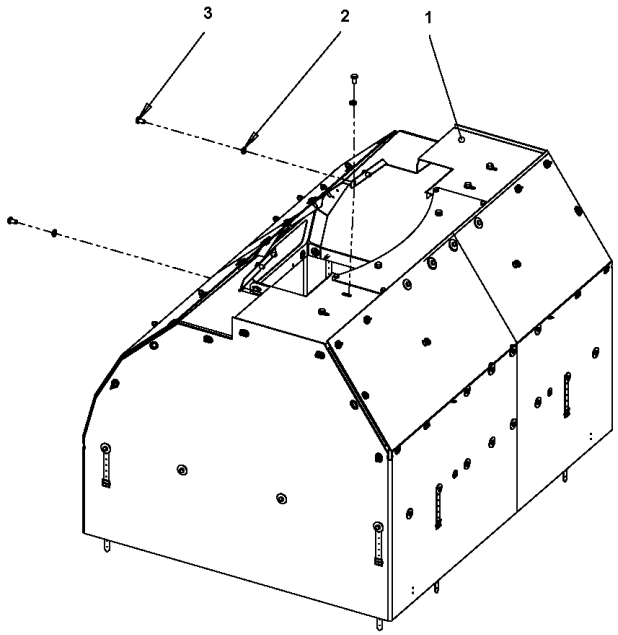

Elemento	N.º de pieza	Nombre	Cant.	L
1	-	Protective cover mount	1	
2	4700904557	Steel plain washer	14	
3	4700500035	Hex screw	14	

Heat cover wheels, front Protective cover mount

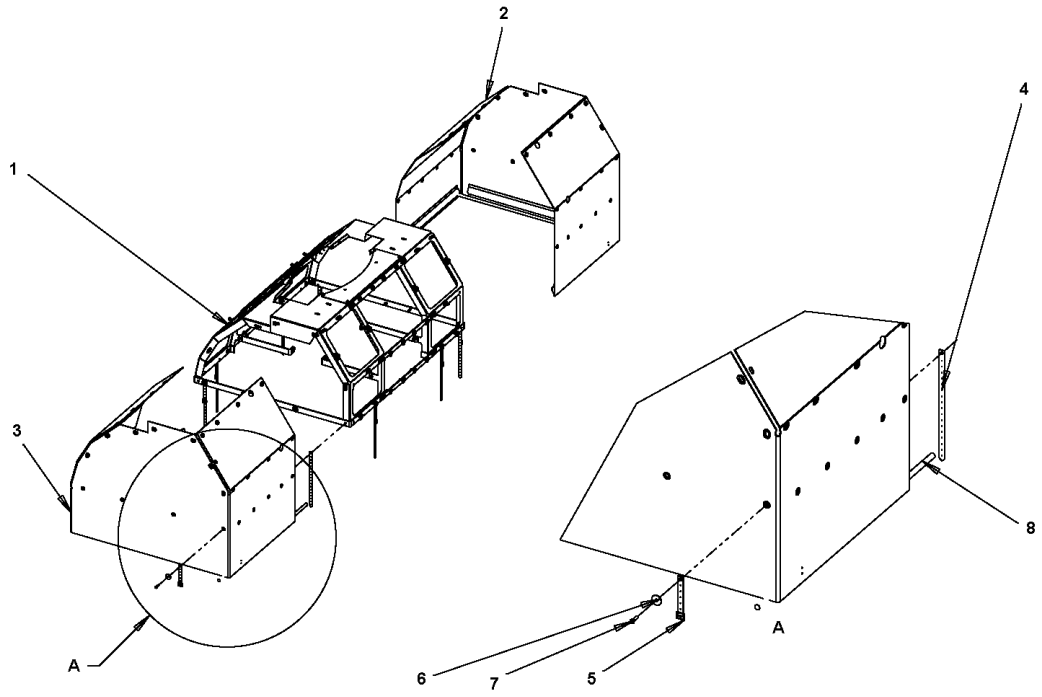

Elemento	N.º de pieza	Nombre	Cant.	L
1	-	Bracket Assy	1	
2	4812110826	Protective cover	1	
3	4812110826	Protective cover	1	
4	4811000112	Catching belt	8	
5	4811000113	Catching belt	8	
6	4700615050	Washer	60	
7	4700500022	Hexagon screw M8X30 8.8 A2K	52	
8	4700397399	Bar	4	

Heat cover wheels, front Bracket assy

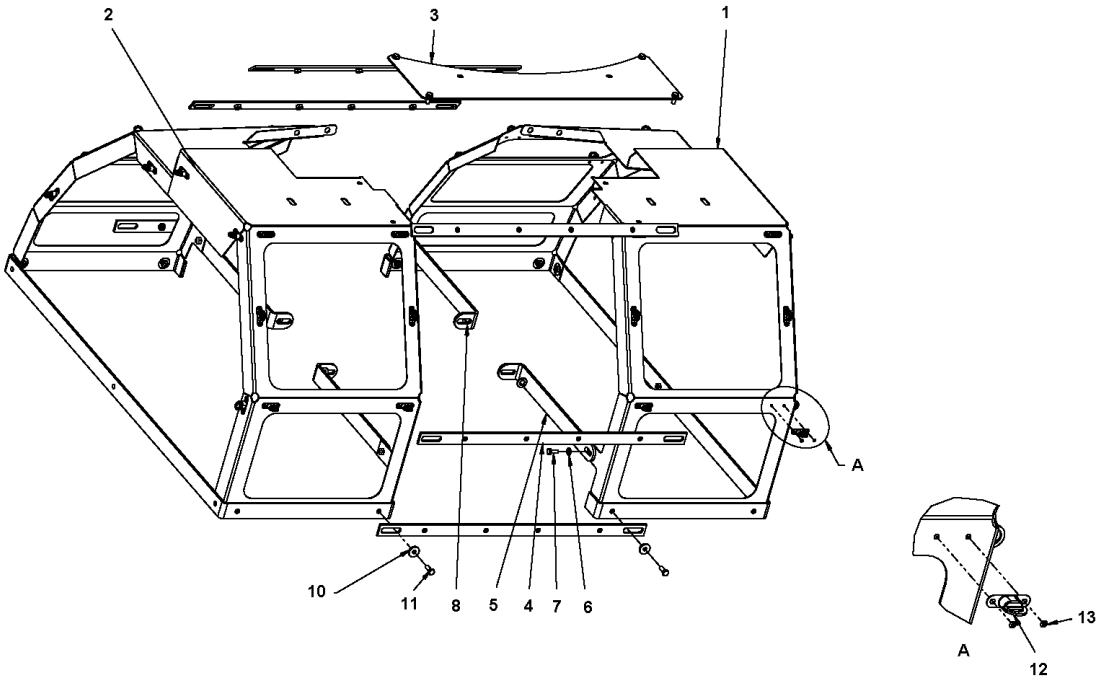

Elemento	N.º de pieza	Nombre	Cant.	L
1	4812110951	Bracket assy	1	
2	4812110952	Bracket assy	1	
3	4812110949	Cover plate	1	
4	4812110731	Bracket	6	
5	4812110950	Bracket	4	
6	4700904229	Steel plain washer 8.4X16X1.5	8	
7	4700500053	Perno	8	
8	4700904231	Steel plain washer	4	
10	4700904734	Steel plain washer	4	
11	4700500020	Hex. screw	4	
12	4700792801	Turn fastener	30	
13	4700624005	Blind rivet	60	

Lock module 4700394121 Water tank Lock Module

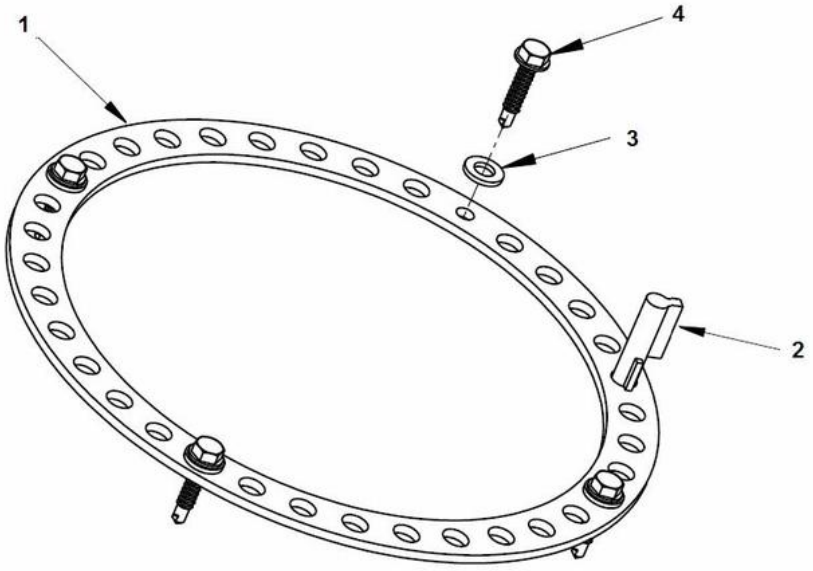

Elemento	N.º de pieza	Nombre	Cant.	L
1	4812118056	Lock plate	1	
2	4700370699	Lock w key	1	
3	4700904228	Arandela 6,4x12x1,5	4	
4	4811000457	Thread rolling screw	4	

Night worklight LED Switch module - Night light

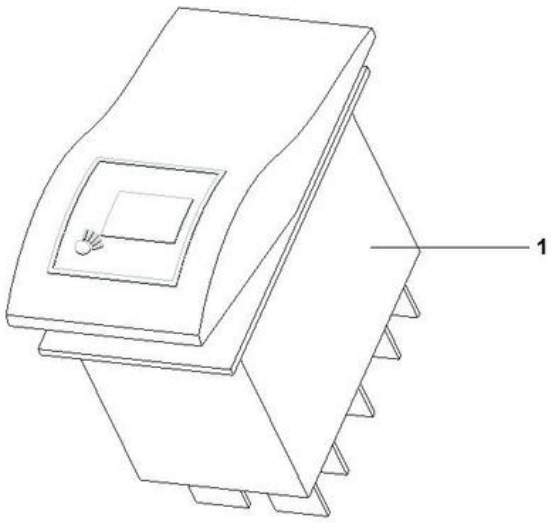

Elemento	N.º de pieza	Nombre	Cant.	L
1	4700792794	Switch, Process light	1	

Night worklight LED Reading light module

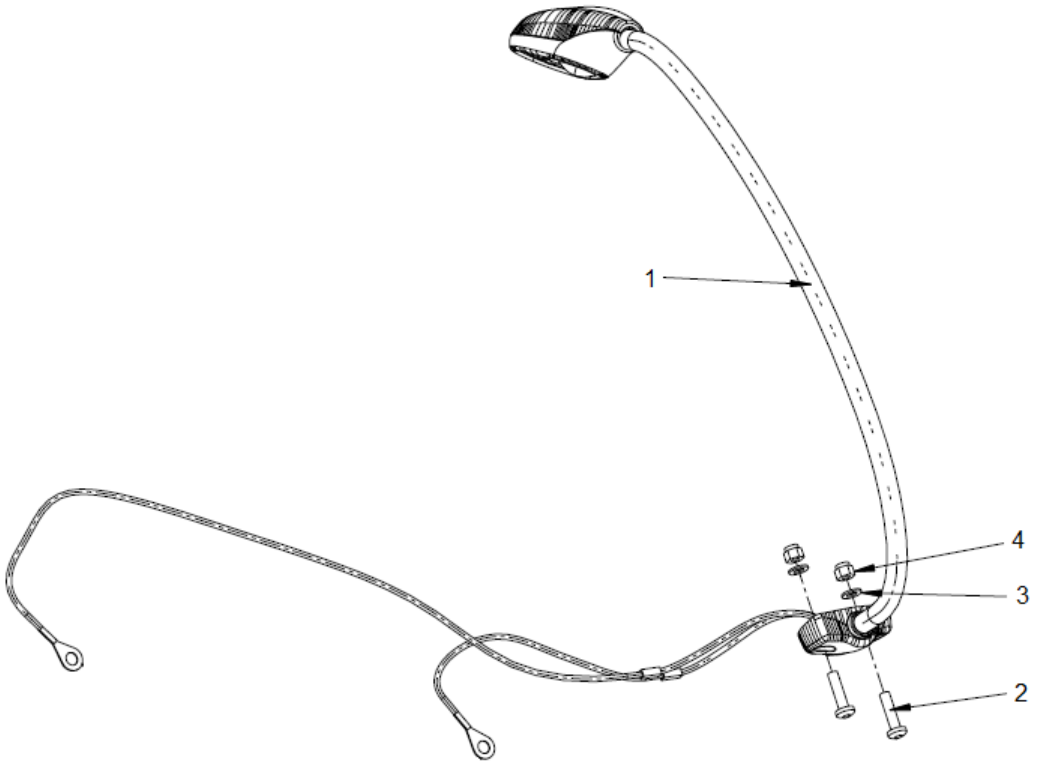

Elemento	N.º de pieza	Nombre	Cant.	L
1	4700397604	Reading Light Assy	1	
2	4700791421	Machine Screw Torx, M5x20 8.8 A2K	2	
3	4700904281	Steel plain washer	2	
4	4700586001	Lock nut M	2	

Night worklight LED Wiring Harness Kit - Lightning

Elemento	N.º de pieza	Nombre	Cant.	L
1	4812115290	Wiring Harness - Lightning	1	
2	4700792422	Relay, 24V 20A	1	
3	4700395352	Cable Tie Holder, 19x19 Black	12	
4	4700313068	Cable tie	12	
5	4700313041	Cable tie	8	
6	4700792667	Cable Tie with Holder, Black	7	
7	4700901227	Fuse 10A Red	1	

Night worklight LED Working lights module

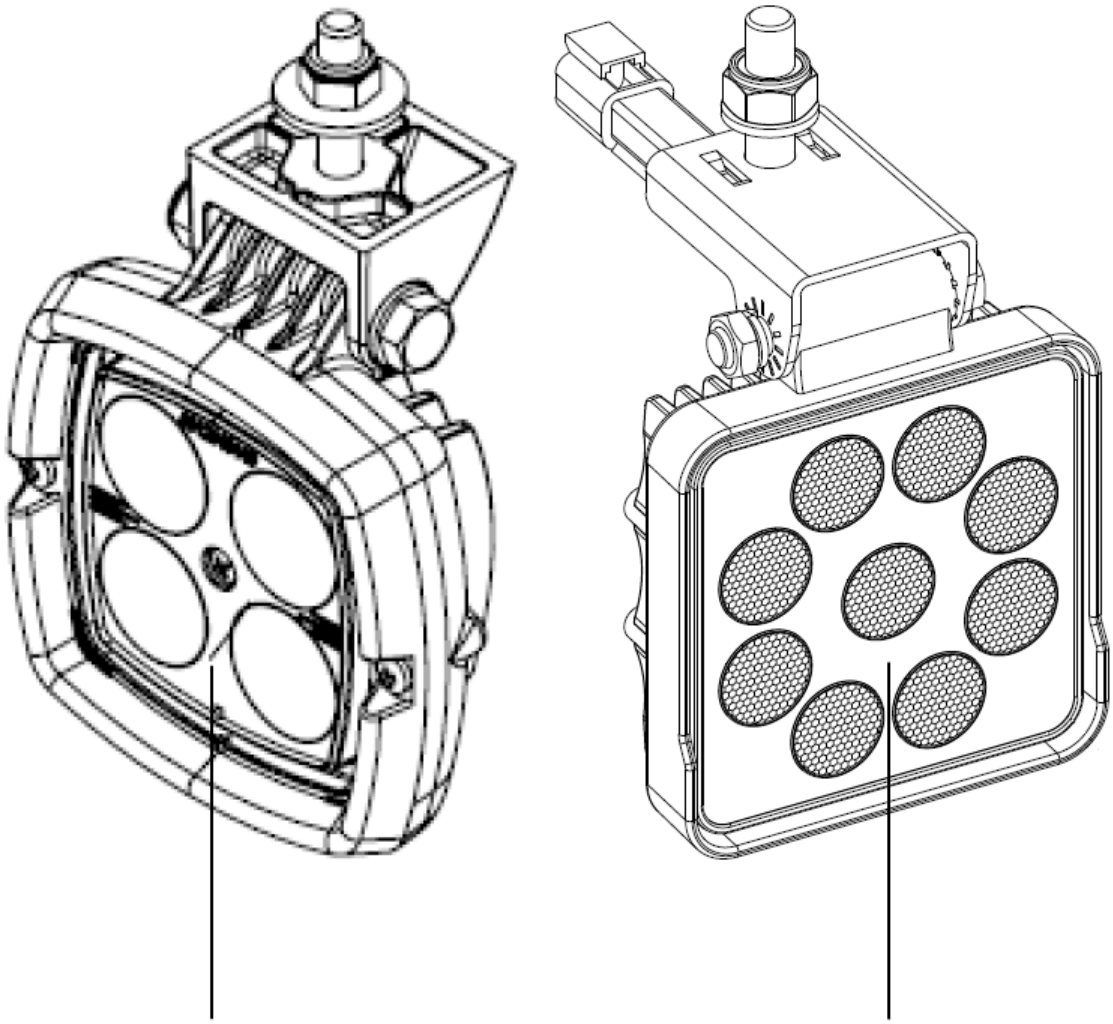

Elemento	N.º de pieza	Nombre	Cant.	L
1	4812315449	Work lamp	4	
2	4812126777	Working light, LED 15W	4	

Night worklight LED Bracket module

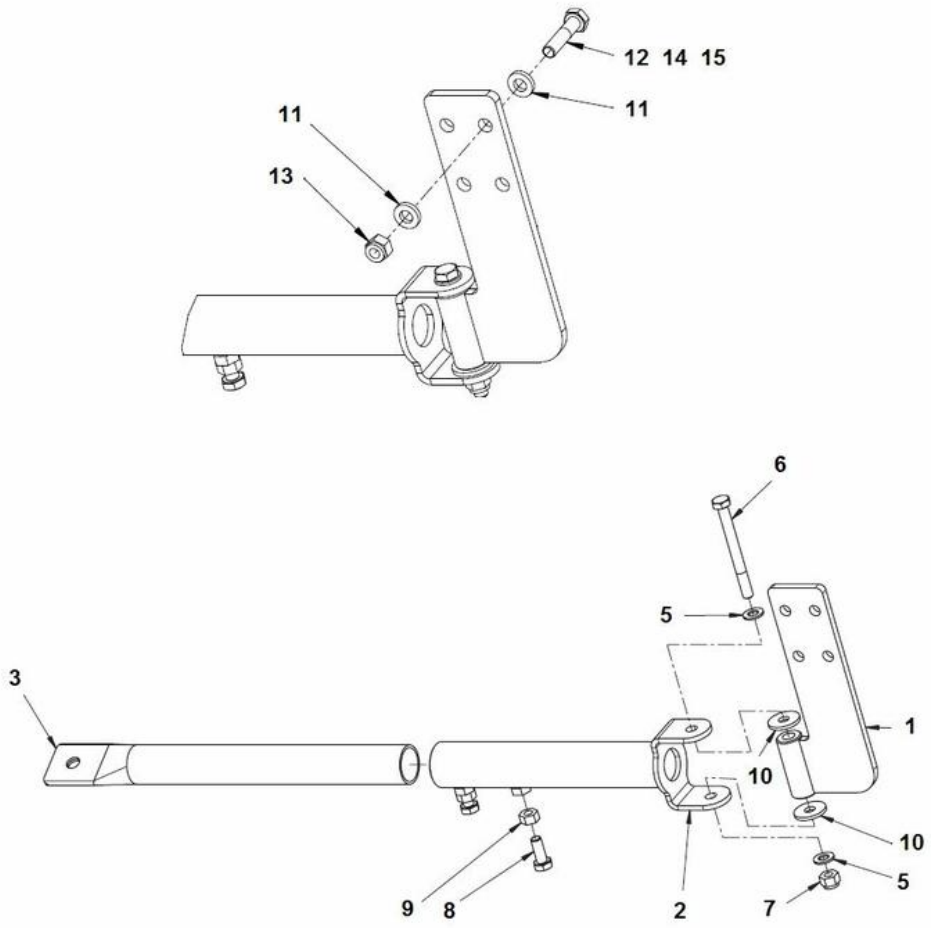

Elemento	N.º de pieza	Nombre	Cant.	L
1	4700397028	Bracket	1	
2	4700397029	Bracket	1	
3	4700397045	Bracket	1	
5	4700904229	Steel plain washer 8.4X16X1.5	2	
6	4700500190	Hexagon head screw M	1	
7	4700586003	Lock nut M8	1	
8	4700500053	Perno	2	
9	4700570005	Hexagon nut M	2	
10	4700903662	Washer	2	
11	4700904556	Steel plain washer	8	
12	4700500047	Hexagon screw M	4	A
13	4700586003	Lock nut M8	4	
14	4700500024	Screw M8x45	4	B
15	4700500025	Screw	4	C

Night worklight LED Bracket module

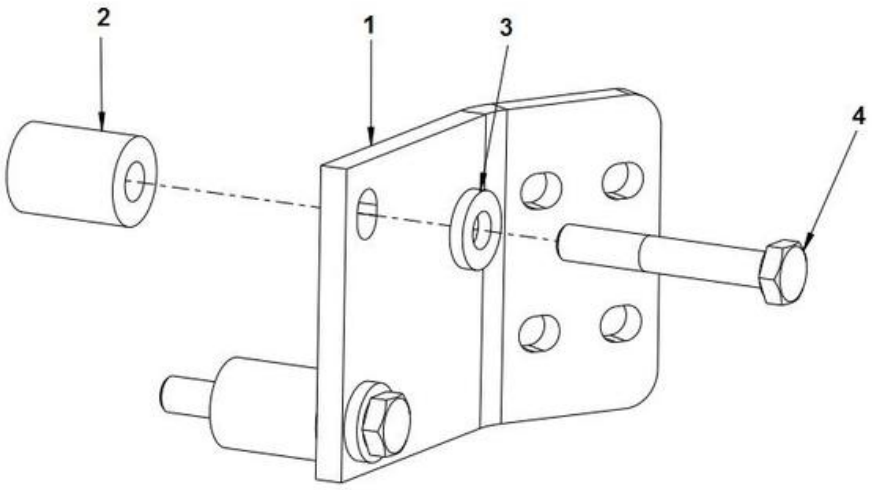

Elemento	N.º de pieza	Nombre	Cant.	L
1	4700395787	Bracket	1	
2	4700348659	Spacer Sleeve, 11x35x33	2	
3	4700904557	Steel plain washer	2	
4	4700500109	Hexagon head screw M	2	

Rotate beacon Rotating beacon module

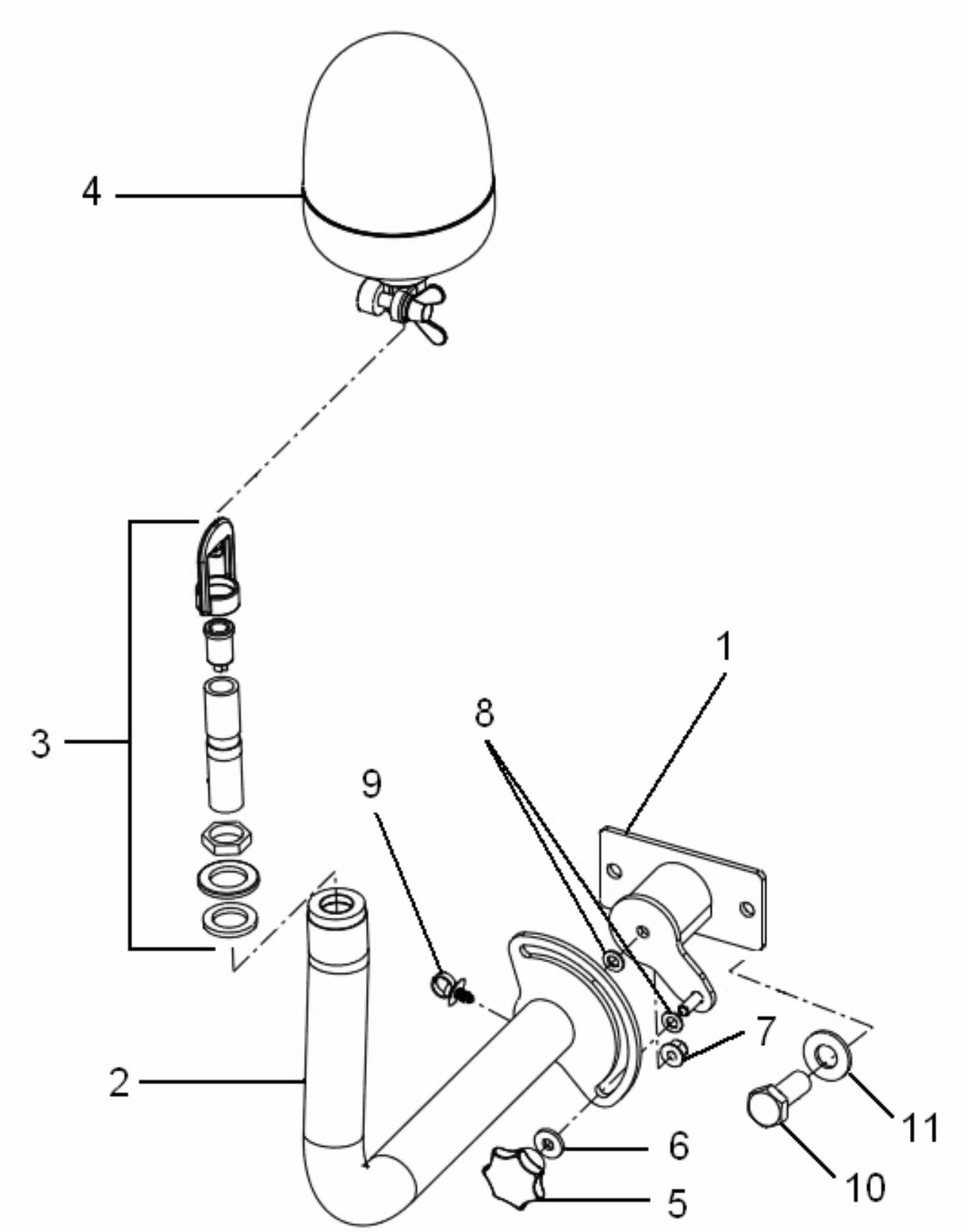

Elemento	N.º de pieza	Nombre	Cant.	L
1	4700397516	Bracket	1	
2	4700397517	Lever	1	
3	4700392321	Bracket	1	
4	4812111326	Rotating beacon	1	
5	4700792410	Hand knob nut	1	
6	4700904640	Steel plain washer	1	
7	4700902286	Hexagon lock nut with flange M8	1	
8	4700904229	Steel plain washer 8.4X16X1.5	2	
9	4700792441	Cable tie with holder	1	
10	4700500028	Arandela 6,4x12x1,5	2	
11	4700904230	Plain washer M10 10.5X22X2.0	2	

Rotate Beacon From SN 10000511KKB005913 Rotating Beacon Module

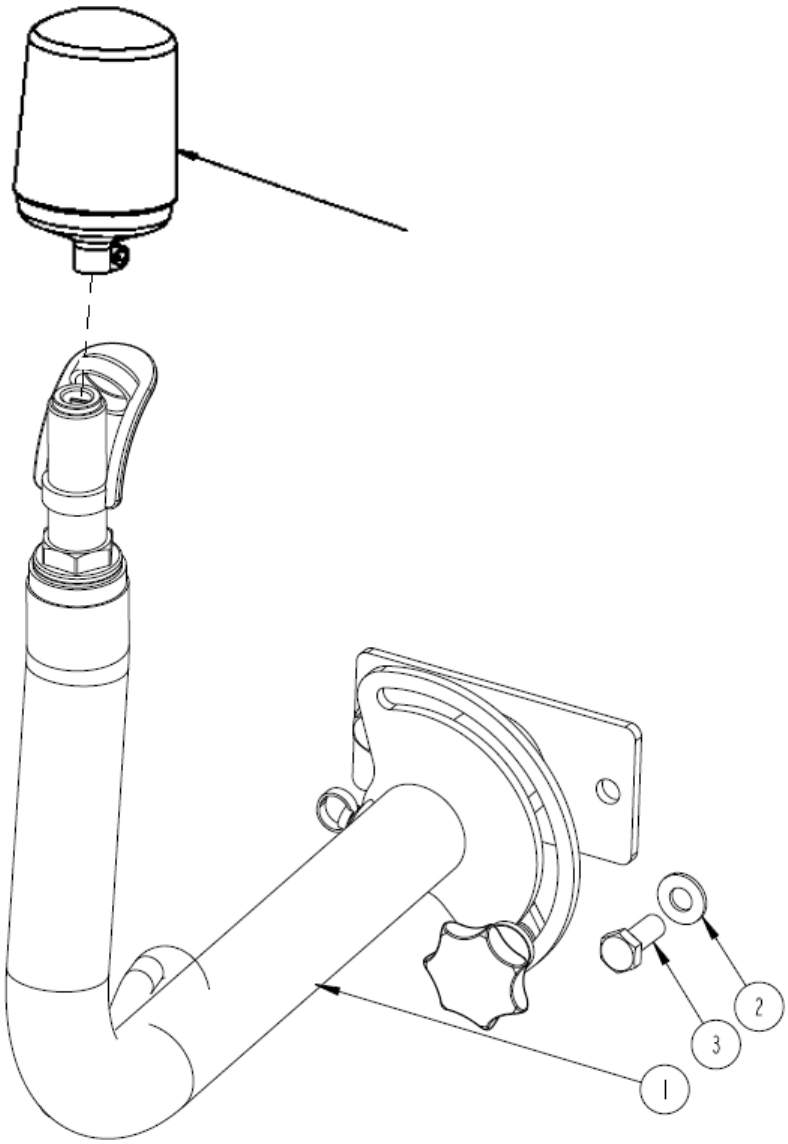

Elemento	N.º de pieza	Nombre	Cant.	L
1		Rotating beacon assy	1	
2	4700904230	Plain washer M10 10.5X22X2.0	2	
3	4700500028	Arandela 6,4x12x1,5	2	
4	4812111326	Rotating beacon	1	

Rotate Beacon From SN 10000511KKB005913 Rotating Beacon assy

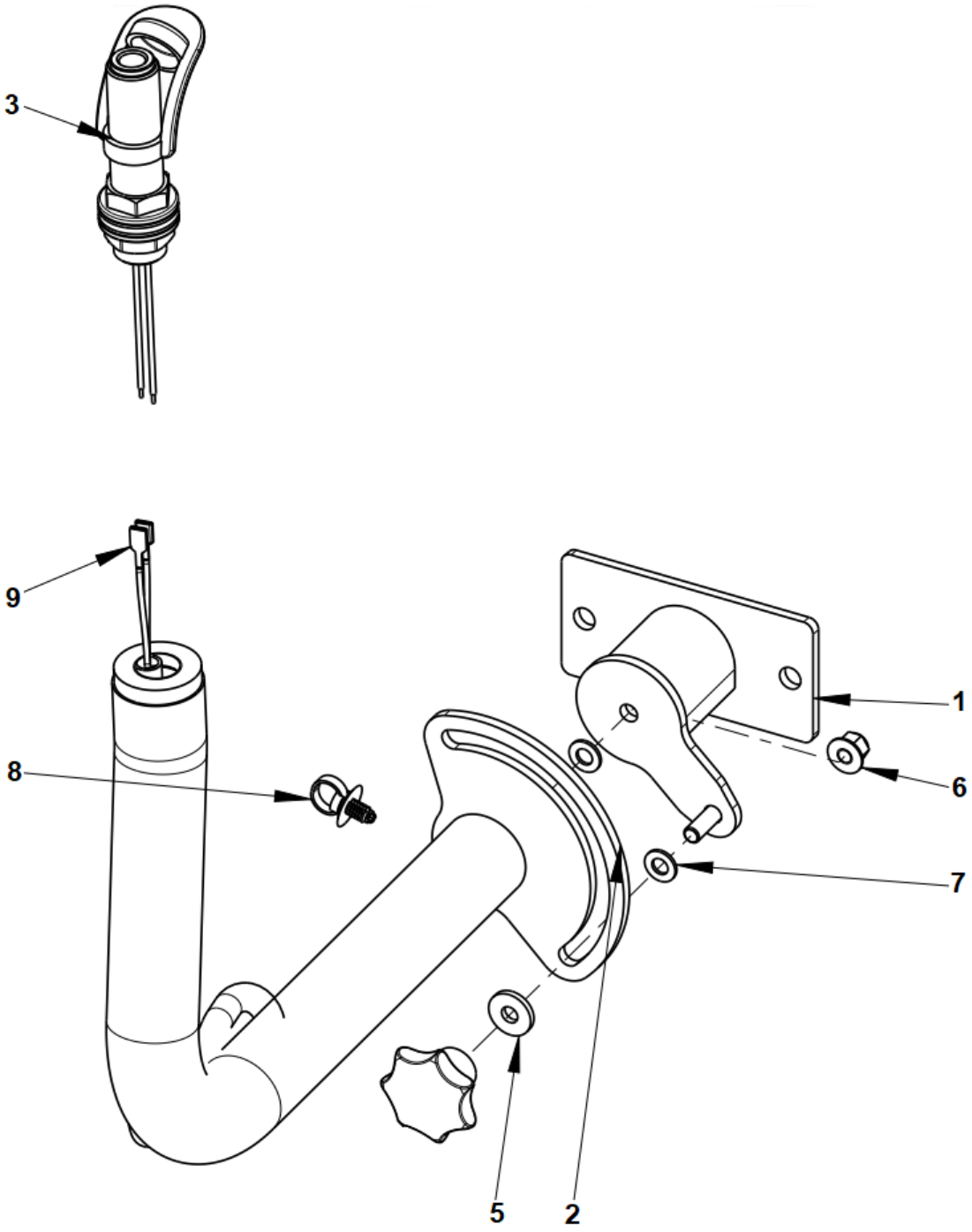

Elemento	N.º de pieza	Nombre	Cant.	L
1	4700397516	Bracket	1	
2	4812319407	Lever	1	
3	4812319403	Bracket	1	
5	4700792410	Hand knob nut	1	
6	4700904640	Steel plain washer	1	
7	4700902286	Hexagon lock nut with flange M8	1	
8	4700904229	Steel plain washer 8.4X16X1.5	2	
9	4700792441	Cable tie with holder	1	
10	4812115020	Wiring harness	1	

Rotate Beacon From SN 10000511KKB005913 Connection Cable Kit

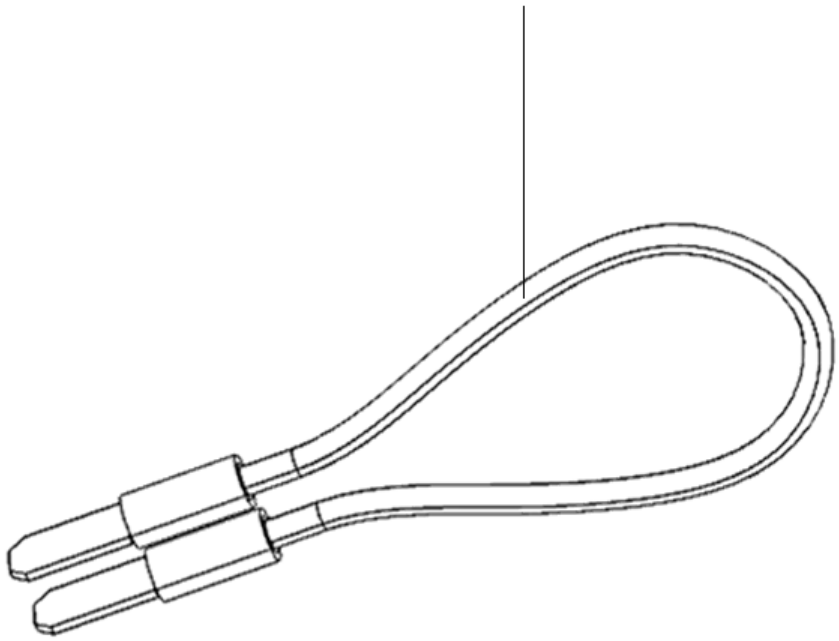

Elemento	N.º de pieza	Nombre	Cant.	L
1	4811000077	Connection cable	1	

Radio and CD Player Radio and cd player

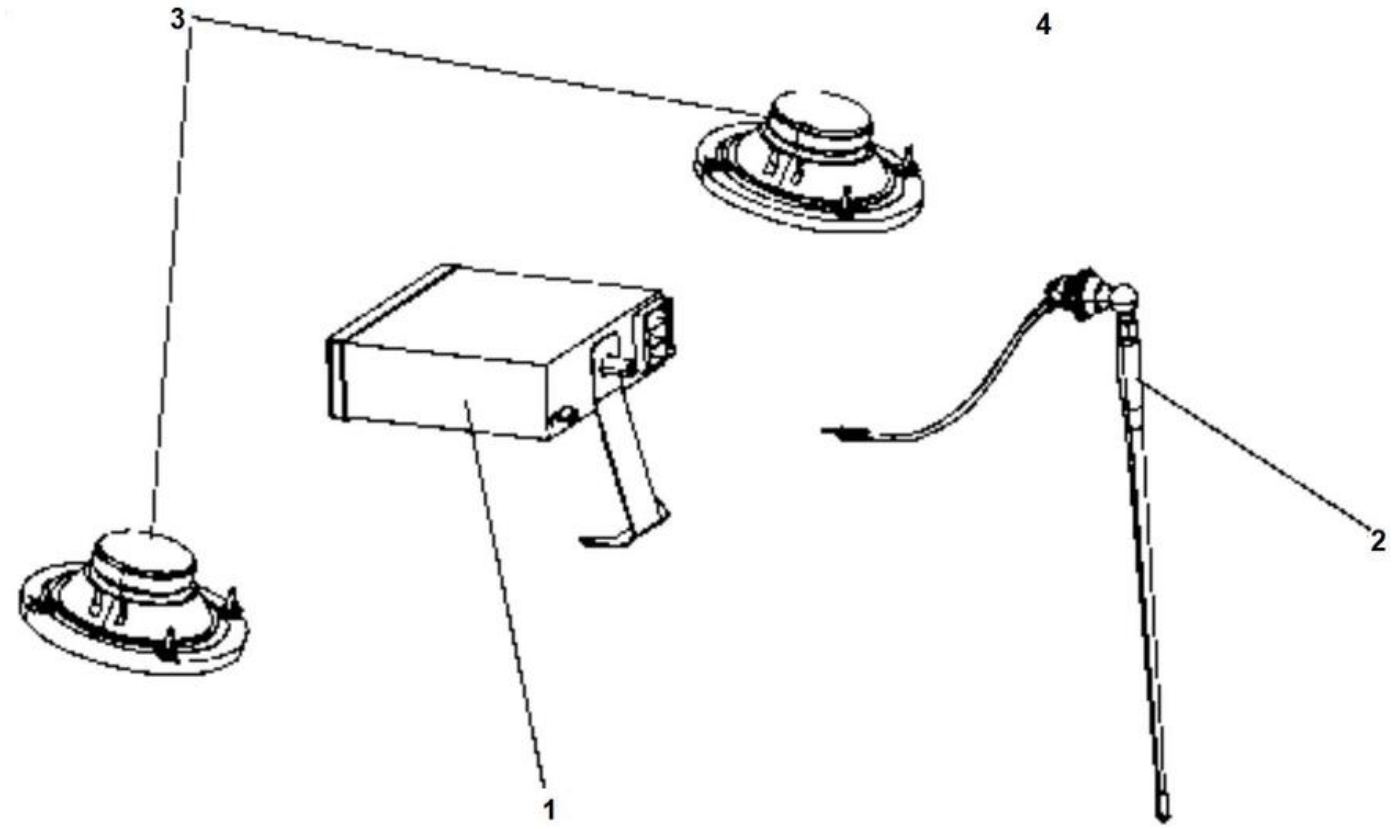

Elemento	N.º de pieza	Nombre	Cant.	L
1		Radio and cd player module	1	
2	4700937165	Antenna	1	
3		Loud speakers	1	
4	4811000077	Connection cable	1	

Radio and CD Player Radio and cd player module

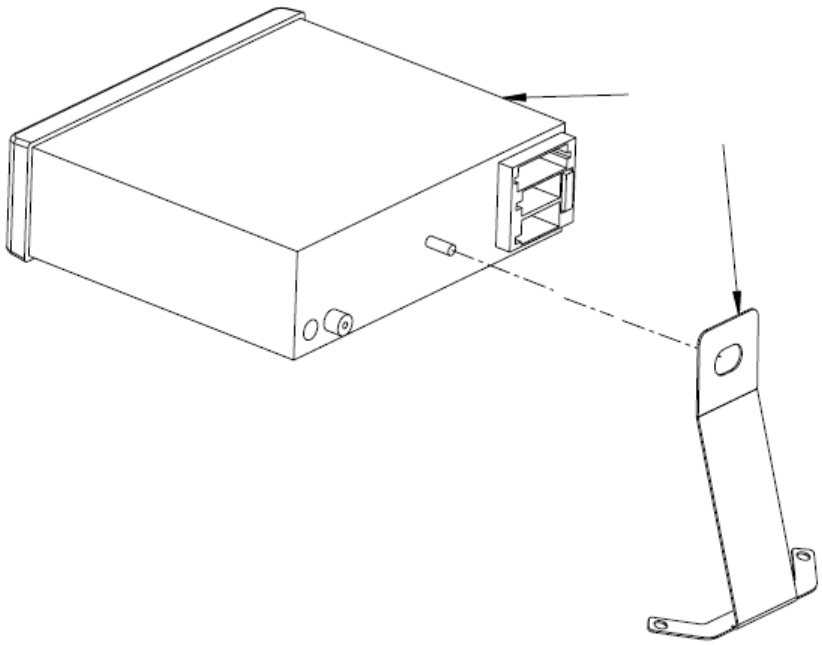

Elemento	N.º de pieza	Nombre	Cant.	L
1	4700792583	Car stereo	1	
2	4700394654	Bracket	1	

Radio and CD Player Loud Speaker Module

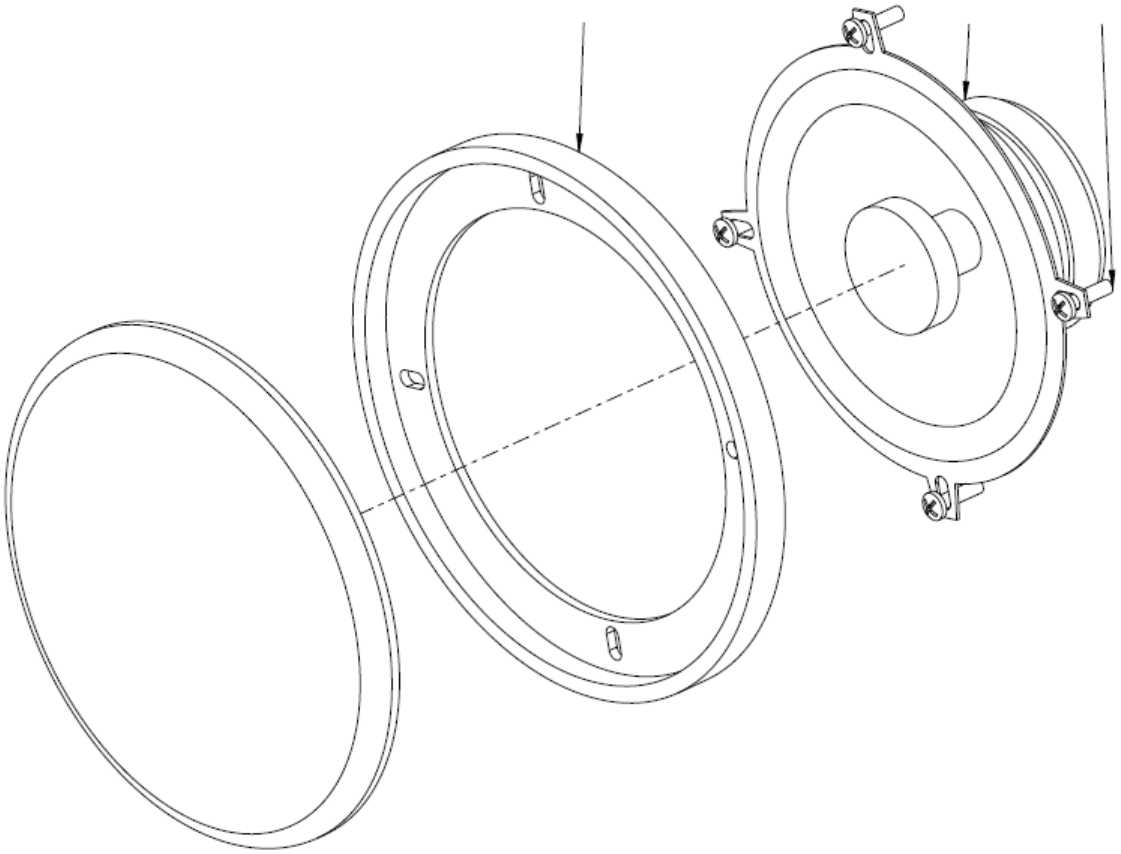

Elemento	N.º de pieza	Nombre	Cant.	L
1	4811000268	Loud speaker	2	
2	4811000269	Loud speaker cover	2	
3	4700541526	Screw ST 4,2x16	8	

Rear view Camera Camera Wiring Harness

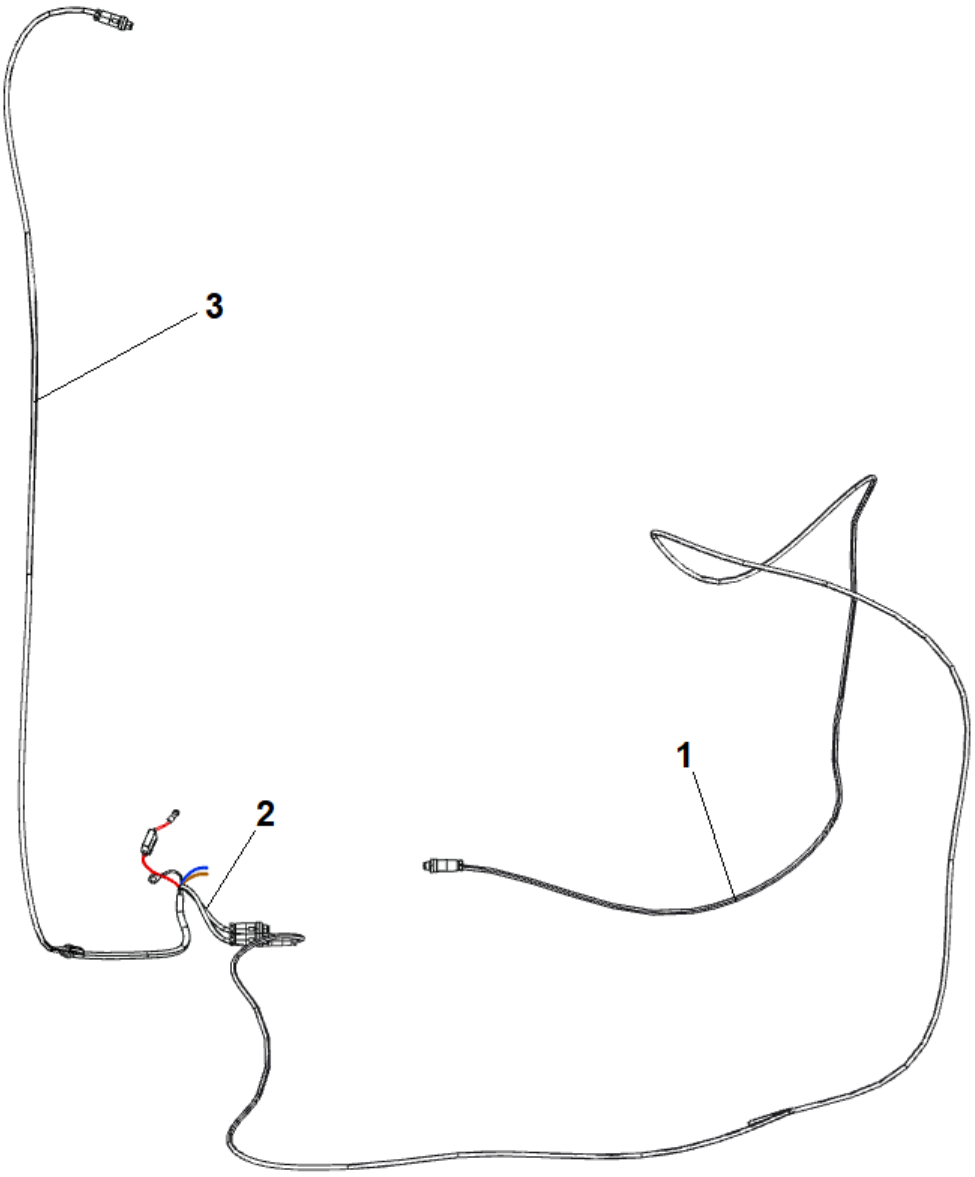

Elemento	N.º de pieza	Nombre	Cant.	L
1	4812319701	Adapter cable	1	
2	4812319702	Wiring Harness	1	
3	4812319703	Wiring Harness	1	

Rear view Camera Display Rear Camera Assy

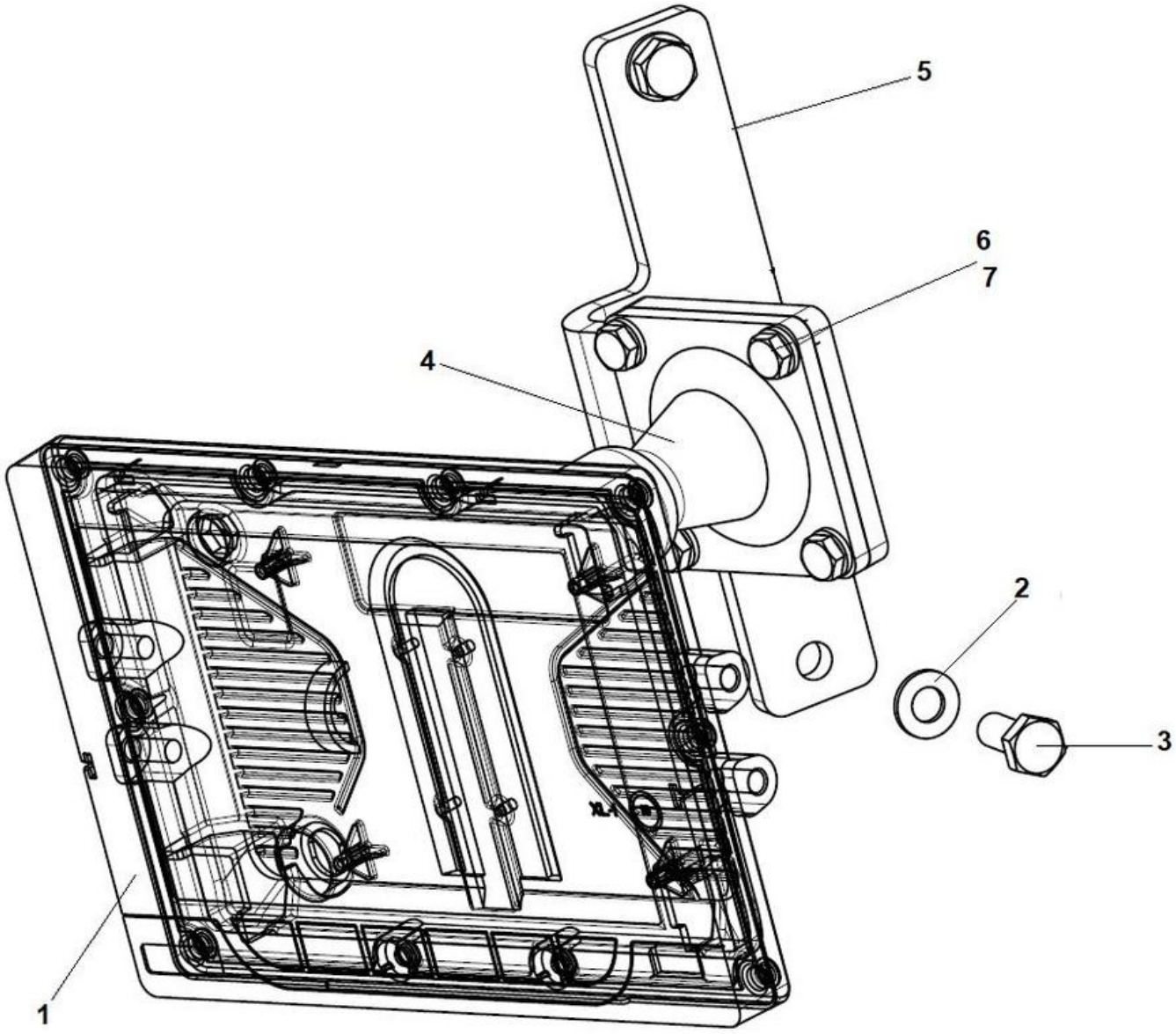

Elemento	N.º de pieza	Nombre	Cant.	L
1	4812319699	Display	1	
2	4700904229	Steel plain washer 8.4X16X1.5	2	
3	4700500053	Perno	2	
4	4812319704	Bracket	1	
5	4812319719	Bracket	1	
6	4700904281	Steel plain washer	4	
7	4700500184	Screw M5-0,8x14 8,8	4	

Rear view Camera Backup Camera module

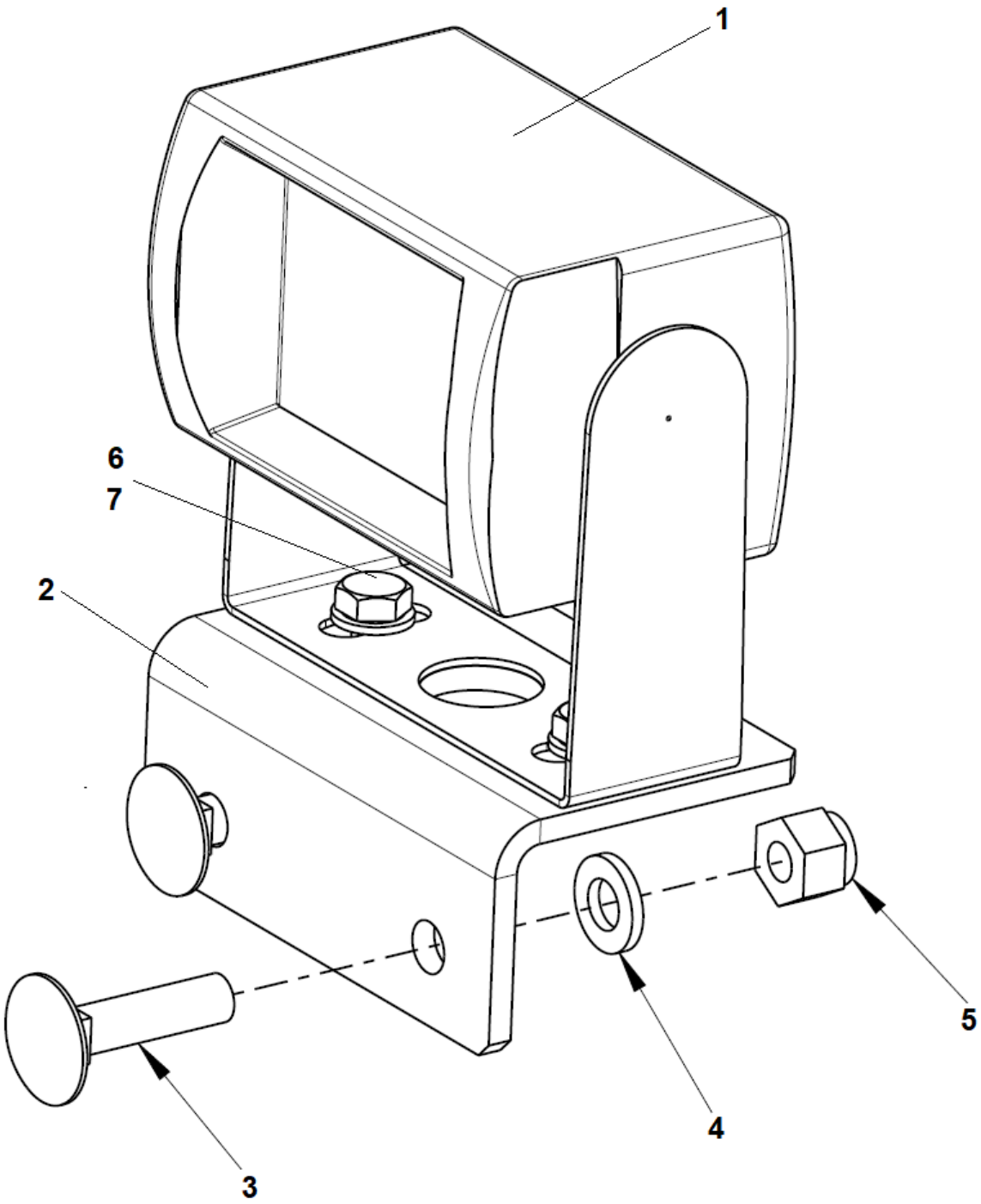

Elemento	N.º de pieza	Nombre	Cant.	L
1	4812319700	Rear view Camera	1	
2	4812319646	Bracket	1	
3	4700903923	Cup square neck bolt	2	
4	4700904228	Arandela 6,4x12x1,5	2	
5	4700586002	Lock nut M	2	
6	4700904281	Steel plain washer	2	
7	4700500041	Hex. screw	2	

Scraper (simple) Scraper module

Elemento	N.º de pieza	Nombre	Cant.	L
1	4700170292	Bracket	1	
1	4812316455	Scraper bracket (grey)	1	
2	4700170294	Blade	1	
3	4700170293	Sheet metal part	1	
3	4812316456	Scraper bracket (grey)	1	
4	4700904231	Steel plain washer	4	
5	4700500111	Screw, M12x055, 8.8	2	
6	4700586019	Lock nut M12	2	

Seat belt Seat belt module

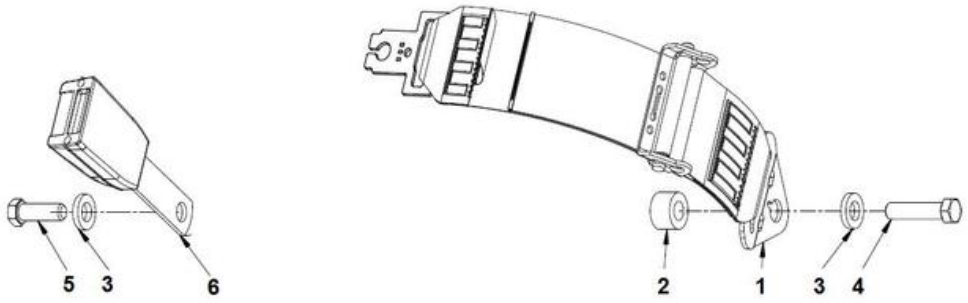

Elemento	N.º de pieza	Nombre	Cant.	L
1	4812117923	Seat belt	1	
2	4700791572	Spacer washer	1	
3	4700904703	Plain washer 13x24x4 mm	4	
4	4700792527	Screw	1	
5	4700928347	Hexagon screw	2	
6	4812117924	Buckle	1	

Seat belt Seat belt 3"

Elemento	N.º de pieza	Nombre	Cant.	L
1	4812118816	Seat belt 3"	1	
2	4700791572	Spacer washer	1	
3	4700904703	Plain washer 13x24x4 mm	4	
4	4700792527	Screw	1	
5	4700928347	Hexagon screw	2	
6	4812117924	Buckle	1	

Seat comfort Seat, fabric suspensioned (option)

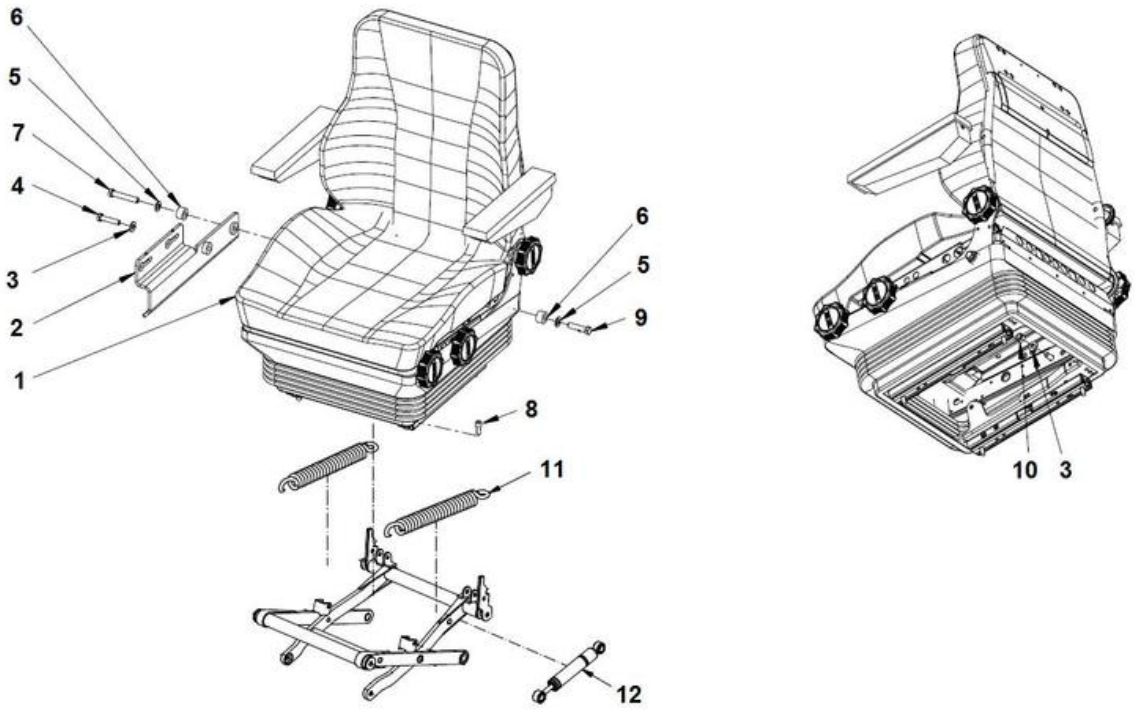

Elemento	N.º de pieza	Nombre	Cant.	L
1	4700390013	Seat	1	A
1	4700937892	Seat switch	1	
1	4700937620	Arm rest, right	1	
1	4700937892	Seat switch	1	
1	4700937620	Arm rest, right	1	
1	4700937621	Arm rest, left	1	
1	4700937621	Arm rest, left	1	
2	4700390169	Bracket	1	
3	4700904230	Plain washer M10 10.5X22X2.0	2	
4	4700500161	Screw M10x45	1	
5	4700904638	Steel plain washer	2	
6	4700791572	Spacer washer	2	
7	4700792501	Screw	1	
8	4700508092	Perno	4	
9	4700792527	Screw	1	
10	4700586018	Hex bolt M06X020H 8.8 A2K	1	
11	4812325014	Spring	2	
12	4700938165	Gas spring	1	

Comments for Page: Seat, fabric suspensioned (option)

(L)OCAL REMARKS

A | en_US | Without seat belt

(L)OCAL REMARKS

A | en_US | Without seat belt

Seat STD Seat, galon suspensioned

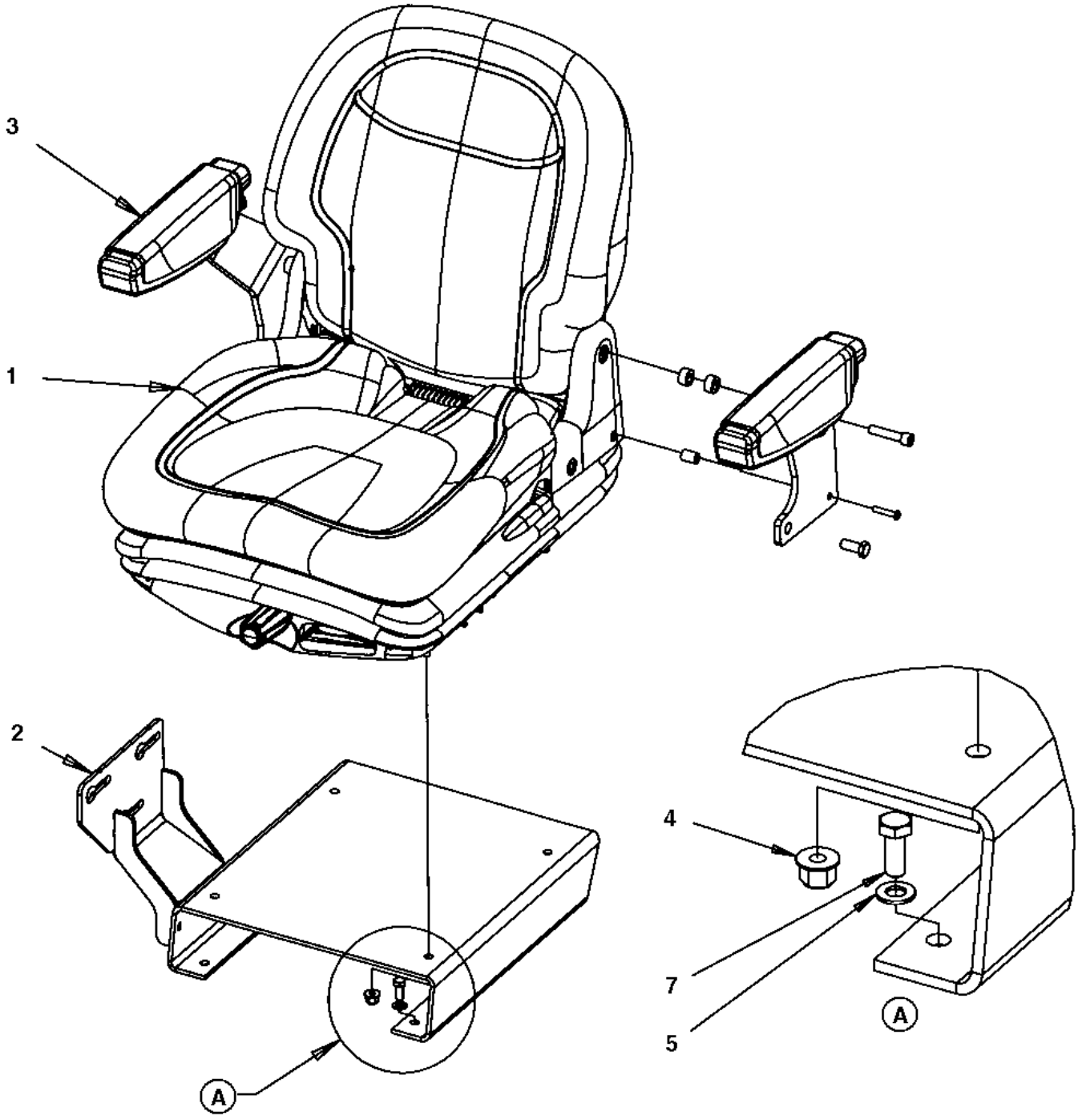

Elemento	N.º de pieza	Nombre	Cant.	L
1	4700377518	Drivers seat, cpl	1	
1	4700945622	Seat switch	1	
1	4700945661	Adjuster kit, slide	1	A
2	4700390561	Seat frame	1	
3	4700390963	Arm rest	1	
4	4700902286	Hexagon lock nut with flange M8	4	
5	4700904229	Steel plain washer 8.4X16X1.5	4	
7	4700500053	Perno	4	

Comments for Page: Seat, galon suspensioned

(L)OCAL REMARKS

A | en_US | Left & right sliding rail

SMV-sign SMV-sign

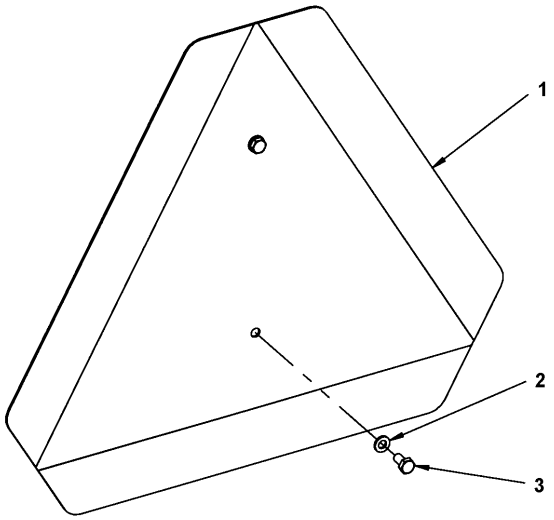

Elemento	N.º de pieza	Nombre	Cant.	L
1	4700476019	SMV-sign	1	
2	4700904228	Arandela 6,4x12x1,5	2	
3	4700500012	Hexagon head screw M	2	

Referenced Pages

4812110250 Bracket module 435

Esta página se ha dejado en blanco de forma intencionada

Sprinkler pump back up Sprinkler pump back-up

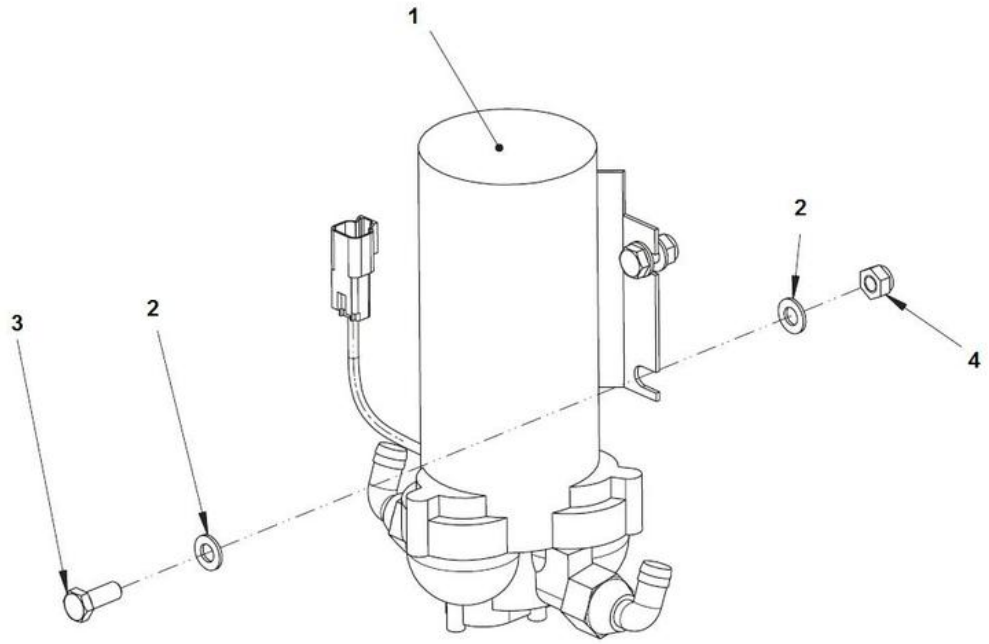

Elemento	N.º de pieza	Nombre	Cant.	L
1	4812110394	Sprinkler pump	1	
2	4700904229	Steel plain washer 8.4X16X1.5	8	
3	4700500053	Perno	4	
4	4700791182	Nut, M8 -8 DIN985	4	

Steering valve Steering valve

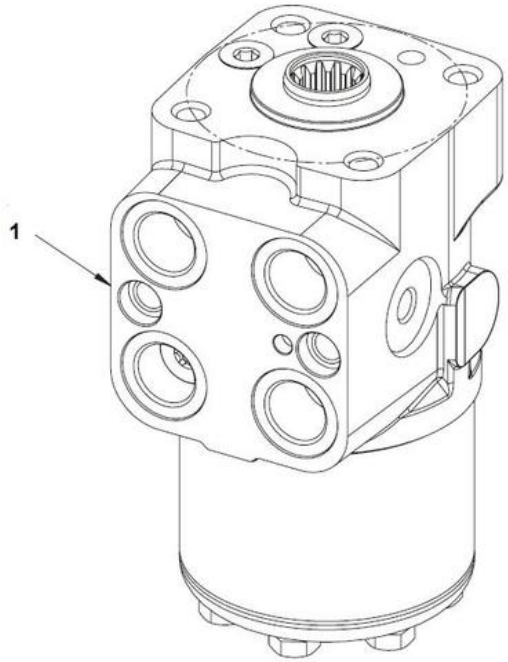

Elemento	N.º de pieza	Nombre	Cant.	L
1	4700396328	Steering valve	1	
2	4700935429	Seal kit	1	

Vandal cover Control panel cover

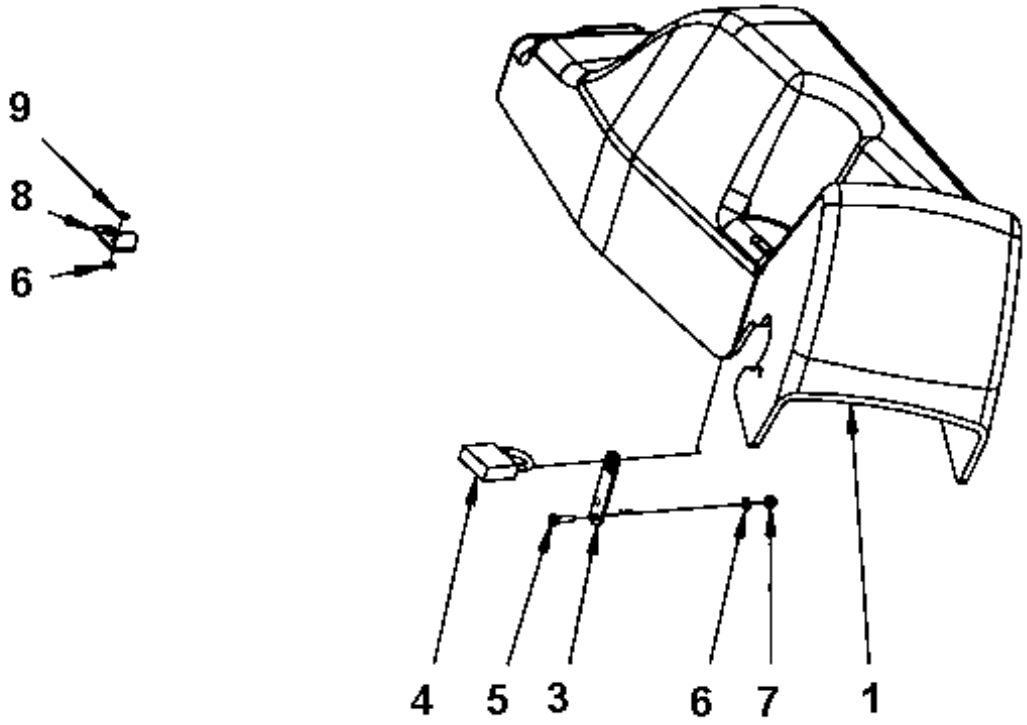

Elemento	N.º de pieza	Nombre	Cant.	L
1	4700395947	Instrument panel cover	1	
3	4700387545	Latch	1	
4	4700358881	LOCK	1	
5	4700904653	Screw M5x16 A2-70	2	
6	4700904281	Steel plain washer	4	
7	4700586001	Lock nut M	2	
8	4700396670	Bracket	1	
9	4700904619	Blind rivet	2	

Working lights LED Working lights LED

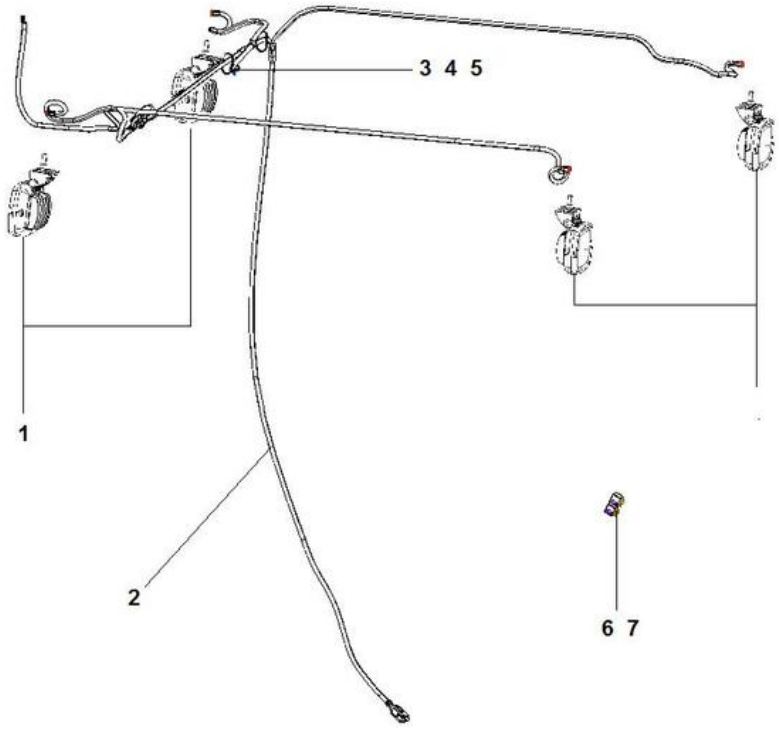

Elemento	N.º de pieza	Nombre	Cant.	L
1	4812315449	Work lamp	4	
2	4812126777	Working light, LED 15W	4	
3	4812119163	Wiring harness	1	
4	4700313102	Cable ties	2	
5	4700570005	Hexagon nut M	2	
6	4700904229	Steel plain washer 8.4X16X1.5	1	
7	4700792422	Relay, 24V 20A	2	
8	4700901224	Fuse, 3A Violet	2	

Dynapac do Brasil Industria e Comercio de Maquinas Ltda
Av. Georg Schaeffler 430 Sorocaba, Brasil

www.dynapac.com