RUTHZIL TRATOR COMERCIAL DE PEÇAS LTDA 11 97083-6812 ROLANDO CITRANGULO

DYNAPAC
CP221

SPARE PARTS CATALOGUE

SCP221-2EN5

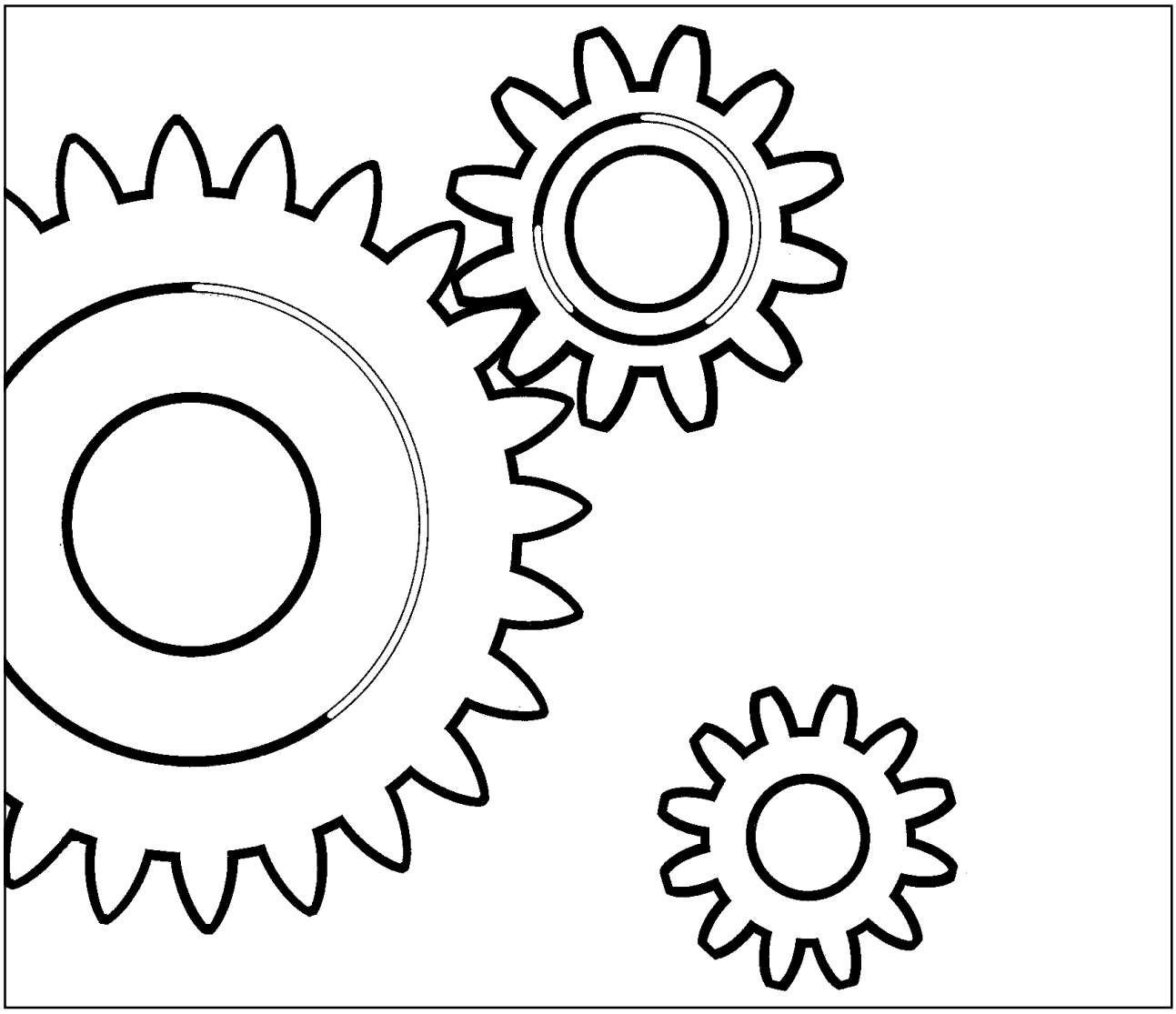

DYNAPAC

Box 504, SE-371 23 Karlskrona, Sweden
Phone: +46 455 30 60 00, Fax: +46 455 30 60 10
www.dynapac.com

DYNAPAC

Pneumatic Tire Roller
CP221

Spare Parts Catalogue
SCP221-2EN5

Valid from roller serial number:

22620278* - *22620599

Diesel engines:

CUMMINS 4BT 3.9C
CUMMINS 4BT 3.9C Elite

Published catalogue issues valid for these rollers:

Catalogue	*Issue date*	*Valid for serial numbers*
SCP221-2EN1	*1999-06*	*Replaced by SCP221-2EN2*
SCP221-2EN2	*2001-03*	*Replaced by SCP221-2EN3*
SCP221-2EN3	*2002-07*	*Replaced by SCP221-2EN4*
SCP221-2EN4	*2003-05*	*Replaced by SCP221-2EN5*
SCP221-2EN5	*2004-03*	*See above*



We reserve the right to change specifications without notice.
Printed in Sweden.

DYNAPAC

RESERVDELSBESTÄLLNING

Följande uppgifter ska lämnas vid beställning av reservdelar för att undvika leveransfel:

1. Maskintyp.
2. Vältens serienummer.
3. Antal av önskad reservdel.
4. Reserdelens artikelnummer.
5. Reservdelens benämning.
6. Måttuppgifter vid beställning av metervara.

ORDERING SPARE PARTS

To avoid errors in delivery, please give the following information when ordering spare parts:

1. Type of machine.
2. Roller serial number.
3. Quantity required.
4. Part number.
5. Parts denomination.
6. Dimensions when ordering per length.

ERSATZTEILBESTELLUNG

Zur Vermeidung von Fehllieferungen sind bei der Bestellung von Ersatzteilen folgende Angaben zu machen:

1. Maschinentyp.
2. Herstellungsnummer.
3. Bestellmenge. (Quantity)
4. Ersatzteilnummer. (Part Nº)
5. Ersatzteilbenennung. (Denomination)
6. Massangaben bei Bestellung von Meterware.

ORDINI DI RICAMBI

Per evitare errori nelle consegne di ricambi, Vi preghiamo di comunicarci le seguenti informazioni al momento dell 'ordinazione:

1. Tipo di macchina.
2. Numero di serie della macchina.
3. Quantità dei pezzi desiderati. (Quantity)
4. Numero di codice del pezzo. (Part Nº)
5. Descrizione del pezzo di ricambio. (Denomination)
6. Misura, in caso di ordine per metro.

PEDIDO DE RECAMBIOS

Para evitar errores en las entregas, deberán indicarse los siguientes datos al hacer un pedido de recambios:

1. Tipo de máquina.
2. Número de serie.
3. Cantidad de piezas deseadas. (Quantity)
4. Número de artículo de la pieza de recambio. (Part Nº)
5. Denominación de la pieza. (Denomination)
6. Indíquese la medida al solicitar un artículo que se expide por metros.

COMMANDE DE PIECES DE RECHANGE

Les indications suivantes doivent être fournies lors de la commande de piéces de rechange, afin d'éviter toute erreur de livraison:

1. Type de machine.
2. Numéro de série.
3. Quantité désirée de pièce de rechange. (Quantity)
4. Numéro de la piéce de rechange. (Part Nº)
5. Dénomination de la piéce de rechange. (Denomination)
6. Longueur en cas de commande au mètre.

YOUR AGENT/DEALER:

DYNAPAC

Text pages

The text pages is structured as the picture on the right.

1. This is the remarks for specific items and the descriptions of the remarks is at the bottom of the parts list.
2. Parts indicated by a dot and moved to the right are included when buying the assembled unit above.
3. Spare parts and service code for a specific part, mainly for internal use at Dynapac. "A" = Service part, "B" = Fast moving part, "C" = Suggested exchanged part and "D" = Regular spare part.

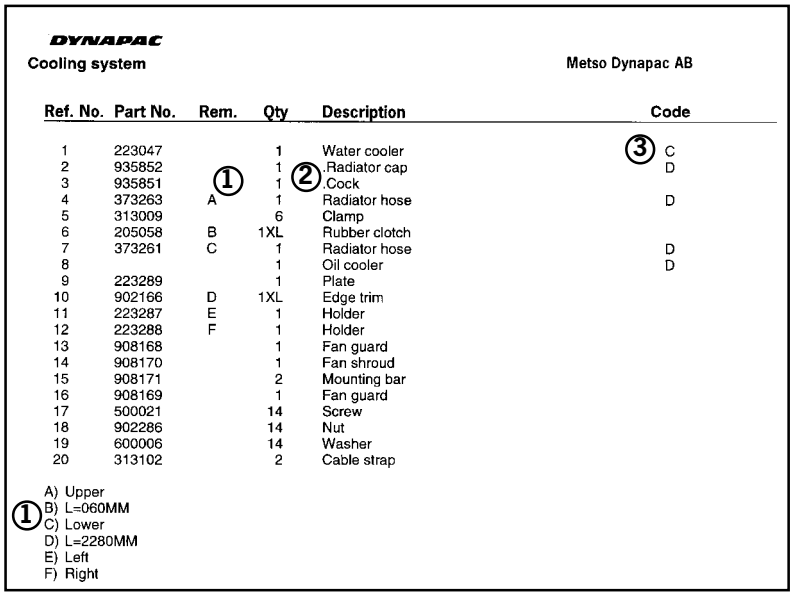

DYNAPAC

Cooling system — Metso Dynapac AB

Ref. No.	Part No.	Rem.	Qty	Description	Code
1	223047		1	Water cooler	③ C
2	935852		1	Radiator cap	D
3	935851	①	1	② Cock	
4	373263	A	1	Radiator hose	D
5	313009		6	Clamp	
6	205058	B	1XL	Rubber clotch	
7	373261	C	1	Radiator hose	D
8			1	Oil cooler	D
9	223289		1	Plate	
10	902166	D	1XL	Edge trim	
11	223287	E	1	Holder	
12	223288	F	1	Holder	
13	908168		1	Fan guard	
14	908170		1	Fan shroud	
15	908171		2	Mounting bar	
16	908169		1	Fan guard	
17	500021		14	Screw	
18	902286		14	Nut	
19	600006		14	Washer	
20	313102		2	Cable strap	

① A) Upper
B) L=060MM
C) Lower
D) L=2280MM
E) Left
F) Right

Changes

PARTS INFO	SERVICE INFO	GROUP	PAGE	NOTES

Notes

Notes

DYNAPAC

PÄRMETIKETT

För att undvika fel vid reservdelsbeställning finns här nedan två etiketter som passar i fickorna på pärmarnas ryggar. På dessa kan man se från vilket vältnummer av aktuell maskin reservdelskatalogen gäller. Gör så här:

1. Tag denna sida ur pärmen.
2. Klipp ut etiketten till **VÄNSTER** (1) och sätt in den i fickan på **DENNA** pärmens rygg.
3. Finns det en etikett till **HÖGER** (2), kan denna användas på pärmen för **FÖREGÅENDE** utgåva av denna katalog.
4. Kasta detta papper.

BINDER LABEL

To avoid errors when ordering spare parts use the labels below to identify the catalogues on the back of the binder. The label contain the serial number range for which the catalogue is valid. Do like this:

1. Remove this page from the binder.
2. Cut out the **LEFT** label (1) and put it on **THIS** binders back.
3. If there is a label to the **RIGHT** (2), it can be used on the binder for **PRECEDING** issue of this catalogue.
4. Throw away this paper.

KATALOG-BESCHRIFTUNG

Zur Vermeidung von Fehlen bei der Ersatzteilbestellung benutzen Sie bitte die unteren Beschriftungen, um die Kataloge auf der Rückseite zu kennzeichen. Auf der Beschriftung ist angegaben, für welche Maschinennummern der jeweilige Katalog gültig ist. Ablauf:

1. Nehmen Sie dieses Blatt aus dem Katalog.
2. Schneiden Sie die **LINKE** Beschriftung (1) aus. Schieben Sie die Beschriftung in die tasche auf **DEM** Katalogrücke.
3. Sollte die Beschriftung unten **RECHTS** (2) mitgeliefert werden, kennzeichen Sie damit bitte die **ÄLTERE** Ausführung dieses Kataloges.
4. Den Rest dieses Blattes bitte vernichten.

ETICHETTA POSTA SUL RACCOGLITORE

Per evitare errori quando ordinate pezzi di ricambio, usate le etichette in calce che servono ad identificare i cataloghi sul retro del raccoglitore. L'etichetta indica il numero di matricola delle maccine prese in considerazione nel catalogo.

1. Rimuovete questa pagina dal raccoglitore.
2. Ritagliate l'etichetta posta a **SINISTRA** (1) e ponetela sul retro **DEL** raccoglitore.
3. Se trovate anche un'etichetta sulla **DESTRA** (2), ritagliatela e ponetela sul raccoglitore relativo alla **PRECEDENTE** edizione del catalogo.
4. Distruggete questo foglio.

ETIQUETA PARA LA CARPETA

Para evitar errores al pedir repuestos utilicen las etiquetas abajo descritas para identificar los catálogos en la parte trasera de la carpeta. En la etiqueta se ven los números de referencia de la serie para la cual es válido el catálogo. Instrucciones:

1. Quitar esta página de la carpeta.
2. Corta la etiqueta **IZQUIERDA** (1) y ponerla est **ESTA** carpeta en la parte trasera.
3. Si hay una etiqueta en la parte **DERECHA** (2) se puede utilizar en la carpeta para el catálogo que **PRECEDE** a esta.
4. Tirar esta hoja.

ETIQUETAGE DU CATALOGUE

Afin d'éviter des erreurs lors de commandes de pièces de rechange, nous vous conseillons d'apposer les marquages ci-dessous à l'arrière du classeur, pour identifier les catalogues. Ce marquage indique les numéros de série pour lesquels le catalogue est adapté. Il convient de procéder de la façon suivante:

1. Retirez cette page du classeur.
2. Découpez l'étiquette de **GAUCHE** (1), et apposez-la à l'arrière de **CE** catalogue.
3. Si il y a une étiquette à **DROITE** (2), vous pourrez l'apposer sur le classeur de l'edition **PRECEDENTE** du catalogue.
4. Détruire cetta feuille.

1.



CP221

Catalogue **SCP221-2EN5**
Valid **from** serial number:
22620278* - *22620599

CP221 SN 22620278 - 22620599 2

Frame 4

Handrail and cover plate 6
Frame and hood 8
Rear cover 10
Front scrapers 12
Rear scrapers 14
Front scrapers and mat Option 16
Rear scrapers and mat Option 18
Sprinkler system 20
Cover assy 24

Suspension 26

Steering link 28
Front suspension 30
Rear suspension 32
259219 Brake 34
195176 Chain protector 36
Wheel 38
Wheel with Bridgestone tyre 40
Wheel with Michelin tyre 42
Wheel with Firestone tyre 44
Spare wheel Option 46
Pneumatic circuit diagram Option 48
Air on the run Option 50
Diagram brake circuit 54
191533 Brake valve, Varga 56
Brake circuit up to SN 22620359 58
Brake circuit from SN 22620360 64
Compressor assembly 68
380253 Compressor Knorr-Bremse LP4850 Up to 22620318 70
380475 Compressor Knorr-Bremse LP4850 From 22620319 72
Parking brake circuit From 22620430 74
384571 Brake chamber 76
Parking brake From 22620430 78
384572 Caliper disc brake 80
Master cylinder From 22620430 82

Engine 84

Engine Cummins 86
Cooling system 88
Air cleaner 90
Fuel system 92
Muffler 94

Transmission 96

Transmission Up to SN 22620318 98
Converter housing & case 100
Turbine shaft, stator support 102
Drive plate 104
Torque converter 106
Auxiliary pump drive 108
Charging pump drive 110
Reverse & 2nd shaft 112
Low speed shaft 114

Forward shaft 116
Reverse idler 118
Output & 3rd clutch 120
Chrging pump & oil filter 122
Control valve 124
240647 Control valve assembly 126
Disc brake 128
937693 Brake caliper 130
Transmission From SN 22620319 132
Converter housing 134
Case and rear cover 136
Turbine shaft 138
Drive plate 140
Torque converter 142
Gear 144
Auxiliary pump drive 146
Pump drive 148
Forward shaft 150
Reverse and 2nd shaft 152
Reverse idler 154
Low speed shaft 156
Output and 3rd shaft 158
Charging pump and filter 160
Control valve 124
240647 Control valve assembly 126
Disc brake Up to 22620429 166
384385 Caliper disc brake 168
Differential, Rockwell 170
Cardan shaft assembly up to SN 22620342 174
Cardan shaft assembly from SN 22620343 176
Cardan shaft, Albarus 178

Hydraulic system 180

Steering system up to SN 22620322 182
375455 Steering valve 184
Steering cylinder 186
376059 Steering cylinder 188
Steering system from SN 22620323 190
375455 Steering valve 184
Steering cylinder 186
376059 Steering cylinder 188

Electrical equipment 198

Electrical system 200
Horn assy 204
Lights 206
Instrument board Up to SN 22620429 208
Instrument board From SN 22620430 210
Electrical equipment 212

Drivers platform 214

Throttle controls 216
Forward and reverse control, brake Up to 22620318 218
Forward and reverse control From 22620319 222
Parking brake From 22620319 Up to 22620429 224
384385 Caliper disc brake 168
Pedal and brake valve 228
195779 Brake valve 230
Instruction book holder up to SN 22620407, not 402 232

Instruction book holder from SN 22620408 + 402 ---- 234
Steering assembly ---- 236
375455 Steering valve ---- 184
Safety belt, Only with rops Option ---- 240
Seat assembly Without armrests ---- 242
Seat assembly With armrests ---- 244
Rops ---- 246
Seat cover ---- 248

Decals ---- 250

Decals up to SN 22620384 ---- 252
Decals from SN 22620385 ---- 254

Standard equipment ---- 256

Standard equipment ---- 258

Optional equipment ---- 260

Tool equipment ---- 262
Canopy with glass fibre ---- 264
Cab assembly mounting ---- 266
SMV sign ---- 268
Protecting cover ---- 270


50
60
90
91
70
30
40
80
DYNAPAC
DYNAPAC
20
10

Ref. No.	Part No.	Rem.	Qty	Description	Code
10				Frame (Page 4)	
20				Suspension (Page 26)	
30				Engine (Page 84)	
40				Transmission (Page 96)	
50				Hydraulic system (Page 180)	
60				Electrical equipment (Page 198)	
70				Drivers platform (Page 214)	
80				Decals (Page 250)	
90				Standard equipment (Page 256)	
91				Optional equipment (Page 260)	

Ref. No.	Part No.	Rem.	Qty	Description	Code
10				Handrail and cover plate (Page 6)	
20				Frame and hood (Page 8)	
30				Rear cover (Page 10)	
50				Front scrapers (Page 12)	
60				Rear scrapers (Page 14)	
70				Front scrapers and mat Option (Page 16)	
80				Rear scrapers and mat Option (Page 18)	
90				Sprinkler system (Page 20)	
100				Cover assy (Page 24)	

Handrail and cover plate

16844-1

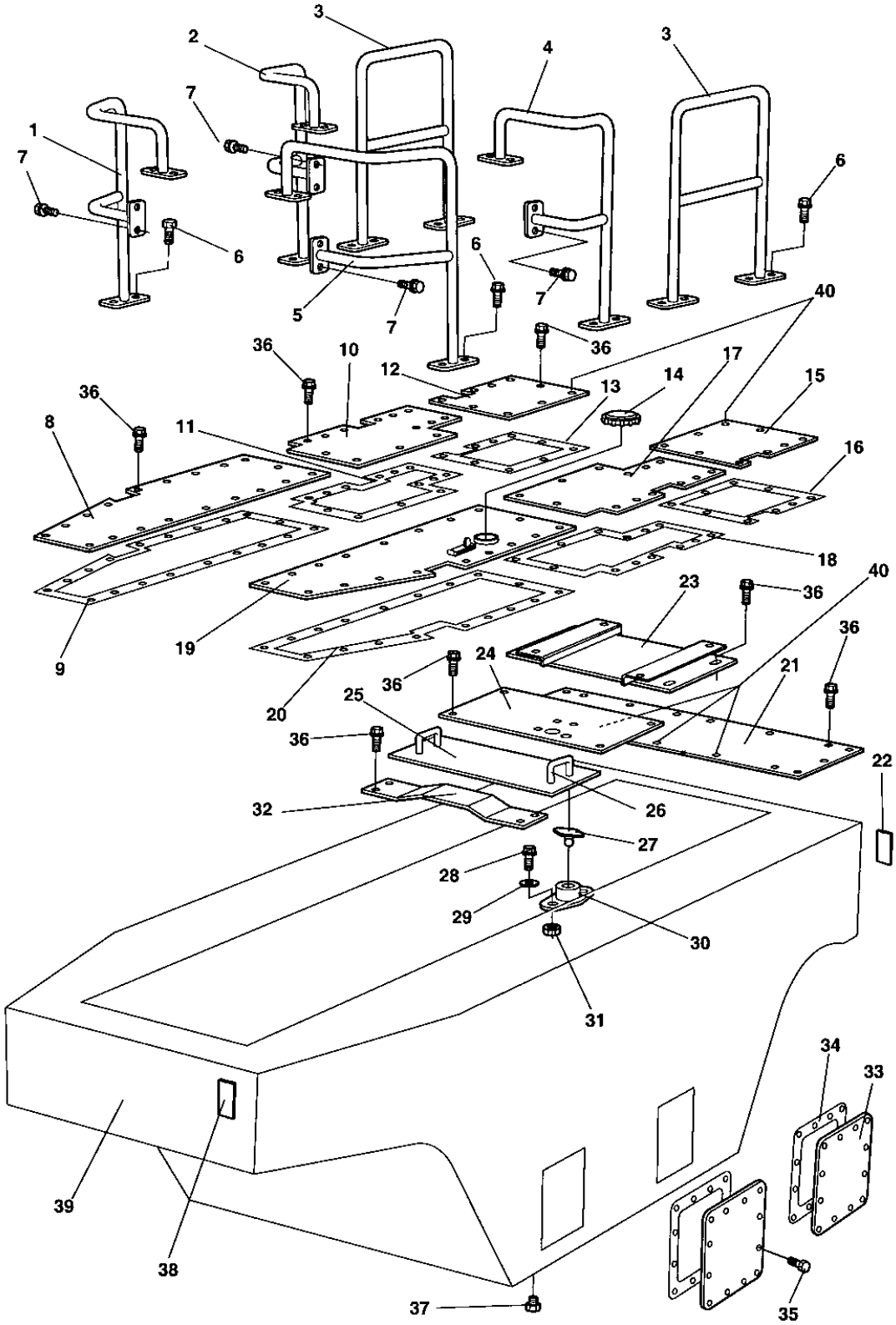

Handrail and cover plate

Ref. No.	Part No.	Rem.	Qty	Description	Code
1	375078		1	Hand rail, right	
2	375076		1	Hand rail, right	
3	375074		2	Hand rail	
4	375075		1	Hand rail, left	
5	375077		1	Hand rail, left	
6	500506		16	Screw	
7	500053		16	Screw M8-1,25x20 8,8	
8	375092		1	Cover plate	
9	375514		1	Gasket	
10	375094		1	Cover plate	
11	375519		1	Gasket	
12	375097		1	Cover plate	
13	375516		1	Gasket	
14	333228		1	Cap	
15	375096		1	Cover plate	
16	375517		1	Gasket	
17	375095		1	Cover plate	
18	375518		1	Gasket	
19	375146		1	Cover plate	
20	375515		1	Gasket	
21	375098		1	Cover plate	
22	901182		2	Reflector, red	B
23	195364		1	Floor	
24	375099		1	Cover plate	
25	375100		1	Cover plate Up to 22620318	
	382233		1	Cover plate From 22620319	
26	265753		2	.Grab handle	
27	450067		2	.Door bumper	D
28	535008		4	.Screw	
29	904281		4	.Washer 5,3x10x1	
30	450066		2	.Door bumper	D
31	570003		4	.Nut M5	
32	375101		1	Cover plate Up to 22620318	
	382222		1	Cover plate From 22620319	
33	264237		4	Cover	
34	264238		4	Gasket	D
35	500506		48	Screw	
36	927026	A	126	Screw Up to 22620423	
	500505		93	Screw M8x20 8,8 From 22620424	
37	232046		2	Plug	
38	901187		2	Reflector, white	B
39	191885		1	Frame	
40	513003		5	Screw	

A) Thread rolling screw

Frame and hood

16846-2

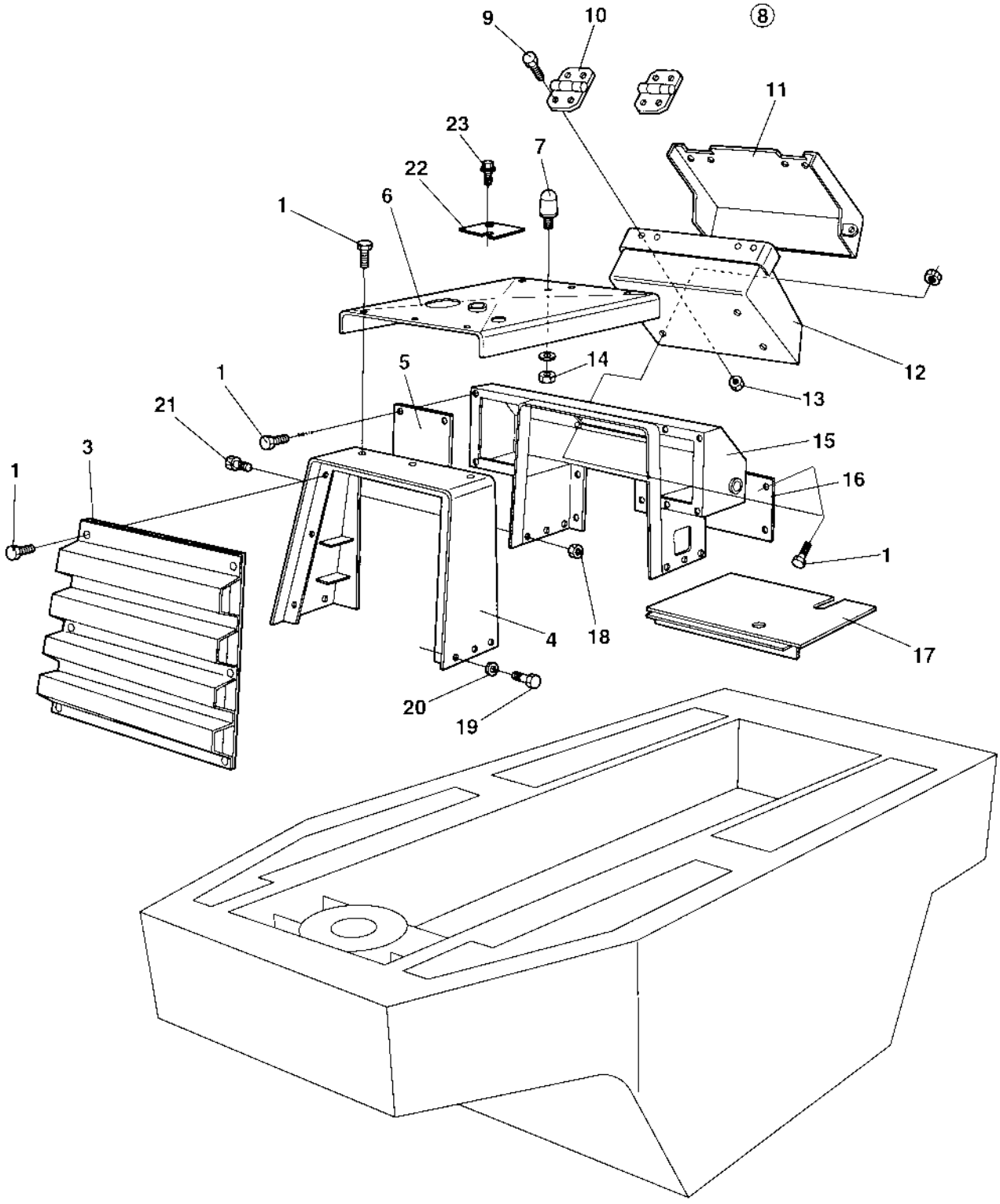

Frame and hood

Ref. No.	Part No.	Rem.	Qty	Description	Code
1	904643		34	Screw	
3	375582		1	Fan guard	
4	375148		1	Cooler frame	
5	191947		2	Cover	
6	375529		1	Hood Up to 22620322	
	382666		1	Hood From 22620323	
7	925629		2	Shock absorber	
8	192011		1	Control panel	
9	500013		8	.Screw M6-1x16 8,8	
10	249865		2	.Hinge	
11	380764		1	.Cover	
12	380765		1	.Frame	
13	586002		8	.Lock nut M6	
14	570005		2	Nut M8	
15	375149		1	Control panel welded	
16	376387		1	Cover plate Up to 22620318	
	383013		1	Protective plate Up to 22620407 not 402	
	385708		1	Protective plate From 22620408 + 402	
17	191959		1	Protector	
18	570006		1	Nut M10	
19	500030		11	Screw M10-1,5x35H 8,8	
20	904557		12	Washer 10,5x22x4	
21	500031		1	Screw M10-1,5x40 8,8	
22	373955		1	Cover From 22620323	
23	500505		2	Screw M8x20 8,8 From 22620323	

Rear cover

16205

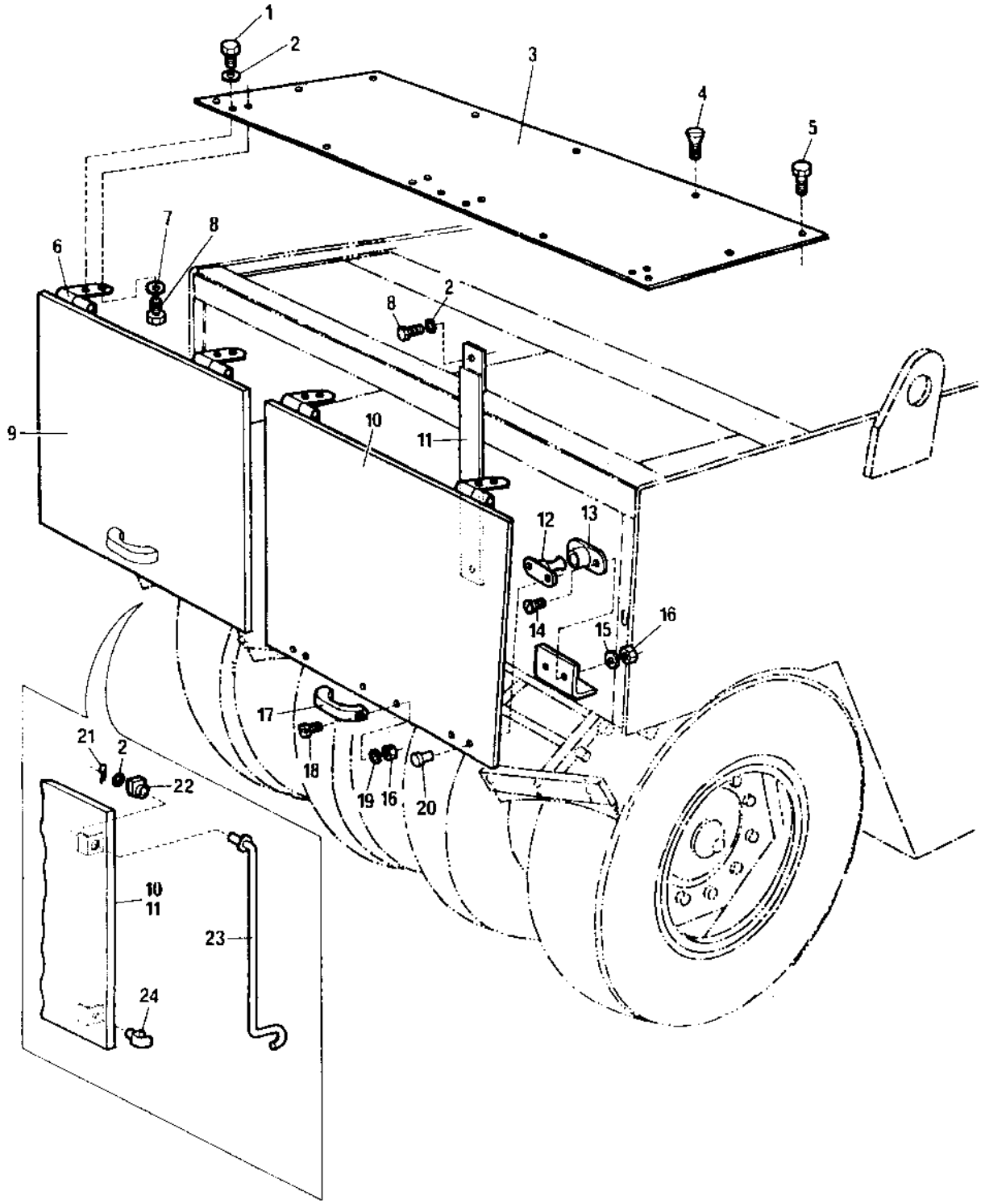

Rear cover

Ref. No.	Part No.	Rem.	Qty	Description	Code
1	500022		4	Screw M8-1,25x30 8,8	
2	904229		8	Washer 8,4x16x1,5	
3	375098		1	Cover plate	
4	535044		3	Screw	
5	928511		9	Screw	
6	191511		4	Hinge	
7	603019		4	Washer	
8	500019		6	Screw M8-1,25x16 8,8	
9	195356		1	Cover left, cpl	
10	195355		1	Cover right, cpl	
11	195359		1	Bracket	
12	450067		4	Door bumper	D
13	450066		4	Door bumper	D
14	535008		8	Screw	
15	615041		8	Washer 5,3x11	
16	570003		12	Nut M5	
17	927210		2	Grab handle	
18	533025		4	Screw M5x12	
19	904281		4	Washer 5,3x10x1	
20	624012		8	Rivet	
21	630006		2	Cotter pin	
22	192939		2	Grommet	
23	192940		1	Rod, right	
	192941		1	Rod, left	
24	192938		2	Clamp	

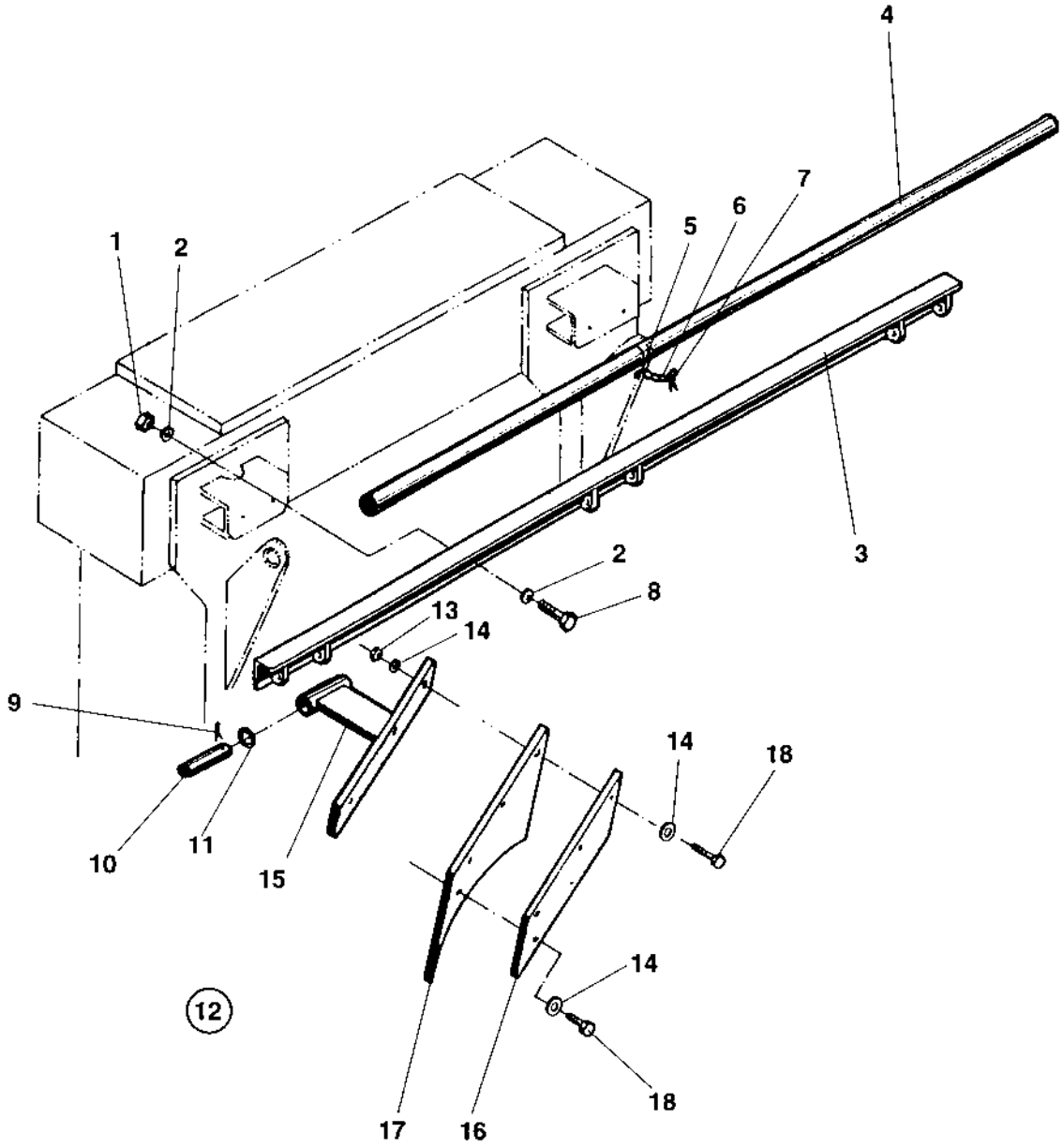
4
7
6
5
1
2
3
2
8
13
14
9
14
18
10
11
15
12
14
18
17
16

Ref. No.	Part No.	Rem.	Qty	Description	Code
1	570007		4	Lock nut M12	
2	615045		8	Conical spring washer	
3	255173		1	Scraper bracket	
4	267661		1	Shaft	
5	358254		2	Key-ring	
6	343775		2	Wire	
7	901178		2	.Hair pin	
8	500037		4	Screw M12-1,75x35 8,8	
9	630008		6	Pin	D
10	251729		3	Shaft	
11	904232		6	Washer 17x30x3	
12	380432		3	Scraper, cpl	
13	570007		6	.Lock nut M12	
14	904231		12	.Washer 13x24x2	
15	380430		1	.Bracket	
16	380428		1	.Bracket	
17	376357		1	.Scraper	B
18	500195		6	.Screw M12-1,75x50 8.8	

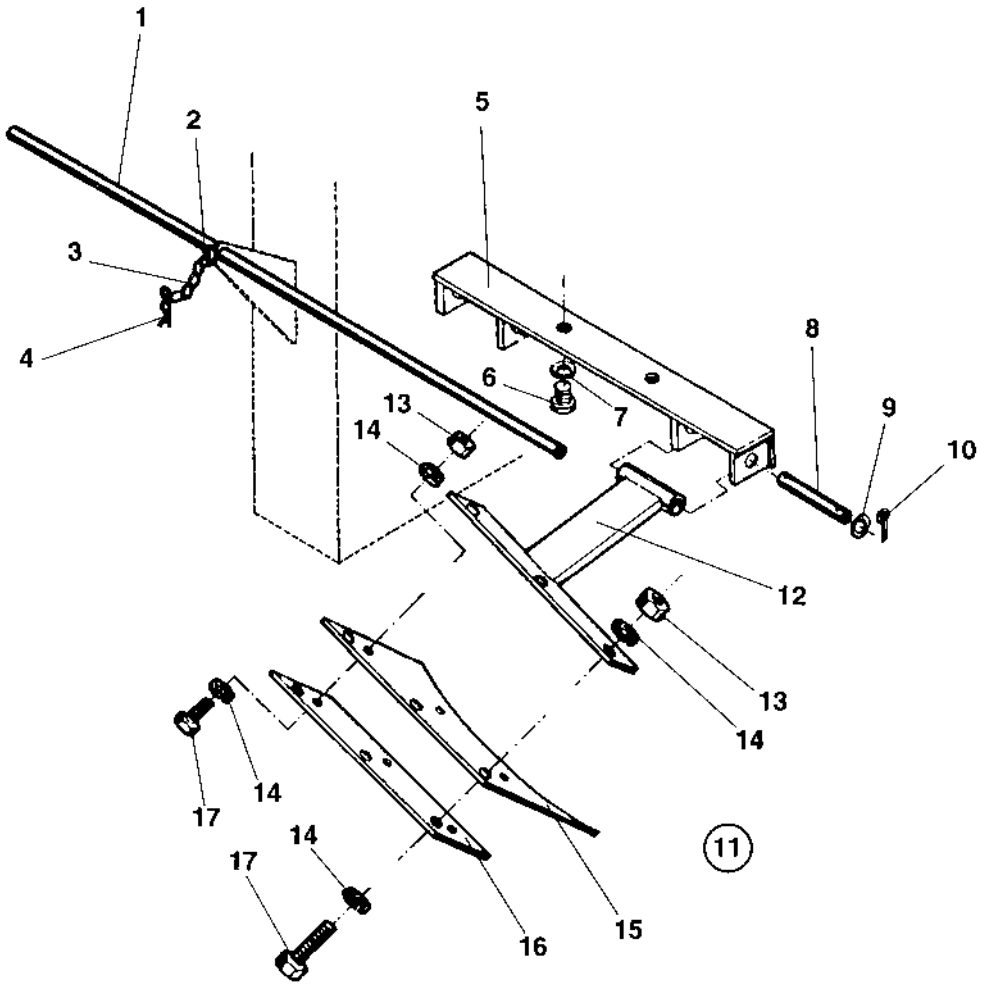
1
2
3
4
5
6
7
8
9
10
11
12
13
14
13
14
14
17
14
17
15
16

Rear scrapers

Ref. No.	Part No.	Rem.	Qty	Description	Code
1	267660		1	Shaft	
2	358254		2	Key-ring	
3	343775		2	Wire	
4	901178		2	Hair pin	
5	251722		2	Scraper bracket	
6	500035		4	Screw M12x020H	
7	615045		4	Conical spring washer	
8	251729		4	Shaft	
9	904232		8	Washer 17x30x3	
10	630008		8	Pin	D
11	380432		4	Scraper, cpl	
12	380430		1	.Bracket	
13	570007		6	.Lock nut M12	
14	904231		12	.Washer 13x24x2	
15	376357		1	.Scraper	B
16	380428		1	.Bracket	
17	500195		6	.Screw M12-1,75x50 8.8	

Front scrapers and mat Option

16273

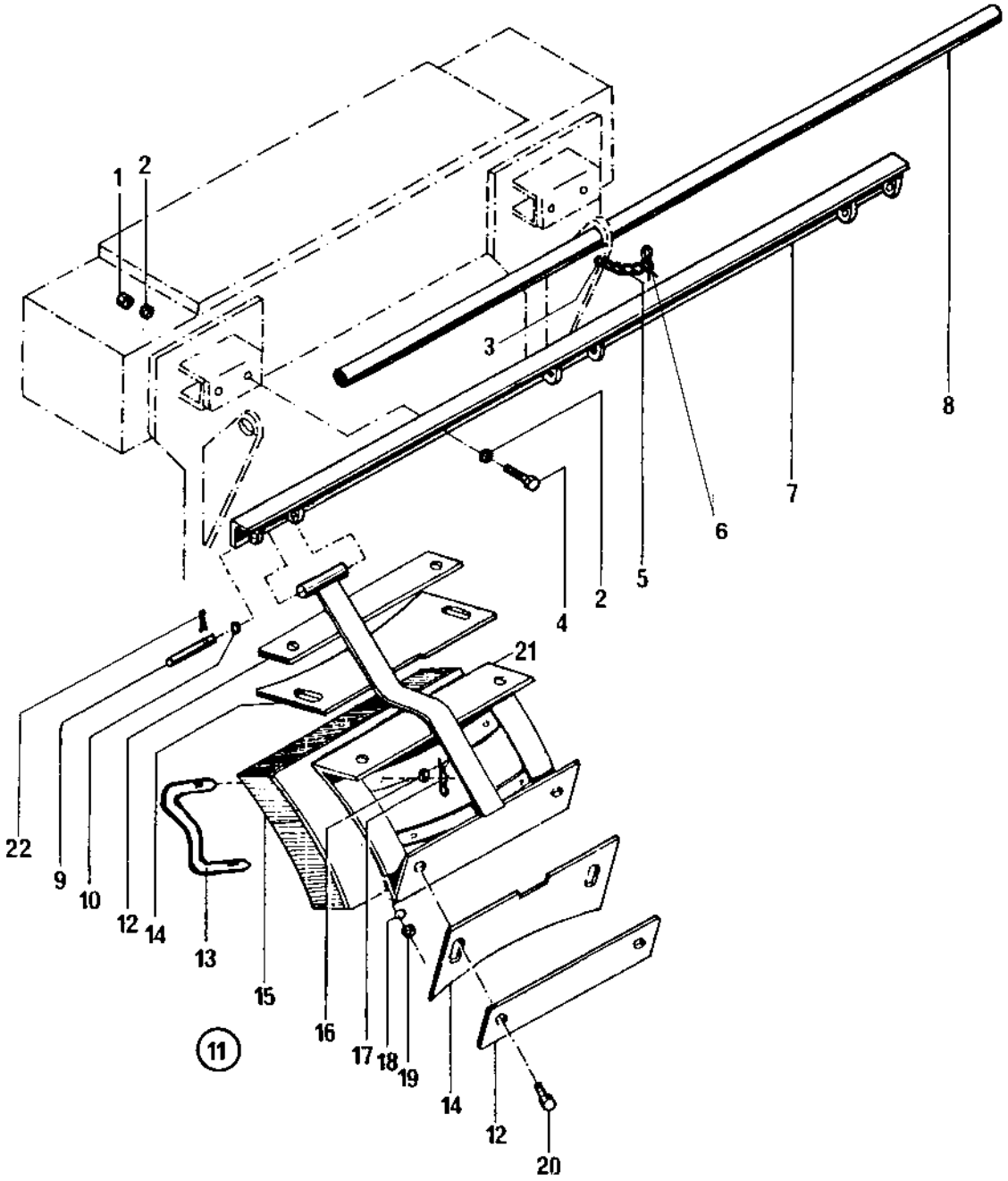

Front scrapers and mat Option

Ref. No.	Part No.	Rem.	Qty	Description	Code
1	570004		4	Nut M6	
2	615045		8	Conical spring washer	
3	358254		2	Key-ring	
4	500037		4	Screw M12-1,75x35 8,8	
5	343775		2	Wire	
6	901178		2	Hair pin	
7	255173		1	Scraper bracket	
8	267661		1	Shaft	
9	251729		3	Shaft	
10	904232		6	Washer 17x30x3	
11	263774		3	Scraper and mat, cpl	
12	263763		2	.Plate	
13	267791		2	.Mat holder	D
14	376375		2	.Scraper	B
15	263772		1	.Mat	B
16	904639		4	.Washer 6,7x14x1,5	
17	630035		4	.Split pin	D
18	904231		4	.Washer 13x24x2	
19	586019		4	.Lock nut M12	
20	500056		4	.Screw M12x45 8,8	
21	263771		1	Bracket	
22	630008		6	Pin	D

Rear scrapers and mat Option

16274

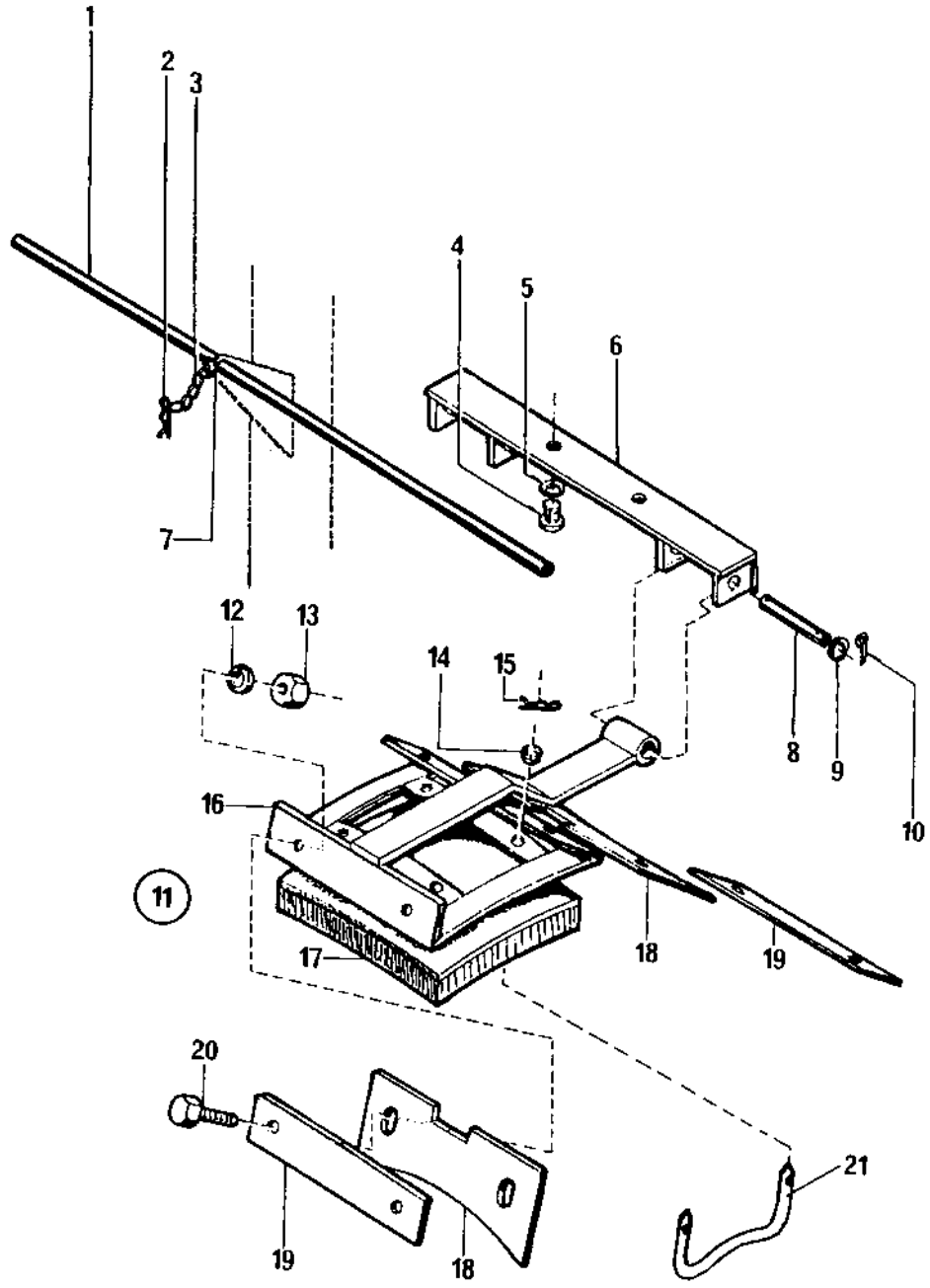

Rear scrapers and mat Option

Ref. No.	Part No.	Rem.	Qty	Description	Code
1	267660		1	Shaft	
2	901178		2	Hair pin	
3	343775		2	Wire	
4	500035		4	Screw M12x020H	
5	615045		4	Conical spring washer	
6	251722		2	Scraper bracket	
7	358254		2	Key-ring	
8	251729		4	Shaft	
9	904232		8	Washer 17x30x3	
10	630008		8	Pin	D
11	263774		4	Scraper and mat, cpl	
12	904231		4	.Washer 13x24x2	
13	586019		4	.Lock nut M12	
14	904639		4	.Washer 6,7x14x1,5	
15	630035		4	.Split pin	D
16	263771		1	.Bracket	
17	263772		1	.Mat	B
18	376375		2	.Scraper	B
19	263763		2	.Plate	
20	500056		4	.Screw M12x45 8,8	
21	267791		2	.Mat holder	D

Sprinkler system

16281-3

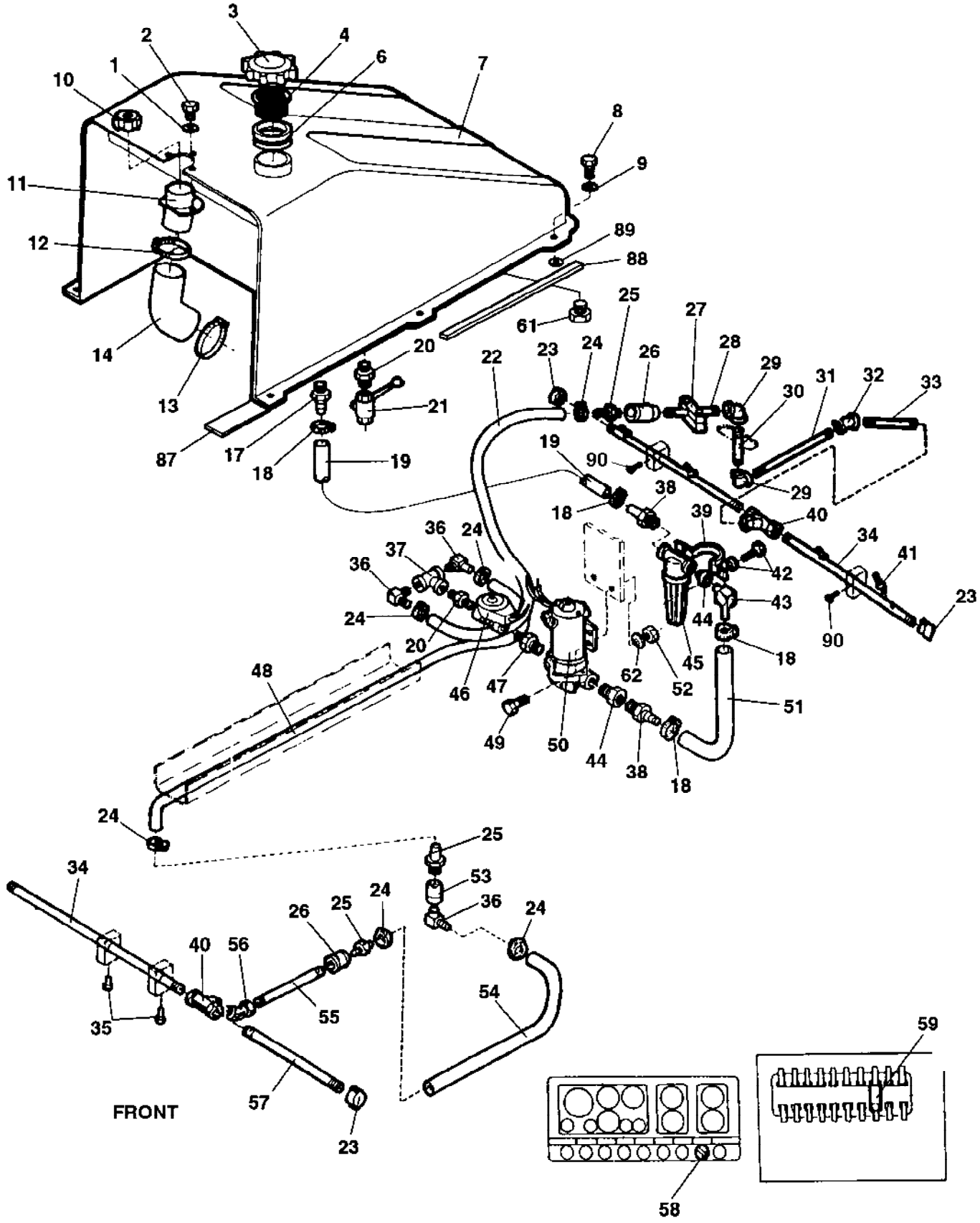

Sprinkler system

Ref. No.	Part No.	Rem.	Qty	Description	Code
1	904229		3	Washer 8,4x16x1,5	
2	500022		3	Screw M8-1,25x30 8,8	
3	333228		1	Cap	
4	358846		1	Strainer	D
6	248511		1	Spacer	
7	193103		1	Sprinkling tank	
8	904990		6	Screw M10x50	
	947684	C,D	6	Screw M10x35	
9	904230	C,E	6	Washer 10,5x22x2	
10	373304		1	Cap	D
11	375567		1	Filling pipe	
12	904631		1	Hose clamp	
13	904059		1	Hose clamp	
14	193093		1	Filling pipe	
17	813732		1	Hose connection	
18	313002		4	Hose clamp	
19	244057	A	1	Hose	
20	901299		2	Adapter	
21	333041		1	Valve	D
22	244054		1	Hose reinforced 0,65 m	
23	331092		4	Plug	
24	313002		6	Hose clamp	
25	904694		3	Hose connection	
26	331032		1	Sleeve	
27	258333		1	Clamp	
28	259225		1	Tube	
29	331015		2	Elbow 90	
30	259225		1	Tube	
31	259226		1	Tube	
32	230543		2	Elbow 45	
33	256860		1	Tube	
34	263614		3	Tube	
35	500048		2	Screw M10-1,5x20 8,8	
36	268608		3	Hose connector	
37	331006		1	Connection	
38	254075		2	Hose connection	
39	242018		1	Clamp	
40	230469		2	T-pipe	
41	813744		7	Nozzle sprinkler	B
42	541703		2	Screw M6x16	
43	241753		1	Hose connector	
44	248491		2	Reducer	
45	248513		1	Water filter	A
46	925659		1	Solenoid valve	C
47	234317		1	Nipple	
48	244054		1	Hose reinforced 0,65 m	
49	500028		2	Screw M10-1,5x25 8,8	

A) L=1900 mm
C) Old version
D) Together with washer 904230
E) Together with screw 947684

Sprinkler system

16281-3

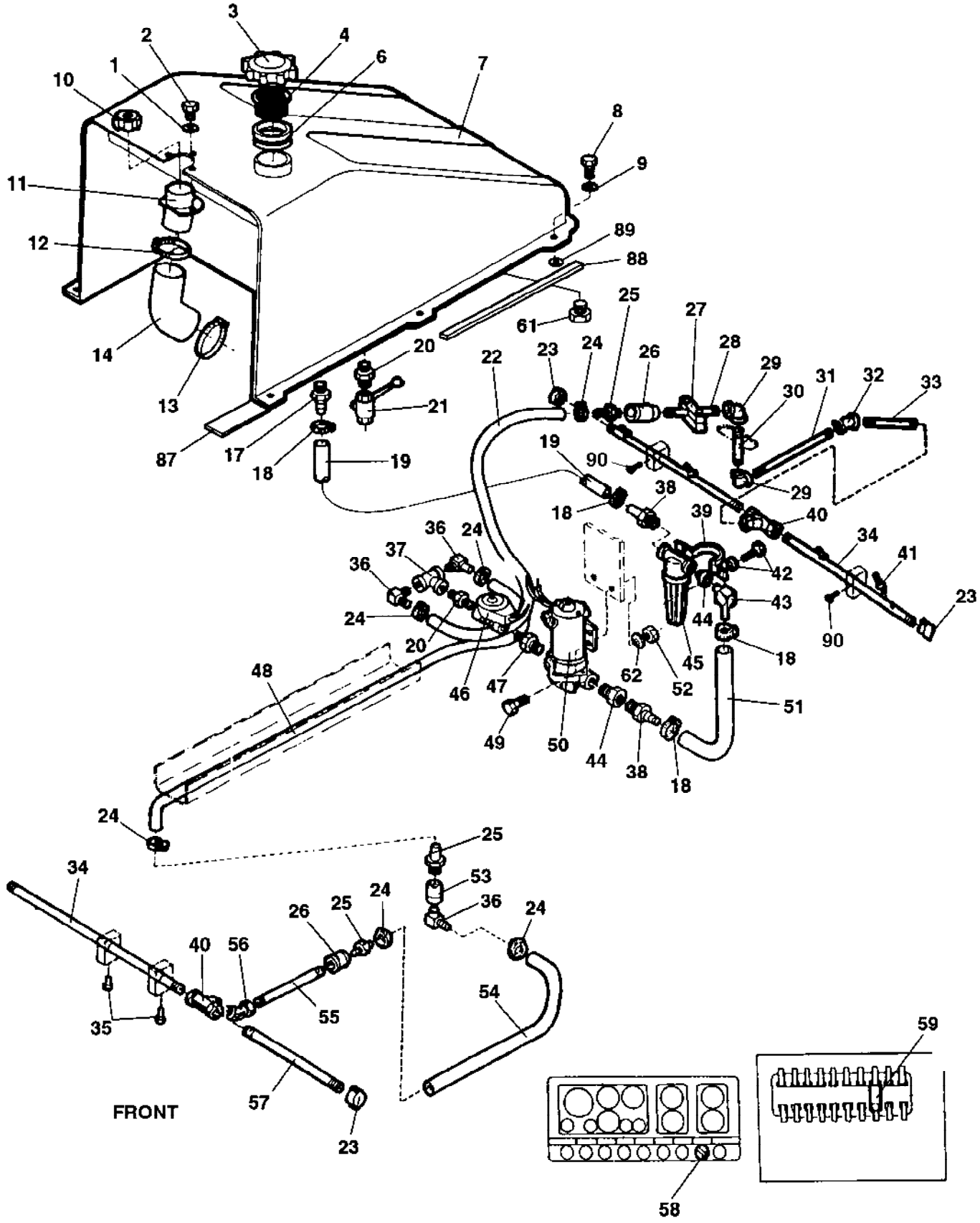

Sprinkler system

Ref. No.	Part No.	Rem.	Qty	Description	Code
50	904808	G	1	Water pump Up to 22620334	
	383697	F	1	Water pump From 22620335	
51	244057		1	Hose	
52	570006		2	Nut M10	
53	240154		1	Connector	
54	244054		1	Hose reinforced 0,65 m	
55	258340		1	Tube	
56	232166		1	Elbow 45	
57	242122		1	Tube	
58	930151		1	Switch	D
59	928722		1	Fuse	B
61	813422		2	Plug	
62	904230		2	Washer 10,5x22x2	
87	297018	J	1	Rubber strip	
88	202046	B	1	Rubber strip 25x10	
89	904567		2	Washer 10,5x28x6	
90	500079		4	Screw M6-1x50 8,8	

B) L=2400 mm
F) New version with Cannon connector, to fit the new cable harness.
G) Old version, without connector. To fit the old cable harness; install AMP connector 901765 together with 2 sleeves 903824 at the pump wires.
J) L=1450 mm

Cover assy

16271

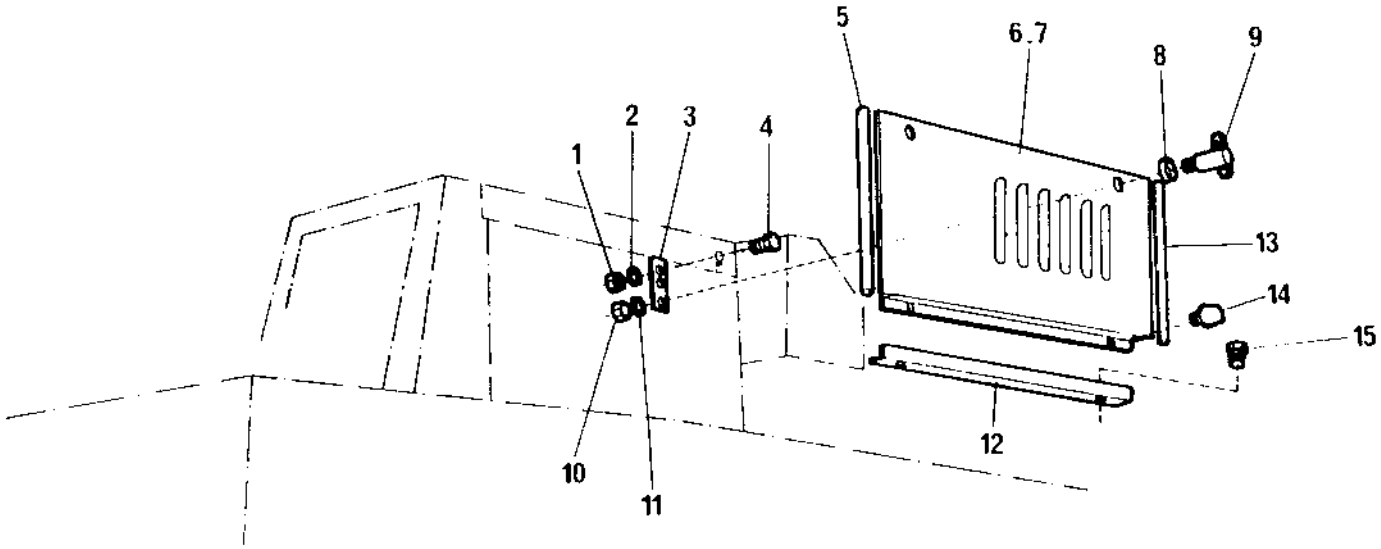

Cover assy

Ref. No.	Part No.	Rem.	Qty	Description	Code
1	586002		8	Lock nut M6	
2	904639		2	Washer 6,7x14x1,5	
3	192174		4	Support	
4	500040		8	Screw M6-1x20 8,8	
5	202028		2	Edge trim	
6	192172		1	Cover, left	
	385780	A	1	Cover, noise suppressed, left Option	
	385745		1	.Cover	
	385753		1	.Absorbent, left	
	385752		1	.Absorbent cover	
	791234		7	.Insulating washer	
7	192171		1	Cover, right	
	385781	A	1	Cover, noise suppressed, right Option	
	385744		1	.Cover	
	385754		1	.Absorbent, right	
	385752		1	.Absorbent cover	
	791234		7	.Insulating washer	
8	814259		4	Rubber grommet	D
9	192833		4	Reversing valve	C
10	586019		4	Lock nut M12	
11	904213		4	Washer 13x30x4	
12	192995		2	Bracket	
13	202028		2	Edge trim	
14	248765		4	Stop	
15	541703		6	Screw M6x16	

A) Introduced as option from SN 22620385

Ref. No.	Part No.	Rem.	Qty	Description	Code
10				Steering link (Page 28)	
20				Front suspension (Page 30)	
30				Rear suspension (Page 32)	
40	195176			Chain protector (Page 36)	
50				Wheel (Page 38)	
60				Spare wheel Option (Page 46)	
70				Pneumatic circuit diagram Option (Page 48)	
80				Air on the run Option (Page 50)	
90				Diagram brake circuit (Page 54)	
100				Brake circuit up to SN 22620359 (Page 58)	
110				Brake circuit from SN 22620360 (Page 64)	
120				Compressor assembly (Page 68)	
130				Parking brake circuit From 22620430 (Page 74)	
135				Parking brake From 22620430 (Page 78)	
140				Master cylinder From 22620430 (Page 82)	

Steering link

16230-1

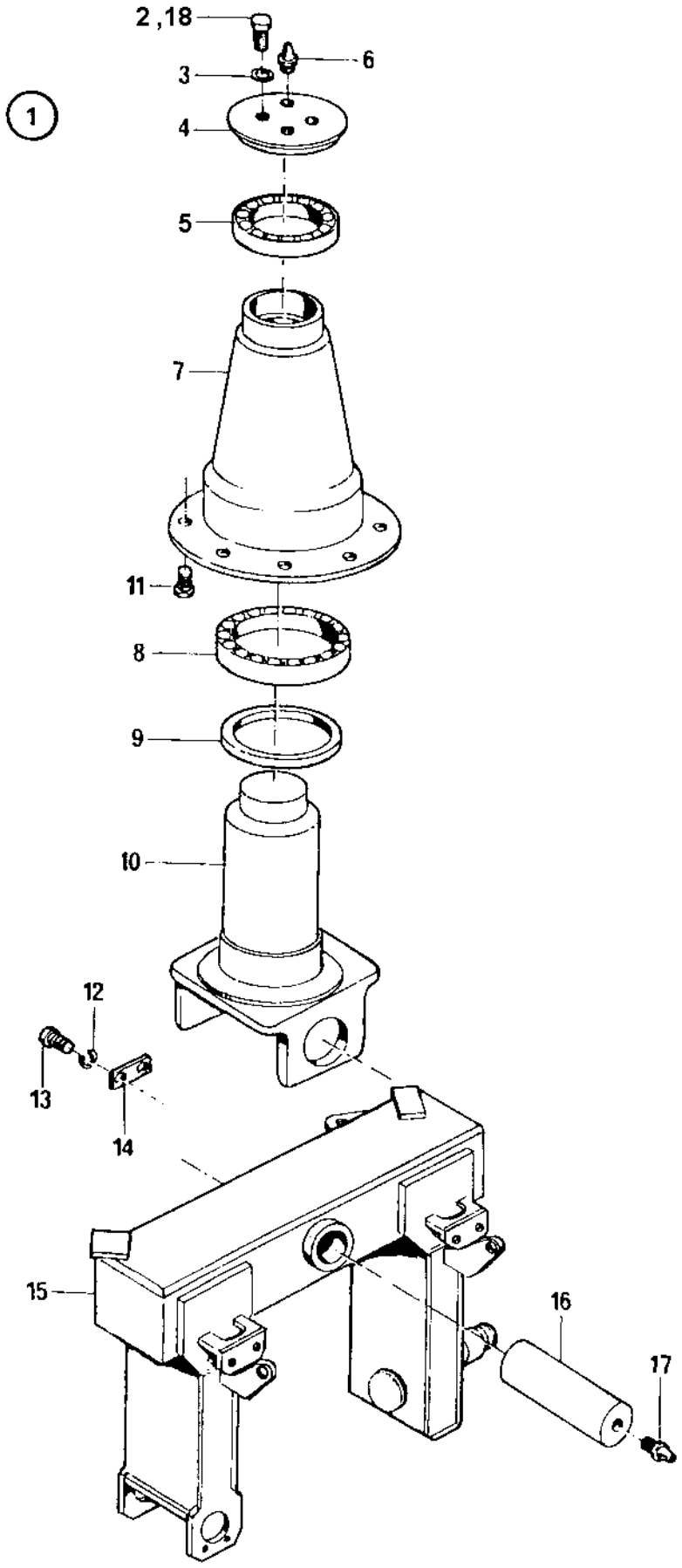

Steering link

Ref. No.	Part No.	Rem.	Qty	Description	Code
1	256422		1	Bearing housing, cpl	
2	502058		3	.Screw 1/2 UNC	
3	904231		3	.Washer 13x24x2	
4	254089		1	.Cover	
5	116031		1	.Bearing	
6	310037		1	.Grease nipple	D
7	254032		1	.Bearing housing	
8	116006		1	.Bearing	D
9	254750		1	.Ring	
10	254030		1	.Fork	
11	503093		8	Screw	
12	904231		2	Washer 13x24x2	
13	502057		2	Screw	
14	253931		1	Lock plate	
15	259361		1	Fork	
16	253929		1	Pin	
17	310037		1	Grease nipple	D
18	902541	A	1	Lock fluid Loctite 243, 50 ml	

A) 50 ml

Front suspension

16231-1

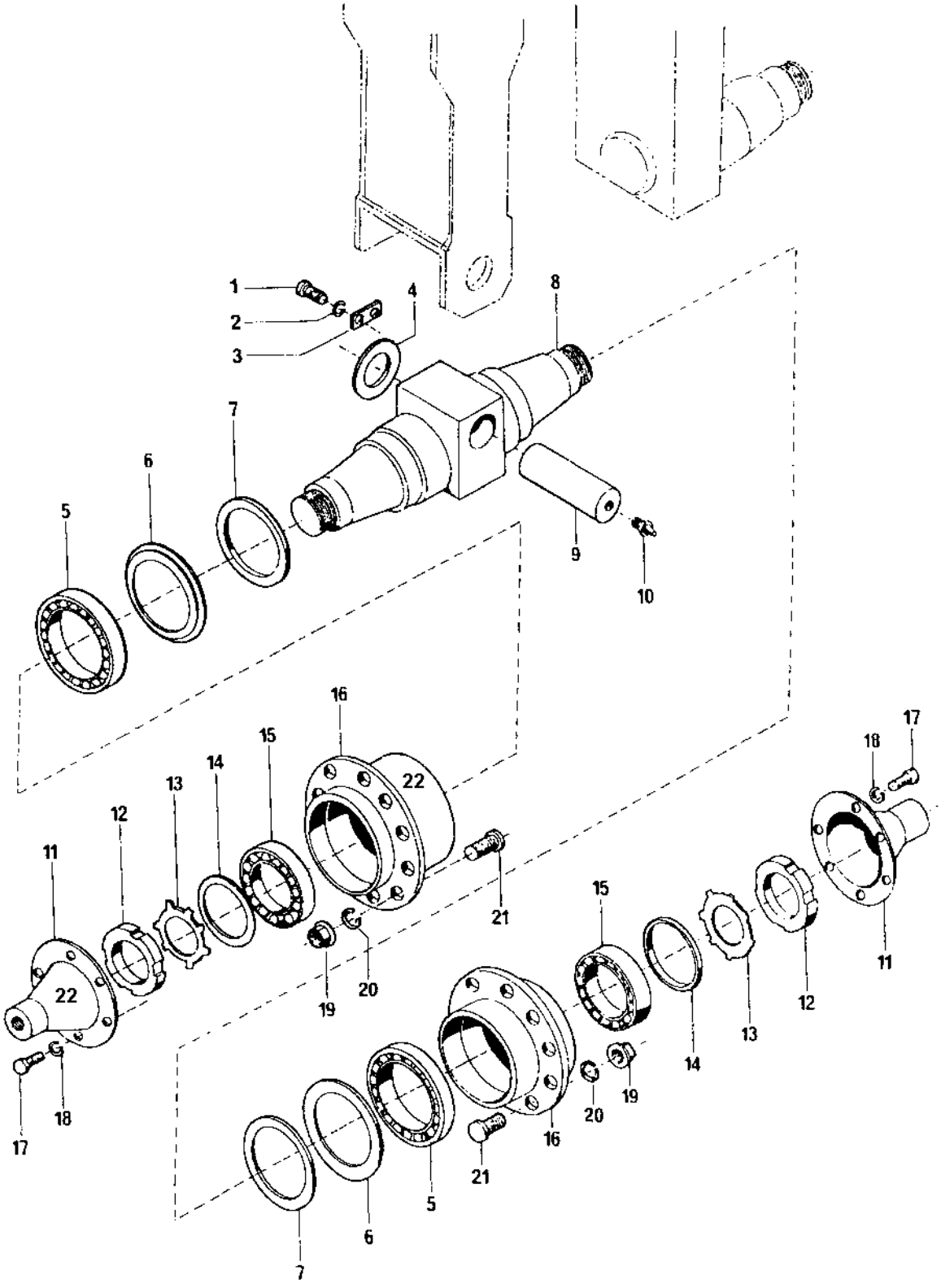

Front suspension

Ref. No.	Part No.	Rem.	Qty	Description	Code
1	500051		2	Screw M12-1,75x25 8,8	
2	904231		2	Washer 13x24x2	
3	259211		1	Snap plate	
4	259349		2	Spacer	
5	116016		3	Bearing	B
6	255658		3	Ring	
7	163108		3	Seal ring	
8	256127		1	Shaft	
9	258729		1	Pin	
10	310037		1	Grease nipple	D
11	256157		3	Bearing cover	
12	135011		3	Lock nut	
13	136011		3	Lock washer	
14	252668		3	Ring	
15	116009		3	Bearing	B
16	256159		3	Wheel hub	
17	502017		18	Screw	
18	904229		18	Washer 8,4x16x1,5	
19	754014		28	Nut	
20	902252		28	Washer	
21	754105		28	Screw	
22	490065	A		Lube grease SKF LGHQ3	

A) Quantity as required

Rear suspension

17599

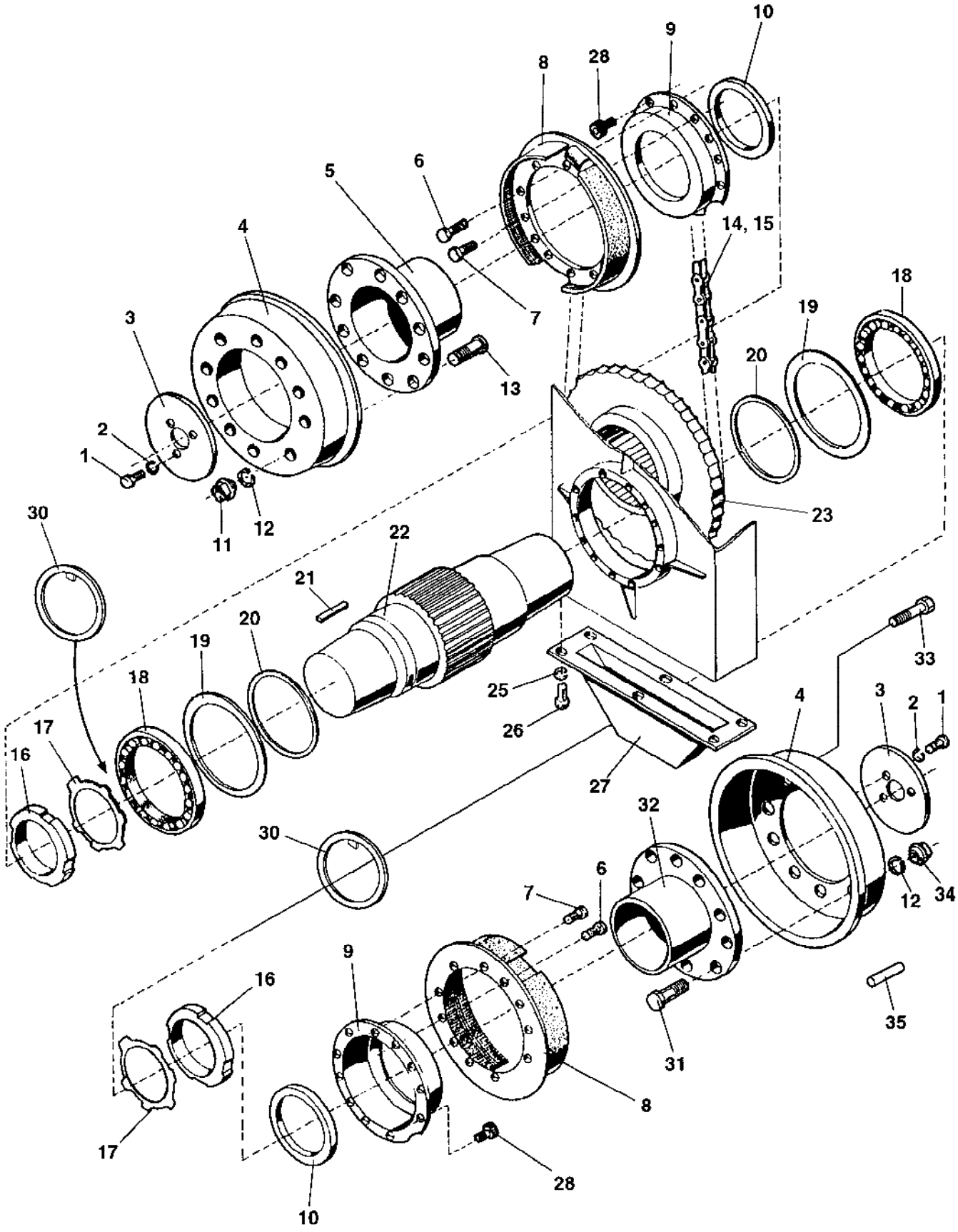

Ref. No.	Part No.	Rem.	Qty	Description	Code
1	947696		12	Screw M16x45	
2	904232		12	Washer 17x30x3	
3	254088		4	Snap plate	
4	253745		4	Brake drum	
5	253747	A	2	Wheel hub	
6	375152		12	Spacer	
7	900724	B	20	Screw	
	375152	B	20	Spacer	
8	259219		4	Brake (Page 34)	
9	268419		4	Bearing cover	
10	161084		4	Seal ring	
11	754014		20	Nut	
12	902252		40	Washer	
13	747097		20	Wheel stud	
14	417055		2	Chain	D
15	417040		2	Chain lock	D
16	381717	G	4	Lock nut	
17	136021		4	Washer	
18	116018		4	Bearing	B
19	134051		4	Ring	
20	150038		4	Snap ring	D
21	350082		4	Flat key	
22	259088		2	Shaft	
23	380187		2	Chain wheel	
25	904557		12	Washer 10,5x22x4	
26	500028		12	Screw M10-1,5x25 8,8	
27	261490		2	Cover	
28	509028		56	Screw	
30	376465		4	Spacer ring	
31	754105	C	20	Screw Up to 22620304	
32	253747	E	2	Wheel hub Up to 22620304	
	382858	F	2	Wheel hub From 22620305	
33	904920	D	20	Screw M20-1,5x60 10,9 From 22620305	
34	754014	C	20	Nut Up to 22620304	
35	904930	D	4	Parallel pin From 22620305	

A) Outher
B) Screw and spacer together
C) For hub without threaded holes
D) For hub with threaded holes
E) Hub without threaded holes
F) Hub with threaded holes
G) Not used as spare part; we recommend 381716 together with 4 pcs of 516049 (totally 16 pcs)

259219 Brake

16233

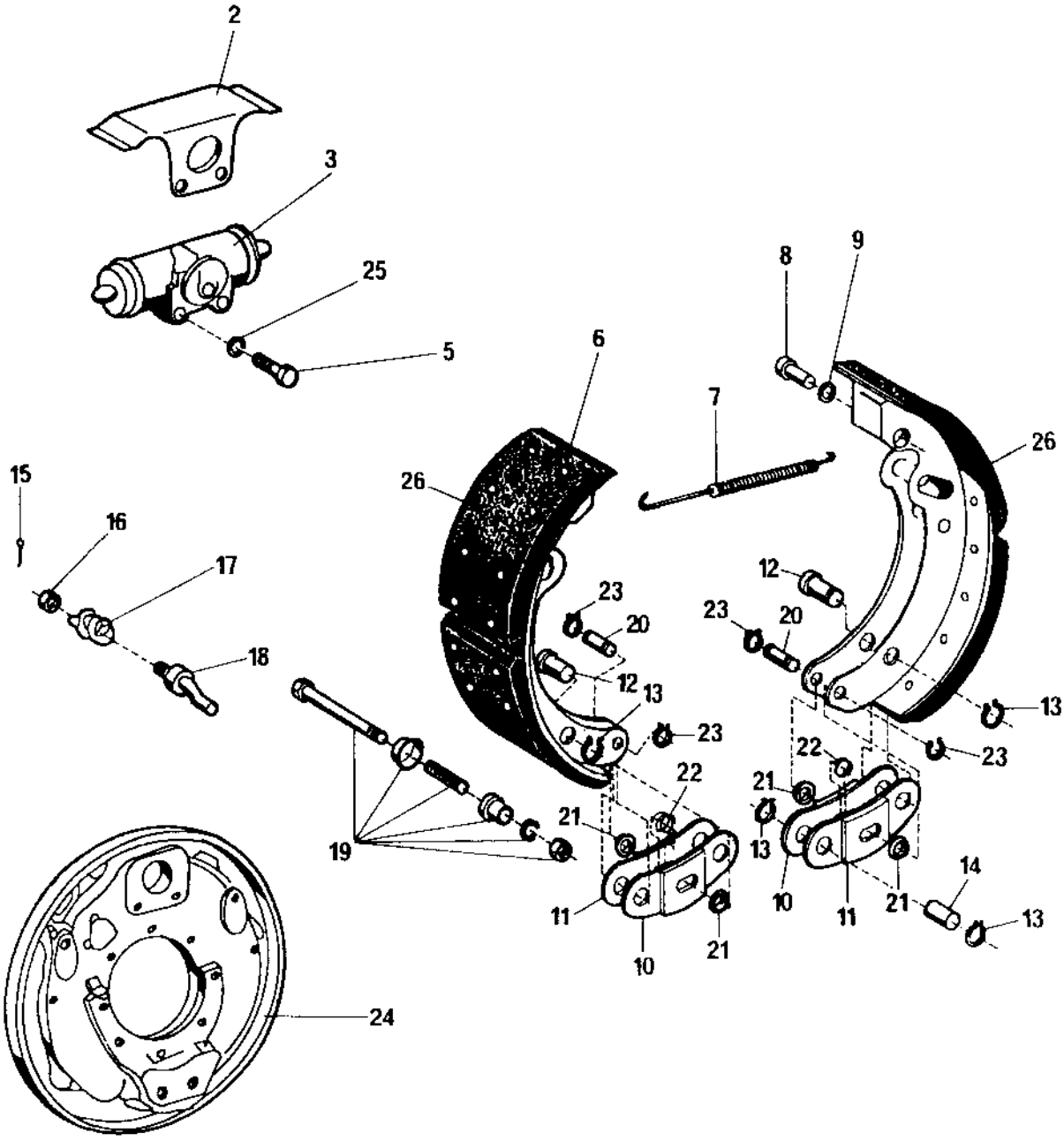

259219 Brake

Ref. No.	Part No.	Rem.	Qty	Description	Code
2	754025		1	.Protecting plate	
3	415114		1	.Brake cylinder	D
5	500028		2	.Screw M10-1,5x25 8,8	
6	754009		2	.Brake disc	B
7	754022		2	.Spring	
8	754006		2	.Spring holder	
9	754001		2	.Lock	
10	754027		2	.Rod end	
11	754026		2	.Rod end	
12	754021		2	.Pin	
13	754029		6	.Snap ring	
14	754020		2	.Pin	
15	754007		2	.Pin	
16	754016		2	.Nut	
17	754024		2	.Spring	
18	754010		2	.Adjusting bolt	
19	754012		2	.Mounting kit	D
20	754019		2	.Pin	
21	754028		4	.Seat	
22	754023		2	.Spring	
23	754018		4	.Lock	
24	263100		1	.Wheel column	
25	604007		2	.Spring washer	
26	754010		2	.Adjusting bolt	

195176 Chain protector

16280

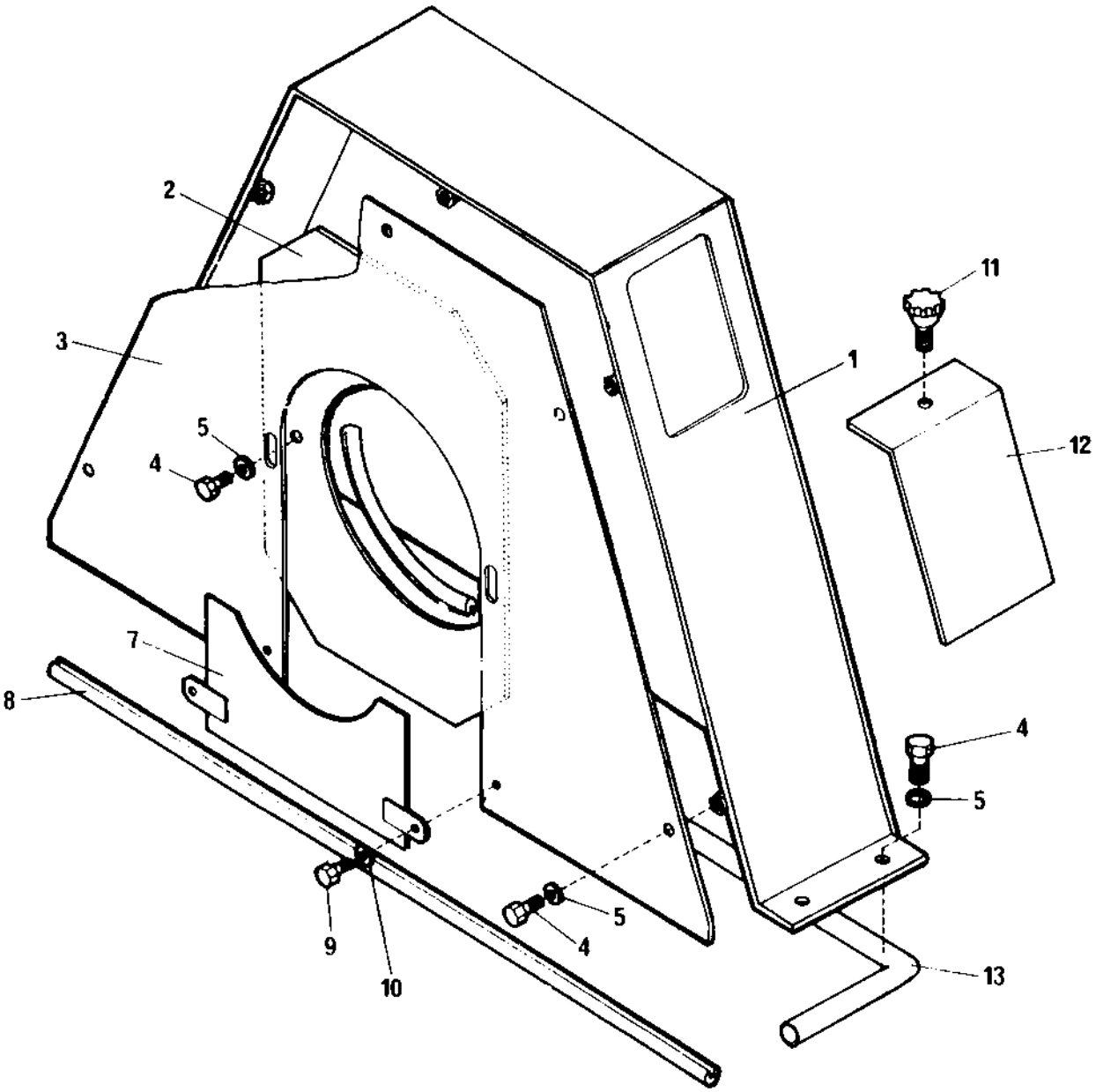

195176 Chain protector

Ref. No.	Part No.	Rem.	Qty	Description	Code
1	195177		1	Cover plate, left	
	195178		1	Cover plate, right	
2	195034		1	Cover	
3	195181		2	Cover	
4	500043		22	Screw M10x16H 8,8	
5	904230		22	Washer 10,5x22x2	
7	195182		1	Cover	
8	246947	A		Rubber strip	
9	500188		4	Screw M8-1,25x14 8,8	
10	904229		4	Washer 8,4x16x1,5	
11	904596		2	Hand knob	
12	195180		2	Cover	
13	202057	B		Edge trim	D

A) L=1084MM
B) L=1548MM

Ref. No.	Part No.	Rem.	Qty	Description	Code
51				Wheel with Bridgestone tyre (Page 40)	
52				Wheel with Michelin tyre (Page 42)	
53				Wheel with Firestone tyre (Page 44)	

Wheel with Bridgestone tyre

16242-2

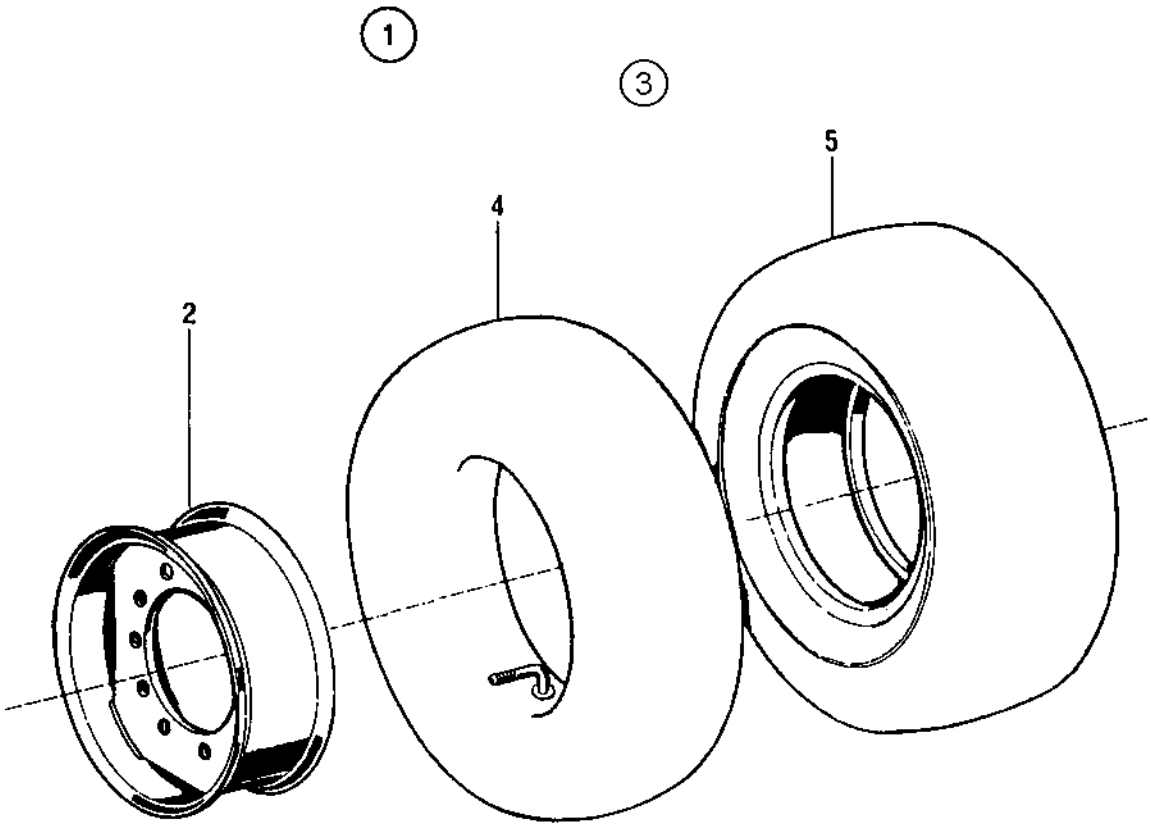

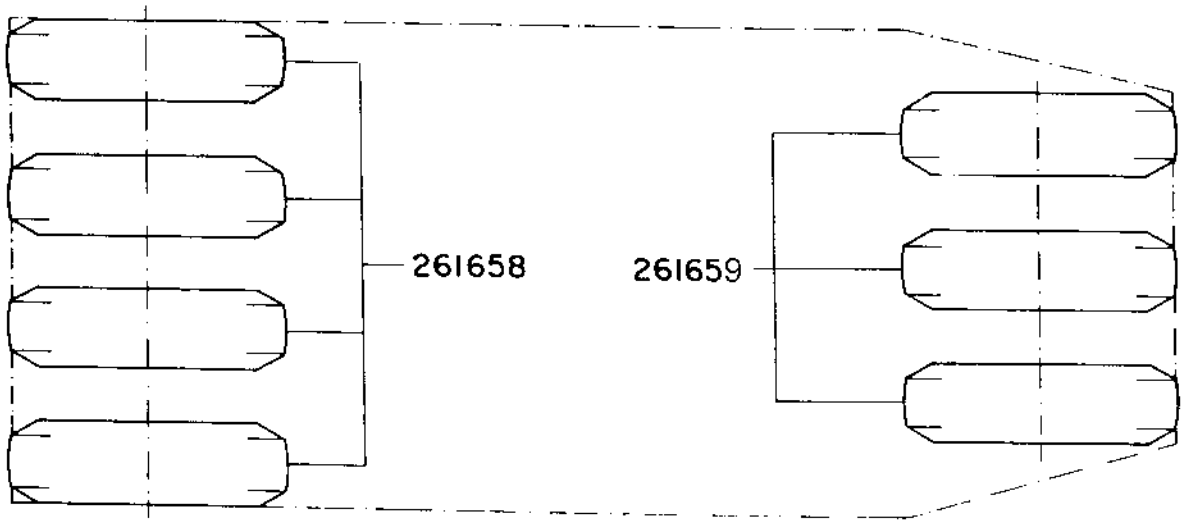

Wheel with Bridgestone tyre

Ref. No.	Part No.	Rem.	Qty	Description	Code
1	261659	D,E	3	Wheel, cpl	
	261658	D	4	Wheel, cpl	
2	259089	A	1	.Rim	
	250658	B	1	.Rim	
3	269482	D	1	.Inner tube and tyre	
4	195414		1	..Inner tube	
5	904763	C,D	1	..Tyre, smooth	B

A) Included in 261659
B) Included in 261658
C) Bridgestone
D) Attention: Don't mix different types of tyres on the same machine, cause the specifications are different and don't match.
E) Earlier used 261657 is replaced by 261659.

Wheel with Michelin tyre

17335

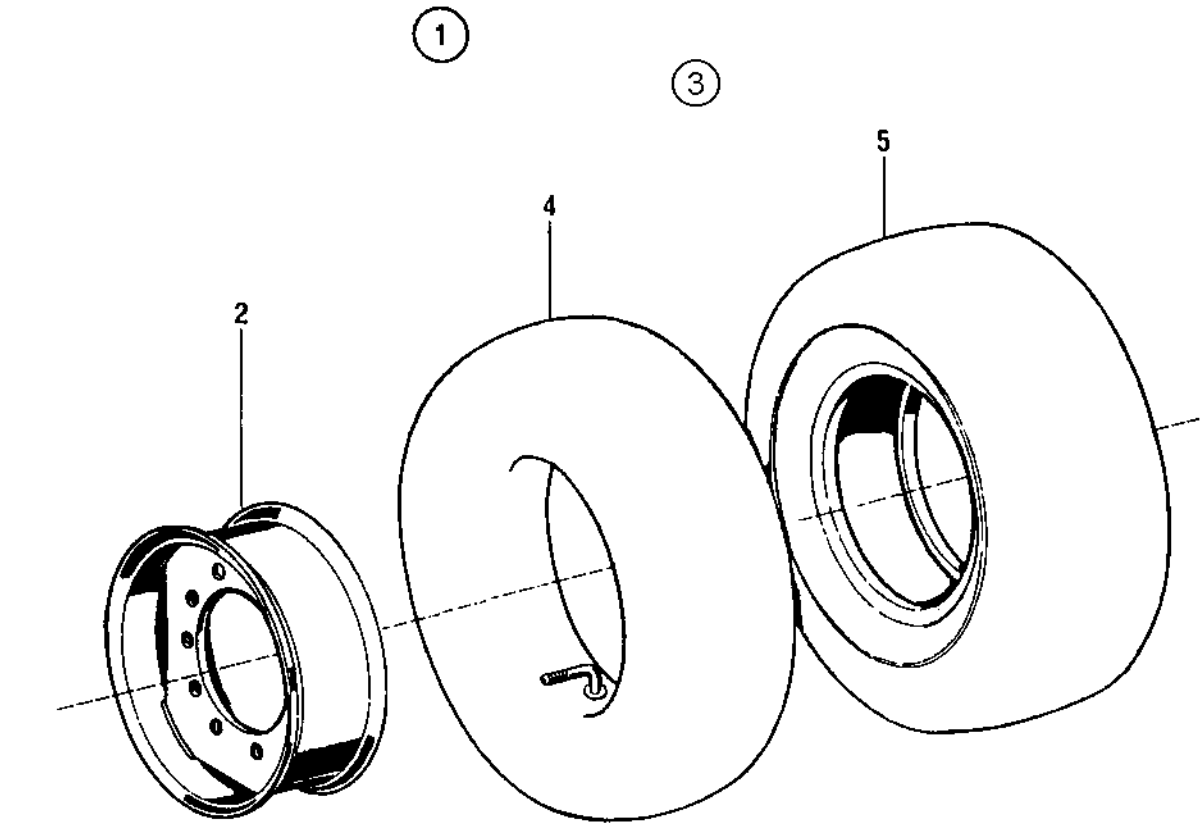

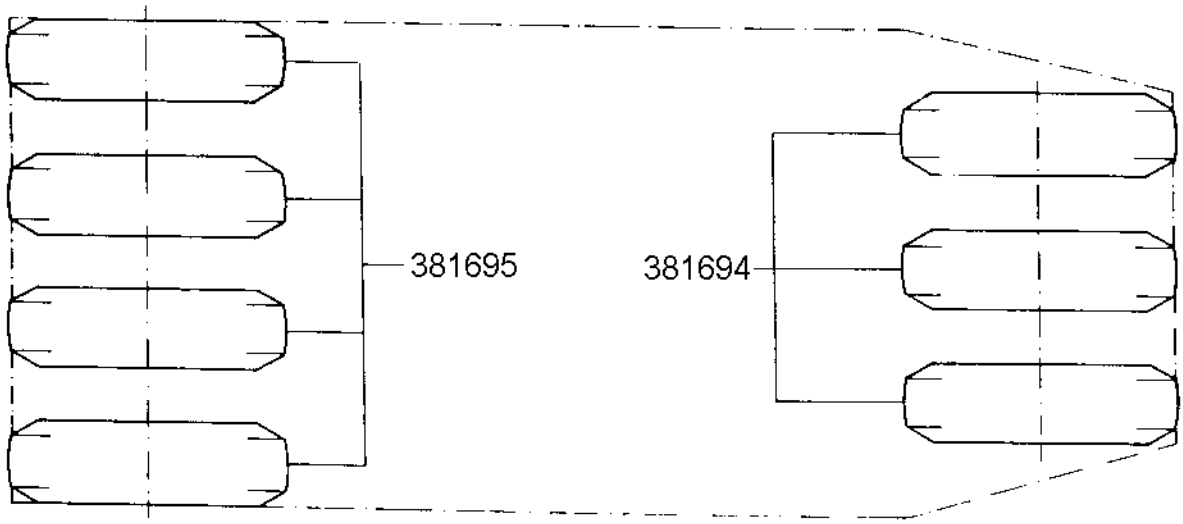

Wheel with Michelin tyre

Ref. No.	Part No.	Rem.	Qty	Description	Code
1	381694	D	3	Wheel, cpl	
	381695	D	4	Wheel, cpl	
2	259089	A	1	.Rim	
	250658	B	1	.Rim	
3	381620	D	1	.Inner tube and tyre	
4	195414		1	..Inner tube	
5	901317	C,D	1	..Tyre	B

A) Included in 381694
B) Included in 381695
C) Michelin
D) Attention: Don't mix different types of tyres on the same machine, cause the specifications are different and don't match.

Wheel with Firestone tyre

17762

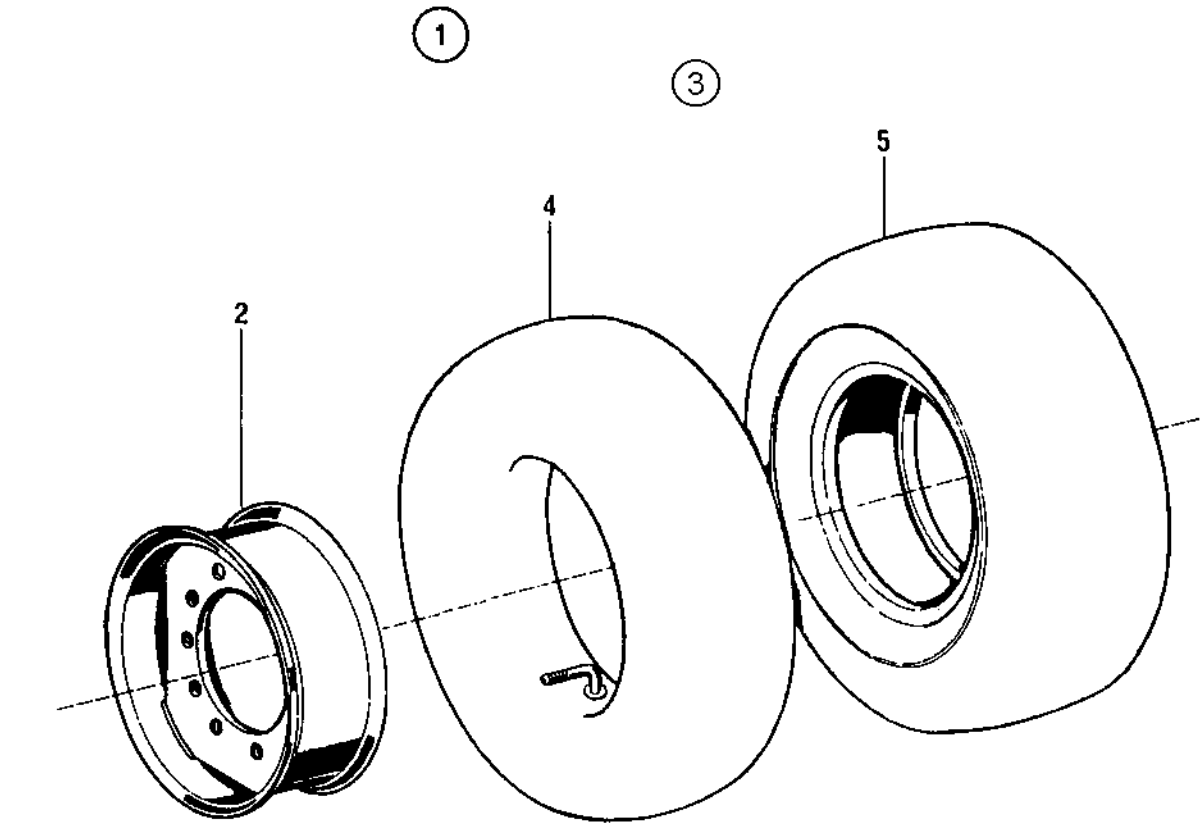

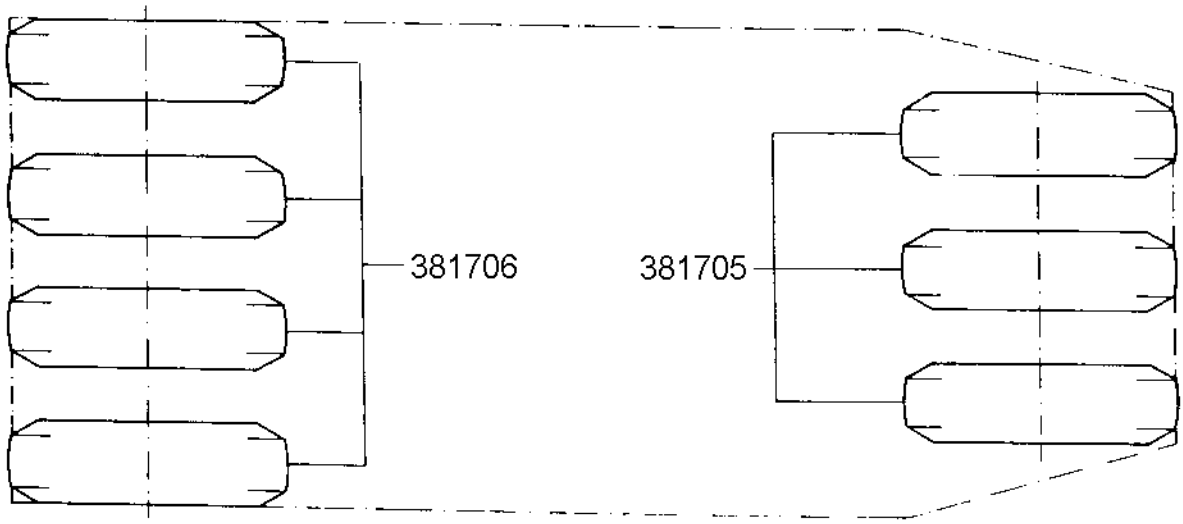

Wheel with Firestone tyre

Ref. No.	Part No.	Rem.	Qty	Description	Code
1	381705	D	3	Wheel, cpl	
	381706	D	4	Wheel, cpl	
2	259089	A	1	.Rim	
	250658	B	1	.Rim	
3	381704	D	1	.Inner tube and tyre	
4	195414		1	..Inner tube	
5	401048	C,D	1	..Tyre	B

A) Included in 381705
B) Included in 381706
C) Firestone
D) Attention: Don't mix different types of tyres on the same machine, cause the specifications are different and don't match.

Spare wheel Option

16430

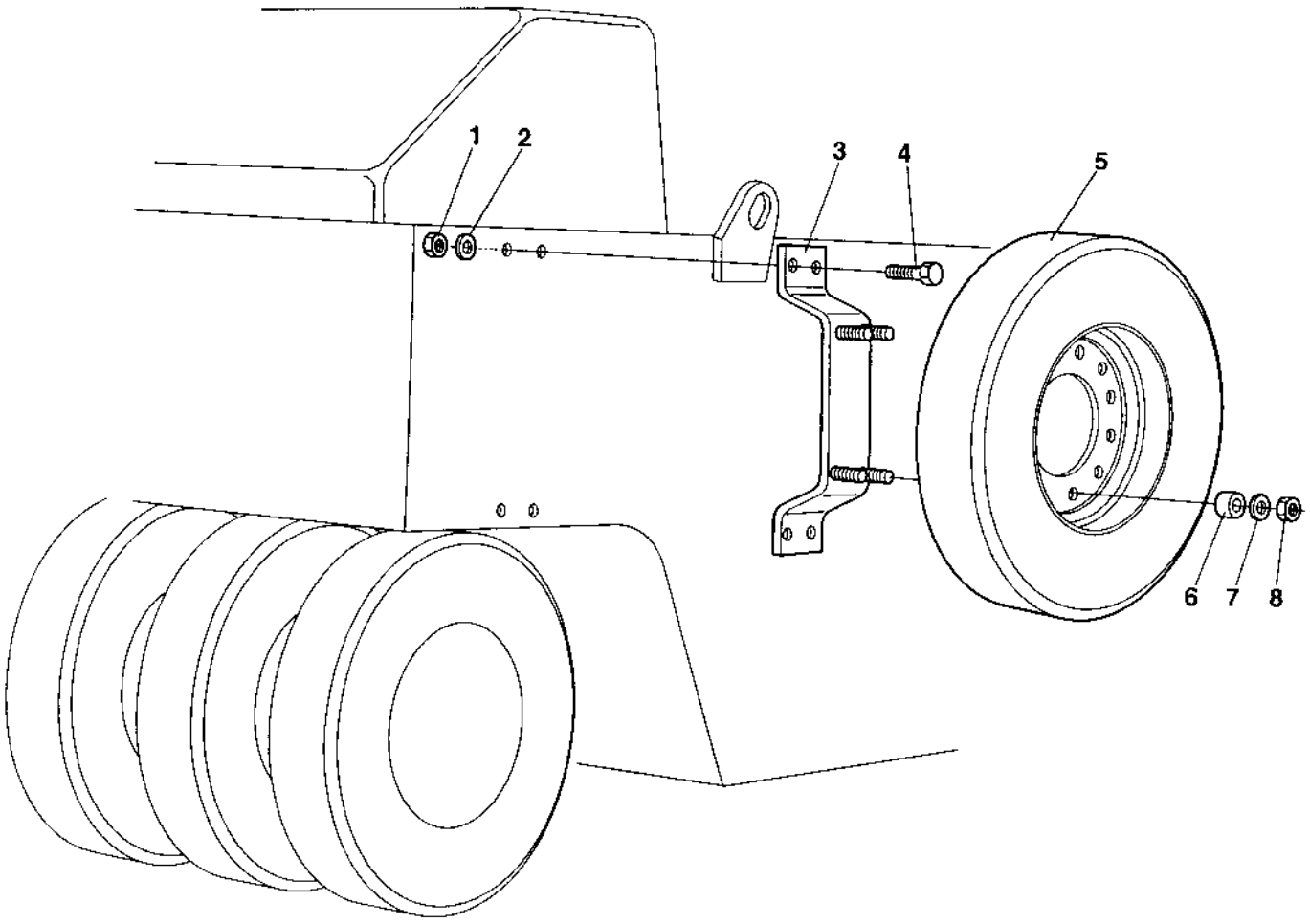

Spare wheel Option

Ref. No.	Part No.	Rem.	Qty	Description	Code
1	570015		4	Nut M20	
2	904233		8	Washer 21x36x3	
3	257028		1	Bracket	
4	500101		4	Screw M20x50	
5	261658	A,D	1	Wheel, cpl	
	381695	B,D	1	Wheel, cpl	
	381706	C,D	1	Wheel, cpl	
6	257029		4	Spacer	
7	902252		4	Washer	
8	754014		4	Nut	

A) Bridgestone
B) Michelin
C) Firestone
D) Attention: Don't mix different types of tyres on the same machine, cause the specifications are different and don't match.

Pneumatic circuit diagram Option

16243

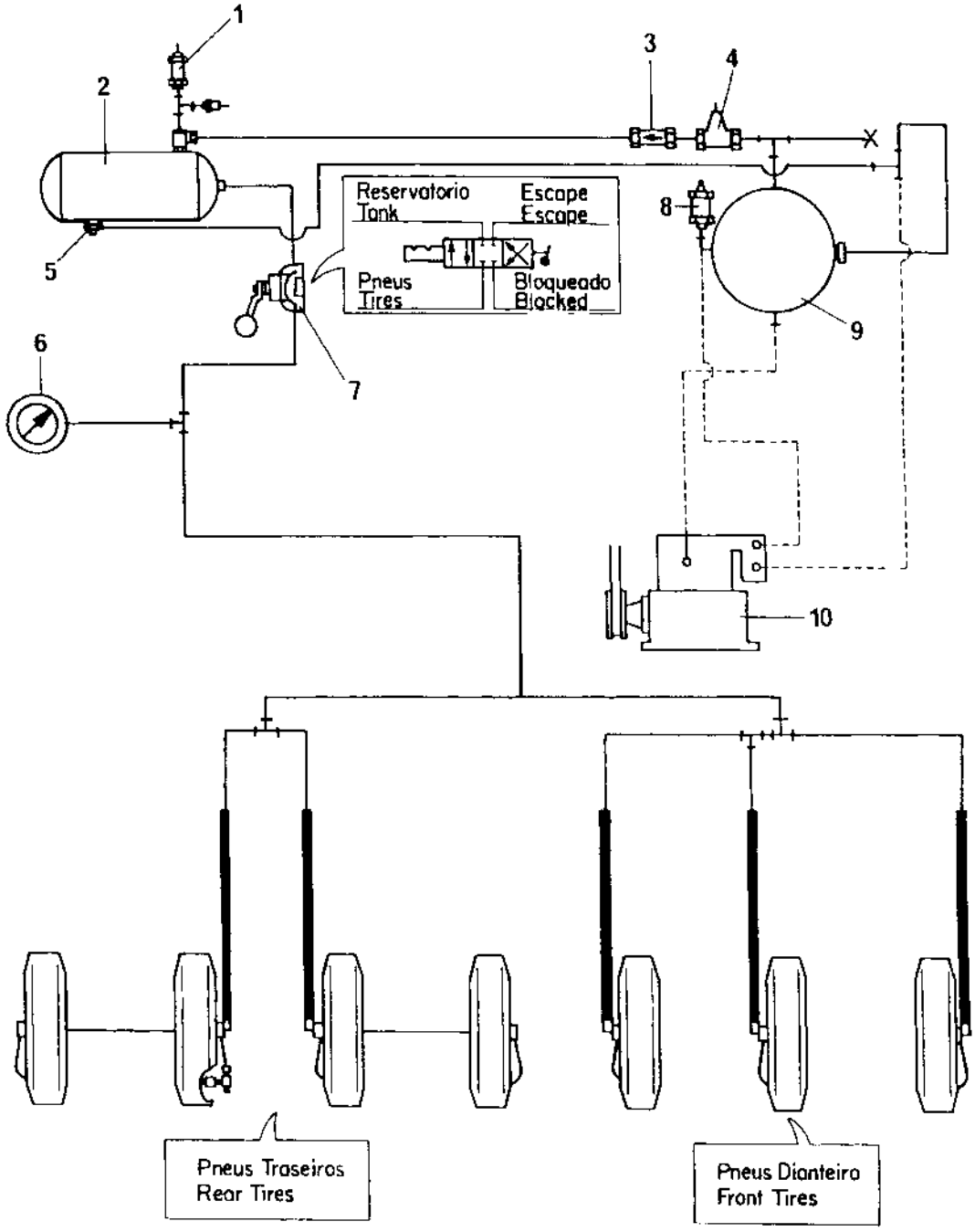

Pneumatic circuit diagram Option

Ref. No.	Part No.	Rem.	Qty	Description	Code
1	333062		1	Safety valve	D
2	255907		1	Air tank	
	384615	A	1	Air tank From 22620355	
3	912120		1	Check valve	D
4	333067		1	Valve	D
5	333053		1	Drain valve	D
	195054		1	Drain valve	
6	266221		1	Manometer	D
7	190886		1	Valve	
	194362		1	Valve	
8	333062		1	Safety valve	D
9			1	Air tank	D
10				Compressor, see another assembly	D

A) Replaces earlier 902139

Air on the run Option

16245

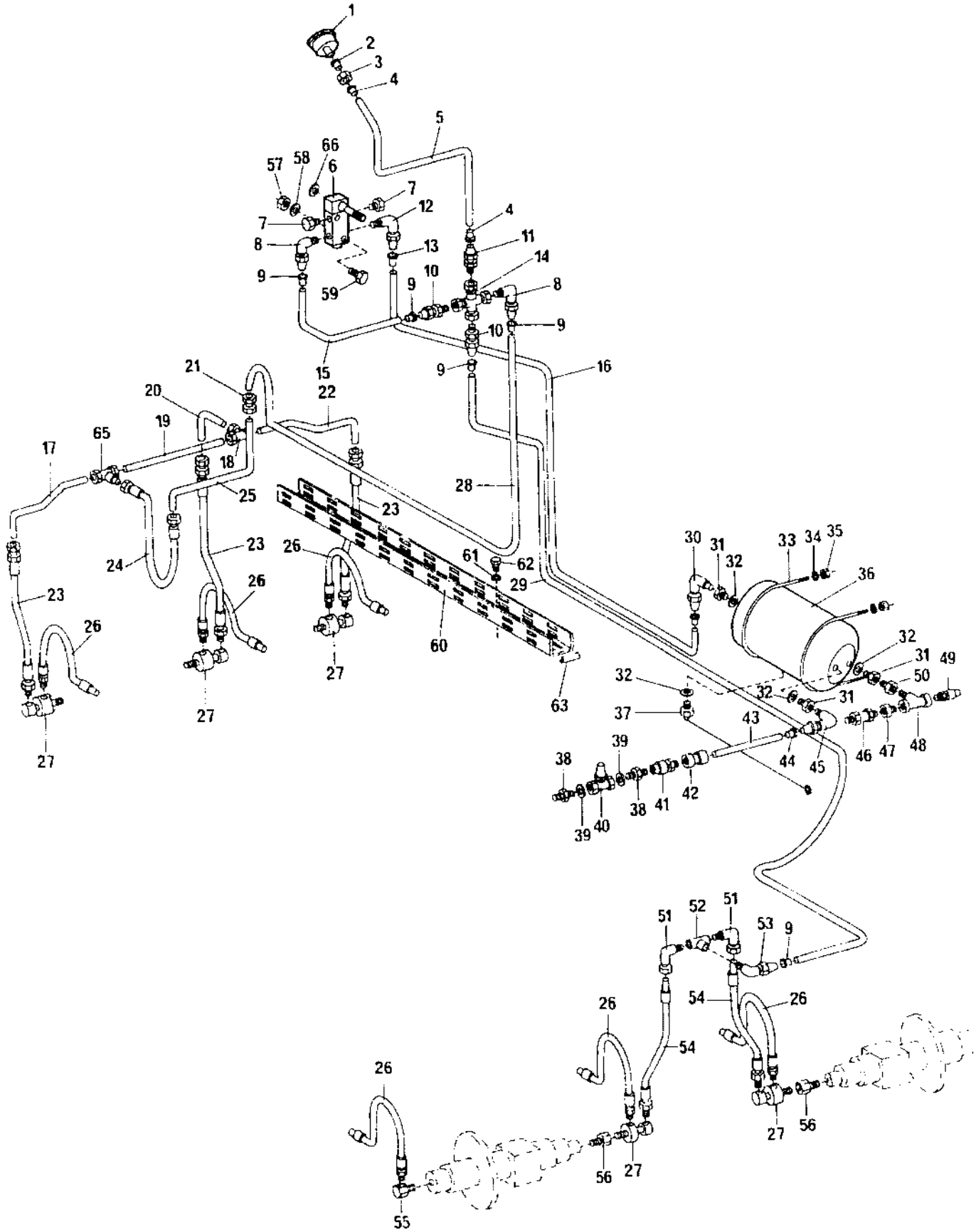

Ref. No.	Part No.	Rem.	Qty	Description	Code
1	266221		1	Manometer	D
	927025		1	Socket	
	747583		1	Bulb	
	195814	G	1	Pipe, nylon	D
	904626		1	Coupling	
	926625		1	Sleeve	
2	231193		1	Sleeve	
3	231192	A	1	Nut	
4	920783		2	Insert	
5	247154	H	1	Pipe	
6	374791		1	Directional valve	
7	232078		2	Plug	
8	920794		3	Nipple	
9	920784		6	Insert	
10	192804		2	Connection	
11	920787		1	Pipe connection	
12	920795		1	Brake connection	
13	920785		2	Insert	
14	192803		1	Connection	
15	247151		1	Pipe 3/8"	
16	247152		1	Tube	D
17	262092		1	Tube	
18	230524		1	Connection-T	
19	262091		1	Tube	
20	259246		1	Tube	
21	230322		1	Connection	
22	259245		1	Tube	
23	257987		3	Hose	
24	257988		1	Hose	
25	192245		1	Tube	
26	191927		7	Hose	
27	195172		5	Rotor	
28	247151	A	1	Pipe 3/8"	
29	247151	B	1	Pipe 3/8"	
30	191921		1	Elbow	
31	234729		3	Reducing nipple	
32	330333		4	Copper washer	D
33	194366		2	Clamp	
34	904230		4	Washer 10,5x22x2	
35	570006		4	Nut M10	
36	384615	J	1	Air tank From 22620355	
37	195054		1	Drain valve	
38	240264		2	Adapter	
39	330333		2	Copper washer	D
40	333067		1	Valve	D
41	912120		1	Check valve	D
42	268920		1	Adapter	
43	247153	C	1	Tube	
44	920786		2	Insert	
45	194212		1	Elbow	
46	333062		1	Safety valve	D
47	813465		1	Reducing	
48	253007		1	Tee-connector	

A) L=1090 mm
B) L=3500 mm
C) L=350 mm
G) L=150 mm
H) L=420 mm
J) Replaces earlier 902139

Air on the run Option

16245

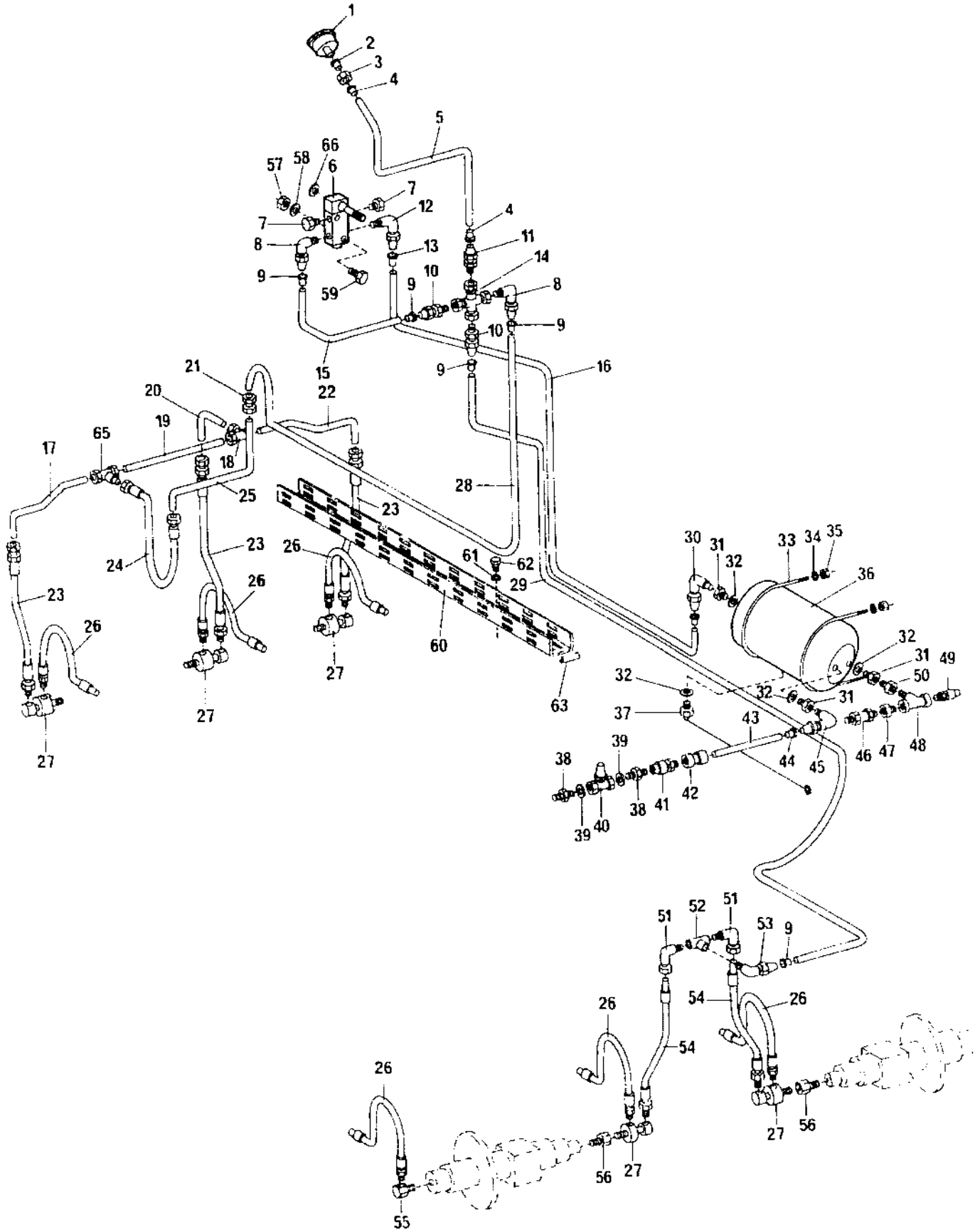

Ref. No.	Part No.	Rem.	Qty	Description	Code
49	401106		1	Filler pipe	
50	334603		2	Bushing	
51	194365		2	Connection 90deg	
52	814262		1	Tee-connector	
53	920794		1	Nipple	
54	194367		2	Hose	
55	257985		2	Connector	
56	254086		2	Connector	
57	570003		2	Nut M5	
58	615042		2	Conical spring washer	
59	500099		2	Screw	
60	380251		1	Channel	
61	904281		8	Washer 5,3x10x1	
62	500012		8	Screw M6x12	
63	202028	D	4	Edge trim	
65	230055		1	Connection-T	
66	904281	F		Washer 5,3x10x1	

D) L=400 mm
F) Inside panel

Diagram brake circuit

16292

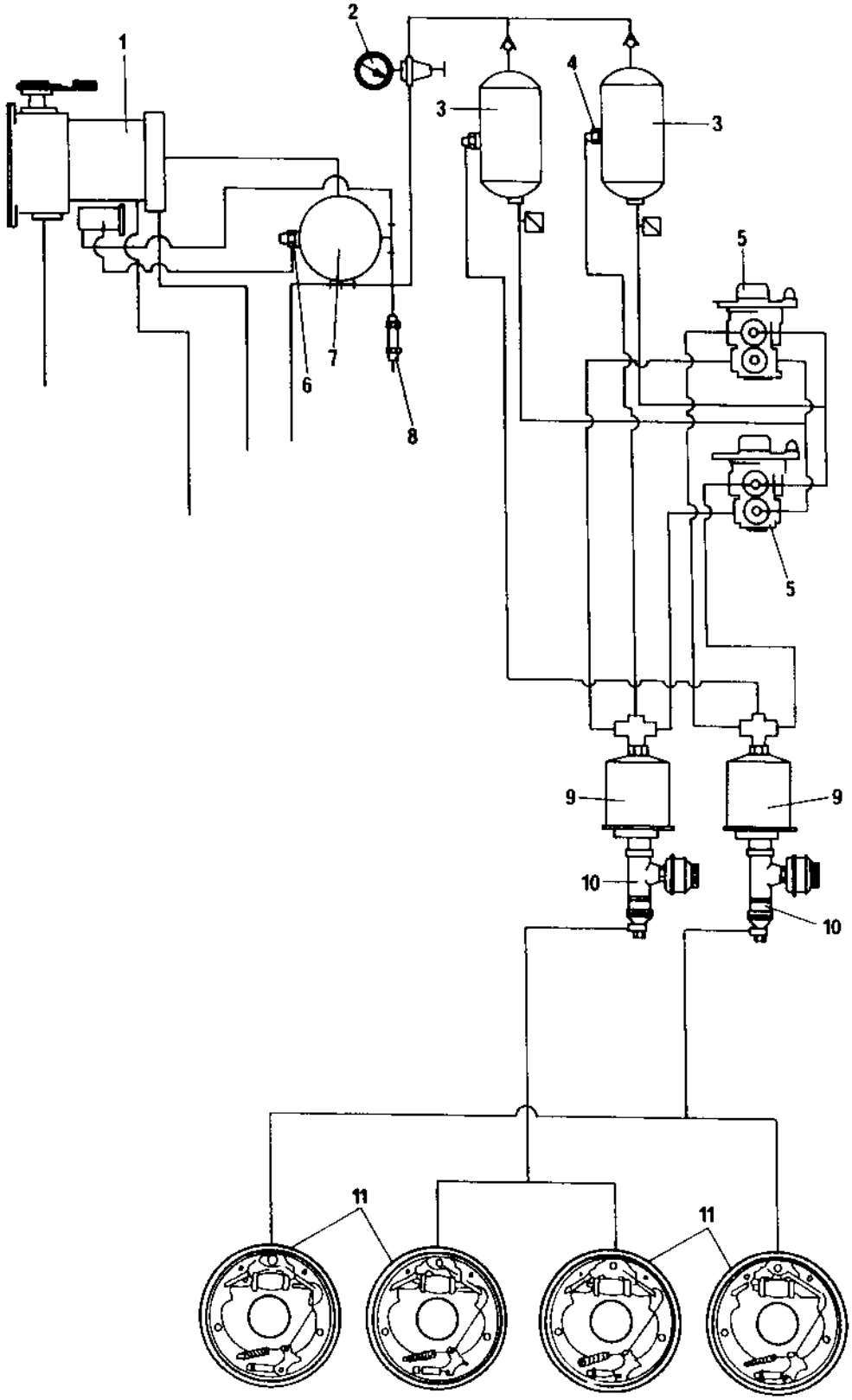

Diagram brake circuit

Ref. No.	Part No.	Rem.	Qty	Description	Code
1				Compressor, see another assembly	
2	194410		1	Pressure relief valve, cpl	
	197901		1	.Gauge	
3	384614	A	2	Air tank From 22620355	
4	269137		2	Drain valve Up to 22620359	D
	384453		2	Drain valve From 22620360	
5	191533		2	Brake valve, Varga (Page 56)	
6	269137		1	Drain valve Up to 22620359	D
	384453		1	Drain valve From 22620360	
7	384615	B	1	Air tank From 22620355	
8	333062		1	Safety valve	D
9	194402		2	Brake chamber	
10	194401		2	Brake master cylinder	
11			4	Wheel, see another assembly	

A) Replaces earlier 194237
B) Replaces earlier 902139

191533 Brake valve, Varga

16267

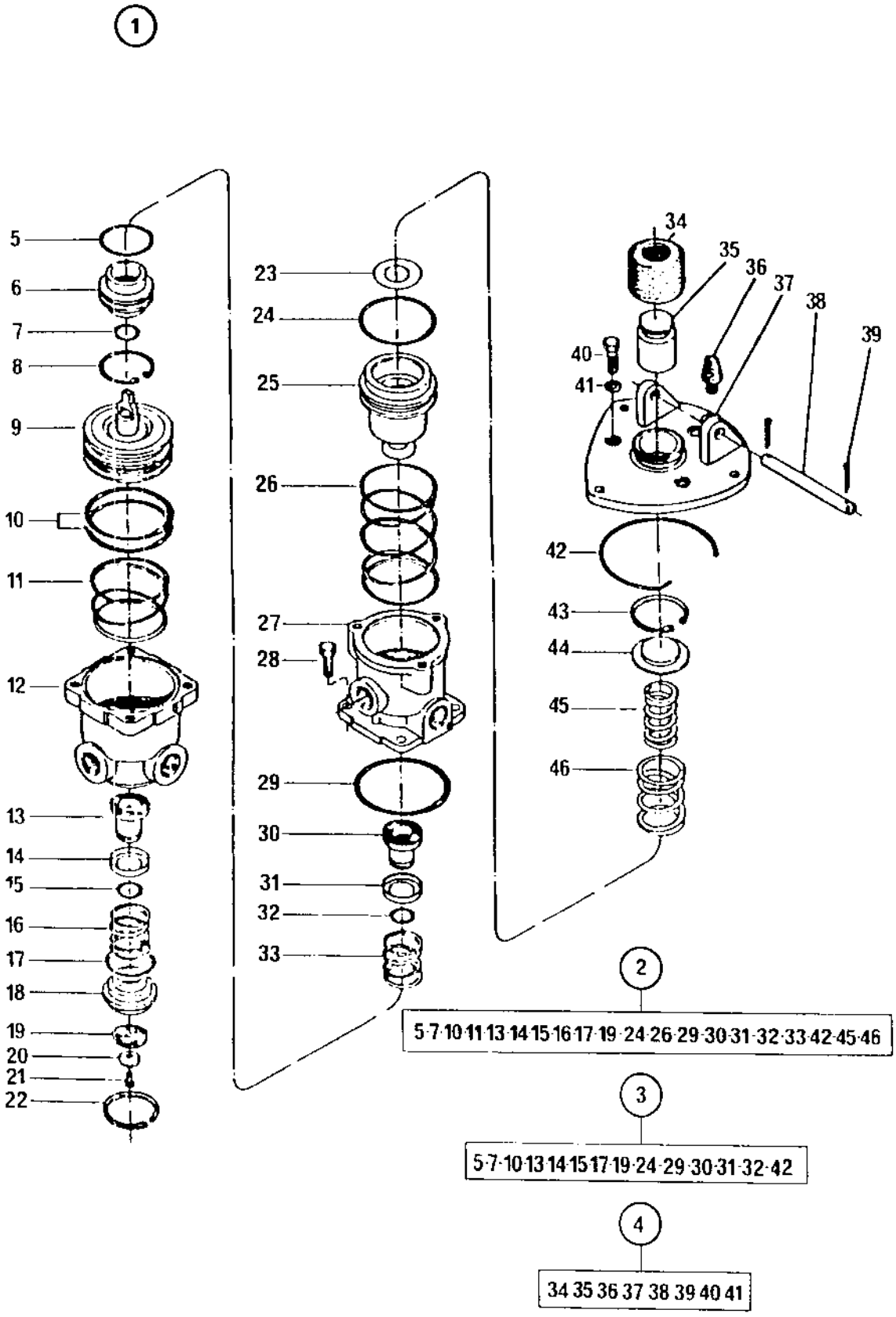

191533 Brake valve, Varga

Ref. No.	Part No.	Rem.	Qty	Description	Code
1			1	Brake valve, Varga	
2	192833		1	.Reversing valve	C
3	192824		1	.Repair kit	
4	192825		1	.Pedal repair kit	
5			1	.Seal ring	
6			1	.Valve guide	
7			1	.Seal ring	
8			1	.Retaining ring	
9			1	.Piston	
10			2	.Seal ring	
11			1	.Spring	
12			1	.Lower body	
13			1	.Valve	
14			1	.Seal ring	
15			1	.Seal ring	
16			1	.Spring	
17			1	.Seal ring	
18			1	.Guide valve	
19			1	.Diaphragm	
20	192284		1	.Lock washer	
21			1	.Screw	
22			1	.Retaining ring	
23			1	.Washer	
24			1	.Seal ring	
25			1	.Piston	
26			1	.Spring	
27			1	.Upper body	
28			4	.Screw	
29			1	.Seal ring	
30			1	.Valve	
31			1	.Seal ring	
32			1	.Seal ring	
33			1	.Spring	
34			1	.Scoop	
35			1	.Piston	
36			1	.Pedal stop	
37			1	.Bracket	
38			1	.Pin	
39			2	.Cotter pin	
40			1	.Screw	
41			2	.Washer	
42			1	.Retaining ring	
43			1	.Retaining ring	
44			1	.Seal ring	
45			1	.Spring	
46			1	.Spring	

Brake circuit up to SN 22620359

16301-1

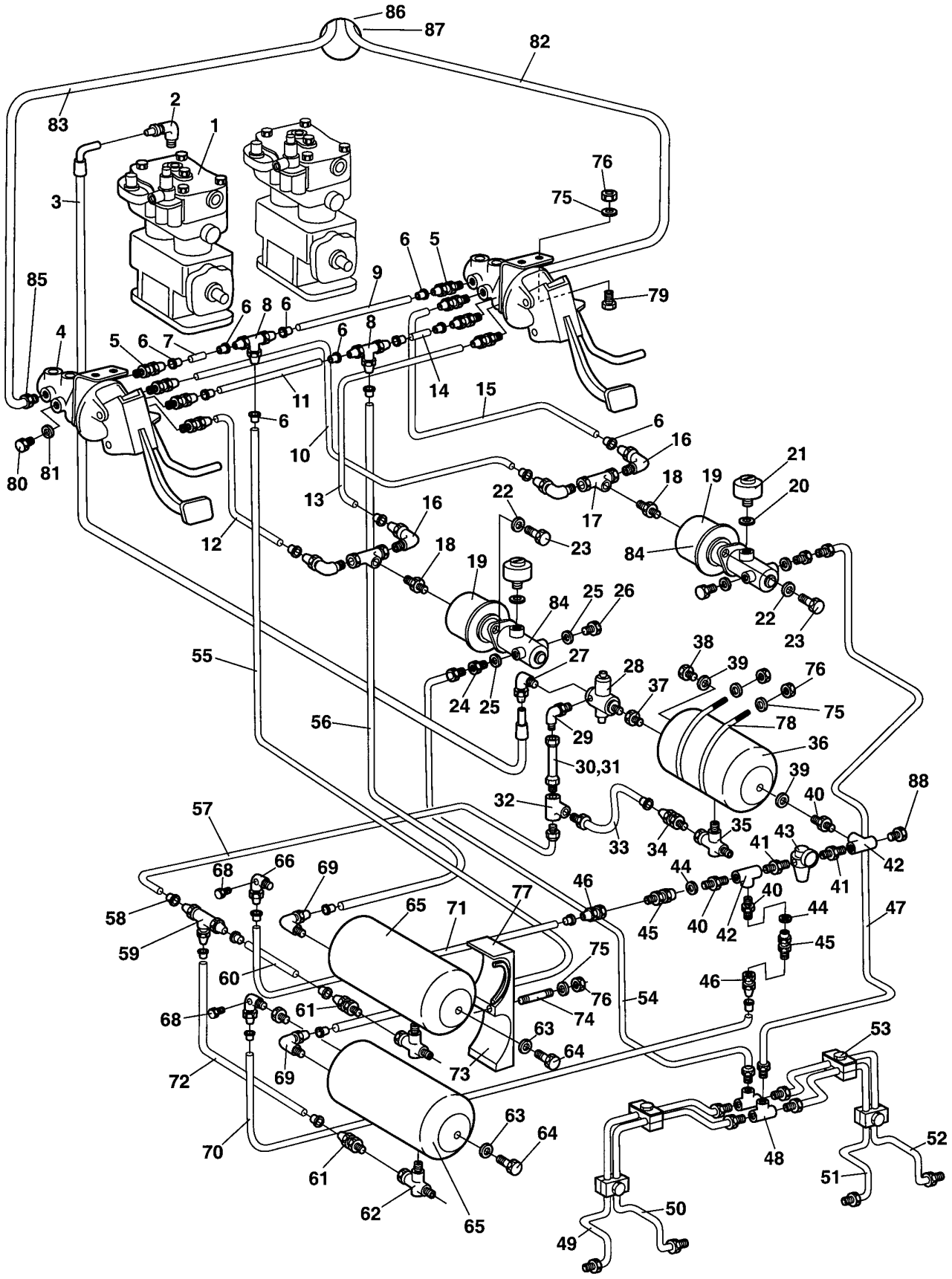

Brake circuit up to SN 22620359

Ref. No.	Part No.	Rem.	Qty	Description	Code
1				Compressor, see another assembly	
2	904659		1	Elbow 90	
	938161		1	.Nut with sealing cone	
3	196586	Q	1	Hose From 22620313	
4	195778		2	Brake pedal	
5	904657		8	Straight connector	
6	195834		20	Sleeve insert	
7	195838	A		Pipe, nylon	D
8	904660		2	Tee-connector	
9	195838	B		Pipe, nylon	D
10	195838	C		Pipe, nylon	D
11	195838	D		Pipe, nylon	D
12	195838	E		Pipe, nylon	D
13	195838	C		Pipe, nylon	D
14	195838	F		Pipe, nylon	D
15	195838	E		Pipe, nylon	D
16	904658		4	Elbow 90	
17	195831		2	Check valve double	
18	195832		2	Connector	
19	194402		2	Brake chamber	
20	330333		2	Copper washer	D
21	415277		2	Oil tank	
22	904229		6	Washer 8,4x16x1,5	
23	500022		6	Screw M8-1,25x30 8,8	
24	194407		2	Connection	
25	330328		4	Washer 10x14x1	
26	194408		2	Plug	
27	904659		1	Elbow 90	
28	195810		1	Unloader valve	
29	195813		1	Male stud elbow	
30	195814	H		Pipe, nylon	D
31	926625		4	Sleeve	
32	195828		1	Tee-connector	
33	195814	I		Pipe, nylon	D
34	195811		1	Straight male stud	
35	269137		1	Drain valve	D
36	384615	R	1	Air tank From 22620355	
37	195931		1	Connector	
38	232052		1	Plug	D
39	162019		2	Seal ring	D
40	240264		3	Adapter	
41	813722		2	Nipple	
42	814262		2	Tee-connector	

A) L=200 mm
B) L=940 mm
C) L=1350 mm
D) L=880 mm
E) L=800 mm
F) L=250 mm
H) L=150 mm
I) L=300 mm
Q) Replaces earlier used 195823
R) Replaces earlier 902139

Brake circuit up to SN 22620359

16301-1

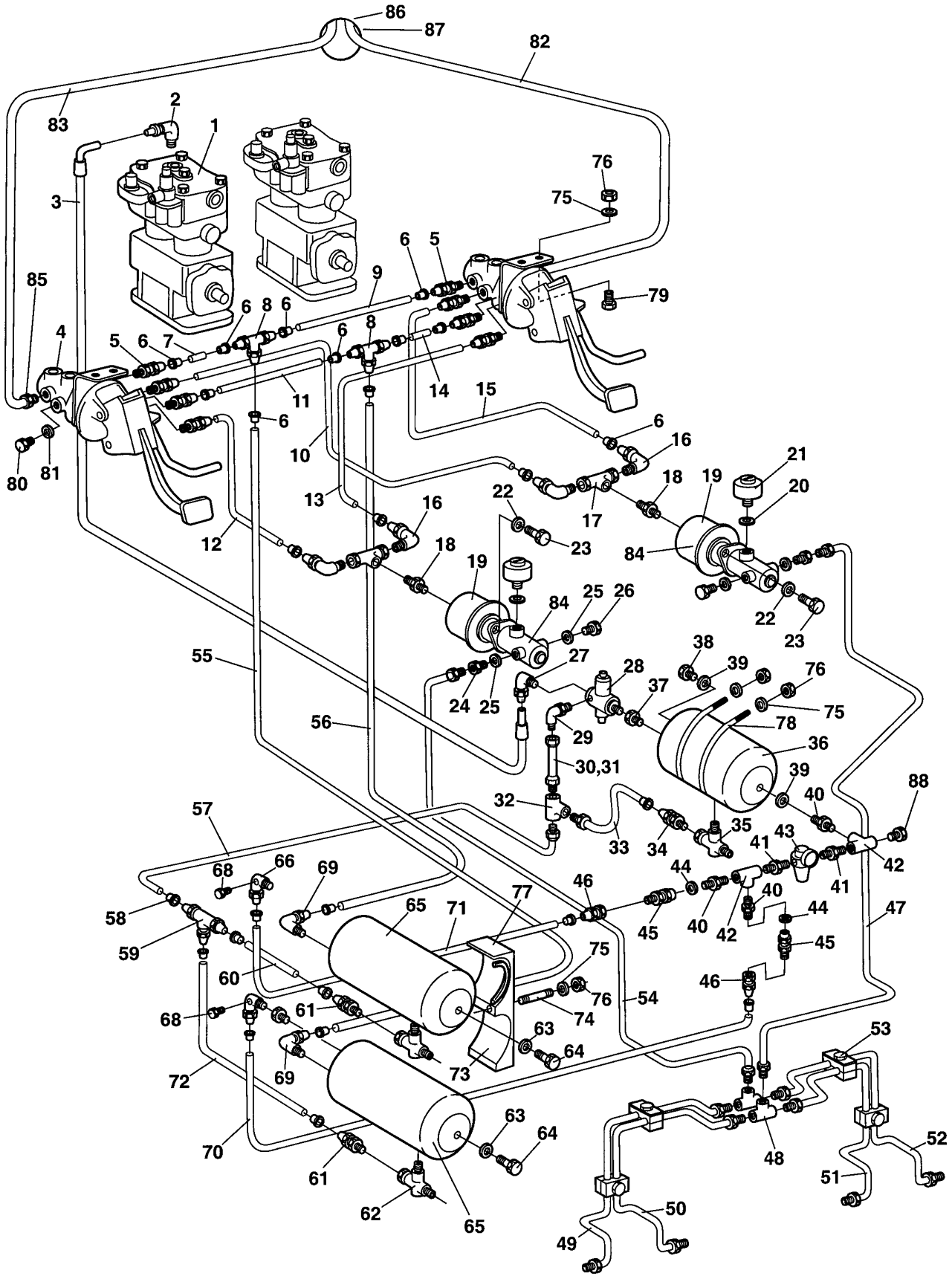

Brake circuit up to SN 22620359

Ref. No.	Part No.	Rem.	Qty	Description	Code
43	194410		1	Pressure relief valve, cpl	
	197901		1	.Gauge	
44	330333		2	Copper washer	D
45	195816		2	Check valve	
46	195812		2	Straight male stud	
47	194803		1	Brake pipe	
48	745072		2	Tee-connector	
49	191937		1	Brake tube	
50	191934		1	Brake tube	
51	191935		1	Brake tube	
52	191936		1	Brake tube	
53	258015		4	Clamp	
54	194802		1	Brake line	
55	195838	J		Pipe, nylon	D
56	195838	K		Pipe, nylon	D
57	195814	L		Pipe, nylon	D
58	926625		10	Sleeve	
59	195828		1	Tee-connector	
60	195814	M		Pipe, nylon	D
61	195811		2	Straight male stud	
62	269137		2	Drain valve	D
63	162019		2	Seal ring	D
64	232052		2	Plug	D
65	384614	S	2	Air tank From 22620355	
66	195915		2	Male stud elbow	
67	195833		4	Sleeve insert	
68	256485		2	Adapter	
69	904659		2	Elbow 90	
70	195839	D		Pipe, nylon	
71	195839	P		Pipe, nylon	
72	195839	N		Pipe, nylon	
73	194371		1	Bracket	
74	194372		2	Stud	
75	904230		22	Washer 10,5x22x2	
76	570006		14	Nut M10	
77	202028			Edge trim	
78	194366		2	Clamp	
79	500030		8	Screw M10-1,5x35H 8,8	
80	232143		6	Plug	
81	330330		6	Washer	
82	195814	O		Pipe, nylon	D
83	195814	L		Pipe, nylon	D
84	194401		2	Brake master cylinder	

D) L=880 mm
J) L=4000 mm
K) L=3600 mm
L) L=900 mm
M) L=100 mm
N) L=650 mm
O) L=1500 mm
P) L=850 mm
S) Replaces earlier 194237

Brake circuit up to SN 22620359

16301-1

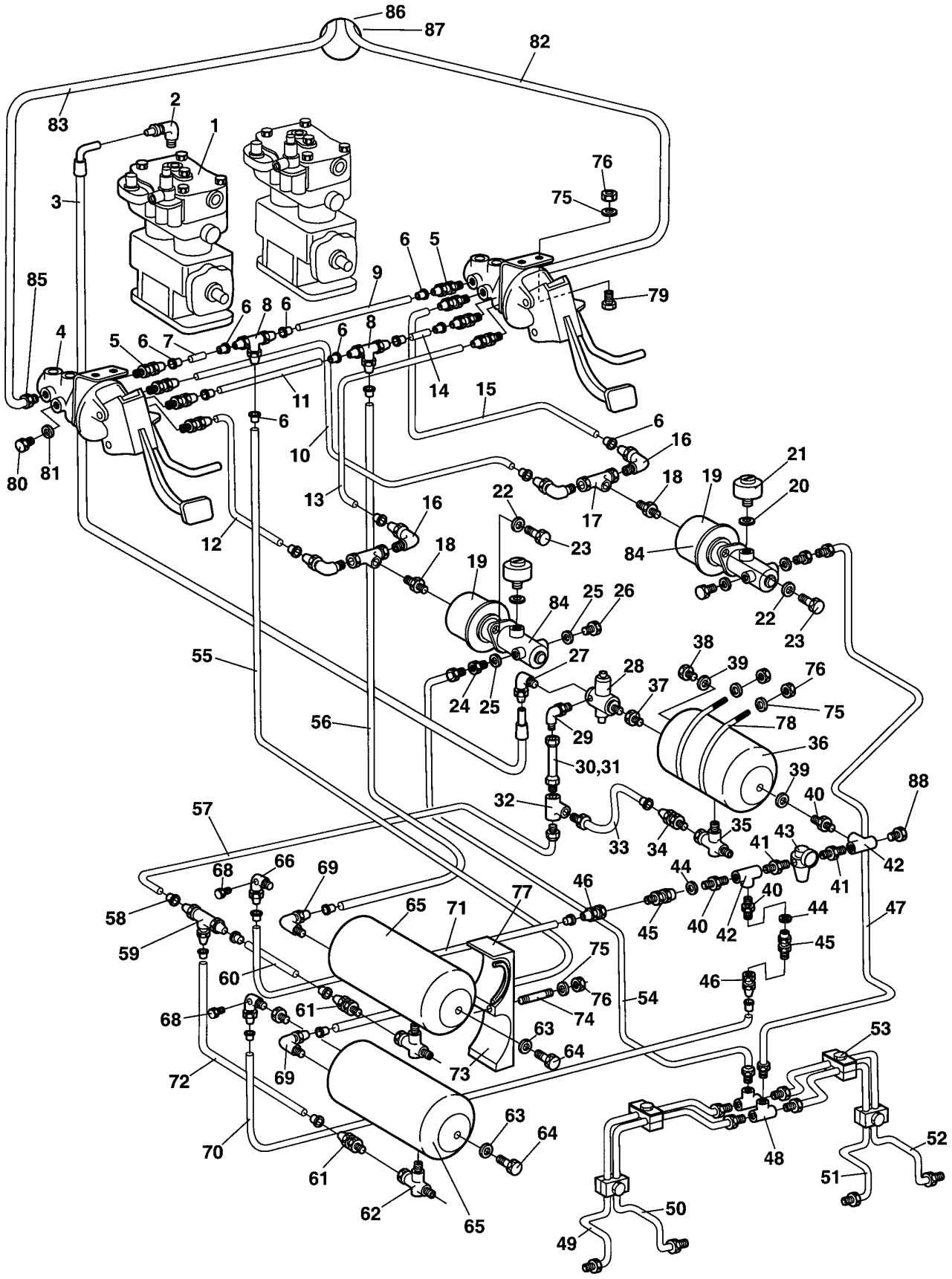

Brake circuit up to SN 22620359

Ref. No.	Part No.	Rem.	Qty	Description	Code
85	195932		2	Male stud elbow	
86	904627		2	Nut M6	
87	230520		2	Locking sleeve R6	
88	192343		1	Plug	

Brake circuit from SN 22620360

17548-1

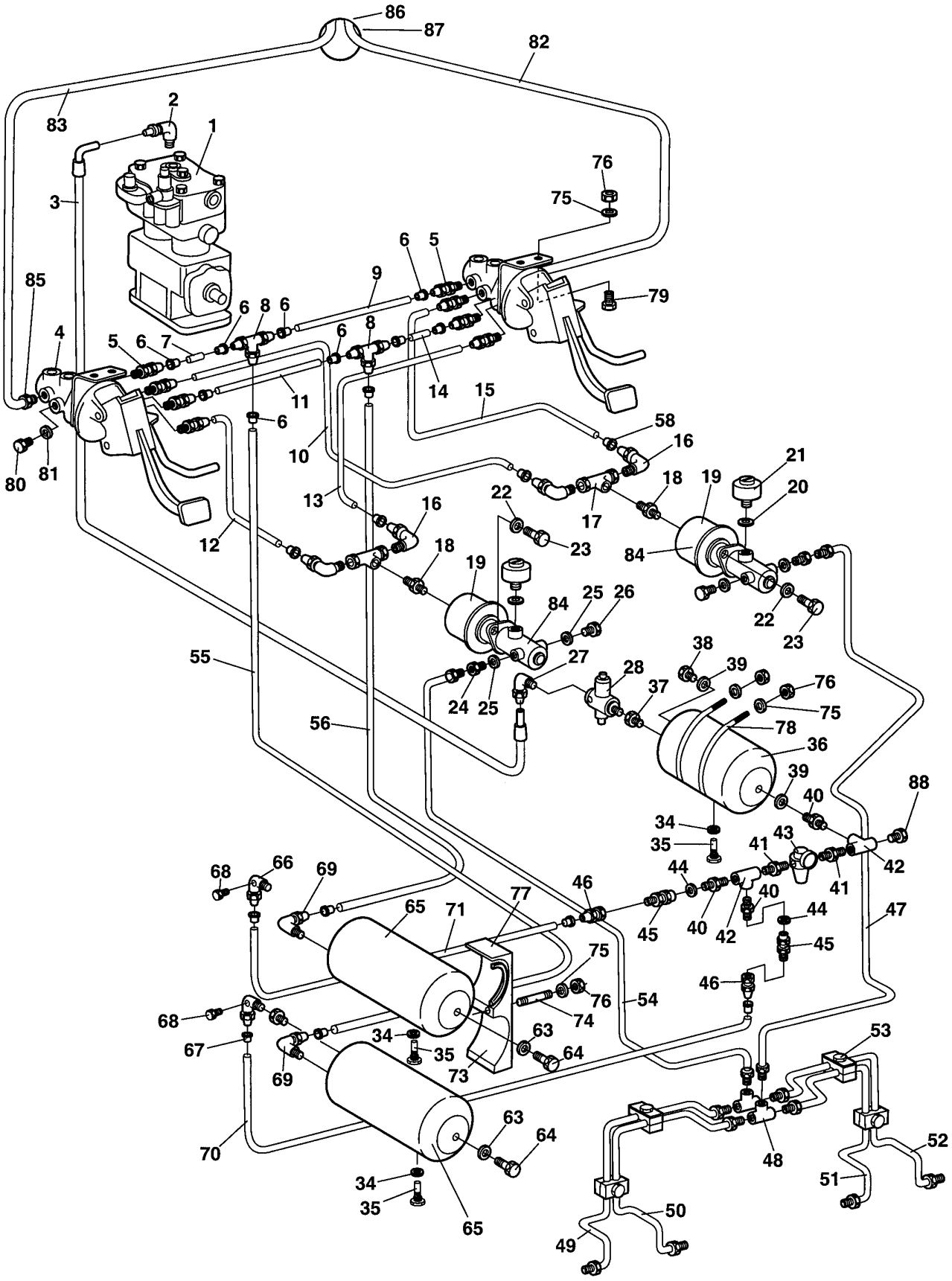

Brake circuit from SN 22620360

Ref. No.	Part No.	Rem.	Qty	Description	Code
1				Compressor, see another assembly	
2	904659		1	Elbow 90	
	938161		1	.Nut with sealing cone	
3	196586	Q	1	Hose From 22620313	
4	195778		2	Brake pedal	
5	904657		8	Straight connector	
6	195834		20	Sleeve insert	
7	195838	A		Pipe, nylon	D
8	904660		2	Tee-connector	
9	195838	B		Pipe, nylon	D
10	195838	C		Pipe, nylon	D
11	195838	D		Pipe, nylon	D
12	195838	E		Pipe, nylon	D
13	195838	C		Pipe, nylon	D
14	195838	F		Pipe, nylon	D
15	195838	E		Pipe, nylon	D
16	904658		4	Elbow 90	
17	195831		2	Check valve double	
18	195832		2	Connector	
19	194402		2	Brake chamber	
20	330333		2	Copper washer	D
21	415277		2	Oil tank	
22	904229		6	Washer 8,4x16x1,5	
23	500022		6	Screw M8-1,25x30 8,8	
24	194407		2	Connection	
25	330328		4	Washer 10x14x1	
26	194408		2	Plug	
27	904659		1	Elbow 90	
28	384452		1	Unloader valve	
34	162019		3	Seal ring	D
35	384453		3	Drain valve	
36	384615	R	1	Air tank From 22620355	
37	195931		1	Connector	
38	232052		1	Plug	D
39	162019		2	Seal ring	D
40	240264		3	Adapter	
41	813722		2	Nipple	
42	814262		2	Tee-connector	
43	194410		1	Pressure relief valve, cpl	
	197901		1	.Gauge	
44	330333		2	Copper washer	D
45	195816		2	Check valve	
46	195812		2	Straight male stud	
47	194803		1	Brake pipe	
48	745072		2	Tee-connector	
49	191937		1	Brake tube	
50	191934		1	Brake tube	

A) L=200 mm
B) L=940 mm
C) L=1350 mm
D) L=880 mm
E) L=800 mm
F) L=250 mm
Q) Replaces earlier used 195823
R) Replaces earlier 902139

Brake circuit from SN 22620360

17548-1

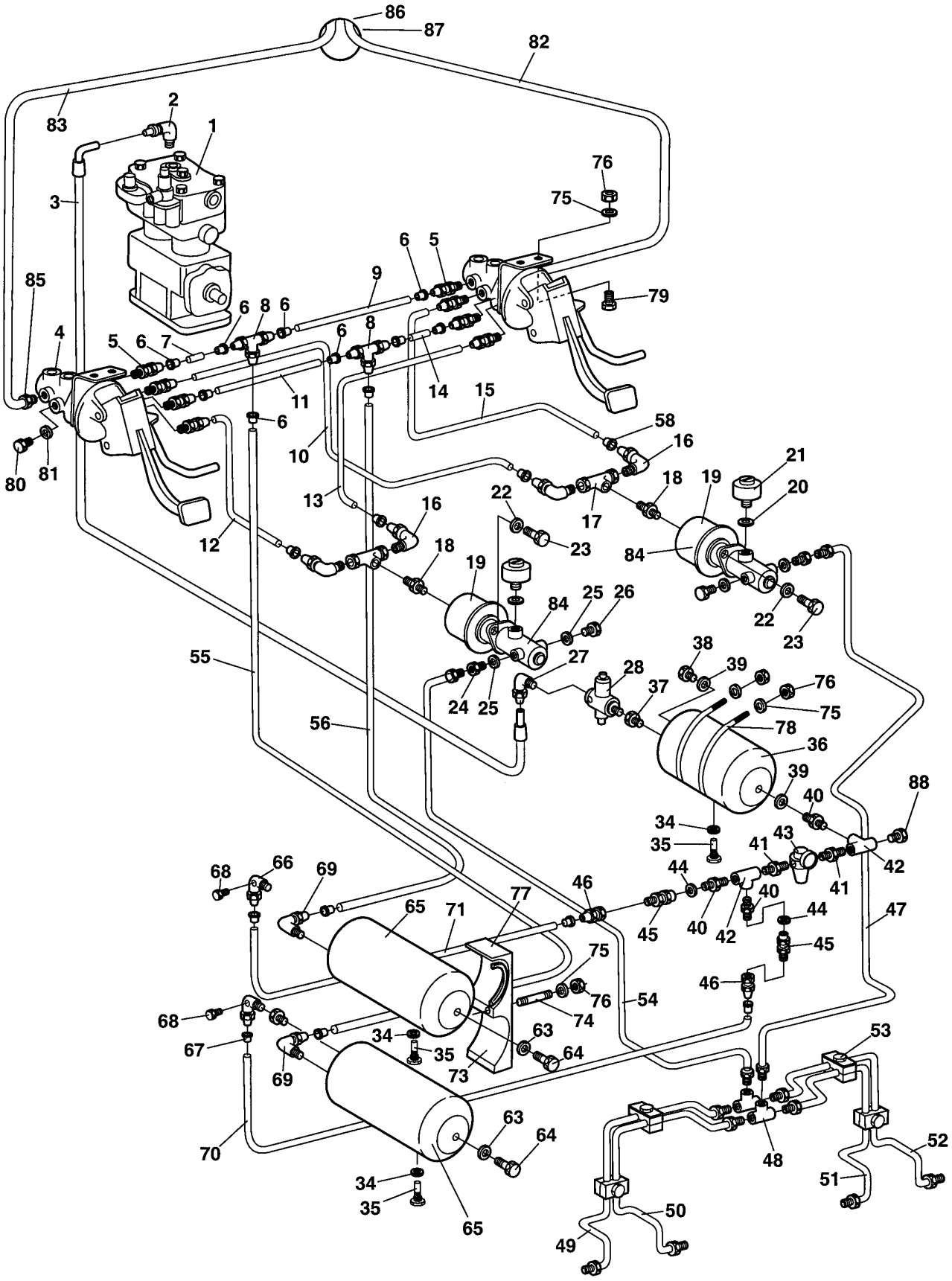

Brake circuit from SN 22620360

Ref. No.	Part No.	Rem.	Qty	Description	Code
51	191935		1	Brake tube	
52	191936		1	Brake tube	
53	258015		4	Clamp	
54	194802		1	Brake line	
55	195838	J		Pipe, nylon	D
56	195838	K		Pipe, nylon	D
58	926625		4	Sleeve	
63	162019		2	Seal ring	D
64	232052		2	Plug	D
65	384614	S	2	Air tank From 22620355	
66	195915		2	Male stud elbow	
67	195833		4	Sleeve insert	
68	256485		2	Adapter	
69	904659		2	Elbow 90	
70	195839	D		Pipe, nylon	
71	195839	P		Pipe, nylon	
73	194371		1	Bracket	
74	194372		2	Stud	
75	904230		22	Washer 10,5x22x2	
76	570006		14	Nut M10	
77	202028			Edge trim	
78	194366		2	Clamp	
79	500030		8	Screw M10-1,5x35H 8,8	
80	232143		6	Plug	
81	330330		6	Washer	
82	195814	O		Pipe, nylon	D
83	195814	L		Pipe, nylon	D
84	194401		2	Brake master cylinder	
85	195932		2	Male stud elbow	
86	904627		2	Nut M6	
87	230520		2	Locking sleeve R6	
88	192343		1	Plug	

D) L=880 mm
J) L=4000 mm
K) L=3600 mm
L) L=900 mm
O) L=1500 mm
P) L=850 mm
S) Replaces earlier 194237

Compressor assembly

16767-1

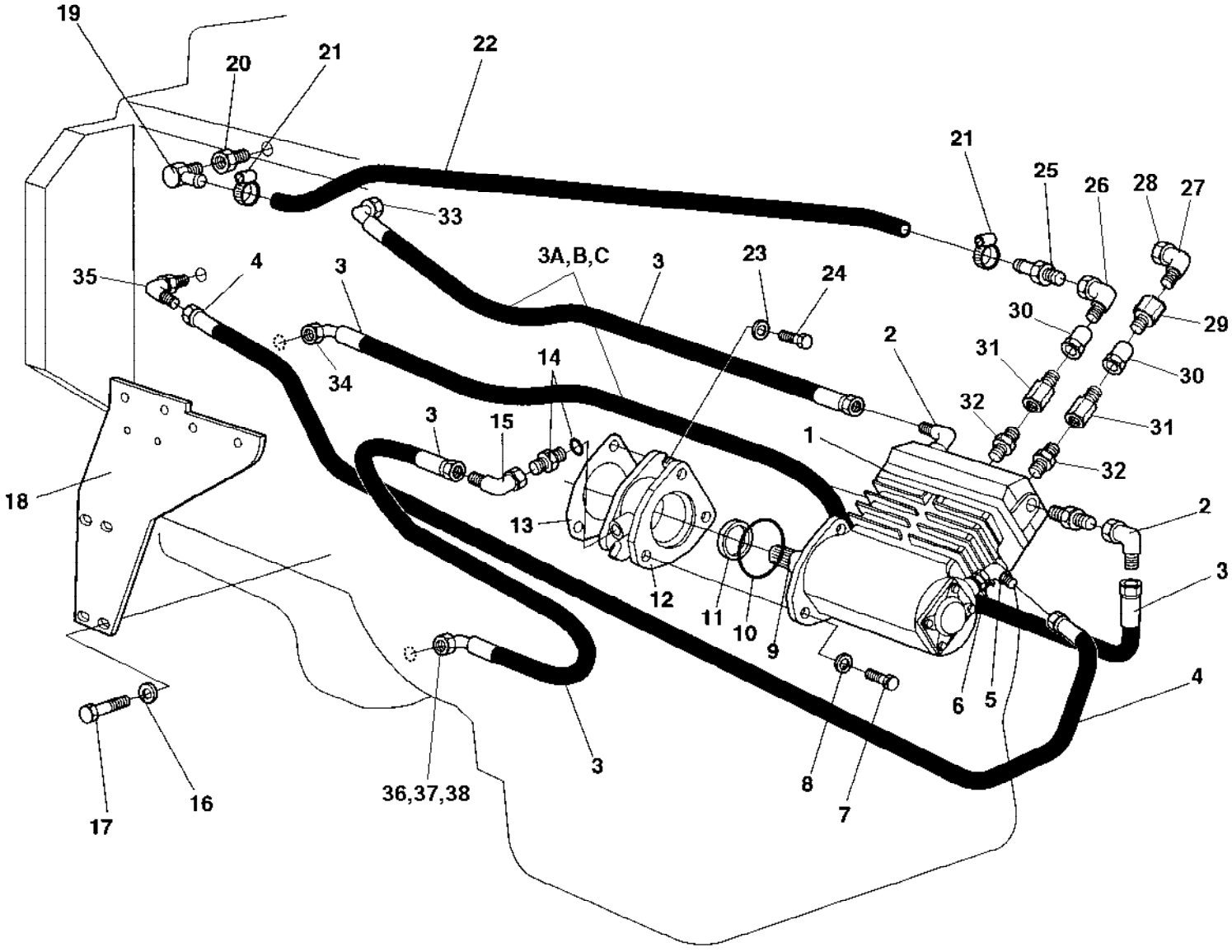

Compressor assembly

Ref. No.	Part No.	Rem.	Qty	Description	Code
1	380253		1	Compressor Knorr-Bremse LP4850 Up to 22620318 (Page 70)	
	380475		1	Compressor Knorr-Bremse LP4850 From 22620319 (Page 72)	
2	928908		2	Adapter	
3	482466	B	3	Hydraulic hose	
3-A	921161		2	Clamp	
3-B	500048		2	Screw M10-1,5x20 8,8	
3-C	904557		2	Washer 10,5x22x4	
4	281628		1	Hydraulic hose	
5	334196		1	Elbow 90	
6	900176		1	Adapter	
7	500123		3	Screw M16x35	
8	904232		3	Washer 17x30x3	
9	380239		1	Shaft	
10	160092		1	O-ring	
11	163105		1	Lip-type oil seal	
12	380242		1	Flange	
13	191623		1	Gasket	
14	234659		1	Straight o-ring connector	
15	334197		1	Elbow 90	
16	904213		8	Washer 13x30x4	
17	500037		8	Screw M12-1,75x35 8,8	
18	380406		2	Support	
19	928081		1	Hose connector	
20	813454		1	Nipple	
21	240297	C	2	Hose clamp	
	313004		2	Hose clamp	
22	246072	A	1	Hose	
23	904703		2	Washer 13x24x4	
24	502058		2	Screw 1/2 UNC	
25	192914		1	Hose connector	
26	249273	D	1	Elbow 90	
	234365		1	Elbow 90	
27	195777	E	1	Elbow 90	
	904659		1	Elbow 90	
28	938161		1	.Nut with sealing cone	
29	195842		1	Reducing	
30	904688		2	Connector	
31	234667		2	Reducer	
32	902126		2	Adapter	
33	813445		1	Elbow 45	
34	334117		1	Adapter	
35	234341		1	Elbow 45	
36	813435		1	Adapter	
37	330333		1	Copper washer	D
38	234729		1	Reducing nipple	

A) L=1250 mm
B) Two of these hoses needs the clamp, screw and washer, item 3A
B and C
C) Replaced by 313004
D) Replaced by 234365
E) Replaced by 904659

380253 Compressor Knorr-Bremse LP4850

17469

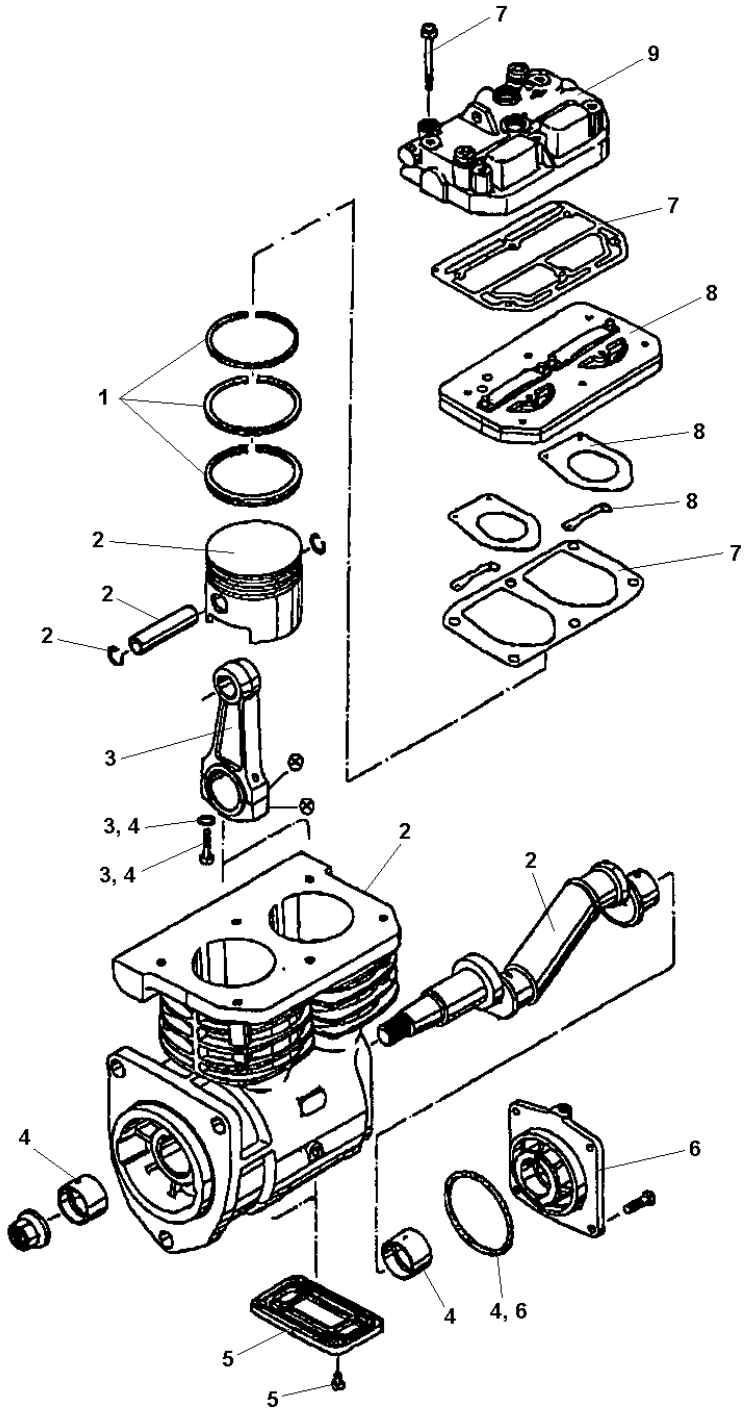

380253 Compressor Knorr-Bremse LP4850

Ref. No.	Part No.	Rem.	Qty	Description	Code
1	938325		2	Piston ring kit	
2				Not Sold Separately	
3	938756		2	Connecting rod	
		A	4	.Washer	
		A	4	.Screw	
4	938326		1	Bearing bushing kit	
		A	2	.Bearing bushing	
		A	1	.O-ring	
		A	4	.Washer	
		A	4	.Screw	
5	938757		2	Cover, crankcase	
		A	2	.Plug	
6	938759		1	Bearing cover	
		A	1	.O-ring	
7	938324		1	Repair kit	
		A	1	.Cylinder head gasket	
		A	1	.Cyl. head cover gasket	
		A	6	.Screw	
8	938327		1	Disc valve kit	
		A	1	.Disc valve	
		A	2	.Gasket	
		A	2	.Clip	
9	938758		1	Cylinder head cover	

A) Not sold separately

380475 Compressor Knorr-Bremse LP4850

17469

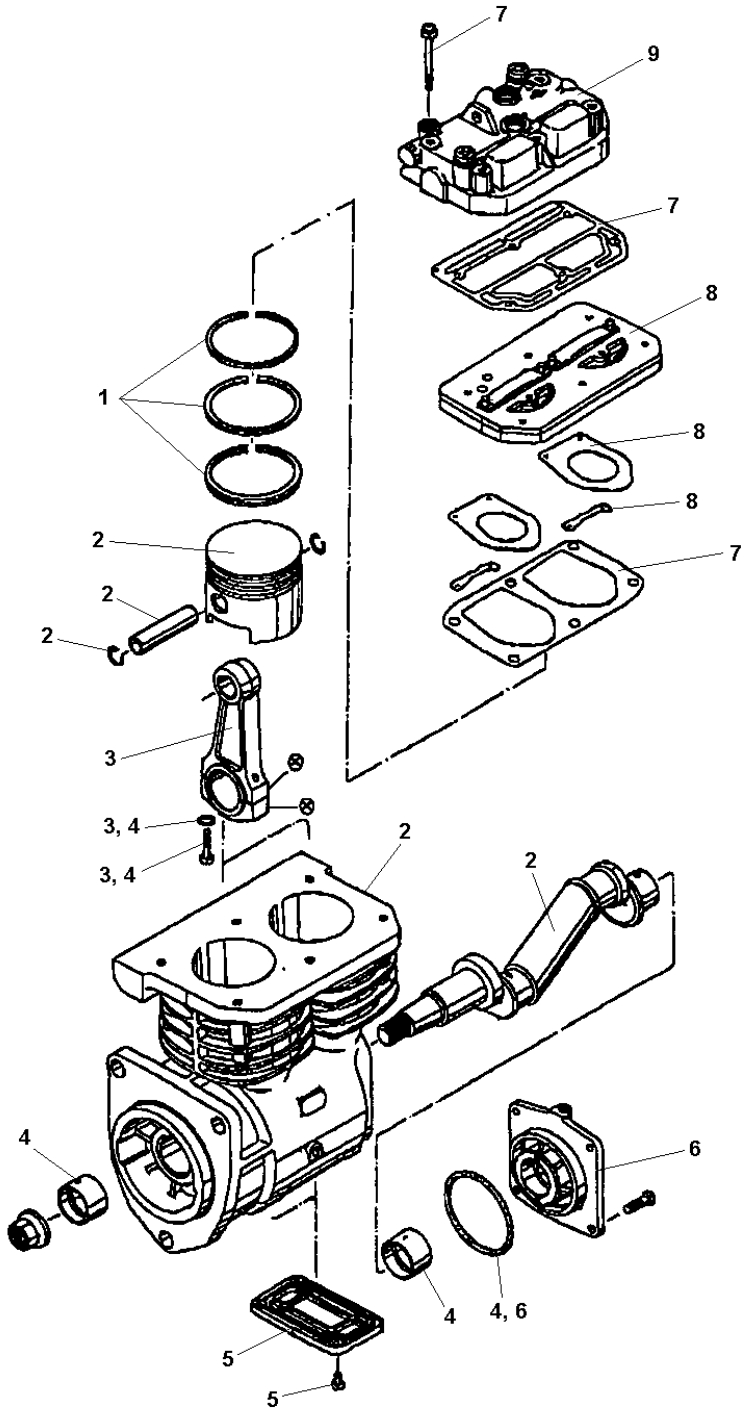

380475 Compressor Knorr-Bremse LP4850

Ref. No.	Part No.	Rem.	Qty	Description	Code
1	938325		2	Piston ring kit	
2				Not Sold Separately	
3	938756		2	Connecting rod	
		A	4	.Washer	
		A	4	.Screw	
4	938326		1	Bearing bushing kit	
		A	2	.Bearing bushing	
		A	1	.O-ring	
		A	4	.Washer	
		A	4	.Screw	
5	938757		2	Cover, crankcase	
		A	2	.Plug	
6	938759		1	Bearing cover	
		A	1	.O-ring	
7	938324		1	Repair kit	
		A	1	.Cylinder head gasket	
		A	1	.Cyl. head cover gasket	
		A	6	.Screw	
8	938327		1	Disc valve kit	
		A	1	.Disc valve	
		A	2	.Gasket	
		A	2	.Clip	
9	938758		1	Cylinder head cover	

A) Not sold separately

Parking brake circuit

17745

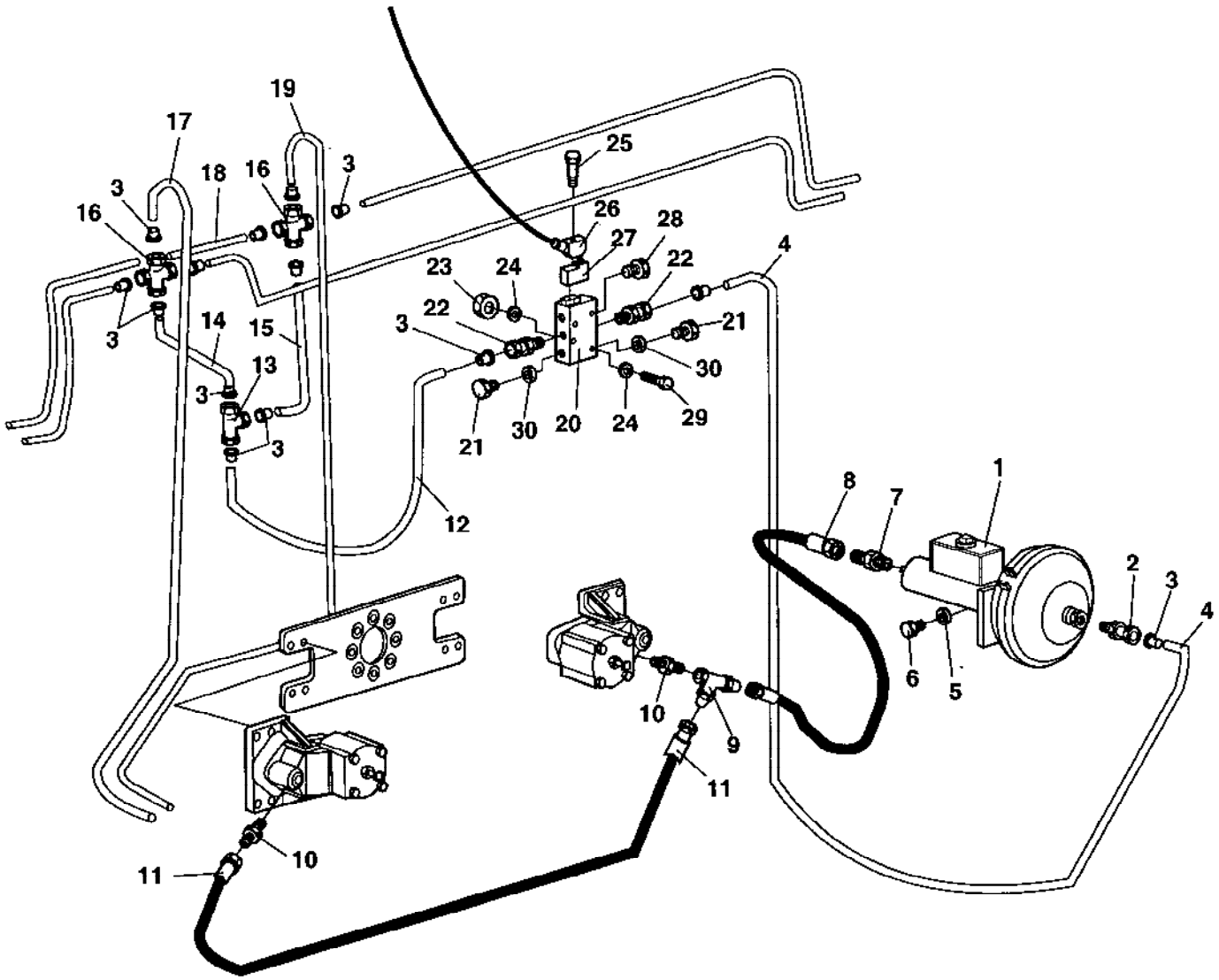

Parking brake circuit

Ref. No.	Part No.	Rem.	Qty	Description	Code
1	384571		1	Brake chamber (Page 76)	
2	791154		1	Adapter	
3	195834		8	Sleeve insert	
4	195838	A	1	Pipe, nylon	D
5	904229		4	Washer 8,4x16x1,5	
6	500021		4	Screw M8-1,25x25 8,8	
7	900249		1	Straight connector	
8	482999		1	Hydraulic hose	
9	334556		1	Tee-connector	
10	334143		2	Straight connector	
11	482023		1	Hydraulic hose	
12	195838	B	1	Pipe, nylon	D
13	904660		1	Tee-connector	
14	195838	C	1	Pipe, nylon	D
15	195838	C	1	Pipe, nylon	D
16	791155		2	Adapter	
17		D	1	Missing description	
18		D	1	Missing description	
19		D	1	Missing description	
20	384576		1	Valve	
21	332038		2	Plug	
22	791153		2	Adapter	
23	570003		4	Nut M5	
24	904281		8	Washer 5,3x10x1	
25	903152		2	Screw	
26	384575		1	Cable harness Up to 22620506	
	387775		1	Cable harness From 22620507	
27	384577		1	Magnetic valve	
28	791317		1	Filter plug	
29	500080		4	Screw	
30	162004		2	Sealing	

A) L=2,6 m
B) L=1 m
C) L=0,25 m
D) Existing tubes

384571 Brake chamber

17769

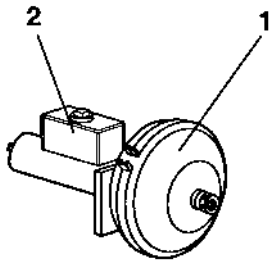

384571 Brake chamber

Ref. No.	Part No.	Rem.	Qty	Description	Code
1	939496		1	Diaphragm	D
2	939497		1	Repair kit	D

Parking brake

17765

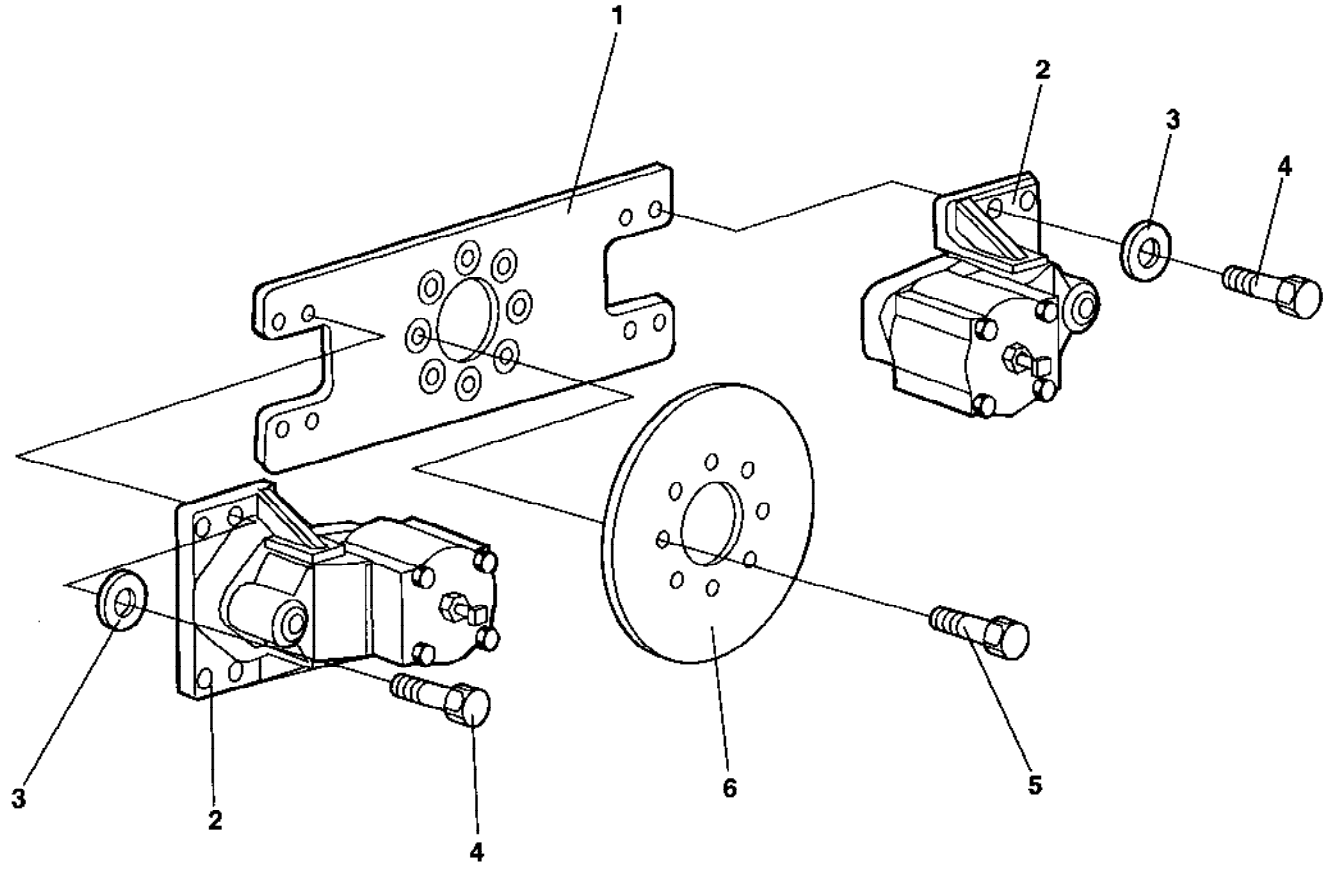

Parking brake

Ref. No.	Part No.	Rem.	Qty	Description	Code
1	384573		1	Bracket	
2	384572		2	Caliper disc brake (Page 80)	
3	904231		8	Washer 13x24x2	
4	947688		8	Screw	
5	938355		6	Screw	
6	938108		1	Disc	

384572 Caliper disc brake

17766

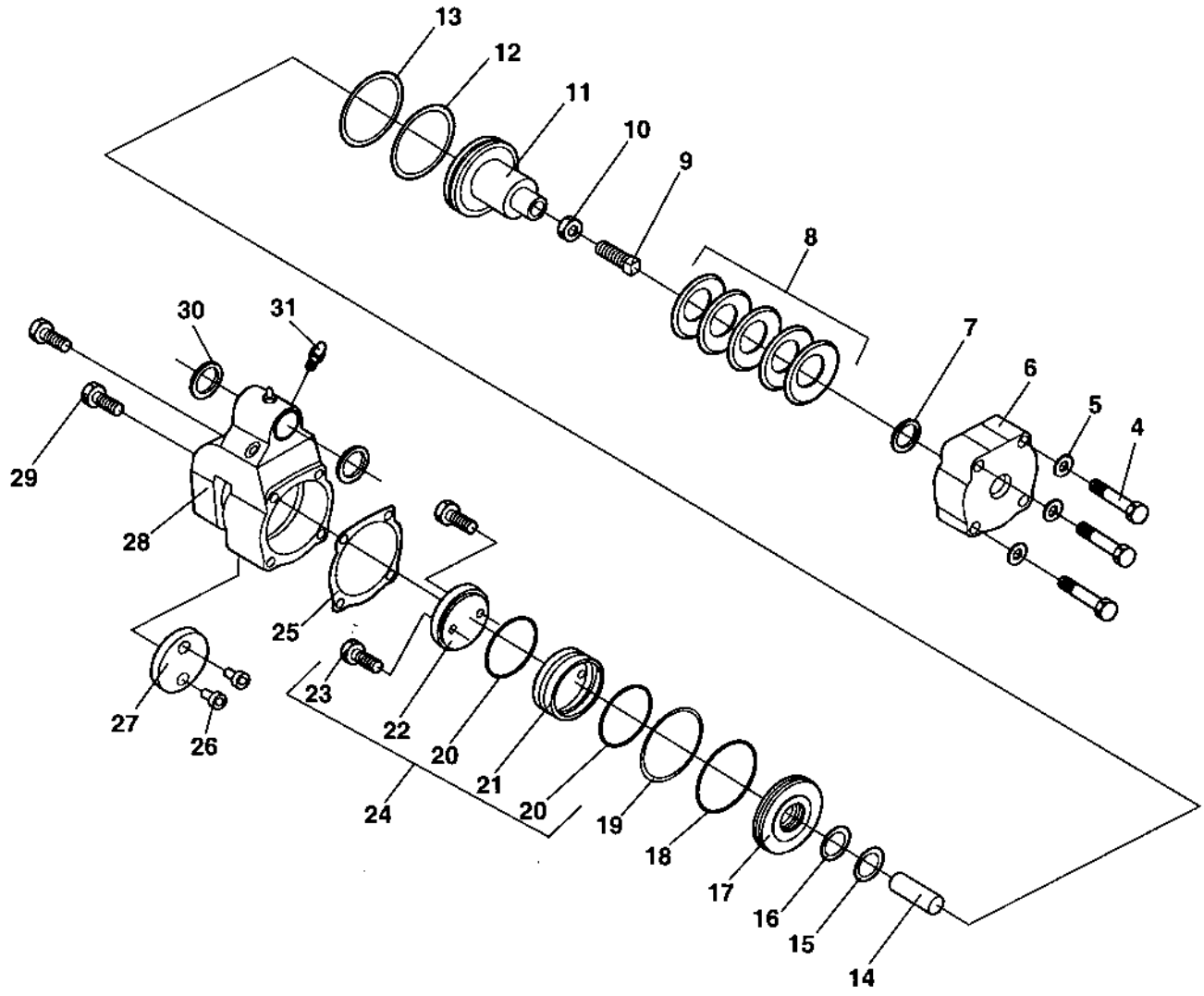

384572 Caliper disc brake

Ref. No.	Part No.	Rem.	Qty	Description	Code
1	939491		1	Lining kit	D
2	939492		1	Seal kit	D
3	939493		1	Repair kit	D
7		B,C	1	Seal	D
8		C	1	Spring set	D
12		B,C	1	Back-up ring	D
13		B,C	1	O-ring	D
15		B,C	1	O-ring	D
16		B,C	1	Back-up ring	D
18		B,C	1	O-ring	D
19		B,C	1	Back-up ring	D
20		B,C	2	O-ring	D
22		A,C	1	Lining	D
23		A,C	2	Screw	D
25		B,C	1	Gasket	D
26		A,C	2	Bushing	D
27		A,C	1	Lining	D
29		A,C	2	Screw	D
30		B,C	2	Seal	D
31		B,C	1	Bleeder screw	D

A) Included in Lining kit
B) Included in Seal Kit
C) Included in Repair kit

Master cylinder

17768

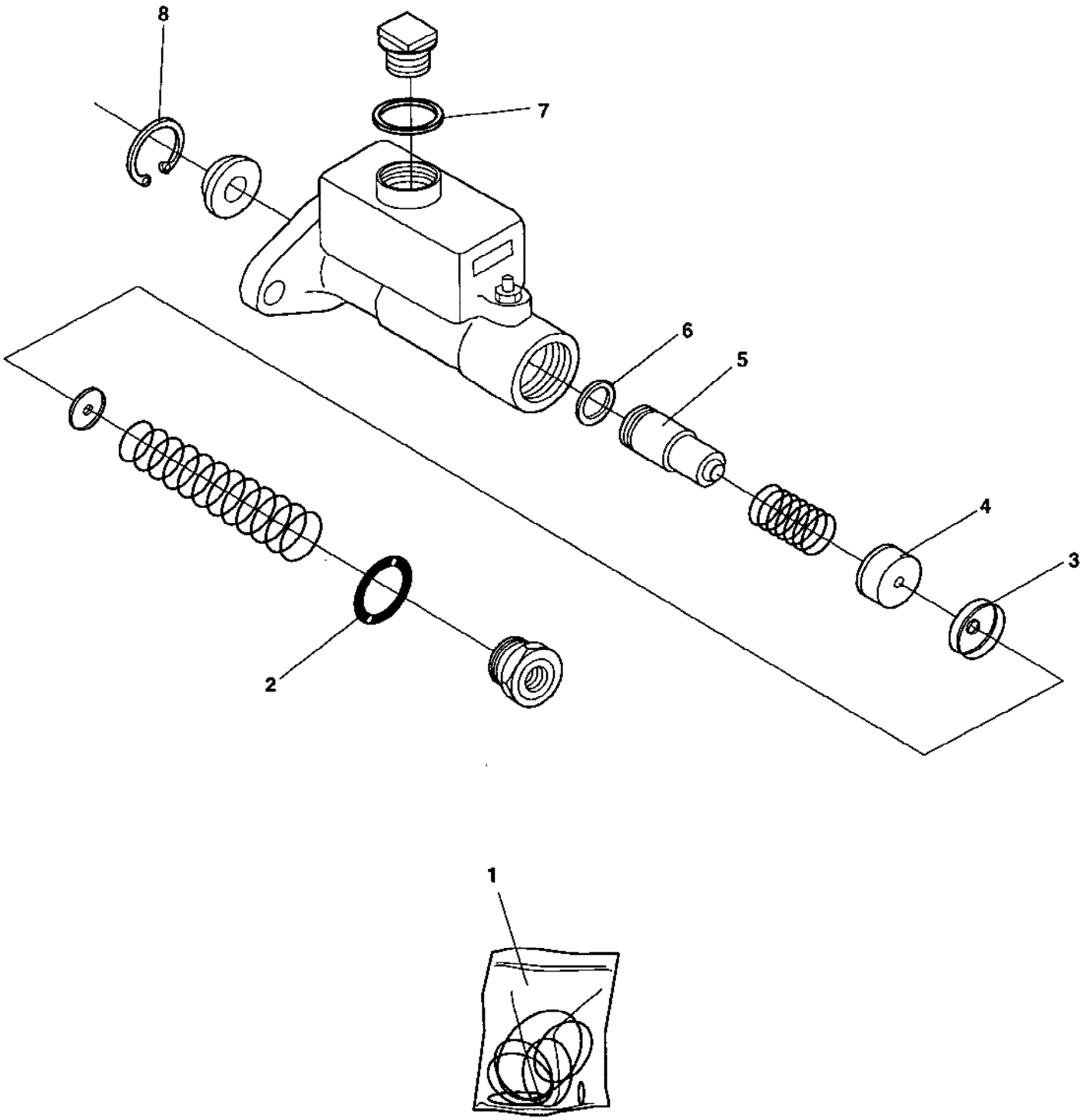

Master cylinder

Ref. No.	Part No.	Rem.	Qty	Description	Code
1	939497		1	Repair kit	D
2		A	1	.Washer	D
3		A	1	.Cup	D
4		A	1	.Piston assembly	D
5		A	1	.Piston	D
6		A	1	.Cup	D
7		A	1	.Gasket	D
8		A	1	.Retaining ring	D

A) Not sold separately

Ref. No.	Part No.	Rem.	Qty	Description	Code
10				Engine Cummins (Page 86)	
20				Cooling system (Page 88)	
30				Air cleaner (Page 90)	
40				Fuel system (Page 92)	
50				Muffler (Page 94)	

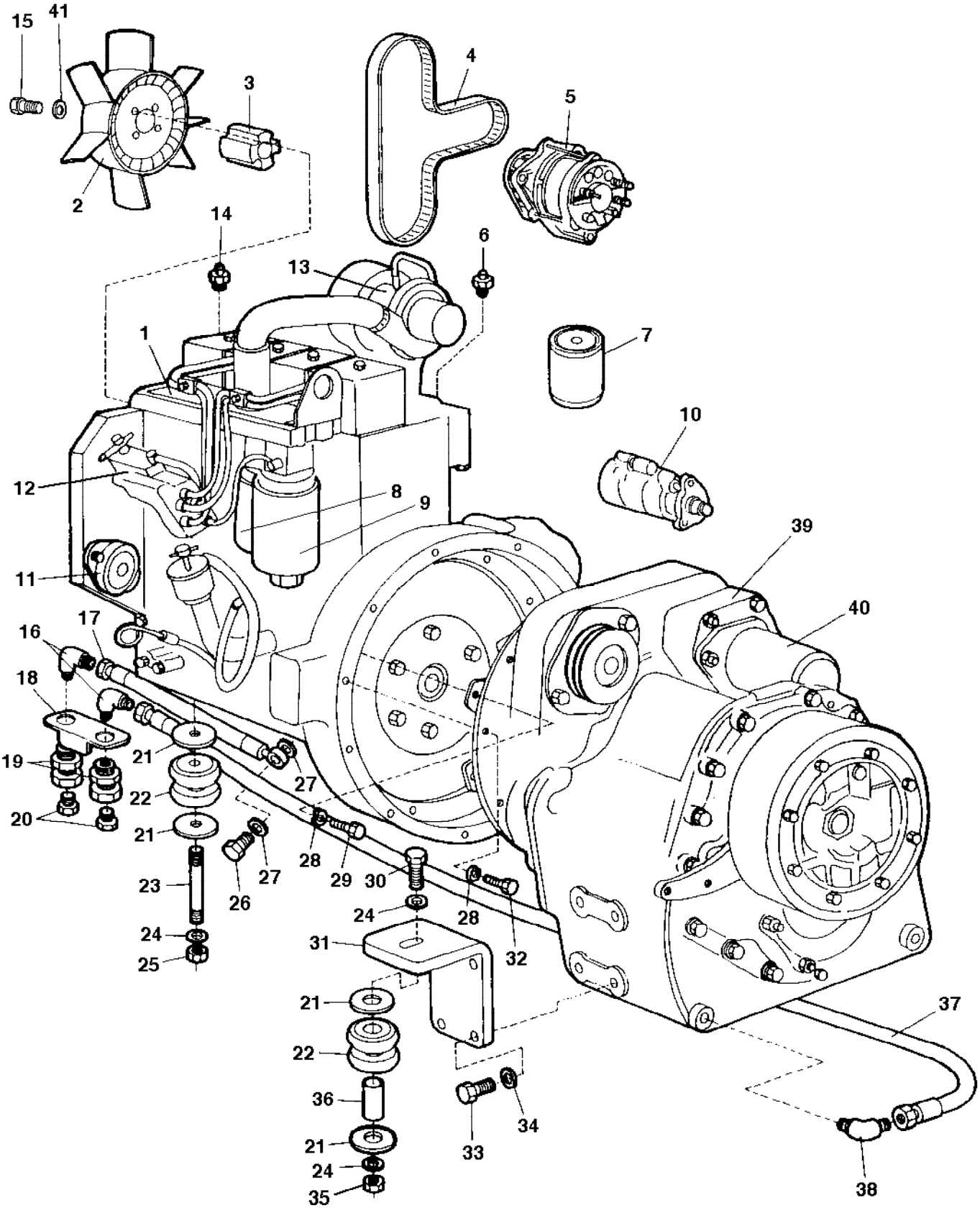
15
41
3
4
5
2
14
6
13
1
7
10
12
8
9
39
11
40
17
16
18
21
19
27
22
20
21
28
29
30
27
23
26
24
28
24
31
32
25
21
37
22
36
34
21
33
24
35
38

Ref. No.	Part No.	Rem.	Qty	Description	Code
1	374541	C	1	Diesel engine Up to 22620499	
	386353		1	Diesel engine From 22620500	
	935758	A	1	.Fuel solenoid	D
	939371	A	1	.Thermostat, cpl	
	903193	A	1	.Water pump, cpl	
2	938137		1	.Fan	
3	191996		1	.Spacer	
4	192273		1	.Belt	D
5	901350		1	.Alternator	C
6	935044		1	.Oil pressure sensor	D
7	212373		1	.Oil filter	A
8	900829		1	.Fuel filter	A
9	900827	B	1	.Fuel filter	A
10	901448		1	.Starter	C
11	191667		1	.Hydraulic pump gear	C
12	939481		1	.Injection pump	
13	939485		1	.Turbo, cpl	
	939486		1	..Gasket, turbo	
	939487		1	..Gasket, oil drain	
14	258307		1	Temperature sensor	D
15	500077		4	Screw	
	902541		1	Lock fluid Loctite 243, 50 ml	
16	813435		2	Adapter	
17	191808		1	Hose	
18	191806		1	Holder	
19	240154		2	Connector	
20	813422		2	Plug	
21	191803		6	Washer	
22	193092		6	Shock absorber	D
23	191805		1	Stud	
24	904558		5	Washer 17x30x6	
25	571006		1	Nut UNC 5/8 - 11	
26	267465		1	Hollow screw	D
27	330331		2	Washer 18,2x23,9x1,5	
28	904230		20	Washer 10,5x22x2	
29	503027		8	Screw UNF 3/8-24x45 Up to 22620318	
	502038		8	Screw UNC 3/8-16x45 From 22620319	
30	500150		2	Screw	
31	191802		2	Bracket	
32	500030		11	Screw M10-1,5x35H 8,8	
33	502092		8	Screw	
34	903290		8	Washer 21x36x6	
35	570008		2	Nut	
36	191799		3	Pipe	
37	191804		1	Hose	
38	334410		1	Adapter	
39	374966		1	Transmission Up to 22620318	
	381950		1	Transmission From 22620319	
40	249993		1	.Oil filter	A
41	904557		4	Washer 10,5x22x4	

A) Not illustrated
B) With water separator
C) Replaced by 386353

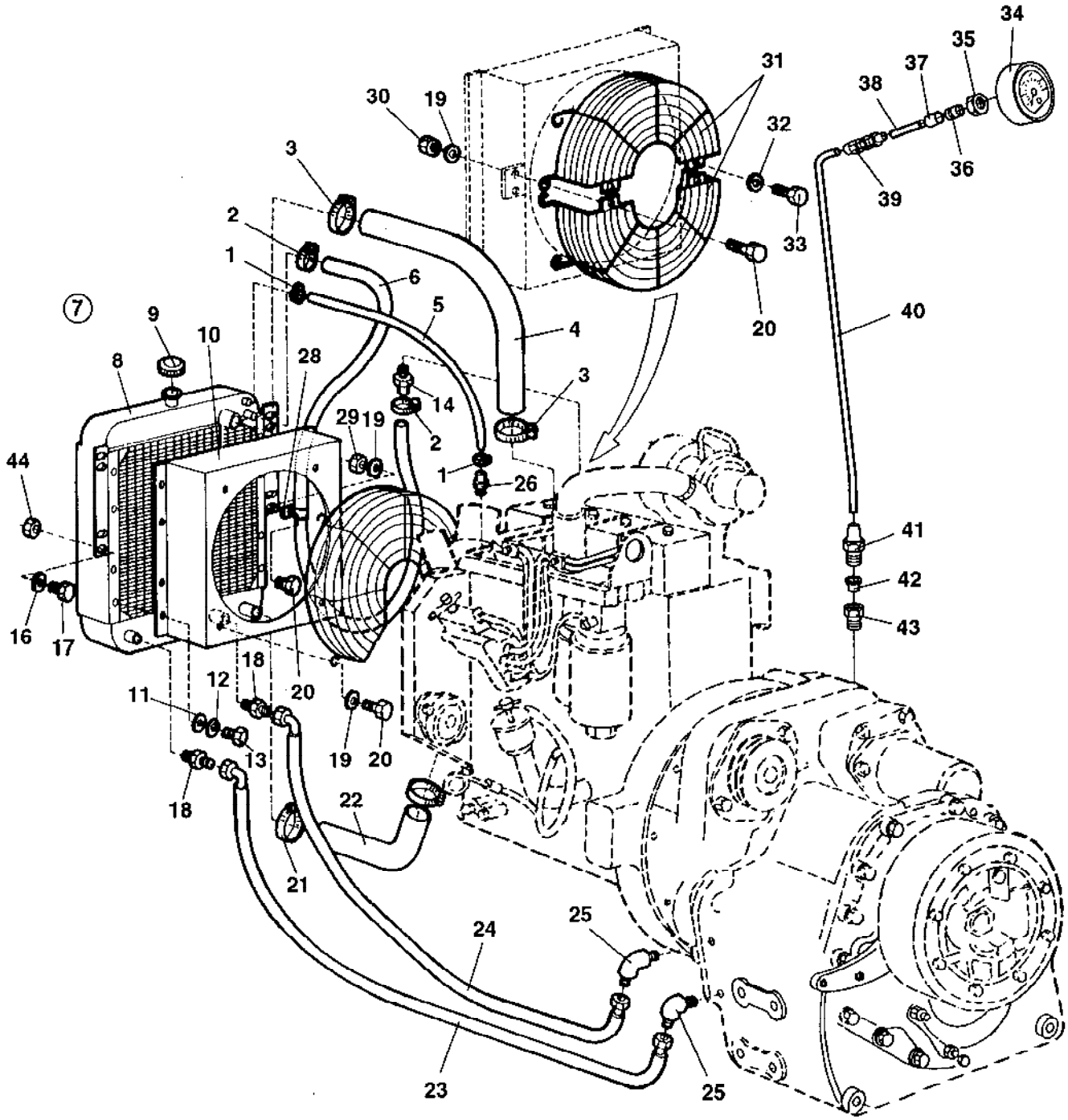
34
35
37
38
36
39
31
32
33
30
19
3
2
1
6
5
4
20
40
7
9
10
8
28
14
29
19
2
3
1
26
44
41
42
43
16
17
18
12
11
20
13
19
20
18
22
21
25
24
23
25

Ref. No.	Part No.	Rem.	Qty	Description	Code
1	313108		2	Hose clamp	
2	313035		2	Hose clamp	
3	313010		2	Hose clamp	
4	374891		1	Hose	
5	246068	A	1	Hose	
6	246072	B	1	Hose	
7	191792		1	Radiator, cpl	
8	819179201		1	.Radiator	
9	249593		1	.Filler cap	D
10	819179202		1	.Cooling air cover	
11	600005		8	.Washer	
12	604003		8	.Washer	
13	500012		8	.Screw M6x12	
14	374984		1	Hose connector	
16	603023		12	Washer M10	
17	500029		6	Screw M10-1,5x30 8,8	
18	334157		2	Straight connector	
19	615043		9	Washer 8,4x18x2	
20	500021		9	Screw M8-1,25x25 8,8	
21	313023		2	Hose clamp	
22	191783		1	Hose	
23	191790		1	Hose	
24	191789		1	Hose	
25	334132		2	Elbow 45, O-ring	
26	242614		1	Hose connector	
28	240908		1	Clamp	
29	570005		1	Nut M8	
30	570005		4	Nut M8	
31	193109		2	Fan guard	
32	615042		2	Conical spring washer	
33	500012		2	Screw M6x12	
34	265909		1	Manometer	
35	904627		1	Nut M6	
36	230520		1	Locking sleeve R6	
37	926625		1	Sleeve	
38	195814	C	1	Pipe, nylon	D
39	904626		1	Coupling	
40	247154	D	1	Pipe	
41	920787		1	Pipe connection	
42	920783		1	Insert	
43	234867		1	Straight connector	
44	570006		6	Nut M10	

A) L=0,6 m
B) L=1,4 m
C) L=0,15 m
D) L=0,65 m

Air cleaner

16358

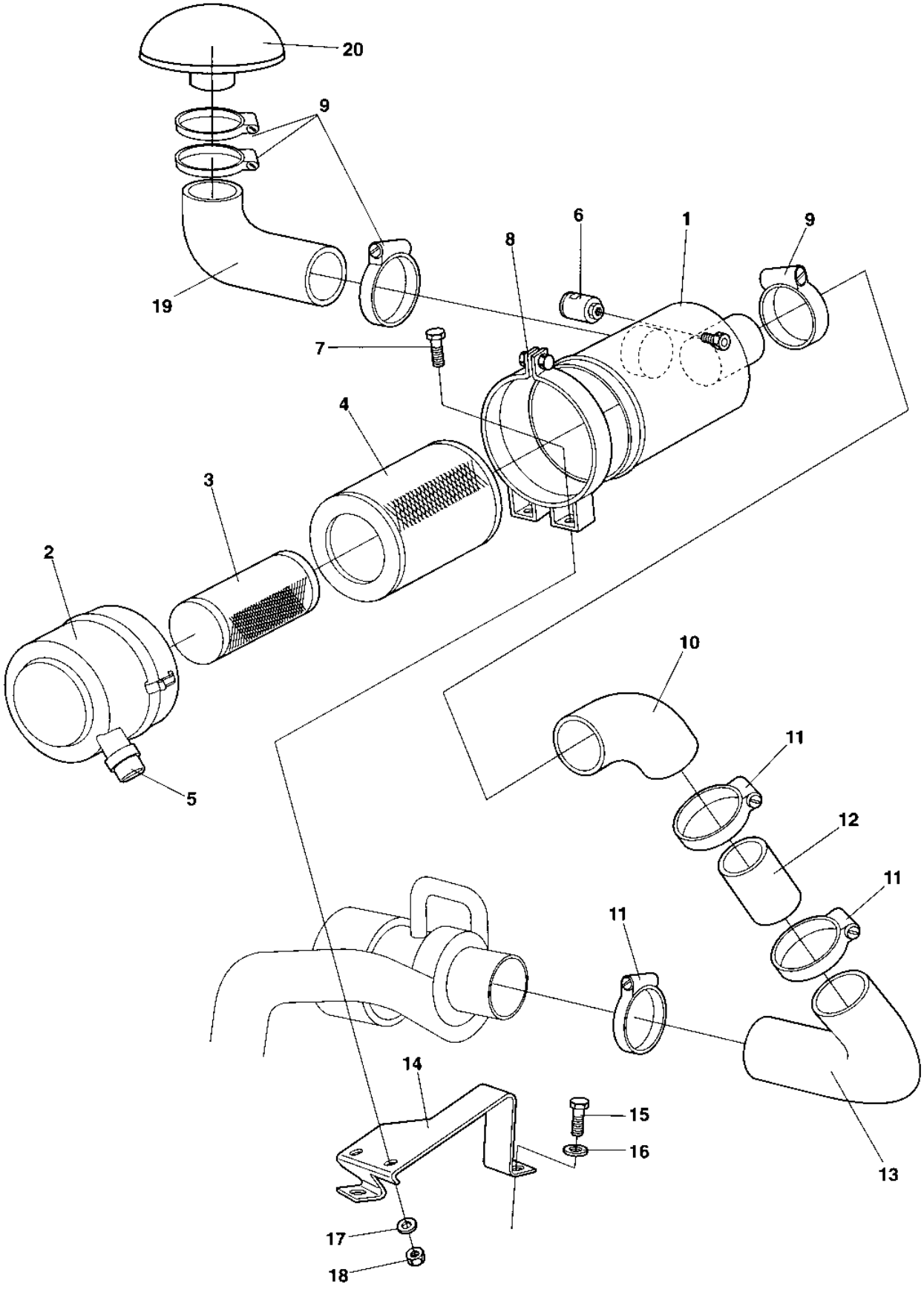

Air cleaner

Ref. No.	Part No.	Rem.	Qty	Description	Code
1	374727		1	Air filter, cpl	
2	375023		1	.Cover	
3	374772		1	.Safety filter	A
4	374771		1	.Main filter	A
5	374905		1	.Vacuator valve	
6				See electrical equipment	
7	500053		2	Screw M8-1,25x20 8,8	
8	374745		1	Bracket	
9	313033		2	Hose clamp	D
10	927048		1	Rubber elbow	D
11	313038		3	Hose clamp	
12	191883		1	Pipe	
13	499132		1	Rubber elbow	D
14	380444		1	Bracket	
15	500048		2	Screw M10-1,5x20 8,8	
16	603023		2	Washer M10	
17	904229		2	Washer 8,4x16x1,5	
18	570005		2	Nut M8	
19	375170		1	Rubber hose	D
20	499343		1	Rain cap	D

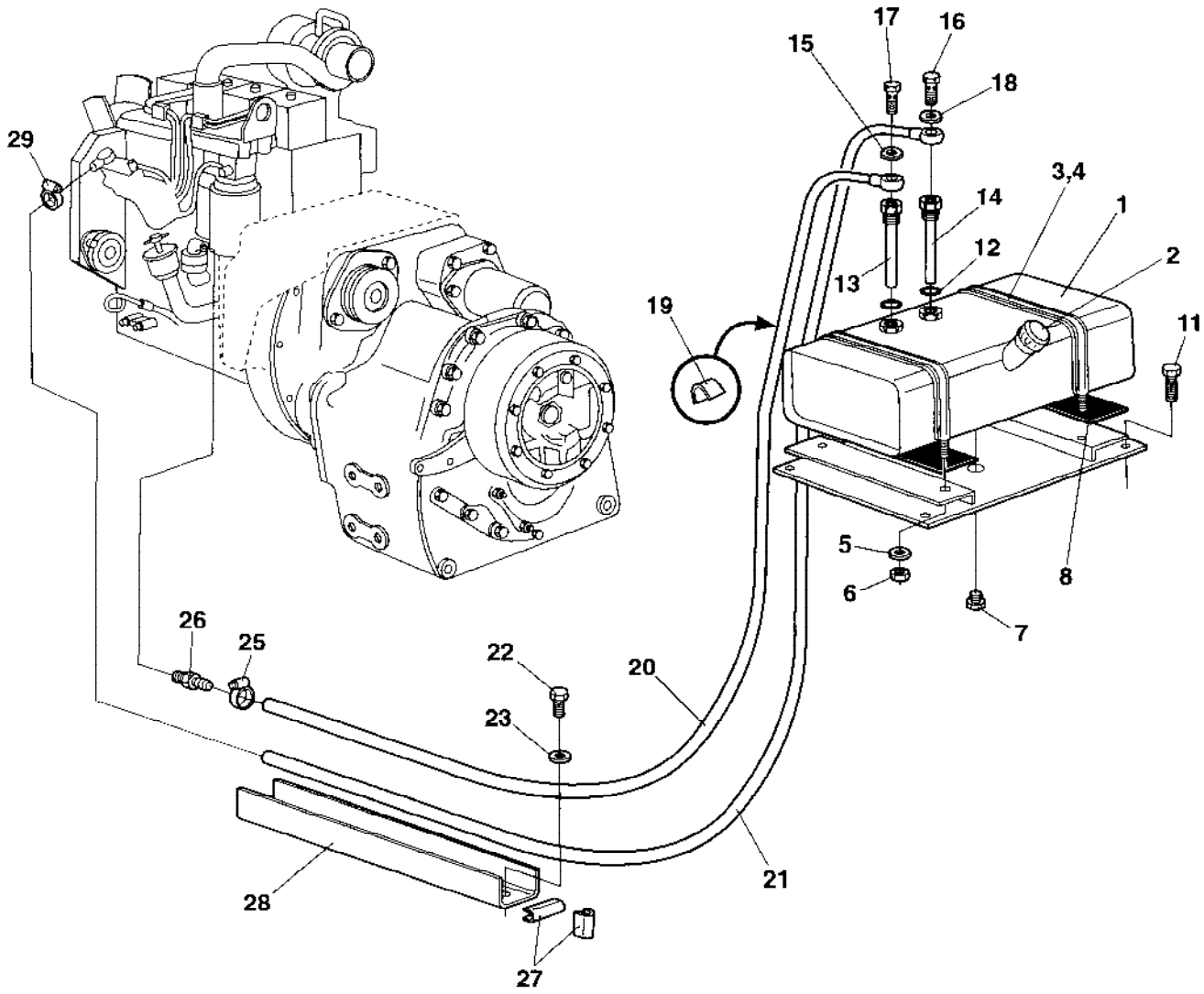
17
16
15
18
29
3,4
1
14
2
12
13
19
11
5
8
6
7
26
25
22
20
23
21
28
27

Ref. No.	Part No.	Rem.	Qty	Description	Code
1	376392		1	Fuel tank	
2			1	Cap See Sprinkler system assembly	
3	191824		2	Clamp, cpl	
4	297018	A		Rubber strip	
5	904231		4	Washer 13x24x2	
6	586019		4	Lock nut M12	
7	374764		1	Plug	
8	264039		6	Shim	
11	904644		4	Screw	
12	330330		2	Washer	
13	374755		1	Pipe	
14	374754		1	Pipe	
15	747282		2	Copper washer 14x20x1,5	
16	330171		1	Hollow screw	
17	330171		1	Hollow screw	
18	747282		2	Copper washer 14x20x1,5	
19	192501		2	Shim	
20	374761		1	Fuel hose	
	929322		1	.Fuel strainer	A
21	374762		1	Fuel hose	
22	500012		8	Screw M6x12	
23	904639		8	Washer 6,7x14x1,5	
25	921161		1	Clamp	
26	334172		1	Adapter	
27	202028	C		Edge trim	
28	380251		1	Channel	
29	313001		1	Hose clamp	
30	500006		5	Screw M5x16	
31	192032		1	Fuel sender	

A) L=1640 mm
C) L=400 mm

Muffler

17624

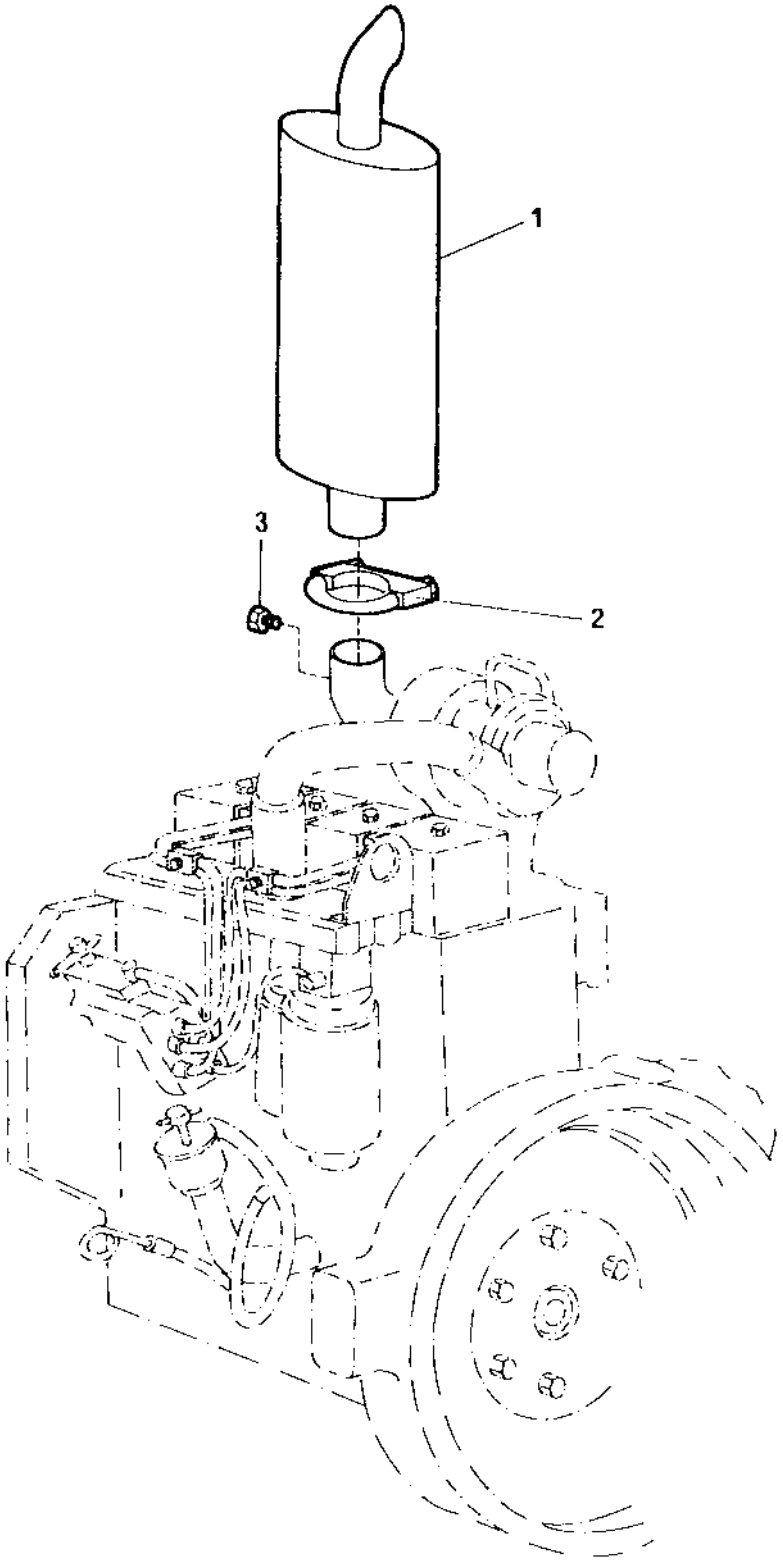

Muffler

Ref. No.	Part No.	Rem.	Qty	Description	Code
1	385975	B	1	Muffler	
2	313112		1	Clamp	D
3	813423		1	Hexagon plug	

B) Replaces earlier used muffler. Introduced from SN 22620385

Ref. No.	Part No.	Rem.	Qty	Description	Code
10				Transmission Up to SN 22620318 (Page 98)	
20				Transmission From SN 22620319 (Page 132)	
30				Differential, Rockwell (Page 170)	
40				Cardan shaft assembly up to SN 22620342 (Page 174)	
50				Cardan shaft assembly from SN 22620343 (Page 176)	
60				Cardan shaft, Albarus (Page 178)	

Ref. No.	Part No.	Rem.	Qty	Description	Code
10				Converter housing & case (Page 100)	
20				Turbine shaft, stator support (Page 102)	
30				Drive plate (Page 104)	
40				Torque converter (Page 106)	
50				Auxiliary pump drive (Page 108)	
60				Charging pump drive (Page 110)	
70				Reverse & 2nd shaft (Page 112)	
80				Low speed shaft (Page 114)	
90				Forward shaft (Page 116)	
100				Reverse idler (Page 118)	
110				Output & 3rd clutch (Page 120)	
120				Chrging pump & oil filter (Page 122)	
130				Control valve (Page 124)	
160				Disc brake (Page 128)	

Converter housing & case

16455-1

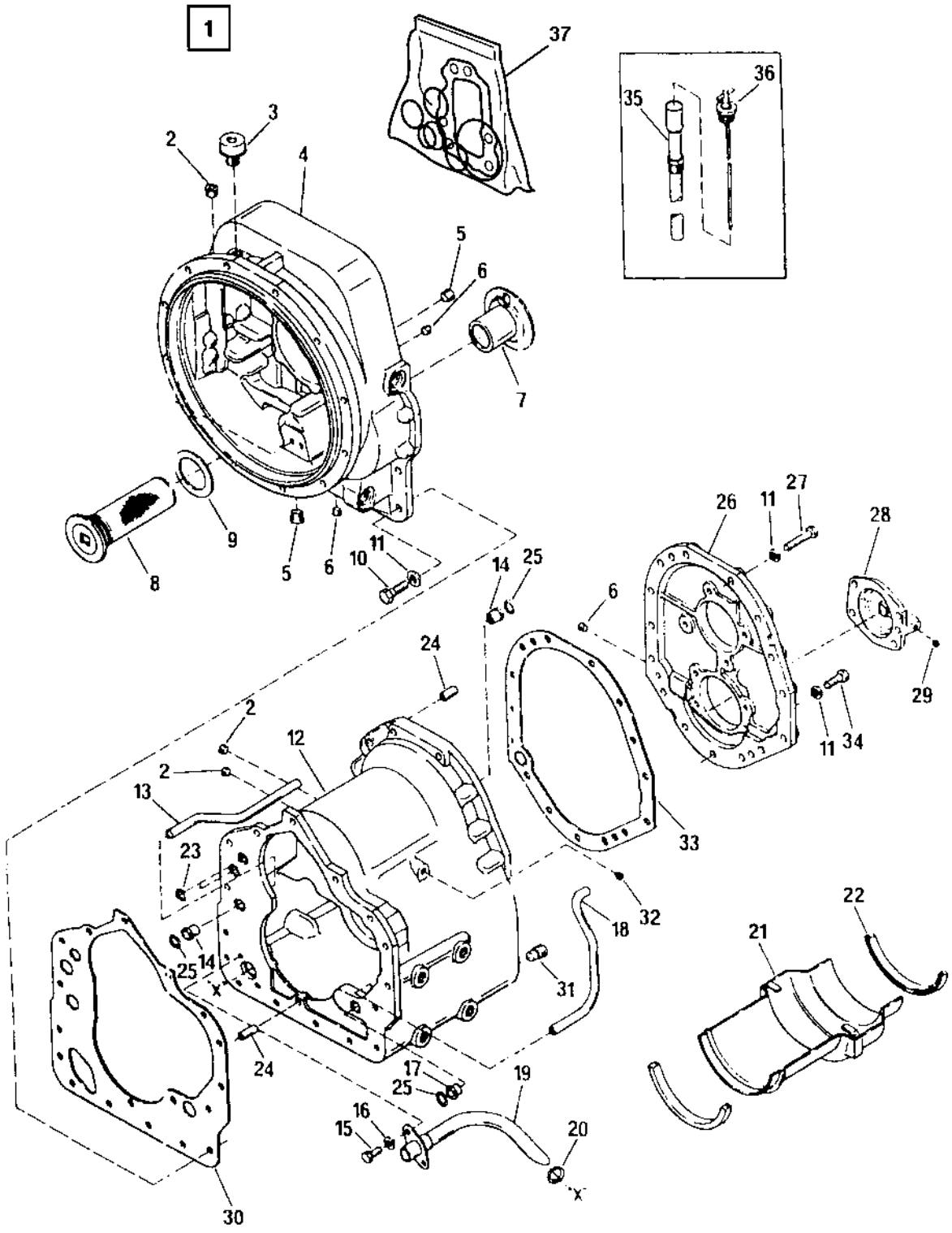

Converter housing & case

Ref. No.	Part No.	Rem.	Qty	Description	Code
1	374966		1	Transmission	
2			1	.Plug	
3	240667		1	.Breather	
4			1	.Housing	
5			2	.Plug	
6	240675		2	.Plug	
7	240618		1	.Bushing	
8	240594		1	.Filter	
9	193666		1	.Gasket	
10	240563		16	.Screw	
11			31	.Spring washer	
12			1	.Housing, cpl	
13	240606		1	..Tube	
14	240583		2	..Bushing	
15	240560		2	..Screw	
16	240716		2	..Spring washer	
17	240582		1	..Bushing	
18	240656		1	..Tube	
19	240605		1	..Tube	
20	193663		1	..O-ring	
21	240622		1	..Oil deflector	
22	193662		2	..Deflector sealing	
23	193664		2	.O-ring	
24	240580		3	.Pin	
25	193659		3	.O-ring	
26	240634		1	.Rear cover	
27			9	.Screw	
28	193660		1	.Cover	
29			1	..Plug	
30	193665		1	.Gasket	
31			2	.Magnetic plug	
32			1	.Plug	
33	193661		1	.Gasket	
34	240563		6	.Screw	
35	240645		1	.Guide tube	
36			1	.Oil dipstick	
37	939297		1	Seal kit Transm. section	
	939298		1	Seal kit Converter section	

Turbine shaft, stator support

16456

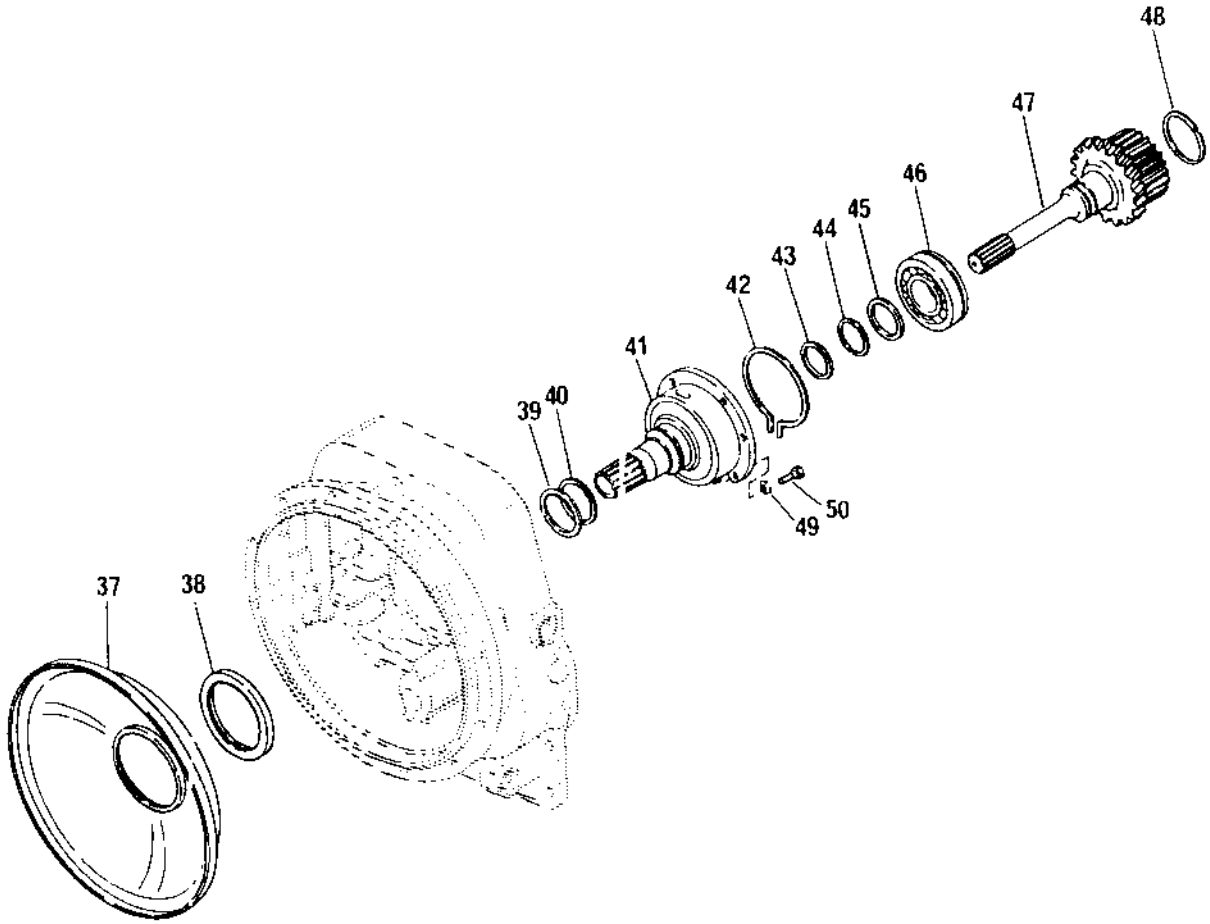

Turbine shaft, stator support

Ref. No.	Part No.	Rem.	Qty	Description	Code
37	240627		1	Oil deflector	
38	193670		1	.Seal ring	
39	193669		1	Seal ring	
40			1	Extension spring	
41			1	Gear	
42	240615		1	Snap ring	
43	193667		1	Seal ring	
44	240595		1	Retaining ring	
45	240616		1	Washer	
46	240682		1	Bearing	
47	240686		1	Shaft	
48	240688		1	.Retaining ring	
49			6	Spring washer	
50	240561		6	Screw	

Drive plate

16457-1

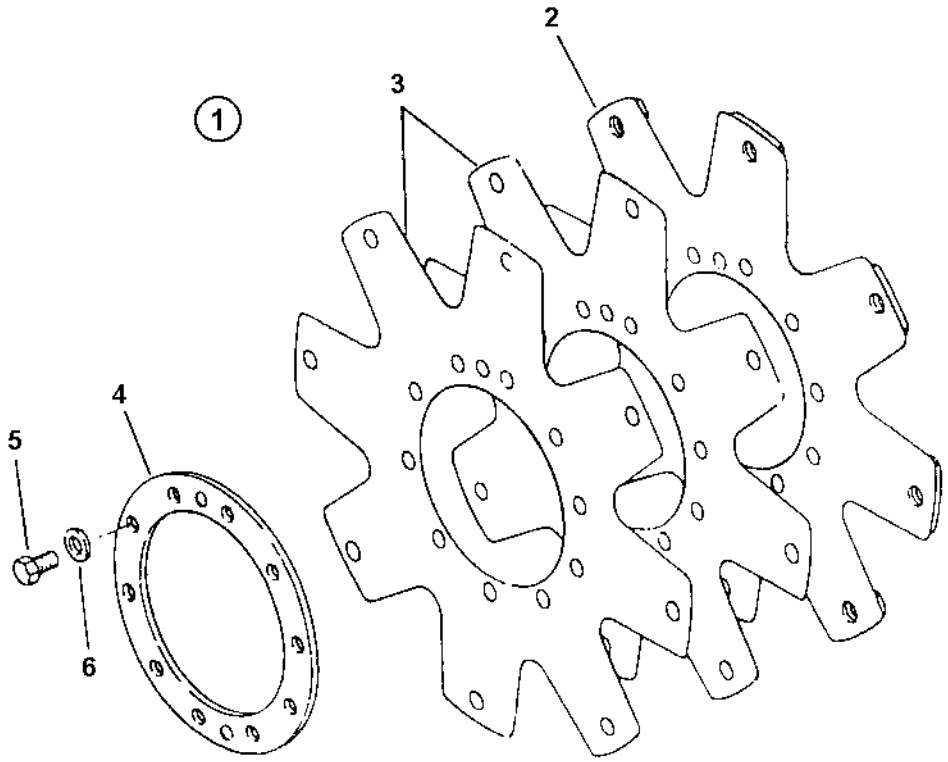

Drive plate

Ref. No.	Part No.	Rem.	Qty	Description	Code
1	938557		1	Drive plate, cpl.	
2			1	.Not Sold Separately	
3			2	.Not Sold Separately	
4	193673		1	.Support ring	
5	240721		10	.Screw	
6	938435		10	.Washer	

Torque converter

16458

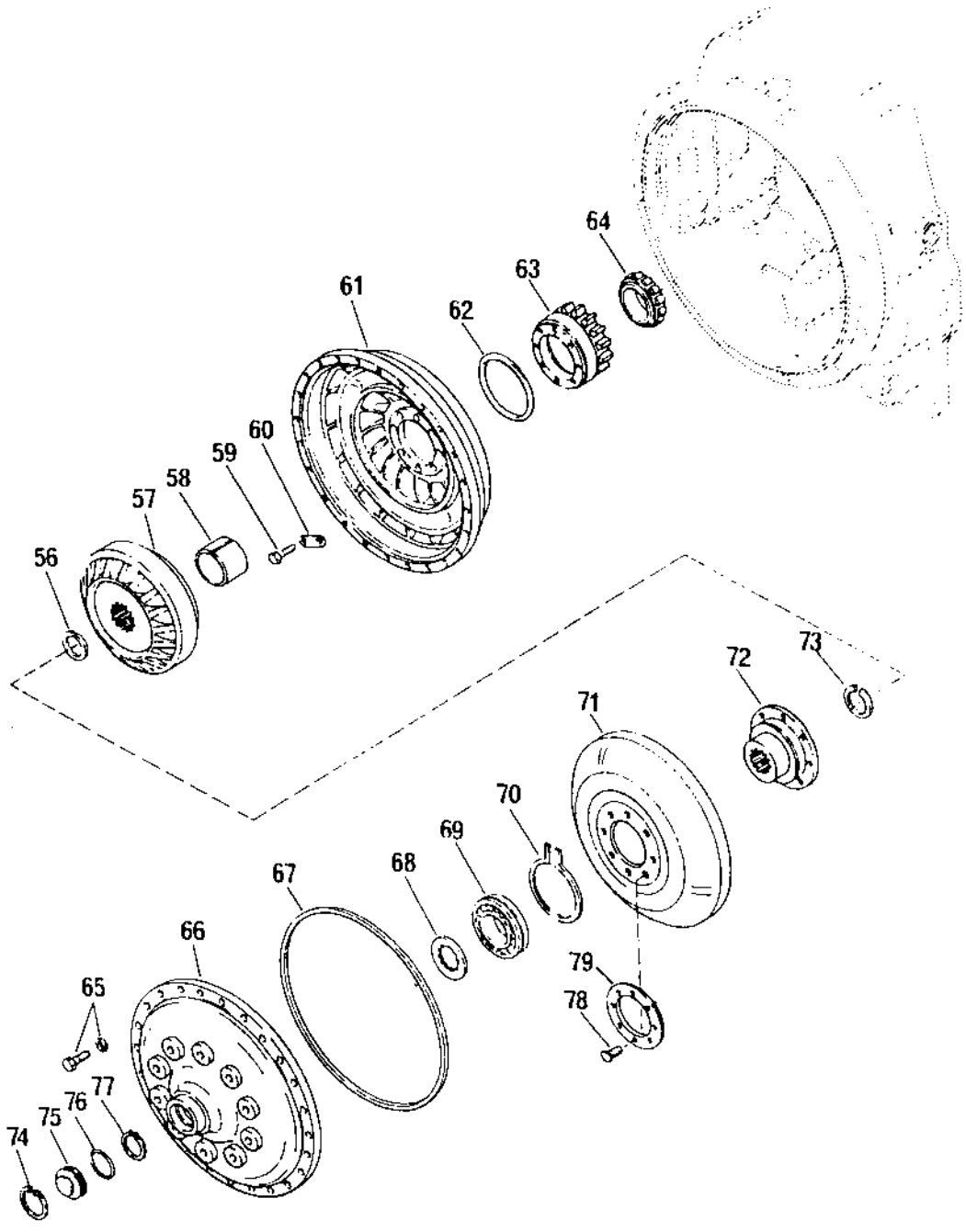

Ref. No.	Part No.	Rem.	Qty	Description	Code
56	240729		1	Seal ring	
57	240683		1	Stator	
58	240701		1	Spacer	
59	240576		8	Screw	
60	240612		4	Lock plate	
61			1	Impeller	
62	193674		1	O-ring	
63	240665		1	Impeller hub	
64	240666		1	Bearing	
65			24	Screw with washer	
66			1	Impeller cover	
67	193676		1	O-ring	
68			1	Ring	
69	240613		1	Bearing	
70	240614		1	Seal ring	
71	240679		1	Turbine	
72	240680		1	Hub	
73	240573		1	Seal ring	
74	240574		1	Retaining ring	
75	240584		1	Plug	
76	193677		1	O-ring	
77	240573		1	Seal ring	
78	240696		12	Screw	
79			1	Washer	

Auxiliary pump drive

16459

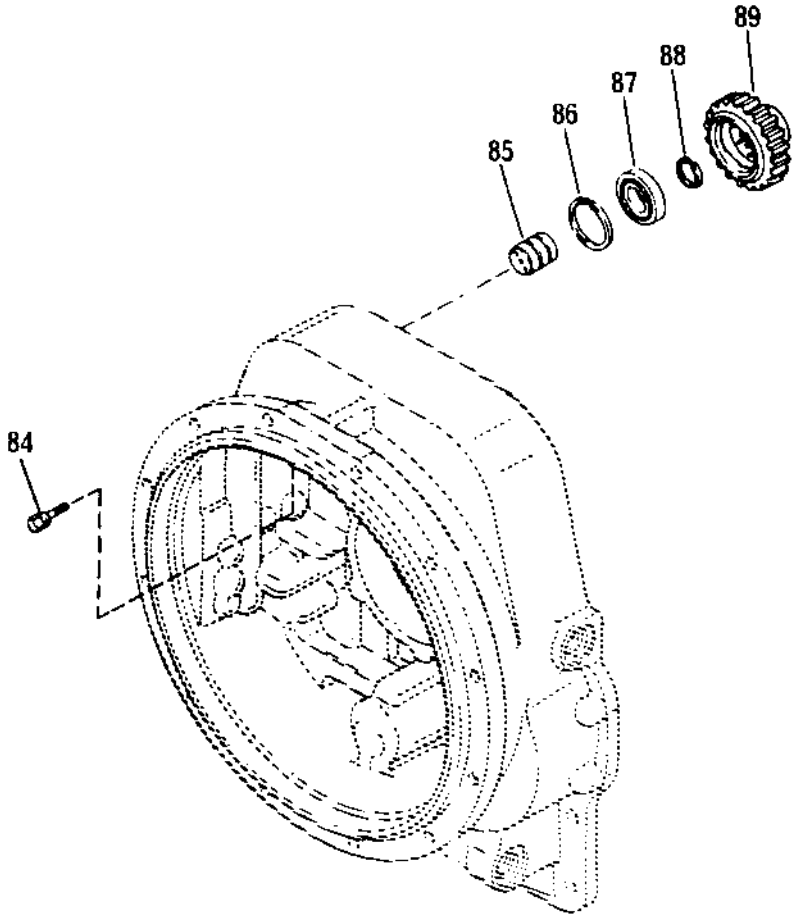

Ref. No.	Part No.	Rem.	Qty	Description	Code
84			2	Screw with washer	
85	240623		1	Support	
86	240586		1	Retaining ring	
87	240663		1	Bearing	
88	240629		1	Locating ring	
89	240677		1	Gear	

Charging pump drive

16460

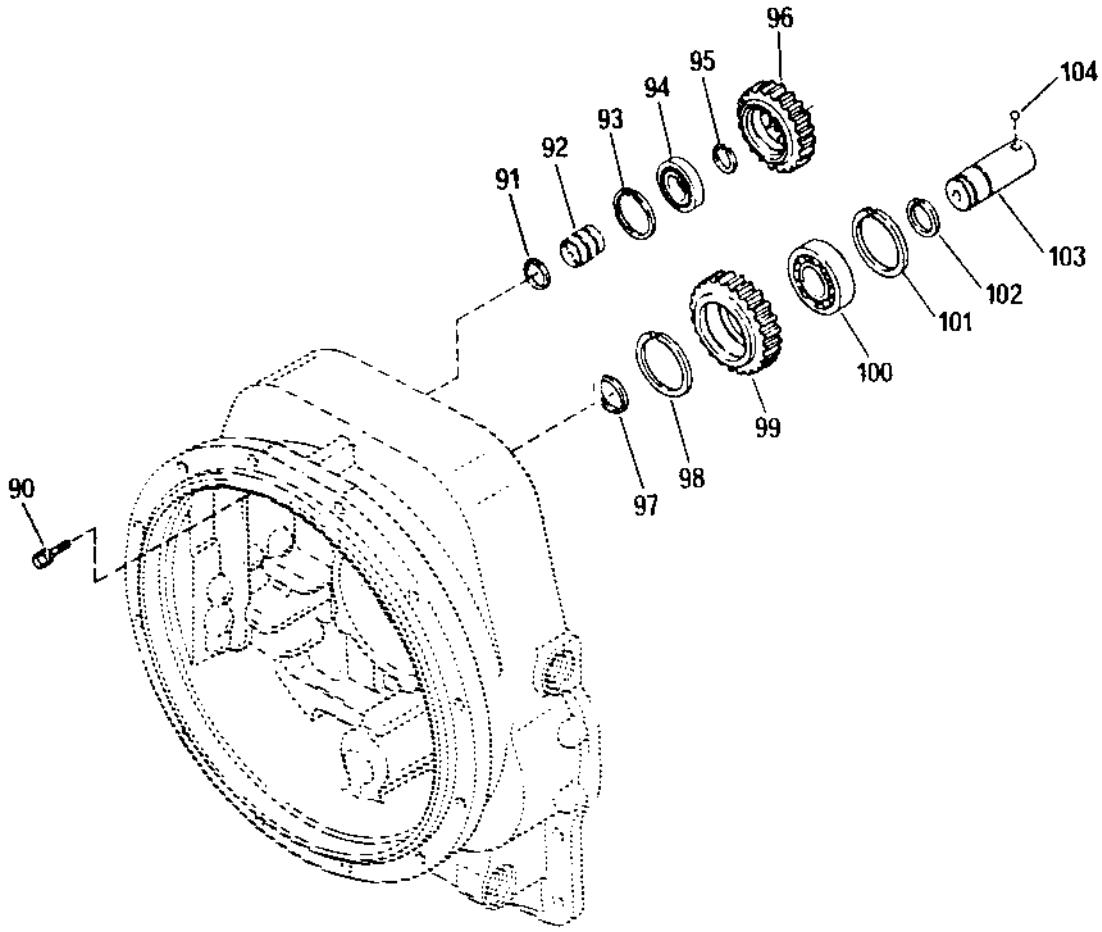

Charging pump drive

Ref. No.	Part No.	Rem.	Qty	Description	Code
90	193678		2	Screw with washer	
91	240629		1	Locating ring	
92	240623		1	Support	
93	240587		1	Seal ring	
94	193679		1	Bearing	
95	240629		1	Locating ring	
96	240661		1	Gear	
97	240629		1	Locating ring	
98	240558		1	Seal ring	
99	240660		1	Intermediate gear	
100	240664		1	Bearing	
101	240588		1	Retaining ring	
102	240629		1	Locating ring	
103	240662		1	Shaft	
104	193680		1	Ball	

Reverse & 2nd shaft

16461

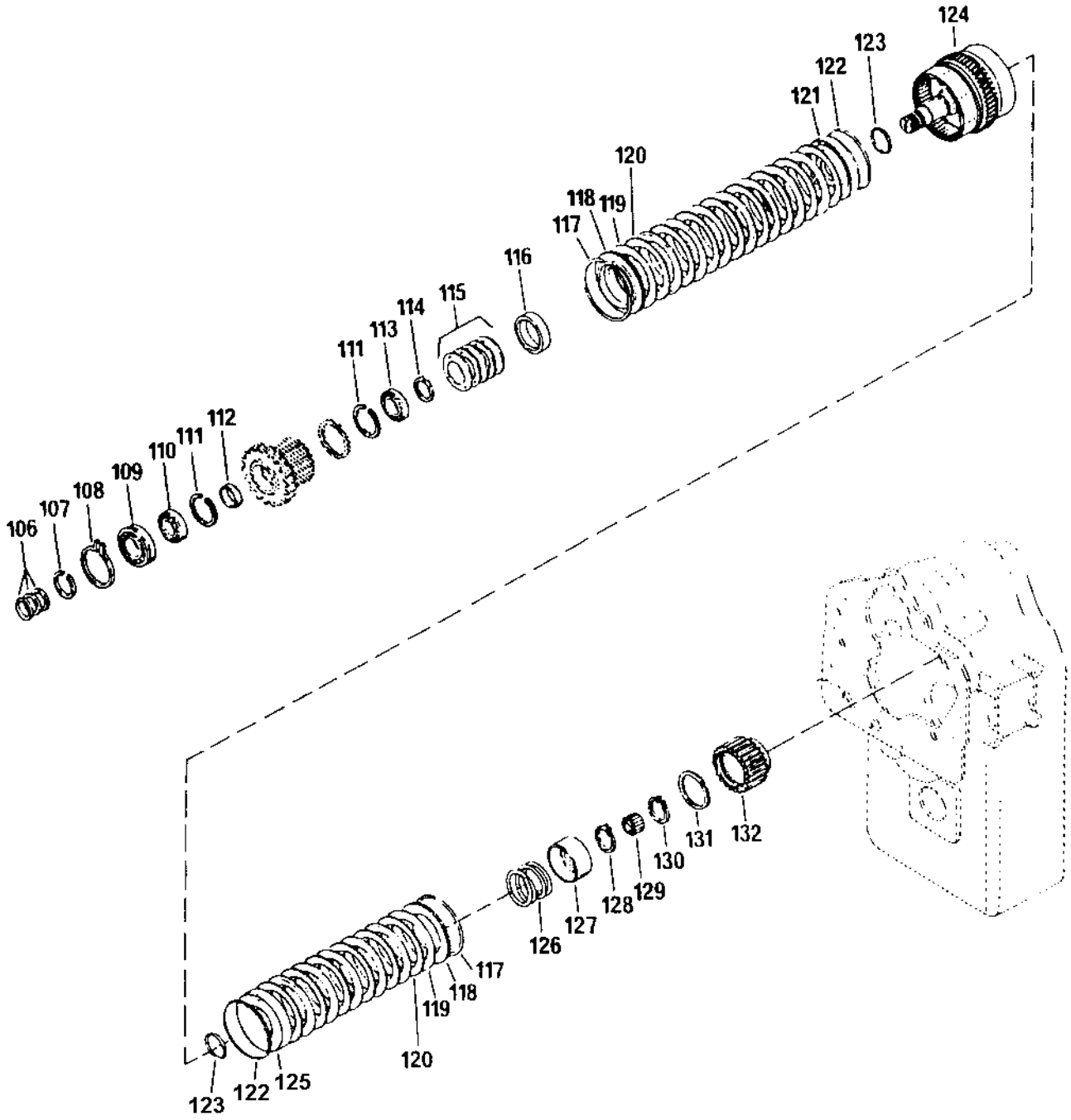

Ref. No.	Part No.	Rem.	Qty	Description	Code
106	193683		3	Piston ring	
107	193684		1	Retaining ring	
108	240593		1	Snap ring	
109	240585		1	Bearing	
110			1	Bearing	
111	240602		2	Retaining ring	
112	240620		1	Spacer	
113			1	Bearing	
114	240655		1	Snap ring	
115	193685		1	Disc spring	
116	240651		1	Spacer	
117	240601		2	Snap ring	
118	240649		2	Support disc	
119	240650		14	Inner disc	
120	240600		14	Outer disc	
121	240640		1	Piston	
122	193686		2	Seal ring, outer	
123	193687		2	Seal ring, inner	
124	240697		1	Plate carrier	
125	240642		1	Piston	
126	240639		1	Spring	
127	240638		1	Spring stop	
128	240626		1	Snap ring	
129	240596		1	Bearing	
130	240625		1	Retaining ring	
132	938379		1	Hub	

Low speed shaft

16462

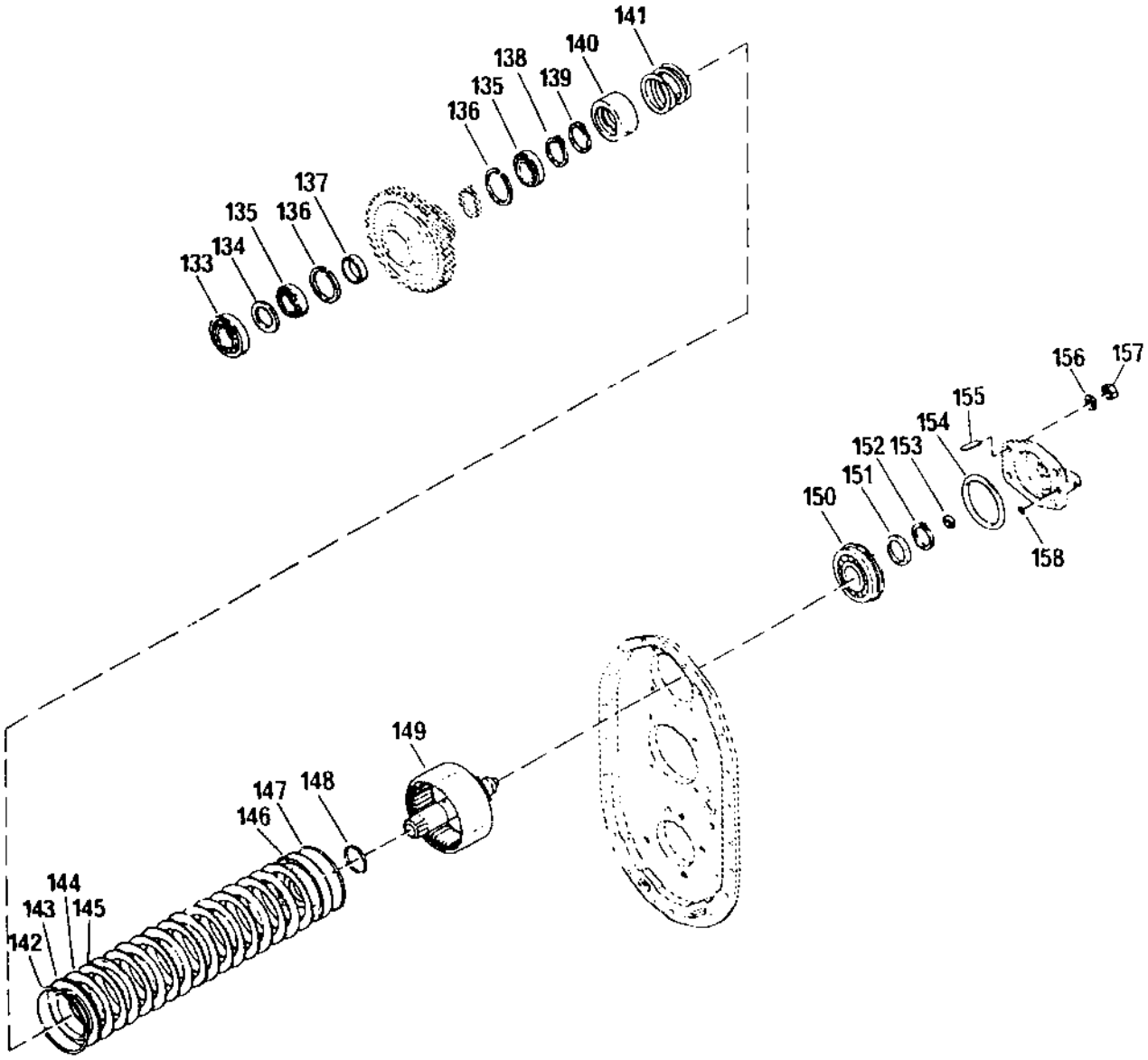

Low speed shaft

Ref. No.	Part No.	Rem.	Qty	Description	Code
133	240591		1	Bearing	
134	240604		1	Spacer	
135	240592		2	Bearing	
136	240588		2	Retaining ring	
137	240621		1	Spacer	
138	240625		1	Retaining ring	
139	240626		1	Snap ring	
140	240638		1	Spring stop	
141	240639		1	Spring	
142	240601		1	Snap ring	
143	240649		1	Support disc	
144	240624		8	Inner disc	
145	240600		8	Outer disc	
146			1	Piston	
147	193686		1	Seal ring, outer	
148	193687		1	Seal ring, inner	
149	240641		1	Disc carrier	
150	240681		1	Bearing	
151	240616		1	Washer	
152	240625		1	Retaining ring	
153	193699		1	Piston ring	
154	193700		1	O-ring	
155	193701		4	Stud	
156			4	Spring washer	
157	193702		4	Nut	
158	193703		1	O-ring	

Forward shaft

16221

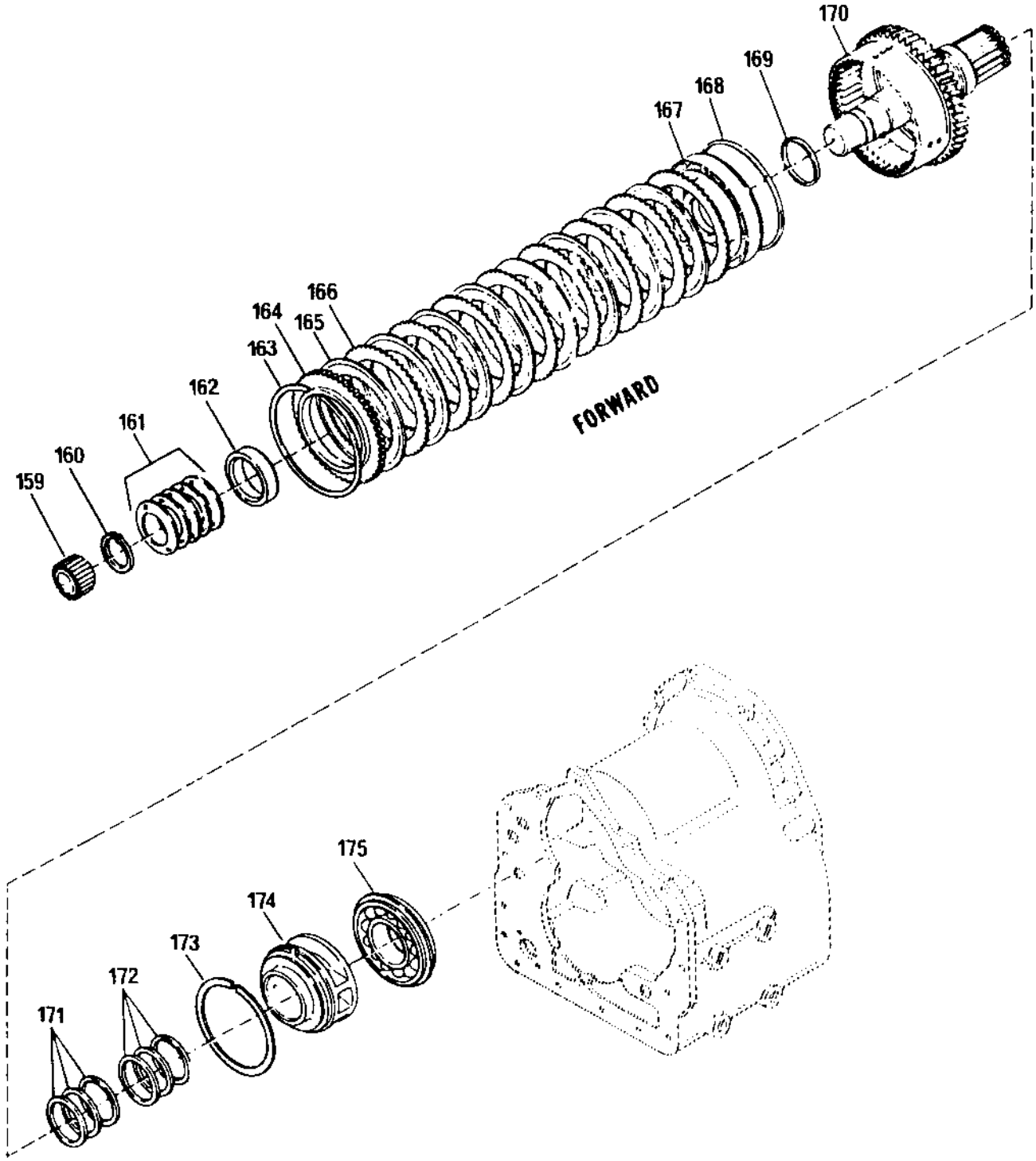

Ref. No.	Part No.	Rem.	Qty	Description	Code
159	240636		1	Needle bearing	
160	240655		1	Snap ring	
161	193685		1	Disc spring	
162	240651		1	Spacer	
163	240601		1	Snap ring	
164	240649		1	Support disc	
165	240650		8	Inner disc	
166	240600		8	Outer disc	
167	240640		1	Piston	
168	193686		1	Seal ring, outer	
169	193687		1	Seal ring, inner	
170	240653		1	Plate carrier	
171	938362		4	Piston ring expander	
172	938368		4	Piston ring	
173	240637		1	Retaining ring	
174	240691		1	Bushing	
175	240695		1	Bearing	

Reverse idler

16464

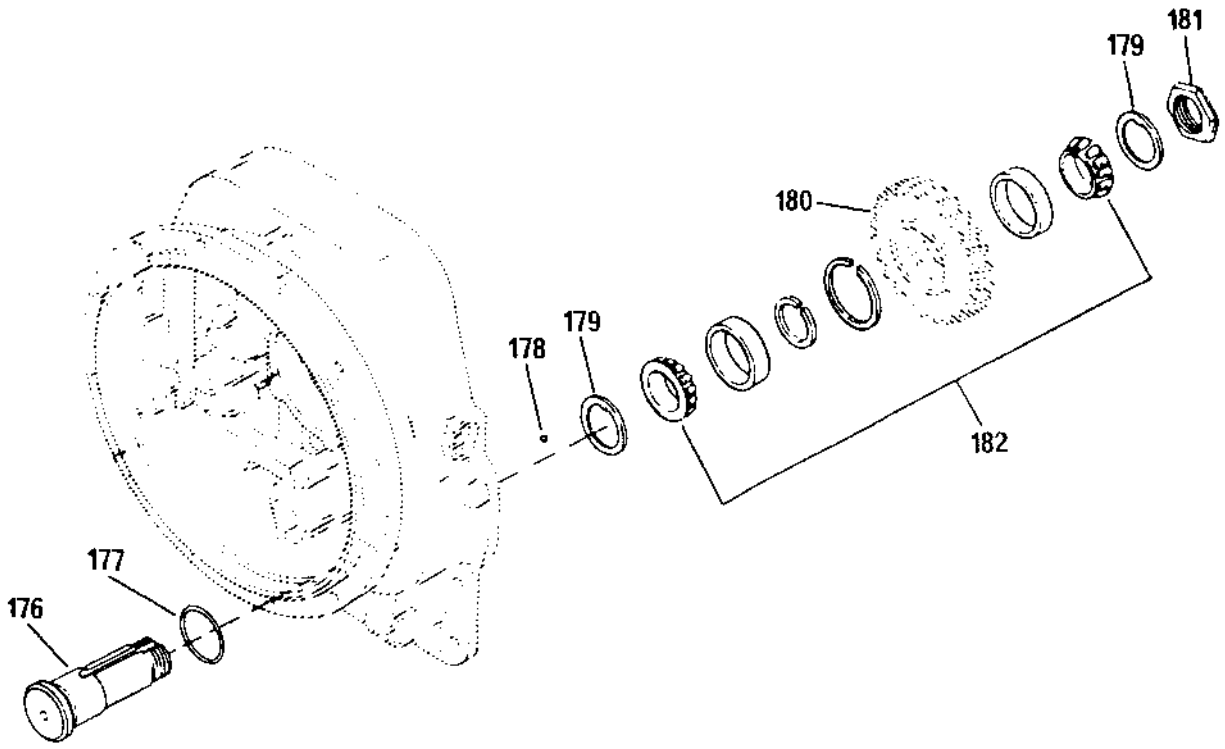

Reverse idler

Ref. No.	Part No.	Rem.	Qty	Description	Code
176	193707		1	Intermediate shaft	
177	193708		1	O-ring	
178	240567		1	Ball	
179	240673		2	Washer	
180	240669		1	Intermediate gear	
181	240579		1	Nut	
182	193709		1	Bearing	

Output & 3rd clutch

16465

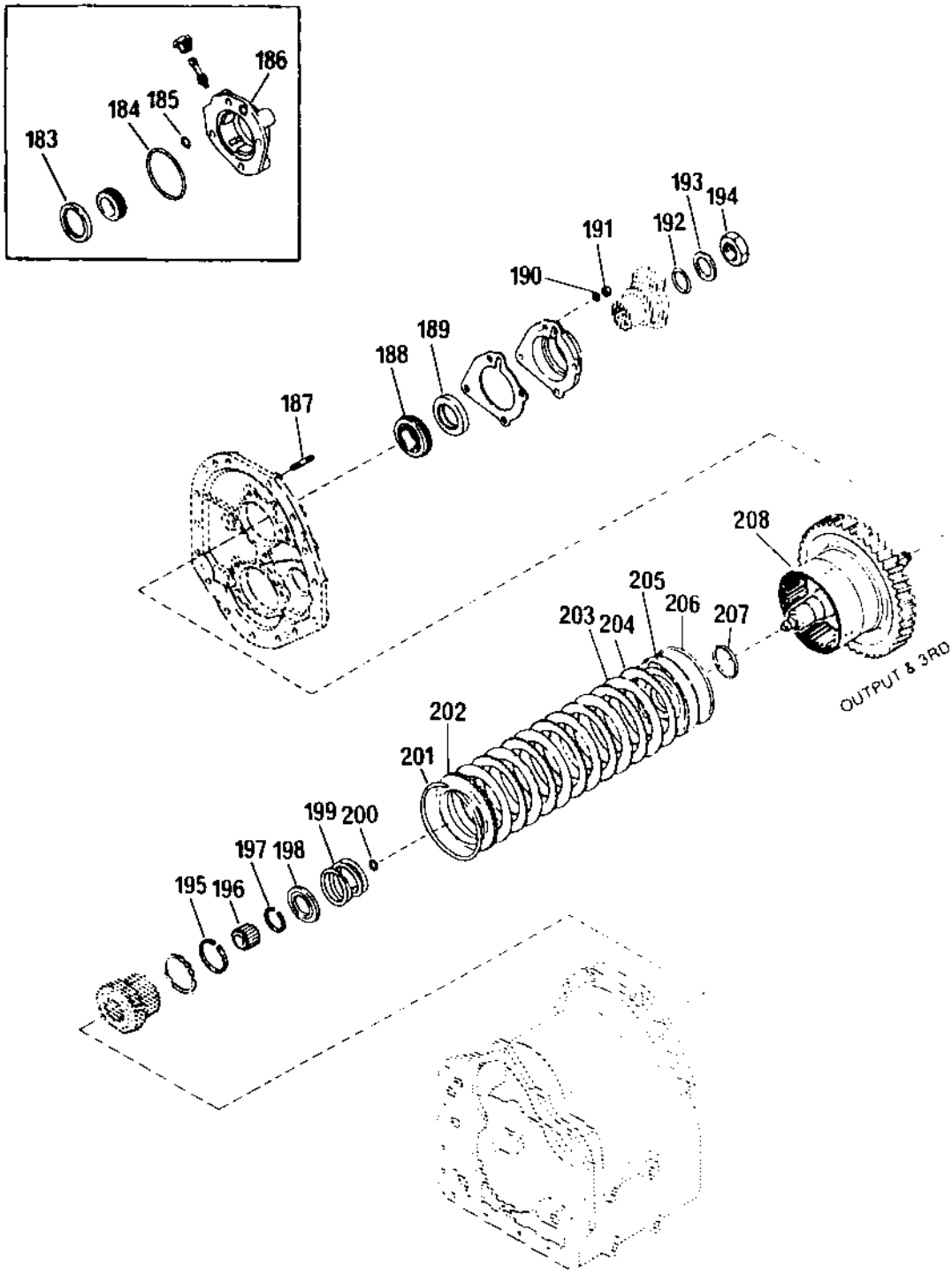

Ref. No.	Part No.	Rem.	Qty	Description	Code
183	240630		1	Spacer	
184	193712		1	O-ring	
185	193713		1	O-ring	
186			1	Cover	
187			4	Stud	
188	240590		1	Bearing	
189	193710		1	Oil seal	
190			4	Spring washer	
191	240728		4	Nut	
192	193711		1	O-ring	
193	240570		1	Washer	
194	240581		1	Nut	
195	240659		1	Retainer ring	
196	240603		1	Needle bearing	
197	240626		1	Snap ring	
198	240638		1	Spring stop	
199	240639		1	Spring	
200	193699		1	Piston ring	
201	240601		1	Snap ring	
202	240649		1	Support disc	
203	240650		6	Inner disc	
204	240600		6	Outer disc	
205	240642		1	Piston	
206	193686		1	Seal ring, outer	
207	193687		1	Seal ring, inner	
208	240643		1	Disc carrier	

Chrging pump & oil filter

16466

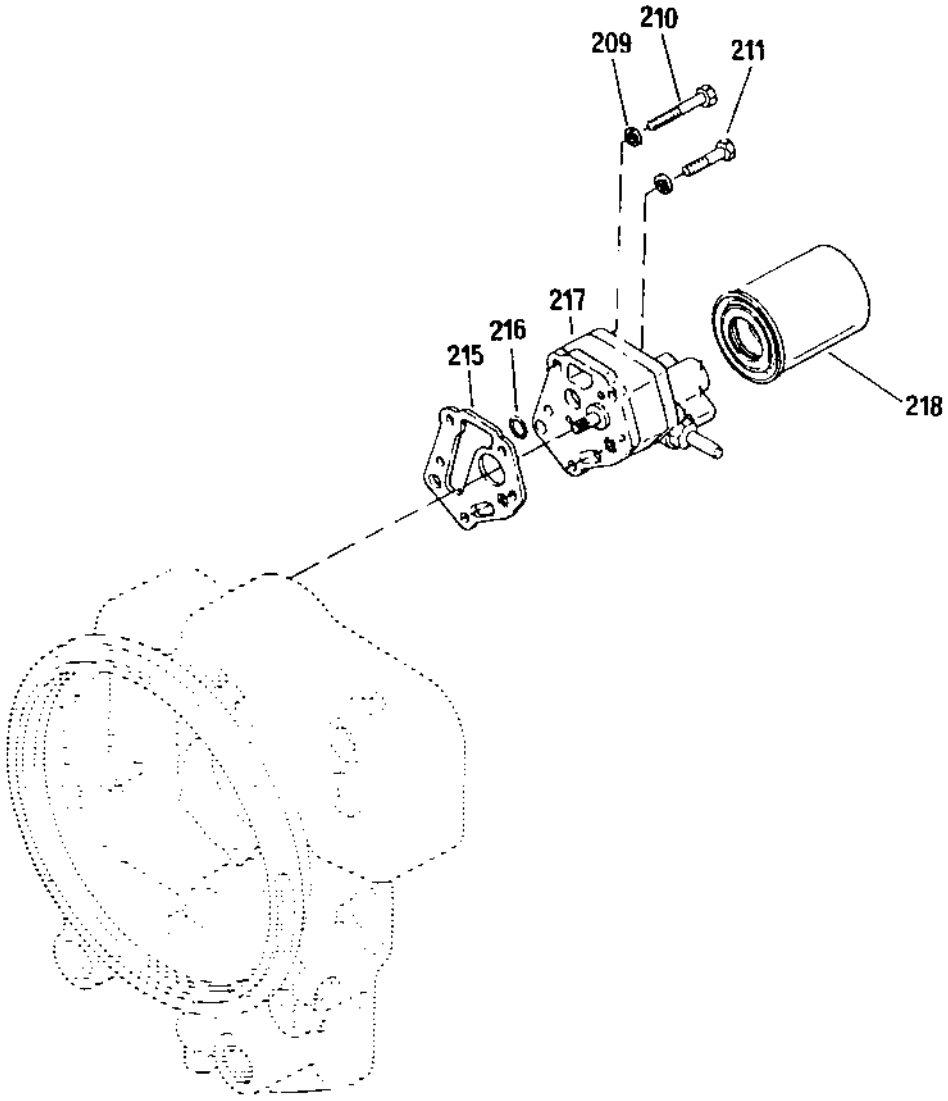

Chrging pump & oil filter

Ref. No.	Part No.	Rem.	Qty	Description	Code
209			5	Spring washer	
210	240566		1	Screw	
211	240565		2	Screw	
212			2	Nut	
215	193714		1	Gasket	
216	193664		1	O-ring	
217	193715		1	Hydraulic pump	
	938746	A	1	Gasket kit	
218	249993		1	Oil filter	A

A) Not illustrated

Control valve

17308

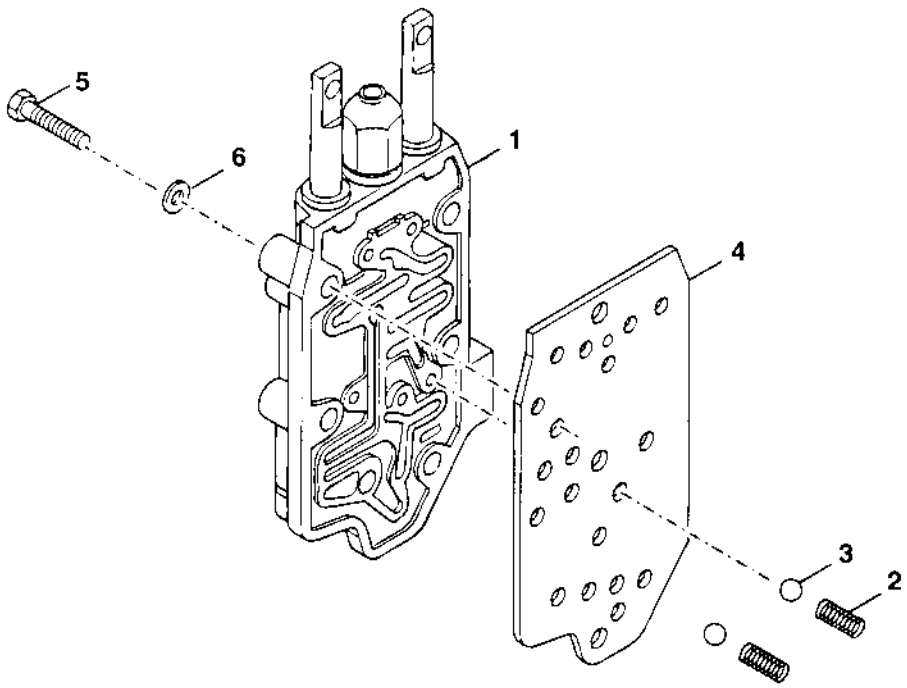

Control valve

Ref. No.	Part No.	Rem.	Qty	Description	Code
1	240647		1	Control valve assembly (Page 126)	
2	240632		2	Spring	
3	240568		2	Ball	
4	193716		1	Gasket	
5	240562		9	Screw	
6	938435		9	Washer	

240647 Control valve assembly

17309-1

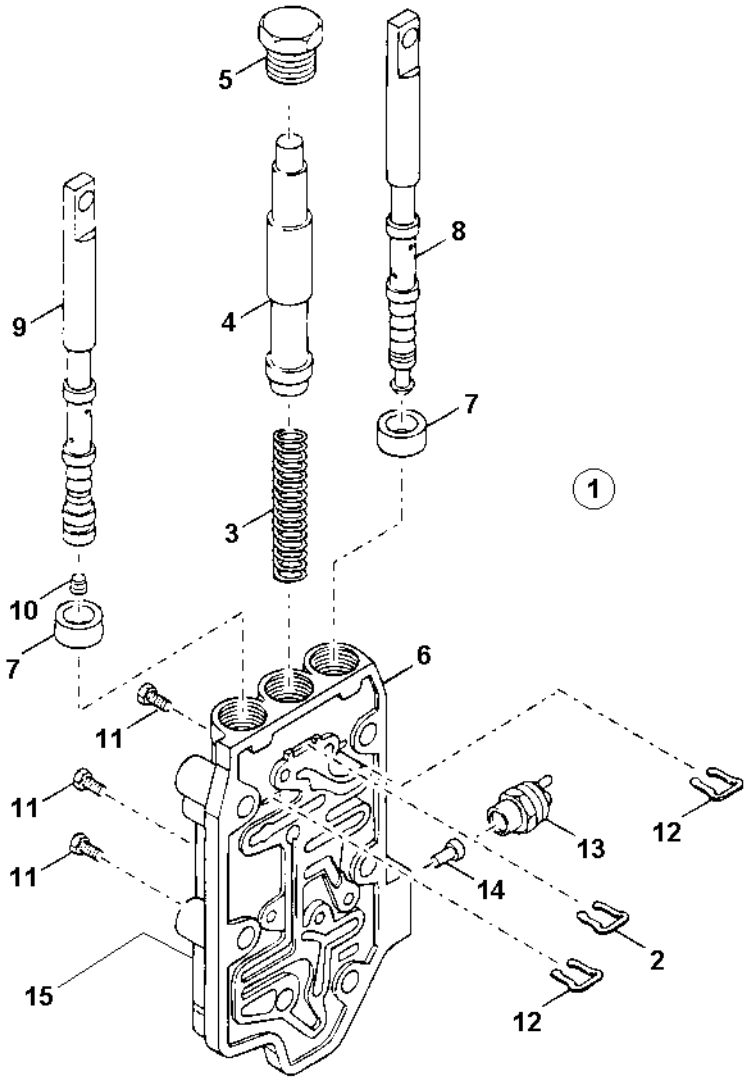

240647 Control valve assembly

Ref. No.	Part No.	Rem.	Qty	Description	Code
1			1	Control valve, cpl	
2	240609		1	.Clamp	
3	240610		1	.Valve spring	
4	240611		1	.Control piston	
5	240685		1	.Back stop	
6	240648		1	.Control valve, assy	
7	193719		1	..Oil seal	
8	240608		1	..Control piston	
9	240607		1	..Control piston	
10	240674		1	...Plug	
11	240720		4	..Plug	
12	240609		2	..Clamp	
13	240598	A	1	..Switch	
14	240599		1	..Pin	
15	193045	B	1	Sensor	

A) Neutral start switch
B) Reverse sensor, always sold separately, (not illustrated)

Disc brake

17310

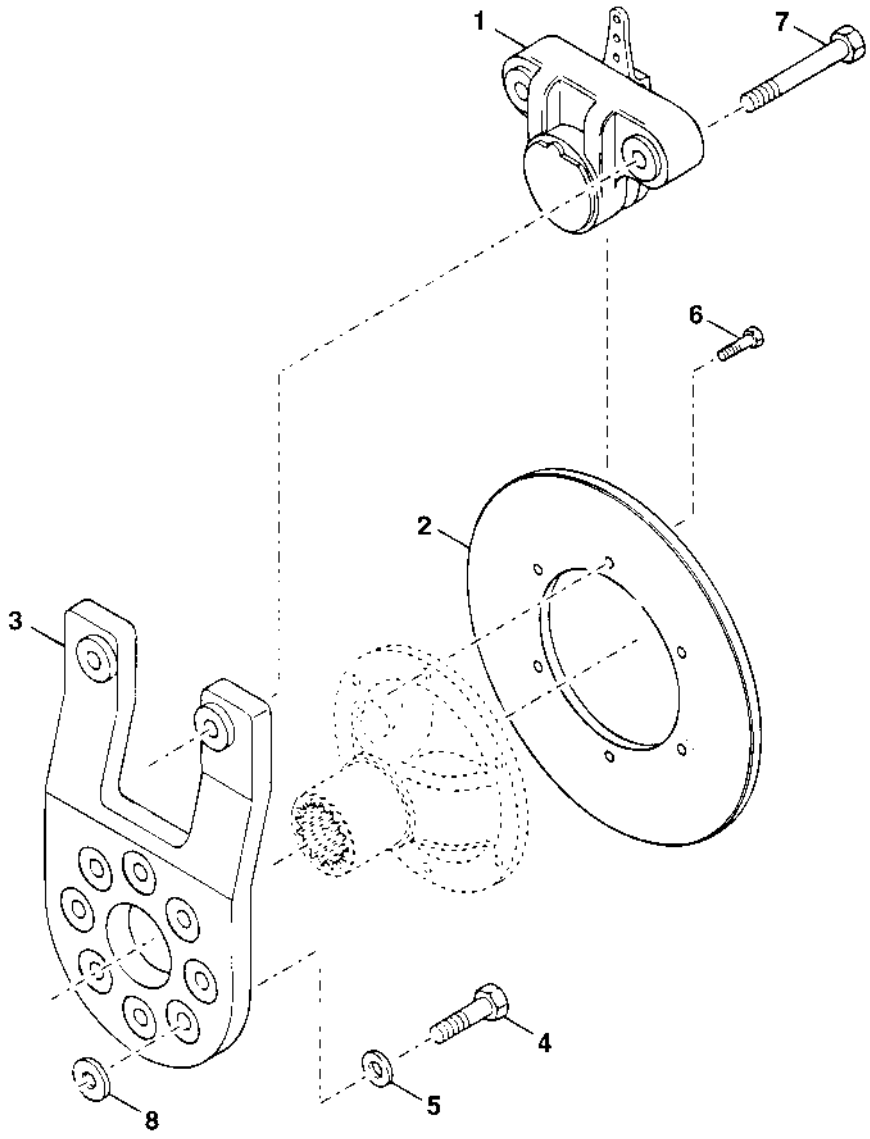

Disc brake

Ref. No.	Part No.	Rem.	Qty	Description	Code
1	937693		1	Brake caliper (Page 130)	
2	938108		1	Disc	
3	939430		1	Bracket	
4	938354		4	Screw	
5	938374		4	Washer	
6	938355		6	Screw	
7	939428		2	Screw	
8	939429		2	Nut	

937693 Brake caliper

16470

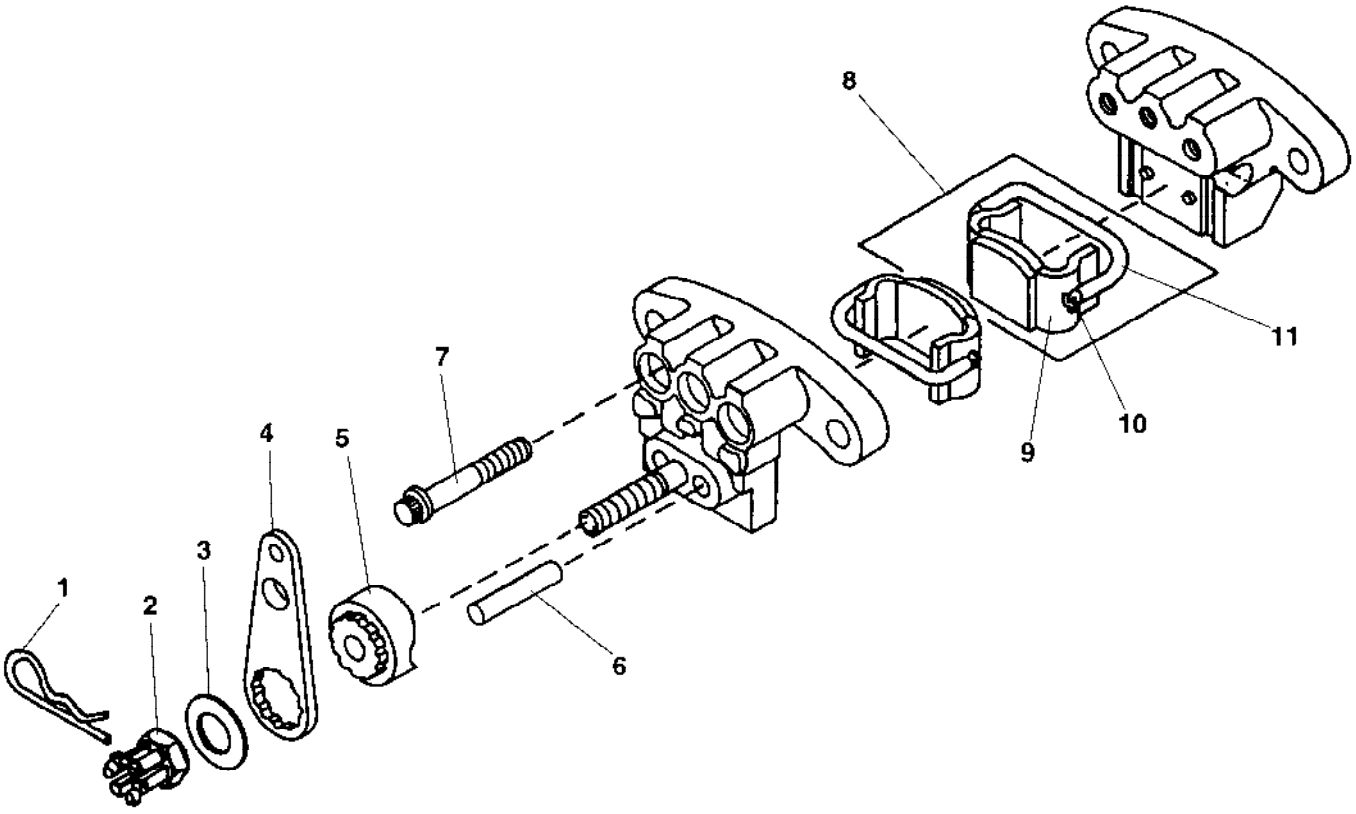

937693 Brake caliper

Ref. No.	Part No.	Rem.	Qty	Description	Code
			1	Brake caliper, cpl	
1	937683		1	.Hitch pin	
2	937684		1	.Castle nut	
3	937685		1	.Washer	
4	937686		1	.Lever	
5	937687		1	.Cam	
6	937688		1	.Push pin	
7	937689		3	.Bolt	
8	937682		2	.Pad & holder, spring assembly	
9	937690		1	..Pad & holder assembly	D
10	937691		2	..Spring retainer	D
11	937692		1	..Spring	D

Ref. No.	Part No.	Rem.	Qty	Description	Code
15				Converter housing (Page 134)	
25				Case and rear cover (Page 136)	
35				Turbine shaft (Page 138)	
45				Drive plate (Page 140)	
55				Torque converter (Page 142)	
65				Gear (Page 144)	
75				Auxiliary pump drive (Page 146)	
85				Pump drive (Page 148)	
95				Forward shaft (Page 150)	
105				Reverse and 2nd shaft (Page 152)	
115				Reverse idler (Page 154)	
125				Low speed shaft (Page 156)	
135				Output and 3rd shaft (Page 158)	
145				Charging pump and filter (Page 160)	
155				Control valve (Page 124)	
175				Disc brake Up to 22620429 (Page 166)	

Converter housing

17294

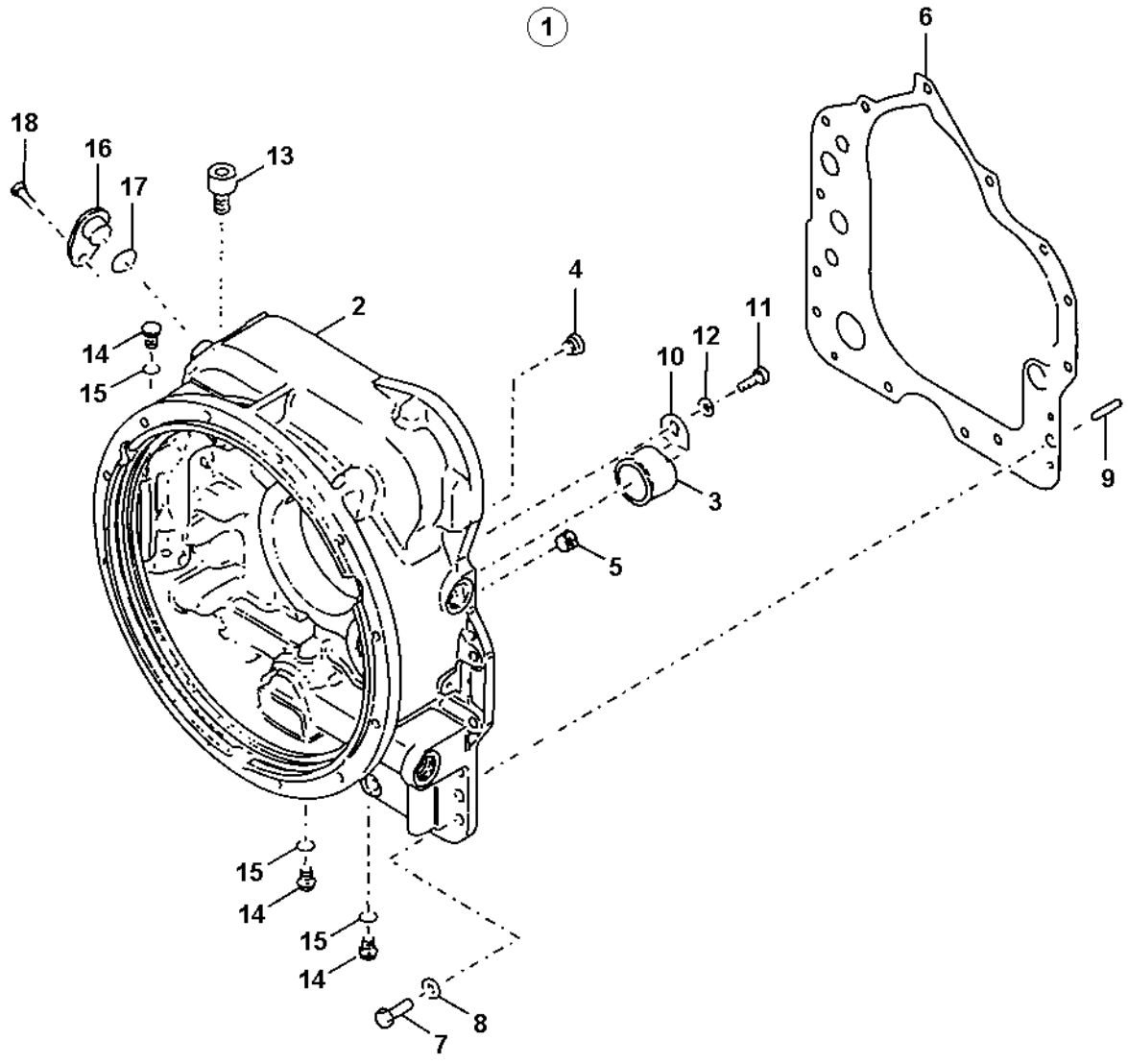

Converter housing

Ref. No.	Part No.	Rem.	Qty	Description	Code
1	381950		1	Transmission	
2	938350		1	.Converter housing	
3	938370		1	.Sleeve	
4	938351		1	.Plug	
5	240675		1	.Plug	
6	938420		1	.Gasket	
7	240563		16	.Screw	
8	938436		16	.Washer	
9	938381		1	.Pin	
10	938359		1	.Clip	
11	240560		1	.Screw	
12	938434		1	.Washer	
13	240667		1	.Breather	
14	938431		3	.Plug	
15	938448		3	..O-ring	
16	938377		1	.Plug	
17	938380		1	.O-ring	
18	938376		1	.Screw	

Case and rear cover

17295

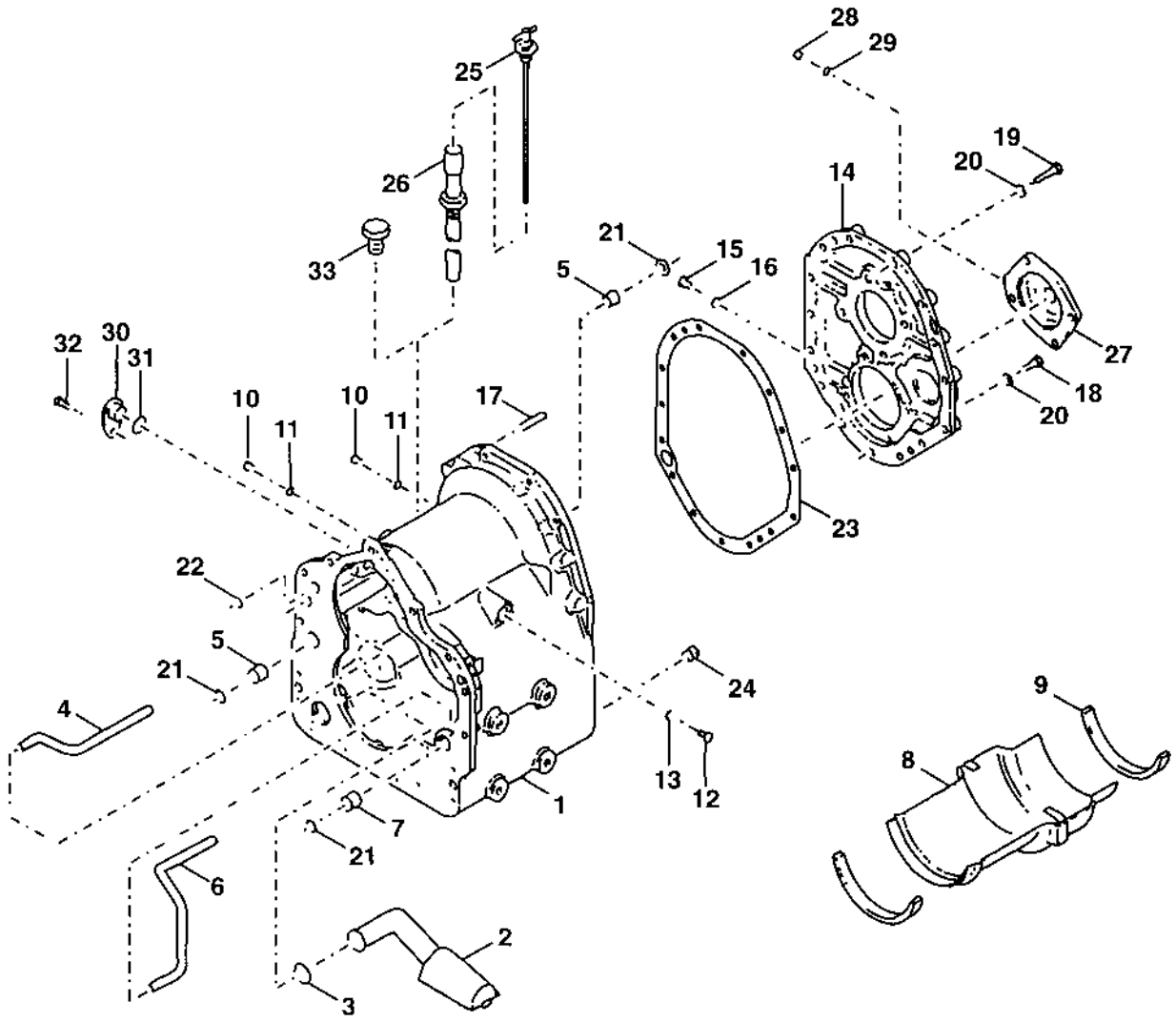

Case and rear cover

Ref. No.	Part No.	Rem.	Qty	Description	Code
1	938421		1	Transmission housing	
2	938423		1	.Suction tube	
3	938402		1	.O-ring	
4	240606		1	.Tube	
5	240583		2	.Bushing	
6	938425		1	.Tube	
7	240582		1	.Bushing	
8	240622		1	Oil deflector	
9	193662		2	Deflector sealing	
10	938431		2	Plug	
11	938448		2	.O-ring	
12	938432		1	Plug	
13	938449		1	.O-ring	
14	938422		1	Rear cover	
15	938431		1	.Plug	
16	938448		1	..O-ring	
17	938381		2	Pin	
18	240563		6	Screw	
19	938353		9	Screw	
20	938436		15	Washer	
21	193659		3	O-ring	
22	193664		2	O-ring	
23	938428		1	Gasket	
24	938357		2	Magnetic drain plug	
25	938367		1	Dipstick	
26	240645		1	Guide tube	
27	938424		1	Bearing cap	
28	938431		1	.Plug	
29	938448		1	..O-ring	
30	938377		1	Plug	
31	938380		1	O-ring	
32	938376		1	Screw	
33				Not used on this model	

Turbine shaft

17296

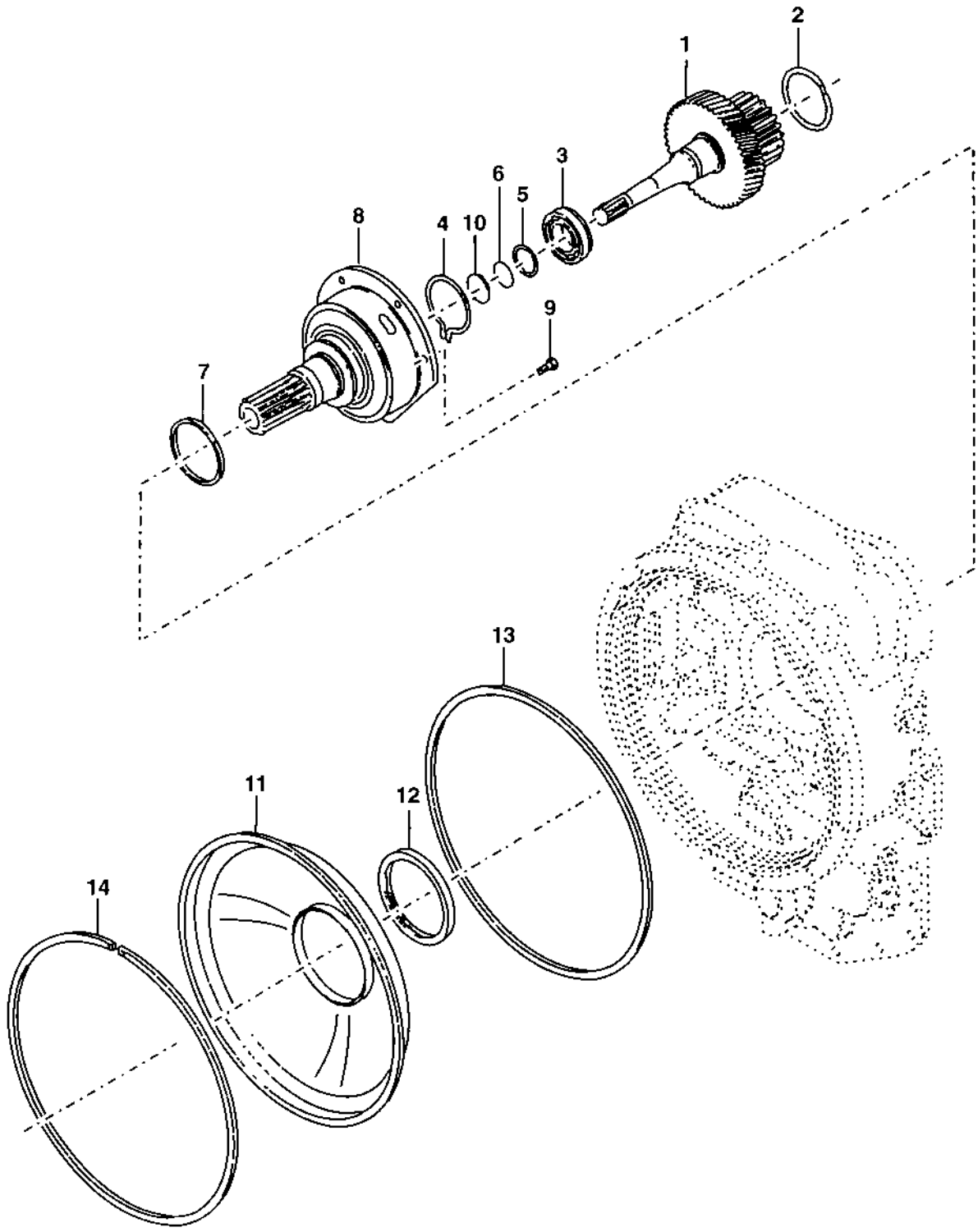

Turbine shaft

Ref. No.	Part No.	Rem.	Qty	Description	Code
1	938427		1	Hub	
2	240688		1	.Retaining ring	
3	938403		1	Ball bearing	
4	240615		1	Snap ring	
5	240616		1	Washer	
6	240595		1	Retaining ring	
7	938416		1	Piston ring	
8	938417		1	Support	
9	938366		6	Screw	
10	938372		1	Piston ring	
11	938365		1	Oil deflector	
12	938401		1	.Seal	
13	938364		1	Seal ring	
14	938369		1	Retaining ring	

Drive plate

17297

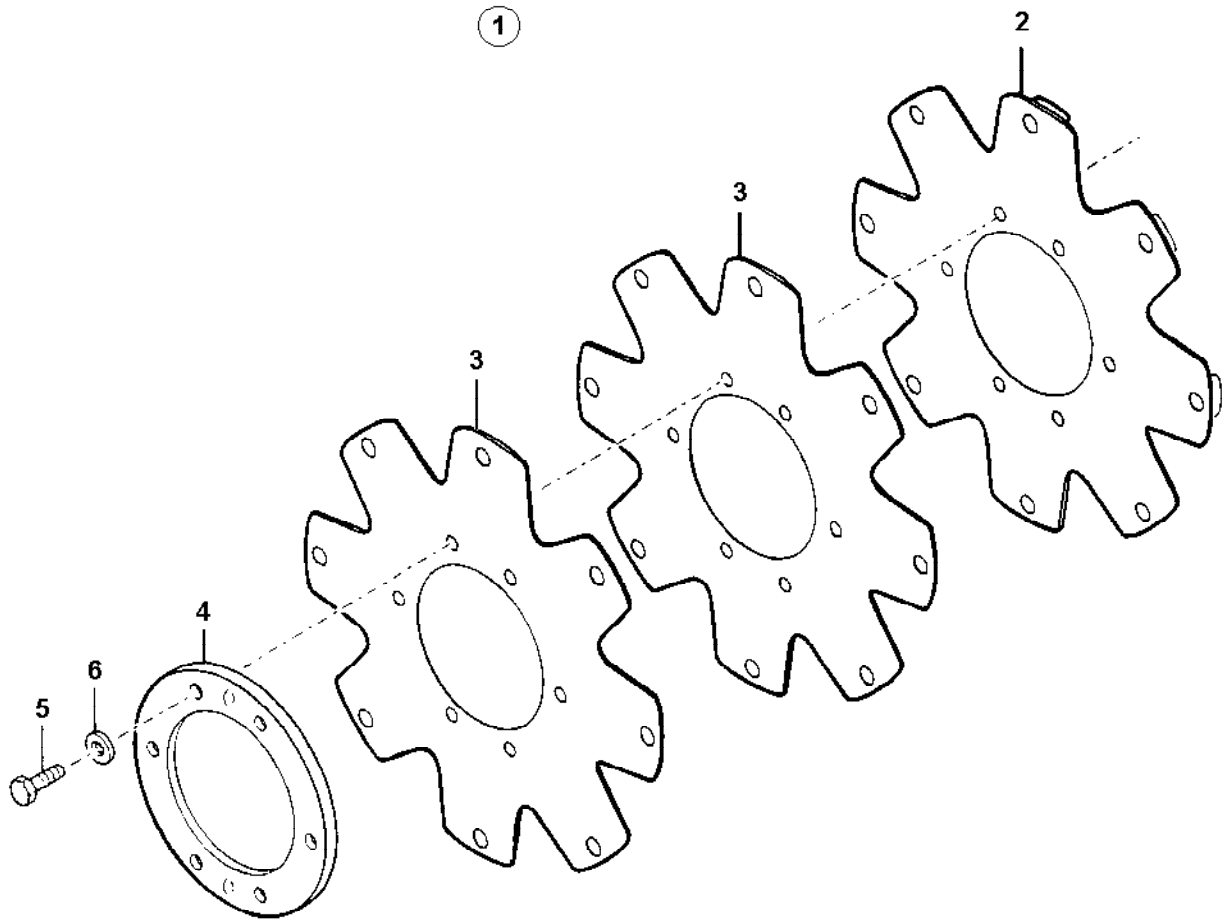

Drive plate

Ref. No.	Part No.	Rem.	Qty	Description	Code
1	938447		1	Drive plate, cpl.	
2			1	.Not Sold Separately	
3			2	.Not Sold Separately	
4	938404		1	.Support ring	
5	938433		6	.Screw	
6	938444		6	.Washer	

Torque converter

17298

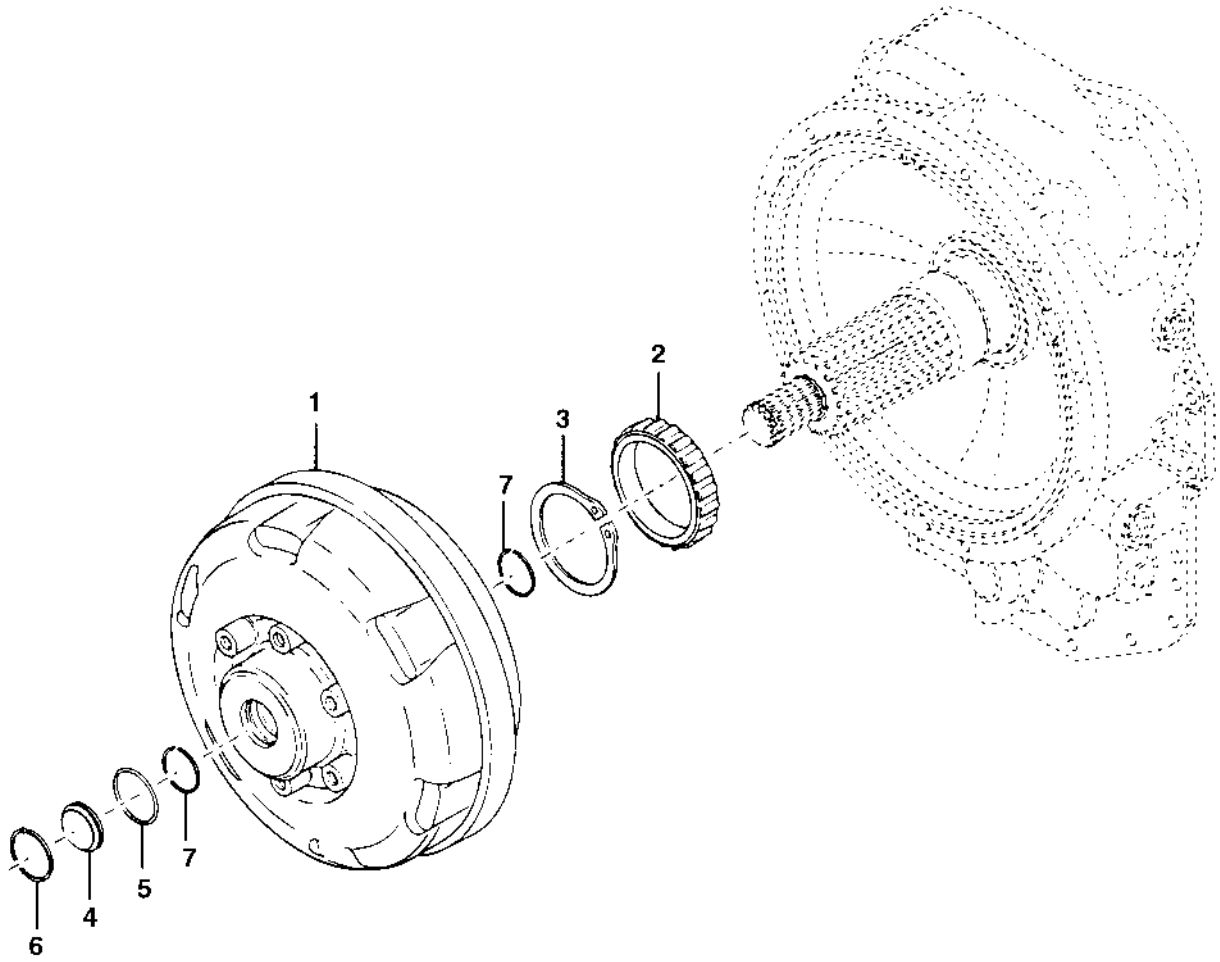

Torque converter

Ref. No.	Part No.	Rem.	Qty	Description	Code
1	938405		1	Torque converter	
2	240666		1	Bearing	
3	938439		1	Snap ring	
4	240584		1	Plug	
5	193677		1	O-ring	
6	240574		1	Retaining ring	
7	938406		2	Retaining ring	

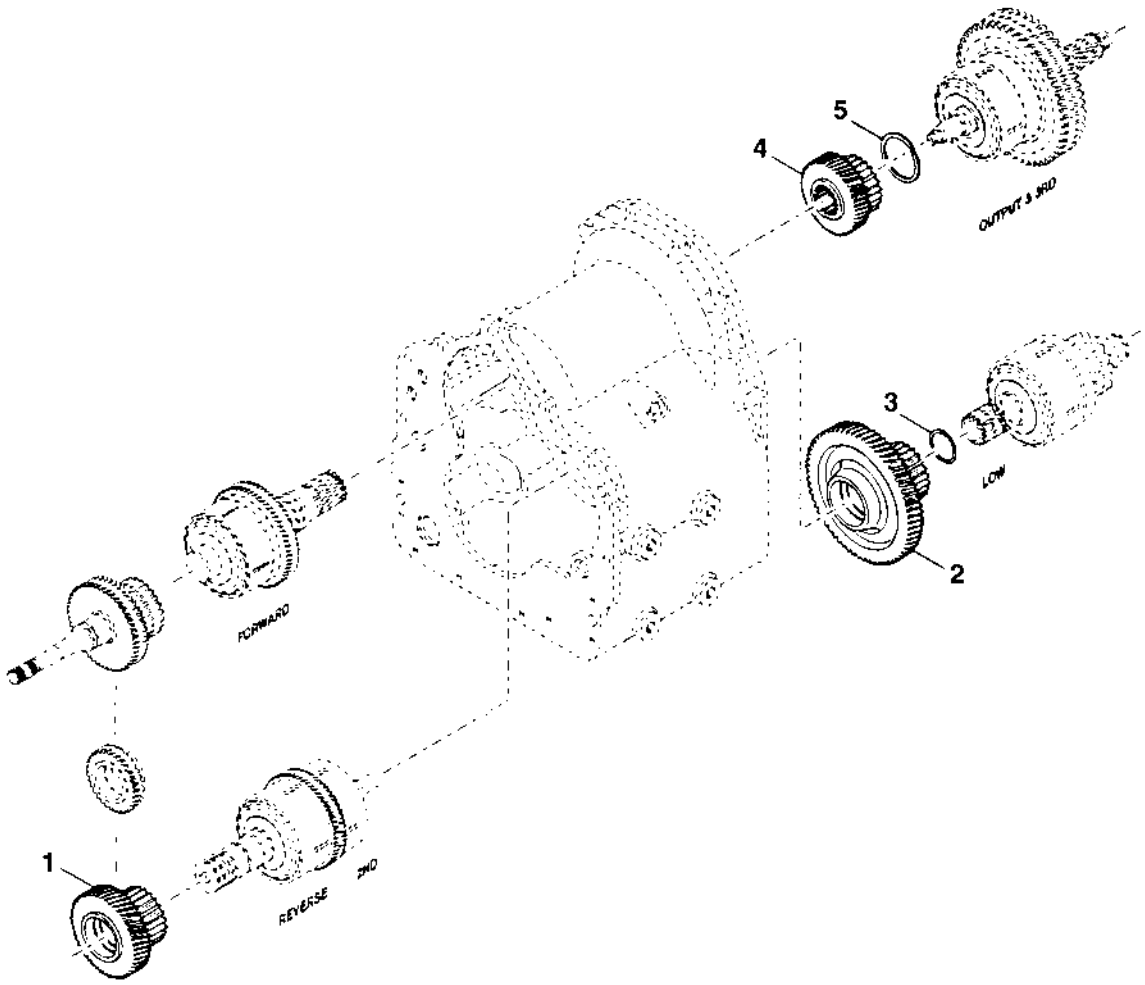
5
4
OUTPUT 3 RD
3
LOW
2
FORWARD
1
REVERSE
2ND

Gear

Ref. No.	Part No.	Rem.	Qty	Description	Code
1	938407		1	Gear	
2	938378		1	Gear	
3				Not used on this model	
4	240690		1	Gear	
5	240688		1	.Retaining ring	

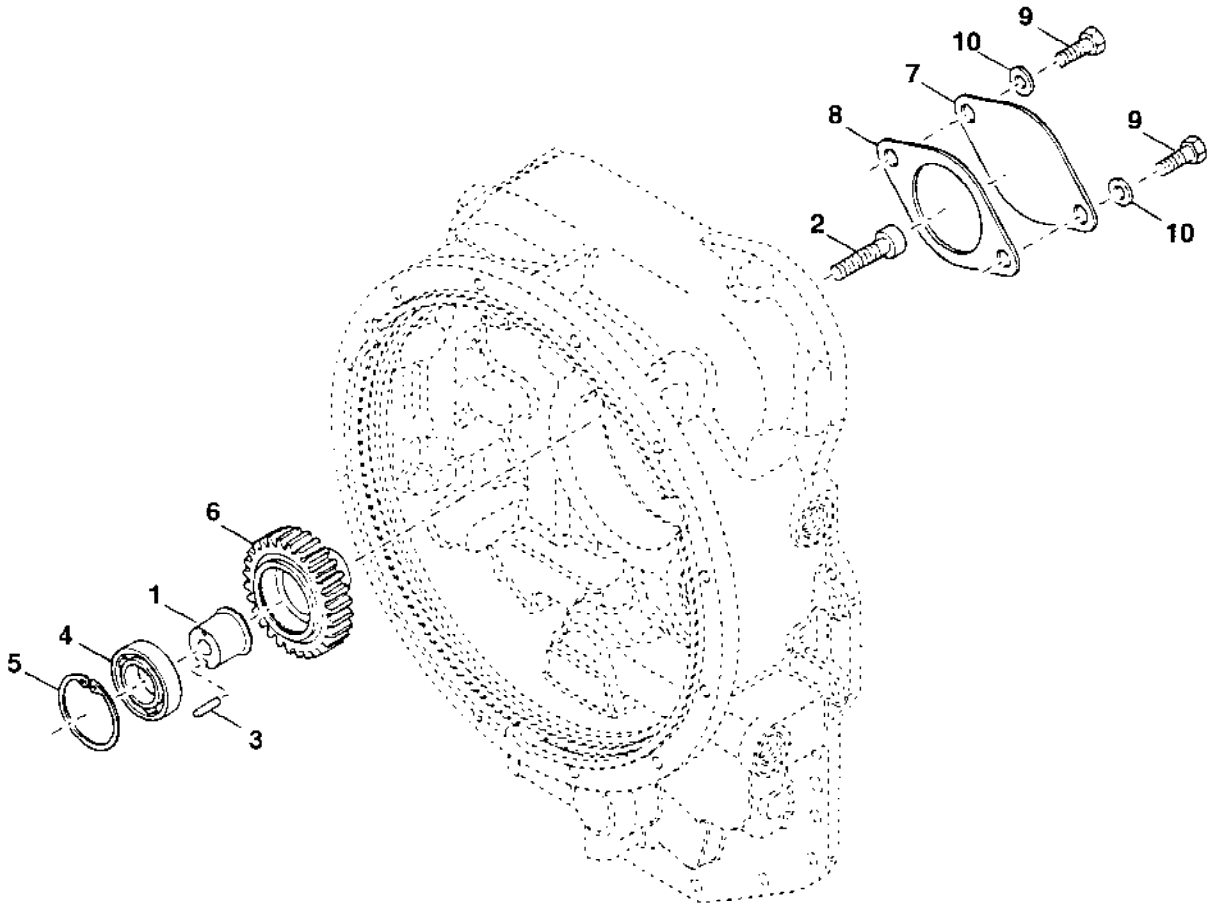
9
10
7
8
9
2
10
6
1
4
5
3

Auxiliary pump drive

Ref. No.	Part No.	Rem.	Qty	Description	Code
1	938408		1	Bearing support	
2	938445		1	Screw	
3	938409		1	Pin	
4	938358		1	Ball bearing	
5	240586		1	Retaining ring	
6	938410		1	Gear	
7	938375		1	Cover	
8	938419		1	Gasket	
9	938356		2	Screw	
10	938437		2	Washer	

Pump drive

17301

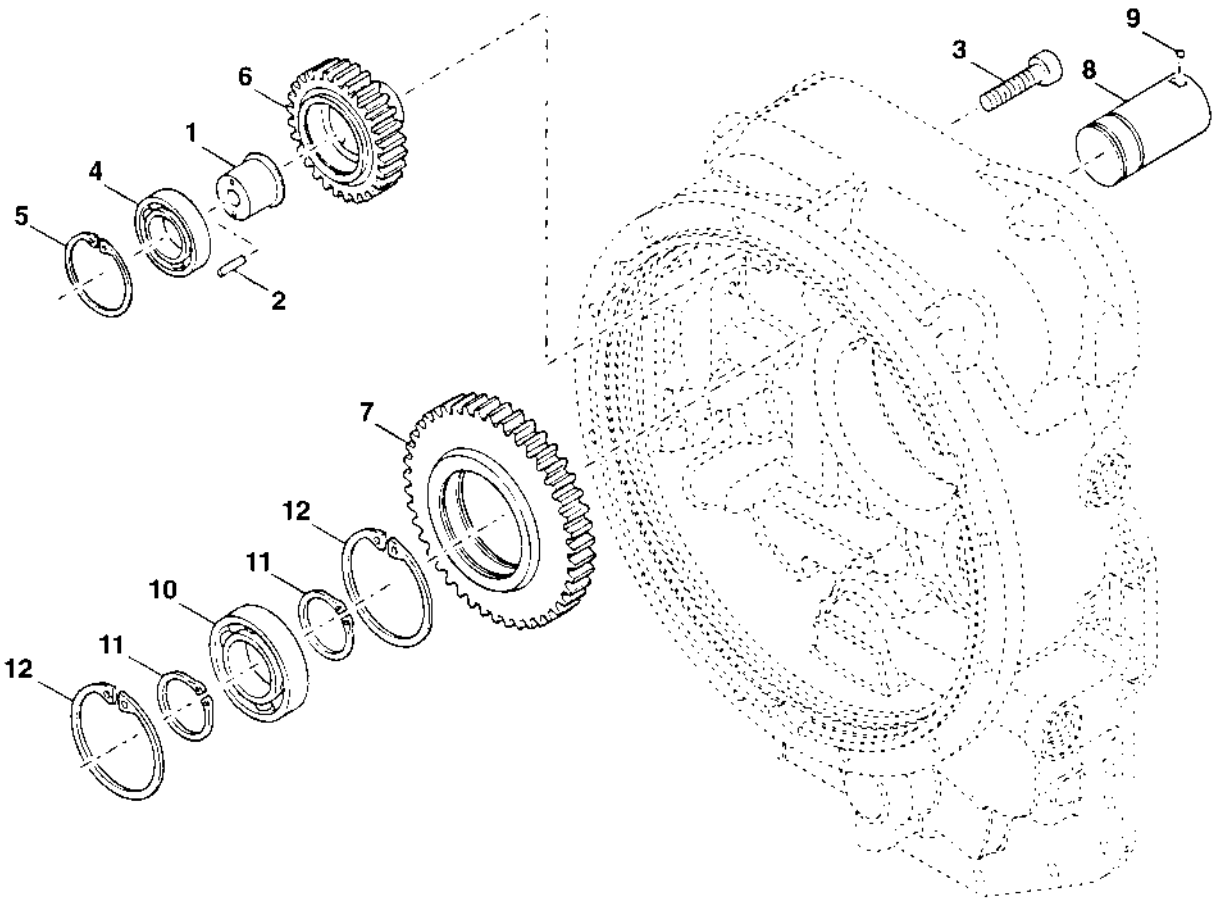

Pump drive

Ref. No.	Part No.	Rem.	Qty	Description	Code
1	938408		1	Bearing support	
2	938409		1	Pin	
3	938445		2	Screw	
4	938358		2	Ball bearing	
5	240586		1	Retaining ring	
6	938411		1	Gear	
7	938412		1	Gear	
8	240662		1	Shaft	
9	193680		1	Ball	
10	938360		1	Ball bearing	
11	240629		2	Locating ring	
12	240588		2	Retaining ring	

Forward shaft

17302

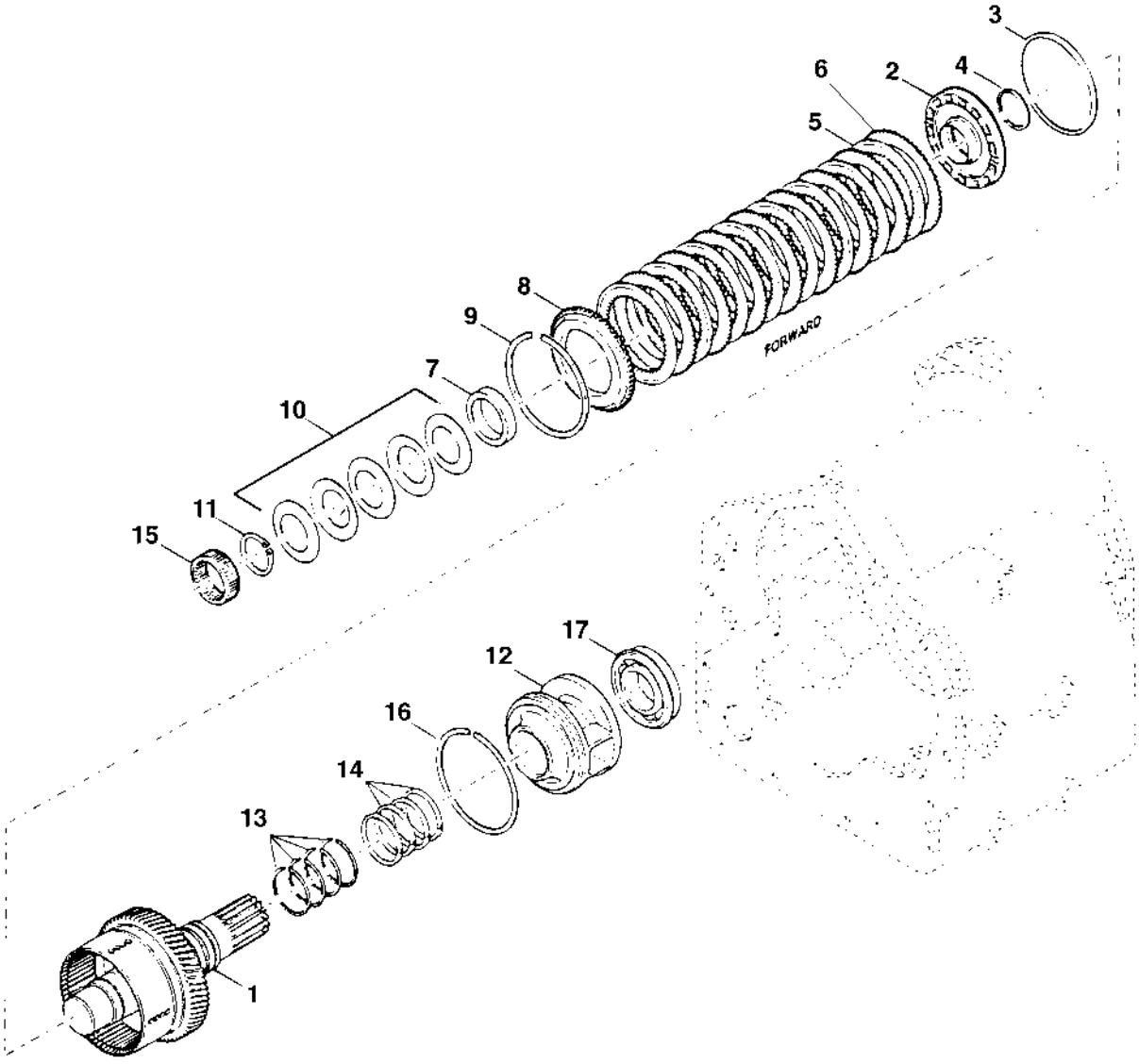

Forward shaft

Ref. No.	Part No.	Rem.	Qty	Description	Code
1	938429		1	Disc carrier	
2	938382		1	Clutch piston	
3	193686		1	.Seal ring, outer	
4	193687		1	.Seal ring, inner	
5	240650		8	Inner disc	
6	240600		8	Outer disc	
7	240651		1	Spacer	
8	240649		1	Support disc	
9	240601		1	Snap ring	
10	193685		1	Disc spring	
11	240655		1	Snap ring	
12	240691		1	Bushing	
13	938362		4	Piston ring expander	
14	938368		4	Piston ring	
15	240636		1	Needle bearing	
16	240637		1	Retaining ring	
17	240695		1	Bearing	

Reverse and 2nd shaft

17303

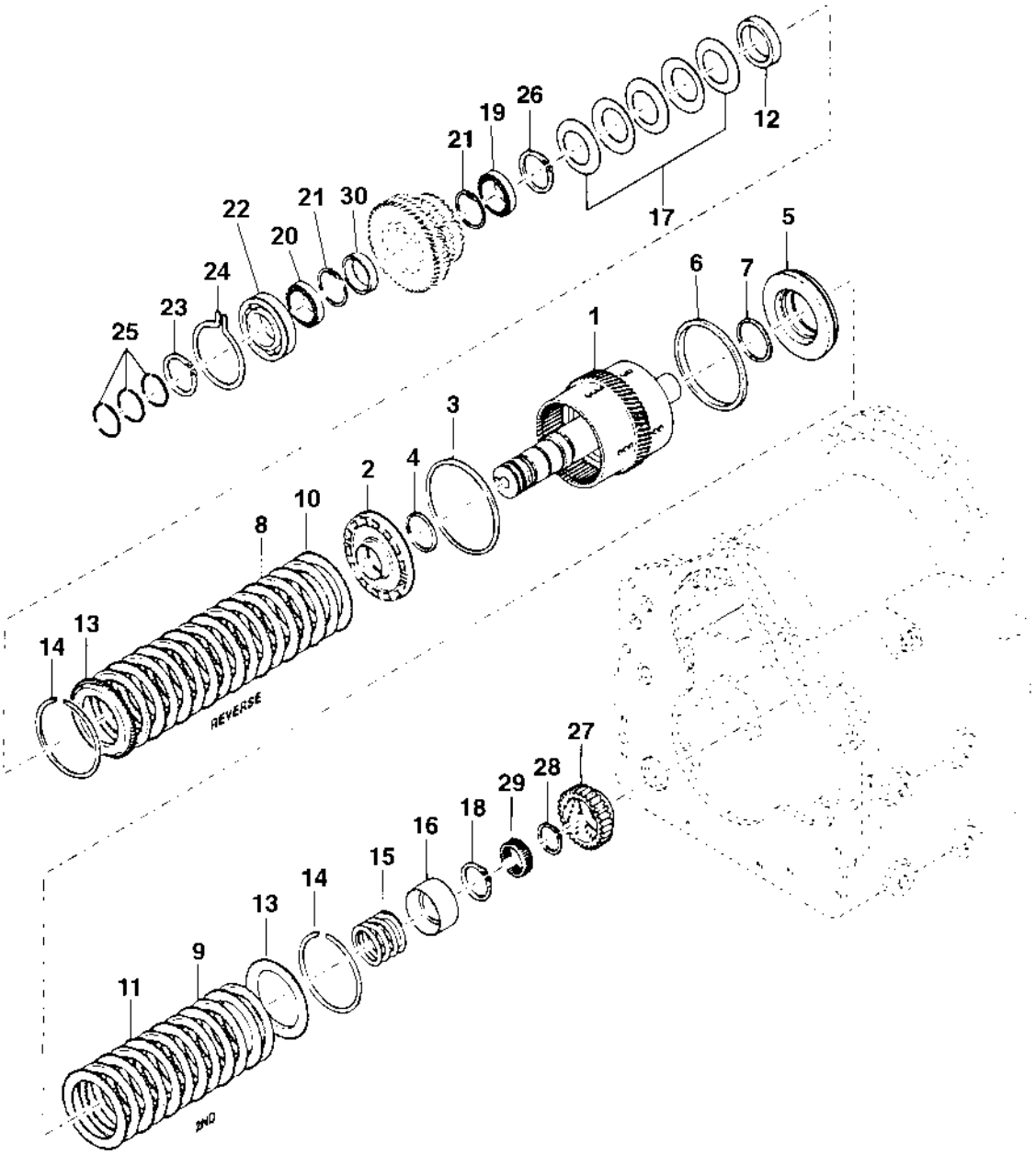

Reverse and 2nd shaft

Ref. No.	Part No.	Rem.	Qty	Description	Code
1	938426		1	Disc carrier	
2	938382		1	Clutch piston	
3	193686		1	.Seal ring, outer	
4	193687		1	.Seal ring, inner	
5	240642		1	Piston	
6	193686		1	.Seal ring, outer	
7	193687		1	.Seal ring, inner	
8	240650		8	Inner disc	
9	240650		6	Inner disc	
10	240600		8	Outer disc	
11	240600		6	Outer disc	
12	240651		1	Spacer	
13	240649		2	Support disc	
14	240601		2	Snap ring	
15	240639		1	Spring	
16	240638		1	Spring stop	
17	193685		1	Disc spring	
18	240626		1	Snap ring	
19	425738967		1	Bearing	
20	425738932		1	Bearing	
21	240602		2	Retaining ring	
22	240585		1	Bearing	
23	193684		1	Retaining ring	
24	240593		1	Snap ring	
25	193683		3	Piston ring	
26	240655		1	Snap ring	
27	938379		1	Hub	
28	240625		1	Retaining ring	
29	240596		1	Bearing	
30	938414		1	Spacer	

Reverse idler

17304

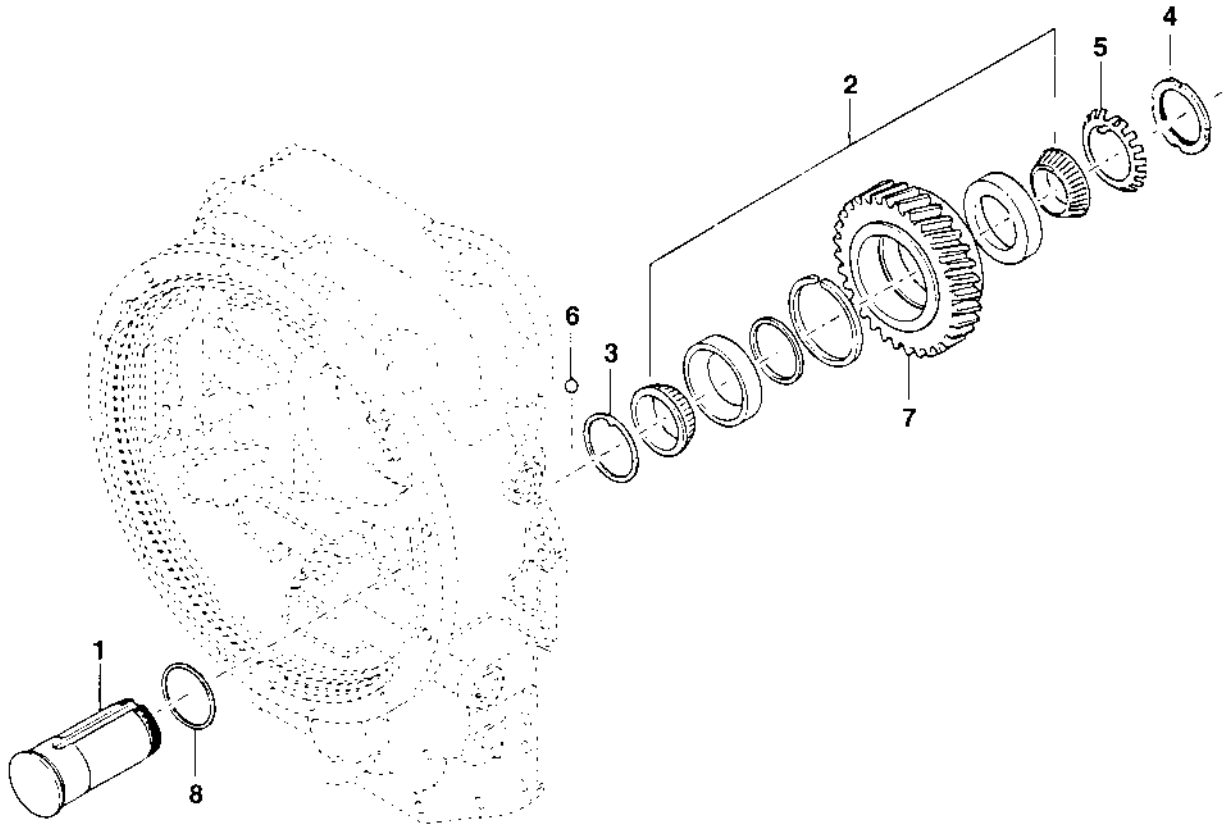

Reverse idler

Ref. No.	Part No.	Rem.	Qty	Description	Code
1	938418		1	Shaft	
2	193709		1	Bearing	
3	938413		1	Washer	
4	938371		1	Retaining nut	
5	938373		1	Retaining washer	
6	240567		1	Ball	
7	938415		1	Gear	
8	938446		1	O-ring	

Low speed shaft

17305

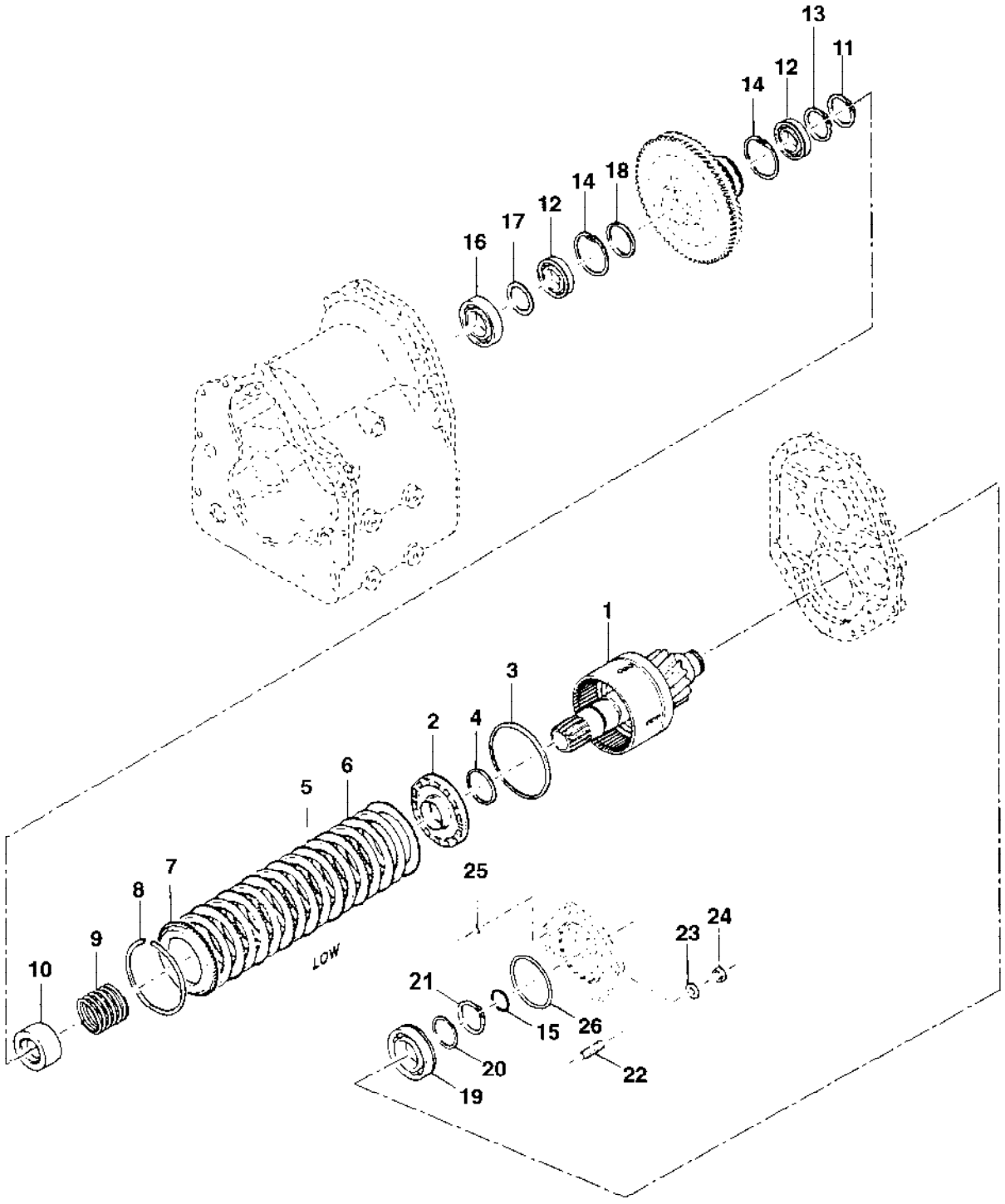

Low speed shaft

Ref. No.	Part No.	Rem.	Qty	Description	Code
1	240641		1	Disc carrier	
2	938382		1	Clutch piston	
3	193686		1	.Seal ring, outer	
4	193687		1	.Seal ring, inner	
5	240624		8	Inner disc	
6	240600		8	Outer disc	
7	240649		1	Support disc	
8	240601		1	Snap ring	
9	240639		1	Spring	
10	240638		1	Spring stop	
11	240626		1	Snap ring	
12	240592		2	Bearing	
13	240625		1	Retaining ring	
14	240588		2	Retaining ring	
15	193699		1	Piston ring	
16	240591		1	Bearing	
17	240604		1	Spacer	
18	240621		1	Spacer	
19	240681		1	Bearing	
20	240616		1	Washer	
21	240625		1	Retaining ring	
22	193701		4	Stud	
23	938436		4	Washer	
24	193702		4	Nut	
25	193703		1	O-ring	
26	193700		1	O-ring	

Output and 3rd shaft

17306

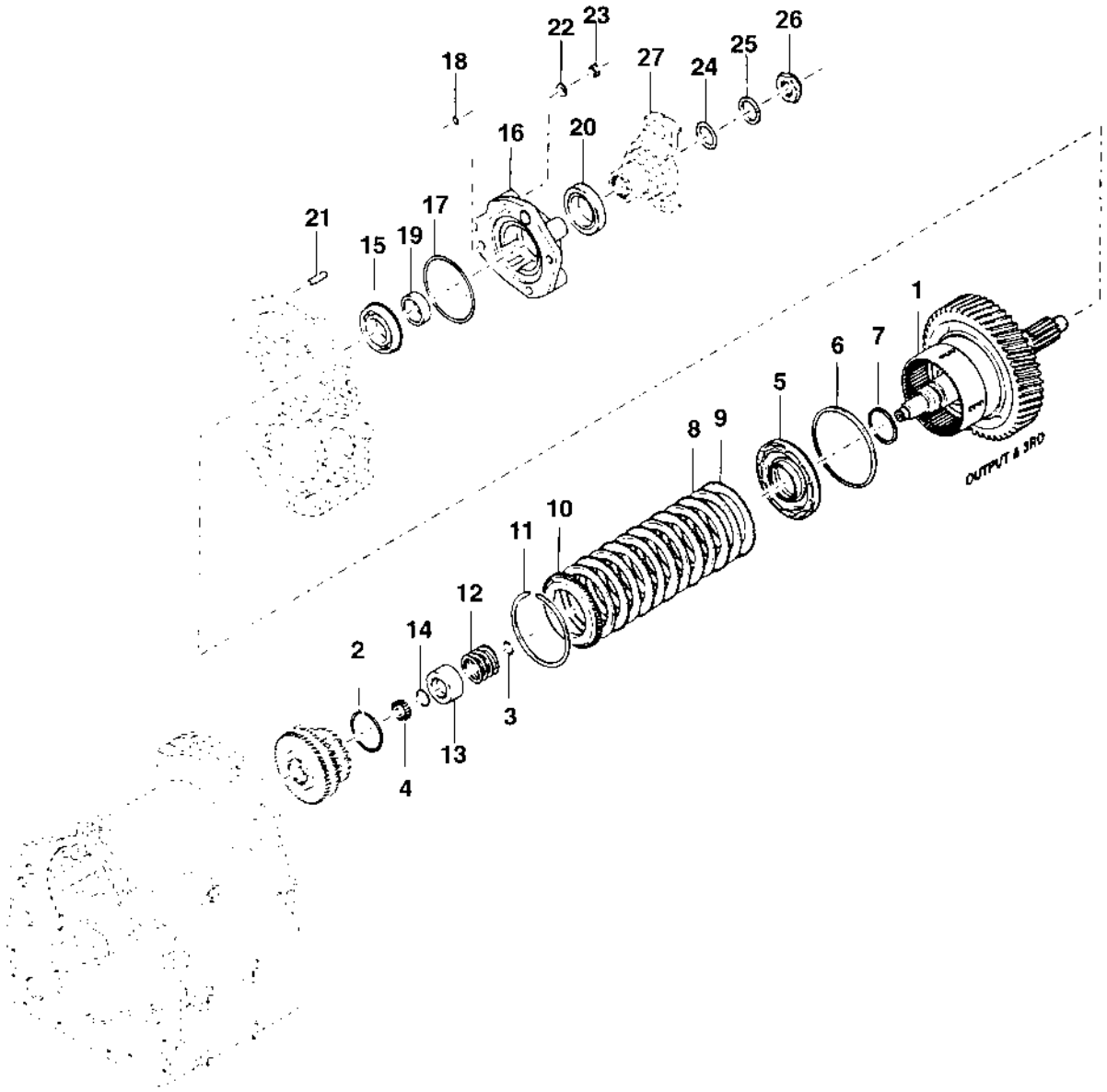

Output and 3rd shaft

Ref. No.	Part No.	Rem.	Qty	Description	Code
1	240643		1	Disc carrier	
2	240659		1	Retainer ring	
3	193699		1	Piston ring	
4	240603		1	Needle bearing	
5	240642		1	Piston	
6	193686		1	.Seal ring, outer	
7	193687		1	.Seal ring, inner	
8	240650		6	Inner disc	
9	240600		6	Outer disc	
10	240649		1	Support disc	
11	240601		1	Snap ring	
12	240639		1	Spring	
13	240638		1	Spring stop	
14	240626		1	Snap ring	
15	240590		1	Bearing	
16	938361		1	Bearing cap	
17	938442		1	O-ring	
18	938440		1	O-ring	
19	240630		1	Spacer	
20	193710		1	Oil seal	
21	938363		4	Stud	
22	938438		4	Washer	
23	938443		4	Nut	
24	938441		1	O-ring	
25	240570		1	Washer	
26	240581		1	Nut	
27	938471		1	Flange	

Charging pump and filter

17307

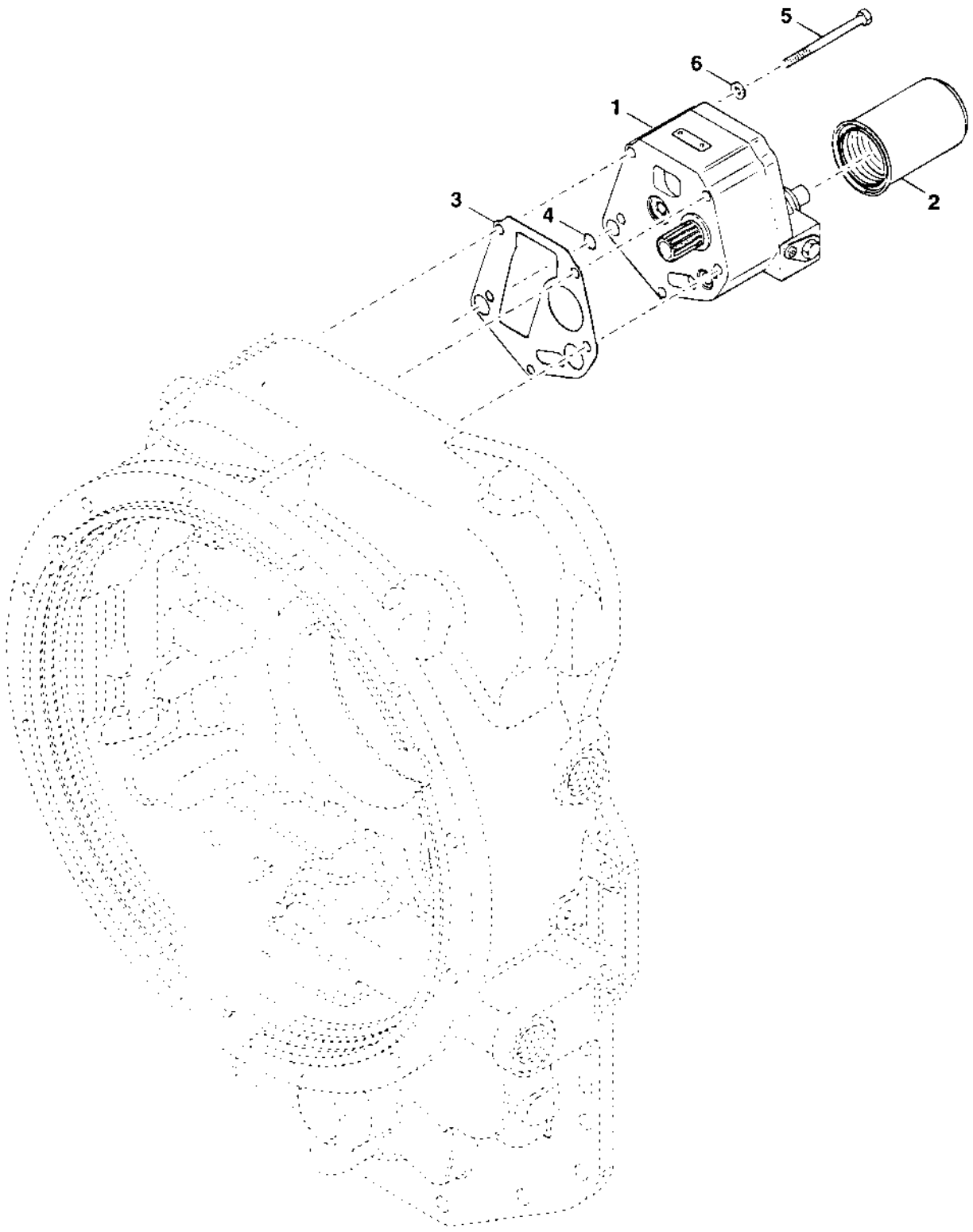

Charging pump and filter

Ref. No.	Part No.	Rem.	Qty	Description	Code
1	938430		1	Charging pump	
2	249993	A	1	Oil filter	A
3	193714		1	Gasket	
4	193664		1	O-ring	
5	240565		3	Screw	
	240566		2	Screw	
6	938436		5	Washer	

A) Spin on type

Control valve

17308

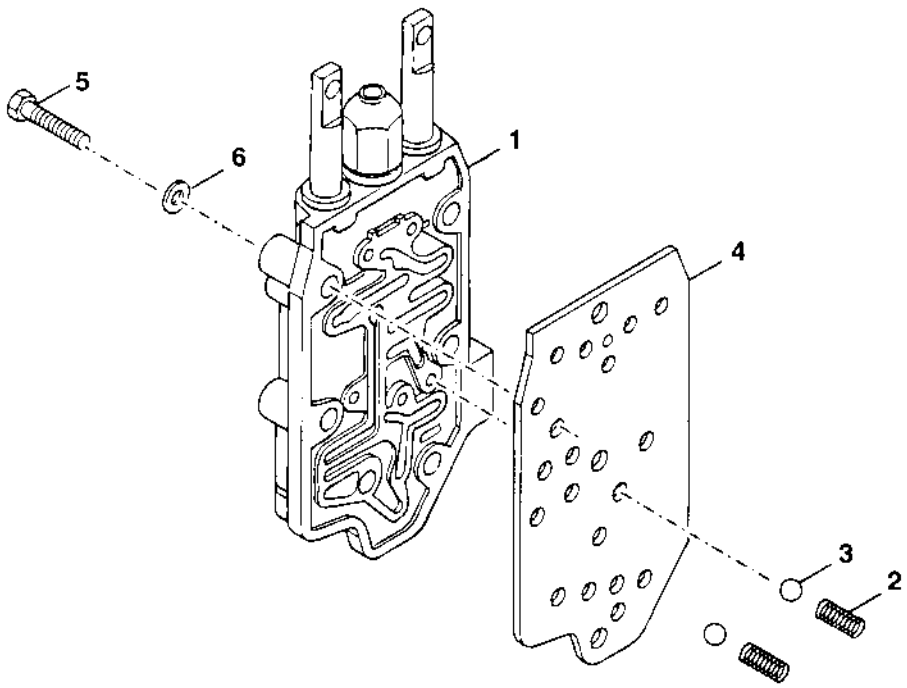

Control valve

Ref. No.	Part No.	Rem.	Qty	Description	Code
1	240647		1	Control valve assembly (Page 126)	
2	240632		2	Spring	
3	240568		2	Ball	
4	193716		1	Gasket	
5	240562		9	Screw	
6	938435		9	Washer	

240647 Control valve assembly

17309-1

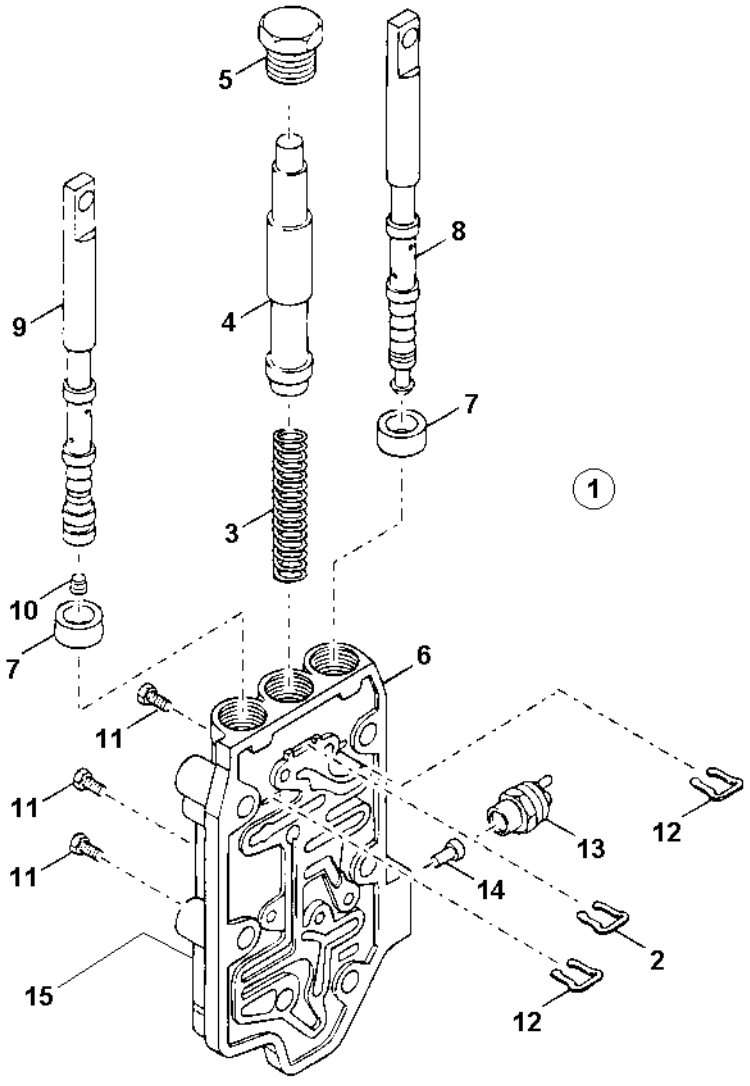

240647 Control valve assembly

Ref. No.	Part No.	Rem.	Qty	Description	Code
1			1	Control valve, cpl	
2	240609		1	.Clamp	
3	240610		1	.Valve spring	
4	240611		1	.Control piston	
5	240685		1	.Back stop	
6	240648		1	.Control valve, assy	
7	193719		1	..Oil seal	
8	240608		1	..Control piston	
9	240607		1	..Control piston	
10	240674		1	...Plug	
11	240720		4	..Plug	
12	240609		2	..Clamp	
13	240598	A	1	..Switch	
14	240599		1	..Pin	
15	193045	B	1	Sensor	

A) Neutral start switch
B) Reverse sensor, always sold separately, (not illustrated)

Disc brake

17310

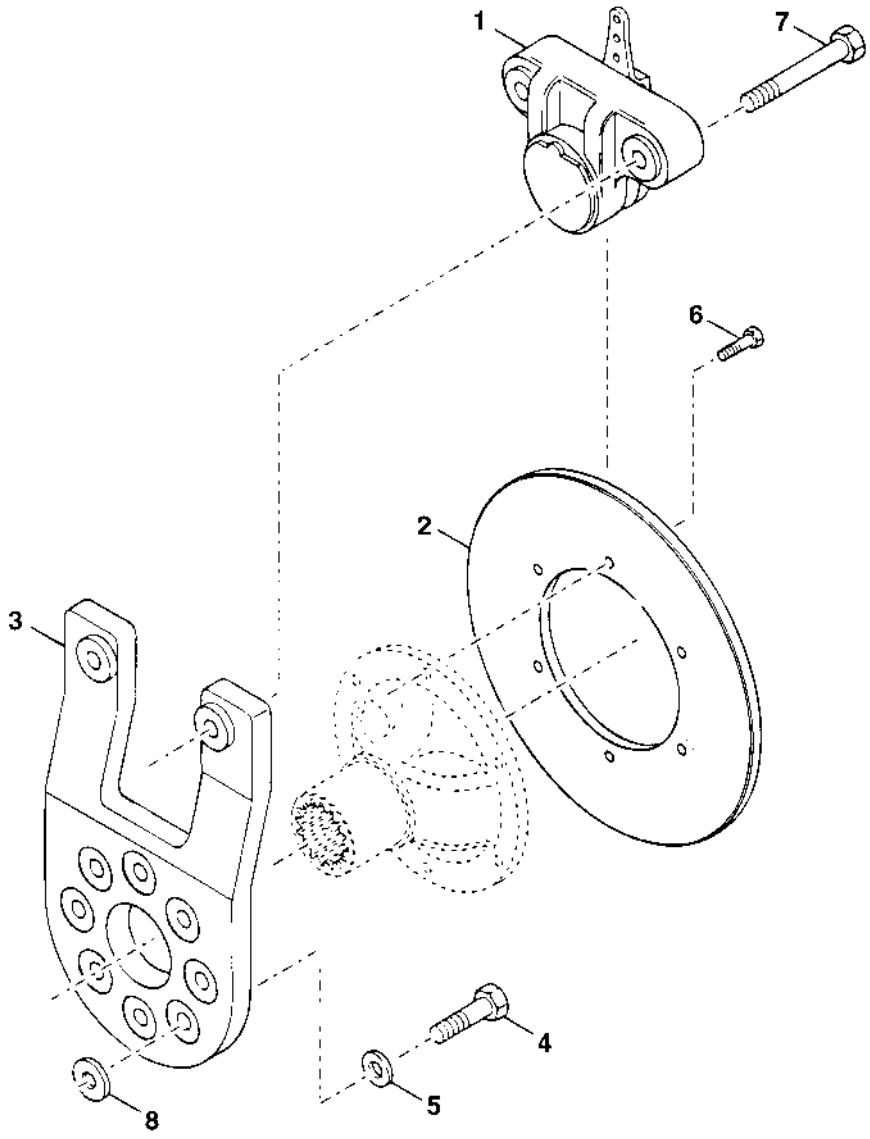

Disc brake

Ref. No.	Part No.	Rem.	Qty	Description	Code
1	384385		1	Caliper disc brake (Page 168)	
2	938108		1	Disc	
3	384386		1	Bracket	
4	938354		4	Screw	
5	938374		4	Washer	
6	938355		6	Screw	
7	791237		2	Screw 5/8-11UNCx76	
8				Not used on this model	

384385 Caliper disc brake

17312

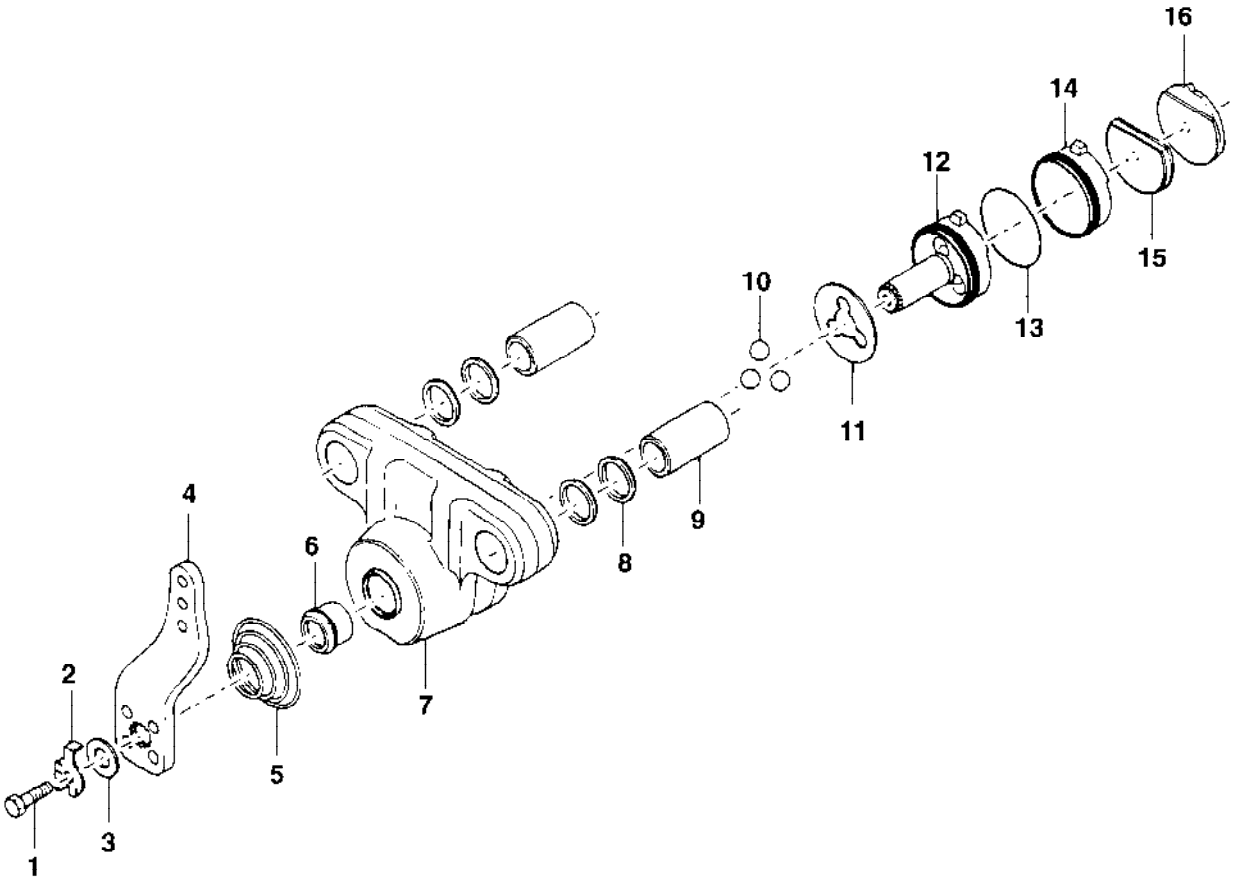

384385 Caliper disc brake

Ref. No.	Part No.	Rem.	Qty	Description	Code
1	938385		1	Screw	
2	938386		1	Clip	
3	938387		1	Washer	
4	938388		1	Lever	
5	938389		1	Spring	
6	938390		1	Shaft seal	
7			1	Not Sold Separately	
8	938392		4	O-ring	
9	938393		2	Bushing	
10	938394		3	Ball	
11	938395		1	Ball spacer	
12			1	Not Sold Separately	
13	938397		1	Plain bearing	
14	938398		1	Rotor seal	
15	938399		1	Pad, lever side	
16	938400		1	Pad, carrier side	

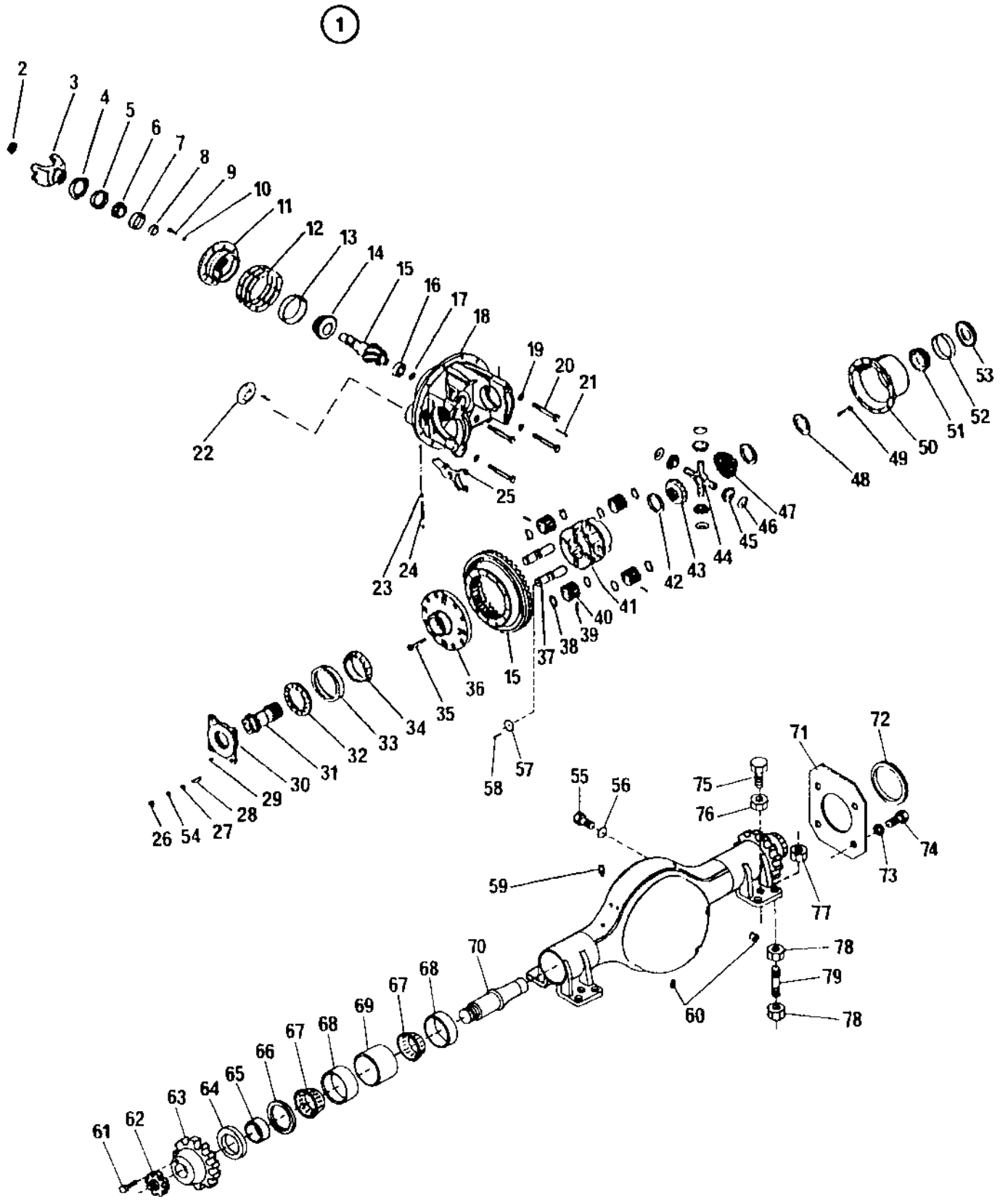
1
2
3
4
5
6
7
8
9
10
11
12
13
14
15
16
17
18
19
20
21
22
23
24
25
26
27
28
29
30
31
32
33
34
35
36
37
38
39
40
41
42
43
44
45
46
47
48
49
50
51
52
53
54
55
56
57
58
59
60
61
62
63
64
65
66
67
68
69
70
71
72
73
74
75
76
77
78
79

Differential, Rockwell

Ref. No.	Part No.	Rem.	Qty	Description	Code
1	195150		1	Differential axle	
2	195692		1	.Nut	
3	195722		1	.Fork link	
4	195723		1	.Deflector	
5	195720		1	.Seal ring	
6	923631		1	.Bearing	D
7	268816		1	.Bearing cup	
8	923633		1	.Shim	
9	242480		8	.Screw	
10	195724		8	.Washer	
11	195719		1	.Pinion housing	
12	416278		2	.Shim 005	
	416279		1	.Shim 010	
	416280		3	.Shim 003	
13	416361		1	.Bearing cup	
14	416363		1	.Bearing	D
15	195691		1	.Drive pinion and gear	
16	195721		1	.Bearing	
17	416238		1	.Retaining ring	
18	195689		1	.Differential carrier	
19	416250		4	.Washer	
20	195690		4	.Screw	
21	195708		1	.Counter pin	
22	195725		1	.Diaphragm	
23	195718		2	.Filler cap	
24	195717		1	.Pin	
25	195716		1	.Fork link	
26	195715		4	.Nut	
27	195713		4	.Washer	
28	195712		4	.Stud	
29	195709		1	.Expanding pin	
30	195711		1	.Lock plate	
31	195710		1	.Gear	
32	195707		1	.Adjusting ring	
33	267587		1	.Bearing cup	
34	922539		1	.Bearing	D
35	195705		8	.Screw	
36	195704		1	.Left support	
37	195697		4	.Shaft	
38	195700		8	.Washer	
39	195702		4	.Expanding pin	
40	195701		4	.Planet pinion	
41	195693		1	.Differential carrier	
42	416243		2	.Washer	
43	195695		1	.Differential side gear	
44	416296		1	.Cross	D
45	242500		4	.Differential pinion	
46	416245		4	.Washer	
47	195694		11	.Differential side gear	
48	416243		1	.Washer	
49	195696		12	.Screw	
50	195703		1	.Right support	
51	242493		1	.Bearing cone	
52	242492		1	.Bearing cup	
53	195706		1	.Adjusting ring	
54	195714		4	.Washer	
55	922524		8	.Screw	
	192655		4	.Screw	
56	813953		12	.Washer	

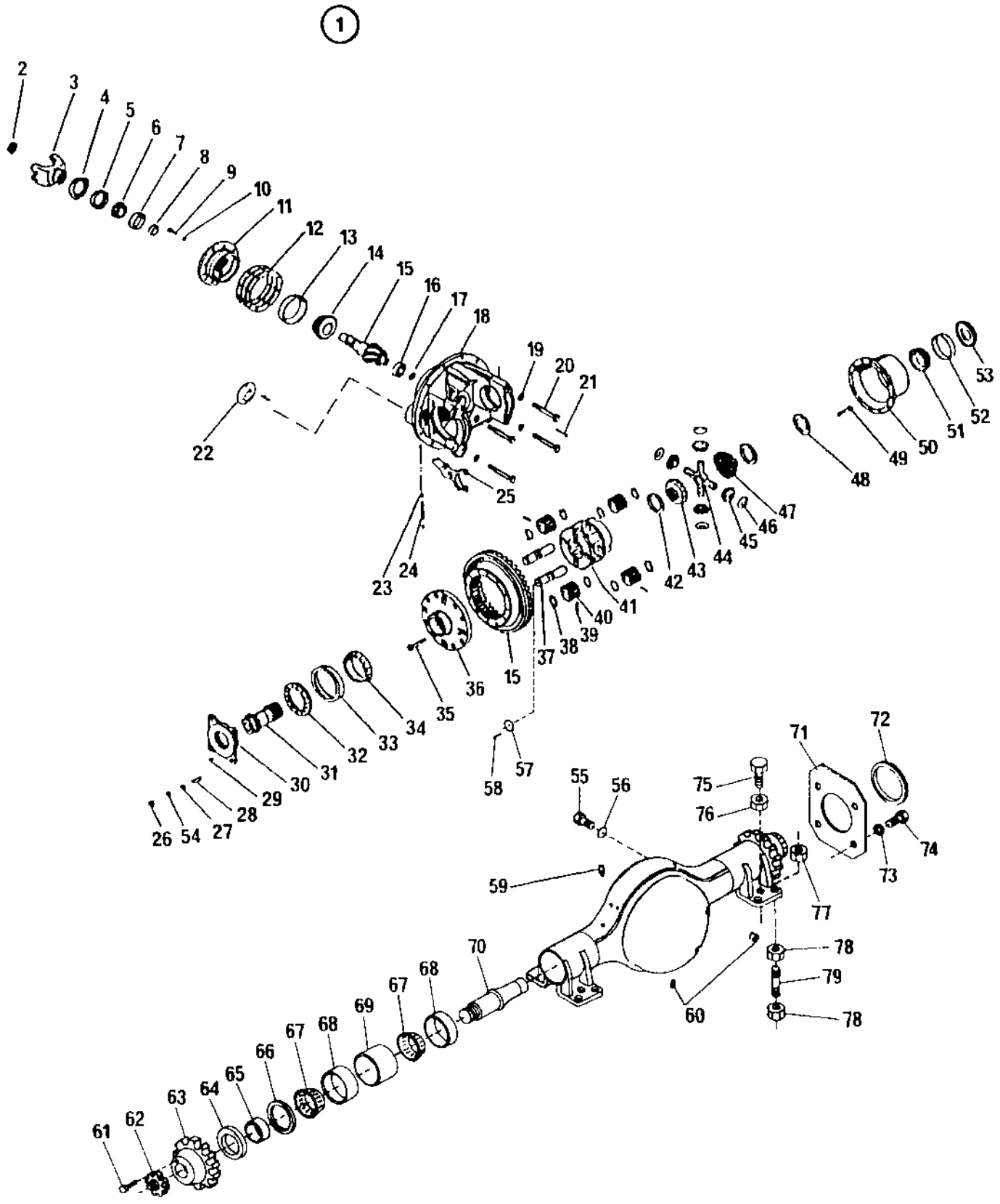
1
2
3
4
5
6
7
8
9
10
11
12
13
14
15
16
17
18
19
20
21
22
23
24
25
26
54
27
28
29
30
31
32
33
34
35
36
15
37
38
39
40
41
42
43
44
45
46
47
48
49
50
51
52
53
55
56
58
57
59
60
70
68
67
69
67
68
66
65
64
63
62
61
71
72
75
76
73
74
77
78
79
78

Ref. No.	Part No.	Rem.	Qty	Description	Code
57	195698		4	.Spacer	
58	195699		200	.Roller	
59	415280		1	.Breather	
60	195726		2	.Magnetic plug	
61	195729		2	.Lock screw	
62	195730		2	.Adjusting nut	
63	195731		2	.Gear	
64	195733		2	.Seal ring	
65	195372		2	.Floor	
66	195734		2	.Snap ring	
67	195735		4	.Bearing cone	
68	195736		4	.Bearing cup	
69	195737		2	.Spacer	
70	195739	C	1	.Axle drive shaft	
	195738	D	1	.Axle drive shaft	
71	195034		1	.Cover	
72	195740		1	.Sealing	
73	195741		8	.Washer 5/16"	
74	195742		4	.Screw	
75	503133		4	.Screw	
76	572007		4	.Nut	
77	586009		8	.Nut	
78	571007		16	.Nut	
79	252914		8	.Stud	

C) Left
D) Right

Cardan shaft assembly up to SN 22620342

16240-1

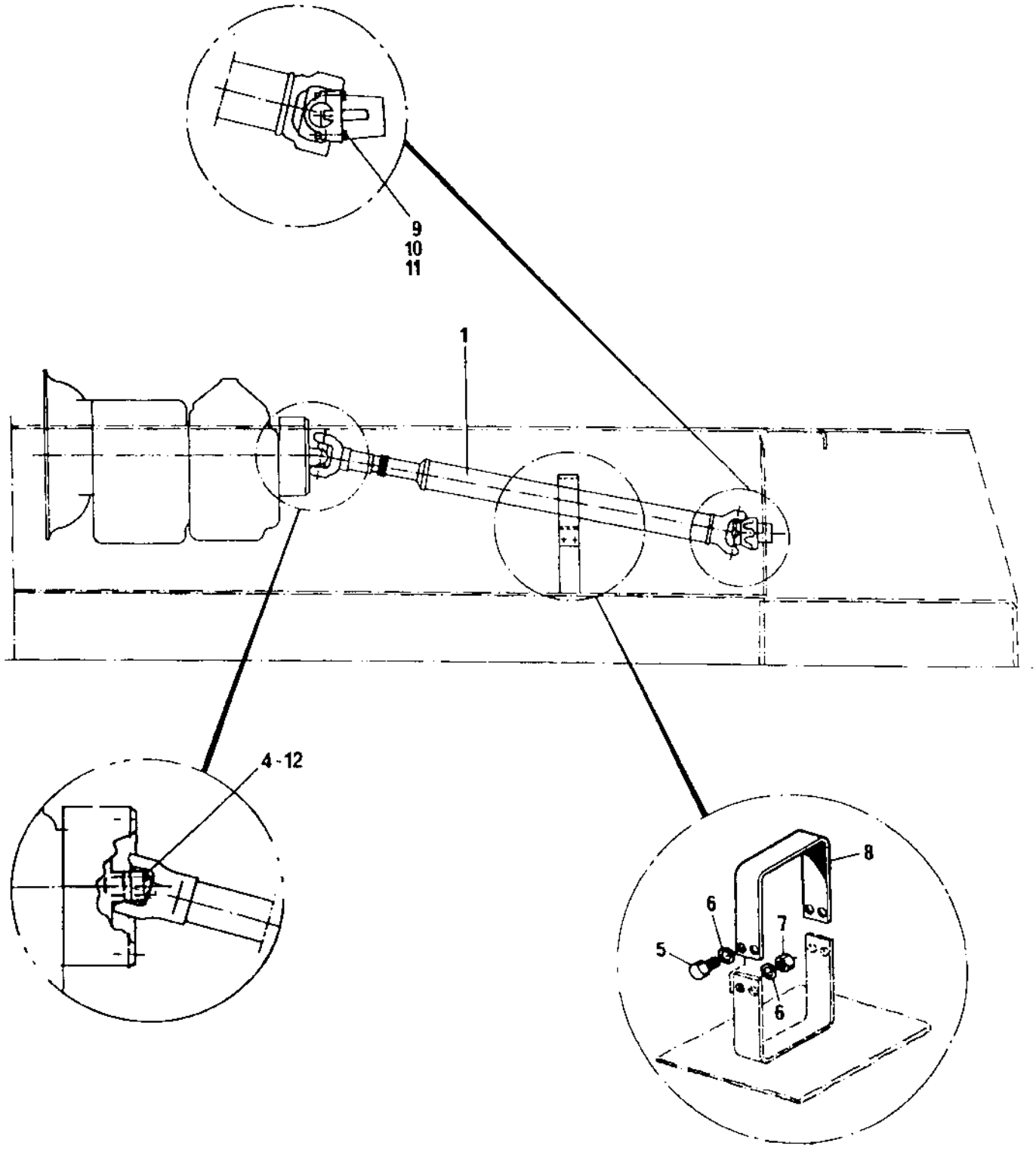

Cardan shaft assembly up to SN 22620342

Ref. No.	Part No.	Rem.	Qty	Description	Code
1	195236		1	Cardan shaft	
4	503027		4	Screw UNF 3/8-24x45	
5	500028		4	Screw M10-1,5x25 8,8	
6	600008		8	Washer	
7	570006		4	Nut M10	
8	268154		1	Protection	
9	195233		4	Screw	
10	904358		4	Nut UNF	
11	195152		2	Clamp	
12	604006		8	Washer	

Cardan shaft assembly from SN 22620343

17497

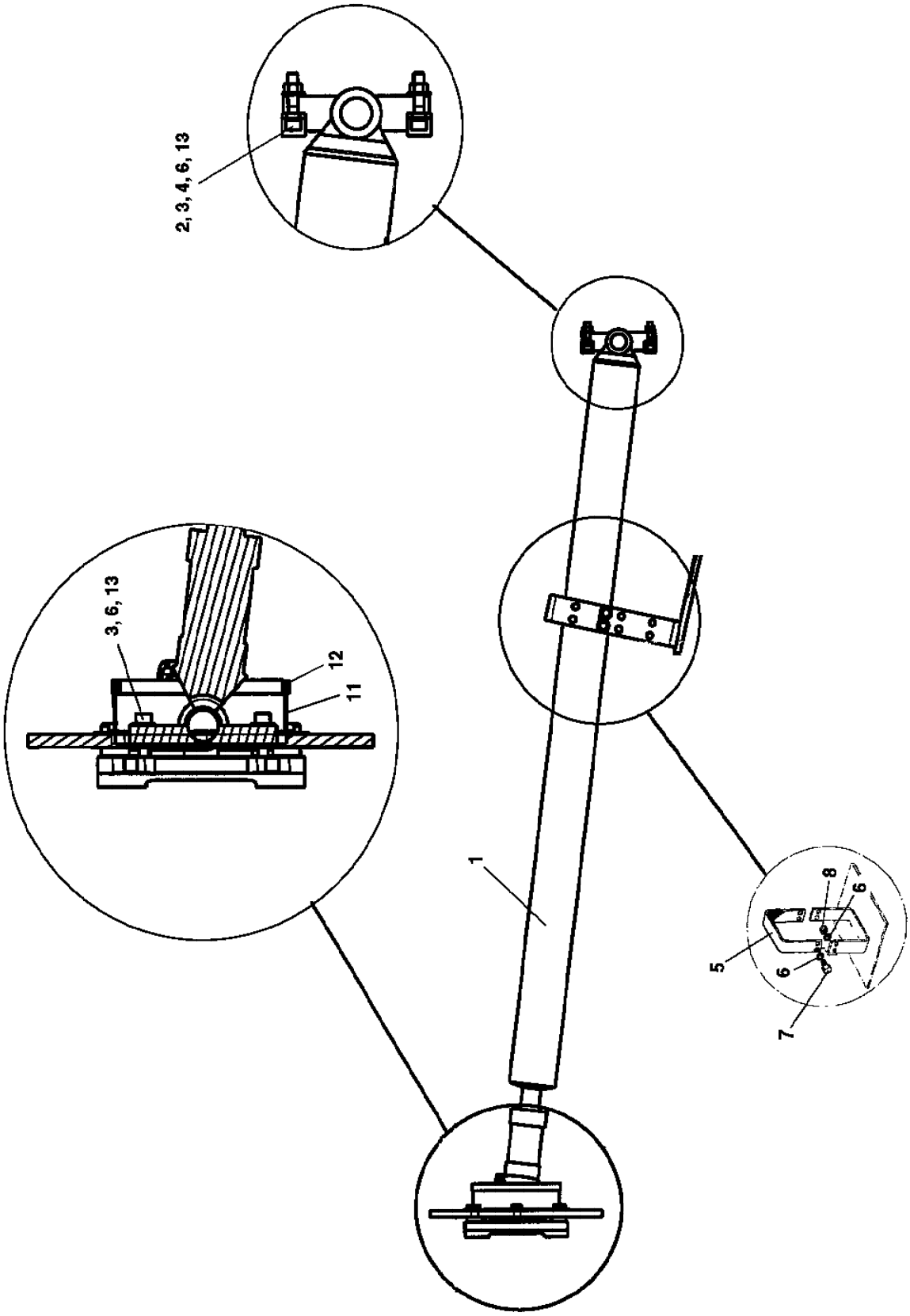

Cardan shaft assembly from SN 22620343

Ref. No.	Part No.	Rem.	Qty	Description	Code
1	195236		1	Cardan shaft	
2	195152		2	Clamp	
3	510023		8	Screw UNF	
4	904358		4	Nut UNF	
5	268154		1	Protection	
6	904230		16	Washer 10,5x22x2	
7	500028		4	Screw M10-1,5x25 8,8	
8	570006		4	Nut M10	
11	384861		1	Splash guard	
12	202028	A	1	Edge trim	
13	902541	B		Lock fluid Loctite 243, 50 ml	

A) L=0,6 m
B) Quantity as required

Cardan shaft, Albarus

16241

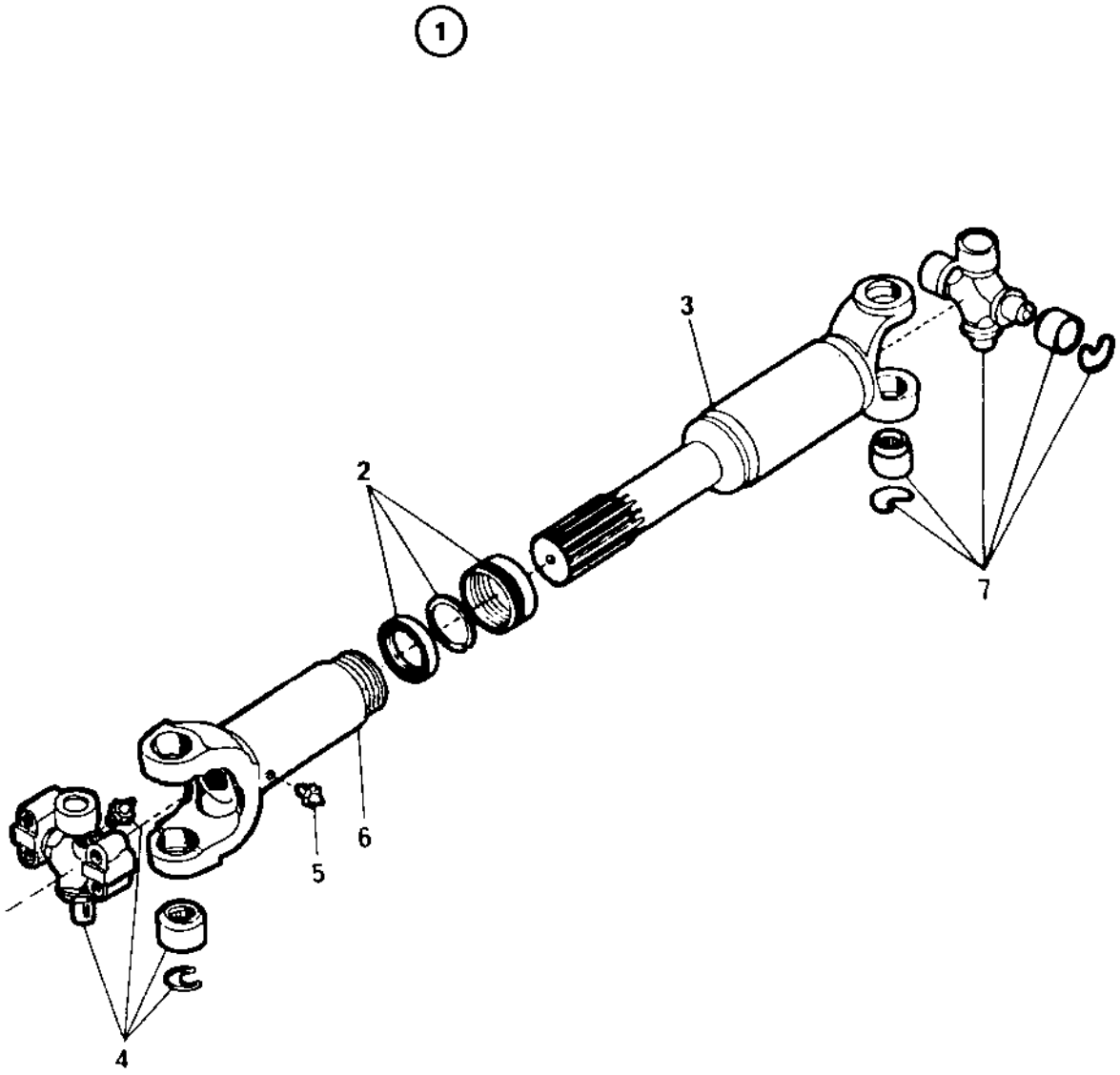

Cardan shaft, Albarus

Ref. No.	Part No.	Rem.	Qty	Description	Code
1	195236		1	Cardan shaft	
2	195314		1	.Seal kit	
3			1	.Tube shaft	
4	927988		1	.Universal joint cross	D
5	310028		1	.Grease nipple	D
6	195315		1	.Slip yoke	
7	195749		1	.Universal joint cross	D

Ref. No.	Part No.	Rem.	Qty	Description	Code
10				Steering system up to SN 22620322 (Page 182)	
15				Steering system from SN 22620323 (Page 190)	

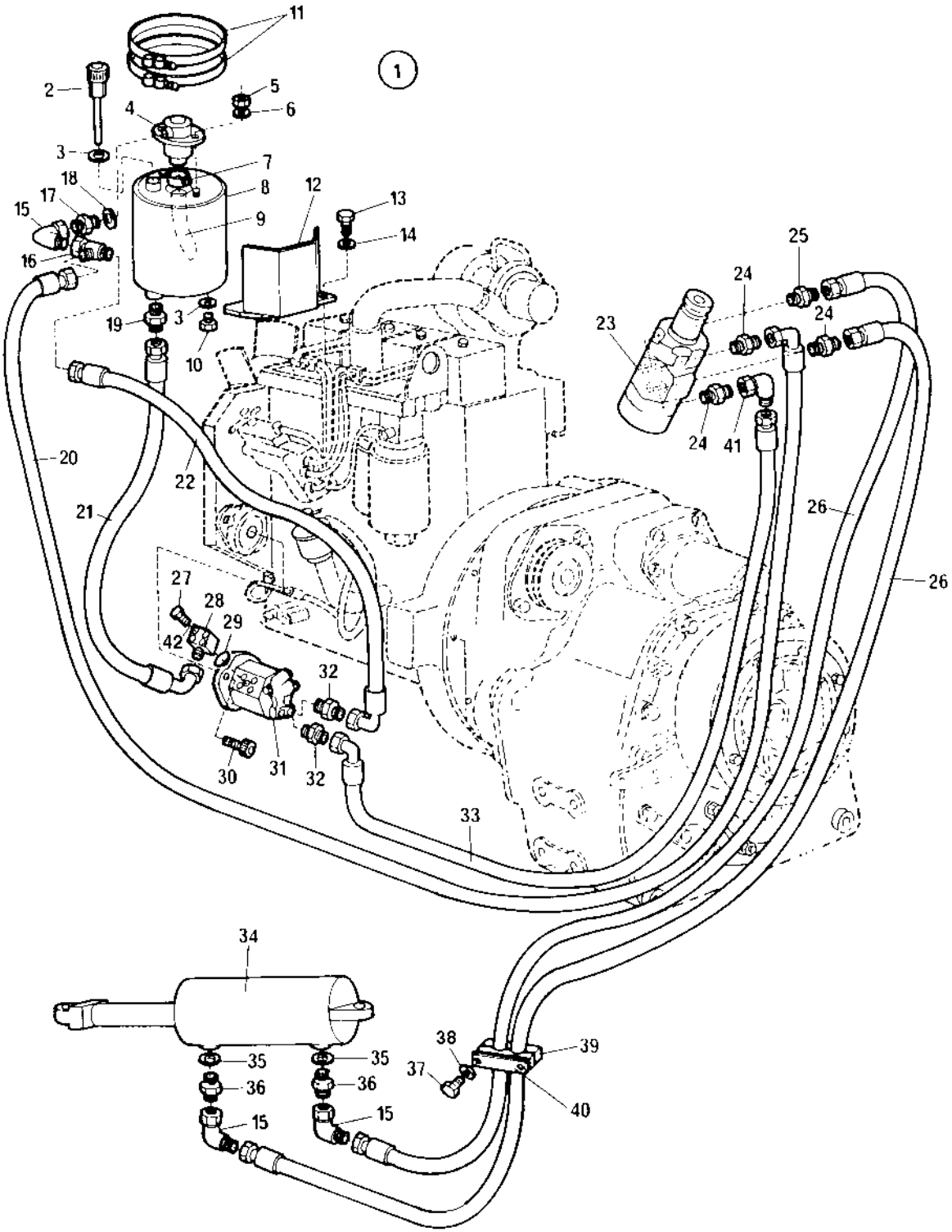
1
11
2
5
6
4
3
7
8
18
17
15
16
12
13
14
9
19
3
10
25
24
24
23
24
41
20
22
21
26
26
27
28
29
42
32
30
31
32
33
34
35
35
36
36
15
15
38
39
37
40

Ref. No.	Part No.	Rem.	Qty	Description	Code
1	241846		1	Hydraulic oil tank, CPL	
2	499373		1	.Air cleaner	
3	330331		2	.Washer 18,2x23,9x1,5	
4	912081		1	.Filter, cpl	
	499474		1	..Filter element	
5	570005		2	.Nut M8	
6	604005		2	.Spring washer	
7	313006		1	.Hose clamp	
8	241848		1	.Hydraulic oil tank	
9	244034		1	.Hose	
10	232160		1	.Plug	
11	194339		2	Clamp	
12	194178		1	Support	
13	500029		3	Screw M10-1,5x30 8,8	
14	904230		3	Washer 10,5x22x2	
15	334197		2	Elbow 90	
16	334135		1	T-connector	
17	234941		1	Adapter	
18	330331		1	Washer 18,2x23,9x1,5	
19	334157		1	Straight connector	
20	482732		1	Hydraulic hose	
21	192188		1	Hydraulic hose	
22	242030		1	Hydraulic hose	
23	375455		1	Steering valve (Page 184)	D
24	334116		3	Straight o-ring connector	
25	334204	D,I	1	Reducer	
	334137	D,J	1	Adapter	
26	191787		2	Hydraulic hose	
27	500089	D,H	4	Screw M6x70	
	500088	F	4	Screw M6x40	
28	268851	D,E	1	Connection	
	904786	G	1	Flange adapter	
29	813457		1	O-ring	
30	508013		2	Screw	
31	191788		1	Steering pump If not available; use 376548	
32	334121		2	Straight connector	
33	242175		1	Hydraulic hose	
34			1	Steering cylinder (Page 186)	
35		A	2	Seal ring	
36	334116	B,C	2	Straight o-ring connector	
37	500189		2	Screw	
38	904228		4	Washer 6,4x12x1,5	
39	192223		1	Hose fixing	
40	241431		1	Plate	
41	334197		1	Elbow 90	
42	904228		4	Washer 6,4x12x1,5	

A) Earlier seal ring 330397 and nipple 269207 are together replaced by adapter 334116
B) With o-ring and backup ring
C) Replaces earlier nipple 269207 and seal ring 330397
D) Old version
E) Replaced by 904786 together with screw 500088
F) Together with flange adapter 904786
G) Together with screw 500088
H) Together with connection 268851
I) Together with adapter 334137
J) Together with reducer 334204

375455 Steering valve

16436

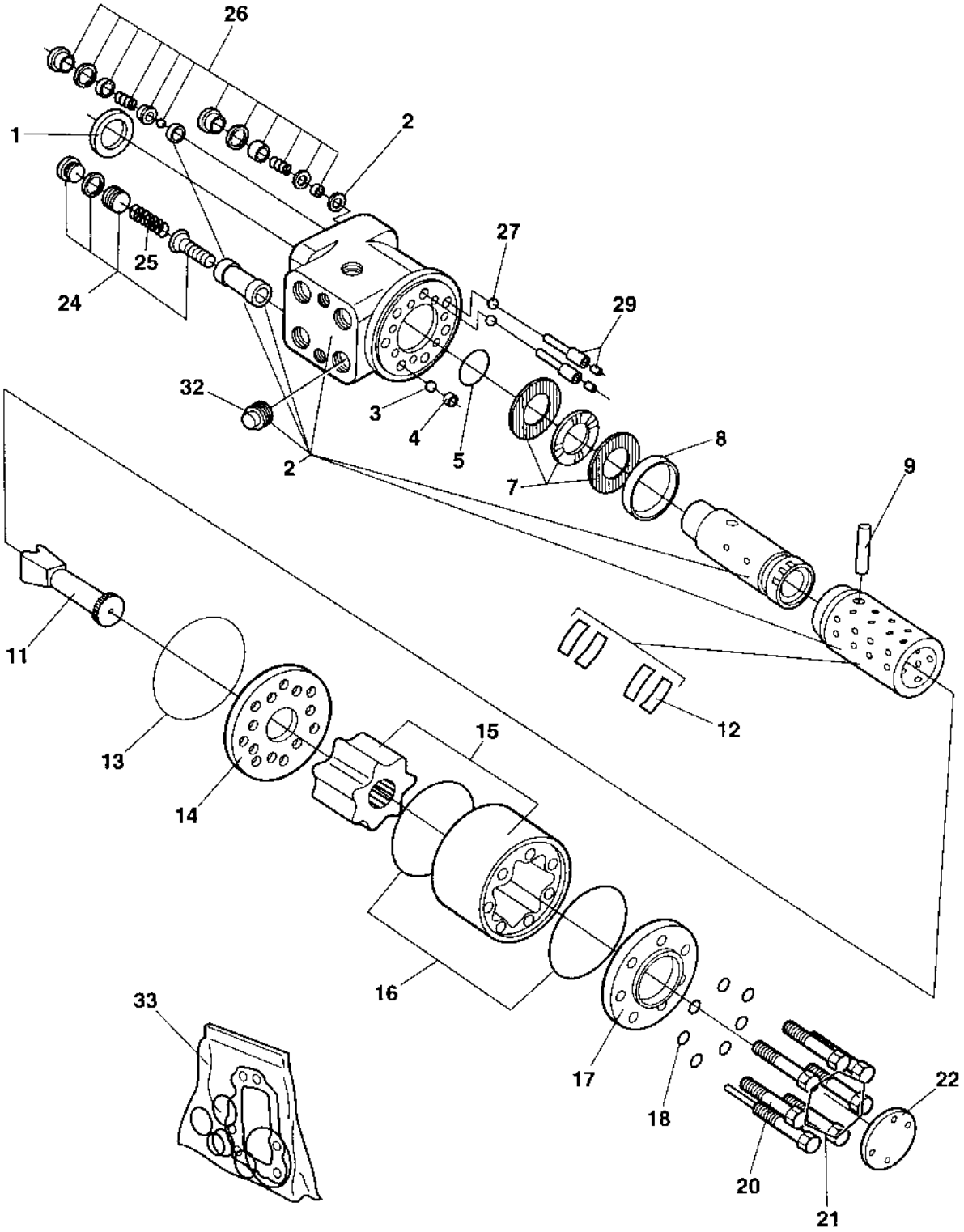

375455 Steering valve

Ref. No.	Part No.	Rem.	Qty	Description	Code
1	936487	A	1	Dust seal ring	
2			1	Housing, spool and sleeve	
3	480468		1	Ball	
4	480446		1	Threaded bushing	D
5	908780	A	1	O-ring	
7	911620		1	Bearing	D
8	480449		1	Ring	
9	480447		1	Cross pin	
11	902861		1	Cardan shaft	
12	911618		1	Spring kit	D
13	936488	A	1	O-ring	
14	902862		1	Valve plate	
15	936489		1	Gear wheel set	
16	936490	A	2	O-ring	
17	480450		1	End cap	
18	936491	A	7	Washer	
20	936492		1	Screw with pin	
21	936493		6	Screw	
22	936494		1	Name plate	
24	929010		1	Relief valve 17,0-17,5MPa	D
25	936495		1	Spring wire	
26	929012		2	Shock valve 22,5-24,0 MPa	
27	929013		2	Ball	
29	929014		2	Rolled pin	
32	908782		1	Valve	
33	908783	B	1	Seal kit	D

A) Included in kit, item 33
B) Not included in PN 375455

Steering cylinder

16257-1

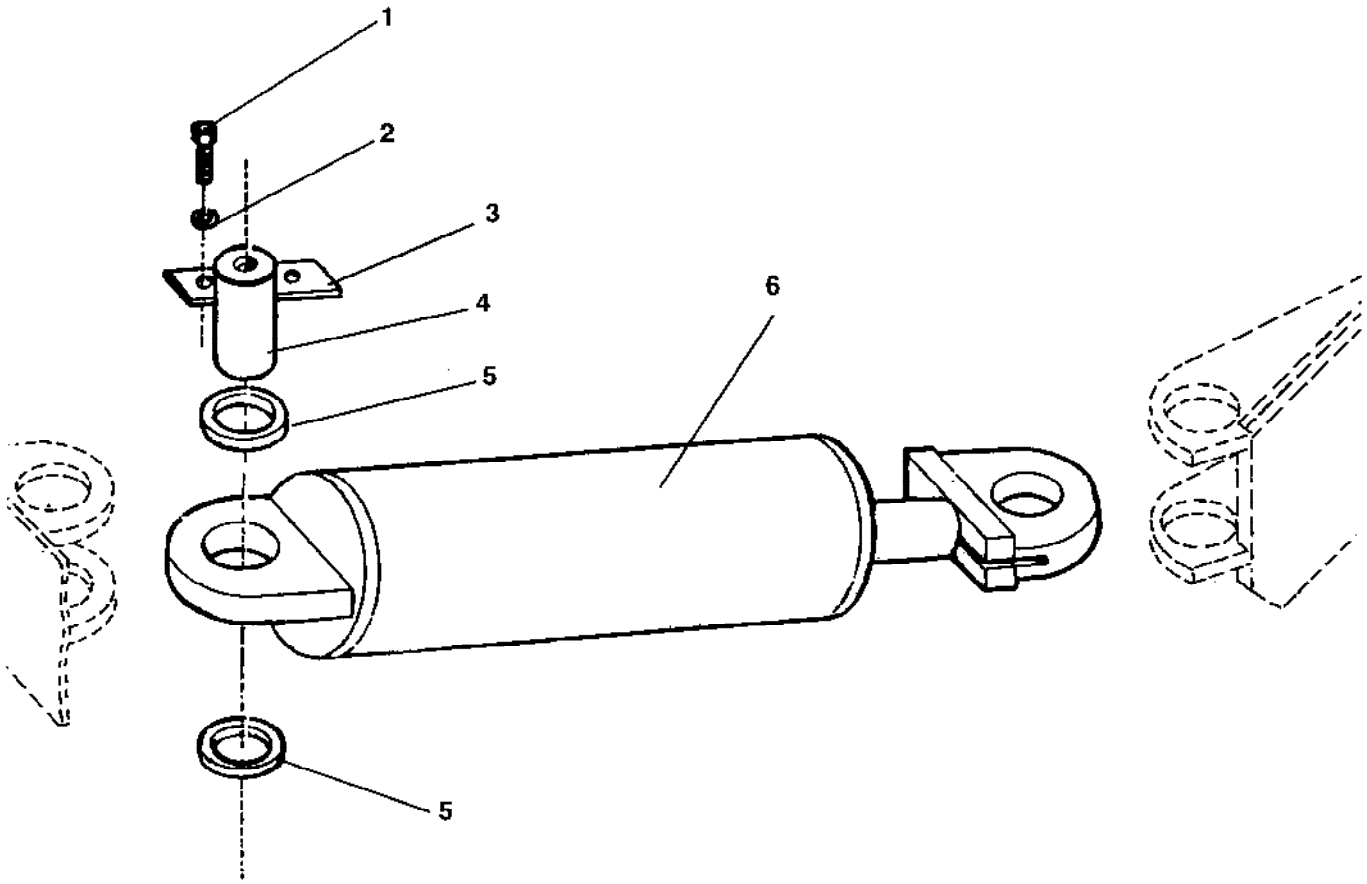

Steering cylinder

Ref. No.	Part No.	Rem.	Qty	Description	Code
1	500051		4	Screw M12-1,75x25 8,8	
2	604009		4	Washer	
3	259211		2	Snap plate	
4	257139		2	Shaft	
5	259215		4	Spacer ring	
6	376059		1	Steering cylinder (Page 188)	

376059 Steering cylinder

16634

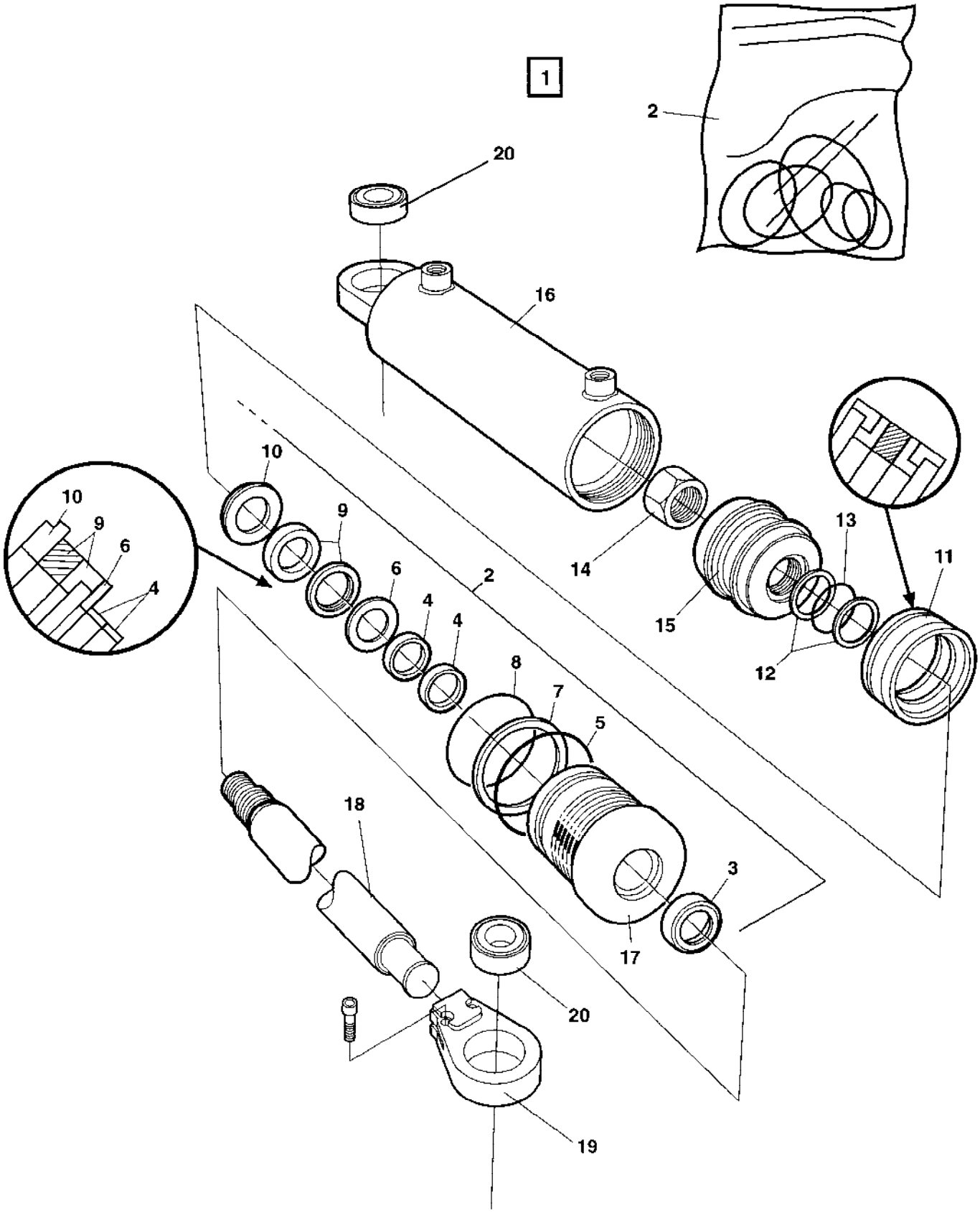

376059 Steering cylinder

Ref. No.	Part No.	Rem.	Qty	Description	Code
1			1	Steering cylinder, cpl	
2	936703		1	.Seal kit	D
3	936700		1	.Shear wiper	
4	936699		2	.Guide ring	
5	160033		1	.O-ring	D
6	936697		1	.Back-up ring	
7	903289		1	.Back-up ring	
8	160032		1	.O-ring	D
9	936696		1	.Piston rod sealing	
10	936695		1	.Snap ring	
11	926326		1	.Piston seal	
12	904141		2	.Back-up ring	
13	160013		1	.O-ring	
14	904142		1	.Lock nut	
15	904143		1	.Piston block	
16	936694		1	.Cylinder tube	
17	936698		1	.Guide	
18	936701		1	.Piston rod	
19	936702		1	.Link head	
20	901691		2	.Bushing	D

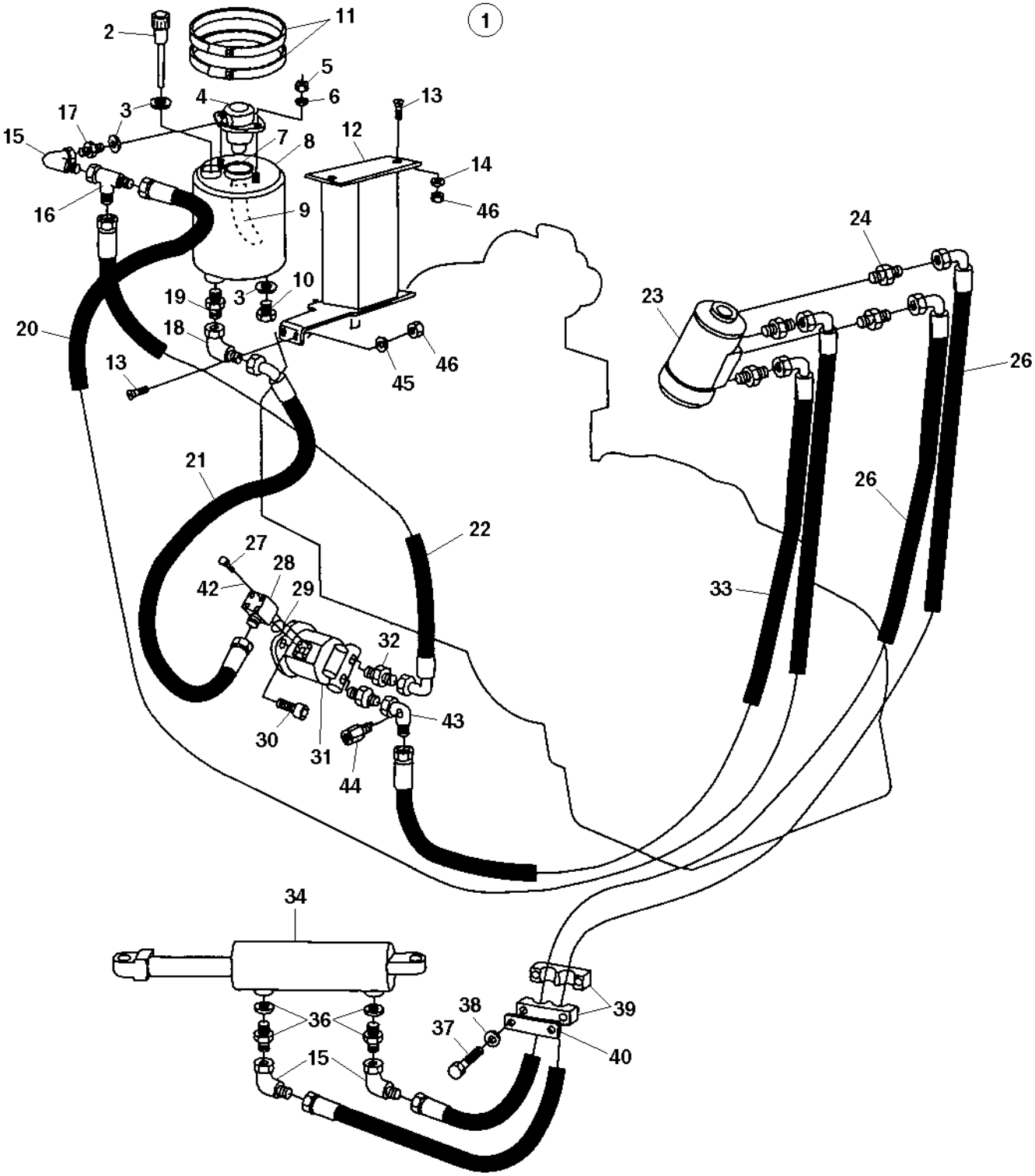
1
2
11
5
4
6
13
17
3
15
7
8
12
14
16
9
46
24
10
19
3
23
20
18
46
26
13
45
21
26
22
27
28
42
29
33
32
43
30
31
44
34
36
38
39
37
40
15