Pneumatic Roller
CP224

DYNAPAC
Part of the Atlas Copco Group

RUTHZIL TRATOR COMERCIAL DE PEÇAS LTDA 11 97083-6812 ROLANDO CITRANGULO

Spare Parts Catalogue

SCP224-BR2EN1

Valid from roller serial number:
**1000501x0B001388* -*



Diesel engines:
Cummins QSB 3.3

Published catalogue issues valid for these rollers:

Catalogue	*Issue date*	*Valid for serial numbers*
SCP224-BR2EN1	*2011-05*	**1000501x0B001388* -*



We reserve the right to change specifications without notice.
Printed in Sweden.

DYNAPAC
Part of the Atlas Copco Group

RESERVDELSBESTÄLLNING

Följande uppgifter ska lämnas vid beställning av reservdelar för att undvika leveransfel:

1. Maskintyp.
2. Vältens serienummer.
3. Antal av önskad reservdel.
4. Reserdelens artikelnummer.
5. Reservdelens benämning.
6. Måttuppgifter vid beställning av metervara.

ORDERING SPARE PARTS

To avoid errors in delivery, please give the following information when ordering spare parts:

1. Type of machine.
2. Roller serial number.
3. Quantity required.
4. Part number.
5. Parts denomination.
6. Dimensions when ordering per length.

ERSATZTEILBESTELLUNG

Zur Vermeidung von Fehllieferungen sind bei der Bestellung von Ersatzteilen folgende Angaben zu machen:

1. Maschinentyp.
2. Herstellungsnummer.
3. Bestellmenge. (Quantity)
4. Ersatzteilnummer. (Part Nº)
5. Ersatzteilbenennung. (Denomination)
6. Massangaben bei Bestellung von Meterware.

ORDINI DI RICAMBI

Per evitare errori nelle consegne di ricambi, Vi preghiamo di comunicarci le seguenti informazioni al momento dell 'ordinazione:

1. Tipo di macchina.
2. Numero di serie della macchina.
3. Quantità dei pezzi desiderati. (Quantity)
4. Numero di codice del pezzo. (Part Nº)
5. Descrizione del pezzo di ricambio. (Denomination)
6. Misura, in caso di ordine per metro.

PEDIDO DE RECAMBIOS

Para evitar errores en las entregas, deberán indicarse los siguientes datos al hacer un pedido de recambios:

1. Tipo de máquina.
2. Número de serie.
3. Cantidad de piezas deseadas. (Quantity)
4. Número de artículo de la pieza de recambio. (Part Nº)
5. Denominación de la pieza. (Denomination)
6. Indíquese la medida al solicitar un artículo que se expide por metros.

COMMANDE DE PIECES DE RECHANGE

Les indications suivantes doivent être fournies lors de la commande de piéces de rechange, afin d'éviter toute erreur de livraison:

1. Type de machine.
2. Numéro de série.
3. Quantité désirée de pièce de rechange. (Quantity)
4. Numéro de la piéce de rechange. (Part Nº)
5. Dénomination de la piéce de rechange. (Denomination)
6. Longueur en cas de commande au mètre.

YOUR AGENT/DEALER:

Text pages

The text pages is structured as the picture on the right.

1. This is the remarks for specific items and the descriptions of the remarks is at the bottom of the parts list.

2. Parts indicated by a dot and moved to the right are included when buying the assembled unit above.

3. Spare parts Class code for a specific part.
"A" = 3 or more units/year,
"B" = 2 or more units/year,
"C" = 1 or more units/year,
"D" = at least 1 unit/year.

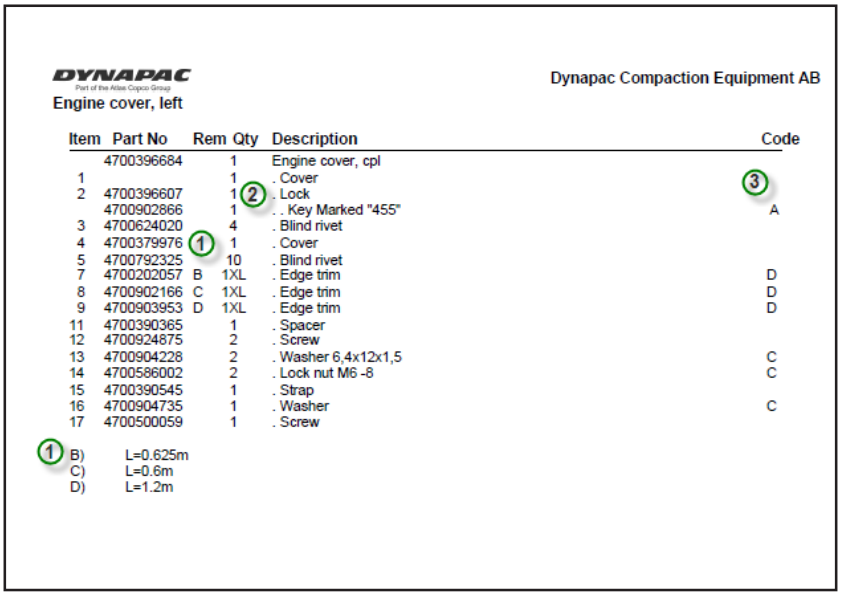

DYNAPAC
Part of the Atlas Copco Group

Dynapac Compaction Equipment AB

Engine cover, left

Item	Part No	Rem	Qty	Description	Code
	4700396684		1	Engine cover, cpl	
1			1	. Cover	3
2	4700396607		1	. Lock	
	4700902866		1	. . Key Marked "455"	A
3	4700624020		4	. Blind rivet	
4	4700379976		1	. Cover	
5	4700792325		10	. Blind rivet	
7	4700202057	B	1XL	. Edge trim	D
8	4700902166	C	1XL	. Edge trim	D
9	4700903953	D	1XL	. Edge trim	D
11	4700390365		1	. Spacer	
12	4700924875		2	. Screw	
13	4700904228		2	. Washer 6,4x12x1,5	C
14	4700586002		2	. Lock nut M6 -8	C
15	4700390545		1	. Strap	
16	4700904735		1	. Washer	C
17	4700500059		1	. Screw	

1 B) L=0.625m
C) L=0.6m
D) L=1.2m

Changes

PARTS INFO	SERVICE INFO	GROUP	PAGE	NOTES

Notes

Notes

PÄRMETIKETT

För att undvika fel vid reservdelsbeställning finns här nedan två etiketter som passar i fickorna på pärmarnas ryggar. På dessa kan man se från vilket vältnummer av aktuell maskin reservdelskatalogen gäller. Gör så här:

1. Tag denna sida ur pärmen.
2. Klipp ut etiketten till **VÄNSTER** (1) och sätt in den i fickan på **DENNA** pärmens rygg.
3. Finns det en etikett till **HÖGER** (2), kan denna användas på pärmen för **FÖREGÅENDE** utgåva av denna katalog.
4. Kasta detta papper.

BINDER LABEL

To avoid errors when ordering spare parts use the labels below to identify the catalogues on the back of the binder. The label contain the serial number range for which the catalogue is valid. Do like this:

1. Remove this page from the binder.
2. Cut out the **LEFT** label (1) and put it on **THIS** binders back.
3. If there is a label to the **RIGHT** (2), it can be used on the binder for **PRECEDING** issue of this catalogue.
4. Throw away this paper.

KATALOG-BESCHRIFTUNG

Zur Vermeidung von Fehlen bei der Ersatzteilbestellung benutzen Sie bitte die unteren Beschriftungen, um die Kataloge auf der Rückseite zu kennzeichen. Auf der Beschriftung ist angegaben, für welche Maschinennummern der jeweilige Katalog gültig ist. Ablauf:

1. Nehmen Sie dieses Blatt aus dem Katalog.
2. Schneiden Sie die **LINKE** Beschriftung (1) aus. Schieben Sie die Beschriftung in die tasche auf **DEM** Katalogrücke.
3. Sollte die Beschriftung unten **RECHTS** (2) mitgeliefert werden, kennzeichen Sie damit bitte die **ÄLTERE** Ausführung dieses Kataloges.
4. Den Rest dieses Blattes bitte vernichten.

ETICHETTA POSTA SUL RACCOGLITORE

Per evitare errori quando ordinate pezzi di ricambio, usate le etichette in calce che servono ad identificare i cataloghi sul retro del raccoglitore. L'etichetta indica il numero di matricola delle maccine prese in considerazione nel catalogo.

1. Rimuovete questa pagina dal raccoglitore.
2. Ritagliate l'etichetta posta a **SINISTRA** (1) e ponetela sul retro **DEL** raccoglitore.
3. Se trovate anche un'etichetta sulla **DESTRA** (2), ritagliatela e ponetela sul raccoglitore relativo alla **PRECEDENTE** edizione del catalogo.
4. Distruggete questo foglio.

ETIQUETA PARA LA CARPETA

Para evitar errores al pedir repuestos utilicen las etiquetas abajo descritas para identificar los catálogos en la parte trasera de la carpeta. En la etiqueta se ven los números de referencia de la serie para la cual es válido el catálogo. Instrucciones:

1. Quitar esta página de la carpeta.
2. Corta la etiqueta **IZQUIERDA** (1) y ponerla est **ESTA** carpeta en la parte trasera.
3. Si hay una etiqueta en la parte **DERECHA** (2) se puede utilizar en la carpeta para el catálogo que **PRECEDE** a esta.
4. Tirar esta hoja.

ETIQUETAGE DU CATALOGUE

Afin d'éviter des erreurs lors de commandes de pièces de rechange, nous vous conseillons d'apposer les marquages ci-dessous à l'arrière du classeur, pour identifier les catalogues. Ce marquage indique les numéros de série pour lesquels le catalogue est adapté. Il convient de procéder de la façon suivante:

1. Retirez cette page du classeur.
2. Découpez l'étiquette de **GAUCHE** (1), et apposez-la à l'arrière de **CE** catalogue.
3. Si il y a une étiquette à **DROITE** (2), vous pourrez l'apposer sur le classeur de l'edition **PRECEDENTE** du catalogue.
4. Détruire cetta feuille.

1.



CP224

Catalogue **SCP224-BR2EN1**
Valid **from** serial number:
***1000501x0B001388* -**

TABLE OF CONTENTS

Page

CP224 SN 10000501x 0B001388 - 2

Service kits 4

4812155996 Service kit 50h, Cummins QSB 3.3 6

4700939076 Service kit 250 / 750 h 8

4700950175 Service kit 500h, Cummins QSB 3.3 10

4812155997 Service kit 1000h, Cummins QSB 3.3 12

Repair kit 14

4812155697 Sprinkler kit 16

4812155694 Scraper kit 18

4812155699 Air on the run kit Front 20

4812155751 Air on the run kit Rear 22

Frame 24

Frame module 26
- Ballast cover 28
- Ballast cover 30
- Ballast cover 32
- Cover 34
- Cover 36
- Manifold 38
- Accumulator 40
- Filter bracket 42
- Steering cylinder 44

4812111106 Reducing valve 46

Sprinkler tank module 48
- Sprinkler tank 50

Cover module 52
- Cover 54
  - Cap 56

Level sensor module 58

Cover module 60
- Cover 62

Sprinkler pump magnet valve module 64
- Sprinkler pump magnet valve 66

Filter bracket 68

Cover plate 70

Water hoses 72

Eyelet module, option 74

Step module 76

Bracket module 78

SMV-sign 80

Grab handle module 82

TABLE OF CONTENTS

Page

Suspension **84**

Front suspension 86
Front suspension module 88
Front suspension 90
Tilt shaft cpl. 92
Wheel shaft cpl. 94
Hub 96
Tilt shaft cpl. 98
Wheel module Pirelli 100
Wheel Pirelli 102
Wheel module, option Michelin 104
Wheel Michelin 106
Cover module 108
Cover 110
Scraper module 112
Scraper bracket module 114
Bracket 116
Sprinkler module 118
Sprinkler pipe 120
Sprinkler pipe module 122
Sprinkler pipe 124

Rear Suspension 126
Gear module, left 128
Gear module repair kit 130
Gear module sealing kit 132
Negative multidisc brake repair kit 134
Gearbox repair kit 136
Gear module, right 138
Gear module repair kit 130
Gear module sealing kit 132
Negative multidisc brake repair kit 134
Gearbox repair kit 136
Hydraulic motor module, left 140
Hydraulic motor module, right 142
Wheel module Pirelli 100
Wheel Pirelli 102
Wheel module, option Michelin 104
Wheel Michelin 106
Scraper module 112
Scraper module 144
Scraper assy 146
Scraper bracket module 114
Bracket 116
Sprinkler pipe module 122
Sprinkler pipe 124
Pulse sensor module 148

Air on the run system option 150
Pipe and hose kit Air on the run 152
Air control kit 154
Air dryer kit 156
Pneumatic valve kit 158

TABLE OF CONTENTS

Page

Compressor module ... 160
Compressor ... 162
Pipe and hose kit, Front Air on the run ... 164
Pipe and hose kit, Rear Air on the run ... 166
Cover module Air on the run ... 168
Cover Air on the run ... 170

Engine ... 172

Engine room ... 174
Engine ... 176
Engine module ... 178
Diesel engine 74 kW ... 180
Air cooler hoses ... 182
Water cooler hoses ... 184
Air cleaner module ... 186
Air cleaner hose module ... 188
Air cleaner hose ... 190
Muffler ... 192
Exhaust pipe module ... 194
Coolant hoses ... 196
Fuel tank module ... 198
Fuel tank ... 200
Fuel hose module ... 202
Charge air cooler ... 204
Water cooler ... 206
Expansion tank ... 208
Hydraulic oil cooler ... 210
Belt guard module Alternator ... 212
Hydraulic oil tank module ... 214
Cover ... 216
Fan module ... 218
Fan ... 220
Hoses ... 222

Engine hood ... 224
Locking device ... 226

Air inlet cover module ... 228
Cover ... 230
Cover ... 232

Hydraulic system ... 234

Hydraulic steering, sliding seat ... 236
Steering, slideable ... 238

Hydraulic pump module ... 240
Hydraulic pump ... 242
Pulse sensor module ... 148

Hydraulic steering pump module ... 244
Hydraulic steering pump ... 246

Hydraulic valve module ... 248
Hydraulic valve ... 250
4812111106 Reducing valve ... 46

4812111106 Reducing valve ... 46

TABLE OF CONTENTS

Page

Hydraulic valve module Air on the run ... 252
Thermobypass valve kit ... 254
Hydraulic hoses Air on the run, option ... 256
Hoses Air on the run ... 258
Hoses Air on the run ... 260
Accumulator ... 262
Hydraulic valve module ... 248
Hydraulic valve ... 250
4812111106 Reducing valve ... 46
4812111106 Reducing valve ... 46
Hydraulic valve module Air on the run ... 252
Hydraulic hoses, with platform Air on the run ... 264
Hydraulic hoses, with cab Air on the run ... 266
Solenoid valve ... 268
Hydraulic hoses ... 270
Hydraulic system, steering ... 272
Hydraulic valve module ... 248
Hydraulic valve ... 250
4812111106 Reducing valve ... 46
4812111106 Reducing valve ... 46
Steering cylinder ... 274
Hose bracket ... 276
Hydraulic system, engine room ... 278
Hydraulic hoses ... 280
Manifold ... 38
Manifold ... 282
Hydraulic valve module ... 284
Hydraulic valve ... 286
Hydraulic valve From ECN 09451 ... 250
4812111106 Reducing valve ... 46
4812111106 Reducing valve ... 46
Hydraulic motor module, right ... 288
Hydraulic motor module, left ... 290
Hydraulic hoses, Dynamic brake ... 292
Hose bracket ... 276
Accumulator ... 40
Brake valve dynamic module ... 294
Brake valve dynamic ... 296
Thermobypass valve kit ... 254
Hydraulic hoses, Edge cutter (optional) ... 298
Hydraulic hoses Brake system ... 300
Hose assy kit ... 302
Electrical equipment ... 304
Electric cables, power supply ... 306
Battery disconnector ... 308
Battery disconnector ... 310
Battery module ... 312
Electric cables, power supply cab ... 314
Electr. cables, Engine/ECU/Horn/Backup alarm ... 316

TABLE OF CONTENTS

Page

Battery disconnector ... 308
Battery disconnector ... 310
Battery module ... 312
Back-up alarm module ... 318
Back-up alarm ... 320
Horn module ... 322
Horn ... 324
Battery disconnector ... 308
Battery disconnector ... 310
Tachograph ... 326
Tachograph holder module ... 328
Cable harness kit ... 330
Power supply module ... 332
Standard ECU module ... 334
Standard ECU assembly ... 336
Driving & side direction lights ... 338
Accessories ECU module ... 340
Driving lights, front RH ... 342
Driving lights, front LH ... 344
Turn signals ... 346
Driving lights, rear ... 348
Steering column switch module ... 350
Cable harness and switch module ... 352
Registration plate light module ... 354
Registration plate light ... 356
Rotating beacon, working light ... 358
Rotating beacon module - See A, B, C for S/N ... 360
Rotating beacon module - See D, E, F for S/N ... 362
Working light module H3 ... 364
Working light module Xenon ... 366
Cable harness, Sprinkler and Edge Cutter option ... 368
Cable harness Asphalt temp DCA, front option ... 370
Cable harness Asphalt temp DCA, rear option ... 372
Cable harness, Air on the run, option ... 374

Drivers platform ... 376

Platform, no cab ... 378
Rops module ... 380
Rops ... 382
Manual box ... 384
Rops ... 386
Manual box ... 384
Platform module ... 388
Platform ... 390
Platform no ROPS ... 392
Manual box ... 384
Hand rail, left ... 394
Hand rail ... 396
Hand rail, right ... 398
Hand rail ... 400

TABLE OF CONTENTS

Page

Hand rail ... 402
Lunch box module ... 404
Cab module ... 406
Cab, asymmetric ... 408
Manual box ... 384
Canopy option ... 410
Canopy assy ... 412
Bracket ... 414
GPS equipment module, option DCA ... 416
GPS holder module, option DCA ... 418
Antenna bracket module, option DCA ... 420
Computer bracket module, option DCA ... 422
Computer module, option DCA ... 424
Cab heater system ... 426
Heater hose kit ... 428
Cab noise cover ... 430
Radio and cd player ... 432
Radio and cd player module ... 434
Drivers seat ... 436
Seat frame structure ... 438
Seat frame ... 440
Steering column ... 442
Brake pedal ... 444
Seat, galon suspensioned ... 446
Seat, fabric suspensioned (option) ... 448
Controls, slidable and turning ... 450
Cross sliding ... 452
Carrier ... 454
Drive control, cpl ... 456
Display unit ... 458
Steering column switch module ... 350
Seat belt module ... 460
Rear view mirror module ... 462

Decals ... 464

Optional equipment ... 466

Ballast module ... 468
Air conditioning ... 470
Compressor module ... 472
Compressor complete ... 474
Condensor module ... 476
Condensor ... 478
Evaporator module ... 480
4700393584 Evaporator unit ... 482
Hose kit AC ... 484
ACC module ... 486
ACC controls ... 488
Protection cover ... 490

TABLE OF CONTENTS

Page

Edge cutter ... 492
Edge cutter, module ... 494
4700390998 Edge cutter, cpl ... 496
4700390999 Holder ... 498
4700391009 Bearing unit ... 500
4700387275 Hydraulic cylinder ... 502
Cutting disc module ... 504
Hydraulic valve module ... 506
Hydraulic valve ... 508
4700391018 Hydraulic valve ... 510
Bracket module ... 512
Disc/Roller holder ... 514
Asphalt temperatur module ... 516
Fire extinghisher ... 518
Scraper module ... 144
Scraper assy ... 146


CP224
DYNAPAC
DYNAPAC

CP224 SN 10000501x 0B001388 -

Item	Part No	Rem	Qty	Description	Code
1				**Service kits (Page 4)**	
2				**Repair kit (Page 14)**	
3				**Frame (Page 24)**	
4				**Suspension (Page 84)**	
5				**Engine (Page 172)**	
6				**Hydraulic system (Page 234)**	
7				**Electrical equipment (Page 304)**	
8				**Drivers platform (Page 376)**	
9				**Decals (Page 464)**	
10				**Optional equipment (Page 466)**	

Service kits

Item	Part No	Rem	Qty	Description	Code
1	4812155996			**Service kit 50h, Cummins QSB 3.3 (Page 6)**	A
2	4700939076			**Service kit 250 / 750 h (Page 8)**	
3	4700950175			**Service kit 500h, Cummins QSB 3.3 (Page 10)**	
4	4812155997			**Service kit 1000h, Cummins QSB 3.3 (Page 12)**	A

4812155996 Service kit 50h, Cummins QSB 3.3

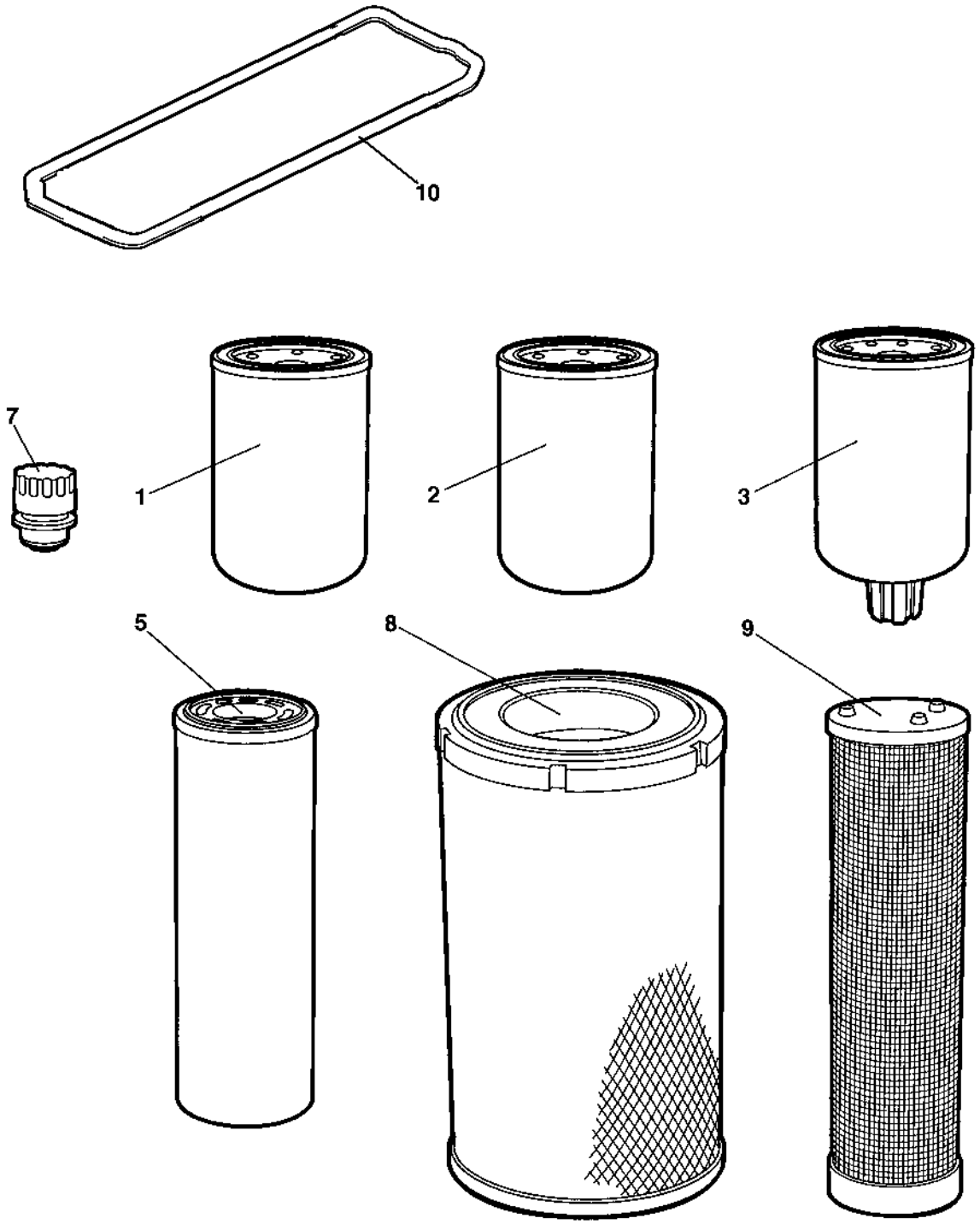

4812155996 Service kit 50h, Cummins QSB 3.3

Item	Part No	Rem	Qty	Description	Code
	4812155996			**Service kit 50h, Cummins QSB 3.3 (Page 6)**	A
1	4700939068		1	Oil filter element	A
2	4700950302		1	Fuel filter element	A
3	4700950301		1	Pre-fuel filter element	A
5	4700372229		2	Hydraulic oil filter element	A

4700939076 Service kit 250 / 750 h

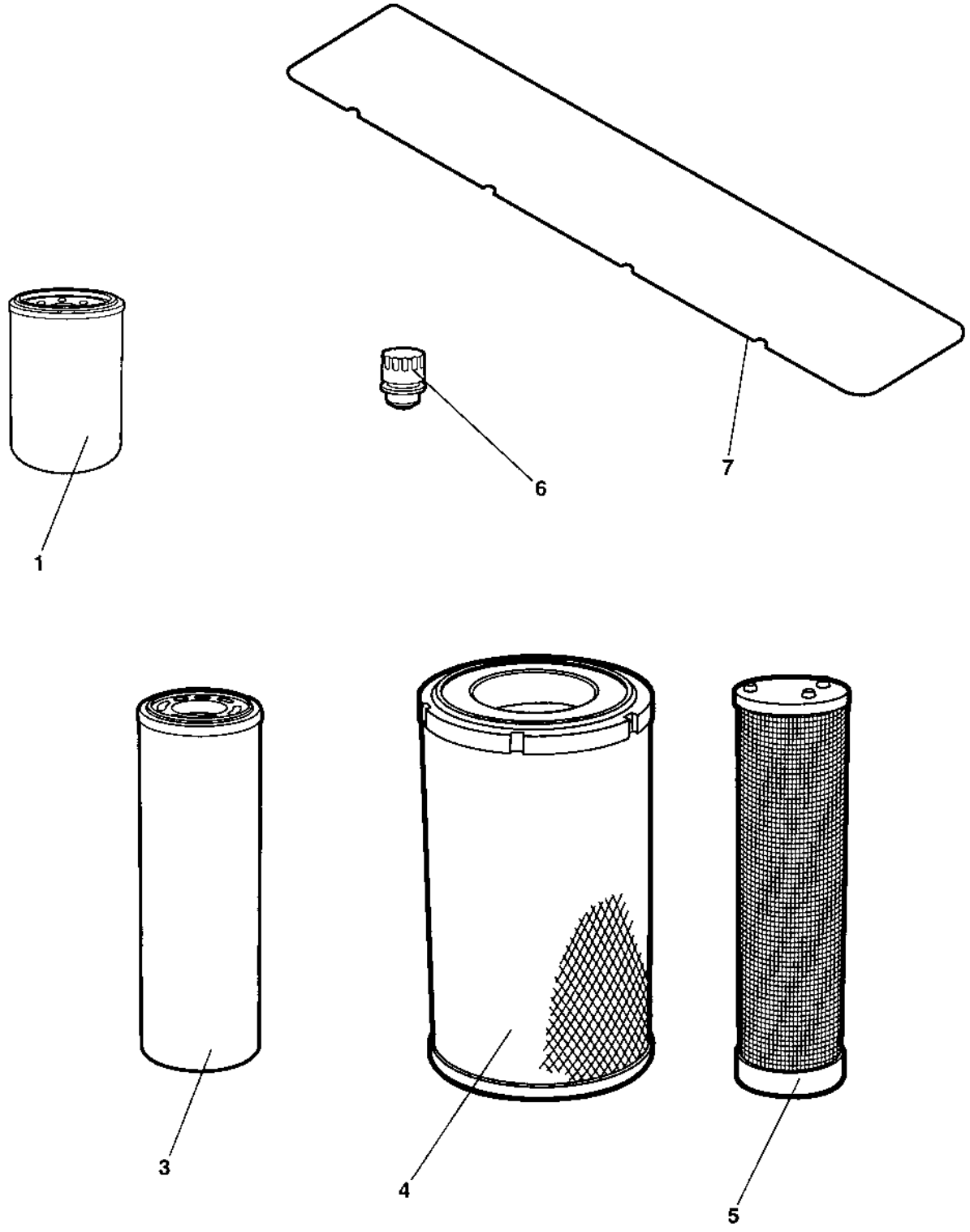

4700939076 Service kit 250 / 750 h

Item	Part No	Rem	Qty	Description	Code
	4700939076			**Service kit 250 / 750 h (Page 8)**	
1	4700939068		1	Oil filter element	A

4700950175 Service kit 500h, Cummins QSB 3.3

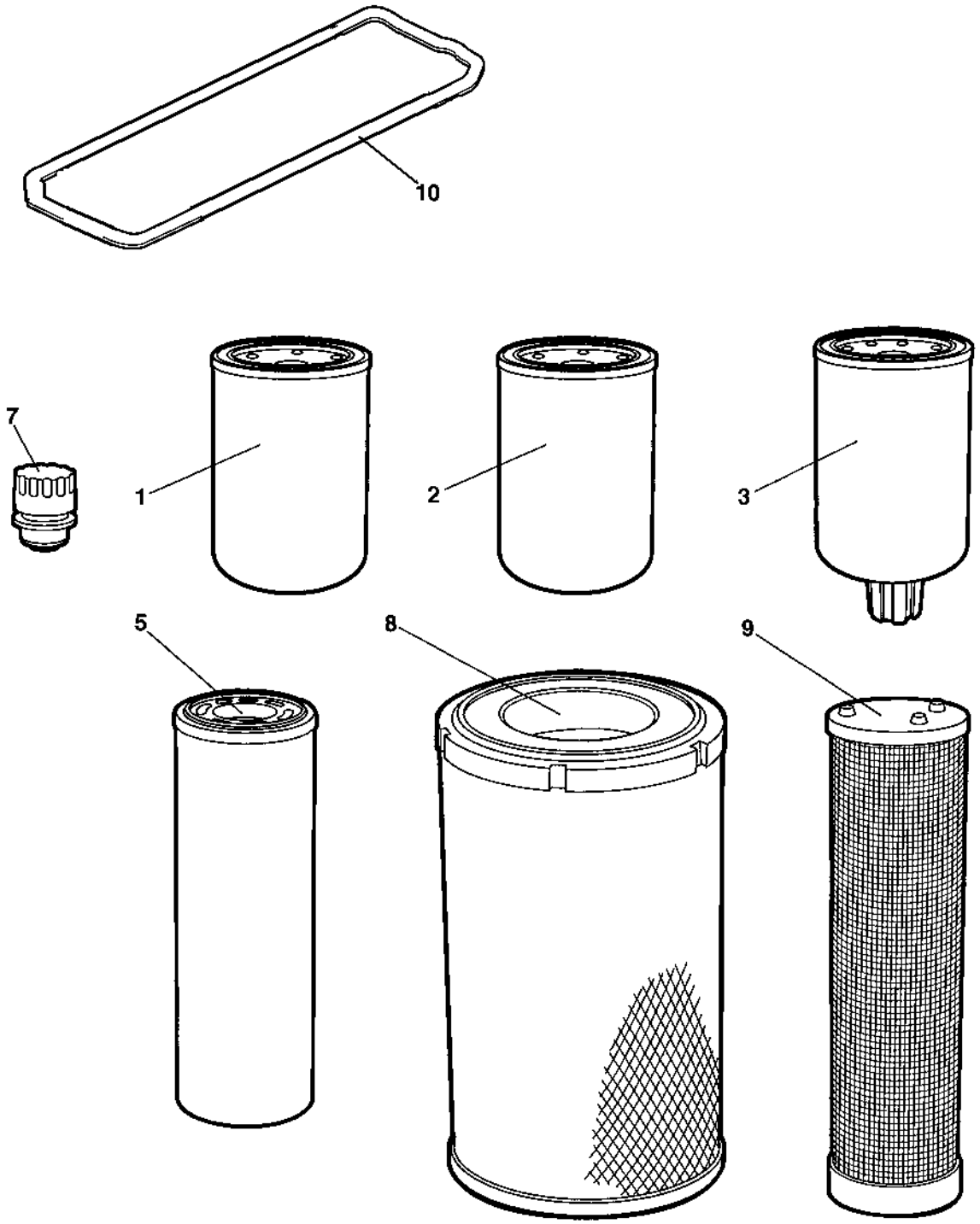

4700950175 Service kit 500h, Cummins QSB 3.3

Item	Part No	Rem	Qty	Description	Code
	4700950175			**Service kit 500h, Cummins QSB 3.3 (Page 10)**	
1	4700939068		1	Oil filter element	A
2	4700950302		1	Fuel filter element	A
3	4700950301		1	Pre-fuel filter element	A

4812155997 Service kit 1000h, Cummins QSB 3.3

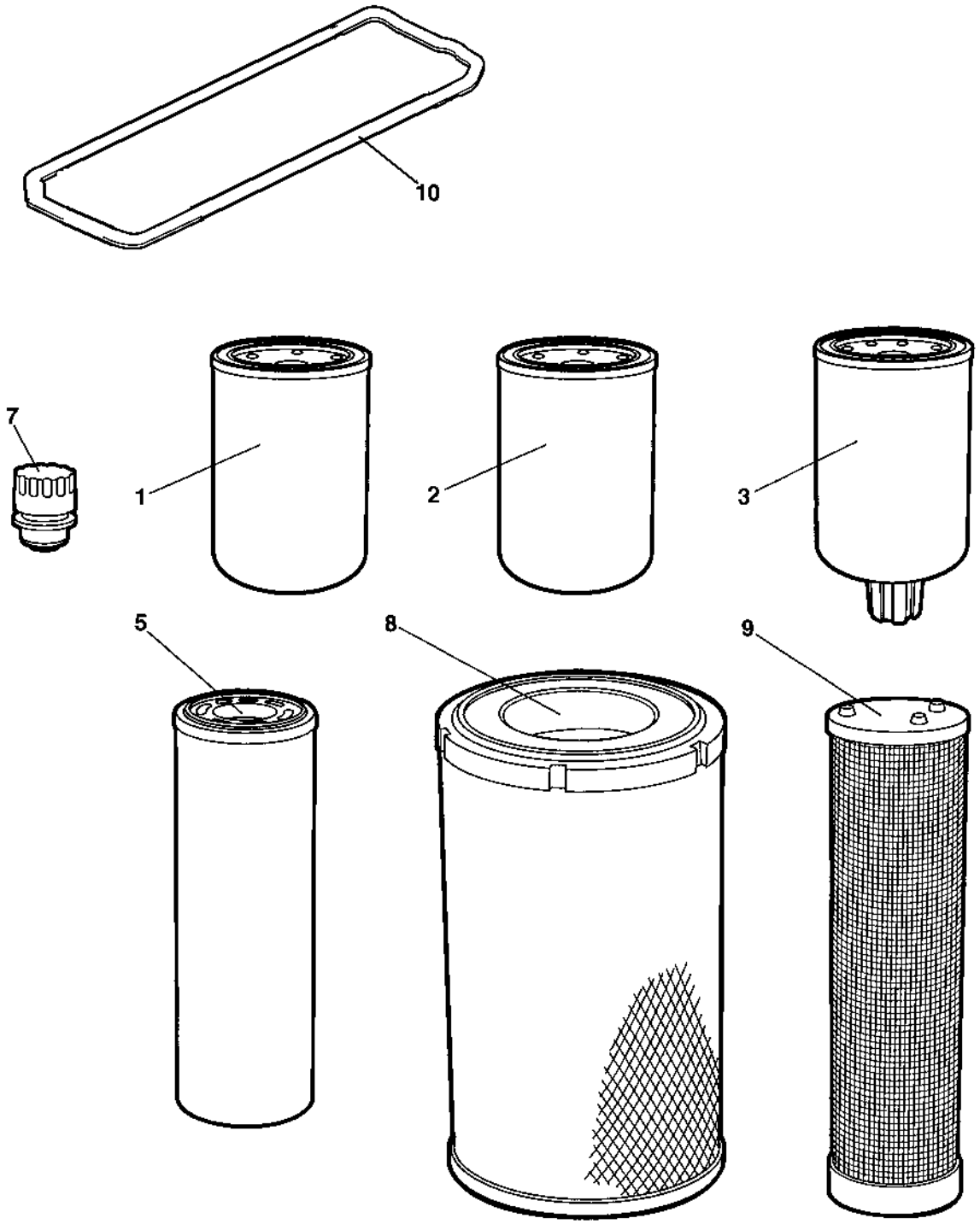

4812155997 Service kit 1000h, Cummins QSB 3.3

Item	Part No	Rem	Qty	Description	Code
	4812155997			**Service kit 1000h, Cummins QSB 3.3 (Page 12)**	A
1	4700939068		1	Oil filter element	A
2	4700950302		1	Fuel filter element	A
3	4700950301		1	Pre-fuel filter element	A
5	4700372229		2	Hydraulic oil filter element	A
7	4700391026		1	Ventilating filter	A
8	4700392088		1	Main filter element	A
9	4700392089		1	Safety filter element	A
10	4700939070		1	Gasket, valve cover	B

Repair kit

Item	Part No	Rem	Qty	Description	Code
1	4812155697		1	**Sprinkler kit (Page 16)**	
2	4812155694		1	**Scraper kit (Page 18)**	
3	4812155699		1	**Air on the run kit Front (Page 20)**	
4	4812155751		1	**Air on the run kit Rear (Page 22)**	

4812155697 Sprinkler kit

1

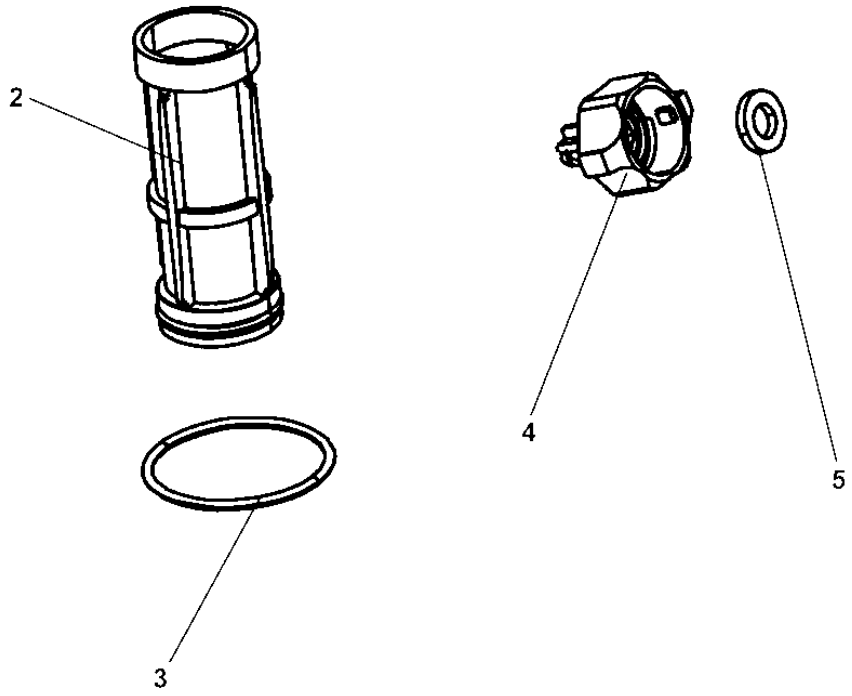

4812155697 Sprinkler kit

Item	Part No	Rem	Qty	Description	Code
1	4812155697		1	**Sprinkler kit (Page 16)**	
2	4700791949		1	Filter element	A
3	4700791959		7	O-ring	C
4	4700392509		7	Retainer, nozzle, strainer, yellow 0.8	D
5	4700392510		7	Gasket	B

4812155694 Scraper kit

1

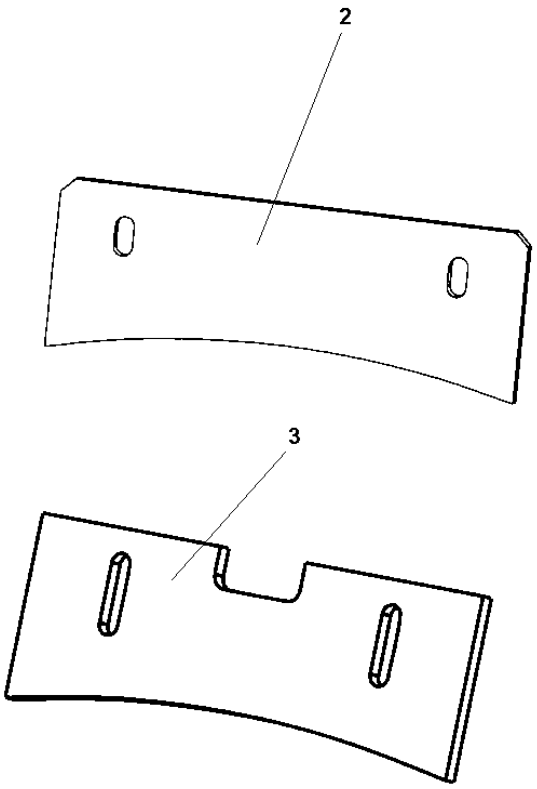

4812155694 Scraper kit

Item	Part No	Rem	Qty	Description	Code
1	4812155694		1	**Scraper kit (Page 18)**	
2	4700170294		3	Blade	
3	4700383390		8	Scraper	A

4812155699 Air on the run kit Front

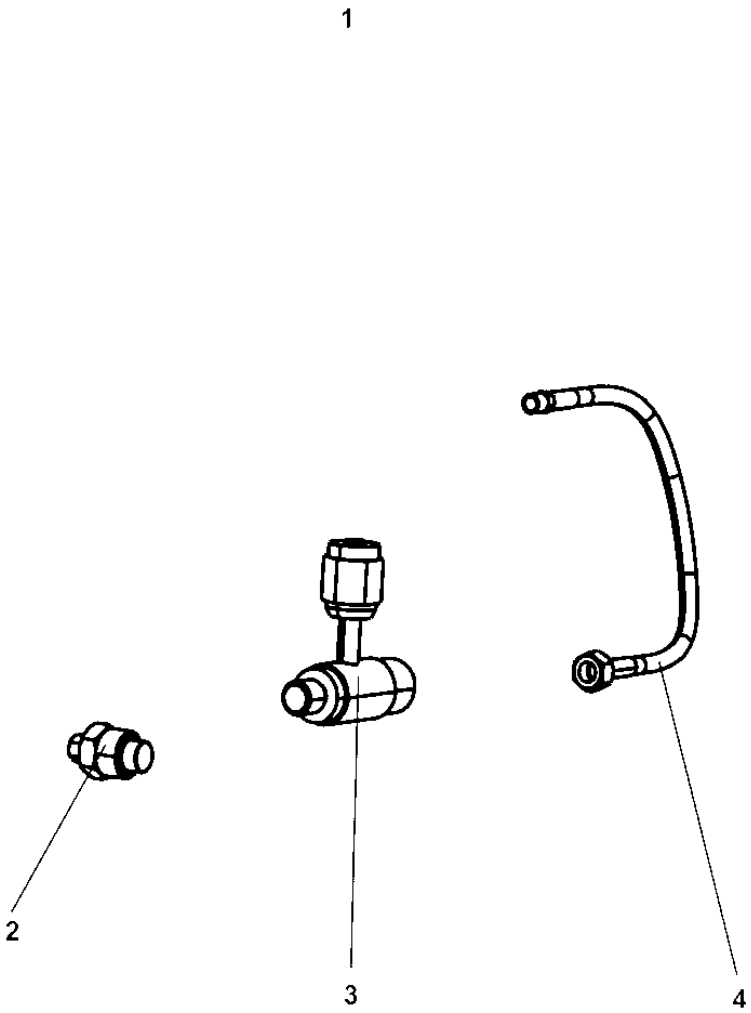

4812155699 Air on the run kit Front

Item	Part No	Rem	Qty	Description	Code
1	4812155699		1	**Air on the run kit Front (Page 20)**	
2	4700257198		3	Rotating nipple	
3	4700258298		3	Valve	
4	4700170545		3	Hose	

4812155751 Air on the run kit Rear

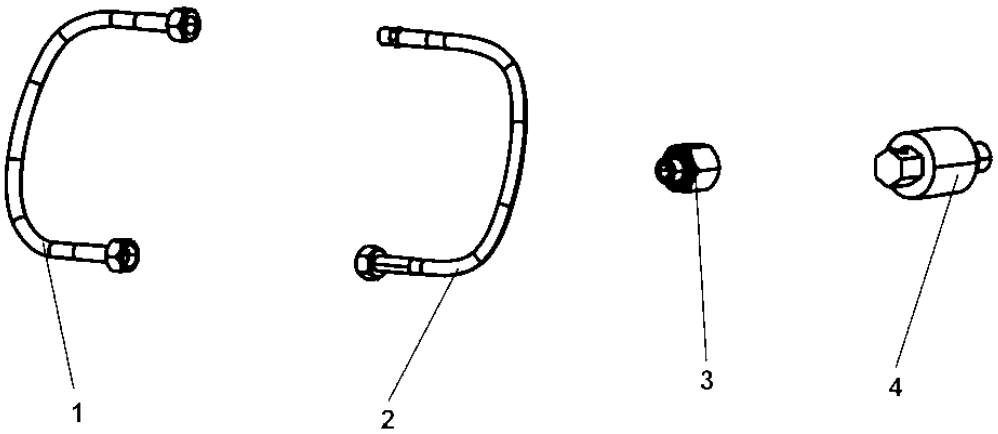

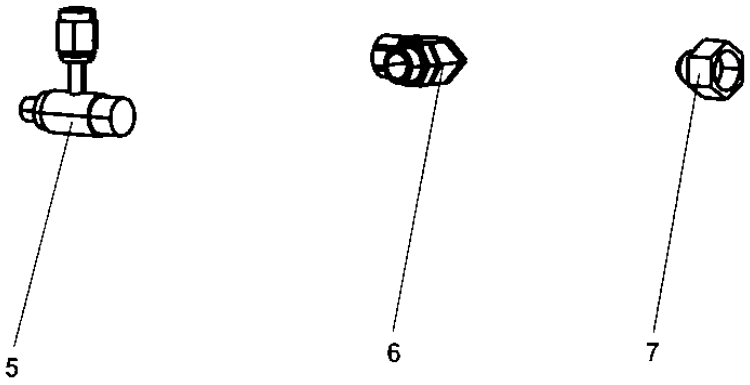

4812155751 Air on the run kit Rear

Item	Part No	Rem	Qty	Description	Code
1	4700170571		2	Hose	
2	4700170545		2	Hose	
3	4700170259		2	Adapter	
4	4700195172		2	Rotor	
5	4700258298		4	Valve	
6	4700928908		2	Adapter	C
7	4700334461		2	Reducing	C

Frame

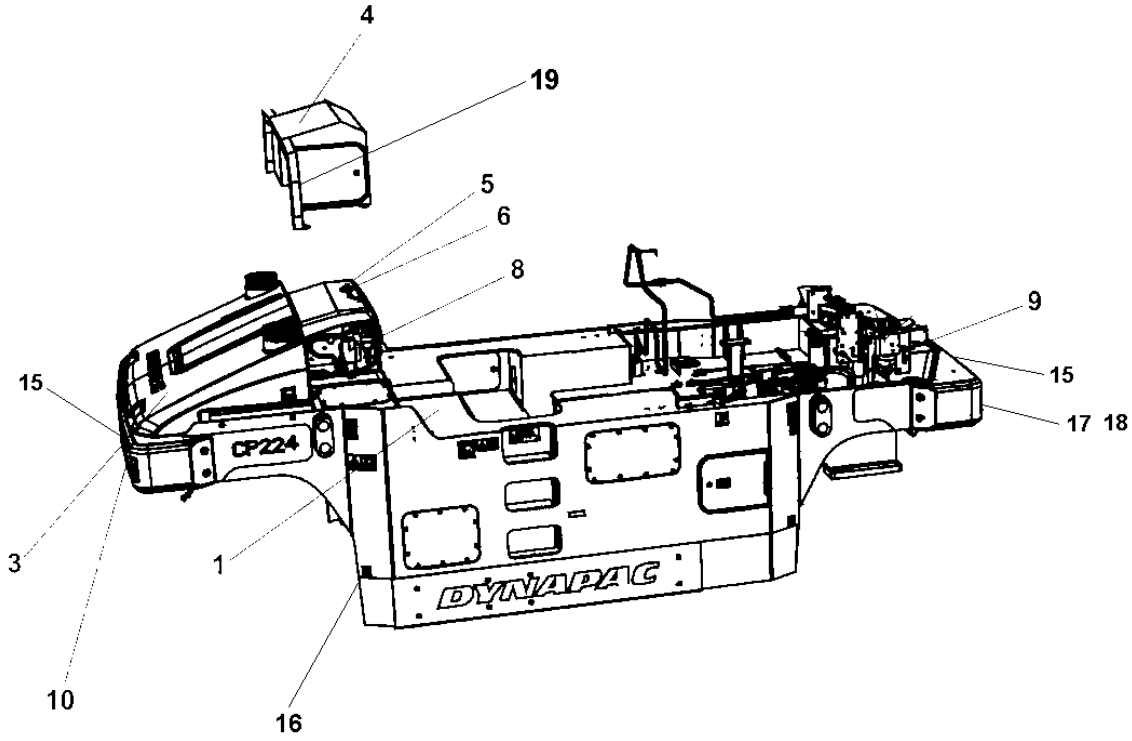

Frame

Item	Part No	Rem	Qty	Description	Code
1				Frame module (Page 26)	
3				Sprinkler tank module (Page 48)	
4				Cover module (Page 52)	
5				Level sensor module (Page 58)	
6				Cover module (Page 60)	
8				Sprinkler pump magnet valve module (Page 64)	
9				Filter bracket (Page 68)	
10				Cover plate (Page 70)	
14				Water hoses (Page 72)	
15				Eyelet module, option (Page 74)	
16				Step module (Page 76)	
17				Bracket module (Page 78)	
18				SMV-sign (Page 80)	
19				Grab handle module (Page 82)	

Frame module

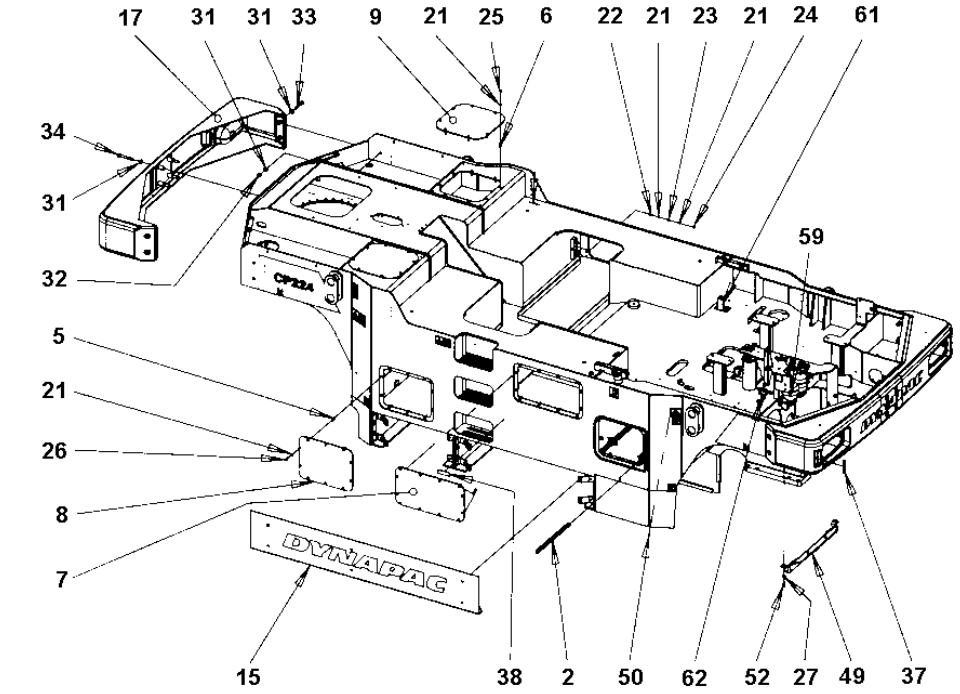

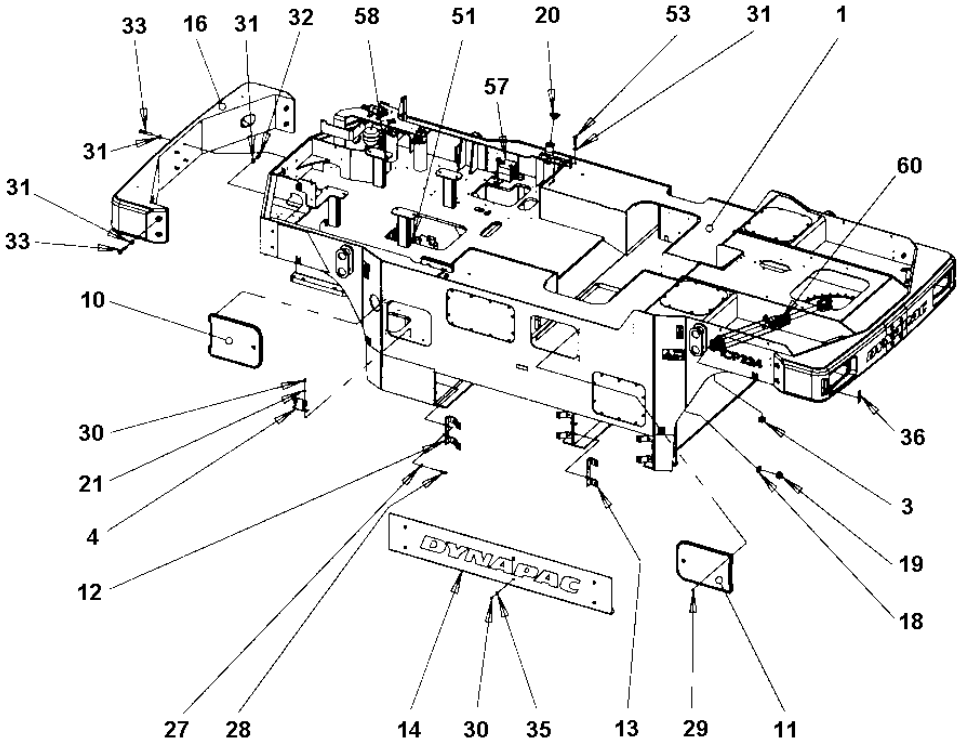

Frame module

Item	Part No	Rem	Qty	Description	Code
1	4700394309		1	Frame	
2	4700395864		2	Slide rail	
3	4700792254		1	Spherical roller bearing	
4	4700170144		1	Bracket	
5	4700900672		44	Blind insert nut	
6	4700900634		16	Blind insert nut	
7			2	**Ballast cover (Page 28)**	
8			2	**Ballast cover (Page 30)**	
9			2	**Ballast cover (Page 32)**	
10			2	**Cover (Page 34)**	
11			1	**Cover (Page 36)**	
12	4700170262		6	Bracket	
13	4700170261		2	Bracket	
14	4700170230		1	Cover	
15	4700170236		1	Cover	
16	4700170266		1	Cross beam	
17	4700170295		1	Cross beam	
18	4700162014		2	Washer sealing	
19	4700232248		2	Plug	
20	4700394253		1	Fuel cap	D
	4700945753		1	Key 2PCS "921"	
21	4700904229		78	Steel plain washer 8,4x16x1,5	C
22	4700903768		8	Threaded stud	C
23	4700570005		8	Nut M8	C
24	4700586003		8	Lock nut M8	C
25	4700500047		16	Hexagon head screw	C
26	4700500022		44	Screw M8x30H 8.8 A2K	C
27	4700904703		20	Washer	C
28	4700500194		12	Screw	C
29	4700513008		12	Screw	C
30	4700500019		14	Hexagon head screw	C
31	4700904232		26	Washer	C
32	4700586021		8	Nut M16	C
33	4700508037		12	Screw	
34	4700508038		4	Screw	
35	4700904640		12	Washer 8,4x22x3	C
36	4700377743		2	Reflector, white	D
37	4700377742		2	Reflector, red	D
38	4700377744		2	Reflector, yellow	D
49	4700170303		2	Bracket	
50	4700624005		8	Blind rivet 3,2x6,1	C
51	4700395030		1	Manifold	
52	4700500051		8	Screw M12x25H 8.8 A3K	C
53	4700500134		2	Screw	C
57			1	**Manifold (Page 38)**	
58			1	**Accumulator (Page 40)**	
59			1	**Filter bracket (Page 42)**	
60			1	**Steering cylinder (Page 44)**	
61	4812110840		1	Grommet	
62	4812111106		1	**Reducing valve (Page 46)**	

Ballast cover

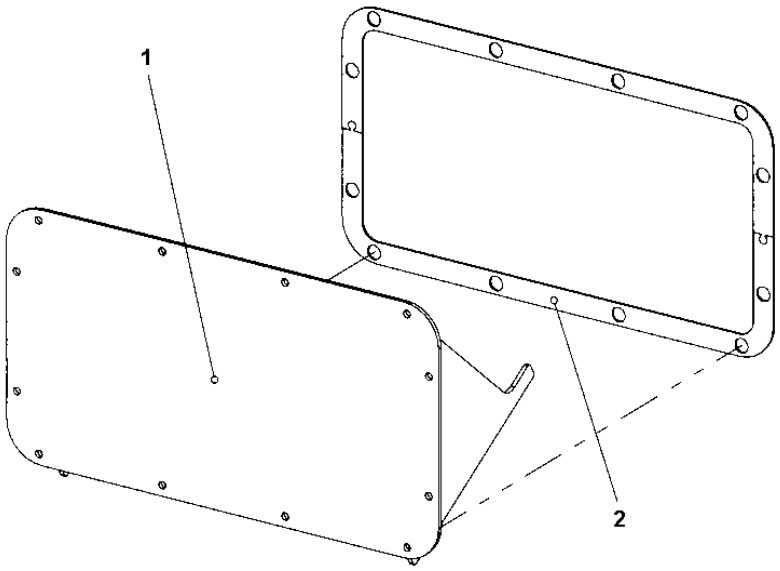

Ballast cover

Item	Part No	Rem	Qty	Description	Code
1	4812110421		1	Cover	
2	4700170231		2	Gasket	

Ballast cover

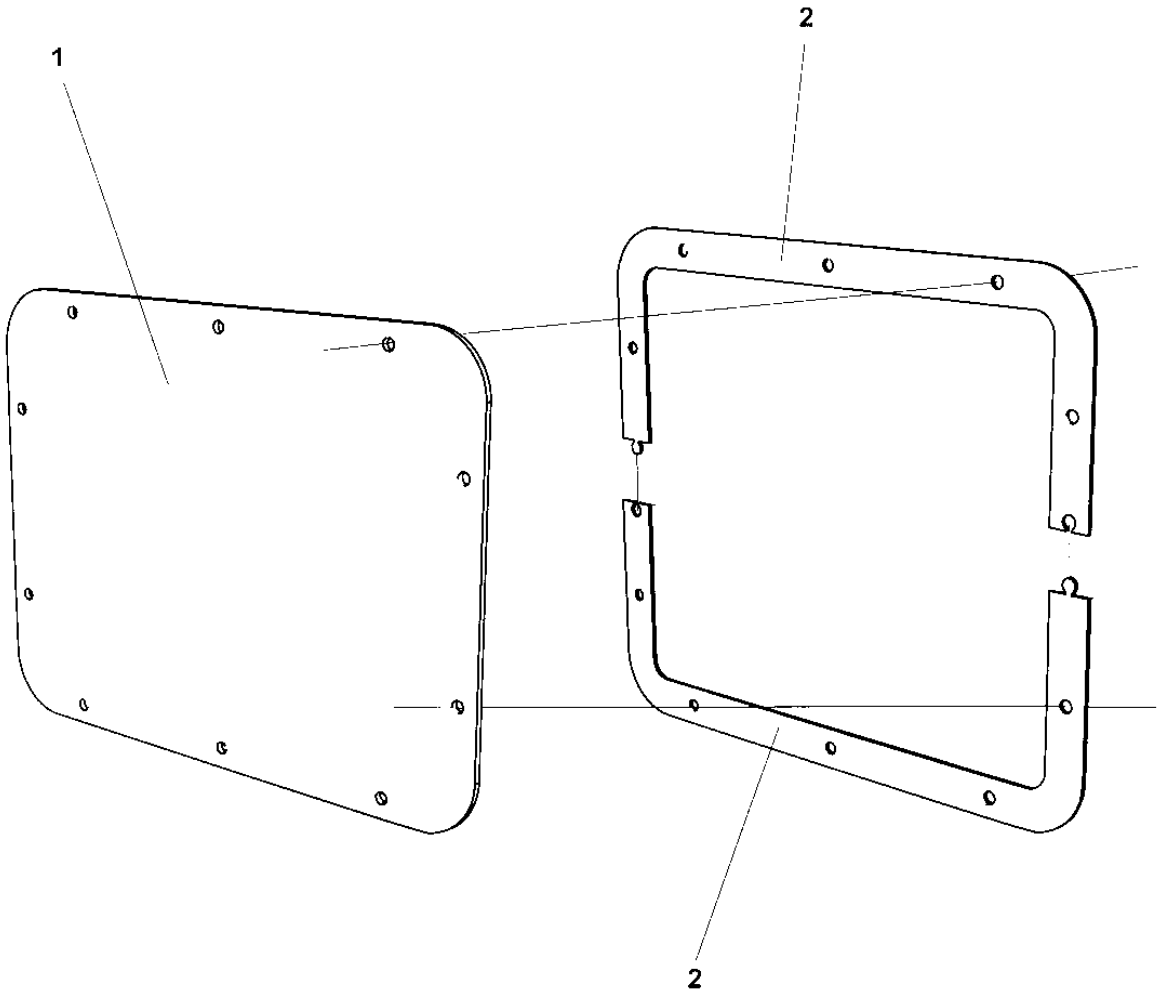

Ballast cover

Item	Part No	Rem	Qty	Description	Code
1	4700170242		1	Cover	
2	4700170232		2	Gasket	

Ballast cover

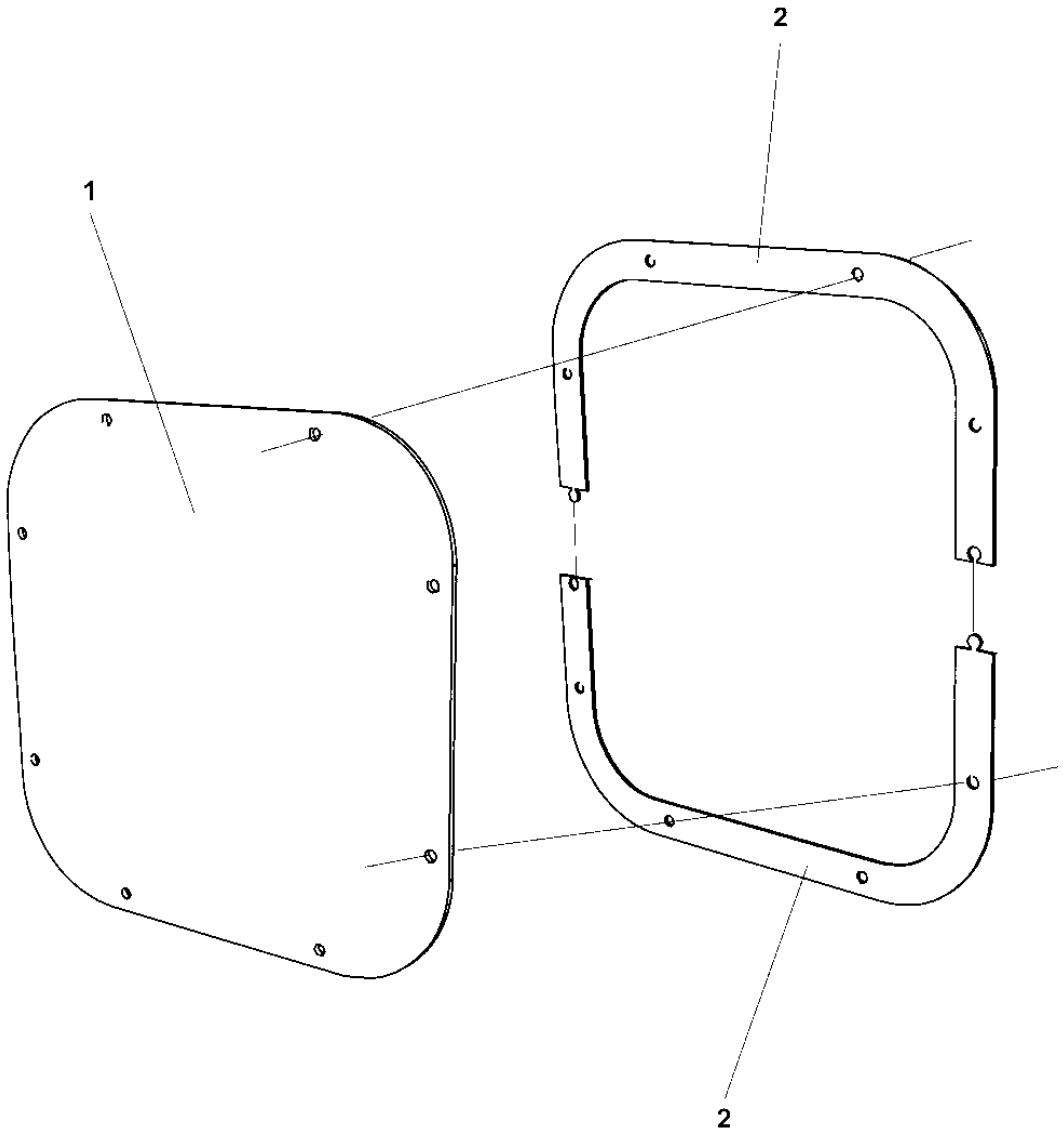

Ballast cover

Item	Part No	Rem	Qty	Description	Code
1	4700170241		1	Cover	
2	4700170233		2	Gasket	

Cover

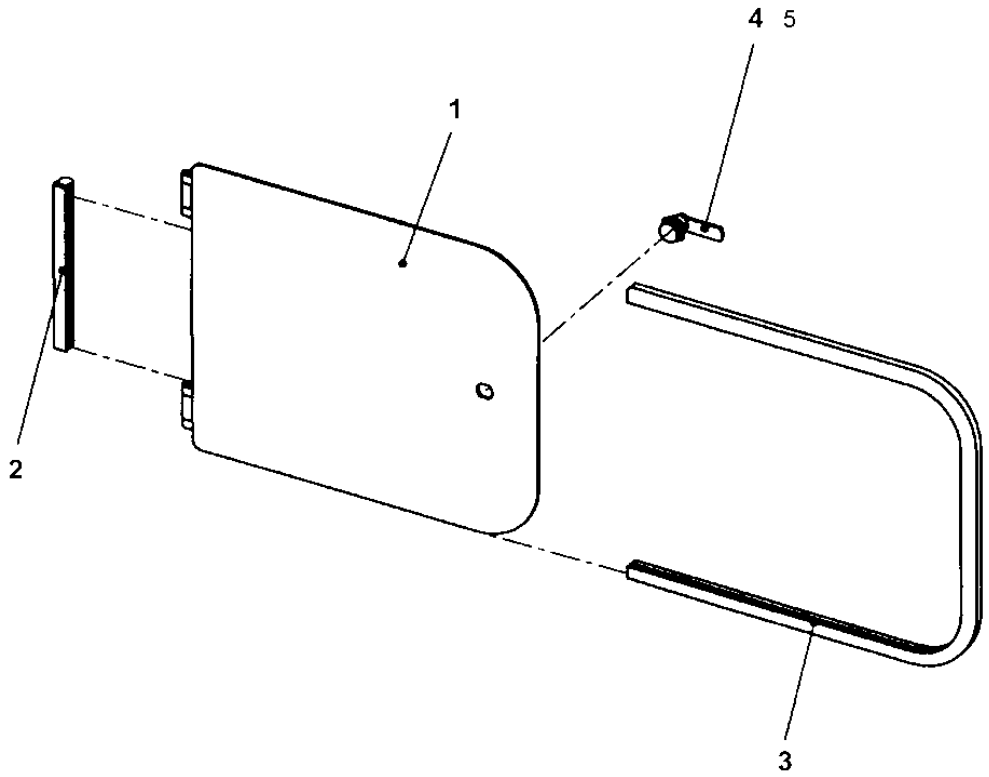

Cover

Item	Part No	Rem	Qty	Description	Code
1	4700170249		1	Cover	
2	4700202057	A	1	Edge trim	D
3	4700202057	B	1	Edge trim	D
4	4700397348		1	Lock Ø22	
5	4700902866		1	Key Marked "455"	

A) L = 0,2 m
B) L = 1,107 m

Cover

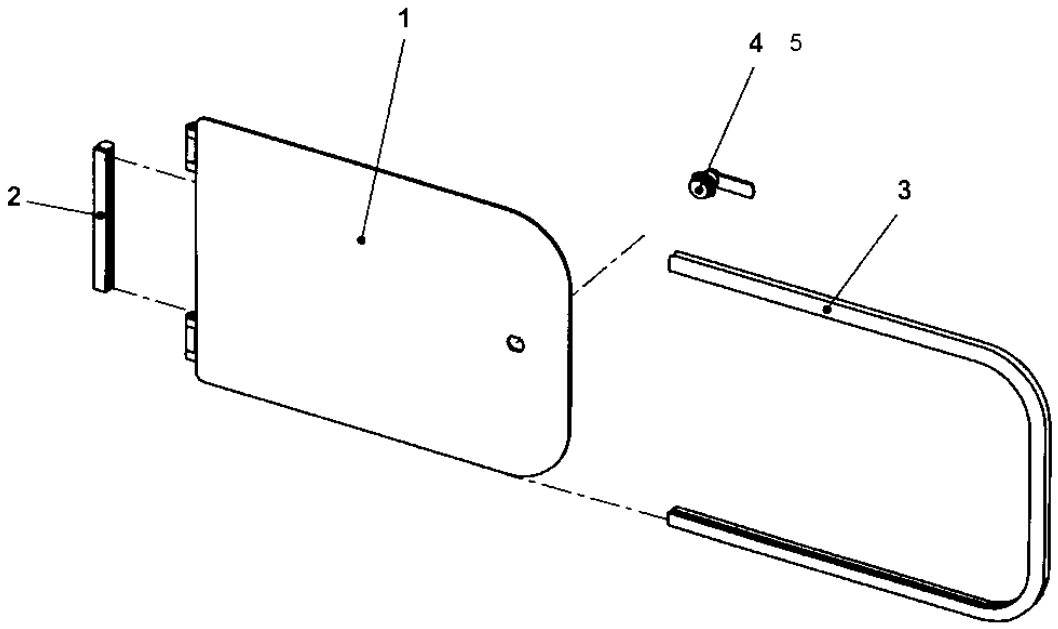

Cover

Item	Part No	Rem	Qty	Description	Code
1	4700170256		1	Cover	
2	4700202057	A	1	Edge trim	D
3	4700202057	B	1	Edge trim	D
4	4812113939		1	Cover	
5	4700902866		1	Key Marked "455"	

A) L = 0,17 m
B) L = 1,137 m

Manifold

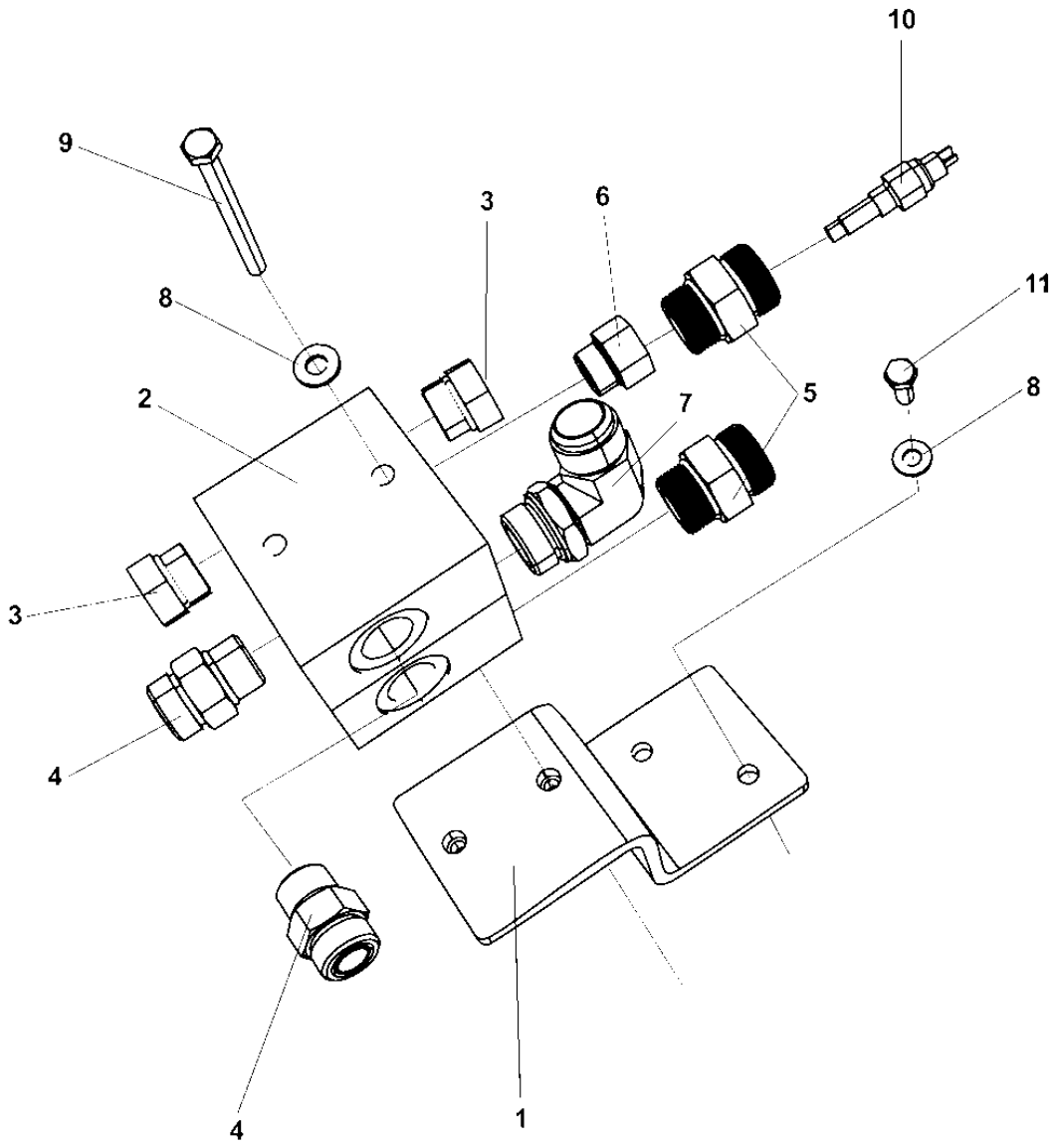

Manifold

Item	Part No	Rem	Qty	Description	Code
1	4700396279		1	Bracket	
2	4700345243		2	Connection block	
3	4700232222		3	Plug	
4	4700791823		4	Straight connector orfs	
5	4700792339		1	Straight connector orfs	D
6	4700234983		1	Adapter	
7	4700334163		1	Adapter	
8	4700904230		4	Steel plain washer	C
9	4700500055		2	Screw	
10	4700903632		1	Temperature sensor Engine	
11	4700500028		2	Screw	C

Accumulator

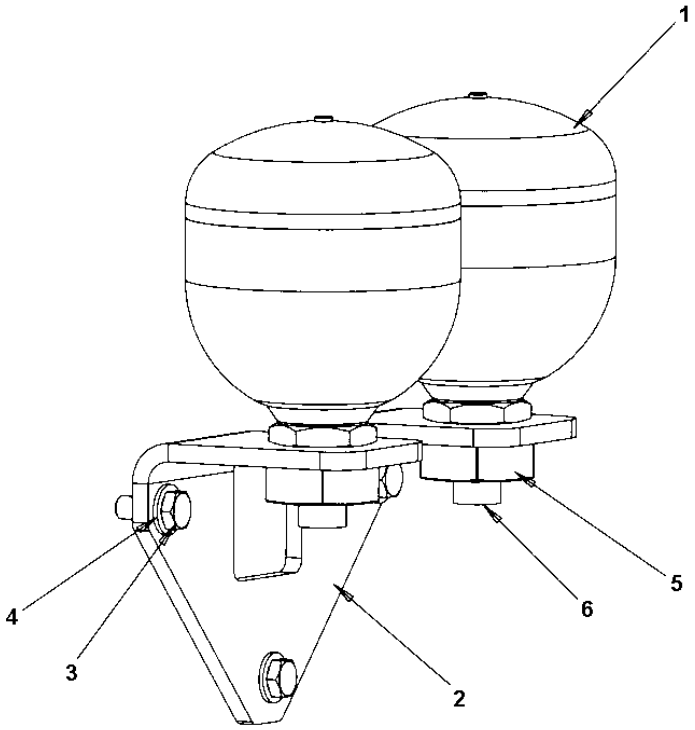

Accumulator

Item	Part No	Rem	Qty	Description	Code
1	4700396171		2	Accumulator	
2	4700395521		1	Bracket	
3	4700500028		3	Screw	C
4	4700904230		3	Steel plain washer	C
5	4700396349		2	Nut	
6	4700791405		2	Straight o-ring connector	

Filter bracket

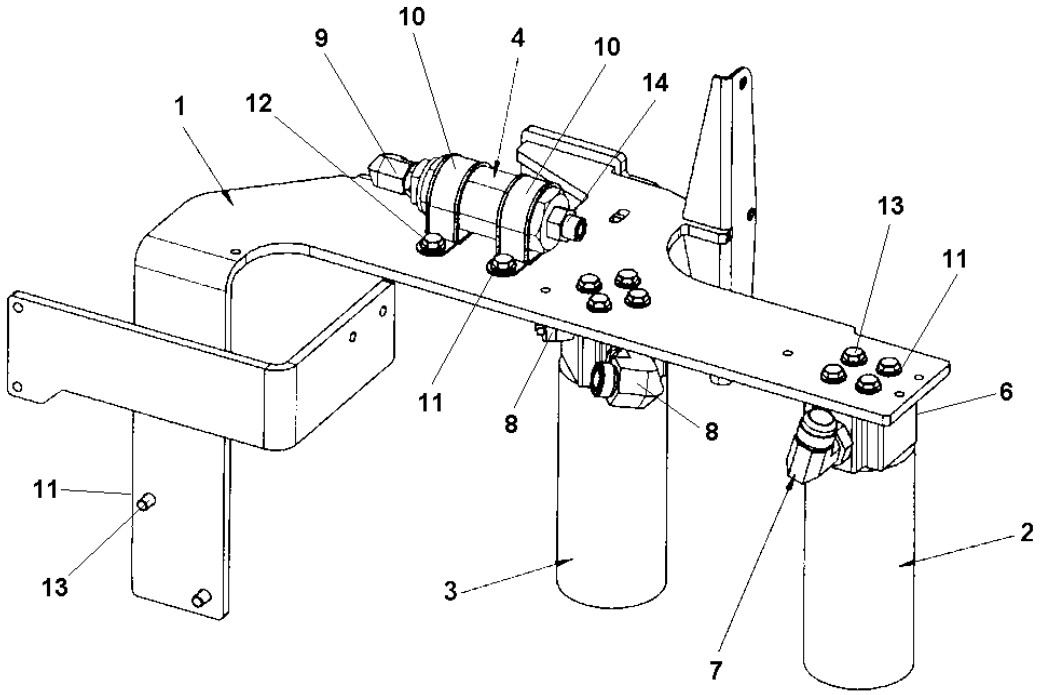

Filter bracket

Item	Part No	Rem	Qty	Description	Code
1	4700395936		1	Bracket	D
2	4700372435		1	Hydraulic oil filter, cpl	A
	4700372436		1	. Filter head	D
	4700359552		1	. Cleaning filter element Maximum 50 hours use	A
	4700372229		1	. Hydraulic oil filter element	A
3	4700359550		1	Hydraulic oil filter, cpl	A
	4700359551		1	. Filter head	A
	4700359552		1	. Cleaning filter element Maximum 50 hours use	A
	4700372229		1	. Hydraulic oil filter element	A
4	4700396274		1	Hydraulic oil filter	D
6	4700792339		1	Straight connector orfs	D
7	4700314163		1	Elbow adapter 90	D
8	4700791321		2	Elbow adapter 90	D
9	4700791699		1	Elbow 90	C
10	4700904352		2	Clamp	
11	4700904230		14	Steel plain washer	C
12	4700500043		2	Screw M10x16H 8,8	D
13	4700500028		12	Screw	C
14	4700791407		1	Straight o-ring connector	D

Steering cylinder

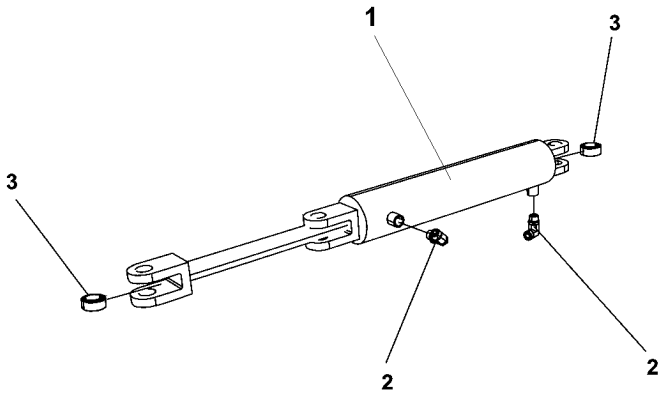

Steering cylinder

Item	Part No	Rem	Qty	Description	Code
1	4700396098		1	Hydraulic cylinder	
2	4700791841		2	Elbow 90 orfs	
3	4700792554		2	Radial spherical plain bearing	D

4812111106 Reducing valve

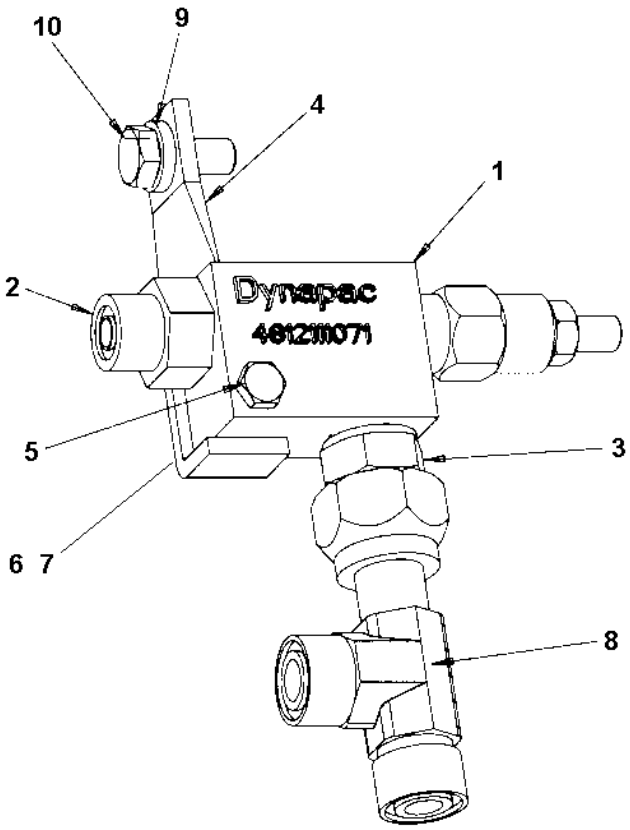

4812111106 Reducing valve

Item	Part No	Rem	Qty	Description	Code
1	4812111071		1	Reducing valve	
2	4700791404		1	Straight o-ring connector	
3	4700904727		1	Adapter	
4	4812111102		1	Bracket	
5	4700500088		1	Screw M6x40	
6	4700904228		1	Washer 6,4x12x1,5	C
7	4700570004		1	Nut M6X1,00 -8 A2K	C
8	4700791798		1	T-connector	
9	4700904556		1	Washer 8,4x16x3,0	C
10	4700500053		1	Screw M8x20H 8.8	C

Sprinkler tank module

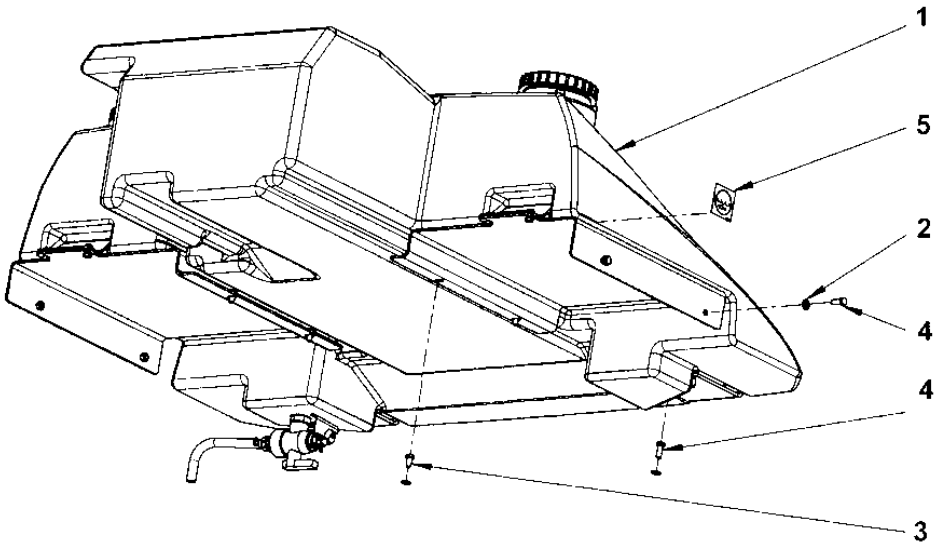

Sprinkler tank module

Item	Part No	Rem	Qty	Description	Code
1			1	**Sprinkler tank (Page 50)**	
2	4700904231		12	Washer 13x24x2 300 HV	C
3	4700500036		4	Screw	
4	4700500046		8	Screw M12x025H	C
5	4700991657		2	Decal "WATER"	D

Sprinkler tank

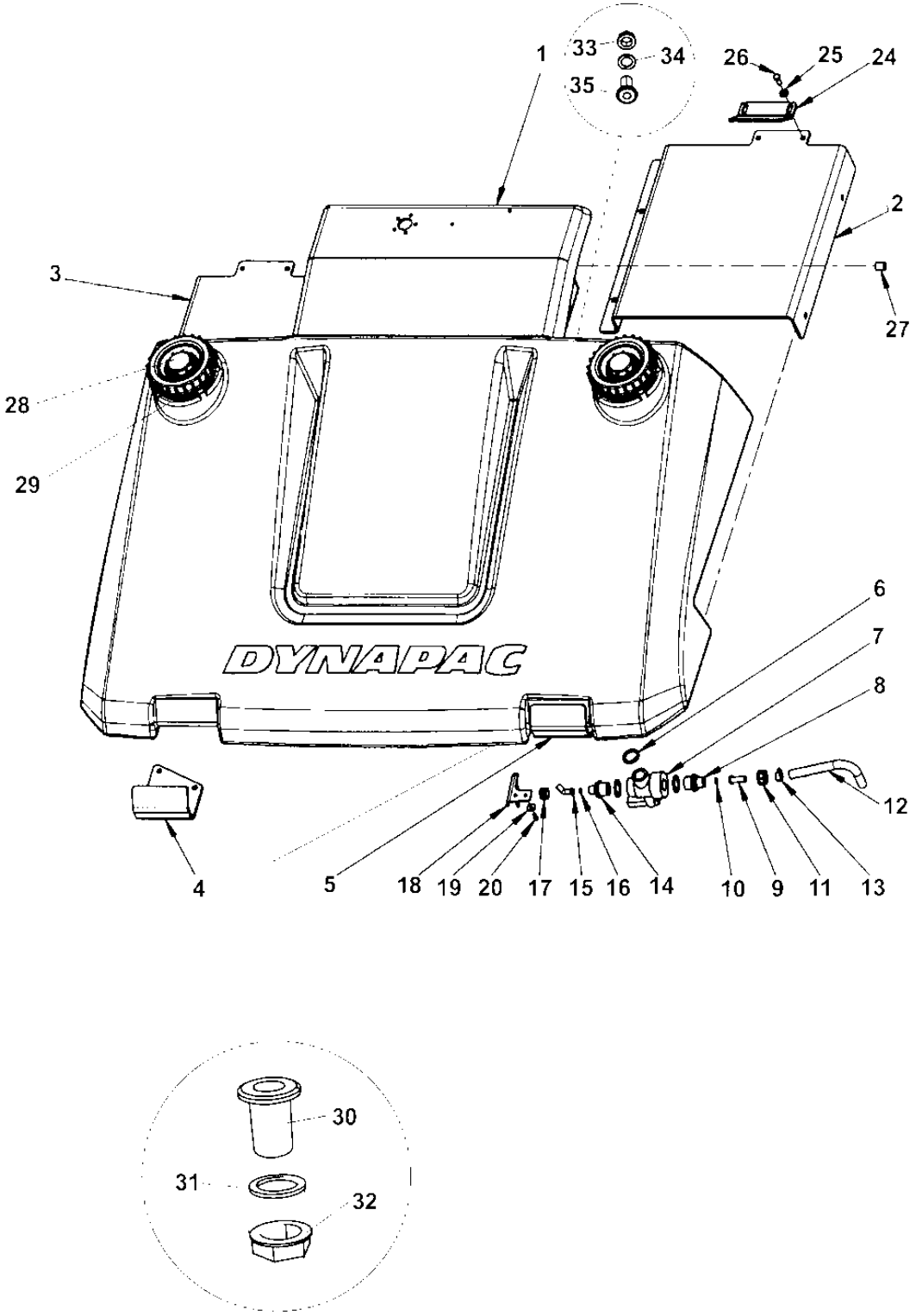

Sprinkler tank

Item	Part No	Rem	Qty	Description	Code
1	4700396617		1	Sprinkler tank	
2	4700396625		1	Bracket	
3	4700396626		1	Bracket	
4	4700396873		1	Bracket	
5	4700396874		1	Bracket	
6	4700392223		3	Plane gasket	
7	4700792782		1	Ball valve	
8	4700792781		1	Reducer nipple	
9	4700792780		1	Hose connection swivel	
10	4700480852		1	O-ring 70	
11	4700792779		1	Swivel nut	
12	4700792073	A	1	Hose reinforced	D
13	4700313003		1	Hose clamp	D
14	4700392226		1	Reducer nipple	
15	4700393542		1	Hose connection swivel	C
16	4700792600		1	O-ring 70	
17	4700392227		1	Swivel nut	
18	4700396176		1	Bracket	
19	4700904735		2	Washer	C
20	4700500013		2	Screw M6-1x16 8,8	C
24	4700389873		2	Bracket	
25	4700904557		4	Steel plain washer	C
26	4700500028		4	Screw	C
27	4700355704		3	Spacer sleeve	
28	4700359003		2	Cap	C
29	4700358846		2	Strainer	A
30	4700392223		1	Plane gasket	
31	4700392222		1	Grommet	
32	4700392224		1	Lock nut	
33	4700392231		1	Plane gasket	
34	4700392230		1	Grommet	
35	4700392232		1	Nut	

A) L = 0,4 m

Cover module

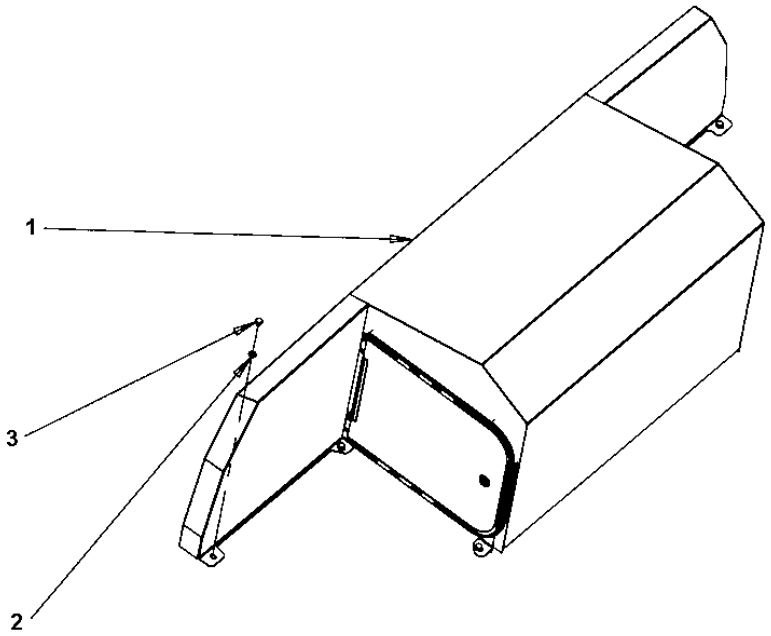

Cover module

Item	Part No	Rem	Qty	Description		Code
1				**Cover (Page 54)**		
2	4700904229		6	Steel plain washer	8,4x16x1,5	C
3	4700500042		6	Screw		

Cover

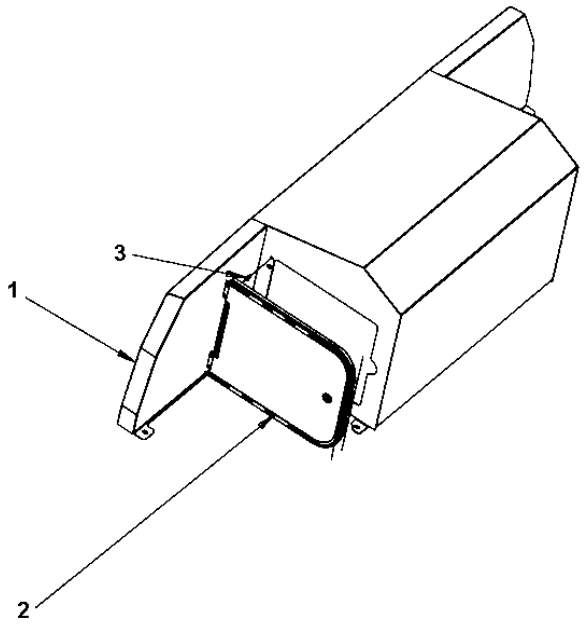

Cover

Item	Part No	Rem	Qty	Description		Code
1	4700170567		1	Cover		
2				**Cap**	**(Page 56)**	
3	4700513008		4	Screw		C

Cap

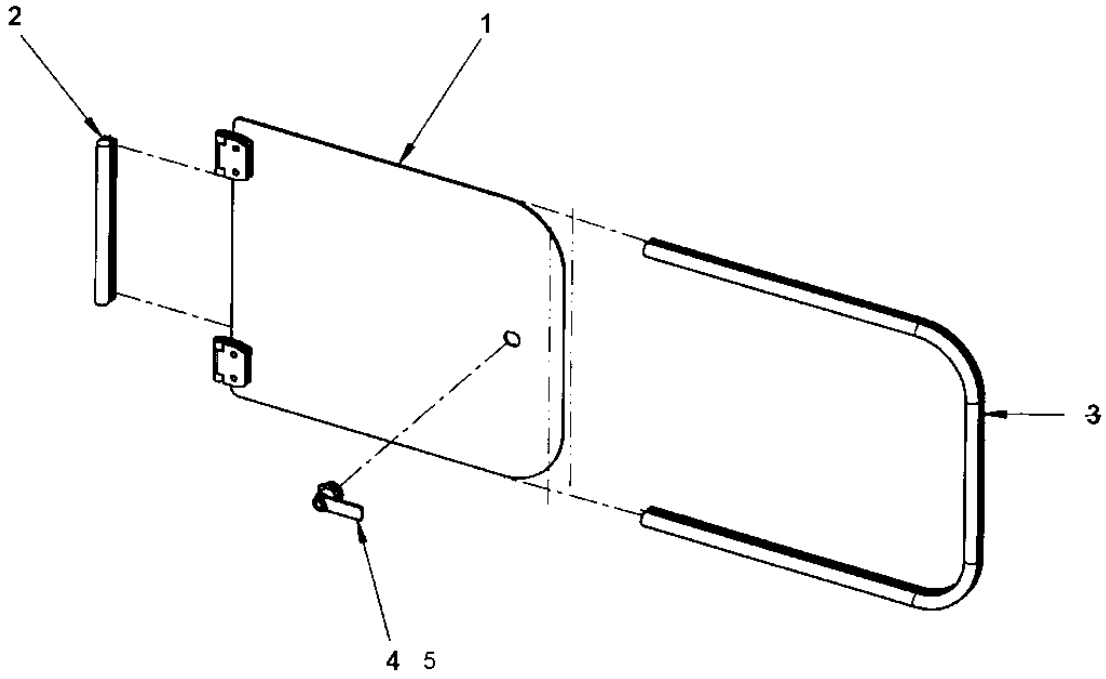

Cap

Item	Part No	Rem	Qty	Description	Code
1	4700170576		1	Cover	
2	4700202057	A	1	Edge trim	D
3	4700202057	B	1	Edge trim	D
4	4812113939		1	Cover	
5	4700902866		1	Key Marked "455"	

A) L = 0,2 m
B) L = 1,107 m

Level sensor module

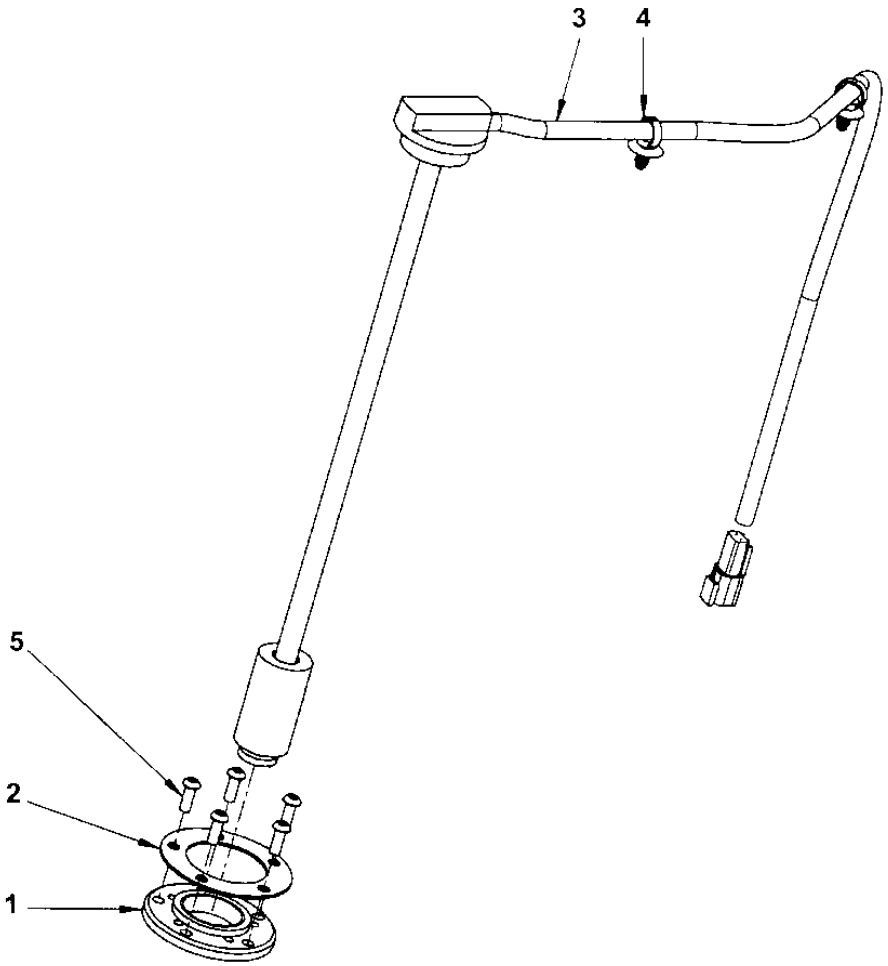

Level sensor module

Item	Part No	Rem	Qty	Description	Code
1	4700370745		1	Flange, cpl	C
2	4700372718		1	Lid	D
3	4700389731		1	Level sender	
4	4700792441		2	Cable tie with holder	C
5	4700904206		5	Screw	C

Cover module

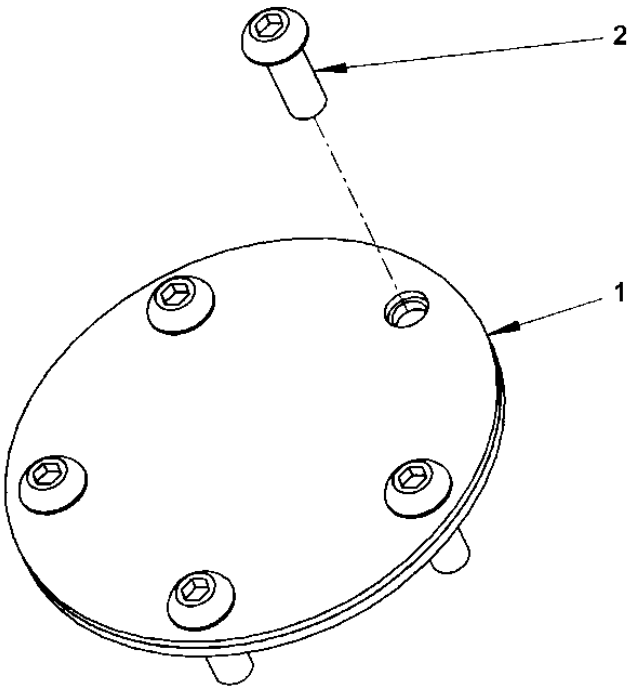

Cover module

Item	Part No	Rem	Qty	Description	Code
1			1	**Cover (Page 62)**	
2	4700904206		5	Screw	C

Cover

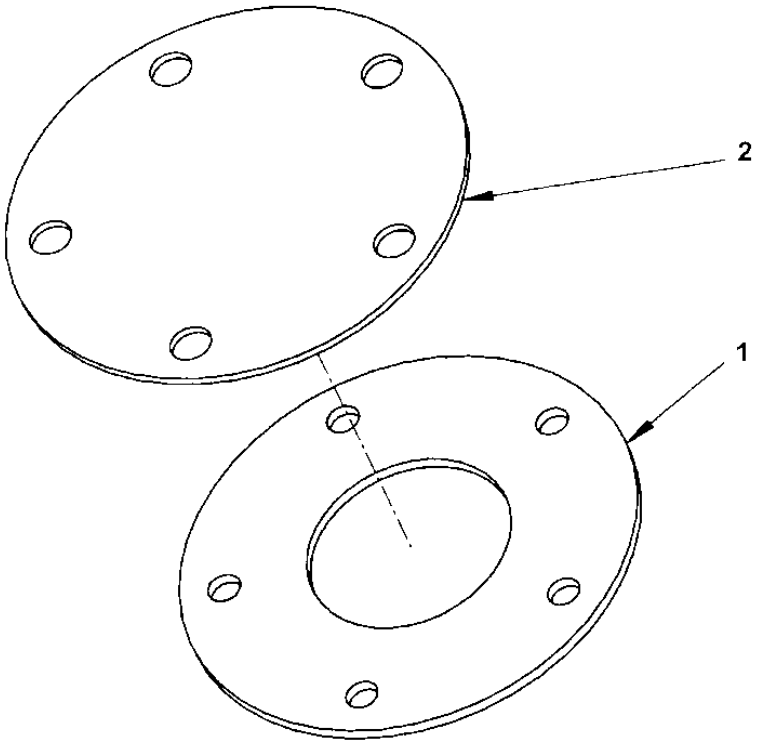

Cover

Item	Part No	Rem	Qty	Description	Code
1	4700370746		1	Gasket	B
2	4700370747		1	Cover	

Sprinkler pump magnet valve module

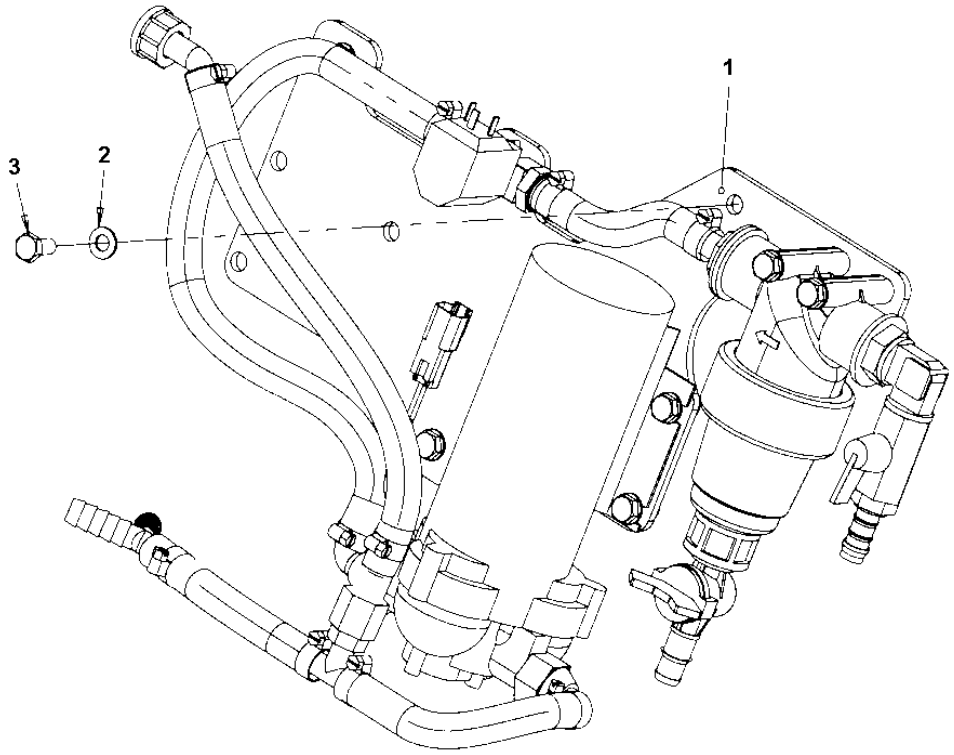

Sprinkler pump magnet valve module

Item	Part No	Rem	Qty	Description	Code
1			1	**Sprinkler pump magnet valve (Page 66)**	
2	4700904229		3	Steel plain washer 8,4x16x1,5	C
3	4700500019		3	Hexagon head screw	C

Sprinkler pump magnet valve

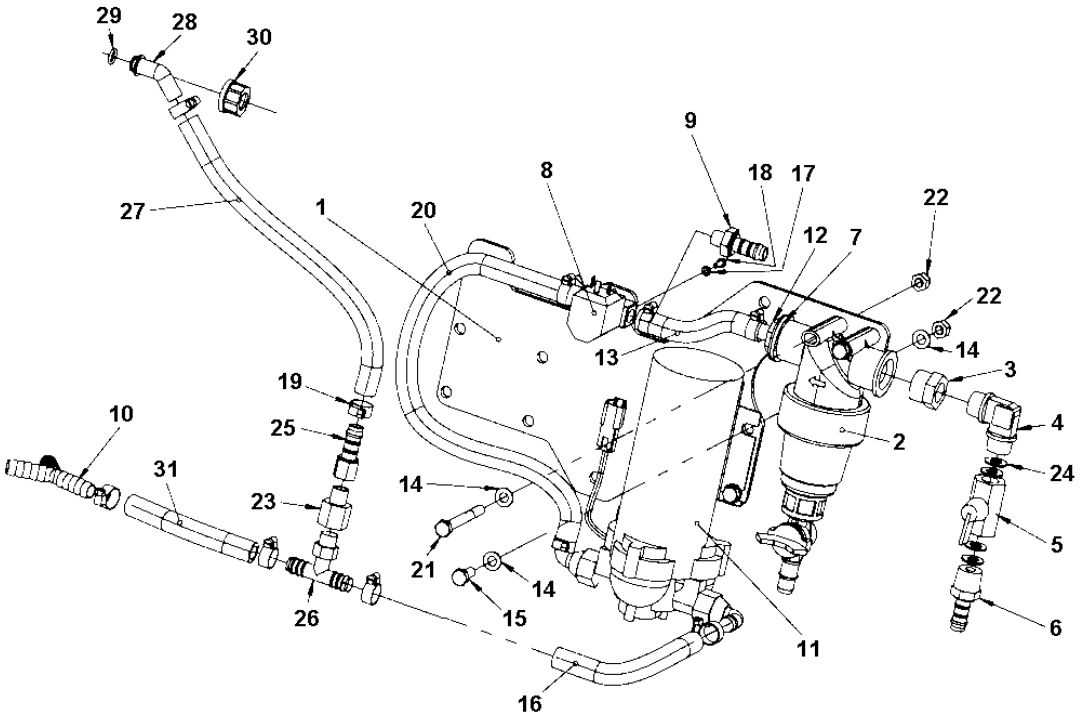

Sprinkler pump magnet valve

Item	Part No	Rem	Qty	Description	Code
1	4812110491		1	Sprinkler plate	
2	4700791950		1	Water strainer, cpl	
	4700791959		1	. O-ring	C
	4700791949		1	. Filter element	A
	4700791568		1	. Gasket	
	4700379009		1	. Valve	
3	4700903886		1	Adapter	C
4	4700901298		1	Connector	C
5	4700925599		1	Valve	C
6	4700924544		1	Hose connection	C
7	4700160313		1	O-ring 70	
8	4700391438		1	Solenoid valve	
9	4700901432		2	Hose connection	
10	4811000107		1	Hose connection	C
11	4812110394		1	Sprinkler pump	
12	4700396672		1	Hose connection, plastic	
13	4812112074	A	1XL	Plastic hose	
14	4700904229		10	Steel plain washer 8,4x16x1,5	C
15	4700500053		4	Screw M8x20H 8.8	C
16	4812112074	B	1XL	Plastic hose	
17	4700904698		2	Washer	C
18	4700500002		2	Screw M4-0,7x12H 8.8	D
19	4700313002		12	Hose clamp 13-20 mm	
20	4812112074	C	1XL	Plastic hose	
21	4700500190		2	Screw	
22	4700586003		6	Lock nut M8	C
23	4700792813		1	Bypass valve	
24	4700379753		4	Gasket	
25	4811000085		1	Hose connection	
26	4700903879		1	Connector	C
27	4812112074	D	1	Plastic hose	
28	4700393542		1	Hose connection swivel	C
29	4700792600		1	O-ring 70	
30	4700392227		1	Swivel nut	
31	4812112074	E	1	Plastic hose	

A) L = 0.14 m
B) L = 0.15 m
C) L=0.400 m
D) L = 0.35 m
E) L = 0.12 m

Filter bracket

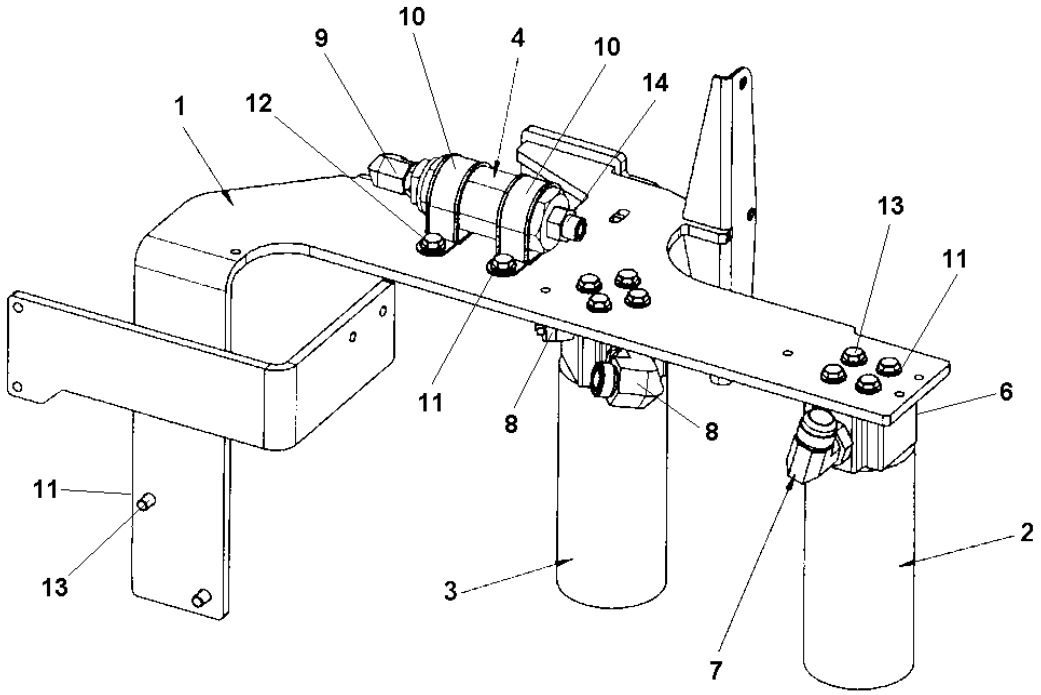

Filter bracket

Item	Part No	Rem	Qty	Description	Code
1	4700395936		1	Bracket	D
2	4700372435		1	Hydraulic oil filter, cpl	A
	4700372436		1	. Filter head	D
	4700359552		1	. Cleaning filter element Maximum 50 hours use	A
	4700372229		1	. Hydraulic oil filter element	A
3	4700359550		1	Hydraulic oil filter, cpl	A
	4700359551		1	. Filter head	A
	4700359552		1	. Cleaning filter element Maximum 50 hours use	A
	4700372229		1	. Hydraulic oil filter element	A
4	4700396274		1	Hydraulic oil filter	D
6	4700792339		1	Straight connector orfs	D
7	4700314163		1	Elbow adapter 90	D
8	4700791321		2	Elbow adapter 90	D
9	4700791699		1	Elbow 90	C
10	4700904352		2	Clamp	
11	4700904230		14	Steel plain washer	C
12	4700500043		2	Screw M10x16H 8,8	D
13	4700500028		12	Screw	C
14	4700791407		1	Straight o-ring connector	D

Cover plate

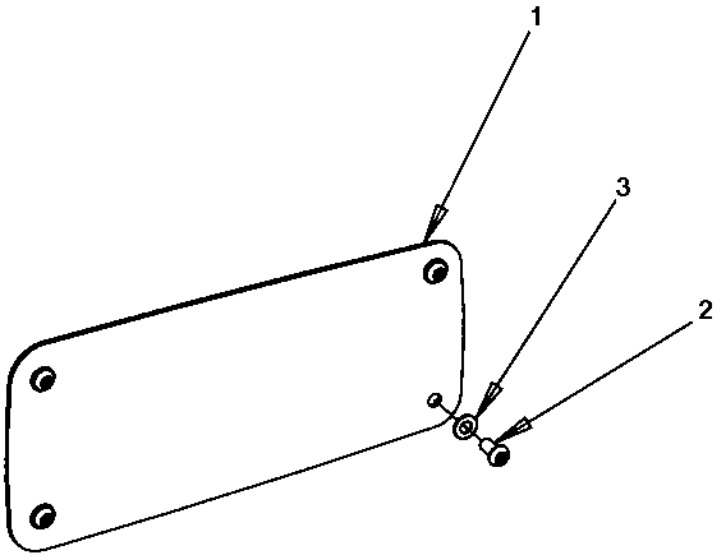

Cover plate

Item	Part No	Rem	Qty	Description	Code
1	4700390919		1	Cover plate	
2	4700904956		4	Screw	
3	4700904229		4	Steel plain washer 8,4x16x1,5	C

Water hoses

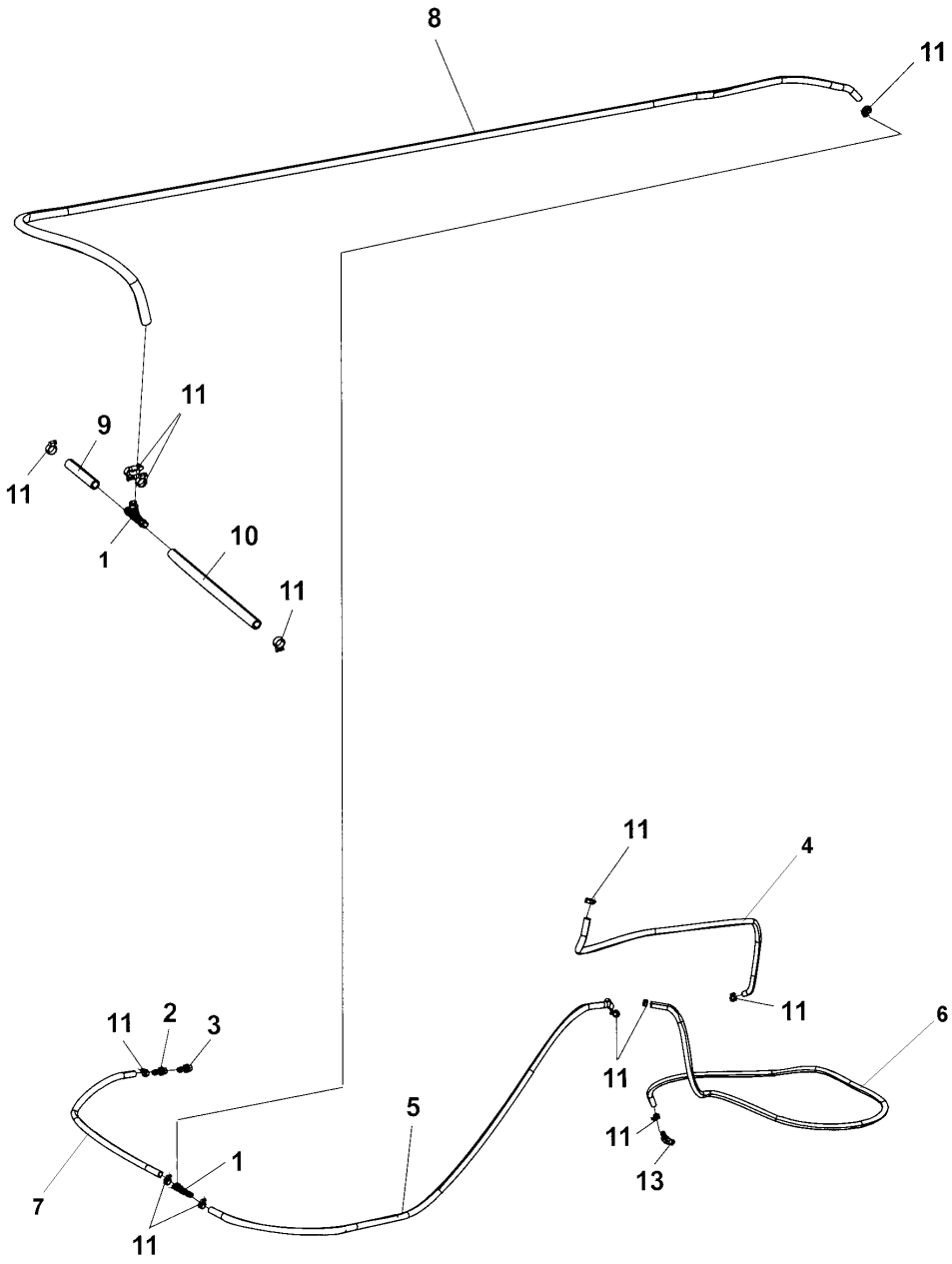

Water hoses

Item	Part No	Rem	Qty	Description	Code
1	4700923735		2	Hose connection	C
2	4700234931		1	Hose connector	
3	4700233215		1	Ball valve	
4	4700904878	A	1	Plastic hose	C
5	4700904878	B	1	Plastic hose	C
6	4700904878	C	1	Plastic hose	C
7	4700904878	D	1	Plastic hose	C
8	4700904878	E	1	Plastic hose	C
9	4700904878	F	1	Plastic hose	C
10	4700904878	G	1	Plastic hose	C
11	4700313001		14	Hose clamp	C
12	4700792241		2	Cable tie and holder	
13	4700234932		1	Adapter	

A) L = 1,5 m
B) L = 2,3 m
C) L = 1,8 m
D) L = 0,75 m
E) L = 2,9 m
F) L = 0,1 m
G) L = 0,32 m

Eyelet module, option

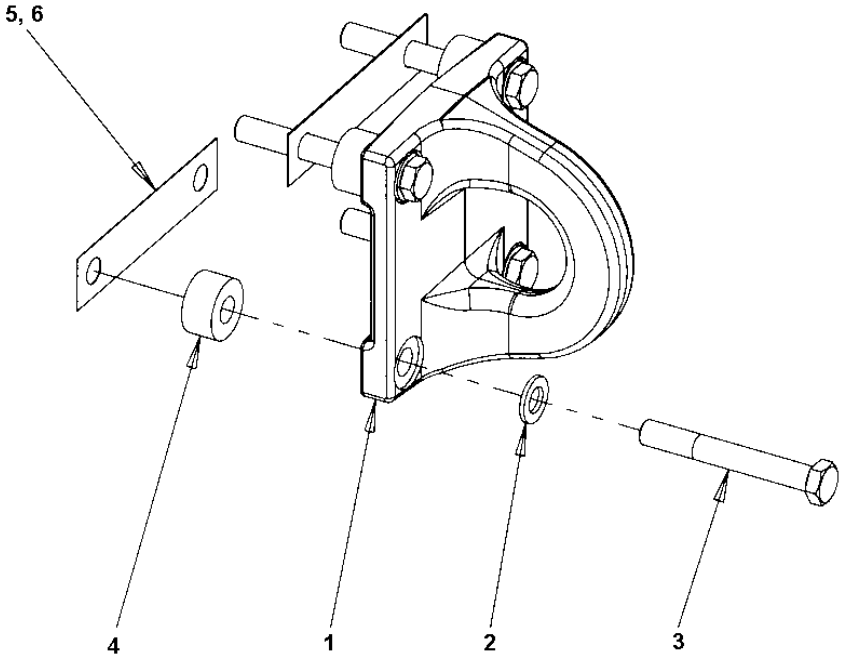

Eyelet module, option

Item	Part No	Rem	Qty	Description	Code
1	4700397234		1	Eyelet	
2	4700904232		4	Washer	C
3	4700927633		4	Screw	
4	4700170557		4	Spacer	
5	4812110654		N	Shim	
6	4812110655		N	Shim	

Step module

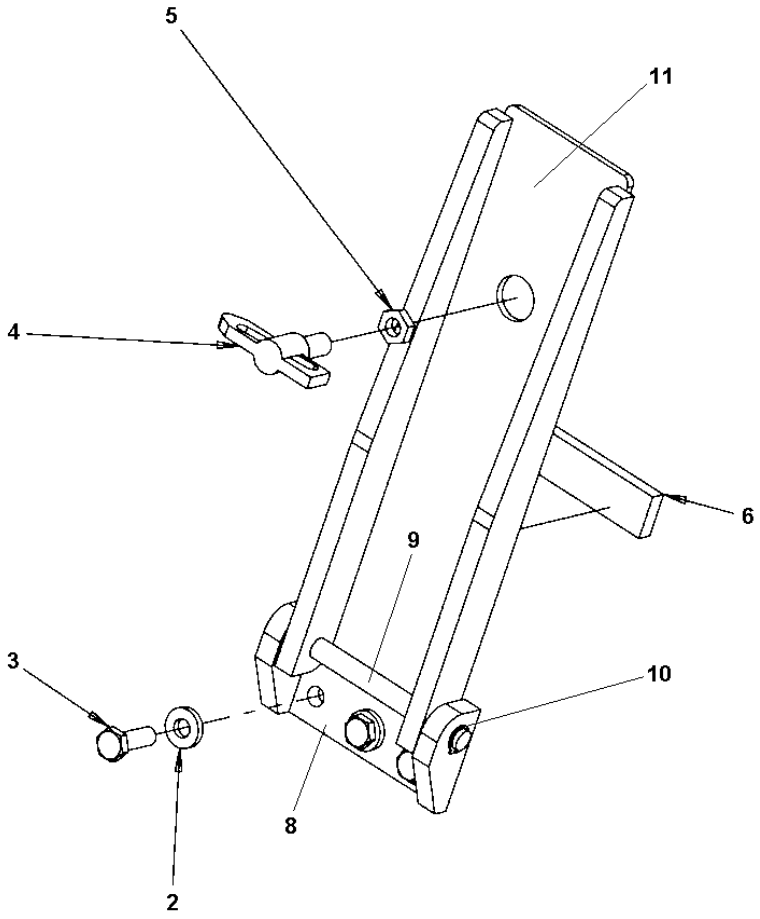

Step module

Item	Part No	Rem	Qty	Description	Code
2	4700904557		3	Steel plain washer	C
3	4700500029		3	Hexagon head screw	C
4	4700475064		1	Lock	D
5	4700927233		1	Nut	C
6	4700370820		1	Rubber cloth	C
7	4700929141		N	Glue	
8	4700370303		1	Bracket	
9	4700370685		1	Shaft	
10	4700150003		2	Retaining ring	
11	4700379417		1	Sheet metal part	

Bracket module

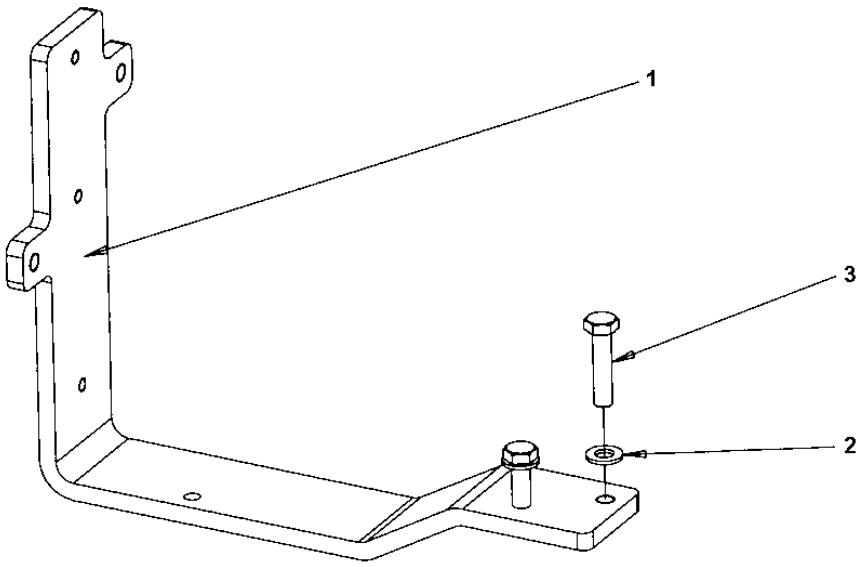

Bracket module

Item	Part No	Rem	Qty	Description	Code
1	4700397260		1	Bracket	
2	4700904229		2	Steel plain washer 8,4x16x1,5	C
3	4700500230		2	Screw M8-1.25x35	

SMV-sign

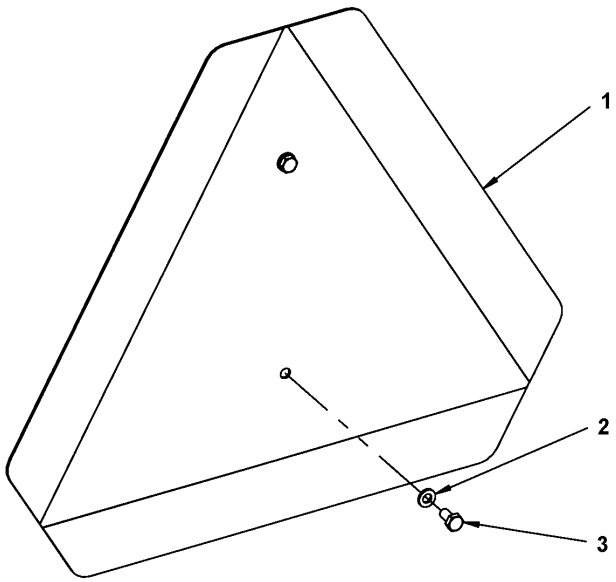

SMV-sign

Item	Part No	Rem	Qty	Description	Code
1	4700476019		1	SMV-sign	D
2	4700904228		2	Washer 6,4x12x1,5	C
3	4700500012		2	Screw M6x12	C

Grab handle module

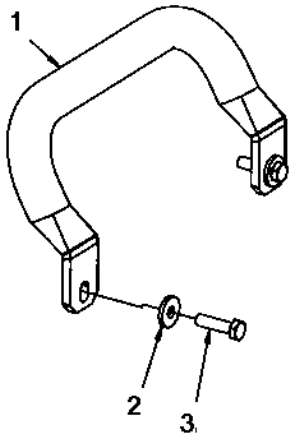

Grab handle module

Item	Part No	Rem	Qty	Description	Code
1	4700394545		1	Grab handle	
2	4700904640		2	Washer 8,4x22x3	C
3	4700500022		2	Screw M8x30H 8.8 A2K	C

Suspension

Item	Part No	Rem	Qty	Description	Code
10			1	**Front suspension (Page 86)**	
20			1	**Rear Suspension (Page 126)**	
30			1	**Air on the run system option (Page 150)**	

Front suspension

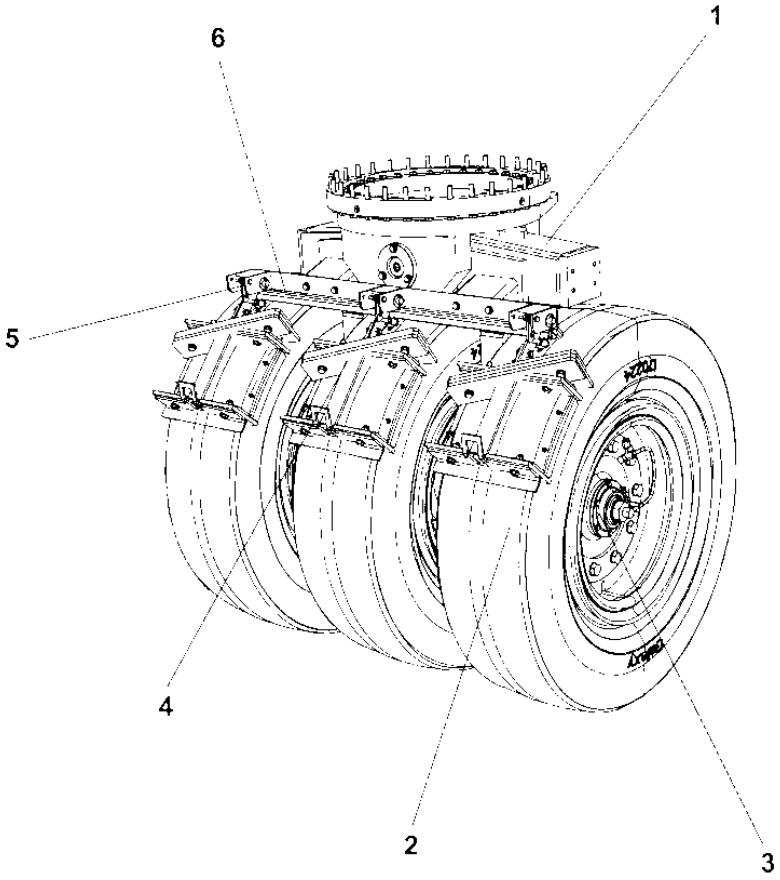

Front suspension

Item	Part No	Rem	Qty	Description	Code
1				Front suspension module (Page 88)	
2				Wheel module Pirelli (Page 100) Wheel module, option Michelin (Page 104)	
3				Cover module (Page 108)	
4				Scraper module (Page 112)	
5				Scraper bracket module (Page 114)	
6				Sprinkler module (Page 118)	
7				Sprinkler pipe module (Page 122)	

Front suspension module

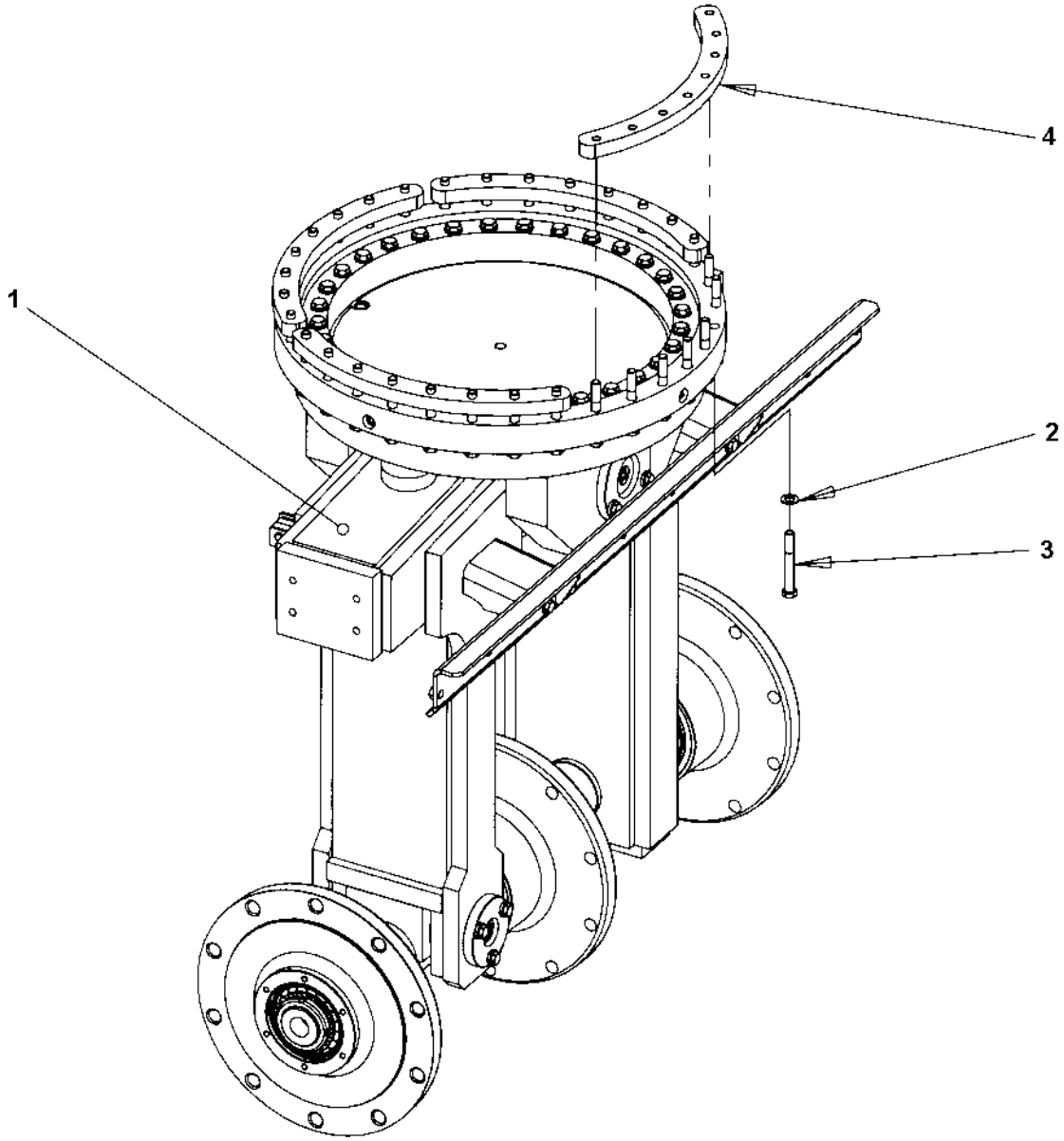

Front suspension module

Item	Part No	Rem	Qty	Description	Code
1			1	**Front suspension (Page 90)**	
2	4700904231		32	Washer 13x24x2 300 HV	C
3	4700500197		32	Screw 12x90	C
4	4812110597		4	Plate	

Front suspension

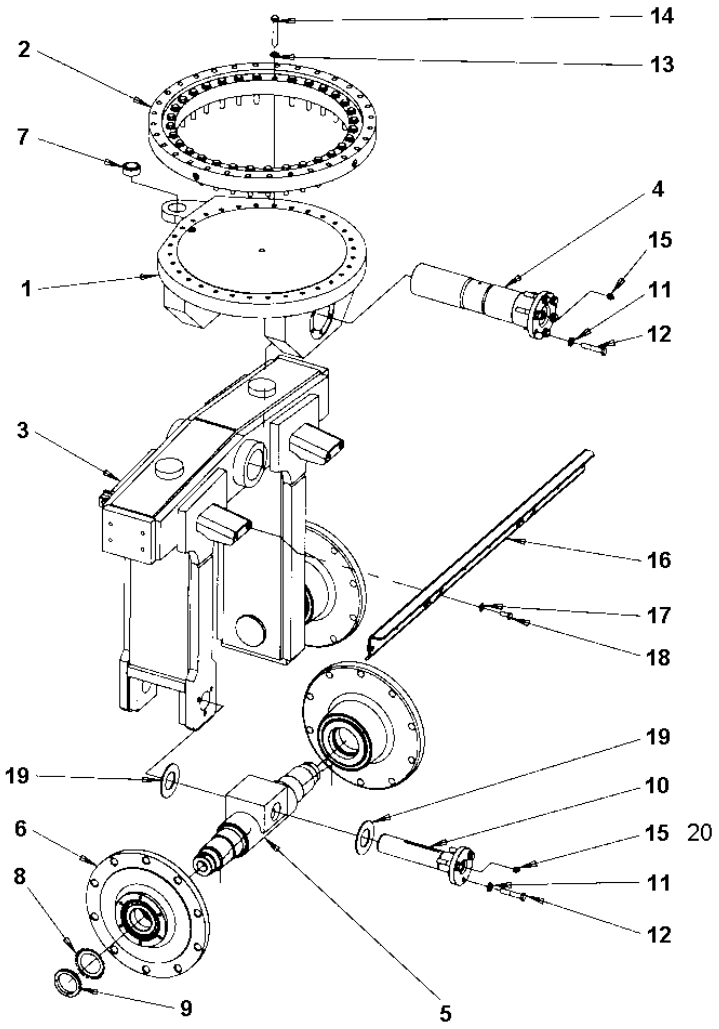

Front suspension

Item	Part No	Rem	Qty	Description	Code
1	4700170101		1	Tilt holder	
2	4700170102		1	Sleeve bearing	
3	4700170143		1	Yoke	
4			1	**Tilt shaft cpl. (Page 92)**	
5			1	**Wheel shaft cpl. (Page 94)**	
6			3	**Hub (Page 96)**	
7	4700792554		1	Radial spherical plain bearing	D
8	4700136011		3	Lock washer	
9	4700135011		3	Lock nut	
10			1	**Tilt shaft cpl. (Page 98)**	
11	4700904703		9	Washer	C
12	4700947712		9	Screw	C
13	4700904231		32	Washer 13x24x2 300 HV	C
14	4700500117		32	Screw M12x80H 8,8	C
15	4811000106		2	Grease nipple	
16	4700170276		1	Scraper bracket	
17	4700904230		4	Steel plain washer	C
18	4700500028		4	Screw	C
19	4700397437		2	Spacer	
20	4700490039		N	Grease Shell Retinax LX-2	

Tilt shaft cpl.

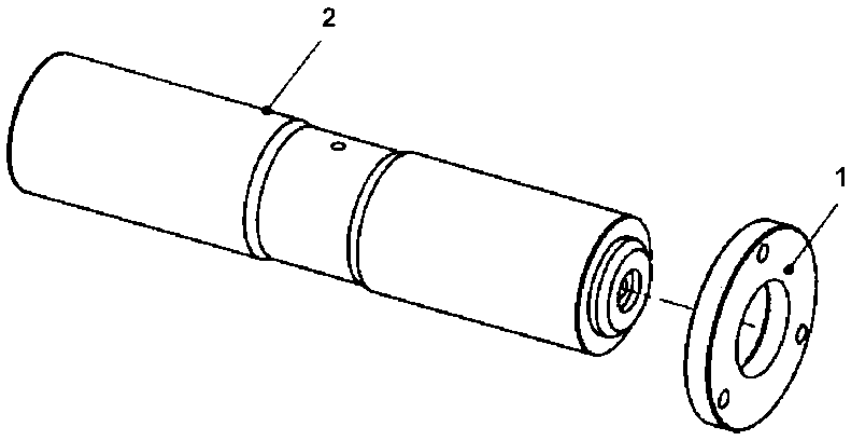

Tilt shaft cpl.

Item	Part No	Rem	Qty	Description	Code
1	4700170137		1	Cover plate	
2	4700170138		1	Shaft	

Wheel shaft cpl.

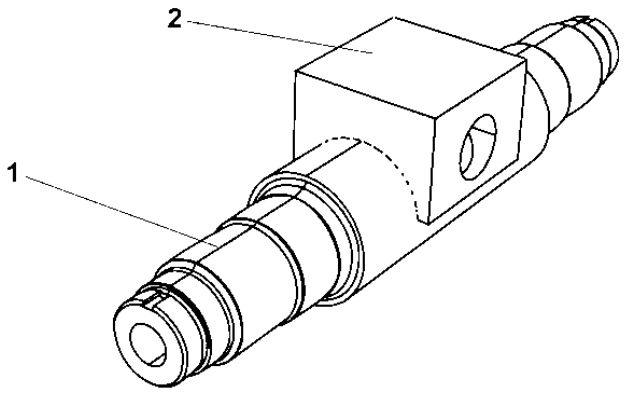

Wheel shaft cpl.

Item	Part No	Rem	Qty	Description	Code
1	4700170119		1	Wheel shaft	
2	4700170120		1	Shaft support	

Hub

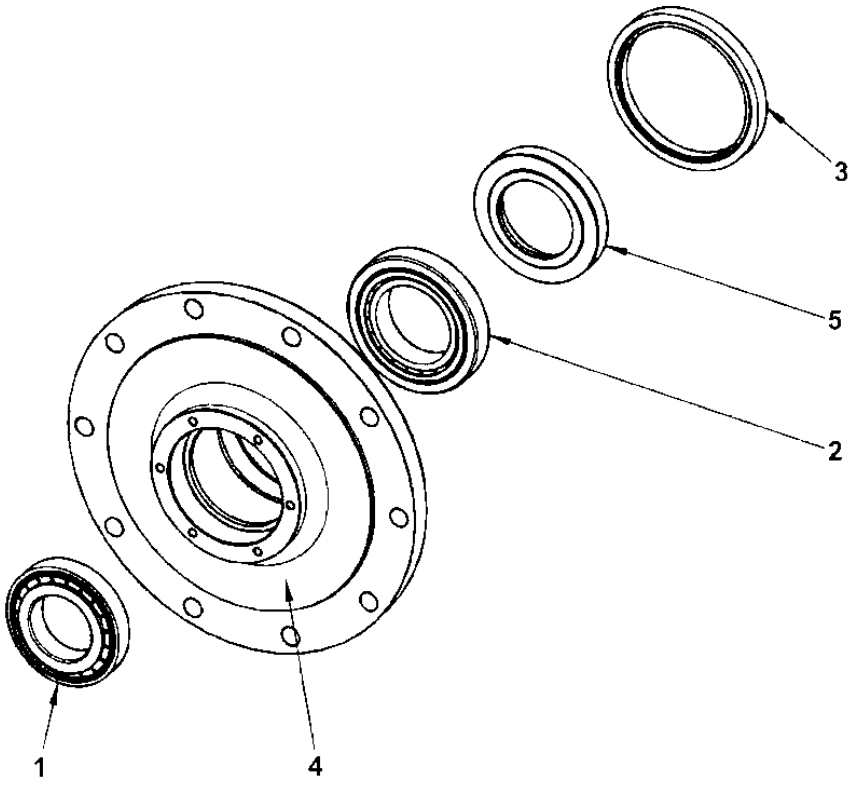

Hub

Item	Part No	Rem	Qty	Description	Code
1	4700116009		1	Bearing	
2	4700116016		1	Bearing	B
3	4700163108		1	Seal ring	
4	4700170122		1	Hub	
5	4700255658		1	Ring	

Tilt shaft cpl.

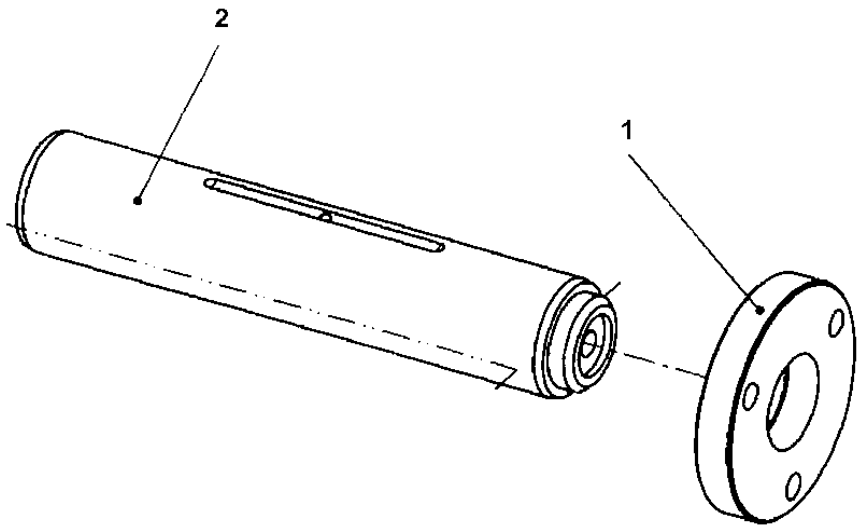

Tilt shaft cpl.

Item	Part No	Rem	Qty	Description	Code
1	4700170126		1	Cover plate	
2	4700170127		1	Shaft	

Wheel module Pirelli

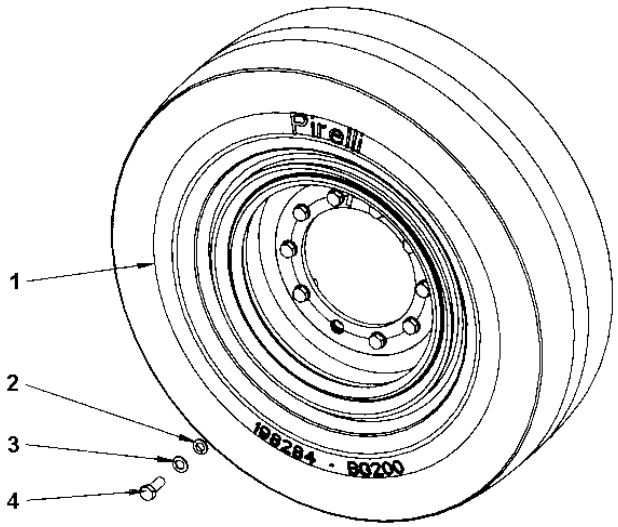

Wheel module Pirelli

Item	Part No	Rem	Qty	Description	Code
1			1	**Wheel Pirelli (Page 102)**	
2	4700902252		10	Washer	C
3	4700904233		10	Washer 21x36x3	C
4	4700792683		10	Screw	

Wheel Pirelli

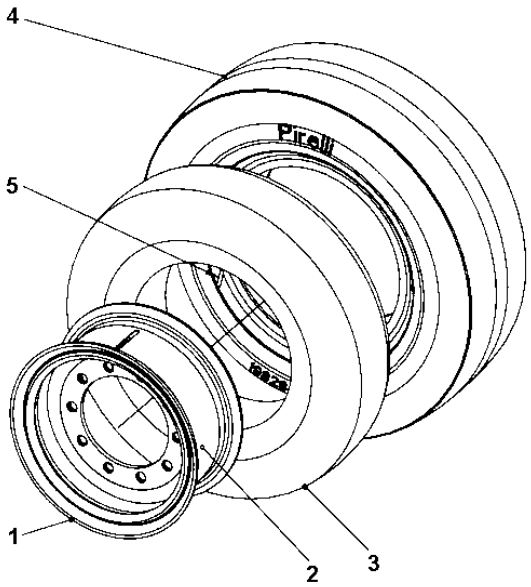

Wheel Pirelli

Item	Part No	Rem	Qty	Description	Code
1	4700170130		1	Rim	
2	4700198243		1	Flap	
3	4700170558		1	Air tube	
4	4700198284		1	Smooth tyre	
5	4700170550		1	Valve	

Wheel module, option Michelin

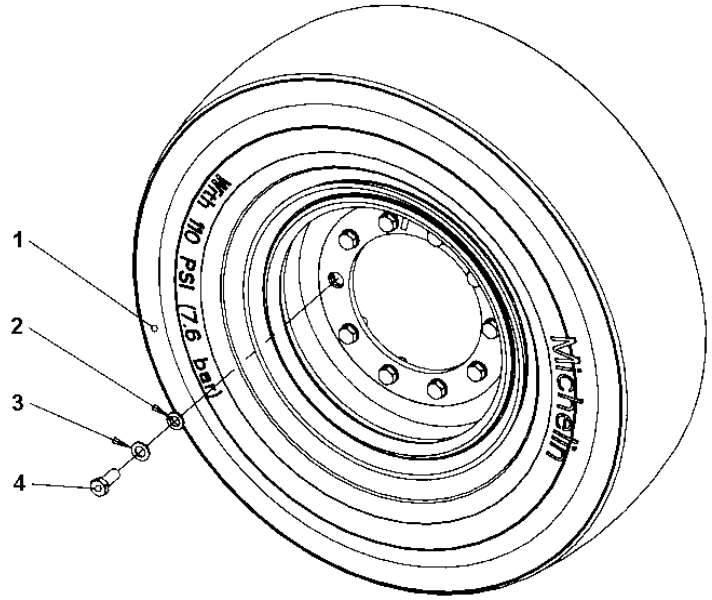

Wheel module, option Michelin

Item	Part No	Rem	Qty	Description	Code
1			1	**Wheel Michelin (Page 106)**	
2	4700902252		10	Washer	C
3	4700904233		10	Washer 21x36x3	C
4	4700792683		10	Screw	

Wheel Michelin

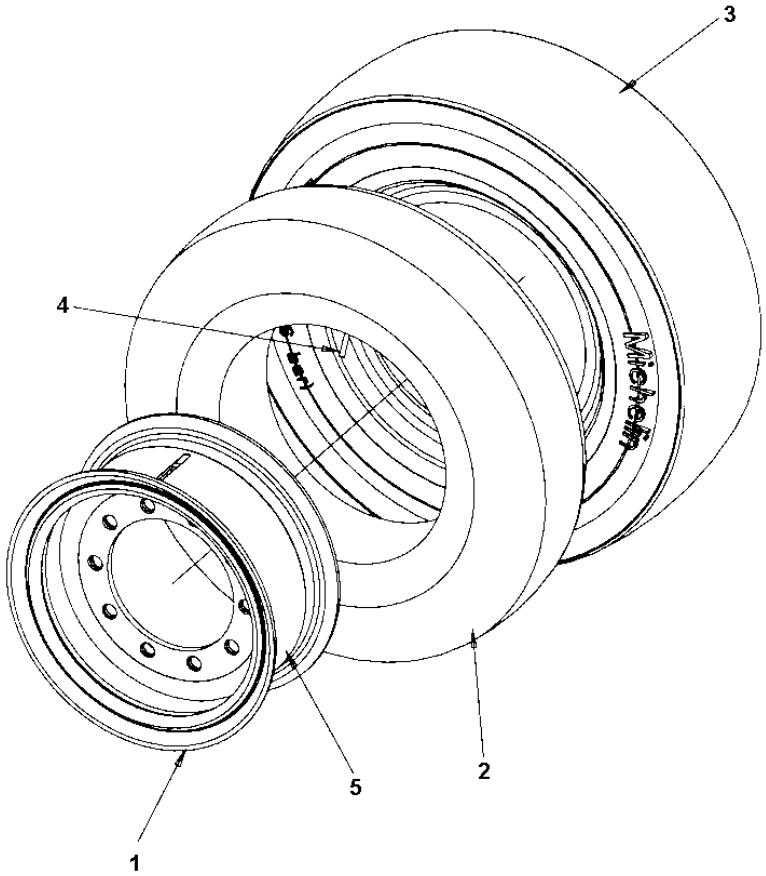

Wheel Michelin

Item	Part No	Rem	Qty	Description	Code
1	4700170130		1	Rim	
2	4700170558		1	Air tube	
3	4700901317		1	Tyre, smooth Michelin	D
4	4700170550		1	Valve	
5	4700198243		1	Flap	

Cover module

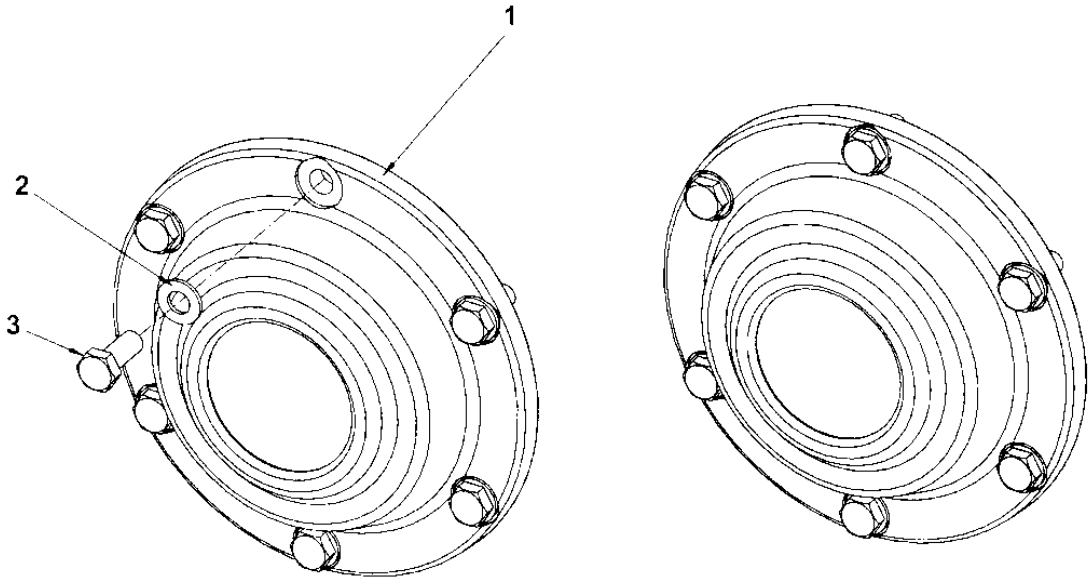

Cover module

Item	Part No	Rem	Qty	Description	Code
1			1	**Cover (Page 110)**	
2	4700904229		6	Steel plain washer 8,4x16x1,5	C
3	4700500053		3	Screw M8x20H 8.8	C

Cover

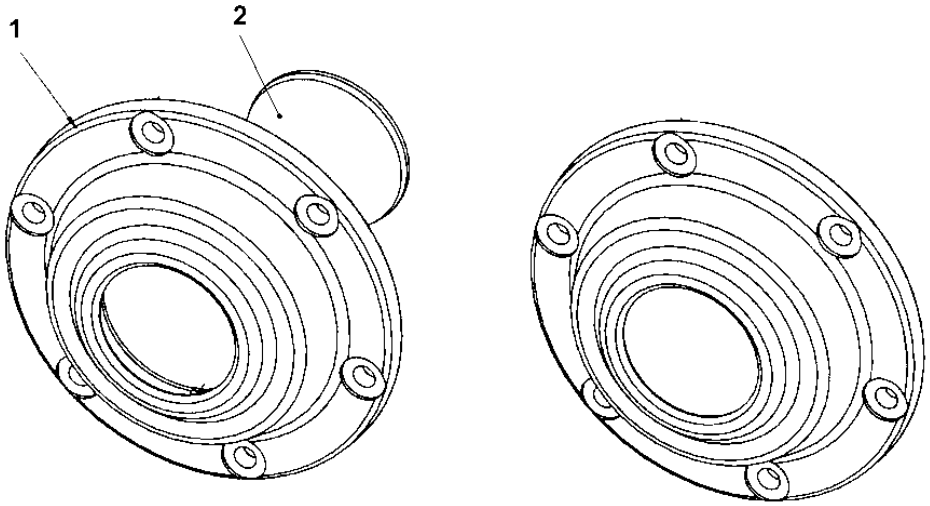

Cover

Item	Part No	Rem	Qty	Description	Code
1	4700170139		1	Cover	
2	4700380533		1	Protection cover	

Scraper module

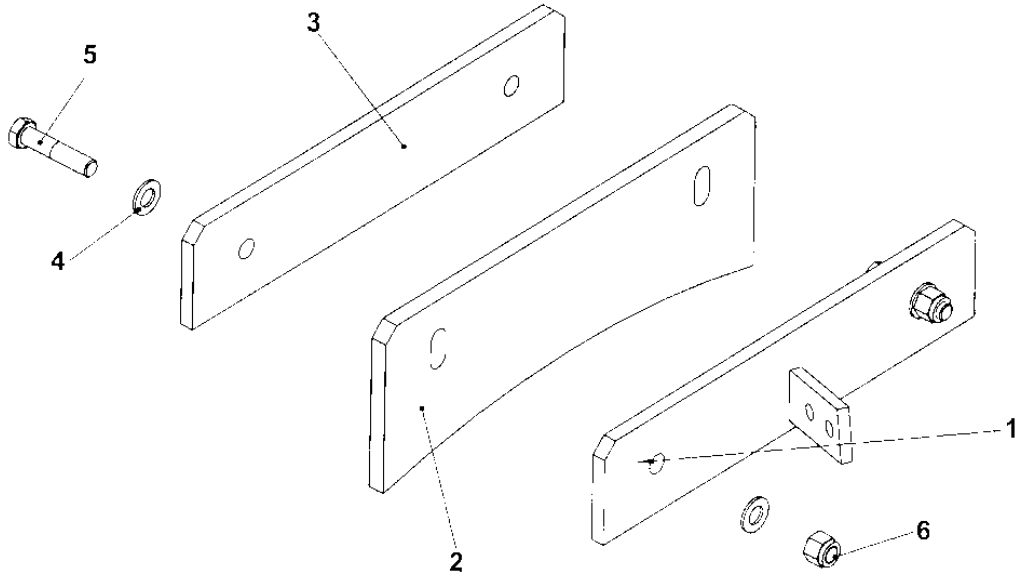

Scraper module

Item	Part No	Rem	Qty	Description	Code
1	4700170292		1	Bracket	
2	4700170294		1	Blade	
3	4700170293		1	Sheet metal part	
4	4700904231		4	Washer 13x24x2 300 HV	C
5	4700500111		2	Screw M12x55 8,8	C
6	4700586019		2	Lock nut	C

Scraper bracket module

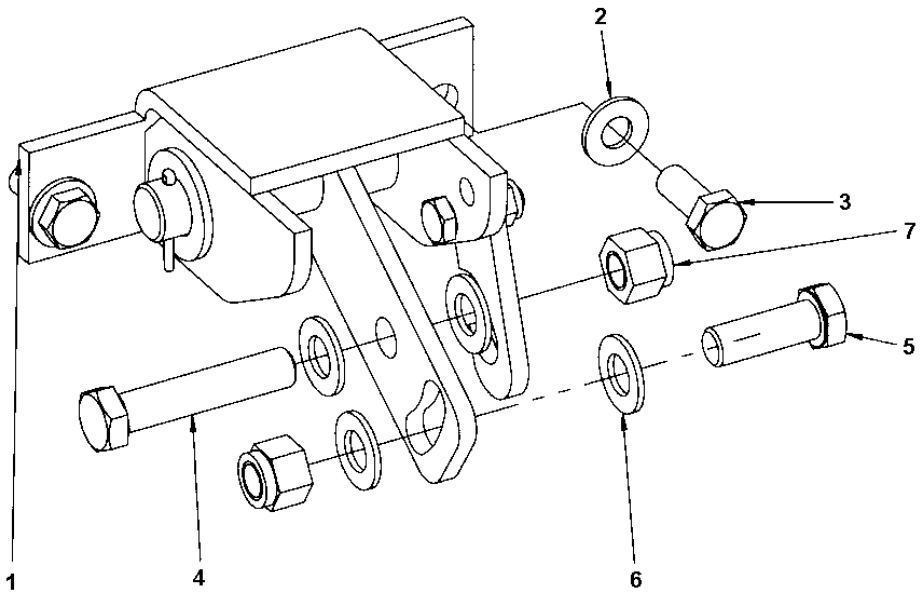

Scraper bracket module

Item	Part No	Rem	Qty	Description	Code
1			1	**Bracket (Page 116)**	
2	4700904230		2	Steel plain washer	C
3	4700500028		2	Screw	C
4	4700500103		1	Screw M12x60H 8,8	
5	4700500037		1	Screw	C
6	4700904231		4	Washer 13x24x2 300 HV	C
7	4700586019		2	Lock nut	C

Bracket

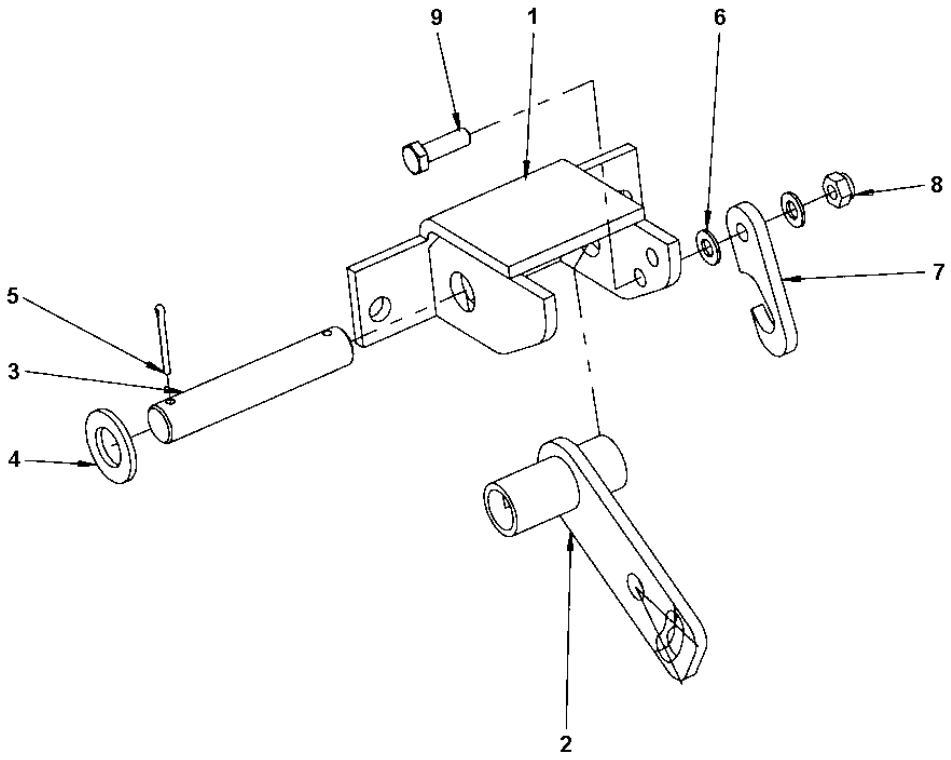

Bracket

Item	Part No	Rem	Qty	Description	Code
1	4700170279		1	Bracket	
2	4700170281		1	Arm	
3	4700170282		1	Pin	
4	4700904793		2	Washer 19x34x3	
5	4700630008		2	Pin	D
6	4700904229		2	Steel plain washer 8,4x16x1,5	C
7	4700170304		1	Holding bar	
8	4700791182		1	Lock nut M8	
9	4700500021		1	Screw M8-1,25x25 8.8	C

Sprinkler module

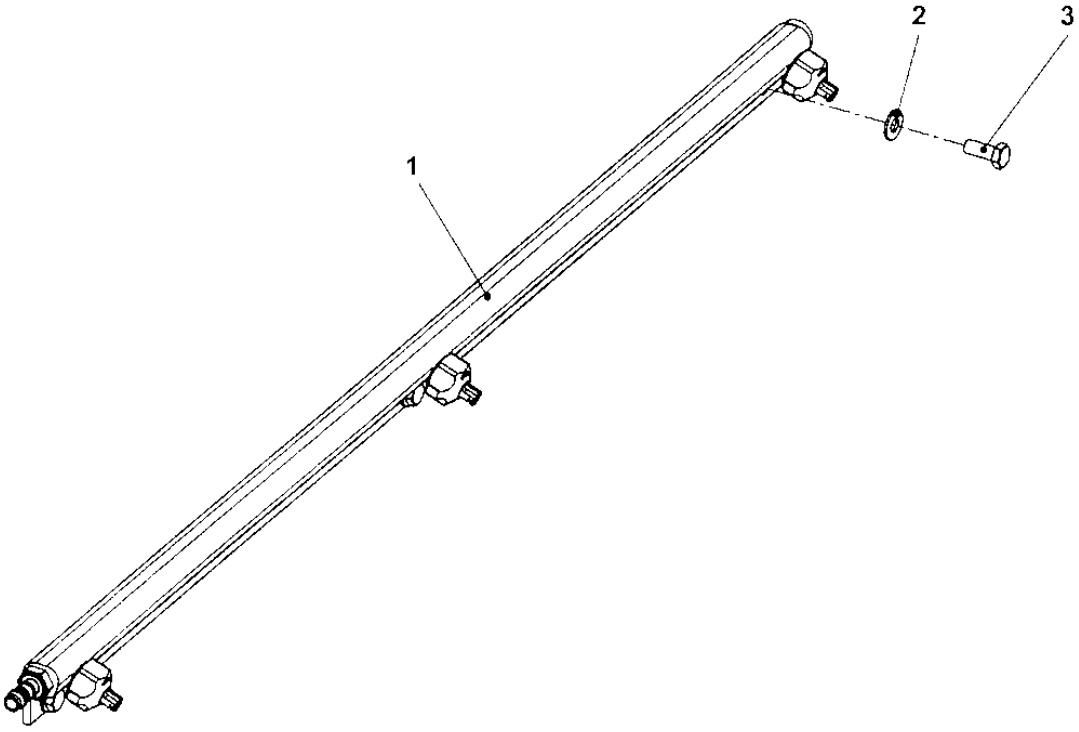

Sprinkler module

Item	Part No	Rem	Qty	Description	Code
1			1	**Sprinkler pipe (Page 120)**	
2	4700904230		3	Steel plain washer	C
3	4700500028		3	Screw	C

Sprinkler pipe

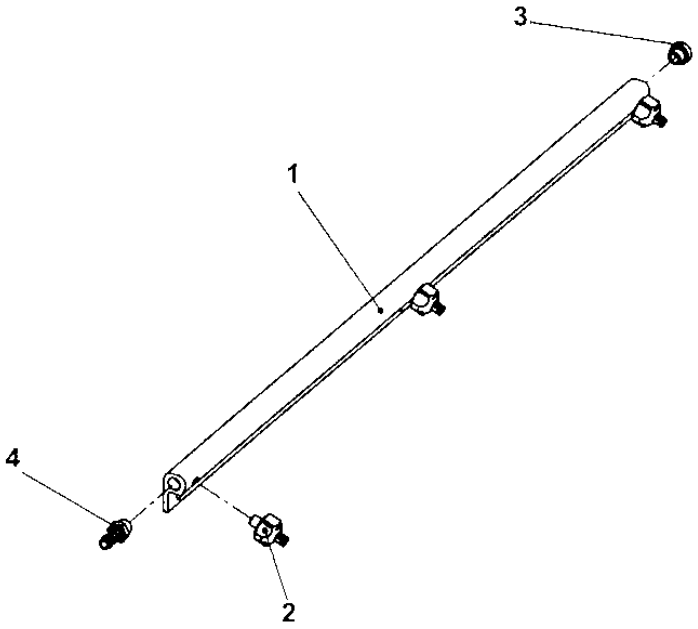

Sprinkler pipe

Item	Part No	Rem	Qty	Description	Code
1	4700396449		1	Sprinkler pipe	
2	4700392011		3	Spraying nozzle, cpl	A
3	4700792072		1	End plug	
4	4700234931		1	Hose connector	

Sprinkler pipe module

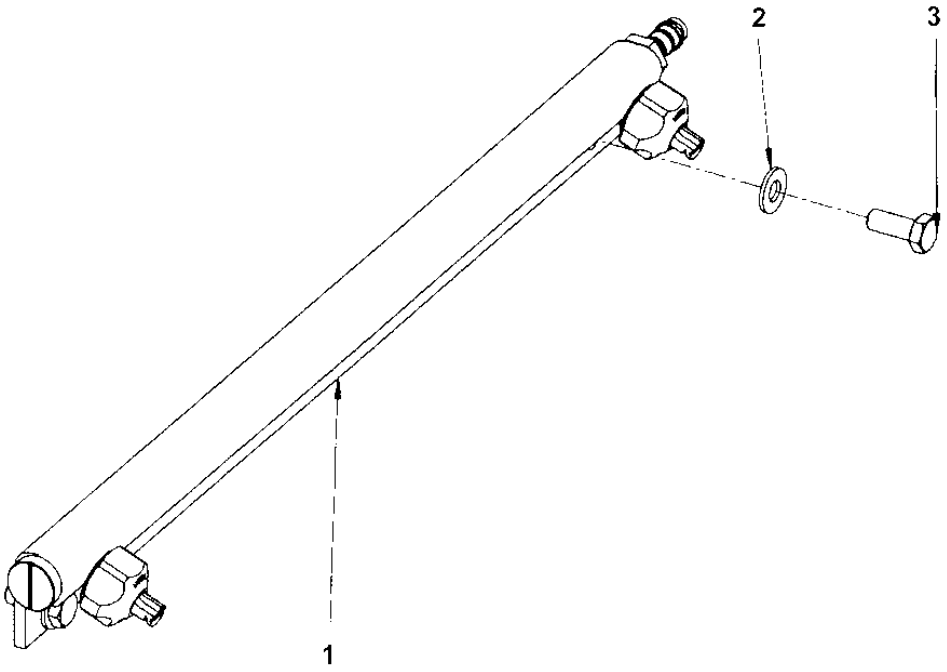

Sprinkler pipe module

Item	Part No	Rem	Qty	Description	Code
1			1	**Sprinkler pipe (Page 124)**	
2	4700904230		2	Steel plain washer	C
3	4700500028		2	Screw	C

Sprinkler pipe

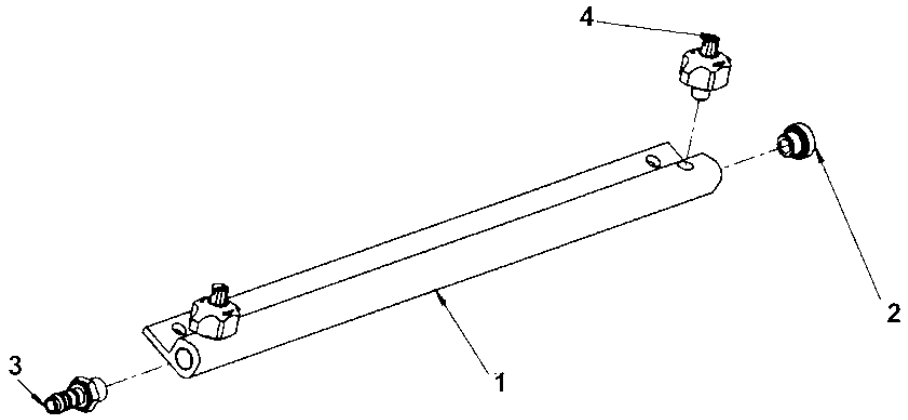

Sprinkler pipe

Item	Part No	Rem	Qty	Description	Code
1	4700396448		1	Sprinkler pipe	
2	4700792072		1	End plug	
3	4700234931		1	Hose connector	
4	4700392011		2	Spraying nozzle, cpl	A

Rear Suspension

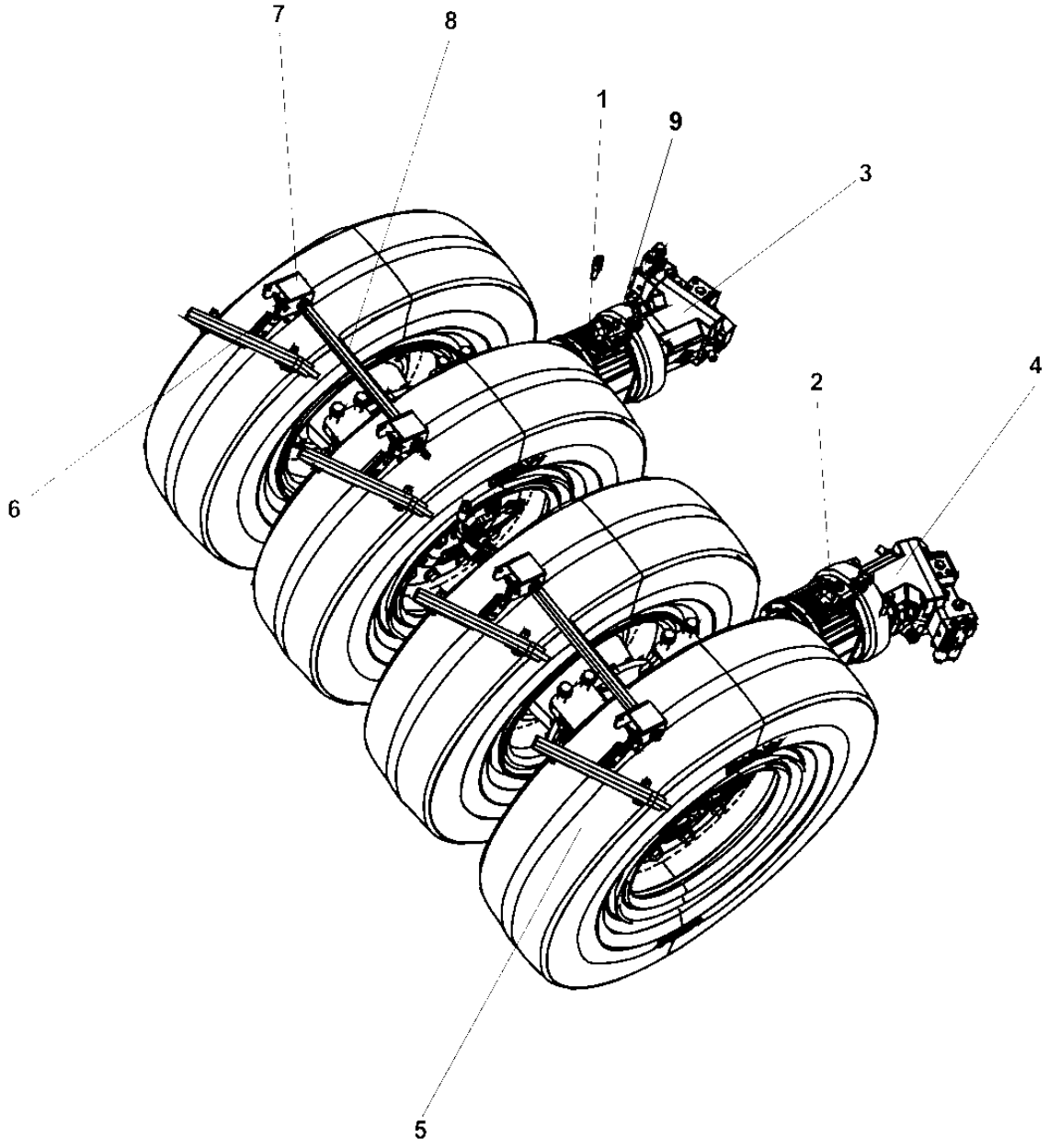

Rear Suspension

Item	Part No	Rem	Qty	Description	Code
1				Gear module, left (Page 128)	
2				Gear module, right (Page 138)	
3				Hydraulic motor module, left (Page 140)	
4				Hydraulic motor module, right (Page 142)	
5				Wheel module Pirelli (Page 100)	
				Wheel module, option Michelin (Page 104)	
6				Scraper module (Page 112)	
7				Scraper module (Page 144)	
8				Scraper bracket module (Page 114)	
9				Sprinkler pipe module (Page 122)	
10				Pulse sensor module (Page 148)	

Gear module, left

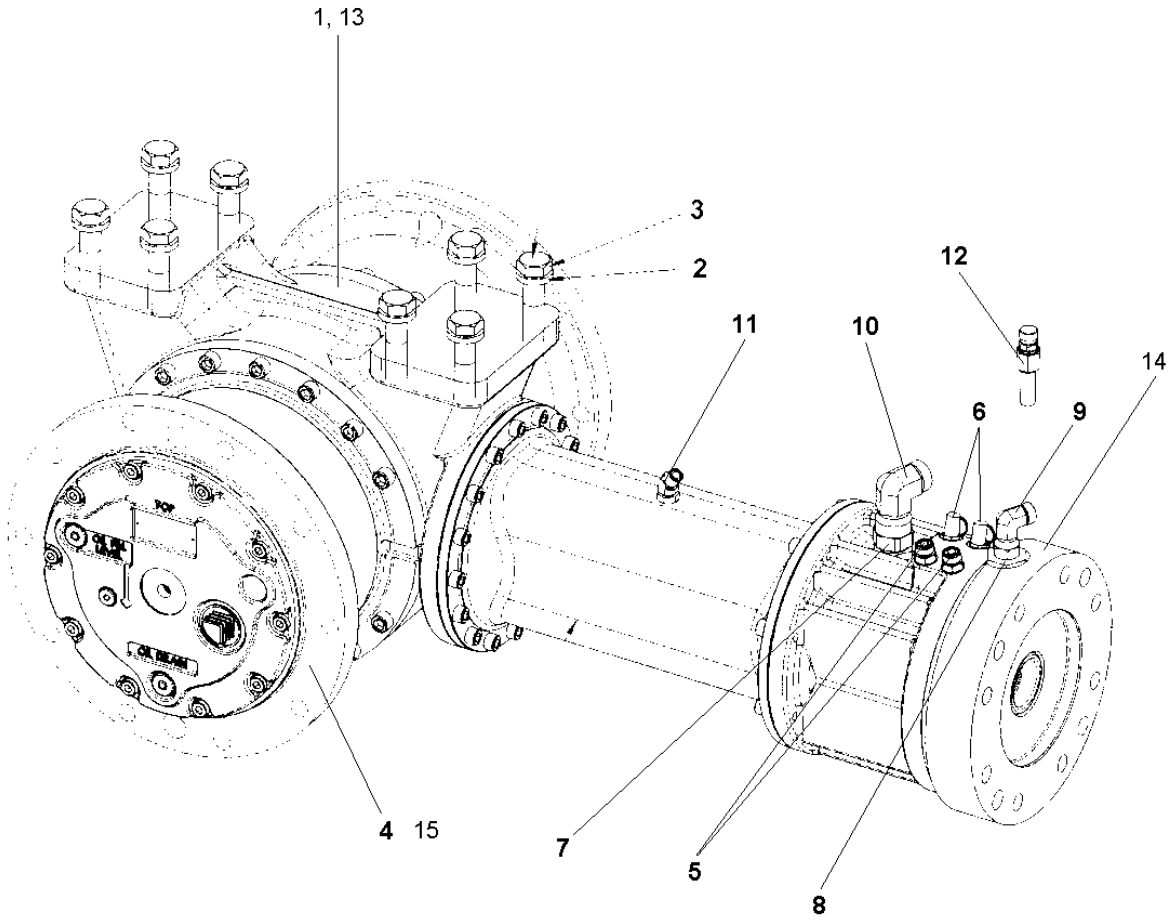

Gear module, left

Item	Part No	Rem	Qty	Description	Code
1			1	**Gear module repair kit (Page 130)**	
2	4700903290		8	Washer 21x36x6	C
3	4700947706		8	Hexagon head screw M20X0,65 10.9	C
4	4700395139		1	Gear	
5	4700792177		2	Straight connector	
6	4700923405		2	Measuring nipple	C
7	4700904728		1	Adapter	
8	0570702503		1	Elbow 90	
9	4700904766		1	Elbow connector 90	
10	4700904584		1	Elbow connector 90	C
11	4700792443		1	Elbow connector 45	
12	4700396338		1	Connector	
13			1	**Gear module sealing kit (Page 132)**	
14			1	**Negative multidisc brake repair kit (Page 134)**	
15			1	**Gearbox repair kit (Page 136)**	

Gear module repair kit

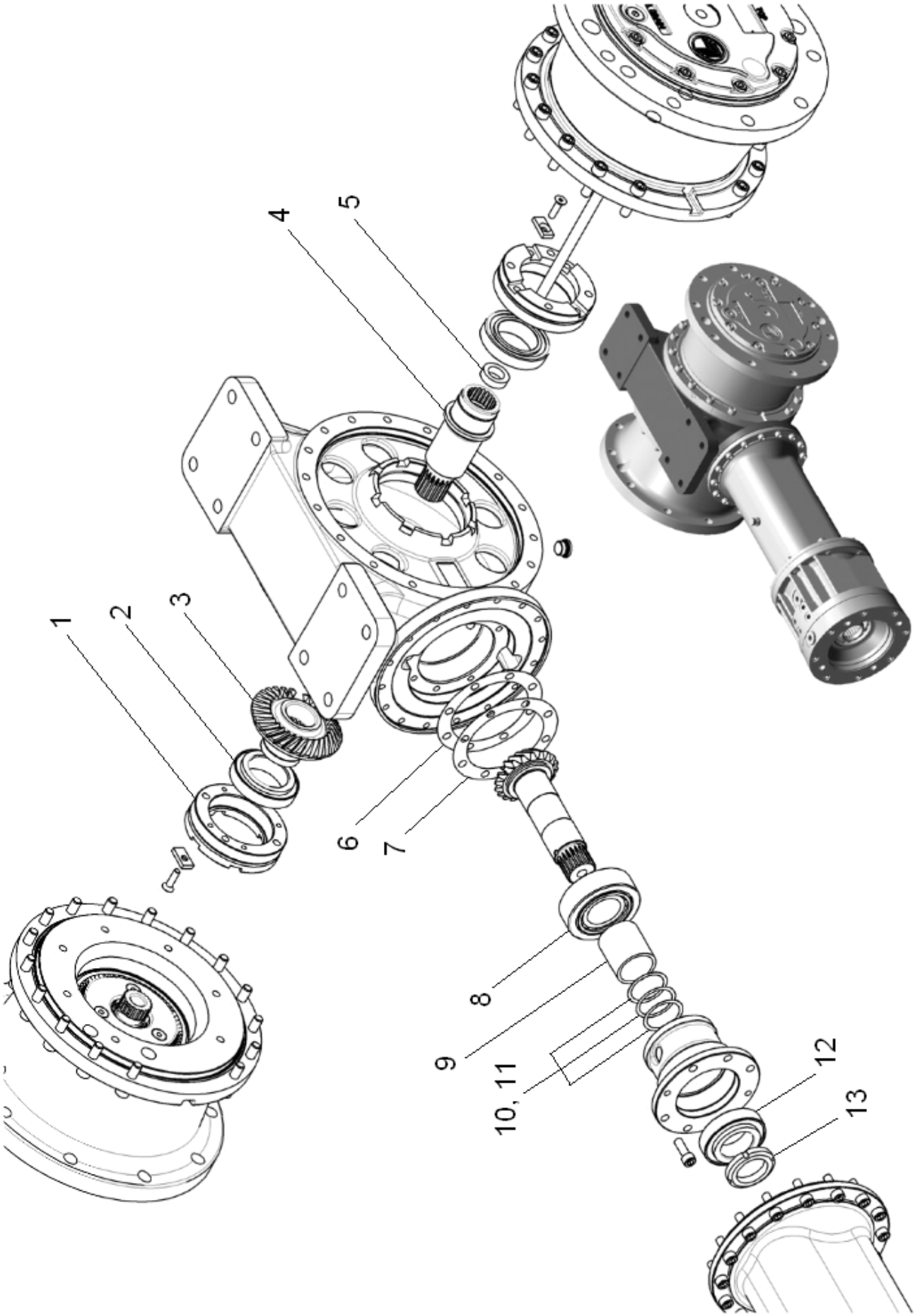

Gear module repair kit

Item	Part No	Rem	Qty	Description	Code
1	4812100426		2	Nut M128X2,00	
2	4812100427		2	Bearing CLA 55X90X23 32011X	
3	4812100428		1	Bevel gear 1:1,55 DX	
4	4812100429		1	Hub	
5	4812100430		1	Spacer	
6	4812100431		2	Spacer 106X145X0,15	
7	4812100432		2	Spacer 106X145X0,10	
8	4812100433		1	Bearing 445X100X38,25 32309	
9	4812100434		1	Spacer	
10	4812100435		2	Spacer 45,2X54,8X0,2	
11	4812100436		2	Spacer 45,2X54,8X0,15	
12	4812100437		1	Bearing 45X85X24,75 32209	
13	4812100438		1	Nut M45X1,5	

Gear module sealing kit

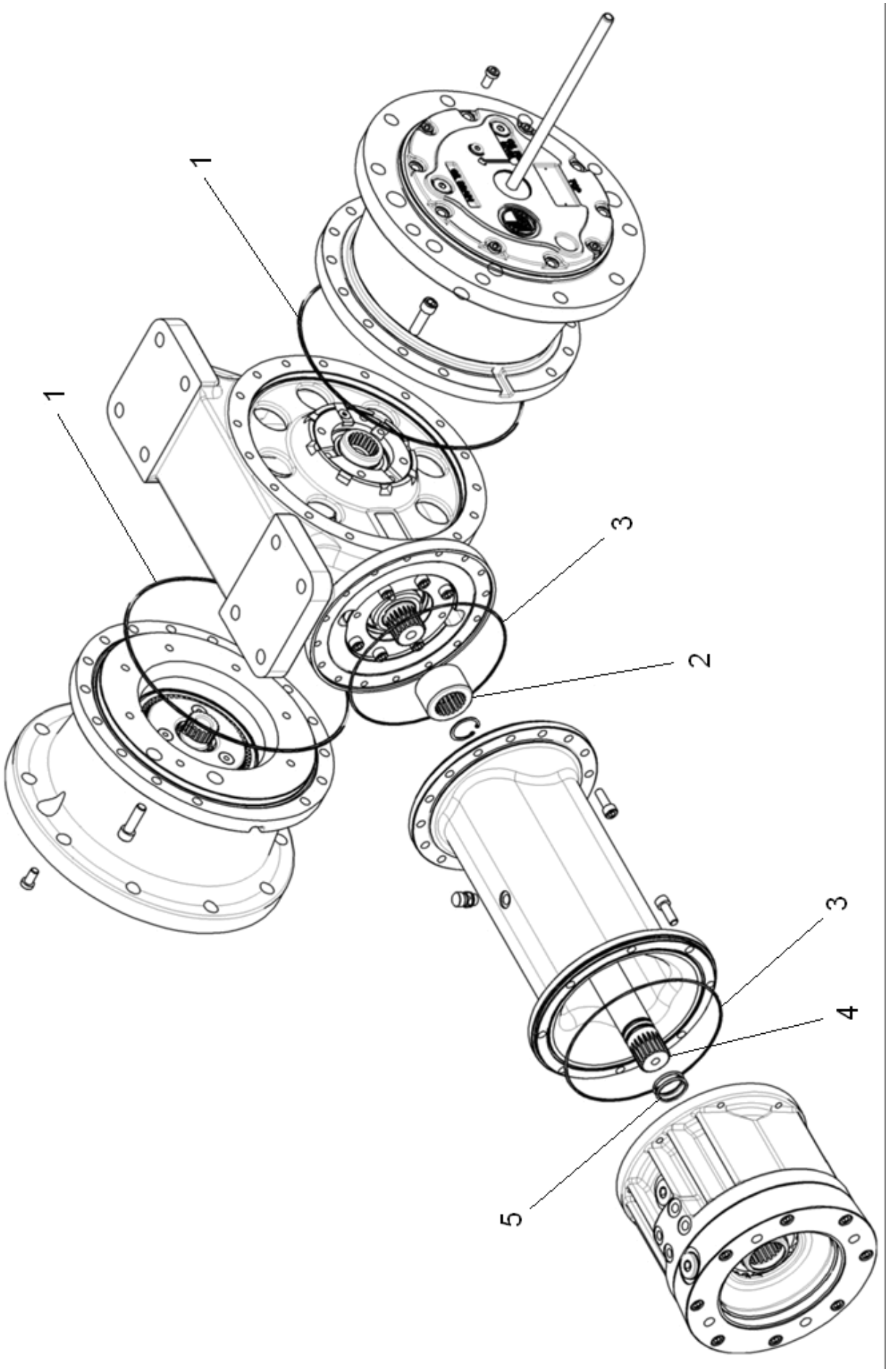

Gear module sealing kit

Item	Part No	Rem	Qty	Description	Code
1	4700160107		2	O-ring 3,53X291,69	
2	4812100423		1	Coupling 40X36X20 DIN5482	
3	4812100422		2	O-ring 2,62x202,87	
4	4812100424		1	Splined shaft 40X36X20 DIN5482	
5	4812100425		2	O-ring 32,93x3,53	

Negative multidisc brake repair kit

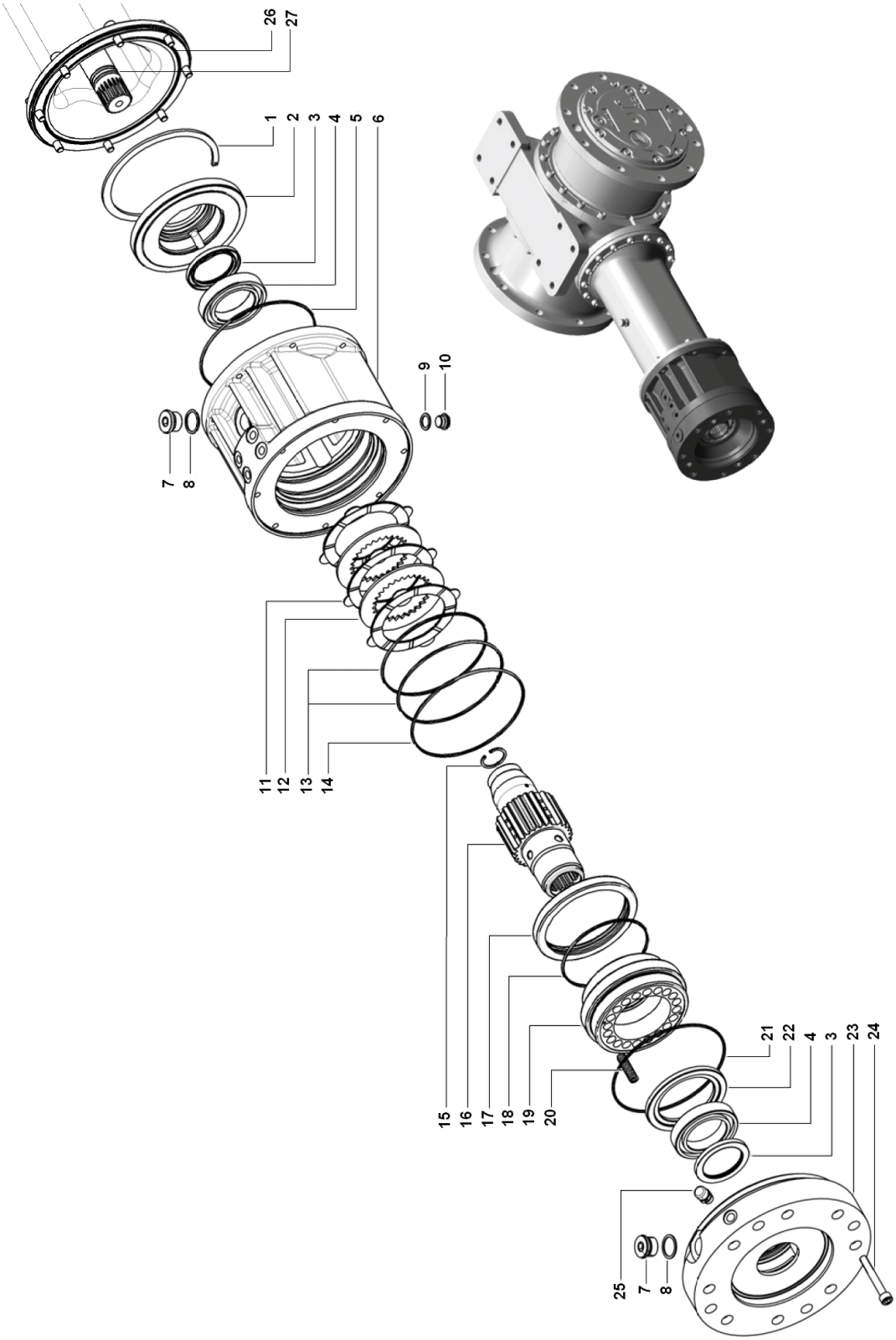

Negative multidisc brake repair kit

Item	Part No	Rem	Qty	Description	Code
1	4812100874		1	Circlip	
2	4812100875		1	Spring	
3	4812100446		2	Seal ring 60x80x7	
4	4812100447		2	Bearing	
5	4812100448		1	O-ring 171,00x3,53	
6	4812100878		1	Brake housing	
7	4812100879		2	Plug	
8	4812100880		2	Washer 27x33x1,5	
9	4812100881		1	Washer 17x23x1,5	
10	4812100882		1	Plug	
11	4812100449		9	Sintered disc	
12	4812100450		8	Steel disc	
13	4700480622		2	O-ring 3,53x151,99	
14	4700160048		1	O-ring 164,69x3,53	
15	4812100883		1	Circlip	
16	4812100884		1	Brake shaft	
17	4812100885		1	Spacer	
18	4700813647		1	O-ring 3,53x126,59	
19	4812100886		1	Brake piston	
20	4812100887		17	Spring	
21	4812100451		1	O-ring 3,53x142,47	
22	4812100452		1	Spacer	
23	4812100888		1	Motor adapter	
24	4812100889		8	Screw	
25	4812100453		1	Breather plug M14x1.5	
26	4812100422		1	O-ring 2,62x202,87	
27	4812100425		2	O-ring 32,93x3,53	

Gearbox repair kit

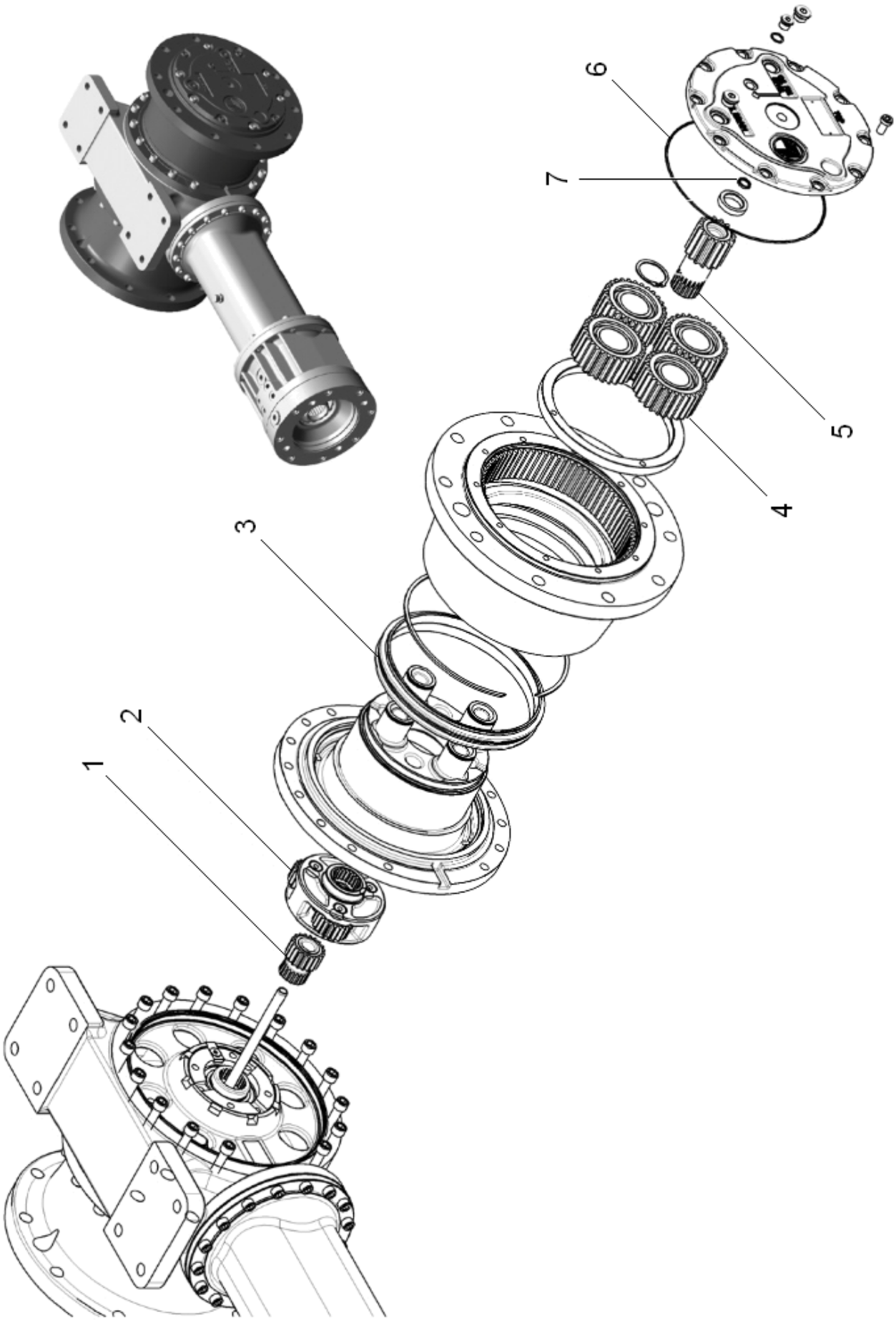

Gearbox repair kit

Item	Part No	Rem	Qty	Description	Code
1	4812100439		1	Sun gear Z=19 1:4,26 M=2,25	
2	4812100440		1	1st red. assembly 1:4,26	
3	4812100441		1	Lifetime seal I.D.=220	
4	4812100442		4	Planetary assembly 1:5,87	
5	4812100443		1	Sun gear Z=15 1:5,87 M=3,00	
6	4812100444		1	O-ring 2,62X228,27	
7	4812100445		1	Gasket 13,87X3,53	

Gear module, right

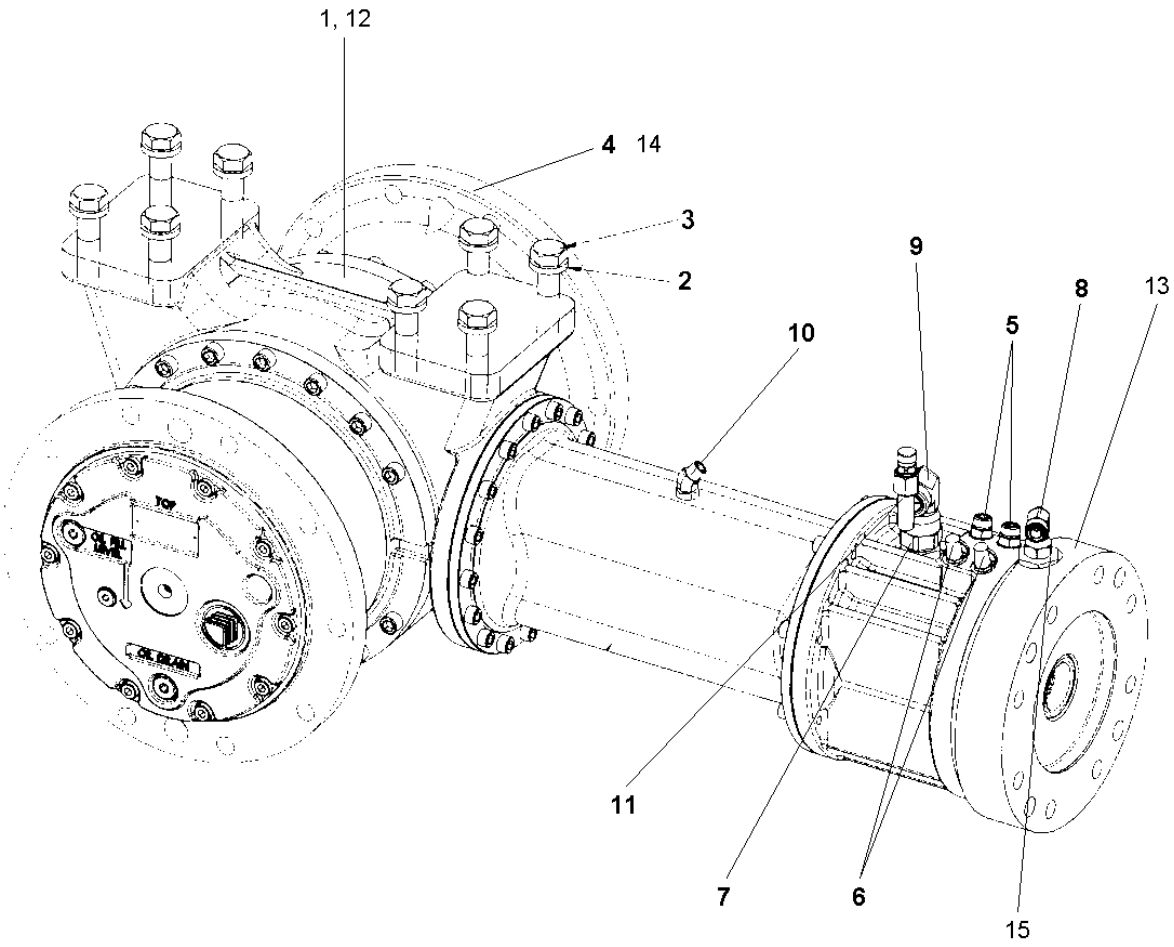

Gear module, right

Item	Part No	Rem	Qty	Description	Code
1			1	**Gear module repair kit (Page 130)**	
2	4700903290		8	Washer 21x36x6	C
3	4700947706		8	Hexagon head screw M20X0,65 10.9	C
4	4700395139		1	Gear	
5	4700792177		2	Straight connector	
6	4700923405		2	Measuring nipple	C
7	4700904728		1	Adapter	
8	4700904766		1	Elbow connector 90	
9	4700904584		1	Elbow connector 90	C
10	4700792443		1	Elbow connector 45	
11	4700396338		1	Connector	
12			1	**Gear module sealing kit (Page 132)**	
13			1	**Negative multidisc brake repair kit (Page 134)**	
14			1	**Gearbox repair kit (Page 136)**	
15	0570702503		1	Elbow 90	

Hydraulic motor module, left

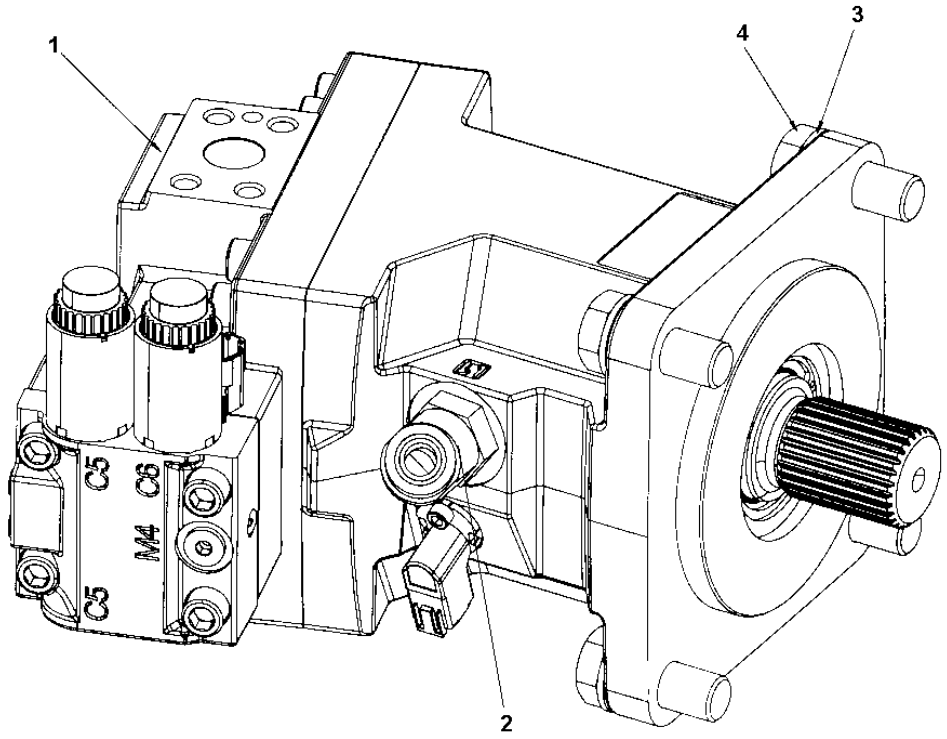

Hydraulic motor module, left

Item	Part No	Rem	Qty	Description	Code
1	4700396445		1	Hydraulic motor	
2	4700791230		1	Elbow 45	
3	4700904233		4	Washer 21x36x3	C
4	4700500101		4	Screw M20x50	C

Hydraulic motor module, right

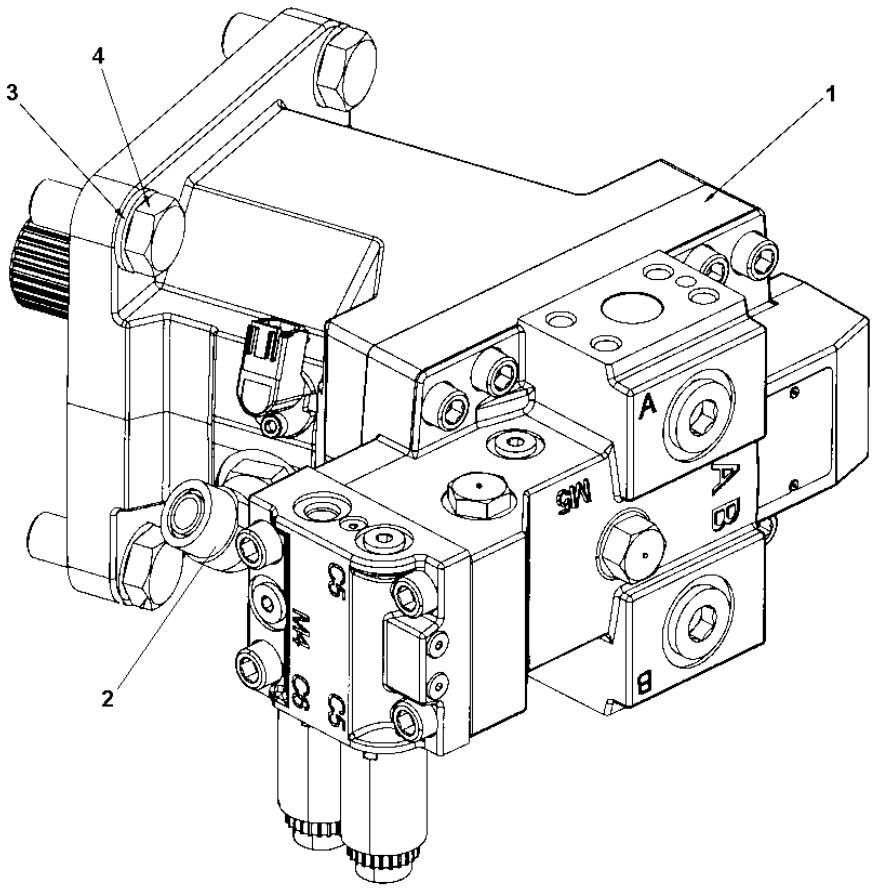

Hydraulic motor module, right

Item	Part No	Rem	Qty	Description	Code
1	4700396445		1	Hydraulic motor	
2	4700791230		1	Elbow 45	
3	4700904233		4	Washer 21x36x3	C
4	4700500101		4	Screw M20x50	C

Scraper module

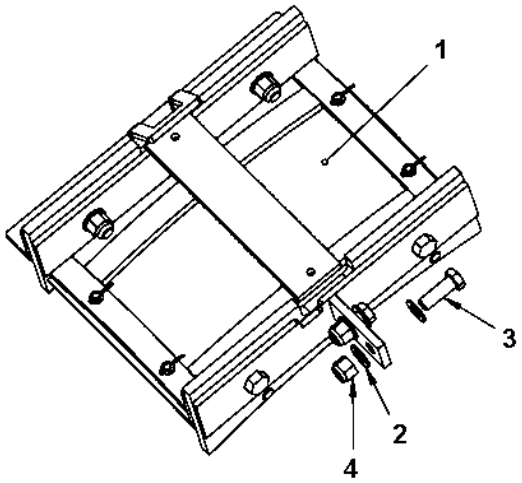

Scraper module

Item	Part No	Rem	Qty	Description	Code
1			1	**Scraper assy (Page 146)**	
2	4700904231		4	Washer 13x24x2 300 HV	C
3	4700500037		2	Screw	C
4	4700586019		2	Lock nut	C

Scraper assy

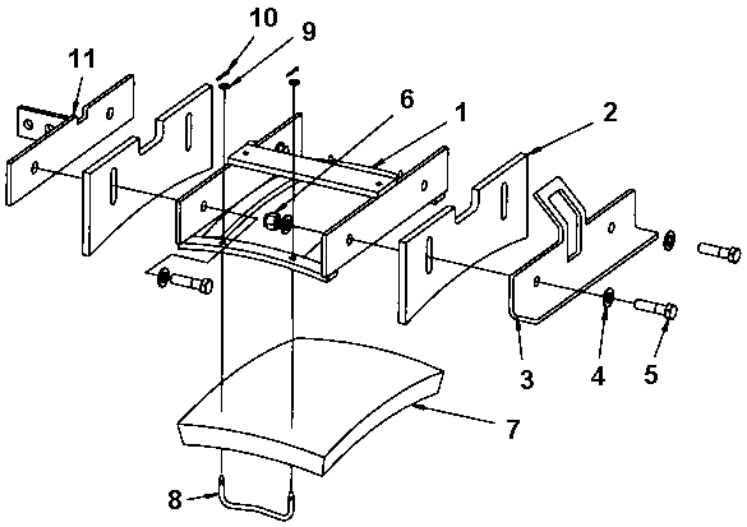

Scraper assy

Item	Part No	Rem	Qty	Description	Code
1	4700395067		1	Scraper holder	
2	4700383390		2	Scraper	A
3	4700383263		1	Bracket	
4	4700904231		6	Washer 13x24x2 300 HV	C
5	4700500056		4	Screw	C
6	4700586019		2	Lock nut	C
7	4700263772		1	Mat	D
8	4700267791		2	Mat holder	D
9	4700904228		4	Washer 6,4x12x1,5	C
10	4700630035		4	Split pin	C
11	4700396546		1	Bracket	

Pulse sensor module

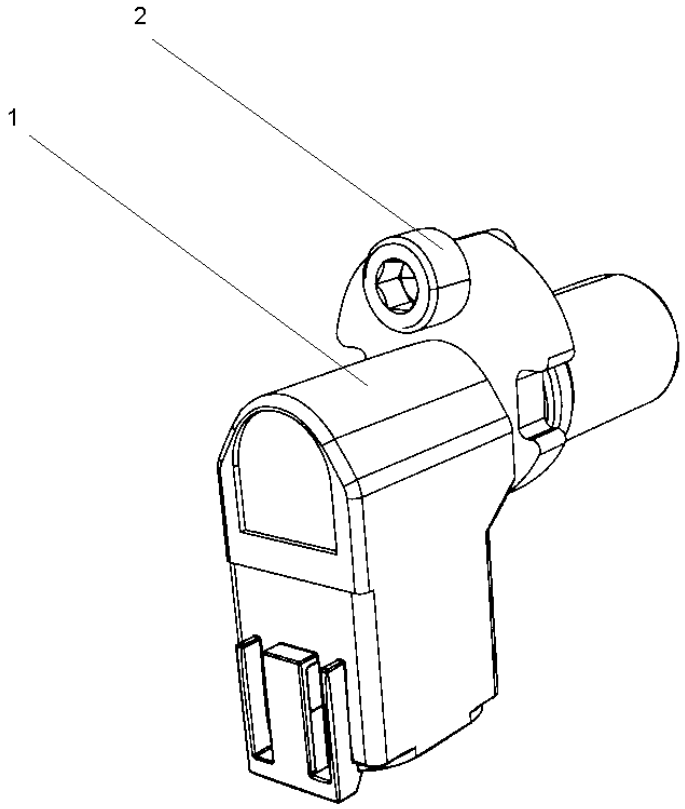

Pulse sensor module

Item	Part No	Rem	Qty	Description	Code
1	4700396601		1	Pulse sensor	
2	4700508001		1	Screw M06x012H	

Air on the run system option

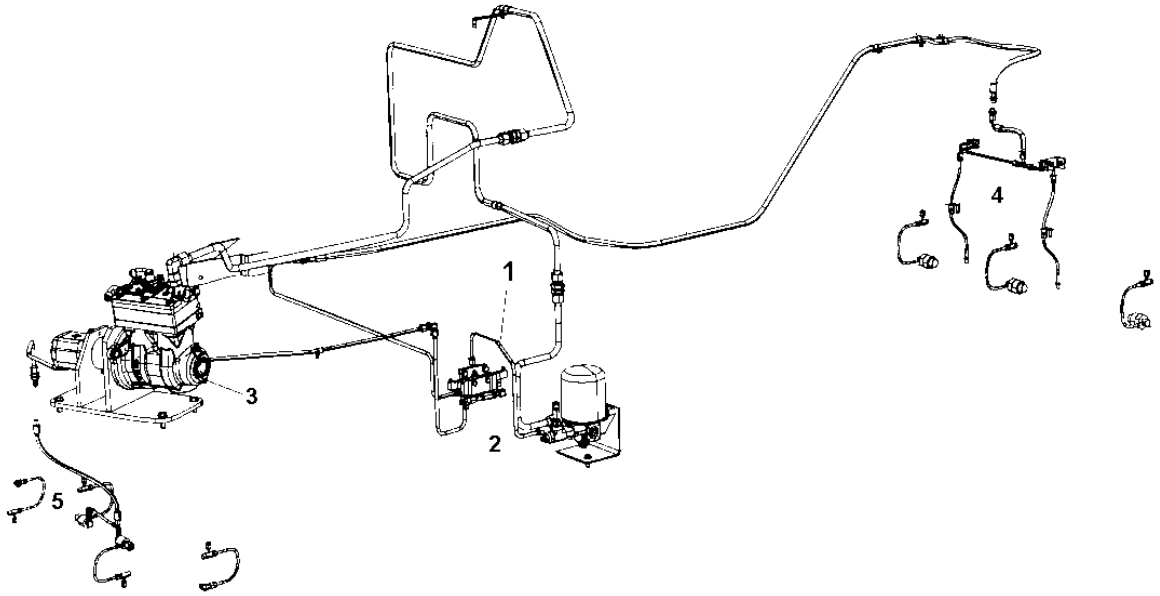

Air on the run system option

Item	Part No	Rem	Qty	Description	Code
1				**Pipe and hose kit Air on the run (Page 152)**	
2				**Air control kit (Page 154)**	
3				**Compressor module (Page 160)**	
4				**Pipe and hose kit, Front Air on the run (Page 164)**	
5				**Pipe and hose kit, Rear Air on the run (Page 166)**	
6				**Cover module Air on the run (Page 168)**	

Pipe and hose kit Air on the run

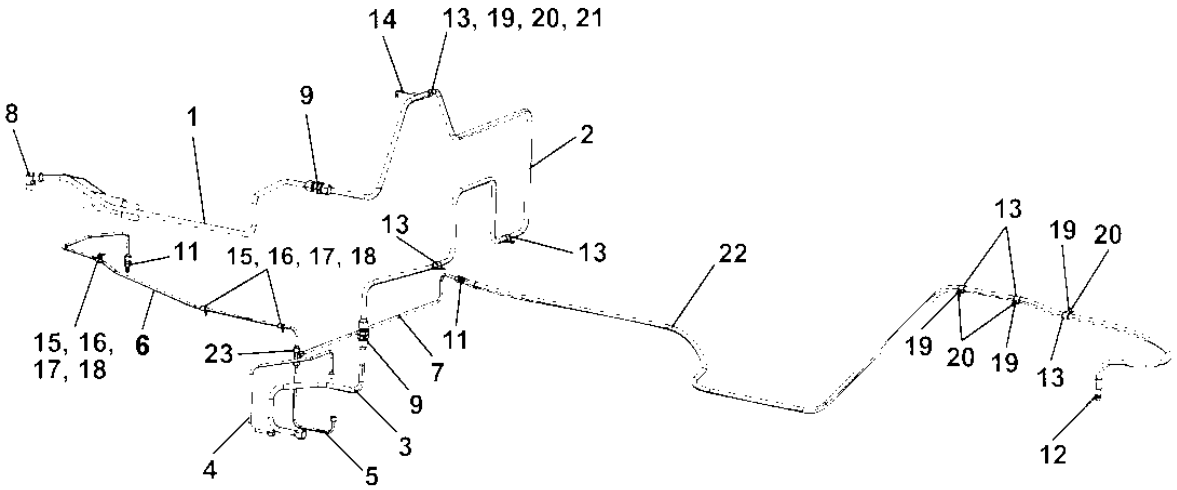

Pipe and hose kit Air on the run

Item	Part No	Rem	Qty	Description	Code
1	4700397145		1	Compressed air pipe	
2	4700397146		1	Compressed air pipe	
3	4700397139		1	Compressed air pipe	
4	4700397140		1	Compressed air pipe	
5	4700397141		1	Compressed air pipe	
6	4700397142		1	Compressed air pipe	
7	4700397143		1	Compressed air pipe	
8	4700334155		1	Elbow 90	C
9	4700230456		2	Adapter	C
11	4700234921		2	Connector	
12	4700334236		1	Adapter	C
13	4700902558		6	Clamp	
14	4700396994		1	Bracket	
15	4700791341		3	Clamp	
16	4700377549		3	Spacer	
17	4700904228		3	Washer 6,4x12x1,5	C
18	4700500075		3	Screw M6-1,0x25 8.8	C
19	4700904229		4	Steel plain washer 8,4x16x1,5	C
20	4700500019		4	Hexagon head screw	C
21	4700570005		1	Nut M8	C
22	4700397193		1	Compressed air pipe	
23	4700234804		1	Connector	

Air control kit

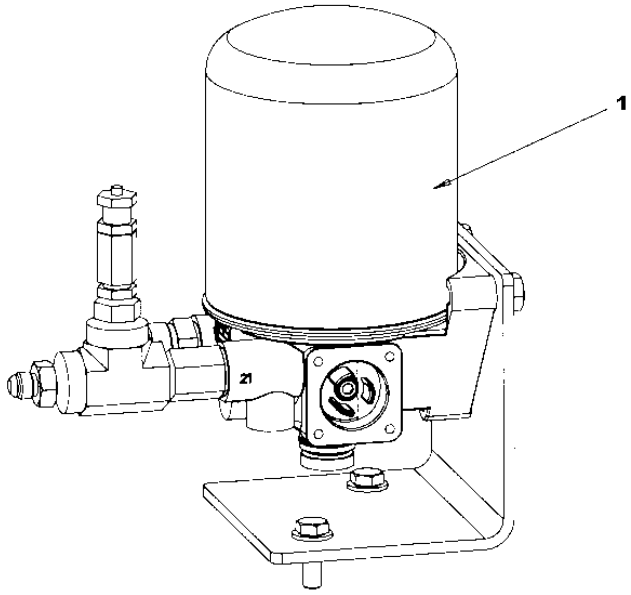

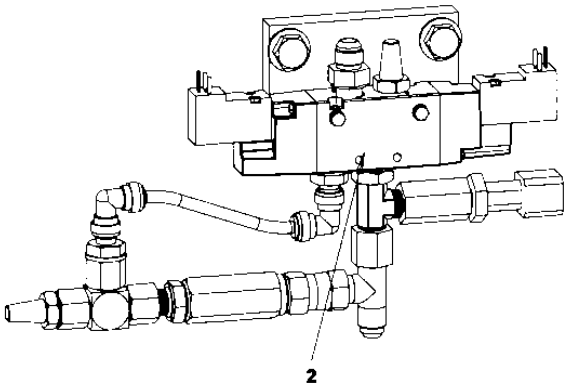

Air control kit

Item	Part No	Rem	Qty	Description	Code
1			1	**Air dryer kit (Page 156)**	
2			1	**Pneumatic valve kit (Page 158)**	

Air dryer kit

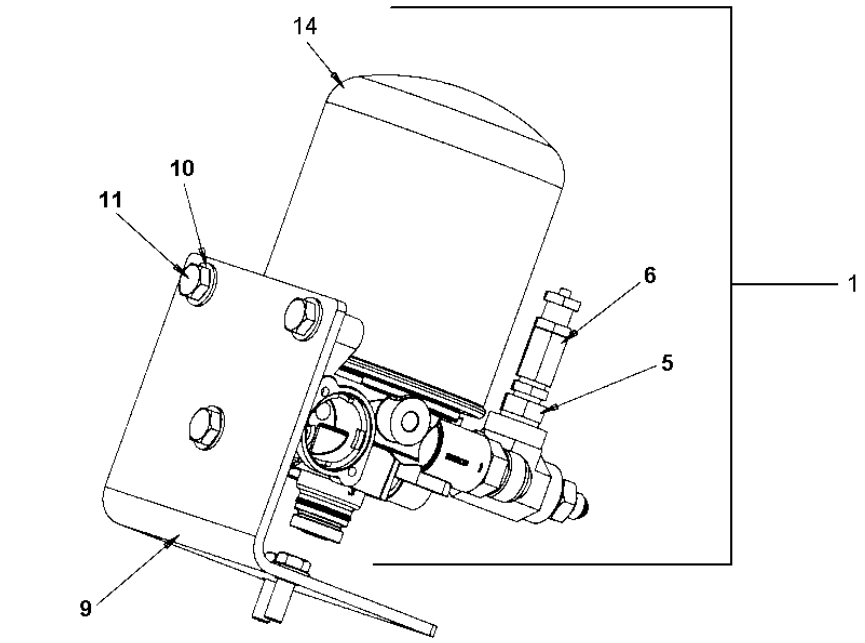

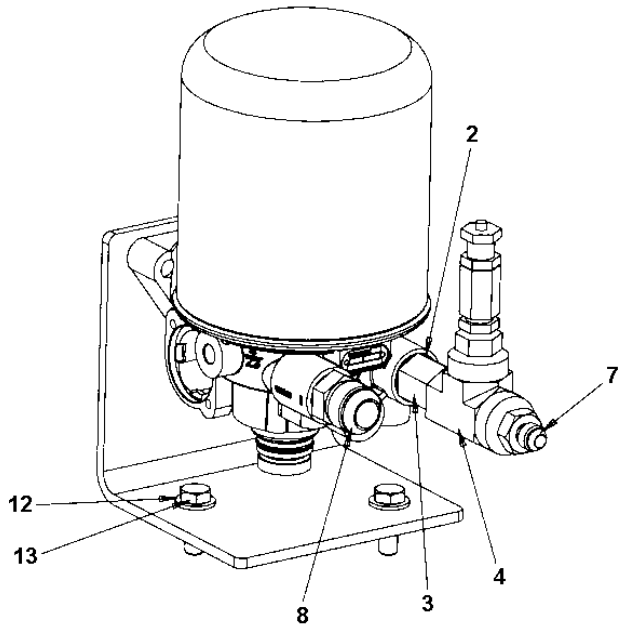

Air dryer kit

Item	Part No	Rem	Qty	Description	Code
1	4700396714		1	Air dryer	
2	4700330333		1	Copper washer	D
3	4700234729		1	Reducing nipple	
4	4700334425		1	Tee-connector	
5	4700334603		1	Bushing	
6	4700333062		1	Safety valve	D
7	4700234840		1	Connector	C
8	4700235003		1	Connector	
9	4700396973		1	Bracket	
10	4700904231		3	Washer 13x24x2 300 HV	C
11	4700500046		3	Screw M12x025H	C
12	4700904230		2	Steel plain washer	C
13	4700500029		2	Hexagon head screw	C
14	4812100497		1	Air dryer filter element	

Pneumatic valve kit

Pneumatic valve kit

Item	Part No	Rem	Qty	Description	Code
1	4700396342		1	Pneumatic valve	
3	D433830401		1	Connector	C
4	4700396341		1	Pressure sender	
5	4700334234		1	Tee-connector	C
6	4700334520		1	Adapter	
7	4700396992		1	Bracket	
10	4700904230		2	Steel plain washer	C
11	4700500029		2	Hexagon head screw	C
12	4812111234		1	Silencer	
13	4700334538		1	Tee-connector	
14	4700904698		2	Washer	C
15	0147117903		2	Hexagon head screw	
16	4700901425		1	Straight o-ring connector	
17	4812112485		1	Checkvalve	
18	4811000196		1	Adaptor	
19	4700925502		1	Tube	
20	4812112768		1	Plug	
21	4812111249		1	Bend 90, push in	

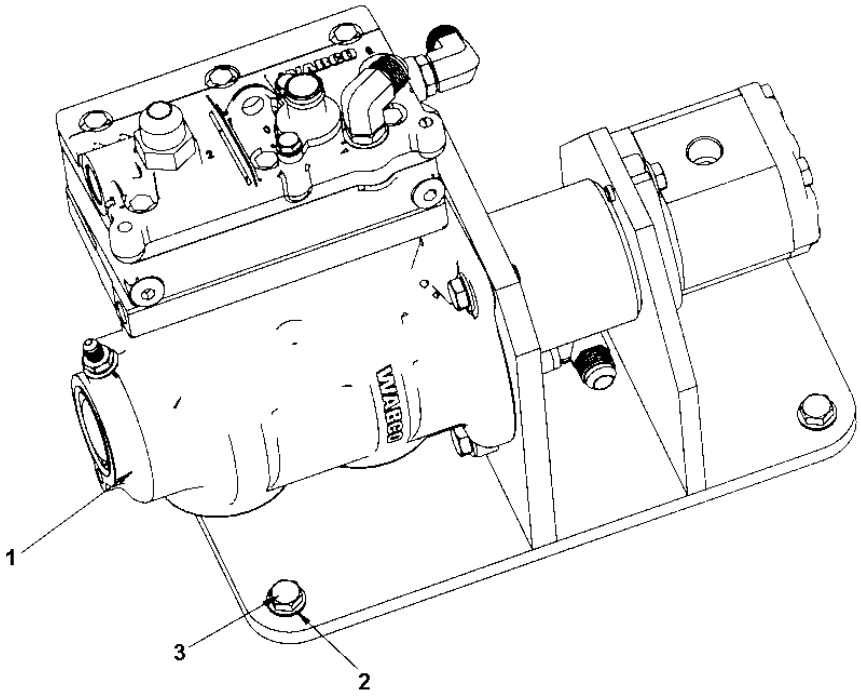
1
3
2

Compressor module

Item	Part No	Rem	Qty	Description	Code
1			1	**Compressor (Page 162)**	
2	4700904231		4	Washer 13x24x2 300 HV	C
3	4700500037		4	Screw	C

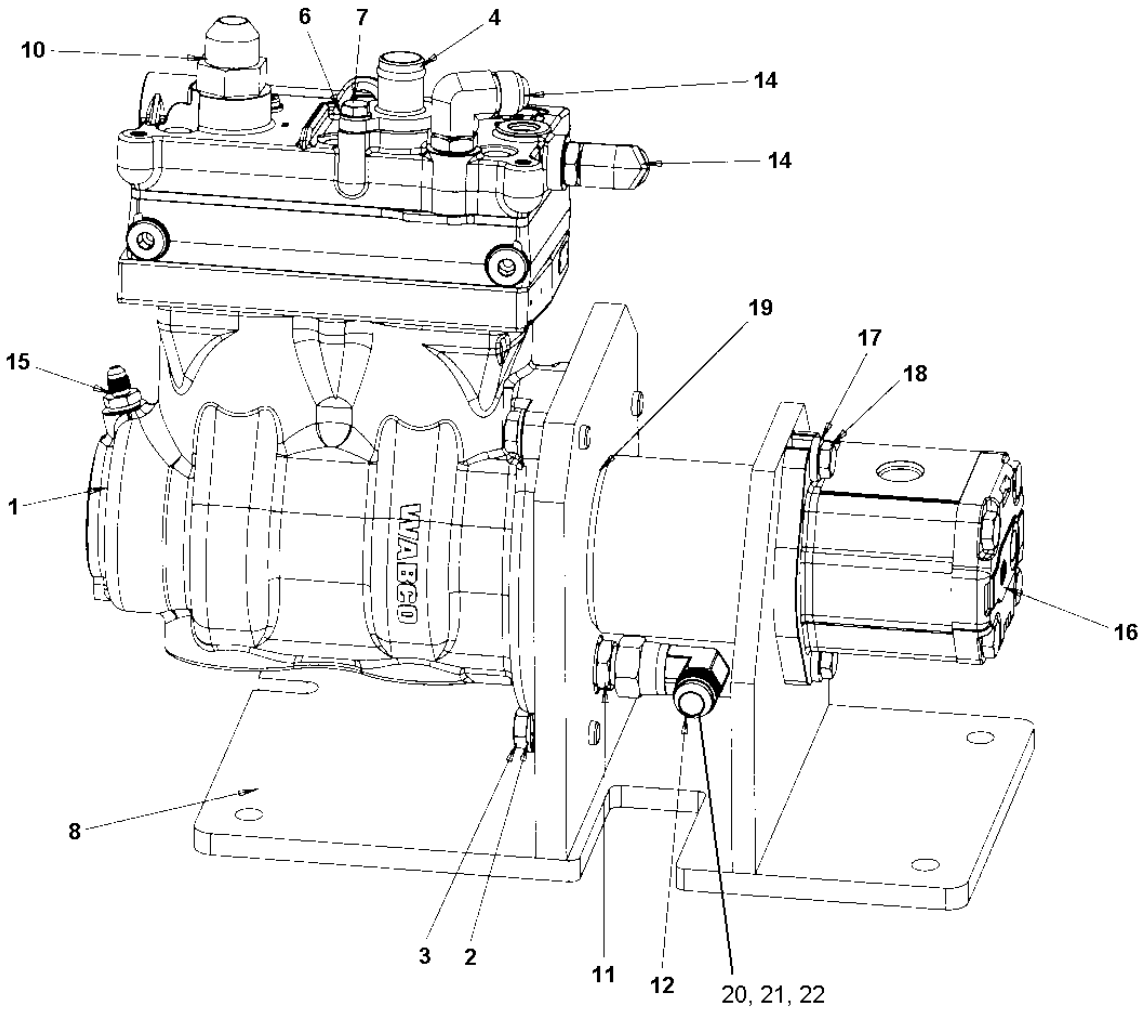
6
7
4
10
14
14
19
17
18
15
1
16
8
3
2
11
12
20, 21, 22

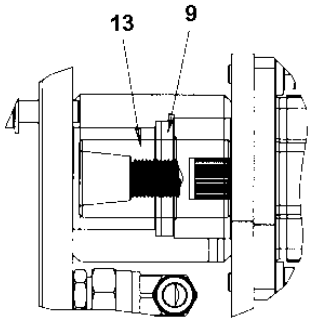
13
9

Compressor

Item	Part No	Rem	Qty	Description	Code
1	4700396598		1	Compressor	
2	4700904231		3	Washer 13x24x2 300 HV	C
3	4700500037		3	Screw	C
4	4700397000		1	Connection	
6	4700904229		2	Steel plain washer 8,4x16x1,5	C
7	4700500053		2	Screw M8x20H 8.8	C
8	4700170306		1	Bracket	
	4812114458	A,B,C	1	Bracket See note for aplication	
9	4700397022		1	Radial lip-type seal	
10	4700902126		1	Adapter	
11	4700234382		1	Adapter	
12	4700334198		1	Adapter	
13	4700397021		1	Splined sleeve	
14	4700791575		2	Elbow 45, O-ring	
15	4700902125		1	Connector	
16	4700396340		1	Hydraulic motor	
17	4700904557		2	Steel plain washer	C
18	4700500029		2	Hexagon head screw	C
19	4700160048		1	O-ring 164,69x3,53	
20	4700334137		1	Stright connector	
21	4812113145		1	Check valve	
22	4700924717		1	Stright connector	

A) From SN K0B001388 (CP224)
B) From SN P0B001387 (CP224W)
C) From SN C0B001380 (CP274)

Pipe and hose kit, Front Air on the run

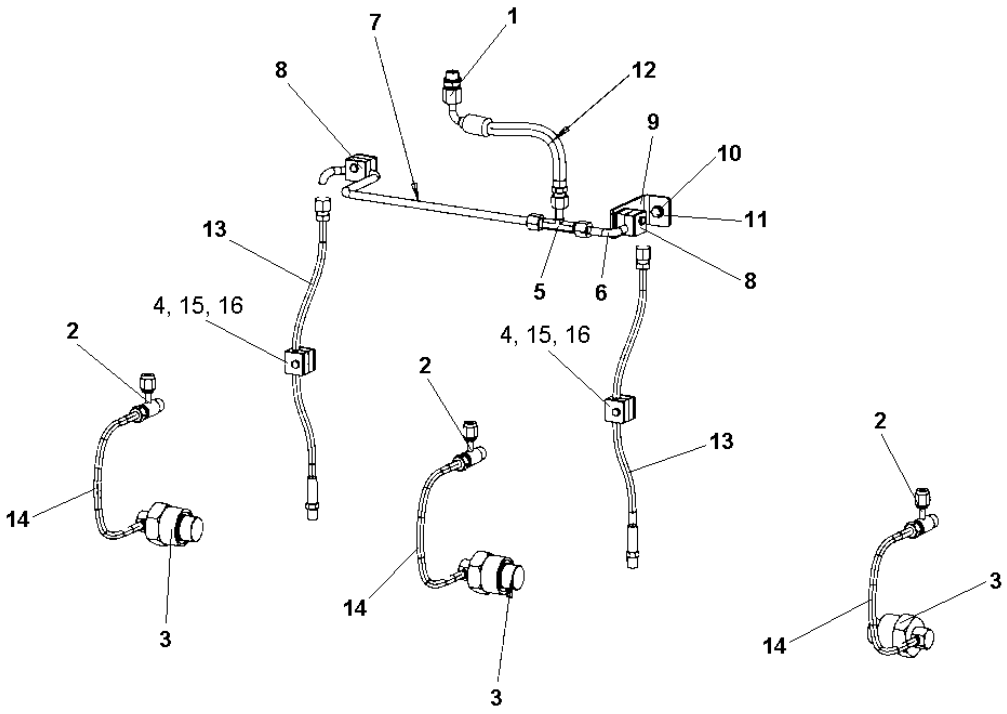

Pipe and hose kit, Front Air on the run

Item	Part No	Rem	Qty	Description	Code
1	4700334236		1	Adapter	C
2	4700258298		3	Valve	
3	4700257198		3	Rotating nipple	
4	4700921039		2	Pipe clamp	
5	4700230524		1	T-connection	
6	4700394454		1	Pipe	
7	4700394455		1	Pipe	
8	4700170258		1	Clamp	
9	4700394565		1	Holder	
10	4700904229		1	Steel plain washer 8,4x16x1,5	C
11	4700500053		1	Screw M8x20H 8.8	C
12	4700170559		1	Hose	
13	4700170544		2	Hose	
14	4700170545		3	Hose	
15	4700904228		2	Washer 6,4x12x1,5	C
16	4700500012		2	Screw M6x12	C

Pipe and hose kit, Rear Air on the run

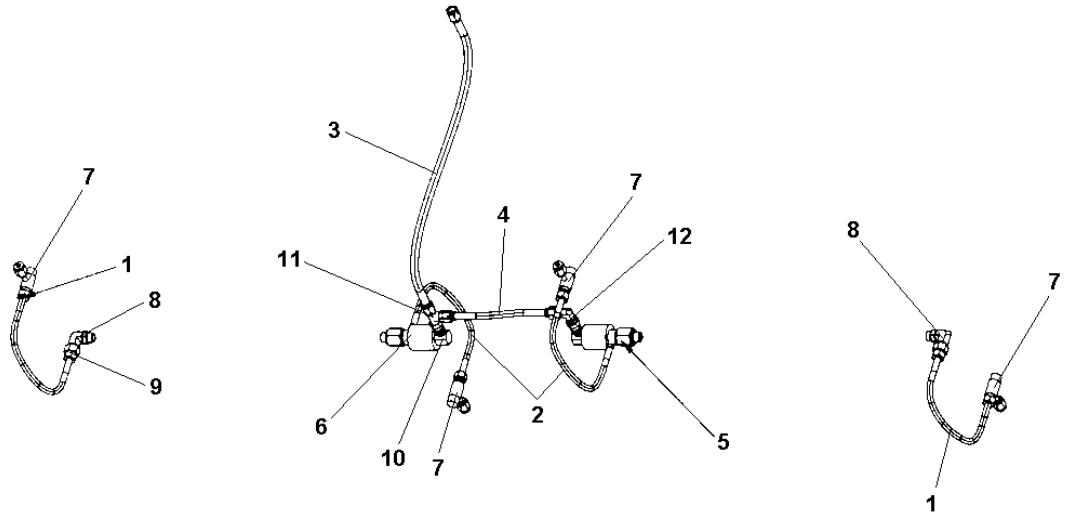

Pipe and hose kit, Rear Air on the run

Item	Part No	Rem	Qty	Description	Code
1	4700170571		2	Hose	
2	4700170545		2	Hose	
3	4700397353		1	Hose	
4	4700170572		1	Hose	
5	4700170259		2	Adapter	
6	4700195172		2	Rotor	
7	4700258298		4	Valve	
8	4700928908		2	Adapter	C
9	4700334461		2	Reducing	C
10	4700792816		2	Adapter	
11	4700234804		1	Connector	
12	4700923295		1	Connector	C

Cover module Air on the run

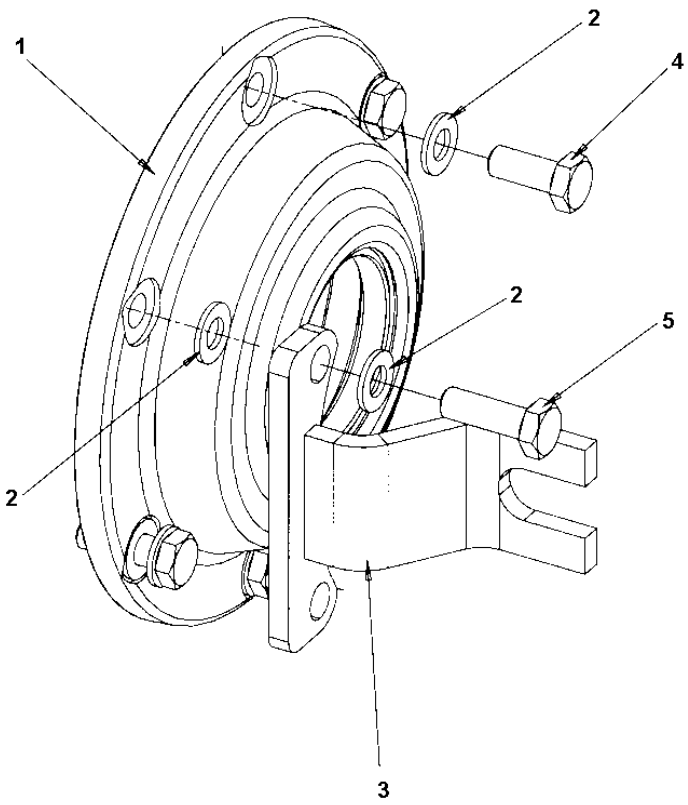

Cover module Air on the run

Item	Part No	Rem	Qty	Description	Code
1			1	**Cover Air on the run (Page 170)**	
2	4700904229		8	Steel plain washer 8,4x16x1,5	C
3	4700381475		1	Holder	
4	4700500053		4	Screw M8x20H 8.8	C
5	4700500021		2	Screw M8-1,25x25 8.8	C

Cover Air on the run

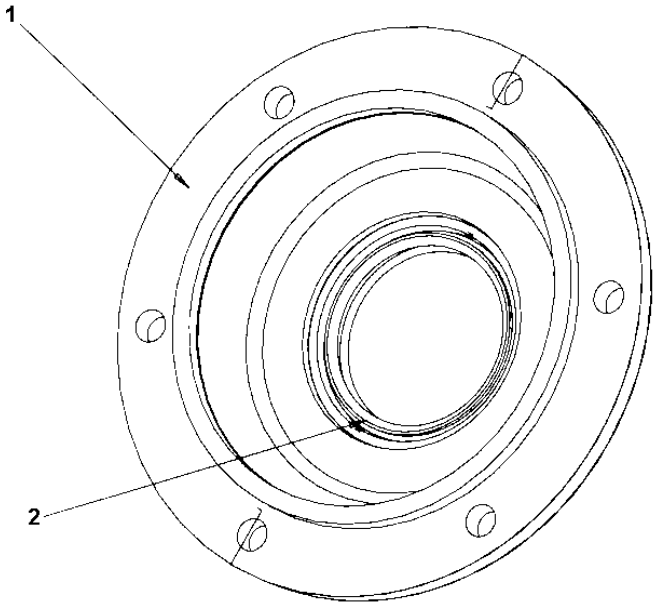

Cover Air on the run

Item	Part No	Rem	Qty	Description	Code
1	4700170139		1	Cover	
2	4700161023		1	Seal ring	

Engine

Item	Part No	Rem	Qty	Description	Code
8				**Engine room (Page 174)**	
9				**Engine hood (Page 224)**	
10				**Air inlet cover module (Page 228)**	

Engine room

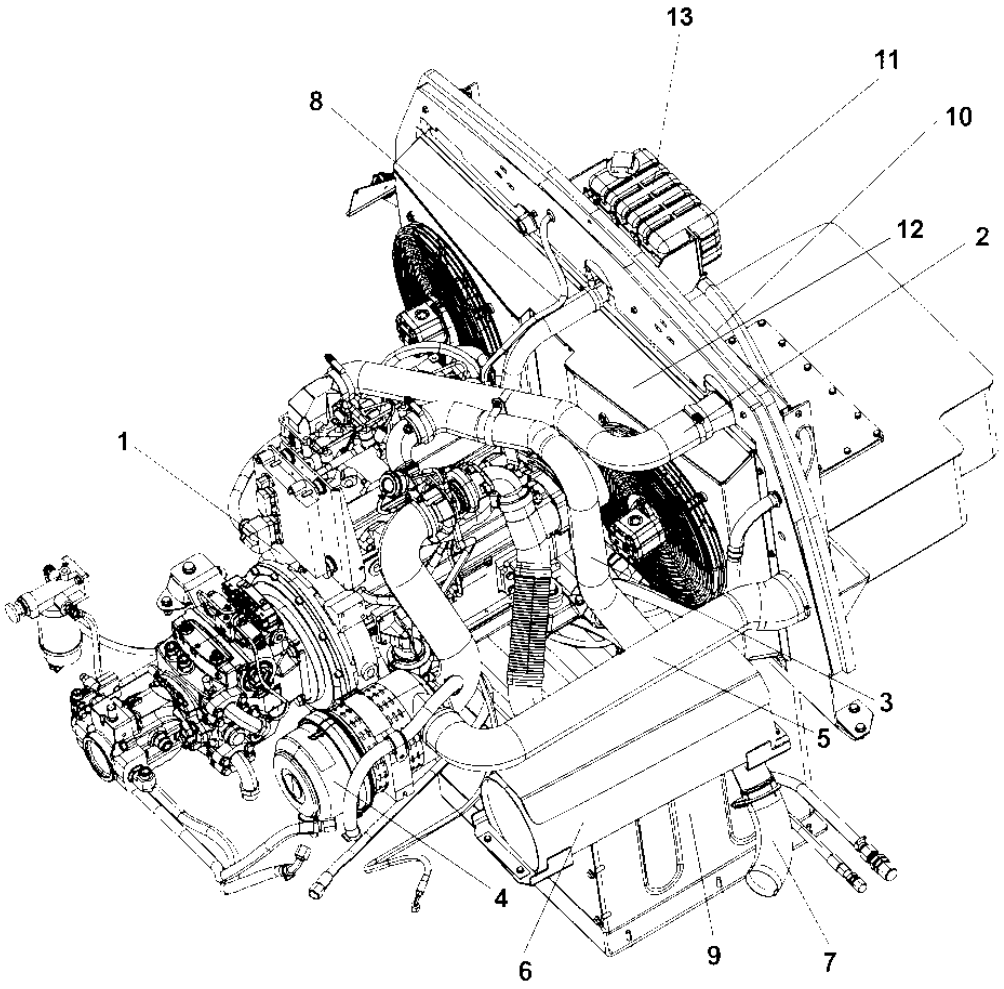

Engine room

Item	Part No	Rem	Qty	Description	Code
1				Engine (Page 176)	
2				Air cooler hoses (Page 182)	
3				Water cooler hoses (Page 184)	
4				Air cleaner module (Page 186)	
5				Air cleaner hose module (Page 188)	
6				Muffler (Page 192)	
7				Exhaust pipe module (Page 194)	
8				Coolant hoses (Page 196)	
9				Fuel tank module (Page 198)	
10				Fuel hose module (Page 202)	
11				Charge air cooler (Page 204)	
12				Water cooler (Page 206)	
13				Expansion tank (Page 208)	
14				Hydraulic oil cooler (Page 210)	
15				Belt guard module Alternator (Page 212)	
16				Hydraulic oil tank module (Page 214)	
17				Fan module (Page 218)	
18				Hoses (Page 222)	

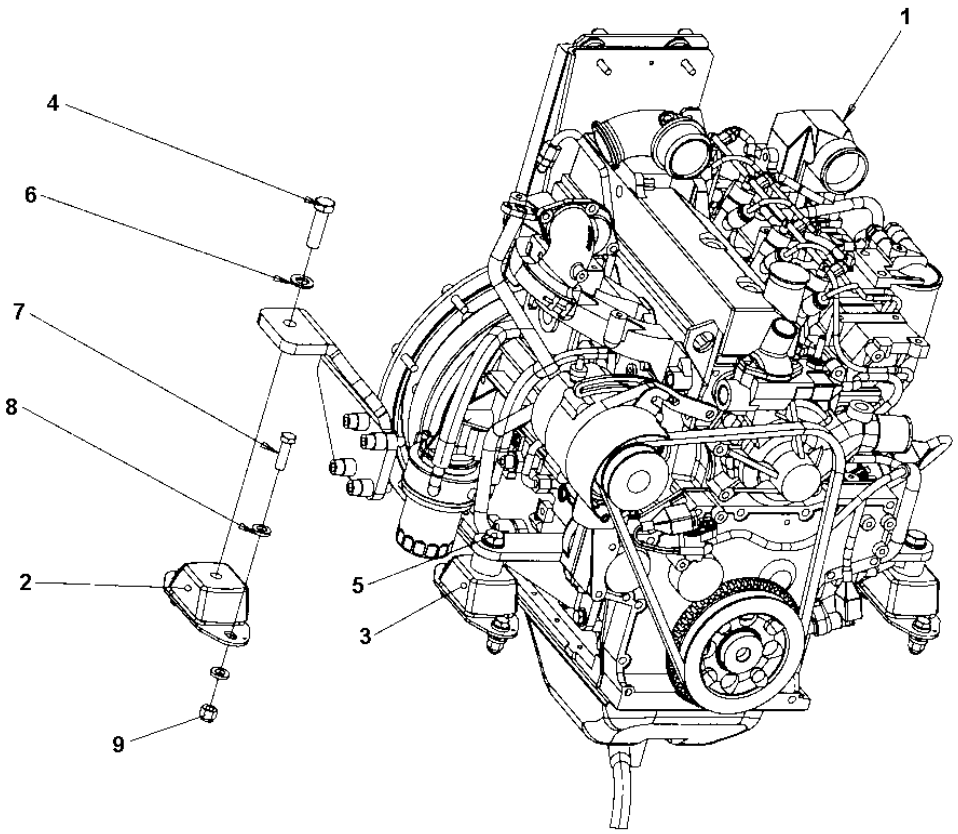
1
4
6
7
8
2
5
3
9

Engine

Item	Part No	Rem	Qty	Description	Code
1			1	**Engine module (Page 178)**	
2	4700387128		2	Shock absorber	
3	4700387129		2	Shock absorber	D
4	4700500076		2	Screw M16x55	C
5	4700500165		2	Screw M16-2,0x75 8,8	
6	4700904232		4	Washer	C
7	4700500194		8	Screw	C
8	4700904703		16	Washer	C
9	4700586019		8	Lock nut	C

Engine module

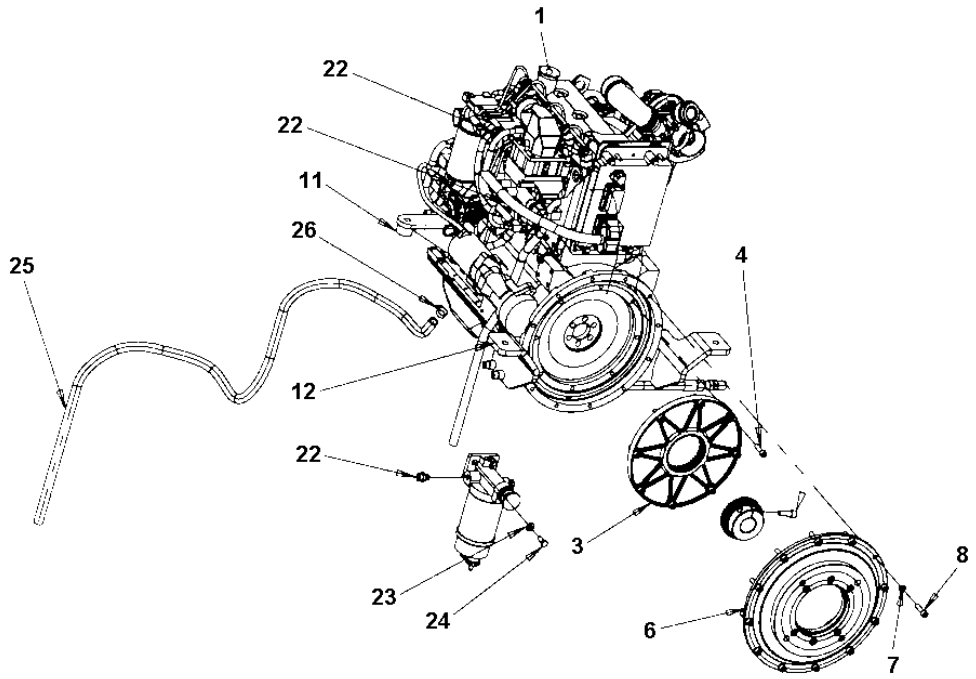

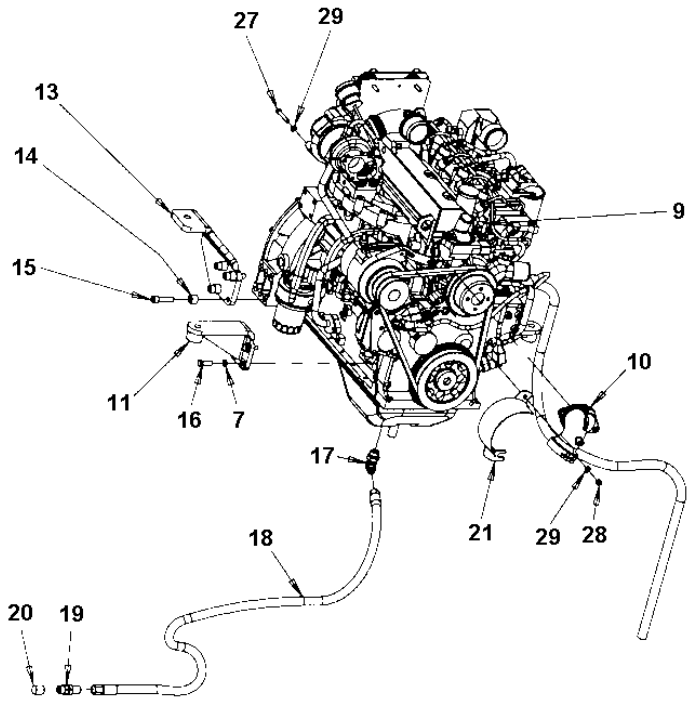

Engine module

Item	Part No	Rem	Qty	Description	Code
1			1	**Diesel engine 74 kW (Page 180)**	
3	4700396063		1	Clutch	
4	4700508053		8	Screw	
6	4700396002		1	Hydraulic pump bracket	
7	4700904637		20	Washer	C
8	4700508029		12	Screw M10-1,5x30H 8,8	C
9	4700792544		1	Connector	
10	4700391962		1	Exhaust pipe	
11	4700394610		2	Engine bracket	
12	4700394611		1	Engine bracket	
13	4700394612		1	Engine bracket	
14	4700375152		8	Spacer	
15	4700928791		8	Screw	
16	4700500029		8	Hexagon head screw	C
17	4700791431		1	Elbow 90, O-ring	C
	4700379480		1	Reducer	
	4811000151		1	Washer sealing	
18	4700482261		1	Hydraulic hose	C
19	4700230515		1	Connector	C
20	4700330383		1	Cap hydraulic	
21	4700396543		1	Cover	
22	4700792604		4	Quick connect coupling	
23	4700904230		2	Steel plain washer	C
24	4700500028		2	Screw	C
25	4812110705	A	1	Hydraulic slang	
26	4700313003		1	Hose clamp	D
27	4700500239		1	Screw	C
28	4700570005		1	Nut M8	C
29	4700904229		2	Steel plain washer 8,4x16x1,5	C

A) L = 2,2 m

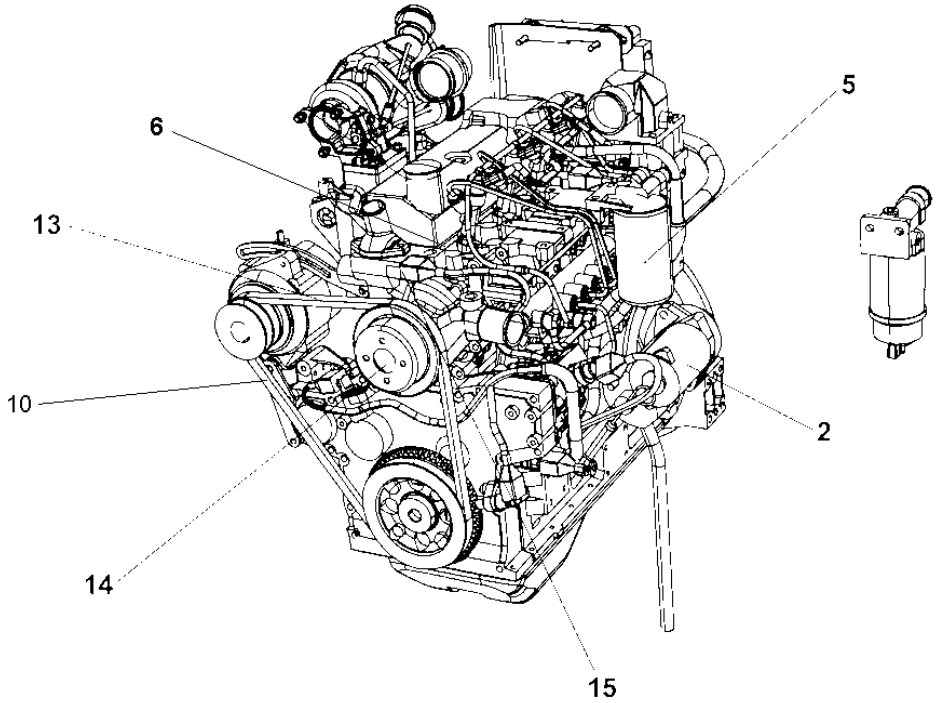
6
5
13
10
2
14
15

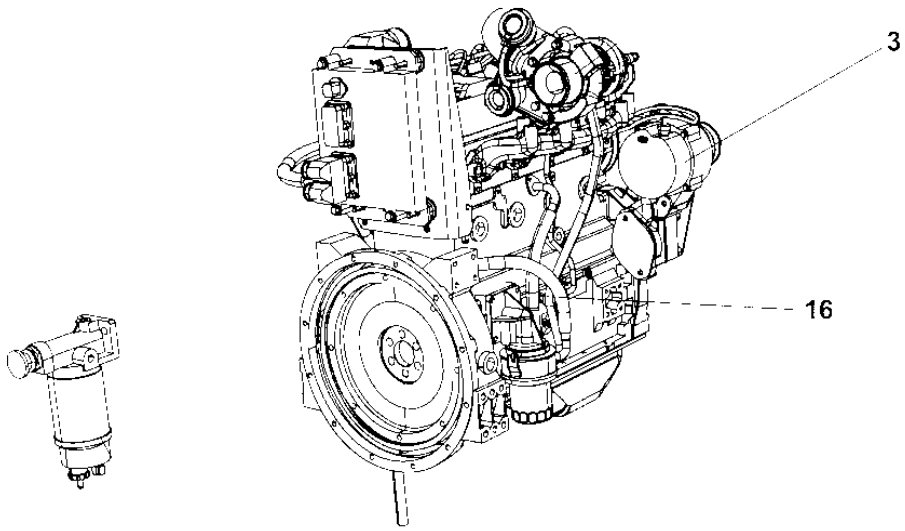
3
16

Diesel engine 74 kW

Item	Part No	Rem	Qty	Description	Code
2	4700950636		1	Starter	
3	4700950640		1	Alternator	
5	4700950302		1	Fuel filter element	A
6	4700939070		1	Gasket, valve cover	B
10	4700950639		1	V-belt	A
13	4700950539		1	Cover	
14	4700939071		1	Pulley	
15	4700950637		1	Sensor, Water temp	
16	4700950638		1	Oil pressure switch	

Air cooler hoses

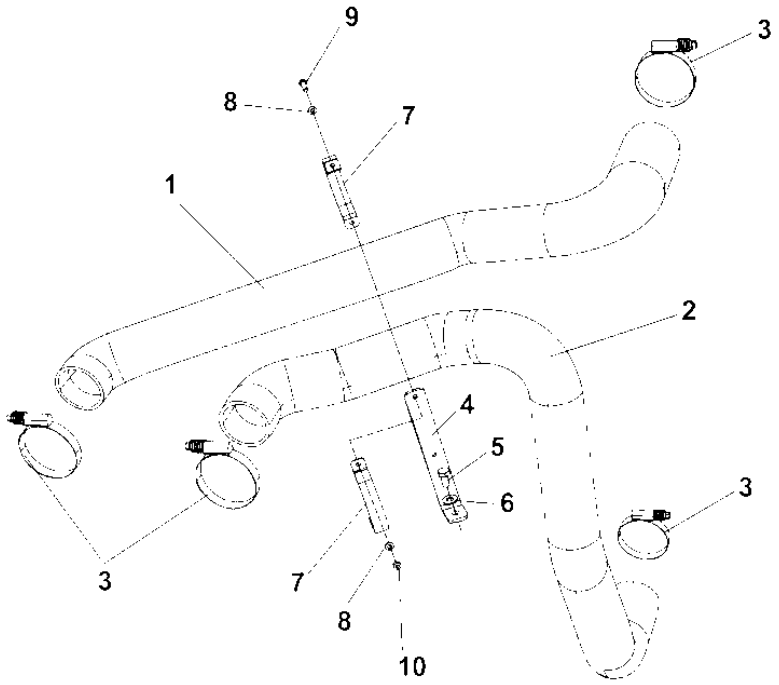

Air cooler hoses

Item	Part No	Rem	Qty	Description	Code
1	4700394943		1	Air cooler hose	
2	4700394942		1	Air cooler hose	
3	4700386966		4	Hose clamp 2.3/4"-3.5/8"	
4	4700396547		1	Bracket	
5	4700500048		1	Screw M10-1,5x20 8,8	C
6	4700904230		1	Steel plain washer	C
7	4700393097		2	Clamp	
8	4700904228		4	Washer 6,4x12x1,5	C
9	4700500040		2	Screw M6-1x20 8,8	C
10	4700570004		2	Nut M6X1,00 -8 A2K	C

Water cooler hoses

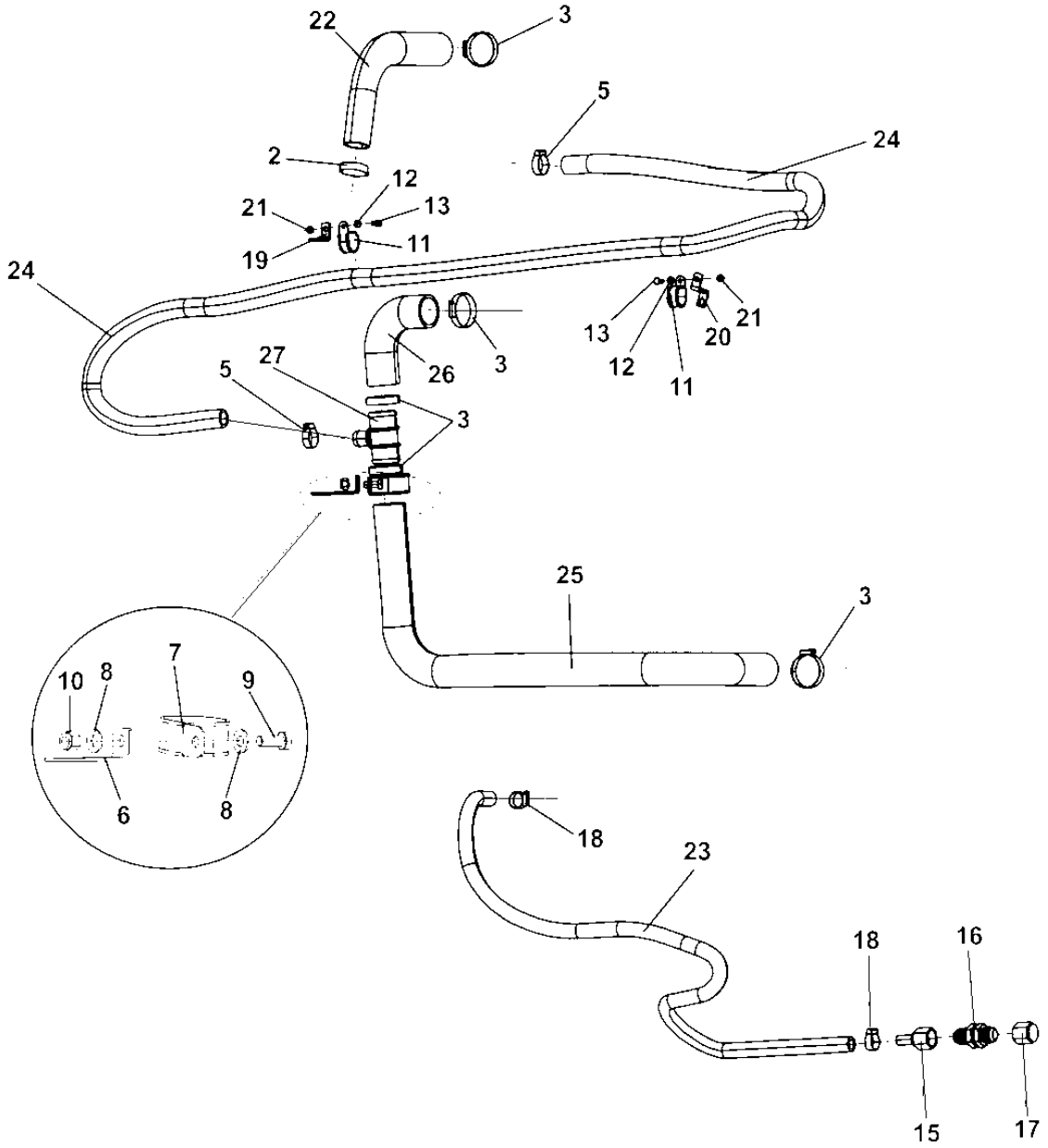

Water cooler hoses

Item	Part No	Rem	Qty	Description	Code
2	4700313008		1	Hose clamp	C
3	4700313010		5	Hose clamp	C
5	4700313035		1	Hose clamp	D
6	4700396632		1	Bracket	D
7	4700904352		1	Clamp	
8	4700904230		2	Steel plain washer	C
9	4700500028		1	Screw	C
10	4700586018		1	Lock nut	C
11	4700921084	A	2	Pipe clamp	
12	4700904228		2	Washer 6,4x12x1,5	C
13	4700500013		2	Screw M6-1x16 8,8	C
15	4700792788		1	Hose connection	
16	4700230456		1	Adapter	C
17	4700230401		1	Plug	
18	4700313004		2	Hose clamp	D
19	4812110984		1	Bracket	
20	4812110990		1	Bracket	
21	4700904563		2	Lock nut M6	C
22	4700394936		1	Coolant hose	
23	4700205112	A	1	Coolant hose	D
24	4700205027	B	1	Coolant hose	D
25	4812111029		1	Coolant hose	
26	4812111030		1	Coolant hose	
27	4812111031		1	Coolant hose	

A) L = 1,6 m
B) L = 2.5 m

Air cleaner module

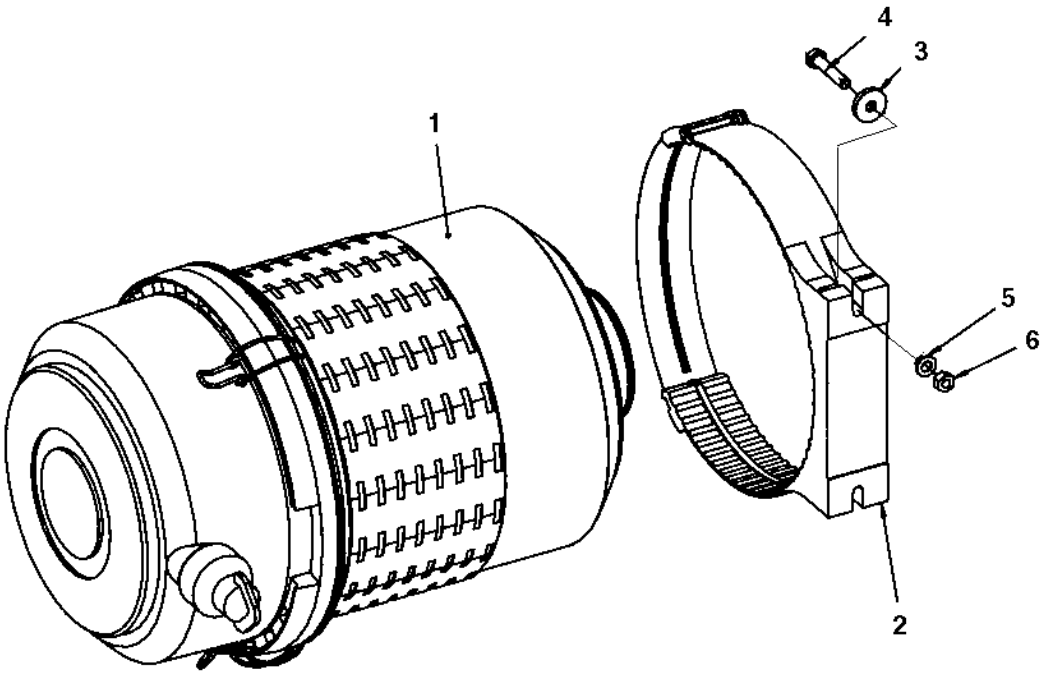

Air cleaner module

Item	Part No	Rem	Qty	Description	Code
1	4700392087		1	Air cleaner	
	4700392088		1	. Main filter element	A
	4700392089		1	. Safety filter element	A
2	4700392091		1	Bracket	
3	4700904734		2	Steel plain washer	
4	4700500023		2	Screw M8-1,25x40 8,8	C
5	4700904556		2	Washer 8,4x16x3,0	C
6	4700570005		2	Nut M8	C

Air cleaner hose module

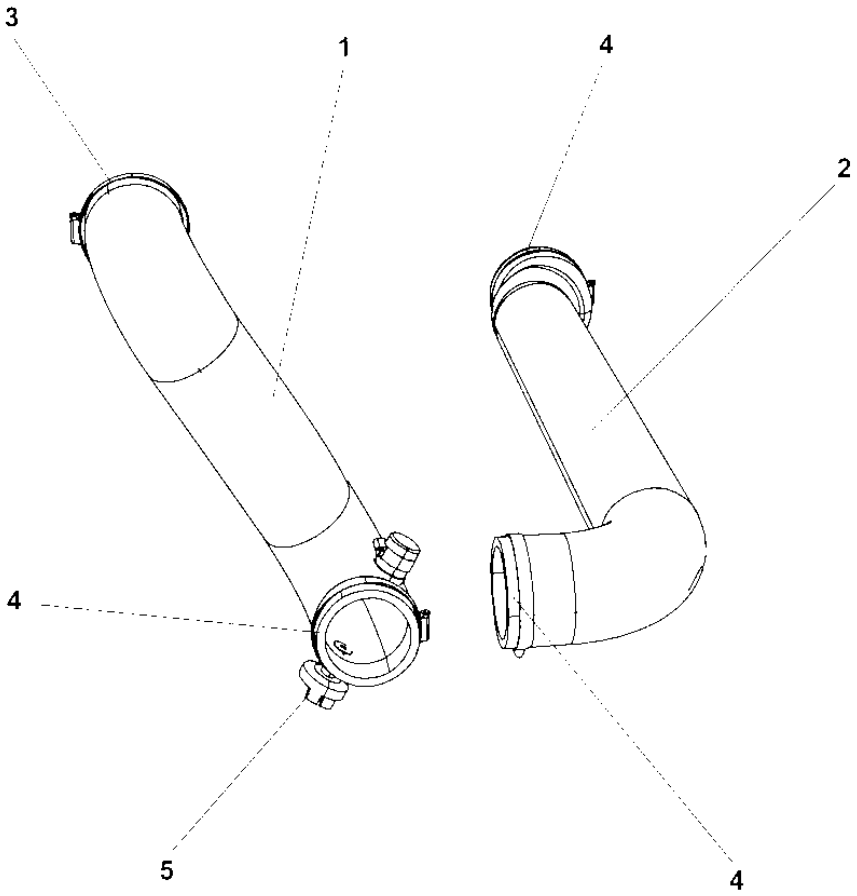

Air cleaner hose module

Item	Part No	Rem	Qty	Description	Code
1			1	**Air cleaner hose (Page 190)**	
2	4700394938		1	Air cleaner hose	
3	4700313033		3	Hose clamp	D
4	4700313105		1	Hose clamp	
5	4700390830		1	Indicator	

Air cleaner hose

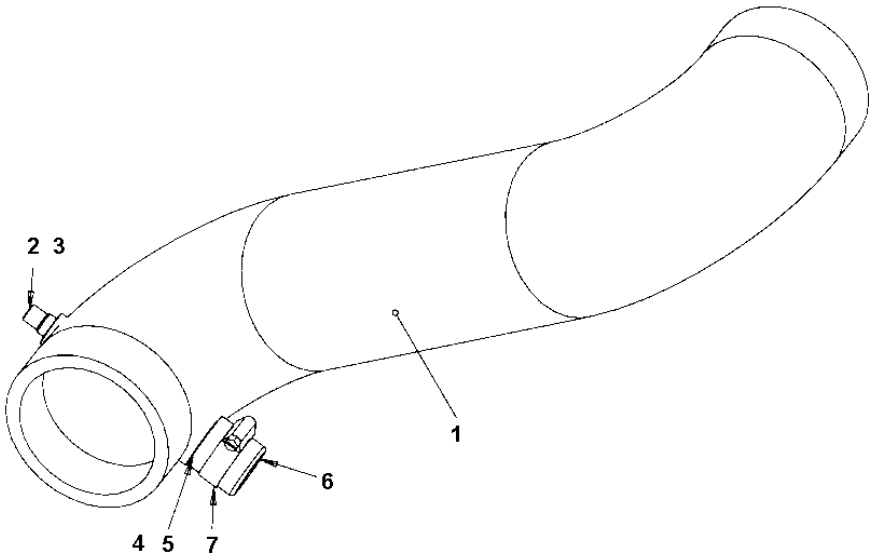

Air cleaner hose

Item	Part No	Rem	Qty	Description	Code
1	4700396134		1	Air cleaner hose	
2	4700390836		1	Pipe	
3	4700390835		1	Nut	
4	4700396104		1	Nut	
5	4700396103		1	Nipple	
6	4700396391		1	Cap	
7	4700313035		1	Hose clamp	D

Muffler

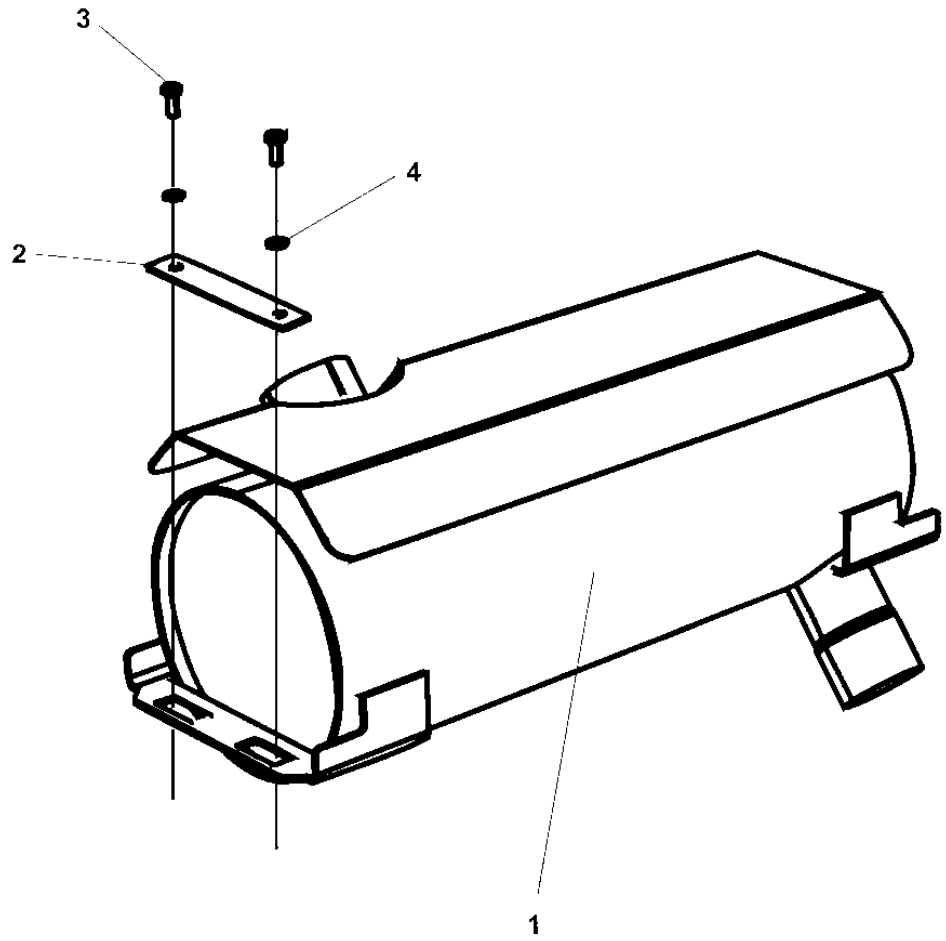

Muffler

Item	Part No	Rem	Qty	Description	Code
1	4812112235		1	Muffler	
2	4700379184		2	Washer	
3	4700500053		4	Screw M8x20H 8.8	C
4	4700904229		4	Steel plain washer 8,4x16x1,5	C

Exhaust pipe module

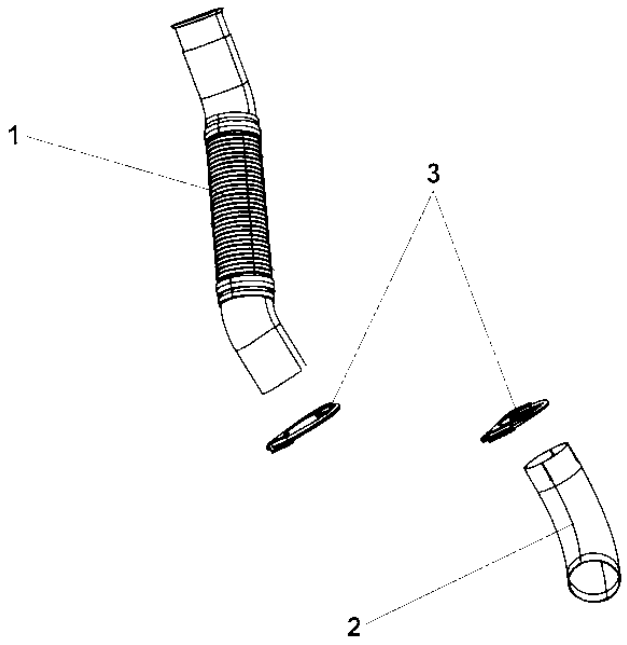

Exhaust pipe module

Item	Part No	Rem	Qty	Description	Code
1	4700395035		1	Exhaust pipe	
2	4700396244		1	Exhaust pipe	
3	4700313094		2	Pipe clamp	C

Coolant hoses

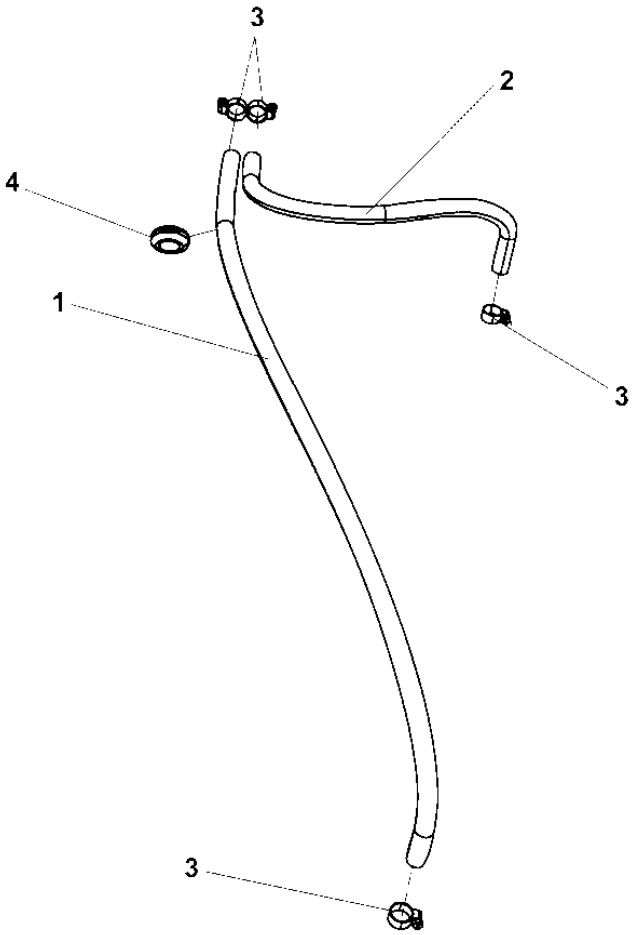

Coolant hoses

Item	Part No	Rem	Qty	Description	Code
1	4700246069	A	1XL	Fuel hose 3/8"	
2	4700246069	B	1XL	Fuel hose 3/8"	
3	4700313001		4	Hose clamp	C
4	4700909127		1	Grommet	

A) L= 0,8 m
B) L= 0,4 m

Fuel tank module

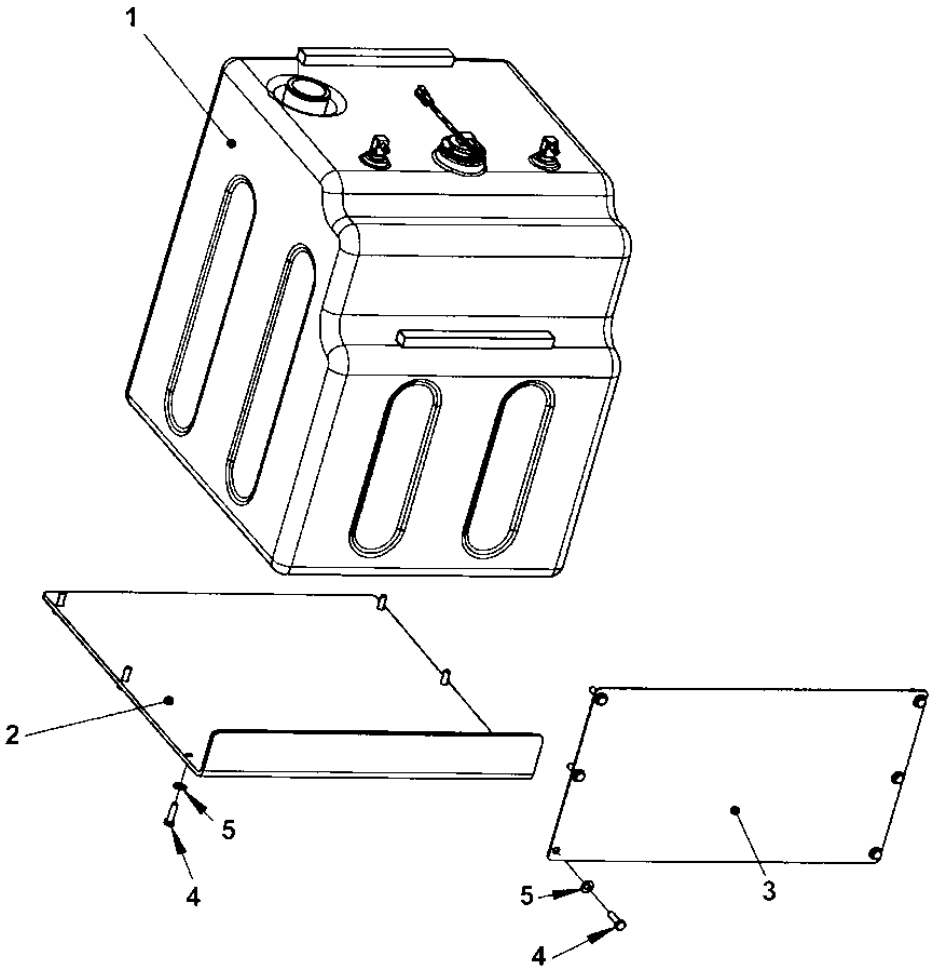

Fuel tank module

Item	Part No	Rem	Qty	Description	Code
1			1	**Fuel tank (Page 200)**	
2	4700396628		1	Holder plate	
3	4700396629		1	Holder plate	
4	4700500030		12	Screw	C
5	4700904230		12	Steel plain washer	C

Fuel tank

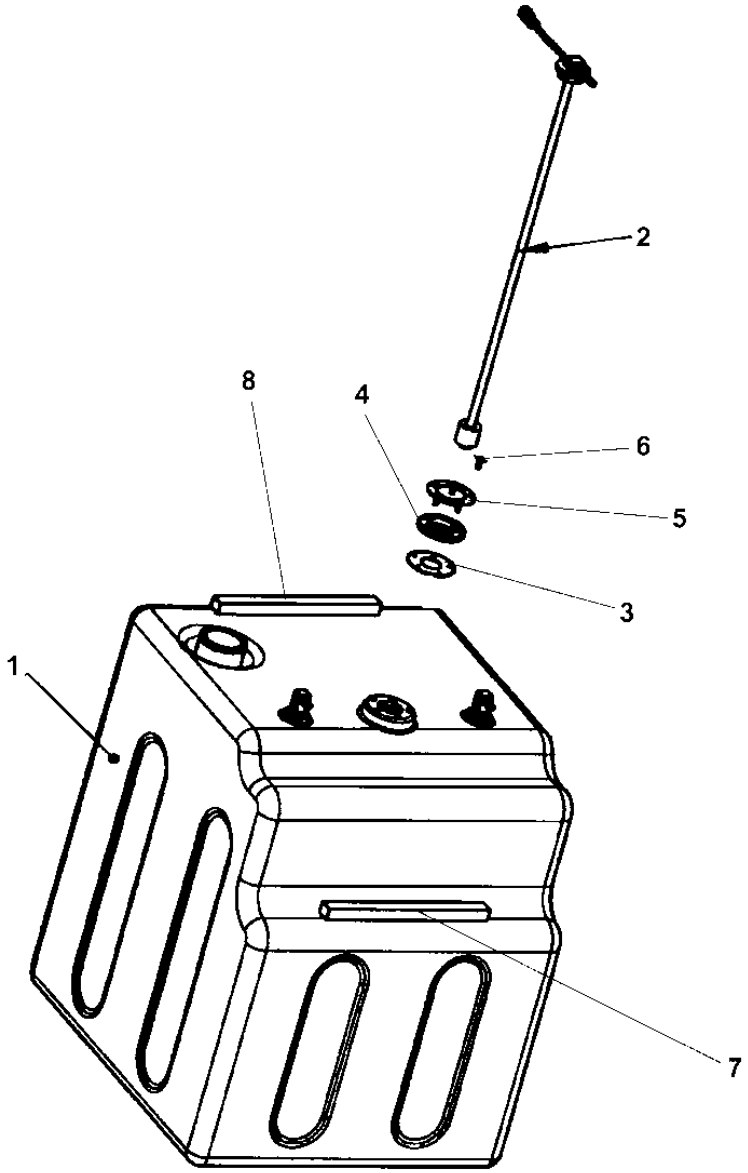

Fuel tank

Item	Part No	Rem	Qty	Description	Code
1	4700395061		1	Fuel tank	
2	4700391353		1	Level sender	
3	4700370746		1	Gasket	B
4	4700370745		1	Flange, cpl	C
5	4700372718		1	Lid	D
6	4700904206		5	Screw	C
7	4700791597	A	1	Rubber strip	
8	4700791597	A	1	Rubber strip	

A) L = 0,3 m

Fuel hose module

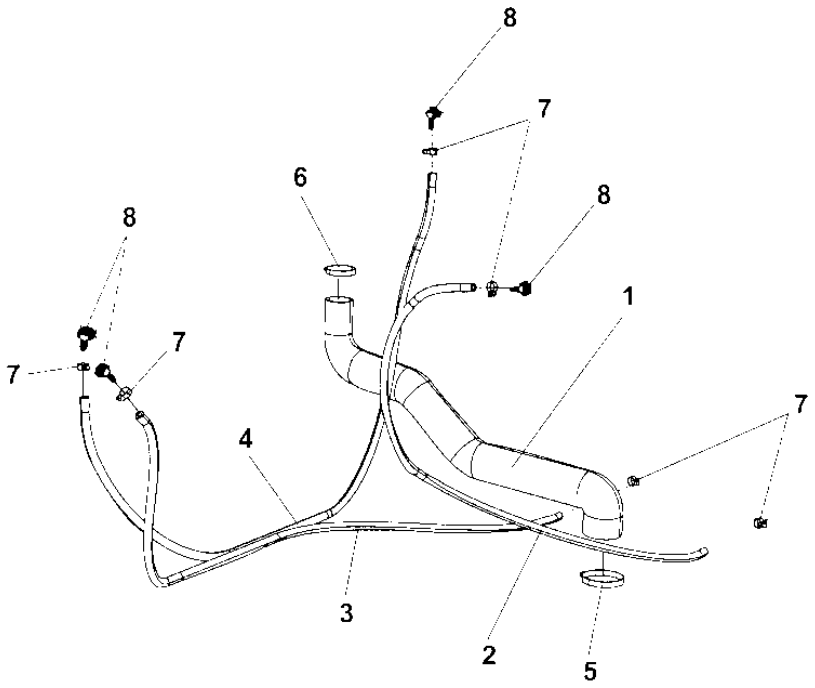

Fuel hose module

Item	Part No	Rem	Qty	Description	Code
1	4700395544		1	Filler hose	
2	4700904984	A	1	Fuel hose	C
3	4700904984	B	1	Fuel hose	C
4	4700904984	B	1	Fuel hose	C
5	4700313001		6	Hose clamp	C
6	4700313038		1	Hose clamp	
7	4700313023		1	Hose clamp	
8	4700792526		2	Quick connect coupling	
9	4700792522		2	Quick connect coupling	

A) L = 1,2 m
B) L = 1,5 m

Charge air cooler

1

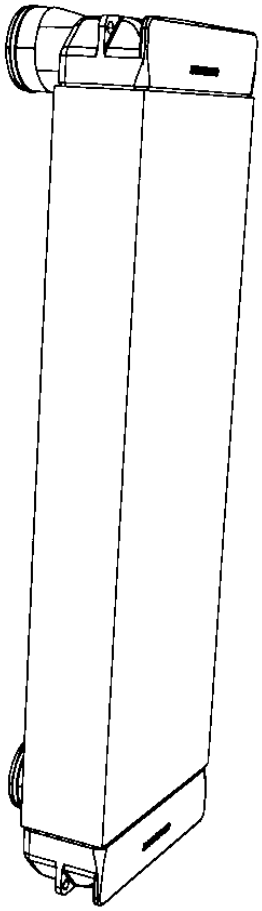

Charge air cooler

Item	Part No	Rem	Qty	Description	Code
1	4700395887		1	Charge air cooler	
	4812112773		1	Charge air cooler	

Water cooler

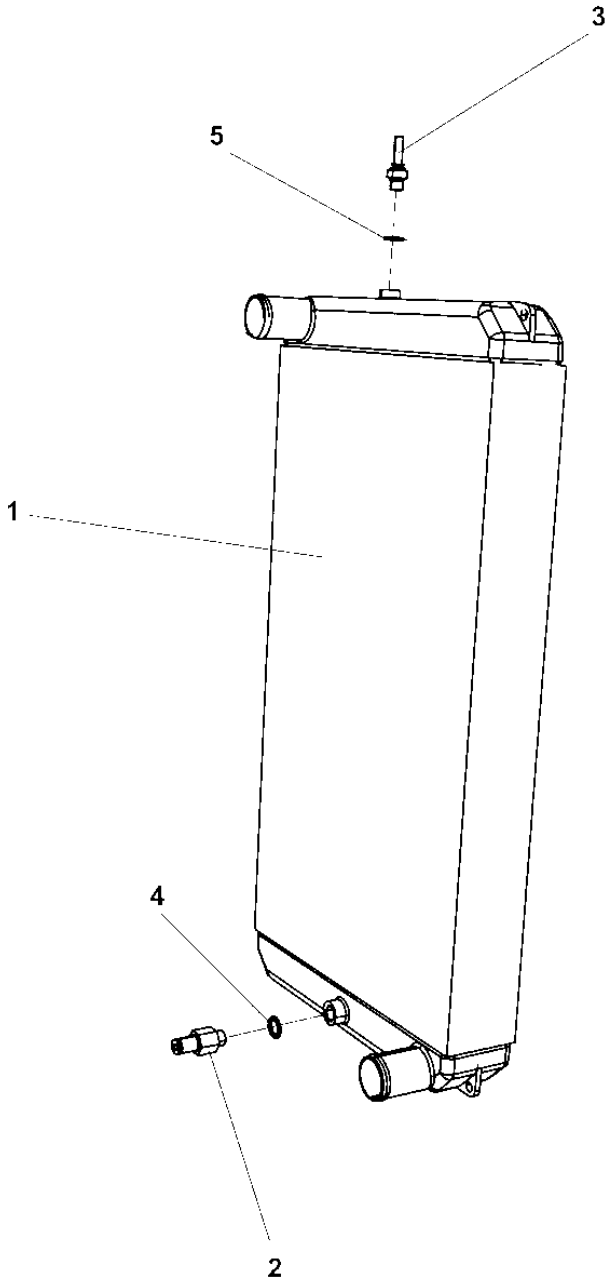

Water cooler

Item	Part No	Rem	Qty	Description	Code
1	4700395886		1	Water cooler	
	4812112998		1	Water cooler assembly From SN 10000501/10000502	
2	4700391303		1	Hose connection	
3	4700792322		1	Hose connection	
4	4700162011		1	Washer, sealing	D
5	4700162004		1	Sealing	B

Expansion tank

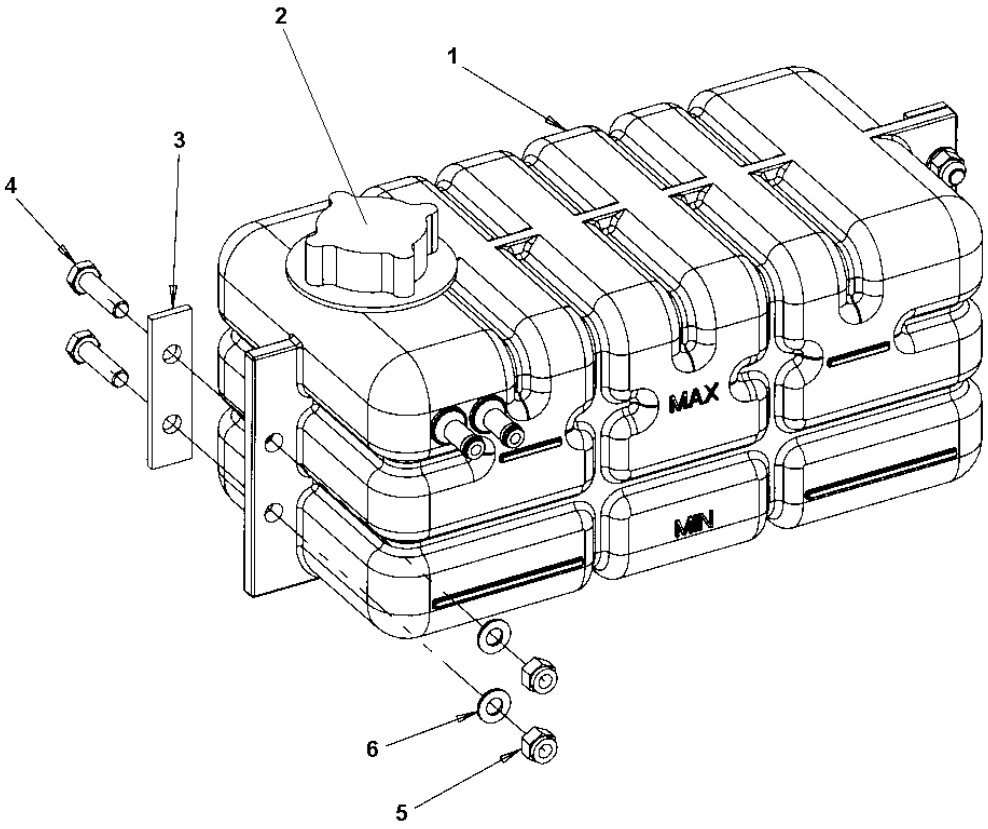

Expansion tank

Item	Part No	Rem	Qty	Description	Code
1	4700392313		1	Expansion tank	
2	4700903714		1	Cap	
3	4700381413		2	Washer	
4	4700500022		4	Screw M8x30H 8.8 A2K	C
5	4700586003		4	Lock nut M8	C
6	4700904229		4	Steel plain washer 8,4x16x1,5	C

Hydraulic oil cooler

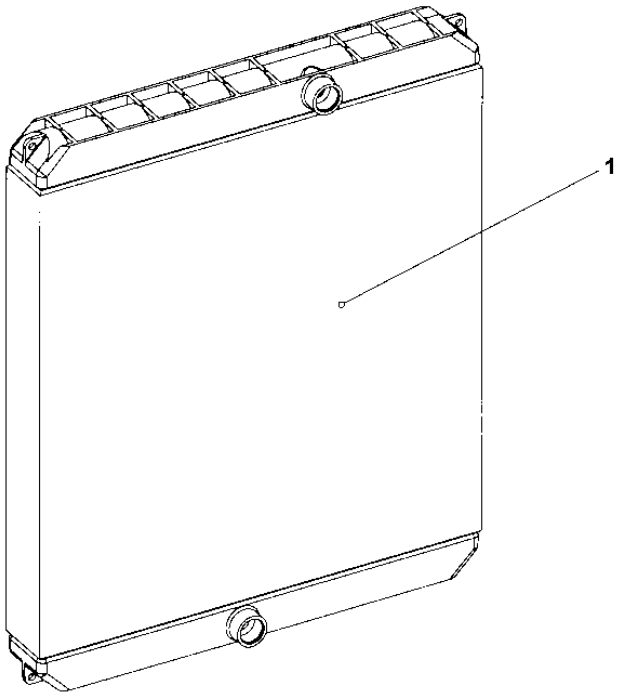

Hydraulic oil cooler

Item	Part No	Rem	Qty	Description	Code
1	4700395885		1	Hydraulic oil cooler	
	4812112771		1	Hydraulic oil cooler	

Belt guard module Alternator

1

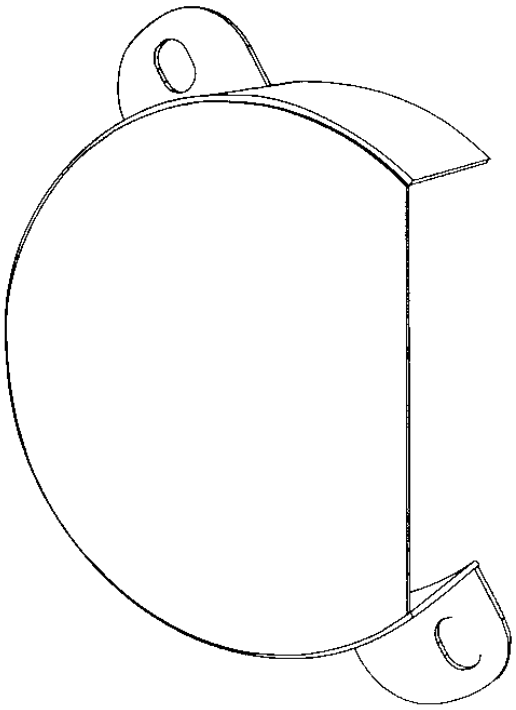

Belt guard module Alternator

Item	Part No	Rem	Qty	Description	Code
1	4700379163		1	V-belt cover	

Hydraulic oil tank module

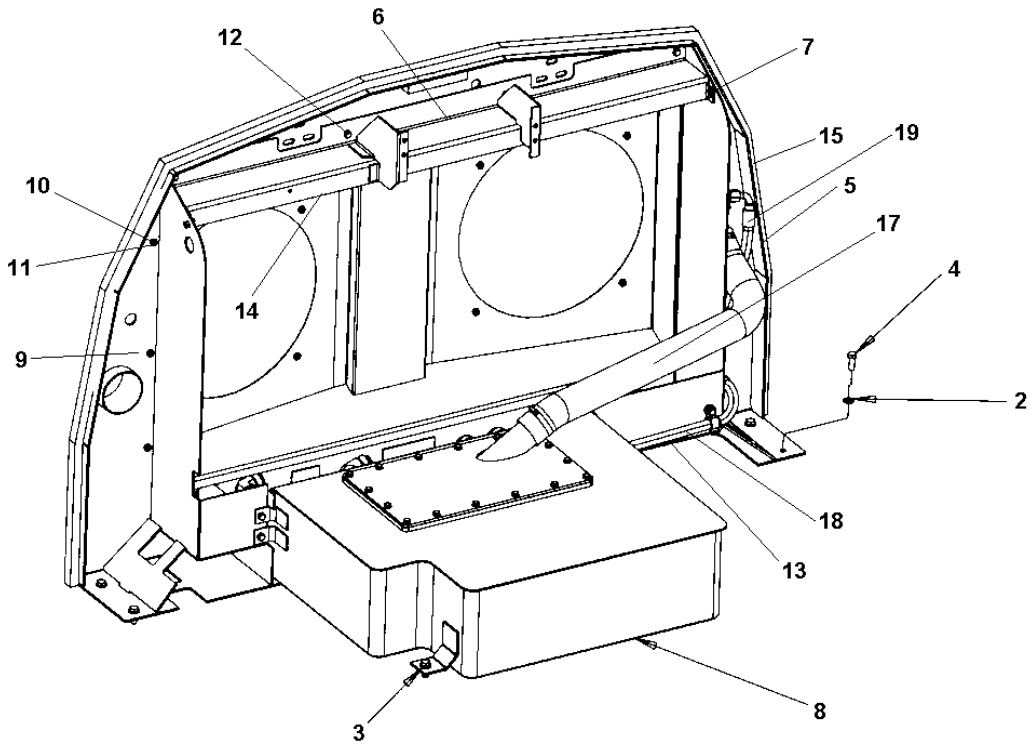

Hydraulic oil tank module

Item	Part No	Rem	Qty	Description	Code
2	4700904231		4	Washer 13x24x2 300 HV	C
3	4700904703		1	Washer	C
4	4700500046		5	Screw M12x025H	C
5	4700394749		1	Cooler stand	
6			1	**Cover (Page 216)**	
7	4700904556		9	Washer 8,4x16x3,0	C
8	4812110550		1	Hydraulic oil tank	
9			1	Fan shroud	
10	4700904229		6	Steel plain washer 8,4x16x1,5	C
11	4700500019		6	Hexagon head screw	C
12	4700500053		9	Screw M8x20H 8.8	C
13	4700357819		5	Rubber cloth	
14	4700280875	A	2	List	
15	4700202042		N	Rubber strip	
17	4812110581		1	Filler hose	
18	4700482084	B	1	Hydraulic hose	
19	4700482228	C	1	Hydraulic hose	

A) L = 1,314 m
B) L = 0,5 m
C) L = 0,32 m

Cover

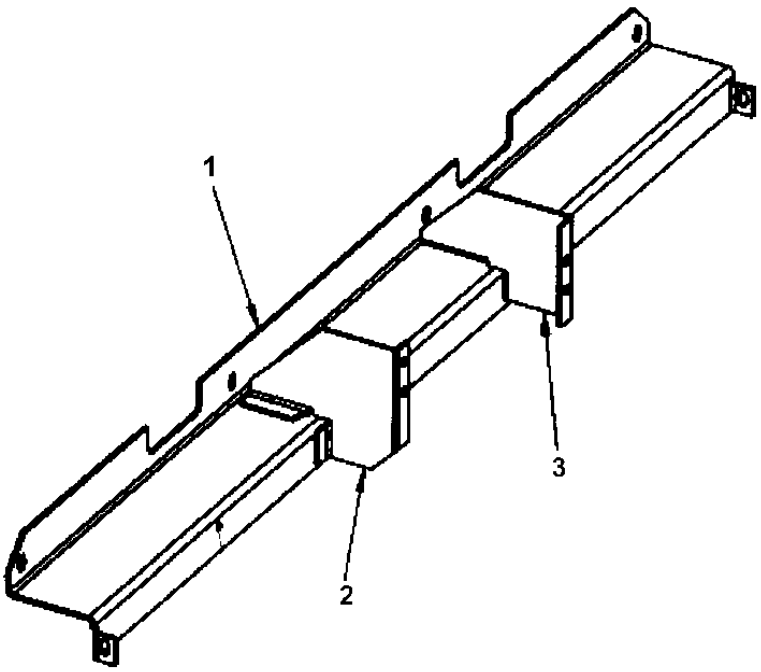

Cover

Item	Part No	Rem	Qty	Description	Code
1	4700395946		1	Cover	
2	4700395215		1	Bracket	
3	4700395214		1	Bracket	

Fan module

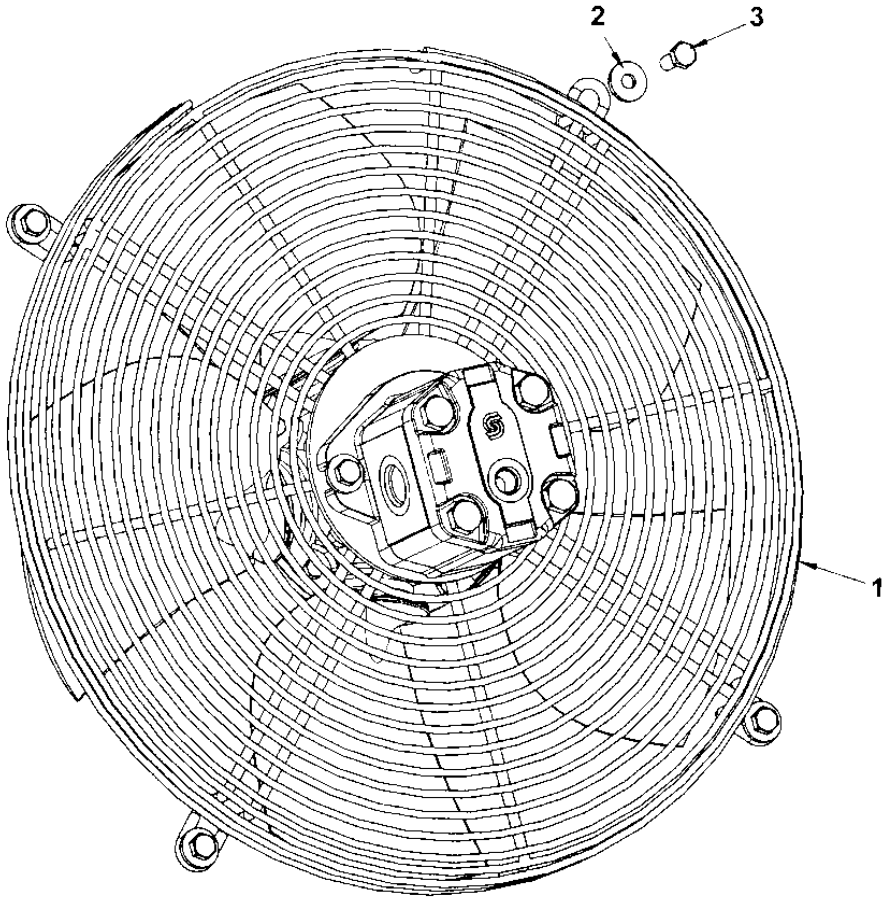

Fan module

Item	Part No	Rem	Qty	Description	Code
1			1	**Fan (Page 220)**	
2	4700904640		4	Washer 8,4x22x3	C
3	4700500053		4	Screw M8x20H 8.8	C

Fan

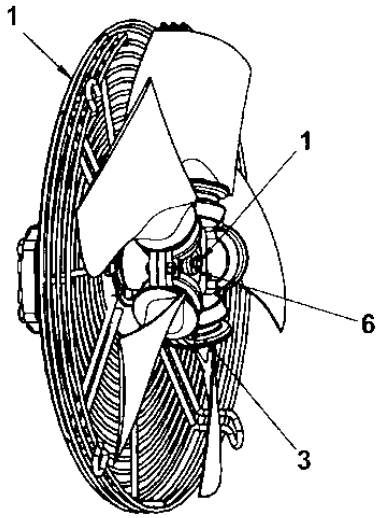

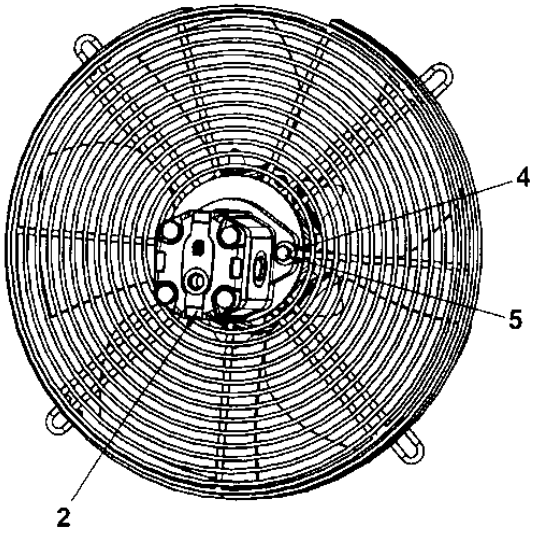

Fan

Item	Part No	Rem	Qty	Description	Code
1	4700390608		1	Fan guard	
2	4700390609		1	Hydraulic motor	D
3	4700390607		1	Fan	D
4	4700904640		2	Washer 8,4x22x3	C
5	4700500022		2	Screw M8x30H 8.8 A2K	C
6	4700904735		1	Washer	C
7	4700500016		1	Screw M6x55 8.8 A2K	C

Hoses

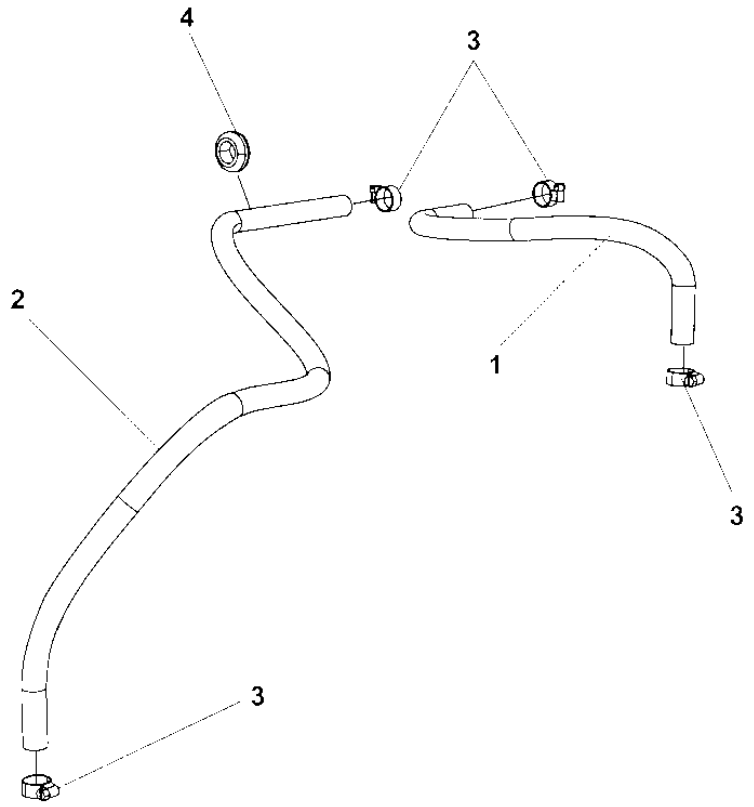

Hoses

Item	Part No	Rem	Qty	Description	Code
1	4700246069	A	1	Fuel hose 3/8"	
2	4700246069	B	1	Fuel hose 3/8"	
3	4700313001		4	Hose clamp	C
4	4700909127		1	Grommet	

A) L = 0,4 m
B) L = 0,8 m

Engine hood

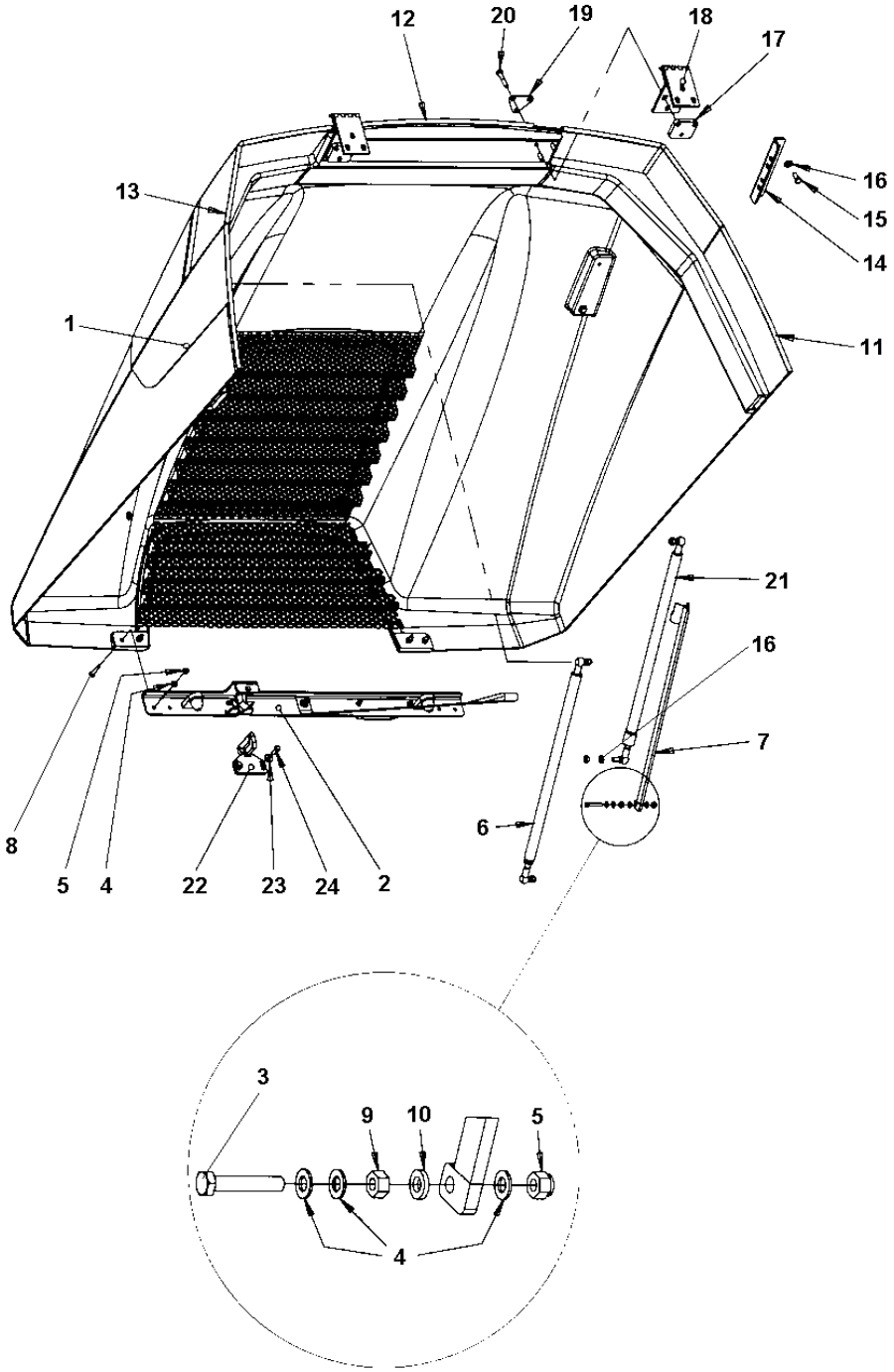

Engine hood

Item	Part No	Rem	Qty	Description	Code
1	4700396351		1	Hood	
2			1	**Locking device (Page 226)**	
3	4700792360		1	Screw	
4	4700904229		7	Steel plain washer 8,4x16x1,5	C
5	4700586003		5	Lock nut M8	C
6	4700904879		1	Gas spring	
7	4700382382		1	Safety rod	
8	4700903643		4	Hexagon socket countersunk screw	
9	4700570005		1	Nut M8	C
10	4700904556		1	Washer 8,4x16x3,0	C
11	4700902166	A	1	Edge trim	D
12	4700902166	B	1	Edge trim	D
13	4700902166	A	1	Edge trim	D
14	4700396539		2	Bracket	
15	4700500028		4	Screw	C
16	4700904230		6	Steel plain washer	C
17	4700374799		2	Holder plate	
18	4700371366		2	Hinge	D
19	4700396201		2	Washer	
20	4700500091		6	Screw	C
21	4700382384		1	Gas spring	D
22	4700382131		1	Lock clamp	
23	4700904640		2	Washer 8,4x22x3	C
24	4700500021		2	Screw M8-1,25x25 8.8	C

A) L = 1,0 m
B) L = 0,5 m

Locking device

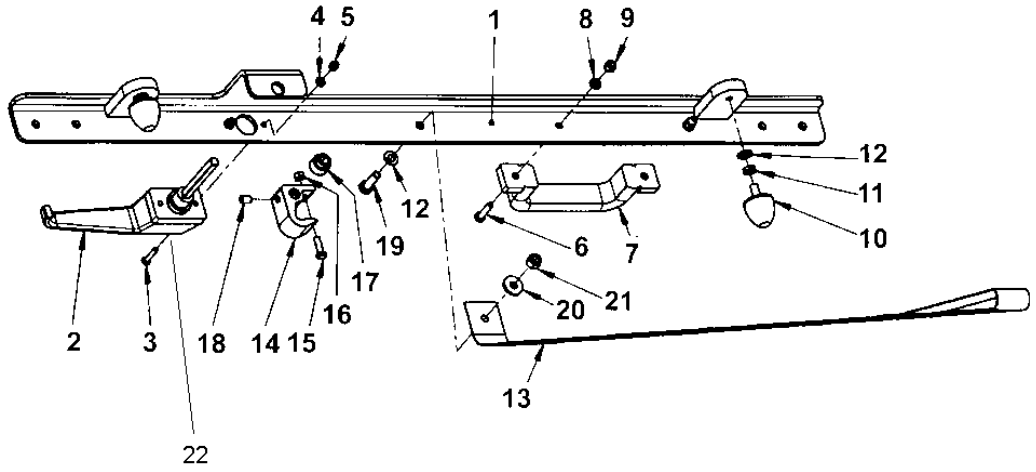

Locking device

Item	Part No	Rem	Qty	Description	Code
1	4700396200		1	Bracket	
2	4700382165		1	Locking handle	
3	4700535010		2	Screw	
4	4700904281		2	Washer 5,3x10x1 300HV	C
5	4700586001		2	Lock nut	C
6	4700500075		2	Screw M6-1,0x25 8.8	C
7	4700904874		1	Grab handle	D
8	4700904228		2	Washer 6,4x12x1,5	C
9	4700586002		2	Lock nut M6 -8	C
10	4700925629		2	Shock absorber	
11	4700573008		2	Nut M8	C
12	4700904229		3	Steel plain washer 8,4x16x1,5	C
13	4700396317		1	Grab handle	
14	4700382130		1	Hook	
15	4700500040		1	Screw M6-1x20 8,8	C
16	4700570004		1	Nut M6X1,00 -8 A2K	C
17	4700382335		1	Spacer sleeve	
18	4700516049		1	Set screw	
19	4700500021		1	Screw M8-1,25x25 8.8	C
20	4700904640		1	Washer 8,4x22x3	C
21	4700586003		1	Lock nut M8	C
22	4700902866		1	Key Marked "455"	

Air inlet cover module

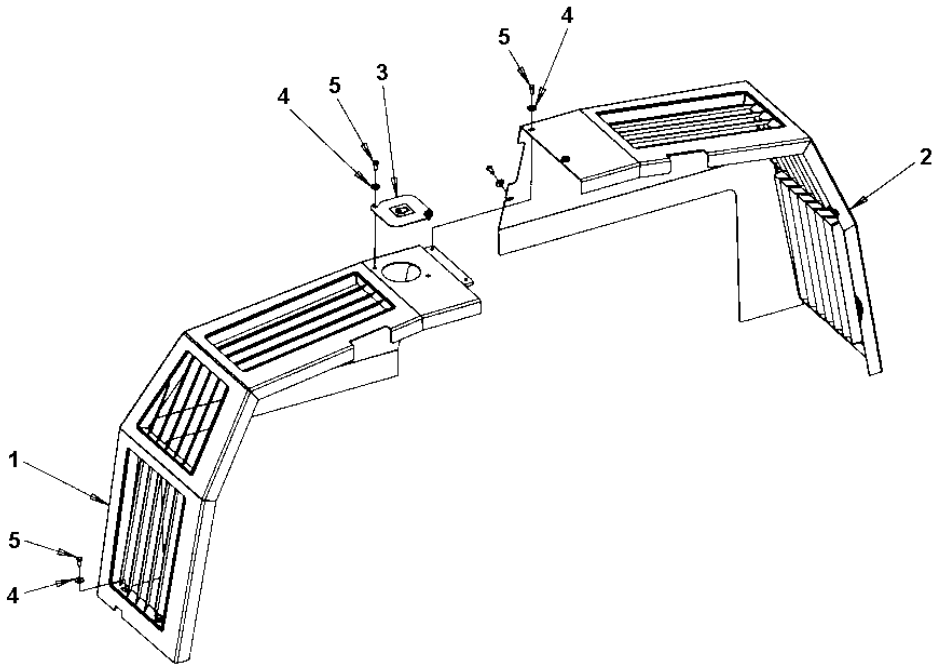

Air inlet cover module

Item	Part No	Rem	Qty	Description	Code
1			1	**Cover (Page 230)**	
2			1	**Cover (Page 232)**	
3	4700381297		1	Cover	
4	4700904640		9	Washer 8,4x22x3	C
5	4700500019		9	Hexagon head screw	C

Cover

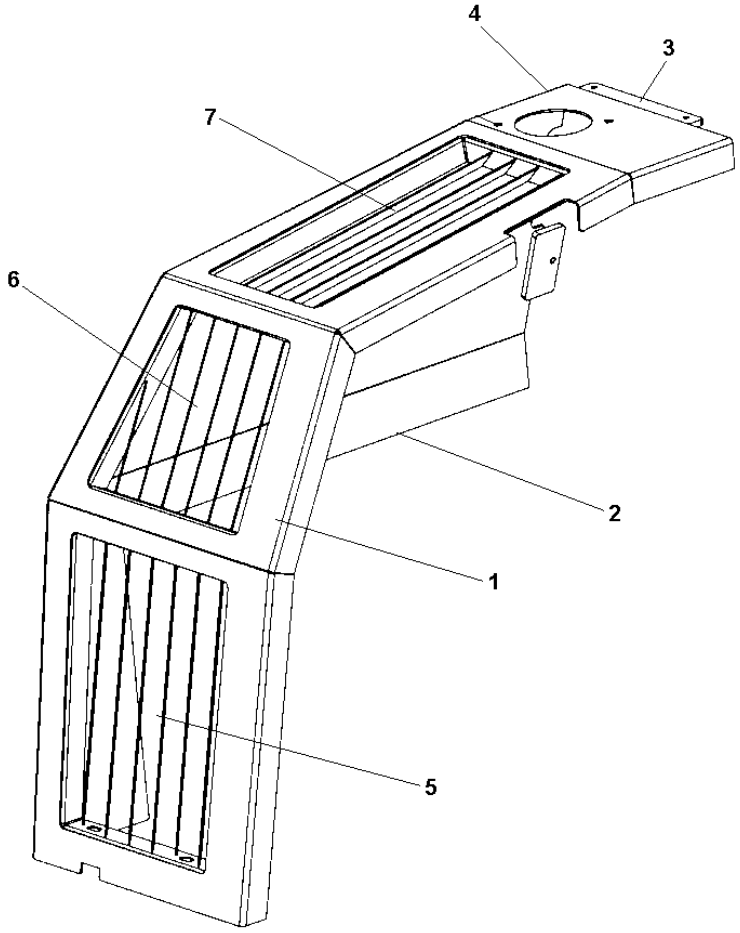

Cover

Item	Part No	Rem	Qty	Description	Code
1	4700396492		1	Cover	
2	4700396395		1	Cover	
3	4700396397		1	Plate	
4	4700396398		1	Plate	
5	4700396405		1	Grid	
6	4700396412		1	Grid	
7	4700396284		1	Grid	

Cover

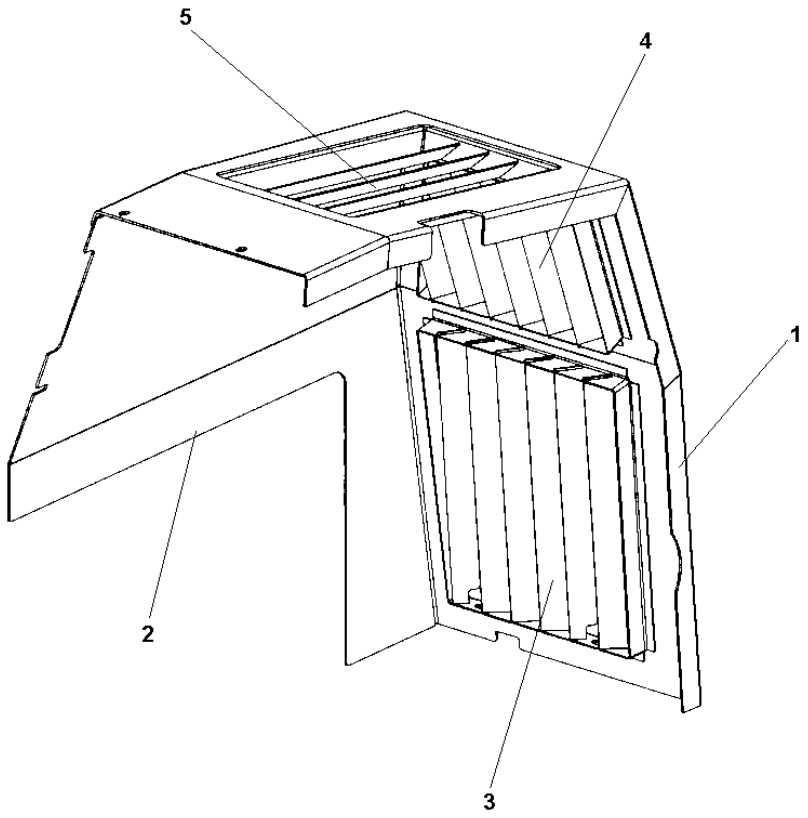

Cover

Item	Part No	Rem	Qty	Description	Code
1	4700396550		1	Cover	
2	4700396396		1	Cover	
3	4700396406		1	Grid	
4	4700396413		1	Grid	
5	4700396284		1	Grid	

Hydraulic system

Item	Part No	Rem	Qty	Description	Code
1				Steering cylinder (Page 274)	
5				Hydraulic steering, sliding seat (Page 236)	
8				Hydraulic pump module (Page 240)	
9				Hydraulic steering pump module (Page 244)	
12				Hydraulic valve module (Page 248)	
13				Hydraulic valve module Air on the run (Page 252)	
14				Thermobypass valve kit (Page 254)	
15				Hydraulic hoses Air on the run, option (Page 256)	
16				Hydraulic hoses (Page 270)	
17				Hydraulic hoses, Edge cutter (optional) (Page 298)	
18				Hydraulic hoses Brake system (Page 300)	

Hydraulic steering, sliding seat

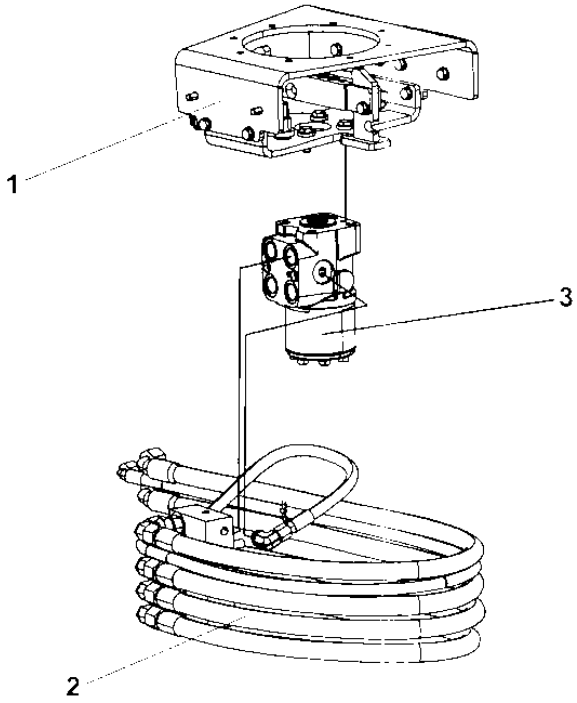

Hydraulic steering, sliding seat

Item	Part No	Rem	Qty	Description	Code
1			1	**Carrier (Page 454)**	
2			1	**Steering, slideable (Page 238)**	
3	4700396328		1	Steering valve	C
	4700392758		1	Pilot valve, emergency steering	

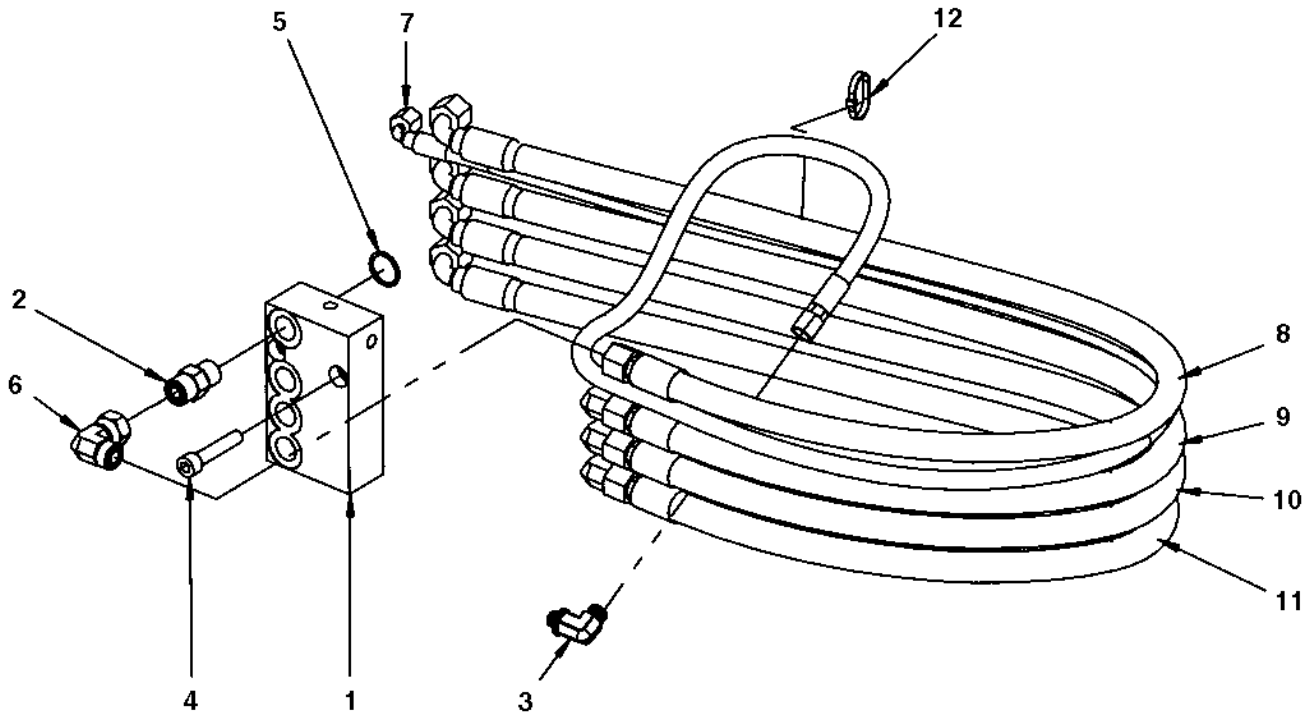
5
7
12
2
6
8
9
10
11
4
1
3

Steering, slideable

Item	Part No	Rem	Qty	Description	Code
1	4700370155		1	Valve block	C
2	4700791799		4	Straight connector orfs	
3	4700792334		1	Elbow 90 orfs	
4	4700903773		2	Screw M10x1x50 8,8	C
5	4700160287		4	O-ring	C
6	4700791745		4	Elbow 90, O-ring with swivel	
7	4700484006		1	Hydraulic hose	
8	4700484007		1	Hydraulic hose	
9	4700484007		1	Hydraulic hose	
10	4700484007		1	Hydraulic hose	
11	4700484007		1	Hydraulic hose	
12	4700313041		N	Cable ties	

Hydraulic pump module

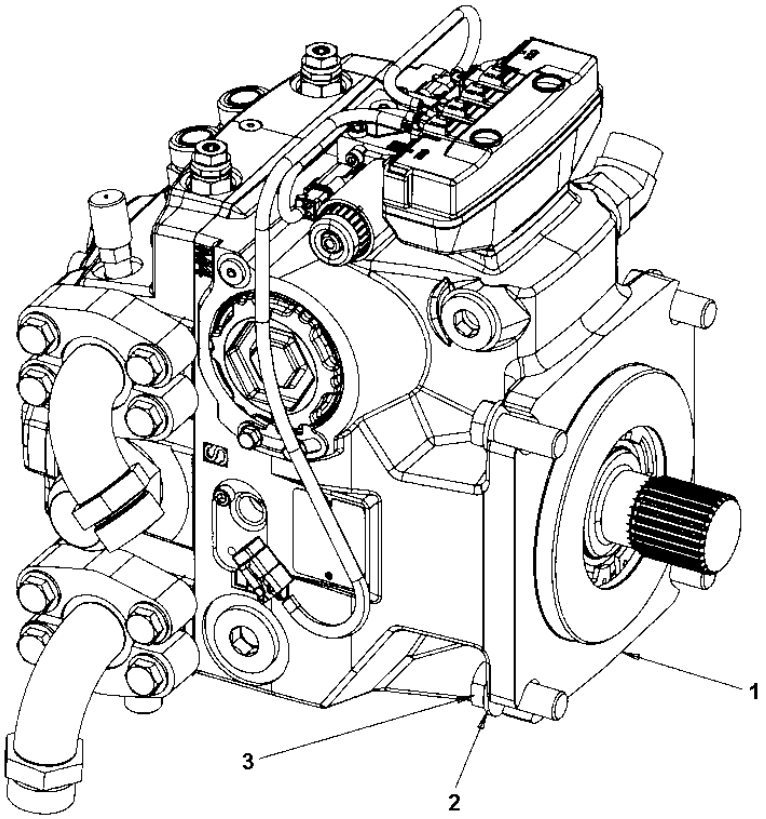

Hydraulic pump module

Item	Part No	Rem	Qty	Description	Code
1			1	**Hydraulic pump (Page 242)**	
2	4700904232		4	Washer	C
3	4700500093		4	Screw M16x40	C

Hydraulic pump

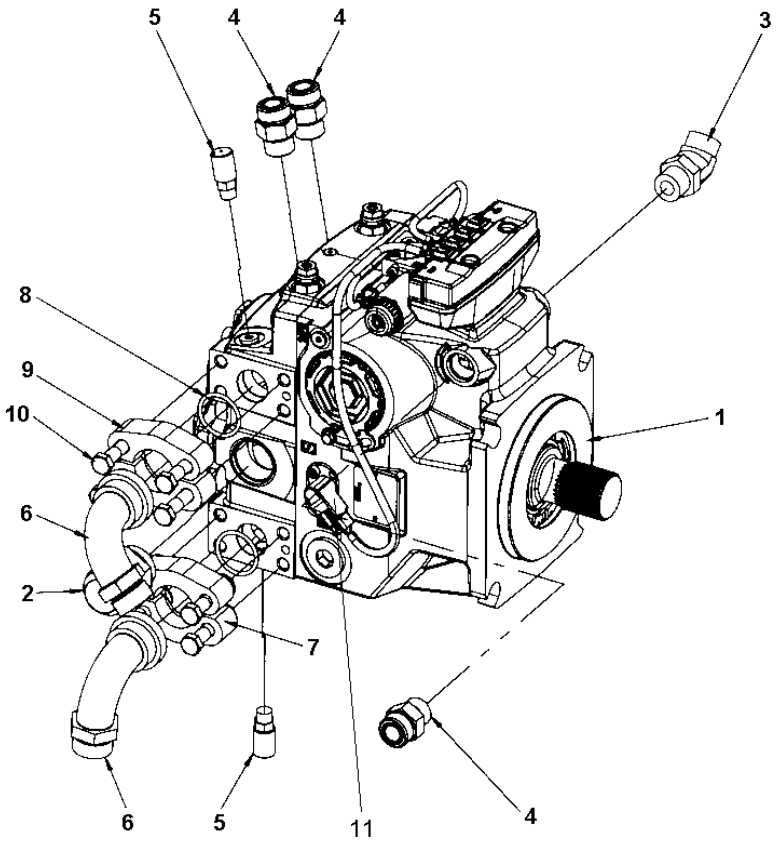

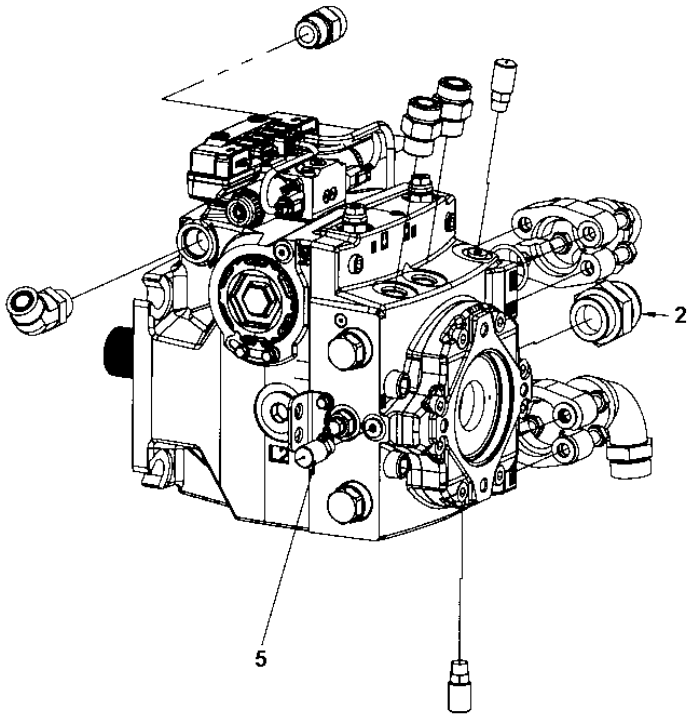

Hydraulic pump

Item	Part No	Rem	Qty	Description	Code
1	4700395140		1	Hydraulic pump	
2	4700334169		1	Connector	
3	4700791230		1	Elbow 45	
4	4700791823		3	Straight connector orfs	
5	4700900229		3	Measuring nipple	C
6	4700904689		2	Flange fitting 90	
7	4700900342		4	Split flange	
8	4700904171		2	O-ring	
9	4700904231		8	Washer 13x24x2 300 HV	C
10	4700500195		8	Screw	C
11			1	**Pulse sensor module (Page 148)**	

Hydraulic steering pump module

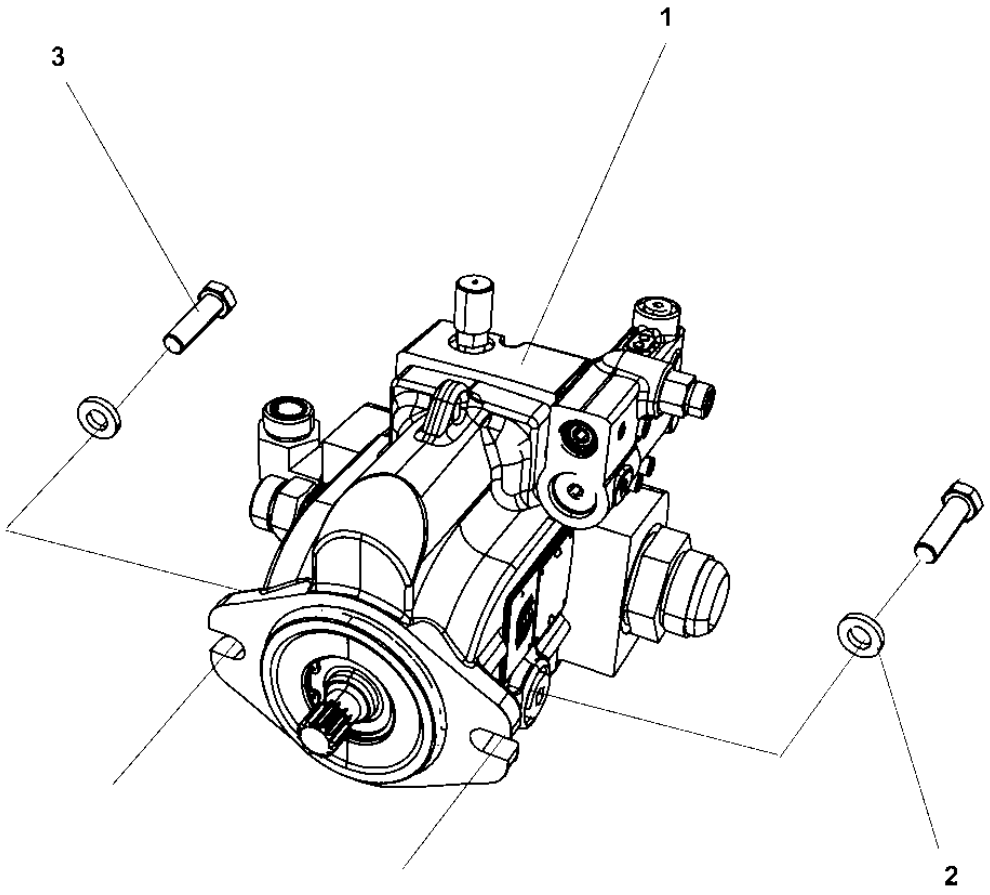

Hydraulic steering pump module

Item	Part No	Rem	Qty	Description	Code
1			1	**Hydraulic steering pump (Page 246)**	
2	4700904703		2	Washer	C
3	4700500194		2	Screw	C

Hydraulic steering pump

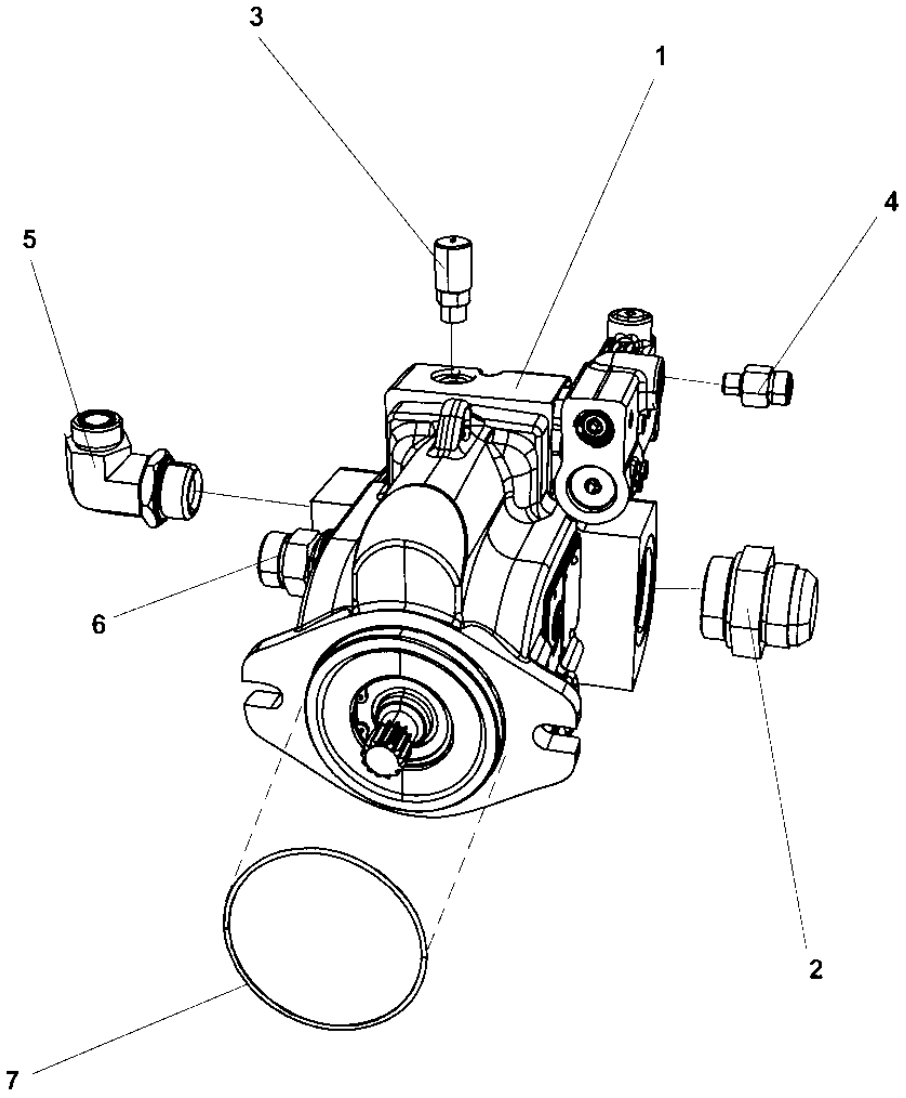

Hydraulic steering pump

Item	Part No	Rem	Qty	Description	Code
1	4700395142		1	Hydraulic steering pump	
2	4700334168		1	Nipple with O-ring	
3	4700900229		1	Measuring nipple	C
4	4700791827		1	Straight connector orfs	
5	4700791321		1	Elbow adapter 90	D
6	4700791743		1	Straight connector orfs	
7	4700160279		1	O-ring	C

Hydraulic valve module

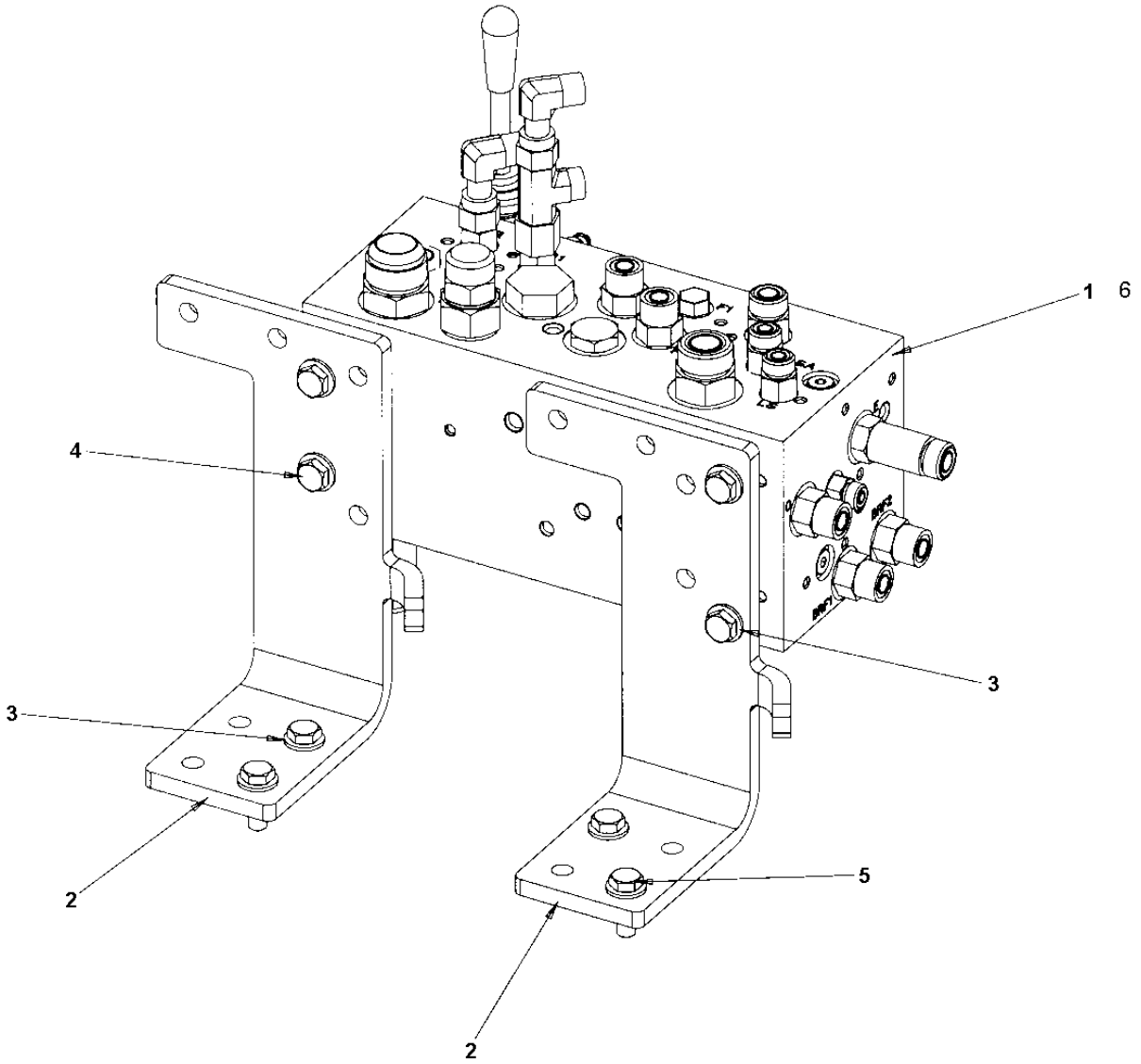

Hydraulic valve module

Item	Part No	Rem	Qty	Description	Code
1			1	**Hydraulic valve (Page 250)**	
2	4700396275		2	Bracket	
3	4700904230		8	Steel plain washer	C
4	4700500028		4	Screw	C
5	4700500029		4	Hexagon head screw	C
6	4812111106		1	**Reducing valve (Page 46)**	

Hydraulic valve

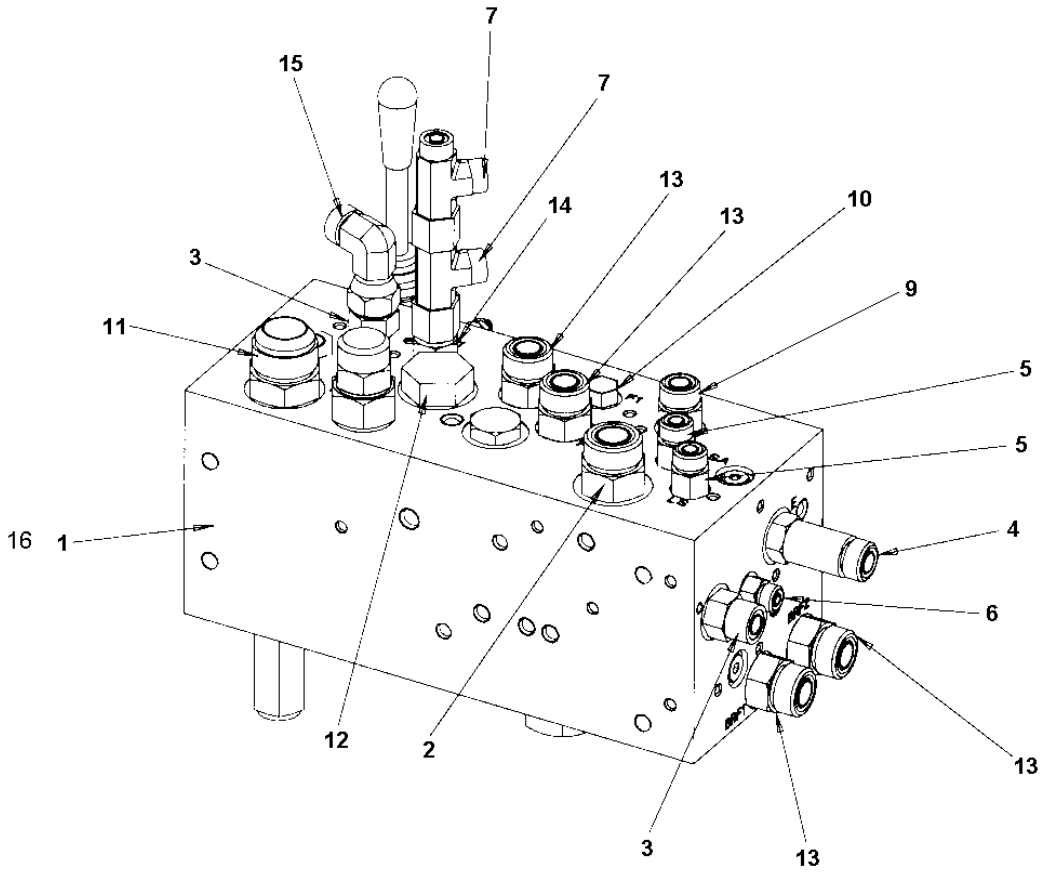

Hydraulic valve

Item	Part No	Rem	Qty	Description	Code
1	4700395157		1	Valve block	
2	4700791823		1	Straight connector orfs	
3	4700791799		2	Straight connector orfs	
4	4700791826		1	Straight connector orfs	
5	4700791827		2	Straight connector orfs	
6	4700791744		1	Straight connector	
7	4700791414		2	T-connection, O-ring with swivel	C
9	4700791540		1	Straight connector	
10	4700232061		1	Plug	
11	4700234435		1	Adapter	
12	4700232222		1	Plug	
13	4700791743		4	Straight connector orfs	
14	4700791828		2	Straight connector orfs	
15	4700791745		1	Elbow 90, O-ring with swivel	
16	4812111106		1	**Reducing valve (Page 46)**	

Hydraulic valve module Air on the run

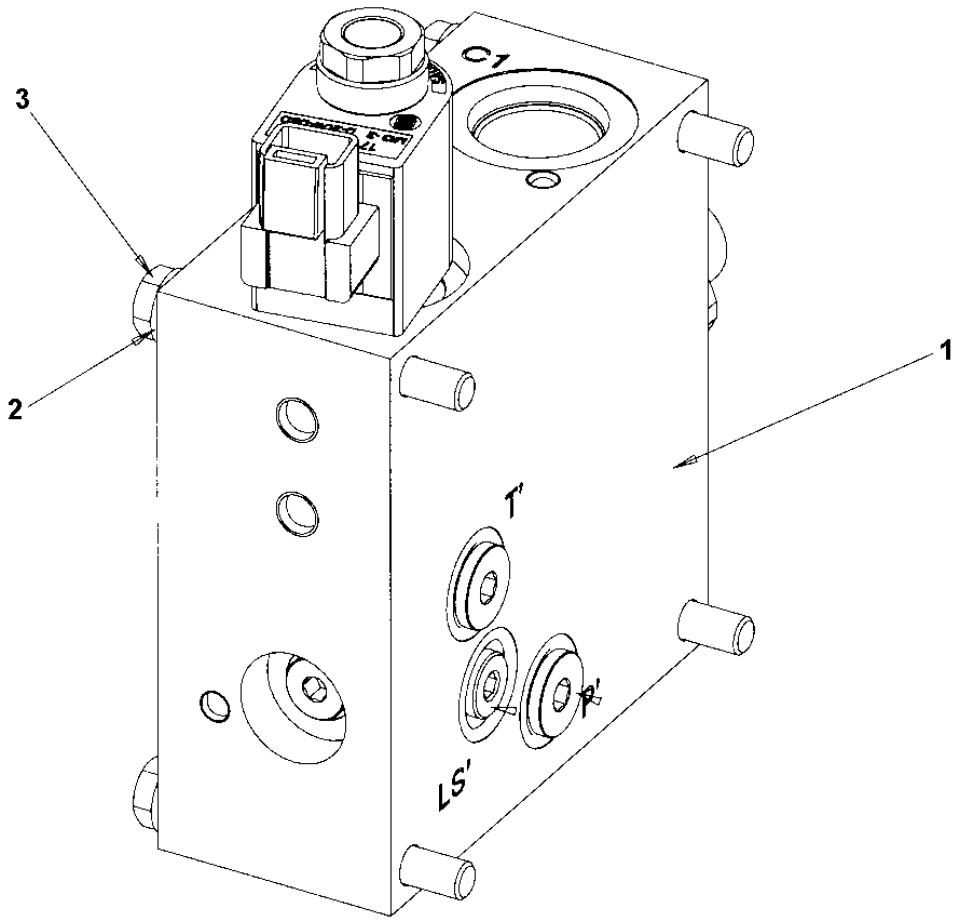

Hydraulic valve module Air on the run

Item	Part No	Rem	Qty	Description		Code
1	4700396027		1	Hydraulic valve		
2	4700904229		4	Steel plain washer	8,4x16x1,5	C
3	4700500189		4	Screw		C

Thermobypass valve kit

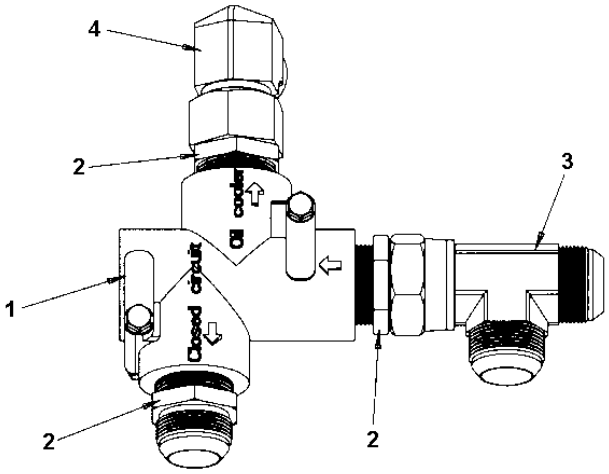

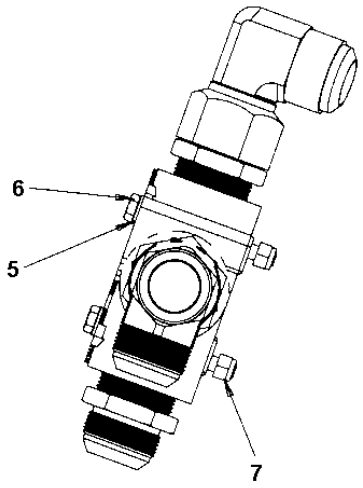

Thermobypass valve kit

Item	Part No	Rem	Qty	Description	Code
1	4700396666		1	Thermobypass valve	
2	4700334164		3	Adapter	
3	4700334189		1	Adapter	
4	4700234152		1	Adapter	
5	4700904229		2	Steel plain washer 8,4x16x1,5	C
6	4700500190		2	Screw	
7	4700586003		2	Lock nut M8	C

Hydraulic hoses Air on the run, option

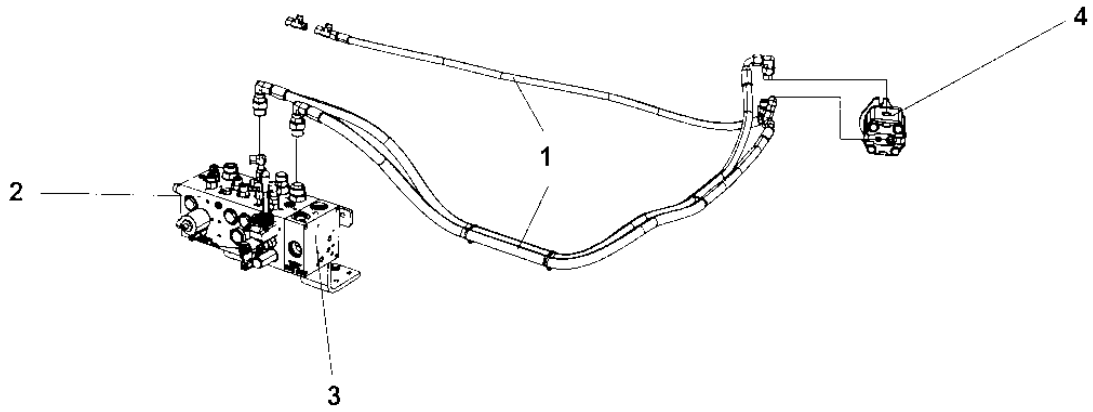

Hydraulic hoses Air on the run, option

Item	Part No	Rem	Qty	Description	Code
1				**Hoses Air on the run (Page 258)**	
				Hoses Air on the run (Page 260)	
2				**Hydraulic valve module (Page 248)**	
3				**Hydraulic valve module Air on the run (Page 252)**	
4	4700396340		1	Hydraulic motor	
5				**Hydraulic hoses, with platform Air on the run (Page 264)**	
6				**Hydraulic hoses, with cab Air on the run (Page 266)**	

Hoses Air on the run

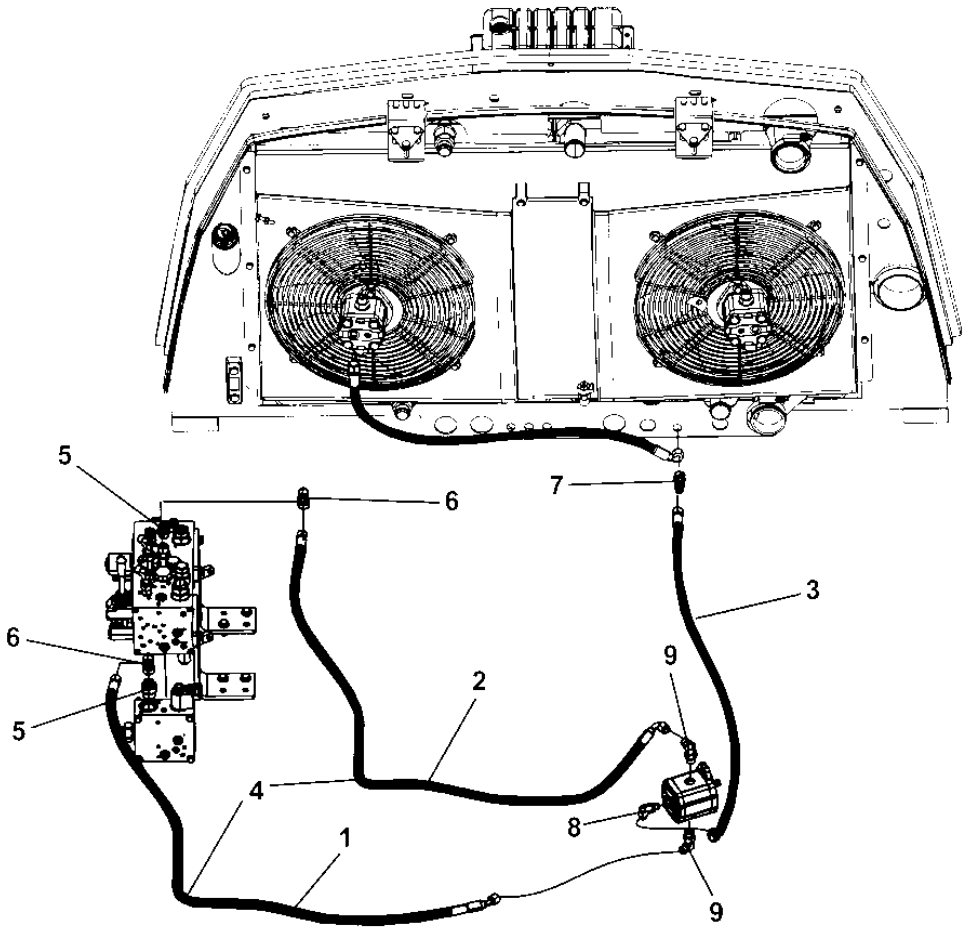

Hoses Air on the run

Item	Part No	Rem	Qty	Description	Code
1	4700484316	A	1	Hydraulic hose	
2	4700484317	B	1	Hydraulic hose	
3	4700484318	C	1	Hydraulic hose	
4	4700792602		3	Cable tie with holder	
5	4700791850		2	Straight connector	
6	4700791745		2	Elbow 90, O-ring with swivel	
7	4700791414		1	T-connection, O-ring with swivel	C
8	4700791846		1	Elbow 90, O-ring with swivel	C
9	4700792133		2	Connector	

A) L = 1,72 m
B) L = 1,92 m
C) L = 1,32 m

Hoses Air on the run

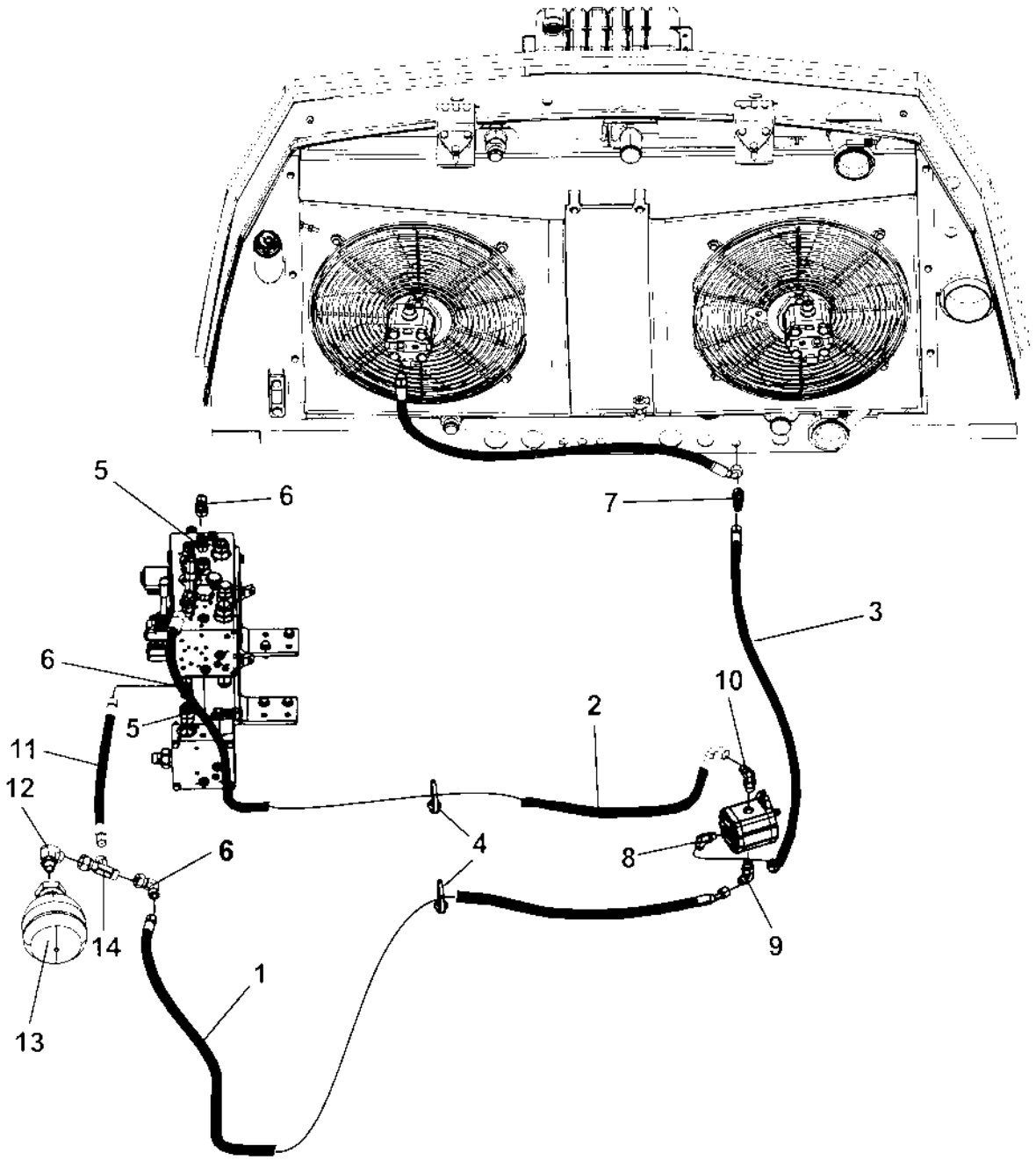

Hoses Air on the run

Item	Part No	Rem	Qty	Description	Code
1	4700484316	A	1	Hydraulic hose	
2	4811000148		1	Hydraulic hose	
3	4700484318	C	1	Hydraulic hose	
4	4700792602		3	Cable tie with holder	
5	4700791850		2	Straight connector	
6	4700791745		3	Elbow 90, O-ring with swivel	
7	4700791414		1	T-connection, O-ring with swivel	C
8	4700791846		1	Elbow 90, O-ring with swivel	C
9	4700792133		1	Connector	
10	4700791838		1	Elbow 90, O-ring with swivel	
11	4811000147		1	Hydraulic hose	
12	4700791699		1	Elbow 90	C
13			1	**Accumulator (Page 262)**	
14	4700791798		1	T-connector	

A) L = 1,2 m
C) L = 1,32 m

Accumulator

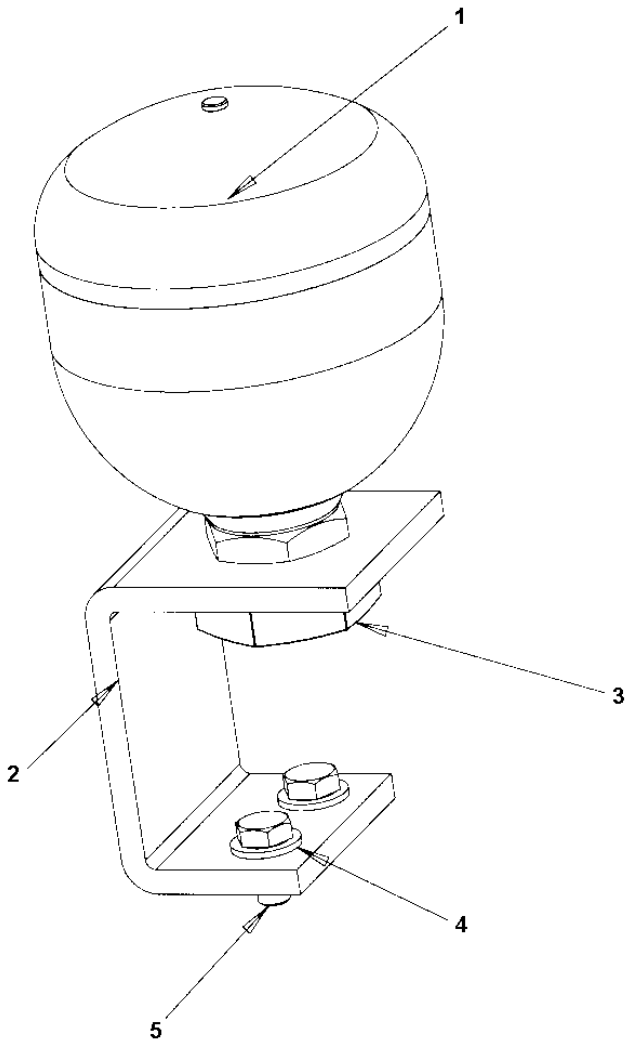

Accumulator

Item	Part No	Rem	Qty	Description	Code
1	4700396171		1	Accumulator	
2	4812111834		1	Bracket	
3	4700396349		1	Nut	
4	4700904230		2	Steel plain washer	C
5	4700947682		2	Screw M10x1,5x20 10.9	

Hydraulic hoses, with platform Air on the run

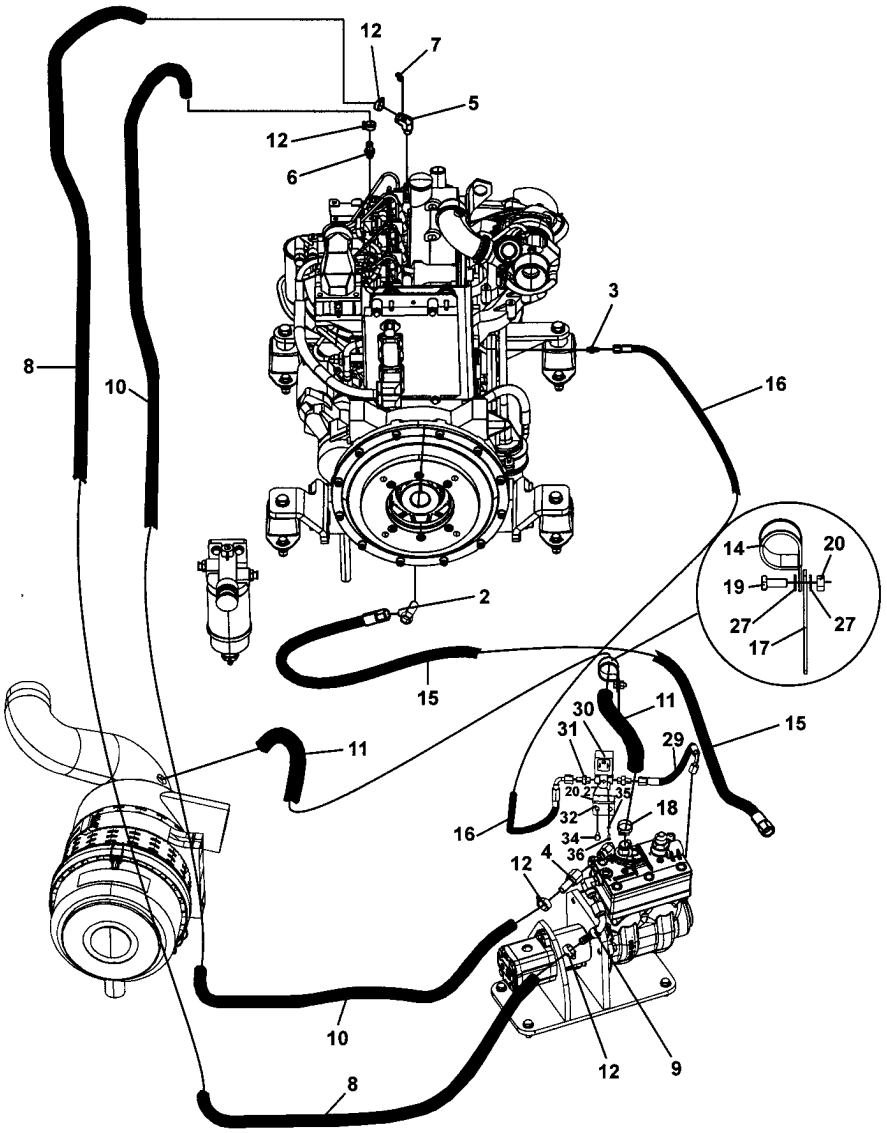

Hydraulic hoses, with platform Air on the run

Item	Part No	Rem	Qty	Description	Code
2	4700334135		1	Tee-connector	C
3	4700900176		1	Adapter	D
4	4700792502		1	Hose connection	D
5	4700395174		1	Connector	D
6	4700379607		2	Hose connection	D
7	4700395175		1	Hose connection	D
8	4700205112	A	N	Coolant hose	D
9	4700792499		1	Hose connection	D
10	4700205112	B	N	Coolant hose	D
11	4700205027	C	N	Coolant hose	D
12	4700313004		4	Hose clamp	D
14	4700923008		1	Clamp	
15	4700482606	D	N	Hydraulic hose	D
16	4700482730	E	N	Hydraulic hose	D
17	4812110339		1	Bracket	D
18	4700313035		1	Hose clamp	D
19	4700500053		1	Screw M8x20H 8.8	C
20	4700570005		3	Nut M8	C
27	4700904229		4	Steel plain washer 8,4x16x1,5	C
29	4700482575		1	Hydraulic hose	
30	4812112800		1	Solenoid valve From 0B001330	
31	4700334144		2	Connector	C
32	4812112795		1	Bracket From 0B001330	
34	4700500021		2	Screw M8-1,25x25 8.8	C
35	4700904698		2	Washer	C
36	4700500002		2	Screw M4-0,7x12H 8.8	D

A) L = 2,85 m
B) L = 2,7 m
C) L = 0,73 m
D) L = 1,12 m
E) L = 1,320 m

Hydraulic hoses, with cab Air on the run

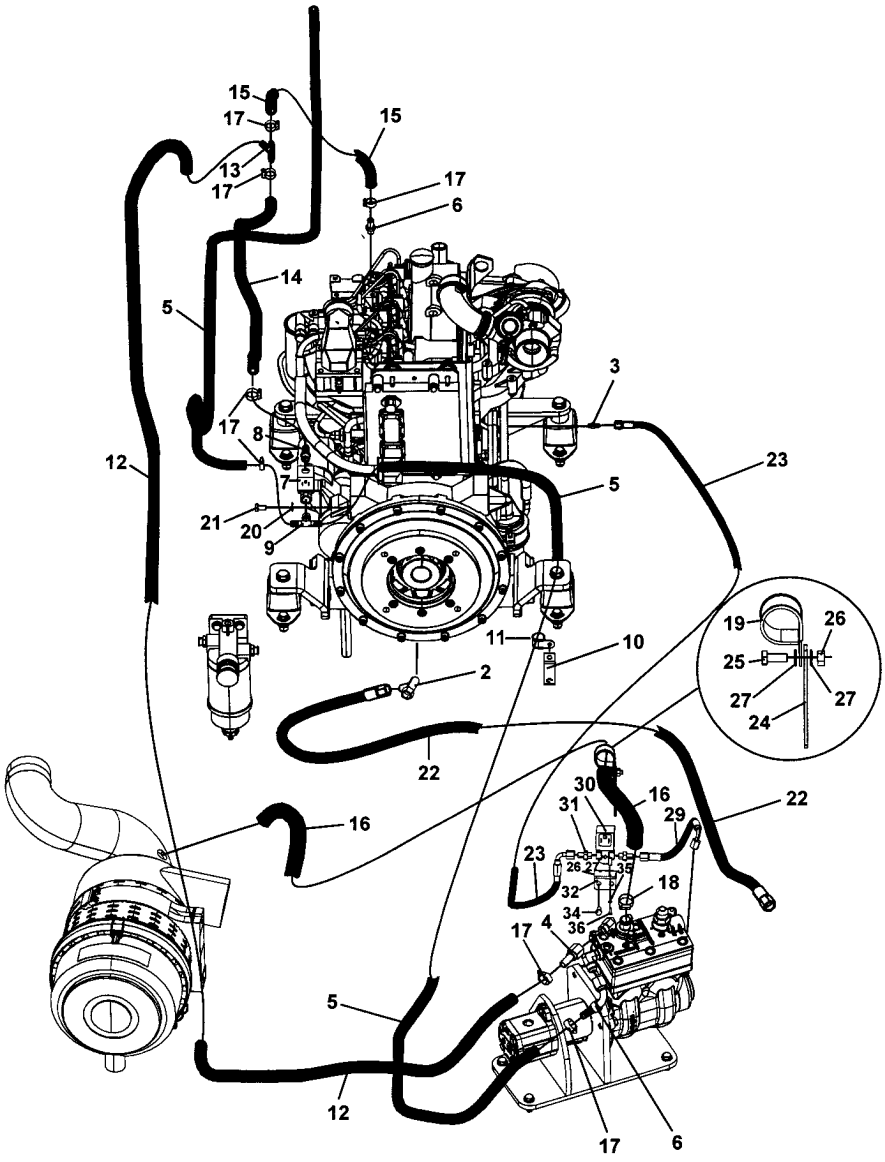

Hydraulic hoses, with cab Air on the run

Item	Part No	Rem	Qty	Description	Code
2	4700334135		1	Tee-connector	C
3	4700900176		1	Adapter	D
4	4700792502		1	Hose connection	D
5	4700205112	A	N	Coolant hose	D
6	4700792499		1	Hose connection	D
7				**Solenoid valve (Page 268)**	
8	4700792064		1	Hose connection	D
9	4700792806		1	Adapter	D
10	4700396632		1	Bracket	D
11	4700921056		1	Clamp	C
12	4700205112	B	N	Coolant hose	D
13	4700792065		1	Hose connection	C
14	4700205112	C	N	Coolant hose	D
15	4700205112	D	N	Coolant hose	D
16	4700205027	E	N	Coolant hose	D
17	4700313004		6	Hose clamp	D
18	4700313035		1	Hose clamp	D
19	4700923008		1	Clamp	
20	4700904231		2	Washer 13x24x2 300 HV	C
21	4700500048		2	Screw M10-1,5x20 8,8	C
22	4700482606	F	N	Hydraulic hose	D
23	4700482730	G	N	Hydraulic hose	D
24	4812110339		1	Bracket	D
25	4700500053		2	Screw M8x20H 8.8	C
26	4700570005		3	Nut M8	C
27	4700904229		4	Steel plain washer 8,4x16x1,5	C
29	4700482575	H	1	Hydraulic hose	
30	4812112800		1	Solenoid valve From 0B001330	
31	4700334144		2	Connector	C
32	4812112795		1	Bracket From 0B001330	
34	4700500021		2	Screw M8-1,25x25 8.8	C
35	4700904698		2	Washer	C
36	4700500002		2	Screw M4-0,7x12H 8.8	D

A) L = 2,85 m
B) L = 1,8 m
C) L = 0,14 m
D) L = 0,6 m
E) L = 0,73 m
F) L = 1,12 m
G) L = 1,06 m
H) L = 0,25 m

Solenoid valve

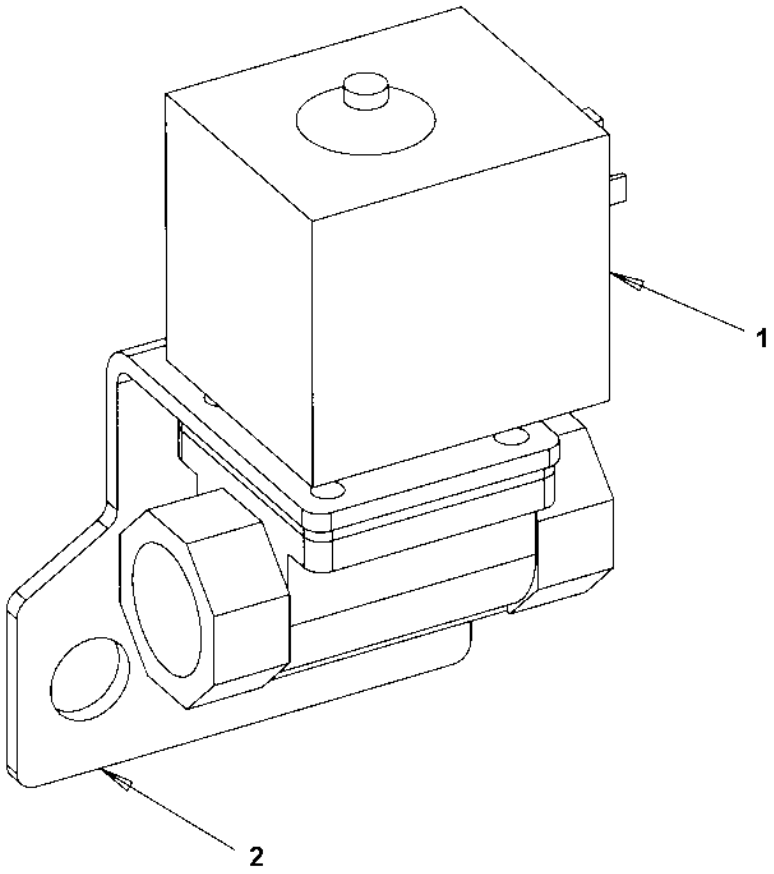

Solenoid valve

Item	Part No	Rem	Qty	Description	Code
1	4700396499		1	Solenoid valve	D
2	4700396752		1	Bracket	D

Hydraulic hoses

Item	Part No	Rem	Qty	Description	Code
1				**Hydraulic system, steering (Page 272)**	
2				**Hydraulic system, engine room (Page 278)**	
3				**Hydraulic hoses (Page 280)**	
4				**Hydraulic hoses, Dynamic brake (Page 292)**	
5				**Thermobypass valve kit (Page 254)**	

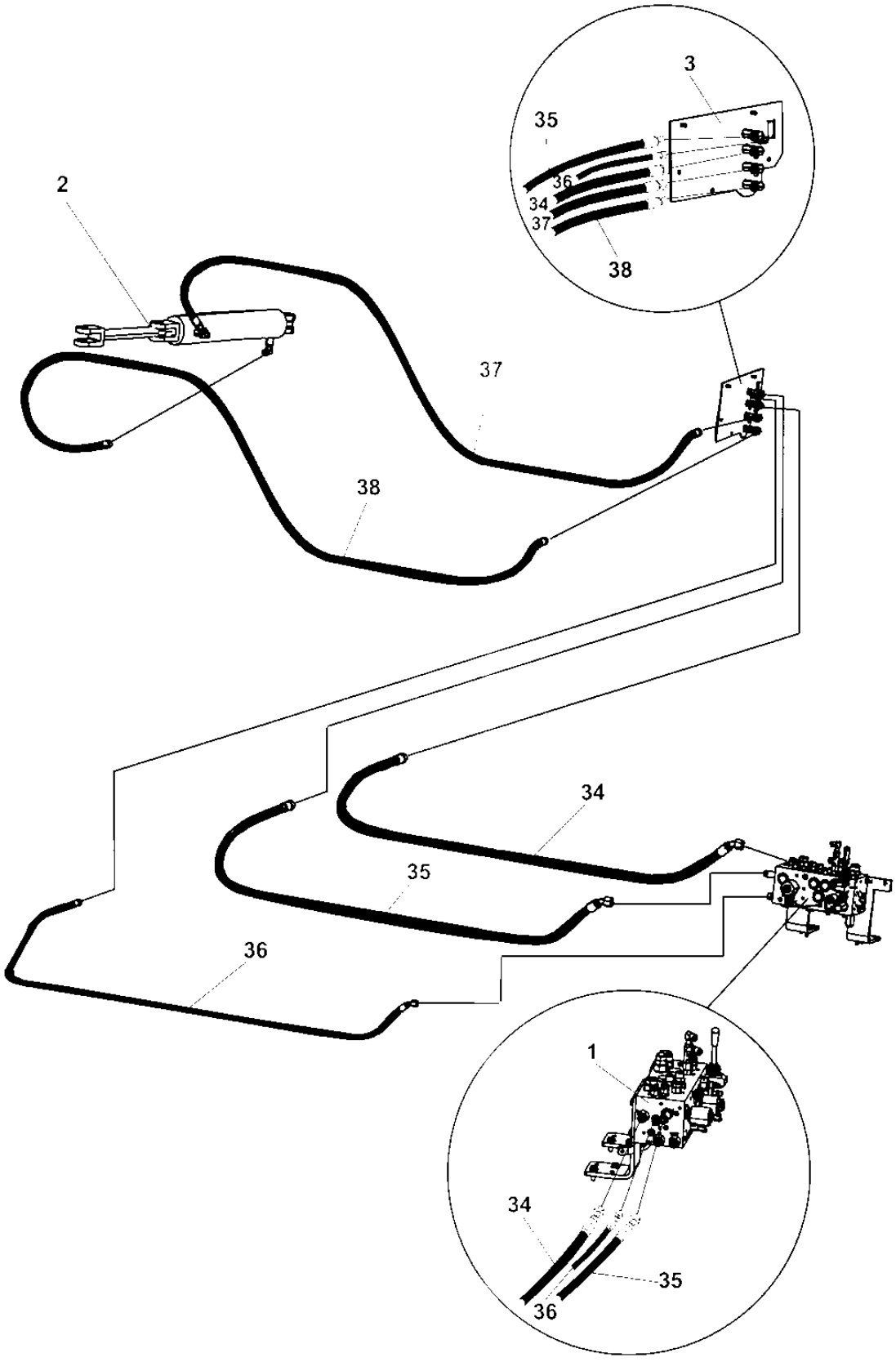
3
35
36
34
37
38
2
37
38
34
35
36
1
34
35
36

Hydraulic system, steering

Item	Part No	Rem	Qty	Description	Code
1				**Hydraulic valve module (Page 248)**	
2				**Steering cylinder (Page 274)**	
3				**Hose bracket (Page 276)**	
34	4700484302	A	1	Hydraulic hose L = 1990 mm	
35	4700484303	B	1	Hydraulic hose L = 2040 mm	
36	4700484304	C	1	Hydraulic hose L = 2100 mm	
37	4700483693	D	1	Hydraulic hose L = 2450 mm	
38	4700484305	E	1	Hydraulic hose L = 2960 mm	

A) L = 1,99 m
B) L = 2,04 m
C) L = 2,1 m
D) L = 2,44 m
E) L = 2,96 m

Steering cylinder

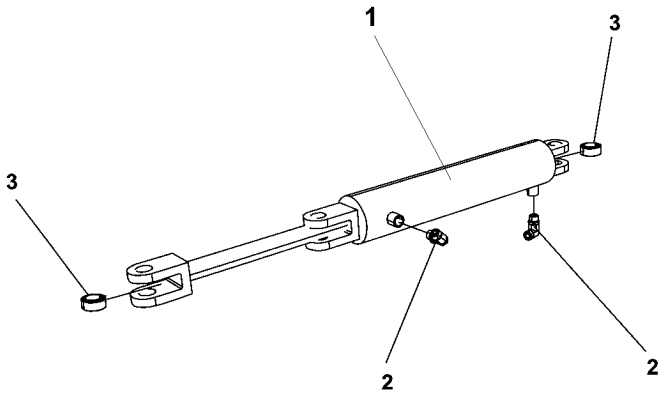

Steering cylinder

Item	Part No	Rem	Qty	Description	Code
1	4700396098		1	Hydraulic cylinder	
2	4700791841		2	Elbow 90 orfs	
3	4700792554		2	Radial spherical plain bearing	D

Hose bracket

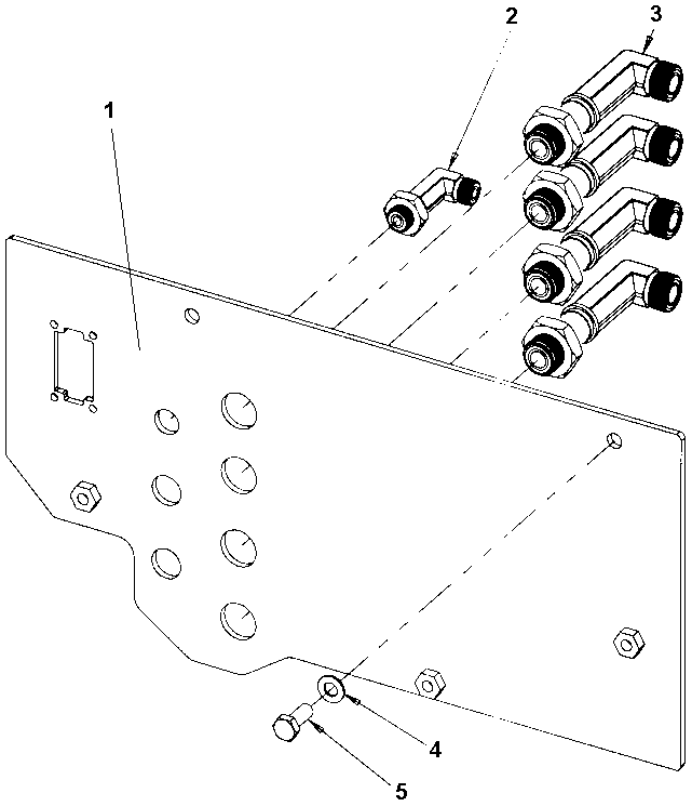

Hose bracket

Item	Part No	Rem	Qty	Description	Code
1	4700396318		1	Hose bracket	
2	4700792343		1	Bulkhead elbow	
3	4700792342		4	Bulkhead elbow	
4	4700904229		2	Steel plain washer 8,4x16x1,5	C
5	4700500053		2	Screw M8x20H 8.8	C

Hydraulic system, engine room

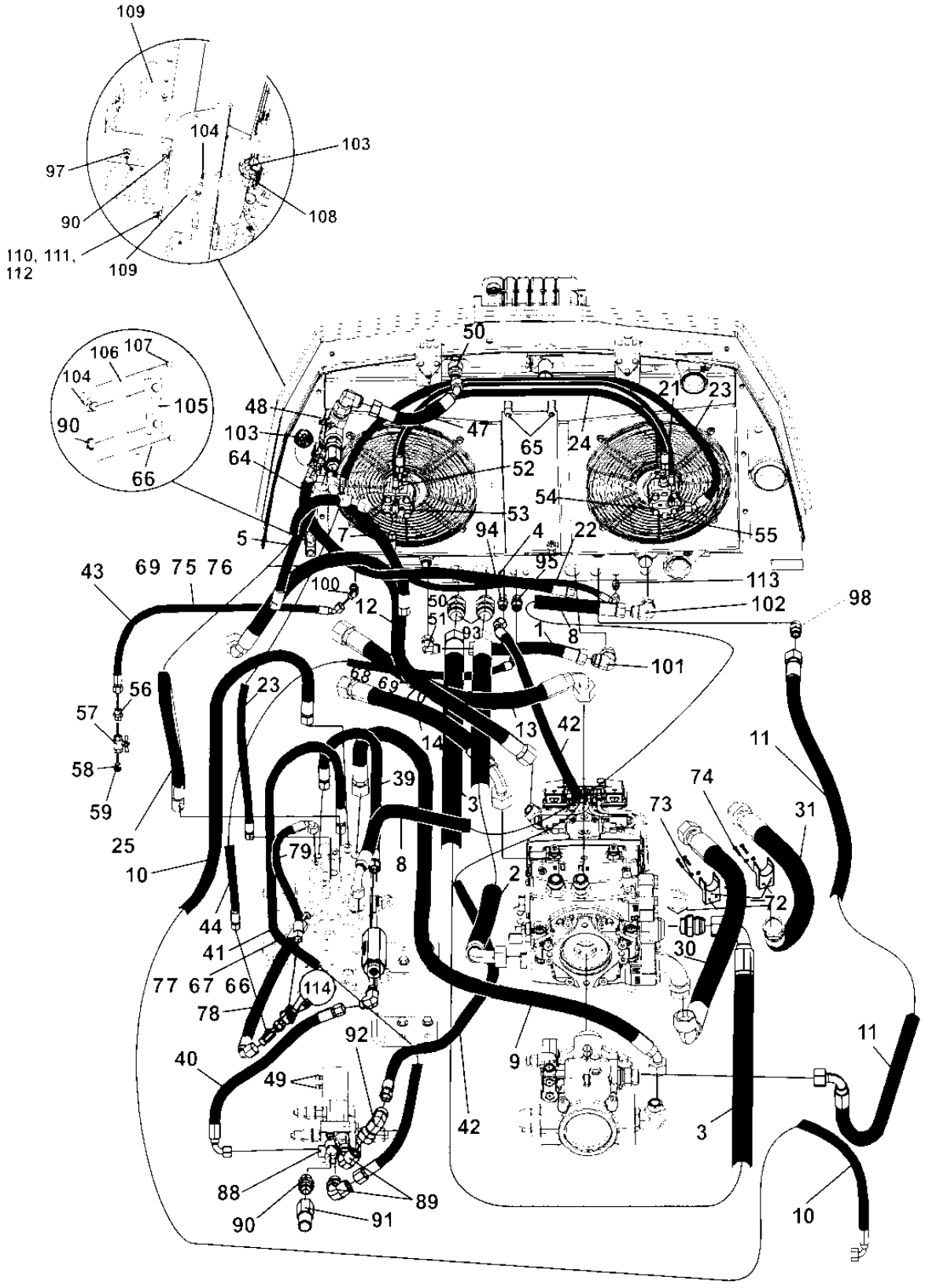

Hydraulic system, engine room

Item	Part No	Rem	Qty	Description	Code
1	4700484272		1	Hydraulic hose L = 400 mm	
2	4700484273		1	Hydraulic hose L = 1480 mm	
3	4700484274		1	Hydraulic hose L = 2070 mm	
4	4700484275		1	Hydraulic hose L = 1370 mm	
5	4700484276		1	Hydraulic hose L = 570 mm	
6	4700484277		1	Hydraulic hose L = 730 mm	
7	4700484278		1	Hydraulic hose L = 600 mm	
8	4700484279		1	Hydraulic hose L = 1260 mm	
9	4700484280		1	Hydraulic hose L = 1700 mm	
10	4700484281		1	Hydraulic hose L = 1380 mm	
11	4700484366		1	Hydraulic hose L = 1550 mm	
12	4700484282		1	Hydraulic hose L = 2900 mm	
13	4700484283		1	Hydraulic hose L = 570 mm	
14	4700483733		1	Hydraulic hose L = 415 mm	
15	4700484284		1	Hydraulic hose L = 900 mm	
16	4700484285		1	Hydraulic hose L = 2140 mm	
17	4700484286		1	Hydraulic hose L = 840 mm	
18	4700483871		1	Hydraulic hose	
19	4700484287		1	Hydraulic hose L = 2090 mm	
20	4700484288		1	Hydraulic hose L = 1970 mm	
21	4700484289		1	Hydraulic hose L = 1430 mm	
22	4700484290		1	Hydraulic hose L = 1040 mm	
23	4700484291		1	Hydraulic hose L = 2030 mm	
24	4700484292		1	Hydraulic hose L = 1180 mm	
25	4700483713		1	Hydraulic hose	
26	4700484294		1	Hydraulic hose L = 1170 mm	
27	4700484295		1	Hydraulic hose L = 1490 mm	
28	4700484296		1	Hydraulic hose L = 1380 mm	
29	4700484297		1	Hydraulic hose L = 1750 mm	
30	4700484298		1	Hydraulic hose L = 830 mm	
31	4700484299		1	Hydraulic hose L = 930 mm	
32	4700484300		1	Hydraulic hose L = 1690 mm	
33	4700484306		1	Hydraulic hose L = 2820 mm	
34	4700484302		1	Hydraulic hose L = 1990 mm	
35	4700484303		1	Hydraulic hose L = 2040 mm	
36	4700484304		1	Hydraulic hose L = 2100 mm	
37	4700483693		1	Hydraulic hose L = 2450 mm	
38	4700484305		1	Hydraulic hose L = 2960 mm	
39	4700484311		1	Hydraulic hose L = 815 mm	
40	4700484312		1	Hydraulic hose L = 590 mm	
41	4700484313		1	Hydraulic hose L = 1660 mm	
42	4700484314		1	Hydraulic hose L = 1550 mm	
43	4700484315		1	Hydraulic hose L = 1080 mm	
45	4700484319		1	Hydraulic hose L = 470 mm	
46	4700484319		1	Hydraulic hose L = 470 mm	
47	4700484345		1	Hydraulic hose L = 450 mm	
48	4811000131		1	Hydraulic hose	
49	4700484229		1	Hydraulic hose L = 410 mm	
50	4700483593		1	Hydraulic hose	
51	4700484314		1	Hydraulic hose L = 1550 mm	

Hydraulic hoses

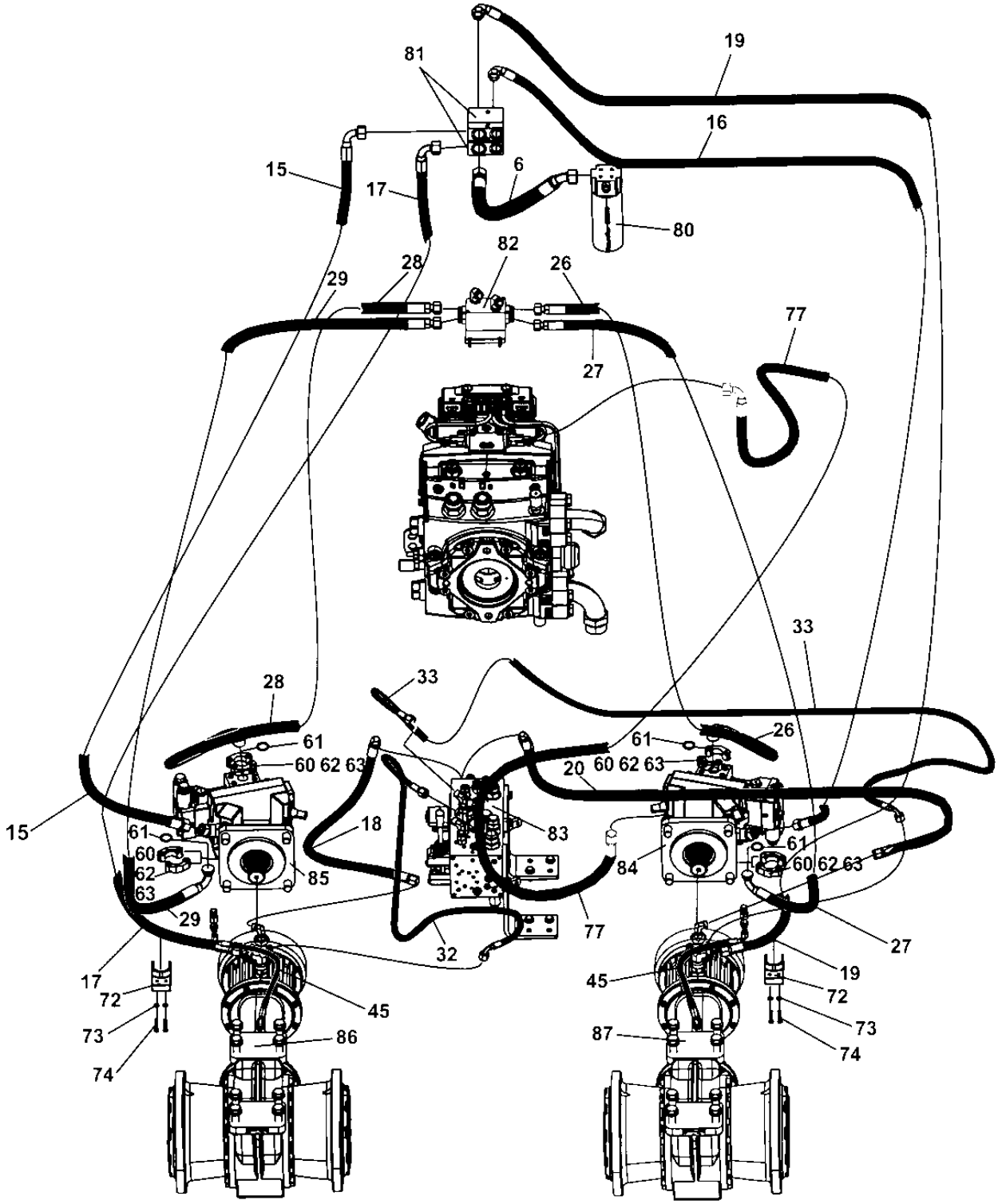

Hydraulic hoses

Item	Part No	Rem	Qty	Description	Code
6	4700484277	A	1	Hydraulic hose L = 730 mm	
15	4700484284	B	1	Hydraulic hose L = 900 mm	
16	4700484285	C	1	Hydraulic hose L = 2140 mm	
17	4700484286	D	1	Hydraulic hose L = 840 mm	
18	4700483871		1	Hydraulic hose	
19	4700484287	F	1	Hydraulic hose L = 2090 mm	
20	4700484288	G	1	Hydraulic hose L = 1970 mm	
26	4700484294	H	1	Hydraulic hose L = 1170 mm	
27	4700484295	J	1	Hydraulic hose L = 1490 mm	
28	4700484296	K	1	Hydraulic hose L = 1380 mm	
29	4700484297	L	1	Hydraulic hose L = 1750 mm	
32	4700484300	M	1	Hydraulic hose L = 1690 mm	
33	4700484306		1	Hydraulic hose L = 2820 mm	
45	4700484319	O	1	Hydraulic hose L = 470 mm	
60	4700923384		8	Flange half	
61	4700904005		4	O-ring	
62	4700904231	P	16	Washer 13x24x2 300 HV	C
63	4700903906	P	16	Screw	
72	4700395895		2	Hose clamp	
73	4700904228		4	Washer 6,4x12x1,5	C
74	4700500061		4	Screw M6-1X35 8,8	C
77	4811000131		1	Hydraulic hose	
80	4700396273		1	Hydraulic oil filter, cpl	
81				**Manifold (Page 38)**	
82				**Manifold (Page 282)**	
83				**Hydraulic valve module (Page 284)**	
84				**Hydraulic motor module, right (Page 288)**	
85				**Hydraulic motor module, left (Page 290)**	
86				**Gear module, left (Page 128)**	
87				**Gear module, right (Page 138)**	

A) L = 0,73 m
B) L = 0,9 m
C) L = 2,14 m
D) L = 0,84 m
F) L = 2,09 m
G) L = 1,97 m
H) L = 1,17 m
J) L = 1,49 m
K) L = 1,38 m
L) L = 1,75 m
M) L = 1,69 m
O) L = 0,47 m
P) not shown in illustration

Manifold

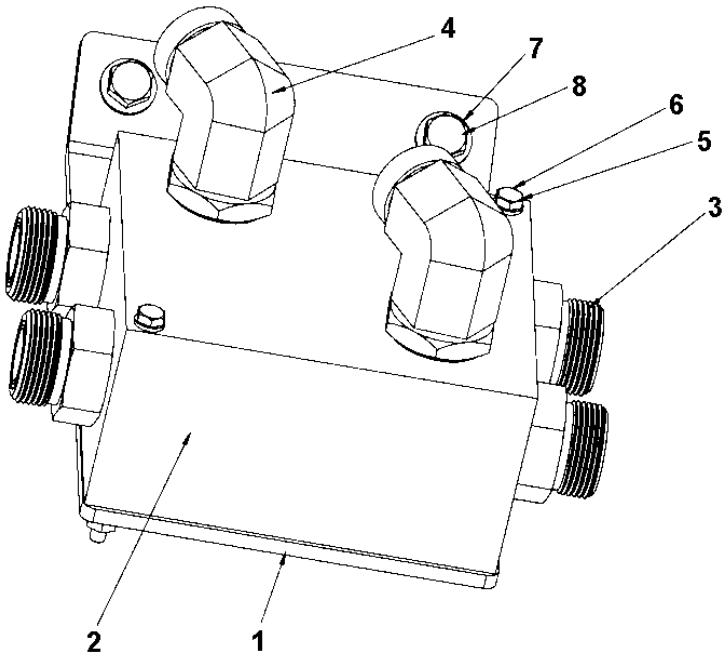

Manifold

Item	Part No	Rem	Qty	Description	Code
1	4700396288		1	Bracket	
2	4700395028		1	Manifold	
3	4700792339		4	Straight connector orfs	D
4	4700792299		2	Elbow 90	
5	4700904228		2	Washer 6,4x12x1,5	C
6	4700500095		2	Screw	
7	4700904230		2	Steel plain washer	C
8	4700500029		2	Hexagon head screw	C

Hydraulic valve module

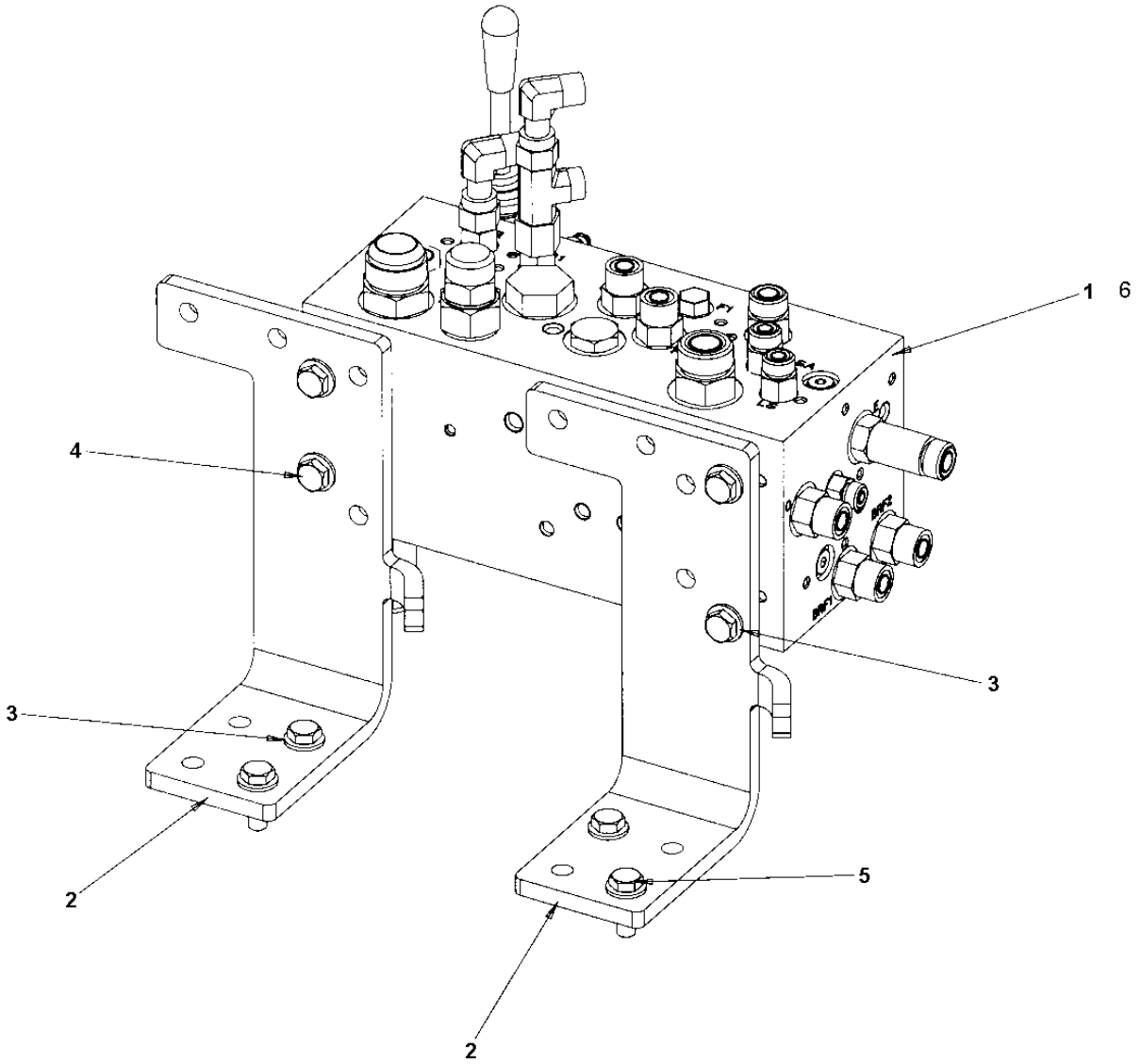

Hydraulic valve module

Item	Part No	Rem	Qty	Description	Code
1			1	**Hydraulic valve (Page 286)**	
			1	**Hydraulic valve From ECN 09451 (Page 250)**	
2	4700396275		2	Bracket	
3	4700904230		8	Steel plain washer	C
4	4700500028		4	Screw	C
5	4700500029		4	Hexagon head screw	C
6	4812111106		1	**Reducing valve (Page 46)**	

Hydraulic valve

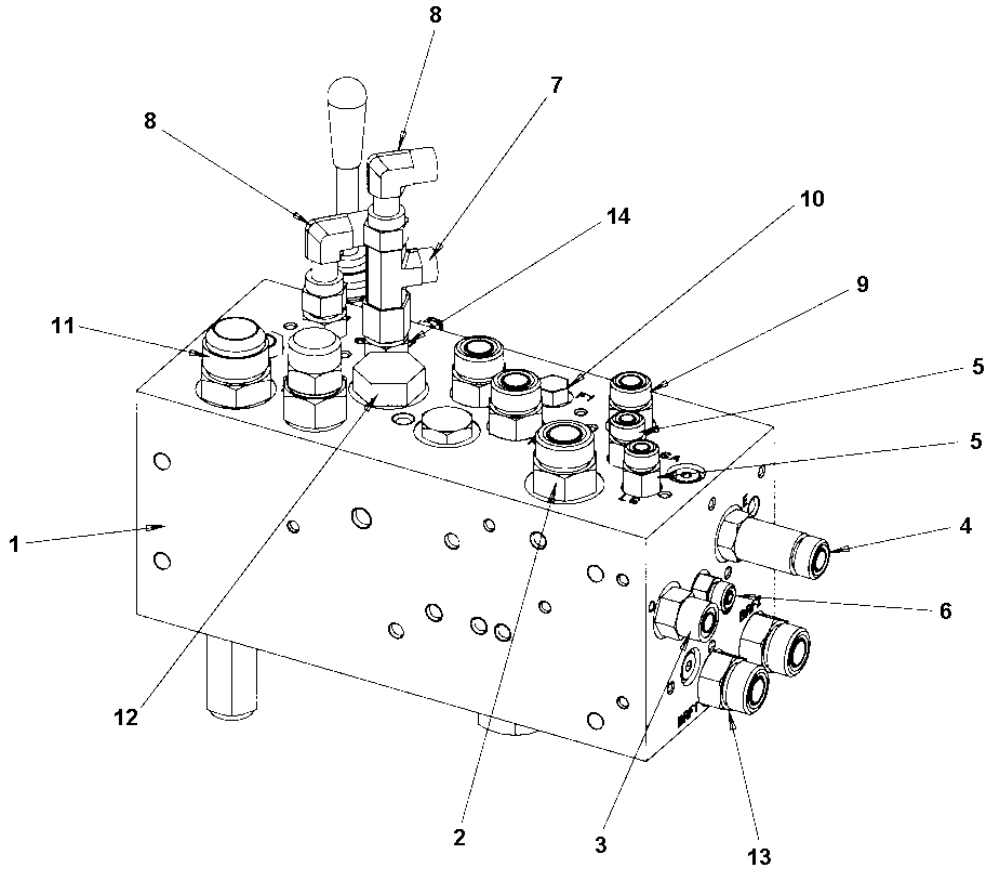

Hydraulic valve

Item	Part No	Rem	Qty	Description	Code
1	4700395157		1	Valve block	
2	4700791823		1	Straight connector orfs	
3	4700791799		1	Straight connector orfs	
4	4700791826		1	Straight connector orfs	
5	4700791827		2	Straight connector orfs	
6	4700791744		1	Straight connector	
7	4700791414		1	T-connection, O-ring with swivel	C
8	4700791401		2	Elbow 90, O-ring with swivel	C
9	4700791540		1	Straight connector	
10	4700232061		1	Plug	
11	4700234435		1	Adapter	
12	4700232222		1	Plug	
13	4700791743		4	Straight connector orfs	
14	4700791828		2	Straight connector orfs	

Hydraulic motor module, right

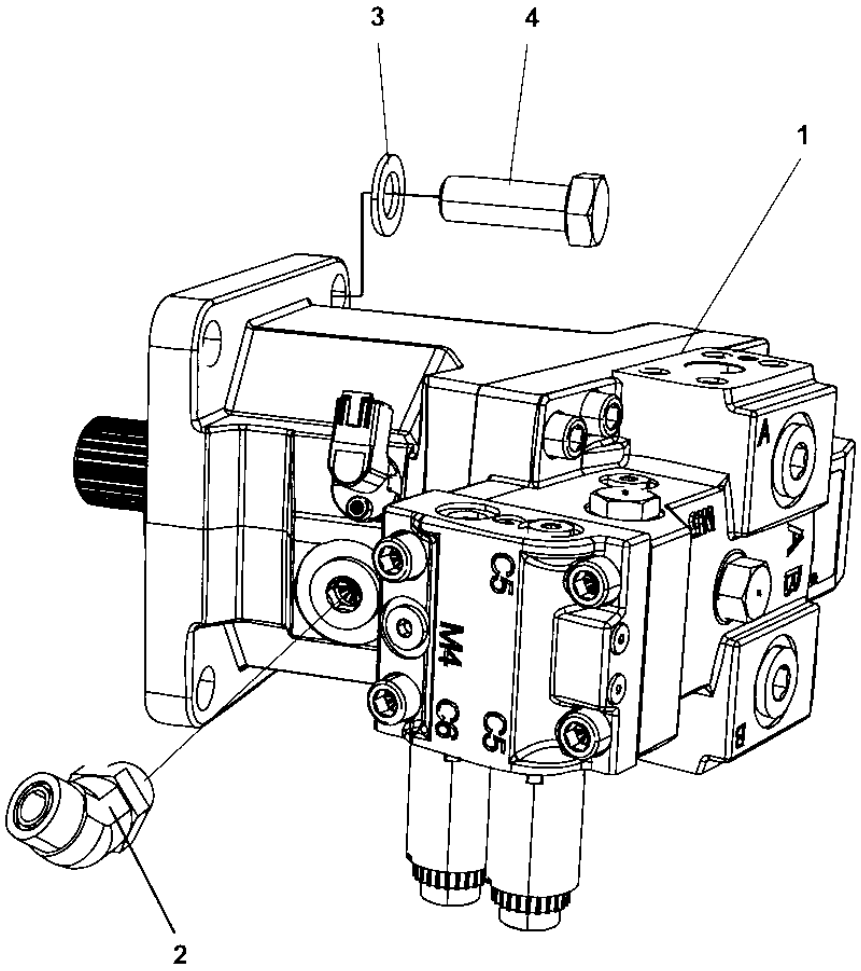

Hydraulic motor module, right

Item	Part No	Rem	Qty	Description	Code
1	4700395141		1	Hydraulic motor	
2	4700791230		1	Elbow 45	
3	4700904233		4	Washer 21x36x3	C
4	4700500101		4	Screw M20x50	C

Hydraulic motor module, left

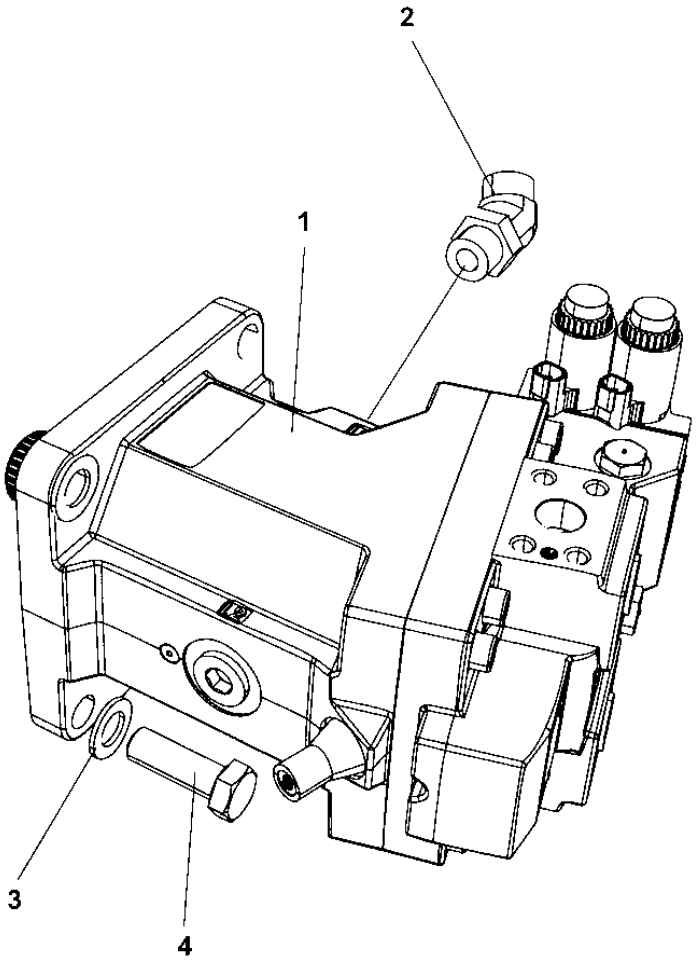

Hydraulic motor module, left

Item	Part No	Rem	Qty	Description	Code
1	4700395141		1	Hydraulic motor	
2	4700791230		1	Elbow 45	
3	4700904233		4	Washer 21x36x3	C
4	4700500101		4	Screw M20x50	C

Hydraulic hoses, Dynamic brake

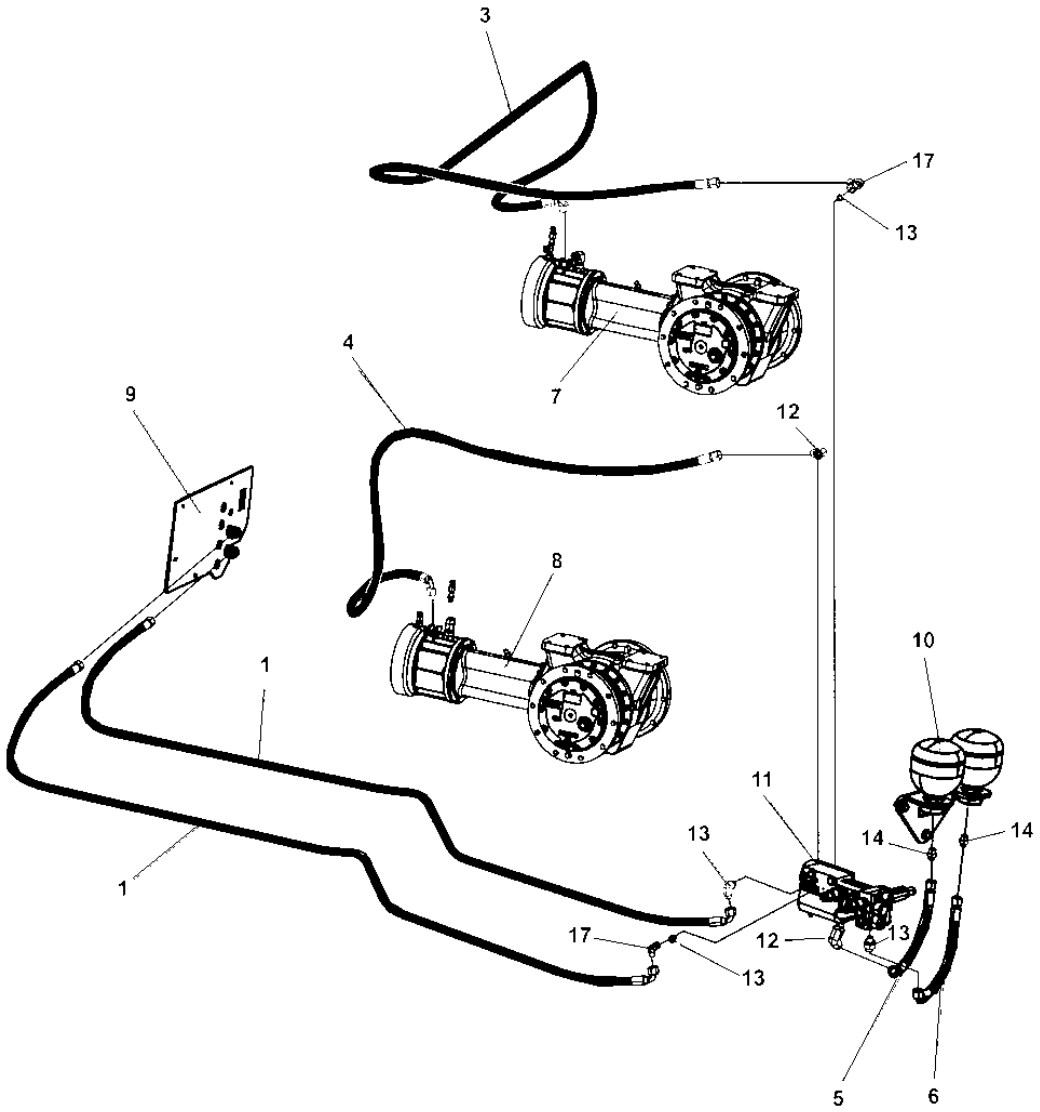

Hydraulic hoses, Dynamic brake

Item	Part No	Rem	Qty	Description	Code
1	4700484306	A	1	Hydraulic hose L = 2820 mm	
3	4700484307	B	1	Hydraulic hose	
4	4700484308	C	1	Hydraulic hose	
5	4700484309	D	1	Hydraulic hose	
6	4700484310	E	1	Hydraulic hose	
7				**Gear module, left (Page 128)**	
8				**Gear module, right (Page 138)**	
9				**Hose bracket (Page 276)**	
10				**Accumulator (Page 40)**	
11				**Brake valve dynamic module (Page 294)**	
12	4700792246		3	Elbow 90 orfs	
13	4700792673		3	Straight connector orfs	
14	4700791405		2	Straight o-ring connector	
17	4700791401		2	Elbow 90, O-ring with swivel	C

A) L = 2,82 m
B) L = 3,13 m
C) L = 1,9 m
D) L = 0,3 m
E) L = 0,39 m

Brake valve dynamic module

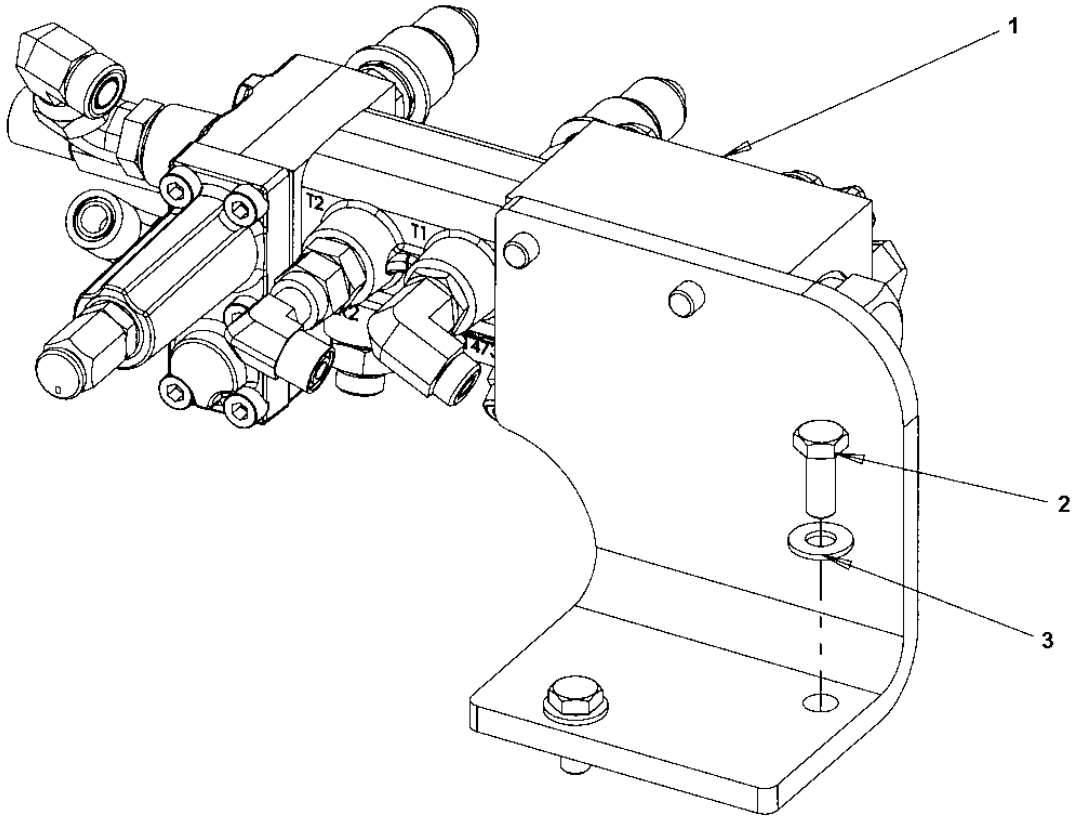

Brake valve dynamic module

Item	Part No	Rem	Qty	Description	Code
1			1	**Brake valve dynamic (Page 296)**	
2	4700500028		2	Screw	C
3	4700904230		2	Steel plain washer	C

Brake valve dynamic

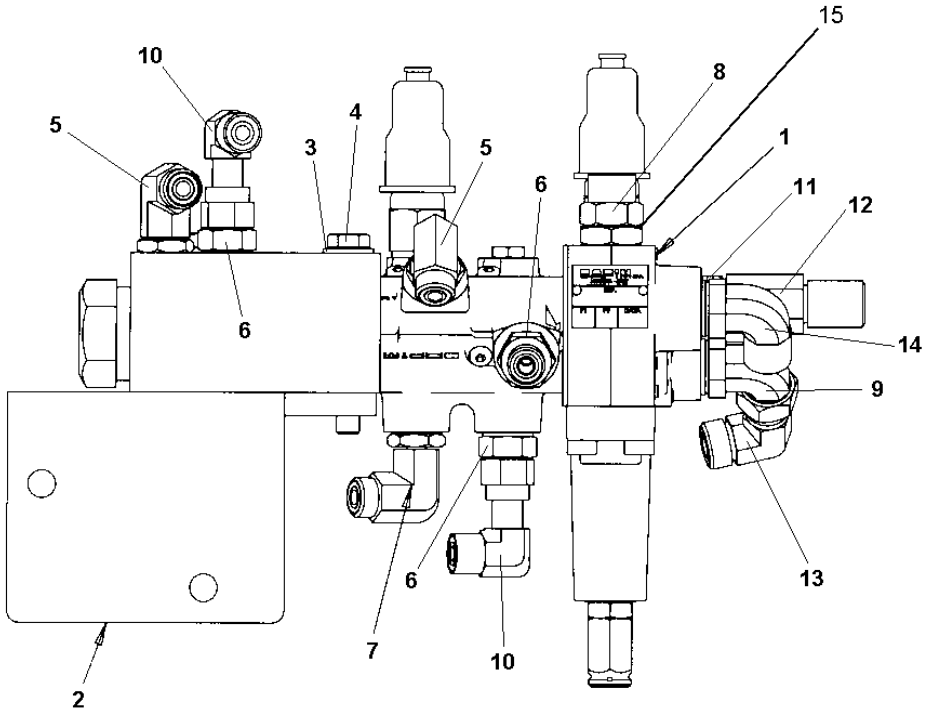

Brake valve dynamic

Item	Part No	Rem	Qty	Description	Code
1	4700396015		1	Brake valve dynamic	
2	4700395649		1	Bracket	
3	4700904230		1	Steel plain washer	C
4	4700500192		1	Screw M10x80	C
5	4700792246		2	Elbow 90 orfs	
6	4700792673		3	Straight connector orfs	
7	4811000086		1	Elbow 90 orfs	
8	4700792671		1	Straight connector orfs	D
9	4700792151		1	Elbow adapter 90	
10	4700791401		2	Elbow 90, O-ring with swivel	C
11	0570501047	A	1	Straight connector jic	
12	4700791320		1	Measuring fitting	
13	4700791745		1	Elbow 90, O-ring with swivel	
14	4811000087		1	Elbow 90 orfs	
15	4812100788	A	1	Accumulator pressure switch M10x1 DIN 3852-1X	

A) not shown on the illustration

Hydraulic hoses, Edge cutter (optional)

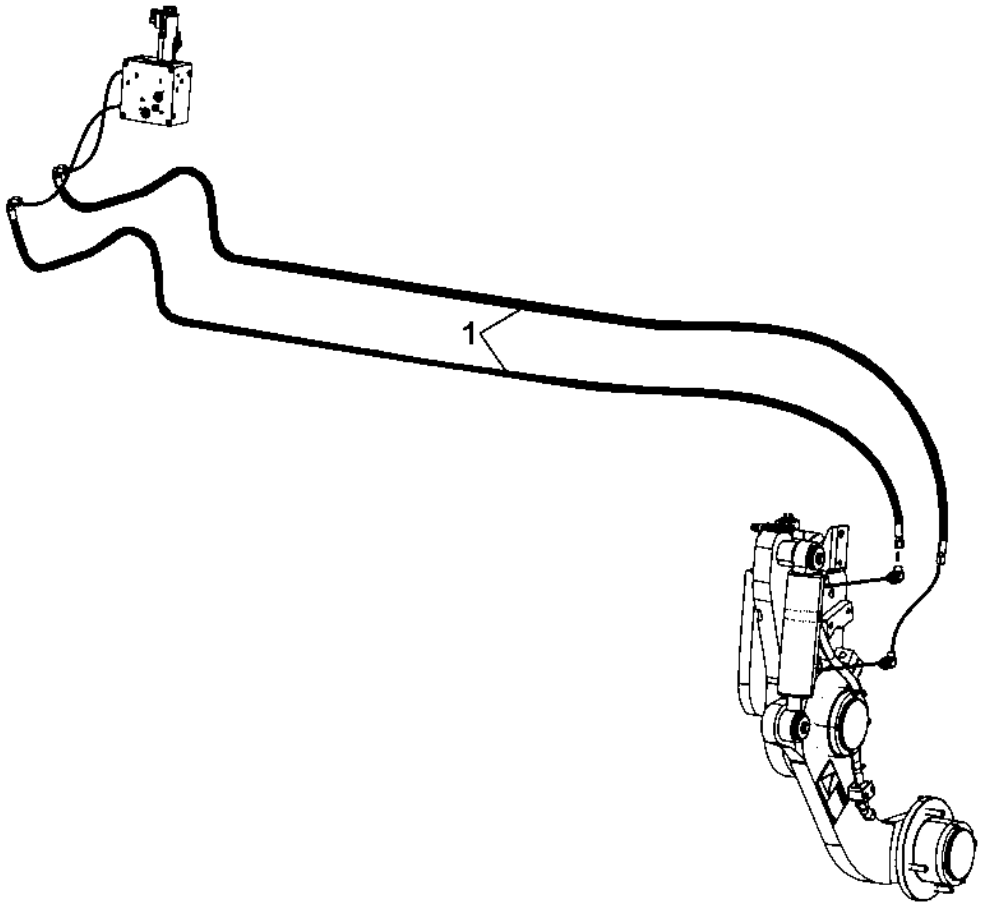

Hydraulic hoses, Edge cutter (optional)

Item	Part No	Rem	Qty	Description	Code
1	4700484362	A	2	Hydraulic hose	

A) L = 3,0 m

Hydraulic hoses Brake system

Item	Part No	Rem	Qty	Description	Code
1				**Hose assy kit (Page 302)**	

Hose assy kit

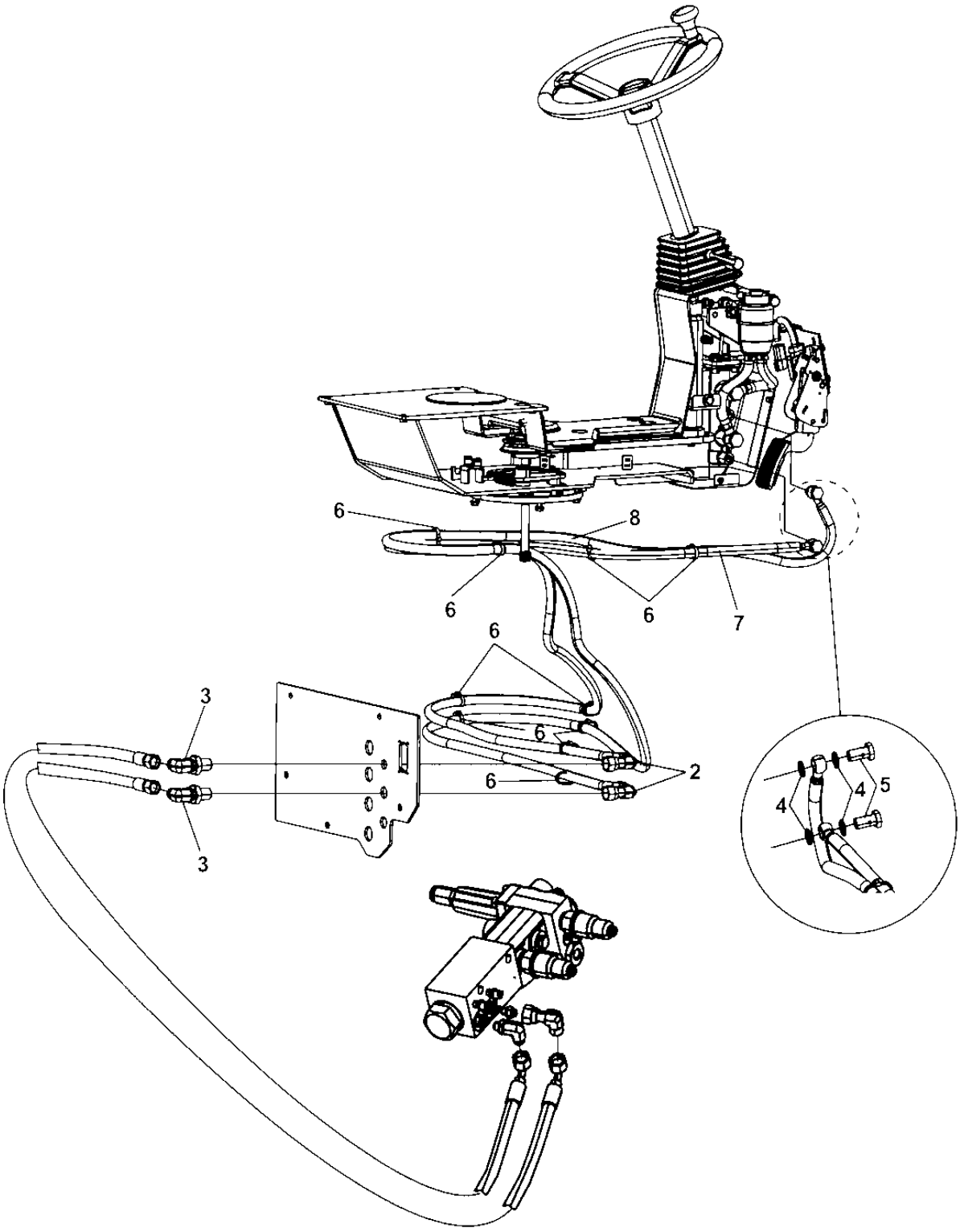

Hose assy kit

Item	Part No	Rem	Qty	Description	Code
2	4700791401		2	Elbow 90, O-ring with swivel	C
3	4700792744		2	Bulkhead union elbow 90	
4	4700162027		4	Sealing	B
5	4700792760		2	Screw M12	
6	4700313041		N	Cable ties	
7	4700396719		1	Hose	
8	4700396720		1	Hose	

Electrical equipment

Item	Part No	Rem	Qty	Description	Code
1				Electric cables, power supply (Page 306)	
2				Electric cables, power supply cab (Page 314)	
3				Electr. cables, Engine/ECU/Horn/Backup alarm (Page 316)	
4				Battery disconnector (Page 308)	
5				Tachograph (Page 326)	
6				Standard ECU module (Page 334)	
7				Driving & side direction lights (Page 338)	
8				Rotating beacon, working light (Page 358)	
9				Cable harness, Sprinkler and Edge Cutter option (Page 368)	
10				Cable harness Asphalt temp DCA, front option (Page 370)	
11				Cable harness Asphalt temp DCA, rear option (Page 372)	
12				Cable harness, Air on the run, option (Page 374)	

Electric cables, power supply

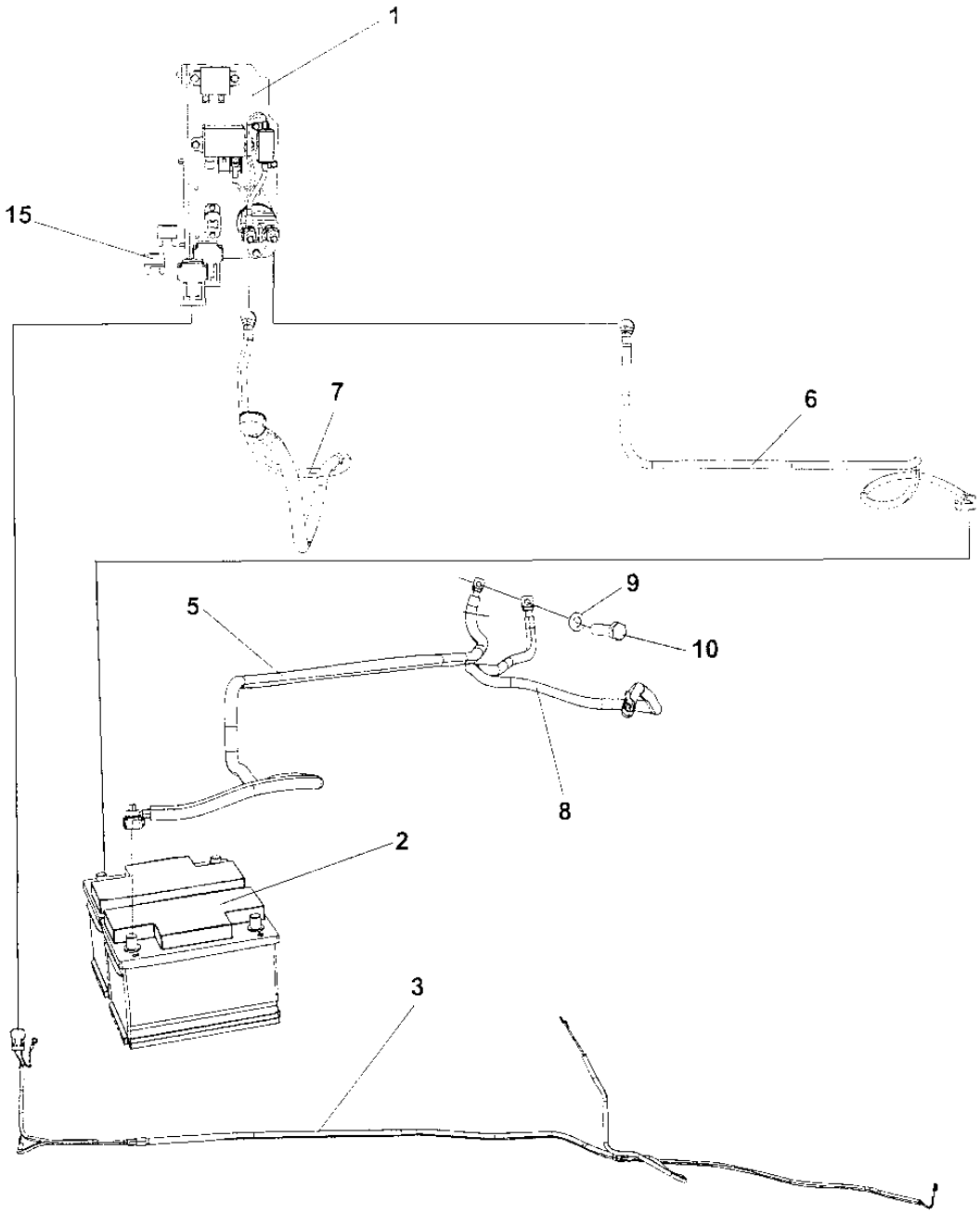

Electric cables, power supply

Item	Part No	Rem	Qty	Description	Code
1				**Battery disconnector (Page 308)**	
2				**Battery module (Page 312)**	
3	4700395934		1	Cable harness	
5	4700792786		1	Battery cable	
6	4700792766		1	Battery cable	
7	4700792770		1	Connection cable, coarse	
8	4700792787		1	Connection cable, coarse	
9	4700904230		1	Steel plain washer	C
10	4700500029		1	Hexagon head screw	C
15	4700904039		1	Fuse 50A Red High	A

Battery disconnector

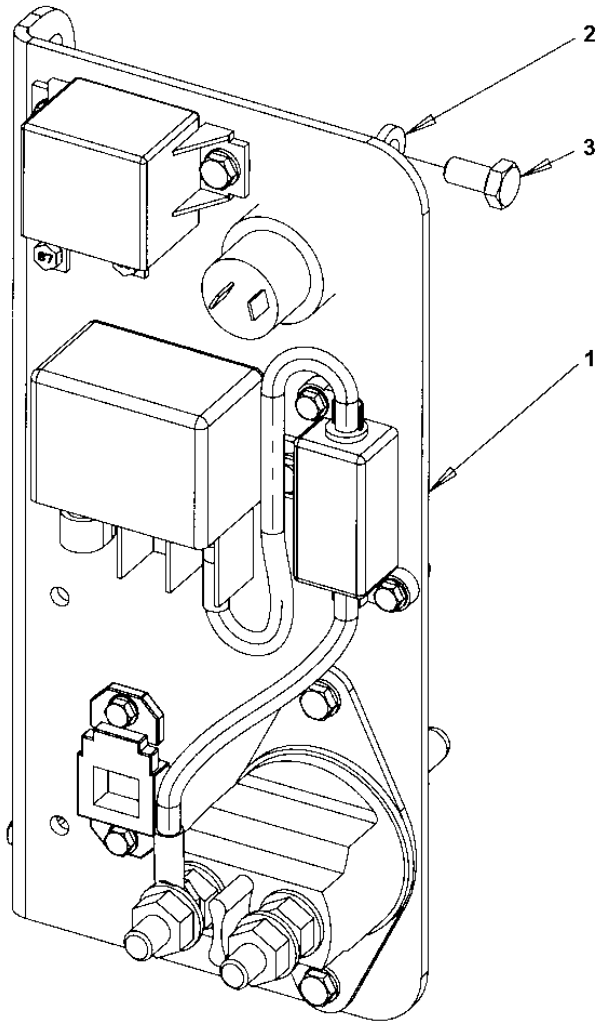

Battery disconnector

Item	Part No	Rem	Qty	Description	Code
1			1	**Battery disconnector (Page 310)**	
2	4700904556		3	Washer 8,4x16x3,0	C
3	4700500019		3	Hexagon head screw	C

Battery disconnector

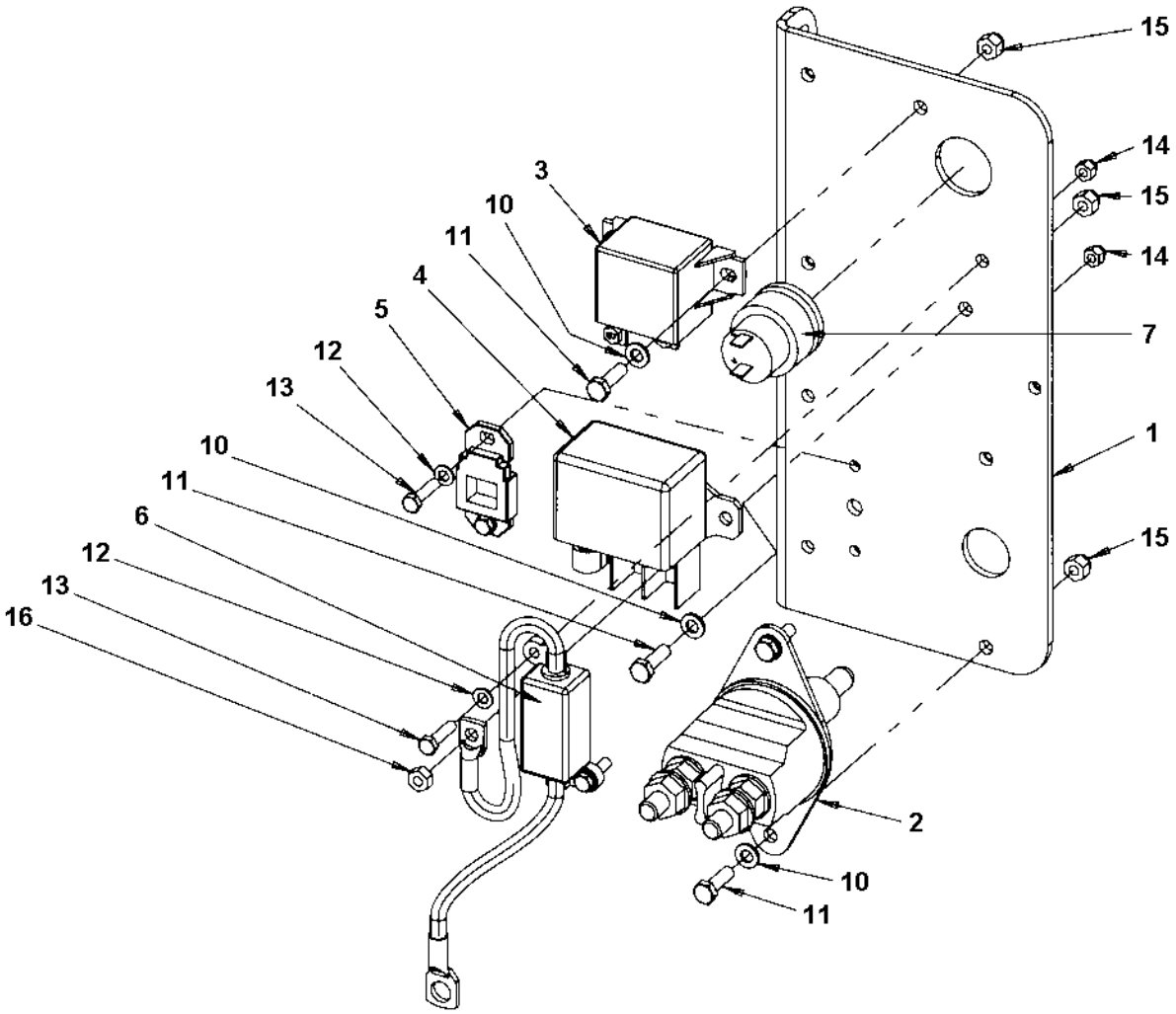

Battery disconnector

Item	Part No	Rem	Qty	Description	Code
1	4700391269		1	Holder	
2	4700903640		1	Battery switch	D
	4700903641		1	. Key	D
3	4700792309		1	Relay	D
4	4700792310		1	Relay	
5	4700904036		1	Fuse holder	D
6	4700391585	A	1	Cable harness	
	4700791479		1	. Fuse, Orange 125A	
7	4700395816		1	Plug socket 24V	
10	4700904228		6	Washer 6,4x12x1,5	C
11	4700500040		6	Screw M6-1x20 8,8	C
12	4700904281		4	Washer 5,3x10x1 300HV	C
13	4700500060		4	Screw M5-0,8x20 8.8	C
14	4700586001		4	Lock nut	C
15	4700586002		6	Lock nut M6 -8	C
16	4700570004		1	Nut M6X1,00 -8 A2K	C

A) Pre-heater

Battery module

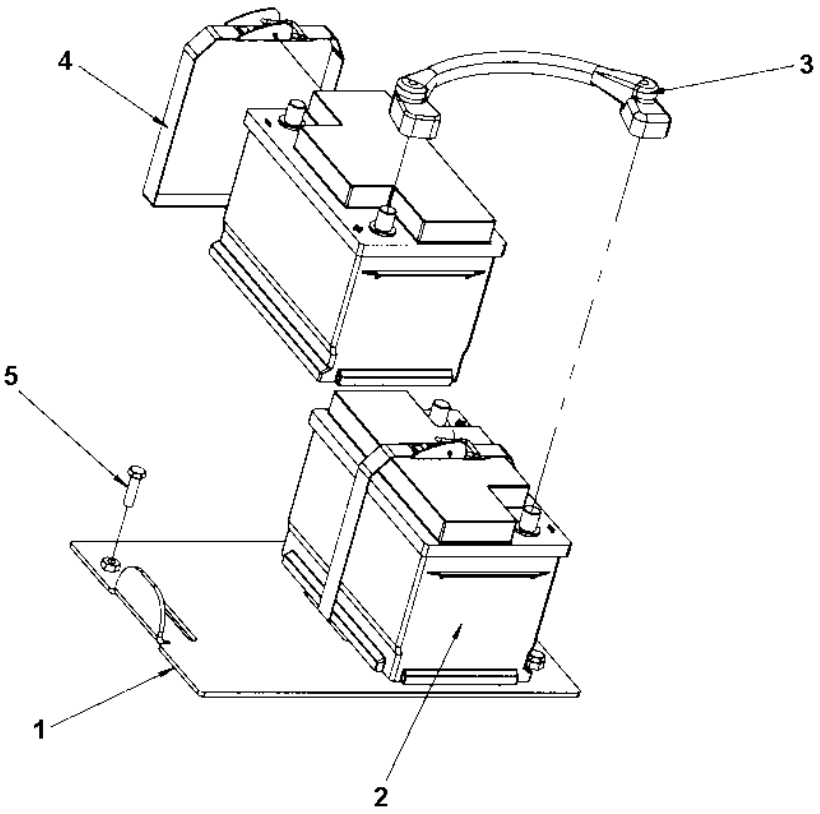

Battery module

Item	Part No	Rem	Qty	Description	Code
1	4700395861		1	Battery holder	
2	4700792311		2	Battery	
3	4700792768		1	Connection cable	
4	4700389662		2	Strap	
5	4700500030		2	Screw	C

Electric cables, power supply cab

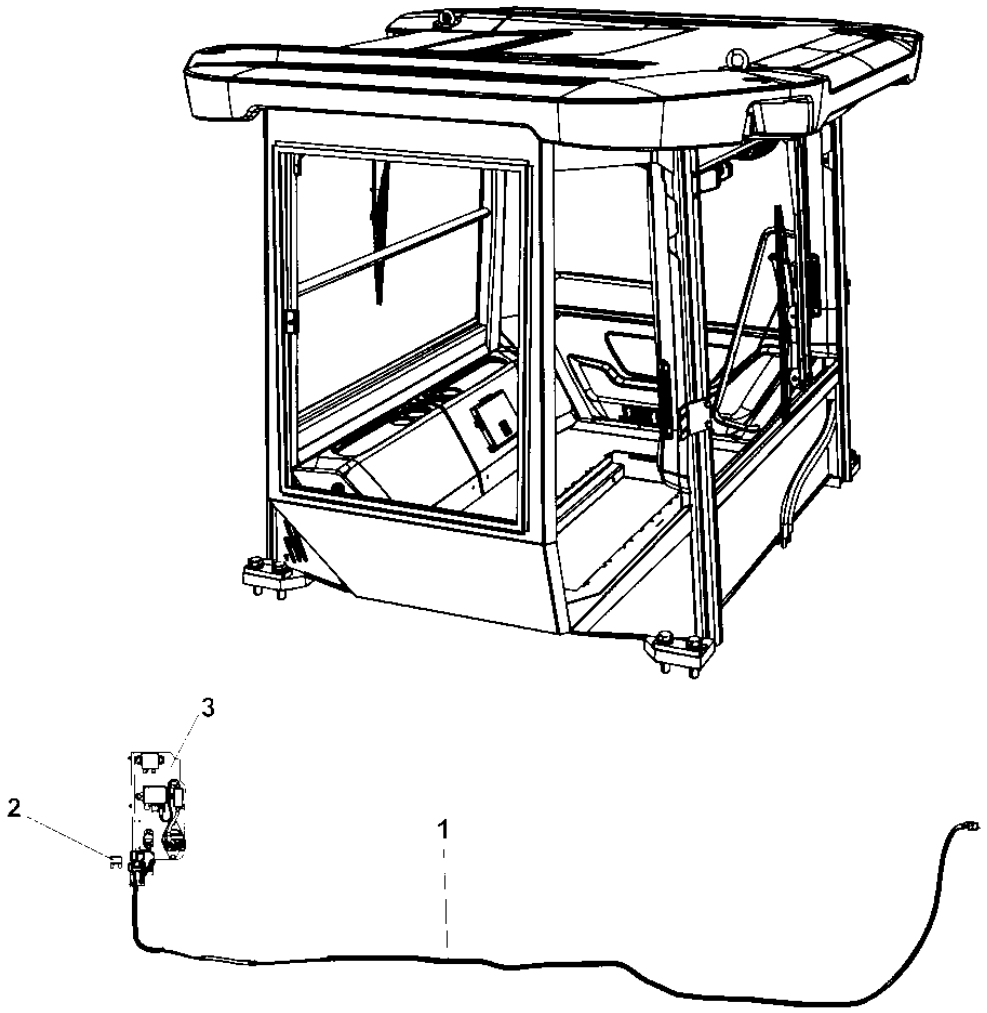

Electric cables, power supply cab

Item	Part No	Rem	Qty	Description	Code
1	4700396637		1	Cable harness, power supply Cab	
2	4700904039		1	Fuse 50A Red High	A
3			1	**Battery disconnector (Page 308)**	

Electr. cables, Engine/ECU/Horn/Backup alarm

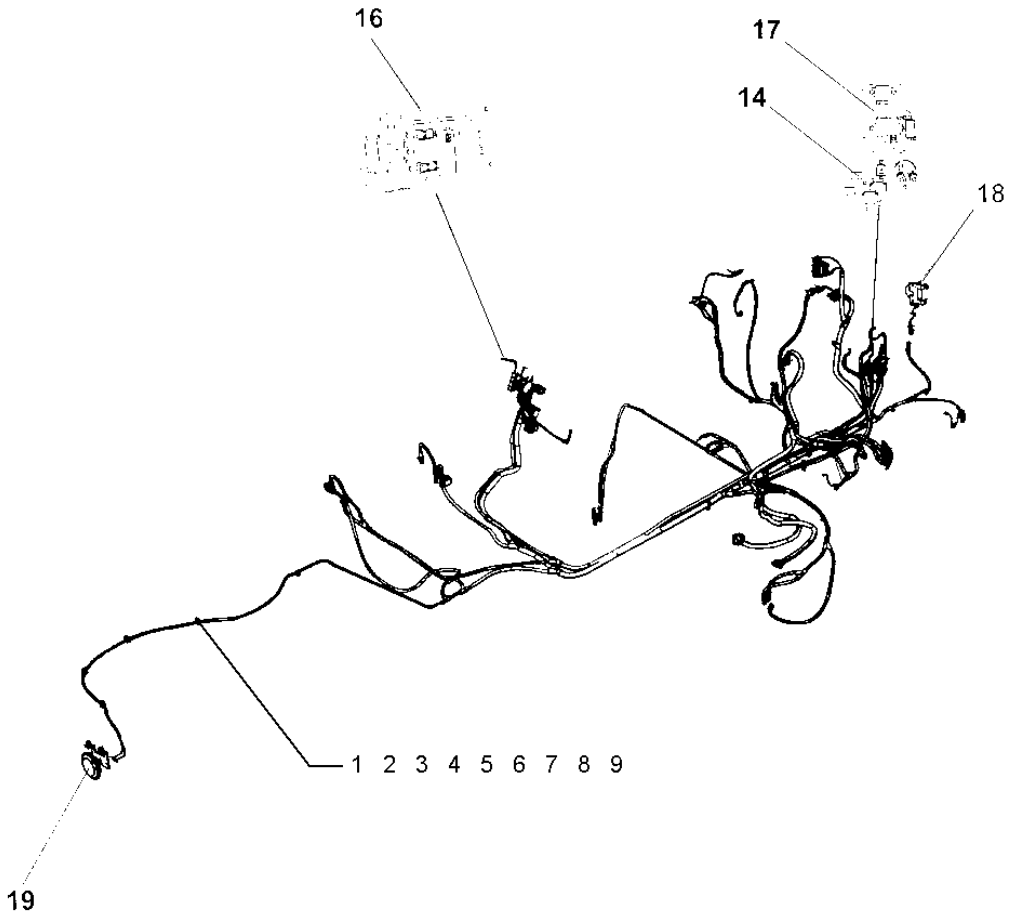

Electr. cables, Engine/ECU/Horn/Backup alarm

Item	Part No	Rem	Qty	Description	Code
1	4812112679		1	Cable harness From SN 10000501/10000502	
2	4700904229		3	Steel plain washer 8,4x16x1,5	C
3	4700570005		3	Nut M8	C
4	4700792771		N	Cable ties	C
5	4700921031		1	Clamp	
6	4700904735		2	Washer	C
7	4700904228		1	Washer 6,4x12x1,5	C
8	4700500015		1	Screw M6X30 8.8	C
9	4700586002		1	Lock nut M6 -8	C
14	4700904037		1	Fuse 30A	A
16			1	**Battery disconnector (Page 308)**	
17			1	**Battery module (Page 312)**	
18			1	**Back-up alarm module (Page 318)**	
19			1	**Horn module (Page 322)**	

Back-up alarm module

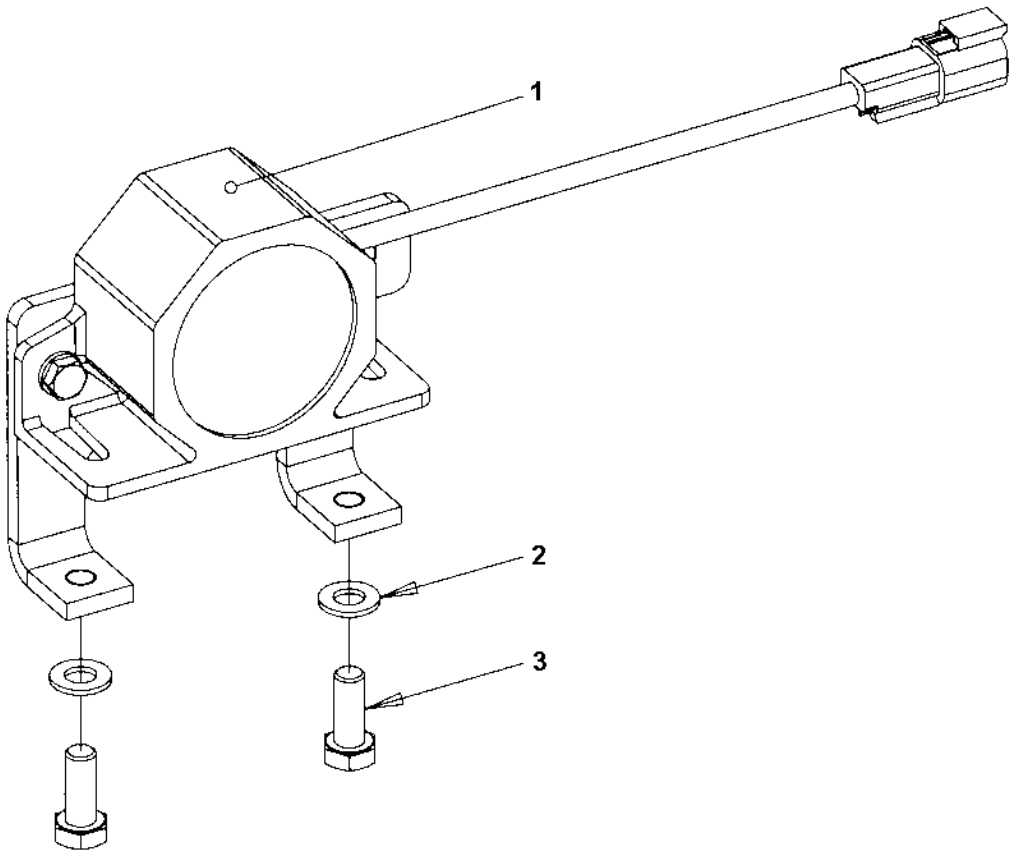

Back-up alarm module

Item	Part No	Rem	Qty	Description	Code
1			1	**Back-up alarm (Page 320)**	
2	4700904229		2	Steel plain washer 8,4x16x1,5	C
3	4700500053		2	Screw M8x20H 8.8	C

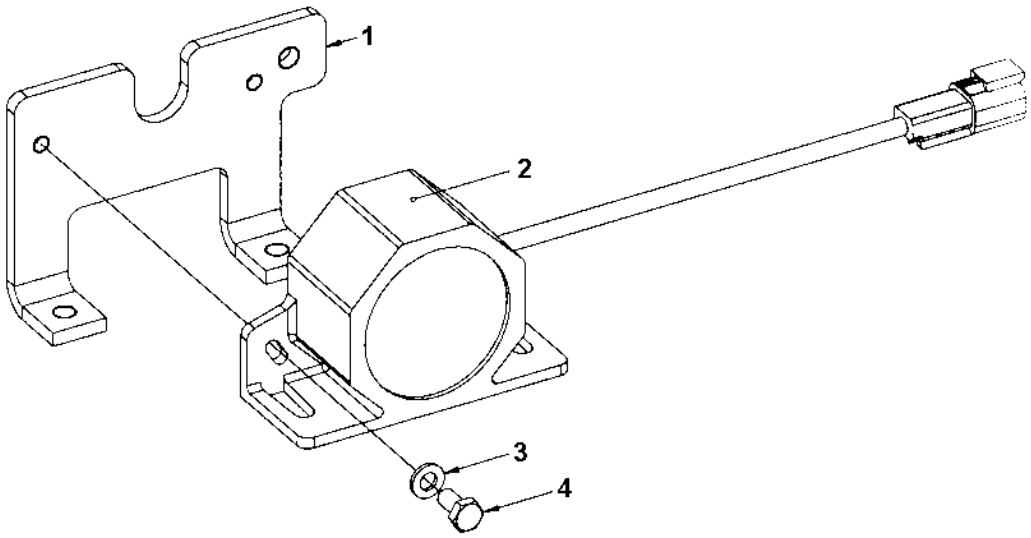
1
2
3
4

Back-up alarm

Item	Part No	Rem	Qty	Description	Code
1	4700396768		1	Bracket	
2	4700904911		1	Back-up alarm 97 dB	
3	4700904228		2	Washer 6,4x12x1,5	C
4	4700500012		2	Screw M6x12	C

Horn module

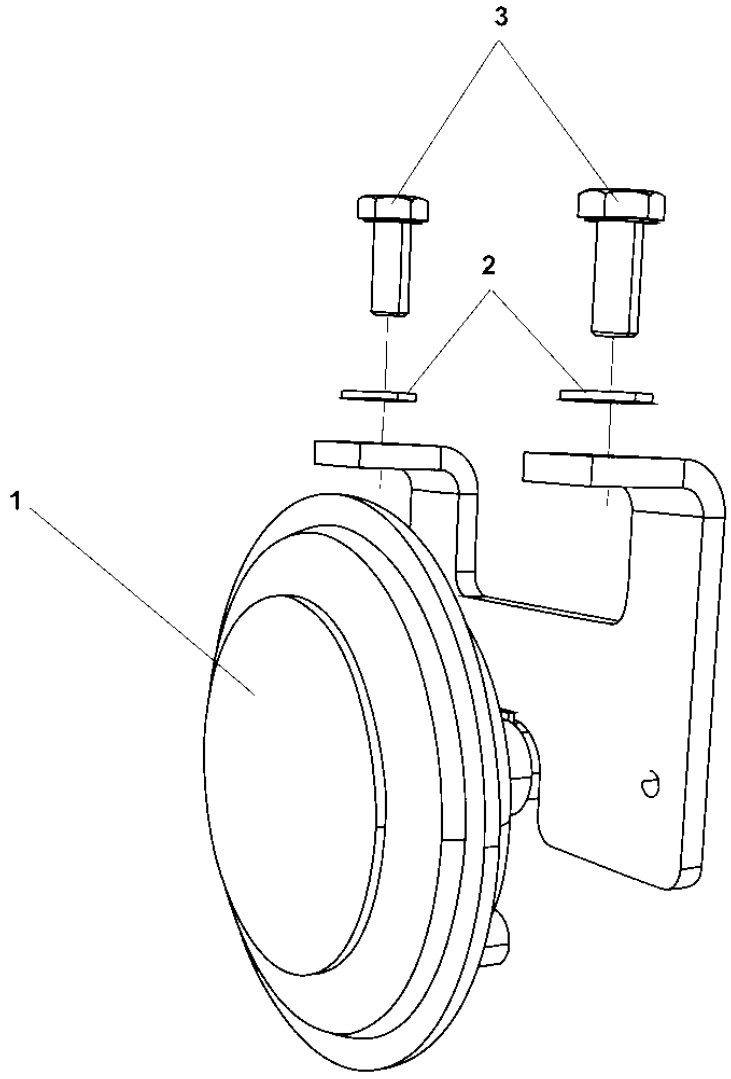

Horn module

Item	Part No	Rem	Qty	Description	Code
1			1	**Horn (Page 324)**	
2	4700904229		2	Steel plain washer 8,4x16x1,5	C
3	4700500053		2	Screw M8x20H 8.8	C

Horn

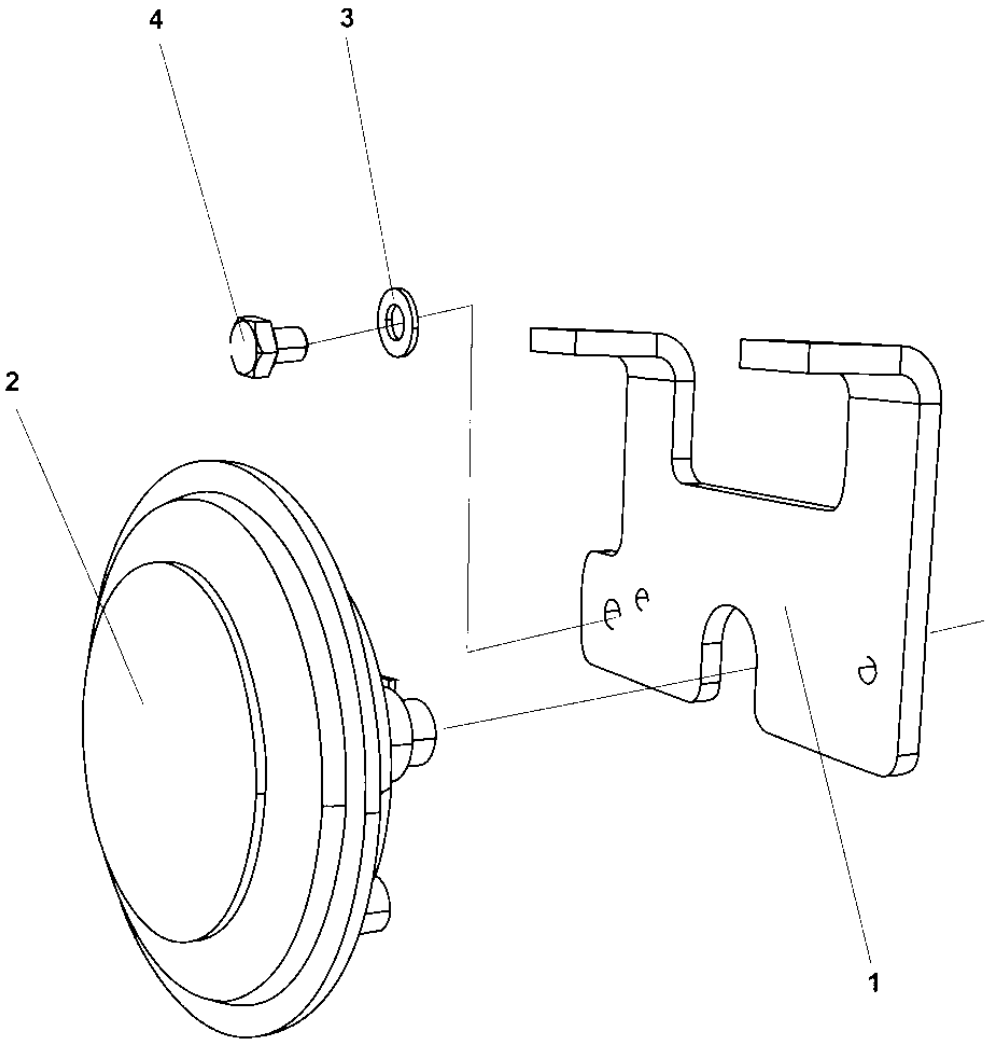

Horn

Item	Part No	Rem	Qty	Description		Code
1	4700396768		1	Bracket		
2	4700999014		1	Horn		
3	4700904229		1	Steel plain washer	8,4x16x1,5	C
4	4700500042		1	Screw		

Tachograph

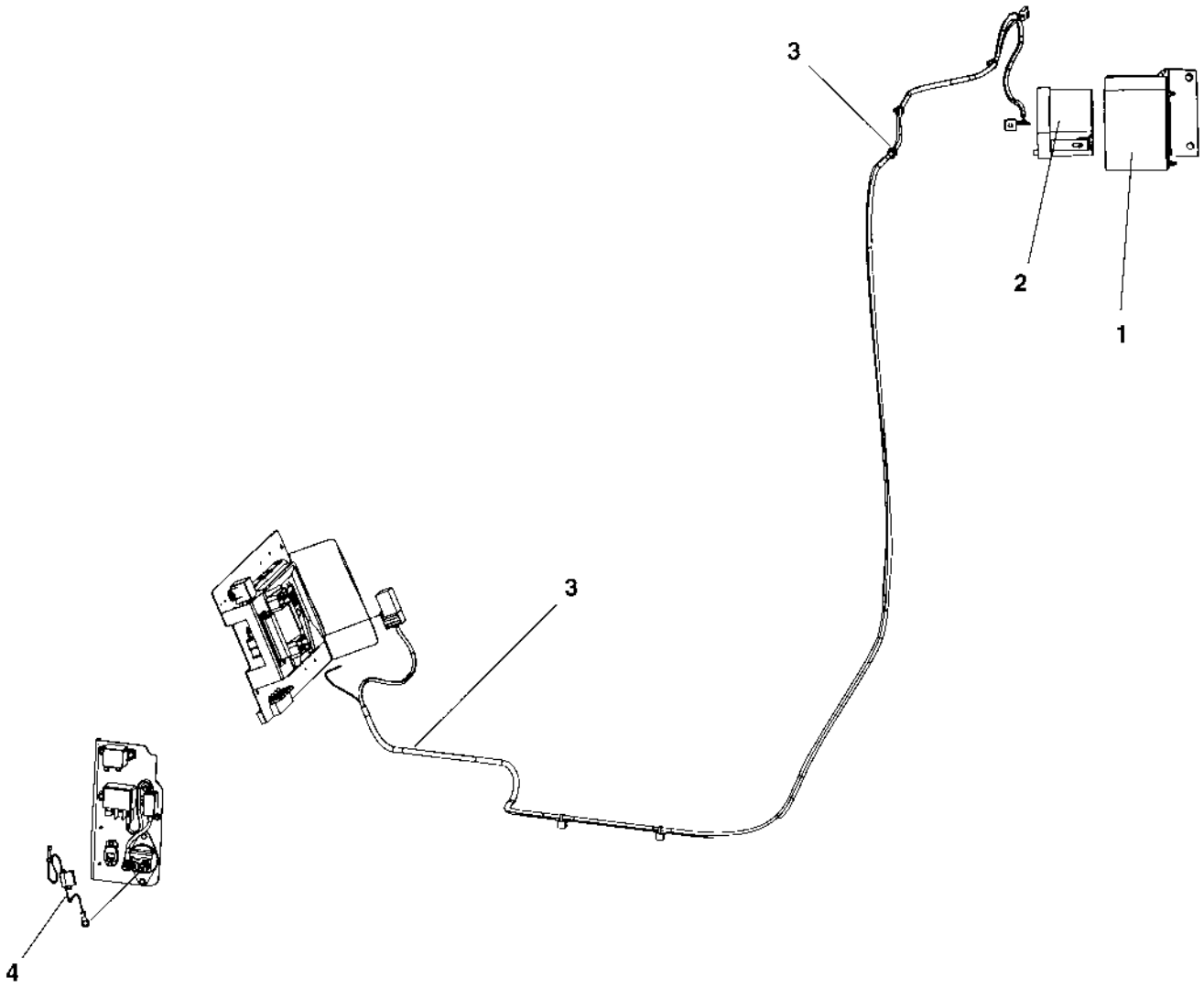

Tachograph

Item	Part No	Rem	Qty	Description	Code
1			1	**Tachograph holder module (Page 328)**	
2	4700395226		1	Tachograph	
3			1	**Cable harness kit (Page 330)**	
4			1	**Power supply module (Page 332)**	

Tachograph holder module

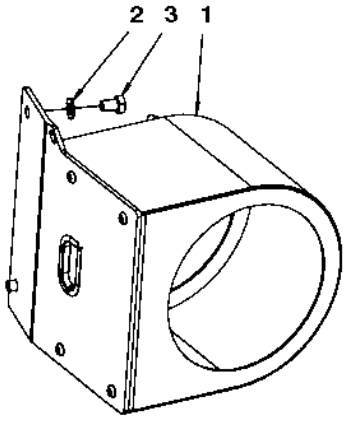

Tachograph holder module

Item	Part No	Rem	Qty	Description	Code
1	4700393776		1	Tachograph holder	
2	4700904229		2	Steel plain washer 8,4x16x1,5	C
3	4700500018		2	Screw M8-1,25x12 8,8	C

Cable harness kit

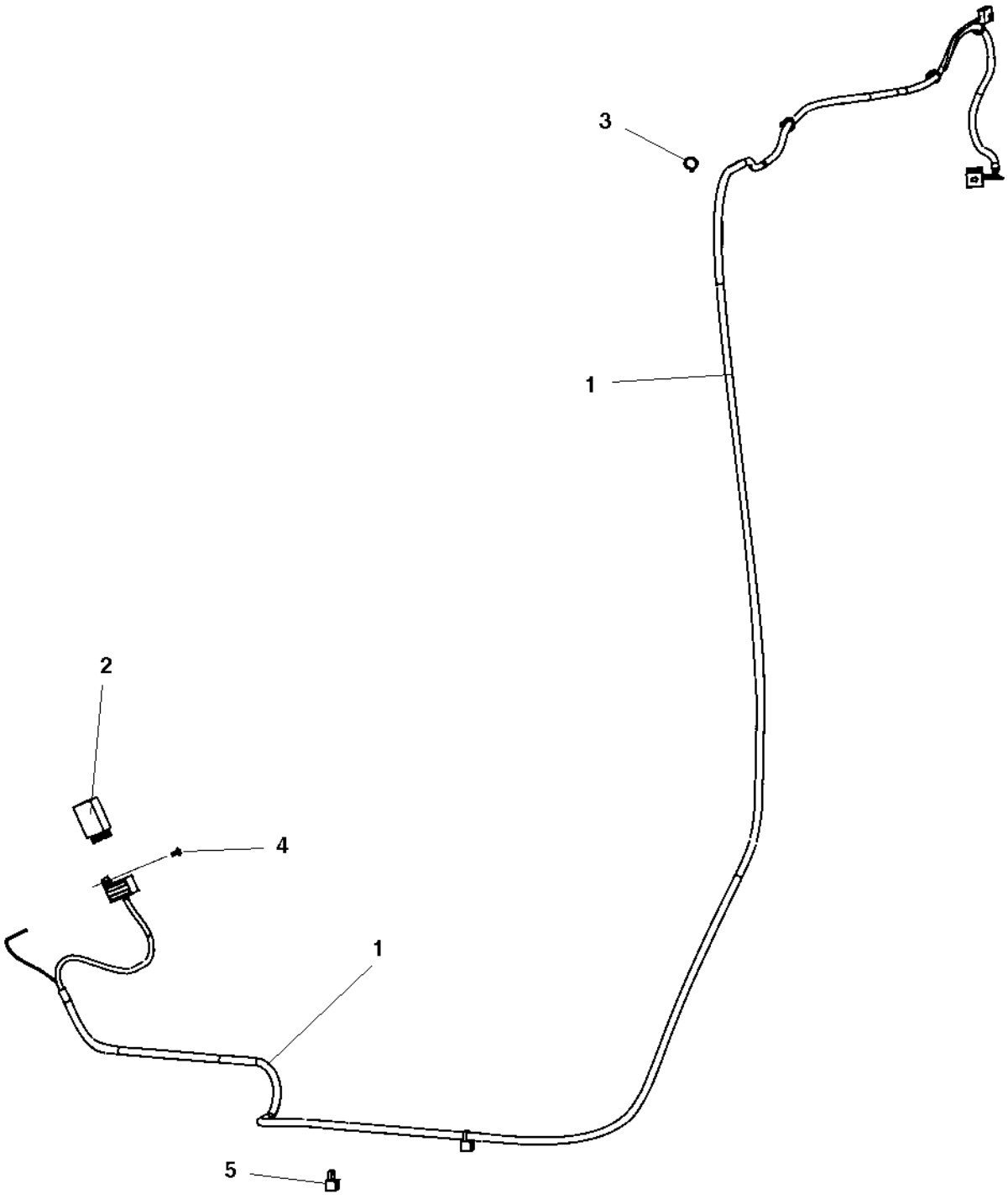

Cable harness kit

Item	Part No	Rem	Qty	Description	Code
1	4700394931		1	Cable harness	
2	4700395023		1	Frequency converter	
3	4700313041		8	Cable ties	
4	4700792210		1	Screw torx	
5	4700792667		2	Cable tie with holder	

Power supply module

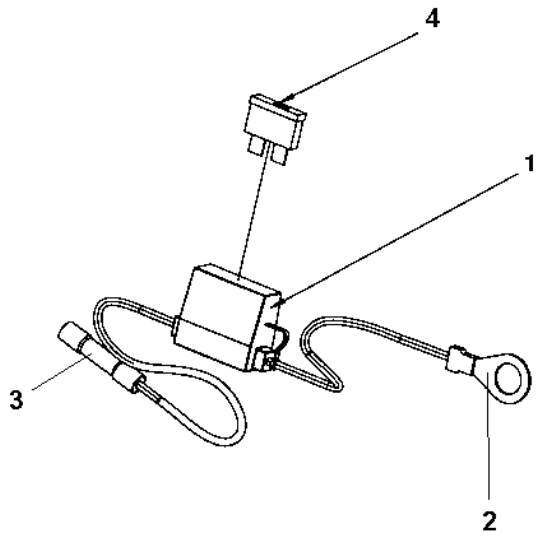

Power supply module

Item	Part No	Rem	Qty	Description	Code
1	4700904015		1	Fuse holder	D
2	4700960067		1	Cable clip	
3	4700904024		1	Splicing sleeve	
4	4700901227		1	Fuse 10A	A

Standard ECU module

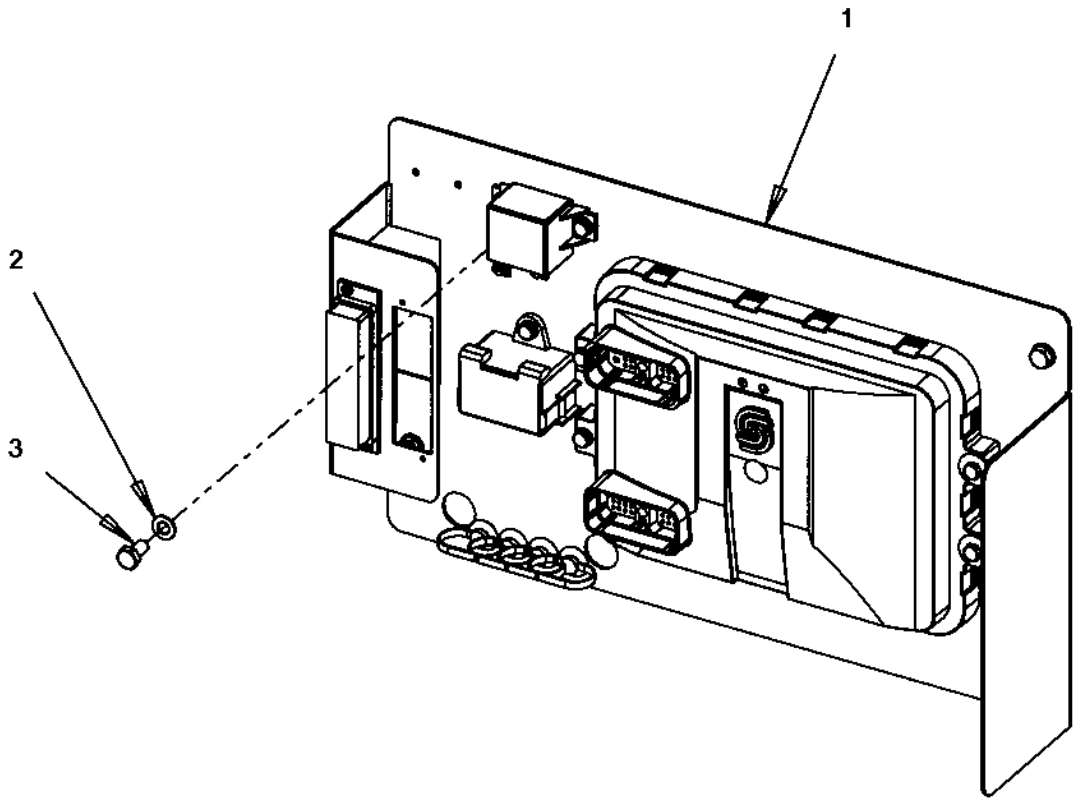

Standard ECU module

Item	Part No	Rem	Qty	Description	Code
1			1	**Standard ECU assembly (Page 336)**	
2	4700904229		4	Steel plain washer 8,4x16x1,5	C
3	4700500019		4	Hexagon head screw	C

Standard ECU assembly

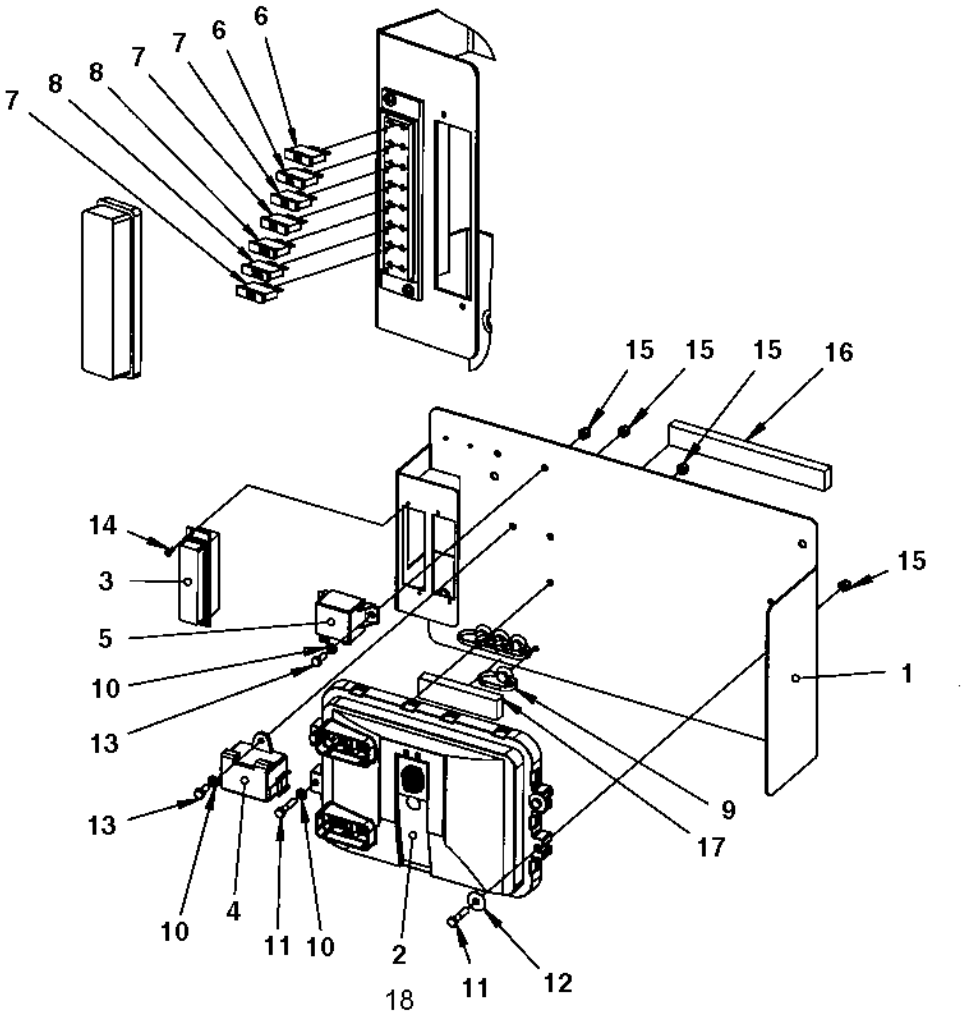

Standard ECU assembly

Item	Part No	Rem	Qty	Description	Code
1	4700391213		1	Mounting plate	
2	4700390860		1	Control unit	
3	4700791185		2	Fuse box	
4	4700791551		1	Junction block	
5	4700792309		1	Relay	D
6	4700901225		2	Fuse 5A	A
7	4700901227		3	Fuse 10A	A
8	4700903741		2	Fuse 20A Yellow Medium	A
9	4700792441		4	Cable tie with holder	C
10	4700904228		5	Washer 6,4x12x1,5	C
11	4700500015		4	Screw M6X30 8.8	C
12	4700928467		2	Washer	C
13	4700500013		3	Screw M6-1x16 8,8	C
14	4700901767		4	Screw ST3,5x9,5 Black	
15	4700586002		7	Lock nut M6 -8	C
16	4700791597	A	1XL	Rubber strip	
17	4700791597	B	1XL	Rubber strip	
18	4812113273		1	Software	
	4812112881		1	. Software	
	4700397572A		1	. Software	
	4812112882		1	. Software	

A) L= 0,2 m
B) L= 0,1 m

Driving & side direction lights

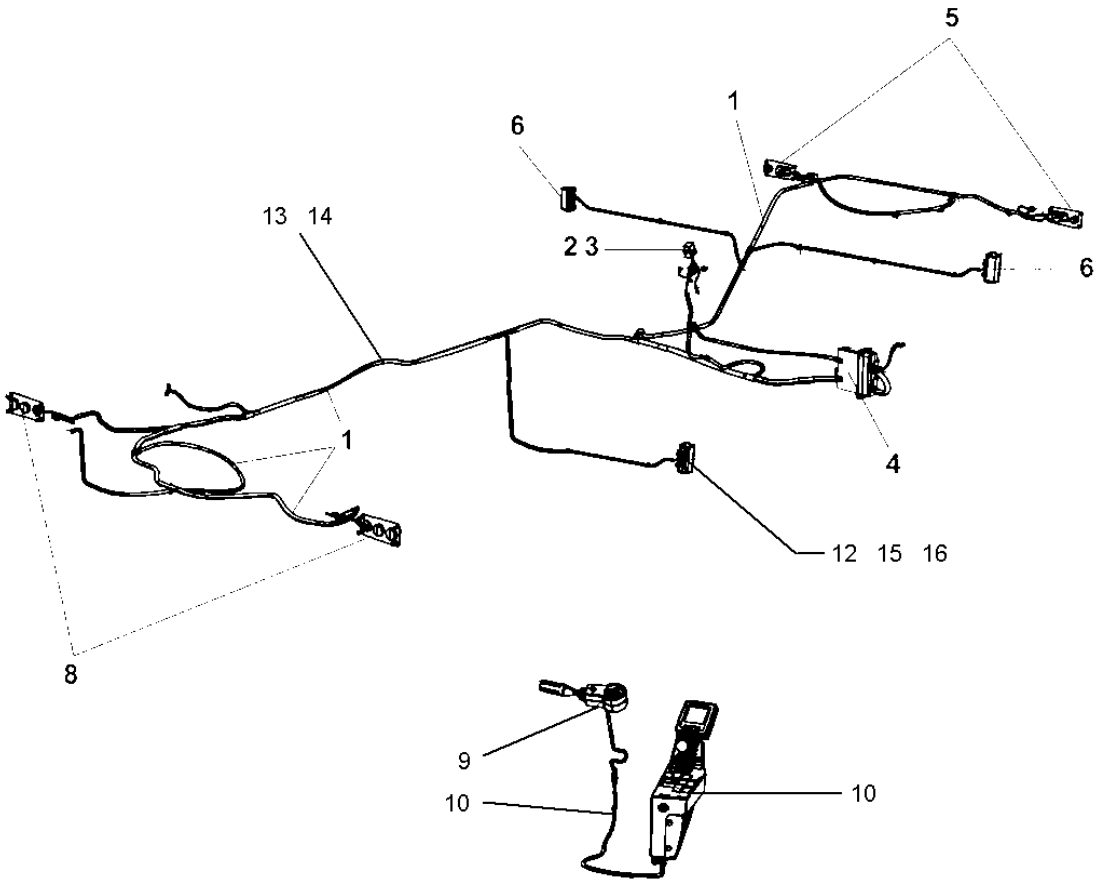

Driving & side direction lights

Item	Part No	Rem	Qty	Description	Code
1	4700395823		1	Cable harness	
2	4700792422		1	Relay	
3	4700792210		1	Screw torx	
4			1	**Accessories ECU module (Page 340)**	
5			2	**Driving lights, front RH (Page 342)**	
			2	**Driving lights, front LH (Page 344)**	
6			2	**Turn signals (Page 346)**	
8			2	**Driving lights, rear (Page 348)**	
9			1	**Steering column switch module (Page 350)**	
10			1	**Cable harness and switch module (Page 352)**	
11			1	**Registration plate light module (Page 354)**	
12	4700901227		1	Fuse 10A	A
13	4700395352		8	Cable tie holder	
14	4700313068		8	Cable ties L=92 mm	
15	4811000163		1	Relay	
16	4700901226		1	Fuse 7,5A	

Accessories ECU module

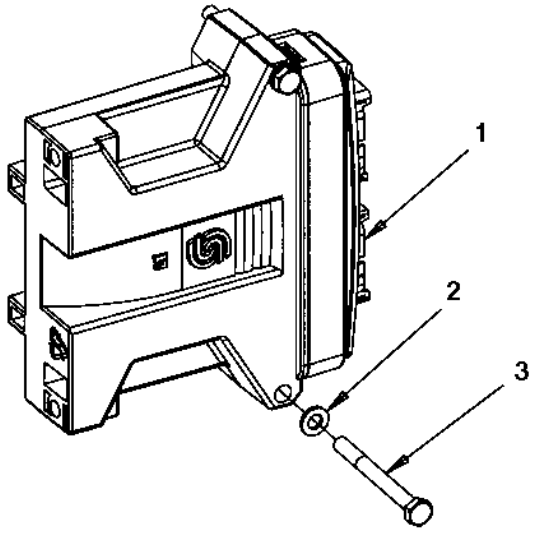

Accessories ECU module

Item	Part No	Rem	Qty	Description	Code
1	4700390862		1	Control unit without software	
2	4700904228		2	Washer 6,4x12x1,5	C
3	4700500187		2	Screw M6x60	C

Driving lights, front RH

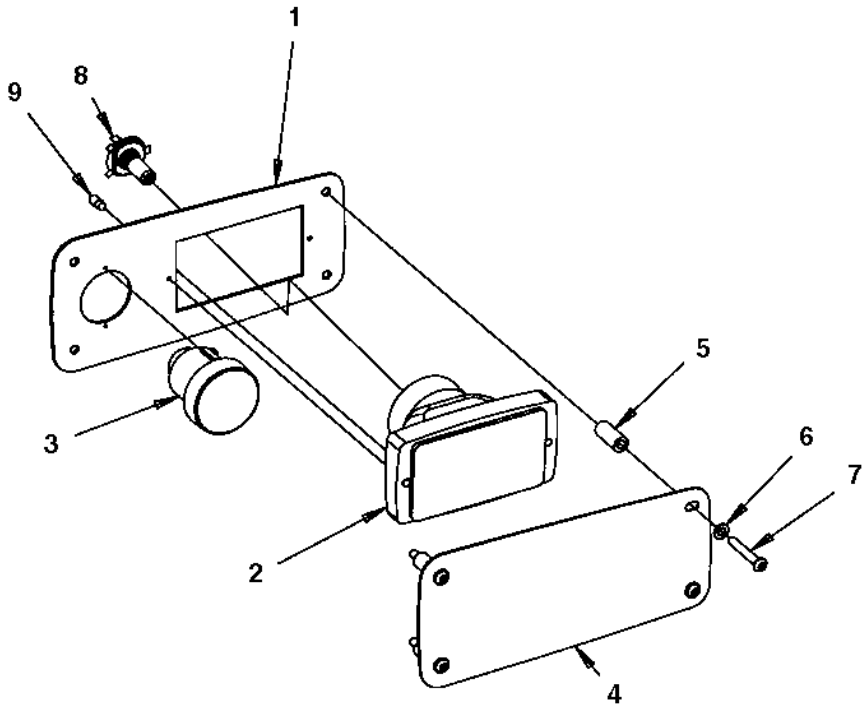

Driving lights, front RH

Item	Part No	Rem	Qty	Description	Code
1	4700390434		1	Lights bracket	
2	4700791951		1	Headlight	
3	4700792521		1	Direction indicator	
4	4700390436		1	Protecting cover	
5	4700391115		4	Spacer sleeve	
6	4700904229		4	Steel plain washer 8,4x16x1,5	C
7	4700792361		4	Hexagon socket head cap screw	
8	4700792353		1	Bulb 24V 75/70W H4	
9	4700792350		1	Bulb 24V 2W	

Driving lights, front LH

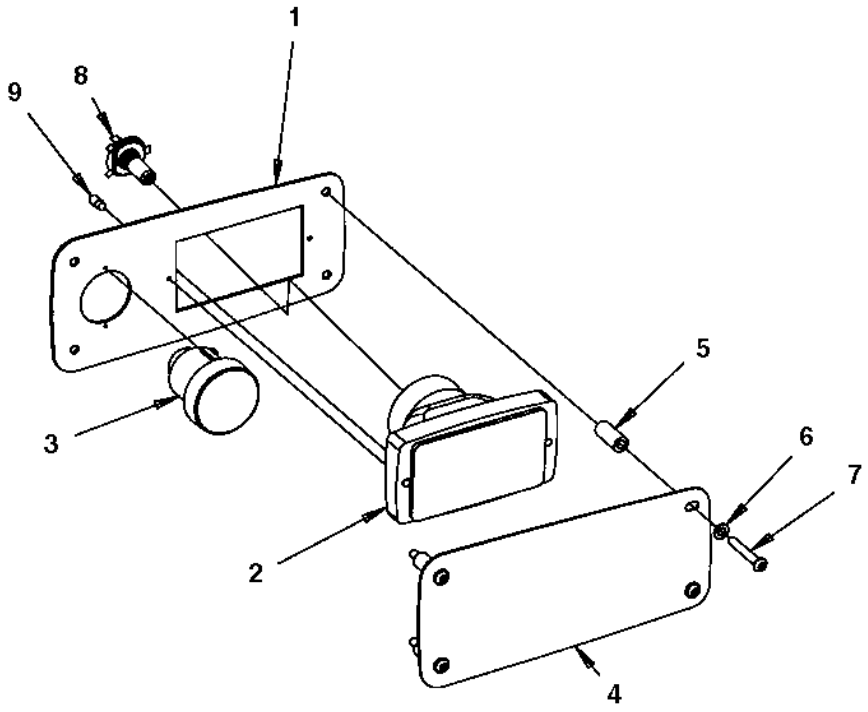

Driving lights, front LH

Item	Part No	Rem	Qty	Description	Code
1	4700390434		1	Lights bracket	
2	4700792059		1	Headlight	
3	4700792521		1	Direction indicator	
4	4700390436		1	Protecting cover	
5	4700391115		4	Spacer sleeve	
6	4700904229		4	Steel plain washer 8,4x16x1,5	C
7	4700792361		4	Hexagon socket head cap screw	
8	4700792353		1	Bulb 24V 75/70W H4	
9	4700792350		1	Bulb 24V 2W	

Turn signals

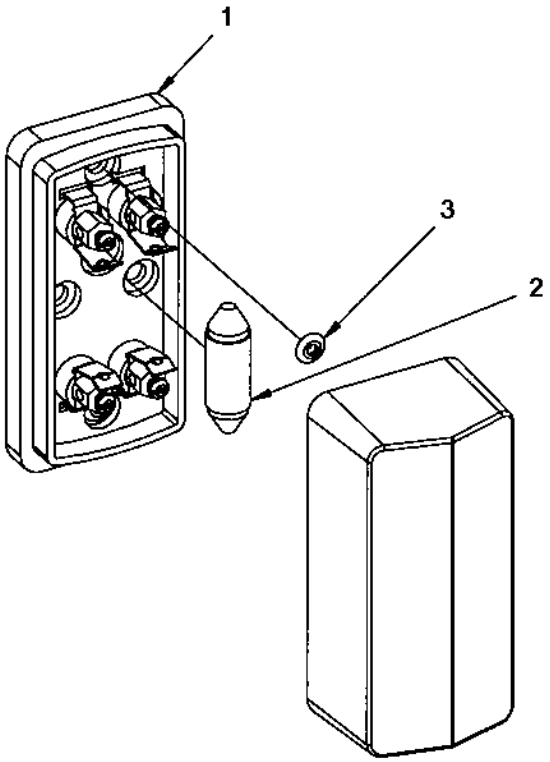

Turn signals

Item	Part No	Rem	Qty	Description	Code
1	4700902064		1	Direction lights	B
2	4700792354		1	Bulb 24V 5W	
3	4700923253		2	Rivet	C

Driving lights, rear

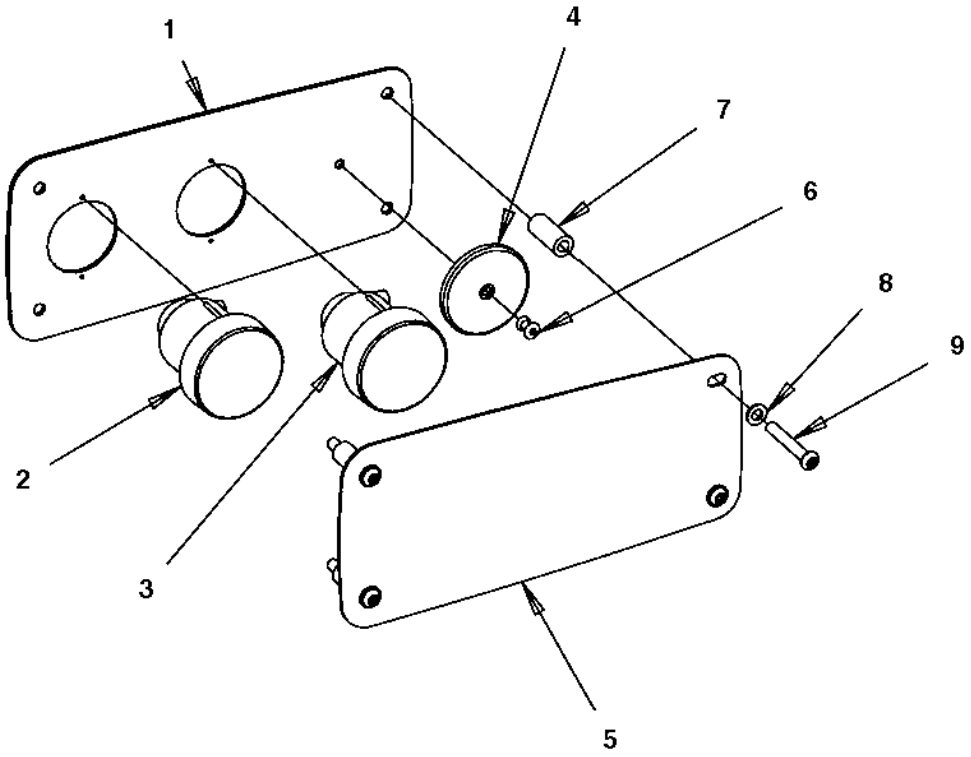

Driving lights, rear

Item	Part No	Rem	Qty	Description	Code
1	4700390435		1	Lights bracket	
2	4700792520		1	Direction indicator	
	4700792349		1	. Bulb 24V 21W	
3	4700792519		1	Brake/position light	
	4700792351		1	. Bulb 24V 21/5W	
4	4700791956		1	Reflector, red	
5	4700390436		1	Protecting cover	
6	4700791754		1	Blind rivet	
7	4700391115		4	Spacer sleeve	
8	4700904229		4	Steel plain washer 8,4x16x1,5	C
9	4700792361		4	Hexagon socket head cap screw	

Steering column switch module

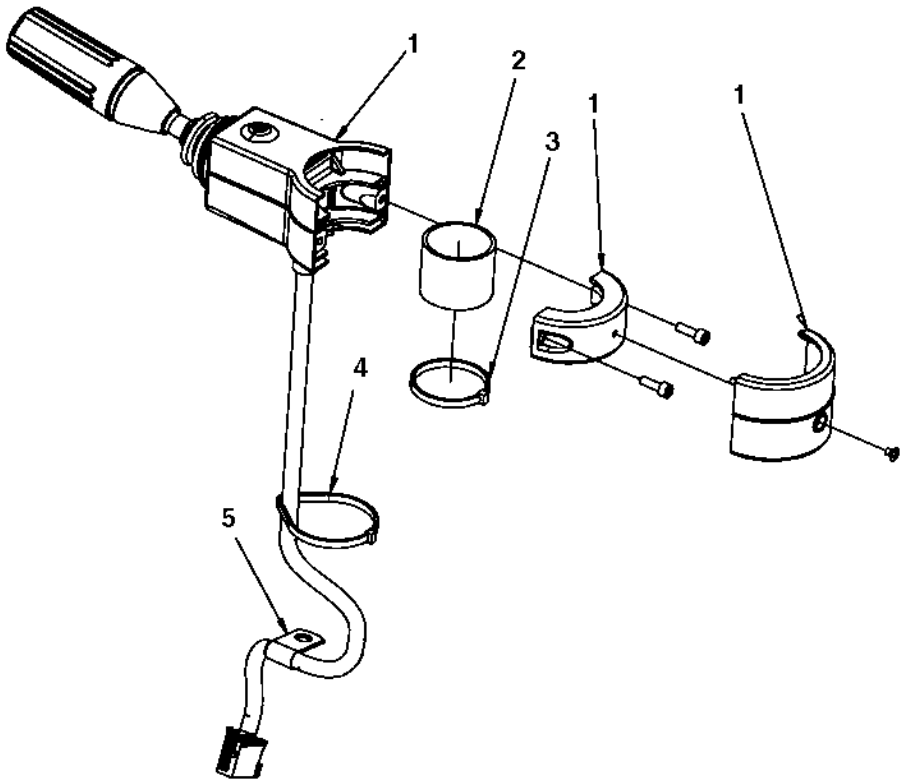

Steering column switch module

Item	Part No	Rem	Qty	Description	Code
1	4700392450		1	Steering column switch	
2	4700392451		1	Rubber cloth	
3	4700313041		1	Cable ties	
4	4700792609		1	Cable ties	
5	4700921080		1	Clamp	C

Cable harness and switch module

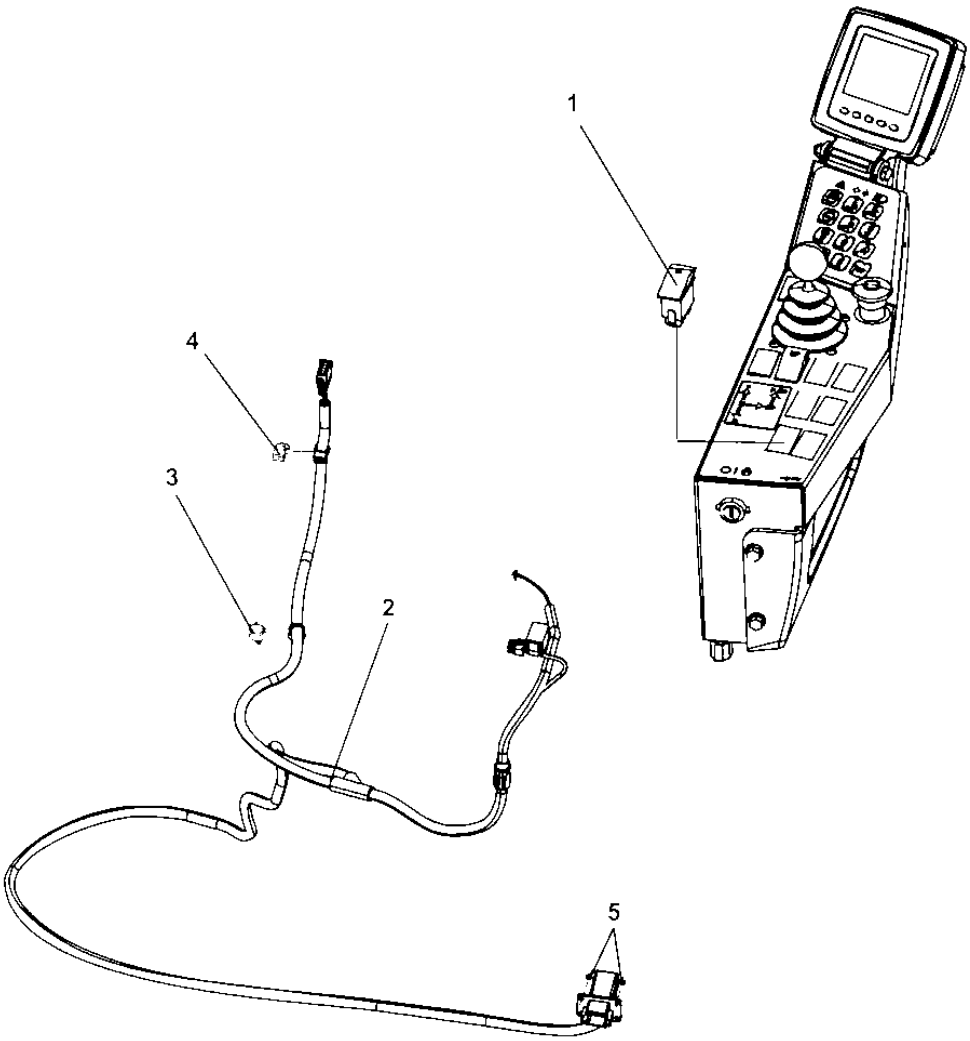

Cable harness and switch module

Item	Part No	Rem	Qty	Description	Code
1	4700792398		1	Switch	
2	4812110898		1	Cable harness	
3	4700792441		1	Cable tie with holder	C
4	4700792537		1	Cable tie with holder	
5	4700791709		4	Pop rivet	C

Registration plate light module

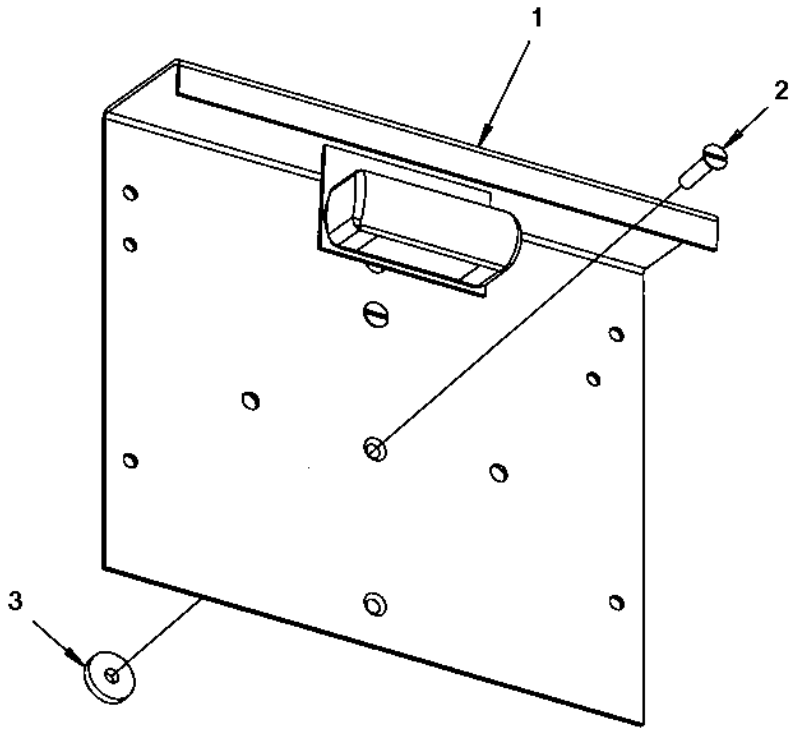

Registration plate light module

Item	Part No	Rem	Qty	Description	Code
1			1	**Registration plate light (Page 356)**	
2	4700928784		2	Screw	
3	4700904735		2	Washer	C

Registration plate light

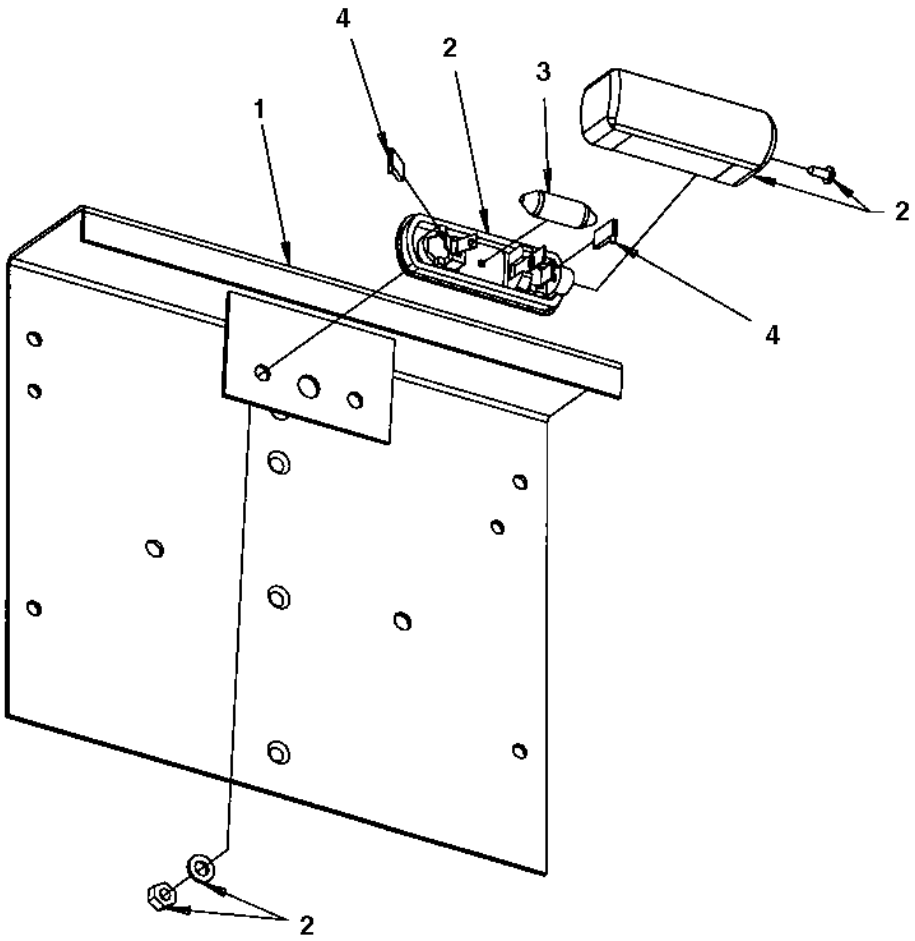

Registration plate light

Item	Part No	Rem	Qty	Description	Code
1	4700355797		1	Licence plate holder	
2	4700929455		1	Licence plate light	D
3	4700792354		1	Bulb 24V 5W	
4	4700792035		2	Push-on terminal	

Rotating beacon, working light

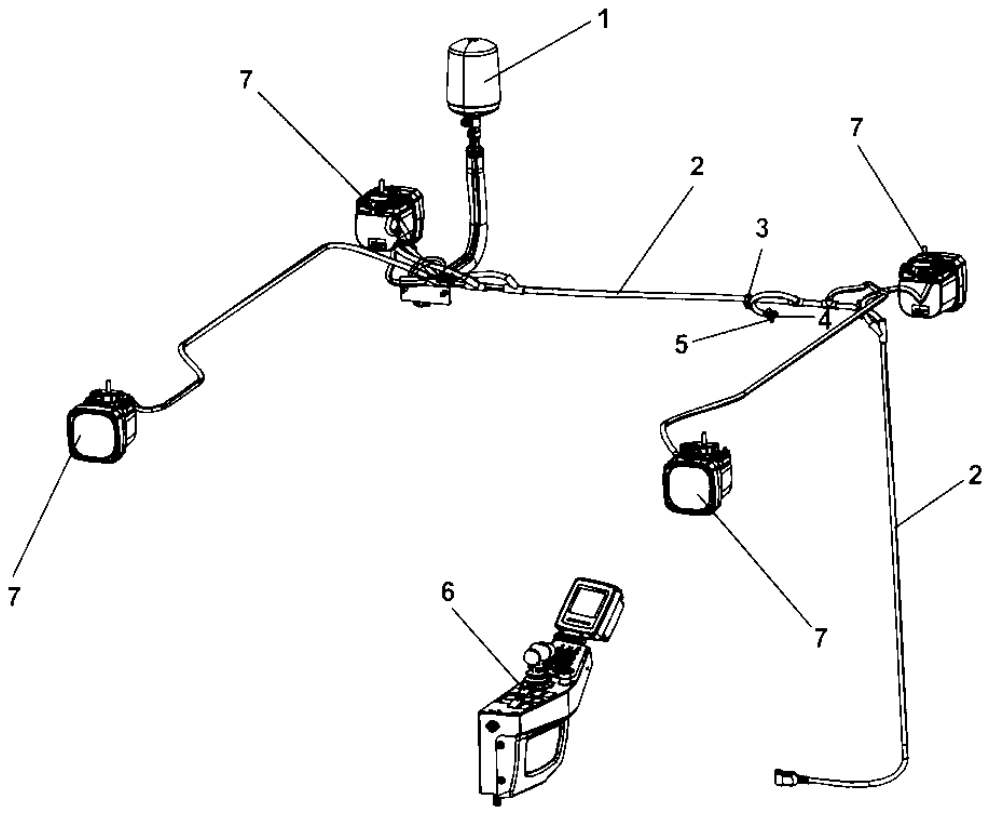

Rotating beacon, working light

Item	Part No	Rem	Qty	Description	Code
1		A,B,C	1	**Rotating beacon module - See A, B, C for S/N (Page 360)**	
		D,E,F	1	**Rotating beacon module - See D, E, F for S/N (Page 362)**	
2	4700395239		1	Cable harness	
3	4700313102		N	Cable ties	
4	4700570005		2	Nut M8	C
5	4700904229		1	Steel plain washer 8,4x16x1,5	C
6	4700792397		1	Switch	
7			4	**Working light module H3 (Page 364)**	
			4	**Working light module Xenon (Page 366)**	

A) CP224: Up to S/N B000700
B) CP224W: Up to S/N B000671
C) CP274: Up to S/N B000015
D) CP224: From S/N B000701
E) CP224W: From S/N B000672
F) CP274: From S/N B000016

Rotating beacon module - See A, B, C for S/N

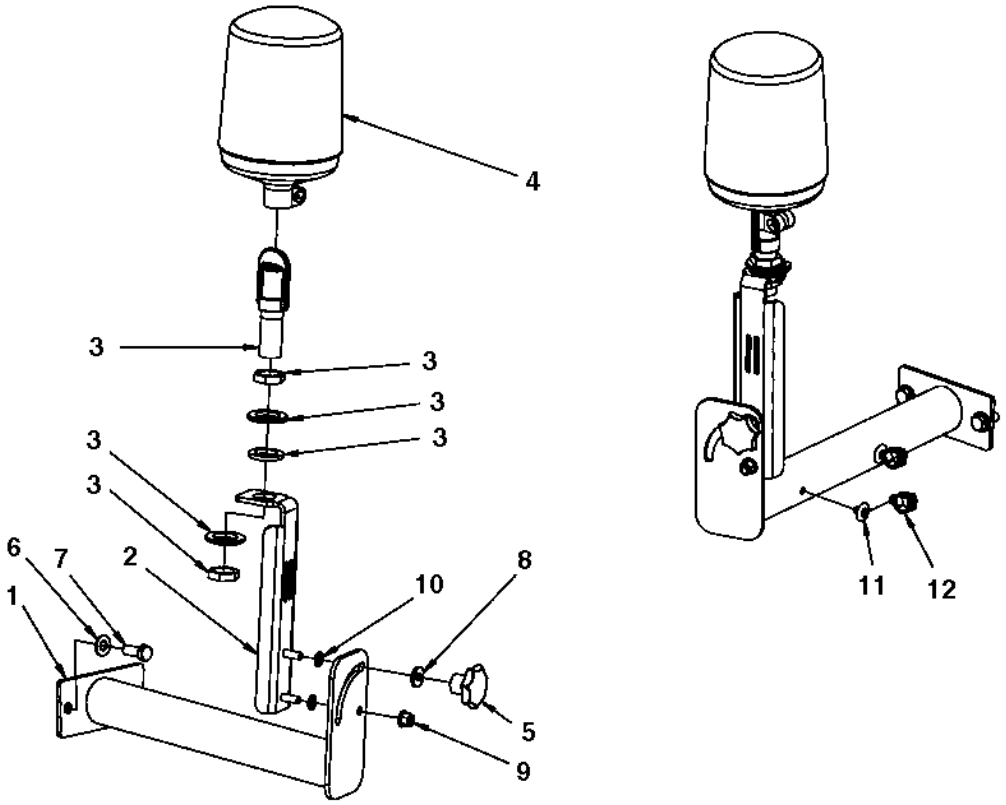

Rotating beacon module - See A, B, C for S/N

Item	Part No	Rem	Qty	Description	Code
1	4700393590		1	Bracket	
2	4700392158		1	Bracket	
3	4700392321		1	Bracket	
4	4700393681		1	Rotating beacon	
5	4700792410		1	Star knob M8-50	
6	4700904230		2	Steel plain washer	C
7	4700500028		2	Screw	C
8	4700904640		1	Washer 8,4x22x3	C
9	4700902286		1	Hexagon lock nut with flange	C
10	4700904229		2	Steel plain washer 8,4x16x1,5	C
11	4700792419		2	T-stud	
12	4700792417		2	Wiring clip	

Rotating beacon module - See D, E, F for S/N

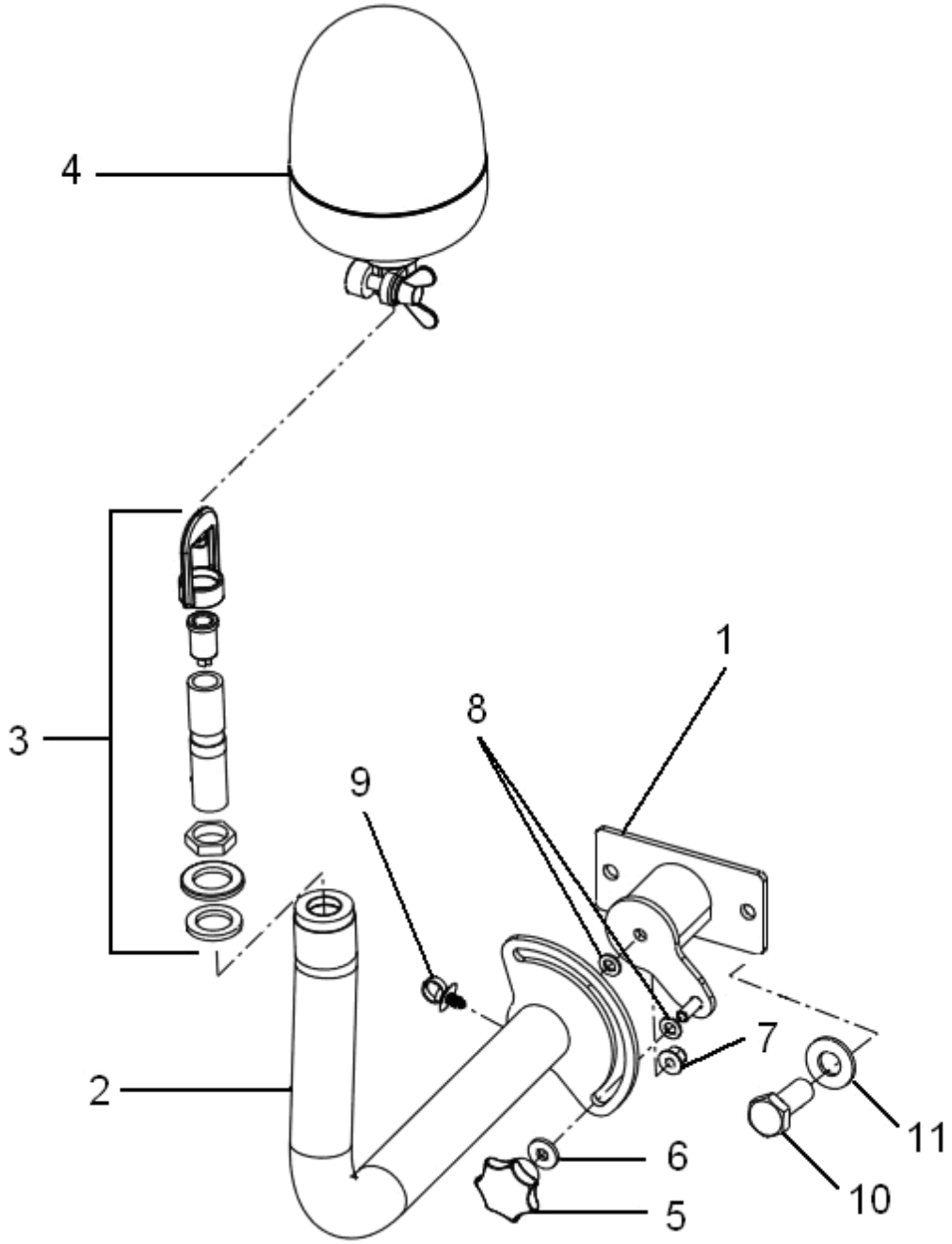

Rotating beacon module - See D, E, F for S/N

Item	Part No	Rem	Qty	Description	Code
1	4700397516		1	Bracket	
2	4700397517		1	Lever	
3	4700392321		1	Bracket	
4	4812111326		1	Rotating beacon	
5	4700792410		1	Star knob M8-50	
6	4700904640		1	Washer 8,4x22x3	C
7	4700902286		1	Hexagon lock nut with flange	C
8	4700904229		2	Steel plain washer 8,4x16x1,5	C
9	4700792441		1	Cable tie with holder	C
10	4700500028		2	Screw	C
11	4700904230		2	Steel plain washer	C

Working light module H3

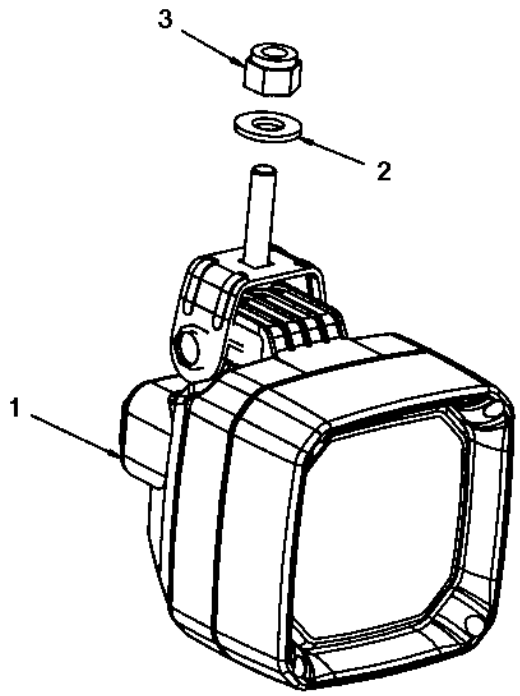

Working light module H3

Item	Part No	Rem	Qty	Description	Code
1	4700392033		1	Working light	
	4700792352		1	. Bulb	
2	4700904230		1	Steel plain washer	C
3	4700586018		1	Lock nut	C

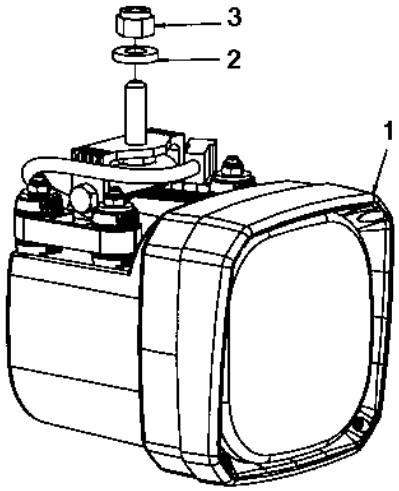
3
2
1

Working light module Xenon

Item	Part No	Rem	Qty	Description	Code
1	4700393538		1	Xenon lamp	
2	4700904557		1	Steel plain washer	C
3	4700586018		1	Lock nut	C

Cable harness, Sprinkler and Edge Cutter option

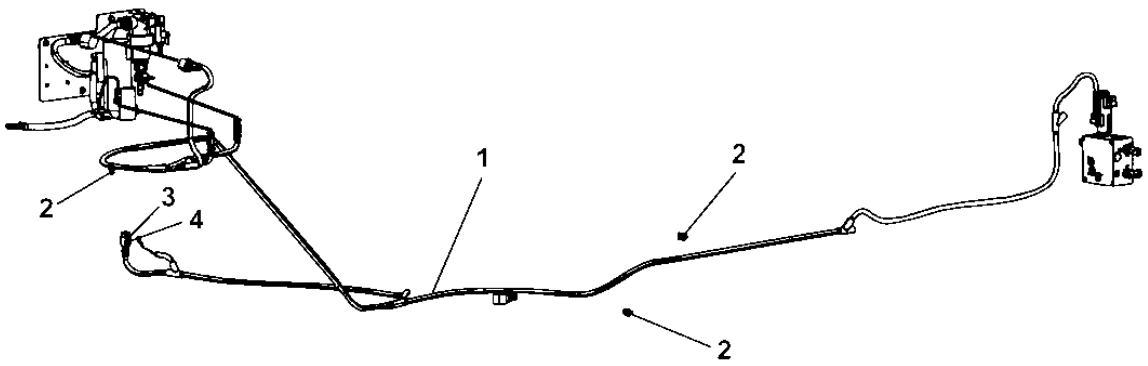

Cable harness, Sprinkler and Edge Cutter option

Item	Part No	Rem	Qty	Description	Code
1	4700396516		1	Cable harness	
2	4700792602		3	Cable tie with holder	
3	4700904218		1	Holder	
4	4700792669		1	Blind rivet	

Cable harness Asphalt temp DCA, front option

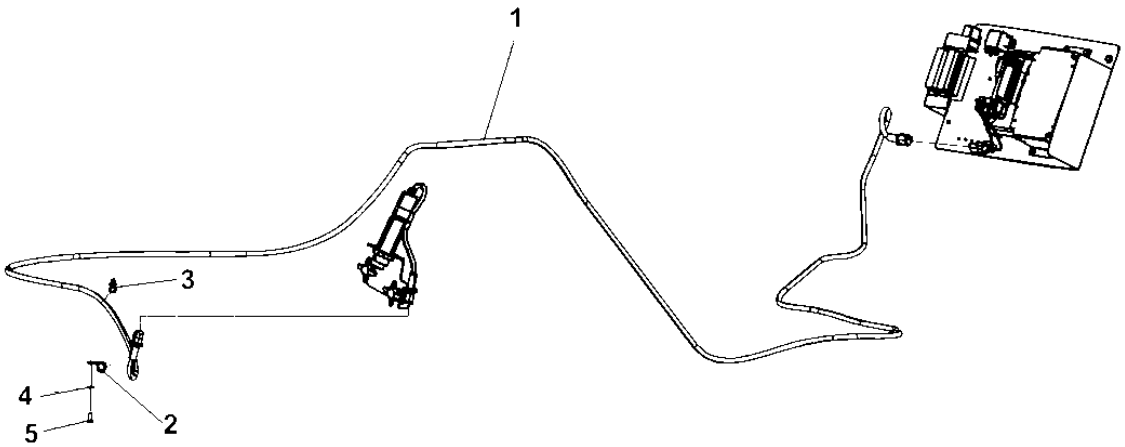

Cable harness Asphalt temp DCA, front option

Item	Part No	Rem	Qty	Description	Code
1	4700393971		1	Cable harness	
2	4700921080		1	Clamp	C
3	4700792602		1	Cable tie with holder	
4	4700904229		1	Steel plain washer 8,4x16x1,5	C
5	4700500019		1	Hexagon head screw	C

Cable harness Asphalt temp DCA, rear option

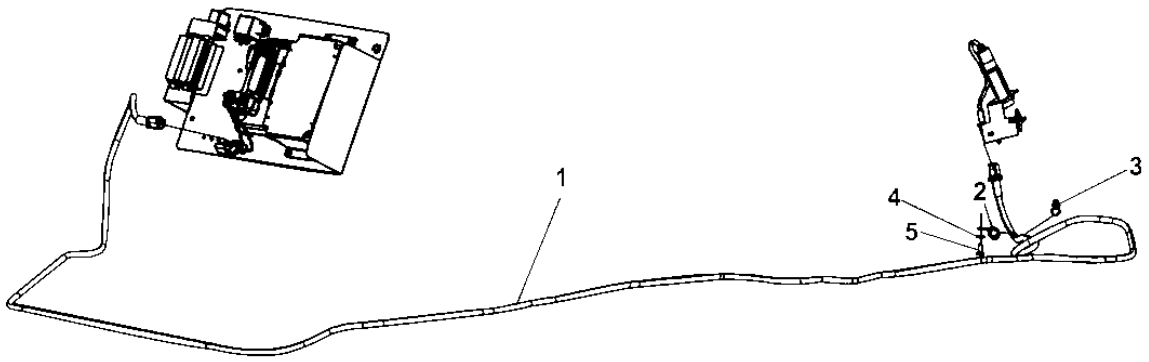

Cable harness Asphalt temp DCA, rear option

Item	Part No	Rem	Qty	Description	Code
1	4700393971		1	Cable harness	
2	4700921080		1	Clamp	C
3	4700792602		1	Cable tie with holder	
4	4700904229		1	Steel plain washer 8,4x16x1,5	C
5	4700500019		1	Hexagon head screw	C

Cable harness, Air on the run, option

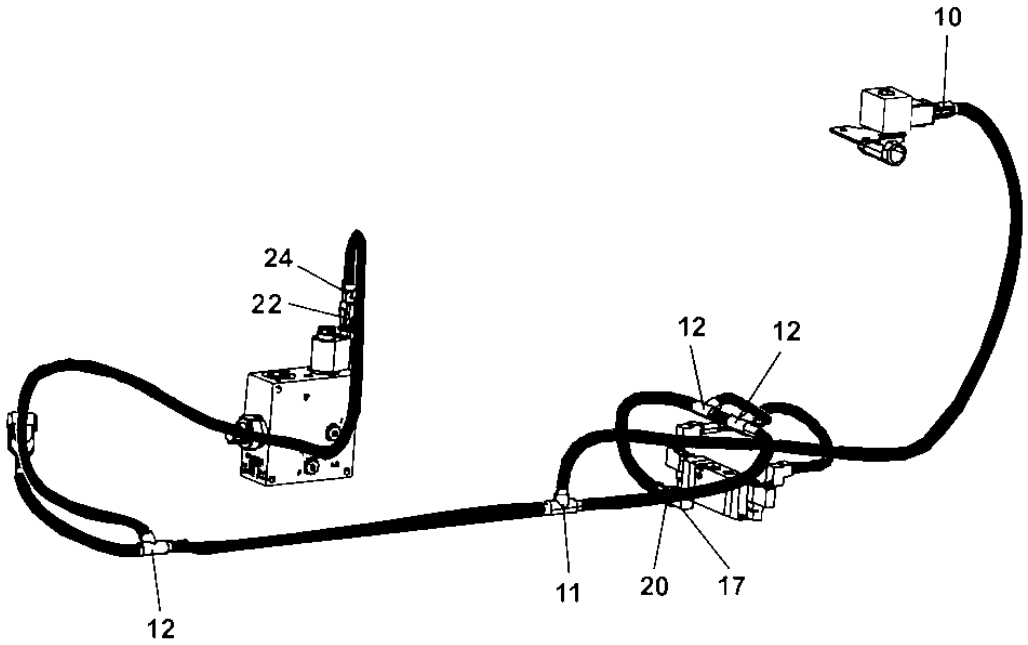

Cable harness, Air on the run, option

Item	Part No	Rem	Qty	Description	Code
10	4700902221		1	Coupling	
11	4700904568		1	Branching	
12	4700791025		3	Branching	
17	4700791670		1	Coupling	
20	4700792475		1	Coupling	
22	4700791668		1	Connector plug	
24	4700792467		1	Coupling	

Drivers platform

Item	Part No	Rem	Qty	Description	Code
1				Platform, no cab (Page 378)	
3				Cab module (Page 406)	
4				Canopy (Page 410)	
5				GPS equipment module, option DCA (Page 416)	
6				GPS holder module, option DCA (Page 418)	
7				Antenna bracket module, option DCA (Page 420)	
8				Computer bracket module, option DCA (Page 422)	
9				Computer module, option DCA (Page 424)	
10				Cab heater system (Page 426)	
11				Cab noise cover (Page 430)	
12				Radio and cd player (Page 432)	
13				Drivers seat (Page 436)	
14				Rear view mirror module (Page 462)	

Platform, no cab

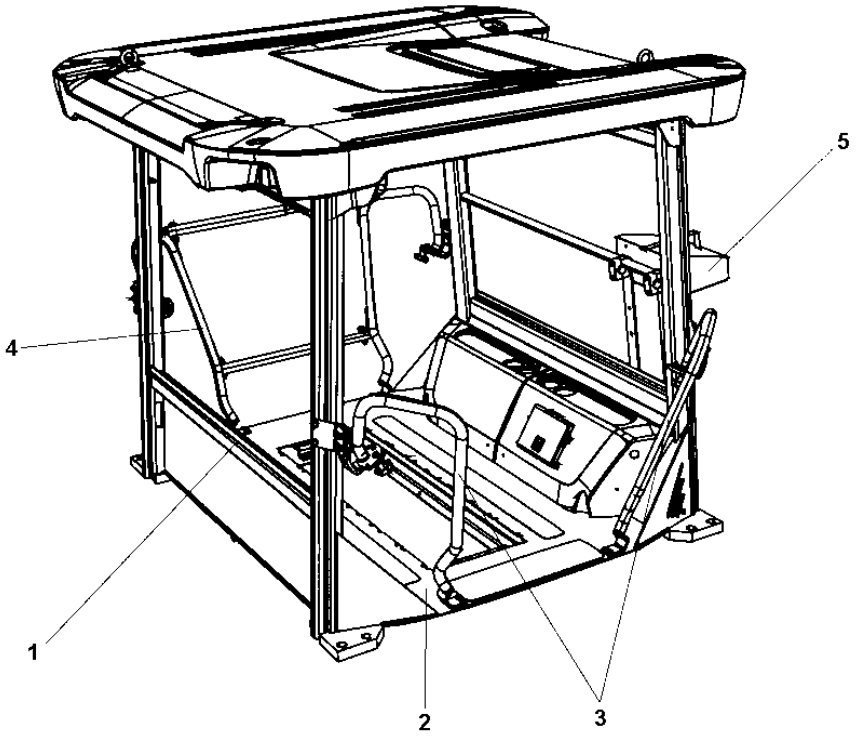

Platform, no cab

Item	Part No	Rem	Qty	Description	Code
1			1	**Rops module (Page 380)**	
2			1	**Platform module (Page 388)**	
3			1	**Hand rail, left (Page 394)**	
4			1	**Hand rail, right (Page 398)**	
5			1	**Lunch box module (Page 404)**	

Rops module

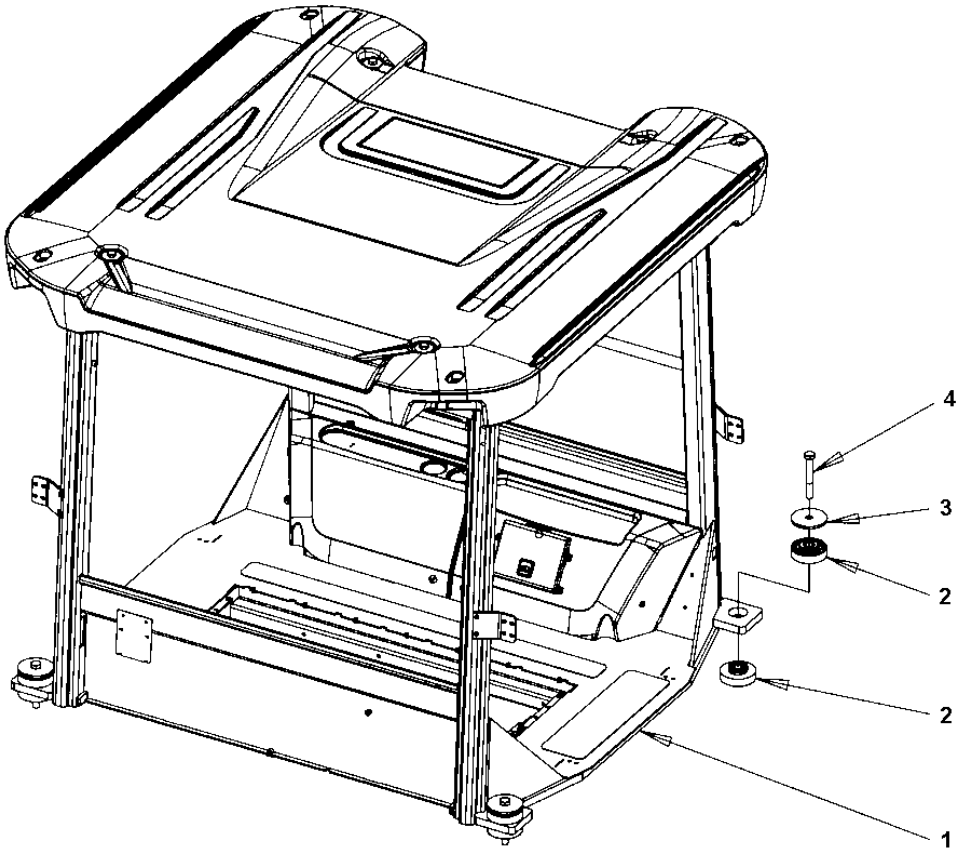

Rops module

Item	Part No	Rem	Qty	Description	Code
1			1	**Rops (Page 382)**	
			1	**Rops (Page 386)**	
2	4812110585		8	Shock absorber	
3	4700391788		4	Steel spacer	
4	4700904487		4	Screw M20x140 10,9 FZB	

Rops

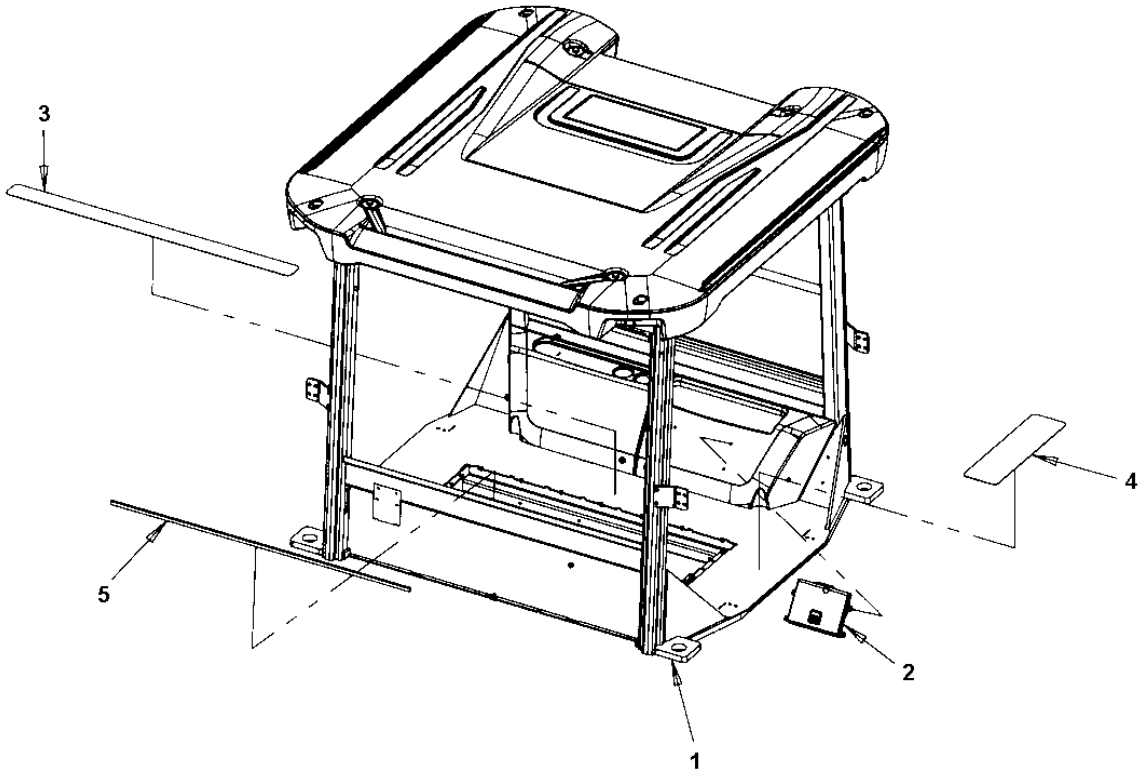

Rops

Item	Part No	Rem	Qty	Description	Code
1	4700396820		1	Rops	
2			1	**Manual box (Page 384)**	
3	4700372121		3	Protection	
4	4700396828		1	Protection	
5	4700902379	A	1	Edge trim	

A) L = 2,65 m

Manual box

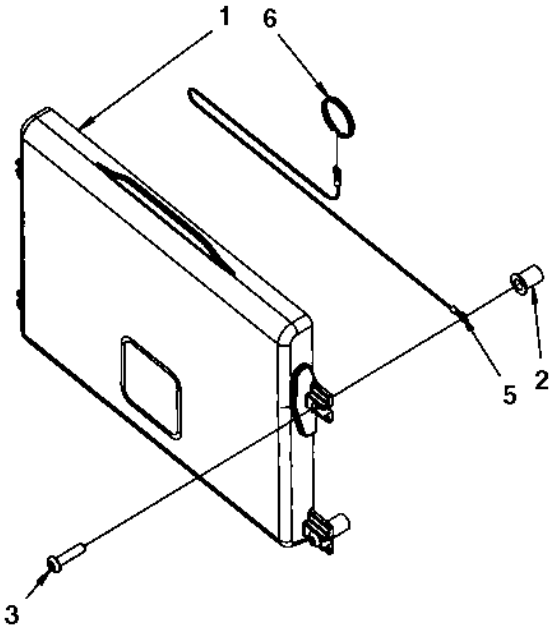

Manual box

Item	Part No	Rem	Qty	Description	Code
1	4700383705		1	Instruction book holder	D
2	4700792536		4	Rubber nut	
3	4700792589		4	Screw	
5	4700384584		1	Wire	
6	4700358254		1	Key-ring	

Rops

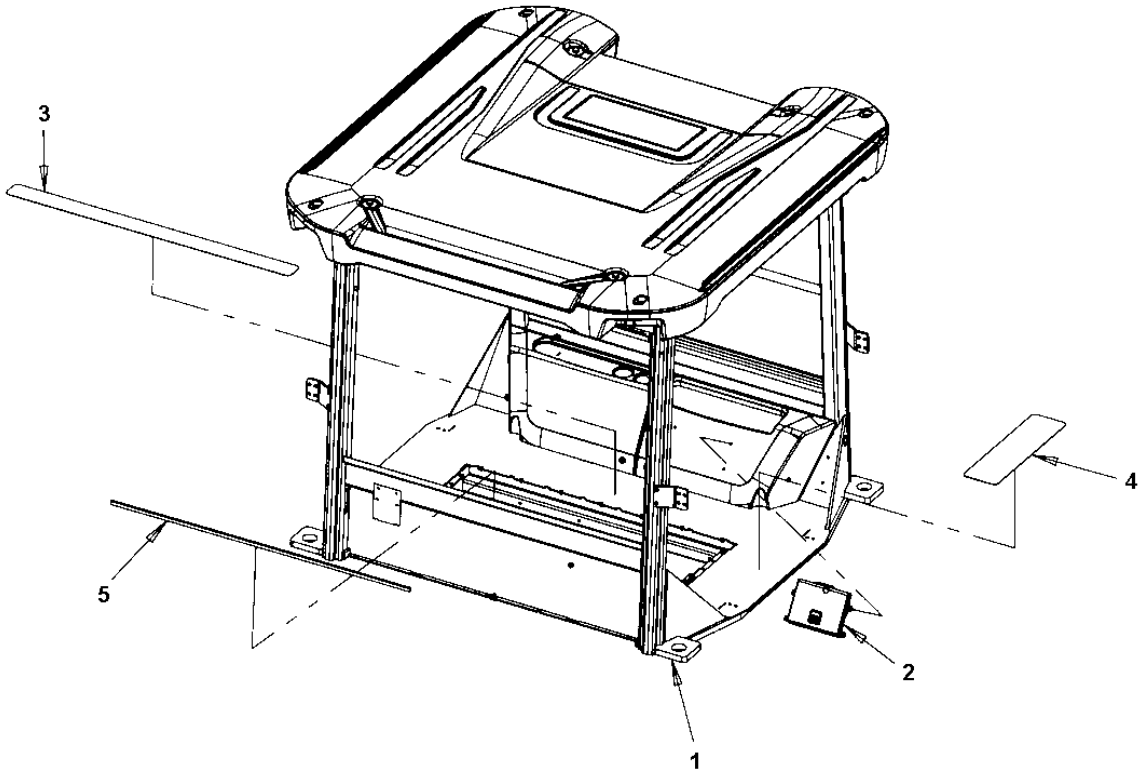

Rops

Item	Part No	Rem	Qty	Description	Code
1	4812113431		1	Rops	
2			1	**Manual box (Page 384)**	
3	4700372121		3	Protection	
4	4700396828		1	Protection	
5	4700902379	A	1	Edge trim	

A) L = 2,65 m

Platform module

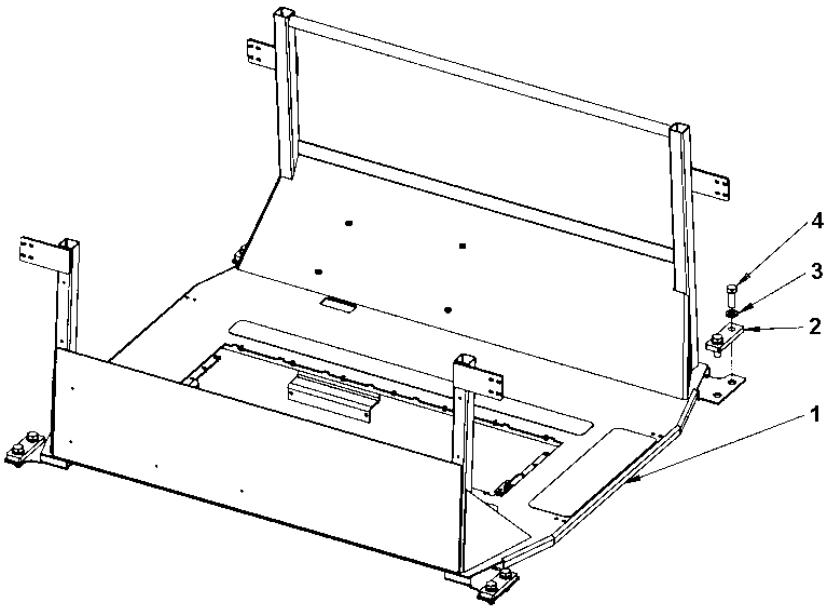

Platform module

Item	Part No	Rem	Qty	Description	Code
1			1	**Platform (Page 390)**	
2	4812110366		4	Spacer	
3	4700903290		8	Washer 21x36x6	C
4	4700500206		4	Screw M20X60	C

Platform

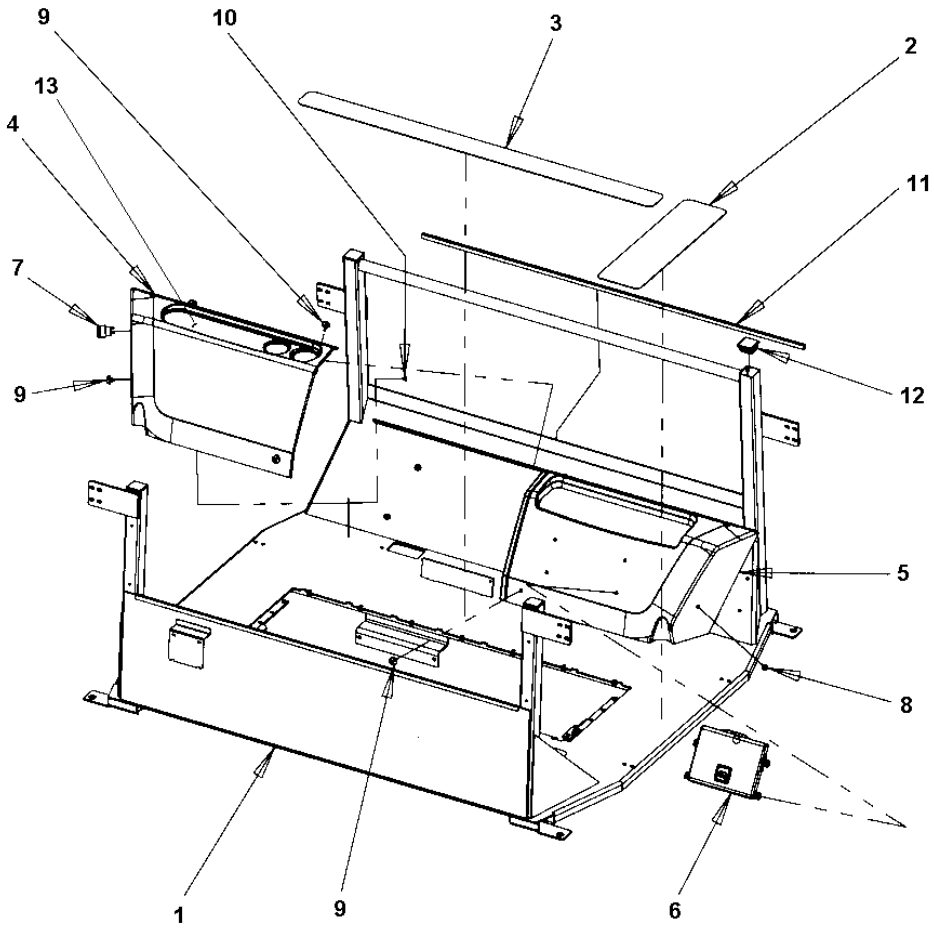

Platform

Item	Part No	Rem	Qty	Description	Code
1			1	**Platform no ROPS (Page 392)**	
2	4700396828		1	Protection	
3	4700372121		3	Protection	
4	4812110322		1	Cover	
5	4812110323		1	Cover	
6			1	**Manual box (Page 384)**	
7	4700395816		1	Plug socket 24V	
8	4700395785		4	Screw	
9	4700395786		5	Knob	
10	4812110586		1	Cage nut	
11	4700902379	A	1	Edge trim	
12	4812110588		4	Plug	
13	4700902804		2	Plug	

A) L = 2,7 m

Platform no ROPS

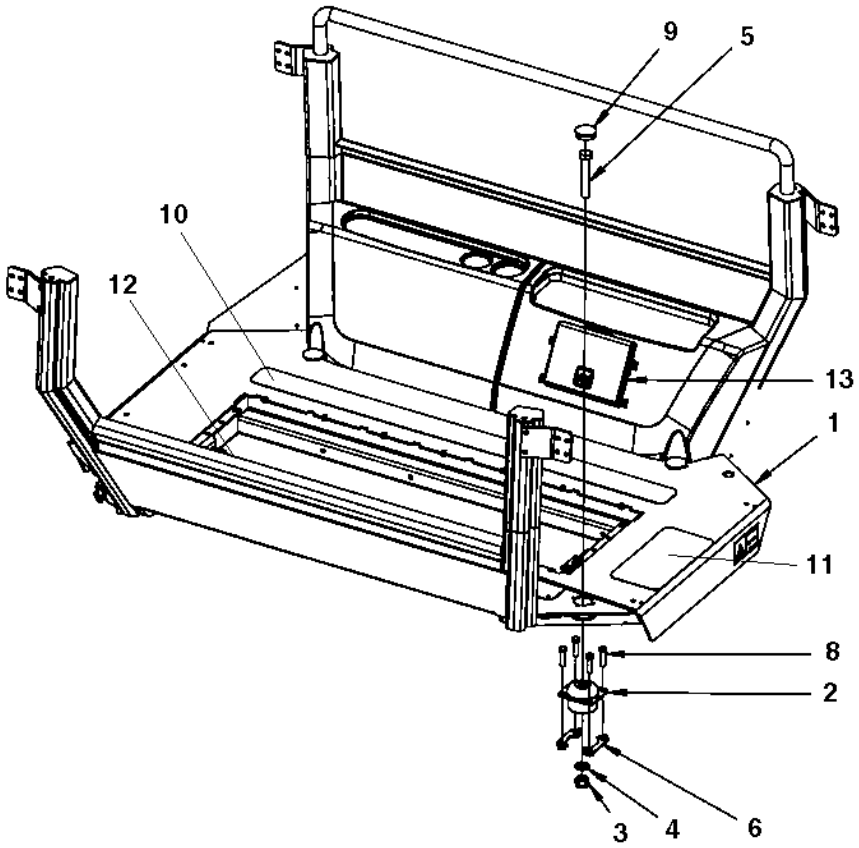

Platform no ROPS

Item	Part No	Rem	Qty	Description	Code
1	4700390866		1	Platform	
2	4700373399		4	Shock absorber	D
3	4700901145		4	Lock nut M20-10	
4	4700904233		8	Washer 21x36x3	C
5	4700500228		4	Screw M20-2,5x120 8,8	C
6	4700393525		8	Holder	
8	4700500056		16	Screw	C
9	4700904131		4	Plug	
10	4700372121		2	Protection	
11	4700373363		1	Slip protection	
12	4700393978		1	Slip protection	
13			1	**Manual box (Page 384)**	

Hand rail, left

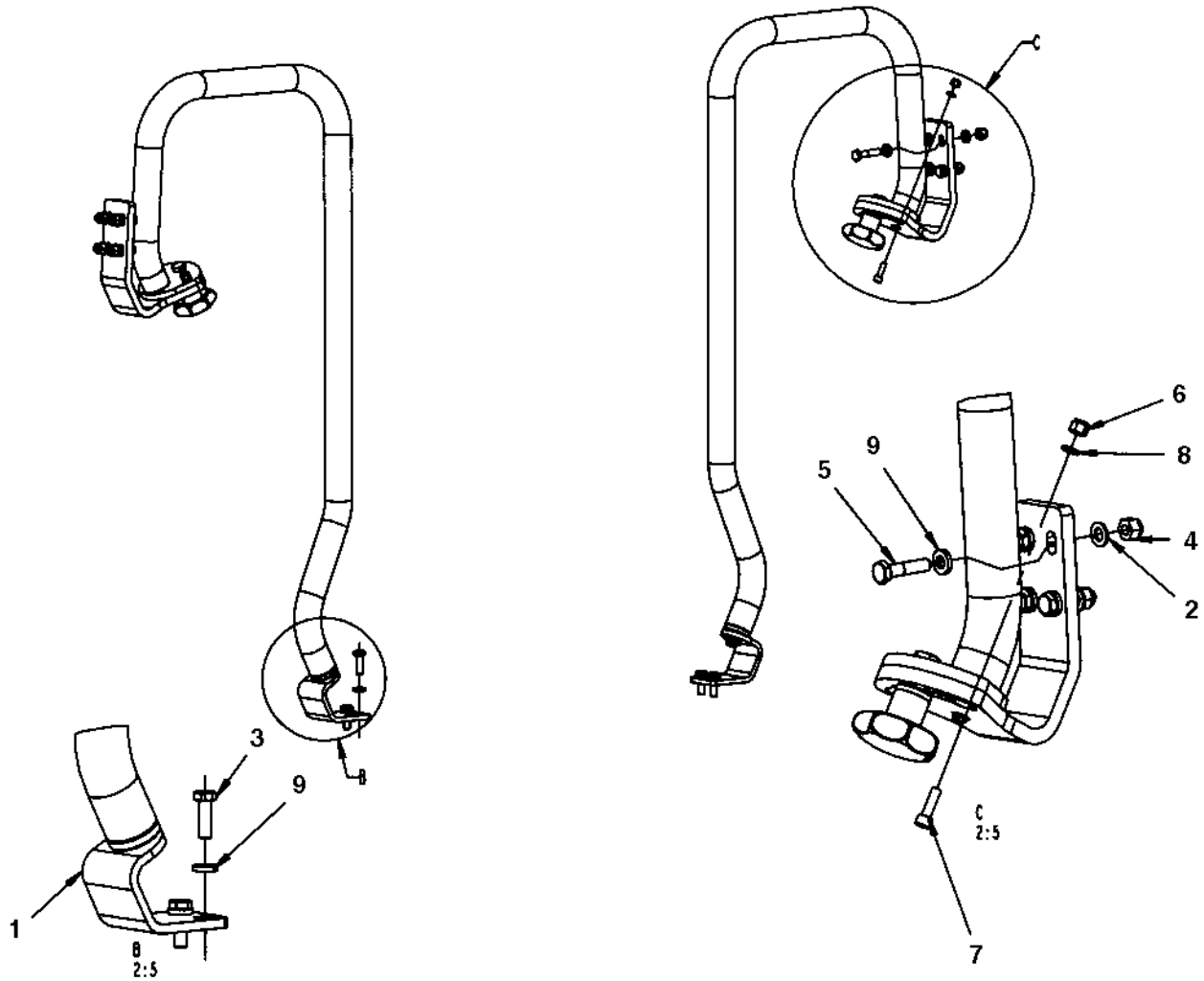

Hand rail, left

Item	Part No	Rem	Qty	Description	Code
1			2	**Hand rail (Page 396)**	
2	4700904229		8	Steel plain washer 8,4x16x1,5	C
3	4700500021		4	Screw M8-1,25x25 8.8	C
4	4700586003		8	Lock nut M8	C
5	4700500047		8	Hexagon head screw	C
6	4700586002		2	Lock nut M6 -8	C
7	4700508025		2	Screw M6x20	
8	4700904228		2	Washer 6,4x12x1,5	C
9	4700904556		12	Washer 8,4x16x3,0	C

Hand rail

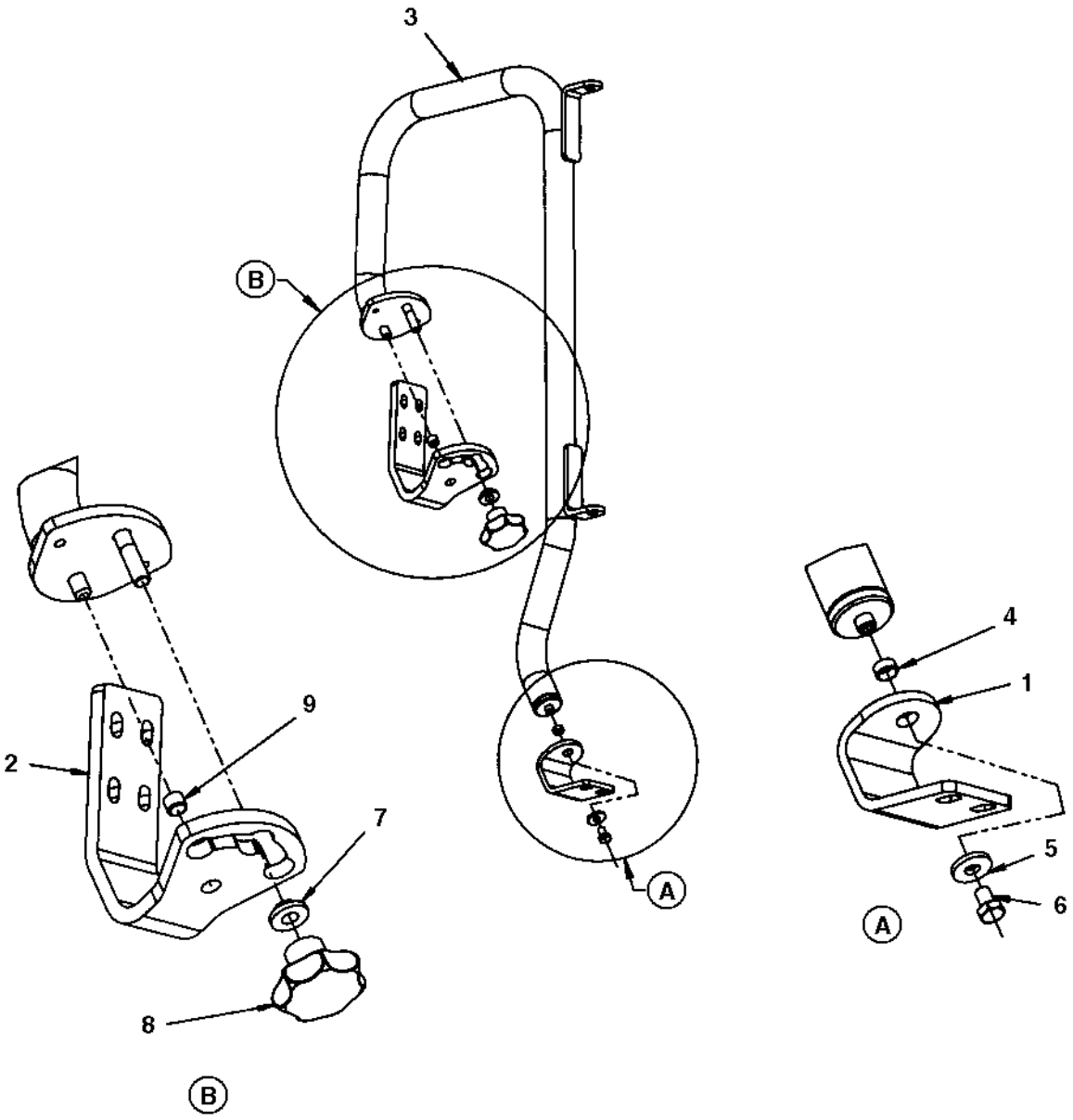

Hand rail

Item	Part No	Rem	Qty	Description	Code
1	4700381936		1	Bracket	
2	4700381935		1	Bracket	
3	4700390155		1	Hand rail	
4	4700792448		1	Plastic bushing	
5	4700904640		1	Washer 8,4x22x3	C
6	4700500018		1	Screw M8-1,25x12 8,8	C
7	4700370286		1	Washer	C
8	4700499174		1	Knob	
9	4700792447		1	Plastic bushing	

Hand rail, right

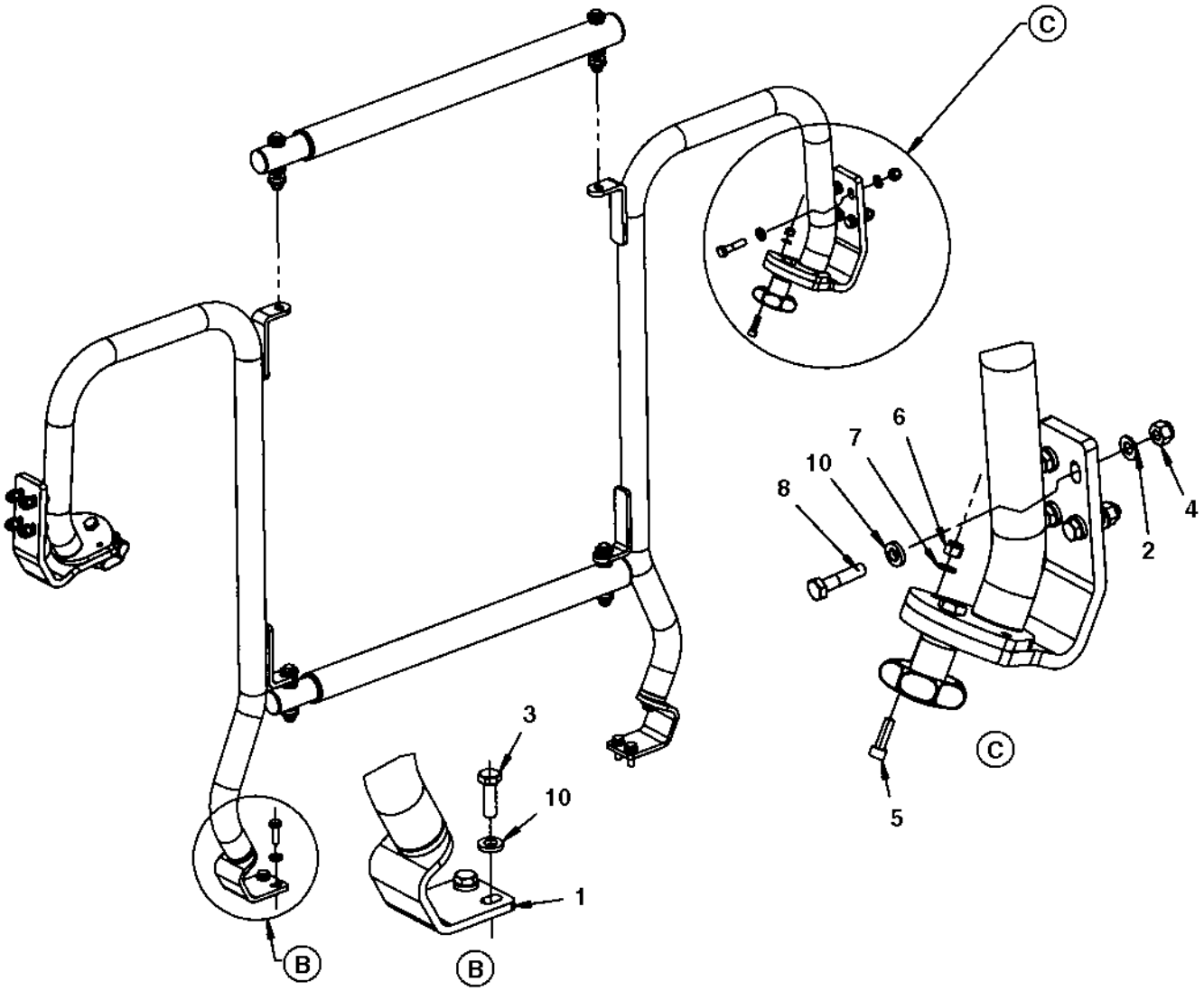

Hand rail, right

Item	Part No	Rem	Qty	Description	Code
1			1	**Hand rail (Page 400)**	
2	4700904229		8	Steel plain washer 8,4x16x1,5	C
3	4700500021		4	Screw M8-1,25x25 8.8	C
4	4700586003		8	Lock nut M8	C
5	4700508025		2	Screw M6x20	
6	4700586002		2	Lock nut M6 -8	C
7	4700904228		2	Washer 6,4x12x1,5	C
8	4700500047		8	Hexagon head screw	C
9			2	**Hand rail (Page 402)**	
10	4700904556		12	Washer 8,4x16x3,0	C

Hand rail

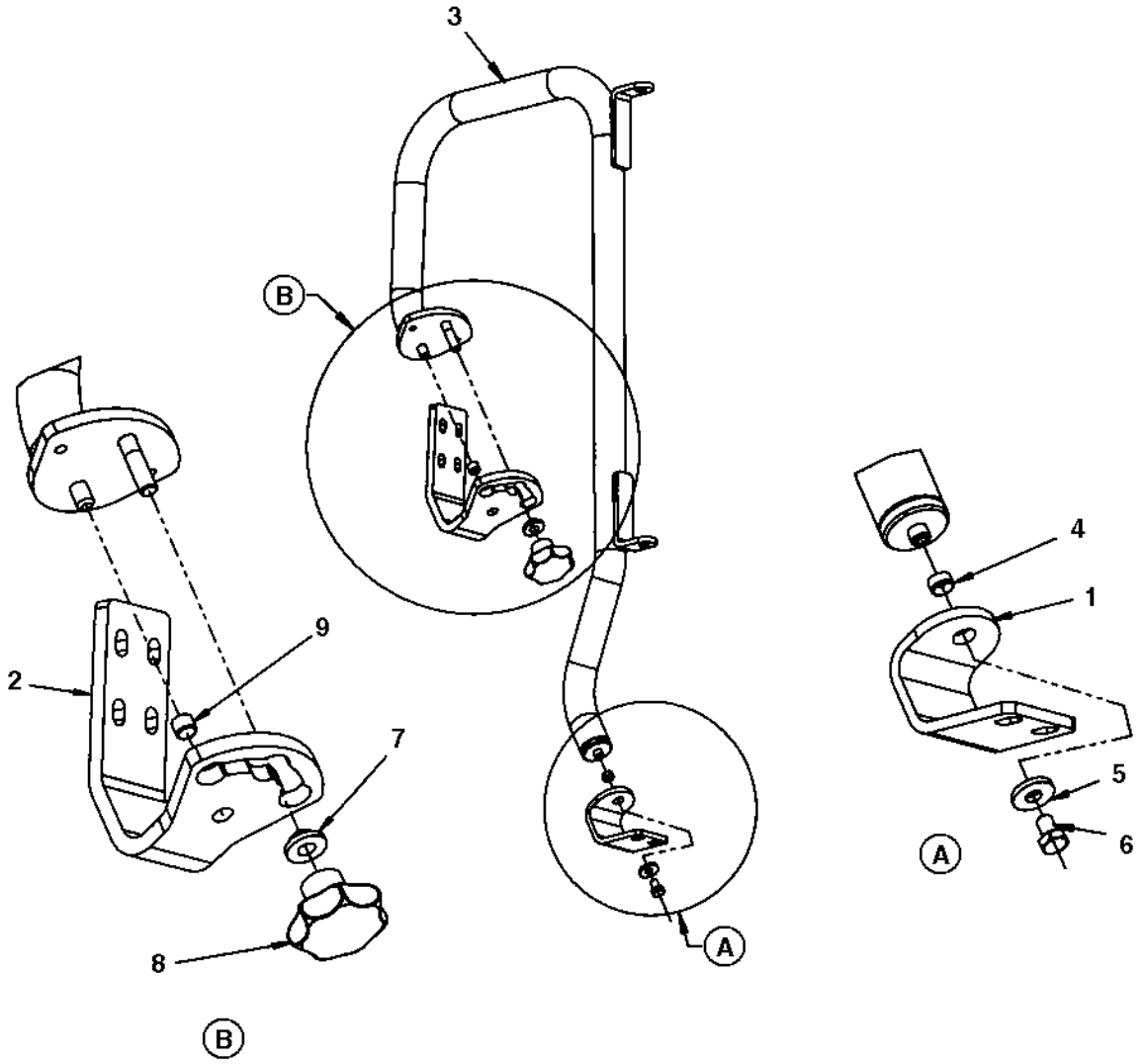

Hand rail

Item	Part No	Rem	Qty	Description	Code
1	4700381936		1	Bracket	
2	4700381935		1	Bracket	
3	4700381934		1	Hand rail	
4	4700792448		1	Plastic bushing	
5	4700904640		1	Washer 8,4x22x3	C
6	4700500018		1	Screw M8-1,25x12 8,8	C
7	4700370286		1	Washer	C
8	4700499174		1	Knob	
9	4700792447		1	Plastic bushing	

Hand rail

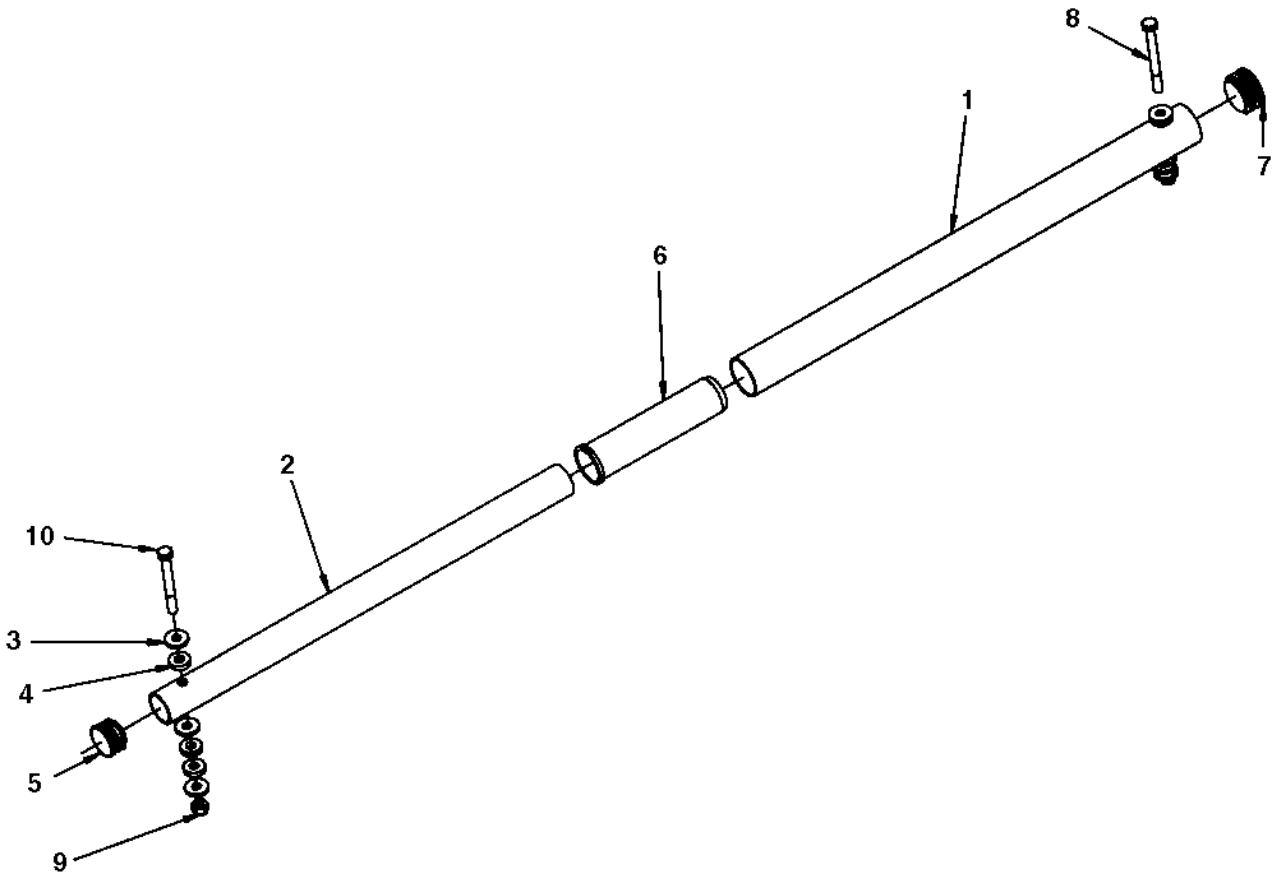

Hand rail

Item	Part No	Rem	Qty	Description	Code
1	4700391675		1	Steel tube	
2	4700391676		1	Steel tube	
3	4700904640		6	Washer 8,4x22x3	C
4	4700391674		6	Rubber washer	
5	4700926216		1	Protective plug	
6	4700391678		1	Bushing	
7	4700792449		1	Protective plug	
8	4700500190		1	Screw	
9	4700586003		2	Lock nut M8	C
10	4700500189		1	Screw	C

Lunch box module

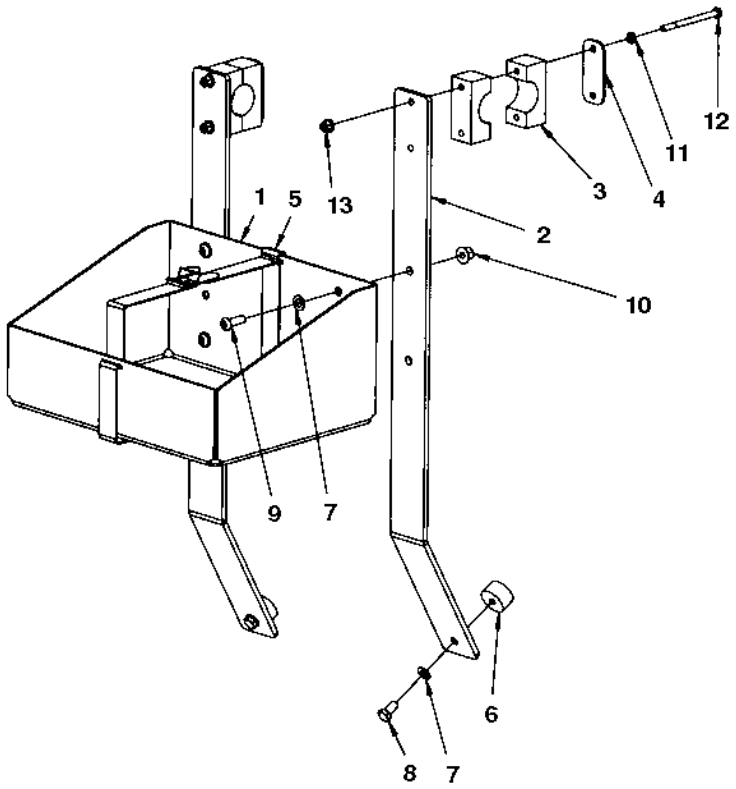

Lunch box module

Item	Part No	Rem	Qty	Description	Code
1	4700377913		1	Box	
2	4700394859		2	Bracket	
3	4700904340		2	Pipe clamp	
4	4700924791		2	Cover plate	
5	4700287643		1	Metal strapping	D
6	4700450163		2	Shock absorber	D
7	4700904229		6	Steel plain washer 8,4x16x1,5	C
8	4700500019		2	Hexagon head screw	C
9	4700904654		4	Screw	
10	4700902286		4	Hexagon lock nut with flange	C
11	4700904228		4	Washer 6,4x12x1,5	C
12	4700500153		4	Screw	C
13	4700902285		4	Hexagon lock nut with flange	C

Cab module

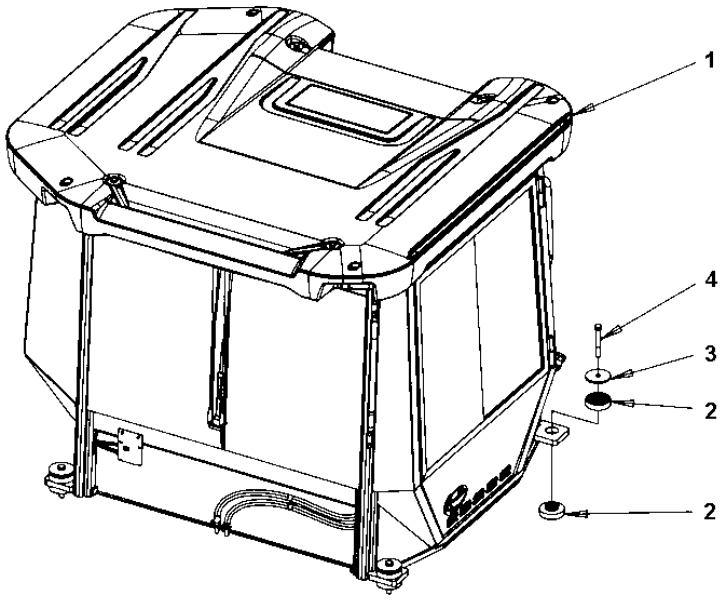

Cab module

Item	Part No	Rem	Qty	Description	Code
1			1	**Cab, asymmetric (Page 408)**	
2	4812110585		8	Shock absorber	
3	4700391788		4	Steel spacer	
4	4700904487		4	Screw M20x140 10,9 FZB	

Cab, asymmetric

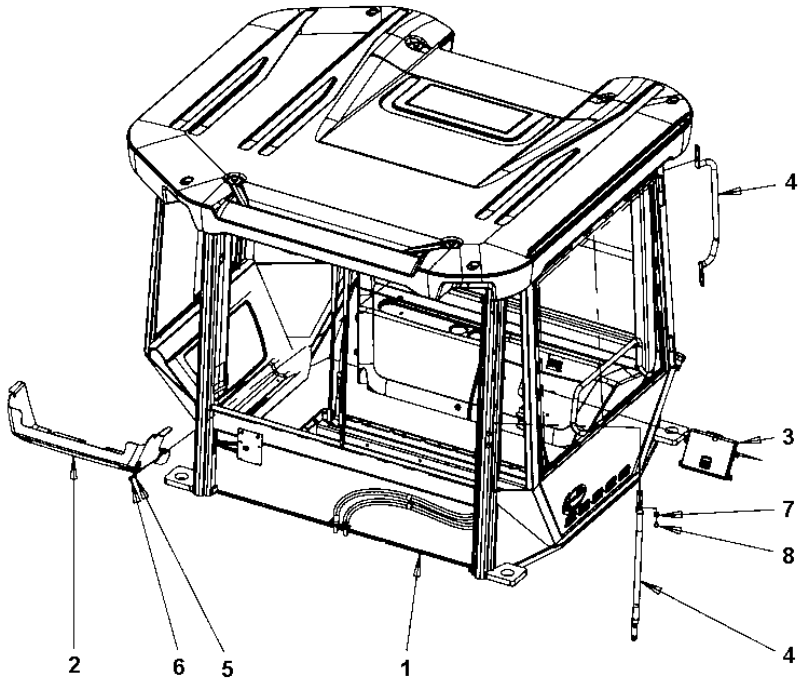

Cab, asymmetric

Item	Part No	Rem	Qty	Description	Code
1	4812113430		1	Cab, cpl	
2	4700393582		1	Cover	
3			1	**Manual box (Page 384)**	
4	4812110295		2	Handrail	
5	4700904556		2	Washer 8,4x16x3,0	C
6	4700500018		2	Screw M8-1,25x12 8,8	C
7	4700904557		8	Steel plain washer	C
8	4700500048		8	Screw M10-1,5x20 8,8	C

Canopy option

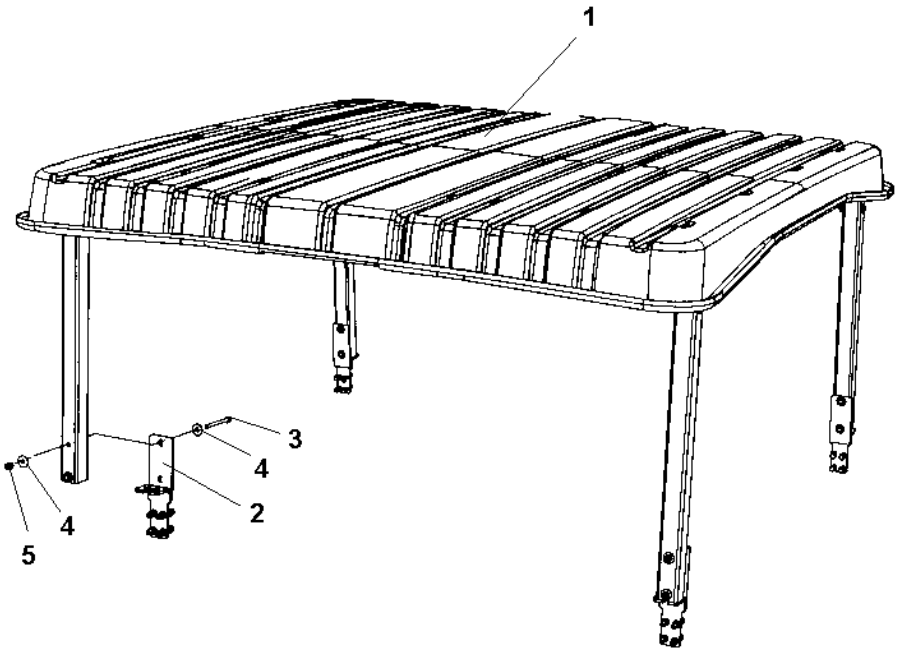

Canopy option

Item	Part No	Rem	Qty	Description	Code
1			1	**Canopy assy (Page 412)**	
2			4	**Bracket (Page 414)**	
3	4700500190		8	Screw	
4	4700601003		16	Washer 8,4x25x2	C
5	4700586003		8	Lock nut M8	C

Canopy assy

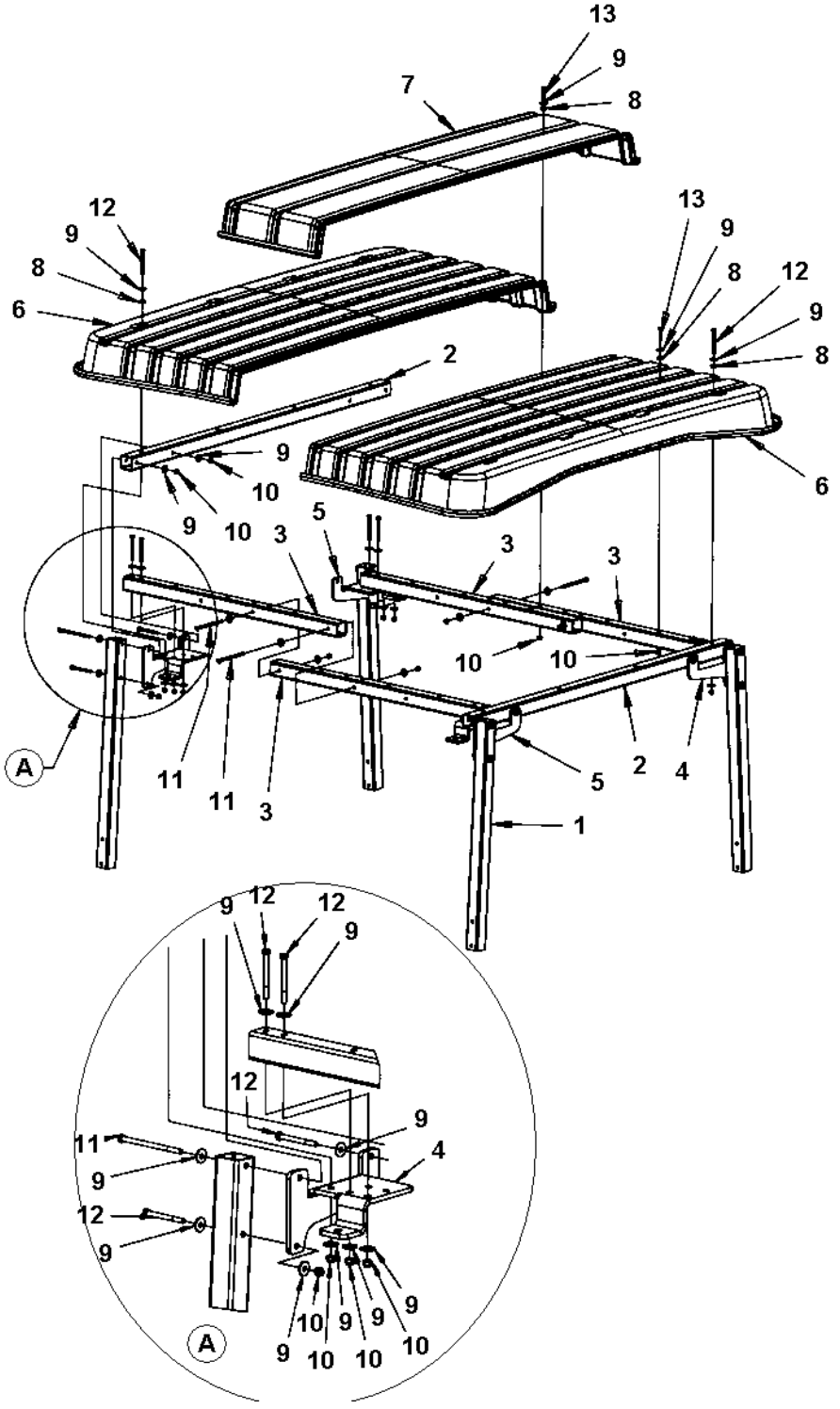
13
9
8
7
12
9
8
6
13
9
8
12
9
8
6
2
9
10
9
10
3
5
3
3
10
10
A
11
11
3
5
2
4
1
9
12
12
9
12
9
4
11
9
12
9
A
10
9
9
9
9
10
10
10

Canopy assy

Item	Part No	Rem	Qty	Description	Code
1	4700393640		4	Pillar	
2	4700393641		2	Roof beam	
3	4700393642		4	Cross beam	
4	4700393645		2	Bracket	
5	4700393646		2	Bracket	
6	4700394139		2	Plastic roof	
7	4700394140		1	Plastic roof	
8	4700391674		22	Rubber washer	
9	4700601003		74	Washer 8,4x25x2	C
10	4700586003		46	Lock nut M8	C
11	4700500143		8	Screw	
12	4700500190		20	Screw	
13	4700904241		18	Screw	C

Bracket

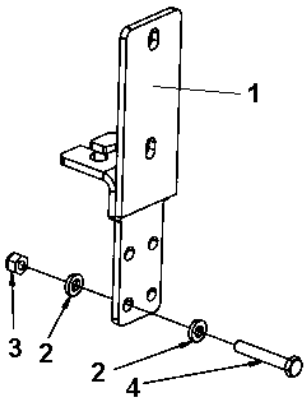

Bracket

Item	Part No	Rem	Qty	Description	Code
1	4700393639		1	Bracket	
2	4700904556		8	Washer 8,4x16x3,0	C
3	4700586003		4	Lock nut M8	C
4	4700500239		4	Screw	C

GPS equipment module, option DCA

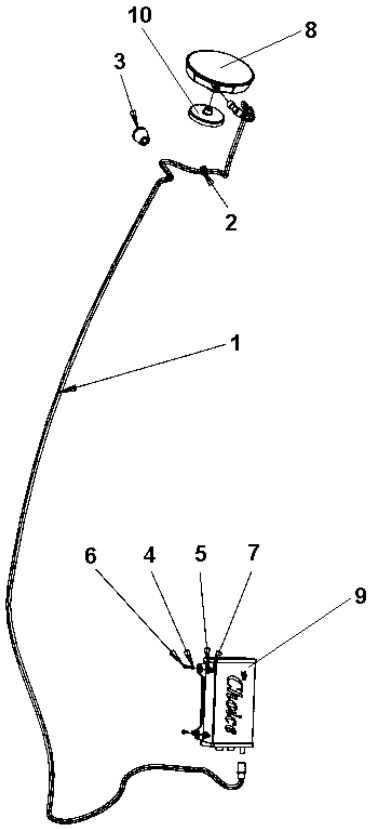

GPS equipment module, option DCA

Item	Part No	Rem	Qty	Description	Code
1	4700390754	A	1	Cable for antenna	
2	4700313041		2	Cable ties	
3	4700792704		1	Grommet	
4	4700904698		4	Washer	C
5	4700601001		4	Washer	C
6	4700500238		4	Screw	C
7	4700923976		4	Nut	C
8	4700394677		1	GPS antenna	
9	4700396123		1	GPS receiver	
10	4700390756		1	Magnetic	

A) L = 5,00 m

GPS holder module, option DCA

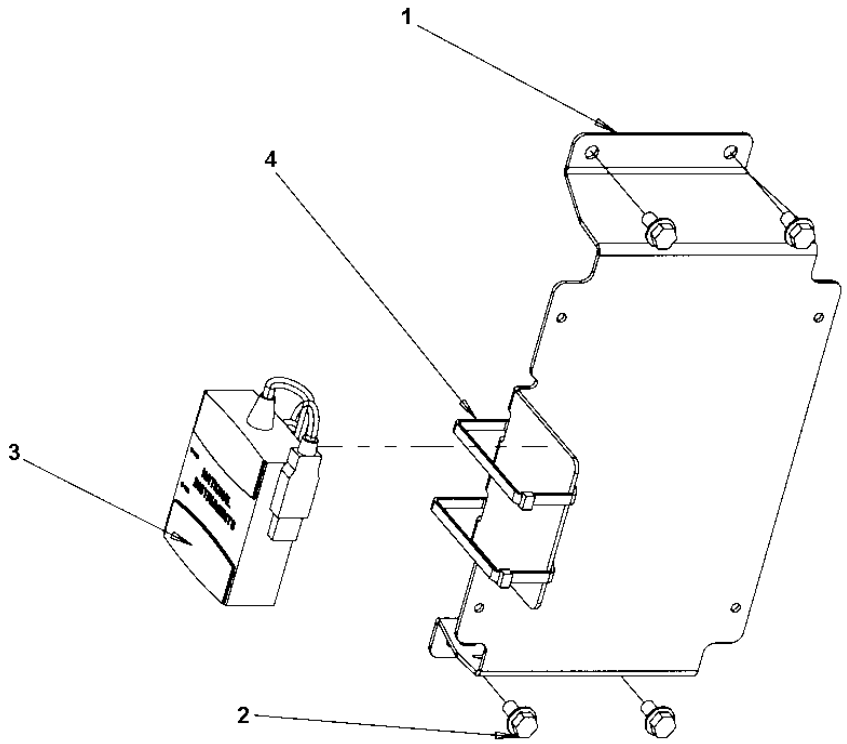

GPS holder module, option DCA

Item	Part No	Rem	Qty	Description	Code
1	4700394276		1	Bracket	
2	4700541702		4	Screw M6x12	C
3	4700792660		1	Gateway CAN/BUS	
4	4700313041		2	Cable ties	

Antenna bracket module, option DCA

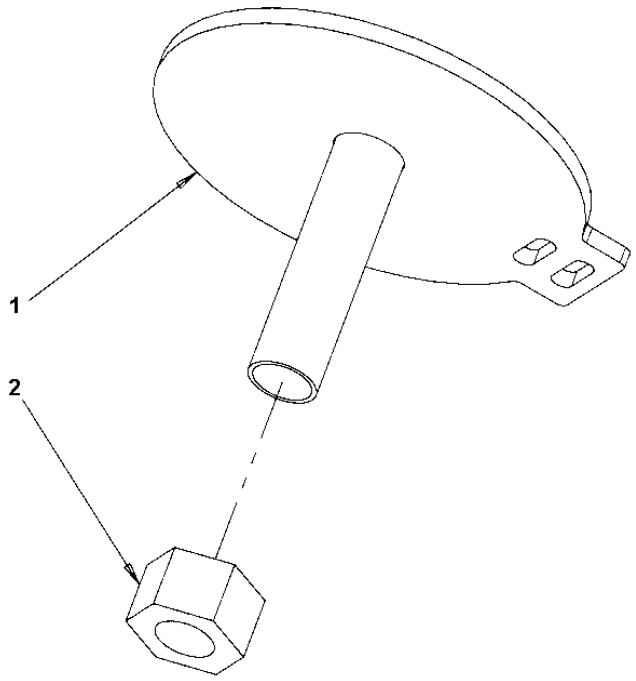

Antenna bracket module, option DCA

Item	Part No	Rem	Qty	Description	Code
1	4700394275		1	Bracket	
2	4700570008		1	Nut M16 -8	C

Computer bracket module, option DCA

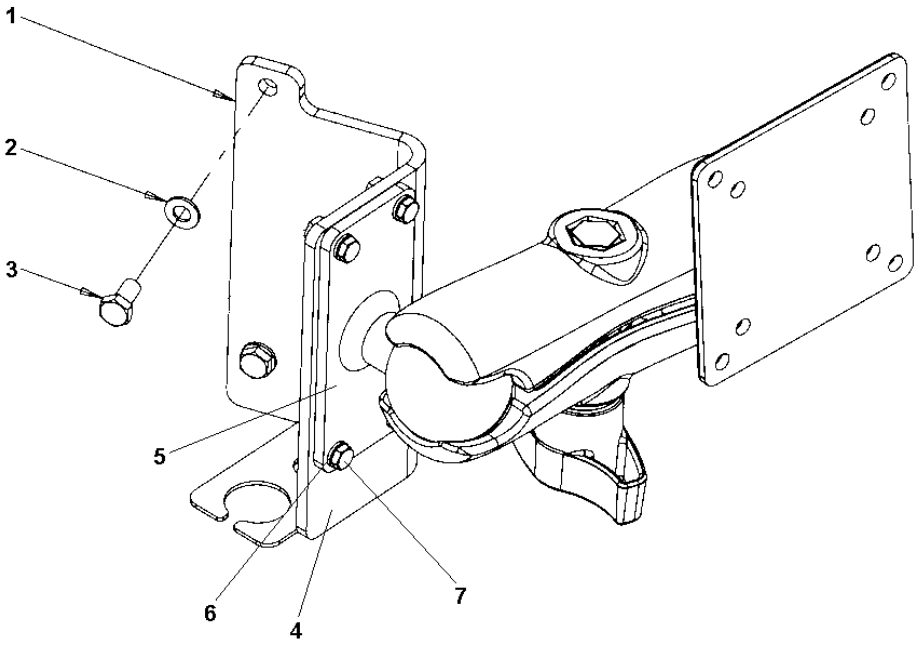

Computer bracket module, option DCA

Item	Part No	Rem	Qty	Description	Code
1	4700396121		1	Holder	
2	4700904229		2	Steel plain washer 8,4x16x1,5	C
3	4700500019		2	Hexagon head screw	C
4	4700395888		1	Bracket	
5	4700394542		1	Ball joint	
6	4700904228		4	Washer 6,4x12x1,5	C
7	4700500040		4	Screw M6-1x20 8,8	C

Computer module, option DCA

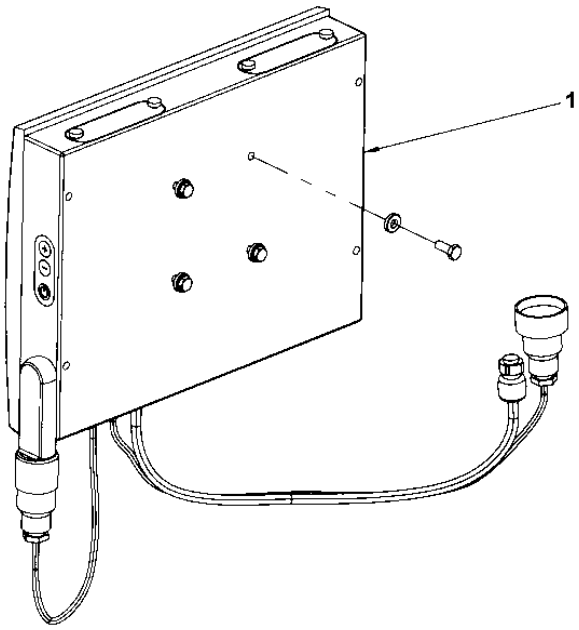

Computer module, option DCA

Item	Part No	Rem	Qty	Description	Code
1	4700396119		1	Computer	

Cab heater system

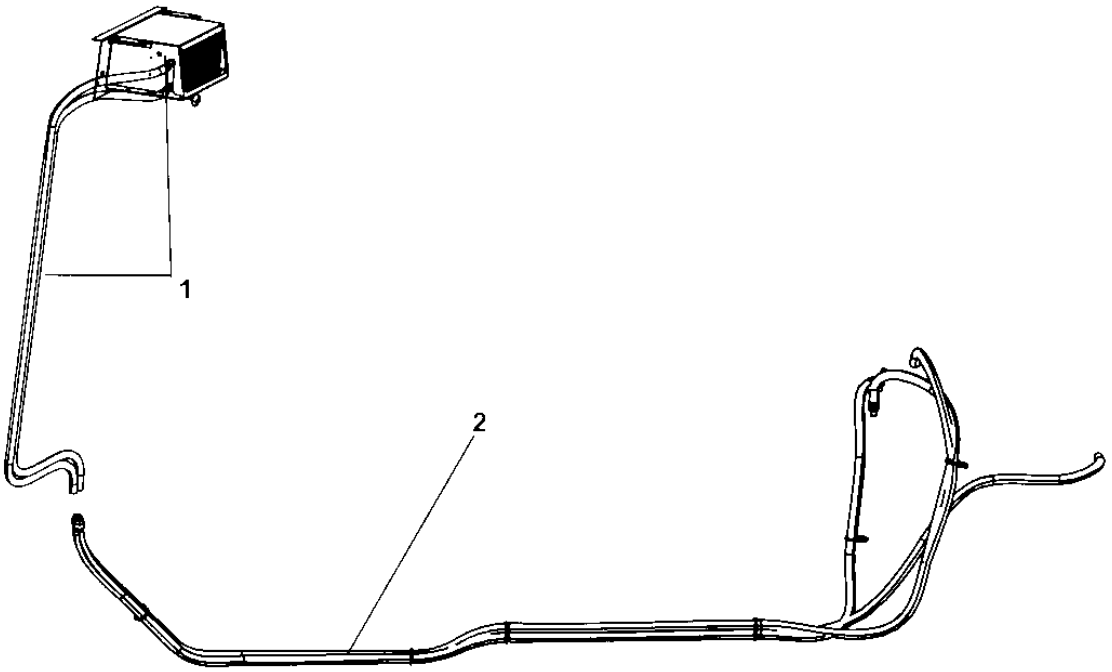

Cab heater system

Item	Part No	Rem	Qty	Description	Code
2				**Heater hose kit (Page 428)**	

Heater hose kit

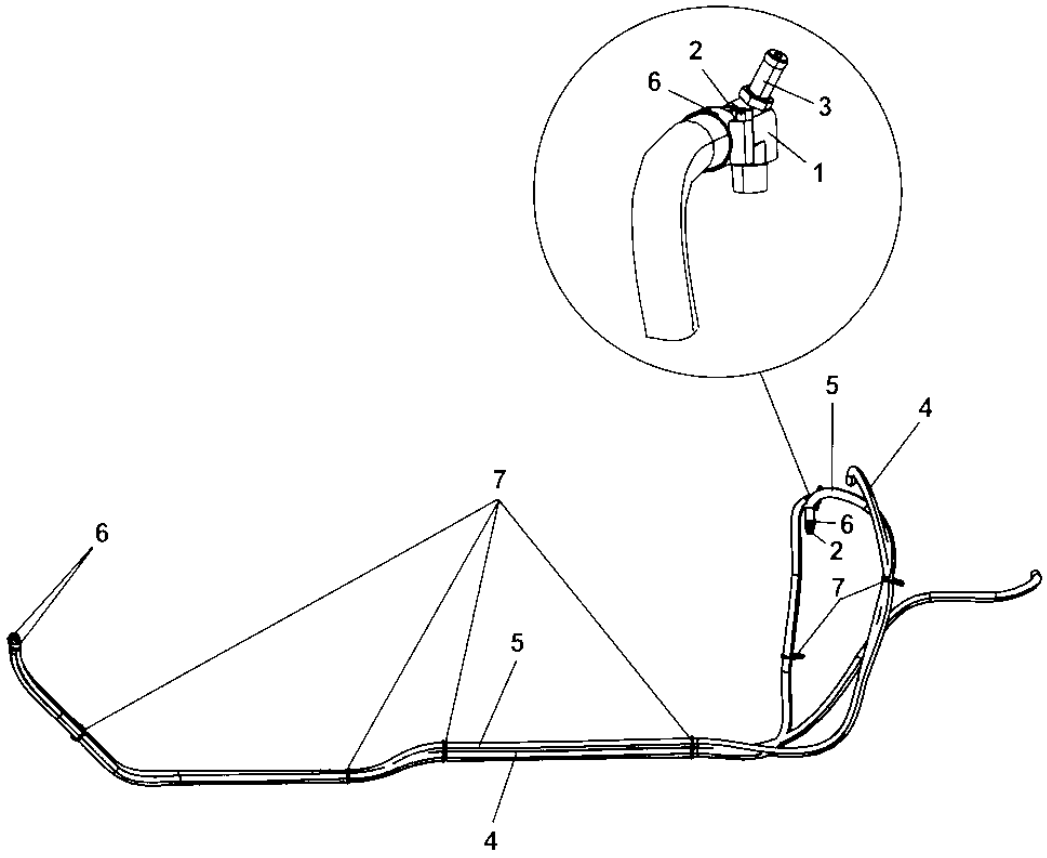

Heater hose kit

Item	Part No	Rem	Qty	Description	Code
1	4700395174		1	Connector	D
2	4700379607		2	Hose connection	D
3	4700395175		1	Hose connection	D
4	4700205112	A	1	Coolant hose	D
5	4700205112	B	1	Coolant hose	D
6	4700313004		4	Hose clamp	D
7	4700313041		N	Cable ties	

A) L = 3,00 m
B) L = 3,72 m

Cab noise cover

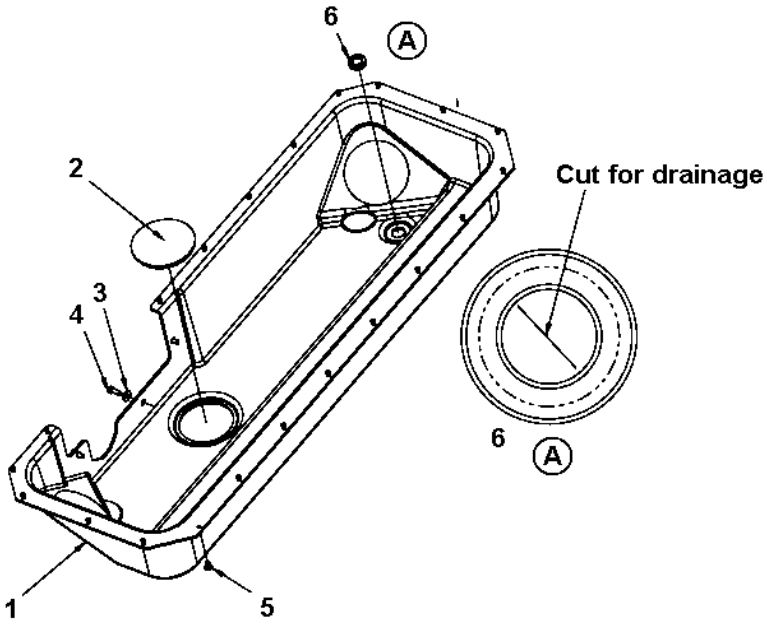

Cab noise cover

Item	Part No	Rem	Qty	Description	Code
1	4700391919		1	Noise reducing hood	
2	4700379992		3	Plug	
3	4700904640		3	Washer 8,4x22x3	C
4	4700500053		3	Screw M8x20H 8.8	C
5	4700792325		21	Blind rivet	
6	4700792392		1	Grommet with membrane	

Radio and cd player

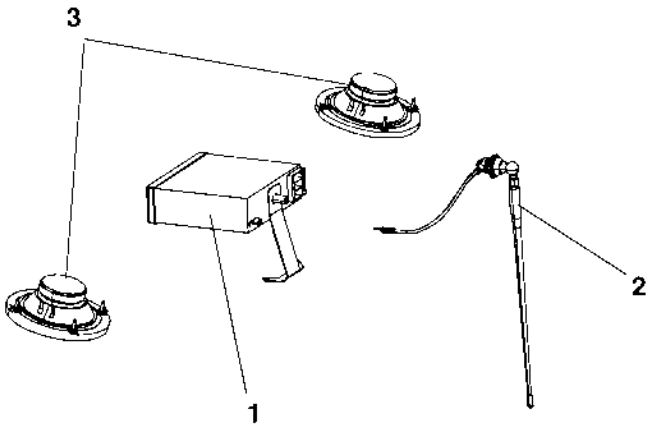

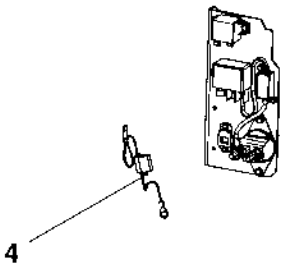

Radio and cd player

Item	Part No	Rem	Qty	Description	Code
1			1	**Radio and cd player module (Page 434)**	
2	4700937165		1	Antenna	D
3	4700791968		2	Loud speakers	
4			1	**Power supply module (Page 332)**	

Radio and cd player module

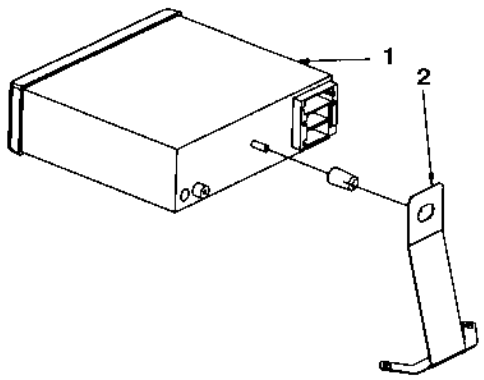

Radio and cd player module

Item	Part No	Rem	Qty	Description	Code
1	4700792583		1	Car stereo	
2	4700394654		1	Bracket	

Drivers seat

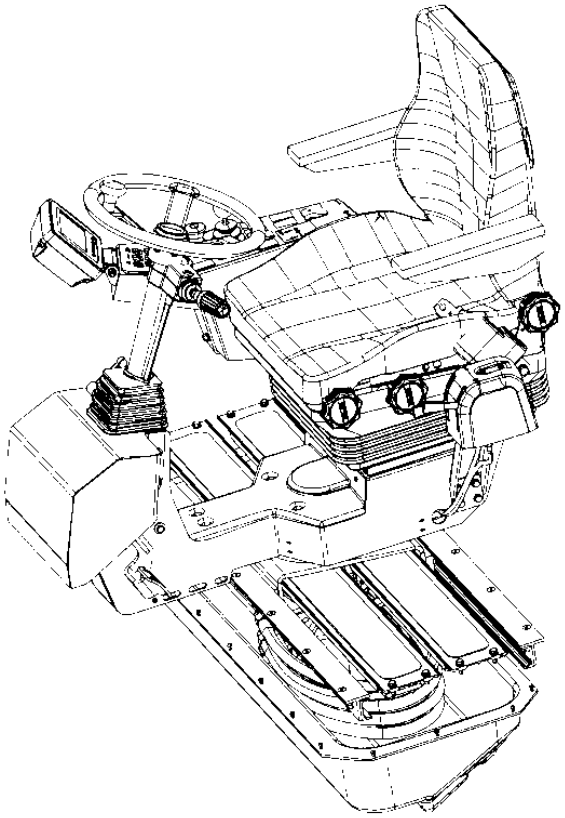

Drivers seat

Item	Part No	Rem	Qty	Description	Code
5				Seat frame structure (Page 438)	
6				Seat, galon suspensioned (Page 446)	
7				Seat, fabric suspensioned (option) (Page 448)	
10				Controls, slidable and turning (Page 450)	
14				Cross sliding (Page 452)	
15				Drive control, cpl (Page 456)	
20				Display unit (Page 458)	
21				Steering column switch module (Page 350)	
22				Seat belt module (Page 460)	

Seat frame structure

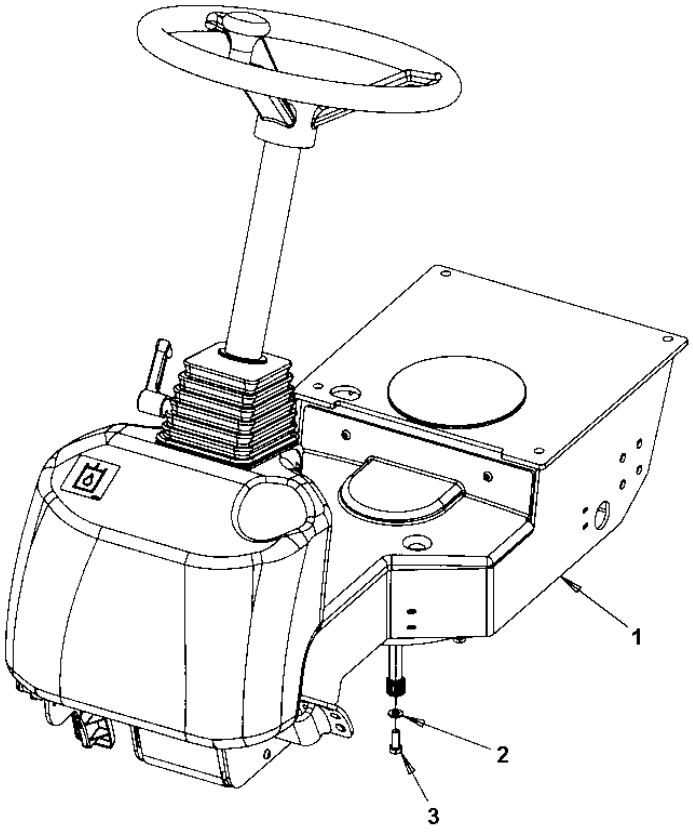

Seat frame structure

Item	Part No	Rem	Qty	Description	Code
1			1	**Seat frame (Page 440)**	
2	4700904229		4	Steel plain washer 8,4x16x1,5	C
3	4700947679		4	Screw	

Seat frame

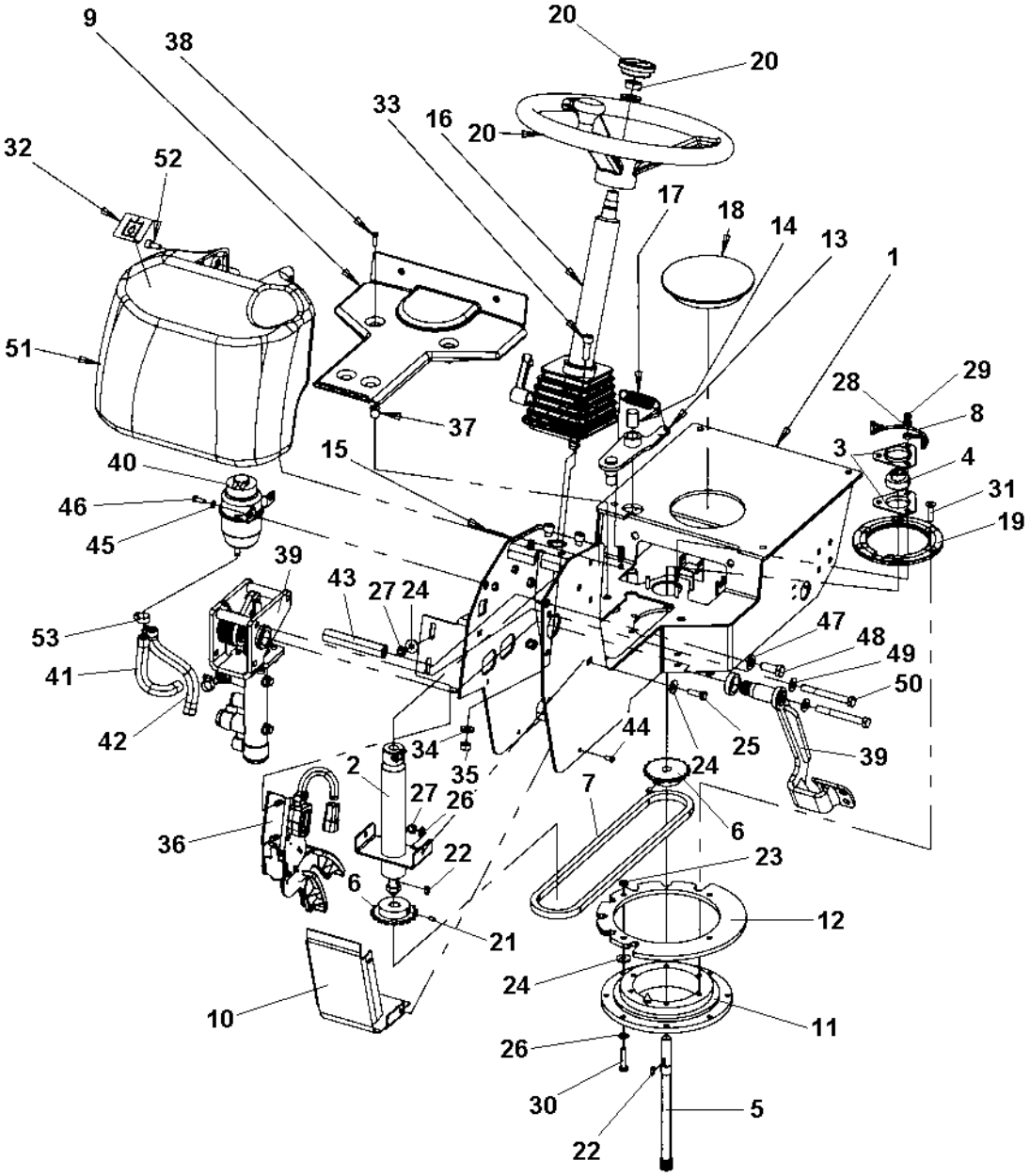
9
38
20
20
33
16
20
32
52
17
18
14
13
1
51
28
29
8
37
15
3
4
40
31
46
19
45
39
43
27
24
53
47
48
49
41
50
42
44
25
39
2
34
35
24
7
27
26
6
36
22
23
6
12
21
24
10
11
26
30
5
22

Seat frame

Item	Part No	Rem	Qty	Description	Code
1	4700395530		1	Seat frame	
2	4700359919		1	Shaft	C
3	4700903917		1	Bearing outer	B
4	4700903918		1	Bearing inner	B
5	4700391770		1	Shaft	
6	4700359916		2	Chain wheel	D
7	4700379718		1	Chain and connecting link	
8	4700372672		1	Chain guard	
9	4700392839		1	Cover	
10	4700395536		1	Cover	
11	4700359125		1	Ball bearing	B
12	4700379728		1	Locking disc	
13	4700395383		1	Coupling link	
14	4700359819		1	Bushing	C
15	4700630008		1	Pin	D
16			1	**Steering column (Page 442)**	D
17	4700359043		1	Spring	D
18	4700359920		1	Plug	C
19	4700372965		1	Lock ring	C
20	4700372964		1	Steering wheel, cpl	D
21	4700516051		2	Set screw	C
22	4700350009		2	Flat key	C
23	4700573008		4	Nut M8	C
24	4700904640		8	Washer 8,4x22x3	C
25	4700500021		2	Screw M8-1,25x25 8.8	C
26	4700904229		6	Steel plain washer 8,4x16x1,5	C
27	4700586003		4	Lock nut M8	C
28	4700603001		3	Washer	C
29	4700586002		3	Lock nut M6 -8	C
30	4700792678		4	Screw	
31	4700902520		6	Screw	C
32	4700272372		1	Decal "HYDRAULIC OIL"	D
33	4700508029		3	Screw M10-1,5x30H 8,8	C
34	4700904557		3	Steel plain washer	C
35	4700570006		3	Nut	C
36	4700395471		1	Throttle control	
37	4700792539		6	Rubber nut	
38	4700791524		6	Screw M6X20	
39			1	**Brake pedal (Page 444)**	
40	4700396327		1	Reservoir	
41	4700904985		N	Fuel hose	C
42	4700904985		N	Fuel hose	C
43	4700395534		1	Spacer	
44	4700904650		4	Screw	C
45	4700904228		2	Washer 6,4x12x1,5	C
46	4700500013		2	Screw M6-1x16 8,8	C
47	4700904231		2	Washer 13x24x2 300 HV	C
48	4700500046		2	Screw M12x025H	C
49	4700904230		3	Steel plain washer	C
50	4700500077		3	Screw	C
51	4812110538		1	Casing	
52	4700508005		4	Screw	
53	4700313001		4	Hose clamp	C

Steering column

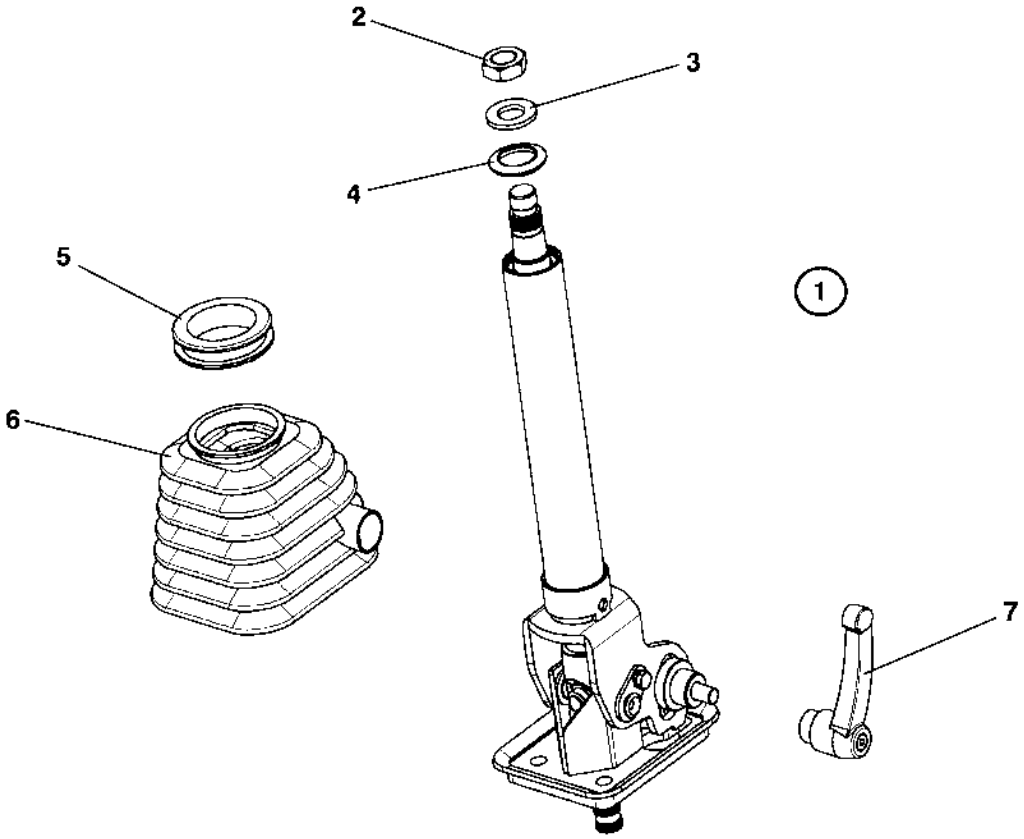

Steering column

Item	Part No	Rem	Qty	Description	Code
1				Steering column	D
2	4700945632		1	. Nut	C
3	4700945633		1	. Washer	
4	4700945634		1	. Rubber cap	C
5	4700945635		1	. Bellows ring	C
6	4700945636		1	. Bellows	C
7	4700945637		1	. Locking handle	D

Brake pedal

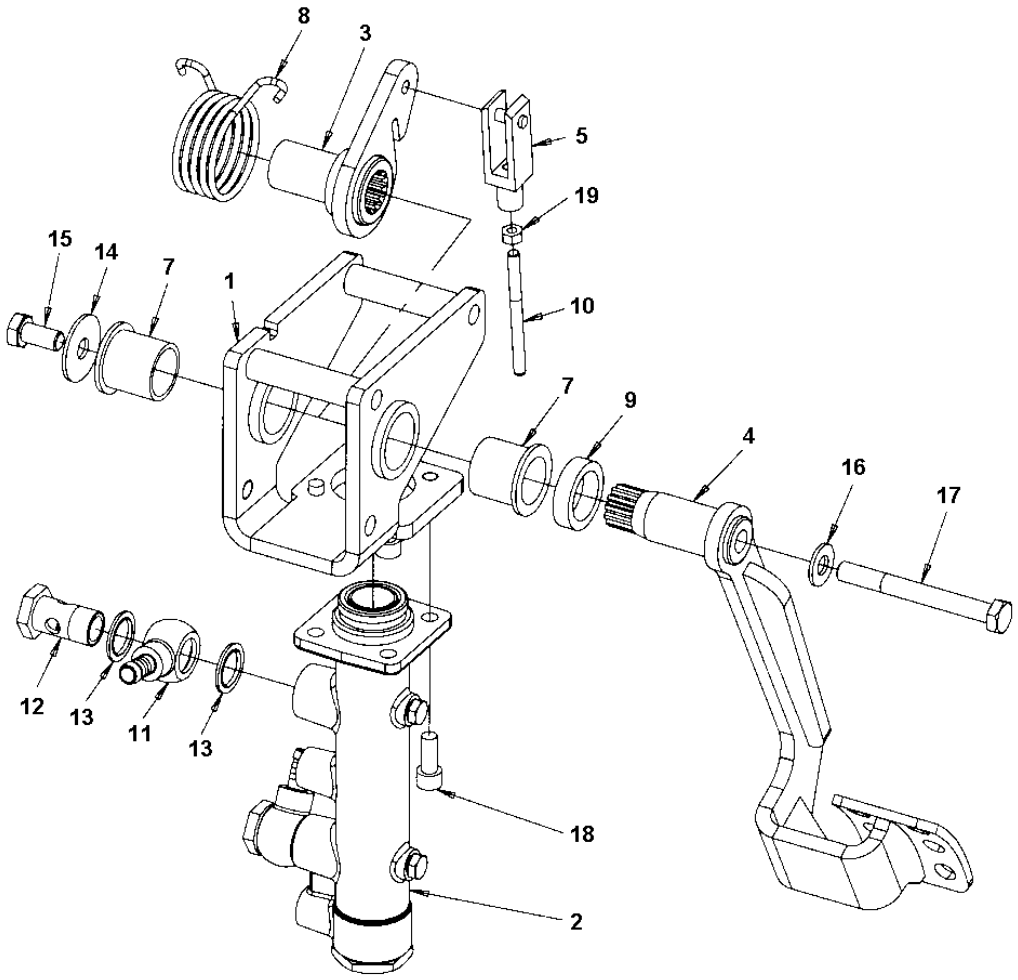

Brake pedal

Item	Part No	Rem	Qty	Description	Code
1	4700395463		1	Bracket	
2	4700395470		1	Brake cylinder	
3	4700395464		1	Lever	
4	4700395465		1	Pedal	
5	4700900445		1	Yoke	D
7	4700395468		2	Bushing	
8	4700395467		1	Torsion spring	
9	4700395469		1	Spacer	
10	4700395466		1	Pin	
11	4700792759		2	Banjo fitting	
12	4700904292		2	Hollow screw	
13	4700162015		4	Seal ring	D
14	4700615061		1	Washer	C
15	4700500048		1	Screw M10-1,5x20 8,8	C
16	4700904230		1	Steel plain washer	C
17	4700500077		1	Screw	C
18	4700508009		4	Screw	
19	4700570004		1	Nut M6X1,00 -8 A2K	C

Seat, galon suspensioned

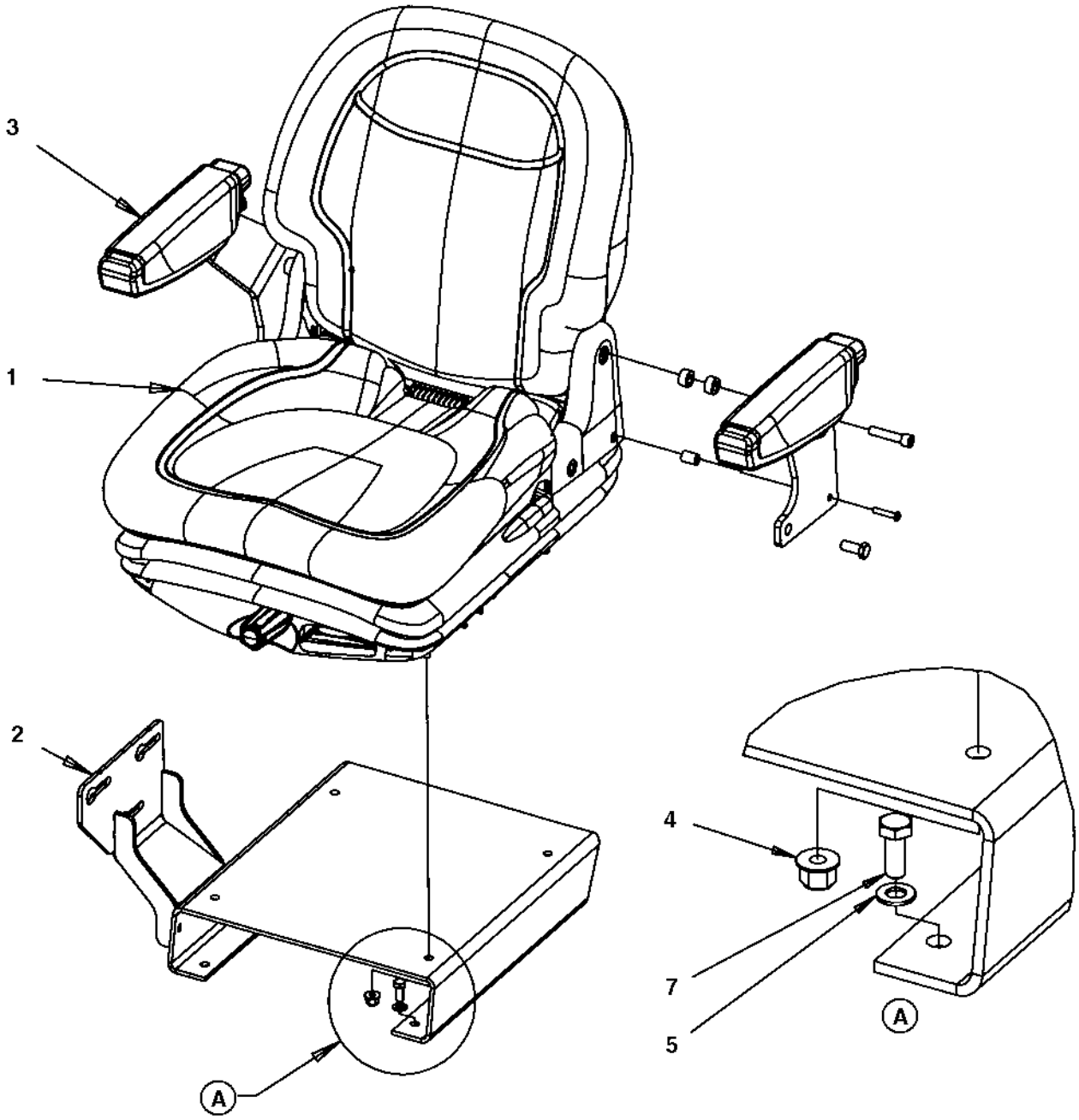

Seat, galon suspensioned

Item	Part No	Rem	Qty	Description	Code
1	4700377518		1	Drivers seat, cpl	D
	4700945622		1	. Seat switch	B
	4700945661	A	1	. Adjuster kit	D
2	4700390561		1	Seat frame	
3	4700390963		1	Arm rest kit	D
4	4700902286		4	Hexagon lock nut with flange	C
5	4700904229		4	Steel plain washer 8,4x16x1,5	C
7	4700500053		4	Screw M8x20H 8.8	C

A) Left & right sliding rail

Seat, fabric suspensioned (option)

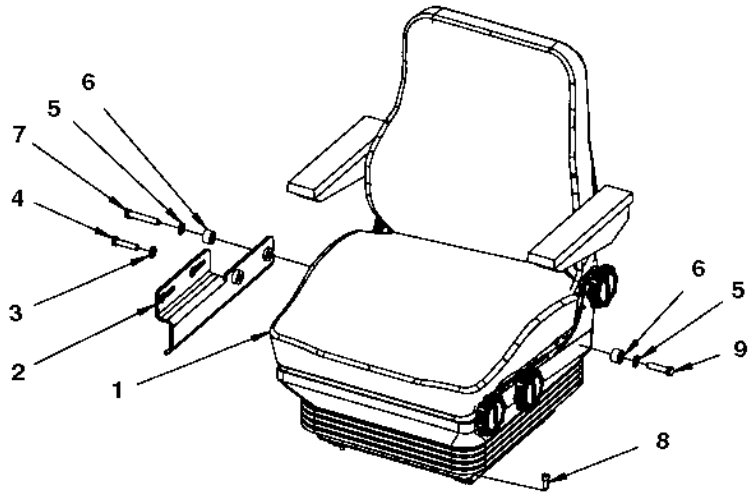

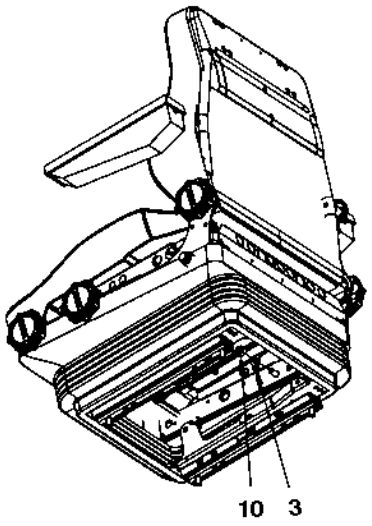

Seat, fabric suspensioned (option)

Item	Part No	Rem	Qty	Description	Code
1	4700390013	A	1	Seat	
	4700937892		1	. Seat switch	B
	4700937620		1	. Arm rest, right	D
	4700937621		1	. Arm rest, left	D
2	4700390169		1	Bracket	
3	4700904230		2	Steel plain washer	C
4	4700500161		1	Hexagon head screw	C
5	4700904638		2	Washer 12x22x2	
6	4700791572		2	Spacer washer	
7	4700792501		1	Screw	
8	4700508092		4	Screw	C
9	4700792527		1	Screw	
10	4700586018		1	Lock nut	C

A) Without seat belt

Controls, slidable and turning

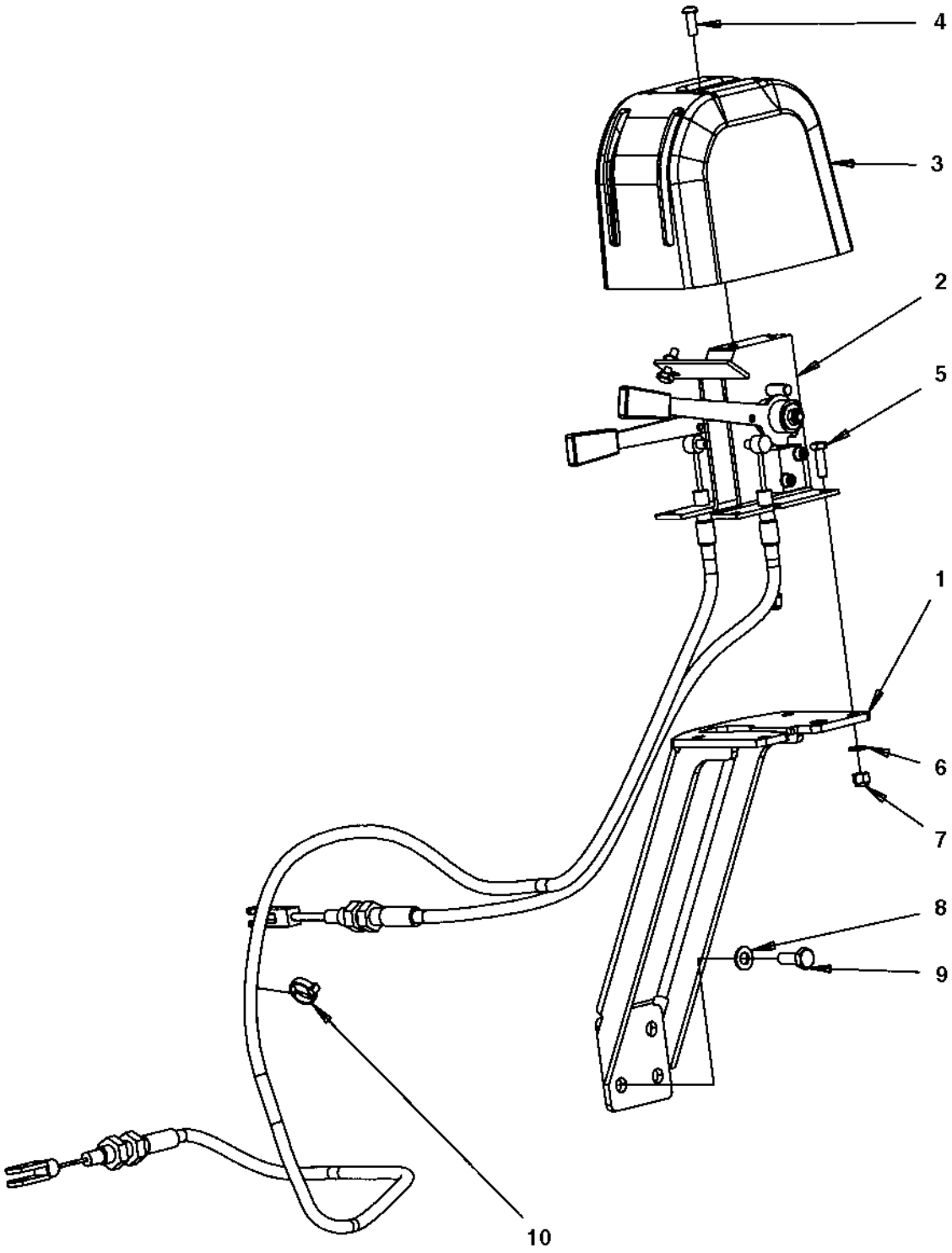

Controls, slidable and turning

Item	Part No	Rem	Qty	Description	Code
1	4700391241		1	Bracket	
2	4700390239		1	Control	
	4700393496		1	. Cable 675	
	4700393497		1	. Cable 1300	
3	4700392965		1	Control cover	
4	4700791524		2	Screw M6X20	
5	4700500040		4	Screw M6-1x20 8,8	C
6	4700904228		4	Washer 6,4x12x1,5	C
7	4700586002		4	Lock nut M6 -8	C
8	4700904229		4	Steel plain washer 8,4x16x1,5	C
9	4700500053		4	Screw M8x20H 8.8	C
10	4700313041		N	Cable ties	

Cross sliding

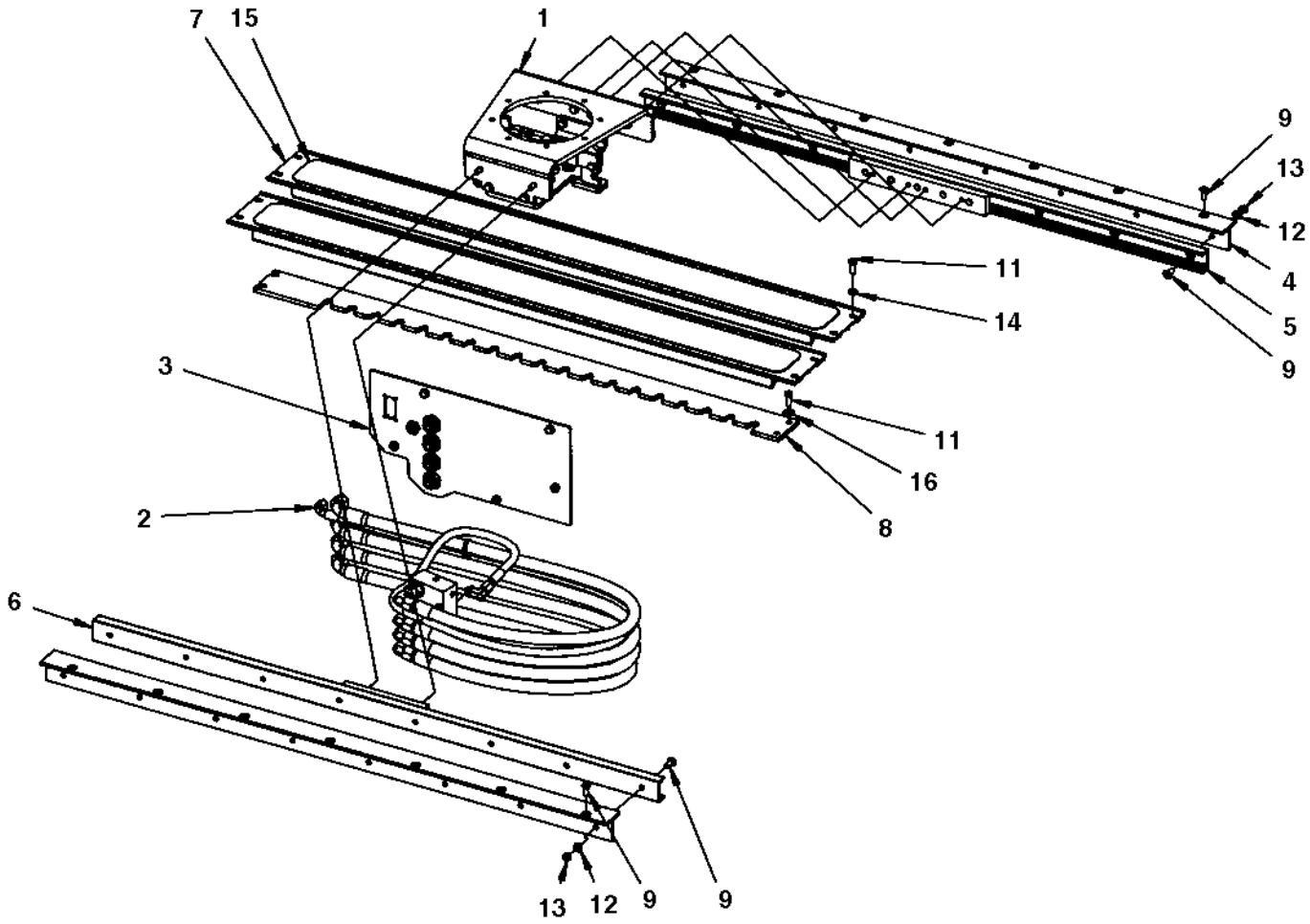

Cross sliding

Item	Part No	Rem	Qty	Description	Code
1			1	**Carrier (Page 454)**	
2			1	**Steering, slideable (Page 238)**	
3			1	**Hose bracket (Page 276)**	
4	4700390428		2	Rail holder	
5	4700391082		1	Linear bearing	
6	4700391083		1	Linear bearing	
7	4700393191		2	Cover	
8	4700379729		1	Locking rail	
9	4700513003		30	Screw	C
11	4700500020		12	Screw M8-1,25x22 8,8	D
12	4700904229		16	Steel plain washer 8,4x16x1,5	C
13	4700570005		16	Nut M8	C
14	4700904556		8	Washer 8,4x16x3,0	C
15	4700393978		2	Slip protection	
16	4700791304		4	Washer	C

Carrier

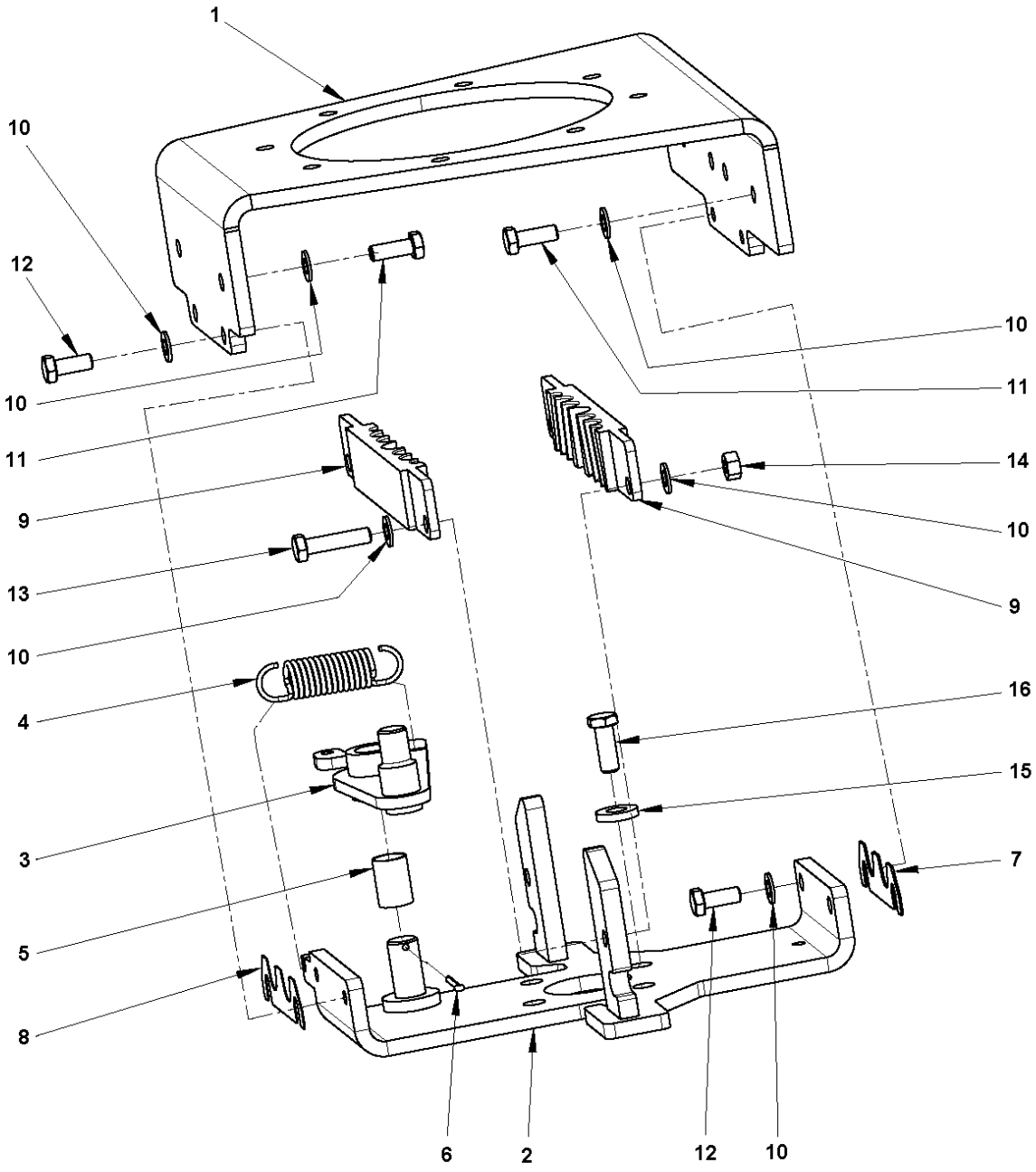

Carrier

Item	Part No	Rem	Qty	Description	Code
1	4700379715		1	Carrier	D
2	4700391478		1	Steering valve bracket	D
3	4700393347		1	Coupling link	D
4	4700359043		1	Spring	D
5	4700359819		1	Bushing	C
6	4700630008		1	Pin	D
7	4812115060		6	Shim	
8	4812115061		6	Shim	
9	4812110896		2	Clamp	C
10	4700904229		14	Steel plain washer 8,4x16x1,5	C
11	4700500020		6	Screw M8-1,25x22 8,8	D
12	4700500053		4	Screw M8x20H 8.8	C
13	4700500047		2	Hexagon head screw	C
14	4700570005		2	Nut M8	C
15	4700904557		4	Steel plain washer	C
16	4700502035		4	Screw 3/8"-16UNCx1 8.8	D

Drive control, cpl

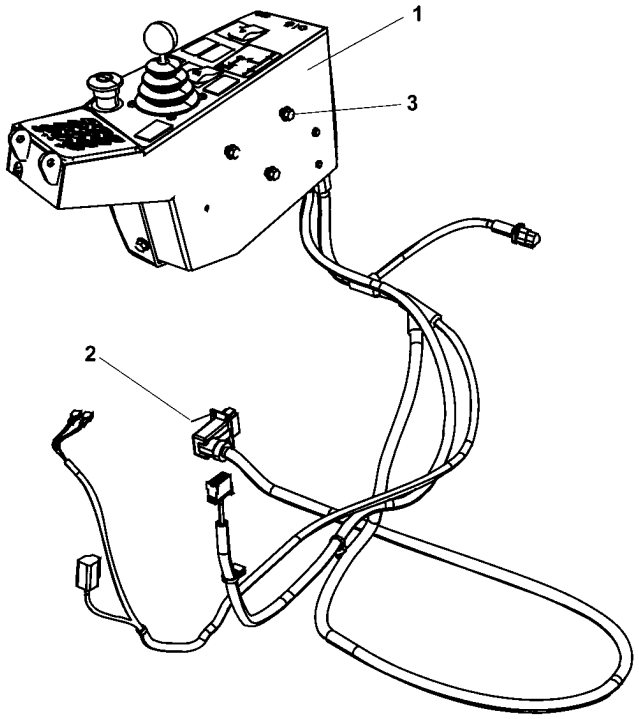

Drive control, cpl

Item	Part No	Rem	Qty	Description	Code
1			1	**Drive control**	
2	4700791709		4	Pop rivet	C
3	4700500505		3	Screw M8x20 8.8	

Display unit

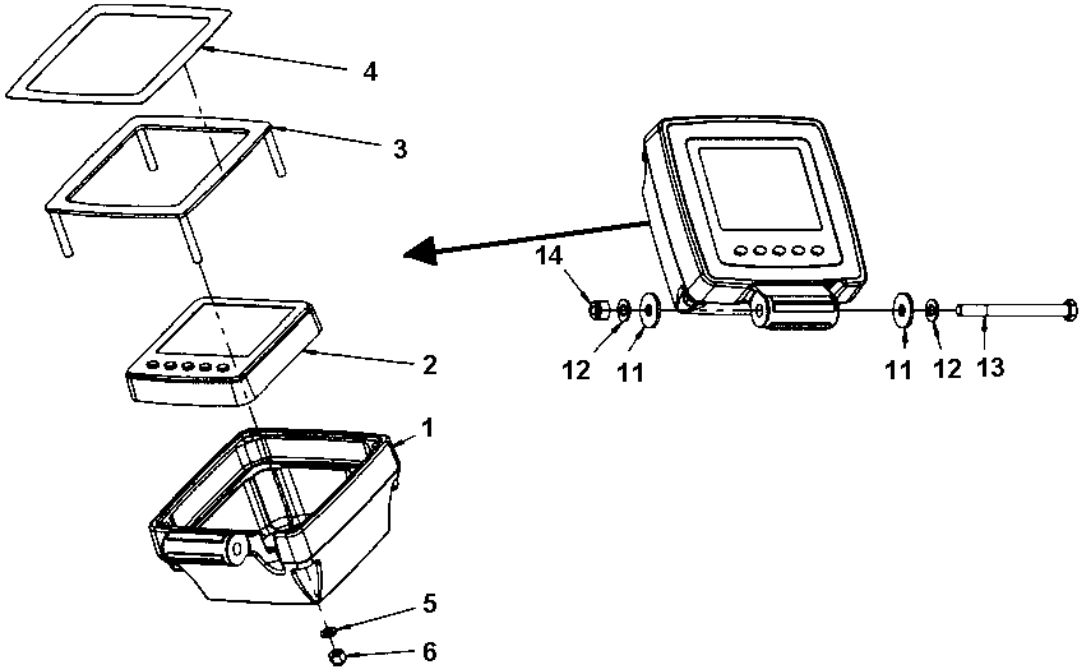

Display unit

Item	Part No	Rem	Qty	Description	Code
1	4700392717		1	Display holder	D
2	4812113786		1	Display unit	
3	4700392719		1	Cover	D
4	4700393094		1	Decal	D
5	4700904228		4	Washer 6,4x12x1,5	C
6	4700586002		4	Lock nut M6 -8	C
11	4700903662		2	Washer	C
12	4700904229		2	Steel plain washer 8,4x16x1,5	C
13	4700500115		1	Screw M8-1,25x90 8.8	C
14	4700586003		1	Lock nut M8	C

Seat belt module

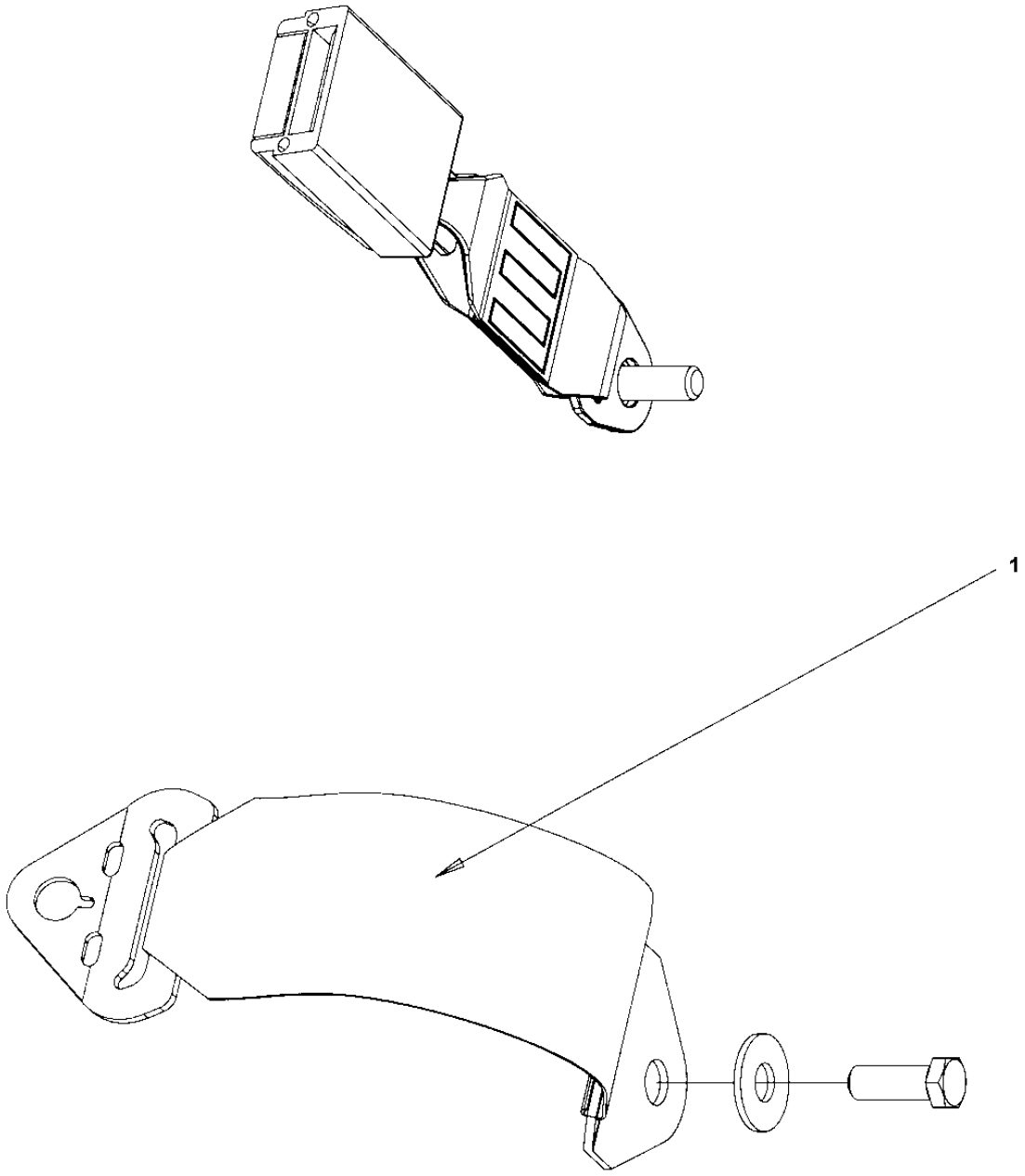

Seat belt module

Item	Part No	Rem	Qty	Description	Code
1	4700379637		1	Seat belt 3"	B

Rear view mirror module

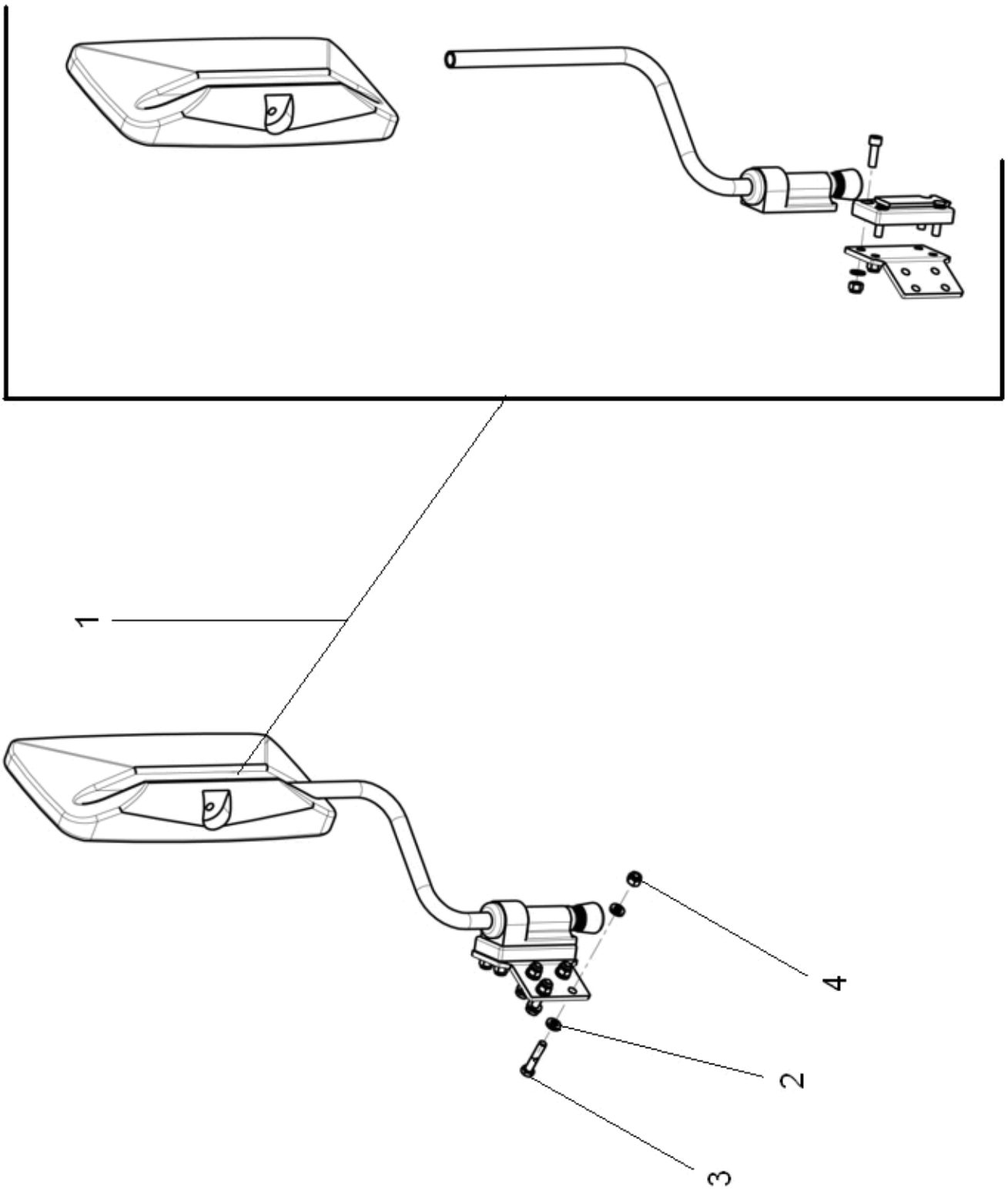

Rear view mirror module

Item	Part No	Rem	Qty	Description	Code
1	4812110352		1	Mirror assy ECN 09289	
	4700381944		1	Mirror bracket	
	4700392316		1	Bracket	
	4700381943		1	Mirror	
	4700508019		4	Screw M8x25 8.8	C
	4700904229		4	Steel plain washer 8,4x16x1,5	C
	4700586003		4	Lock nut M8	C
2	4700904556		8	Washer 8,4x16x3,0	C
3	4700500023		4	Screw M8-1,25x40 8,8	C
4	4700586003		4	Lock nut M8	C

Decals

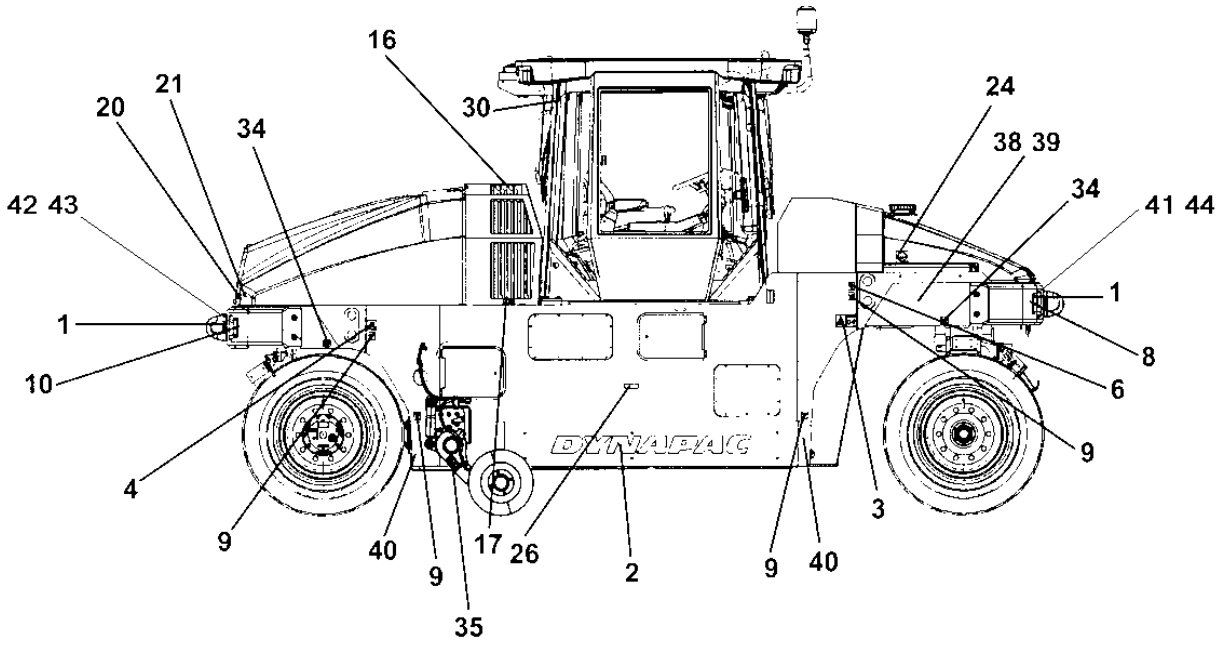
16
21
20
34
30
24
38 39
34
41 44
42 43
1
10
4
9
40
9
17
26
2
35
9
40
3
9
6
8
1

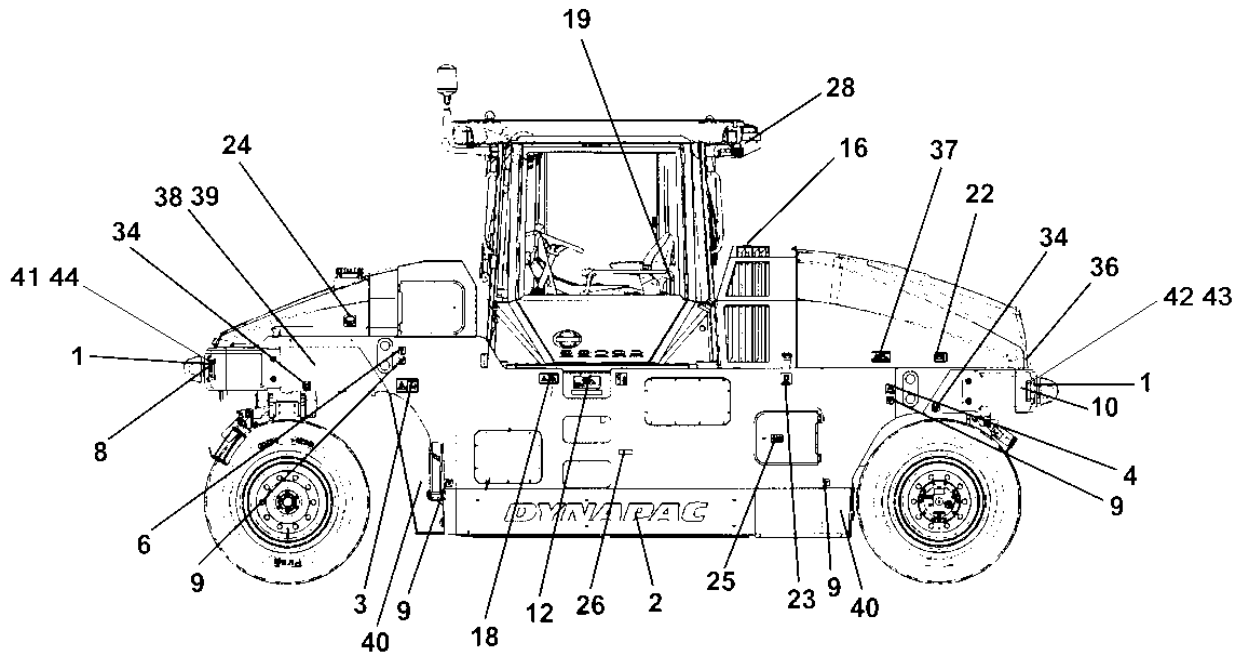
19
28
24
16
37
22
38 39
34
34
36
41 44
42 43
1
8
6
9
3
40
9
18
12
26
2
25
23
9
40
4
9
10
1

Decals

Item	Part No	Rem	Qty	Description	Code
1	4700904095		2	Decal "DYNAPAC" L=880 mm	
2	4700904098		2	Decal "DYNAPAC" L=1350 mm	
3	4700903422		2	Decal "SAFETY"	D
4	4700904870		2	Lifting sign	D
6	4700357587		2	Decal "LIFT POINT"	D
8	4700377743		2	Reflector, white	D
9	4700382751		8	Decal "TIE DOWN POINT"	D
10	4700377742		2	Reflector, red	D
12			1	Product identification plate	
16	4700388449		1	Decal "COOLING LEVEL"	
17	4700791642		1	Decal "WARNING" Use of starting fluid prohib.	D
18	4700903459		1	Decal "SAFETY"	D
19	4700903425		1	Decal "SAFETY MANUAL"	D
20	4700903424		1	Decal "HOT SURFACE"	D
21	4700903423		1	Decal "SAFETY"	D
22	4700904835		1	Decal "BATTERY POWER"	D
23	4700991658		1	Decal "FUEL"	D
24	4700991657		2	Decal "WATER"	D
25	4700393959		1	Decal "24V"	
26	4700377744		2	Reflector, yellow	D
28	4700904165		1	Safety decal Toxic gases	D
30	4700903590		1	Decal Emergency exit	
34	4700374765		4	Decal "TYRE PRESSURE"	
35	4700904083		1	Safety decal	D
36	4700397286		1	Safety decal High pressure fluid	
37	4700904895		1	Safety decal "Brake release"	D
38	4811000110		2	Decal model code "CP224"	
39	4812110487	A	N	Decal	
40	4812110488	B	N	Decal	
41	4700394593		1	Decal "Risk location"	
42	4700394594		1	Decal "Risk location"	
43	4700394595		1	Decal "Risk location"	
44	4700394596		1	Decal "Risk location"	

A) L = 2,2 m
B) L = 1,8 m

Optional equipment

Item	Part No	Rem	Qty	Description	Code
7				**Ballast module (Page 468)**	
14				**Air conditioning (Page 470)**	
15				**Edge cutter (Page 492)**	
23				**Asphalt temperatur module (Page 516)**	
24				**Fire extinghisher (Page 518)**	
25				**Scraper module (Page 144)**	
			1		

Ballast module

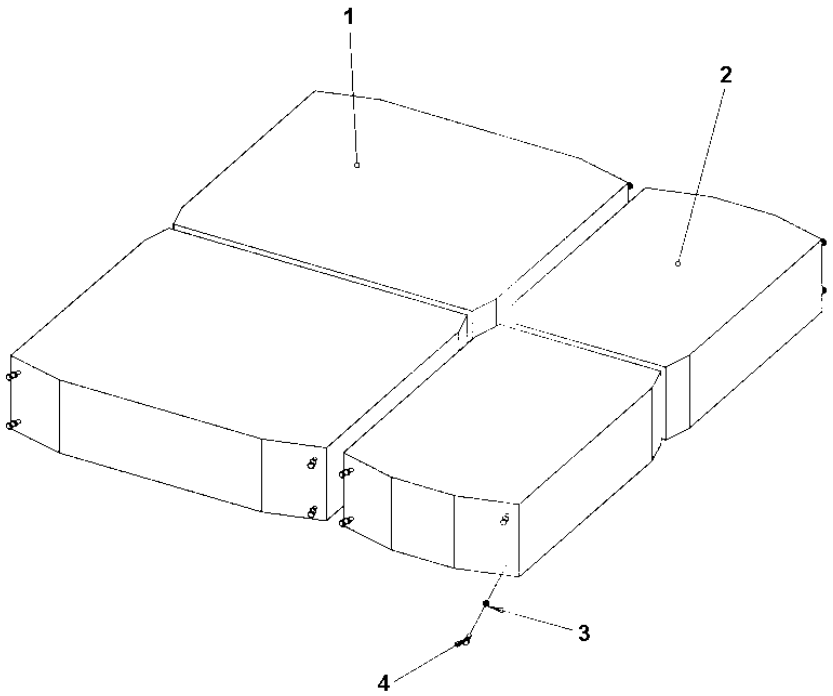

Ballast module

Item	Part No	Rem	Qty	Description	Code
1	4700170226		2	Ballast	
2	4700170227		2	Ballast	
3	4700927233		16	Nut	C
4	4700500194		16	Screw	C

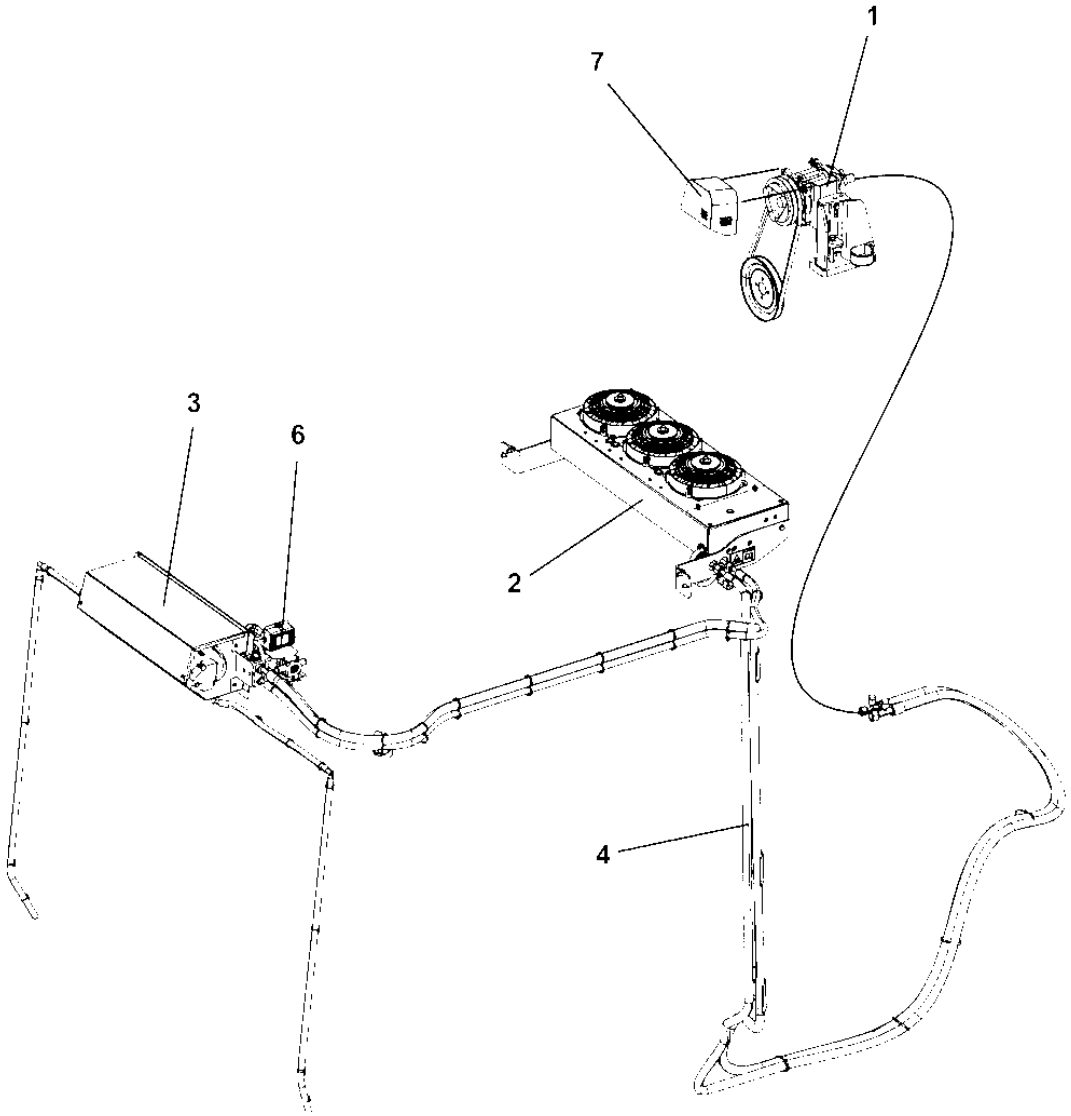
1
7
3
6
2
4

Air conditioning

Item	Part No	Rem	Qty	Description	Code
1			1	**Compressor module (Page 472)**	
2			1	**Condensor module (Page 476)**	
3			1	**Evaporator module (Page 480)**	
4			1	**Hose kit AC (Page 484)**	
6			1	**ACC module (Page 486)**	
7			1	**Protection cover (Page 490)**	

Compressor module

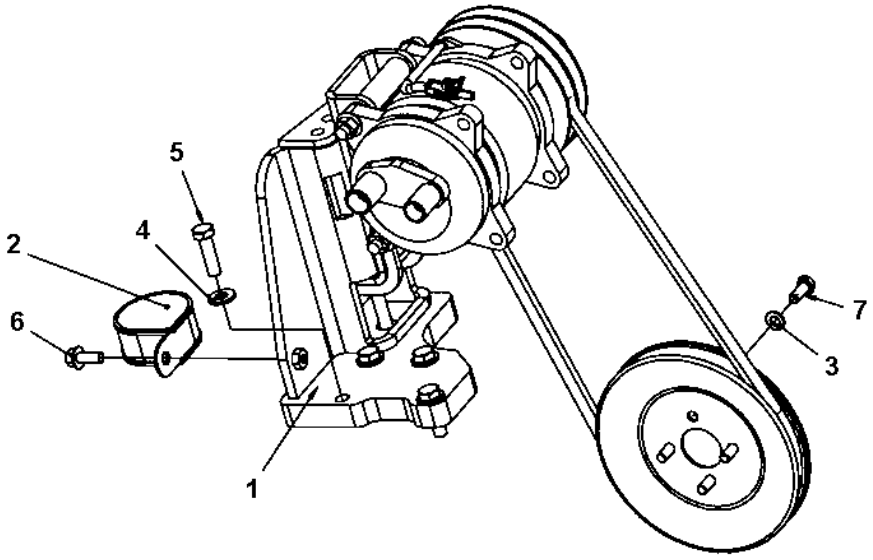

Compressor module

Item	Part No	Rem	Qty	Description	Code
1			1	**Compressor complete (Page 474)**	
2	4700904352		1	Clamp	
3	4700904229		4	Steel plain washer 8,4x16x1,5	C
4	4700904230		4	Steel plain washer	C
5	4700500030		4	Screw	C
6	4700500505		1	Screw M8x20 8.8	
7	4700500053		4	Screw M8x20H 8.8	C

Compressor complete

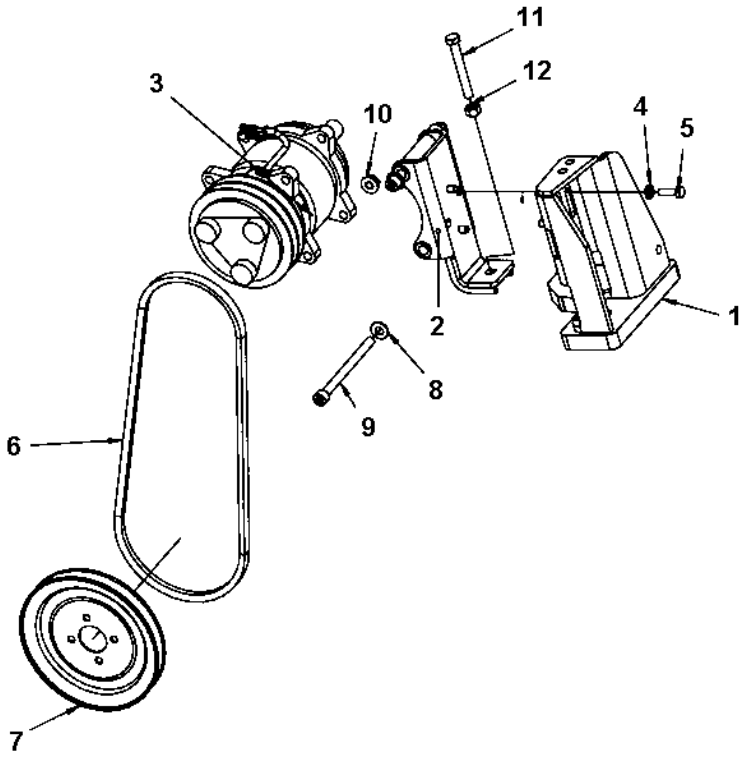

Compressor complete

Item	Part No	Rem	Qty	Description	Code
1	4700394861		1	Compressor bracket	
2	4700394860		1	Compressor bracket	
	4812113596		1	Compressor bracket	
3	4700396036		1	Compressor	
4	4700904556		2	Washer 8,4x16x3,0	C
5	4700500021		2	Screw M8-1,25x25 8.8	C
6	4700410012		1	V-belt	
7	4700395192		1	V-belt pulley	
8	4700904230		2	Steel plain washer	C
9	4700792797		2	Hexagon socket head cap screw m	
10	4700570103		2	Nut M10	
11	4700500241		1	Screw	
12	4700570006		1	Nut	C

Condensor module

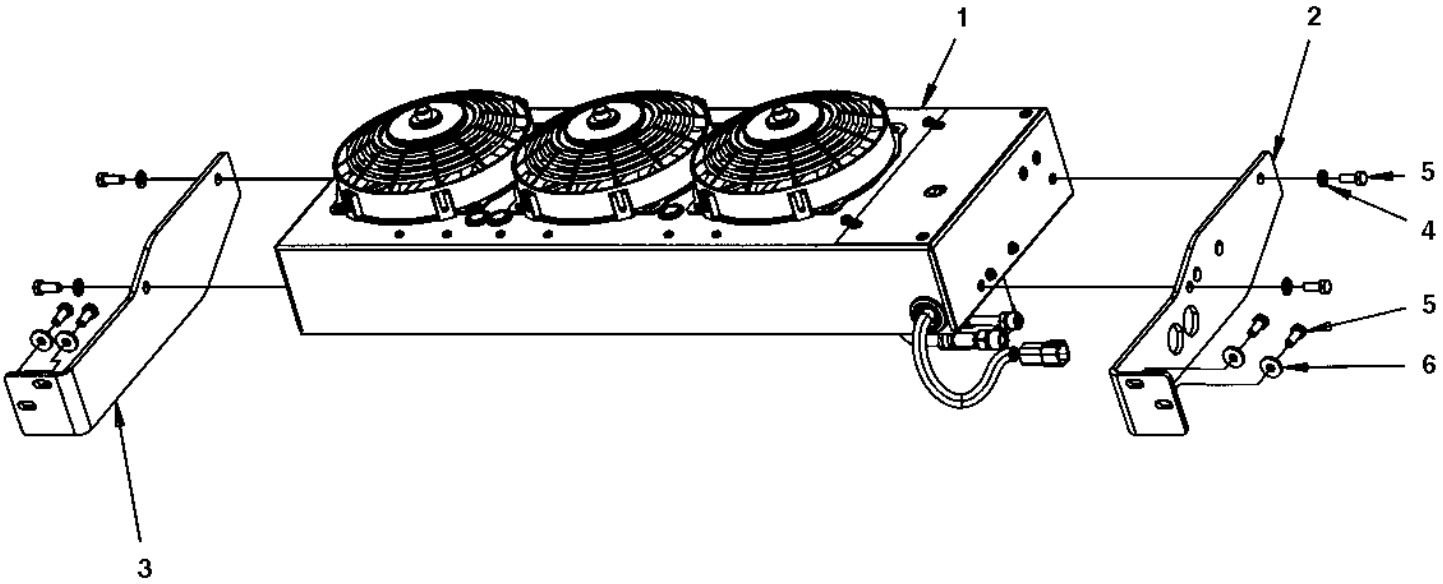

Condensor module

Item	Part No	Rem	Qty	Description	Code
1			1	**Condensor (Page 478)**	
2	4700393222		1	Bracket	
3	4700393223		1	Bracket	
4	4700904229		4	Steel plain washer 8,4x16x1,5	C
5	4700500053		8	Screw M8x20H 8.8	C
6	4700904640		4	Washer 8,4x22x3	C

Condensor

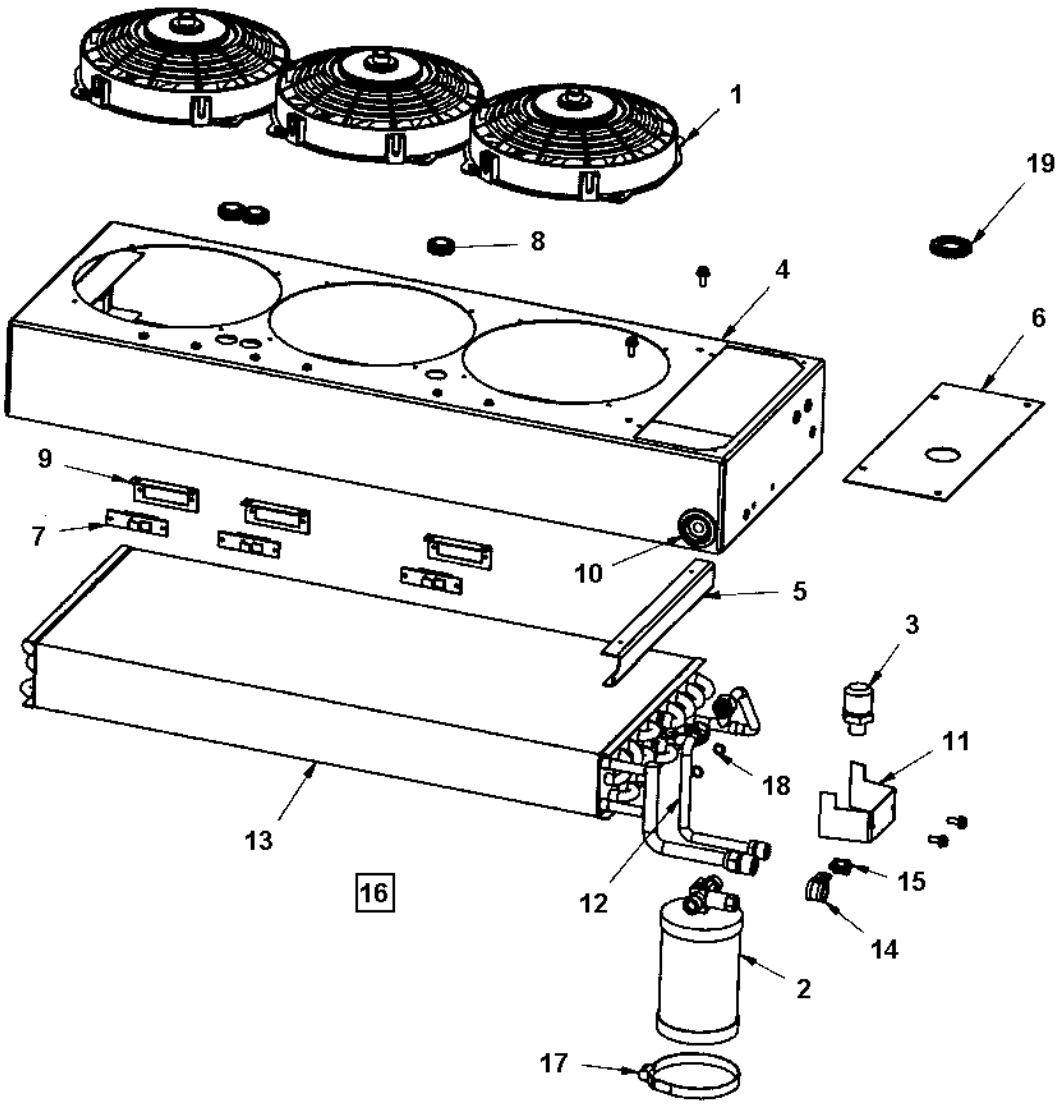

Condensor

Item	Part No	Rem	Qty	Description	Code
1	4700950372		3	Fan	
2	4700950373		1	Dryer	
3	4700938605		1	Pressure switch	B
4			1	Casing	
5			1	Bracket	
6			1	Cover	
7	4700938606		3	Resistor	B
8	4700938609		3	Grommet	
9	4812155658		3	Resistor bracket	
10			1	Grommet	
11			1	Bracket	
12			1	Copper tube	
13	4700950374		1	Condensor Coil	
14			1	Clamp	
15			1	Clamp	
16	4700950375		1	Cable harness	
17	4700938789		1	Clamp	C
18			2	O-ring	
19			1	Grommet	

Evaporator module

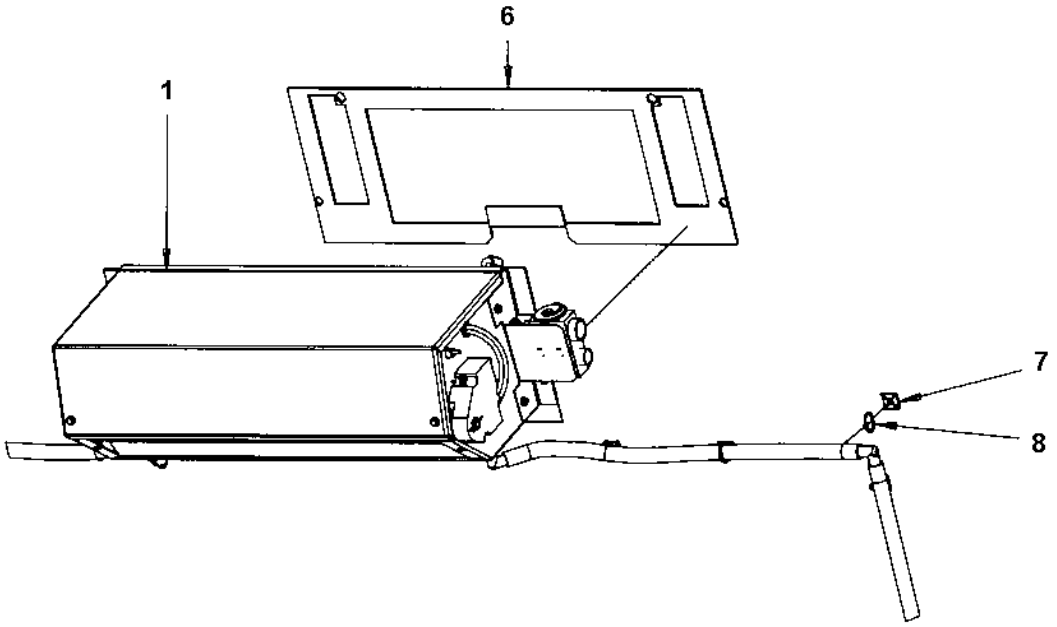

Evaporator module

Item	Part No	Rem	Qty	Description	Code
1	4700393584		1	**Evaporator unit (Page 482)**	
6	4700297018	A	1XL	Rubber strip	
7	4700395352		14	Cable tie holder	
8	4700313068		14	Cable ties L=92 mm	

A) L= 1,6 m

4700393584 Evaporator unit

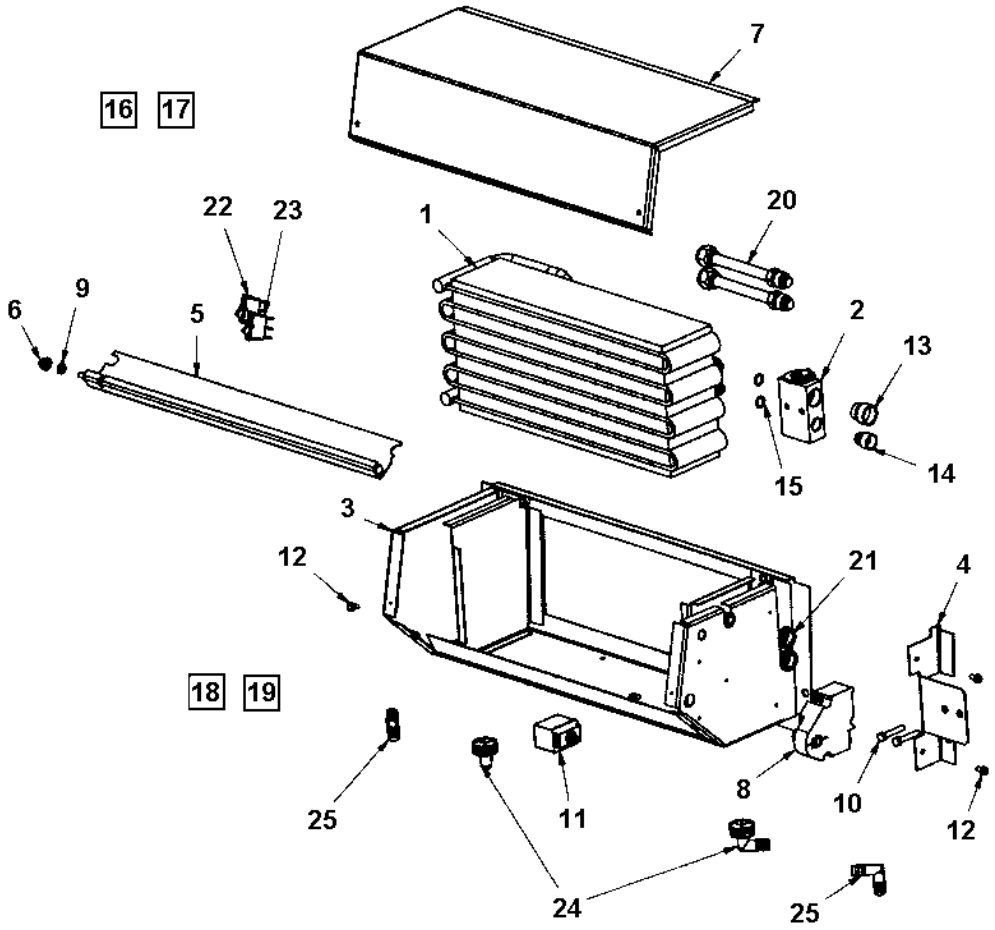

4700393584 Evaporator unit

Item	Part No	Rem	Qty	Description	Code
1	4700950310		1	Evaporator coil	
2	4700950342		1	Block valve	
3			1	Casing	
4			1	Bracket	
5			1	Recirculation cover	
6			1	Bushing	
7			1	Cover	
8	4700950343		1	Actuator motor	
9			1	Washer	
10			2	Screw M6x35	
11	4700950344		1	Thermostat	
12			4	Screw M5x10	
13			1	Plug	
14			1	Plug	
15	4700950345		2	O-ring	
16	4700950346		1	Cable harness, recirc.	
17	4700950347		1	Cable harness, panel	
18			1	Drain hose	
19			1	Drain hose	
20			2	Connect tube	
21			2	Insulation tape	
22	4700950348		1	Switch, air condition	
23	4700950349		1	Switch, recirculation	
24	4700950350		2	Drain valve	
25	4700950380		2	Drain elbow	

Hose kit AC

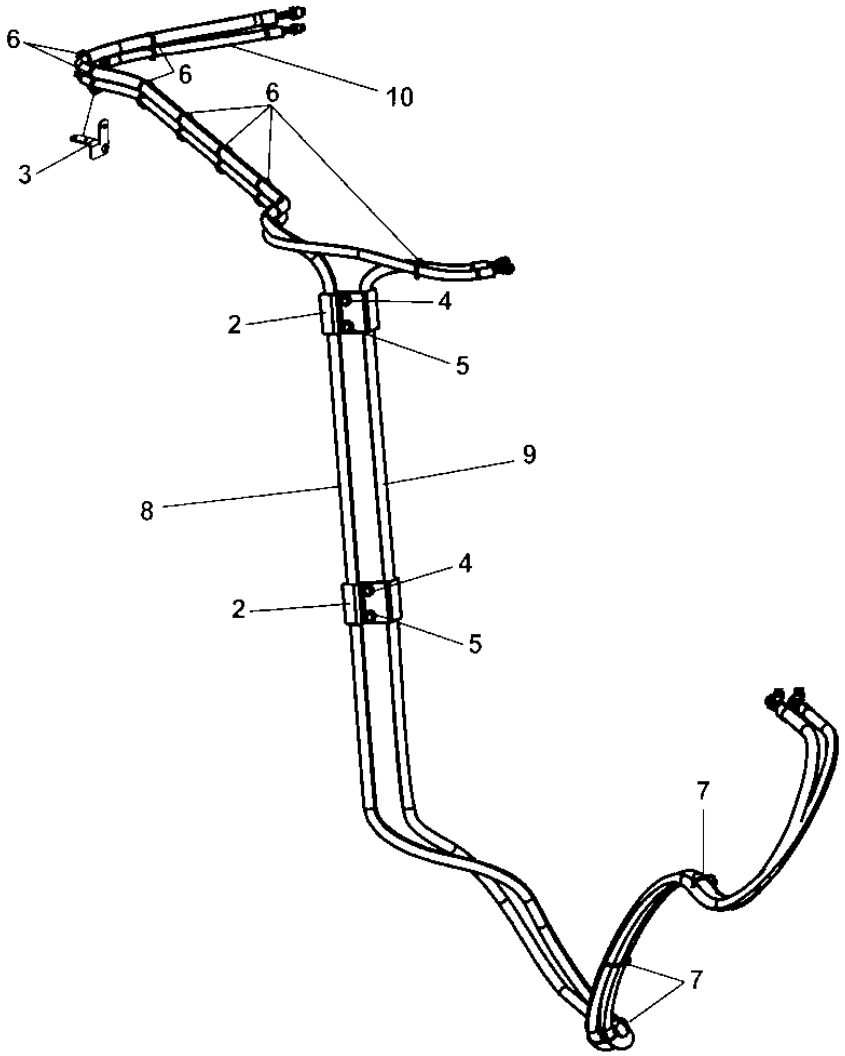

Hose kit AC

Item	Part No	Rem	Qty	Description	Code
2	4700393418		2	Bracket	
3	4700395156		1	Bracket	
4	4700904557		4	Steel plain washer	C
5	4700500048		4	Screw M10-1,5x20 8,8	C
6	4700792686		N	Cable tie with holder	
7	4700313041		N	Cable ties	
8	4700396705		1	Refrigerant hose	
9	4700396706		1	Refrigerant hose	
10	4700393594		1	Refrigerant hose	

ACC module

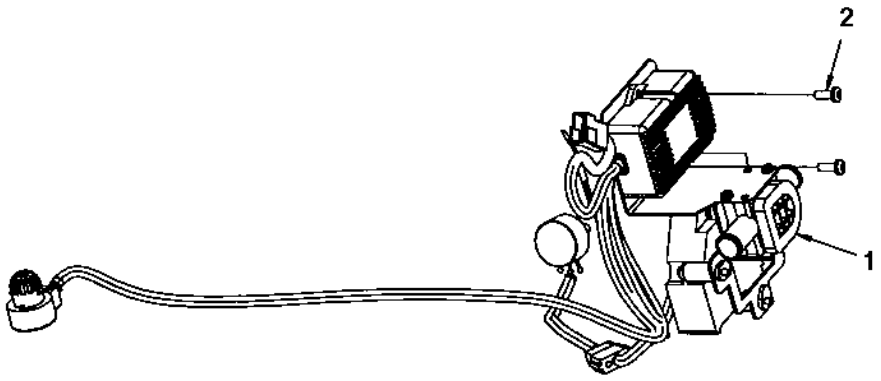

ACC module

Item	Part No	Rem	Qty	Description	Code
1			1	**ACC controls (Page 488)**	
2	4700792187		2	Screw M5x14	

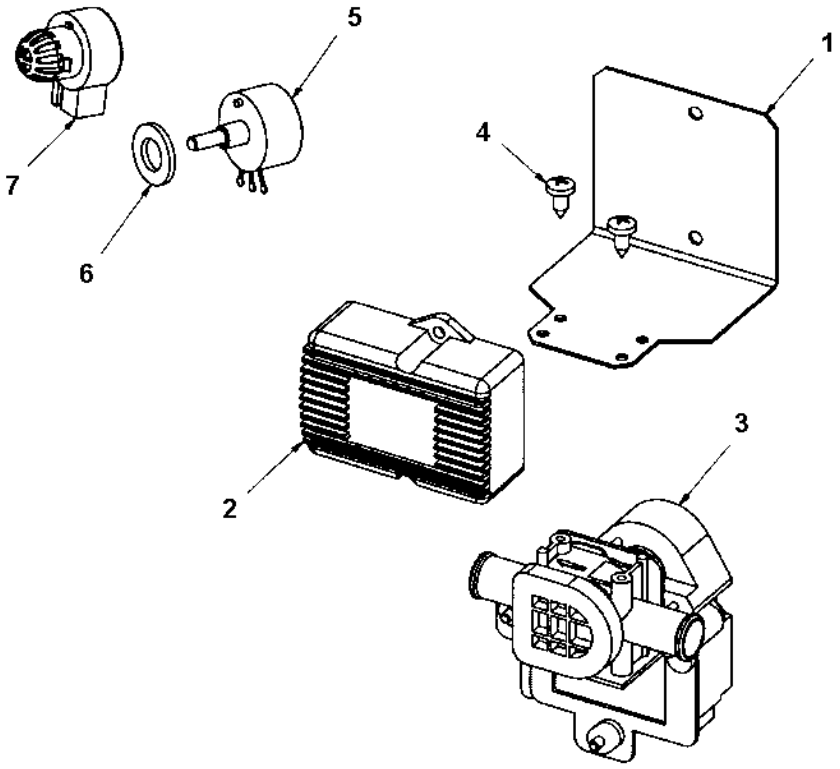
5
1
7
4
6
2
3

ACC controls

Item	Part No	Rem	Qty	Description	Code
1			1	Bracket	
2	4700950369		1	ATM unit	
3	4700950370		1	Heater valve	
4			2	Screw	
5	4700950371		1	Potentiometer	
6			1	Washer	
7	4700938624		1	Sensor	B

Protection cover

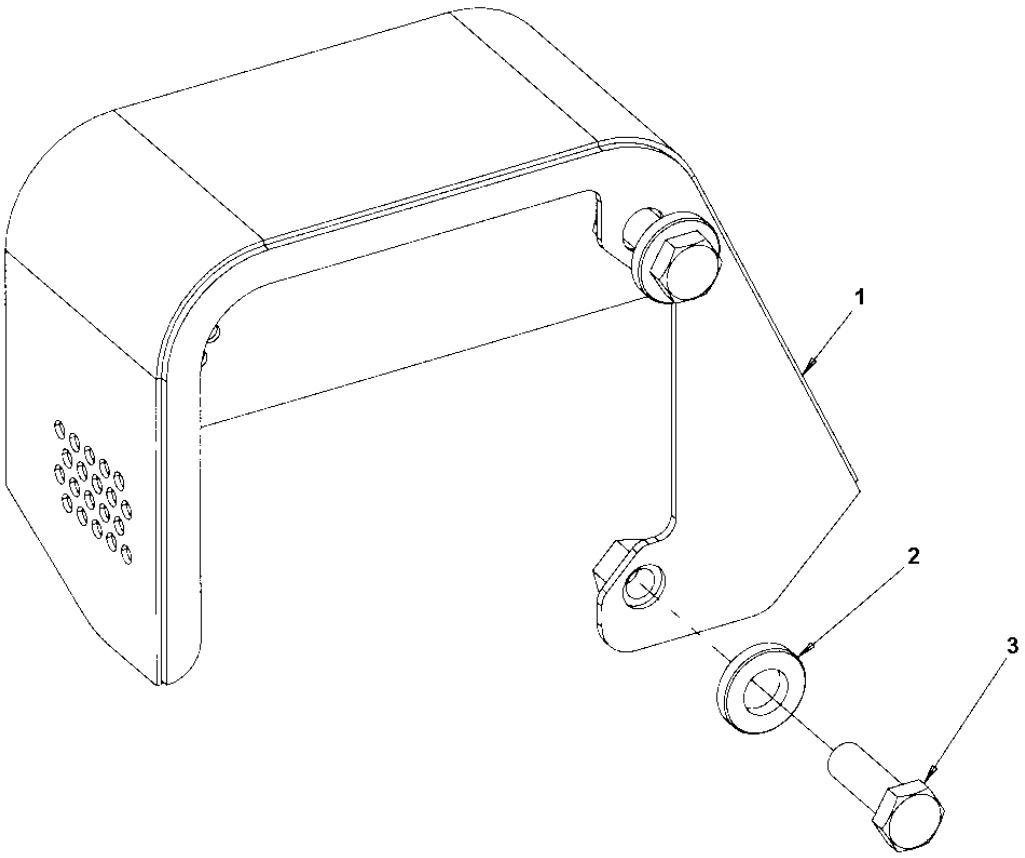

Protection cover

Item	Part No	Rem	Qty	Description	Code
1	4700396544		1	Protection cover	
2	4700603012		2	Washer	C
3	4700500029		2	Hexagon head screw	C

Edge cutter

Edge cutter

Item	Part No	Rem	Qty	Description	Code
1				**Edge cutter, module (Page 494)**	
2				**Cutting disc module (Page 504)**	
3				**Hydraulic valve module (Page 506)**	
4				**Bracket module (Page 512)**	
5				**Disc/Roller holder (Page 514)**	

Edge cutter, module

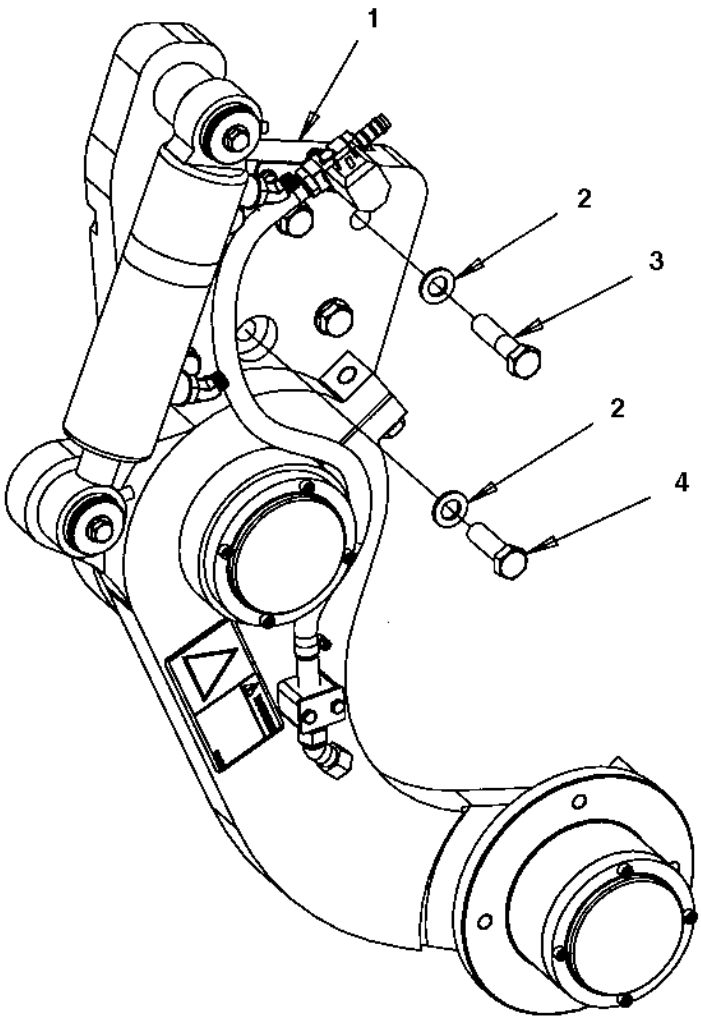

Edge cutter, module

Item	Part No	Rem	Qty	Description	Code
1	4700390998		1	**Edge cutter, cpl (Page 496)**	
2	4700904232		6	Washer	C
3	4700500058		5	Screw M16-2,0x65 8,8	
4	4700500070		1	Screw M16x50	C

4700390998 Edge cutter, cpl

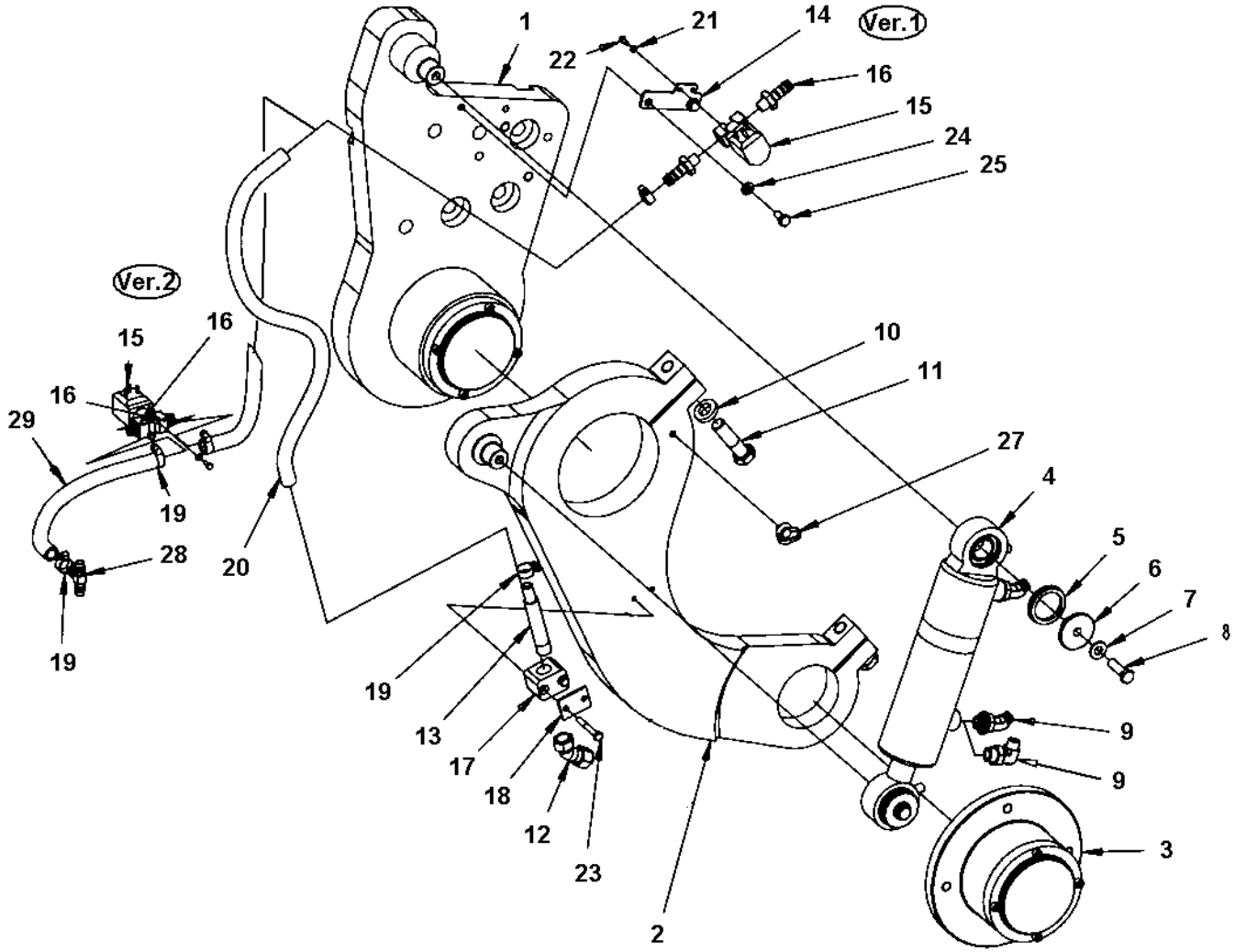

4700390998 Edge cutter, cpl

Item	Part No	Rem	Qty	Description	Code
	4700390998			**Edge cutter, cpl (Page 496)**	
1	4700390999		1	**Holder (Page 498)**	
2	4700391000		1	Lever	
3	4700391009		1	**Bearing unit (Page 500)**	
4	4700387275		1	**Hydraulic cylinder (Page 502)**	
	4700945526		2	. Bearing	
5	4700791565		2	Sealing	
6	4700376861		2	Washer	
7	4700904230		2	Steel plain washer	C
8	4700947684		2	Screw	
9	4700792389		2	Elbow 45 orfs	
	4700792676		1	Elbow 90 orfs	
10	4700904558		2	Washer 17X30X6 300HV	
11	4700500134		2	Screw	C
12	4700392123		1	Nozzle body	
13	4700392058		1	Pipe	
14	4700392059		1	Bracket	
15	4700391438		1	Solenoid valve	
16	4700901432		2	Hose connection	
17	4700791453		1	Pipe clamp block	
18	4700791454		1	Cover plate	
19	4700313002		4	Hose clamp 13-20 mm	
20	4812112074	A	1XL	Plastic hose	
21	4700904698		2	Washer	C
22	4700925784		2	Screw	
23	4700500186		2	Screw	C
24	4700904229		2	Steel plain washer 8,4x16x1,5	C
25	4700500019		2	Hexagon head screw	C
27	4700792441		1	Cable tie with holder	C
28	4700791362		1	Hose connector	
29	4812112074	B	1XL	Plastic hose	

A) Length as required.
B) L= 0.3 m

4700390999 Holder

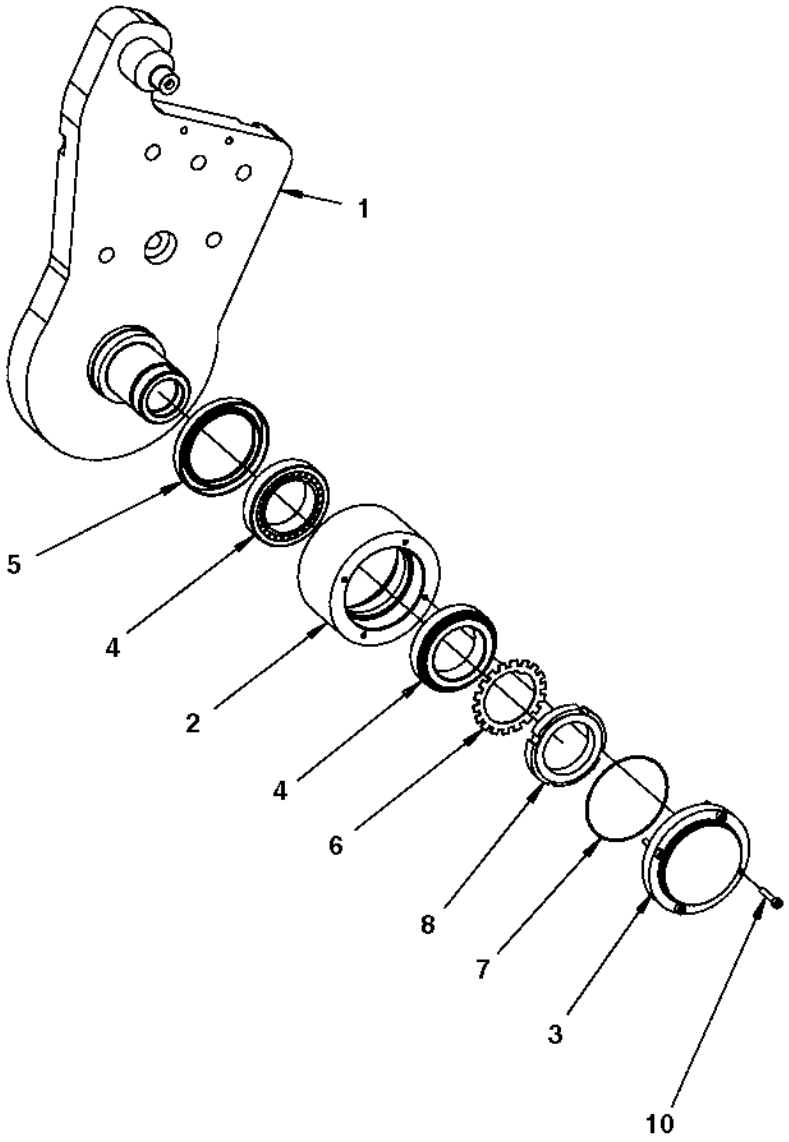

4700390999 Holder

Item	Part No	Rem	Qty	Description	Code
1	4700391001		1	Holder	
2	4700391008		1	Bearing housing	
3	4700391010		1	Bearing cover	
4	4700792385		2	Taper roller bearing	
5	4700792384		1	Radial lip-type seal	
6	4700136012		1	Lock washer	
7	4700900512		1	O-ring	D
8	4700135012		1	Shaft nut	
10	4700508018		4	Screw	

4700391009 Bearing unit

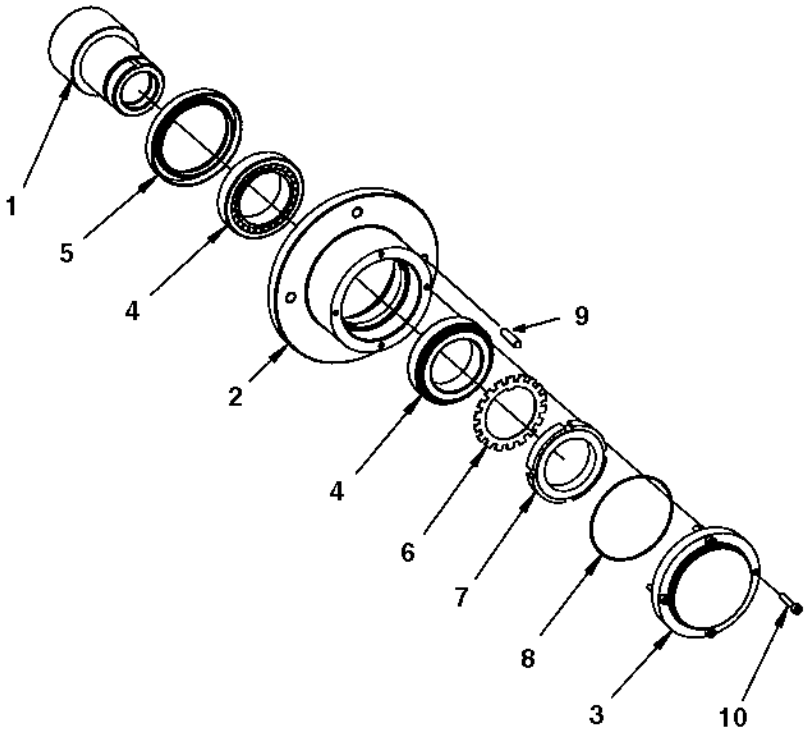

4700391009 Bearing unit

Item	Part No	Rem	Qty	Description	Code
	4700391009			**Bearing unit (Page 500)**	
1	4700391011		1	Shaft	
2	4700391012		1	Bearing housing	
3	4700391010		1	Bearing cover	
4	4700792385		2	Taper roller bearing	
5	4700792384		1	Radial lip-type seal	
6	4700136012		1	Lock washer	
7	4700135012		1	Shaft nut	
8	4700900512		1	O-ring	D
9	4700903891		4	Stud	
10	4700508018		4	Screw	

4700387275 Hydraulic cylinder

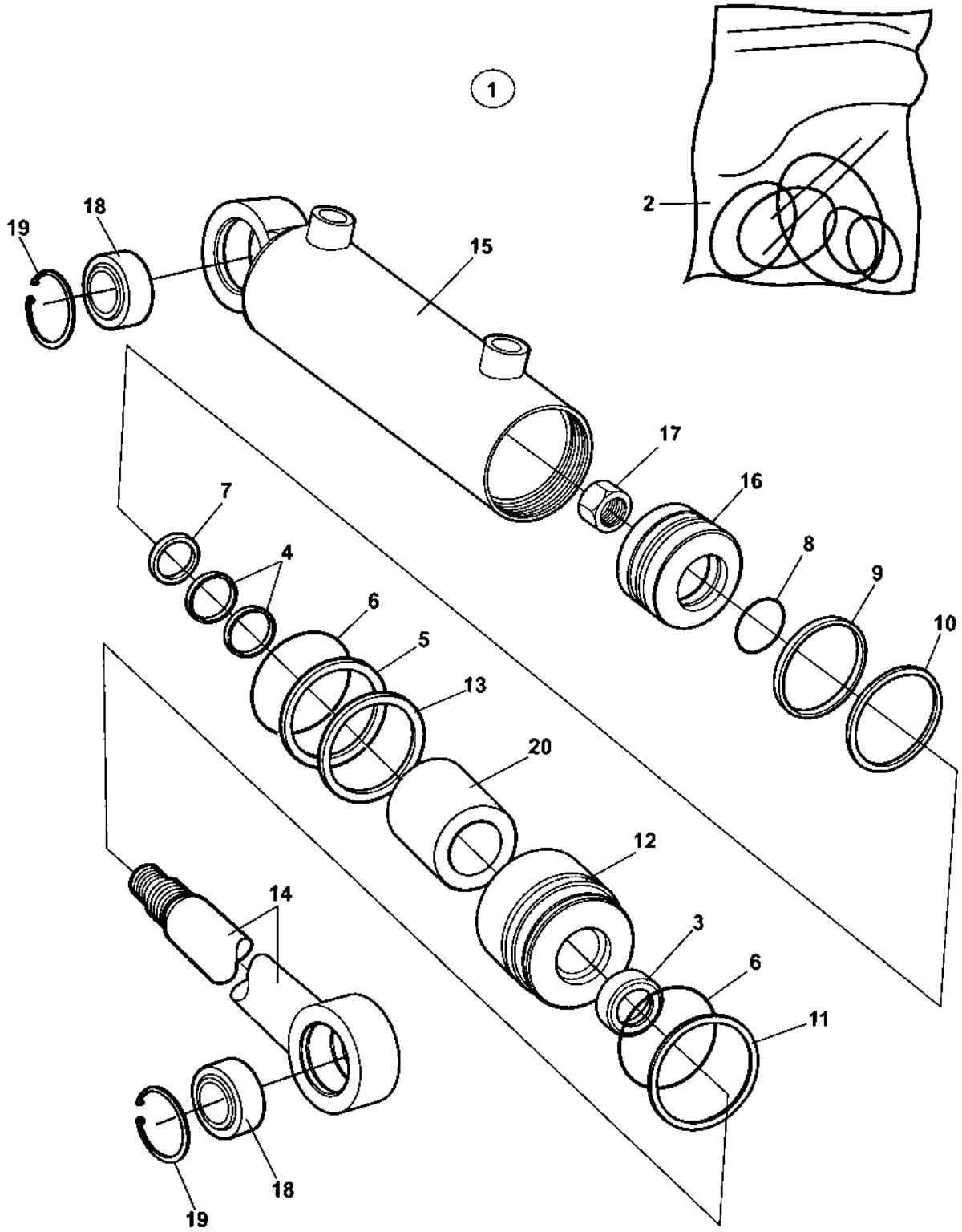

4700387275 Hydraulic cylinder

Item	Part No	Rem	Qty	Description	Code
1	4700387275		1	**Hydraulic cylinder (Page 502)**	
2	4700945668		1	. Seal kit	
3			1	. . Seal	
4			2	. . Seal	
5			1	. . Back-up ring	
6			2	. . O-ring	
7			1	. . Seal	
8			1	. . O-ring	
9			1	. . Seal	
10			1	. . Seal	
11			1	. Retaining ring	
12			1	. Steering	
13			1	. Retaining ring	
14			1	. Piston rod	
15			1	. Cylinder	
16			1	. Piston block	
17			1	. Cylinder nut	
18	4700945526		1	. Bearing	
19			1	. Retaining ring	
20		A	1	. Spacer	

A) Not valid for this model

Cutting disc module

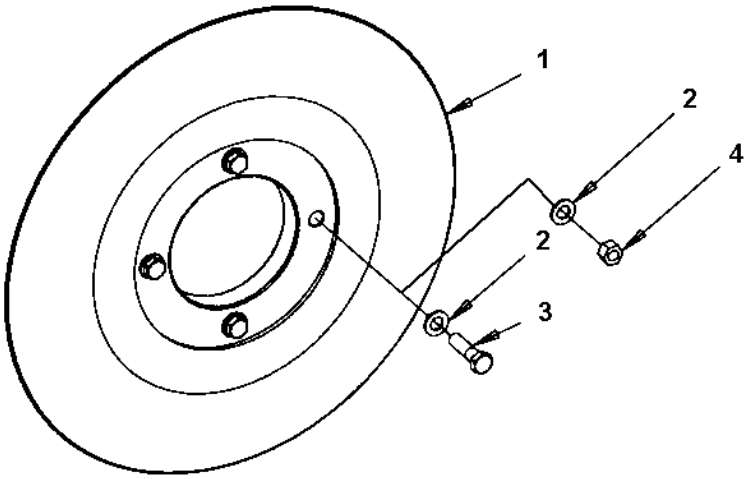

Cutting disc module

Item	Part No	Rem	Qty	Description	Code
1	4700390805		1	Cutting disc 80mm	
	4700390806		1	Cutting disc 120mm	
	4700390807		1	Cutting disc 150mm	
2	4700904231		4	Washer 13x24x2 300 HV	C
3	4700500056		4	Screw	C
4	4700570007		4	Hexagon nut M12	C

Hydraulic valve module

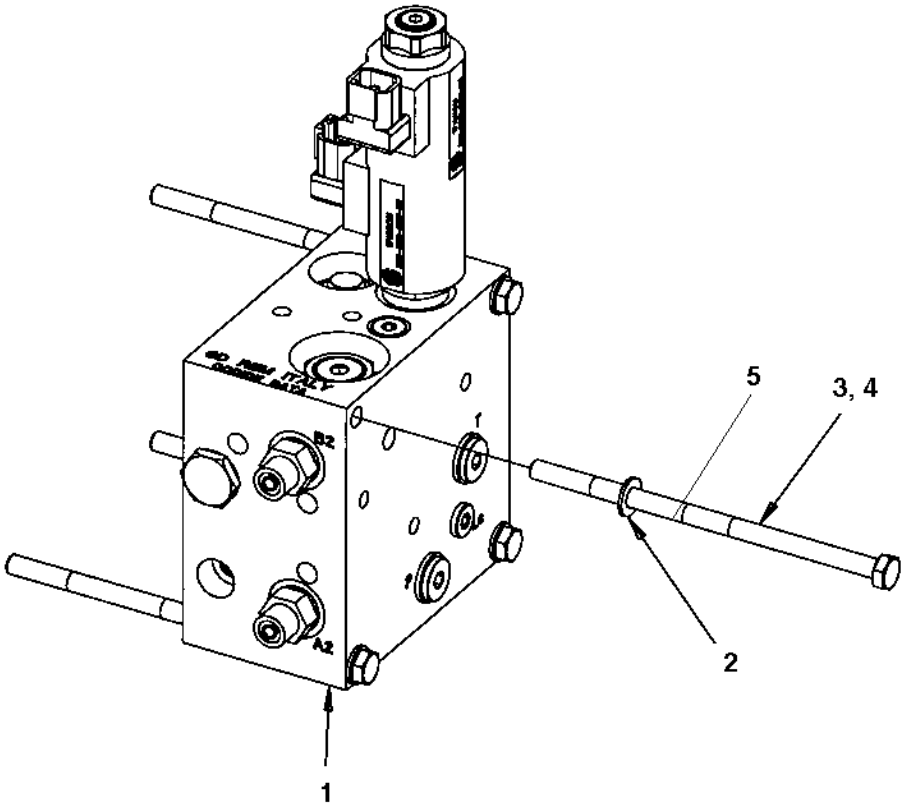

Hydraulic valve module

Item	Part No	Rem	Qty	Description	Code
1			1	**Hydraulic valve (Page 508)**	
2	4700904229		4	Steel plain washer 8,4x16x1,5	C
3	4700792359	1	4	Screw M8x160 8.8	
4	4700500115	2	4	Screw M8-1,25x90 8.8	C
5	4700500170		4	Screw M8x140 8.8 From c	

1) Used when option valve is mounted.
2) Used when mounted on base valve.

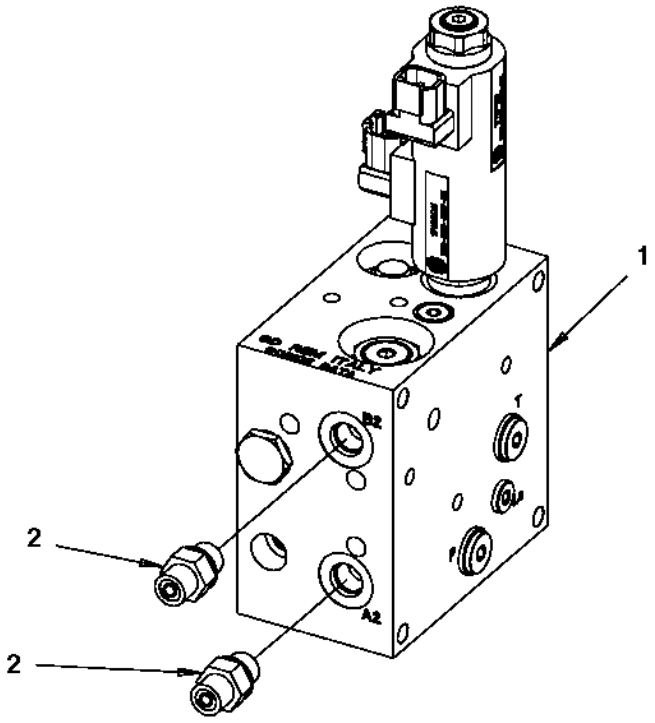
1
2
2
B2
A2
T
P

Hydraulic valve

Item	Part No	Rem	Qty	Description	Code
1	4700391018		1	**Hydraulic valve (Page 510)**	
2	4700791914		2	Straight connector orfs	

4700391018 Hydraulic valve

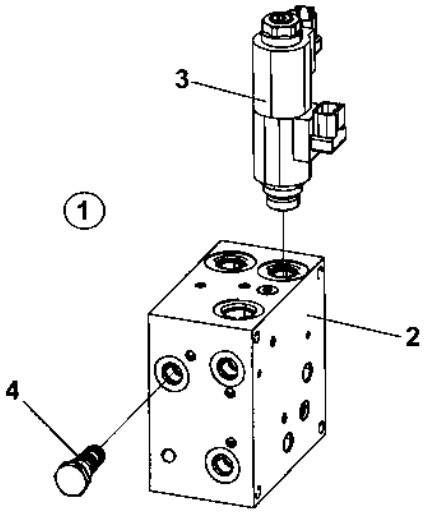

4700391018 Hydraulic valve

Item	Part No	Rem	Qty	Description	Code
1			1	Hydraulic valve	
2			1	. Valve block	
3	4700950587		1	. Proportional valve	
4	4700940572		1	. Shuttle valve	C

Bracket module

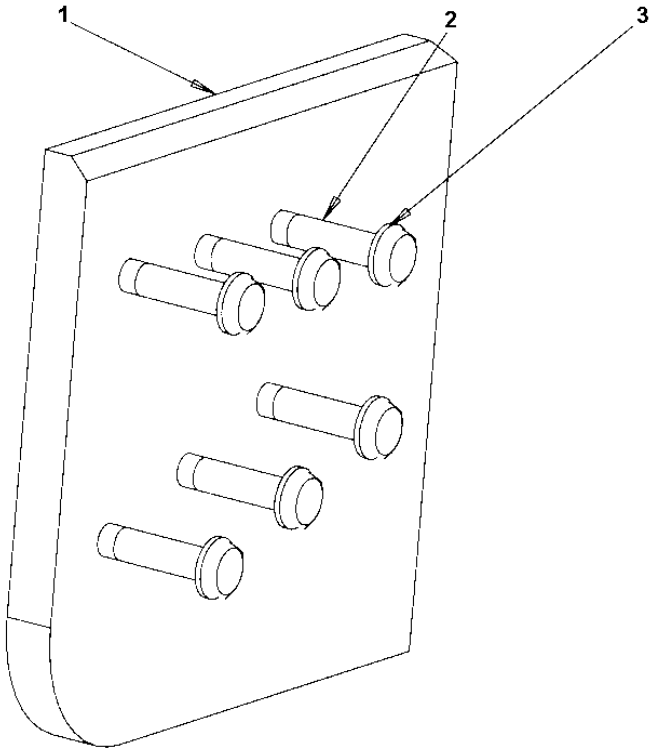

Bracket module

Item	Part No	Rem	Qty	Description	Code
1	4700396977		1	Bracket	
2	4700500094		6	Screw	
3	4700904232		6	Washer	C

Disc/Roller holder

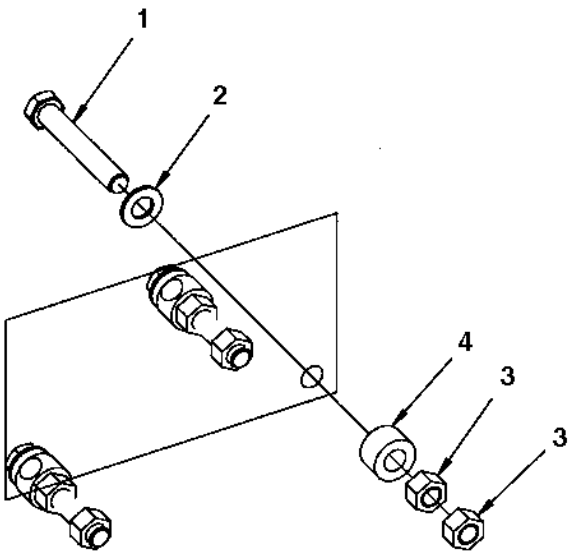

Disc/Roller holder

Item	Part No	Rem	Qty	Description	Code
1	4700903898		3	Screw	
2	4700904231		3	Washer 13x24x2 300 HV	C
3	4700570007		6	Hexagon nut M12	C
4	4700791572		3	Spacer washer	

Asphalt temperatur module

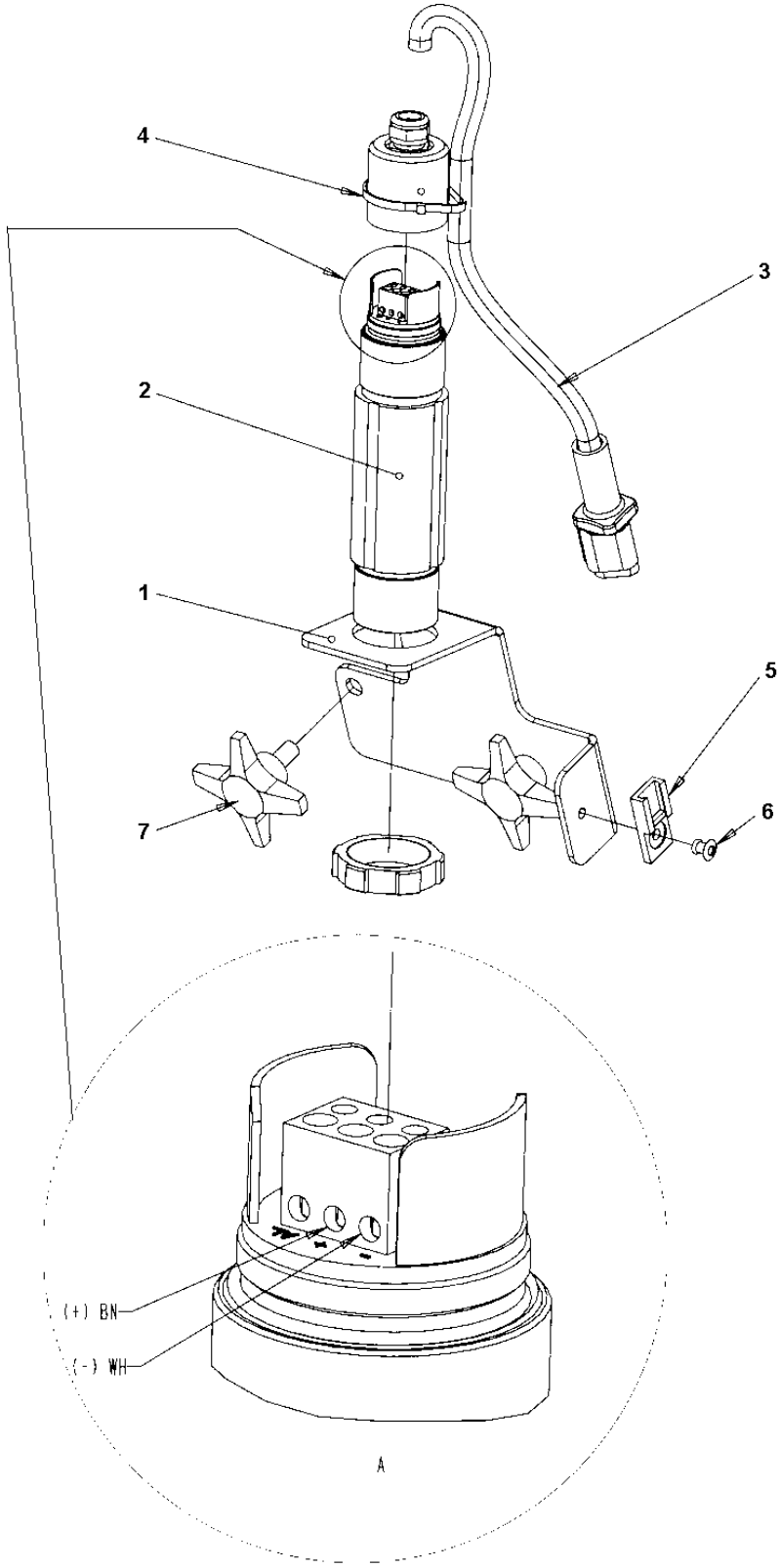

Asphalt temperatur module

Item	Part No	Rem	Qty	Description	Code
1	4700394004		1	Bracket	
2	4700387982		1	Temperature sender	B
3	4700393951		1	Cable harness	
4	4700313041		1	Cable ties	
5	4700904218		1	Holder	
6	4700792669		1	Blind rivet	
7	4700904596		2	Hand knob	

Fire extinghisher

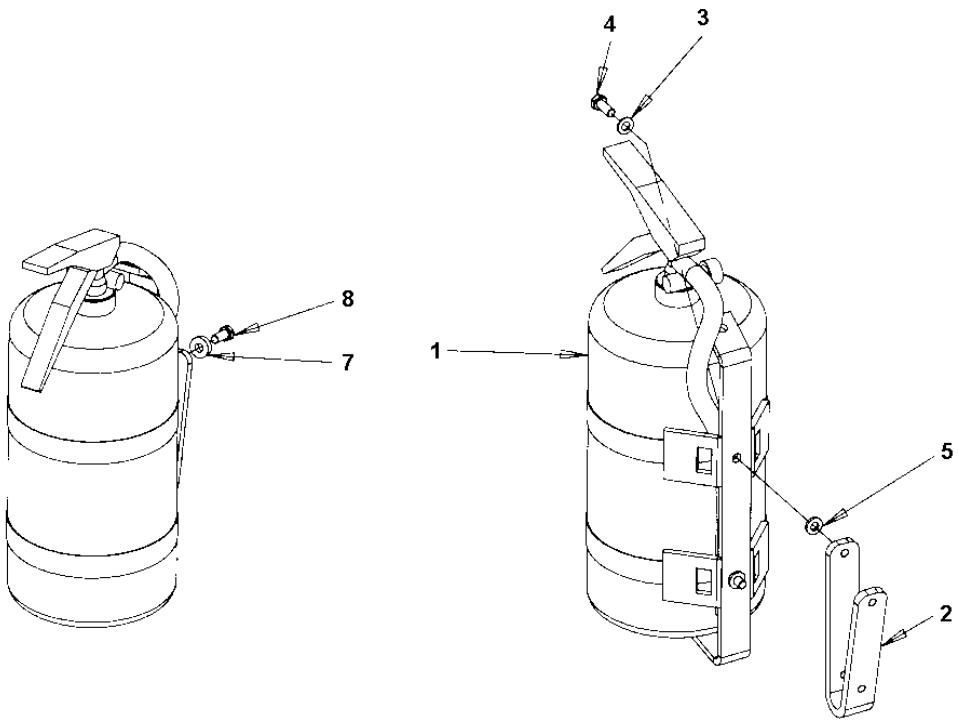

Fire extinghisher

Item	Part No	Rem	Qty	Description	Code
1			1	Fire exinguisher	
2	4812110202		1	Bracket	
3	4700904229		2	Steel plain washer 8,4x16x1,5	C
4	4700500053		2	Screw M8x20H 8.8	C
5	4700904556		2	Washer 8,4x16x3,0	C
7	4700394301		2	Spacer sleeve	
8	4700500053		2	Screw M8x20H 8.8	C

NUMERICAL INDEX

Part Number	Page	Part Number	Page	Part Number	Page
0147117903	159	4700170544	165	4700313102	359
0570501047	297	4700170545	21,23,165,167	4700313105	189
0570702503	129,139	4700170550	103,107	4700314163	43,69
4700116009	97	4700170557	75	4700330333	157
4700116016	97	4700170558	103,107	4700330383	179
4700135011	91	4700170559	165	4700333062	157
4700135012	499,501	4700170567	55	4700334135	265,267
4700136011	91	4700170571	23,167	4700334137	163
4700136012	499,501	4700170572	167	4700334144	265,267
4700150003	77	4700170576	57	4700334155	153
4700160048	135,163	4700195172	23,167	4700334163	39
4700160107	133	4700198243	103,107	4700334164	255
4700160279	247	4700198284	103	4700334168	247
4700160287	239	4700202042	215	4700334169	243
4700160313	67	4700202057	35,37,57	4700334189	255
4700161023	171	4700205027	185,265,267	4700334198	163
4700162004	207	4700205112	185,265,267,429	4700334234	159
4700162011	207	4700230401	185	4700334236	153,165
4700162014	27	4700230456	153,185	4700334425	157
4700162015	445	4700230515	179	4700334461	23,167
4700162027	303	4700230524	165	4700334520	159
4700163108	97	4700232061	251,287	4700334538	159
4700170101	91	4700232222	39,251,287	4700334603	157
4700170102	91	4700232248	27	4700345243	39
4700170119	95	4700233215	73	4700350009	441
4700170120	95	4700234152	255	4700355704	51
4700170122	97	4700234382	163	4700355797	357
4700170126	99	4700234435	251,287	4700357587	465
4700170127	99	4700234729	157	4700357819	215
4700170130	103,107	4700234804	153,167	4700358254	385
4700170137	93	4700234840	157	4700358846	51
4700170138	93	4700234921	153	4700359003	51
4700170139	111,171	4700234931	73,121,125	4700359043	441,455
4700170143	91	4700234932	73	4700359125	441
4700170144	27	4700234983	39	4700359550	43,69
4700170226	469	4700235003	157	4700359551	43,69
4700170227	469	4700246069	197,223	4700359552	43,69
4700170230	27	4700255658	97	4700359819	441,455
4700170231	29	4700257198	21,165	4700359916	441
4700170232	31	4700258298	21,23,165,167	4700359919	441
4700170233	33	4700263772	147	4700359920	441
4700170236	27	4700267791	147	4700370155	239
4700170241	33	4700272372	441	4700370286	397,401
4700170242	31	4700280875	215	4700370303	77
4700170249	35	4700287643	405	4700370685	77
4700170256	37	4700297018	481	4700370745	59,201
4700170258	165	4700313001	73,197,203,223	4700370746	63,201
4700170259	23,167		441	4700370747	63
4700170261	27	4700313002	67,497	4700370820	77
4700170262	27	4700313003	51,179	4700371366	225
4700170266	27	4700313004	185,265,267,429	4700372121	383,387,391,393
4700170276	91	4700313008	185	4700372229	7,13,43,69
4700170279	117	4700313010	185	4700372435	43,69
4700170281	117	4700313023	203	4700372436	43,69
4700170282	117	4700313033	189	4700372672	441
4700170292	113	4700313035	185,191,265,267	4700372718	59,201
4700170293	113	4700313038	203	4700372964	441
4700170294	19,113	4700313041	239,303,331,351	4700372965	441
4700170295	27		417,419,429,451	4700373363	393
4700170303	27		485,517	4700373399	393
4700170304	117	4700313068	339,481	4700374765	465
4700170306	163	4700313094	195	4700374799	225

NUMERICAL INDEX

Part Number	Page	Part Number	Page	Part Number	Page
4700375152	179	4700390754	417	4700392316	463
4700376861	497	4700390756	417	4700392321	361,363
4700377518	447	4700390805	505	4700392450	351
4700377549	153	4700390806	505	4700392451	351
4700377742	27,465	4700390807	505	4700392509	17
4700377743	27,465	4700390830	189	4700392510	17
4700377744	27,465	4700390835	191	4700392717	459
4700377913	405	4700390836	191	4700392719	459
4700379009	67	4700390860	337	4700392758	237
4700379163	213	4700390862	341	4700392839	441
4700379184	193	4700390866	393	4700392965	451
4700379417	77	4700390919	71	4700393094	459
4700379480	179	4700390963	447	4700393097	183
4700379607	265,429	4700390998	495,497	4700393191	453
4700379637	461	4700390999	497,499	4700393222	477
4700379715	455	4700391000	497	4700393223	477
4700379718	441	4700391001	499	4700393347	455
4700379728	441	4700391008	499	4700393418	485
4700379729	453	4700391009	497,501	4700393496	451
4700379753	67	4700391010	499,501	4700393497	451
4700379992	431	4700391011	501	4700393525	393
4700380533	111	4700391012	501	4700393538	367
4700381297	229	4700391018	509,511	4700393542	51,67
4700381413	209	4700391026	13	4700393582	409
4700381475	169	4700391082	453	4700393584	481,483
4700381934	401	4700391083	453	4700393590	361
4700381935	397,401	4700391115	343,345,349	4700393594	485
4700381936	397,401	4700391213	337	4700393639	415
4700381943	463	4700391241	451	4700393640	413
4700381944	463	4700391269	311	4700393641	413
4700382130	227	4700391303	207	4700393642	413
4700382131	225	4700391353	201	4700393645	413
4700382165	227	4700391438	67,497	4700393646	413
4700382335	227	4700391478	455	4700393681	361
4700382382	225	4700391585	311	4700393776	329
4700382384	225	4700391674	403,413	4700393951	517
4700382751	465	4700391675	403	4700393959	465
4700383263	147	4700391676	403	4700393971	371,373
4700383390	19,147	4700391678	403	4700393978	393,453
4700383705	385	4700391770	441	4700394004	517
4700384584	385	4700391788	381,407	4700394139	413
4700386966	183	4700391919	431	4700394140	413
4700387128	177	4700391962	179	4700394253	27
4700387129	177	4700392011	121,125	4700394275	421
4700387275	497,503	4700392033	365	4700394276	419
4700387982	517	4700392058	497	4700394301	519
4700388449	465	4700392059	497	4700394309	27
4700389662	313	4700392087	187	4700394454	165
4700389731	59	4700392088	13,187	4700394455	165
4700389873	51	4700392089	13,187	4700394542	423
4700390013	449	4700392091	187	4700394545	83
4700390155	397	4700392123	497	4700394565	165
4700390169	449	4700392158	361	4700394593	465
4700390239	451	4700392222	51	4700394594	465
4700390428	453	4700392223	51	4700394595	465
4700390434	343,345	4700392224	51	4700394596	465
4700390435	349	4700392226	51	4700394610	179
4700390436	343,345,349	4700392227	51,67	4700394611	179
4700390561	447	4700392230	51	4700394612	179
4700390607	221	4700392231	51	4700394654	435
4700390608	221	4700392232	51	4700394677	417
4700390609	221	4700392313	209	4700394749	215

NUMERICAL INDEX

Part Number	Page	Part Number	Page	Part Number	Page
4700394859	405	4700396063	179	4700396706	485
4700394860	475	4700396098	45,275	4700396714	157
4700394861	475	4700396103	191	4700396719	303
4700394931	331	4700396104	191	4700396720	303
4700394936	185	4700396119	425	4700396752	269
4700394938	189	4700396121	423	4700396768	321,325
4700394942	183	4700396123	417	4700396820	383
4700394943	183	4700396134	191	4700396828	383,387,391
4700395023	331	4700396171	41,263	4700396873	51
4700395028	283	4700396176	51	4700396874	51
4700395030	27	4700396200	227	4700396973	157
4700395035	195	4700396201	225	4700396977	513
4700395061	201	4700396244	195	4700396992	159
4700395067	147	4700396273	281	4700396994	153
4700395139	129,139	4700396274	43,69	4700397000	163
4700395140	243	4700396275	249,285	4700397021	163
4700395141	289,291	4700396279	39	4700397022	163
4700395142	247	4700396284	231,233	4700397139	153
4700395156	485	4700396288	283	4700397140	153
4700395157	251,287	4700396317	227	4700397141	153
4700395174	265,429	4700396318	277	4700397142	153
4700395175	265,429	4700396327	441	4700397143	153
4700395192	475	4700396328	237	4700397145	153
4700395214	217	4700396338	129,139	4700397146	153
4700395215	217	4700396340	163,257	4700397193	153
4700395226	327	4700396341	159	4700397234	75
4700395239	359	4700396342	159	4700397260	79
4700395352	339,481	4700396349	41,263	4700397286	465
4700395383	441	4700396351	225	4700397348	35
4700395463	445	4700396391	191	4700397353	167
4700395464	445	4700396395	231	4700397437	91
4700395465	445	4700396396	233	4700397516	363
4700395466	445	4700396397	231	4700397517	363
4700395467	445	4700396398	231	4700397572A	337
4700395468	445	4700396405	231	4700410012	475
4700395469	445	4700396406	233	4700450163	405
4700395470	445	4700396412	231	4700475064	77
4700395471	441	4700396413	233	4700476019	81
4700395521	41	4700396445	141,143	4700480622	135
4700395530	441	4700396448	125	4700480852	51
4700395534	441	4700396449	121	4700482084	215
4700395536	441	4700396492	231	4700482228	215
4700395544	203	4700396499	269	4700482261	179
4700395649	297	4700396516	369	4700482575	265,267
4700395785	391	4700396539	225	4700482606	265,267
4700395786	391	4700396543	179	4700482730	265,267
4700395816	311,391	4700396544	491	4700483593	279
4700395823	339	4700396546	147	4700483693	273,279
4700395861	313	4700396547	183	4700483713	279
4700395864	27	4700396550	233	4700483733	279
4700395885	211	4700396598	163	4700483871	279,281
4700395886	207	4700396601	149	4700484006	239
4700395887	205	4700396617	51	4700484007	239
4700395888	423	4700396625	51	4700484229	279
4700395895	281	4700396626	51	4700484272	279
4700395934	307	4700396628	199	4700484273	279
4700395936	43,69	4700396629	199	4700484274	279
4700395946	217	4700396632	185,267	4700484275	279
4700396002	179	4700396637	315	4700484276	279
4700396015	297	4700396666	255	4700484277	279,281
4700396027	253	4700396672	67	4700484278	279
4700396036	475	4700396705	485	4700484279	279

NUMERICAL INDEX

Part Number	Page	Part Number	Page	Part Number	Page
4700484280	279	4700500029	77,157,159,163	4700502035	455
4700484281	279		179,249,283,285	4700508001	149
4700484282	279		307,491	4700508005	441
4700484283	279	4700500030	199,313,473	4700508009	445
4700484284	279,281	4700500036	49	4700508018	499,501
4700484285	279,281	4700500037	115,145,161,163	4700508019	463
4700484286	279,281	4700500040	183,227,311,423	4700508025	395,399
4700484287	279,281		451	4700508029	179,441
4700484288	279,281	4700500042	53,325	4700508037	27
4700484289	279	4700500043	43,69	4700508038	27
4700484290	279	4700500046	49,157,215,441	4700508053	179
4700484291	279	4700500047	27,395,399,455	4700508092	449
4700484292	279	4700500048	183,267,409,445	4700513003	453
4700484294	279,281		485	4700513008	27,55
4700484295	279,281	4700500051	27	4700516049	227
4700484296	279,281	4700500053	47,67,109,163	4700516051	441
4700484297	279,281		165,169,193,215	4700535010	227
4700484298	279		219,265,267,277	4700541702	419
4700484299	279		319,323,431,447	4700570004	47,183,227,311
4700484300	279,281		451,455,473,477		445
4700484302	273,279		519	4700570005	27,153,179,187
4700484303	273,279	4700500055	39		225,265,267,317
4700484304	273,279	4700500056	147,393,505		359,453,455
4700484305	273,279	4700500058	495	4700570006	441,475
4700484306	279,281,293	4700500060	311	4700570007	505,515
4700484307	293	4700500061	281	4700570008	421
4700484308	293	4700500070	495	4700570103	475
4700484309	293	4700500075	153,227	4700573008	227,441
4700484310	293	4700500076	177	4700586001	227,311
4700484311	279	4700500077	441,445	4700586002	227,311,317,337
4700484312	279	4700500088	47		395,399,441,451
4700484313	279	4700500091	225		459
4700484314	279	4700500093	241	4700586003	27,67,209,225
4700484315	279	4700500094	513		227,255,395,399
4700484316	259,261	4700500095	283		403,411,413,415
4700484317	259	4700500101	141,143,289,291		441,459,463
4700484318	259,261	4700500103	115	4700586018	185,365,367,449
4700484319	279,281	4700500111	113	4700586019	113,115,145,147
4700484345	279	4700500115	459,507		177
4700484362	299	4700500117	91	4700586021	27
4700484366	279	4700500134	27,497	4700601001	417
4700490039	91	4700500143	413	4700601003	411,413
4700499174	397,401	4700500153	405	4700603001	441
4700500002	67,265,267	4700500161	449	4700603012	491
4700500012	81,165,321	4700500165	177	4700615061	445
4700500013	51,185,337,441	4700500170	507	4700624005	27
4700500015	317,337	4700500186	497	4700630008	117,441,455
4700500016	221	4700500187	341	4700630035	147
4700500018	329,397,401,409	4700500189	253,403	4700791025	375
4700500019	27,65,153,215	4700500190	67,255,403,411	4700791182	117
	229,309,335,371		413	4700791185	337
	373,405,423,497	4700500192	297	4700791230	141,143,243,289
4700500020	453,455	4700500194	27,177,245,469		291
4700500021	117,169,225,227	4700500195	243	4700791304	453
	265,267,395,399	4700500197	89	4700791320	297
	441,475	4700500206	389	4700791321	43,69,247
4700500022	27,83,209,221	4700500228	393	4700791341	153
4700500023	187,463	4700500230	79	4700791362	497
4700500028	39,41,43,51,69	4700500238	417	4700791401	287,293,297,303
	91,115,119,123	4700500239	179,415	4700791404	47
	179,185,225,249	4700500241	475	4700791405	41,293
	285,295,361,363	4700500505	457,473	4700791407	43,69

NUMERICAL INDEX

Part Number	Page	Part Number	Page	Part Number	Page
4700791414	251,259,261,287	4700792342	277	4700792760	303
4700791431	179	4700792343	277	4700792766	307
4700791453	497	4700792349	349	4700792768	313
4700791454	497	4700792350	343,345	4700792770	307
4700791479	311	4700792351	349	4700792771	317
4700791524	441,451	4700792352	365	4700792779	51
4700791540	251,287	4700792353	343,345	4700792780	51
4700791551	337	4700792354	347,357	4700792781	51
4700791565	497	4700792359	507	4700792782	51
4700791568	67	4700792360	225	4700792786	307
4700791572	449,515	4700792361	343,345,349	4700792787	307
4700791575	163	4700792384	499,501	4700792788	185
4700791597	201,337	4700792385	499,501	4700792797	475
4700791642	465	4700792389	497	4700792806	267
4700791668	375	4700792392	431	4700792813	67
4700791670	375	4700792397	359	4700792816	167
4700791699	43,69,261	4700792398	353	4700813647	135
4700791709	353,457	4700792410	361,363	4700900176	265,267
4700791743	247,251,287	4700792417	361	4700900229	243,247
4700791744	251,287	4700792419	361	4700900342	243
4700791745	239,251,259,261	4700792422	339	4700900445	445
	297	4700792441	59,337,353,363	4700900512	499,501
4700791754	349		497	4700900634	27
4700791798	47,261	4700792443	129,139	4700900672	27
4700791799	239,251,287	4700792447	397,401	4700901145	393
4700791823	39,243,251,287	4700792448	397,401	4700901225	337
4700791826	251,287	4700792449	403	4700901226	339
4700791827	247,251,287	4700792467	375	4700901227	333,337,339
4700791828	251,287	4700792475	375	4700901298	67
4700791838	261	4700792499	265,267	4700901317	107
4700791841	45,275	4700792501	449	4700901425	159
4700791846	259,261	4700792502	265,267	4700901432	67,497
4700791850	259,261	4700792519	349	4700901767	337
4700791914	509	4700792520	349	4700902064	347
4700791949	17,67	4700792521	343,345	4700902125	163
4700791950	67	4700792522	203	4700902126	163
4700791951	343	4700792526	203	4700902166	225
4700791956	349	4700792527	449	4700902221	375
4700791959	17,67	4700792536	385	4700902252	101,105
4700791968	433	4700792537	353	4700902285	405
4700792035	357	4700792539	441	4700902286	361,363,405,447
4700792059	345	4700792544	179	4700902379	383,387,391
4700792064	267	4700792554	45,91,275	4700902520	441
4700792065	267	4700792583	435	4700902558	153
4700792072	121,125	4700792589	385	4700902804	391
4700792073	51	4700792600	51,67	4700902866	35,37,57,227
4700792133	259,261	4700792602	259,261,369,371	4700903290	129,139,389
4700792151	297		373	4700903422	465
4700792177	129,139	4700792604	179	4700903423	465
4700792187	487	4700792609	351	4700903424	465
4700792210	331,339	4700792660	419	4700903425	465
4700792241	73	4700792667	331	4700903459	465
4700792246	293,297	4700792669	369,517	4700903590	465
4700792254	27	4700792671	297	4700903632	39
4700792299	283	4700792673	293,297	4700903640	311
4700792309	311,337	4700792676	497	4700903641	311
4700792310	311	4700792678	441	4700903643	225
4700792311	313	4700792683	101,105	4700903662	459
4700792322	207	4700792686	485	4700903714	209
4700792325	431	4700792704	417	4700903741	337
4700792334	239	4700792744	303	4700903768	27
4700792339	39,43,69,283	4700792759	445	4700903773	239

NUMERICAL INDEX

Part Number	Page	Part Number	Page	Part Number	Page
4700903879	67	4700904487	381,407	4700927233	77,469
4700903886	67	4700904556	47,187,215,225	4700927633	75
4700903891	501		309,395,399,409	4700928467	337
4700903898	515		415,453,463,475	4700928784	355
4700903906	281		519	4700928791	179
4700903917	441	4700904557	51,77,163,367	4700928908	23,167
4700903918	441		409,441,455,485	4700929141	77
4700904005	281	4700904558	497	4700929455	357
4700904015	333	4700904563	185	4700937165	433
4700904024	333	4700904568	375	4700937620	449
4700904036	311	4700904584	129,139	4700937621	449
4700904037	317	4700904596	517	4700937892	449
4700904039	307,315	4700904637	179	4700938605	479
4700904083	465	4700904638	449	4700938606	479
4700904095	465	4700904640	27,83,219,221	4700938609	479
4700904098	465		225,227,229,361	4700938624	489
4700904131	393		363,397,401,403	4700938789	479
4700904165	465		431,441,477	4700939068	7,9,11,13
4700904171	243	4700904650	441	4700939070	13,181
4700904206	59,61,201	4700904654	405	4700939071	181
4700904218	369,517	4700904689	243	4700939076	5,9
4700904228	47,81,147,153	4700904698	67,159,265,267	4700940572	511
	165,183,185,227		417,497	4700945526	497,503
	281,283,311,317	4700904703	27,91,177,215	4700945622	447
	321,337,341,395		245	4700945632	443
	399,405,423,441	4700904727	47	4700945633	443
	451,459	4700904728	129,139	4700945634	443
4700904229	27,53,65,67,71	4700904734	187	4700945635	443
	79,109,117,153	4700904735	51,221,317,355	4700945636	443
	163,165,169,179	4700904766	129,139	4700945637	443
	193,209,215,225	4700904793	117	4700945661	447
	227,253,255,265	4700904835	465	4700945668	503
	267,277,317,319	4700904870	465	4700945753	27
	323,325,329,335	4700904874	227	4700947679	439
	343,345,349,359	4700904878	73	4700947682	263
	361,363,371,373	4700904879	225	4700947684	497
	395,399,405,423	4700904895	465	4700947706	129,139
	439,441,447,451	4700904911	321	4700947712	91
	453,455,459,463	4700904956	71	4700950175	5,11
	473,477,497,507	4700904984	203	4700950301	7,11,13
	519	4700904985	441	4700950302	7,11,13,181
4700904230	39,41,43,69,91	4700909127	197,223	4700950310	483
	115,119,123,157	4700921031	317	4700950342	483
	159,179,183,185	4700921039	165	4700950343	483
	199,225,249,263	4700921056	267	4700950344	483
	283,285,295,297	4700921080	351,371,373	4700950345	483
	307,361,363,365	4700921084	185	4700950346	483
	441,445,449,473	4700923008	265,267	4700950347	483
	475,497	4700923253	347	4700950348	483
4700904231	49,89,91,113,115	4700923295	167	4700950349	483
	145,147,157,161	4700923384	281	4700950350	483
	163,215,243,267	4700923405	129,139	4700950369	489
	281,441,505,515	4700923735	73	4700950370	489
4700904232	27,75,177,241	4700923976	417	4700950371	489
	495,513	4700924544	67	4700950372	479
4700904233	101,105,141,143	4700924717	163	4700950373	479
	289,291,393	4700924791	405	4700950374	479
4700904241	413	4700925502	159	4700950375	479
4700904281	227,311	4700925599	67	4700950380	483
4700904292	445	4700925629	227	4700950539	181
4700904340	405	4700925784	497	4700950587	511
4700904352	43,69,185,473	4700926216	403	4700950636	181

NUMERICAL INDEX

Part Number	Page
4700950637	181
4700950638	181
4700950639	181
4700950640	181
4700960067	333
4700991657	49,465
4700991658	465
4700999014	325
4811000085	67
4811000086	297
4811000087	297
4811000106	91
4811000107	67
4811000110	465
4811000131	279,281
4811000147	261
4811000148	261
4811000151	179
4811000163	339
4811000196	159
4812100422	133,135
4812100423	133
4812100424	133
4812100425	133,135
4812100426	131
4812100427	131
4812100428	131
4812100429	131
4812100430	131
4812100431	131
4812100432	131
4812100433	131
4812100434	131
4812100435	131
4812100436	131
4812100437	131
4812100438	131
4812100439	137
4812100440	137
4812100441	137
4812100442	137
4812100443	137
4812100444	137
4812100445	137
4812100446	135
4812100447	135
4812100448	135
4812100449	135
4812100450	135
4812100451	135
4812100452	135
4812100453	135
4812100497	157
4812100788	297
4812100874	135
4812100875	135
4812100878	135
4812100879	135
4812100880	135
4812100881	135
4812100882	135
4812100883	135
4812100884	135
4812100885	135
4812100886	135
4812100887	135
4812100888	135
4812100889	135
4812110202	519
4812110295	409
4812110322	391
4812110323	391
4812110339	265,267
4812110352	463
4812110366	389
4812110394	67
4812110421	29
4812110487	465
4812110488	465
4812110491	67
4812110538	441
4812110550	215
4812110581	215
4812110585	381,407
4812110586	391
4812110588	391
4812110597	89
4812110654	75
4812110655	75
4812110705	179
4812110840	27
4812110896	455
4812110898	353
4812110984	185
4812110990	185
4812111029	185
4812111030	185
4812111031	185
4812111071	47
4812111102	47
4812111106	27,47,249,251
	285
4812111234	159
4812111249	159
4812111326	363
4812111834	263
4812112074	67,497
4812112235	193
4812112485	159
4812112679	317
4812112768	159
4812112771	211
4812112773	205
4812112795	265,267
4812112800	265,267
4812112881	337
4812112882	337
4812112998	207
4812113145	163
4812113273	337
4812113430	409
4812113431	387
4812113596	475
4812113786	459
4812113939	37,57
4812114458	163
4812115060	455
4812115061	455
4812155658	479
4812155694	15,19
4812155697	15,17
4812155699	15,21
4812155751	15,23
4812155996	5,7
4812155997	5,13
D433830401	159