CP2700 DYNAPAC

Spare parts list

Pneumatic Roller

CP2700 Tier 4i s/n 10000507x0B003949 -
Engine: Cummins QSB 4.5

RUTHZIL TRATOR COMERCIAL DE PEÇAS LTDA 11 97083-6812 ROLANDO CITRANGULO



© 2015 Atlas Copco Construction Technique Brasil Ltda | No. 4812316337| 2015-06

General information

Use only authorized parts. Any damage or malfunction caused by the use of unauthorized parts is not covered by Warranty or Product Liability.
Any unauthorized use or copying of the contents or any part thereof is prohibited. This applies in particular to trademarks, model denominations, part numbers, and drawings.

Instructions for use
This spare parts list contains no safety regulations and is merely intended to assist in the ordering of spare parts.
For information about operating, servicing, or repairing, the relevant Safety and operating instructions must be consulted at all costs.
Please observe the safety instructions listed in the relevant Safety and operating instructions!

Any unauthorized use or copying of the contents or any part thereof is prohibited. This applies in particular to trademarks, model denominations, part numbers, and drawings.

Contents

Service, repair and wear part kits

Service kit 50h, QSB 4.5 T4 . . . 1
Service kit 250/750h, QSB 4.5 T4 . . . 3
Service kit 250/750h, QSB 4.5 T4 . . . 5
Service kit 500h, QSB 4.5 T4 . . . 7
Service kit 500h, QSB 4.5 T4 . . . 9
Service kit 1000h, QSB 4.5 T4 . . . 11
Service kit 1000h, QSB 4.5 T4 . . . 13
4812155698 Sprinkler kit . . . 15
4812155696 Scraper kit . . . 17
4812155752 Air on the run kit Front . . . 19
4812155751 Air on the run kit Rear . . . 21

Mechanical

Grab handle module . . . 23
Cover module . . . 25
Step module . . . 27
Frame assy module . . . 29
Cover . . . 32
Cover . . . 35
Cover . . . 37
Manifold assy . . . 39
Manifold . . . 41
Filter bracket . . . 43
Accumulator . . . 45
Steering cylinder . . . 47
Air leading cover . . . 49
Engine hood . . . 51
Locking device . . . 53

Operator platform

Control module, rotating/sliding . . . 55
Display unit . . . 57
Seat frame . . . 59
4700391163 Steering column . . . 62
4700395462 Brake pedal . . . 65
Seat frame adapter module . . . 67
4812112989 Forward-reverse control . . . 69
4812116077 Drive control . . . 71
Control handle . . . 73
391087 Cross sliding . . . 75
Carrier . . . 77
Fire extinghisher . . . 79
4812114766 Rear view mirror module . . . 81
4812115420 Bracket module . . . 83

Cab module

Cab module . . . 85

Cab assembly

Cab assy . . . 87

Manual box

Manual box . . . 89

Cab

Cab . . . 91

Assembly left side

Assembly left side . . . 93

Accessories left side

Accessories left side . . . 95

Glasswork door side
Glasswork door side . . . 97

Rear plastics assembly
Rear plastics assembly . . . 99

Cabin frame
Cabin frame . . . 101

Glasswork wind screen
Glasswork windscreen . . . 103

Door assembly
Door assembly . . . 105

General installation accessories
General installation accessories . . . 107

Electric assembly
Cab, electrics . . . 109

Windscreen wipersystem
Windscreen wipersystem . . . 111

Rear glass wiper
Rear glass wiper set . . . 113

Washer equipments
Washer equipments . . . 115

Assembly heater unit
Heater mount . . . 117

Heater
Heater . . . 119
Heater controls . . . 121

Air channel assy
Air channel assy . . . 123

Mounting right side
Protective frame asymmetric . . . 125

Cover assy, right side
Cover assy, right side . . . 127

Glasswork right side
Glasswork right side . . . 129

Wiper system right side
Wiper system right side . . . 131

Windshield wiper, assymetric side
Windshield wiper, assymetric side . . . 133

Windshield washer reservoir assy
Windshield washer reservoir assy . . . 135

Fastner kit, right side ceiling
Fastener kit, right side ceiling . . . 137

Platform, no cab

Platform, no cab . . . 139

Rops module
Rops module . . . 141

Rops
Rops . . . 143

Manual box
Manual box . . . 145

Platform module
Platform module . . . 147

Platform
Platform . . . 149

Manual box
Manual box . . . See page 145

Hand rail, right
Hand rail, right . . . 152

Hand rail
Hand rail . . . 155

Hand rail
Hand rail . . . 157

Hand rail, left
Hand rail, left . . . 159

Hand rail
Hand rail . . . 161

Engine
4812116251 Bracket module engine . . . 163
4812116678 Coupling module . . . 165
4812116745 Engine equipment kit . . . 167
Expansion vessel hose kit . . . 169
Fuel tank . . . 171
Fuel hose kit . . . 173
Expansion tank module . . . 175
4812115885 Air cleaner module and hose assy kit . . . 177
4812118476 Belt guard module . . . 179

4812115890 Exhaust system module
4812115890 Exhaust system module . . . 181

4812115891 Exhaust system
4812115891 Exhaust system . . . 183

4812116000 Hydraulic oil cooler module
4812116000 Hydraulic oil cooler module . . . 185

4812116001 Water cooler module
4812116001 Water cooler module . . . 187

4812116002 Charge air cooler
4812116002 Charge air cooler . . . 189

4812116186 Hose assy kit
4812116186 Hose assy kit . . . 191

4812116210 Hose assy kit
4812116210 Hose assy kit . . . 193

Drive

Gear module
Gear module . . . 195
Negative multidisc brake repair kit . . . 197
Gear module sealing kit . . . 199
Gearbox repair kit . . . 201
Gear module repair kit . . . 203

Protective cover module, option Rear
Protective cover module, option Rear . . . 205

Bracket assy, Protective cover Rear
Bracket assy, Protective cover Rear . . . 207

Front suspension
Front suspension . . . 209
Front suspension . . . 211
Hub . . . 213

Cover module
Cover module . . . 215

Cover
Cover . . . 217

Protective cover module, option Front
Protective cover module, option Front . . . 219

Bracket assy, Protective cover
Bracket assy, Protective cover . . . 221

Bracket assy, Protective cover
Bracket assy, Protective cover . . . 223

Wheel module, option Michelin
Wheel module, option Michelin . . . 225

Wheel Michelin
Wheel Michelin . . . 227

4812100082 Wheel module Otani
4812100082 Wheel module Otani . . . 229

4812100081 Wheel Otani
4812100081 Wheel Otani . . . 231

Hydraulic system

Hydraulic motor module
Hydraulic motor module . . . 233
4700395141 Hydraulic motor . . . 235
4812101635 Control kit . . . 237
Hose assy kit . . . 239
Hydraulic pump module . . . 241
4812118386 Hydraulic valve module overspeed protection . . . 243
Brake valve dynamic valve . . . 245

Hydraulic pump module
Hydraulic pump module . . . 247

Hydraulic pump . . . 249
4812156697 Control unit . . . 251

Hydraulic oil tank module
Hydraulic oil tank module . . . 253
Bracket assy . . . 256
Bracket assy . . . 259

Hydraulic valve module
Hydraulic valve module . . . 261
Hydraulic valve assy . . . 263
Hydraulic valve . . . 265

Hydraulic steering, sliding seat
Hydraulic steering, sliding seat . . . 267

Carrier
Carrier . . . See page 77

Steering, slideable
Steering, slideable . . . 270

4812111106 Reducing valve
4812111106 Reducing valve . . . 273

Electric system
Battery module . . . 275
Horn module . . . 277
Standard ECU module . . . 279
Back-up alarm module . . . 281
Working lights LED . . . 283
Wiring harness kit . . . 285

Disconnector battery
Battery disconnector module . . . 287
Disconnector battery . . . 289

Night worklight LED
Switch module - Night light . . . 291
Reading light module . . . 293
Wiring harness kit . . . 295
Working lights module . . . 297
Bracket module . . . 299
Bracket module . . . 301

Options / Accessories

Sprinkler tank module
Sprinkler tank module . . . 303
Sprinkler tank mount . . . 305

Ballast module (2x)
Ballast module (2x) . . . 307

Steel ballast
Ballast module 4 plates . . . 309
Ballast module 8 plates . . . 311
Ballast module 12 plates . . . 313
Ballast module 16 plates . . . 315

Edge cutter
Edge cutter . . . 317

Edge cutter, module

Edge cutter, module . . . 319

4700390998 Edge cutter, cpl
4700390998 Edge cutter, cpl . . . 321

4700390999 Holder
4700390999 Holder . . . 324

4700391009 Bearing unit
4700391009 Bearing unit . . . 327

4700387275 Hydraulic cylinder
4700387275 Hydraulic cylinder . . . 329

Cutting disc module
Cutting disc module . . . 331

Hydraulic valve module
Hydraulic valve module . . . 333

Hydraulic valve
Hydraulic valve . . . 335

4700391018 Hydraulic valve
4700391018 Hydraulic valve . . . 337

Bracket module
Bracket module . . . 339

Disc/Roller holder
Disc/Roller holder . . . 341

Standard AC
Condensor module . . . 343
Condensor . . . 345
Hose kit AC . . . 347
Protection cover . . . 349
Compressor module . . . 351
Compressor assy . . . 353
4700393584 Evaporator unit . . . 355

Cocoa mats
Sprinkler pump module . . . 357
Hose assy kit . . . 359
Wiring harness kit sprinkler . . . 361
Level sensor module . . . 363

Scraper bracket module
Scraper bracket module . . . 365
Bracket . . . 367

Scraper module
Scraper module . . . 369
Scraper assy . . . 371

Sprinkler pipe module
Sprinkler pipe module . . . 373
Sprinkler pipe . . . 375

Sprinkler module
Sprinkler module . . . 377
Sprinkler pipe . . . 379

Driving lights RH

Steering column switch module . . . 381
4812115521 Wiring Harness Kit . . . 383
Driving lights module . . . 385
Driving lights module rear . . . 387
Turn signals . . . 389
Wiring harness kit . . . 391
Wiring harness kit . . . 393

Rotate beacon
Rotating beacon ignition controlled . . . 395

Radio and CD Player
Radio & CD Player . . . 397
Radio and cd player module . . . 399
Power supply module . . . 401

Seat belt
Seat belt module . . . 403

Seat comfort
Seat, fabric suspensioned (option) . . . 405

SMV-sign
4812110250 Bracket module . . . 407
SMV-sign . . . 409

Sprinkler pump back up
Sprinkler pump back-up . . . 411

Steering valve
Steering valve . . . 413

Vandal cover
Control panel cover . . . 415

Lock module
4700394121 Lock Module . . . 417

Service, repair and wear part kits Service kit 50h, QSB 4.5 T4

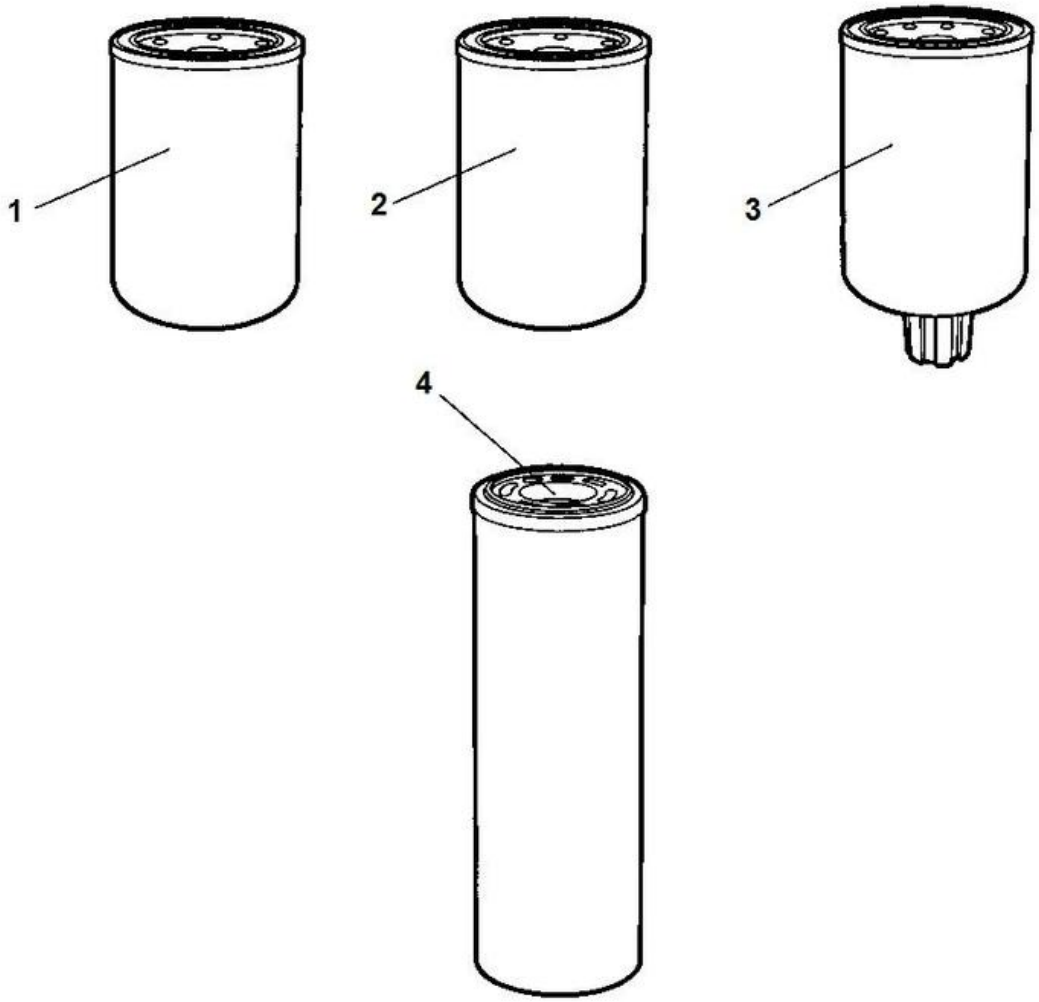

Item	Part No.	Name	Qty	L
0	4812316684	Service kit 50h, QSB 4.5 T4	1	
1	4700939082	Oil filter	1	
2	4812158187	Fuel filter	1	
3	4812041531	Fuel prefilter	1	
4	4700372229	Hydraulic oil filter element	2	

Service, repair and wear part kits Service kit 250/750h, QSB 4.5 T4

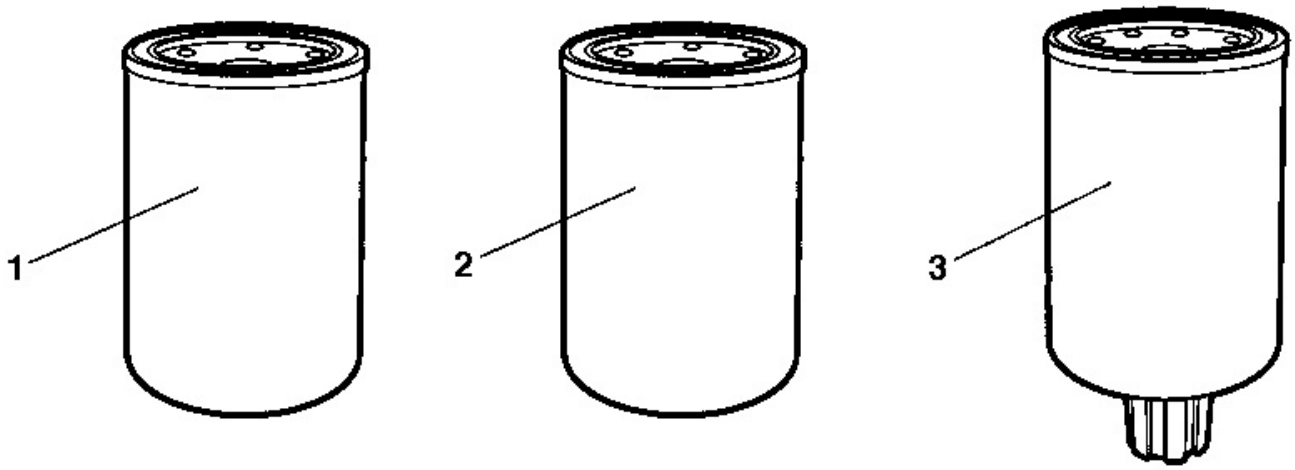

Item	Part No.	Name	Qty	L
0	4812316685	Service kit 250/750h, QSB 4.5 T4	1	
1	4700939082	Oil filter	1	
2	4812158187	Fuel filter	1	
3	4812041531	Fuel prefilter	1	

Service, repair and wear part kits Service kit 250/750h, QSB 4.5 T4

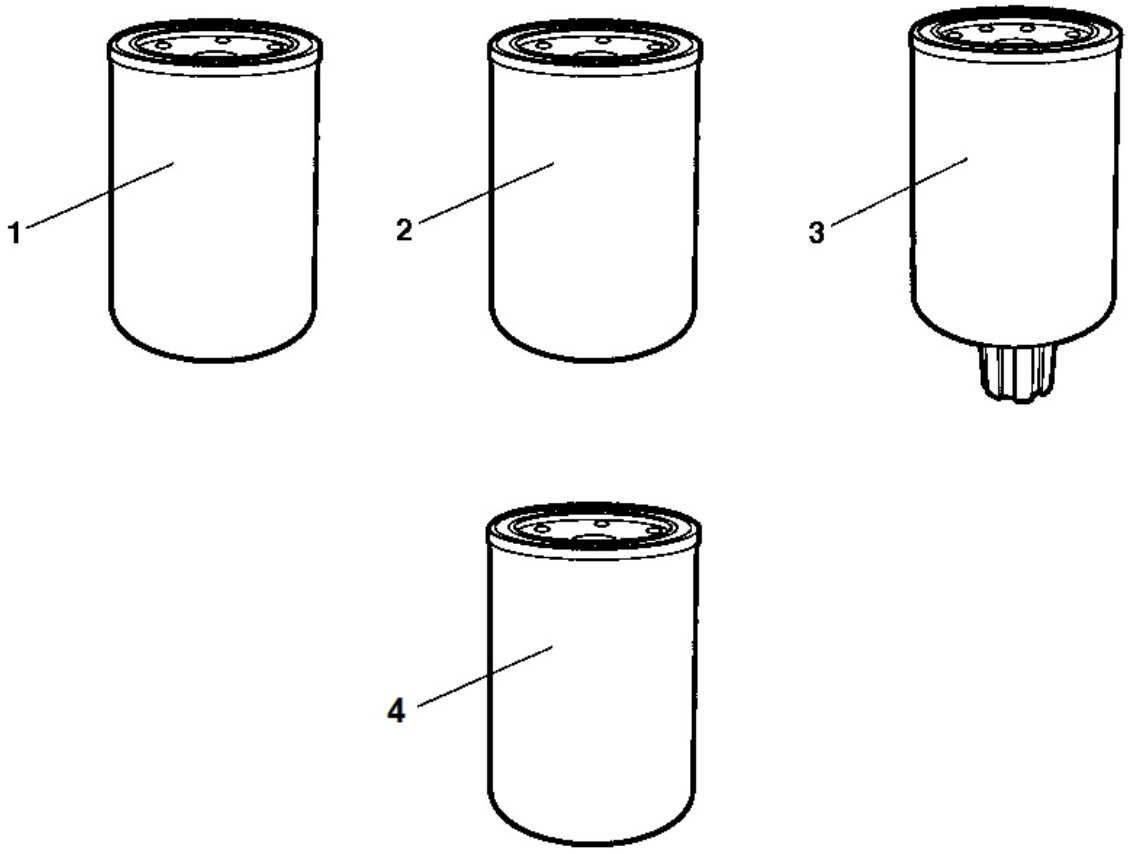

Item	Part No.	Name	Qty	L
0	4812316686	Service kit 250/750h, QSB 4.5 T4	1	
1	4700939082	Oil filter	1	
2	4812158187	Fuel filter	1	
3	4812041531	Fuel prefilter	1	
4	4812100497	Air dryer filter element	1	

Comments for Page: Service kit 250/750h, QSB 4.5 T4

For machines equiped with air on the run

Service, repair and wear part kits Service kit 500h, QSB 4.5 T4

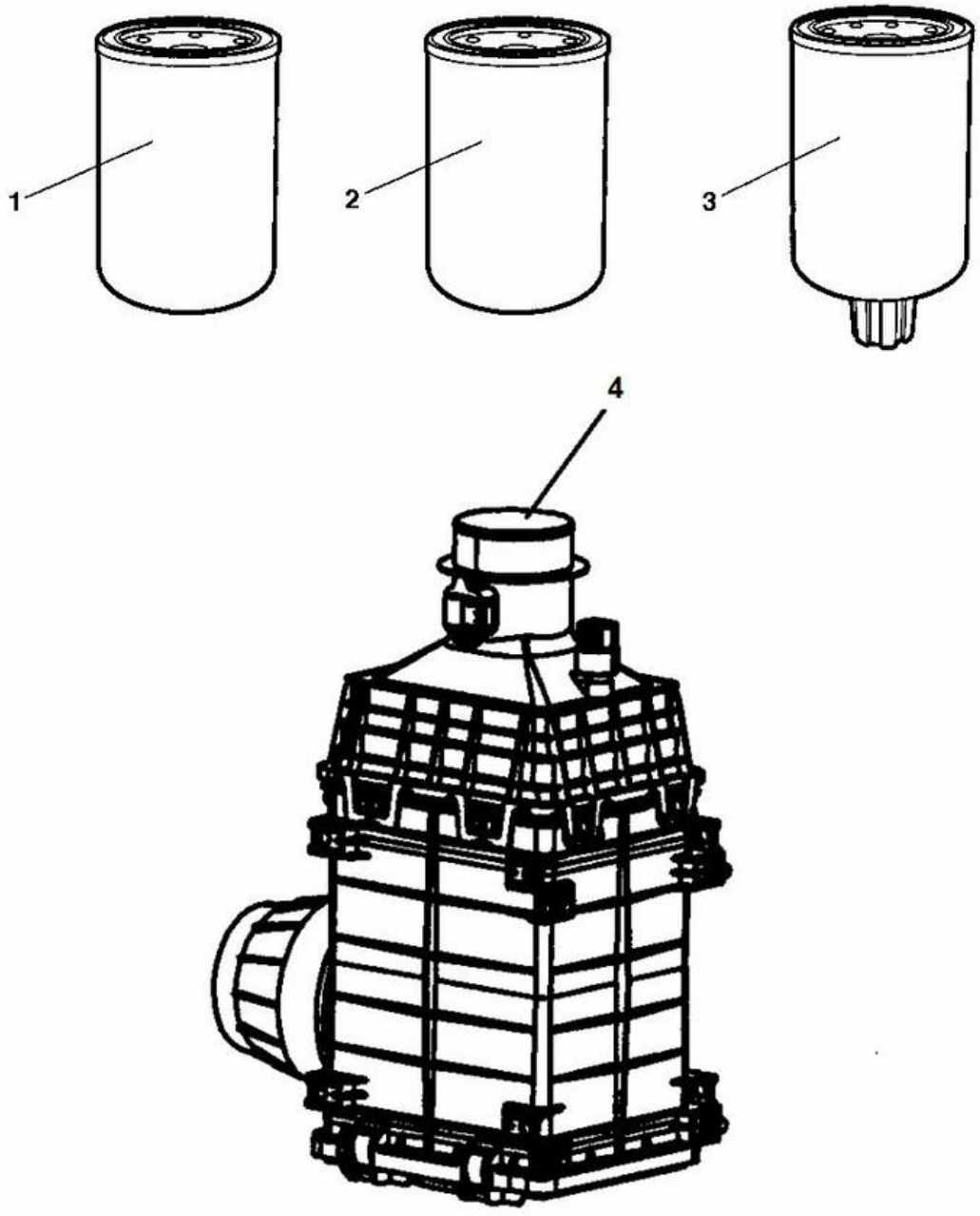

Item	Part No.	Name	Qty	L
0	4812316687	Service kit 500h, QSB 4.5 T4	1	
1	4700939082	Oil filter	1	
2	4812158187	Fuel filter	1	
3	4812041531	Fuel prefilter	1	
4	4812159185	Air filter element	1	

Service, repair and wear part kits Service kit 500h, QSB 4.5 T4

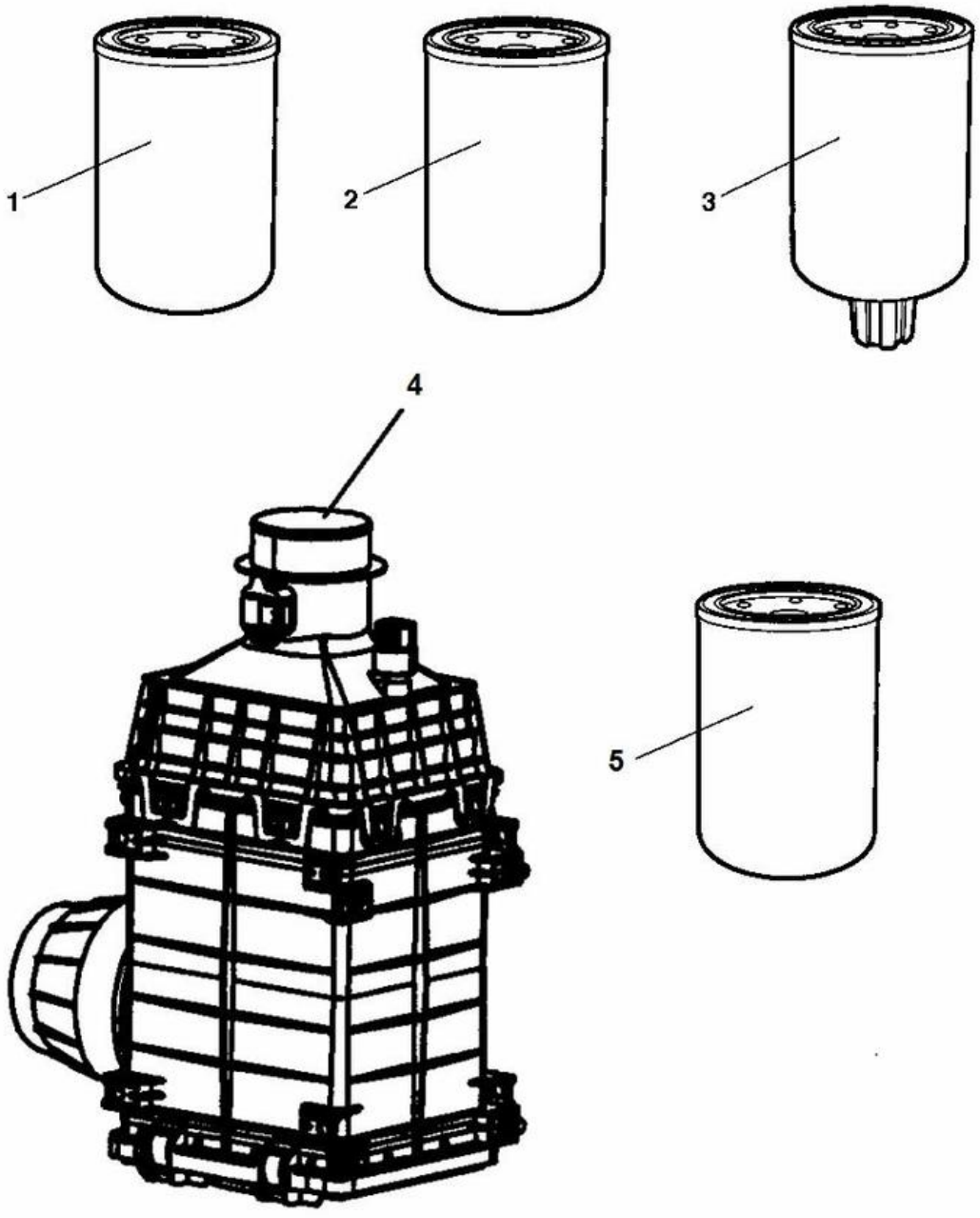

Item	Part No.	Name	Qty	L
0	4812316688	Service kit 500h, QSB 4.5 T4	1	
1	4700939082	Oil filter	1	
2	4812158187	Fuel filter	1	
3	4812041531	Fuel prefilter	1	
4	4812159185	Air filter element	1	
5	4812100497	Air dryer filter element	1	

Comments for Page: Service kit 500h, QSB 4.5 T4

For machines equiped with air on the run

Service, repair and wear part kits Service kit 1000h, QSB 4.5 T4

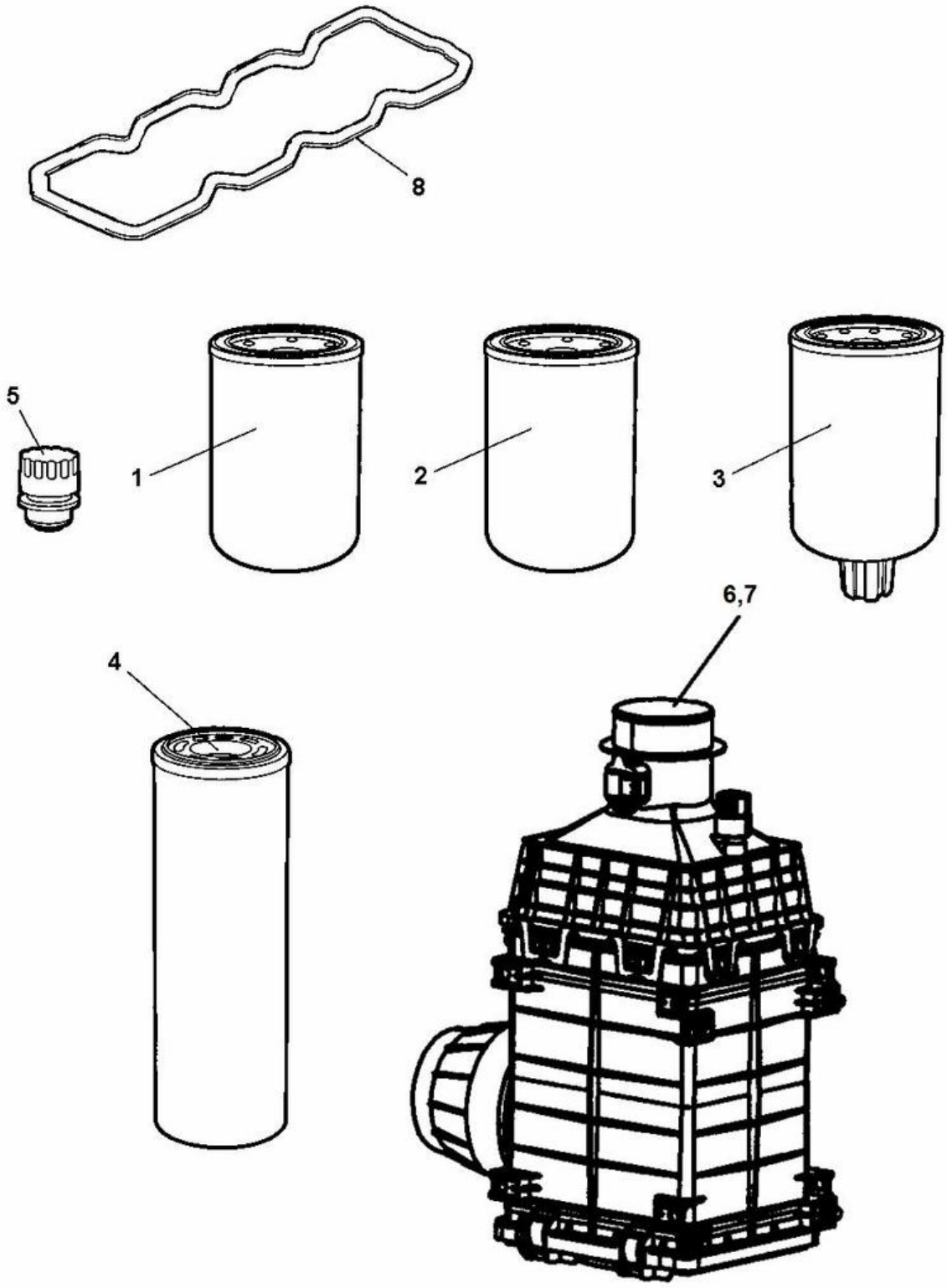

Item	Part No.	Name	Qty	L
0	4812316689	Service kit 1000h, QSB4.5 T4	1	
1	4700939082	Oil filter	1	
2	4812158187	Fuel filter	1	
3	4812041531	Fuel prefilter	1	
4	4700372229	Hydraulic oil filter element	2	
5	4700391026	Ventilating filter	1	
6	4812159185	Air filter element	1	
7	4812158191	Safety filter element	1	
8	4700945760	Gasket, valve cover	1	

Service, repair and wear part kits Service kit 1000h, QSB 4.5 T4

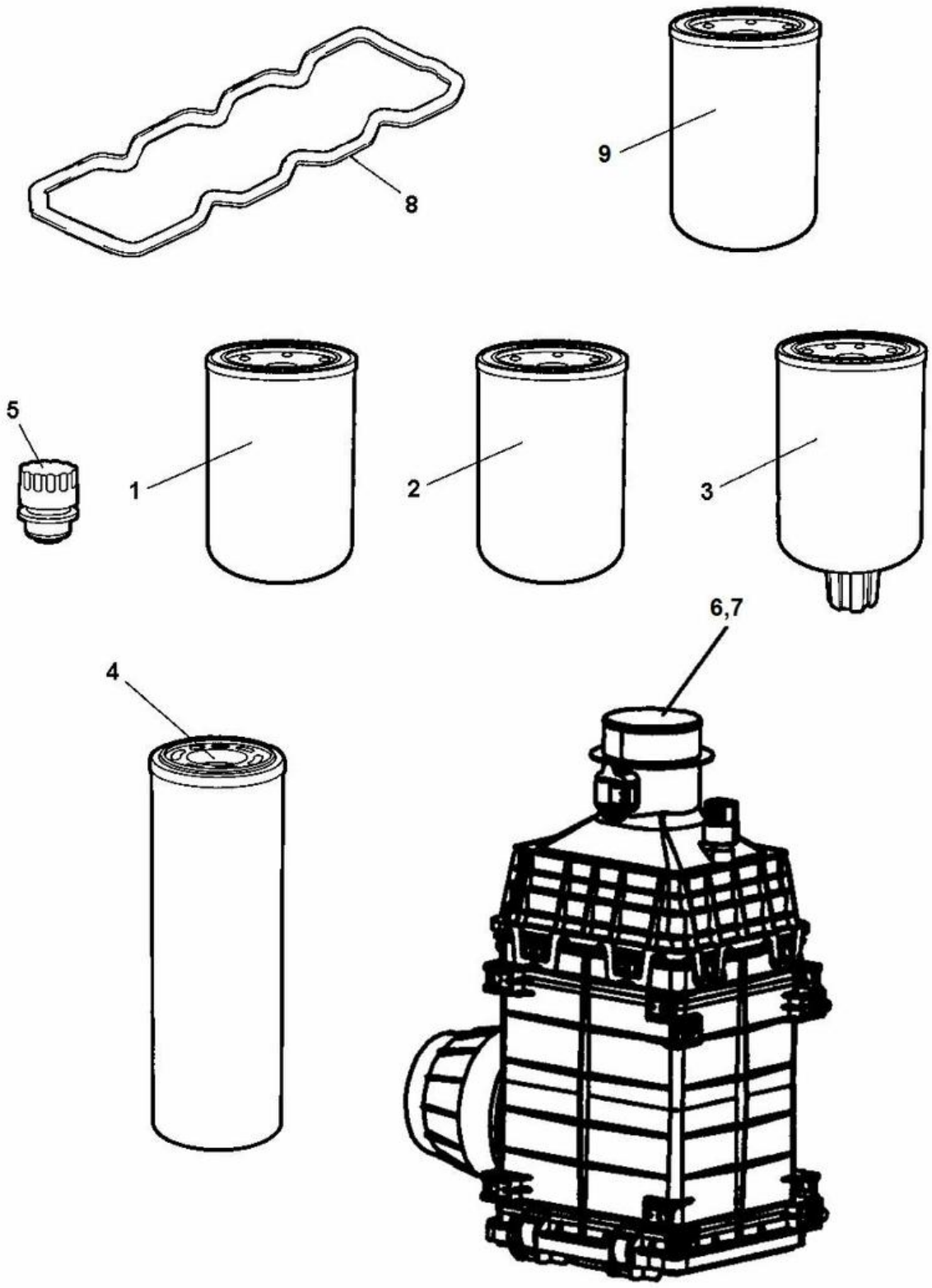

Item	Part No.	Name	Qty	L
0	4812316690	Service kit 1000h, QSB 4.5 T4	1	
1	4700939082	Oil filter	1	
2	4812158187	Fuel filter	1	
3	4812041531	Fuel prefilter	1	
4	4700372229	Hydraulic oil filter element	2	
5	4700391026	Ventilating filter	1	
6	4812159185	Air filter element	1	
7	4812158191	Safety filter element	1	
8	4700945760	Gasket, valve cover	1	
9	4812100497	Air dryer filter element	1	

Comments for Page: Service kit 1000h, QSB 4.5 T4

For machines equiped with air on the run

Service, repair and wear part kits 4812155698 Sprinkler kit

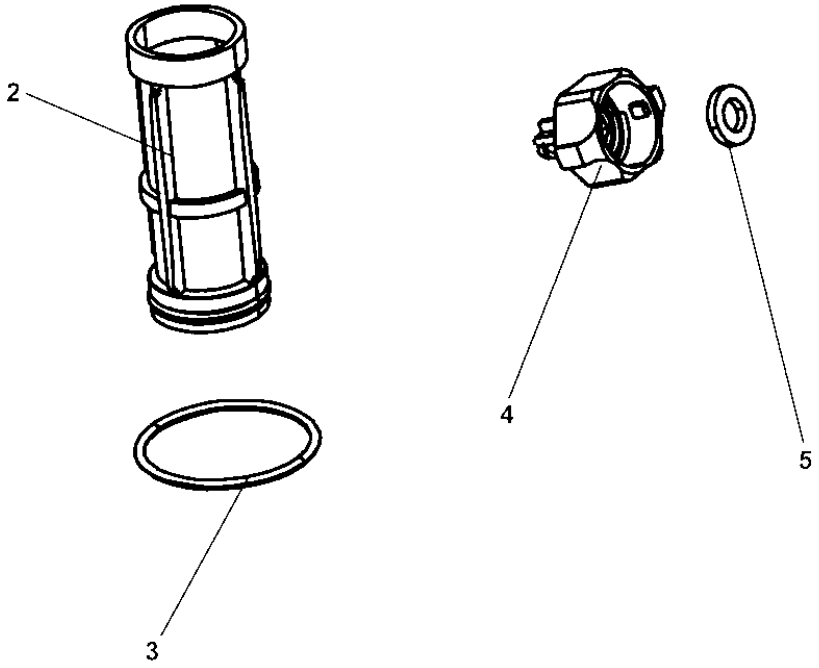

Item	Part No.	Name	Qty	L
1	4812155698	Sprinkler kit	1	
2	4700791949	Filter element	1	
3	4700791959	O-ring	9	
4	4700392509	Retainer, nozzle, strainer, yellow	9	
5	4700392510	Gasket	9	

Service, repair and wear part kits 4812155696 Scraper kit

Item	Part No.	Name	Qty	L
1	4812155696	Scraper kit	1	
2	4700170294	Blade	1	
3	4700383390	Scraper	1	

Service, repair and wear part kits 4812155752 Air on the run kit Front

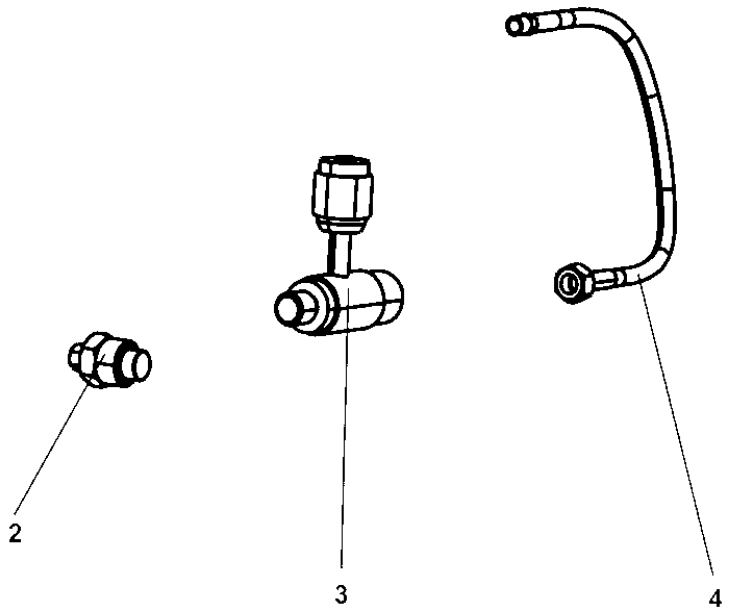

Item	Part No.	Name	Qty	L
1		Air on the run kit Front	1	
2	4700257198	Rotating nipple	5	
3	4700258298	Valve	5	
4	4700170545	Hose	5	

Service, repair and wear part kits 4812155751 Air on the run kit Rear

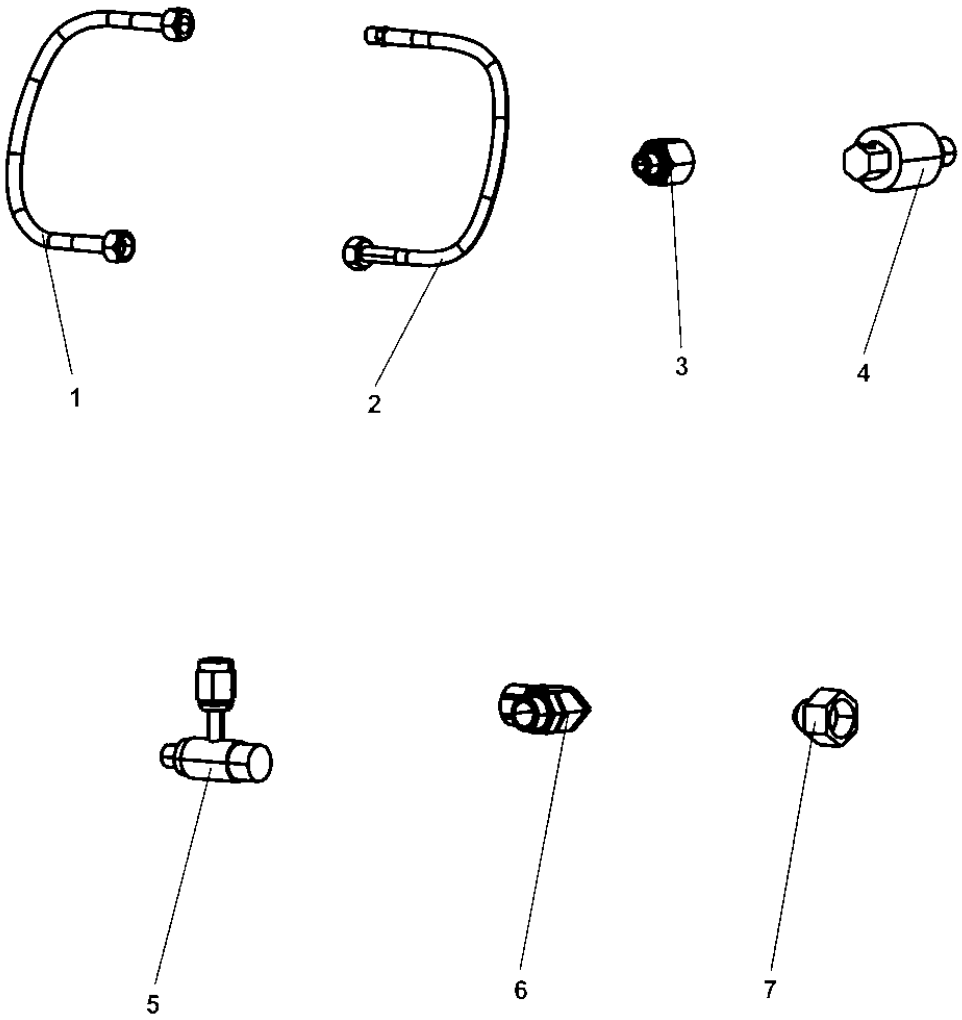

Item	Part No.	Name	Qty	L
0	4812155751	Air on the run kit Rear	1	
1	4700170571	Hose	2	
2	4700170545	Hose	2	
3	4700170259	Adapter	2	
4	4700195172	Rotor	2	
5	4700258298	Valve	4	
6	4700928908	Adapter	2	
7	4700334461	Reducing	2	

Mechanical Grab handle module

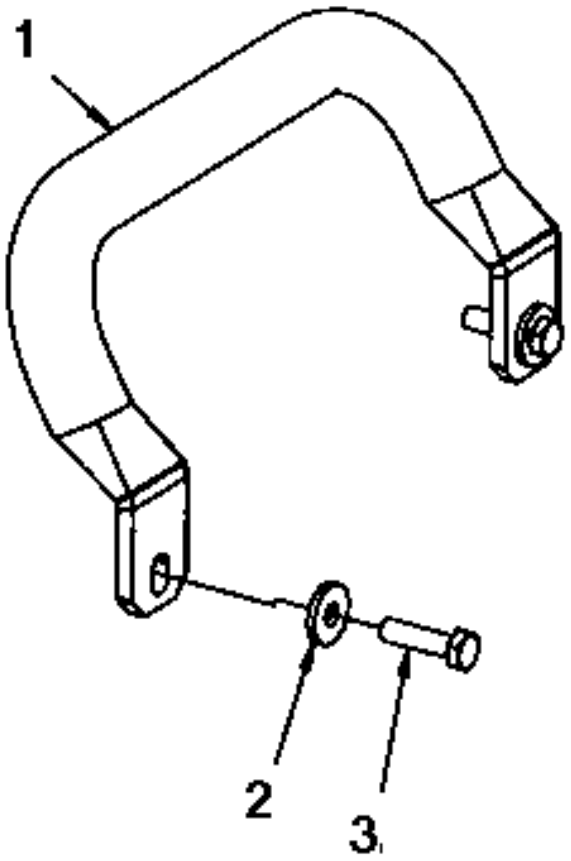

Item	Part No.	Name	Qty	L
1	4700394545	Grab handle	1	
2	4700904640	Washer, 8.4x 2x3 mm 300 HV	2	
3	4700500022	Screw	2	

Mechanical Cover module

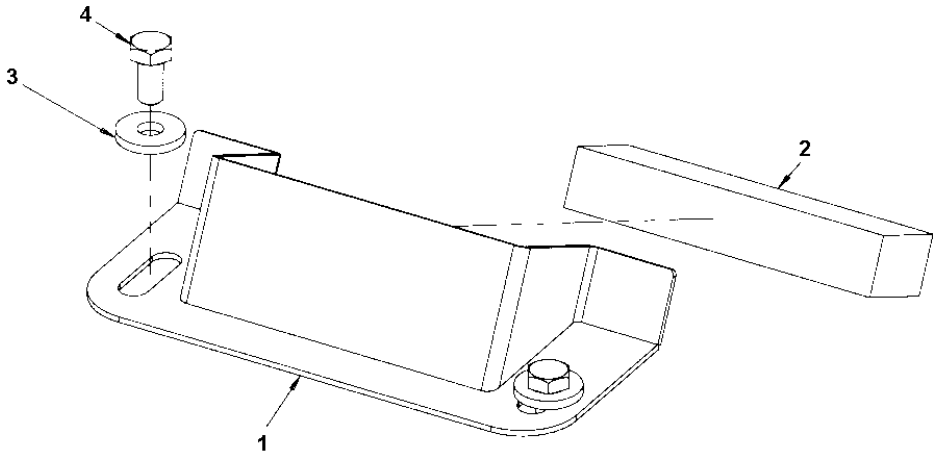

Item	Part No.	Name	Qty	L
1	4700396923	Cover plate	1	
2	4700792796	Rubber strip 25x20	1	A
3	4700904640	Washer, 8.4x 2x3 mm 300 HV	2	
4	4700500019	Hex. screw	2	

Comments for Page: Cover module

2 - L = 0,112 m

Mechanical Step module

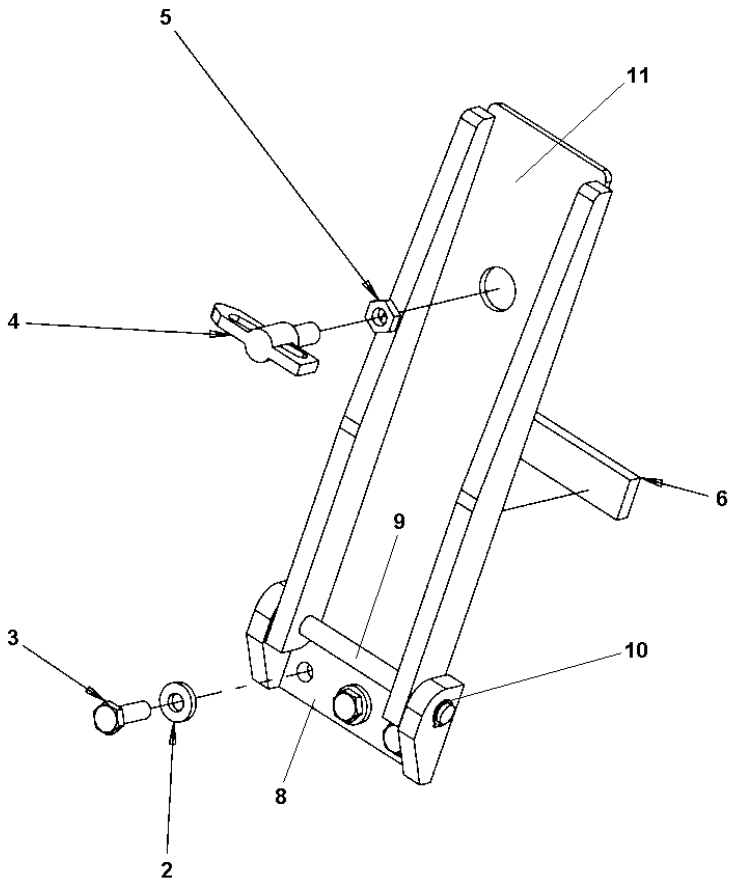

Item	Part No.	Name	Qty	L
2	4700904557	Washer, 10.5x22x4 mm 300 HV	3	
3	4700500029	Hex. screw	3	
4	4700475064	Lock	1	
5	4700927233	Nut	1	
6	4700370820	Rubber cloth	1	
7	4700929141	Glue	N	
8	4700370303	Bracket	1	
9	4700370685	Shaft	1	
10	4700150003	Retaining ring for shaft	2	
11	4700379417	Sheet metal part	1	

Mechanical Frame assy module

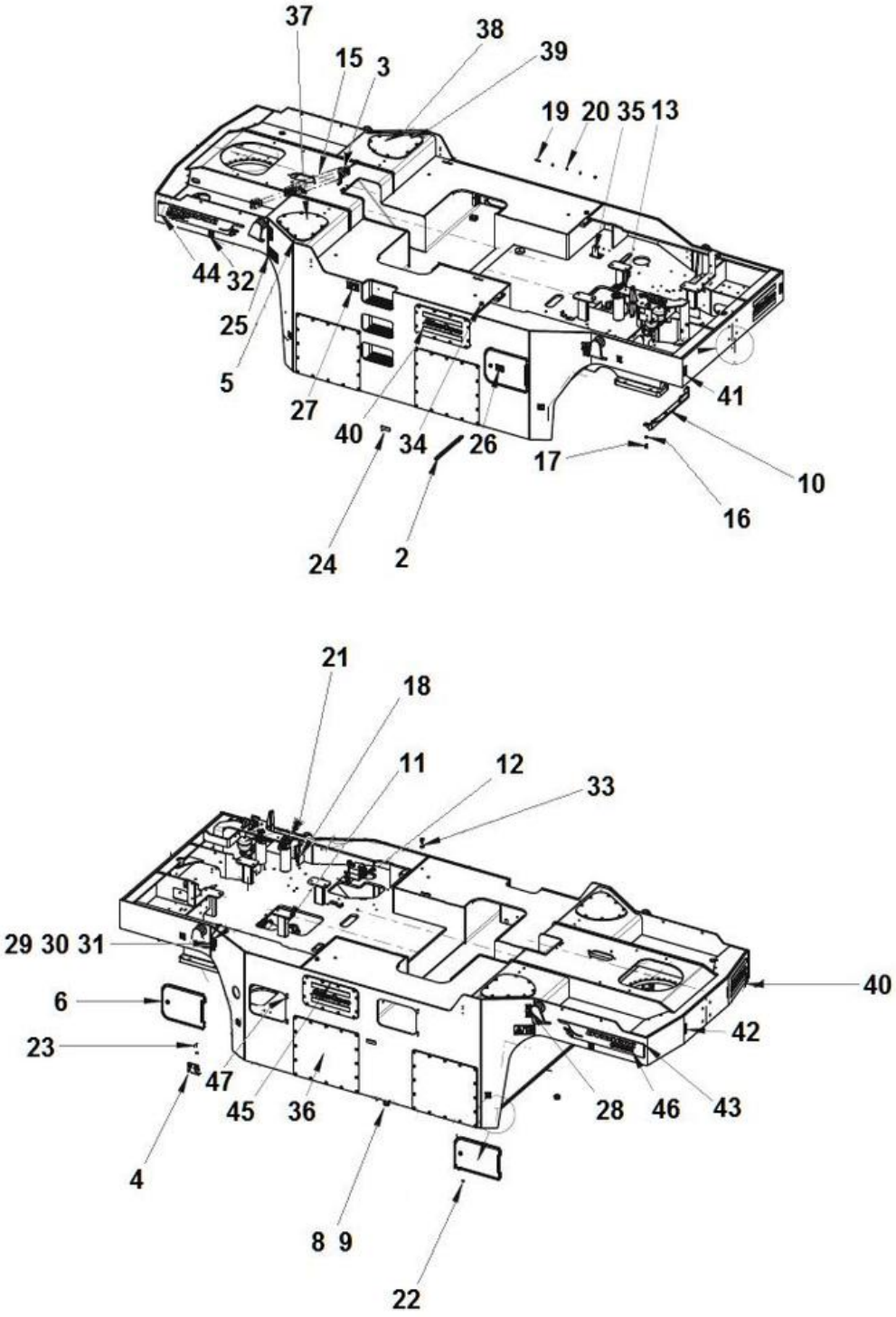

Item	Part No.	Name	Qty	L
1		Frame	1	
2	4700395864	Slide rail	2	
3	4700792554	Radial spherical plain bearing	1	
4	4700170144	Bracket	1	
5	4700900634	Blind insert nut	104	
6	-	Cover	2	
7	-	Cover	1	
8	4700162014	Washer sealing	2	
9	4700232248	Plug	2	
10	4700170303	Bracket	2	
11	-	Manifold assy	1	
12	-	Manifold	1	
13	-	Filter bracket	1	
14	-	Accumulator	1	
15	-	Steering cylinder	1	
16	4700904703	Plain washer 13x24x4 mm	8	
17	4700500051	Hex. screw	8	
18	4700904229	Washer, 8.4x16x1.5 mm 300 HV	122	
19	4700903768	Threaded stud	8	
20	4700570005	Hex. nut	8	
21	4700586003	Hexagon lock nut M8	8	
22	4700513008	Washer	8	
23	4700500019	Hex. screw	2	
24	4700377744	Reflector, yellow	2	
25	4700903422	Safety decal "CRUSH AREA"	2	
26	4700393959	Decal "Battery voltage 24V"	1	
27	4700903459	Decal "SAFETY"	1	
28	4700357587	Label, lift point	2	
29	4700904870	Lifting data plate	2	
30	4700382751	Decal "SECURING POINT/TIE DOWN"	8	
31	4700624005	Blind rivet 3,2x6,1	8	
32	4700374765	Decal "TYRE PRESSURE"	4	
33	4700904232	Steel plain washer	2	
34	4700500154	Screw	2	
35	4812110840	Grommet	1	
36		Cover	4	
37	-	Cover	1	

Item	Part No.	Name	Qty	L
38	-	Cover	1	
39	4700500022	Screw	104	
40	4812120306	Decal "AC logotype" Black, H=190	4	
41	4700377742	Reflector, red	4	
42	4700377743	Reflector, white	2	
43	4812121205	Decal "COMPACTING ROCKS"	1	
44	4812121204	Decal "COMPACTING ROCKS"	1	
45	-	Cover assy	2	
46	4812316253	Decal model "CP2700"	2	
47	4700925785	Hex. socket screw M06x012H	4	

Mechanical Cover

This page intentionally left blank

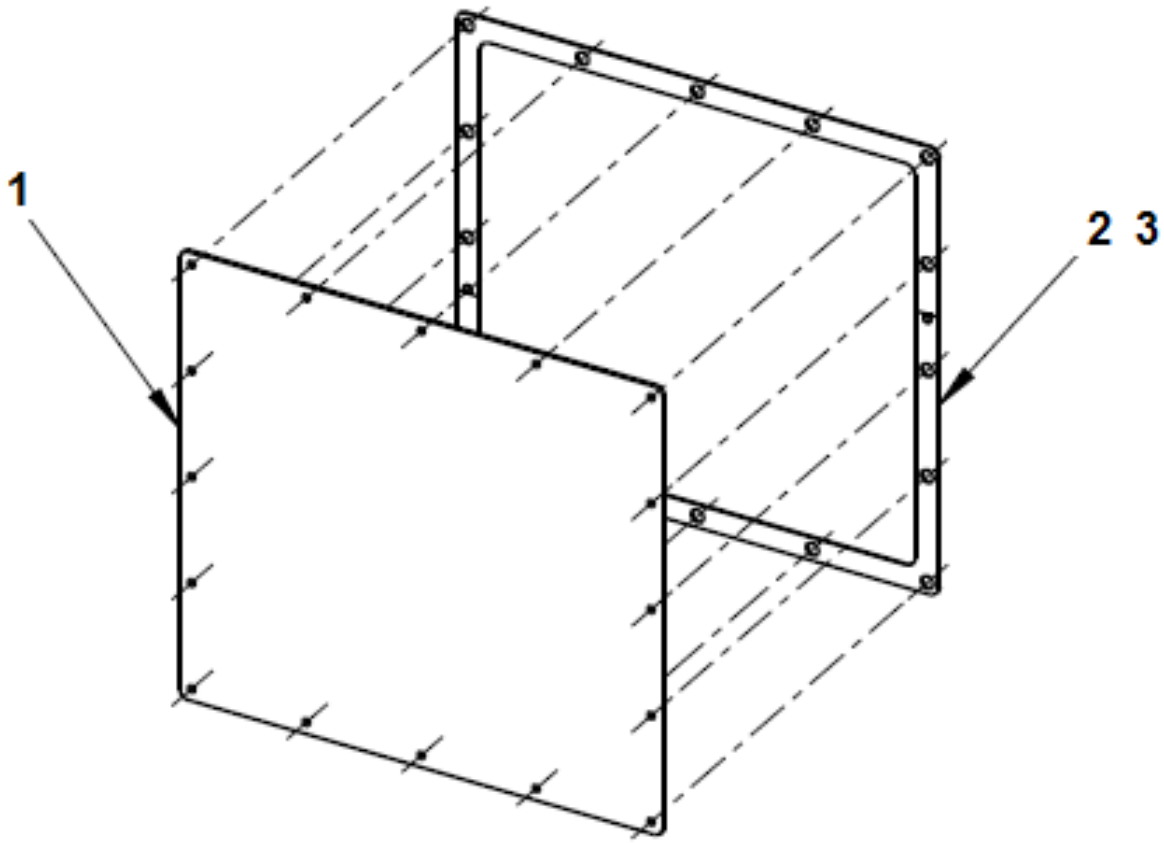
1
2 3

Item	Part No.	Name	Qty	L
1	4812315613	Cover	1	
2	4812315614	Gasket	2	
3	4700929141	Glue	1	

Mechanical Cover

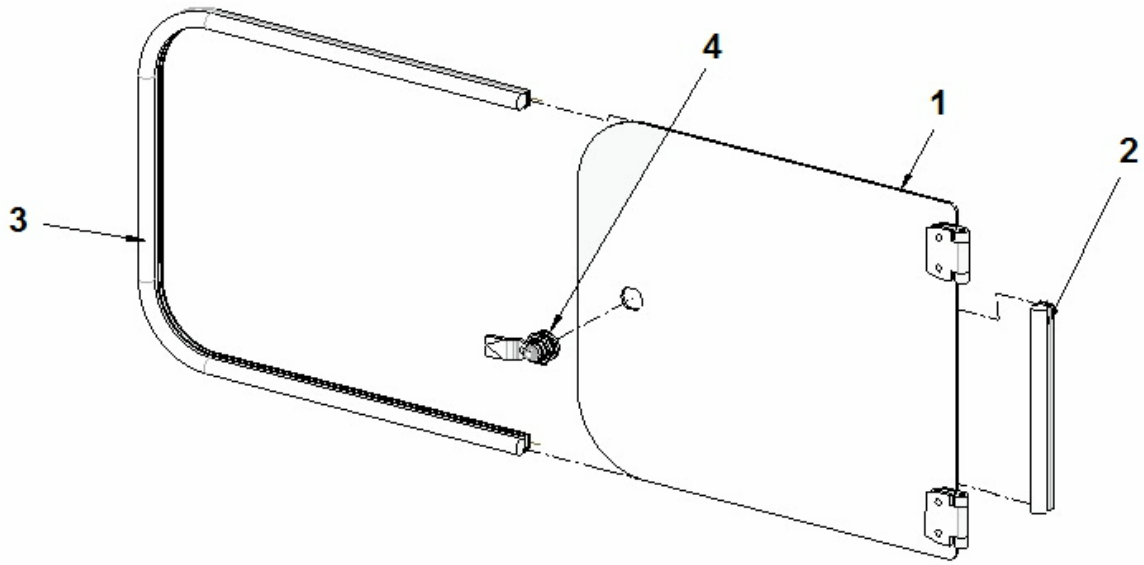

Item	Part No.	Name	Qty	L
1	4812315718	Cover	1	
2	4700202057	Rubber edge trim	1	
3	4700202057	Rubber edge trim	1	
4	4812113939	Lock	1	
5	4812113949	T-Key	1	

Comments for Page: Cover

2 - L = 0,2m

3 - L = 1,13m

Mechanical Cover

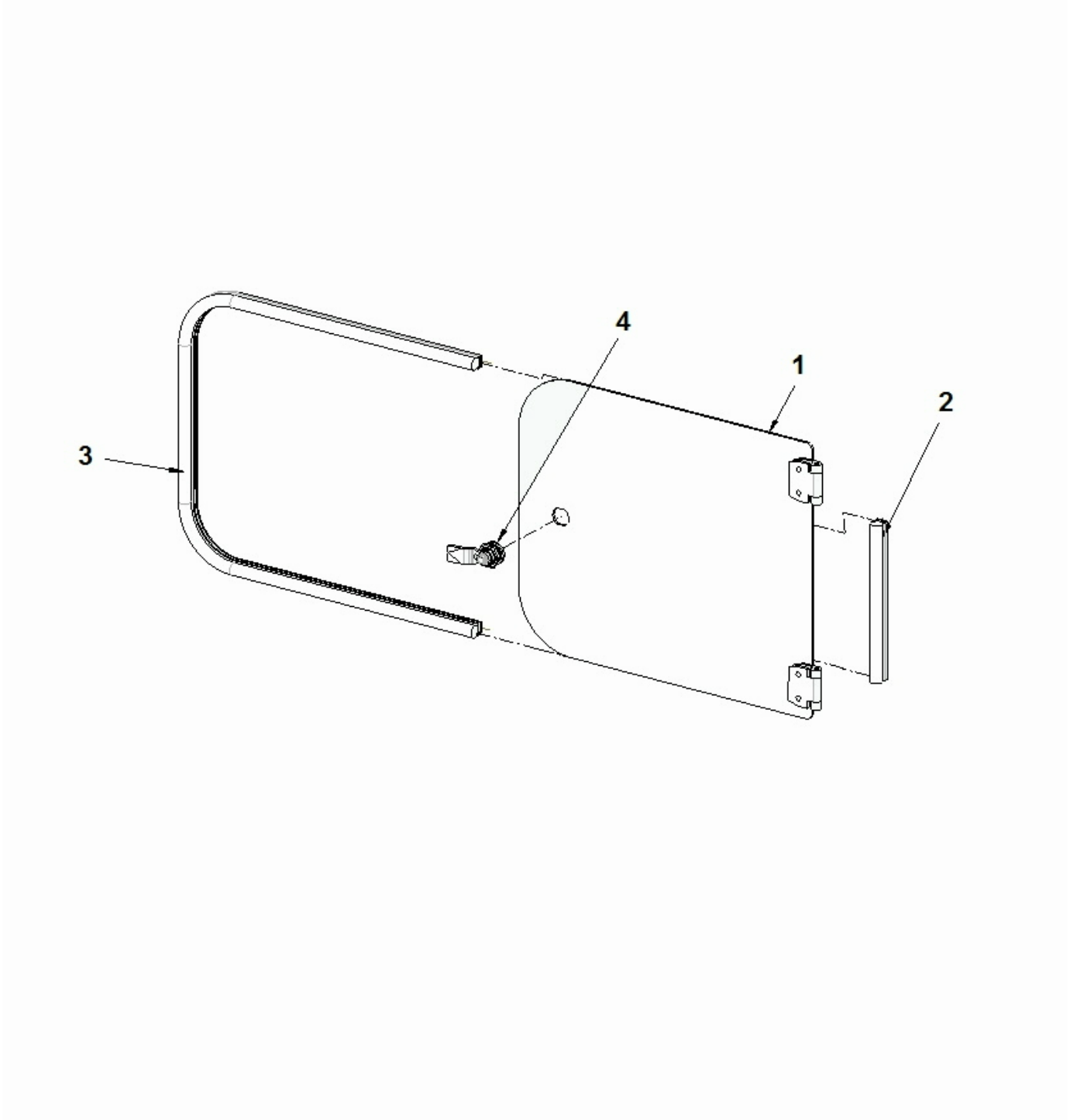

Item	Part No.	Name	Qty	L
1	4812315721	Cover	1	
2	4700202057	Rubber edge trim	1	
3	4700202057	Rubber edge trim	1	
4	4812113939	Lock	1	
5	4812113949	T-Key	1	

Comments for Page: Cover

2 - L = 0,17 m

3 - L = 1,137 m

Mechanical Manifold assy

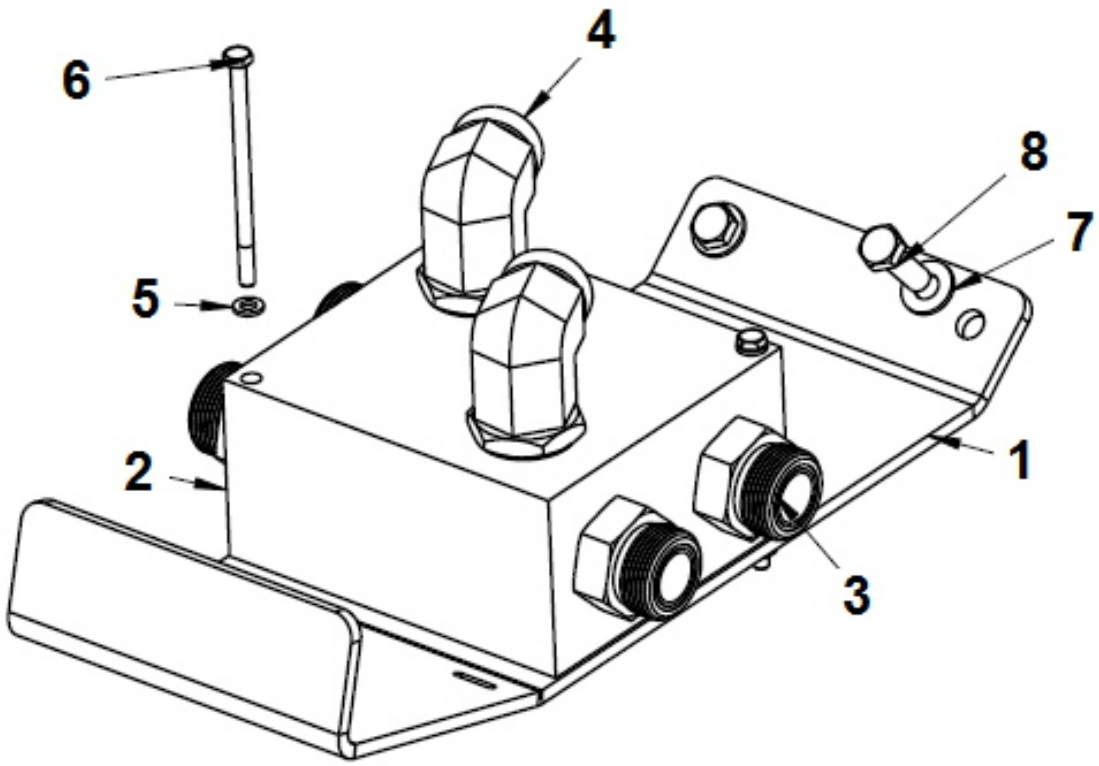

Item	Part No.	Name	Qty	L
1	4812316261	Bracket	1	
2	4700395028	Manifold	1	
3	4700792339	Adapter	4	
4	4700792299	Adapter	2	
5	4700904228	Steel plain washer	2	
6	4700500095	Screw	2	
7	4700904230	Washer	2	
8	4700500029	Hex. screw	2	

Mechanical Manifold

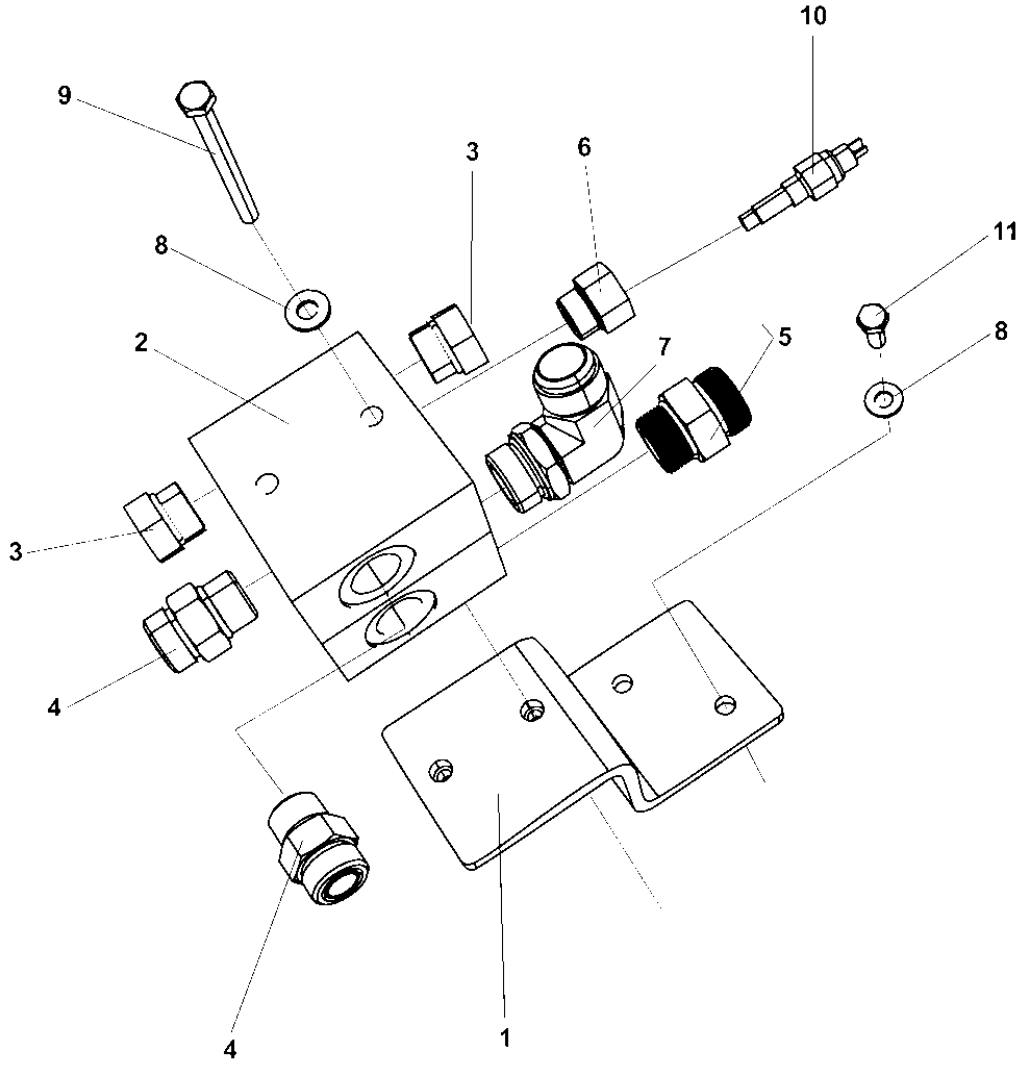

Item	Part No.	Name	Qty	L
1	4700396279	Bracket	1	
2	4700345243	Connection block	2	
3	4700232222	Plug threaded	3	
4	4700791823	Adapter	4	
5	4700792339	Adapter	1	
6	4700234983	Adapter	1	
7	4700334163	Connector elbow 90°	1	
8	4700904230	Washer	4	
9	4700500055	Screw	2	
10	4700903632	Temperature sensor Engine	1	
11	4700500028	Screw, M10x25 mm 8.8 A3K	2	

Mechanical Filter bracket

Item	Part No.	Name	Qty	L
1	4700395936	Bracket	1	
2	4700372435	Hydraulic oil filter, cpl	1	
.2.1	4700372229	Hydraulic oil filter element	1	
3	4700359550	Hydraulic oil filter, cpl	1	
.3.1	4700372229	Hydraulic oil filter element	1	
4	4700396274	Hydraulic oil filter	1	
6	4700792339	Adapter	1	
7	4700334163	Connector elbow 90°	1	
8	4700791321	Connector elbow 90 orfs	2	
9	4700791699	Elbow 90	1	
10	4700904352	Clamp	2	
11	4700904230	Washer	14	
12	4700500043	Hex. screw	2	
13	4700500028	Screw, M10x25 mm 8.8 A3K	12	
14	4700791407	Straight o-ring connector	1	

Mechanical Accumulator

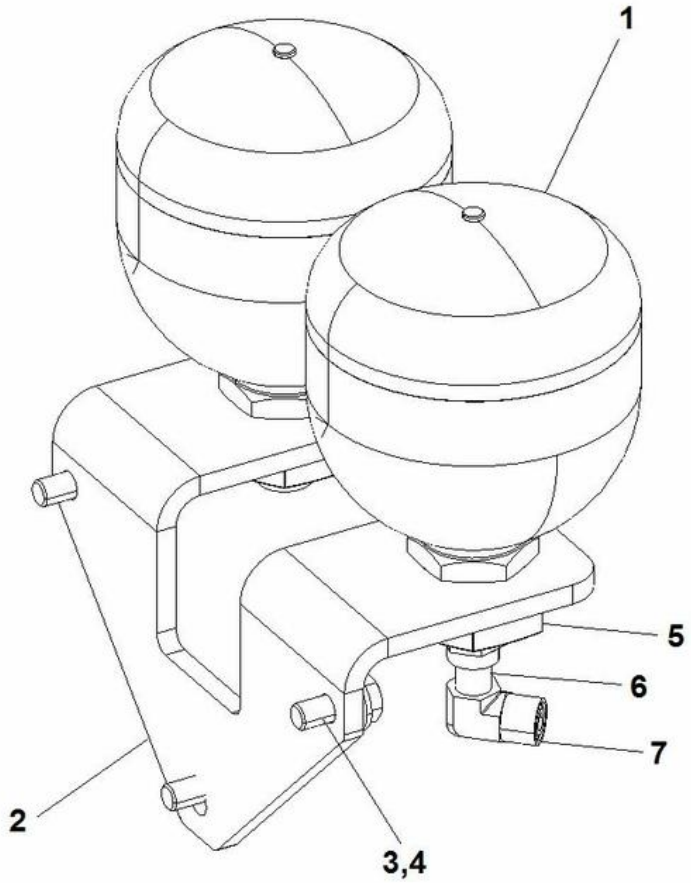

Item	Part No.	Name	Qty	L
1	4700396171	Accumulator	2	
2	4700395521	Bracket	1	
3	4700500028	Screw, M10x25 mm 8.8 A3K	3	
4	4700904230	Washer	3	
5	4700396349	Nut	2	
6	4700791405	Straight o-ring connector	2	
7	4700791401	Elbow 90, O-ring with swivel	1	

Mechanical Steering cylinder

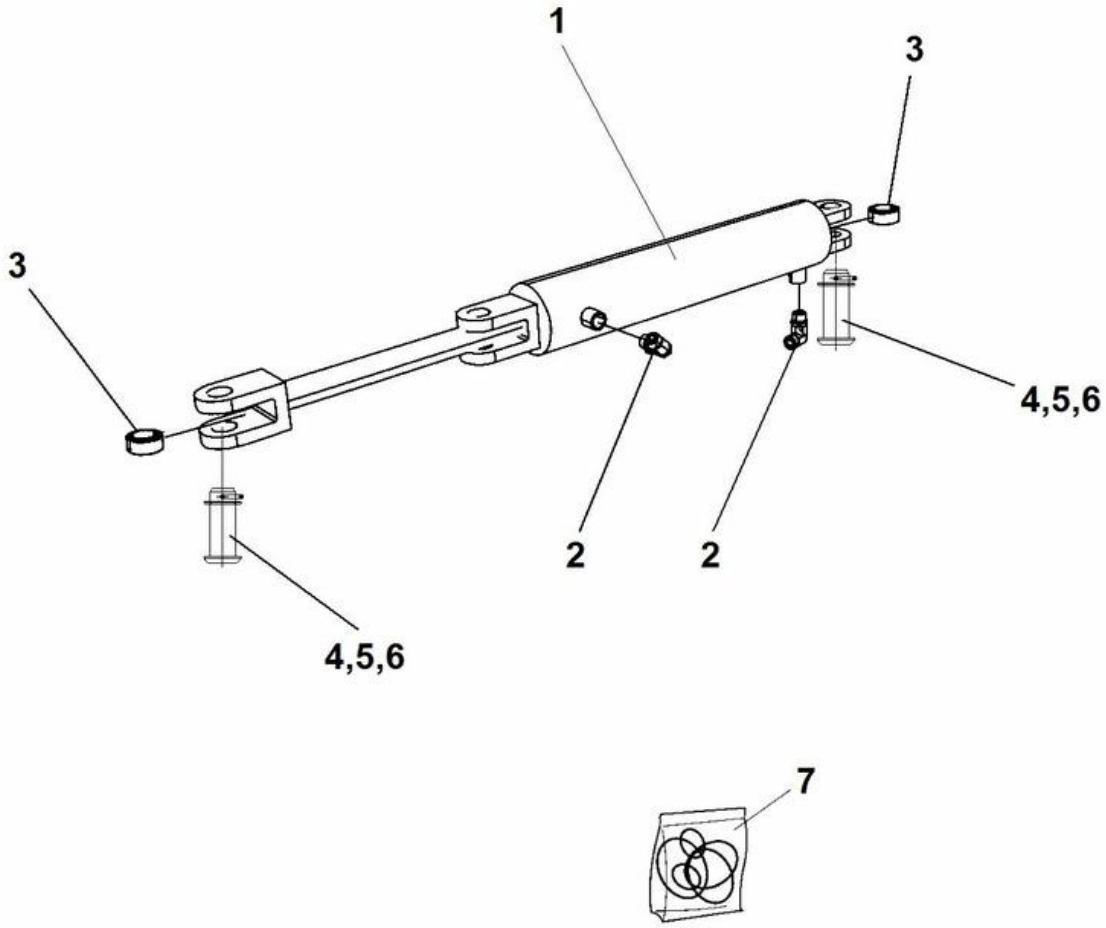

Item	Part No.	Name	Qty	L
1	4700396098	Hydraulic cylinder	1	
2	4700791841	Elbow 90 orfs	2	
3	4700792554	Radial spherical plain bearing	2	
4	4812101695	Clamp	2	
5	4812101696	Washer	2	
6	4812101697	Pin	2	
7	4812101384	Seal kit	1	

Mechanical Air leading cover

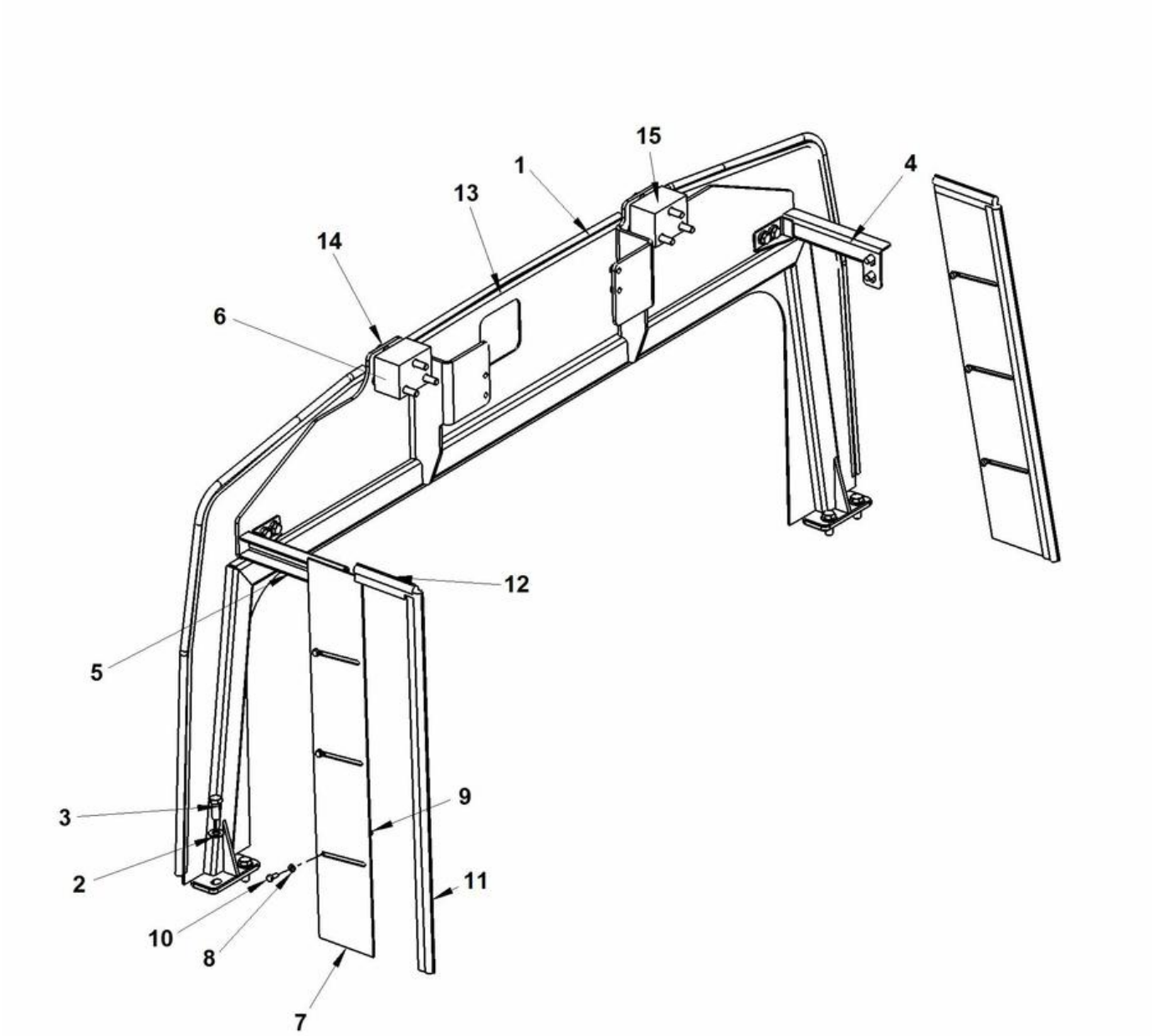

Item	Part No.	Name	Qty	L
1	4812315532	Bracket	1	
2	4700904231	Steel plain washer, 13x24x2 mm 300 HV	4	
3	4700500046	Hex. head screw M12x030H	4	
4		Bracket	1	
5		Bracket	1	
6	4812315657	Spacer	2	
7	4812315774	Cover	2	
8	4700904228	Steel plain washer	6	
9	4700570004	Hex. nut	6	
10	4700500013	Hex. screw	6	
11	4700902166	Edge trim	1	
12	4700902166	Edge trim	1	
13	4700902166	Edge trim	1	
14	4700904230	Washer	6	
15	4700500077	Screw	6	

Comments for Page: Air leading cover

11 - L = 1,3 m

12 - L = 0,3 m

13 - L = 3,0 m

Mechanical Engine hood

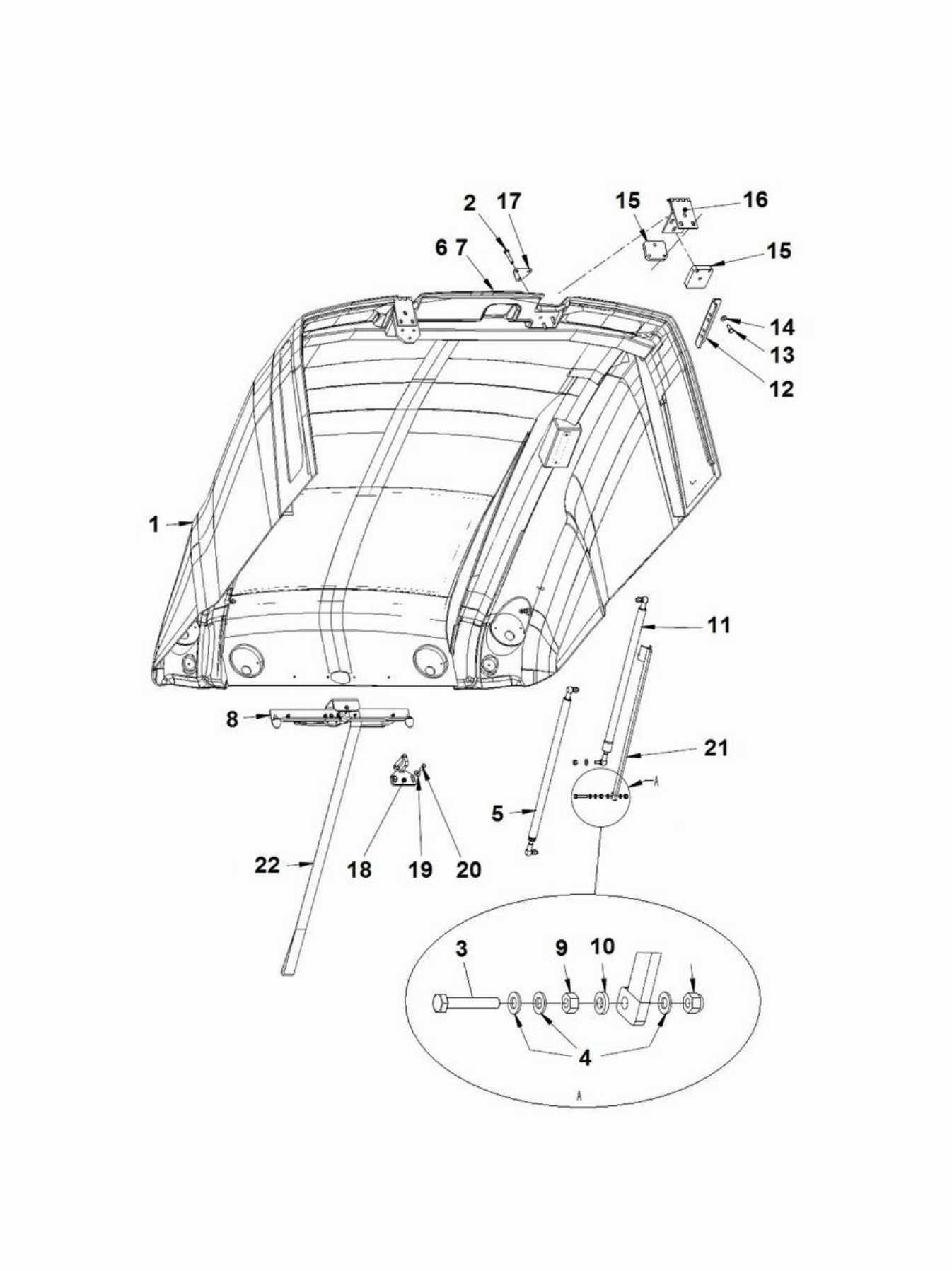

Item	Part No.	Name	Qty	L
1	4812315572	Engine cover	1	
2	4700500149	Screw	6	
3	4700792360	Screw	1	
4	4700904229	Washer, 8.4x16x1.5 mm 300 HV	3	
5	4700904879	Gas spring	1	
6	4812315793	Cover	1	
7	4700500018	Hex. screw	2	
8	-	Locking device	1	
9	4700570005	Hex. nut	1	
10	4700904556	Steel plain washer	1	
11	4700382384	Gas spring	1	
12	4812316064	Bracket	2	
13	4700500028	Screw, M10x25 mm 8.8 A3K	4	
14	4700904230	Washer	4	
15	4700374799	Holder plate	4	
16	4812317291	Hinge	2	
17	4700396201	Washer	2	
18	4812316057	Lock clamp	1	
19	4700904640	Washer, 8.4x 2x3 mm 300 HV	2	
20	4700500021	Hex. screw	2	
21	4700382382	Safety rod	1	
22	4700396317	Grab handle	1	

Mechanical Locking device

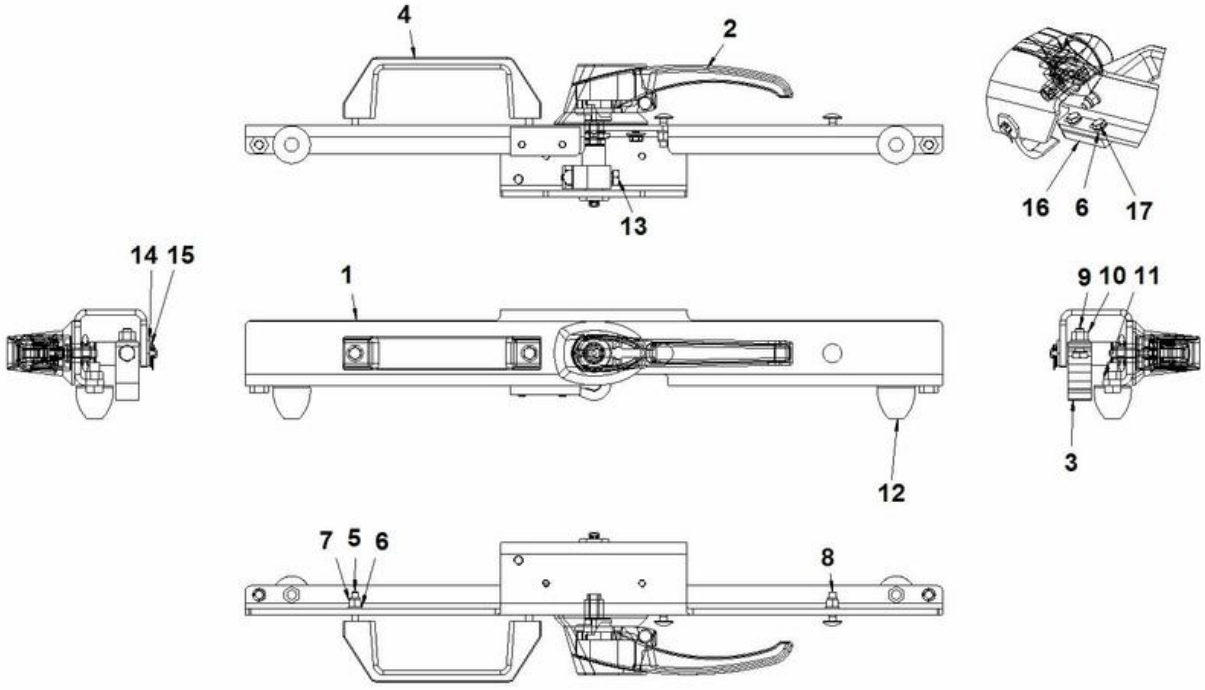

Item	Part No.	Name	Qty	L
1	4812315693	Sheet metal part	1	
2	4812112403	Lock handle	1	
.2	4700902866	Key Marked "455"	1	
3	4812315795	Hook	1	
4	4812112404	Grab handle	1	
5	4700500015	Hex. screw	2	
6	4700904228	Steel plain washer	6	
7	4700586002	Lock nut M6 -8	4	
8	4700903923	Cup square neck bolt	2	
9	4700500053	Hex. screw	1	
10	4700904229	Washer, 8.4x16x1.5 mm 300 HV	1	
11	4700570005	Hex. nut	3	
12	4700925629	Shock absorber	2	
13	4700500018	Hex. screw	1	
14	4812316054	Spacer sleeve	1	
15	4700630003	Split pin	1	
16	4700382336	Holder	1	
17	4700500013	Hex. screw	2	

Operator platform Control module, rotating/sliding

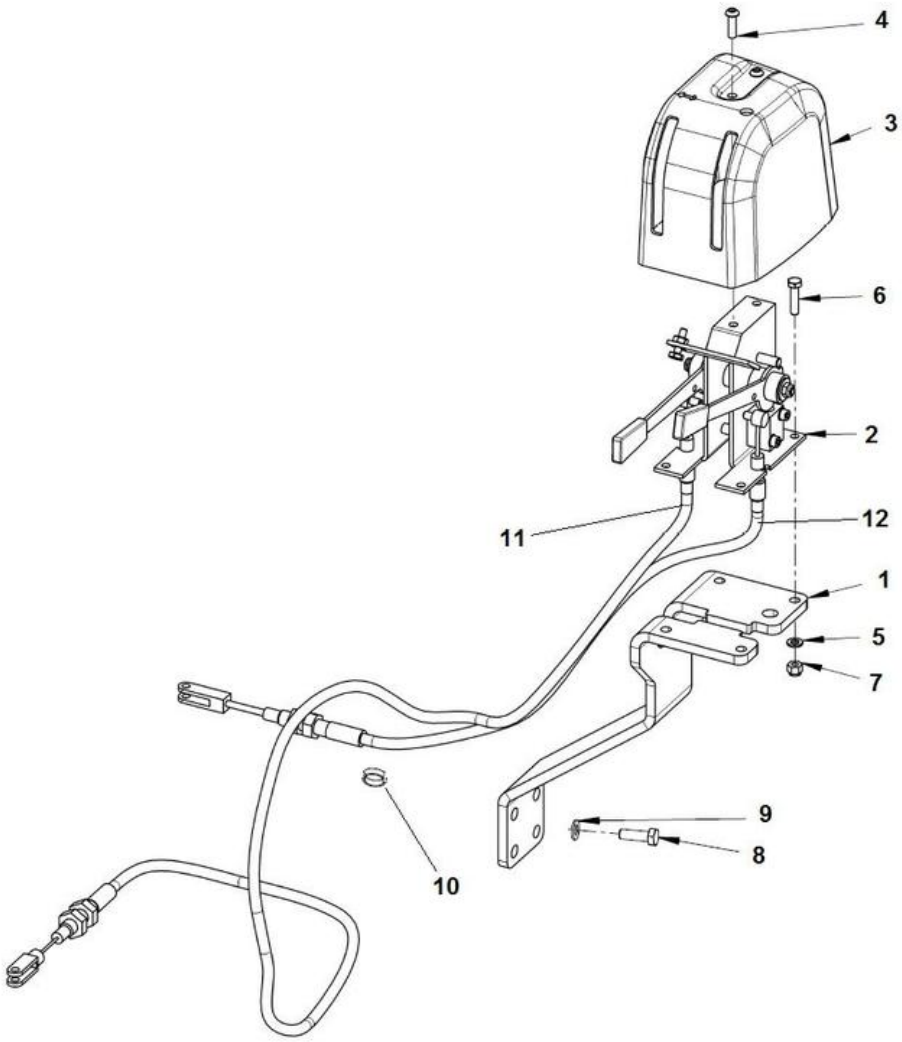

Item	Part No.	Name	Qty	L
1	4812118312	Bracket	1	
2	4812121328	Control	1	
3	4700392965	Control cover	1	
4	4700791524	Screw, M6 x 20 mm A2-70	2	
5	4700904228	Steel plain washer	4	
6	4700500075	Screw, M6-1,0x25 mm 8.8	4	
7	4700586002	Lock nut M6 -8	4	
8	4700500021	Hex. screw	4	
9	4700904229	Washer, 8.4x16x1.5 mm 300 HV	4	
10	4700313041	Cable tie	1	
11	4812121330	Cable, sliding	1	
12	4812121331	Cable	1	

Operator platform Display unit

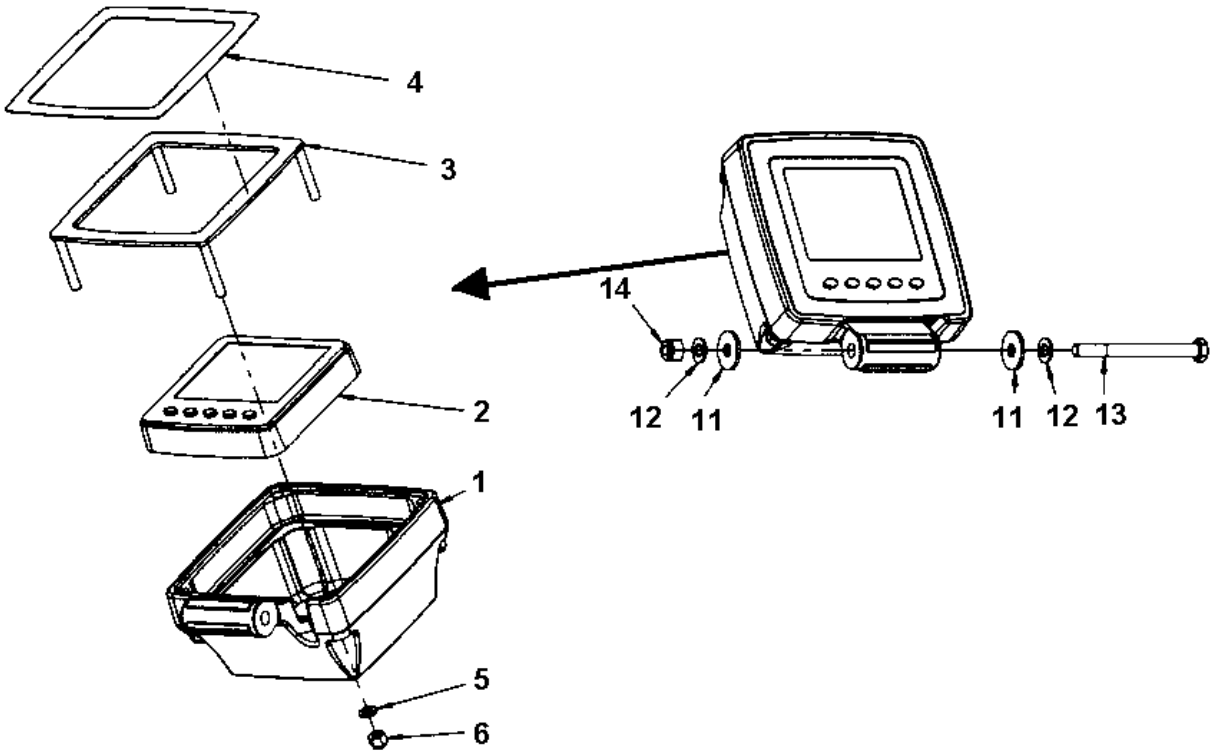

Item	Part No.	Name	Qty	L
1	4700392717	Display holder	1	
2	4812113786	Display unit	1	
3	4700392719	Cover	1	
4	4700393094	Decal	1	
5	4700904228	Steel plain washer	4	
6	4700586002	Lock nut M6 -8	4	
11	4700903662	Washer	2	
12	4700904229	Washer, 8.4x16x1.5 mm 300 HV	2	
13	4700500115	Screw	1	
14	4700586003	Hexagon lock nut M8	1	

Operator platform Seat frame

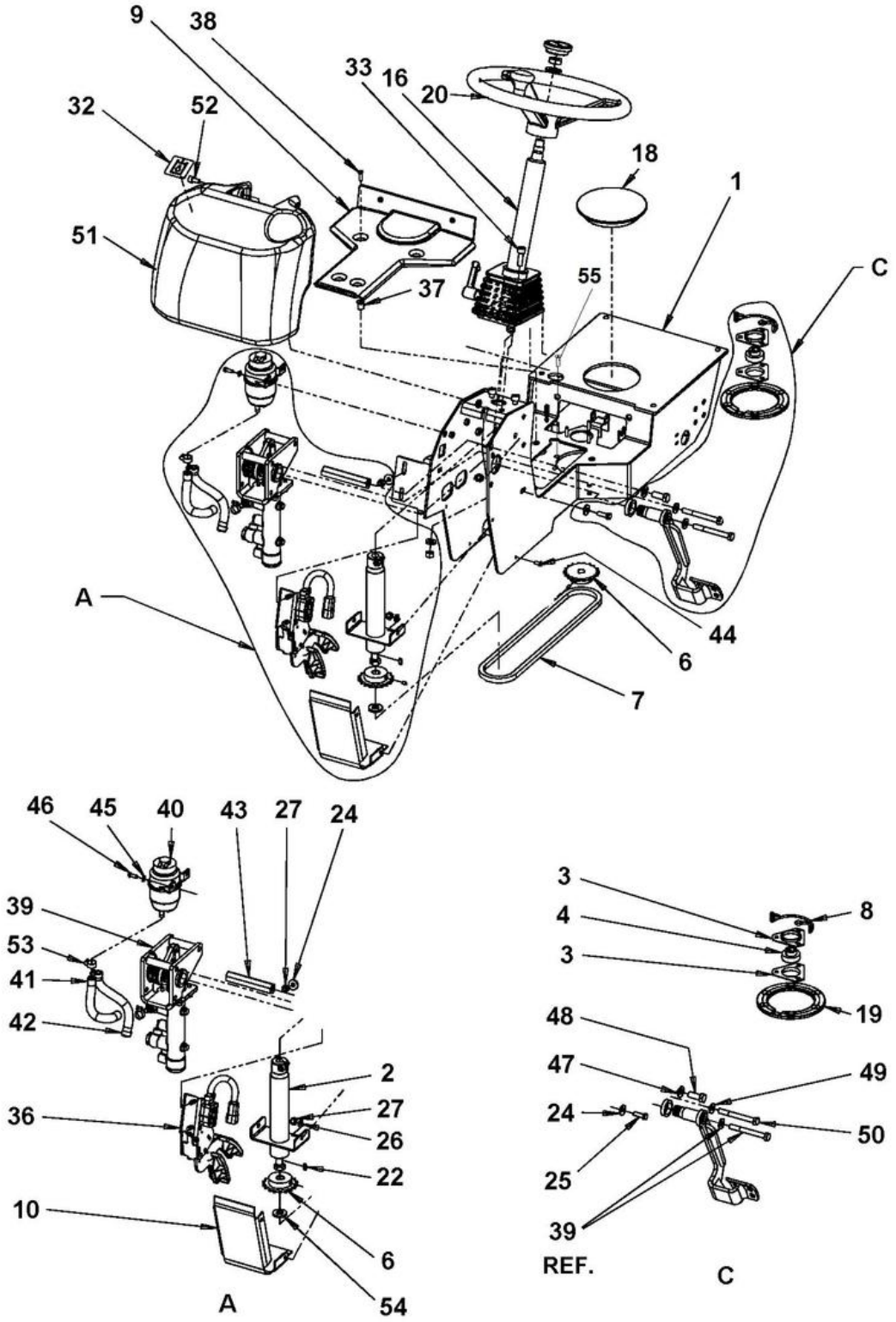

Item	Part No.	Name	Qty	L
1	4700395530	Seat frame	1	
2	4700359919	Shaft	1	
3	4700903917	Bearing outer	1	
4	4700903918	Bearing inner	1	
6		Chain wheel assembly	2	
7	4700379718	Chain and connecting link	1	
8	4700372672	Chain guard	1	
9	4700392839	Cover	1	
10	4700395536	Cover	1	
16	-	Steering column	1	
18	4700359920	Plug	1	
19	4700372965	Lock ring	1	
20	4700372964	Steering wheel	1	
22	4700350009	Flat key	1	
24	4700904640	Washer, 8.4x 2x3 mm 300 HV	4	
25	4700500021	Hex. screw	2	
26	4700904229	Washer, 8.4x16x1.5 mm 300 HV	2	
27	4700586003	Hexagon lock nut M8	4	
32	4700272372	Decal "HYDRAULIC OIL"	1	
33	4700508029	Cylinder screw	3	
36	4700395471	Throttle control Eletric	1	
37	4700792539	Rubber nut	6	
38	4700791524	Screw, M6 x 20 mm A2-70	6	
39	-	Brake pedal	1	
40	4700396327	Reservoir	1	
41	4700904984	Fuel hose	1	
42	4700904984	Fuel hose	1	
43	4700395534	Spacer	1	
44	4700904650	Screw, M8 x 50 mm 12.9 UNBRAKO® U-130	4	
45	4700904228	Steel plain washer	2	
46	4700500013	Hex. screw	2	
47	4700904231	Steel plain washer, 13x24x2 mm 300 HV	2	
48	4700500046	Hex. head screw M12x030H	2	
49	4700904230	Washer	3	
50	4700500077	Screw	3	
51	4812110538	Cover	1	
52	4700508005	Screw	4	

Item	Part No.	Name	Qty	L
53	4700313001	Hose clamp	4	
54	4700904214	Washer 15x30x4 300 HV	1	
55	4700902520	Screw	6	

Comments for Page: Seat frame

41 - L = 0,16m

42 - L = 0,18m

Operator platform 4700391163 Steering column

This page intentionally left blank

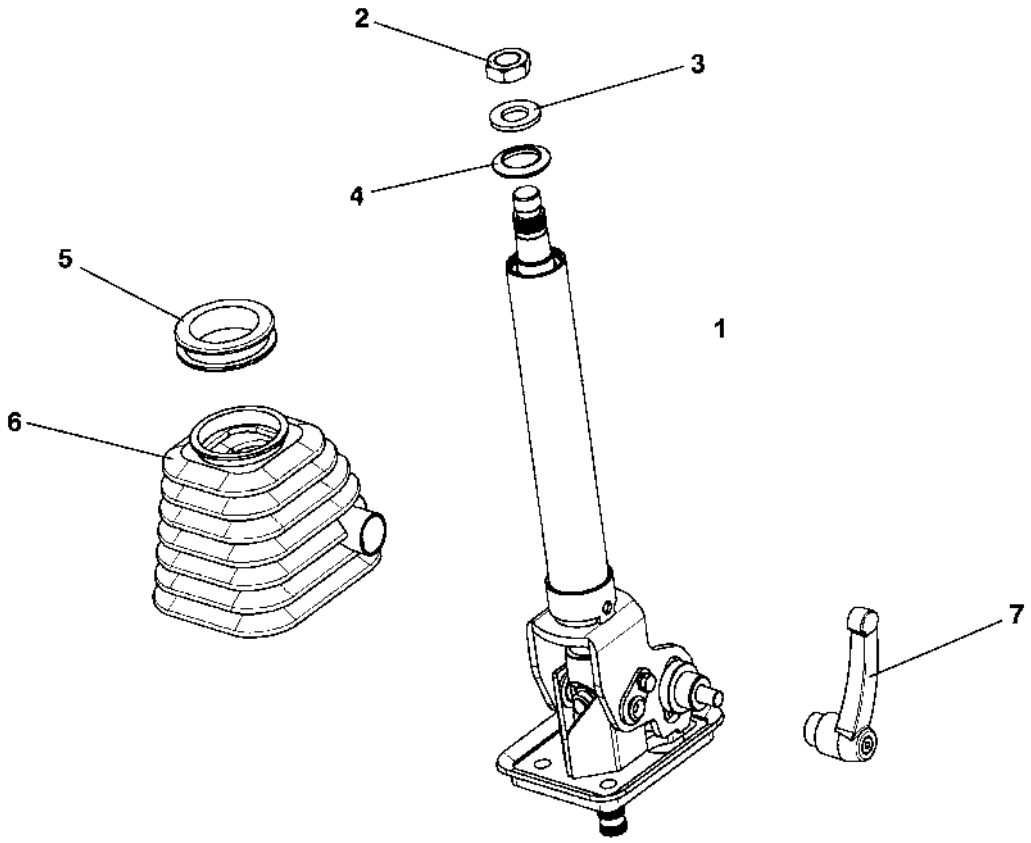
2
3
4
5
1
6
7

Item	Part No.	Name	Qty	L
1	4700391163	Steering column	1	
.2	4700945632	Nut	1	
.3	4700945633	Washer	1	
.4	4700945634	Rubber cap	1	
.5	4700945635	Bellows ring	1	
.6	4700945636	Bellows	1	
.7	4700945637	Locking handle	1	

Operator platform 4700395462 Brake pedal

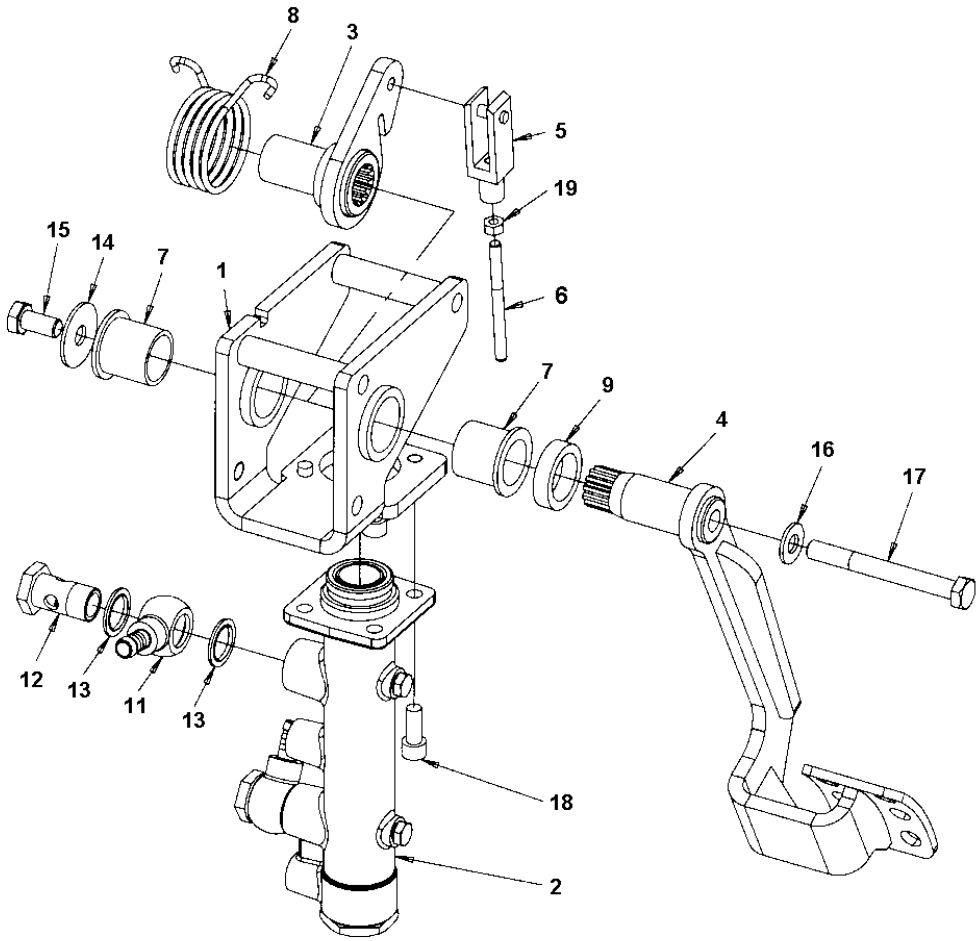

Item	Part No.	Name	Qty	L
1	4700395463	Bracket	1	
2	4700395470	Brake cylinder	1	
3	4700395464	Lever	1	
4	4700395465	Pedal	1	
5	4700900445	Fork	1	
6	4700395466	Pin	1	
7	4700395468	Bushing	2	
8	4700395467	Torsion spring	1	
9	4700395469	Spacer	1	
11	4700792759	Banjo fitting	2	
12	4700904292	Hollow screw	2	
13	4700162015	Seal ring	4	
14	4700615061	Steel plain washer	1	
15	4700500048	Screw	1	
16	4700904230	Washer	1	
17	4700500077	Screw	1	
18	4700508009	Screw	4	
19	4700570004	Hex. nut	1	

Operator platform Seat frame adapter module

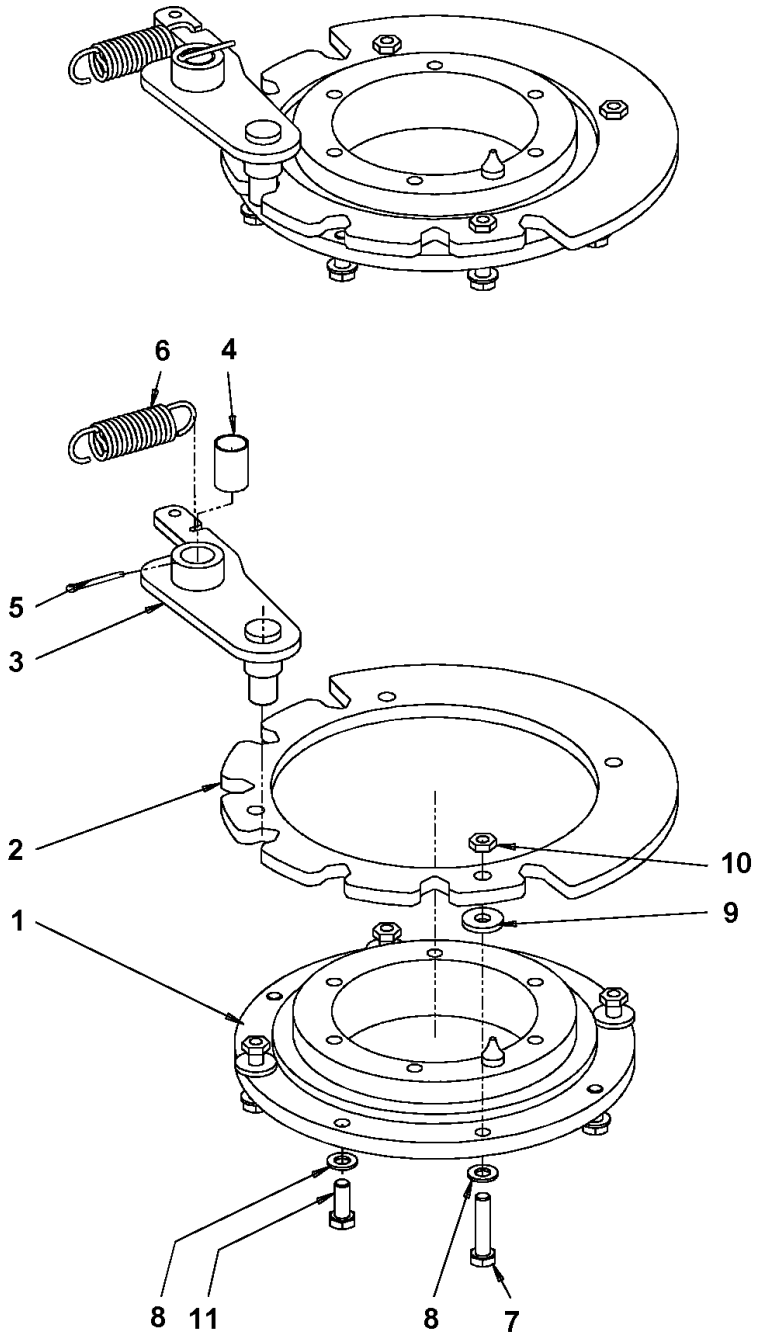

Item	Part No.	Name	Qty	L
1	4700359125	Ball bearing	1	
2	4700379728	Locking disc	1	
3	4812119788	Coupling link	1	
4	4700359819	Bushing	1	
5	4700630008	Pin	1	
6	4700359043	Spring	1	
7	4700792678	Screw	4	
8	4700904229	Washer, 8.4x16x1.5 mm 300 HV	8	
9	4700904640	Washer, 8.4x 2x3 mm 300 HV	4	
10	4700573008	Nut M8	4	
11	4700947679	Hex screw	4	

Operator platform 4812112989 Forward-reverse control

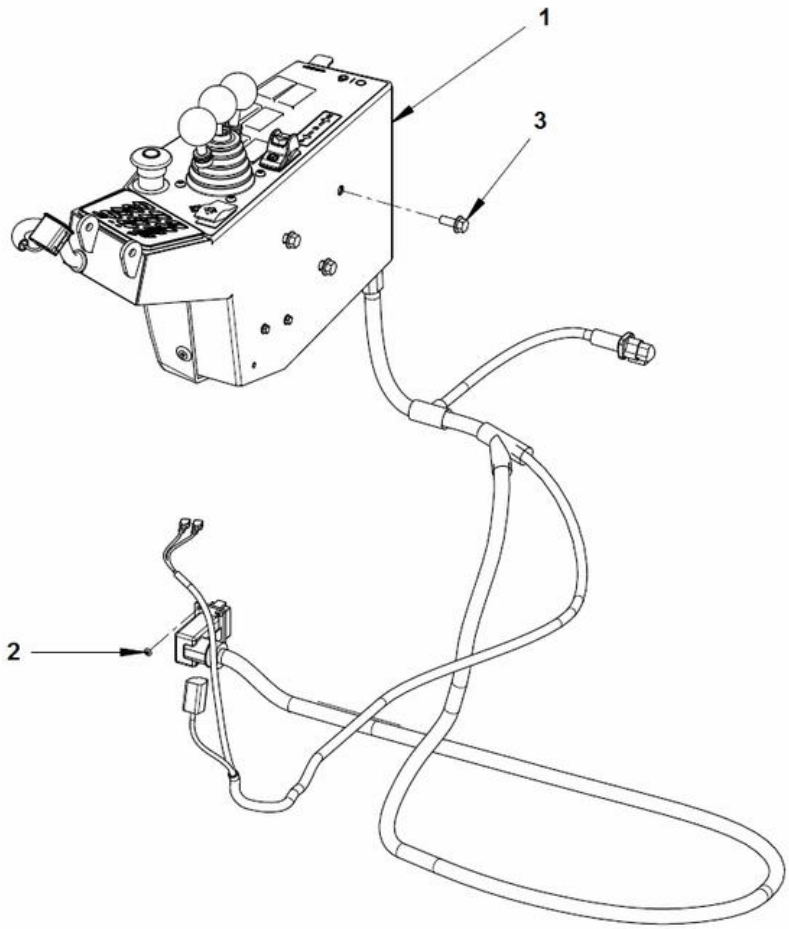

Item	Part No.	Name	Qty	L
1		Drive control	1	
2	4700791709	Blind rivet	4	
3	4700500505	Screw, M8x20 mm 8.8 A2K	3	

Operator platform 4812116077 Drive control

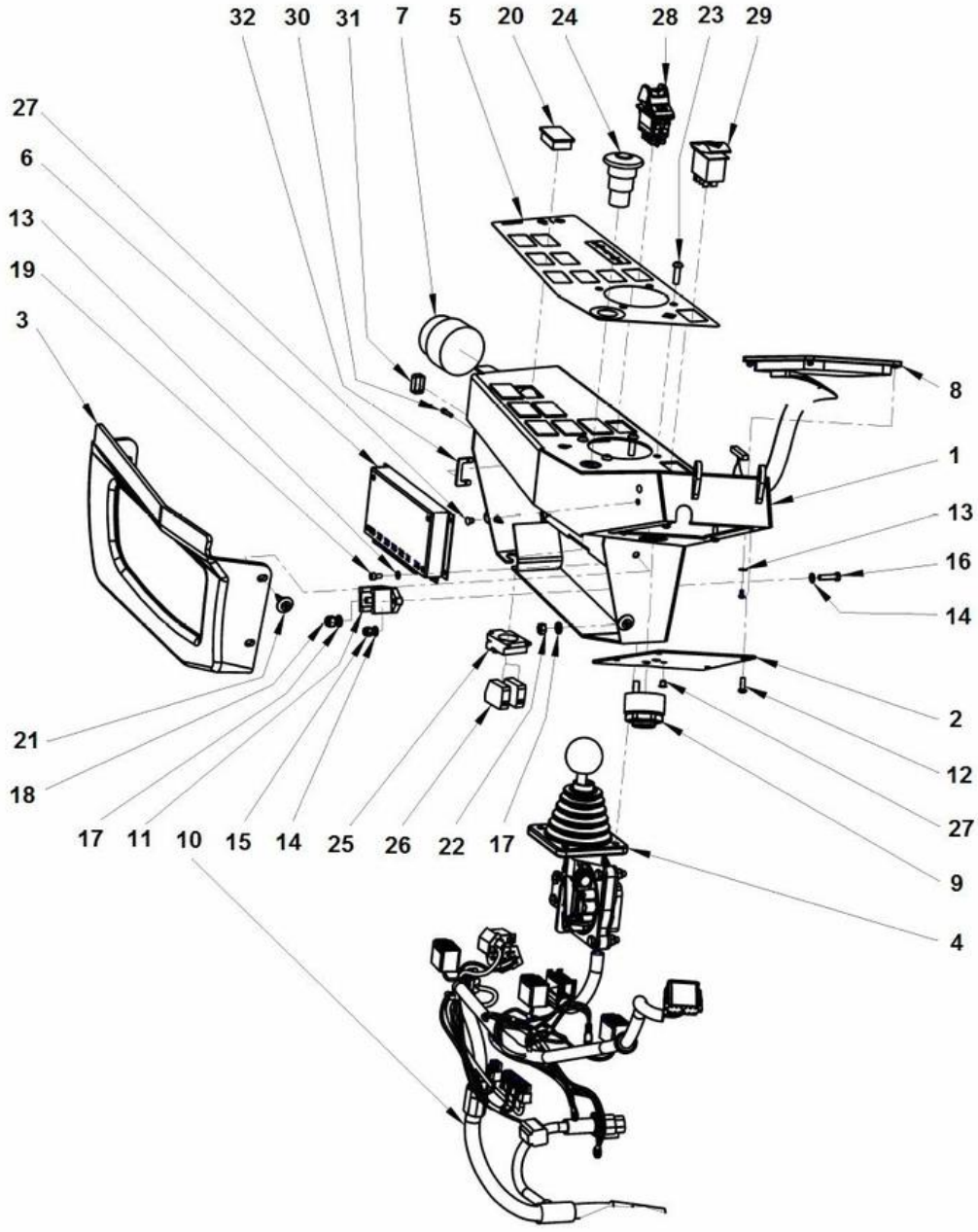

Item	Part No.	Name	Qty	L
1	4812110886	Control box	1	
2	4700391396	Cover	1	
3	4700396662	Cover	1	
4	-	Control handle	1	
5	4812113814	Decal	1	
6	4812113875	Control unit	1	
7	4812110901	Ignition switch	1	
.7	4700940451	Ignition key	1	
8	4700396165	Membrane switch panel	1	
9	4700385599	Buzzer	1	
10	4812116071	Wiring Harness	1	
11	4700392930	Junction box	1	
12	4812119227	Thread rolling screw	4	
13	4700904698	Steel plain washer	8	
14	4700904281	Washer, 5,3x10x1 300HV	4	
15	4700586001	Lock nut	2	
16	4700500060	Screw M5-0,8x20 8.8	2	
17	4700904228	Steel plain washer	3	
18	4700586002	Lock nut M6 -8	2	
19	4700508017	Cylinder screw	4	
20	4700791588	Panel plug	7	
21	4700395785	Expansion rivet	4	
22	4700570004	Hex. nut	1	
23	4700791524	Screw, M6 x 20 mm A2-70	4	
24	4700791739	Emergency stop	1	
25	4700791733	Fixing collar	1	
26	4700791723	Connector N/C	2	
27	4700902804	Plug	5	
28	4812118697	Switch, parking brake	1	
29	4811000271	Switch	1	
30	4812114213	Lock screw	2	
31	4812114214	Cover	1	
32	4812119317	Holder	1	

Operator platform Control handle

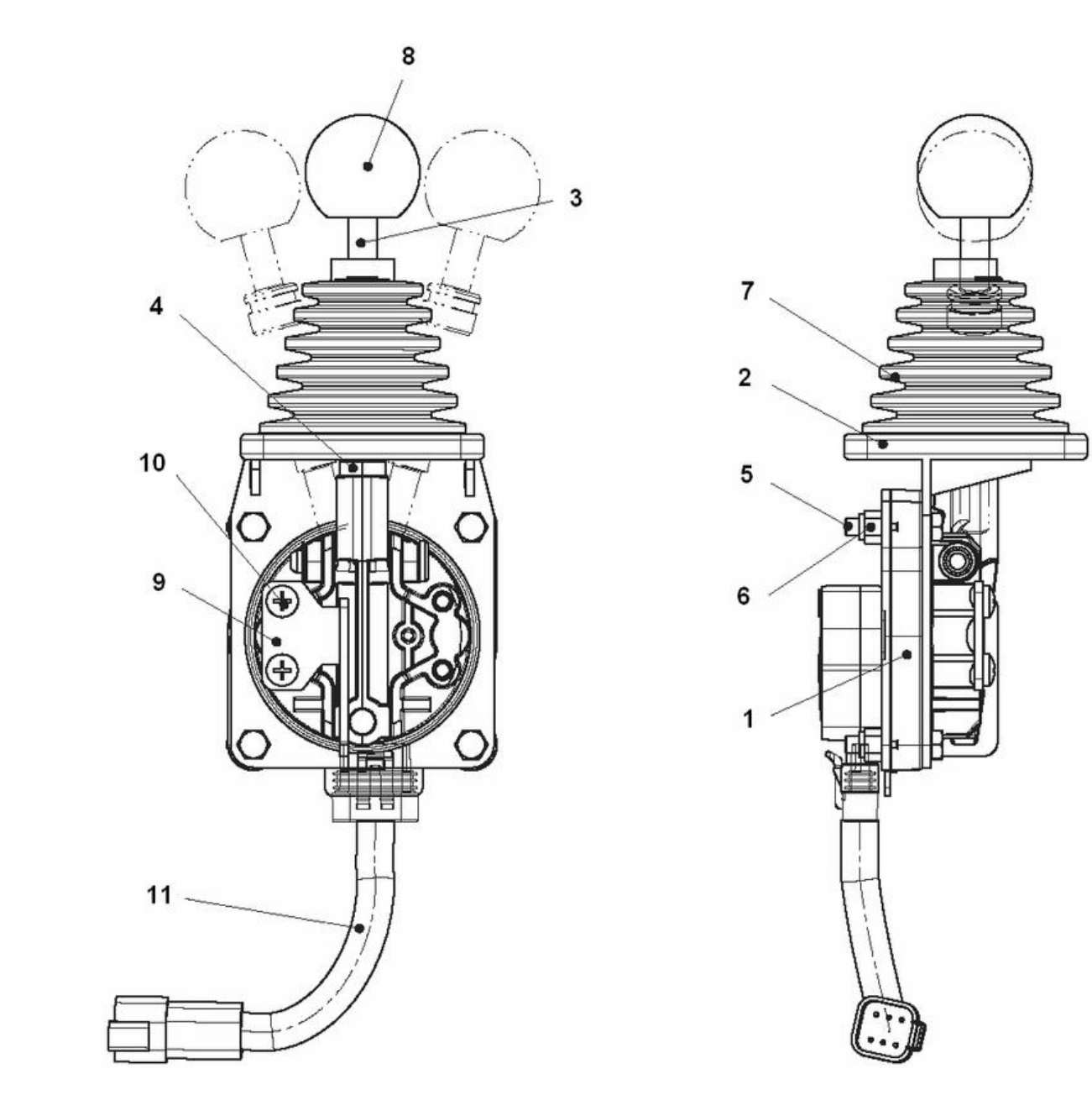

Item	Part No.	Name	Qty	L
1	4812114262	Control	1	
1	4812113874	Control	1	A
2	4812113850	Bracket	1	
3	4812113988	Control rod	1	
4	4700573005	Nut	1	
5	4700500015	Hex. screw	4	
6	4700586002	Lock nut M6 -8	1	
7	4812114281	Bellow	1	
8	4811000413	Ball knob Ø40 M8	1	
9	4812113989	Moviment limiter	1	
10	4811000390	Screw ST5,5X16 A2K	2	
11	4812114251	Wiring Harness	1	B

Comments for Page: Control handle

(L)OCAL REMARKS

A | en_US | From S/N K0B001388 (CP224), P0B001387 (CP224W) and C0B001380 (CP274)

B | en_US | Used only with 4812113874

Operator platform 391087 Cross sliding

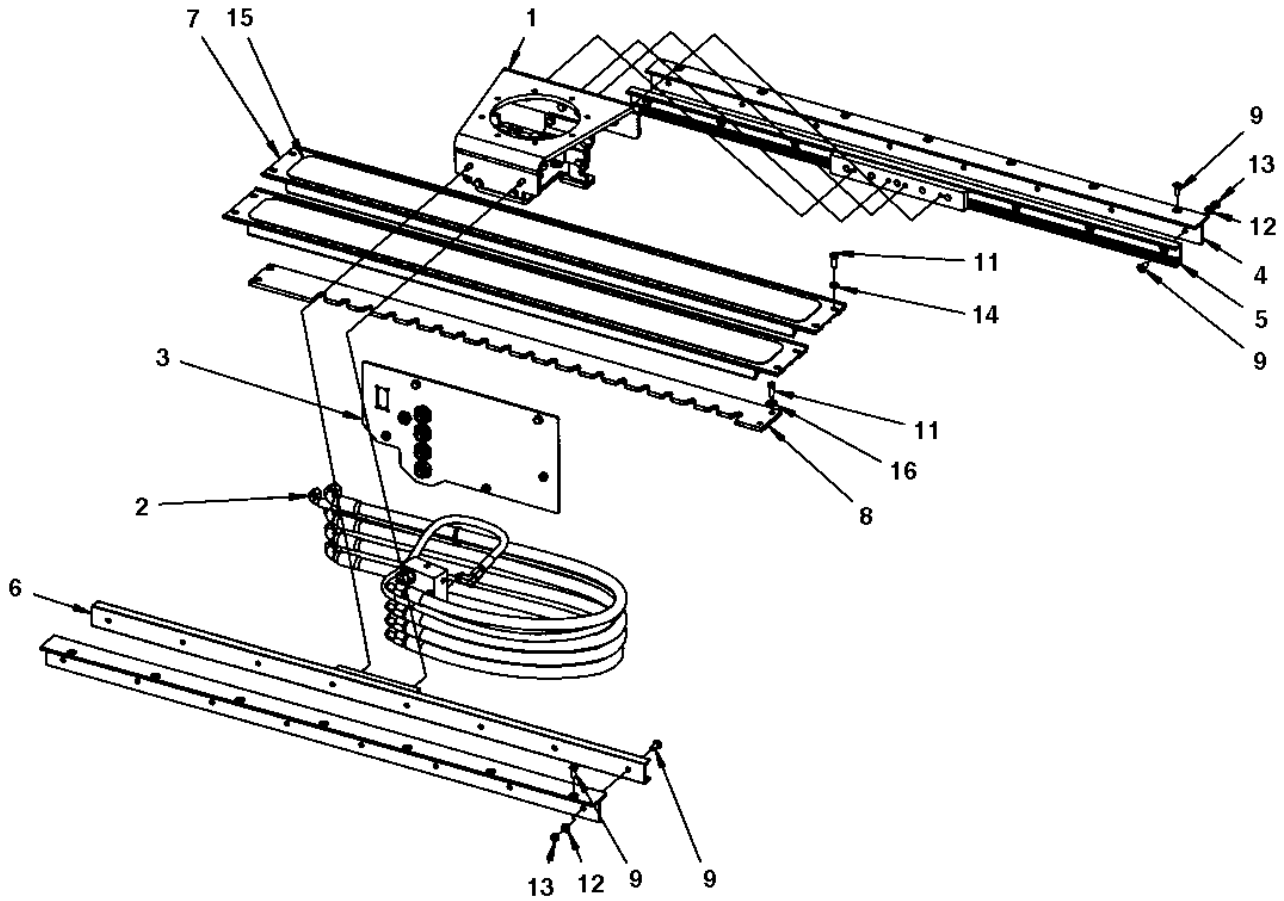

Item	Part No.	Name	Qty	L
1	-	Carrier	1	
2	-	Steering, slideable	1	
3	-	Hose bracket	1	
4	4700390428	Rail holder	2	
5	4700391082	Linear bearing	1	
6	4700391083	Linear bearing	1	
7	4700393191	Cover	2	
8	4700379729	Locking rail	1	
9	4700513003	Screw	30	
11	4700500020	Hex. screw	12	
12	4700904229	Washer, 8.4x16x1.5 mm 300 HV	16	
13	4700570005	Hex. nut	16	
14	4700904556	Steel plain washer	8	
15	4700393978	Slip protection	2	
16	4700791304	Steel plain washer	4	

Operator platform Carrier

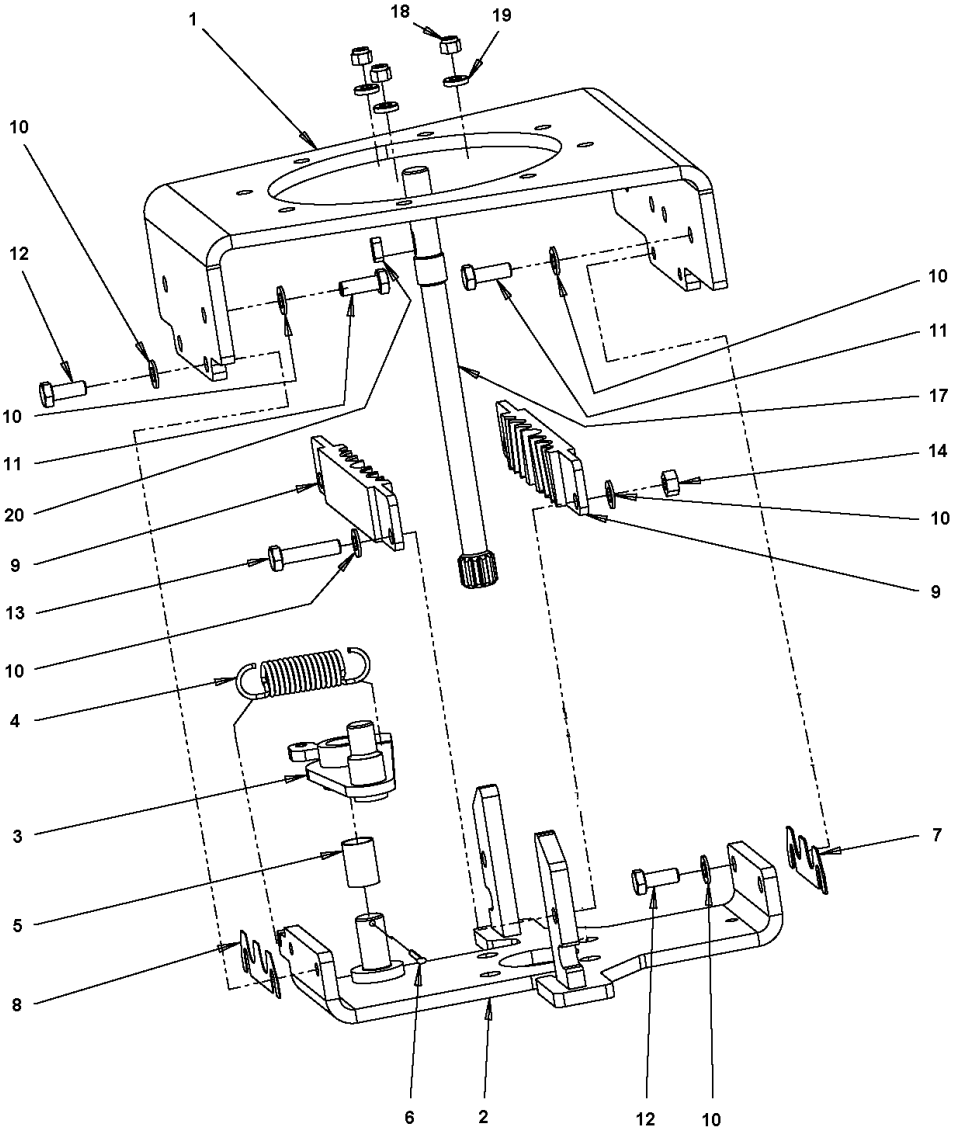

Item	Part No.	Name	Qty	L
1	4700379715	Carrier	1	
2	4700391478	Steering valve bracket	1	
3	4700393347	Coupling link	1	
4	4700359043	Spring	1	
5	4700359819	Bushing	1	
6	4700630008	Pin	1	
7	4812115060	Shim	6	
8	4812115061	Shim	6	
9	4812110896	Clamp	2	
10	4700904229	Washer, 8.4x16x1.5 mm 300 HV	14	
11	4700500020	Hex. screw	6	
12	4700500053	Hex. screw	4	
13	4700500047	Hexagon head screw	2	
14	4700570005	Hex. nut	2	
17	4700391770	Shaft	1	
18	4700586002	Lock nut M6 -8	3	
19	4700603001	Washer	3	
20	4700350009	Flat key	1	

Operator platform Fire extinghisher

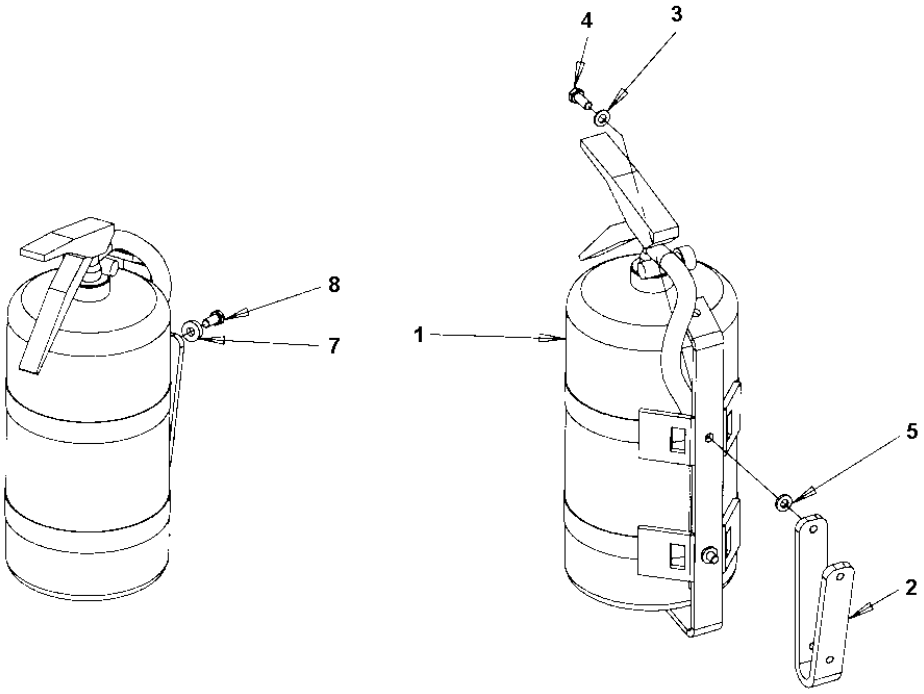

Item	Part No.	Name	Qty	L
1	-	Fire exinguisher	1	
2	4812110202	Bracket	1	
3	4700904229	Washer, 8.4x16x1.5 mm 300 HV	2	
4	4700500053	Hex. screw	2	
5	4700904556	Steel plain washer	2	
7	4700394301	Spacer sleeve	2	
8	4700500053	Hex. screw	2	

Operator platform 4812114766 Rear view mirror module

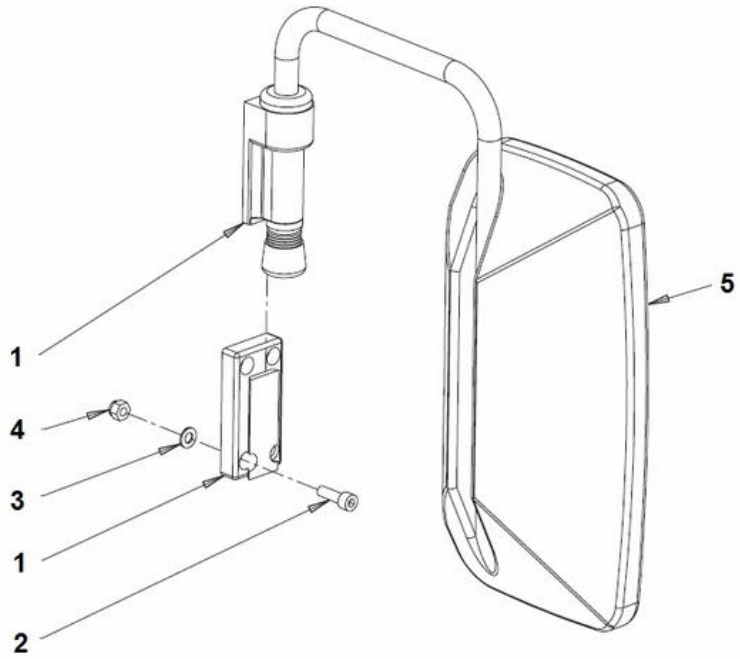

Item	Part No.	Name	Qty	L
1	4812110367	Bracket	1	
2	4700900777	Screw	4	
3	4700904229	Washer, 8.4x16x1.5 mm 300 HV	4	
4	4700586003	Hexagon lock nut M8	4	
5	4700381943	Mirror	1	

Operator platform 4812115420 Bracket module

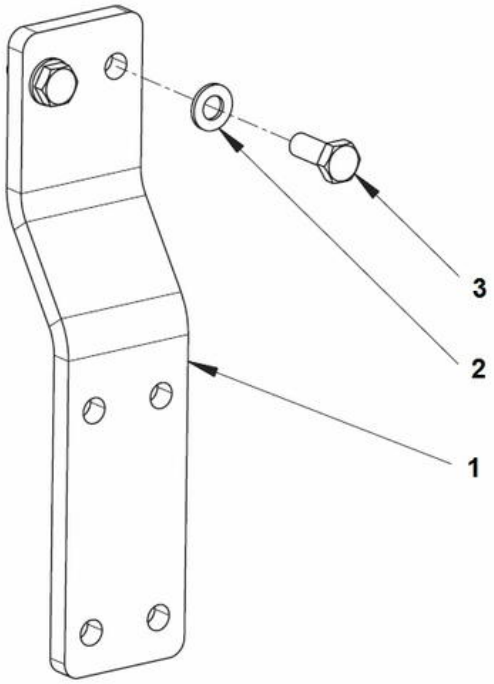

Item	Part No.	Name	Qty	L
1	4812115053	Bracket	1	
2	4700904229	Washer, 8.4x16x1.5 mm 300 HV	1	
3	4700500053	Hex. screw	1	

Cab module Cab module

Item	Part No.	Name	Qty	L
1	4700396823	Cab, assy	1	
2	4812110585	Shock absorber	8	
3	4700391788	Steel spacer	4	
4	4700904487	Screw M20x140 10.9	4	

Cab assembly Cab assy

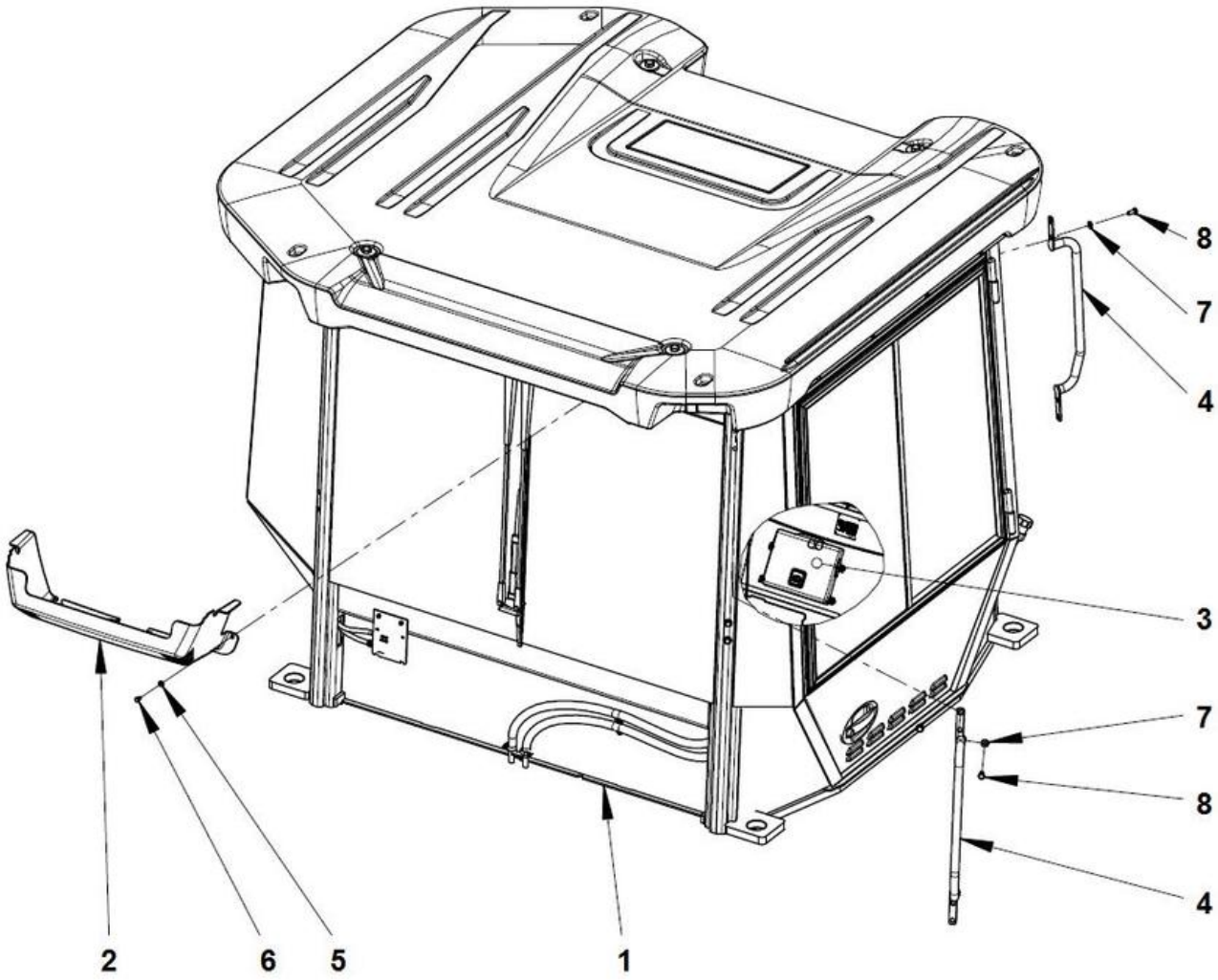

Item	Part No.	Name	Qty	L
1	4812115764	Cab	1	
2	4700393582	Cover	1	
3	4700394119	Manual box	1	
4	4812110295	Handrail	2	
5	4700904556	Steel plain washer	2	
6	4700500018	Hex. screw	2	
7	4700904557	Washer, 10.5x22x4 mm 300 HV	8	
8	4700500048	Screw	8	

Manual box Manual box

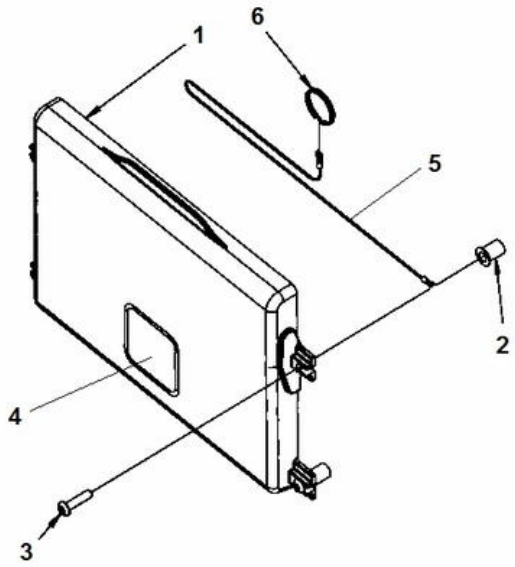

Item	Part No.	Name	Qty	L
1	4700383705	Instruction manual box	1	
2	4700792536	Rubber nut	4	
3	4700792589	Screw	4	
4	4700903425	Safety decal "READ SAFETY INSTRUCTIONS"	1	
5	4700384584	Wire	1	
6	4700358254	Key-ring	1	

Cab Cab

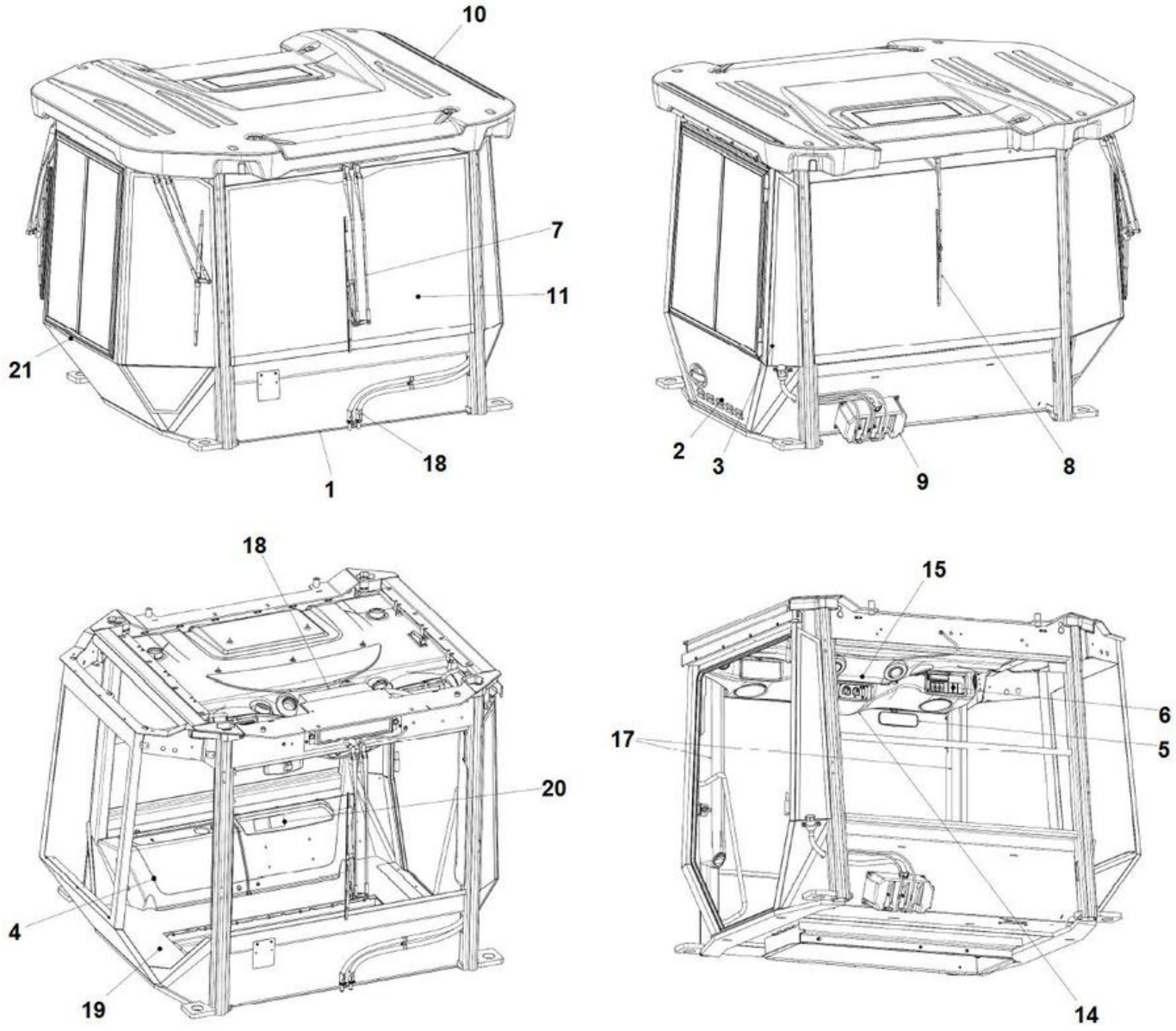

Item	Part No.	Name	Qty	L
1	4812110676	Cabin frame		
2	4812110753	Door assembly		
3	4812110754	Assembly left side		
4	4812110324	Rear plastics assembly		
5	4812110603	General installation accessories		
6	4812113368	Electric assembly cabin		
7	4812113386	Windscreen wipersystem		
8	4700395740	Rear glass wiper set		
9		Washer equipments		
10	4812113418	Roof wide assymetric		
11	4812110602	Glasswork windscreen		
13	4700395747	Glass gluing installation		
14		Mounting front panel		
15	4700395849	Roofing felt assembly		
17	4812110608	Air channel assy		
18	4812113408	Heater mount		
19	4812110614	Floor carpet		
20	4812113393	ROPS and FOPS sign assembly		
21	4812113414	Protective frame asymmetric		

Assembly left side Assembly left side

Item	Part No.	Name	Qty	L
1	4812113412	Accessories left side	1	
2	4812110601	Glasswork door side	1	

Accessories left side Accessories left side

Item	Part No.	Name	Qty	L
1	-	Covering plate	1	
2	-	Threaded rivet	4	
3	-	Plate	1	
4	4700908580	Lock pin	1	
5	4700908583	Bracket	1	
6	4700908581	Washer	1	
7	4700908582	Cover	1	
8	-	Bracket	1	
9	4700908505	Hook	1	
10	4700908506	Emergency hammer	1	
11	4700908507	Emergency hammer, hook	1	
12	-	Screw	4	
13	4700395830	Screw	4	
14	4700938676	Screw	6	
15	-	Screw	6	
16	4700938842	Sealing strip	4,5	
17	-	O-RING	1	

Glasswork door side Glasswork door side

Item	Part No.	Name	Qty	L
1	4700393252	Screen	1	
2	4700393253	Screen	1	

Rear plastics assembly Rear plastics assembly

Item	Part No.	Name	Qty	L
1	4812110322	Cover	1	
2	4812110323	Cover	1	
3	4700395785	Expansion rivet	3	
4	4700395786	Knob	6	
5	-	Plug	2	
6	4700395816	Plug socket 24V	1	

Cabin frame Cabin frame

Item	Part No.	Name	Qty	L
1	4700396821	Rops frame	1	
2	4812113375	Oriel frame	1	
3	4812113376	Frame	1	

Glasswork wind screen Glasswork windscreen

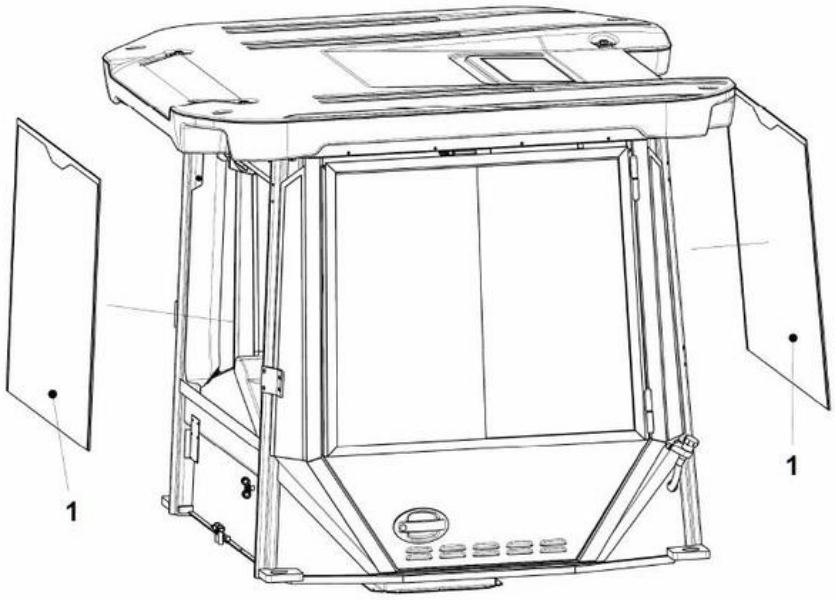

Item	Part No.	Name	Qty	L
1	4700393250	Windscreen	2	

Door assembly Door assembly

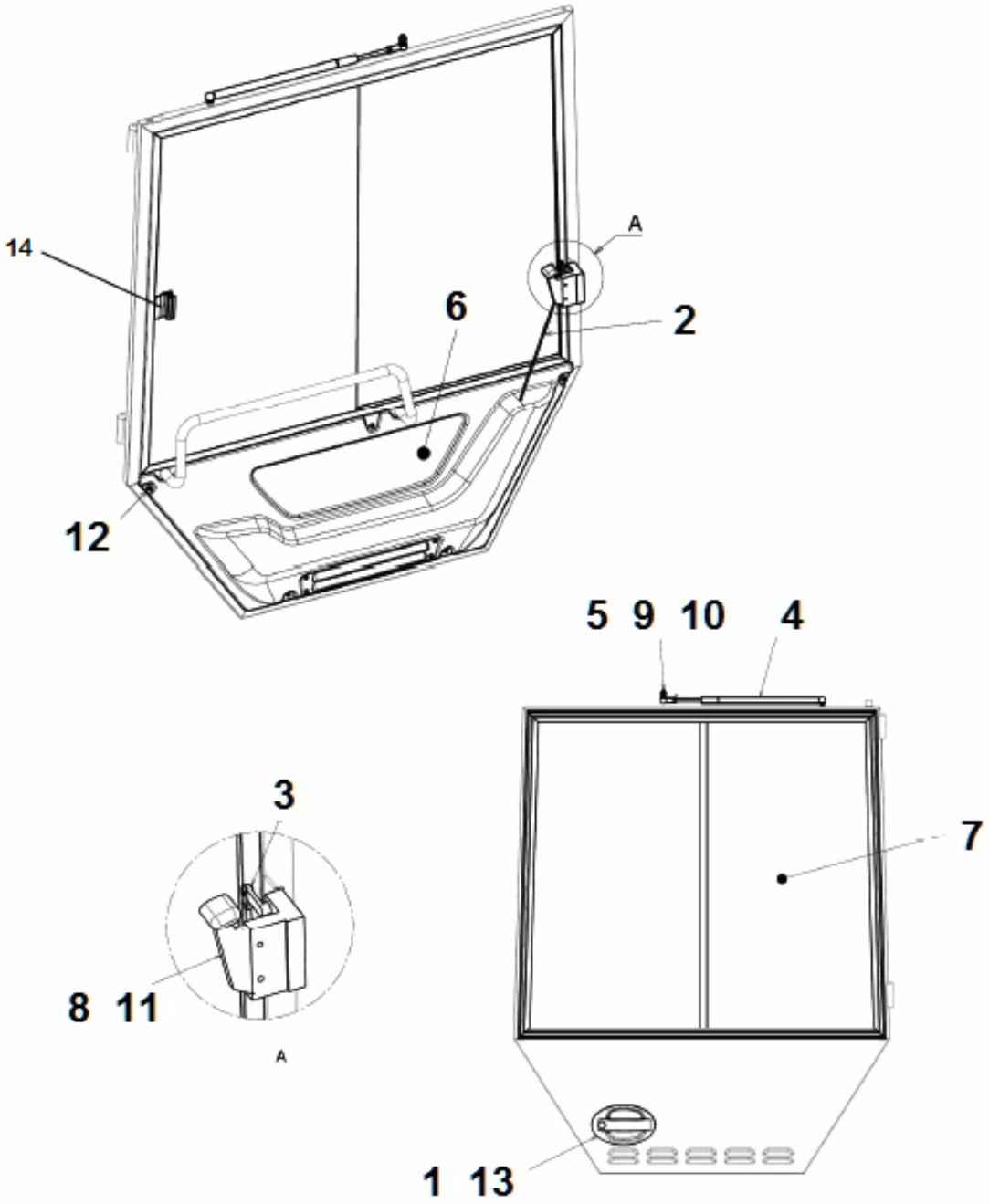

Item	Part No.	Name	Qty	L
1	4700395833	Handle, outer	1	
.1	4700902866	Key Marked "455"	1	
2	4812159096	Connecting rod	1	
3	4812159155	Joint	1	
4	4700908284	Gas spring	1	
5	-	Joint	1	
6		Door panel	1	
7	4812155164	Sliding screen	1	
8	4700395834	Handle, inner	1	
9	-	Nut	1	
10	-	Lock nut	1	
11	4812159157	Socket screw	2	
12	-	Screw	5	
13	-	Screw	3	
14	4812317475	Window latch	1	

General installation accessories General installation accessories

Item	Part No.	Name	Qty	L
1	4700395792	Rear view mirror	1	
3	4700935589	Decal	1	
3	4700903590	Decal emergency exit	1	
4	4700926215	Protective plug	6	
5	-	Plug	18	
6	4812159157	Socket screw	1	
7	4812157763	Nut cap	1	
8	-	Plug	1	
9	-	Plug	1	
10	-	Plug	2	
14	4812110609	Mounting plate	1	
16	-	Screw	2	

Electric assembly Cab, electrics

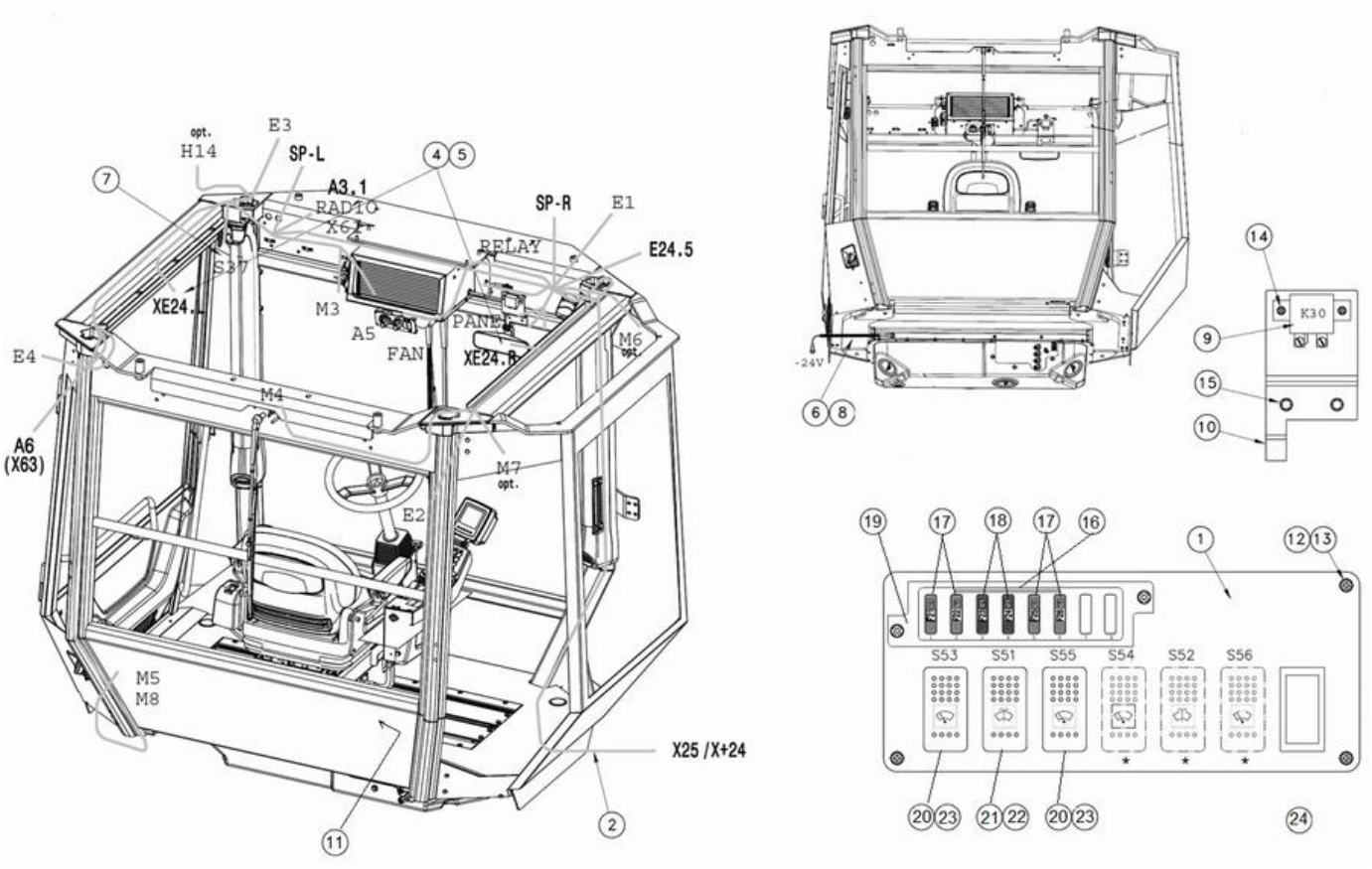

Item	Part No.	Name	Qty	L
1	-	Control panel plate	1	
2	-	Cable harness	1	
4	4700395800	Interior light	2	
5	4700792715	Bulb, 10W	2	
6	-	Screw	1	
7	4700908500	Door switch	1	
8	4700395799	Cable harness	1	
9	4700792309	Relay	1	
10	-	Mounting plate	1	
11	4700395816	Plug socket 24V	1	
12	4812157188	Rubber nut	5	
13	4812157189	Screw	5	
14	-	Screw	2	
15	-	Screw	2	
16	4700791211	Contact bridge	4	
17	4700901227	Fuse 10A Red	4	
18	4700901228	Fuse, 15A Blue	2	
19	4700791185	Fuse box	1	
20	-	Button	2	
21	-	Button	1	
22	4700792504	Switch	1	A
23	4700792505	Switch, Windshield washer	2	B
24	4700791588	Panel plug	4	

Comments for Page: Cab, electrics

(L)OCAL REMARKS

A | en_US | Windshield washer

B | en_US | Windshield wiper

Windscreen wipersystem Windscreen wipersystem

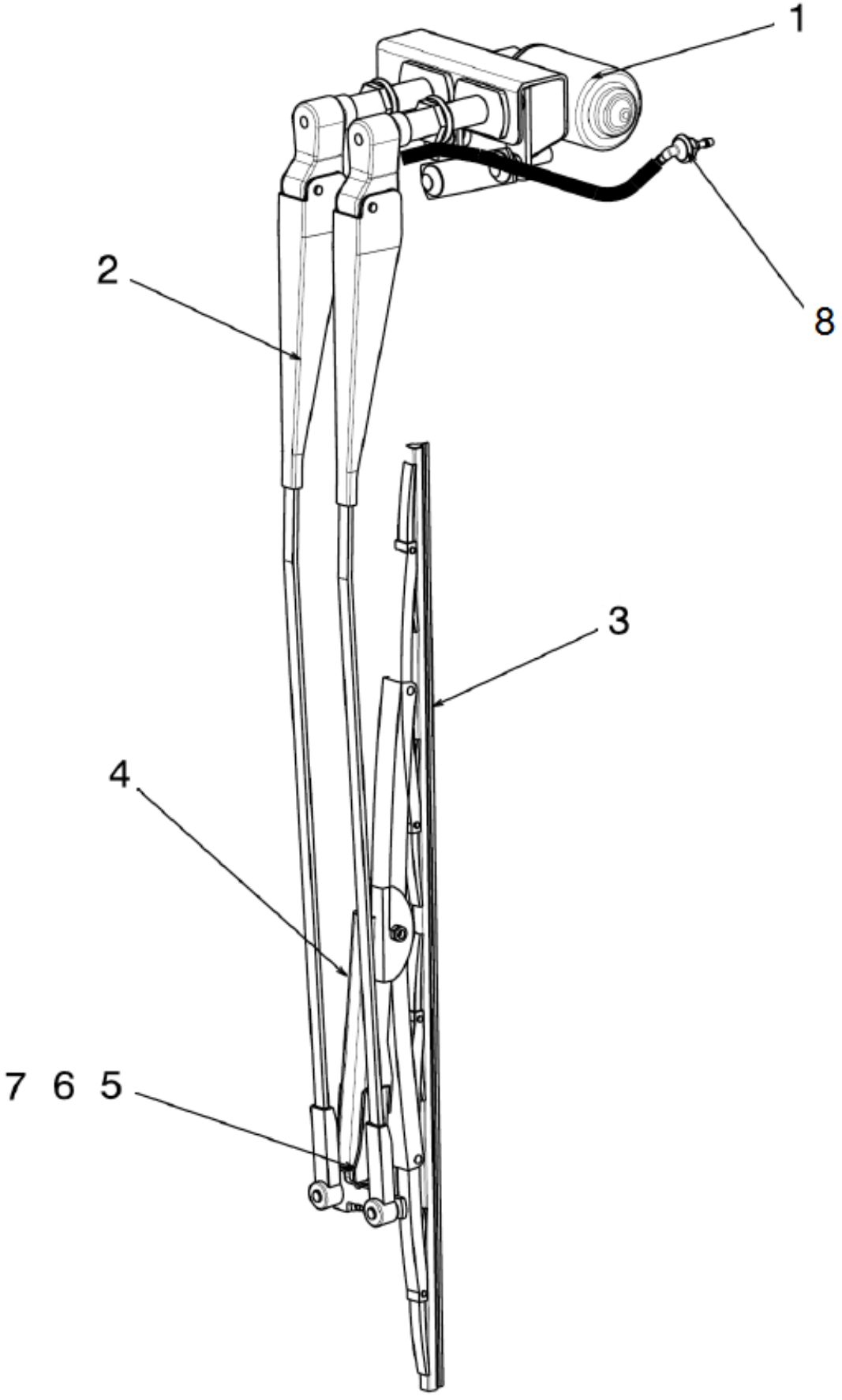

Item	Part No.	Name	Qty	L
1	4700395810	Wiper motor	1	
2	4700395811	Wiper arm	1	
3	4700905306	Wiper blade	1	
4	4700395796	Mounting plate	1	
5	4700508021	Screw, M8 x 50 mm 8.8 A2K	1	
6	4700904229	Washer, 8.4x16x1.5 mm 300 HV	1	
7	4700586003	Hexagon lock nut M8	1	
8	4700908561	Grommet	1	

Rear glass wiper Rear glass wiper set

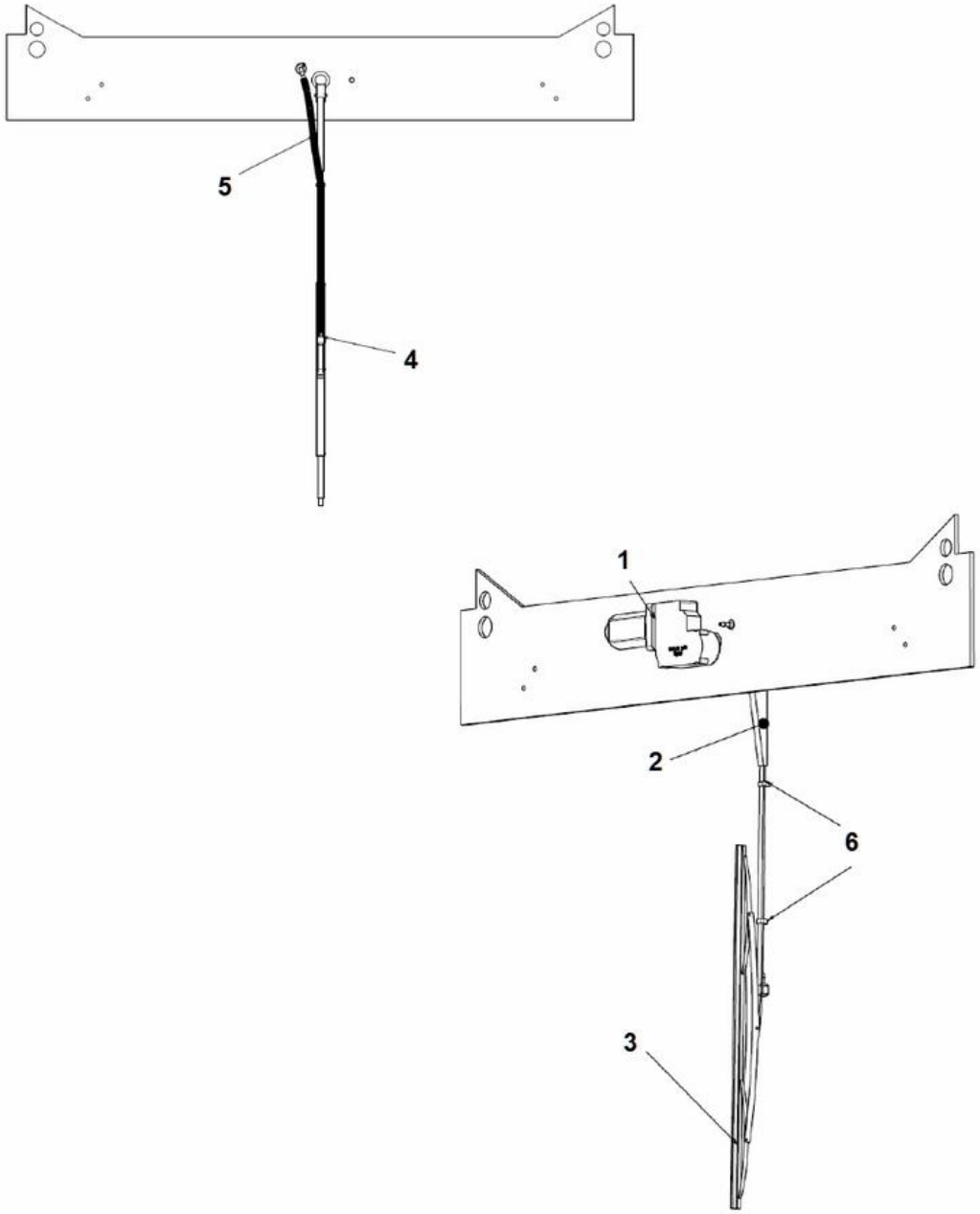

Item	Part No.	Name	Qty	L
1	4700945897	Wiper motor	1	
2	4700395713	Arm	1	
3	4700395814	Wiper blade	1	
4	4700938256	Nozzle	1	
5	-	Hose	1XL	A
6	-	Fasterner for rubber hose	2	

Comments for Page: Rear glass wiper set

(L)OCAL REMARKS

A | en_US | L = 0,6 m

Washer equipments Washer equipments

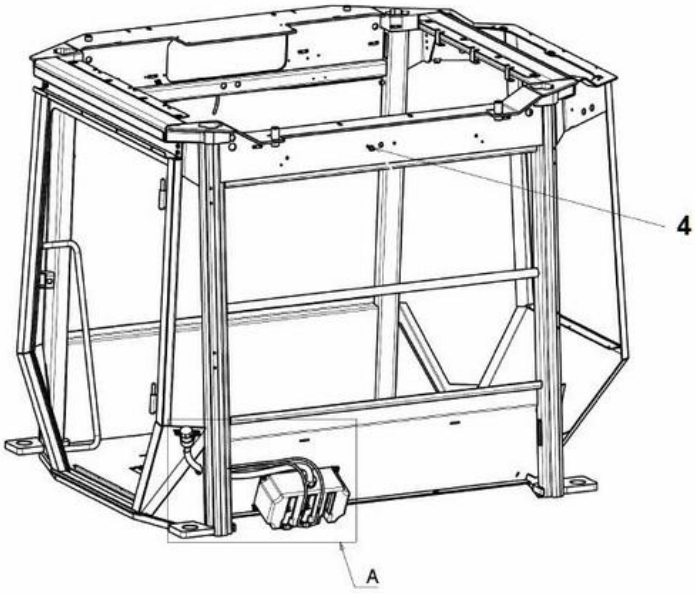

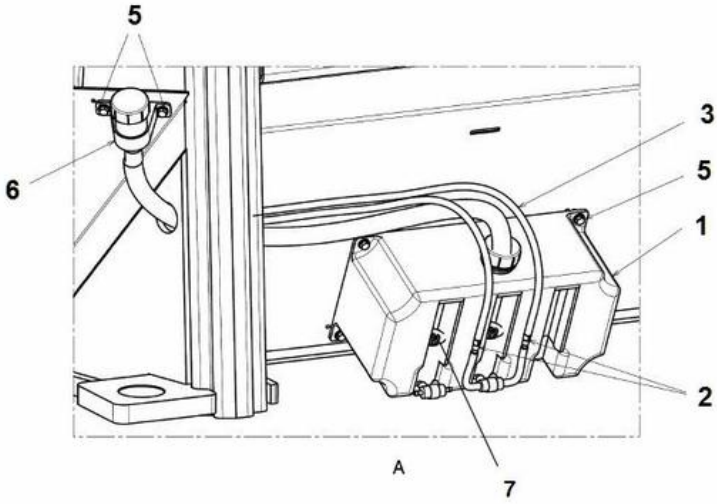

Item	Part No.	Name	Qty	L
1	4812317244	Tank asssembly	1	
2	4700908564	Check valve	2	
3	4700908563	Plastic hose	1XL	A
4	4700908561	Grommet	2	
5	4700395830	Screw	6	
6	4812110619	Filling pipe	1	
7	4812110618	Water pump	2	

Comments for Page: Washer equipments

(L)OCAL REMARKS

A | en_US | L = 12 m

Assembly heater unit Heater mount

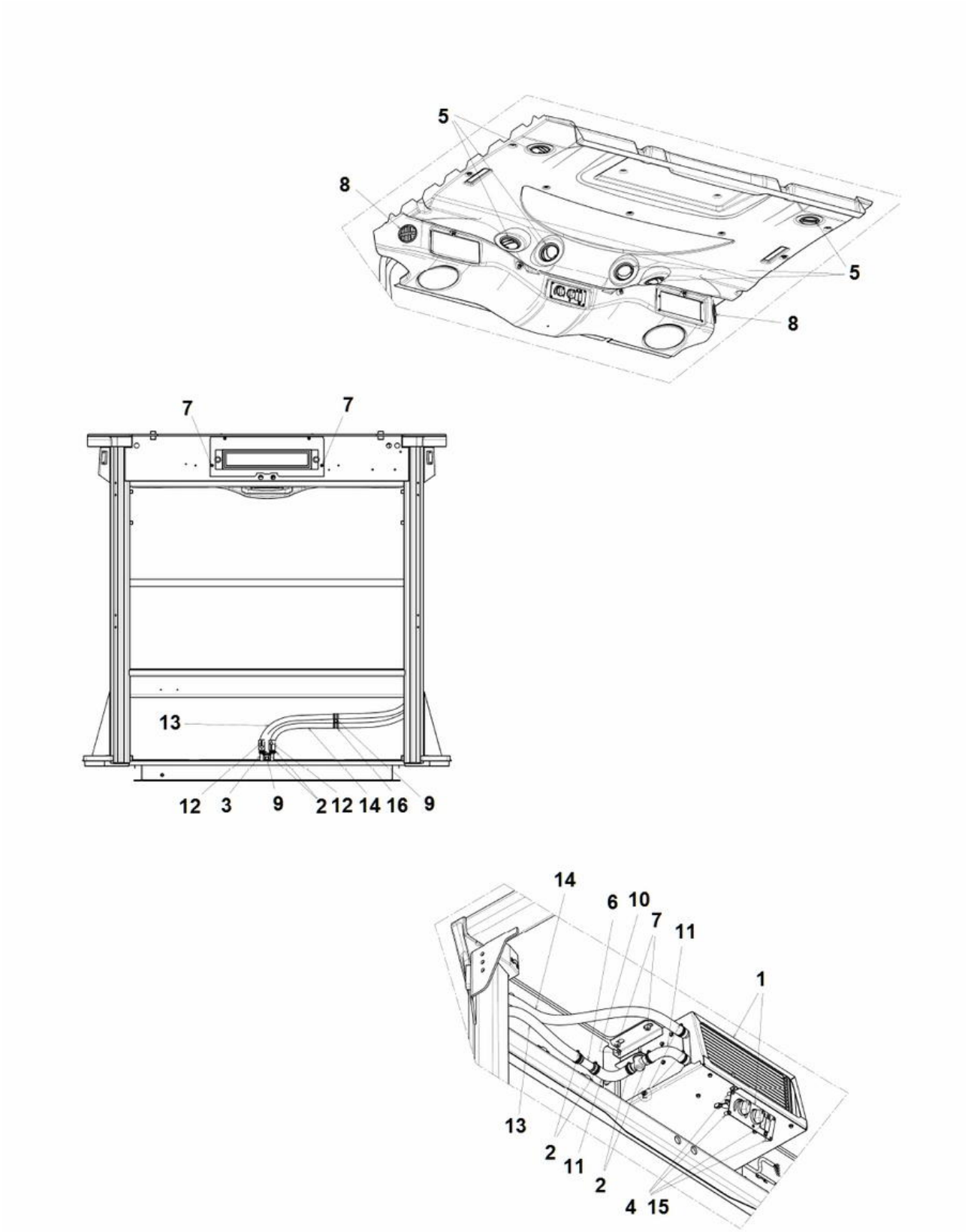

Item	Part No.	Name	Qty	L
1	4700393617	Heater	1	
2	4812155992	Hose clamp	8	
3	-	Hose holder	1	
4	-	Rubber nut	4	
5	4700395757	Air nozzle	6	
6	-	Connector tube	1	
7	-	Screw	6	
8	4700395759	Air nozzle	2	
9	-	Screw	2	
10	-	Socket screw	2	
11	-	Hose elbow	2	
12	-	making tape	2	
13	-	Hose	1	
14	-	Hose	1	
15	-	Socket screw	4	
16	-	Pipe clamp	2	

Heater Heater

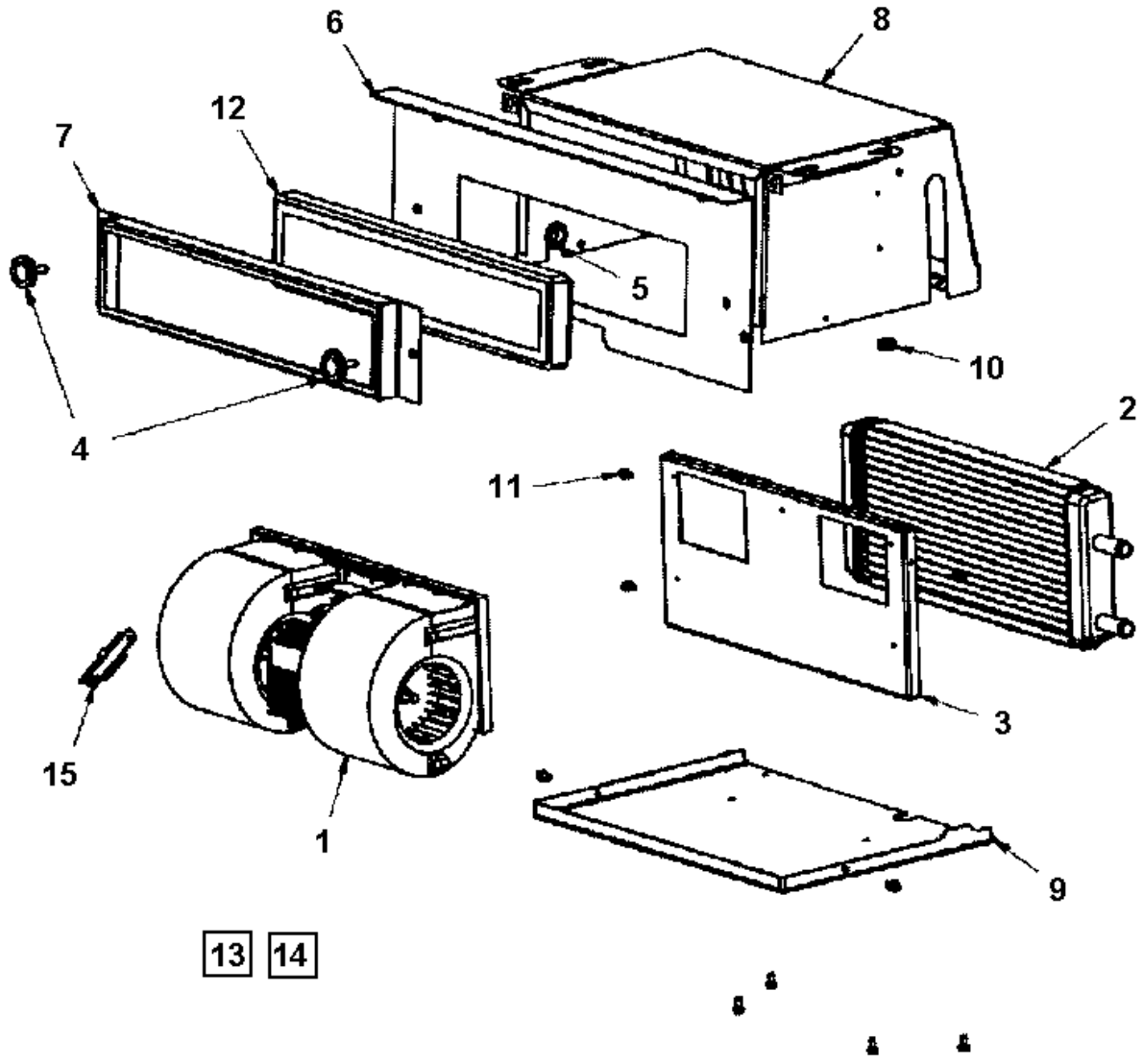

Item	Part No.	Name	Qty	L
1	4700395761	Blower 24V	1	
2	4700395762	Heater coil	1	
3	-	Blower bracket	1	
4	4700395774	Knob	2	
5	4700938609	Grommet	1	
6	-	Front plate	1	
7	4700395775	Filter bracket	1	
8	-	Casing	1	
9	-	Cover plate	1	
10	-	Grommet	1	
11	-	Screw M5x10	11	
12	4700395818	Filter	1	
13	4700395819	Cable harness	1	
14	4700395828	Panel cable	1	
15	4700395820	Resistor assy	1	

Heater Heater controls

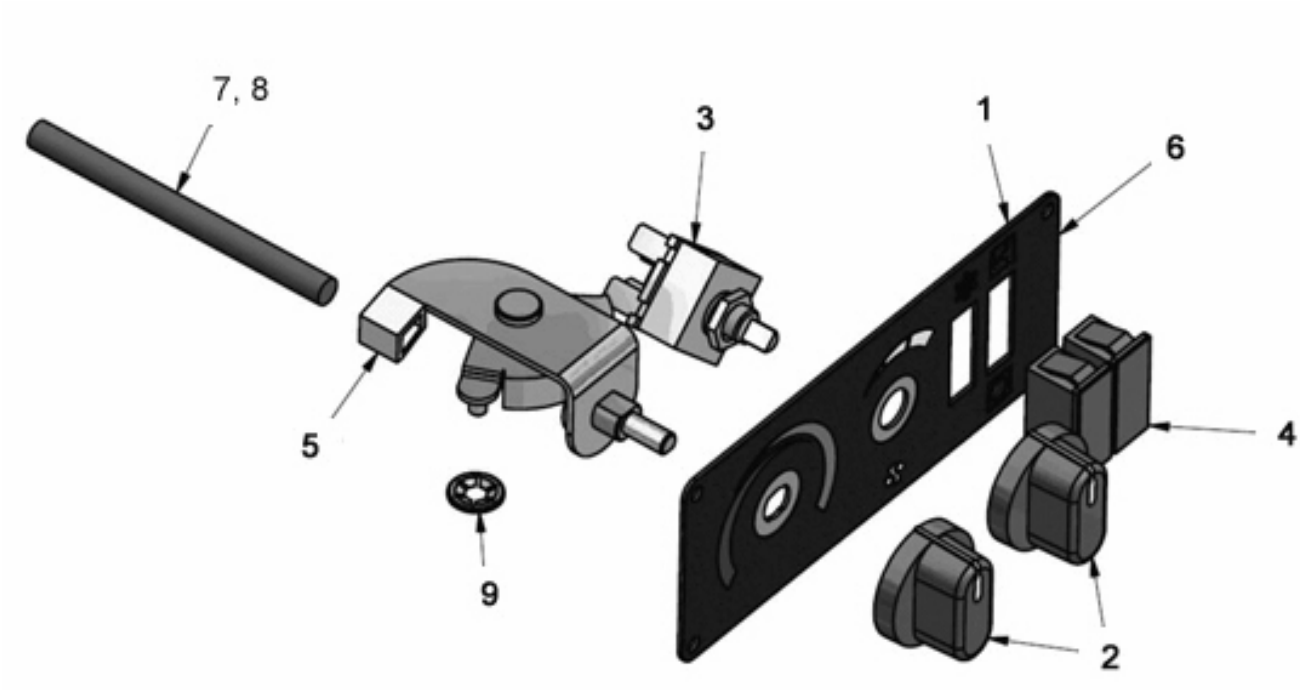

Item	Part No.	Name	Qty	L
1	-	Panel plate	1	
2	4700377508	Knob	2	
3	4700938622	Switch	1	
4	-	Cover	2	
5	4700377507	Rotary control	1	
6	-	Overlay	1	
7	4700395841	Wire clips	1	
8	4700395842	Wire	1	
9	4700395843	Lock washer	2	

Air channel assy Air channel assy

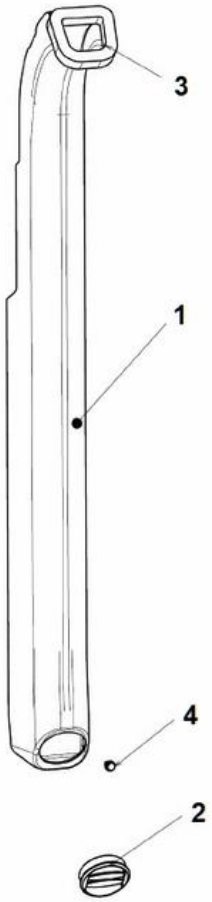

Item	Part No.	Name	Qty	L
1	-	Air gate	1	
2	4700395832	Air nozzle	1	
3	-	SEAL	1	
4	4700395830	Screw	1	

Mounting right side Protective frame asymmetric

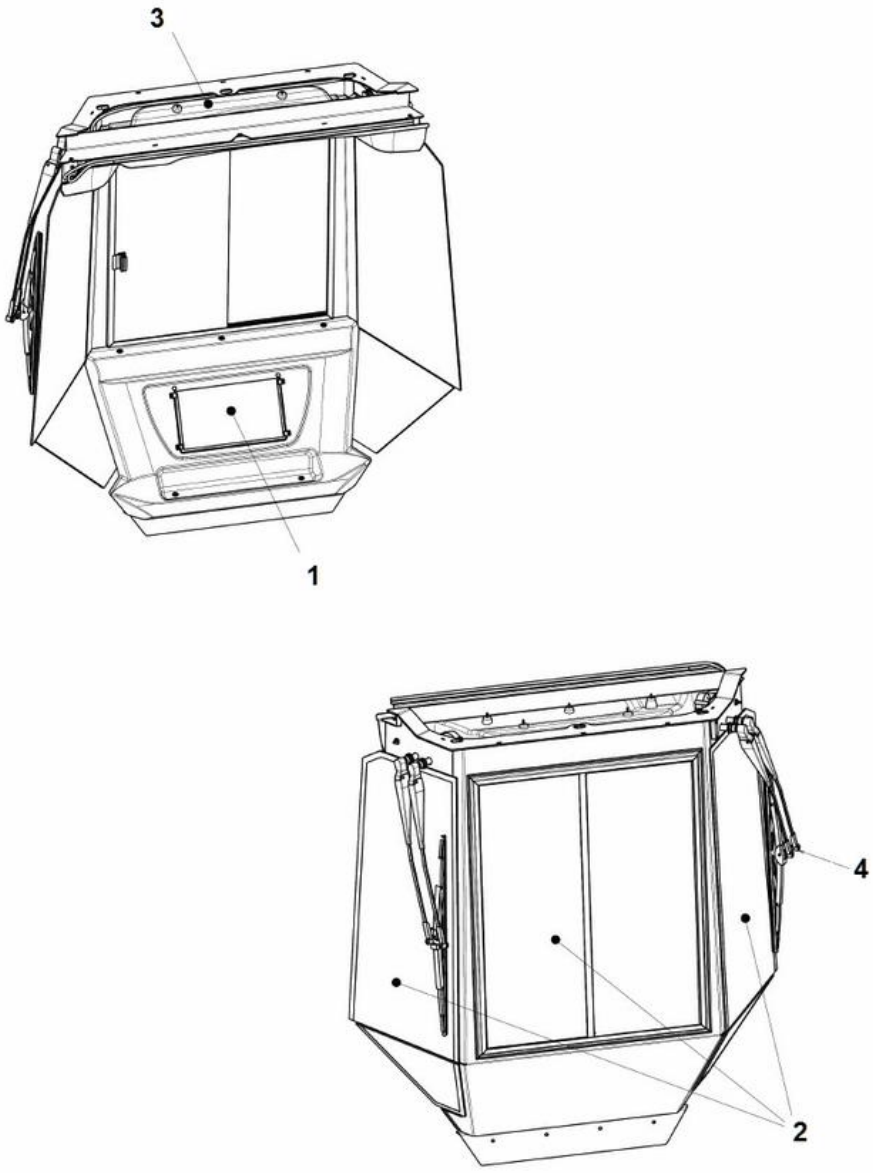

Item	Part No.	Name	Qty	L
1	4812113401	Panel assembly	1	
2	4812110600	Glasswork right	1	
3	4812113402	Blanket assembly	1	
4	4812113389	Wiper system	1	

Cover assy, right side Cover assy, right side

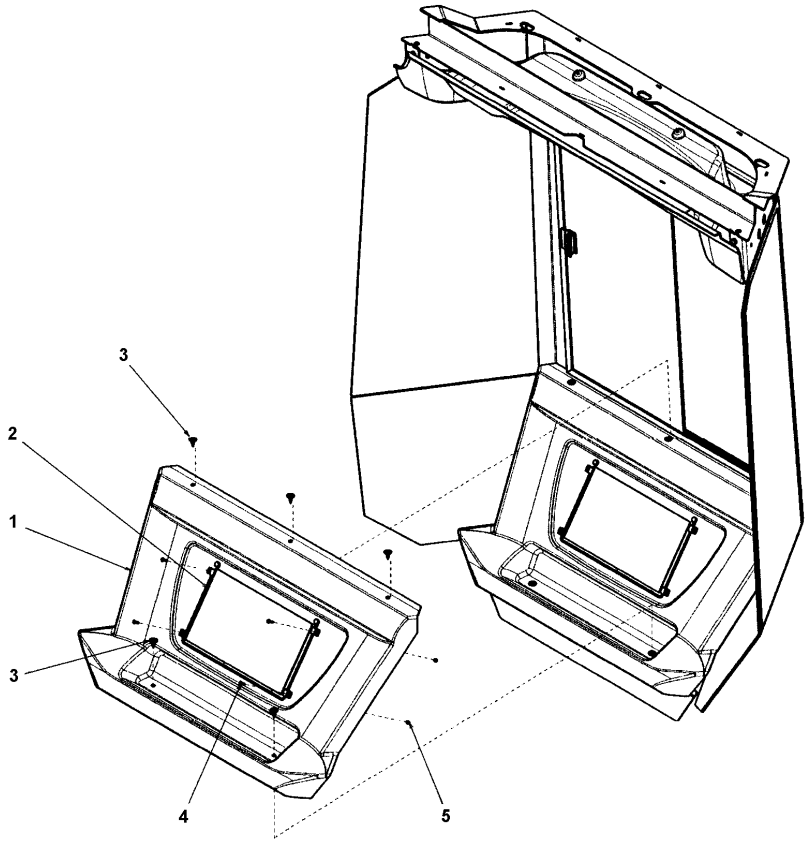

Item	Part No.	Name	Qty	L
1	-	Plastic part	1	
2	-	Document pocket	1	
3	-	Fastener	5	
4	-	Screw	4	
5	-	Nut	4	

Glasswork right side Glasswork right side

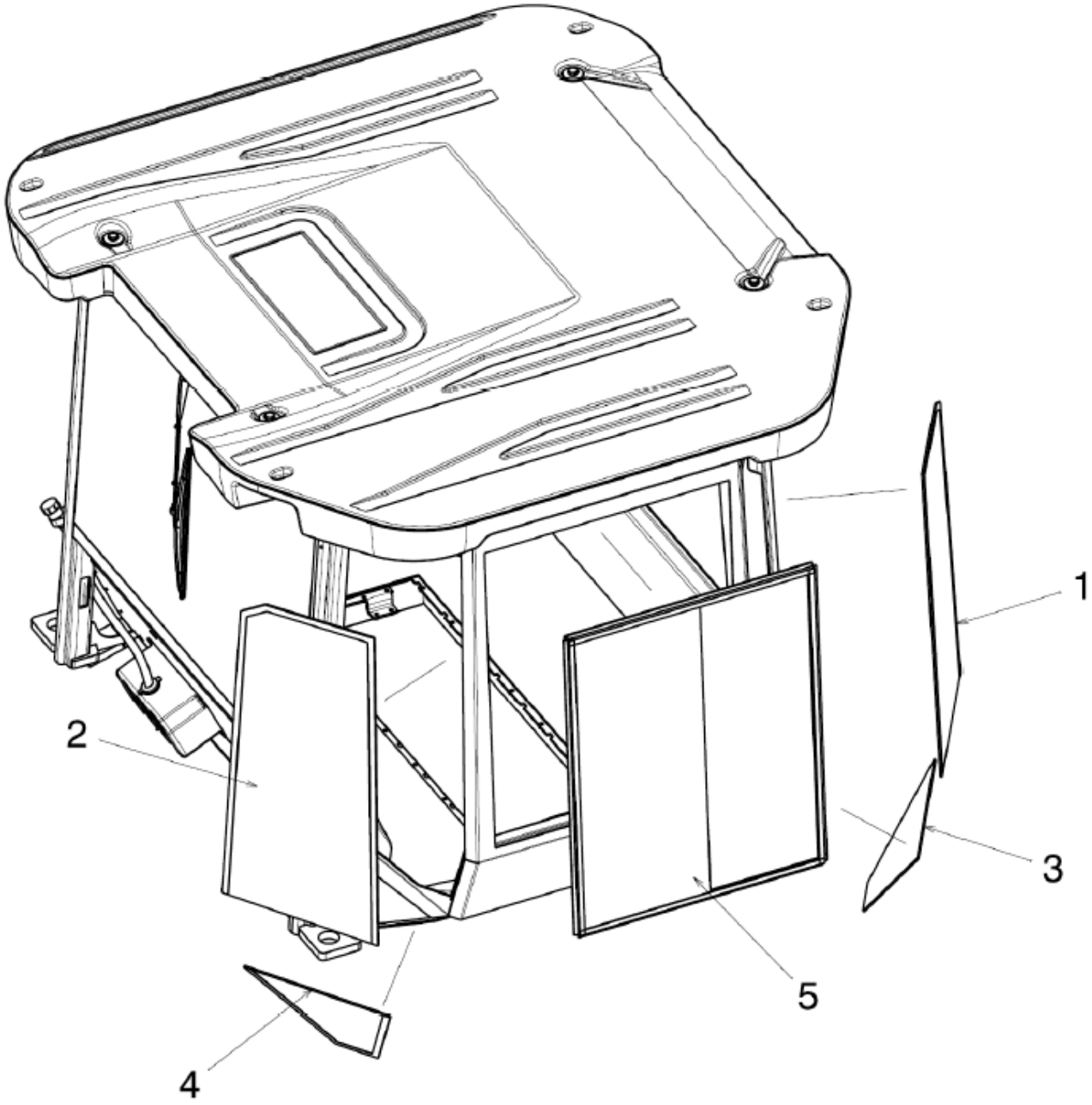

Item	Part No.	Name	Qty	L
1	4700396955	Screen	1	
2	4700396956	Screen	1	
3	4700396957	Screen	1	
4	4700396958	Screen	1	
5	4700395790	Sliding screen	1	

Wiper system right side Wiper system right side

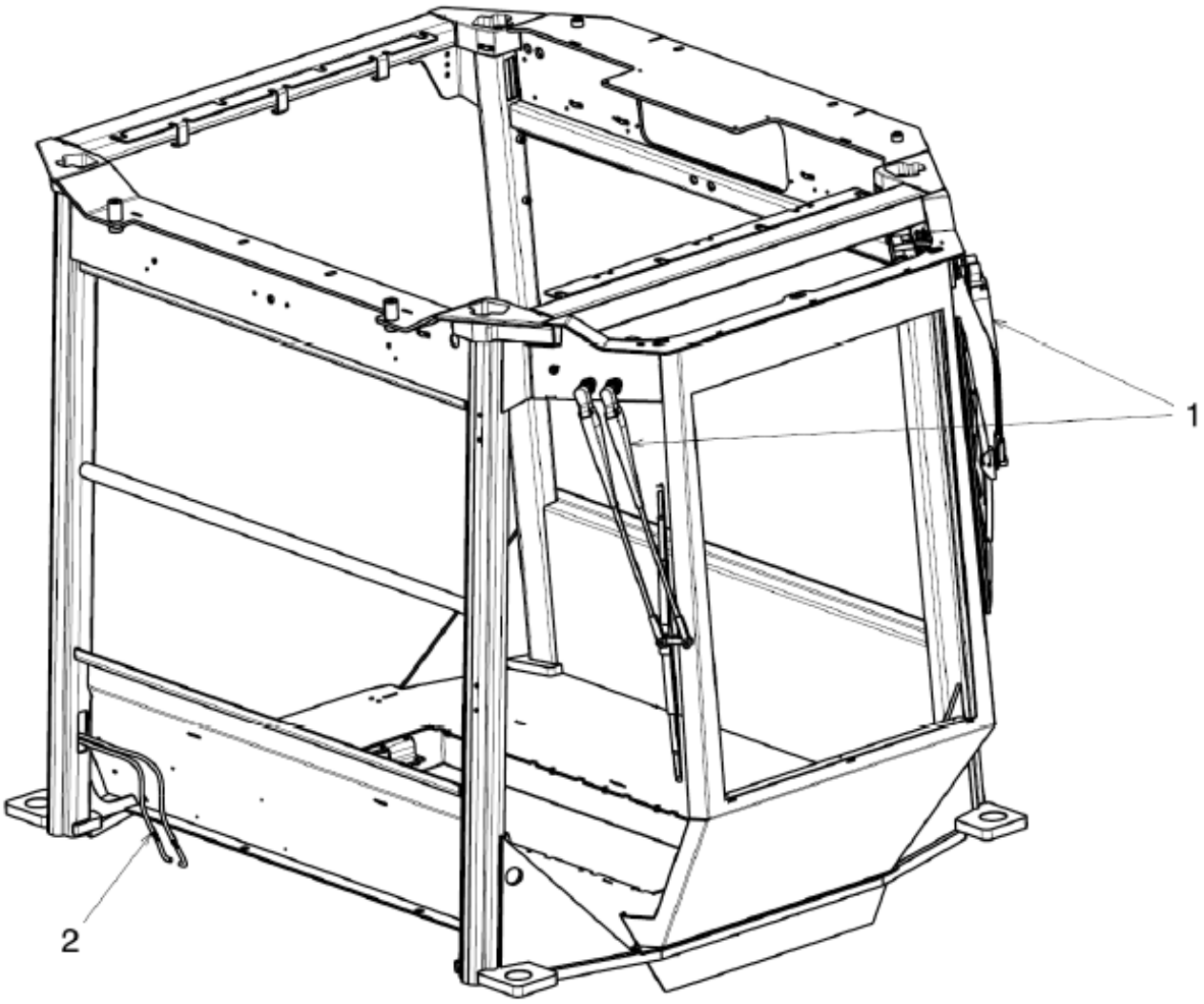

Item	Part No.	Name	Qty	L
1	4812113391	Wiper assy assymetric side	2	
2	4812113390	Windshield washer reservoir assy	1	

Windshield wiper, assymetric side Windshield wiper, assymetric side

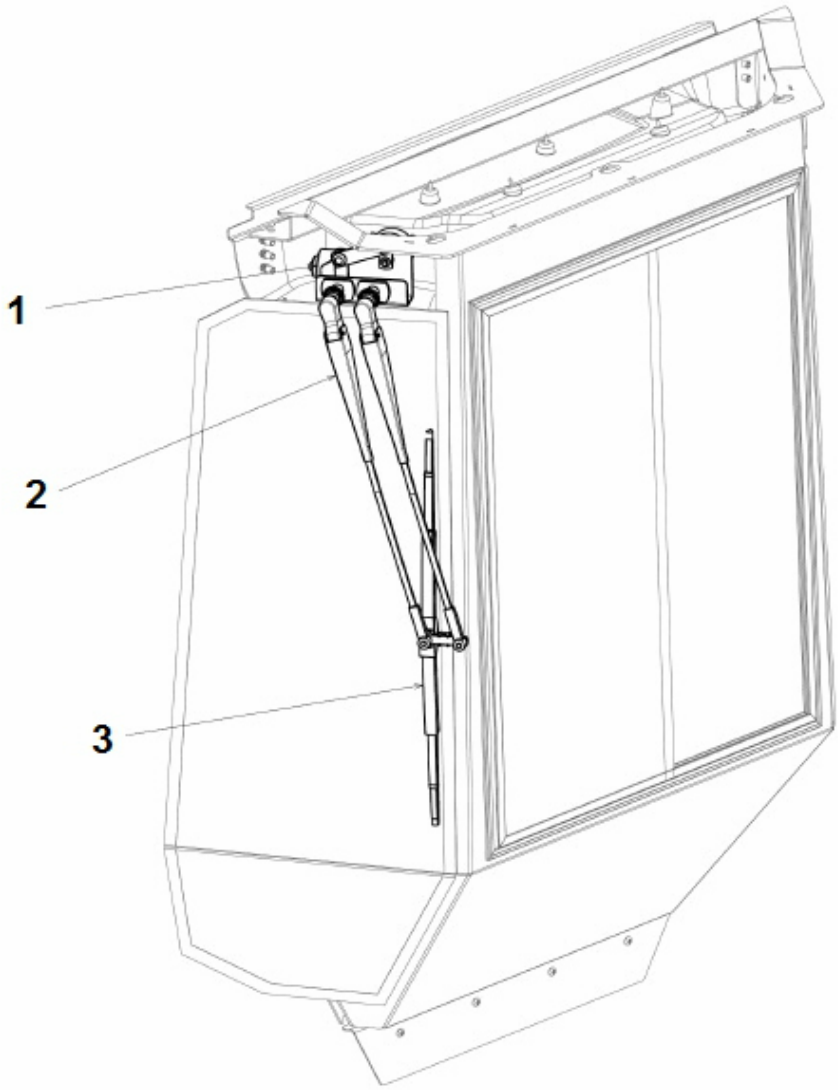

Item	Part No.	Name	Qty	L
1	4812158895	Wiper motor	1	
2	4812158099	Wiper arm	1	
3	4700905306	Wiper blade	1	

Windshield washer reservoir assy Windshield washer reservoir assy

Item	Part No.	Name	Qty	L
1	4700908561	Grommet	2	
2	4700908563	Plastic hose	10	
3	4700908564	Check valve	2	

Fastner kit, right side ceiling Fastener kit, right side ceiling

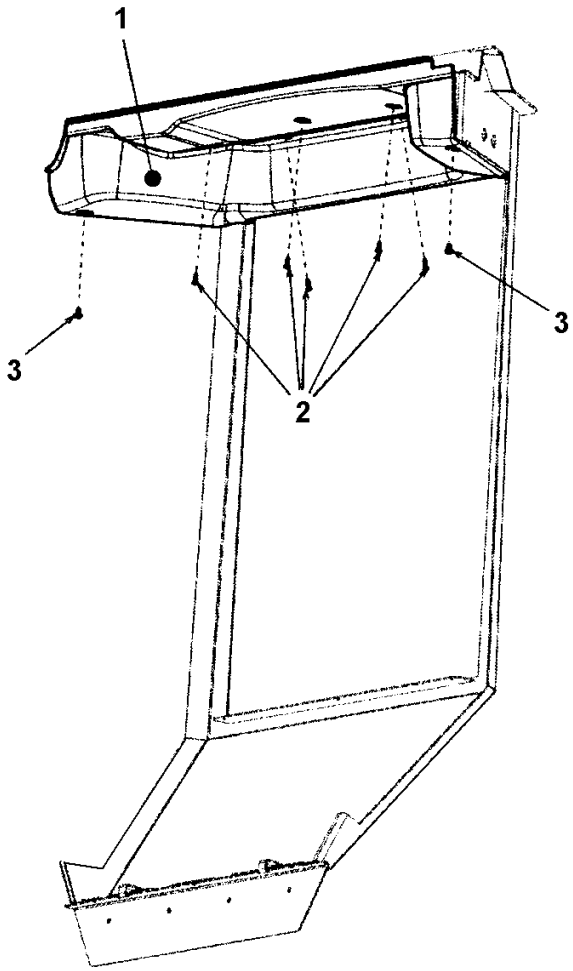

Item	Part No.	Name	Qty	L
1	-	Right side ceiling	1	
2	4700395829	Screw	5	
3	4700923934	Screw	2	

Platform, no cab Platform, no cab

Item	Part No.	Name	Qty	L
1	-	Rops module	1	
2	-	Platform module	1	
3	-	Hand rail, right	1	
4	-	Hand rail, left	1	

Rops module Rops module

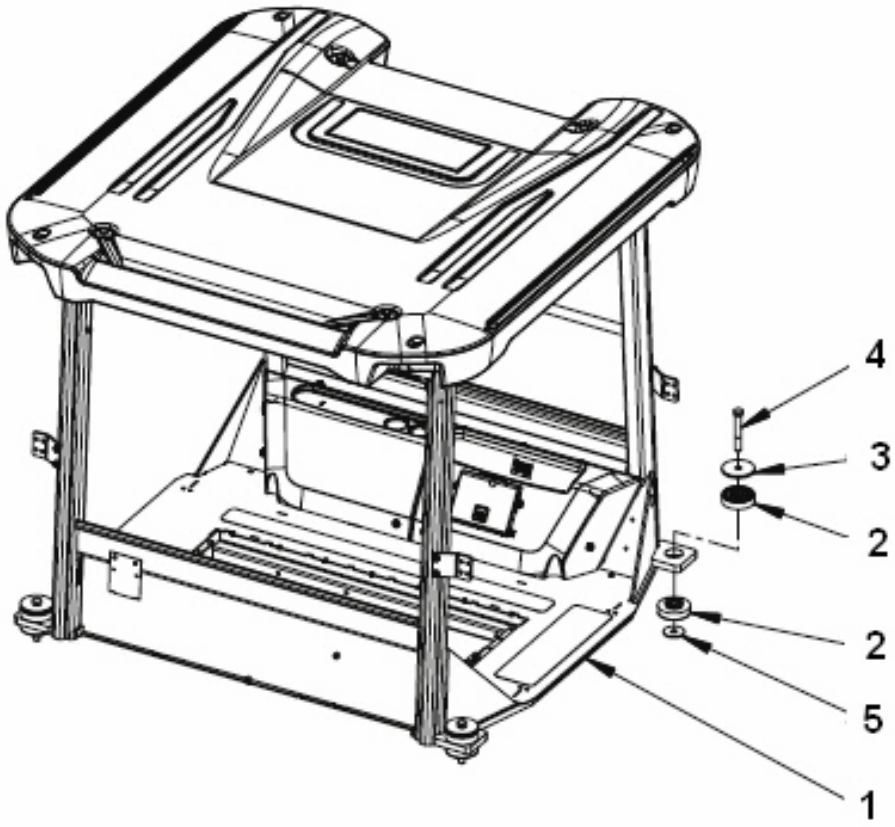

Item	Part No.	Name	Qty	L
1	-	ROPS	1	
2	4812110585	Shock absorber	8	
3	4700391788	Steel spacer	4	
4	4700904487	Screw M20x140 10.9	4	
5	4700347512	Washer	4	

Rops Rops

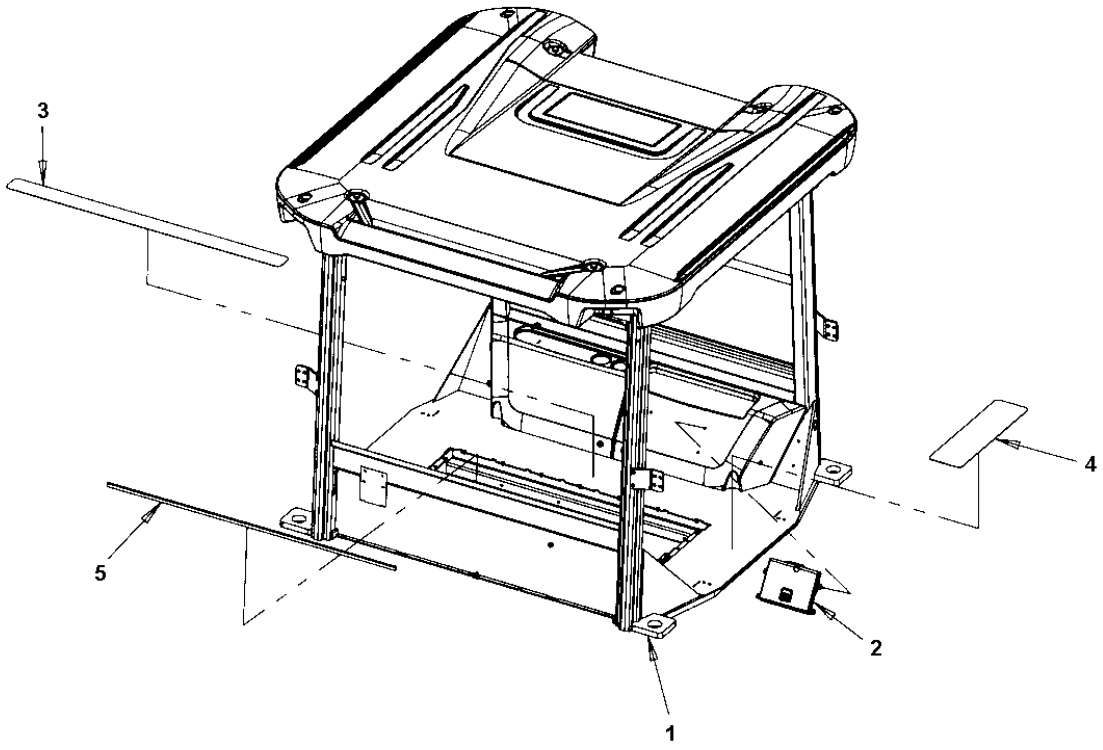

Item	Part No.	Name	Qty	L
1	4812113431	Rops	1	B, C
2	-	Manual box	1	
3	4700372121	Protection	3	
4	4700396828	Protection	1	
5	4700902379	Edge trim	1XL	A

Comments for Page: Rops

(L)OCAL REMARKS

A | en_US | L = 2,65 m

B | en_US | From SN L0B001925 (CP-274)

C | en_US | From SN V0B001931 (CP-224/CP224W)

Manual box Manual box

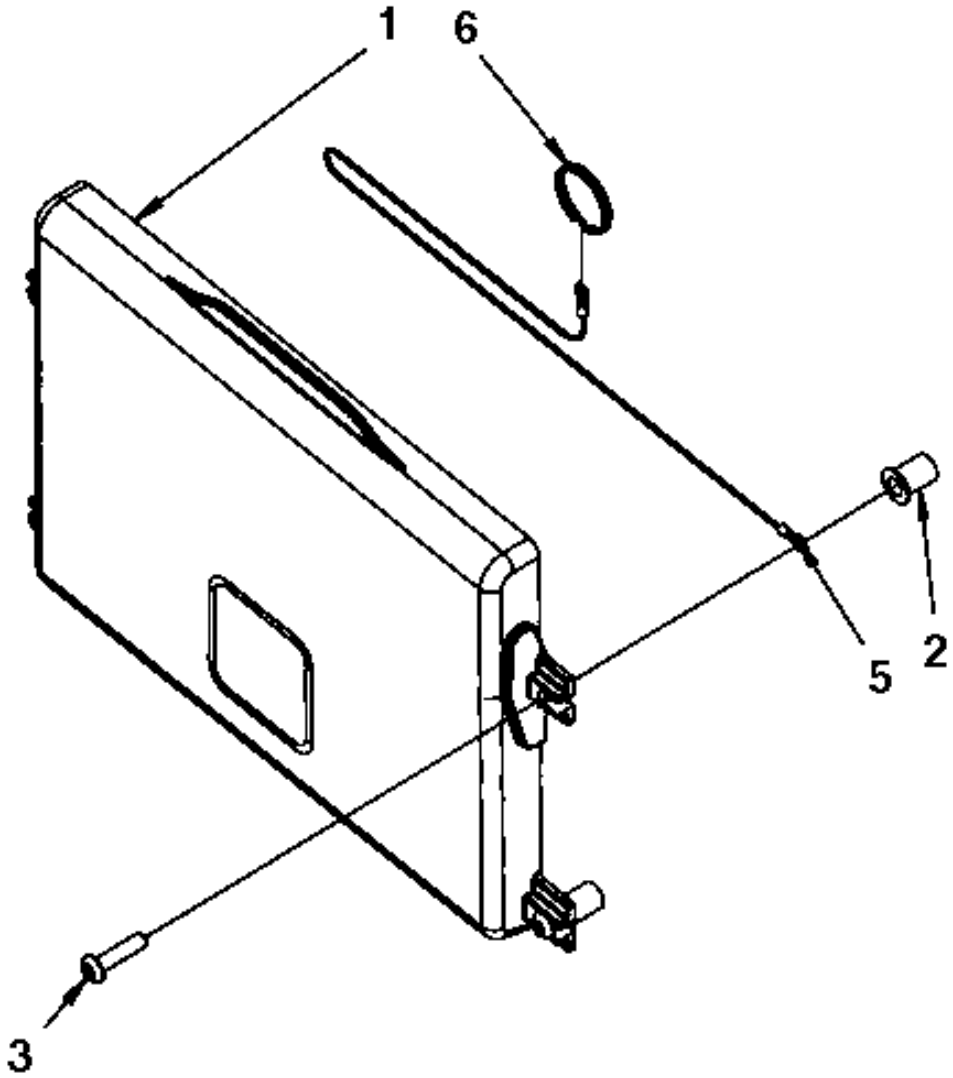

Item	Part No.	Name	Qty	L
1	4700383705	Instruction manual box	1	
2	4700792536	Rubber nut	4	
3	4700792589	Screw	4	
5	4700384584	Wire	1	
6	4700358254	Key-ring	1	

Platform module Platform module

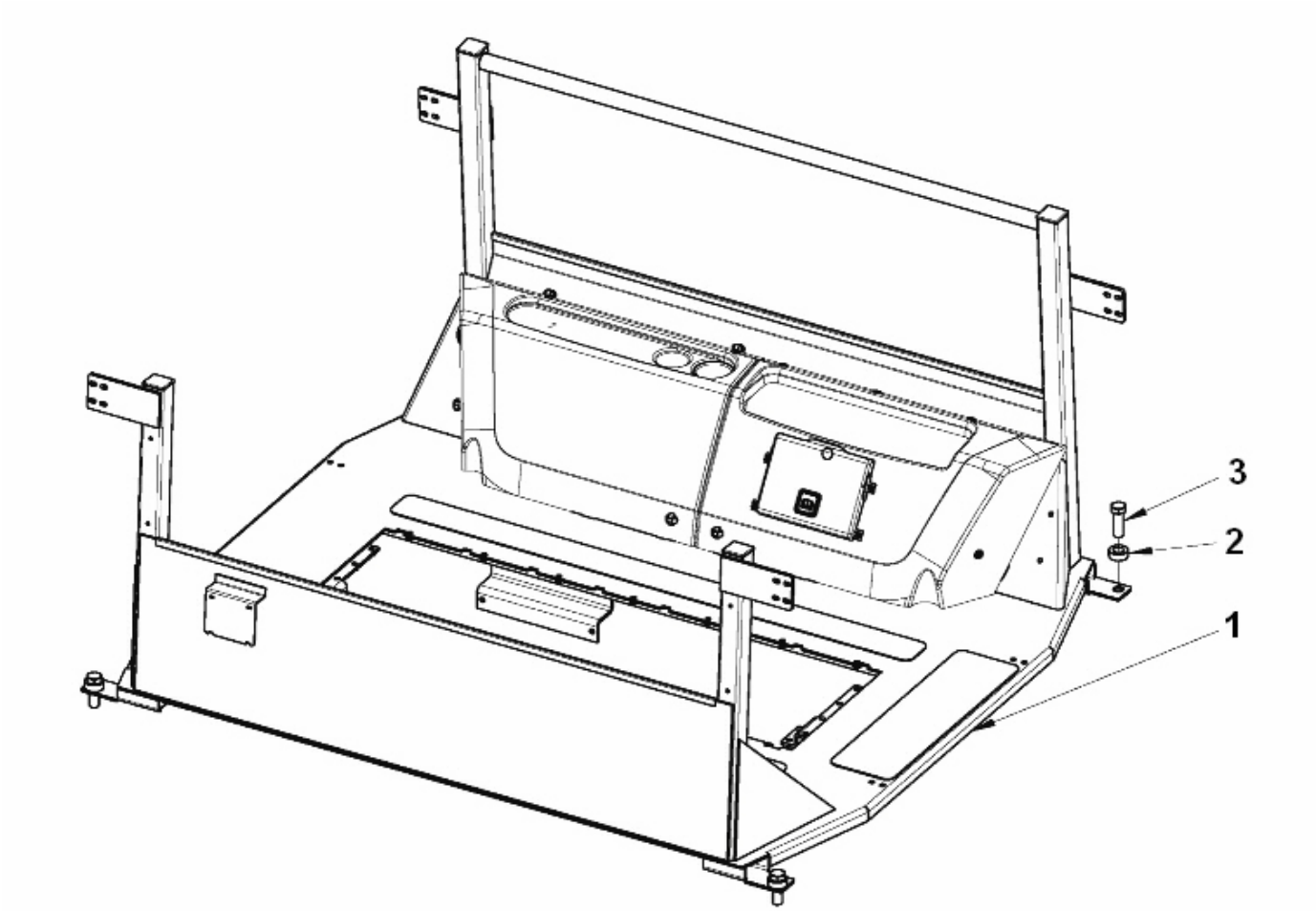

Item	Part No.	Name	Qty	L
1	-	Platform	1	
2	4700370258	Washer 40X22X15	4	
3	4700500206	Hex. screw M 20x60 DIN 931	4	

Platform Platform

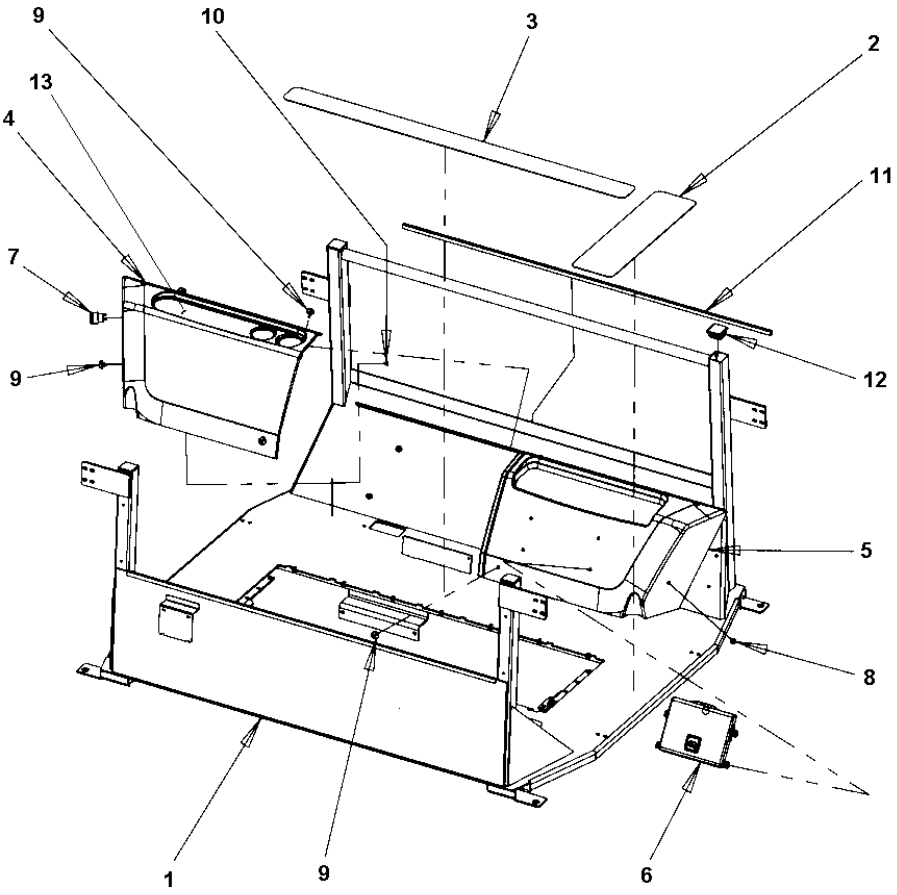

Item	Part No.	Name	Qty	L
1	4700395306	Platform	1	
2	4700396828	Protection	1	
3	4700372121	Protection	3	
4	4812110322	Cover	1	
5	4812110323	Cover	1	
6	-	Manual box	1	
7	4700395816	Plug socket 24V	1	
8	4700395785	Expansion rivet	4	
9	4700395786	Knob	5	
10	4812110586	Cage nut	1	
11	4700902379	Edge trim	1	A
12	4812110588	Plug	4	
13	4700902804	Plug	2	

Comments for Page: Platform

(L)OCAL REMARKS

A | en_US | L = 2,7 m

Referenced Pages

Manual box 145

Hand rail, right Hand rail, right

This page intentionally left blank

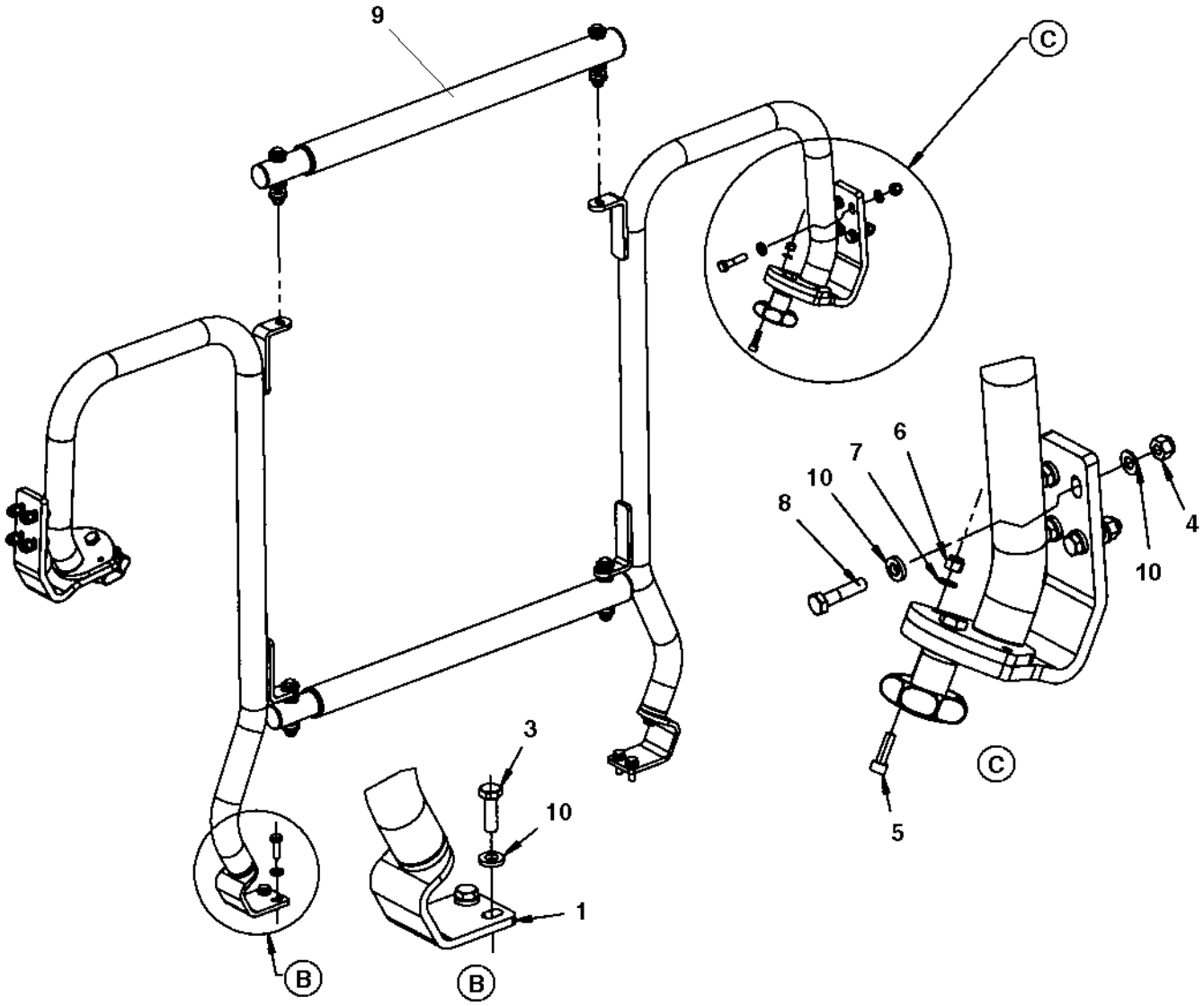
9
C
6
7
10
8
4
10
3
10
1
B
B
C
5

Item	Part No.	Name	Qty	L
1	-	Hand rail	2	
3	4700500021	Hex. screw	4	
4	4700586003	Hexagon lock nut M8	8	
5	4700508025	Screw	2	
6	4700586002	Lock nut M6 -8	2	
7	4700904228	Steel plain washer	2	
8	4700500023	Screw, M8 x 40 mm 8.8 A2K	8	
9	-	Hand rail	2	
10	4700904556	Steel plain washer	20	

Hand rail Hand rail

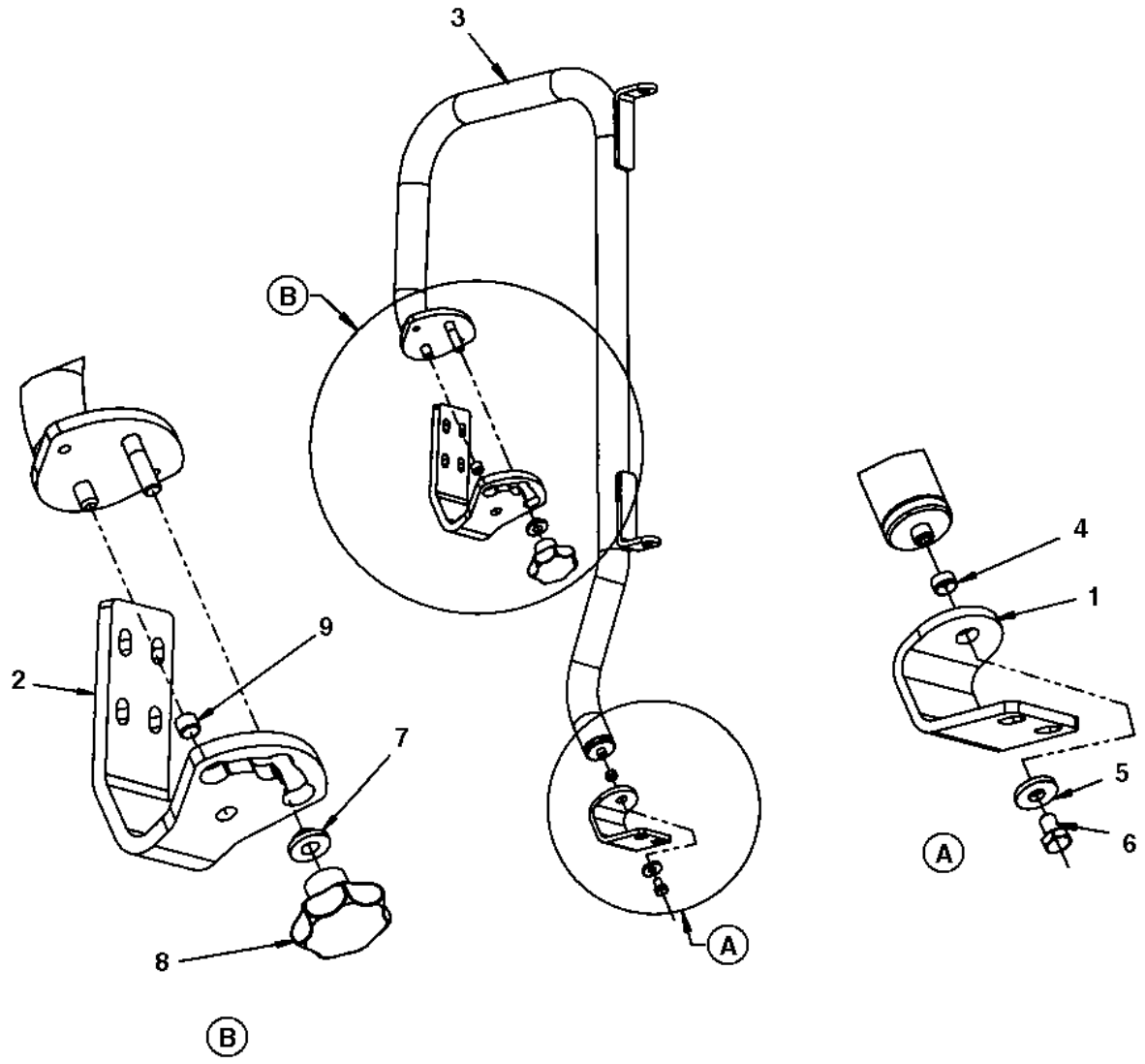

Item	Part No.	Name	Qty	L
1	4700381936	Bracket	1	
2	4700381935	Bracket	1	
3	4700381934	Hand rail	1	
4	4700792448	Plastic bushing	1	
5	4700904640	Washer, 8.4x 2x3 mm 300 HV	1	
6	4700500018	Hex. screw	1	
7	4700370286	Washer	1	
8	4700499174	Knob	1	
9	4700792447	Plastic bushing	1	

Hand rail Hand rail

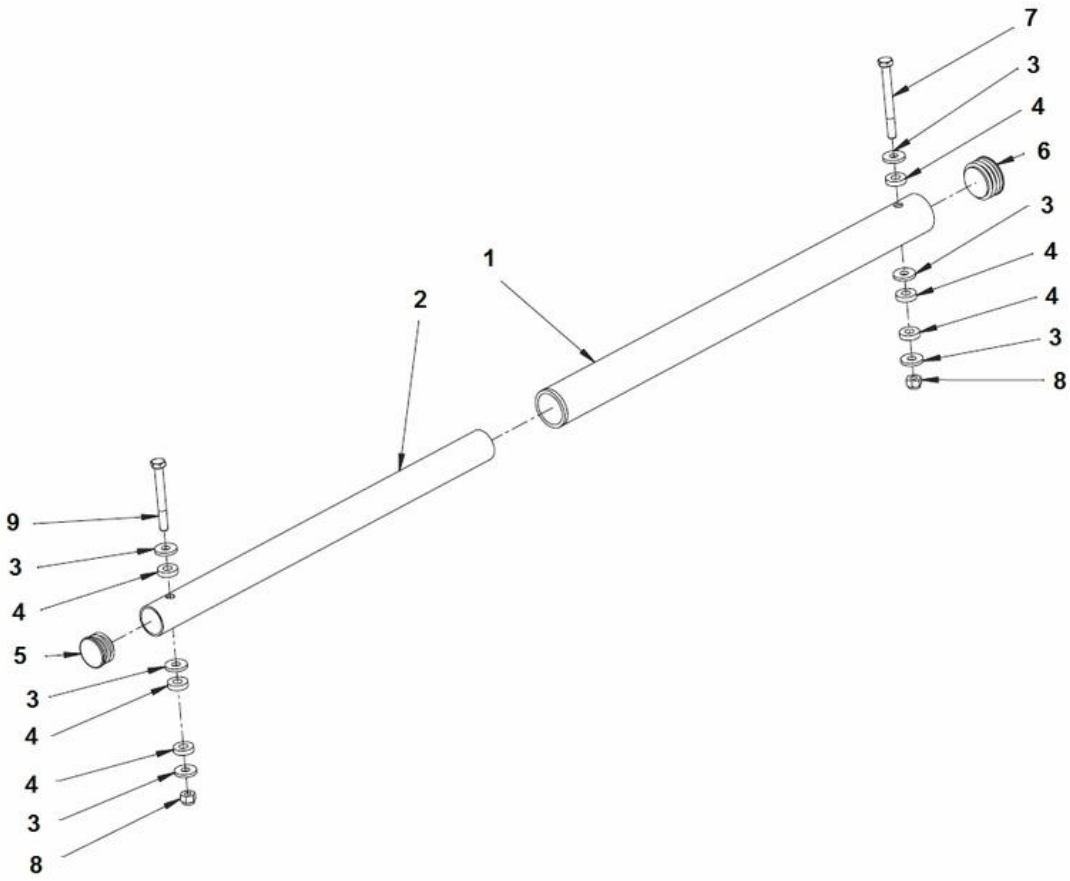

Item	Part No.	Name	Qty	L
1	4700397339	Handrail assy	1	
.1	4700391675	Steel tube	1	
.1	4700391678	Bushing	1	
2	4700391676	Steel tube	1	
3	4700904640	Washer, 8.4x 2x3 mm 300 HV	6	
4	4700391674	Rubber washer	6	
5	4700926216	Protective plug	1	
6	4700792449	Protective plug	1	
7	4700500190	Screw	1	
8	4700586003	Hexagon lock nut M8	2	
9	4700500189	Screw	1	

Hand rail, left Hand rail, left

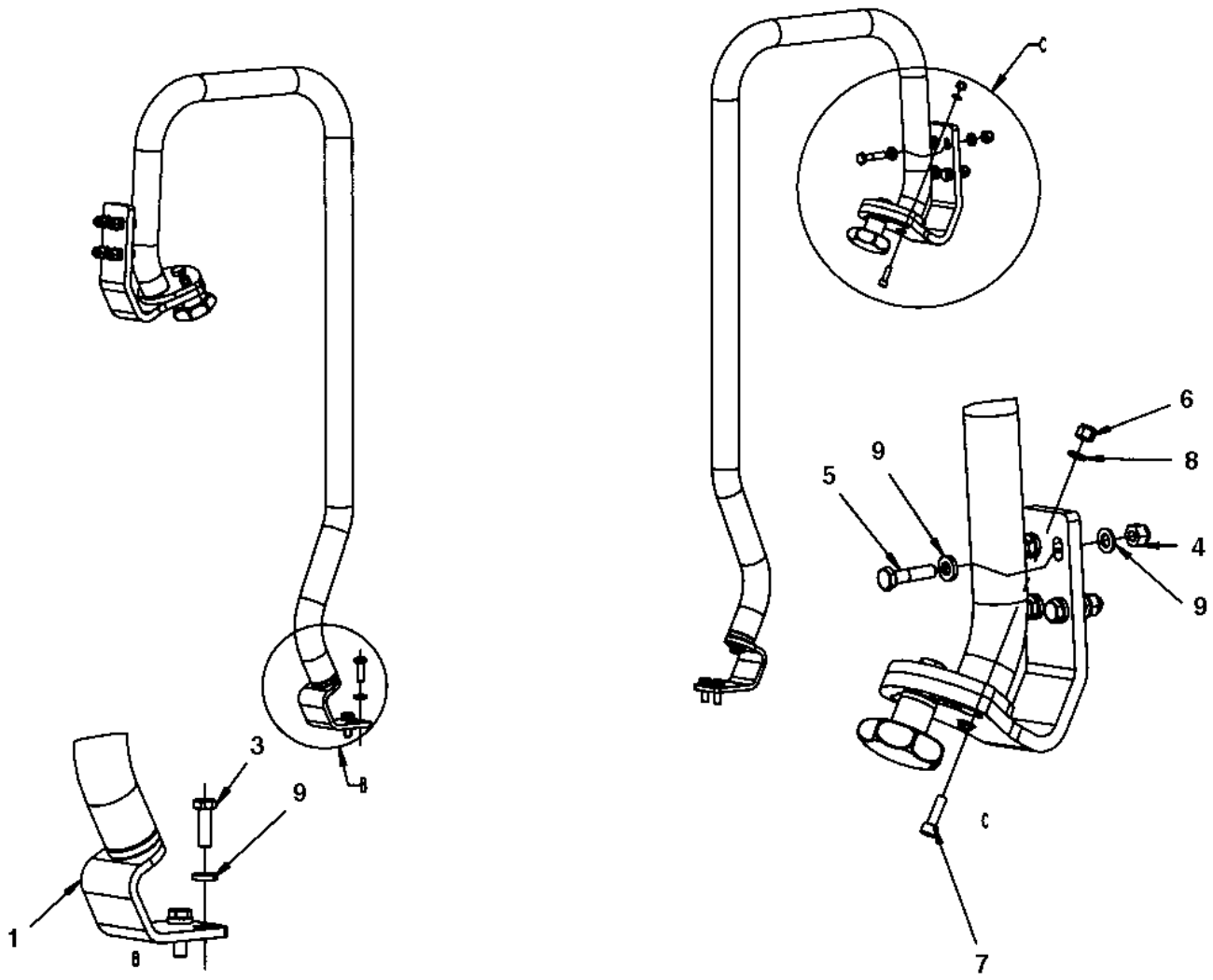

Item	Part No.	Name	Qty	L
1	-	Hand rail	2	
3	4700500021	Hex. screw	4	
4	4700586003	Hexagon lock nut M8	8	
5	4700500023	Screw, M8 x 40 mm 8.8 A2K	8	
6	4700586002	Lock nut M6 -8	2	
7	4700508025	Screw	2	
8	4700904228	Steel plain washer	2	
9	4700904556	Steel plain washer	20	

Hand rail Hand rail

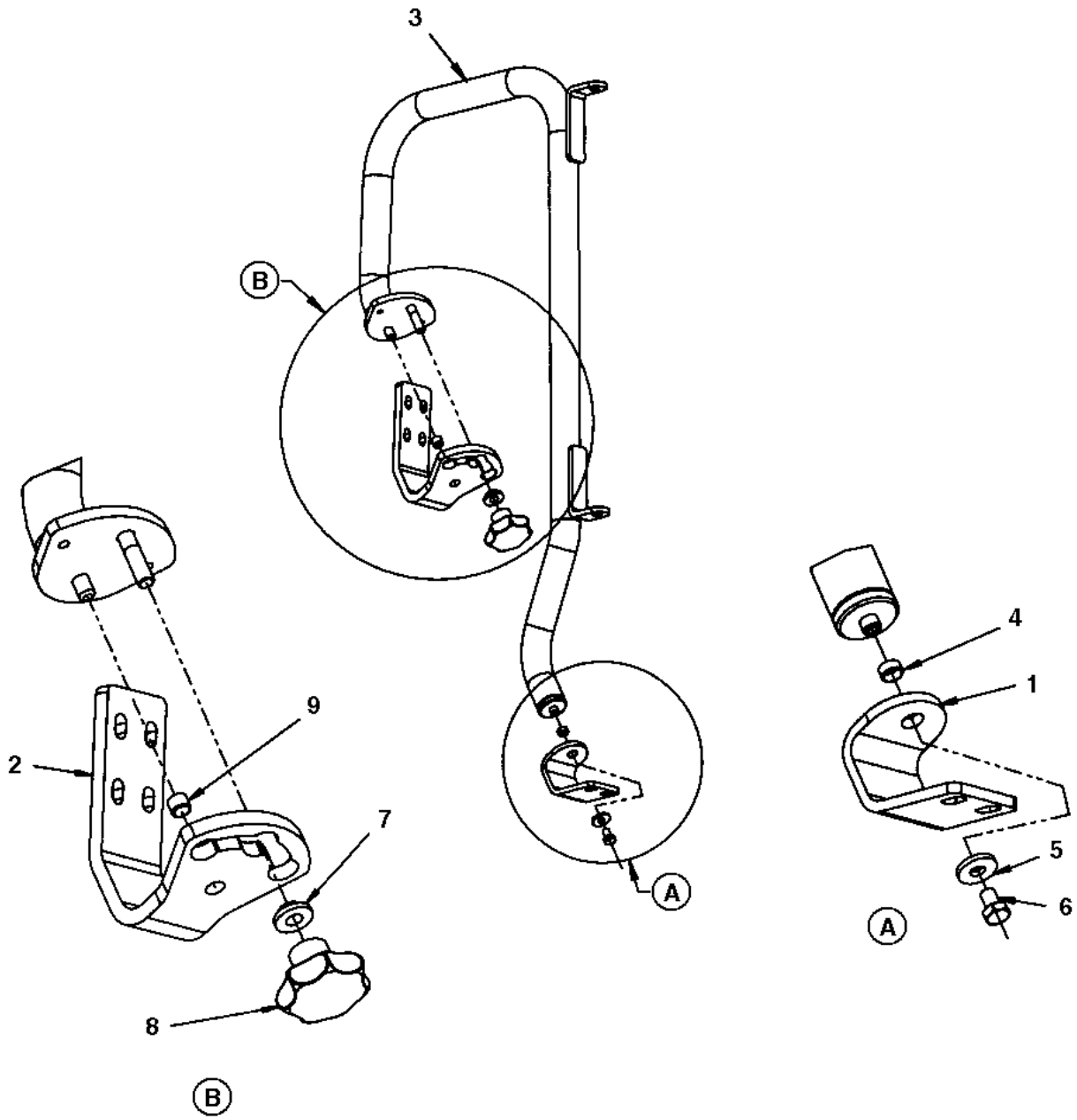

Item	Part No.	Name	Qty	L
1	4700381936	Bracket	1	
2	4700381935	Bracket	1	
3	4700390155	Hand rail	1	
4	4700792448	Plastic bushing	1	
5	4700904640	Washer, 8.4x 2x3 mm 300 HV	1	
6	4700500018	Hex. screw	1	
7	4700370286	Washer	1	
8	4700499174	Knob	1	
9	4700792447	Plastic bushing	1	

Engine 4812116251 Bracket module engine

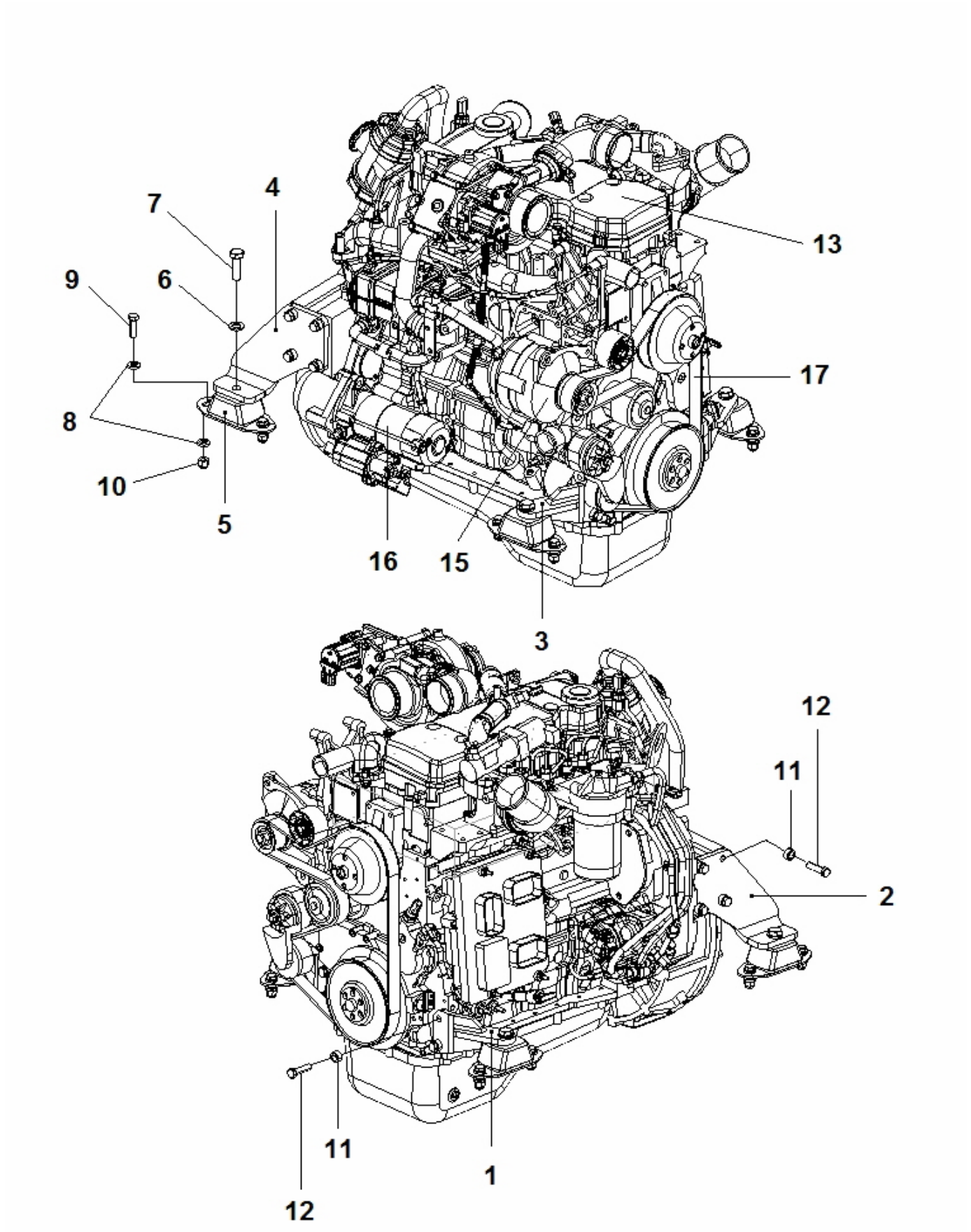

Item	Part No.	Name	Qty	L
1	4700392284	Engine bracket, Left	1	
2	4700393021	Engine bracket, Right	1	
3	4700392283	Engine bracket, Right	1	
4	4700393022	Engine bracket, Left	1	
5	4700387128	Shock absorber	4	
6	4700904232	Steel plain washer	4	
7	4700500070	Hex. screw	4	
8	4700904703	Plain washer 13x24x4 mm	16	
9	4700500194	Hex. screw	8	
10	4700586019	Lock nut, M12	8	
11	4700375132	Spacer	12	
12	4700500056	Screw, M12x45 mm 8.8 A3K	12	
13		Diesel engine QSB 4.5 IIIB 82kW	1	
14		Diesel engine QSB 4.5 IIIB 97kW	1	
15	4812041537	Alternator	1	
16	4812159499	Starter motor	1	
17	4812158083	Fan belt	1	

Engine 4812116678 Coupling module

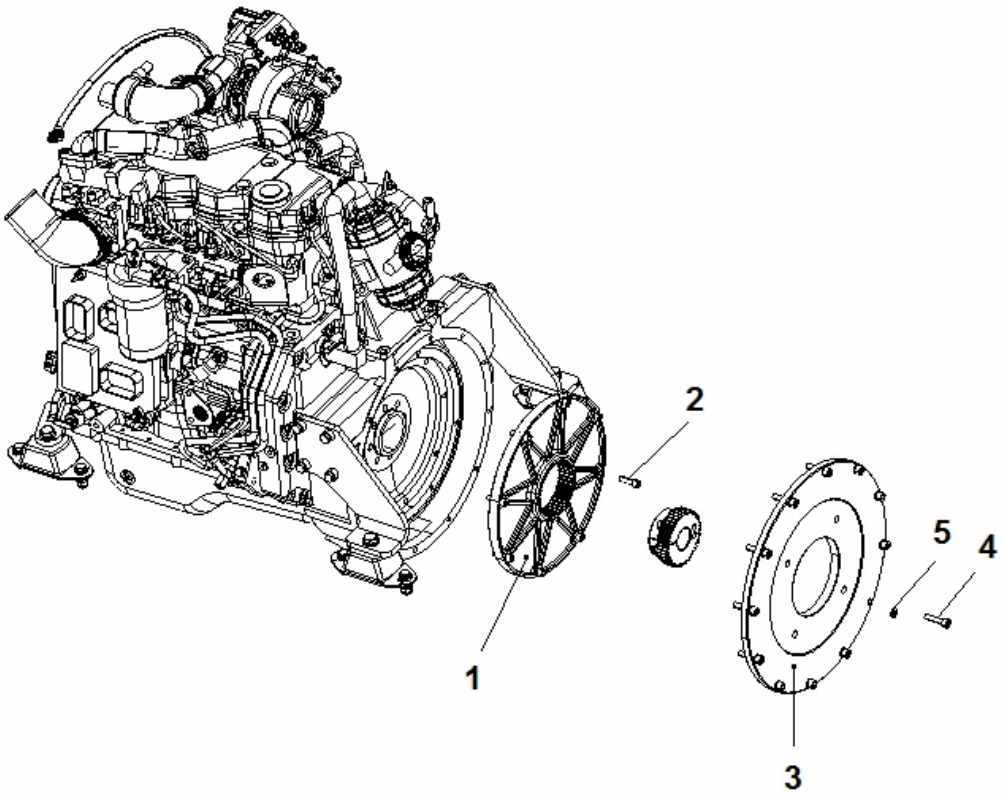

Item	Part No.	Name	Qty	L
1	4700396062	Clutch	1	
2	4700509025	Screw 3/8-16UNCx32 8,8	8	
3	4700396011	Pump bracket	1	
4	4700508080	Screw	12	
5	4700904637	Washer	12	

Engine 4812116745 Engine equipment kit

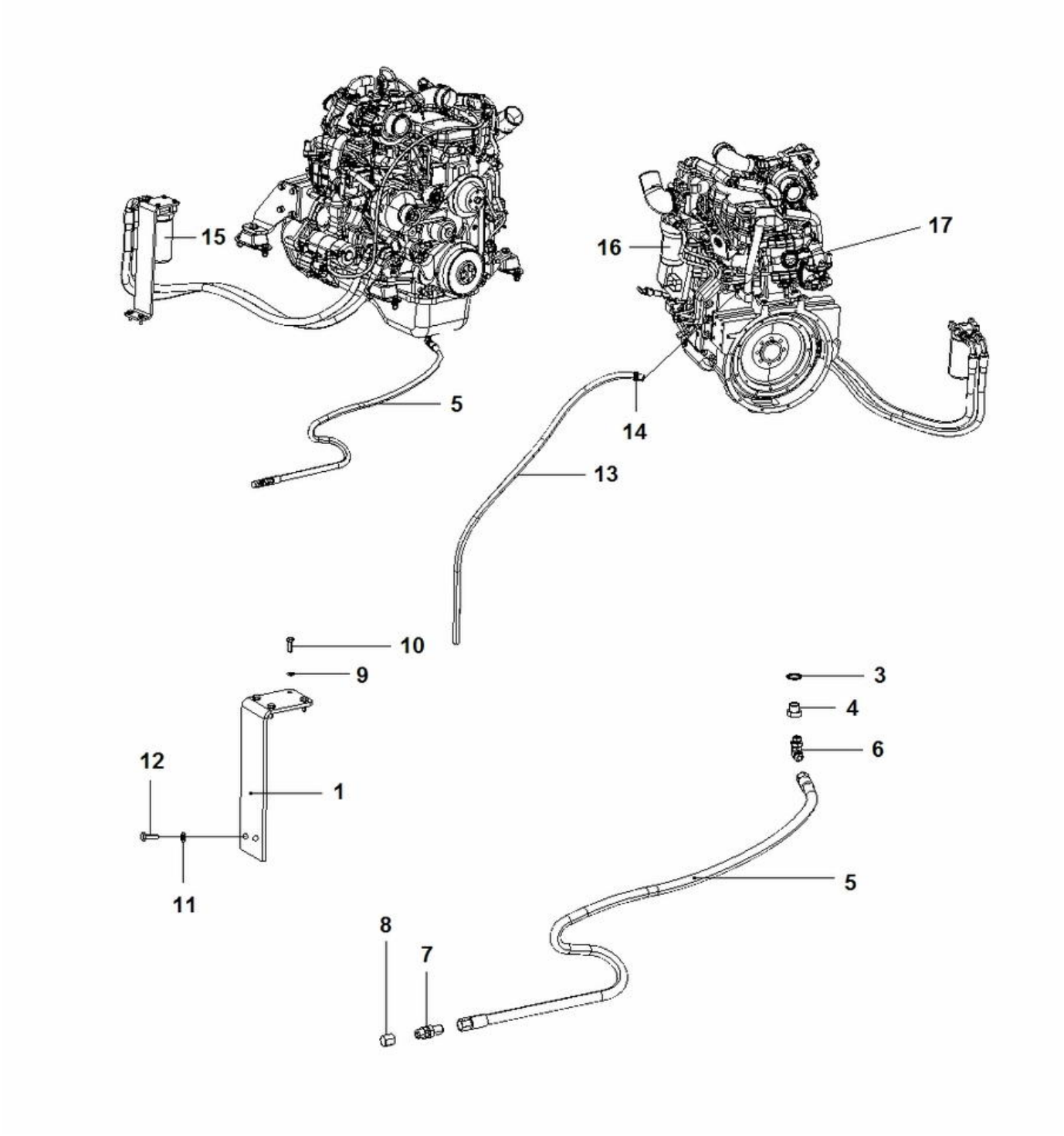

Item	Part No.	Name	Qty	L
1	4812101950	Bracket	1	
3	4811000151	Washer sealing	1	
4	4700379480	Reducer	1	
5	4700482261	Hydraulic hose	1	
6	4700791431	Elbow 90, O-ring	1	
7	4700230515	Connector	1	
8	4700330383	Cap JIC, steel	1	
9	4700904229	Washer, 8.4x16x1.5 mm 300 HV	4	
10	4700500021	Hex. screw	4	
11	4700904230	Washer	2	
12	4700500029	Hex. screw	2	
13	4811000264	Hose	1XL	A
14	4700313035	Clamp	1	
15	4700939082	Oil filter	1	
16	4812158187	Fuel filter	1	
17	4812158465	Crankcase ventilation filter	1	

Comments for Page: 4812116745 Engine equipment kit

(L)OCAL REMARKS

A | en_US | L=2,15 m

Engine Expansion vessel hose kit

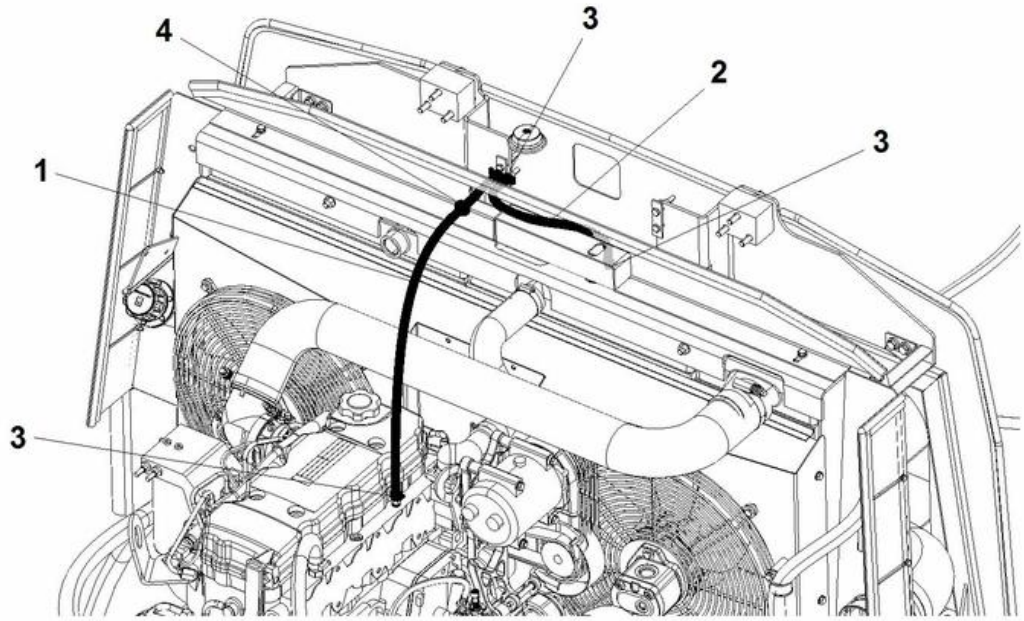

Item	Part No.	Name	Qty	L
1	4700246069	Rubber hose	1	
2	4700246069	Rubber hose	1	
3	4700313001	Hose clamp	4	
4	4700909127	Grommet	1	

Comments for Page: Expansion vessel hose kit

1 - L = 0,8m

2 - L = 0,4m

Engine Fuel tank

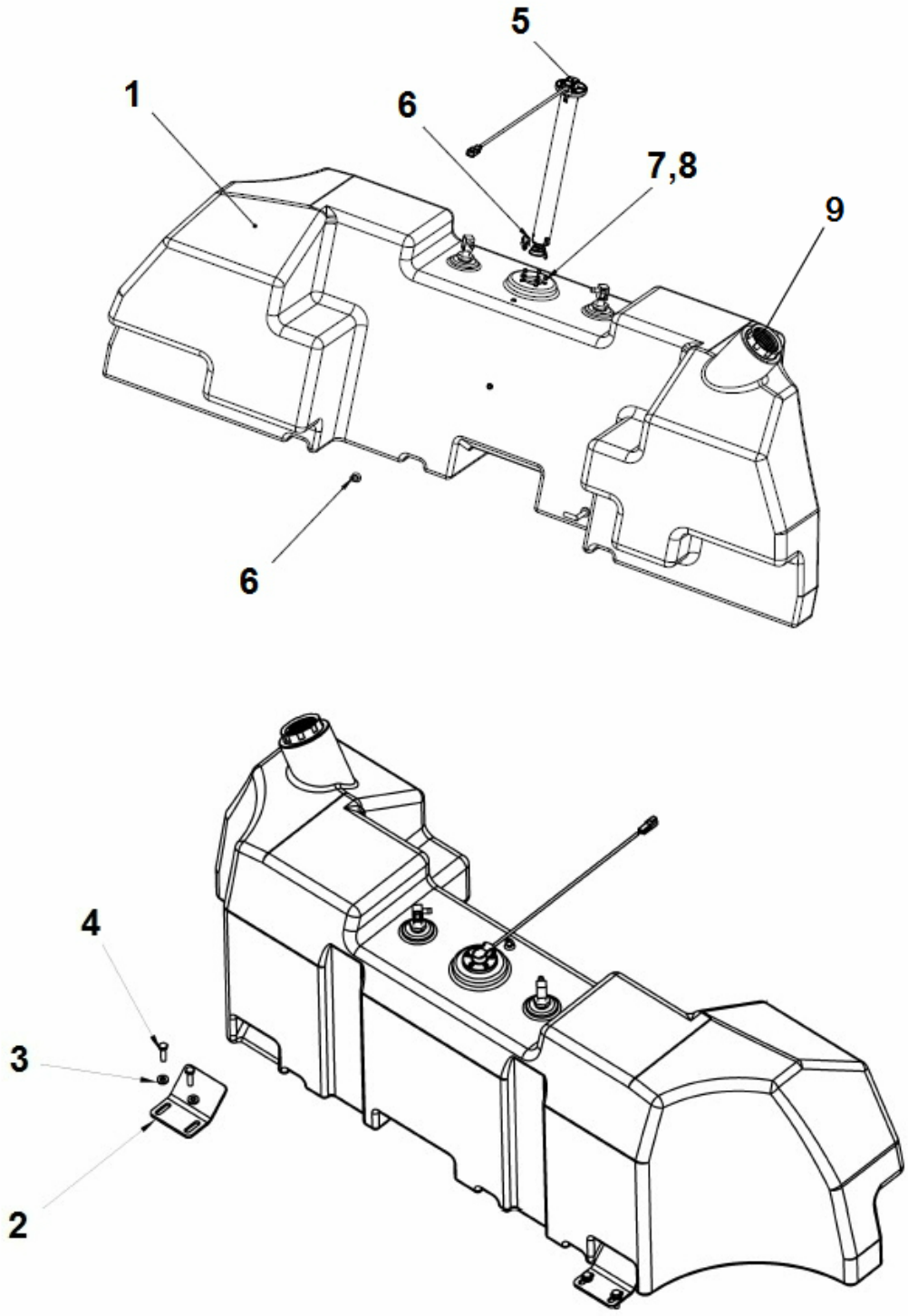

Item	Part No.	Name	Qty	L
1	4812315446	Fuel tank	1	
2	4812315453	Bracket	2	
3	4700904557	Washer, 10.5x22x4 mm 300 HV	4	
4	4700500030	Hexagon head screw	4	
5	4812316556	Level sender	1	
6	4700792441	Cable tie with holder	2	
7	4700904698	Steel plain washer	5	
8	4700903386	Screw	5	
9	4812317307	Cover and keys	1	

Comments for Page: Fuel tank

Changes from Level sender 4812315584 to 4812316556

CP2700

From SN x0B004576

CP2100

From SN x0B004580

Engine Fuel hose kit

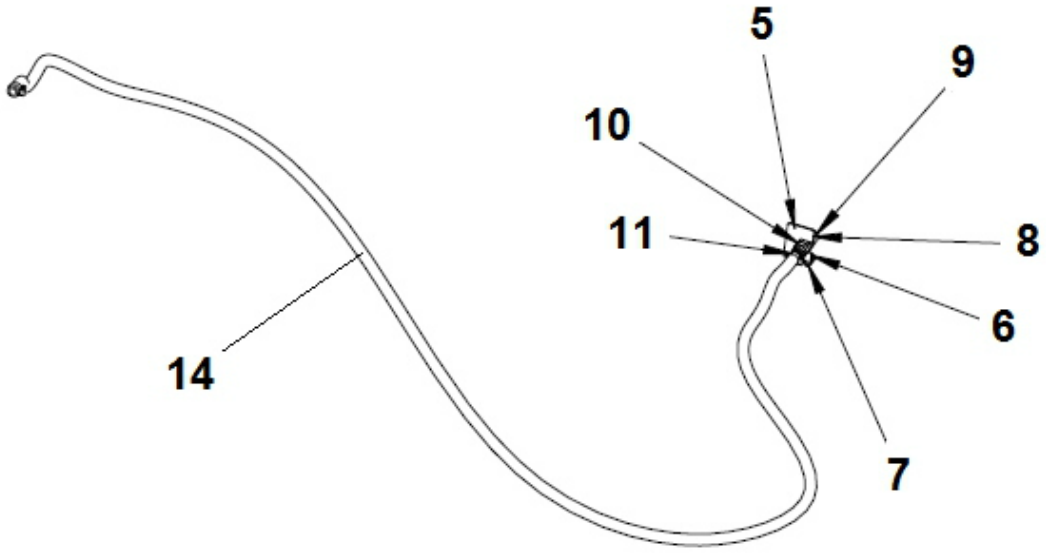

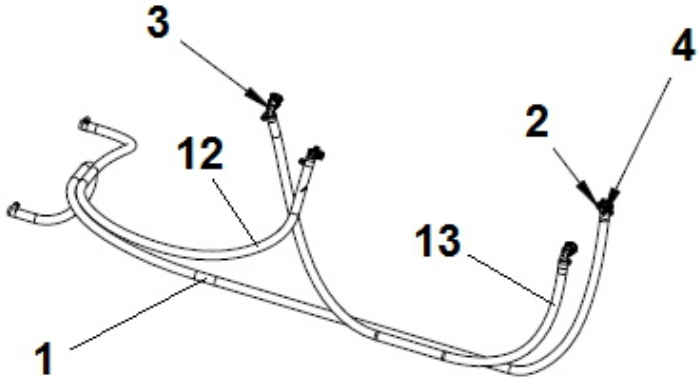

Item	Part No.	Name	Qty	L
1	4700904984	Fuel hose	1	
2	4700792526	Quick connect system for fuel	2	
3	4700792522	Quick connect system for fuel	2	
4	4700313001	Hose clamp	6	
5	4812315722	Bracket	1	
6	4700904229	Washer, 8.4x16x1.5 mm 300 HV	2	
7	4700500019	Hex. screw	2	
8	4700230515	Connector	1	
9	4700330383	Cap JIC, steel	1	
10	4812118501	Hose connection	1	
11	4700313002	Hose clamp	2	
12	4700904984	Fuel hose	1	
13	4700904984	Fuel hose	1	
14	4812112074	Plastic hose (x m)	1	

Comments for Page: Fuel hose kit

1 - L = 5,4m

12 - L = 4,8m

13 - L = 1,1m

14 - L = 2,8m

Engine Expansion tank module

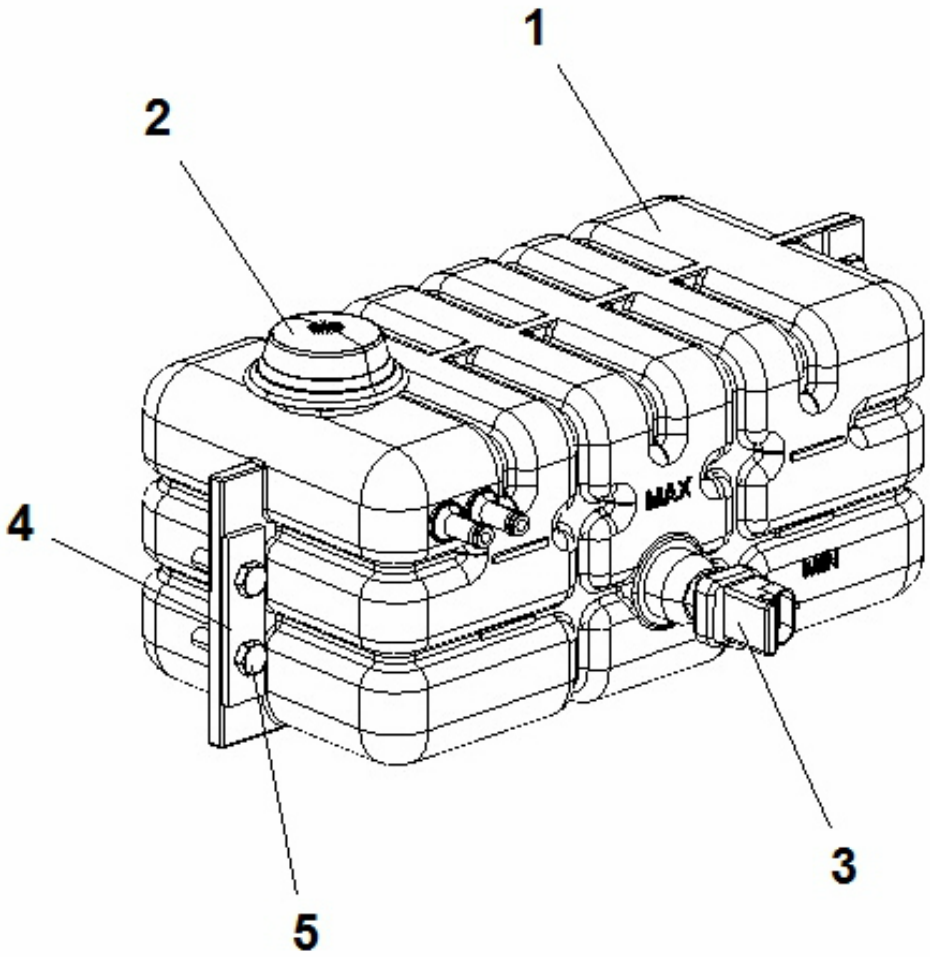

Item	Part No.	Name	Qty	L
1	4700392313	Expansion tank	1	
2	4700903714	Cooler cap	1	
3	4812114098	Level sensor	1	
4	4700381413	Washer	2	
5	4700500022	Screw	4	

Engine 4812115885 Air cleaner module and hose assy kit

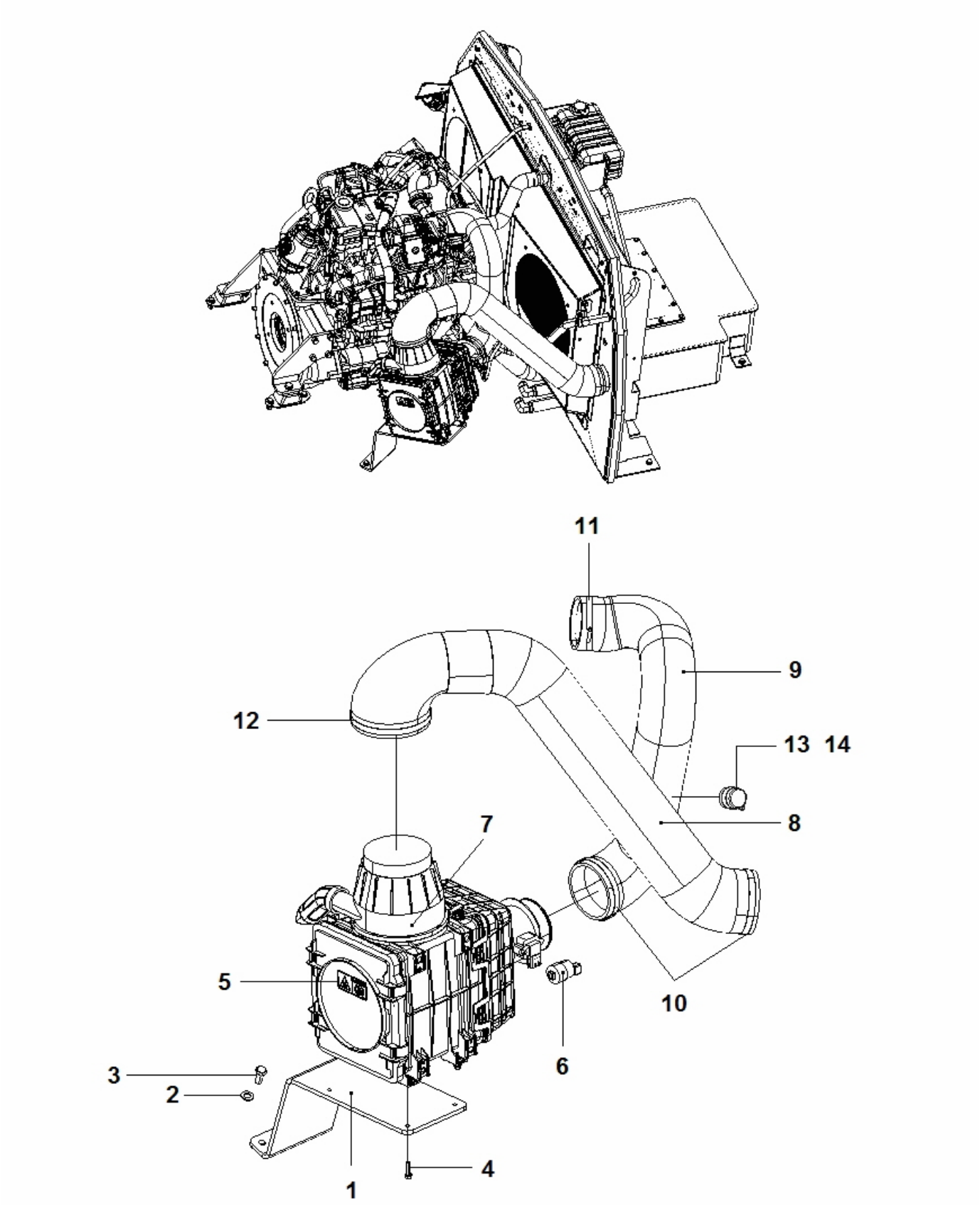

Item	Part No.	Name	Qty	L
1	4812115886	Bracket	1	
2	4700904231	Steel plain washer, 13x24x2 mm 300 HV	3	
3	4700500051	Hex. screw	3	
4	4700500502	Hexagon screw with flange M6 -25	4	
5	4700791642	Decal "WARNING" Use of starting fluid prohib.	1	
6	4700904575	Indicator	1	
7	4812117241	Air filter	1	
.7	4812159185	Air filter element	1	
.7	4812158191	Safety filter element	1	
8	4812115888	Air intake hose	1	
9	4812115889	Air intake hose	1	
10	4700389600	Hose clamp	2	
11	4700378712	Clamp	1	
12	4700379214	Clamp	1	
13	4700396391	Rubber Cover	1	
14	4700313035	Clamp	1	

Engine 4812118476 Belt guard module

1

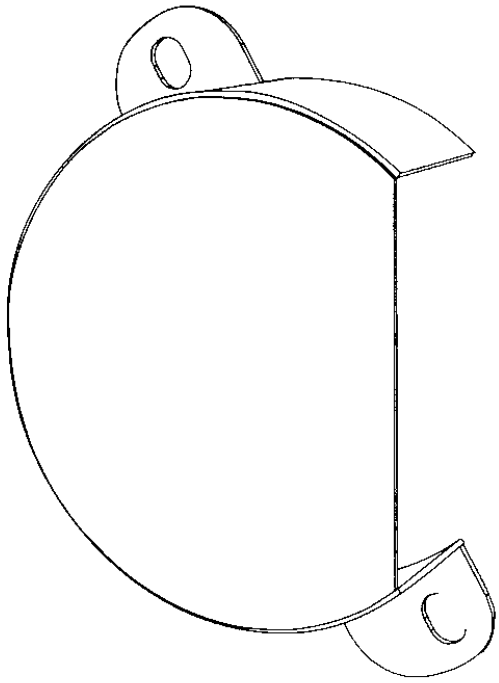

Item	Part No.	Name	Qty	L
1	4812118478	Belt guard	1	

4812115890 Exhaust system module 4812115890 Exhaust system module

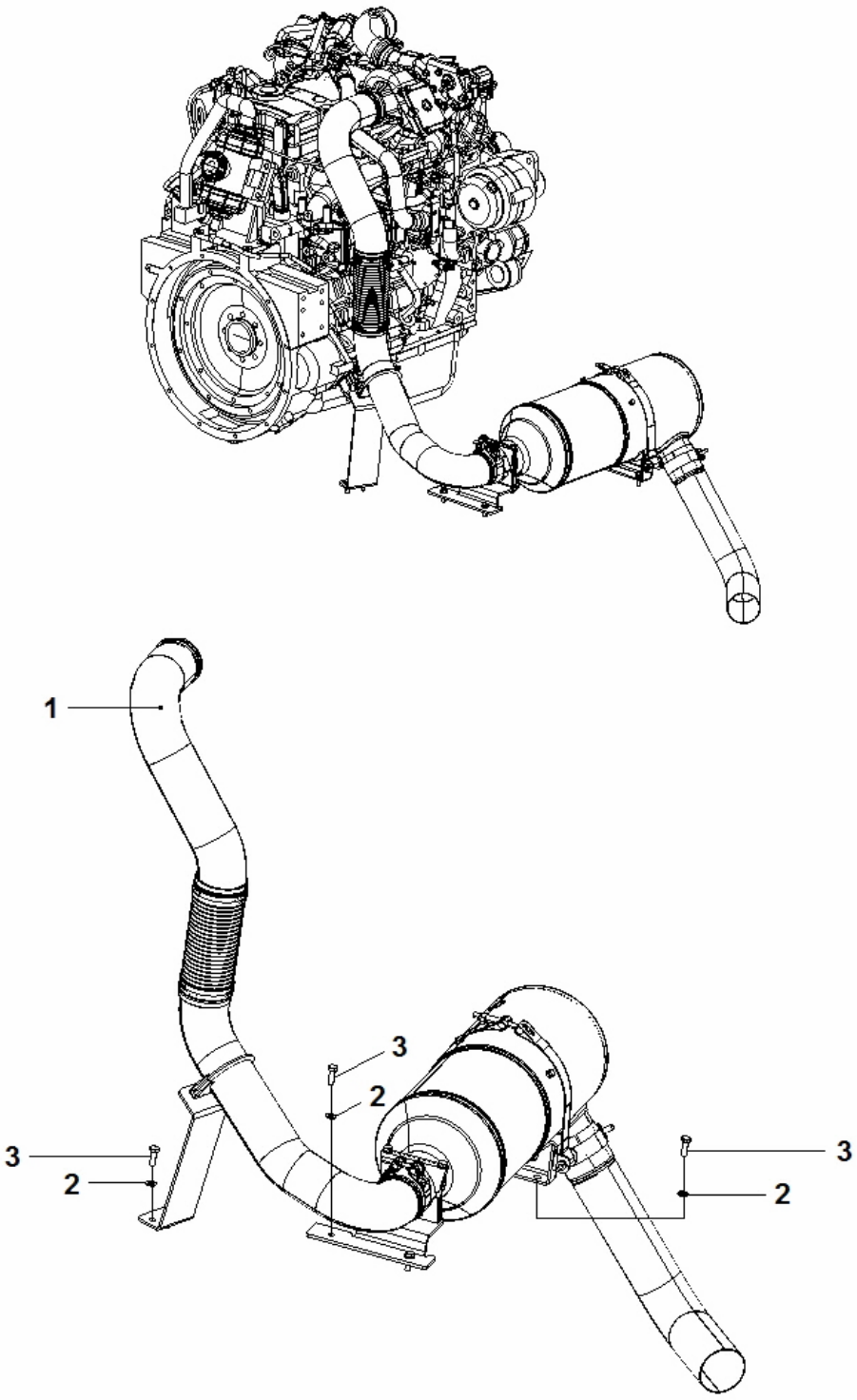

Item	Part No.	Name	Qty	L
1		Exhaust system	1	
2	4700904229	Washer, 8.4x16x1.5 mm 300 HV	6	
3	4700500021	Hex. screw	6	

4812115891 Exhaust system 4812115891 Exhaust system

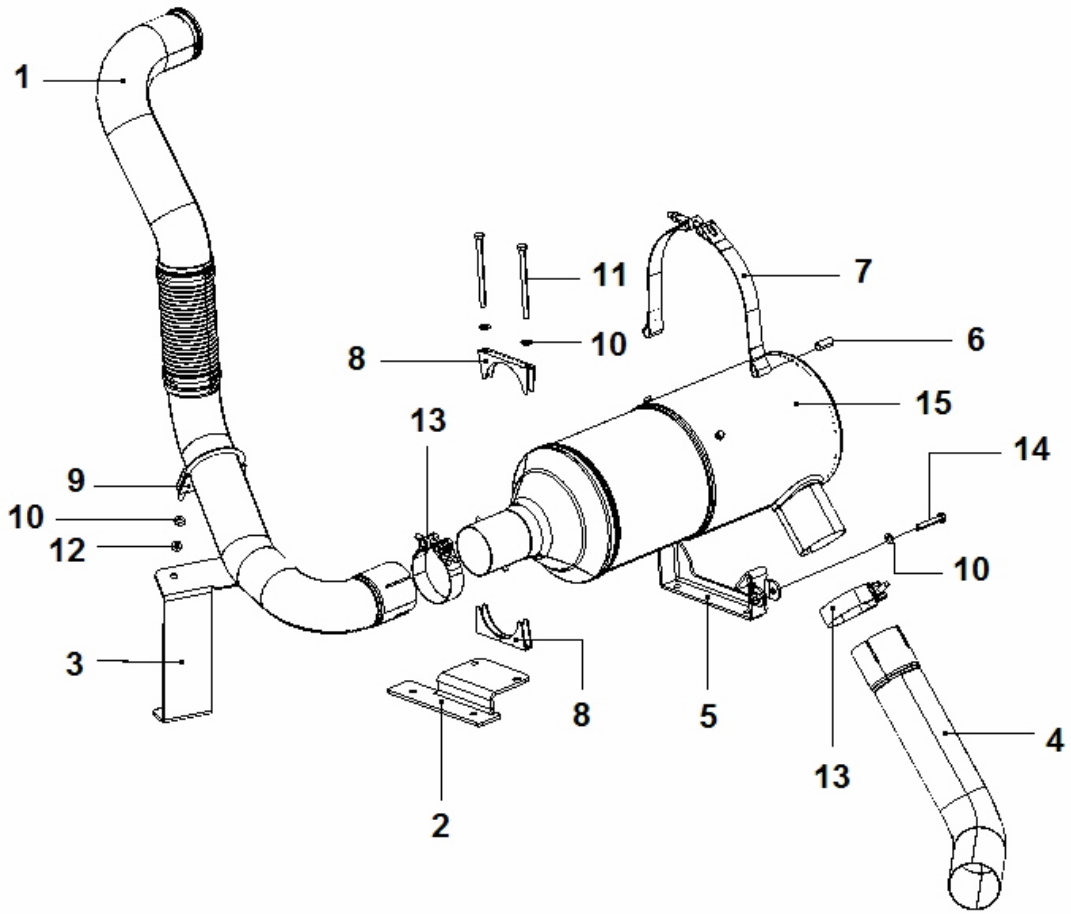

Item	Part No.	Name	Qty	L
1	4812115895	Exhaust pipe	1	
2	4812115892	Bracket	1	
3	4812115893	Bracket	1	
4	4812115896	Exhaust pipe	1	
5	4812115894	Holder	1	
6	4812115581	Spacer sleeve	2	
7	4812115335	Clamp	1	
8	4812118676	Pipe clamp	2	
9	4700313093	Pipe clamp	1	
10	4700904229	Washer, 8.4x16x1.5 mm 300 HV	6	
11	4700500180	Hex. screw	2	
12	4700570005	Hex. nut	2	
13	4812113999	Clamp	2	
14	4700500024	Screw M8x45	2	
15	4812116995	Catalytic coverter	1	

4812116000 Hydraulic oil cooler module 4812116000 Hydraulic oil cooler module

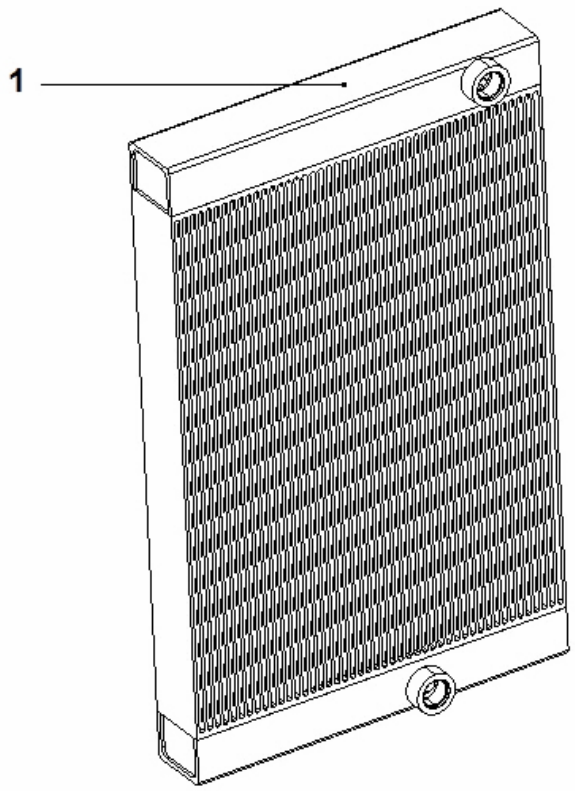

Item	Part No.	Name	Qty	L
1	4812116004	Hydraulic oil cooler	1	

4812116001 Water cooler module 4812116001 Water cooler module

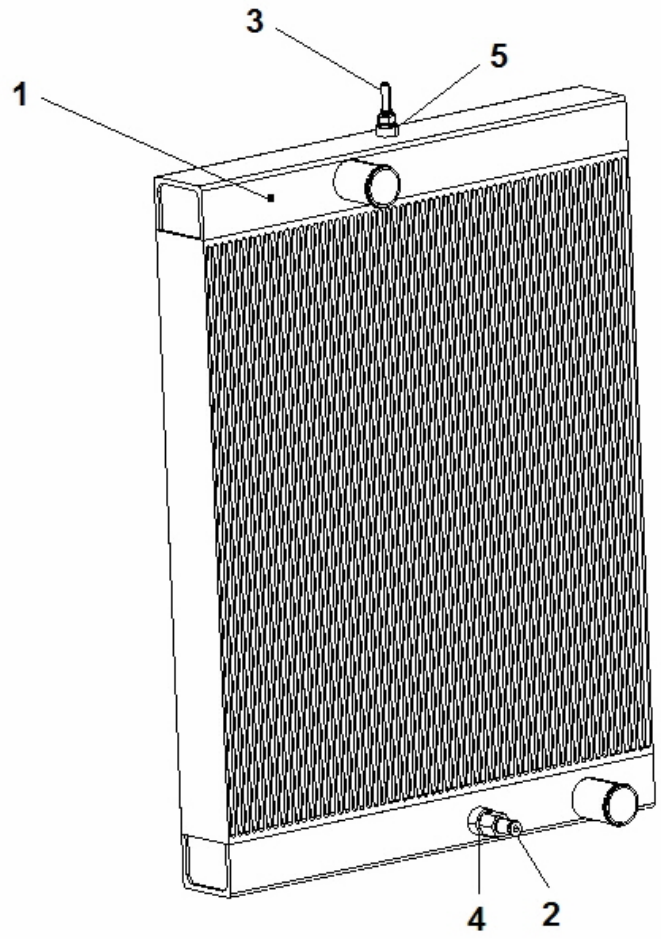

Item	Part No.	Name	Qty	L
1	4812116005	Water cooler	1	
2	4700391303	Hose connection	1	
3	4700792322	Hose connection	1	
4	4700162011	Washer, sealing	1	
5	4700162004	Sealing	1	

4812116002 Charge air cooler 4812116002 Charge air cooler

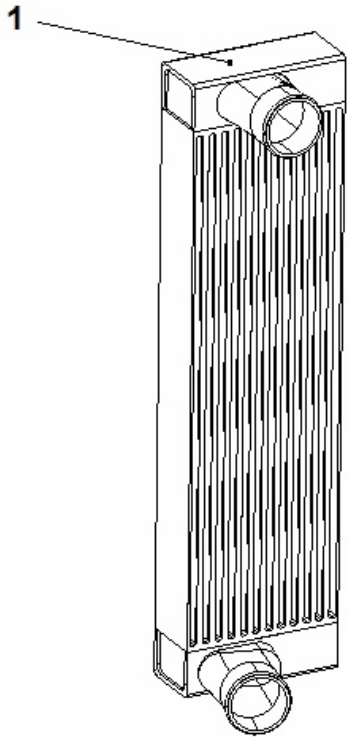

Item	Part No.	Name	Qty	L
1	4812116006	Charge air cooler	1	

4812116186 Hose assy kit 4812116186 Hose assy kit

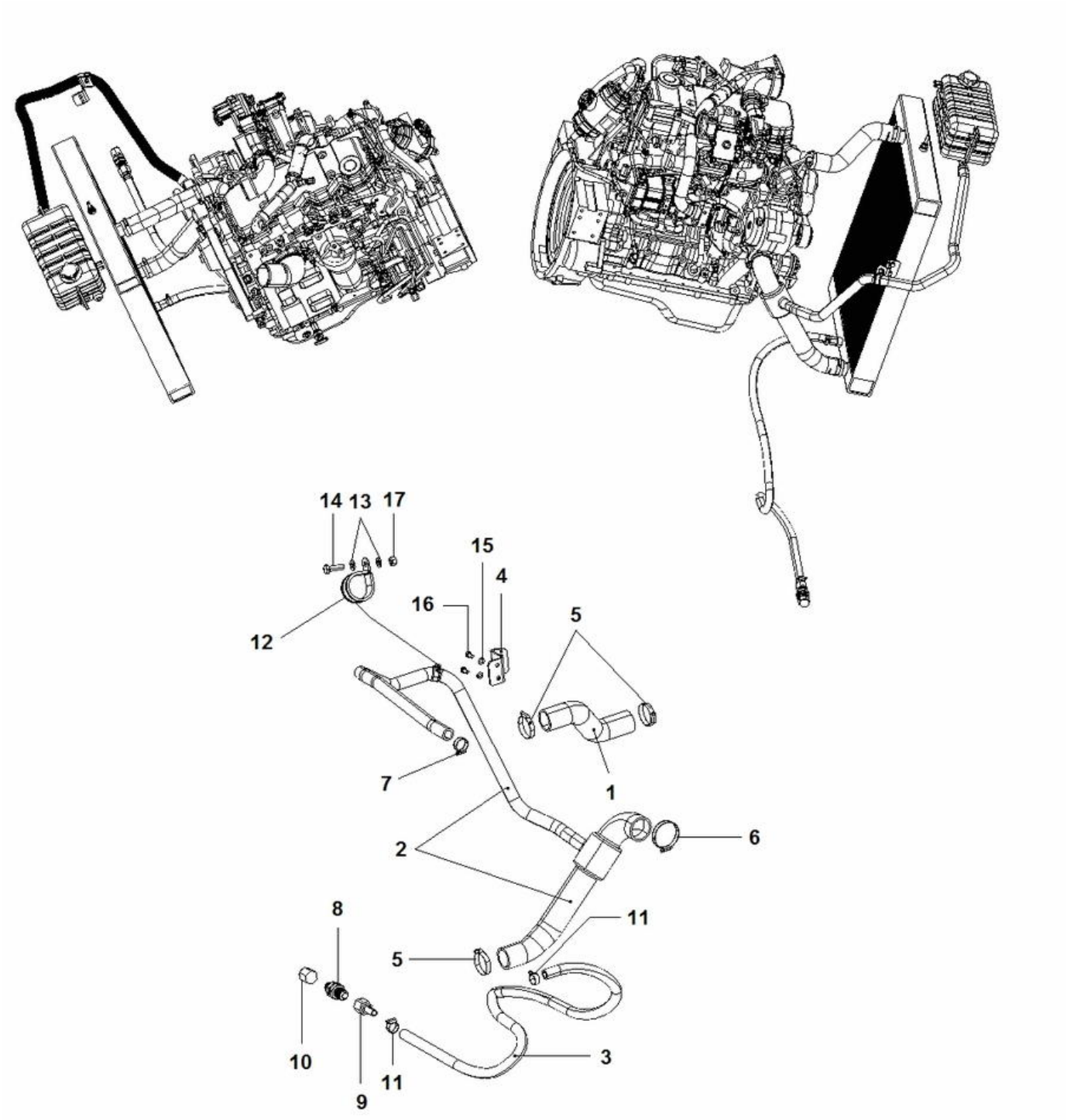

Item	Part No.	Name	Qty	L
1	4812116189	Coolant hose	1	
2	4812116188	Coolant hose	1	
3	4700205112	Coolant hose	1XL	A
4	4812116190	Bracket	1	
5	4700313010	Hose clamp	3	
6	4700313023	Hose clamp	1	
7	4700313035	Clamp	1	
8	4700230456	Straight connector	1	
9	4700792788	Hose connection	1	
10	4700230401	Plug	1	
11	4700313004	Hose clamp 19-29mm	2	
12	4700921084	Pipe clamp	1	
13	4700904228	Steel plain washer	2	
14	4700500040	Screw	1	
15	4700904229	Washer, 8.4x16x1.5 mm 300 HV	2	
16	4700500019	Hex. screw	2	
17	4700570004	Hex. nut	1	

Comments for Page: 4812116186 Hose assy kit

(L)OCAL REMARKS

A | en_US | L=1,55 m

4812116210 Hose assy kit 4812116210 Hose assy kit

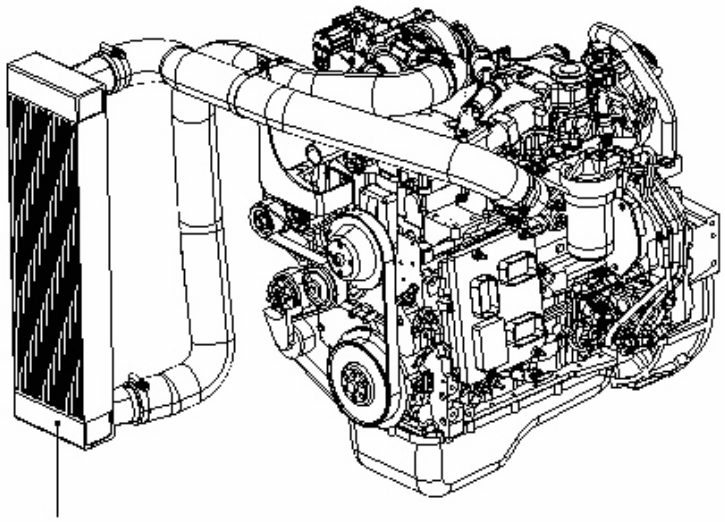

CHARGE AIR COOLER MODULE

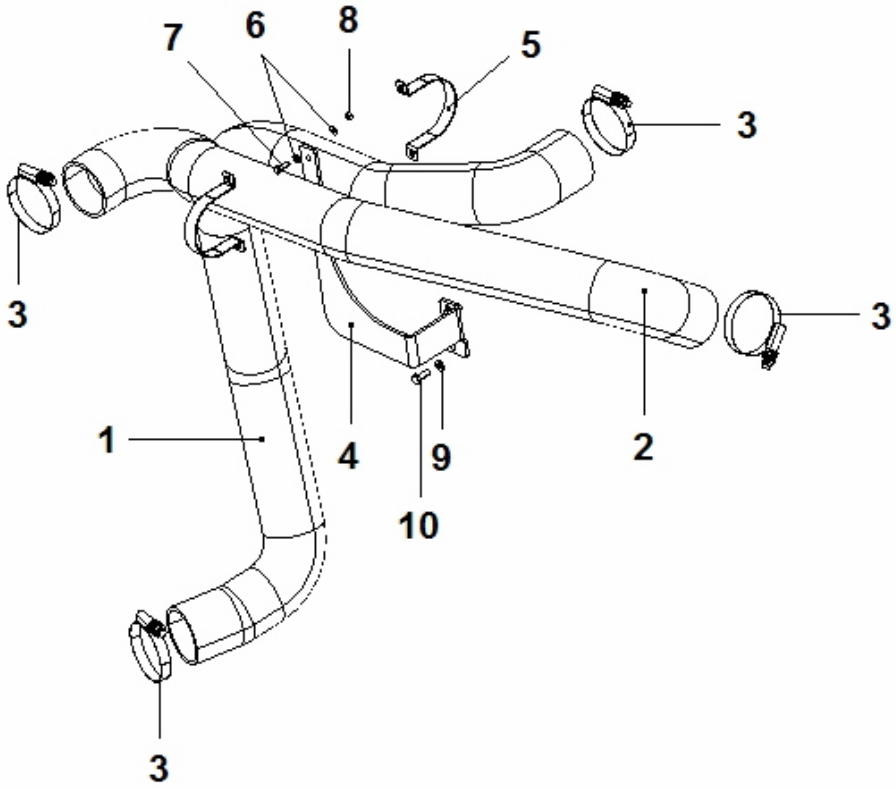

Item	Part No.	Name	Qty	L
1	4812116212	Charge air hose	1	
2	4812116213	Charge air hose	1	
3	4700386966	Hose clamp 2.3/4"-3.5/8"	4	
4	4812116214	Bracket	1	
5	4700392742	Clamp	2	
6	4700904228	Steel plain washer	4	
7	4700500040	Screw	2	
8	4700570004	Hex. nut	2	
9	4700904229	Washer, 8.4x16x1.5 mm 300 HV	2	
10	4700500053	Hex. screw	2	

Gear module Gear module

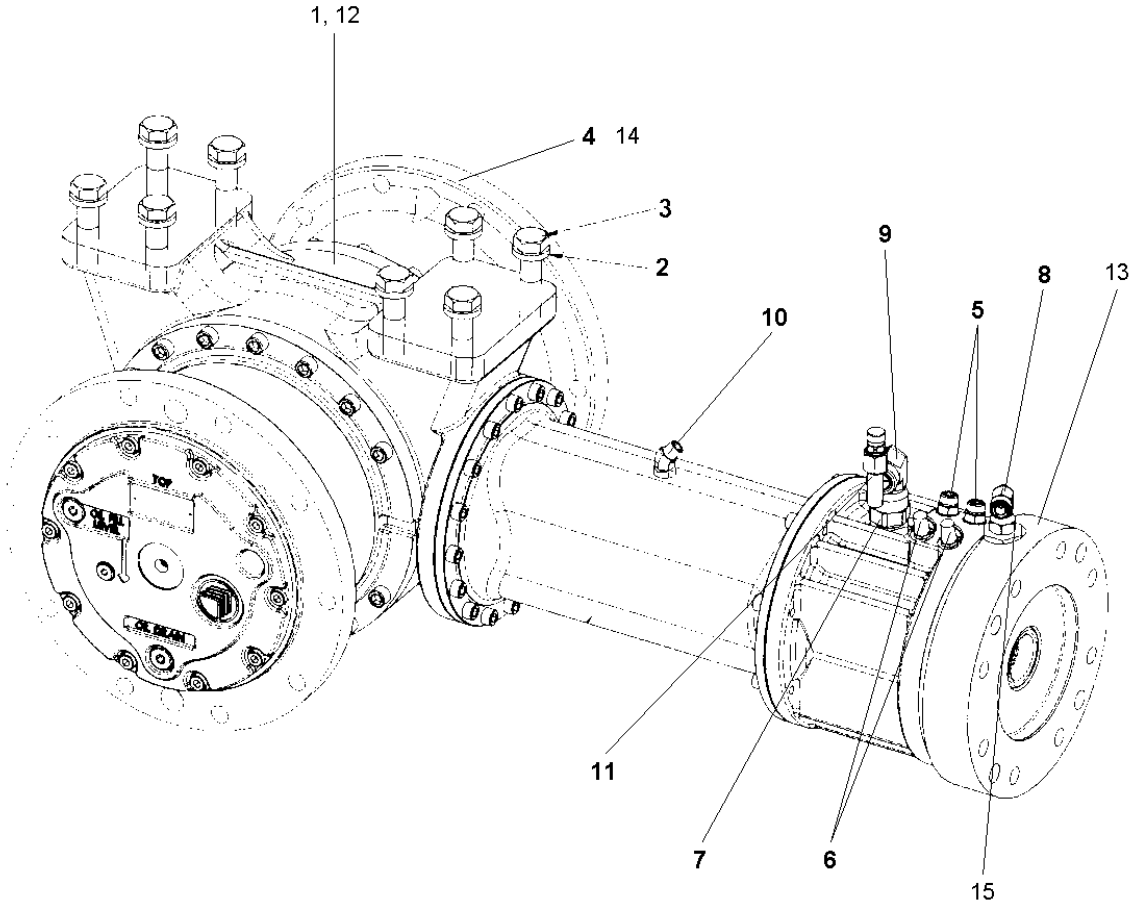

Item	Part No.	Name	Qty	L
1	-	Brake flange	1	
2	4700903290	Steel plain washer 21x36x6	8	
3	4700947706	Hex. screw	8	A
4	4700395139	Gear	1	
5	4700792177	Straight connector	2	
6	4700923405	Measuring nipple	2	
7	4700904728	Adapter	1	
8	4700904766	Elbow connector 90°	1	A
9	4700904584	Elbow connector 90°	1	
10	4700792443	Elbow connector 45	1	
11	4700396338	Connector	1	
12	-	Gear module sealing kit	1	
13	-	Negative multidisc brake repair kit	1	
14	-	Gearbox repair kit	1	
15	0570702503	Elbow 90	1	A

Comments for Page: Gear module

(L)OCAL REMARKS

A | en_US | From SN J0B000915 (CP-274), C0B000916 (CP-224) and K0B000922 (CP-224W)

Gear module Negative multidisc brake repair kit

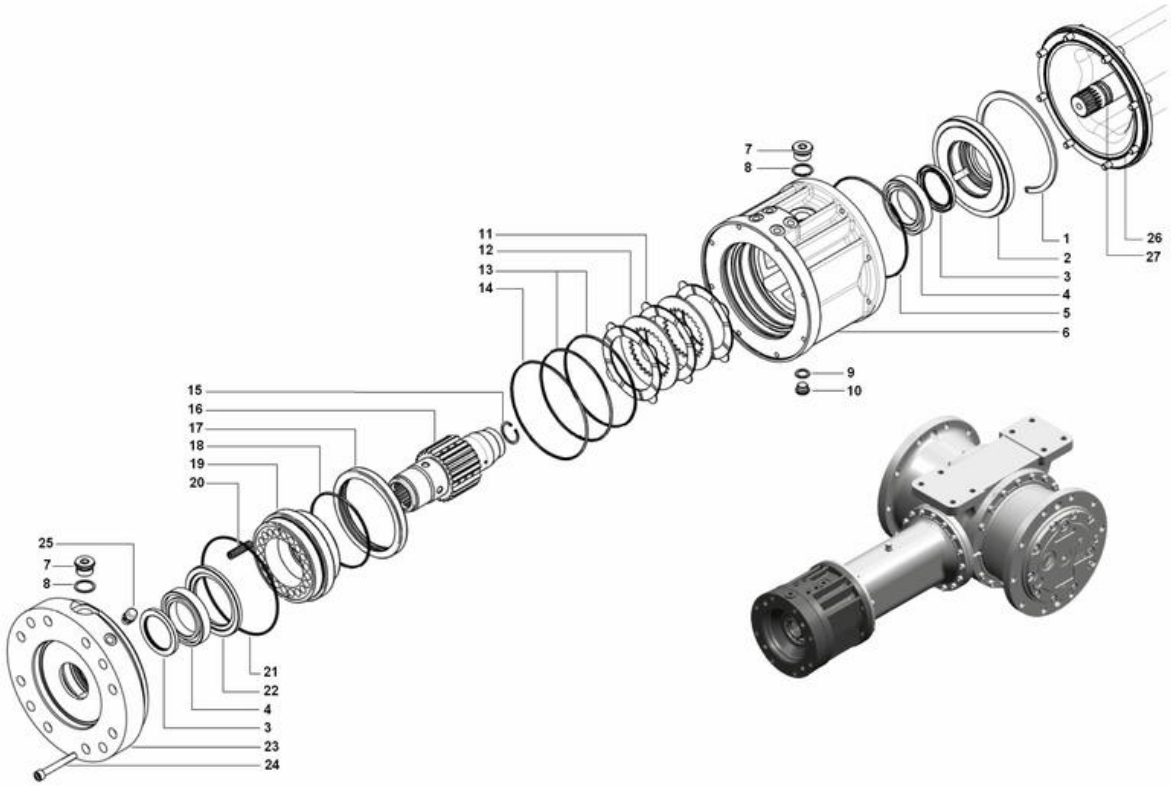

Item	Part No.	Name	Qty	L
1	4812100874	Circlip	1	
2	4812100875	Spring	1	
3	4812100446	Seal ring 60x80x7	2	
4	4812100447	Bearing	2	
5	4812100448	O-ring 171,00x3,53	1	
6	4812100878	Brake housing	1	
7	4812100879	Plug	2	
8	4812100880	Washer 27x33x1,5	2	
9	4812100881	Washer 17x23x1,5	1	
10	4812100882	Plug	1	
11	4812100449	Sintered disc	9	
12	4812100450	Steel disc	8	
13	4700480622	O-ring 3,53x151,99	2	
14	4700160048	O-ring 164,69x3,53	1	
15	4812100883	Circlip	1	
16	4812100884	Brake shaft	1	
17	4812100885	Spacer	1	
18	4700813647	O-ring 3,53x126,59	1	
19	4812100886	Brake piston	1	
20	4812100887	Spring	17	
21	4812100451	O-ring 3,53x142,47	1	
22	4812100452	Spacer	1	
23	4812100888	Motor adapter	1	
24	4812100889	Screw	8	
25	4812100453	Breather plug M14x1.5	1	
26	4812100422	O-ring 2,62x202,87	1	
27	4812100425	O-ring 32,93x3,53	2	

Gear module Gear module sealing kit

Item	Part No.	Name	Qty	L
1	4700160107	O-ring 3,53X291,69	2	
2	4812100423	Coupling 40X36X20 DIN5482	1	
3	4812100422	O-ring 2,62x202,87	2	
4	4812100424	Splined shaft 40X36X20 DIN5482	1	
5	4812100425	O-ring 32,93x3,53	2	

Gear module Gearbox repair kit

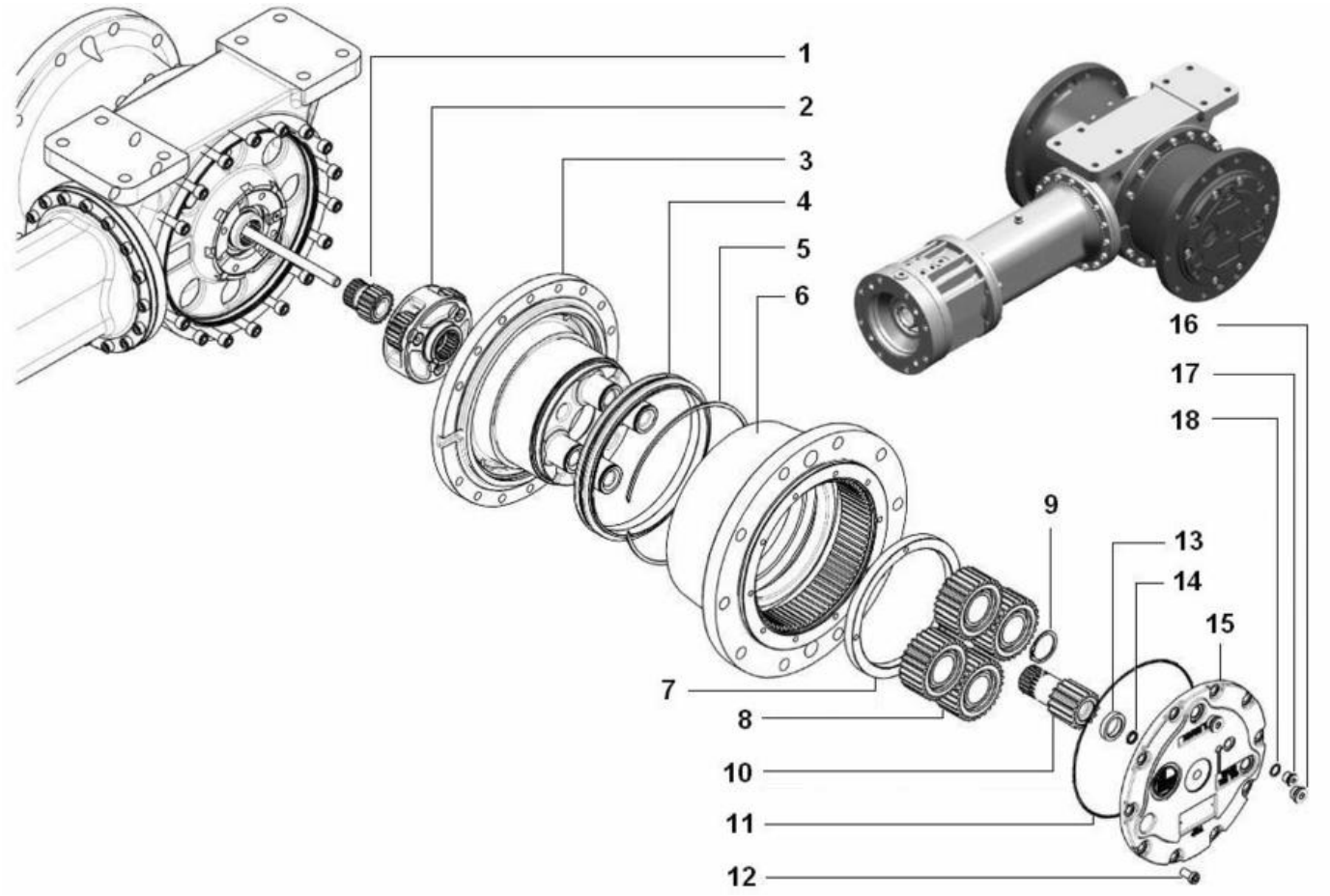

Item	Part No.	Name	Qty	L
1	4812100439	Sun gear	1	
2	4812100440	Reduction assy	1	
3	4812101607	Hub	1	
4	4812100441	Lifetime seal	1	
5	4812101608	Circlip	1	
6	4812101609	Gearbox housing + Main bearing	1	
7	4812101610	Nut	1	
8	4812100442	Planet gear	4	
9	4812101611	Circlip	4	
10	4812100443	Sun gear	1	
11	4812100444	O-ring	1	
12	4812101612	Screw	4	
13	4812101613	Pad	1	
14	4812100445	Gasket	1	
15	4812101614	Cover assembly	1	
16	4812101615	Washer	1	
17	4812101616	Plug	1	
18	4812101617	Plug	2	

Gear module Gear module repair kit

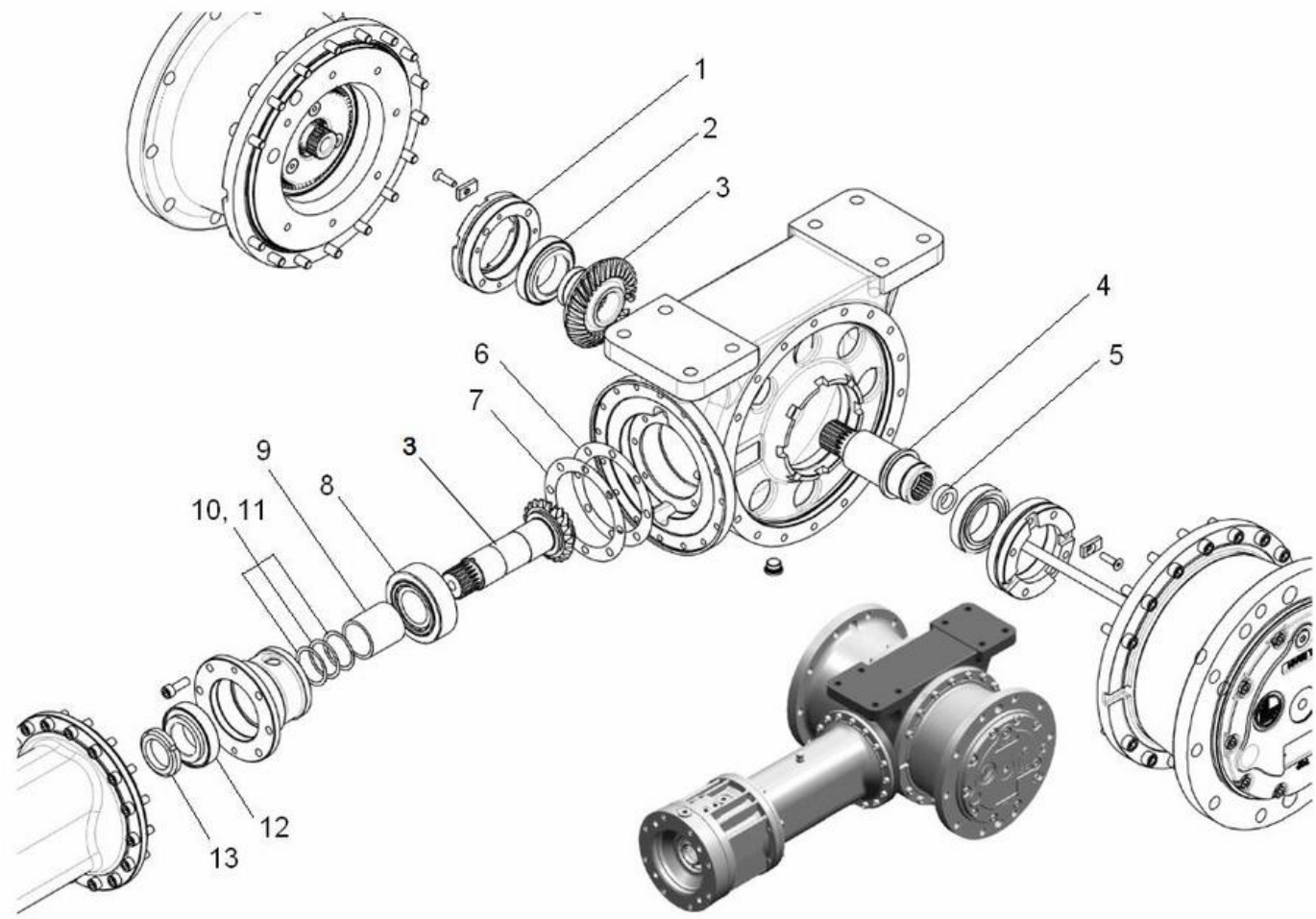

Item	Part No.	Name	Qty	L
1	4812100426	Nut	2	
2	4812100427	Bearing	2	
3	4812100428	Bevel gear (pair)	1	
4	4812100429	Hub	1	
5	4812100430	Spacer	1	
6	4812100431	Spacer	2	
7	4812100432	Spacer	2	
8	4812100433	Bearing	1	
9	4812100434	Spacer	1	
10	4812100435	Spacer	2	
11	4812100436	Spacer	2	
12	4812100437	Bearing	1	
13	4812100438	Nut	1	

Protective cover module, option Rear Protective cover module, option Rear

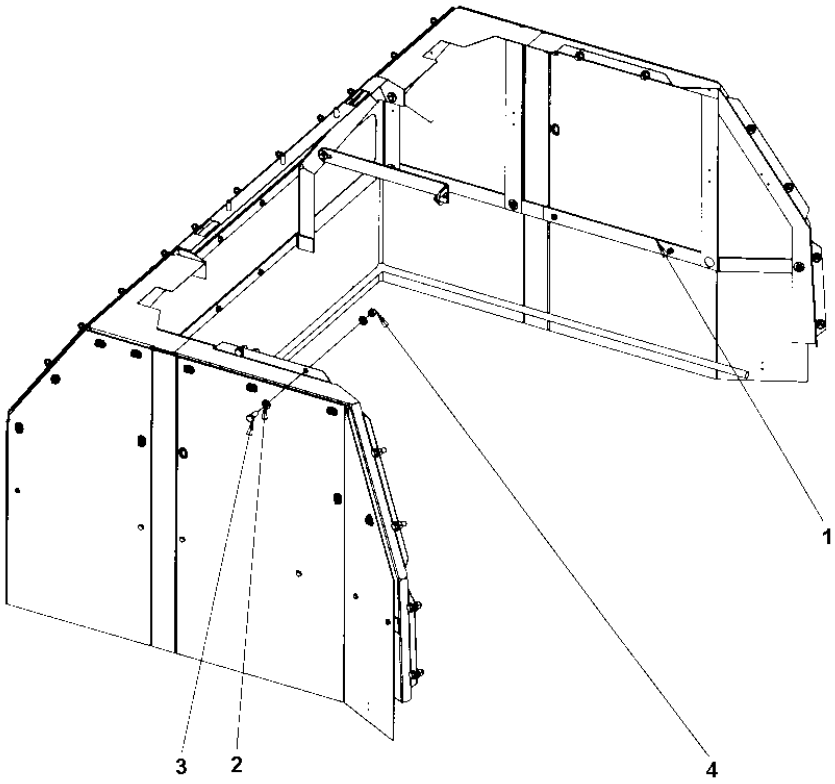

Item	Part No.	Name	Qty	L
1	-	Bracket assy, Protective cover Rear	1	
2	4700904231	Steel plain washer, 13x24x2 mm 300 HV	29	
3	4700500046	Hex. head screw M12x030H	17	
4	4700928849	Nut	12	

Bracket assy, Protective cover Rear Bracket assy, Protective cover Rear

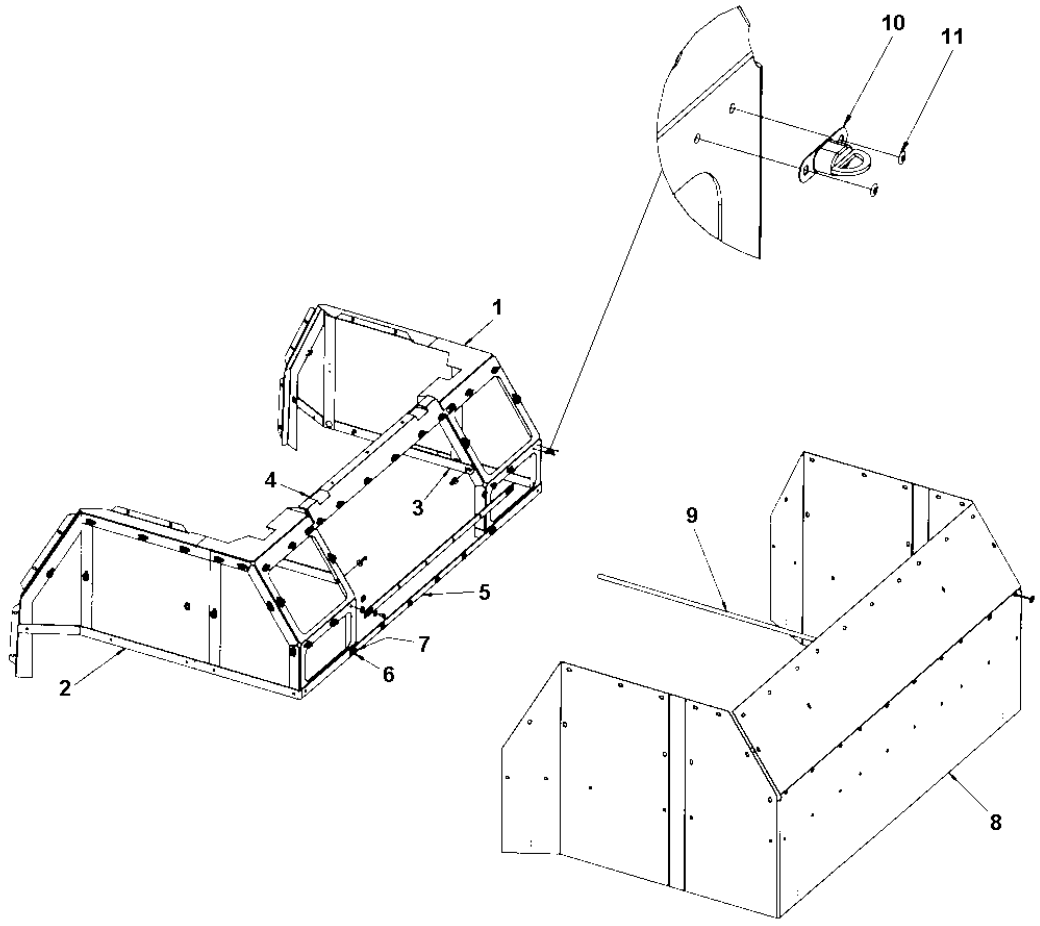

Item	Part No.	Name	Qty	L
1	4812111008	Bracket	1	
2	4812111009	Protective cover bracket	1	
3	4812110950	Bracket	2	
4	4812110963	Bracket	1	
5	4812110964	Bracket	2	
6	4700904734	Washer, 8.4x26x4 mm 300 HV	17	
7	4700500053	Hex. screw	22	
8	4812110871	Plastic cloth	1	
9	4700397399	Bar	4	
10	4700792801	Turn fastener	41	
11	4700624005	Blind rivet 3,2x6,1	62	

Front suspension Front suspension

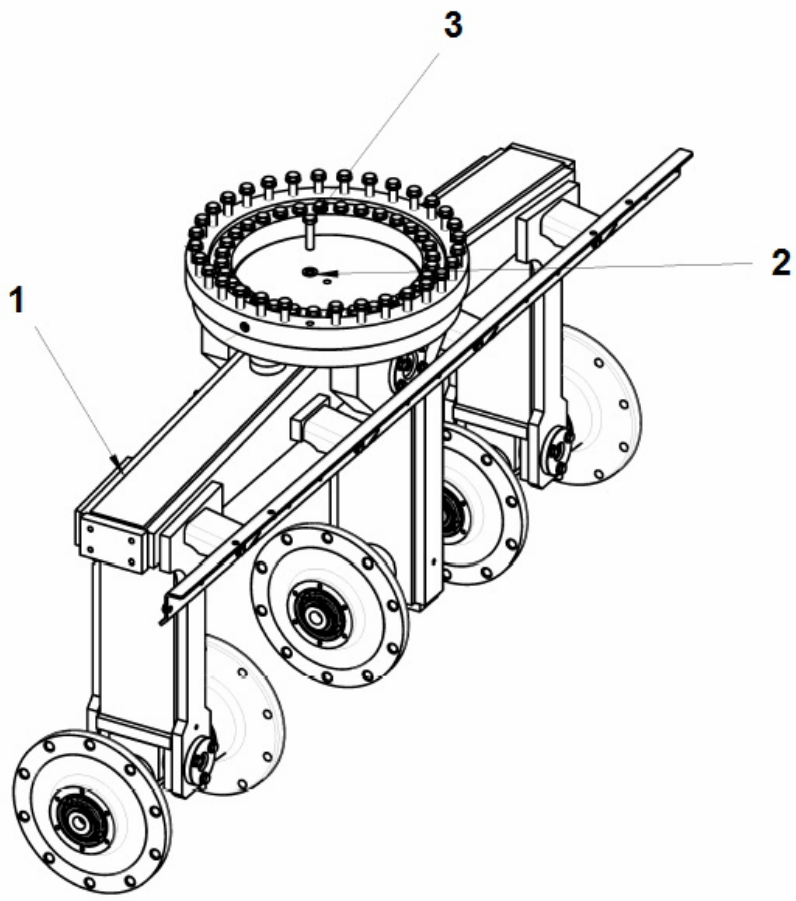

Item	Part No.	Name	Qty	L
1	-	Front suspension	1	
2	4700904232	Steel plain washer	32	
3	4700500058	Screw M16-2,0x65 8,8	32	

Front suspension Front suspension

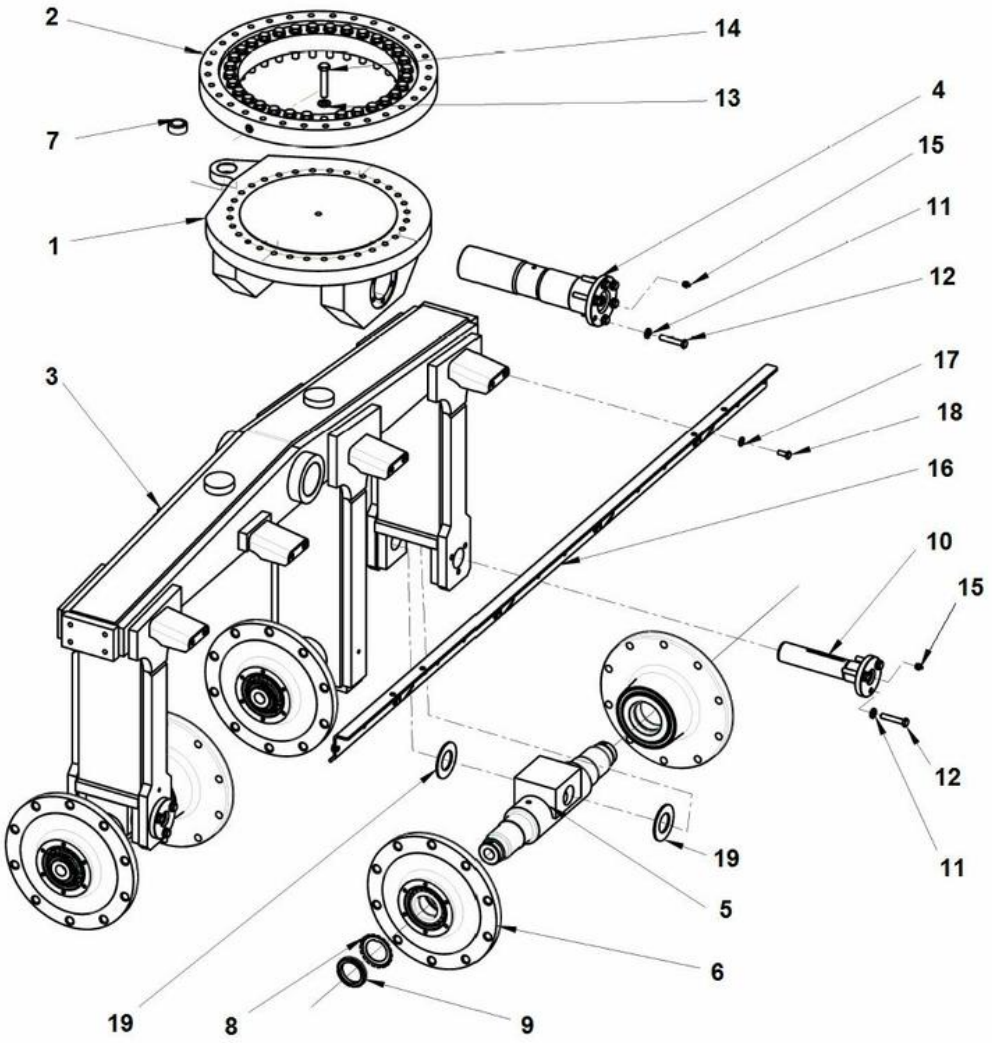

Item	Part No.	Name	Qty	L
1	4812315457	Tilt holder	1	
2	4812266355	Slewing bearing	1	
3	4700170104	Yoke	1	
4	4700170136	Tilt shaft cpl.	1	
5	4700170117	Wheel shaft cpl.	2	
6	-	Hub	5	
7	4700792554	Radial spherical plain bearing	1	
8	4700136011	Lock washer	5	
9	4700135011	Lock nut	5	
10	4700170125	Tilt shaft cpl.	2	
11	4700904703	Plain washer 13x24x4 mm	12	
12	4700947712	Hexagon head screw m	12	
13	4700904232	Steel plain washer	32	
14	4700500135	Hex. screw	32	
15	4811000106	Grease nipple	3	
16	4700170275	Scraper bracket	1	
17	4700904230	Washer	8	
18	4700500028	Screw, M10x25 mm 8.8 A3K	8	
19	4700397437	Spacer	4	

Front suspension Hub

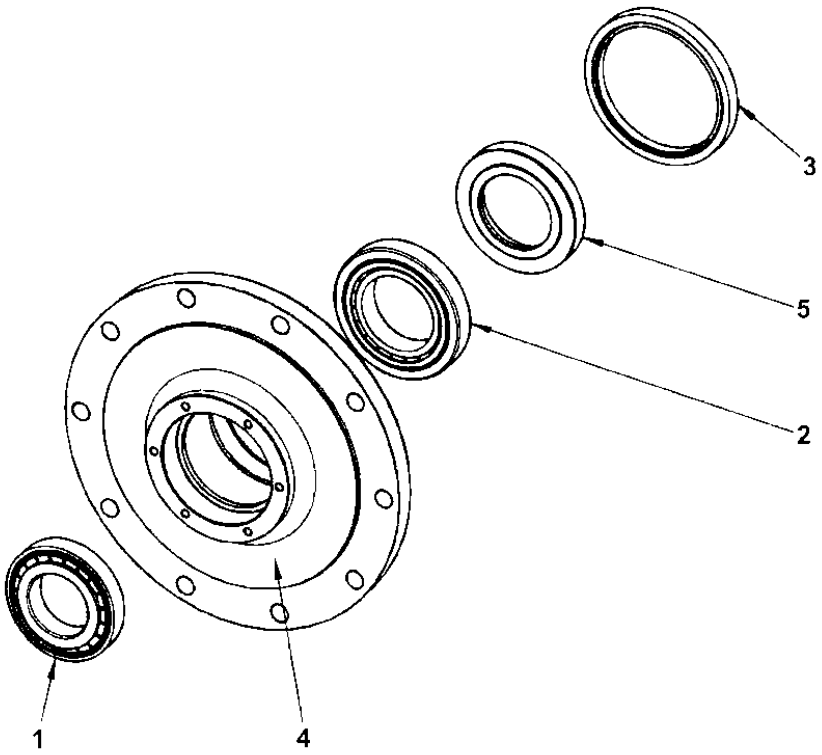

Item	Part No.	Name	Qty	L
1	4700116009	Bearing	1	
2	4700116016	Bearing	1	
3	4700163108	Seal ring	1	
4	4700170122	Hub	1	
5	4700255658	Ring	1	

Cover module Cover module

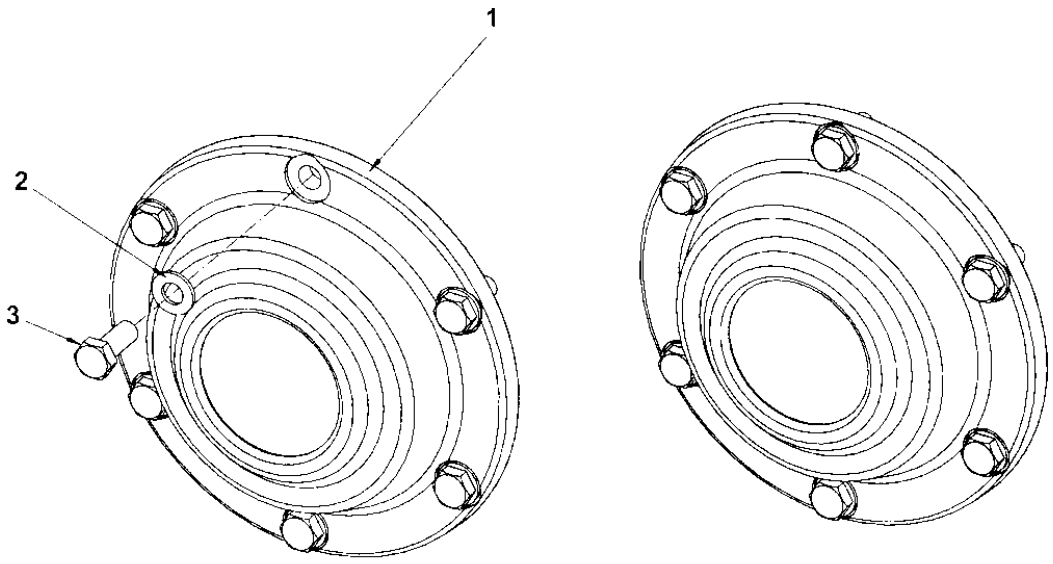

Item	Part No.	Name	Qty	L
1	-	Cover	1	
2	4700904229	Washer, 8.4x16x1.5 mm 300 HV	6	
3	4700500053	Hex. screw	3	

Cover Cover

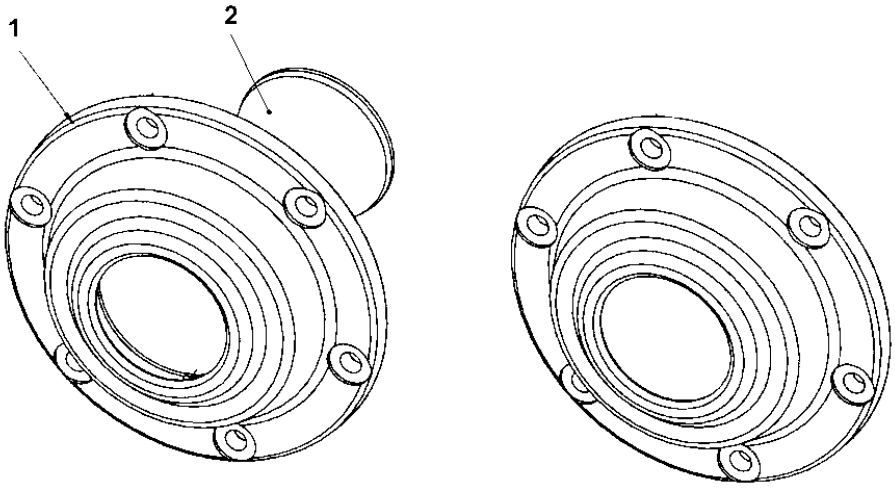

Item	Part No.	Name	Qty	L
1	4700170139	Cover	1	
2	4700380533	Protection cover	1	

Protective cover module, option Front Protective cover module, option Front

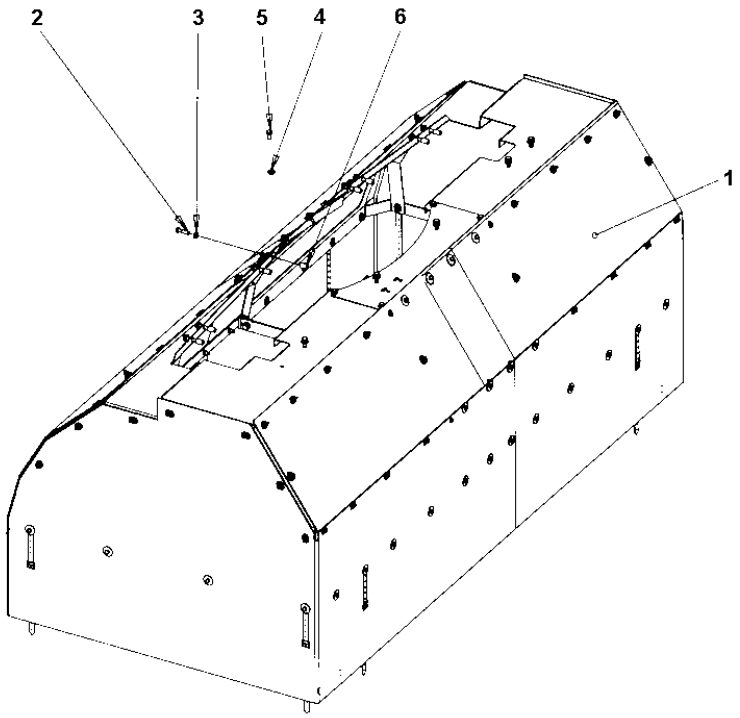

Item	Part No.	Name	Qty	L
1	-	Bracket assy, Protective cover	1	
2	4700500031	Screw	8	
3	4700904557	Washer, 10.5x22x4 mm 300 HV	8	
4	4700904231	Steel plain washer, 13x24x2 mm 300 HV	6	
5	4700500035	Hexagon screw, M12x20H	6	
6	4700373507	Spacer	8	

Bracket assy, Protective cover Bracket assy, Protective cover

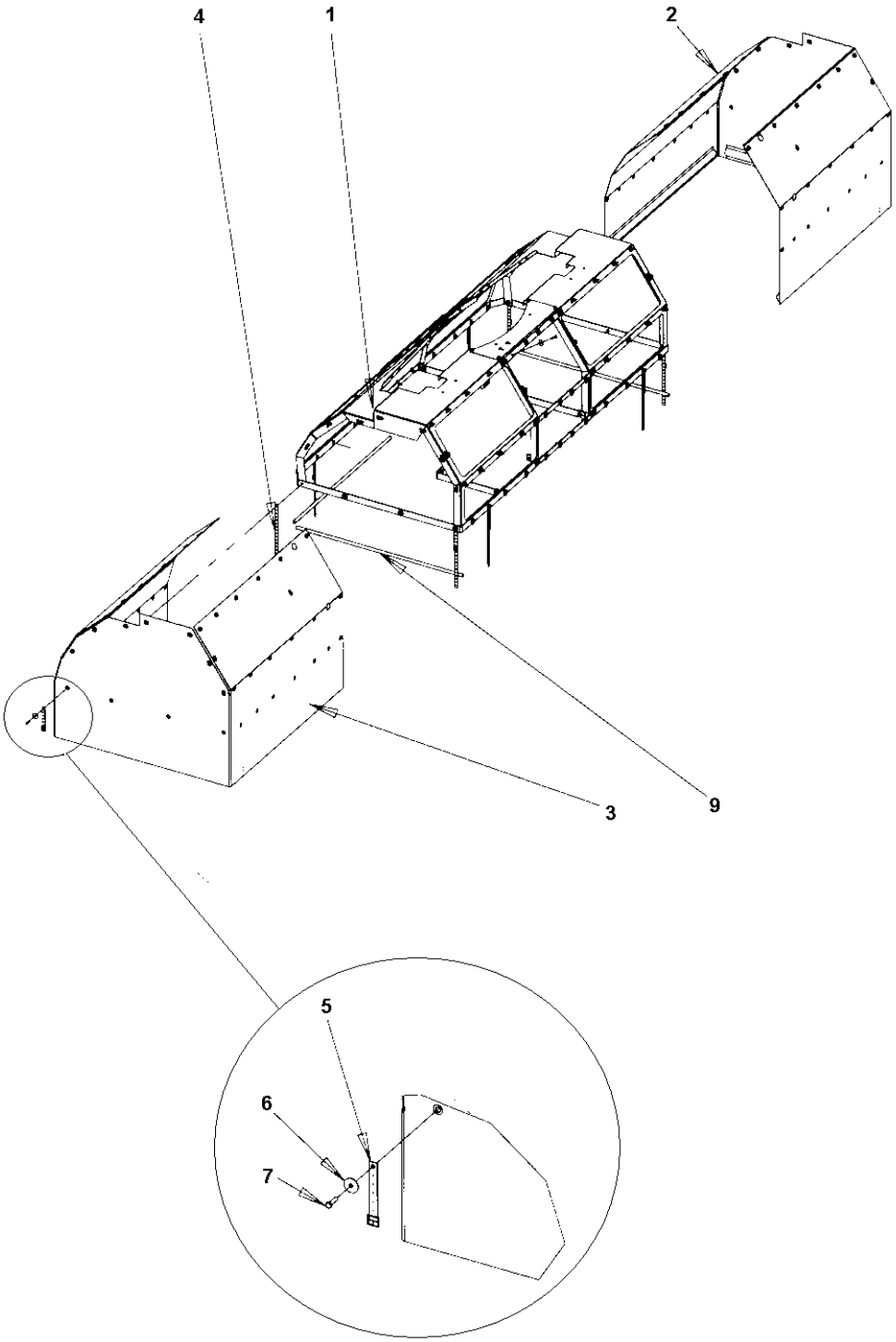

Item	Part No.	Name	Qty	L
1	-	Bracket assy, Protective cover	1	
2	4812110825	Protective cover	1	
3	4812110825	Protective cover	1	
4	4811000112	Catching belt	14	
5	4811000113	Catching belt	14	
6	4700615050	Washer	52	
7	4700500022	Screw	52	
8	4700904640	Washer, 8.4x 2x3 mm 300 HV	9	
9	4700397399	Bar	4	

Bracket assy, Protective cover Bracket assy, Protective cover

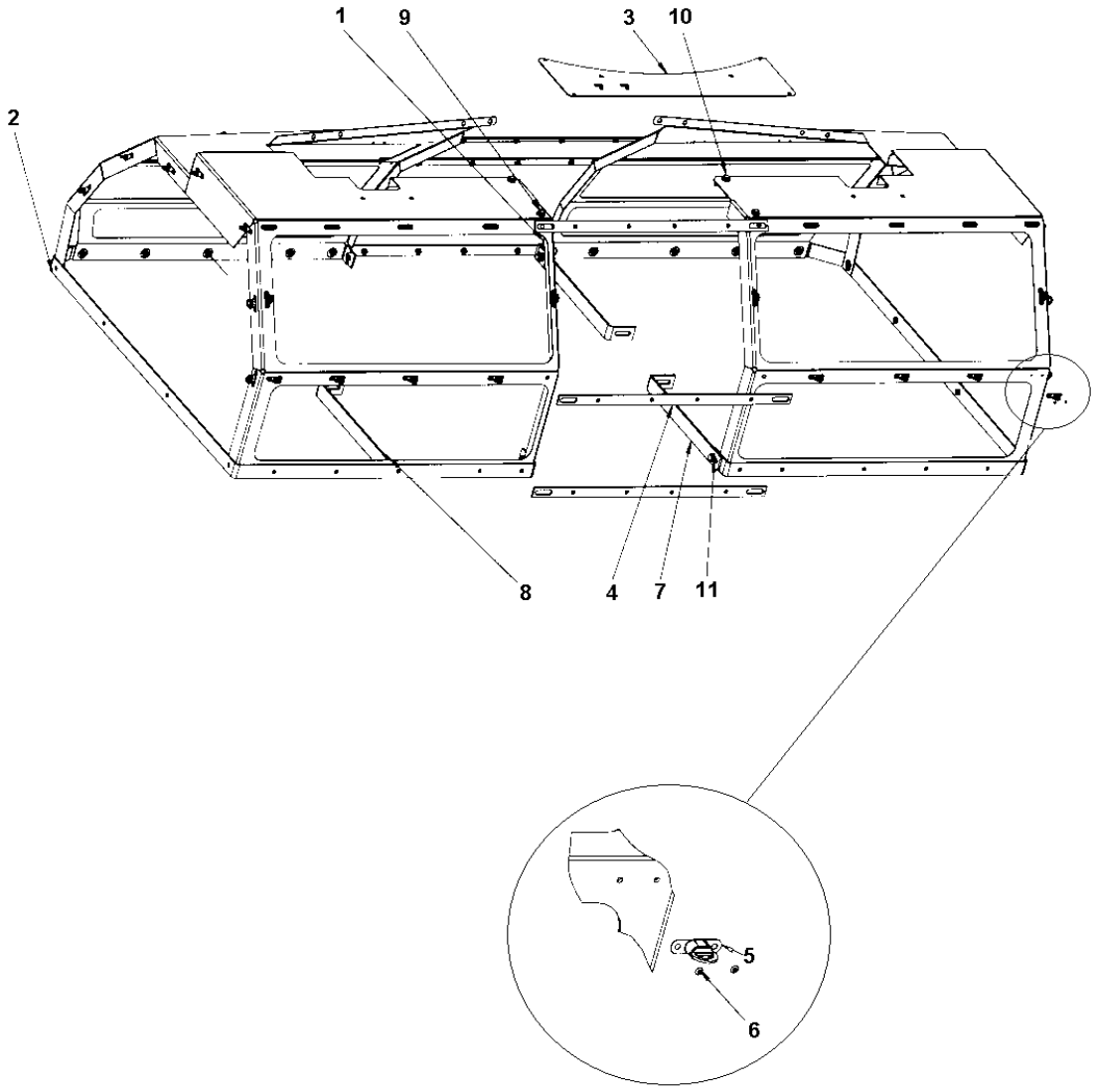

Item	Part No.	Name	Qty	L
1	4812110733	Left bracket	1	
2	4812110734	Right bracket	1	
3	4812110730	Cover plate	1	
4	4812110731	Bracket	6	
5	4700792801	Turn fastener	37	
6	4700624005	Blind rivet 3,2x6,1	70	
7	4812110732	Bracket	3	
8	4812111846	Bracket	1	
9	4700904557	Washer, 10.5x22x4 mm 300 HV	7	
10	4700500048	Screw	4	
11	4700500028	Screw, M10x25 mm 8.8 A3K	3	

Wheel module, option Michelin Wheel module, option Michelin

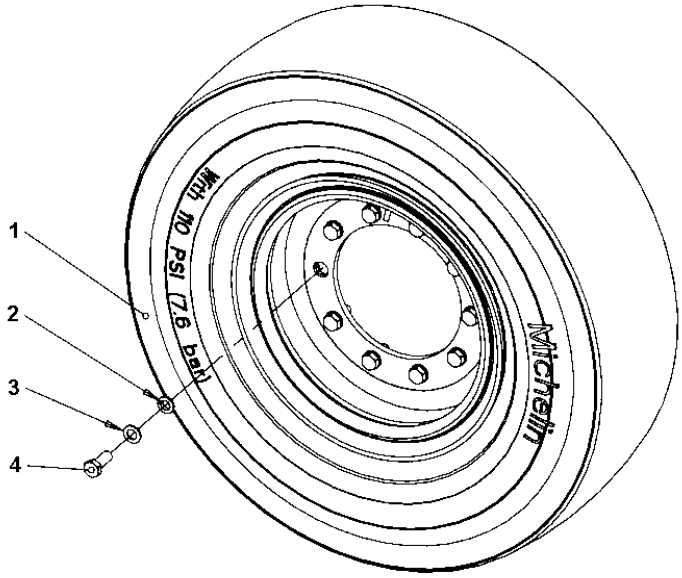

Item	Part No.	Name	Qty	L
1	-	Wheel Michelin	1	
2	4700902252	Washer	10	
3	4700904233	Steel plain washer 21x36x3	10	
4	4700792683	Screw	10	

Wheel Michelin Wheel Michelin

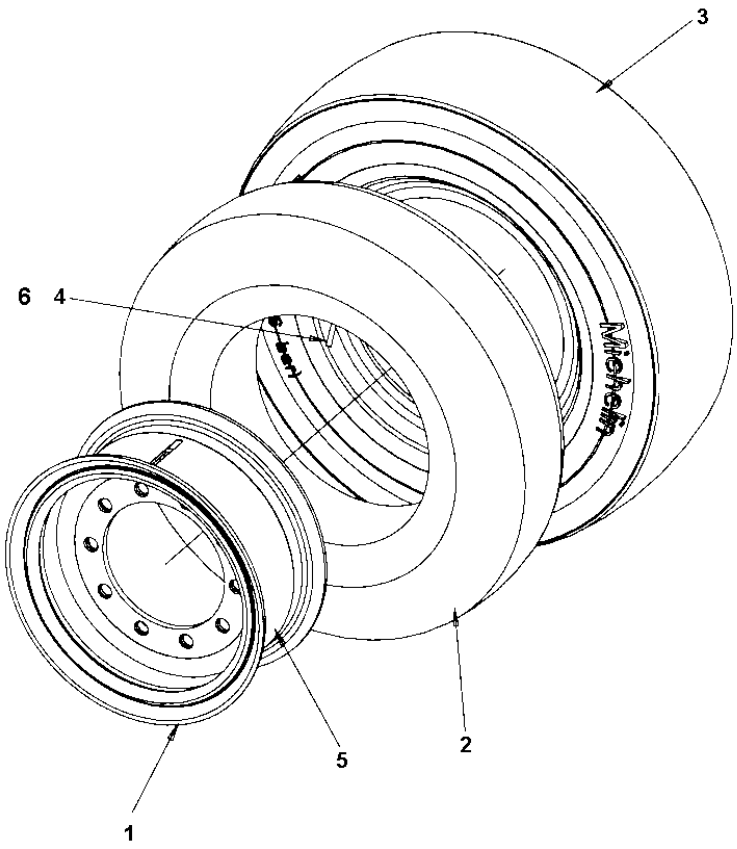

Item	Part No.	Name	Qty	L
1	4700170130	Rim	1	
2	4700170558	Air tube	1	
3	4700901317	Tyre, smooth Michelin	1	
4	4700170550	Valve	1	
5	4700198243	Flap	1	
6	4700264984	Washer	1	

4812100082 Wheel module Otani 4812100082 Wheel module Otani

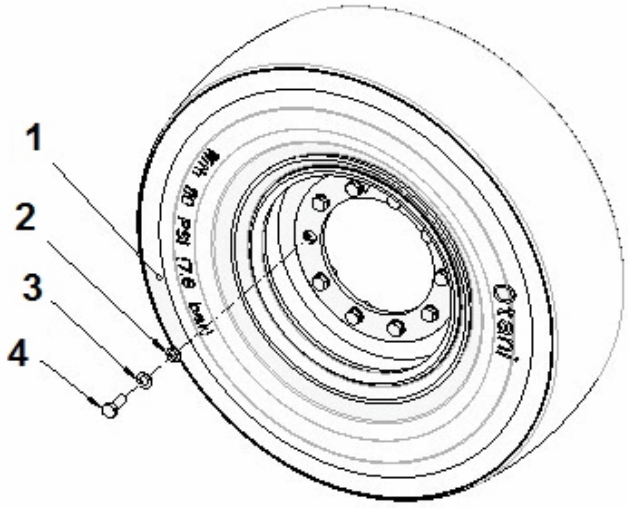

Item	Part No.	Name	Qty	L
1		Wheel Otani	1	
2	4700902252	Washer	10	
3	4700904233	Steel plain washer 21x36x3	10	
4	4700792683	Screw	10	

4812100081 Wheel Otani 4812100081 Wheel Otani

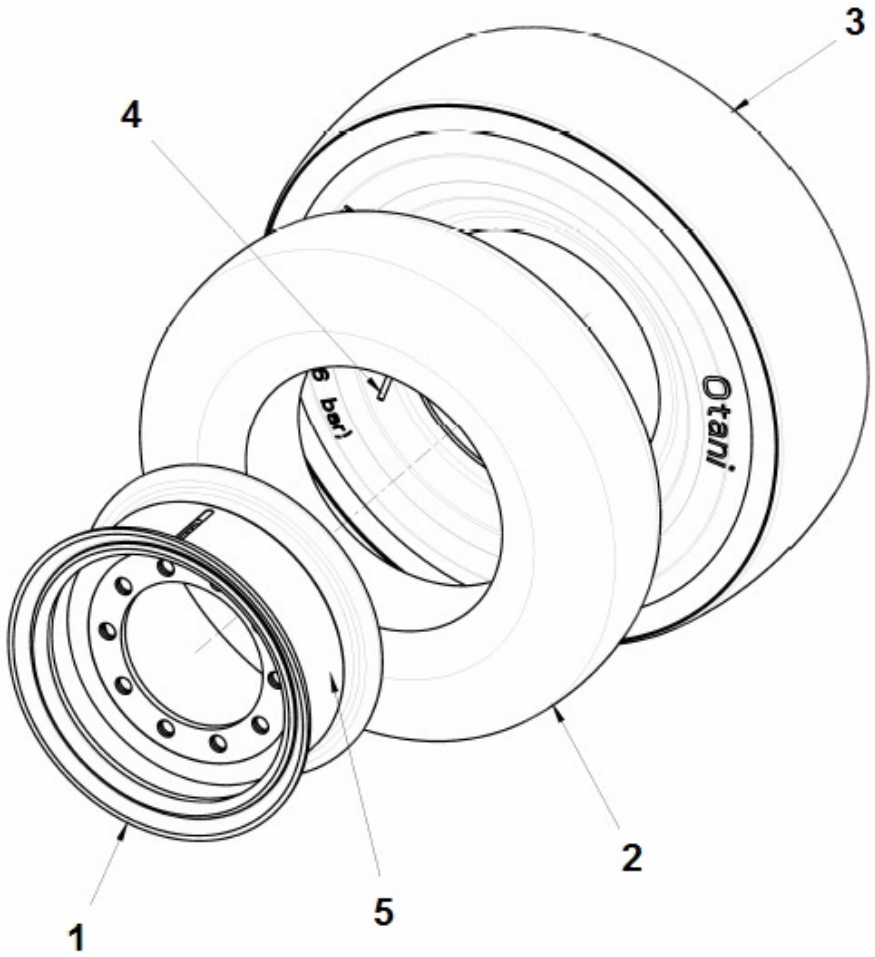

Item	Part No.	Name	Qty	L
1	4700170130	Rim	1	
2	4700170558	Air tube	1	
3	4812100864	Tire	1	
4	4700170550	Valve	1	
5	4700198243	Flap	1	

Hydraulic motor module Hydraulic motor module

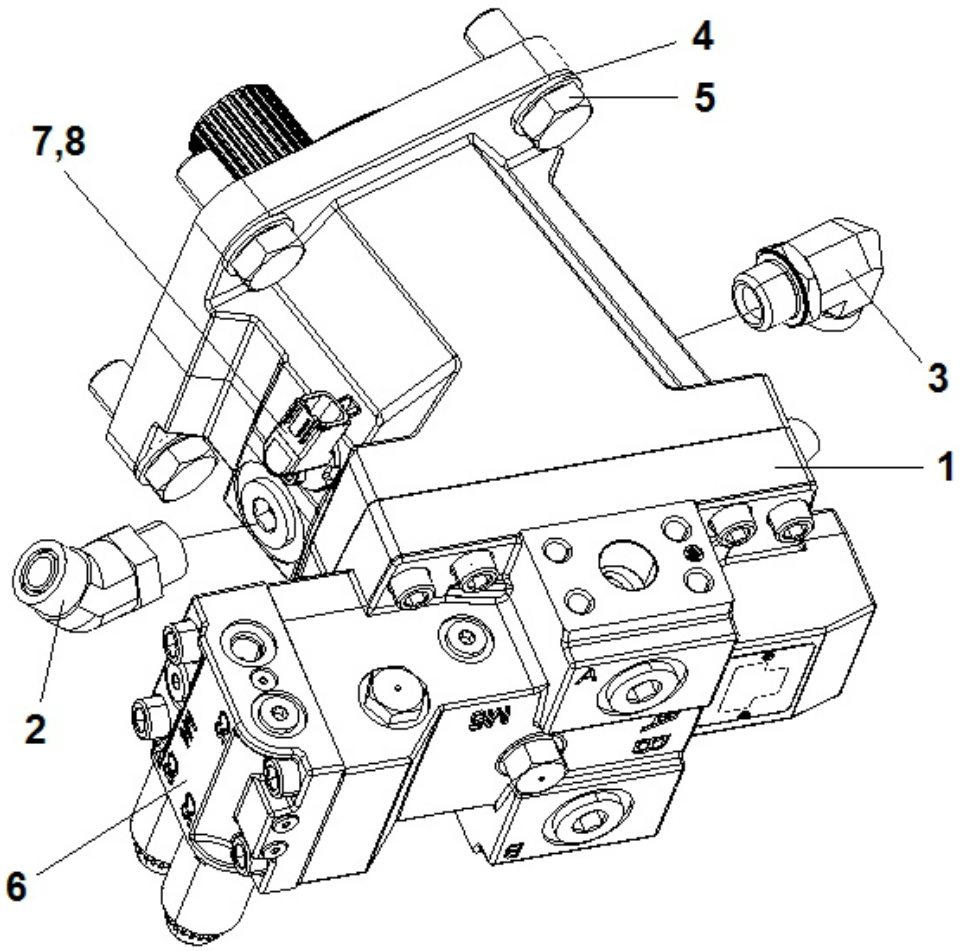

Item	Part No.	Name	Qty	L
1	4700395141	Hydraulic motor	1	
2	4700791230	Adapter	1	
3	4700791231	Adapter	1	
4	4700904233	Steel plain washer 21x36x3	4	
5	4700500101	Screw M20 x 50 mm	4	
6	-	Control kit	1	
7	4700396601	Speed sensor	1	
8	4700508001	Screw M6x12	1	

Comments for Page: Hydraulic motor module

7 & 8 - Used on the left hydraulic motor

Hydraulic motor module 4700395141 Hydraulic motor

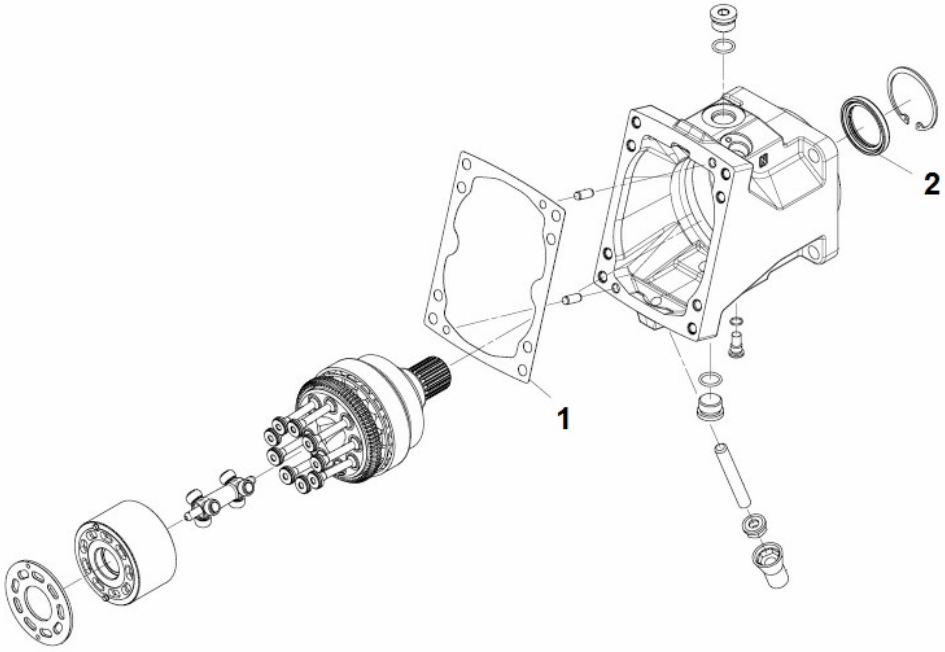

Item	Part No.	Name	Qty	L
1	4812315797	Gasket	1	
2	4812315788	Seal lip	1	
3	4812315787	Overhaul seal kit	1	

Hydraulic motor module 4812101635 Control kit

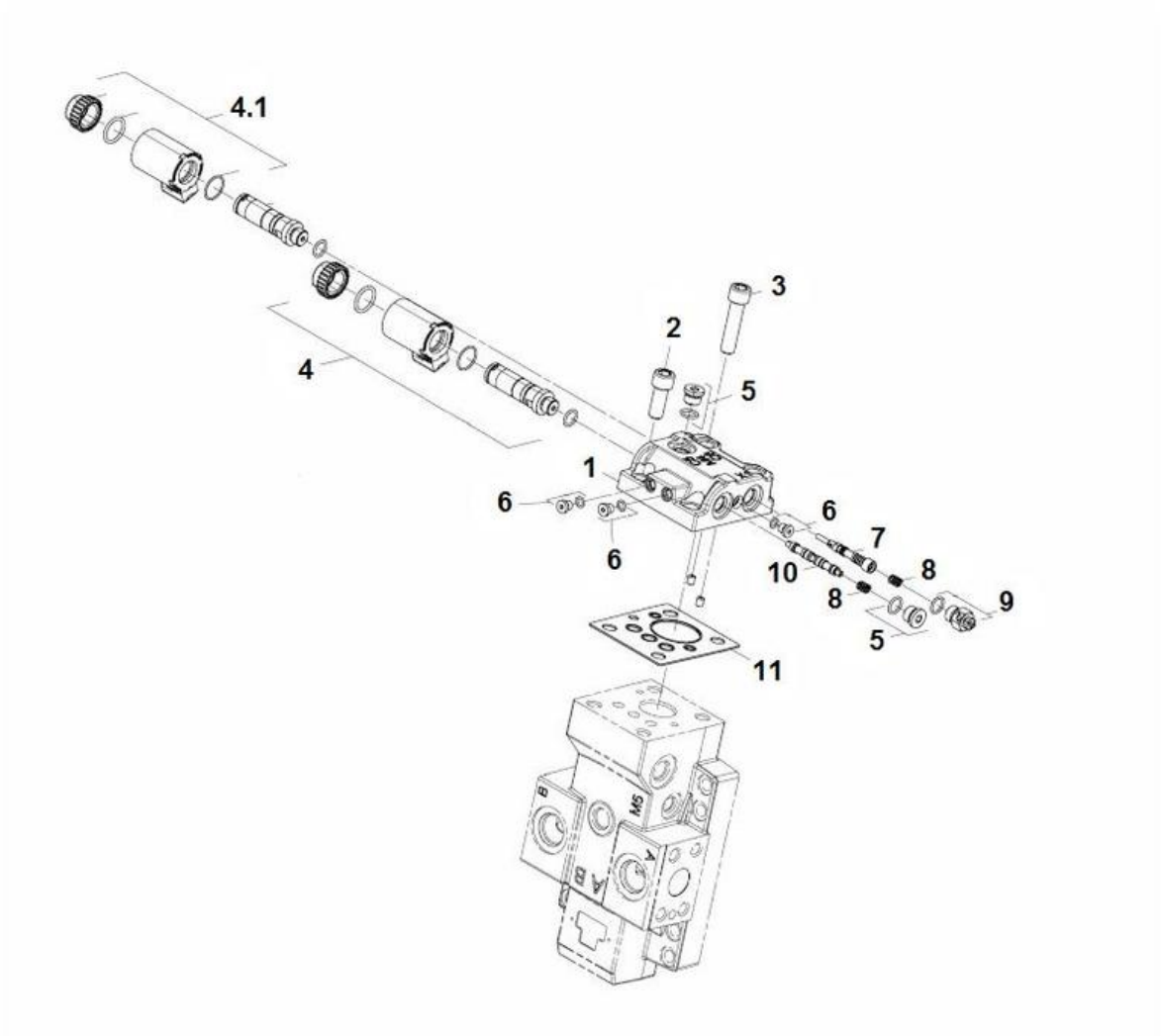

Item	Part No.	Name	Qty	L
1	4812157481	Housing control	1	
2	4812158452	Screw	2	
3	4700902944	Screw	2	
4	4812157074	Solenoid On/off, 24 volt	2	
.4.1	4812315798	Coil kit	1	
5	4700908432	Plug	2	
6	4812315799	Plug socket	3	
7	4812158399	Spool	1	
8	4812315800	Spring	2	
9	4812158451	Adjuster	1	
10	4812158397	Spool	1	
11	4812157053	Control seal	1	

Hydraulic system Hose assy kit

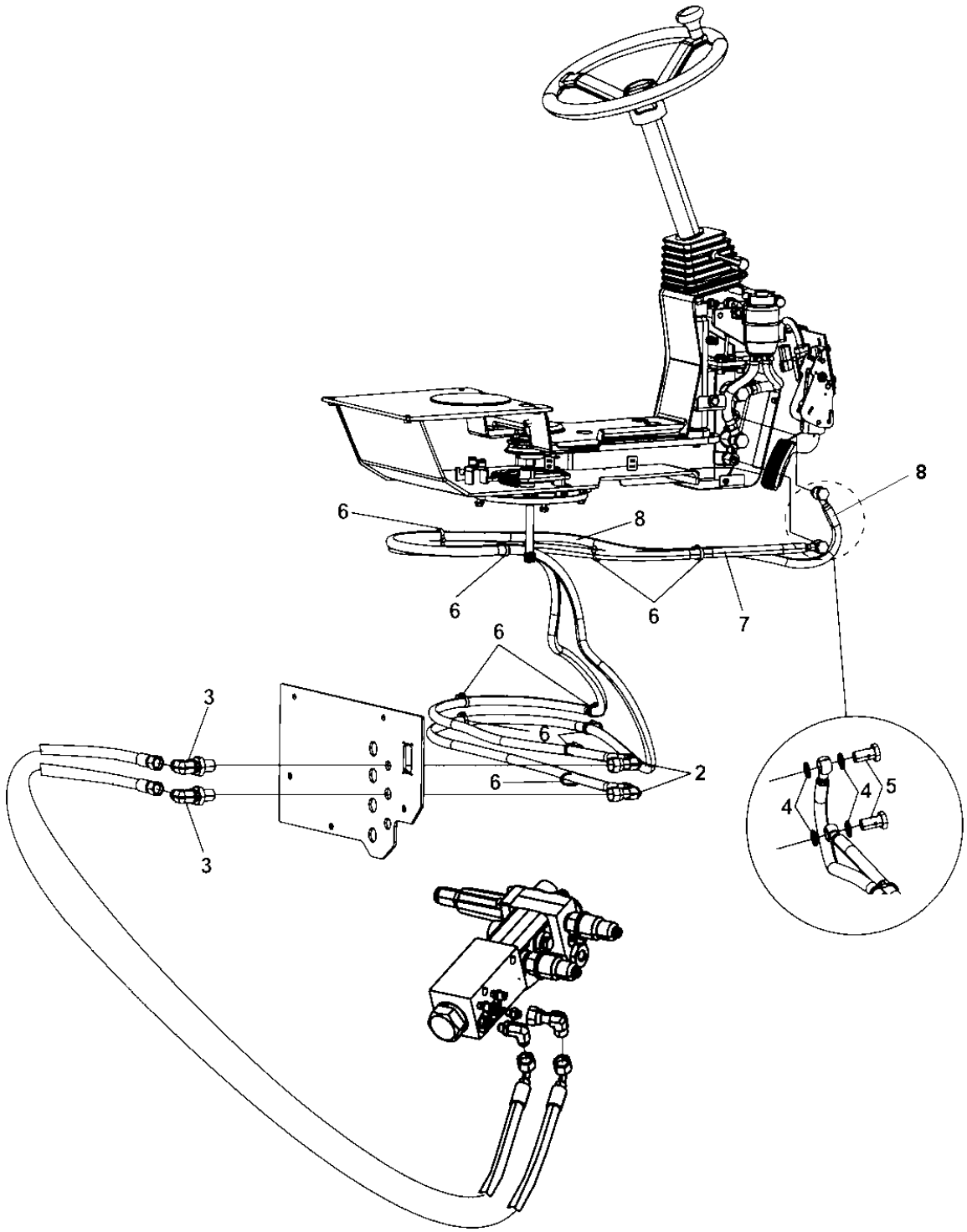

Item	Part No.	Name	Qty	L
2	4700791401	Elbow 90, O-ring with swivel	2	
3	4700792744	Bulkhead union elbow 90	2	
4	4700162027	Sealing	4	
5	4700792760	Screw M12	2	
6	4700313041	Cable tie	N	
7	4700396719	Hose	1	
8	4700396720	Hose	1	

Hydraulic system Hydraulic pump module

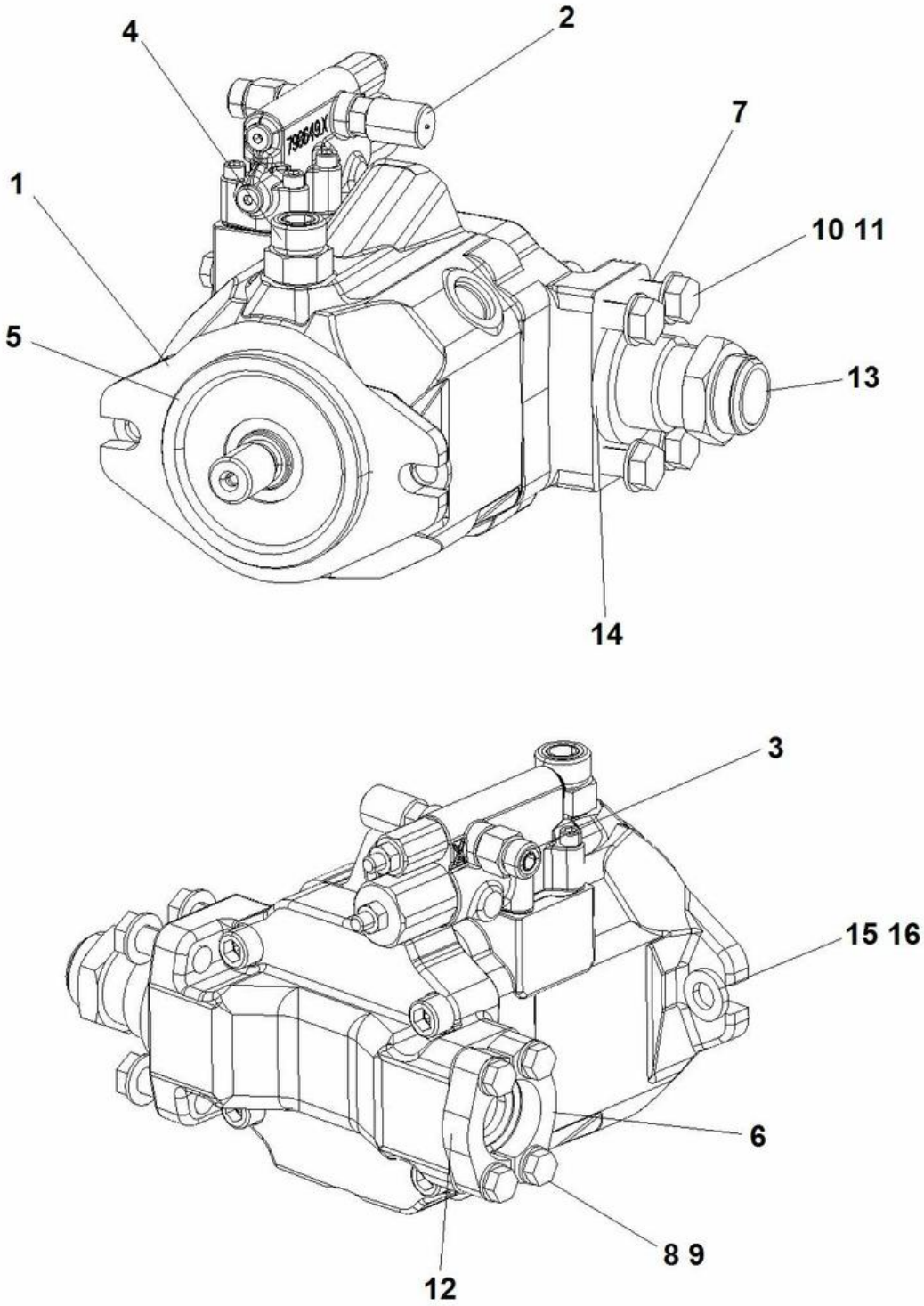

Item	Part No.	Name	Qty	L
1	4812100192	Hydraulic pump	1	
2	4700910162	Measuring nipple	1	
3	4700791827	Straight connector orfs	1	
4	4700791743	Straight connector orfs	1	
5	4700160279	O-ring 70	1	
6	4700232097	Flange half	2	
7	4700232118	Flange	2	
8	4700904637	Washer	4	
9	4700502036	Screw 3/8"-16UNCx11/4"8.8	4	
10	4700904231	Steel plain washer, 13x24x2 mm 300 HV	4	
11	4700502059	Screw 1/2"-13UNCx1.1/2" 8.8	4	
12	4700813429	O-ring	1	
13	4700160191	O-ring	1	
14	4812100897	Flange fitting 90	1	
15	4700904703	Plain washer 13x24x4 mm	2	
16	4700502058	Screw	2	

Hydraulic system 4812118386 Hydraulic valve module overspeed protection

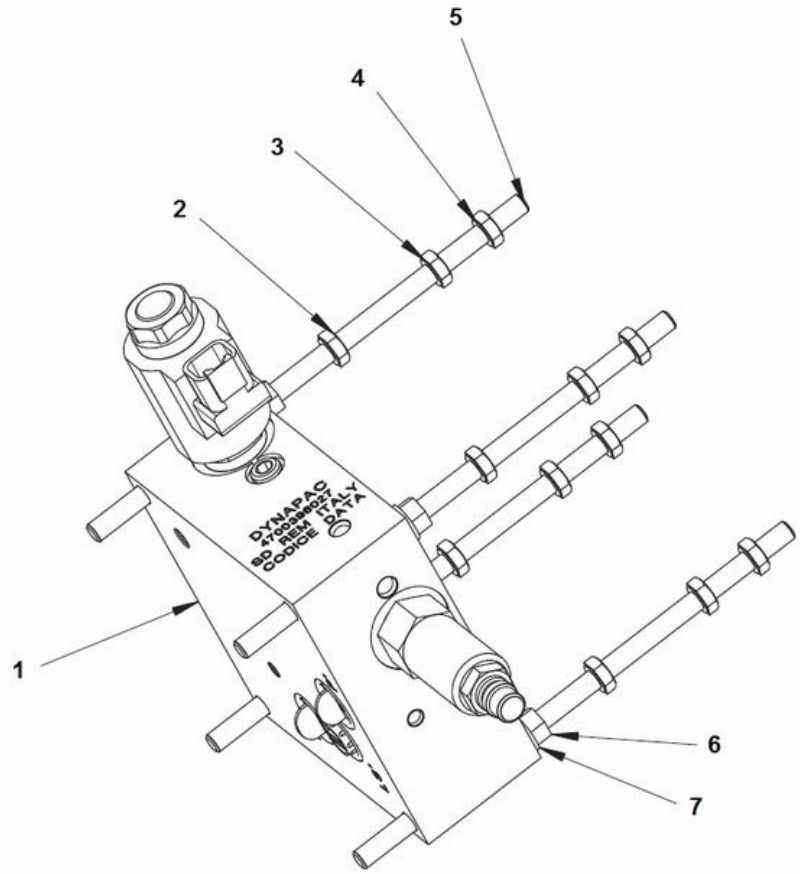

Item	Part No.	Name	Qty	L
1	4812113942	Hydraulic valve block overspeed pretection	1	A
2	4700500115	Screw	4	A
3	4700500170	Screw M8x140 8.8	4	A
4	4812118090	Hexagon head screw M8x165 8.8	4	A
5	4700791550	Threaded stud	4	A
6	4700570005	Hex. nut	6	A
7	4700904229	Washer, 8.4x16x1.5 mm 300 HV	4	A

Comments for Page: 4812118386 Hydraulic valve module overspeed protection

(L)OCAL REMARKS

A | en_US | From SN A0B002924 (CP274 T4), C0B002813 (CP274 T3), L0B002824 (CP224 T3) and H0B002873 (CP224W T3)

Hydraulic system Brake valve dynamic valve

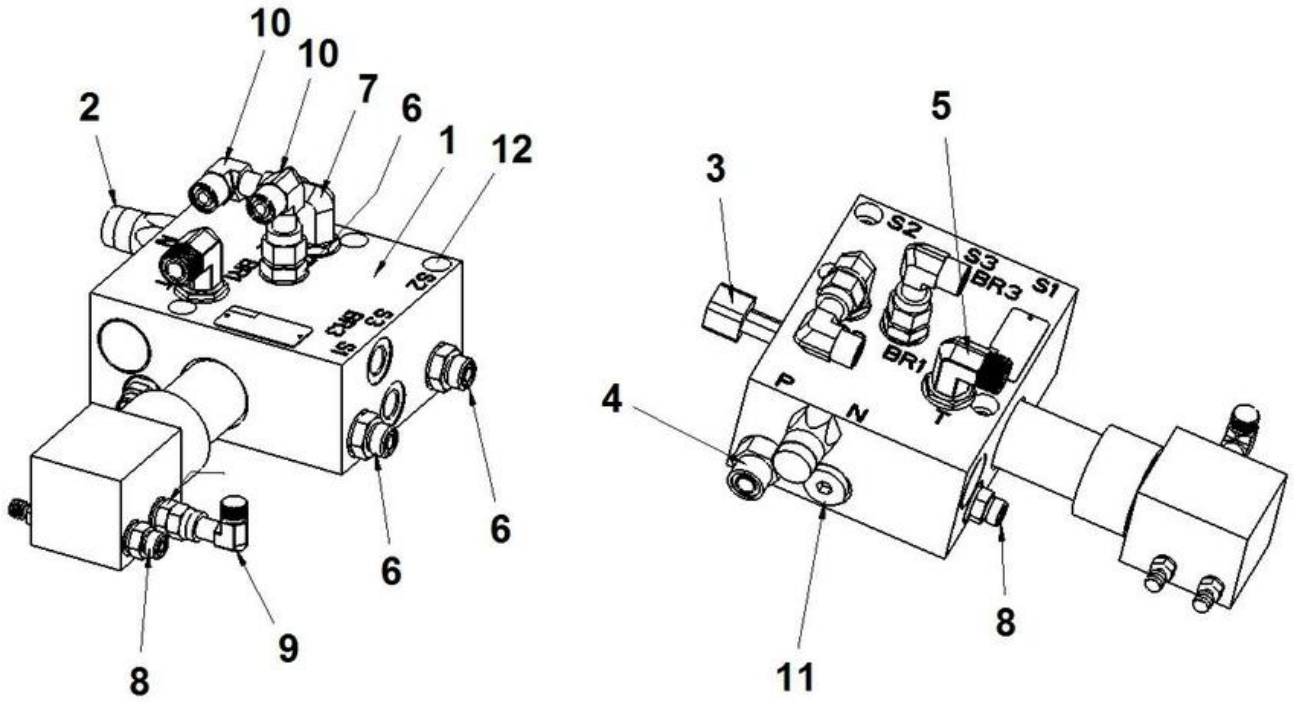

Item	Part No.	Name	Qty	L
1	4812100002	Brake valve	1	
2	4812100008	Pressure switch	1	
3	4812100009	Pressure transmitter	1	
4	4700791412	Straight o-ring connector	1	
5	4700792333	Elbow 90 orfs	1	
6	4700791535	Connector	3	
7	4700791544	Connector elbow	1	
8	4700791538	Straight connector	3	
9	4812113110	Adapter	1	
10	4700791401	Elbow 90, O-ring with swivel	2	
11	4700792295	Steel plug	1	
12	4700508078	Screw	3	

Hydraulic pump module Hydraulic pump module

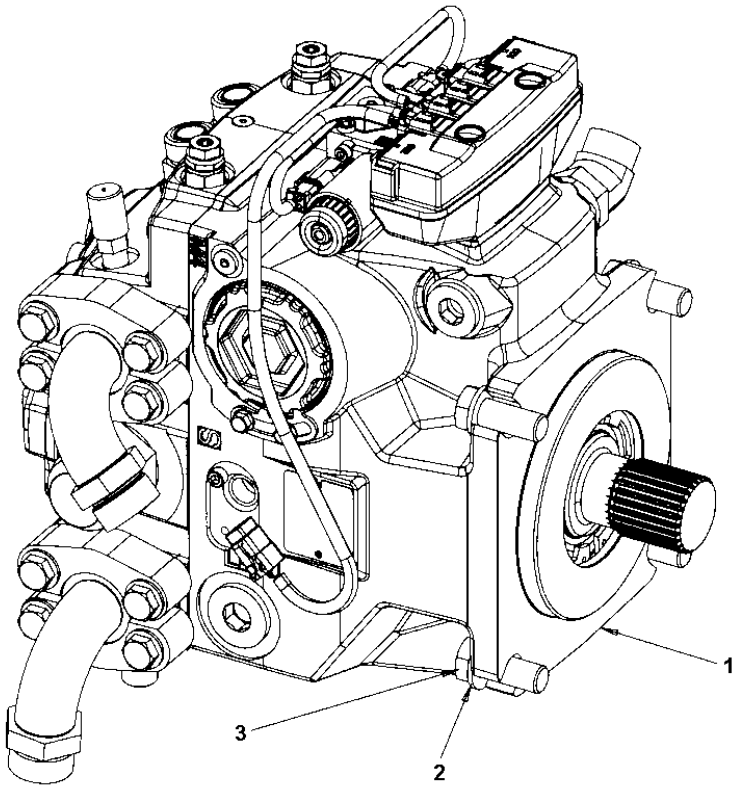

Item	Part No.	Name	Qty	L
1	-	Hydraulic pump	1	
2	4700904232	Steel plain washer	4	
3	4700500093	Hex. screw	4	

Hydraulic pump module Hydraulic pump

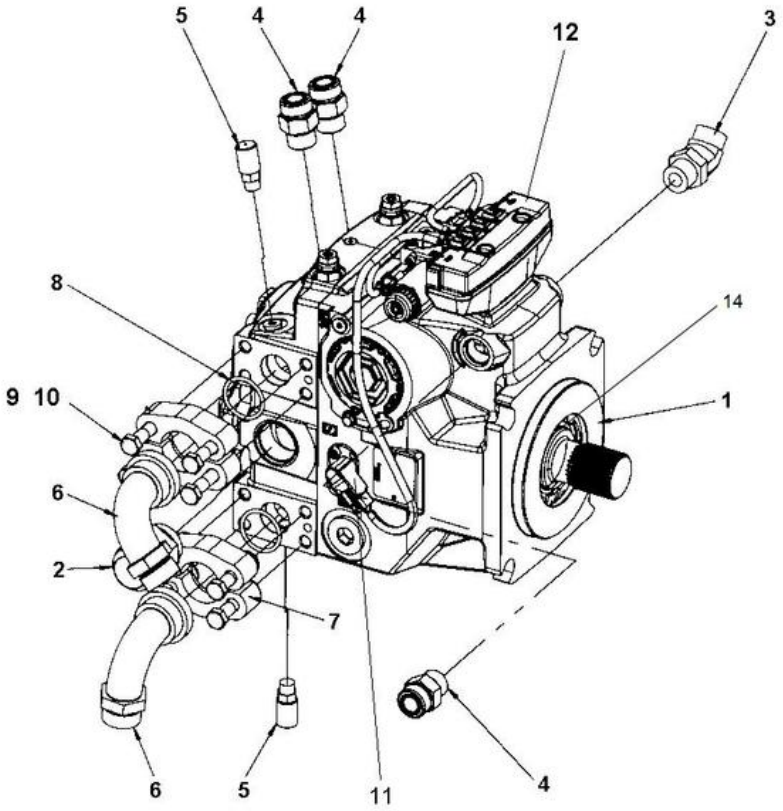

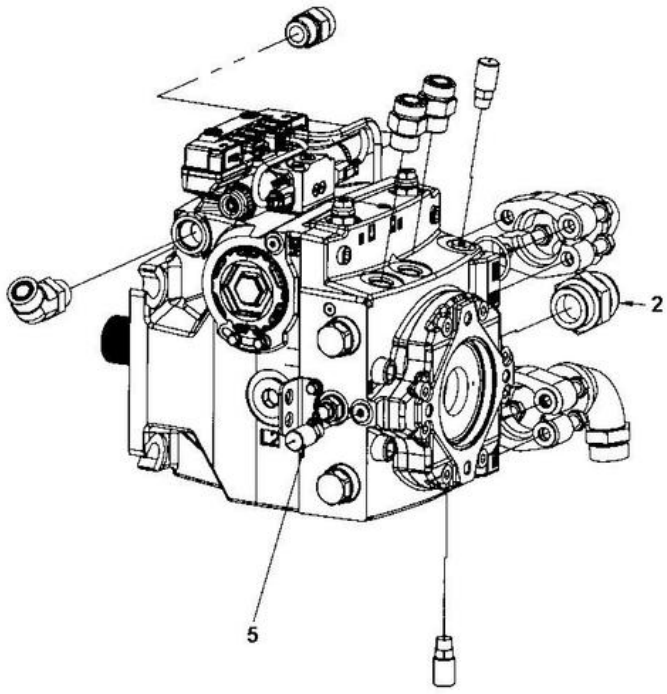

Item	Part No.	Name	Qty	L
1	4700395140	Hydraulic pump	1	
2	4700334169	Connector	1	
3	4700791230	Adapter	1	
4	4700791823	Adapter	3	
5	4700900229	Measuring fitting	3	
6	4700904689	Flange fitting 90	2	
7	4700900342	Split flange	4	
8	4700904171	O-ring	2	
9	4700904231	Steel plain washer, 13x24x2 mm 300 HV	8	
10	4700500195	Screw	8	
11	4700396601	Speed sensor	1	
12	4812156697	Control unit	1	
13	4812159297	Seal kit	1	
14	4812159298	Seal lip	1	

Hydraulic pump module 4812156697 Control unit

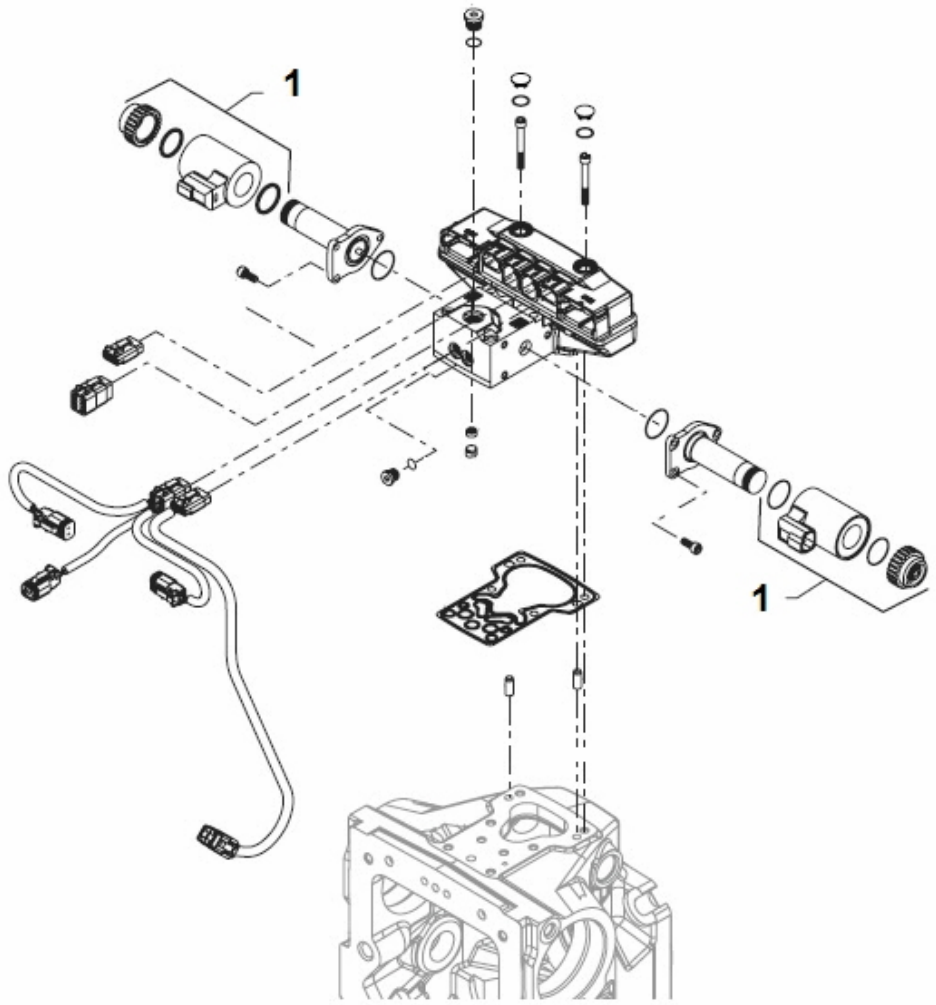

Item	Part No.	Name	Qty	L
1	4812157372	Coil kit 24V	2	

Hydraulic oil tank module Hydraulic oil tank module

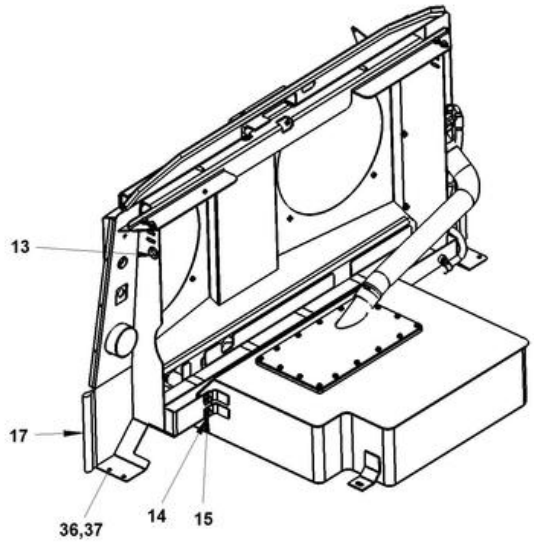

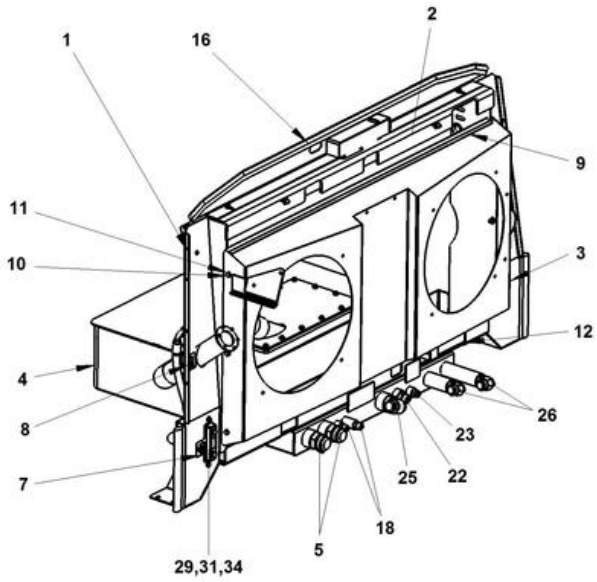

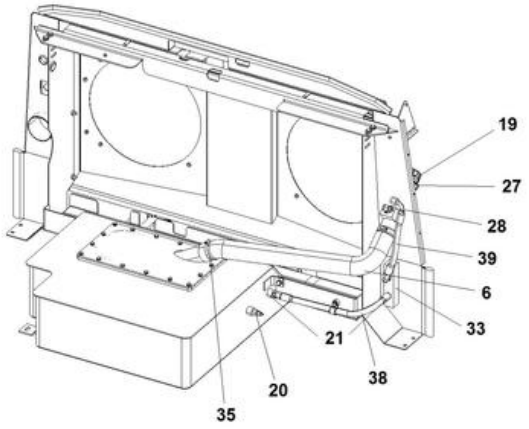

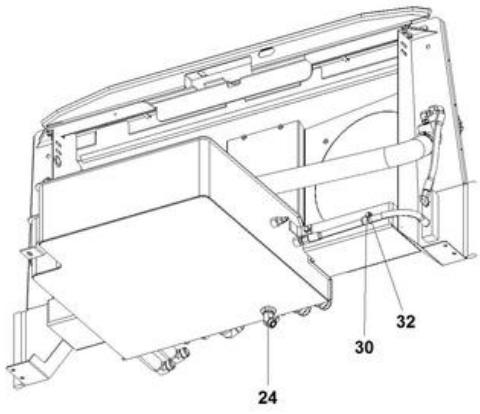

Item	Part No.	Name	Qty	L
1	4812315531	Cooler bracket	1	
2	-	Bracket assy	1	
3	4812315540	Fan shroud	1	
4	4812315725	Hydraulic oil tank	1	
5	4700334169	Connector	2	
6	4812315566	Filler hose	1	
7	4700272373	Label, hydraulic oil level	1	
8	4700272372	Decal "HYDRAULIC OIL"	1	
9	4700280875	List	2	
10	4700904229	Washer, 8.4x16x1.5 mm 300 HV	6	
11	4700500021	Hex. screw	6	
12	4700357819	Rubber cloth	5	
13	4700792775	Grommet	2	
14	4700904230	Washer	3	
15	4700500028	Screw, M10x25 mm 8.8 A3K	3	
16	-	Bracket assy	1	
17	4811000455	Edge trim	1XL	
18	4700791799	Straight connector orfs	2	
19	4700391026	Ventilating filter	1	
20	4700792276	Temperature sensor	1	
21	4700925723	Connector	2	
22	4700904578	Straight connector	1	
23	4700791828	Adapter	1	
24	4700791808	Elbow adapter 45	1	
25	4700334153	Adapter	1	
26	4700334163	Connector elbow 90°	2	
27	4700500004	Screw M5x12 8,8	6	
28	4700791431	Elbow 90, O-ring	2	
29	4700989151	Oil level glass	1	
30	4700921116	Clamp	1	
31	4700904229	Washer, 8.4x16x1.5 mm 300 HV	3	
32	4700500021	Hex. screw	1	
33	4812110505	Bracket	1	
34	4700500019	Hex. screw	2	
35	4700313023	Hose clamp	2	
36	4700904231	Steel plain washer, 13x24x2 mm 300 HV	4	
37	4700500046	Hex. head screw M12x030H	4	

Item	Part No.	Name	Qty	L
38	4700482084	Hydraulic hose	1	
39	4700482228	Hydraulic hose	1	

Hydraulic oil tank module Bracket assy

This page intentionally left blank

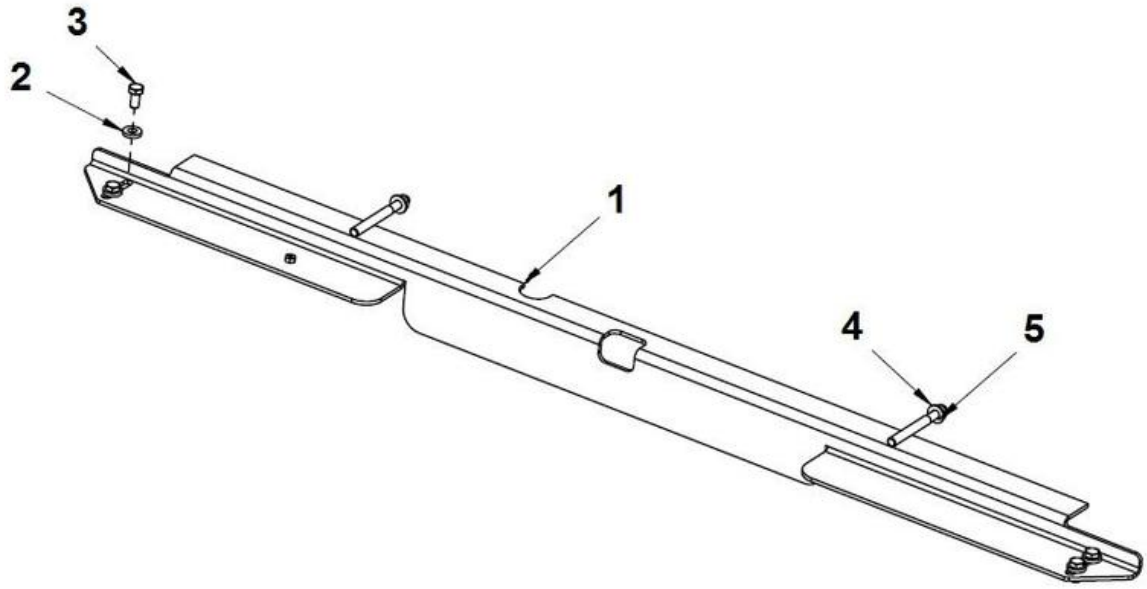
3
2
1
4
5

Item	Part No.	Name	Qty	L
1	4812315538	Bracket	1	
2	4700904557	Washer, 10.5x22x4 mm 300 HV	4	
3	4700500048	Screw	4	
4	4700904230	Washer	2	
5	4700570006	Hex. nut	2	

Hydraulic oil tank module Bracket assy

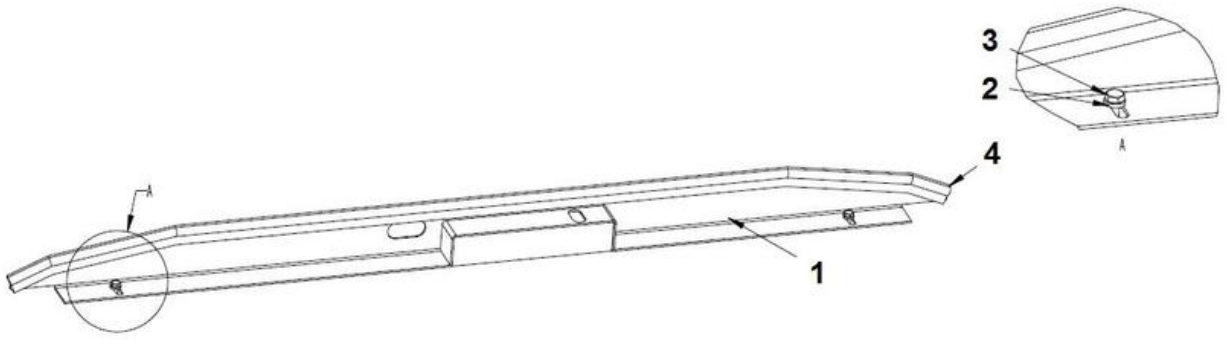

Item	Part No.	Name	Qty	L
1	4812316059	Bracket	1	
2	4700904556	Steel plain washer	2	
3	4700500053	Hex. screw	2	
4	4700902166	Edge trim	1	

Hydraulic valve module Hydraulic valve module

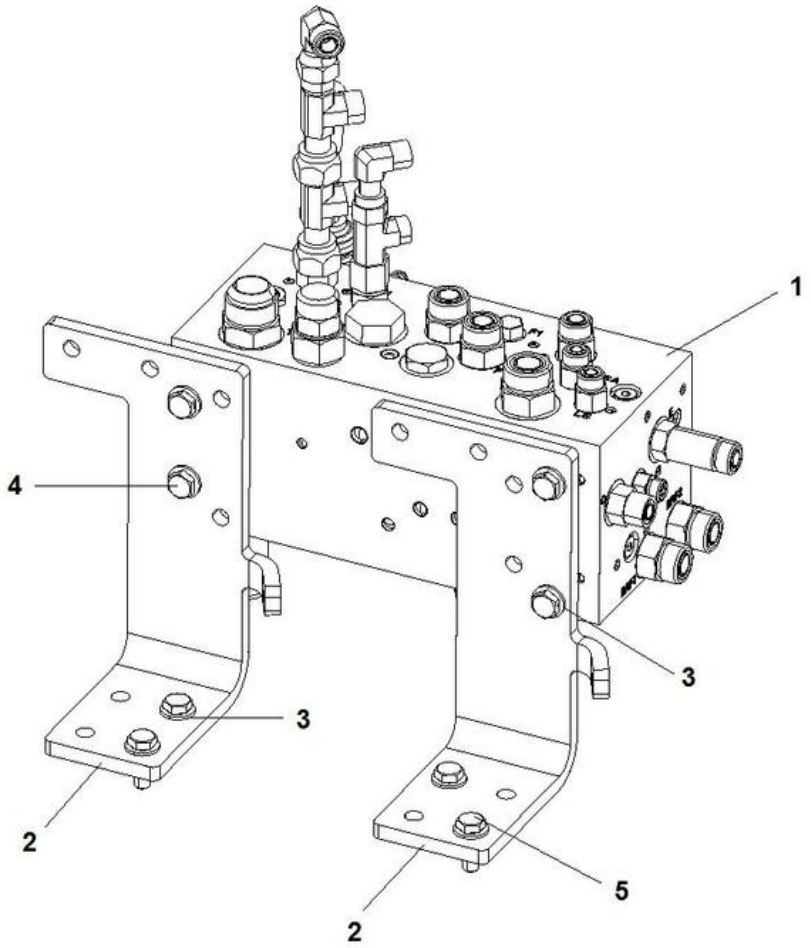

Item	Part No.	Name	Qty	L
1	-	Hydraulic valve assy	1	
1	-	Hydraulic valve	1	
2	4700396275	Bracket	2	
3	4700904230	Washer	8	
4	4700500028	Screw, M10x25 mm 8.8 A3K	4	
5	4700500029	Hex. screw	4	

Comments for Page: Hydraulic valve module

1 - 4812315649 - from SN x0B003995

1 - 4700396773 - up to SN x0B003994

Hydraulic valve module Hydraulic valve assy

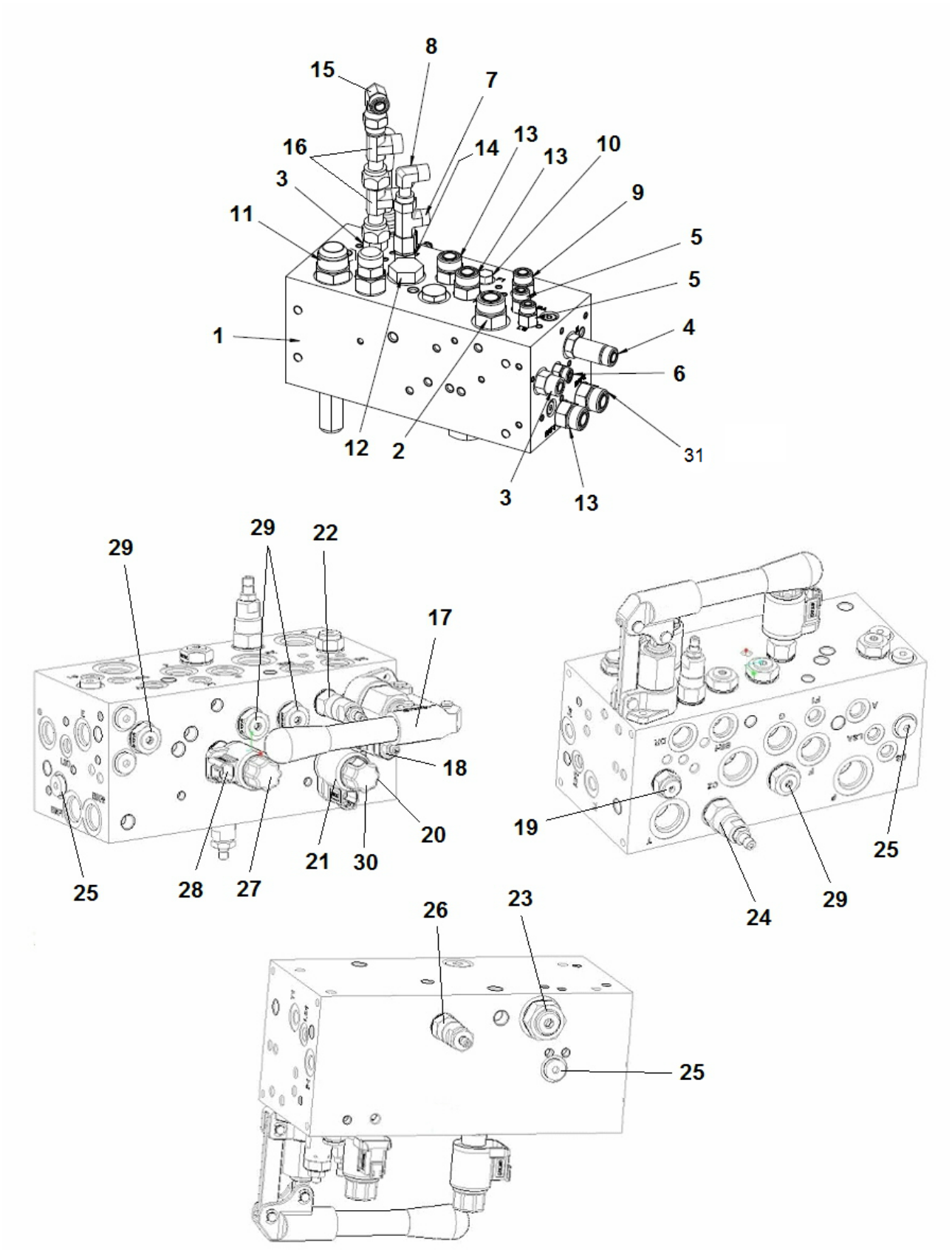

Item	Part No.	Name	Qty	L
1	4812100004	Hydraulic block	1	
2	4700791823	Adapter	1	
3	4700791799	Straight connector orfs	2	
4	4700791826	Straight connector orfs	1	
5	4700791827	Straight connector orfs	2	
6	4700791744	Adapter	1	
7	4700791414	T-connection, O-ring with swivel	1	
8	4700791401	Elbow 90, O-ring with swivel	1	
9	4700791540	Adapter	1	
10	4700232061	Plug	1	
11	4700234435	Adapter	1	
12	4700232222	Plug threaded	1	
13	4700791743	Straight connector orfs	3	
14	4700791828	Adapter	2	
15	4700791745	Elbow 90, O-ring with swivel	1	
16	4700791798	Adapter	2	
17	4812315887	Manual pump	1	
18	4812315888	Relief valve	1	
19	4812315889	Check valve pilot	1	
20	4812315890	Sequence valve	1	
21	4812315891	Solenoid valve	1	
22	4812315892	Pressure reducing valve	1	
23	4812315893	Logic element cart	1	
24	4812315894	Relief valve	1	
25	4812315895	Shuttle valve	3	
26	4812315896	Relief valve	1	
27	4812315897	Proportional valve	1	
28	4812315898	Coil	1	
29	4812315899	Check valve	1	
30	4812315900	Coil	1	
31	4700791821	Straight connector orfs	1	

Hydraulic valve module Hydraulic valve

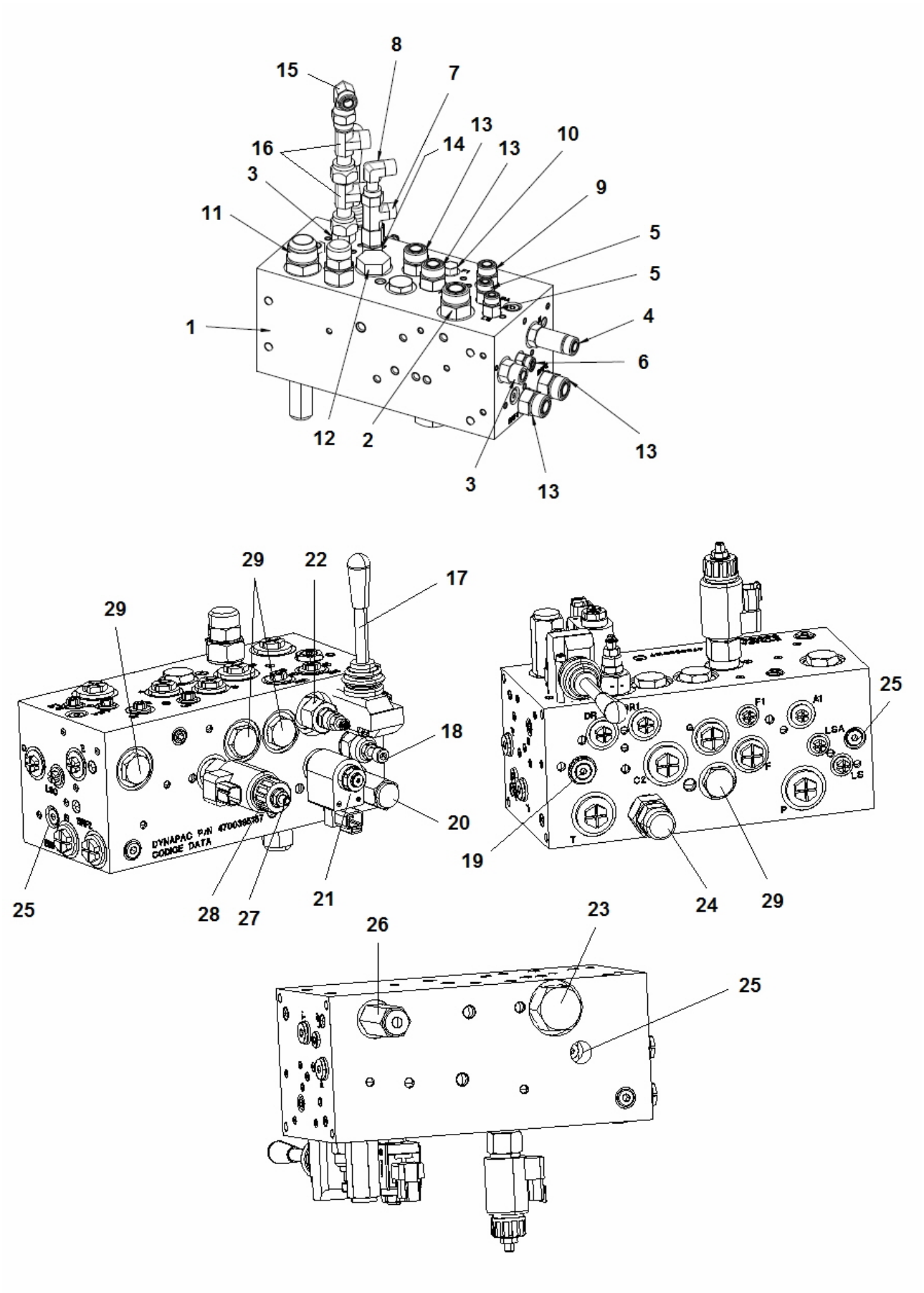

Item	Part No.	Name	Qty	L
1	4700395157	Valve block	1	
2	4700791823	Adapter	1	
3	4700791799	Straight connector orfs	2	
4	4700791826	Straight connector orfs	1	
5	4700791827	Straight connector orfs	2	
6	4700791744	Adapter	1	
7	4700791414	T-connection, O-ring with swivel	1	B
8	4700791401	Elbow 90, O-ring with swivel	1	B
9	4700791540	Adapter	1	
10	4700232061	Plug	1	
11	4700234435	Adapter	1	
12	4700232222	Plug threaded	1	
13	4700791743	Straight connector orfs	4	
14	4700791828	Adapter	2	
15	4700791745	Elbow 90, O-ring with swivel	1	A, B
16	4700791798	Adapter	2	B
17	4812101702	Manual pump	1	
18	4812101703	Relief valve	1	
19	4812101704	Check valve pilot	1	
20	4812101705	Sequence valve	1	
21	4812101689	Solenoid valve	1	
22	4812101706	Pressure reducing valve	1	
23	4812101707	Logic element cart.	1	
24	4812101708	Relief valve	1	
25	4812101709	Shuttle valve	3	
26	4812101710	Relief valve	1	
27	4812101711	Proportional valve	1	
28	4812101712	Coil	1	
29	4812101713	Check valve	4	

Comments for Page: Hydraulic valve

(L)OCAL REMARKS

A | en_US | From SN 274B0006 (CP-274) and 224B0004 (CP-224/CP-224W)

B | en_US | From SN L0B002475 (CP-274), A0B002496 (CP-224) and C0B002486 (CP-224W)

Up to SN x0B003994 (CP2700)

Hydraulic steering, sliding seat Hydraulic steering, sliding seat

Item	Part No.	Name	Qty	L
1	-	Carrier	1	
2	-	Steering, slideable	1	
3	4700396328	Steering valve	1	
3	4812120733	Pilot valve, emergency steering	1	
4	4700904557	Washer, 10.5x22x4 mm 300 HV	4	
5	4700502035	Screw 3/8"-16UNCx1 8.8	4	

Referenced Pages

Carrier 77

Steering, slideable Steering, slideable

This page intentionally left blank

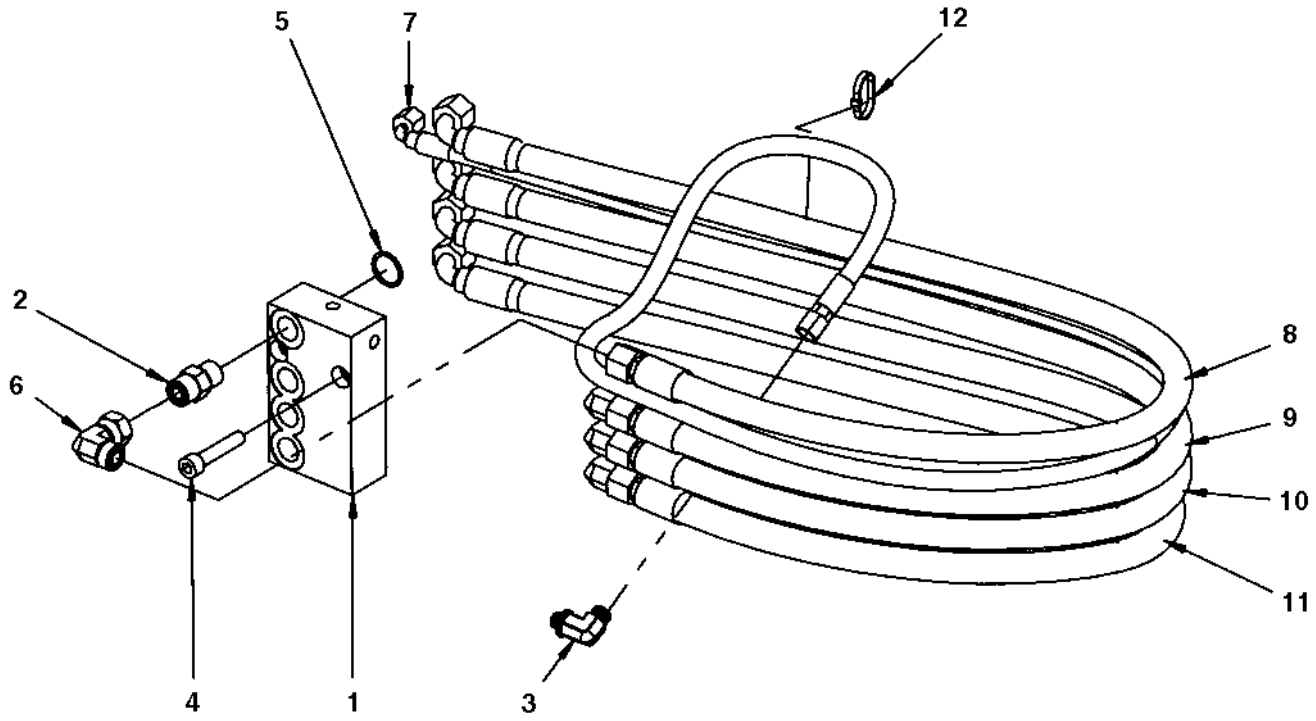
5
7
12
2
6
8
9
10
11
4
1
3

Item	Part No.	Name	Qty	L
1	4700370155	Valve block	1	
2	4700791799	Straight connector orfs	4	
3	4700792334	Elbow 90 orfs	1	
4	4700903773	Screw M10x1x50 8,8	2	
5	4700160287	O-ring	4	
6	4700791745	Elbow 90, O-ring with swivel	4	
7	4700484006	Hydraulic hose	1	
8	4700484007	Hydraulic hose	1	
9	4700484007	Hydraulic hose	1	
10	4700484007	Hydraulic hose	1	
11	4700484007	Hydraulic hose	1	
12	4700313041	Cable tie	N	

4812111106 Reducing valve 4812111106 Reducing valve

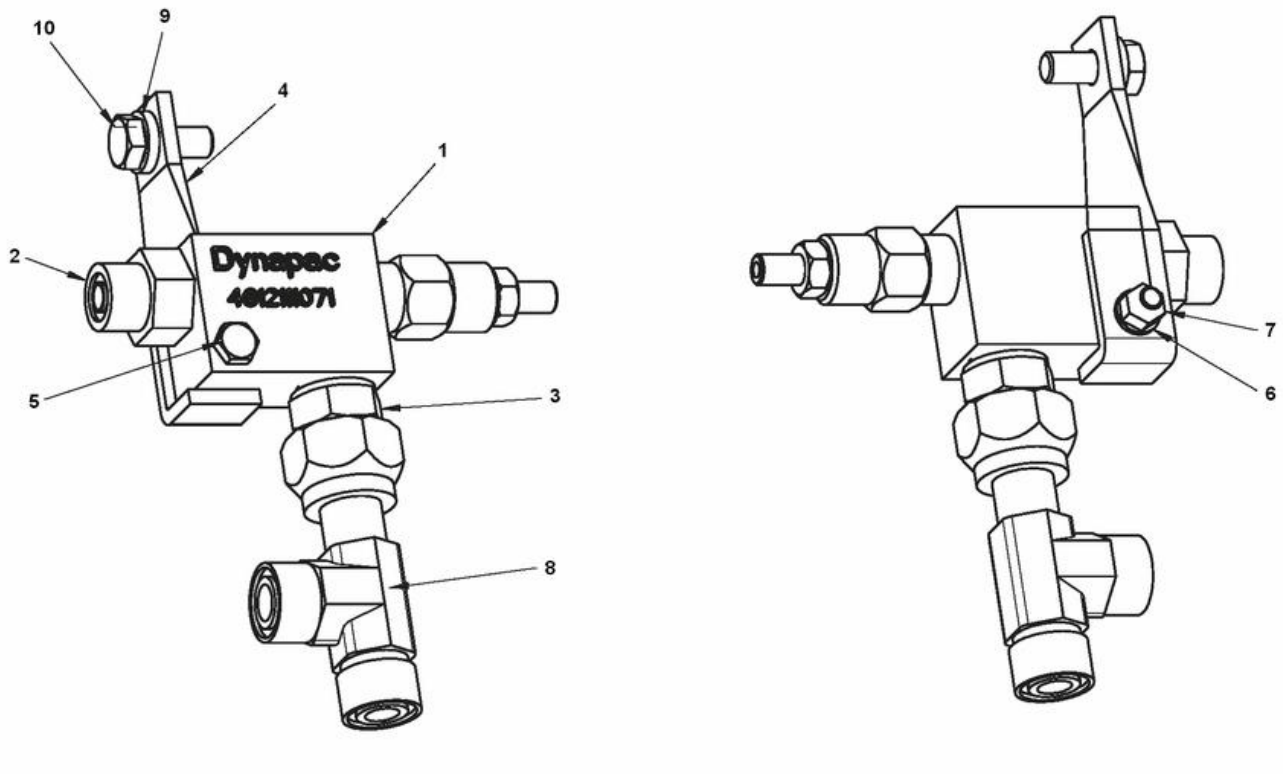

Item	Part No.	Name	Qty	L
1	4812111071	Reducing valve	1	
2	4700791404	Straight o-ring connector	1	
3	4700904727	Adapter	1	
4	4812111102	Bracket	1	
5	4700500088	Screw M6x40	1	
6	4700904228	Steel plain washer	1	
7	4700570004	Hex. nut	1	
8	4700791798	Adapter	1	
9	4700904556	Steel plain washer	1	
10	4700500053	Hex. screw	1	

Electric system Battery module

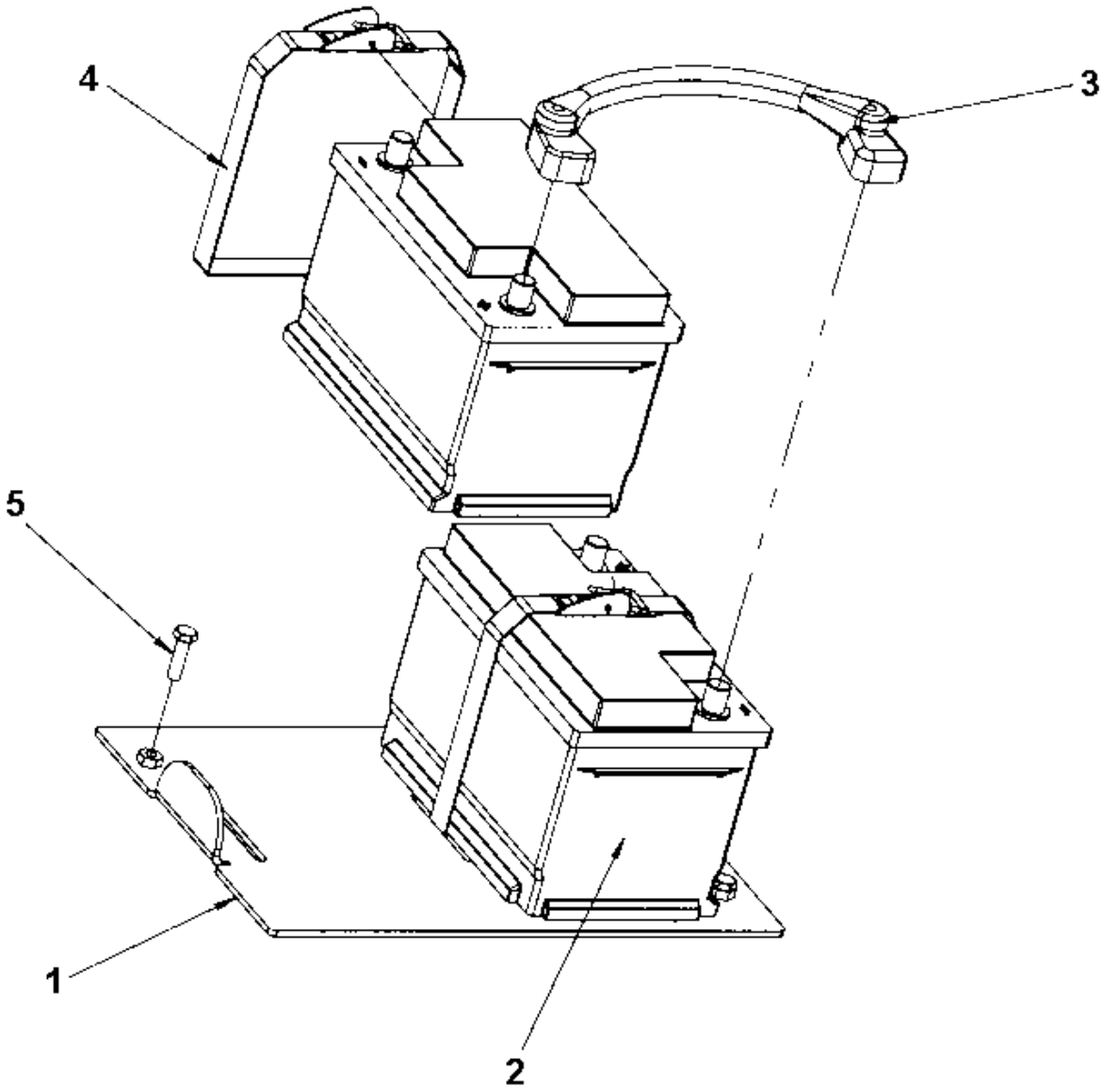

Item	Part No.	Name	Qty	L
1	4700395861	Battery holder	1	
2		Battery, 12V 74Ah (278x175x190mm)	2	
3	4700792768	Connection cable	1	
4	4700389662	Strap	2	
5	4700500030	Hexagon head screw	2	

Electric system Horn module

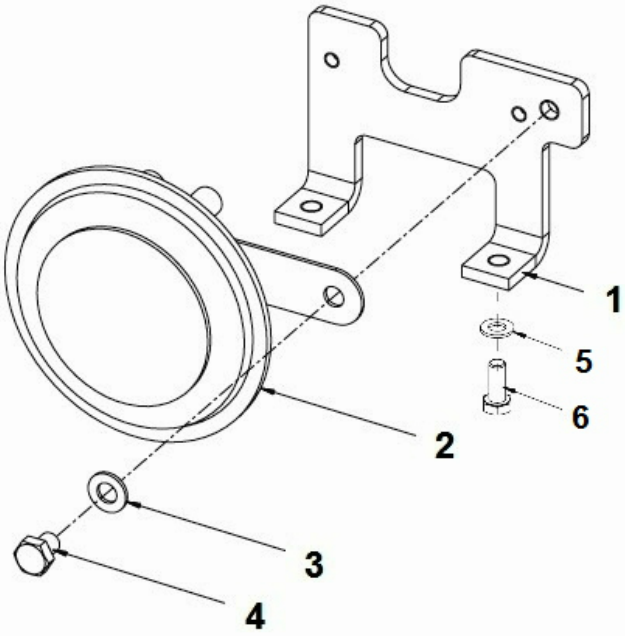

Item	Part No.	Name	Qty	L
1	4700396768	Bracket	1	
2	4700999014	Horn	1	
3	4700904229	Washer, 8.4x16x1.5 mm 300 HV	1	
4	4700500042	Hex. head screw M8	1	
5	4700904229	Washer, 8.4x16x1.5 mm 300 HV	2	
6	4700500053	Hex. screw	2	

Electric system Standard ECU module

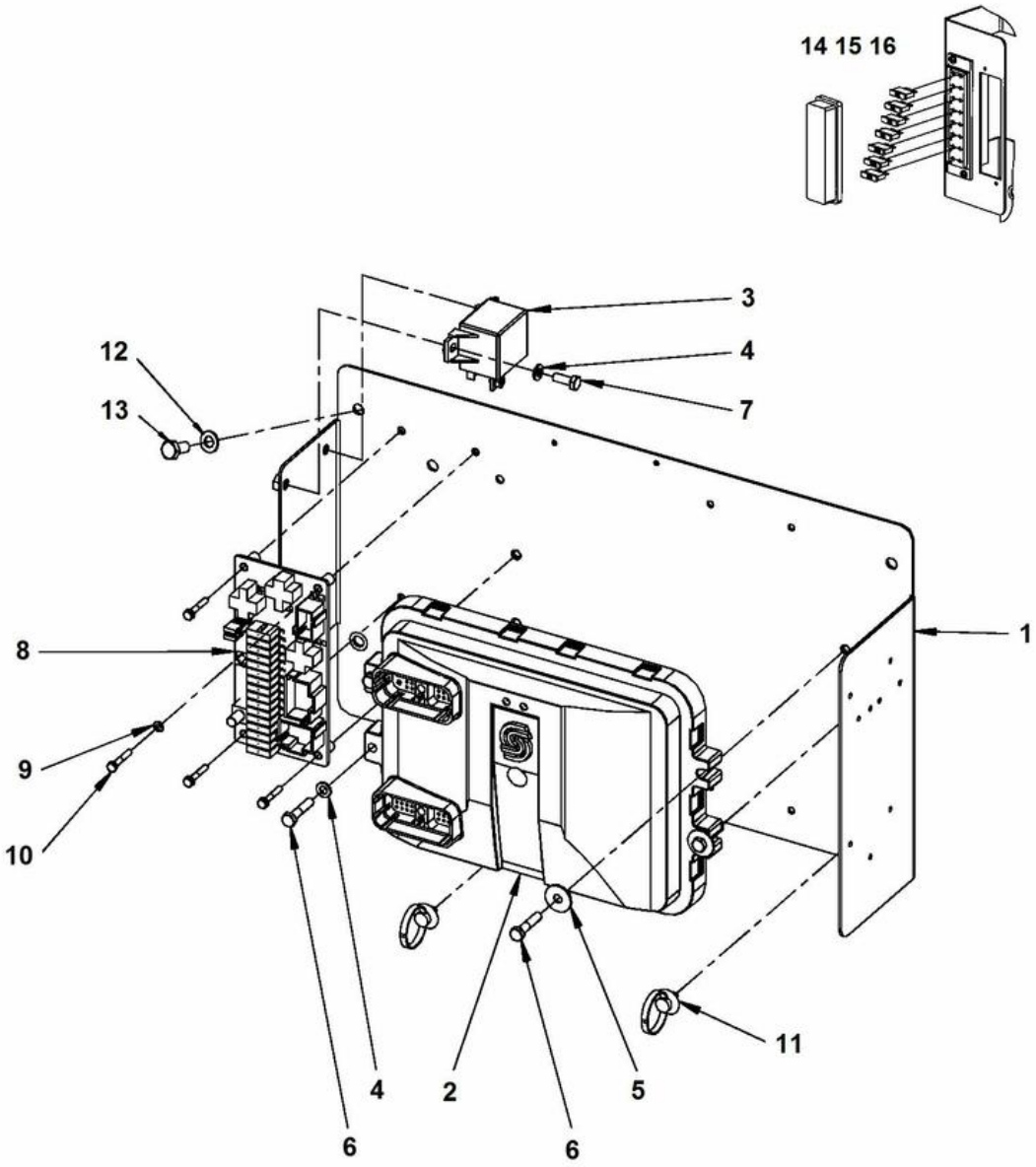

Item	Part No.	Name	Qty	L
1	4812114619	Mounting plate	1	
2	4700390860	Control unit	1	
3	4700792309	Relay	1	
4	4700904228	Steel plain washer	4	
5	4700928467	Washer	2	
6	4700500015	Hex. screw	4	
7	4700500013	Hex. screw	2	
8	4812114655	Circuit board	1	
9	4700904698	Steel plain washer	4	
10	4700904312	Screw	4	
11	4700792441	Cable tie with holder	2	
12	4700904229	Washer, 8.4x16x1.5 mm 300 HV	4	
13	4700500019	Hex. screw	4	
14	4700901227	Fuse 10A Red	7	
15	4700903741	Fuse 20A Yellow	2	
16	4700901225	Fuse 5A Tan	1	
17		Software MC088	1	
18		Display software	1	
19		I-O-Unit software	1	
20		Software	1	

Electric system Back-up alarm module

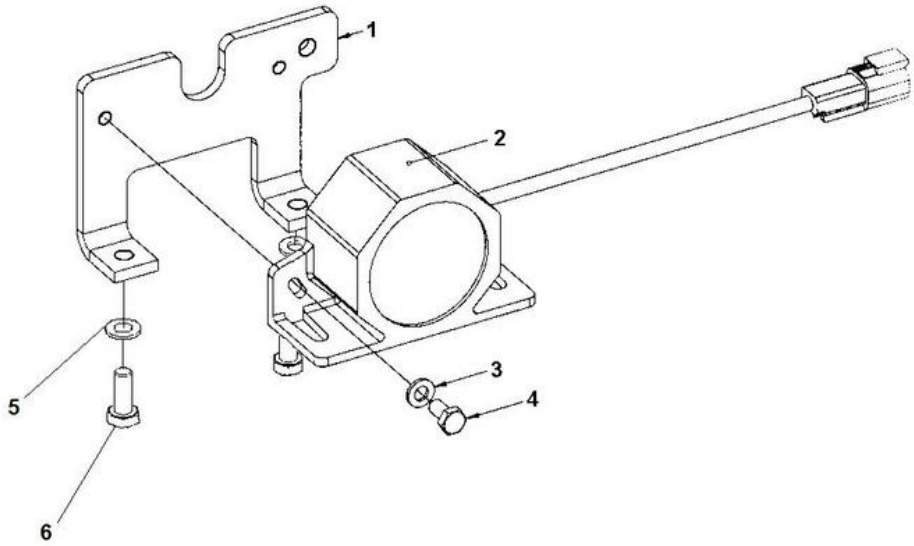

Item	Part No.	Name	Qty	L
1	4700396768	Bracket	1	
2	4700904911	Back-up alarm	1	
3	4700904228	Steel plain washer	2	
4	4700500012	Hex. screw	2	
5	4700904229	Washer, 8.4x16x1.5 mm 300 HV	2	
6	4700500053	Hex. screw	2	

Electric system Working lights LED

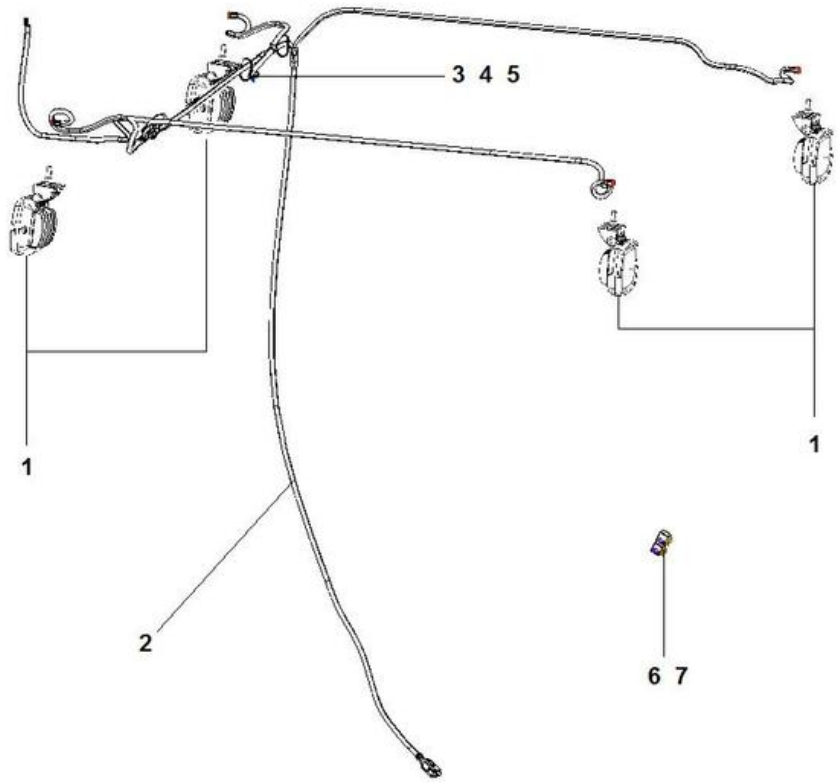

Item	Part No.	Name	Qty	L
1	4812315449	Work lamp	4	
2	4812119163	Wiring harness	1	
3	4700313102	Cable ties	2	
4	4700570005	Hex. nut	2	
5	4700904229	Washer, 8.4x16x1.5 mm 300 HV	1	
6	4700792422	Relay 24V 20A	2	
7	4700901224	Fuse, 3A Violet	2	

Electric system Wiring harness kit

Item	Part No.	Name	Qty	L
1	4812315773	Wiring harness	1	
2	4812100075	Wiring harness air filter	1	
3	4812100085	Wiring harness power supply	1	
4	4700792767	Battery cable	1	
5	4700792627	Connection cable coarse	1	
6	4700792766	Battery cable	1	
7	4700792770	Connection cable, coarse	1	
8	4700792769	Connection cable, coarse	1	
9	4700904037	Fuse 30A Green	1	
10	4700904039	Fuse 50A Red	1	
11	4700792602	Cable tie with holder	20	
12	4700904638	Washer 12x22x2	1	
13	4700500046	Hex. head screw M12x030H	1	
14	4700904281	Washer, 5,3x10x1 300HV	1	
15	4700570003	Hex. nut	1	
16	4700904229	Washer, 8.4x16x1.5 mm 300 HV	2	
17	4700570005	Hex. nut	2	
18	4700313041	Cable tie	2	
19	4700792441	Cable tie with holder	4	
20	4700335607	Connection cable, coarse	1	
21	4700904231	Steel plain washer, 13x24x2 mm 300 HV	1	
22	4700500035	Hexagon screw, M12x20H	1	

Disconnector battery Battery disconnector module

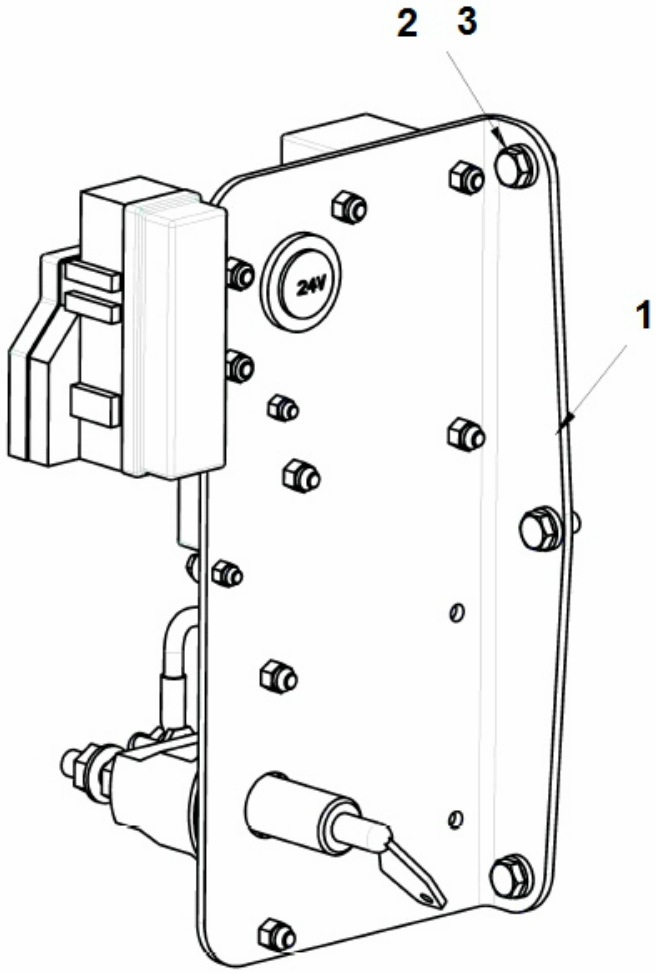

Item	Part No.	Name	Qty	L
1	-	Disconnector battery	1	
2	4700904556	Steel plain washer	3	
3	4700500019	Hex. screw	3	

Disconnector battery Disconnector battery

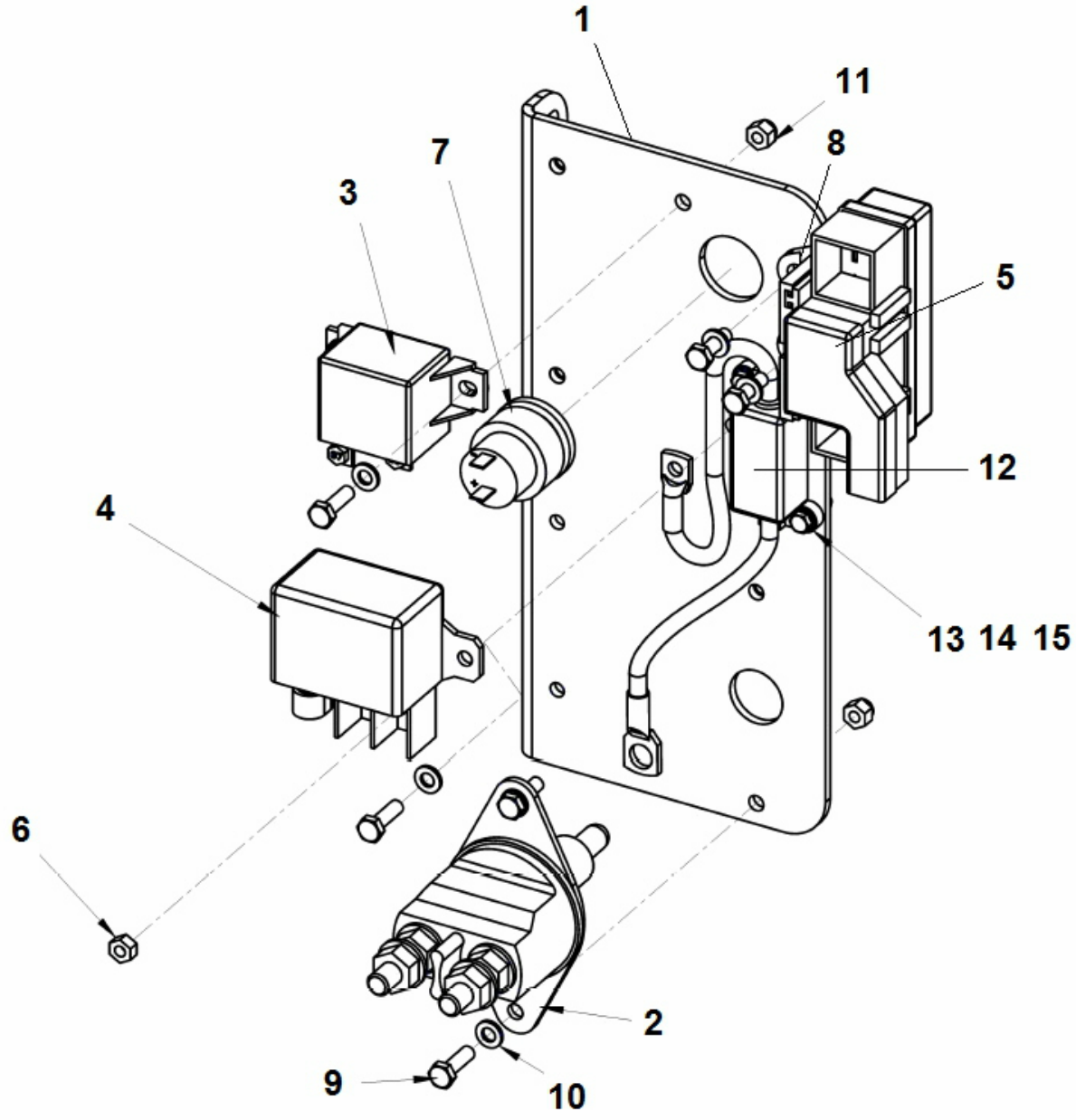

Item	Part No.	Name	Qty	L
1	4812100087	Holder	1	
2	4700903640	Battery switch	1	
3	4700792309	Relay	1	
4	4700792310	Relay	1	
5	4812111981	Fuse holder	1	
6	4700570004	Hex. nut	1	
7	4700395816	Plug socket 24V	1	
8	4812112000	Fuse holder	2	
9	4700500040	Screw	8	
10	4700904228	Steel plain washer	8	
11	4700586002	Lock nut M6 -8	8	
12	4700391585	Cable harness	1	
13	4700904281	Washer, 5,3x10x1 300HV	2	
14	4700500060	Screw M5-0,8x20 8.8	2	
15	4700586001	Lock nut	2	

Night worklight LED Switch module - Night light

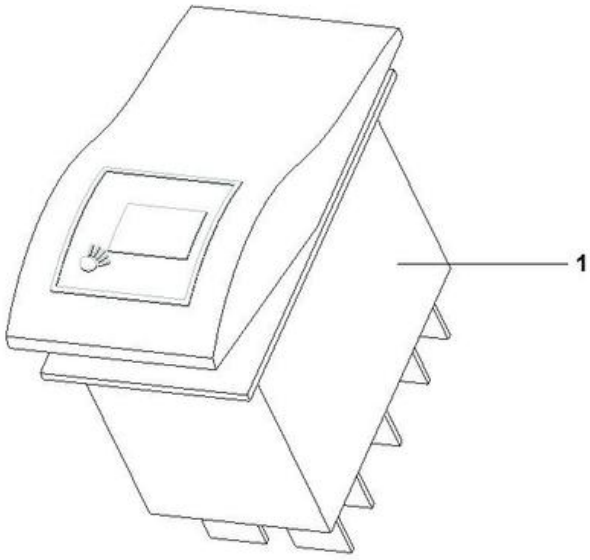

Item	Part No.	Name	Qty	L
1	4700792794	Switch	1	

Night worklight LED Reading light module

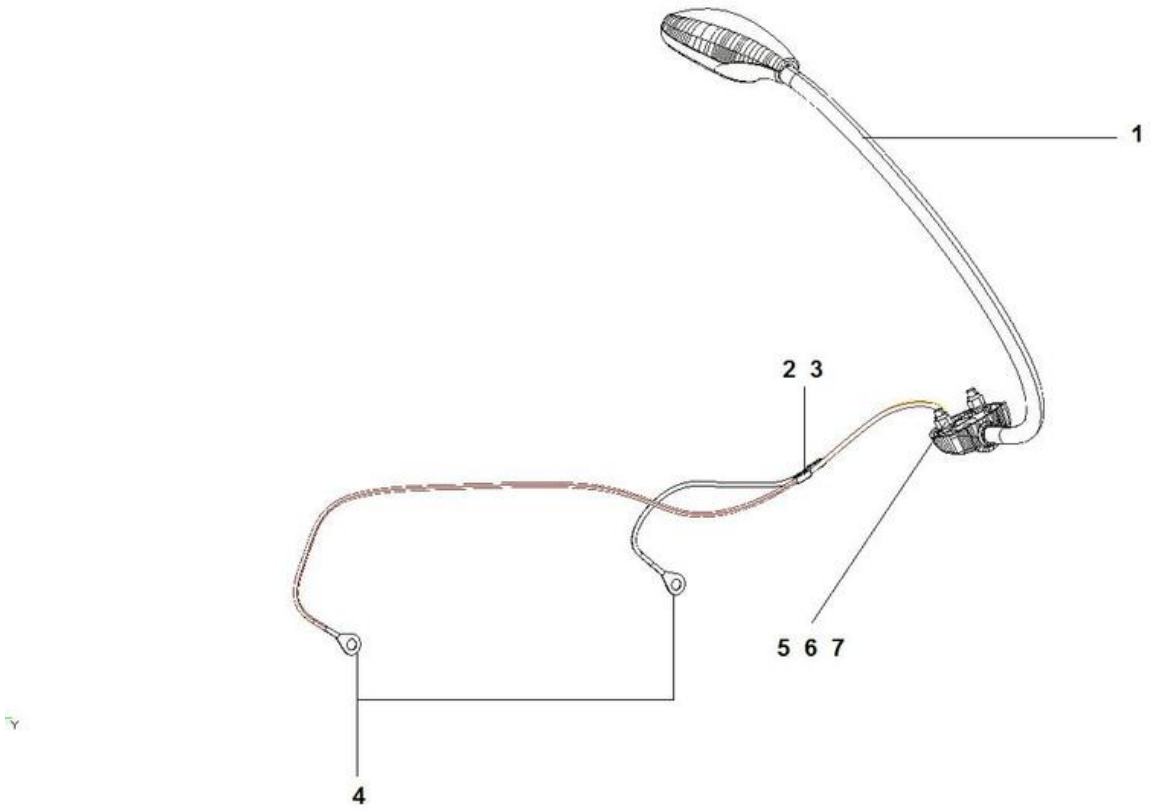

Item	Part No.	Name	Qty	L
1	4700397602	Reading light	1	
2	4700791989	Splice	2	
3	4700903997	Shrink hose	1XL	
4	4700791996	Ring terminal	2	
5	4700791421	Machine screw	2	
6	4700904281	Washer, 5,3x10x1 300HV	2	
7	4700586001	Lock nut	2	

Night worklight LED Wiring harness kit

Item	Part No.	Name	Qty	L
1	4812115290	Wiring harness	1	
2	4700792422	Relay 24V 20A	1	
3	4700395352	Cable tie holder	12	
4	4700313068	Clamp	12	
5	4700313041	Cable tie	8	
6	4700792667	Cable tie holder	7	
7	4700901227	Fuse 10A Red	1	

Night worklight LED Working lights module

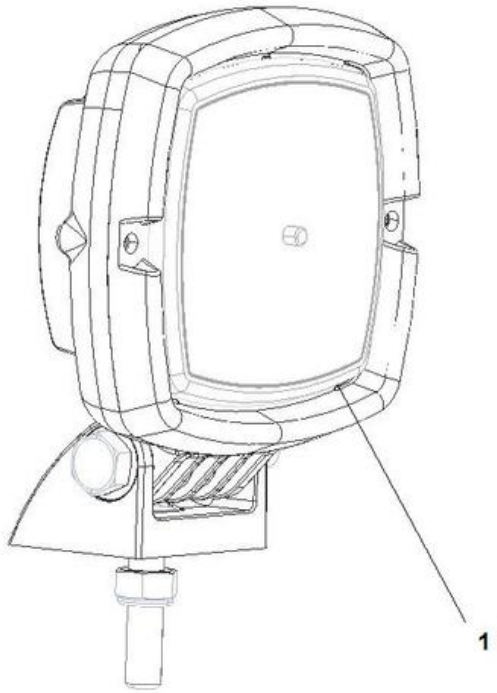

Item	Part No.	Name	Qty	L
1	4812315449	Work lamp	4	

Night worklight LED Bracket module

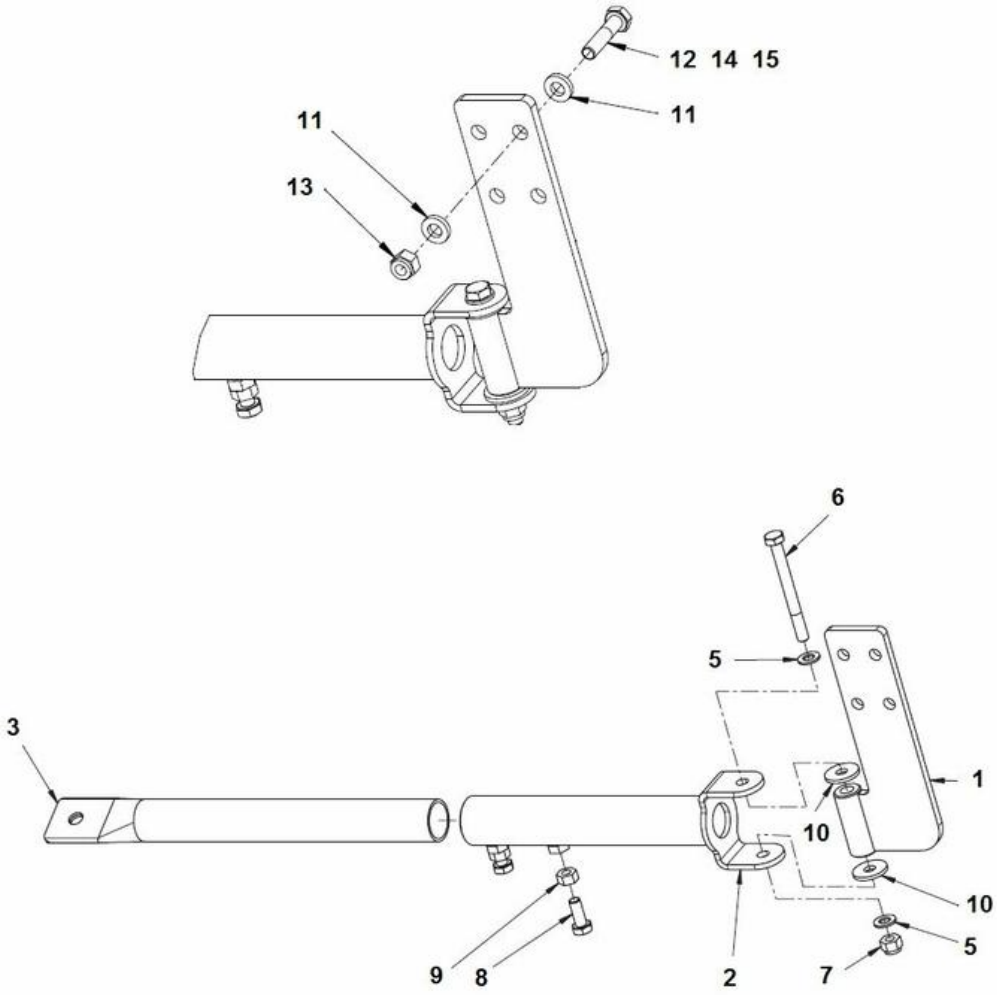

Item	Part No.	Name	Qty	L
1	4700397028	Bracket	1	
2	4700397029	Bracket	1	
3	4700397045	Bracket	1	
5	4700904229	Washer, 8.4x16x1.5 mm 300 HV	2	
6	4700500190	Screw	1	
7	4700586003	Hexagon lock nut M8	1	
8	4700500053	Hex. screw	2	
9	4700570005	Hex. nut	2	
10	4700903662	Washer	2	
11	4700904556	Steel plain washer	8	
12	4700500047	Hexagon head screw	4	
13	4700586003	Hexagon lock nut M8	4	
14	4700500024	Screw M8x45	4	
15	4700500025	Screw, M8 x 50 mm 8.8 A2K	4	

Night worklight LED Bracket module

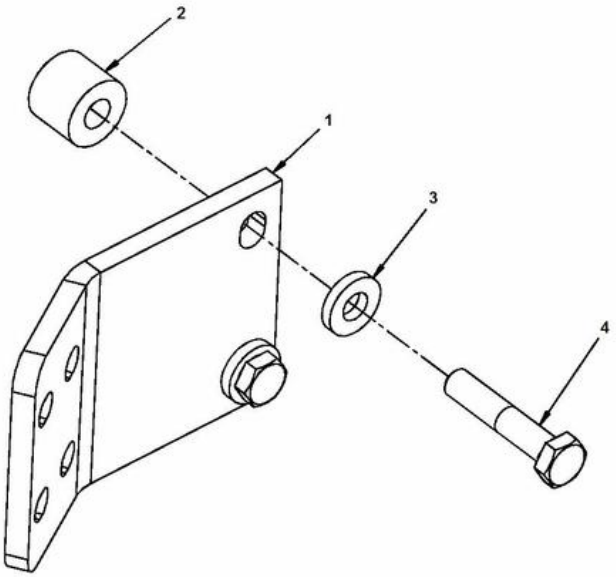

Item	Part No.	Name	Qty	L
1	4700395787	Holder plate	1	
2	4700397500	Spacer sleeve	2	
3	4700904557	Washer, 10.5x22x4 mm 300 HV	2	
4	4700500091	Screw	2	

Sprinkler tank module Sprinkler tank module

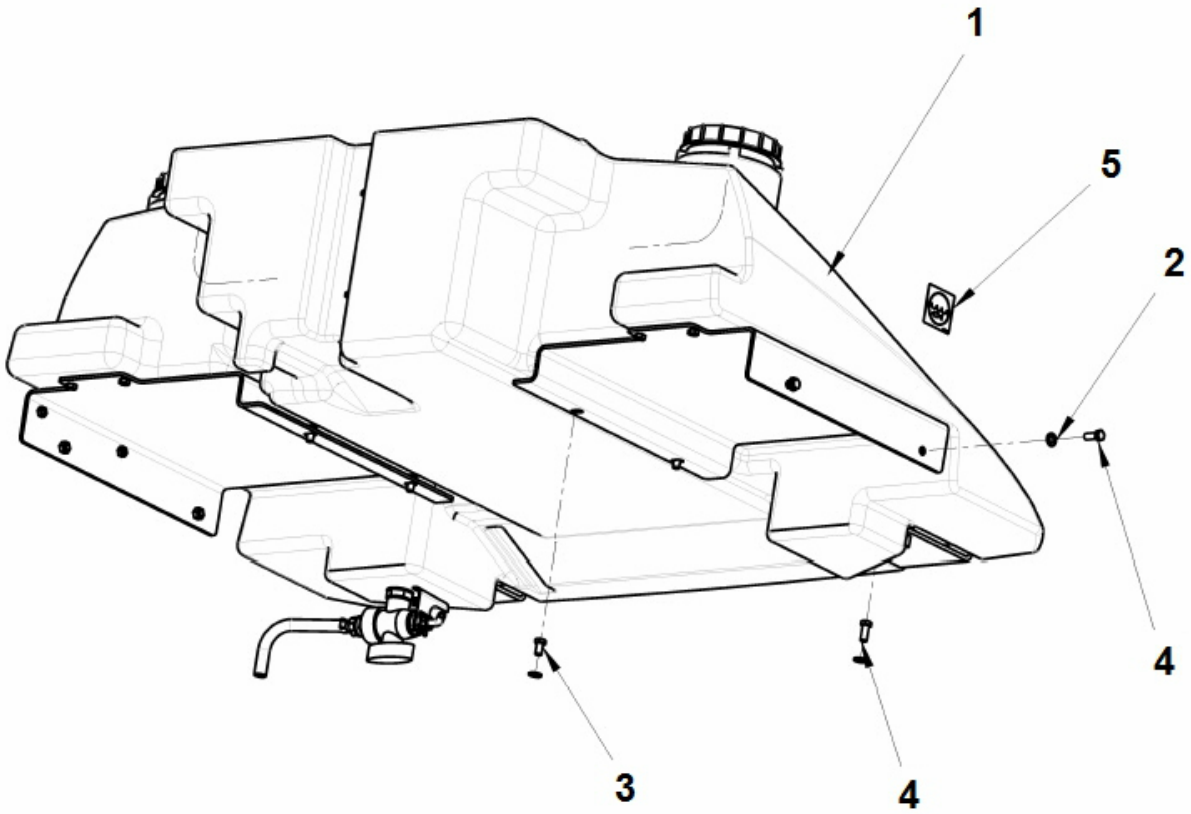

Item	Part No.	Name	Qty	L
1	-	Sprinkler tank mount	1	
2	4700904231	Steel plain washer, 13x24x2 mm 300 HV	12	
3	4700500036	Screw	4	
4	4700500046	Hex. head screw M12x030H	8	
5	4700991657	Decal "WATER"	2	

Sprinkler tank module Sprinkler tank mount

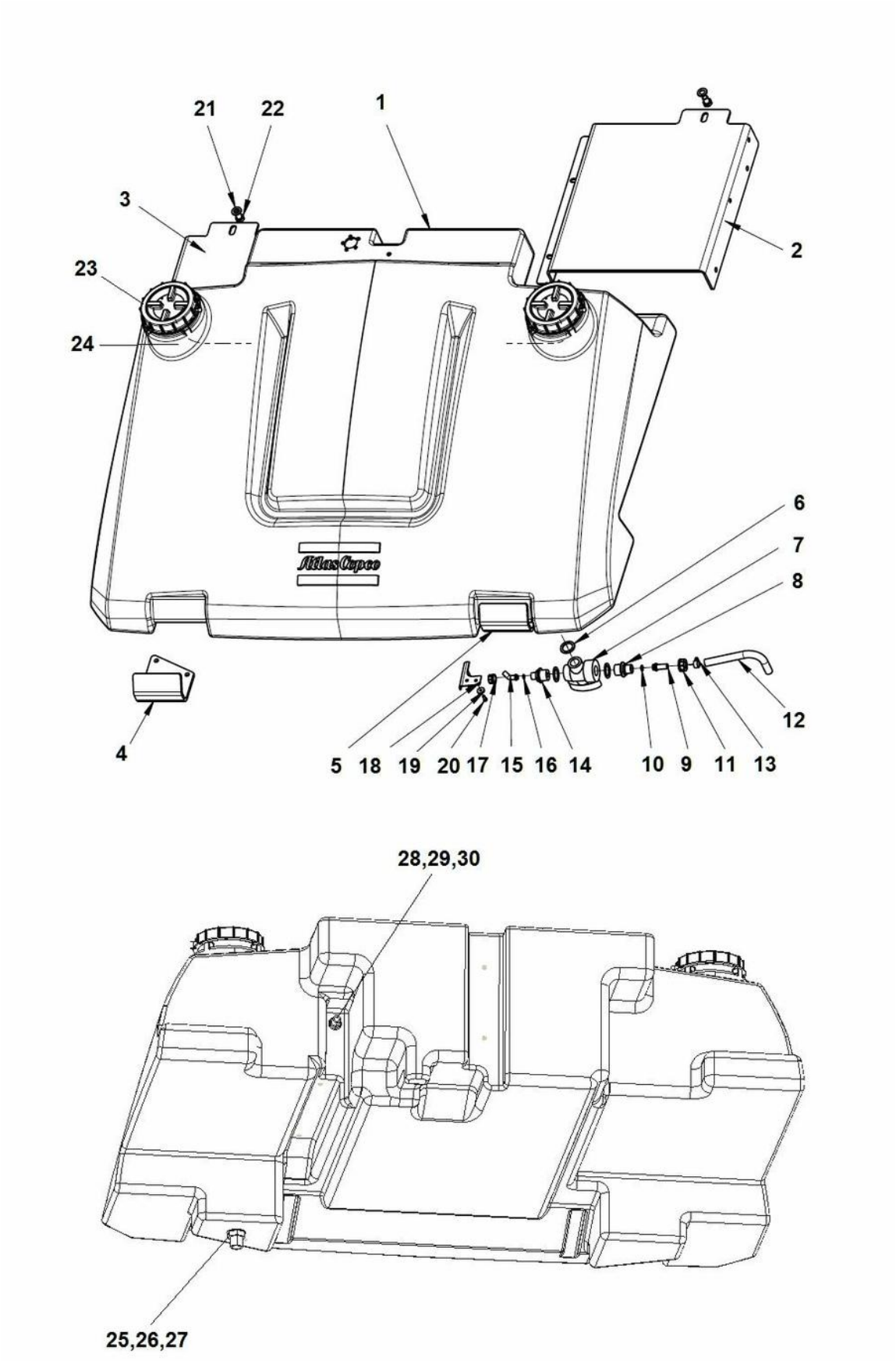

Item	Part No.	Name	Qty	L
1	4812315447	Water tank	1	
2	4812316081	Left bracket	1	
3	4812316080	Right bracket	1	
4	4700396873	Bracket	1	
5	4700396874	Bracket	1	
6	4700392223	Plane gasket	3	
7	4812120706	Ball valve	1	
8	4700792781	Reducer nipple	1	
9	4700792780	Hose connection swivel	1	
10	4700480852	O-ring 70	1	
11	4700792779	Swivel nut	1	
12	4700792073	Hose reinforced	1XL	
13	4700313003	Hose clamp	1	
14	4700392226	Reducer nipple	1	
15	4700393542	Hose connection	1	
16	4700792600	O-ring 70	1	
17	4700392227	Swivel nut	1	
18	4700396176	Bracket	1	
19	4700904735	Steel plain washer	2	
20	4700500013	Hex. screw	2	
21	4700904232	Steel plain washer	2	
22	4700500119	Screw	2	
23	4700359003	Tank Cap	2	
24	4700358846	Strainer	2	
25	4700392223	Plane gasket	1	
26	4700392222	Grommet	1	
27	4700392224	Lock nut	1	
28	4700392231	Plane gasket	1	
29	4700392230	Grommet	1	
30	4700392232	Nut	1	

Ballast module (2x) Ballast module (2x)

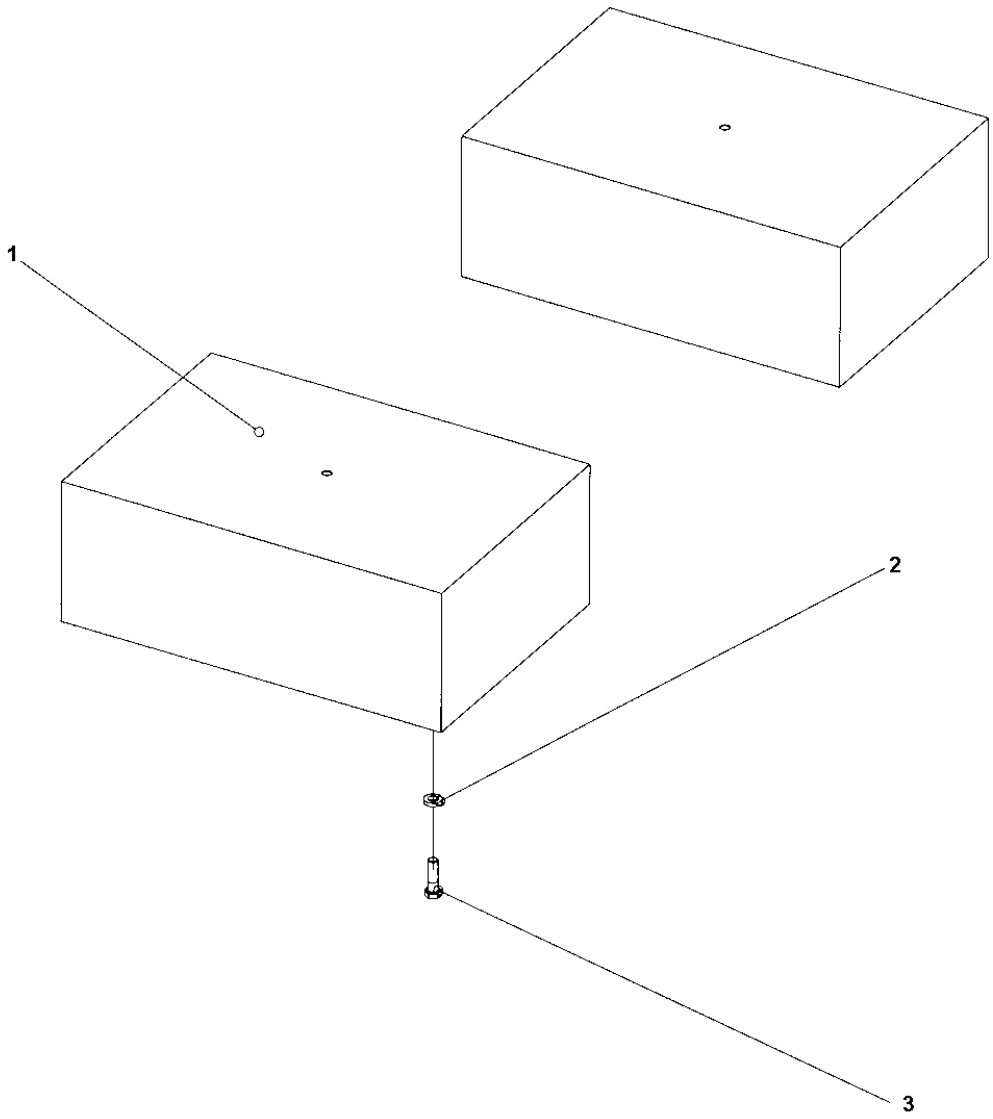

Item	Part No.	Name	Qty	L
1	4700170270	Ballast	2	
2	4700904558	Washer, 17x30x6 mm 300 HV	4	
3	4700500070	Hex. screw	4	

Steel ballast Ballast module 4 plates

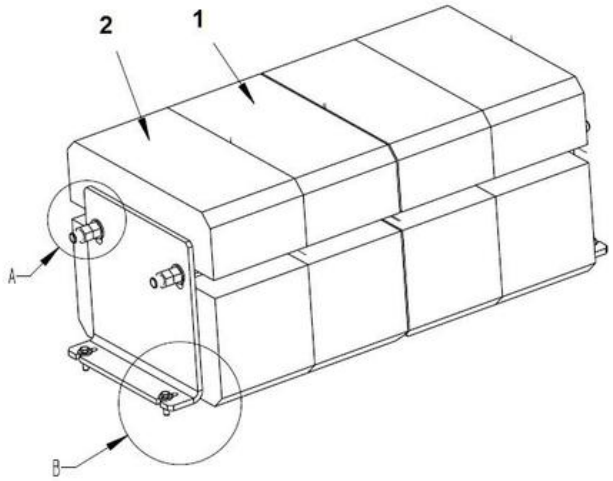

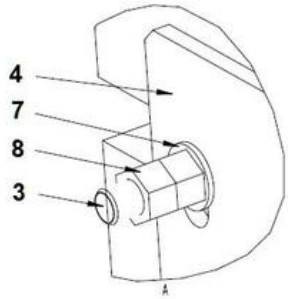

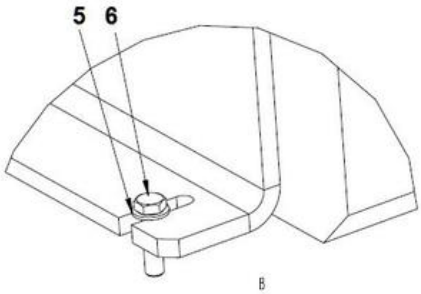

Item	Part No.	Name	Qty	L
1	4812316134	Steel ballast	2	
2	4812315515	Ballast	2	
3	4812316172	Rod	2	
4	4812315628	Sheet metal part	2	
5	4700904213	Washer	4	
6	4700500056	Screw, M12x45 mm 8.8 A3K	4	
7	4700904234	Steel plain washer	4	
8	4700903736	Hex. nut M24x3	8	

Steel ballast Ballast module 8 plates

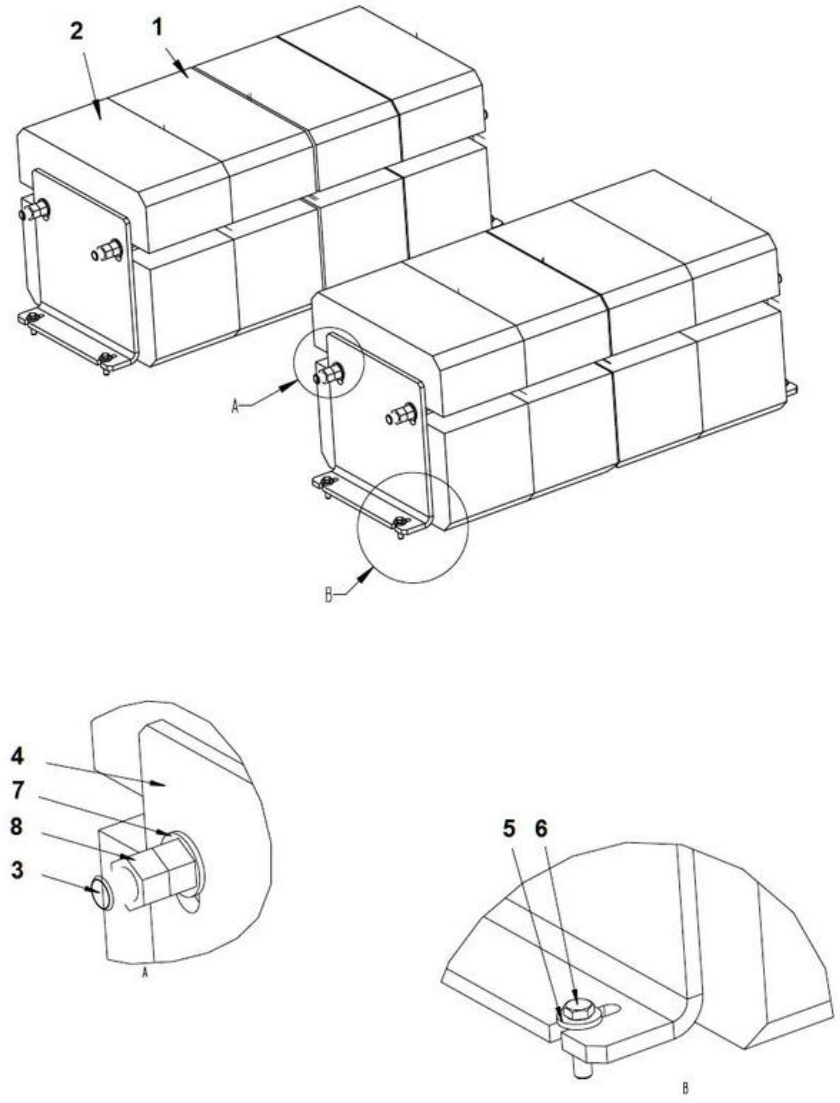

Item	Part No.	Name	Qty	L
1	4812316134	Steel ballast	4	
2	4812315515	Ballast	4	
3	4812316172	Rod	4	
4	4812315628	Sheet metal part	4	
5	4700904213	Washer	8	
6	4700500056	Screw, M12x45 mm 8.8 A3K	8	
7	4700904234	Steel plain washer	8	
8	4700903736	Hex. nut M24x3	16	

Steel ballast Ballast module 12 plates

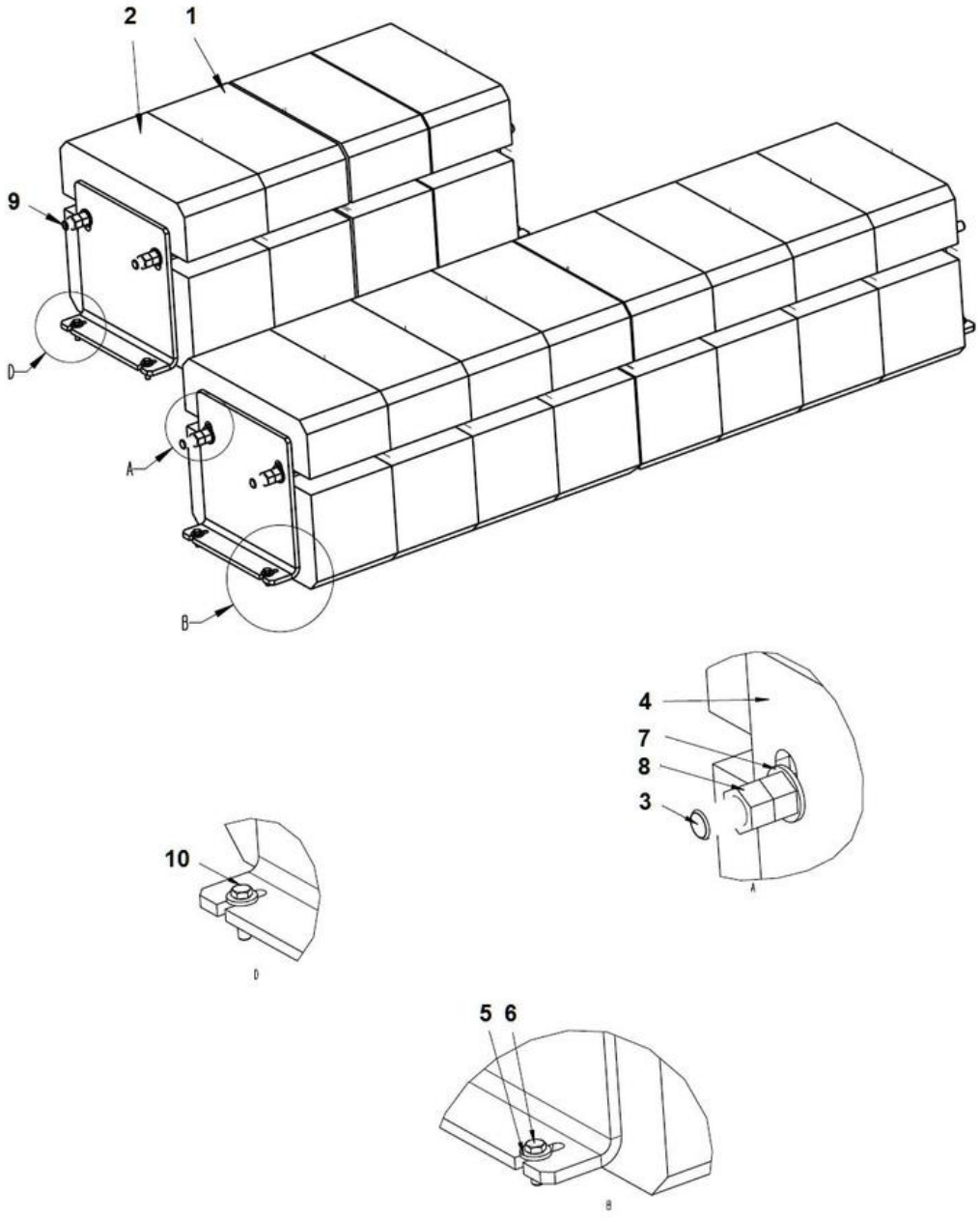

Item	Part No.	Name	Qty	L
1	4812316134	Steel ballast	4	
2	4812315515	Ballast	8	
3	4812315621	Rod	2	
4	4812315628	Sheet metal part	4	
5	4700904213	Washer	8	
6	4700500037	Hex. screw	4	
7	4700904234	Steel plain washer	8	
8	4700903736	Hex. nut M24x3	16	
9	4812316172	Rod	2	
10	4700500056	Screw, M12x45 mm 8.8 A3K	4	

Steel ballast Ballast module 16 plates

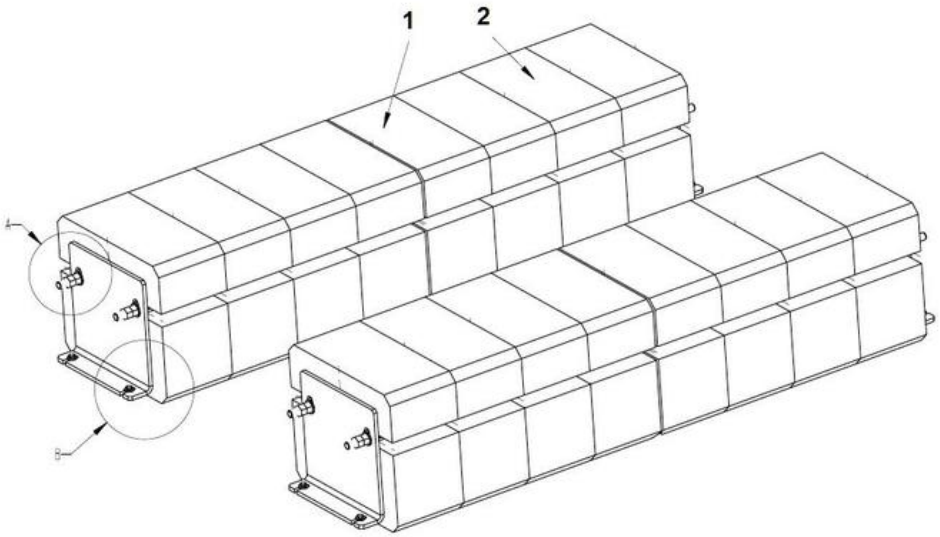

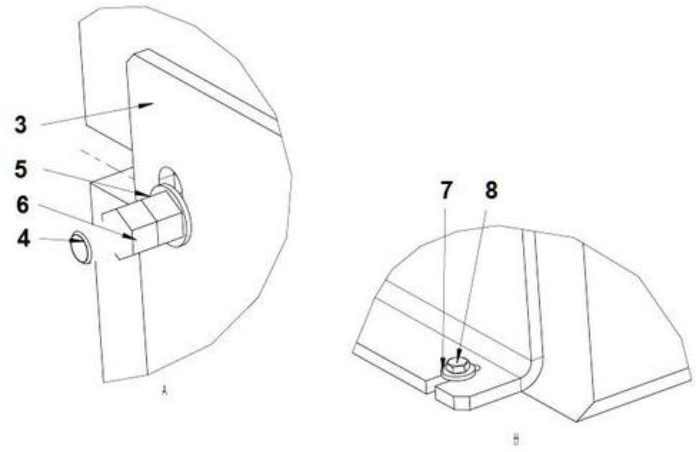

Item	Part No.	Name	Qty	L
1	4812316134	Steel ballast	4	
2	4812315515	Ballast	12	
3	4812315628	Sheet metal part	4	
4	4812315621	Rod	4	
5	4700904234	Steel plain washer	8	
6	4700903736	Hex. nut M24x3	16	
7	4700904213	Washer	8	
8	4700500037	Hex. screw	8	

Edge cutter Edge cutter

NO DRAWING AVAILABLE FOR THIS BOM

Item	Part No.	Name	Qty	L
1	-	Edge cutter, module		
2	-	Cutting disc module		
3	-	Hydraulic valve module		
4	-	Bracket module		
5	-	Disc/Roller holder		

Edge cutter, module Edge cutter, module

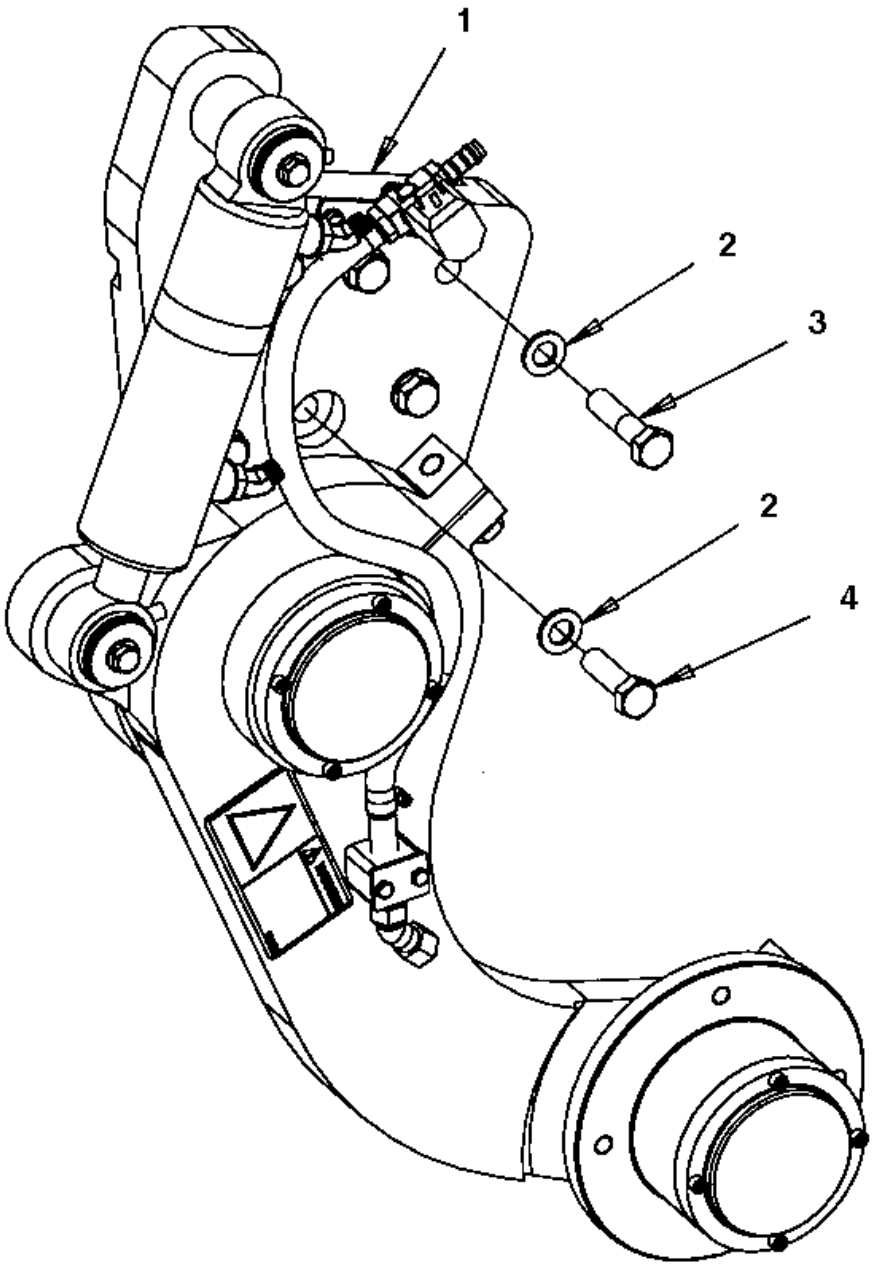

Item	Part No.	Name	Qty	L
1	4700390998	Edge cutter, cpl	1	
2	4700904232	Steel plain washer	6	
3	4700500058	Screw M16-2,0x65 8,8	5	
4	4700500070	Hex. screw	1	

4700390998 Edge cutter, cpl 4700390998 Edge cutter, cpl

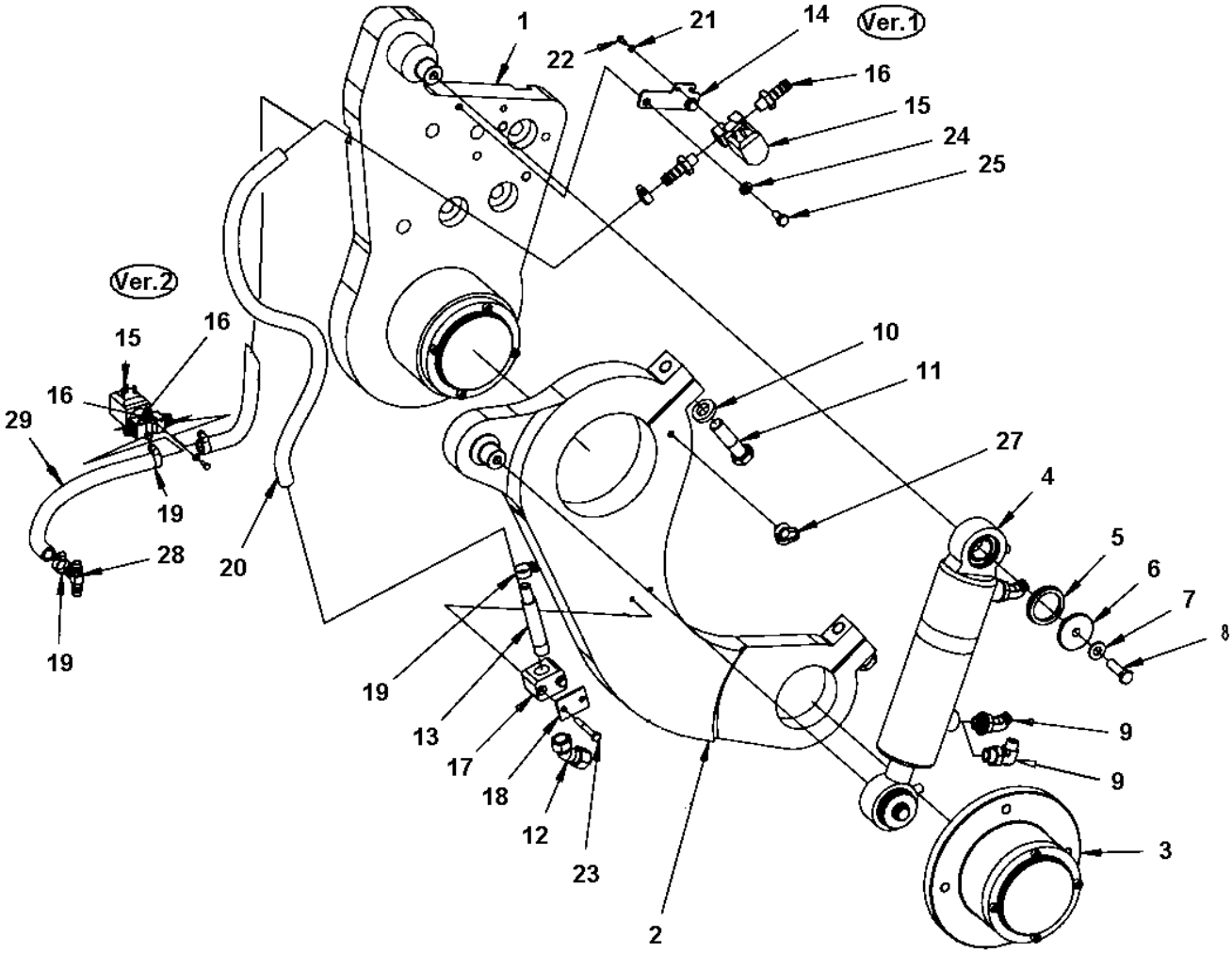

Item	Part No.	Name	Qty	L
-	4700390998	Edge cutter, cpl		
1	4700390999	Holder	1	
2	4700391000	Lever	1	
3	4700391009	Bearing unit	1	
4	4700387275	Hydraulic cylinder	1	
.4	4700945526	Bearing	2	
5	4700791565	Sealing	2	
6	4700376861	Washer	2	
7	4700904230	Washer	2	
8	4700947684	Screw	2	
9	4700792389	Elbow 45 orfs	2	
9	4700792676	Elbow 90 orfs	1	
10	4700904558	Washer, 17x30x6 mm 300 HV	2	
11	4700500134	Hex. screw	2	
12	4700392123	Nozzle body	1	
13	4700392058	Pipe	1	
14	4700392059	Bracket	1	
15	4700391438	Solenoid valve	1	
16	4700901432	Hose connection	2	
17	4700791453	Pipe clamp block	1	
18	4700791454	Cover plate	1	
19	4700313002	Hose clamp	4	
20	4812112074	Plastic hose (x m)	1XL	A
21	4700904698	Steel plain washer	2	
22	4700925784	Screw	2	
23	4700500186	Screw	2	
24	4700904229	Washer, 8.4x16x1.5 mm 300 HV	2	
25	4700500019	Hex. screw	2	
27	4700792441	Cable tie with holder	1	
28	4700791362	Hose connector	1	
29	4812112074	Plastic hose (x m)	1XL	B

Comments for Page: 4700390998 Edge cutter, cpl

(L)OCAL REMARKS

A | en_US | Length as required.

B | en_US | L= 0.3 m

4700390999 Holder 4700390999 Holder

This page intentionally left blank

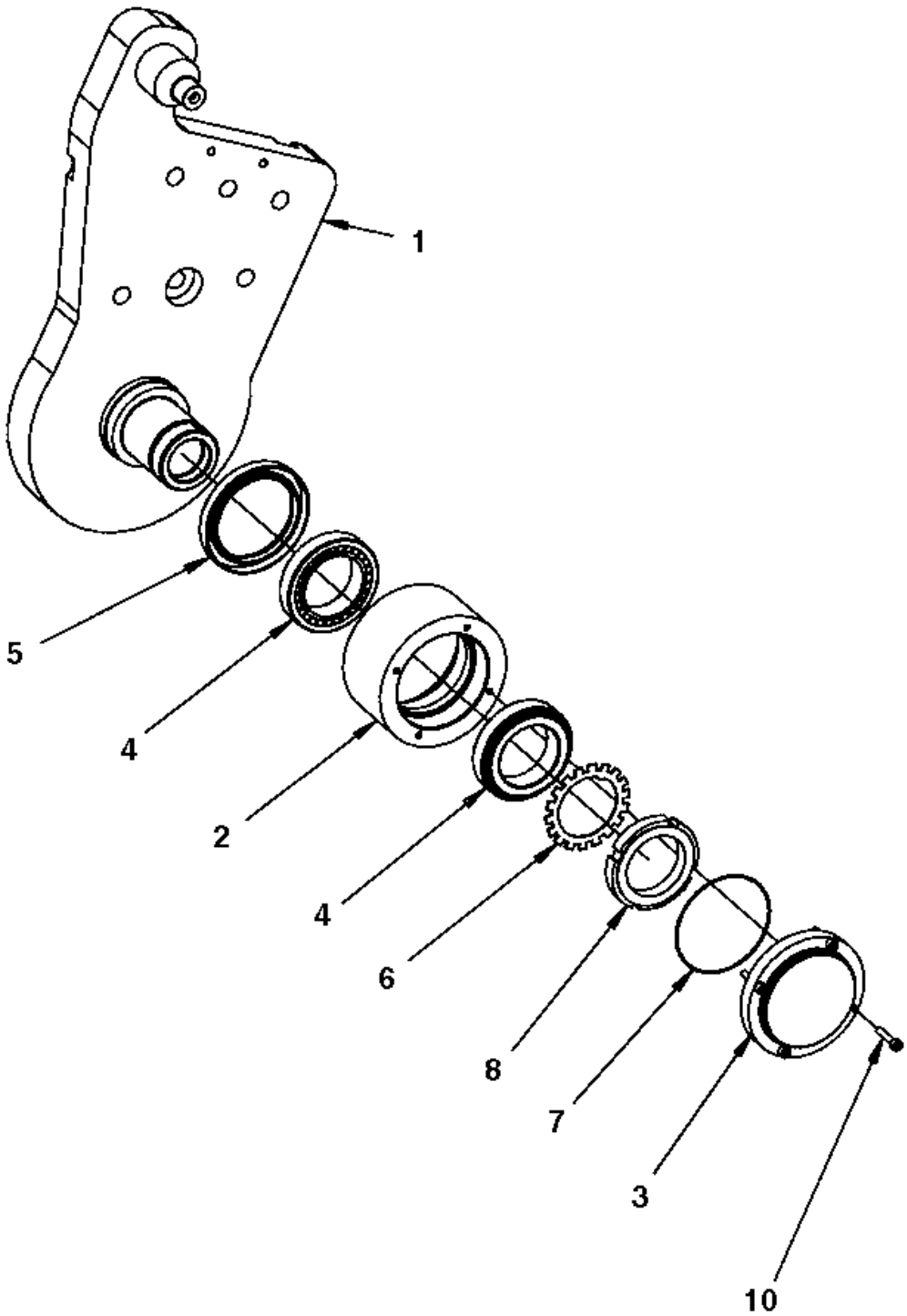
1
5
4
2
4
6
8
7
3
10

Item	Part No.	Name	Qty	L
1	4700391001	Holder	1	
2	4700391008	Bearing housing	1	
3	4700391010	Bearing cover	1	
4	4700792385	Taper roller bearing	2	
5	4700792384	Radial lip-type seal	1	
6	4700136012	Lock washer	1	
7	4700900512	O-ring	1	
8	4700135012	Shaft nut	1	
10	4700508018	Screw	4	

4700391009 Bearing unit 4700391009 Bearing unit

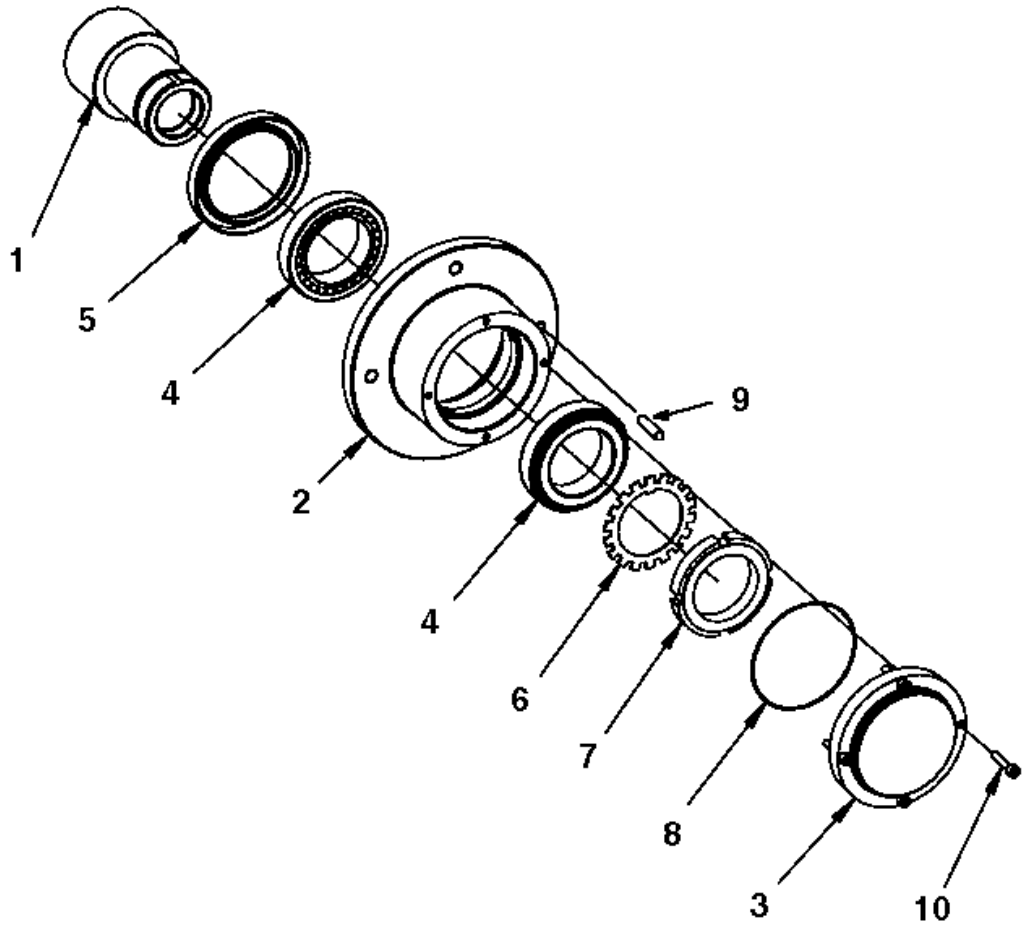

Item	Part No.	Name	Qty	L
-	4700391009	Bearing unit		
1	4700391011	Shaft	1	
2	4700391012	Bearing housing	1	
3	4700391010	Bearing cover	1	
4	4700792385	Taper roller bearing	2	
5	4700792384	Radial lip-type seal	1	
6	4700136012	Lock washer	1	
7	4700135012	Shaft nut	1	
8	4700900512	O-ring	1	
9	4700903891	Stud	4	
10	4700508018	Screw	4	

4700387275 Hydraulic cylinder 4700387275 Hydraulic cylinder

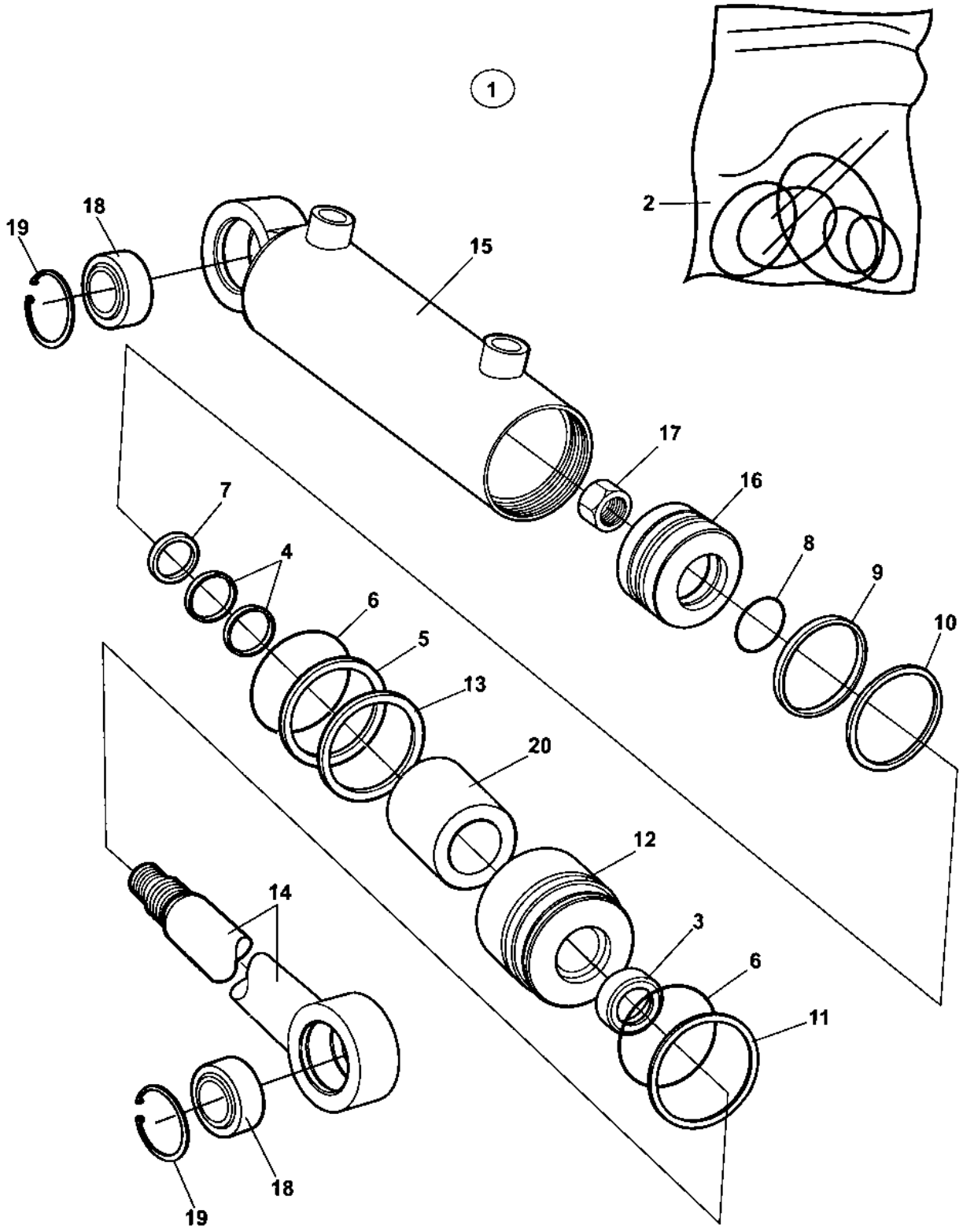

Item	Part No.	Name	Qty	L
1	4700387275	Hydraulic cylinder	1	
.2	4700945668	Seal kit	1	
3	-	SEAL	1	
4	-	SEAL	2	
5	-	Back-up ring	1	
6	-	O-RING	2	
7	-	SEAL	1	
8	-	O-RING	1	
9	-	SEAL	1	
10	-	SEAL	1	
11	-	Retaining ring	1	A
12	-	Steering	1	
13	-	Retaining ring	1	A
14	-	Rod seal	1	
15	-	Cylinder	1	
16	-	Piston block	1	
17	-	Cylinder nut	1	
18	4700945526	Bearing	1	
19	-	Retaining ring	1	A
20	-	Spacer	1	A

Comments for Page: 4700387275 Hydraulic cylinder

(L)OCAL REMARKS

A | en_US | Not valid for this model

Cutting disc module Cutting disc module

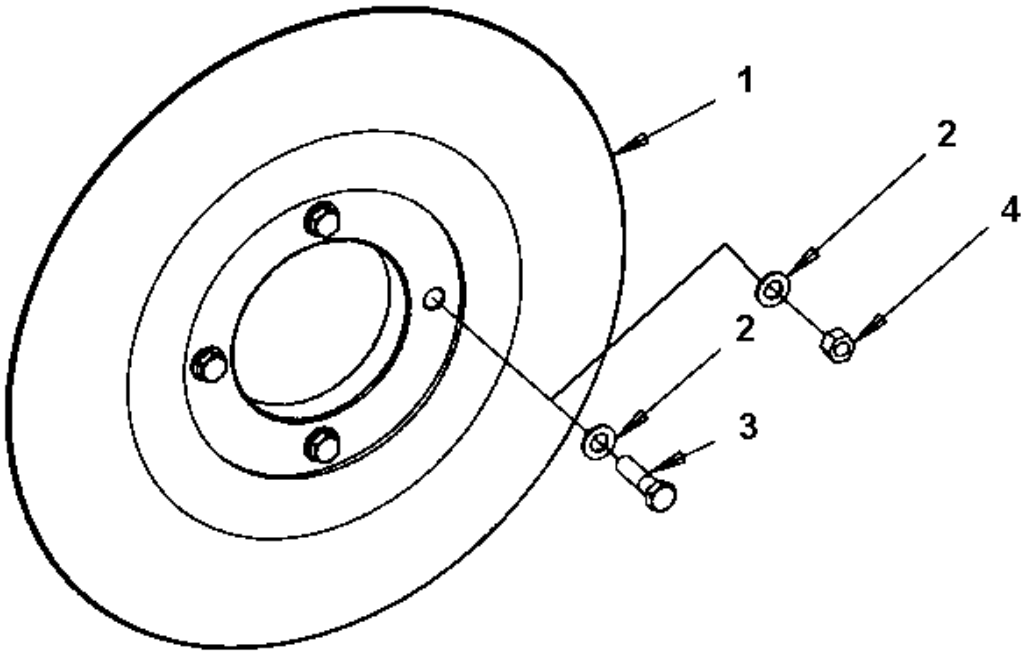

Item	Part No.	Name	Qty	L
1	4700390805	Cutting disc 80mm	1	
1	4700390806	Cutting disc 120mm	1	
1	4700390807	Cutting disc 150mm	1	
2	4700904231	Steel plain washer, 13x24x2 mm 300 HV	4	
3	4700570007	Nut	4	

Hydraulic valve module Hydraulic valve module

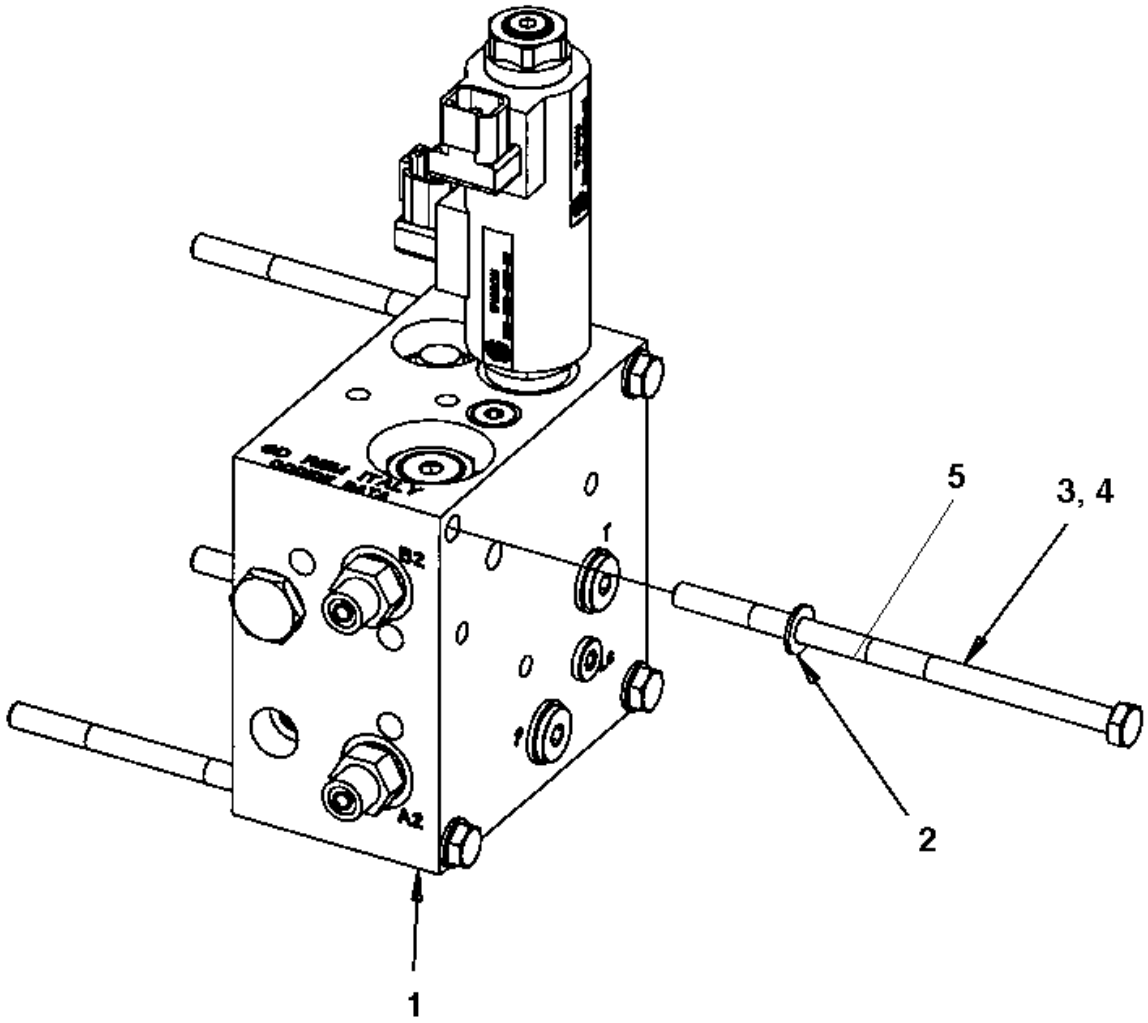

Item	Part No.	Name	Qty	L
1	-	Hydraulic valve	1	
2	4700904229	Washer, 8.4x16x1.5 mm 300 HV	4	
3	4700792359	Screw M8x160 8.8	4	1
4	4700500115	Screw	4	2
5	4700500170	Screw M8x140 8.8	4	

Comments for Page: Hydraulic valve module

(L)OCAL REMARKS

1 | en_US | Used when option valve is mounted.

2 | en_US | Used when mounted on base valve.

Hydraulic valve Hydraulic valve

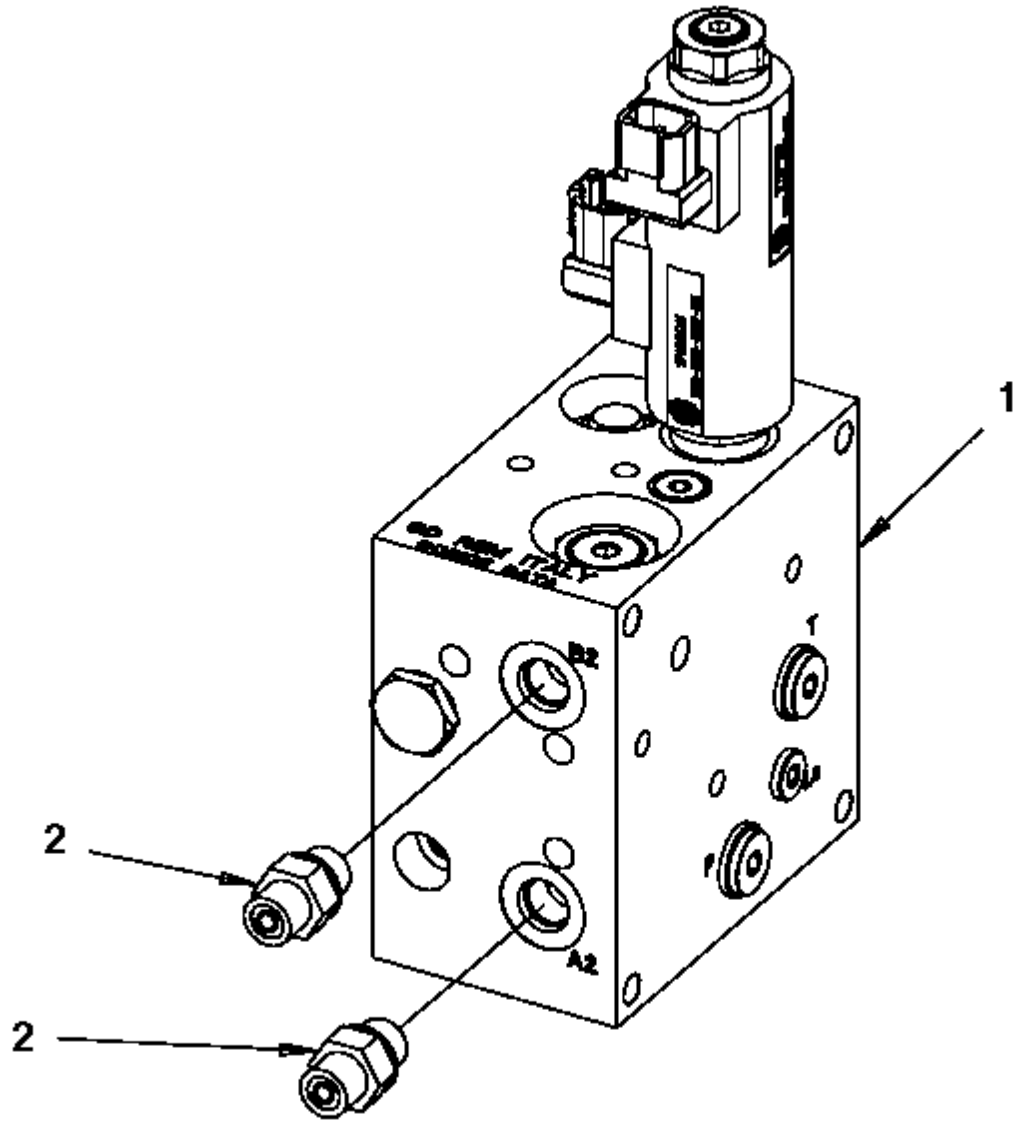

Item	Part No.	Name	Qty	L
1	4700391018	Hydraulic valve	1	
2	4700791914	Adapter	2	

4700391018 Hydraulic valve 4700391018 Hydraulic valve

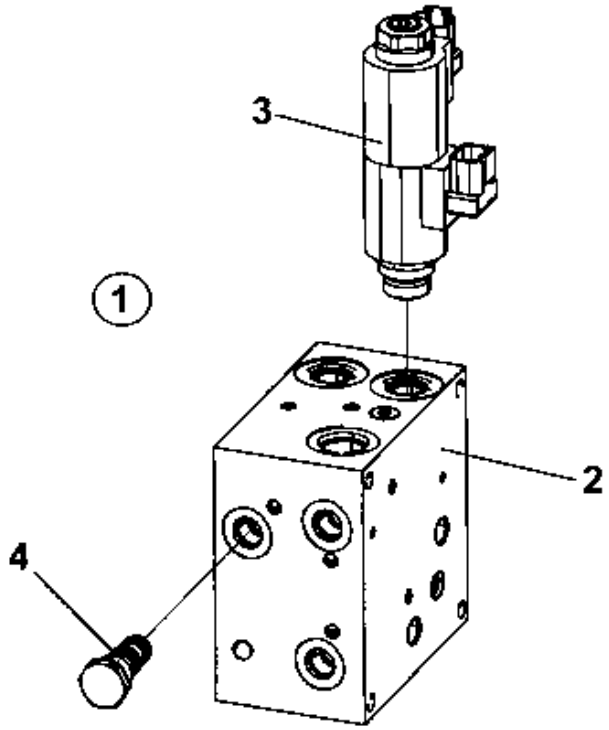

Item	Part No.	Name	Qty	L
1	-	Hydraulic valve	1	
2	-	Valve block	1	
3	4700950587	Proportional valve	1	
4	4700940572	Shuttle valve	1	

Bracket module Bracket module

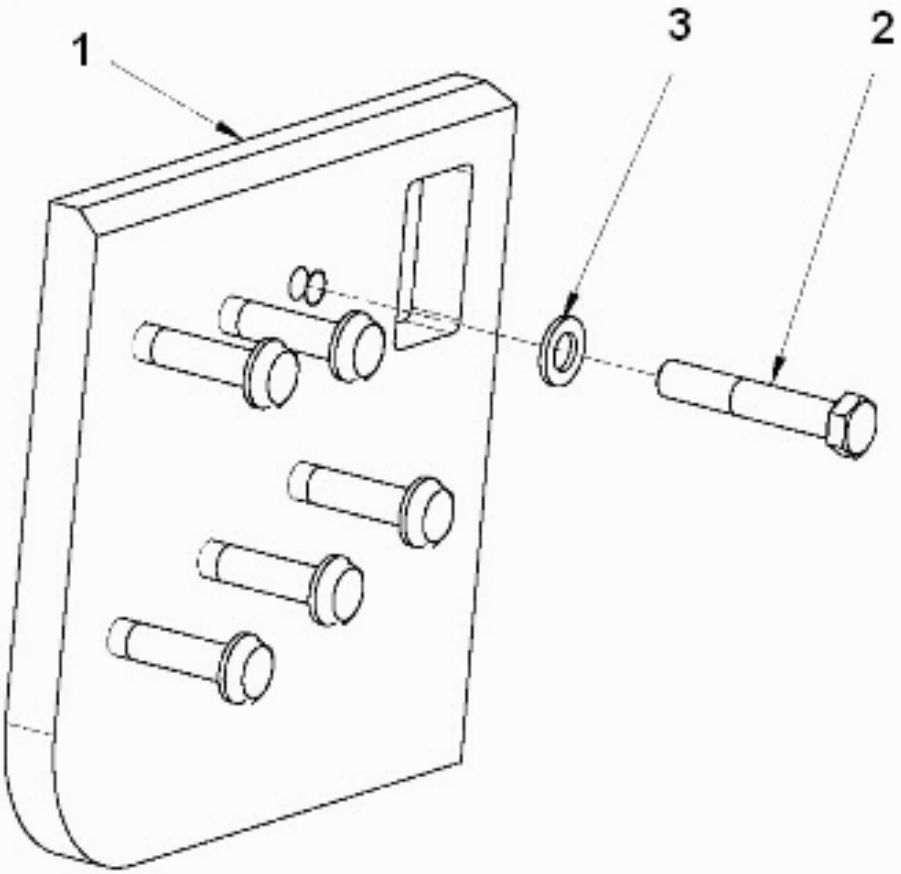

Item	Part No.	Name	Qty	L
1	4700396977	Bracket	1	
2	4700500094	Hex. screw	6	
3	4700904232	Steel plain washer	6	

Disc/Roller holder Disc/Roller holder

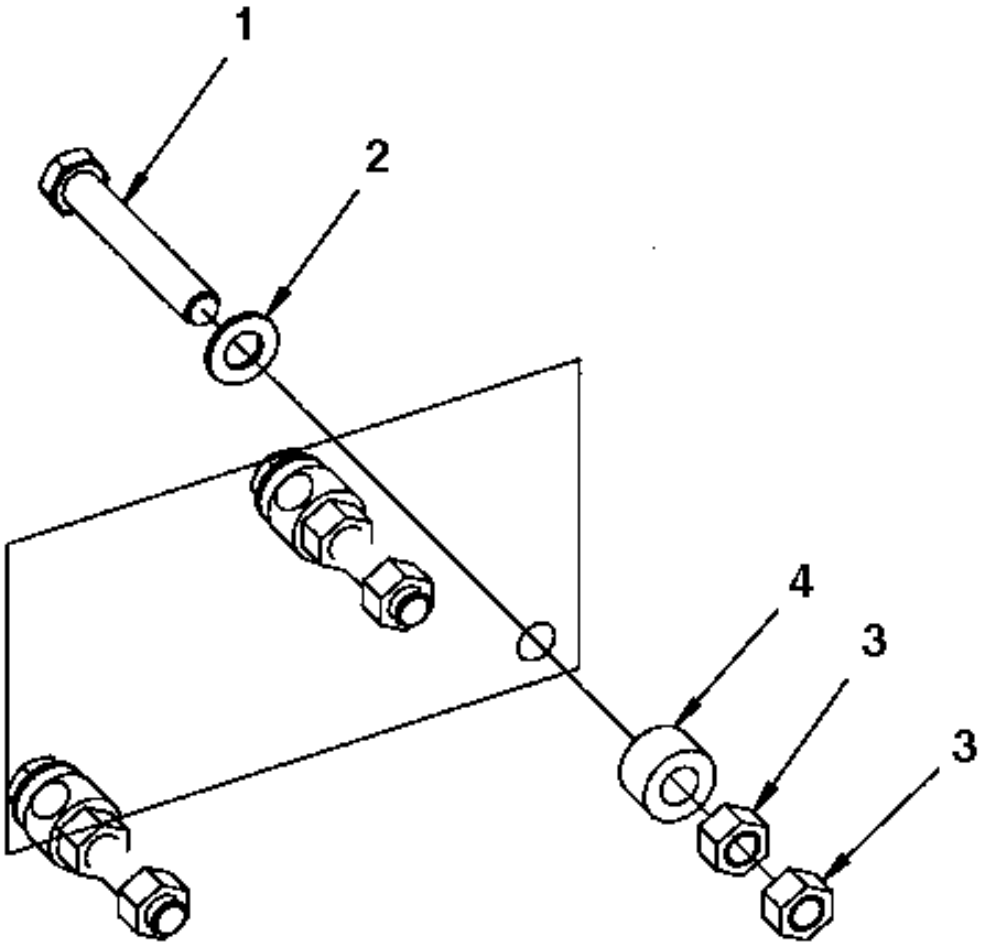

Item	Part No.	Name	Qty	L
1	4700903898	Screw	3	
2	4700904231	Steel plain washer, 13x24x2 mm 300 HV	3	
3	4700570007	Nut	6	
4	4700791572	Spacer washer	3	

Standard AC Condensor module

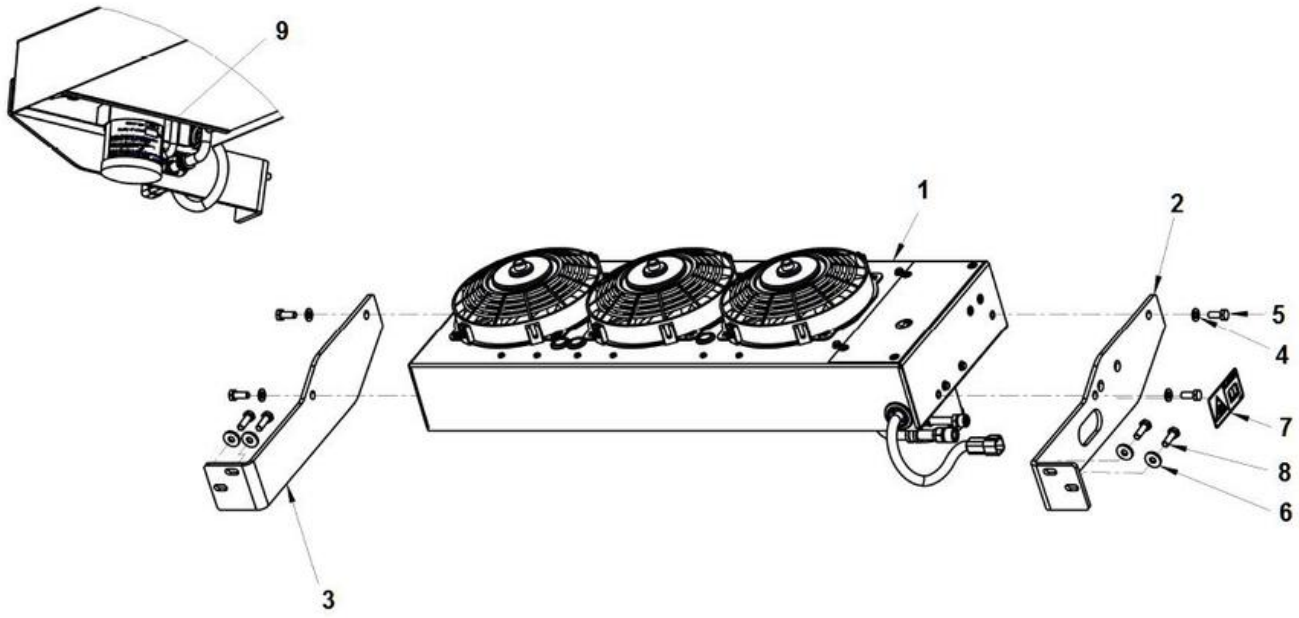

Item	Part No.	Name	Qty	L
1	4700393529	Condenser unit	1	
2	4700393222	Bracket	1	
3	4700393223	Bracket	1	
4	4700904229	Washer, 8.4x16x1.5 mm 300 HV	4	
5	4700500053	Hex. screw	4	
6	4700904640	Washer, 8.4x 2x3 mm 300 HV	4	
7	4700904165	Safety decal "Toxic gases"	1	
8	4700500021	Hex. screw	4	
9	4812121417	Decal	1	

Standard AC Condensor

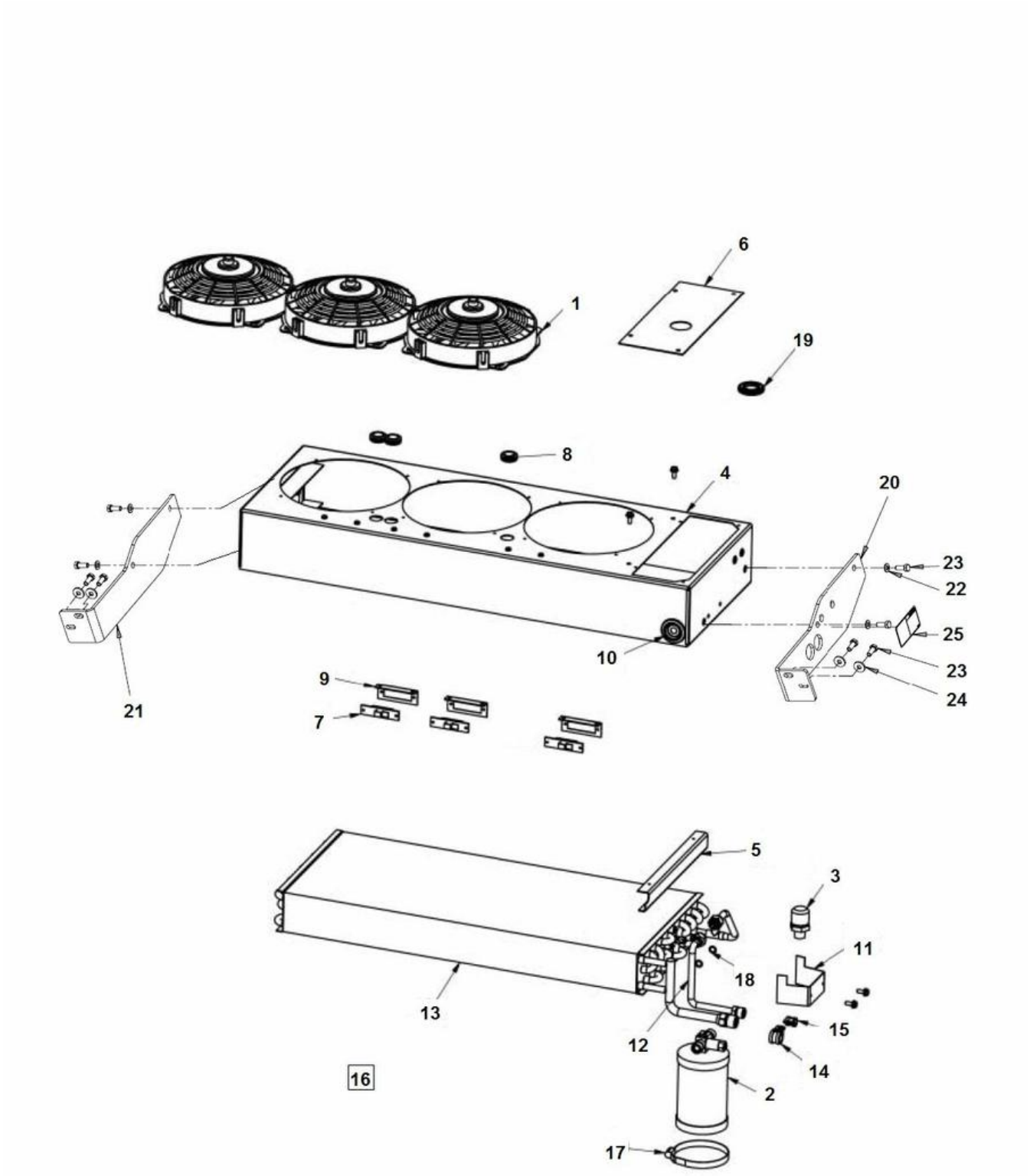

Item	Part No.	Name	Qty	L
1	4700950372	Fan	3	
2	4700950373	Dryer	1	
3	4700938605	Pressure switch	1	
4	-	Casing	1	
5	-	Bracket	1	
6	-	Cover	1	
7	4700938606	Resistor	3	
8	4700938609	Grommet	3	
9	4812155658	Resistor bracket	3	
10	-	Grommet	1	
11	-	Bracket	1	
12	-	Copper tube	1	
13	4700950374	Condensor Coil	1	
14	-	Clamp	1	
15	-	Clamp	1	
16	4700950375	Cable harness	1	
17	4700938789	Clamp	1	
18	-	O-RING	2	
19	-	Grommet	1	
20	4700393222	Bracket	1	
21	4700393223	Bracket	1	
22	4700904229	Washer, 8.4x16x1.5 mm 300 HV	4	
23	4700500053	Hex. screw	8	
24	4700904640	Washer, 8.4x 2x3 mm 300 HV	4	
25	4700904165	Safety decal "Toxic gases"	1	

Standard AC Hose kit AC

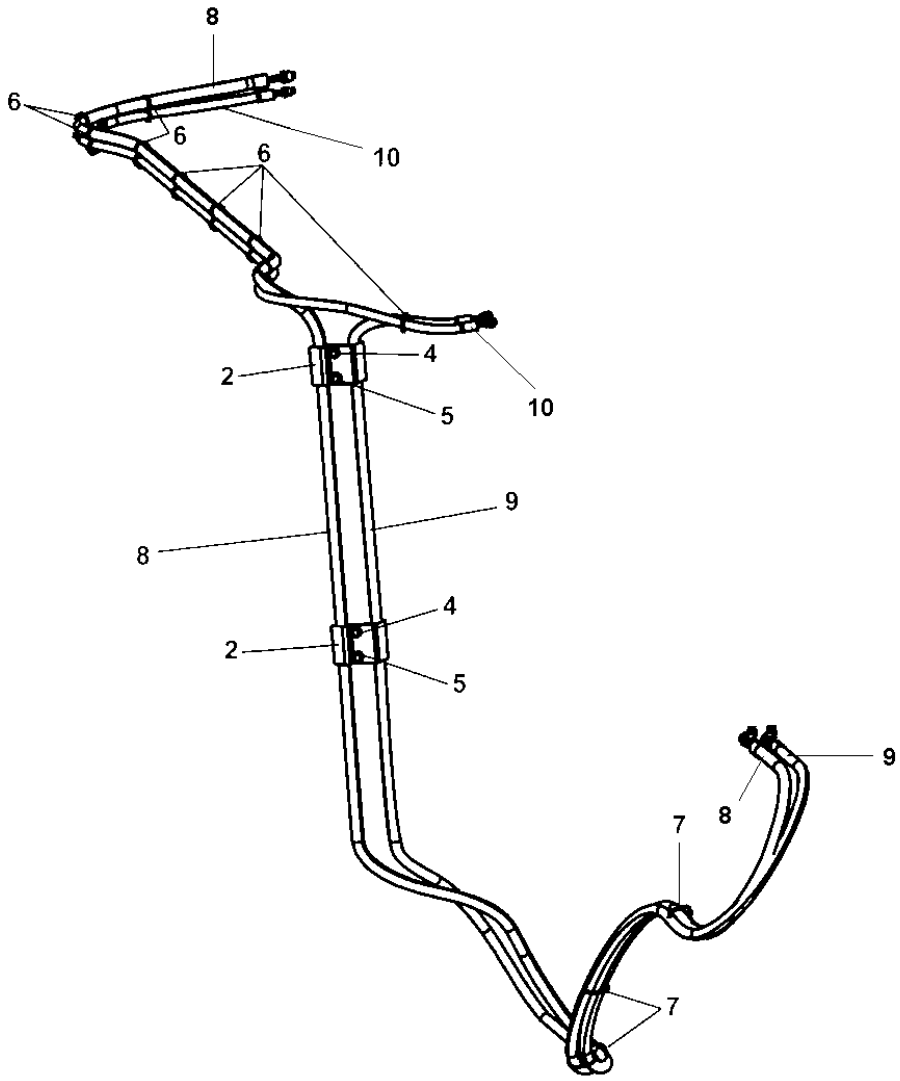

Item	Part No.	Name	Qty	L
2	4700393418	Bracket	2	
4	4700904557	Washer, 10.5x22x4 mm 300 HV	4	
5	4700500048	Screw	4	
6	4700792686	Cable tie with holder	N	
7	4700313041	Cable tie	N	
8	4700396705	Refrigerant hose	1	
9	4700396706	Refrigerant hose	1	
10	4700393594	Refrigerant hose	1	

Standard AC Protection cover

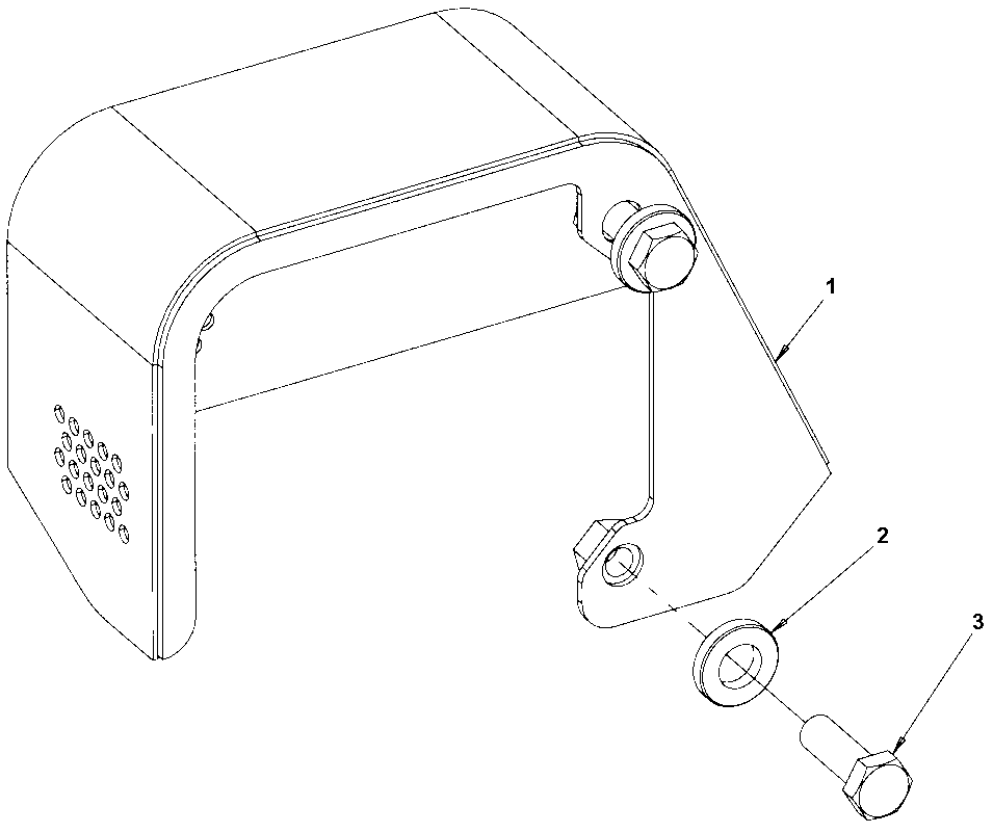

Item	Part No.	Name	Qty	L
1	4700396544	Protection cover	1	
2	4700603012	Washer	2	
3	4700500029	Hex. screw	2	

Standard AC Compressor module

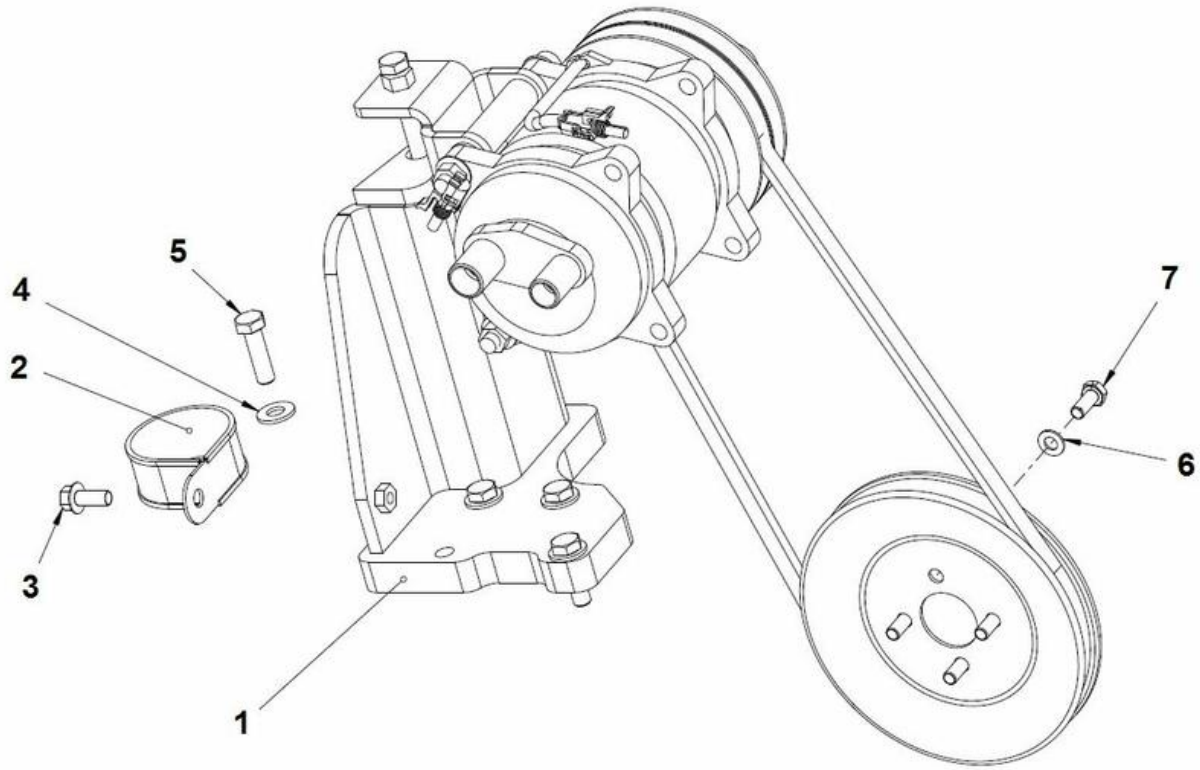

Item	Part No.	Name	Qty	L
1	-	Compressor assy	1	
2	4700904352	Clamp	1	
3	4700500505	Screw, M8x20 mm 8.8 A2K	1	
4	4700904230	Washer	4	
5	4700500030	Hexagon head screw	4	
6	4700904229	Washer, 8.4x16x1.5 mm 300 HV	4	
7	4700500053	Hex. screw	4	

Standard AC Compressor assy

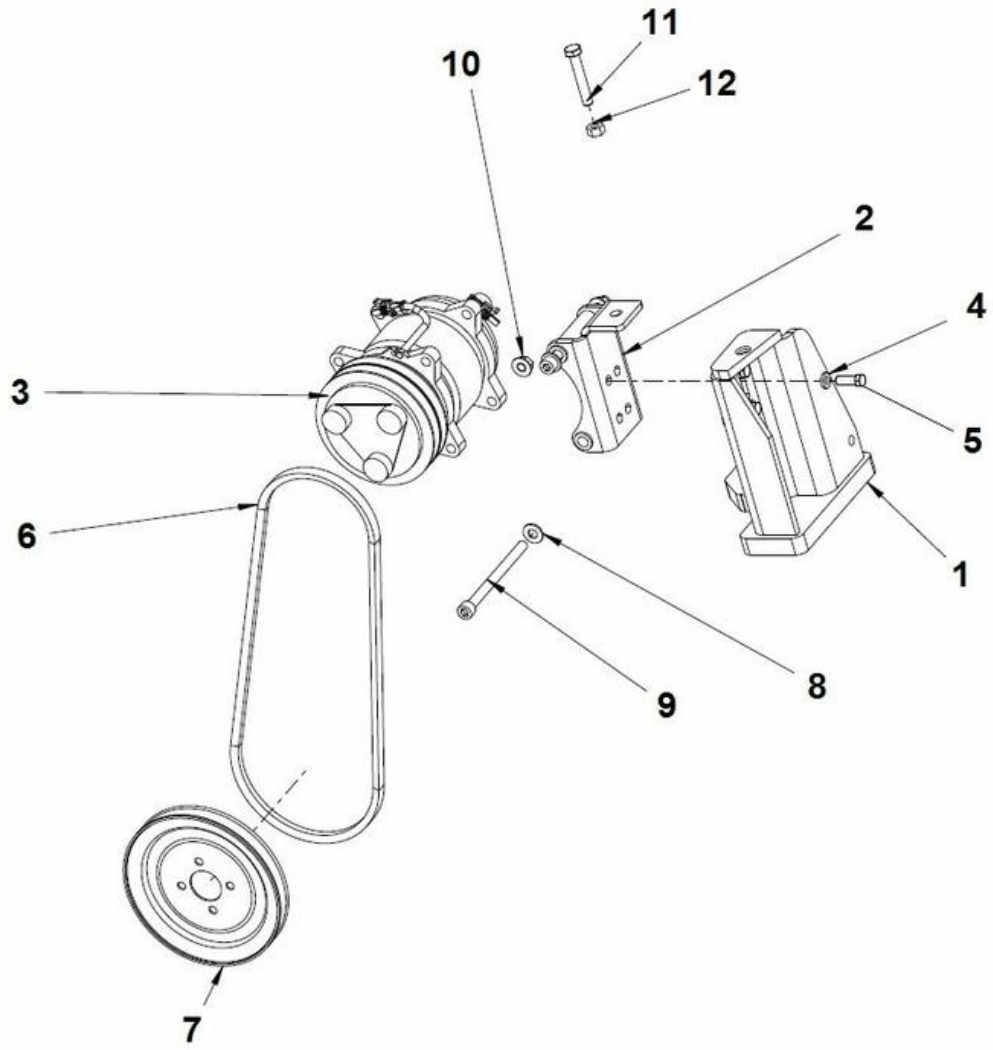

Item	Part No.	Name	Qty	L
1	4812116079	Compressor bracket	1	
2	4812316133	Bracket	1	
3	4700396036	Compressor	1	
4	4700904556	Steel plain washer	4	
5	4700500021	Hex. screw	4	
6	4700410012	V-belt	1	
7	4700395192	V-belt pulley	1	
8	4700904230	Washer	2	
9	4700792797	Hexagon socket head cap screw m	2	
10	4700570103	Nut, M10 x 1.5 mm GEOMET®	2	
11	4700791082	Screw	1	
12	4700570006	Hex. nut	1	

Standard AC 4700393584 Evaporator unit

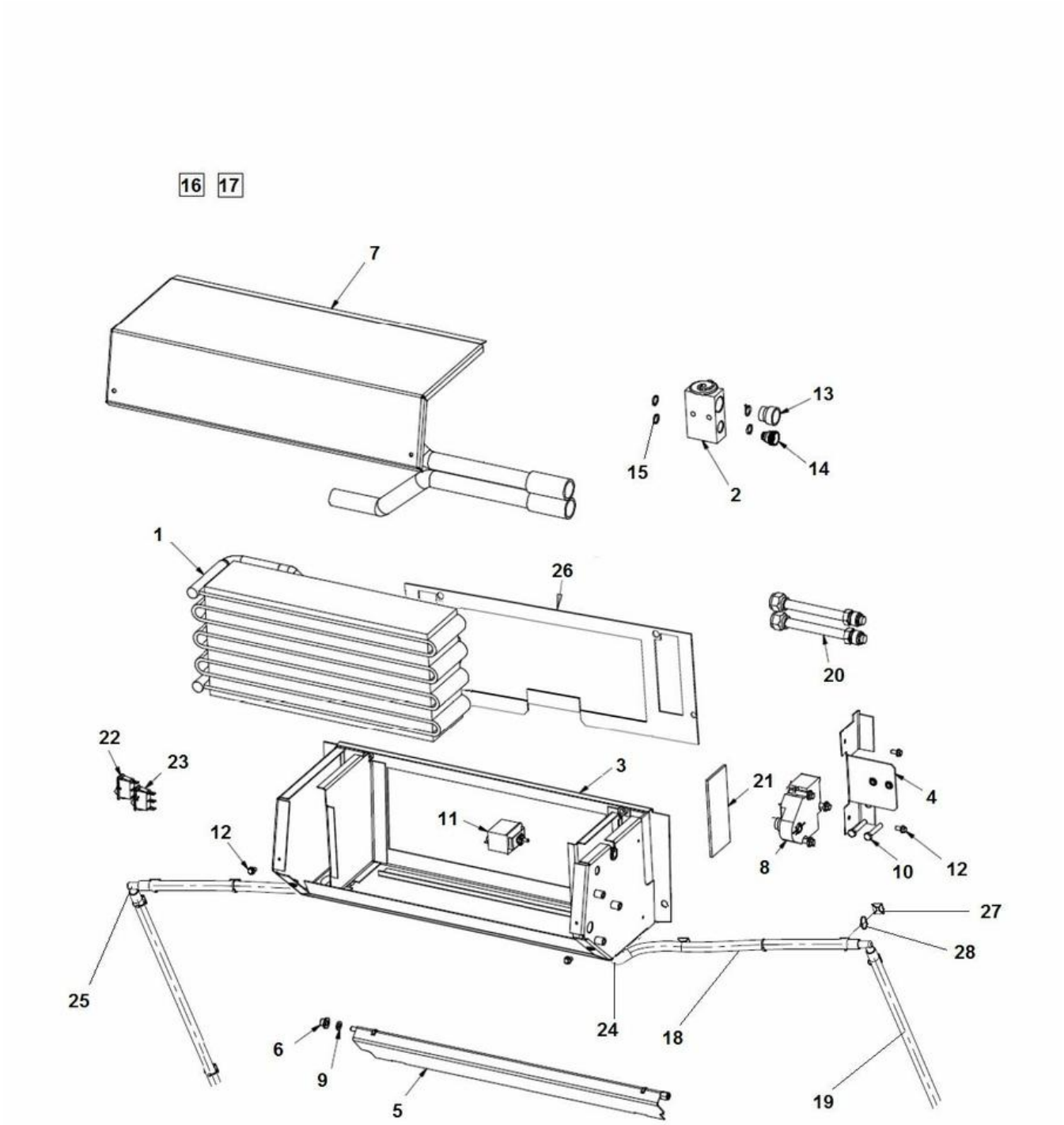

Item	Part No.	Name	Qty	L
1	4700950310	Evaporator coil	1	
2	4700950342	Block valve	1	
3	-	Casing	1	
4	-	Bracket	1	
5	-	Recicurlation cover	1	
6	-	Bushing	1	
7	-	Cover	1	
8	4700950343	Actuator motor	1	
9	-	Washer	1	
10	-	Screw	2	
11	4700950344	Thermostat	1	
12	-	Screw	4	
13	-	Plug	1	
14	-	Plug	1	
15	4700950345	O-ring	2	
16	4700950346	Cable harness, recirc.	1	
17	4700950347	Cable harness, panel	1	
18	-	Drain hose	1	
19	-	Drain hose	1	
20	-	Connect tube	2	
21	-	Insulation tape	2	
22	4700950348	Switch, air condition	1	
23	4700950349	Switch, recirculation	1	
24	4700950350	Drain valve	2	
25	4700950380	Drain elbow	2	
26	4700297018	Rubber strip	1XL	
27	4700395352	Cable tie holder	14	
28	4700313068	Clamp	14	

Cocoa mats Sprinkler pump module

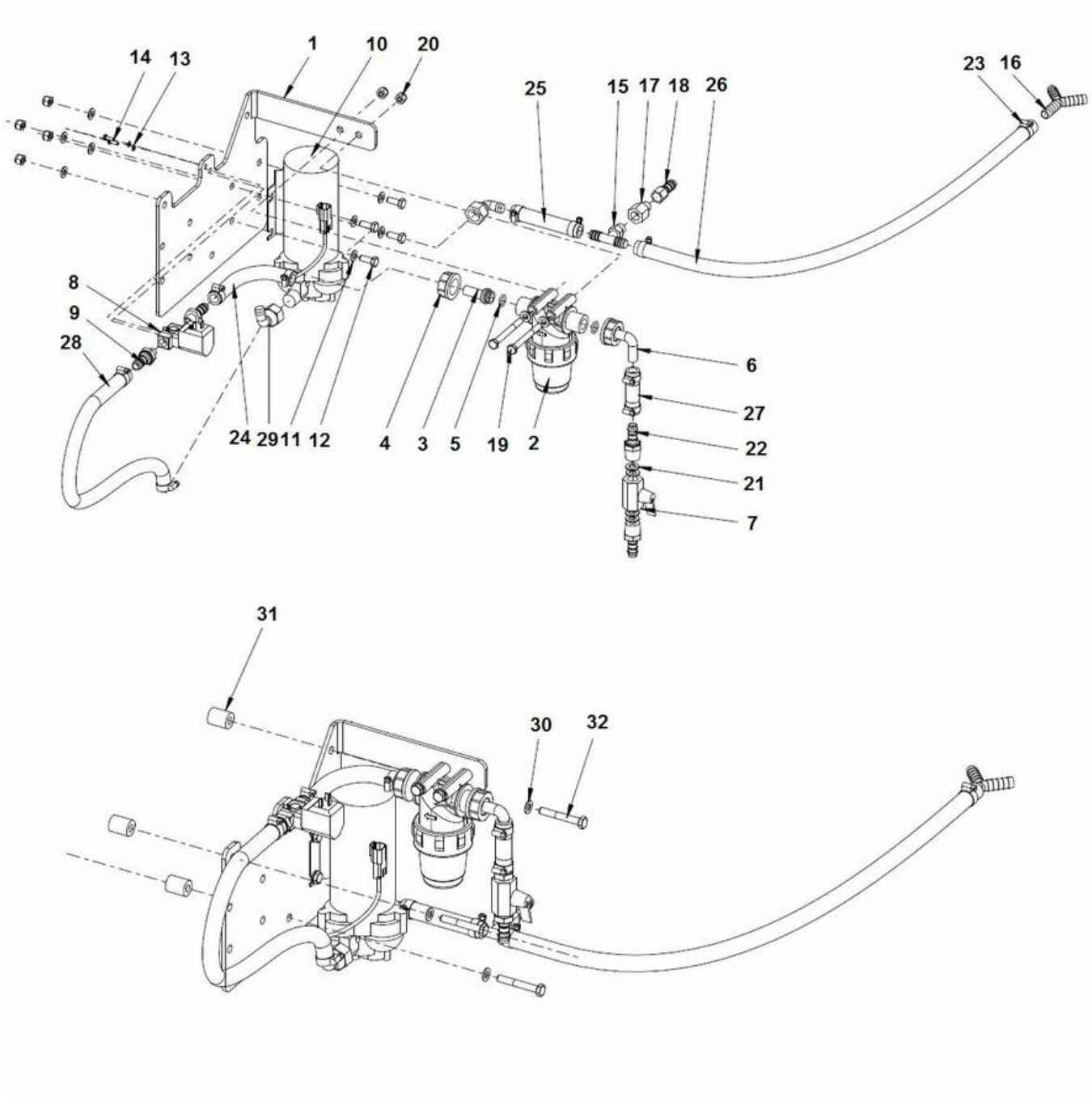

Item	Part No.	Name	Qty	L
1	4812315633	Sprinkler plate	1	
2	4812111328	Water filter	1	
3	4812111329	Hose connebtion swivel	1	
4	4700792779	Swivel nut	2	
5	4700480852	O-ring 70	2	
6	4812111330	Hose connection	1	
7	4700925599	Ball valve	1	
8	4700391438	Solenoid valve	1	
9	4700901432	Hose connection	2	
10	4812110395	Sprinkler pump	1	
11	4700904229	Washer, 8.4x16x1.5 mm 300 HV	10	
12	4700500053	Hex. screw	4	
13	4700904698	Steel plain washer	2	
14	4700500002	Screw M4-0,7x12H 8.8	2	
15	4700903879	Connector	1	
16	4811000107	Hose connection	1	
17	4700792813	Bypass valve	1	
18	4811000085	Hose connection	1	
19	4700500090	Screw	2	
20	4700586003	Hexagon lock nut M8	6	
21	4700379753	Gasket	4	
22	4700924544	Hose connection	2	
23	4700313002	Hose clamp	10	
24	4812112074	Plastic hose (x m)	1XL	
25	4812112074	Plastic hose (x m)	1XL	
26	4812112074	Plastic hose (x m)	1XL	
27	4812112074	Plastic hose (x m)	1XL	
28	4812112074	Plastic hose (x m)	1XL	
29	4700391595	Hose connection	2	
30	4700904229	Washer, 8.4x16x1.5 mm 300 HV	3	
31	4700355704	Spacer sleeve	3	
32	4700500067	Screw	3	

Cocoa mats Hose assy kit

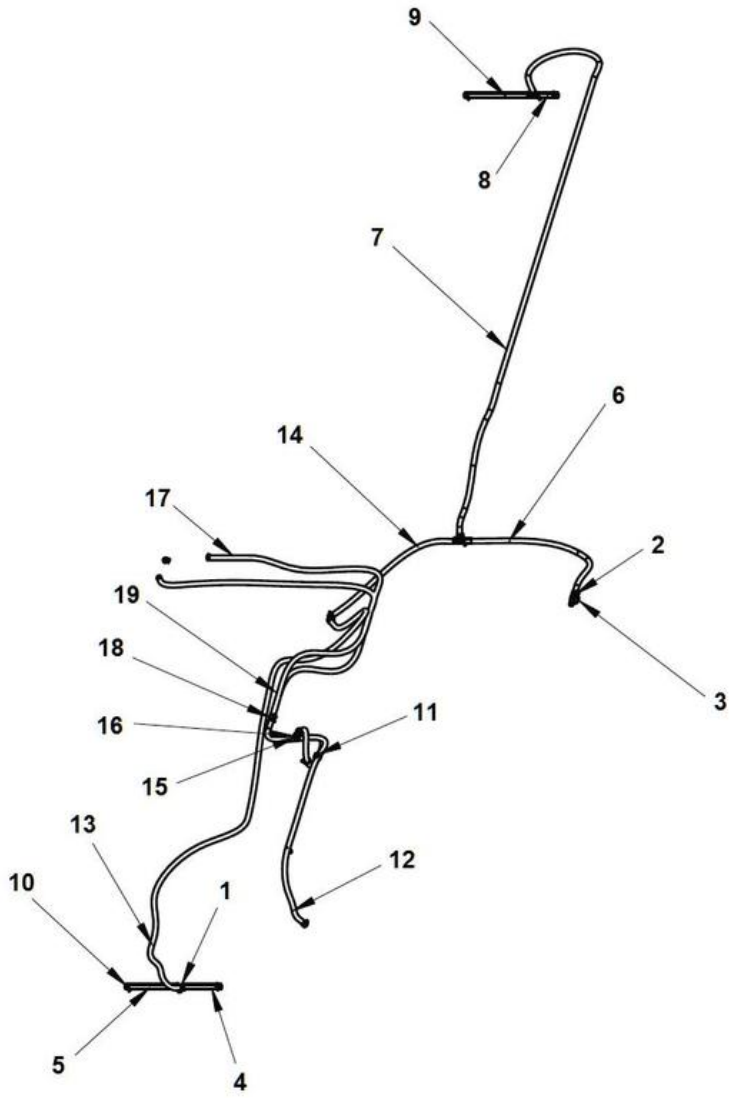

Item	Part No.	Name	Qty	L
1	4700923735	Hose connection	3	
2	4700234931	Adapter	1	
3	4700233215	Ball valve	1	
4	4812112074	Plastic hose (x m)	1	
5	4812112074	Plastic hose (x m)	1	
6	4812112074	Plastic hose (x m)	1	
7	4812112074	Plastic hose (x m)	1	
8	4812112074	Plastic hose (x m)	1	
9	4812112074	Plastic hose (x m)	1	
10	4700313002	Hose clamp	22	
11	4700792441	Cable tie with holder	3	
12	4812112074	Plastic hose (x m)	1	
13	4812112074	Plastic hose (x m)	1	
14	4812112074	Plastic hose (x m)	1	
15	4700393542	Hose connection	1	
16	4700392227	Swivel nut	1	
17	4812112074	Plastic hose (x m)	1	
18	4812316058	Hose connection	1	
19	4812112074	Plastic hose (x m)	1	

Comments for Page: Hose assy kit

4 - L = 0,17m

5 - L = 0,25m

6 - L = 0,9m

7 - L = 3,0m

8 - L = 0,1m

9 - L = 0,32m

12 - L = 4,0m

13 - L = 3,5m

14 - L = 0,7m

17 - L = 3,05m

19 - L = 2,4m

Cocoa mats Wiring harness kit sprinkler

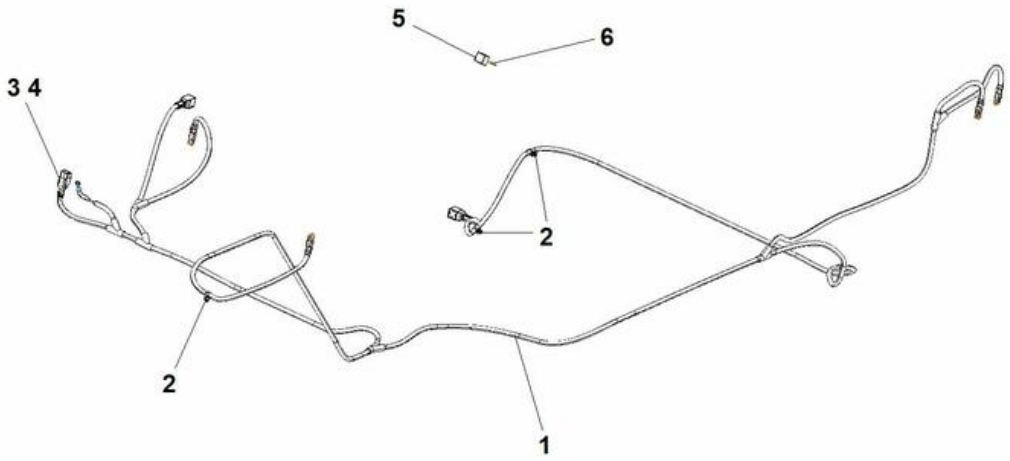

Item	Part No.	Name	Qty	L
1	4812315600	Wiring harness	1	
2	4700792602	Cable tie with holder	3	
3	4700904218	Holder	1	
4	4700792669	Blind rivet	1	
5	4700792422	Relay 24V 20A	1	
6	4700901226	Fuse 7.5A Brown	1	

Cocoa mats Level sensor module

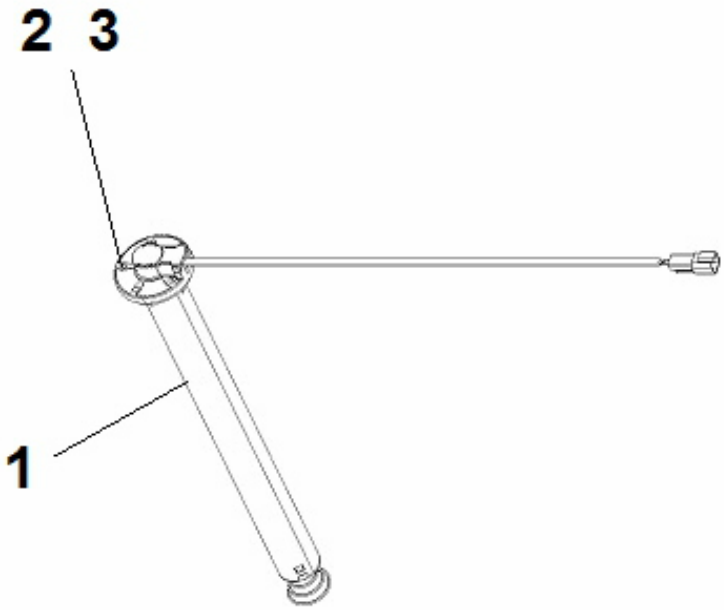

Item	Part No.	Name	Qty	L
1	4812315404	Level sender	1	
2	4700904698	Steel plain washer	5	
3	4700903386	Screw	5	

Scraper bracket module Scraper bracket module

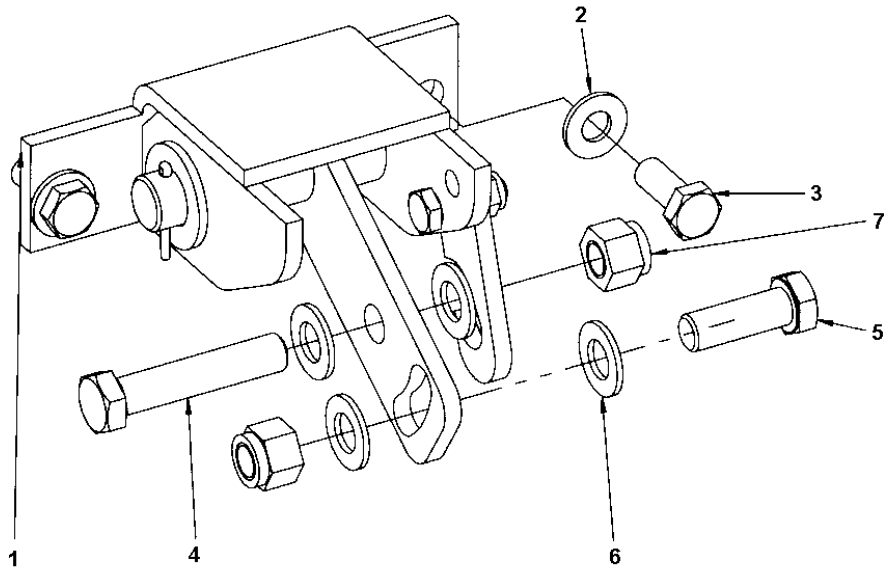

Item	Part No.	Name	Qty	L
1	-	Bracket	1	
2	4700904230	Washer	2	
3	4700500028	Screw, M10x25 mm 8.8 A3K	2	
4	4700500103	Screw M12x60H 8,8	1	
5	4700500037	Hex. screw	1	
6	4700904231	Steel plain washer, 13x24x2 mm 300 HV	4	
7	4700586019	Lock nut, M12	2	

Scraper bracket module Bracket

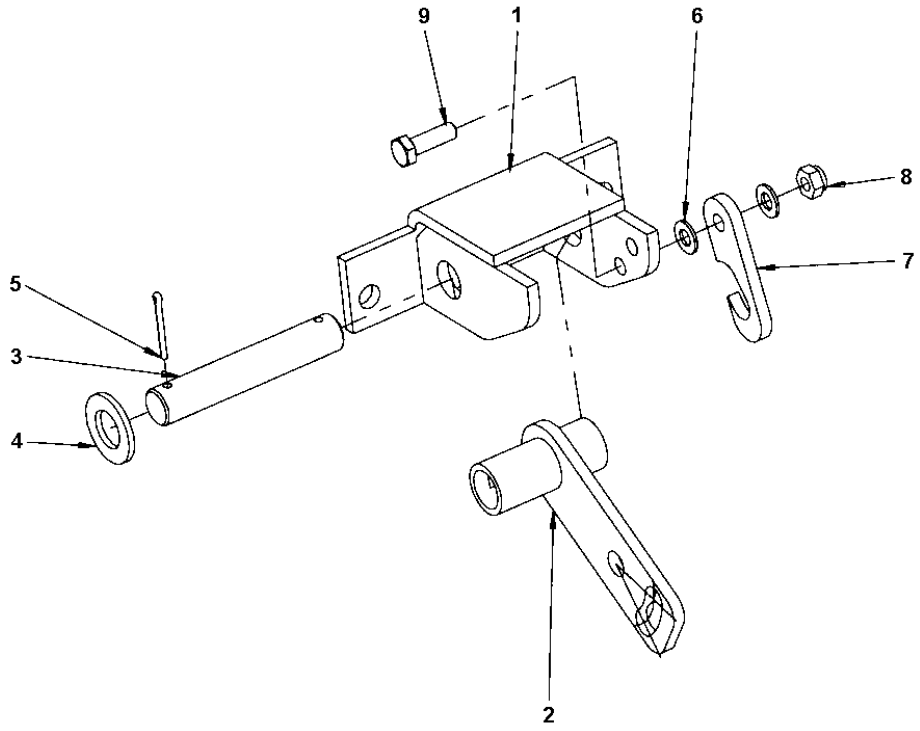

Item	Part No.	Name	Qty	L
1	4700170279	Bracket	1	
2	4700170281	Arm	1	
3	4700170282	Pin	1	
4	4700904793	Steel plain washer	2	
5	4700630008	Pin	2	
6	4700904229	Washer, 8.4x16x1.5 mm 300 HV	2	
7	4700170304	Holding bar	1	
8	4700791182	Nut, M8 -8 DIN985	1	
9	4700500021	Hex. screw	1	

Scraper module Scraper module

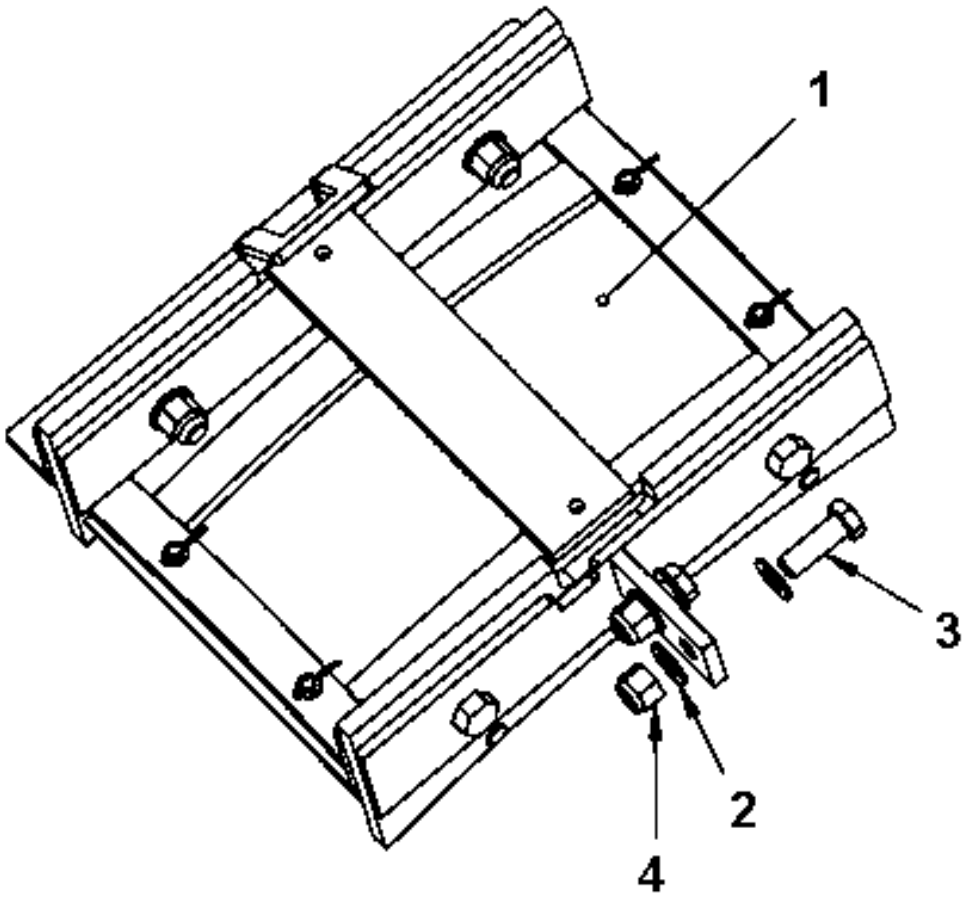

Item	Part No.	Name	Qty	L
1	-	Scraper assy	1	
2	4700904231	Steel plain washer, 13x24x2 mm 300 HV	4	
3	4700500037	Hex. screw	2	
4	4700586019	Lock nut, M12	2	

Scraper module Scraper assy

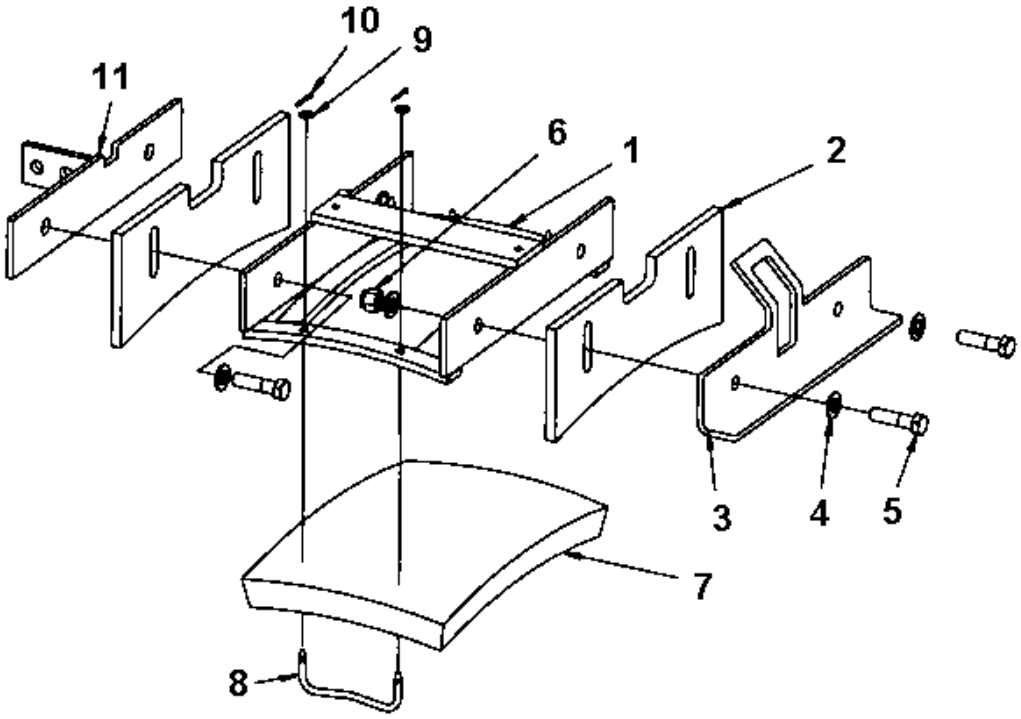

Item	Part No.	Name	Qty	L
1	4700395067	Scraper holder	1	
2	4700383390	Scraper	2	
3	4700383263	Bracket	1	
4	4700904231	Steel plain washer, 13x24x2 mm 300 HV	6	
5	4700500056	Screw, M12x45 mm 8.8 A3K	4	
6	4700586019	Lock nut, M12	2	
7	4700263772	Mat	1	
8	4700267791	Mat holder	2	
9	4700904228	Steel plain washer	4	
10	4700630035	Split pin	4	
11	4700396546	Bracket	1	

Sprinkler pipe module Sprinkler pipe module

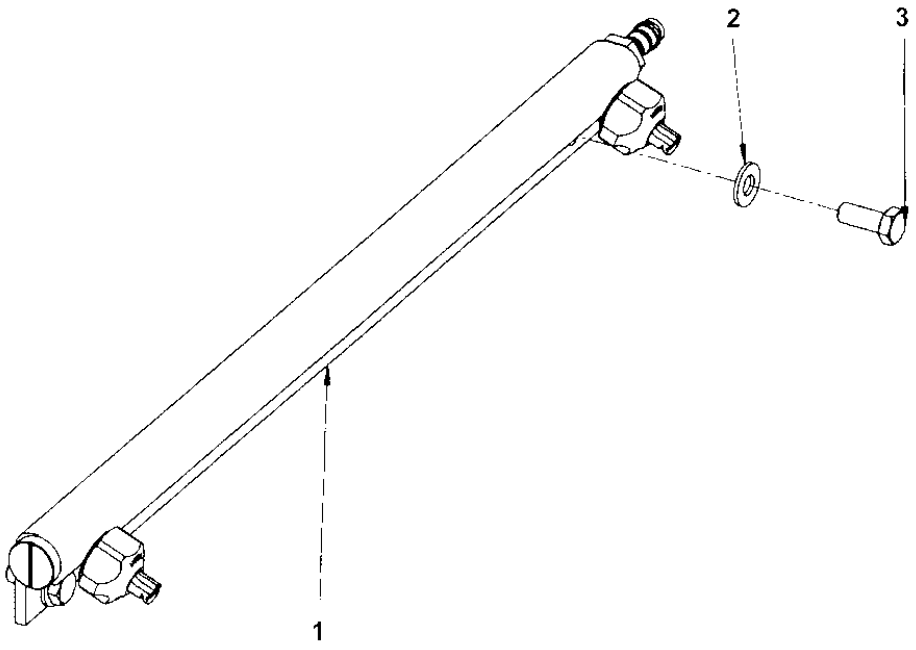

Item	Part No.	Name	Qty	L
1	-	Sprinkler pipe	1	
2	4700904230	Washer	2	
3	4700500028	Screw, M10x25 mm 8.8 A3K	2	

Sprinkler pipe module Sprinkler pipe

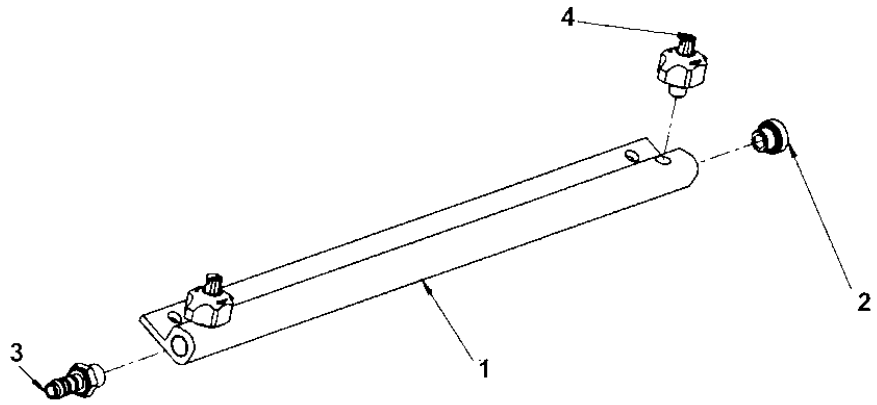

Item	Part No.	Name	Qty	L
1	4700396448	Sprinkler pipe	1	
2	4700792072	End plug	1	
3	4700234931	Adapter	1	
4	4700392011	Spraying nozzle, cpl	2	

Sprinkler module Sprinkler module

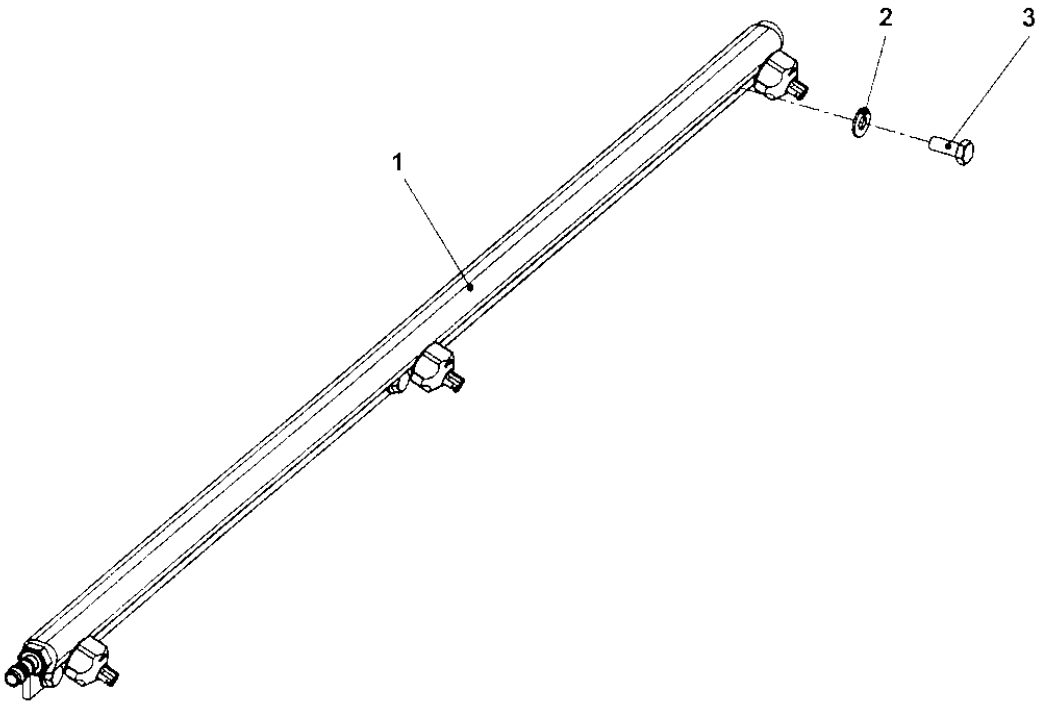

Item	Part No.	Name	Qty	L
1	-	Sprinkler pipe	1	
2	4700904230	Washer	3	
3	4700500028	Screw, M10x25 mm 8.8 A3K	3	

Sprinkler module Sprinkler pipe

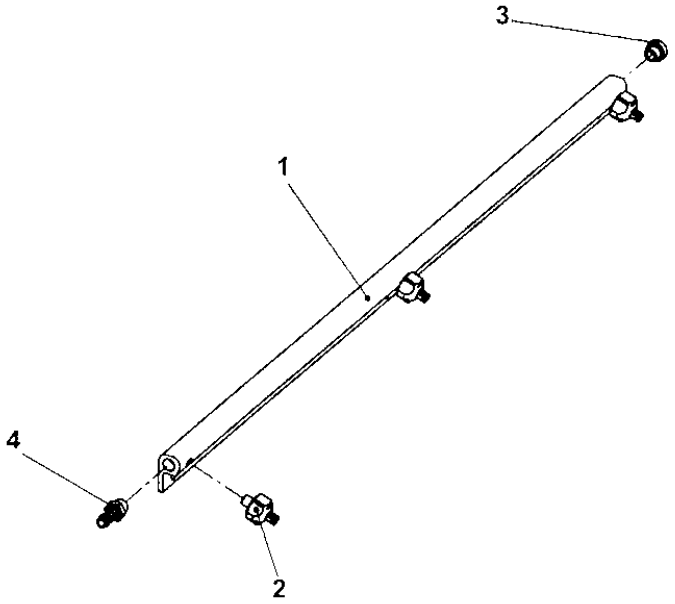

Item	Part No.	Name	Qty	L
1	4700396449	Sprinkler pipe	1	
2	4700392011	Spraying nozzle, cpl	3	
3	4700792072	End plug	1	
4	4700234931	Adapter	1	

Driving lights RH Steering column switch module

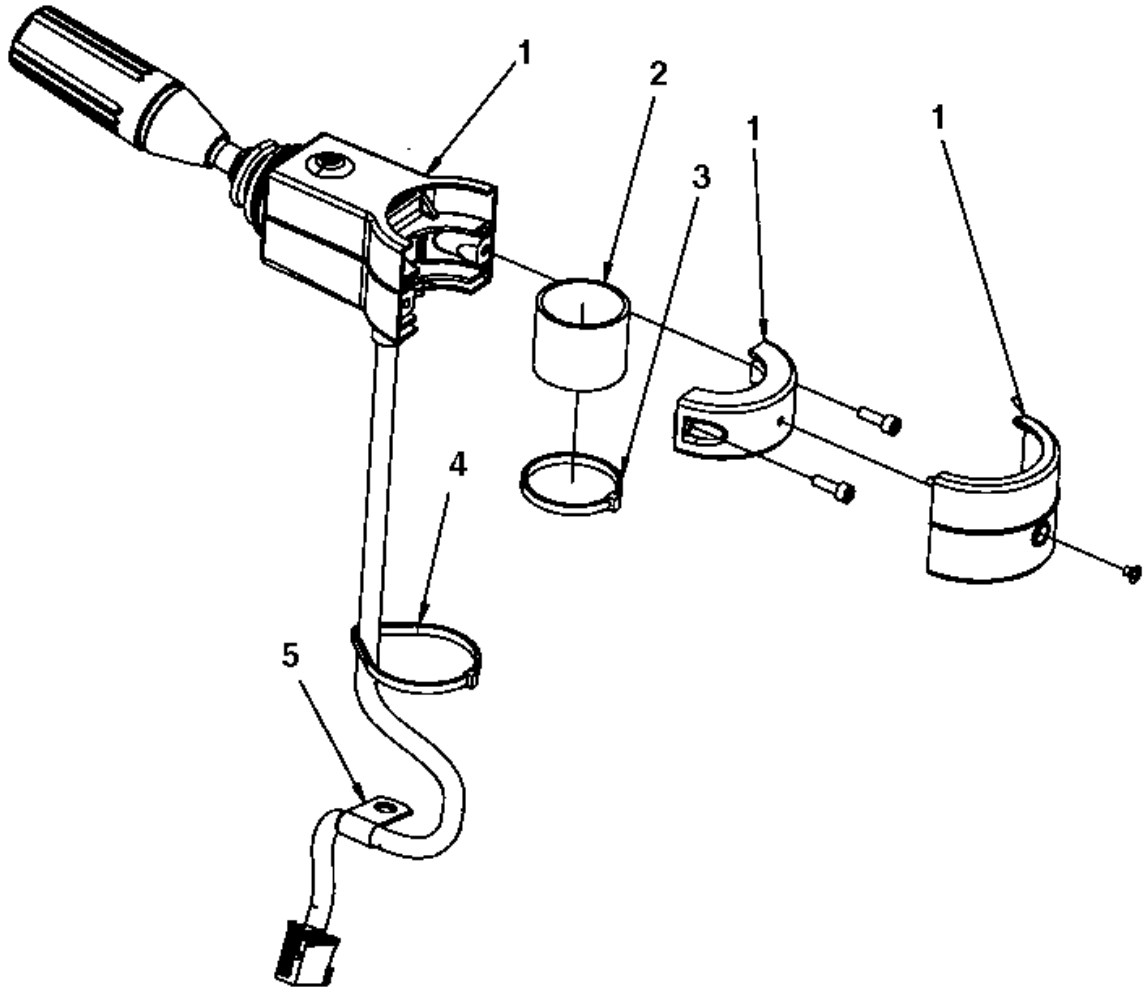

Item	Part No.	Name	Qty	L
1	4700392450	Steering column switch	1	
2	4700392451	Rubber cloth	1	
3	4700313041	Cable tie	1	
4	4700792609	Cable ties	1	
5	4700921080	Clamp	1	

Driving lights RH 4812115521 Wiring Harness Kit

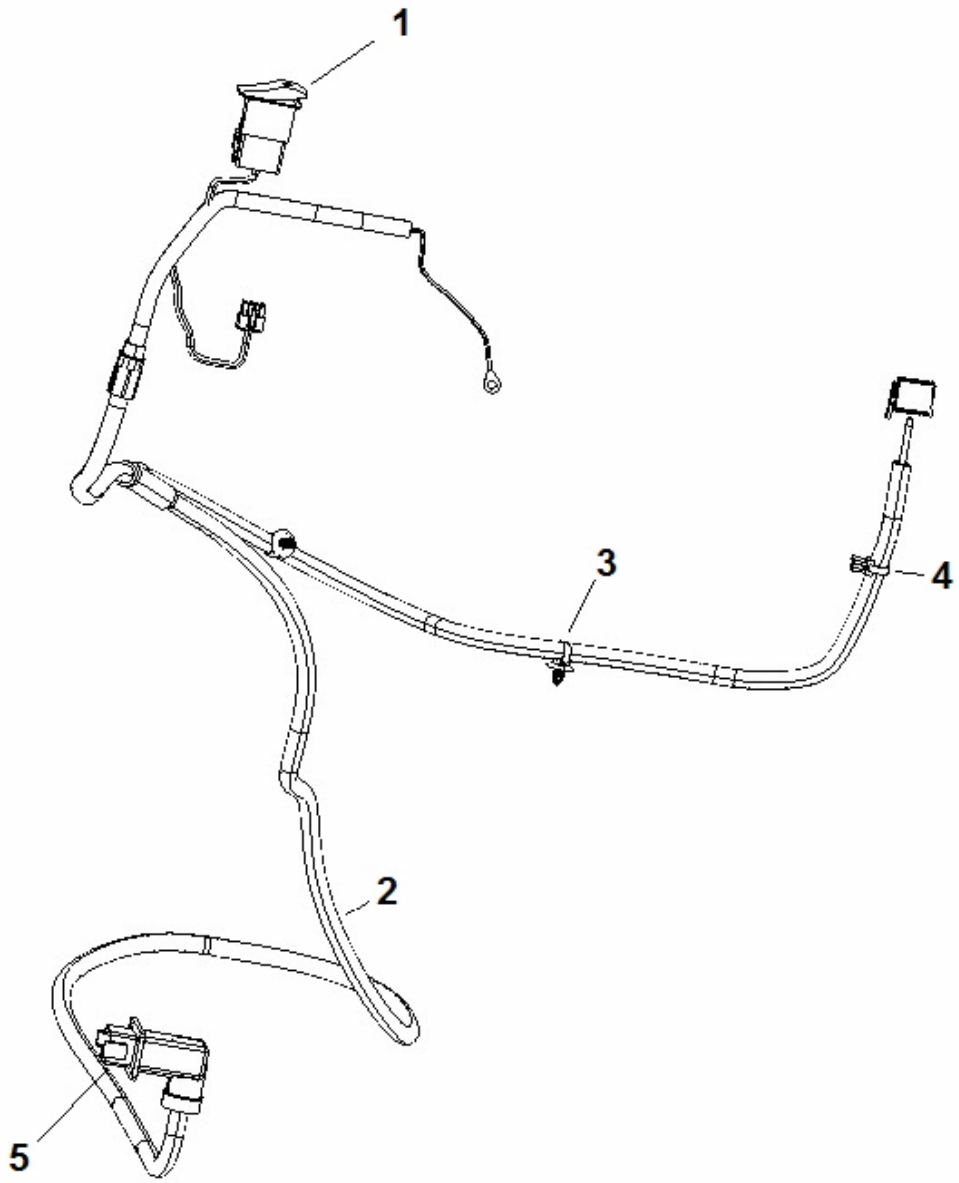

Item	Part No.	Name	Qty	L
1	4700792398	Switch	1	
2	4812115522	Wiring Harness	1	
3	4700792441	Cable tie with holder	2	
4	4700792537	Cable tie with holder	1	
5	4700791709	Blind rivet	4	

Driving lights RH Driving lights module

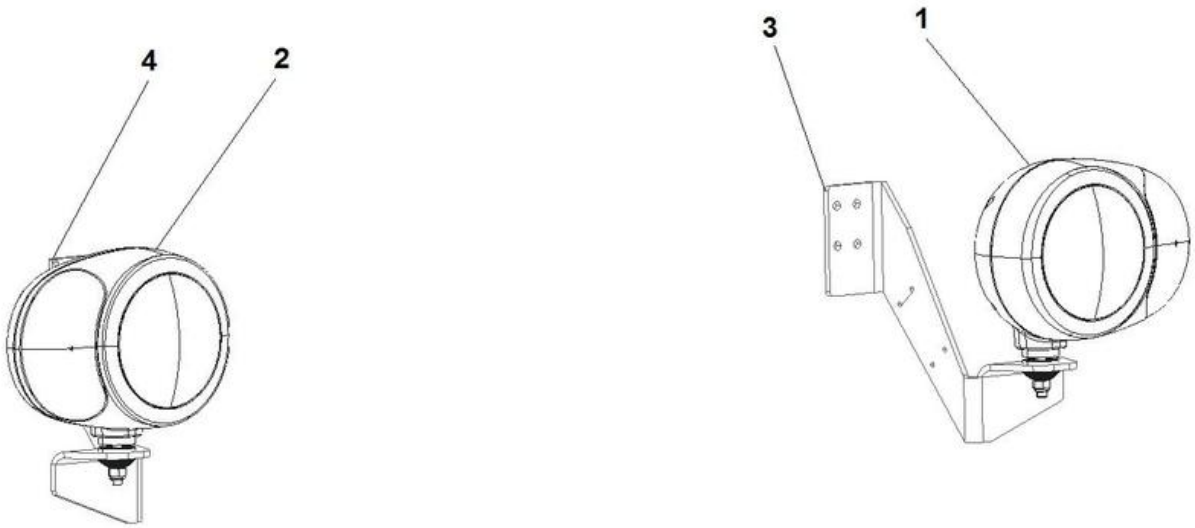

Item	Part No.	Name	Qty	L
1	4812100099	Head light	1	
2	4812100100	Head light	1	
3	4812315711	Bracket right	1	
4	4812315712	Bracket left	1	

Driving lights RH Driving lights module rear

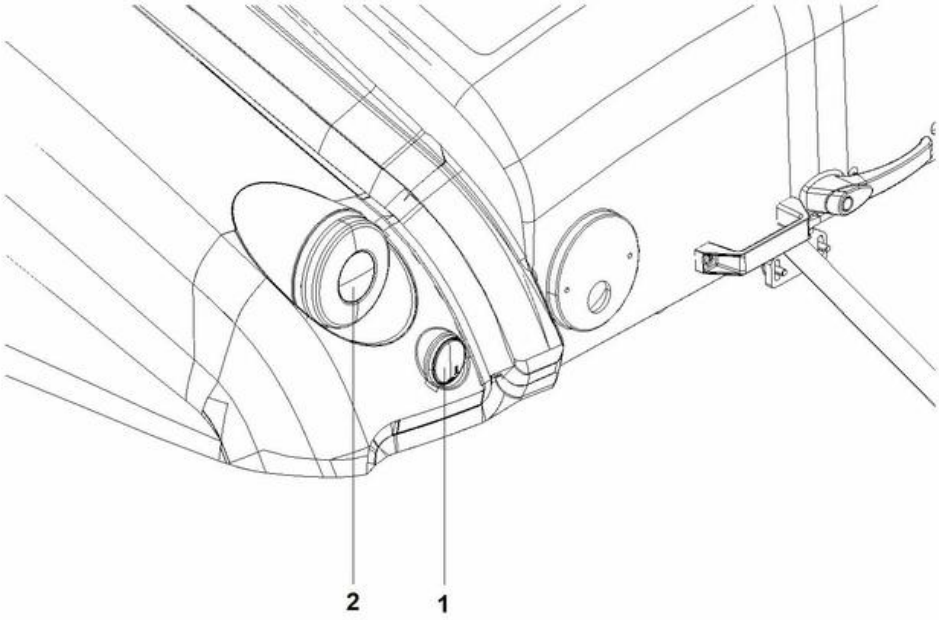

Item	Part No.	Name	Qty	L
1	4812100115	Reflector	2	
2	4812100116	Direction light	2	

Driving lights RH Turn signals

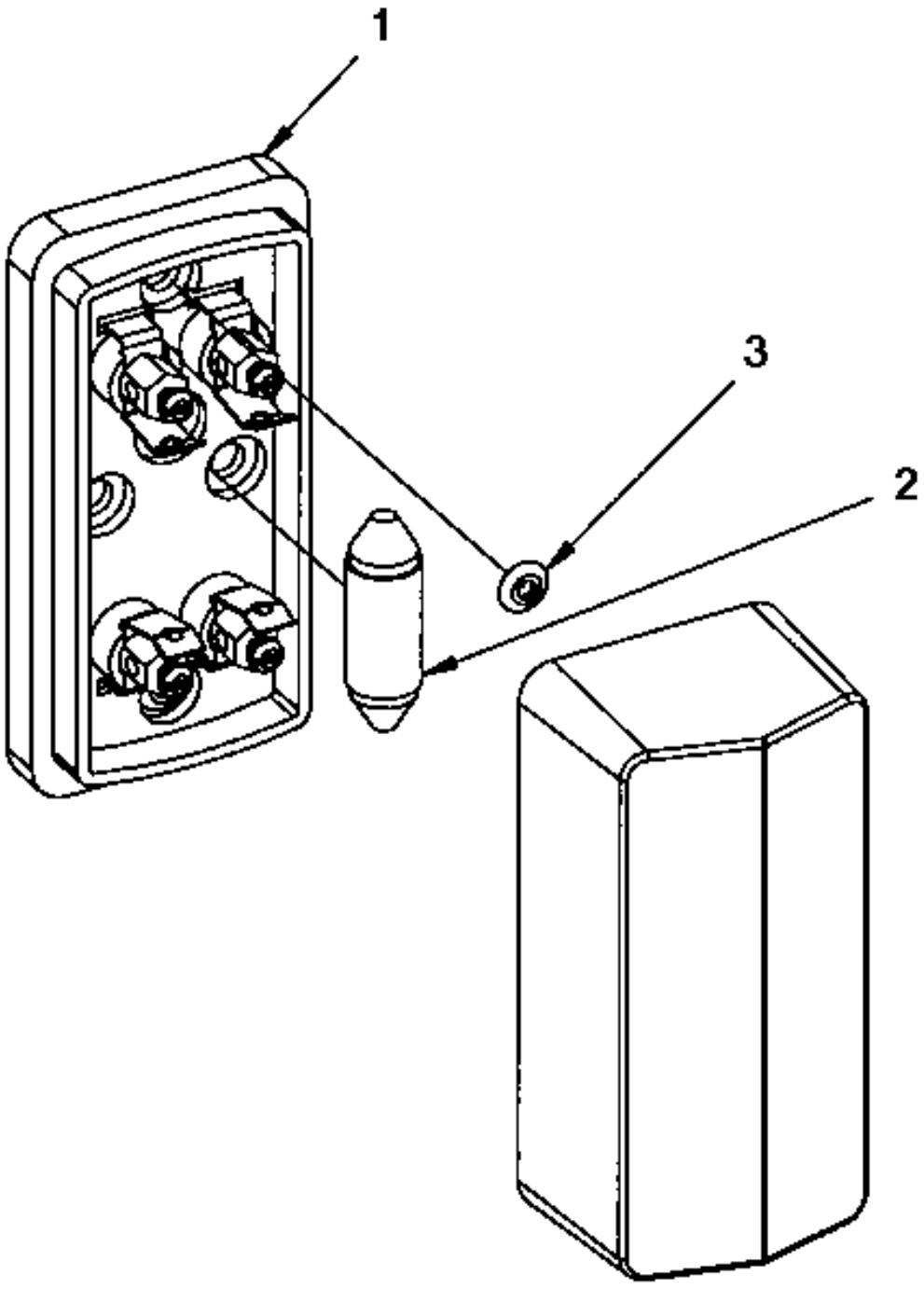

Item	Part No.	Name	Qty	L
1	4700902064	Direction lights	1	
2	4700792354	Bulb 24V 5W	1	
3	4700923253	Rivet	2	

Driving lights RH Wiring harness kit

Item	Part No.	Name	Qty	L
1	4812100084	Wiring harness	1	
2	4700792422	Relay 24V 20A	1	
3	4700792602	Cable tie with holder	6	
4	4700395352	Cable tie holder	8	
5	4700313068	Clamp	8	
6	4700901227	Fuse 10A Red	1	
7	4811000163	Flash relay	1	
8	4700901226	Fuse 7.5A Brown	1	

Driving lights RH Wiring harness kit

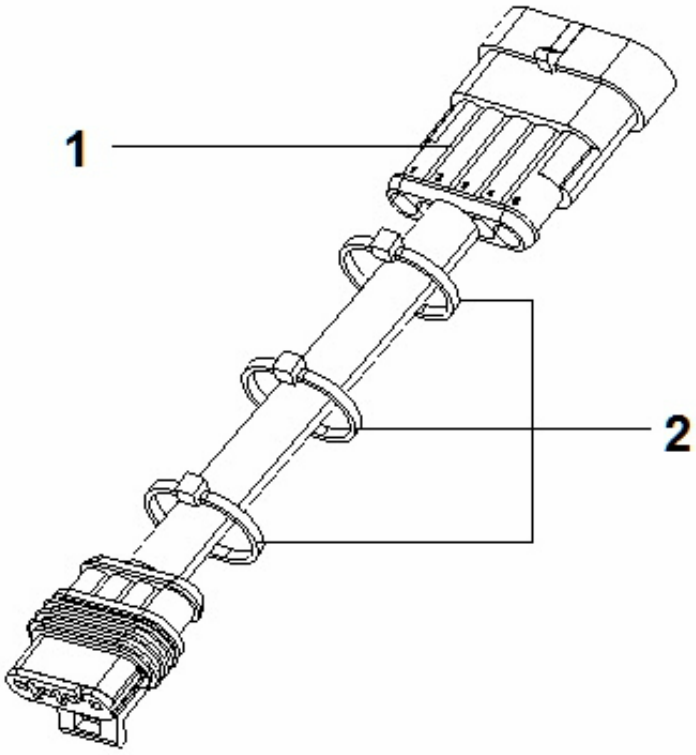

Item	Part No.	Name	Qty	L
1	4812315920	Wiring harness	1	
2	4700313068	Clamp	3	

Rotate beacon Rotating beacon ignition controlled

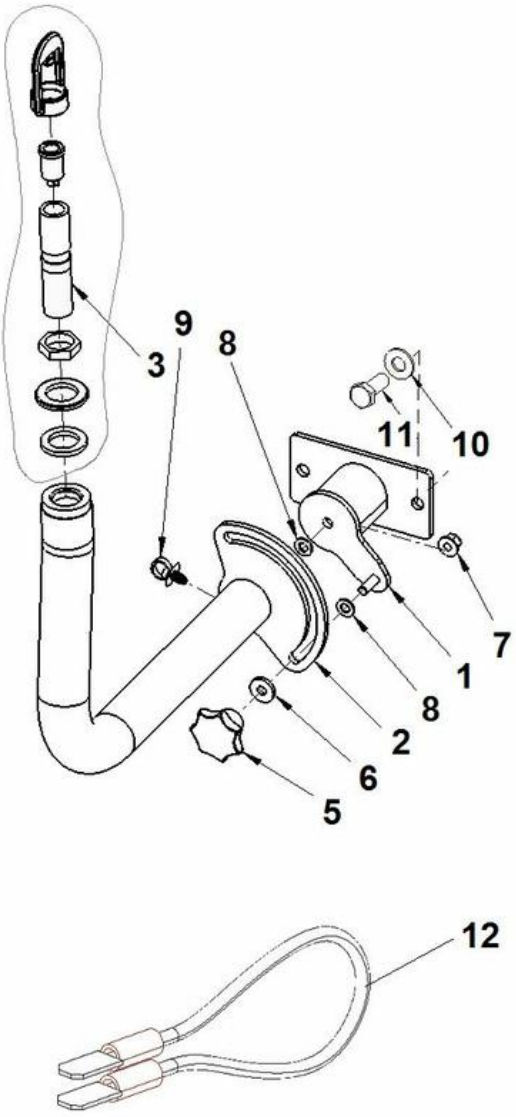

Item	Part No.	Name	Qty	L
1	4700397516	Bracket	1	
2	4812120467	Lever	1	
3	4812120469	Bracket	1	
5	4700792410	Hand knob nut	1	
6	4700904640	Washer, 8.4x 2x3 mm 300 HV	1	
7	4700902286	Lock nut, M8x1.25 mm A2K	1	
8	4700904229	Washer, 8.4x16x1.5 mm 300 HV	2	
9	4700792441	Cable tie with holder	1	
10	4700904230	Washer	2	
11	4700500028	Screw, M10x25 mm 8.8 A3K	2	
12	4811000077	Connection cable	1	

Radio and CD Player Radio & CD Player

NO DRAWING AVAILABLE FOR THIS BOM

Item	Part No.	Name	Qty	L
1	-	Radio and cd player module	1	
2	4700937165	Antenna	1	
3	4700791968	Loud speakers	1	
4	-	Power supply module	1	

Radio and CD Player Radio and cd player module

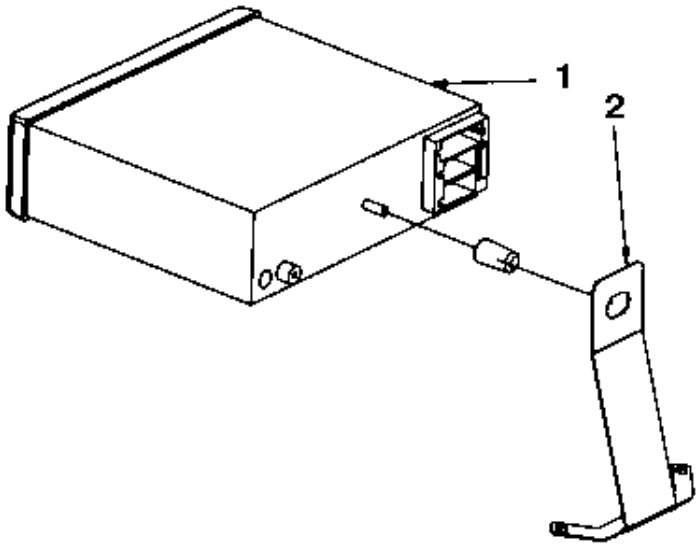

Item	Part No.	Name	Qty	L
1	4700792583	Car stereo	1	
2	4700394654	Bracket	1	

Radio and CD Player Power supply module

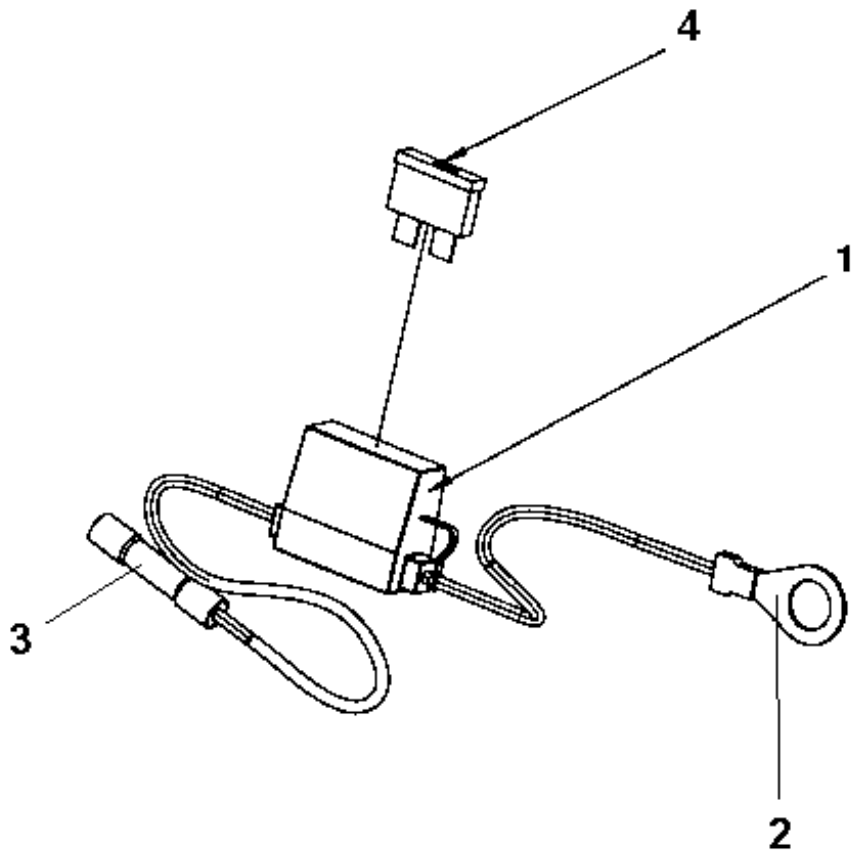

Item	Part No.	Name	Qty	L
1	4700904015	Fuse holder	1	
2	4700960067	Cable clip	1	
3	4700904024	Splicing sleeve	1	
4	4700901227	Fuse 10A Red	1	

Seat belt Seat belt module

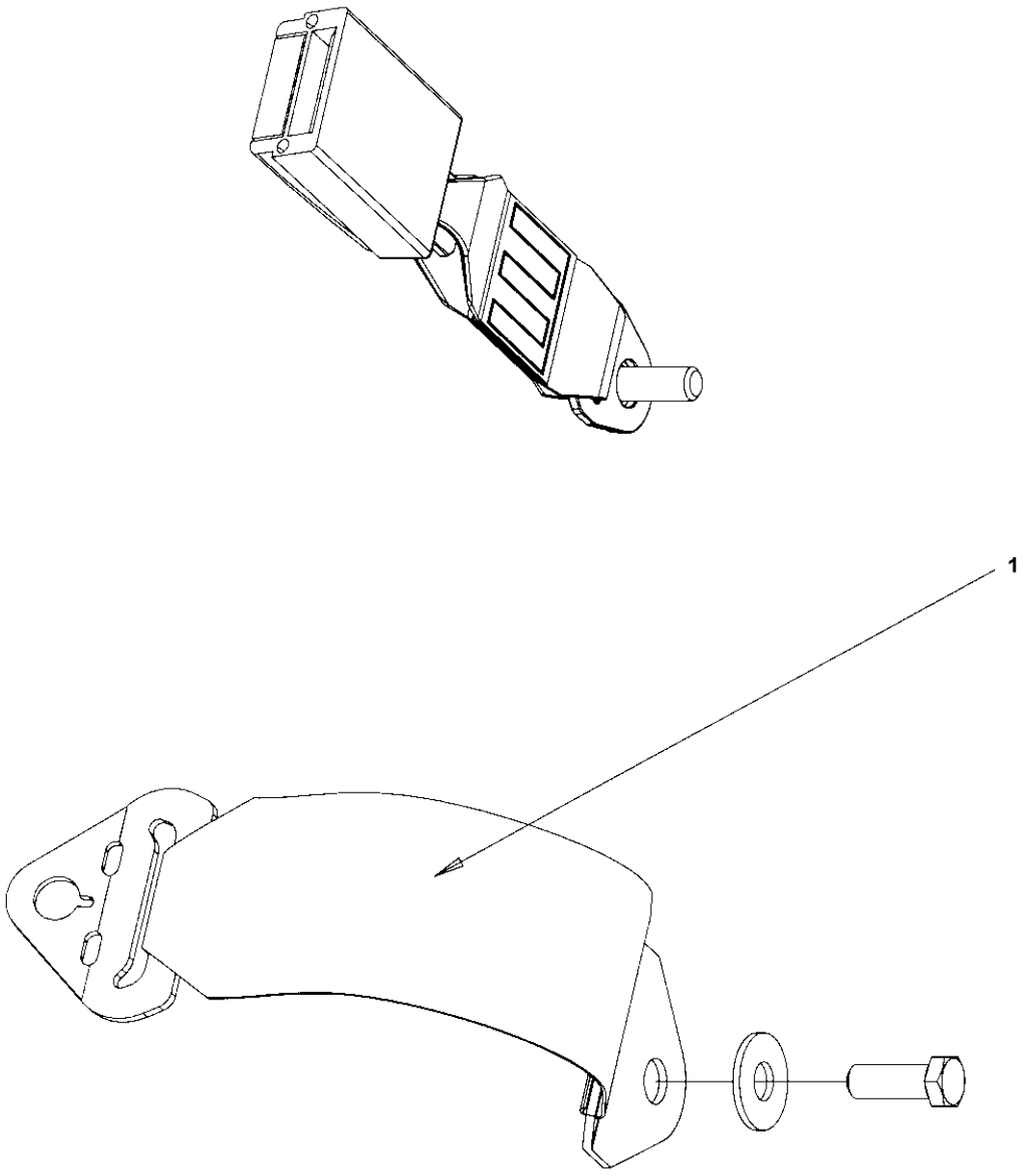

Item	Part No.	Name	Qty	L
1	4700379637	Seat belt kit, static 3"	1	

Seat comfort Seat, fabric suspensioned (option)

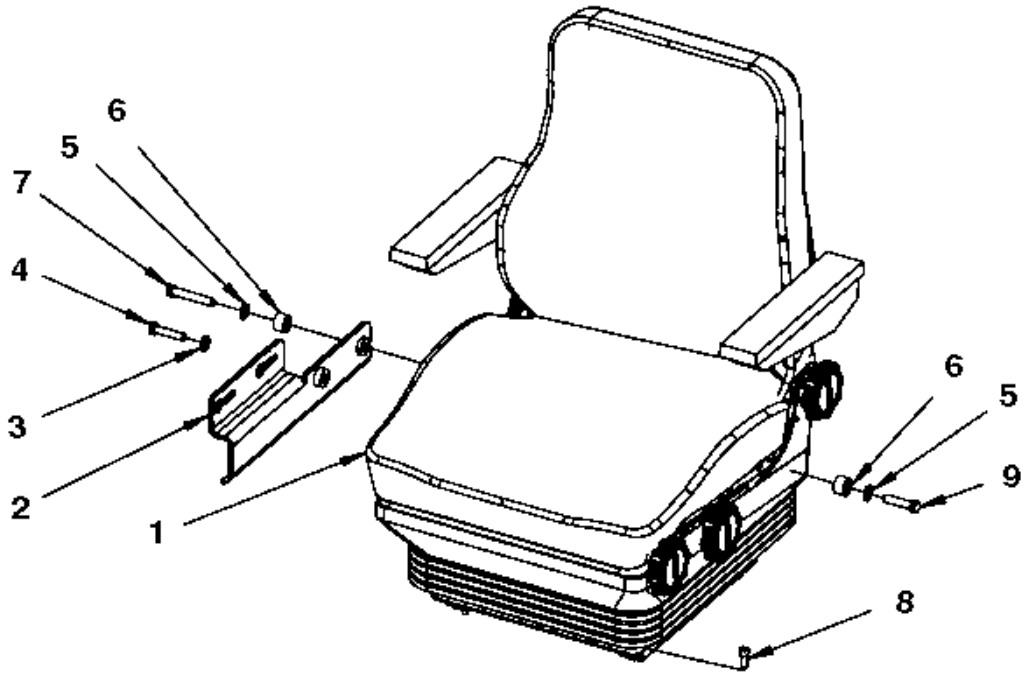

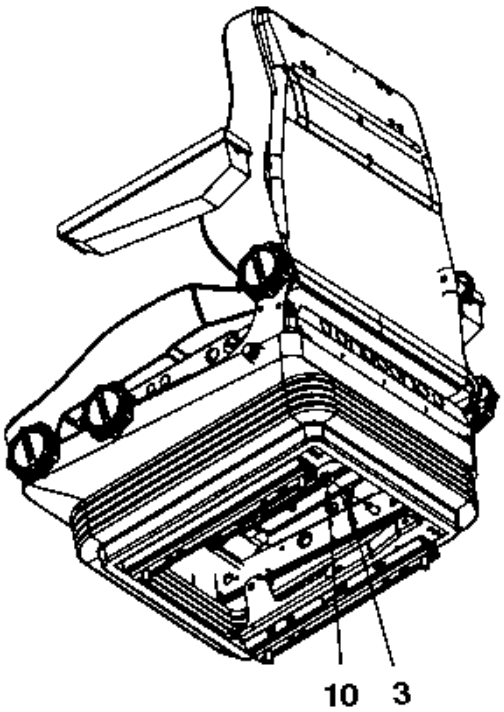

Item	Part No.	Name	Qty	L
1	4700390013	Seat	1	A
.1	4700937892	Seat switch	1	
.1	4700937620	Arm rest, right	1	
.1	4700937621	Arm rest, left	1	
2	4700390169	Bracket	1	
3	4700904230	Washer	2	
4	4700500161	Screw	1	
5	4700904638	Washer 12x22x2	2	
6	4700791572	Spacer washer	2	
7	4700792501	Screw	1	
8	4700508092	Screw	4	
9	4700792527	Screw	1	
10	4700586018	Lock nut	1	

Comments for Page: Seat, fabric suspensioned (option)

(L)OCAL REMARKS

A | en_US | Without seat belt

SMV-sign 4812110250 Bracket module

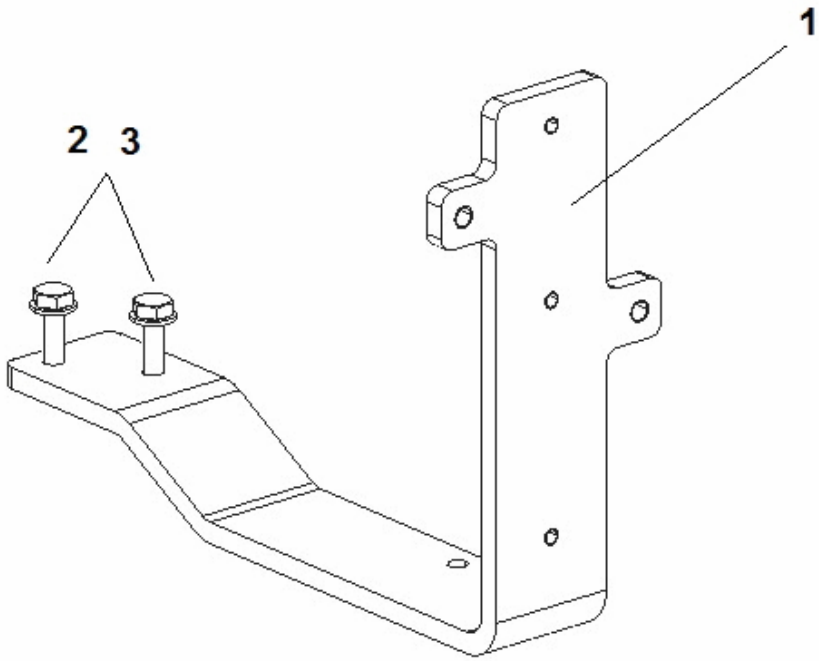

Item	Part No.	Name	Qty	L
1	4700397260	Bracket	1	
2	4700904229	Washer, 8.4x16x1.5 mm 300 HV	2	
3	4700500230	Hex. screw	2	

SMV-sign SMV-sign

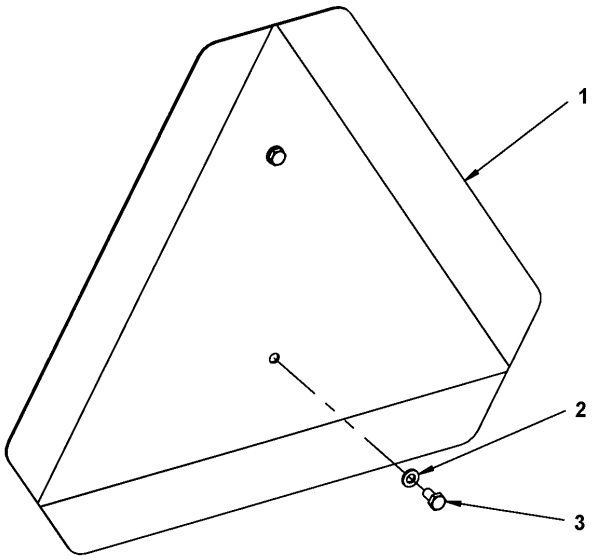

Item	Part No.	Name	Qty	L
1	4700476019	SMV-sign	1	
2	4700904228	Steel plain washer	2	
3	4700500012	Hex. screw	2	

Sprinkler pump back up Sprinkler pump back-up

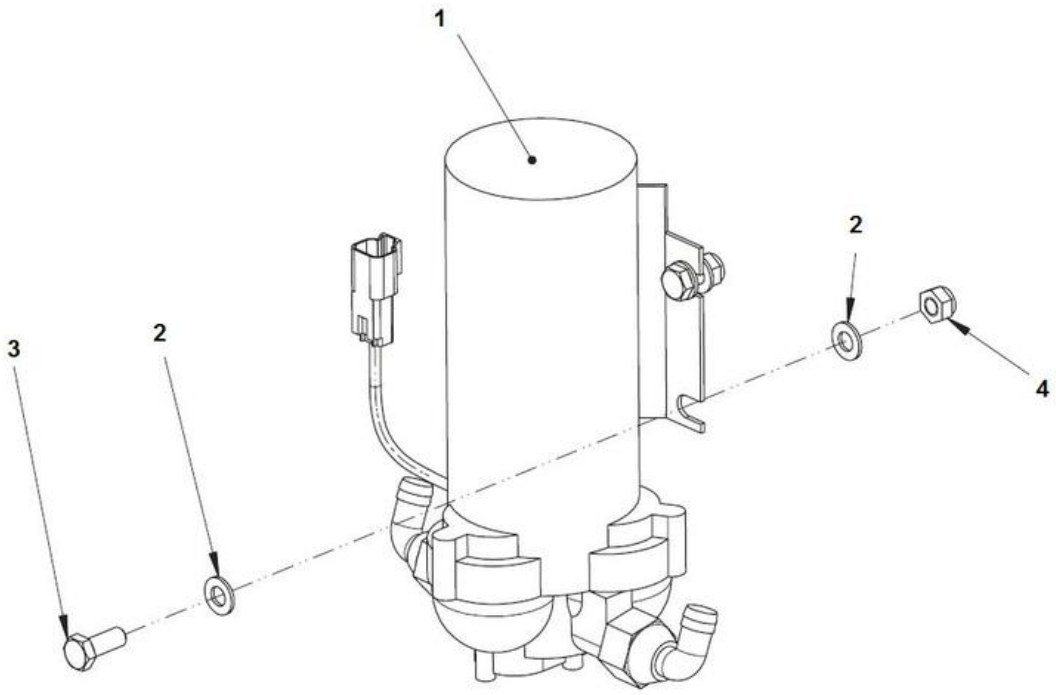

Item	Part No.	Name	Qty	L
1	4812110394	Sprinkler pump	1	
2	4700904229	Washer, 8.4x16x1.5 mm 300 HV	8	
3	4700500053	Hex. screw	4	
4	4700791182	Nut, M8 -8 DIN985	4	

Steering valve Steering valve

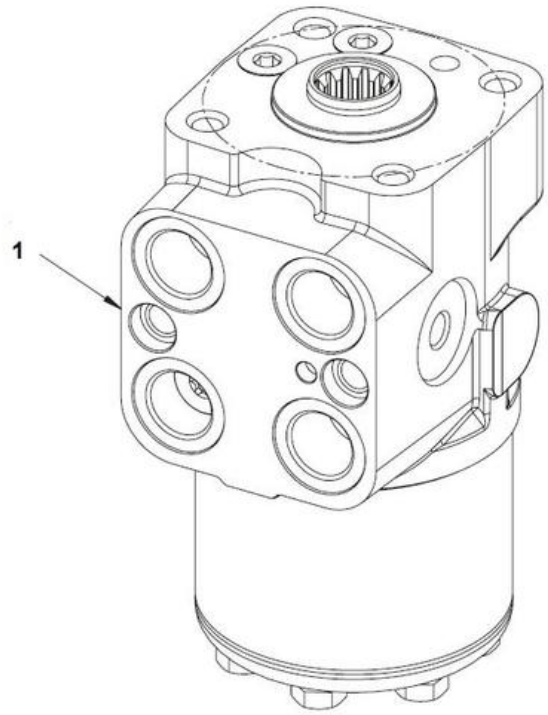

Item	Part No.	Name	Qty	L
1	4700396328	Steering valve	1	

Vandal cover Control panel cover

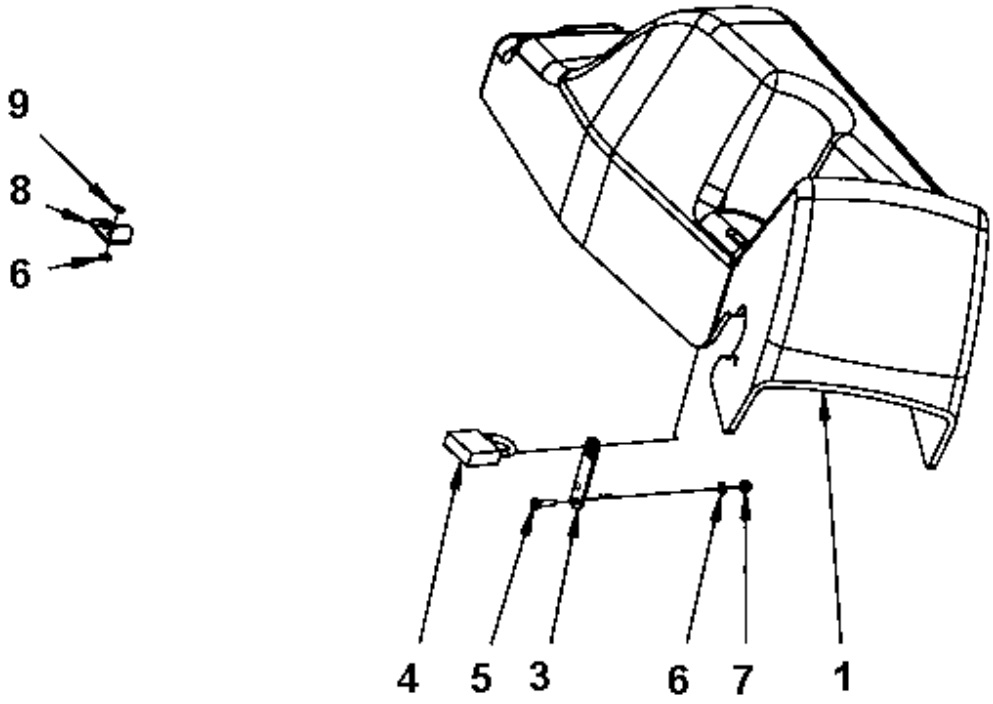

Item	Part No.	Name	Qty	L
1	4700395947	Instrument panel cover	1	
3	4700387545	Latch	1	
4	4700358881	Pad lock	1	
5	4700904653	Screw M5x16 A2-70	2	
6	4700904281	Washer, 5,3x10x1 300HV	4	
7	4700586001	Lock nut	2	
8	4700396670	Bracket	1	
9	4700904619	Blind rivet	2	

Lock module 4700394121 Lock Module

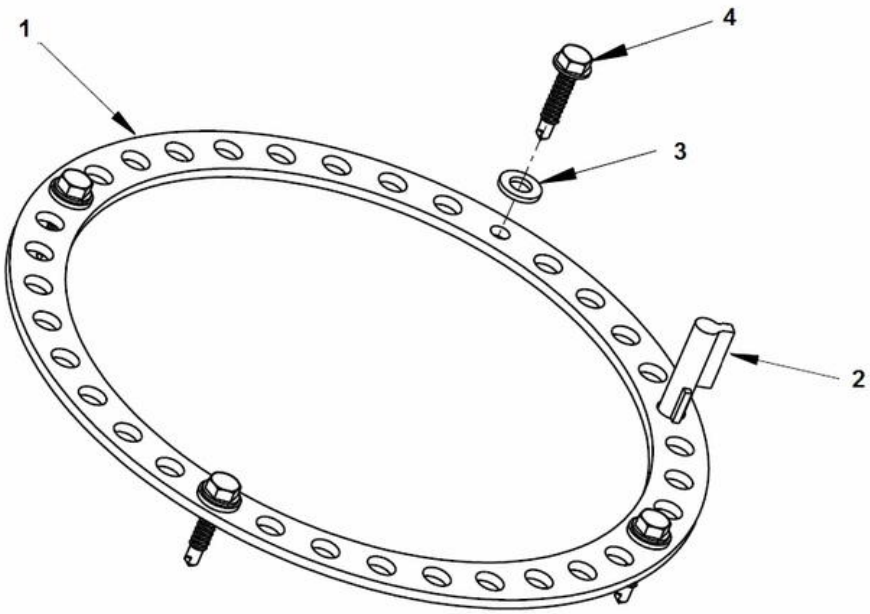

Item	Part No.	Name	Qty	L
1	4812118056	Lock plate	1	
2	4700370699	Lock w key	1	
3	4700904228	Steel plain washer	4	
4	4811000457	Thread rolling screw	4	

Any unauthorized use or copying of the contents or any part thereof is prohibited. This applies in particular to trademarks, model denominations, part numbers, and drawings.