RUTHZIL TRATOR COMERCIAL DE PEÇAS LTDA 11 97083-6812 ROLANDO CITRANGULO

DYNAPAC
CP271

SPARE PARTS CATALOGUE

SCP271-1EN4

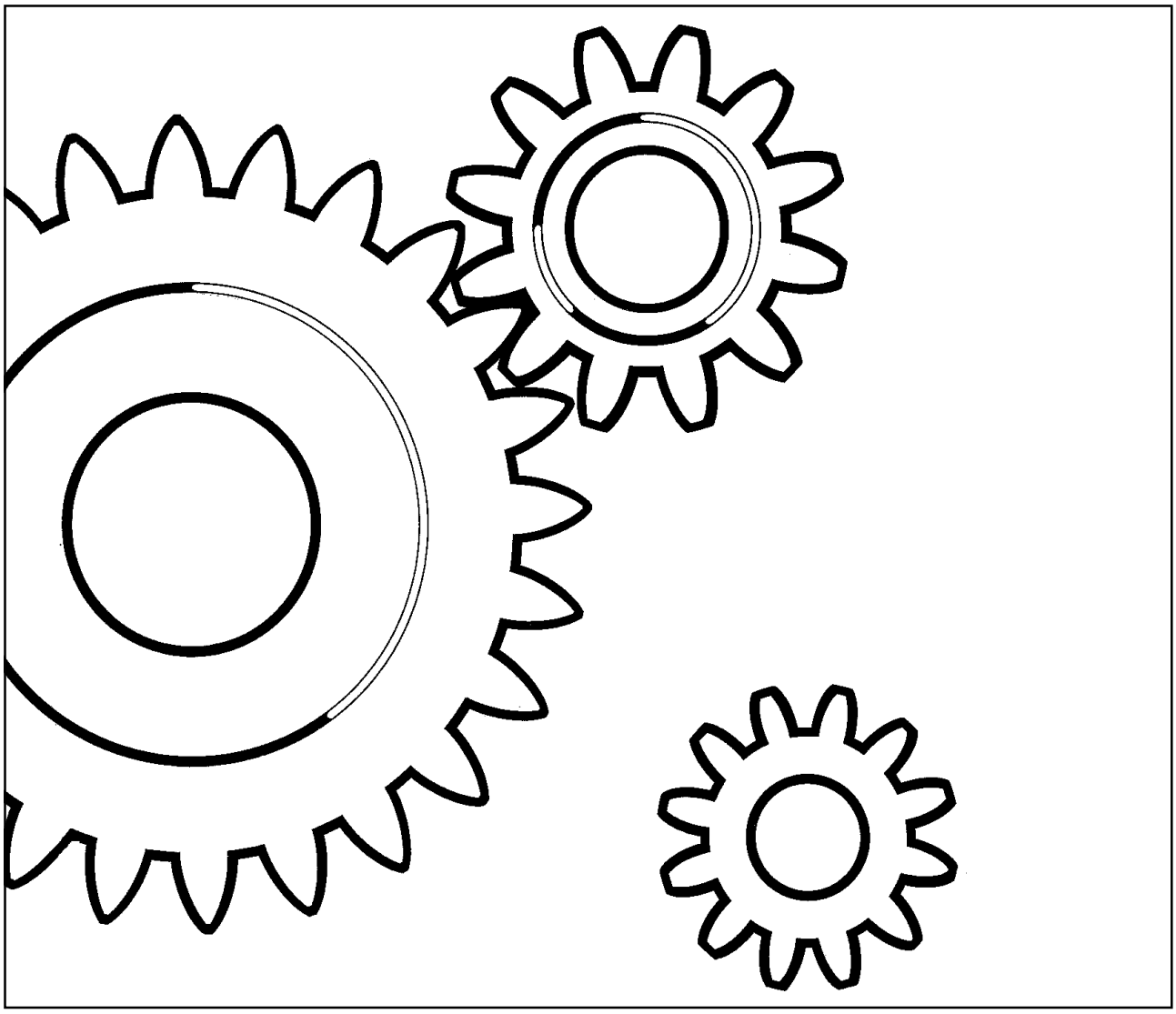

DYNAPAC

Box 504, SE-371 23 Karlskrona, Sweden
Phone: +46 455 30 60 00, Fax: +46 455 30 60 10
www.dynapac.com

DYNAPAC

Pneumatic Tire Roller
CP271

Spare Parts Catalogue
SCP271-1EN4

Valid from roller serial number:

23620271* - *23620367

Diesel engines:

CUMMINS 4BT 3.9C
CUMMINS 4BT 3.9C Elite

Published catalogue issues valid for these rollers:

Catalogue	*Issue date*	*Valid for serial numbers*
SCP271EN1	*1998-05*	*Replaced by SCP271EN2*
SCP271EN2	*1999-03*	*Replaced by SCP271-1EN1*
SCP271-1EN1	*1999-06*	*Replaced by SCP271-1EN2*
SCP271-1EN2	*2002-07*	*Replaced by SCP271-1EN3*
SCP271-1EN3	*2003-05*	*Replaced by SCP271-1EN4*
SCP271-1EN4	*2004-11*	*See above*



We reserve the right to change specifications without notice.
Printed in Sweden.

DYNAPAC

RESERVDELSBESTÄLLNING

Följande uppgifter ska lämnas vid beställning av reservdelar för att undvika leveransfel:

1. Maskintyp.
2. Vältens serienummer.
3. Antal av önskad reservdel.
4. Reserdelens artikelnummer.
5. Reservdelens benämning.
6. Måttuppgifter vid beställning av metervara.

ORDERING SPARE PARTS

To avoid errors in delivery, please give the following information when ordering spare parts:

1. Type of machine.
2. Roller serial number.
3. Quantity required.
4. Part number.
5. Parts denomination.
6. Dimensions when ordering per length.

ERSATZTEILBESTELLUNG

Zur Vermeidung von Fehllieferungen sind bei der Bestellung von Ersatzteilen folgende Angaben zu machen:

1. Maschinentyp.
2. Herstellungsnummer.
3. Bestellmenge. (Quantity)
4. Ersatzteilnummer. (Part Nº)
5. Ersatzteilbenennung. (Denomination)
6. Massangaben bei Bestellung von Meterware.

ORDINI DI RICAMBI

Per evitare errori nelle consegne di ricambi, Vi preghiamo di comunicarci le seguenti informazioni al momento dell 'ordinazione:

1. Tipo di macchina.
2. Numero di serie della macchina.
3. Quantità dei pezzi desiderati. (Quantity)
4. Numero di codice del pezzo. (Part Nº)
5. Descrizione del pezzo di ricambio. (Denomination)
6. Misura, in caso di ordine per metro.

PEDIDO DE RECAMBIOS

Para evitar errores en las entregas, deberán indicarse los siguientes datos al hacer un pedido de recambios:

1. Tipo de máquina.
2. Número de serie.
3. Cantidad de piezas deseadas. (Quantity)
4. Número de artículo de la pieza de recambio. (Part Nº)
5. Denominación de la pieza. (Denomination)
6. Indíquese la medida al solicitar un artículo que se expide por metros.

COMMANDE DE PIECES DE RECHANGE

Les indications suivantes doivent être fournies lors de la commande de piéces de rechange, afin d'éviter toute erreur de livraison:

1. Type de machine.
2. Numéro de série.
3. Quantité désirée de pièce de rechange. (Quantity)
4. Numéro de la piéce de rechange. (Part Nº)
5. Dénomination de la piéce de rechange. (Denomination)
6. Longueur en cas de commande au mètre.

YOUR AGENT/DEALER:

DYNAPAC

Text pages

The text pages is structured as the picture on the right.

1. This is the remarks for specific items and the descriptions of the remarks is at the bottom of the parts list.
2. Parts indicated by a dot and moved to the right are included when buying the assembled unit above.
3. Spare parts and service code for a specific part, mainly for internal use at Dynapac. "A" = Service part, "B" = Fast moving part, "C" = Suggested exchanged part and "D" = Regular spare part.

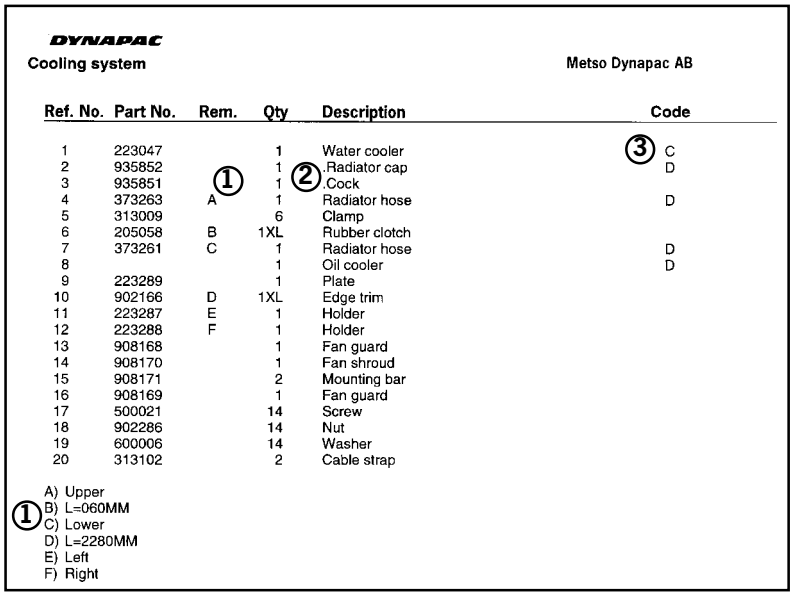

DYNAPAC

Cooling system — Metso Dynapac AB

Ref. No.	Part No.	Rem.	Qty	Description	Code
1	223047		1	Water cooler	③ C
2	935852		1	Radiator cap	D
3	935851	①	1	② Cock	
4	373263	A	1	Radiator hose	D
5	313009		6	Clamp	
6	205058	B	1XL	Rubber clotch	
7	373261	C	1	Radiator hose	D
8			1	Oil cooler	D
9	223289		1	Plate	
10	902166	D	1XL	Edge trim	
11	223287	E	1	Holder	
12	223288	F	1	Holder	
13	908168		1	Fan guard	
14	908170		1	Fan shroud	
15	908171		2	Mounting bar	
16	908169		1	Fan guard	
17	500021		14	Screw	
18	902286		14	Nut	
19	600006		14	Washer	
20	313102		2	Cable strap	

① A) Upper
B) L=060MM
C) Lower
D) L=2280MM
E) Left
F) Right

Changes

PARTS INFO	SERVICE INFO	GROUP	PAGE	NOTES

Notes

Notes

DYNAPAC

PÄRMETIKETT

För att undvika fel vid reservdelsbeställning finns här nedan två etiketter som passar i fickorna på pärmarnas ryggar. På dessa kan man se från vilket vältnummer av aktuell maskin reservdelskatalogen gäller. Gör så här:

1. Tag denna sida ur pärmen.
2. Klipp ut etiketten till **VÄNSTER** (1) och sätt in den i fickan på **DENNA** pärmens rygg.
3. Finns det en etikett till **HÖGER** (2), kan denna användas på pärmen för **FÖREGÅENDE** utgåva av denna katalog.
4. Kasta detta papper.

BINDER LABEL

To avoid errors when ordering spare parts use the labels below to identify the catalogues on the back of the binder. The label contain the serial number range for which the catalogue is valid. Do like this:

1. Remove this page from the binder.
2. Cut out the **LEFT** label (1) and put it on **THIS** binders back.
3. If there is a label to the **RIGHT** (2), it can be used on the binder for **PRECEDING** issue of this catalogue.
4. Throw away this paper.

KATALOG-BESCHRIFTUNG

Zur Vermeidung von Fehlen bei der Ersatzteilbestellung benutzen Sie bitte die unteren Beschriftungen, um die Kataloge auf der Rückseite zu kennzeichen. Auf der Beschriftung ist angegaben, für welche Maschinennummern der jeweilige Katalog gültig ist. Ablauf:

1. Nehmen Sie dieses Blatt aus dem Katalog.
2. Schneiden Sie die **LINKE** Beschriftung (1) aus. Schieben Sie die Beschriftung in die tasche auf **DEM** Katalogrücke.
3. Sollte die Beschriftung unten **RECHTS** (2) mitgeliefert werden, kennzeichen Sie damit bitte die **ÄLTERE** Ausführung dieses Kataloges.
4. Den Rest dieses Blattes bitte vernichten.

ETICHETTA POSTA SUL RACCOGLITORE

Per evitare errori quando ordinate pezzi di ricambio, usate le etichette in calce che servono ad identificare i cataloghi sul retro del raccoglitore. L'etichetta indica il numero di matricola delle maccine prese in considerazione nel catalogo.

1. Rimuovete questa pagina dal raccoglitore.
2. Ritagliate l'etichetta posta a **SINISTRA** (1) e ponetela sul retro **DEL** raccoglitore.
3. Se trovate anche un'etichetta sulla **DESTRA** (2), ritagliatela e ponetela sul raccoglitore relativo alla **PRECEDENTE** edizione del catalogo.
4. Distruggete questo foglio.

ETIQUETA PARA LA CARPETA

Para evitar errores al pedir repuestos utilicen las etiquetas abajo descritas para identificar los catálogos en la parte trasera de la carpeta. En la etiqueta se ven los números de referencia de la serie para la cual es válido el catálogo. Instrucciones:

1. Quitar esta página de la carpeta.
2. Corta la etiqueta **IZQUIERDA** (1) y ponerla est **ESTA** carpeta en la parte trasera.
3. Si hay una etiqueta en la parte **DERECHA** (2) se puede utilizar en la carpeta para el catálogo que **PRECEDE** a esta.
4. Tirar esta hoja.

ETIQUETAGE DU CATALOGUE

Afin d'éviter des erreurs lors de commandes de pièces de rechange, nous vous conseillons d'apposer les marquages ci-dessous à l'arrière du classeur, pour identifier les catalogues. Ce marquage indique les numéros de série pour lesquels le catalogue est adapté. Il convient de procéder de la façon suivante:

1. Retirez cette page du classeur.
2. Découpez l'étiquette de **GAUCHE** (1), et apposez-la à l'arrière de **CE** catalogue.
3. Si il y a une étiquette à **DROITE** (2), vous pourrez l'apposer sur le classeur de l'edition **PRECEDENTE** du catalogue.
4. Détruire cetta feuille.

1.



CP271

Catalogue **SCP271-1EN4**
Valid **from** serial number:
23620271* - *23620367

TABLE OF CONTENTS

Page

CP271 SN 23620271 - 23620367 2

Frame 4

Frame and hood 6
Rear cover 8
Front scraper 10
Rear scrapers 12
Front scrapers and mat Option 14
Rear scrapers and mat Option 16
Sprinkler system 18
Cover assy 22
Water ballast cover 24

Suspension 26

Steering link 28
Front suspension 30
259219 Brake 32
Rear suspension 34
259219 Brake 32
195176 Chain protector 38
Wheel 40
Wheel with Bridgestone tyre 42
Wheel with Michelin tyre 44
Wheel with Firestone tyre 46
Spare wheel Option 48
Pneumatic circuit Diagram, Option 50
Air on the run -699B452, Option 52
Air on the run 699B453- , Option 56
Diagram brake circuit -699B452 60
Diagram brake circuit 699B453- 62
191533 Brake valve, Varga 64
Brake circuit -699B452 66
243610 Brake chamber 70
415209 Master cylinder 72
Brake circuit -23620279 and 283-286+288-289 74
194402 Brake chamber 80
Brake circuit 23620280- not 283-286+288-289 82
194402 Brake chamber 80
Compressor assembly -699B538 90
Compressor assembly -23620279 and 283-286+288-289 94
Compressor assembly 23620280- not 283-286 +288-289 96
Compressor Varga 100
Compressor assembly SN 23620355 - 102
380253 Compressor Knorr-Bremse LP4850 Up to 23620448 104
380475 Compressor Knorr-Bremse LP4850 From 23620449 106

Engine 108

Engine Cummins 110
Cooling system 112
Air cleaner SN -23620303 and 306 + 307 114
Air cleaner SN 23620304- not 306 + 307 116
Fuel system -23620303 and 306 + 307 118
Fuel system SN 23620304- not 306 + 307 120
Sedimenter - SN 23620303 and 306 + 307 122
Muffler 124

Transmission 126

Transmission Up to SN 23620307 128
Converter housing & case 130
Turbine shaft, stator support 132
Drive plate 134
Torque converter 136
Gear 138
Auxiliary pump drive 140
Charging pump drive 142
Reverse & 2nd shaft 144
Low speed shaft 146
Forward shaft 148
Reverse idler 150
Output & 3rd clutch 152
Charging pump & oil filter 154
Control valve 156
240647 Control valve assembly 158
Drum brake 160
Transmission From SN 23620308 162
Converter housing & case 164
Turbine shaft, stator support 166
Drive plate 168
Torque converter 170
Auxiliary pump drive 172
Charging pump drive 174
Reverse & 2nd shaft 176
Low speed shaft 178
Forward shaft 180
Reverse idler 182
Output & 3rd clutch 184
Charging pump & oil filter 186
Control valve 156
240647 Control valve assembly 158
Disc brake 192
937693 Brake caliper 194
Differential assembly Merc. Benz 196
Differential assembly Eaton 198
Differential -699B431, Merc. Benz 200
Differential assembly 699B432-699B481, Eaton 202
Differential 699B482-, Rockwell 206
Cardan shaft assembly 210
Cardan shaft -699B481, Albarus 212
Cardan shaft 699B482-, Albarus 214

Hydraulic system 216

Steering system 218
900411 Steering valve Up to 23620307 220
375455 Steering valve From 23620308 222
Steering cylinder 224
250832 Steering cylinder 226
376060 Steering cylinder 228

Electrical equipment 230

Electrical system 232
Horn assy 236
Lights 238
Instrument board 240
Electrical equipment 242

Drivers platform 244

Forward and reverse control, brake Up to 23620307 246
Forward and reverse control, brake From 23620308 248
Throttle control, cpl Up to 23620307 250
Throttle control, cpl From 23620308- 252
Pedal and brake valve -23620279 and 283-286+288-289 254
191533 Brake valve, Varga From 699B453 64
Pedal and brake valve 23620280- not 283-286+288-289 258
195779 Brake valve 260
Operator's manual box 262
Steering assembly Up to 23620306 264
900411 Steering valve 220
Steering assembly From 23620307 268
375455 Steering valve 222
Seat assembly Without armrests 272
Seat assembly With armrests 274
Safety belt, Only with rops Option 276
Seat cover 278

Decals 280

Kit, plate decals - SN 23620303 and 306+307 282
Decals SN 23620304 - Not 306 + 307 284

Standard equipment 286

Standard equipment 288

Optional equipment 290

Tool equipment 292
Canopy Option 294
Cab assembly mounting Option 296
Protective cover 298


50
60
40
70
30
80
90
91
DYNAPAC
CP271
DYNAPAC
20
10

Ref. No.	Part No.	Rem.	Qty	Description	Code
10				Frame (Page 4)	
20				Suspension (Page 26)	
30				Engine (Page 108)	
40				Transmission (Page 126)	
50				Hydraulic system (Page 216)	
60				Electrical equipment (Page 230)	
70				Drivers platform (Page 244)	
80				Decals (Page 280)	
90				Standard equipment (Page 286)	
91				Optional equipment (Page 290)	

Ref. No.	Part No.	Rem.	Qty	Description	Code
10				Frame and hood (Page 6)	
20				Rear cover (Page 8)	
40				Front scraper (Page 10)	
50				Rear scrapers (Page 12)	
60				Front scrapers and mat Option (Page 14)	
70				Rear scrapers and mat Option (Page 16)	
80				Sprinkler system (Page 18)	
90				Cover assy (Page 22)	
100				Water ballast cover (Page 24)	

Frame and hood

16309-1

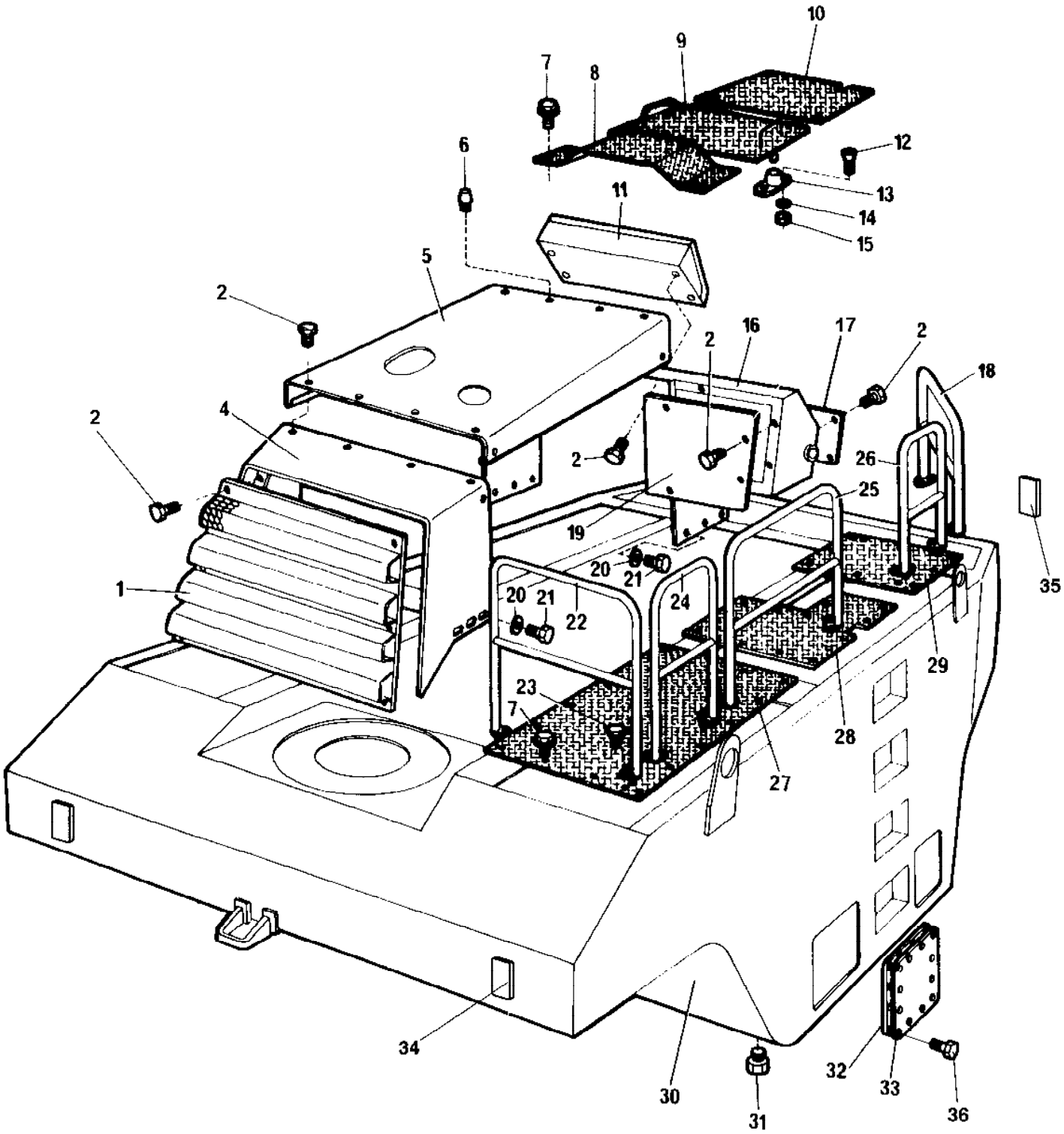

Frame and hood

Ref. No.	Part No.	Rem.	Qty	Description	Code
1	192699		1	Fan guard Up to 23620367	
	375576		1	Fan guard From 23620368	
2	904643		38	Screw	
4	192582		1	Cooler frame Up to 23620367	
	375559	E	1	Cooler frame From 23620368 Up to 23620529	
	375559	F	1	Cooler frame From 23620530	
5	192674	A	1	Hood	
	375530	B	1	Hood	
6	925629		2	Shock absorber	
7	928511		94	Screw	
8	191958		1	Floor Up to 23620307	
	375101		1	Cover plate From 23620308	
9	191960		1	Floor	
10	193034		1	Cover plate	
11	192011		1	Control panel	
12	535008		4	Screw	
13	450066		2	Door bumper	D
14	615041		4	Washer 5,3x11	
15	570003		4	Nut M5	
16	192575	C	1	Control panel	
	195781	D	1	Control panel Up to 23620367	
	375618	E	1	Control panel From 23620368 Up to 23620529	
	375618	F	1	Control panel From 23620530	
17	195022		1	Cover Up to 23620307	
	376387		1	Cover plate From 23620308	
18	193039		2	Hand rail	
19	192098	A	2	Cover	
	375568	B	2	Cover plate	
20	904557		12	Washer 10,5x22x4	
21	500030		11	Screw M10-1,5x35H 8,8	
22	193038		2	Hand rail	
23	500047		40	Screw M8-1,25x35 8,8	
24	193041		2	Hand rail	
25	193801		2	Hand rail	
26	193040		2	Hand rail	
27	192791		2	Front floor	
28	191899		1	Floor, side right	
	191900		1	Floor, side left	
29	247930		2	Rear floor	
30	192580		1	Frame	
31	232046		2	Plug	
32	264238		4	Gasket	D
33	264237		4	Cover	
34	901187		2	Reflector, white	B
35	901182		2	Reflector, red	B
36	500506		48	Screw	

A) SN -23620303 and 306 + 307
B) SN 23620304- not 306 + 307
C) SN -23620279 and 283-286 + 288-289
D) SN 23620280- not 283-286 + 288-289
E) Rev. A
F) Rev. B

Rear cover

16310

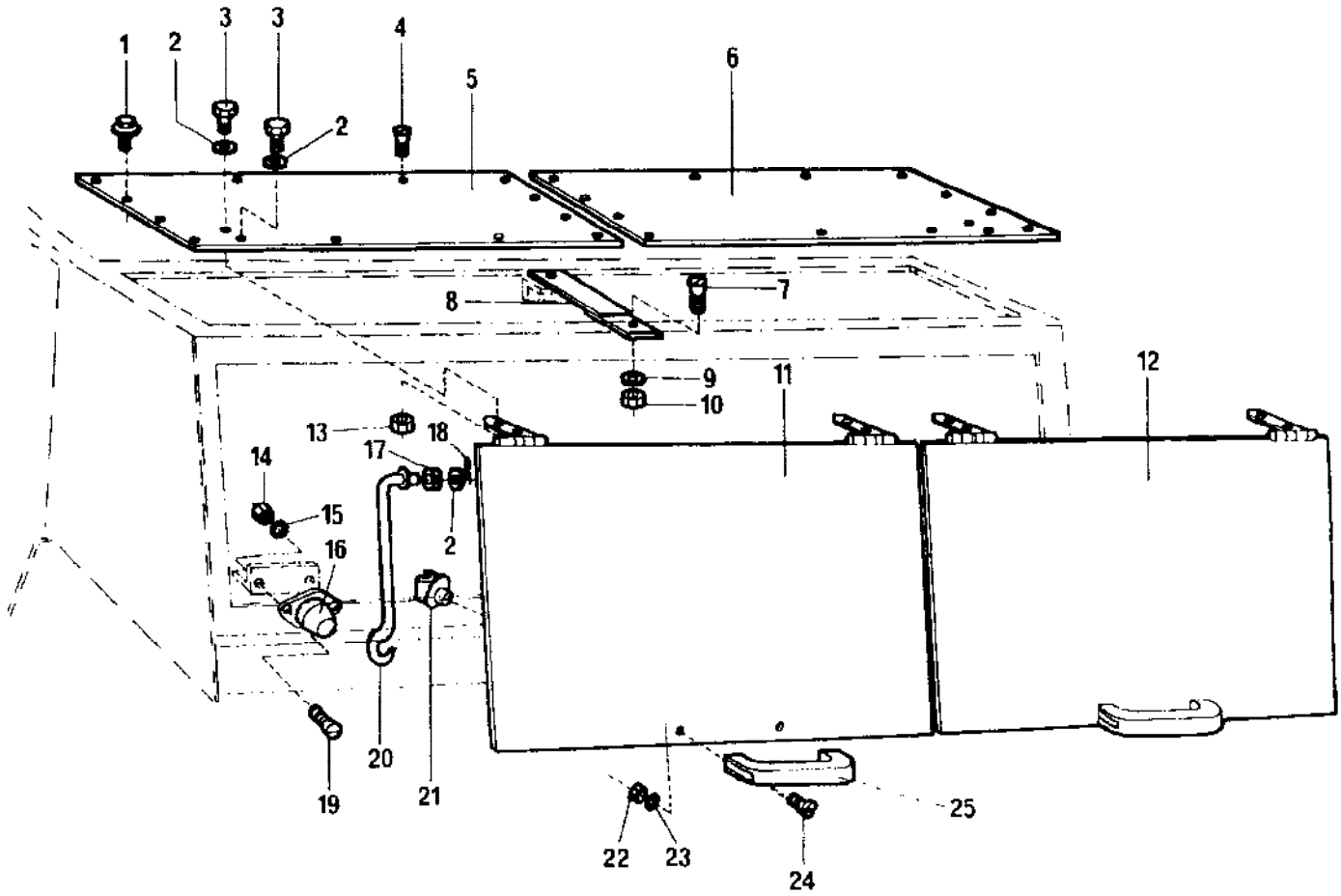

Rear cover

Ref. No.	Part No.	Rem.	Qty	Description	Code
1	928511		16	Screw	
2	904229		14	Washer 8,4x16x1,5	
3	500022		7	Screw M8-1,25x30 8,8	
4	535044		8	Screw	
5	192734		1	Cover, left Up to 23620367	
	375061		1	Cover, left From 23620368	
6	192735		1	Cover, right Up to 23620367	
	375060		1	Cover, right From 23620368	
7	535048		2	Screw	
8	195613		1	Bracket	
9	904230		2	Washer 10,5x22x2	
10	570006		2	Nut M10	
11	192785		1	Rear cover, left	
12	192786		1	Rear cover, right	
13	586003		3	Lock nut M8	
14	570003		12	Nut M5	
15	904281		8	Washer 5,3x10x1	
16	450066		4	Door bumper	D
17	192939		2	Grommet	
18	630006		2	Cotter pin	
19	535008		8	Screw	
20	192940		1	Rod, right	
	192941		1	Rod, left	
21	192939		2	Grommet	
22	570003		2	Nut M5	
23	904281		4	Washer 5,3x10x1	
24	533025		4	Screw M5x12	
25	927210		2	Grab handle	

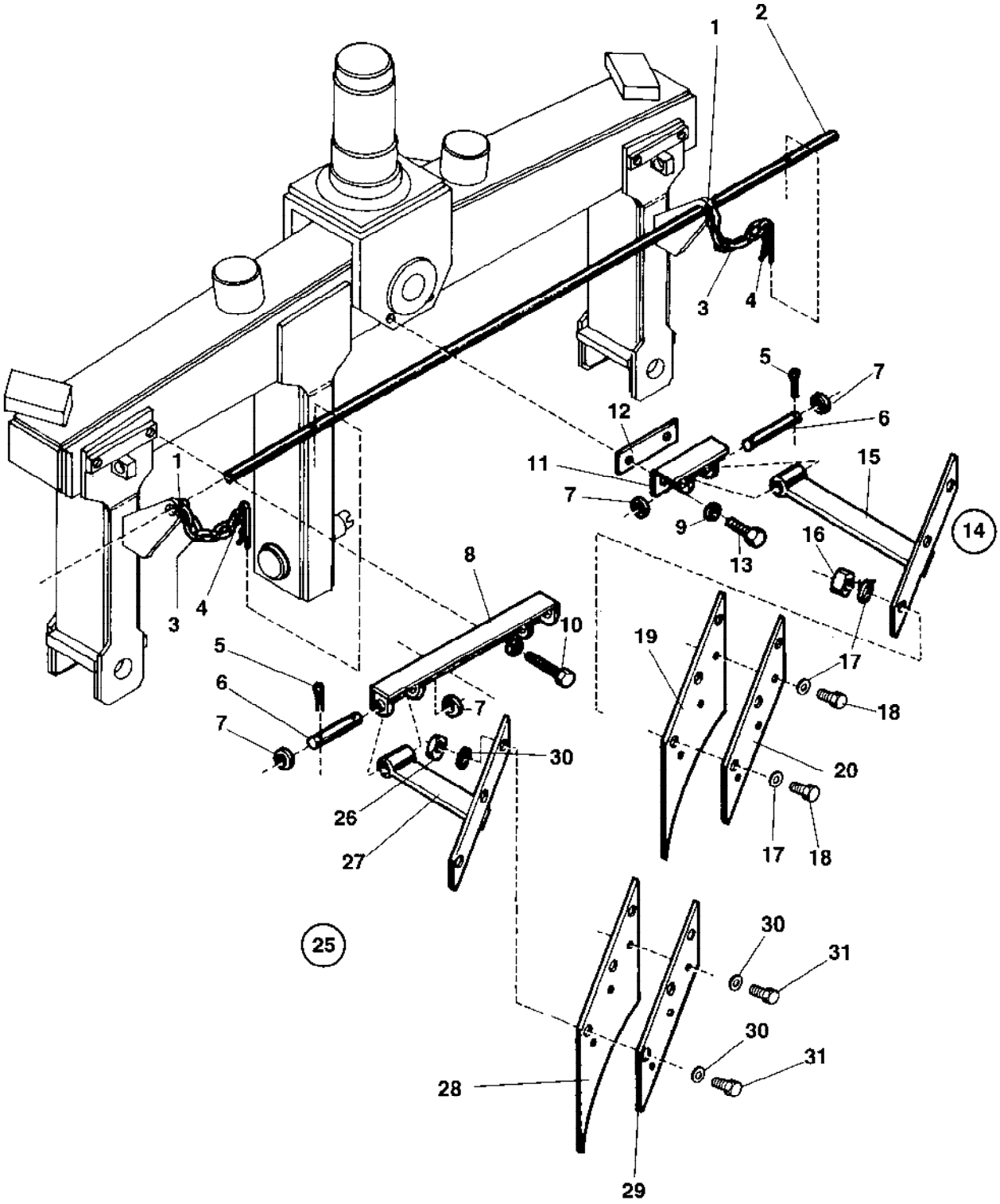
1
2
3
4
5
7
6
12
11
15
9
13
16
14
8
10
19
17
18
20
26
27
30
25
31
28
29

Front scraper

Ref. No.	Part No.	Rem.	Qty	Description	Code
1	358254		2	Key-ring	
2	256957		1	Shaft	
3	343775		2	Wire	
4	901178		2	Hair pin	
5	630008		10	Pin	D
6	251729		5	Shaft	
7	904232		10	Washer 17x30x3	
8	251722		2	Scraper bracket	
9	615045		6	Conical spring washer	
10	500035		4	Screw M12x020H	
11	251723		1	Scraper bracket	
12	258513		1	Plate	
13	500046		2	Screw M12x30H 8,8 FZB	
14	380432		1	Scraper, cpl	
15	380430		1	.Bracket	
16	570007		6	.Lock nut M12	
17	904231		12	.Washer 13x24x2	
18	500195		6	.Screw M12-1,75x50 8.8	
19	376357		1	.Scraper	B
20	380428		1	.Bracket	
25	380433		4	Scraper, cpl	
26	570007		6	.Lock nut M12	
27	380431		1	.Bracket	
28	376357		1	.Scraper	B
29	380428		1	.Bracket	
30	904231		12	.Washer 13x24x2	
31	500195		1	.Screw M12-1,75x50 8.8	

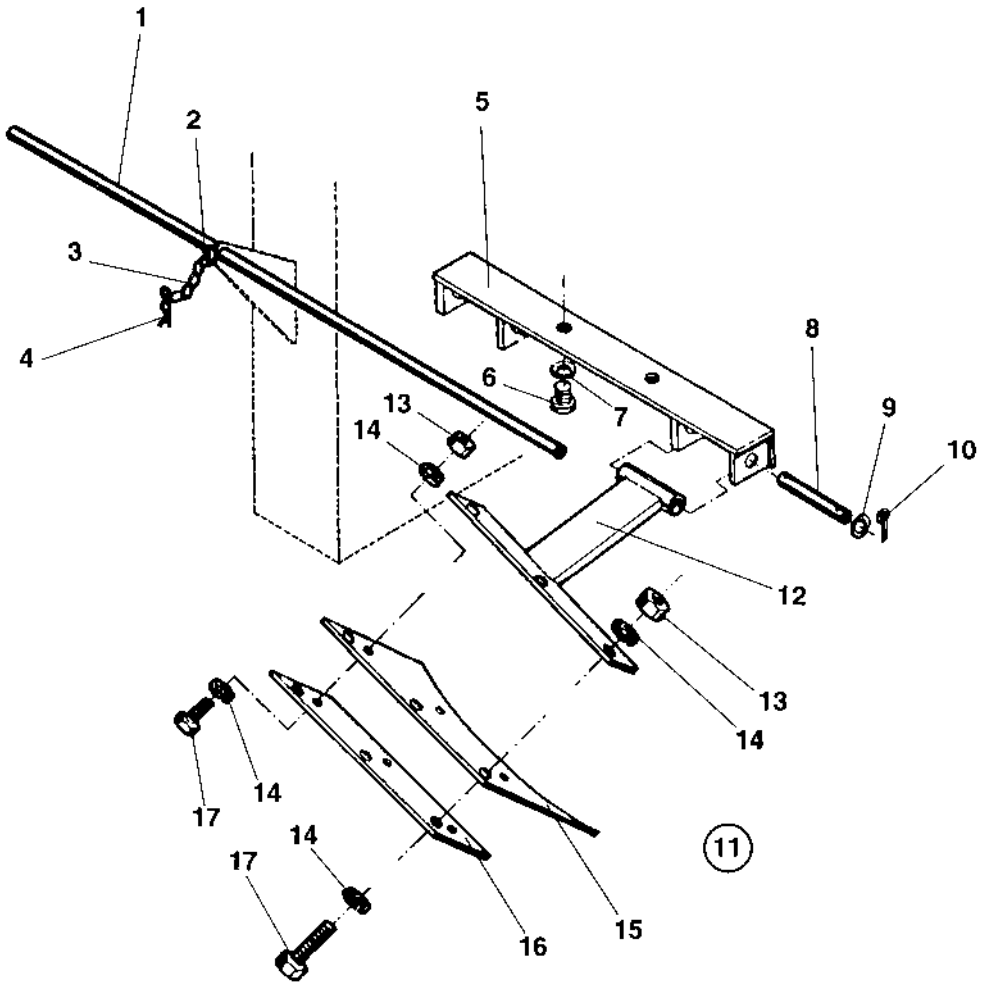
1
2
3
4
5
6
7
8
9
10
11
12
13
14
15
16
17

Ref. No.	Part No.	Rem.	Qty	Description	Code
1	267660		1	Shaft	
2	901178		2	.Hair pin	
3	343775		2	Wire	
4	500035		4	Screw M12x020H	
5	615045		4	Conical spring washer	
6	251722		2	Scraper bracket	
7	358254		2	Key-ring	
8	251729		4	Shaft	
9	904232		8	Washer 17x30x3	
10	630008		8	Pin	D
11	380432		4	Scraper, cpl	
12	380430		1	.Bracket	
13	570007		6	.Lock nut M12	
14	904231		12	.Washer 13x24x2	
15	376357		1	.Scraper	B
16	380428		1	.Bracket	
17	500195		6	.Screw M12-1,75x50 8.8	

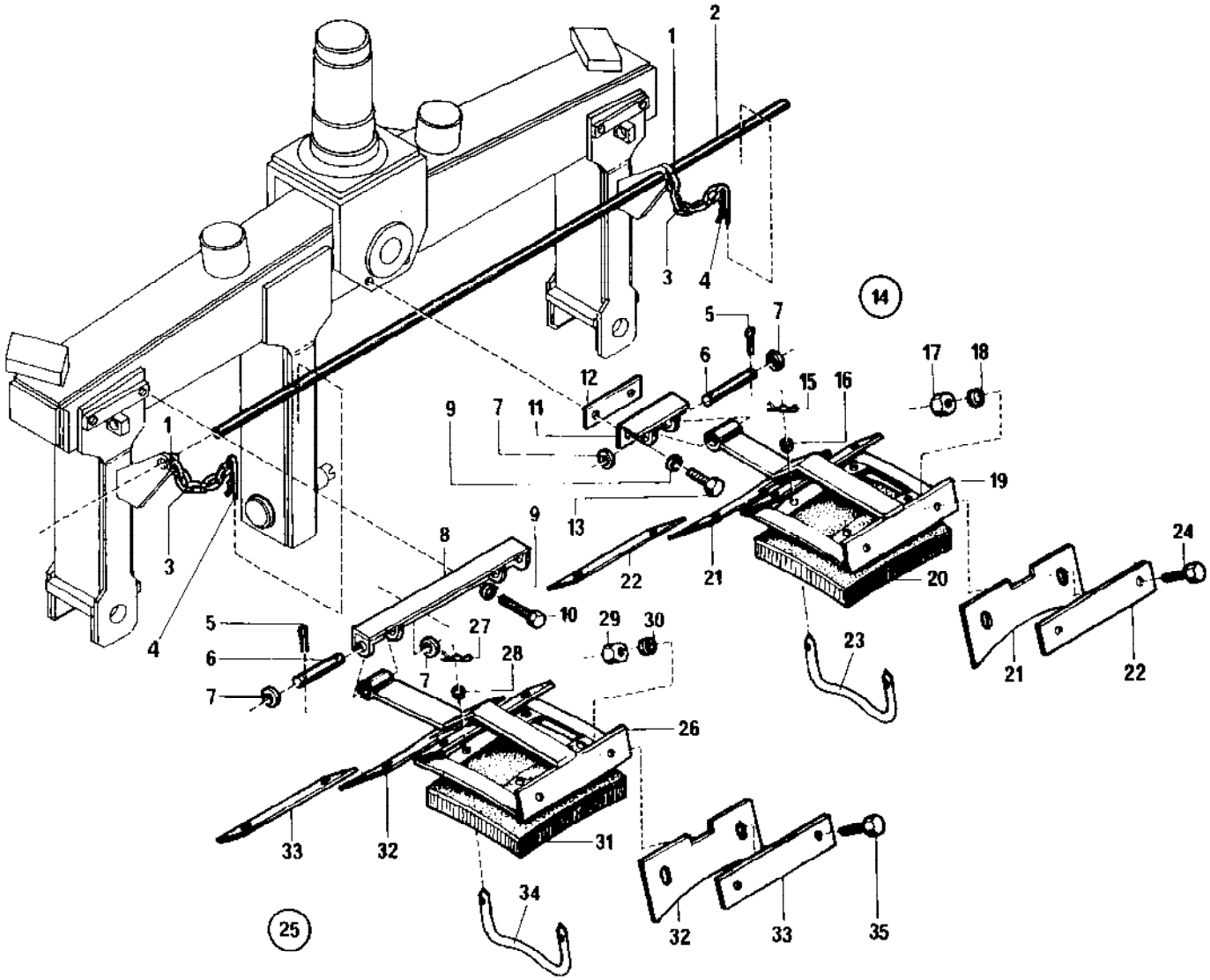
1
2
3
4
5
6
7
8
9
10
11
12
13
14
15
16
17
18
19
20
21
22
23
24
25
26
27
28
29
30
31
32
33
34
35

Front scrapers and mat Option

Ref. No.	Part No.	Rem.	Qty	Description	Code
1	358254		2	Key-ring	
2	256957		1	Shaft	
3	343775		2	Wire	
4	901178		2	.Hair pin	
5	630008		10	Pin	D
6	251729		5	Shaft	
7	904232		10	Washer 17x30x3	
8	251722		2	Scraper bracket	
9	615045		6	Conical spring washer	
10	500035		4	Screw M12x020H	
11	251723		1	Scraper bracket	
12	258513		1	Plate	
13	500046		2	Screw M12x30H 8,8 FZB	
14	263774		1	Scraper and mat, cpl	
15	630035		2	.Split pin	D
16	600005		2	.Washer	
17	586019		4	.Lock nut M12	
18	600009		4	.Washer	
19	263771		1	.Bracket	
20	263772		1	.Mat	B
21	191078		2	.Scraper Up to 23620318	B
	376375		2	.Scraper From 23620319 Up to 23620319	B
	191078		2	.Scraper From 23620320 Up to 23620320	B
	376375		2	.Scraper From 23620321	B
22	263763		2	.Plate	
23	267791		1	.Mat holder	D
24	500056		4	.Screw M12x45 8,8	
25	263775		4	Scraper and mat, cpl	
26	263770		1	.Scraper bracket	
27	630035		2	.Split pin	D
28	904639		2	.Washer 6,7x14x1,5	
29	586019		4	.Lock nut M12	
30	904231		4	.Washer 13x24x2	
31	263772		1	.Mat	B
32	191078		2	.Scraper Up to 23620318	B
	376375		2	.Scraper From 23620319 Up to 23620319	B
	191078		2	.Scraper From 23620320 Up to 23620320	B
	376375		2	.Scraper From 23620321	B
33	263763		2	.Plate	
34	267791		1	.Mat holder	D
35	500056		4	.Screw M12x45 8,8	

Rear scrapers and mat Option

16274

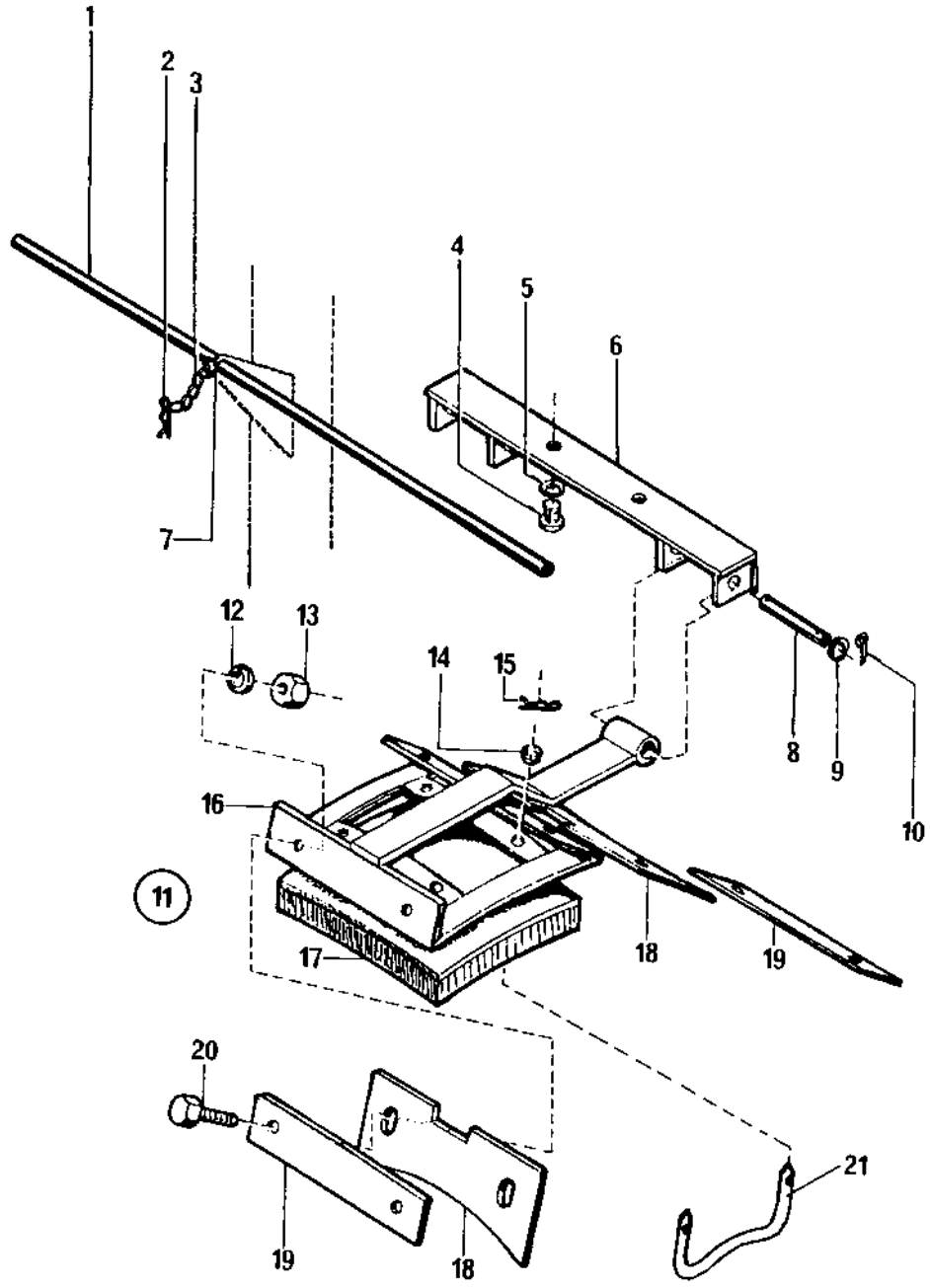

Rear scrapers and mat Option

Ref. No.	Part No.	Rem.	Qty	Description	Code
1	267660		1	Shaft	
2	901178		2	Hair pin	
3	343775		2	Wire	
4	500035		4	Screw M12x020H	
5	615045		4	Conical spring washer	
6	251722		2	Scraper bracket	
7	358254		2	Key-ring	
8	251729		4	Shaft	
9	904232		8	Washer 17x30x3	
10	630008		8	Pin	D
11	263774		4	Scraper and mat, cpl	
12	600009		4	.Washer	
13	586019		4	.Lock nut M12	
14	600005		4	.Washer	
15	630035		4	.Split pin	D
16	263771		1	.Bracket	
17	263772		1	.Mat	B
18	191078		2	.Scraper Up to 23620318	B
	376375		2	.Scraper From 23620319 Up to 23620319	B
	191078		2	.Scraper From 23620320 Up to 23620320	B
	376375		2	.Scraper From 23620321	B
19	263763		2	.Plate	
20	500056		4	.Screw M12x45 8,8	
21	267791		2	.Mat holder	D

Sprinkler system

16318

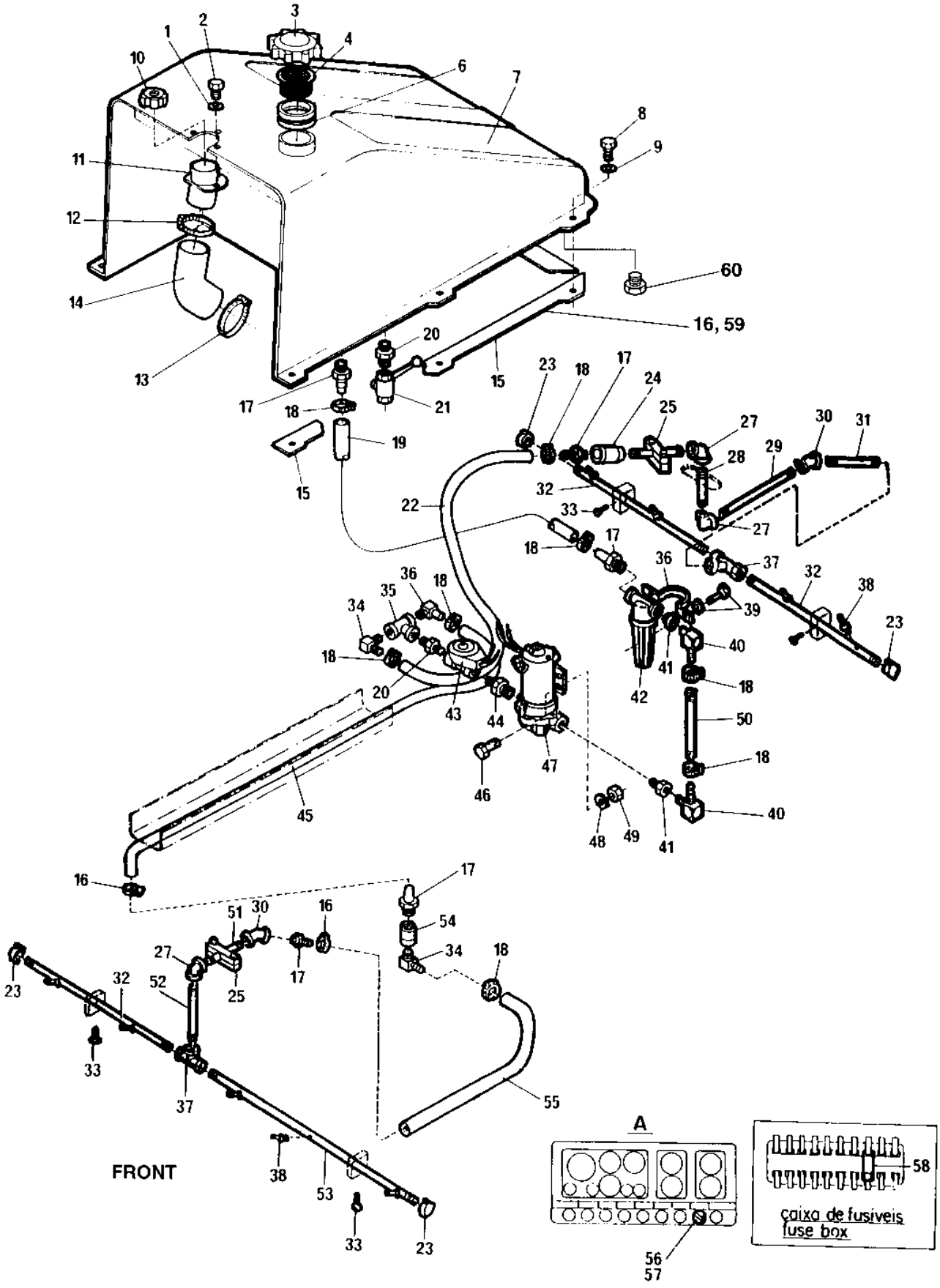

Sprinkler system

Ref. No.	Part No.	Rem.	Qty	Description	Code
1	904229		3	Washer 8,4x16x1,5	
2	500022		3	Screw M8-1,25x30 8,8	
3	333228		1	Cap	
4	358846		1	Strainer	D
6	248511		1	Spacer	
7	193103		1	Sprinkling tank	
8	904990		6	Screw M10x50	
	947684	E,F	6	Screw M10x35	
9	904230	E,G	6	Washer 10,5x22x2	
10	268964012		1	Tank cup Up to 23620328	
	373304		1	Cap From 23620329	D
11	193091		1	Filling pipe Up to 23620328	
	375567		1	Filling pipe From 23620329	
12	904631		1	Hose clamp	
13	904059		1	Hose clamp	
14	193093		1	Filling pipe	
15	193100		1	Rubber strip	
16	193101		1	Rubber strip	
17	813732		4	Hose connection	
18	313004		10	Hose clamp	
19	244057		1	Hose	
20	901299		2	Adapter	
21	333041		1	Valve	D
22	244057		1	Hose	
23	331092		4	Plug	
24	813746		1	Sleeve	
25	258333		2	Clamp	
27	331015		3	Elbow 90	
28	259225		1	Tube	
29	259226		1	Tube	
30	230543		3	Elbow 45	
31	256860		1	Tube	
32	263614		3	Tube	
33	192442		4	Clamp	
34	813725		3	Hose connector	
35	331006		1	Connection	
36	242018		1	Clamp	
37	230469		2	T-pipe	
38	813744		9	Nozzle sprinkler	B
39	541703		2	Screw M6x16	
40	241753		2	Hose connector	
41	248491		2	Reducer	
42	248513		1	Water filter	A
43	925659		1	Solenoid valve	C
44	234317		1	Nipple	
45	244057	A	1	Hose	

A) L=5500 mm
E) Old version
F) Together with washer 904230
G) Together with screw 947684

Sprinkler system

16318

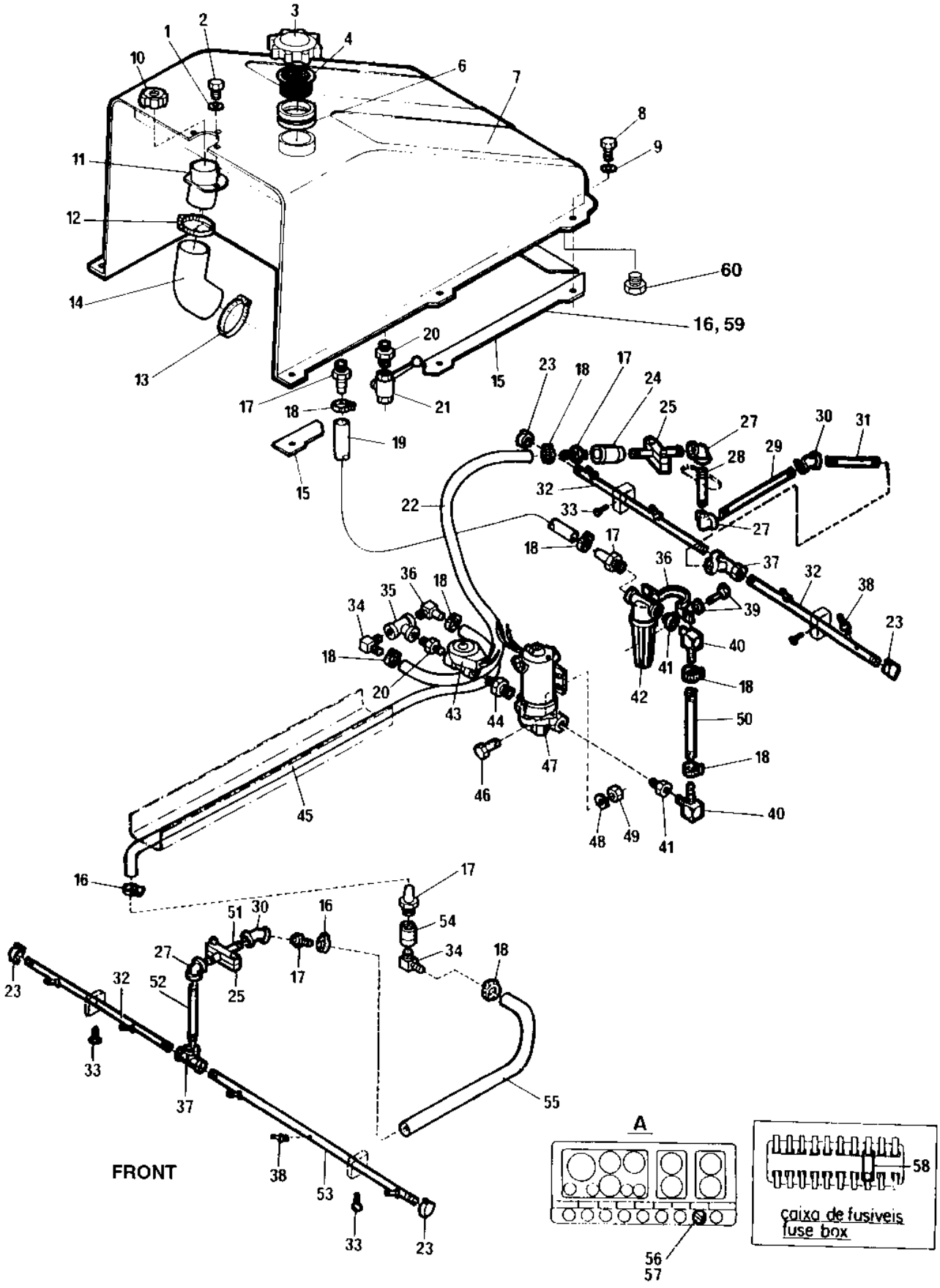

Ref. No.	Part No.	Rem.	Qty	Description	Code
46	500028		2	Screw M10-1,5x25 8,8	
47	904808	J	1	Water pump Up to 23620463	
	383697	H	1	Water pump From 23620464	
48	904230		2	Washer 10,5x22x2	
49	570006		2	Nut M10	
50	244057	B	1	Hose	
51	258340		1	Tube	
52	256860		1	Tube	
53	263615		1	Tube	
54	240154		1	Connector	
55	244057	C	1	Hose	
56	930151		1	Switch	D
57	930163		2	Contact piece	D
58	928722		1	Fuse	B
59	903614	D		Rubber strip	
60	813422		2	Plug	

B) L=400 mm
C) L=1000 mm
D) L=2300 mm
H) New version with Cannon connector, to fit the new cable harness.
J) Old version, without connector. To fit the old cable harness; install AMP connector 901765 together with 2 sleeves 903824 at the pump wires.

Cover assy

16317

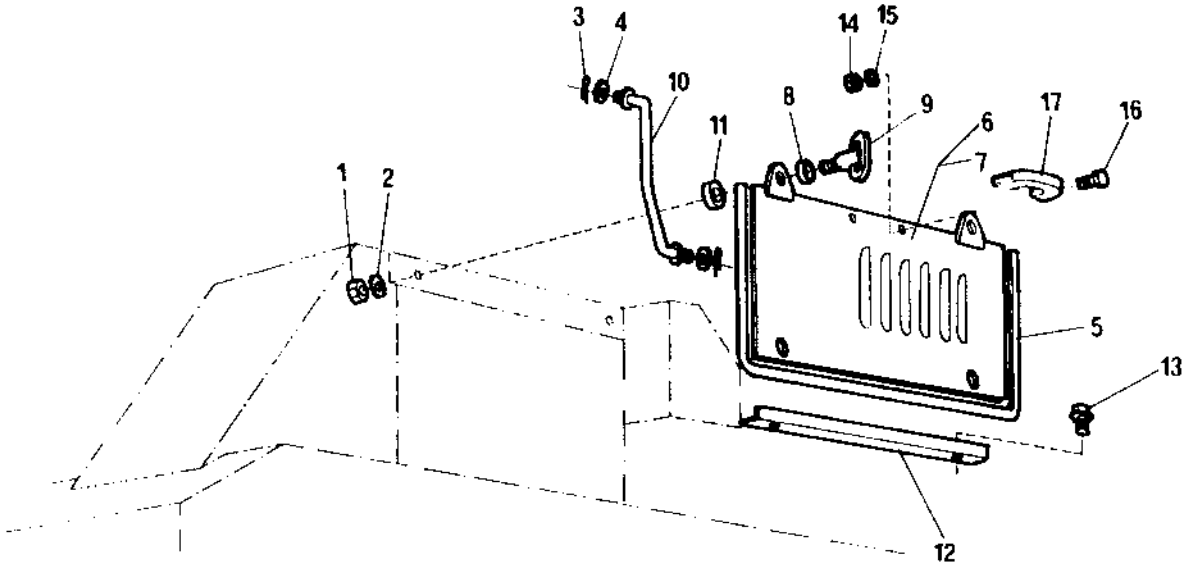

Cover assy

Ref. No.	Part No.	Rem.	Qty	Description	Code
1	570007		4	Lock nut M12	
2	904213		4	Washer 13x30x4	
3	630031		8	Cotter pin	
4	904230		8	Washer 10,5x22x2	
5	202028	A	2	Edge trim	
6	192876		1	Cover, left	
7	192877		1	Cover, right	
8	814259		8	Rubber grommet	D
9	192883		4	Lock	
10	192886		2	Cover rod	
	192885		2	Cover rod	
11	192887		4	Washer	
12	192995		2	Bracket	
13	541703		6	Screw M6x16	
14	570003		4	Nut M5	
15	904281		4	Washer 5,3x10x1	
16	533025		4	Screw M5x12	
17	927210		2	Grab handle	

A) L=2000 mm

Water ballast cover

16308

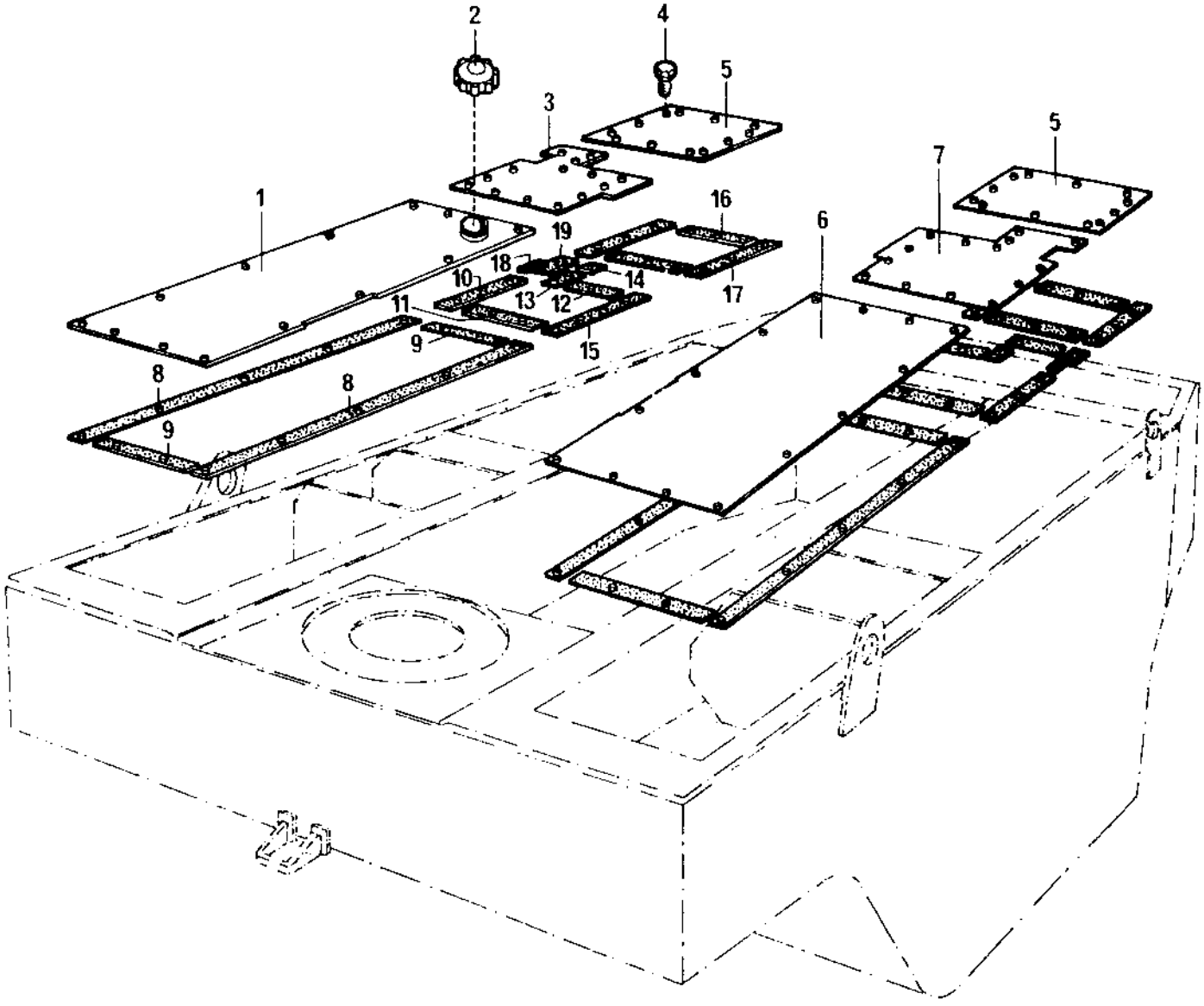

Water ballast cover

Ref. No.	Part No.	Rem.	Qty	Description	Code
1	192794		1	Floor,right front	
2	333228		1	Cap	
3	191899		1	Floor, side right	
4	928511		90	Screw	
5	247930		2	Rear floor	
6	192791		1	Front floor	
7	191900		1	Floor, side left	
8	247350	A		Gasket	D
9	247350	B		Gasket	D
10	247350	C		Gasket	D
11	247350	D		Gasket	D
12	247350	E		Gasket	D
13	247350	F		Gasket	D
14	247350	G		Gasket	D
15	247350	H		Gasket	D
16	247350	I		Gasket	D
17	247350	J		Gasket	D
18	247350	K		Gasket	D
19	247350	L		Gasket	D

A) L=5600 mm
B) L=2100 mm
C) L=1384 mm
D) L=1190 mm
E) L=670 mm
F) L=636 mm
G) L=506 mm
H) L=1820 mm
I) L=2100 mm
J) L=2920 mm
K) L=220 mm
L) L=864 mm

Ref. No.	Part No.	Rem.	Qty	Description	Code
10				Steering link (Page 28)	
20				Front suspension (Page 30)	
30				Rear suspension (Page 34)	
35	195176			Chain protector (Page 38)	
50				Wheel (Page 40)	
55				Spare wheel Option (Page 48)	
60				Pneumatic circuit Diagram, Option (Page 50)	
70				Air on the run -699B452, Option (Page 52)	
80				Air on the run 699B453- , Option (Page 56)	
90				Diagram brake circuit -699B452 (Page 60)	
100				Diagram brake circuit 699B453- (Page 62)	
110				Brake circuit -699B452 (Page 66)	
120				Brake circuit -23620279 and 283-286+288-289 (Page 74)	
130				Brake circuit 23620280- not 283-286+288-289 (Page 82)	
140				Compressor assembly -699B538 (Page 90)	
150				Compressor assembly -23620279 and 283-286+288-289 (Page 94)	
160				Compressor assembly 23620280- not 283-286 +288-289 (Page 96)	
220				Compressor Varga (Page 100)	
240				Compressor assembly SN 23620355 - (Page 102)	

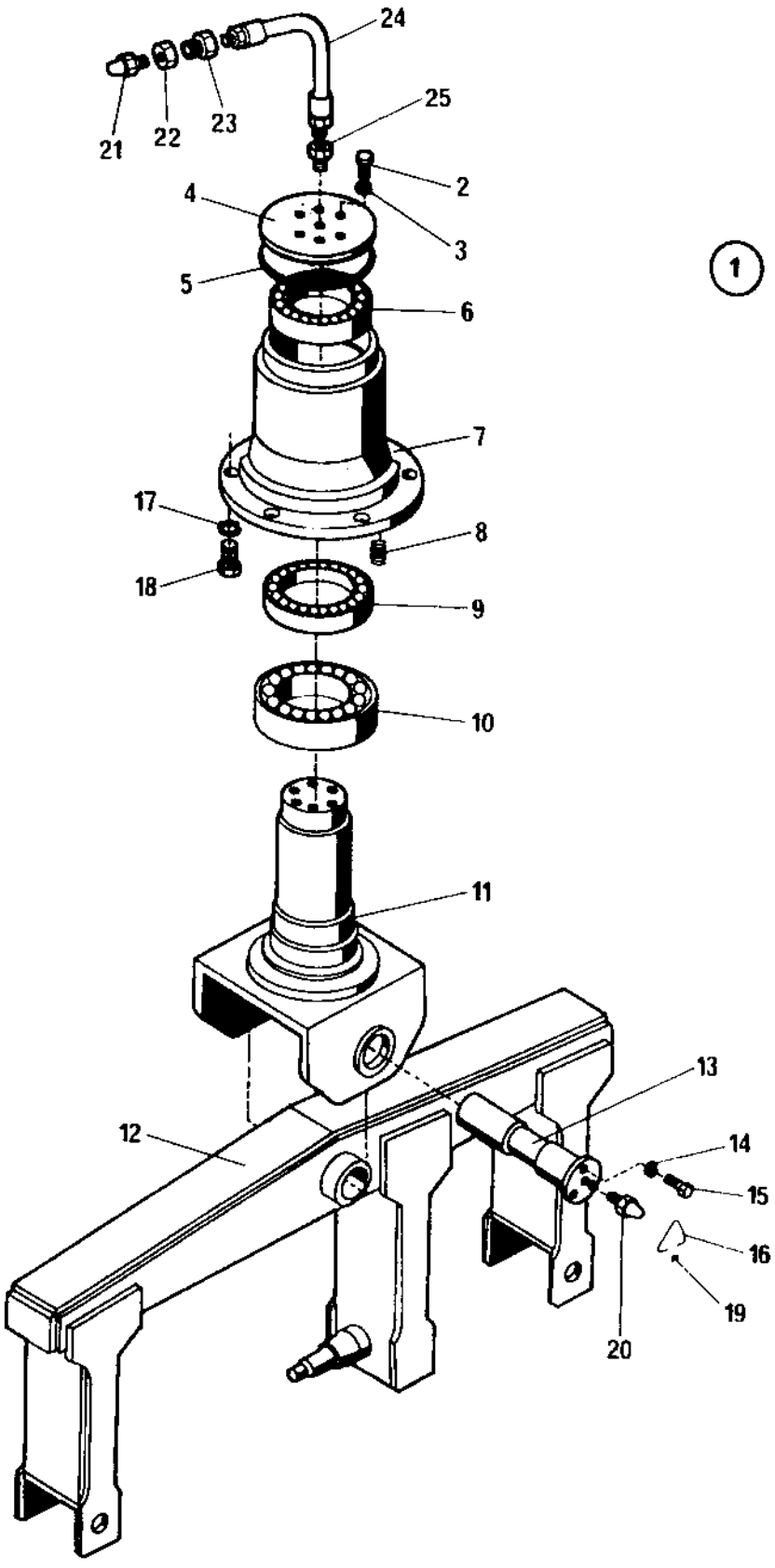
24
25
21
22
23
2
4
3
5
6
7
17
8
18
9
10
11
13
12
14
15
16
19
20
1

Steering link

Ref. No.	Part No.	Rem.	Qty	Description	Code
1	256658		1	Bearing housing, cpl	
2	502060		6	.Screw	
3	600009		6	.Washer	
4	256090		1	.Bearing cover	
5	256101		1	.O-ring	
6	115042		1	.Bearing	B
7	256099		1	.Bearing housing	
8	250622		3	.Spring	
9	115043		1	.Bearing	
10	117005		1	.Bearing	
11	269745		1	.Fork	
12	262197		1	Front suspension	
13	258512		1	Shaft	
14	615044		3	Conical spring washer	D
15	259639		3	Screw	
16	245725		1	Locking wire	
17	904234		6	Washer 25x45x4	
18	500129		6	Screw M24x1,5	
19	499420		1	Lead seal	
20	310037		1	Grease nipple	D
21	310022		1	Grease nipple	D
22	570008		1	Nut	
23	268482		1	Nipple	
24	193021		1	Hose	
25	813465		1	Reducing	

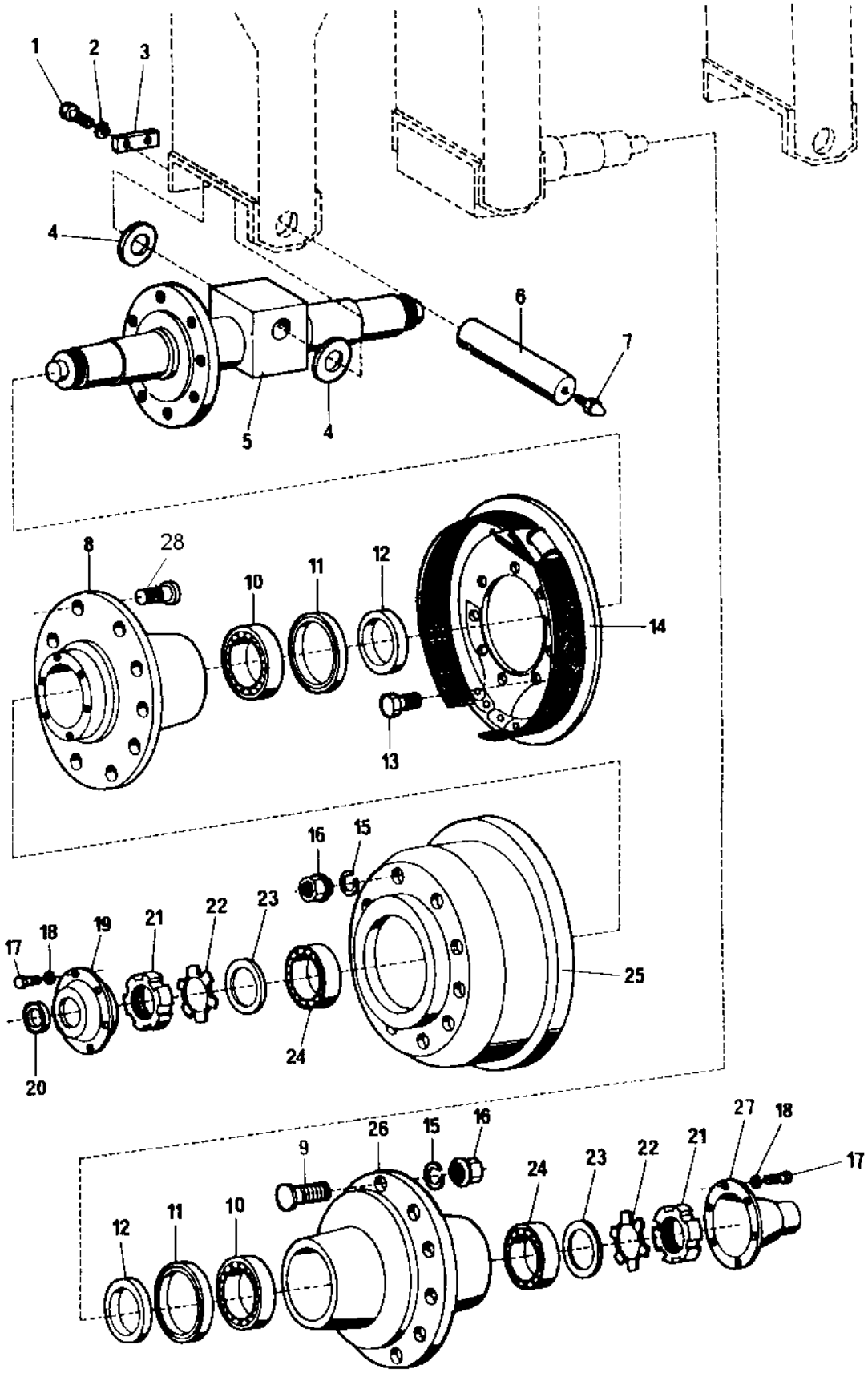
1
2
3
4
5
4
6
7
8
28
10
11
12
14
13
16
15
17
18
19
21
22
23
25
24
20
9
26
15
16
27
18
17
24
23
22
21
12
11
10

Front suspension

Ref. No.	Part No.	Rem.	Qty	Description	Code
1	500051		4	Screw M12-1,75x25 8,8	
2	615045		4	Conical spring washer	
3	259211		2	Snap plate	
4	259349		4	Spacer	
5	255054		2	Shaft	
6	258729		2	Pin	
7	310037		1	Grease nipple	D
8	256158		2	Wheel hub	
9	754105		30	Screw	
10	116016		5	Bearing	B
11	163108		5	Seal ring	
12	255658		5	Ring	
13	503100		16	Screw	
14	259219		2	Brake (Page 32)	
15	902252		50	Washer	
16	754014		50	Nut	
17	502017		30	Screw	
18	615043		30	Washer 8,4x18x2	
19	255337		4	Bearing cover	
20	161023		4	Seal ring	
21	135011		5	Lock nut	
22	136011		5	Lock washer	
23	252668		5	Ring	
24	116009		5	Bearing	B
25	253745		2	Brake drum	
26	256159		3	Wheel hub	
27	256157		1	Bearing cover	
28	747097		20	Wheel stud	

259219 Brake

16233

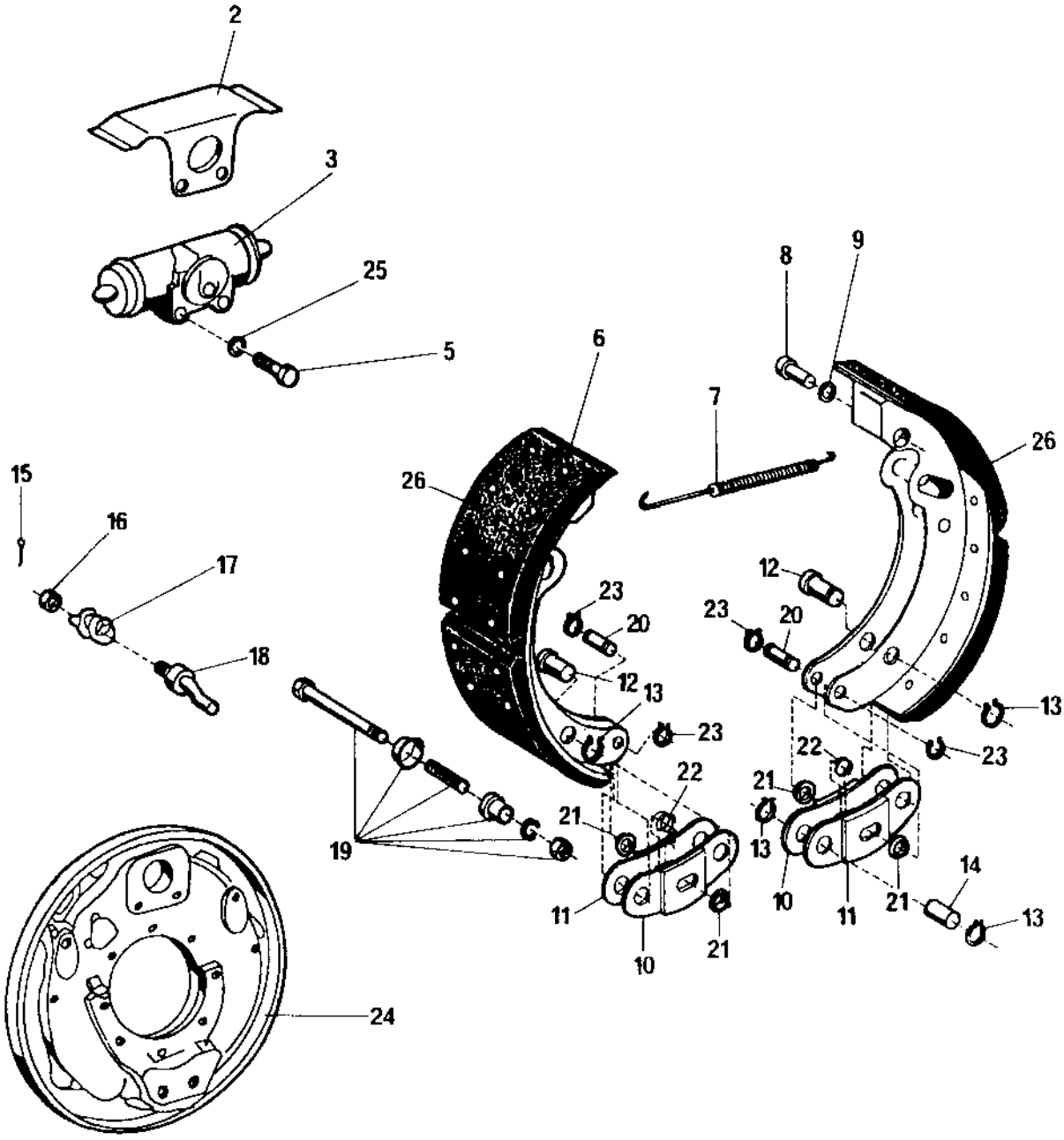

259219 Brake

Ref. No.	Part No.	Rem.	Qty	Description	Code
2	754025		1	.Protecting plate	
3	415114		1	.Brake cylinder	D
5	500028		2	.Screw M10-1,5x25 8,8	
6	754009		2	.Brake disc	B
7	754022		2	.Spring	
8	754006		2	.Spring holder	
9	754001		2	.Lock	
10	754027		2	.Rod end	
11	754026		2	.Rod end	
12	754021		2	.Pin	
13	754029		6	.Snap ring	
14	754020		2	.Pin	
15	754007		2	.Pin	
16	754016		2	.Nut	
17	754024		2	.Spring	
18	754010		2	.Adjusting bolt	
19	754012		2	.Mounting kit	D
20	754019		2	.Pin	
21	754028		4	.Seat	
22	754023		2	.Spring	
23	754018		4	.Lock	
24	263100		1	.Wheel column	
25	604007		2	.Spring washer	
26	754010		2	.Adjusting bolt	

Rear suspension

16306

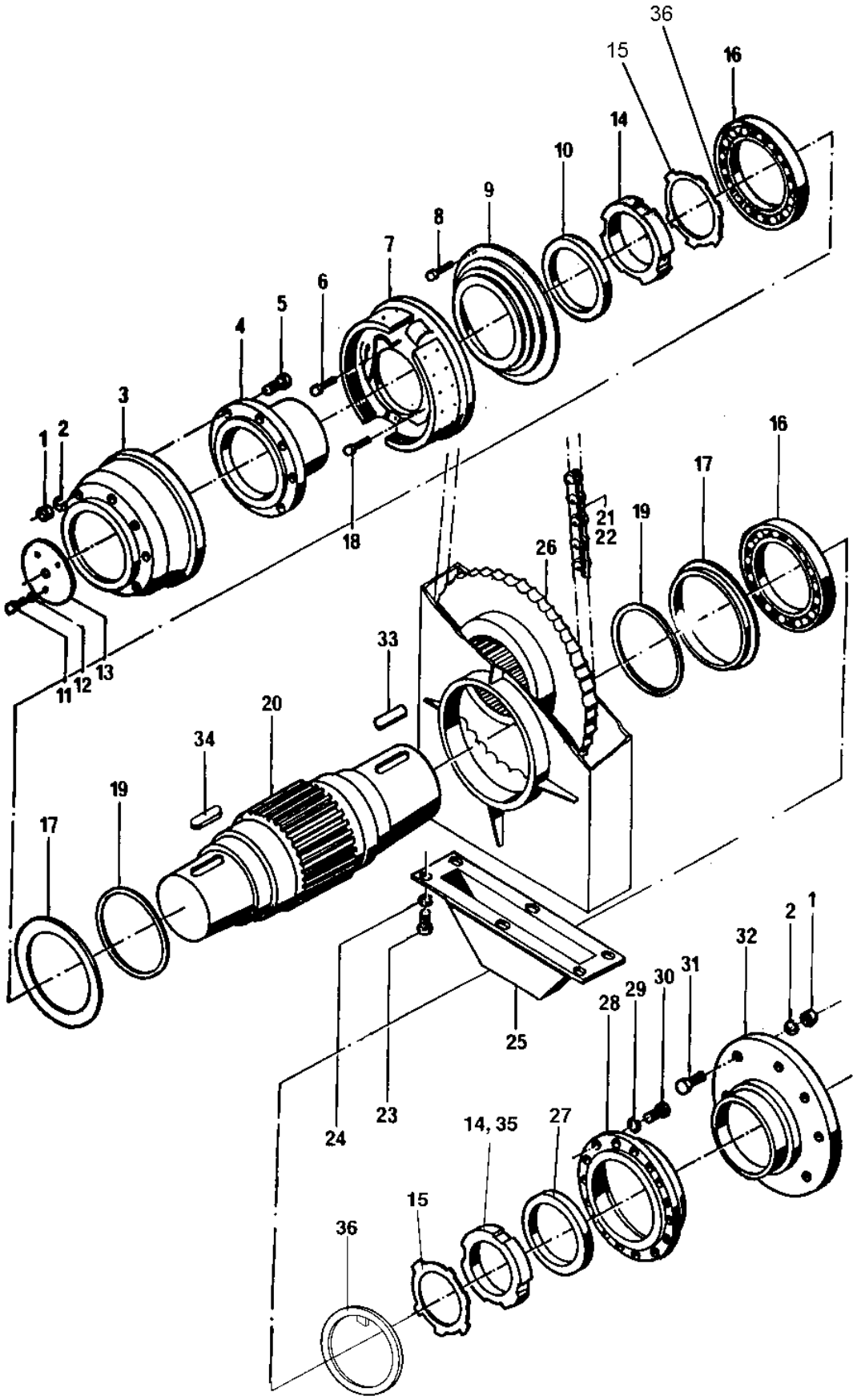

Ref. No.	Part No.	Rem.	Qty	Description	Code
1	754014		40	Nut	
2	902252		40	Washer	
3	253745		2	Brake drum	
4	253747		2	Wheel hub	
5	747097		20	Wheel stud	
6	900724	A	10	Screw	
	375152	A	10	Spacer	
7	259219		2	Brake (Page 32)	
8	509028		28	Screw	
9	268419		2	Bearing cover	
10	161084		2	Seal ring	
11	947696		12	Screw M16x45	
12	904232		22	Washer 17x30x3	
13	254088		4	Snap plate	
14	250787		4	Lock nut Up to 23620305	
	381716	E	4	Lock nut From 23620306 Up to 23620346	
	381717	G	4	Lock nut From 23620347	
15	136021		4	Washer	
16	116018		4	Bearing	B
17	134051		4	Ring	
18	900723	B	6	Screw	
	375152	B	6	Spacer	
19	150038		4	Snap ring	D
20	254085	C	2	Shaft	
	381518	D	2	Shaft	
21	191775		2	Chain	D
22	417040		2	Chain lock	D
23	500028		12	Screw M10-1,5x25 8,8	
24	904557		12	Washer 10,5x22x4	
25	261490		2	Cover	
26	380187		2	Chain wheel	
27	161087		2	Seal ring	D
28	268418		2	Bearing cover	
29	904229		12	Washer 8,4x16x1,5	
30	502019		12	Screw	
31	754105		20	Screw	
32	254241		2	Wheel hub	
33	350113		2	Flat key	
34	350082		2	Flat key	
35	516049	F	16	Set screw From 23620306 Up to 23620346	
36	376465		4	Spacer ring From 23620347	

A) Screw and spacer together
B) Screw and spacer together
C) With UNC 3/8" holes
D) With M16 holes
E) In use together with item 35
F) Only in use together with 381716, item 14
G) Not used as spare part; we recommend 381716 together with 516049

259219 Brake

16233

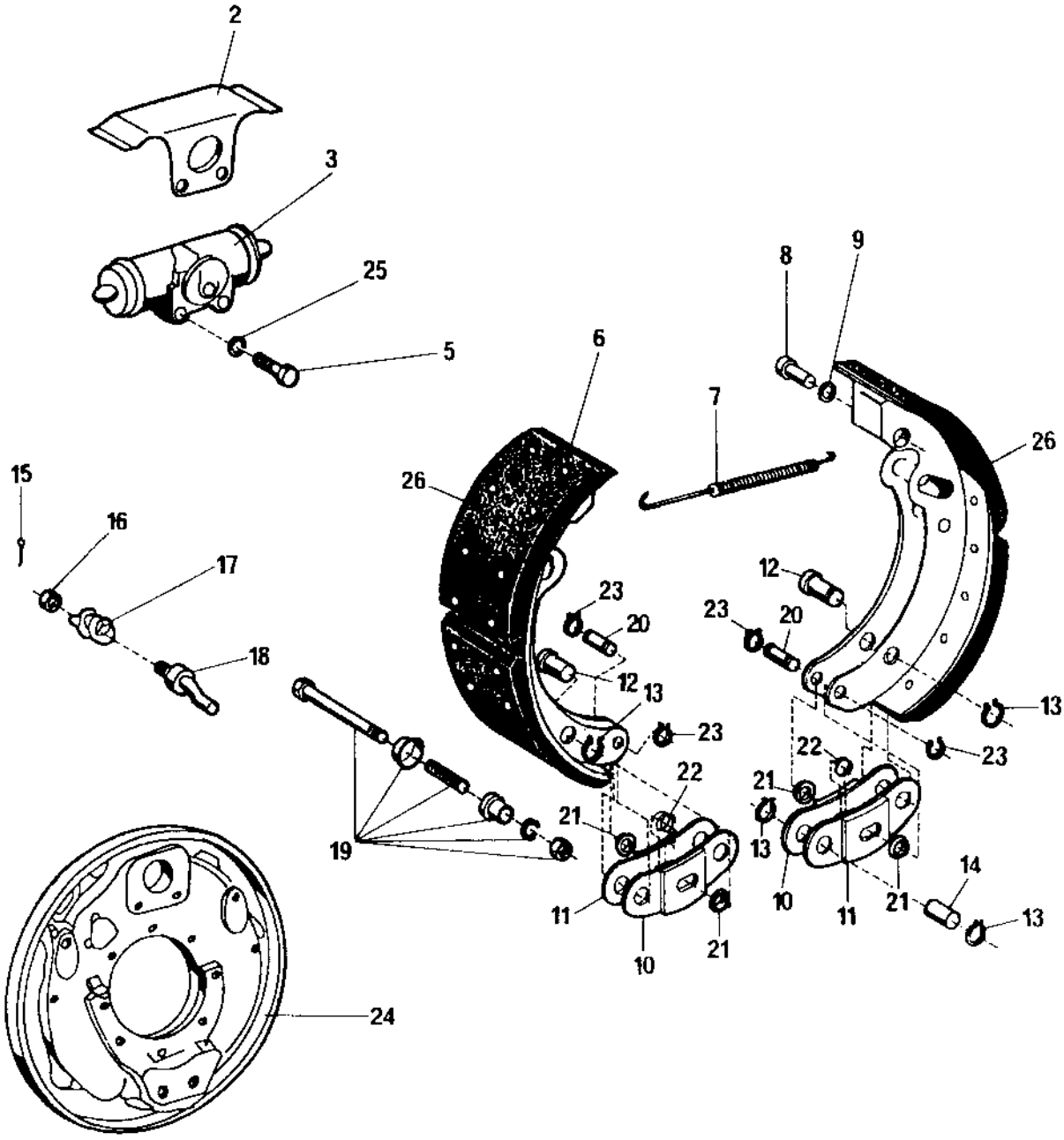

259219 Brake

Ref. No.	Part No.	Rem.	Qty	Description	Code
2	754025		1	.Protecting plate	
3	415114		1	.Brake cylinder	D
5	500028		2	.Screw M10-1,5x25 8,8	
6	754009		2	.Brake disc	B
7	754022		2	.Spring	
8	754006		2	.Spring holder	
9	754001		2	.Lock	
10	754027		2	.Rod end	
11	754026		2	.Rod end	
12	754021		2	.Pin	
13	754029		6	.Snap ring	
14	754020		2	.Pin	
15	754007		2	.Pin	
16	754016		2	.Nut	
17	754024		2	.Spring	
18	754010		2	.Adjusting bolt	
19	754012		2	.Mounting kit	D
20	754019		2	.Pin	
21	754028		4	.Seat	
22	754023		2	.Spring	
23	754018		4	.Lock	
24	263100		1	.Wheel column	
25	604007		2	.Spring washer	
26	754010		2	.Adjusting bolt	

195176 Chain protector

16280

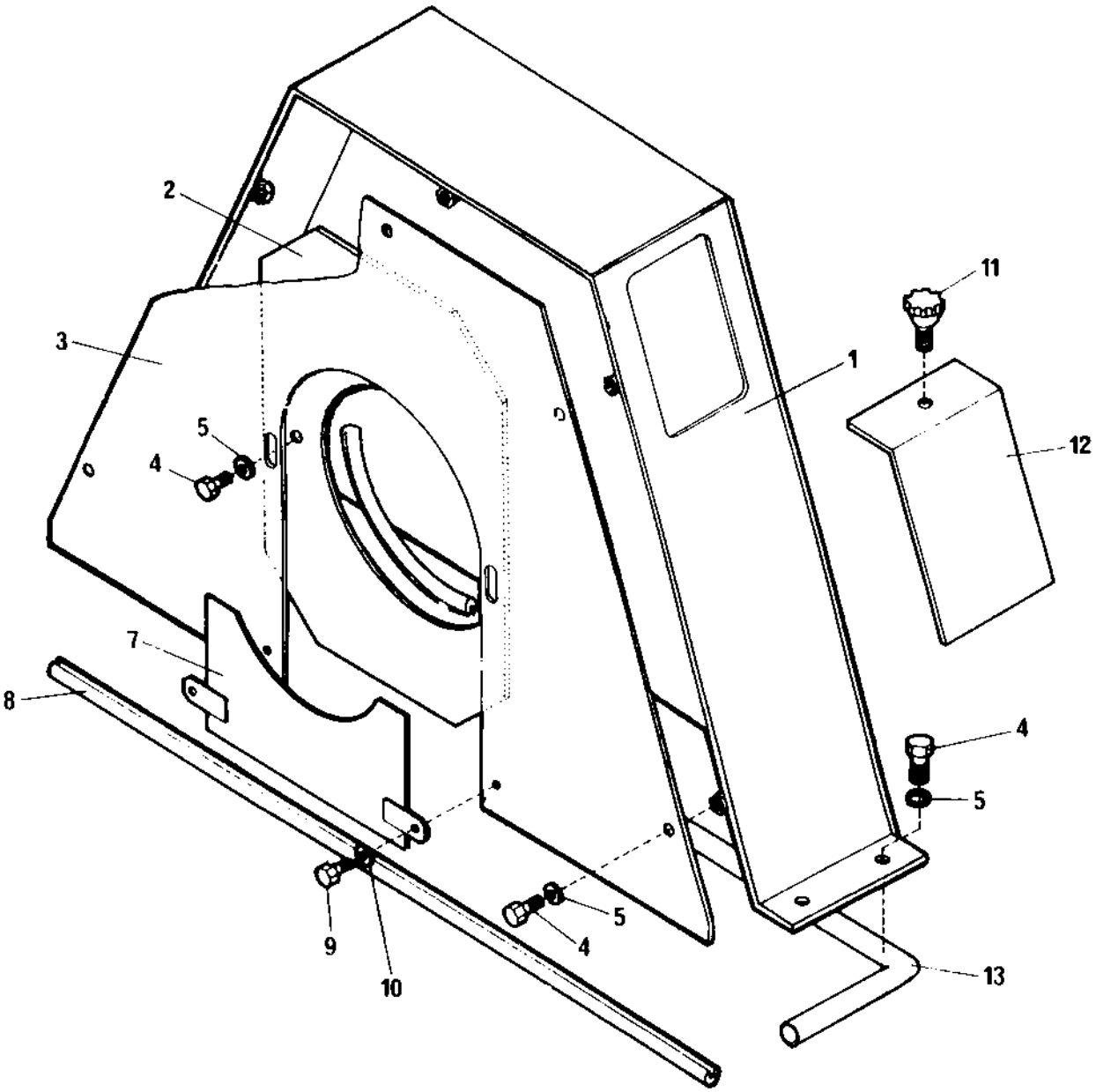

195176 Chain protector

Ref. No.	Part No.	Rem.	Qty	Description	Code
1	195177		1	Cover plate, left	
	195178		1	Cover plate, right	
2	195034		1	Cover	
3	195181		2	Cover	
4	500043		22	Screw M10x16H 8,8	
5	904230		22	Washer 10,5x22x2	
7	195182		1	Cover	
8	246947	A		Rubber strip	
9	500188		4	Screw M8-1,25x14 8,8	
10	904229		4	Washer 8,4x16x1,5	
11	904596		2	Hand knob	
12	195180		2	Cover	
13	202057	B		Edge trim	D

A) L=1084MM
B) L=1548MM

Ref. No.	Part No.	Rem.	Qty	Description	Code
51				Wheel with Bridgestone tyre (Page 42)	
52				Wheel with Michelin tyre (Page 44)	
53				Wheel with Firestone tyre (Page 46)	

Wheel with Bridgestone tyre

16324-2

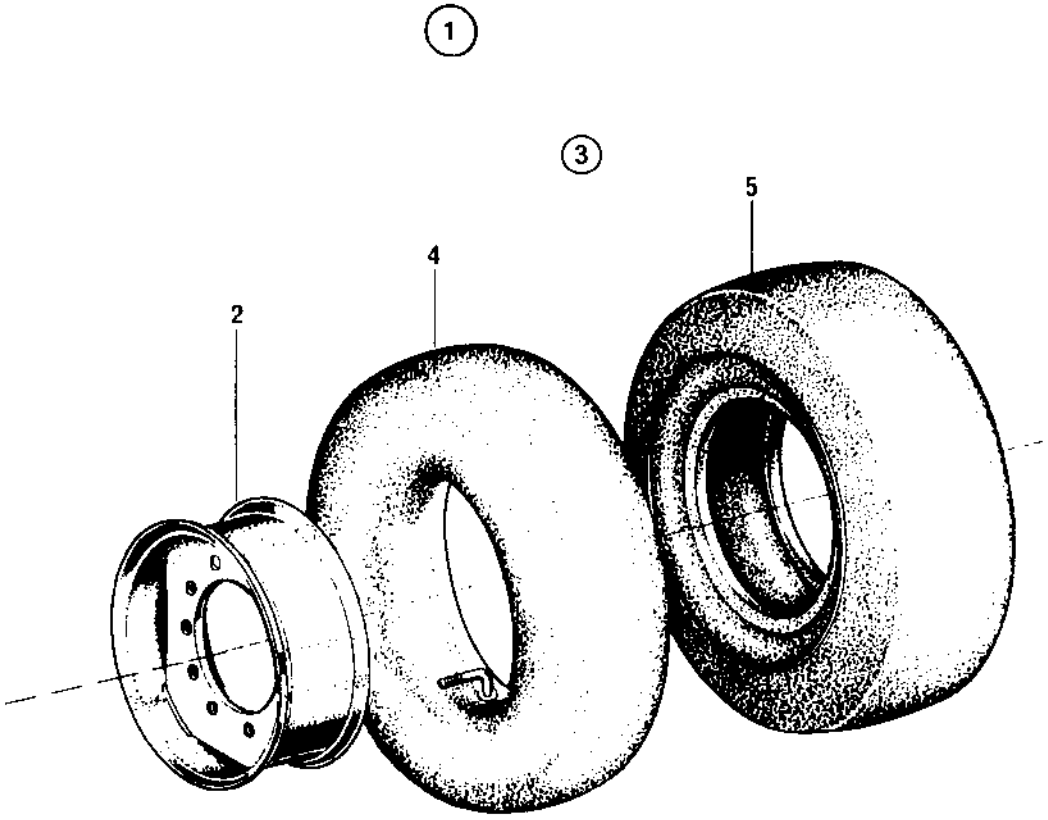

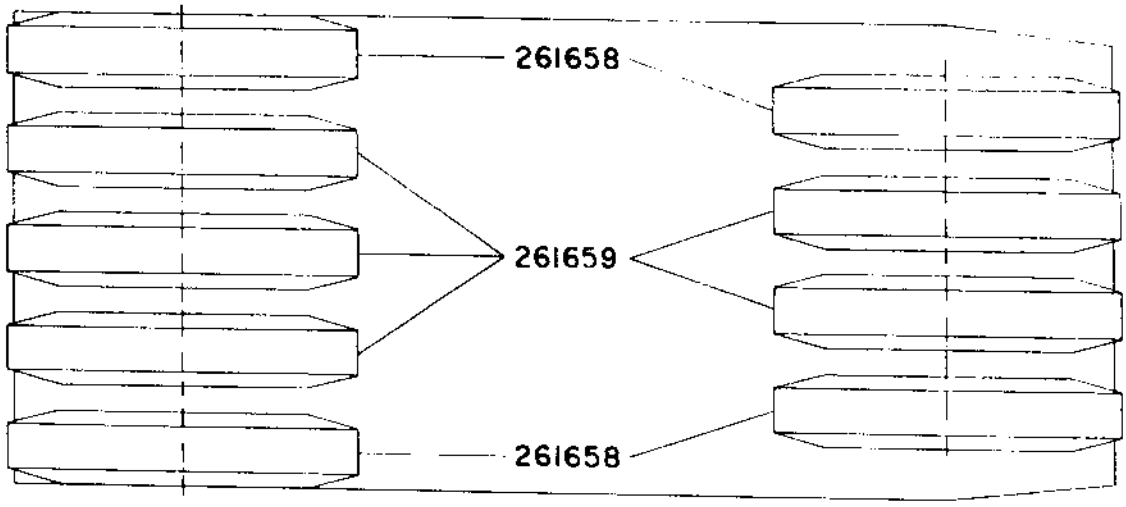

Wheel with Bridgestone tyre

Ref. No.	Part No.	Rem.	Qty	Description	Code
1	261659	D,E	5	Wheel, cpl	
	261658	D	4	Wheel, cpl	
2	259089	A	1	.Rim	
	250658	B	1	.Rim	
3	269482	D	1	.Inner tube and tyre	
4	195414		1	..Inner tube	
5	904763	C,D	1	..Tyre, smooth	B

A) Included in 261659
B) Included in 261658
C) Bridgestone
D) Attention: Don't mix different types of tyres on the same machine, cause the specifications are different and don't match.
E) Earlier used 261657 is replaced by 261659.

Wheel with Michelin tyre

17345

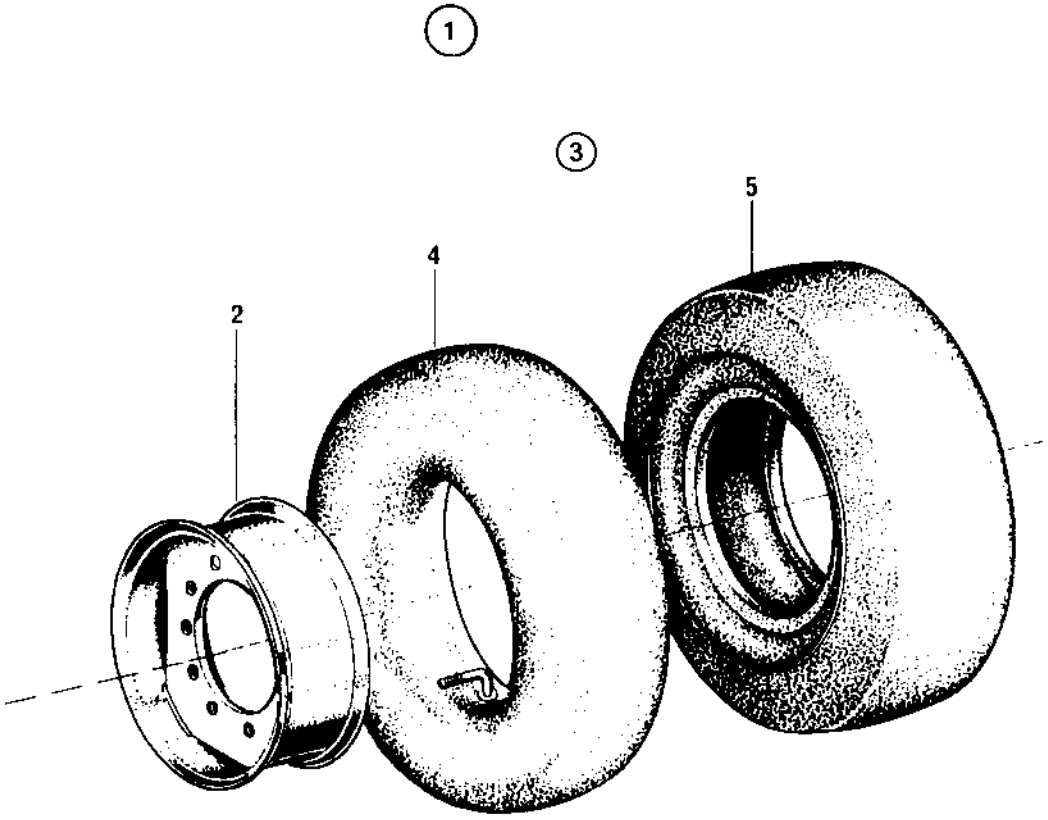

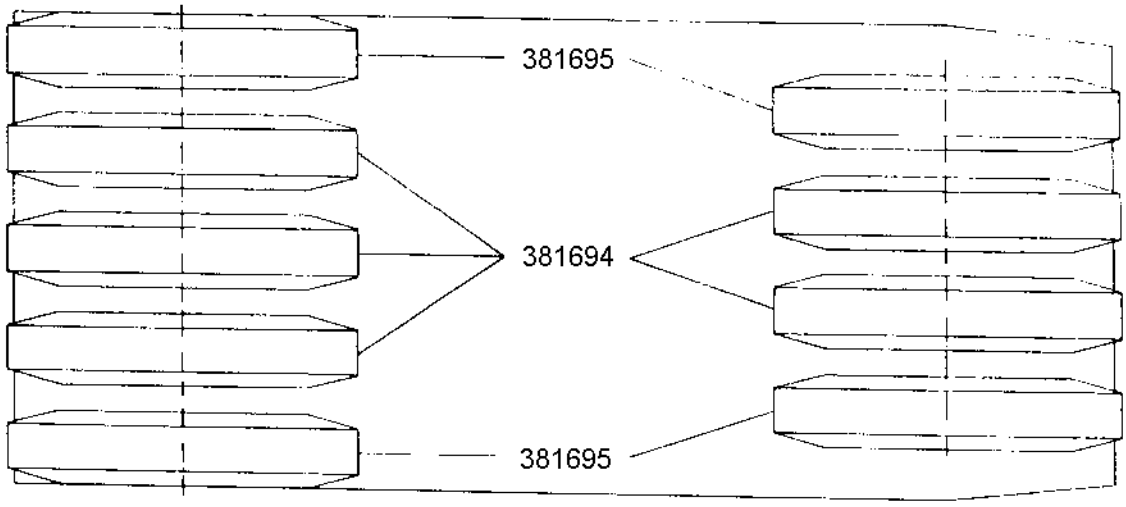

Wheel with Michelin tyre

Ref. No.	Part No.	Rem.	Qty	Description	Code
1	381694	D	5	Wheel, cpl	
	381695	D	4	Wheel, cpl	
2	259089	A	1	.Rim	
	250658	B	1	.Rim	
3	381620	D	1	.Inner tube and tyre	
4	195414		1	..Inner tube	
5	901317	C,D	1	..Tyre	B

A) Included in 381694
B) Included in 381695
C) Michelin
D) Attention: Don't mix different types of tyres on the same machine, cause the specifications are different and don't match.

Wheel with Firestone tyre

17763

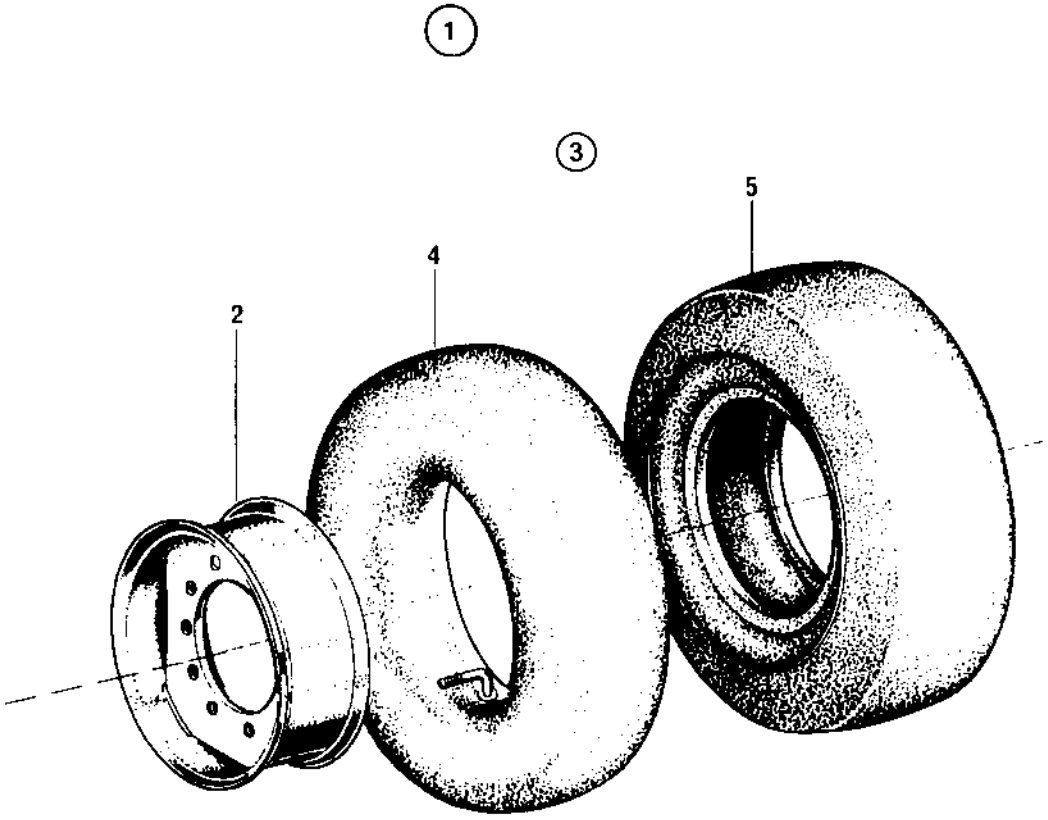

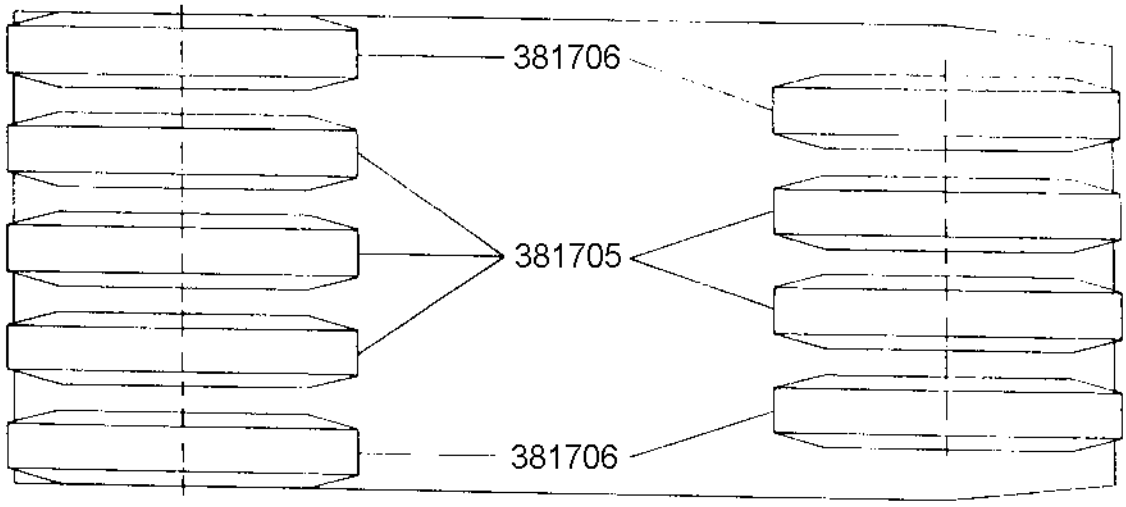

Wheel with Firestone tyre

Ref. No.	Part No.	Rem.	Qty	Description	Code
1	381705	D	5	Wheel, cpl	
	381706	D	4	Wheel, cpl	
2	259089	A	1	.Rim	
	250658	B	1	.Rim	
3	381704	D	1	.Inner tube and tyre	
4	195414		1	..Inner tube	
5	401048	C,D	1	..Tyre	B

A) Included in 381705
B) Included in 381706
C) Firestone
D) Attention: Don't mix different types of tyres on the same machine, cause the specifications are different and don't match.

Spare wheel Option

16430

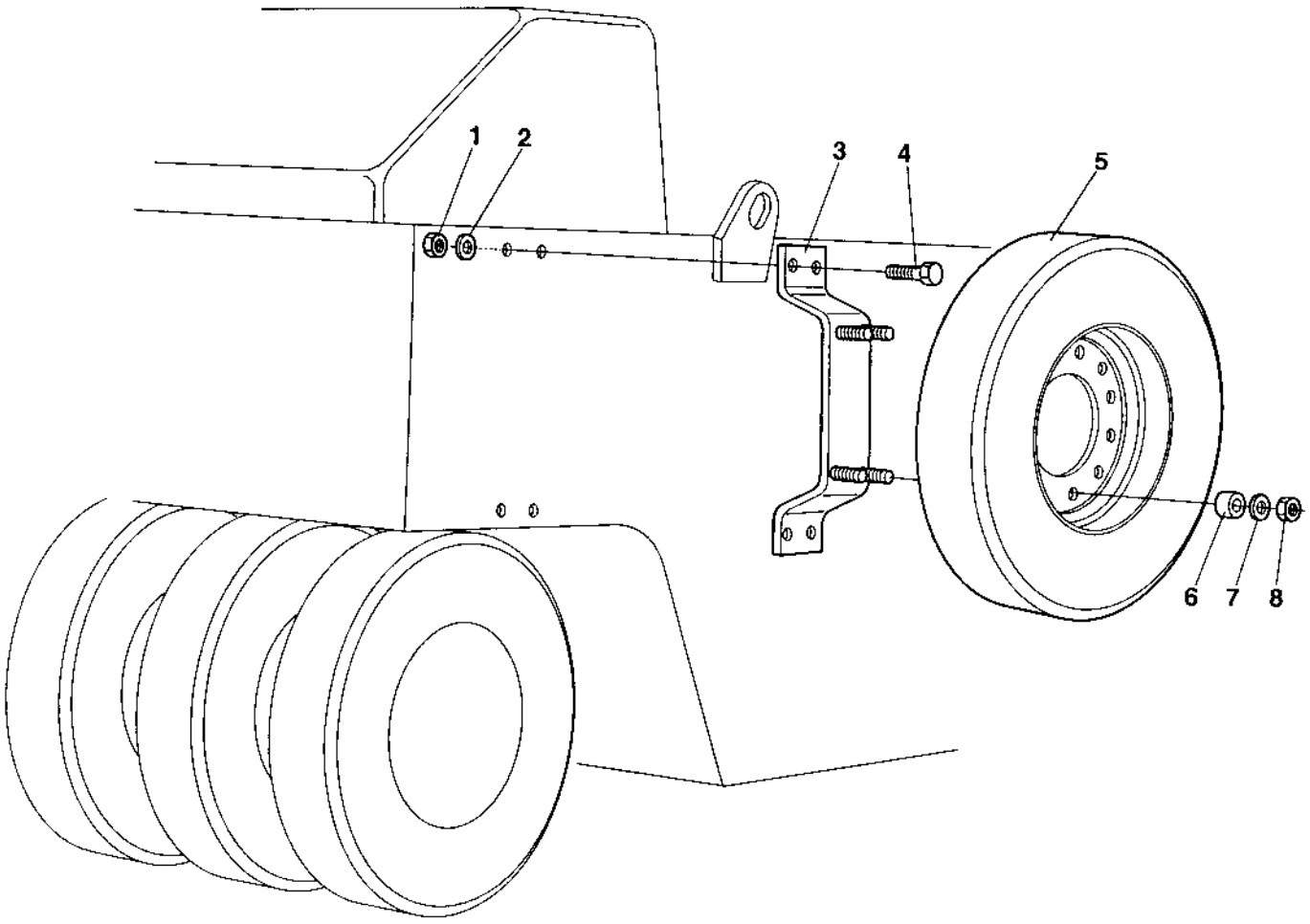

Spare wheel Option

Ref. No.	Part No.	Rem.	Qty	Description	Code
1	570015		4	Nut M20	
2	904233		8	Washer 21x36x3	
3	257028		1	Bracket	
4	500101		4	Screw M20x50	
5	261659	A,D	1	Wheel, cpl	
	381694	B,D	1	Wheel, cpl	
	381705	C,D	1	Wheel, cpl	
6	257029		4	Spacer	
7	902252		4	Washer	
8	754014		4	Nut	

A) Bridgestone
B) Michelin
C) Firestone
D) Attention: Don't mix different types of tyres on the same machine, cause the specifications are different and don't match.

Pneumatic circuit Diagram, Option

16243

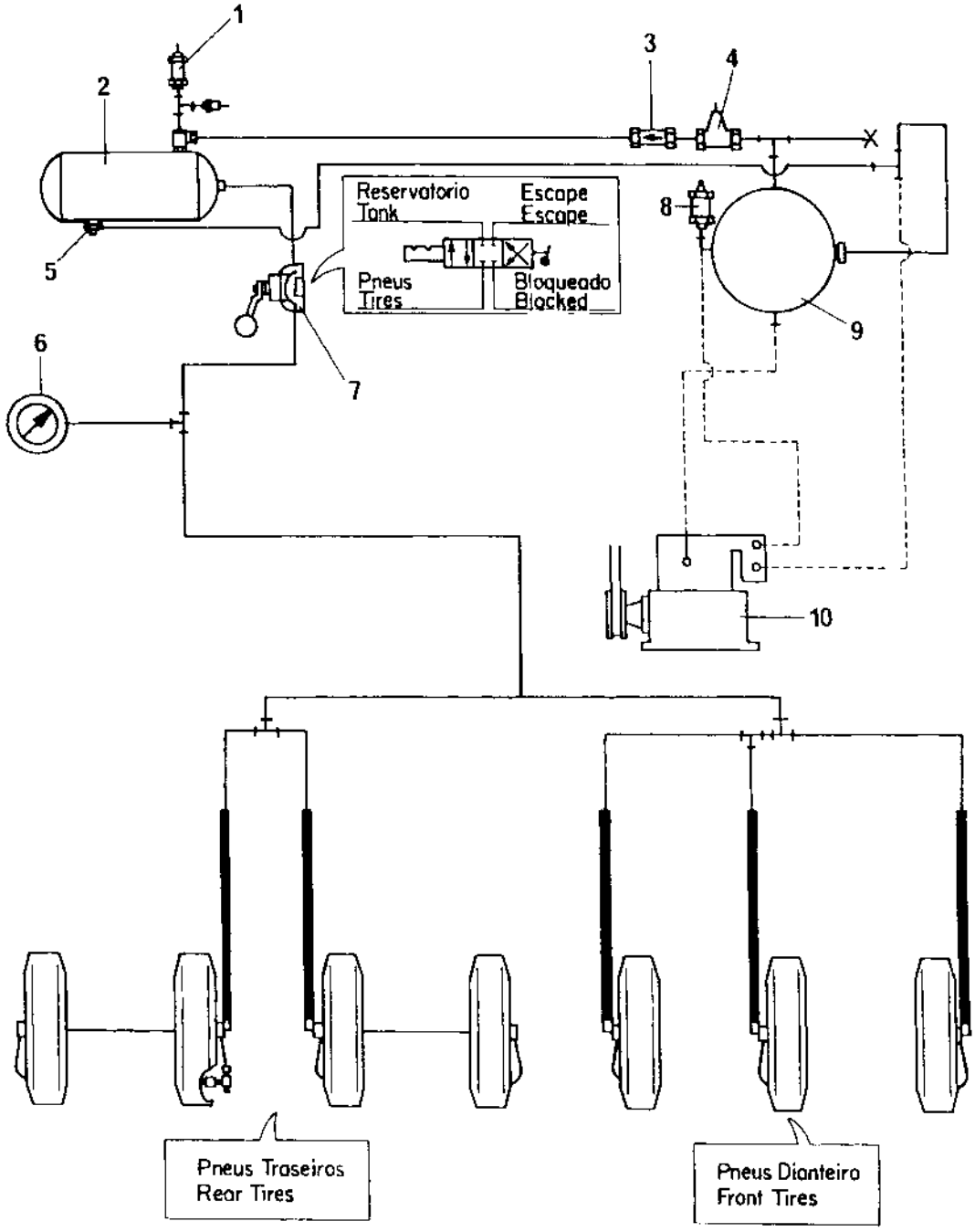

Pneumatic circuit Diagram, Option

Ref. No.	Part No.	Rem.	Qty	Description	Code
1	333062		1	Safety valve	D
2	255907		1	Air tank	
	384615	A	1	Air tank From 23620487	
3	333068		1	Valve	
4	912120		1	Check valve	D
5	333053		1	Drain valve	D
6	266221		1	Manometer	D
7	190886		1	Valve	
	374791		1	Directional valve	
8	333062		1	Safety valve	D
9			1	Air tank	D
10				Compressor, see another assembly	D

A) Replaces earlier 902139

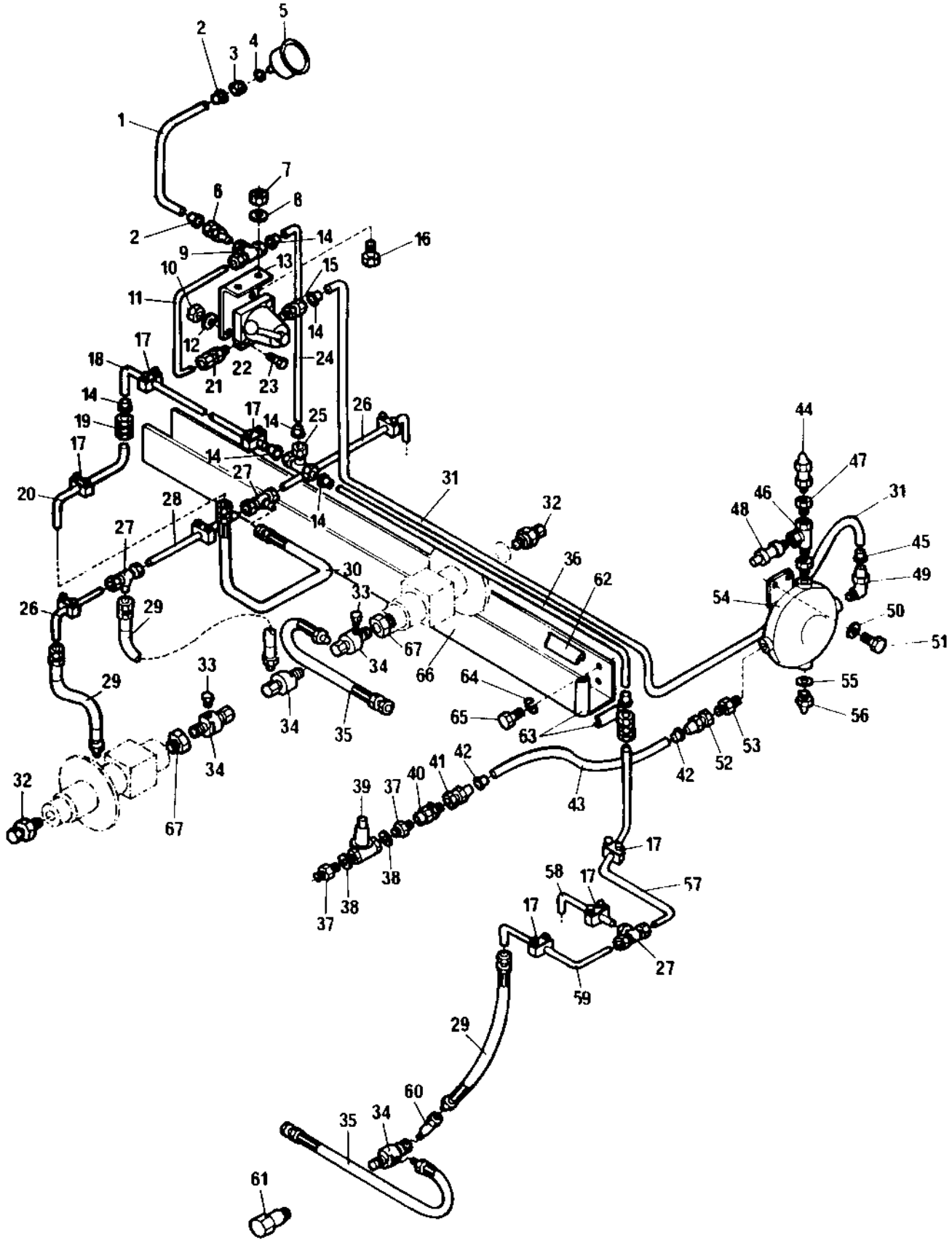

Air on the run -699B452, Option

Ref. No.	Part No.	Rem.	Qty	Description	Code
1	247154	A	1	Pipe	
2	920783		2	Insert	
3	231192		1	Nut	
4	231193		1	Sleeve	
5	266221		1	Manometer	D
6	330281		1	Adapter	
7	570005		2	Nut M8	
8	615043		2	Washer 8,4x18x2	
9	230055		1	Connection-T	
10	570004		2	Nut M6	
11	259250		1	Tube	
12	603001		4	Washer	
13	191941		1	Bracket	
14	920784		10	Insert	
15	920790		1	Nipple	
16	500053		2	Screw M8-1,25x20 8,8	
17	258268		8	Clamp	
18	247151	B	1	Pipe 3/8"	
19	230322		2	Connection	
20				Not used on this model	
21	330298		1	Connection	
22	190886		1	Valve	
23	500015		2	Screw M6-1x30 8,8	
24	247151	C	1	Pipe 3/8"	
25	920797		1	Brake connection	
26	256922		2	Tube	
27	230524		2	Connection-T	
28	256923		1	Tube	
29	257987		5	Hose	
30	257988		1	Hose	
31	247152		1	Tube	D
32	257198		2	Rotating nipple	
33	232077		2	Plug	
34	334479		5	Rotating nipple	
35	191927		9	Hose	
36	247151	B	1	Pipe 3/8"	
37	240264		2	Adapter	
38	330333		2	Copper washer	D
39	333067		1	Valve	D
40	912120		1	Check valve	D
41	268920		1	Adapter	
42	920786		2	Insert	
43	247153	D	1	Tube	
44	333062		1	Safety valve	D
45	920785		1	Insert	
46	928839		1	Tee-connector	
47	813465		2	Reducing	
48	401106		1	Filler pipe	
49	191921		1	Elbow	
50	603019		2	Washer	
51	500021		2	Screw M8-1,25x25 8,8	
52	268920		1	Adapter	
53	813722		1	Nipple	
54	192340		1	Air tank	
55	330333		1	Copper washer	D
56	333053		1	Drain valve	D

A) L=260 mm
B) L=3600 mm
C) L=550 mm
D) L=1400 mm

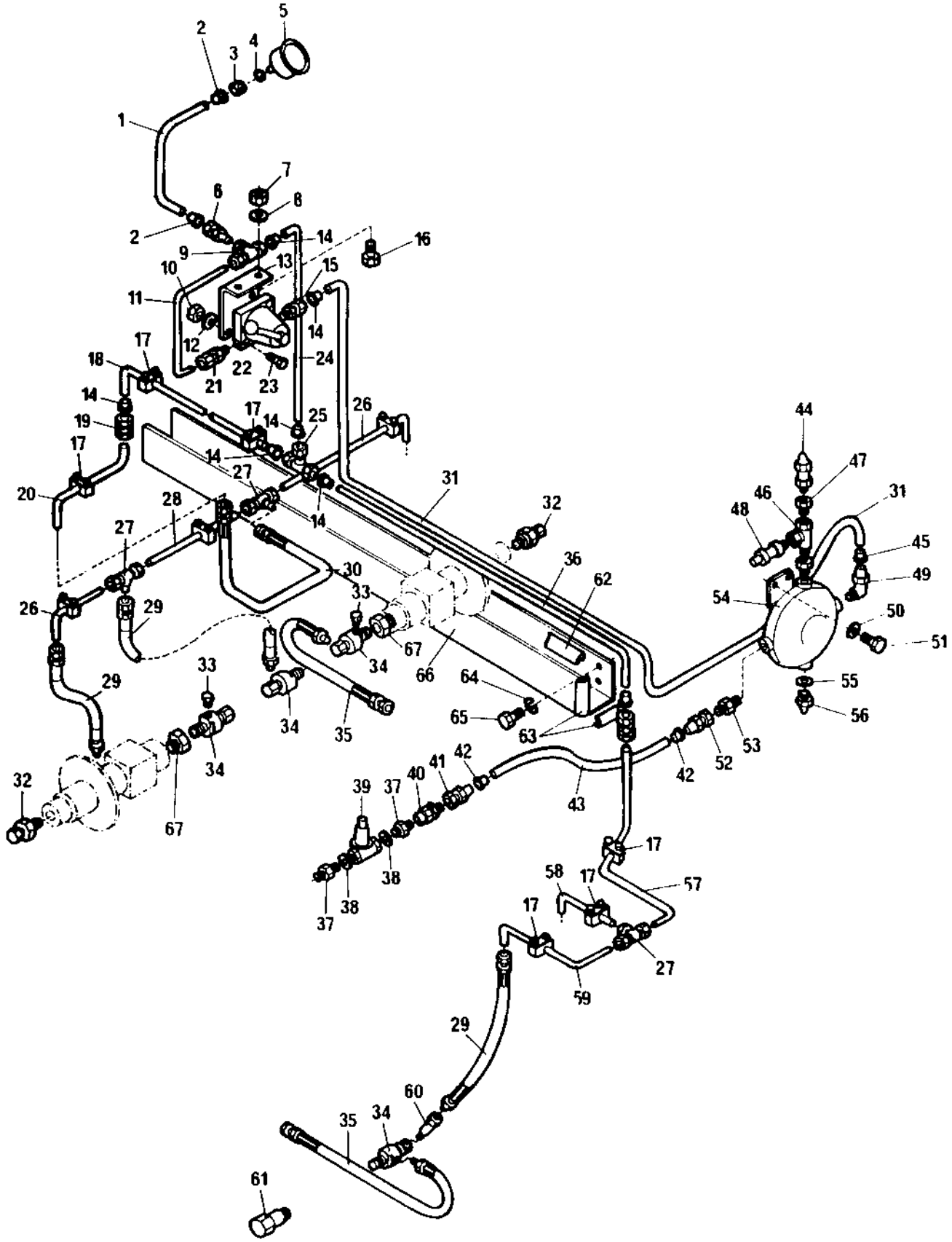

Air on the run -699B452, Option

Ref. No.	Part No.	Rem.	Qty	Description	Code
57	259564		1	Tube	
58	257162		1	Tube	
59	257167		1	Tube	
60	254086		2	Connector	
61	257985		2	Connector	
62	202028	E	1	Edge trim	
63	202028		4	Edge trim	
64	615042		8	Conical spring washer	
65	500012		8	Screw M6x12	
66	191888		1	Channel	
67	234918		2	Reducing nipple	

E) L=2600 mm

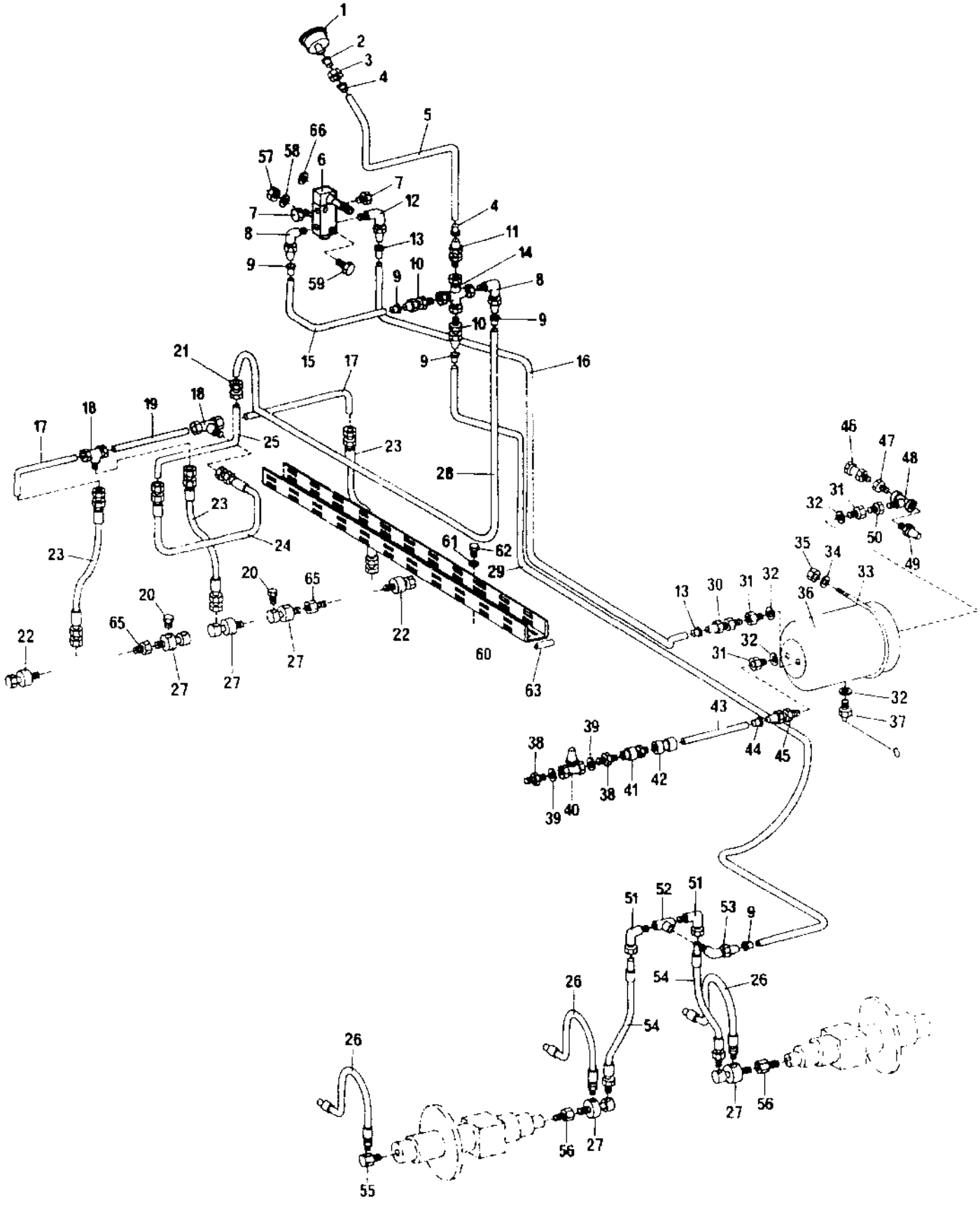

Air on the run 699B453- , Option

Ref. No.	Part No.	Rem.	Qty	Description	Code
1	266221		1	Manometer	D
2	231193		1	Sleeve	
	230520		1	Locking sleeve R6	
3	231192		1	Nut	
	904627		1	Nut M6	
4	920783		2	Insert	
5	247154	A	1	Pipe	
6	194362		1	Valve Up to 23620270	
	374791		1	Directional valve From 23620271	
7	232078		2	Plug	
8	920794		3	Nipple	
9	920784		6	Insert	
10	192804		1	Connection	
11	920787		1	Pipe connection	
12	920789		1	Brake connection	
13	920785		2	Insert	
14	192803		1	Connection	
15	247151	B	1	Pipe 3/8"	
16	247152	C	1	Tube	D
17	256922		2	Tube	
18	230524		2	Connection-T	
19	256923		1	Tube	
20	332127		2	Plug	
21	230322		1	Connection	
22	257198		2	Rotating nipple	
23	257987		3	Hose	
24	257988		1	Hose	
25	192245		1	Tube	
26	191927		9	Hose	
27	195172		5	Rotor	
28	247151	D	1	Pipe 3/8"	
29	247151	E	1	Pipe 3/8"	
30	900524		1	Brake connection	
31	234729		3	Reducing nipple	
32	330333		4	Copper washer	D
33	194366		2	Clamp	
34	904230		4	Washer 10,5x22x2	
35	570006		4	Nut M10	
36	384615	L	1	Air tank From 23620487	
37	333053		1	Drain valve	D
38	240264		2	Adapter	
39	330333		2	Copper washer	D
40	333067		1	Valve	D
41	912120		1	Check valve	D
42	268920		1	Adapter	
43	247153	F	1	Tube	
44	920786		2	Insert	
45	194363		1	Nipple	
46	333062		1	Safety valve	D
47	813465		1	Reducing	

A) L=570 mm
B) L=500 mm
C) L=3400 mm
D) L=1800 mm
E) L=3250 mm
F) L=700 mm
L) Replaces earlier 902139

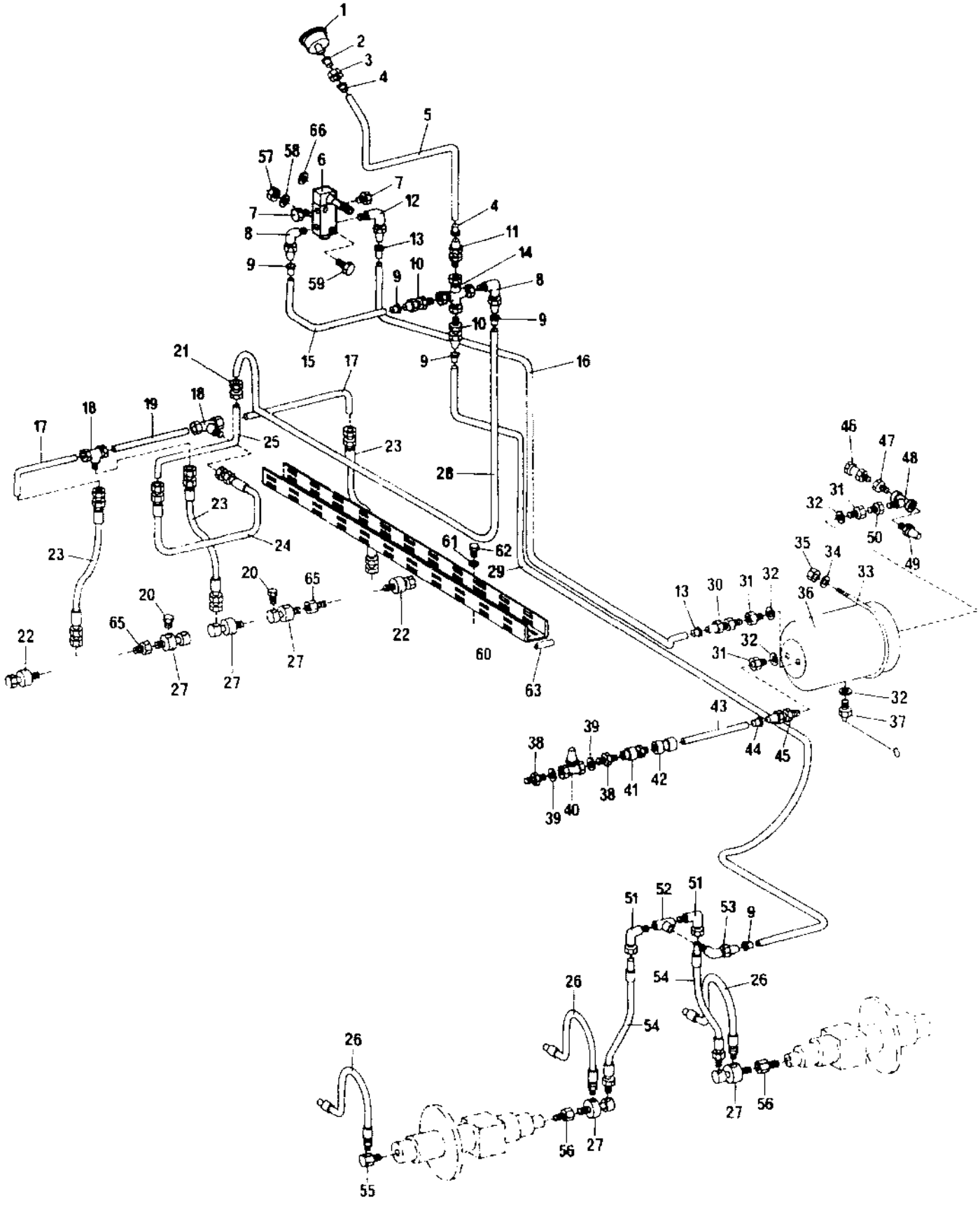

Ref. No.	Part No.	Rem.	Qty	Description	Code
48	235007		1	Tee-connector	
49	401106		1	Filler pipe	
50	334603		2	Bushing	
51	194365		2	Connection 90deg	
52	814262		1	Tee-connector	
53	920794		1	Nipple	
54	194367		2	Hose	
55	257985		2	Connector	
56	254086		2	Connector	
57	570004		2	Nut M6 Up to 23620270	
	570003		2	Nut M5 From 23620271	
58	615041		2	Washer 5,3x11	
59	500008		2	Screw M5-0,8x30 8,8 Up to 23620270	
	508099		2	Screw From 23620271	
60	191888	J	1	Channel	
	380251	K	1	Channel	
61	904735		8	Washer Up to 23620270	
	904281		2	Washer 5,3x10x1 From 23620271	
62	500012		8	Screw M6x12	
63	202028	G		Edge trim	
65	813465		2	Reducing	
66	904281	I	4	Washer 5,3x10x1	

G) L=400 mm
I) Inside panel
J) Width=70 mm
K) Width=100 mm

Diagram brake circuit -699B452

16246

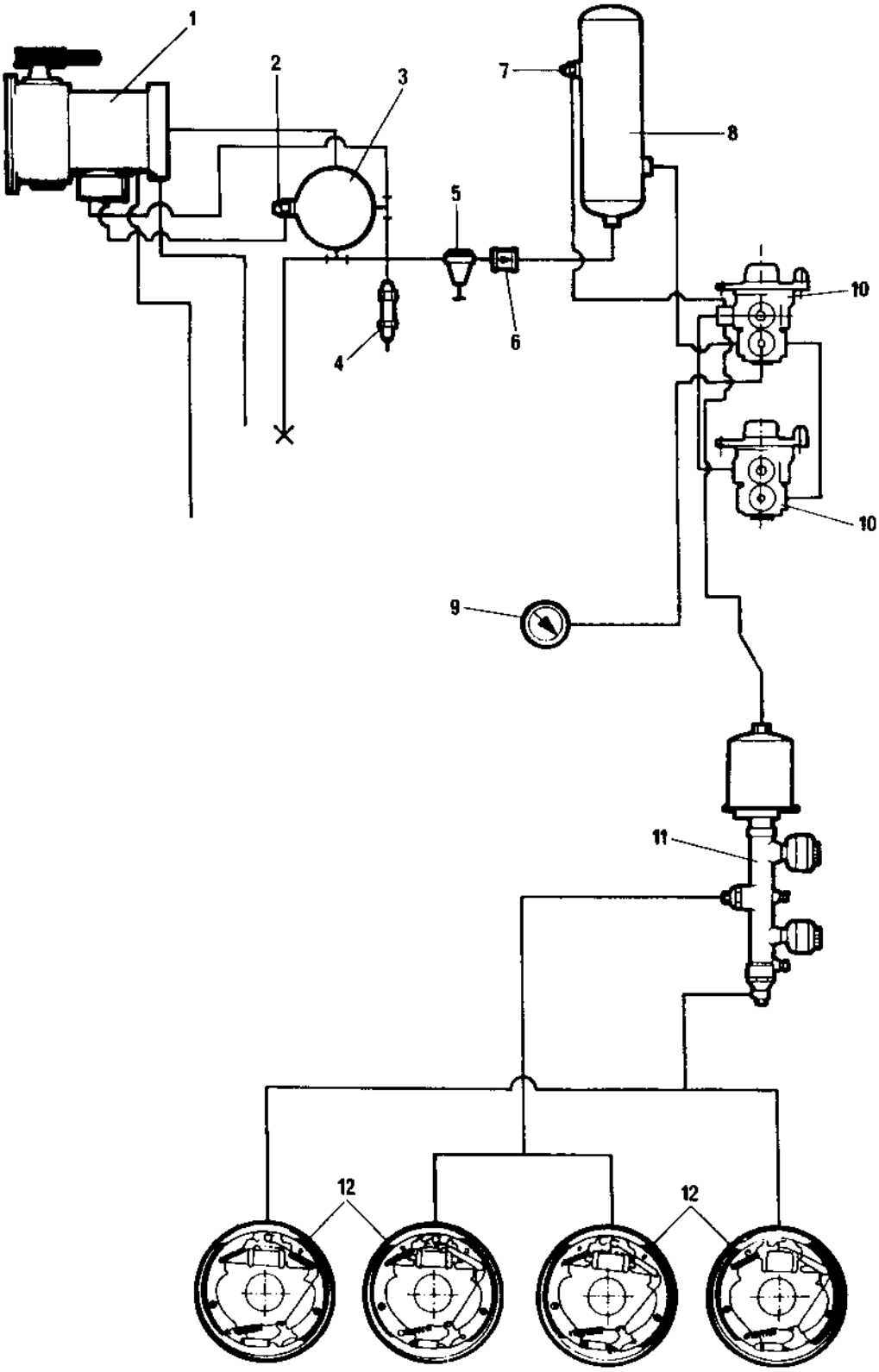

Diagram brake circuit -699B452

Ref. No.	Part No.	Rem.	Qty	Description	Code
1				Compressor, see another assembly	
2	269137		1	Drain valve	D
3	192340		1	Air tank	
4	333062		1	Safety valve	D
5	243875		1	Manometer	
6	912120		1	Check valve	D
7	269137		1	Drain valve	D
8	255907		1	Air tank	
9	266221		1	Manometer	D
10	192002		2	Brake valve	
11			1	Master cylinder, see another assembly	
12			4	Wheel, see another assembly	

Diagram brake circuit 699B453-16292

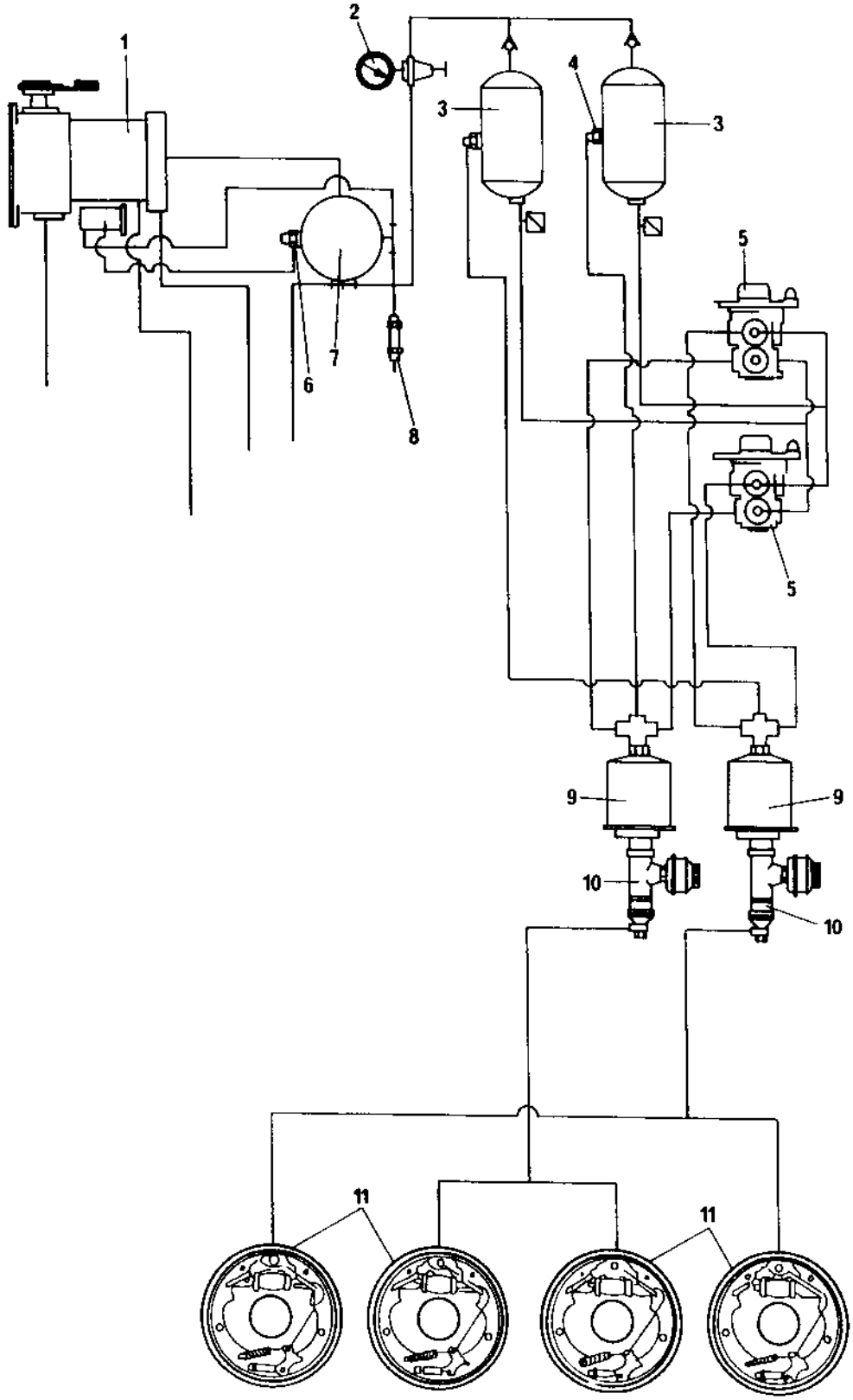

Diagram brake circuit 699B453-

Ref. No.	Part No.	Rem.	Qty	Description	Code
1				Compressor, see another assembly	
2	194410		1	Pressure relief valve, cpl	
	197901		1	.Gauge	
3	384614	A	2	Air tank From 23620487	
4	269137		2	Drain valve	D
5	191533		2	Brake valve, Varga (Page 64)	
6	269137		1	Drain valve	D
7	384615	B	1	Air tank From 23620487	
8	333062		1	Safety valve	D
9	194402		2	Brake chamber (Page 80)	
10	194401		2	Brake master cylinder	
11			4	Wheel, see another assembly	

A) Replaces earlier 194237
B) Replaces earlier 902139

191533 Brake valve, Varga

16267

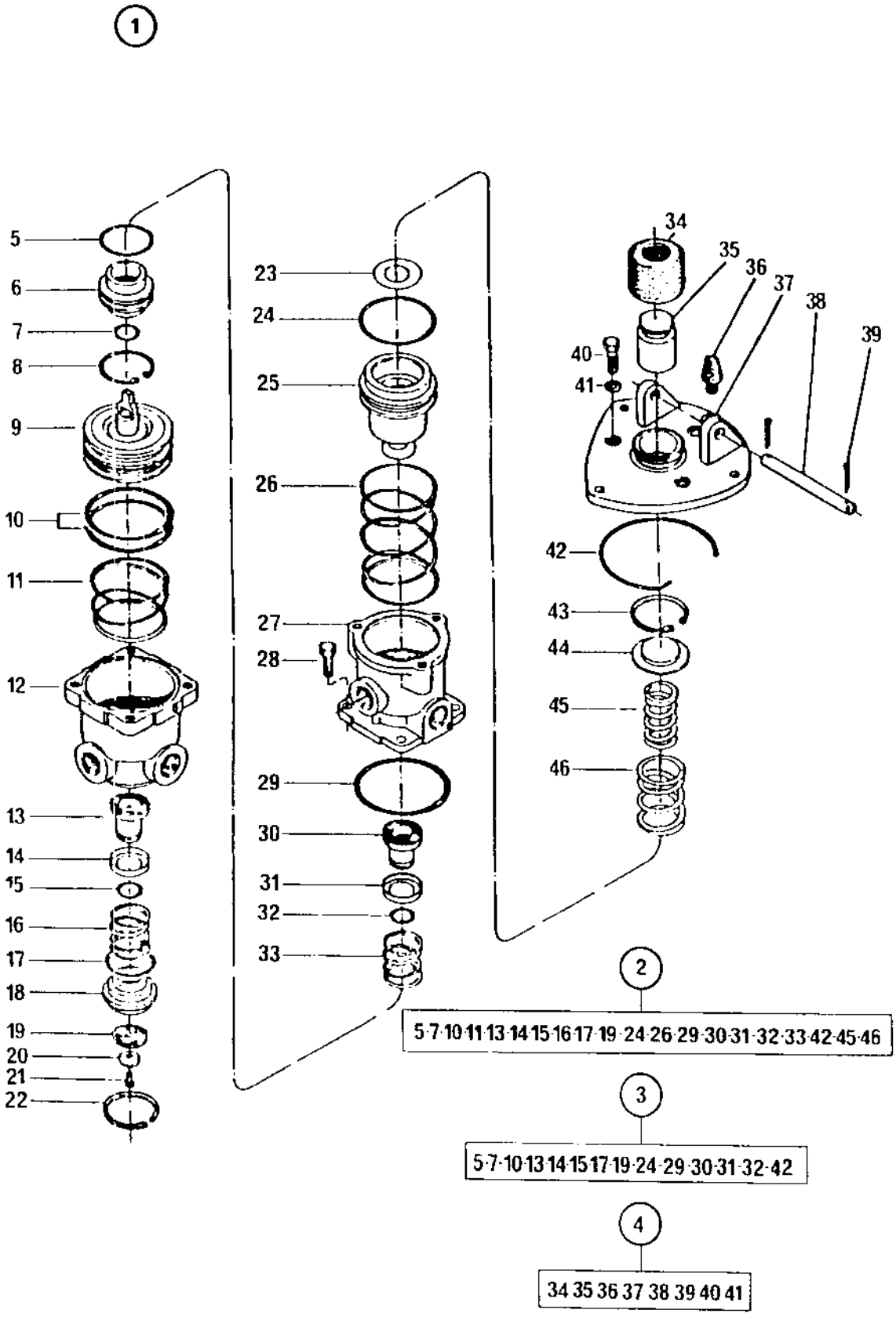

191533 Brake valve, Varga

Ref. No.	Part No.	Rem.	Qty	Description	Code
1			1	Brake valve, Varga	
2	192833		1	.Reversing valve	C
3	192824		1	.Repair kit	
4	192825		1	.Pedal repair kit	
5			1	.Seal ring	
6			1	.Valve guide	
7			1	.Seal ring	
8			1	.Retaining ring	
9			1	.Piston	
10			2	.Seal ring	
11			1	.Spring	
12			1	.Lower body	
13			1	.Valve	
14			1	.Seal ring	
15			1	.Seal ring	
16			1	.Spring	
17			1	.Seal ring	
18			1	.Guide valve	
19			1	.Diaphragm	
20	192284		1	.Lock washer	
21			1	.Screw	
22			1	.Retaining ring	
23			1	.Washer	
24			1	.Seal ring	
25			1	.Piston	
26			1	.Spring	
27			1	.Upper body	
28			4	.Screw	
29			1	.Seal ring	
30			1	.Valve	
31			1	.Seal ring	
32			1	.Seal ring	
33			1	.Spring	
34			1	.Scoop	
35			1	.Piston	
36			1	.Pedal stop	
37			1	.Bracket	
38			1	.Pin	
39			2	.Cotter pin	
40			1	.Screw	
41			2	.Washer	
42			1	.Retaining ring	
43			1	.Retaining ring	
44			1	.Seal ring	
45			1	.Spring	
46			1	.Spring	

Brake circuit -699B452

16314-2

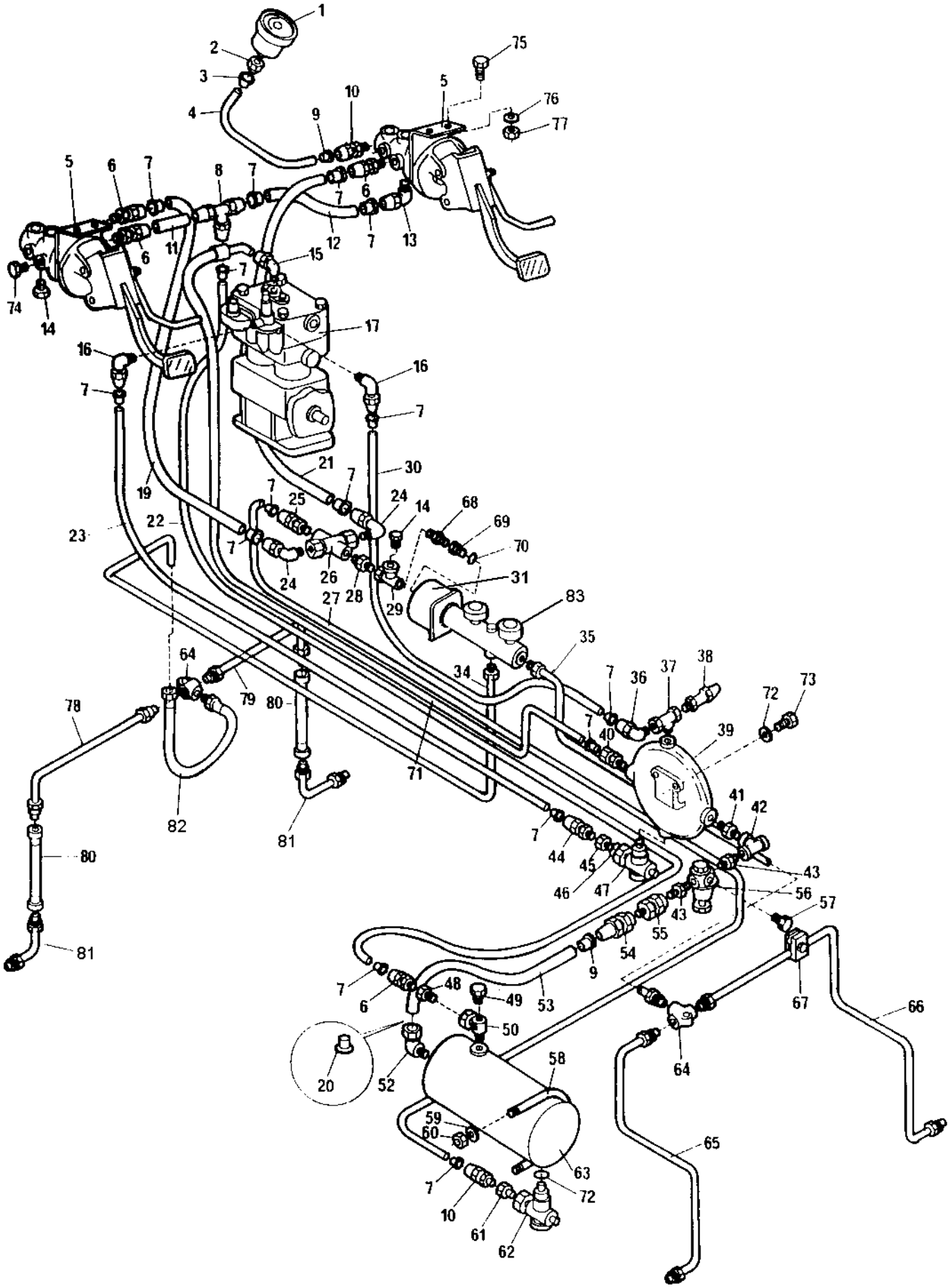

Ref. No.	Part No.	Rem.	Qty	Description	Code
1	266221		1	Manometer	D
2	231192		1	Nut	
3	231193		1	Sleeve	
4	247152	A	1	Tube	D
5			2	Pedal assembly	D
6	900524		3	Brake connection	
7	920785		12	Insert	
8	920817		1	Brake connection	
9	920783		12	Insert	
10	920787		2	Pipe connection	
11	247152	B	1	Tube	D
12	247152	C	1	Tube	D
13	191921		1	Elbow	
14	192343		10	Plug	
15	191921		1	Elbow	
16	249608		2	Adapter 90deg	
17				Compressor, see another assembly	
18	240149		1	Hydraulic hose	
19	247152	D	1	Tube	D
20	920786		2	Insert	
21	247152	E	1	Tube	D
22	247152	F	1	Tube	D
23	247154	G	1	Pipe	
24	920795		2	Brake connection	
25	920792		1	Brake connection	
26	191940		1	Valve	
27	247154	G	1	Pipe	
28	334394		1	Adapter	
29	249427		1	Tee-connector	
30	247154	H	1	Pipe	
31	243610		1	Brake chamber (Page 70)	
34	192006		1	Brake line	
35	192005		1	Brake line	
36	920792		1	Brake connection	
37	235007		1	Tee-connector	
38	333062		1	Safety valve	D
39	192340		1	Air tank	
40	191921		1	Elbow	
41	813722		1	Nipple	
42	814262		1	Tee-connector	
43	234317		2	Nipple	
44	920787		1	Pipe connection	
45	249872		1	Reducing adapter	
46	330333		1	Copper washer	D
47	269137		1	Drain valve	D
48	190904		1	Adapter	
49	232077		1	Plug	
50	192348		1	Connection	
51	401106		1	Filler pipe	
52	191926		1	Elbow	
53	247153	I	1	Tube	
54	268920		1	Adapter	

A) L=1000 mm
B) L=700 mm
C) L=850 mm
D) L=800 mm
E) L=1200 mm
F) L=1300 mm
G) L=3000 mm
H) L=3100 mm
I) L=400 mm

Brake circuit -699B452

16314-2

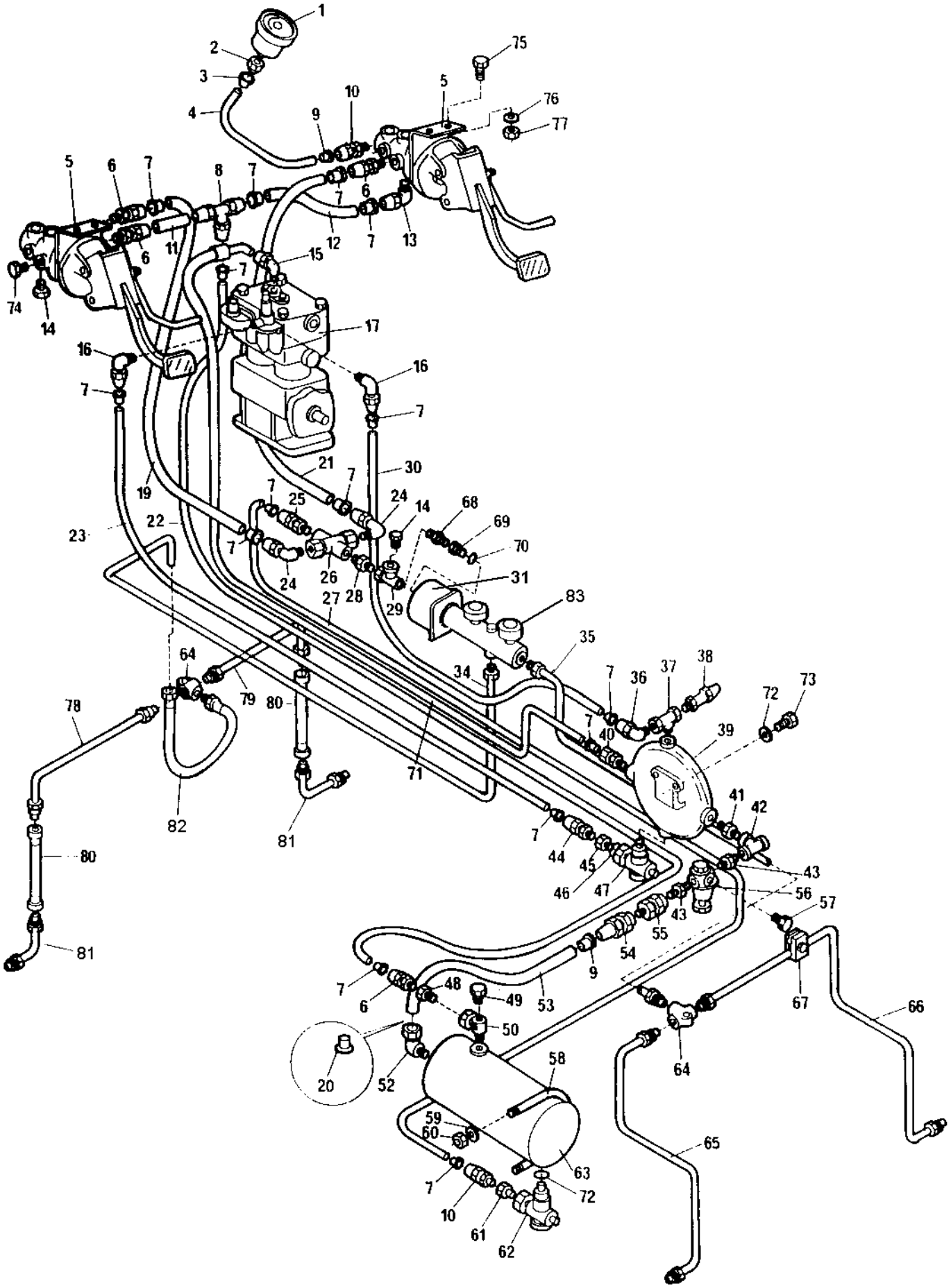

Ref. No.	Part No.	Rem.	Qty	Description	Code
55	912120		1	Check valve	D
56	243875		1	Manometer	
57	232078		1	Plug	
58	251911		2	Clamp	
59	615044		4	Conical spring washer	D
60	571003		4	Nut UNC 3/8 - 16	
61	249872		1	Reducing adapter	
62	269137		1	Drain valve	D
63	255907		1	Air tank	
64	745072		2	Tee-connector	
65	192034		1	Brake line	
66	192033		1	Brake line	
67	258015		4	Clamp	
68	813438		1	Nipple	
69	234729		1	Reducing nipple	
70	330333		2	Copper washer	D
71	193601		1	Hose	
72	603019		2	Washer	
73	500021		2	Screw M8-1,25x25 8,8	
74	192341		2	Plug	
75	500029		4	Screw M10-1,5x30 8,8	
76	615044		4	Conical spring washer	D
77	570006		8	Nut M10	
78	255039		1	Brake line	
79	256753		1	Brake line	
80	256926		2	Brake hose	
81	256925		2	Brake line	
82	262054		1	Brake hose	
83	415209		1	Master cylinder (Page 72)	

243610 Brake chamber

16251-1

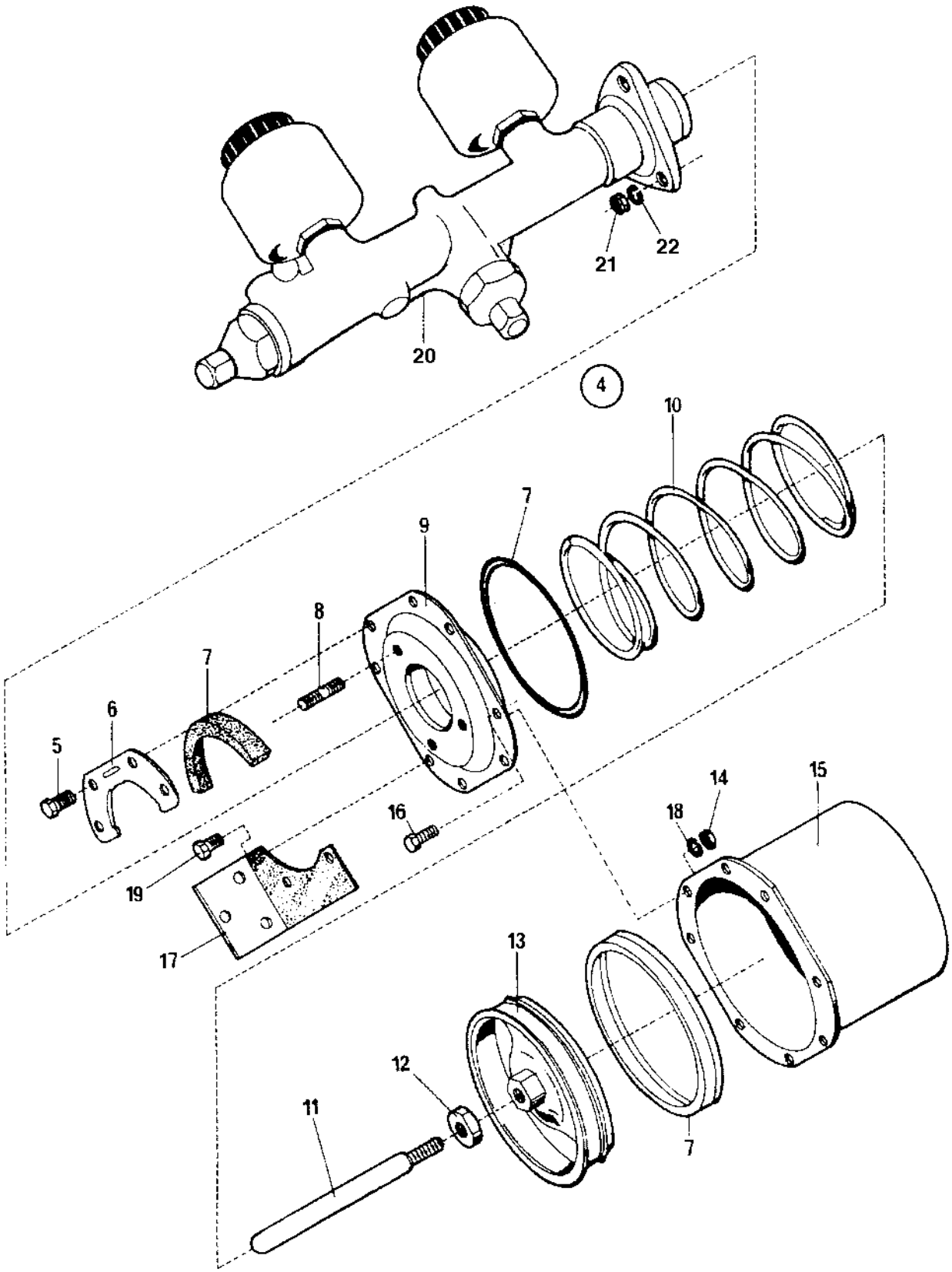

243610 Brake chamber

Ref. No.	Part No.	Rem.	Qty	Description	Code
4			1	Brake chamber	
5	500021		4	.Screw M8-1,25x25 8,8	
6	415279		1	.Protecting plate	
7	926871		1	.Repair set	
8	415285		3	.Stud	
9	415282		1	.Cylinder cover	
10	268964018		1	.Spring	
11	415283		1	.Piston rod	
12	268964019		1	.Nut	
13	415281		1	.Piston	
14	570005		8	.Nut M8	
15	415278		1	.Roller	
16	500019		1	Screw M8-1,25x16 8,8	
17	243886		1	Support	
18	604005		3	Spring washer	
19	500022		3	Screw M8-1,25x30 8,8	
20	415209		1	Master cylinder (Page 72)	
21	570006		3	Nut M10	
22	604006		3	Washer	

415209 Master cylinder

16252

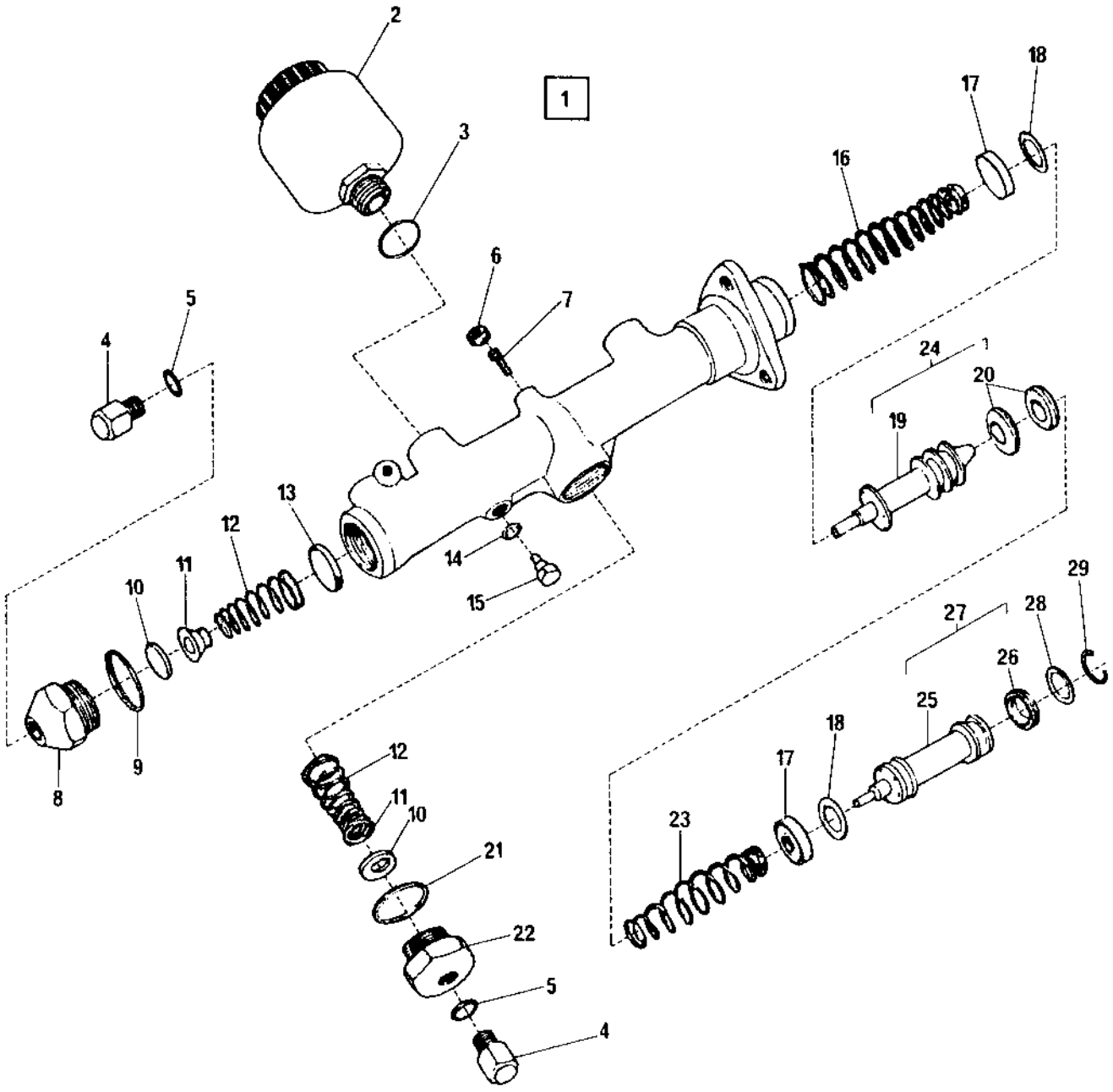

31
6-10-11-12-16-17-18-21-23-24-27

30
6-10-11-17-18-21-24-27

32
6-10-11-17-18-20-21-26

415209 Master cylinder

Ref. No.	Part No.	Rem.	Qty	Description	Code
1				Master cylinder, cpl	
2	415277		2	.Oil tank	
3	330333		2	.Copper washer	D
4	415320		2	.Nipple	
5	747282		3	.Copper washer 14x20x1,5	
6			2	.Screw protection	
7			2	.Screw	
8			1	.Plug	
9			1	.Seal ring	
10			2	.Valve seat	
11			2	.Retaining valve	
12			2	.Valve spring	
13			1	.Spring stop	
14			1	.Washer	
15			1	.Screw	
16			1	.Spring	
17			2	.Rubber pad	
18			2	.Washer	
19			1	.Secondary piston	
20			2	.Rubber pad	
21			1	.Seal ring	
22			1	.Plug	
23			1	.Spring	
24			1	.Piston	
25			1	.Primary piston	
26			1	.Rubber pad	
27			1	.Primary piston	
28			1	.Washer	
29			1	.Snap ring	
30	926964		1	Repair kit	
31	923226		1	Repair kit	
32	243280		1	Repair kit	

Brake circuit -23620279 and 283-286+288-289

16319-1

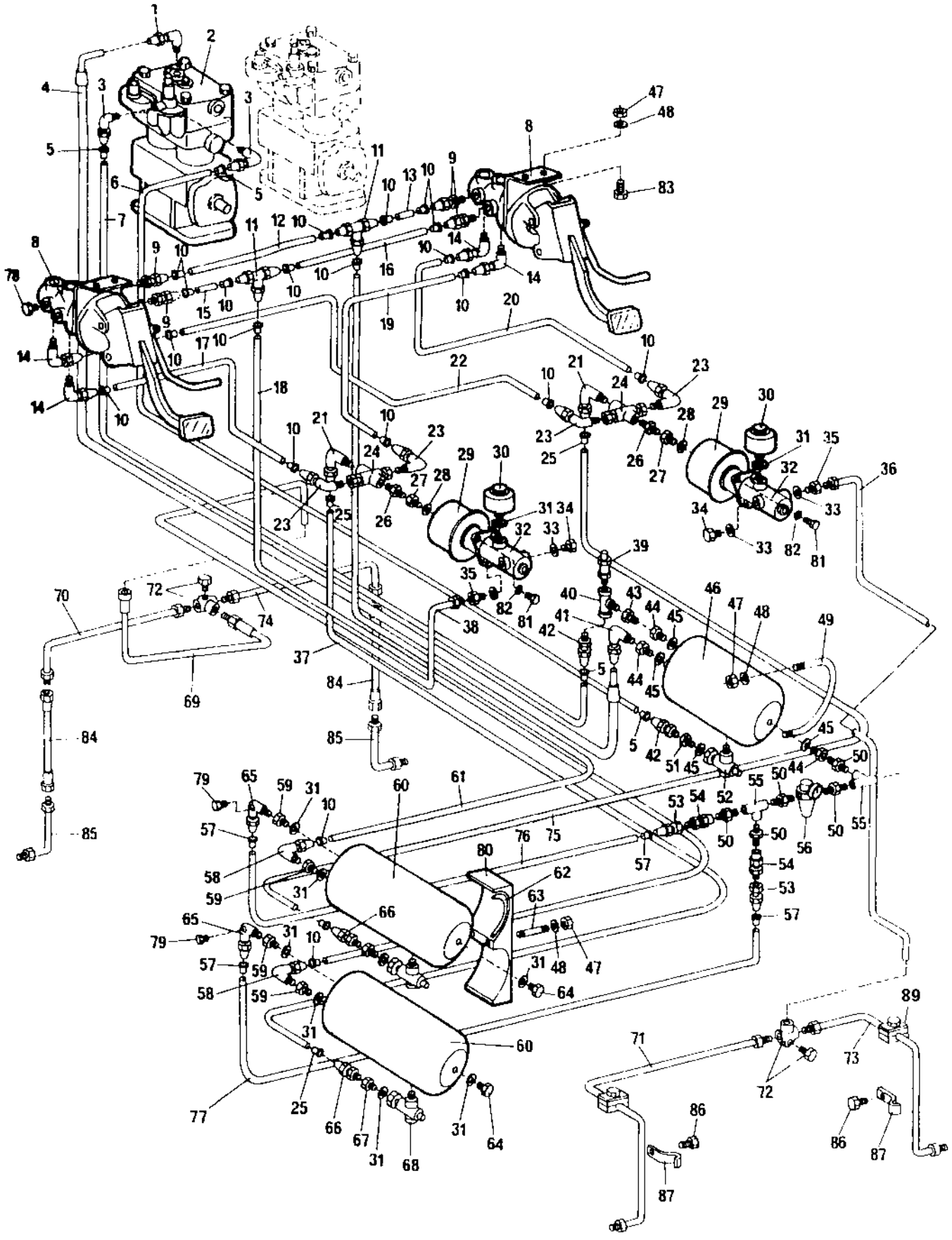

Brake circuit -23620279 and 283-286+288-289

Ref. No.	Part No.	Rem.	Qty	Description	Code
1	191921		1	Elbow	
2				Compressor, see another assembly	
3	249608		2	Adapter 90deg	
4	193601		1	Hose	
5	920783		2	Insert	
6	247154	A	1	Pipe	
7	247154	B	1	Pipe	
8	194233		2	Brake pedal	
9	920790		4	Nipple	
10	920785		20	Insert	
11	920817		2	Brake connection	
12	247152	C	1	Tube	D
13	247152	D	1	Tube	D
14	268964022		4	Adapter 90deg	
15	247152	E	1	Tube	D
16	247152	F	1	Tube	D
17	247152	G	1	Tube	D
18	247152	H	1	Tube	D
19	247152	I	1	Tube	D
20	247152	J	1	Tube	D
21	920792		2	Brake connection	
22	247152	K	1	Tube	D
23	920795		4	Brake connection	
24	191940		2	Valve	
25	920783		6	Insert	
26	234257		2	Nipple	
27	190901		2	Adapter	
28	330330		2	Washer	
29	194402		2	Brake chamber (Page 80)	
30	415277		2	Oil tank	
31	330333		10	Copper washer	D
32	194401		1	Brake master cylinder	
33	330328		4	Washer 10x14x1	
34	194408		2	Plug	
35	194407		1	Connection	
36	194292		1	Brake line	
37	247154	L	1	Pipe	
38	194291		1	Brake line	
39	333062		1	Safety valve	D
40	235007		1	Tee-connector	
41	191921		1	Elbow	
42	920787		2	Pipe connection	

A) L=3250 mm
B) L=3300 mm
C) L=400 mm
D) L=950 mm
E) L=340 mm
F) L=1100 mm
G) L=870 mm
H) L=3500 mm
I) L=1760 mm
J) L=800 mm
K) L=1350 mm
L) L=2900 mm

Brake circuit -23620279 and 283-286+288-289

16319-1

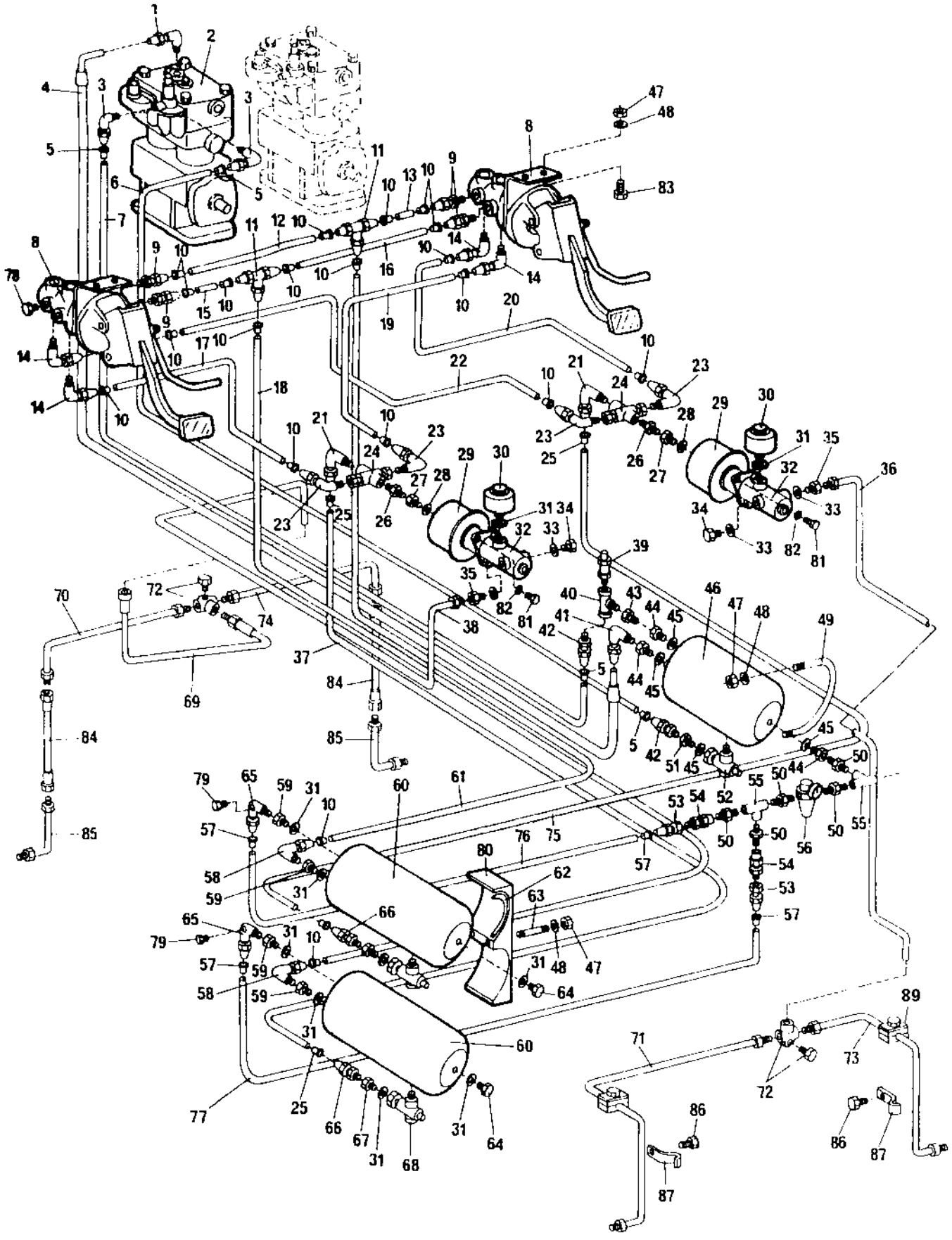

Brake circuit -23620279 and 283-286+288-289

Ref. No.	Part No.	Rem.	Qty	Description	Code
43	334603		1	Bushing	
44	234729		3	Reducing nipple	
45	330333		4	Copper washer	D
46	384615	R	1	Air tank From 23620487	
47	570006		14	Nut M10	
48	615044		14	Conical spring washer	D
49	194366		2	Clamp	
50	813722		5	Nipple	
51	249872		1	Reducing adapter	
52	269137		1	Drain valve	D
53	268920		2	Adapter	
54	912120		2	Check valve	D
55	814262		2	Tee-connector	
56	194410		1	Pressure relief valve, cpl	
	197901		1	.Gauge	
57	920786		4	Insert	
58	191921		2	Elbow	
59	234729		4	Reducing nipple	
60	384614	S	2	Air tank From 23620487	
61	247152	M	1	Tube	D
62	202028	N	4	Edge trim	
63	194372		2	Stud	
64	232052		2	Plug	D
65	194213		2	Elbow	
66	920787		2	Pipe connection	
67	249872		2	Reducing adapter	
68	269137		2	Drain valve	D
69	262054		1	Brake hose	
70	255039		1	Brake line	
71	194664		1	Brake line, left	
72	750072		2	Tee-connector	
73	194665		1	Brake line, right	
74	256753		1	Brake line	
75	247154	O	1	Pipe	
76	247153	P	1	Tube	
77	247153	Q	1	Tube	
78	192342		8	Plug	
79	256485		2	Adapter	
80	194371		1	Bracket	
81	500022		6	Screw M8-1,25x30 8,8	
82	615043		6	Washer 8,4x18x2	
83	500030		8	Screw M10-1,5x35H 8,8	

M) L=4000 mm
N) L=180 mm
O) L=4500 mm
P) L=580 mm
Q) L=1000 mm
R) Replaces earlier 902139
S) Replaces earlier 194237

Brake circuit -23620279 and 283-286+288-289

16319-1

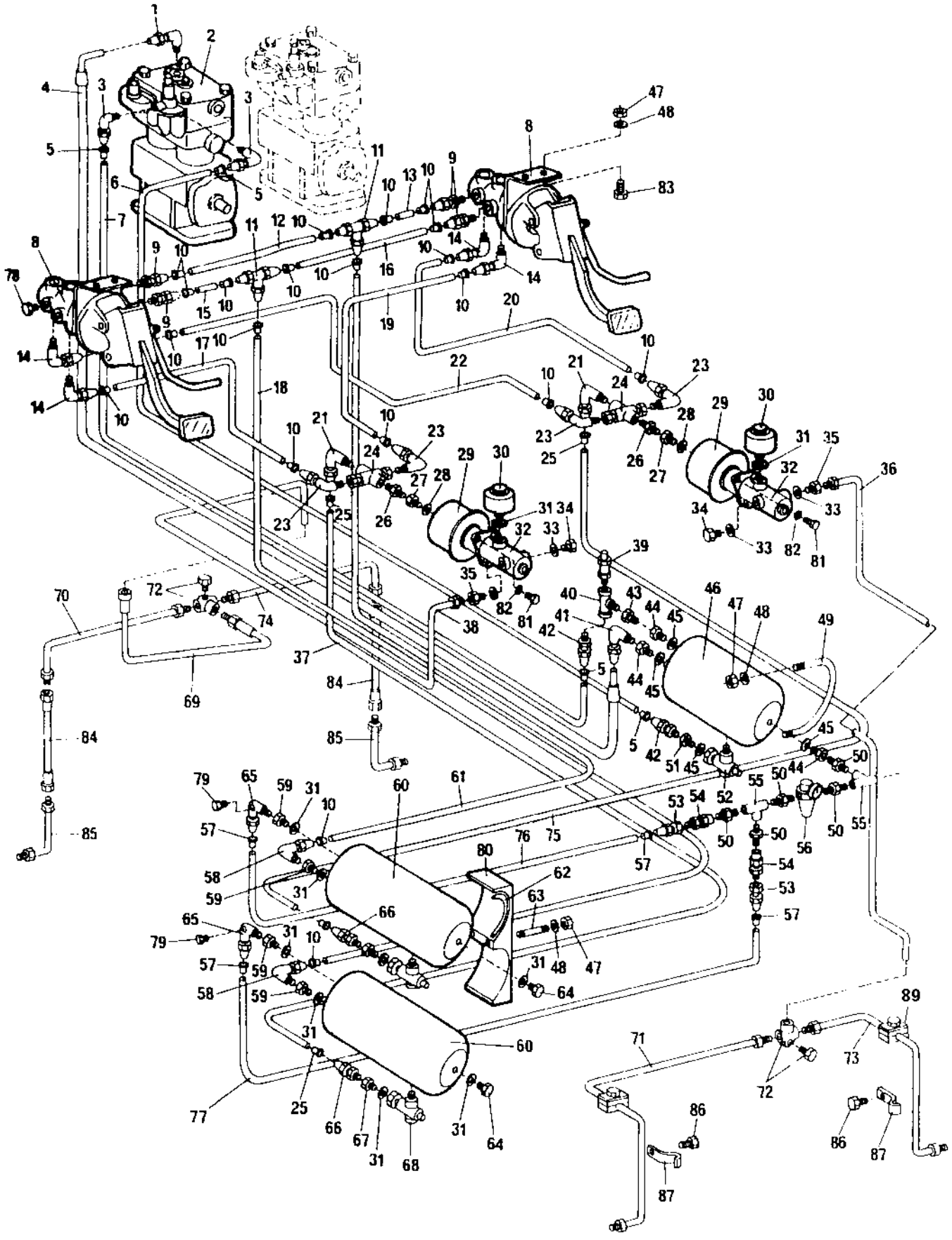

Brake circuit -23620279 and 283-286+288-289

Ref. No.	Part No.	Rem.	Qty	Description	Code
84	256926		2	Brake hose	
85	256925		2	Brake line	
86	541703		2	Screw M6x16	
87	921087		2	Clamp	
88	814259		1	Rubber grommet	D
89	258267		3	Clamp	

194402 Brake chamber

16253

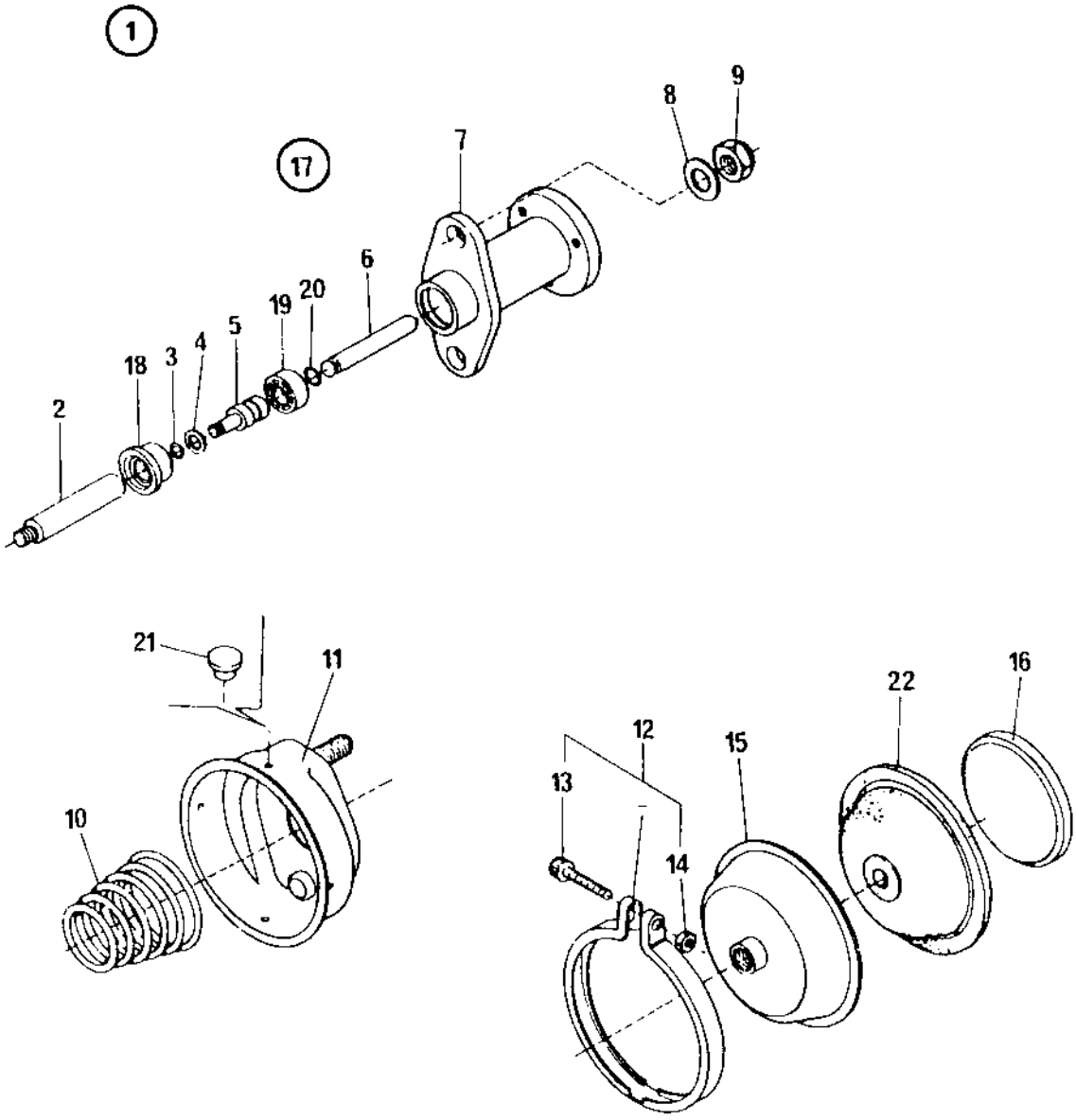

194402 Brake chamber

Ref. No.	Part No.	Rem.	Qty	Description	Code
1			1	Brake chamber, cpl	
2	195195		1	.Shaft	
3	195206		1	.Retaining ring	
4	195207		1	.Spacer	
5	195208		1	.Pin	
6	195211		1	.Shaft	
7	195194		1	.Locking flange	
8	195193		2	.Washer	
9	195192		2	.Lock nut	
10	195198		1	.Spring	
11	195196		1	.Cover	
12	195202		1	.Clamp	
13	195203		1	.Screw	
14	195204		1	.Nut	
15	195201		1	.Roller	
16	195199		1	.Piston	
17	195212		1	.Repair kit	D
18	195205		1	..Gasket	
19	195209		1	..Guide ring	
20	195210		1	..O-ring	
21	195197		3	..Filler cap	
22	195200		1	..Diaphragm	

Brake circuit 23620280- not 283-286+288-289

16427-1

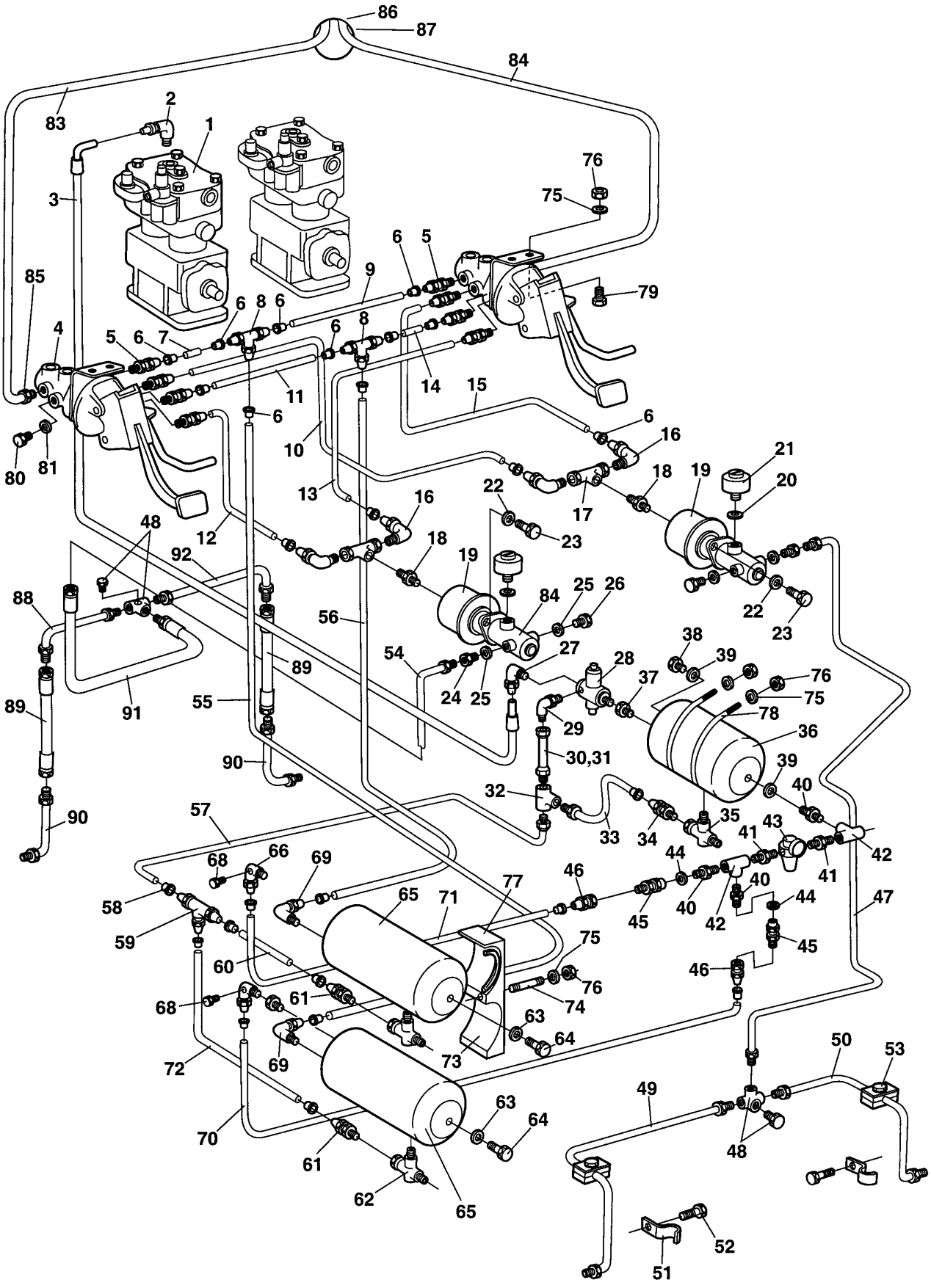

Brake circuit 23620280- not 283-286+288-289

Ref. No.	Part No.	Rem.	Qty	Description	Code
1				Compressor, see another assembly	
2	191921		1	Elbow	
3	195823	Q	1	Hose	
	196586		1	Hose From 23620440	
4	195778		2	Brake pedal	
5	904657		8	Straight connector	
6	195834		20	Sleeve insert	
7	195838	A		Pipe, nylon	D
8	904660		2	Tee-connector	
9	195838	B		Pipe, nylon	D
10	195838	C		Pipe, nylon	D
11	195838	D		Pipe, nylon	D
12	195838	E		Pipe, nylon	D
13	195838	C		Pipe, nylon	D
14	195838	F		Pipe, nylon	D
15	195838	E		Pipe, nylon	D
16	904658		4	Elbow 90	
17	195831		2	Check valve double	
18	195832		2	Connector	
19	194402		2	Brake chamber (Page 80)	
20	330333		2	Copper washer	D
21	415277		2	Oil tank	
22	904229		6	Washer 8,4x16x1,5	
23	500022		6	Screw M8-1,25x30 8,8	
24	194407		2	Connection	
25	330328		4	Washer 10x14x1	
26	194408		2	Plug	
27	904659		1	Elbow 90	
28	195810		1	Unloader valve	
29	195813		1	Male stud elbow	
30	195814	G		Pipe, nylon	D
31	926625		4	Sleeve	
32	195828		1	Tee-connector	
33	195814	H		Pipe, nylon	D
34	195811		1	Straight male stud	
35	269137		1	Drain valve	D
36	384615	R	1	Air tank From 23620487	
37	195931		1	Connector	
38	232052		1	Plug	D
39	162019		2	Seal ring	D
40	240264		3	Adapter	
41	813722		2	Nipple	
42	814262		2	Tee-connector	

A) L=200 mm
B) L=940 mm
C) L=1350 mm
D) L=880 mm
E) L=800 mm
F) L=250 mm
G) L=150 mm
H) L=300 mm
Q) Replaced by improved hose 196586
R) Replaces earlier 902139

Brake circuit 23620280- not 283-286+288-289

16427-1

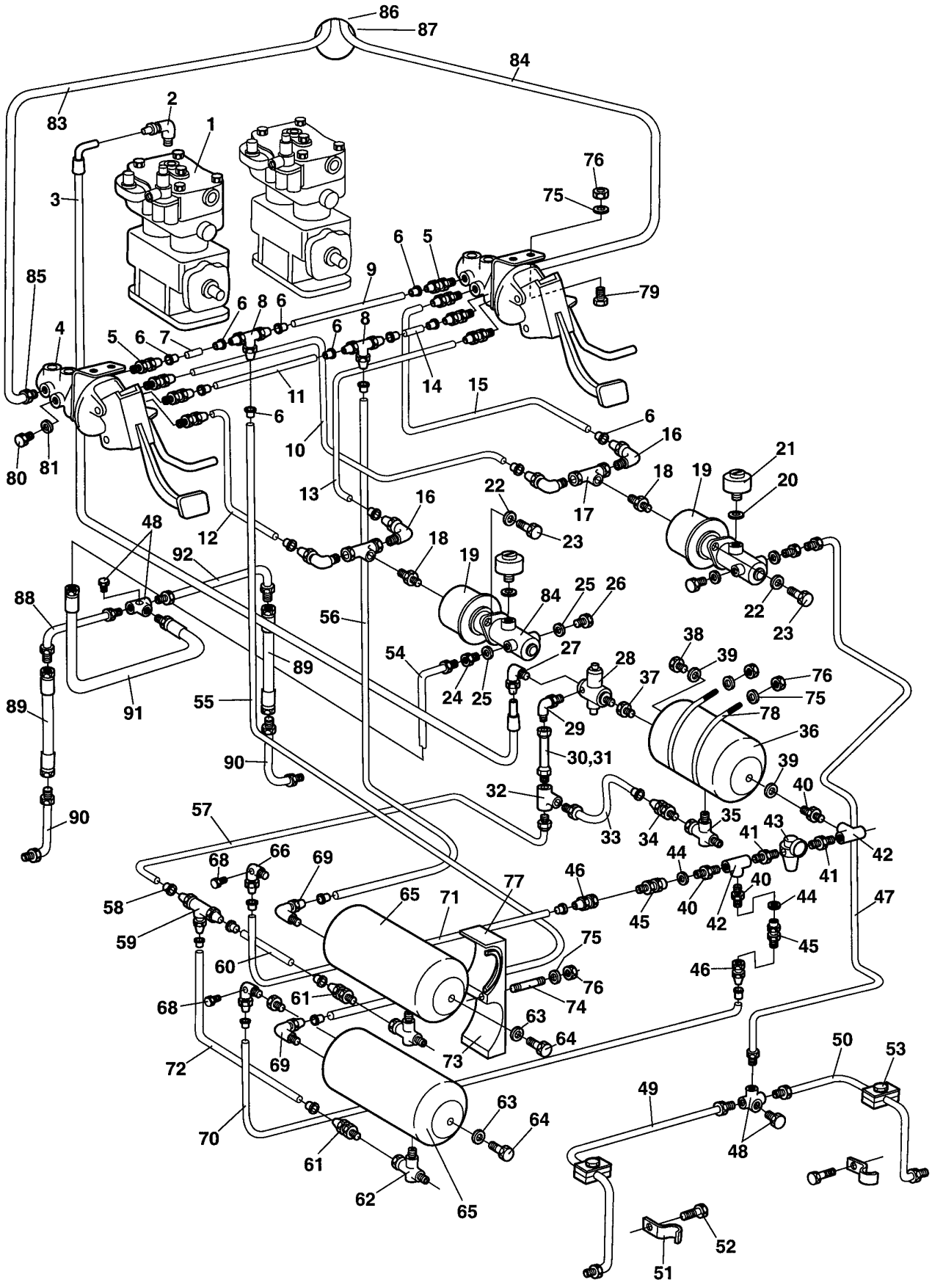

Brake circuit 23620280- not 283-286+288-289

Ref. No.	Part No.	Rem.	Qty	Description	Code
43	194410		1	Pressure relief valve, cpl	
	197901		1	.Gauge	
44	330333		2	Copper washer	D
45	195816		2	Check valve	
46	195812		2	Straight male stud	
47	194803		1	Brake pipe	
48	745072		2	Tee-connector	
49	194664		1	Brake line, left	
50	194665		1	Brake line, right	
51	921087		1	Clamp	
52	541703		1	Screw M6x16	
53			2	Clamp	
54	194291		1	Brake line	
55	195838	I		Pipe, nylon	D
56	195838	J		Pipe, nylon	D
57	195814	K		Pipe, nylon	D
58	926625		10	Sleeve	
59	195828		1	Tee-connector	
60	195814	L		Pipe, nylon	D
61	195811		2	Straight male stud	
62	269137		2	Drain valve	D
63	162019		2	Seal ring	D
64	232052		2	Plug	D
65	384614	S	2	Air tank From 23620487	
66	195915		2	Male stud elbow	
67	195833		4	Sleeve insert	
68	256485		2	Adapter	
69	904659		2	Elbow 90	
70	195839	D		Pipe, nylon	
71	195839	M		Pipe, nylon	
72	195839	N		Pipe, nylon	
73	194371		1	Bracket	
74	194372		2	Stud	
75	904230		22	Washer 10,5x22x2	
76	570006		14	Nut M10	
77	202028			Edge trim	
78	194366		2	Clamp	
79	500030		8	Screw M10-1,5x35H 8,8	
80	232143		6	Plug	
81	330330		6	Washer	
82	195814	O		Pipe, nylon	D
83	195814	K		Pipe, nylon	D
84	194401		2	Brake master cylinder	

D) L=880 mm
I) L=4000 mm
J) L=3600 mm
K) L=900 mm
L) L=100 mm
M) L=850 mm
N) L=650 mm
O) L=1500 mm
S) Replaces earlier 194237

Brake circuit 23620280- not 283-286+288-289

16427-1

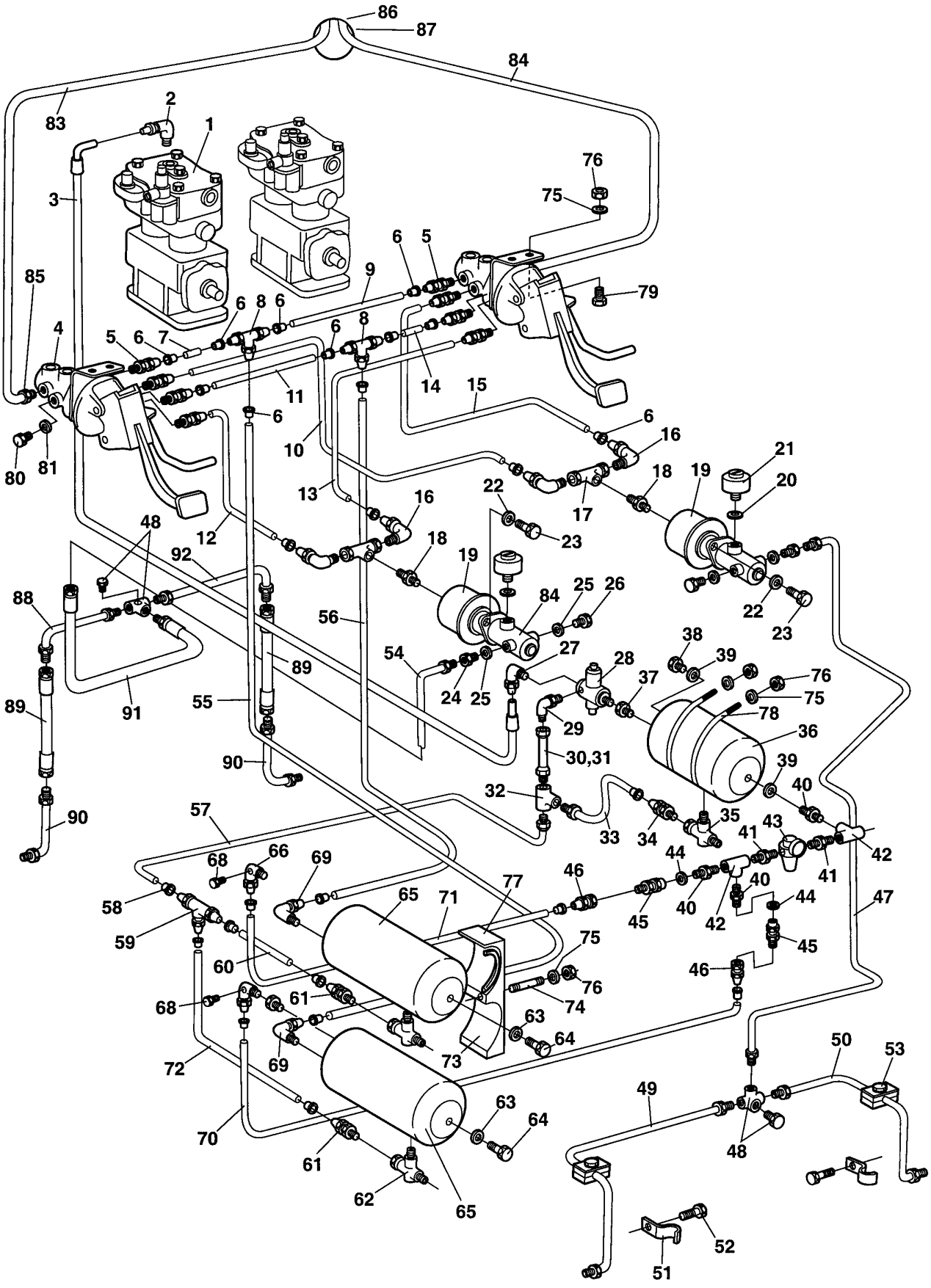

Brake circuit 23620280- not 283-286+288-289

Ref. No.	Part No.	Rem.	Qty	Description	Code
85	195932		2	Male stud elbow	
86	904627		2	Nut M6	
87	230520		2	Locking sleeve R6	
88	255039		1	Brake line	
89	256926		2	Brake hose	
90	256925		2	Brake line	
91	262054		1	Brake hose	
92	256753		1	Brake line	
93	192343		1	Plug	

194402 Brake chamber

16253

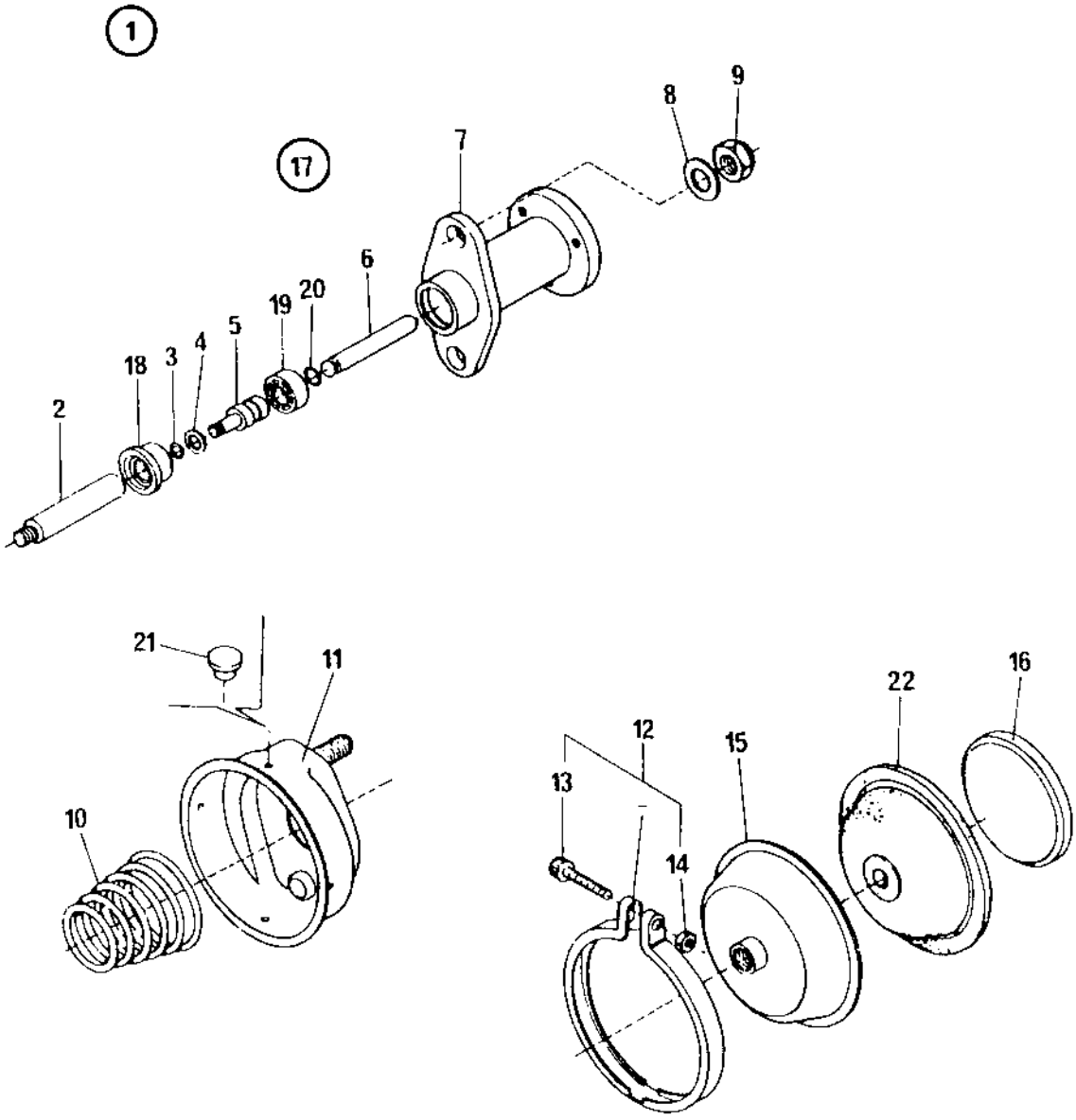

194402 Brake chamber

Ref. No.	Part No.	Rem.	Qty	Description	Code
1			1	Brake chamber, cpl	
2	195195		1	.Shaft	
3	195206		1	.Retaining ring	
4	195207		1	.Spacer	
5	195208		1	.Pin	
6	195211		1	.Shaft	
7	195194		1	.Locking flange	
8	195193		2	.Washer	
9	195192		2	.Lock nut	
10	195198		1	.Spring	
11	195196		1	.Cover	
12	195202		1	.Clamp	
13	195203		1	.Screw	
14	195204		1	.Nut	
15	195201		1	.Roller	
16	195199		1	.Piston	
17	195212		1	.Repair kit	D
18	195205		1	..Gasket	
19	195209		1	..Guide ring	
20	195210		1	..O-ring	
21	195197		3	..Filler cap	
22	195200		1	..Diaphragm	

Compressor assembly -699B538

16249-1

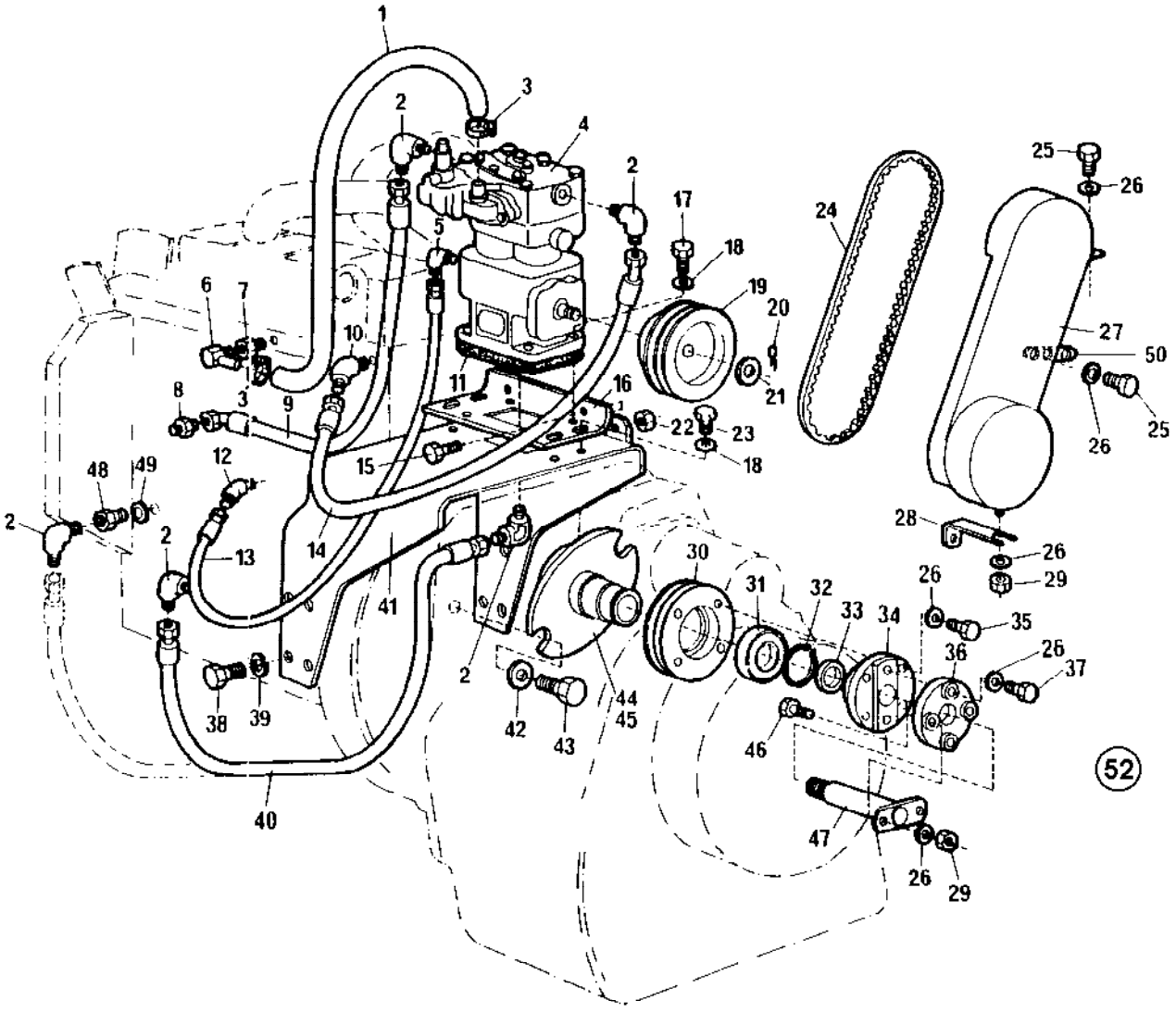

Compressor assembly -699B538

Ref. No.	Part No.	Rem.	Qty	Description	Code
1	246072	A	1	Hose	
2	813435		4	Adapter	
3	313004		2	Hose clamp	
4	191072	B	1	Compressor Varga	
5	234342		1	Adapter	
6	928081		1	Hose connector	
7	813454		1	Nipple	
8	334117		1	Adapter	
9	482466		1	Hydraulic hose	
10	813445		1	Elbow 45	
11	251842		1	Gasket	
12	234341		1	Elbow 45	
13	482257		1	Hydraulic hose	
14	482169		1	Hydraulic hose	D
15	500241		2	Screw	
16	191957		1	Holder plate	
17	500028		4	Screw M10-1,5x25 8,8	
18	603023		8	Washer M10	
19	191954		1	Compressor pulley	
20	630010		1	Split pin	
21	600014		1	Washer	
22	570006		2	Nut M10	
23	500031		4	Screw M10-1,5x40 8,8	
24	192097		1	Belt	D
25	500019		3	Screw M8-1,25x16 8,8	
26	904229		8	Washer 8,4x16x1,5	
27	195921		1	Belt guard	
28	192189		1	Bracket	
29	586003		2	Lock nut M8	
30	191952		1	Pulley Up to 699B441	
	194222		1	Pulley From 699B442	
31	111240		1	Bearing Up to 699B441	
	111059		1	Bearing From 699B442	
32	150018		1	Snap ring Up to 699B441	
	150017		1	Retaining ring From 699B442	D
33	192145		1	Seal ring	
34	192128		1	Cover	
35	192812		4	Screw	
36	904410	B	1	Coupling	
37	194307		2	Screw	
38	500037		8	Screw M12-1,75x35 8,8	

A) L=640 mm

B) Advise: Due to big improvements mentioned in MI 99004, 99006 and 99014, we recommend to upgrade to the same type of compressor installation as shown for CP221 from S/N 22620273 and CP271 from S/N 23620355. To upgrade, you need a rebuilding kit, P/N: see item 52

Compressor assembly -699B538

16249-1

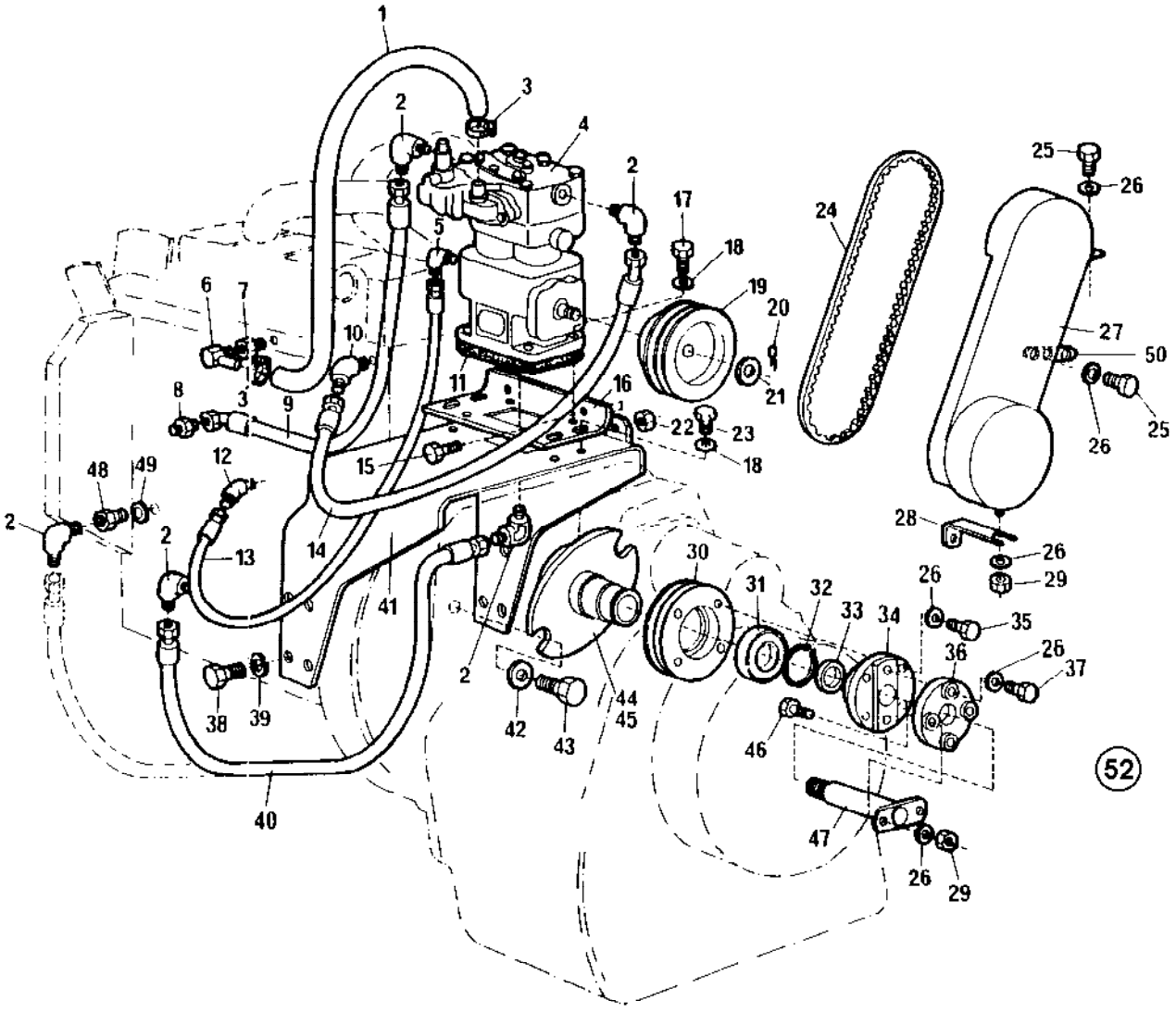

Compressor assembly -699B538

Ref. No.	Part No.	Rem.	Qty	Description	Code
39	615045		8	Conical spring washer	
40	241433		1	Hose	
41	191956		1	Platform	
42	603003		2	Washer 13,5x24x4	
43	502058		2	Screw 1/2 UNC	
44	191951		1	Flange Up to 699B441	
	194223		1	Flange From 699B442	
45	191623		1	Gasket	
46	500024		2	Screw M8x45	
47	191953		1	Shaft	
48	234729		1	Reducing nipple	
49	330333		1	Copper washer	D
50	192189		1	Bracket	
51	615042		1	Conical spring washer	
52	381166	C	1	Rebuilding kit	
	380405	D	1	Rebuilding kit	

C) For CP221/271 with Varga compressor P/N 191072 and one of the following transmissions: 191648, 374966, 381950

D) For CP221/271 with one or two belt driven compressors, (except with Varga compressor P/N 191072), and one of the following transmissions: 191648, 374966, 381950

Compressor assembly -23620279 and 283-286+288-289

16250-1

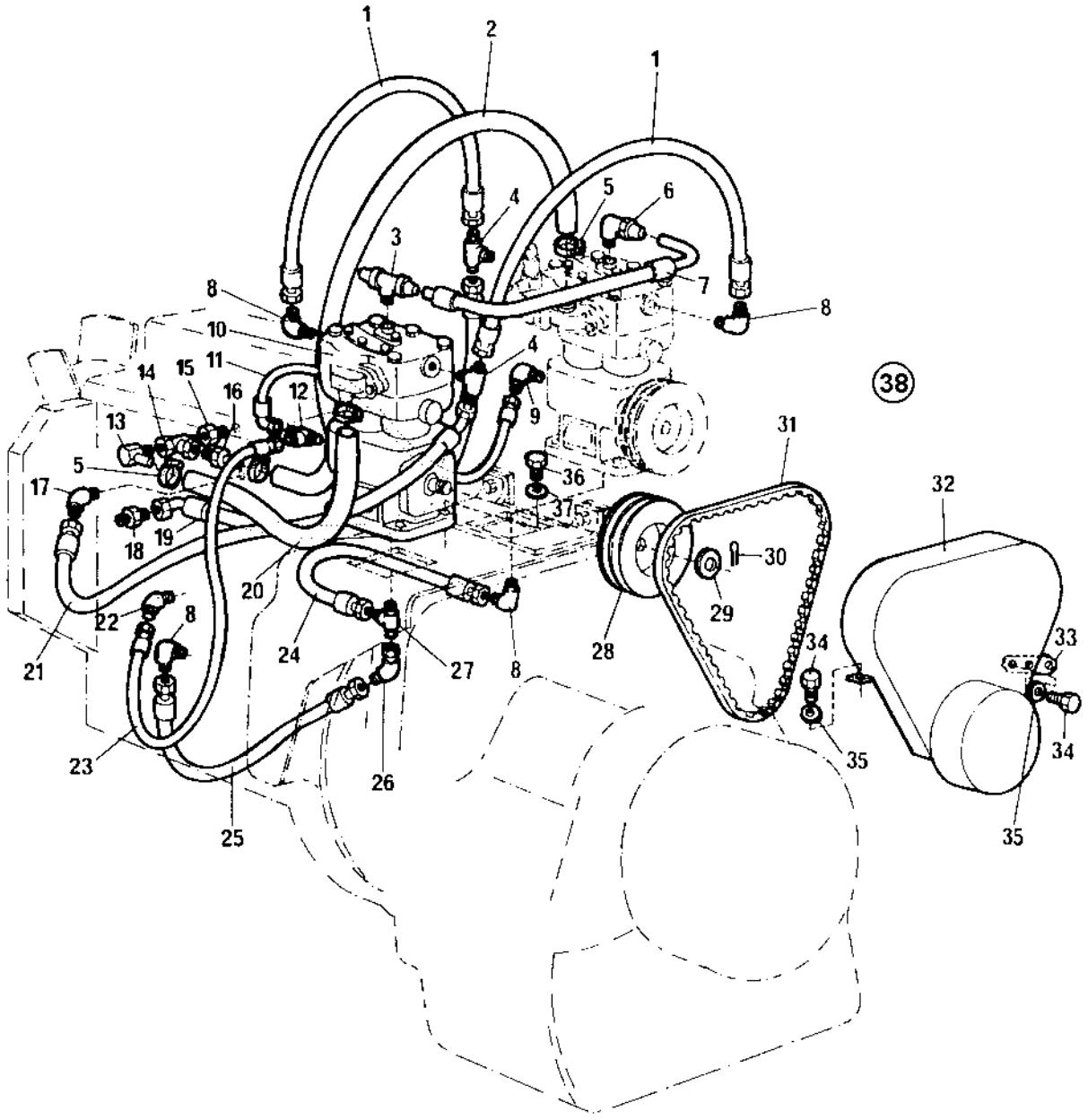

Compressor assembly -23620279 and 283-286+288-289

Ref. No.	Part No.	Rem.	Qty	Description	Code
1	261463		2	Hose	
2	246072		1	Hose	
3	192091		1	Tee-connector	
4	192153		2	Tee-connector	
5	313004		4	Hose clamp	
6	191921		1	Elbow	
7	240149		1	Hydraulic hose	
8	813436		2	Adapter	
9	234342		1	Adapter	
10	191072	A	1	Compressor Varga	
11	308001205		1	Hydraulic hose	
12	234333		1	Adapter	
13	928081		1	Hose connector	
14	334424		1	Tee-connector	
15	813454		1	Nipple	
16	241172		1	Hose connector	
17	812445		1	Elbow 45deg	
18	334117		1	Adapter	
19	482466		1	Hydraulic hose	
20	246072		1	Hose	
21	482169		1	Hydraulic hose	D
22	234341		1	Elbow 45	
23	482257		1	Hydraulic hose	
24	482328		1	Hydraulic hose	
25	241433		1	Hose	
26	234662		1	Elbow 45	
27	334070		1	Adapter	
28	191954		1	Compressor pulley	
29	600014		1	Washer	
30	630010		1	Split pin	
31	924644		2	V-belt	
32	192159		1	Belt guard	
33	192189		1	Bracket	
34	500019		3	Screw M8-1,25x16 8,8	
35	904229		5	Washer 8,4x16x1,5	
36	500031		4	Screw M10-1,5x40 8,8	
37	603023		4	Washer M10	
38	381166	B	1	Rebuilding kit	
	380405	C	1	Rebuilding kit	

A) Advise: Due to big improvements mentioned in MI 99004, 99006 and 99014, we recommend to upgrade to the same type of compressor installation as shown for CP221 from S/N 22620273 and CP271 from S/N 23620355. To upgrade, you need a rebuilding kit, P/N: see item 38

B) For CP221/271 with Varga compressor P/N 191072 and one of the following transmissions: 191648, 374966, 381950

C) For CP221/271 with one or two belt driven compressors, (except with Varga compressor P/N 191072), and one of the following transmissions: 191648, 374966, 381950

Compressor assembly 23620280- not 283-286 +288-289

17261-1

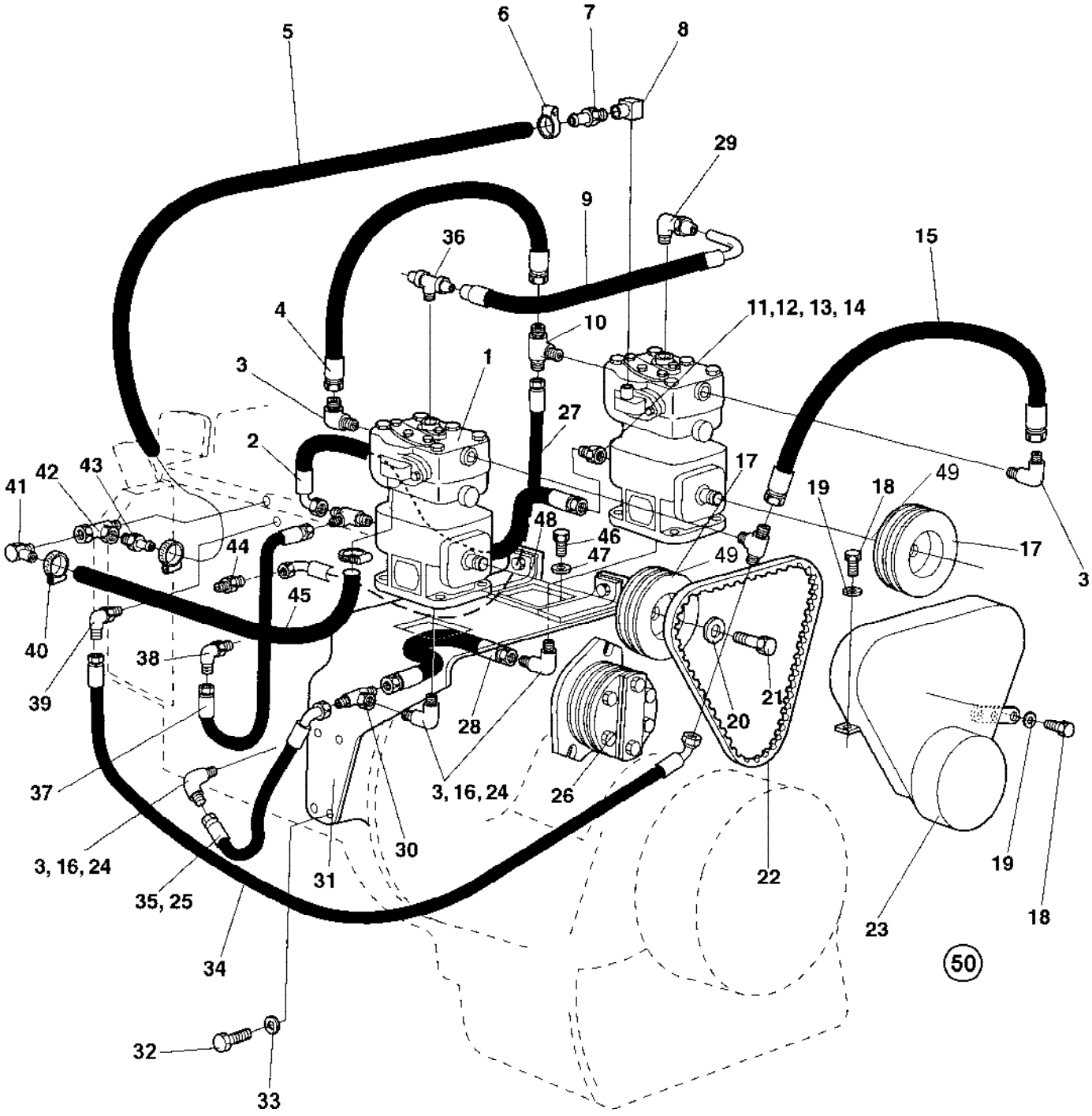

Compressor assembly 23620280- not 283-286 +288-289

Ref. No.	Part No.	Rem.	Qty	Description	Code
1	195775	E	2	Compressor	
2	308001205		1	Hydraulic hose	
3	813435		4	Adapter	
4	261463		1	Hose	
5	246072	A	1	Hose	
6	313004		2	Hose clamp	
7	192914		1	Hose connector	
8	249273		1	Elbow 90	
9	195824		1	Hydraulic hose	
10	192153		1	Tee-connector	
11	234342		1	Adapter	
12	813465		1	Reducing	
13	195776		1	Reducing	
14	330328		1	Washer 10x14x1	
15	195825		1	Hydraulic hose	
16	330333		2	Copper washer	D
17	195759	B	2	Pulley	
	376228	C	2	Pulley	
	376228		2	Pulley From 23620330	
18	500019		4	Screw M8-1,25x16 8,8	
19	904229		5	Washer 8,4x16x1,5	
20			1	Washer	
21			1	Screw	
22	195773	B	2	V-belt	
	904593	C	1	Cogged belt	
	904593		1	Cogged belt From 23620330	
23	195920		1	V-belt guard	
24	234729		2	Reducing nipple	
25	904623		1	Hose guard	
26		B	1	Coupling	
		C	1	Coupling	
			1	Coupling From 23620330	
27	482466		1	Hydraulic hose	
28	482328		1	Hydraulic hose	
29	195777		1	Elbow 90	

A) L=1000 mm
B) To S/N 23620282 And 287 + 290 - 320 + 322 - 323 + 325 +327 + 329
C) From S/N 23620283 - 286 And 288 - 289 + 321 + 324 + 326 + 328
E) Advise: Due to big improvements mentioned in MI 99004, 99006 and 99014, we recommend to upgrade to the same type of compressor installation as shown for CP221 from S/N 22620273 and CP271 from S/N 23620355. To upgrade, you need a rebuilding kit, P/N: see item 50

Compressor assembly 23620280- not 283-286 +288-289

17261-1

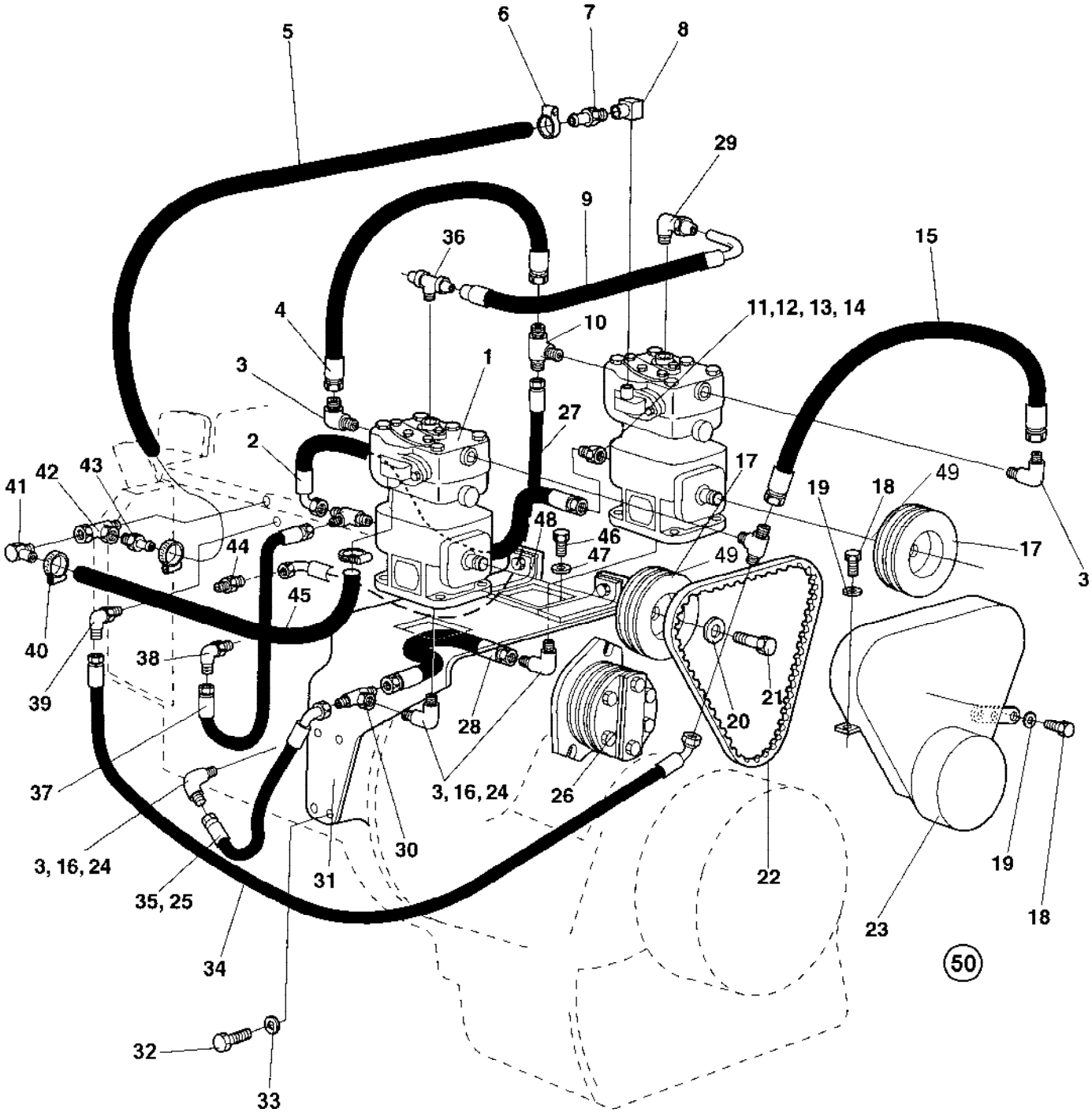

Compressor assembly 23620280- not 283-286 +288-289

Ref. No.	Part No.	Rem.	Qty	Description	Code
29	195842		1	Reducing	
30	234953		1	Tee-connector	
31	195770		1	Bracket	
32	500037		8	Screw M12-1,75x35 8,8	
33	615045		8	Conical spring washer	
34	482169		1	Hydraulic hose	D
35	241433		1	Hose	
36	195928		1	Tee-connector	
37	482257		1	Hydraulic hose	
38	234341		1	Elbow 45	
39	813445		1	Elbow 45	
40	313004		2	Hose clamp	
41	928081		1	Hose connector	
42	334424		1	Tee-connector	
43	813454		1	Nipple	
44	334117		1	Adapter	
45	246072		2	Hose	
46	500028		4	Screw M10-1,5x25 8,8	
	500031		4	Screw M10-1,5x40 8,8	
	500090	D	4	Screw M8x75	
47	603023		4	Washer M10	
	904229		4	Washer 8,4x16x1,5	
48	195711		1	Lock plate	
	500241		2	Screw	
	570006		4	Nut M10	
49	376227		2	Hub From 23620330	
50	381166	F	1	Rebuilding kit	
	380405	G	1	Rebuilding kit	

D) In use together with spacer 376363

F) For CP221/271 with Varga compressor P/N 191072 and one of the following transmissions: 191648, 374966, 381950

G) For CP221/271 with one or two belt driven compressors, (except with Varga compressor P/N 191072), and one of the following transmissions: 191648, 374966, 381950

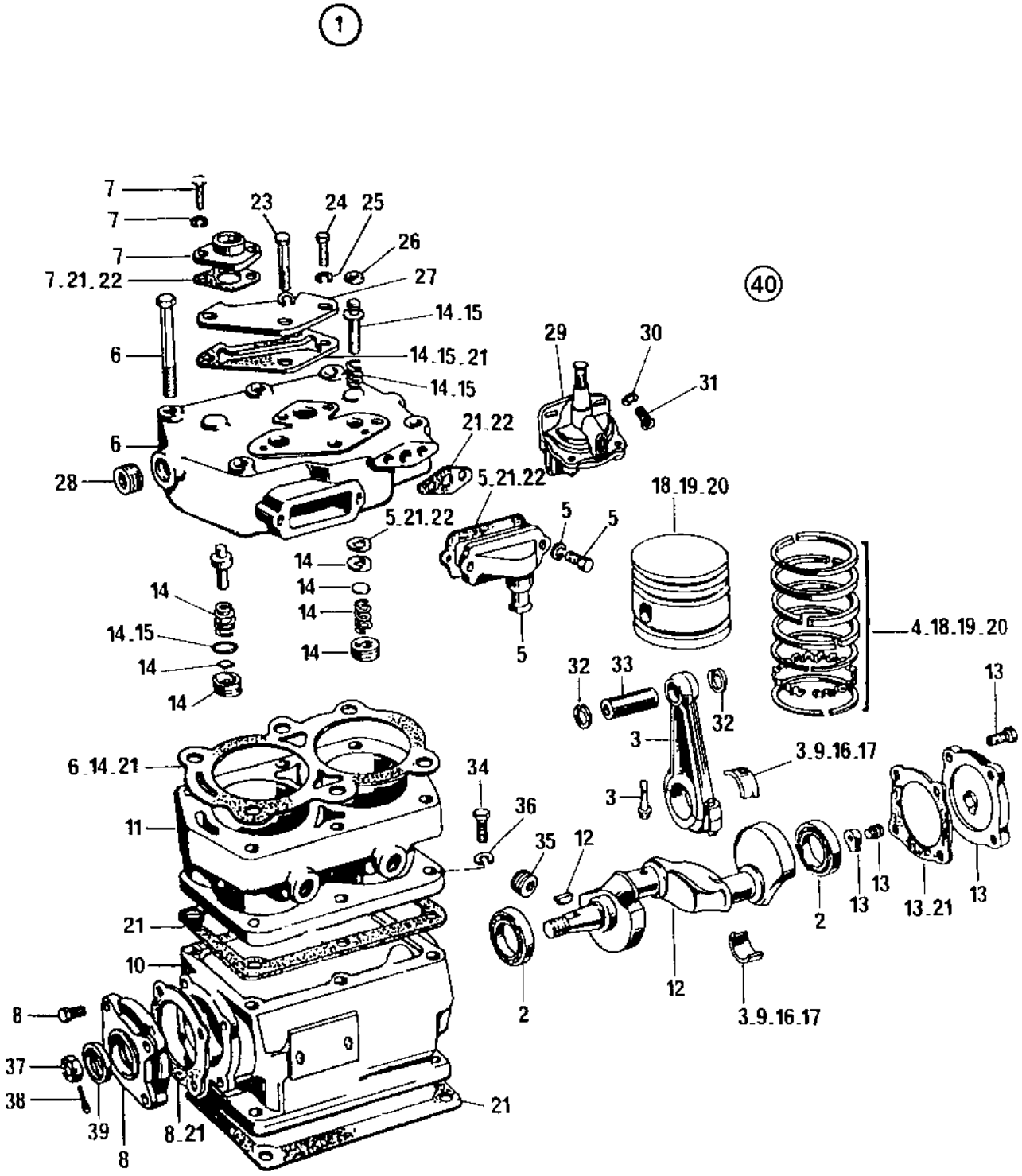
1
40
7
7
7
7.21.22
23
24
25
26
27
14.15
14.15.21
14.15
6
6
28
21.22
5.21.22
5.21.22
14
14
14
14
14
14.15
14
14
29
30
31
5
5
5
18.19.20
4.18.19.20
32
33
32
3
3
3.9.16.17
13
13
13.21
13
2
12
12
3.9.16.17
2
6.14.21
11
34
36
35
21
10
8
37
38
39
8
8.21
21

Ref. No.	Part No.	Rem.	Qty	Description	Code
1	191072	A	1	Compressor Varga	
2	192035		1	.Bearing repair kit	
3	192036		1	.Pitman repair kit	
4	192037		1	.Ring repair kit STD	
5	192038		1	.Induction manifold	
6	192039		1	.Cylinder head repair	
7	192040		1	.Exhaust manifold	
8	192041		1	.Front cover	
9	192042		1	.Bearing repair kit STD	
10	192043		1	.Sump repair kit	
11	192044		1	.Block repair kit	
12	192045		1	.Crank shaft repair kit	
13	192046		1	.Rear cover repair kit	
14	192047		1	.Cylinder head	
15	192048		1	.Cylinder head kit	
16	192049		1	.Bearing repair kit 0.10	
17	192050		1	.Bearing repair kit 0.20	
18	192051		1	.Ring/piston repair kit STD	
19	192052		1	.Ring/piston repair kit 0.10	
20	192053		1	.Ring/piston repair kit 0.20	
21	192054		1	.Gasket repair kit	
22	192055		1	.Gasket repair kit	
23	192056		1	.Screw	
24	192057		1	.Screw	
25	192058		1	.Spring washer	
26	192059		1	.Gasket	
27	192060		1	.Cylinder head cover	
28	192061		1	.Plug	
29	192062		1	.Governor	
30	192063		1	.Spring washer	
31	192064		1	.Screw	
32	192065		2	.Retaining ring	
33	192066		1	.Pin	
34	192067		1	.Screw	
35	192068		1	.Plug	
36	192069		1	.Spring washer	
37	192070		1	.Castle nut	
38	192071		1	.Cotter pin	
39	192072		1	.Seal ring	
40	381166	B	1	Rebuilding kit	

A) Advise: Due to big improvements mentioned in MI 99004, 99006 and 99014, we recommend to upgrade to the same type of compressor installation as shown for CP221 from S/N 22620273 and CP271 from S/N 23620355. To upgrade, you need a rebuilding kit, P/N: see item 40

B) For CP221/271 with Varga compressor P/N 191072 and one of the following transmissions: 191648, 374966, 381950

Compressor assembly SN 23620355 -

16767-1

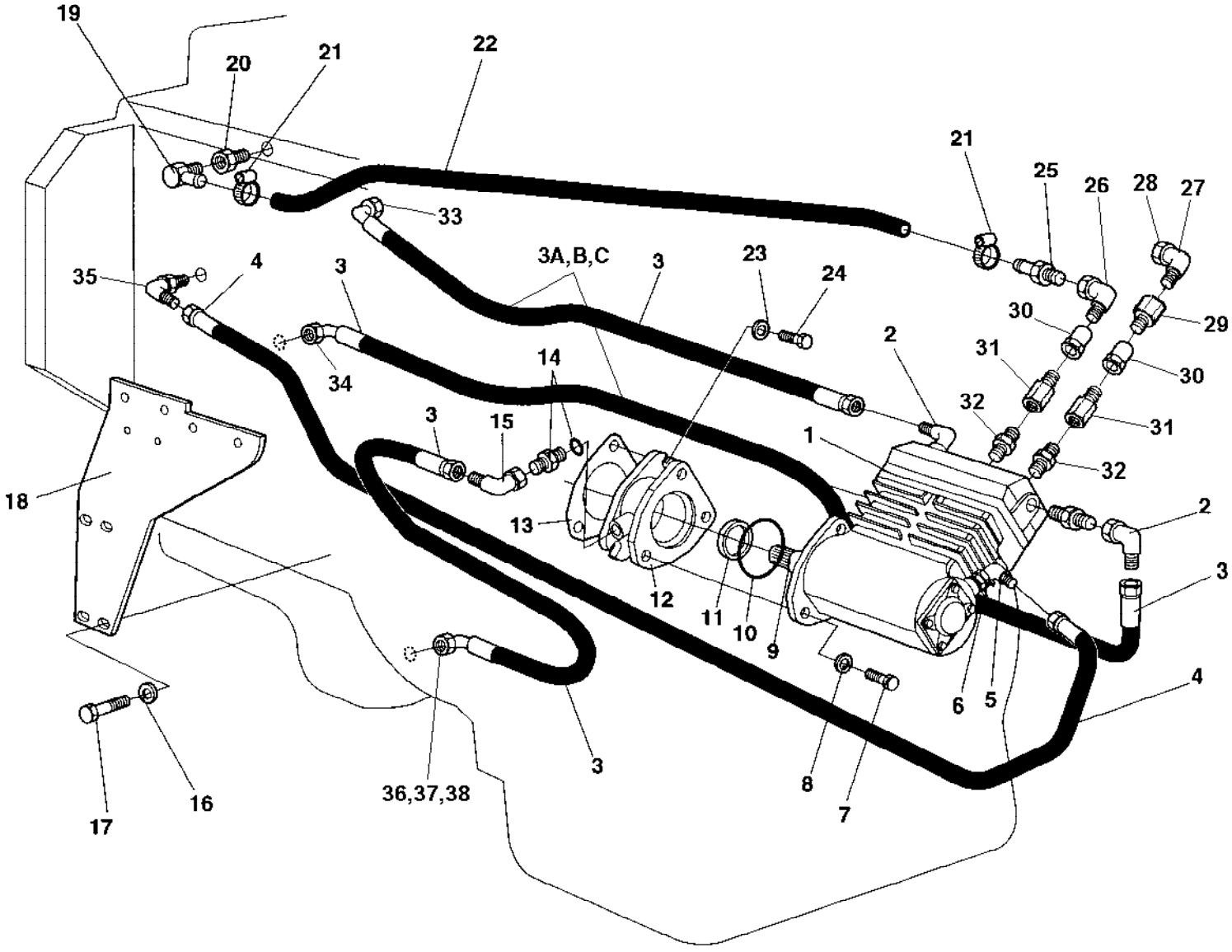

Compressor assembly SN 23620355 -

Ref. No.	Part No.	Rem.	Qty	Description	Code
1	380253		1	Compressor Knorr-Bremse LP4850 Up to 23620448 (Page 104)	
	380475		1	Compressor Knorr-Bremse LP4850 From 23620449 (Page 106)	
2	928908		2	Adapter	
3	482466	B	3	Hydraulic hose	
3-A	921161		2	Clamp	
3-B	500048		2	Screw M10-1,5x20 8,8	
3-C	904557		2	Washer 10,5x22x4	
4	281628		1	Hydraulic hose	
5	334196		1	Elbow 90	
6	900176		1	Adapter	
7	500123		3	Screw M16x35	
8	904232		3	Washer 17x30x3	
9	380239		1	Shaft	
10	160092		1	O-ring	
11	163105		1	Lip-type oil seal	
12	380242		1	Flange	
13	191623		1	Gasket	
14	234659		1	Straight o-ring connector	
15	334197		1	Elbow 90	
16	904213		8	Washer 13x30x4	
17	500037		8	Screw M12-1,75x35 8,8	
18	380406		2	Support	
19	928081		1	Hose connector	
20	813454		1	Nipple	
21	240297	C	2	Hose clamp	
	313004		2	Hose clamp	
22	246072	A	1	Hose	
23	904703		2	Washer 13x24x4	
24	502058		2	Screw 1/2 UNC	
25	192914		1	Hose connector	
26	249273	D	1	Elbow 90	
	234365		1	Elbow 90	
27	195777	E	1	Elbow 90	
	904659		1	Elbow 90	
28	938161		1	.Nut with sealing cone	
29	195842		1	Reducing	
30	904688		2	Connector	
31	234667		2	Reducer	
32	902126		2	Adapter	
33	813445		1	Elbow 45	
34	334117		1	Adapter	
35	234341		1	Elbow 45	
36	813435		1	Adapter	
37	330333		1	Copper washer	D
38	234729		1	Reducing nipple	

A) L=1250 mm
B) Two of these hoses needs the clamp, screw and washer, item 3A
B and C
C) Replaced by 313004
D) Replaced by 234365
E) Replaced by 904659

380253 Compressor Knorr-Bremse LP4850

17469

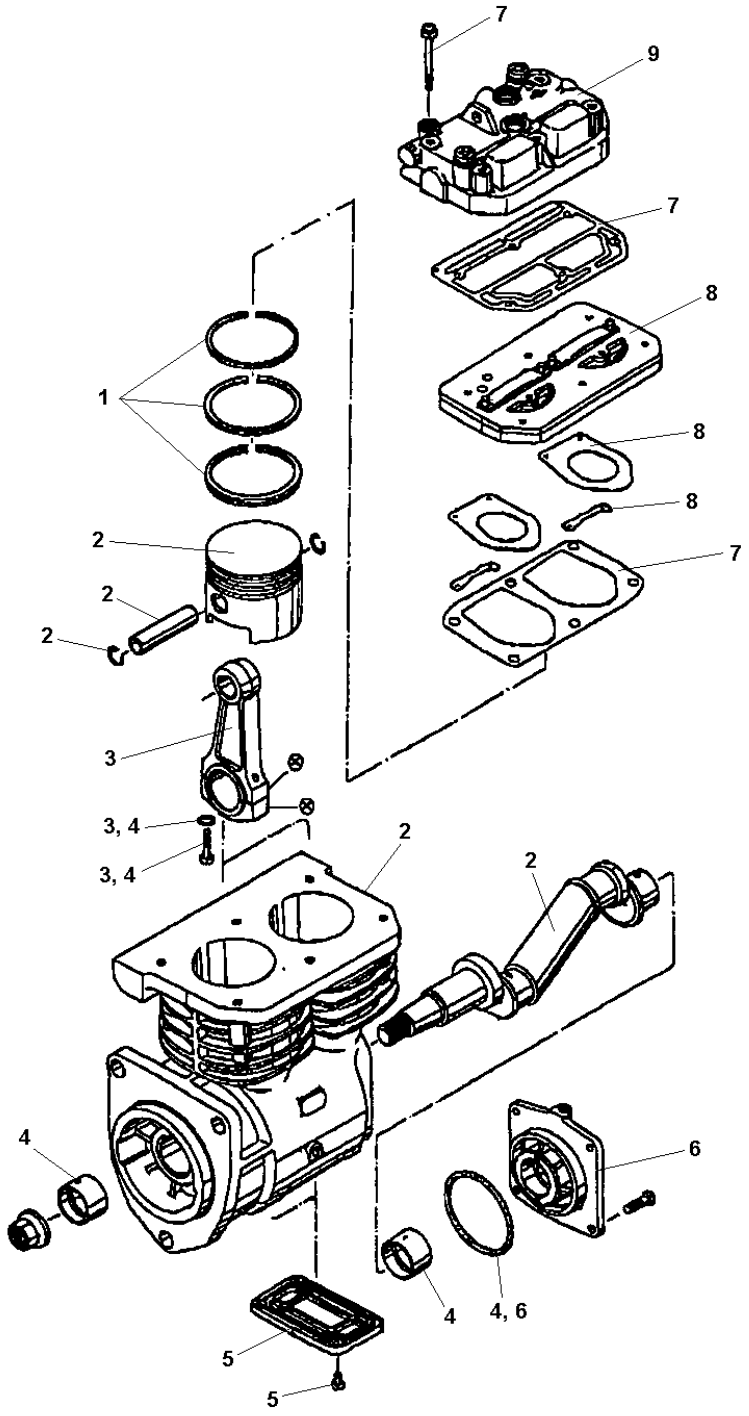

380253 Compressor Knorr-Bremse LP4850

Ref. No.	Part No.	Rem.	Qty	Description	Code
1	938325		2	Piston ring kit	
2				Not Sold Separately	
3	938756		2	Connecting rod	
		A	4	.Washer	
		A	4	.Screw	
4	938326		1	Bearing bushing kit	
		A	2	.Bearing bushing	
		A	1	.O-ring	
		A	4	.Washer	
		A	4	.Screw	
5	938757		2	Cover, crankcase	
		A	2	.Plug	
6	938759		1	Bearing cover	
		A	1	.O-ring	
7	938324		1	Repair kit	
		A	1	.Cylinder head gasket	
		A	1	.Cyl. head cover gasket	
		A	6	.Screw	
8	938327		1	Disc valve kit	
		A	1	.Disc valve	
		A	2	.Gasket	
		A	2	.Clip	
9	938758		1	Cylinder head cover	

A) Not sold separately

380475 Compressor Knorr-Bremse LP4850

17469

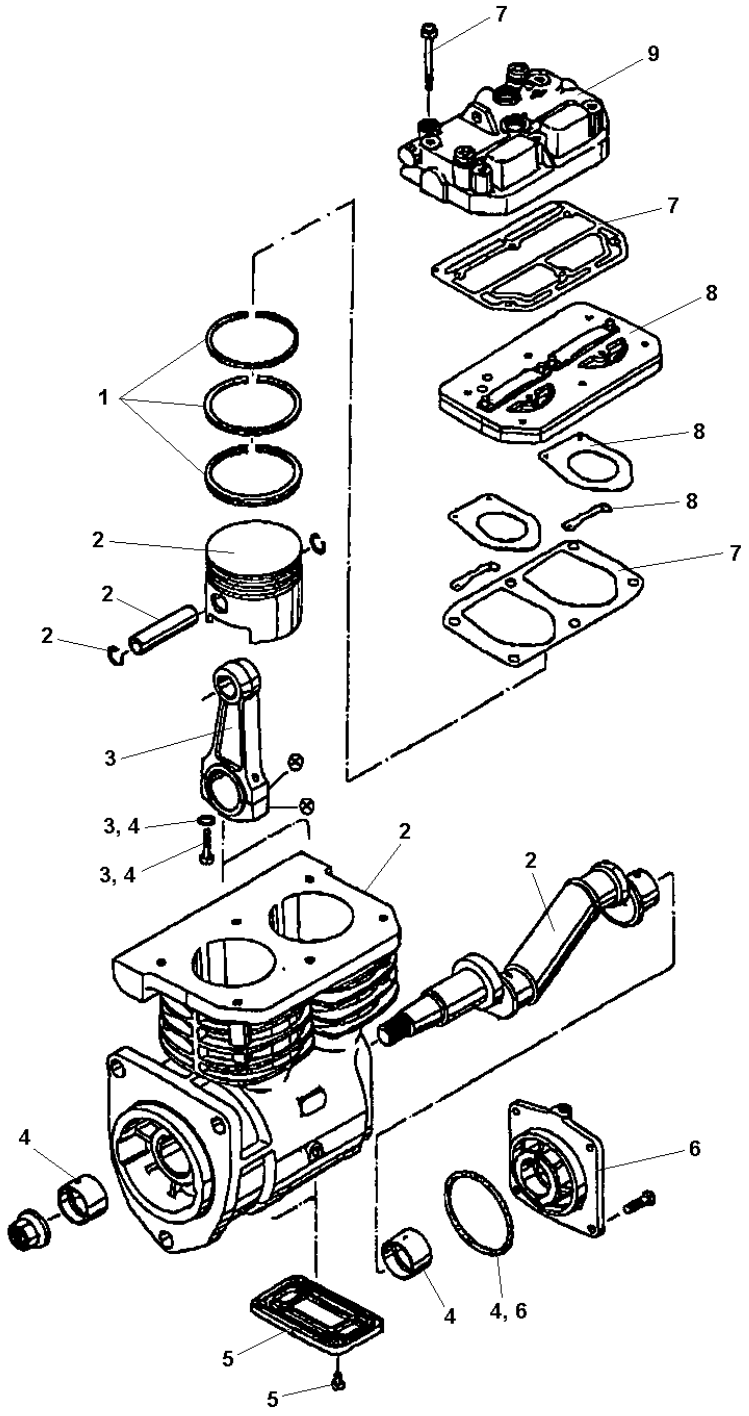

380475 Compressor Knorr-Bremse LP4850

Ref. No.	Part No.	Rem.	Qty	Description	Code
1	938325		2	Piston ring kit	
2				Not Sold Separately	
3	938756		2	Connecting rod	
		A	4	.Washer	
		A	4	.Screw	
4	938326		1	Bearing bushing kit	
		A	2	.Bearing bushing	
		A	1	.O-ring	
		A	4	.Washer	
		A	4	.Screw	
5	938757		2	Cover, crankcase	
		A	2	.Plug	
6	938759		1	Bearing cover	
		A	1	.O-ring	
7	938324		1	Repair kit	
		A	1	.Cylinder head gasket	
		A	1	.Cyl. head cover gasket	
		A	6	.Screw	
8	938327		1	Disc valve kit	
		A	1	.Disc valve	
		A	2	.Gasket	
		A	2	.Clip	
9	938758		1	Cylinder head cover	

A) Not sold separately

Ref. No.	Part No.	Rem.	Qty	Description	Code
10				Engine Cummins (Page 110)	
20				Cooling system (Page 112)	
30				Air cleaner SN -23620303 and 306 + 307 (Page 114)	
35				Air cleaner SN 23620304- not 306 + 307 (Page 116)	
40				Fuel system -23620303 and 306 + 307 (Page 118)	
45				Fuel system SN 23620304- not 306 + 307 (Page 120)	
50				Sedimenter - SN 23620303 and 306 + 307 (Page 122)	
60				Muffler (Page 124)	

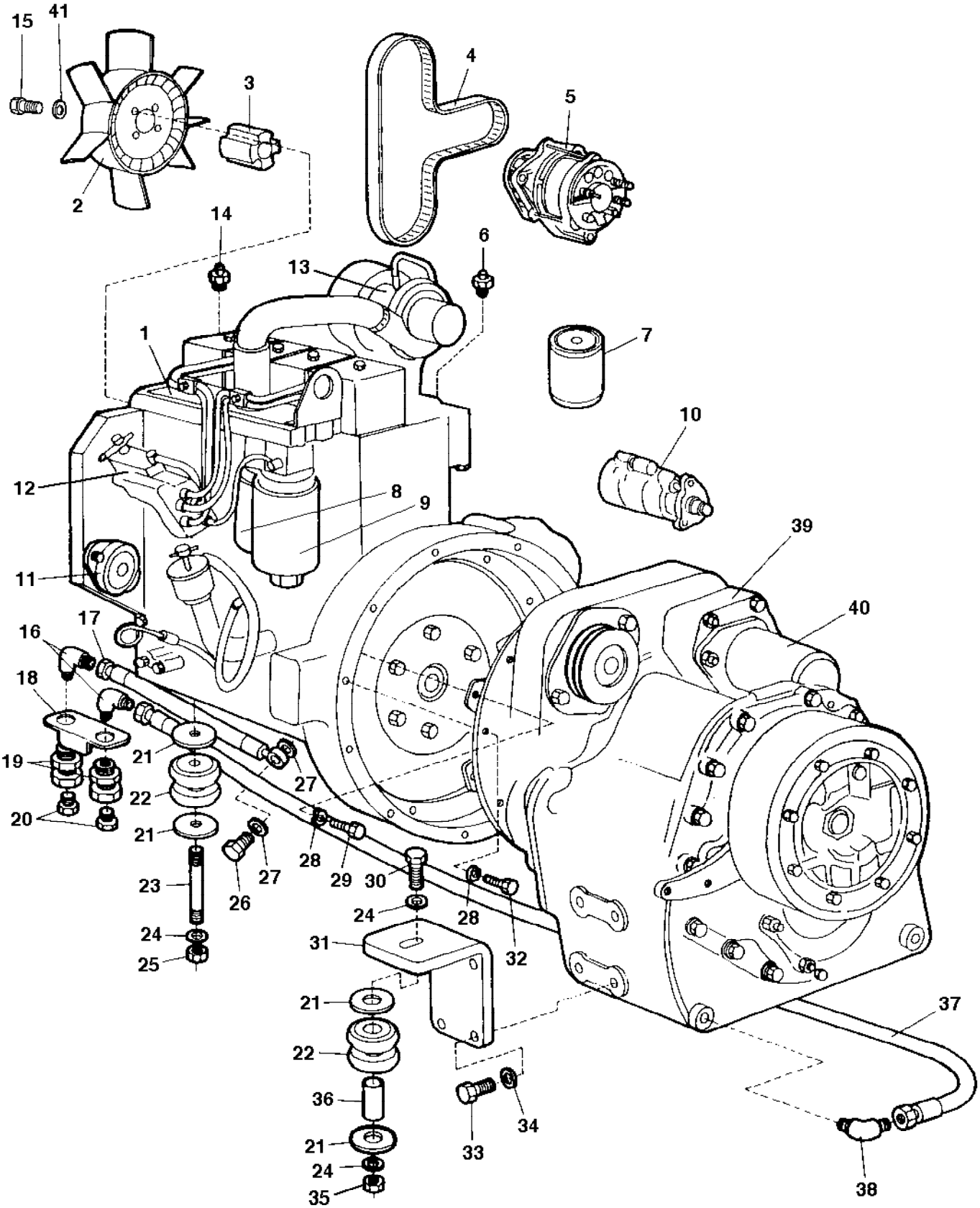
15
41
3
4
5
2
14
6
13
1
7
10
12
8
9
39
11
40
17
16
18
19
21
27
22
20
21
28
29
30
27
26
23
24
28
32
24
31
25
21
37
22
36
34
33
21
24
35
38

Ref. No.	Part No.	Rem.	Qty	Description	Code
1	192500		1	Diesel engine Up to 23620303	
	374541		1	Diesel engine From 23620304 Up to 23620305	
	192500		1	Diesel engine From 23620306 Up to 23620307	
	374541		1	Diesel engine From 23620308	
	935758	A	1	.Fuel solenoid From 23620308	D
	939371	A	1	.Thermostat, cpl	
	903193	A	1	.Water pump, cpl	
2	348996	B	1	.Fan Up to 23620307	
	938137	C	1	.Fan From 23620304	
3	191996		1	.Spacer	
4	192273		1	.Belt	D
5	901350		1	.Alternator	C
6	935044		1	.Oil pressure sensor	D
7	212373		1	.Oil filter	A
8	900829		1	.Fuel filter	A
9	900827	D	1	.Fuel filter	A
10	901448		1	.Starter	C
11	191667		1	.Hydraulic pump gear	C
12	939481		1	.Injection pump	
13	939485		1	.Turbo, cpl	
	939486		1	..Gasket, turbo	
	939487		1	..Gasket, oil drain	
14	258307		1	Temperature sensor	D
15	500077		4	Screw	
	902541		1	Lock fluid Loctite 243, 50 ml	
16	813435		2	Adapter	
17	191808		1	Hose	
18	191806		1	Holder	
19	240154		2	Connector	
20	813422		2	Plug	
21	191803		6	Washer	
22	193092		6	Shock absorber	D
23	191805		1	Stud	
24	904558		5	Washer 17x30x6	
25	571006		1	Nut UNC 5/8 - 11	
26	267465		1	Hollow screw	D
27	330331		2	Washer 18,2x23,9x1,5	
28	904230		20	Washer 10,5x22x2	
29	503027		8	Screw UNF 3/8-24x45	
30	500150		2	Screw	
31	191802		2	Bracket	
32	500030		1	Screw M10-1,5x35H 8,8	
33	502092		8	Screw	
34	903290		8	Washer 21x36x6	
35	570008		2	Nut	
36	191799		3	Pipe	
37	191804		1	Hose	
38	334410		1	Adapter	
39	191648		1	Transmission Up to 23620309	
	374966		1	Transmission From 23620310	
40	249993		1	.Oil filter	A
41	904557		4	Washer 10,5x22x4	

A) Not illustrated
B) Not used on SN 23620304 and 305
C) Not used on SN 23620306 and 307
D) With water separator

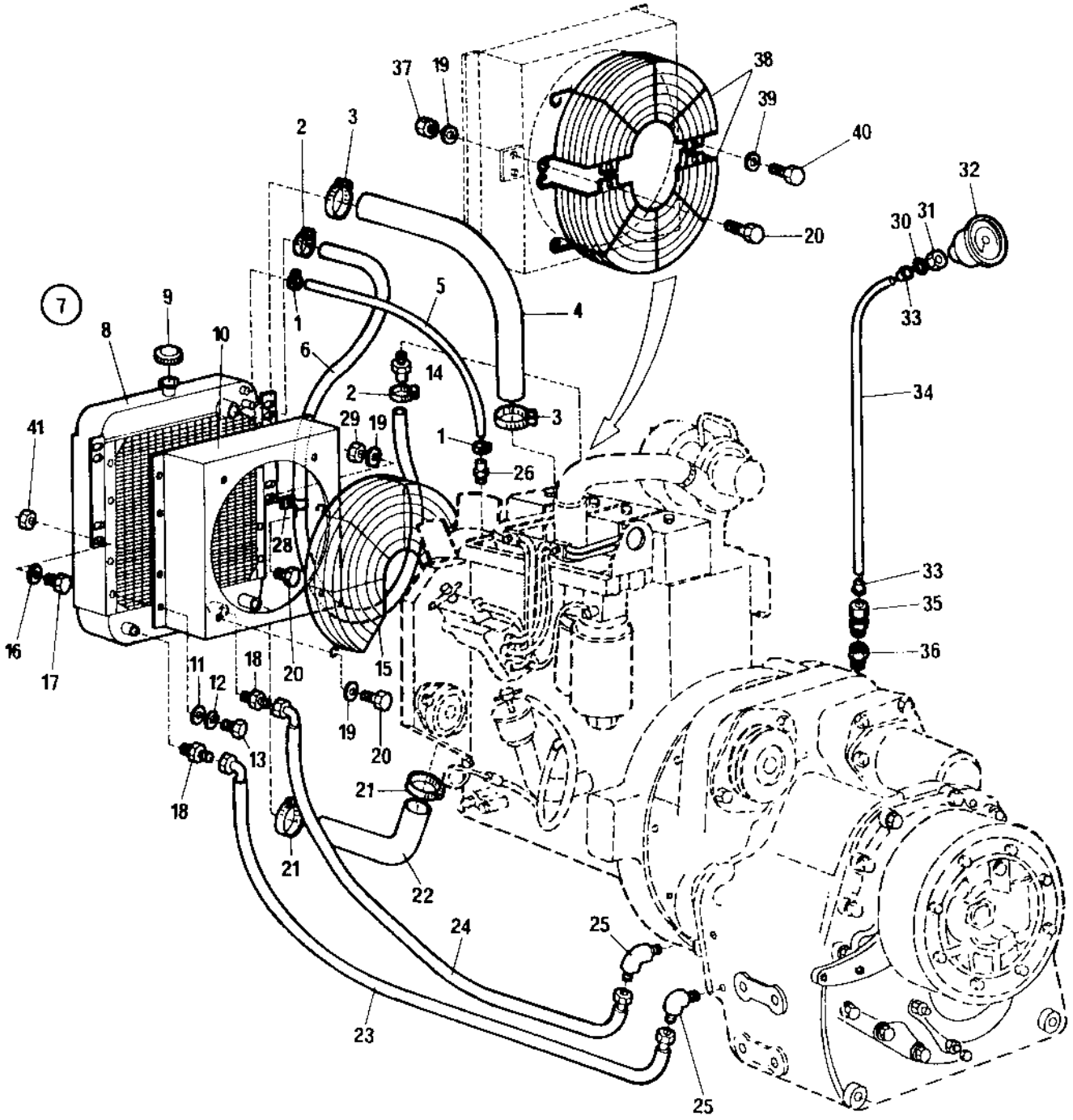
37
19
38
39
40
2
3
32
30
31
20
7
9
8
10
1
5
4
6
14
2
3
33
34
41
29
19
1
26
28
33
35
16
17
20
15
36
11
12
18
19
20
13
18
21
21
22
24
25
23
25

Ref. No.	Part No.	Rem.	Qty	Description	Code
1	313108		2	Hose clamp	
2	313035		2	Hose clamp	
3	313010		2	Hose clamp	
4	374891		1	Hose	
5	246068	A	1	Hose	
6	246072	B	1	Hose	
7	191792		1	Radiator, cpl	
8	819179201		1	.Radiator	
9	249593		1	.Filler cap	D
10	819179202		1	.Cooling air cover	
11	600005		8	.Washer	
12	604003		8	.Washer	
13	500012		8	.Screw M6x12	
14	192227	D	1	Hose connector	
	374984	E	1	Hose connector	
15	191794		1	Fan guard	
16	603023		12	Washer M10	
17	500029		6	Screw M10-1,5x30 8,8	
18	334157		2	Straight connector	
19	600006		5	Washer	
20	500021		6	Screw M8-1,25x25 8,8	
21	313023		2	Hose clamp	
22	191783		1	Hose	
23	191790		1	Hose	
24	191789		1	Hose	
25	334132		2	Elbow 45, O-ring	
26	242614		1	Hose connector	
27	241172		1	Hose connector	
28	240908		1	Clamp	
29	570005		4	Nut M8	
30	231193		1	Sleeve	
31	231192		1	Nut	
32	265909		1	Manometer	
33	920783		2	Insert	
34	247154	C	1	Pipe	
35	920787		1	Pipe connection	
36	234867		1	Straight connector	
37	570005		2	Nut M8	
38	193109		2	Fan guard	
39	615042		2	Conical spring washer	
40	500012		2	Screw M6x12	
41	570006		6	Nut M10	

A) L=600 mm
B) L=1400 mm
C) L=800 mm
D) Up to S/N 23620303 and 306 + 307
E) From S/N 23620304 Not 306 + 307

Air cleaner SN -23620303 and 306 + 307

16212

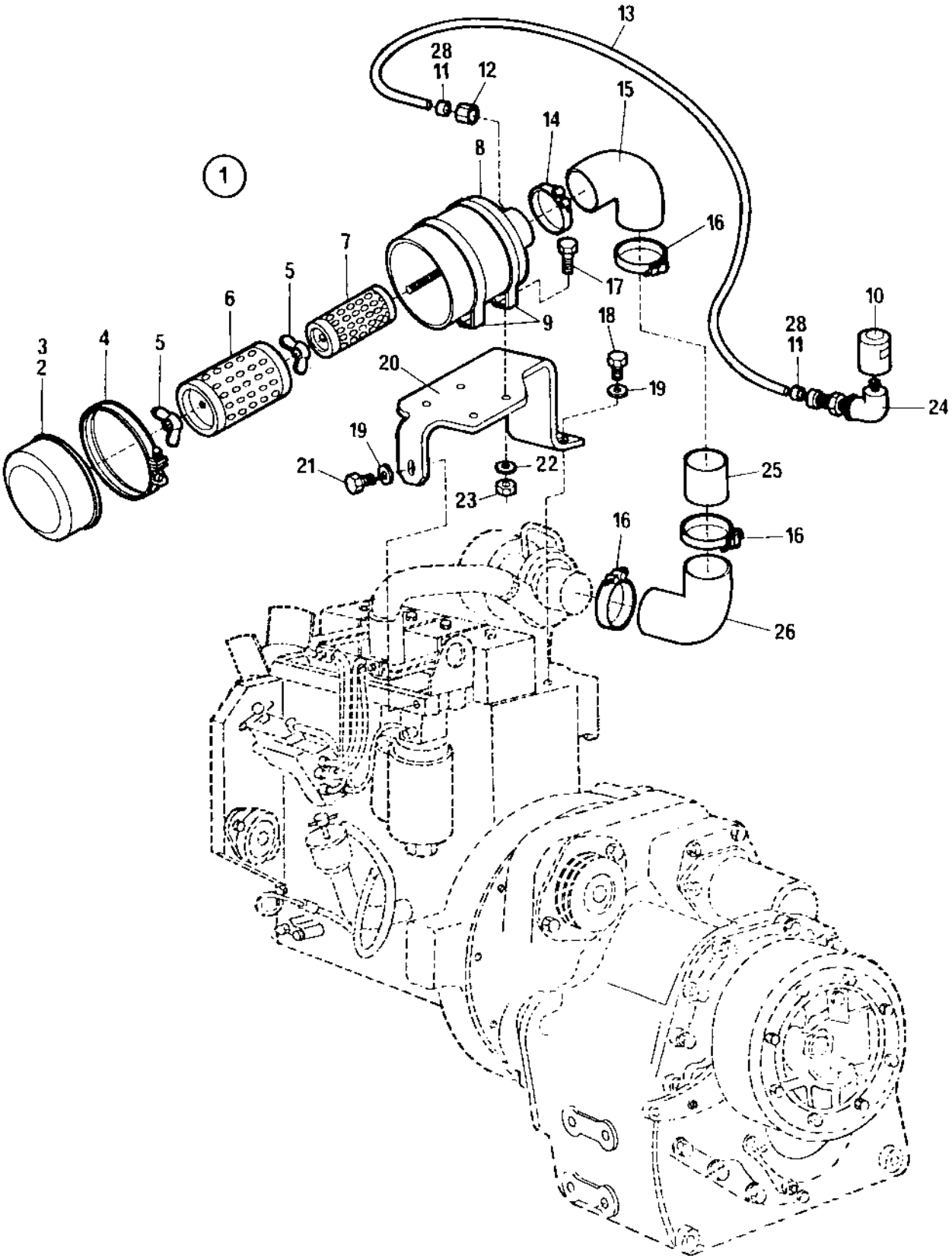

Air cleaner SN -23620303 and 306 + 307

Ref. No.	Part No.	Rem.	Qty	Description	Code
1	260543		1	Air filter, cpl	
2	499368		1	.Baffle	
3	499369		1	.Dust cup	
4	499366		1	.Clamp	
5	891518		2	.Fly nut	
6	499511		1	.Primary element	A
7	499510		1	.Element secondary	A
8	268936		1	.Body	
9	499133		1	.Mounting strip	
10	923328		1	.Restriction indicator	
11	920783		2	Insert	
12	230542		1	Connection	
13	247154	A	1	Pipe	
14	313033		1	Hose clamp	D
15	191881		1	Rubber elbow	
16	313038		3	Hose clamp	
17	500053		4	Screw M8-1,25x20 8,8	
18	500058		2	Screw	
19	603023		3	Washer M10	
20	192158		1	Platform	
21	500028		1	Screw M10-1,5x25 8,8	
22	615043		1	Washer 8,4x18x2	
23	570005		4	Nut M8	
24	261799		1	Elbow 90deg	
25	191883		1	Pipe	
26	499132		1	Rubber elbow	D
28	291193		2	Sleeve	

A) L=1100 mm

Air cleaner SN 23620304- not 306 + 307

16358

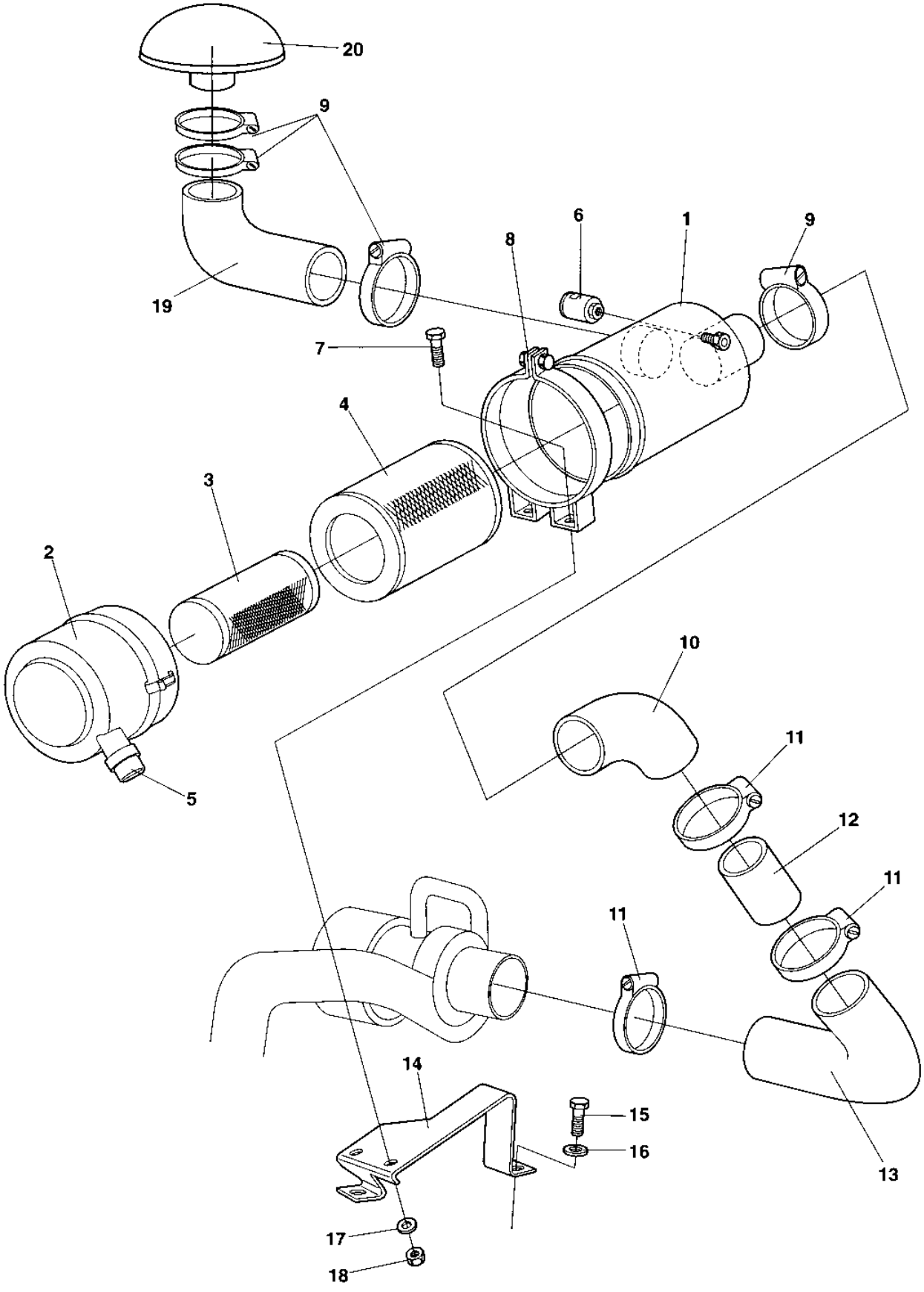

Air cleaner SN 23620304- not 306 + 307

Ref. No.	Part No.	Rem.	Qty	Description	Code
1	374727		1	Air filter, cpl	
2	375023		1	.Cover	
3	374772		1	.Safety filter	A
4	374771		1	.Main filter	A
5	374905		1	.Vacuator valve	
6				See electrical equipment	
7	500053		2	Screw M8-1,25x20 8,8	
8	374745		1	Bracket	
9	313033		2	Hose clamp	D
10	927048		1	Rubber elbow	D
11	313038		3	Hose clamp	
12	191883		1	Pipe	
13	499132		1	Rubber elbow	D
14	380444		1	Bracket	
15	500048		2	Screw M10-1,5x20 8,8	
16	603023		2	Washer M10	
17	615043		2	Washer 8,4x18x2	
18	570005		2	Nut M8	
19	375170		1	Rubber hose	D
20	499343		1	Rain cap	D

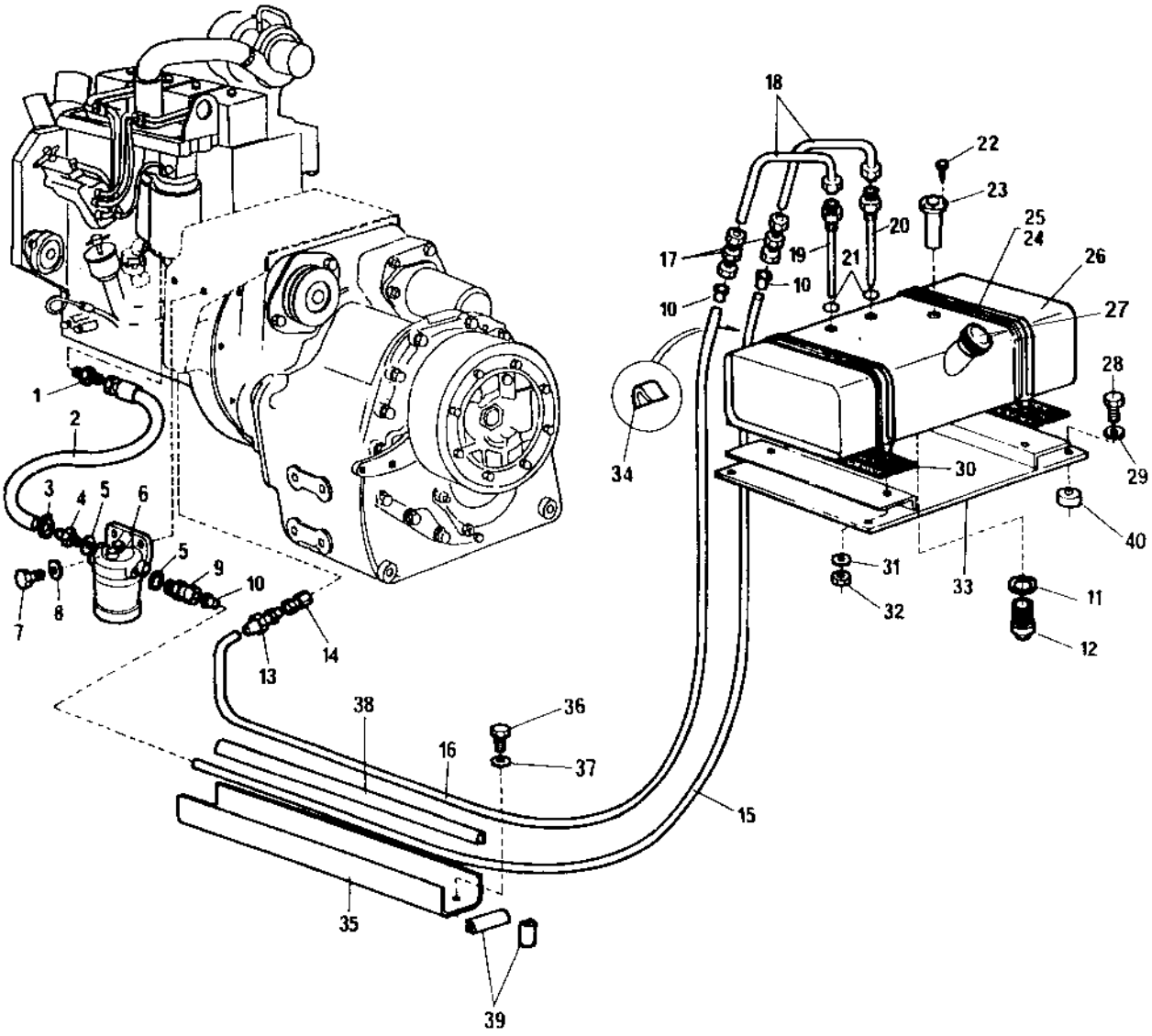
1
2
3
4
5
6
7
8
9
10
11
12
13
14
15
16
17
18
19
20
21
22
23
24
25
26
27
28
29
30
31
32
33
34
35
36
37
38
39
40

Fuel system -23620303 and 306 + 307

Ref. No.	Part No.	Rem.	Qty	Description	Code
1	334172		1	Adapter	
2	348595		1	Hose cpl	D
3	313002		1	Hose clamp	
4	242454		1	Connector	
5	195647		4	Washer	
6	750035		1	Fuel filter	B
7	500028		2	Screw M10-1,5x25 8,8	
8	615044		2	Conical spring washer	D
9	192349		1	Coupling	
10	920784		4	Insert	
11	925966		1	Rubber sealing	D
12	264389		1	Fuel filter	A
13	920788		1	Coupling	
14	191894		1	Coupling	
15	247151	A	1	Pipe 3/8"	
16	247151	B	1	Pipe 3/8"	
17	268913		2	Nipple	
18	191821		2	Fuel tube	
19	191823		1	Tube	
20	191822		1	Tube	
21	330330		2	Washer	
22	537009		5	Screw	
23	927468		1	Fuel sender	D
24	191824		2	Clamp, cpl	
25	297018		2	Rubber strip	
26	191887		1	Fuel tank	
27			1	Cap See Sprinkler system assembly	
28	500030		4	Screw M10-1,5x35H 8,8	
29	615044		4	Conical spring washer	D
30	264039		6	Shim	
31	600009		4	Washer	
32	586117		4	Nut	
33	195364		1	Floor	
34	192501		2	Shim	
35	191888		1	Channel	
36	500012		8	Screw M6x12	
37	615042		8	Conical spring washer	
38	202028	C	1	Edge trim	
39	202028	D	4	Edge trim	
40	346235		4	Spacer sleeve	

A) L=2900 mm
B) L=3100 mm
C) L=2600 mm
D) L=55 mm

Fuel system SN 23620304- not 306 + 307

16357

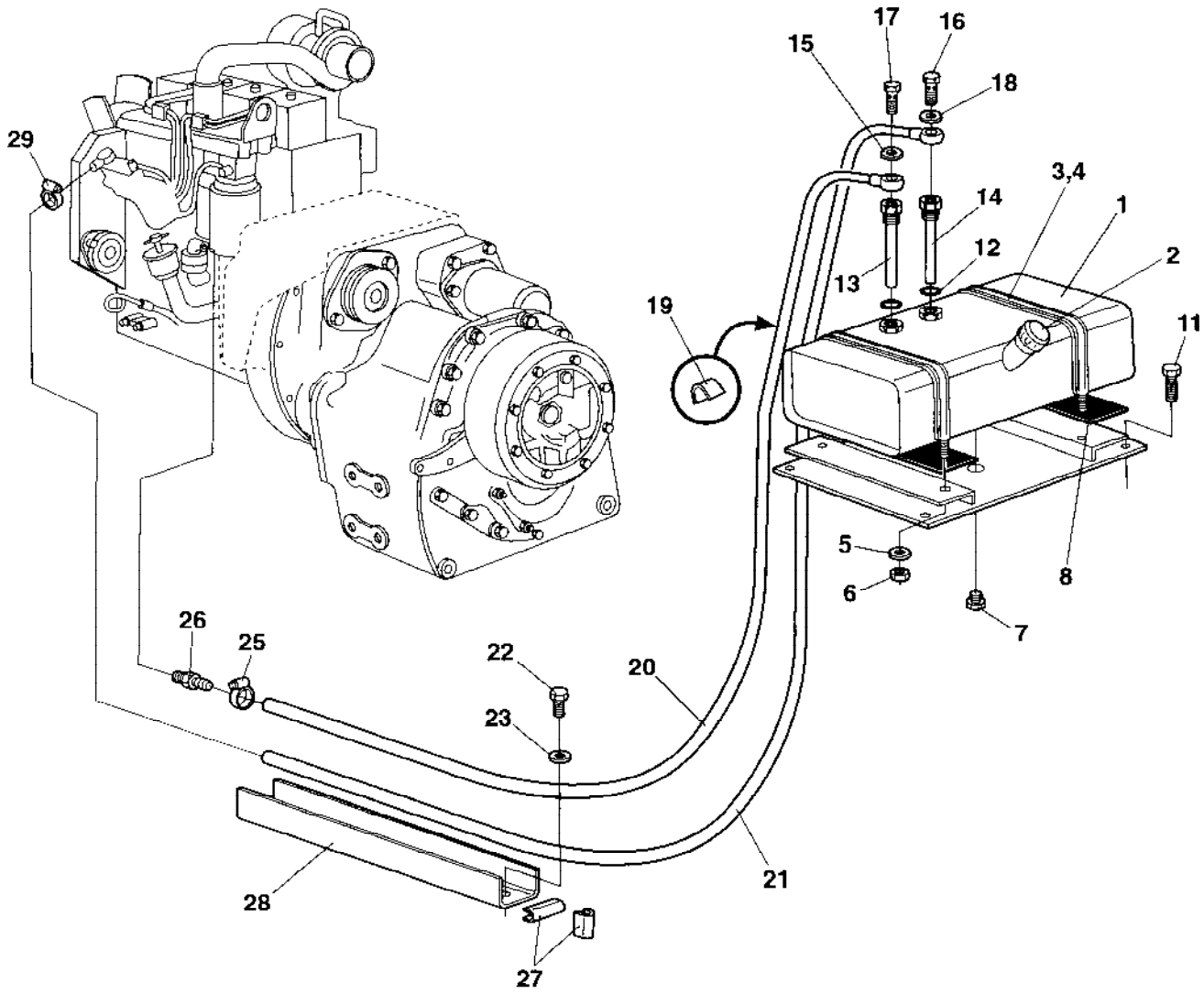

Fuel system SN 23620304- not 306 + 307

Ref. No.	Part No.	Rem.	Qty	Description	Code
1	376392		1	Fuel tank	
2			1	Cap See Sprinkler system assembly	
3	191824		2	Clamp, cpl	
4	297018	A		Rubber strip	
5	904231		4	Washer 13x24x2	
6	586019		4	Lock nut M12	
7	374764		1	Plug	
8	264039		6	Shim	
11	904644		4	Screw	
12	330330		2	Washer	
13	374754		1	Pipe	
14	374755		1	Pipe	
15	747282		2	Copper washer 14x20x1,5	
16	330171		1	Hollow screw	
17	330171		1	Hollow screw	
18	747282		2	Copper washer 14x20x1,5	
19	192501		2	Shim	
20	374761		1	Fuel hose	
	929322		1	.Fuel strainer	A
21	374762		1	Fuel hose	
22	500012		8	Screw M6x12	
23	904639		8	Washer 6,7x14x1,5	
25	921161		1	Clamp	
26	334172		1	Adapter	
27	202028	C		Edge trim	
28	380251		1	Channel	
29	313001		1	Hose clamp	
30	500006		5	Screw M5x16	
31	192032		1	Fuel sender	

A) L=1,640 mm
C) L=400 mm

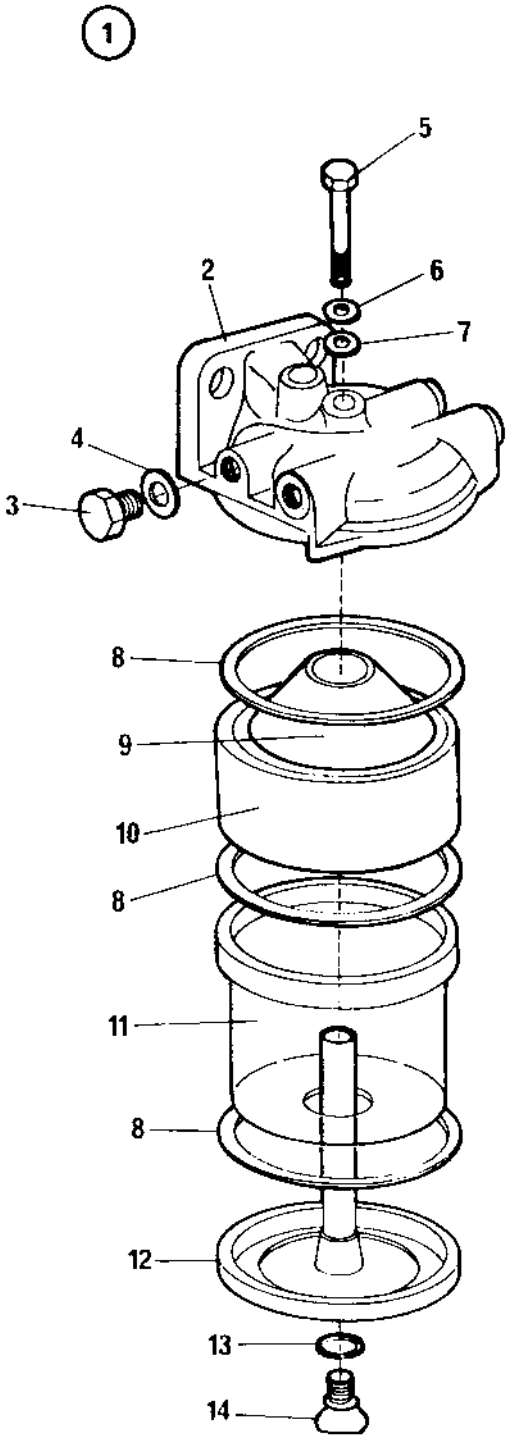
1
5
2
6
7
4
3
8
9
10
8
11
8
12
13
14

Sedimenter - SN 23620303 and 306 + 307

Ref. No.	Part No.	Rem.	Qty	Description	Code
1	750035		1	Fuel filter	B
2	195627		1	.Filter head	
3	195628		2	.Plug	
4	195629		2	.Washer	
5	195630		1	.Screw	
6	195631		1	.Washer	
7	195632		1	.Seal ring	
8	195633		3	.Seal ring	
9	195634		1	.Sedimenter cone	
10	195635		1	.Sedimenter body	
11	195636		1	.Cup	
12	195637		1	.Base	
13	195638		1	.Washer	
14	195639		1	.Drain screw	

Muffler

16211

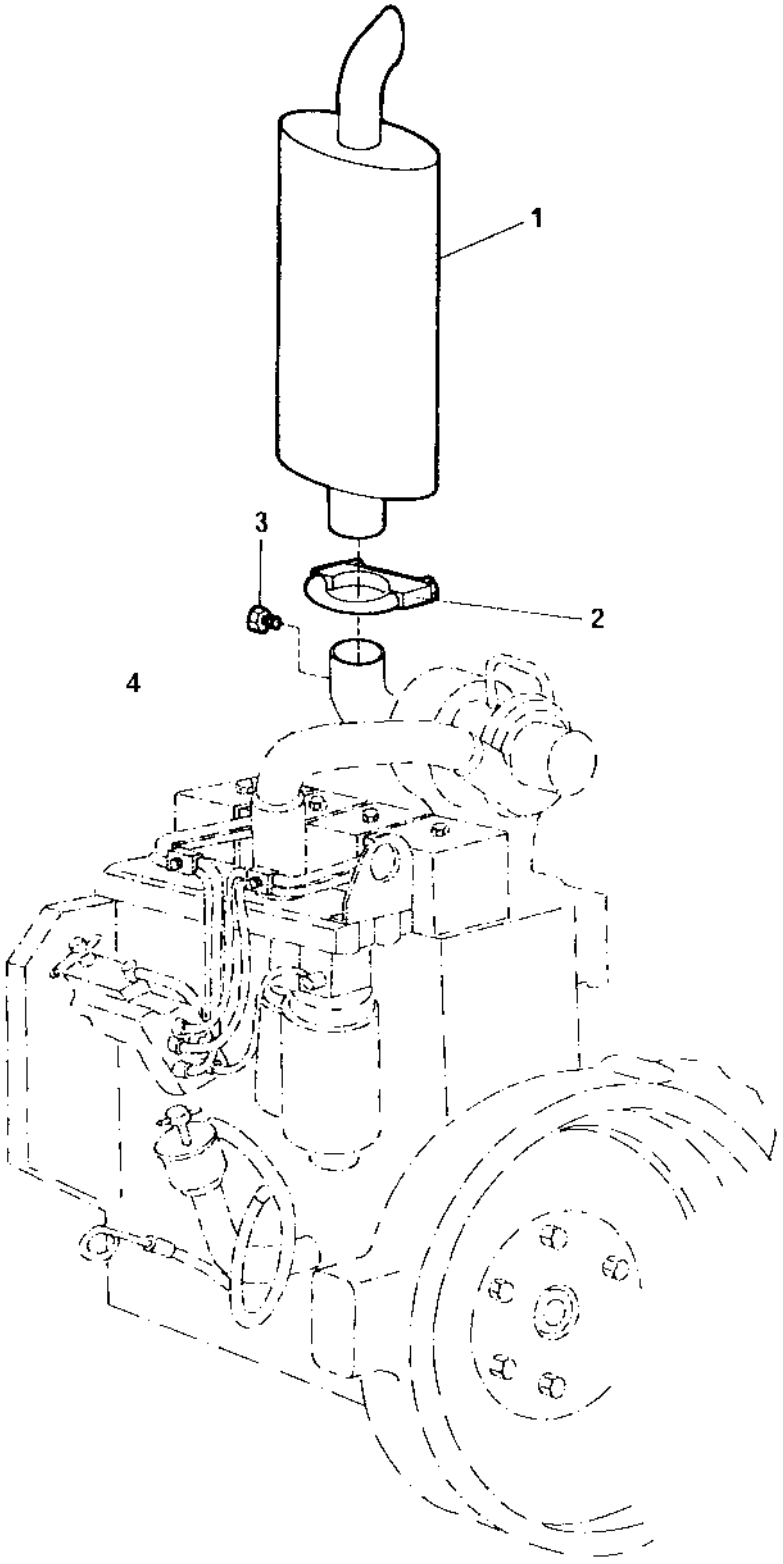

Muffler

Ref. No.	Part No.	Rem.	Qty	Description	Code
1	385975	B	1	Muffler	
2	313112		1	Clamp	D
3	813423		1	Hexagon plug	
4	374827	A	1	Bracket	
	500028	A	4	Screw M10-1,5x25 8,8	
	600008	A	4	Washer	

A) Only in old version
B) Replaces earlier used muffler. Introduced from SN 23620524.

Ref. No.	Part No.	Rem.	Qty	Description	Code
10				Transmission Up to SN 23620307 (Page 128)	
20				Transmission From SN 23620308 (Page 162)	
30				Differential assembly Merc. Benz (Page 196)	
40				Differential assembly Eaton (Page 198)	
50				Differential -699B431, Merc. Benz (Page 200)	
60				Differential assembly 699B432-699B481, Eaton (Page 202)	
70				Differential 699B482-, Rockwell (Page 206)	
80				Cardan shaft assembly (Page 210)	
90				Cardan shaft -699B481, Albarus (Page 212)	
100				Cardan shaft 699B482-, Albarus (Page 214)	

Ref. No.	Part No.	Rem.	Qty	Description	Code
10				Converter housing & case (Page 130)	
20				Turbine shaft, stator support (Page 132)	
30				Drive plate (Page 134)	
40				Torque converter (Page 136)	
50				Gear (Page 138)	
60				Auxiliary pump drive (Page 140)	
70				Charging pump drive (Page 142)	
80				Reverse & 2nd shaft (Page 144)	
90				Low speed shaft (Page 146)	
100				Forward shaft (Page 148)	
110				Reverse idler (Page 150)	
120				Output & 3rd clutch (Page 152)	
130				Charging pump & oil filter (Page 154)	
140				Control valve (Page 156)	
170				Drum brake (Page 160)	

Converter housing & case

16213-1

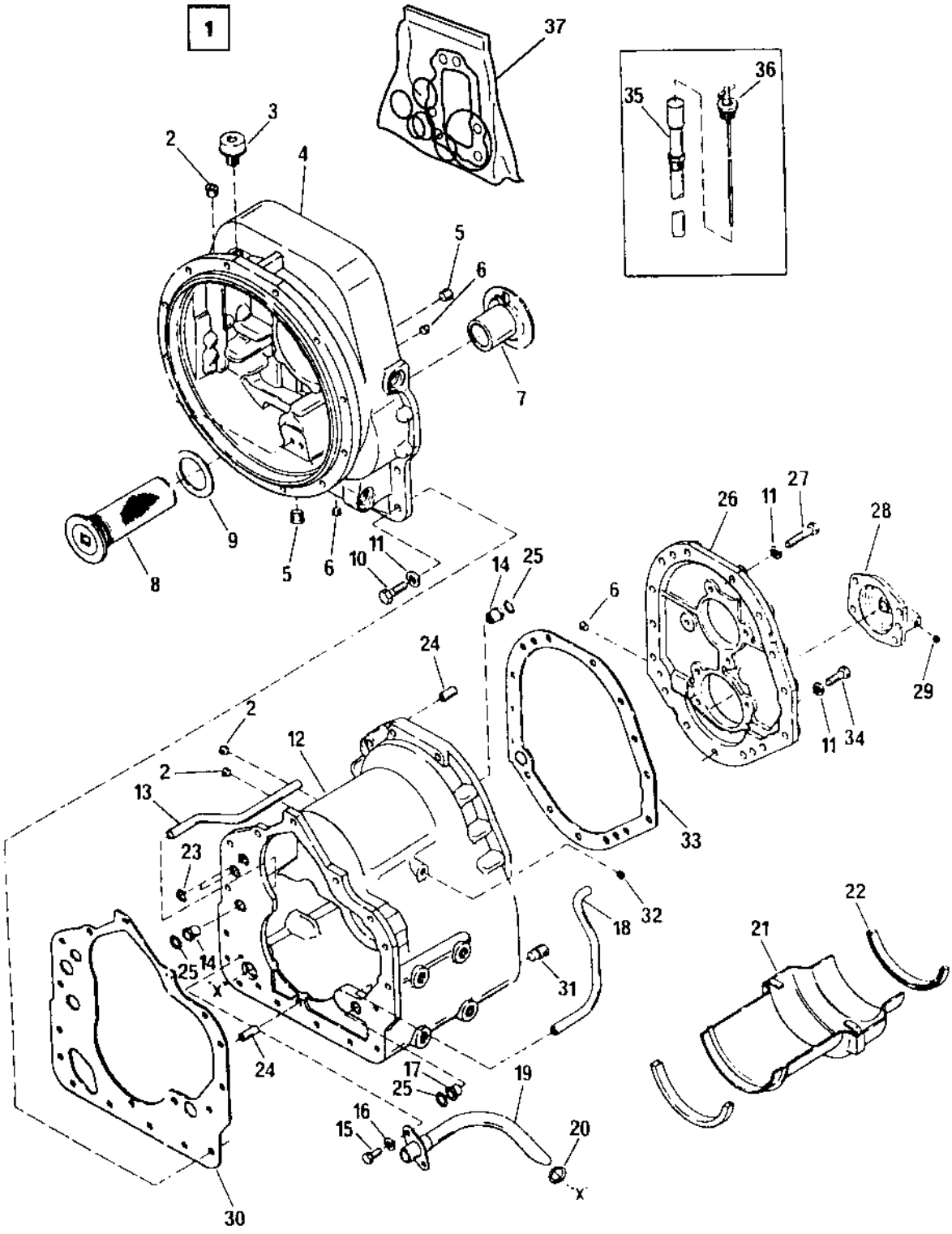

Converter housing & case

Ref. No.	Part No.	Rem.	Qty	Description	Code
1	191648		1	Transmission	
2	193658		3	.Plug	
3	240667		1	.Breather	
4	240700		1	.Housing	
5	240571		2	.Plug	
6	240675		3	.Plug	
7	240618		1	.Bushing	
8	240594		1	.Filter	
9	193666		1	.Gasket	
10	240563		16	.Screw	
11	240718		31	.Spring washer	
12	240257		1	.Air tank	
13	240606		1	..Tube	
14	240583		2	..Bushing	
15	240560		2	..Screw	
16	240716		2	..Spring washer	
17	240582		1	..Bushing	
18	240656		1	..Tube	
19	240605		1	..Tube	
20	193663		1	..O-ring	
21	240622		1	..Oil deflector	
22	193662		2	..Deflector sealing	
23	193664		2	.O-ring	
24	240580		3	.Pin	
25	193659		3	.O-ring	
26	240634		1	.Rear cover	
27	240564		9	.Screw	
28	193660		1	.Cover	
29	240684		1	..Plug	
30	193665		1	.Gasket	
31	240572		2	.Magnetic plug	
32	240575		1	.Plug	
33	193661		1	.Gasket	
34	240563		6	.Screw	
35	240645		1	.Guide tube	
36	240644		1	.Oil dipstick	
37	939297		1	Seal kit Transm. section	
	939298		1	Seal kit Converter section	

Turbine shaft, stator support

16214

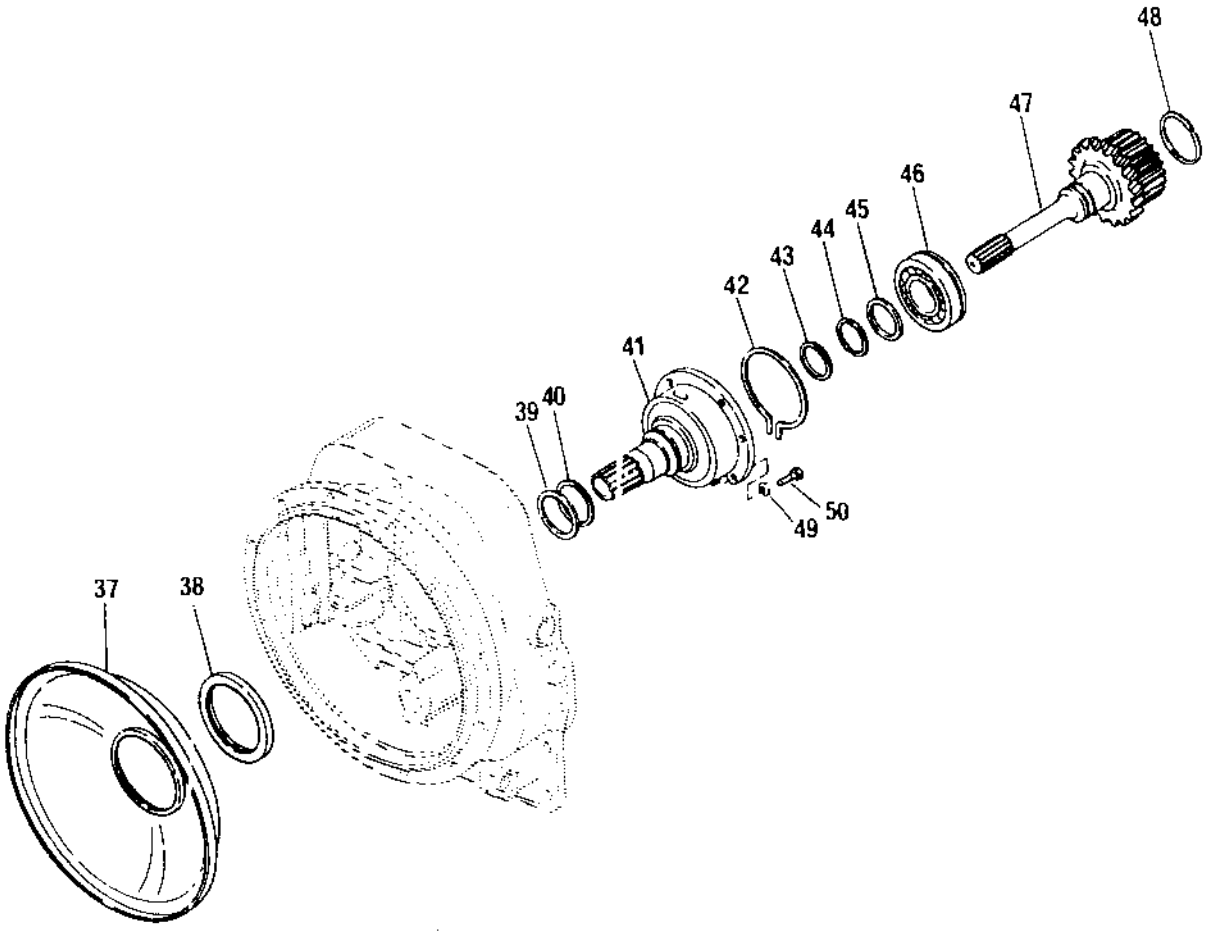

Turbine shaft, stator support

Ref. No.	Part No.	Rem.	Qty	Description	Code
37	240627		1	Oil deflector	
38	193670		1	.Seal ring	
39	193669		1	Seal ring	
40	193668		1	Extension spring	
41	240693		1	Gear	
42	240615		1	Snap ring	
43	193667		1	Seal ring	
44	240595		1	Retaining ring	
45	240616		1	Washer	
46	240682		1	Bearing	
47	240686		1	Shaft	
48	240688		1	.Retaining ring	
49	240717		6	Spring washer	
50	240561		6	Screw	

Drive plate

16215

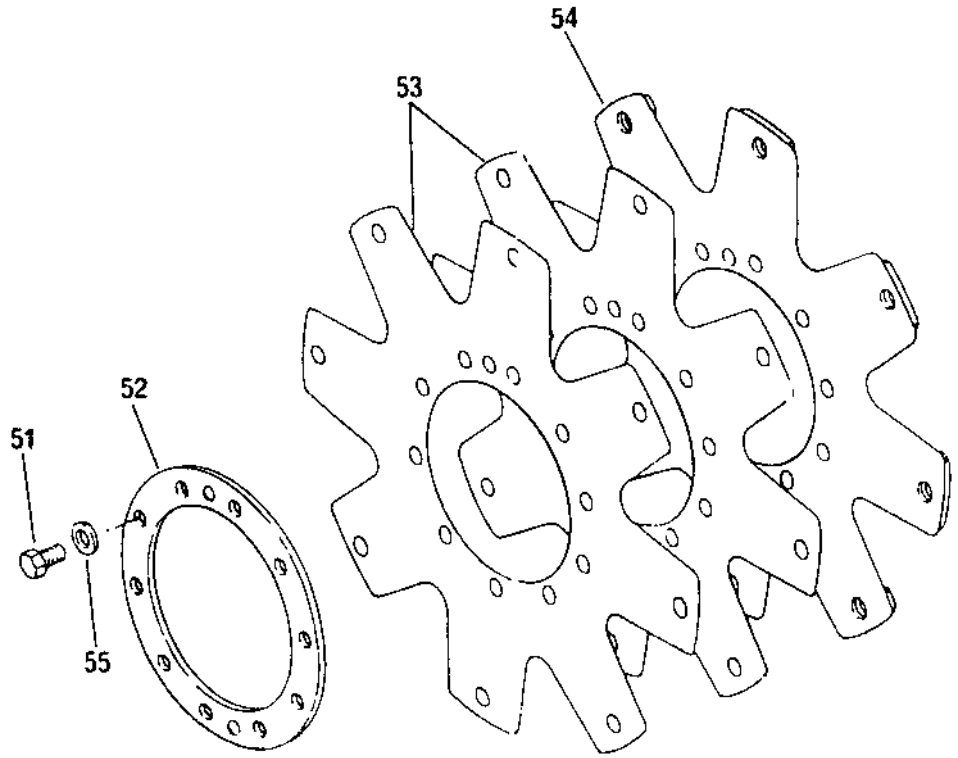

Drive plate

Ref. No.	Part No.	Rem.	Qty	Description	Code
51	240721		10	Screw	
52	193673		1	Support ring	
53	193672		2	Drive plate	
54	193671		1	Drive plate	
55	240718		10	Spring washer	

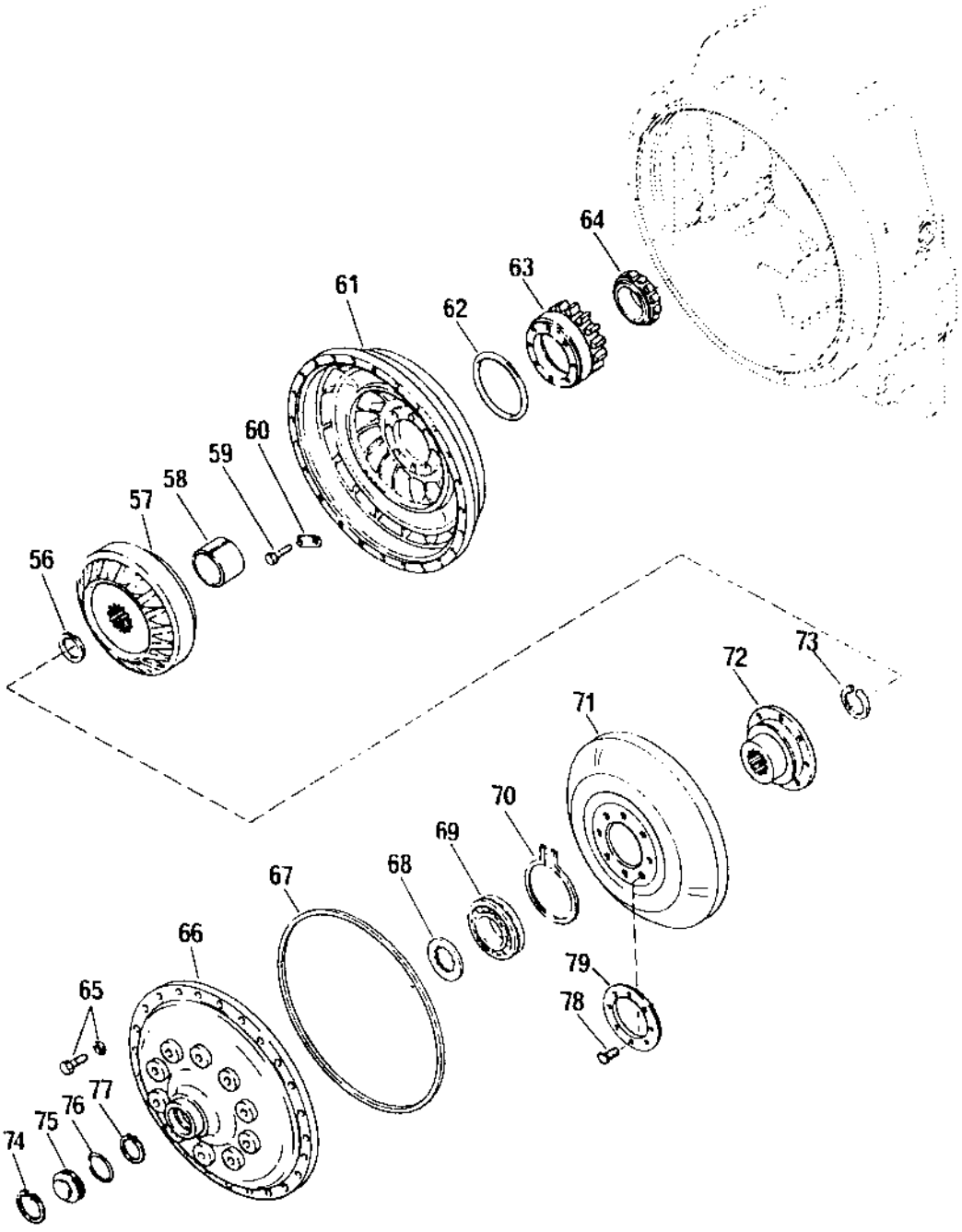
64
63
62
61
60
59
58
57
56
73
72
71
70
69
68
67
66
65
79
78
77
76
75
74

Ref. No.	Part No.	Rem.	Qty	Description	Code
56	240729		1	Seal ring	
57	240683		1	Stator	
58	240701		1	Spacer	
59	240576		8	Screw	
60	240612		4	Lock plate	
61	193675		1	Impeller	
62	193674		1	O-ring	
63	240665		1	Impeller hub	
64	240666		1	Bearing	
65	240597		24	Screw with washer	
66	240678		1	Impeller cover	
67	193676		1	O-ring	
68	240698		1	Ring	
69	240613		1	Bearing	
70	240614		1	Seal ring	
71	240679		1	Turbine	
72	240680		1	Hub	
73	240573		1	Seal ring	
74	240574		1	Retaining ring	
75	240584		1	Plug	
76	193677		1	O-ring	
77	240573		1	Seal ring	
78	240696		12	Screw	
79	240633		1	Washer	

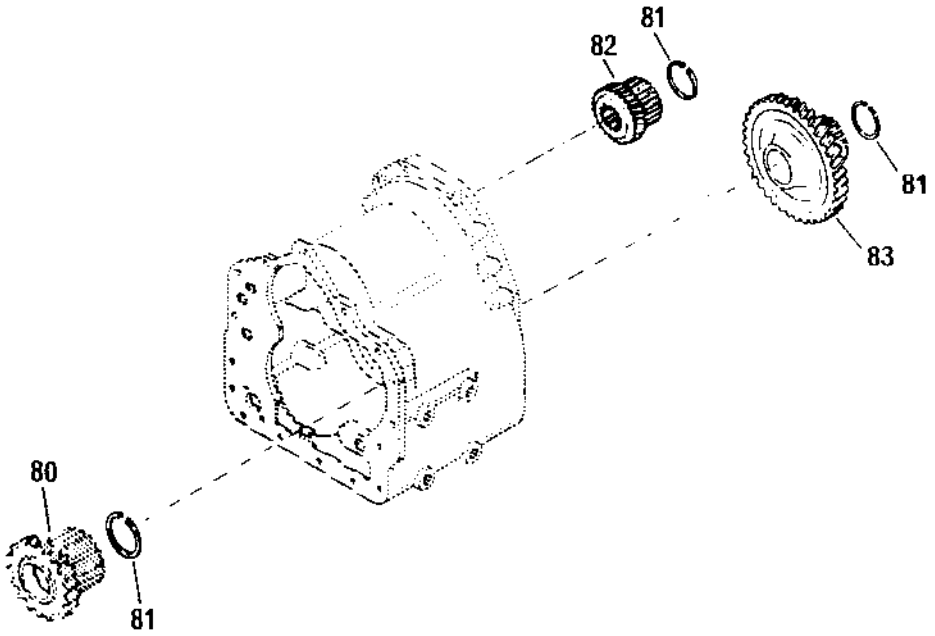
81
82
81
83
80
81

Ref. No.	Part No.	Rem.	Qty	Description	Code
80	240687		1	Gear	
81	240688		3	Retaining ring	
82	240690		1	Gear	
83	240693		1	Gear	

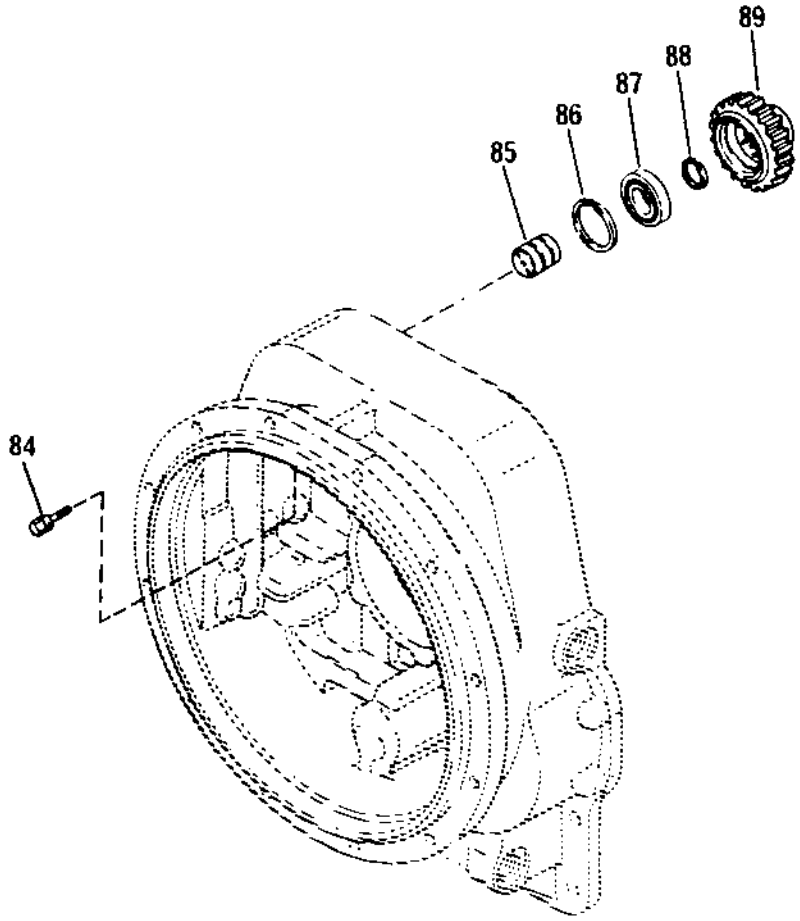
89
88
87
86
85
84

Ref. No.	Part No.	Rem.	Qty	Description	Code
84	240722		2	Screw with washer	
85	240623		1	Support	
86	240586		1	Retaining ring	
87	240663		1	Bearing	
88	240629		1	Locating ring	
89	240677		1	Gear	

Charging pump drive

16218

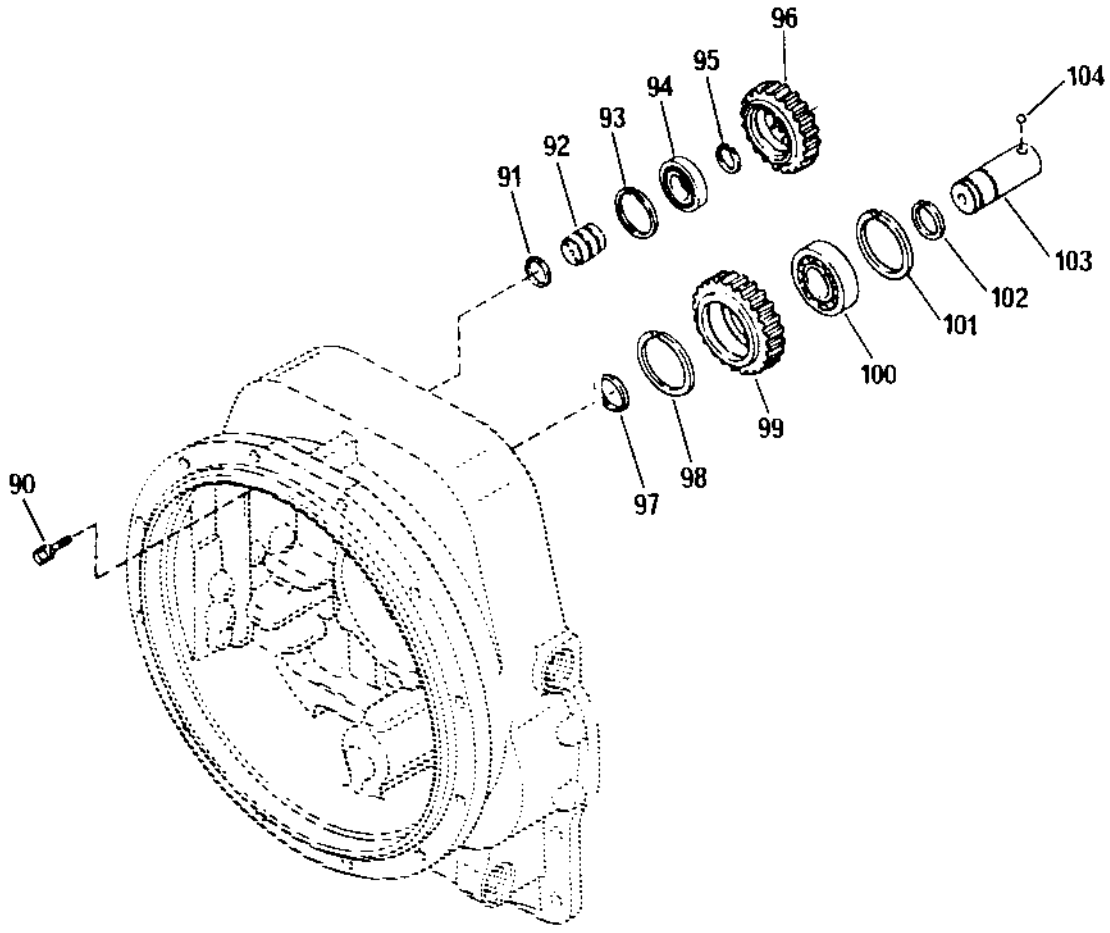

Ref. No.	Part No.	Rem.	Qty	Description	Code
90	193678		2	Screw with washer	
91	240629		1	Locating ring	
92	240623		1	Support	
93	240587		1	Seal ring	
94	193679		1	Bearing	
95	240629		1	Locating ring	
96	240661		1	Gear	
97	240629		1	Locating ring	
98	240558		1	Seal ring	
99	240660		1	Intermediate gear	
100	240664		1	Bearing	
101	240558		1	Seal ring	
102	240629		1	Locating ring	
103	240662		1	Shaft	
104	193680		1	Ball	

Reverse & 2nd shaft

16219

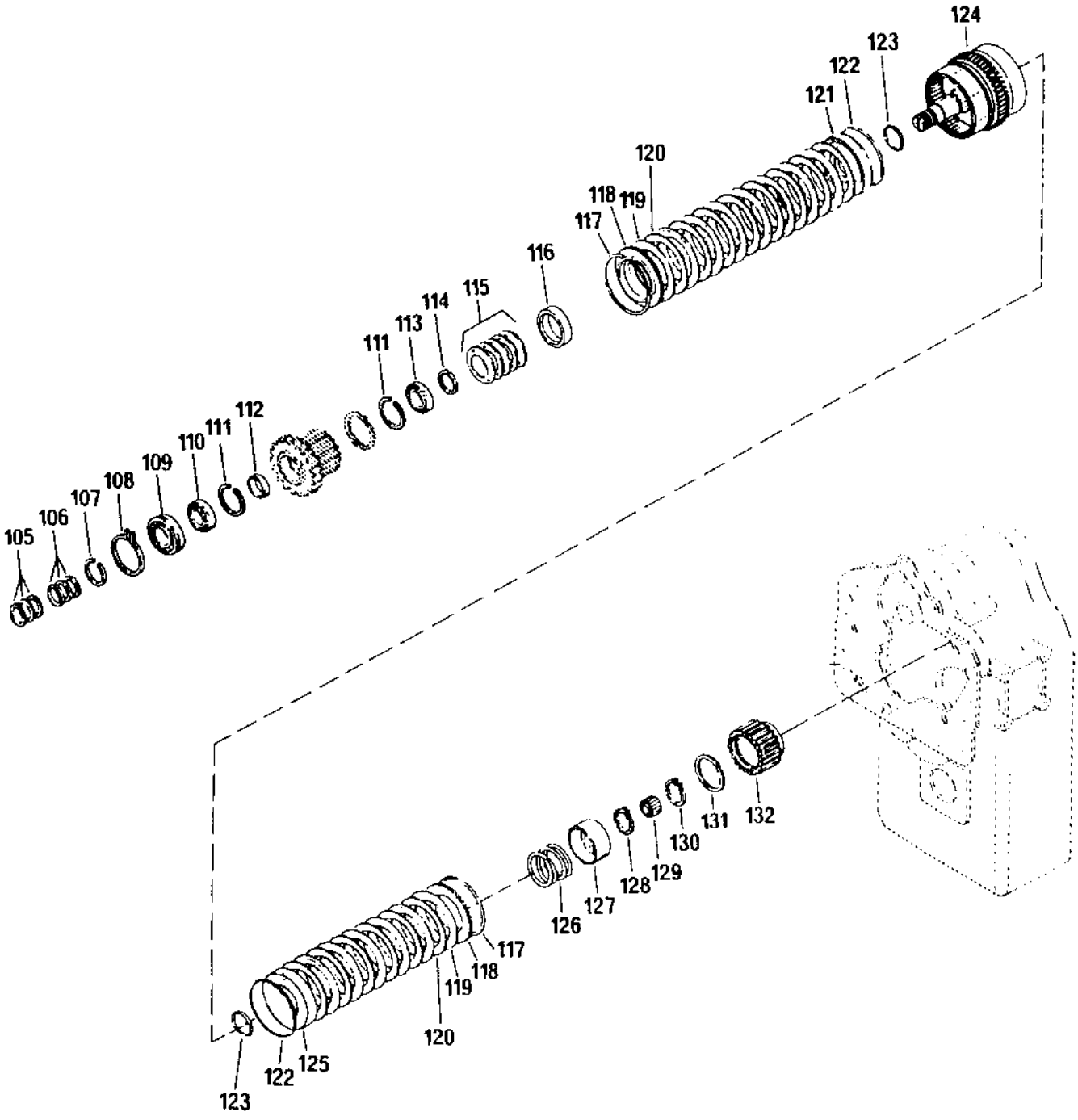

Ref. No.	Part No.	Rem.	Qty	Description	Code
105	193668		3	Extension spring	
106	193683		1	Piston ring	
107	193684		1	Retaining ring	
108	240593		1	Snap ring	
109	240585		1	Bearing	
110	425738932		1	Bearing	
111	240602		2	Retaining ring	
112	240620		1	Spacer	
113	425738967		1	Bearing	
114	240655		1	Snap ring	
115	193685		1	Disc spring	
116	240651		1	Spacer	
117	240601		2	Snap ring	
118	240649		2	Support disc	
119	240650		14	Inner disc	
120	240600		14	Outer disc	
121	240640		1	Piston	
122	193686		2	Seal ring, outer	
123	193687		2	Seal ring, inner	
124	240697		1	Plate carrier	
125	240642		1	Piston	
126	240639		1	Spring	
127	240638		1	Spring stop	
128	240626		1	Snap ring	
129	240596		1	Bearing	
130	240625		1	Retaining ring	
131	240688		1	Retaining ring	
132	240689		1	Hub	

Low speed shaft

16220

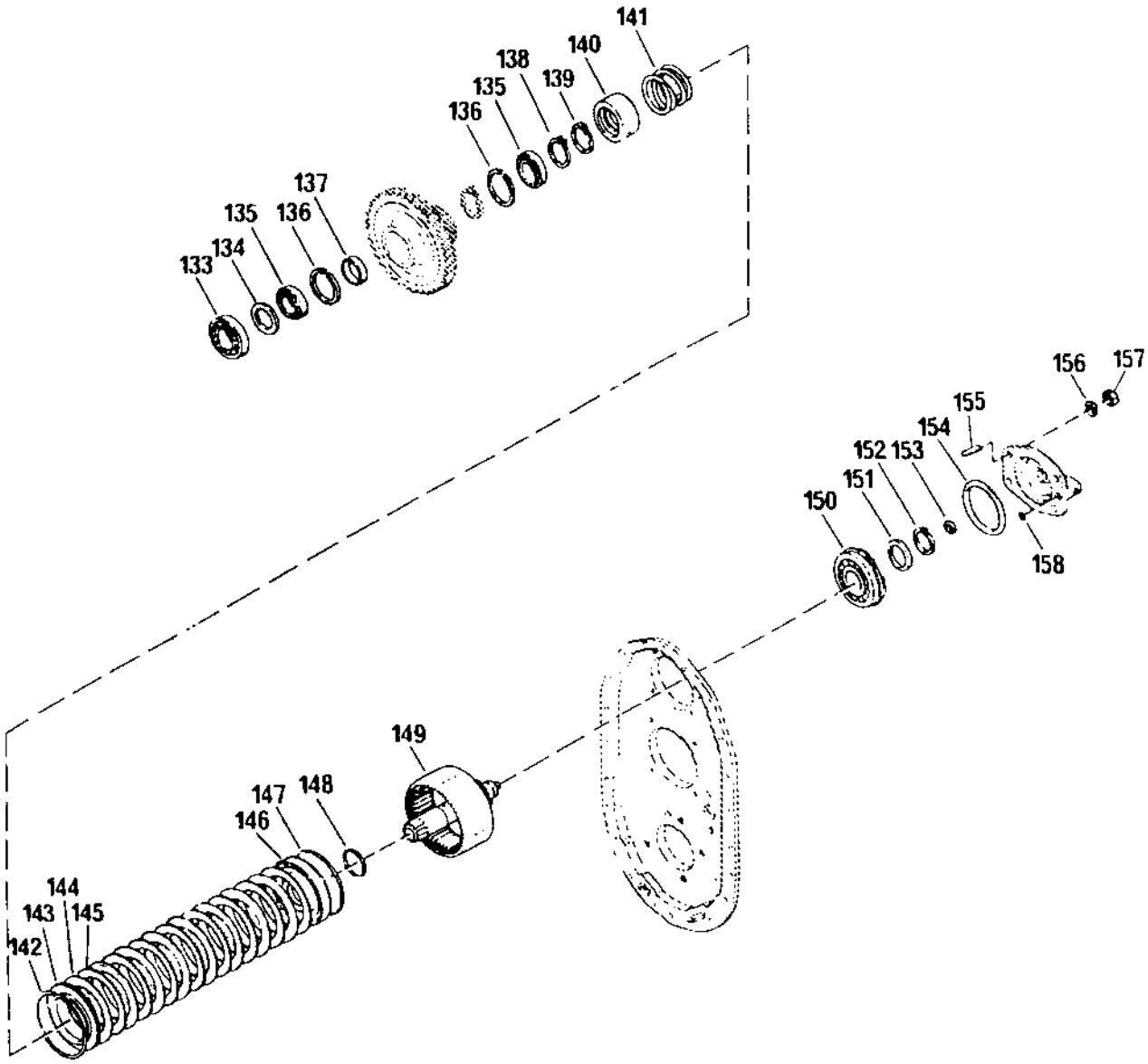

Low speed shaft

Ref. No.	Part No.	Rem.	Qty	Description	Code
133	240591		1	Bearing	
134	240604		1	Spacer	
135	240592		2	Bearing	
136	240558		2	Seal ring	
137	240621		1	Spacer	
138	240625		1	Retaining ring	
139	240626		1	Snap ring	
140	240638		1	Spring stop	
141	240639		1	Spring	
142	240601		1	Snap ring	
143	240649		1	Support disc	
144	240624		8	Inner disc	
145	240600		8	Outer disc	
146	240640		1	Piston	
147	193686		1	Seal ring, outer	
148	193687		1	Seal ring, inner	
149	240641		1	Disc carrier	
150	240681		1	Bearing	
151	240616		1	Washer	
152	240625		1	Retaining ring	
153	193699		1	Piston ring	
154	193700		1	O-ring	
155	193701		4	Stud	
156	240719		4	Spring washer	
157	193702		4	Nut	
158	193703		1	O-ring	

Forward shaft

16221

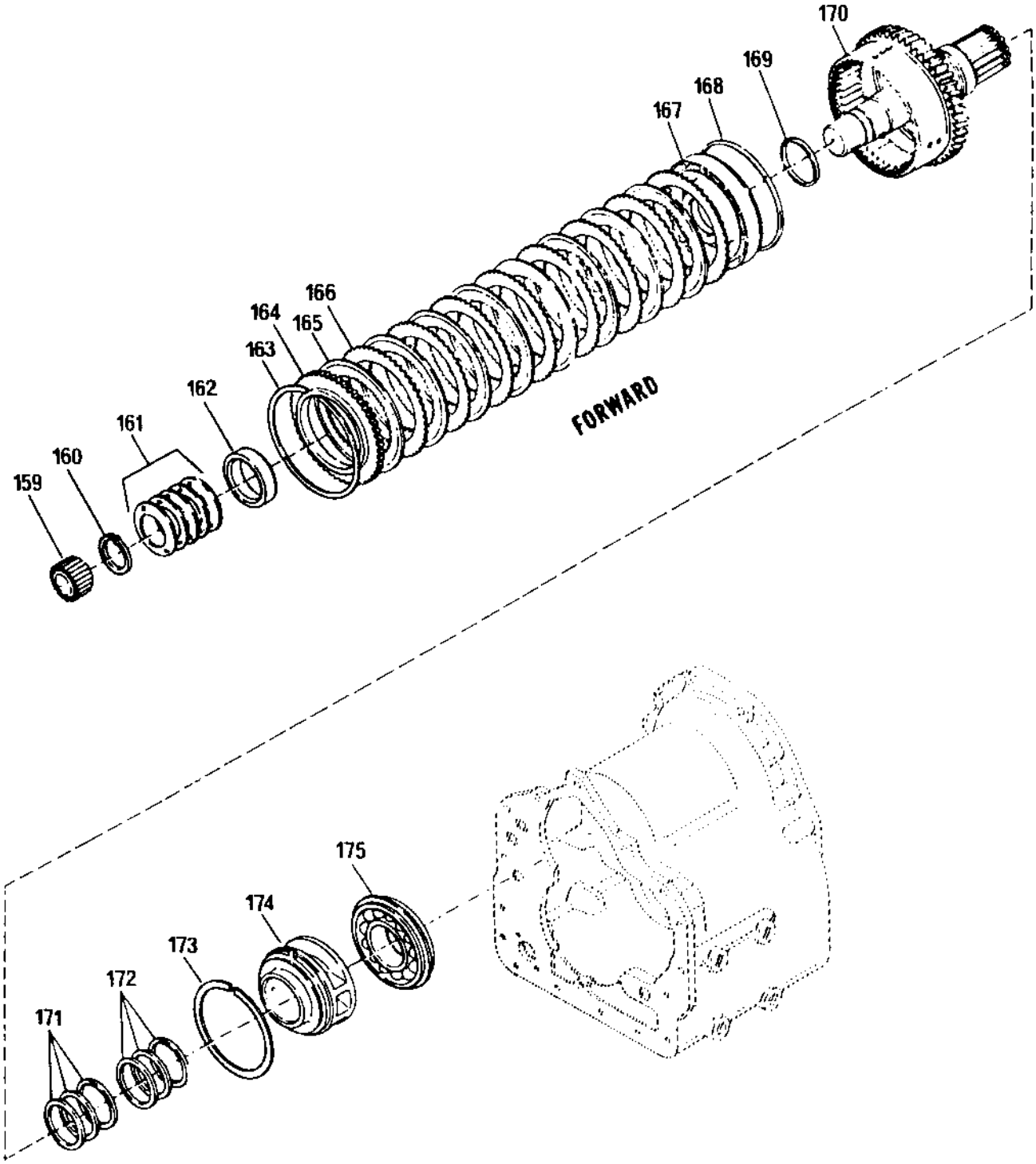

Ref. No.	Part No.	Rem.	Qty	Description	Code
159	240636		1	Needle bearing	
160	240655		1	Snap ring	
161	193685		1	Disc spring	
162	240651		1	Spacer	
163	240601		1	Snap ring	
164	240649		1	Support disc	
165	240650		8	Inner disc	
166	240600		8	Outer disc	
167	240640		1	Piston	
168	193686		1	Seal ring, outer	
169	193687		1	Seal ring, inner	
170	240653		1	Plate carrier	
171	938362		4	Piston ring expander	
172	938368		4	Piston ring	
173	240637		1	Retaining ring	
174	240691		1	Bushing	
175	240695		1	Bearing	

Reverse idler

16222

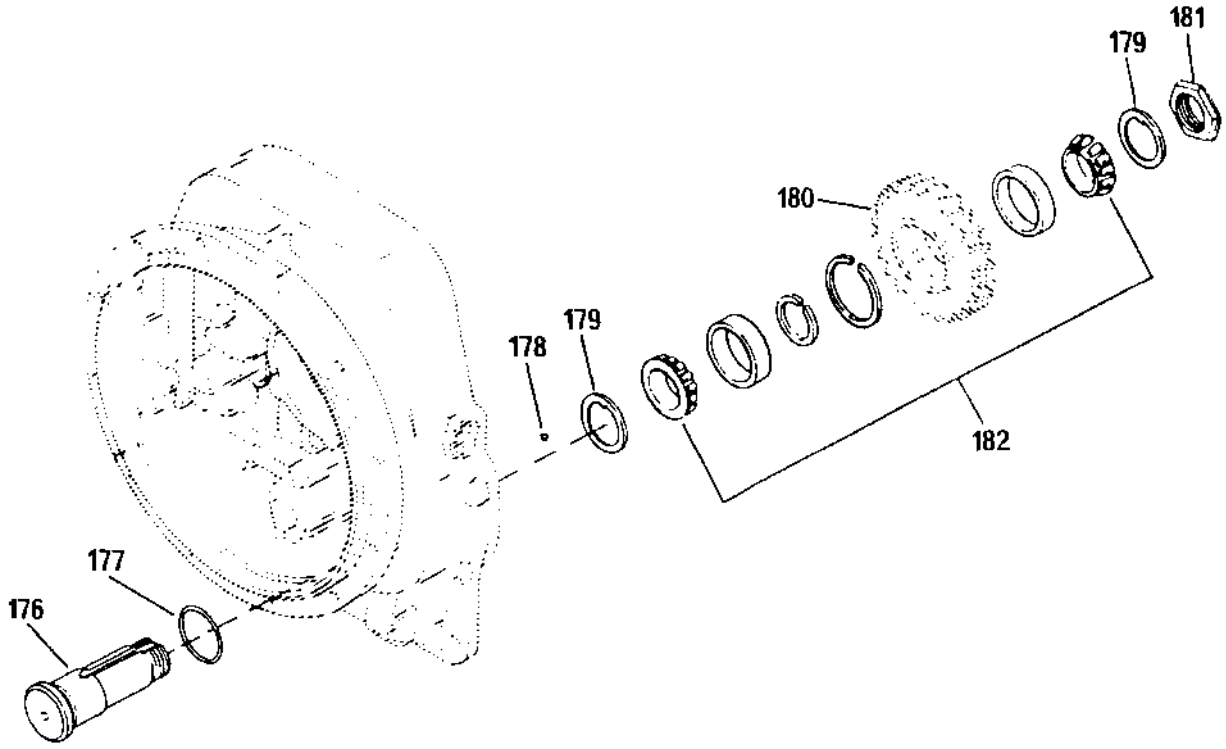

Reverse idler

Ref. No.	Part No.	Rem.	Qty	Description	Code
176	173707		1	Intermediate shaft	
177	193708		1	O-ring	
178	240567		1	Ball	
179	240673		2	Washer	
180	240669		1	Intermediate gear	
181	240579		1	Nut	
182	193709		1	Bearing	

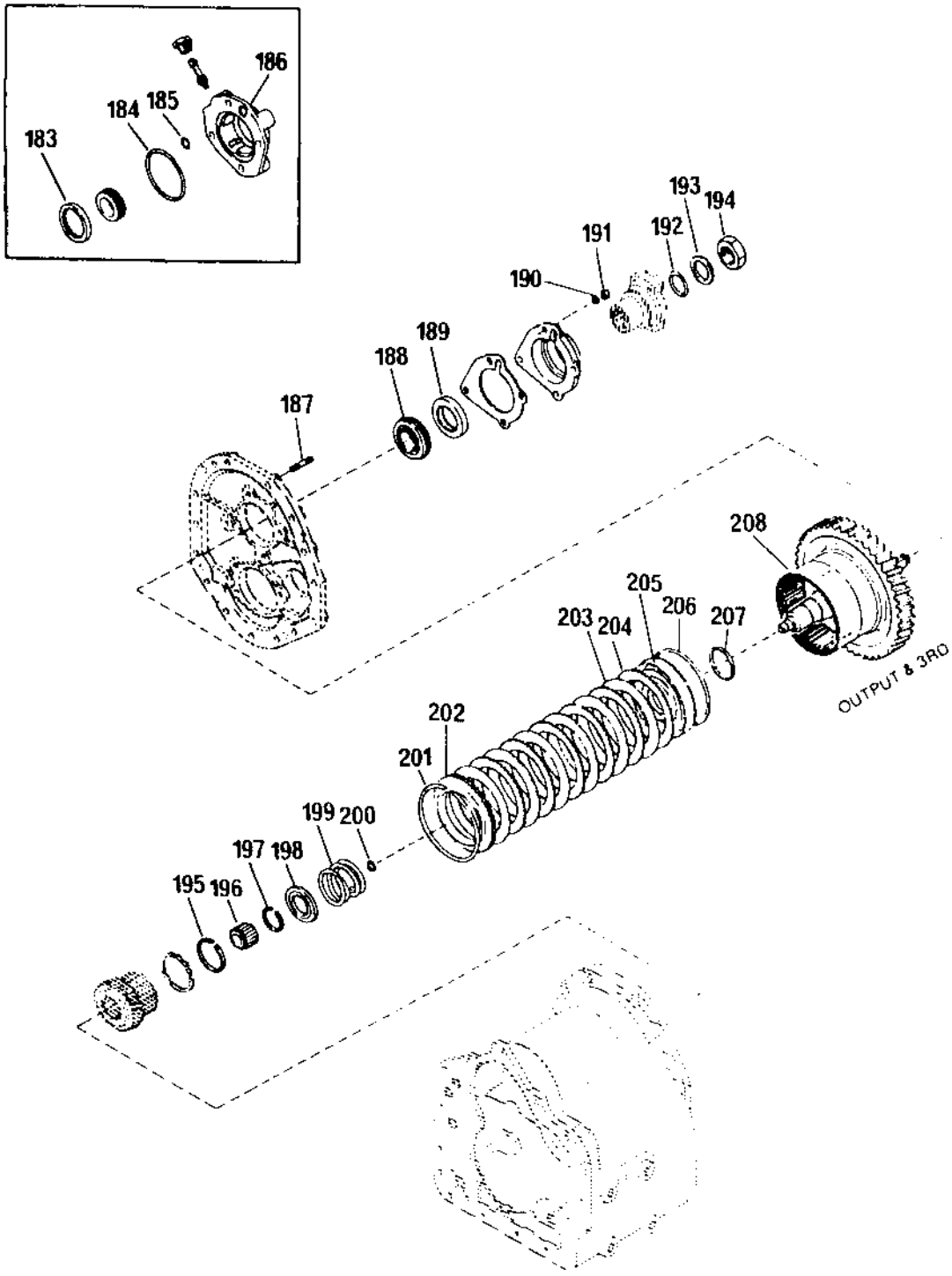
183
184
185
186
187
188
189
190
191
192
193
194
195
196
197
198
199
200
201
202
203
204
205
206
207
208
OUTPUT & 3RD

Ref. No.	Part No.	Rem.	Qty	Description	Code
183	240630		1	Spacer	
184	193712		1	O-ring	
185	193713		1	O-ring	
186	240711		1	Cover	
187	240710		4	Stud	
188	240590		1	Bearing	
189	193710		1	Oil seal	
190	240724		4	Spring washer	
191	240728		4	Nut	
192	193711		1	O-ring	
193	240570		1	Washer	
194	240581		1	Nut	
195	240659		1	Retainer ring	
196	240603		1	Needle bearing	
197	240626		1	Snap ring	
198	240638		1	Spring stop	
199	240639		1	Spring	
200	193699		1	Piston ring	
201	240601		1	Snap ring	
202	240649		1	Support disc	
203	240650		6	Inner disc	
204	240600		6	Outer disc	
205	240642		1	Piston	
206	193686		1	Seal ring, outer	
207	193687		1	Seal ring, inner	
208	240643		1	Disc carrier	

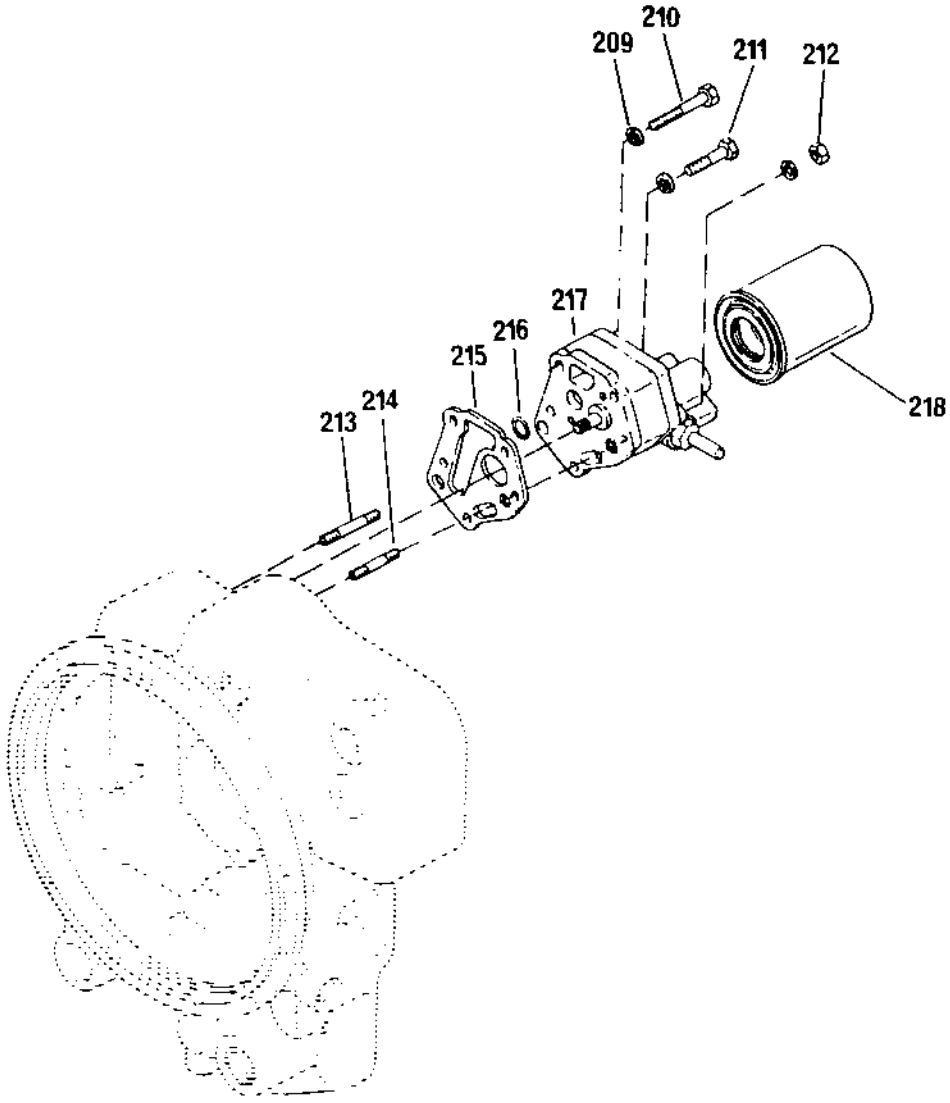
209
210
211
212
213
214
215
216
217
218

Ref. No.	Part No.	Rem.	Qty	Description	Code
209	240719		5	Spring washer	
210	240566		1	Screw	
211	240565		2	Screw	
212	240726		2	Nut	
213	240671		1	Stud	
214	240670		1	Stud	
215	193714		1	Gasket	
216	193664		1	O-ring	
217	193715		1	Hydraulic pump	
	938746	A	1	Gasket kit	
218	249993		1	Oil filter	A

A) Not illustrated

Control valve

17308

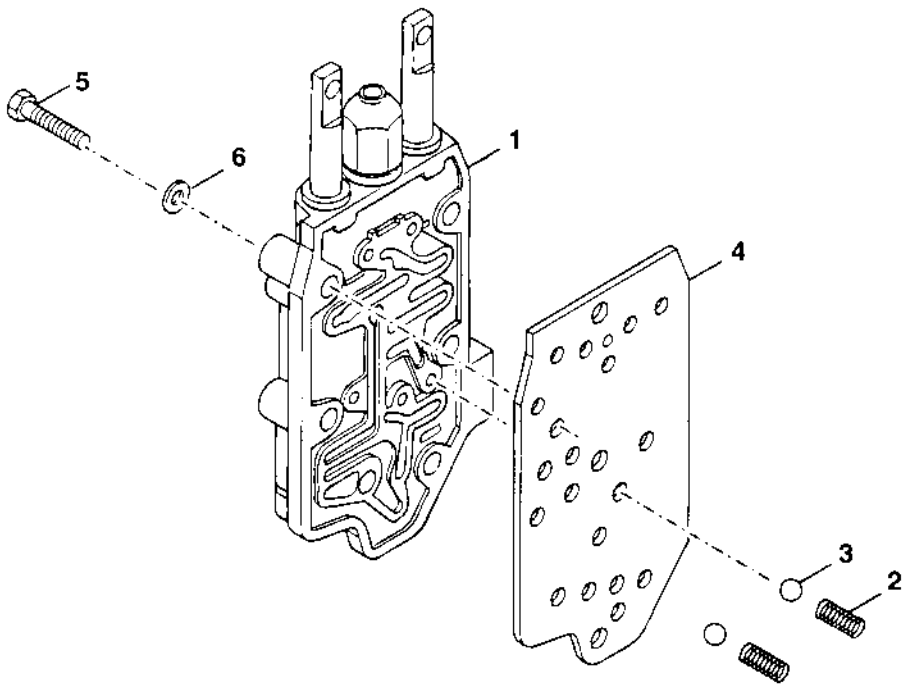

Control valve

Ref. No.	Part No.	Rem.	Qty	Description	Code
1	240647		1	Control valve assembly (Page 158)	
2	240632		2	Spring	
3	240568		2	Ball	
4	193716		1	Gasket	
5	240562		9	Screw	
6	938435		9	Washer	

240647 Control valve assembly

17309-1

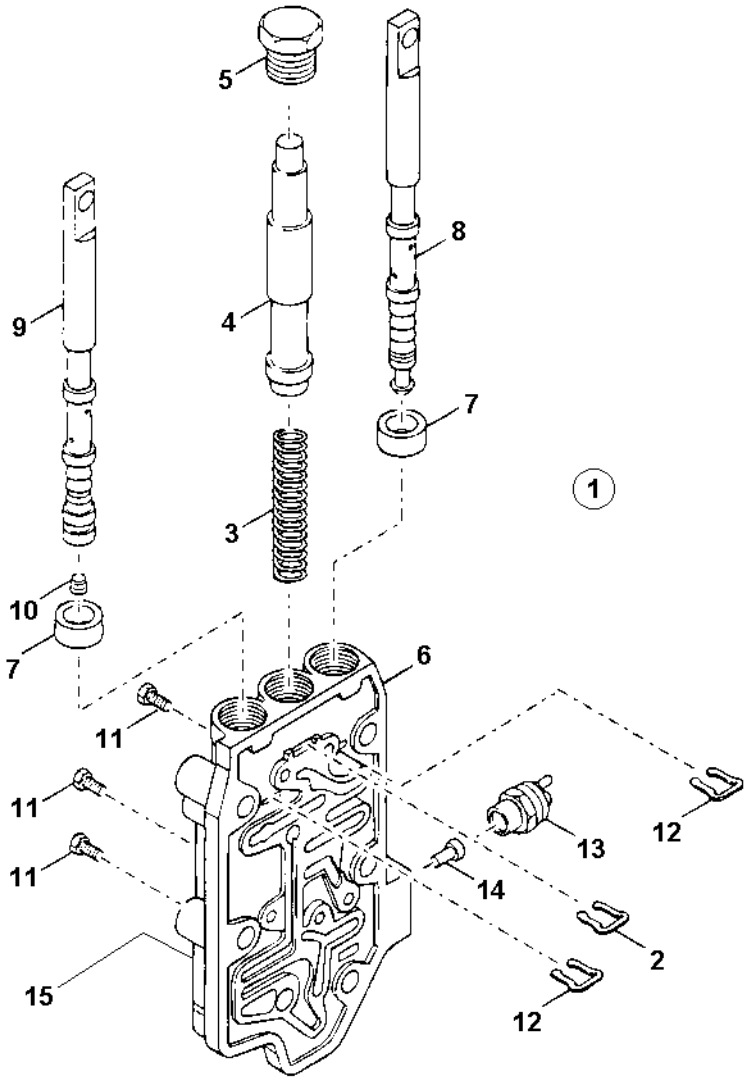

240647 Control valve assembly

Ref. No.	Part No.	Rem.	Qty	Description	Code
1			1	Control valve, cpl	
2	240609		1	.Clamp	
3	240610		1	.Valve spring	
4	240611		1	.Control piston	
5	240685		1	.Back stop	
6	240648		1	.Control valve, assy	
7	193719		1	..Oil seal	
8	240608		1	..Control piston	
9	240607		1	..Control piston	
10	240674		1	...Plug	
11	240720		4	..Plug	
12	240609		2	..Clamp	
13	240598	A	1	..Switch	
14	240599		1	..Pin	
15	193045	B	1	Sensor	

A) Neutral start switch
B) Reverse sensor, always sold separately, (not illustrated)

Drum brake

16228

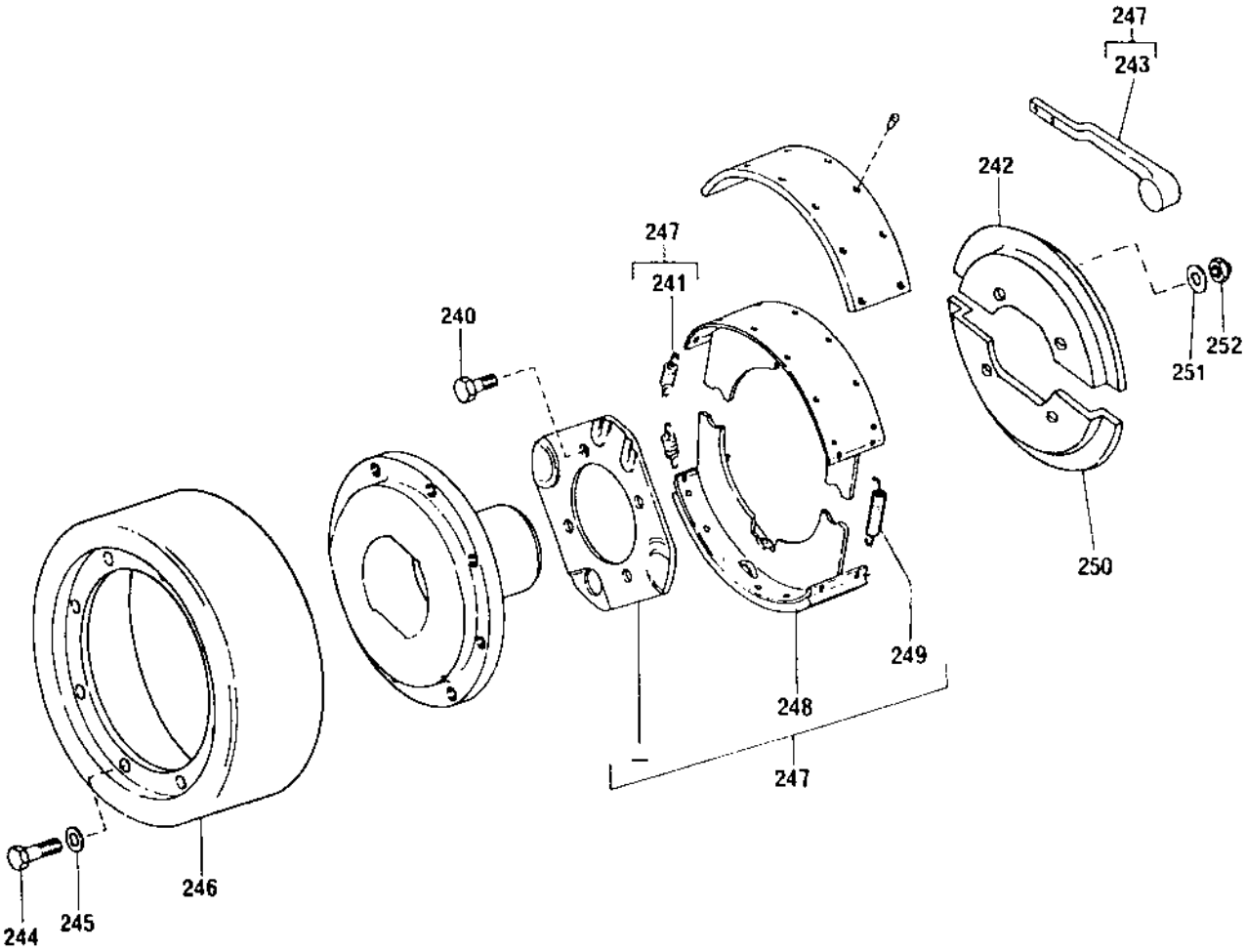

Drum brake

Ref. No.	Part No.	Rem.	Qty	Description	Code
240	193720		4	Screw	
241	240705		2	Spring	
242	240707		1	Protection	
243	240706		1	Lever	
244	240578		8	Screw	
245	240717		8	Spring washer	
246	240709		1	Brake drum	
247	240714		1	Brake assembly	
248	240715		2	.Brake shoe	B
249	193721		1	Spring	
250	240708		1	Protection	
251	240723		4	Spring washer	
252	240727		4	Nut	

Ref. No.	Part No.	Rem.	Qty	Description	Code
15				Converter housing & case (Page 164)	
25				Turbine shaft, stator support (Page 166)	
35				Drive plate (Page 168)	
45				Torque converter (Page 170)	
55				Auxiliary pump drive (Page 172)	
65				Charging pump drive (Page 174)	
75				Reverse & 2nd shaft (Page 176)	
85				Low speed shaft (Page 178)	
95				Forward shaft (Page 180)	
105				Reverse idler (Page 182)	
115				Output & 3rd clutch (Page 184)	
125				Charging pump & oil filter (Page 186)	
135				Control valve (Page 156)	
165				Disc brake (Page 192)	

Converter housing & case

16455-1

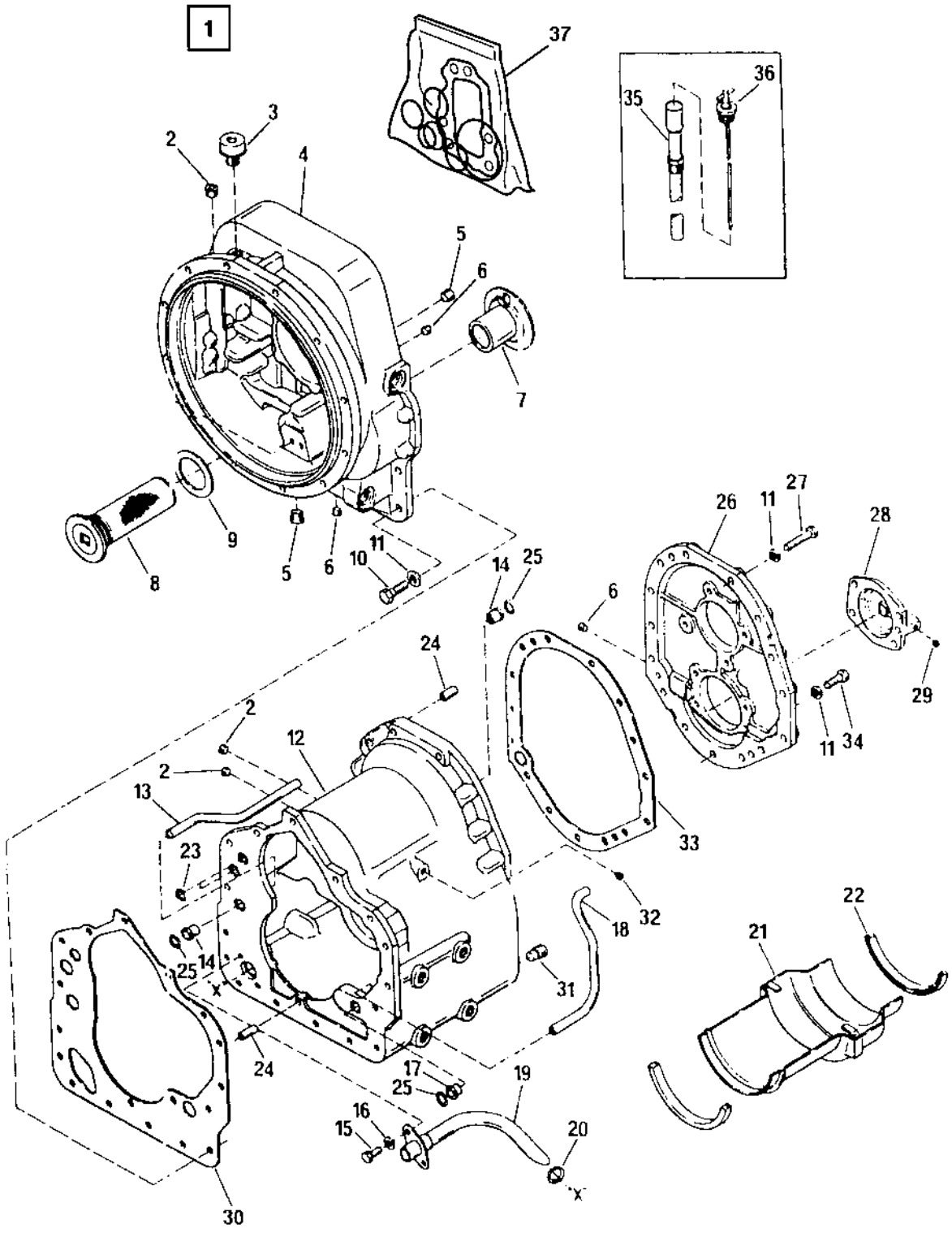

Converter housing & case

Ref. No.	Part No.	Rem.	Qty	Description	Code
1	374966		1	Transmission	
2			1	.Plug	
3	240667		1	.Breather	
4			1	.Housing	
5			2	.Plug	
6	240675		2	.Plug	
7	240618		1	.Bushing	
8	240594		1	.Filter	
9	193666		1	.Gasket	
10	240563		16	.Screw	
11			31	.Spring washer	
12			1	.Housing, cpl	
13	240606		1	..Tube	
14	240583		2	..Bushing	
15	240560		2	..Screw	
16	240716		2	..Spring washer	
17	240582		1	..Bushing	
18	240656		1	..Tube	
19	240605		1	..Tube	
20	193663		1	..O-ring	
21	240622		1	..Oil deflector	
22	193662		2	..Deflector sealing	
23	193664		2	.O-ring	
24	240580		3	.Pin	
25	193659		3	.O-ring	
26	240634		1	.Rear cover	
27			9	.Screw	
28	193660		1	.Cover	
29			1	..Plug	
30	193665		1	.Gasket	
31			2	.Magnetic plug	
32			1	.Plug	
33	193661		1	.Gasket	
34	240563		6	.Screw	
35	240645		1	.Guide tube	
36			1	.Oil dipstick	
37	939297		1	Seal kit Transm. section	
	939298		1	Seal kit Converter section	

Turbine shaft, stator support

16456

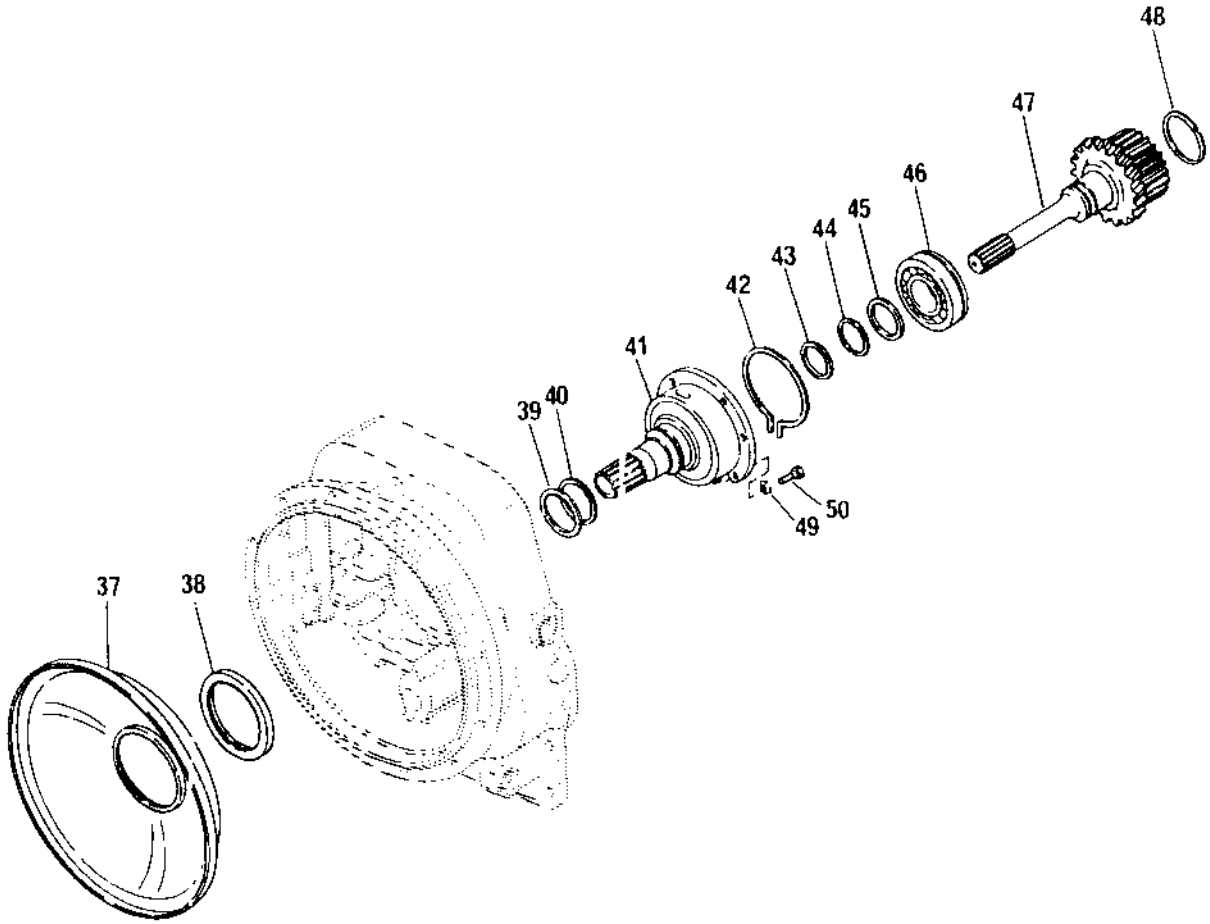

Turbine shaft, stator support

Ref. No.	Part No.	Rem.	Qty	Description	Code
37	240627		1	Oil deflector	
38	193670		1	.Seal ring	
39	193669		1	Seal ring	
40			1	Extension spring	
41			1	Gear	
42	240615		1	Snap ring	
43	193667		1	Seal ring	
44	240595		1	Retaining ring	
45	240616		1	Washer	
46	240682		1	Bearing	
47	240686		1	Shaft	
48	240688		1	.Retaining ring	
49			6	Spring washer	
50	240561		6	Screw	

Drive plate

16457-1

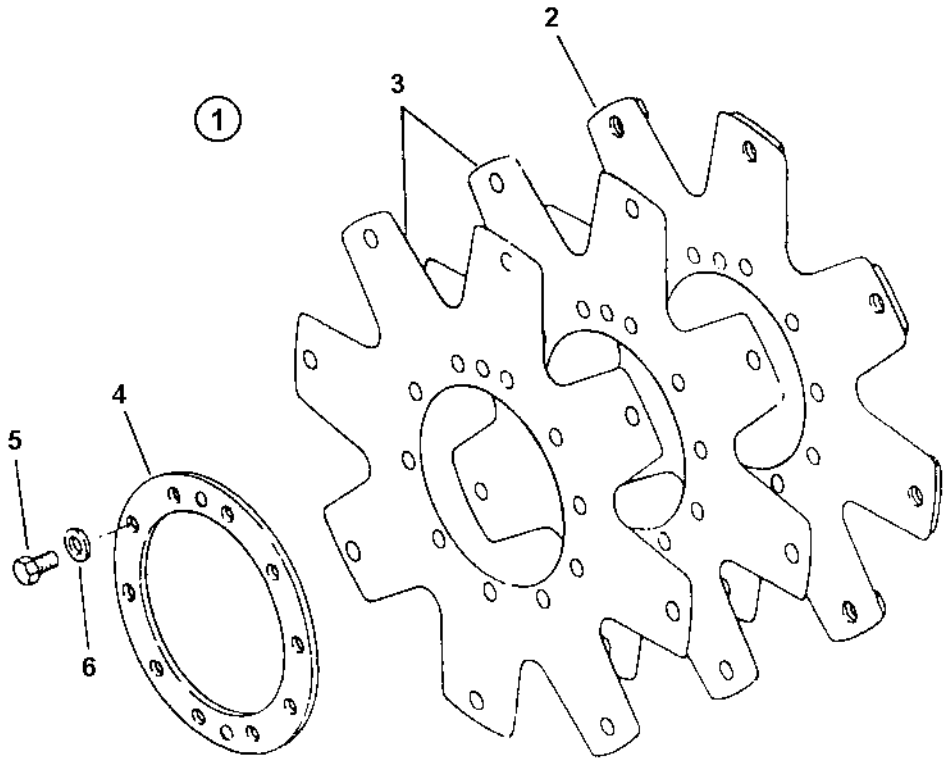

Drive plate

Ref. No.	Part No.	Rem.	Qty	Description	Code
1	938557		1	Drive plate, cpl.	
2			1	.Not Sold Separately	
3			2	.Not Sold Separately	
4	193673		1	.Support ring	
5	240721		10	.Screw	
6	938435		10	.Washer	

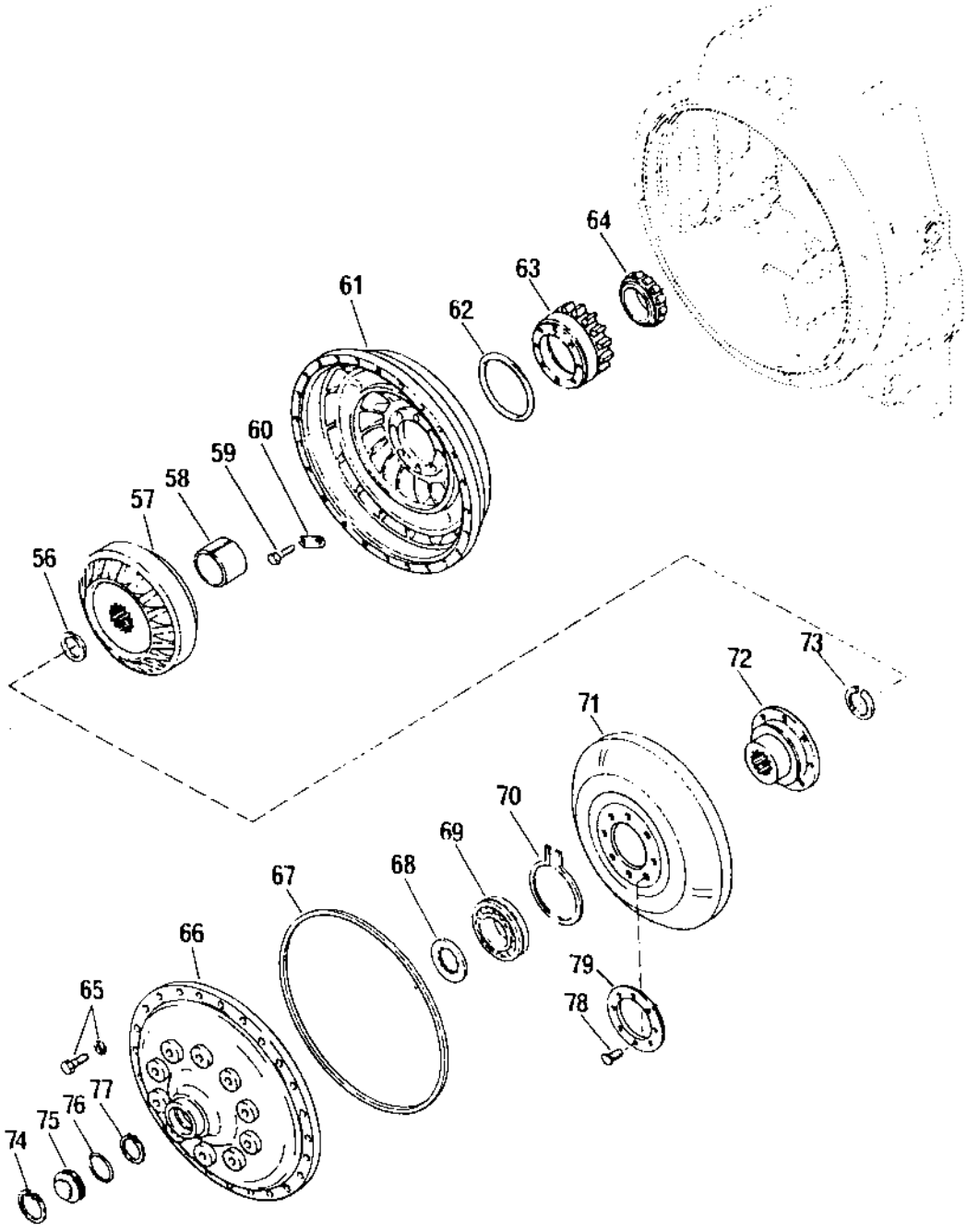
64
63
61
62
60
59
58
57
56
73
72
71
70
69
68
67
66
65
79
78
77
76
75
74

Ref. No.	Part No.	Rem.	Qty	Description	Code
56	240729		1	Seal ring	
57	240683		1	Stator	
58	240701		1	Spacer	
59	240576		8	Screw	
60	240612		4	Lock plate	
61			1	Impeller	
62	193674		1	O-ring	
63	240665		1	Impeller hub	
64	240666		1	Bearing	
65			24	Screw and washer	
66			1	Impeller cover	
67	193676		1	O-ring	
68			1	Ring	
69	240613		1	Bearing	
70	240614		1	Seal ring	
71	240679		1	Turbine	
72	240680		1	Hub	
73	240573		1	Seal ring	
74	240574		1	Retaining ring	
75	240584		1	Plug	
76	193677		1	O-ring	
77	240573		1	Seal ring	
78	240696		12	Screw	
79			1	Washer	

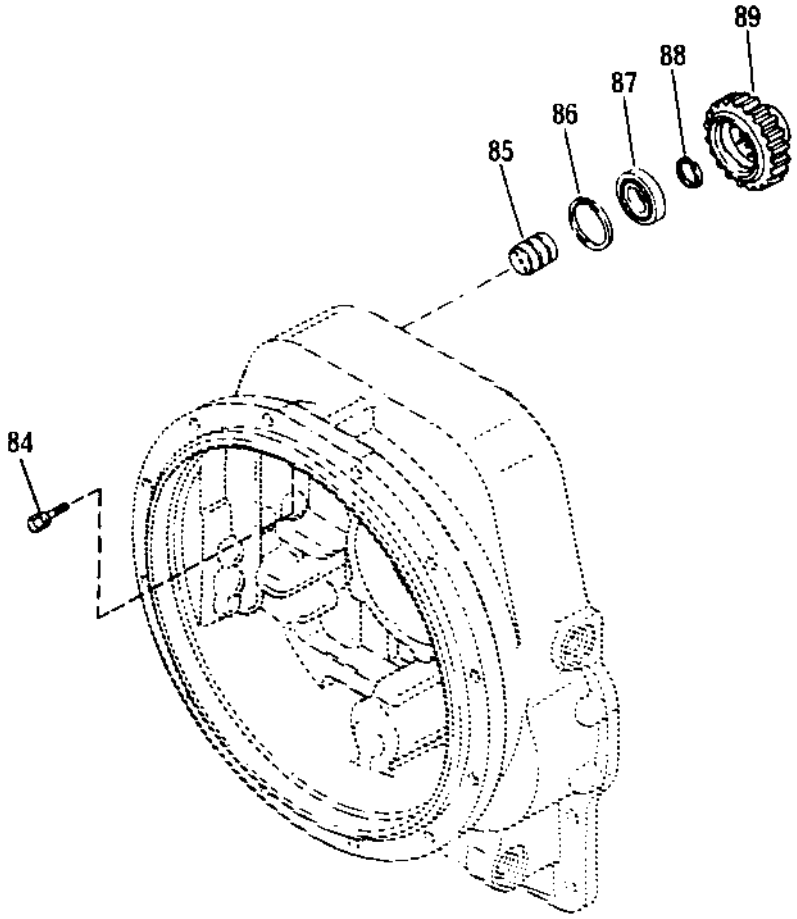
89
88
87
86
85
84

Ref. No.	Part No.	Rem.	Qty	Description	Code
84			2	Screw with washer	
85	240623		1	Support	
86	240586		1	Retaining ring	
87	240663		1	Bearing	
88	240629		1	Locating ring	
89	240677		1	Gear	

Charging pump drive

16460

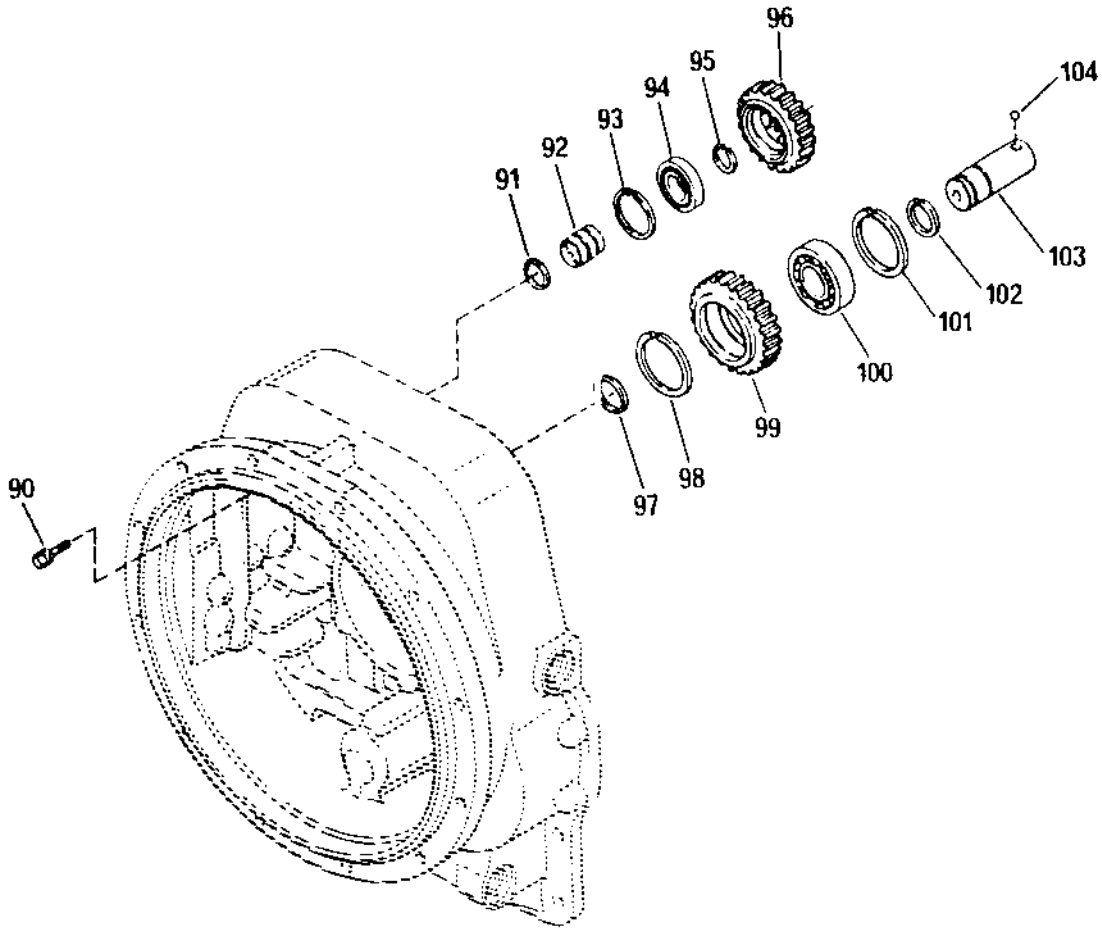

Ref. No.	Part No.	Rem.	Qty	Description	Code
90	193678		2	Screw with washer	
91	240629		1	Locating ring	
92	240623		1	Support	
93	240587		1	Seal ring	
94	193679		1	Bearing	
95	240629		1	Locating ring	
96	240661		1	Gear	
97	240629		1	Locating ring	
98	240558		1	Seal ring	
99	240660		1	Intermediate gear	
100	240664		1	Bearing	
101	240588		1	Retaining ring	
102	240629		1	Locating ring	
103	240662		1	Shaft	
104	193680		1	Ball	

Reverse & 2nd shaft

16461

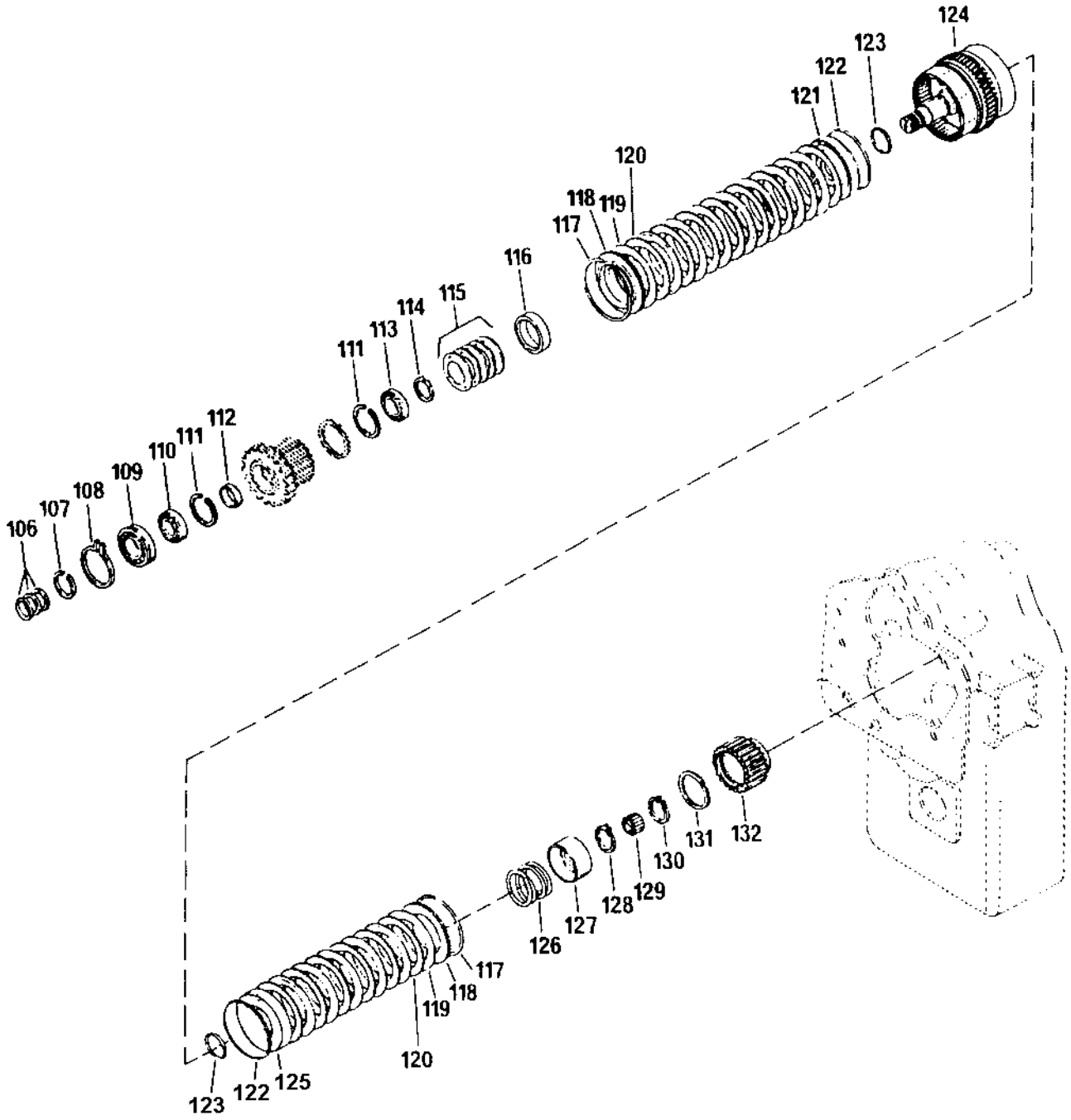

Ref. No.	Part No.	Rem.	Qty	Description	Code
106	193683		3	Piston ring	
107	193684		1	Retaining ring	
108	240593		1	Snap ring	
109	240585		1	Bearing	
110			1	Bearing	
111	240602		2	Retaining ring	
112	240620		1	Spacer	
113			1	Bearing	
114	240655		1	Snap ring	
115	193685		1	Disc spring	
116	240651		1	Spacer	
117	240601		2	Snap ring	
118	240649		2	Support disc	
119	240650		14	Inner disc	
120	240600		14	Outer disc	
121	240640		1	Piston	
122	193686		2	Seal ring, outer	
123	193687		2	Seal ring, inner	
124	240697		1	Plate carrier	
125	240642		1	Piston	
126	240639		1	Spring	
127	240638		1	Spring stop	
128	240626		1	Snap ring	
129	240596		1	Bearing	
130	240625		1	Retaining ring	
132	938379		1	Hub	

Low speed shaft

16462

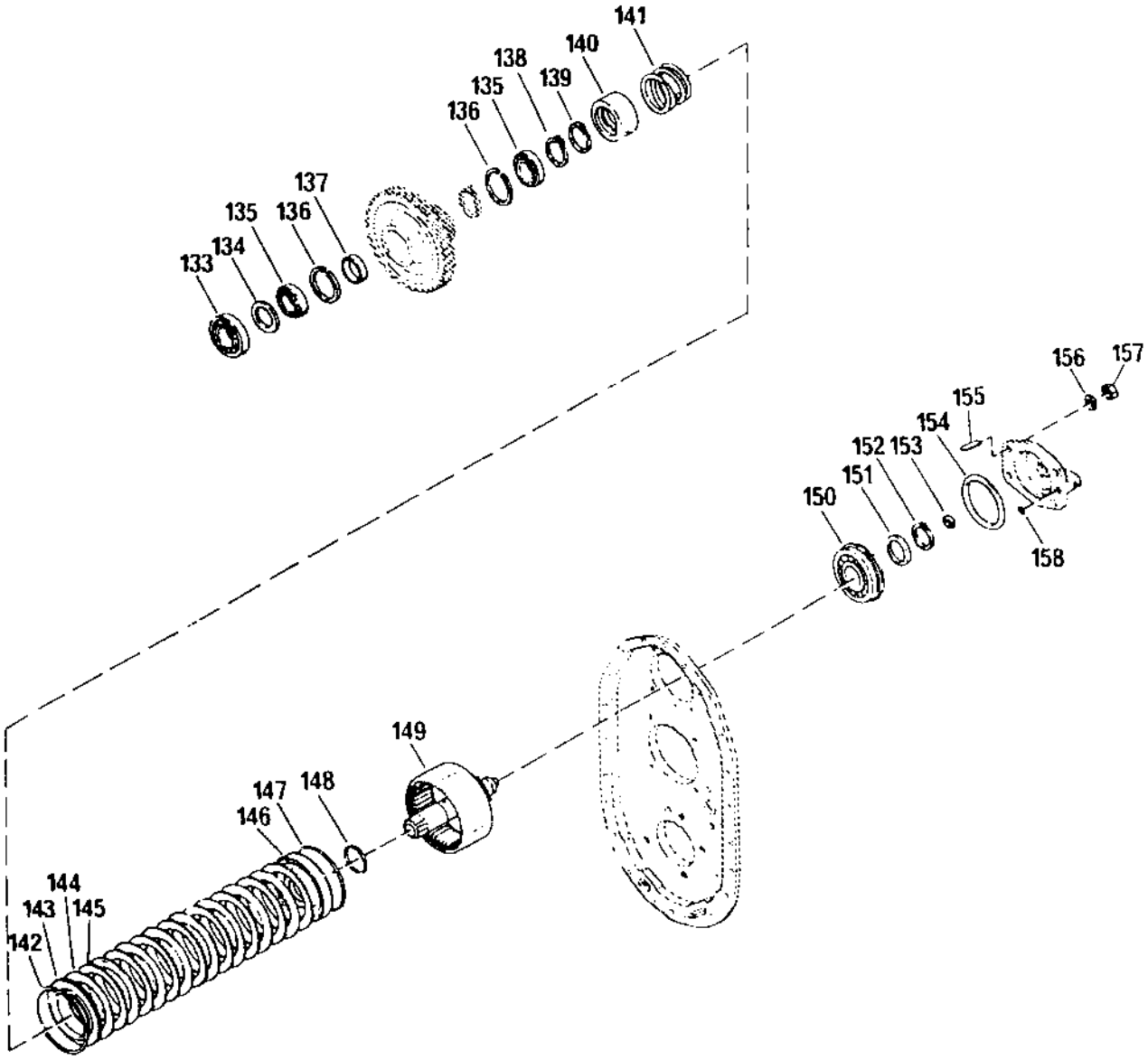

Low speed shaft

Ref. No.	Part No.	Rem.	Qty	Description	Code
133	240591		1	Bearing	
134	240604		1	Spacer	
135	240592		2	Bearing	
136	240588		2	Retaining ring	
137	240621		1	Spacer	
138	240625		1	Retaining ring	
139	240626		1	Snap ring	
140	240638		1	Spring stop	
141	240639		1	Spring	
142	240601		1	Snap ring	
143	240649		1	Support disc	
144	240624		8	Inner disc	
145	240600		8	Outer disc	
146			1	Piston	
147	193686		1	Seal ring, outer	
148	193687		1	Seal ring, inner	
149	240641		1	Disc carrier	
150	240681		1	Bearing	
151	240616		1	Washer	
152	240625		1	Retaining ring	
153	193699		1	Piston ring	
154	193700		1	O-ring	
155	193701		4	Stud	
156			4	Spring washer	
157	193702		4	Nut	
158	193703		1	O-ring	

Forward shaft

16221

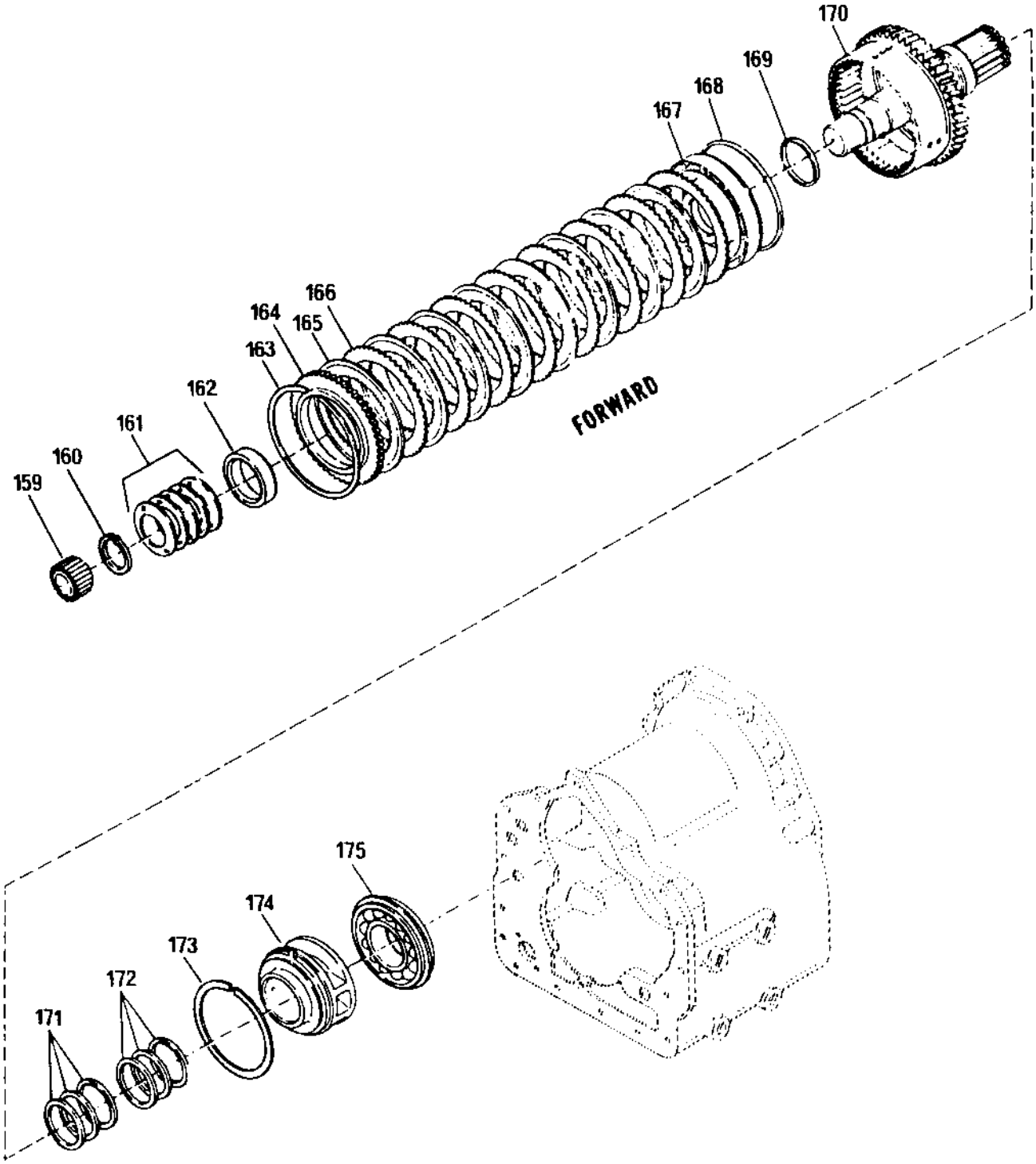

Ref. No.	Part No.	Rem.	Qty	Description	Code
159	240636		1	Needle bearing	
160	240655		1	Snap ring	
161	193685		1	Disc spring	
162	240651		1	Spacer	
163	240601		1	Snap ring	
164	240649		1	Support disc	
165	240650		8	Inner disc	
166	240600		8	Outer disc	
167	240640		1	Piston	
168	193686		1	Seal ring, outer	
169	193687		1	Seal ring, inner	
170	240653		1	Plate carrier	
171	938362		4	Piston ring expander	
172	938368		4	Piston ring	
173	240637		1	Retaining ring	
174	240691		1	Bushing	
175	240695		1	Bearing	

Reverse idler

16464

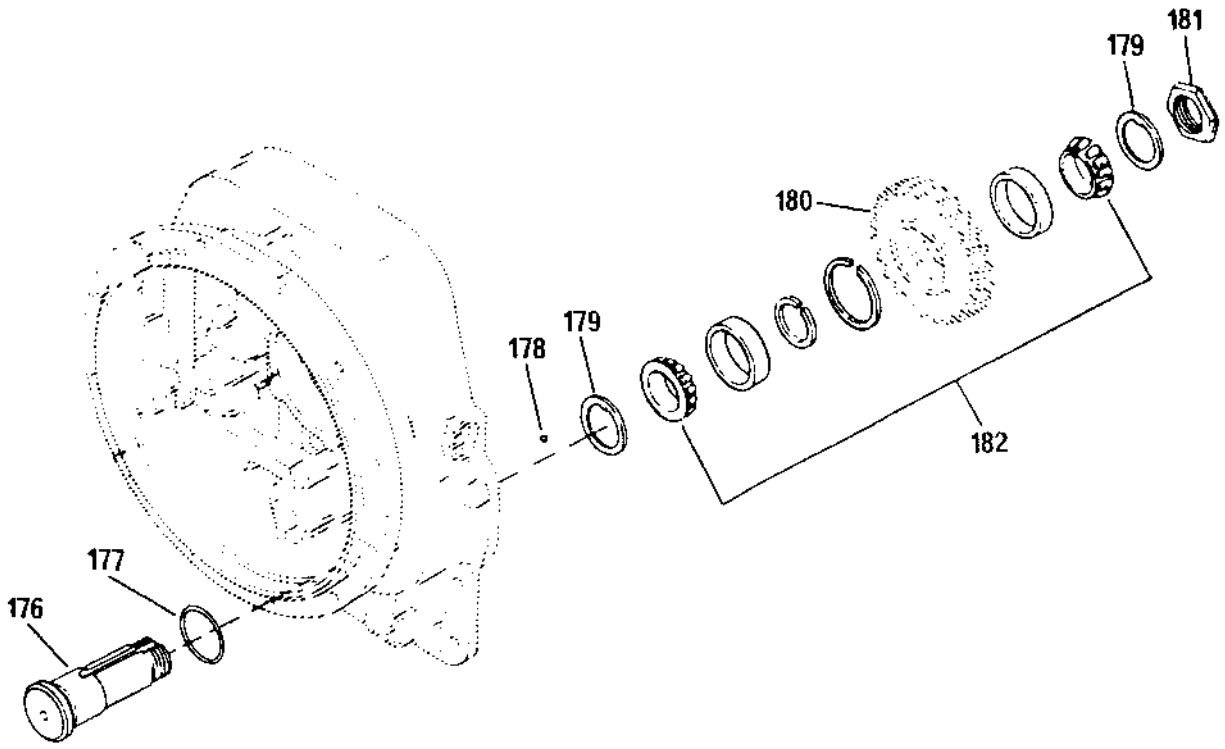

Reverse idler

Ref. No.	Part No.	Rem.	Qty	Description	Code
176	193707		1	Intermediate shaft	
177	193708		1	O-ring	
178	240567		1	Ball	
179	240673		2	Washer	
180	240669		1	Intermediate gear	
181	240579		1	Nut	
182	193709		1	Bearing	

Output & 3rd clutch

16465

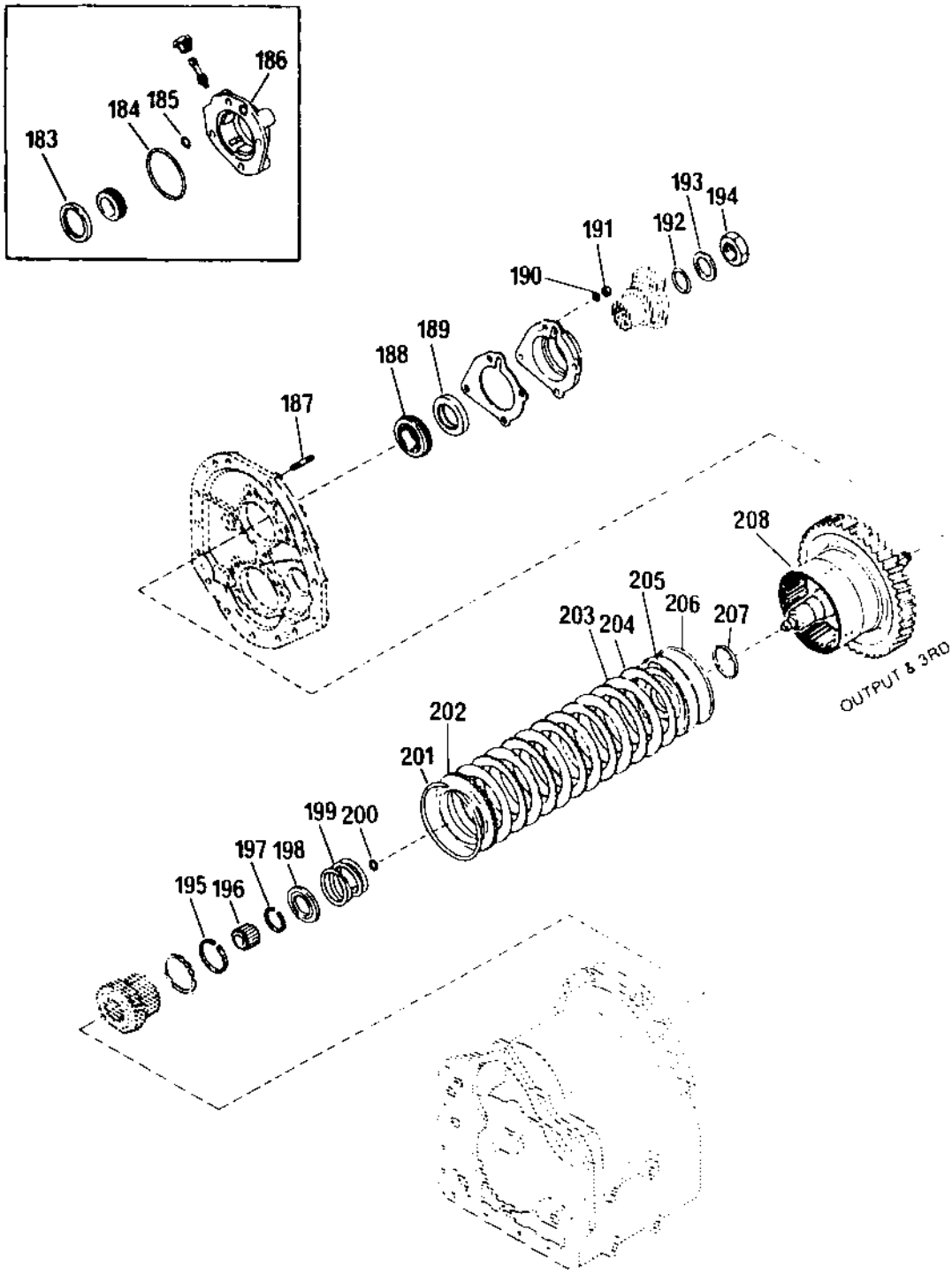

Ref. No.	Part No.	Rem.	Qty	Description	Code
183	240630		1	Spacer	
184	193712		1	O-ring	
185	193713		1	O-ring	
186			1	Cover	
187			4	Stud	
188	240590		1	Bearing	
189	193710		1	Oil seal	
190			4	Spring washer	
191	240728		4	Nut	
192	193711		1	O-ring	
193	240570		1	Washer	
194	240581		1	Nut	
195	240659		1	Retainer ring	
196	240603		1	Needle bearing	
197	240626		1	Snap ring	
198	240638		1	Spring stop	
199	240639		1	Spring	
200	193699		1	Piston ring	
201	240601		1	Snap ring	
202	240649		1	Support disc	
203	240650		6	Inner disc	
204	240600		6	Outer disc	
205	240642		1	Piston	
206	193686		1	Seal ring, outer	
207	193687		1	Seal ring, inner	
208	240643		1	Disc carrier	

Charging pump & oil filter

16466

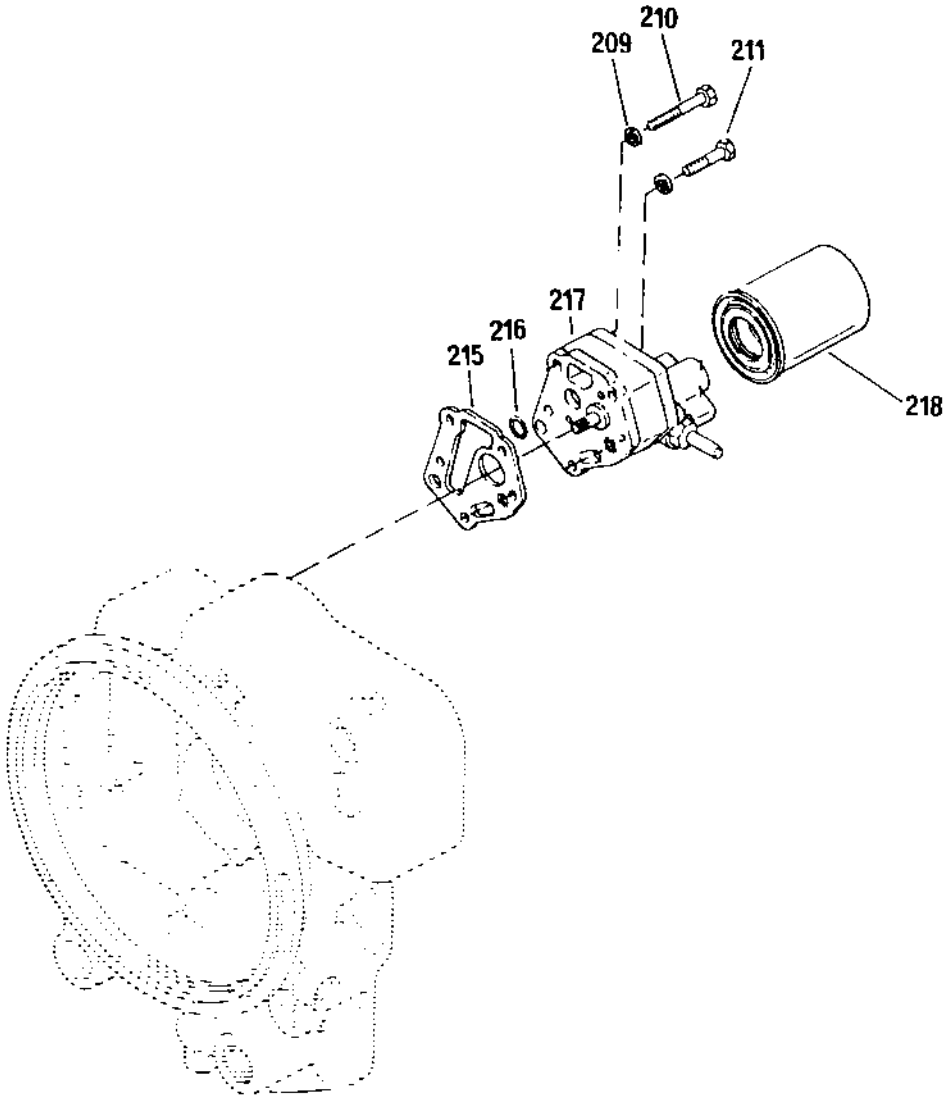

Charging pump & oil filter

Ref. No.	Part No.	Rem.	Qty	Description	Code
209			5	Spring washer	
210	240566		1	Screw	
211	240565		2	Screw	
212			2	Nut	
215	193714		1	Gasket	
216	193664		1	O-ring	
217	193715		1	Hydraulic pump	
	938746	A	1	Gasket kit	
218	249993		1	Oil filter	A

A) Not illustrated

Control valve

17308

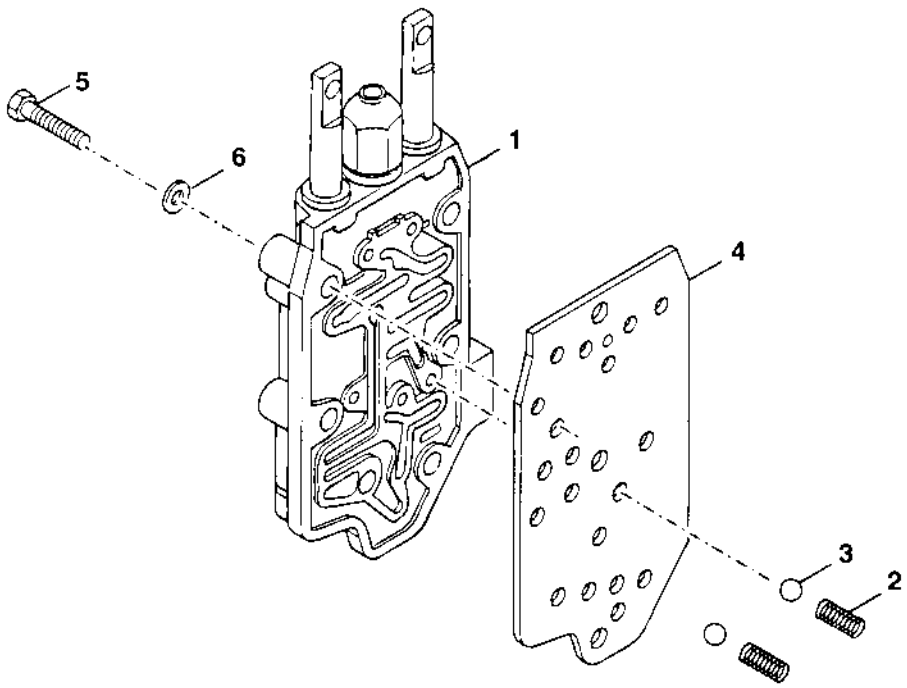

Control valve

Ref. No.	Part No.	Rem.	Qty	Description	Code
1	240647		1	Control valve assembly (Page 158)	
2	240632		2	Spring	
3	240568		2	Ball	
4	193716		1	Gasket	
5	240562		9	Screw	
6	938435		9	Washer	

240647 Control valve assembly

17309-1

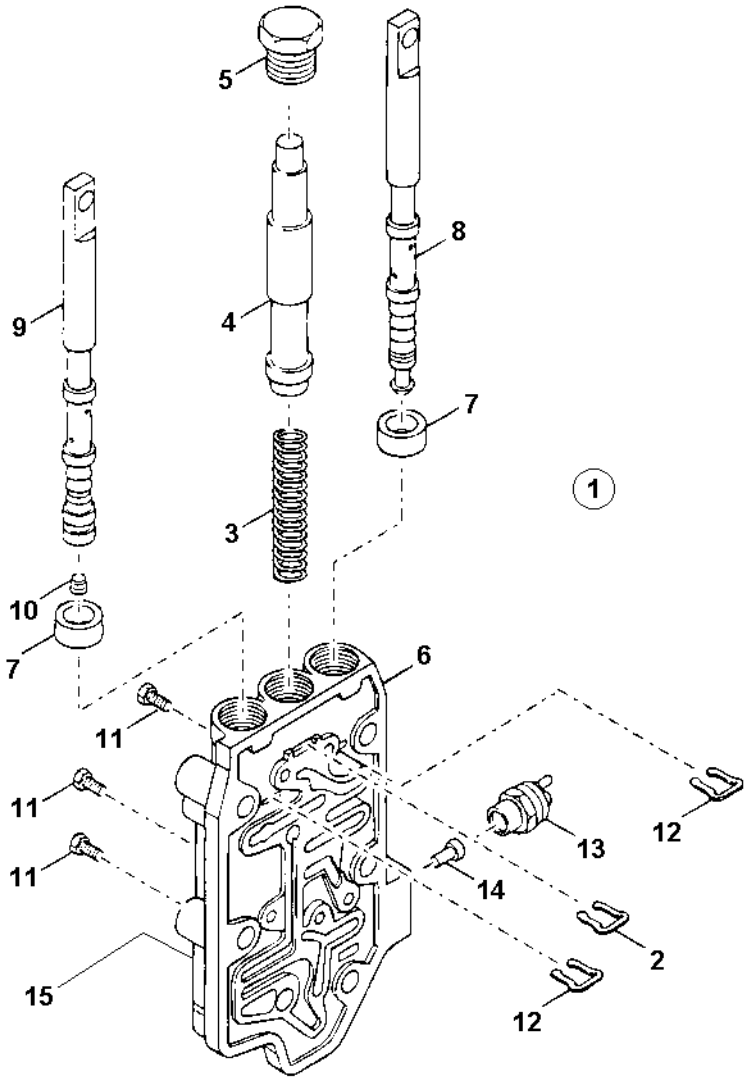

240647 Control valve assembly

Ref. No.	Part No.	Rem.	Qty	Description	Code
1			1	Control valve, cpl	
2	240609		1	.Clamp	
3	240610		1	.Valve spring	
4	240611		1	.Control piston	
5	240685		1	.Back stop	
6	240648		1	.Control valve, assy	
7	193719		1	..Oil seal	
8	240608		1	..Control piston	
9	240607		1	..Control piston	
10	240674		1	...Plug	
11	240720		4	..Plug	
12	240609		2	..Clamp	
13	240598	A	1	..Switch	
14	240599		1	..Pin	
15	193045	B	1	Sensor	

A) Neutral start switch
B) Reverse sensor, always sold separately, (not illustrated)

Disc brake

17310

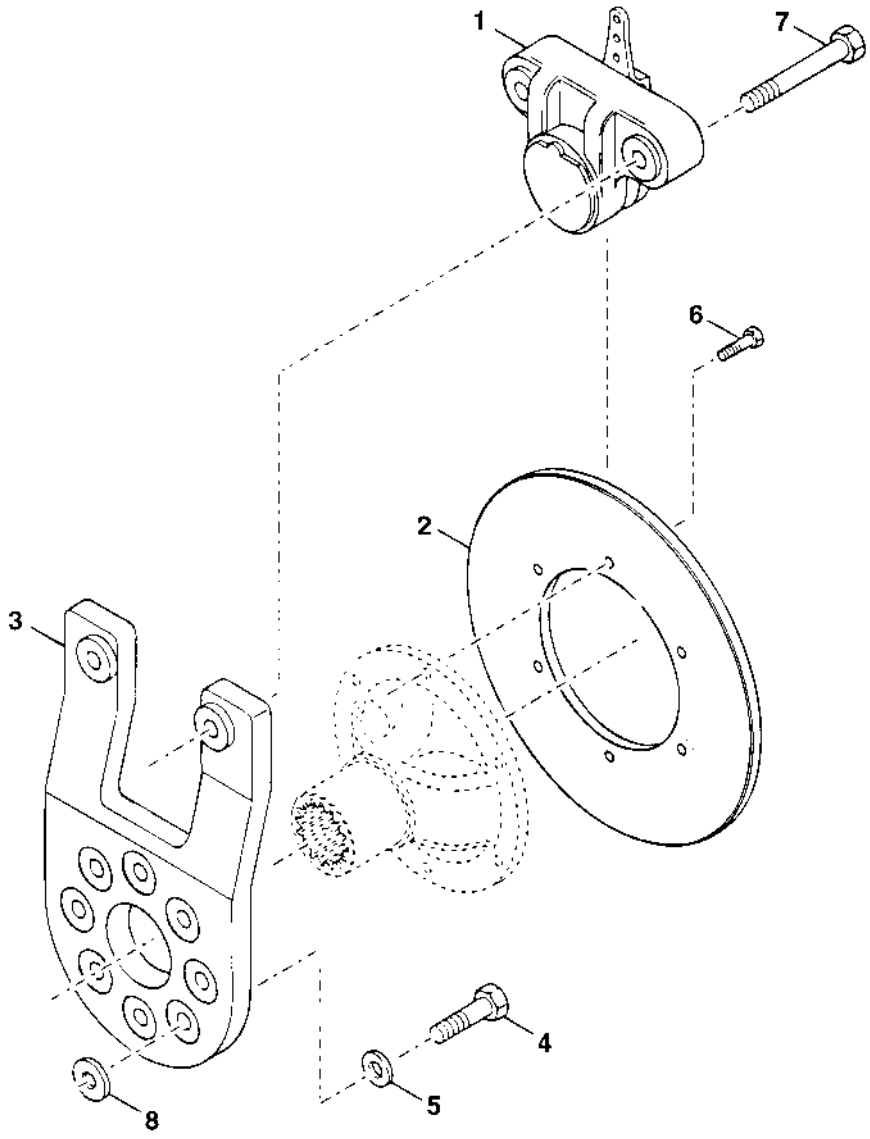

Disc brake

Ref. No.	Part No.	Rem.	Qty	Description	Code
1	937693		1	Brake caliper (Page 194)	
2	938108		1	Disc	
3	939430		1	Bracket	
4	938354		4	Screw	
5	938374		4	Washer	
6	938355		6	Screw	
7	939428		2	Screw	
8	939429		2	Nut	

937693 Brake caliper

16470

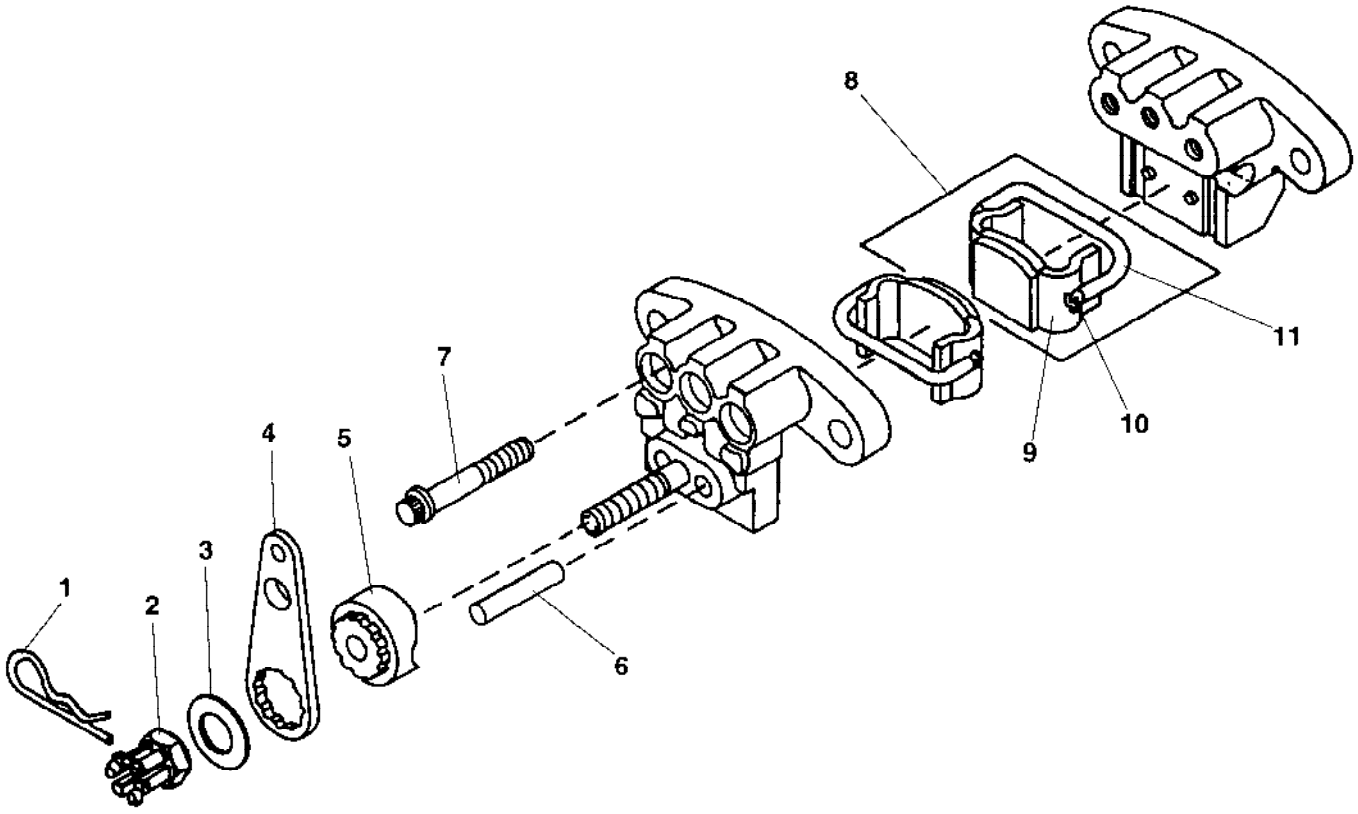

937693 Brake caliper

Ref. No.	Part No.	Rem.	Qty	Description	Code
			1	Brake caliper, cpl	
1	937683		1	.Hitch pin	
2	937684		1	.Castle nut	
3	937685		1	.Washer	
4	937686		1	.Lever	
5	937687		1	.Cam	
6	937688		1	.Push pin	
7	937689		3	.Bolt	
8	937682		2	.Pad & holder, spring assembly	
9	937690		1	..Pad & holder assembly	D
10	937691		2	..Spring retainer	D
11	937692		1	..Spring	D

Differential assembly Merc. Benz

16303

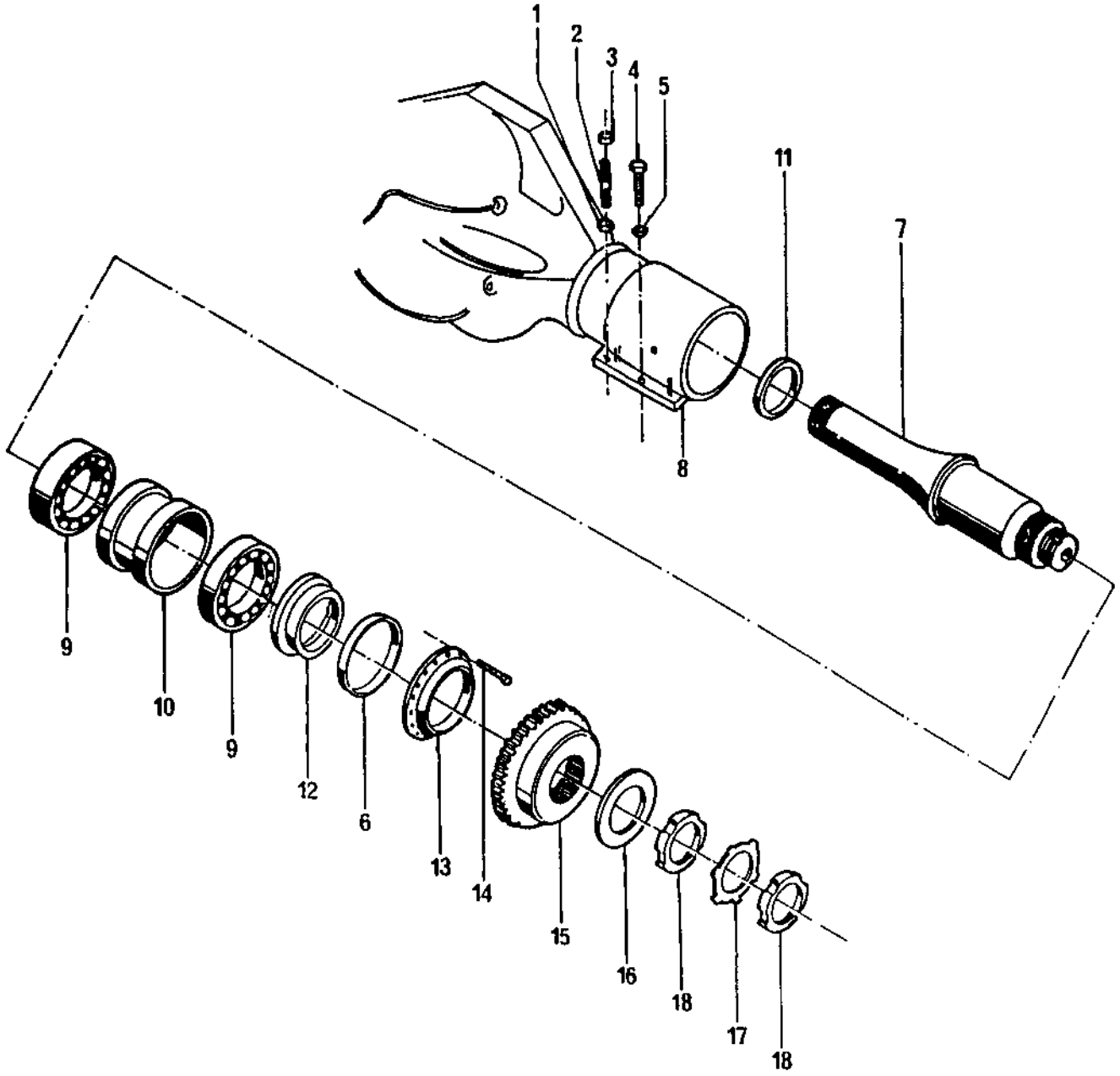

Differential assembly Merc. Benz

Ref. No.	Part No.	Rem.	Qty	Description	Code
1	586009		8	Nut	
2	252914		8	Stud	
3	571007		16	Nut	
4	503133		4	Screw	
5	572007		4	Nut	
6	161082		2	Seal ring Up to 699B431	
7	250684		2	Shaft Up to 699B431	
8	251052		1	Differential, cpl Up to 699B431	
9	116020		4	Bearing Up to 699B431	
10	250686		2	Spacer ring Up to 699B431	
11	161081		2	Seal ring Up to 699B431	
12	250687		2	Spacer ring Up to 699B431	
13	254036		2	Bearing housing cover Up to 699B431	
14	500060		32	Screw Up to 699B431	
15	250652		2	Gear Up to 699B431	
16	251053		2	Washer Up to 699B431	
17	136010		2	Washer Up to 699B431	
18	135010		4	Nut Up to 699B431	

Differential assembly Eaton

16235

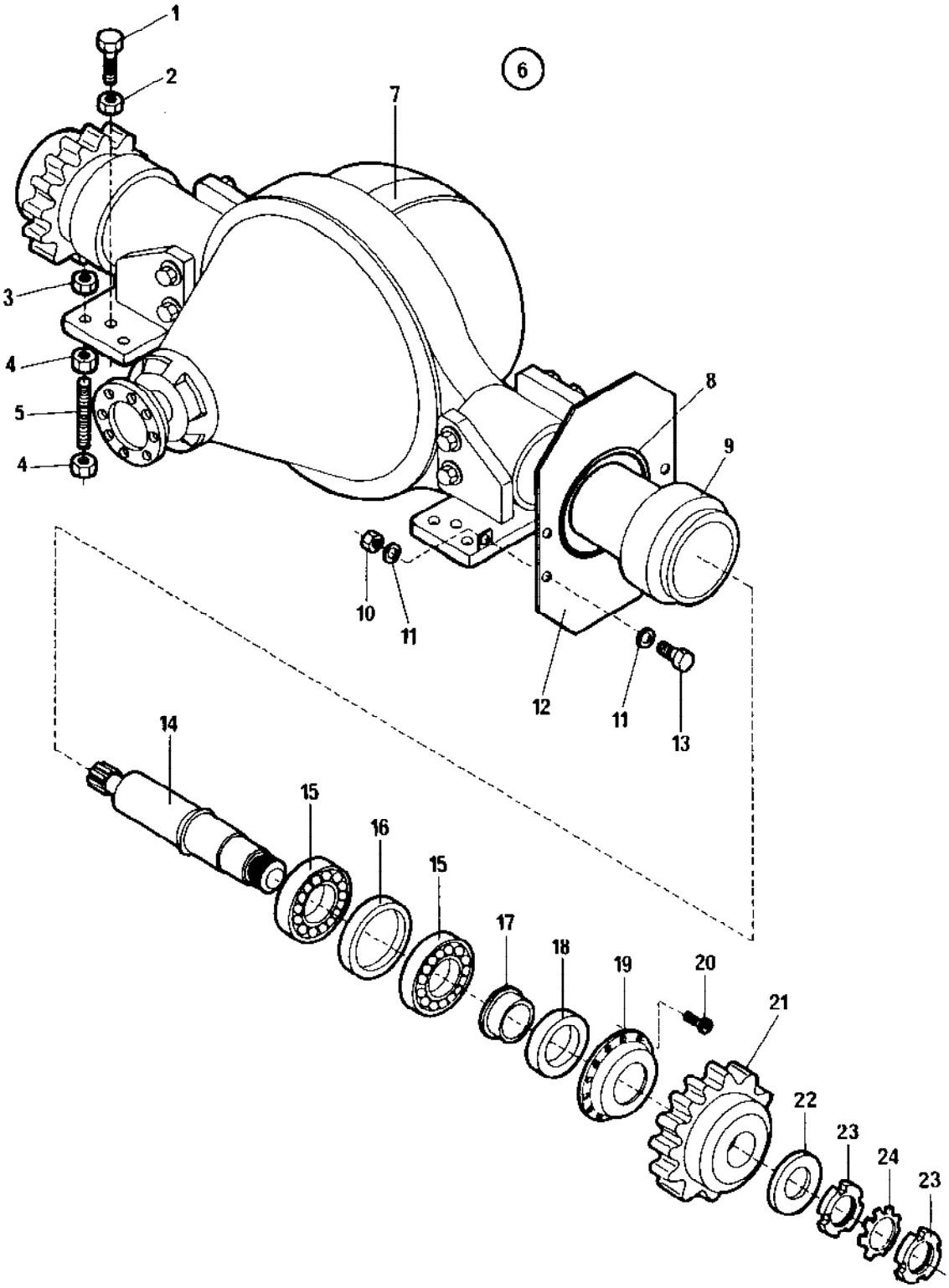

Differential assembly Eaton

Ref. No.	Part No.	Rem.	Qty	Description	Code
1	503133		4	Screw	
2	572007		4	Nut	
3	586009		8	Nut	
4	571007		16	Nut	
5	252914		1	Stud	
6	193378		1	Differential assembly	
7	194593		1	.Differential kit	
8	246947		2	.Rubber strip	
9	194604		2	.Bearing housing	
10	570006		4	.Nut M10	
11	603023		8	.Washer M10	
12	241820		2	.Cover	
13	500030		4	.Screw M10-1,5x35H 8,8	
14	194603		1	.Shaft, left	
	194602		1	.Shaft, right	
15	116020		4	.Bearing	
16	194594		2	.Spacer	
17	194595		2	.Spacer	
18	194605		2	.Seal ring	
19	194606		2	.Cover	
20	194615		32	.Screw	
21	194601		2	.Gear	
22	194597		2	.Washer	
23	194598		4	.Nut	
24	194599		2	.Lock washer	

Differential -699B431, Merc. Benz

16236

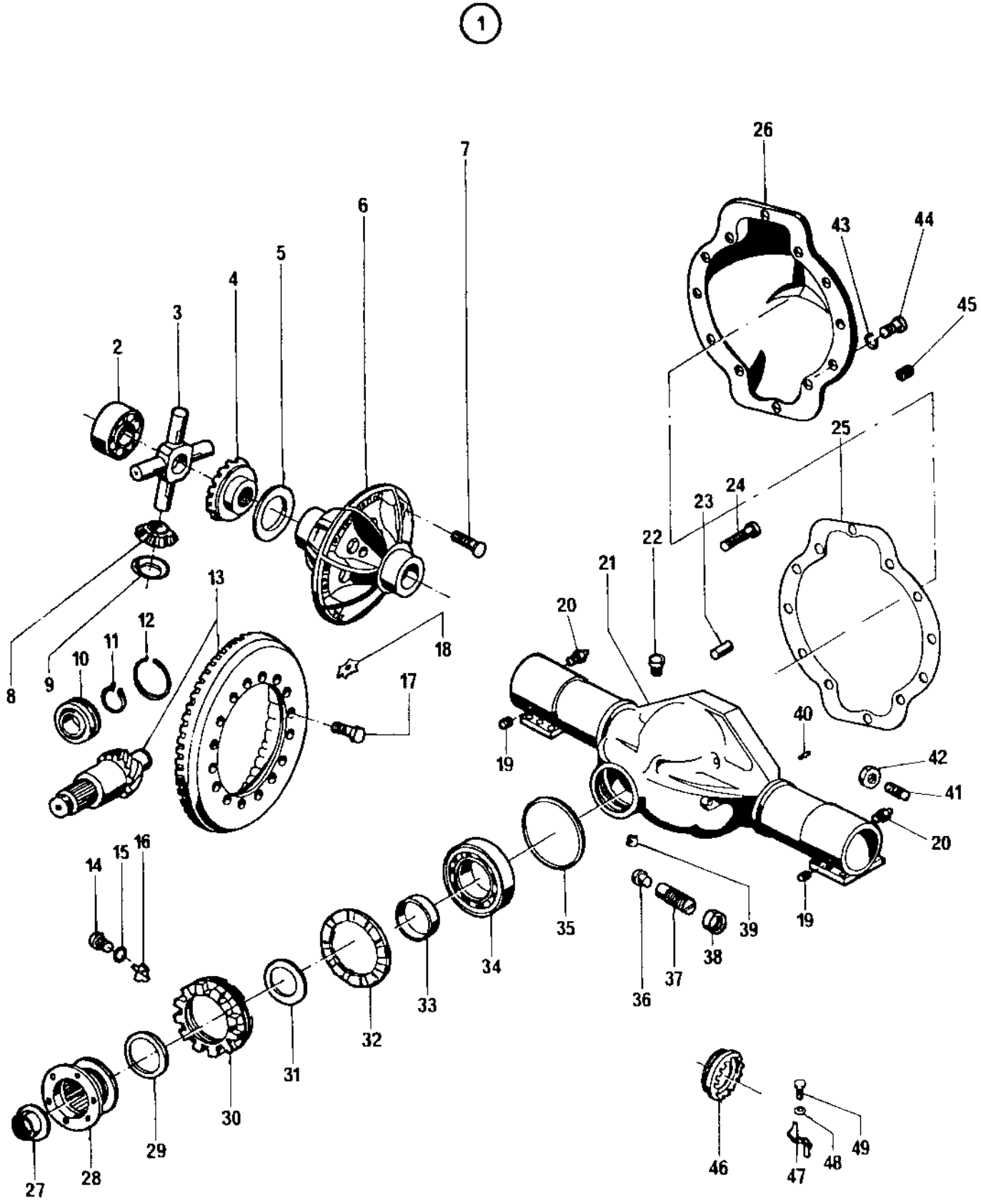

Differential -699B431, Merc. Benz

Ref. No.	Part No.	Rem.	Qty	Description	Code
1	251052		1	Differential, cpl	
2	754048		2	.Bearing	D
3	754063		1	.Cross	
4	754083		1	.Gear	
5	754062		2	.Washer	
6	754066		1	.Box	
7	754086		8	.Screw	
8	754082		4	.Gear	
9	754058		4	.Washer	
10	754051		1	.Bearing	
11	754044		1	.Ring	
12	754077		1	.Clamp	
13	754065		1	.Drive pinion, gear	
14	500018		1	.Screw M8-1,25x12 8,8	
15	754053		1	.Washer	
16	754072		1	.Lock	
17	754076		1	.Screw	
18	754074		8	.Lock	
19	333129		2	.Breather	
20	310001		2	.Grease nipple	D
21			1	.Housing	D
22	754056		1	.Breather	
23	754042		4	.Pin	
24	754084		4	.Screw	
25	754069		1	.Gasket	
26	754067		1	.Cover	
27	754078		1	.Nut	
28	754085		1	.Flange	
29	754052		1	.Seal ring	
30	754079		1	.Nut	
31	754064		1	.Ring	
32	754075		1	.Ring	
33	754071		1	.Ring	
34	754050		2	.Bearing	D
35	754080		1	.Ring	
36	754070		1	.Seat	
37	754073		1	.Screw	
38	754060		1	.Nut	
39	754049		1	.Plug	
40	754059		2	.Pin	
41	754068		1	.Screw	
42	754054		1	.Nut	
43	754043		12	.Washer	
44	754045		12	.Screw	
45	754055		1	.Plug	
46	754061		2	.Nut	
47	754057		2	.Lock	
48	754053		2	.Washer	
49	754047		2	.Screw	

Differential assembly 699B432-699B481, Eaton

16238

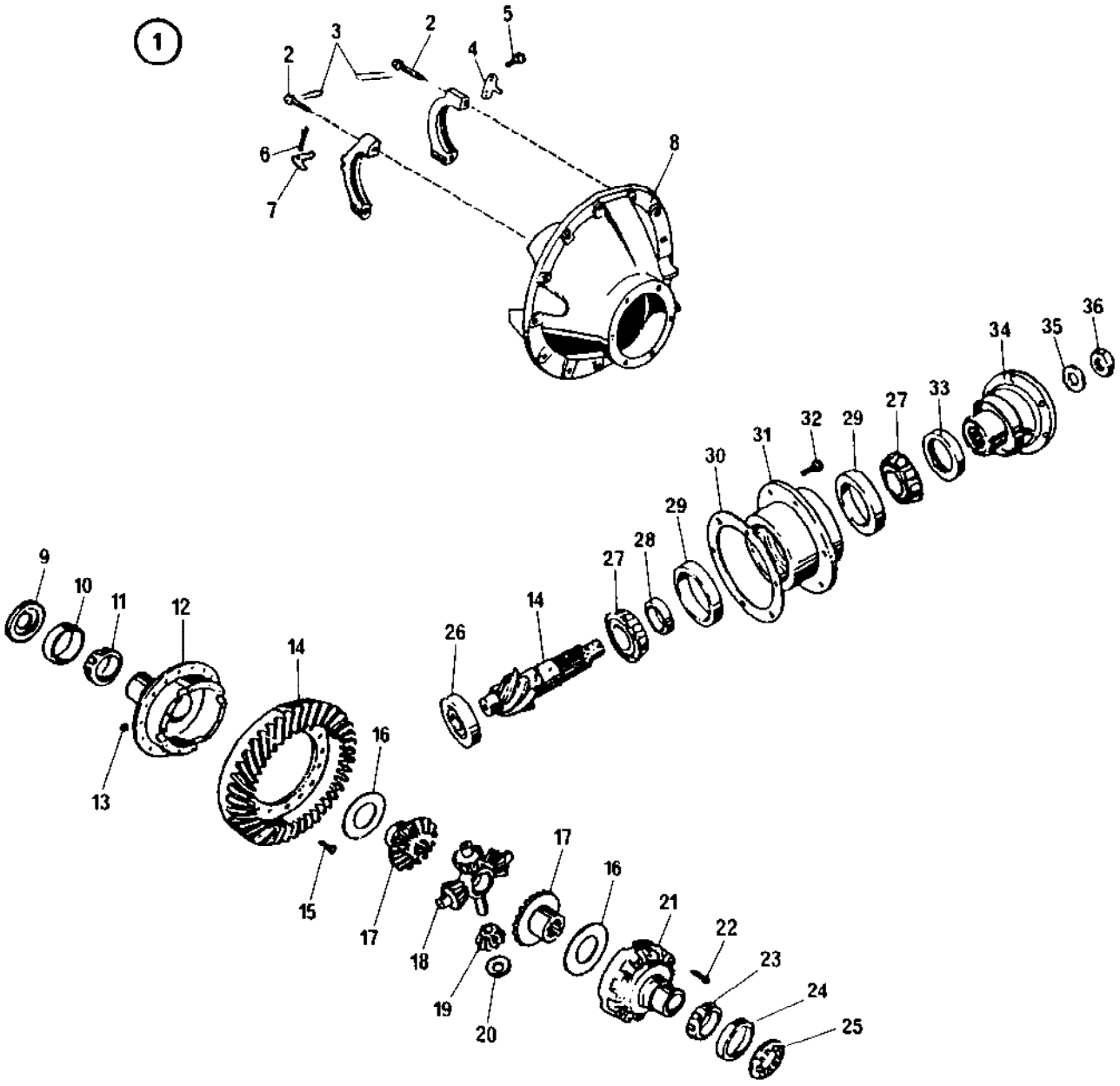

Differential assembly 699B432-699B481, Eaton

Ref. No.	Part No.	Rem.	Qty	Description	Code
1	194593		1	Differential kit	
2	194497		4	.Screw	
3	194501		CN	.Locking wire	
4	194500		1	.Lock	
5	194502		2	.Screw	
6	194499		1	.Pin	
7	194498		1	.Lock	
8	194496		1	.Differential carrier	
9	194561		1	.Adjusting ring	
10	194574		1	.Bearing cup	
11	194563		1	.Bearing cone	
12	194566	A	1	.Differential carrier	
13	194576		16	.Nut	
	194576	B	16	.Nut	
14	194504		1	.Drive pinion and gear	
15	194573		16	.Screw	
16	194568		2	.Washer	
17	194569		2	.Planet pinion	
18	194572		1	.Differential cross	
	194531		CN	.Spacer 16,281	
19	194571		4	.Differential pinion	
20	194570		4	.Washer	
21	194567		1	.Differential carrier	
22	194564		4	.Screw, short	
	194565		8	.Screw, long	
23	194562		1	.Bearing cone	
24	194578		1	.Bearing cup	
25	194577		1	.Adjusting ring	
26	194503		1	.Bearing	
27	194505		2	.Bearing cone	
28	194506		1	.Spacer 15,82	
	194538		CN	.Spacer 16,38	
	194532		CN	.Spacer 16,294	
	194533		CN	.Spacer 16,307	
	194534		CN	.Spacer 16,320	
	194535		CN	.Spacer 16,332	
	194536		CN	.Spacer 16,345	
	194540		CN	.Spacer 16,43	
	194537		CN	.Spacer 16,36	
	194541		CN	.Spacer 16,46	
	194508		CN	.Spacer 15,89	
	194509		CN	.Spacer 15,90	
	194510		CN	.Spacer 15,93	
	194511		CN	.Spacer 15,95	
	194512		CN	.Spacer 15,98	
	194513		CN	.Spacer 16,00	
	194514		CN	.Spacer 16,03	
	194515		CN	.Spacer 16,05	
	194507		CN	.Spacer 15,85	
	194516		CN	.Spacer 16,08	
	194517		CN	.Spacer 16,10	
	194518		CN	.Spacer 16,116	
	194519		CN	.Spacer 16,129	
	194520		CN	.Spacer 16,142	
	194521		CN	.Spacer 16,154	
	194522		CN	.Spacer 16,167	
	194523		CN	.Spacer 16,180	
	194524		CN	.Spacer 16,193	
	194525		CN	.Spacer 16,205	

A) Left
B) Optional

Differential assembly 699B432-699B481, Eaton

16238

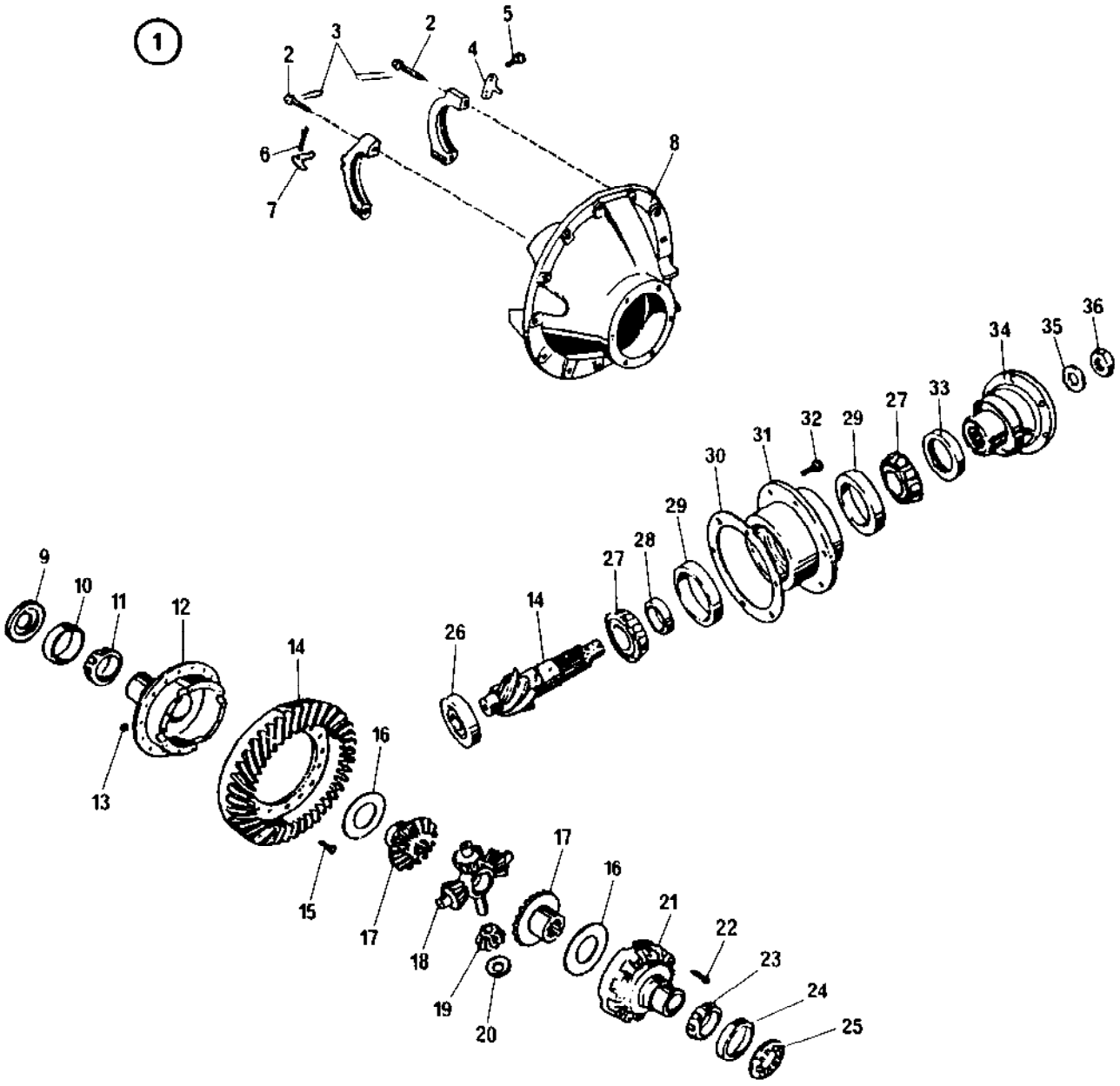

Differential assembly 699B432-699B481, Eaton

Ref. No.	Part No.	Rem.	Qty	Description	Code
28	194526		CN	.Spacer 16,218	
	194527		CN	.Spacer 16,213	
	194528		CN	.Spacer 16,243	
	194529		CN	.Spacer 16,256	
	194530		CN	.Spacer 16,269	
29	194548		2	.Bearing cup	
30	194549		CN	.Shim 0,08	
	194550		CN	.Shim 0,13	
	194551		CN	.Shim 0,25	
	194552		CN	.Shim 0,51	
	194553		CN	.Shim 0,76	
31	194554		1	.Pinion housing	
32	194555		6	.Screw	
33	194556		1	.Seal ring	
34	194557	B	1	.Seal ring	
35	194559		1	.Washer	
36	194560		1	.Nut	

B) Optional

Differential 699B482-, Rockwell

16239

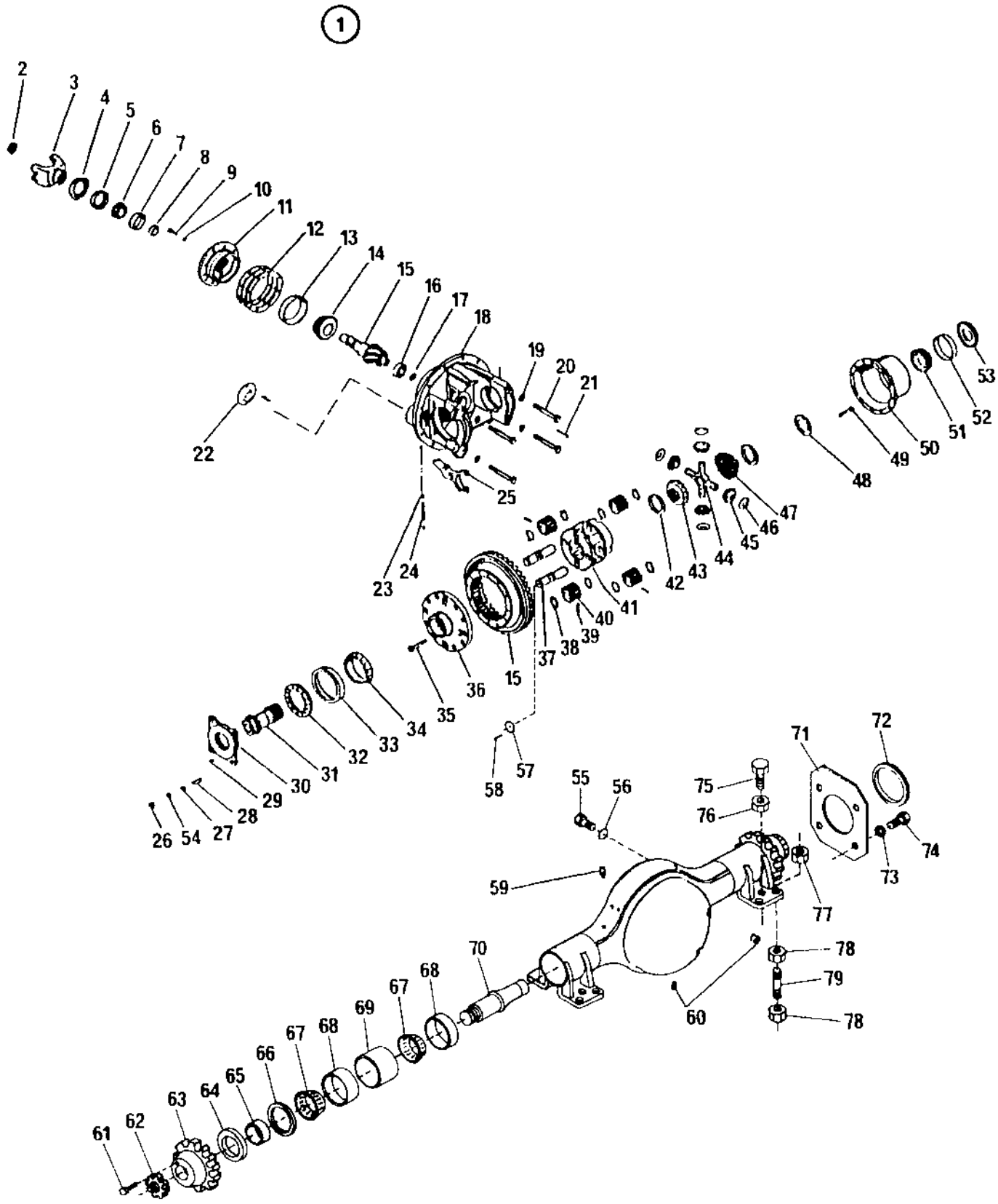

Differential 699B482-, Rockwell

Ref. No.	Part No.	Rem.	Qty	Description	Code
1	195150		1	Differential axle	
2	195692		1	.Nut	
3	195722		1	.Fork link	
4	195723		1	.Deflector	
5	195720		1	.Seal ring	
6	923631		1	.Bearing	D
7	268816		1	.Bearing cup	
8	923633		1	.Shim	
9	242480		8	.Screw	
10	195724		8	.Washer	
11	195719		1	.Pinion housing	
12	416278		2	.Shim 005	
	416279		1	.Shim 010	
	416280		3	.Shim 003	
13	416361		1	.Bearing cup	
14	416363		1	.Bearing	D
15	195691		1	.Drive pinion and gear	
16	195721		1	.Bearing	
17	416238		1	.Retaining ring	
18	195689		1	.Differential carrier	
19	416250		4	.Washer	
20	195690		4	.Screw	
21	195708		1	.Counter pin	
22	195725		1	.Diaphragm	
23	195718		2	.Filler cap	
24	195717		1	.Pin	
25	195716		1	.Fork link	
26	195715		4	.Nut	
27	195713		4	.Washer	
28	195712		4	.Stud	
29	195709		1	.Expanding pin	
30	195711		1	.Lock plate	
31	195710		1	.Gear	
32	195707		1	.Adjusting ring	
33	267587		1	.Bearing cup	
34	922539		1	.Bearing	D
35	195705		8	.Screw	
36	195704		1	.Left support	
37	195697		4	.Shaft	
38	195700		8	.Washer	
39	195702		4	.Expanding pin	
40	195701		4	.Planet pinion	
41	195693		1	.Differential carrier	
42	416243		2	.Washer	
43	195695		1	.Differential side gear	
44	416296		1	.Cross	D
45	242500		4	.Differential pinion	
46	416245		4	.Washer	
47	195694		11	.Differential side gear	
48	416243		1	.Washer	
49	195696		12	.Screw	
50	195703		1	.Right support	
51	242493		1	.Bearing cone	
52	242492		1	.Bearing cup	
53	195706		1	.Adjusting ring	
54	195714		4	.Washer	
55	922524		8	.Screw	
	192655		4	.Screw	
56	813953		12	.Washer	

Differential 699B482-, Rockwell

16239

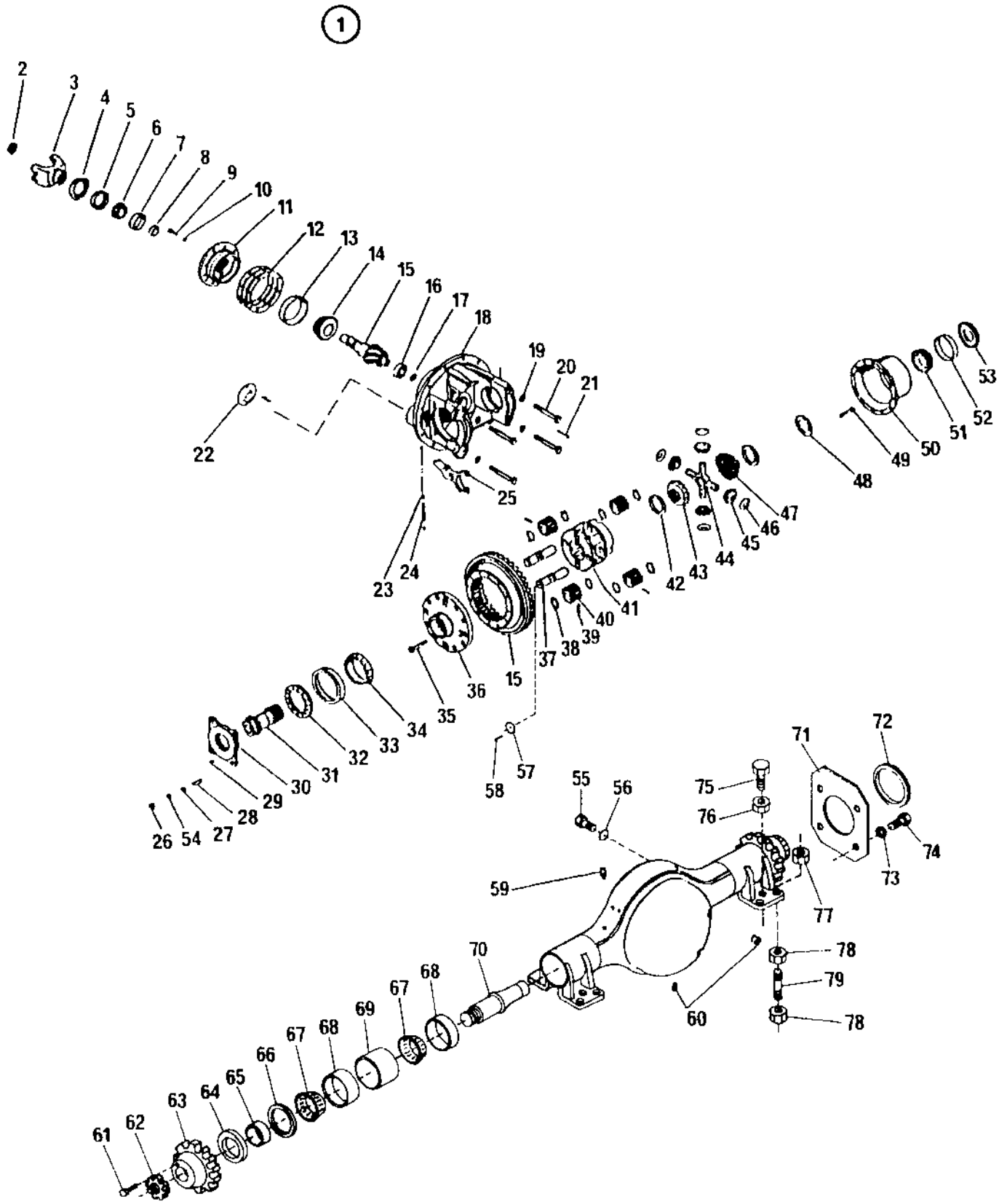

Ref. No.	Part No.	Rem.	Qty	Description	Code
57	195698		4	.Spacer	
58	195699		200	.Roller	
59	415280		1	.Breather	
60	195726		2	.Magnetic plug	
61	195729		2	.Lock screw	
62	195730		2	.Adjusting nut	
63	195731		2	.Gear	
64	195733		2	.Seal ring	
65	195732		2	.Spacer	
66	195734		2	.Snap ring	
67	195735		4	.Bearing cone	
68	195736		4	.Bearing cup	
69	195737		2	.Spacer	
70	195739	C	1	.Axle drive shaft	
	195738	D	1	.Axle drive shaft	
71	195034		1	.Cover	
72	195740		1	.Sealing	
73	195741		8	.Washer 5/16"	
74	195742		4	.Screw	
75	503133		4	.Screw	
76	572007		4	.Nut	
77	586009		8	.Nut	
78	571007		16	.Nut	
79	252914		8	.Stud	

C) Left
D) Right

Cardan shaft assembly

16322

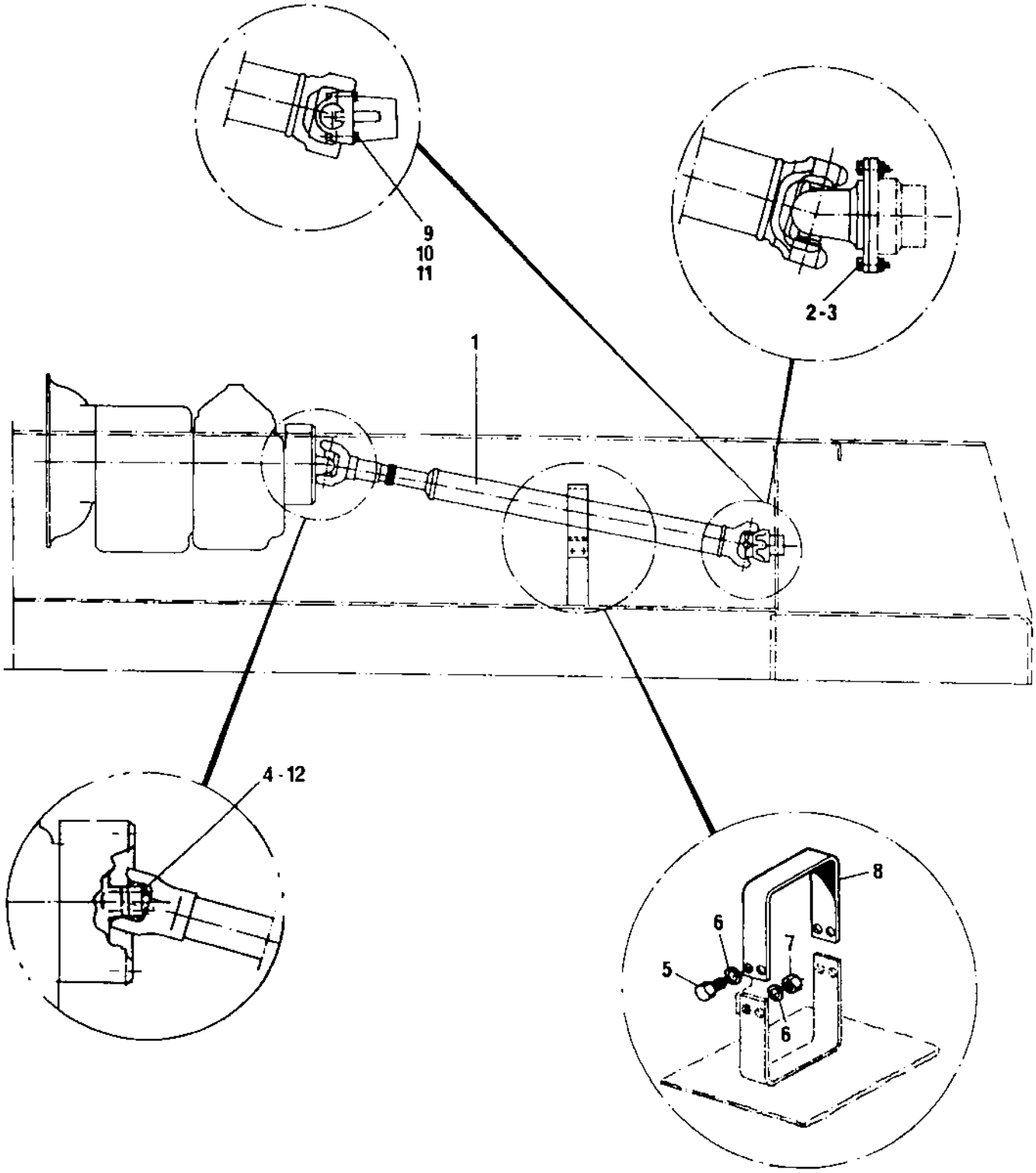

Cardan shaft assembly

Ref. No.	Part No.	Rem.	Qty	Description	Code
1	191834	A	1	Cardan shaft Up to 699B481	
	195235	B	1	Cardan shaft From 699B482	
2	503025	A	8	Screw Up to 699B481	
3	586011	A	8	Lock nut 3/8 UNF Up to 699B481	
4	503027		4	Screw UNF 3/8-24x45	
5	500028		4	Screw M10-1,5x25 8,8	
6	600008		8	Washer	
7	570006		4	Nut M10	
8	268154		1	Protection	
9	195152	B	2	Clamp From 699B482	
10	195233	B	4	Screw From 699B482	
11	904358	B	4	Nut UNF From 699B482	
12	604006		8	Washer From 699B482	

A) With Mercedes Benz or Eaton differential
B) With Rockwell differential

Cardan shaft -699B481, Albarus

16323

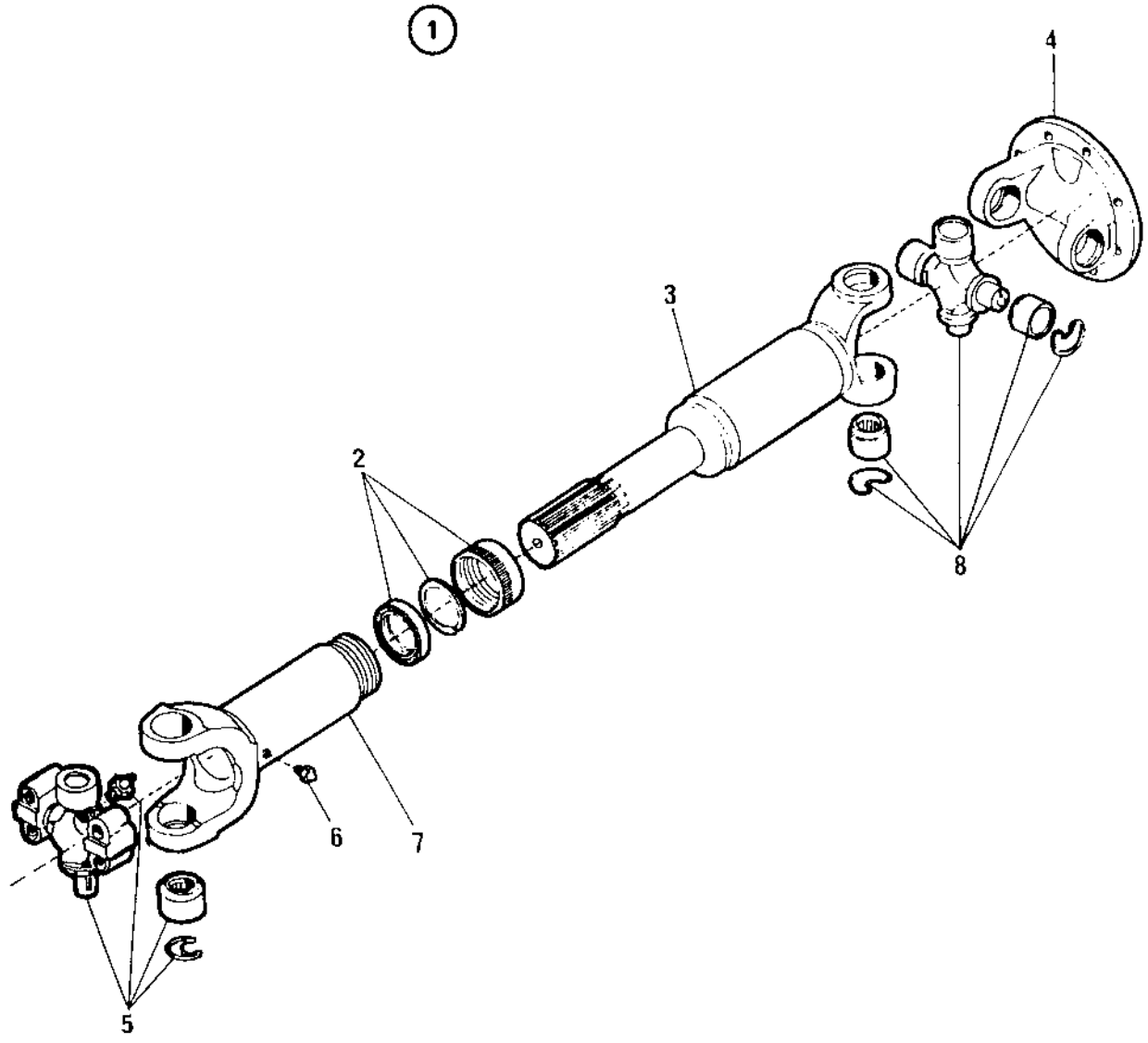

Cardan shaft -699B481, Albarus

Ref. No.	Part No.	Rem.	Qty	Description	Code
1	191834		1	Cardan shaft	
2	195314		1	.Seal kit	
3			1	.Tube shaft	
4	912074		1	.Flange	
5	927988		1	.Universal joint cross	D
6	310028		1	.Grease nipple	D
7	195315		1	.Slip yoke	
8	920492		1	.Universal joint cross	

Cardan shaft 699B482-, Albarus

16321

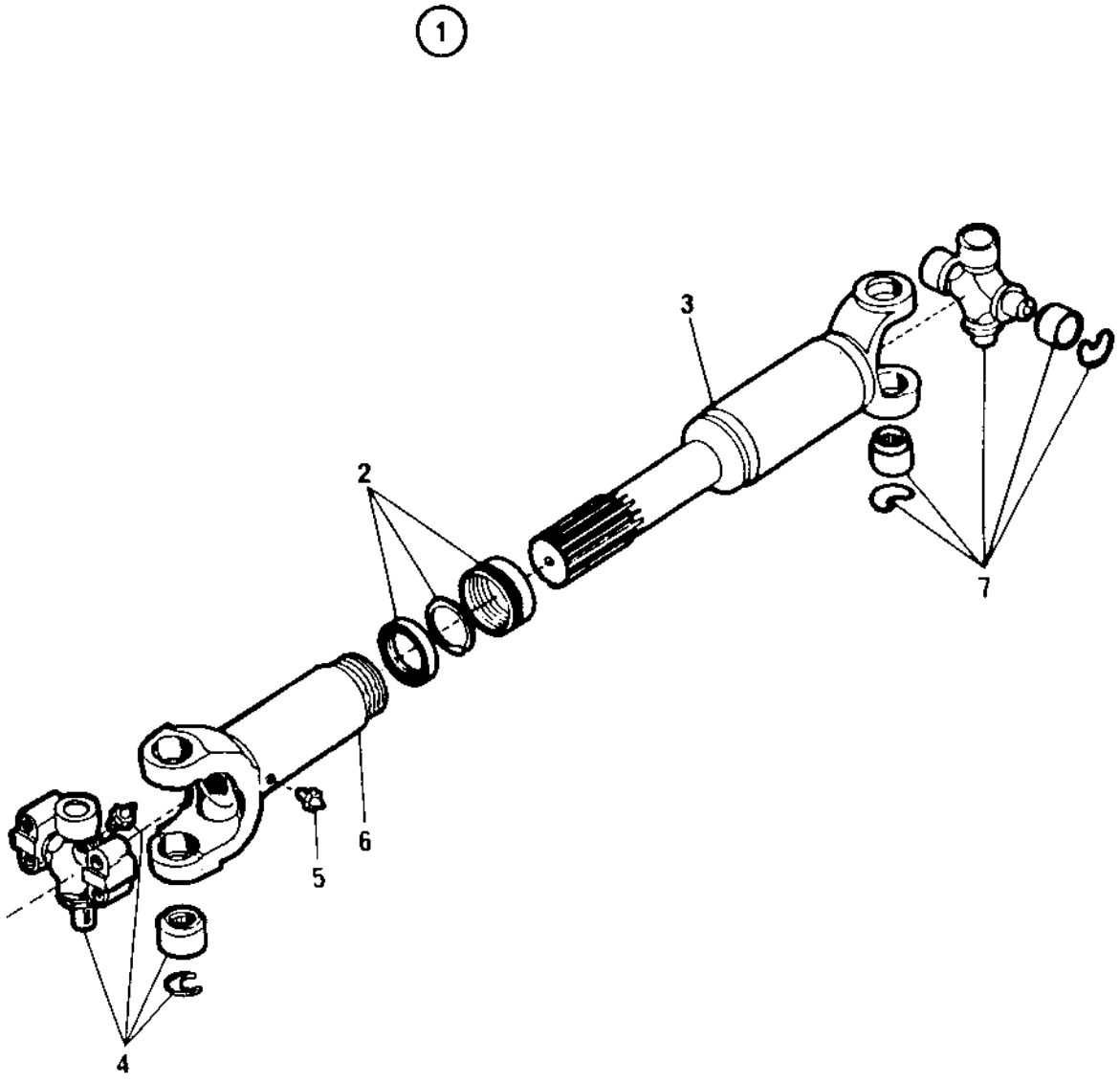

Cardan shaft 699B482-, Albarus

Ref. No.	Part No.	Rem.	Qty	Description	Code
1	195235		1	Cardan shaft	
2	195314		1	.Seal kit	
3			1	.Tube shaft	
4	927988		1	.Universal joint cross	D
5	310028		1	.Grease nipple	D
6	195315		1	.Slip yoke	
7	195749		1	.Universal joint cross	D

Ref. No.	Part No.	Rem.	Qty	Description	Code
10				Steering system (Page 218)	
30				Steering cylinder (Page 224)	
40	250832			Steering cylinder (Page 226)	
50	376060			Steering cylinder (Page 228)	

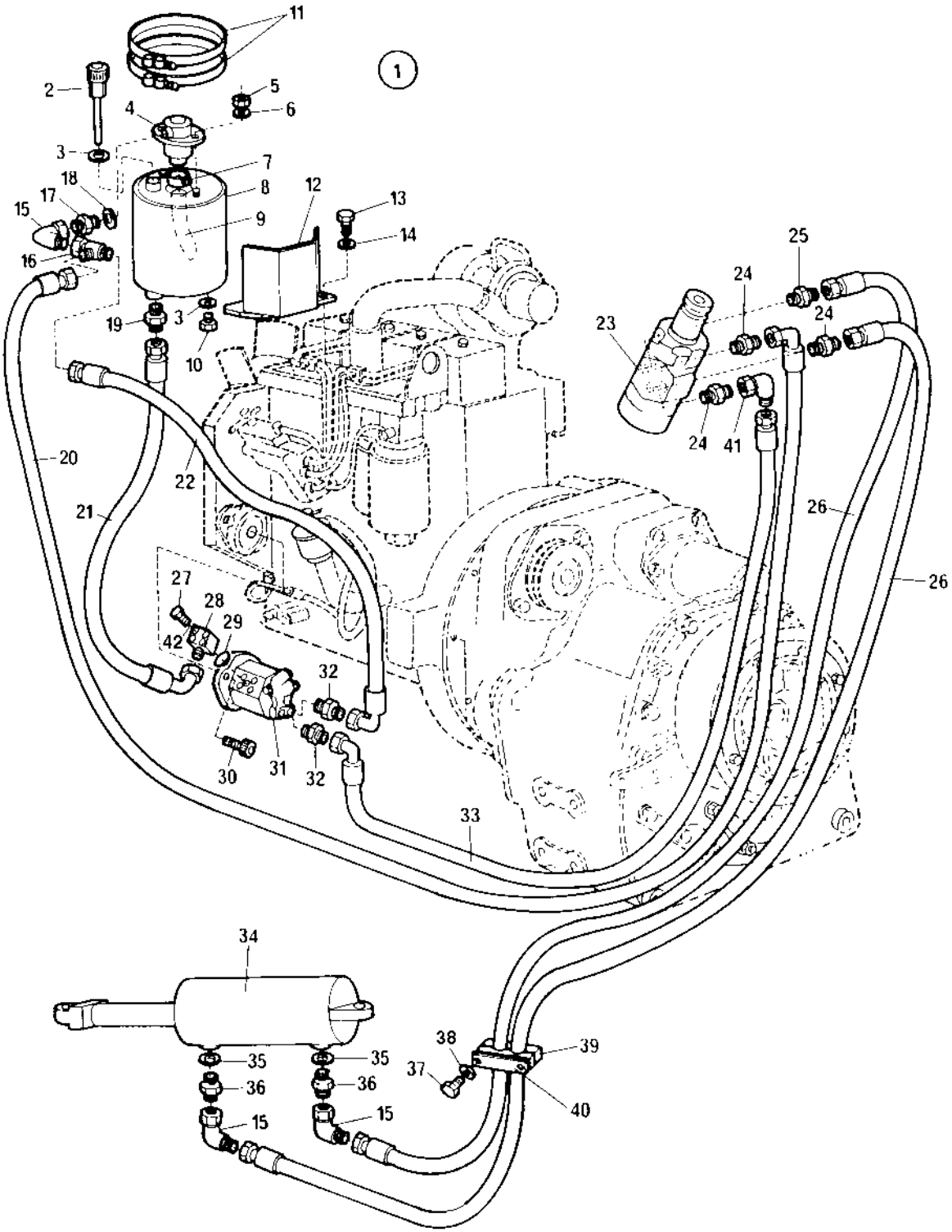
11
1
2
5
6
4
3
7
18
8
12
13
17
15
9
14
16
25
24
19
3
10
23
24
24
41
20
22
26
21
26
27
28
29
42
32
30
31
32
33
34
38
39
35
35
37
36
36
40
15
15

Ref. No.	Part No.	Rem.	Qty	Description	Code
1	241846		1	Hydraulic oil tank, CPL	
2	499373		1	.Air cleaner	
3	330331		2	.Washer 18,2x23,9x1,5	
4	912081		1	.Filter, cpl	
	499474		1	..Filter element	
5	570005		2	.Nut M8	
6	604005		2	.Spring washer	
7	313006		1	.Hose clamp	
8	241848		1	.Hydraulic oil tank	
9	244034	A	1	.Hose	
10	232160		1	.Plug	
11	194339		2	Clamp	
12	194178		1	Support	
13	500029		3	Screw M10-1,5x30 8,8	
14	904230		3	Washer 10,5x22x2	
15	334197		3	Elbow 90	
16	334135		1	T-connector	
17	234941		1	Adapter	
18	330331		1	Washer 18,2x23,9x1,5	
19	334157		1	Straight connector	
20	482732		1	Hydraulic hose	
21	192188		1	Hydraulic hose	
22	242030		1	Hydraulic hose	
23	900411		1	Steering valve Up to 23620307 (Page 220)	
	375455		1	Steering valve From 23620308 (Page 222)	D
24	234843		3	Adapter Up to 23620307	
	334116		1	Straight o-ring connector From 23620308	
25	268844		1	Nipple Up to 23620307	
	334116		1	Straight o-ring connector From 23620308	
26	191818	B	2	Hydraulic hose	
27	500089	F,J	4	Screw M6x70	
	500088	H	4	Screw M6x40	
28	268851	F,G	1	Connection	
	904786	I	1	Flange adapter	
29	813457		1	O-ring	
30	508013		2	Screw	
31	191788		1	Steering pump If not available; use 376548	
32	334121		2	Straight connector	
33	482465		1	Hydraulic hose	D
34			1	Steering cylinder (Page 224)	
35		C	2	Seal ring	
36	334116	D	2	Straight o-ring connector	
37	500186		2	Screw M6-1x45 8,8	
38	904228		2	Washer 6,4x12x1,5	
39	192223		1	Hose fixing	
40	241431		1	Plate	

A) L=140 mm
B) L=750 mm
C) Earlier seal ring 330397 and nipple 269207 are together replaced by adapter 334116
D) With o-ring and backup ring
F) Old version
G) Replaced by 904786 together with screw 500088
H) Together with flange adapter 904786
I) Together with screw 500088
J) Together with connection 268851

900411 Steering valve

16256

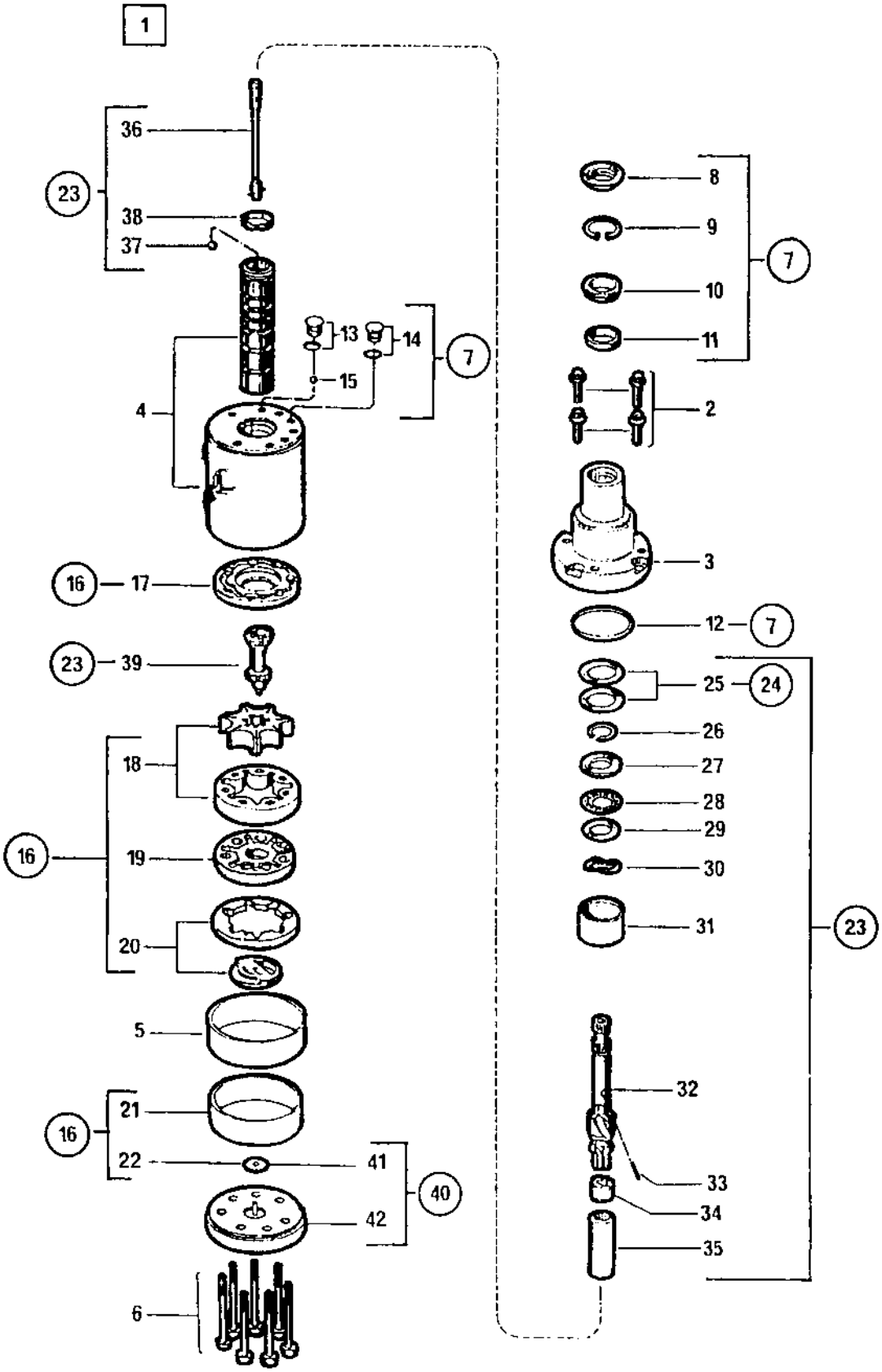

900411 Steering valve

Ref. No.	Part No.	Rem.	Qty	Description	Code
1			1	Steering valve, cpl	
2	910577		4	.Screw	
3	910569		1	.Cover, upper	
4	240904		1	.Housing	
5	240905		1	.Sleeve	
6	240906		7	.Screw	
7	928840		1	.Seal kit	
8	910586		1	..Dust filter	
9			1	..Snap ring	
10			1	.Spacer	
11			1	..Seal ring	
12			1	..Seal ring	
13			2	..Plug with o-ring	
14			1	..Plug with o-ring	
15			1	..Ball	
16	249547		1	.Manual pump kit	
17			1	..Spacer	
18			1	..Rotor set	
19			1	..Collector	
20	240100		1	..Collector ring	
21	240907		1	..Rotor sealing	
22			1	..Washer	
23	249548		1	.Shaft repair kit	
24	910599		1	..Shim kit	
25		A	2	..Shim	
	330534	B	1	..Shim	
	330534	C	1	..Shim	
	330534	D	2	..Shim	
26			1	..Snap ring	
27			1	..Washer	
28			1	..Bearing	
29			1	..Washer	
30			1	..Lock washer	
31			1	..Spacer	
32			1	..Shaft	
33			1	..Needle	
34			1	..Ring	
35			1	..Spacer	
36			1	..Bar	
37			1	..Ball	
38			1	..Spring	
39			1	..Column	
40	249549		1	.Cover kit	
41			1	..Washer	
42			1	..Cover	

A) 0,030
B) 0,003
C) 0,005
D) 0,010

375455 Steering valve

16436

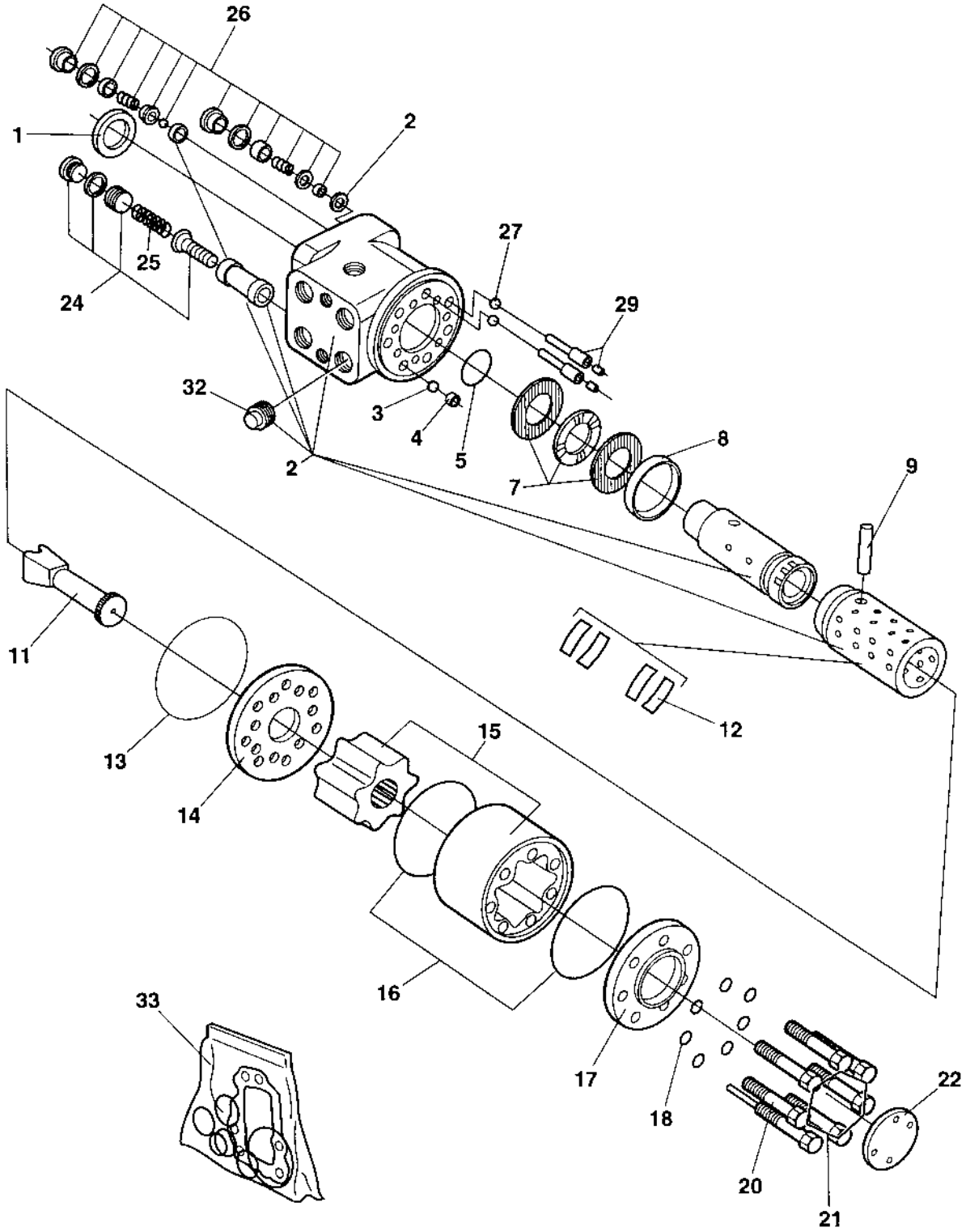

375455 Steering valve

Ref. No.	Part No.	Rem.	Qty	Description	Code
1	936487	A	1	Dust seal ring	
2			1	Housing, spool and sleeve	
3	480468		1	Ball	
4	480446		1	Threaded bushing	D
5	908780	A	1	O-ring	
7	911620		1	Bearing	D
8	480449		1	Ring	
9	480447		1	Cross pin	
11	902861		1	Cardan shaft	
12	911618		1	Spring kit	D
13	936488	A	1	O-ring	
14	902862		1	Valve plate	
15	936489		1	Gear wheel set	
16	936490	A	2	O-ring	
17	480450		1	End cap	
18	936491	A	7	Washer	
20	936492		1	Screw with pin	
21	936493		6	Screw	
22	936494		1	Name plate	
24	929010		1	Relief valve 17,0-17,5MPa	D
25	936495		1	Spring wire	
26	929012		2	Shock valve 22,5-24,0 MPa	
27	929013		2	Ball	
29	929014		2	Rolled pin	
32	908782		1	Valve	
33	908783	B	1	Seal kit	D

A) Included in kit, item 33
B) Not included in PN 375455

Steering cylinder

16327

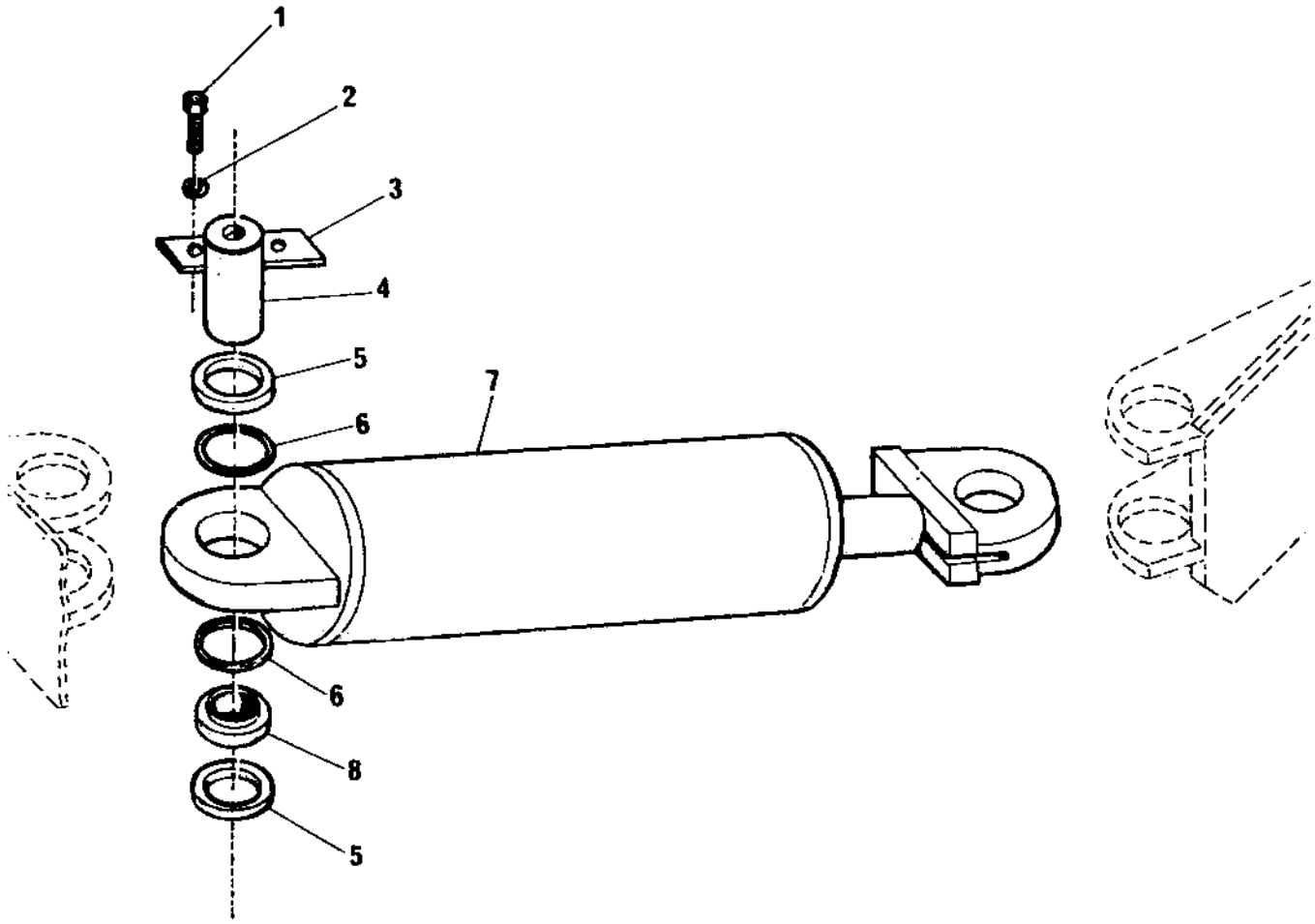

Steering cylinder

Ref. No.	Part No.	Rem.	Qty	Description	Code
1	500051		4	Screw M12-1,75x25 8,8	
2	604009		4	Washer	
3	259211		2	Snap plate	
4	257139		2	Shaft	
5	259215		4	Spacer ring	
6	151021		4	Snap ring Up to 23620309	
	151021		4	Snap ring From 23620313 Up to 23620313	
	151021		4	Snap ring From 23620315 Up to 23620315	
	151021		4	Snap ring From 23620319 Up to 23620319	
	151021		4	Snap ring From 23620322 Up to 23620322	
7	250832		1	Steering cylinder Up to 23620209 (Page 226)	
	376060		1	Steering cylinder From 23620310 Up to 23620312 (Page 228)	
	250832		1	Steering cylinder From 23620313 Up to 23620313 (Page 226)	
	376060		1	Steering cylinder From 23620314 Up to 23620314 (Page 228)	
	250832		1	Steering cylinder From 23620315 Up to 23620315 (Page 226)	
	376060		1	Steering cylinder From 23620316 Up to 23620318 (Page 228)	
	250832		1	Steering cylinder From 23620319 Up to 23620319 (Page 226)	
	376060		1	Steering cylinder From 23620320 Up to 23620321 (Page 228)	
	250832		1	Steering cylinder From 23620322 Up to 23620322 (Page 226)	
	376060		1	Steering cylinder From 23620323 (Page 228)	
8	100054		2	Bearing Up to 23620309	
	100054		2	Bearing From 23620313 Up to 23620313	
	100054		2	Bearing From 23620315 Up to 23620315	
	100054		2	Bearing From 23620319 Up to 23620319	
	100054		2	Bearing From 23620322 Up to 23620322	

250832 Steering cylinder

16325

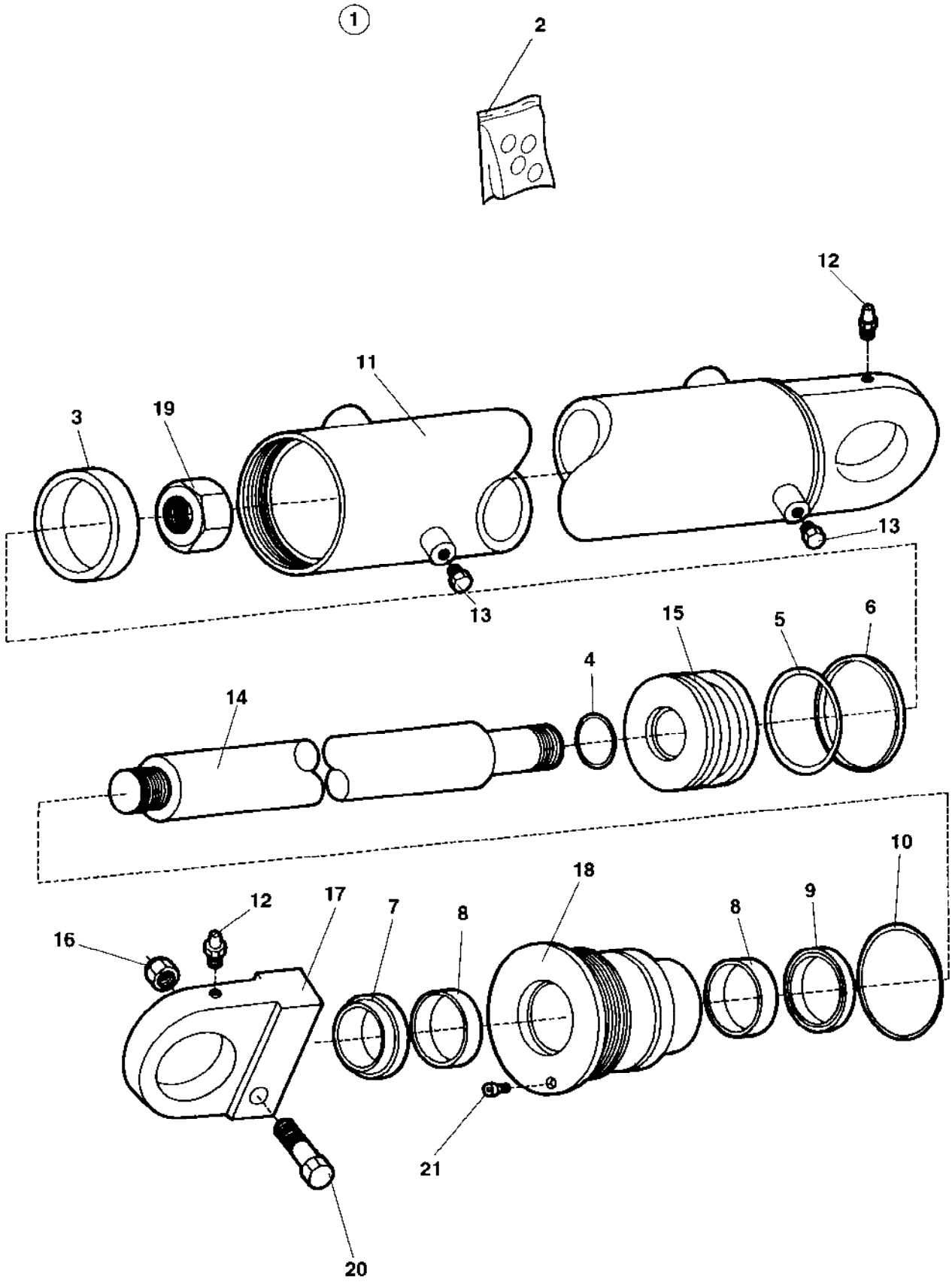

250832 Steering cylinder

Ref. No.	Part No.	Rem.	Qty	Description	Code
1			1	Steering cylinder, cpl	
2	262019		1	.Repair kit	
3	190730		1	..Guide ring	
4	160218		1	..O-ring	
5	190729		1	..O-ring	
6	190731		1	..Teflon ring	
7	922045		1	..Ring	
8	243623		2	..Guide ring	
9	160335		1	..O-ring	
10	243624		1	..Gasket	
11	190725		1	.Liner	
12	310001		2	.Grease nipple	D
13	232010		2	.Plug	
14	190721		1	.Shaft	
15	190722		1	.Piston	
16	586006		1	.Nut	
17	241776		1	.Bracket	
18	243622		1	.Rod guide	
19	243197		1	.Lock nut	
20	502269		1	.Screw	
21	517052		1	.Screw	

376060 Steering cylinder

16634

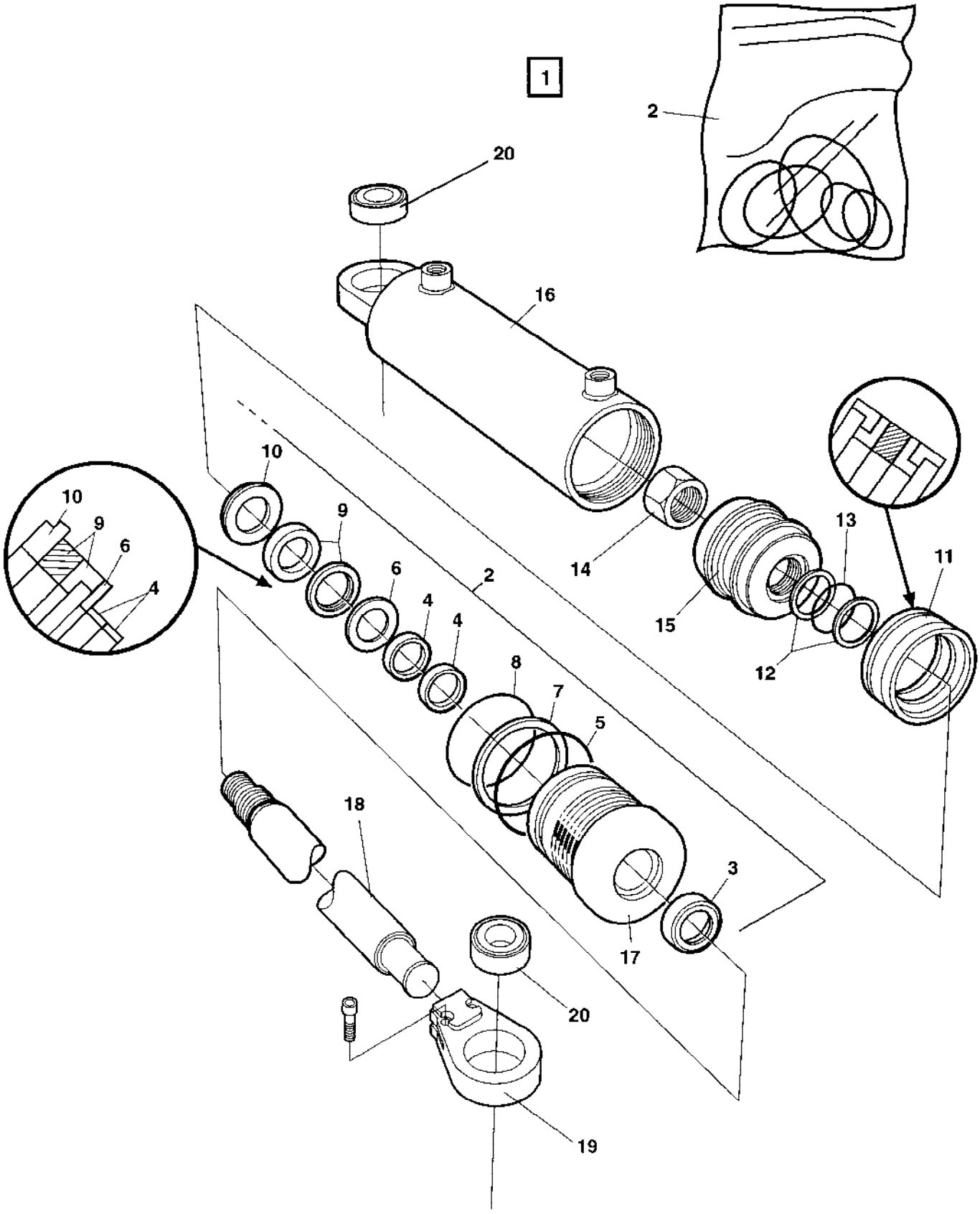

376060 Steering cylinder

Ref. No.	Part No.	Rem.	Qty	Description	Code
1			1	Steering cylinder, cpl	
2	936703		1	.Seal kit	D
3	936700		1	.Shear wiper	
4	936699		2	.Guide ring	
5	160033		1	.O-ring	D
6	936697		1	.Back-up ring	
7	903289		1	.Back-up ring	
8	160032		1	.O-ring	D
9	936696		1	.Piston rod sealing	
10	936695		1	.Snap ring	
11	926326		1	.Piston seal	
12	904141		2	.Back-up ring	
13	160013		1	.O-ring	
14	904142		1	.Lock nut	
15	904143		1	.Piston block	
16	936704		1	.Cylinder tube	
17	936698		1	.Guide	
18	936705		1	.Piston rod	
19	936702		1	.Link head	
20	901691		2	.Bushing	D

Ref. No.	Part No.	Rem.	Qty	Description	Code
20				Electrical system (Page 232)	
30				Lights (Page 238)	
40				Instrument board (Page 240)	
60				Electrical equipment (Page 242)	

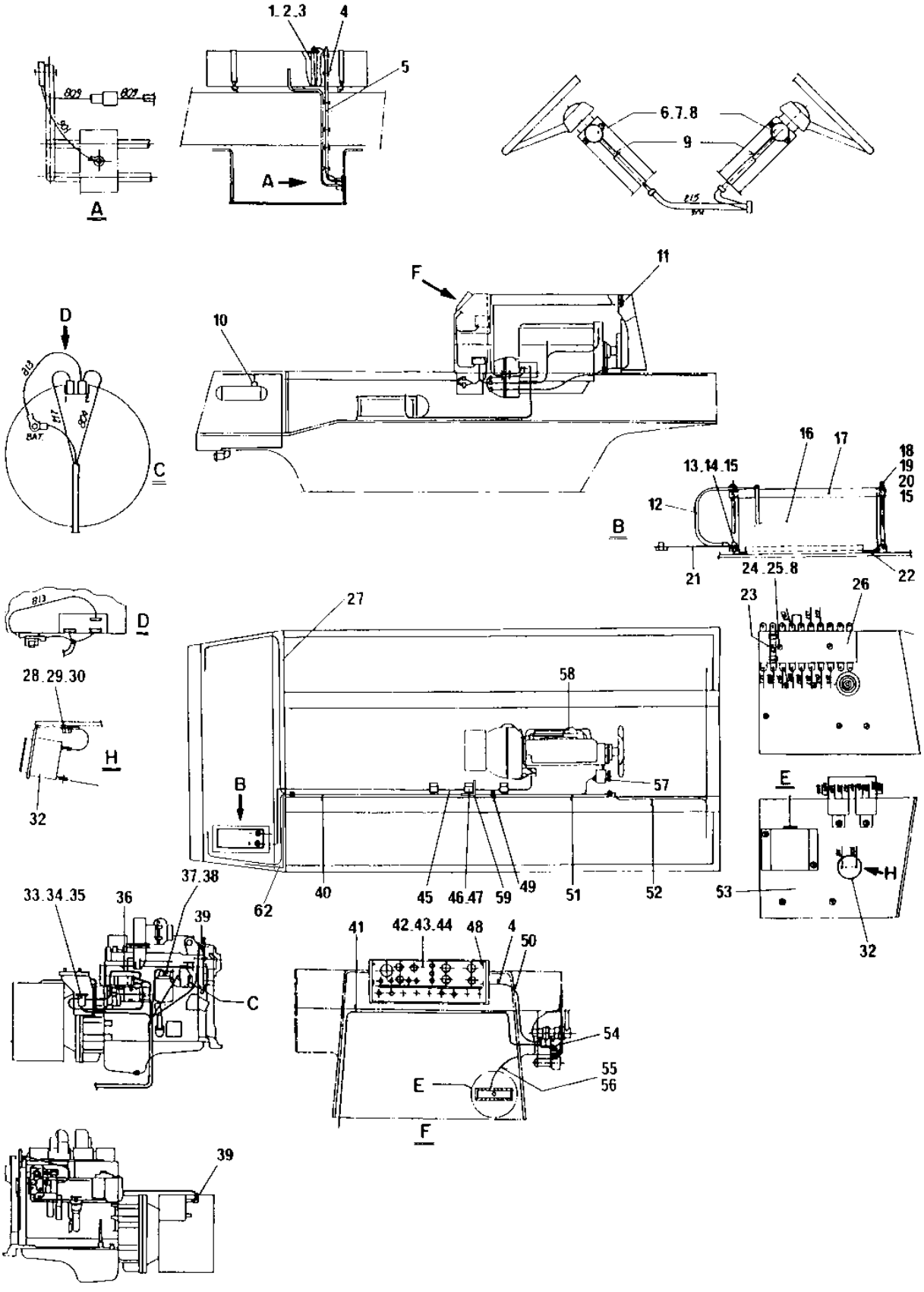
1.2.3
4
5
A
6.7.8
9
11
F
10
D
C
16
17
18
19
20
15
13.14.15
12
B
21
24.25.8
22
23
26
27
28.29.30
H
58
57
B
32
E
37.38
33.34.35
36
39
62
40
45
46.47
59
49
51
52
53
H
32
41
42.43.44
48
4
50
C
54
55
56
E
F
39

Ref. No.	Part No.	Rem.	Qty	Description	Code
1	192032		1	Fuel sender	
2	500006		5	Screw M5x16	
3	904281		1	Washer 5,3x10x1	
4	313068		14	Cable ties L=92 mm	
5	192309		1	Cable harness	
6	930138		2	Push button	
7	541525		4	Screw	
8	904281		10	Washer 5,3x10x1	
9	192312		1	Cable harness	
10	415350	A	2	Pressure gauge Up to 23620314	
	904600		2	Pressure gauge From 23620315	
11	347241	B	1	Horn	C
		C	1	Horn assy (Page 236)	
12	258870		1	Battery cable (-)	
13	500048		1	Screw M10-1,5x20 8,8	
14	570006		3	Nut M10	
15	904230		3	Washer 10,5x22x2	
16	470020		1	Battery	
17	343369		1	Battery frame	
18	250070		2	Fixing screw	
19	571003		2	Nut UNC 3/8 - 16	
20	904637		2	Washer 10x18x2	
21	265215		1	Cable	
22	259933		1	Shim	
23	813412		8	Fuse 10A	A
24	533032		4	Screw	
25	570003		4	Nut M5	
26	240759		1	Fuse box	
27	194332		1	Cable harness	
28	500020		1	Screw M8-1,25x22 8,8	
29	570005		2	Nut M8	
30	904229		3	Washer 8,4x16x1,5	
32	928661		2	Warning buzzer	
33	975065		1	Starter relay	
34	500013		2	Screw M6-1x16 8,8	
35	604004		2	Washer	
36	192310		1	Cable harness	
37	930139		1	Oil pressure switch Up to 23620314	D
38	256485		1	Adapter Up to 23620314	
39	258307		2	Temperature sensor	D
40	194333		1	Cable harness	
41	192308		1	Cable harness	
42	242514		1	Resistance cable	
43	192313		1	Cable harness	
44	344389		1	Cable	
45	192894		1	Battery cable	
46	313041		3	Cable ties L=186 mm	
47	927026		3	Screw	
48	240519		4	Screw	
49	313041		6	Cable ties L=186 mm	
50	192303		1	Cable harness	
51	192304		1	Cable harness	

A) Interchangeable by 904600 together with 904599
B) Replaced by 382755 horn assy
C) New placement viewed in the mount instruction of horn assy

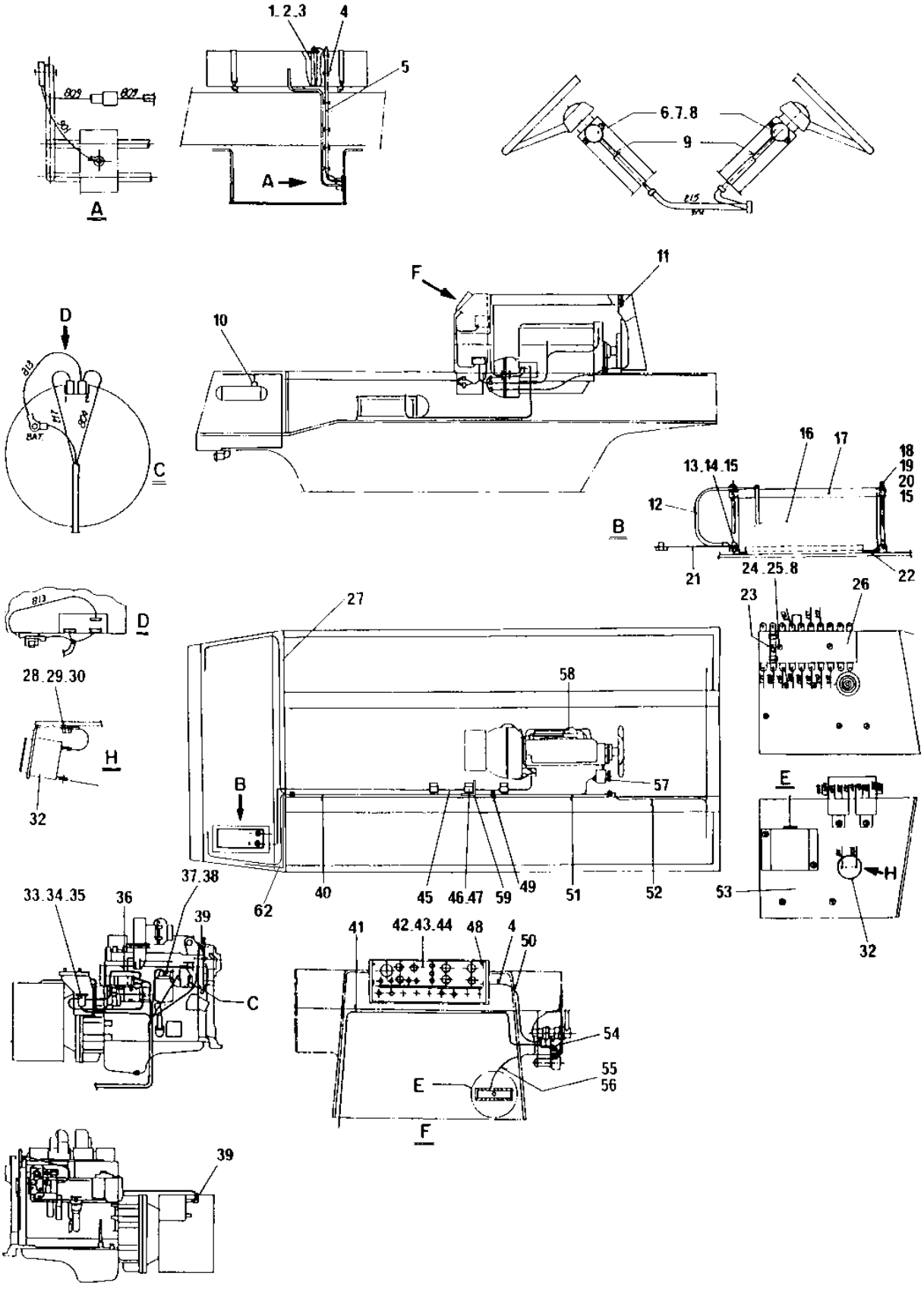
1.2.3
4
5
A
6.7.8
9
11
F
10
D
C
16
17
18
19
20
15
13.14.15
12
B
21
24.25.8
22
23
26
27
28.29.30
H
58
57
B
32
E
37.38
33.34.35
36
39
62
40
45
46.47
59
49
51
52
53
H
32
41
42.43.44
48
4
50
C
54
55
56
E
F
39

Ref. No.	Part No.	Rem.	Qty	Description	Code
52	192316		1	Cable harness	
53	387733		1	Bracket	
54	193044		1	Cable harness	
55	192306		1	Cable harness	
56	192307		1	Cable harness	
57	901350		1	Alternator	C
58	901448		1	Starter	C
59	374954		1	Bracket	
60	904599		2	Connection cable From 23620315	
61	921099		1	Clamp	
62	193930	D	1	Cable harness Up to 23620463	
	383963	E	1	Cable harness From 23620464	

D) Old version with AMP connection for water pump
E) New version with Cannon connection for water pump

Horn assy

17211

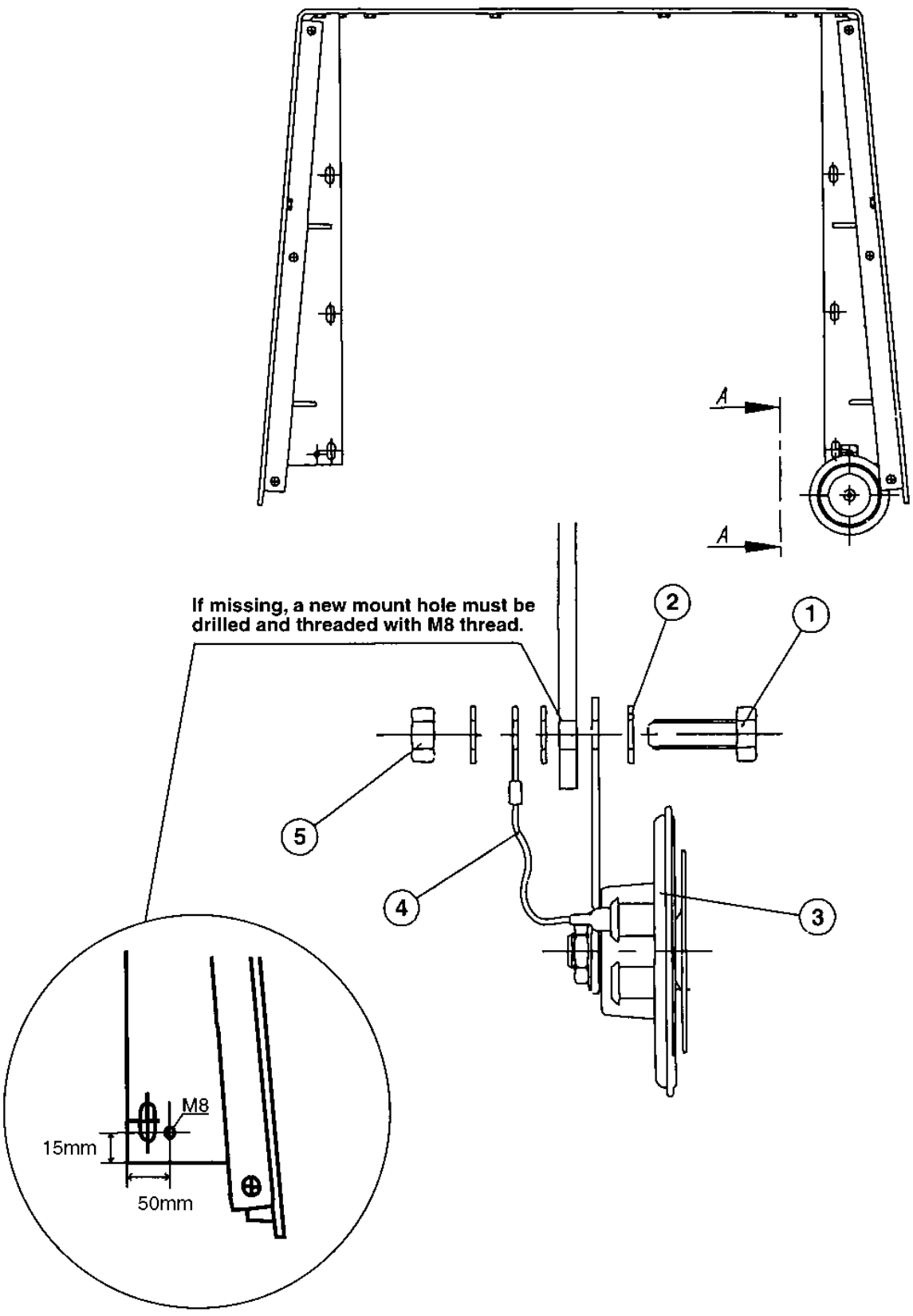

Horn assy

Ref. No.	Part No.	Rem.	Qty	Description	Code
1	500021		1	Screw M8-1,25x25 8,8	
2	904229		3	Washer 8,4x16x1,5	
3	999027		1	Horn	D
4	904912		1	Connection cable	
5	586003		1	Lock nut M8	

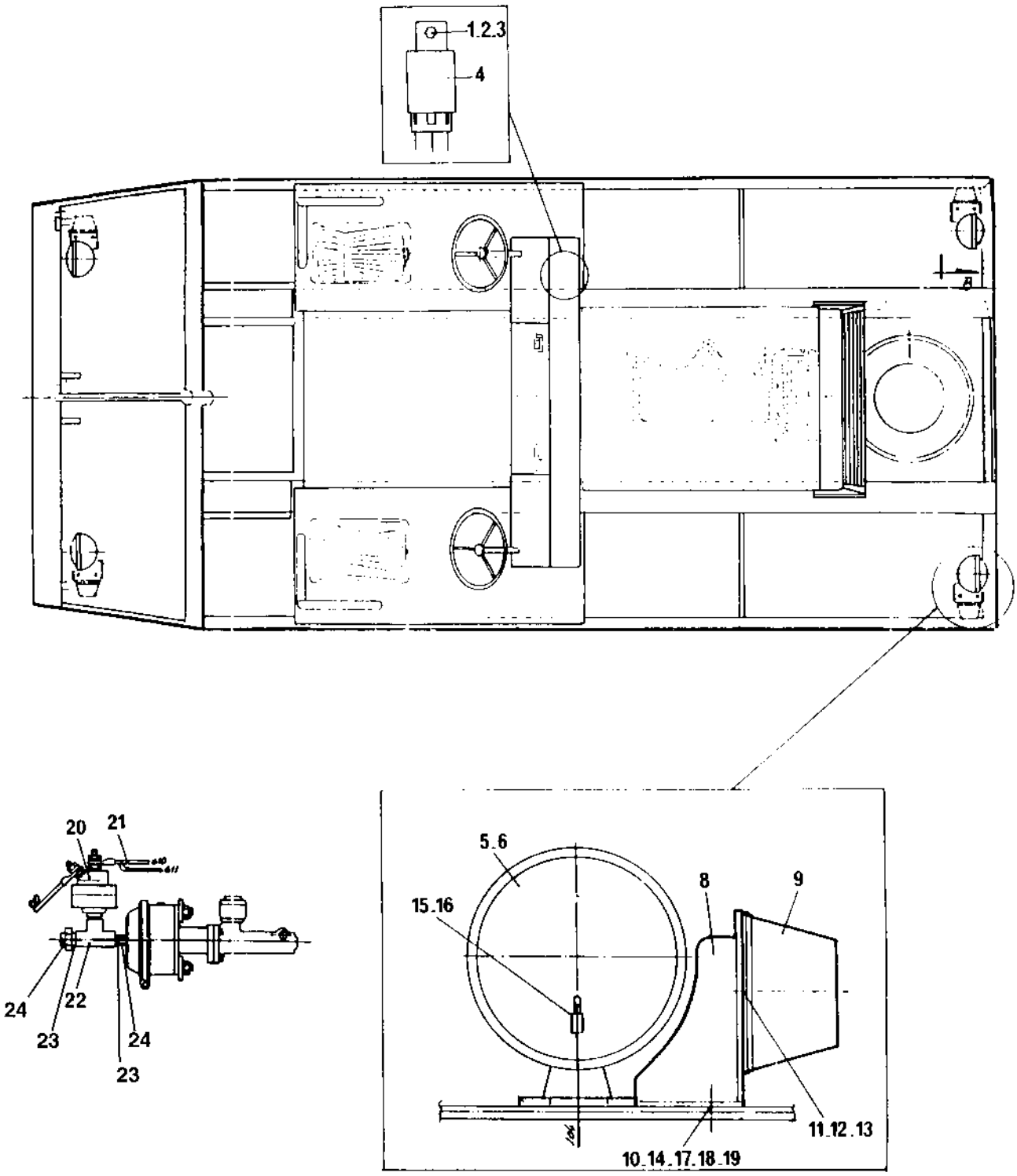
1.2.3
4
20
21
24
22
23
24
23
5.6
15.16
8
9
11.12.13
10.14.17.18.19

Lights

Ref. No.	Part No.	Rem.	Qty	Description	Code
1	500004		1	Screw M5 0,8x12 8,8	
2	904281		1	Washer 5,3x10x1	
3	570003		1	Nut M5	
4	975068		1	Relay	D
5	985066		4	Head light	D
6	985087		4	Lamp	B
8	191541		4	Bracket	
9	900223		4	Lantern	D
10	500020		8	Screw M8-1,25x22 8,8	
11	533025		8	Screw M5x12	
12	904281		8	Washer 5,3x10x1	
13	247638		4	Lamp	B
14	570005		4	Nut M8	
15	960273		2	Terminal	
16	901766		1	Connector 2-POL	D
17	904229		8	Washer 8,4x16x1,5	
18	615043		8	Washer 8,4x18x2	
19	570003		8	Nut M5	
20	248271		1	Switch brake light	
21	192308		1	Cable harness	
22	904571		1	Connection-T	
23	904577		2	Connector	
24	902131		2	Adapter	

Instrument board

16263-2

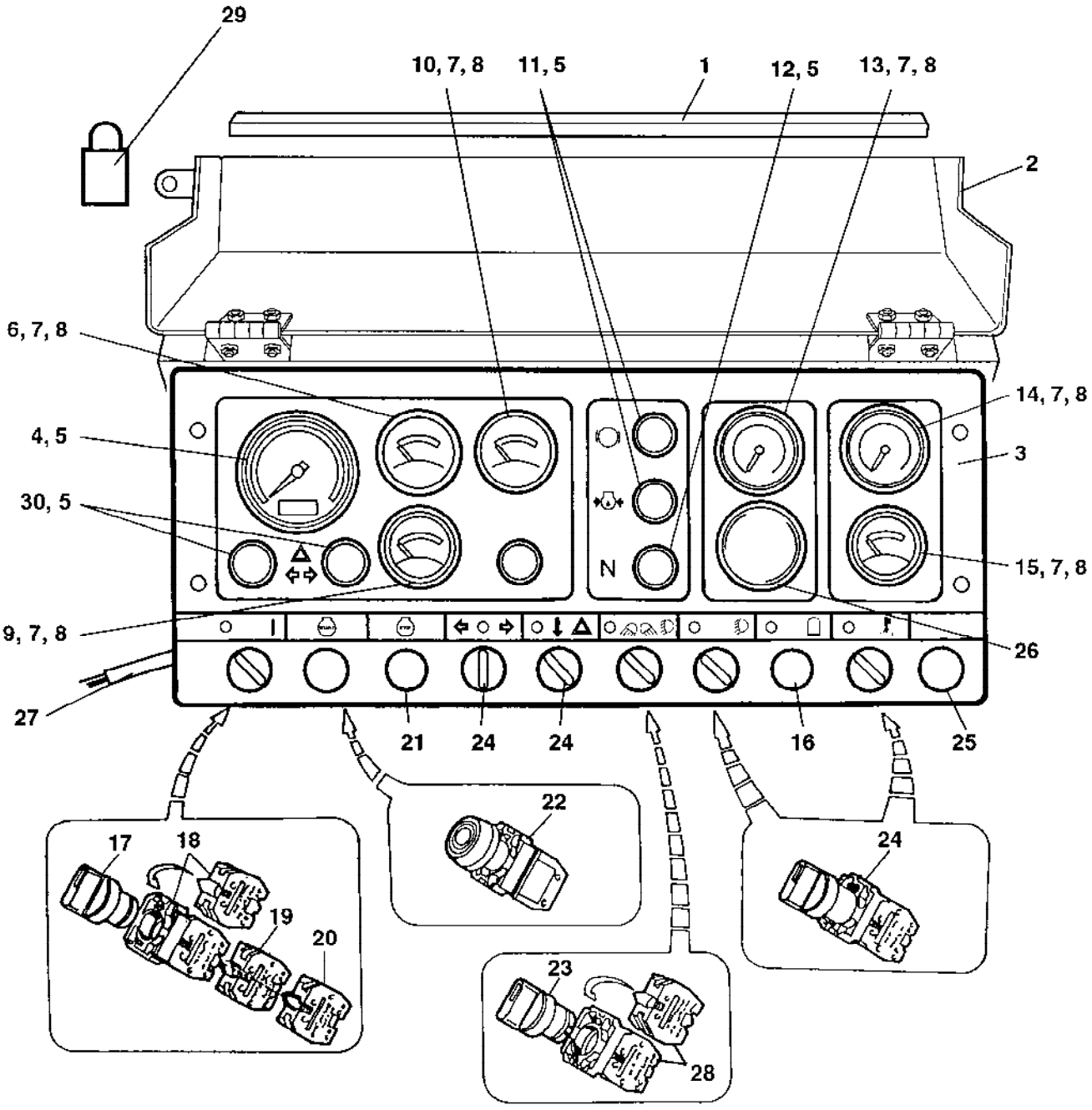

Instrument board

Ref. No.	Part No.	Rem.	Qty	Description	Code
1	202028	A	1	Edge trim	
2	240410		1	Cover	
3	191766		1	Instrument board	
4	266625		1	Electric tachometer	
5	985012		6	Bulb	D
6	248035		1	Fuel gauge	
7	747583		7	Bulb	
8	927025		7	Socket	
9	265232		1	Water temperature gauge	D
10	265244		1	Volt meter	
11	985146		3	Pilot lamp cpl Red	D
12	932059		1	Pilot lamp cpl Yellow	
13	266221		2	Manometer Up to 699B452	D
	266221		1	Manometer From 699B453	D
14	265909		1	Manometer	
15	265231		1	Oil temperature gauge	
16	911456		5	Hole plug	
17	930192		1	Switch	D
18	930195		1	Contact block	
19	930163		1	Contact piece	D
21	791157		1	Plug unthreaded	
22	928928		1	Push button	D
23	932058		1	Switch	D
24	930151		2	Switch	D
25	928661		1	Warning buzzer	
26	192135	B	1	Plug From 699B453	
	195935	C	1	Double pressure gauge	
27	192303		1	Cable harness	
28	930182		1	Contact block	D
29	358881		1	Pad lock	
30	985145		2	Pilot lamp cpl Green	

A) L=585 mm
B) Up to SN23620279 and 283-286 + 288-289
C) From SN 23620280 not 283-286 + 288-289

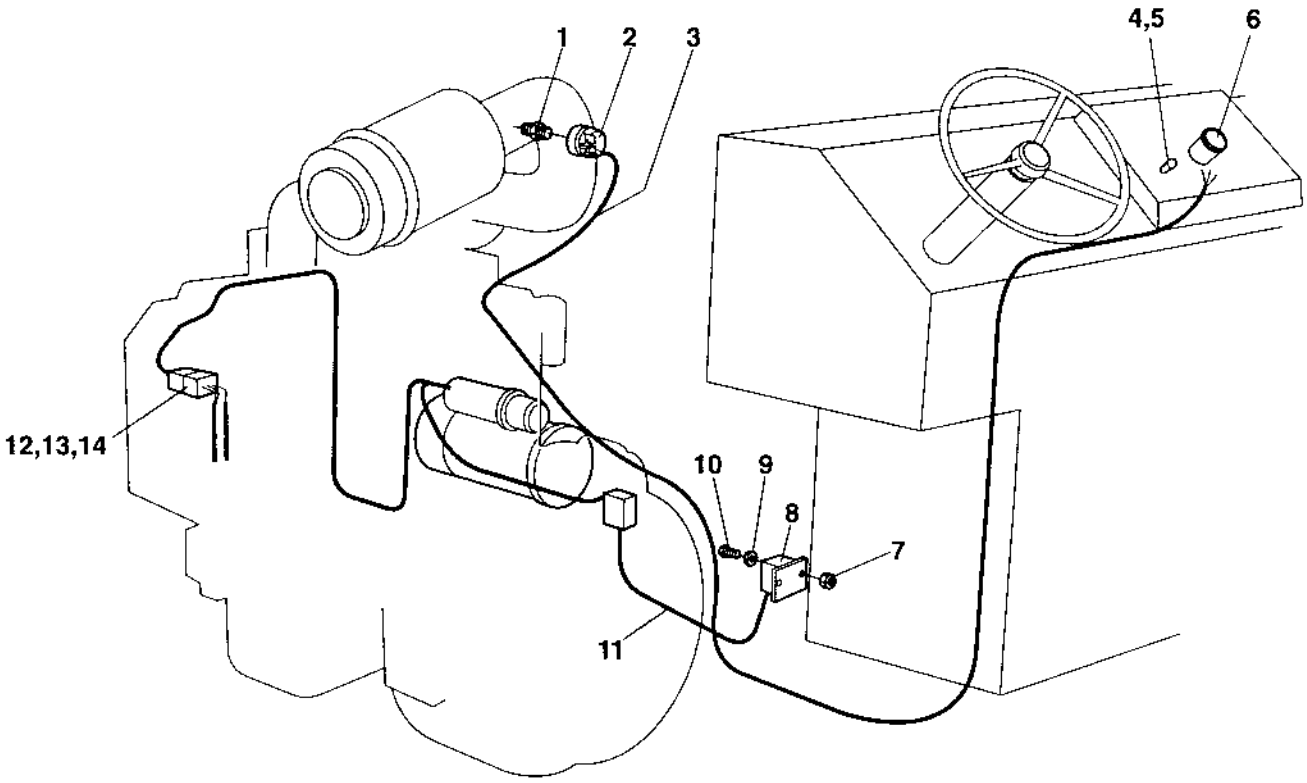
1
2
3
4,5
6
12,13,14
10
9
8
7
11

Ref. No.	Part No.	Rem.	Qty	Description	Code
1	375113		1	Nipple	
2	929023		1	Indicator	D
3	374961		1	Cable harness	
4	985012		1	Bulb	D
5	985146		1	Pilot lamp cpl Red	D
6			1	Volt meter See Instrument board assembly	D
7	570004		2	Nut M6	
8	904448		1	Relay	D
9	904228		2	Washer 6,4x12x1,5	
10	500040		2	Screw M6-1x20 8,8	
11	374960		1	Cable harness	
12	903307		1	Connector	
13	923302		1	Connector, socket	
14	929911		1	Sealing	D

Ref. No.	Part No.	Rem.	Qty	Description	Code
10				Forward and reverse control, brake Up to 23620307 (Page 246)	
15				Forward and reverse control, brake From 23620308 (Page 248)	
20				Throttle control, cpl Up to 23620307 (Page 250)	
25				Throttle control, cpl From 23620308- (Page 252)	
30				Pedal and brake valve -23620279 and 283-286+288-289 (Page 254)	
40				Pedal and brake valve 23620280- not 283-286+288-289 (Page 258)	
50				Operator's manual box (Page 262)	
60				Steering assembly Up to 23620306 (Page 264)	
70				Steering assembly From 23620307 (Page 268)	
90				Seat assembly Without armrests (Page 272)	
95				Seat assembly With armrests (Page 274)	
100				Safety belt, Only with rops Option (Page 276)	
110				Seat cover (Page 278)	

Forward and reverse control, brake

16316

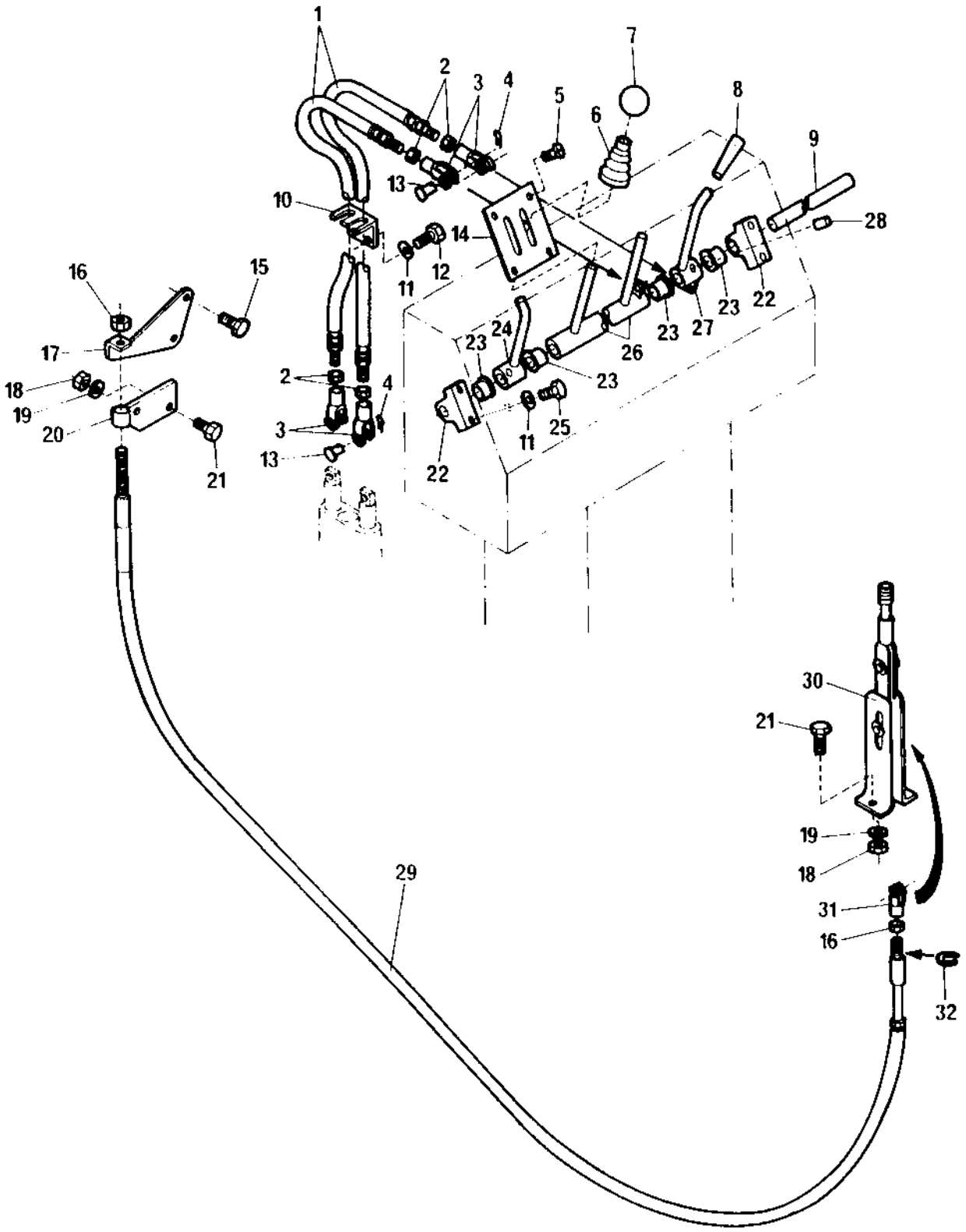

Forward and reverse control, brake

Ref. No.	Part No.	Rem.	Qty	Description	Code
1	192114		2	Control cable	D
2	570004		4	Nut M6	
3	921850		4	Yoke	
4	630003		4	Cotter pin	
5	550132		8	Screw	
6	193006		4	Protection	
7	312035		2	Ball knob W1/2"-12, D= 40mm Up to 23620396	
8	312083		2	Handle Up to 23620396	
9	192932		1	Shaft	
10	192026		1	Bracket	
11	904230		6	Washer 10,5x22x2	
12	500048		2	Screw M10-1,5x20 8,8	
13	530016		4	Clevis pin	
14	192931		2	Cover	
15	192376		2	Screw	
16	572002		3	Nut	
17	192767		1	Bracket	
18	570005		4	Nut M8	
19	904229		4	Washer 8,4x16x1,5	
20	192766		1	Bracket	
21	500021		2	Screw M8-1,25x25 8,8	
22	192934		2	Bearing housing	
23	191999		4	Bushing	D
24	192935	A,B	1	Lever From 23620397	
25	500028		4	Screw M10-1,5x25 8,8	
26	192937	A,B	1	Lever Gear From 23620397	
27	192936	A,B	1	Lever Forward and Reverse From 23620397	
28	629075		2	Expanding pin	
29	193023		1	Brake cable	D
30	193022		1	Brake lever	
31	813369		1	Fork link	
32	193054		1	Grommet	

A) New version with tread: M12
B) Interchangeable with the old version of this lever together with ball knob 312023

Forward and reverse control, brake

16494

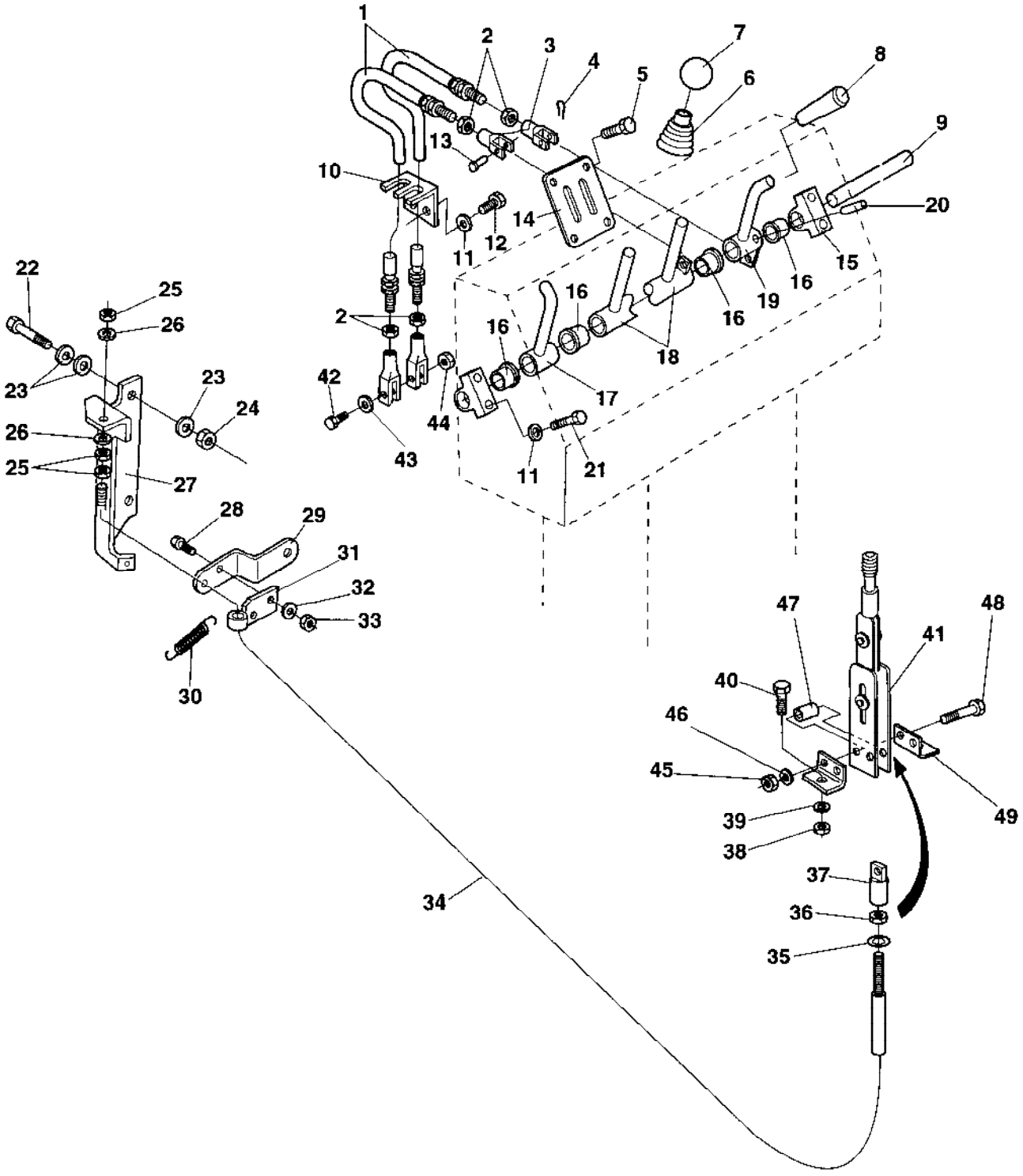

Forward and reverse control, brake

Ref. No.	Part No.	Rem.	Qty	Description	Code
1	192114		2	Control cable	D
2	570004		4	Nut M6	
3	921850		4	Yoke	
4	630003		4	Cotter pin	
5	550132		8	Screw	
6	193006		4	Protection	
7	312035		2	Ball knob W1/2"-12, D= 40mm Up to 23620396	
8	312083		2	Handle Up to 23620396	
9	192932		1	Shaft	
10	192026		1	Bracket	
11	904230		6	Washer 10,5x22x2	
12	500048		2	Screw M10-1,5x20 8,8	
13	530016		4	Clevis pin	
14	192931		2	Cover	
15	192934		2	Bearing housing	
16	191999		4	Bushing	D
17	192935	A,B	1	Lever From 23620397	
18	192937	A,B	1	Lever Gear From 23620397	
19	192936	A,B	1	Lever Forward and Reverse From 23620397	
20	629075		2	Expanding pin	
21	500028		4	Screw M10-1,5x25 8,8	
22	904449		2	Screw	
23	904232		6	Washer 17x30x3	
24	904450		2	Nut	
25	572002		3	Nut	
26	904229		2	Washer 8,4x16x1,5	
27	376273		1	Bracket	
28	500021		2	Screw M8-1,25x25 8,8	
29			1	Bracket	
30	359043		1	Spring	D
31	374969		1	Bracket	
32	615043		4	Washer 8,4x18x2	
33	570005		2	Nut M8	
34	193023		1	Brake cable	D
35	193054		1	Grommet	
36	572002		1	Nut	
37	813369		1	Fork link Up to 23620367	
	380063		1	Rod end From 23620368	
38	570005		2	Nut M8	
39	904229		2	Washer 8,4x16x1,5	
40	500021		2	Screw M8-1,25x25 8,8	
41	193022		1	Brake lever Up to 23620367	
	380392		1	Brake lever From 23620368	
42	500022		2	Screw M8-1,25x30 8,8	
43	904229		2	Washer 8,4x16x1,5	
44	586003		2	Lock nut M8	
45	570006		2	Nut M10	
46	904230		2	Washer 10,5x22x2	
47	380064		2	Spacer From 23620368	
48	500032		2	Screw M10 x 55	
49	380065		2	Bracket From 23620368	

A) New version with thread: M12
B) Interchangeable with the old version of this lever together with ball knob 312023

Throttle control, cpl

16485

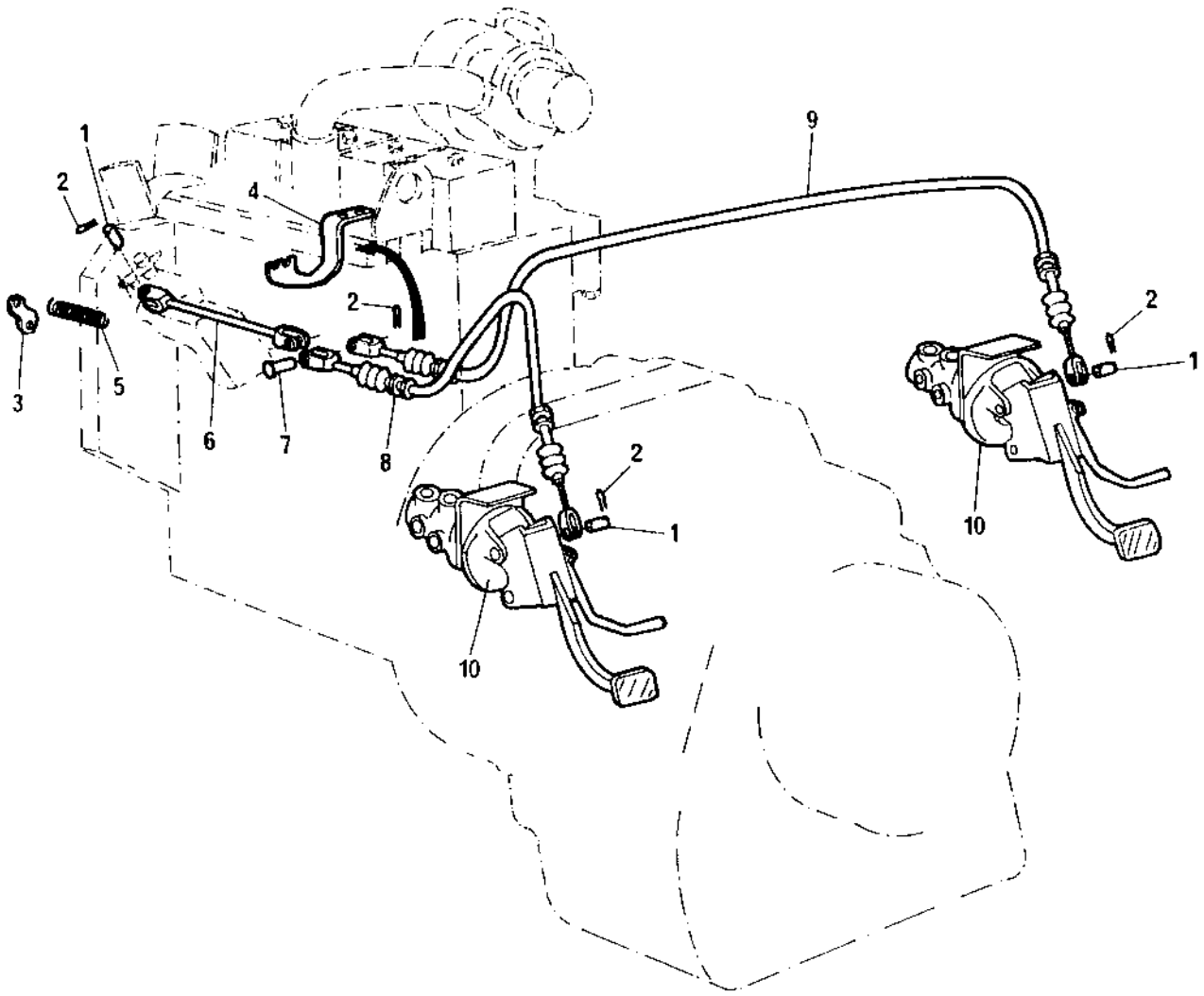

Throttle control, cpl

Ref. No.	Part No.	Rem.	Qty	Description	Code
1	250137		3	Trunnion	
2	630003		7	Cotter pin	
3	192107		1	Bracket	
4	192146		1	Bracket	
5	345664		1	Spring	
6	192144		1	Control cable	D
7	192127		1	Trunnion	
8	192148		1	Control cable	D
9	192147		1	Control cable	D
10			2	Pedal assembly	D

Throttle control, cpl

16486

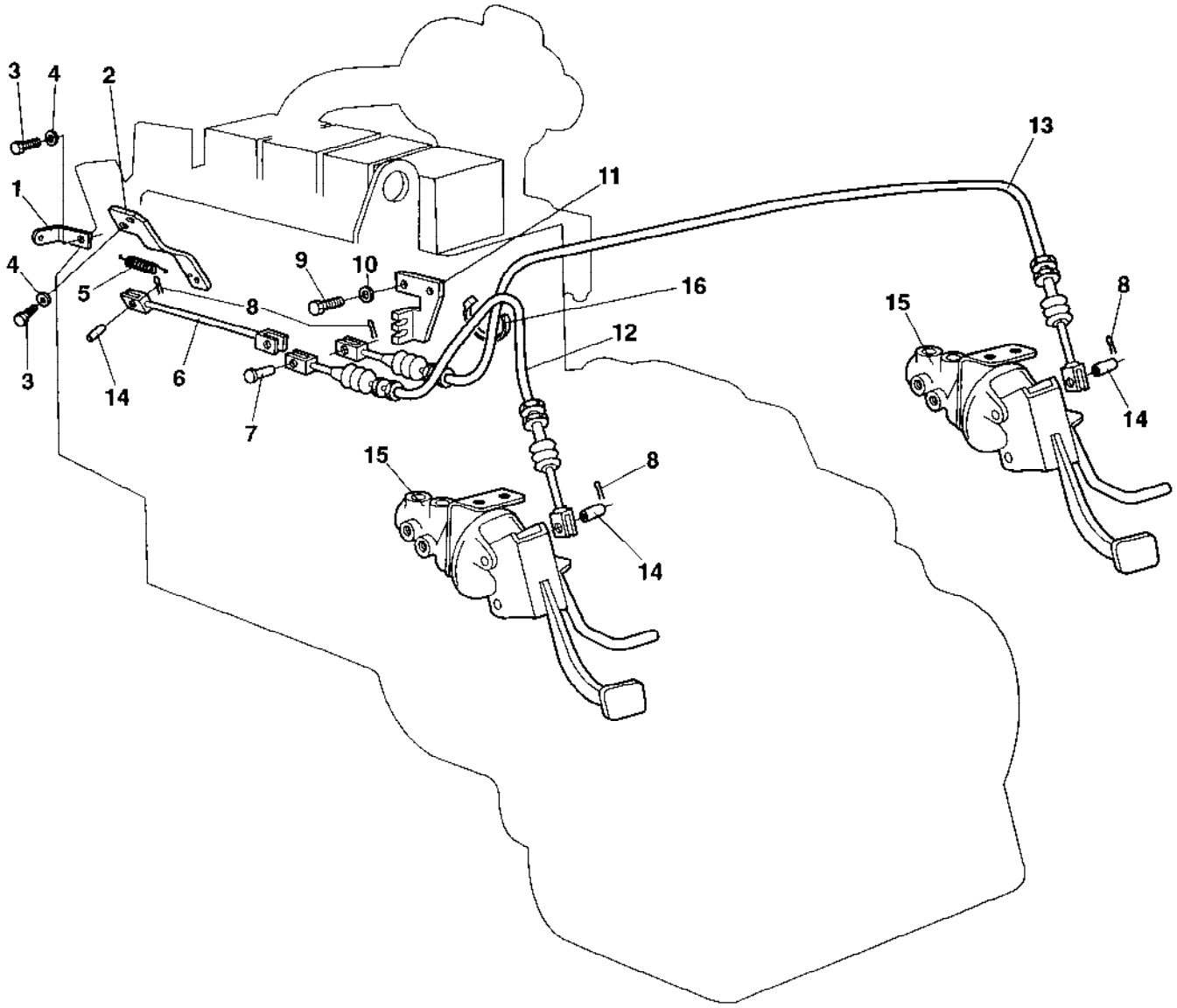

Throttle control, cpl

Ref. No.	Part No.	Rem.	Qty	Description	Code
1	374903		1	Bracket	
2	374411		1	Control lever	
3	500012		2	Screw M6x12	
4	904228		2	Washer 6,4x12x1,5	
5	904796		1	Spring	
6	192144		1	Control cable	D
7	192127		1	Trunnion	
8	630003		4	Cotter pin	
9	500048		2	Screw M10-1,5x20 8,8	
10	904230		2	Washer 10,5x22x2	
11	374904		1	Bracket	
12	192148		1	Control cable	D
13	192147		1	Control cable	D
14	250137		3	Trunnion	
15			2	Pedal assembly	
16	313041		2	Cable ties L=186 mm	

Pedal and brake valve -23620279 and 283-286+288-289

16282

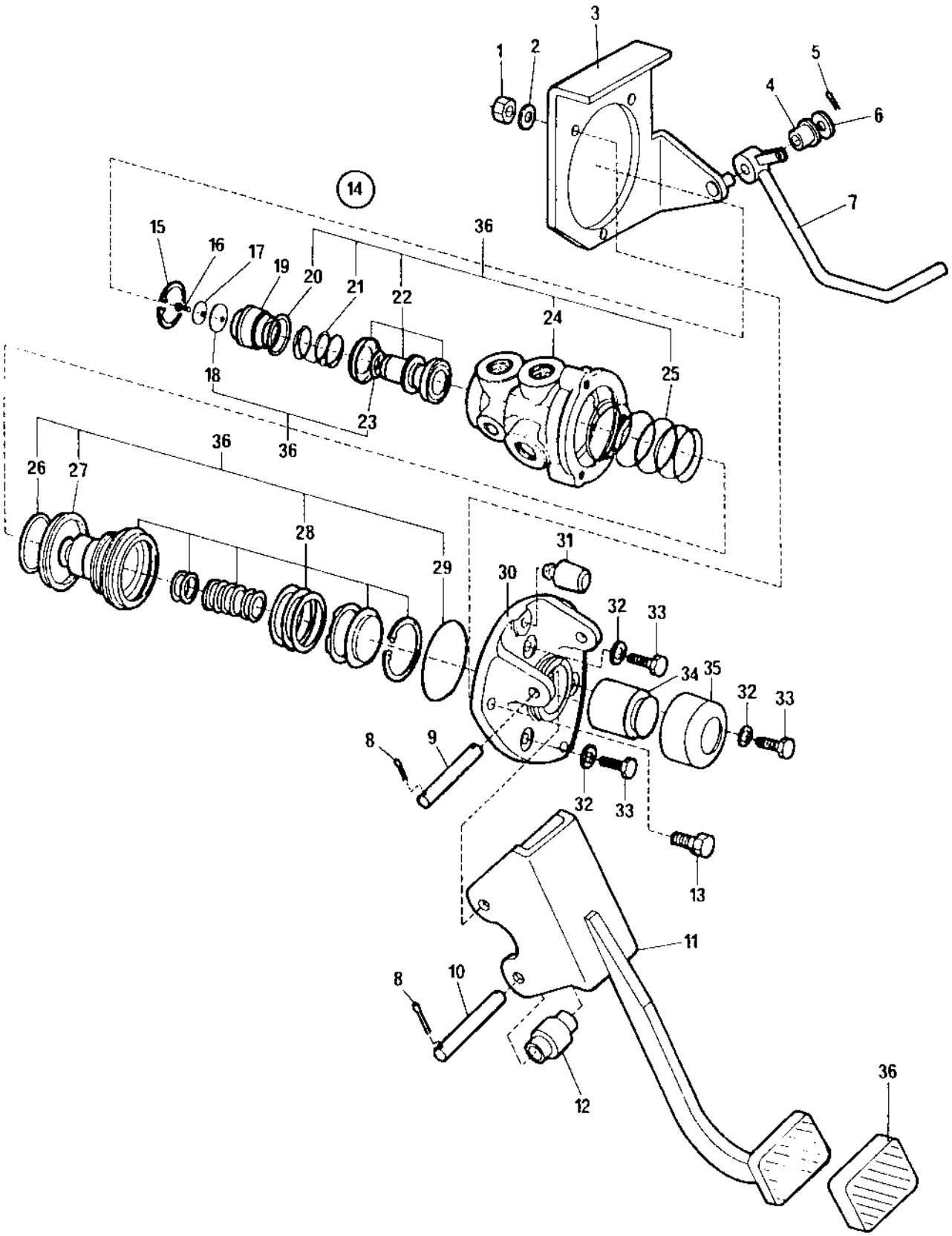

Pedal and brake valve -23620279 and 283-286+288-289

Ref. No.	Part No.	Rem.	Qty	Description	Code
1	570005		3	Nut M8	
2	615043		3	Washer 8,4x18x2	
3	191976		1	Holder plate	
4	191999		1	Bushing	D
5	630014		1	Cotter pin	
6	600021		1	Washer	
7	191973		1	Pedal, cpl	
8	630005		4	Cotter pin	
9	192000		1	Pin	
10	191997		1	Pin	
11	191969		1	Brake pedal Up to 699B452	
	194756		1	Brake pedal From 699B453	
12	191998		1	Roller	
13	500022		3	Screw M8-1,25x30 8,8	
14	192002		1	Brake valve Up to 699B452	
	191533		1	Brake valve, Varga From 699B453 (Page 64)	
15	192282		1	.Retaining ring	
16	192283		1	.Screw	
17	192284		1	.Lock washer	
18	192285		1	.Diaphragm	
19	192286		1	.Guide valve	
20	192287		1	.Seal ring	
21	192288		1	.Spring	
22	192289		1	.Valve assembly	
23	192290		1	.Seal ring	
24	192291		1	.Valve housing	
25	192292		1	.Spring	
26	192293		1	.Seal ring	
27	192294		1	.Gasket	
28	192295		1	.Piston assembly	
29	192296		1	.Retaining ring	
30	192297		1	.Bracket	
31	192299		1	.Pedal stop	
32	192298		1	.Spring washer	
33	192300		1	.Screw	
34	192301		1	.Piston	
35	192302		1	.Scoop	
36	195351		1	Repair kit	D

191533 Brake valve, Varga

16267

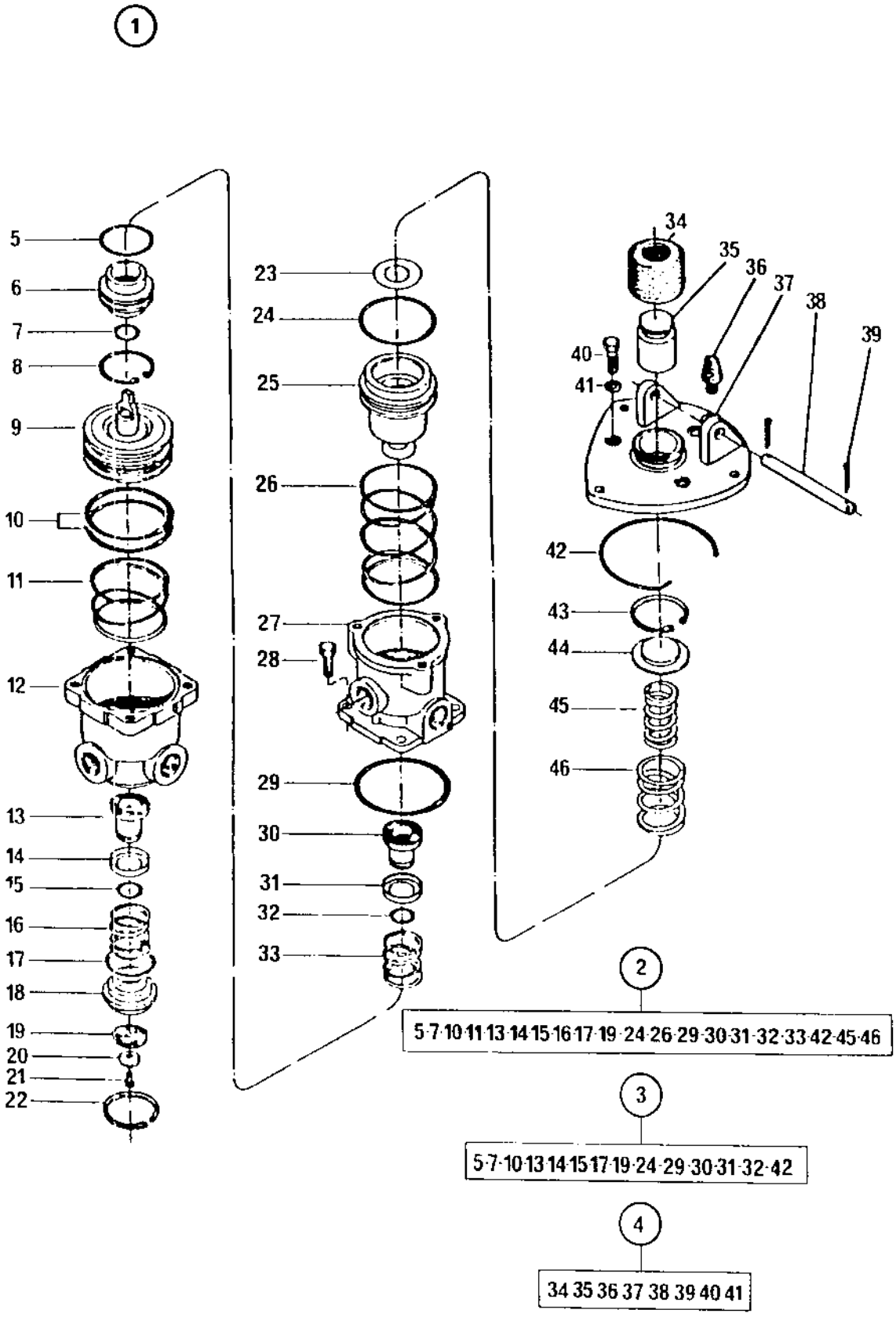

191533 Brake valve, Varga

Ref. No.	Part No.	Rem.	Qty	Description	Code
1			1	Brake valve, Varga	D
2	192833		1	.Reversing valve	C
3	192824		1	.Repair kit	
4	192825		1	.Pedal repair kit	
5			1	.Seal ring	
6			1	.Valve guide	
7			1	.Seal ring	
8			1	.Retaining ring	
9			1	.Piston	
10			2	.Seal ring	
11			1	.Spring	
12			1	.Lower body	
13			1	.Valve	
14			1	.Seal ring	
15			1	.Seal ring	
16			1	.Spring	
17			1	.Seal ring	
18			1	.Guide valve	
19			1	.Diaphragm	
20	192284		1	.Lock washer	
21			1	.Screw	
22			1	.Retaining ring	
23			1	.Washer	
24			1	.Seal ring	
25			1	.Piston	
26			1	.Spring	
27			1	.Upper body	
28			4	.Screw	
29			1	.Seal ring	
30			1	.Valve	
31			1	.Seal ring	
32			1	.Seal ring	
33			1	.Spring	
34			1	.Scoop	
35			1	.Piston	
36			1	.Pedal stop	
37			1	.Bracket	
38			1	.Pin	
39			2	.Cotter pin	
40			1	.Screw	
41			2	.Washer	
42			1	.Retaining ring	
43			1	.Retaining ring	
44			1	.Seal ring	
45			1	.Spring	
46			1	.Spring	

Pedal and brake valve 23620280- not 283-286+288-289

16471

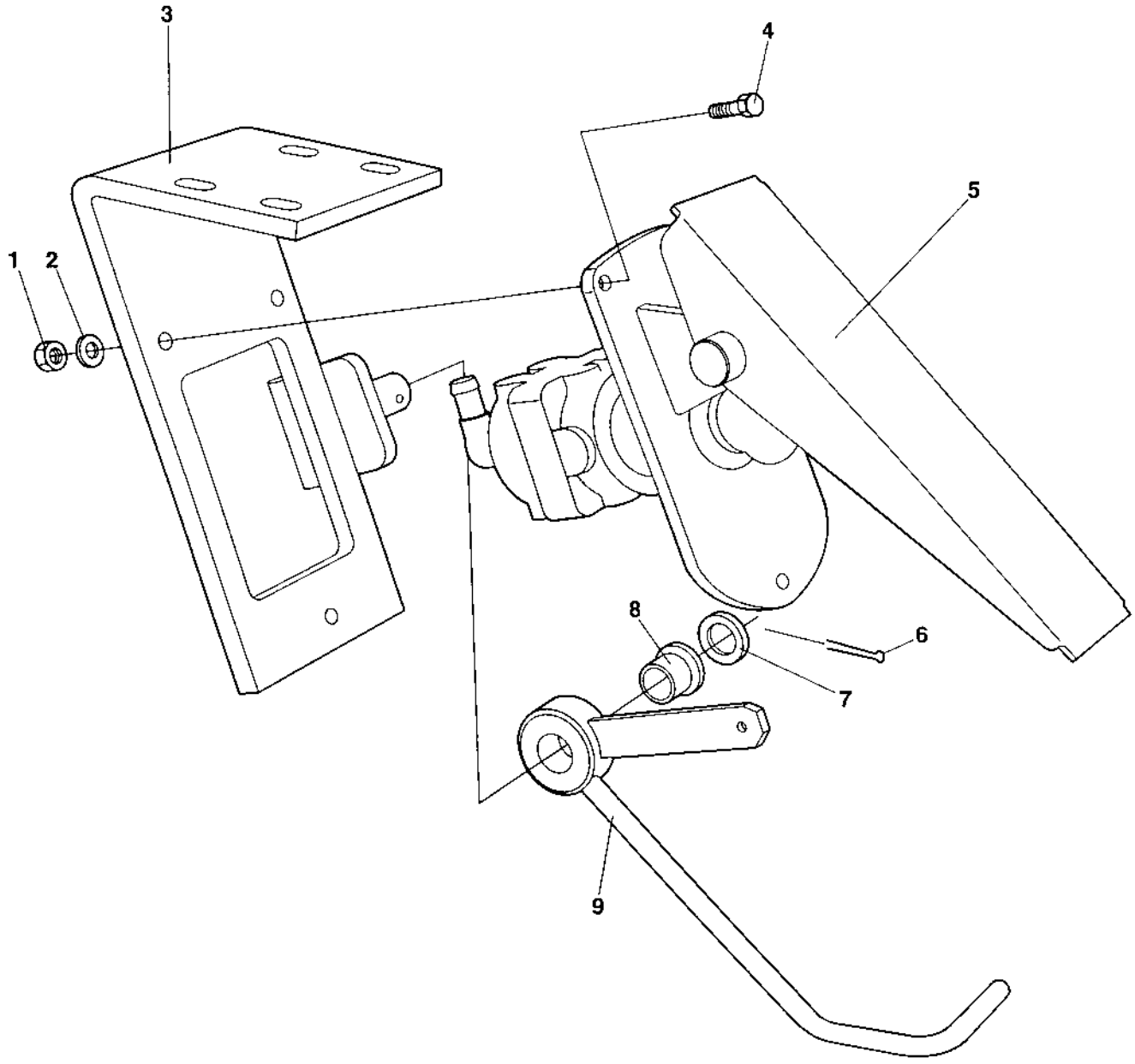

Pedal and brake valve 23620280- not 283-286+288-289

Ref. No.	Part No.	Rem.	Qty	Description	Code
1	570005		3	Nut M8	
2	615043		3	Washer 8,4x18x2	
3	195758		1	Bracket	
4	500022		3	Screw M8-1,25x30 8,8	
5	195779		1	Brake valve (Page 260)	
6	630014		1	Cotter pin	
7	600021		1	Washer	
8	191999		1	Bushing	D
9	191973		1	Pedal, cpl	

195779 Brake valve

16821

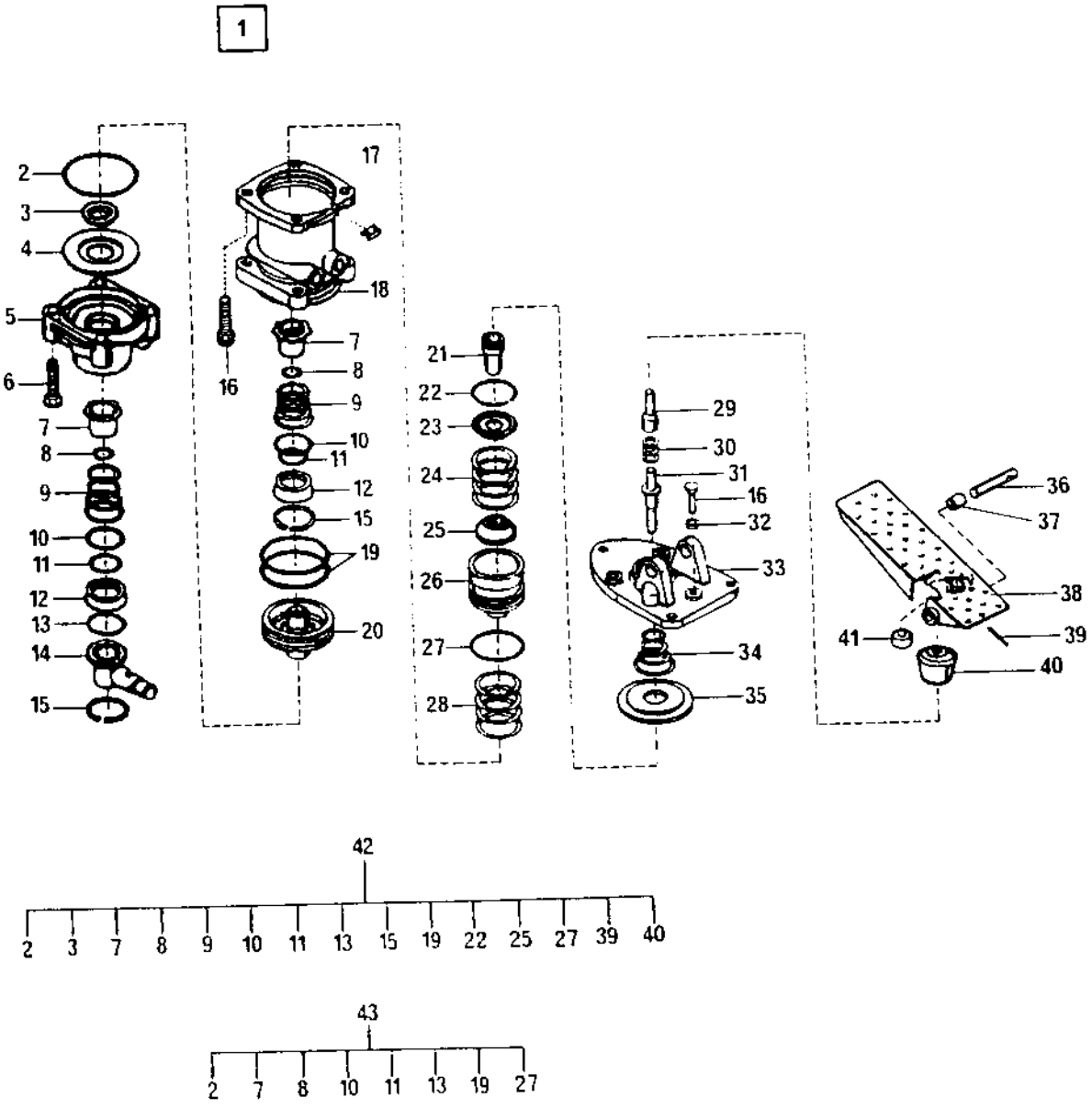

195779 Brake valve

Ref. No.	Part No.	Rem.	Qty	Description	Code
1			1	Brake valve	
2	196159		1	.O-ring	
3	196158		1	.Gasket	
4	196157		1	.Intermediate support	
5	196156		1	.Housing, lower	
6	196155		4	.Screw	
7	196154		2	.Valve housing	
8	196153		2	.O-ring	
9	196152		2	.Spring	
10	196151		2	.O-ring	
11	196150		2	.O-ring	
12	196149		2	.O-ring	
13	196148		1	.O-ring	
14	196146		1	.Cover	
15	196145		2	.Retaining ring	
16	196162		5	.Screw	
17	196164		1	.Filler cap	
18	196163		1	.Housing, upper	
19	196161		2	.O-ring	
21	196172		1	.Shaft	
22	196171		1	.Retaining ring	
23	196170		1	.Spring leg	
24	196169		1	.Spring	
25	196168		1	.Rubber spring	
26	196167		1	.Piston	
27	196166		1	.O-ring	
28	196165		1	.Spring	
29	196179		1	.Upper bar	
30	196178		6	.Spacer	
31	196177		1	.Lower bar	
32	196176		1	.Nut	
33	196175		1	.Cover	
34	196174		1	.Spring	
35	196173		1	.Cover	
36	196185		1	.Pin	
37	196184		1	.Bushing	
38	196183		1	.Pedal	
39	196181		1	.Expanding pin	
40	196180		1	.Protection cap	
41	196182		1	.Buffer	
42	196186		1	Repair kit	
43	196187		1	Repair kit	

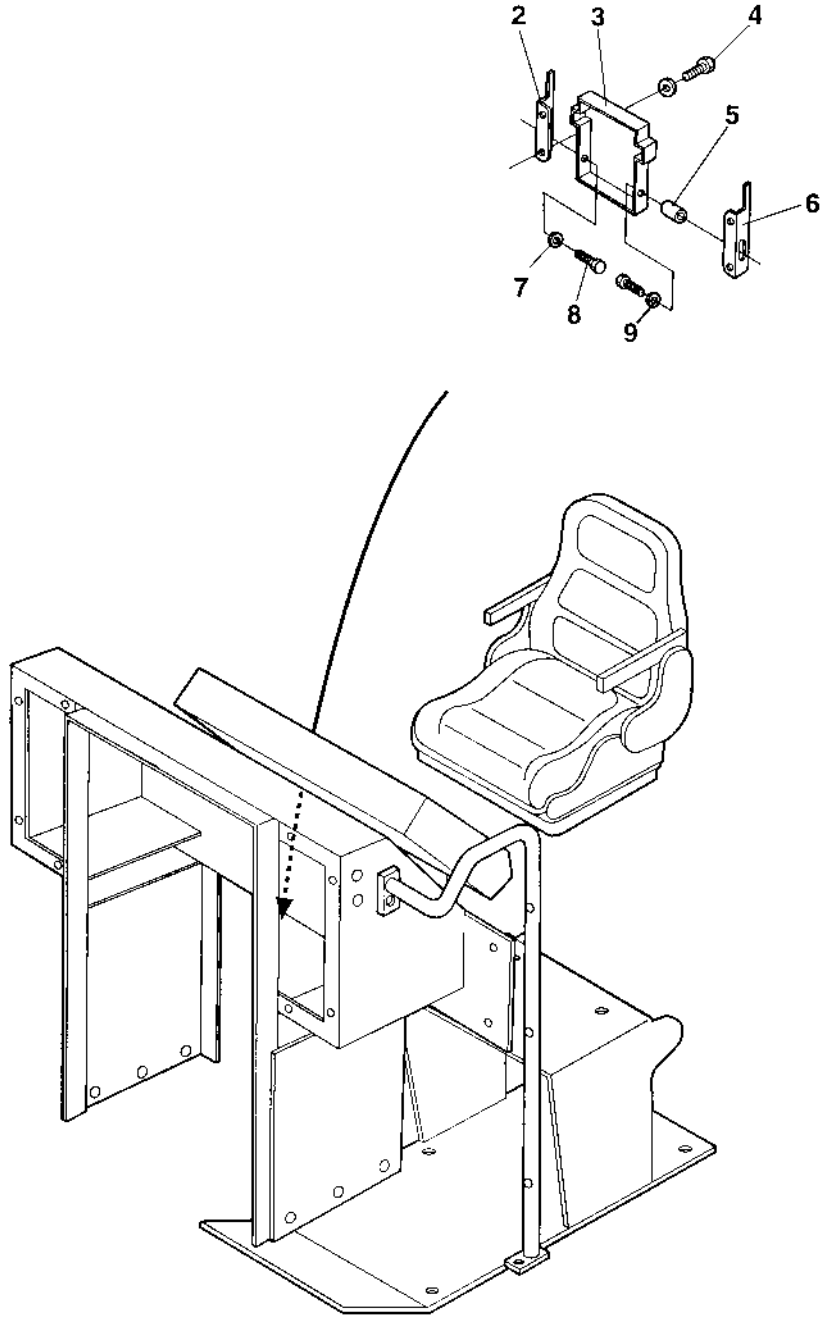
2
3
4
5
6
7
8
9

Ref. No.	Part No.	Rem.	Qty	Description	Code
2	357427		1	Cover holder	
3	357425		1	Instruction book holder	
4	624021		4	Pop rivet	
5	902163		2	Parallel pin	
6	357426		1	Cover holder	
7	929602		2	Washer	
8	902164		2	Screw	
9	904697		1	Washer 3,2x6x0,5	

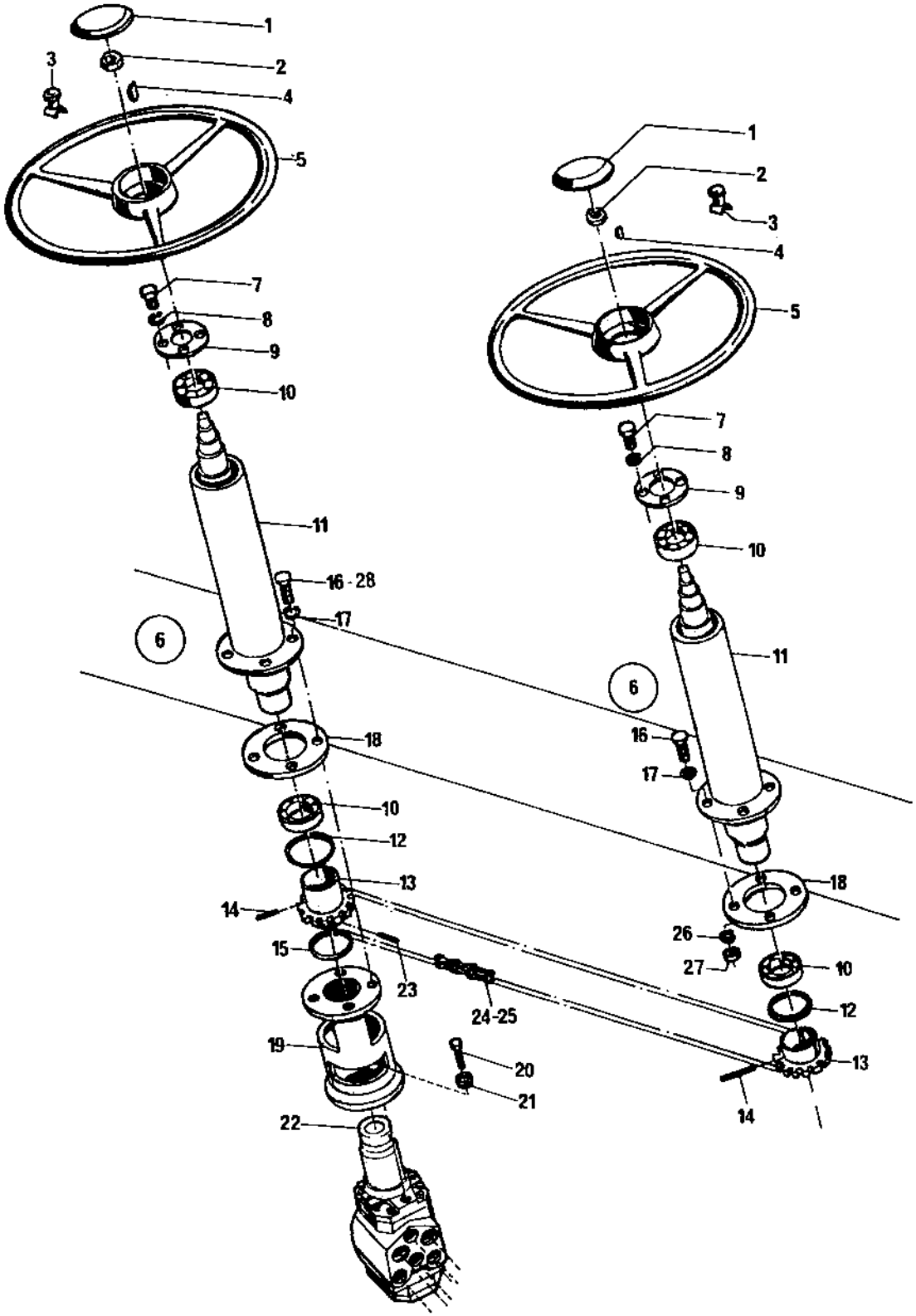
1
2
3
4
5
7
8
9
10
11
16 - 28
17
6
18
10
12
13
14
15
23
24-25
19
20
21
22
1
2
3
4
5
7
8
9
10
11
6
16
17
18
26
27
10
12
13
14

Steering assembly

Ref. No.	Part No.	Rem.	Qty	Description	Code
1	312039		2	Cap	
2	572005		2	Nut	
3	262094		2	Turning knob	
4	250795		2	Key	
5	922624		2	Steering wheel	
6	263685		2	Steering column, cpl	
7	550060		4	.Screw	
8	604002		4	.Washer	
9	250407		1	.Cover bearing	
10	111164		2	.Bearing	D
11	263607		1	.Wheel column	
12	151015		1	.Snap ring	
13	268744		1	.Shaft, cpl	
14	628207		1	.Pin	
15	150014		1	.Snap ring	D
16	500030		4	Screw M10-1,5x35H 8,8	
17	600008		8	Washer	
18	263587		2	Shim	
19	268749		1	Bracket	
20	502019		4	Screw	
21	600006		4	Washer	
22	900411		1	Steering valve (Page 220)	
23	268845		1	Shaft	
24	417063		1	Chain	D
25	417037		1	Connecting link	D
26	615044		4	Conical spring washer	D
27	570006		4	Nut M10	
28	500031		4	Screw M10-1,5x40 8,8	

900411 Steering valve

16256

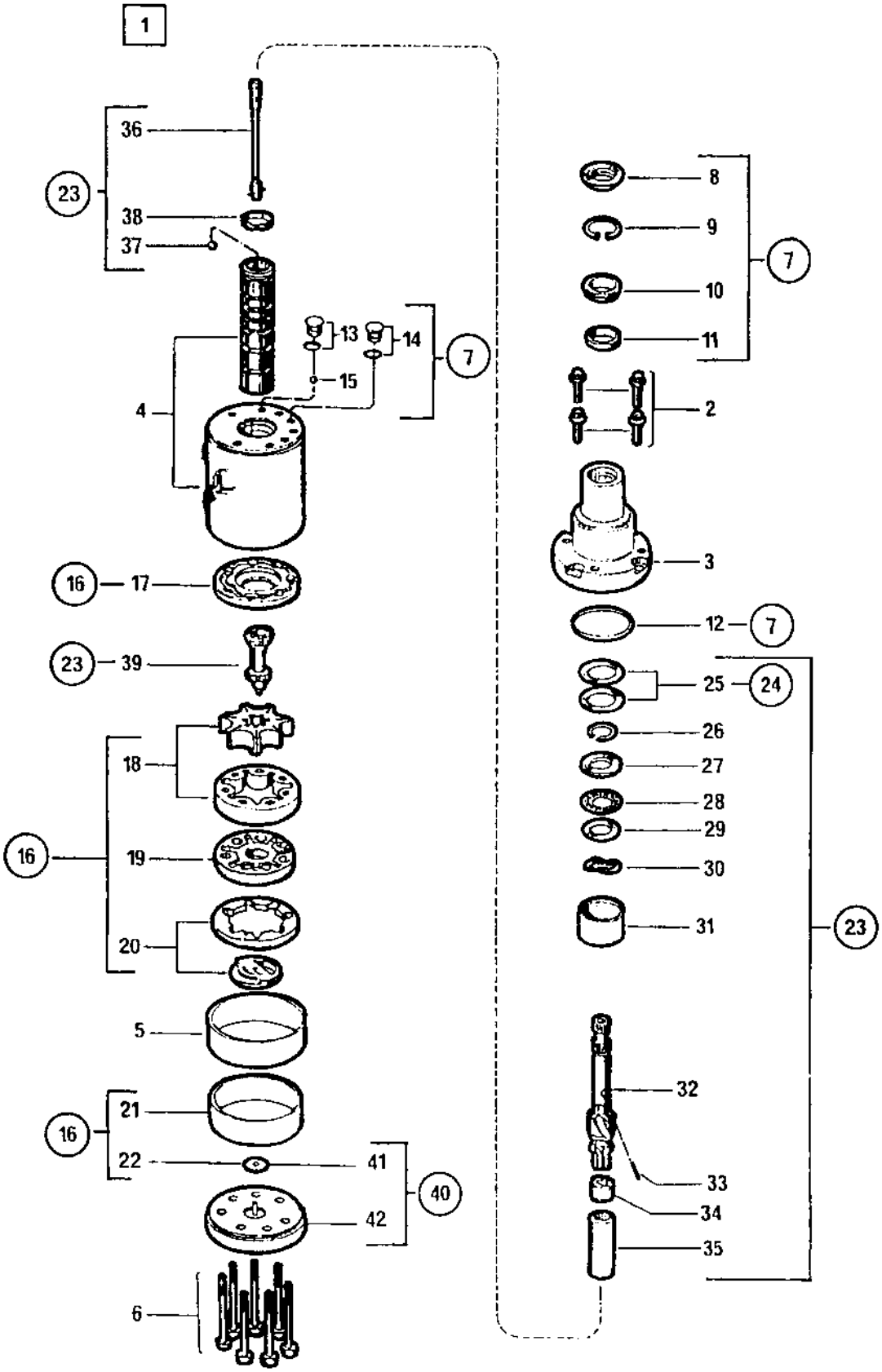

900411 Steering valve

Ref. No.	Part No.	Rem.	Qty	Description	Code
1			1	Steering valve, cpl	
2	910577		4	.Screw	
3	910569		1	.Cover, upper	
4	240904		1	.Housing	
5	240905		1	.Sleeve	
6	240906		7	.Screw	
7	928840		1	.Seal kit	
8	910586		1	..Dust filter	
9			1	..Snap ring	
10			1	.Spacer	
11			1	..Seal ring	
12			1	..Seal ring	
13			2	..Plug with o-ring	
14			1	..Plug with o-ring	
15			1	..Ball	
16	249547		1	.Manual pump kit	
17			1	..Spacer	
18			1	..Rotor set	
19			1	..Collector	
20	240100		1	..Collector ring	
21	240907		1	..Rotor sealing	
22			1	..Washer	
23	249548		1	.Shaft repair kit	
24	910599		1	..Shim kit	
25		A	2	..Shim	
	330534	B	1	..Shim	
	330534	C	1	..Shim	
	330534	D	2	..Shim	
26			1	..Snap ring	
27			1	..Washer	
28			1	..Bearing	
29			1	..Washer	
30			1	..Lock washer	
31			1	..Spacer	
32			1	..Shaft	
33			1	..Needle	
34			1	..Ring	
35			1	..Spacer	
36			1	..Bar	
37			1	..Ball	
38			1	..Spring	
39			1	..Column	
40	249549		1	.Cover kit	
41			1	..Washer	
42			1	..Cover	

A) 0,030
B) 0,003
C) 0,005
D) 0,010

Steering assembly

16480-1

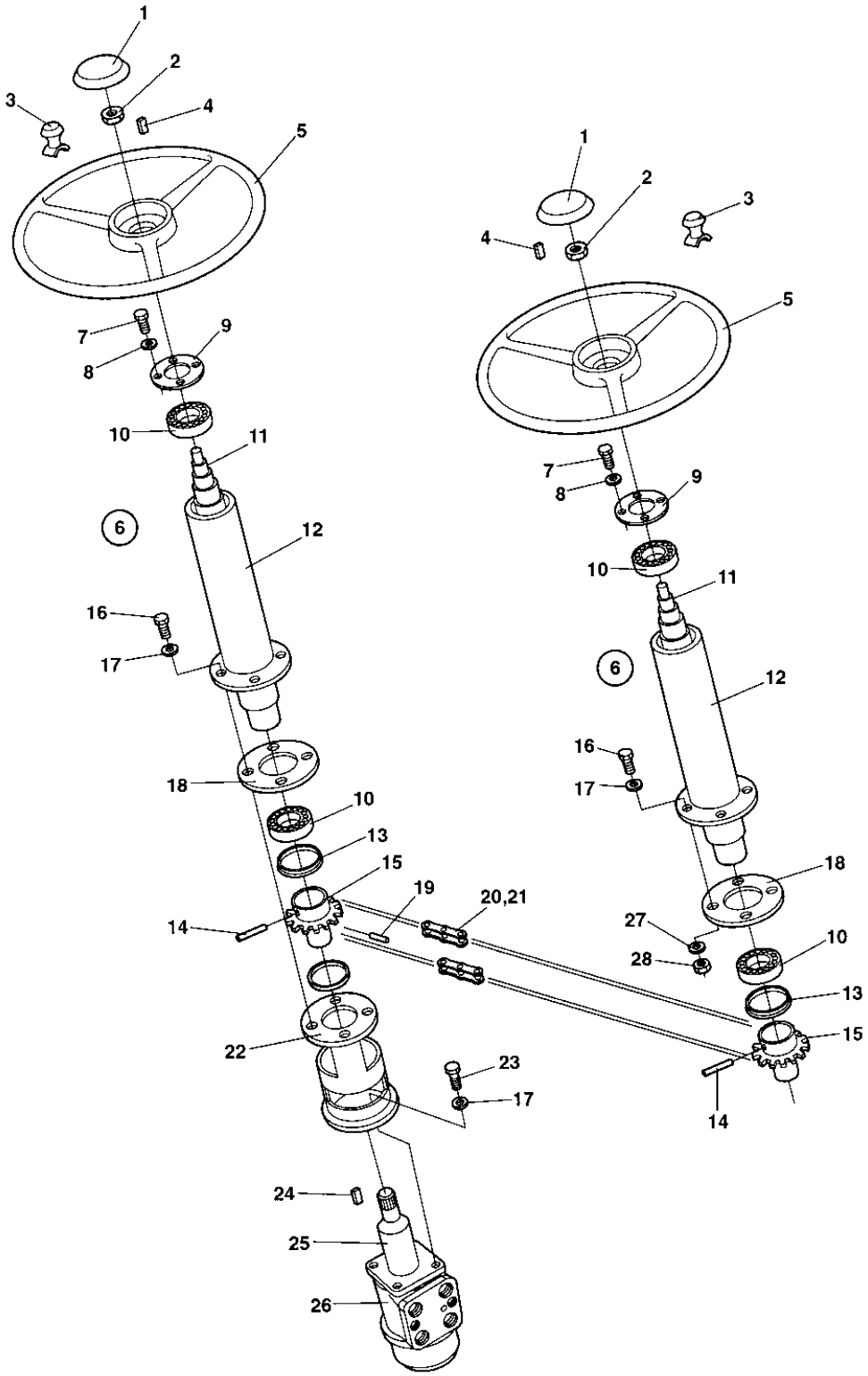

Steering assembly

Ref. No.	Part No.	Rem.	Qty	Description	Code
1	312039		2	Cap	
2	572005		2	Nut	
3	262094		2	Turning knob	
4	250795		2	Key	
5	922624		2	Steering wheel	
6	375483		2	Steering column, cpl	
7	550043		4	.Screw	
8	604002		4	.Washer	
9	250407		1	.Cover bearing	
10	111164		2	.Bearing	D
11	374845		1	.Shaft	
12	263607		1	.Wheel column	
13	151015		1	.Snap ring	
14	926445		1	.Pin	
15	374821		1	.Chain wheel	
16	500030		8	Screw M10-1,5x35H 8,8	
17	600008		12	Washer	
18	263587		2	Shim	
19	516032		1	Stop screw	
20	417063		1	Chain	D
21	417037		1	Connecting link	D
22	374822		1	Steering valve bracket	
23	500029		4	Screw M10-1,5x30 8,8	
24	350009		1	Flat key	D
25	370978		1	Linkage shaft	
26	375455		1	Steering valve (Page 222)	D
27	615044		4	Conical spring washer	D
28	570006		4	Nut M10	

375455 Steering valve

16436

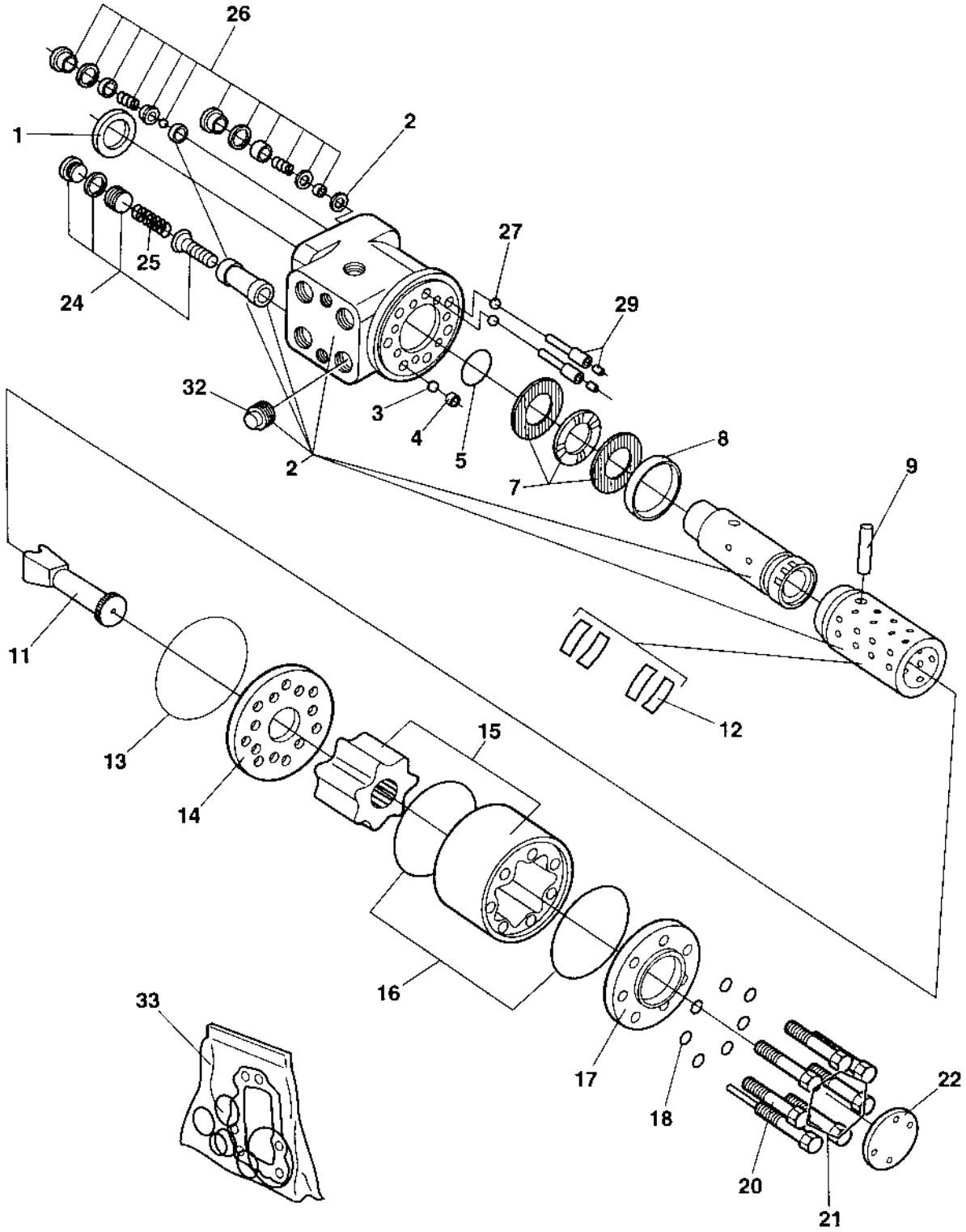

375455 Steering valve

Ref. No.	Part No.	Rem.	Qty	Description	Code
1	936487	A	1	Dust seal ring	
2			1	Housing, spool and sleeve	
3	480468		1	Ball	
4	480446		1	Threaded bushing	D
5	908780	A	1	O-ring	
7	911620		1	Bearing	D
8	480449		1	Ring	
9	480447		1	Cross pin	
11	902861		1	Cardan shaft	
12	911618		1	Spring kit	D
13	936488	A	1	O-ring	
14	902862		1	Valve plate	
15	936489		1	Gear wheel set	
16	936490	A	2	O-ring	
17	480450		1	End cap	
18	936491	A	7	Washer	
20	936492		1	Screw with pin	
21	936493		6	Screw	
22	936494		1	Name plate	
24	929010		1	Relief valve 17,0-17,5MPa	D
25	936495		1	Spring wire	
26	929012		2	Shock valve 22,5-24,0 MPa	
27	929013		2	Ball	
29	929014		2	Rolled pin	
32	908782		1	Valve	
33	908783	B	1	Seal kit	D

A) Included in kit, item 33
B) Not included in PN 375455

Seat assembly Without armrests

16203

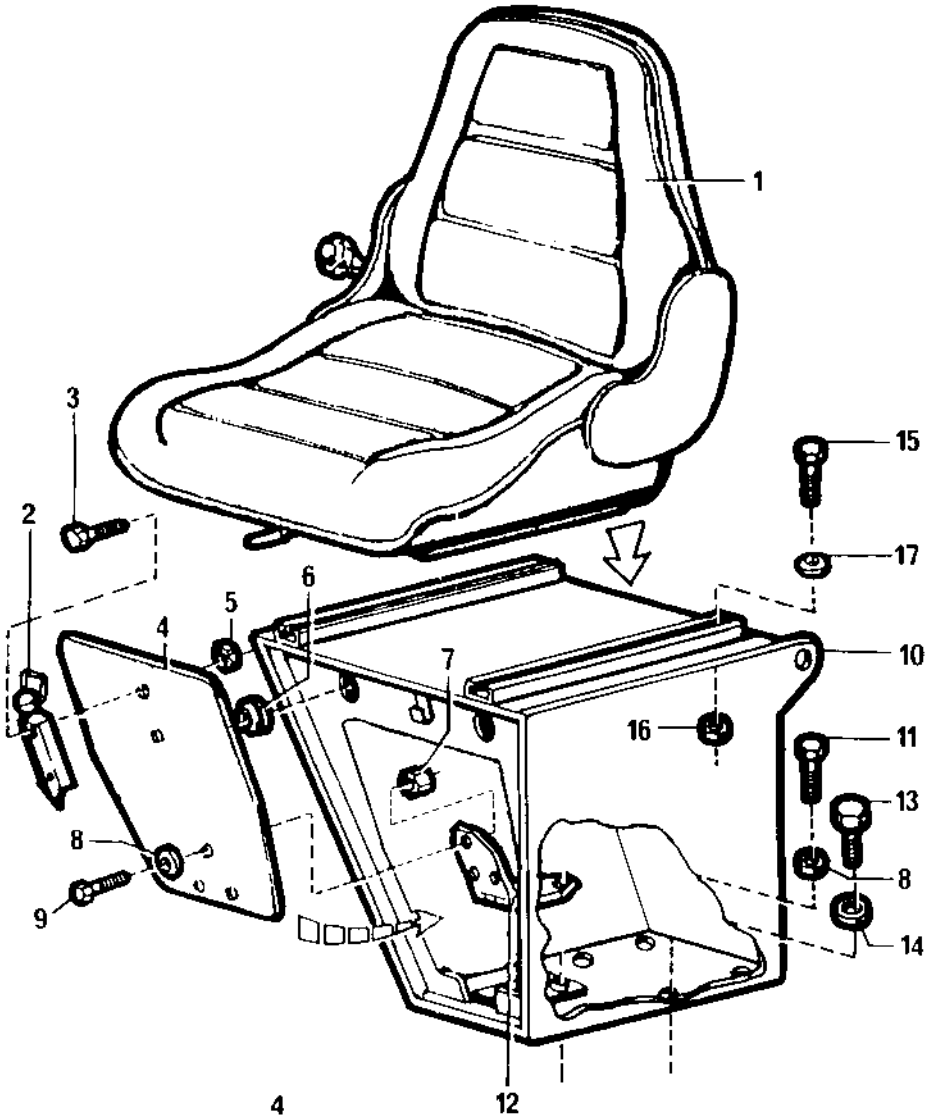

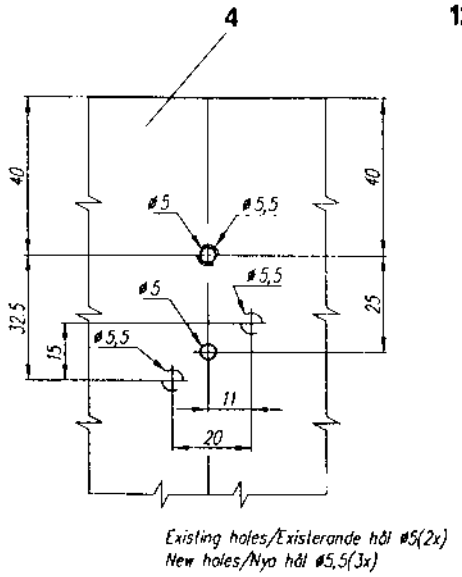

Existing holes/Existerande hål ø5(2x)
New holes/Nya hål ø5,5(3x)

Seat assembly Without armrests

Ref. No.	Part No.	Rem.	Qty	Description	Code
1	247741		1	Drivers seat	
2	262593	A	1	Hook	
	904519	C	1	Eccentric lock	
3	533009	D	2	Screw M4	
	535007	E	3	Screw M5x16	
4	247737	B	1	Protection	
5	570002	D	2	Nut M4	
	586001	E	3	Lock nut M5	
	904281		3	Washer 5,3x10x1	
6	909153		2	Grommet	
7	586002		3	Lock nut M6	
8	904735		6	Washer	
9	500040		3	Screw M6-1x20 8,8	
10	247739		1	Seat frame	
11	500013		3	Screw M6-1x16 8,8	
12	928632		2	Hinge	
13	500051		6	Screw M12-1,75x25 8,8	
14	904231		6	Washer 13x24x2	
15	500021		4	Screw M8-1,25x25 8,8	
16	570005		4	Nut M8	
17	904229		4	Washer 8,4x16x1,5	

A) Old version with 2 mounting holes, replaced by 904519 with 3 mounting holes. To be interchangeable; new holes needs to be drilled in the old version of 247737, item 4.

B) New version with 3 mounting holes for item 2, the earlier version with 2 mounting holes was used together with earlier 262593, item 2.

C) New version with 3 mounting holes

D) Together with 262593, item 2

E) Together with 904519, item 2

Seat assembly With armrests

17456

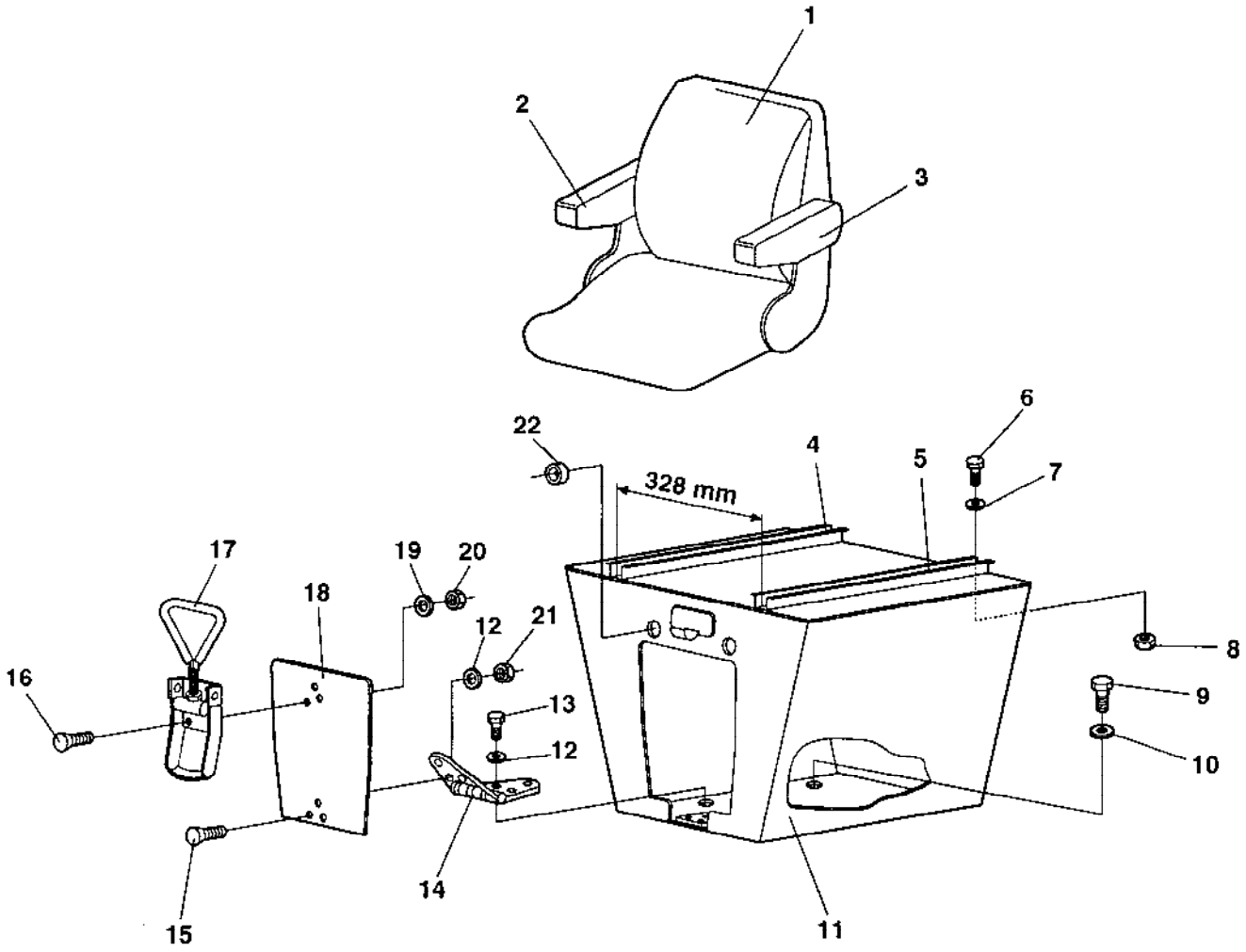

Seat assembly With armrests

Ref. No.	Part No.	Rem.	Qty	Description	Code
1	370234		1	Drivers seat	
2	372697		1	.Arm rest	
3	372696		1	.Arm rest	
4	909536		1	.Sliding rail	D
5	909535		1	.Sliding rail	D
6	500053		4	Screw M8-1,25x20 8,8	
7	904229		4	Washer 8,4x16x1,5	
8	570005		4	Nut M8	
9	500051		6	Screw M12-1,75x25 8,8	
10	904703		6	Washer 13x24x4	
11	381748		1	Seat frame	
12	603001		6	Washer	
13	500185		3	Screw M6-1x14 8,8	
14	928632		1	Hinge	
15	500013		3	Screw M6-1x16 8,8	
16	535005		3	Screw M5x12	
17	904519		1	Eccentric lock	
18	247737		1	Protection	
19	904281		3	Washer 5,3x10x1	
20	570003		3	Nut M5	
21	586002		3	Lock nut M6	
22	909153		2	Grommet	

Safety belt, Only with rops Option

16275

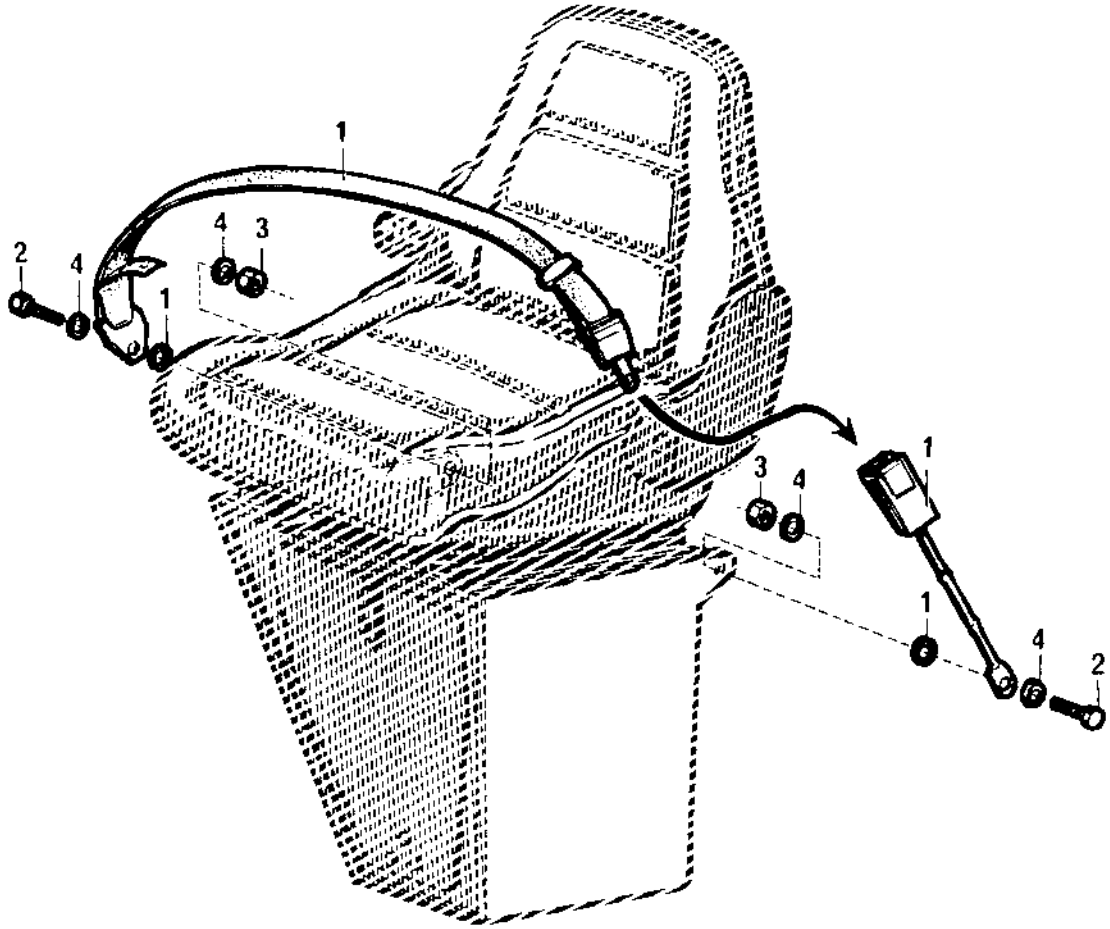

Safety belt, Only with rops Option

Ref. No.	Part No.	Rem.	Qty	Description	Code
1	370766		2	Safety belt	
	383200	A	2	Safety belt 3"	
2	500028		4	Screw M10-1,5x25 8,8	
3	570006		4	Nut M10	
4	600008		4	Washer	

A) 3", Option

Seat cover

16329

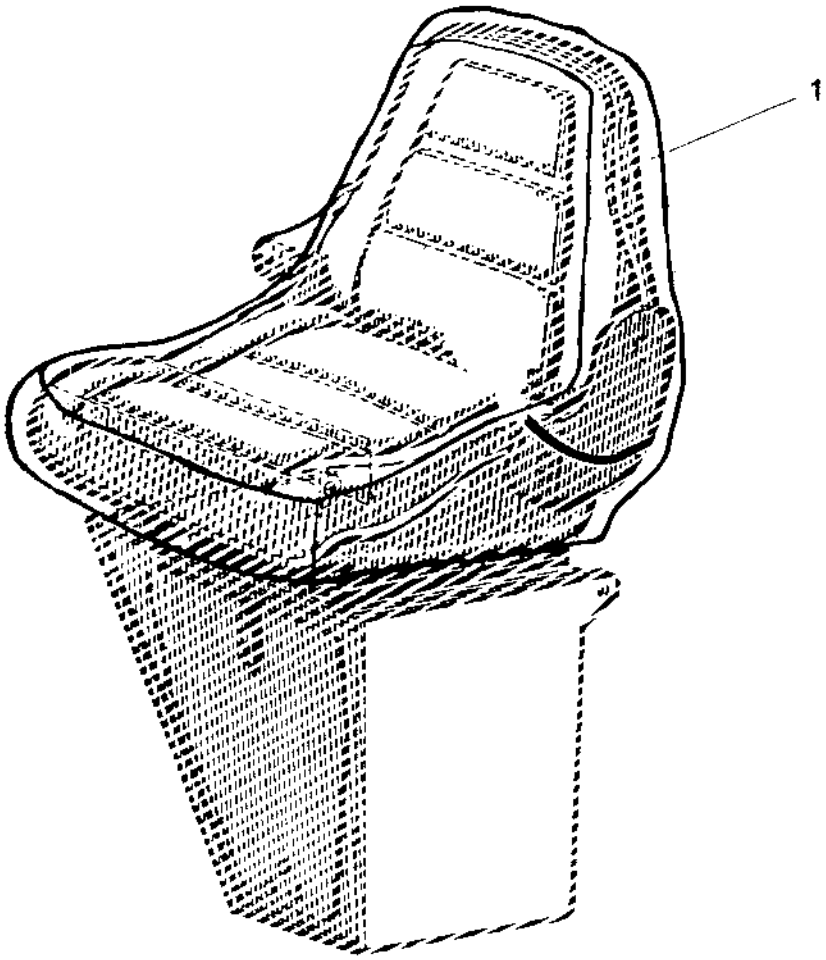

Seat cover

Ref. No.	Part No.	Rem.	Qty	Description	Code
1	348331		1	Seat cover	D

Ref. No.	Part No.	Rem.	Qty	Description	Code
10				Kit, plate decals - SN 23620303 and 306+307 (Page 282)	
20				Decals SN 23620304 - Not 306 + 307 (Page 284)	

Kit, plate decals - SN 23620303 and 306+307

16326

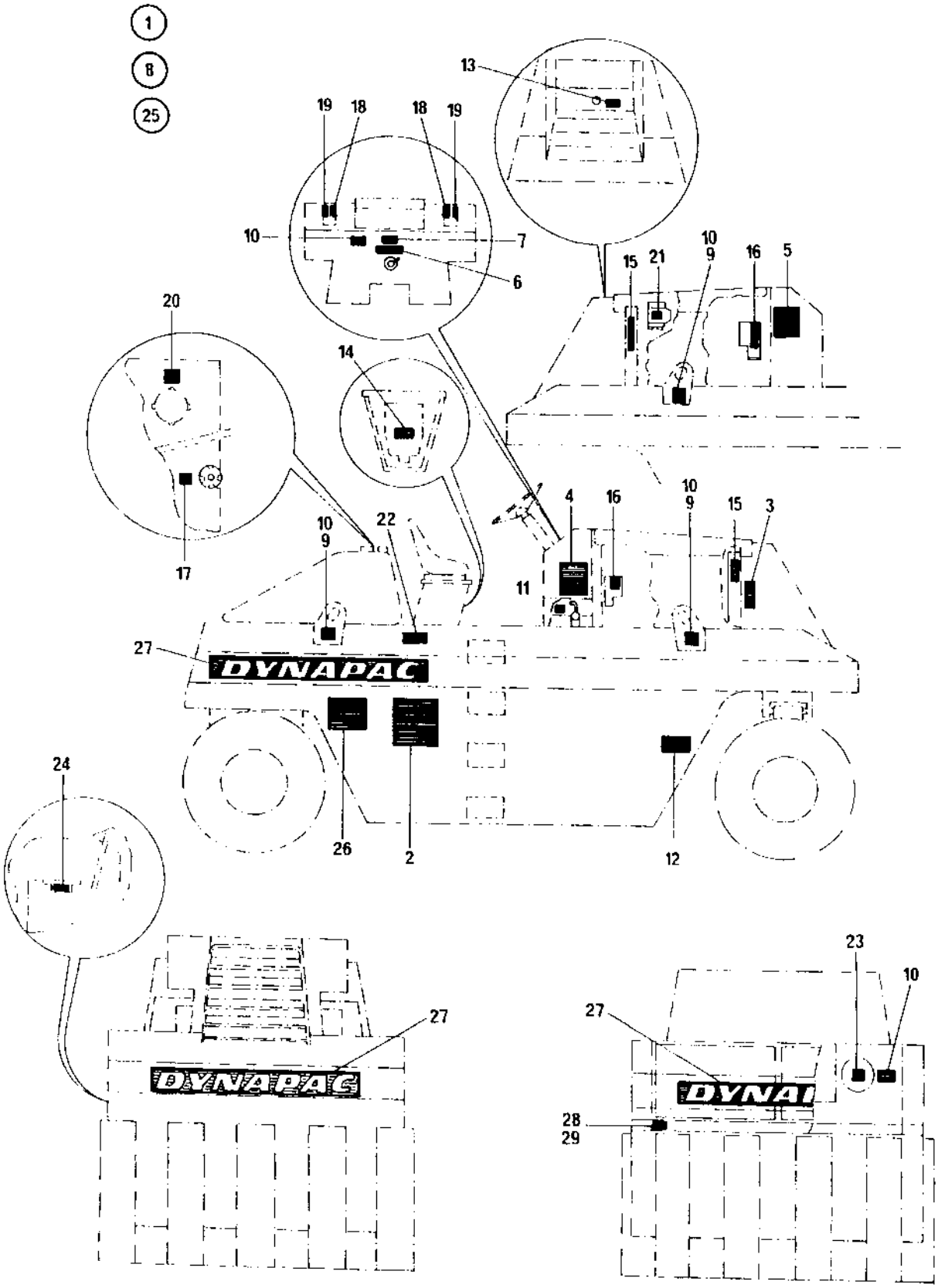

Kit, plate decals - SN 23620303 and 306+307

Ref. No.	Part No.	Rem.	Qty	Description	Code
1	193088		1	Kit, decal english	
	193087		1	Kit, decals portugues	
	193089		1	Kit, decals spanish	
	193090		1	Kit, decal french	
2	193380		1	.Maintenance instruction kit	
	193379		1	.Maintenance	
	193381		1	.Maintenance	
	193382		1	.Maintenance	
3	266343		1	.Decal "ALTERNATOR"	
4	248918		1	.Decal "SAFETY"	
	240147		1	.Decal "SAFETY"	
	242867		1	.Decal "SAFETY"	
5	248917		1	.Decal "SAFETY"	
	240146		1	.Decal "SAFETY"	
	242868		1	.Decal "SAFETY"	
6	252994		1	.Decal	
	251745		1	.Decal	
	253204		1	.Decal	
	253177		1	.Decal	
7	268657		1	.Decal	
	243502		1	.Decal	
	243503		1	.Decal	
	268673		1	.Decal	
8	193085		1	Kit, plate decals	
9	588176		4	.Decal "LIFT POINT"	
10	903459		2	.Decal "SAFETY"	
11	259804		1	.Decal "OIL LEVEL"	
12	903422		2	.Decal "SAFETY"	
13	903424		1	.Decal "HOT SURFACE"	
14	903425		1	.Decal "SAFETY MANUAL"	
15	903423		2	.Decal "SAFETY"	
17	991658		1	.Decal "FUEL"	
18	193007		2	.Decal "SHIFT SPEED"	
19	193008		2	.Decal "FORWARD/REVERSE"	
20	991657		1	.Decal "WATER"	
21	258938		1	.Decal "HYDRAULIC FLUID SYSTEM"	
22	192254		2	.Decal "MODEL"	
23	193082		1	.Decal "DRAIN"	
24	193083		1	.Decal "DRAIN"	
25	193086		1	Decals complement	
27	904093		4	.Decal "DYNAPAC" L=1010 mm	
28	261786		1	.Decal "NAME PLATE"	
29	624016		7	.Blind rivet	
30	266547		1	Kit, decal USA	

Decals SN 23620304 - Not 306 + 307

16351-1

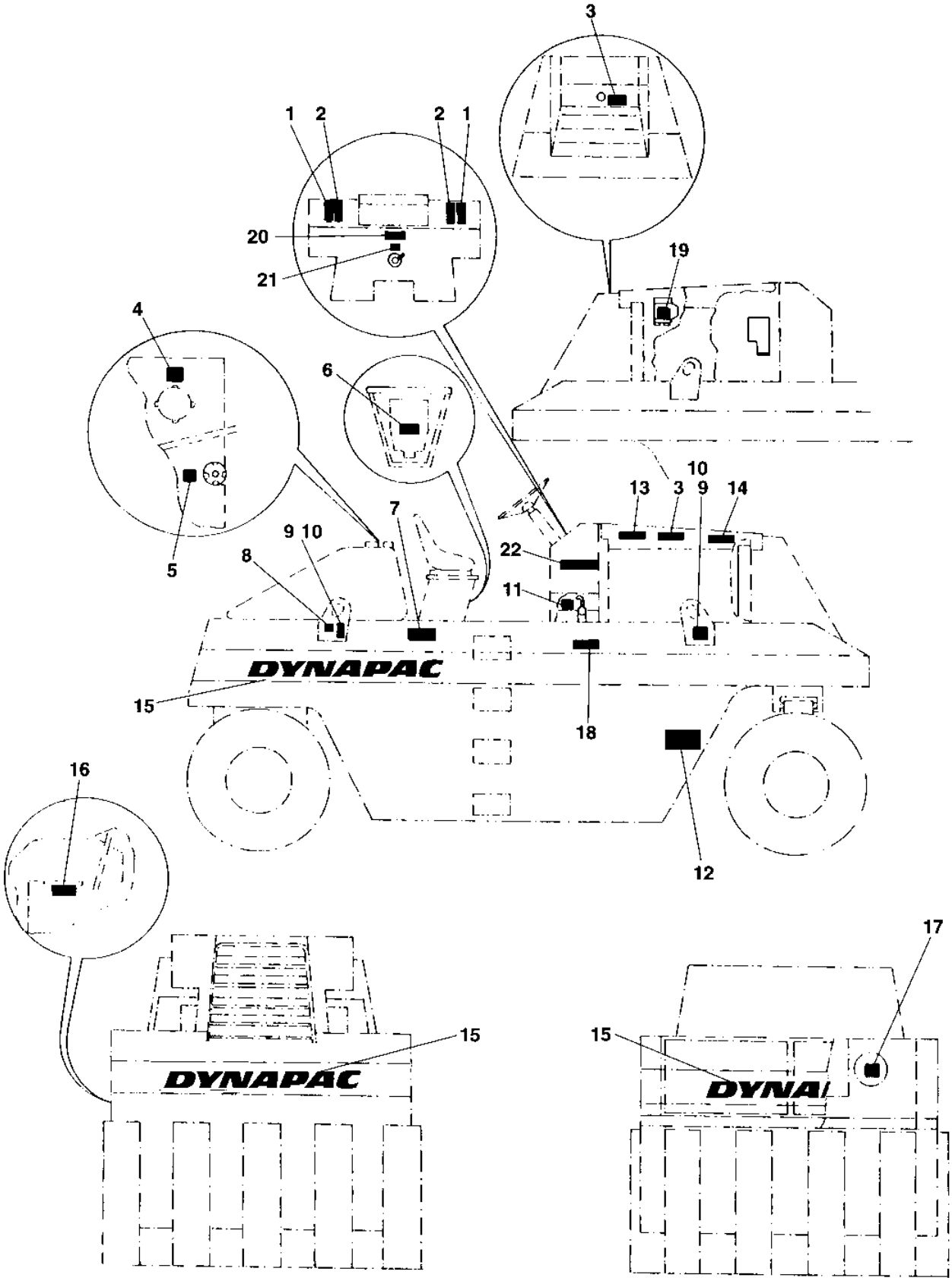

Decals SN 23620304 - Not 306 + 307

Ref. No.	Part No.	Rem.	Qty	Description	Code
1	991650		2	Decal "DIRECTION"	
2	249007		2	Decal "GEAR"	
3	903424		3	Decal "HOT SURFACE"	
4	991657		1	Decal "WATER"	
5	991658		1	Decal "FUEL"	
6	903425		2	Decal "SAFETY MANUAL"	
7	192254		2	Decal "MODEL"	
8	588176		4	Decal "LIFT POINT"	
9	343017		2	Lifting sign	
10	624016		12	Blind rivet	
11	259804		1	Decal "OIL LEVEL"	
12	903422		2	Decal "SAFETY"	
13	903423		2	Decal "SAFETY"	
14	903832		2	Safety decal	
15	904098		4	Decal "DYNAPAC" L=1350 mm	
16	193083		1	Decal "DRAIN"	
17	193082		1	Decal "DRAIN"	
18	903459		2	Decal "SAFETY"	
19	272372		1	Decal "HYDRAULIC OIL"	
20	349248SE		1	Decal "WARNING" Swedish	
	349248EN		1	Decal "WARNING" English	
	349248DE		1	Decal "WARNING" German	
	349248IT		1	Decal "WARNING" Italian	
	349248ES		1	Decal "WARNING" Spanish	
	349248FR		1	Decal "WARNING" French	
	349248NO		1	Decal "WARNING" Norwegian	
	349248DK		1	Decal "WARNING" Danish	
	349248FI		1	Decal "WARNING" Finnish	
	349248PT		1	Decal "WARNING" Portuguese	
	349248NL		1	Decal "WARNING" Dutch	
	349248GR		1	Decal "WARNING" Greek	
	349248IS		1	Decal "WARNING" Icelandic	
	349248CN		1	Decal "WARNING" Chinese	
21	374765		1	Decal "TYRE PRESSURE"	
22	960787		1	Product identif. decal "Dynapac"	

Ref. No.	Part No.	Rem.	Qty	Description	Code
1				Standard equipment (Page 288)	

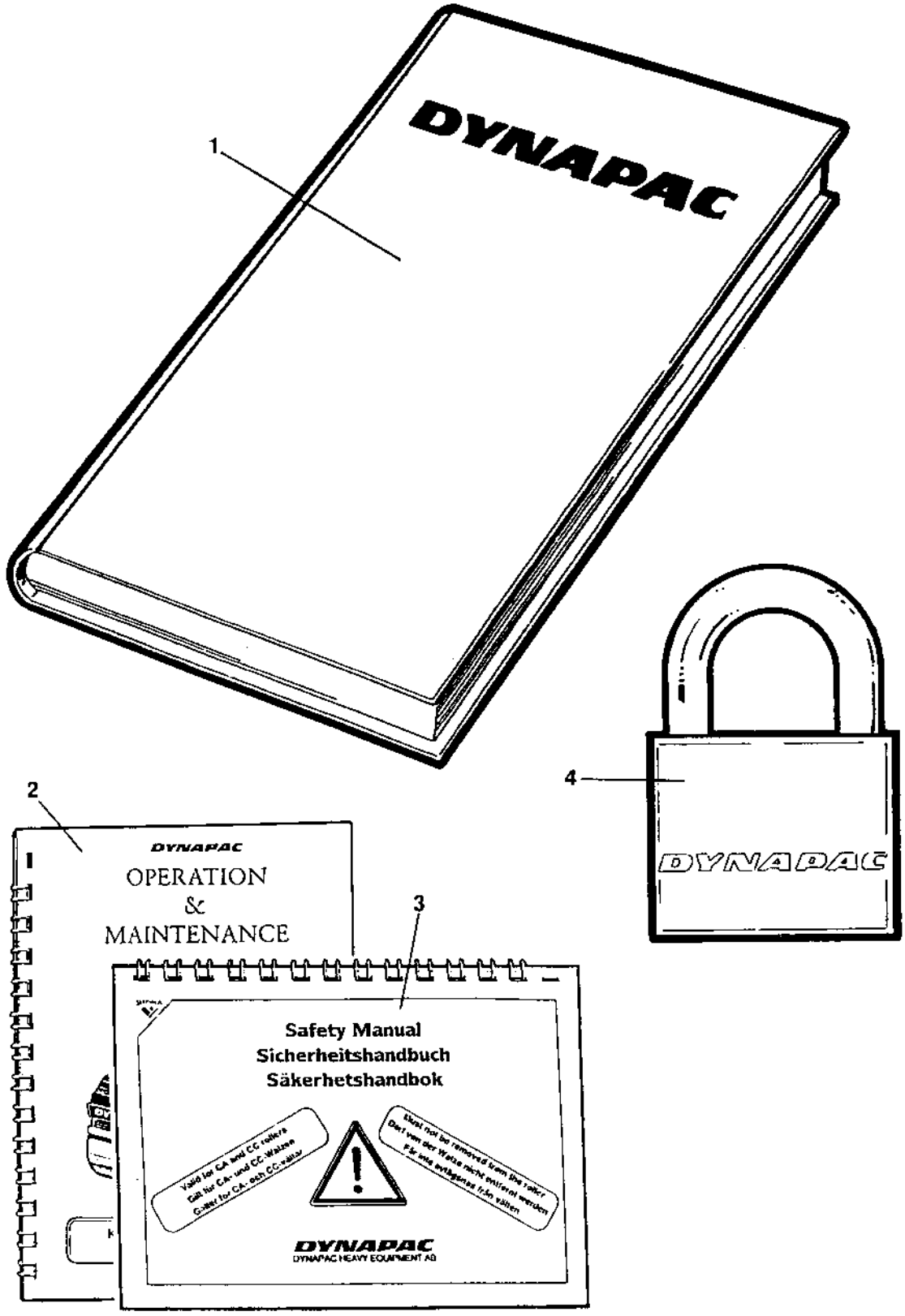
1
DYNAPAC
2
DYNAPAC
OPERATION
&
MAINTENANCE
3
Safety Manual
Sicherheitshandbuch
Säkerhetshandbok
DYNAPAC
DYNAPAC HEAVY EQUIPMENT AB
4
DYNAPAC

Standard equipment

Ref. No.	Part No.	Rem.	Qty	Description	Code
1			1	Documentation, cpl. OMS221xx	
			1	.Warranty registration card	
			1	.Operating instruction O221xx	
			1	.Maintenance instruction M221xx	
			1	.Spare parts catalogue SCP271-xxxx	
2			1	.Operating / maintenance instruction OM221xx	
3			1	.Safety manual RSAFExx	
4	358881		5	Pad lock	

Ref. No.	Part No.	Rem.	Qty	Description	Code
10				Tool equipment (Page 292)	
20				Canopy Option (Page 294)	
30				Cab assembly mounting Option (Page 296)	
40				Protective cover (Page 298)	

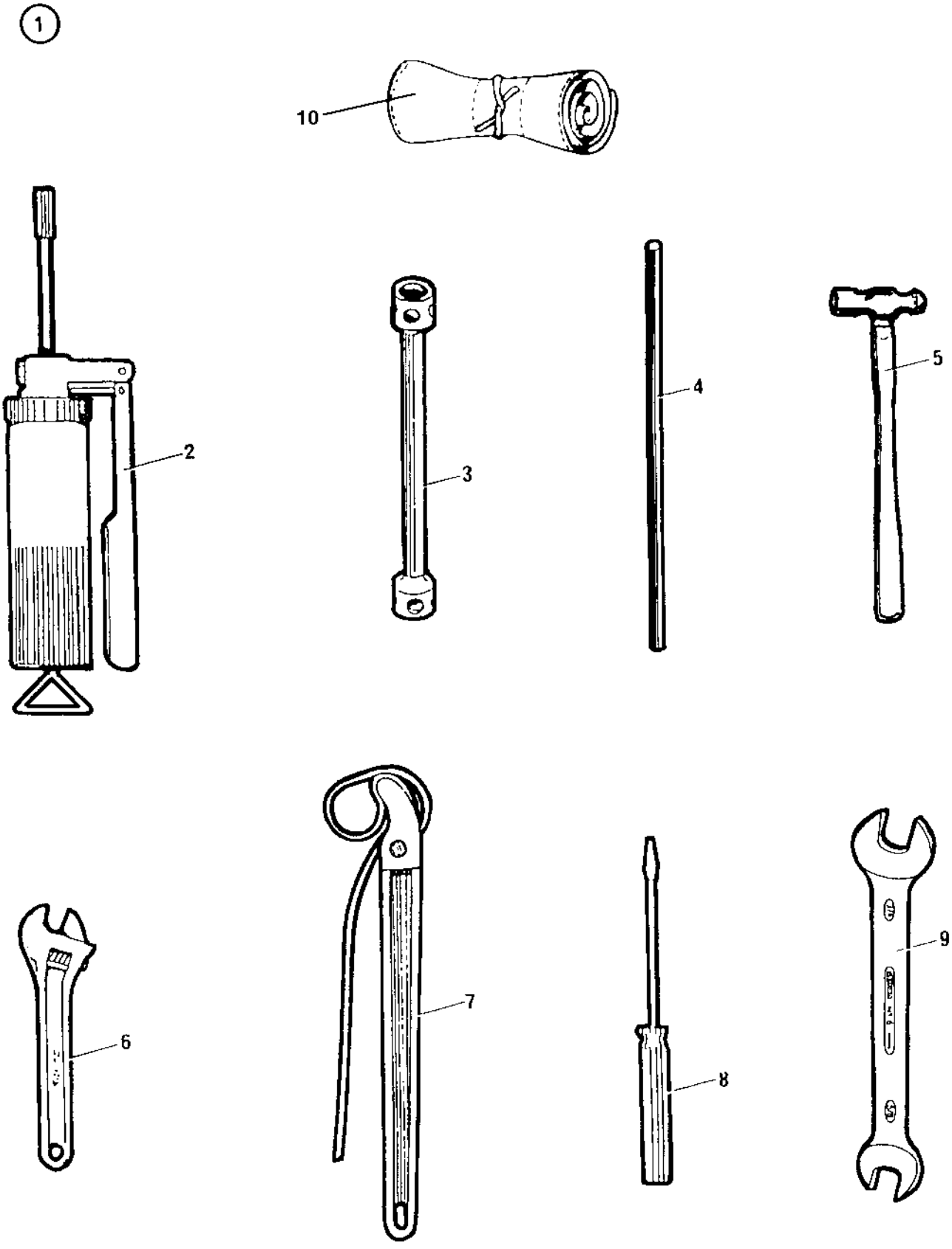
1
10
2
3
4
5
6
7
8
9

Tool equipment

Ref. No.	Part No.	Rem.	Qty	Description	Code
1	268964		1	Tool kit	
2	311016		1	.Grease gun	
3	268964016		1	.Wheel nut key	
4	928348		1	.Lever	
5	268964017		1	.Ball pan hammer	
6	485011		1	.Adjustable wrench	
7	485075		1	.Strap spanner	
8	268964001		1	.Screw driver 1/8" x 3"	
	268964002		1	.Screw driver 1/8" x 5"	
	268964003		1	.Screw driver 1/4" x 8"	
	268964004		1	.Screw driver 3/8" x 12"	
9	268964005		1	.Open end spanner 10x11	
	268964006		1	.Open end spanner 12x13	
	268964007		1	.Open end spanner 16x17	
	268964008		1	.Open end spanner 18x19	
	268964009		1	.Open end spanner 24x26	
	268965010		1	.Open end spanner 27x32	
10	277992		1	.Tool bag	

Canopy Option

16285

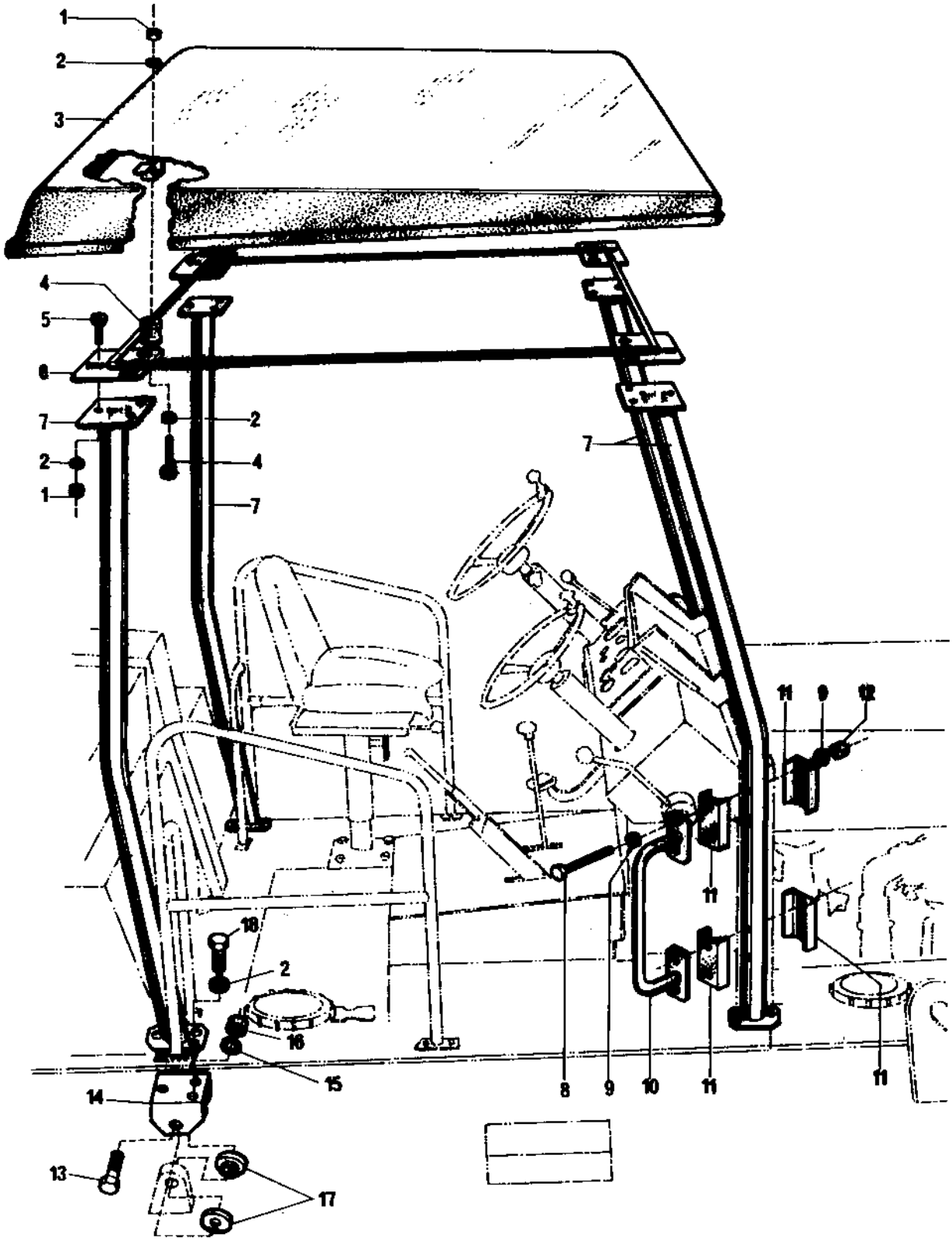

Canopy Option

Ref. No.	Part No.	Rem.	Qty	Description	Code
1	586018		20	Lock nut M10	
2	600008		32	Washer	
3	267077		1	Hood	
4	450089		4	Shock absorber	D
5	500030		12	Screw M10-1,5x35H 8,8	
6	266966		1	Frame	
7	266968		4	Column	
8	500115		8	Screw M8-1,25x90 8.8	
9	600006		8	Washer	
10	264269		2	Grab handle	
11	266960		8	Shim	
12	586003		8	Lock nut M8	
13	929162		4	Screw full thread	
14	192788	A	2	Bracket	
	192789	B	2	Bracket	
15	615046		4	Conical spring washer	
16	570008		4	Nut	
17	192770		8	Spacer	
18	500028		12	Screw M10-1,5x25 8,8	

A) Front
B) Rear

Cab assembly mounting Option

16330

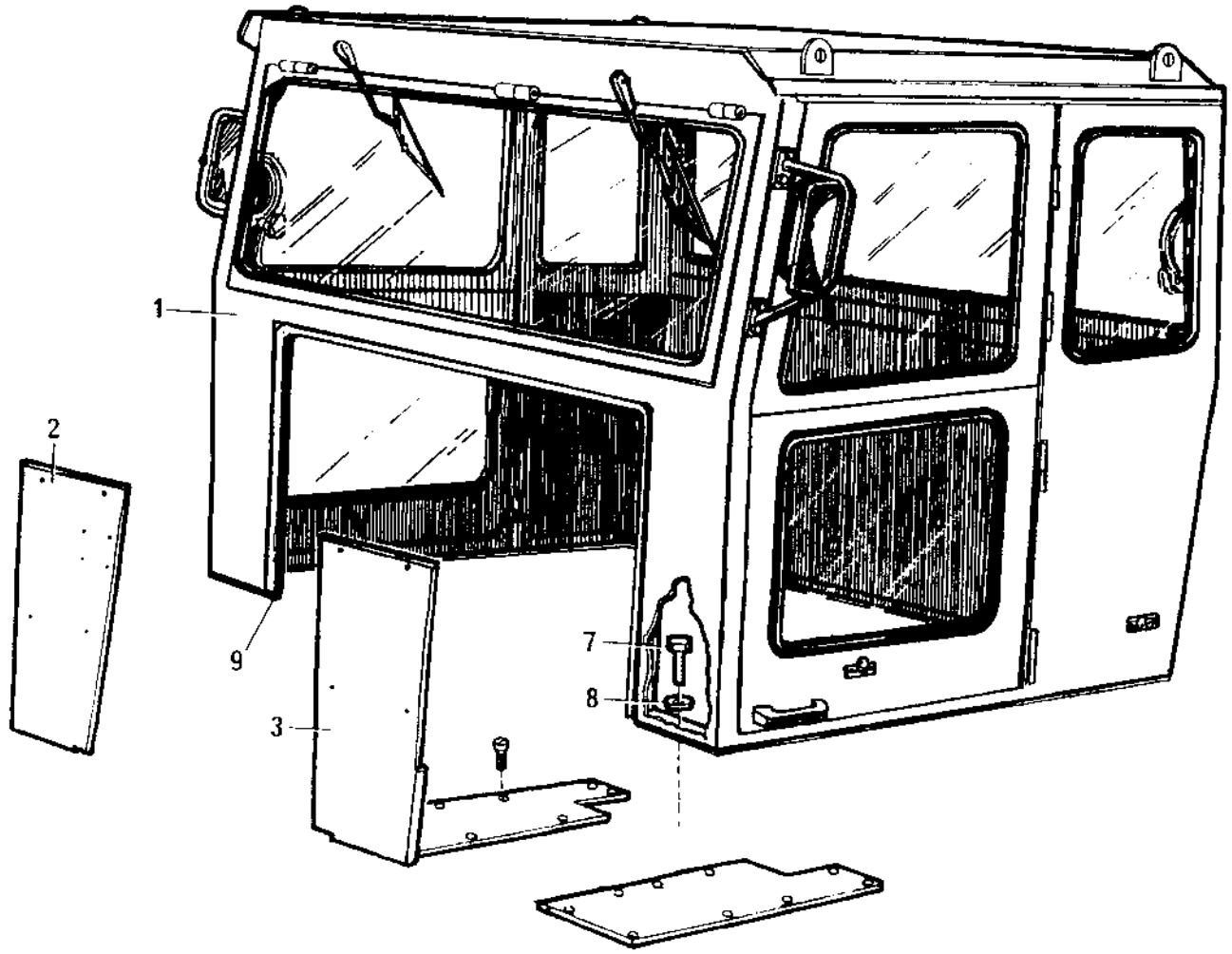

Cab assembly mounting Option

Ref. No.	Part No.	Rem.	Qty	Description	Code
1	269906		1	Cab	
2	263592		1	Cover plate	
3	263595		1	Cover plate	
7	500036		10	Screw	
8	600017		10	Washer	
9	202028	A		Edge trim	

A) L=1000 mm

Protective cover

16901

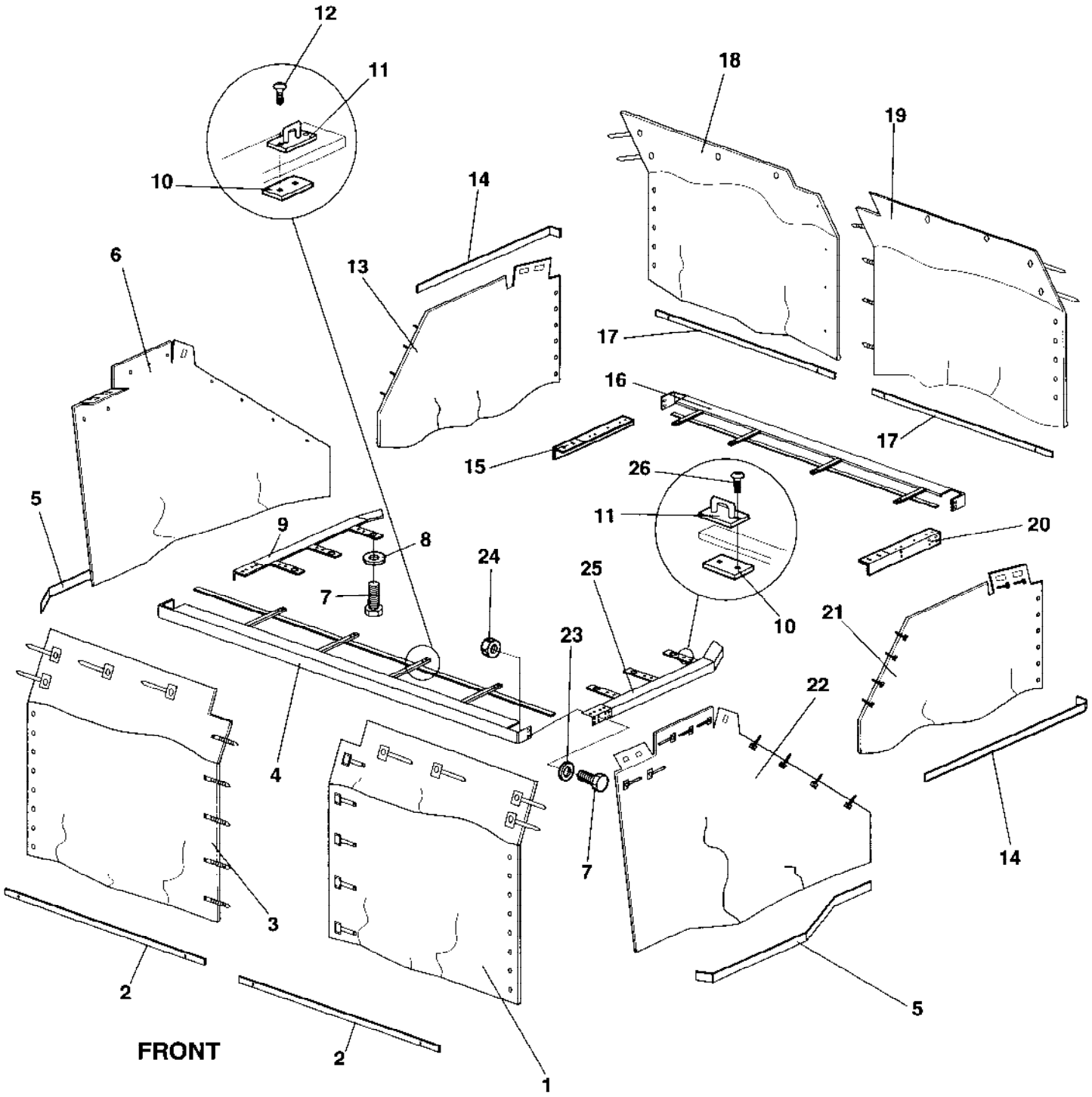

Protective cover

Ref. No.	Part No.	Rem.	Qty	Description	Code
1	380971		1	Protective cover, front	
2	380955		2	Protective cover anchor	
3	380818		1	Protective cover, front	
4	380856		1	Cover stretcher	
5	380958		2	Protective cover anchor	
6	380817		1	Protective cover, right	
7	500028		22	Screw M10-1,5x25 8,8	
8	904557		10	Washer 10,5x22x4	
9	380880		1	Cover stretcher	
10	372265		30	Bracket	
11	901634		54	Retainer	
12	903658		96	Screw M5x10	
13	380820		1	Protective cover, right	
14	380956		2	Protective cover anchor	
15	380865		1	Cover stretcher	
16	380867		1	Cover stretcher	
17	380957		2	Protective cover anchor	
18	380972		1	Protective cover, rear	
19	380821		1	Protective cover, rear	
20	380866		1	Cover stretcher	
21	380819		1	Protective cover, left	
22	380816		1	Protective cover, left	
23	904230		24	Washer 10,5x22x2	
24	586018		12	Lock nut M10	
25	380879		1	Cover stretcher	
26	904696		12	Screw	

NUMERICAL INDEX

Part Number	Page	Part Number	Page	Part Number	Page
100054	225	191881	115	192091	95
111059	91	191883	115,117	192097	91
111164	265,269	191887	119	192098	7
111240	91	191888	55,59	192107	251
115042	29			192114	247
115043	29	191894	119	192127	251,253
116009	31	191899	7,25	192128	91
116016	31	191900	7	192135	241
116018	35	191921	53,77	192144	251
116020	197,199			192145	91
117005	29	191926	67	192146	251
134051	35	191927	53,57	192147	251
135010	197	191940	67	192148	251
135011	31	191941	53	192153	95,97
136010	197	191951	93	192158	115
136011	31	191952	91	192159	95
136021	35	191953	93	192188	219
150014	265	191954	91	192189	91
150017	91	191956	93	192223	219
150018	91	191957	91	192227	113
150038	35	191958	7	192245	57
151015	265	191960	7	192254	283,285
151021	225	191969	255	192273	111
160013	229	191973	255,259	192282	255
160032	229	191976	255	192283	255
160033	229	191996	111	192284	65
160092	103	191997	255	192285	255
160218	227	191998	255	192286	255
160335	227	191999	247,249	192287	255
161023	31			192288	255
161081	197	192000	255	192289	255
161082	197	192002	61	192290	255
161084	35	192005	67	192291	255
161087	35	192006	67	192292	255
162019	83,85	192011	7	192293	255
163105	103	192026	247	192294	255
163108	31	192032	121,233	192295	255
173707	151	192033	69	192296	255
190721	227	192034	69	192297	255
190722	227	192035	101	192298	255
190725	227	192036	101	192299	255
190729	227	192037	101	192300	255
190730	227	192038	101	192301	255
190731	227	192039	101	192302	255
190886	51,53	192040	101	192303	233
190901	75	192041	101	192304	233
190904	67	192042	101	192306	235
191072	91,95	192043	101	192307	235
	101	192044	101	192308	233
191078	15,17	192045	101	192309	233
191533	63,65	192046	101	192310	233
	255,257	192047	101	192312	233
191541	239	192048	101	192313	233
191623	93	192049	101	192316	233
191648	111,131	192050	101	192340	53
191667	111	192051	101	192341	69
191766	241	192052	101	192342	77
191775	35	192053	101	192343	67,87
191783	113	192054	101	192348	67
191788	219	192055	101	192349	119
191789	113	192056	101	192376	247
191790	113	192057	101	192442	19
191792	113	192058	101	192500	111
191794	113	192059	101	192501	119
191799	111	192060	101	192575	7
191802	111	192061	101	192580	7
191803	111	192062	101	192582	7
191804	111	192063	101	192655	207
191805	111	192064	101	192674	7
191806	111	192065	101	192699	7
191808	111	192066	101	192734	9
191818	219	192067	101	192735	9
191821	119	192068	101	192766	247
191822	119	192069	101	192767	247
191823	119	192070	101	192770	295
191824	119,121	192071	101	192785	9
191834	211,213	192072	101	192786	9

NUMERICAL INDEX

Part Number	Page	Part Number	Page	Part Number	Page
192788	295	193671	135	194511	203
192789	295	193672	135	194512	203
192791	7	193673	135,169	194513	203
192794	25	193674	137,171	194514	203
192803	57	193675	137	194515	203
192804	57	193676	137	194516	203
192812	91	193677	137	194517	203
192824	65	193678	143,175	194518	203
192825	65	193679	143	194519	203
192833	65	193680	143	194520	203
192876	23	193683	145,177	194521	203
192877	23	193684	145	194522	203
192883	23	193685	145,149	194523	203
192885	23		181	194524	203
192886	23	193686	145,147	194525	203
192887	23		153,179	194526	203
192894	233		185	194527	205
192914	97	193687	145	194528	205
192931	247	193699	147	194529	205
192932	247	193700	147	194530	205
192934	247	193701	147	194531	203
192935	247	193702	147	194532	203
192936	247	193703	147	194533	203
192937	247	193707	183	194534	203
192939	9	193708	151	194535	203
192940	9	193709	151	194536	203
192941	9	193710	153	194537	203
192995	23	193711	153	194538	203
193006	247	193712	153	194540	203
193007	283	193713	153	194541	203
193008	283	193714	155	194548	205
193021	29	193715	155	194549	205
193022	247	193716	157,189	194550	205
193023	247	193719	159	194551	205
193034	7	193720	161	194552	205
193038	7	193721	161	194553	205
193039	7	193801	7	194554	205
193040	7	193930	235	194555	205
193041	7	194178	219	194556	205
193044	235	194213	77	194557	205
193045	159,191	194222	91	194559	205
193054	247	194223	93	194560	205
193082	283	194233	75	194561	203
193083	283	194291	75	194562	203
193085	283	194292	75	194563	203
193086	283	194307	91	194564	203
193087	283	194332	233	194565	203
193088	283	194333	233	194566	203
193089	283	194339	219	194567	203
193090	283	194362	57	194568	203
193091	19	194363	57	194569	203
193092	111	194365	59	194570	203
193093	19	194366	57	194571	203
193100	19	194367	59	194572	203
193101	19	194371	77	194573	203
193103	19	194372	77	194574	203
193109	113	194401	63	194576	203
193378	199	194402	63,81	194577	203
193379	283		89	194578	203
193380	283	194407	75	194593	199
193381	283	194408	75	194594	199
193382	283	194410	63	194595	199
193601	69	194496	203	194597	199
193658	131	194497	203	194598	199
193659	131,165	194498	203	194599	199
193660	131	194499	203	194601	199
193661	131	194500	203	194602	199
193662	131	194501	203	194603	199
193663	131	194502	203	194604	199
193664	131,155	194503	203	194605	199
	187	194504	203	194606	199
193665	131	194505	203	194615	199
193666	131	194506	203	194664	77
193667	133,167	194507	203	194665	77
193668	133,145	194508	203	194756	255
193669	133	194509	203	194803	85
193670	133	194510	203	195022	7

NUMERICAL INDEX

Part Number	Page	Part Number	Page	Part Number	Page
195034	39,209	195712	207	196159	261
195150	207	195713	207	196161	261
195152	211	195714	207	196162	261
195172	57	195715	207	196163	261
195176	27	195716	207	196164	261
195177	39	195717	207	196165	261
195178	39	195718	207	196166	261
195180	39	195719	207	196167	261
195181	39	195720	207	196168	261
195182	39	195721	207	196169	261
195192	81	195722	207	196170	261
195193	81	195723	207	196171	261
195194	81	195724	207	196172	261
195195	81	195725	207	196173	261
195196	81	195726	209	196174	261
195197	81	195729	209	196175	261
195198	81	195730	209	196176	261
195199	81	195731	209	196177	261
195200	81	195732	209	196178	261
195201	81	195733	209	196179	261
195202	81	195734	209	196180	261
195203	81	195735	209	196181	261
195204	81	195736	209	196182	261
195205	81	195737	209	196183	261
195206	81	195738	209	196184	261
195207	81	195739	209	196185	261
195208	81	195740	209	196186	261
195209	81	195741	209	196187	261
195210	81	195742	209	196586	83
195211	81	195749	215	197901	63
195212	81	195758	259	202028	23,297
195233	211	195759	97	202057	39
195235	211,215	195770	99	212373	111
195314	213	195773	97	230055	53
195315	213	195775	97	230322	53
195351	255	195776	97	230469	19
195364	119	195777	97	230520	57
195414	43,45	195778	83	230524	53
	47	195779	259,261	230542	115
195613	9	195781	7	230543	19
195627	123	195810	83	231192	53
195628	123	195811	83	231193	53
195629	123	195812	85	232010	227
195630	123	195813	83	232046	7
195631	123	195814	83	232052	77
195632	123	195816	85	232077	53
195633	123	195823	83	232078	57
195634	123	195824	97	232143	85
195635	123	195825	97	232160	219
195636	123	195828	83	234257	75
195637	123	195831	83	234317	19
195638	123	195832	83	234333	95
195639	123	195833	85	234341	91
195647	119	195834	83	234342	91
195689	207	195838	83	234365	103
195690	207	195839	85	234659	103
195691	207	195842	97	234662	95
195692	207	195915	85	234667	103
195693	207	195920	97	234729	57
195694	207	195921	91	234843	219
195695	207	195928	99	234867	113
195696	207	195931	83	234918	55
195697	207	195932	85	234941	219
195698	207	195935	241	234953	99
195699	209	196145	261	235007	57
195700	207	196146	261	240100	221,267
195701	207	196148	261	240146	283
195702	207	196149	261	240147	283
195703	207	196150	261	240149	67
195704	207	196151	261	240154	21
195705	207	196152	261	240257	131
195706	207	196153	261	240264	53
195707	207	196154	261	240297	103
195708	207	196155	261	240410	241
195709	207	196156	261	240519	233
195710	207	196157	261	240558	143
195711	99	196158	261	240560	131

NUMERICAL INDEX

Part Number	Page	Part Number	Page	Part Number	Page
240561	133	240647	157	241776	227
240562	157	240648	159	241820	199
240563	131	240649	145	241846	219
240564	131	240650	145	241848	219
240565	155	240651	145	242018	19
240566	155	240653	149	242030	219
240567	151	240655	145	242454	119
240568	157	240656	131	242480	207
240570	153	240659	153	242492	207
240571	131	240660	143	242493	207
240572	131	240661	143	242500	207
240573	137	240662	143	242514	233
240574	137	240663	141	242614	113
240575	131	240664	143	242867	283
240576	137	240665	137	242868	283
240578	161	240666	137	243197	227
240579	151	240667	131	243280	73
240580	131	240669	151	243502	283
240581	153	240670	155	243503	283
240582	131	240671	155	243610	67,71
240583	131	240673	151	243622	227
240584	137	240674	159	243623	227
240585	145	240675	131	243624	227
240586	141,173	240677	141	243875	61
240587	143	240678	137	243886	71
240588	175	240679	137	244034	219
240590	153	240680	137	244057	19
240591	147	240681	147	245725	29
240592	147	240682	133	246068	113
240593	145	240683	137	246072	91
240594	131	240684	131	246947	39
240595	133	240685	159	247151	53
240596	145	240686	133	247152	53
240597	137	240687	139	247153	53
240598	159	240688	133	247154	53
240599	159	240689	145	247350	25
240600	145	240690	139	247638	239
240601	145	240691	149	247737	273,275
240602	145	240693	133	247739	273
240603	153	240695	149	247741	273
240604	147	240696	137	247930	7
240605	131	240697	145	248035	241
240606	131	240698	137	248271	239
240607	159	240700	131	248491	19
240608	159	240701	137	248511	19
240609	159	240705	161	248513	19
240610	159	240706	161	248917	283
240611	159	240707	161	248918	283
240612	137	240708	161	249007	285
240613	137	240709	161	249273	97
240614	137	240710	153	249427	67
240615	133	240711	153	249547	221
240616	133	240714	161	249548	221
240618	131	240715	161	249549	221
240620	145	240716	131	249593	113
240621	147	240717	133	249608	67
240622	131	240718	131	249872	67
240623	141	240719	147	249993	111
240624	147	240720	159	250070	233
240625	145	240721	135	250137	251
240626	145	240722	141	250407	265
240627	133	240723	161	250622	29
240629	141	240724	153	250652	197
240630	153	240726	155	250658	43
240632	157	240727	161	250684	197
240633	137	240728	153	250686	197
240634	131	240729	137	250687	197
240636	149	240759	233	250787	35
240637	149	240904	221	250795	265
240638	145	240905	221	250832	217
240639	145	240906	221	251052	197,201
240640	145	240907	221	251053	197
240641	147	240908	113	251722	11,13
240642	145	241172	95		
240643	153	241431	219	251723	11
240644	131	241433	93	251729	11
240645	131	241753	19	251745	283

NUMERICAL INDEX

Part Number	Page	Part Number	Page	Part Number	Page
251842	91	262197	29	291193	115
251911	69	262593	273	297018	119
252668	31	263100	33	308001205	95
252914	197	263587	265	310001	201
252994	283	263592	297	310022	29
253177	283	263595	297	310028	213
253204	283	263607	265	310037	29
253745	31	263614	19	311016	293
253747	35	263615	21	312035	247
254036	197	263685	265	312039	265
254085	35	263763	15	312083	247
254086	55	263770	15	313001	121
254088	35	263771	15	313002	119
254241	35	263772	15	313004	19
255039	69	263774	15	313006	219
255054	31	263775	15	313010	113
255337	31	264039	119	313023	113
255658	31	264237	7	313033	115
255907	51	264238	7	313035	113
256090	29	264269	295	313038	115
256099	29	264389	119	313041	233
256101	29	265215	233	313068	233
256157	31	265231	241	313108	113
256158	31	265232	241	313112	125
256159	31	265244	241	330171	121
256485	77	265909	113	330281	53
256658	29	266221	51	330298	53
256753	69	266343	283	330328	75
256860	19	266547	283	330330	75
256922	53	266625	241	330331	111
256923	53	266960	295	330333	53
256925	69	266966	295	330534	221
256926	69	266968	295	331006	19
256957	11	267077	295	331015	19
257028	49	267465	111	331092	19
257029	49	267587	207	332127	57
257139	225	267660	13	333041	19
257162	55	267791	15	333053	51
257167	55	268154	211	333062	51
257198	53	268418	35	333067	53
257985	55	268419	35	333068	51
257987	53	268482	29	333129	201
257988	53	268657	283	333228	19
258015	69	268673	283	334070	95
258267	79	268744	265	334116	219
258268	53	268749	265	334117	91
258307	111	268816	207	334121	219
258333	19	268844	219	334132	113
258340	21	268845	265	334135	219
258512	29	268851	219	334157	113
258513	11	268913	119	334172	119
258729	31	268920	53	334196	103
258870	233	268936	115	334197	103
258938	283	268964	293	334394	67
259089	43	268964001	293	334410	111
259211	31	268964002	293	334424	95
259215	225	268964003	293	334479	53
259219	31,33	268964004	293	334603	59
	37	268964005	293	343017	285
259225	19	268964006	293	343369	233
259226	19	268964007	293	343775	11
259250	53	268964008	293	344389	233
259349	31	268964009	293	345664	251
259564	53	268964012	19	346235	119
259639	29	268964016	293	347241	233
259804	283	268964017	293	348331	279
259933	233	268964018	71	348595	119
260543	115	268964019	71	348996	111
261463	95	268964022	75	349248CN	285
261490	35	268965010	293	349248DE	285
261658	43	269137	61	349248DK	285
261659	43	269482	43	349248EN	285
261786	283	269745	29	349248ES	285
261799	115	269906	297	349248FI	285
262019	227	272372	285	349248FR	285
262054	69	277992	293	349248GR	285
262094	265	281628	103	349248IS	285

NUMERICAL INDEX

Part Number	Page	Part Number	Page	Part Number	Page
349248IT	285	380187	35	417063	265
349248NL	285	380239	103	425738932	145
349248NO	285	380242	103	425738967	145
349248PT	285	380251	59	450066	7
349248SE	285	380253	103,105	450089	295
350009	269	380392	249	470020	233
350082	35	380405	93	480446	223
350113	35	380406	103	480447	223
357425	263	380428	11	480449	223
357426	263	380430	11	480450	223
357427	263	380431	11	480468	223
358254	11	380432	11	482169	91
358846	19	380433	11	482257	91
358881	241,289	380444	117	482328	95
359043	249	380475	103,107	482465	219
370234	275	380816	299	482466	91
370766	277	380817	299	482732	219
370978	269	380818	299	485011	293
372265	299	380819	299	485075	293
372696	275	380820	299	499132	115
372697	275	380821	299	499133	115
373304	19	380856	299	499343	117
374411	253	380865	299	499366	115
374541	111	380866	299	499368	115
374727	117	380867	299	499369	115
374745	117	380879	299	499373	219
374754	121	380880	299	499420	29
374755	121	380955	299	499474	219
374761	121	380956	299	499510	115
374762	121	380957	299	499511	115
374764	121	380958	299	500004	239
374765	285	380971	299	500006	121
374771	117	380972	299	500008	59
374772	117	381166	93	500012	55
374791	51	381518	35	500013	233
374821	269	381620	45	500015	53
374822	269	381694	45	500018	201
374827	125	381695	45	500019	71
374845	269	381704	47	500020	233
374891	113	381705	47	500021	53,237
374903	253	381706	47		
374904	253	381716	35	500022	9
374905	117	381717	35	500024	93
374954	235	381748	275	500028	19
374960	243	383200	277	500029	69
374961	243	383697	21	500030	7
374966	111	383963	235	500031	91
374969	249	384614	63	500032	249
374984	113	384615	51	500035	11
375023	117	385975	125	500036	297
375060	9	387733	235	500037	91
375061	9	401048	47	500040	243
375101	7	401106	53	500043	39
375113	243	415114	33	500046	11
375152	35	415209	69	500047	7
375170	117	415277	73	500048	103
375455	219,223	415278	71	500051	31
	271	415279	71	500053	53
375483	269	415280	209	500056	15
375530	7	415281	71	500058	115
375559	7	415282	71	500060	197
375567	19	415283	71	500077	111
375568	7	415285	71	500088	219
375576	7	415320	73	500089	219
375618	7	415350	233	500090	99
376060	217	416238	207	500101	49
376227	99	416243	207	500115	295
376228	97	416245	207	500123	103
376273	249	416250	207	500129	29
376357	11	416278	207	500150	111
376375	15	416279	207	500185	275
376387	7	416280	207	500186	219
376392	121	416296	207	500188	39
376465	35	416361	207	500195	11
380063	249	416363	207	500241	91
380064	249	417037	265	500506	7
380065	249	417040	35	502017	31

NUMERICAL INDEX

Part Number	Page	Part Number	Page	Part Number	Page
502019	35	615046	295	754082	201
502058	93	624016	283	754083	201
502060	29	624021	263	754084	201
502092	111	628207	265	754085	201
502269	227	629075	247	754086	201
503025	211	630003	247	754105	31
503027	111	630005	255	791157	241
503100	31	630006	9	812445	95
503133	197	630008	11	813369	247
508013	219	630010	91	813412	233
508099	59	630014	255	813422	21
509028	35	630031	23	813423	125
516032	269	630035	15	813435	91
516049	35	745072	69	813436	95
517052	227	747097	31	813438	69
530016	247	747282	73	813445	91
533009	273	747583	241	813454	91
533025	9	750035	119	813457	219
533032	233	750072	77	813465	29
535005	275	754001	33	813722	53
535007	273	754006	33	813725	19
535008	7	754007	33	813732	19
535044	9	754009	33	813744	19
535048	9	754010	33	813746	19
537009	119	754012	33	813953	207
541525	233	754014	31	814259	23
541703	19	754016	33	814262	59
550043	269	754018	33	819179201	113
550060	265	754019	33	819179202	113
550132	247	754020	33	891518	115
570002	273	754021	33	900176	103
570003	7	754022	33	900223	239
570004	53	754023	33	900411	219
570005	53	754024	33	900524	57
570006	9	754025	33	900723	35
570007	11	754026	33	900724	35
570008	29	754027	33	900827	111
570015	49	754028	33	900829	111
571003	69	754029	33	901178	11
571006	111	754042	201	901182	7
571007	197	754043	201	901187	7
572002	247	754044	201	901299	19
572005	265	754045	201	901317	45
572007	197	754047	201	901350	111
586001	273	754048	201	901448	111
586002	273	754049	201	901634	299
586003	9	754050	201	901691	229
586006	227	754051	201	901766	239
586009	197	754052	201	902126	103
586011	211	754053	201	902131	239
586018	295	754054	201	902163	263
586019	15	754055	201	902164	263
586117	119	754056	201	902252	31
588176	283	754057	201	902541	111
600005	15	754058	201	902861	223
600006	113	754059	201	902862	223
600008	125	754060	201	903193	111
600009	15	754061	201	903289	229
600014	91	754062	201	903290	111
600017	297	754063	201	903307	243
600021	255	754064	201	903422	283
603001	53	754065	201	903423	283
603003	93	754066	201	903424	283
603019	53	754067	201	903425	283
603023	91	754068	201	903459	283
604002	265	754069	201	903614	21
604003	113	754070	201	903658	299
604004	233	754071	201	903832	285
604005	71	754072	201	904059	19
604006	71	754073	201	904093	283
604007	33	754074	201	904098	285
604009	225	754075	201	904141	229
615041	7	754076	201	904142	229
615042	55	754077	201	904143	229
615043	31	754078	201	904213	23
615044	29	754079	201	904228	219
615045	11	754080	201	904229	9

NUMERICAL INDEX

Part Number	Page	Part Number	Page	Part Number	Page
904230	9	922524	207	937687	195
904231	11	922539	207	937688	195
904232	11	922624	265	937689	195
904233	49	923226	73	937690	195
904234	29	923302	243	937691	195
904281	9	923328	115	937692	195
904358	211	923631	207	937693	193
904410	91	923633	207	938108	193
904448	243	924644	95	938137	111
904449	249	925629	7	938161	103
904450	249	925659	19	938324	105
904519	273	925966	119	938325	105
904557	7	926326	229	938326	105
904558	111	926445	269	938327	105
904571	239	926625	83	938354	193
904577	239	926871	71	938355	193
904593	97	926964	73	938362	149
904596	39	927025	241	938368	149
904599	235	927026	233	938374	193
904600	233	927048	117	938379	177
904623	97	927210	9	938435	157
904627	57	927468	119	938557	169
904631	19	927988	213	938746	155
904637	233	928081	91	938756	105
904639	15	928348	293	938757	105
904643	7	928511	7	938758	105
904644	121	928632	273	938759	105
904657	83	928661	233	939297	131
904658	83	928722	21	939298	131
904659	83	928839	53	939371	111
904660	83	928840	221	939428	193
904688	103	928908	103	939429	193
904696	299	928928	241	939430	193
904697	263	929010	223	939481	111
904703	103	929012	223	939485	111
904735	59	929013	223	939486	111
904763	43	929014	223	939487	111
904786	219	929023	243	947684	19
904796	253	929162	295	947696	35
904808	21	929322	121	960273	239
904912	237	929602	263	960787	285
904990	19	929911	243	975065	233
908780	223	930138	233	975068	239
908782	223	930139	233	985012	241
908783	223	930151	21	985066	239
909153	273	930163	21	985087	239
909535	275	930182	241	985145	241
909536	275	930192	241	985146	241
910569	221	930195	241	991650	285
910577	221	932058	241	991657	283
910586	221	932059	241	991658	283
910599	221	935044	111	999027	237
911456	241	935758	111		
911618	223	936487	223		
911620	223	936488	223		
912074	213	936489	223		
912081	219	936490	223		
912120	51	936491	223		
920492	213	936492	223		
920783	53	936493	223		
920784	53	936494	223		
920785	53	936495	223		
920786	53	936695	229		
920787	57	936696	229		
920788	119	936697	229		
920789	57	936698	229		
920790	53	936699	229		
920792	67	936700	229		
920794	57	936702	229		
920795	67	936703	229		
920797	53	936704	229		
920817	67	936705	229		
921087	79	937682	195		
921099	235	937683	195		
921161	103	937684	195		
921850	247	937685	195		
922045	227	937686	195		