RUTHZIL TRATOR COMERCIAL DE PEÇAS LTDA 11 97083-6812 ROLANDO CITRANGULO

CATERPILLAR®

KEBP0289-19
December 2007

Parts Manual

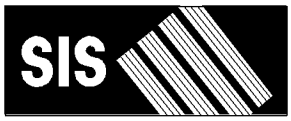

See “General Information” for New Parts Manual Features.

CS-423E Vibratory Compactor

EAE1-Up (Machine)
CRS2300-Up (Engine)
G4D1-Up (Engine)

Powered By 3054C Engine

Product and Dealer Information

Note: For product identification plate locations, see the section “Product Identification Information” in the Operation and Maintenance Manual.

Delivery Date: _____

Product Information

Model: _____

Product Identification Number: _____

Engine Serial Number: _____

Transmission Serial Number: _____

Generator Serial Number: _____

Attachment Serial Numbers: _____

Attachment Information: _____

Customer Equipment Number: _____

Dealer Equipment Number: _____

Dealer Information

Name: _____ Branch: _____

Address: _____

_____

_____

	Dealer Contact	Phone Number	Hours
Sales:	_____	_____	_____
Parts:	_____	_____	_____
Service:	_____	_____	_____

Informations produit et concessionnaire

Nota: Voir l'emplacement de la plaque signalétique du produit au chapitre "Informations produit" du guide d'utilisation et d'entretien.

Date de livraison: _____

Informations produit

Modèle: _____

Numéro d'identification produit: _____

Numéro de série du moteur: _____

Numéro de série de la boîte de vitesses: _____

Numéro de série de l'alternateur: _____

Numéros de série d'équipement: _____

Informations sur l'équipement: _____

Numéro matériel client: _____

Numéro matériel concessionnaire: _____

Informations concessionnaire

Nom: _____ Agence: _____

Adresse: _____

_____

_____

	Contact concessionnaire	Numéro de téléphone	Heures
Ventes:			
Pièces:			
Service:			

Información del Producto/Distribuidor

Nota: Para saber la ubicación de las placas de identificación del producto, ver la sección “Información sobre identificación del producto” en el Manual de Operación y Mantenimiento.

Fecha de entrega: _____

Información del producto

Modelo: _____

Número de identificación del producto: _____

Número de serie del motor: _____

Número de serie de la transmisión: _____

Número de serie del generador: _____

Números de serie de los accesorios: _____

Información sobre los accesorios: _____

Número del equipo del cliente: _____

Número del equipo del distribuidor: _____

Información del distribuidor

Nombre: _____ Sucursal: _____

Dirección: _____

_____

_____

Comunicación con el distribuidor	Número de teléfono	Horas
Ventas: _____	_____	_____
Piezas: _____	_____	_____
Servicio: _____	_____	_____

Informações Sobre Produto e Revendedor

Nota: Para localizações da placa de identificação do produto, consulte a seção, “Informações Sobre Identificação do Produto” no Manual de Operação e Manutenção.

Data de Entrega: _____

Informações Sobre o Produto

Modelo: _____

Número de Identificação do Produto: _____

Número de Série do Motor: _____

Número de Série da Transmissão: _____

Número de Série do Gerador: _____

Números de Série de Acessórios: _____

Informações Sobre Acessórios: _____

Número do Equipamento do Cliente: _____

Número do Equipamento do Revendedor: _____

Informações Sobre o Revendedor

Nome: _____ Filial: _____

Endereço: _____

_____

_____

	Contato do Revendedor	Telefone	Horas
Vendas:	_____	_____	_____
Peças:	_____	_____	_____
Serviço:	_____	_____	_____

Produkt- und Händlerinformation

Anmerkung: Für die Lage der Produkt-Identnummer und Seriennummern siehe Abschnitt “Produkt-Identinformation” im Betriebs- und Wartungshandbuch.

Lieferdatum: _____

Produkt-Identinformation

Modell: _____

Produkt-Identnummer: _____

Seriennummer des Motors: _____

Seriennummer des Getriebes: _____

Seriennummer des Generators: _____

Seriennummern der Arbeitsgeräte: _____

Arbeitsgeräteinformation: _____

Kundennummer: _____

Händlernummer: _____

Händlerinformation

Name: _____ Niederlassung: _____

Adresse: _____

_____

_____

	Kontaktperson beim Händler	Telefon	Dienststunden
Verkauf:	_____	_____	_____
Ersatzteile:	_____	_____	_____
Service:	_____	_____	_____

MEMORANDA

TABLE OF CONTENTS

Name	Page
GENERAL INFORMATION	A16
REPAIR ALTERNATIVES	A35
SUPPLEMENTAL COOLANT ADDITIVES	A40
ENGLISH-PORTUGUESE PARTS NOMENCLATURE	A45
MAINTENANCE PARTS	A53
INDEX	A73
MACHINE ARRANGEMENT	1
CHASSIS AR	1
COMMON AR	1
ENGINE ARRANGEMENT	2
ENGINE AR-PRIMARY	2
INSTALLATION AR-ENGINE	3
BASIC ENGINE	4
CAMSHAFT GP	4
COVER GP-FRONT HOUSING	6
COVER GP-VALVE MECHANISM	7
CRANKSHAFT GP	13
CYLINDER BLOCK GP	17
CYLINDER HEAD GP	21
DRIVE GP-FAN	25
DRIVE GP-PUMP	26
FLYWHEEL GP	27
HOUSING GP-FLYWHEEL	28
HOUSING GP-FRONT	29
LIFTING GP-ENGINE	33
MOUNTING GP-ENGINE	34
MOUNTING GP-ENGINE FLEXIBLE	36
PAN GP-OIL	37
PISTON & ROD GP	41
PLUG GP-ENGINE	44
PULLEY GP-CRANKSHAFT	47
ROCKER ARM GP	48
SERVICE GP-ENGINE	49
VALVE MECHANISM GP	52
LUBRICATION SYSTEM	54
FILTER GP-ENGINE OIL	54
PUMP GP-ENGINE OIL	55
COOLING SYSTEM	56
CONNECTION GP-WATER	56
COOLER GP-FLTR BASE & ENG OIL	58
FAN GP-SUCTION	62
PUMP GP-WATER	66
RADIATOR & HYD OIL COOLER GP	68
RECOVERY GP-COOLANT	71
AIR INLET AND EXHAUST SYSTEM	72
AIR CLEANER GP	72
CONNECTION GP-INLET	74
ELBOW GP-EXHAUST	75
EXTENSION GP-AIR CLEANER	76
MANIFOLD GP-EXHAUST	77
MUFFLER GP	78
FUEL SYSTEM	79
CAP GP-FUEL FILLER	79
GOVERNOR GP	80
LINES GP-FUEL	81
PUMP GP-FUEL INJECTION	82
PUMP GP-FUEL PRM & PRIM FILTER	90
TANK & MTG GP-FUEL	95
TANK GP-FUEL	96
ELECTRICAL AND STARTING SYSTEM	98
ALARM GP	98
ALTERNATOR GP-CHARGING	99
BATTERY & WIRING GP	100
CONVERTER GP-ELECTRICAL	103
ELECTRICAL AR	104
GLOW PLUG GP	105
LAMP GP-DOME	106
LAMP GP-FLOOD	107
LAMP GP-WARNING BEACON	110
LIGHTING GP-FLOOD	111
LIGHTING GP-WARNING	114
MODULE GP-TIMER	116
SOLENOID GP-THROTTLE	117
STARTING MOTOR GP-ELECTRIC	118
SWITCH GP-DISCONNECT	119
SWITCH GP-MAGNETIC	120
WARNING GP-BACKUP	122
WIRING GP-AIR CONDITIONER	124
WIRING GP-CAB	125
WIRING GP-CONSOLE	126
WIRING GP-ENGINE	130
WIRING GP-PUMP	134
POWER TRAIN	136
AXLE & MTG GP-DRIVE	136
AXLE GP	137
DRIVE GP-DRUM	141
DRUM AR-SMOOTH	143
DRUM GP-COMPACTOR	144
DRUM GP-DRIVE & VIBRATORY	145
DRUM GP-PADDED	148
DRUM GP-SMOOTH	150
INSTALLATION GP-DRUM	152
LINES GP-PROPEL	153
MOTOR & MTG GP-PROPEL	156
MOUNTING GP-WHEEL	158
PLANETARY GP-FINAL DRIVE	161

TABLE OF CONTENTS

Name	Page
POWER TRAIN AR	164
PUMP & MTG GP-PROPEL	165
SHELL AR	167
WHEEL & TIRE GP	168
FRAME AND BODY	172
BUMPER AR	172
BUMPER GP	173
BUMPER GP-DRUM	175
ENCLOSURE GP-ENGINE	177
FRAME GP-FRONT	183
FRAME GP-REAR	184
GUARD GP-LINES	186
HANDRAIL GP	187
HITCH GP-ARTICULATING & OSC	188
HOOD GP	189
SCRAPER GP-DRUM	193
SCRAPER GP-PADDED DRUM	195
SCRAPER GP-SMOOTH DRUM	196
BRAKING SYSTEM	200
BRAKE AR	200
LINES GP-BRAKE & SHIFT	201
PUMP & MTG GP-BRAKE	205
STEERING SYSTEM	207
CONTROL GP-STEERING	207
CYLINDER & MTG GP-STEERING	209
KNOB GP-STEERING	210
LINES GP-STEERING	211
LINES GP-STEERING CYLINDER	213
HYDRAULIC SYSTEM	214
CYLINDER GP-HYDRAULIC	214
FILTER & MTG GP-HYDRAULIC	215
HYDRAULIC AR	217
HYDRAULIC AR-AUXILIARY	217
LINES GP-HYDRAULIC	218
LINES GP-HYDRAULIC FILTER	219
LINES GP-PRESSURE TEST	220
MANIFOLD GP-HYDRAULIC	222
MOTOR GP-PISTON	223
PUMP GP-PISTON	233
TANK & MTG GP-HYDRAULIC	245
TANK GP-HYDRAULIC	247
VALVE & MTG GP-CONTROL	249
VALVE GP-CONTROL	251
VIBRATORY SYSTEM	252
DRIVE GP-SUPPORT & VIBRATORY	252
HOUSING GP-ECCENTRIC WEIGHT	254
HYDRAULIC AR-VIBRATORY	258
LINES GP-VIBRATORY	259
MOTOR & MTG GP-VIBRATORY	260
PUMP & MTG GP-VIBRATORY	262
SHAFT GP-ECCENTRIC WEIGHT	271
SUPPORT GP-VIBRATORY	273
WATER SYSTEM	275
BAR GP-SPRAY	275
FILTER GP-WATER	277
LINES GP-WATER SPRAY	278
PUMP GP-WATER SPRAY	279
SPRAY AR-WATER	280
TANK GP-WATER	281
OPERATOR STATION	283
ACCUMULATOR GP-REFRIGERANT	283
AIR CONDITIONER GP	285
CAB AR	289
CAB GP-ENCLOSED ROPS	290
CANOPY GP	296
COMPRESSOR GP-REFRIGERANT	297
CONDENSER & MTG GP-REFRIGERANT	300
CONTROL GP-DIRECTION & SPEED	301
CONTROL GP-HANDLE	305
CONTROL GP-PROPEL	306
CYLINDER & MTG GP-TILT	310
DOOR GP-CAB	312
DUCT GP-CAB AIR	318
FILTER GP-CAB AIR	320
FLOOR MAT GP	321
GAUGE GP-VIBRATORY	322
GUARD GP-VANDALISM	324
HEATER & MTG GP-CAB	325
HEATER GP-CAB	326
LINER GP-CAB	328
LINES GP-AIR CONDITIONER	329
LINES GP-CAB HEATER	331
LINKAGE GP	333
MIRROR GP-REAR VIEW	334
MODULE GP-WARNING INDICATOR	337
MOTOR GP-WINDOW WIPER	338
MOUNTING GP-CAB	340
OPERATOR AR	343
PANEL GP-INSTRUMENT	345
PLATFORM GP-OPERATOR	366
ROPS GP	369
ROPS GP-ENCLOSED	370
SCREEN GP-SUN	373
SEAT & MOUNTING GP	375
SEAT GP-SUSPENSION	376
TANK GP-WINDOW WASHER	382
VISOR GP-CAB	383
WINDOW GP	384
WINDOW GP-DOOR	386
WINDOW GP-REAR	388
WIPER & WASHER GP-WINDOW	389
WIPER GP-WINDOW	391

TABLE OF CONTENTS

Name	Page	Name	Page
SERVICE EQUIPMENT AND SUPPLIES	392		
FILM GP	392		
PLATE & FILM GP	393		
PART NUMBER INDEX	B1		

TABLE DES MATIÈRES

Désignation	Page
GÉNÉRALITÉS	A19
OPTIONS DE RÉPARATION	A36
ADDITIFS POUR LIQUIDE DE REFROIDISSEMENT	A41
PIÈCES DE RECHANGE	A56
INDEX	A80
VERSION DE MACHINE	1
VERSION DE CHASSIS	1
VERSION NORMALE	1
VERSION DE MOTEUR	2
MOTEUR (VERSION PRINCIPALE)	2
MONTAGE DE MOTEUR (VERSION)	3
MOTEUR STANDARD	4
ARBRE A CAMES (ASS)	4
COUVERCLE DE CARTER AV (ASS)	6
CACHE-SOUPAPES (ASS)	7
VILEBREQUIN (ASS)	13
BLOC-CYLINDRES (ASS)	17
CULASSE (ASS)	21
ENTRAÎNEMENT DE VENTILATEUR (ASS)	25
ENTRAÎNEMENT DE POMPE (ASS)	26
VOLANT MOTEUR (ASS)	27
CARTER DE VOLANT (ASS)	28
CARTER AV (ASS)	29
OEILLETONS DE LEVAGE MOTEUR (ASS)	33
MONTAGE DE MOTEUR (ASS)	34
MONTAGE SOUPLE DU MOTEUR (ASS)	36
HUILE MOTEUR - CARTER (ASS)	37
PISTON ET BIELLE (ASS)	41
BOUCHON DE MOTEUR (ASS)	44
VILEBREQUIN - POULIE (ASS)	47
AXE DE CULBUTEUR (ASS)	48
ENTRETIEN DU MOTEUR (ASS)	49
CULBUTERIE (ASS)	52
CIRCUIT DE GRAISSAGE	54
FILTRE À HUILE MOTEUR (ASS)	54
POMPE A HUILE MOTEUR (ASS)	55
CIRCUIT DE REFROIDISSEMENT	56
RACCORD D'EAU (ASS)	56
SUPPORT DE FILTRE ET REFROIDISSEUR D'HUILE MOTEUR	58
VENTILATEUR ASPIRANT (ASS)	62
POMPE A EAU (ASS)	66
RADIATEUR ET REFROIDISSEUR D'HUILE HYDRAULIQUE (ASS)	68
VASE D'EXPANSION POUR LIQUIDE RÉFRIGERANT	71
CIRCUIT D'ADMISSION D'AIR ET D'ÉCHAPPEMENT	72
FILTRE A AIR (ASS)	72
RACCORD D'ADMISSION (ASS)	74
COUDE D'ÉCHAPPEMENT (ASS)	75
RALLONGE DE FILTRE A AIR (ASS)	76
COLLECTEUR D'ÉCHAPPEMENT (ASS)	77
SILENCIEUX (ASS)	78
CIRCUIT DE CARBURANT	79
BOUCHON DE GOULOTTE DE CARBURANT (ASS)	79
REGULATEUR (ASS)	80
CANALISATIONS DE CARBURANT (ASS)	81
POMPE D'INJECTION DE CARBURANT (ASS)	82
POMPE D'AMORÇAGE DE CARBURANT ET FILTRE PRINCIPAL	90
RÉSERVOIR DE CARBURANT ET MONTAGE (ASS)	95
RÉSERVOIR DE CARBURANT (ASS)	96
CIRCUIT ÉLECTRIQUE ET DE DÉMARRAGE	98
AVERTISSEUR (ASS)	98
ALTERNATEUR DE CHARGE (ASS)	99
BATTERIE ET CÂBLAGE	100
TRANSFORMATION ELECTRIQUE (ASS)	103
VERSION ÉLECTRIQUE	104
BOUGIE DE PRÉCHAUFFAGE (ASS)	105
PLAFONNIER (ASS)	106
LAMPE - PHARE (ASS)	107
LAMPE - GYROPHARE (ASS)	110
ÉCLAIRAGE - PROJECTEURS (ASS)	111
ÉCLAIRAGE - AVERTISSEUR (ASS)	114
MODULE CHRONOMETRE	116
SOLENOIDE D'ACCELERATION (ASS)	117
DÉMARREUR ÉLECTRIQUE (ASS)	118
ROBINET DE BATTERIE (ASS)	119
CONTACTEUR MAGNETIQUE (ASS)	120
AVERTISSEUR DE RECUL (ASS)	122
CABLAGE - CLIMATISEUR (ASS)	124
CABLAGE DE CABINE (ASS)	125

* TRADUCTION NON DISPONIBLE AU MOMENT DE LA PUBLICATION

TABLE DES MATIÈRES

Désignation	Page
CABLAGE DE CONSOLE (ASS)	126
CABLAGE DE MOTEUR (ASS)	130
CÂBLAGE-POMPE (ASS)	134
TRANSMISSION	136
ESSIEU DE MOTEUR ET MONTAGE (ASS)	136
ESSIEU (ASS)	137
ENTRAINEMENT DE TAMBOUR (ASS)	141
TAMBOUR LISSE (VERSION)	143
TAMBOUR DE COMPACTEUR (ASS)	144
TAMBOUR VIBRATEUR ET ENTRAINEMENT (ASS)	145
TAMBOUR À PIEDS DAMEURS (ASS)	148
TAMBOUR LISSE	150
MONTAGE DES TAMBOURS (ASS)	152
CANALISATIONS D'ENTRAINEMENT	153
MOTEUR ET MONTAGE - PROPULSION (ASS)	156
ROUE - GROUPE DE MONTAGE	158
TRAINS PLANÉTAIRES-RÉDUCTEURS (ASS)	161
TRANSMISSION (VERSION)	164
POMPE ET MONTAGE DE PROPULSION (ASS)	165
VERSION D'ENVELOPPE	167
ROUE ET PNEU (ASS)	168
CHÂSSIS ET BENNE	172
*BUMPER AR	172
VERSION DE PARE-CHOCS	172
PARE-CHOCS (ASS)	173
PARE-CHOCS - TAMBOUR (ASS)	175
CARENAGE DE MOTEUR (ASS)	177
CHÂSSIS AV (ASS)	183
BÂTI AR (ASS)	184
PROTECTEUR DES CANALISATIONS (ASS)	186
MAIN COURANTE (ASS)	187
ATTELAGE-ARTICULATION ET OSCILLATION (ASS)	188
CAPOT (ASS)	189
GRATTOIR DE TAMBOUR (ASS)	193
RACLOIR-CYLINDRE À PIEDS DAMEURS (ASS)	195
RACLOIR-CYLINDRE LISSE	196
CIRCUIT DE FREIN	200
VERSION DE FREIN	200
CANALISATIONS DE FREIN ET CHANGEMENT DE VIT (ENS)	201
POMPE ET MONTAGE - FREIN (ASS)	205
CIRCUIT DE DIRECTION	207
COMMANDE DE DIRECTION (ASS)	207
VERIN DE DIRECTION ET MONTAGE (ASS)	209
BOUTON DE DIRECTION (ASS)	210
CANALISATIONS DE DIRECTION (ASS)	211
CANALISATIONS DE VÉRIN DE DIRECTION (ASS)	213
CIRCUIT HYDRAULIQUE	214
VÉRIN HYDRAULIQUE (ASS)	214
FILTRE À HUILE HYDRAULIQUE ET MONTAGE (ASS)	215
VERSION HYDRAULIQUE	217
HYDRAULIQUE AUXILIAIRE (VERSION)	217
CANALISATIONS HYDRAULIQUES (ASS)	218
CANALISATIONS DE FILTRE HYDRAULIQUE	219
CANALISATIONS - CONTRÔLE DE PRESSION (ASS)	220
COLLECTEUR HYDRAULIQUE (ASS)	222
GROUPE DE MOTEUR A PISTONS	223
POMPE A PISTONS (ASS)	233
RÉSERVOIR HYDRAULIQUE ET MONTAGE (ASS)	245
RÉSERVOIR HYDRAULIQUE (ASS)	247
DISTRIBUTEUR ET MONTAGE (ASS)	249
DISTRIBUTEUR (ASS)	251
CIRCUIT DE VIBRATION	252
TAMBOUR VIBRATEUR ET ENTRAINEMENT (ASS)	252
CARTER-POIDS EXCENTRIQUE (ASS)	254
VIBRATION HYDRAULIQUE (VERSION)	258
CANALISATIONS DE VIBRATEUR (ASS)	259
MOTEUR - MONTAGE ET VIBRATION (ENS)	260
POMPE ET MONTAGE - VIBRATION (ASS)	262
ARBRE - POIDS EXCENTRIQUE (ASS)	271
SUPPORT DE VIBRATEUR (ASS)	273
CIRCUIT D'EAU	275
RAMPE DE PULVERISATION (ASS)	275
FILTRE D'EAU	277
CANALISATIONS DE PULVÉRISATION D'EAU (ASS)	278

* TRADUCTION NON DISPONIBLE AU MOMENT DE LA PUBLICATION

TABLE DES MATIÈRES

Désignation	Page
POMPE DE PULVÉRISATION D'EAU	279
PULVERISATION D'EAU	280
RÉSERVOIR D'EAU (ASS)	281
POSTE DE CONDUITE	283
ACCUMULATEUR - CLIMATISEUR (ASS)	283
CLIMATISEUR (ASS)	285
CABINE (VERSION)	289
*CAB GP-ENCLOSED ROPS	290
TOIT (ASS)	296
COMPRESSEUR DE REFRIGERANT (ASS)	297
CONDENSATEUR ET MONTAGE (RÉFRIGÉRANT)	300
COMMANDE DE VITESSE ET DE SENS DE MARCHE	301
COMMANDE DE POIGNÉE (ASS)	305
COMMANDE DE DEPLACEMENT (ASS)	306
VERIN D'INCLINAISON ET MONTAGE (ASS)	310
PORTIÈRE DE CABINE (ASS)	312
GAINE D'AIR (ASS)	318
FILTRE À AIR DE CABINE (ASS)	320
TAPIS DU PLANCHER (ASS)	321
INDICATEUR DE VIBRATION (ASS)	322
PROTECTION ANTIVANDALISME (ASS)	324
CHAUFFAGE ET MONTAGE - CABINE (ASS)	325
CHAUFFAGE DE CABINE (ASS)	326
CABINE - REVÊTEMENT (ASS)	328
CANALISATIONS DE CLIMATISEUR (ASS)	329
CANALISATIONS DE CHAUFFAGE DE CABINE (ASS)	331
TIMONERIE (ASS)	333
RÉTROVISEUR (ASS)	334
MODULE - TÉMOIN (ASS)	337
MOTEUR D'ESSUIE-GLACE (ASS)	338
MONTAGE DE CABINE (ASS)	340
POSTE DE CONDUITE (VERSION)	343
TABLEAU DE BORD (ASS)	345
PLATE-FORME DE CABINE	366
TOIT ROPS (ASS)	369
CABINE ROPS FERMÉE (ASS)	370
PARE-SOLEIL (ASS)	373
SIÈGE ET MONTAGE (ASS)	375
SIÈGE AVEC SUSPENSION (ASS)	376
RÉSERVOIR - LAVE-GLACE (ASS)	382
RETROVISEUR - CABINE (ASS)	383
VITRE (ASS)	384
GLACE DE PORTIÈRE (ASS)	386
GLACE AR	388
ESSUIE-GLACE ET LAVE-GLACE	389
ESSUIE-GLACE (ASS)	391
MATÉRIEL ET FOURNITURES D'ENTRETIEN	392
PLAQUE SIGNALÉTIQUE (ASS)	392
PLAQUES SIGNALETIQUES ET AUTOCOLLANTS (ASS)	393
INDEX DE NUMÉROS DE PIÈCES	B1

* TRADUCTION NON DISPONIBLE AU MOMENT DE LA PUBLICATION

CONTENIDO

Nombre	Página
INFORMACIÓN GENERAL	A23
ALTERNATIVAS DE REPARACIÓN	A37
ADITIVOS DE REFRIGERANTE SUPLEMENTARIOS	A42
PIEZAS DE MANTENIMIENTO	A60
INDICE	A88
CONFIGURACIÓN DE MOTOR	1
CHASIS (CONFIG)	1
CONFIGURACIÓN COMÚN	1
CONFIGURACIÓN DE MOTOR	2
MOTOR PRIMARIO (CONFIG)	2
CONFIGURACIÓN DE INSTALACIÓN DEL MOTOR	3
MOTOR BÁSICO	4
ÁRBOL DE LEVAS (GR)	4
TAPA DE LA CAJA DELANTERA (GR)	6
TAPA DEL MECANISMO DE VÁLVULAS (GR)	7
CIGÜEÑAL (GR)	13
BLOQUE MOTOR (GR)	17
CULATA DE CILINDROS (GR)	21
IMPULSOR DE VENTILADOR (GR)	25
MANDO DE BOMBA (GR)	26
VOLANTE (GR)	27
VOLANTE - CAJA DE (GR)	28
CAJA DELANTERA (GR)	29
CÁNCAMOS DE LEVANTAMIENTO DEL MOTOR (GR)	33
MONTAJE DEL MOTOR (GR)	34
MONTAJE FLEXIBLE DEL MOTOR (GR)	36
CÁRTER - COLECTOR DEL (GR)	37
PISTÓN Y BIELA (GR)	41
TAPÓN DEL MOTOR (GR)	44
CIGÜEÑAL - POLEA DE (GR)	47
BALANCÍN (GR)	48
SERVICIO GR-MOTOR	49
MECANISMO DE VÁLVULAS (GR)	52
SISTEMA DE LUBRICACIÓN	54
FILTRO DE ACEITE DEL MOTOR (GR)	54
BOMBA DE ACEITE DEL MOTOR (GR)	55
SISTEMA DE ENFRIAMIENTO	56
AGUA - CONEXIÓN DE (GR)	56
ENFRIADOR DE ACEITE DEL MOTOR Y BASE DEL FILTRO	58
SUCCIÓN - VENTILADOR DE (GR)	62
BOMBA DE AGUA (GR)	66
RADIADOR Y ENFRIADOR DE ACEITE HIDRÁULICO (GR)	68
RECUPERACIÓN DEL REFRIGERANTE (GR)	71
SISTEMA DE ADMISIÓN Y ESCAPE DE AIRE	72
FILTRO DE AIRE (GR)	72
CONEXION DE ENTRADA	74
CODO DE ESCAPE (GR)	75
EXTENSIÓN DEL FILTRO DE AIRE (GR)	76
MÚLTIPLE DE ESCAPE (GR)	77
SILENCIADOR (GR)	78
SISTEMA DE COMBUSTIBLE	79
TAPA DEL TUBO DE LLENADO DE COMBUSTIBLE (GR)	79
REGULADOR (GR)	80
TUBERÍAS DE COMBUSTIBLE (GR)	81
BOMBA DE INYECCIÓN DE COMBUSTIBLE (GR)	82
BOMBA DE CEBADO Y FILTRO PRIMARIO DE COMBUSTIBLE (GR)	90
TANQUE DE COMBUSTIBLE Y GRUPO DE MONTAJE	95
COMBUSTIBLE - TANQUE DE (GR)	96
SISTEMA ELÉCTRICO Y DE ARRANQUE	98
ALARMA (GR)	98
CARGA - ALTERNADOR DE (GR)	99
BATERÍA Y CABLES (GR)	100
CONVERTIDOR ELÉCTRICO (GR)	103
CONFIGURACIÓN ELÉCTRICA	104
BUJÍA INCANDESCENTE (GR)	105
LÁMPARA DEL TECHO (GR)	106
REFLECTOR (GR)	107
LÁMPARA DE BALIZA DE ADVERTENCIA (GR)	110
LUCES DE REFLECTOR (GR)	111
LUCES DE ADVERTENCIA (GR)	114
MÓDULO DEL CRONÓMETRO (GR)	116
SOLENOIDE DEL ACELERADOR (GR)	117
MOTOR DE ARRANQUE ELÉCTRICO (GR)	118
DISYUNTOR (GR)	119
INTERRUPTOR MAGNÉTICO (GR)	120
RETROCESO - ALARMA DE (GR)	122

* NO HAY TRADUCCION DISPONIBLE EN EL MOMENTO DE LA IMPRESION

CONTENIDO

Nombre	Página
CABLES DEL ACONDICIONADOR DE AIRE (GR)	124
CABLES DE LA CABINA (GR)	125
CABLES DE LA CONSOLA (GR)	126
CABLES DEL MOTOR (GR)	130
CABLES DE LA BOMBA(GR)	134
TREN DE FUERZA	136
EJE DE IMPULSIÓN Y MONTAJE (GR)	136
EJE (GR)	137
MANDO DEL TAMBOR (GR)	141
RODILLO LISO (GR)	143
TAMBOR COMPACTADOR (GR)	144
TAMBOR VIBRADOR Y MANDO (GR)	145
RODILLO DE PISONES (GR)	148
RODILLO LISO (GR)	150
INSTALACIÓN DEL TAMBOR (GR)	152
TUBERÍAS DE PROPULSIÓN (GR)	153
MOTOR DE PROPULSIÓN Y MONTAJE (GR)	156
MONTAJE DE RUEDA (GR)	158
PLANETARIO DEL MANDO FINAL (GR)	161
TREN DE FUERZA (CONFIG)	164
BOMBA DE PROPULSIÓN Y MONTAJE	165
CONFIGURACIÓN DEL CASCO	167
RUEDA Y NEUMÁTICO (GR)	168
BASTIDOR Y CHASIS	172
*BUMPER AR	172
PARACHOQUES (CONFIG)	172
PARACHOQUES (GR)	173
PARAGOLPES DEL TAMBOR (GR)	175
COMPARTIMIENTO DEL MOTOR (GR)	177
BASTIDOR DELANTERO (GR)	183
BASTIDOR TRASERO (GR)	184
PROTECTOR DE LAS TUBERÍAS (GR)	186
*HANDRAIL GP	187
ENGANCHE ARTICULADO Y OSCILANTE (GR)	188
CAPÓ (GR)	189
BARRA LIMPIADORA DEL TAMBOR (GR)	193
RASPADOR DE TAMBOR AMORTIGUADO (GR)	195
RASPADOR DE TAMBOR LISO (GR)	196
SISTEMA DE FRENOS	200
CONFIGURACIÓN DE FRENO	200
TUBERÍAS DEL FRENO Y CAMBIO DE VELOCIDADES (GR)	201
BOMBA Y MONTAJE DEL FRENO (GR)	205
SISTEMA DE DIRECCIÓN	207
CONTROL DE DIRECCIÓN (GR)	207
CILINDRO DE DIRECCIÓN Y MONTAJE (GR)	209
GRUPO PERILLA, DIRECCIÓN	210
TUBERÍAS DE DIRECCIÓN (GR)	211
TUBERÍAS DEL CILINDRO DE DIRECCIONAL (GR)	213
SISTEMA HIDRÁULICO	214
CILINDRO HIDRÁULICO (GRUPO)	214
FILTRO DE ACEITE HIDRÁULICO Y MONTAJE (GR)	215
HIDRÁULICA (CONFIG)	217
CONFIGURACIÓN AUXILIAR HIDRÁULICA	217
TUBERÍAS HIDRÁULICAS (GR)	218
TUBERIAS DEL FILTRO HIDRAULICO (GR)	219
TUBERÍAS DE PRUEBA DE PRESIÓN (GR)	220
MULTIPLE HIDRAULICO (GR)	222
PISTONES DEL MOTOR (GR)	223
BOMBA DE PISTONES (GR)	233
TANQUE HIDRÁULICO Y MONTAJE (GR)	245
TANQUE HIDRÁULICO (GR)	247
VÁLVULA DE CONTROL Y MONTAJE (GR)	249
VÁLVULA DE CONTROL (GR)	251
SISTEMA VIBRATORIO	252
MANDO DE SOPORTE Y VIBRATORIO (GR)	252
PESAS EXCÉNTRICAS -CAJA DE (GR)	254
VIBRADOR HIDRÁULICO (CONFIG)	258
TUBERÍAS DEL VIBRADOR (GR)	259
MOTOR DE LA VIBRACIÓN Y MONTAJE (GR)	260
BOMBA DEL VIBRADOR Y MONTAJE (GR)	262
PESAS EXCÉNTRICAS DEL EJE (GR)	271
SOPORTE VIBRATORIO (GR)	273
SISTEMA DE AGUA	275
BARRA ROCIADORA (GR)	275
FILTRO DE AGUA (GR)	277
TUBERIAS DEL ROCIADOR DE AGUA (GR)	278
BOMBA DEL ROCIADOR DE AGUA (GR)	279
ROCIADOR DE AGUA (CONJ)	280

* NO HAY TRADUCCION DISPONIBLE EN EL MOMENTO DE LA IMPRESION

CONTENIDO

Nombre	Página
TANQUE DEL AGUA (GR)	281
PUESTO DEL OPERADOR	283
ACUMULADOR DEL ACONDICIONADOR DE AIRE (GR)	283
ACONDICIONADOR DE AIRE (GR)	285
CABINA (CONFIG)	289
CABINA INCLUYE ROPS (GR)	290
TECHO (GR)	296
COMPRESOR DE REFRIGERANTE (GR)	297
CONDENSADOR DEL REFRIGERANTE Y MONTAJE (GR)	300
CONTROL GR-DIRECCIÓN Y VELOCIDAD	301
CONTROL DE MANIJA (GR)	305
CONTROL DE PROPULSION (GR)	306
CILINDRO DE INCLINACIÓN Y MONTAJE (GR)	310
PUERTA DE CABINA	312
CONDUCTO DE AIRE (GR)	318
FILTRO DE AIRE DE LA CABINA (GR)	320
ALFOMBRILLA DEL PISO (GR)	321
MEDIDOR VIBRATORIO (GR)	322
PROTECTOR CONTRA EL VANDALISMO (GR)	324
CALEFACCIÓN Y MONTAJE DE LA CABINA (GR)	325
CALEFACCIÓN DE LA CABINA (GR)	326
REVESTIMIENTO DE LA CABINA (GR)	328
TUBERÍAS DE ACONDICIONADOR DE AIRE (GR)	329
TUBERÍAS DE CALEFACCIÓN DE LA CABINA	331
VARILLAJE (GR)	333
RETROVISOR (GR)	334
MÓDULO INDICADOR DE ADVERTENCIA (GR)	337
MOTOR-LIMPIAPARABRISAS (GR)	338
GRUPO DE MONTAJE DE LA CABINA	340
COMPARTIMIENTO DEL OPERADOR (CONFIG)	343
TABLERO DE INSTRUMENTOS (GR)	345
PLATAFORMA DE LA CABINA	366
ESTRUCTURA ROPS (GR)	369
CABINA ROPS CERRADA (GR)	370
PERSIANA PARA EL SOL (GR)	373
ASIENTO Y MONTAJE (GR)	375
SUSPENSIÓN - ASIENTO CON (GR)	376
TANQUE DEL LAVAPARABRISAS (GR)	382
VISERA (GR)	383
VENTANA (GR)	384
VENTANA DE LA PUERTA (GR)	386
VENTANA TRASERA (GR)	388
LIMPIA Y LAVAPARABRISAS (GR)	389
LIMPIAPARABRISAS DE LA VENTANA (GR)	391
EQUIPOS Y SUMINISTRO DE SERVICIOS	392
ETIQUETA DE ADVERTENCIA (GR)	392
CALCOMANÍAS Y PLACAS DE IDENTIFICACIÓN (GR)	393
INDICE DE NUMEROS DE PIEZA	B1

* NO HAY TRADUCCION DISPONIBLE EN EL MOMENTO DE LA IMPRESION

ÍNDICE

Designação	Página
INFORMAÇÃO GERAL	A27
ALTERNATIVAS DE REPARO	A38
ADITIVOS SUPLEMENTARES DO LÍQUIDO ARREFECEDOR	A43
NOMENCLATURA DE PEÇAS INGLÊS-PORTUGUÊS	A45
PEÇAS DE MANUTENÇÃO	A65
ÍNDICE	A96
MÁQUINA - ARRANJO	1
CHASSI	1
ARRANJO BÁSICO	1
MOTOR - ARRANJO	2
MOTOR PRIMÁRIO	2
GRUPO DE INSTALAÇÃO - MOTOR	3
MOTOR BÁSICO	4
EIXO-COMANDO DE VÁLVULA	4
TAMPA - CAIXA DIANTEIRA	6
TAMPA - MECANISMO DAS VÁLVULAS	7
VIRABREQUIM	13
BLOCO DO MOTOR	17
CABEÇOTE DO MOTOR	21
COMANDO DO VENTILADOR	25
COMANDO DA BOMBA	26
VOLANTE DO MOTOR	27
CAIXA DO VOLANTE DO MOTOR	28
CAIXA DIANTEIRA	29
LEVANTAMENTO DO MOTOR	33
MONTAGEM - MOTOR	34
MONTAGEM FLEXÍVEL DO MOTOR	36
CÁRTER DO ÓLEO DO MOTOR	37
PISTÃO E BIELA	41
BUJÃO DO MOTOR	44
POLIA DO VIRABREQUIM	47
BALANCIM	48
MANUTENÇÃO-MOTOR	49
MECANISMO DAS VÁLVULAS	52
SISTEMA DE LUBRIFICAÇÃO	54
FILTRO - ÓLEO DO MOTOR	54
BOMBA DE ÓLEO - MOTOR	55
SISTEMA DE ARREFECIMENTO	56
CONEXÃO - TUBO D'ÁGUA	56
ARREFECEDOR DE ÓLEO DO MOTOR E BASE DO FILTRO	58
VENTILADOR DE SUCÇÃO	62
BOMBA DE ÁGUA	66
RADIADOR E ARREFECEDOR DO ÓLEO HIDRÁULICO	68
RECUPERAÇÃO DE LÍQUIDO ARREFECEDOR	71
SISTEMA DA ADMISSÃO DE AR E DE ESCAPE	72
PURIFICADOR DE AR	72
CONEXÃO - ADMISSÃO DE AR	74
COTOVELO DE ESCAPE	75
EXTENSÃO DO PURIFICADOR DE AR	76
COLETOR DE ESCAPE	77
SILENCIADOR	78
SISTEMA DE COMBUSTÍVEL	79
TAMPA - BOCAL DE ENCHIMENTO DE COMBUSTÍVEL	79
GOVERNADOR	80
TUBOS - COMBUSTÍVEL	81
BOMBA DE INJEÇÃO DO COMBUSTÍVEL	82
BOMBA DE ESCORVA DO COMBUSTÍVEL E DO FILTRO PRIMÁRIO	90
TANQUE DE COMBUSTÍVEL E MONTAGEM	95
TANQUE DE COMBUSTÍVEL	96
SISTEMA ELÉTRICO E DE PARTIDA	98
ALARME	98
ALTERNADOR DE CORRENTE	99
BATERIA E CABOS / FIOS ELÉTRICOS	100
CONVERSOR ELÉTRICO	103
SISTEMA ELÉTRICO	104
VELA DE AQUECIMENTO; VELA INCANDESCENTE	105
LÂMPADA - TETO	106
LÂMPADA - FAROL	107
LUZ GIRATÓRIA DE ALARME	110
SISTEMA DE ILUMINAÇÃO - FARÓIS	111
SISTEMA DE ILUMINAÇÃO - ADVERTÊNCIA	114
MÓDULO - CRONÔMETRO	116
SOLENÓIDE - ACELERADOR	117
MOTOR ELÉTRICO DE PARTIDA	118
CHAVE GERAL	119
INTERRUPTOR - MAGNÉTICO	120
ALARME DE MARCHA À RÉ	122
CABOS/FIOS ELÉTRICOS - AR CONDICIONADO	124

* TRADUÇÃO NÃO DISPONÍVEL NO MOMENTO DA IMPRESSÃO

ÍNDICE

Designação	Página
CABOS/FIOS ELÉTRICOS - CABINE	125
CABOS/FIOS ELÉTRICOS DO CONSOLE	126
CABOS/FIOS ELÉTRICOS - MOTOR	130
CABOS/FIOS ELÉTRICOS - BOMBA	134
TREM DE FORÇA	136
EIXO PROPULSÃO E MONTAGEM	136
EIXO	137
COMANDO DO TAMBOR	141
TAMBOR LISO	143
TAMBOR - COMPACTADOR	144
TAMBOR VIBRATÓRIO - COMANDO	145
TAMBOR COM PISO	148
TAMBOR LISO	150
TAMBOR - INSTALAÇÃO	152
TUBOS - PROPULSÃO	153
MOTOR DE PROPULSÃO E MONTAGEM	156
MONTAGEM - RODA	158
GR. PLANETÁRIO - COMANDO FINAL	161
TREM DE FORÇA	164
BOMBA DE PROPULSÃO E MONTAGEM	165
CARCAÇA	167
RODA E PNEU	168
CHASSI E CARROCERIA	172
*BUMPER AR	172
PÁRA-CHOQUE	172
PÁRA-CHOQUE DO TAMBOR	175
COBERTURA DO MOTOR	177
CHASSI DIANTEIRO	183
CHASSI TRASEIRO	184
PROTETOR - TUBOS	186
CORRIMAO, BALAUSTRE	187
ENGATE - ARTICULAÇÃO E OSCILAÇÃO	188
CAPÔ	189
BARRA LIMPADORA DO TAMBOR	193
RASPADOR - ROLO COM PISO	195
RASPADOR - ROLO LISO	196
SISTEMA DE FREIO	200
FREIO	200
TUBOS - FREIO E MUDANÇA	201
BOMBA DO FREIO E MONTAGEM	205
SISTEMA DE DIREÇÃO	207
CONTROLE DE DIREÇÃO	207
CILINDRO DE DIREÇÃO E MONTAGEM	209
BOTÃO - DIREÇÃO	210
TUBOS - DIREÇÃO	211
TUBOS DO CILINDRO DE DIREÇÃO	213
SISTEMA HIDRÁULICO	214
CILINDRO HIDRÁULICO	214
FILTRO HIDRÁULICO E MONTAGEM	215
COMANDO HIDRÁULICO	217
COMANDO HIDRÁULICO AUXILIAR	217
TUBOS - ÓLEO HIDRÁULICO	218
TUBOS - FILTRO HIDRÁULICO	219
TUBOS - TESTE DE PRESSÃO	220
COLETOR HIDRÁULICO	222
MOTOR - PISTÃO	223
BOMBA DE PISTÃO	233
TANQUE DE ÓLEO HIDRÁULICO E MONTAGEM	245
TANQUE HIDRÁULICO	247
VÁLVULA DE CONTROLE E MONTAGEM	249
VÁLVULA DE CONTROLE	251
SISTEMA VIBRATÓRIO	252
COMANDO VIBRATÓRIO E SUPORTE	252
CAIXA - PESO EXCÊNTRICO	254
VIBRADOR HIDRÁULICO	258
TUBOS - SISTEMA VIBRATÓRIO	259
MOTOR VIBRATÓRIO E MONTAGEM	260
BOMBA E MONTAGEM VIBRATÓRIA	262
EIXO - PESO ECÊNTRICO	271
SUPORTE DO SISTEMA VIBRATÓRIO	273
SISTEMA DE ÁGUA	275
BARRA DE BORRIFO	275
FILTRO - ÁGUA	277
TUBOS - BORRIFO DE ÁGUA	278
BOMBA DE PULVERIZAÇÃO DE ÁGUA	279
BORRIFO D'ÁGUA	280
TANQUE DE ÁGUA	281
POSTO DO OPERADOR	283
ACUMULADOR - AR CONDICIONADO	283
CONDICIONADOR DE AR	285
CABINE	289
CABINE - ESTRUTURA DE PROTEÇÃO CONTRA CAPOTAMENTO	290
TOLDO	296
COMPRESSOR DE REFRIGERANTE	297
CONDENSADOR DO REFRIGERANTE E MONTAGEM	300
CONTROLE - SENTIDO E VELOCIDADE	301
CONTROLE-CABO	305
CONTROLE DE PROPULSÃO	306

* TRADUÇÃO NÃO DISPONÍVEL NO MOMENTO DA IMPRESSÃO

ÍNDICE

Designação	Página
CILINDRO DE INCLINAÇÃO E MONTAGEM	310
PORTA DA CABINE	312
DUCTO DE AR	318
FILTRO - AR DA CABINE	320
TAPETE	321
INDICATOR VIBRATÓRIO	322
PROTETOR CONTRA VANDALISMO	324
AQUECEDOR DA CABINE E MONTAGEM	325
AQUECEDOR DA CABINE	326
REVESTIMENTO DA CABINE	328
TUBOS - AR CONDICIONADO	329
TUBOS - AQUECEDOR DA CABINE	331
ARTICULAÇÃO	333
ESPELHO RETROVISOR	334
MÓDULO - INDICADOR DE ALARME	337
MOTOR - LIMPADOR DO VIDRO	338
MONTAGEM - CABINE	340
CABINE	343
PAINEL DE INSTRUMENTOS	345
PLATAFORMA DO OPERADOR	366
ESTRUTURA ROPS	369
ROPS FECHADA	370
TELA PÁRA-SOL	373
ASSENTO E MONTAGEM	375
ASSENTO COM SUSPENSÃO	376
TANQUE - LAVADOR DE JANELA	382
PÁRA-SOL DA CABINE	383
VIDRO	384
VIDRO DA PORTA	386
VIDRO TRASEIRO	388
LIMPADOR E LAVADOR - JANELA	389
LIMPADOR DO VIDRO	391
EQUIPAMENTOS DE SERVIÇO E SUPRIMENTOS	392
DECALQUE	392
PLACA E DECALQUE	393
ÍNDICE DE NÚMERO DE PEÇA	B1

* TRADUÇÃO NÃO DISPONÍVEL NO MOMENTO DA IMPRESSÃO

INHALTSVERZEICHNIS

Bezeichnung	Seite
ALLGEMEINE HINWEISE	A31
REPARATURALTERNATIVEN	A39
KÜHLMITTELZUSATZ	A44
WARTUNGSTEILE	A69
STICHWORTVERZEICHNIS	A103
MASCHINE	1
FAHRWERK	1
GRUNDAUSFÜHRUNG	1
MOTOR	2
MOTORAUSFÜHRUNG	2
MOTOR-EINBAUSATZ	3
MOTOR (GRUNDAUSFÜHRUNG)	4
NOCKENWELLE	4
STIRNRADGEHÄUSEDECKEL	6
VENTILDECKEL	7
KURBELWELLE	13
MOTORBLOCK	17
ZYLINDERKOPF	21
LÜFTERANTRIEB	25
PUMPENANTRIEB	26
SCHWUNGRAD	27
SCHWUNGRADGEHÄUSE	28
STIRNRADGEHÄUSE	29
MOTORHUBÖSE	33
MOTORAUFLAGER	34
MOTORAUFHÄNGUNG, ELASTISCH	36
ÖLWANNE	37
PLEUELSTANGE UND KOLBEN	41
MOTORSTOPFEN	44
KURBELWELLEN-RIEMENSCHEIBE	47
VENTILKIPPHEBEL	48
SERVICE - MOTOR	49
VENTILSTEUERUNG	52
SCHMIERSYSTEM	54
ÖLFILTER	54
SCHMIERPUMPE	55
KÜHLSYSTEM	56
KÜHLWASSERANSCHLUSS	56
MOTORÖLKÜHLER UND FILTER-SOCKEL	58
SAUGLÜFTER	62
KÜHLWASSERPUMPE	66
KÜHLER UND HYDRAULIKÖLKÜHLER	68
KÜHLMITTELÜBERLAUFBEHÄLTER	71
LUFTANSAUG- UND ABGASSYSTEM	72
LUFTREINIGER	72
EINLASSANSCHLUSS	74
AUSPUFFBOGEN	75
LUFTREINIGERVERLÄNGERUNG	76
AUSPUFFKRÜMMER	77
SCHALLDÄMPFER	78
KRAFTSTOFFSYSTEM	79
KRAFTSTOFFFILTERKAPPE	79
REGLER	80
KRAFTSTOFFLEITUNGEN	81
KRAFTSTOFFEINSPRITZPUMPE	82
KRAFTSTOFFENTLÜFTUNGSPUMPE UND -HAUPTFILTER	90
KRAFTSTOFFTANK U. BEFESTIGUNG	95
KRAFTSTOFFTANK	96
ELEKTRISCHE ANLAGE UND STARTSYSTEM	98
WARNVORRICHTUNG	98
DREHSTROMGENERATOR	99
BATTERIE UND VERDRAHTUNG	100
ELEKTR. UMFORMER	103
ELEKTR. ANLAGE	104
GLÜHKERZE	105
FAHRERHAUSBELEUCHTUNG	106
ARBEITSLEUCHTEN	107
RUNDUM-KENNLEUCHTE	110
ARBEITSLEUCHTEN	111
WARNLEUCHTEN	114
TIMERMODUL	116
DREHZAHLSTEUERUNGSSOLENOID	117
STARTERMOTOR	118
TRENNSCHALTER	119
MAGNETSCHALTER	120
RÜCKFAHRWARNHORN	122
KLIMAANLAGENVERDRAHTUNG	124
FAHRERHAUSVERDRAHTUNG	125
KONSOLENVERDRAHTUNG	126
MOTORVERDRAHTUNG	130
PUMPENVERDRAHTUNG	134
KRAFTÜBERTRAGUNG	136
ANTRIEBSACHSE U. AUFHÄNGUNG	136
ACHSE	137
BANDAGENANTRIEB	141
GLATTBANDAGE	143
VERDICHTUNGSBANDAGE	144

* ÜBERSETZUNG ZUM ZEITPUNKT DER DRUCKLEGUNG NICHT VORHANDEN

INHALTSVERZEICHNIS

Bezeichnung	Seite
VIBRATIONSBANDAGE UND ANTRIEB	145
STAMPFFUSSBANDAGE	148
GLATTBANDAGE	150
WALZENEINBAU	152
FAHRANTRIEBSLEITUNGEN	153
ANTRIEBSMOTOR UND BEFESTIGUNGSTEILE	156
RADAUFHAENGUNG	158
SEITENANTRIEB - PLANETENGETRIEBE	161
KRAFTÜBERTRAGUNG	164
FAHRANTRIEBSPUMPE U. BEFESTIGUNGSTEILE	165
KÖRPER	167
RAD UND REIFEN	168
RAHMEN UND FAHRGESTELL	172
*BUMPER AR	172
RAMMSCHUTZ	172
STOSSSTANGE	173
BANDAGENSTOSSSTANGE	175
MOTORVERKLEIDUNG	177
VORDERRAHMEN	183
RAHMEN, HINTEN	184
LEITUNGSVERKLEIDUNG	186
GELAENDER	187
KNICKGELENK- U. SCHWINGANHÄNGUNG	188
HAUBE	189
BANDAGENABSTREIFER	193
ABSTREIFER F. STAMPFFUSSBANDAGE	195
GLATTBANDAGEN-ABSTREIFER	196
BREMSSYSTEM	200
BREMSE	200
BREMS- U. SCHALTUNGSLEITUNGEN	201
BREMSPUMPE UND BEFESTIGUNGSTEILE	205
LENKSYSTEM	207
LENKBETÄTIGUNG	207
LENKZYLINDER UND AUFHÄNGUNG	209
LENKKNOPF	210
LENKÖLLEITUNGEN	211
LENKZYLINDERLEITUNGEN	213
HYDRAULIKSYSTEM	214
HYDRAULIKZYLINDER	214
HYDRAULIKFILTER UND BEFESTIGUNGSTEILE	215
HYDRAULIKSYSTEM	217
ZUSATZHYDRAULIK	217
HYDRAULIKLEITUNGEN	218
HYDRAULIKFILTERLEITUNGEN	219
DRUCKTESTLEITUNGEN	220
HYDRAULIKVERTEILER	222
KOLBENMOTOR	223
KOLBENPUMPE	233
HYDRAULIKTANK UND BEFESTIGUNGSTEILE	245
HYDRAULIKTANK	247
STEUERVENTIL UND BEFESTIGUNGSTEILE	249
STEUERVENTIL	251
VIBRATIONSSYSTEM	252
NEBENANTRIEB U. VIBRATIONSBANDAGE	252
EXZENTERGEWICHTSGEHÄUSE	254
VIBRATIONSHYDRAULIK	258
VIBRATIONSLEITUNGEN	259
VIBRATIONSMOTOR U. BEFESTIGUNG	260
VIBRATIONSPUMPE U. BEFESTIGUNGSTEILE	262
EXZENTERGEWICHTSWELLE	271
VIBRATIONSUNTERSTÜTZUNG	273
WASSERSYSTEM	275
SPRÜHBALKEN	275
WASSERFILTER	277
WASSERSPRÜHLEITUNGEN	278
WASSERSPRÜHPUMPE	279
WASSERSPRÜHSYSTEM	280
WASSERTANK	281
FAHRERHAUS	283
KLIMAANLAGENDRUCKSPEICHER	283
KLIMAANLAGE	285
FAHRERHAUS	289
FAHRERHAUS MIT ÜBERROLLSCHUTZ	290
WETTERDACH	296
KÄLTEMITTELKOMPRESSOR	297
KÄLTEMITTELKONDENSATOR U. BEFESTIGUNGSTEILE	300
STEUERUNG - RICHTUNG U. DREHZAHL	301
STEUERHEBEL	305
FAHRANTRIEBSSTEUERUNG	306
KIPPZYLINDER U. BEFESTIGUNG	310
FAHRERHAUSTÜR	312
LUFTKANAL	318

* ÜBERSETZUNG ZUM ZEITPUNKT DER DRUCKLEGUNG NICHT VORHANDEN

INHALTSVERZEICHNIS

Bezeichnung	Seite
FAHRERHAUSLUFTFILTER	320
FUSSMATTE	321
VIBRATIONSANZEIGE	322
SCHUTZVERKLEIDUNG	324
FAHRERHAUSHEIZUNG U. BEFESTIGUNGSTEILE	325
FAHRERHAUSHEIZUNG	326
FAHRERHAUSAUSKLEIDUNG	328
KLIMAANLAGENLEITUNGEN	329
FAHRERHAUSHEIZUNGSLEITUNGEN	331
GESTÄNGE	333
RÜCKSPIEGEL	334
WARNANZEIGEMODUL	337
SCHEIBENWISCHERMOTOR	338
FAHRERHAUSANBAUSATZ	340
FAHRERHAUSAUSRÜSTUNG	343
INSTRUMENTENTAFEL	345
FAHRERPLATTFORM	366
ÜBERROLLSCHUTZ	369
ÜBERROLL-SCHUTZKABINE	370
SONNENBLENDE	373
FAHRERSITZ UND UNTERBAU	375
SCHWINGSITZ	376
SCHEIBENWASCHMITTELBEHÄLTER	382
FAHRERHAUS, SONNENBLENDE	383
FAHRERHAUSFENSTER	384
TÜRFENSTER	386
HECKFENSTER	388
SCHEIBENWISCHER UND -WASCHANLAGE	389
SCHEIBENWISCHER	391
WARTUNGSAUSRÜSTUNG UND -ZUBEHÖR	392
AUFKLEBER	392
SCHILD UND AUFKLEBER	393
ERSATZTEILNUMMERNINDEX	B1

* ÜBERSETZUNG ZUM ZEITPUNKT DER DRUCKLEGUNG NICHT VORHANDEN

GENERAL INFORMATION

1. MACHINE IDENTIFICATION

Caterpillar machines are identified by Product Identification Numbers (PIN). Some components included in a machine may be identified by Serial Numbers (S/N). Typical components that will be serialized include engines, transmissions, bulldozers, and rippers. The machine and engine are further identified by arrangement numbers and in some cases modification numbers. These numbers are shown on the product identification plate(s) and on the master plate in the operator's compartment.

Caterpillar dealers need all of these numbers to determine accurate parts identification.

SIS *New Feature*

Effective First Quarter 2001 the Caterpillar Product Identification Number (PIN) changed from 8 to 17 characters. In an effort to provide uniform equipment identification, Caterpillar and other construction equipment manufacturers are moving to comply with the latest version of the product identification numbering standard. Non-road machine PINs are defined by ISO 10261. The new PIN format will apply to all Caterpillar machines and generator sets. The PIN plates and frame marking will display the 17 character PIN. The new format will look like the following:

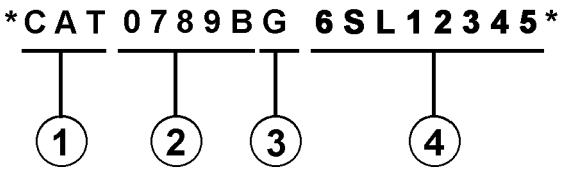

Where:

1. Caterpillar's World Manufacturing Code (characters 1-3)

2. Machine Descriptor (characters 4-8)

3. Check Character (character 9)

4. Machine Indicator Section (MIS) or Product Sequence Number (characters 10-17). These were previously referred to as the Serial Number.

Machines and generator sets produced before First Quarter 2001 will maintain their 8 character PIN format.

Components such as engines, transmissions, axles, etc. and work tools will continue to use an 8 character Serial Number (S/N).

2. ORDERING PARTS

⚠ WARNING

When replacement parts are required for this product Caterpillar recommends using Caterpillar replacement parts or parts with equivalent specifications including, but not limited to, physical dimensions, type, strength and material.

Failure to heed this warning can lead to premature failures, product damage, personal injury or death.

Quality Caterpillar replacement parts are available from Caterpillar dealers throughout the world. Their parts inventories are up to date and include all parts normally required to protect your investment in Caterpillar machines. Dealers may offer repair kits or remanufactured parts to allow selection of the most effective repair alternative for a particular situation. When ordering parts, your order should specify the quantity, part number, part name, and the serial number/product identification number of the machine for which the parts are needed.

3. PARTS MANUAL ORGANIZATION

Product information in this manual is presented as "information elements" that represent all of the components for the specific model. Engine Arrangement and Seat Group are examples of information elements. The information elements are organized alphabetically by part name and secondarily by part number within each major section of the manual.

4. TABLE OF CONTENTS

A table of contents (TOC) is found at the beginning of the manual. The TOC lists each section of the manual with a complete list of all information elements organized as they appear in the manual. Page numbers are provided for quick reference to detailed parts identification illustrations and serviceable consist lists.

5. MAINTENANCE PARTS INDEX

The Maintenance Parts Index, located near the beginning of the manual, references most frequently used maintenance part numbers, providing description, quantity, usage and page number. This information is organized alphabetically by part description.

6. INDEX

The index located near the front of the manual is an alphabetical listing of all information elements included in the manual. Page numbers are provided for quick reference to detailed parts identification illustrations and serviceable consist lists.

7. PART NUMBER INDEX

A numerical index listing all part numbers and the corresponding page number(s) appears at the back of the manual.

8. CAPTIONS

Captions located at the beginning of each information element identify the part number and part name along with additional descriptive information. PIN and S/N information found in each caption should be used to select correct information for a specific machine. Field replacement options, identification of optional attachment components, and where used ("part of") information is also provided.

The first line of a caption is shown in larger type font to indicate the beginning of an information element. Captions for additional pages that may be required to illustrate an information element will be shown in standard type font and will include the term *(contd.)* .

9. NON-SERVICED PARTS

In some instances it is necessary to display non-serviced parts that are a link to a lower level serviceable consist lists. These non-serviced part numbers are shown in *italic* type indicating that they are not available.

10. PARTS LIST REFERENCE NUMBERS

Numbers shown in the Ref No column correspond to numbers used in the associated graphic(s). An alphabetic suffix may be added to a reference number to identify lower level consist items. Numbers shown in the Graphic Ref column refer to the graphic number identifier displayed in the lower left corner of each illustration. The Graphic Ref number may be used in combination with the item Ref No to determine the correct part number. There may be intentional omission of a Ref No in a consist list as information is updated to reflect the latest serviceable part numbers.

11. INDENTED PART NAMES

When a part name is indented in a parts list, it is part of (included in) the group or assembly under which it is indented.

12. ILLUSTRATION REFERENCE LETTERS

When necessary, illustrations contain reference letters (A, B, C etc.) that are intended to track lines and harnesses from one point to another. They are also used to show where to reconnect illustrations that have been separated.

13. ABBREVIATIONS AND SYMBOLS

O.D. – Outside Diameter
I.D. – Inside Diameter
A – Not Part Of This Group
B – Use As Required
C – Change From Previous Type
D – Order By The Meter
E – Order By The Centimeter
F – Not Shown
G – Order By The Inch
I – Refer To Hydraulic Information System
M – Metric Part
R – Remfg Part May Be Available
Y – Separate Illustration
Z – Not Serviced Separately

SIS *New Feature*

14. DESCRIPTION OF TYPE CHANGES

Type - A type is defined as any configuration change that requires an additional Information Element for an Arrangement, Group, or Assembly. If serial number breaks for types are not available, a type # (Type 1, Type 2, etc.) will be displayed in the caption. These "type" changes are identified with a "C" note (change from previous type) in the Parts List. Only the "types" that apply to this Parts Manual will be included. Additional types may exist causing "C" notes to appear on an Information Element when no other types are shown.

15.<END>

This symbol indicates the end of an information element.

NOTE:

Continuing improvement and advancement of product design may cause changes to your machine which may not be included in this publication. Whenever a question arises regarding your caterpillar product or this publication, please consult your caterpillar dealer for the latest available information.

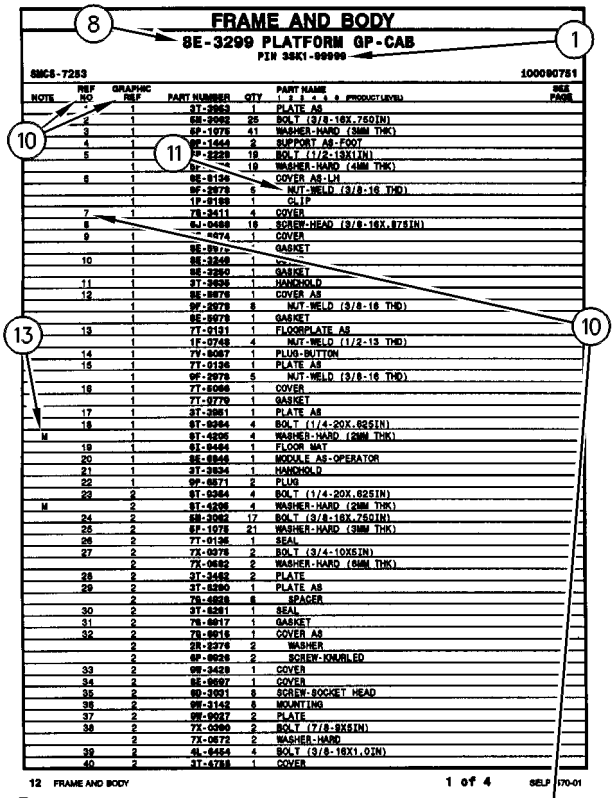
FRAME AND BODY
8E-3299 PLATFORM GP-CAB
PIN 3SK1-99999
SMCS-7283
100090751
1
8
10
11
13
10
12 FRAME AND BODY
1 of 4
SELP4570-01

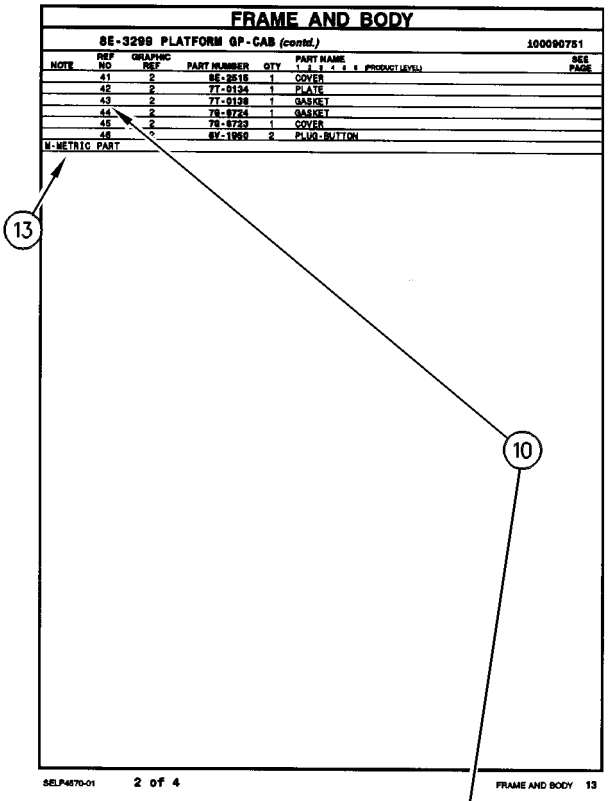
FRAME AND BODY
8E-3299 PLATFORM GP-CAB (contd.)
100090751
13
10
M-METRIC PART
SELP4570-01
2 of 4
FRAME AND BODY 13

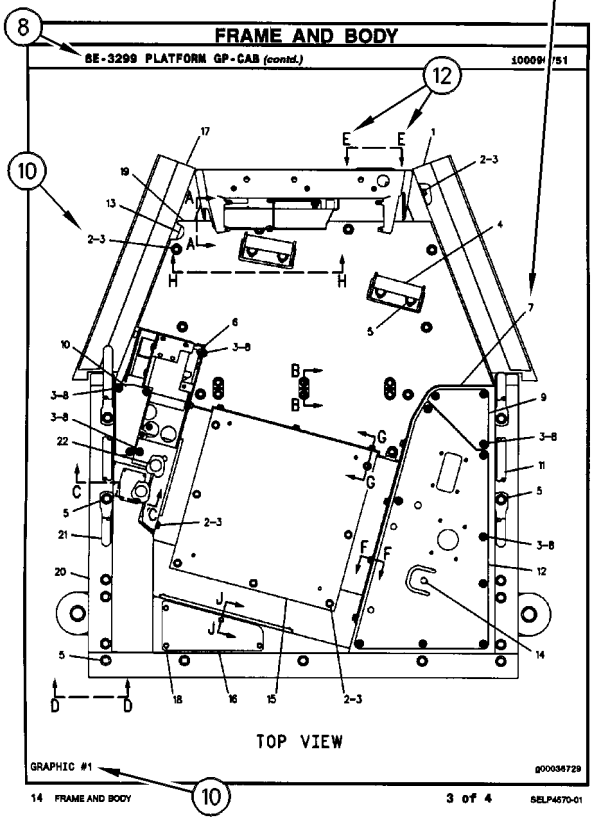
FRAME AND BODY
8E-3299 PLATFORM GP-CAB (contd.)
100090751
8
12
10
TOP VIEW
GRAPHIC #1
g00036729
14 FRAME AND BODY
10
3 of 4
SELP4570-01

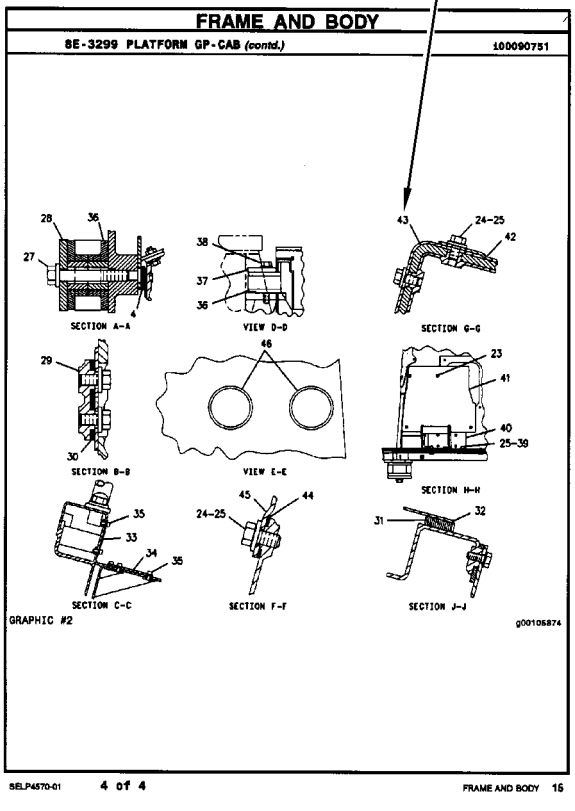
FRAME AND BODY
8E-3299 PLATFORM GP-CAB (contd.)
100090751
SECTION A-A
VIEW D-D
SECTION G-G
SECTION B-B
VIEW E-E
SECTION H-H
SECTION C-C
SECTION F-F
SECTION J-J
GRAPHIC #2
g00105874
SELP4570-01
4 of 4
FRAME AND BODY 15

1. IDENTIFICATION DE LA MACHINE

Toutes les machines Caterpillar portent un numéro d'identification (PIN). Certains composants des machines peuvent porter des numéros de série (S/N). En général, parmi les composants qui portent des numéros de série il y a les moteurs, les transmissions, les bulldozers et les rippers. En plus, la machine et le moteur peuvent recevoir des numéros de version, et dans certains cas, de modification. Ces numéros figurent sur les plaques de numéro de série et sur la plaque signalétique principale qui se trouve dans le poste de conduite.

Les concessionnaires Caterpillar doivent connaître tous ces numéros pour identifier correctement les pièces.

SIS *Nouvelle Caractéristique*

À partir du premier trimestre 2001, le numéro d'identification produit (PIN) Caterpillar passe de 8 à 17 caractères. Afin de permettre une identification uniforme des matériels, Caterpillar et d'autres constructeurs de machines de travaux publics s'efforcent de se conformer à la norme la plus récente portant sur les numéros d'identification des produits. Les numéros d'identification (PIN) de machines de chantier sont définis par la norme ISO 10261. Le nouveau format du numéro d'identification est valable pour toutes les machines et tous les groupes électrogènes Caterpillar. Le numéro d'identification produit (PIN) figurant sur la plaque et sur le châssis se composera de 17 caractères. Le nouveau format ressemblera à ceci:

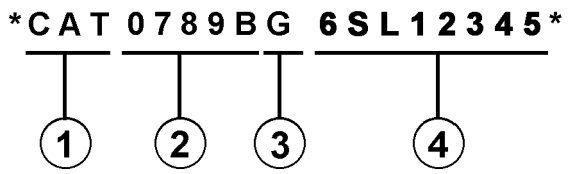

Il se décomposera de la façon suivante:

1. Code international de fabrication de Caterpillar (caractères 1 à 3)

2. Descriptif de la machine (caractères 4 à 8)

3. Contrôle (caractère 9)

4. Indicateur machine (MIS) ou numéro de séquence produit (caractères 10 à 17). Ceux-ci étaient auparavant désignés sous le terme de numéro de série.

Les machines et les groupes électrogènes construits avant le premier trimestre 2001 garderont le format à 8 caractères du numéro d'identification produit (PIN).

Les organes tels que les moteurs, les boîtes de vitesses, les essieux, etc., continueront d'être désignés par un numéro de série (S/N) à 8 caractères.

2. COMMANDE DE PIÈCES

⚠ DANGER

Lorsqu'il faut remplacer des pièces de rechange pour ce produit Caterpillar recommande d'utiliser les pièces de rechange Caterpillar ou les pièces qui ont des spécifications équivalentes dont les dimensions physiques, le type, la force et le matériau. Ces équivalences ne se limitent pas à l'énoncé précédent.

L'inobservation de cette mise en garde peut entraîner des défaillances prématurées, des dommages au produit, des blessures ou même la mort.

Les concessionnaires Caterpillar fournissent dans le monde entier des pièces de rechange de qualité Caterpillar. Leurs stocks de pièces sont constamment réapprovisionnés et comptent toutes les pièces nécessaires pour assurer la bonne marche de vos machines Caterpillar. Certains concessionnaires proposent également des kits de réparation ou des pièces rénovées, ce qui permet de choisir la solution la plus économique dans une situation donnée. Lors des commandes de pièces, mentionner la quantité, le numéro et la désignation des pièces ainsi que le numéro de série ou le numéro d'identification (PIN) de la machine pour laquelle ces pièces sont requises.

3. ORGANISATION DU CATALOGUE DE PIÈCES

Les renseignements sur les produits sont présentés sous forme de "Information element" (élément d'information) représentant tous les composants d'un modèle donné. "Engine Arrangement" (version de moteur) et "Seat Group" (assemblage de siège)" sont des exemples d'éléments d'information. Les éléments d'information sont classés par ordre alphabétique par la désignation standard des pièces et par numéros de pièces dans chaque partie importante du manuel.

4. TABLE DES MATIÈRES

SIS *Nouvelle Caractéristique*

La table des matières se trouve au début du manuel. La table des matières fournit la liste de tous les chapitres du manuel avec une liste complète de tous les éléments d'information classés par ordre d'apparition dans le manuel. Les numéros de page sont fournis afin que l'utilisateur puisse trouver rapidement les illustrations détaillées concernant l'identification des pièces et les listes des pièces d'entretien.

5. INDEX DES PIÈCES D'ENTRETIEN

La rubrique "Index des pièces d'entretien" qui se trouve au début du manuel renvoie aux pièces d'entretien les plus fréquemment utilisées en précisant la désignation, la quantité, là où la pièce est utilisée et le numéro de page. Ces pièces sont classés par ordre alphabétique.

6. INDEX

L'index qui se trouve vers le début du manuel est une liste alphabétique de tous les éléments d'information du manuel. Les numéros de page sont fournis afin que l'utilisateur puisse trouver rapidement les illustrations détaillées concernant l'identification des pièces et les listes des pièces d'entretien.

7. INDEX DES NUMÉROS DE PIÈCES

Une liste numérique de tous les numéros de pièces et des pages correspondantes se trouve à la fin du manuel.

8. LÉGENDES

Les légendes qui se trouvent en haut de chaque page de chaque élément d'information fournissent le numéro de pièce, la désignation ainsi que des renseignements supplémentaires sur les pièces. Les renseignements concernant les numéros de série (S/N) qui se trouvent dans chaque légende doivent être utilisés pour sélectionner les informations correctes pour un moteur donné. Les informations concernant les options de remplacement sur le chantier, l'identification des composants des équipements offerts en option et les lieux d'application sont aussi fournies.

SIS *Nouvelle Caractéristique*

Les lettres de la première ligne d'une légende sont présentées en police plus grande afin d'indiquer le début d'une unité d'information. Les légendes qui pourraient être requises pour des pages supplémentaires afin d'illustrer une unité d'information seront présentées en police standard et comprendront le terme (à suivre).

9. PIÈCES NON FOURNIES

SIS *Nouvelle Caractéristique*

Dans certains cas, il est nécessaire d'indiquer les pièces non fournies qui sont en aval de la liste des pièces d'entretien. Les numéros des pièces non fournies dans la liste des pièces et les légendes seront en italique pour signaler qu'ils ne sont pas disponibles.

10. NUMÉROS DE RÉFÉRENCE DE LA LISTE DES PIÈCES

SIS *Nouvelle Caractéristique*

Les numéros indiqués dans la colonne des numéros de références correspondent aux numéros utilisés dans les illustrations auxquelles ils sont associés. Un suffixe alphabétique peut être ajouté à un numéro de référence pour identifier la liste des articles en aval. Les numéros indiqués dans la colonne de référence de l'illustration renvoient à l'identification du numéro affiché dans le coin inférieur gauche de chaque illustration. Le numéro de référence de l'illustration pourrait être utilisé avec le numéro de référence de l'article pour déterminer le numéro de pièce correct. Il peut y avoir une omission intentionnelle d'un numéro de référence dans une liste de pièces suite à la mise à jour des informations en vue de refléter les numéros de pièces les plus récentes.

11. DÉSIGNATIONS DE PIÈCES EN RETRAIT

Lorsqu'une désignation de pièce est en retrait, cela veut dire que l'article en regard fait partie de l'ensemble sous lequel il figure.

12. LETTRES DE RÉFÉRENCE DES ILLUSTRATIONS

Quand cela est nécessaire, les illustrations comportent des lettres de référence (A, B, C, etc.) pour montrer le trajet des canalisations et faisceaux de câbles d'un point à l'autre. Elles sont utilisées également pour indiquer où relier les illustrations séparées auparavant.

13. ABRÉVIATIONS ET SYMBOLES

O.D. – Diamètre extérieur
I.D. – Diamètre intérieur
A – Ne fait pas partie de ce groupe
B – Utiliser selon besoin
C – Modification
D – Commander par mètre
E – Commander par centimètre
F – Non représenté
G – Commander par pouce
I – Voir "Hydraulic Information System"
M – Pièce métrique
R – Pièce rénovée éventuellement disponible
Y – Illustration séparée
Z – Non fourni séparément

NOTA:

En raison du progrès technique et des améliorations continuelles apportées au matériel, votre machine comporte peut-être des modifications qui n'apparaissent pas dans la présente publication. En cas de doute sur un détail de votre machine Caterpillar ou sur le texte de la présente publication, adressez-vous à votre concessionnaire Caterpillar.

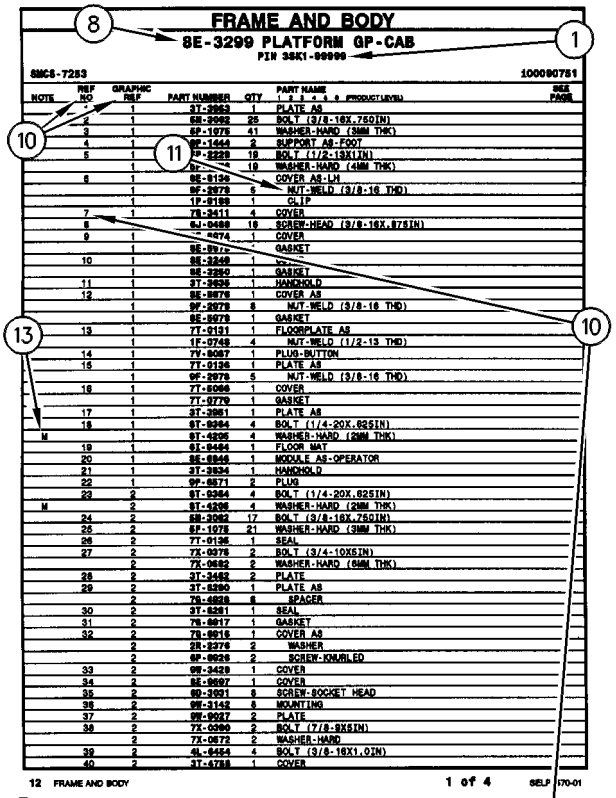
FRAME AND BODY
8E-3299 PLATFORM GP-CAB
PIN 3SK1-99999
SMCS-7283
100090751
1 of 4
SELP4570-01

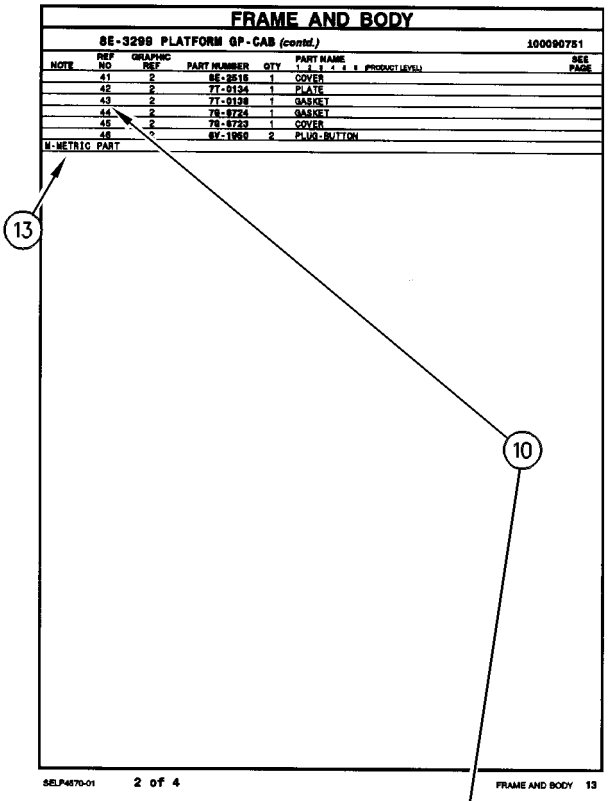
FRAME AND BODY
8E-3299 PLATFORM GP-CAB (contd.)
100090751
2 of 4
SELP4570-01

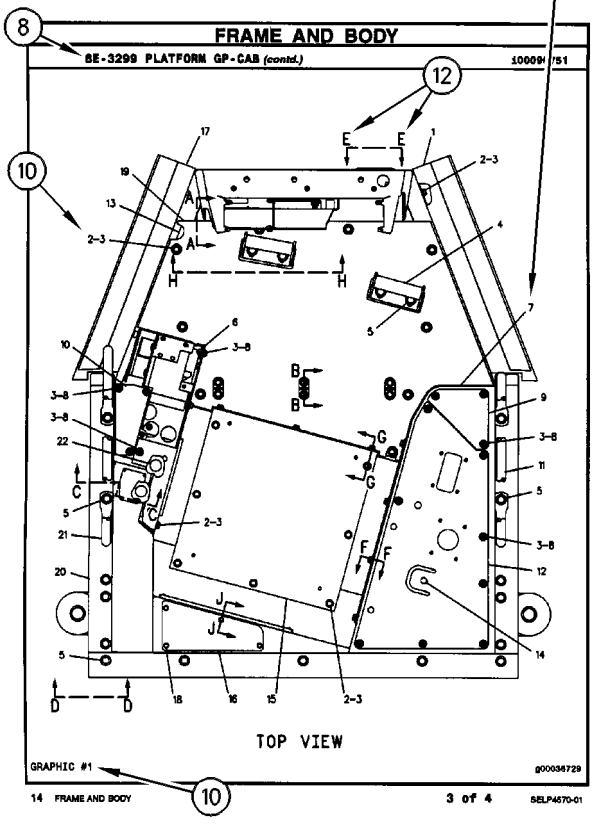
FRAME AND BODY
8E-3299 PLATFORM GP-CAB (contd.)
TOP VIEW
GRAPHIC #1
g00036729
3 of 4
SELP4570-01

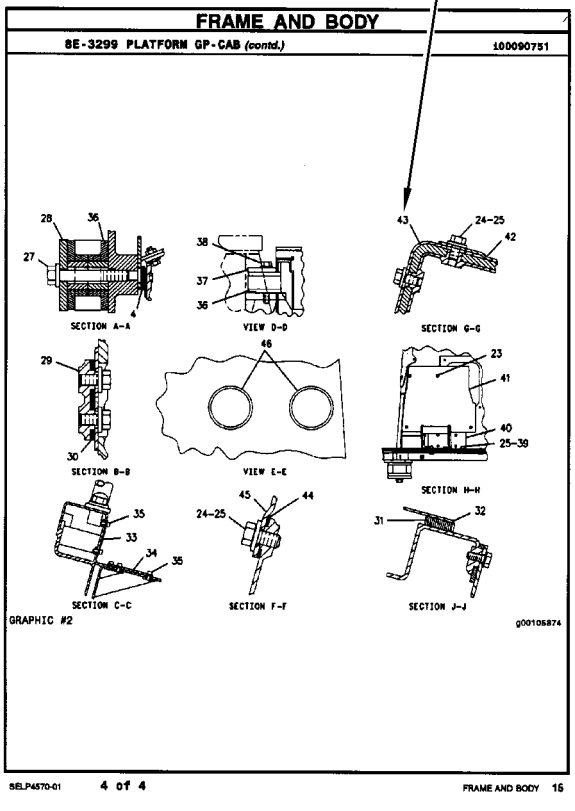
FRAME AND BODY
8E-3299 PLATFORM GP-CAB (contd.)
100090751
SECTION A-A
VIEW D-D
SECTION G-G
SECTION B-B
VIEW E-E
SECTION H-H
SECTION C-C
SECTION F-F
SECTION J-J
GRAPHIC #2
g00105874
4 of 4
SELP4570-01

INFORMACIÓN GENERAL

1. MÁQUINAS

Las máquinas Caterpillar se identifican con Números de Identificación del Producto (PIN). Algunos componentes incluídos en la máquina pueden estar identificados con Números de Serie (N/S). Los componentes que tienen típicamente esta identificación incluyen motores, transmisiones, hojas topadoras y desgarradores. La máquina y el motor se identifican además con Números de Configuración y en algunos casos, Números de Modificación. Estos números están en las placas de identificación del producto o en la placa principal en la cabina del operador.

Los distribuidores Caterpillar necesitan estos números para identificar con exactitud los números de piezas de repuesto.

SIS *Nueva Característica*

A partir del primer trimestre del 2001, el Número de Identificación de Producto (PIN) de Caterpillar cambió de 8 a 17 caracteres. Para hacer más uniforme el método de identificación de equipos, Caterpillar y otros fabricantes de equipo de construcción han tomado medidas para cumplir con la versión más reciente de la norma de numeración de identificación de productos. Los Números de Identificación de Producto para máquinas que no se operan en carreteras son definidos por la norma ISO 10261. El nuevo formato PIN corresponderá a todas las máquinas y grupos electrógenos Caterpillar. Las placas y los caracteres PIN estampados en el bastidor mostrarán el PIN de 17 caracteres. El nuevo formato tendrá la apariencia siguiente:

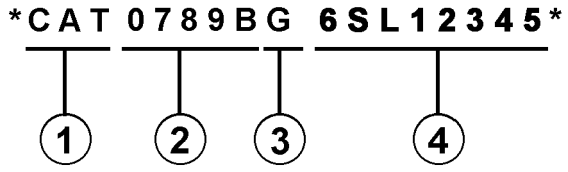

Significado de los caracteres:

1. Código de Fabricación Mundial de Caterpillar (caracteres 1-3)

2. Sección Descriptor de la Máquina (caracteres 4-8)

3. Carácter de Verificación (carácter 9)

4. Sección Indicador de la Máquina (MIS) o Número de Secuencia de Producto (caracteres 10-17). Anteriormente, estos caracteres constituían el Número de Serie.

Las máquinas y grupos electrógenos producidos antes del primer semestre del 2001 mantendrán su formato PIN de 8 caracteres.

Los componentes como motores, transmisiones, ejes, herramientas de trabajo, etc., continuarán usando un Número de Serie (S/N) de 8 caracteres.

2. COMO PEDIR REPUESTOS

⚠ ADVERTENCIA

Cuando se necesiten piezas de repuesto para este producto, Caterpillar recomienda usar piezas de repuesto Caterpillar o piezas que tengan especificaciones equivalentes incluyendo, pero sin estar limitadas a, dimensiones físicas, tipo, fortaleza y material.

El no hacer caso de esta advertencia puede llevar a fallas prematuras, daños al producto y lesiones graves o mortales.

Las piezas de repuesto Caterpillar de calidad están a la disposición de los distribuidores Caterpillar en todo el mundo. Sus existencias actualizadas incluyen todas las piezas normalmente requeridas para proteger su inversión en máquinas Caterpillar. Los distribuidores pueden tener juegos de reparación o piezas remanufacturadas para permitir la selección de la mejor alternativa de reparación en un caso en particular. Al pedir piezas de repuesto, especifique en su pedido la cantidad, el número de pieza, el nombre de la pieza y el número de serie/número de identificación del producto, de la máquina para la cual se necesitan estas piezas.

3. ORGANIZACION DEL MANUAL DE PIEZAS

La información sobre el producto, se presenta en este manual, como "elementos de información" que representan todos los componentes de un modelo específico. Las configuraciones de motores y los grupos de asientos son ejemplos de elementos de información. Los elementos de información están organizados primeramente por nombres de piezas en orden alfabético y en segundo lugar, por el número de pieza dentro de cada sección principal del manual.

4. CONTENIDO

La página de Contenido se encuentra al principio del manual. El Contenido indica cada sección del manual con una lista completa de todos los elementos de información organizados en el orden que aparecen en el manual. Los números de página proporcionan una referencia rápida a las ilustraciones detalladas de identificación de piezas y a las listas de componentes de repuesto de dichas piezas.

5. ÍNDICE DE PIEZAS DE MANTENIMIENTO

Al principio de este catálogo se encuentra un índice de los números de piezas utilizadas más frecuentemente para el mantenimiento, que incluye descripción, cantidad necesaria, lugar de utilización y número de página. Esta información está organizada alfabéticamente, por descripción de la pieza.

6. ÍNDICE

El Índice, ubicado cerca del principio del manual, es una lista en orden alfabético de todos los elementos de información incluídos en el manual. Los números de página proporcionan una referencia rápida a las ilustraciones detalladas de identificación de piezas y a las listas de componentes de repuesto de dichas piezas.

7. INDICE NUMÉRICO DE PIEZAS

Un índice numérico de piezas con el correspondiente número de página aparece al final de este catálogo.

8. TÍTULOS

Los títulos ubicados al principio de cada elemento de información identifican el número y el nombre de la pieza junto con información descriptiva. Se debe usar información sobre los Números de Identificación de Pieza (PIN) y los números de serie (S/N) para seleccionar la información que corresponda a una máquina en particular. También se suministra información sobre las opciones de reparación en el campo, la identificación de componentes de accesorios optativos y el lugar de ubicación de la pieza ("es parte de").

La primera línea del título se muestra con un tipo de letra más grande para indicar el comienzo de un elemento de información. Si se requieren páginas adicionales para ilustrar un elemento de información, los títulos se muestran con un tipo de letra normal y la continuación se indica entre paréntesis.

9. PIEZAS QUE NO SE SUMINISTRAN COMO REPUESTO

En algunos casos es necesario indicar piezas que no se suministran como repuesto pero que pueden estar conectadas a listas de componentes de otras piezas de repuesto. En tal caso, dichas piezas se muestran en cursiva para indicar que no son piezas disponibles.

10. NÚMEROS DE REFERENCIA

Los números en la columna de No. de Referencia corresponden a los números indicados en la ilustración que pertenece a ese número de pieza. Los números que tienen un sufijo alfabético identifican artículos de las listas de componentes de piezas. Los números en la columna de Referencia de la ilustración se identifican en la esquina inferior izquierda de cada ilustración. Para determinar el número de pieza correcto se puede utilizar tanto el No. de Referencia de la ilustración como el No. de Referencia del artículo. A medida que se actualiza la información para indicar los más recientes números de piezas de repuesto, puede omitirse intencionalmente un No. de Referencia en una lista de componentes de piezas.

11. NOMBRES DE PIEZA SANGRADOS

Cuando el nombre de una pieza está sangrado en una lista, significa que esta pieza forma parte del grupo o conjunto del renglón inmediatamente superior.

12. LETRAS DE REFERENCIA DE ILUSTRACIONES

Las ilustraciones contienen algunas veces letras de referencia (A, B, C etc.) cuyo propósito es seguir el trayecto de líneas y mazos de cables de un punto a otro. También se utilizan para mostrar dónde volver a unir ilustraciones que se habían separado.

13. ABREVIATURAS Y SIMBOLOS

O.D. – Diámetro exterior
I.D. – Diámetro interior
A – No es pieza de este grupo
B – Utilizado según la demanda
C – Indica cambio
D – Se pide por metro
E – Se pide por centímetro
F – No se muestra
G – Se pide por pulgada
I – Consulte el sistema de información hidráulica
M – Pieza métrica
R – Puede estar disponible como pieza remanufacturada
Y – Ilustración separada
Z – No se suministra por separado

SIS *Nueva Característica*

14. DESCRIPCIÓN DE LOS CAMBIOS DE TIPO

Tipo – Un tipo se define como cualquier cambio de configuración que requiere un Elemento de información adicional de una Configuración, Grupo o Conjunto. Si el número de serie se clasifica por tipos que no están disponibles, se mostrará un número de tipo (Tipo 1,Tipo 2,etc.) en el comentario de la fotografía. Estos cambios de "tipo" se identifican con una nota "C" (cambio con respecto al tipo anterior) en la Lista de Piezas. Se incluirían sólo los "tipos" que aplican a este Manual de Piezas. Es posible que haya tipos adicionales que causen la aparición de notas "C" en el Elemento de Información cuando no se muestran otros tipos."

15.<END>

Este símbolo indica el final de un elemento de información.

NOTA:

Las contínuas mejoras y adelantos en diseño podrían originar cambios a su máquina que no se incluyen en esta publicación. Cuando tenga alguna pregunta acerca de su producto Caterpillar o de esta publicación, consulte al distribuidor Caterpillar para obtener la información más reciente.

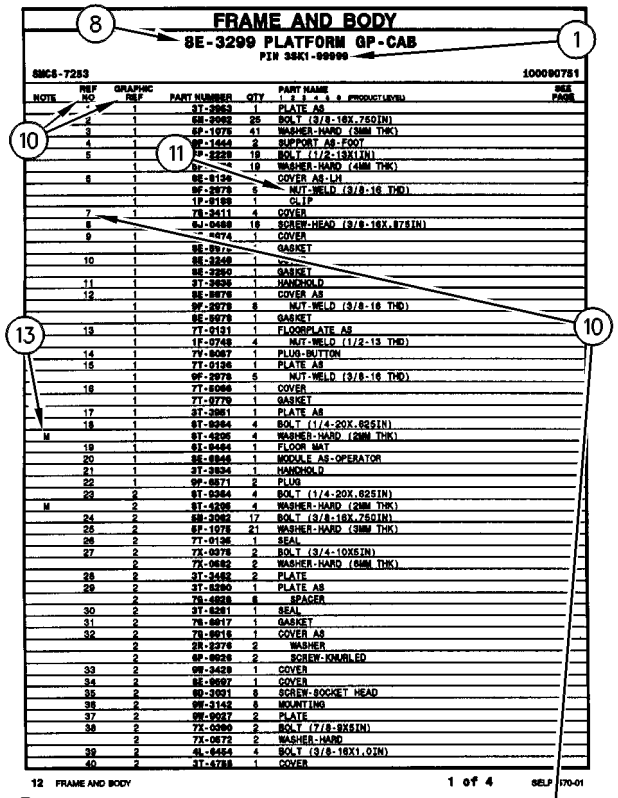

FRAME AND BODY

8E-3299 PLATFORM GP-CAB

PIN 3SK1-99999

SMCS-7283 100090751

NOTE	REF NO	GRAPHIC REF	PART NUMBER	QTY	PART NAME 1 2 3 4 5 6 (PRODUCT LEVEL)	SEE PAGE
	*	1	3T-3963	1	PLATE AS	
	2	1	6M-2062	25	BOLT (3/8-16X.750IN)	
	3	1	6P-1075	41	WASHER-HARD (3MM THK)	
	4	1	9F-1444	2	SUPPORT AS-FOOT	
	5	1	9P-2229	19	BOLT (1/2-13X1IN)	
		1	6P-[illegible]	19	WASHER-HARD (4MM THK)	
	6	1	8E-8136	*	COVER AS-LH	
		1	9F-2078	6	NUT-WELD (3/8-16 THD)	
		1	1P-8189	1	CLIP	
	7	1	7X-3411	4	COVER	
	8	1	6J-0468	18	SCREW-HEAD (3/8-16X.87SIN)	
	9	1	[illegible]-0074	1	COVER	
		1	8E-8976	*	GASKET	
	10	1	8E-3248	1	[illegible]	
		1	8E-2260	1	GASKET	
	11	1	3T-3636	1	HANDHOLD	
	12	1	8E-8976	1	COVER AS	
		1	9F-2078	8	NUT-WELD (3/8-16 THD)	
		1	8E-8978	1	GASKET	
	13	1	7T-0131	1	FLOORPLATE AS	
		1	1F-0748	4	NUT-WELD (1/2-13 THD)	
	14	1	7Y-8067	1	PLUG-BUTTON	
	15	1	7T-0126	1	PLATE AS	
		1	9F-2078	5	NUT-WELD (3/8-16 THD)	
	16	1	7T-8066	1	COVER	
		1	7T-0770	1	GASKET	
	17	1	3T-3961	1	PLATE AS	
	18	1	9T-0264	4	BOLT (1/4-20X.62SIN)	
M		1	9T-4295	4	WASHER-HARD (2MM THK)	
	19	1	9T-8464	1	FLOOR MAT	
	20	1	8E-8846	1	MODULE AS-OPERATOR	
	21	1	3T-3834	1	HANDHOLD	
	22	1	9F-8871	2	PLUG	
	23	2	9T-0264	4	BOLT (1/4-20X.62SIN)	
M		2	9T-4295	4	WASHER-HARD (2MM THK)	
	24	2	6M-2062	17	BOLT (3/8-16X.750IN)	
	25	2	6P-1075	21	WASHER-HARD (3MM THK)	
	26	2	7T-0136	1	SEAL	
	27	2	7X-0078	2	BOLT (3/4-10X5IN)	
		2	7X-0682	2	WASHER-HARD (6MM THK)	
	28	2	3T-3482	2	PLATE	
	29	2	3T-8290	1	PLATE AS	
		2	7G-4828	8	SPACER	
	30	2	3T-8281	1	SEAL	
	31	2	7G-8817	1	GASKET	
	32	2	7G-8816	1	COVER AS	
		2	5R-2276	2	WASHER	
		2	9F-8826	2	SCREW-KNURLED	
	33	2	9M-3429	1	COVER	
	34	2	8E-8697	1	COVER	
	35	2	9D-3091	8	SCREW-SOCKET HEAD	
	36	2	9M-3142	8	MOUNTING	
	37	2	9M-9017	2	PLATE	
	38	2	7X-0360	2	BOLT (7/8-9X5IN)	
		2	7X-0672	2	WASHER-HARD	
	39	2	4L-8454	4	BOLT (3/8-16X1.0IN)	
	40	2	3T-4788	1	COVER	

12 FRAME AND BODY 1 of 4 SELP4570-01

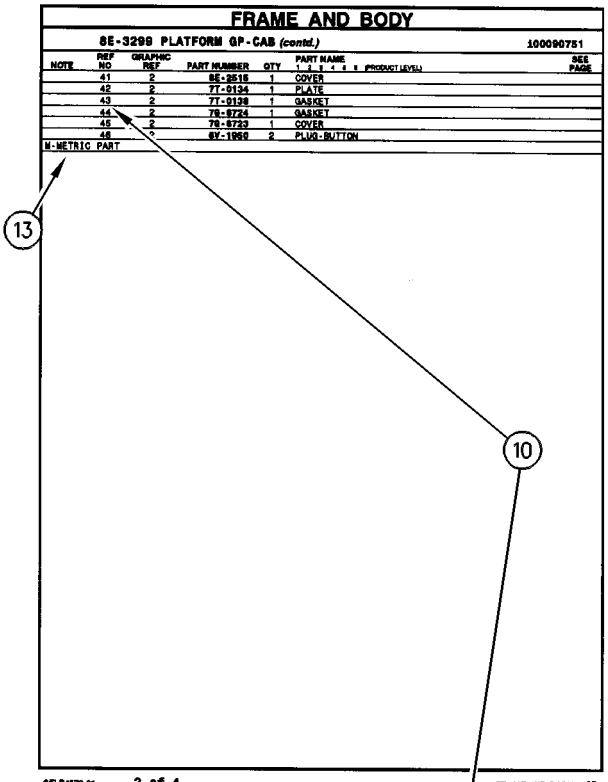

FRAME AND BODY

8E-3299 PLATFORM GP-CAB (contd.) 100090751

NOTE	REF NO	GRAPHIC REF	PART NUMBER	QTY	PART NAME 1 2 3 4 5 6 (PRODUCT LEVEL)	SEE PAGE
	41	2	8E-2515	1	COVER	
	42	2	7T-0134	1	PLATE	
	43	2	7T-0138	1	GASKET	
	44	2	7G-8724	1	GASKET	
	45	2	7G-8723	1	COVER	
	46	*	8Y-1950	2	PLUG-BUTTON	

M-METRIC PART

SELP4570-01 2 of 4 FRAME AND BODY 13

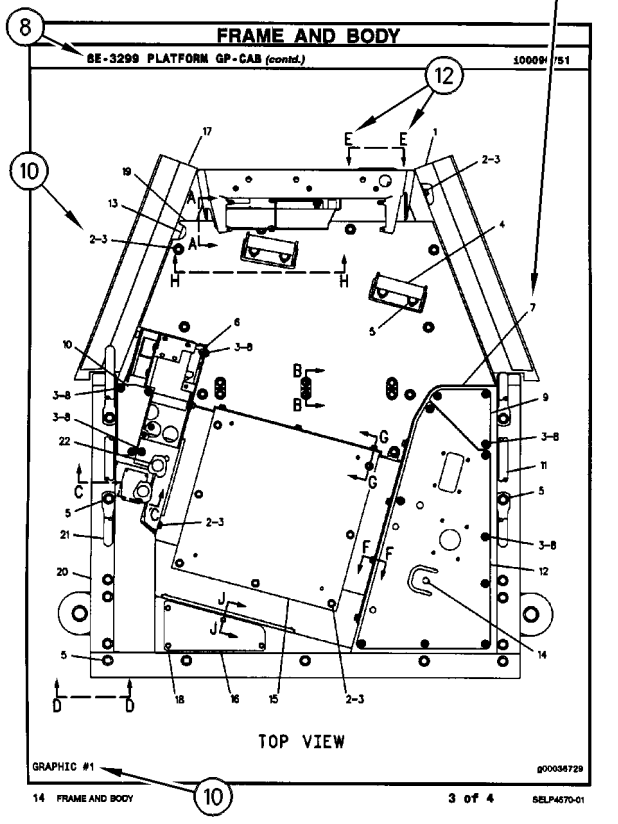

FRAME AND BODY

8E-3299 PLATFORM GP-CAB (contd.) 100090751

GRAPHIC #1 g00036729

TOP VIEW

14 FRAME AND BODY 3 of 4 SELP4570-01

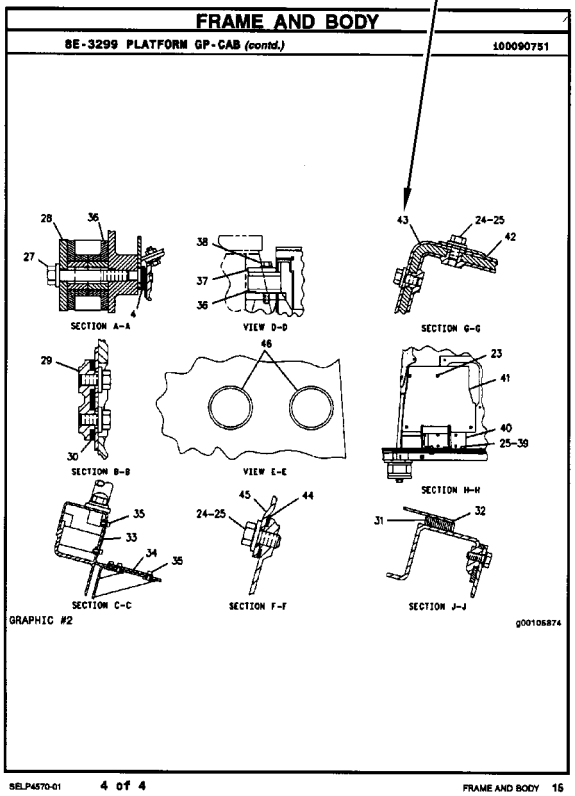

FRAME AND BODY

8E-3299 PLATFORM GP-CAB (contd.) 100090751

SECTION A-A

VIEW D-D

SECTION G-G

SECTION B-B

VIEW E-E

SECTION H-H

SECTION C-C

SECTION F-F

SECTION J-J

GRAPHIC #2 g00105874

SELP4570-01 4 of 4 FRAME AND BODY 15

1. IDENTIFICAÇÃO DA MÁQUINA

As máquinas Caterpillar são identificadas pelos Números de Informação do Produto (PIN). Alguns componentes incluídos numa máquina podem ser identificados por Números de Série (S/N). Componentes típicos que serão enumerados com números de série incluem motores, transmissões, lâminas e ríperes. Além do número de série, a máquina e o motor são ainda identificados por números de arranjo e, em alguns casos, números de modificações. Tais números encontram-se na(s) placa(s) de identificação do produto e na placa mestre no compartimento do operador.

SIS *Novidades*

A partir do primeiro trimestre de 2001 o Número de Identificação de Produto da Caterpillar (PIN) precisa ser mudado de 8 para 17 caracteres. Esforçando-se para fornecer uma identificação uniforme de equipamentos, a Caterpillar e outros fabricantes de equipamento de construção estão mudando para atender a versão mais atualizada do padrão de identificação de produtos. Os números de PIN para produtos de aplicações não rodoviárias são definidos pela ISO 10261. O novo formato de número PIN será adotado em todas as máquinas e grupos geradores Caterpillar. As placas e as marcações do chassi mostrarão os 17 dígitos de PIN. O novo formato terá a seguinte disposição:

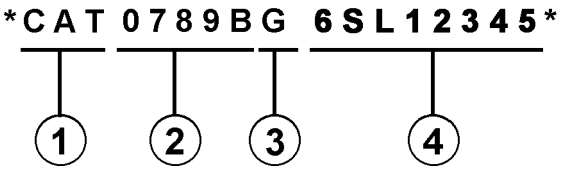

Onde:

1. Código de Fabricação Mundial da Caterpillar (dígitos 1-3)

2. Descrição da Máquina (dígitos 4-8)

3. Dígito de Verificação (dígito 9)

4. Seção de Indicador da Máquina (MIS) ou Número de Seqüência de Produto (dígitos 10-17). Estes eram anteriormente chamados de Número de Série.

Máquinas e grupos geradores produzidos antes do primeiro trimestre de 2001 manterão o formato de 8 caracteres de PIN.

Componentes como motores, transmissões, eixos, ferramentas de trabalho, etc. continuarão a usar Número de Série (S/N) com oito caracteres.

2. COMO OBTER PEÇAS

⚠ CUIDADO

Quando peças de substituição são exigidas para este produto, a Caterpillar recomenda a utilização de peças de substituição Caterpillar ou peças com as especificações equivalentes incluindo, mas não limitadas, à dimensões físicas, tipos, resistência e materiais.

A inobservância desta advertência poderá resultar em falhas prematuras, danos ao produto, ferimentos ou morte.

As Peças de Reposição de Qualidade Caterpillar encontram-se disponíveis nos revendedores Caterpillar no mundo inteiro. Seus estoques de peças são atualizados e incluem todas as peças normalmente necessárias para proteger seu investimento em máquinas Caterpillar. Alguns revendedores podem oferecer jogos de reparo ou peças de troca/remanufaturadas disponíveis como uma opção da alternativa de reparo mais eficaz para uma situação específica. Ao encomendar peças, seu pedido deve especificar a quantidade, o número e o nome da peça e o número de série/número de identificação do produto referentes à máquina para a qual as peças se destinam.

3. ORGANIZAÇÃO DO MANUAL DE PEÇAS

A informação do produto neste manual é apresentada em forma de "elementos de informação" que representam todos os componentes para o modelo específico. Arranjo de Motor e Grupo de Assento são exemplos de elementos de informação. Os elementos de informação são organizados em ordem alfabética por nome de peça ou secundariamente, por número de peça incluído em cada seção principal do manual.

4. LISTA DE CONTEÚDOS

A Lista de Conteúdos (TOC) se encontra no princípio do manual. A Lista de Conteúdos (TOC) relaciona em cada seção do manual uma lista completa com todos os elementos de informação organizados conforme aparecem no manual. Números de página são fornecidos para que se tenha referência rápida de ilustrações de peças detalhadas e listas de conteúdos que podem receber serviço de manutenção.

5. ÍNDICE DE PEÇAS DE MANUTENÇÃO

O Índice de Peças de Manutenção, localizado perto do princípio do manual, faz referência aos números de peça de manutenção usados com maior frequência, fornecendo uma descrição, a quantidade, o uso e o número de página. Esta informação é organizada com a descrição da peça em ordem alfabética.

6. ÍNDICE

O Índice localizado perto do princípio do manual, consiste de uma lista em ordem alfabética de todos os elementos de informação incluídos no manual. Números de página são fornecidos para que se tenha referência rápida de ilustrações de peças detalhadas e listas de conteúdos que podem receber serviço de manutenção.

7. ÍNDICE DE NÚMERO DE PEÇA

Um índice numérico relacionando todos os números de peça e a(s) página(s) correspondentes, aparece no final do manual.

8. LEGENDAS

As legendas localizadas no início de cada elemento de informação identificam o número e o nome de peça, juntamente com informação descritiva adicional. Informações sobre o Número de Informação do Produto (PIN) e o Número de Série (S/N) encontradas em cada legenda devem ser usadas para selecionar a informação correta sobre uma máquina específica. Opções de substituição no campo, identificação de componentes de acessórios opcionais e informações sobre onde são utilizados ("parte de") são também fornecidas.

A primeira linha de uma legenda é indicada em tipo maior para indicar o princípio de um elemento de informação. Legendas para páginas adicionais que podem ser necessárias para ilustrar um elemento de informação serão apresentadas em tipo padrão e incluirão o termo *(continua)* .

9. NÃO DISPONÍVEL SEPARADAMENTE

Em alguns casos, é necessário mostrar peças não disponíveis separadamente que têm uma ligação com listas de conteúdos de nível inferior que podem receber serviço de manutenção. Os números de peça destes componentes não disponíveis aparecerão em *itálico* , a fim de indicar que não estão disponíveis.

10. NÙMEROS DE REFERÊNCIA À LISTA DE PEÇAS

Os números indicados na coluna Ref No (No. de Referência) correspondem-se aos números usados no(s) gráfico(s) correspondente(s). Um sufixo com letras pode ser acrescentado a um número de referência para identificar itens de conteúdo de nível inferior. Os números indicados na coluna Graphic Ref (Referência de Gráfico) referem-se ao identificador de número de gráfico presente no canto esquerdo inferior de cada ilustração. O número de Referência de Gráfico pode ser usado em combinação com o item Ref No para determinar-se o número de peça correto. Poderá haver omissão intencional de um número de referência (Ref No) de uma lista de conteúdos uma vez que as informações são atualizadas para refletir os números de peça mais recentes que podem receber serviço de manutenção.

11. NOMES DE PEÇAS DESALINHADOS

Quando um nome de peça encontra-se desalinhado numa lista de peças, significa que tal item faz parte do (está incluído no) grupo ou conjunto sob o qual está relacionado.

12. LETRAS DE REFERÊNCIA NAS ILUSTRAÇÕES

Quando necessário, as ilustrações contêm letras de referência (A, B, C, etc.) que são utilizadas para seguir tubulações e cabos elétricos de um ponto a outro. Também foram utilizadas para indicar onde se pode reconectar as ilustrações que foram separadas.

13. ABREVIAÇÕES E SÍMBOLOS

O.D. – "Outside Diameter" (Diâmetro Externo)
I.D. – "Inside Diameter" (Diâmetro Interno)
A – Não faz parte deste grupo
B – Use conforme necessário
C – Indica modificação
D – Vendido por metro
E – Vendido por centímetro
F – Não ilustrado
G – Vendido por polegada
I – Consultar o Sistema de Informações Hidráulicas
M – Peça métrica
R – Peça remanufaturada pode estar disponível; consulte o seu revendedor Cat
Y – Ilustração separada
Z – Não disponível separadamente

SIS *Novidades*

14. <END>

Este símbolo indica o final de um elemento de informação.

NOTA:

Os contínuos aperfeiçoamentos e avanços no projeto do produto podem ocasionar modificações em sua máquina que talvez ainda não estejam incluídas nesta publicação. Sempre que surgirem dúvidas quanto a um produto Caterpillar ou quanto à presente publicação, consulte o seu revendedor Caterpillar para obter as informações mais recentes disponíveis.

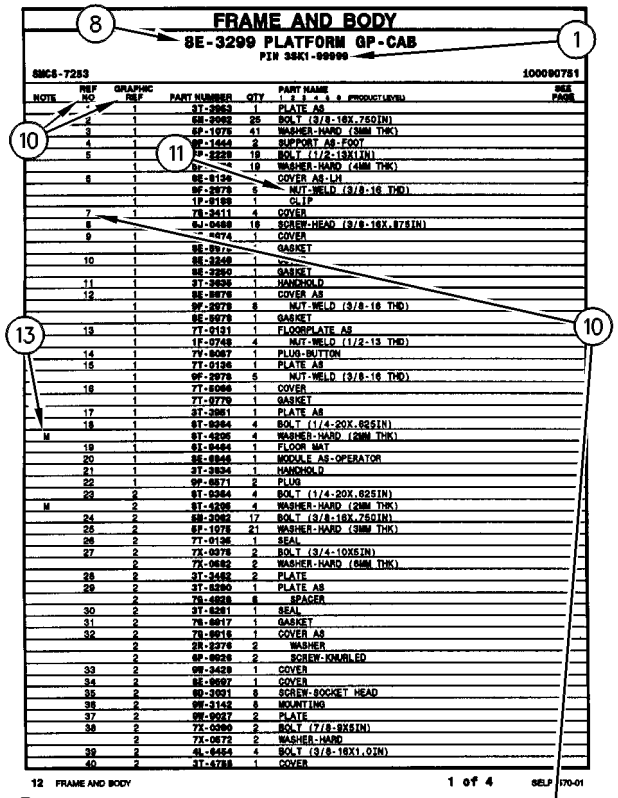

FRAME AND BODY

8E-3299 PLATFORM GP-CAB

PIN 3SK1-99999

SMCS-7283 100090751

NOTE	REF NO	GRAPHIC REF	PART NUMBER	QTY	PART NAME 1 2 3 4 5 6 (PRODUCT LEVEL)	SEE PAGE
	*	1	3T-3963	1	PLATE AS	
	2	1	6M-2062	25	BOLT (3/8-16X.750IN)	
	3	1	6P-1075	41	WASHER-HARD (3MM THK)	
	4	1	9F-1443	2	SUPPORT AS-FOOT	
	5	1	9P-2229	19	BOLT (1/2-13X1IN)	
		1	6P-[illegible]	19	WASHER-HARD (4MM THK)	
	6	1	8E-8136	*	COVER AS-LH	
		1	9F-2979	6	NUT-WELD (3/8-16 THD)	
		1	1P-8189	1	CLIP	
	7	1	7X-3411	4	COVER	
	8	1	6J-0468	18	SCREW-HEAD (3/8-16X.875IN)	
	9	1	[illegible]-0074	1	COVER	
		1	8E-8976	*	GASKET	
	10	1	8E-3249	1	[illegible]	
		1	8E-2260	1	GASKET	
	11	1	3T-3636	1	HANDHOLD	
	12	1	8E-8976	1	COVER AS	
		1	9F-2979	8	NUT-WELD (3/8-16 THD)	
		1	8E-8978	1	GASKET	
	13	1	7T-9131	1	FLOORPLATE AS	
		1	1F-0748	4	NUT-WELD (1/2-13 THD)	
	14	1	7Y-8067	1	PLUG-BUTTON	
	15	1	7T-0126	1	PLATE AS	
		1	9F-2978	5	NUT-WELD (3/8-16 THD)	
	16	1	7T-8066	1	COVER	
		1	7T-9779	1	GASKET	
	17	1	3T-3961	1	PLATE AS	
	18	1	9T-0264	4	BOLT (1/4-20X.625IN)	
M		1	9T-4295	4	WASHER-HARD (2MM THK)	
	19	1	6J-8464	1	FLOOR MAT	
	20	1	8E-8848	1	MODULE AS-OPERATOR	
	21	1	3T-3834	1	HANDHOLD	
	22	1	9F-8871	2	PLUG	
	23	2	9T-0264	4	BOLT (1/4-20X.625IN)	
M		2	9T-4295	4	WASHER-HARD (2MM THK)	
	24	2	6M-2062	17	BOLT (3/8-16X.750IN)	
	25	2	6P-1075	21	WASHER-HARD (3MM THK)	
	26	2	7T-0136	1	SEAL	
	27	2	7X-0078	2	BOLT (3/4-10X5IN)	
		2	7X-0682	2	WASHER-HARD (6MM THK)	
	28	2	3T-3482	2	PLATE	
	29	2	3T-8290	1	PLATE AS	
		2	7S-4828	8	SPACER	
	30	2	3T-8281	1	SEAL	
	31	2	7S-8817	1	GASKET	
	32	2	7S-8816	1	COVER AS	
		2	2R-2276	2	WASHER	
		2	9F-8826	2	SCREW-KNURLED	
	33	2	9M-3429	1	COVER	
	34	2	8E-8697	1	COVER	
	35	2	9D-3931	8	SCREW-SOCKET HEAD	
	36	2	9M-3142	8	MOUNTING	
	37	2	9M-9017	2	PLATE	
	38	2	7X-0360	2	BOLT (7/8-9X5IN)	
		2	7X-0672	2	WASHER-HARD	
	39	2	4L-8454	4	BOLT (3/8-16X1.0IN)	
	40	2	3T-4788	1	COVER	

12 FRAME AND BODY 1 of 4 SELP4570-01

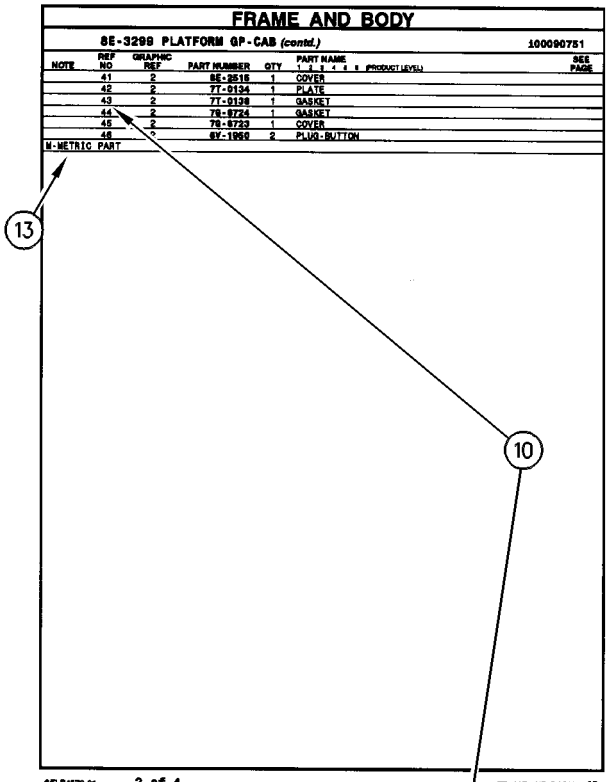

FRAME AND BODY

8E-3299 PLATFORM GP-CAB (contd.) 100090751

NOTE	REF NO	GRAPHIC REF	PART NUMBER	QTY	PART NAME 1 2 3 4 5 6 (PRODUCT LEVEL)	SEE PAGE
	41	2	8E-2515	1	COVER	
	42	2	7T-0134	1	PLATE	
	43	2	7T-0138	1	GASKET	
	44	2	7S-8724	1	GASKET	
	45	2	7S-8723	1	COVER	
	46	*	8Y-1950	2	PLUG-BUTTON	

M-METRIC PART

SELP4570-01 2 of 4 FRAME AND BODY 13

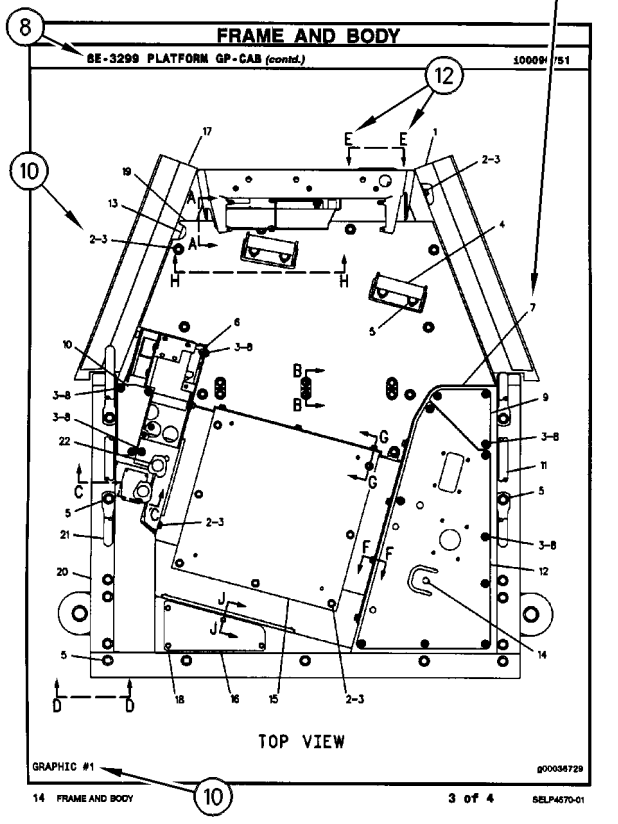

FRAME AND BODY

8E-3299 PLATFORM GP-CAB (contd.) 100090751

TOP VIEW

GRAPHIC #1 g00036729

14 FRAME AND BODY 3 of 4 SELP4570-01

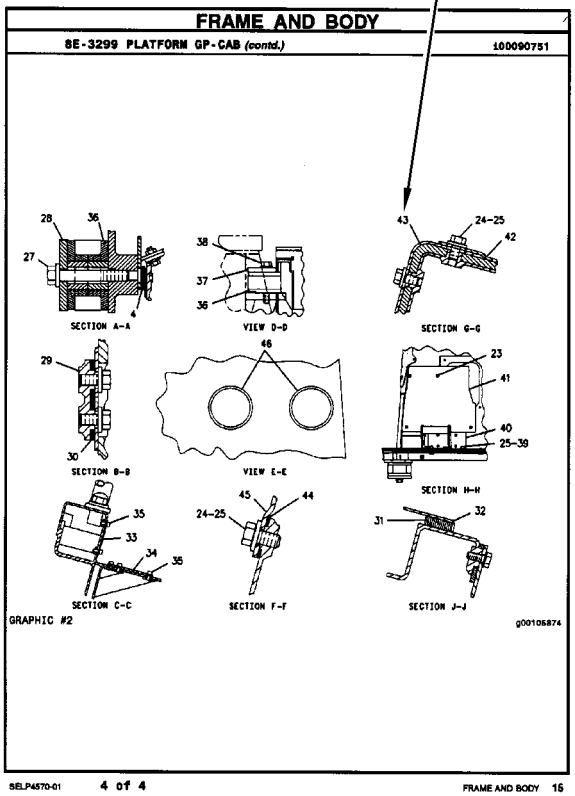

FRAME AND BODY

8E-3299 PLATFORM GP-CAB (contd.) 100090751

SECTION A-A

VIEW D-D

SECTION G-G

SECTION B-B

VIEW E-E

SECTION H-H

SECTION C-C

SECTION F-F

SECTION J-J

GRAPHIC #2 g00105874

SELP4570-01 4 of 4 FRAME AND BODY 15

ALLGEMEINE HINWEISE

1. MASCHINENKENNZEICHNUNG

Caterpillar-Maschinen sind mit PRODUCT IDENTIFICATION NUMBERS (PIN) (Produkt-Identnummern) gekennzeichnet. Einige Baugruppen, z.B. Motoren, Getriebe, Planierschilde und Aufreißer, sind mit SERIAL NUMBERS (S/N) (Seriennummern) gekennzeichnet. An der Maschine und am Motor befinden sich außerdem ARRANGEMENT NUMBERS (Ausrüstungsnummern) sowie in einigen Fällen MODIFICATION NUMBERS (Änderungsnummern). Sie befinden sich auf den PIN-Schildern und auf dem Typenschild im Fahrerhaus.

Bei Ersatzteilbestellungen müssen dem Händler alle diese Nummern zur Verfügung gestellt werden.

SIS *Neu im Parts Manual*

Vom ersten Quartal 2001 ab wurde die Caterpillar Produkt-Identnummer (PIN) von 8 auf 17 Zeichen geändert. Um zur Standardisierung der Produkt-Identnummer beizutragen, sind Caterpillar und andere Baumaschinenhersteller bestrebt, die aktuellste Norm zur Produkt-Identnummerierung einzuführen. Produkt-Identnummern für Baumaschinen sind durch ISO 10261 definiert. Das neue Format der Produkt-Identnummern gilt für alle Caterpillar-Maschinen und -Stromaggregate. Die Produkt-Identschilder und -Identrahmenmarkierung enthalten die aus 17 Zeichen bestehende Identnummer. Das neue Format hat folgende Abschnitte:

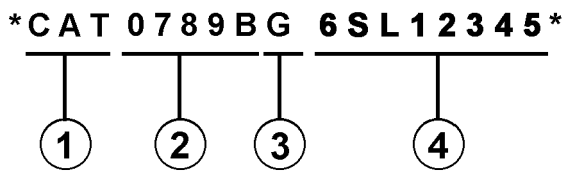

Abschnitte:

1. Caterpillars weltweiter Herstellungscode (Zeichen 1-3)

2. Modell (Zeichen 4-8)

3. Kontrollzeichen (Zeichen 9)

4. Maschinenspezifische Kennung (MIS) oder Produktsequenznummer (Zeichen 10-17). Diese wurde früher als Seriennummer bezeichnet.

Für vor dem ersten Quartal 2001 hergestellte Maschinen und Stromaggregate wird das aus 8 Zeichen bestehende PIN-Format beibehalten.

Bauteile wie z.B. Motoren, Getriebe, Achsen sowie Arbeitsgeräte werden weiterhin eine aus 8 Zeichen bestehende Seriennummer (S/N) aufweisen.

2. BESTELLEN VON ERSATZTEILEN

⚠ WARNUNG

Wenn für diese Maschine Ersatzteile benötigt werden, empfiehlt Caterpillar, ausschließlich Caterpillar-Ersatzteile oder solche zu verwenden, die die gleichen technischen Merkmale hinsichtlich Typ, Festigkeit, Werkzeugeigenschaften und die gleichen Maße aufweisen.

Bei Nichtbeachtung dieser Warnung besteht Verletzungs- oder sogar Lebensgefahr! Ferner kann Nichtbeachtung vorzeitige Ausfälle der Teile und Beschädigung der Maschine zur Folge haben.

Original Caterpillar-Ersatzteile können weltweit bei jedem Caterpillar-Händlern bestellt werden. Die umfangreichen Händlerlager enthalten normalerweise alle Teile, die Sie für Ihre Caterpillar-Maschine benötigen. Einige Händler bieten Reparatursätze, Austausch- oder werküberholte Teile an, so daß Sie eine Auswahl unter verschiedenen Reparaturmöglichkeiten treffen können. Ihre Bestellung muß folgende Angaben enthalten: Anzahl der benötigten Teile, Bestellnummer, Bezeichnung des Teils, Serien-Nr./Produkt-Ident-Nr., Ausrüstungs-Nr. und Änderungs-Nr. der Maschine, für die diese Teile benötigt werden.

3. AUFBAU DES PARTS MANUAL

Die Produktinformationen für alle Komponenten eines bestimmten Modells sind in INFORMATION ELEMENTS (Informationseinheiten) gegliedert. ENGINE ARRANGEMENT (Motorausführung) und SEAT GROUP (Fahrersitz) sind Beispiele für solche Informationseinheiten. Sie sind innerhalb jeder Gruppe alphabetisch, entsprechend der Ersatzteilbezeichnung, und zusätzlich numerisch, entsprechend der Ersatzteilnummer, geordnet.

4. INHALTSVERZEICHNIS

Das Inhaltsverzeichnis befindet sich am Anfang des Buches. Im Inhaltsverzeichnis werden die einzelnen Abschnitte des Buches aufgeführt. Die Abschnitte enthalten eine vollständige Aufstellung aller Informationseinheiten. Diese sind entsprechend ihrem Erscheinen im Buch geordnet. Das Inhaltsverzeichnis enthält Seitenangaben für Schnellverweise auf detaillierte Abbildungen und Teillisten.

ALLGEMEINE HINWEISE

5. INDEX FÜR WARTUNGSTEILE

Der Index für Wartungsteile vorn im Buch enthält die Bestellnummern, Seitenangaben, Mengenangaben und Informationen über den Einsatzbereich für die am häufigsten benötigten Ersatzteile. Die Angaben sind alphabetisch entsprechend der Teilebezeichnung geordnet.

6. INDEX

Der Index vorn im Buch enthält eine alphabetische Liste aller Informationseinheiten. Er enthält Seitenangaben für Schnellverweise auf detaillierte Abbildungen und Teillisten.

7. INDEX FÜR BESTELLNUMMERN

Hinten im Buch befindet sich ein numerischer Index, mit allen Bestellnummern und dem Hinweis auf die Seite, auf der sich die betreffende Abbildung befindet.

8. ÜBERSCHRIFTEN

Die Überschriften, die sich am Anfang jeder der Informationseinheiten befinden, enthalten Bestellnummern, Ersatzteilbezeichnungen und zusätzliche beschreibende Informationen. Produkt-Ident- und Seriennummern in den Überschriften sollten zur Auswahl der richtigen Informationen für die betreffende Maschine verwendet werden. Die Überschriften enthalten außerdem Informationen über möglichen Außendienstersatz, mögliche Baugerätekomponenten und die Baugruppe, zu der das Teil gehört.

Die erste Zeile einer Überschrift erscheint in einer größeren Schriftart, um den Anfang einer Informationseinheit zu kennzeichnen. Überschriften für zusätzliche Seiten, die zur Erläuterung einer Informationseinheit notwendig sind, erscheinen in normaler Schriftart und enthalten den Begriff "(contd.)".

9. NICHT EINZELN LIEFERBARE TEILE

In einigen Fällen ist es notwendig nicht lieferbare Teile, die selbst mit einer eigenen Teilliste im Buch vertreten sind, aufzuführen. Die Bestellnummern dieser nicht einzeln lieferbaren Teile erscheinen kursiv, wodurch angezeigt wird, daß sie nur in Verbindung mit anderen Teilen lieferbar sind.

10. REFERENZNUMMER FÜR ERSATZTEILE

Die Zahlen, die in der Spalte "Ref No" aufgeführt sind, stimmen mit den Zahlen in den beigefügten Abbildungen überein. Ein Buchstaben-Suffix kann zu einer Referenznummer hinzugefügt werden, um zu kennzeichnen, daß das Teil mit einer eigenen Teilliste im Buch aufgeführt ist. Die in der Spalte "Graphic Ref" angeführten Zahlen verweisen auf die Identifikationsnummer der Abbildung, die sich in der linken unteren Ecke der Abbildung befindet. Diese Nummer kann zusammen mit der Referenznummer des Teils angegeben werden, um die richtige Ersatzteilnummer zu ermitteln. Referenznummern können absichtlich weggelassen werden, da die Nummern der lieferbaren Ersatzteile ständig aktualisiert werden.

11. EINGERÜCKTE BEZEICHNUNGEN

Wenn eine Bezeichnung eingerückt ist, wird dadurch angezeigt, daß das Teil zu einer Baugruppe gehört, unter deren Bezeichnung es eingerückt ist.

12. REFERENZBUCHSTABEN

Falls erforderlich sind in den Abbildungen Referenzbuchstaben enthalten (z.B. A, B, C, usw.), die Leitungen und Kabelbäume von einem Punkt zum anderen verfolgen. Außerdem geben sie die Stelle an, an der getrennte Abbildungen fortgesetzt werden.

13. ABKÜRZUNGEN UND SYMBOLE

O.D. – Außendurchmesser
I.D. – Innendurchmesser
A – kein Teil dieser Gruppe
B – nach Bedarf verwenden
C – Hinweis auf eine Änderung
D – in Meter-Länge bestellen
E – in Zentimeter-Länge bestellen
F – nicht gezeigt
G – in Zoll-Länge bestellen
I – siehe Hydraulikinformationssystem
M – metrisches Teil
R – werküberholtes Teil unter Umständen lieferbar
Y – separate Abbildung
Z – nicht einzeln lieferbar

SIS *Neu im Parts Manual*

14. BESCHREIBUNG DER TYPENÄNDERUNGEN

Typ-A bezieht sich auf alle Konfigurationsänderungen, die ein zusätzliches Informationselement für Ausführung, Gruppe oder Einheit benötigen. Wenn kein Seriennummernumbruch für Typen erhältlich ist, wird in der Überschrift eine Typennummer (Typ 1, Typ 2, etc.) angegeben. Diese "Typenänderungen" sind in der Teileliste mit der Anmerkung "C" (Änderung des vorherigen Typs) versehen. Es werden nur die für dieses Ersatzteilhandbuch relevanten "Typen" angegeben. Es können zusätzliche Typen vorhanden sein, was zu "C" Anmerkungen zu einem Informationselement führen kann, wenn keine anderen Typen angegeben werden.

15. <END>

Dieses Symbol zeigt das Ende eines Informationselements an.

ANMERKUNG:

Ständig vorgenommene Verbesserungen und Weiterentwicklungen an Ihrer Maschine können Änderungen verursachen, die in der vorliegenden Ausgabe noch nicht berücksichtigt sind. Fragen zu Ihrer Caterpillar-Maschine oder diesem Ersatzteilbuch beantwortet Ihr Caterpillar-Händler.

ALLGEMEINE HINWEISE

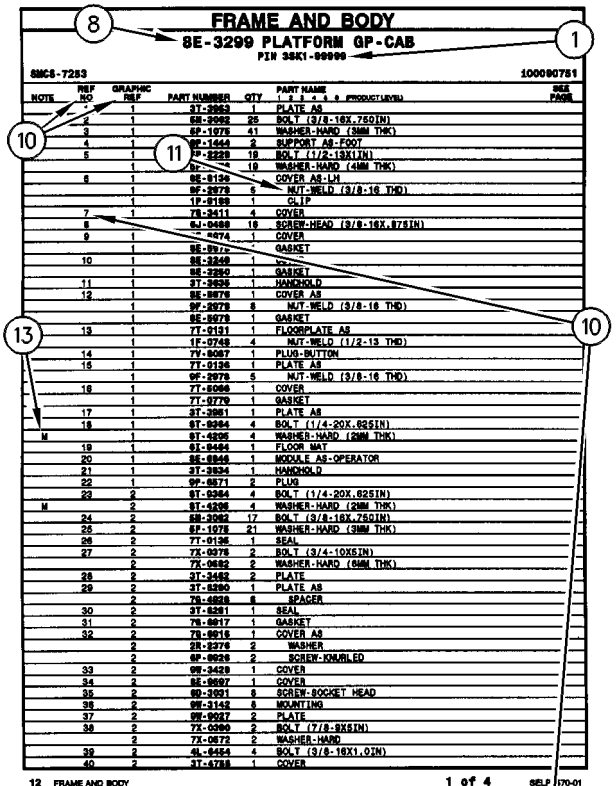

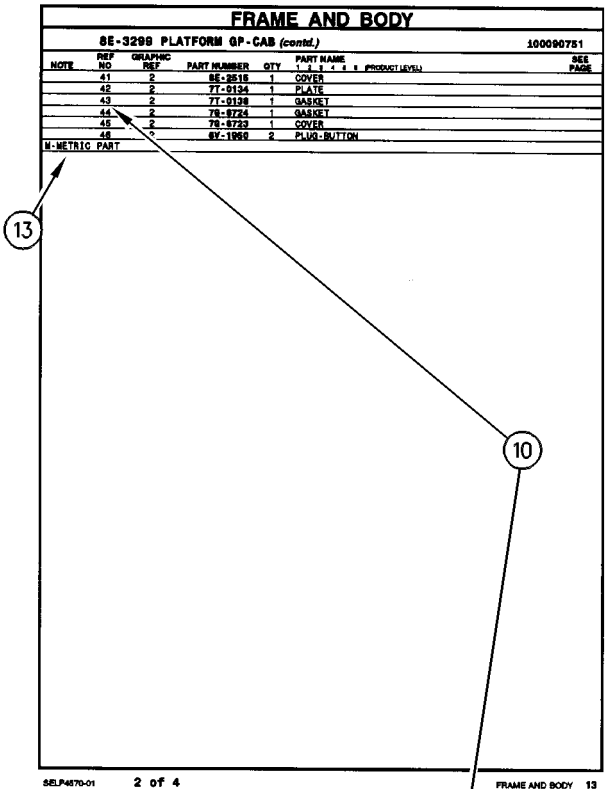

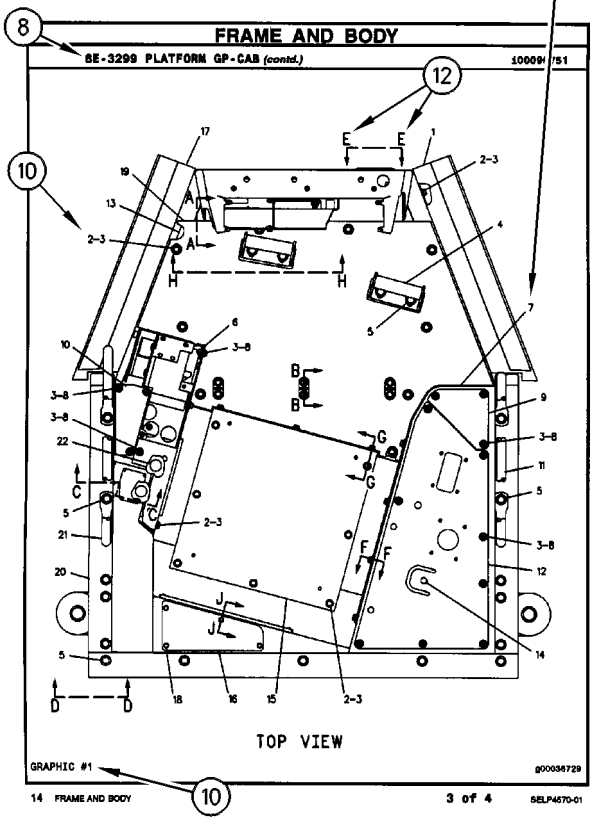

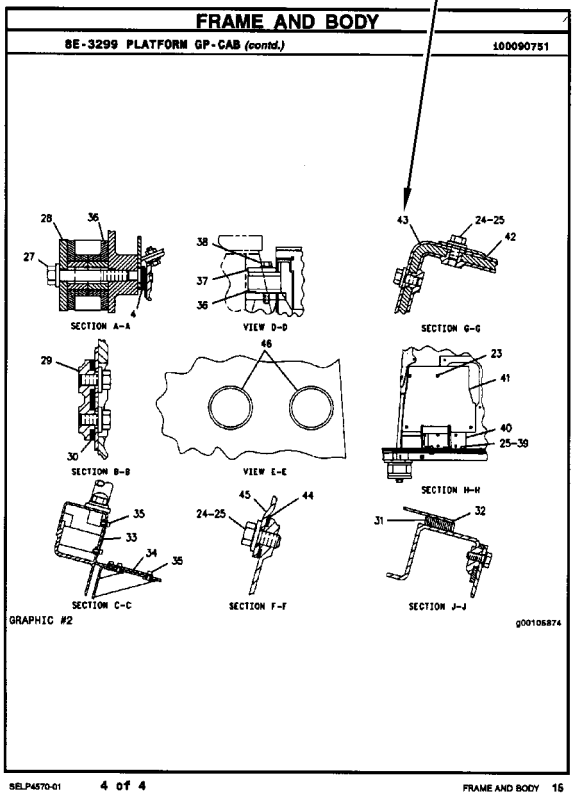

REMANUFACTURED COMPONENTS

As an option when making repairs consider Caterpillar Remanufactured Components. Components that are available through the Caterpillar Remanufactured Program are identified three ways in the parts book:

- with the letter R in the note field of the parts list
- with an R* at the beginning of the first line of the caption
- with an *R at the end of the first line of the caption

Typical components included in the Remanufacturing Program include:

ALTERNATORS
CONNECTING RODS
CRANKSHAFTS - UNDERSIZE
CRANKSHAFTS - UPGRADE TO NEW
CYLINDER HEADS
ELECTRONIC CONTROL MODULES (ECM)
ELECTRONIC SENSORS
FUEL INJECTORS
FUEL NOZZLES
FUEL PUMPS
GOVERNORS
OIL PUMPS
PISTONS
SHORT BLOCKS
STARTERS
TURBOCHARGERS - COMPLETE
TURBOCHARGER CARTRIDGES
WATER PUMPS

Caterpillar Remanufactured engines for many engine arrangements are also available.

OPTIONS DE RÉPARATION

COMPOSANTS RÉNOVÉS

Comme option de réparation, considérer les composants rénovés Caterpillar. Les composants disponibles dans le cadre du programme Caterpillar de composants rénovés sont identifiés de trois façons dans le catalogue de pièces:

- avec la lettre "R" dans l'espace note de la liste des pièces
- avec R* au début de la première ligne des légendes
- avec *R à la fin de la première ligne des légendes

Les composants suivants figurent parmi les composants typiques du programme de rénovation:

ALTERNATEURS
BIELLES
VILEBREQUINS - SOUS-DIMENSIONNÉS
VILEBREQUINS - REMIS À NEUF
CULASSES
MODULES DE COMMANDE ÉLECTRONIQUE (ECM)
CAPTEURS ÉLECTRONIQUES
INJECTEURS
TÊTES D'INJECTEURS
POMPES À CARBURANT
RÉGULATEURS
POMPES À HUILE
PISTONS
BLOCS EMBIELLÉS
DÉMARREURS
TURBOCOMPRESSEURS - COMPLETS
CARTOUCHES DE TURBOCOMPRESSEUR
POMPES À EAU

Des moteurs rénovés sont aussi disponibles pour plusieurs versions de moteur.

ALTERNATIVAS DE REPARACIÓN

COMPONENTES REMANUFACTURADOS

Al hacer reparaciones, tenga en cuenta la opción de Componentes Remanufacturados Caterpillar. Los componentes que están disponibles por medio del programa de Productos Remanufacturados Caterpillar se identifican de tres maneras en el manual de piezas:

- con la letra R en el espacio de Nota de la lista de piezas
- con una R* al comienzo de la primera línea de la leyenda
- con una *R al final de la primera línea de la leyenda

Los componentes que se incluyen típicamente en el Programa de Productos Remanufacturados son:

ALTERNADORES
BIELAS
CIGÜEÑALES - BAJOMEDIDA
CIGÜEÑALES - REMANUFACTURADOS A NUEVO
CULATAS
MÓDULOS DE CONTROL ELECTRÓNICO (ECM)
SENSORES ELECTRONICOS
INYECTORES
BOQUILLAS
BOMBAS DE COMBUSTIBLE
REGULADORES
BOMBAS DE ACEITE
PISTONES
MONOBLOQUES
MOTORES DE ARRANQUE
TURBOCOMPRESORES - COMPLETOS
NÚCLEOS DE TURBOCOMPRESOR
BOMBAS DE AGUA

También hay disponibles motores Remanufacturados Caterpillar para muchas de las configuraciones de motores.

ALTERNATIVAS DE REPARO

COMPONENTES REMANUFATURADOS

Considere o uso de Componentes Remanufaturados Caterpillar ao efetuar reparos. Os componentes disponíveis através do Programa de Remanufatura Caterpillar são identificados de três formas no manual de peças:

- com um R na área da nota da lista de peças
- com um R* no princípio da primeira linha da legenda
- com um *R no final da primeira linha da legenda

Os componentes típicos que constam no Programa de Remanufatura incluem:

ALTERNADORES
BIELAS
VIRABREQUINS - SUBMEDIDAS
VIRABREQUINS - ATUALIZAÇÃO
CABEÇOTES
MÓDULOS DE CONTROLE ELETRÔNICO (ECM)
SENSORES ELETRÔNICOS
INJETORES DE COMBUSTÍVEL
BICOS DE ABASTECIMENTO DE COMBUSTÍVEL
BOMBAS DE COMBUSTÍVEL
GOVERNADORES
BOMBAS DE ÓLEO
PISTÕES
BLOCOS BÁSICOS DO MOTOR
MOTORES DE PARTIDA
TURBOALIMENTADORES - COMPLETOS
CARTUCHOS DE TURBOALIMENTADORES
BOMBAS D'ÁGUA

Motores Remanufaturados Caterpillar também encontram-se disponíveis para diversos arranjos de motor.

WERKÜBERHOLTE AT-PRODUKTE

Bei Reparaturen sollten werküberholte AT-Produkte von Caterpillar in Betracht gezogen werden. Die durch das AT-Programm von Caterpillar erhältlichen Teile sind im Parts Book auf drei verschiedene Arten gekennzeichnet:

- mit dem Buchstaben R in der Spalte NOTE der Ersatzteilliste
- mit einem R* am Anfang der ersten Zeile der Überschrift
- mit einem *R am Ende der ersten Zeile der Überschrift

Das AT-Programm umfaßt u.a. folgende Produkte:

DREHSTROMGENERATOREN
PLEUELSTANGEN
KURBELWELLEN - MIT UNTERMASS
KURBELWELLEN - MIT ORIGINALMASS
ZYLINDERKÖPFE
ELEKTRONISCHE STEUEREINHEITEN (EMC)
ELEKTRONISCHE SENSOREN
PUMPENDÜSEN
EINSPRITZDÜSEN
KRAFTSTOFFPUMPEN
DREHZAHLREGLER
ÖLPUMPEN
KOLBEN
TEILMOTOREN
ANLASSER
TURBOLADER - KOMPLETT
TURBOLADERLAUFZEUGE
KÜHLWASSERPUMPEN

Viele Motoren können durch werküberholte AT-Motoren von Caterpillar ersetzt werden.

SUPPLEMENTAL COOLANT ADDITIVES

CUSTOMER BENEFITS:

Protects against cavitation, foam, erosion, corrosion, and scale buildup in cooling systems.

- Provides measured coolant conditioner.

DESCRIPTION:

Additives deplete from the coolant with normal operation. For this reason, Supplemental Coolant Additives (SCA) must be added to all heavy duty coolants at regular intervals. In addition, when not using a fully formulated, pre-charged antifreeze, like Caterpillar's DEAC, an initial charge of SCA must be added to the cooling system. The amount of SCA added to the system is dependent on the capacity of the system.

The SCA for initial fill is provided as a liquid. SCA's for maintenance intervals are available in liquid form and as a spin-on element. (No Spin-on available for 3600 Family of Engines)

NOTE:

The amount of SCA added at initial fill is not the same as the amount added at maintenance intervals.

The coolant additive elements can be used with any ethylene or propylene glycol type antifreeze which meets ASTM D4985 or ASTM D5345 Specifications.

NOTE:

For use with standard heavy duty coolant only, not for use with Extended Life Coolant.

PARTS NEEDED:

Cooling System Capacity		Liquid SCA at Initial Fill	Liquid SCA at Maintenance*	Spin-on SCA Maintenance Element*
Liters	Gallons			
22-30	(6-8)	3P-2044 (1)	6V-3542 (1)	111-2370 (1)
30-38	(8-10)	3P-2044 (1) 6V-3542 (1)	111-2372 (1)	111-2369 (1)
38-49	(10-13)	3P-2044 (1) 8T-1589 (1)	111-2372 (1)	111-2369 (1)
49-64	(13-17)	3P-2044 (2)	8T-1589 (1)	9N-3368 (1)
64-83	(17-22)	3P-2044 (2) 8T-1589 (1)	111-2372 (1) 6V-3542 (1)	111-2371 (1)
83-114	(22-30)	3P-2044 (3) 8T-1589 (1)	3P-2044 (1)	9N-3718 (1)
114-163	(30-43)	3P-2044 (5)	3P-2044 (1) 6V-3542 (1)	111-2371 (2)
163-242	(43-64)	3P-2044 (8)	3P-2044 (2)	9N-3718 (2)

** Normal maintenance period is 250 hrs. See your Operation and Maintenance Manual for complete coolant maintenance instructions.*

( ) Indicates quantity required.

ADDITIFS POUR LIQUIDE DE REFROIDISSEMENT

AVANTAGES POUR LE CLIENT

L'additif protège contre la cavitation, la mousse, l'érosion, la corrosion et l'accumulation de dépôts dans le circuit de refroidissement.

- L'additif complémentaire fournit une quantité mesurée d'additif.

DESCRIPTION:

Les additifs s'épuisent pendant l'utilisation du moteur. C'est pourquoi l'on doit ajouter de l'additif au liquide de refroidissement/antigel pour moteurs diesel à intervalles réguliers. En plus, si l'on n'utilise pas de l'antigel entièrement formulé et pré-chargé comme le liquide de refroidissement/antigel Caterpillar pour moteurs diesel, une quantité initiale d'additif doit être ajoutée au circuit de refroidissement. La quantité d'additif à ajouter au circuit dépend de la contenance du circuit.

L'additif pour le remplissage initial est fourni sous forme liquide. L'additif pour l'entretien ultérieur est disponible sous forme liquide et sous forme d'élément à visser. (Il n'y a pas d'élément à visser pour les moteurs de la famille 3600).

NOTA:

La quantité d'additif à ajouter au remplissage initial diffère de la quantité à ajouter aux intervalles d'entretien.

Les éléments d'additif peuvent être utilisés avec tout antigel de type éthylène ou propylène-glycol conforme à la norme ASTM D4985 ou ASTM D5345.

NOTA:

A utiliser uniquement avec du liquide de refroidissement pour moteurs diesel et non avec le liquide de refroidissement longue durée.

PIÈCES NÉCESSAIRES:

Contenance du circuit de refroidissement		Additif liquide au remplissage initial	Additif liquide aux intervalles d'entretien*	Elément d'additif à visser aux intervalles d'entretien*
Litres	Gallons U.S.			
22-30	(6-8)	3P-2044 (1)	6V-3542 (1)	111-2370 (1)
30-38	(8-10)	3P-2044 (1) 6V-3542 (1)	111-2372 (1)	111-2369 (1)
38-49	(10-13)	3P-2044 (1) 8T-1589 (1)	111-2372 (1)	111-2369 (1)
49-64	(13-17)	3P-2044 (2)	8T-1589 (1)	9N-3368 (1)
64-83	(17-22)	3P-2044 (2) 8T-1589 (1)	111-2372 (1) 6V-3542 (1)	111-2371 (1)
83-114	(22-30)	3P-2044 (3) 8T-1589 (1)	3P-2044 (1)	9N-3718 (1)
114-163	(30-43)	3P-2044 (5)	3P-2044 (1) 6V-3542 (1)	111-2371 (2)
163-242	(43-64)	3P-2044 (8)	3P-2044 (2)	9N-3718 (2)

** L'intervalle d'entretien normal est de 250 heures-service. Voir le Guide d'utilisation et d'entretien pour de plus amples renseignements concernant l'entretien du circuit de refroidissement.*

( ) Indique la quantité exigée.

ADITIVOS DE REFRIGERANTE SUPLEMENTARIOS

VENTAJAS PARA EL USUARIO:

Protegen contra la cavitación, la formación de espuma, la corrosión y la acumulación de escamas en los sistemas de enfriamiento.

- Suministra un acondicionador dosificado de refrigerante.

DESCRIPCIÓN:

Los aditivos en el refrigerante se agotan con la operación normal. Por esta razón, se debe agregar Aditivo de refrigerante suplementario (SCA) a todos los refrigerantes para servicio pesado, a intervalos regulares. Además, cuando no se usa un anticongelante de precarga completo, tal como el DEAC de Caterpillar, es necesario agregar una cantidad de aditivo de refrigerante suplementario inicial al sistema de enfriamiento. La cantidad de aditivo que se debe agregar depende de la capacidad del sistema.

El SCA de llenado inicial es líquido. El que se usa para el mantenimiento está disponible tanto en líquido como en un elemento enroscable. (No hay elemento enroscable disponible para la Familia de Motores 3600).

NOTA:

La cantidad de aditivo de llenado inicial no es la misma que se agrega en los intervalos de mantenimiento.

Los elementos de aditivo de refrigerante se pueden usar con cualquier anticongelante de tipo glicol etilénico o propílico que esté de acuerdo con las especificaciones de las normas ASTM D4985 o ASTM D5345.

NOTA:

Se debe utilizar únicamente con refrigerante estándar para servicio pesado; no se debe usar con Refrigerante de Larga Duración.

PIEZAS NECESARIAS:

Capacidad del Sistema de Enfriamiento		SCA líquido de llenado inicial	SCA líquido de mantenimiento*	Elemento de mantenimiento enroscable*
litros	gal EE.UU.			
22-30	6-8	3P-2044 (1)	6V-3542 (1)	111-2370 (1)
30-38	8-10	3P-2044 (1) 6V-3542 (1)	111-2372 (1)	111-2369 (1)
38-49	10-13	3P-2044 (1) 8T-1589 (1)	111-2372 (1)	111-2369 (1)
49-64	13-17	3P-2044 (2)	8T-1589 (1)	9N-3368 (1)
64-83	17-22	3P-2044 (2) 8T-1589 (1)	111-2372 (1) 6V-3542 (1)	111-2371 (1)
83-114	22-30	3P-2044 (3) 8T-1589 (1)	3P-2044 (1)	9N-3718 (1)
114-163	30-43	3P-2044 (5)	3P-2044 (1) 6V-3542 (1)	111-2371 (2)
163-242	43-64	3P-2044 (8)	3P-2044 (2)	9N-3718 (2)

** El período normal de mantenimiento es de 250 horas. Para ver las instrucciones completas sobre el mantenimiento del refrigerante, consulte el Manual de Operación y Mantenimiento.*

( ) Indica la cantidad necesaria.

ADITIVOS SUPLEMENTARES DO LÍQUIDO ARREFECEDOR

BENEFÍCIOS PARA O CLIENTE:

Protege contra cavitação, espuma, erosão, corrosão e acúmulo de crostas nos sistemas de arrefecimento.

- Fornece uma quantidade pré-determinada de condicionador de arrefecimento.

DESCRIÇÃO:

Com a operação normal, os aditivos se esgotam do líquido arrefecedor. Por isso, Aditivos Suplementares do Líquido Arrefecedor (SCA) devem ser acrescentados a todos os líquidos arrefecedores para serviço pesado em intervalos regulares. Além disso, quando um anticongelante pré-carregado, totalmente formulado não for usado, como o DEAC Caterpillar, uma carga inicial de SCA deve ser acrescentada ao sistema de arrefecimento. A quantidade de SCA acrescentada ao sistema depende da capacidade do sistema.

O SCA para abastecimento inicial é fornecido em forma de líquido. Os aditivos suplementares (SCA) para intervalos de manutenção estão à disposição em forma líquida e como um elemento com roscas. (Exceto os Motores da Família 3600)

NOTA:

A quantidade de SCA adicionada no abastecimento inicial não é a mesma que a acrescentada nos intervalos de manutenção.

Os elementos do aditivo do líquido arrefecedor podem ser usados com qualquer tipo de anticongelante etileno ou propileno que satisfaz as Especificações ASTM D4985 ou ASTM D5345.

NOTA:

Para uso apenas com líquido arrefecedor para serviço pesado padrão, não deve ser usado com Líquido Arrefecedor de Vida Longa.

PEÇAS NECESSÁRIAS:

Capacidade do Sistema de Arrefecimento		Líquido SCA Durante Abastecimento Inicial	Líquido SCA Durante Manutenção*	Elemento de Manutenção de SCA com Roscas*
Litros	Galões			
22-30	6-8	3P-2044 (1)	6V-3542 (1)	111-2370 (1)
30-38	8-10	3P-2044 (1) 6V-3542 (1)	111-2372 (1)	111-2369 (1)
38-49	10-13	3P-2044 (1) 8T-1589 (1)	111-2372 (1)	111-2369 (1)
49-64	13-17	3P-2044 (2)	8T-1589 (1)	9N-3368 (1)
64-83	17-22	3P-2044 (2) 8T-1589 (1)	111-2372 (1) 6V-3542 (1)	111-2371 (1)
83-114	22-30	3P-2044 (3) 8T-1589 (1)	3P-2044 (1)	9N-3718 (1)
114-163	30-43	3P-2044 (5)	3P-2044 (1) 6V-3542 (1)	111-2371 (2)
163-242	43-64	3P-2044 (8)	3P-2044 (2)	9N-3718 (2)

** O período normal de manutenção é de 250 horas. Consulte o Manual de Operação e Manutenção para obter instruções completas quanto à manutenção do líquido arrefecedor.*

( ) Indica a quantidade exigida.

KÜHLMITTELZUSATZ

VORTEILE FÜR DEN KUNDEN:

Schutz gegen Kavitation, Schaumbildung, Erosion, Korrosion und Kesselsteinbildung in Kühlsystemen.

- Richtig dosierter Kühlmittelzusatz

BESCHREIBUNG:

Additive erschöpfen sich während des Motorbetriebs. Deshalb muß allen HD-Kühlmitteln regelmäßig Kühlmittelzusatz beigefügt werden. Wenn bei Erstfüllung kein vollwertiges Fertigkühlmittel, wie das Frostschutz- und Kühlmittel für Dieselmotoren von Caterpiller (DEAC), verwendet wird, muß bei Erstfüllung Kühlmittelzusatz beigefügt werden. Wieviel Kühlmittelzusatz beigefügt werden muß, hängt vom Inhalt des Kühlsystems ab.

Für Erstfüllung ist Kühlmittelzusatz nur in flüssiger Form erhältlich. Für Wartungsintervalle ist Kühlmittelzusatz in flüssiger Form und als Zusatzelement erhältlich. (Für die Motorbaureihe 3600 sind keine Zusatzelemente erhältlich.)

ANMERKUNG:

Die Kühlmittelmenge bei Erstfüllung ist nicht die gleiche Menge, die bei Wartungsintervallen beigefügt werden muß.

Die Kühlmittelzusatzelemente können mit allen Frostschutzmitteln auf Ethylen- oder Propylenglykolbasis verwendet werden, die den Standards nach ASTM D4985 oder ASTM D5345 entsprechen.

ANMERKUNG:

Den Kühlmittelzusatz nicht mit Langzeitkühlmittel (ELC) von Caterpillar verwenden. Der Kühlmittelzusatz ist nur für HD-Kühlmittel bestimmt.

TEILEBEZEICHNUNG:

Kühlsysteminhalt		Kühlmittelzusatz bei Erstfüllung	Flüssiger Kühlmittelzusatz bei Wartung*	Kühlmittelzusatzelement bei Wartung*
Liter	US-Gall.			
22-30	(6-8)	3P-2044 (1)	6V-3542 (1)	111-2370 (1)
30-38	(8-10)	3P-2044 (1) 6V-3542 (1)	111-2372 (1)	111-2369 (1)
38-49	(10-13)	3P-2044 (1) 8T-1589 (1)	111-2372 (1)	111-2369 (1)
49-64	(13-17)	3P-2044 (2)	8T-1589 (1)	9N-3368 (1)
64-83	(17-22)	3P-2044 (2) 8T-1589 (1)	111-2372 (1) 6V-3542 (1)	111-2371 (1)
83-114	(22-30)	3P-2044 (3) 8T-1589 (1)	3P-2044 (1)	9N-3718 (1)
114-163	(30-43)	3P-2044 (5)	3P-2044 (1) 6V-3542 (1)	111-2371 (2)
163-242	(43-64)	3P-2044 (8)	3P-2044 (2)	9N-3718 (2)

** Der normale Wartungsintervall beträgt 250 Betriebsstunden. Für vollständige Anweisungen zur Wartung des Kühlsystems, siehe Betriebs- und Wartungshandbuch.*

( ) Erforderliche Anzahl

NOMENCLATURA DE PEÇAS INGLÊS-PORTUGUÊS

INGLÊS	PORTUGUÊS
ABOVE	Acima
ABSORBER	Amortecedor
ACCESSORY	Acessório
ACTUATOR	Acionador
ADAPTER	Adaptador
ADHESIVE	Adesivo
ADJUSTER	Adjustador
AFTERCOOLER	Pós-resfriador
AIR	Ar
AIR CLEANER	Purificador de ar
AIR SYSTEM	Sistema de ar
ALARM	Alarme
ALTERNATOR	Alternador
AMMETER	Amperímetro
ANCHOR	Âncora, fixador
ANGLE	Ângulo, canto
ANVIL A.	Bigorna conj.
ARBOR	Mandril, eixo
ARM	Braço
ARMATURE	Armadura, Induzida
ARM REST	Apoio para braço
ARRESTER	Detentor
ASSEM. = ASSEMBLY	Conjunto
ATTACHMENT	Acessório
AVAILABLE	Disponível
AXLE	Eixo
AXLE SHAFT	Semi-eixo, ponta
BACK-UP ALARM	Alarme de marcha à ré
BACK-UP LIGHT	Luz da marcha à ré
BACK-UP SWITCH	Interruptor de marcha à ré
BACKBOARD	Prancha traseira
BACK CUSHION	Encosto
BACKHOE	Retroescavadeira
BAFFLE	Defletor
BAG	Saco, sacola
BAIL	Alça
BALANCER	Balanceador
BALL	Esfera
BALLCHECK ASSEMBLY	Conjunto de (válvula) de esfera de retenção
BALL JOINT	Junta esférica
BALLSTUD	Munhão esférica
BAND	Banda, cinta, tira
BAND & LINING	Banda e revestimento
BAR	Barra
BARREL	Cilindro
BARRIER	Barreira
BASE	Base
BASIN	Bacia, coletor
BATTERY	Bateria
BEAM	Barra, viga, trave
BEARING	Mancal, rolamento
BEARING BALL	Rolamento de esferas
BEARING-SLEEVE	Mancal tipo luva
BEARING-NEEDLE	Rolamento de agulha
BEARING-ROLLER	Rolamento tipo roletes
BELL	Campânula
BELLCRANK	Alavanca angular
BELLOWS	Fole
BELOW	Abaixo
BELT	Correia, cinto
BELT TIGHTENER	Ajustador de correia
BEVEL GEAR	Coroa
BIT-CUTTER	Broca, fresa
BLACK	Preto
BLADE	Lâmina
BLEEDER	Sangrador
BLOCK	Bloco, calço
BLOWER	Ventilador
BLUE	Azul
BOARD	Prancha, tábua
BODY	Corpo
BOLT	Parafuso
BONNET	Tampa
BOOM	Lança
BOOSTER	Reforçador
BOOT	Protetor contra poeira
BORE	Furo
BOSS	Ressalto
BOTH	Ambos (as)
BOTTOM	Fundo
BOWL	Caçamba
BOX	Caixa
BRACE	Tirante
BRACKET	Suporte
BRAKE	Freio
BREAKER	Interruptor
BREATHER	Respiro
BRIDGE	Braço
BROWN	Marrom
BRUSH	Escova
BUCKET	Caçamba
BULB	Bulbo
BULLDOZER	Bulldozer
BUMPER	Pára-choque
BUSHING	Bucha
BUTTON	Botão
BUZZER WARNING	Alarme sonoro
C = CHANGE	Alteração
CAB	Cabina
CABINET	Gabinete
CABLE	Cabo
CAGE	Alojamento
CALIPER	Calibrador
CAM	Excêntrico, ressalto
CAMSHAFT	Eixo-comando-de-válvulas
CANOPY	Coberta, toldo

NOMENCLATURA DE PEÇAS INGLÊS-PORTUGUÊS

INGLÊS	PORTUGUÊS
CAP	Tampa
CAPACITOR	Capacitor, condensador
CARBURETOR	Caburador
CARCASS	Carcaça
CARRIER	Suporte
CARTON	Caixa de papelão
CARTRIDGE	Cartucho
CASE	Caixa, alojamento
CASING	Invólucro, revestimento
CASTER	Rolete, roldana
CAST IRON	Ferro fundido
CATWALK	Passadiço
CENTER	Centro
CHAIN	Corrente
CHAMBER	Câmara
CHANGEOVER	Modificação
CHANNEL	Canal
CHASSIS	Chassi, armação
CHECK-VALVE	Válvula de retenção
CIRCUIT	Circuito
CIRCUIT BREAKER	Interruptor de circuito
CLAMP	Braçadeira
CLASP	Fecho, grampo
CLEANER	Purificador
CLEVIS	Forquilha, garfo
CLIP	Clipe, presilha, grampo
CLOSURE	Fecho
CLUTCH	Embreagem
COARSE	Grosso, áspero
COATING	Capa, revestimento
COCK	Torneira
COIL	Bobina, serpentina
COLLAR	Colar
COLLECTOR	Coletor
COLLET	Mandril
COLUMN	Coluna
COMPACTOR	Compactador
COMPARTMENT	Compartimento
COMPLETE	Completo
COMPOUND	Composto
COMPRESSOR	Compressor
CONCAVE	Côncavo
CONDITIONER	Condicionador
CONDUIT	Conduite, eletroduto
CONE	Cone
CONNECTING	Ligação
CONNECTED ROD	Biela
CONNECTION	Conexão
CONNECTOR	Conetor
CONSISTS OF	Consiste de
CONSOLE	Consolo
CONTACT	Contato, platinado
CONTACTOR	Contactador
CONTINUED FROM	Continuação de
CONTROL	Controle
CONVERSION	Conversão
CONVERTER	Conversor
COOLER	Arrefecedor
COOLING	Arrefecimento
CORK	Cortiça
CORE	Núcleo
CORNER	Canto
COTTER PIN	Contrapino
COUNTER	Contador, tacômetro
COUNTERWEIGHT	Contrapeso
COUPLER	Acoplador, engate
COUPLING	Acoplamento, conexão
COVER	Tampa
COWL	Capota
COWLING	Capota
CRADLE	Armação, suporte
CRANK	Manivela
CRANKCASE	Cárter
CRANKSHAFT	Virabrequim
CROSS UNION	Junta transversal
CROSSBAR	Barra transversal
CUP	Capa, anel externa
CURTAIN	Cortina
CUSHION	Almofada, amortecedor
CUTTER	Fresa, cortador
CUTTING EDGE	Borda cortante
CYLINDER	Cilindro
CYLINDER BLOCK	Bloco do motor
CYLINDER HEAD	Cabeçote
DAMPER	Amortecedor
DARK GREEN	Verde escuro
DASH	Painel
DASH PANEL	Painel de Instrumento
DECELERATOR	Desacelerador
DEFLECTOR	Defletor
DETENT	Retém, pino de trava
DIAGRAM-WIRING	Diagrama dos circuitos elétricos
DIAL	Medidor de dial
DIAPHRAGM	Diafragma
DIESEL ENGINE COMPLETE	Motor diesel completo
DIFFERENTIAL	Diferencial
DIFFUSER	Difusor
DIMMER	Redutor de luminosidade
DIODE	Diodo
DIRECTOR	Diretor
DISC	Disco
DISCONNECT	Desligar
DISPOSABLE	Disponível, substituível
DISSIPATOR	Dissipador de calor
DISTRIBUTOR	Distribuidor
DM = DECIMETER	dm = decímetro

NOMENCLATURA DE PEÇAS INGLÊS-PORTUGUÊS

INGLÊS	PORTUGUÊS
DOME LIGHT	Lâmpada do teto
DOOR	Porta
DOWEL	Pino-guia, cavilha
DOWNSHIFT	Mudança para marcha mais baixa
DOZER	Bulldozer (lâmina)
DRAIN	Dreno
DRAWBAR	Barra de tração
DRILL	Broca
DRILLED	Broqueado, perturado
DRIVE	Comando, acionamento, propulsão
DRIVER	Acionador, mecanismo propulsor
DRIVESHAFT	Eixo acionador, eixo de transmissão
DRUM	Tambor
DUCT	Conduto, canal
EACH	Cada
EDGE	Borda, canto
EFFECTIVE WITH	Efetivo a partir de
EJECTOR	Ejetor
ELBOW	Cotovelo
ELEMENT	Elemento
ENCLOSURE	Cobertura
END	Extremidade
END BIT	Canto de lâmina
END VIEW	Vista traseira
ENGINE	Motor
ENGINE ARRANGEMENT	Arranjo do motor
EXCEPT	Exceto
EXHAUST	Escape
EXHAUST PIPE	Cano de escape
EXPANDER	Expansor
EXPANSION PLUG	Bujão de expansão
EXTENSION	Extensão
EXTINGUISHER	Extintor
EXTRACTOR	Extrator
EYE	Olhal
EYEBOLT	Parafuso de olhal
FABRIC	Tecido, tela textura
FACING	Revestimento, forro
FAN	Ventilador
FASTENED	Fixo, preso
FASTENER	Fixador, prendedor
FENDER	Pára-lamas
FERRULE	Virola
FIELD COIL	Bobina indutora, ou de campo
FIELD REPLACEMENT	Reposicão ou substituicão no campo
FILLER	Bocal de enchimento
FILM	Película
FILTER	Filtro
FINAL DRIVE	Comando final
FINGER	Dedo
FIREWALL	Parede contra fogo
FITTING	Graxeira, conexão
FIXTURE	Dispositivo, Aparelho
FLANGE	Flange
FLASHER	Luz intermitente
FLOAT	Flutuar, livre
FLOOD-LAMP	Farol
FLOOR	Piso
FLOORMAT	Tapete
FLOORPLATE	Chapa do piso
FLYWEIGHT	Peso volante
FLYWHEEL	Volante
FOLLOWER	Seguidor
FOOT	Pé
FORK	Garfo
FOR USE WITH	Para usar com
FOUNDATION	Assentamento, alicerce
FRAME	Armacão, chassi
FRONT	Frente, dianteiro
FT = FOOT	Pé
FUEL INJECTION	Injecão de combustível
FUEL PUMP	Bomba de combustível
FUEL RATIO	Limitador de combustível
FUEL SYSTEM	Sistema do combustível
FUEL TANK	Tanque do combustível
FUMES DISPOSAL	Eliminação de vapores do cárter
FUSE	Fusível
G = GROUP	Grupo
GAGE	Indicador, manômetro
GAP	Folga, lacuna, intervalo
GASKET	Junta
GASKET KIT	Jogo de junta
GATE	Entrada, trava
GAUGE	Indicador, manômetro
GEAR	Engrenagem, marcha
GEAR BOX	Caixa de engrenagem
GEAR PUMP	Bomba de engrenagem
GENERATOR	Gerador
GLAND	Junta, gaxeta, vedacão sobreposta
GLASS	Vidro
GLOW PLUG	Vela incandescente
GOVERNOR	Governador
GRAB IRON	Balaústre corrimão
GRATE	Grade, grelha
GRAY	Cinza
GRID	Grade, grelha
GRILL	Grade, grelha
GRIP	Pega, garra, cabo

NOMENCLATURA DE PEÇAS INGLÊS-PORTUGUÊS

INGLÊS	PORTUGUÊS
GROMMET	Ilhós
GROUND BRUSH	Escova-terra
GROUND (ELECTRIC)	Terra (eletricidade)
GROUSER	Garra (de sapata)
GUARD	Protetor
GUIDE	Guia
GUSSET	Cantoneira
HACKSAW	Serra para metais
HALF	Metade, meio (a)
HALF LINK	Semi-elo
HAMMER	Martelo
HAND CONTROL	Controle manual
HANDLE	Cabo, alça
HANDRAIL	Corrimão, balaústre
HANGER	Suporte, dispositivo de suspensão
HARDWARE	Ferragem
HARDWARE KIT	Jogo de ferragem
HARNESS	Chicote
HEAD = HD	Cabeça
HEADER	Coletor
HEADLAMP	Farol dianteiro
HEADLIGHT	Farol dianteiro
HEAT SINK	Difusor de calor
HEATER	Aquecedor
HIGH-IDLE	Marcha acelerada em vazio
HINGE	Dobradiça, articulacão
HITCH	Engate
HOIST	Guincho, talha
HOLD	Suporte, fixador
HOLD DOWN	Fixar, reter, manter abaixado
HOLDER	Fixador, suporte
HOLE	Furo, buraco
HOOD	Capô
HOOD & DASH	Capô e painel
HOOK	Gancho
HORN	Buzina
HOSE	Mangueira
HOUSING	Alojamento
HUB	Cubo
HYDRAULIC	Hidráulico
ID = INSIDE DIAMETER	Diâmetro interno
IDLER	Roda-guia
IDLER & SHAFT	Roda-guia e eixo
IDLER GEAR	Engrenagem intermediária
IDLER PULLEY	Polia intermediária
IMPELLER	Impulsor, rotor
IN = INCH	Polegada
INCLUDES	Inclui
INDICATE	Indicam
INDICATOR	Indicador
INLAY	Incrustação
INLET	Admissão, entrada
INPUT	Entrada
INSERT	Inserção
INSTALLATION	Instalação
INSTALLED ON MODEL	Instalação no modelo
INSTRUCTION	Instrução
INSTRUMENT	Instrumento
INSULATED BRUSH	Escova isolada
INSULATION	Isolação, isolamento
INSULATOR	Isolante, isolador
INTAKE	Admissão
INTERLOCK	Trava interna
INTERMEDIATE	Intermediário
INTERNAL	Interno
INVERTER	Inversor
IRON	Ferro
JACK	Macaco
JAW	Mandíbula, garra
JET	Jato, vaporizador
JOINT	Junta, articulação
JUNCTION	Junção
KEY	Chaveta
KINGBOLT	Pino de engate
KNIFE	Faca, lâmina
KNOB	Maçaneta, botão
LADDER	Escada
LAMP	Lâmpada
LARGE	Grande
LATCH	Trinco, lingüeta
LEAD	Condutor, cabo
LEG	Perna
LENS	Lente
LEVEL	Nível
LEVER	Alavanca
L.H. = LEFT HAND	Lado esquerdo
LID	Placa, tampa
LIFT	Levantar
LIFT CYLINDER	Cilindro de levantamento
LIFTER	Tucho
LIFTING EYE	Olhal de levantamento
LIGHT GREEN	Verde claro
LIGHTING	Sistema de iluminação
LINE	Tubulação
LINER	Camisa
LINES & PUMP	Tubulação e bomba
LINES & VALVE	Tubulação e válvula
LINING	Revestimento, lona
LINK	Elo
LINKAGE	Articulação
LIP	Lábio, borda
LISTED	Relacionamento
LITERATURE	Literatura
LOCATED	Localizado

NOMENCLATURA DE PEÇAS INGLÊS-PORTUGUÊS

INGLÊS	PORTUGUÊS
LOCATOR	Localizador
LOCK	Trava
LOCKNUT	Contraporca
LOCKWASHER	Arruela de pressão
LOCKWIRE	Arame de trava
LONG	Longo
LOOM	Tubo isolador
LOW IDLE	Marcha lenta
LOUVER	Persiana
LOWER	Abaixar, inferior
LUBRICANT	Lubrificante
LUG	Ressalto, orelha
MACHINE SCREW	Parafuso de fenda
MAGNET	Imã magneto
MAIN	Principal
MAINTENANCE	Manutenção
MANIFOLD	Coletor
MARKED	Marcado (a)
MARKER	Marcador
MASTER PIN	Pino mestre
MAT	Capacho, esteira
METER	Medidor, contador
MINOR	Menor
MIRROR	Espelho
MISCELLANEOUS	Miscelânea
MODIFICATION	Modificação
MOLDBOARD	Armação da lâmina
MOTOR	Motor
MOULDING	Moldura
MOUNT	Montar
MOUNTED	Montado (a)
MOUNTING	Montagem
MUFFLER	Silenciador
NAMEPLATE	Plaqueta de identificação
N.C. (THREAD)	Rosca grossa
NEEDLE	Agulha
N.F. (THREAD)	Rosca fina
NIB	Ponta, bico
NIPPLE	Conexão
NONE	Nenhum (a)
NORMALIZING	Normalização
NOT PART OF	Não faz parte de
NOZZLE	Bocal, bico injetor
N/S = NOT SERVICED	Não vendável
NUMBER (No)	Número (No)
NUT	Porca
NUT-WING	Porca borboleta
NUT-CASTLE	Porca acastelada
NUT-WELD	Porca-soldada
NUT-CAP	Porca cega
NUT-HEX	Porca sextavada
NUT-LOCK	Contraporca
NUT-IMPERIAL	Porca imperial
NUT-JAM	Porca de trava, contraporca
NUT-LOW CROWN	Porca de meia coroa
NUT-RETAINING	Porca de retenção
NUT-SELF LOCK	Porca de autotravamento
NUT-SLOTTED	Porca fendada
NUT-SPANNER	Porca para chaves
O.D. = OUTSIDE DIAMETER	Diâmetro externo
O-RING	Anel "O"
OIL	Óleo
OILPAN	Cárter
OIL PUMP	Bomba de óleo
OIL SYSTEM	Sistema de lubrificação
OILER	Almotolia, lubrificador
ORANGE	Laranja
TO ORDER	Para pedir
ORIFICE	Orifício
OUTER	Externo
OUTER RACE	Anel externo
OUTPUT	Saída
OVERALL	Geral, total
OVERHAUL	Revisão
OVER SIZE	Sobremedida
PACKING	Embalagem, gaxeta
PAD	Coxim, calço
PADLOCK	Cadeado
PAINT	Pintura
PAN	Cárter
PANEL	Painel
PARKING BRAKE	Freio de estacionamento
PARTITION	Separacão
PARTS G	Grupo de peças
PARTS OF	Peça de
PARTS OF ALL ENGINE ARRANGEMENTS	Peças de todos os arranjos do motor exceto
PAWL	Garra
PEDAL	Pedal
PEDESTAL	Pedestal
PERFORMANCE	Desempenho
PILOT	Piloto
PIN	Pino
PIN & BUSHING	Pino e bucha
PIN-COTTER	Contrapino
PINCH BAR	Pé de cabra
PINION	Pinhão
PIPE	Tubo
PISTON	Pistão
PIVOT	Articulação, pivô
PLANETARY	Planetário
PLATE	Placa
PLATFORM	Plataforma
PLUG	Bujão
PLUNGER	Pistão, êmbolo

NOMENCLATURA DE PEÇAS INGLÊS-PORTUGUÊS

INGLÊS	PORTUGUÊS
POINT	Ponta, ponto
POINTER	Ponteiro
POLE & COIL	Polo e bobina
POLE	Polo, lança, vara
POPPET	Gatilho
POST	Poste, coluna
POTENTIOMETER	Potenciômetro
POWER TAKE OFF	Tomada de força
POWER TRAIN	Trem de força
PRE-SCREENER	Tela protetora
PRECHAMBER	Câmara de pré-combustão
PRECLEANER	Pré-purificador
PRECOMBUSTION	Pré-combustão
PRESS	Prensa
PRESS = PRESSURE	Pressão
PREVIOUS	Prévio, anterior
PRIMARY	Primário, principal
PROBE	Prova
PROJECTOR	Projeter
PROTECTION	Proteção
PROTECTOR	Proteter
PULLER	Extrator, sacador
PULLEY	Polia
PUMP	Bomba
PURPLE	Roxo
PUSHROD	Haste de empuxo
QTY = QUANTITY	Quantidade
RACE	Pista
RACE & ROLLER	Pista e rolete
RACK	Cremalheira
RADIATOR	Radiador
RAIL	Trilho, guia
RANGE TRANSM	Transmissão manual
RATCHET	Catraca
REAR	Traseiro (a)
REBORED	Escareado, alargado
REBUILD KIT	Jogo de recondicionamento
RECEPTACLE	Recipiente
RECTIFIER	Retificador
RED	Vermelho
REDUCER	Redutor
REFER	Referir
REGULATOR	Regulador
RELATED REPAIR ITEMS	Itens de reparos relacionados
RELAY	Relé
RELIEF VALVE	Válvula de alívio
REPAIR G	Grupo de reparo
REPAIR KIT	Jogo de reparo
REPAIR ITEMS	Itens de reparo
REPLACEMENT	Reposição, substituição
REQUIRED	Necessário
RESERVOIR A	Reservatôrio

INGLÊS	PORTUGUÊS
RESIN	Resina
RESISTOR	Resistência
RETAINER	Fixador
RETARDER	Retardador
REVERSIBLE	Reversível
R.H. = RIGHT HAND	Lado direito
RIM	Aro
RIM & TIRE	Aro e pneu
RING	Anel
RIVET	Rebite
ROCKET	Balancim
ROD	Haste
ROD END	Extremidade da haste
ROLLER	Rolete
ROPE-STARTING	Partida à corda
ROTATOR	Girador
ROTOCHAMBER	Càmara pneumática
ROTOCOIL	Girador de válvula
ROTOR	Rotor
RUST INHIBITOR	Antioxidante
SADDLE	Sela, assento
SAFETY	Segurança
SAFETY TREAD	Tiras antiderrapante
SCRAPER	Tampa
SCREEN	Tela
SCREW	Parafuso
SCREW-HEX HD	Parafuso de cabeça hexagonal
SCREW-KIT	Jogos de parafuso
SCREW-MACHINE	Parafuso de fenda
SCREW-ROUND HD	Parafuso de cabeça redonda
SCREW-FLANGED	Parafuso com flange
SCREW-LOCKING	Parafuso de trava
SCREW-THUMB	Parafuso de orelhas
SCREWDRIVER	Chave de fenda
SEAL	Retentor
SEALED UNIT	Unidade vedada
SEALER	Vedador isolante
SEAT	Assento
SECONDARY	Secundário
SECTION	Seção
SEGMENT	Segmento
SENDER	Emissor
SENSOR	Sensor
SEPARATE	Separar, separado
SEPARATOR	Separador
SERIAL NUMBER PLATE	Placa de número de série
SERVICE	Serviço, manutenção
SERVICE KIT	Jogo de manutenção
SERVICE METER	Horômetro
SETSCREW	Parafuso de fixação
SHACKLE	Grilheto, anel, manilha
SHAFT	Eixo

NOMENCLATURA DE PEÇAS INGLÊS-PORTUGUÊS

INGLÊS	PORTUGUÊS
SHANK	Porta-ponta do escarificador
SHEAVE	Polia, roldana
SHEET	Folha, lâmina
SHELL	Invólucro, cápsula, casquilho
SHIELD	Blindagem, protetor
SHIFT	Mudança
SHIM	Calço
SHIPPING	Embarque
SHOCK ABSORBER	Amortecedor de choques
SHOCKMOUNT	Montagem a prova de choques
SHOE	Sapata
SHORT	Curto
SHOWN	Ilustrado, mostrado
SHROUD	Tampa de proteção
SHUNT	Derivação
SHUT OFF	Desligar, parada
SHUTTLE	Pistão de vaivém
SIDE	Lateral
SIDE VIEW	Vista lateral
SILICONE	Silicone
SINK	Absorvente de calor
SKIVING	Desbaste
SLACK ADJUSTER	Adjustador de folga
SLEEVE	Luva, manga, camisa
SLIDER	Cursor, deslizador
SLIDE RAIL	Trilho deslizante
SLING	Cabos, amarras, linga
SLINGER	Defletor
SLUG	Pistão de reação, pistãozinho
SMALL	Pequeno
SNAP RING	Anel de retenção, anel de pressão
SNUBBER	Amortecedor
SOCKET	Soquete, tomada
SOLENOID	Solenóide
SPACER	Espaçador
SPARE	Sobressalente
SPARK PLUG	Vela de ignição
SPECIAL	Especial
SPEEDOMETER	Velocimetro
SPIDER	Cruzeta
SPINDLE	Ponta de eixo
SPLINE	Estria
SPOOL	Carretel
SPOUT	Calha, tubo
SPRING	Mola
SPROCKET	Roda motriz, roda dentada
STABILIZER	Estabilizador
STACK	Chaminé, cano de escapamento
STAND	Suporte, cavalete
STANDPIPE	Suporte vertical de sucção
STAPLE	Grampo
STARTER	Arranque motor de partida
STATOR	Estator
STEERING	Direção
STEM	Haste
STEP	Degrau
STICK	Vareta
STOP	Parar
STORAGE	Armazenagem
STRAINER	Tela filtrante
STRAP	Tira, cinta, suporte de fixação
STREET ELL	Conexão cotovelo
STRIP	Tira, fita, listra
STROKE	Curso do pistão
STUD	Prisioneiro
SUMP	Tanque, reservatório
SUPPLY VALVE	Válvula de suprimento
SUPPORT	Suporte
SUSPENSION	Suspensão
SWITCH	Interruptor
SWIVEL	Articulação giratória
TAB	Tira, aba, lingüeta
TABLE	Mesa
TACHOGRAPH	Tacógrafo
TACHOMETER	Tacômetro
TAG	Etiqueta
TAIL LAMP	Farol traseiro
TAN	Castanho
TANG	Lingüeta
TANK	Tanque
TAP	Macho
TAPE	Fita
TAPPET	Tucho
TEE	Conexão em "T"
TEMP. = TEMPERATURE	Temperatura
TERMINAL	Terminal
TEST UNIT	Unidade de teste
TESTER	Aparelho de teste
THERMISTOR	Termistor
THERMOCOUPLE	Termopar
THERMOMETER	Termômetro
THERMOSTAT	Termostato
THERMOSWITCH	Interruptor térmico
THICK	Grosso (a) espesso (a)
TIE	Ligação, tirante
THREAD (OF NUT)	Rosca (de porca)
THROTTLE	Acelerador de
THROWER	Defletor
THRU = THROUGH	Através de
TIGHTENER	Tensor
TILT CYLINDER	Cilindro de inclinação
TIMING	Sincronização, Distribuição

NOMENCLATURA DE PEÇAS INGLÊS-PORTUGUÊS

INGLÊS	PORTUGUÊS
TIP	Ponta
TIRE	Pneu
TIRE & RIM	Pneu e aro
TONGUE	Língua, lingueta
TOOL	Ferramenta
TOOLCABINET	Armário para ferramenta
TOOTH/TEETH	Dente/dentes
TOP	Topo, parte superior
TORQUE	Torque
TORQ. CONV.	Conversor de torque
TORQ. DIVIDER	Divisor de torque
TOWER	Torre
TRACK	Esteira
TRACK PIN	Pino de esteira
TRACTOR	Trator
TRAILING UNIT	Unidade rebocada
TRANSFER	Decalcomania
TRANSFORMER	Transformador
TRANSISTOR	Transistor
TRANSMISSION	Transmissão
TRANSMISSION OVERHAUL	Revisão da transmissão
TREAD	Piso, banda de rodagem
TREADLE	Pedal
TROLLY	Carrinho
TRUCK	Caminhão
TRUNNION	Munhão
TUBE	Tubo, cano
TUBING	Tubulagem canalização
TURBINE	Turbina
TURBOCHARGER	Turboalimentador
U-BOLT	Parafuso em "U"
U-JOINT	Junta universal
UNDERSIZE	Submedida
UNION	União
UPPER	Superior
USE AS REQUIRED	Usar conforme necessitar
VALUE	Valor
VALVE	Válvula
VALVE GRINDING	Retificação das válvulas
VEE BELT	Correia "V"
VEE BELT SET	Jogo de correia em "V"
VENT	Respiro
VIEW	Vista
VISE	Morsa, torno
VISOR	Pára-sol
WALKWAY	Passadiço, corredor
WARNING G.	Grupo de alarma
WASHER	Arruela
WATER PUMP	Bomba d'água
WEARPLATE	Placa de desgaste
WEDGE	Cunha
WEIGHT	Peso
WELD	Solda
WELDNUT	Porca soldada
WHEEL	Roda
WHITE	Branco
WICK	Mecha, pavio
WINCH	Guincho
WINDOW	Janela
WINDSHIELD	Pára-brisa
WIPER	Limpador
WIRE	Fio
WIRING	Sistema elétrico
WIRING DIAGRAM	Diagrama do sistema elétrico
WITH	Com
WRAPPER	Invólucro, envoltório
WRENCH	Chave
YELLOW	Amarelo
YOKE	Garfo

MAINTENANCE PARTS

DESCRIPTION	PART NUMBER	QTY	WHERE USED	PAGE
AIR INLET AND EXHAUST SYSTEM				
FILTER ELEMENT AS-AIR (PRIMARY)	110-6326	1	AIR CLEANER GP	72
FILTER ELEMENT AS-AIR (SECONDARY)	110-6331	1	AIR CLEANER GP	72
BASIC ENGINE				
CAP-OIL FILLER (ENGINE)	130-9888	1	COVER GP-VALVE MECHANISM	7
		1	COVER GP-VALVE MECHANISM	9
		1	COVER GP-VALVE MECHANISM	11
COVER	230-9127	1	COVER GP-VALVE MECHANISM	7
		1	COVER GP-VALVE MECHANISM	9
		1	COVER GP-VALVE MECHANISM	11
COVER AS-FRONT	226-8767	1	HOUSING GP-FRONT	29
		1	HOUSING GP-FRONT	31
GASKET-COVER	226-8766	1	HOUSING GP-FRONT	29
		1	HOUSING GP-FRONT	31
	277-3012	1	HOUSING GP-FRONT	29
		1	HOUSING GP-FRONT	31
GASKET (VALVE COVER)	225-6451	1	COVER GP-VALVE MECHANISM	7
		1	COVER GP-VALVE MECHANISM	9
		1	COVER GP-VALVE MECHANISM	11
KEY-WOODRUFF	1B-8736	1	HOUSING GP-FRONT	29
		1	HOUSING GP-FRONT	31
PLUG-DRAIN (ENGINE OIL)	7C-0351	2	PAN GP-OIL	37
		2	PAN GP-OIL	39
V-BELT SET (INCLUDES 2-BELTS) (FAN)	121-4365	1	DRIVE GP-FAN	25
COOLING SYSTEM				
CAP AS-VENTED (COOLANT RECOVERY)	229-3469	1	RECOVERY GP-COOLANT	71
CAP-RADIATOR	006-8865	1	RADIATOR & HYD OIL COOLER GP	68
CONNECTION GP-WATER (TEMPERATURE REGULATOR)	254-2269	1	CONNECTION GP-WATER	57
HOSE-RADIATOR (LOWER)	227-0140	1	RADIATOR & HYD OIL COOLER GP	69
HOSE-RADIATOR (UPPER)	226-5925	1	RADIATOR & HYD OIL COOLER GP	69
REGULATOR-WATER TEMPERATURE	225-6908	1	CONNECTION GP-WATER	56

MAINTENANCE PARTS

DESCRIPTION	PART NUMBER	QTY	WHERE USED	PAGE
ELECTRICAL AND STARTING SYSTEM				
BATTERY (12-VOLT, MAINTENANCE FREE)	3T-5760	2	BATTERY & WIRING GP	100
BELT-DRIVE (WARNING BEACON)	9X-8139	1	LAMP GP-WARNING BEACON	110
CIRCUIT BREAKER AS (60-AMPERE) (ALTERNATOR)	171-2208	1	WIRING GP-ENGINE	131
CIRCUIT BREAKER AS (60-AMPERE) (GLOW PLUG)	171-2208	1	WIRING GP-ENGINE	131
CIRCUIT BREAKER AS (60-AMPERE) (MAIN)	171-2208	1	WIRING GP-ENGINE	131
GLOW PLUG	226-8770	4	GLOW PLUG GP	105
KEY (BATTERY DISCONNECT)	8H-5306	1	SWITCH GP-DISCONNECT	119
LAMP-HALOGEN (24-VOLT, 65-WATT)	9X-3463	1	LAMP GP-FLOOD	109
LAMP-HALOGEN (24-VOLT, 65-WATT) (FLOODLIGHT)	9X-3463	1	LAMP GP-FLOOD	107
		1	LAMP GP-FLOOD	108
LAMP (24-VOLT) (DOME)	7N-9943	1	LAMP GP-DOME	106
LAMP (24-VOLT, 70-WATT) (WARNING BEACON)	9X-7849	1	LAMP GP-WARNING BEACON	110
V-BELT SET (ALTERNATOR)	229-3542	1	WIRING GP-ENGINE	131
FUEL SYSTEM				
CAP GP-FUEL FILLER (EXTREME SERVICE, LOCKABLE)	164-4858	1	TANK GP-FUEL	96
DRAIN AS	222-6617	1	PUMP GP-FUEL PRM & PRIM FILTER	90
FILTER ELEMENT AS-FUEL	1R-1804	1	PUMP GP-FUEL PRM & PRIM FILTER	90
		1	PUMP GP-FUEL PRM & PRIM FILTER	94
SEAL (WATER SEPARATOR)	207-2757	1	PUMP GP-FUEL PRM & PRIM FILTER	94
STRAINER-FUEL	9P-7121	1	TANK GP-FUEL	96
HYDRAULIC SYSTEM				
BREATHER AS (HYDRAULIC TANK)	183-3873	1	TANK & MTG GP-HYDRAULIC	245
CAP AS-FILLER (HYDRAULIC TANK)	142-8937	1	TANK GP-HYDRAULIC	247
FILTER AS-OIL (ADVANCED EFFICIENCY) (HYDRAULIC)	1G-8878	1	FILTER & MTG GP-HYDRAULIC	215
GASKET-COVER	164-6956	4	PUMP GP-PISTON	233
GASKET-FRONT COVER	119-5045	1	MOTOR GP-PISTON	225
STRAINER-SUCTION (HYDRAULIC TANK)	1G-7663	1	TANK GP-HYDRAULIC	247
LUBRICATION SYSTEM				
FILTER AS-ENGINE OIL	7W-2326	1	FILTER GP-ENGINE OIL	54

MAINTENANCE PARTS

DESCRIPTION	PART NUMBER	QTY	WHERE USED	PAGE
OPERATOR STATION				
ACCUMULATOR GP-REFRIGERANT (WITH DESICCANT)	176-3900	1	ACCUMULATOR GP-REFRIGERANT	284
BLADE AS-WIPER (500-MM)	5C-8811	1	WIPER & WASHER GP-WINDOW	389
BLADE AS-WIPER (700-MM)	6V-7419	1	WIPER & WASHER GP-WINDOW	389
CAP-VENTED (WINDOW WASHER)	8E-8292	1	TANK GP-WINDOW WASHER	382
CIRCUIT BREAKER AS (15-AMPERE) (KEY SWITCH)	6T-3643	1	PANEL GP-INSTRUMENT	357
CIRCUIT BREAKER AS (15-AMPERE) (MAIN POWER RELAY)	6T-3643	1	PANEL GP-INSTRUMENT	346
FILTER (CAB AIR)	180-7487	1	FILTER GP-CAB AIR	320
FUSE (10-AMPERE)	113-8490	16	PANEL GP-INSTRUMENT	355
		16	PANEL GP-INSTRUMENT	345
LAMP AS-INDICATOR (ALTERNATOR)	2N-2371	1	PANEL GP-INSTRUMENT	360
LAMP GP-DOME (24-VOLT)	3E-6389	1	LINER GP-CAB	328
LAMP (24-VOLT) (ALTERNATOR INDICATOR)	7N-5876	1	PANEL GP-INSTRUMENT	349
		1	PANEL GP-INSTRUMENT	352
		1	PANEL GP-INSTRUMENT	360
		1	PANEL GP-INSTRUMENT	363
LAMP (24-VOLT) (FUEL LEVEL GAUGE)	5D-0019	1	PANEL GP-INSTRUMENT	349
		1	PANEL GP-INSTRUMENT	360
LAMP (24-VOLT) (PARKING BRAKE)	116-5270	1	PANEL GP-INSTRUMENT	345
LAMP (24-VOLT) (RED)	116-5270	1	PANEL GP-INSTRUMENT	355
LAMP (24-VOLT) (WARNING LAMP)	110-2079	4	MODULE GP-WARNING INDICATOR	337
LAMP (24-VOLT, 3-WATT)	115-1748	1	PANEL GP-INSTRUMENT	352
		1	PANEL GP-INSTRUMENT	363
V-BELT (A/C COMPRESSOR)	2P-4191	1	COMPRESSOR GP-REFRIGERANT	298
POWER TRAIN				
BREATHER (AXLE)	197-9155	2	AXLE GP	137
PLUG AS-DRAIN (MAGNETIC)	152-6144	5	AXLE GP	137
PLUG-DRAIN (SPEED REDUCTION GEAR)	151-7516	1	PLANETARY GP-FINAL DRIVE	161
PLUG-MAGNETIC (OIL DRAIN)	152-6145	1	AXLE GP	137
VIBRATORY SYSTEM				
PLUG-MAGNETIC (ECCENTRIC WEIGHT)	5P-4484	2	HOUSING GP-ECCENTRIC WEIGHT	256
PLUG-MAGNETIC (ECCENTRIC WEIGHT HOUSING)	5P-4484	2	HOUSING GP-ECCENTRIC WEIGHT	254
PLUG-MAGNETIC (VIBRATORY SUPPORT)	159-5846	1	SUPPORT GP-VIBRATORY	273
WATER SYSTEM				
CAP AS (WATER TANK)	7R-8588	1	TANK GP-WATER	281
CAP-FILLER (WATER TANK DRAIN PLUG)	6G-9333	1	TANK GP-WATER	282
FILTER-WATER	148-3046	1	FILTER GP-WATER	277
STRAINER (WATER SPRAY NOZZLE)	140-3138	7	BAR GP-SPRAY	275
STRAINER (WATER TANK FILL)	7R-0476	1	TANK GP-WATER	281

PIÈCES DE RECHANGE

DESCRIPTION	NUMÉRO DE PIECÈS	QTÉ	DOMAINE D'APPLICATION	PAGE
CIRCUIT D'ADMISSION D'AIR ET D'ÉCHAPPEMENT				
ÉLÉMENT DE FILTRE À AIR (ENS) (PRINCIPAL)	110-6326	1	FILTRE A AIR (ASS)	72
ÉLÉMENT DE FILTRE À AIR (ENS) (SECONDAIRE)	110-6331	1	FILTRE A AIR (ASS)	72
CIRCUIT DE CARBURANT				
BOUCHON DE GOULOTTE DE CARBURANT (ASS) (SERVICE INTENSIF, VERROUILLABLE)	164-4858	1	RÉSERVOIR DE CARBURANT (ASS)	96
BOURRELET D'ÉTANCHÉITÉ (SÉPARATEUR D'EAU)	207-2757	1	POMPE D'AMORÇAGE DE CARBURANT ET FILTRE PRINCIPAL	94
ÉLÉMENT DE FILTRE (ENS)-CARBURANT	1R-1804	1	POMPE D'AMORÇAGE DE CARBURANT ET FILTRE PRINCIPAL	90
		1	POMPE D'AMORÇAGE DE CARBURANT ET FILTRE PRINCIPAL	94
FILTRE À CARBURANT	9P-7121	1	RÉSERVOIR DE CARBURANT (ASS)	96
VIDANGE (ENS)	222-6617	1	POMPE D'AMORÇAGE DE CARBURANT ET FILTRE PRINCIPAL	90
CIRCUIT DE GRAISSAGE				
FILTRE A HUILE MOTEUR (ENS)	7W-2326	1	FILTRE À HUILE MOTEUR (ASS)	54
CIRCUIT DE REFROIDISSEMENT				
BOUCHON À ÉVENT (ENS) (VASE D'EXPANSION DE LIQUIDE DE REFROIDISSEMENT)	229-3469	1	VASE D'EXPANSION POUR LIQUIDE RÉFRIGERANT	71
CHAPEAU - RADIATEUR	006-8865	1	RADIATEUR ET REFROIDISSEUR D'HUILE HYDRAULIQUE (ASS)	68
FLEXIBLE DE RADIATEUR (INFÉRIEUR)	227-0140	1	RADIATEUR ET REFROIDISSEUR D'HUILE HYDRAULIQUE (ASS)	69
FLEXIBLE DE RADIATEUR (SUPÉRIEUR)	226-5925	1	RADIATEUR ET REFROIDISSEUR D'HUILE HYDRAULIQUE (ASS)	69
RACCORD D'EAU (ASS) (THERMOSTAT)	254-2269	1	RACCORD D'EAU (ASS)	57
THERMOSTAT-TEMPÉRATURE D'EAU	225-6908	1	RACCORD D'EAU (ASS)	56
CIRCUIT DE VIBRATION				
BOUCHON AIMANTÉ (BALOURD)	5P-4484	2	CARTER-POIDS EXCENTRIQUE (ASS)	256
BOUCHON AIMANTÉ (CARTER DE BALOURD)	5P-4484	2	CARTER-POIDS EXCENTRIQUE (ASS)	254
BOUCHON AIMANTÉ (SUPPORT VIBRANT)	159-5846	1	SUPPORT DE VIBRATEUR (ASS)	273
CIRCUIT D'EAU				
BOUCHON DE GOULOTTE DE REMPLISSAGE (BOUCHON DE VIDANGE DU RÉSERVOIR D'EAU)	6G-9333	1	RÉSERVOIR D'EAU (ASS)	282
CHAPEAU (ENS) (RÉSERVOIR D'EAU)	7R-8588	1	RÉSERVOIR D'EAU (ASS)	281
CREPINE (GICLEUR D'EAU)	140-3138	7	RAMPE DE PULVERISATION (ASS)	275
CREPINE (REMPLISSAGE RÉSERVOIR D'EAU)	7R-0476	1	RÉSERVOIR D'EAU (ASS)	281
FILTRE -EAU	148-3046	1	FILTRE D'EAU	277

* TRADUCTION NON DISPONIBLE AU MOMENT DE LA PUBLICATION

PIÈCES DE RECHANGE

DESCRIPTION	NUMÉRO DE PIECÈS	QTÉ	DOMAINE D'APPLICATION	PAGE
CIRCUIT ÉLECTRIQUE ET DE DÉMARRAGE				
AMPOULE (24 VOLTS) (PLAFONNIER)	7N-9943	1	PLAFONNIER (ASS)	106
AMPOULE (24V, 70W) (GYROPHARE)	9X-7849	1	LAMPE - GYROPHARE (ASS)	110
BATTERIE (12V, SANS ENTRETIEN)	3T-5760	2	BATTERIE ET CÂBLAGE	100
BOUGIE DE PRECHAUFFAGE	226-8770	4	BOUGIE DE PRÉCHAUFFAGE (ASS)	105
CLÉ (COUPE-BATTERIE)	8H-5306	1	ROBINET DE BATTERIE (ASS)	119
DISJONCTEUR (ENS) (60A) (ALTERNATEUR)	171-2208	1	CABLAGE DE MOTEUR (ASS)	131
DISJONCTEUR (ENS) (60A) (BOUGIE DE PRÉCHAUFFAGE)	171-2208	1	CABLAGE DE MOTEUR (ASS)	131
DISJONCTEUR (ENS) (60A) (PRINCIPAL)	171-2208	1	CABLAGE DE MOTEUR (ASS)	131
ENTRAÎNEMENT POUR COURROIE (GYROPHARE)	9X-8139	1	LAMPE - GYROPHARE (ASS)	110
JEU DE COURROIES TRAPEZOIDALES (ALTERNATEUR)	229-3542	1	CABLAGE DE MOTEUR (ASS)	131
LAMPE HALOGÈNE (24V, 65W)	9X-3463	1	LAMPE - PHARE (ASS)	109
LAMPE HALOGÈNE (24V, 65W) (PROJECTEUR)	9X-3463	1	LAMPE - PHARE (ASS)	107
		1	LAMPE - PHARE (ASS)	108
CIRCUIT HYDRAULIQUE				
BOUCHON DE GOULOTTE DE REMPLISSAGE (ENS) (RÉSERVOIR HYDRAULIQUE)	142-8937	1	RÉSERVOIR HYDRAULIQUE (ASS)	247
CRÉPINE-ASPIRATION (RÉSERVOIR HYDRAULIQUE)	1G-7663	1	RÉSERVOIR HYDRAULIQUE (ASS)	247
FILTRE À HUILE (ENS) (EFFICACITÉ AVANCÉE) (HYDRAULIQUE)	1G-8878	1	FILTRE À HUILE HYDRAULIQUE ET MONTAGE (ASS)	215
*GASKET-FRONT COVER	119-5045	1	GROUPE DE MOTEUR A PISTONS	225
JOINT DE COUVERCLE	164-6956	4	POMPE A PISTONS (ASS)	233
RENIFLARD (ENS) (RÉSERVOIR HYDRAULIQUE)	183-3873	1	RÉSERVOIR HYDRAULIQUE ET MONTAGE (ASS)	245

* TRADUCTION NON DISPONIBLE AU MOMENT DE LA PUBLICATION

PIÈCES DE RECHANGE

DESCRIPTION	NUMÉRO DE PIECÈS	QTÉ	DOMAINE D'APPLICATION	PAGE
MOTEUR STANDARD				
BOUCHON DE GOULOTTE DE REMPLISSAGE D'HUILE (MOTEUR)	130-9888	1	CACHE-SOUPAPES (ASS)	7
		1	CACHE-SOUPAPES (ASS)	9
		1	CACHE-SOUPAPES (ASS)	11
BOUCHON DE VIDANGE (HUILE MOTEUR)	7C-0351	2	HUILE MOTEUR - CARTER (ASS)	37
		2	HUILE MOTEUR - CARTER (ASS)	39
CLAVETTE WOODRUFF	1B-8736	1	CARTER AV (ASS)	29
		1	CARTER AV (ASS)	31
COUVERCLE	230-9127	1	CACHE-SOUPAPES (ASS)	7
		1	CACHE-SOUPAPES (ASS)	9
		1	CACHE-SOUPAPES (ASS)	11
COUVERCLE AVANT (ENS)	226-8767	1	CARTER AV (ASS)	29
		1	CARTER AV (ASS)	31
JEU DE COURROIES TRAPEZOIDALES (COMPREND 2 COURROIES) (VENTILATEUR)	121-4365	1	ENTRAÎNEMENT DE VENTILATEUR (ASS)	25
JOINT DE COUVERCLE	226-8766	1	CARTER AV (ASS)	29
		1	CARTER AV (ASS)	31
	277-3012	1	CARTER AV (ASS)	29
		1	CARTER AV (ASS)	31
JOINT PLAT (CACHE-SOUPAPES)	225-6451	1	CACHE-SOUPAPES (ASS)	7
		1	CACHE-SOUPAPES (ASS)	9
		1	CACHE-SOUPAPES (ASS)	11

* TRADUCTION NON DISPONIBLE AU MOMENT DE LA PUBLICATION

PIÈCES DE RECHANGE

DESCRIPTION	NUMÉRO DE PIECÈS	QTÉ	DOMAINE D'APPLICATION	PAGE
POSTE DE CONDUITE				
ACCUMULATEUR - CLIMATISEUR (ASS) (AVEC SICCATIF)	176-3900	1	ACCUMULATEUR - CLIMATISEUR (ASS)	284
AMPOULE (24 VOLTS) (FREIN DE STATIONNEMENT)	116-5270	1	TABLEAU DE BORD (ASS)	345
AMPOULE (24 VOLTS) (JAUGE DE NIVEAU D'HUILE)	5D-0019	1	TABLEAU DE BORD (ASS)	349
		1	TABLEAU DE BORD (ASS)	360
AMPOULE (24 VOLTS) (ROUGE)	116-5270	1	TABLEAU DE BORD (ASS)	355
AMPOULE (24 VOLTS) (TÉMOIN D'ALTERNATEUR)	7N-5876	1	TABLEAU DE BORD (ASS)	349
		1	TABLEAU DE BORD (ASS)	352
		1	TABLEAU DE BORD (ASS)	360
		1	TABLEAU DE BORD (ASS)	363
AMPOULE (24 VOLTS) (VOYANT)	110-2079	4	MODULE - TÉMOIN (ASS)	337
AMPOULE (24V, 3W)	115-1748	1	TABLEAU DE BORD (ASS)	352
		1	TABLEAU DE BORD (ASS)	363
BALAI D'ESSUIE-GLACE (ENS) (500-MM)	5C-8811	1	ESSUIE-GLACE ET LAVE-GLACE	389
BALAI D'ESSUIE-GLACE (ENS) (700-MM)	6V-7419	1	ESSUIE-GLACE ET LAVE-GLACE	389
BOUCHON À ÉVENT (LAVE-GLACE)	8E-8292	1	RÉSERVOIR - LAVE-GLACE (ASS)	382
COURROIE TRAPEZOIDALE (COMPRESSEUR DE CLIMATISEUR)	2P-4191	1	COMPRESSEUR DE REFRIGERANT (ASS)	298
DISJONCTEUR (ENS) (15A) (INTERRUPTEUR À CLÉ)	6T-3643	1	TABLEAU DE BORD (ASS)	357
DISJONCTEUR (ENS) (15A) (RELAIS DE PUISSANCE PRINCIPAL)	6T-3643	1	TABLEAU DE BORD (ASS)	346
FILTRE (AIR DE CABINE)	180-7487	1	FILTRE À AIR DE CABINE (ASS)	320
FUSIBLE (10A)	113-8490	16	TABLEAU DE BORD (ASS)	345
		16	TABLEAU DE BORD (ASS)	355
LAMPE DE TÉMOIN (ENS) (ALTERNATEUR)	2N-2371	1	TABLEAU DE BORD (ASS)	360
PLAFONNIER (ASS) (24 VOLTS)	3E-6389	1	CABINE - REVÊTEMENT (ASS)	328
TRANSMISSION				
BOUCHON AIMANTÉ (VIDANGE D'HUILE)	152-6145	1	ESSIEU (ASS)	137
BOUCHON DE VIDANGE (ENS) (MAGNÉTIQUE)	152-6144	5	ESSIEU (ASS)	137
BOUCHON DE VIDANGE (PIGNON DE RÉDUCTION DE VITESSE)	151-7516	1	TRAINS PLANÉTAIRES-RÉDUCTEURS (ASS)	161
RENIFLARD (ESSIEU)	197-9155	2	ESSIEU (ASS)	137

* TRADUCTION NON DISPONIBLE AU MOMENT DE LA PUBLICATION

PIEZAS DE MANTENIMIENTO

DESCRIPCION	NUMERO DE PIEZA	CANT	SE UTILIZA EN	PAGINA
MOTOR BÁSICO				
CHAVETA DE MEDIA LUNA	1B-8736	1	CAJA DELANTERA (GR)	29
		1	CAJA DELANTERA (GR)	31
*COVER AS-FRONT	226-8767	1	CAJA DELANTERA (GR)	29
		1	CAJA DELANTERA (GR)	31
CUBIERTA	230-9127	1	TAPA DEL MECANISMO DE VÁLVULAS (GR)	7
		1	TAPA DEL MECANISMO DE VÁLVULAS (GR)	9
		1	TAPA DEL MECANISMO DE VÁLVULAS (GR)	11
EMPAQUETADURA (TAPA DE VÁLVULA)	225-6451	1	TAPA DEL MECANISMO DE VÁLVULAS (GR)	7
		1	TAPA DEL MECANISMO DE VÁLVULAS (GR)	9
		1	TAPA DEL MECANISMO DE VÁLVULAS (GR)	11
JUEGO DE CORREAS TRAPEZOIDALES (INCLUYE 2-CORREAS) (VENTILADOR)	121-4365	1	IMPULSOR DE VENTILADOR (GR)	25
JUNTA DE LA TAPA DE VÁLVULAS	226-8766	1	CAJA DELANTERA (GR)	29
		1	CAJA DELANTERA (GR)	31
	277-3012	1	CAJA DELANTERA (GR)	29
		1	CAJA DELANTERA (GR)	31
TAPA DEL TUBO DE LLENADO DE ACEITE (MOTOR)	130-9888	1	TAPA DEL MECANISMO DE VÁLVULAS (GR)	7
		1	TAPA DEL MECANISMO DE VÁLVULAS (GR)	9
		1	TAPA DEL MECANISMO DE VÁLVULAS (GR)	11
TAPÓN DE DRENAJE (ACEITE DE MOTOR)	7C-0351	2	CÁRTER - COLECTOR DEL (GR)	37
		2	CÁRTER - COLECTOR DEL (GR)	39

* NO HAY TRADUCCION DISPONIBLE EN EL MOMENTO DE LA IMPRESION

PIEZAS DE MANTENIMIENTO

DESCRIPCION	NUMERO DE PIEZA	CANT	SE UTILIZA EN	PAGINA
PUESTO DEL OPERADOR				
ACUMULADOR DEL ACONDICIONADOR DE AIRE (GR) (CON DESECANTE)	176-3900	1	ACUMULADOR DEL ACONDICIONADOR DE AIRE (GR)	284
CORREA TRAPEZOIDAL (COMPRESOR DEL ACONDICIONADOR DE AIRE)	2P-4191	1	COMPRESOR DE REFRIGERANTE (GR)	298
DISYUNTOR (CONJ) (15 AMPERIOS) (INTERRUPTOR DE LLAVE)	6T-3643	1	TABLERO DE INSTRUMENTOS (GR)	357
DISYUNTOR (CONJ) (15 AMPERIOS) (RELÉ DE FUERZA PRINCIPAL)	6T-3643	1	TABLERO DE INSTRUMENTOS (GR)	346
FILTRO (AIRE DE CABINA)	180-7487	1	FILTRO DE AIRE DE LA CABINA (GR)	320
FUSIBLE (10-AMPERIOS)	113-8490	16	TABLERO DE INSTRUMENTOS (GR)	345
		16	TABLERO DE INSTRUMENTOS (GR)	355
HOJA DE LIMPIAPARABRISAS (CONJ) (*500-MM)	5C-8811	1	LIMPIA Y LAVAPARABRISAS (GR)	389
HOJA DE LIMPIAPARABRISAS (CONJ) (*700-MM)	6V-7419	1	LIMPIA Y LAVAPARABRISAS (GR)	389
LÁMPARA DEL TECHO (GR) (24 VOLTIOS)	3E-6389	1	REVESTIMIENTO DE LA CABINA (GR)	328
LAMPARA INDICADORA (CONJ) (ALTERNADOR)	2N-2371	1	TABLERO DE INSTRUMENTOS (GR)	360
LÁMPARA (24 VOLTIOS) (*ALTERNATOR INDICATOR)	7N-5876	1	TABLERO DE INSTRUMENTOS (GR)	349
		1	TABLERO DE INSTRUMENTOS (GR)	352
		1	TABLERO DE INSTRUMENTOS (GR)	360
		1	TABLERO DE INSTRUMENTOS (GR)	363
LÁMPARA (24 VOLTIOS) (FRENO DE ESTACIONAMIENTO)	116-5270	1	TABLERO DE INSTRUMENTOS (GR)	345
LÁMPARA (24 VOLTIOS) (LÁMPARA DE ADVERTENCIA)	110-2079	4	MÓDULO INDICADOR DE ADVERTENCIA (GR)	337
LÁMPARA (24 VOLTIOS) (MEDIDOR DE NIVEL DE COMBUSTIBLE)	5D-0019	1	TABLERO DE INSTRUMENTOS (GR)	349
		1	TABLERO DE INSTRUMENTOS (GR)	360
LÁMPARA (24 VOLTIOS) (ROJO)	116-5270	1	TABLERO DE INSTRUMENTOS (GR)	355
LÁMPARA (24-VOLTIOS, 3-VATIOS)	115-1748	1	TABLERO DE INSTRUMENTOS (GR)	352
		1	TABLERO DE INSTRUMENTOS (GR)	363
TAPA CON RESPIRADERO (LIMPIAPARABRISAS)	8E-8292	1	TANQUE DEL LAVAPARABRISAS (GR)	382
SISTEMA DE ADMISIÓN Y ESCAPE DE AIRE				
ELEMENTO DEL FILTRO DE AIRE (CONJ) (PRIMARIO)	110-6326	1	FILTRO DE AIRE (GR)	72
ELEMENTO DEL FILTRO DE AIRE (CONJ) (SECUNDARIO)	110-6331	1	FILTRO DE AIRE (GR)	72

* NO HAY TRADUCCION DISPONIBLE EN EL MOMENTO DE LA IMPRESION

PIEZAS DE MANTENIMIENTO

DESCRIPCION	NUMERO DE PIEZA	CANT	SE UTILIZA EN	PAGINA
SISTEMA DE AGUA				
COLADOR (LLENADO DEL TANQUE DE AGUA)	7R-0476	1	TANQUE DEL AGUA (GR)	281
COLADOR (TOBERA DE ROCIADO DE AGUA)	140-3138	7	BARRA ROCIADORA (GR)	275
FILTRO DE AGUA	148-3046	1	FILTRO DE AGUA (GR)	277
TAPA DEL TUBO DE LLENADO (TAPÓN DE DRENAJE DEL TANQUE DE AGUA)	6G-9333	1	TANQUE DEL AGUA (GR)	282
TAPÓN (CONJ) (TANQUE DE AGUA)	7R-8588	1	TANQUE DEL AGUA (GR)	281
SISTEMA DE COMBUSTIBLE				
COLADOR DE COMBUSTIBLE	9P-7121	1	COMBUSTIBLE - TANQUE DE (GR)	96
DRENAJE (CONJ)	222-6617	1	BOMBA DE CEBADO Y FILTRO PRIMARIO DE COMBUSTIBLE (GR)	90
ELEMENTO DE FILTRO DE COMBUSTIBLE (CONJ)	1R-1804	1	BOMBA DE CEBADO Y FILTRO PRIMARIO DE COMBUSTIBLE (GR)	90
		1	BOMBA DE CEBADO Y FILTRO PRIMARIO DE COMBUSTIBLE (GR)	94
SELLO (SEPARADOR DE AGUA)	207-2757	1	BOMBA DE CEBADO Y FILTRO PRIMARIO DE COMBUSTIBLE (GR)	94
TAPA DEL TUBO DE LLENADO DE COMBUSTIBLE (GR) (SERVICIO PESADO, TRABABLE)	164-4858	1	COMBUSTIBLE - TANQUE DE (GR)	96
SISTEMA DE ENFRIAMIENTO				
AGUA - CONEXIÓN DE (GR) (REGULADOR DE TEMPERATURA)	254-2269	1	AGUA - CONEXIÓN DE (GR)	57
CONJUNTO DE TAPA-VENTILADA (COLECTOR DE REFRIGERANTE)	229-3469	1	RECUPERACIÓN DEL REFRIGERANTE (GR)	71
MANGUERA DE RADIADOR (INFERIOR)	227-0140	1	RADIADOR Y ENFRIADOR DE ACEITE HIDRÁULICO (GR)	69
MANGUERA DE RADIADOR (SUPERIOR)	226-5925	1	RADIADOR Y ENFRIADOR DE ACEITE HIDRÁULICO (GR)	69
REGULADOR DE TEMPERATURA DEL AGUA	225-6908	1	AGUA - CONEXIÓN DE (GR)	56
TAPA DEL RADIADOR	006-8865	1	RADIADOR Y ENFRIADOR DE ACEITE HIDRÁULICO (GR)	68
SISTEMA DE LUBRICACIÓN				
FILTRO DE ACEITE DEL MOTOR (CONJ)	7W-2326	1	FILTRO DE ACEITE DEL MOTOR (GR)	54

* NO HAY TRADUCCION DISPONIBLE EN EL MOMENTO DE LA IMPRESION

PIEZAS DE MANTENIMIENTO

DESCRIPCION	NUMERO DE PIEZA	CANT	SE UTILIZA EN	PAGINA
SISTEMA ELÉCTRICO Y DE ARRANQUE				
BATERÍA (12-VOLTIOS, LIBRE DE MANTENIMIENTO)	3T-5760	2	BATERÍA Y CABLES (GR)	100
BUJÍA INCANDESCENTE	226-8770	4	BUJÍA INCANDESCENTE (GR)	105
DISYUNTOR (CONJ) (60 AMPERIOS) (ALTERNADOR)	171-2208	1	CABLES DEL MOTOR (GR)	131
DISYUNTOR (CONJ) (60 AMPERIOS) (BUJÍA INCANDESCENTE)	171-2208	1	CABLES DEL MOTOR (GR)	131
DISYUNTOR (CONJ) (60 AMPERIOS) (PRINCIPAL)	171-2208	1	CABLES DEL MOTOR (GR)	131
JUEGO DE CORREAS TRAPEZOIDALES (ALTERNADOR)	229-3542	1	CABLES DEL MOTOR (GR)	131
LÁMPARA (24 VOLTIOS) (CÚPULA)	7N-9943	1	LÁMPARA DEL TECHO (GR)	106
LÁMPARA (24-VOLTIOS, 70-VATIOS) (BALIZA GIRATORIA DE ADVERTENCIA)	9X-7849	1	LÁMPARA DE BALIZA DE ADVERTENCIA (GR)	110
LLAVE (INTERRUPTOR GENERAL)	8H-5306	1	DISYUNTOR (GR)	119
LUCES DE ALÓGENO (24 VOLTIOS, 65 VATIOS)	9X-3463	1	REFLECTOR (GR)	109
LUCES DE ALÓGENO (24 VOLTIOS, 65 VATIOS) (REFLECTOR)	9X-3463	1	REFLECTOR (GR)	107
		1	REFLECTOR (GR)	108
MANDO DE CORREA (BALIZA DE ADVERTENCIA)	9X-8139	1	LÁMPARA DE BALIZA DE ADVERTENCIA (GR)	110
SISTEMA HIDRÁULICO				
COLADOR-SUCCION (TANQUE HIDRÁULICO)	1G-7663	1	TANQUE HIDRÁULICO (GR)	247
FILTRO DE ACEITE (CONJ) (EFICIENCIA AVANZADA) (HIDRÁULICO)	1G-8878	1	FILTRO DE ACEITE HIDRÁULICO Y MONTAJE (GR)	215
*GASKET-FRONT COVER	119-5045	1	PISTONES DEL MOTOR (GR)	225
JUNTA DE LA TAPA DE VÁLVULAS	164-6956	4	BOMBA DE PISTONES (GR)	233
RESPIRADERO (CONJ) (TANQUE HIDRÁULICO)	183-3873	1	TANQUE HIDRÁULICO Y MONTAJE (GR)	245
TAPA DE LLENADO (CONJ) (TANQUE HIDRAULICO)	142-8937	1	TANQUE HIDRÁULICO (GR)	247
SISTEMA VIBRATORIO				
TAPÓN MAGNÉTICO (COMPARTIMENTO PARA PESAS EXCENTRICAS)	5P-4484	2	PESAS EXCÉNTRICAS -CAJA DE (GR)	254
TAPÓN MAGNÉTICO (PESAS EXCENTRICAS)	5P-4484	2	PESAS EXCÉNTRICAS -CAJA DE (GR)	256
TAPÓN MAGNÉTICO (SOPORTE VIBRATORIO)	159-5846	1	SOPORTE VIBRATORIO (GR)	273

* NO HAY TRADUCCION DISPONIBLE EN EL MOMENTO DE LA IMPRESION

PIEZAS DE MANTENIMIENTO

DESCRIPCION	NUMERO DE PIEZA	CANT	SE UTILIZA EN	PAGINA
TREN DE FUERZA				
CONJUNTO DE TAPON, DRENAJE (MAGNÉTICO)	152-6144	5	EJE (GR)	137
RESPIRADERO (EJE)	197-9155	2	EJE (GR)	137
TAPÓN DE DRENAJE (ENGRANAJE REDUCTOR DE VELOCIDAD)	151-7516	1	PLANETARIO DEL MANDO FINAL (GR)	161
TAPÓN MAGNÉTICO (DRENAJE DE ACEITE)	152-6145	1	EJE (GR)	137

* NO HAY TRADUCCION DISPONIBLE EN EL MOMENTO DE LA IMPRESION

PEÇAS DE MANUTENÇÃO

DESCRIÇÃO	NÚMERO DE PEÇA	QUANT	UTILIZADA EM	PÁGINA
MOTOR BÁSICO				
BUJÃO DO DRENO (ÓLEO DO MOTOR)	7C-0351	2	CÁRTER DO ÓLEO DO MOTOR	37
		2	CÁRTER DO ÓLEO DO MOTOR	39
CHAVETA WOODRUFF/SEMICIRCULAR	1B-8736	1	CAIXA DIANTEIRA	29
		1	CAIXA DIANTEIRA	31
JOGO DE CORREIAS EM V (INCLUI 2 CORREIAS) (VENTILADOR)	121-4365	1	COMANDO DO VENTILADOR	25
JUNTA - TAMPA	226-8766	1	CAIXA DIANTEIRA	29
		1	CAIXA DIANTEIRA	31
	277-3012	1	CAIXA DIANTEIRA	29
		1	CAIXA DIANTEIRA	31
JUNTA (TAMPA DA VÁLVULA)	225-6451	1	TAMPA - MECANISMO DAS VÁLVULAS	9
		1	TAMPA - MECANISMO DAS VÁLVULAS	11
		1	TAMPA - MECANISMO DAS VÁLVULAS	7
TAMPA	230-9127	1	TAMPA - MECANISMO DAS VÁLVULAS	7
		1	TAMPA - MECANISMO DAS VÁLVULAS	9
		1	TAMPA - MECANISMO DAS VÁLVULAS	11
TAMPA - BOCAL DE ENCHIMENTO DE ÓLEO (MOTOR)	130-9888	1	TAMPA - MECANISMO DAS VÁLVULAS	7
		1	TAMPA - MECANISMO DAS VÁLVULAS	9
		1	TAMPA - MECANISMO DAS VÁLVULAS	11
TAMPA-DIANTEIRA	226-8767	1	CAIXA DIANTEIRA	29
		1	CAIXA DIANTEIRA	31

PEÇAS DE MANUTENÇÃO

DESCRIÇÃO	NÚMERO DE PEÇA	QUANT	UTILIZADA EM	PÁGINA
POSTO DO OPERADOR				
ACUMULADOR - AR CONDICIONADO (COM DESSECANTE)	176-3900	1	ACUMULADOR - AR CONDICIONADO	284
CORREIA EM V (COMPRESSOR DO CONDICIONADOR DE AR)	2P-4191	1	COMPRESSOR DE REFRIGERANTE	298
DISJUNTOR AUTOMÁTICO DE CIRCUITO (15 AMPERES) (CHAVE INTERRUPTORA)	6T-3643	1	PAINEL DE INSTRUMENTOS	357
DISJUNTOR AUTOMÁTICO DE CIRCUITO (15 AMPERES) (RELÉ PRINCIPAL DE POTÊNCIA)	6T-3643	1	PAINEL DE INSTRUMENTOS	346
FILTRO (AR DA CABINE)	180-7487	1	FILTRO - AR DA CABINE	320
FUSÍVEL (10 AMPERES)	113-8490	16	PAINEL DE INSTRUMENTOS	355
		16	PAINEL DE INSTRUMENTOS	345
LÂMINA DO LIMPADOR DE PÁRA-BRISA (500 MM)	5C-8811	1	LIMPADOR E LAVADOR - JANELA	389
LÂMINA DO LIMPADOR DE PÁRA-BRISA (700 MM)	6V-7419	1	LIMPADOR E LAVADOR - JANELA	389
LÂMPADA - TETO (24 VOLTS)	3E-6389	1	REVESTIMENTO DA CABINE	328
LÂMPADA INDICADORA (ALTERNADOR)	2N-2371	1	PAINEL DE INSTRUMENTOS	360
LÂMPADA (24 VOLTS) (FREIO DE ESTACIONAMENTO)	116-5270	1	PAINEL DE INSTRUMENTOS	345
LÂMPADA (24 VOLTS) (INDICADOR DO ALTERNADOR)	7N-5876	1	PAINEL DE INSTRUMENTOS	349
		1	PAINEL DE INSTRUMENTOS	352
		1	PAINEL DE INSTRUMENTOS	360
		1	PAINEL DE INSTRUMENTOS	363
LÂMPADA (24 VOLTS) (INDICATOR DO NÍVEL DE COMBUSTÍVEL)	5D-0019	1	PAINEL DE INSTRUMENTOS	349
		1	PAINEL DE INSTRUMENTOS	360
LÂMPADA (24 VOLTS) (LUZ DE ADVERTÊNCIA)	110-2079	4	MÓDULO - INDICADOR DE ALARME	337
LÂMPADA (24 VOLTS) (VERMELHO)	116-5270	1	PAINEL DE INSTRUMENTOS	355
LÂMPADA (24 VOLTS, 3 WATTS)	115-1748	1	PAINEL DE INSTRUMENTOS	352
		1	PAINEL DE INSTRUMENTOS	363
TAMPA COM RESPIRO (LAVADOR DO VIDRO)	8E-8292	1	TANQUE - LAVADOR DE JANELA	382
SISTEMA DA ADMISSÃO DE AR E DE ESCAPE				
ELEMENTO DO FILTRO DE AR (PRIMÁRIO)	110-6326	1	PURIFICADOR DE AR	72
ELEMENTO DO FILTRO DE AR (SECUNDÁRIO)	110-6331	1	PURIFICADOR DE AR	72

PEÇAS DE MANUTENÇÃO

DESCRIÇÃO	NÚMERO DE PEÇA	QUANT	UTILIZADA EM	PÁGINA
SISTEMA DE ÁGUA				
FILTRO - ÁGUA	148-3046	1	FILTRO - ÁGUA	277
TAMPA - BOCAL DE ENCHIMENTO (BUJÃO DO DRENO DO TANQUE DE ÁGUA)	6G-9333	1	TANQUE DE ÁGUA	282
TAMPA (TANQUE DE ÁGUA)	7R-8588	1	TANQUE DE ÁGUA	281
TELA FILTRANTE (BOCAL PULVERIZADOR DE ÁGUA)	140-3138	7	BARRA DE BORRIFO	275
TELA FILTRANTE (ENCHIMENTO DO TANQUE DE ÁGUA)	7R-0476	1	TANQUE DE ÁGUA	281
SISTEMA DE ARREFECIMENTO				
CONEXÃO - TUBO D'ÁGUA (TERMOSTATO)	254-2269	1	CONEXÃO - TUBO D'ÁGUA	57
MANGUEIRA - RADIADOR (INFERIOR)	227-0140	1	RADIADOR E ARREFECEDOR DO ÓLEO HIDRÁULICO	69
MANGUEIRA - RADIADOR (SUPERIOR)	226-5925	1	RADIADOR E ARREFECEDOR DO ÓLEO HIDRÁULICO	69
REGULADOR DE TEMPERATURA DA ÁGUA	225-6908	1	CONEXÃO - TUBO D'ÁGUA	56
TAMPA - COM RESPIRO (RECUPERACÃO DO LÍQUIDO ARREFECEDOR)	229-3469	1	RECUPERAÇÃO DE LÍQUIDO ARREFECEDOR	71
TAMPA - RADIADOR	006-8865	1	RADIADOR E ARREFECEDOR DO ÓLEO HIDRÁULICO	68
SISTEMA DE COMBUSTÍVEL				
DRENO	222-6617	1	BOMBA DE ESCORVA DO COMBUSTÍVEL E DO FILTRO PRIMÁRIO	90
ELEMENTO - FILTRO DE COMBUSTÍVEL	1R-1804	1	BOMBA DE ESCORVA DO COMBUSTÍVEL E DO FILTRO PRIMÁRIO	90
		1	BOMBA DE ESCORVA DO COMBUSTÍVEL E DO FILTRO PRIMÁRIO	94
FILTRO - COMBUSTÍVEL	9P-7121	1	TANQUE DE COMBUSTÍVEL	96
RETENTOR (SEPARADOR DE ÁGUA)	207-2757	1	BOMBA DE ESCORVA DO COMBUSTÍVEL E DO FILTRO PRIMÁRIO	94
TAMPA - BOCAL DE ENCHIMENTO DE COMBUSTÍVEL (SERVIÇO PESADO, TRAVÁVEL)	164-4858	1	TANQUE DE COMBUSTÍVEL	96
SISTEMA DE LUBRIFICAÇÃO				
FILTRO - ÓLEO DO MOTOR	7W-2326	1	FILTRO - ÓLEO DO MOTOR	54

PEÇAS DE MANUTENÇÃO

DESCRIÇÃO	NÚMERO DE PEÇA	QUANT	UTILIZADA EM	PÁGINA
SISTEMA ELÉTRICO E DE PARTIDA				
BATERIA (12 VOLTS, ISENTO DE MANUTENÇÃO)	3T-5760	2	BATERIA E CABOS / FIOS ELÉTRICOS	100
CHAVE (DESCONEXÃO DA BATERIA)	8H-5306	1	CHAVE GERAL	119
CORREIA DE COMANDO (PISCA-ALERTA)	9X-8139	1	LUZ GIRATÓRIA DE ALARME	110
DISJUNTOR AUTOMÁTICO DE CIRCUITO (60 AMPERES) (ALTERNADOR)	171-2208	1	CABOS/FIOS ELÉTRICOS - MOTOR	131
DISJUNTOR AUTOMÁTICO DE CIRCUITO (60 AMPERES) (PRINCIPAL)	171-2208	1	CABOS/FIOS ELÉTRICOS - MOTOR	131
DISJUNTOR AUTOMÁTICO DE CIRCUITO (60 AMPERES) (VELA DE AQUECIMENTO)	171-2208	1	CABOS/FIOS ELÉTRICOS - MOTOR	131
JOGO DE CORREIAS EM V (ALTERNADOR)	229-3542	1	CABOS/FIOS ELÉTRICOS - MOTOR	131
LÂMPADA - HALOGÊNEO (24 VOLTS, 65 WATTS)	9X-3463	1	LÂMPADA - FAROL	109
LÂMPADA - HALOGÊNEO (24 VOLTS, 65 WATTS) (FAROL)	9X-3463	1	LÂMPADA - FAROL	107
		1	LÂMPADA - FAROL	108
LÂMPADA (24 VOLTS) (TETO)	7N-9943	1	LÂMPADA - TETO	106
LÂMPADA (24 VOLTS, 70 WATTS) (PISCA-PISCA DE ADVERTÊNCIA)	9X-7849	1	LUZ GIRATÓRIA DE ALARME	110
VELA DE AQUECIMENTO; VELA INCANDESCENTE	226-8770	4	VELA DE AQUECIMENTO; VELA INCANDESCENTE	105
SISTEMA HIDRÁULICO				
FILTRO - ÓLEO (EFICIÊNCIA AVANÇADA) (HIDRÁULICO)	1G-8878	1	FILTRO HIDRÁULICO E MONTAGEM	215
JUNTA - TAMPA	164-6956	4	BOMBA DE PISTÃO	233
JUNTA-TAMPA DIANTEIRA	119-5045	1	MOTOR - PISTÃO	225
RESPIRO (TANQUE HIDRÁULICO)	183-3873	1	TANQUE DE ÓLEO HIDRÁULICO E MONTAGEM	245
TAMPA - BOCAL DE ENCHIMENTO (TANQUE HIDRÁULICO)	142-8937	1	TANQUE HIDRÁULICO	247
TELA DE SUCÇÃO (TANQUE HIDRÁULICO)	1G-7663	1	TANQUE HIDRÁULICO	247
SISTEMA VIBRATÓRIO				
BUJÃO MAGNÉTICO (ALOJAMENTO DO PESO EXCÊNTRICO)	5P-4484	2	CAIXA - PESO EXCÊNTRICO	254
BUJÃO MAGNÉTICO (PESO DO EXCÊNTRICO)	5P-4484	2	CAIXA - PESO EXCÊNTRICO	256
BUJÃO MAGNÉTICO (SUPORTE VIBRATÓRIO)	159-5846	1	SUPORTE DO SISTEMA VIBRATÓRIO	273
TREM DE FORÇA				
BUJÃO DO DRENO (ENGRENAGEM DE REDUÇÃO DE VELOCIDADE)	151-7516	1	GR. PLANETÁRIO - COMANDO FINAL	161
BUJÃO-DRENAGEM (MAGNÉTICO)	152-6144	5	EIXO	137
BUJÃO MAGNÉTICO (DRENO DO ÓLEO)	152-6145	1	EIXO	137
RESPIRO (EIXO)	197-9155	2	EIXO	137

WARTUNGSTEILE

BESCHREIBUNG	ERSATZTEIL-NUMMER	MENGE	VERWENDET IN	SEITE
ELEKTRISCHE ANLAGE UND STARTSYSTEM				
BATTERIE (12 V, WARTUNGSFREI)	3T-5760	2	BATTERIE UND VERDRAHTUNG	100
GLÜHKERZE	226-8770	4	GLÜHKERZE	105
HALOGENSCHINWERFER (24V)(65W)	9X-3463	1	ARBEITSLEUCHTEN	109
HALOGENSCHINWERFER (24V)(65W) (ARBEITSSCHEINWERFER)	9X-3463	1	ARBEITSLEUCHTEN	107
		1	ARBEITSLEUCHTEN	108
KEILRIEMENSATZ (DREHSTROMGE-NERATOR)	229-3542	1	MOTORVERDRAHTUNG	131
LAUFBAND UND ANTRIEB (RUNDUM-KENNLEUCHTE)	9X-8139	1	RUNDUM-KENNLEUCHTE	110
LEUCHTE (24 V) (FAHRERHAUSDACH)	7N-9943	1	FAHRERHAUSBELEUCHTUNG	106
LEUCHTE (24 V, 70 W) (RUNDUM-KENNLEUCHTE)	9X-7849	1	RUNDUM-KENNLEUCHTE	110
SCHLÜSSEL (ELEKTRISCHER HAUPTSCHALTER)	8H-5306	1	TRENNSCHALTER	119
UNTERBRECHER (60 A) (DREHSTROM-GENERATOR)	171-2208	1	MOTORVERDRAHTUNG	131
UNTERBRECHER (60 A) (GLÜHKERZE)	171-2208	1	MOTORVERDRAHTUNG	131
UNTERBRECHER (60 A) (HAUPTUN-TERBRECHER)	171-2208	1	MOTORVERDRAHTUNG	131

* ÜBERSETZUNG ZUM ZEITPUNKT DER DRUCKLEGUNG NICHT VORHANDEN

WARTUNGSTEILE

BESCHREIBUNG	ERSATZTEIL-NUMMER	MENGE	VERWENDET IN	SEITE
FAHRERHAUS				
FAHRERHAUSBELEUCHTUNG (24 V)	3E-6389	1	FAHRERHAUSAUSKLEIDUNG	328
FILTER (FAHRERHAUS LUFT)	180-7487	1	FAHRERHAUSLUFTFILTER	320
KAPPE MIT ENTLÜFTER (SCHEIBEN-WASCHER)	8E-8292	1	SCHEIBENWASCHMITTELBEHÄLTER	382
KEILRIEMEN (KLIMAANLAGEN-KOMPRESSOR)	2P-4191	1	KÄLTEMITTELKOMPRESSOR	298
KLIMAANLAGENDRUCKSPEICHER (MIT TROCKENMITTEL)	176-3900	1	KLIMAANLAGENDRUCKSPEICHER	284
KONTROLLEUCHTE (DREHSTROMGE-NERATOR)	2N-2371	1	INSTRUMENTENTAFEL	360
LEUCHTE (24 V) (DREHSTROMGENE-RATORANZEIGE)	7N-5876	1	INSTRUMENTENTAFEL	349
		1	INSTRUMENTENTAFEL	352
		1	INSTRUMENTENTAFEL	360
		1	INSTRUMENTENTAFEL	363
LEUCHTE (24 V) (FESTSTELLBREMSE)	116-5270	1	INSTRUMENTENTAFEL	345
LEUCHTE (24 V) (KRAFTSTOFFANZEI-GE)	5D-0019	1	INSTRUMENTENTAFEL	349
		1	INSTRUMENTENTAFEL	360
LEUCHTE (24 V) (ROT)	116-5270	1	INSTRUMENTENTAFEL	355
LEUCHTE (24 V) (WARNLEUCHTE)	110-2079	4	WARNANZEIGEMODUL	337
LEUCHTE (24 V, 3 W)	115-1748	1	INSTRUMENTENTAFEL	352
		1	INSTRUMENTENTAFEL	363
SCHEIBENWISCHERBLATT (500 MM)	5C-8811	1	SCHEIBENWISCHER UND -WASCHANLAGE	389
SCHEIBENWISCHERBLATT (700 MM)	6V-7419	1	SCHEIBENWISCHER UND -WASCHANLAGE	389
SICHERUNG (10 A)	113-8490	16	INSTRUMENTENTAFEL	355
		16	INSTRUMENTENTAFEL	345
UNTERBRECHER (15 A) (HAUPT-SCHALTER)	6T-3643	1	INSTRUMENTENTAFEL	346
UNTERBRECHER (15 A) (STARTSCHAL-TERSCHLÜSSEL)	6T-3643	1	INSTRUMENTENTAFEL	357
HYDRAULIKSYSTEM				
ANSAUGSIEB (HYDRAULIKTANK)	1G-7663	1	HYDRAULIKTANK	247
EINFÜLLKAPPE (HYDRAULIKTANK)	142-8937	1	HYDRAULIKTANK	247
ENTLÜFTER (HYDRAULIKTANK)	183-3873	1	HYDRAULIKTANK UND BEFESTI-GUNGSTEILE	245
*GASKET-FRONT COVER	119-5045	1	KOLBENMOTOR	225
ÖLFILTER (HOCHLEISTUNG) (HYDRAULIK)	1G-8878	1	HYDRAULIKFILTER UND BEFESTIGUNGSTEILE	215
VENTILDECKELDICHTUNG	164-6956	4	KOLBENPUMPE	233

* ÜBERSETZUNG ZUM ZEITPUNKT DER DRUCKLEGUNG NICHT VORHANDEN

WARTUNGSTEILE

BESCHREIBUNG	ERSATZTEIL-NUMMER	MENGE	VERWENDET IN	SEITE
KRAFTSTOFFSYSTEM				
ABLASSVORRICHTUNG	222-6617	1	KRAFTSTOFFENTLÜFTUNGSPUMPE UND -HAUPTFILTER	90
DICHTUNG (WASSERABSCHEIDER)	207-2757	1	KRAFTSTOFFENTLÜFTUNGSPUMPE UND -HAUPTFILTER	94
KRAFTSTOFFFILTEREINSATZ	1R-1804	1	KRAFTSTOFFENTLÜFTUNGSPUMPE UND -HAUPTFILTER	90
		1	KRAFTSTOFFENTLÜFTUNGSPUMPE UND -HAUPTFILTER	94
KRAFTSTOFFFILTERKAPPE (SCHWEREINSATZ, SPERRBAR)	164-4858	1	KRAFTSTOFFTANK	96
KRAFTSTOFFSIEB	9P-7121	1	KRAFTSTOFFTANK	96
KRAFTÜBERTRAGUNG				
ABLASSSCHRAUBE (MAGNETISCH)	152-6144	5	ACHSE	137
ABLASSSTOPFEN (GESCHWINDIGKEITSVERRINGERUNGSGANG)	151-7516	1	SEITENANTRIEB - PLANETENGETRIEBE	161
ENTLÜFTER (ACHSE)	197-9155	2	ACHSE	137
MAGNETSTOPFEN (ÖLABLASS)	152-6145	1	ACHSE	137
KÜHLSYSTEM				
KÜHLERKAPPE	006-8865	1	KÜHLER UND HYDRAULIKÖLKÜHLER	68
KÜHLERSCHLAUCH (OBEN)	226-5925	1	KÜHLER UND HYDRAULIKÖLKÜHLER	69
KÜHLERSCHLAUCH (UNTEN)	227-0140	1	KÜHLER UND HYDRAULIKÖLKÜHLER	69
KÜHLWASSERANSCHLUSS (THERMOSTAT)	254-2269	1	KÜHLWASSERANSCHLUSS	57
LÜFTUNGSKAPPE (KÜHLMITTELAUFFANG)	229-3469	1	KÜHLMITTELÜBERLAUFBEHÄLTER	71
WASSERTEMPERATURREGLER	225-6908	1	KÜHLWASSERANSCHLUSS	56
LUFTANSAUG- UND ABGASSYSTEM				
LUFTFILTER (HAUPTELEMENT)	110-6326	1	LUFTREINIGER	72
LUFTFILTER (HILFSELEMENT)	110-6331	1	LUFTREINIGER	72

* ÜBERSETZUNG ZUM ZEITPUNKT DER DRUCKLEGUNG NICHT VORHANDEN

WARTUNGSTEILE

BESCHREIBUNG	ERSATZTEIL-NUMMER	MENGE	VERWENDET IN	SEITE
MOTOR (GRUNDAUSFÜHRUNG)				
ABDECKUNG	230-9127	1	VENTILDECKEL	7
		1	VENTILDECKEL	9
		1	VENTILDECKEL	11
ABLASSSTOPFEN (MOTORÖL)	7C-0351	2	ÖLWANNE	37
		2	ÖLWANNE	39
*COVER AS-FRONT	226-8767	1	STIRNRADGEHÄUSE	29
		1	STIRNRADGEHÄUSE	31
DICHTUNG (VENTILDECKEL)	225-6451	1	VENTILDECKEL	7
		1	VENTILDECKEL	9
		1	VENTILDECKEL	11
KEILRIEMENSATZ (EINSCHL. 2 RIEMEN) (LÜFTER)	121-4365	1	LÜFTERANTRIEB	25
ÖLEINFÜLLKAPPE (MOTOR)	130-9888	1	VENTILDECKEL	7
		1	VENTILDECKEL	9
		1	VENTILDECKEL	11
SCHEIBENFEDER	1B-8736	1	STIRNRADGEHÄUSE	29
		1	STIRNRADGEHÄUSE	31
VENTILDECKELDICHTUNG	226-8766	1	STIRNRADGEHÄUSE	29
		1	STIRNRADGEHÄUSE	31
	277-3012	1	STIRNRADGEHÄUSE	29
		1	STIRNRADGEHÄUSE	31
SCHMIERSYSTEM				
ÖLFILTER	7W-2326	1	ÖLFILTER	54
VIBRATIONSSYSTEM				
MAGNETSTOPFEN (EXZENTERGEWICHT)	5P-4484	2	EXZENTERGEWICHTSGEHÄUSE	256
MAGNETSTOPFEN (EXZENTERGEWICHTSGEHÄUSE)	5P-4484	2	EXZENTERGEWICHTSGEHÄUSE	254
MAGNETSTOPFEN (VIBRATIONSAUFHÄNGUNG)	159-5846	1	VIBRATIONSUNTERSTÜTZUNG	273
WASSERSYSTEM				
EINFÜLLSTUTZENKAPPE (WASSERTANKABLASSSTOPFEN)	6G-9333	1	WASSERTANK	282
KAPPE (WASSERTANK)	7R-8588	1	WASSERTANK	281
SIEB (WASSERSPRÜHDÜSE)	140-3138	7	SPRÜHBALKEN	275
SIEB (WASSERTANKFÜLLUNG)	7R-0476	1	WASSERTANK	281
WASSERFILTER	148-3046	1	WASSERFILTER	277

* ÜBERSETZUNG ZUM ZEITPUNKT DER DRUCKLEGUNG NICHT VORHANDEN

INDEX

Name	Page
A	
ACCUMULATOR GP-REFRIGERANT–WITH DESICCANT	283, 284
ACCUMULATOR GP-REFRIGERANT (WITH DESICCANT)	284
ADJUSTER GP-HEIGHT (SUSPENSION SEAT)	376, 380
AIR CLEANER GP	72, 73
AIR CONDITIONER GP	285, 288
ALARM GP	98, 123
ALARM GP (24-VOLT) (FAULT INDICATOR)	355
ALTERNATOR GP-CHARGING	99
ALTERNATOR GP-CHARGING (24-VOLT)	99
AXLE & MTG GP-DRIVE	136
AXLE GP–WITHOUT BRAKES	137
B	
BAR GP-SPRAY	275
BATTERY & WIRING GP	100
BATTERY (12-VOLT, MAINTENANCE FREE)	100
BELT-DRIVE (WARNING BEACON)	110
BLADE AS-WIPER (500-MM)	389
BLADE AS-WIPER (700-MM)	389
BRAKE AR	200
BREATHER AS (HYDRAULIC TANK)	245
BREATHER (AXLE)	137
BUMPER AR	172
BUMPER AR–WITHOUT BLADE	172
BUMPER GP	174
BUMPER GP–PADDED SHELL	173
BUMPER GP-DRUM	175
BUMPER GP-DRUM–WITHOUT BLADE	176
C	
CAB AR	289
CAB GP-ENCLOSED ROPS	290, 292, 294
CAMSHAFT GP	4, 5
CANOPY GP	296
CAP AS-FILLER (HYDRAULIC TANK)	247
CAP AS-VENTED (COOLANT RECOVERY)	71
CAP AS (WATER TANK)	281
CAP-FILLER (WATER TANK DRAIN PLUG)	282
CAP GP-FUEL FILLER	79
CAP GP-FUEL FILLER (EXTREME SERVICE, LOCKABLE)	96
CAP-OIL FILLER (ENGINE)	7, 9, 11
CAP-RADIATOR	68
CAP-VENTED (WINDOW WASHER)	382
CHASSIS AR	1
CIRCUIT BREAKER AS (15-AMPERE) (KEY SWITCH)	357
CIRCUIT BREAKER AS (15-AMPERE) (MAIN POWER RELAY)	346
CIRCUIT BREAKER AS (60-AMPERE) (ALTERNATOR)	131
CIRCUIT BREAKER AS (60-AMPERE) (GLOW PLUG)	131
CIRCUIT BREAKER AS (60-AMPERE) (MAIN)	131
CLAMP GP-HYDRAULIC LINES	259
COMMON AR	1
COMPRESSOR GP-REFRIGERANT	297, 298
CONDENSER & MTG GP-REFRIGERANT	300
CONNECTION GP-INLET	74
CONNECTION GP-WATER	56, 57
CONNECTION GP-WATER (TEMPERATURE REGULATOR)	57
CONTROL GP-DIRECTION & SPEED	301, 303
CONTROL GP-HANDLE	305
CONTROL GP-PROPEL	306, 308
CONTROL GP-STEERING	207
CONVERTER GP-ELECTRICAL	103
COOLANT HEATER LINES	331
COOLER AS-HYDRAULIC OIL	68
COOLER GP-FLTR BASE & ENG OIL	58, 60
COVER	7, 9, 11
COVER AS-FRONT	29, 31
COVER GP-FRONT HOUSING	6
COVER GP-VALVE MECHANISM	7, 9, 11
CRANKSHAFT GP	13, 15, 16
CYLINDER & MTG GP-STEERING	209
CYLINDER & MTG GP-TILT	310
CYLINDER AS-TILT	310
CYLINDER BLOCK GP	17, 19

INDEX

Name	Page
	20
CYLINDER GP-HYDRAULIC–STEERING	214
CYLINDER HEAD GP	21
	22
	23
	24

D

DIAPHRAGM (CRANKCASE PRESSURE CONTACTOR)	7
	9
	11
DIFFERENTIAL GP-LIMITED SLIP	137
DIODE GP	349
DIODE GP (INSTRUMENT)	352
DIODE GP (RECEPTACLE)	360
	363
DOOR GP-CAB–LH	316
DOOR GP-CAB–SLIDING WINDOW, LH	312
	314
DRAIN AS	90
DRAIN AS (FUEL FILTER)	94
DRIVE GP-DRUM	141
DRIVE GP-FAN	25
DRIVE GP-PUMP	26
DRIVE GP-SUPPORT & VIBRATORY	252
	253
DRUM AR-SMOOTH	143
DRUM GP-COMPACTOR	144
DRUM GP-DRIVE & VIBRATORY	145
	146
	147
DRUM GP-PADDED	148
	149
DRUM GP-SMOOTH	150
	151
DUCT GP-CAB AIR	318

E

ELBOW GP-EXHAUST	75
ELECTRICAL AR	104
ENCLOSURE GP-ENGINE	177
	180
ENGINE AR-PRIMARY	2
EXTENSION GP-AIR CLEANER	76

F

FAN GP-SUCTION	62
	63
	64
	65
FASTENER GP-SEAT	375
	378
FILLER GP-ENGINE OIL	7
	9
FILM-FUSE/RELAY	346
	356
FILM GP	392
FILM-IDENTIFICATION (CIRCUIT PANEL)	130
FILM-IDENTIFICATION (INSTRUMENT PANEL)	349
	360
FILM-IDENTIFICATION (INSTRUMENT PANEL)	352
	363
FILM-IDENTIFICATION (OPERATOR CONTROLS)	301
	303
FILM-IDENTIFICATION (SERVICE METER)	360
FILM-INFORMATION (ALTERNATE EXIT)	370
	371
FILM-INSTRUCTION (ENGINE START)	349
	352
	360
	363
FILM-INSTRUCTION (UNLOCK, RELEASE)	370
	371
FILM-INSTRUMENT (PANEL)	356
FILM (INSTRUMENTS)	345
FILM-STRIPE (ROUND RED REFLECTIVE)	393
	394
	403
	405
FILM-WARNING (NON ROPS/FOPS)	296
FILM (WATER SPRAY)	134
FILTER & MTG GP-HYDRAULIC	215
FILTER AS-ENGINE OIL	54
FILTER AS-OIL (ADVANCED EFFICIENCY) (HYDRAULIC)	215
FILTER BASE & ENG OIL COOLER	58
	60
FILTER (CAB AIR)	320
FILTER ELEMENT AS-AIR (PRIMARY)	72
FILTER ELEMENT AS-AIR (SECONDARY)	72
FILTER ELEMENT AS-FUEL	90
	94
FILTER GP-CAB AIR	320
FILTER GP-ENGINE OIL	54
FILTER GP-OIL (HYDRAULIC)	215
FILTER GP-WATER	277
FILTER-WATER	277
FLOOR MAT	368
FLOOR MAT AS	366
FLOOR MAT-CAB	321
FLOOR MAT GP	321
FLYWHEEL GP	27
FRAME GP-FRONT	183

INDEX

Name	Page
FRAME GP-REAR	184, 185
FUSE (10-AMPERE)	345
FUSE (10-AMPERE)	355

G

Name	Page
GASKET-COVER	29, 31, 233
GASKET-FRONT COVER	225
GASKET (VALVE COVER)	7, 9, 11
GAUGE AS-OIL LEVEL (DIPSTICK) (ENGINE)	37, 39
GAUGE AS-TACHOMETER	322
GAUGE GP-FUEL LEVEL	352, 363
GAUGE GP-FUEL LEVEL (24-VOLT)	349, 360
GAUGE GP-VIBRATORY	322
GAUGE-SIGHT	247
GAUGE-WATER LEVEL	282
GLOW PLUG	105
GLOW PLUG GP	105
GOVERNOR GP	80
GUARD GP-LINES	186
GUARD GP-VANDALISM	324

H

Name	Page
HANDRAIL GP	187
HARNESS AS-ALARM (BACKUP WARNING)	122, 123
HARNESS AS-CAB	125, 356
HARNESS AS-CONSOLE (VIBRATORY)	128
HARNESS AS-CONTROL (VIBRATORY)	126
HARNESS AS-ENGINE	130
HARNESS AS-HEATER & AIR COND	124, 285, 326
HARNESS AS-LIGHTING (FLOODLIGHT)	111, 112, 113
HARNESS AS-PANEL	352, 363
HARNESS AS-PANEL (FRONT CONSOLE)	349, 360
HARNESS AS-PANEL (HORN)	360, 363
HARNESS AS-PANEL (SIDE CONSOLE)	356
HARNESS AS-PANEL (SIDE CONSOLE)	345
HARNESS AS-PUMP (VIBRATORY)	264, 266
HARNESS AS-SENSOR (VIBRATORY)	322
HARNESS AS-SOLENOID (INJECTION PUMP)	130
HARNESS AS-WIRING (WATER SPRAY)	134
HEATER & MTG GP-CAB	325
HEATER GP-CAB	326
HITCH GP-ARTICULATING & OSC	188
HOOD GP	189, 191
HOSE-RADIATOR (LOWER)	69
HOSE-RADIATOR (UPPER)	69
HOUSING GP-ECCENTRIC WEIGHT	254, 256
HOUSING GP-FLYWHEEL	28
HOUSING GP-FRONT	29, 31
HYDRAULIC AR	217
HYDRAULIC AR-AUXILIARY	217
HYDRAULIC AR-VIBRATORY	258
HYDRAULIC AR-VIBRATORY–VARIABLE FREQUENCY	258

I

Name	Page
INDICATOR GP-AIR FILTER CHANGE	73
INSTALLATION AR-ENGINE	3
INSTALLATION GP-DRUM	152

K

Name	Page
KEY	324
KEY (BATTERY DISCONNECT)	119
KEY-WOODRUFF	29, 31
KIT-ADJUSTER (SEAT)	376, 380
KIT-MOUNTING (FUEL PRIMING PUMP)	92
KIT-SEAL (STEERING CYLINDER)	214
KNOB GP-STEERING	210

L

Name	Page
LAMP AS-INDICATOR (ALTERNATOR)	360
LAMP GP-DOME	106
LAMP GP-DOME (24-VOLT)	328
LAMP GP-FLOOD–SUSPENDED MOUNT	108, 109
LAMP GP-FLOOD–VERTICAL MOUNT	107
LAMP GP-WARNING BEACON–AMBER	110
LAMP-HALOGEN (24-VOLT, 65-WATT)	109
LAMP-HALOGEN (24-VOLT, 65-WATT) (FLOODLIGHT)	107, 108
LAMP (24-VOLT) (ALTERNATOR INDICATOR)	349

INDEX

Name	Page
	352
	363
LAMP (24-VOLT) (ALTERNATOR INDICATOR)	360
LAMP (24-VOLT) (DOME)	106
LAMP (24-VOLT) (FUEL LEVEL GAUGE)	349
LAMP (24-VOLT) (FUEL LEVEL GAUGE)	360
LAMP (24-VOLT) (PARKING BRAKE)	345
LAMP (24-VOLT) (RED)	355
LAMP (24-VOLT) (WARNING LAMP)	337
LAMP (24-VOLT, 3-WATT)	352
	363
LAMP (24-VOLT, 70-WATT) (WARNING BEACON)	110
LIFTING GP-ENGINE	33
LIGHTING GP-FLOOD	111
	112
	113
LIGHTING GP-WARNING–CAB	115
LIGHTING GP-WARNING–ROPS	114
LINER GP-CAB	328
LINES GP-AIR CONDITIONER	329
LINES GP-BRAKE & SHIFT	201
	202
LINES GP-CAB HEATER	331
LINES GP-FUEL	81
LINES GP-HYDRAULIC	218
LINES GP-HYDRAULIC FILTER	219
LINES GP-PRESSURE TEST	220
LINES GP-PROPEL	153
LINES GP-STEERING	211
LINES GP-STEERING CYLINDER	213
LINES GP-VIBRATORY	259
LINES GP-WATER SPRAY	278
LINKAGE GP	333

M

MANIFOLD GP-EXHAUST	77
MANIFOLD GP-HYDRAULIC	222
MIRROR GP-REAR VIEW	334
MIRROR GP-REAR VIEW–CAB	336
MIRROR GP-REAR VIEW–CANOPY	335
MODULE GP-TIMER	116
	345
	356
MODULE GP-WARNING INDICATOR	337
MOTOR & MTG GP-PROPEL	156
MOTOR & MTG GP-VIBRATORY	253
	260
	261
MOTOR GP-PISTON–PROPEL	225
	228
MOTOR GP-PISTON–VIBRATORY	223
	231
MOTOR GP-WINDOW WIPER–FRONT	338
MOTOR GP-WINDOW WIPER–24-VOLT	339
MOTOR GP-WINDOW WIPER (24-VOLT)	389
MOUNTING GP-CAB	340
	342
MOUNTING GP-ENGINE	34
	35
MOUNTING GP-ENGINE FLEXIBLE	36
MOUNTING GP-WHEEL	158
	159
	160
MUFFLER GP	78

O

OPERATOR AR–ROPS	343
OPERATOR AR–WITH AIR CONDITIONER	344
OPERATOR AR–WITH SOFT CANOPY	343
OPERATOR AR–W/O AIR CONDITIONER	344
ORIFICE AS-AIR CONDITIONER	285

P

PADLOCK GP	393
	394
	403
	405
PADLOCK GP (VANDALISM GUARD)	324
PAN GP-OIL	37
	39
PANEL GP-INSTRUMENT	349
	352
	360
	363
PANEL GP-INSTRUMENT–SIDE CONSOLE	345
	355
PISTON & ROD GP	41
	42
PLANETARY GP-FINAL DRIVE	161
PLATE & FILM GP	393
	394
	395
	399
	403
	405
PLATE & FILM GP–FRENCH	396
	400
PLATE & FILM GP–PORTUGUESE	397
	401
PLATE & FILM GP–SPANISH	398
	402
PLATE-IDENTIFICATION (ECCENTRIC WEIGHT)	254
	256
PLATE-IDENTIFICATION (MACHINE)	393
	394

INDEX

Name	Page
	403
	405
PLATE-IDENTIFICATION (START AID)	349
	352
PLATE-IDENTIFICATION (STARTING AID)	360
	363
PLATE-INSTRUCTION (AIR CONDITIONER)	329
PLATE-INSTRUCTION (BATTERY)	100
PLATFORM GP-OPERATOR	366
	368
PLUG AS-DRAIN (MAGNETIC)	137
PLUG-DRAIN (ENGINE OIL)	37
	39
PLUG-DRAIN (SPEED REDUCTION GEAR)	161
PLUG GP-ENGINE	44
	45
	46
PLUG-MAGNETIC (ECCENTRIC WEIGHT)	256
PLUG-MAGNETIC (ECCENTRIC WEIGHT HOUSING)	254
PLUG-MAGNETIC (OIL DRAIN)	137
PLUG-MAGNETIC (VIBRATORY SUPPORT)	273
POWER TRAIN AR	164
POWER TRAIN AR–PADDED	164
POWER TRAIN AR–SMOOTH	164
PULLEY GP-CRANKSHAFT	47
PUMP & MTG GP-BRAKE	205
PUMP & MTG GP-PROPEL	165
PUMP & MTG GP-VIBRATORY	262
	264
	266
	268
PUMP GP-ENGINE OIL	55
PUMP GP-FUEL INJECTION	82
	83
	86
	87
PUMP GP-FUEL PRM & PRIM FILTER	90
	92
	94
PUMP GP-GEAR (VIBRATORY)	262
PUMP GP-HAND (TILT CYLINDER)	310
PUMP GP-METERING (HMU) (FLOW CONTROL)	207
PUMP GP-PISTON–PROPEL	233
PUMP GP-PISTON–VIBRATORY	237
	240
	243
PUMP GP-WATER	66
PUMP GP-WATER SPRAY	279

R

Name	Page
RADIATOR & HYD OIL COOLER GP	68
	69
RECOVERY GP-COOLANT	71
REGULATOR-WATER TEMPERATURE	56
RELAY AS (24-VOLT) (BRAKE ONE)	346
	357
RELAY AS (24-VOLT) (BRAKE TWO)	346
	357
RELAY AS (24-VOLT) (COOLANT TEMPERATURE)	346
	357
RELAY AS (24-VOLT) (ENGINE OIL PRESSURE)	345
RELAY AS (24-VOLT) (ENGINE OIL PRESSURE)	357
RELAY AS (24-VOLT) (FUNCTION LIGHT)	346
RELAY AS (24-VOLT) (FUNCTIONAL LIGHT)	357
RELAY AS (24-VOLT) (HYDRAULIC OIL PRESSURE)	346
	357
RELAY AS (24-VOLT) (HYDRAULIC OIL TEMPERATURE)	346
RELAY AS (24-VOLT) (HYDRAULIC OIL TEMPERATURE)	357
RELAY AS (24-VOLT) (NEUTRAL START ONE)	346
	357
RELAY AS (24-VOLT) (NEUTRAL START TWO)	346
	357
RELAY AS (24-VOLT) (VIBRATORY)	128
RELAY AS (24-VOLT) (WARNING LIGHT)	346
	357
RELAY AS (24-VOLT) (WATER SPRAY)	134
RING GP-PISTON	41
	42
ROCKER ARM GP	48
ROPS GP	369
ROPS GP-ENCLOSED	370
	371

S

Name	Page
SCRAPER GP-DRUM	193
	194
SCRAPER GP-PADDED DRUM	195
SCRAPER GP-SMOOTH DRUM	196
	199
SCRAPER GP-SMOOTH DRUM–FRONT & REAR	197
SCREEN GP-SUN	373
	374
SEAL GP-DUO-CONE	161
SEAL (WATER SEPARATOR)	94
SEAT & MOUNTING GP	375
SEAT BELT GP	375
	378

INDEX

Name	Page
SEAT GP-SUSPENSION	376
SEAT GP-SUSPENSION–CLOTH	378
	380
SENDER AS-FUEL LEVEL	96
SENSOR GP-SPEED (VPM)	322
SERVICE GP-ENGINE	49
	50
SHAFT GP-ECCENTRIC WEIGHT	271
	272
SHELL AR–PADDED	167
SOLENOID GP-THROTTLE	117
SPRAY AR-WATER	280
SPRING AS-GAS	177
	180
STARTING MOTOR GP-ELECTRIC	118
STRAINER-FUEL	96
STRAINER-SUCTION (HYDRAULIC TANK)	247
STRAINER (WATER SPRAY NOZZLE)	275
STRAINER (WATER TANK FILL)	281
SUN VISOR	383
SUPPORT GP-VIBRATORY	273
SWITCH AS-PRESSURE (AIR CONDITIONER) (LOW CHARGE)	298
SWITCH AS-PRESSURE (ENGINE OIL)	130
SWITCH AS-PRESSURE (HYDRAULIC OIL)	215
SWITCH AS-PUSH BUTTON (PARKING BRAKE)	345
	355
SWITCH AS-PUSH BUTTON (VIBRATORY, SELECT ON/OFF)	305
SWITCH AS-ROCKER (AIR CONDITIONER)	288
SWITCH AS-ROCKER (BEACON)	114
	115
SWITCH AS-ROCKER (ETHER STARTING AID)	361
	364
SWITCH AS-ROCKER (FLOOD LIGHT)	111
	112
SWITCH AS-ROCKER (FLOOD LIGHTS)	355
SWITCH AS-ROCKER (SPEED SELECT)	350
	353
	361
	364
SWITCH AS-ROCKER (START AID)	349
	352
SWITCH AS-ROCKER (THROTTLE)	350
	353
	361
	364
SWITCH AS-ROCKER (VIBRATORY SELECT)	356
SWITCH AS-ROCKER (VIBRATORY SELECT)	346
SWITCH AS-ROCKER (WATER SPRAY)	134
SWITCH AS-ROTARY (WIPER, WASHER) (REAR WIPER)	355
SWITCH AS-ROTARY (WIPER, WASHER) (REAR WIPER)	355
SWITCH AS-ROTARY (24-VOLT) (FAN)	355
SWITCH AS-START (KEY)	352
	360
	363
SWITCH AS-START (KEY)	349
SWITCH AS-TEMPERATURE (COOLANT)	130
SWITCH AS-TEMPERATURE (HYDRAULIC OIL)	247
SWITCH AS-TEMPERATURE (REFRIGERANT)	285
SWITCH GP-DISCONNECT–BATTERY	119
SWITCH GP-MAGNETIC	121
SWITCH GP-MAGNETIC–PARKING BRAKE	120
SWITCH GP-MAGNETIC (24-VOLT) (GLOW PLUG)	130
SWITCH GP-MAGNETIC (24-VOLT) (MAIN POWER RELAY)	356
SWITCH GP-MAGNETIC (24-VOLT) (STARTER)	130
SWITCH-MICRO (NEUTRAL POSITION)	306
	308
SWITCH-TEMPERATURE (COLD START ADVANCE)	83
SWITCH-TEMPERATURE (FUEL)	87

T

TANK & MTG GP-FUEL	95
TANK & MTG GP-HYDRAULIC	245
TANK GP-COOLANT	71
TANK GP-FUEL	96
TANK GP-HYDRAULIC	247
TANK GP-WATER	281
	282
TANK GP-WINDOW WASHER	382

V

V-BELT (A/C COMPRESSOR)	298
V-BELT SET (ALTERNATOR)	131
V-BELT SET (INCLUDES 2-BELTS) (FAN)	25
VALVE & MTG GP-CONTROL	249
	250
VALVE-BYPASS (OIL COOLER)	249
VALVE-DRAIN (RADIATOR)	69
VALVE GP-CHECK & RELIEF (VIBRATORY PISTON PUMP)	237
VALVE GP-CHECK & RELIEF (VIBRATORY PUMP)	240
	243
VALVE GP-CONTROL	251
VALVE GP-RELIEF (REFRIGERANT COMPRESSOR)	297

INDEX

Name	Page	Name	Page
VALVE GP-SOLENOID (PISTON PUMP)	243		
VALVE GP-SOLENOID (SHIFT)	251		
VALVE GP-SOLENOID (12-VOLT)	87		
VALVE MECHANISM GP	52		
	53		
VALVE-SHUTOFF (CAB HEATER)	331		
VALVE-SHUTOFF (ENGINE OIL DRAIN)	50		
VISOR GP-CAB	383		

W

WARNING GP-BACKUP	122		
	123		
WHEEL & TIRE GP	170		
	171		
WHEEL & TIRE GP–LH	169		
WHEEL & TIRE GP–RH	168		
WINDOW GP	384		
WINDOW GP-DOOR	386		
WINDOW GP-REAR	388		
WIPER & WASHER GP-WINDOW	389		
WIPER GP-WINDOW	389		
WIPER GP-WINDOW–WIPER	391		
WIRING GP-AIR CONDITIONER	124		
WIRING GP-CAB	125		
WIRING GP-CONSOLE–SIDE, VIBRATORY	126		
	128		
WIRING GP-ENGINE	130		
WIRING GP-PUMP	134		

INDEX

Désignation	Page

A

ACCUMULATEUR - CLIMATISEUR (ASS)	283, 284
ACCUMULATEUR - CLIMATISEUR (ASS) (AVEC SICCATIF)	284
ALTERNATEUR DE CHARGE (ASS)	99
ALTERNATEUR DE CHARGE (ASS) (24 VOLTS)	99
AMPOULE (24 VOLTS) (FREIN DE STATIONNEMENT)	345
AMPOULE (24 VOLTS) (JAUGE DE NIVEAU D'HUILE)	349, 360
AMPOULE (24 VOLTS) (PLAFONNIER)	106
AMPOULE (24 VOLTS) (ROUGE)	355
AMPOULE (24 VOLTS) (TÉMOIN D'ALTERNATEUR)	349, 360
AMPOULE (24 VOLTS) (TÉMOIN D'ALTERNATEUR)	352, 363
AMPOULE (24 VOLTS) (VOYANT)	337
AMPOULE (24V, 3W)	352, 363
AMPOULE (24V, 70W) (GYROPHARE)	110
ARBRE - POIDS EXCENTRIQUE (ASS)	271, 272
ARBRE A CAMES (ASS)	4, 5
ATTELAGE-ARTICULATION ET OSCILLATION (ASS)	188
AUTOCOLLANT DE FUSIBLE/ RELAIS	346, 356
AUTOCOLLANT DE MISE EN GARDE (PAS DE CADRE ROPS/FOPS)	296
AUTOCOLLANT D'IDENTIFICATION (COMMANDES DE POSTE DE CONDUITE)	301, 303
AUTOCOLLANT D'IDENTIFICATION (COMPTEUR D'ENTRETIEN)	360
AUTOCOLLANT D'IDENTIFICATION (PANNEAU DE DISJONCTEUR)	130
AUTOCOLLANT D'IDENTIFICATION (TABLEAU DE BORD)	349, 352, 360, 363
AUTOCOLLANT-INFORMATION (ISSUE DE SECOURS)	370, 371
AUTOCOLLANT (INSTRUMENTS)	345
AUTOCOLLANT INSTRUMENTS (PANNEAU)	356
AUTOCOLLANT (PULVÉRISATEUR D'EAU)	134
AVERTISSEUR (ASS)	98, 123
AVERTISSEUR (ASS) (24 VOLTS) (TÉMOIN D'ANOMALIE)	355
AVERTISSEUR DE RECUL (ASS)	123
AVERTISSEUR DE RECUL (ASS)	122
AXE DE CULBUTEUR (ASS)	48

B

BAÏONNETTE- NIVEAU DE CARBURANT (ASS)	352, 363
BAÏONNETTE- NIVEAU DE CARBURANT (ASS) (24 VOLTS)	349, 360
BALAI D'ESSUIE-GLACE (ENS) (500-MM)	389
BALAI D'ESSUIE-GLACE (ENS) (700-MM)	389
BANDE AUTOCOLLANTE (RÉFLECTEUR ROND ROUGE)	393, 394, 403, 405
BÂTI AR (ASS)	184, 185
BATTERIE ET CÂBLAGE	100
BATTERIE (12V, SANS ENTRETIEN)	100
BLOC-CYLINDRES (ASS)	17, 19, 20
BOUCHON À ÉVENT (ENS) (VASE D'EXPANSION DE LIQUIDE DE REFROIDISSEMENT)	71
BOUCHON À ÉVENT (LAVE-GLACE)	382
BOUCHON AIMANTÉ (BALOURD)	256
BOUCHON AIMANTÉ (CARTER DE BALOURD)	254
BOUCHON AIMANTÉ (SUPPORT VIBRANT)	273
BOUCHON AIMANTÉ (VIDANGE D'HUILE)	137
BOUCHON DE GOULOTTE DE CARBURANT (ASS)	79
BOUCHON DE GOULOTTE DE CARBURANT (ASS) (SERVICE INTENSIF, VERROUILLABLE)	96
BOUCHON DE GOULOTTE DE REMPLISSAGE (BOUCHON DE VIDANGE DU RÉSERVOIR D'EAU)	282
BOUCHON DE GOULOTTE DE REMPLISSAGE D'HUILE (MOTEUR)	7, 9, 11
BOUCHON DE GOULOTTE DE REMPLISSAGE (ENS) (RÉSERVOIR HYDRAULIQUE)	247

* TRADUCTION NON DISPONIBLE AU MOMENT DE LA PUBLICATION

INDEX

Désignation	Page
BOUCHON DE MOTEUR (ASS)	44, 45, 46
BOUCHON DE REMPLISSAGE D'HUILE MOTEUR (ASS)	7, 9
BOUCHON DE VIDANGE (ENS) (MAGNÉTIQUE)	137
BOUCHON DE VIDANGE (HUILE MOTEUR)	37
BOUCHON DE VIDANGE (HUILE MOTEUR)	39
BOUCHON DE VIDANGE (PIGNON DE RÉDUCTION DE VITESSE)	161
BOUGIE DE PRECHAUFFAGE	105
BOUGIE DE PRÉCHAUFFAGE (ASS)	105
BOULONNERIE-SIÈGE (ASS)	375, 378
BOURRELET D'ÉTANCHÉITÉ (SÉPARATEUR D'EAU)	94
BOUTON DE DIRECTION (ASS)	210
*BUMPER AR	172
*CAB GP-ENCLOSED ROPS	290, 292, 294
CABINE - REVÊTEMENT (ASS)	328
CABINE-FAISCEAU DE CÂBLES (ENS)	125, 356
CABINE ROPS FERMÉE (ASS)	370, 371
CABINE (VERSION)	289
CABLAGE - CLIMATISEUR (ASS)	124
CABLAGE DE CABINE (ASS)	125
CABLAGE DE CONSOLE (ASS)	126, 128
CABLAGE DE MOTEUR (ASS)	130
CABLAGE MOTEUR (ENS)	130
CÂBLAGE-POMPE (ASS)	134
CACHE-SOUPAPES (ASS)	7, 9, 11
CADENAS (ASS)	393, 394, 403, 405
CADENAS (ASS) (PROTECTION ANTIVANDALISME)	324
CANALISATIONS - CONTRÔLE DE PRESSION (ASS)	220
CANALISATIONS DE CARBURANT (ASS)	81
CANALISATIONS DE CHAUFFAGE DE CABINE (ASS)	331
CANALISATIONS DE CLIMATISEUR (ASS)	329
CANALISATIONS DE DIRECTION (ASS)	211
CANALISATIONS DE FILTRE HYDRAULIQUE	219
CANALISATIONS DE FREIN ET CHANGEMENT DE VIT (ENS)	201, 202
CANALISATIONS DE PULVÉRISATION D'EAU (ASS)	278
CANALISATIONS DE RÉCHAUFFEUR DE LIQUIDE DE REFROIDISSEMENT	331
CANALISATIONS DE VÉRIN DE DIRECTION (ASS)	213
CANALISATIONS DE VIBRATEUR (ASS)	259
CANALISATIONS D'ENTRAINEMENT	153
CANALISATIONS HYDRAULIQUES (ASS)	218
CAPOT (ASS)	189, 191
CAPTEUR DE VITESSE (ASS) (VPM)	322
CARENAGE DE MOTEUR (ASS)	177, 180
CARTER AV (ASS)	29, 31
CARTER DE VOLANT (ASS)	28
CARTER-POIDS EXCENTRIQUE (ASS)	254
CARTER-POIDS EXCENTRIQUE (ASS)	256
CEINTURE DE SECURITE (ASS)	378
CEINTURE DE SECURITE (ASS)	375
CHAPEAU - RADIATEUR	68
CHAPEAU (ENS) (RÉSERVOIR D'EAU)	281
CHÂSSIS AV (ASS)	183
CHAUFFAGE DE CABINE (ASS)	326
CHAUFFAGE ET MONTAGE - CABINE (ASS)	325
CLAPET DE DECHARGE (ASS) (COMPRESSEUR DE RÉFRIGÉRANT)	297
CLAPET DE DECHARGE ET ANTI-RETOUR (POMPE À PISTON VIBRANTE)	237
CLAPET DE DECHARGE ET ANTI-RETOUR (POMPE VIBRANTE)	240, 243
CLAVETTE WOODRUFF	29, 31
CLÉ	324
CLÉ (COUPE-BATTERIE)	119
CLIMATISEUR (ASS)	285, 288
COLLECTEUR D'ÉCHAPPEMENT (ASS)	77
COLLECTEUR HYDRAULIQUE (ASS)	222
COLLIER DE CANALISATIONS HYDRAULIQUES (ASS)	259
COMMANDE DE DEPLACEMENT (ASS)	306, 308
COMMANDE DE DIRECTION (ASS)	207
COMMANDE DE FAISCEAU (ENS) (VIBRANT)	126

C

* TRADUCTION NON DISPONIBLE AU MOMENT DE LA PUBLICATION

INDEX

Désignation	Page
COMMANDE DE POIGNÉE (ASS)	305
COMMANDE DE VITESSE ET DE SENS DE MARCHE	301, 303
COMPRESSEUR DE REFRIGERANT (ASS)	297, 298
COMPTE-TOURS (ENS)	322
CONDENSATEUR ET MONTAGE (RÉFRIGÉRANT)	300
CONSOLE DE FAISCEAU (ENS) (VIBRATION)	128
CONTACTEUR MAGNETIQUE (ASS)	120, 121
CONTACTEUR MAGNETIQUE (ASS) (24 VOLTS) (BOUGIE DE PRÉCHAUFFAGE)	130
CONTACTEUR MAGNETIQUE (ASS) (24 VOLTS) (DÉMARREUR)	130
CONTACTEUR MAGNETIQUE (ASS) (24 VOLTS) (RELAIS DE PUISSANCE PRINCIPAL)	356
CONTACTEUR-MICRO (POINT MORT)	306, 308
COUDE D'ÉCHAPPEMENT (ASS)	75
COURROIE TRAPEZOIDALE (COMPRESSEUR DE CLIMATISEUR)	298
COUVERCLE	7, 9, 11
COUVERCLE AVANT (ENS)	29, 31
COUVERCLE DE CARTER AV (ASS)	6
CRÉPINE-ASPIRATION (RÉSERVOIR HYDRAULIQUE)	247
CREPINE (GICLEUR D'EAU)	275
CREPINE (REMPLISSAGE RÉSERVOIR D'EAU)	281
CULASSE (ASS)	21, 22, 23, 24
CULBUTERIE (ASS)	52, 53

D

Désignation	Page
DÉMARREUR ÉLECTRIQUE (ASS)	118
DIAPHRAGME (CONTACTEUR DE PRESSION DE VILEBREQUIN)	9, 11
DIAPHRAGME (CONTACTEUR DE PRESSION DE VILEBREQUIN)	7
DIFFÉRENTIEL - GLISSEMENT LIMITÉ (ASS)	137
DIODES (ASS)	349
DIODES (ASS) (INSTRUMENT)	352
DIODES (ASS) (PRISE)	360
	363
DISJONCTEUR (ENS) (15A) (INTERRUPTEUR À CLÉ)	357
DISJONCTEUR (ENS) (15A) (RELAIS DE PUISSANCE PRINCIPAL)	346
DISJONCTEUR (ENS) (60A) (ALTERNATEUR)	131
DISJONCTEUR (ENS) (60A) (BOUGIE DE PRÉCHAUFFAGE)	131
DISJONCTEUR (ENS) (60A) (PRINCIPAL)	131
DISTRIBUTEUR (ASS)	251
DISTRIBUTEUR ET MONTAGE (ASS)	249, 250

E

Désignation	Page
ÉCLAIRAGE - AVERTISSEUR (ASS)	115
ÉCLAIRAGE - AVERTISSEUR (ASS)	114
ÉCLAIRAGE - PROJECTEURS (ASS)	111
ÉCLAIRAGE - PROJECTEURS (ASS)	112, 113
ÉLÉMENT DE FILTRE À AIR (ENS) (PRINCIPAL)	72
ÉLÉMENT DE FILTRE À AIR (ENS) (SECONDAIRE)	72
ÉLÉMENT DE FILTRE (ENS)-CARBURANT	90, 94
ENSEMBLE DE TAPIS DE PLANCHER	366
ENTRAÎNEMENT DE POMPE (ASS)	26
ENTRAINEMENT DE TAMBOUR (ASS)	141
ENTRAÎNEMENT DE VENTILATEUR (ASS)	25
ENTRAÎNEMENT POUR COURROIE (GYROPHARE)	110
ENTRETIEN DU MOTEUR (ASS)	49, 50
ESSIEU (ASS)	137
ESSIEU DE MOTEUR ET MONTAGE (ASS)	136
ESSUIE-GLACE (ASS)	389, 391
ESSUIE-GLACE ET LAVE-GLACE	389

F

Désignation	Page
FAISCEAU DE CABLES - AVERTISSEUR (ENS) (AVERTISSEMENT DE RECUL)	122, 123
FAISCEAU DE CABLES - CAPTEUR (ENS) (VIBRANT)	322
FAISCEAU DE CABLES (ENS) (PULVÉRISATEUR D'EAU)	134
FAISCEAU DE CHAUFFAGE ET CLIMATISATION	124, 285, 326

* TRADUCTION NON DISPONIBLE AU MOMENT DE LA PUBLICATION

INDEX

Désignation	Page
FAISCEAU DE SOLÉNOÏDE (ENS) (POMPE D'INJECTION)	130
FAISCEAU D'ÉCLAIRAGE (ENS) (PLAFONNIER)	113
FAISCEAU D'ÉCLAIRAGE (ENS) (PLAFONNIER)	111, 112
FILTRE -EAU	277
FILTRE A AIR (ASS)	72, 73
FILTRE À AIR DE CABINE (ASS)	320
FILTRE À CARBURANT	96
FILTRE A HUILE (ASS) (HYDRAULIQUE)	215
FILTRE À HUILE (ENS) (EFFICACITÉ AVANCÉE) (HYDRAULIQUE)	215
FILTRE À HUILE HYDRAULIQUE ET MONTAGE (ASS)	215
FILTRE À HUILE MOTEUR (ASS)	54
FILTRE A HUILE MOTEUR (ENS)	54
FILTRE (AIR DE CABINE)	320
FILTRE D'EAU	277
FLEXIBLE DE RADIATEUR (INFÉRIEUR)	69
FLEXIBLE DE RADIATEUR (SUPÉRIEUR)	69
FUSIBLE (10A)	345, 355

G

GAINE D'AIR (ASS)	318
*GASKET-FRONT COVER	225
GLACE AR	388
GLACE DE PORTIÈRE (ASS)	386
GRATTOIR DE TAMBOUR (ASS)	193, 194
GROUPE DE MOTEUR A PISTONS	223, 225, 228, 231

H

HUILE MOTEUR - CARTER (ASS)	37, 39
HYDRAULIQUE AUXILIAIRE (VERSION)	217

I

INDICATEUR DE COLMATAGE DE FILTRE À AIR (ASS)	73
INDICATEUR DE VIBRATION (ASS)	322
INTERRUPTEUR - BOUTON-POUSSOIR (ENS) (FREIN DE STATIONNEMENT)	345, 355
INTERRUPTEUR - BOUTON-POUSSOIR (ENS) (VIBREUR, CHOISIR MARCHE/ ARRÊT)	305
INTERRUPTEUR BALANCIER (ENS) (ACCÉLÉRATEUR)	350, 353, 361, 364
INTERRUPTEUR BALANCIER (ENS) (AUXILIAIRE DE DÉMARRAGE)	349, 352
INTERRUPTEUR BALANCIER (ENS) (CLIMATISEUR)	288
INTERRUPTEUR BALANCIER (ENS) (DÉMARRAGE À L'ÉTHER)	361, 364
INTERRUPTEUR BALANCIER (ENS) (GYROPHARE)	114, 115
INTERRUPTEUR BALANCIER (ENS) (PROJECTEUR)	111, 112
INTERRUPTEUR BALANCIER (ENS) (PROJECTEURS)	355
INTERRUPTEUR BALANCIER (ENS) (PULVÉRISATION D'EAU)	134
INTERRUPTEUR BALANCIER (ENS) (SÉLECTEUR DE VIBRATEUR)	346, 356
INTERRUPTEUR BALANCIER (ENS) (SÉLECTEUR DE VITESSE)	350, 353, 361, 364
INTERRUPTEUR DE DEMARRAGE (ENS) (CLAVETTE)	349, 360
INTERRUPTEUR DE DEMARRAGE (ENS) (CLAVETTE)	363
INTERRUPTEUR DE DEMARRAGE (ENS) (CLAVETTE)	352
INTERRUPTEUR ROTATIF (ENS) (ESSUIE-GLACE, LAVE-GLACE) (ESSUIE-GLACE ARRIÈRE)	355
INTERRUPTEUR ROTATIF (ENS) (24 VOLTS) (VENTILATEUR)	355

J

JAUGE DE NIVEAU D'EAU	282
JAUGE D'HUILE MOTEUR (BAÏONNETTE) (ENS) (MOTEUR)	37, 39

* TRADUCTION NON DISPONIBLE AU MOMENT DE LA PUBLICATION

INDEX

Désignation	Page
JEU DE COURROIES TRAPEZOIDALES (ALTERNATEUR)	131
JEU DE COURROIES TRAPEZOIDALES (COMPREND 2 COURROIES) (VENTILATEUR)	25
JOINT DE COUVERCLE	29, 31, 233
JOINT DUO-CONE (ASS)	161
JOINT PLAT (CACHE-SOUPAPES)	9, 11
JOINT PLAT (CACHE-SOUPAPES)	7

K

KIT DE JOINTS (VÉRIN DE DIRECTION)	214
KIT DE MONTAGE (POMPE D'AMORÇAGE DE CARBURANT)	92
KIT DE REGLAGE (SIÈGE)	376, 380

L

LAMPE - GYROPHARE (ASS)	110
LAMPE - PHARE (ASS)	107
LAMPE - PHARE (ASS)	108, 109
LAMPE DE TÉMOIN (ENS) (ALTERNATEUR)	360
LAMPE HALOGÈNE (24V, 65W)	109
LAMPE HALOGÈNE (24V, 65W) (PROJECTEUR)	107, 108

M

MAIN COURANTE (ASS)	187
MANOCONTACT (ENS) (CLIMATISEUR) (CHARGE BASSE)	298
MANOCONTACT (ENS) (HUILE HYDRAULIQUE)	215
MANOCONTACT (ENS) (HUILE MOTEUR)	130
MODULE - TÉMOIN (ASS)	337
MODULE CHRONOMETRE	116, 345, 356
MONTAGE DE CABINE (ASS)	340, 342
MONTAGE DE MOTEUR (ASS)	34, 35
MONTAGE DE MOTEUR (VERSION)	3
MONTAGE DES TAMBOURS (ASS)	152
MONTAGE SOUPLE DU MOTEUR (ASS)	36
MOTEUR - MONTAGE ET VIBRATION (ENS)	253, 260, 261
MOTEUR D'ESSUIE-GLACE (ASS)	338, 339
MOTEUR D'ESSUIE-GLACE (ASS) (24 VOLTS)	389
MOTEUR ET MONTAGE - PROPULSION (ASS)	156
MOTEUR (VERSION PRINCIPALE)	2

O

OEILLETONS DE LEVAGE MOTEUR (ASS)	33
ORIFICE DE CLIMATISEUR (ENS)	285

P

PANNEAU DE FAISCEAU (ENS)	352, 363
PANNEAU DE FAISCEAU (ENS) (CONSOLE AVANT)	349, 360
PANNEAU DE FAISCEAU (ENS) (CONSOLE LATÉRALE)	345, 356
PANNEAU DE FAISCEAU (ENS) (KLAXON)	360, 363
PARE-CHOCS - TAMBOUR (ASS)	175, 176
PARE-CHOCS (ASS)	173, 174
PARE-SOLEIL	383
PARE-SOLEIL (ASS)	373, 374
PISTON ET BIELLE (ASS)	41
PISTON ET BIELLE (ASS)	42
PLAFONNIER (ASS)	106
PLAFONNIER (ASS) (24 VOLTS)	328
PLAQUE D'INSTRUCTIONS (BATTERIE)	100
PLAQUE D'INSTRUCTIONS (CLIMATISEUR)	329
PLAQUE (IDENTIFICATION) (AUXILIAIRE DE DÉMARRAGE)	349, 352, 360, 363
PLAQUE (IDENTIFICATION) (BALOURD)	254, 256
PLAQUE (IDENTIFICATION) (MACHINE)	393, 394
PLAQUE (IDENTIFICATION) (MACHINE)	403, 405
PLAQUE SIGNALÉTIQUE (ASS)	392

* TRADUCTION NON DISPONIBLE AU MOMENT DE LA PUBLICATION

INDEX

Désignation	Page
PLAQUES SIGNALETIQUES ET AUTOCOLLANTS (ASS)	393
	394
	395
	396
	397
	398
	399
	400
	401
	402
	403
	405
PLATE-FORME DE CABINE	366
	368
POMPE À COMMANDE MANUELLE (ASS) (INCLINAISON DE VÉRIN LEVAGE DE NÉRIN)	310
POMPE A EAU (ASS)	66
POMPE A ENGRENAGES (ASS) (VIBRATION)	262
POMPE A HUILE MOTEUR (ASS)	55
POMPE A PISTONS (ASS)	233
	237
	240
	243
POMPE D'AMORÇAGE DE CARBURANT ET FILTRE PRINCIPAL	90
	94
POMPE D'AMORÇAGE DE CARBURANT ET FILTRE PRINCIPAL	92
POMPE DE FAISCEAU (ENS) (VIBRANT)	264
	266
POMPE DE PULVÉRISATION D'EAU	279
POMPE DE REGULARISATION DE DEBIT (ASS) (MODULE DE RÉGULATION) (COMMANDE DE DÉBIT)	207
POMPE D'INJECTION DE CARBURANT (ASS)	86
	87
POMPE D'INJECTION DE CARBURANT (ASS)	82
	83
POMPE ET MONTAGE - FREIN (ASS)	205
POMPE ET MONTAGE - VIBRATION (ASS)	264
POMPE ET MONTAGE - VIBRATION (ASS)	266
	268
POMPE ET MONTAGE - VIBRATION (ASS)	262
POMPE ET MONTAGE DE PROPULSION (ASS)	165
PORTIÈRE DE CABINE (ASS)	312
	314
	316
POSTE DE CONDUITE (VERSION)	343
	344
PROTECTEUR DES CANALISATIONS (ASS)	186
PROTECTION ANTIVANDALISME (ASS)	324
PULVERISATION D'EAU	280

R

RACCORD D'ADMISSION (ASS)	74
RACCORD D'EAU (ASS)	57
RACCORD D'EAU (ASS)	56
RACCORD D'EAU (ASS) (THERMOSTAT)	57
RACLOIR-CYLINDRE À PIEDS DAMEURS (ASS)	195
RACLOIR-CYLINDRE LISSE	196
	197
	199
RADIATEUR ET REFROIDISSEUR D'HUILE HYDRAULIQUE (ASS)	68
	69
RALLONGE DE FILTRE A AIR (ASS)	76
RAMPE DE PULVERISATION (ASS)	275
REFROIDISSEUR D'HUILE HYDRAULIQUE (ENS)	68
REFROIDISSEUR HUILE MOTEUR ET SUPPORT DE FILTRE	58
	60
REGARD DE NIVEAU	247
REGLAGE DE HAUTEUR (ASS) (SIEGE A SUSPENSION)	376
	380
REGULATEUR (ASS)	80
RELAIS (ENS) (24 VOLTS) (DÉMARRAGE AU POINT MORT DEUX)	346
RELAIS (ENS) (24 VOLTS) (DÉMARRAGE AU POINT MORT DEUX)	357
RELAIS (ENS) (24 VOLTS) (DÉMARRAGE AU POINT MORT UN)	346
	357
RELAIS (ENS) (24 VOLTS) (ÉCLAIRAGE FONCTIONNEL)	357
RELAIS (ENS) (24 VOLTS) (FREIN DEUX)	346
	357
RELAIS (ENS) (24 VOLTS) (FREIN UN)	346
	357
RELAIS (ENS) (24 VOLTS) (PRESSION D'HUILE HYDRAULIQUE)	346
	357
RELAIS (ENS) (24 VOLTS) (PRESSION D'HUILE MOTEUR)	345
	357
RELAIS (ENS) (24 VOLTS) (PULVÉRISATION D'EAU)	134

* TRADUCTION NON DISPONIBLE AU MOMENT DE LA PUBLICATION

INDEX

Désignation	Page
RELAIS (ENS) (24 VOLTS) (TÉMOIN DE FONCTIONNEMENT)	346
RELAIS (ENS) (24 VOLTS) (TÉMOINS LUMINEUX)	346, 357
RELAIS (ENS) (24 VOLTS) (TEMPÉRATURE DE L'HUILE HYDRAULIQUE)	346, 357
RELAIS (ENS) (24 VOLTS) (TEMPÉRATURE DE LIQUIDE DE REFROIDISSEMENT)	357
RELAIS (ENS) (24 VOLTS) (TEMPÉRATURE DE LIQUIDE DE REFROIDISSEMENT)	346
RELAIS (ENS) (24 VOLTS) (VIBRATION)	128
RENIFLARD (ENS) (RÉSERVOIR HYDRAULIQUE)	245
RENIFLARD (ESSIEU)	137
RÉSERVOIR - LAVE-GLACE (ASS)	382
RÉSERVOIR DE CARBURANT (ASS)	96
RÉSERVOIR DE CARBURANT ET MONTAGE (ASS)	95
RÉSERVOIR D'EAU (ASS)	281, 282
RÉSERVOIR DU LIQUIDE DE REFROIDISSEMENT (ASS)	71
RÉSERVOIR HYDRAULIQUE (ASS)	247
RÉSERVOIR HYDRAULIQUE ET MONTAGE (ASS)	245
RETROVISEUR - CABINE (ASS)	383
RÉTROVISEUR (ASS)	334, 335, 336
ROBINET DE BATTERIE (ASS)	119
ROTATION DE LA ROUE DU VENTILATEUR SOUFFLANT (DÉMARRAGE DU MOTEUR)	349, 352, 360, 363
ROTATION DE LA ROUE DU VENTILATEUR SOUFFLANT (DÉVERROUILLAGE, DÉBLOCAGE)	370, 371
ROUE - GROUPE DE MONTAGE	158, 159, 160
ROUE ET PNEU (ASS)	168, 169, 170, 171
SEGMENT DE PISTON (ASS)	41, 42
SIÈGE AVEC SUSPENSION (ASS)	378
SIÈGE AVEC SUSPENSION (ASS)	376, 380
SIÈGE ET MONTAGE (ASS)	375
SILENCIEUX (ASS)	78
SOLENOIDE D'ACCELERATION (ASS)	117
SONDE - NIVEAU DE CARBURANT (ENS)	96
SOUPAPE - SOLÉNOÏDE (ASS) (CHANGEMENT DE VITESSES)	251
SOUPAPE - SOLÉNOÏDE (ASS) (POMPE À PISTONS)	243
SOUPAPE - SOLÉNOÏDE (ASS) (12 VOLTS)	87
SOUPAPE D'ARRÊT (RÉCHAUFFEUR DE CABINE)	331
SOUPAPE D'ARRÊT (VIDANGE D'HUILE MOTEUR)	50
SOUPAPE DE DÉRIVATION (REFROIDISSEUR D'HUILE)	249
SOUPAPE DE VIDANGE (RADIATEUR)	69
SUPPORT DE FILTRE ET REFROIDISSEUR D'HUILE MOTEUR	58, 60
SUPPORT DE VIBRATEUR (ASS)	273
TABLEAU DE BORD (ASS)	345, 349, 352, 355, 360, 363
TAMBOUR À PIEDS DAMEURS (ASS)	148, 149
TAMBOUR DE COMPACTEUR (ASS)	144
TAMBOUR LISSE	150, 151
TAMBOUR LISSE (VERSION)	143
TAMBOUR VIBRATEUR ET ENTRAINEMENT (ASS)	145, 146, 147, 252, 253
TAPIS DE PLANCHER	368
TAPIS DE PLANCHER DU POSTE DE CONDUITE	321
TAPIS DU PLANCHER (ASS)	321
THERMOCONTACT (AVANCE DE DÉMARRAGE À FROID)	83
THERMOCONTACT (CARBURANT)	87
THERMOCONTACT (ENS) (HUILE HYDRAULIQUE)	247

S

T

* TRADUCTION NON DISPONIBLE AU MOMENT DE LA PUBLICATION

INDEX

Désignation	Page
THERMOCONTACT (ENS) (LIQUIDE DE REFROIDISSEMENT)	130
THERMOCONTACT (ENS) (RÉFRIGÉRANT)	285
THERMOSTAT-TEMPÉRATURE D'EAU	56
TIMONERIE (ASS)	333
TOIT (ASS)	296
TOIT ROPS (ASS)	369
TRAINS PLANÉTAIRES-RÉDUCTEURS (ASS)	161
TRANSFORMATION ELECTRIQUE (ASS)	103
TRANSMISSION (VERSION)	164

V

Désignation	Page
VASE D'EXPANSION POUR LIQUIDE RÉFRIGERANT	71
VENTILATEUR ASPIRANT (ASS)	62 63 64 65
VERIN DE DIRECTION ET MONTAGE (ASS)	209
VERIN D'INCLINAISON	310
VERIN D'INCLINAISON ET MONTAGE (ASS)	310
VERIN-GAZ (ENS)	177 180
VÉRIN HYDRAULIQUE (ASS)	214
VERSION DE CHASSIS	1
VERSION DE FREIN	200
VERSION DE PARE-CHOCS	172
VERSION D'ENVELOPPE	167
VERSION ÉLECTRIQUE	104
VERSION HYDRAULIQUE	217
VERSION NORMALE	1
VIBRATION HYDRAULIQUE (VERSION)	258
VIDANGE (ENS)	90
VIDANGE (ENS) (FILTRE À CARBURANT)	94
VILEBREQUIN - POULIE (ASS)	47
VILEBREQUIN (ASS)	13 15 16
VITRE (ASS)	384
VOLANT MOTEUR (ASS)	27

* TRADUCTION NON DISPONIBLE AU MOMENT DE LA PUBLICATION

INDICE

Nombre	Página

A

ACONDICIONADOR DE AIRE (GR)	285, 288
ACUMULADOR DEL ACONDICIONADOR DE AIRE (GR)	283, 284
ACUMULADOR DEL ACONDICIONADOR DE AIRE (GR) (CON DESECANTE)	284
AGUA - CONEXIÓN DE (GR)	56, 57
AGUA - CONEXIÓN DE (GR) (REGULADOR DE TEMPERATURA)	57
AJUSTADOR DE ALTURA (GR) (ASIENTO DE SUSPENSION)	376, 380
ALARMA (GR)	98, 123
ALARMA (GR) (24 VOLTIOS) (*FAULT INDICATOR)	355
ALFOMBRA (CONJ)	366
ALFOMBRILLA DE LA CABINA	321
ALFOMBRILLA DEL PISO	368
ALFOMBRILLA DEL PISO (GR)	321
ANILLO DE PISTÓN (GR)	41, 42
ÁRBOL DE LEVAS (GR)	4, 5
ASIENTO Y MONTAJE (GR)	375

B

BALANCÍN (GR)	48
BARRA LIMPIADORA DEL TAMBOR (GR)	193, 194
BARRA ROCIADORA (GR)	275
BASE DEL FILTRO Y ACEITE REFRIGERANTE DE MOTOR	58, 60
BASTIDOR DELANTERO (GR)	183
BASTIDOR TRASERO (GR)	184, 185
BATERÍA Y CABLES (GR)	100
BATERÍA (12-VOLTIOS, LIBRE DE MANTENIMIENTO)	100
BLOQUE MOTOR (GR)	17, 19, 20
BOMBA DE ACEITE DEL MOTOR (GR)	55
BOMBA DE AGUA (GR)	66
BOMBA DE CEBADO Y FILTRO PRIMARIO DE COMBUSTIBLE (GR)	90, 92, 94
BOMBA DE ENGRANAJES (GR) (VIBRATORIO)	262
BOMBA DE INYECCIÓN DE COMBUSTIBLE (GR)	82, 83, 86, 87
BOMBA DE PISTONES (GR)	237, 240, 243
BOMBA DE PISTONES (GR)	233
BOMBA DE PROPULSIÓN Y MONTAJE	165
BOMBA DEL ROCIADOR DE AGUA (GR)	279
BOMBA DEL VIBRADOR Y MONTAJE (GR)	262, 264, 266, 268
BOMBA MANUAL (GR) (CILINDRO DE INCLINACIÓN)	310
BOMBA Y MONTAJE DEL FRENO (GR)	205
BUJÍA INCANDESCENTE	105
BUJÍA INCANDESCENTE (GR)	105
*BUMPER AR	172

C

CABINA - MAZO DE CABLES DE LA	125, 356
CABINA (CONFIG)	289
CABINA INCLUYE ROPS (GR)	290, 292, 294
CABINA ROPS CERRADA (GR)	370
CABINA ROPS CERRADA (GR)	371
CABLES DE LA BOMBA(GR)	134
CABLES DE LA CABINA (GR)	125
CABLES DE LA CONSOLA (GR)	126
CABLES DE LA CONSOLA (GR)	128
CABLES DEL ACONDICIONADOR DE AIRE (GR)	124
CABLES DEL MOTOR (GR)	130
CAJA DELANTERA (GR)	29, 31
CALCOMANÍA DE ADVERTENCIA (ARRANQUE DEL MOTOR)	349, 352, 360, 363
CALCOMANÍA DE ADVERTENCIA (DESTRABAR, ALIVIO)	370, 371
CALCOMANÍA DE ADVERTENCIA (SIN ROPS/FOPS)	296

* NO HAY TRADUCCION DISPONIBLE EN EL MOMENTO DE LA IMPRESION

INDICE

Nombre	Página
CALCOMANÍA DE IDENTIFICACIÓN (CONTROLES DEL OPERADOR)	301 303
CALCOMANÍA DE IDENTIFICACIÓN (MEDIDOR DE SERVICIO)	360
CALCOMANÍA DE IDENTIFICACIÓN (TABLERO DE CIRCUITO)	130
CALCOMANÍA DE IDENTIFICACIÓN (TABLERO DE INSTRUMENTOS)	352 363
CALCOMANÍA DE IDENTIFICACIÓN (TABLERO DE INSTRUMENTOS)	349 360
CALCOMANÍA DE RAYAS (RODEADO DE ROJO REFLECTIVO)	393 394 403 405
CALCOMANIA-FUSIBLE/RELÉ	346 356
CALCOMANÍA-INSTRUMENTO (TABLERO)	356
CALCOMANÍA (INSTRUMENTOS)	345
CALCOMANÍA (ROCIADO DE AGUA)	134
CALCOMANÍAS Y PLACAS DE IDENTIFICACIÓN (GR)	393 394 395 396 397 398 399 400 401 402 403 405
CALEFACCIÓN DE LA CABINA (GR)	326
CALEFACCIÓN Y MONTAJE DE LA CABINA (GR)	325
CÁNCAMOS DE LEVANTAMIENTO DEL MOTOR (GR)	33
CANDADO (GR)	393 394 403 405
CANDADO (GR) (PROTECCIÓN CONTRA BANDALISMO)	324
CAPÓ (GR)	189 191
CARGA - ALTERNADOR DE (GR)	99
CARGA - ALTERNADOR DE (GR) (24 VOLTIOS)	99
CÁRTER - COLECTOR DEL (GR)	39
CÁRTER - COLECTOR DEL (GR)	37
CHASIS (CONFIG)	1
CHAVETA DE MEDIA LUNA	29 31
CIGÜEÑAL - POLEA DE (GR)	47
CIGÜEÑAL (GR)	13 15 16
CILINDRO DE DIRECCIÓN Y MONTAJE (GR)	209
CILINDRO DE INCLINACIÓN Y MONTAJE (GR)	310
CILINDRO HIDRÁULICO (GRUPO)	214
CINTURÓN DE SEGURIDAD (GR)	375 378
CODO DE ESCAPE (GR)	75
COLADOR DE COMBUSTIBLE	96
COLADOR (LLENADO DEL TANQUE DE AGUA)	281
COLADOR-SUCCION (TANQUE HIDRÁULICO)	247
COLADOR (TOBERA DE ROCIADO DE AGUA)	275
COMBUSTIBLE - TANQUE DE (GR)	96
COMPARTIMIENTO DEL MOTOR (GR)	177 180
COMPARTIMIENTO DEL OPERADOR (CONFIG)	343 344
COMPRESOR DE REFRIGERANTE (GR)	297 298
CONDENSADOR DEL REFRIGERANTE Y MONTAJE (GR)	300
CONDUCTO DE AIRE (GR)	318
CONEXION DE ENTRADA	74
CONFIGURACIÓN AUXILIAR HIDRÁULICA	217
CONFIGURACIÓN COMÚN	1
CONFIGURACIÓN DE CABLERIA, CALENTADOR Y ACONDICIONADOR DE AIRE	124 285 326
CONFIGURACIÓN DE FRENO	200
CONFIGURACIÓN DE INSTALACIÓN DEL MOTOR	3
CONFIGURACIÓN DEL CASCO	167
CONFIGURACIÓN ELÉCTRICA	104
CONJ. ORIFICIO-AIRE ACONDICIONADO	285
CONJ REFRIGERANTE-ACEITE HIDRÁULICO	68
CONJUNTO DE CABLES-BOMBA (VIBRATORIO)	264 266

* NO HAY TRADUCCION DISPONIBLE EN EL MOMENTO DE LA IMPRESION

INDICE

Nombre	Página
CONJUNTO DE MAZO DE CABLES DE LA CONSOLA (VIBRATORIO)	128
CONJUNTO DE MAZO DE CABLES DE SOLENOIDE (BOMBA DE INYECCIÓN)	130
CONJUNTO DE TAPA-VENTILADA (COLECTOR DE REFRIGERANTE)	71
CONJUNTO DE TAPON, DRENAJE (MAGNÉTICO)	137
CONTROL DE DIRECCIÓN (GR)	207
CONTROL DE MANIJA (GR)	305
CONTROL DE PROPULSION (GR)	308
CONTROL DE PROPULSION (GR)	306
CONTROL GR-DIRECCIÓN Y VELOCIDAD	301 303
CONVERTIDOR ELÉCTRICO (GR)	103
CORREA TRAPEZOIDAL (COMPRESOR DEL ACONDICIONADOR DE AIRE)	298
*COVER AS-FRONT	29 31
CUBIERTA	7 9 11
CULATA DE CILINDROS (GR)	21 22 23 24
*CYLINDER AS-TILT	310

D

Nombre	Página
DETECTOR DE NIVEL DEL COMBUSTIBLE	96
DIAFRAGMA (CONTACTOR DE PRESIÓN DEL CÁRTER)	7 9 11
DIFERENCIAL DE DESLIZAMIENTO LIMITADO (GR)	137
DIODO (GR)	349
DIODO (GR) (INSTRUMENTO)	352
DIODO (GR) (*RECEPTACLE)	360 363
DISYUNTOR (CONJ) (15 AMPERIOS) (INTERRUPTOR DE LLAVE)	357
DISYUNTOR (CONJ) (15 AMPERIOS) (RELÉ DE FUERZA PRINCIPAL)	346
DISYUNTOR (CONJ) (60 AMPERIOS) (ALTERNADOR)	131
DISYUNTOR (CONJ) (60 AMPERIOS) (BUJÍA INCANDESCENTE)	131
DISYUNTOR (CONJ) (60 AMPERIOS) (PRINCIPAL)	131
DISYUNTOR (GR)	119
DOSIFICACIÓN - BOMBA DE (GR) (HMU) (CONTROL DE FLUIDO)	207
DRENAJE (CONJ)	90
DRENAJE (CONJ) (FILTRO DE COMBUSTIBLE)	94

E

Nombre	Página
EJE DE IMPULSIÓN Y MONTAJE (GR)	136
EJE (GR)	137
ELEMENTO DE FILTRO DE COMBUSTIBLE (CONJ)	90 94
ELEMENTO DEL FILTRO DE AIRE (CONJ) (PRIMARIO)	72
ELEMENTO DEL FILTRO DE AIRE (CONJ) (SECUNDARIO)	72
EMPAQUETADURA (TAPA DE VÁLVULA)	7 9 11
ENFRIADOR DE ACEITE DEL MOTOR Y BASE DEL FILTRO	58 60
ENGANCHE ARTICULADO Y OSCILANTE (GR)	188
ESTRUCTURA ROPS (GR)	369
ETIQUETA DE ADVERTENCIA (GR)	392
EXTENSIÓN DEL FILTRO DE AIRE (GR)	76

F

Nombre	Página
FILTRO (AIRE DE CABINA)	320
FILTRO DE ACEITE (CONJ) (EFICIENCIA AVANZADA) (HIDRÁULICO)	215
FILTRO DE ACEITE DEL MOTOR (CONJ)	54
FILTRO DE ACEITE DEL MOTOR (GR)	54
FILTRO DE ACEITE (GR) (HIDRÁULICO)	215
FILTRO DE ACEITE HIDRÁULICO Y MONTAJE (GR)	215
FILTRO DE AGUA	277
FILTRO DE AGUA (GR)	277
FILTRO DE AIRE DE LA CABINA (GR)	320
FILTRO DE AIRE (GR)	72 73
FUSIBLE (10-AMPERIOS)	345 355

G

Nombre	Página
*GASKET-FRONT COVER	225
*GAUGE AS-TACHOMETER	322
*GAUGE-WATER LEVEL	282

* NO HAY TRADUCCION DISPONIBLE EN EL MOMENTO DE LA IMPRESION

INDICE

Nombre	Página
GRUPO DE ABRAZADERA-TUBERIAS HIDRÁULICAS	259
GRUPO DE MONTAJE DE LA CABINA	340, 342
GRUPO PERILLA, DIRECCIÓN	210

H

*HANDRAIL GP	187
HIDRÁULICA (CONFIG)	217
HOJA DE LIMPIAPARABRISAS (CONJ) (*500-MM)	389
HOJA DE LIMPIAPARABRISAS (CONJ) (*700-MM)	389

I

IMPULSOR DE VENTILADOR (GR)	25
INDICADOR DE CAMBIO DE FILTRO DE ACEITE (GR)	73
INDICADOR DEL NIVEL DE ACEITE (GR)	352, 363
INDICADOR DEL NIVEL DE ACEITE (GR) (24 VOLTIOS)	349, 360
INDICADOR DEL NIVEL DEL ACEITE (VARILLA) (CONJ) (MOTOR)	37, 39
INSTALACIÓN DEL TAMBOR (GR)	152
INTERRUPTOR DE ARRANQUE (CONJ) (LLAVE)	349, 352
INTERRUPTOR DE ARRANQUE (CONJ) (LLAVE)	360, 363
INTERRUPTOR DE PRESIÓN (CONJ) (ACEITE DEL MOTOR)	130
INTERRUPTOR DE PRESIÓN (CONJ) (ACEITE HIDRÁULICO)	215
INTERRUPTOR DE PRESIÓN (CONJ) (ACONDICIONADOR DE AIRE) (BATERÍAS CON CARGA BAJA)	298
INTERRUPTOR DE TEMPERATURA (ARRANQUE EN FRIO)	83
INTERRUPTOR DE TEMPERATURA (COMBUSTIBLE)	87
INTERRUPTOR DE TEMPERATURA (CONJ) (ACEITE HIDRÁULICO)	247
INTERRUPTOR DE TEMPERATURA (CONJ) (REFRIGERANTE)	130, 285
INTERRUPTOR DE VOLQUETE (CONJ) (ACELERACIÓN)	350, 353, 361, 364
INTERRUPTOR DE VOLQUETE (CONJ) (AIRE ACONDICIONADO)	288
INTERRUPTOR DE VOLQUETE (CONJ) (AUXILIAR DE ARRANQUE)	352
INTERRUPTOR DE VOLQUETE (CONJ) (AUXILIAR DE ARRANQUE)	349
INTERRUPTOR DE VOLQUETE (CONJ) (AUXILIAR DE ARRANQUE CON ÉTER)	361, 364
INTERRUPTOR DE VOLQUETE (CONJ) (BALIZA)	114, 115
INTERRUPTOR DE VOLQUETE (CONJ) (REFLECTOR)	111
INTERRUPTOR DE VOLQUETE (CONJ) (REFLECTOR)	112
INTERRUPTOR DE VOLQUETE (CONJ) (REFLECTORES)	355
INTERRUPTOR DE VOLQUETE (CONJ) (ROCIADO DE AGUA)	134
INTERRUPTOR DE VOLQUETE (CONJ) (SELECCIÓN DE VELOCIDAD)	350, 353, 361, 364
INTERRUPTOR DE VOLQUETE (CONJ) (SELECTOR VIBRADOR)	346, 356
INTERRUPTOR MAGNÉTICO (GR)	120, 121
INTERRUPTOR MAGNÉTICO (GR) (24 VOLTIOS) (ARRANQUE)	130
INTERRUPTOR MAGNÉTICO (GR) (24 VOLTIOS) (BUJÍA INCANDESCENTE)	130
INTERRUPTOR MAGNÉTICO (GR) (24 VOLTIOS) (RELÉ DE FUERZA PRINCIPAL)	356
INTERRUPTOR-MICRO (POSICIÓN NEUTRAL)	306, 308
INTERRUPTOR PULSADOR (CONJ) (FRENO DE ESTACIONAMIENTO)	345, 355
INTERRUPTOR PULSADOR (CONJ) (VIBRATORIO, SECCIÓN ACTIVO/INACTIVO)	305
INTERRUPTOR ROTATIVO (CONJ) (LIMPIA, LAVAPARABRISAS) (LIMPIAPARABRISAS TRASERO)	355

* NO HAY TRADUCCION DISPONIBLE EN EL MOMENTO DE LA IMPRESION

INDICE

Nombre	Página
INTERRUPTOR ROTATIVO (CONJ) (LIMPIA, LAVAPARABRISAS) (LIMPIAPARABRISAS TRASERO)	355
INTERRUPTOR ROTATIVO (CONJ) (24 VOLTIOS) (VENTILADOR)	355

J

JUEGO DE AJUSTE DEL ASIENTO (ASIENTO)	376, 380
JUEGO DE CORREAS TRAPEZOIDALES (ALTERNADOR)	131
JUEGO DE CORREAS TRAPEZOIDALES (INCLUYE 2-CORREAS) (VENTILADOR)	25
JUEGO DE MONTAJE (BOMBA DE CEBADO DE COMBUSTIBLE)	92
JUEGO DE SELLOS (CILINDRO DE DIRECCION)	214
JUNTA DE LA TAPA DE VÁLVULAS	29, 31, 233

L

LÁMPARA DE BALIZA DE ADVERTENCIA (GR)	110
LÁMPARA DEL TECHO (GR)	106
LÁMPARA DEL TECHO (GR) (24 VOLTIOS)	328
LAMPARA INDICADORA (CONJ) (ALTERNADOR)	360
LÁMPARA (24 VOLTIOS) (*ALTERNATOR INDICATOR)	360
LÁMPARA (24 VOLTIOS) (*ALTERNATOR INDICATOR)	349
LÁMPARA (24 VOLTIOS) (*ALTERNATOR INDICATOR)	352, 363
LÁMPARA (24 VOLTIOS) (CÚPULA)	106
LÁMPARA (24 VOLTIOS) (FRENO DE ESTACIONAMIENTO)	345
LÁMPARA (24 VOLTIOS) (LÁMPARA DE ADVERTENCIA)	337
LÁMPARA (24 VOLTIOS) (MEDIDOR DE NIVEL DE COMBUSTIBLE)	360
LÁMPARA (24 VOLTIOS) (MEDIDOR DE NIVEL DE COMBUSTIBLE)	349
LÁMPARA (24 VOLTIOS) (ROJO)	355
LÁMPARA (24-VOLTIOS, 3-VATIOS)	352, 363
LÁMPARA (24-VOLTIOS, 70-VATIOS) (BALIZA GIRATORIA DE ADVERTENCIA)	110
LIMPIA Y LAVAPARABRISAS (GR)	389
LIMPIAPARABRISAS DE LA VENTANA (GR)	389, 391
LLAVE	324
LLAVE (INTERRUPTOR GENERAL)	119
LUCES DE ADVERTENCIA (GR)	114, 115
LUCES DE ALÓGENO (24 VOLTIOS, 65 VATIOS)	109
LUCES DE ALÓGENO (24 VOLTIOS, 65 VATIOS) (REFLECTOR)	107, 108
LUCES DE REFLECTOR (GR)	111
LUCES DE REFLECTOR (GR)	112, 113

M

MANDO DE BOMBA (GR)	26
MANDO DE CORREA (BALIZA DE ADVERTENCIA)	110
MANDO DE SOPORTE Y VIBRATORIO (GR)	252, 253
MANDO DEL TAMBOR (GR)	141
MANGUERA DE RADIADOR (INFERIOR)	69
MANGUERA DE RADIADOR (SUPERIOR)	69
MAZO DE CABLES (CONJ) (ROCIADO DE AGUA)	134
MAZO DE CABLES DE ALARMA (CONJ) (ADVERTENCIA DE RETROCESO)	122, 123
MAZO DE CABLES DE CONTROL (CONJ) (VIBRATORIO)	126
MAZO DE CABLES DE SENSOR (CONJ) (VIBRATORIO)	322
MAZO DE CABLES DEL MOTOR (CONJ)	130
MAZO DE CABLES DEL TABLERO (CONJ)	352, 363
MAZO DE CABLES DEL TABLERO (CONJ) (BOCINA)	360, 363
MAZO DE CABLES DEL TABLERO (CONJ) (CONSOLA DELANTERA)	349, 360
MAZO DE CABLES DEL TABLERO (CONJ) (CONSOLA LATERAL)	345, 356
MAZO DE CABLES, LUCES (REFLECTOR)	111, 112, 113
MECANISMO DE VÁLVULAS (GR)	52, 53
MEDIDOR VIBRATORIO (GR)	322
MIRILLA	247

* NO HAY TRADUCCION DISPONIBLE EN EL MOMENTO DE LA IMPRESION

INDICE

Nombre	Página
MÓDULO DEL CRONÓMETRO (GR)	116
MÓDULO DEL CRONÓMETRO (GR)	345
	356
MÓDULO INDICADOR DE ADVERTENCIA (GR)	337
MONTAJE DE RUEDA (GR)	158
	159
	160
MONTAJE DEL MOTOR (GR)	34
	35
MONTAJE FLEXIBLE DEL MOTOR (GR)	36
MOTOR DE ARRANQUE ELÉCTRICO (GR)	118
MOTOR DE LA VIBRACIÓN Y MONTAJE (GR)	253
	260
	261
MOTOR DE PROPULSIÓN Y MONTAJE (GR)	156
MOTOR-LIMPIAPARABRISAS (GR)	338
	339
MOTOR-LIMPIAPARABRISAS (GR) (24 VOLTIOS)	389
MOTOR-LIMPIAPARABRISAS (GR) (24 VOLTIOS)	389
MOTOR PRIMARIO (CONFIG)	2
MUELLE DE GAS (CONJ)	177
	180
MÚLTIPLE DE ESCAPE (GR)	77
MULTIPLE HIDRAULICO (GR)	222

P

PARACHOQUES (CONFIG)	172
PARACHOQUES (GR)	173
	174
PARAGOLPES DEL TAMBOR (GR)	175
	176
PERSIANA PARA EL SOL (GR)	373
	374
PESAS EXCÉNTRICAS -CAJA DE (GR)	256
PESAS EXCÉNTRICAS -CAJA DE (GR)	254
PESAS EXCÉNTRICAS DEL EJE (GR)	271
	272
PISTÓN Y BIELA (GR)	41
	42
PISTONES DEL MOTOR (GR)	223
	225
	228
	231
PLACA DE IDENTIFICACION (AUXILIAR DE ARRANQUE)	349
	352
	360
	363
PLACA DE IDENTIFICACION (*MACHINE)	393
	394
	403
	405
PLACA DE IDENTIFICACION (PESA EXCÉNTRICA)	254
	256
PLACA DE INFORMACION (SALIDA ALTERNATIVA)	370
	371
PLACA DE INSTRUCCIONES (ACONDICIONADOR DE AIRE)	329
PLACA DE INSTRUCCIONES (BATERÍA)	100
PLANETARIO DEL MANDO FINAL (GR)	161
PLATAFORMA DE LA CABINA	366
	368
PROTECTOR CONTRA EL VANDALISMO (GR)	324
PROTECTOR DE LAS TUBERÍAS (GR)	186
PUERTA DE CABINA	312
	314
	316

R

RADIADOR Y ENFRIADOR DE ACEITE HIDRÁULICO (GR)	68
	69
RASPADOR DE TAMBOR AMORTIGUADO (GR)	195
RASPADOR DE TAMBOR LISO (GR)	196
	197
	199
RECUPERACIÓN DEL REFRIGERANTE (GR)	71
REFLECTOR (GR)	107
	108
	109
REGULADOR DE TEMPERATURA DEL AGUA	56
REGULADOR (GR)	80
RELÉ (CONJ) (24 VOLTIOS) (ARRANQUE NEUTRAL DOS)	346
	357
RELÉ (CONJ) (24 VOLTIOS) (ARRANQUE NEUTRAL UNO)	346
	357
RELÉ (CONJ) (24 VOLTIOS) (FRENO DOS)	346
	357
RELÉ (CONJ) (24 VOLTIOS) (FRENO UNO)	346
	357
RELÉ (CONJ) (24 VOLTIOS) (LUZ DE ALARMA)	346
	357

* NO HAY TRADUCCION DISPONIBLE EN EL MOMENTO DE LA IMPRESION

INDICE

Nombre	Página
RELÉ (CONJ) (24 VOLTIOS) (LUZ FUNCIONAL)	346, 357
RELÉ (CONJ) (24 VOLTIOS) (PRESIÓN DE ACEITE)	346, 357
RELÉ (CONJ) (24 VOLTIOS) (PRESIÓN DEL ACEITE DE MOTOR)	357
RELÉ (CONJ) (24 VOLTIOS) (PRESIÓN DEL ACEITE DE MOTOR)	345
RELÉ (CONJ) (24 VOLTIOS) (ROCIADO DE AGUA)	134
RELÉ (CONJ) (24 VOLTIOS) (TEMPERATURA DEL ACEITE HIDRÁULICO)	346, 357
RELÉ (CONJ) (24 VOLTIOS) (TEMPERATURA DEL REFRIGERANTE)	346, 357
RELÉ (CONJ) (24 VOLTIOS) (VIBRATORIO)	128
RESPIRADERO (CONJ) (TANQUE HIDRÁULICO)	245
RESPIRADERO (EJE)	137
RETROCESO - ALARMA DE (GR)	123
RETROCESO - ALARMA DE (GR)	122
RETROVISOR (GR)	334, 335, 336
REVESTIMIENTO DE LA CABINA (GR)	328
ROCIADOR DE AGUA (CONJ)	280
RODILLO DE PISONES (GR)	148, 149
RODILLO LISO (GR)	143, 150, 151
RUEDA Y NEUMÁTICO (GR)	168, 169, 170, 171

S

Nombre	Página
SELLO DUOCONE (GR)	161
SELLO (SEPARADOR DE AGUA)	94
SENSOR DE VELOCIDAD (GR) (VIBRACIONES POR MINUTOS)	322
SERVICIO GR-MOTOR	49, 50
SILENCIADOR (GR)	78
SOLENOIDE DEL ACELERADOR (GR)	117
SOPORTE VIBRATORIO (GR)	273
SUCCIÓN - VENTILADOR DE (GR)	62, 63, 64, 65
SUSPENSIÓN - ASIENTO CON (GR)	376, 378, 380

T

Nombre	Página
TABLERO DE INSTRUMENTOS (GR)	345, 352, 355, 363
TABLERO DE INSTRUMENTOS (GR)	349, 360
TAMBOR COMPACTADOR (GR)	144
TAMBOR VIBRADOR Y MANDO (GR)	145, 146, 147
TANQUE DE COMBUSTIBLE Y GRUPO DE MONTAJE	95
TANQUE DE REFRIGERANTE (GR)	71
TANQUE DEL AGUA (GR)	282
TANQUE DEL AGUA (GR)	281
TANQUE DEL LAVAPARABRISAS (GR)	382
TANQUE HIDRÁULICO (GR)	247
TANQUE HIDRÁULICO Y MONTAJE (GR)	245
TAPA CON RESPIRADERO (LIMPIAPARABRISAS)	382
TAPA DE LA CAJA DELANTERA (GR)	6
TAPA DE LLENADO (CONJ) (TANQUE HIDRAULICO)	247
TAPA DEL MECANISMO DE VÁLVULAS (GR)	7, 9, 11
TAPA DEL RADIADOR	68
TAPA DEL TUBO DE LLENADO DE ACEITE (MOTOR)	7, 9, 11
TAPA DEL TUBO DE LLENADO DE COMBUSTIBLE (GR)	79
TAPA DEL TUBO DE LLENADO DE COMBUSTIBLE (GR) (SERVICIO PESADO, TRABABLE)	96
TAPA DEL TUBO DE LLENADO (TAPÓN DE DRENAJE DEL TANQUE DE AGUA)	282
TAPÓN (CONJ) (TANQUE DE AGUA)	281
TAPÓN DE DRENAJE (ACEITE DE MOTOR)	37, 39
TAPÓN DE DRENAJE (ENGRANAJE REDUCTOR DE VELOCIDAD)	161
TAPÓN DEL MOTOR (GR)	44, 45, 46

* NO HAY TRADUCCION DISPONIBLE EN EL MOMENTO DE LA IMPRESION

INDICE

Nombre	Página
TAPÓN MAGNÉTICO (COMPARTIMENTO PARA PESAS EXCENTRICAS)	254
TAPÓN MAGNÉTICO (DRENAJE DE ACEITE)	137
TAPÓN MAGNÉTICO (PESAS EXCENTRICAS)	256
TAPÓN MAGNÉTICO (SOPORTE VIBRATORIO)	273
TECHO (GR)	296
TORNILLERIA DE ASIENTO (GR)	375
	378
TREN DE FUERZA (CONFIG)	164
TUBERÍAS DE ACONDICIONADOR DE AIRE (GR)	329
TUBERIAS DE CALEFACCION	331
TUBERÍAS DE CALEFACCIÓN DE LA CABINA	331
TUBERÍAS DE COMBUSTIBLE (GR)	81
TUBERÍAS DE DIRECCIÓN (GR)	211
TUBERÍAS DE PROPULSIÓN (GR)	153
TUBERÍAS DE PRUEBA DE PRESIÓN (GR)	220
TUBERÍAS DEL CILINDRO DE DIRECCIONAL (GR)	213
TUBERIAS DEL FILTRO HIDRAULICO (GR)	219
TUBERÍAS DEL FRENO Y CAMBIO DE VELOCIDADES (GR)	201
	202
TUBERIAS DEL ROCIADOR DE AGUA (GR)	278
TUBERÍAS DEL VIBRADOR (GR)	259
TUBERÍAS HIDRÁULICAS (GR)	218
TUBO DE LLENADO DE ACEITE (GR)	7
	9

V

Nombre	Página
VÁLVULA DE ALIVIO (GR) (COMPRESOR DEL REFRIGERANTE)	297
VÁLVULA DE CONTROL (GR)	251
VÁLVULA DE CONTROL Y MONTAJE (GR)	249
	250
VÁLVULA DE CORTE (CALENTADOR DE CABINA)	331
VÁLVULA DE CORTE (DRENAJE DE ACEITE DE MOTOR)	50
VALVULA DE DERIVACION (ENFRIADOR DE ACEITE)	249
VÁLVULA DE DRENAJE (RADIADOR)	69
VALVULA DE RETENCIÓN Y ALIVIO (GR) (BOMBA VIBRATORIA DE PISTON)	237
	240
	243
VÁLVULA DE SOLENOIDE (GR) (BOMBA DE PISTON)	243
VÁLVULA DE SOLENOIDE (GR) (*SHIFT)	251
VÁLVULA DE SOLENOIDE (GR) (12 VOLTIOS)	87
VARILLAJE (GR)	333
VENTANA DE LA PUERTA (GR)	386
VENTANA (GR)	384
VENTANA TRASERA (GR)	388
VIBRADOR HIDRÁULICO (CONFIG)	258
VISERA	383
VISERA (GR)	383
VOLANTE - CAJA DE (GR)	28
VOLANTE (GR)	27

* NO HAY TRADUCCION DISPONIBLE EN EL MOMENTO DE LA IMPRESION

ÍNDICE

Designação	Página

A

ACUMULADOR - AR CONDICIONADO 283, 284
ACUMULADOR - AR CONDICIONADO (COM DESSECANTE) 284
ADESIVO - FUSÍVEL/RELÉ 346, 356
AJUSTADOR DE ALTURA (ASSENTO DA SUSPENSÃO) 376, 380
ALARME 98, 123
ALARME DE MARCHA À RÉ 122, 123
ALARME (24 VOLTS) (INDICADOR DE FALHA) 355
ALTERNADOR DE CORRENTE 99
ALTERNADOR DE CORRENTE (24 VOLTS) 99
ANEL DE PISTÃO 41, 42
AQUECEDOR DA CABINE 326
AQUECEDOR DA CABINE E MONTAGEM 325
ARRANJO BÁSICO 1
ARREFECEDOR - ÓLEO HIDRÁULICO 68
ARREFECEDOR DE ÓLEO DO MOTOR E BASE DO FILTRO 58, 60
ARTICULAÇÃO 333
ASSENTO COM SUSPENSÃO 376, 378, 380
ASSENTO E MONTAGEM 375

B

BALANCIM 48
BARRA DE BORRIFO 275
BARRA LIMPADORA DO TAMBOR 193, 194
BATERIA E CABOS / FIOS ELÉTRICOS 100
BATERIA (12 VOLTS, ISENTO DE MANUTENÇÃO) 100
BLOCO DO MOTOR 17, 19, 20
BOCAL DE ENCHIMENTO DE ÓLEO DO MOTOR 7, 9
BOMBA DE ÁGUA 66
BOMBA DE ENGRENAGENS (VIBRATÓRIO) . . . 262
BOMBA DE ESCORVA DO COMBUSTÍVEL E DO FILTRO PRIMÁRIO 90, 92, 94
BOMBA DE INJEÇÃO DO COMBUSTÍVEL 82, 83, 86, 87
BOMBA DE ÓLEO - MOTOR 55
BOMBA DE PISTÃO 233, 237, 240, 243
BOMBA DE PROPULSÃO E MONTAGEM 165
BOMBA DE PULVERIZAÇÃO DE ÁGUA 279
BOMBA DO FREIO E MONTAGEM 205
BOMBA E MONTAGEM VIBRATÓRIA 262, 264, 266, 268
BOMBA MANUAL (CILINDRO DE INCLINAÇÃO) 310
BOMBA REGULADORA (HMU) (CONTROLE DE FLUXO) 207
BORRIFO D'ÁGUA 280
BOTÃO - DIREÇÃO 210
BUJÃO DO DRENO (ENGRENAGEM DE REDUÇÃO DE VELOCIDADE) 161
BUJÃO DO DRENO (ÓLEO DO MOTOR) 37, 39
BUJÃO DO MOTOR 44, 45, 46
BUJÃO-DRENAGEM (MAGNÉTICO) 137
BUJÃO MAGNÉTICO (ALOJAMENTO DO PESO EXCÊNTRICO) . . . 254
BUJÃO MAGNÉTICO (DRENO DO ÓLEO) 137
BUJÃO MAGNÉTICO (PESO DO EXCÊNTRICO) 256
BUJÃO MAGNÉTICO (SUPORTE VIBRATÓRIO) 273
*BUMPER AR 172

C

CABEÇOTE DO MOTOR 21, 22, 23, 24
CABINE 289, 343, 344
CABINE - ESTRUTURA DE PROTEÇÃO CONTRA CAPOTAMENTO 290, 292, 294

* TRADUÇÃO NÃO DISPONÍVEL NO MOMENTO DA IMPRESSÃO

ÍNDICE

Designação	Página
CABOS/FIOS ELÉTRICOS - AR CONDICIONADO	124
CABOS/FIOS ELÉTRICOS - BOMBA	134
CABOS/FIOS ELÉTRICOS - CABINE	125
CABOS/FIOS ELÉTRICOS - MOTOR	130
CABOS/FIOS ELÉTRICOS DO CONSOLE	126 128
CADEADO	393 394 403 405
CADEADO (PROTETOR CONTRA VANDALISMO)	324
CAIXA - PESO EXCÊNTRICO	254 256
CAIXA DIANTEIRA	29 31
CAIXA DO VOLANTE DO MOTOR	28
CAPÔ	189 191
CARCAÇA	167
CÁRTER DO ÓLEO DO MOTOR	37 39
CHASSI	1
CHASSI DIANTEIRO	183
CHASSI TRASEIRO	184 185
CHAVE	324
CHAVE (DESCONEXÃO DA BATERIA)	119
CHAVE GERAL	119
CHAVETA WOODRUFF/SEMICIRCULAR	29 31
CHICOTE - CABINE	125 356
CHICOTE - CABOS ELÉTRICOS (PULVERIZAÇÃO)	134
CHICOTE - CONSOLE (VIBRATÓRIO)	128
CHICOTE - ILUMINAÇÃO (HOLOFOTE)	111 112 113
CHICOTE - MOTOR	130
CHICOTE - SENSOR (VIBRATÓRIO)	322
CHICOTE - SOLENÓIDE (BOMBA INJETORA)	130
CILINDRO DE DIREÇÃO E MONTAGEM	209
CILINDRO DE INCLINAÇÃO E MONTAGEM	310
CILINDRO HIDRÁULICO	214
CILINDRO-INCLINAÇÃO	310
CINTO DE SEGURANÇA	375 378
COBERTURA DO MOTOR	177 180
COLETOR DE ESCAPE	77
COLETOR HIDRÁULICO	222
COMANDO DA BOMBA	26
COMANDO DO TAMBOR	141
COMANDO DO VENTILADOR	25
COMANDO HIDRÁULICO	217
COMANDO HIDRÁULICO AUXILIAR	217
COMANDO VIBRATÓRIO E SUPORTE	252 253
COMPRESSOR DE REFRIGERANTE	297 298
CONDENSADOR DO REFRIGERANTE E MONTAGEM	300
CONDICIONADOR DE AR	285 288
CONEXÃO - ADMISSÃO DE AR	74
CONEXÃO - TUBO D'ÁGUA	56 57
CONEXÃO - TUBO D'ÁGUA (TERMOSTATO)	57
CONTROLE - SENTIDO E VELOCIDADE	301 303
CONTROLE-CABO	305
CONTROLE DE DIREÇÃO	207
CONTROLE DE PROPULSÃO	306 308
CONVERSOR ELÉTRICO	103
CORREIA DE COMANDO (PISCA-ALERTA)	110
CORREIA EM V (COMPRESSOR DO CONDICIONADOR DE AR)	298
CORRIMAO, BALAUSTRE	187
COTOVELO DE ESCAPE	75

D

DECALQUE	392
DECALQUE - ADVERTÊNCIA (SEM ROPS/FOPS)	296
DECALQUE - IDENTIFICAÇÃO (CONTROLES DO OPERADOR)	301 303
DECALQUE - IDENTIFICAÇÃO (MARCADOR DE HORAS DE SERVIÇO)	360
DECALQUE - IDENTIFICAÇÃO (PAINEL DE CIRCUITO)	130
DECALQUE - IDENTIFICAÇÃO (PAINEL DE INSTRUMENTOS)	349 352 360 363
DECALQUE - INFORMAÇÕES (SAÍDA DE EMERGÊNCIA)	370 371
DECALQUE - INSTRUÇÃO (DESTRAVAR, LIBERAR)	370 371

* TRADUÇÃO NÃO DISPONÍVEL NO MOMENTO DA IMPRESSÃO

ÍNDICE

Designação	Página
DECALQUE - INSTRUÇÃO (PARTIDA DO MOTOR)	349, 352, 360, 363
DECALQUE - INSTRUMENTO (PAINEL)	356
DECALQUE - TIRA (REFLETOR VERMELHO REDONDO)	393, 394, 403, 405
DECALQUE (INSTRUMENTOS)	345
DECALQUE (PULVERIZAÇÃO)	134
DIAFRAGMA (CONTACTOR DE PRESSÃO DO CÁRTER)	7
DIAFRAGMA (CONTACTOR DE PRESSÃO DO CÁRTER)	9, 11
DIFERENCIAL - DESLIZAMENTO LIMITADO	137
DIODO	349
DIODO (INSTRUMENTO)	352
DIODO (TOMADA)	360, 363
DISJUNTOR AUTOMÁTICO DE CIRCUITO (15 AMPERES) (CHAVE INTERRUPTORA)	357
DISJUNTOR AUTOMÁTICO DE CIRCUITO (15 AMPERES) (RELÉ PRINCIPAL DE POTÊNCIA)	346
DISJUNTOR AUTOMÁTICO DE CIRCUITO (60 AMPERES) (ALTERNADOR)	131
DISJUNTOR AUTOMÁTICO DE CIRCUITO (60 AMPERES) (PRINCIPAL)	131
DISJUNTOR AUTOMÁTICO DE CIRCUITO (60 AMPERES) (VELA DE AQUECIMENTO)	131
DRENO	90
DRENO (FILTRO DE COMBUSTÍVEL)	94
DUCTO DE AR	318

E

EIXO	137
EIXO - PESO ECÊNTRICO	271, 272
EIXO-COMANDO DE VÁLVULA	4, 5
EIXO PROPULSÃO E MONTAGEM	136
ELEMENTO - FILTRO DE COMBUSTÍVEL	90, 94
ELEMENTO DO FILTRO DE AR (PRIMÁRIO)	72
ELEMENTO DO FILTRO DE AR (SECUNDÁRIO)	72
EMISSOR - NÍVEL DO COMBUSTÍVEL	96
ENGATE - ARTICULAÇÃO E OSCILAÇÃO	188
ESPELHO RETROVISOR	334, 335, 336
ESTRUTURA ROPS	369
EXTENSÃO DO PURIFICADOR DE AR	76

F

FIAÇÃO - ALARME (AVISO DE MARCHA À RÉ)	122, 123
FIAÇÃO - AQUECEDOR E AR CONDICIONADO	124, 285, 326
FIACAO - BOMBA (VIBRATÓRIO)	264, 266
FIAÇÃO - CONTROLE (VIBRATÓRIO)	126
FIAÇÃO - PAINEL	352, 363
FIAÇÃO - PAINEL (BUZINA)	360, 363
FIAÇÃO - PAINEL (CONSOLE DIANTEIRO)	349, 360
FIAÇÃO - PAINEL (CONSOLE LATERAL)	345
FIAÇÃO - PAINEL (CONSOLE LATERAL)	356
FILTRO - ÁGUA	277
FILTRO - AR DA CABINE	320
FILTRO - COMBUSTÍVEL	96
FILTRO - ÓLEO DO MOTOR	54
FILTRO - ÓLEO (EFICIÊNCIA AVANÇADA) (HIDRÁULICO)	215
FILTRO - ÓLEO (HIDRÁULICO)	215
FILTRO (AR DA CABINE)	320
FILTRO HIDRÁULICO E MONTAGEM	215
FIXADOR - ASSENTO	375, 378
FREIO	200
FUSÍVEL (10 AMPERES)	345, 355

G

GOVERNADOR	80
GR. PLANETÁRIO - COMANDO FINAL	161
GRAMPO - TUBULACOES HIDRAULICAS	259
GRUPO DE INSTALAÇÃO - MOTOR	3

I

INDICADOR - TROCA DO FILTRO DE AR	73
INDICADOR - VARETA DO NÍVEL DE ÓLEO (MOTOR)	37

* TRADUÇÃO NÃO DISPONÍVEL NO MOMENTO DA IMPRESSÃO

ÍNDICE

Designação	Página
	39
INDICATOR VIBRATÓRIO	322
INTERRUPTOR - BALANCIM (ACELERADOR)	350
	353
INTERRUPTOR - BALANCIM (ACELERADOR)	361
	364
INTERRUPTOR - BALANCIM (AR CONDICIONADO)	288
INTERRUPTOR - BALANCIM (AUXILIAR DE PARTIDA)	349
	352
INTERRUPTOR - BALANCIM (AUXILIAR DE PARTIDA A ÉTER)	361
	364
INTERRUPTOR - BALANCIM (FARÓIS)	355
INTERRUPTOR - BALANCIM (FAROL)	111
INTERRUPTOR - BALANCIM (FAROL)	112
INTERRUPTOR - BALANCIM (PISCA-PISCA)	114
	115
INTERRUPTOR - BALANCIM (PULVERIZAÇÃO COM ÁGUA)	134
INTERRUPTOR - BALANCIM (SELEÇÃO VIBRATÓRIA)	346
	356
INTERRUPTOR - BALANCIM (SELECIONAR VELOCIDADE)	350
	353
INTERRUPTOR - BALANCIM (SELECIONAR VELOCIDADE)	361
	364
INTERRUPTOR - BOTÃO (FREIO DE ESTACIONAMENTO)	355
INTERRUPTOR - BOTÃO (FREIO DE ESTACIONAMENTO)	345
INTERRUPTOR - BOTÃO (VIBRATÓRIO, SELECIONAR LIGAR-DESLIGAR)	305
INTERRUPTOR - MAGNÉTICO	120
	121
INTERRUPTOR - MAGNÉTICO (24 VOLTS) (MOTOR DE PARTIDA)	130
INTERRUPTOR - MAGNÉTICO (24 VOLTS) (RELÉ PRINCIPAL DE POTÊNCIA)	356
INTERRUPTOR - MAGNÉTICO (24 VOLTS) (VELA DE AQUECIMENTO)	130
INTERRUPTOR - MICRO (POSIÇÃO NEUTRO)	306
	308
INTERRUPTOR - PARTIDA (CHAVE)	349
	352
	360
	363
INTERRUPTOR - PRESSÃO (CONDICIONADOR DE AR) (CARGA BAIXA)	298
INTERRUPTOR - PRESSÃO (ÓLEO DO MOTOR)	130
INTERRUPTOR - PRESSÃO (ÓLEO HIDRÁULICO)	215
INTERRUPTOR - ROTATIVO (LIMPADOR, LAVADOR DE PÁRA-BRISA) (LIMPADOR TRASEIRO)	355
INTERRUPTOR - ROTATIVO (24 VOLTS) (VENTILADOR)	355
INTERRUPTOR - TEMPERATURA (AVANÇO DE PARTIDA A FRIO)	83
INTERRUPTOR - TEMPERATURA (COMBUSTÍVEL)	87
INTERRUPTOR - TEMPERATURA (LÍQUIDO ARREFECEDOR)	130
INTERRUPTOR - TEMPERATURA (ÓLEO HIDRÁULICO)	247
INTERRUPTOR - TEMPERATURA (REFRIGERANTE)	285

J

JOGO DE AJUSTADOR (ASSENTO)	376
	380
JOGO DE CORREIAS EM V (ALTERNADOR)	131
JOGO DE CORREIAS EM V (INCLUI 2 CORREIAS) (VENTILADOR)	25
JOGO DE FIXADORES (BOMBA DE ESCORVA DE COMBUSTÍVEL)	92
JOGO DE RETENTOR (CILINDRO DA DIREÇÃO)	214
JUNTA - TAMPA	29
	31
	233
JUNTA (TAMPA DA VÁLVULA)	7
	9
	11
JUNTA-TAMPA DIANTEIRA	225

L

LÂMINA DO LIMPADOR DE PÁRA-BRISA (500 MM)	389
LÂMINA DO LIMPADOR DE PÁRA-BRISA (700 MM)	389
LÂMPADA - FAROL	107
	108
	109
LÂMPADA - HALOGÊNEO (24 VOLTS, 65 WATTS)	109

* TRADUÇÃO NÃO DISPONÍVEL NO MOMENTO DA IMPRESSÃO

ÍNDICE

Designação	Página
LÂMPADA - HALOGÊNEO (24 VOLTS, 65 WATTS) (FAROL)	107, 108
LÂMPADA - TETO	106
LÂMPADA - TETO (24 VOLTS)	328
LÂMPADA INDICADORA (ALTERNADOR)	360
LÂMPADA (24 VOLTS) (FREIO DE ESTACIONAMENTO)	345
LÂMPADA (24 VOLTS) (INDICADOR DO ALTERNADOR)	349, 352, 363
LÂMPADA (24 VOLTS) (INDICADOR DO ALTERNADOR)	360
LÂMPADA (24 VOLTS) (INDICATOR DO NÍVEL DE COMBUSTÍVEL)	349
LÂMPADA (24 VOLTS) (INDICATOR DO NÍVEL DE COMBUSTÍVEL)	360
LÂMPADA (24 VOLTS) (LUZ DE ADVERTÊNCIA)	337
LÂMPADA (24 VOLTS) (TETO)	106
LÂMPADA (24 VOLTS) (VERMELHO)	355
LÂMPADA (24 VOLTS, 3 WATTS)	352, 363
LÂMPADA (24 VOLTS, 70 WATTS) (PISCA-PISCA DE ADVERTÊNCIA)	110
LEVANTAMENTO DO MOTOR	33
LIMPADOR DO VIDRO	389, 391
LIMPADOR E LAVADOR - JANELA	389
LUZ GIRATÓRIA DE ALARME	110

M

MANGUEIRA - RADIADOR (INFERIOR)	69
MANGUEIRA - RADIADOR (SUPERIOR)	69
MANUTENÇÃO-MOTOR	49, 50
MECANISMO DAS VÁLVULAS	52, 53
MEDIDOR - NÍVEL DE COMBUSTÍVEL	352, 363
MEDIDOR - NÍVEL DE COMBUSTÍVEL (24 VOLTS)	349, 360
MEDIDOR-NÍVEL DE ÁGUA	282
MEDIDOR-TACÔMETRO	322
MÓDULO - CRONÔMETRO	116, 345, 356
MÓDULO - INDICADOR DE ALARME	337
MOLA ACIONADA A GAS	177, 180
MONTAGEM - CABINE	340, 342
MONTAGEM - MOTOR	34, 35
MONTAGEM - RODA	158, 159, 160
MONTAGEM FLEXÍVEL DO MOTOR	36
MOTOR - LIMPADOR DO VIDRO	338, 339
MOTOR - LIMPADOR DO VIDRO (24 VOLTS)	389
MOTOR - PISTÃO	223, 225, 228, 231
MOTOR DE PROPULSÃO E MONTAGEM	156
MOTOR ELÉTRICO DE PARTIDA	118
MOTOR PRIMÁRIO	2
MOTOR VIBRATÓRIO E MONTAGEM	253, 260, 261

O

ORIFÍCIO-CONDICIONADOR DE AR	285

P

PAINEL DE INSTRUMENTOS	345, 349, 352, 355, 360, 363
PÁRA-CHOQUE	172, 173, 174
PÁRA-CHOQUE DO TAMBOR	175, 176
PÁRA-SOL	383
PÁRA-SOL DA CABINE	383
PISTÃO E BIELA	41, 42
PLACA DE IDENTIFICAÇÃO (AUXILIAR DE PARTIDA)	349, 352, 360, 363
PLACA DE IDENTIFICAÇÃO (MÁQUINA)	393, 394, 403, 405

* TRADUÇÃO NÃO DISPONÍVEL NO MOMENTO DA IMPRESSÃO

ÍNDICE

Designação	Página
PLACA DE IDENTIFICAÇÃO (PESO EXCÊNTRICO)	254, 256
PLACA DE INSTRUÇÃO (BATERIA)	100
PLACA DE INSTRUÇÃO (CONDICIONADOR DE AR)	329
PLACA E DECALQUE	393, 394, 395, 396, 397, 398, 399, 400, 401, 402, 403, 405
PLATAFORMA DO OPERADOR	366, 368
POLIA DO VIRABREQUIM	47
PORTA DA CABINE	312, 314, 316
PROTETOR - TUBOS	186
PROTETOR CONTRA VANDALISMO	324
PURIFICADOR DE AR	72, 73

R

Designação	Página
RADIADOR E ARREFECEDOR DO ÓLEO HIDRÁULICO	68, 69
RASPADOR - ROLO COM PISO	195
RASPADOR - ROLO LISO	196, 197, 199
RECUPERAÇÃO DE LÍQUIDO ARREFECEDOR	71
REGULADOR DE TEMPERATURA DA ÁGUA	56
RELÉ (CONJ) (24 VOLTS) (FREIO DOIS)	346, 357
RELÉ (CONJ) (24 VOLTS) (FREIO UM)	346, 357
RELÉ (CONJ) (24 VOLTS) (LUZ DE ADVERTÊNCIA)	346, 357
RELÉ (CONJ) (24 VOLTS) (LUZ DE FUNÇÃO)	346
RELÉ (CONJ) (24 VOLTS) (LUZ FUNCIONAL)	357
RELÉ (CONJ) (24 VOLTS) (PARTIDA EM NEUTRO DOIS)	346, 357
RELÉ (CONJ) (24 VOLTS) (PARTIDA EM NEUTRO UM)	346, 357
RELÉ (CONJ) (24 VOLTS) (PRESSÃO DO ÓLEO DO MOTOR)	345, 357
RELÉ (CONJ) (24 VOLTS) (PRESSÃO DO ÓLEO HIDRÁULICO)	346, 357
RELÉ (CONJ) (24 VOLTS) (PULVERIZAÇÃO COM ÁGUA)	134
RELÉ (CONJ) (24 VOLTS) (TEMPERATURA DO LÍQUIDO ARREFECEDOR)	346, 357
RELÉ (CONJ) (24 VOLTS) (TEMPERATURA DO ÓLEO HIDRÁULICO)	346, 357
RELÉ (CONJ) (24 VOLTS) (VIBRATÓRIO)	128
RESPIRO (EIXO)	137
RESPIRO (TANQUE HIDRÁULICO)	245
RETENTOR DUO-CONE	161
RETENTOR (SEPARADOR DE ÁGUA)	94
REVESTIMENTO DA CABINE	328
RODA E PNEU	168, 169, 170, 171
ROPS FECHADA	370, 371

S

Designação	Página
SENSOR DE VELOCIDADE (VPM)	322
SILENCIADOR	78
SISTEMA DE ILUMINAÇÃO - ADVERTÊNCIA	114, 115
SISTEMA DE ILUMINAÇÃO - FARÓIS	111, 112, 113
SISTEMA ELÉTRICO	104
SOLENÓIDE - ACELERADOR	117
SUPORTE DO SISTEMA VIBRATÓRIO	273

T

Designação	Página
TAMBOR - COMPACTADOR	144
TAMBOR - INSTALAÇÃO	152
TAMBOR COM PISO	148, 149
TAMBOR LISO	143, 150, 151
TAMBOR VIBRATÓRIO - COMANDO	145

* TRADUÇÃO NÃO DISPONÍVEL NO MOMENTO DA IMPRESSÃO

ÍNDICE

Designação	Página
	146
	147
TAMPA	7
	9
	11
TAMPA - BOCAL DE ENCHIMENTO (BUJÃO DO DRENO DO TANQUE DE ÁGUA)	282
TAMPA - BOCAL DE ENCHIMENTO DE COMBUSTÍVEL	79
TAMPA - BOCAL DE ENCHIMENTO DE COMBUSTÍVEL (SERVIÇO PESADO, TRAVÁVEL)	96
TAMPA - BOCAL DE ENCHIMENTO DE ÓLEO (MOTOR)	7
	9
	11
TAMPA - BOCAL DE ENCHIMENTO (TANQUE HIDRÁULICO)	247
TAMPA - CAIXA DIANTEIRA	6
TAMPA - COM RESPIRO (RECUPERACÃO DO LÍQUIDO ARREFECEDOR)	71
TAMPA - MECANISMO DAS VÁLVULAS	7
	9
	11
TAMPA - RADIADOR	68
TAMPA COM RESPIRO (LAVADOR DO VIDRO)	382
TAMPA-DIANTEIRA	29
	31
TAMPA (TANQUE DE ÁGUA)	281
TANQUE - LAVADOR DE JANELA	382
TANQUE - LÍQUIDO ARREFECEDOR	71
TANQUE DE ÁGUA	281
	282
TANQUE DE COMBUSTÍVEL	96
TANQUE DE COMBUSTÍVEL E MONTAGEM	95
TANQUE DE ÓLEO HIDRÁULICO E MONTAGEM	245
TANQUE HIDRÁULICO	247
TAPETE	321
	366
	368
TAPETE - CABINE	321
TELA DE SUCÇÃO (TANQUE HIDRÁULICO)	247
TELA FILTRANTE (BOCAL PULVERIZADOR DE ÁGUA)	275
TELA FILTRANTE (ENCHIMENTO DO TANQUE DE ÁGUA)	281
TELA PÁRA-SOL	373
	374
TOLDO	296
TREM DE FORÇA	164
TUBOS - AQUECEDOR DA CABINE	331
TUBOS - AR CONDICIONADO	329
TUBOS - BORRIFO DE ÁGUA	278
TUBOS - COMBUSTÍVEL	81
TUBOS - DIREÇÃO	211
TUBOS - FILTRO HIDRÁULICO	219
TUBOS - FREIO E MUDANÇA	201
	202
TUBOS - ÓLEO HIDRÁULICO	218
TUBOS - PROPULSÃO	153
TUBOS - SISTEMA VIBRATÓRIO	259
TUBOS - TESTE DE PRESSÃO	220
TUBOS DO AQUECEDOR	331
TUBOS DO CILINDRO DE DIREÇÃO	213

V

VÁLVULA DE ALÍVIO (COMPRESSOR DO REFRIGERANTE)	297
VÁLVULA DE CONTROLE	251
VÁLVULA DE CONTROLE E MONTAGEM	249
	250
VÁLVULA DE DESVIO (ARREFECEDOR DO ÓLEO)	249
VÁLVULA DE DRENAGEM (RADIADOR)	69
VÁLVULA DE PARADA (AQUECEDOR DA CABINE)	331
VÁLVULA DE PARADA (DRENO DO ÓLEO DO MOTOR)	50
VÁLVULA DE RETENÇÃO E DE ALÍVIO (BOMBA DO PISTÃO VIBRATÓRIO)	237
VÁLVULA DE RETENÇÃO E DE ALÍVIO (BOMBA VIBRATÓRIA)	240
	243
VÁLVULA SOLENÓIDE (BOMBA DO PISTÃO)	243
VÁLVULA SOLENÓIDE (MUDANÇA)	251
VÁLVULA SOLENÓIDE (12-VOLTS)	87
VELA DE AQUECIMENTO; VELA INCANDESCENTE	105
VENTILADOR DE SUCÇÃO	62
	63
	64
	65
VIBRADOR HIDRÁULICO	258
VIDRO	384
VIDRO DA PORTA	386
VIDRO TRASEIRO	388
VIGIA	247
VIRABREQUIM	13
	15
	16
VOLANTE DO MOTOR	27

* TRADUÇÃO NÃO DISPONÍVEL NO MOMENTO DA IMPRESSÃO

STICHWORTVERZEICHNIS

Bezeichnung	Seite
A	
ABDECKUNG	7, 9, 11
ABLASSSCHRAUBE (MAGNETISCH)	137
ABLASSSTOPFEN (GESCHWINDIGKEITSVERRINGERUNGSGANG)	161
ABLASSSTOPFEN (MOTORÖL)	39
ABLASSSTOPFEN (MOTORÖL)	37
ABLASSVENTIL (KÜHLER)	69
ABLASSVORRICHTUNG	90
ABLASSVORRICHTUNG (KRAFTSTOFFILTER)	94
ABSPERRVENTIL (FAHRERHAUSHEIZUNG)	331
ABSPERRVENTIL (MOTORÖLABLASS)	50
ABSTREIFER F. STAMPFFUSSBANDAGE	195
ACHSE	137
ALARMKABELSTRANG (RÜCKFAHRWARNUNG)	122, 123
ANBAUSATZ (KRAFTSTOFFENTLÜFTUNGSPUMPE)	92
ANSAUGSIEB (HYDRAULIKTANK)	247
ANTRIEBSACHSE U. AUFHÄNGUNG	136
ANTRIEBSMOTOR UND BEFESTIGUNGSTEILE	156
ARBEITSLEUCHTEN	107, 108, 109, 111, 112, 113
AUFKLEBER	392
AUFKLEBER - INFORMATION (NOTAUSGANG)	370, 371
AUFKLEBER - SOICHERUNG/RELAIS	346
AUFKLEBER - SOICHERUNG/RELAIS	356
AUFKLEBER (INSTRUMENTE)	345
AUFKLEBER (RUND, ROT REFEKTIEREND)	393, 394, 403, 405
AUFKLEBER (WASSERSPRÜHSYSTEM)	134
AUSPUFFBOGEN	75
AUSPUFFKRÜMMER	77
B	
BANDAGENABSTREIFER	193, 194
BANDAGENANTRIEB	141
BANDAGENSTOSSSTANGE	175, 176
BATTERIE UND VERDRAHTUNG	100
BATTERIE (12 V, WARTUNGSFREI)	100
BELEUCHTUNGSKABELSTRANG (ARBEITSSCHEINWERFER)	111, 112, 113
BREMS- U. SCHALTUNGSLEITUNGEN	201, 202
BREMSE	200
BREMSPUMPE UND BEFESTIGUNGSTEILE	205
*BUMPER AR	172
C	
*COVER AS-FRONT	29, 31
D	
DICHTUNG (VENTILDECKEL)	7, 9, 11
DICHTUNG (WASSERABSCHEIDER)	94
DICHTUNGSSATZ (LENKUNGSZYLINDER)	214
DIFFERENTIAL (BEGRENZTER SCHLUPF)	137
DIODE	349
DIODE (ANZEIGE)	352
DIODE (BEHÄLTER)	360, 363
DREHKNOPFSCHALTER (WISCHER, WASCHER) (HINTERER SCHEIBENWISCHER)	355
DREHKNOPFSCHALTER (WISCHER, WASCHER) (HINTERER SCHEIBENWISCHER)	355
DREHKNOPFSCHALTER (24 V) (LÜFTER)	355
DREHSTROMGENERATOR	99
DREHSTROMGENERATOR (24 V)	99
DREHZAHLMESSER	322
DREHZAHLSENSOR (VPM)	322
DREHZAHLSTEUERUNGSSOLENOID	117
DRUCKKNOPFSCHALTER (FESTSTELLBREMSE)	345
DRUCKKNOPFSCHALTER (FESTSTELLBREMSE)	355
DRUCKKNOPFSCHALTER (VIBRATION, WAHL EIN/AUS)	305
DRUCKSCHALTER (HYDRAULIKÖL)	215
DRUCKSCHALTER (KLIMAANLAGE) (NIEDRIGE SPANNUNG)	298
DRUCKSCHALTER (MOTORÖL)	130
DRUCKTESTLEITUNGEN	220

* ÜBERSETZUNG ZUM ZEITPUNKT DER DRUCKLEGUNG NICHT VORHANDEN

STICHWORTVERZEICHNIS

Bezeichnung	Seite
E	
EINFÜLLKAPPE (HYDRAULIKTANK)	247
EINFÜLLSTUTZENKAPPE (WASSERTANKABLASSSTOPFEN)	282
EINLASSANSCHLUSS	74
EINSTELLER-EINBAUSATZ (SITZ)	376, 380
ELEKTR. ANLAGE	104
ELEKTR. UMFORMER	103
ENTLÜFTER (ACHSE)	137
ENTLÜFTER (HYDRAULIKTANK)	245
EXZENTERGEWICHTSGEHÄUSE	254, 256
EXZENTERGEWICHTSWELLE	271, 272
F	
FAHRANTRIEBSLEITUNGEN	153
FAHRANTRIEBSPUMPE U. BEFESTIGUNGSTEILE	165
FAHRANTRIEBSSTEUERUNG	306, 308
FAHRERHAUS	289
FAHRERHAUS-KABELBAUM	125, 356
FAHRERHAUS MIT ÜBERROLLSCHUTZ	290, 292, 294
FAHRERHAUS, SONNENBLENDE	383
FAHRERHAUSANBAUSATZ	340, 342
FAHRERHAUSAUSKLEIDUNG	328
FAHRERHAUSAUSRÜSTUNG	343, 344
FAHRERHAUSBELEUCHTUNG	106
FAHRERHAUSBELEUCHTUNG (24 V)	328
FAHRERHAUSFENSTER	384
FAHRERHAUSFUSSMATTE	321
FAHRERHAUSHEIZUNG	326
FAHRERHAUSHEIZUNG U. BEFESTIGUNGSTEILE	325
FAHRERHAUSHEIZUNGSLEITUNGEN	331
FAHRERHAUSLUFTFILTER	320
FAHRERHAUSTÜR	312, 314, 316
FAHRERHAUSVERDRAHTUNG	125
FAHRERPLATTFORM	366, 368
FAHRERSITZ UND UNTERBAU	375
FAHRWERK	1
FILTER (FAHRERHAUS LUFT)	320
FILTERSOCKEL U. MOTORÖLKÜHLER	58, 60
FUSSMATTE	321, 368
FUSSMATTENSATZ	366
G	
GASFEDER	177, 180
*GASKET-FRONT COVER	225
GELAENDER	187
GESTÄNGE	333
GLATTBANDAGE	143, 150, 151
GLATTBANDAGEN-ABSTREIFER	196, 197, 199
GLEITRINGDICHTUNG	161
GLÜHKERZE	105
GRUNDAUSFÜHRUNG	1
H	
HALOGENSCHINWERFER (24V)(65W)	109
HALOGENSCHINWERFER (24V)(65W) (ARBEITSSCHEINWERFER)	107, 108
HANDPUMPE (KIPPZYLINDER)	310
HAUBE	189, 191
HECKFENSTER	388
HEIZUNGSLEITUNGEN	331
HÖHENEINSTELLUNG (SCHWINGSITZ)	376, 380
HYDRAULIKFILTER UND BEFESTIGUNGSTEILE	215
HYDRAULIKFILTERLEITUNGEN	219
HYDRAULIKLEITUNGEN	218
HYDRAULIKLEITUNGSKLEMME	259
HYDRAULIKÖLKÜHLER	68
HYDRAULIKSYSTEM	217
HYDRAULIKTANK	247
HYDRAULIKTANK UND BEFESTIGUNGSTEILE	245
HYDRAULIKVERTEILER	222
HYDRAULIKZYLINDER	214
I	
IDENTIFIKATIONSSCHILD (EXZENTERGEWICHT)	254

* ÜBERSETZUNG ZUM ZEITPUNKT DER DRUCKLEGUNG NICHT VORHANDEN

STICHWORTVERZEICHNIS

Bezeichnung	Seite
	256
IDENTIFIKATIONSSCHILD (MASCHINE)	393
	394
	403
	405
IDENTIFIKATIONSSCHILD (STARTHILFE)	349
	352
	360
	363
IDENTIFIZIERUNGS-AUFKLEBER (BEDIENUNGSELEMENTE)	301
	303
IDENTIFIZIERUNGS-AUFKLEBER (INSTRUMENTENTAFEL)	360
	363
IDENTIFIZIERUNGS-AUFKLEBER (INSTRUMENTENTAFEL)	349
	352
IDENTIFIZIERUNGS-AUFKLEBER (SCHUTZSCHALTERTAFEL)	130
IDENTIFIZIERUNGS-AUFKLEBER (WARTUNGSANZEIGE)	360
INSTRUKTIONS-AUFKLEBER (ENTSPERREN, FREIGEBEN)	370
INSTRUKTIONS-AUFKLEBER (ENTSPERREN, FREIGEBEN)	371
INSTRUKTIONS-AUFKLEBER (MOTORSTART)	349
	352
	360
	363
INSTRUKTONSSCHILD (BATTERIE)	100
INSTRUKTONSSCHILD (KLIMAANLAGE)	329
INSTRUMENTEN-AUFKLEBER (PANEL)	356
INSTRUMENTENTAFEL	345
	349
	352
	355
	360
	363
INSTRUMENTENTAFEL-KABELSTRANG	352
	363
INSTRUMENTENTAFEL-KABELSTRANG (HUPE)	360
	363
INSTRUMENTENTAFEL-KABELSTRANG (KONSOLE, VORN)	360
INSTRUMENTENTAFEL-KABELSTRANG (KONSOLE, VORN)	349
INSTRUMENTENTAFEL-KABELSTRANG (SEITENKONSOLE)	356
INSTRUMENTENTAFEL-KABELSTRANG (SEITENKONSOLE)	345

K

Bezeichnung	Seite
KABELSTRANG - HEIZUNG U. KLIMAANLAGE	124
	285
	326
KÄLTEMITTELKOMPRESSOR	297
	298
KÄLTEMITTELKONDENSATOR U. BEFESTIGUNGSTEILE	300
KAPPE MIT ENTLÜFTER (SCHEIBENWASCHER)	382
KAPPE (WASSERTANK)	281
KEILRIEMEN (KLIMAANLAGEN-KOMPRESSOR)	298
KEILRIEMENSATZ (DREHSTROMGENERATOR)	131
KEILRIEMENSATZ (EINSCHL. 2 RIEMEN) (LÜFTER)	25
KIPPSCHALTER (ARBEITSLEUCHTE)	111
	112
KIPPSCHALTER (ARBEITSLEUCHTEN)	355
KIPPSCHALTER (ÄTHERSTARTHILFE)	361
	364
KIPPSCHALTER (GANGWAHL)	350
	353
	361
	364
KIPPSCHALTER (GASSTEUERUNG)	350
	353
	361
	364
KIPPSCHALTER (KLIMAANLAGE)	288
KIPPSCHALTER (RUNDUMWARNLEUCHTE)	114
	115
KIPPSCHALTER (STARTHILFE)	349
	352
KIPPSCHALTER (VIBRATIONSWÄHLSCHALTER)	346
	356
KIPPSCHALTER (WASSERSPRÜHSCHALTER)	134
KIPPZYLINDER U. BEFESTIGUNG	310
KLIMAANLAGE	285
	288
KLIMAANLAGENDRUCKSPEICHER	283
	284
KLIMAANLAGENDRUCKSPEICHER (MIT TROCKENMITTEL)	284
KLIMAANLAGENLEITUNGEN	329
KLIMAANLAGENVERDRAHTUNG	124
KNICKGELENK- U. SCHWINGANHÄNGUNG	188
KOLBENMOTOR	223
	225

* ÜBERSETZUNG ZUM ZEITPUNKT DER DRUCKLEGUNG NICHT VORHANDEN

STICHWORTVERZEICHNIS

Bezeichnung	Seite
	228
	231
KOLBENPUMPE	233
	237
	240
	243
KOLBENRING	41
	42
KONSOLEN-VERDRAHTUNG (VIBRATIONSANLAGE)	128
KONSOLENVERDRAHTUNG	126
	128
KONTROLLEUCHTE (DREHSTROMGENERATOR)	360
KÖRPER	167
KRAFTSTOFFEINSPRITZPUMPE	82
	83
	86
	87
KRAFTSTOFFENTLÜFTUNGSPUMPE UND -HAUPTFILTER	90
	92
	94
KRAFTSTOFFFILTEREINSATZ	90
	94
KRAFTSTOFFFILTERKAPPE	79
KRAFTSTOFFFILTERKAPPE (SCHWEREINSATZ, SPERRBAR)	96
KRAFTSTOFFLEITUNGEN	81
KRAFTSTOFFSIEB	96
KRAFTSTOFFSTANDANZEIGE	352
	363
KRAFTSTOFFSTANDANZEIGE (24 V)	349
	360
KRAFTSTOFFSTANDGEBER	96
KRAFTSTOFFTANK	96
KRAFTSTOFFTANK U. BEFESTIGUNG	95
KRAFTÜBERTRAGUNG	164
KÜHLER UND HYDRAULIKÖLKÜHLER	68
	69
KÜHLERKAPPE	68
KÜHLERSCHLAUCH (OBEN)	69
KÜHLERSCHLAUCH (UNTEN)	69
KÜHLMITTELBEHÄLTER	71
KÜHLMITTELÜBERLAUFBEHÄLTER	71
KÜHLWASSERANSCHLUSS	56
	57
KÜHLWASSERANSCHLUSS (THERMOSTAT)	57
KÜHLWASSERPUMPE	66
KURBELWELLE	13
	15
	16
KURBELWELLEN-RIEMENSCHEIBE	47

L

LAUFBAND UND ANTRIEB (RUNDUM-KENNLEUCHTE)	110
LEITUNGSVERKLEIDUNG	186
LENKBETÄTIGUNG	207
LENKKNOPF	210
LENKÖLLEITUNGEN	211
LENKZYLINDER UND AUFHÄNGUNG	209
LENKZYLINDERLEITUNGEN	213
LEUCHTE (24 V) (DREHSTROMGENERATOR-ANZEIGE)	352
	363
LEUCHTE (24 V) (DREHSTROMGENERATOR-ANZEIGE)	349
LEUCHTE (24 V) (DREHSTROMGENERATOR-ANZEIGE)	360
LEUCHTE (24 V) (FAHRERHAUSDACH)	106
LEUCHTE (24 V) (FESTSTELLBREMSE)	345
LEUCHTE (24 V) (KRAFTSTOFFANZEIGE)	349
LEUCHTE (24 V) (KRAFTSTOFFANZEIGE)	360
LEUCHTE (24 V) (ROT)	355
LEUCHTE (24 V) (WARNLEUCHTE)	337
LEUCHTE (24 V, 3 W)	352
	363
LEUCHTE (24 V, 70 W) (RUNDUM-KENNLEUCHTE)	110
LÜFTERANTRIEB	25
LUFTFILTER (HAUPTELEMENT)	72
LUFTFILTER (HILFSELEMENT)	72
LUFTFILTERWARTUNGSANZEIGE	73
LUFTKANAL	318
LUFTREINIGER	72
	73
LUFTREINIGERVERLÄNGERUNG	76
LÜFTUNGSKAPPE (KÜHLMITTELAUFFANG)	71

M

MAGNETSCHALTER	120
	121
MAGNETSCHALTER (24 V) (GLÜHKERZE)	130
MAGNETSCHALTER (24 V) (HAUPTSCHALTER)	356
MAGNETSCHALTER (24 V) (STARTER)	130
MAGNETSTOPFEN (EXZENTERGEWICHT)	256
MAGNETSTOPFEN (EXZENTERGEWICHTSGEHÄUSE)	254
MAGNETSTOPFEN (ÖLABLASS)	137
MAGNETSTOPFEN (VIBRATIONSAUFHÄNGUNG)	273
MAGNETVENTIL (KOLBENPUMPE)	243
MAGNETVENTIL (SCHALTEN)	251
MAGNETVENTIL (12 V)	87

* ÜBERSETZUNG ZUM ZEITPUNKT DER DRUCKLEGUNG NICHT VORHANDEN

STICHWORTVERZEICHNIS

Bezeichnung	Seite
MEMBRAN (KURBELGEHÄUSEDRUCKSCHALTER)	7, 9, 11
MOTOR-EINBAUSATZ	3
MOTORAUFHÄNGUNG, ELASTISCH	36
MOTORAUFLAGER	34, 35
MOTORAUSFÜHRUNG	2
MOTORBLOCK	17, 19, 20
MOTORHUBÖSE	33
MOTORKABELSTRANG	130
MOTORÖLEINFÜLLSTUTZEN	7, 9
MOTORÖLKÜHLER UND FILTERSOCKEL	58, 60
MOTORSTOPFEN	44, 45, 46
MOTORVERDRAHTUNG	130
MOTORVERKLEIDUNG	177, 180

N

NEBENANTRIEB U. VIBRATIONSBANDAGE	252, 253
NEIGEZYLINDER	310
NOCKENWELLE	4, 5

O

ÖFFNUNG - KLIMAANLAGE	285
ÖLEINFÜLLKAPPE (MOTOR)	7, 9, 11
ÖLFILTER	54
ÖLFILTER (HOCHLEISTUNG) (HYDRAULIK)	215
ÖLFILTER (HYDRAULIK)	215
ÖLMESSSTAB (MOTOR)	37, 39
ÖLWANNE	37, 39

P

PLEUELSTANGE UND KOLBEN	41, 42
PUMPENANTRIEB	26
PUMPENKABELSTRANG (VIBRATION)	264, 266
PUMPENVERDRAHTUNG	134

R

RAD UND REIFEN	168, 169, 170, 171
RADAUFHAENGUNG	158, 159, 160
RAHMEN, HINTEN	184, 185
RAMMSCHUTZ	172
REGLER	80
RELAIS (24 V) (BREMSE EINS)	346, 357
RELAIS (24 V) (BREMSE ZWEI)	346, 357
RELAIS (24 V) (FUNKTIONSLEUCHTE)	346, 357
RELAIS (24 V) (HYDRAULIKÖLDRUCK)	357
RELAIS (24 V) (HYDRAULIKÖLDRUCK)	346
RELAIS (24 V) (HYDRAULIKÖLTEMPERATUR)	346, 357
RELAIS (24 V) (KÜHLMITTELTEMPERATUR)	346
RELAIS (24 V) (KÜHLMITTELTEMPERATUR)	357
RELAIS (24 V) (MOTORÖLDRUCK)	345, 357
RELAIS (24 V) (NEUTRALSTART EINS)	346, 357
RELAIS (24 V) (NEUTRALSTART ZWEI)	346, 357
RELAIS (24 V) (VIBRATIONSANLAGE)	128
RELAIS (24 V) (WARNLEUCHTE)	346, 357
RELAIS (24 V) (WASSERSPRÜHSCHALTER)	134
RÜCKFAHRWARNHORN	122, 123
RÜCKSCHLAG- U. DRUCKBEGRENZUNGSVENTIL (VIBRATIONSKOLBENPUMPE)	237
RÜCKSCHLAG- U. DRUCKBEGRENZUNGSVENTIL (VIBRATIONSPUMPE)	240, 243
RÜCKSPIEGEL	334, 335, 336
RUNDUM-KENNLEUCHTE	110

* ÜBERSETZUNG ZUM ZEITPUNKT DER DRUCKLEGUNG NICHT VORHANDEN

STICHWORTVERZEICHNIS

Bezeichnung	Seite

S

SAUGLÜFTER 62, 63, 64, 65
SCHALLDÄMPFER 78
SCHALTER - MICRO (NEUTRALSTELLUNG) . . . 306, 308
SCHAUGLAS 247
SCHEIBENFEDER 29, 31
SCHEIBENWASCHMITTELBEHÄLTER 382
SCHEIBENWISCHER 389, 391
SCHEIBENWISCHER UND -WASCHANLAGE . . . 389
SCHEIBENWISCHERBLATT (500 MM) 389
SCHEIBENWISCHERBLATT (700 MM) 389
SCHEIBENWISCHERMOTOR 338, 339
SCHEIBENWISCHERMOTOR (24 V) 389
SCHILD UND AUFKLEBER 393, 394, 395, 396, 397, 398, 399, 400, 401, 402, 403, 405
SCHLÜSSEL 324
SCHLÜSSEL (ELEKTRISCHER HAUPTSCHALTER) 119
SCHMIERPUMPE 55
SCHUTZVERKLEIDUNG 324
SCHWINGSITZ 376, 378, 380
SCHWUNGRAD 27
SCHWUNGRADGEHÄUSE 28
SEITENANTRIEB - PLANETENGETRIEBE 161
SENSOR, KABELSTRANG (VIBRATION) 322
SERVICE - MOTOR 49, 50
SICHERHEITSGURT 375, 378
SICHERUNG (10 A) 345, 355
SIEB (WASSERSPRÜHDÜSE) 275
SIEB (WASSERTANKFÜLLUNG) 281
SITZBEFESTIGUNGSTEIL 375, 378
SONNENBLENDE 373, 374, 383
SPRÜHBALKEN 275
STAMPFFUSSBANDAGE 148, 149
STARTERMOTOR 118
STARTSCHALTER (TASTE) 349, 360, 363
STARTSCHALTER (TASTE) 352
STEUERHEBEL 305
STEUERUNG - RICHTUNG U. DREHZAHL 301, 303
STEUERUNGS-KABELSTRANG (VIBRATION) 126
STEUERVENTIL 251
STEUERVENTIL UND BEFESTIGUNGSTEILE . . . 249, 250
STIRNRADGEHÄUSE 29, 31
STIRNRADGEHÄUSEDECKEL 6
STOSSSTANGE 173, 174

T

TEMPERATURSCHALTER (HYDRAULIKÖL) 247
TEMPERATURSCHALTER (KALTSTART) 83
TEMPERATURSCHALTER (KRAFTSTOFF) 87
TEMPERATURSCHALTER (KÜHLMITTEL) 130, 285
TIMERMODUL 116, 345, 356
TRENNSCHALTER 119
TÜRFENSTER 386

U

ÜBERDRUCKVENTIL (KÄLTEMITTELKOMPRESSOR) 297
ÜBERROLL-SCHUTZKABINE 370, 371
ÜBERROLLSCHUTZ 369
UMGEHUNGSVENTIL (ÖLKÜHLER) 249
UNTERBRECHER (15 A) (HAUPTSCHALTER) . . . 346
UNTERBRECHER (15 A) (STARTSCHALTER-SCHLÜSSEL) 357
UNTERBRECHER (60 A) (DREHSTROMGENERATOR) 131
UNTERBRECHER (60 A) (GLÜHKERZE) 131

* ÜBERSETZUNG ZUM ZEITPUNKT DER DRUCKLEGUNG NICHT VORHANDEN

STICHWORTVERZEICHNIS

Bezeichnung	Seite
UNTERBRECHER (60 A) (HAUPTUNTERBRECHER)	131
V	
VEDRAHTUNG - SOLENOID (EINSPRITZPUMPE)	130
VENTILDECKEL	7
	9
	11
VENTILDECKELDICHTUNG	29
	31
	233
VENTILKIPPHEBEL	48
VENTILSTEUERUNG	52
	53
VERDICHTUNGSBANDAGE	144
VERDRAHTUNGSKABELBAUM (WASSERSPRÜHSYSTEM)	134
VIBRATIONSANZEIGE	322
VIBRATIONSBANDAGE UND ANTRIEB	145
	146
	147
VIBRATIONSHYDRAULIK	258
VIBRATIONSLEITUNGEN	259
VIBRATIONSMOTOR U. BEFESTIGUNG	253
	260
	261
VIBRATIONSPUMPE U. BEFESTIGUNGSTEILE	262
	264
VIBRATIONSPUMPE U. BEFESTIGUNGSTEILE	266
	268
VIBRATIONSUNTERSTÜTZUNG	273
VORDERRAHMEN	183
VORHÄNGESCHLOSS	393
	394
	403
	405
VORHÄNGESCHLOSS (VANDALISMUSSCHUTZ)	324
W	
WALZENEINBAU	152
WARNANZEIGEMODUL	337
WARNAUFKLEBER (OHNE ÜBERROLLSCHUTZ/STEINSCHLAGSCHUTZ)	296
WARNLEUCHTEN	114
	115
WARNVORRICHTUNG	98
	123
WARNVORRICHTUNG (24 V) (*FAULT INDICATOR)	355
WASSERFILTER	277
WASSERSPRÜHLEITUNGEN	278
WASSERSPRÜHPUMPE	279
WASSERSPRÜHSYSTEM	280
WASSERSTANDSANZEIGE	282
WASSERTANK	281
	282
WASSERTEMPERATURREGLER	56
WETTERDACH	296
Z	
ZAHNRADPUMPE (VIBRATIONSANLAGE)	262
ZUMESSPUMPE (HMU) (FLUSSREGELUNG)	207
ZUSATZHYDRAULIK	217
ZYLINDERKOPF	21
	22
	23
	24

* ÜBERSETZUNG ZUM ZEITPUNKT DER DRUCKLEGUNG NICHT VORHANDEN

MEMORANDA

MACHINE ARRANGEMENT

229-5409 CHASSIS AR

S/N: EAE1-UP

PART OF 228-9623 COMMON AR

SMCS-7000 **i02294048**

NOTE	PART NUMBER	QTY	PART NAME 1 2 3 4 5 6 (PRODUCT LEVEL)	SEE PAGE
Y	*247-1740*	1	ENCLOSURE GP-ENGINE	177
			S/N: EAE1-234	
Y	*253-4272*	1	ENCLOSURE GP-ENGINE	180
			S/N: EAE235-UP	
Y	*153-7112*	1	FRAME GP-FRONT	183
Y	*228-1627*	1	FRAME GP-REAR	184
Y	*228-1696*	1	TANK & MTG GP-FUEL	95
Y	*187-1453*	1	TANK & MTG GP-HYDRAULIC	245

Y-SEPARATE ILLUSTRATION

<END>

228-9623 COMMON AR

S/N: EAE1-UP

SMCS-7000 **i01974604**

NOTE	PART NUMBER	QTY	PART NAME 1 2 3 4 5 6 (PRODUCT LEVEL)	SEE PAGE
Y	*229-5409*	1	CHASSIS AR	1
Y	*233-4654*	1	ELECTRICAL AR	104
Y	**176-3163**	1	ENGINE AR-PRIMARY	2
Y	*229-5727*	1	HYDRAULIC AR	217
Y	*153-5009*	1	HYDRAULIC AR-AUXILIARY	217
Y	*227-8418*	1	INSTALLATION AR-ENGINE	3
Y	*216-8741*	1	POWER TRAIN AR	164

Y-SEPARATE ILLUSTRATION

<END>

ENGINE ARRANGEMENT

176-3163 ENGINE AR-PRIMARY

S/N: G4D1-UP; CRS2300-UP
62 BRAKE KW (83 BHP) AT 2200 RPM
PART OF 228-9623 COMMON AR

SMCS-1000 **i02816623**

NOTE	PART NUMBER	QTY	PART NAME 1 2 3 4 5 6 (PRODUCT LEVEL)	SEE PAGE
Y	*236-9965*	1	ALTERNATOR GP-CHARGING	99
Y	*313-3363*	1	CAMSHAFT GP	5
Y	*306-1639*	1	CONNECTION GP-INLET	74
Y	*231-0038*	1	CONNECTION GP-WATER	56
Y	*240-5535*	1	CONVERTER GP-ELECTRICAL	103
Y	*253-2472*	1	COOLER GP-FLTR BASE & ENG OIL	58
Y	*230-9196*	1	COVER GP-FRONT HOUSING	6
Y	*230-9151*	1	COVER GP-VALVE MECHANISM	7
Y	*313-3357*	1	CRANKSHAFT GP	16
Y	*313-3355*	1	CYLINDER BLOCK GP	20
Y	*313-3360*	1	CYLINDER HEAD GP	24
Y	*236-8181*	1	DRIVE GP-FAN	25
Y	*235-8175*	1	ELBOW GP-EXHAUST	75
Y	*232-7378*	1	FILTER GP-ENGINE OIL	54
Y	*230-7286*	1	FLYWHEEL GP	27
Y	*233-9834*	1	GLOW PLUG GP	105
Y	*223-7825*	1	HOUSING GP-FLYWHEEL	28
Y	*308-4764*	1	HOUSING GP-FRONT	31
Y	*232-3713*	1	LIFTING GP-ENGINE	33
Y	*231-0292*	1	MANIFOLD GP-EXHAUST	77
Y	*233-9840*	1	MOUNTING GP-ENGINE	34
			S/N: CRS2300-2612	
Y	*252-6456*	1	MOUNTING GP-ENGINE	35
			S/N: CRS2613-UP	
Y	*232-2565*	1	PAN GP-OIL	37
Y	*313-3359*	1	PISTON & ROD GP	42
Y	*225-4317*	1	PLUG GP-ENGINE	44
Y	*253-2479*	1	PLUG GP-ENGINE	46
Y	*232-6204*	1	PLUG GP-ENGINE	45
Y	*230-7352*	1	PULLEY GP-CRANKSHAFT	47
Y	*230-7578*	1	PUMP GP-ENGINE OIL	55
Y	*240-5572*	1	PUMP GP-FUEL INJECTION	83
			S/N: CRS2300-6334	
Y	*313-1335*	1	PUMP GP-FUEL INJECTION	87
Y	*233-7425*	1	PUMP GP-FUEL PRM & PRIM FILTER	90
Y	*230-7355*	1	PUMP GP-WATER	66
Y	*230-7304*	1	STARTING MOTOR GP-ELECTRIC	118
Y	*313-3362*	1	VALVE MECHANISM GP	53
			AVAILABLE GASKET KIT(S):	
	277-5156	1	KIT-GASKET (TOP)	
	272-0494	1	KIT-GASKET (BOTTOM)	

Y-SEPARATE ILLUSTRATION

ENGINE ARRANGEMENT

227-8418 INSTALLATION AR-ENGINE

S/N: EAE1-UP

PART OF 228-9623 COMMON AR

SMCS-1000 **i01975162**

NOTE	PART NUMBER	QTY	PART NAME 1 2 3 4 5 6 (PRODUCT LEVEL)	SEE PAGE
Y	*226-5592*	1	AIR CLEANER GP	73
Y	*153-4980*	1	DRIVE GP-PUMP	26
Y	*227-8394*	1	GOVERNOR GP	80
Y	*227-4803*	1	LINES GP-FUEL	81
Y	*227-3115*	1	MOUNTING GP-ENGINE FLEXIBLE	36
Y	*226-5729*	1	MUFFLER GP	78
Y	*226-6025*	1	RADIATOR & HYD OIL COOLER GP	69
Y	*228-1665*	1	RECOVERY GP-COOLANT	71
Y	*220-1960*	1	SERVICE GP-ENGINE (FLUID SAMPLING & DRAIN)	49

Y-SEPARATE ILLUSTRATION

BASIC ENGINE

233-7236 CAMSHAFT GP

S/N: G4D1-UP; CRS2300-UP

PART OF 176-3163 ENGINE AR-PRIMARY

SMCS-1210 **i02052221**

NOTE	REF NO	GRAPHIC REF	PART NUMBER	QTY	PART NAME 1 2 3 4 5 6 (PRODUCT LEVEL)	SEE PAGE
	1	1	**1B-8736**	1	KEY-WOODRUFF	
	2	1	**233-7244**	1	CAMSHAFT	

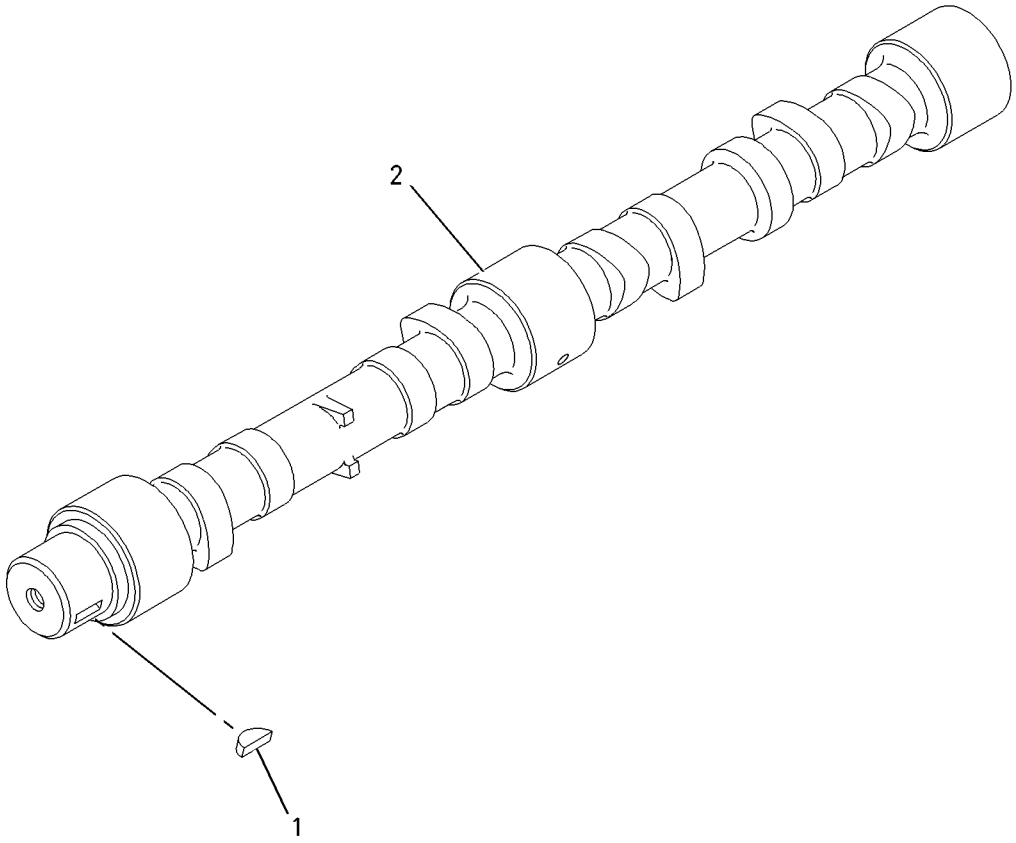

GRAPHIC #1 **<END>** g00911297

BASIC ENGINE

313-3363 CAMSHAFT GP

S/N: G4D1-UP; CRS2300-UP

PART OF 176-3163 ENGINE AR-PRIMARY

SMCS-1210 **i02811259**

NOTE	REF NO	GRAPHIC REF	PART NUMBER	QTY	PART NAME 1 2 3 4 5 6 (PRODUCT LEVEL)	SEE PAGE
	1	1	**067-6095**	8	ROD	
	2	1	**138-2053**	8	TAPPET	
	3	1	**233-7244**	1	CAMSHAFT	

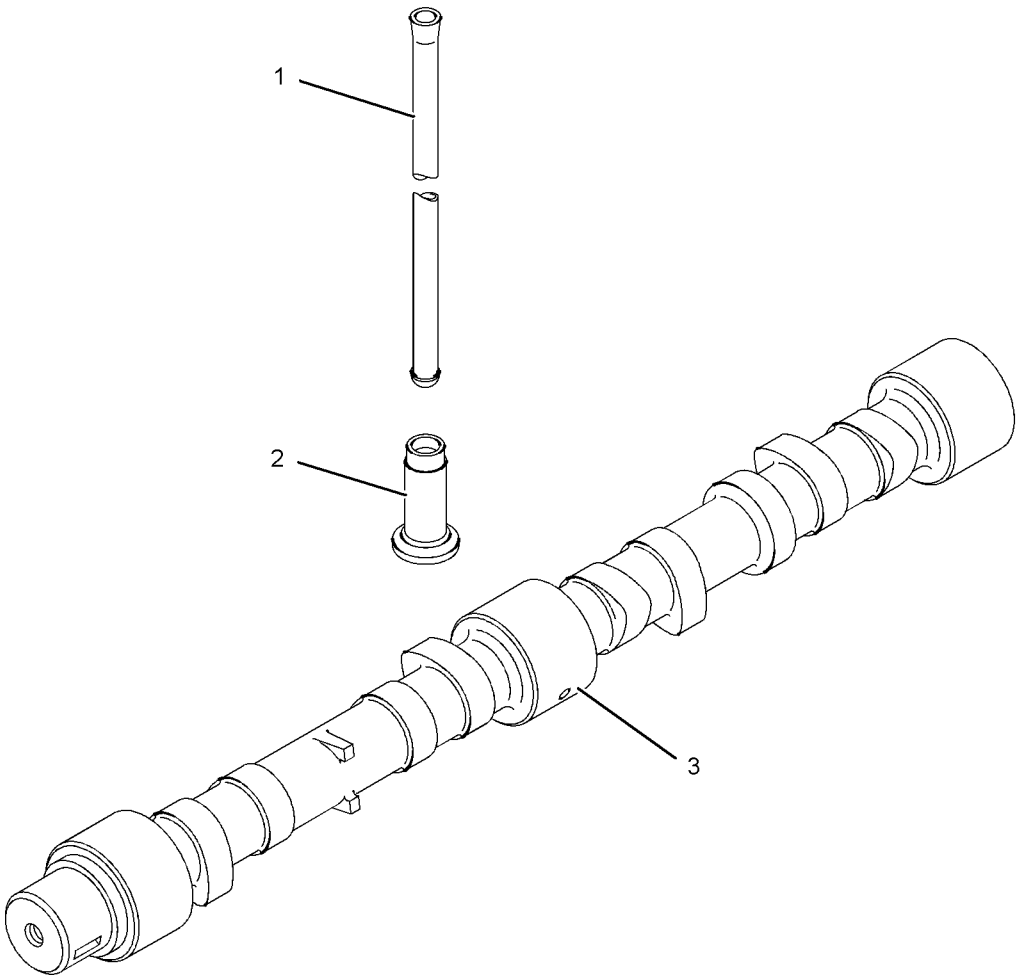

GRAPHIC #1 **<END>** g01189064

230-9196 COVER GP-FRONT HOUSING

S/N: G4D1-UP; CRS2300-UP

PART OF 176-3163 ENGINE AR-PRIMARY

SMCS-1151, 1166 **i02655371**

NOTE	REF NO	GRAPHIC REF	PART NUMBER	QTY	PART NAME 1 2 3 4 5 6 (PRODUCT LEVEL)	SEE PAGE
M	1	1	**100-4830**	1	BOLT (M10X1.5X20-MM)	
	2	1	**111-8222**	5	BOLT	
	3	1	**209-5502**	1	COVER AS (POWER TAKE-OFF)	
	3A	1	**209-5503**	1	SEAL-COVER	
	4	1	**6I-0646**	1	BOLT (M10X1.5X14-MM)	
	5	1	**214-3203**	1	WASHER (SEALING)	

M-METRIC PART

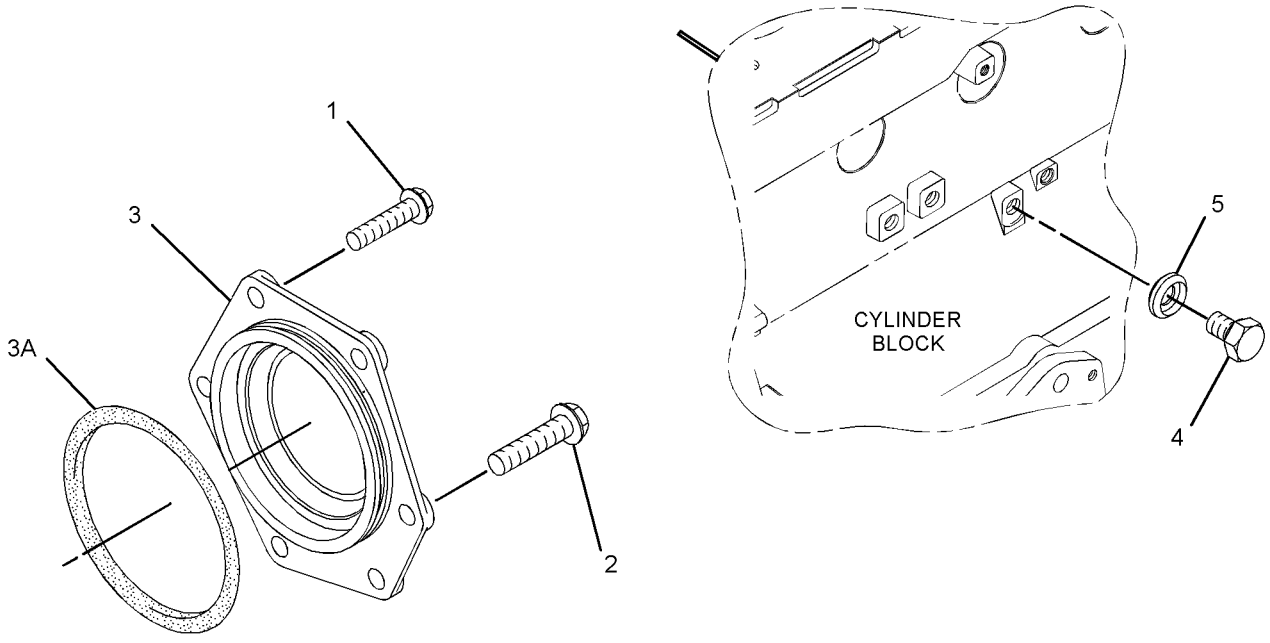

GRAPHIC #1 **<END>** g01342815

230-9151 COVER GP-VALVE MECHANISM

S/N: G4D1-UP; CRS2300-UP
PART OF 176-3163 ENGINE AR-PRIMARY
TYPE 1

SMCS-1107, 1120 **i02896505**

NOTE	REF NO	GRAPHIC REF	PART NUMBER	QTY	PART NAME 1 2 3 4 5 6 (PRODUCT LEVEL)	SEE PAGE
M	1	1	**6I-0254**	1	BOLT (M8X1.25X30-MM)	
	2	1	**6I-0846**	3	BOLT (M6X1X14-MM)	
	3	1	**6I-4374**	1	BOLT (M8X1.25X60-MM)	
	4	1	**226-8763**	1	COVER AS-VALVE	
	5	1	**225-6451**	1	GASKET (VALVE COVER)	
	6	1	**225-6455**	10	BOLT	
	7	1	**225-6456**	1	SPRING	
	8	1	**225-6461**	1	CAP	
	9	1	**225-6464**	1	DIAPHRAGM (CRANKCASE PRESSURE CONTACTOR)	
	10	1	**225-6477**	1	PLATE	
	11	1	**225-6478**	4	SCREW-MACHINE	
	12	1	**225-6479**	1	CAP	
	13	1	**230-9125**	1	CONNECTOR	
	14	1	**150-7732**	1	SEAL-O-RING	
	15	1	**225-6455**	2	BOLT	
	16	1	**225-6517**	1	GASKET	
	17	1	**230-9127**	1	COVER	
	18	1	**230-9152**	1	FILLER GP-ENGINE OIL	
	19	1	**6I-1201**	1	SEAL-O-RING	
	20	1	**130-9888**	1	CAP-OIL FILLER (ENGINE)	
	21	1	**113-1504**	1	SEAL-O-RING	

M-METRIC PART

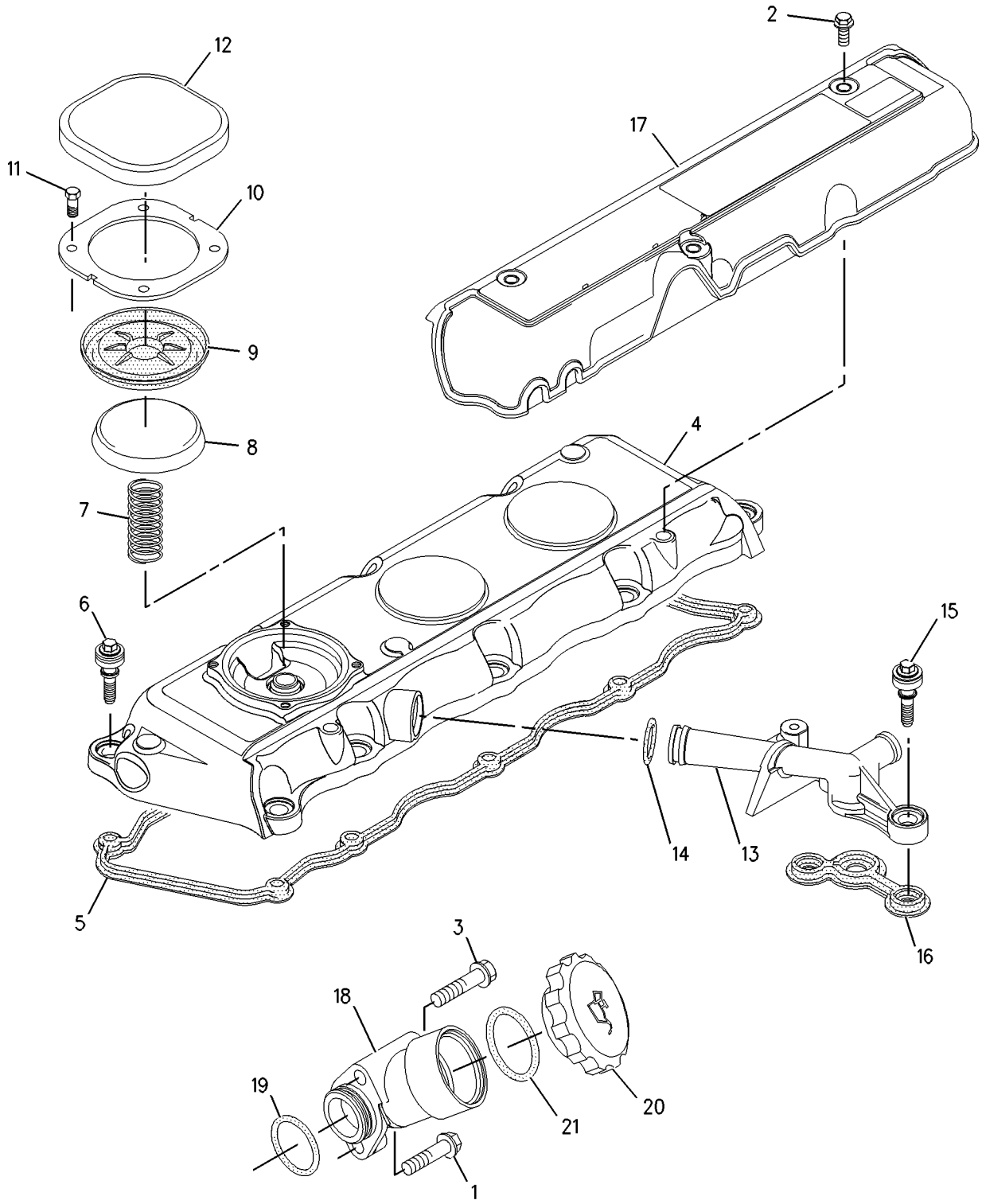

GRAPHIC #1 **<END>** g00956794

230-9151 COVER GP-VALVE MECHANISM

S/N: G4D1-UP; CRS2300-UP
PART OF 176-3163 ENGINE AR-PRIMARY
TYPE 2

SMCS-1107, 1120 **i02896506**

NOTE	REF NO	GRAPHIC REF	PART NUMBER	QTY	PART NAME 1 2 3 4 5 6 (PRODUCT LEVEL)	SEE PAGE
M	1	1	**6I-0254**	1	BOLT (M8X1.25X30-MM)	
	2	1	**6I-0846**	3	BOLT (M6X1X14-MM)	
	3	1	**6I-4374**	1	BOLT (M8X1.25X60-MM)	
C	4	1	**249-5230**	1	COVER AS-VALVE	
	4A	1	**225-6451**	1	GASKET (VALVE COVER)	
	4B	1	**225-6456**	1	SPRING	
	4C	1	**225-6461**	1	CAP	
	4D	1	**225-6464**	1	DIAPHRAGM (CRANKCASE PRESSURE CONTACTOR)	
	4E	1	**225-6477**	1	PLATE	
	4F	1	**225-6478**	4	SCREW-MACHINE	
	4G	1	**225-6479**	1	CAP	
	4H	1	**225-6455**	10	BOLT	
C	5	1	**286-3029**	1	PIPE-BREATHER	
	5A	1	**286-3030**	1	RING-SEAL	
	5B	1	**150-7732**	1	SEAL-O-RING	
	6	1	**230-9127**	1	COVER	
	7	1	**230-9152**	1	FILLER GP-ENGINE OIL	
	7A	1	**6I-1201**	1	SEAL-O-RING	
	7B	1	**130-9888**	1	CAP-OIL FILLER (ENGINE)	
	7C	1	**113-1504**	1	SEAL-O-RING	
C	8	1	**100-4838**	2	BOLT (M6X20-MM)	

C-CHANGE FROM PREVIOUS TYPE
M-METRIC PART

230-9151 **COVER GP-VALVE MECHANISM** *(contd.)* **i02896506**

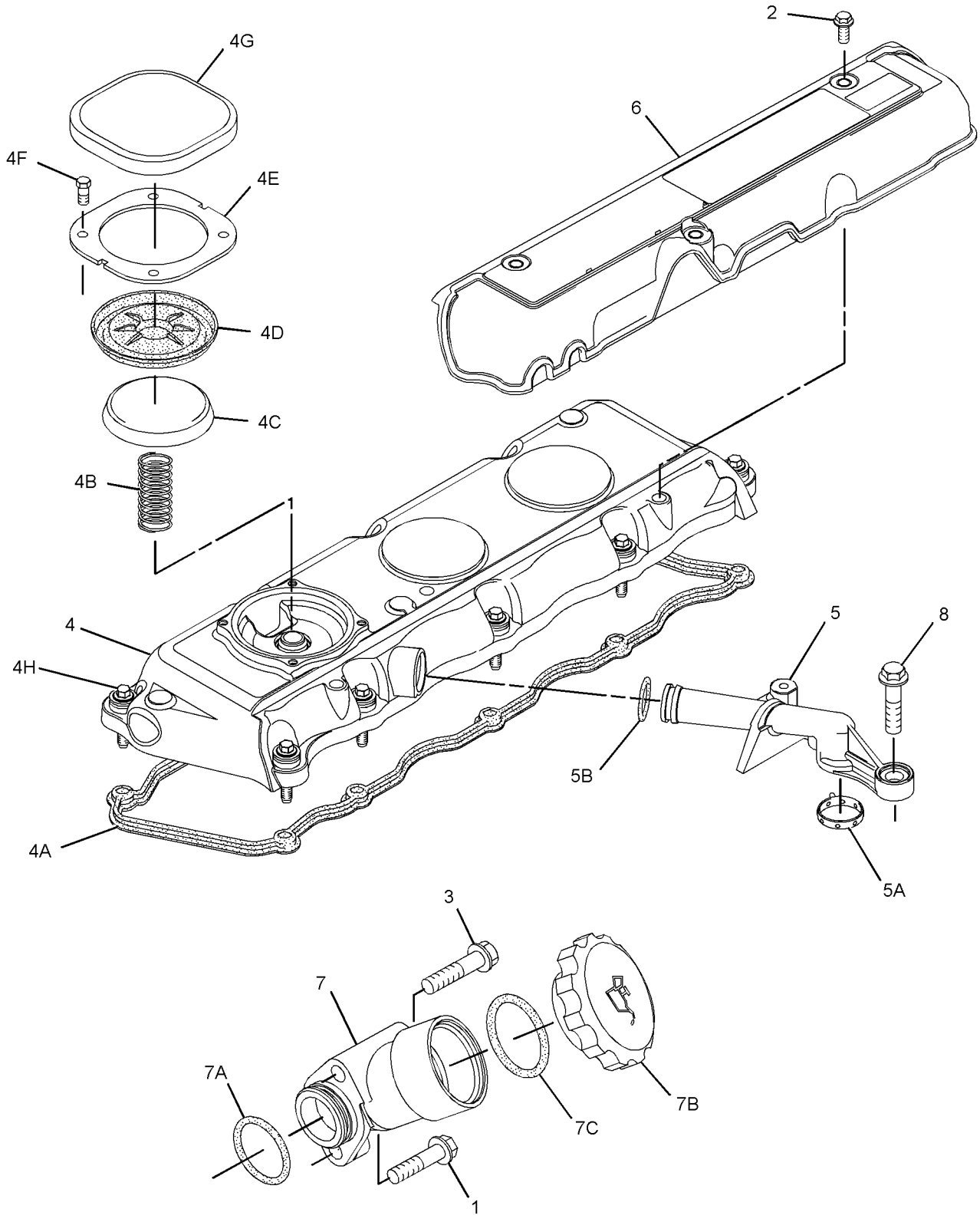

GRAPHIC #1 **<END>** g01392351

230-9151 COVER GP-VALVE MECHANISM

S/N: G4D1-UP; CRS2300-UP
PART OF 176-3163 ENGINE AR-PRIMARY
TYPE 3

SMCS-1107, 1120 **i02896504**

NOTE	REF NO	GRAPHIC REF	PART NUMBER	QTY	PART NAME 1 2 3 4 5 6 (PRODUCT LEVEL)	SEE PAGE
M	1	1	**6I-0254**	1	BOLT (M8X1.25X30-MM)	
	2	1	**6I-0846**	3	BOLT (M6X1X14-MM)	
	3	1	**6I-4374**	1	BOLT (M8X1.25X60-MM)	
C	4	1	**308-1381**	1	COVER AS-CYLINDER	
	4A	1	**225-6451**	1	GASKET (VALVE COVER)	
	4B	1	**225-6456**	1	SPRING	
	4C	1	**225-6461**	1	CAP	
	4D	1	**225-6464**	1	DIAPHRAGM (CRANKCASE PRESSURE CONTACTOR)	
	4E	1	**225-6477**	1	PLATE	
	4F	1	**225-6478**	4	SCREW-MACHINE	
	4G	1	**225-6479**	1	CAP	
	5	1	**286-3029**	1	PIPE-BREATHER	
	5A	1	**286-3030**	1	RING-SEAL	
	5B	1	**150-7732**	1	SEAL-O-RING	
	6	1	**230-9127**	1	COVER	
	7	1	**321-2383**	1	FILLER GP-ENGINE OIL	
	7A	1	**306-2337**	1	SEAL-O-RING	
	7B	1	**130-9888**	1	CAP-OIL FILLER (ENGINE)	
	7C	1	**113-1504**	1	SEAL-O-RING	
	8	1	**100-4838**	2	BOLT (M6X20-MM)	

C-CHANGE FROM PREVIOUS TYPE
M-METRIC PART

230-9151 **COVER GP-VALVE MECHANISM** *(contd.)* **i02896504**

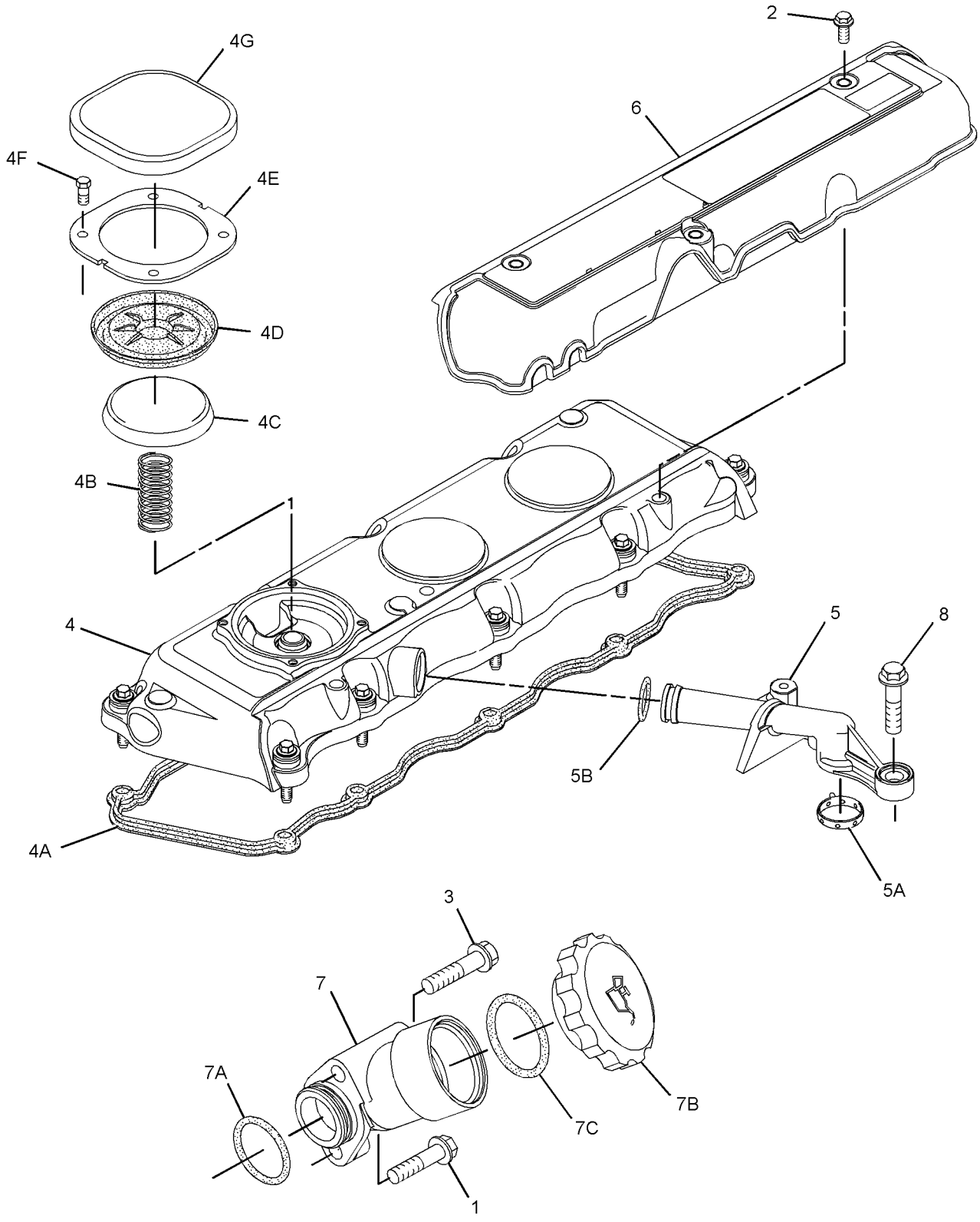

GRAPHIC #1 **<END>** g01385755

BASIC ENGINE

232-7400 CRANKSHAFT GP

S/N: G4D1-UP; CRS2300-UP

PART OF 233-7027, 313-3357 CRANKSHAFT GP

SMCS-1202 **i02827606**

NOTE	REF NO	GRAPHIC REF	PART NUMBER	QTY	PART NAME 1 2 3 4 5 6 (PRODUCT LEVEL)	SEE PAGE
	1	1	**1B-8736**	1	KEY-WOODRUFF	
	2	1	**225-7772**	1	BEARING SET-MAIN (STANDARD)	
AB		1	**233-3785**		KIT-CRANKSHAFT BEARING (0.5-MM OS)	
AB		1	**233-3784**		KIT-CRANKSHAFT BEARING (0.25-MM OS)	
AB		1	**233-3786**		KIT-CRANKSHAFT BEARING (0.76-MM OS)	
	3	1	**032-9090**	2	WASHER-THRUST (STANDARD-UPPER)	
AB		1	**067-6873**		WASHER-THRUST (0.18-MM OS)	
	4	1	**032-9091**	2	WASHER-THRUST (STANDARD-LOWER)	
AB		1	**067-6874**		WASHER-THRUST (0.18-MM OS)	
	5	1	**298-4524**	1	KIT-BEARING	
AB		1	**315-3396**		KIT-BEARING (0.25-MM OS)	
AB		1	**315-3397**		KIT-BEARING (0.50-MM OS)	
AB		1	**315-3398**		KIT-BEARING (0.75-MM OS)	

A-NOT PART OF THIS GROUP
B-USE AS REQUIRED

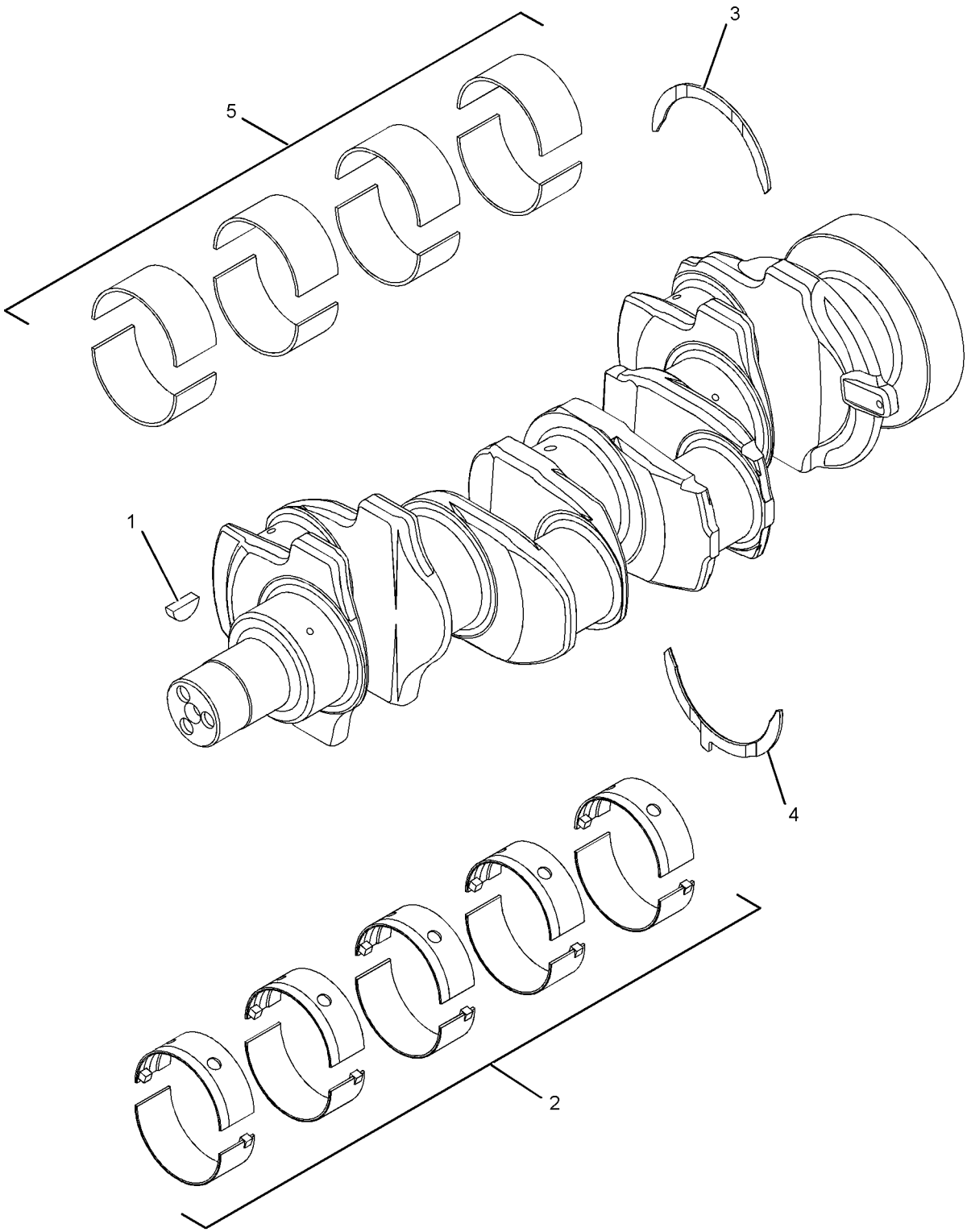

GRAPHIC #1 **<END>** g01369317

233-7027 CRANKSHAFT GP

S/N: G4D1-UP; CRS2300-UP

PART OF 176-3163 ENGINE AR-PRIMARY

SMCS-1202 **i02656143**

NOTE	REF NO	GRAPHIC REF	PART NUMBER	QTY	PART NAME 1 2 3 4 5 6 (PRODUCT LEVEL)	SEE PAGE
	1	1	**1B-8736**	1	KEY-WOODRUFF	
	2	1	**216-8314**	1	GEAR-CRANKSHAFT (34-TEETH)	
Y	3	1	**232-7400**	1	CRANKSHAFT GP	13

Y-SEPARATE ILLUSTRATION

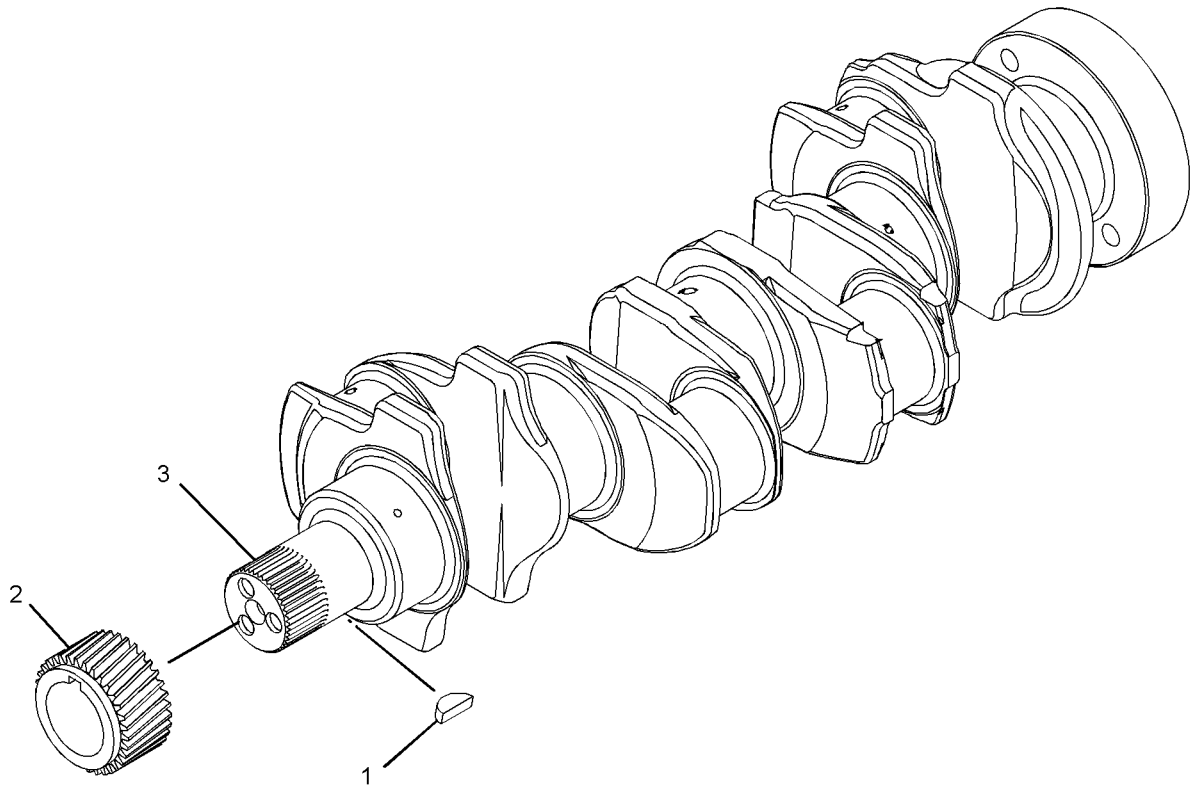

GRAPHIC #1 **<END>** g01382432

BASIC ENGINE

313-3357 CRANKSHAFT GP

S/N: G4D1-UP; CRS2300-UP

PART OF 176-3163 ENGINE AR-PRIMARY

SMCS-1202 **i02811103**

NOTE	REF NO	GRAPHIC REF	PART NUMBER	QTY	PART NAME 1 2 3 4 5 6 (PRODUCT LEVEL)	SEE PAGE
	1	1	**216-8314**	1	GEAR-CRANKSHAFT (34-TEETH)	
Y	2	1	**232-7400**	1	CRANKSHAFT GP	13

Y-SEPARATE ILLUSTRATION

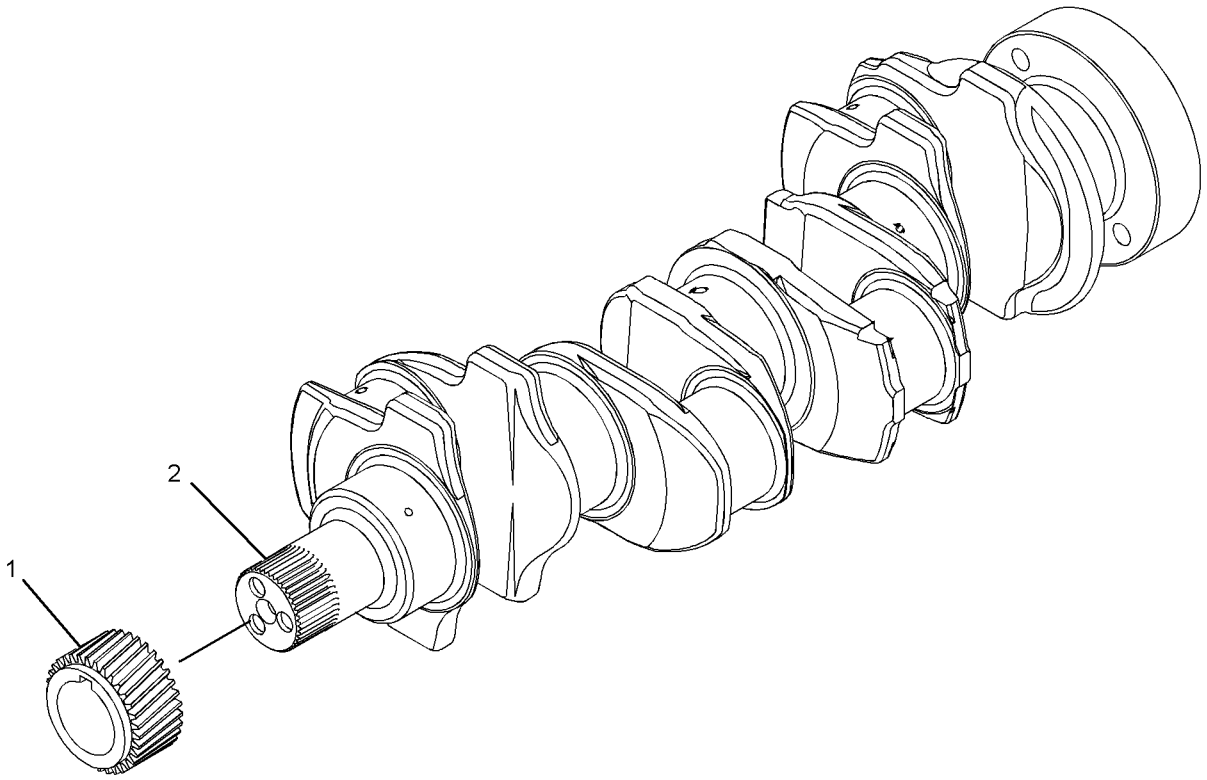

GRAPHIC #1 **<END>** g01424864

232-7604 CYLINDER BLOCK GP

S/N: G4D1-UP; CRS2300-UP

PART OF 233-7007, 313-3355 CYLINDER BLOCK GP

SMCS-1201 **i02535617**

NOTE	REF NO	GRAPHIC REF	PART NUMBER	QTY	PART NAME 1 2 3 4 5 6 (PRODUCT LEVEL)	SEE PAGE
	1	1	**6I-0572**	4	BOLT (M8X1.25X20-MM)	
	2	1	**035-8068**	10	BOLT (5/8-18X3.75-IN)	
	3	1	**067-6002**	10	DOWEL	
	4	1	**067-6006**	1	PLUG	
	5	1	**067-6043**	1	PLUG-SIDE	
M	6	1	**100-4841**	4	BOLT (M6X1X10-MM)	
	7	1	**185-0884**	2	DOWEL	
	8	1	**225-7944**	1	GASKET (ENGINE OIL FILTER BASE)	
	9	1	**225-8858**	2	PLUG	
	10	1	**232-3751**	1	PLATE	
	11	1	**232-7440**	1	BEARING	
	12	1	**276-5605**	4	JET AS-PISTON COOLING	
	13	1	**232-7596**	1	PLUG	
	14	1	**232-7597**	2	PLUG	
	15	1	**232-7599**	1	PLUG	
	16	1	**232-7600**	1	PLUG-CUP	
	17	1	**232-7603**	1	PLUG	

M-METRIC PART

232-7604 CYLINDER BLOCK GP *(contd.)* i02535617

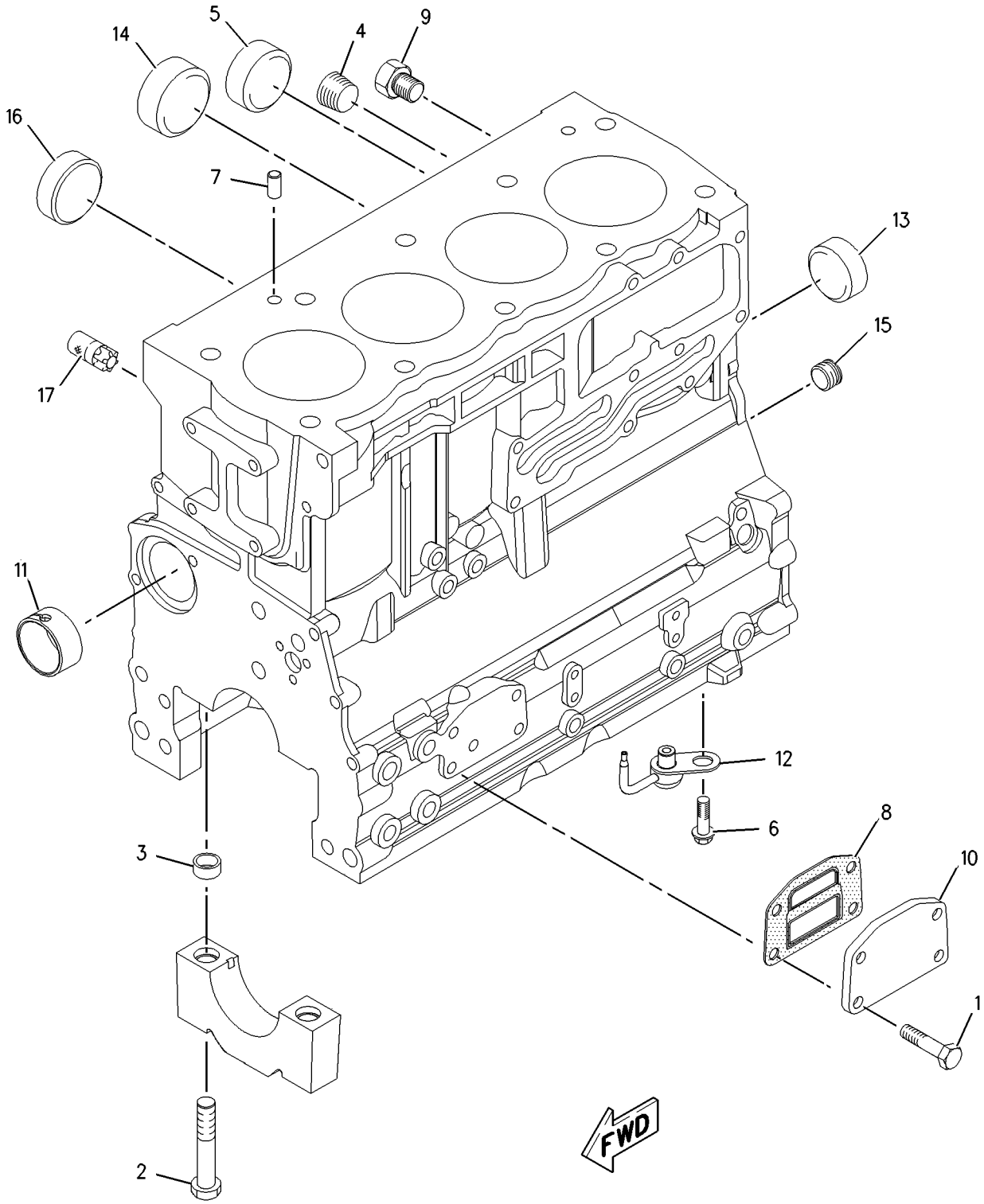

GRAPHIC #1 **<END>** g00951214

BASIC ENGINE

233-7007 CYLINDER BLOCK GP

S/N: G4D1-UP; CRS2300-UP

PART OF 176-3163 ENGINE AR-PRIMARY

SMCS-1201 **i02052230**

NOTE	REF NO	GRAPHIC REF	PART NUMBER	QTY	PART NAME 1 2 3 4 5 6 (PRODUCT LEVEL)	SEE PAGE
M	1	1	**209-9219**	10	BOLT (M8X1.25X16-MM)	
	2	1	**232-7449**	1	HOUSING AS	
Y	3	1	**232-7604**	1	CYLINDER BLOCK GP	17

M-METRIC PART
Y-SEPARATE ILLUSTRATION

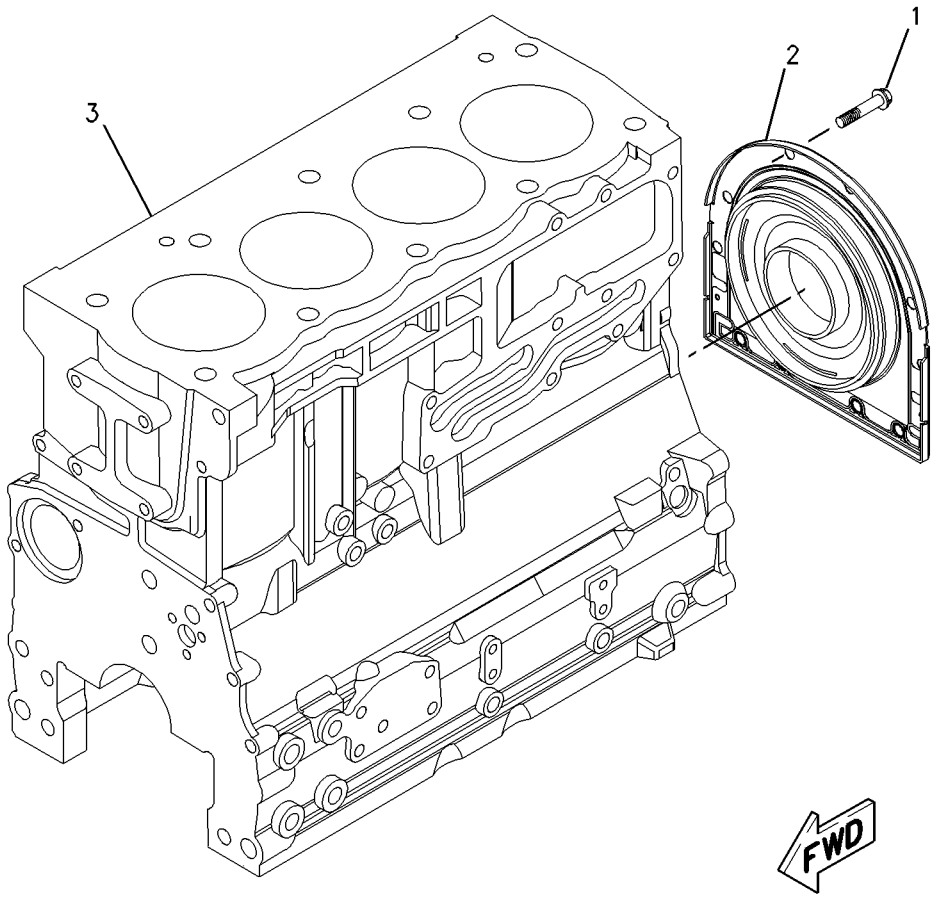

GRAPHIC #1 **<END>** g00952056

BASIC ENGINE

313-3355 CYLINDER BLOCK GP

S/N: G4D1-UP; CRS2300-UP

PART OF 176-3163 ENGINE AR-PRIMARY

SMCS-1201 **i02811089**

NOTE	REF NO	GRAPHIC REF	PART NUMBER	QTY	PART NAME 1 2 3 4 5 6 (PRODUCT LEVEL)	SEE PAGE
M	1	1	**209-9219**	10	BOLT (M8X1.25X16-MM)	
	2	1	**232-7449**	1	HOUSING AS	
Y	3	1	**232-7604**	1	CYLINDER BLOCK GP	17

M-METRIC PART
Y-SEPARATE ILLUSTRATION

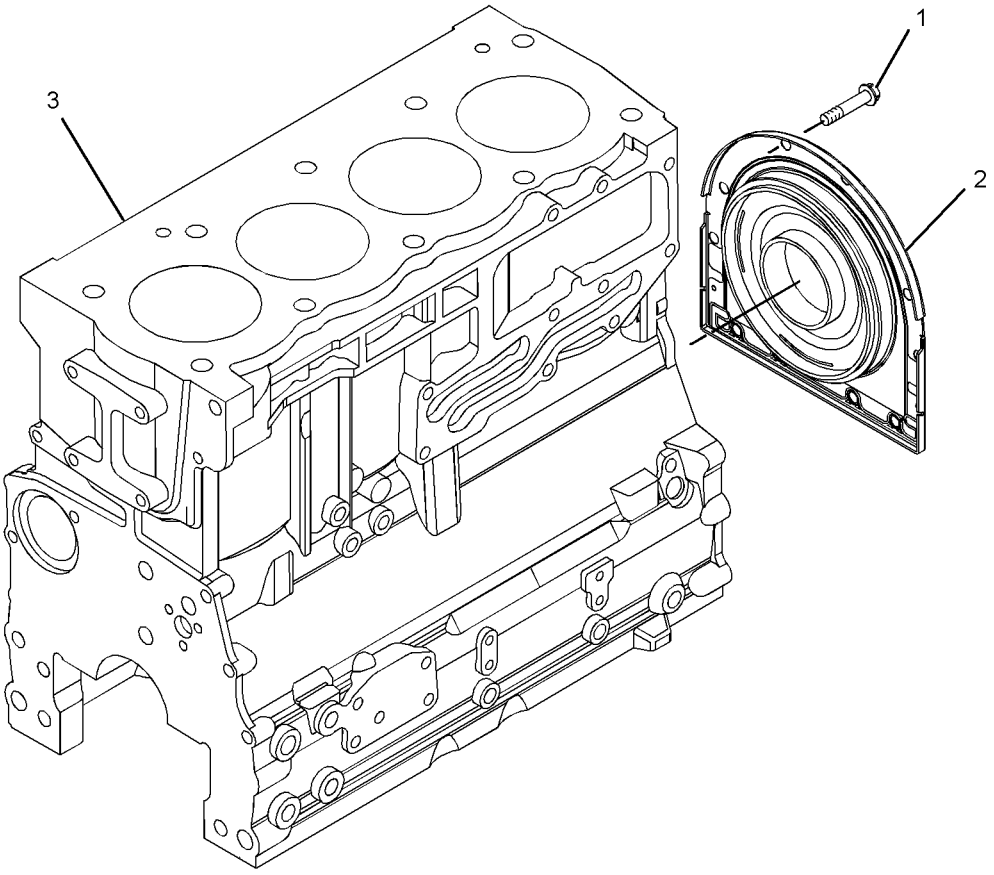

GRAPHIC #1 **<END>** g01424948

BASIC ENGINE

232-7519 CYLINDER HEAD GP

S/N: G4D1-UP; CRS2300-UP

PART OF 233-7234 CYLINDER HEAD GP

SMCS-1100 **i02274200**

NOTE	REF NO	GRAPHIC REF	PART NUMBER	QTY	PART NAME 1 2 3 4 5 6 (PRODUCT LEVEL)	SEE PAGE
	1	1	**2B-0858**	1	PLUG-PIPE	
	2	1	**9Y-5015**	2	PLUG-FREEZE	
	3	1	**067-6006**	4	PLUG	
	4	1	**147-1979**	16	RETAINER-VALVE SPRING	
	5	1	**185-0882**	8	GUIDE-VALVE (INTAKE)	
	6	1	**199-9751**	1	SEAL-O-RING	
	7	1	**225-5493**	4	INSERT-VALVE (INLET)	
	8	1	**225-5494**	4	INSERT-VALVE (EXHAUST)	
	9	1	**225-5495**	4	VALVE-INLET	
	10	1	**225-5496**	8	SPRING-VALVE	
	11	1	**252-6438**	4	SEAL-INLET VALVE	
	12	1	**225-5498**	8	CAP	
	13	1	**225-5499**	4	VALVE-EXHAUST	
	14	1	**232-1322**	1	PLUG	
	15	1	**254-3954**	4	SEAL-EXHAUST VALVE	

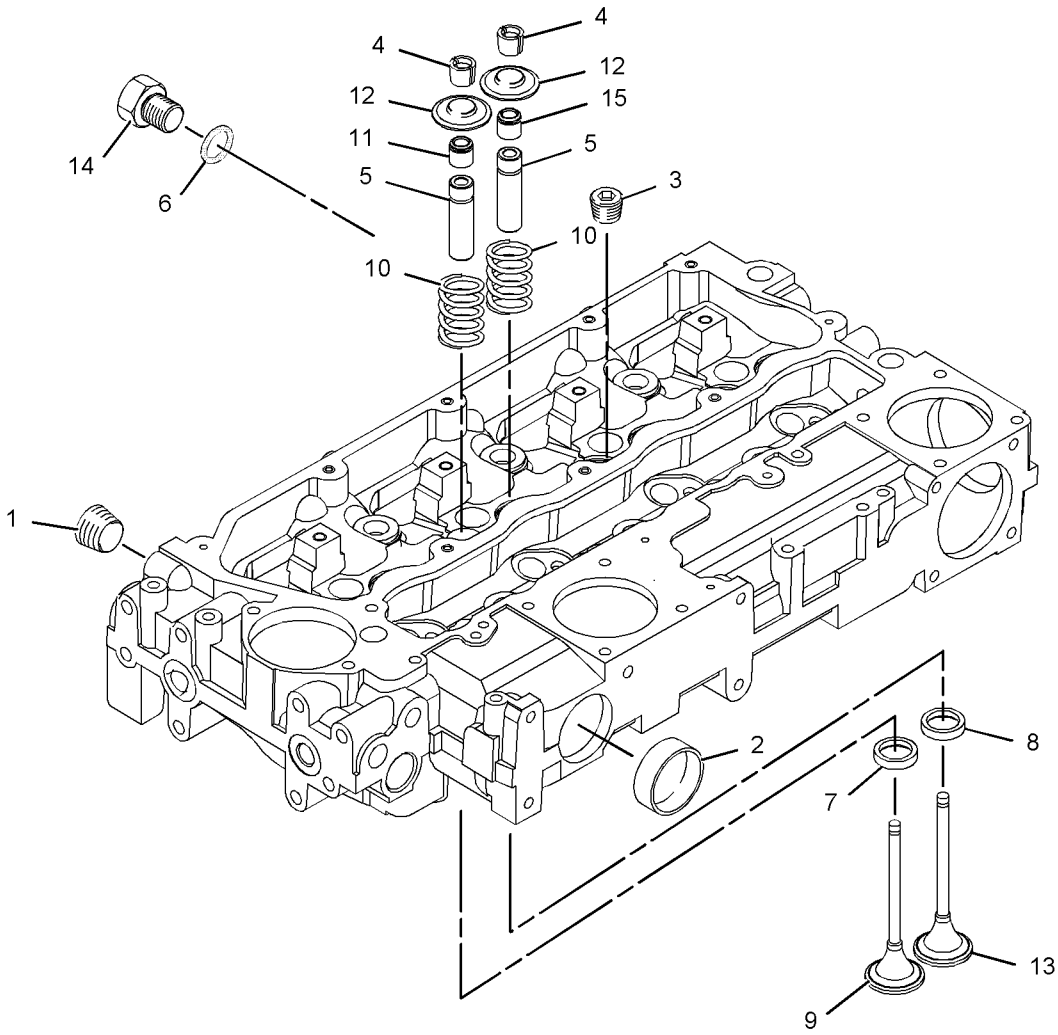

GRAPHIC #1 **<END>** g01095382

BASIC ENGINE

233-7234 CYLINDER HEAD GP

S/N: G4D1-UP; CRS2300-UP

PART OF 176-3163 ENGINE AR-PRIMARY

SMCS-1100 **i02052226**

NOTE	REF NO	GRAPHIC REF	PART NUMBER	QTY	PART NAME 1 2 3 4 5 6 (PRODUCT LEVEL)	SEE PAGE
	1	1	**225-5501**	7	BOLT (M15X1.5X137-MM)	
	2	1	**225-5502**	3	BOLT (M15X1.5X162-MM)	
	3	1	**237-1911**	1	GASKET-CYLINDER HEAD	
Y	4	1	**232-7519**	1	CYLINDER HEAD GP	21

Y-SEPARATE ILLUSTRATION

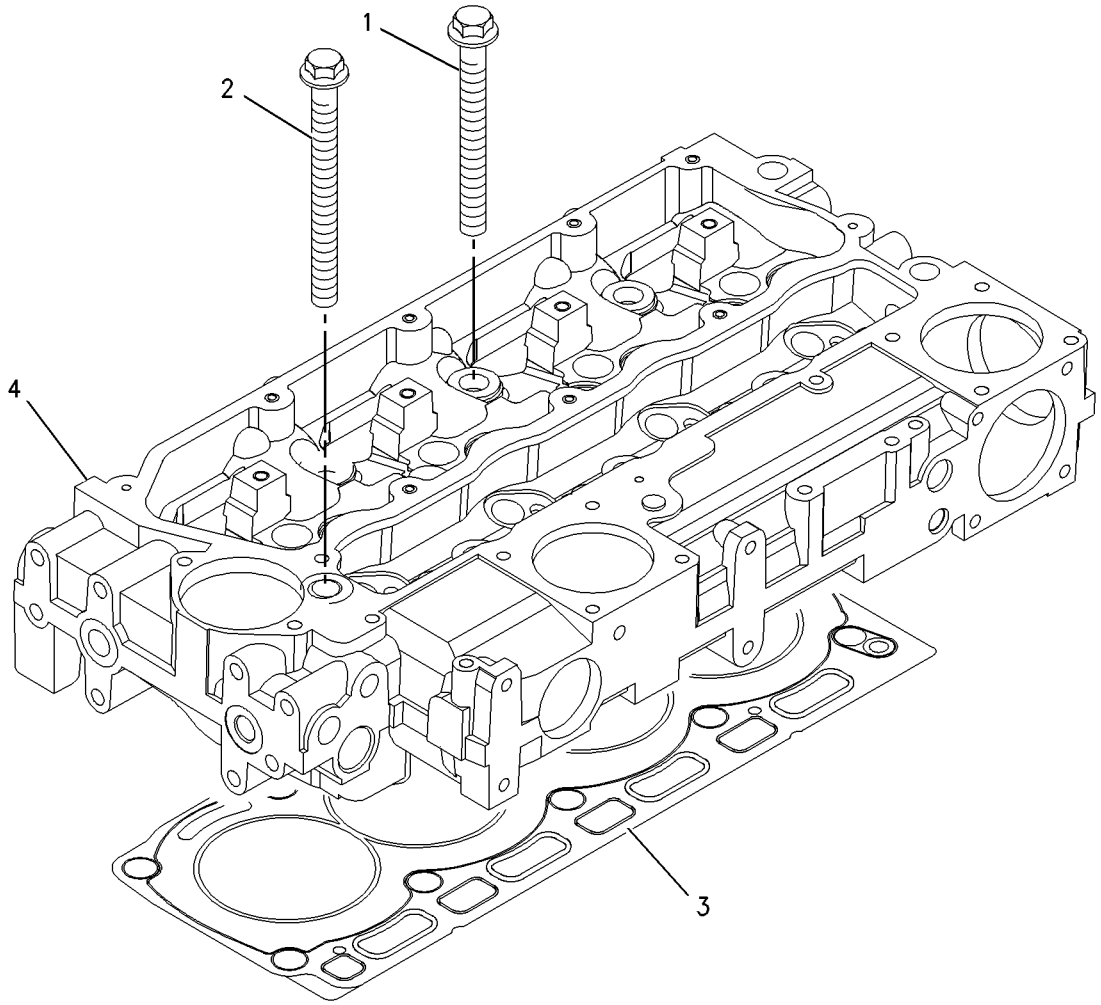

GRAPHIC #1 **<END>** g00909291

247-4868 CYLINDER HEAD GP

S/N: G4D1-UP; CRS2300-UP

PART OF 313-3360 CYLINDER HEAD GP

SMCS-1100 **i02859672**

NOTE	REF NO	GRAPHIC REF	PART NUMBER	QTY	PART NAME 1 2 3 4 5 6 (PRODUCT LEVEL)	SEE PAGE
	1	1	**2B-0858**	1	PLUG-PIPE	
	2	1	**9Y-5015**	2	PLUG-FREEZE	
	3	1	**067-6006**	4	PLUG	
	4	1	**147-1979**	16	RETAINER-VALVE SPRING	
	5	1	**185-0882**	8	GUIDE-VALVE (INTAKE)	
	6	1	**199-9751**	1	SEAL-O-RING	
	7	1	**225-5493**	4	INSERT-VALVE (INLET)	
	8	1	**225-5494**	4	INSERT-VALVE (EXHAUST)	
	9	1	**225-5495**	8	VALVE-INLET	
	10	1	**225-5496**	8	SPRING-VALVE	
	11	1	**225-5498**	8	CAP	
	12	1	**225-5499**	4	VALVE-EXHAUST	
	13	1	**232-1322**	1	PLUG	
	14	1	**252-6438**	4	SEAL-INLET VALVE	
	15	1	**254-3954**	4	SEAL-EXHAUST VALVE	

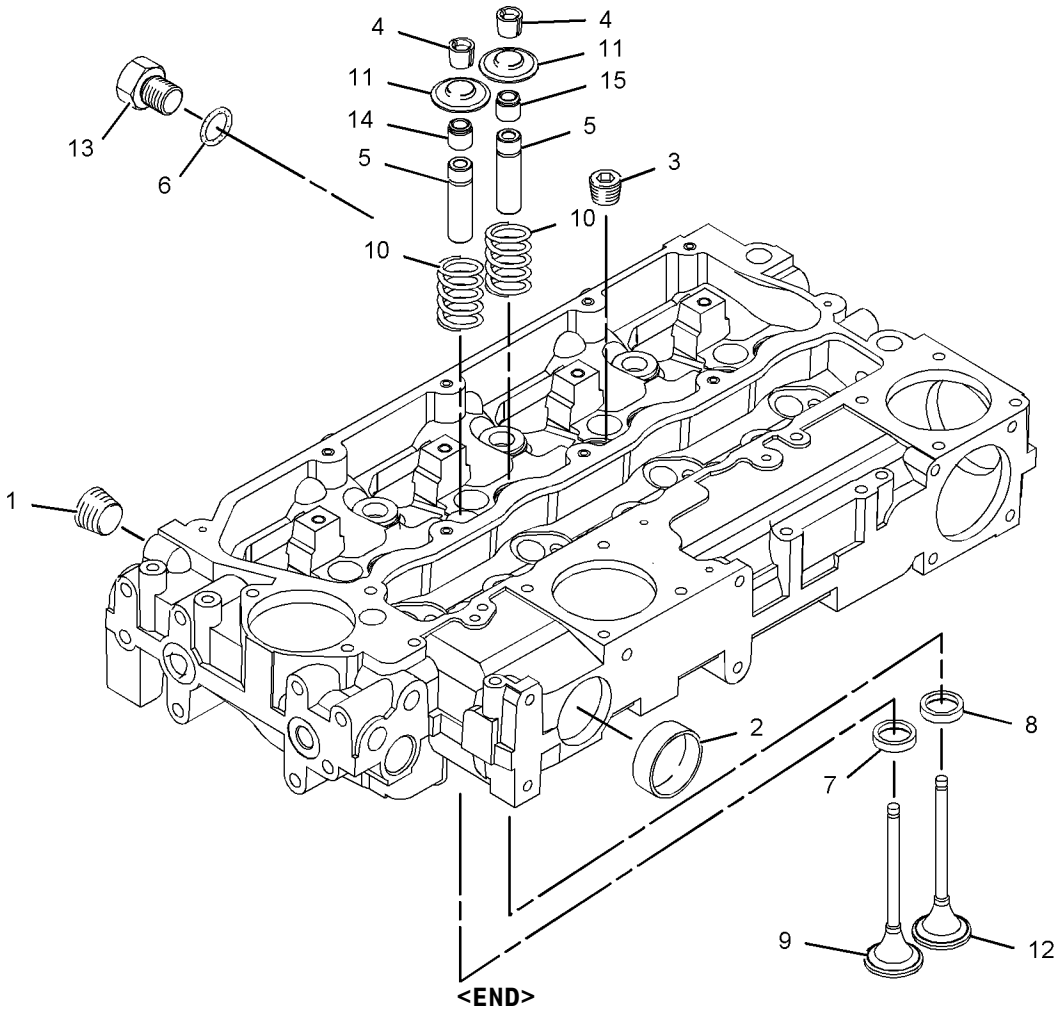

GRAPHIC #1

<END>

g01078948

BASIC ENGINE

313-3360 CYLINDER HEAD GP

S/N: G4D1-UP; CRS2300-UP

PART OF 176-3163 ENGINE AR-PRIMARY

SMCS-1100 **i02811147**

NOTE	REF NO	GRAPHIC REF	PART NUMBER	QTY	PART NAME 1 2 3 4 5 6 (PRODUCT LEVEL)	SEE PAGE
	1	1	**225-5501**	7	BOLT (M15X1.5X137-MM)	
	2	1	**225-5502**	3	BOLT (M15X1.5X162-MM)	
	3	1	**258-4946**	1	GASKET-HEAD	
Y	4	1	**247-4868**	1	CYLINDER HEAD GP	23

Y-SEPARATE ILLUSTRATION

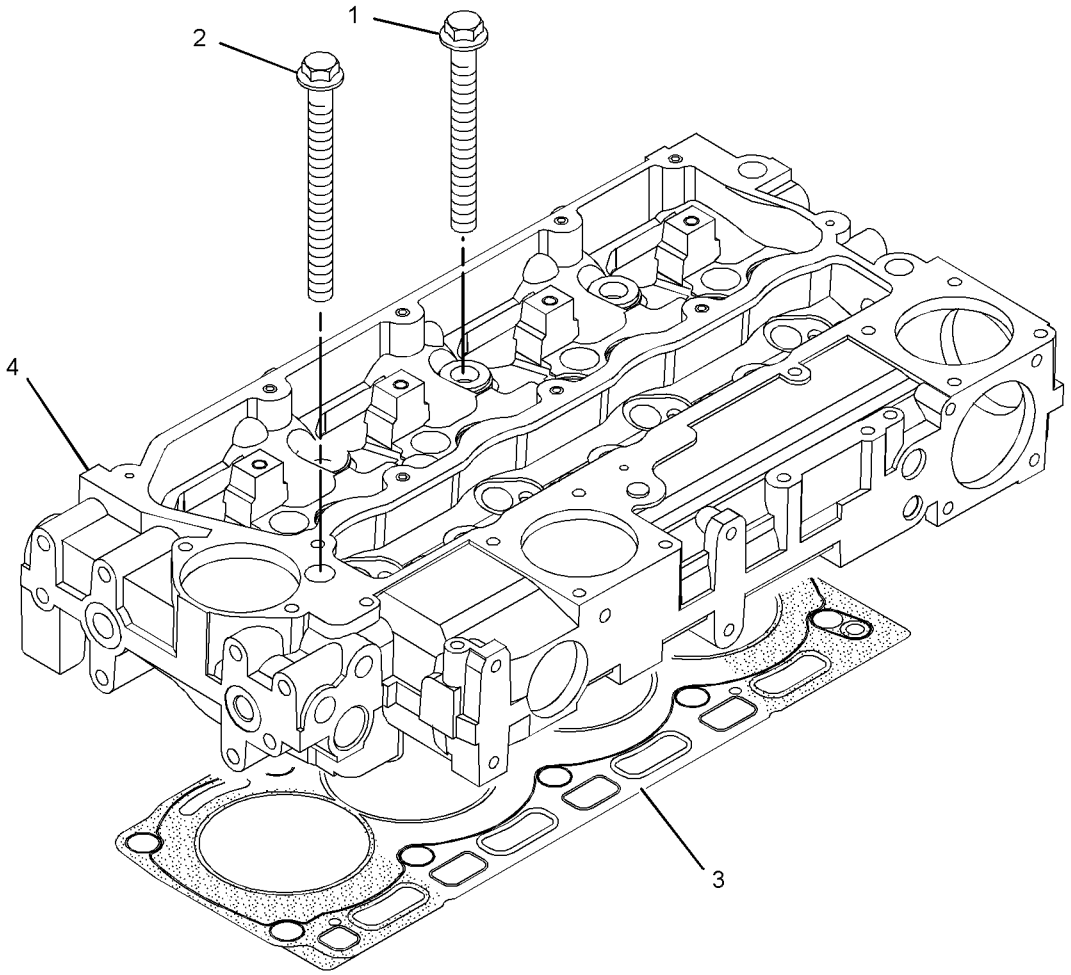

GRAPHIC #1 **<END>** g01269653

236-8181 DRIVE GP-FAN

S/N: G4D1-UP; CRS2300-UP

PART OF 176-3163 ENGINE AR-PRIMARY

SMCS-1359 **i02089621**

NOTE	REF NO	GRAPHIC REF	PART NUMBER	QTY	PART NAME 1 2 3 4 5 6 (PRODUCT LEVEL)	SEE PAGE
	1	1	**121-4365**	1	V-BELT SET (INCLUDES 2-BELTS) (FAN)	
	2	1	**111-0859**	4	BOLT (M10X1.5X35-MM)	
	3	1	**130-3880**	1	PULLEY-FAN DRIVE	
	4	1	**230-8065**	1	HOUSING AS	

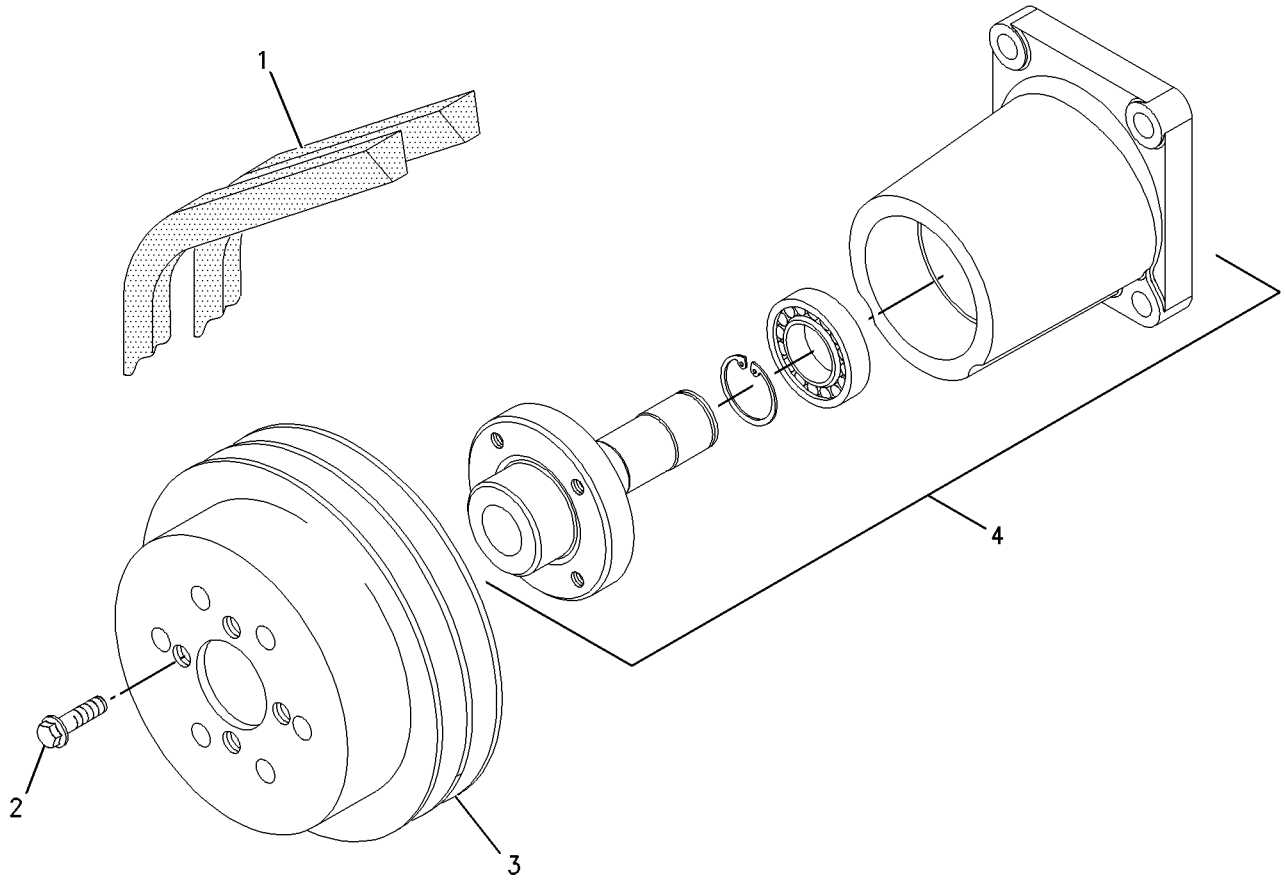

GRAPHIC #1 **<END>** g00956805

BASIC ENGINE

153-4980 DRIVE GP-PUMP

S/N: EAE1-UP

PART OF 227-8418 INSTALLATION AR-ENGINE

SMCS-3108 **i02896511**

NOTE	REF NO	GRAPHIC REF	PART NUMBER	QTY	PART NAME 1 2 3 4 5 6 (PRODUCT LEVEL)	SEE PAGE
	1	1	**102-1733**	1	FLANGE-NYLON	
	2	1	**0T-0924**	8	BOLT (3/8-24X1.5-IN)	

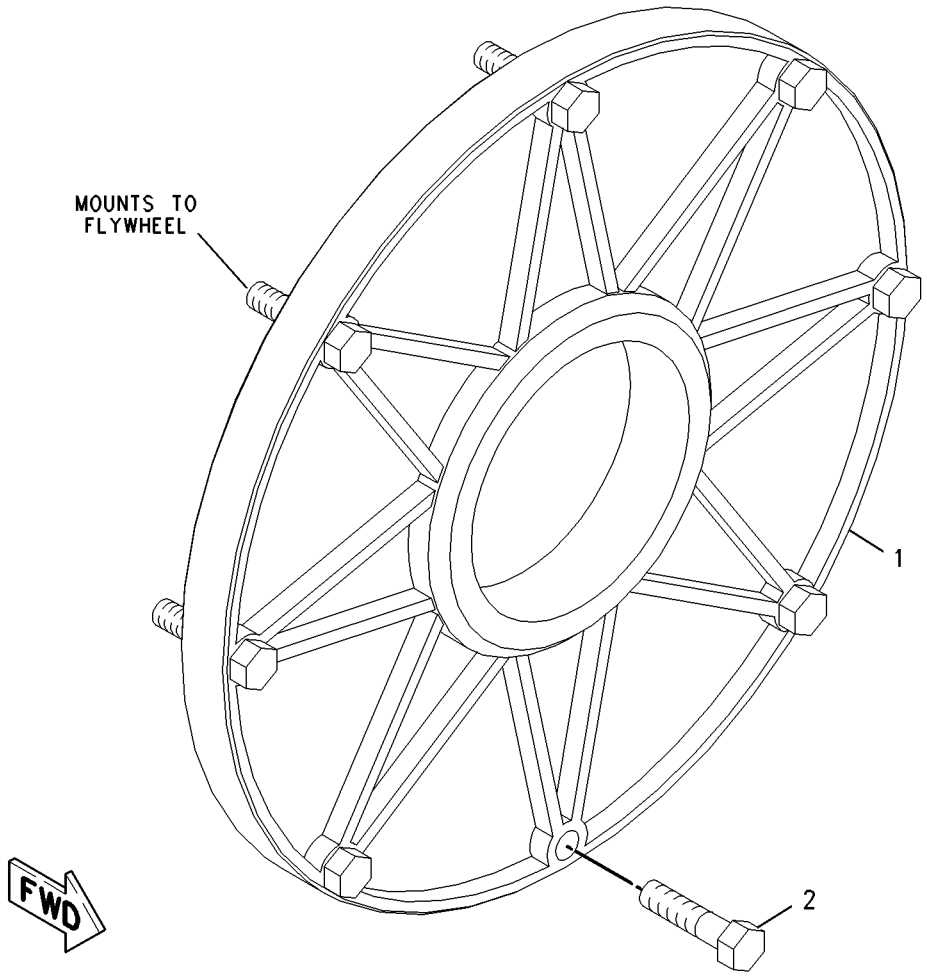

GRAPHIC #1 **<END>** g00847131

BASIC ENGINE

230-7286 FLYWHEEL GP

S/N: G4D1-UP; CRS2300-UP

PART OF 176-3163 ENGINE AR-PRIMARY

SMCS-1156 **i02089643**

NOTE	REF NO	GRAPHIC REF	PART NUMBER	QTY	PART NAME 1 2 3 4 5 6 (PRODUCT LEVEL)	SEE PAGE
	1	1	**0S-1603**	10	BOLT (1/2-20X1.5-IN)	
	2	1	**5P-8245**	10	WASHER-HARD (13.5X25.5X3-MM THK)	
	3	1	**165-6689**	1	FLYWHEEL AS	
	4	1	**033-7687**	1	RING-STARTING MOTOR (126-TEETH)	

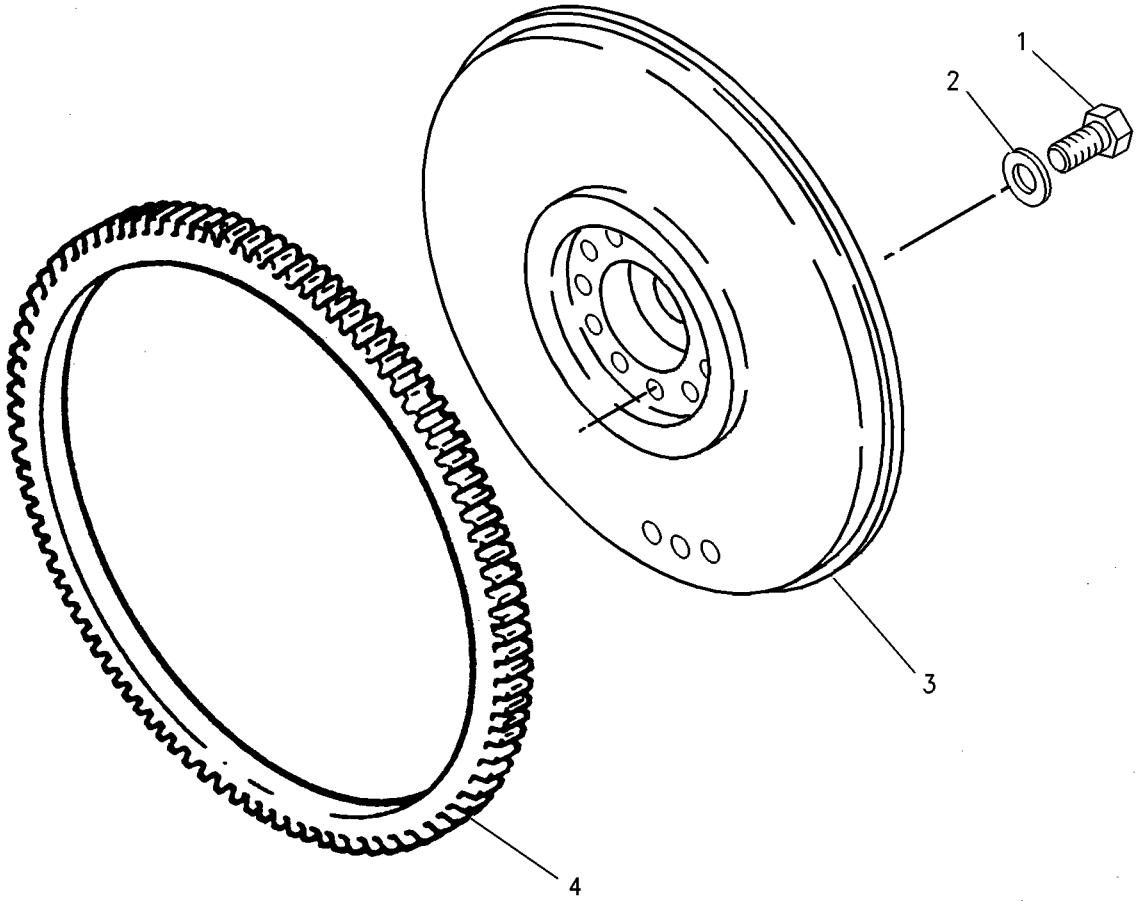

GRAPHIC #1 **<END>** g00931180

BASIC ENGINE

223-7825 HOUSING GP-FLYWHEEL

S/N: G4D1-UP; CRS2300-UP

PART OF 176-3163 ENGINE AR-PRIMARY

SMCS-1157 **i02535012**

NOTE	REF NO	GRAPHIC REF	PART NUMBER	QTY	PART NAME 1 2 3 4 5 6 (PRODUCT LEVEL)	SEE PAGE
M	1	1	**6I-0423**	2	BOLT (M12X1.75X30-MM)	
	2	1	**6I-0631**	2	BOLT (M6X1X12-MM)	
	3	1	**6I-0847**	1	PLUG	
	4	1	**6I-4200**	3	BOLT (M10X1.5X16-MM)	
	5	1	**7W-4642**	1	SHIELD-DUST	
	6	1	**287-8597**	2	DOWEL	
	7	1	**102-1957**	1	PLATE	
M	8	1	**121-0883**	6	BOLT (M10X1.5X30-MM)	
	9	1	**149-9176**	1	HOUSING-FLYWHEEL	
	10	1	**199-3108**	1	PLUG	
	11	1	**199-3109**	1	PLUG	

M-METRIC PART

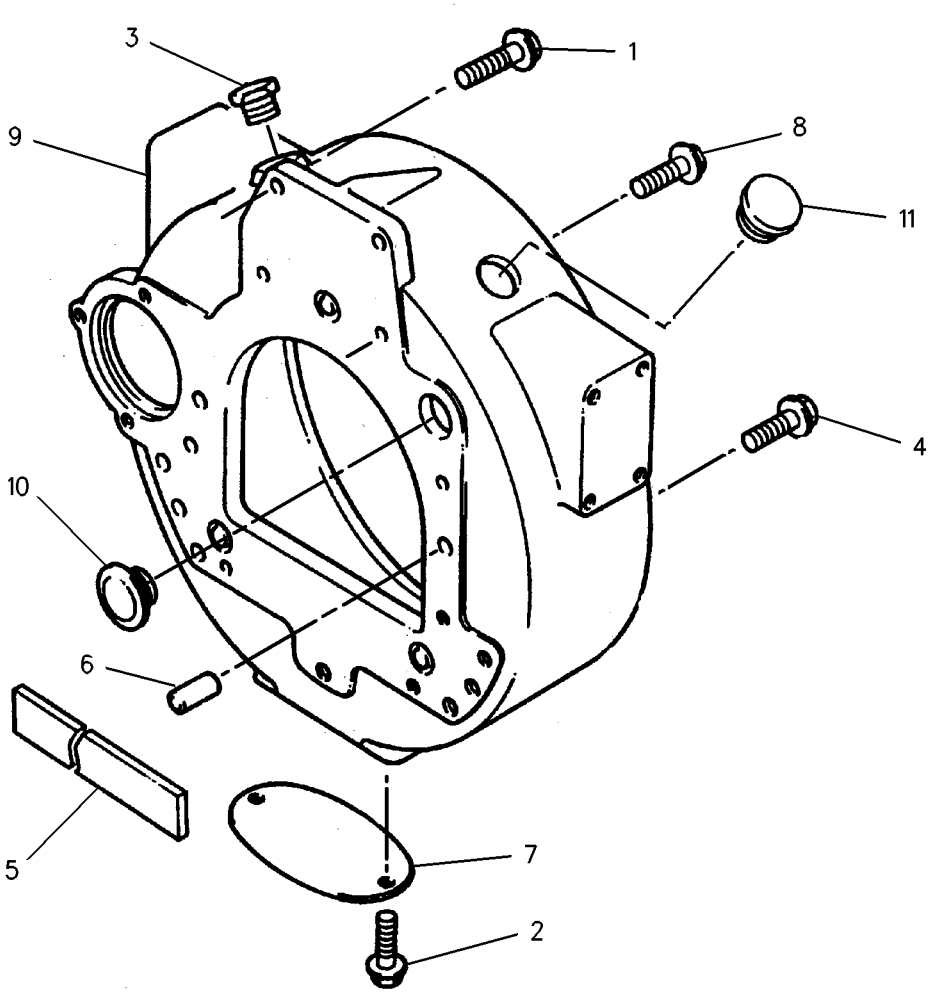

GRAPHIC #1 **<END>** g00949601

232-6179 HOUSING GP-FRONT

S/N: G4D1-UP; CRS2300-UP

PART OF 176-3163 ENGINE AR-PRIMARY

SMCS-1151, 1162 **i02896513**

NOTE	REF NO	GRAPHIC REF	PART NUMBER	QTY	PART NAME 1 2 3 4 5 6 (PRODUCT LEVEL)	SEE PAGE
	1	1	**1B-8736**	1	KEY-WOODRUFF	
	2	1	**288-0422**	1	SEAL-OIL (FRONT)	
M	3	1	**6I-0217**	8	BOLT (M8X1.25X20-MM)	
M	4	1	**6I-0645**	4	BOLT (M8X1.25X25-MM)	
CM	5	1	**6I-0650**	3	BOLT (M10X1.5X65-MM)	
	6	1	**7C-4616**	1	BOLT (M12X1.75X45-MM)	
	7	1	**067-6179**	1	DOWEL	
C	8	1	**282-9861**	1	HUB-IDLER GEAR	
C	9	1	**295-1711**	1	PLATE-RETAINING	
M	10	1	**100-3751**	5	BOLT (M8X1.25X65-MM)	
M	11	1	**100-4830**	1	BOLT (M10X1.5X20-MM)	
M	12	1	**124-3815**	9	BOLT (M8X16X1.25-MM)	
	13	1	**232-3666**	1	WASHER-THRUST	
	14	1	**216-8634**	1	GEAR-CAMSHAFT (68-TEETH)	
	15	1	**277-3012**	1	GASKET-COVER	
	17	1	**226-8767**	1	COVER AS-FRONT	
	17A	1	**226-8766**	1	GASKET-COVER	
	18	1	**133-1011**	1	WASHER	
	19	1	**251-4336**	1	GEAR AS-IDLER (73-TEETH)	
	20	1	**294-0298**	1	HOUSING-FRONT	

C-CHANGE FROM PREVIOUS TYPE
M-METRIC PART

232-6179 **HOUSING GP-FRONT** *(contd.)* **i02896513**

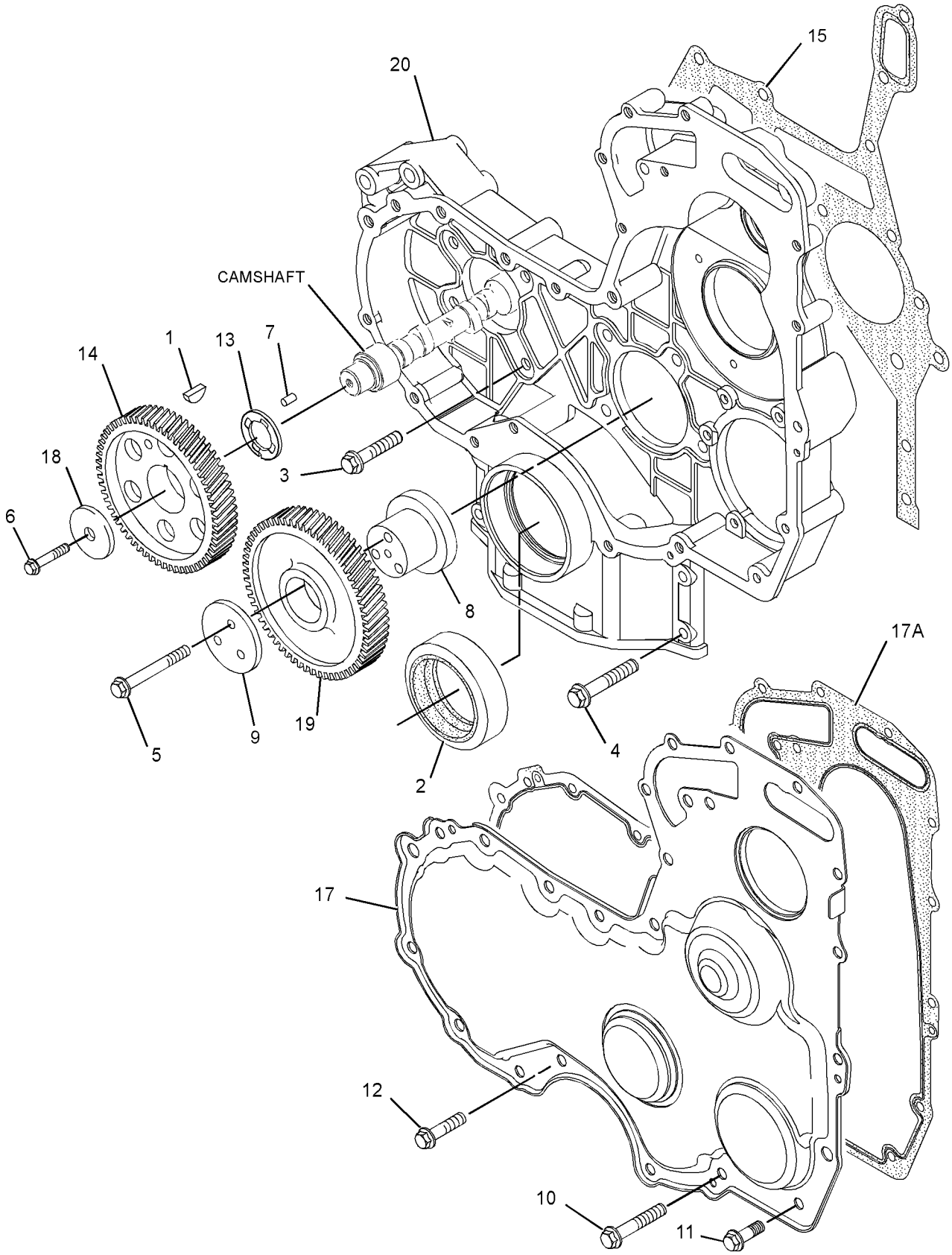

GRAPHIC #1 **<END>** g01311941

308-4764 HOUSING GP-FRONT

S/N: G4D1-UP; CRS2300-UP

PART OF 176-3163 ENGINE AR-PRIMARY

SMCS-1151, 1162 **i02896520**

NOTE	REF NO	GRAPHIC REF	PART NUMBER	QTY	PART NAME 1 2 3 4 5 6 (PRODUCT LEVEL)	SEE PAGE
	1	1	**1B-8736**	1	KEY-WOODRUFF	
M	2	1	**6I-0217**	8	BOLT (M8X1.25X20-MM)	
M	3	1	**6I-0645**	4	BOLT (M8X1.25X25-MM)	
M	4	1	**6I-0650**	3	BOLT (M10X1.5X65-MM)	
	5	1	**7C-4616**	1	BOLT (M12X1.75X45-MM)	
	6	1	**067-6179**	1	DOWEL	
M	7	1	**100-3751**	5	BOLT (M8X1.25X65-MM)	
M	8	1	**100-4830**	1	BOLT (M10X1.5X20-MM)	
M	9	1	**124-3815**	9	BOLT (M8X16X1.25-MM)	
	10	1	**133-1011**	1	WASHER	
	11	1	**216-8634**	1	GEAR-CAMSHAFT (68-TEETH)	
	12	1	**226-8767**	1	COVER AS-FRONT	
	12A	1	**226-8766**	1	GASKET-COVER	
	13	1	**232-3666**	1	WASHER-THRUST	
	14	1	**251-4336**	1	GEAR AS-IDLER (73-TEETH)	
	15	1	**277-3012**	1	GASKET-COVER	
	16	1	**282-9861**	1	HUB-IDLER GEAR	
	17	1	**288-0422**	1	SEAL-OIL (FRONT)	
	18	1	**294-0298**	1	HOUSING-FRONT	
	19	1	**295-1711**	1	PLATE-RETAINING	

M-METRIC PART

308-4764 **HOUSING GP-FRONT** *(contd.)* **i02896520**

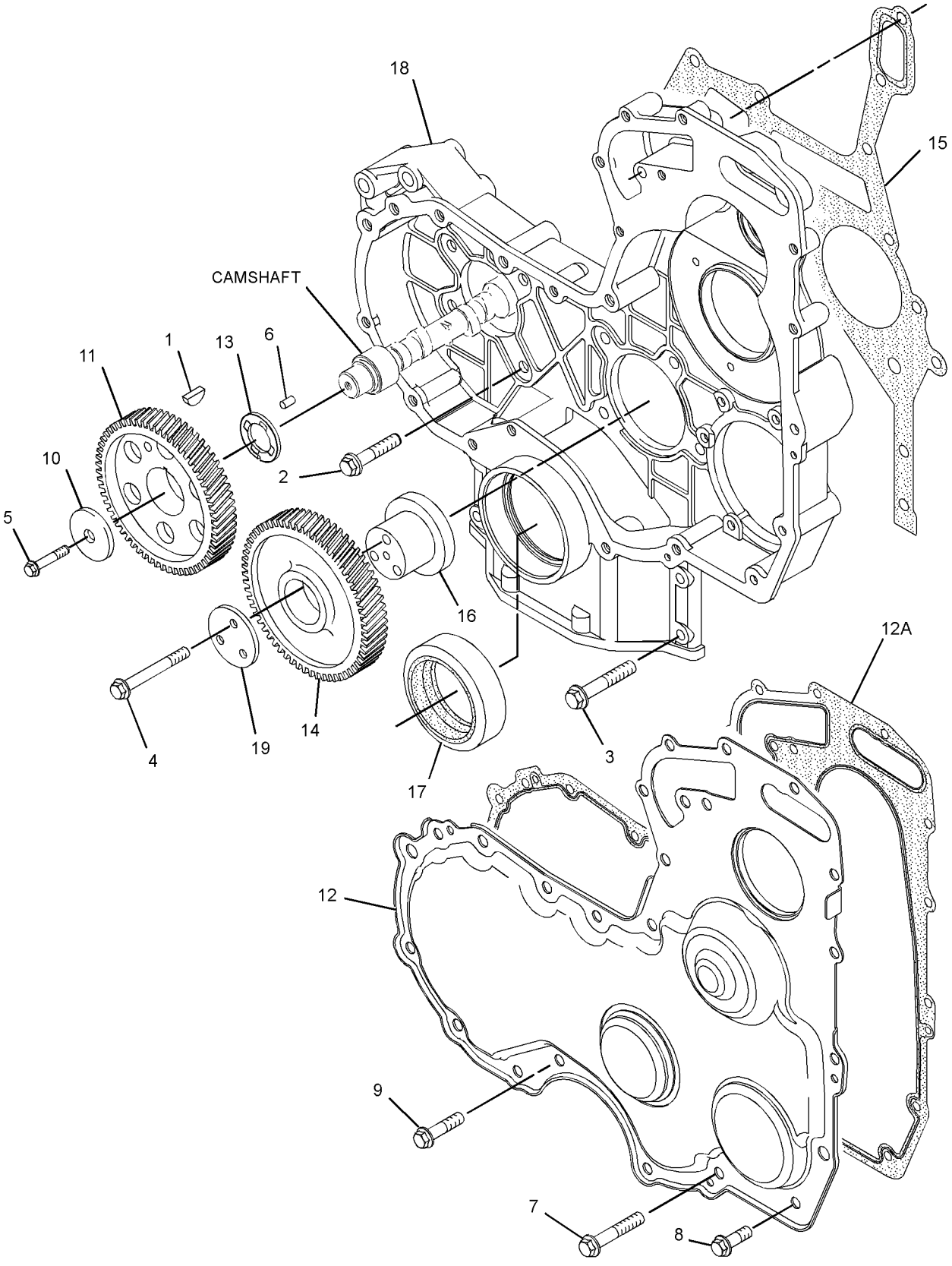

GRAPHIC #1 **<END>** g01376111

BASIC ENGINE

232-3713 LIFTING GP-ENGINE

S/N: G4D1-UP; CRS2300-UP

PART OF 176-3163 ENGINE AR-PRIMARY

SMCS-1122 **i02419719**

NOTE	REF NO	GRAPHIC REF	PART NUMBER	QTY	PART NAME 1 2 3 4 5 6 (PRODUCT LEVEL)	SEE PAGE
M	1	1	**100-4830**	4	BOLT (M10X1.5X20-MM)	
	2	1	**225-8848**	1	PLATE-LIFTING	
	3	1	**275-2452**	1	PLATE-LIFTING	

M-METRIC PART

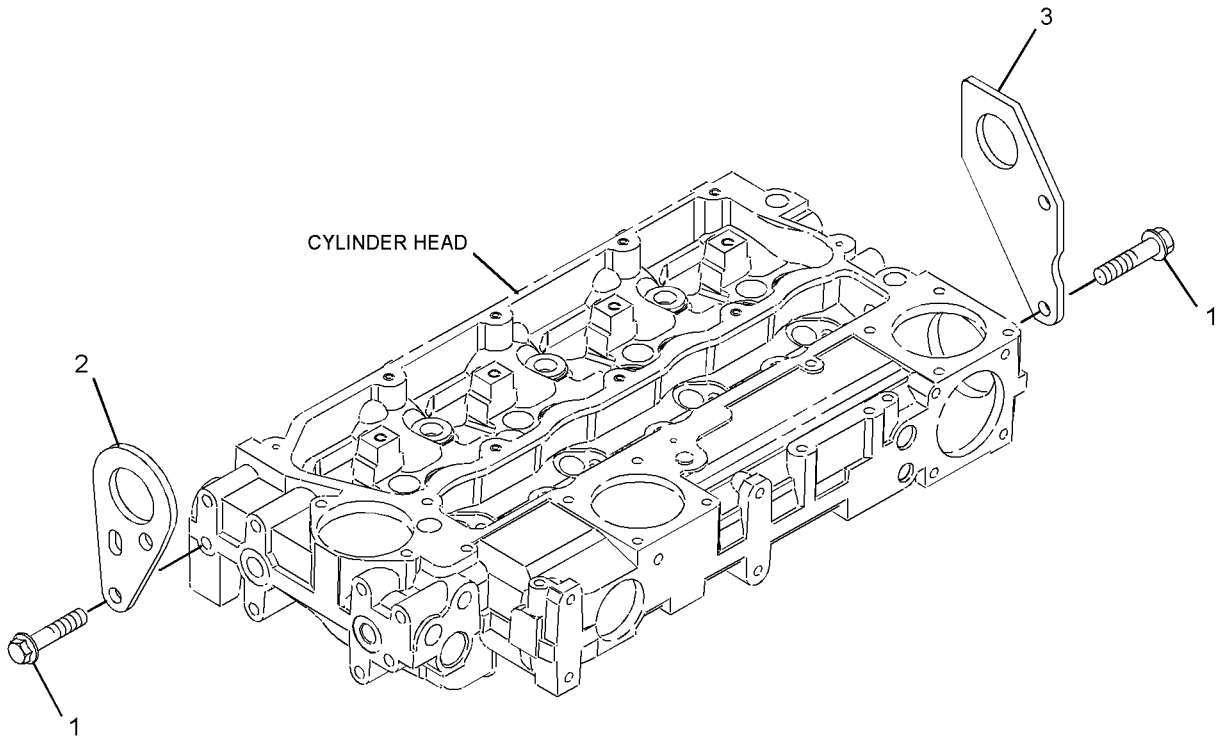

GRAPHIC #1 **<END>** g01210949

BASIC ENGINE

233-9840 MOUNTING GP-ENGINE

S/N: CRS2300-2612

PART OF 176-3163 ENGINE AR-PRIMARY

SMCS-1152 **i02089645**

NOTE	REF NO	GRAPHIC REF	PART NUMBER	QTY	PART NAME 1 2 3 4 5 6 (PRODUCT LEVEL)	SEE PAGE
	1	1	**6H-3616**	6	PLUG-PROTECTION	
M	2	1	**6I-0233**	8	NUT (M12X1.75-THD)	
	3	1	**183-1343**	8	STUD	

M-METRIC PART

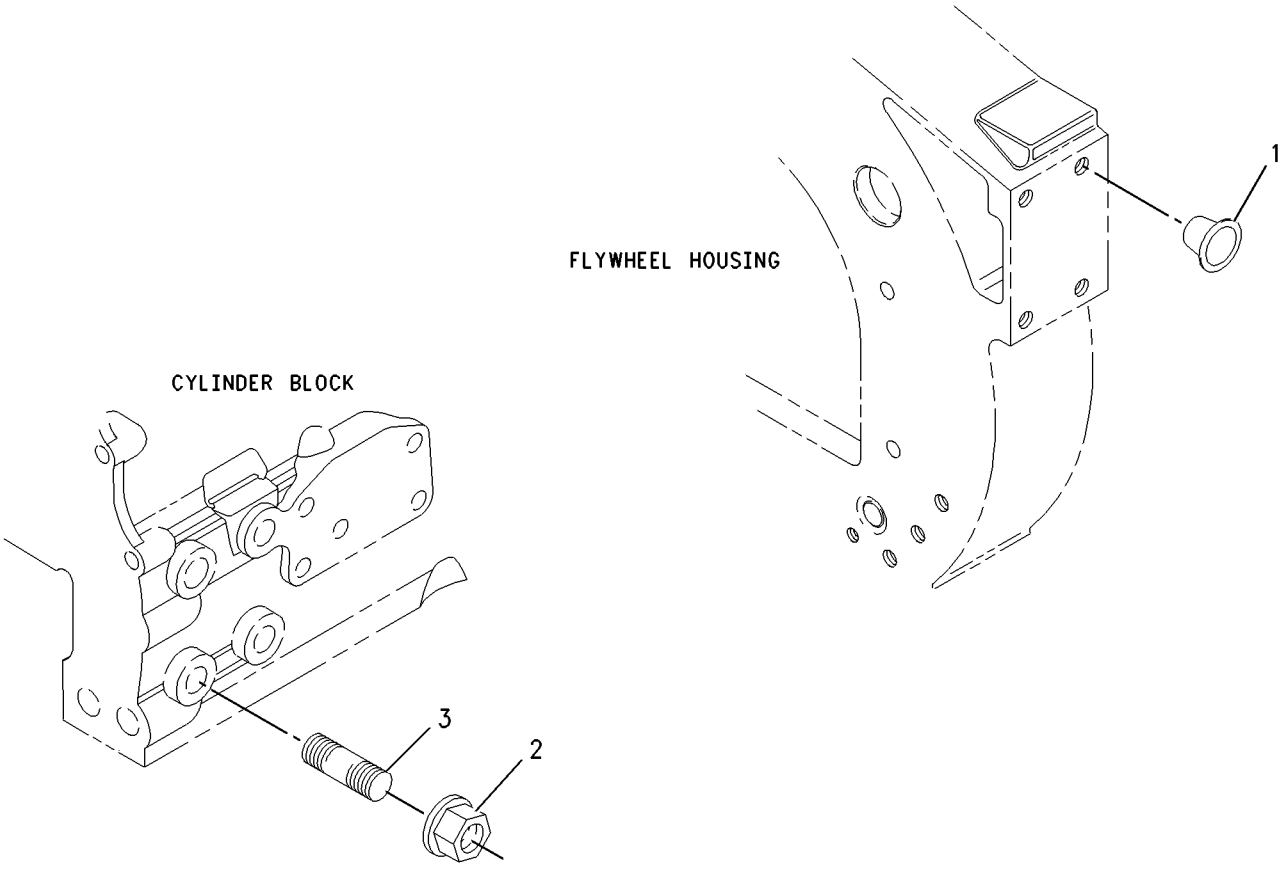

GRAPHIC #1 **<END>** g01003075

252-6456 MOUNTING GP-ENGINE

S/N: G4D1-UP; CRS2613-UP

PART OF 176-3163 ENGINE AR-PRIMARY

SMCS-1152 **i02896519**

NOTE	REF NO	GRAPHIC REF	PART NUMBER	QTY	PART NAME 1 2 3 4 5 6 (PRODUCT LEVEL)	SEE PAGE
	2	1	**6H-3616**	3	PLUG-PROTECTION	
	3	1	**195-2132**	1	SUPPORT-FRONT (LH)	
	4	1	**195-2134**	1	SUPPORT-FRONT (RH)	
	5	1	**195-2136**	8	STUD	
	6	1	**195-2221**	8	NUT (M12X1.75-THD)	

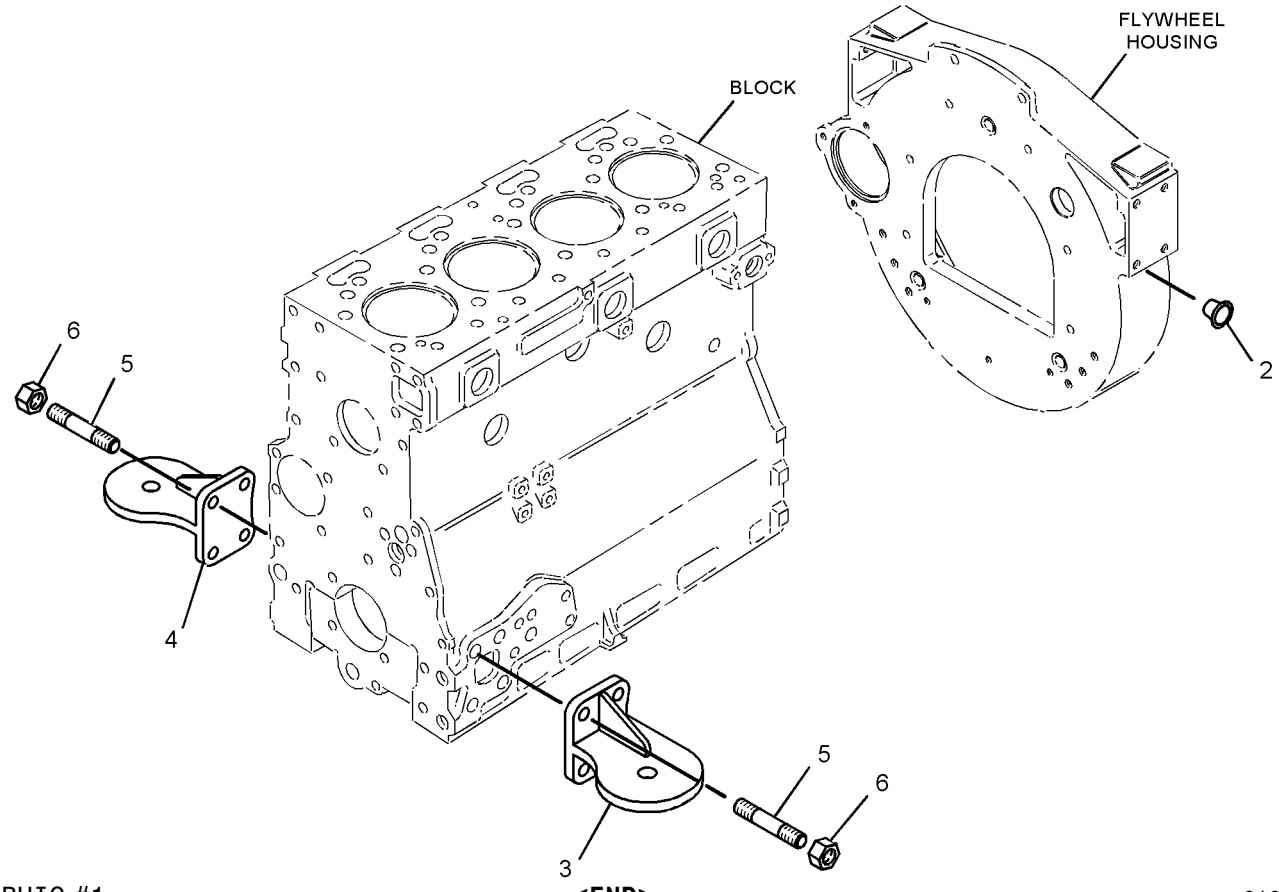

GRAPHIC #1 **<END>** g01062594

BASIC ENGINE

227-3115 MOUNTING GP-ENGINE FLEXIBLE

S/N: EAE1-UP

PART OF 227-8418 INSTALLATION AR-ENGINE

SMCS-1152 **i01975299**

NOTE	REF NO	GRAPHIC REF	PART NUMBER	QTY	PART NAME 1 2 3 4 5 6 (PRODUCT LEVEL)	SEE PAGE
	1	1	**6Y-9915**	4	MOUNT AS	
	2	1	**9W-9952**	4	WASHER (16.75X86X8-MM THK)	
	3	1	**9W-9953**	4	SLEEVE	
	4	1	**132-5789**	1	CLIP	
	5	1	**178-1781**	1	CLIP	
	6	1	**185-8853**	1	SUPPORT AS-ENGINE	
	7	1	**4P-8134**	1	CLIP	
	8	1	**8T-4121**	12	WASHER-HARD (11X21X2.5-MM THK)	
	9	1	**8T-4122**	8	WASHER-HARD (17X32X3.5-MM THK)	
M	10	1	**8T-4132**	4	NUT (M16X2-THD)	
M	11	1	**8T-4174**	4	BOLT (M16X2X120-MM)	
M	12	1	**8T-4186**	12	BOLT (M10X1.5X40-MM)	

M-METRIC PART

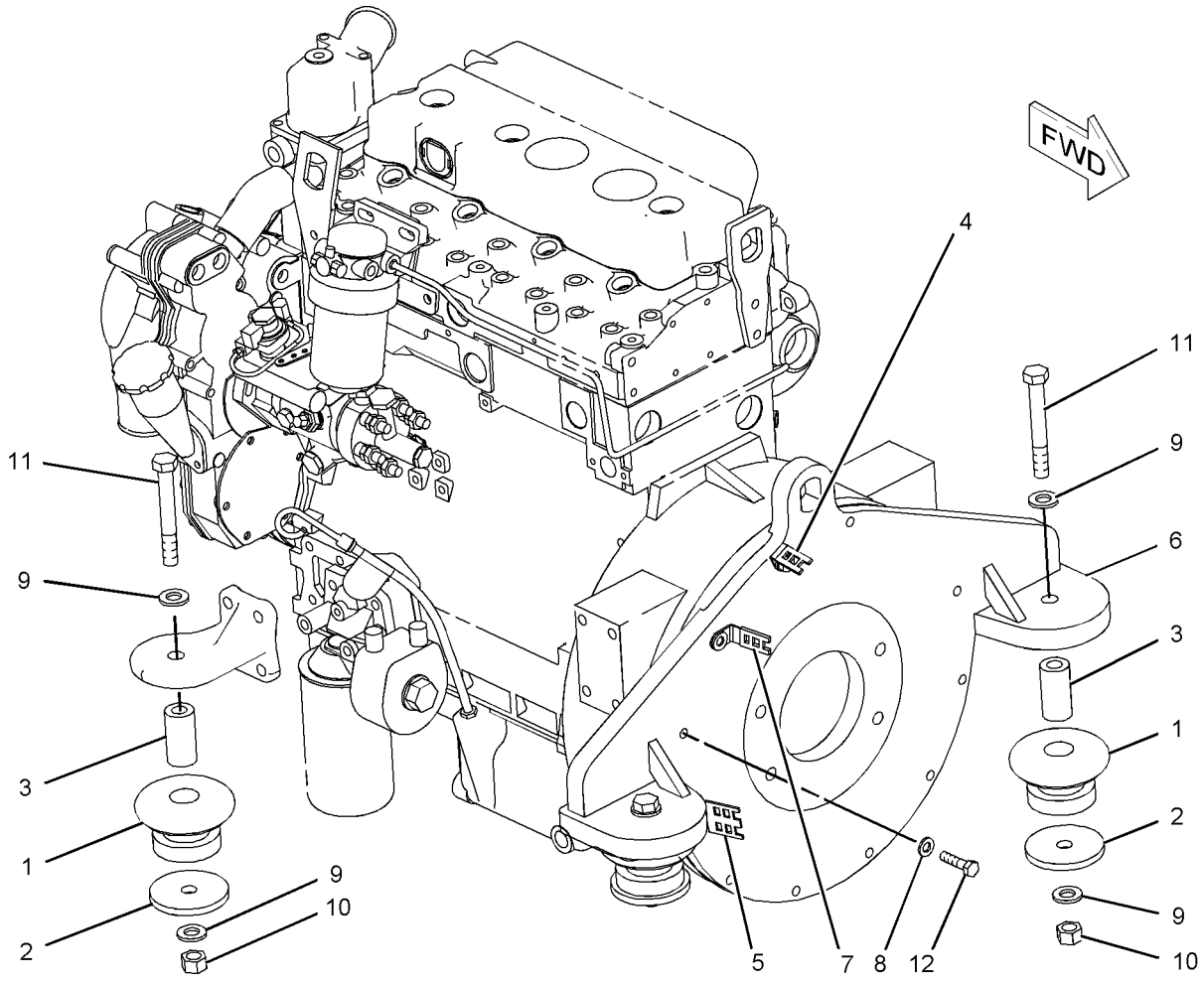

GRAPHIC #1 **<END>** g01032152

232-2565 PAN GP-OIL

S/N: G4D1-UP; CRS2300-UP
PART OF 176-3163 ENGINE AR-PRIMARY
TYPE 1

SMCS-1302 **i02231118**

NOTE	REF NO	GRAPHIC REF	PART NUMBER	QTY	PART NAME 1 2 3 4 5 6 (PRODUCT LEVEL)	SEE PAGE
	1	1	**5P-6718**	2	SEAL-O-RING (SUMP DRAIN)	
M	2	1	**6I-0217**	12	BOLT (M8X1.25X20-MM)	
M	3	1	**6I-0260**	2	BOLT (M8X1.25X25-MM)	
	4	1	**6I-0289**	1	PLUG	
M	5	1	**6I-0363**	2	BOLT (M6X1X20-MM)	
	6	1	**6I-0572**	2	BOLT (M8X1.25X20-MM)	
	7	1	**6I-1497**	1	SEAL	
	8	1	**7C-0351**	2	PLUG-DRAIN (ENGINE OIL)	
	9	1	**067-6213**	1	GASKET	
	10	1	**101-3771**	6	BOLT	
	11	1	**232-2551**	1	TUBE AS	
	12	1	**6I-4079**	1	NUT	
	13	1	**263-2162**	1	GAUGE AS-OIL LEVEL (DIPSTICK) (ENGINE)	
	14	1	**225-6004**	1	PAN AS-OIL	
	15	1	**7C-1224**	2	INSERT	
	16	1	**225-6005**	1	GASKET	
	17	1	**230-8094**	1	BRIDGE	
	18	1	**225-6041**	1	TUBE	

M-METRIC PART

232-2565 **PAN GP-OIL** *(contd.)* **i02231118**

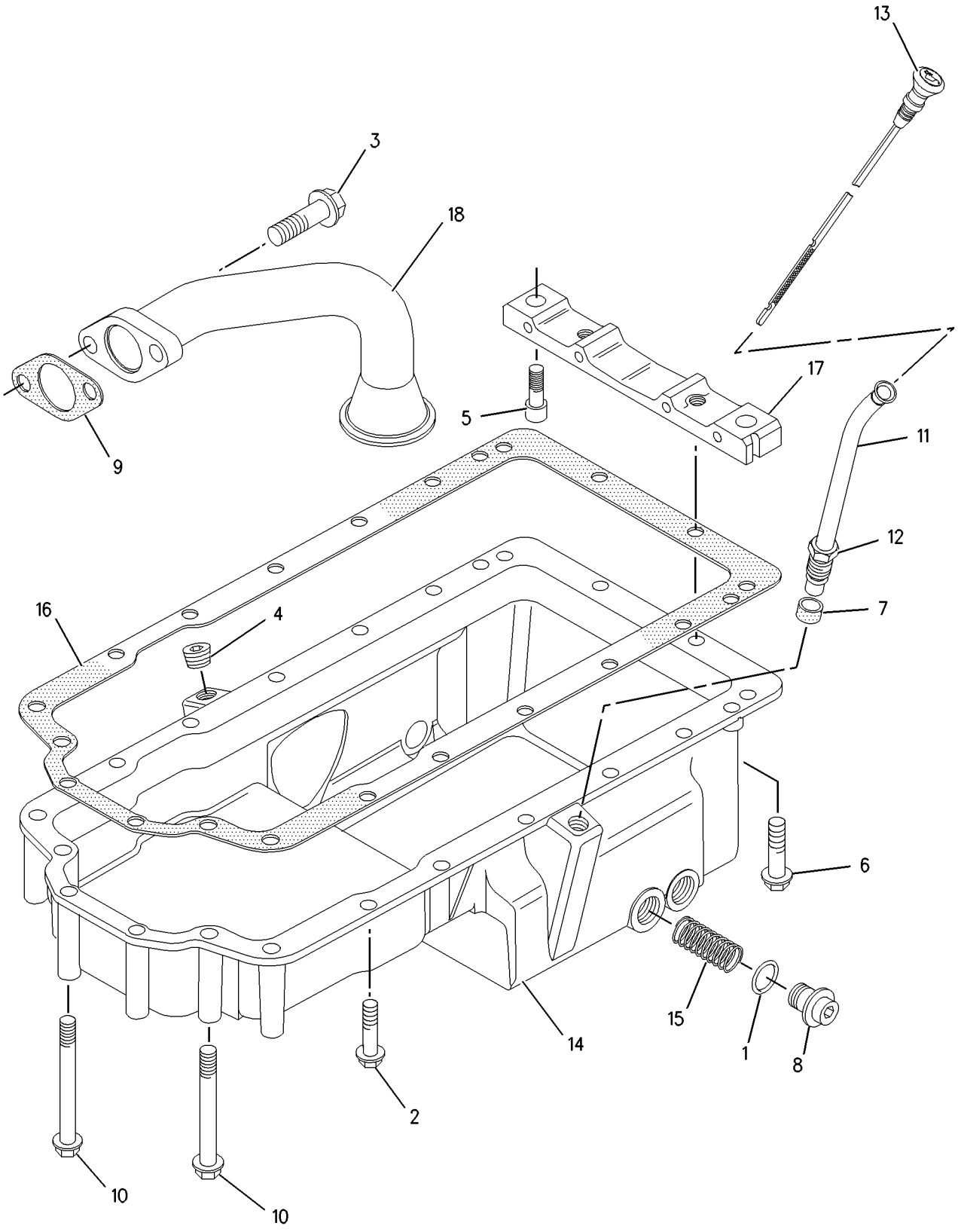

GRAPHIC #1 **<END>** g00994129

232-2565 PAN GP-OIL

S/N: G4D1-UP; CRS2300-UP
PART OF 176-3163 ENGINE AR-PRIMARY
TYPE 2

SMCS-1302 **i02655477**

NOTE	REF NO	GRAPHIC REF	PART NUMBER	QTY	PART NAME 1 2 3 4 5 6 (PRODUCT LEVEL)	SEE PAGE
	1	1	**275-9883**	2	SEAL	
M	2	1	**6I-0217**	12	BOLT (M8X1.25X20-MM)	
M	3	1	**6I-0260**	2	BOLT (M8X1.25X25-MM)	
	4	1	**6I-0289**	1	PLUG	
M	5	1	**6I-0363**	2	BOLT (M6X1X20-MM)	
	6	1	**6I-0572**	2	BOLT (M8X1.25X20-MM)	
	7	1	**6I-1497**	1	SEAL	
	8	1	**7C-0351**	2	PLUG-DRAIN (ENGINE OIL)	
	9	1	**067-6213**	1	GASKET	
	10	1	**101-3771**	6	BOLT	
	11	1	**251-8338**	1	TUBE AS	
	13	1	**263-2162**	1	GAUGE AS-OIL LEVEL (DIPSTICK) (ENGINE)	
	14	1	**304-8764**	1	PAN AS-OIL	
	15	1	**7C-1224**	2	INSERT	
	16	1	**225-6005**	1	GASKET	
	17	1	**230-8094**	1	BRIDGE	
	18	1	**225-6041**	1	TUBE	

M-METRIC PART

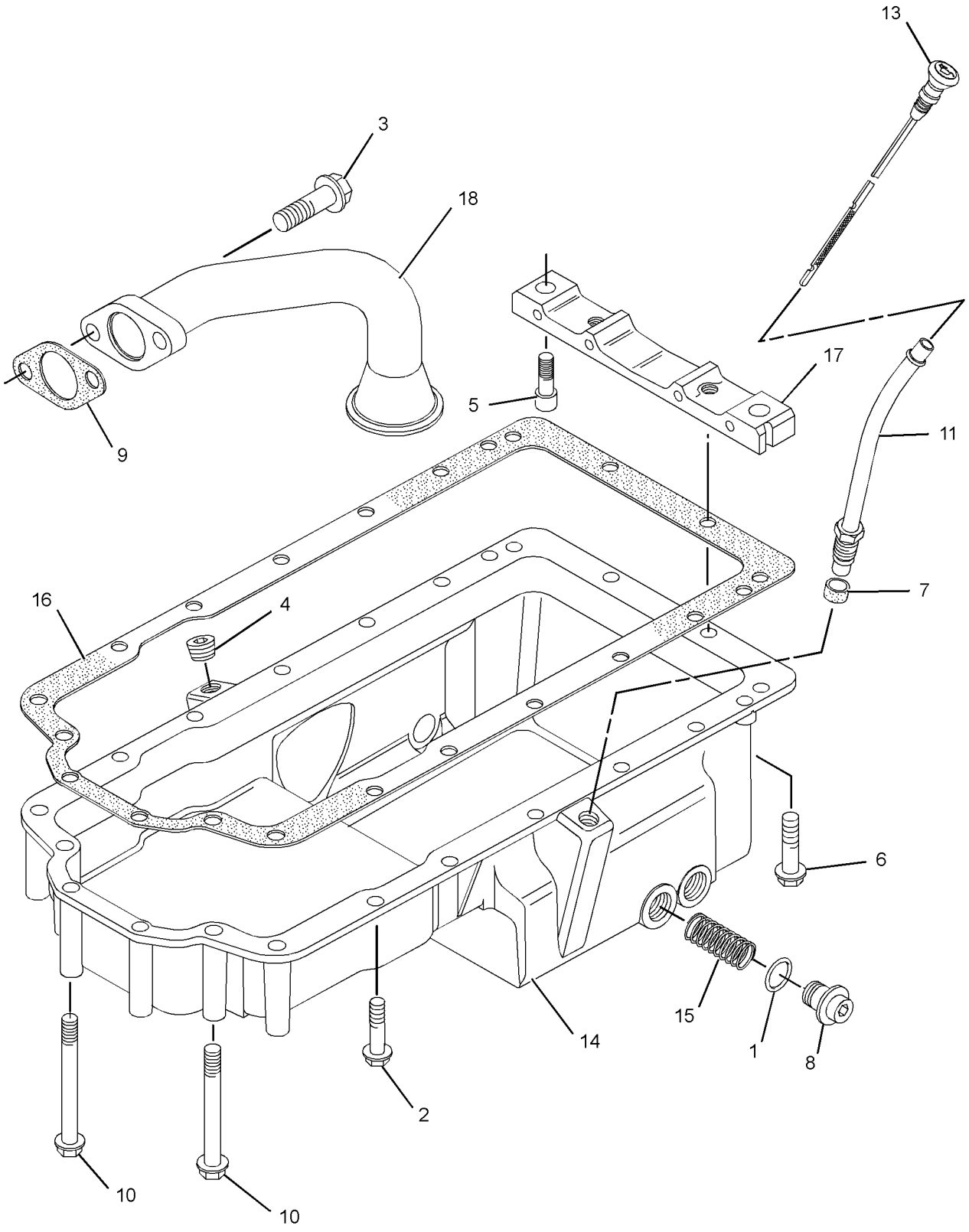

GRAPHIC #1 **<END>** g01271681

BASIC ENGINE

233-7233 PISTON & ROD GP

S/N: G4D1-UP; CRS2300-UP

PART OF 176-3163 ENGINE AR-PRIMARY

SMCS-1225 **i02463020**

NOTE	REF NO	GRAPHIC REF	PART NUMBER	QTY	PART NAME 1 2 3 4 5 6 (PRODUCT LEVEL)	SEE PAGE
	1	1	**233-7232**	4	PISTON AS	
					(EACH PISTON AS INCLUDES)	
	2	1	**124-3536**	2	RING-RETAINING	
	3	1	**233-7231**	1	RING GP-PISTON	
J	4	1	**225-5441**	4	ROD AS-CONNECTING (LENGTH L)	
					—OR—	
J		1	**225-5451**	4	ROD AS-CONNECTING (LENGTH K)	
					—OR—	
J		1	**225-5453**	4	ROD AS-CONNECTING (LENGTH J)	
					—OR—	
J		1	**225-5454**	4	ROD AS-CONNECTING (LENGTH H)	
					—OR—	
J		1	**225-5458**	4	ROD AS-CONNECTING (LENGTH G)	
					—OR—	
J		1	**225-5459**	4	ROD AS-CONNECTING (LENGTH F)	
					(EACH ROD AS INCLUDES)	
	5	1	**225-5438**	1	BUSHING	
	6	1	**225-5439**	2	BOLT-SPECIAL (CONNECTING ROD)	

J-ENSURE THAT CORRECT ROD LENGTH IS FITTED

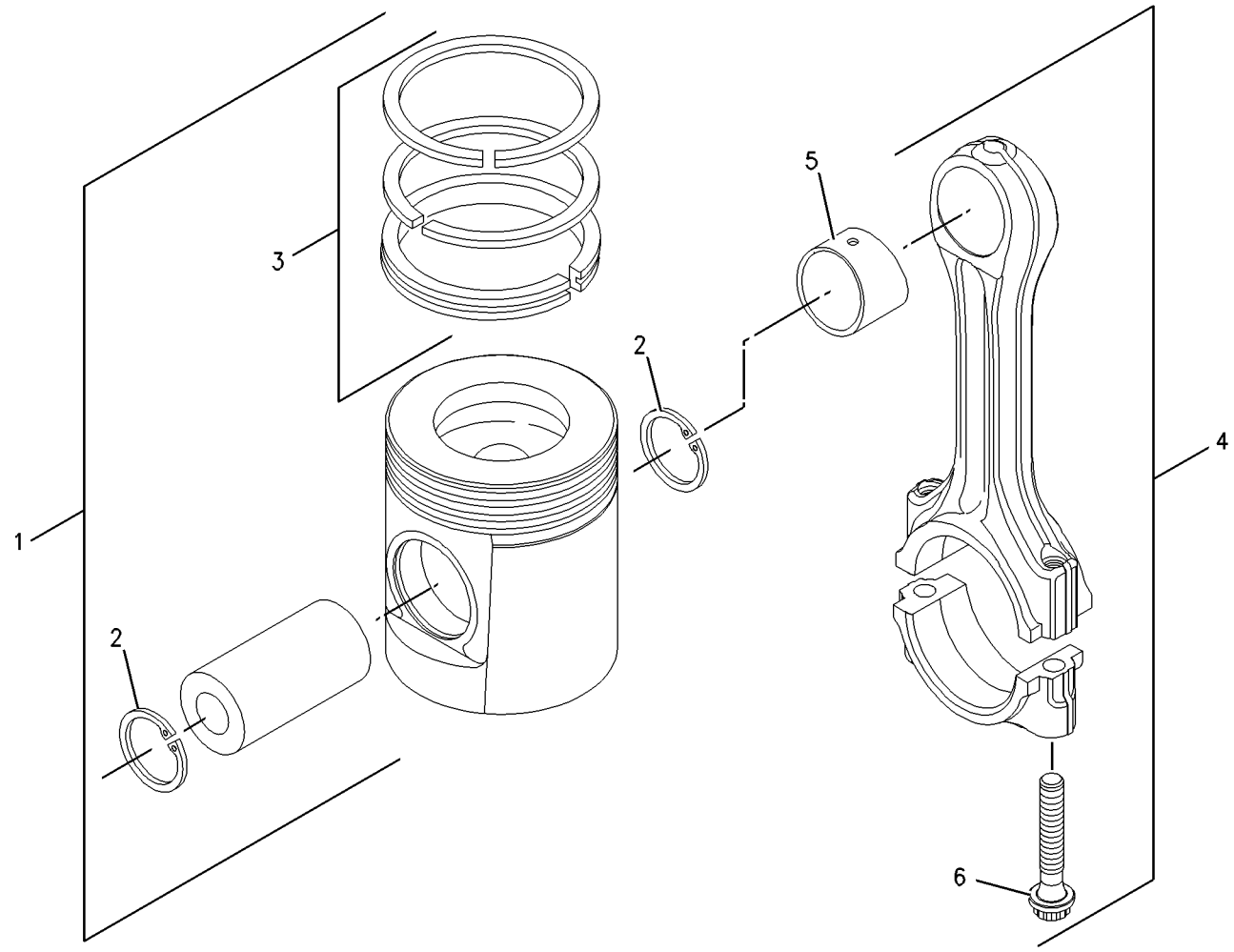

GRAPHIC #1 **<END>** g00909669

BASIC ENGINE

313-3359 PISTON & ROD GP

S/N: G4D1-UP; CRS2300-UP

PART OF 176-3163 ENGINE AR-PRIMARY

SMCS-1225 **i02811132**

NOTE	REF NO	GRAPHIC REF	PART NUMBER	QTY	PART NAME 1 2 3 4 5 6 (PRODUCT LEVEL)	SEE PAGE
BJ	1	1	**225-5441**	4	ROD AS-CONNECTING (LENGTH L)	
					—OR—	
BJ		1	**225-5451**	4	ROD AS-CONNECTING (LENGTH K)	
					—OR—	
BJ		1	**225-5453**	4	ROD AS-CONNECTING (LENGTH J)	
					—OR—	
BJ		1	**225-5454**	4	ROD AS-CONNECTING (LENGTH H)	
					—OR—	
BJ		1	**225-5458**	4	ROD AS-CONNECTING (LENGTH G)	
					—OR—	
BJ		1	**225-5459**	4	ROD AS-CONNECTING (LENGTH F)	
					(EACH INCLUDES)	
	1A	1	**225-5438**	1	BUSHING	
	1B	1	**225-5439**	2	BOLT-SPECIAL (CONNECTING ROD)	
	2	1	**233-7232**	4	PISTON AS	
					(EACH INCLUDES)	
	2A	1	**124-3536**	2	RING-RETAINING	
	2B	1	**233-7231**	1	RING GP-PISTON	
F		1	**288-9942**	1	PISTON AS (0.5-MM OS)	
		1	**124-3536**	2	RING-RETAINING	
F		1	**288-9943**	1	PISTON AS (1.0-MM OS)	
		1	**124-3536**	2	RING-RETAINING	

B-USE AS REQUIRED
F-NOT SHOWN
J-ENSURE THAT CORRECT ROD LENGTH IS FITTED

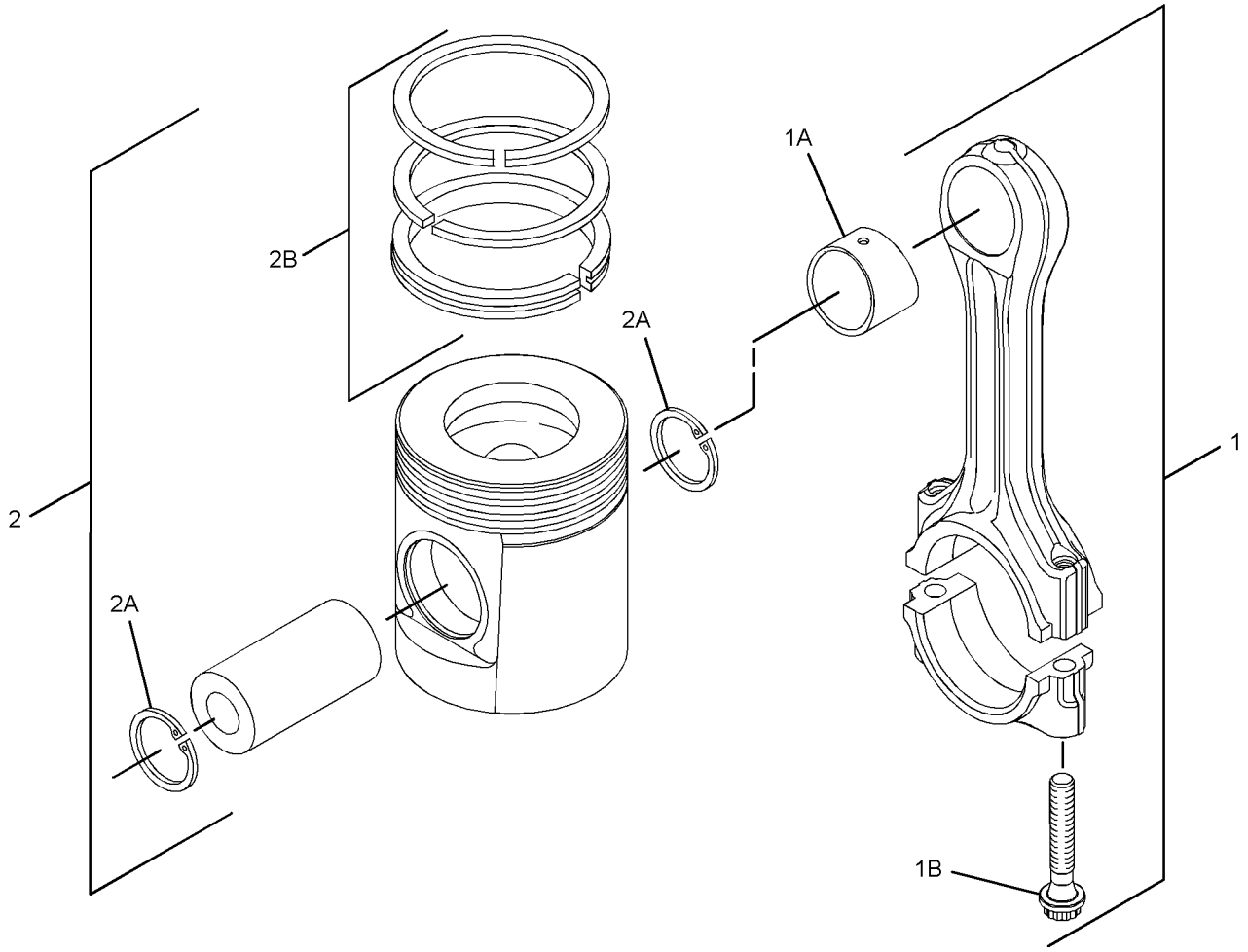

GRAPHIC #1 **<END>** g01425161

BASIC ENGINE

225-4317 PLUG GP-ENGINE

S/N: G4D1-UP; CRS2300-UP
FRONT HOUSING, CYLINDER HEAD
PART OF 176-3163 ENGINE AR-PRIMARY

SMCS-1000 **i02052065**

NOTE	REF NO	GRAPHIC REF	PART NUMBER	QTY	PART NAME 1 2 3 4 5 6 (PRODUCT LEVEL)	SEE PAGE
	1	1	**2B-0858**	3	PLUG-PIPE	

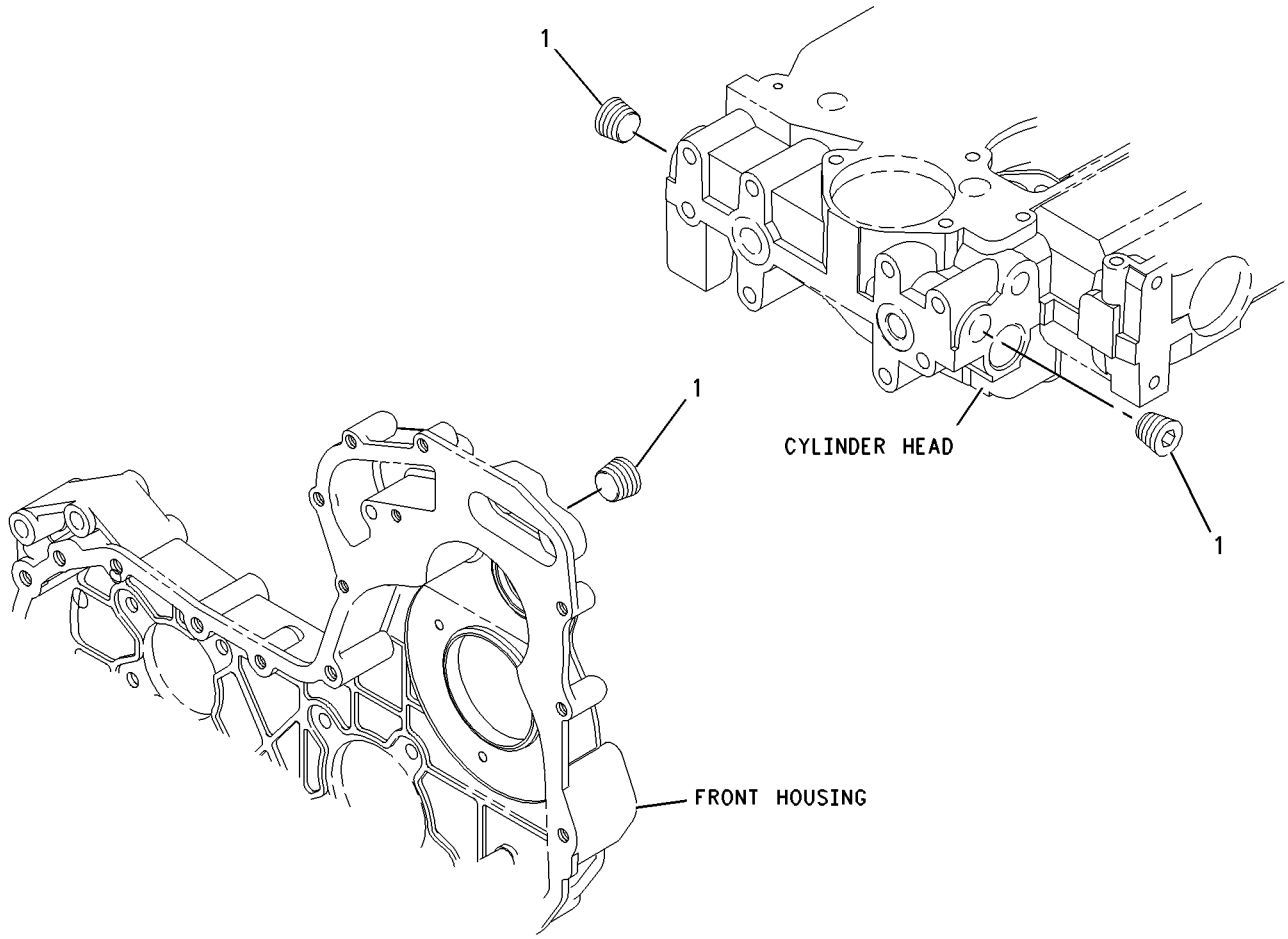

GRAPHIC #1 **<END>** g00911937

232-6204 PLUG GP-ENGINE

S/N: G4D1-UP; CRS2300-UP
PART OF 176-3163 ENGINE AR-PRIMARY

SMCS-1000 **i02089627**

NOTE	REF NO	GRAPHIC REF	PART NUMBER	QTY	PART NAME 1 2 3 4 5 6 (PRODUCT LEVEL)	SEE PAGE
	1	1	**199-9751**	1	SEAL-O-RING	
	2	1	**232-1322**	1	PLUG	

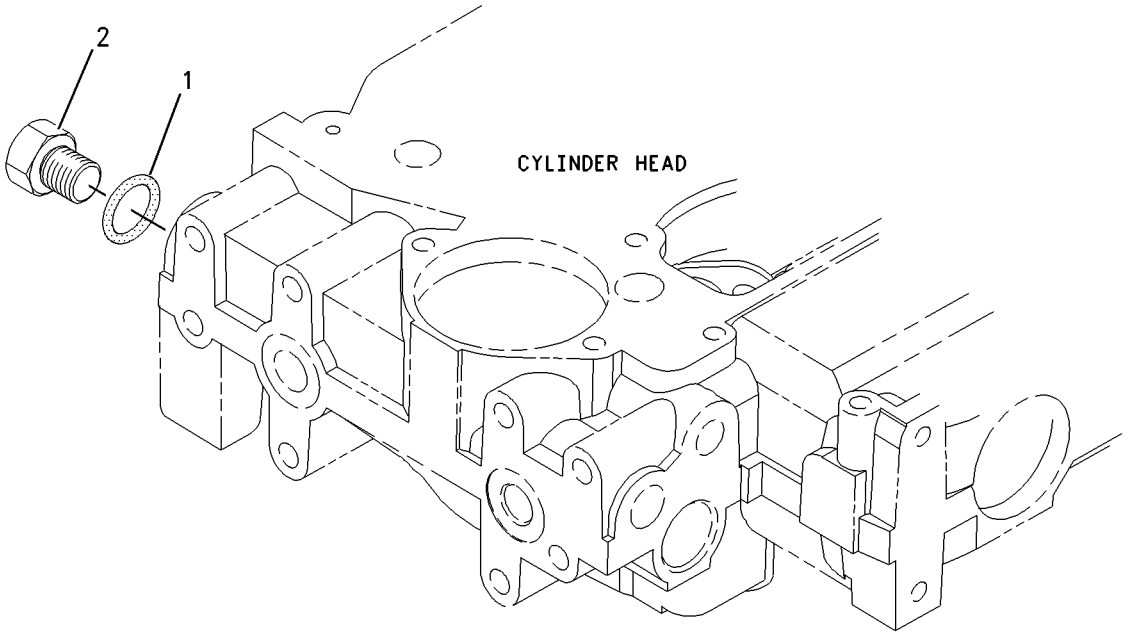

GRAPHIC #1 **<END>** g00950934

BASIC ENGINE

253-2479 PLUG GP-ENGINE

S/N: G4D1-UP; CRS2300-UP

PART OF 176-3163 ENGINE AR-PRIMARY

SMCS-1000 **i02091129**

NOTE	REF NO	GRAPHIC REF	PART NUMBER	QTY	PART NAME 1 2 3 4 5 6 (PRODUCT LEVEL)	SEE PAGE
	1	1	**035-8063**	1	PLUG	
	2	1	**199-9267**	1	SEAL-O-RING	
	3	1	**232-3861**	1	PLUG	

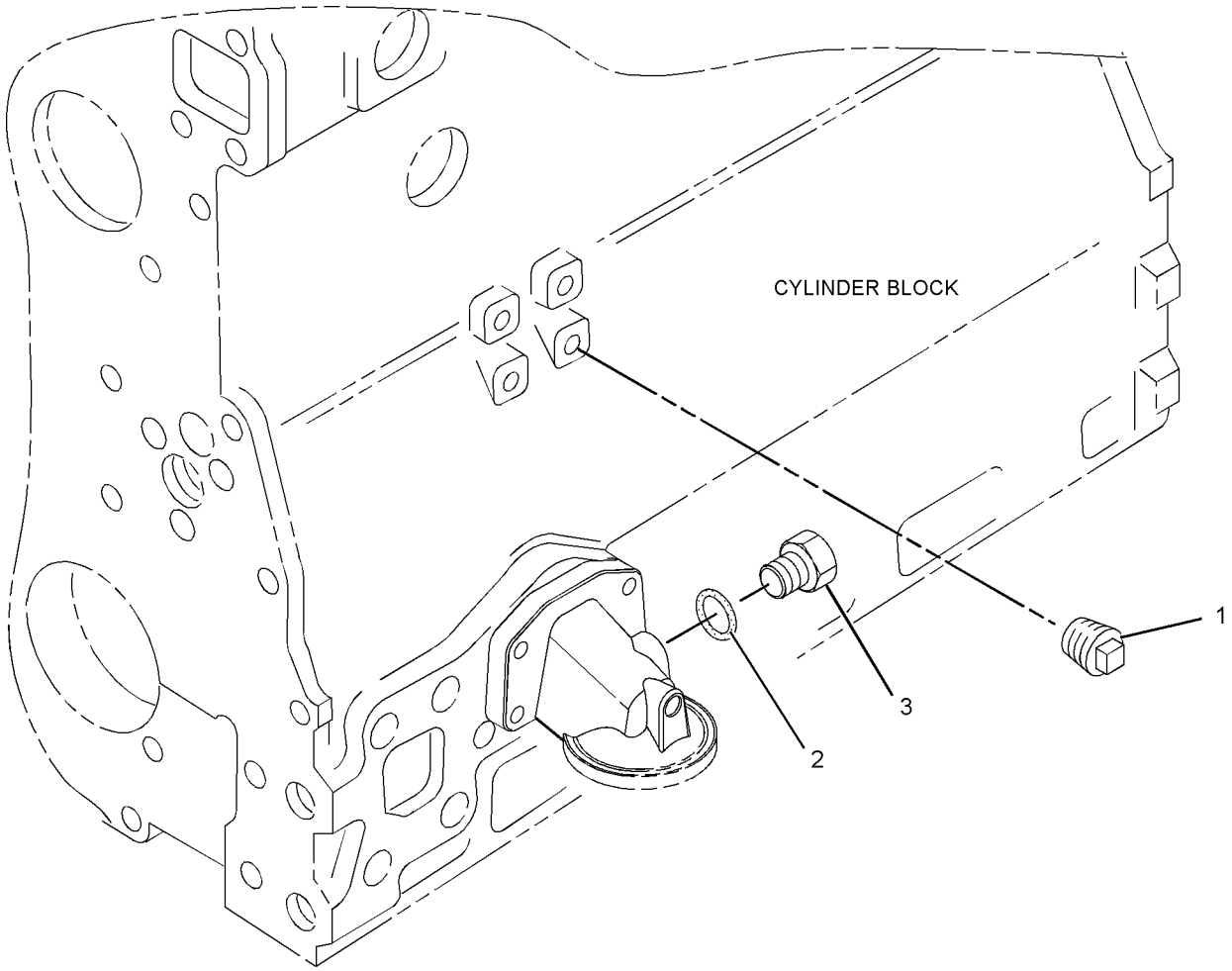

GRAPHIC #1 **<END>** g01079757

230-7352 PULLEY GP-CRANKSHAFT

S/N: G4D1-UP; CRS2300-UP

PART OF 176-3163 ENGINE AR-PRIMARY

SMCS-1205 **i02089639**

NOTE	REF NO	GRAPHIC REF	PART NUMBER	QTY	PART NAME 1 2 3 4 5 6 (PRODUCT LEVEL)	SEE PAGE
	1	1	**6I-0501**	1	BLOCK	
	2	1	**7W-4634**	3	BOLT (7/16-20X1.5-IN)	
	3	1	**111-3297**	1	PULLEY	

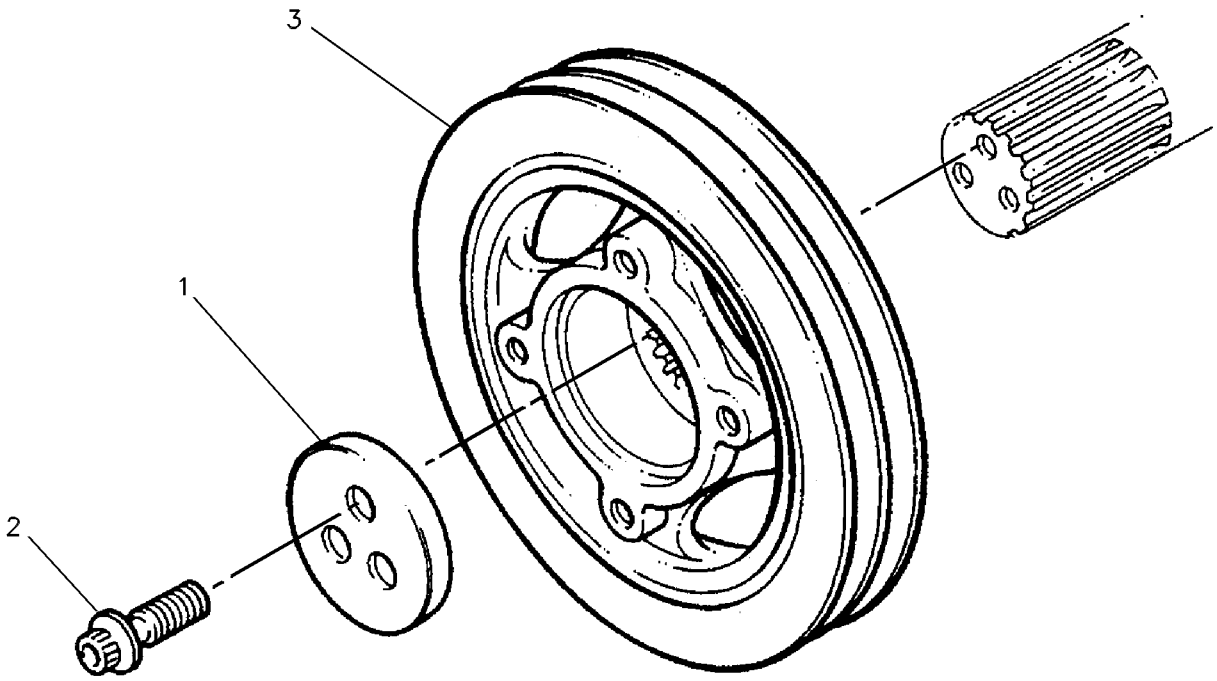

GRAPHIC #1 **<END>** g00658339

BASIC ENGINE

225-5963 ROCKER ARM GP

S/N: G4D1-UP; CRS2300-UP

PART OF 313-3362 VALVE MECHANISM GP

SMCS-1102, 1123 **i02720066**

NOTE	REF NO	GRAPHIC REF	PART NUMBER	QTY	PART NAME 1 2 3 4 5 6 (PRODUCT LEVEL)	SEE PAGE
	1	1	**225-5625**	4	LEVER AS	
	1A	1	**5B-9079**	1	NUT-JAM (3/8-24-THD)	
	1B	1	**185-1546**	1	SCREW	
	2	1	**225-5634**	1	SHAFT AS	
	2A	1	**225-5629**	2	PLUG	
	3	1	**225-5638**	3	SPRING	
	4	1	**225-5640**	4	LEVER AS	
	4A	1	**5B-9079**	1	NUT-JAM (3/8-24-THD)	
	4B	1	**185-1546**	1	SCREW	
	5	1	**225-5959**	2	CLIP	
	6	1	**225-5960**	1	BOLT (M8X1.25X60-MM)	
	7	1	**225-5961**	2	WASHER (26.7X34.32X0.38-MM THK)	
	8	1	**225-5962**	3	BOLT (M8X1.25X30-MM)	

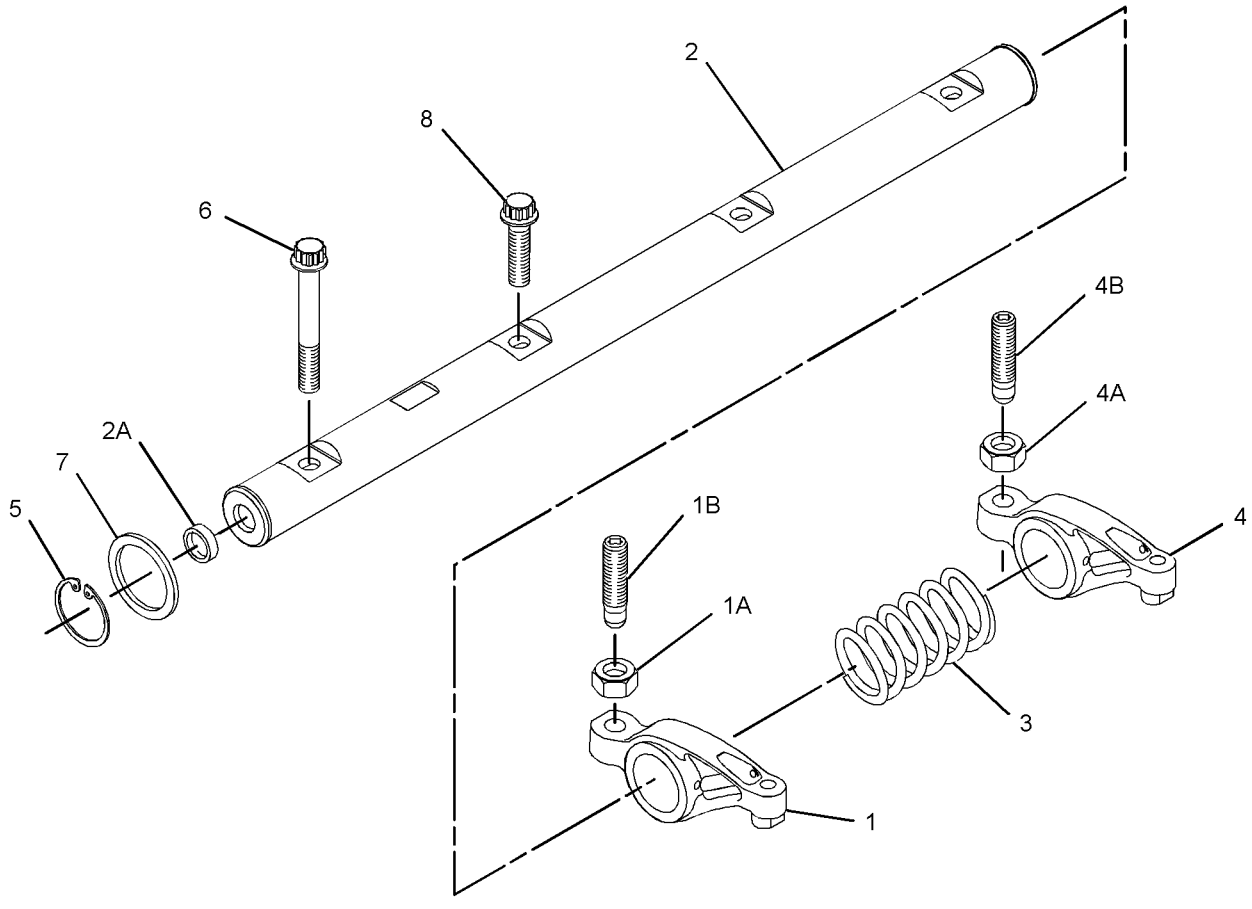

GRAPHIC #1 **<END>** g01368510

220-1960 SERVICE GP-ENGINE

S/N: EAE1-UP
PART OF 227-8418 INSTALLATION AR-ENGINE
TYPE 1

SMCS-1261, 1263, 1302, 7542 **i02897059**

NOTE	REF NO	GRAPHIC REF	PART NUMBER	QTY	PART NAME 1 2 3 4 5 6 (PRODUCT LEVEL)	SEE PAGE
	1	1	**1P-4278**	1	CLAMP-HOSE	
	2	1	**5D-1026**	1	CLAMP-HOSE	
	3	1	**8C-3445**	1	CAP-DUST	
	4	1	**8T-7859**	1	CONNECTOR	
	5	1	**157-0670**	1	CAP-DUST	
	6	1	**6V-7238**	1	VALVE-SHUTOFF (ENGINE OIL DRAIN)	
			3K-0360	1	SEAL-O-RING	
	7	1	**154-9025**	1	VALVE-FLUID SAMPLING (ENGINE OIL)	
	8	1	**159-5255**	1	ADAPTER	
	9	1	**8C-3446**	1	VALVE-FLUID SAMPLING (ENGINE OIL)	
			3J-7354	1	SEAL-O-RING	
	10	1	**5P-9186**	1	SEAL-O-RING	
	11	1	**7K-1181**	1	STRAP-CABLE	
	12	1	**8T-7876**	1	SEAL-O-RING	
E	13	1	**5P-0743**	1	HOSE (50-CM)	
E	14	1	**5P-1420**	1	HOSE (80-CM)	

E-ORDER BY THE CENTIMETER

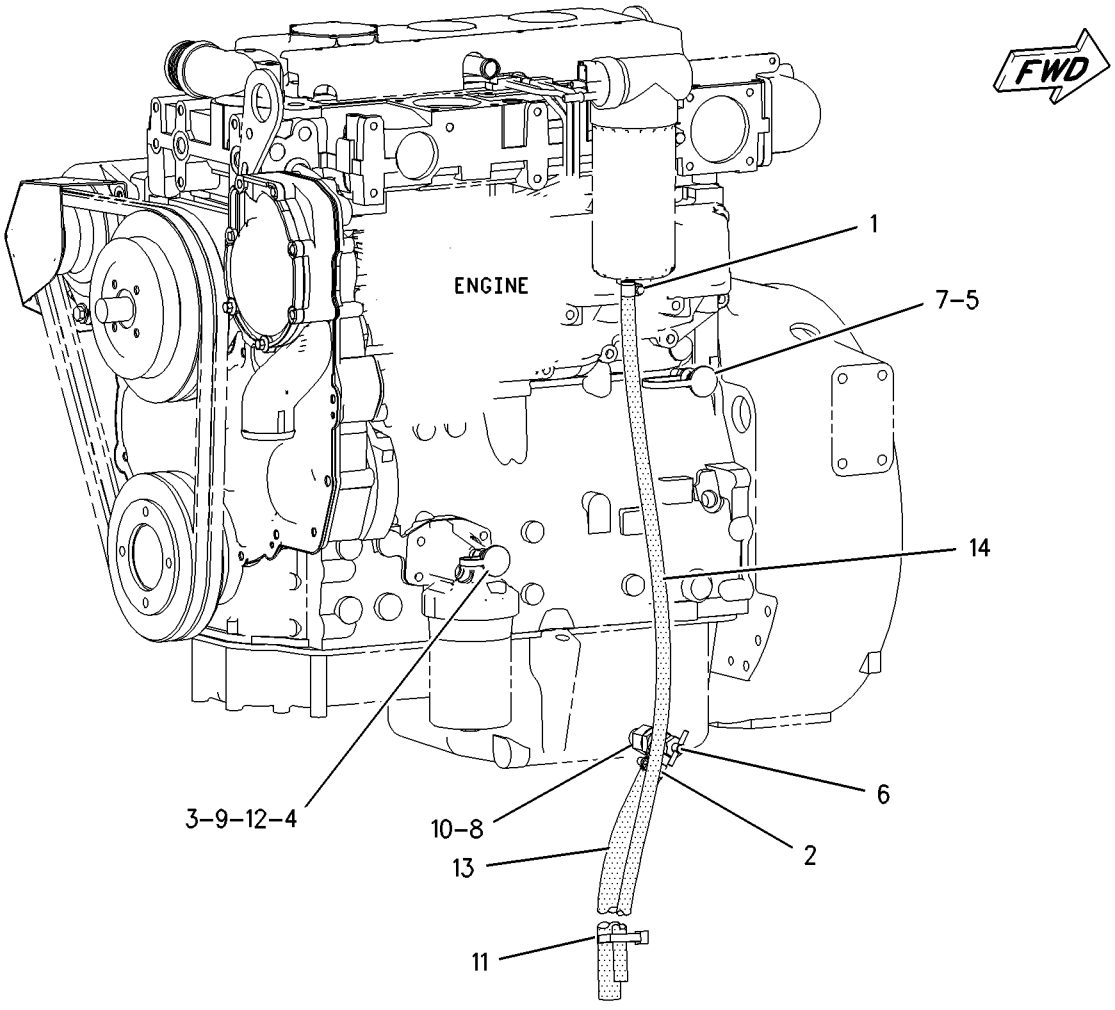

GRAPHIC #1 **<END>** g01002140

220-1960 SERVICE GP-ENGINE

S/N: EAE1-UP

PART OF 227-8418 INSTALLATION AR-ENGINE

TYPE 2

SMCS-1261, 1263, 1302, 7542 **i02515840**

NOTE	REF NO	GRAPHIC REF	PART NUMBER	QTY	PART NAME 1 2 3 4 5 6 (PRODUCT LEVEL)	SEE PAGE
	1	1	**1P-4278**	1	CLAMP-HOSE	
	2	1	**5D-1026**	1	CLAMP-HOSE	
C	3	1	**5P-7833**	1	VALVE-SHUTOFF (COOLANT)	
	4	1	**8C-3445**	1	CAP-DUST (FLUID SAMPLING VALVE)	
	5	1	**8T-7859**	1	CONNECTOR	
	6	1	**157-0670**	1	CAP-DUST	
	7	1	**165-2273**	1	VALVE AS-SHUTOFF (ENGINE OIL DRAIN)	
		1	**3K-0360**	1	SEAL-O-RING	
		1	**6V-7238**	1	VALVE-SHUTOFF (ENGINE OIL DRAIN)	
	8	1	**154-9025**	1	VALVE-FLUID SAMPLING (ENGINE OIL)	
	9	1	**159-5255**	1	ADAPTER	
	10	1	*164-5590*	1	VALVE AS-FLUID SAMPLING (ENGINE OIL)	
		1	**8C-3446**	1	VALVE-FLUID SAMPLING (ENGINE OIL)	
		1	**3J-7354**	1	SEAL-O-RING	
C	11	1	**3P-1823**	1	ADAPTER-PIPE	
	12	1	**5P-9186**	1	SEAL-O-RING	
	13	1	**7K-1181**	1	STRAP-CABLE	
	14	1	**8T-7876**	1	SEAL-O-RING	
E	15	1	**5P-0743**		HOSE (50-CM)	
E	16	1	**5P-1420**		HOSE (80-CM)	

C-CHANGE FROM PREVIOUS TYPE
E-ORDER BY THE CENTIMETER

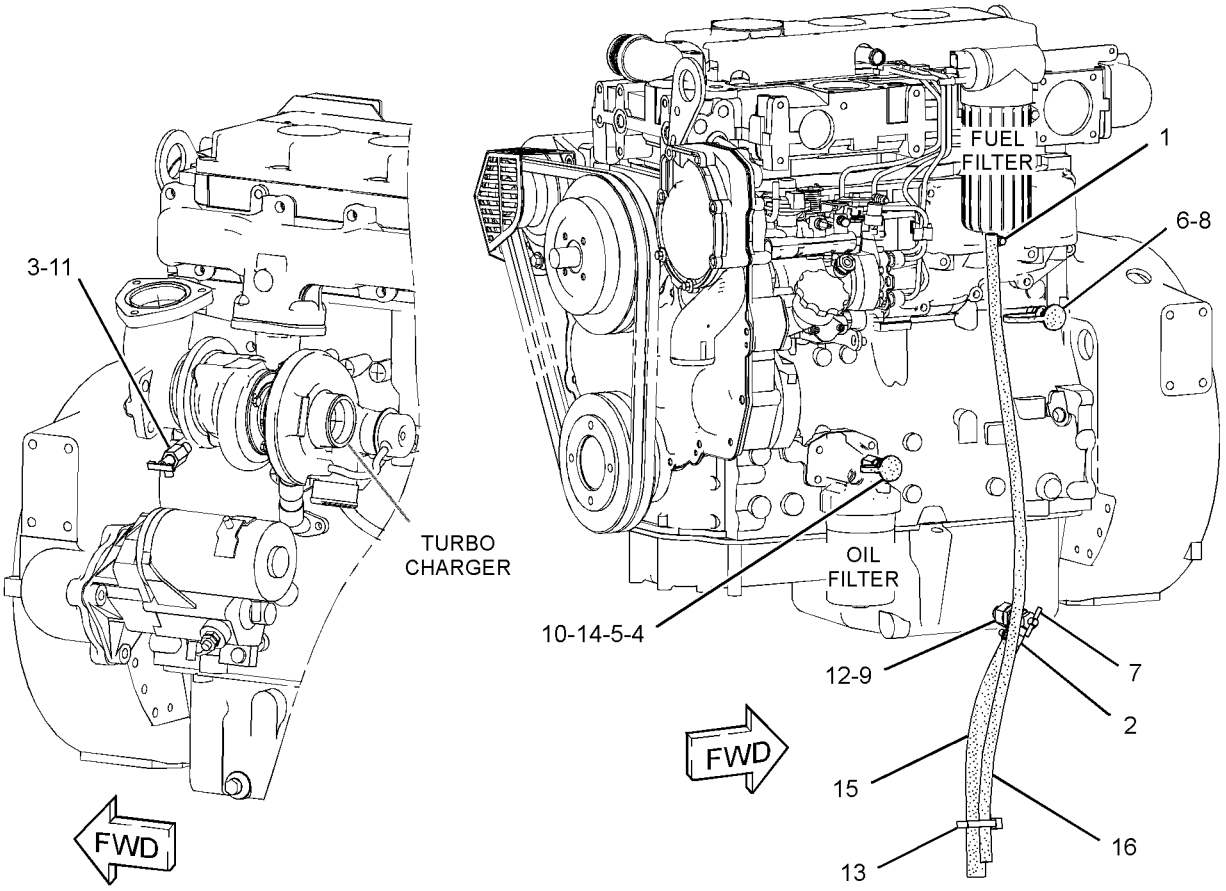

GRAPHIC #1 **<END>** g01256477

BASIC ENGINE

233-7235 VALVE MECHANISM GP

S/N: G4D1-UP; CRS2300-UP

PART OF 176-3163 ENGINE AR-PRIMARY

SMCS-1102, 1121, 1123 **i02052224**

NOTE	REF NO	GRAPHIC REF	PART NUMBER	QTY	PART NAME 1 2 3 4 5 6 (PRODUCT LEVEL)	SEE PAGE
	1	1	**067-6095**	8	ROD	
	2	1	**138-2053**	8	TAPPET	
	3	1	**225-5963**	1	ROCKER ARM GP	
	4	1	**225-5625**	4	LEVER AS	
					(EACH INCLUDES)	
	5	1	**5B-9079**	1	NUT-JAM (3/8-24-THD)	
	6	1	**185-1546**	1	SCREW	
	7	1	**225-5634**	1	SHAFT AS	
	8	1	**225-5629**	2	PLUG	
	9	1	**225-5638**	3	SPRING	
	10	1	**225-5640**	4	LEVER AS	
					(EACH INCLUDES)	
	11	1	**5B-9079**	1	NUT-JAM (3/8-24-THD)	
	12	1	**185-1546**	1	SCREW	
	13	1	**225-5959**	2	CLIP	
	14	1	**225-5960**	1	BOLT (M8X1.25X60-MM)	
	15	1	**225-5961**	2	WASHER (26.7X34.32X0.38-MM THK)	
	16	1	**225-5962**	3	BOLT (M8X1.25X30-MM)	

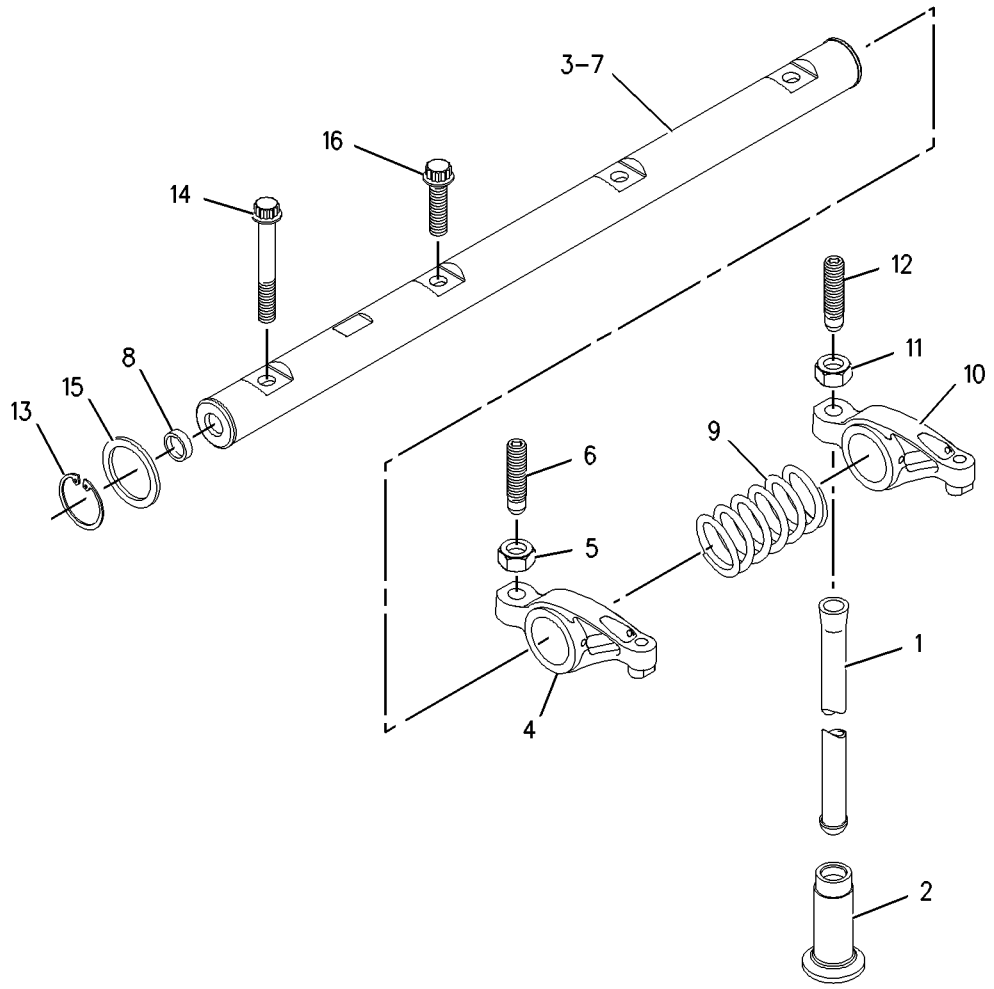

GRAPHIC #1 **<END>** g00910253

313-3362 VALVE MECHANISM GP

S/N: G4D1-UP; CRS2300-UP

PART OF 176-3163 ENGINE AR-PRIMARY

SMCS-1102, 1121, 1123 **i02811255**

NOTE	REF NO	GRAPHIC REF	PART NUMBER	QTY	PART NAME 1 2 3 4 5 6 (PRODUCT LEVEL)	SEE PAGE
Y	1	1	**225-5963**	1	ROCKER ARM GP	48

Y-SEPARATE ILLUSTRATION

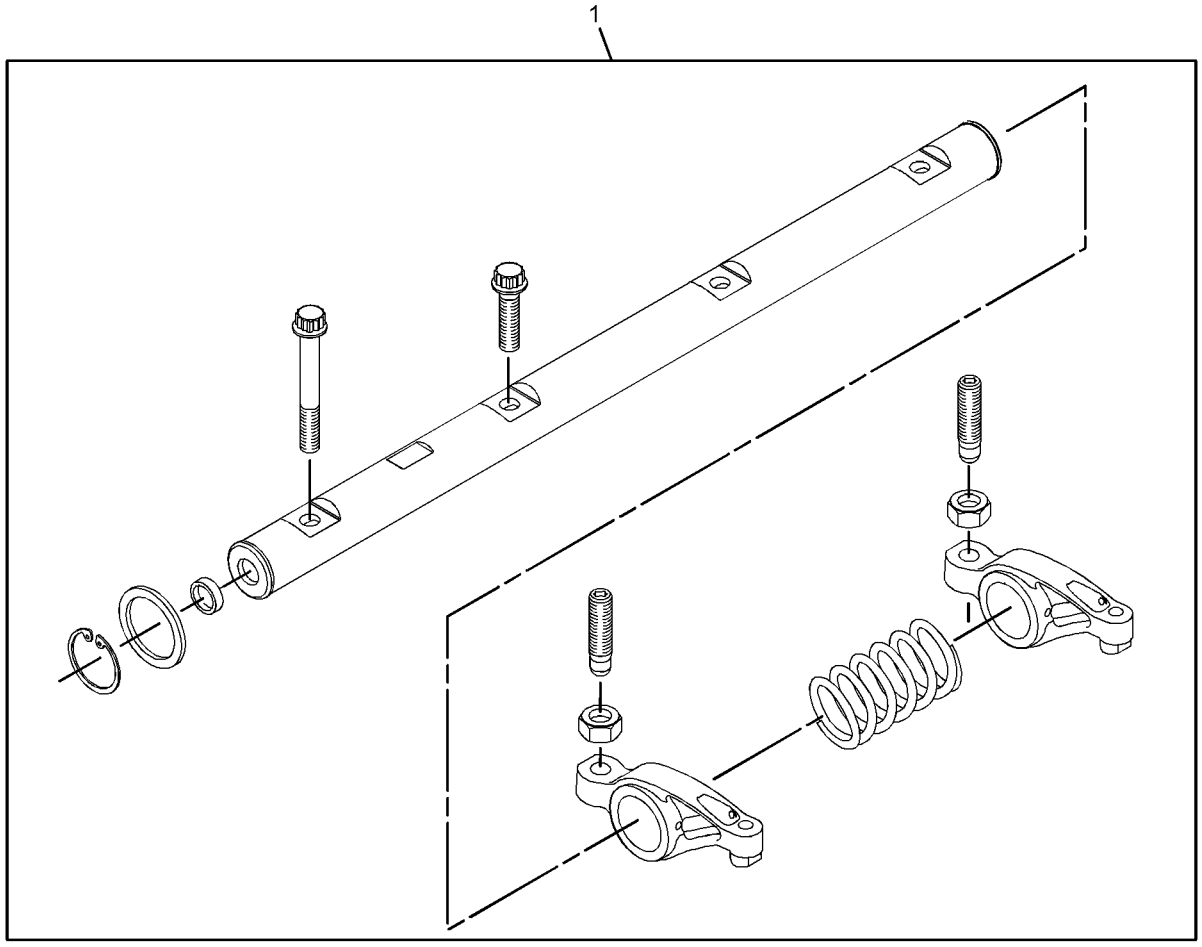

GRAPHIC #1 **<END>** g01419866

LUBRICATION SYSTEM

232-7378 FILTER GP-ENGINE OIL

S/N: G4D1-UP; CRS2300-UP

PART OF 176-3163 ENGINE AR-PRIMARY

SMCS-1306, 1308 **i02089626**

NOTE	REF NO	GRAPHIC REF	PART NUMBER	QTY	PART NAME 1 2 3 4 5 6 (PRODUCT LEVEL)	SEE PAGE
	1	1	**7W-2326**	1	FILTER AS-ENGINE OIL	

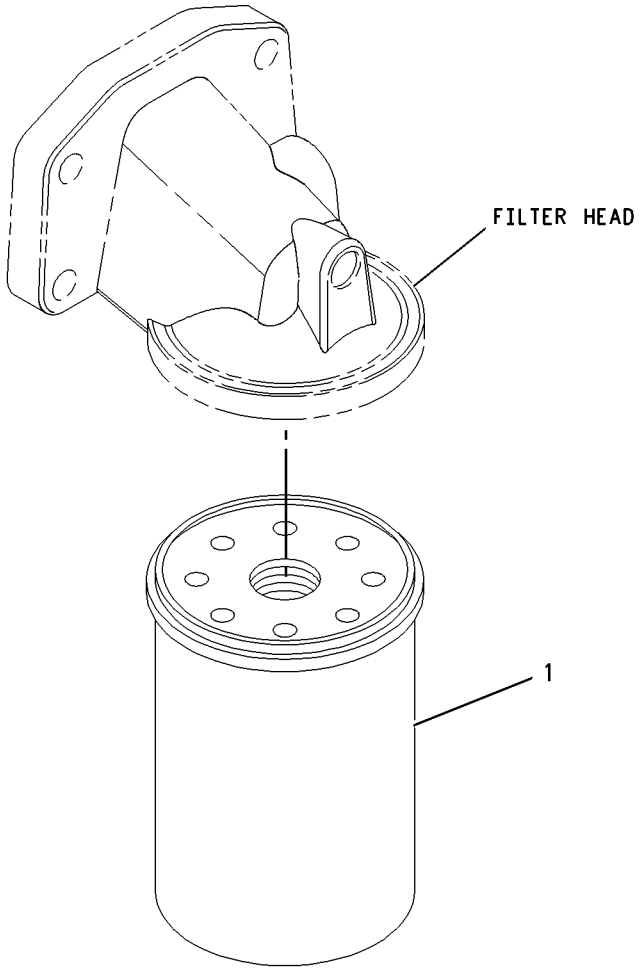

GRAPHIC #1 **<END>** g00950898

230-7578 PUMP GP-ENGINE OIL

S/N: G4D1-UP; CRS2300-UP

PART OF 176-3163 ENGINE AR-PRIMARY

SMCS-1304, 1315 **i02052081**

NOTE	REF NO	GRAPHIC REF	PART NUMBER	QTY	PART NAME 1 2 3 4 5 6 (PRODUCT LEVEL)	SEE PAGE
M	1	1	**100-4461**	5	BOLT (M10X1.50X50-MM)	
	2	1	**225-8329**	1	PUMP AS-ENGINE OIL	

M-METRIC PART

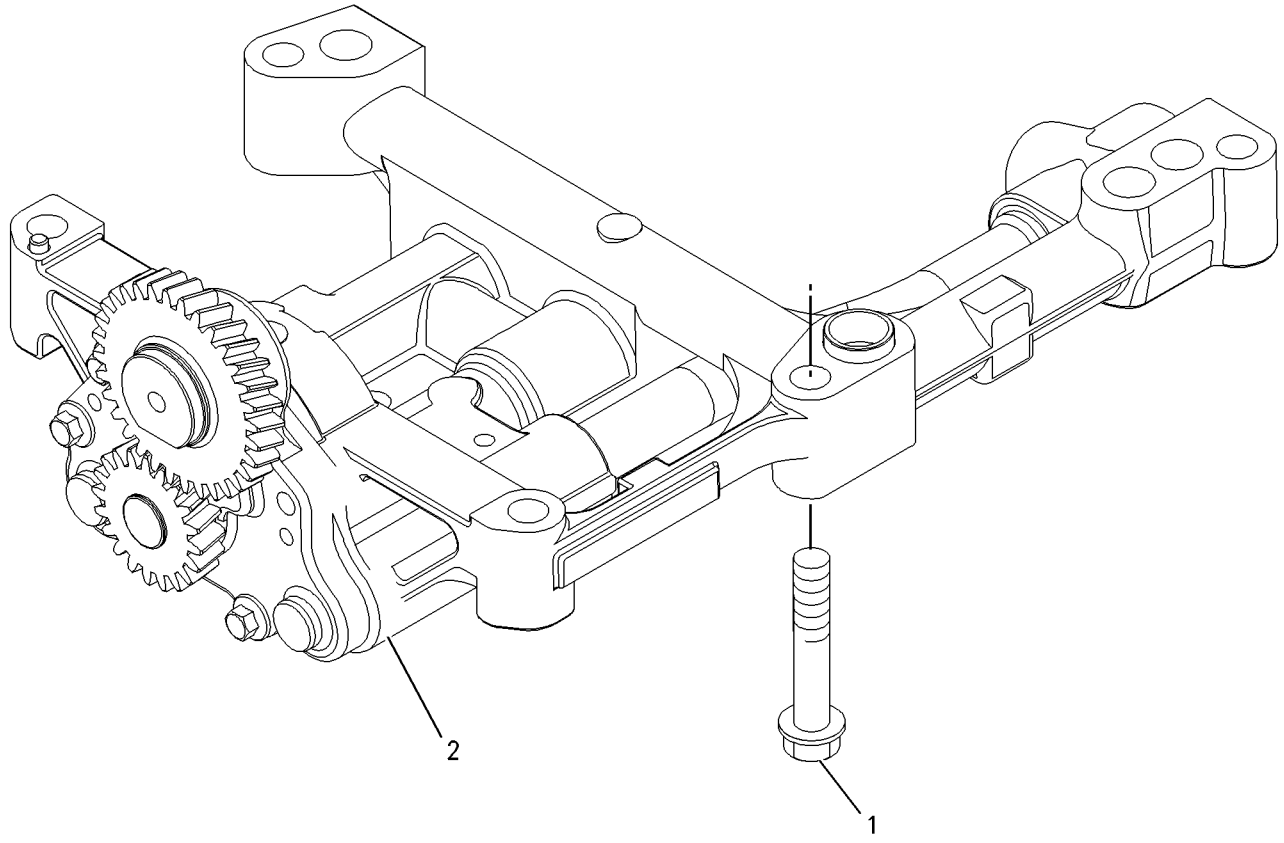

GRAPHIC #1 **<END>** g00911993

231-0038 CONNECTION GP-WATER

S/N: CRS2300-2714

PART OF 176-3163 ENGINE AR-PRIMARY

SMCS-1380 **i02135721**

NOTE	REF NO	GRAPHIC REF	PART NUMBER	QTY	PART NAME 1 2 3 4 5 6 (PRODUCT LEVEL)	SEE PAGE
M	1	1	**6I-0260**	1	BOLT (M8X1.25X25-MM)	
M	2	1	**100-3751**	1	BOLT (M8X1.25X65-MM)	
	3	1	**225-6907**	1	CONNECTION AS (WATER TEMPERATURE REGULATOR)	
	4	1	**225-6908**	1	REGULATOR-WATER TEMPERATURE	
	5	1	**252-1821**	1	SEAL-O-RING (WATER TEMPERATURE REGULATOR)	

M-METRIC PART

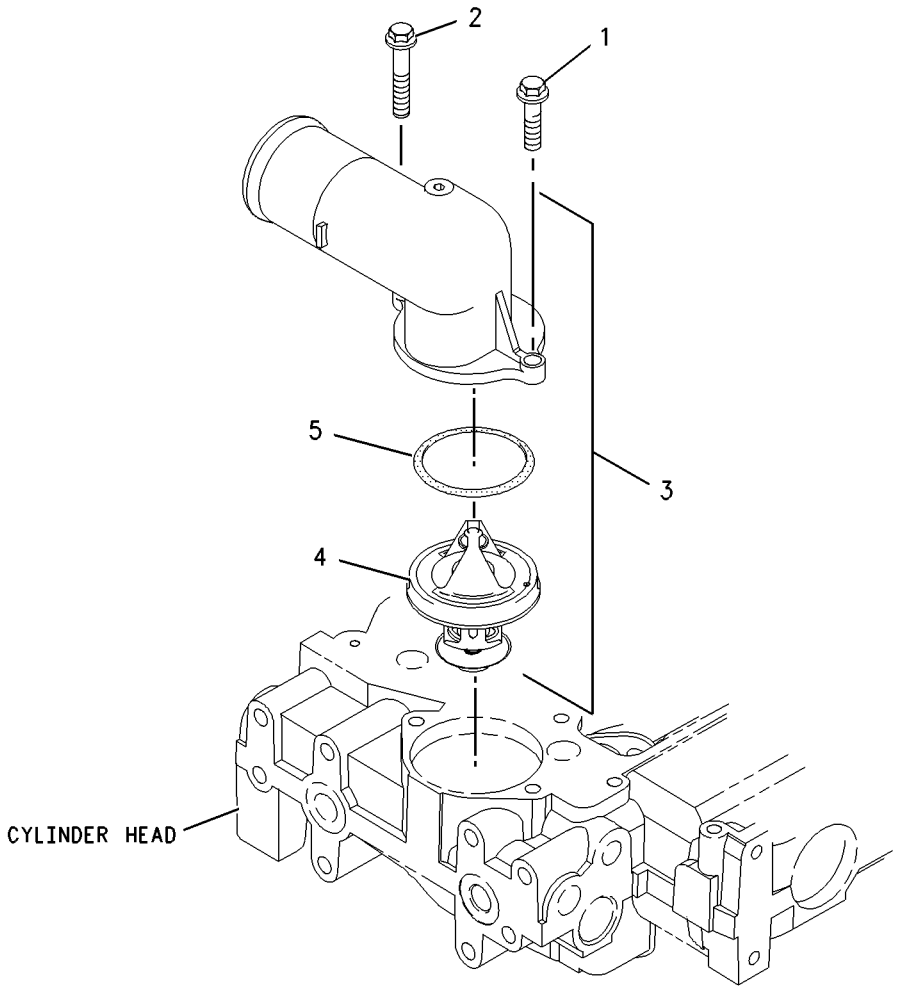

GRAPHIC #1 **<END>** g00956620

COOLING SYSTEM

231-0038 CONNECTION GP-WATER

S/N: G4D1-UP; CRS2715-UP

PART OF 176-3163 ENGINE AR-PRIMARY

SMCS-1380 **i02309391**

NOTE	REF NO	GRAPHIC REF	PART NUMBER	QTY	PART NAME 1 2 3 4 5 6 (PRODUCT LEVEL)	SEE PAGE
M	1	1	**6I-0260**	1	BOLT (M8X1.25X25-MM)	
M	2	1	**100-3751**	1	BOLT (M8X1.25X65-MM)	
	3	1	**254-2269**	1	CONNECTION GP-WATER (TEMPERATURE REGULATOR)	
	4	1	**254-2270**	1	SEAL-O-RING	

M-METRIC PART

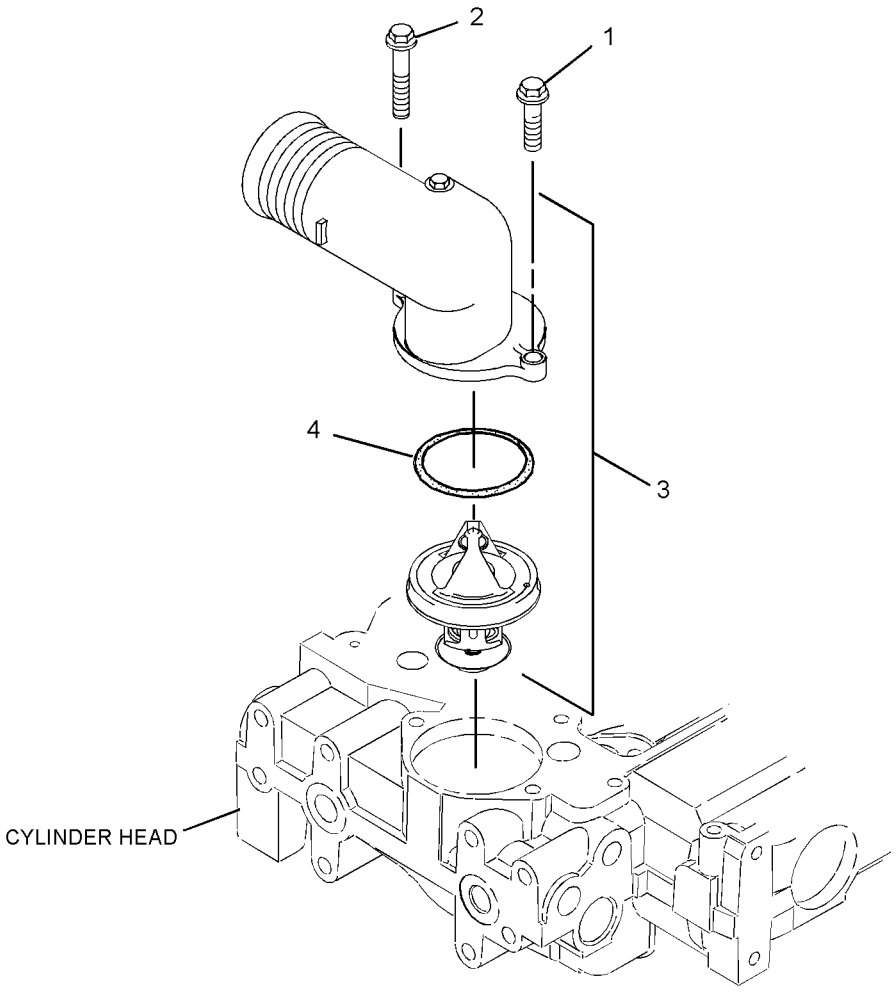

GRAPHIC #1 **<END>** g01156772

253-2472 COOLER GP-FLTR BASE & ENG OIL

S/N: G4D1-UP; CRS2300-UP
PART OF 176-3163 ENGINE AR-PRIMARY
TYPE 1

SMCS-1306, 1378 **i02578009**

NOTE	REF NO	GRAPHIC REF	PART NUMBER	QTY	PART NAME 1 2 3 4 5 6 (PRODUCT LEVEL)	SEE PAGE
	1	1	**6I-0572**	4	BOLT (M8X1.25X20-MM)	
M	2	1	**6I-0645**	4	BOLT (M8X1.25X25-MM)	
	3	1	**8T-7876**	1	SEAL-O-RING	
	4	1	**225-7941**	1	PLUG	
	5	1	**225-7944**	2	GASKET	
	6	1	**249-0974**	1	HEAD AS-OIL FILTER (ENGINE)	
	7	1	**232-3751**	1	PLATE	
	8	1	**233-7223**	1	COOLER AS-OIL (ENGINE)	
M	8A	1	**6I-0260**	10	BOLT (M8X1.25X25-MM)	
	8B	1	**6I-4374**	3	BOLT (M8X1.25X60-MM)	
M	8C	1	**101-3895**	4	BOLT (M8X1.25X35-MM)	
	8D	1	**225-6818**	2	SEAL	
	8E	1	**225-6820**	1	GASKET	
	8F	1	**233-7222**	1	COOLER-OIL (ENGINE)	

M-METRIC PART

253-2472 **COOLER GP-FLTR BASE & ENG OIL** *(contd.)* **i02578009**

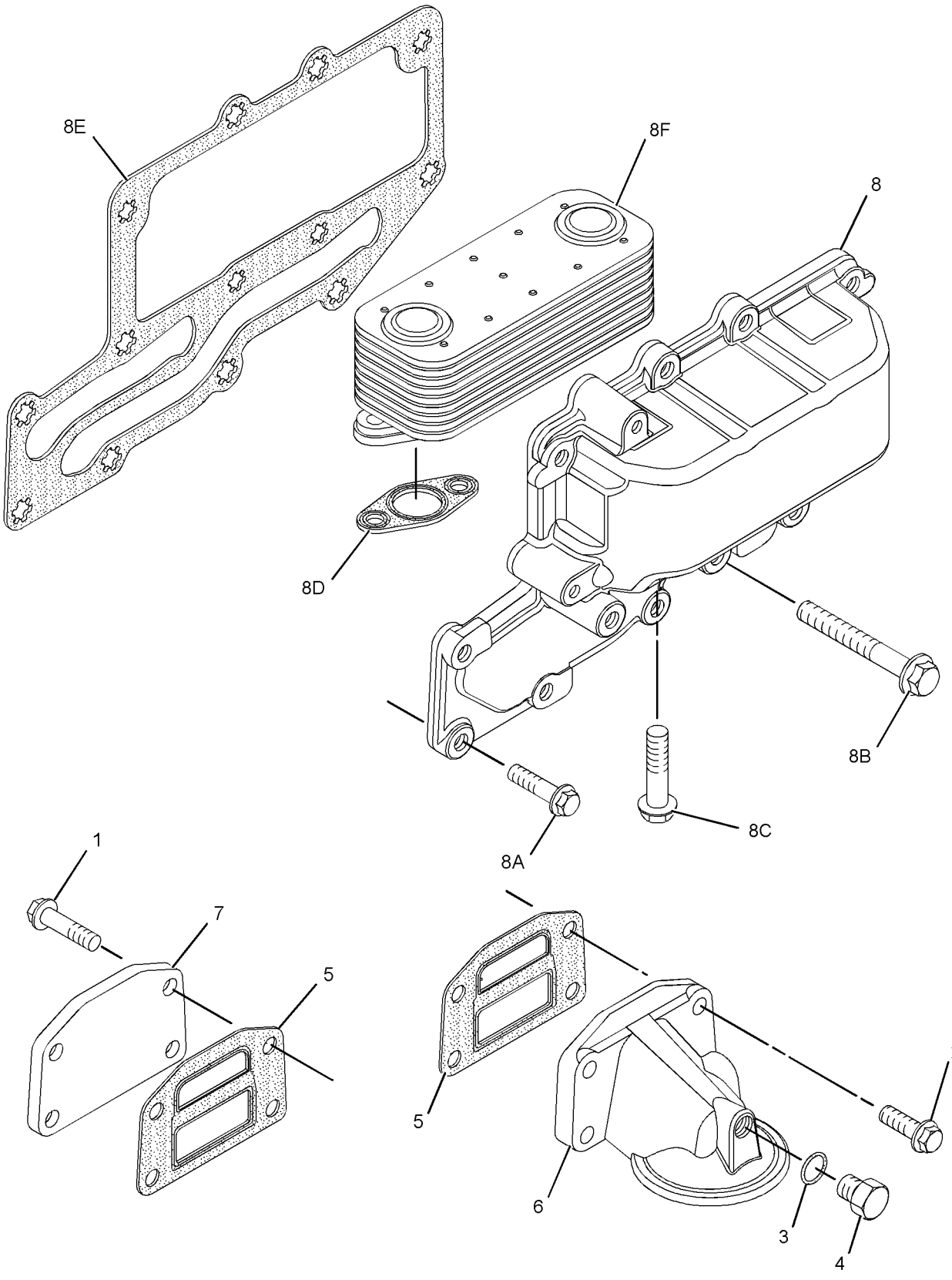

GRAPHIC #1 **<END>** g01300525

253-2472 COOLER GP-FLTR BASE & ENG OIL

S/N: G4D1-UP; CRS2300-UP
PART OF 176-3163 ENGINE AR-PRIMARY
TYPE 2

SMCS-1306, 1378 **i02625285**

NOTE	REF NO	GRAPHIC REF	PART NUMBER	QTY	PART NAME 1 2 3 4 5 6 (PRODUCT LEVEL)	SEE PAGE
	1	1	**6I-0572**	4	BOLT (M8X1.25X20-MM)	
M	2	1	**6I-0645**	4	BOLT (M8X1.25X25-MM)	
	3	1	**8T-7876**	1	SEAL-O-RING	
	4	1	**225-7941**	1	PLUG	
	5	1	**225-7944**	2	GASKET	
	6	1	**249-0974**	1	HEAD AS-OIL FILTER	
	7	1	**232-3751**	1	PLATE	
C	8	1	*296-5615*	1	COOLER AS-OIL (ENGINE)	
	8A	1	**6I-0218**	2	BOLT (M8X1.25X25-MM)	
M	8B	1	**6I-0260**	8	BOLT (M8X1.25X25-MM)	
	8C	1	**6I-4374**	3	BOLT (M8X1.25X60-MM)	
M	8D	1	**101-3895**	4	BOLT (M8X1.25X35-MM)	
	8E	1	**225-6818**	2	SEAL	
	8F	1	**233-7222**	1	COOLER-OIL (ENGINE)	
	8G	1	**272-2265**	1	SEAL	

C-CHANGE FROM PREVIOUS TYPE
M-METRIC PART

253-2472 **COOLER GP-FLTR BASE & ENG OIL** *(contd.)* **i02625285**

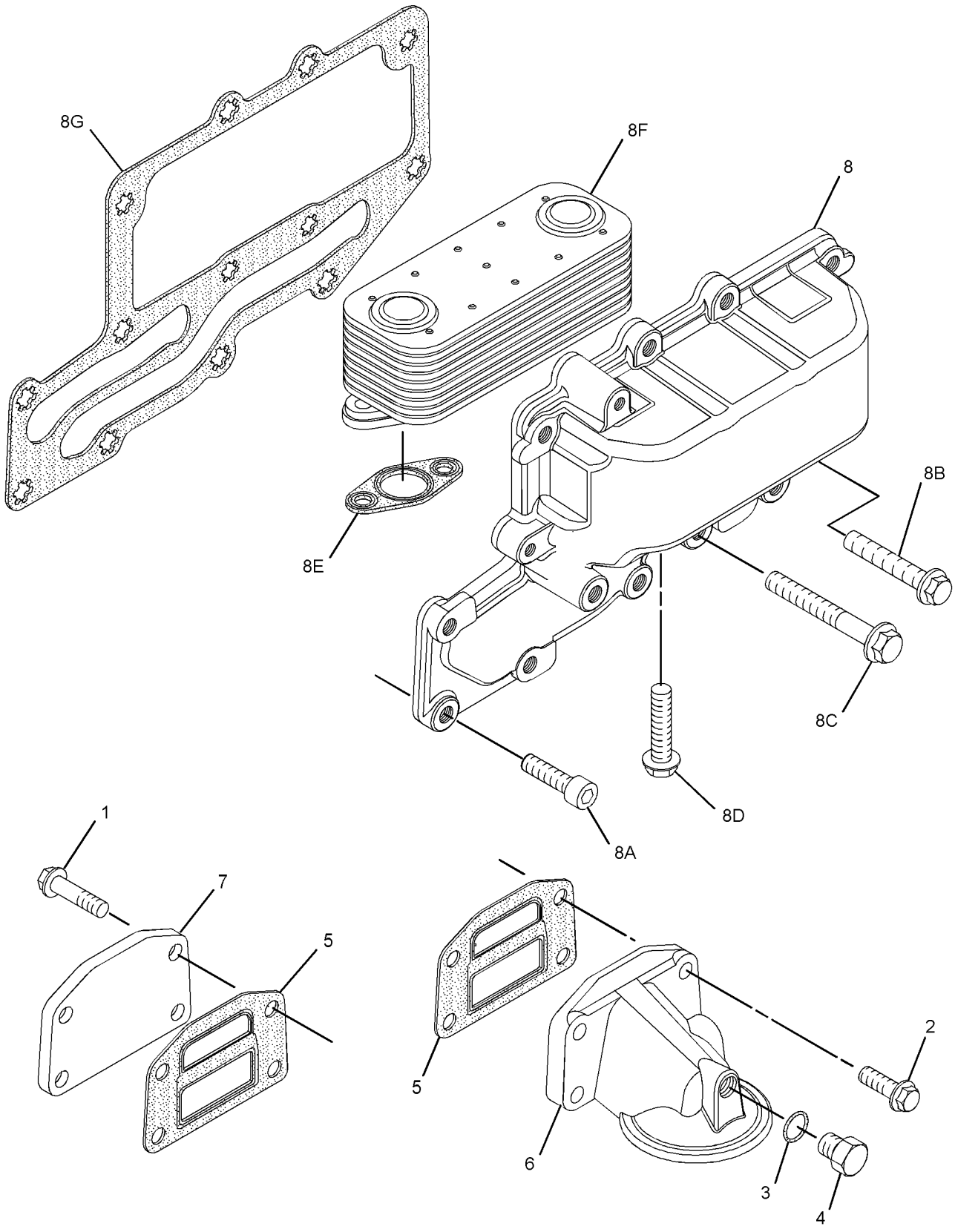

GRAPHIC #1 **<END>** g01318913

COOLING SYSTEM

153-4982 FAN GP-SUCTION

S/N: EAE1-UP
PART OF 249-5075 OPERATOR AR
AN ATTACHMENT
TYPE 1

SMCS-1356 **i02242537**

NOTE	REF NO	GRAPHIC REF	PART NUMBER	QTY	PART NAME 1 2 3 4 5 6 (PRODUCT LEVEL)	SEE PAGE
	1	1	**5P-4116**	4	WASHER-HARD (8.8X20.5X2-MM THK)	
	2	1	**259-0513**	2	GUARD AS-FAN	
	3	1	**130-3881**	1	PULLEY-FAN	
	4	1	**142-3388**	1	SPACER-FAN	
	5	1	**142-3391**	1	SPIDER AS (9-BLADE)	
M	6	1	**153-3061**	4	BOLT (M8X1.25X130-MM)	
	7	1	**8T-4224**	6	WASHER-HARD (8.8X16X2-MM THK)	
M	8	1	**8T-4908**	6	BOLT (M8X1.25X25-MM)	

M-METRIC PART

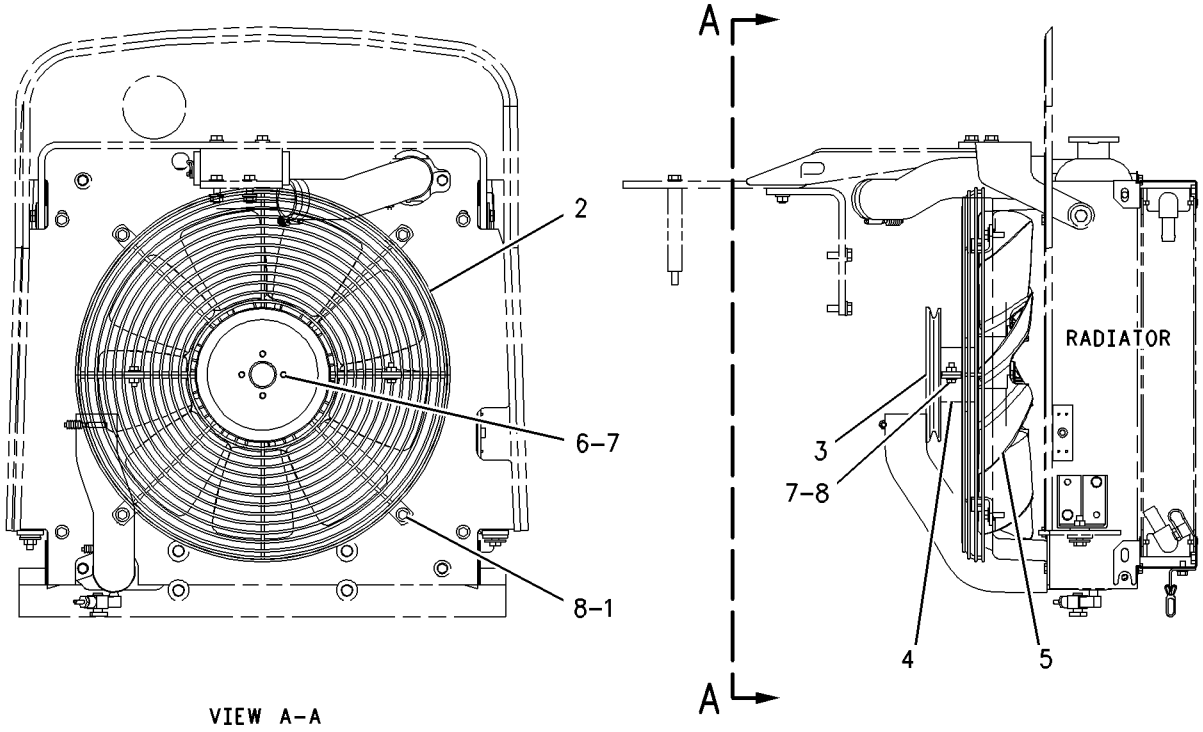

VIEW A-A

GRAPHIC #1 **<END>** g00897351

153-4982 FAN GP-SUCTION

S/N: EAE1-UP
PART OF 249-5075 OPERATOR AR
AN ATTACHMENT
TYPE 2

SMCS-1356 **i02617281**

NOTE	REF NO	GRAPHIC REF	PART NUMBER	QTY	PART NAME 1 2 3 4 5 6 (PRODUCT LEVEL)	SEE PAGE
	1	1	**5P-4116**	4	WASHER-HARD (8.8X20.5X2-MM THK)	
C	2	1	**274-7855**	2	GUARD AS-FAN	
					(EACH INCLUDES)	
M		1	**8T-3612**	1	NUT-WELD (M8X1.25-THD)	
	3	1	**130-3881**	1	PULLEY-FAN	
	4	1	**142-3388**	1	SPACER-FAN	
	5	1	**142-3391**	1	SPIDER AS (9-BLADE)	
M	6	1	**153-3061**	4	BOLT (M8X1.25X130-MM)	
	7	1	**8T-4224**	6	WASHER-HARD (8.8X16X2-MM THK)	
M	8	1	**8T-4908**	6	BOLT (M8X1.25X25-MM)	

C-CHANGE FROM PREVIOUS TYPE
M-METRIC PART

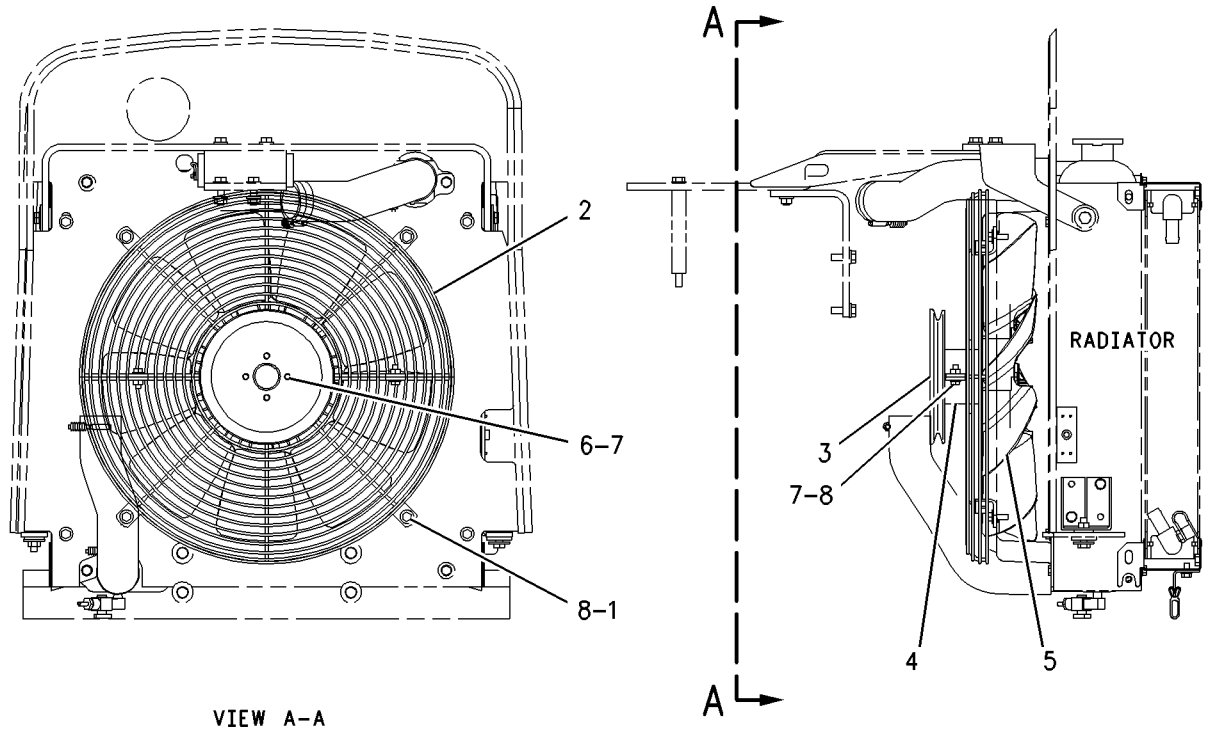

VIEW A-A

GRAPHIC #1 **<END>** g00897351

COOLING SYSTEM

153-5030 FAN GP-SUCTION

S/N: EAE1-UP
PART OF 229-8706, 236-2234, 249-5076 OPERATOR AR
AN ATTACHMENT
TYPE 1

SMCS-1356 **i02242534**

NOTE	REF NO	GRAPHIC REF	PART NUMBER	QTY	PART NAME 1 2 3 4 5 6 (PRODUCT LEVEL)	SEE PAGE
	1	1	**5P-4116**	4	WASHER-HARD (8.8X20.5X2-MM THK)	
	2	1	**259-0513**	2	GUARD AS-FAN	
	3	1	**142-3388**	1	SPACER-FAN	
	4	1	**142-3391**	1	SPIDER AS (9-BLADE)	
M	5	1	**153-3061**	4	BOLT (M8X1.25X130-MM)	
	6	1	**8T-4224**	6	WASHER-HARD (8.8X16X2-MM THK)	
M	7	1	**8T-4908**	6	BOLT (M8X1.25X25-MM)	

M-METRIC PART

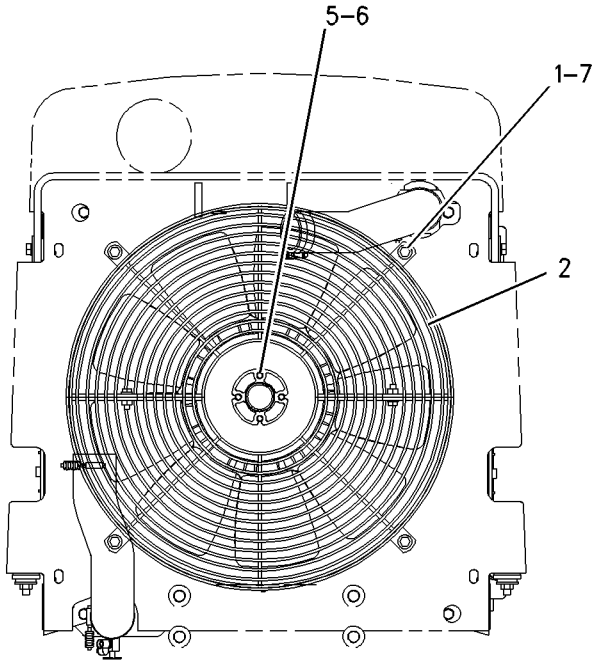

VIEW A–A

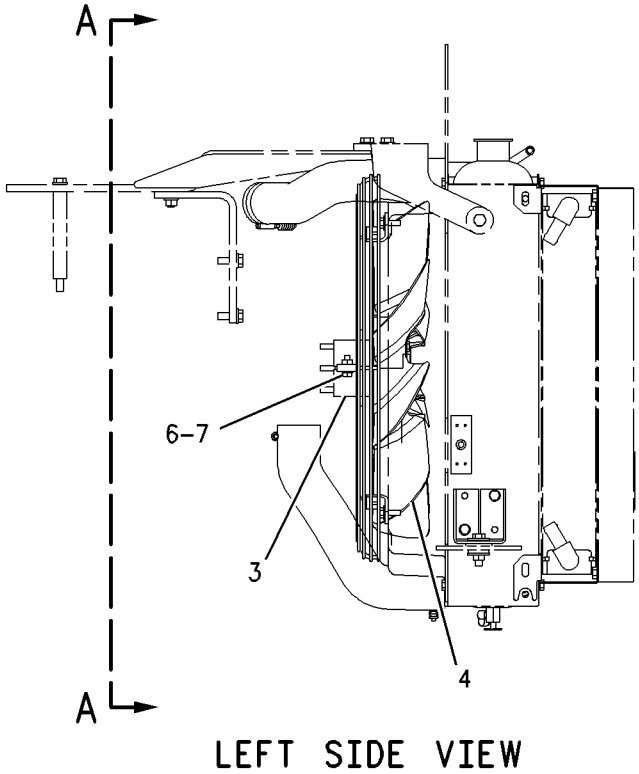

LEFT SIDE VIEW

GRAPHIC #1 **<END>** g00893362

COOLING SYSTEM

153-5030 FAN GP-SUCTION

S/N: EAE1-UP
PART OF 229-8706, 236-2234, 249-5076 OPERATOR AR
AN ATTACHMENT
TYPE 2

SMCS-1356 **i02654700**

NOTE	REF NO	GRAPHIC REF	PART NUMBER	QTY	PART NAME 1 2 3 4 5 6 (PRODUCT LEVEL)	SEE PAGE
	1	1	**5P-4116**	4	WASHER-HARD (8.8X20.5X2-MM THK)	
C	2	1	**274-7855**	2	GUARD AS-FAN	
	3	1	**142-3388**	1	SPACER-FAN	
	4	1	**142-3391**	1	SPIDER AS (9-BLADE)	
M	5	1	**153-3061**	4	BOLT (M8X1.25X130-MM)	
	6	1	**8T-4224**	6	WASHER-HARD (8.8X16X2-MM THK)	
M	7	1	**8T-4908**	6	BOLT (M8X1.25X25-MM)	

C-CHANGE FROM PREVIOUS TYPE
M-METRIC PART

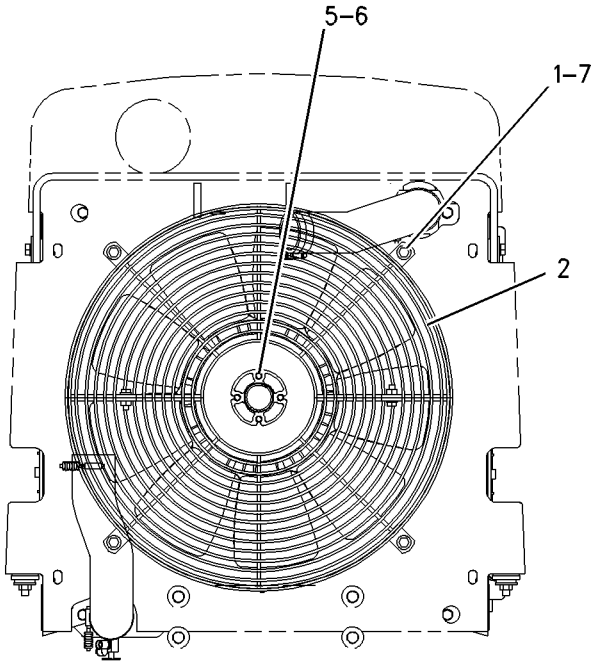

VIEW A-A

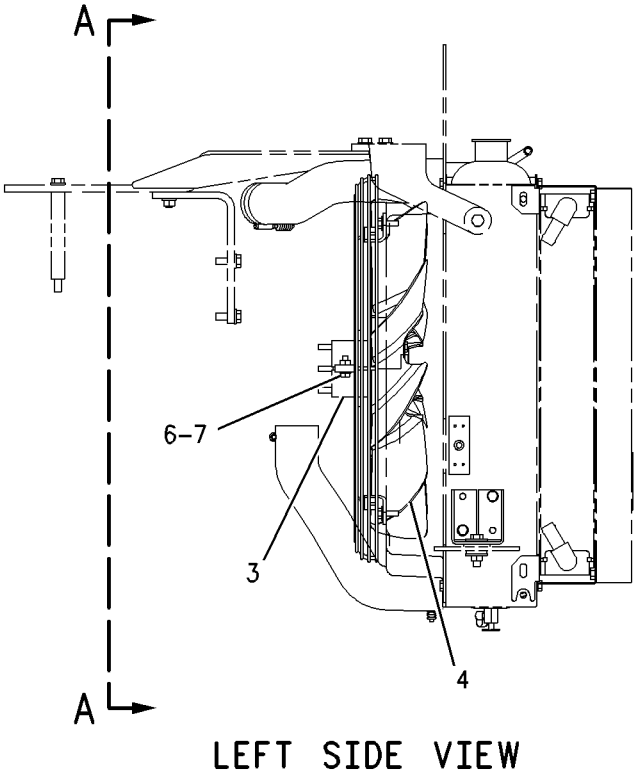

LEFT SIDE VIEW

GRAPHIC #1 **<END>** g00893362

COOLING SYSTEM

230-7355 PUMP GP-WATER

S/N: G4D1-UP; CRS2300-UP

PART OF 176-3163 ENGINE AR-PRIMARY

SMCS-1361 **i02837537**

NOTE	REF NO	GRAPHIC REF	PART NUMBER	QTY	PART NAME 1 2 3 4 5 6 (PRODUCT LEVEL)	SEE PAGE
M	1	1	**6I-0217**	2	BOLT (M8X1.25X20-MM)	
M	2	1	**6I-0254**	2	BOLT (M8X1.25X30-MM)	
M	3	1	**100-3751**	5	BOLT (M8X1.25X65-MM)	
	4	1	**113-8129**	2	BOLT (M8X75-MM)	
	5	1	**225-7741**	1	CONNECTION AS (WATER PUMP)	
	6	1	**225-7738**	1	SEAL-O-RING	
	7	1	**225-7739**	1	SEAL-O-RING	
	8	1	**225-8016**	1	PUMP GP-WATER	
		1	**247-0144**	1	KIT-WATER PUMP	
					(INCLUDES GASKETS)	
	9	1	**225-8019**	1	GASKET	

M-METRIC PART

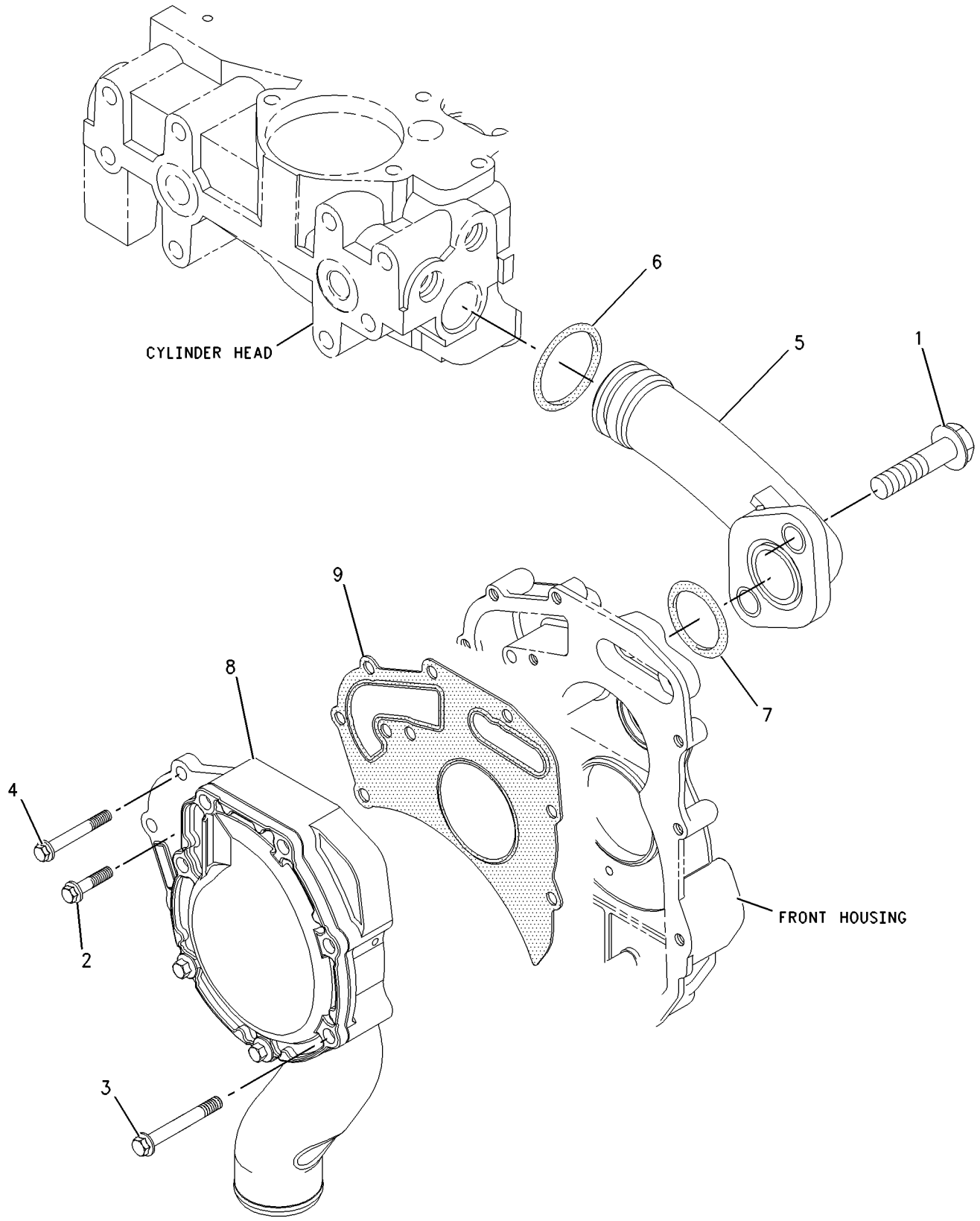

GRAPHIC #1 **<END>** g00912411

186-2725 RADIATOR & HYD OIL COOLER GP

S/N: EAE1-UP

PART OF 226-6025 RADIATOR & HYD OIL COOLER GP

SMCS-1351, 1353, 1374 **i02088937**

NOTE	REF NO	GRAPHIC REF	PART NUMBER	QTY	PART NAME 1 2 3 4 5 6 (PRODUCT LEVEL)	SEE PAGE
	1	1	**006-8865**	1	CAP-RADIATOR	
	2	1	**186-2723**	1	RADIATOR AS	
	3	1	**186-2724**	1	COOLER AS-HYDRAULIC OIL	
M	4	1	**8T-4200**	4	BOLT (M8X1.25X16-MM)	
	5	1	**8T-4224**	4	WASHER-HARD (8.8X16X2-MM THK)	

M-METRIC PART

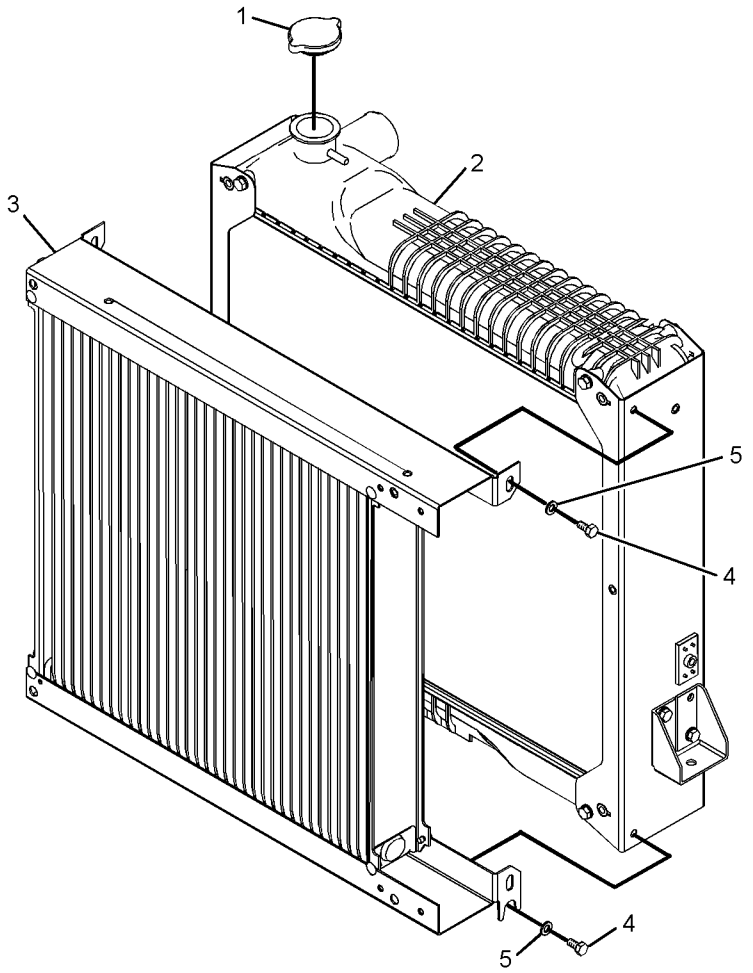

GRAPHIC #1 **<END>** g01065856

COOLING SYSTEM

226-6025 RADIATOR & HYD OIL COOLER GP

S/N: EAE1-UP

PART OF 227-8418 INSTALLATION AR-ENGINE

SMCS-1351, 1353, 1374 **i02898361**

NOTE	REF NO	GRAPHIC REF	PART NUMBER	QTY	PART NAME 1 2 3 4 5 6 (PRODUCT LEVEL)	SEE PAGE
	1	1	**2W-9710**	2	MOUNT AS	
	2	1	**6N-6984**	2	MOUNT-RUBBER	
	3	1	**7X-7655**	1	VALVE-DRAIN (RADIATOR)	
	4	1	**8C-3446**	1	VALVE-FLUID SAMPLING (HYDRAULIC OIL)	
	5	1	**8C-3451**	1	CAP-DUST	
	6	1	**8T-4984**	2	CLAMP-HOSE	
	7	1	**8T-6703**	2	CLAMP-HOSE	
	8	1	**9C-6977**	1	TUBE	
	9	1	**069-3686**	1	CONNECTOR	
Y	10	1	*186-2725*	1	RADIATOR & HYD OIL COOLER GP	68
	11	1	**187-3953**	1	SHROUD AS (RADIATOR)	
	12	1	**188-0948**	1	MOUNT AS (LH)	
		1	**7T-1099**	2	LINK	
	13	1	**188-0949**	1	MOUNT AS (RH)	
	14	1	**195-6280**	1	BRACKET	
	15	1	**211-3086**	1	SEAL	
	16	1	**226-5925**	1	HOSE-RADIATOR (UPPER)	
	17	1	**227-0140**	1	HOSE-RADIATOR (LOWER)	
	18	1	**230-1381**	1	BRACKET	
	19	1	**239-4210**	1	BRACKET AS	
	20	1	**239-4211**	1	BRACKET	
	21	1	**241-5814**	1	BRACKET	
	22	1	**3J-7354**	1	SEAL-O-RING	
	23	1	**5P-4116**	6	WASHER-HARD (8.8X20.5X2-MM THK)	
	24	1	**7J-8611**	1	ELBOW-PIPE	
	25	1	**7X-0603**	2	WASHER-HARD (9.9X35X2.5-MM THK)	
M	26	1	**7X-2536**	4	BOLT (M8X1.25X14-MM)	
M	27	1	**7X-2538**	1	BOLT (M8X1.25X100-MM)	
M	28	1	**7X-2553**	4	BOLT (M16X2X40-MM)	
	29	1	**7X-7729**	10	WASHER (11X25X3-MM THK)	
	30	1	**8T-4121**	7	WASHER-HARD (11X21X2.5-MM THK)	
	31	1	**8T-4122**	4	WASHER-HARD (17X32X3.5-MM THK)	
M	32	1	**8T-4133**	8	NUT (M10X1.5-THD)	
M	33	1	**8T-4185**	2	BOLT (M10X1.5X50-MM)	
M	34	1	**8T-4186**	6	BOLT (M10X1.5X40-MM)	
M	35	1	**8T-4195**	4	BOLT (M10X1.5X30-MM)	
M	36	1	**8T-4200**	2	BOLT (M8X1.25X16-MM)	
	37	1	**8T-4222**	4	WASHER-PLATED (11X32X2.5-MM THK)	
	38	1	**8T-4224**	1	WASHER-HARD (8.8X16X2-MM THK)	
M	39	1	**8T-4908**	2	BOLT (M8X1.25X25-MM)	
M	40	1	**9X-6032**	1	BOLT-SOCKET HEAD (M10X1.5X30-MM)	
E	41	1	**5P-1420**		HOSE (80-CM)	
BE	42	1	**128-8423**		SEAL	
BE	43	1	**201-1601**		SEAL	

B-USE AS REQUIRED
E-ORDER BY THE CENTIMETER
M-METRIC PART
Y-SEPARATE ILLUSTRATION

226-6025 **RADIATOR & HYD OIL COOLER GP** *(contd.)* **i02898361**

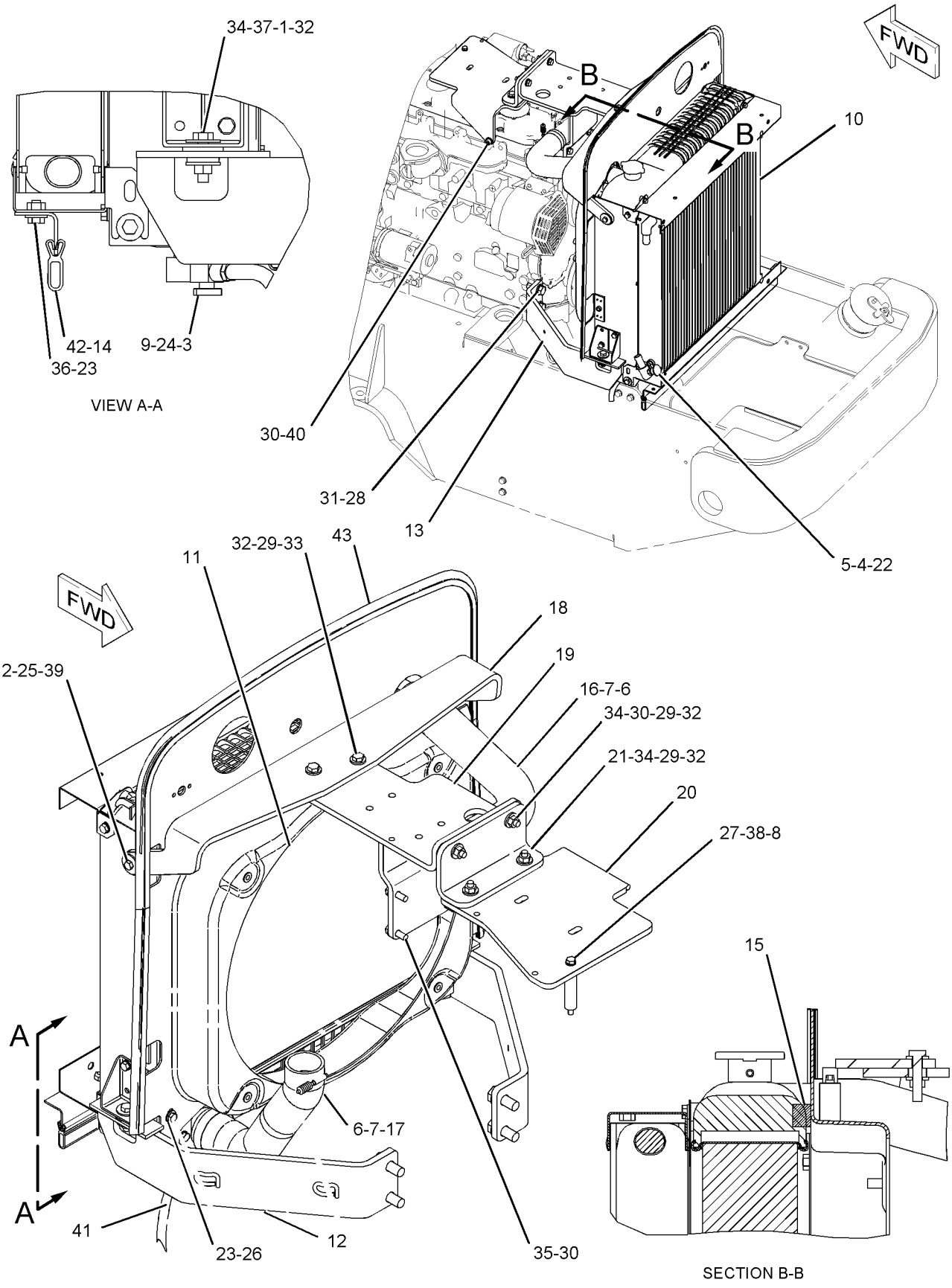

GRAPHIC #1 **<END>** g01085171

228-1665 RECOVERY GP-COOLANT

S/N: EAE1-UP

PART OF 227-8418 INSTALLATION AR-ENGINE

SMCS-1354 **i02897060**

NOTE	REF NO	GRAPHIC REF	PART NUMBER	QTY	PART NAME 1 2 3 4 5 6 (PRODUCT LEVEL)	SEE PAGE
	1	1	**1P-4278**	2	CLAMP-HOSE	
	2	1	**3S-2093**	3	STRAP-CABLE	
	3	1	**228-5108**	1	TANK GP-COOLANT	
		1	**229-3469**	1	CAP AS-VENTED (COOLANT RECOVERY)	
	4	1	**4H-2558**	1	GROMMET	
	5	1	**5P-4115**	4	WASHER-HARD (7.2X19X2-MM THK)	
	6	1	**6K-8178**	2	CLIP	
M	7	1	**6V-7357**	4	BOLT (M6X1X25-MM)	
E	8	1	**5P-1420**		HOSE (157-CM)	

E-ORDER BY THE CENTIMETER
M-METRIC PART

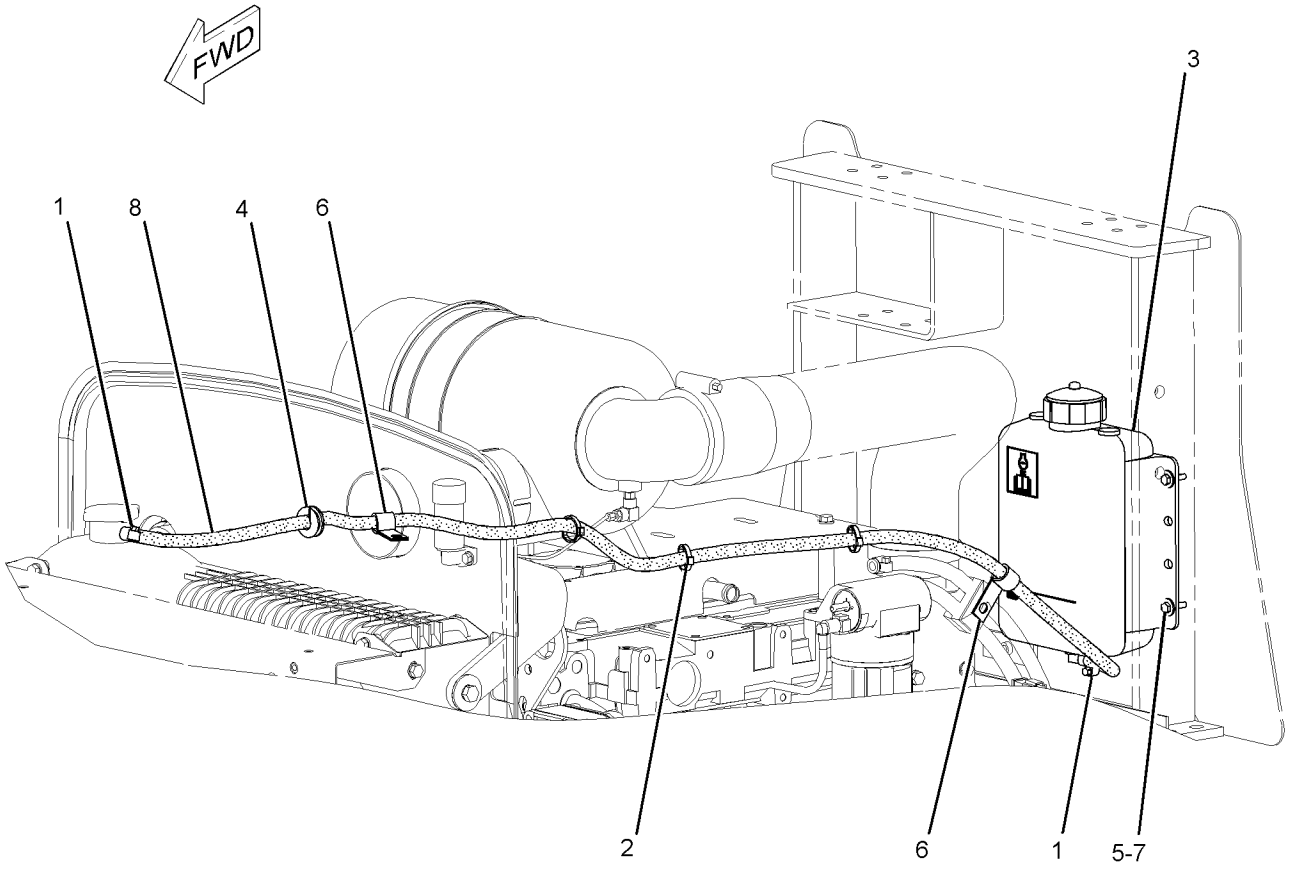

GRAPHIC #1 **<END>** g01034627

AIR INLET AND EXHAUST SYSTEM

180-3112 AIR CLEANER GP

S/N: EAE1-UP

PART OF 226-5592 AIR CLEANER GP

SMCS-1051, 1054 **i02138873**

NOTE	REF NO	GRAPHIC REF	PART NUMBER	QTY	PART NAME 1 2 3 4 5 6 (PRODUCT LEVEL)	SEE PAGE
	1	1	**110-6331**	1	FILTER ELEMENT AS-AIR (SECONDARY)	
	2	1	**110-6326**	1	FILTER ELEMENT AS-AIR (PRIMARY)	
	3	1	**112-9717**	1	VALVE-VACUATOR	

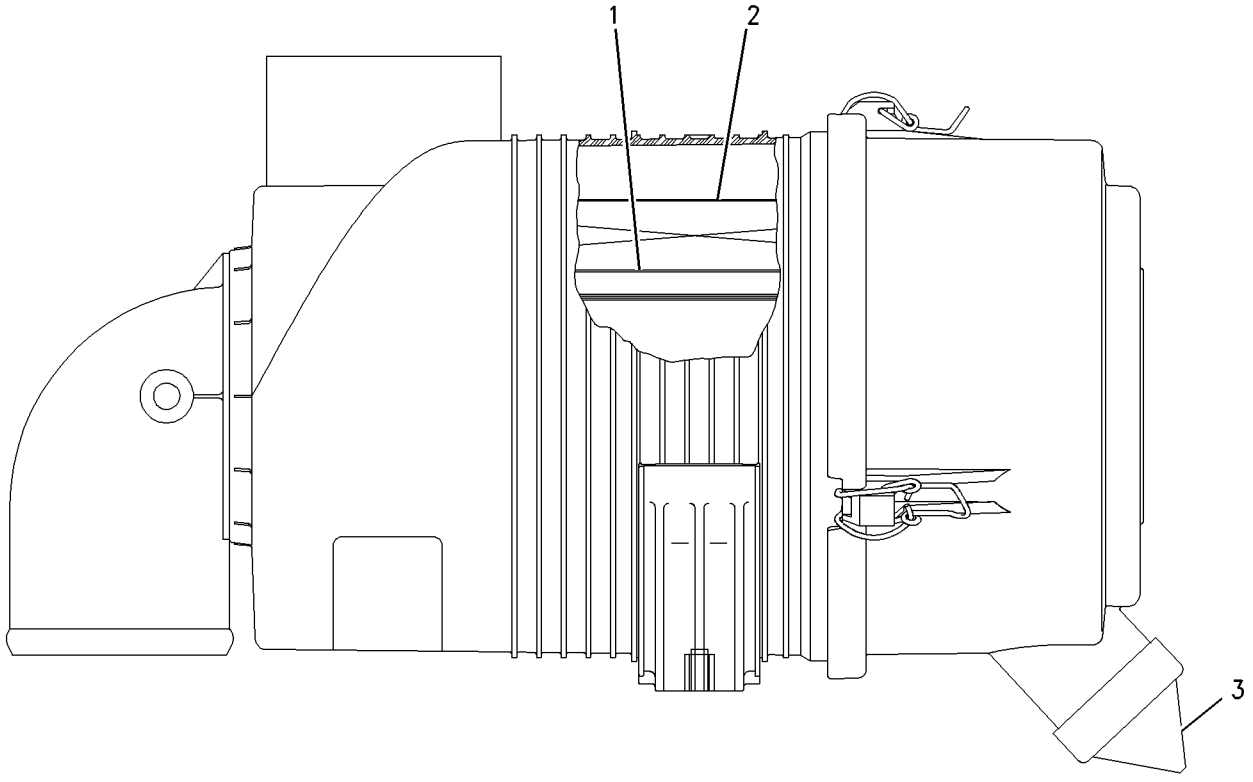

GRAPHIC #1 **<END>** g00837124

AIR INLET AND EXHAUST SYSTEM

226-5592 AIR CLEANER GP

S/N: EAE1-UP

PART OF 227-8418 INSTALLATION AR-ENGINE

SMCS-1051, 1054 **i02135750**

NOTE	REF NO	GRAPHIC REF	PART NUMBER	QTY	PART NAME 1 2 3 4 5 6 (PRODUCT LEVEL)	SEE PAGE
	1	1	**1P-6886**	1	ADAPTER	
	2	1	**5L-3233**	1	FITTING	
	3	1	**5P-2948**	2	FITTING AS (AIR FILTER)	
					(EACH INCLUDES)	
		1	**4K-9821**	1	SLEEVE	
		1	**4K-9822**	1	NUT (5/16-24-THD)	
	4	1	**6I-2933**	1	INDICATOR GP-AIR FILTER CHANGE	
	5	1	**8T-4985**	1	CLAMP-HOSE	
	6	1	**9X-2201**	1	CLAMP-HOSE	
Y	7	1	**142-0102**	1	EXTENSION GP-AIR CLEANER	76
Y	8	1	**180-3112**	1	AIR CLEANER GP	72
	9	1	**226-5593**	1	HOSE-AIR	
M	10	1	**5C-2890**	2	NUT (M6X1-THD)	
	11	1	**8B-4884**	1	ELBOW	
M	12	1	**8T-4138**	2	BOLT (M6X1X20-MM)	
	13	1	**8T-4205**	4	WASHER-HARD (7.2X14.5X2-MM THK)	
	14		**8T-4224**	4	WASHER-HARD (8.8X16X2-MM THK)	
M	15	1	**8T-4908**	4	BOLT (M8X1.25X25-MM)	
D	16	1	**5P-5630**		TUBE (0.3M)	

D-ORDER BY THE METER
M-METRIC PART
Y-SEPARATE ILLUSTRATION

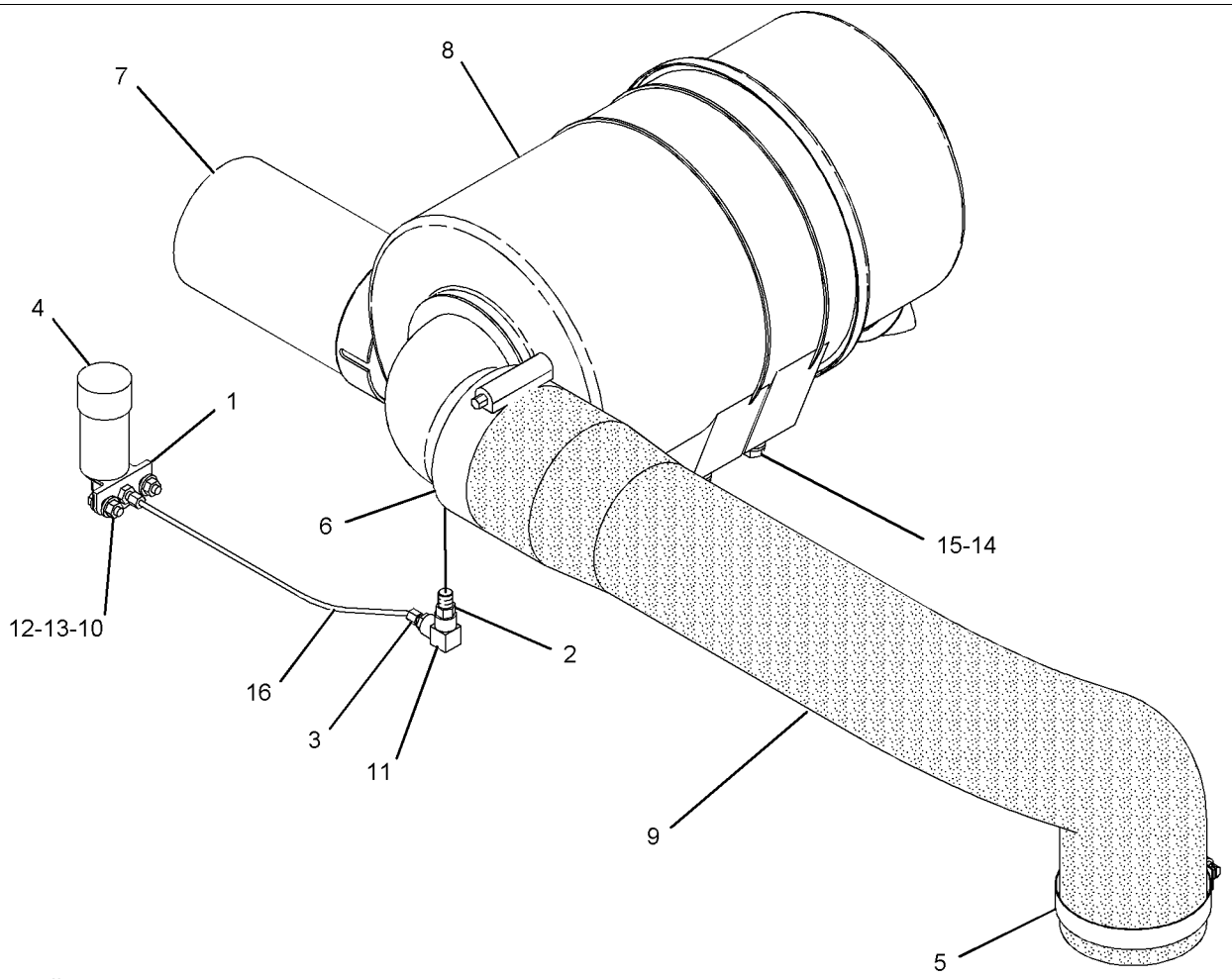

GRAPHIC #1 **<END>** g01034700

AIR INLET AND EXHAUST SYSTEM

306-1639 CONNECTION GP-INLET

S/N: G4D1-UP; CRS2300-UP

PART OF 176-3163 ENGINE AR-PRIMARY

SMCS-1087 **i02658459**

NOTE	REF NO	GRAPHIC REF	PART NUMBER	QTY	PART NAME 1 2 3 4 5 6 (PRODUCT LEVEL)	SEE PAGE
	1	1	**6I-0572**	8	BOLT (M8X1.25X20-MM)	
M	2	1	**6I-0645**	4	BOLT (M8X1.25X25-MM)	
	3	1	**114-2579**	3	GASKET	
	4	1	**115-1162**	3	PLATE	
	5	1	**238-8289**	1	PIPE AS	
	5A	1	**238-8288**	1	GASKET-INLET	
	6	1	**251-6241**	4	BOLT-SPECIAL	

M-METRIC PART

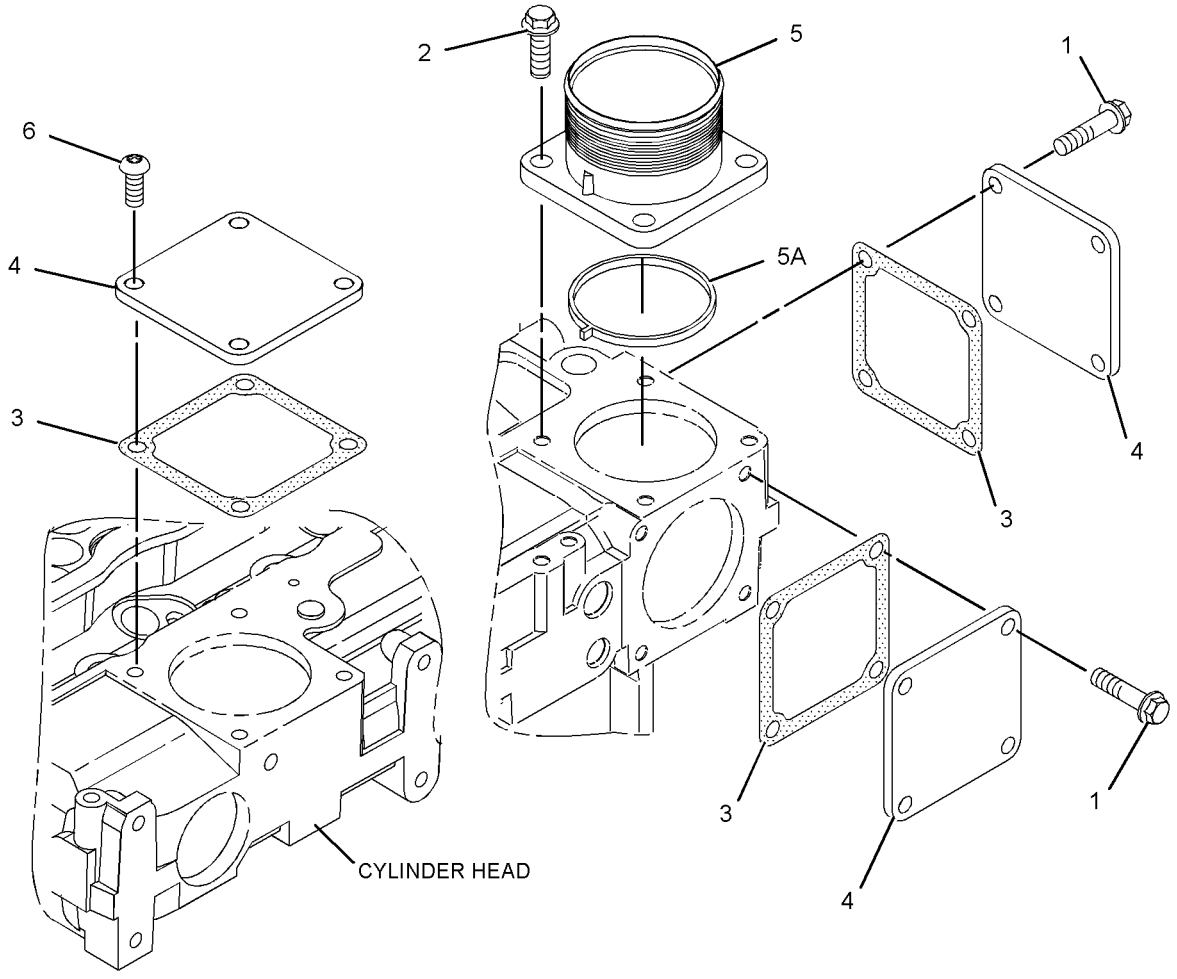

GRAPHIC #1 **<END>** g01119191

AIR INLET AND EXHAUST SYSTEM

235-8175 ELBOW GP-EXHAUST

S/N: G4D1-UP; CRS2300-UP

PART OF 176-3163 ENGINE AR-PRIMARY

SMCS-1061 **i02089622**

NOTE	REF NO	GRAPHIC REF	PART NUMBER	QTY	PART NAME 1 2 3 4 5 6 (PRODUCT LEVEL)	SEE PAGE
	1	1	**6I-0364**	3	STUD (M10X1.5X30-MM)	
	2	1	**6I-0563**	3	NUT	
	3	1	**102-2100**	1	ELBOW	
	4	1	**6I-4039**	1	GASKET	

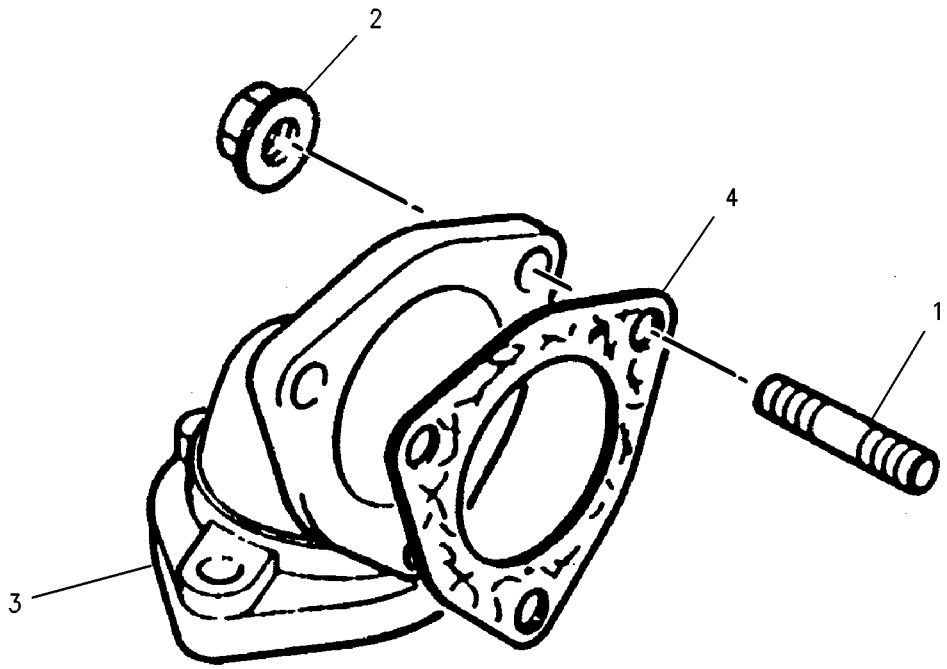

GRAPHIC #1 **<END>** g00567997

AIR INLET AND EXHAUST SYSTEM

142-0102 EXTENSION GP-AIR CLEANER

S/N: EAE1-UP

PART OF 226-5592 AIR CLEANER GP

SMCS-1051 **i00841112**

NOTE	REF NO	GRAPHIC REF	PART NUMBER	QTY	PART NAME 1 2 3 4 5 6 (PRODUCT LEVEL)	SEE PAGE
	1	1	**077-7254**	1	CLAMP	

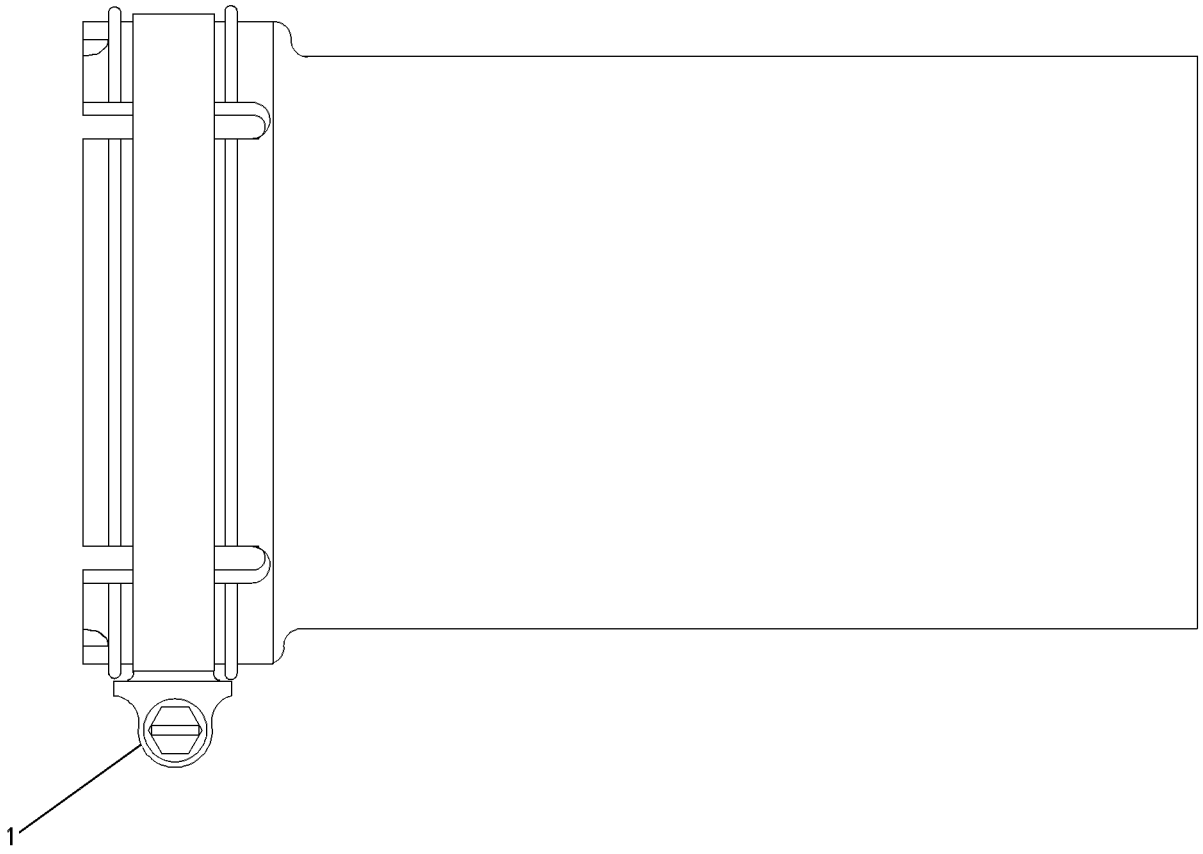

GRAPHIC #1 **<END>** g00421507

231-0292 MANIFOLD GP-EXHAUST

S/N: G4D1-UP; CRS2300-UP

PART OF 176-3163 ENGINE AR-PRIMARY

SMCS-1059 **i02163487**

NOTE	REF NO	GRAPHIC REF	PART NUMBER	QTY	PART NAME 1 2 3 4 5 6 (PRODUCT LEVEL)	SEE PAGE
	1	1	**174-9638**	8	BOLT	
	2	1	**225-8536**	1	GASKET	
	3	1	**255-3450**	1	MANIFOLD-EXHAUST	

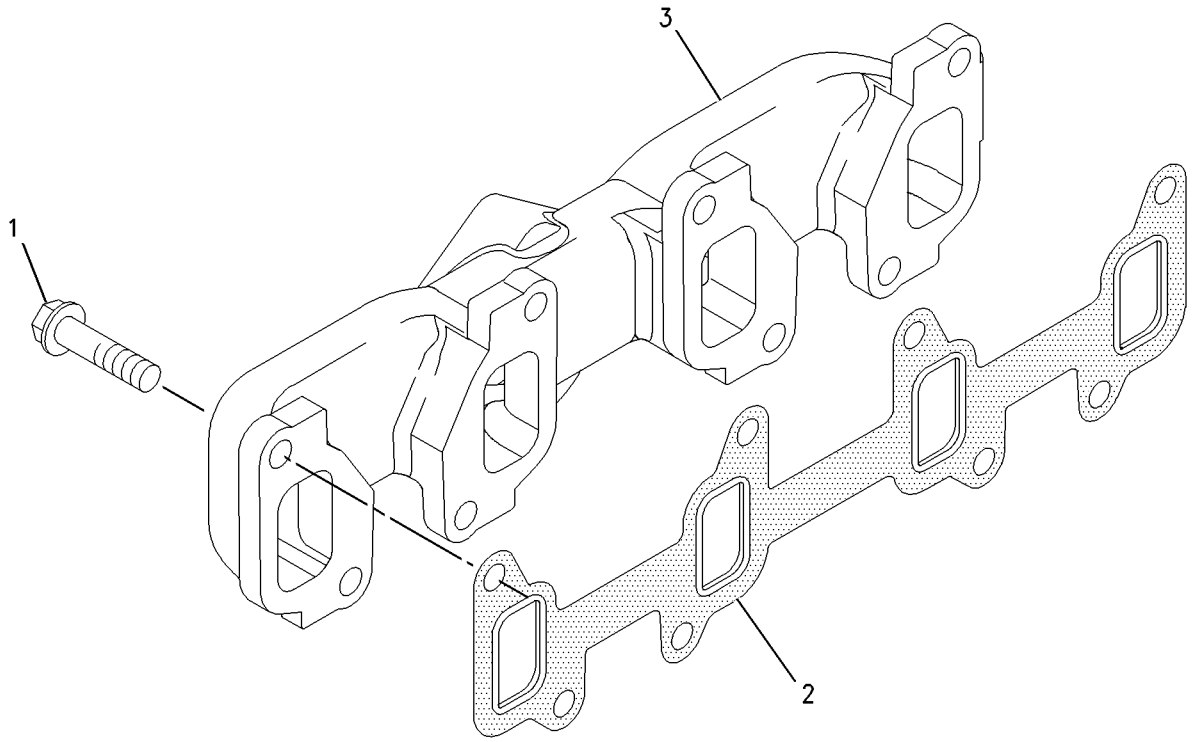

GRAPHIC #1 **<END>** g00955635

AIR INLET AND EXHAUST SYSTEM

226-5729 MUFFLER GP

S/N: EAE1-UP

PART OF 227-8418 INSTALLATION AR-ENGINE

SMCS-1062 **i01975305**

NOTE	REF NO	GRAPHIC REF	PART NUMBER	QTY	PART NAME 1 2 3 4 5 6 (PRODUCT LEVEL)	SEE PAGE
	1	1	**6I-4039**	1	GASKET	
	2	1	**227-9405**	1	MUFFLER	
	3	1	**227-9406**	1	TUBE AS	
	4	1	**7X-7729**	2	WASHER (11X25X3-MM THK)	
	5	1	**8M-3121**	1	CLAMP	
	6	1	**8T-4121**	8	WASHER-HARD (11X21X2.5-MM THK)	
M	7	1	**8T-4133**	4	NUT (M10X1.5-THD)	
M	8	1	**8T-4182**	3	BOLT (M10X1.5X45-MM)	
M	9	1	**8T-4186**	1	BOLT (M10X1.5X40-MM)	
M	10	1	**8T-4195**	2	BOLT (M10X1.5X30-MM)	

M-METRIC PART

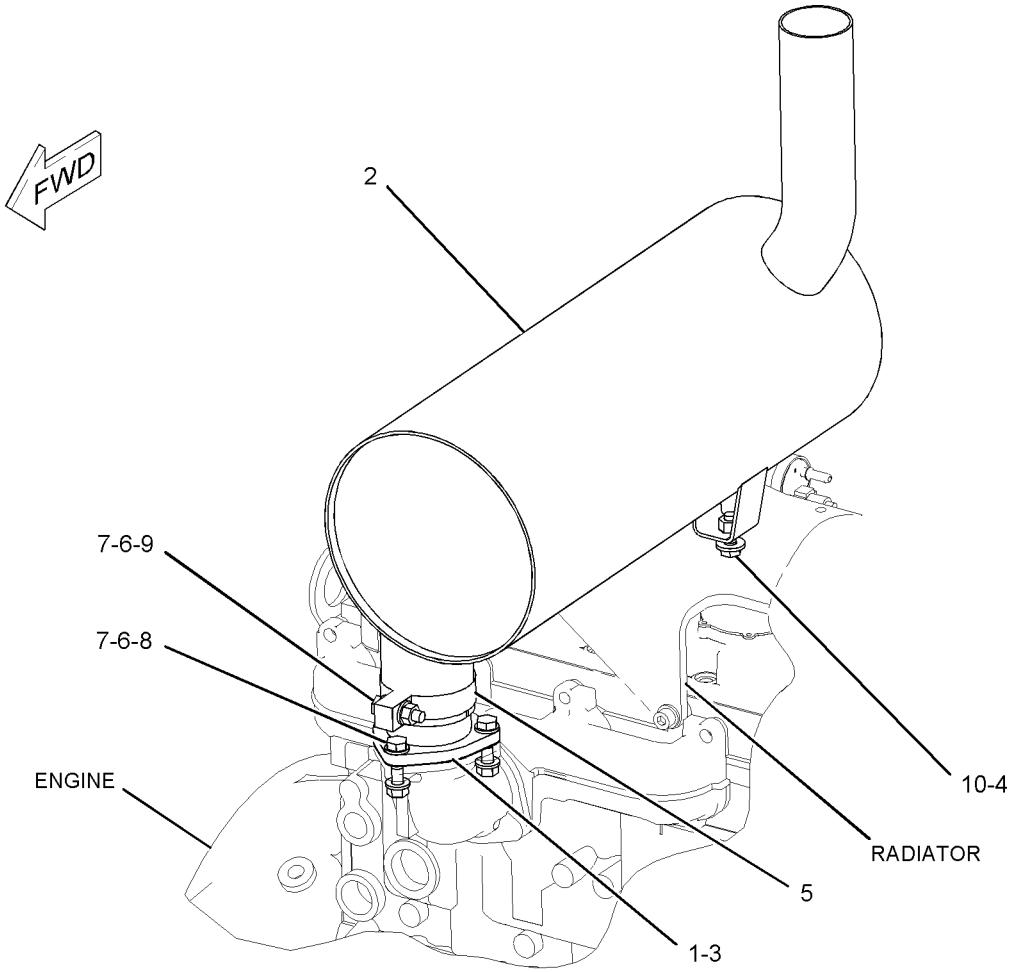

GRAPHIC #1 **<END>** g01034603

164-4858 CAP GP-FUEL FILLER

S/N: EAE1-UP

PART OF 228-1687 TANK GP-FUEL

SMCS-1273 **i02056139**

NOTE	REF NO	GRAPHIC REF	PART NUMBER	QTY	PART NAME 1 2 3 4 5 6 (PRODUCT LEVEL)	SEE PAGE
	1	1	**9X-8600**	1	SEAL-O-RING	
	2	1	**190-9775**	1	COVER AS-FILTER	

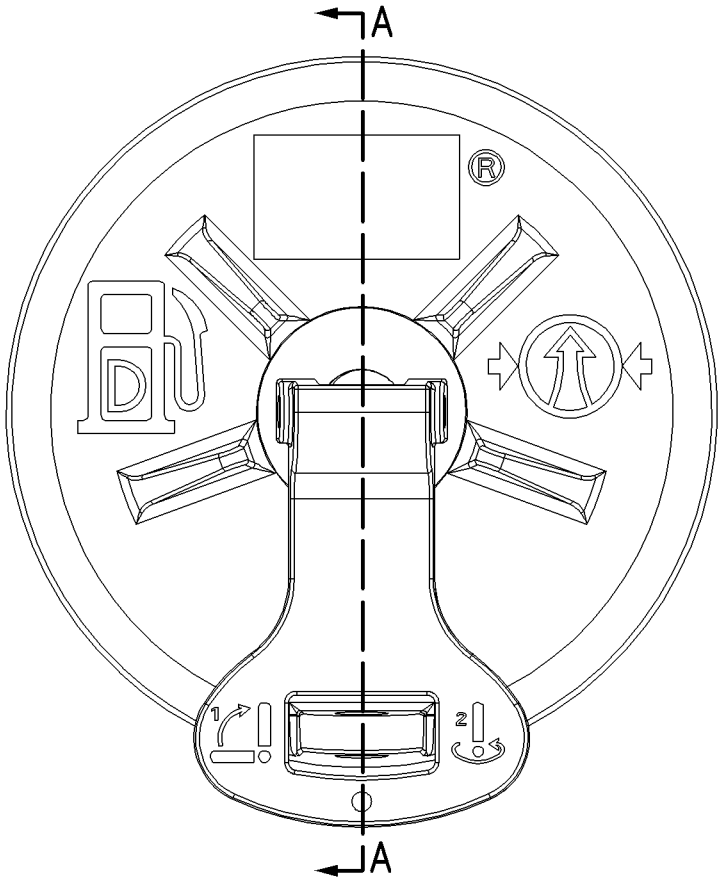

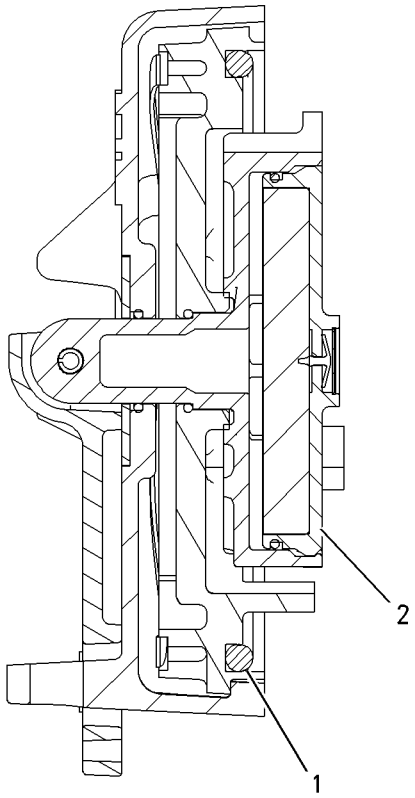

SECTION A-A

GRAPHIC #1 **<END>** g00849812

227-8394 GOVERNOR GP

S/N: EAE1-UP

PART OF 227-8418 INSTALLATION AR-ENGINE

SMCS-1264, 1908 **i02212669**

NOTE	REF NO	GRAPHIC REF	PART NUMBER	QTY	PART NAME 1 2 3 4 5 6 (PRODUCT LEVEL)	SEE PAGE
	1	1	**6V-8187**	3	NUT (1/4-28-THD)	
	2	1	**8E-0853**	1	BALL JOINT AS	
	3	1	**9L-2685**	1	BALL JOINT	
	4	1	**116-0118**	1	CLIP	
Y	5	1	**120-4187**	1	SOLENOID GP-THROTTLE (GOVERNOR)	117
	6	1	**261-8628**	1	ROD	
	7	1	**239-4073**	1	BRACKET AS	
M	8	1	**5C-2890**	5	NUT (M6X1-THD)	
	9	1	**5P-4115**	1	WASHER-HARD (7.2X19X2-MM THK)	
M	10	1	**8T-4138**	5	BOLT (M6X1X20-MM)	
	11	1	**8T-4224**	3	WASHER-HARD (8.8X16X2-MM THK)	
M	12	1	**8T-4908**	3	BOLT (M8X1.25X25-MM)	
	13	1	**9X-8256**	5	WASHER (6.6X12X2-MM THK)	

M-METRIC PART
Y-SEPARATE ILLUSTRATION

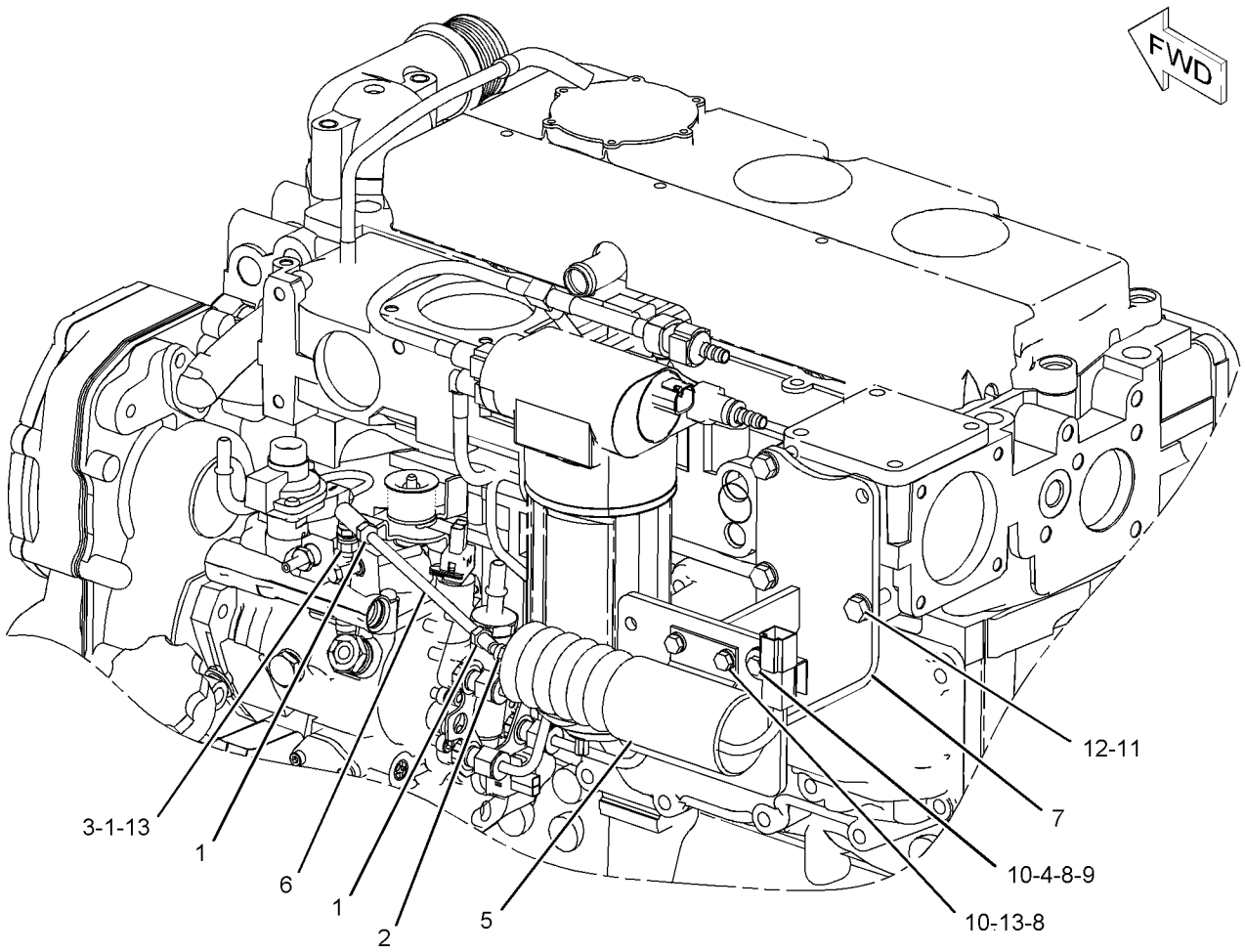

GRAPHIC #1 **<END>** g01032199

227-4803 LINES GP-FUEL

S/N: EAE1-UP

PART OF 227-8418 INSTALLATION AR-ENGINE

SMCS-1274 **i02094786**

NOTE	REF NO	GRAPHIC REF	PART NUMBER	QTY	PART NAME 1 2 3 4 5 6 (PRODUCT LEVEL)	SEE PAGE
	1	1	**5P-4961**	4	CLAMP-HOSE	
	2	1	**102-8703**	5	PLATE-COVER	
	3	1	**156-3617**	10	CLAMP-HALF	
	4	1	**228-5778**	1	PLATE AS	
	5	1	**239-5433**	1	CONNECTOR-SPECIAL	
M	6	1	**7X-2537**	4	BOLT (M8X1.25X35-MM)	
M	7	1	**8T-4192**	1	BOLT (M12X1.75X25-MM)	
	8	1	**8T-4223**	1	WASHER-HARD (13.5X25.5X3-MM THK)	
M	9	1	**8T-6869**	1	BOLT (M8X1.25X60-MM)	
E	10	1	**5P-1442**		HOSE (208-CM)	
E	11	1	**5P-1442**		HOSE (223-CM)	

E-ORDER BY THE CENTIMETER
M-METRIC PART

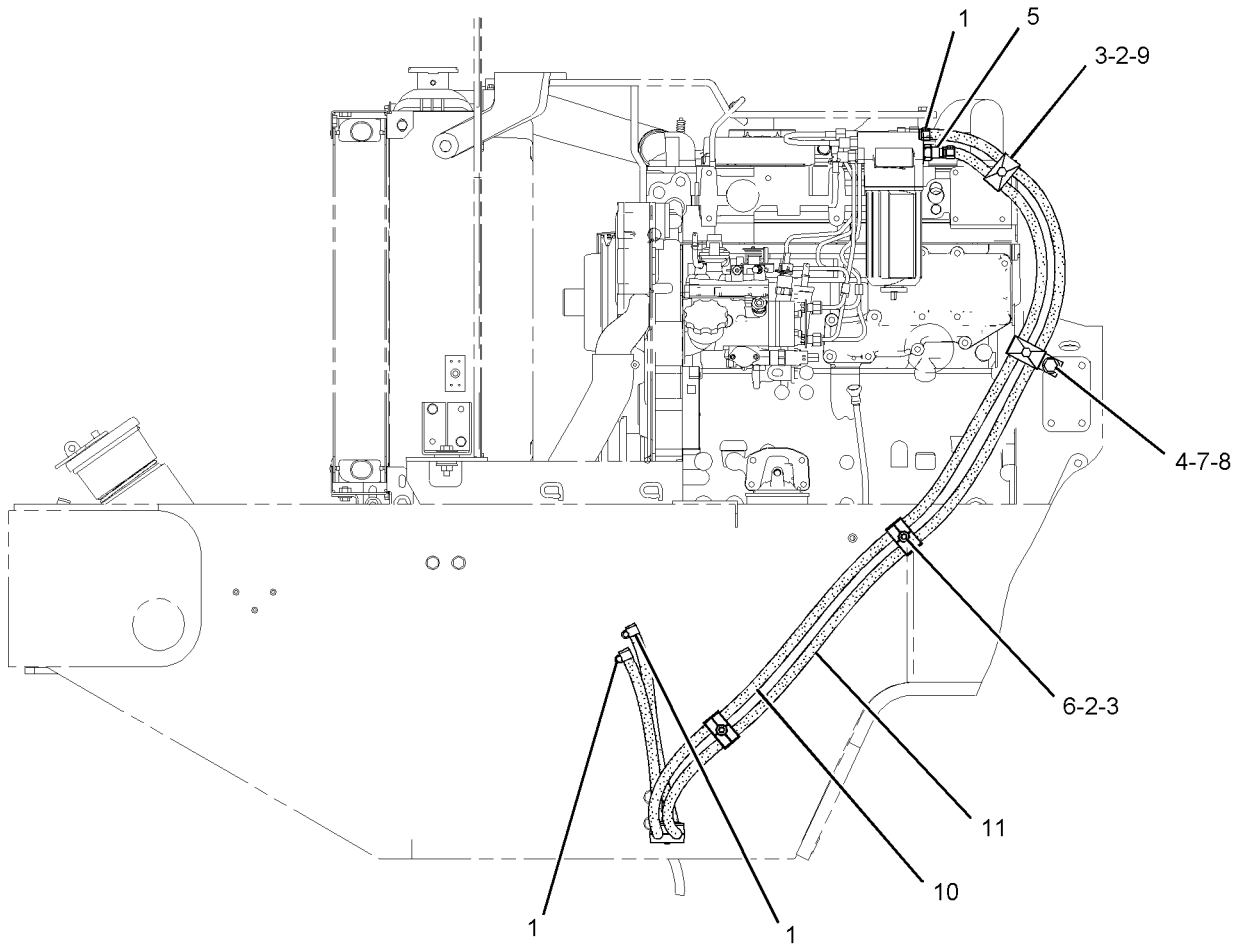

RIGHT SIDE VIEW

GRAPHIC #1

<END>

g01034665

240-5570 PUMP GP-FUEL INJECTION

S/N: CRS2300-UP

PART OF 240-5572 PUMP GP-FUEL INJECTION

FIELD REPLACEMENT ORDER 248-2355—PAGE 86

SMCS-1251, 1290 **i02089677**

NOTE	REF NO	GRAPHIC REF	PART NUMBER	QTY	PART NAME 1 2 3 4 5 6 (PRODUCT LEVEL)	SEE PAGE
	1	1	**248-2641**	1	SOLENOID AS (24-VOLT) (FUEL SHUT OFF)	

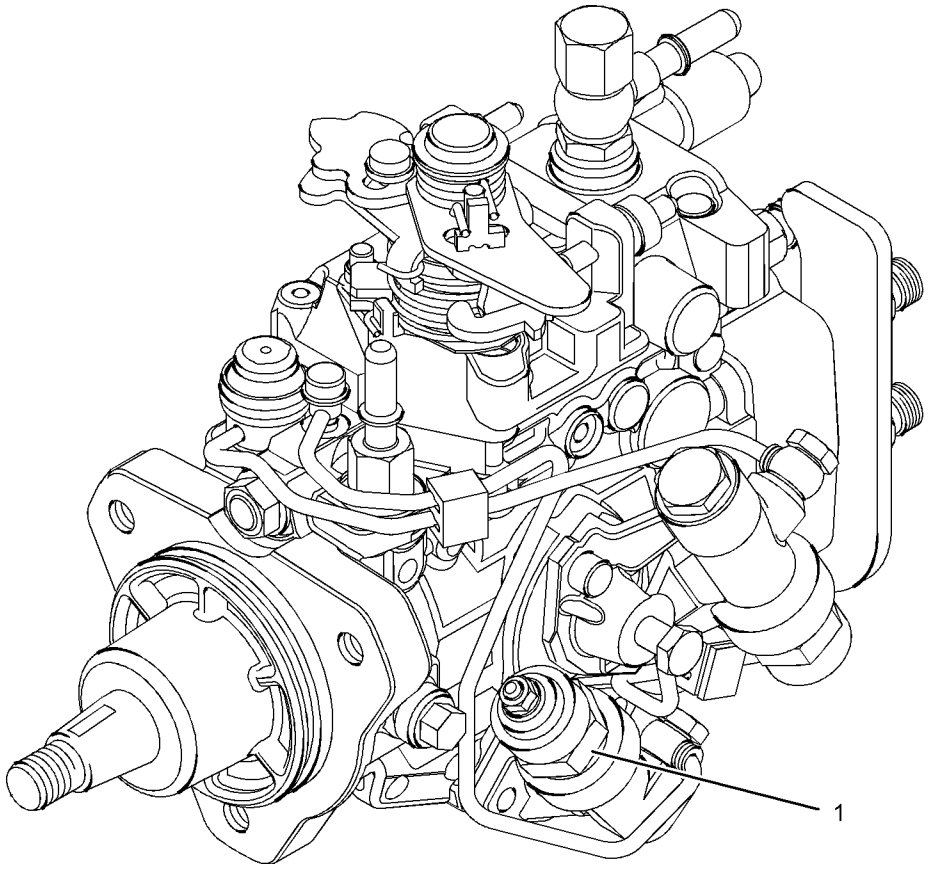

GRAPHIC #1 **<END>** g01084868

240-5572 PUMP GP-FUEL INJECTION

S/N: G4D1-UP; CRS2300-6334

PART OF 176-3163 ENGINE AR-PRIMARY

SMCS-1251, 1290 **i02617883**

NOTE	REF NO	GRAPHIC REF	PART NUMBER	QTY	PART NAME 1 2 3 4 5 6 (PRODUCT LEVEL)	SEE PAGE
M	1	1	**6I-0217**	1	BOLT (M8X1.25X20-MM)	
	2	1	**232-3149**	3	WASHER (8.35X16.85X1.55-MM THK)	
	3	1	**6I-0291**	1	NUT (M8X1.25-THD)	
M	4	1	**100-4830**	1	BOLT (M10X1.5X20-MM)	
M	5	1	**124-3815**	1	BOLT (M8X16X1.25-MM)	
	6	1	**140-8714**	1	CLIP	
	7	1	**145-8327**	1	SEAL-O-RING	
	8	1	**155-8804**	1	CAP	
	9	2	**235-1790**	1	SWITCH-TEMPERATURE (COLD START ADVANCE)	
	10	2	**199-9252**	1	SEAL-O-RING	
	11	2	**199-9751**	1	SEAL-O-RING	
	12	1	**240-5571**	1	BRACKET	
	13	1	**232-3126**	1	CLIP	
	14	2	**232-1295**	1	PLUG	
	15	2	**232-1322**	1	PLUG	
	16	2	**232-1323**	1	PLUG-CUP	
	17	1	**232-2720**	1	TUBE AS	
	18	1	**232-2721**	1	TUBE AS	
	19	1	**232-2722**	1	TUBE AS	
	20	1	**232-2723**	1	TUBE AS	
	21	1	**232-2725**	2	CLIP	
	22	1	**232-2726**	1	CLIP	
M	23	1	**6I-0260**	3	BOLT (M8X1.25X25-MM)	
	24	1	**232-3157**	1	BRACKET	
	25	1	**238-8671**	4	CLAMP-INJECTOR	
	27	1	**232-3274**	4	BOLT (M8X1.25X48.1-MM)	
Y	28	1	**240-5570**	1	PUMP GP-FUEL INJECTION	82
	29	1	**233-7104**	1	GEAR-PUMP (FUEL)	
	30	2	**233-7214**	1	CABLE	
	31	1	**233-7972**	4	INJECTOR AS-FUEL	
					(EACH INCLUDES)	
	32	1	**140-8718**	1	WASHER	
	33	1	**234-0387**	1	NOZZLE	

M-METRIC PART
Y-SEPARATE ILLUSTRATION

240-5572 **PUMP GP-FUEL INJECTION** *(contd.)* **i02617883**

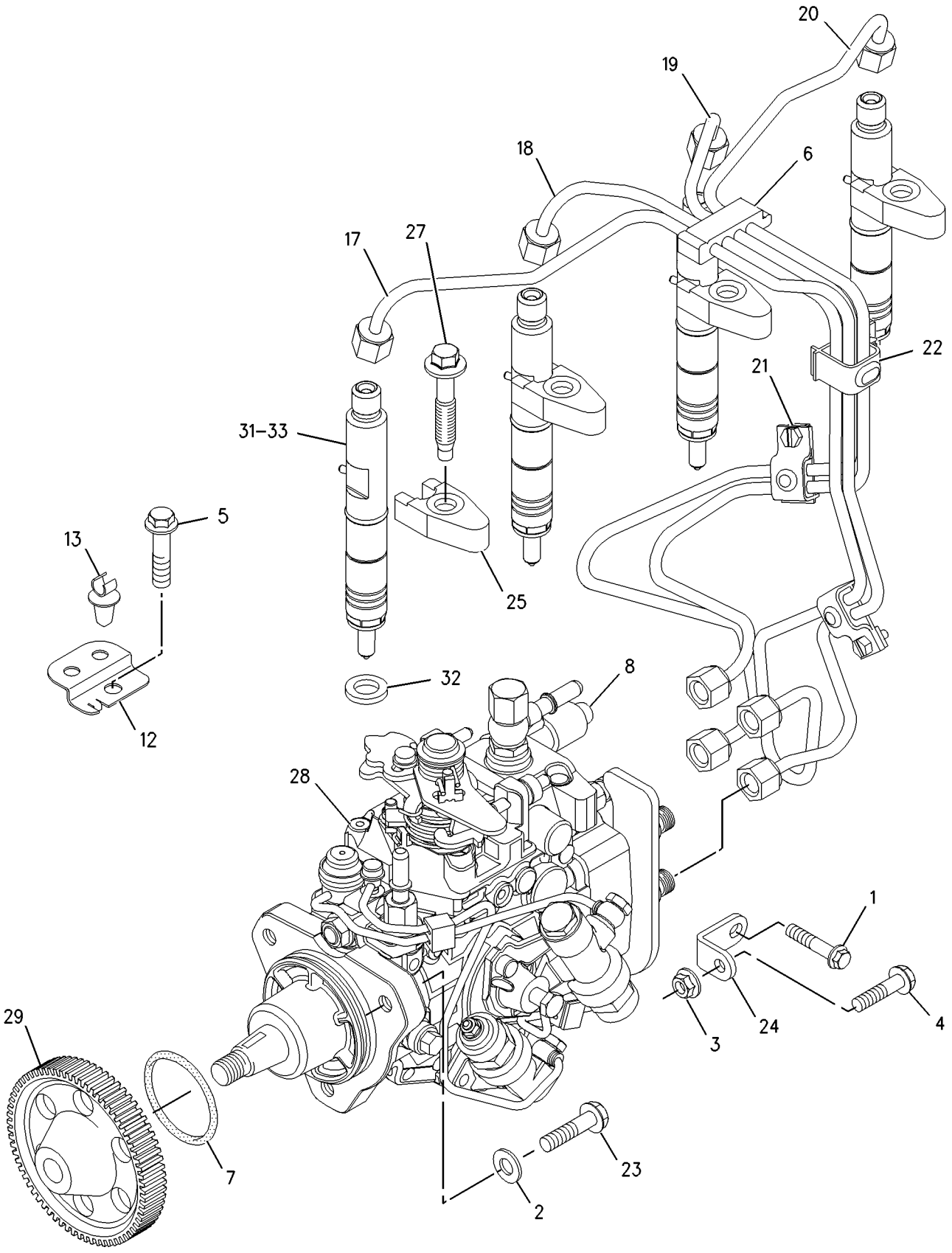

GRAPHIC #1 g00997402

240-5572 **PUMP GP-FUEL INJECTION** *(contd.)* **i02617883**

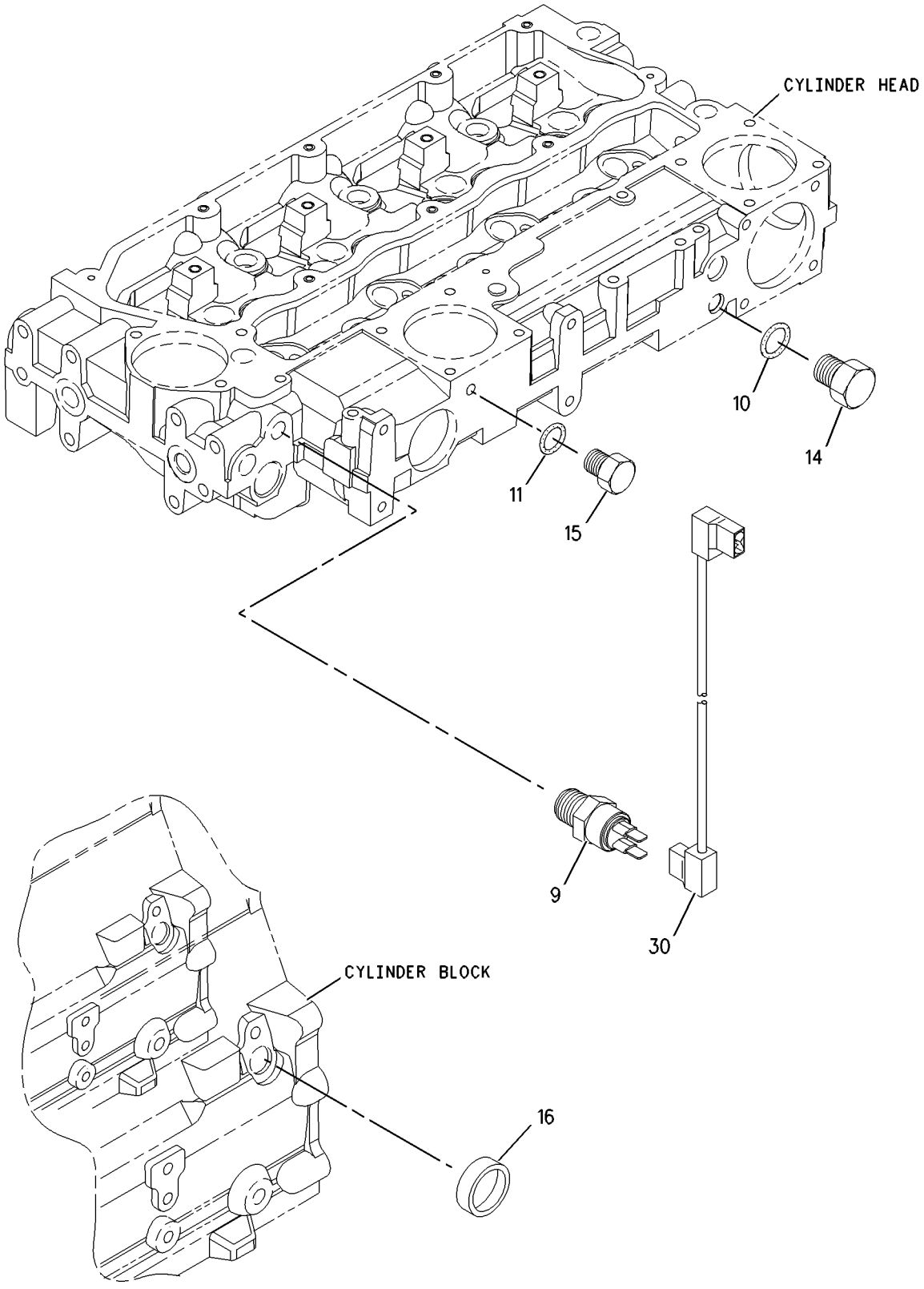

GRAPHIC #2 **<END>** g00955784

248-2355 PUMP GP-FUEL INJECTION

S/N: CRS2300-UP

PART OF 240-5572 PUMP GP-FUEL INJECTION

FIELD REPLACEMENT FOR 240-5570—PAGE 82

SMCS-1251, 1290 **i02138912**

NOTE	REF NO	GRAPHIC REF	PART NUMBER	QTY	PART NAME 1 2 3 4 5 6 (PRODUCT LEVEL)	SEE PAGE
	1	1	**248-2641**	1	SOLENOID AS (24-VOLT)	

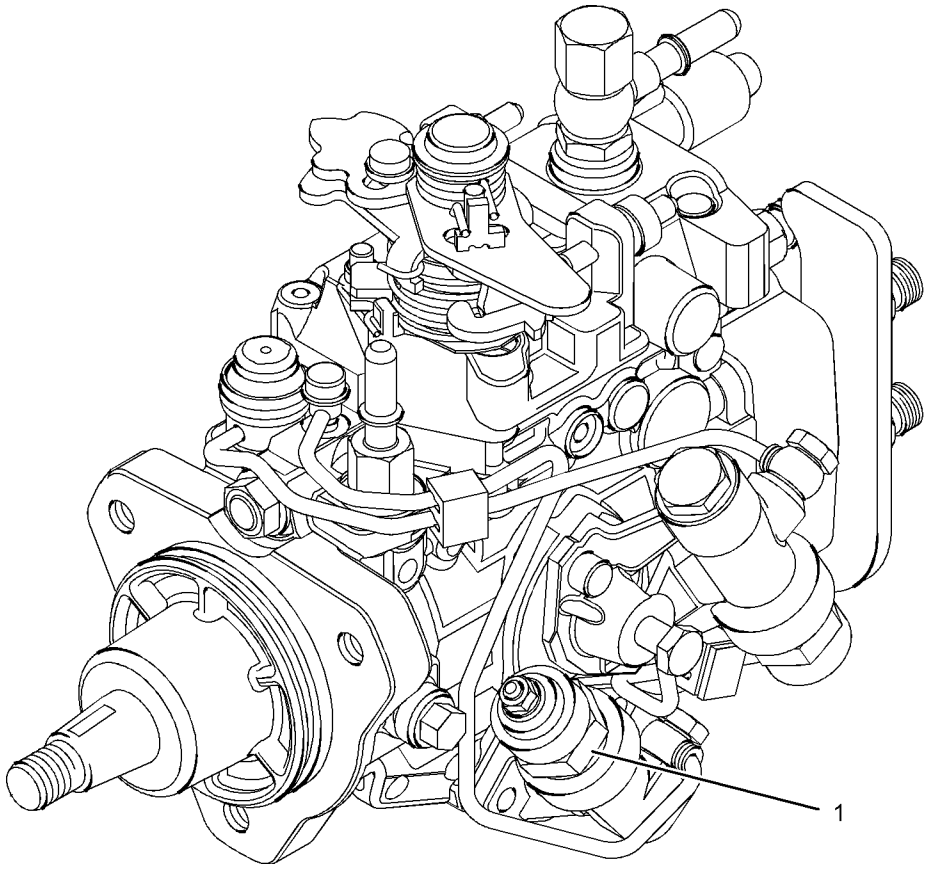

GRAPHIC #1 **<END>** g01084868

313-1335 PUMP GP-FUEL INJECTION

S/N: G4D1-UP; CRS2300-UP

PART OF 176-3163 ENGINE AR-PRIMARY

SMCS-1251, 1290 **i02816639**

NOTE	REF NO	GRAPHIC REF	PART NUMBER	QTY	PART NAME 1 2 3 4 5 6 (PRODUCT LEVEL)	SEE PAGE
M	1	1	**6I-0217**	1	BOLT (M8X1.25X20-MM)	
M	2	1	**6I-0260**	3	BOLT (M8X1.25X25-MM)	
	3	1	**6I-0291**	1	NUT (M8X1.25-THD)	
M	4	1	**100-4830**	1	BOLT (M10X1.5X20-MM)	
M	5	1	**124-3815**	1	BOLT (M8X16X1.25-MM)	
	6	1	**140-8714**	1	CLIP	
	7	1	**145-8327**	1	SEAL-O-RING	
	8	1	**155-8804**	1	CAP	
	9	2	**232-1323**	1	PLUG-CUP	
	10	1	**232-1328**	1	CAP	
	11	2	**232-1793**	1	CABLE	
	12	1	**232-1794**	3	HOSE	
	13	1	**232-2720**	1	TUBE AS	
	14	1	**232-2721**	1	TUBE AS	
	15	1	**232-2722**	1	TUBE AS	
	16	1	**232-2723**	1	TUBE AS	
	17	1	**232-2725**	2	CLIP	
	18	1	**232-2726**	1	CLIP	
	20	1	**232-3149**	3	WASHER (8.35X16.85X1.55-MM THK)	
	21	1	**232-3157**	1	BRACKET	
	22	1	**232-3274**	4	BOLT (M8X1.25X48.1-MM)	
	23	1	**233-7104**	1	GEAR-PUMP	
	24	2	**235-1790**	1	SWITCH-TEMPERATURE (FUEL)	
	25	1	**238-8671**	4	CLAMP-INJECTOR	
	26	1	**240-5571**	1	BRACKET	
	26A	1	**232-3126**	1	CLIP	
	27	1	**266-3721**	1	PUMP GP-FUEL INJECTION	
	27A	1	**208-5029**	1	VALVE GP-SOLENOID (12-VOLT)	
	28	1	**266-6830**	4	INJECTOR AS-FUEL	
					(EACH INCLUDES)	
	28A	1	**140-8718**	1	WASHER	
	28B	1	**234-0387**	1	NOZZLE	
	28C	1	**275-1038**	1	SEAL-O-RING	

M-METRIC PART

313-1335 **PUMP GP-FUEL INJECTION** *(contd.)* **i02816639**

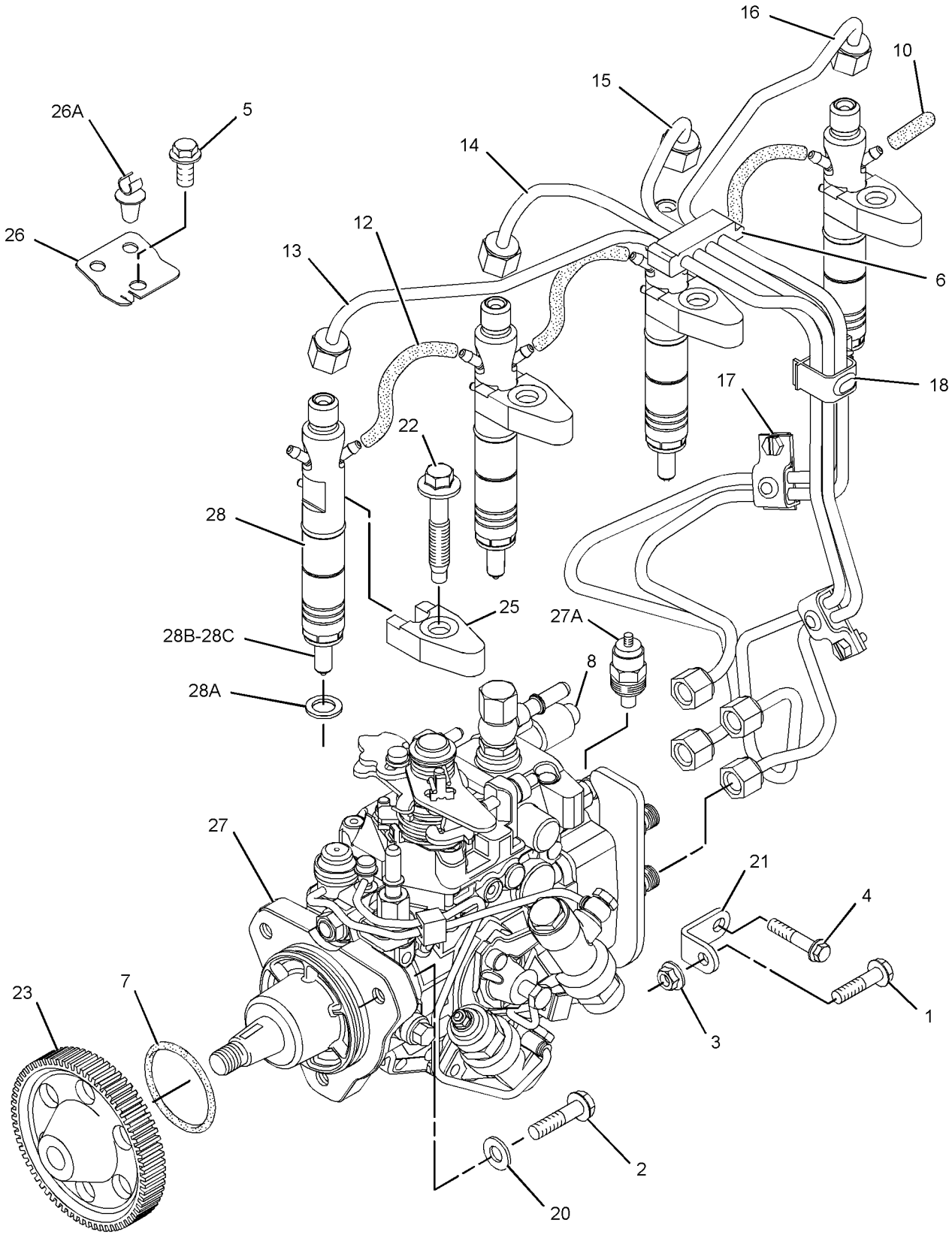

GRAPHIC #1 g01425355

313-1335 **PUMP GP-FUEL INJECTION** *(contd.)* **i02816639**

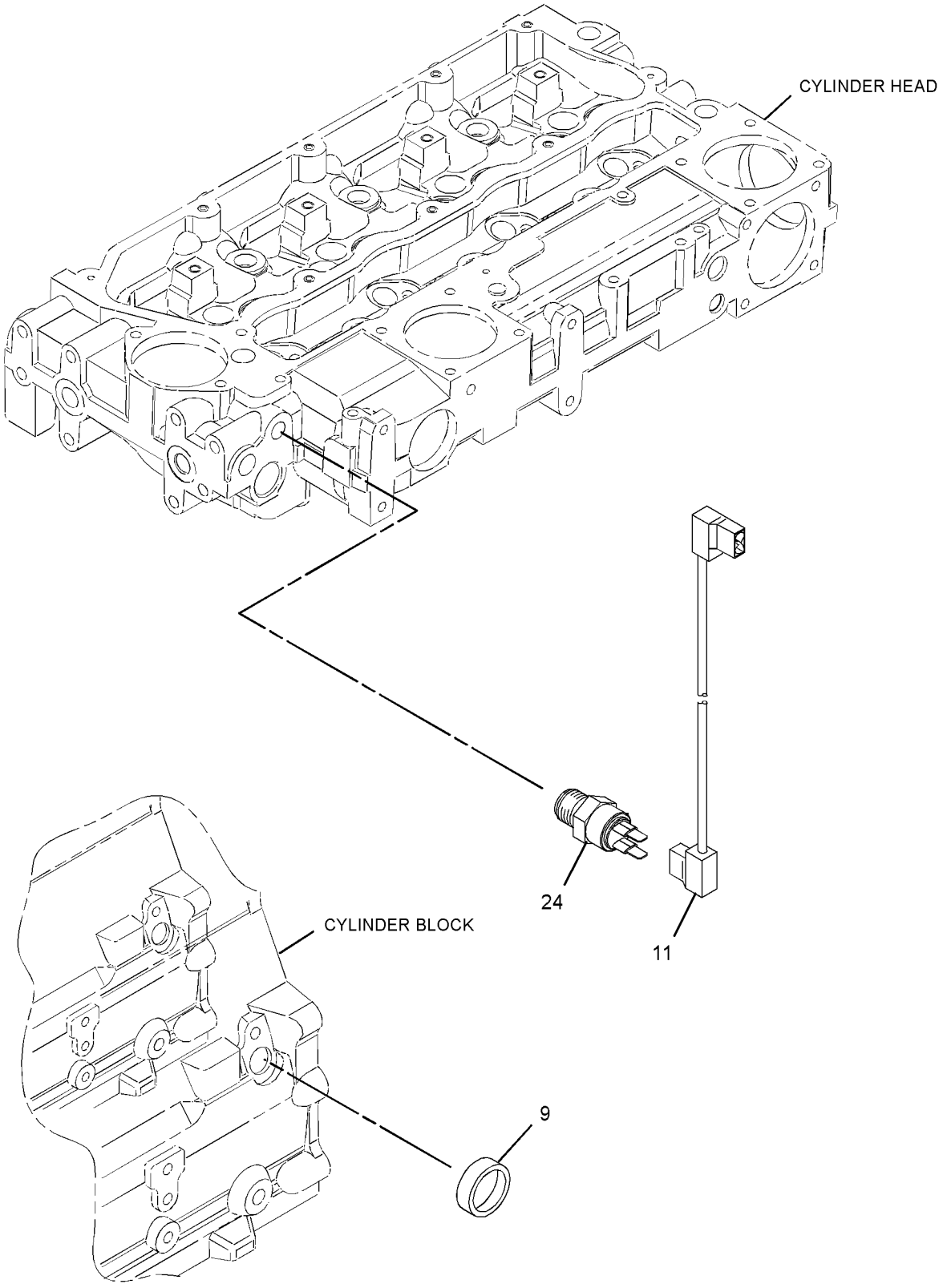

GRAPHIC #2 **<END>** g01425356

233-7425 PUMP GP-FUEL PRM & PRIM FILTER

S/N: G4D1-UP; CRS2300-UP
PART OF 176-3163 ENGINE AR-PRIMARY
TYPE 1

SMCS-1258, 1260 **i02731364**

NOTE	REF NO	GRAPHIC REF	PART NUMBER	QTY	PART NAME 1 2 3 4 5 6 (PRODUCT LEVEL)	SEE PAGE
	1	1	**215-9508**	1	FITTING AS (QUICK DISCONNECT)	
	2	1	**215-9509**	1	FITTING AS (QUICK DISCONNECT)	
	3	1	**232-1115**	1	CLIP-PIPE	
	4	1	**233-7421**	1	LINE AS-FUEL	
	5	1	**274-5043**	1	TUBE	
	6	1	**237-0285**	1	BRACKET	
	7	1	**270-6992**	1	PUMP GP-FUEL PRM & PRIM FILTER	
	7A	1	**1R-1804**	1	FILTER ELEMENT AS-FUEL	
	7B	1	**207-2757**	1	SEAL	
	7C	1	**221-2014**	1	BOWL AS	
	7D	1	**222-6617**	1	DRAIN AS	
J	8	1	**120-6872**	3	BOLT	
J	9	1	**232-9758**	3	WASHER (6.51X17.785X1.6-MM THK)	
	10	1	**235-6281**	2	TIE-CABLE	
					AVAILABLE REPAIR KIT(S):	
J			**240-9756**	1	KIT-MOUNTING (FUEL PRIMING PUMP)	

J-KIT MARKED J CONTAINS PARTS MARKED J

233-7425 **PUMP GP-FUEL PRM & PRIM FILTER** *(contd.)* **i02731364**

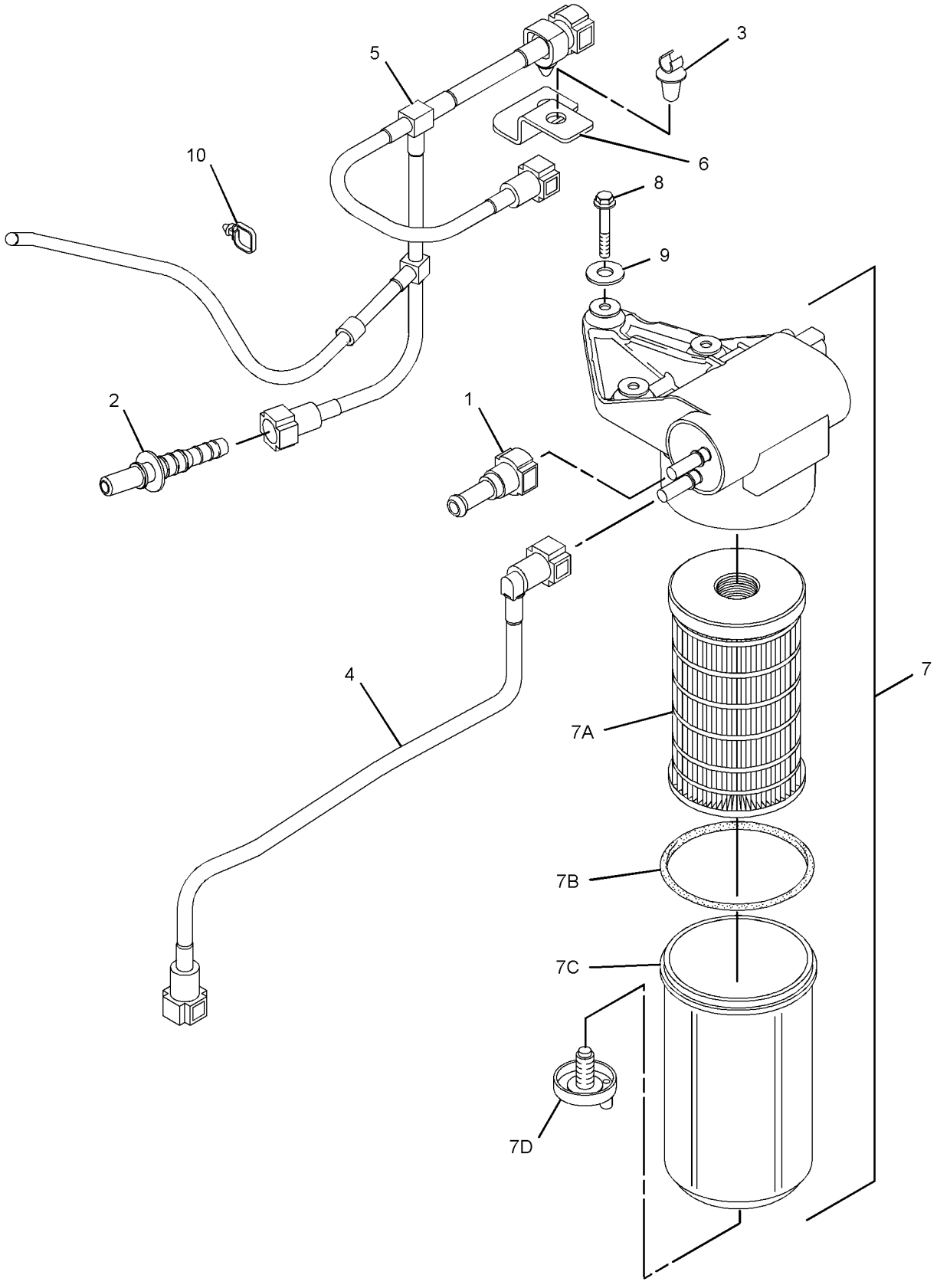

GRAPHIC #1 **<END>** g01384431

233-7425 PUMP GP-FUEL PRM & PRIM FILTER

S/N: G4D1-UP; CRS2300-UP
PART OF 176-3163 ENGINE AR-PRIMARY
TYPE 2

SMCS-1258, 1260 **i02829388**

NOTE	REF NO	GRAPHIC REF	PART NUMBER	QTY	PART NAME 1 2 3 4 5 6 (PRODUCT LEVEL)	SEE PAGE
	1	1	**215-9508**	1	FITTING AS (QUICK DISCONNECT)	
	2	1	**215-9509**	1	FITTING AS (QUICK DISCONNECT)	
C	3	1	**311-6822**	2	CLIP-TUBE	
	4	1	**233-7421**	1	LINE AS-FUEL	
	5	1	**274-5043**	1	TUBE	
	6	1	**237-0285**	1	BRACKET	
CY	7	1	**299-9265**	1	PUMP GP-FUEL PRM & PRIM FILTER	94
J	8	1	**120-6872**	3	BOLT	
J	9	1	**232-9758**	3	WASHER (6.51X17.785X1.6-MM THK)	
	10	1	**235-6281**	2	TIE-CABLE	
					AVAILABLE REPAIR KIT(S):	
J			**240-9756**	1	KIT-MOUNTING (FUEL PRIMING PUMP)	

C-CHANGE FROM PREVIOUS TYPE
J-KIT MARKED J CONTAINS PARTS MARKED J
Y-SEPARATE ILLUSTRATION

233-7425 **PUMP GP-FUEL PRM & PRIM FILTER** *(contd.)* **i02829388**

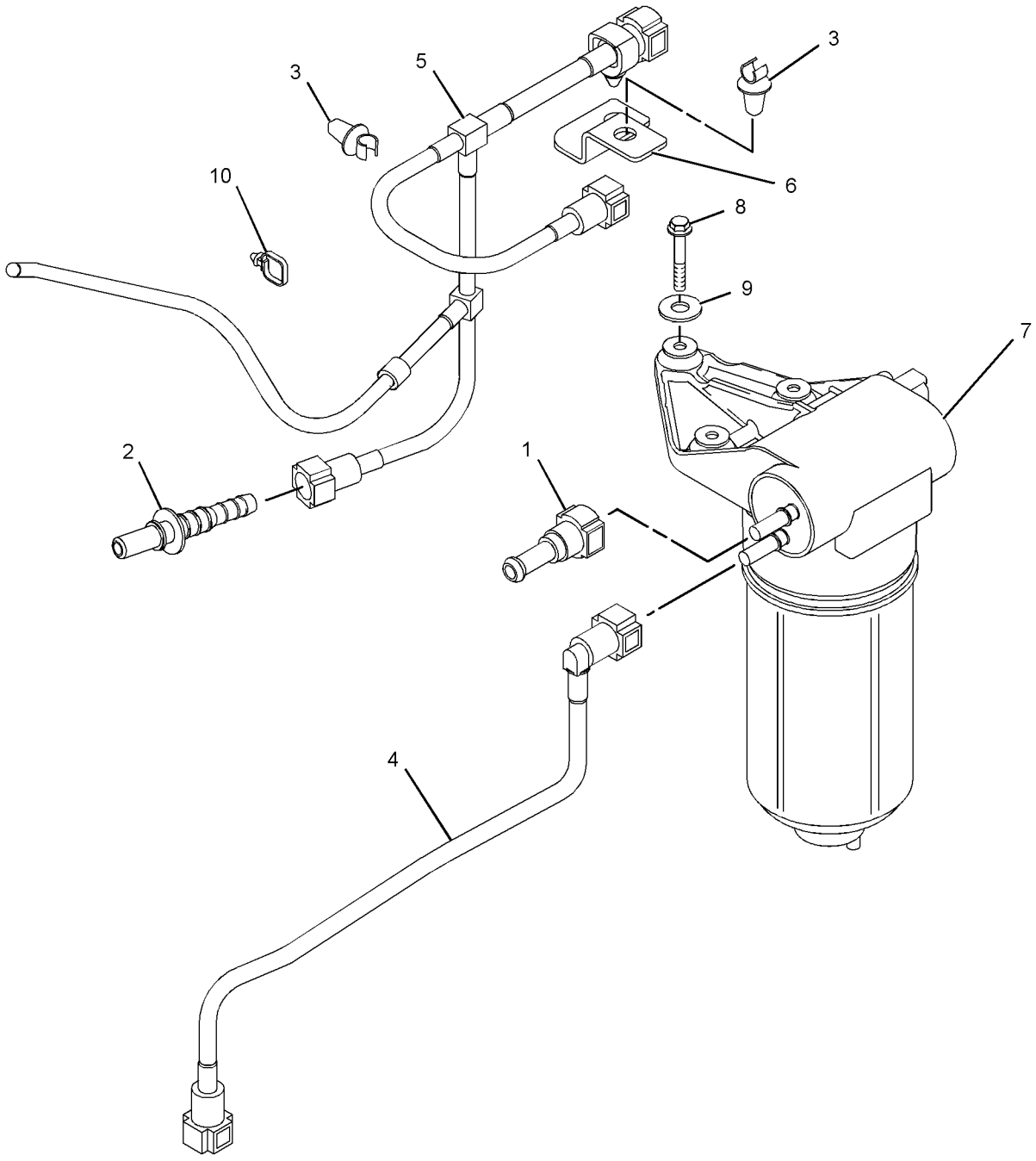

GRAPHIC #1 **<END>** g01419875

299-9265 PUMP GP-FUEL PRM & PRIM FILTER

S/N: G4D1-UP; CRS2300-UP

PART OF 233-7425 PUMP GP-FUEL PRM & PRIM FILTER

SMCS-1258, 1260 **i02897061**

NOTE	REF NO	GRAPHIC REF	PART NUMBER	QTY	PART NAME 1 2 3 4 5 6 (PRODUCT LEVEL)	SEE PAGE
	1	1	**207-2757**	1	SEAL (WATER SEPARATOR)	
	2	1	**221-2014**	1	BOWL AS	
	2A	1	**222-6617**	1	DRAIN AS (FUEL FILTER)	
	3	1	**1R-1804**	1	FILTER ELEMENT AS-FUEL	

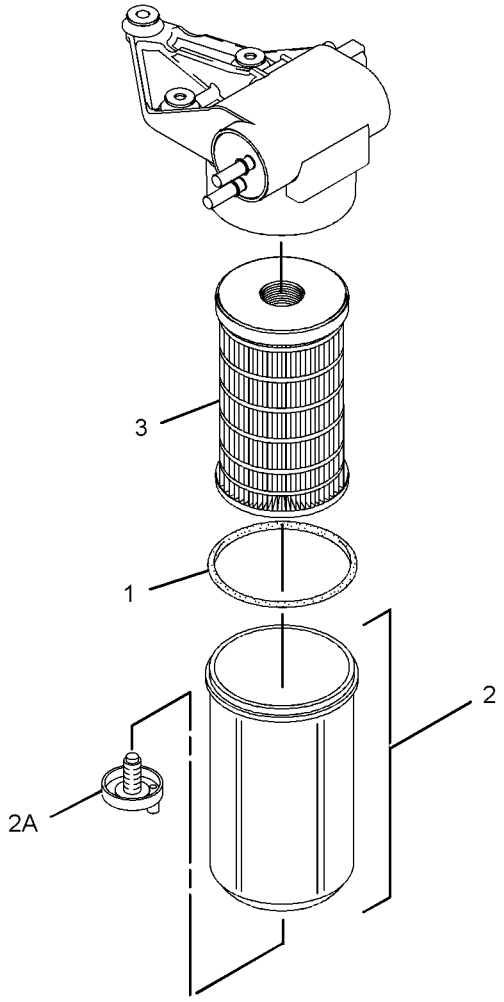

GRAPHIC #1 **<END>** g01419891

FUEL SYSTEM

228-1696 TANK & MTG GP-FUEL

S/N: EAE1-UP

PART OF 229-5409 CHASSIS AR

SMCS-1273 **i01975100**

NOTE	REF NO	GRAPHIC REF	PART NUMBER	QTY	PART NAME 1 2 3 4 5 6 (PRODUCT LEVEL)	SEE PAGE
Y	1	1	*228-1687*	1	TANK GP-FUEL	96
	2	1	**213-9684**	4	ANGLE	
	3	1	**7X-7729**	8	WASHER (11X25X3-MM THK)	
	4	1	**8T-4121**	8	WASHER-HARD (11X21X2.5-MM THK)	
M	5	1	**8T-4133**	8	NUT (M10X1.5-THD)	
M	6	1	**8T-4196**	8	BOLT (M10X1.5X35-MM)	

M-METRIC PART
Y-SEPARATE ILLUSTRATION

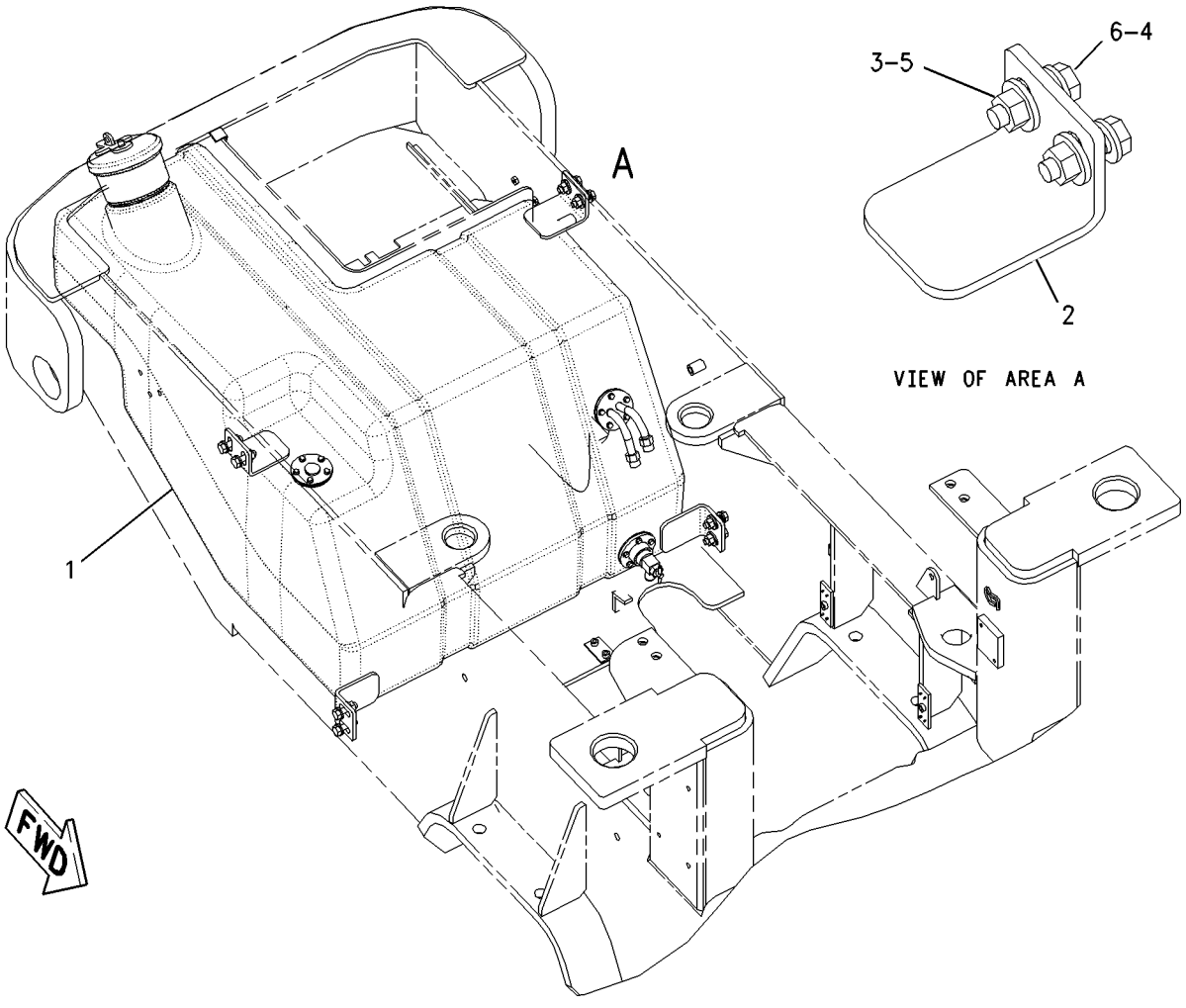

GRAPHIC #1 **<END>** g00823968

FUEL SYSTEM

228-1687 TANK GP-FUEL

S/N: EAE1-UP
170 LITERS
PART OF 228-1696 TANK & MTG GP-FUEL

SMCS-1273 **i02327574**

NOTE	REF NO	GRAPHIC REF	PART NUMBER	QTY	PART NAME 1 2 3 4 5 6 (PRODUCT LEVEL)	SEE PAGE
	1	1	**2S-3440**	1	CLAMP-HOSE	
	2	1	**6S-8620**	1	CLAMP-HOSE	
	3	1	**9P-7121**	1	STRAINER-FUEL	
	4	1	**9R-7240**	2	GASKET	
Y	5	1	**164-4858**	1	CAP GP-FUEL FILLER (EXTREME SERVICE, LOCKABLE)	79
	6	1	**6V-7238**	1	VALVE-SHUTOFF (FUEL TANK)	
		1	**3K-0360**	1	SEAL-O-RING	
	7	1	**170-3528**	1	ADAPTER	
	8	1	**194-6523**	1	ADAPTER	
	9	1	**218-9745**	1	SENDER AS-FUEL LEVEL	
		1	**102-8802**	1	KIT-RECEPTACLE (2-PIN)	
					(INCLUDES RECEPTACLE AS & WEDGE)	
		1	**186-3735**	2	PIN-CONNECTOR (16-GA TO 18-GA)	
	10	1	**228-1731**	1	LINE AS-FUEL	
	11	1	**234-0608**	1	TANK-FUEL	
M	12	1	**8T-0289**	10	BOLT (M5X0.8X20-MM)	
	13	1	**8C-6438**	1	SCREW-PAN HEAD (6-20X12.7-MM)	
	14	1	**8T-0328**	10	WASHER-HARD (5.5X10X1-MM THK)	
E	15	1	**5P-1518**		HOSE (32CM)	

E-ORDER BY THE CENTIMETER
M-METRIC PART
Y-SEPARATE ILLUSTRATION

228-1687 **TANK GP-FUEL** *(contd.)* **i02327574**

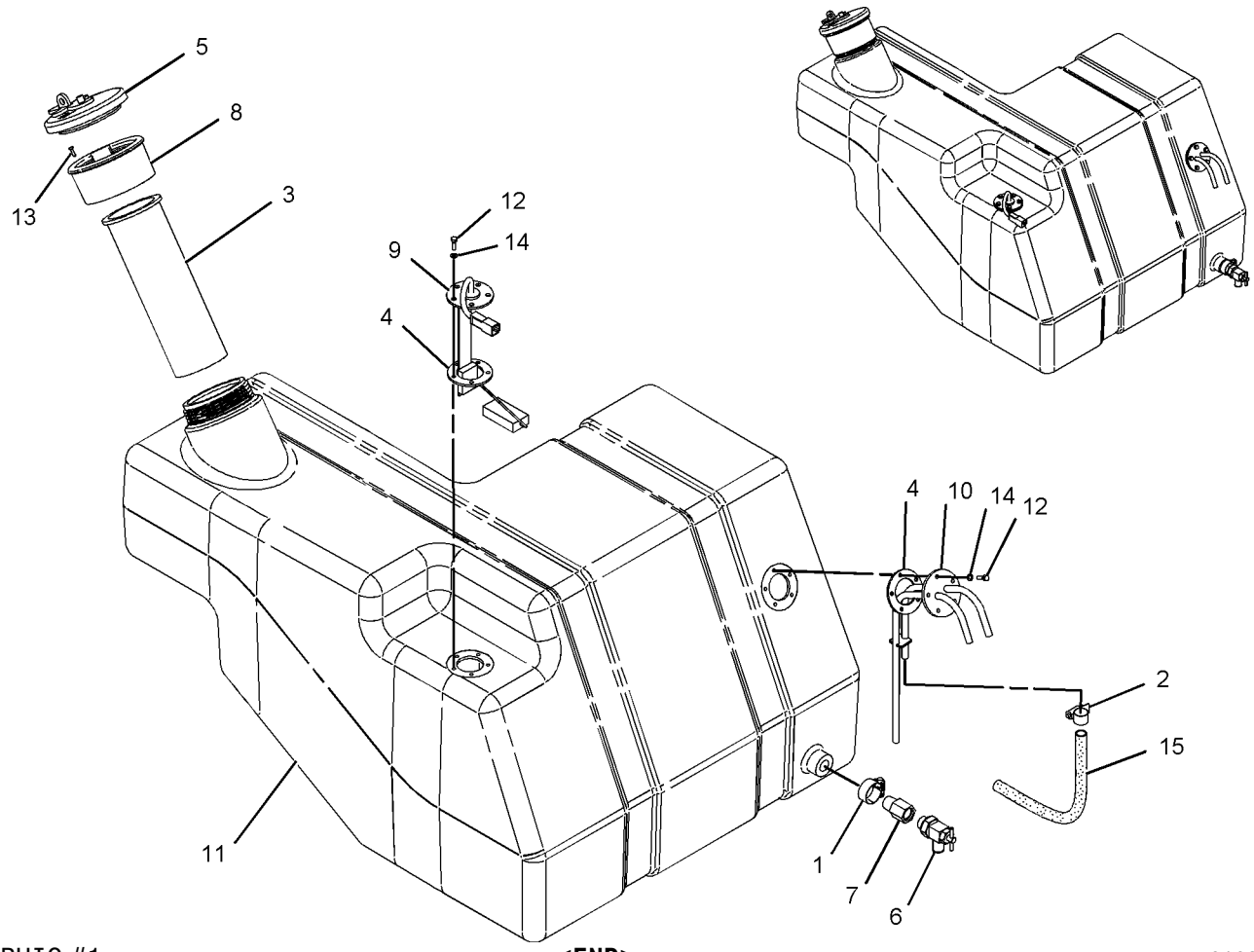

GRAPHIC #1 **<END>** g01036085

3E-6328 ALARM GP

S/N: EAE1-UP
24-VOLT
PART OF 224-1152, 243-5693 PANEL GP-INSTRUMENT
AN ATTACHMENT

SMCS-7400, 7402, 7406, 7407, 7429 **i02021590**

NOTE	REF NO	GRAPHIC REF	PART NUMBER	QTY	PART NAME 1 2 3 4 5 6 (PRODUCT LEVEL)	SEE PAGE
	1	1	**102-8802**	1	KIT-RECEPTACLE (2-PIN)	
					(INCLUDES RECEPTACLE AS & WEDGE)	
	2	1	**186-3735**	2	PIN-CONNECTOR (16-GA TO 18-GA)	

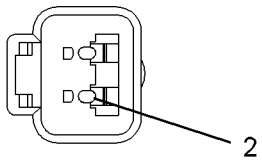

VIEW A–A

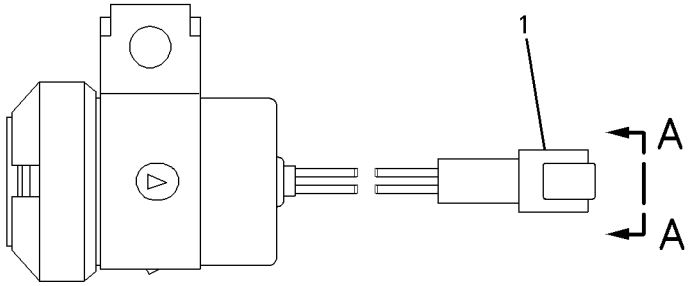

GRAPHIC #1 **<END>** g00697818

236-9965 ALTERNATOR GP-CHARGING

S/N: G4D1-UP; CRS2300-UP

PART OF 176-3163 ENGINE AR-PRIMARY

SMCS-1405 **i02089620**

NOTE	REF NO	GRAPHIC REF	PART NUMBER	QTY	PART NAME 1 2 3 4 5 6 (PRODUCT LEVEL)	SEE PAGE
	1	1	**6B-0933**	1	SPACER (10.31X19.05X6.35-MM THK)	
M	2	1	**6I-0260**	1	BOLT (M8X1.25X25-MM)	
M	3	1	**6I-0454**	1	BOLT (M10X1.5X70-MM)	
	4	1	**6I-0594**	1	NUT (M10X1.15-THD)	
	5	1	**7W-2632**	1	WASHER (8.5X16.8X1.6-MM THK)	
	6	1	**100-8451**	1	BOLT	
	7	1	**113-6349**	1	NUT (M12X1.75X93-MM)	
M	8	1	**140-8783**	2	BOLT (M10X45-THD)	
	9	1	**225-3146**	1	ALTERNATOR GP-CHARGING (24-VOLT)	
	10	1	**228-7391**	1	PULLEY-ALTERNATOR	
	11	1	**233-9530**	1	BRACKET	
	12	1	**233-9531**	1	LEVER-ADJUSTING	
	13	1	**067-6366**	1	WASHER (M8X1.25-THD)	

M-METRIC PART

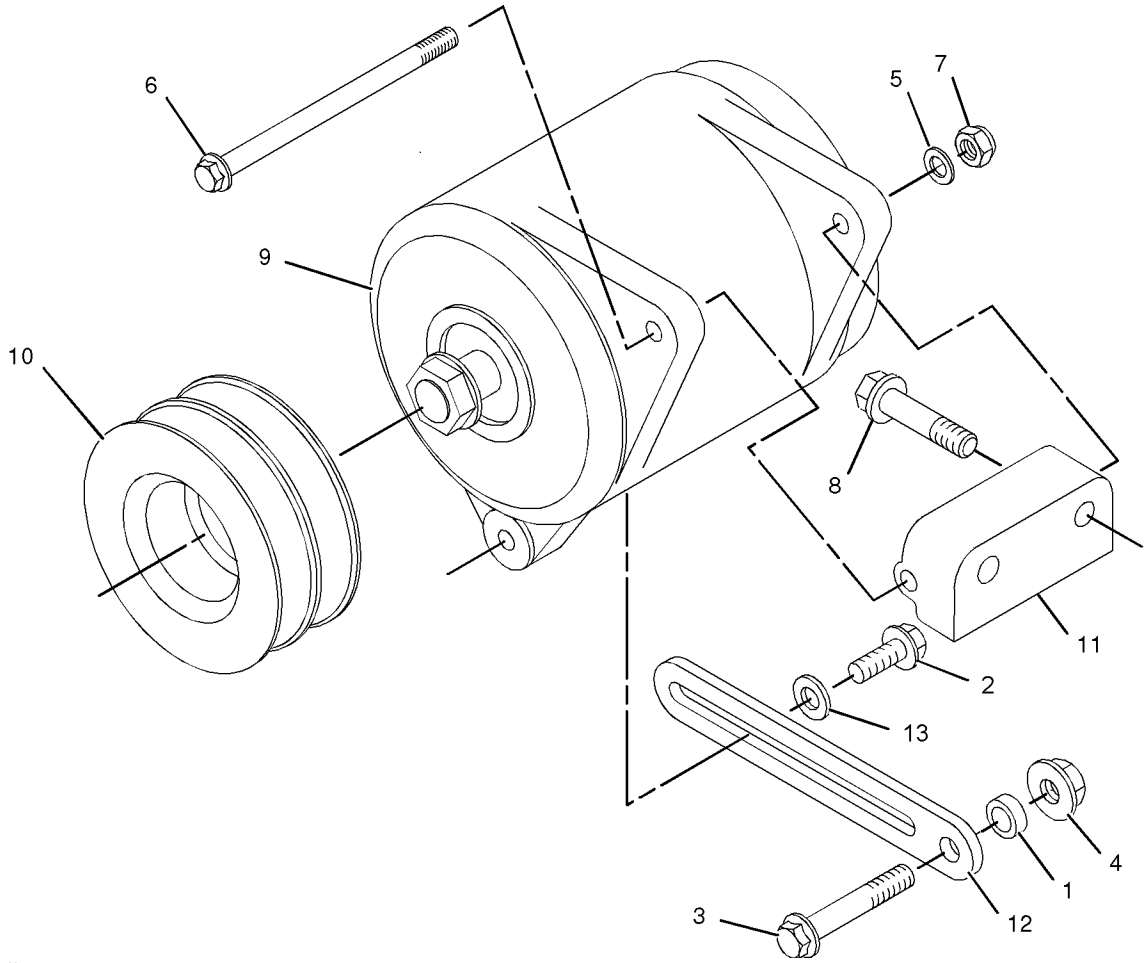

GRAPHIC #1 **<END>** g01046022

ELECTRICAL AND STARTING SYSTEM

229-5334 BATTERY & WIRING GP

S/N: EAE1-UP

PART OF 233-4654 ELECTRICAL AR

SMCS-1401, 1402, 1408 **i02897062**

NOTE	REF NO	GRAPHIC REF	PART NUMBER	QTY	PART NAME 1 2 3 4 5 6 (PRODUCT LEVEL)	SEE PAGE
	1	1	**1G-9960**	2	CLAMP	
	2	1	**2G-5786**	3	CABLE AS (BATTERY)	
					(EACH INCLUDES)	
E		1	**5P-0744**		CABLE (00-GA, BLACK) (48-CM)	
		1	**5P-2600**	1	RING-TERMINAL (FOR 1/2-IN BOLT)	
		1	**035-0425**	1	RING-TERMINAL (FOR 3/8-IN BOLT)	
	3	1	**8T-4223**	1	WASHER-HARD (13.5X25.5X3-MM THK)	
M	4	1	**8T-4244**	1	NUT (M12X1.75-THD)	
	5	1	**2G-8767**	2	WASHER (10.5X60X3-MM THK)	
	6	1	**3E-8320**	1	PLATE-INSTRUCTION (BATTERY)	
	7	1	**5P-7177**	1	RETAINER	
	8	1	**6G-2256**	2	CLAMP	
	9	1	**6W-6005**	1	HOLD-DOWN-BATTERY	
	10	1	**7K-1181**	1	STRAP-CABLE	
	11	1	**7V-5628**	1	PLATE	
	12	1	**8Y-9216**	1	CABLE AS (BATTERY)	
E		1	**5P-0747**		CABLE (00-GA, BLACK) (80-CM)	
	12A	1	**7N-5274**	1	COVER-TERMINAL (BLACK)	
		1	**8L-8413**	1	STRAP-CABLE	
		1	**3S-6050**	1	TERMINAL AS-BATTERY (NEGATIVE)	
		1	**1M-6119**	1	BOLT (5/16-18X1.375-IN)	
		1	**1M-6120**	1	NUT (5/16-18-THD)	
	12B	1	**037-5197**	1	BOOT	
		1	**1S-7252**	1	TERMINAL-CABLE (00-GA, 3/8-IN BOLT)	
	13	1	**038-9317**	2	TREAD-NONSKID	
	14	1	**111-7758**	1	ROD	
	15	1	**128-0314**	1	CABLE AS (BATTERY)	
E		1	**5P-0761**		CABLE (00-GA, RED) (29-CM)	
	15A	1	**9G-0005**	1	COVER-TERMINAL (BLACK)	
		1	**8L-8413**	1	STRAP-CABLE	
		1	**8C-5918**	1	TERMINAL AS (NEGATIVE)	
	15B	1	**9G-0002**	1	COVER-TERMINAL (RED)	
		1	**8L-8413**	1	STRAP-CABLE	
		1	**8T-9756**	1	TERMINAL AS (POSITIVE)	
	16	1	**153-7117**	1	CABLE AS (BATTERY)	
E		1	**5P-0761**		CABLE (00-GA, RED) (149-CM)	
	16A	1	**9G-0002**	1	COVER-TERMINAL (RED)	
		1	**8L-8413**	1	STRAP-CABLE	
		1	**8T-9756**	1	TERMINAL AS (POSITIVE)	
	16B	1	**8T-8799**	1	BOOT	
		1	**2L-8050**	1	TERMINAL-RING (6-GA, 1/4-IN) (6 GA WIRE, 1/4 SCREW)	
		1	**2L-8058**	1	TERMINAL-RING (8-GA, 1/4-IN) (8 GA WIRE, 1/4 SCREW)	
	16C	1	**8N-0869**	1	COVER-TERMINAL (RED)	
		1	**1S-7251**	1	TERMINAL-CABLE (00-GA, 1/2-IN BOLT)	
	17	1	**197-8932**	1	MAT	
	18	1	**209-0617**	1	PLATE AS	
	19	1	**3T-5760**	2	BATTERY (12-VOLT, MAINTENANCE FREE)	
M	20	1	**8T-4137**	2	BOLT (M10X1.5X20-MM)	
	21	1	**5P-4115**	2	WASHER-HARD (7.2X19X2-MM THK)	
	22	1	**8T-4222**	1	WASHER-PLATED (11X32X2.5-MM THK)	
M	23	1	**6V-7357**	2	BOLT (M6X1X25-MM)	
Y	24	1	**7N-0718**	1	SWITCH GP-DISCONNECT (BATTERY)	119
	25	1	**7X-7729**	2	WASHER (11X25X3-MM THK)	
M	26	1	**8C-8451**	2	BOLT (M6X1X40-MM)	

229-5334 **BATTERY & WIRING GP** ***(contd.)*** **i02897062**

NOTE	REF NO	GRAPHIC REF	PART NUMBER	QTY	PART NAME 1 2 3 4 5 6 (PRODUCT LEVEL)	SEE PAGE
M	27	1	**8T-0389**	1	LOCKNUT (M10X1.5-THD)	
M	28	1	**8T-4136**	2	BOLT (M10X1.5X25-MM)	

E-ORDER BY THE CENTIMETER
M-METRIC PART
Y-SEPARATE ILLUSTRATION

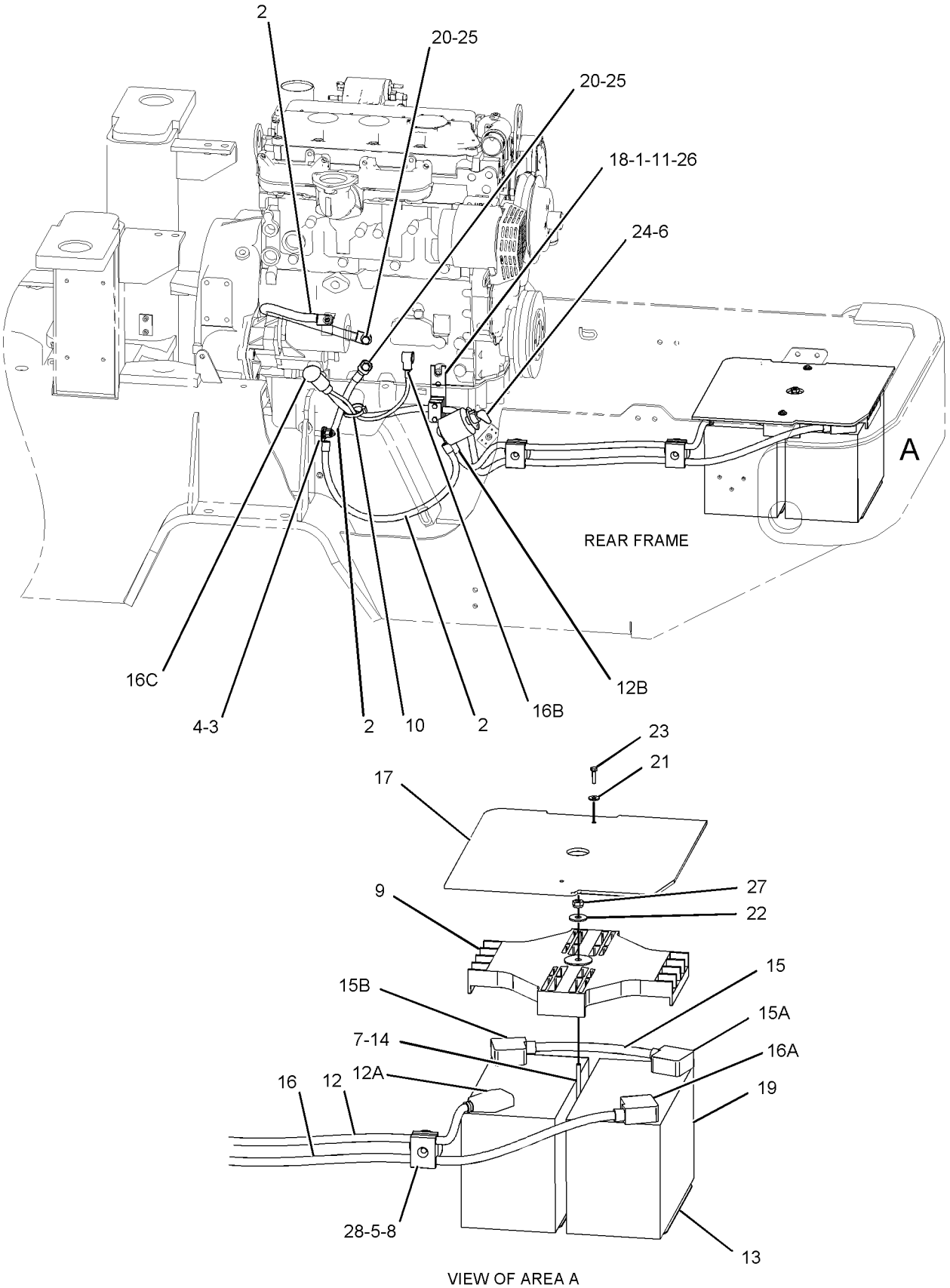

GRAPHIC #1 **<END>** g01034707

240-5535 CONVERTER GP-ELECTRICAL

S/N: G4D1-UP; CRS2300-UP

PART OF 176-3163 ENGINE AR-PRIMARY

SMCS-1421 **i02877892**

NOTE	REF NO	GRAPHIC REF	PART NUMBER	QTY	PART NAME 1 2 3 4 5 6 (PRODUCT LEVEL)	SEE PAGE
	1	1	**300-5183**	1	RESISTOR AS (24-VOLT)	

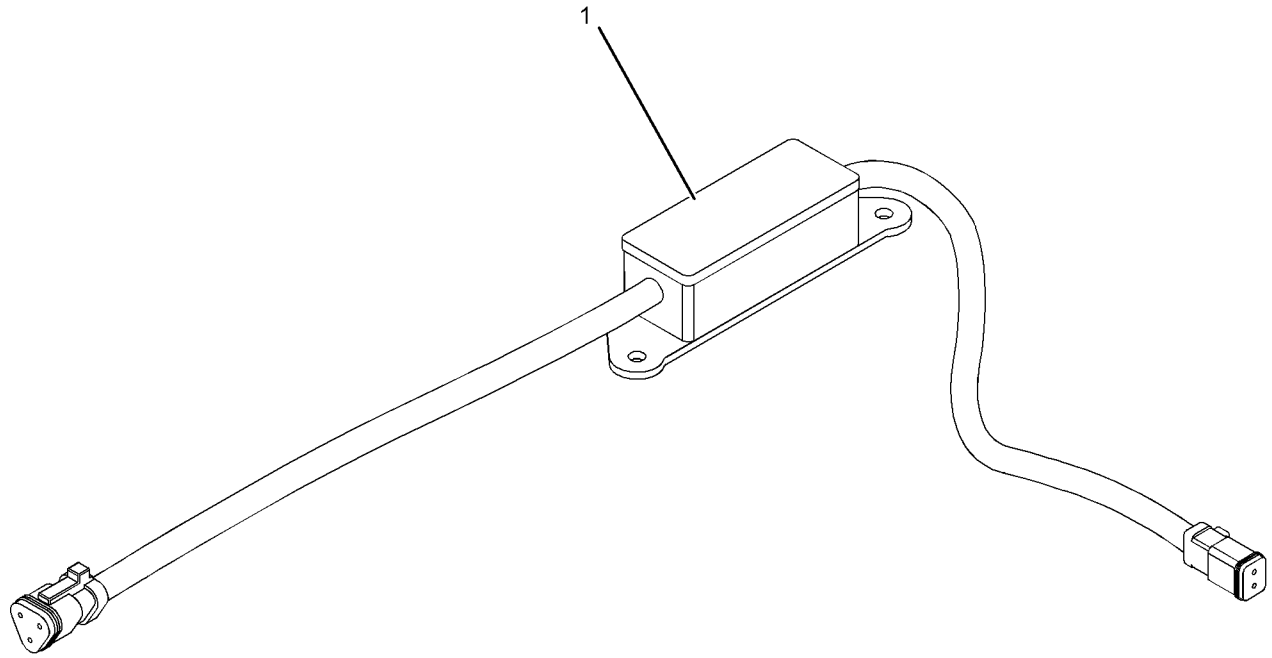

GRAPHIC #1 **<END>** g01029709

ELECTRICAL AND STARTING SYSTEM

233-4654 ELECTRICAL AR

S/N: EAE1-UP

PART OF 228-9623 COMMON AR

SMCS-1408 **i02293874**

NOTE	PART NUMBER	QTY	PART NAME 1 2 3 4 5 6 (PRODUCT LEVEL)	SEE PAGE
Y	*229-5334*	1	BATTERY & WIRING GP	100
Y	*231-8754*	1	WARNING GP-BACKUP	122
Y	*235-1047*	1	WIRING GP-ENGINE	130

Y-SEPARATE ILLUSTRATION

<END>

233-9834 GLOW PLUG GP

S/N: G4D1-UP; CRS2300-UP

PART OF 176-3163 ENGINE AR-PRIMARY

SMCS-1412 **i02783111**

NOTE	REF NO	GRAPHIC REF	PART NUMBER	QTY	PART NAME 1 2 3 4 5 6 (PRODUCT LEVEL)	SEE PAGE
	1	1	**286-4880**	1	BAR	
	2	1	**226-8770**	4	GLOW PLUG	
	3	1	**232-3126**	1	CLIP	

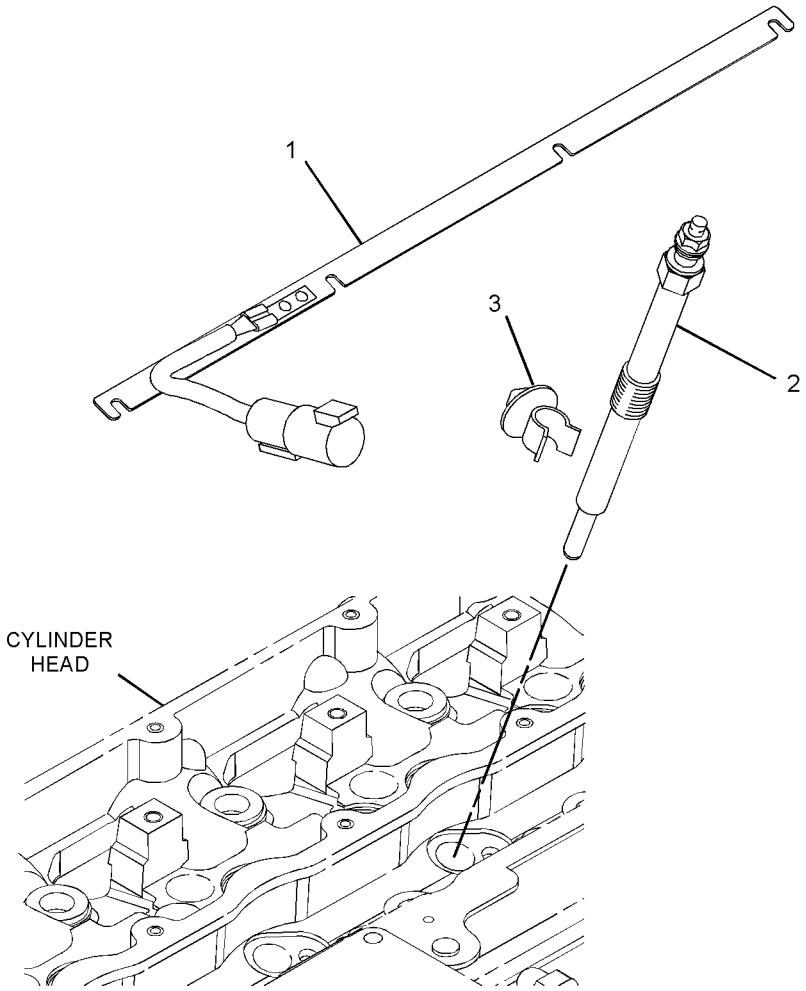

GRAPHIC #1 **<END>** g01392990

3E-6389 LAMP GP-DOME

S/N: EAE1-UP
24-VOLT, WITH SWITCH
PART OF 214-4073 LINER GP-CAB
AN ATTACHMENT

SMCS-1433 **i02897064**

NOTE	REF NO	GRAPHIC REF	PART NUMBER	QTY	PART NAME 1 2 3 4 5 6 (PRODUCT LEVEL)	SEE PAGE
	1	1	**7N-9943**	1	LAMP (24-VOLT) (DOME)	
	2	1	**102-8803**	1	KIT-RECEPTACLE (3-PIN)	
					(INCLUDES RECEPTACLE AS & WEDGE)	
	3	1	**186-3735**	3	PIN-CONNECTOR (16-GA TO 18-GA)	
	4	1	**7T-0020**	1	LENS-DOME LAMP	

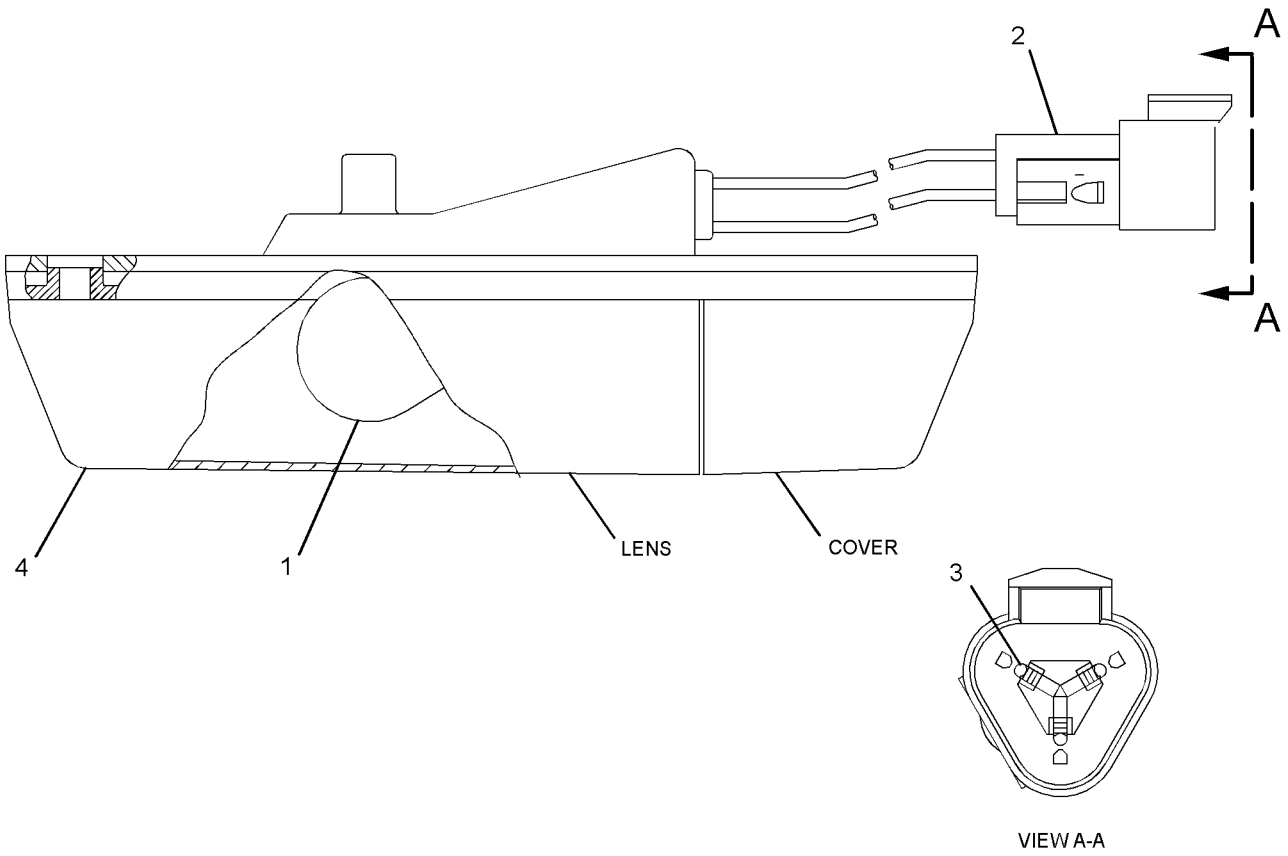

GRAPHIC #1 **<END>** g01270113

9X-1439 LAMP GP-FLOOD—VERTICAL MOUNT

S/N: EAE1-UP

24-VOLT

OPTIONAL FIELD REPLACEMENT ORDER 1-165-0699 KIT-MOUNTING BRACKET, 1-155-2270 KIT-CONNECTING PLUG, 2-8T-8730 SOCKET-CONNECTOR. FIELD REPLACEMENT FOR 9X-4381—PAGE 108

SMCS-1434 **i02897065**

NOTE	REF NO	GRAPHIC REF	PART NUMBER	QTY	PART NAME 1 2 3 4 5 6 (PRODUCT LEVEL)	SEE PAGE
	1	1	**9X-4244**	4	SCREW-SPECIAL	
	2	1	**9X-4174**	1	LENS AS (FLOODLIGHT)	
		1	**9X-4243**	1	SEAL	
M	3	1	**8T-0337**	2	SCREW-MACHINE (M4X0.7X12-MM)	
	4	1	**9X-3455**	1	BODY AS-LAMP	
	5	1	**9X-3463**	1	LAMP-HALOGEN (24-VOLT, 65-WATT) (FLOODLIGHT)	

M-METRIC PART

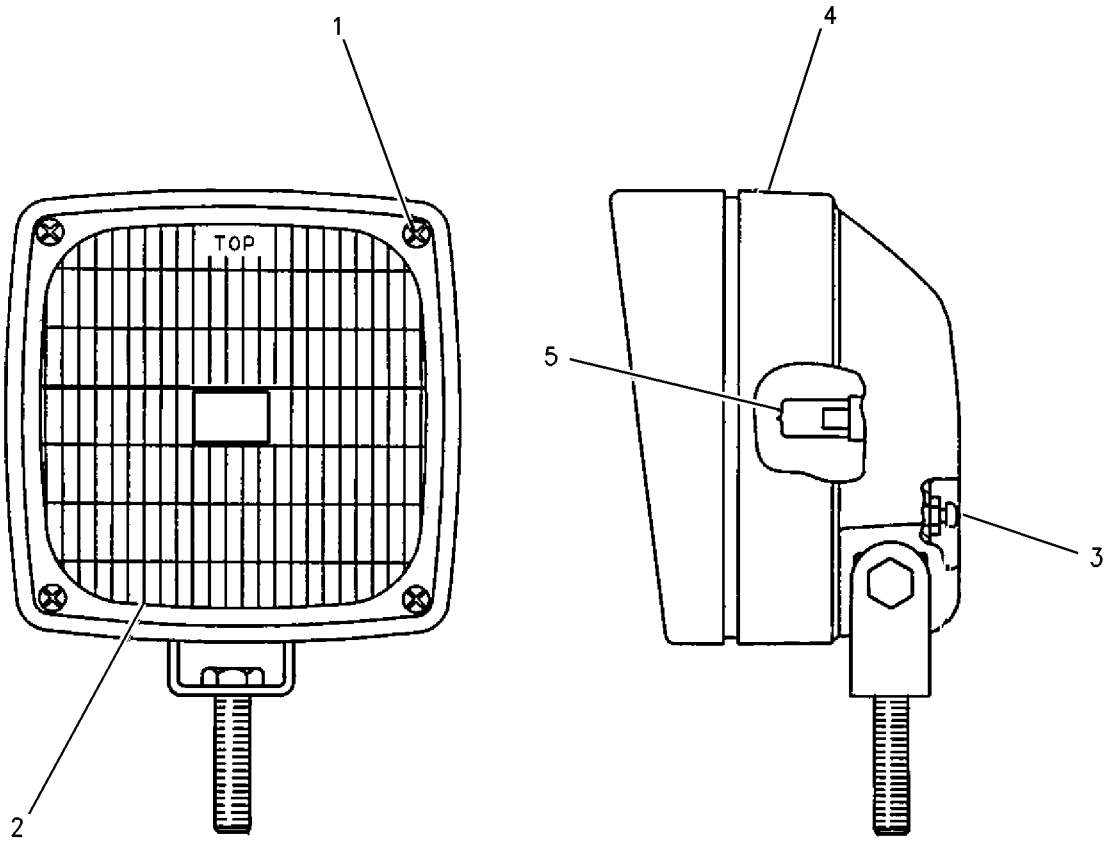

GRAPHIC #1 **<END>** g00644587

9X-4381 LAMP GP-FLOOD–SUSPENDED MOUNT

S/N: EAE1-UP
24-VOLT
PART OF 204-1321, 226-7758 LIGHTING GP-FLOOD
FIELD REPLACEMENT ORDER 9X-1439–PAGE 107
AN ATTACHMENT

SMCS-1434 **i02138908**

NOTE	REF NO	GRAPHIC REF	PART NUMBER	QTY	PART NAME 1 2 3 4 5 6 (PRODUCT LEVEL)	SEE PAGE
	1	1	**9X-4244**	4	SCREW-SPECIAL	
	2	1	**9X-4174**	1	LENS AS (FLOODLIGHT)	
M	3	1	**8T-0337**	2	SCREW-MACHINE (M4X0.7X12-MM)	
	4	1	**9X-3455**	1	BODY AS-LAMP	
		1	**8T-4121**	1	WASHER-HARD (11X21X2.5-MM THK)	
M		1	**8T-4133**	1	NUT (M10X1.5-THD)	
	5	1	**9X-3463**	1	LAMP-HALOGEN (24-VOLT, 65-WATT) (FLOODLIGHT)	
	6	1	**9X-4243**	1	SEAL	

M-METRIC PART

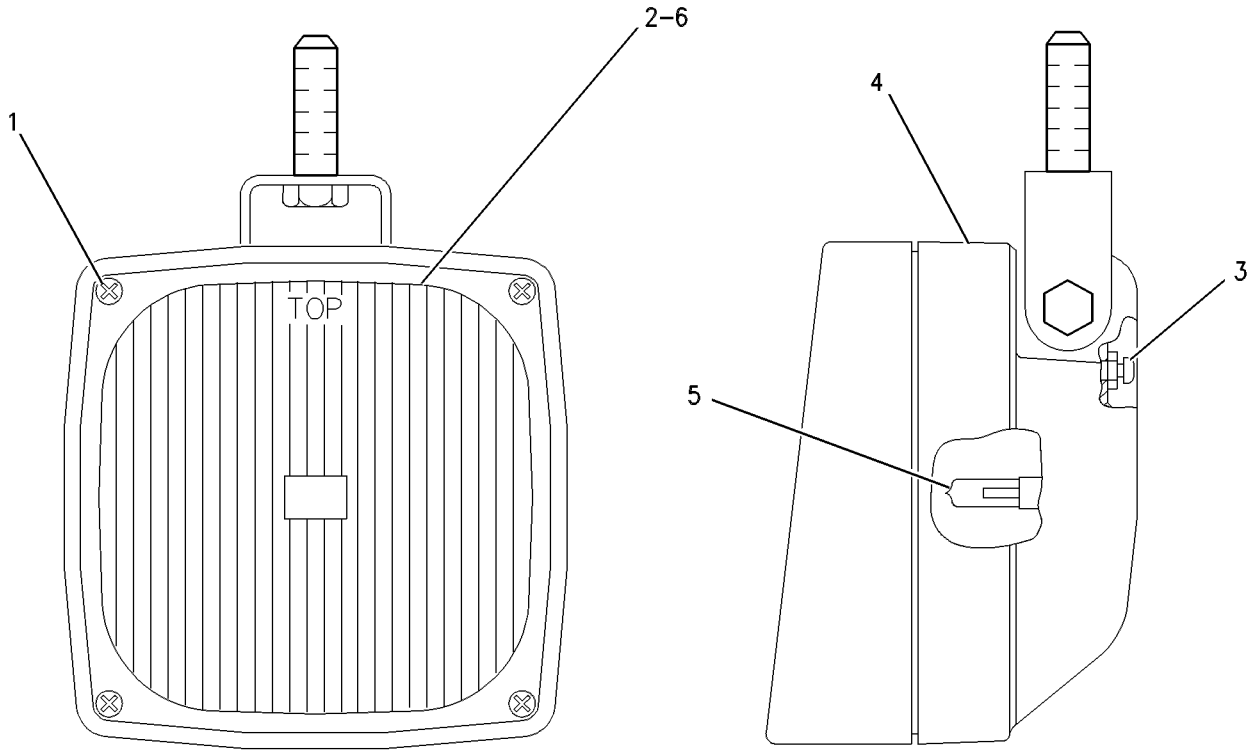

GRAPHIC #1 **<END>** g00384712

219-6487 LAMP GP-FLOOD–SUSPENDED MOUNT

S/N: EAE1-UP
24-VOLT
PART OF 204-1321 LIGHTING GP-FLOOD
AN ATTACHMENT

SMCS-1434 **i02794079**

NOTE	REF NO	GRAPHIC REF	PART NUMBER	QTY	PART NAME 1 2 3 4 5 6 (PRODUCT LEVEL)	SEE PAGE
	1	1	**9X-3463**	1	LAMP-HALOGEN (24-VOLT, 65-WATT)	
M	2	1	**8T-6912**	1	BOLT (M8X1.25X50-MM)	
M	3	1	**6V-9189**	1	LOCKNUT (M8X1.25-THD)	
	4	1	**8T-4224**	2	WASHER-HARD (8.8X16X2-MM THK)	
	5	1	**9X-4244**	2	SCREW-SPECIAL	
	6	1	**202-6612**	1	SEAL	
	7	1	**202-6614**	1	LENS AS (FLOODLIGHT)	
	8	1	**175-4292**	1	BODY AS	
	9	1	**164-7556**	1	BRACKET (LAMP RETAINING)	
	10	1	**175-4291**	1	BRACKET AS	

M-METRIC PART

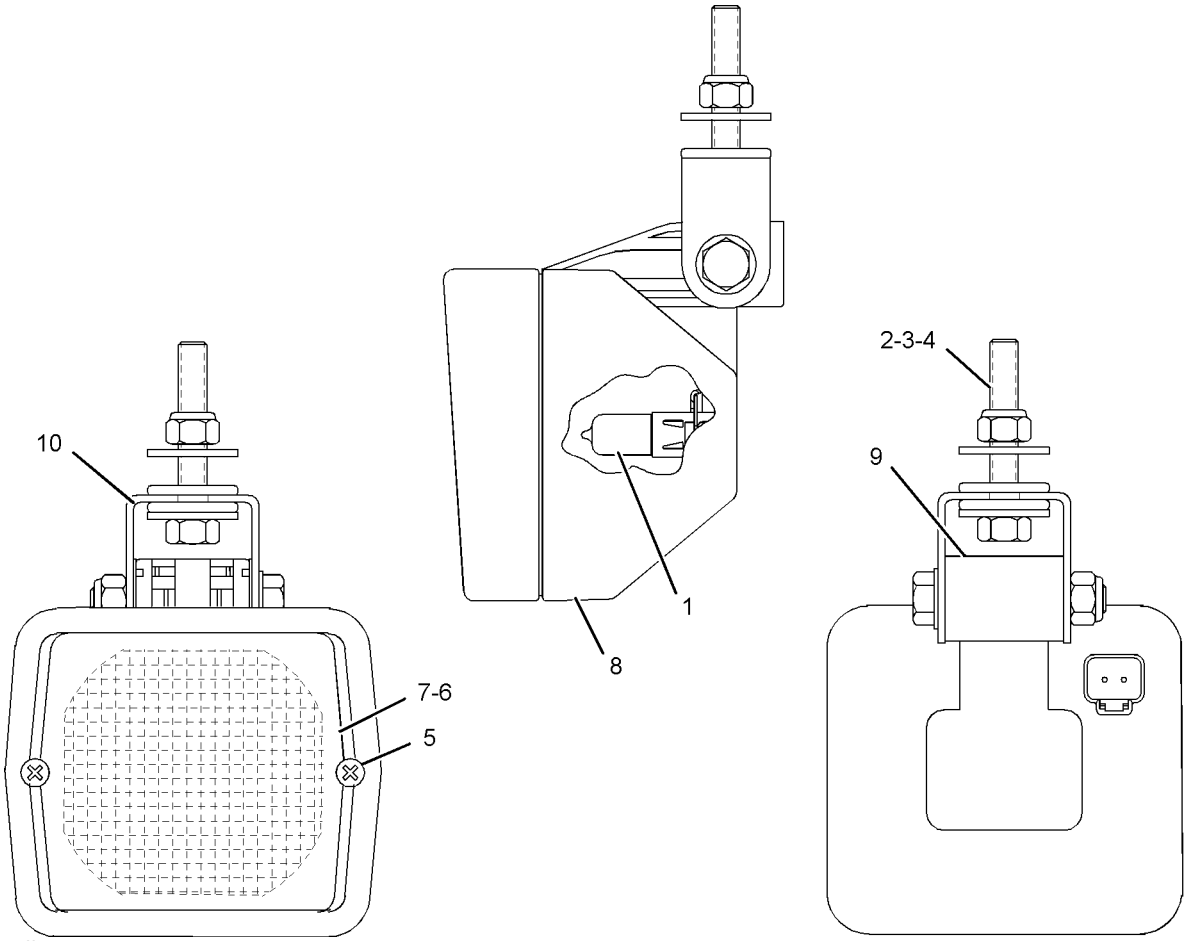

GRAPHIC #1 **<END>** g01021977

108-1029 LAMP GP-WARNING BEACON–AMBER

S/N: EAE1-UP
24-VOLT
PART OF 204-1304, 204-1305 LIGHTING GP-WARNING
AN ATTACHMENT

SMCS-1431 **i02505603**

NOTE	REF NO	GRAPHIC REF	PART NUMBER	QTY	PART NAME 1 2 3 4 5 6 (PRODUCT LEVEL)	SEE PAGE
	1	1	**272-9800**	1	LENS (AMBER)	
	2	1	**9X-7849**	1	LAMP (24-VOLT, 70-WATT) (WARNING BEACON)	
	3	1	**9X-8139**	1	BELT-DRIVE (WARNING BEACON)	
	4	1	**9R-7958**	1	CORD AS	
	5	1	**9R-7942**	1	PLUG AS	

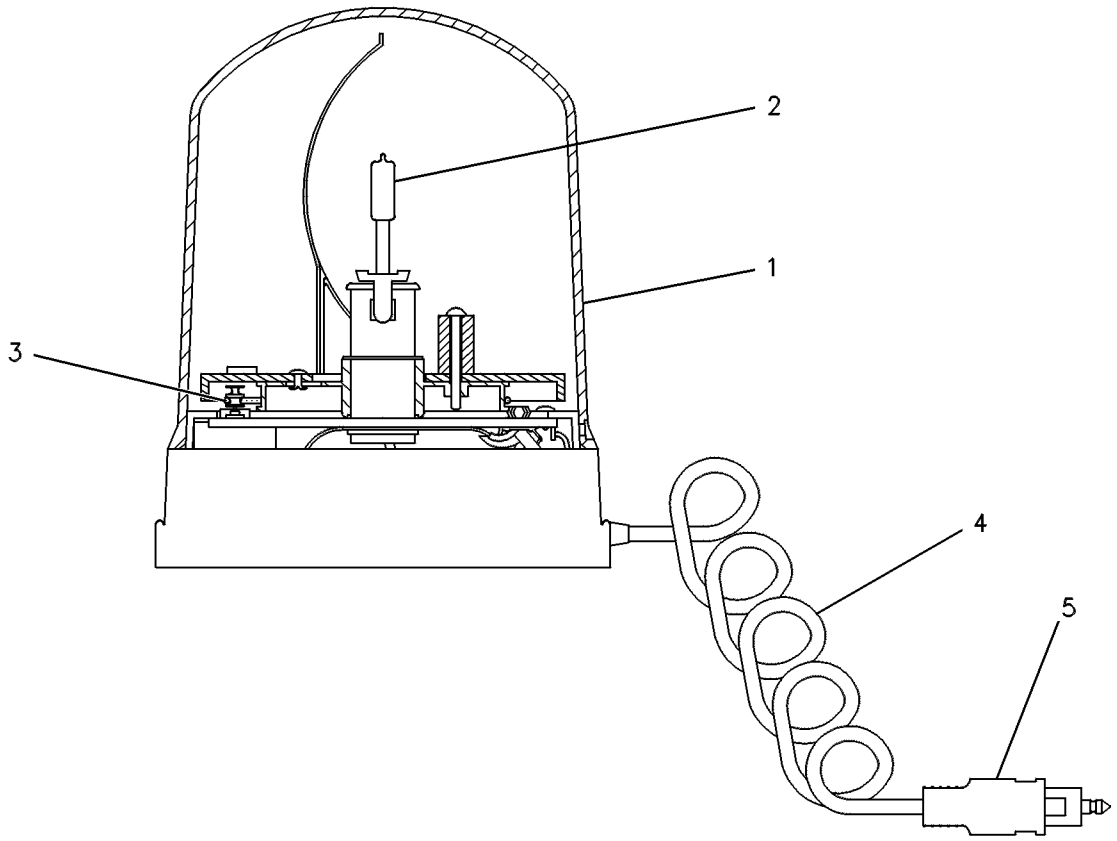

GRAPHIC #1 **<END>** g00131297

204-1321 LIGHTING GP-FLOOD

S/N: EAE1-UP
PART OF 229-8706, 236-2234 OPERATOR AR
AN ATTACHMENT
TYPE 1

SMCS-1434 **i02016377**

NOTE	REF NO	GRAPHIC REF	PART NUMBER	QTY	PART NAME 1 2 3 4 5 6 (PRODUCT LEVEL)	SEE PAGE
	1	1	**3S-2093**	32	STRAP-CABLE	
	2	1	**6T-6329**	1	BEZEL	
	3	1	**6V-8927**	2	BOLT-SOCKET HEAD (6-32X0.5-IN)	
	4	1	**7T-3811**	1	SWITCH AS-ROCKER (FLOOD LIGHT)	
		1	**3L-8187**	6	LOCKWASHER	
		1	**6V-8374**	6	SCREW-MACHINE (6-32X0.25-IN)	
Y	5	1	*9X-4381*	4	LAMP GP-FLOOD (24-VOLT)	108
	6	1	**139-2787**	1	HARNESS AS-LIGHTING (FLOODLIGHT)	
		1	**102-8804**	1	KIT-RECEPTACLE (4-PIN)	
	7	1	**8T-4121**	4	WASHER-HARD (11X21X2.5-MM THK)	
M	8	1	**8T-4133**	4	NUT (M10X1.5-THD)	

M-METRIC PART
Y-SEPARATE ILLUSTRATION

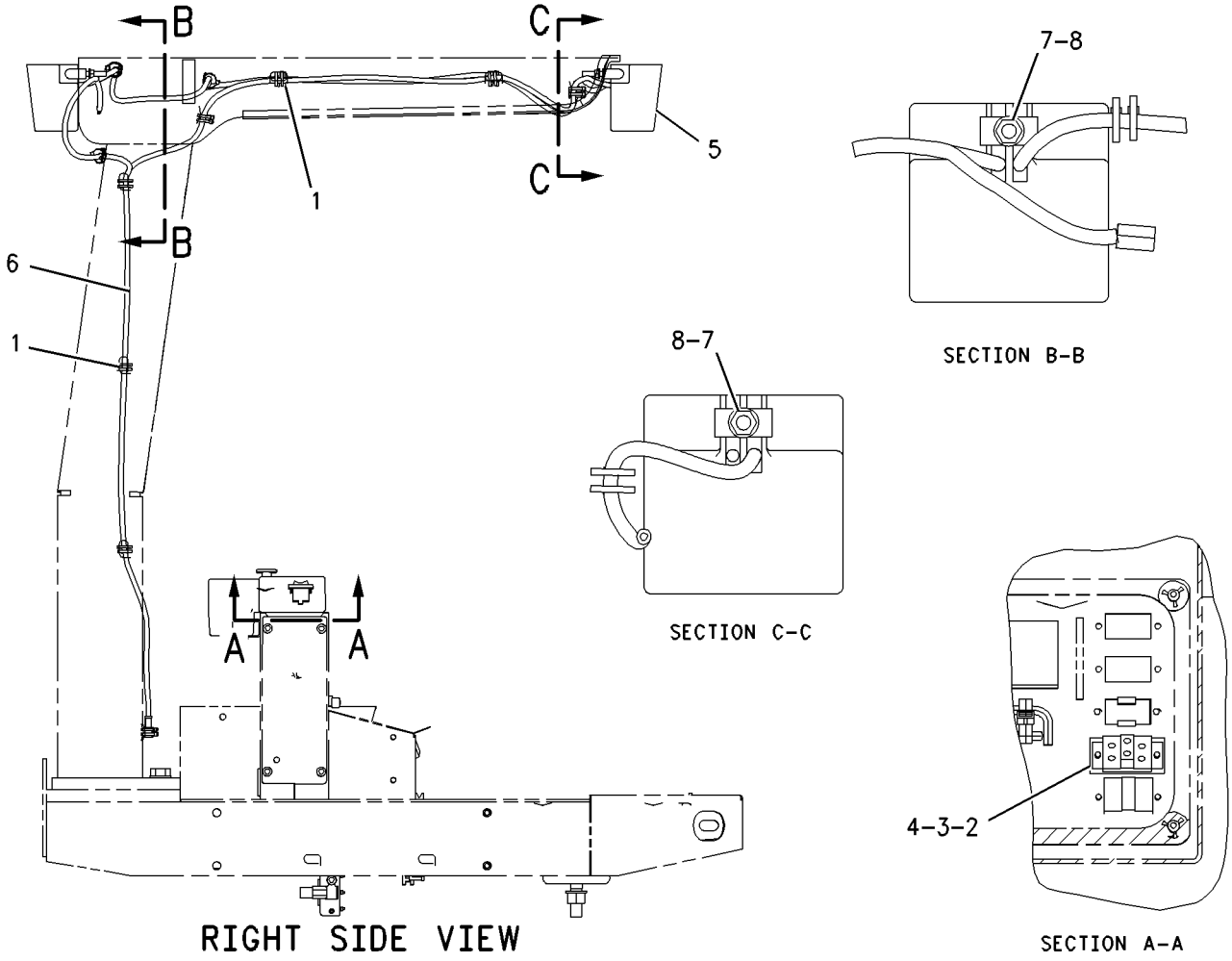

GRAPHIC #1 **<END>** g00840578

204-1321 LIGHTING GP-FLOOD

S/N: EAE1-UP
PART OF 229-8706, 236-2234 OPERATOR AR
AN ATTACHMENT
TYPE 2

SMCS-1434 **i02897068**

NOTE	REF NO	GRAPHIC REF	PART NUMBER	QTY	PART NAME 1 2 3 4 5 6 (PRODUCT LEVEL)	SEE PAGE
	1	1	**3S-2093**	32	STRAP-CABLE	
	2	1	**6T-6329**	1	BEZEL	
	3	1	**6V-8927**	2	BOLT-SOCKET HEAD (6-32X0.5-IN)	
	4	1	**7T-3811**	1	SWITCH AS-ROCKER (FLOOD LIGHT)	
		1	**3L-8187**	6	LOCKWASHER	
		1	**6V-8374**	6	SCREW-MACHINE (6-32X0.25-IN)	
C	5	1	**281-0028**	1	HARNESS AS-LIGHTING (FLOODLIGHT)	
CY	6	1	**219-6487**	4	LAMP GP-FLOOD (24-VOLT, 65-WATT)	109

C-CHANGE FROM PREVIOUS TYPE
Y-SEPARATE ILLUSTRATION

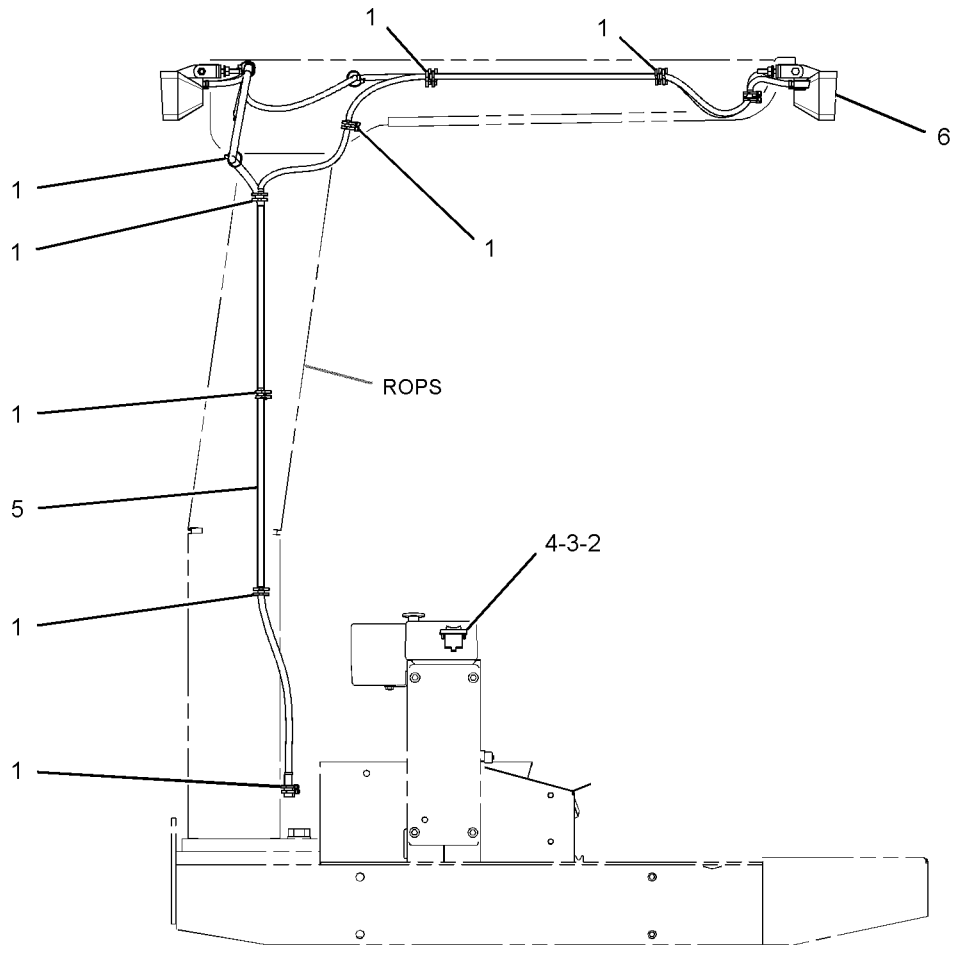

RIGHT SIDE VIEW

GRAPHIC #1

<END>

g01427198

226-7758 LIGHTING GP-FLOOD

S/N: EAE1-UP

PART OF 223-4791, 254-5054, 259-4423 CAB AR

AN ATTACHMENT

SMCS-1434 **i02138916**

NOTE	REF NO	GRAPHIC REF	PART NUMBER	QTY	PART NAME 1 2 3 4 5 6 (PRODUCT LEVEL)	SEE PAGE
	1	1	**9R-7941**	1	SOCKET AS	
		1	**9R-7980**	1	COVER	
	2	1	**9X-0506**	6	TIE	
	3	1	**190-0360**	1	HARNESS AS-LIGHTING (FLOODLIGHT)	
		1	**102-8804**	1	KIT-RECEPTACLE (4-PIN)	
					(INCLUDES RECEPTACLE AS & WEDGE)	
		1	**186-3735**	2	PIN-CONNECTOR (16-GA TO 18-GA)	
	4	1	**8T-4121**	8	WASHER-HARD (11X21X2.5-MM THK)	
M	5	1	**8T-4133**	4	NUT (M10X1.5-THD)	
	6	1	**9R-2620**	4	PLUG	
Y	7	1	**9X-4381**	4	LAMP GP-FLOOD (24-VOLT)	108

M-METRIC PART
Y-SEPARATE ILLUSTRATION

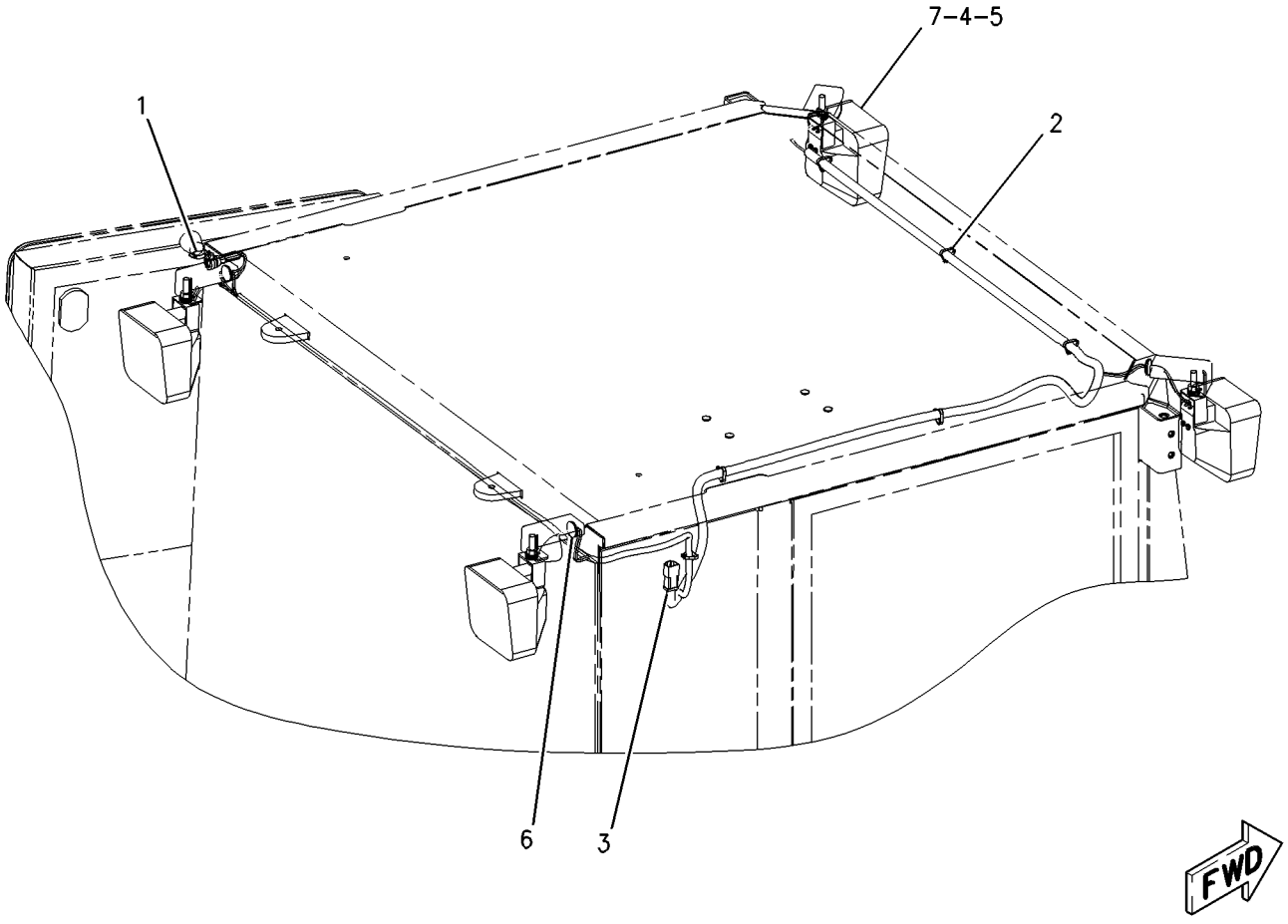

GRAPHIC #1 **<END>** g00998732

204-1304 LIGHTING GP-WARNING–ROPS

S/N: EAE1-UP
AN ATTACHMENT

SMCS-1431 **i01972497**

NOTE	REF NO	GRAPHIC REF	PART NUMBER	QTY	PART NAME 1 2 3 4 5 6 (PRODUCT LEVEL)	SEE PAGE
	1	1	**6T-6329**	1	BEZEL	
	2	1	**6V-8927**	2	BOLT-SOCKET HEAD (6-32X0.5-IN)	
	3	1	**9R-7941**	1	SOCKET AS	
		1	**9R-7980**	1	COVER	
Y	4	1	**108-1029**	1	LAMP GP-WARNING BEACON (24-VOLT)	110
	5	1	**6T-3990**	1	SWITCH AS-ROCKER (BEACON)	
		1	**3L-8187**	2	LOCKWASHER	
		1	**6V-8374**	2	SCREW-MACHINE (6-32X0.25-IN)	
	6	1	**8X-7008**	1	BRACKET	
	7	1	**8T-4121**	2	WASHER-HARD (11X21X2.5-MM THK)	
M	8	1	**8T-4133**	1	NUT (M10X1.5-THD)	
M	9	1	**8T-4195**	1	BOLT (M10X1.5X30-MM)	

M-METRIC PART
Y-SEPARATE ILLUSTRATION

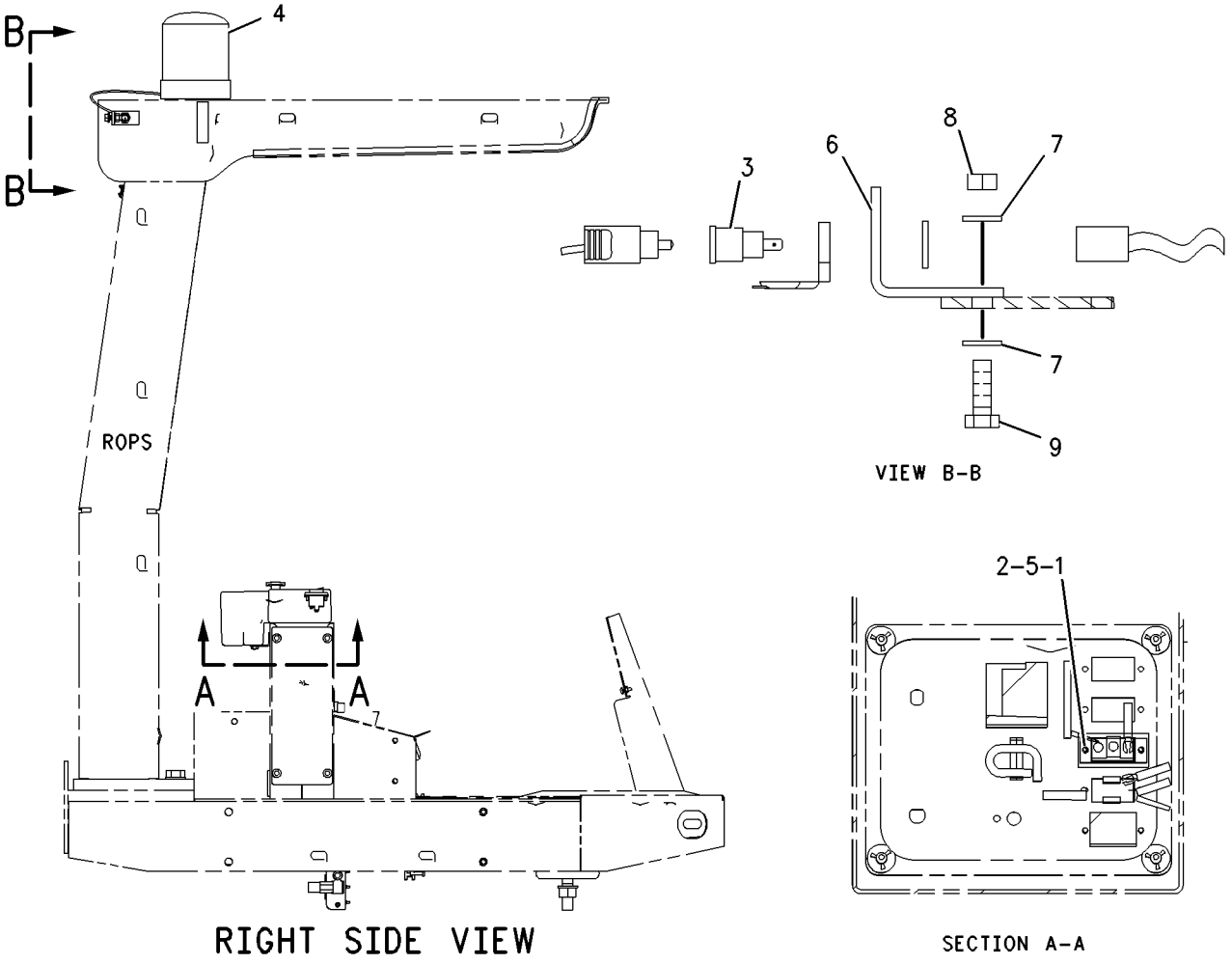

GRAPHIC #1 **<END>** g00853200

204-1305 LIGHTING GP-WARNING–CAB

S/N: EAE1-UP
AN ATTACHMENT

SMCS-1431 **i02327508**

NOTE	REF NO	GRAPHIC REF	PART NUMBER	QTY	PART NAME 1 2 3 4 5 6 (PRODUCT LEVEL)	SEE PAGE
	1	1	**6T-6329**	1	BEZEL	
	2	1	**6V-8927**	2	BOLT-SOCKET HEAD (6-32X0.5-IN)	
Y	3	1	**108-1029**	1	LAMP GP-WARNING BEACON (24-VOLT)	110
	4	1	**6T-3990**	1	SWITCH AS-ROCKER (BEACON)	
		1	**3L-8187**	2	LOCKWASHER	
		1	**6V-8374**	2	SCREW-MACHINE (6-32X0.25-IN)	

Y-SEPARATE ILLUSTRATION

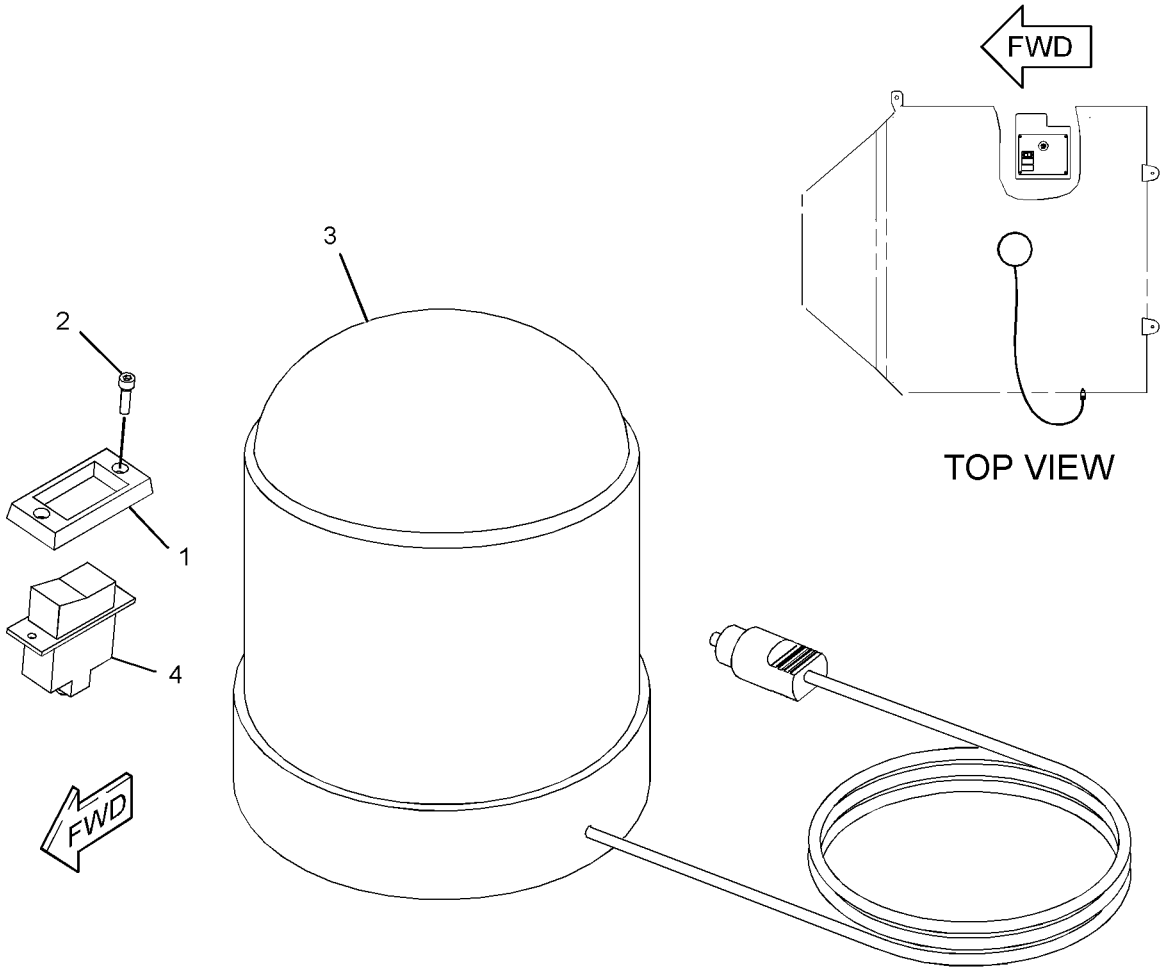

GRAPHIC #1 **<END>** g01160186

228-9108 MODULE GP-TIMER

S/N: EAE1-UP

PART OF 224-1152, 243-5693 PANEL GP-INSTRUMENT

AN ATTACHMENT

SMCS-4490, 7451 **i02130133**

NOTE	REF NO	GRAPHIC REF	PART NUMBER	QTY	PART NAME 1 2 3 4 5 6 (PRODUCT LEVEL)	SEE PAGE
					(NO SERVICED PARTS)	

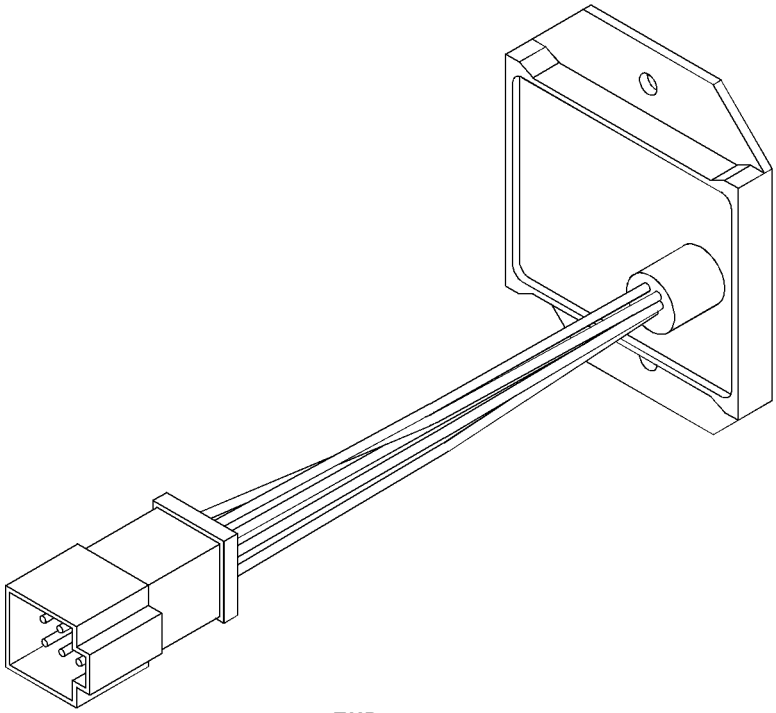

GRAPHIC #1

<END>

g01085465

120-4187 SOLENOID GP-THROTTLE

S/N: EAE1-UP

PART OF 227-8394 GOVERNOR GP

SMCS-1265 **i01159952**

NOTE	REF NO	GRAPHIC REF	PART NUMBER	QTY	PART NAME 1 2 3 4 5 6 (PRODUCT LEVEL)	SEE PAGE
	1	1	**119-7017**	1	SOLENOID	
	2	1	**102-8803**	1	KIT-RECEPTACLE (3-PIN)	
					(INCLUDES RECEPTACLE AS & WEDGE)	
BE	3	1	**9X-1813**		SLEEVE	

B-USE AS REQUIRED
E-ORDER BY THE CENTIMETER

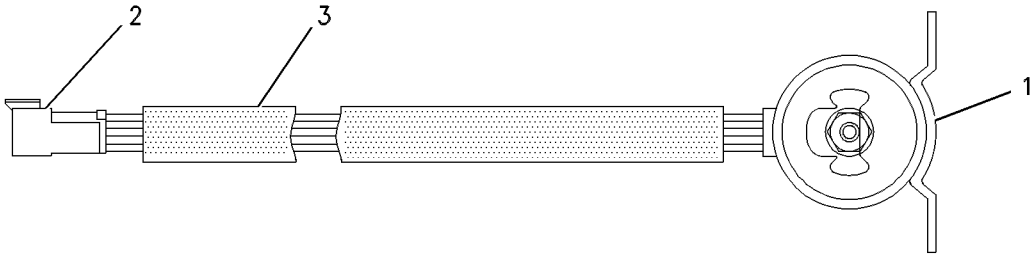

GRAPHIC #1 **<END>** g00476791

230-7304 STARTING MOTOR GP-ELECTRIC

S/N: G4D1-UP; CRS2300-UP

PART OF 176-3163 ENGINE AR-PRIMARY

SMCS-1453 **i02089640**

NOTE	REF NO	GRAPHIC REF	PART NUMBER	QTY	PART NAME 1 2 3 4 5 6 (PRODUCT LEVEL)	SEE PAGE
	1	1	**6I-0364**	3	STUD (M10X1.5X30-MM)	
	2	1	**6I-0594**	3	NUT (M10X1.5-THD)	
	3	1	**225-3150**	1	STARTING MOTOR GP-ELECTRIC	

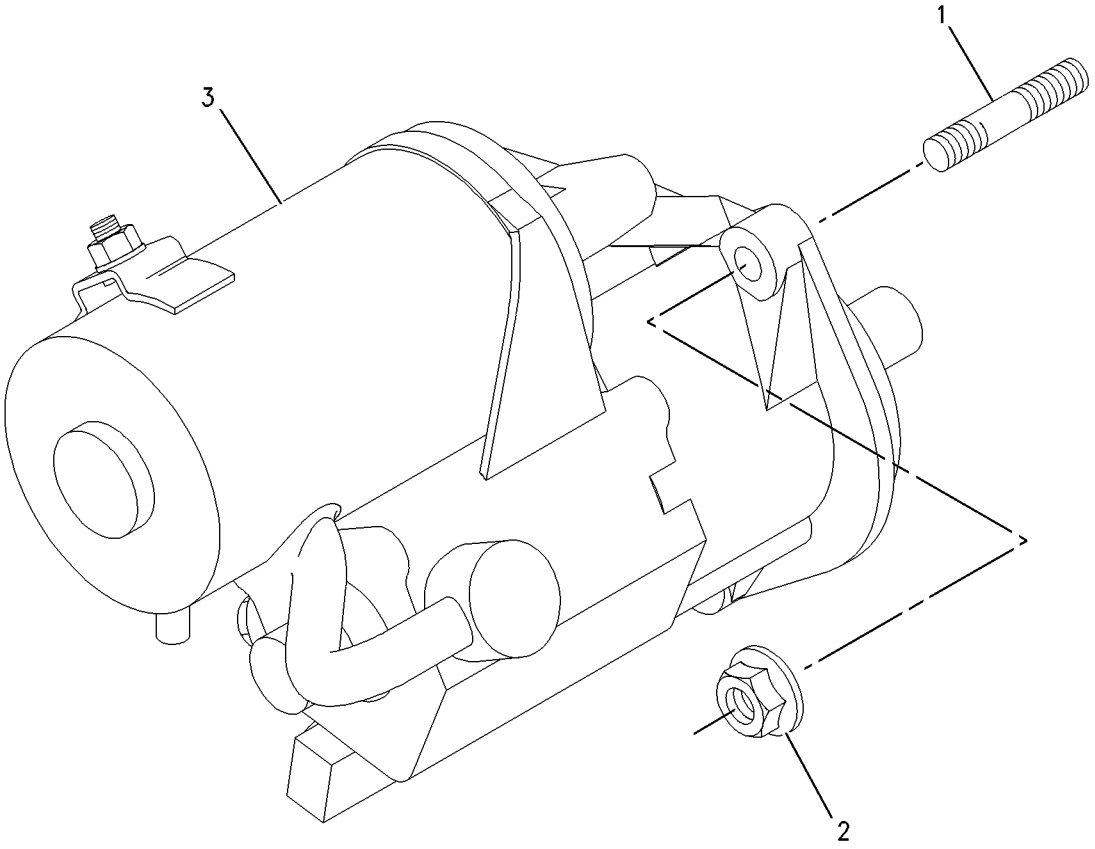

GRAPHIC #1 **<END>** g00933413

7N-0718 SWITCH GP-DISCONNECT–BATTERY

S/N: EAE1-UP

PART OF 229-5334 BATTERY & WIRING GP

SMCS-1411 **i02587657**

NOTE	REF NO	GRAPHIC REF	PART NUMBER	QTY	PART NAME 1 2 3 4 5 6 (PRODUCT LEVEL)	SEE PAGE
	1	1	**8H-5306**	1	KEY (BATTERY DISCONNECT)	
	2	1	**8H-5303**	1	NUT (3/4-16-THD)	
	3	1	**2H-3922**	2	LOCKWASHER	
	4	1	**9F-5644**	2	LOCKWASHER	
	5	1	**6F-7045**	2	NUT-FULL (3/8-24-THD)	

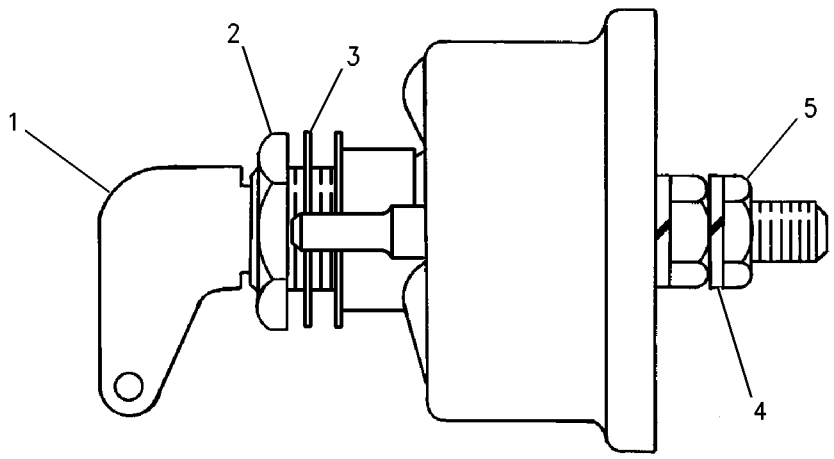

GRAPHIC #1 **<END>** g00715584

167-0138 SWITCH GP-MAGNETIC–PARKING BRAKE

S/N: EAE1-UP
24-VOLT
PART OF 224-1152, 243-5693 PANEL GP-INSTRUMENT
FIELD REPLACEMENT ORDER 241-8368–PAGE 121
AN ATTACHMENT

SMCS-7499 **i02021607**

NOTE	REF NO	GRAPHIC REF	PART NUMBER	QTY	PART NAME 1 2 3 4 5 6 (PRODUCT LEVEL)	SEE PAGE
	1	1	**4F-2294**	2	NUT-JAM (5/16-24-THD)	
	2	1	**6V-8186**	2	NUT-FULL (5/16-24-THD)	
	3	1	**155-2270**	1	KIT-CONNECTING PLUG (2-PIN)	
	4	1	**8T-8730**	2	SOCKET-CONNECTOR	
	5	1	**155-2261**	1	WEDGE-PLUG LOCK (2-PIN)	

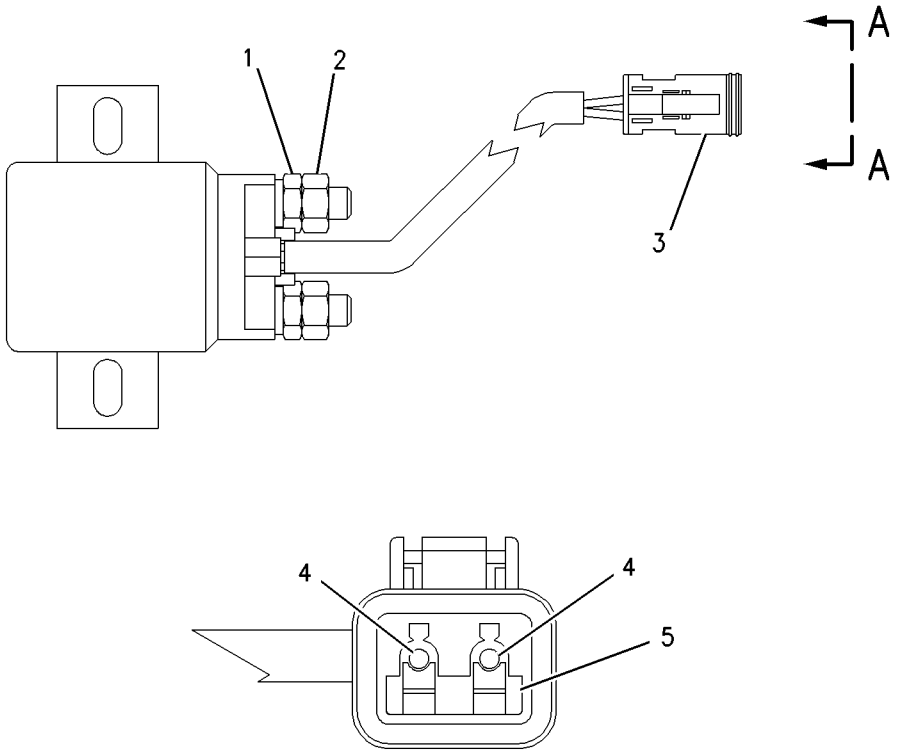

VIEW A-A

GRAPHIC #1 **<END>** g00823979

241-8368 SWITCH GP-MAGNETIC

S/N: EAE1-UP

24-VOLT

FIELD REPLACEMENT FOR 167-0138—PAGE 120

SMCS-7499 **i02290099**

NOTE	REF NO	GRAPHIC REF	PART NUMBER	QTY	PART NAME 1 2 3 4 5 6 (PRODUCT LEVEL)	SEE PAGE
	1	1	**155-2270**	1	KIT-CONNECTING PLUG (2-PIN)	
					(INCLUDES PLUG AS, WEDGE & INTERFACE SEAL)	
	2	1	**4F-2294**	2	NUT-JAM (5/16-24-THD)	
	3	1	**186-3736**	2	SOCKET-CONNECTOR (16-GA TO 18-GA)	

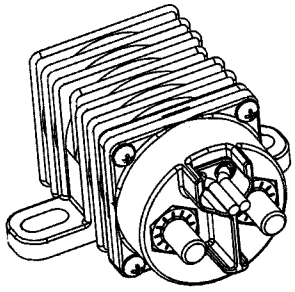

ISOMETRIC VIEW

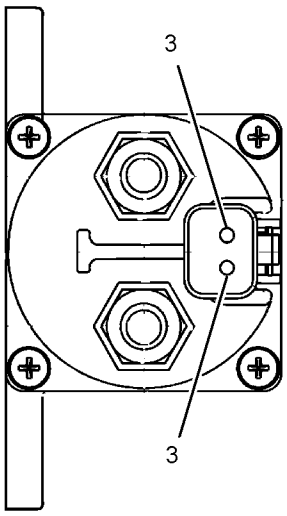

VIEW A-A

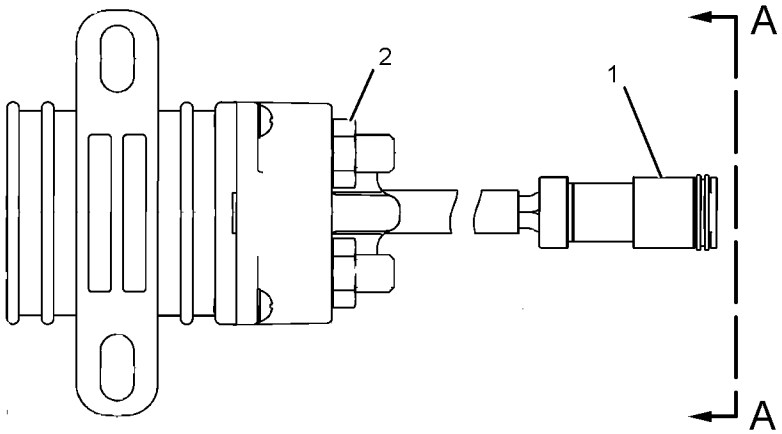

GRAPHIC #1 **<END>** g01077362

231-8754 WARNING GP-BACKUP

S/N: EAE1-291

PART OF 233-4654 ELECTRICAL AR

SMCS-7406 **i02897072**

NOTE	REF NO	GRAPHIC REF	PART NUMBER	QTY	PART NAME 1 2 3 4 5 6 (PRODUCT LEVEL)	SEE PAGE
	1	1	**3S-2093**	9	STRAP-CABLE	
	2	1	**220-0229**	1	ALARM AS (BACKUP)	
		1	**102-8802**	1	KIT-RECEPTACLE (2-PIN)	
					(INCLUDES RECEPTACLE AS & WEDGE)	
		1	**3E-3365**	1	WEDGE-RECEPTACLE LOCK (2-PIN)	
		1	**186-3735**	2	PIN-CONNECTOR (16-GA TO 18-GA)	
BE		1	**9X-1813**		SLEEVE	
	3	1	**229-9782**	1	HARNESS AS-ALARM (BACKUP WARNING)	
		1	**102-8802**	1	KIT-RECEPTACLE (2-PIN)	
					(INCLUDES RECEPTACLE AS & WEDGE)	
		1	**155-2270**	1	KIT-CONNECTING PLUG (2-PIN)	
					(INCLUDES PLUG AS, WEDGE & INTERFACE SEAL)	
	4	1	**8T-4121**	2	WASHER-HARD (11X21X2.5-MM THK)	
M	5	1	**8T-4136**	2	BOLT (M10X1.5X25-MM)	

B-USE AS REQUIRED
E-ORDER BY THE CENTIMETER
M-METRIC PART

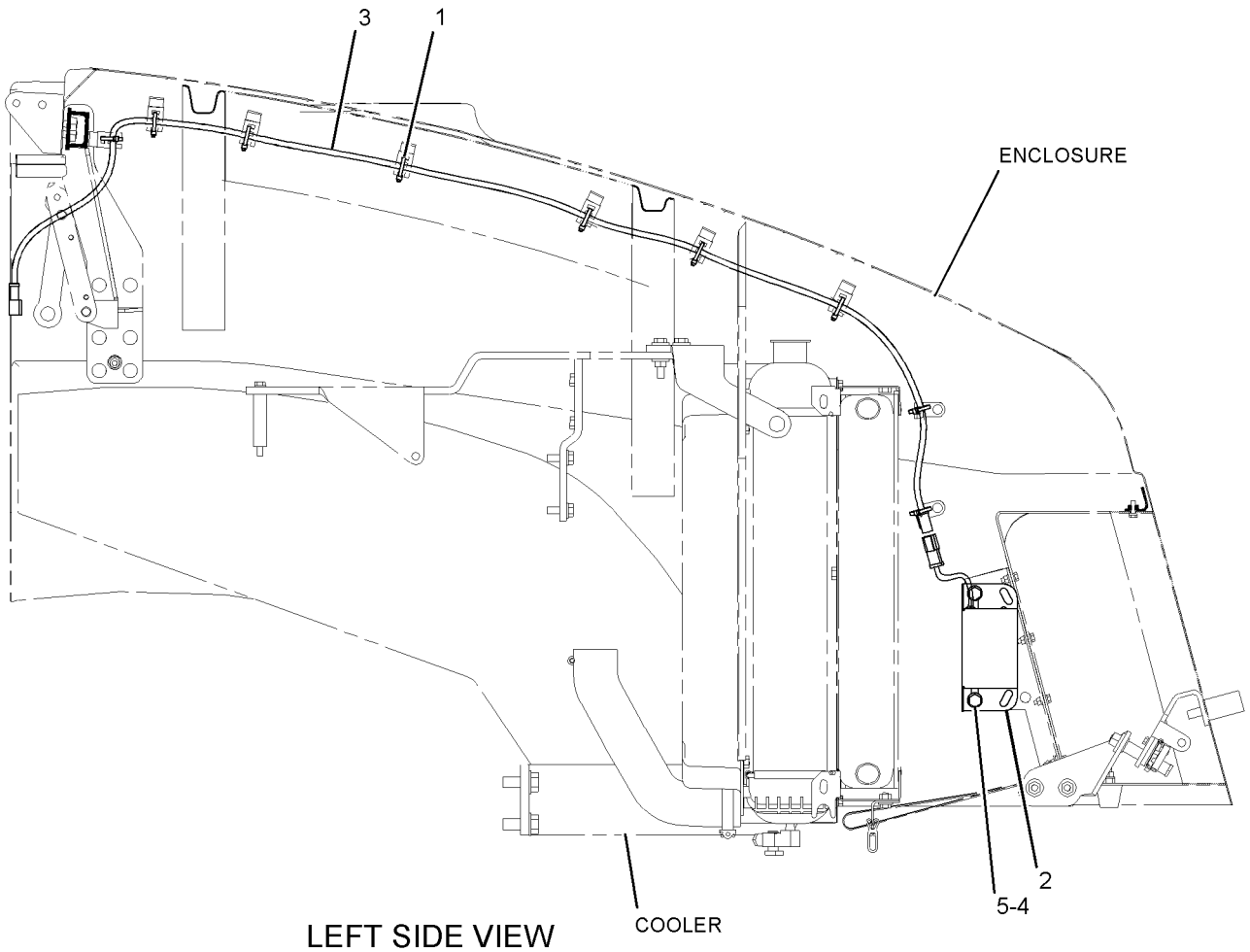

LEFT SIDE VIEW

GRAPHIC #1 **<END>** g01034586

231-8754 WARNING GP-BACKUP

S/N: EAE292-UP

PART OF 233-4654 ELECTRICAL AR

SMCS-7406 **i02565387**

NOTE	REF NO	GRAPHIC REF	PART NUMBER	QTY	PART NAME 1 2 3 4 5 6 (PRODUCT LEVEL)	SEE PAGE
	1	1	**3S-2093**	9	STRAP-CABLE	
C	2	1	**244-1090**	1	ALARM GP	
		1	**102-8802**	1	KIT-RECEPTACLE (2-PIN)	
					(INCLUDES RECEPTACLE AS & WEDGE)	
		1	**186-3735**	2	PIN-CONNECTOR (16-GA TO 18-GA)	
E		1	**9X-1813**		SLEEVE (31-CM)	
	3	1	**229-9782**	1	HARNESS AS-ALARM (BACKUP WARNING)	
		1	**102-8802**	1	KIT-RECEPTACLE (2-PIN)	
					(INCLUDES RECEPTACLE AS & WEDGE)	
		1	**155-2270**	1	KIT-CONNECTING PLUG (2-PIN)	
					(INCLUDES PLUG AS, WEDGE & INTERFACE SEAL)	
	4	1	**8T-4121**	2	WASHER-HARD (11X21X2.5-MM THK)	
CM	5	1	**8T-4198**	2	BOLT (M10X1.5X100-MM)	

C-CHANGE FROM PREVIOUS TYPE
E-ORDER BY THE CENTIMETER
M-METRIC PART

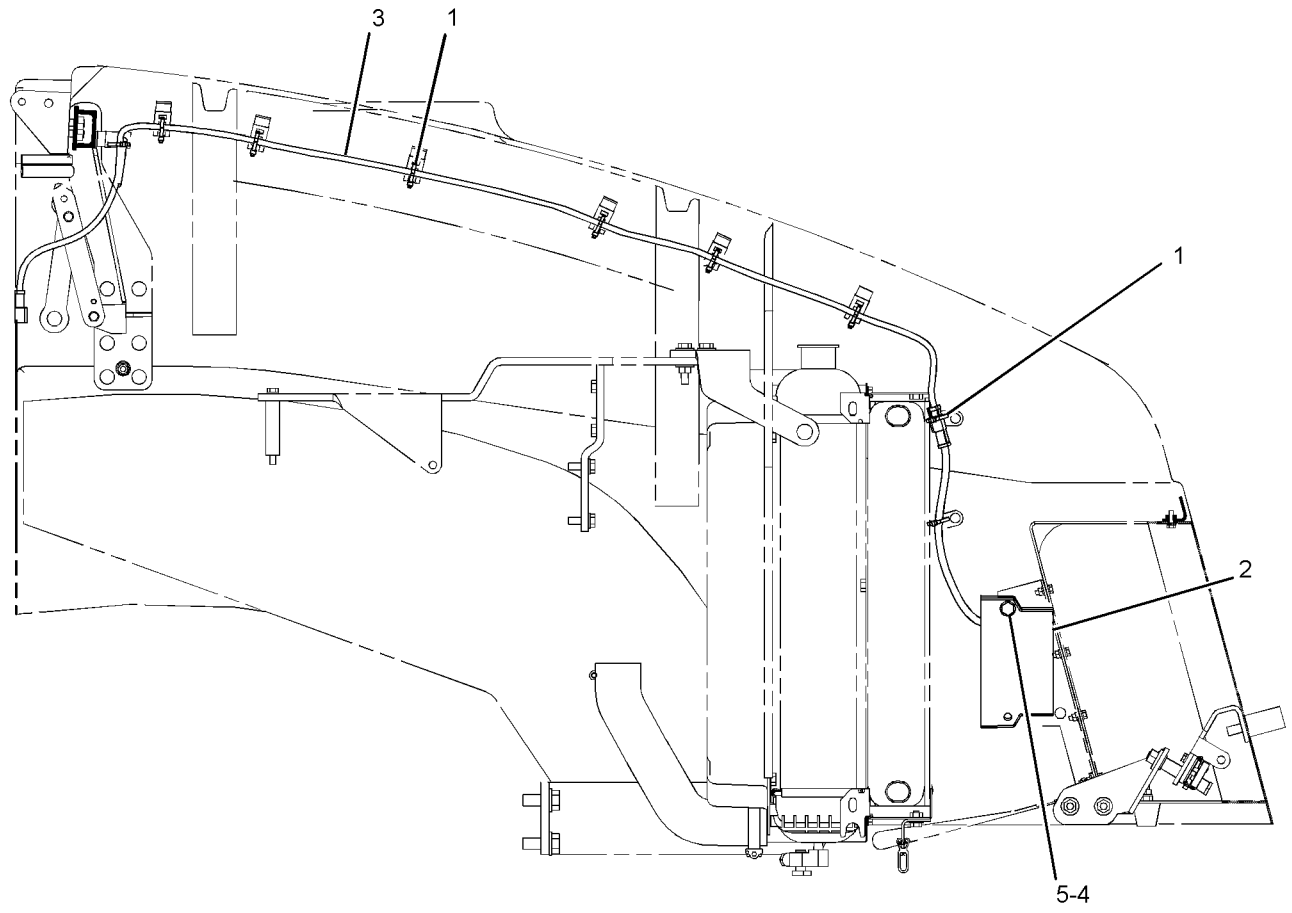

LEFT SIDE VIEW

GRAPHIC #1

<END>

g01285244

236-7762 WIRING GP-AIR CONDITIONER

S/N: EAE1-UP
PART OF 249-5075 OPERATOR AR
AN ATTACHMENT

SMCS-1408, 7320 **i02897074**

NOTE	REF NO	GRAPHIC REF	PART NUMBER	QTY	PART NAME 1 2 3 4 5 6 (PRODUCT LEVEL)	SEE PAGE
	1	1	**3S-2093**	19	STRAP-CABLE	
	2	1	**106-8704**	1	SUPPRESSOR AS-ARC	
		1	**102-8802**	1	KIT-RECEPTACLE (2-PIN)	
					(INCLUDES RECEPTACLE AS & WEDGE)	
		1	**3E-3365**	1	WEDGE-RECEPTACLE LOCK (2-PIN)	
		1	**186-3735**	2	PIN-CONNECTOR (16-GA TO 18-GA)	
	3	1	**116-0118**	1	CLIP	
	4	1	**213-3724**	1	HARNESS AS-HEATER & AIR COND	
			102-8802	1	KIT-RECEPTACLE (2-PIN)	
					(INCLUDES RECEPTACLE AS & WEDGE)	
			155-2270	3	KIT-CONNECTING PLUG (2-PIN)	
					(INCLUDES PLUG AS,WEDGE & INTERFACE SEAL)	
	5	1	**4P-7581**	1	CLIP	
	6	1	**5P-4115**	1	WASHER-HARD (7.2X19X2-MM THK)	
M	7	1	**8T-4970**	1	BOLT (M6X1X14-MM)	

M-METRIC PART

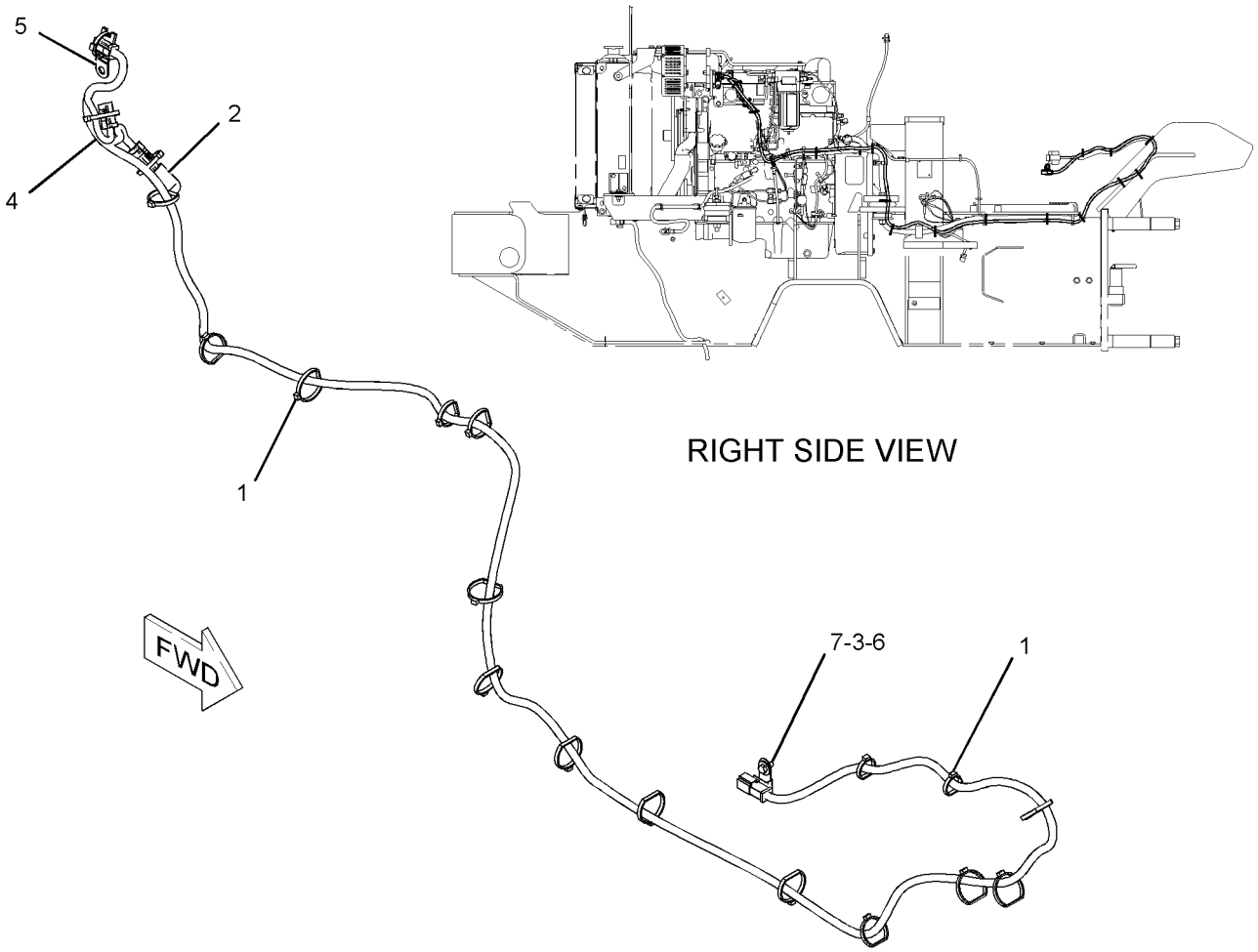

GRAPHIC #1 **<END>** g01034575

226-8940 WIRING GP-CAB

S/N: EAE1-UP
PART OF 223-4791, 254-5054, 259-4423 CAB AR
AN ATTACHMENT

SMCS-1408 **i02138917**

NOTE	REF NO	GRAPHIC REF	PART NUMBER	QTY	PART NAME 1 2 3 4 5 6 (PRODUCT LEVEL)	SEE PAGE
	1	1	**3S-2093**	28	STRAP-CABLE	
	2	1	**226-8941**	1	HARNESS AS-CAB	
		1	**102-8804**	1	KIT-RECEPTACLE (4-PIN)	
		1	**102-8801**	1	KIT-RECEPTACLE (12-PIN)	
					(EACH KIT INCLUDES RECEPTACLE AS & WEDGE)	
		1	**8T-8737**	6	PLUG-SEAL	
		1	**155-2260**	1	KIT-CONNECTING PLUG (3-PIN)	
		1	**155-2271**	1	KIT-CONNECTING PLUG (4-PIN)	
		1	**155-2274**	2	KIT-CONNECTING PLUG (6-PIN)	
					(EACH KIT INCLUDES PLUG AS & WEDGE)	

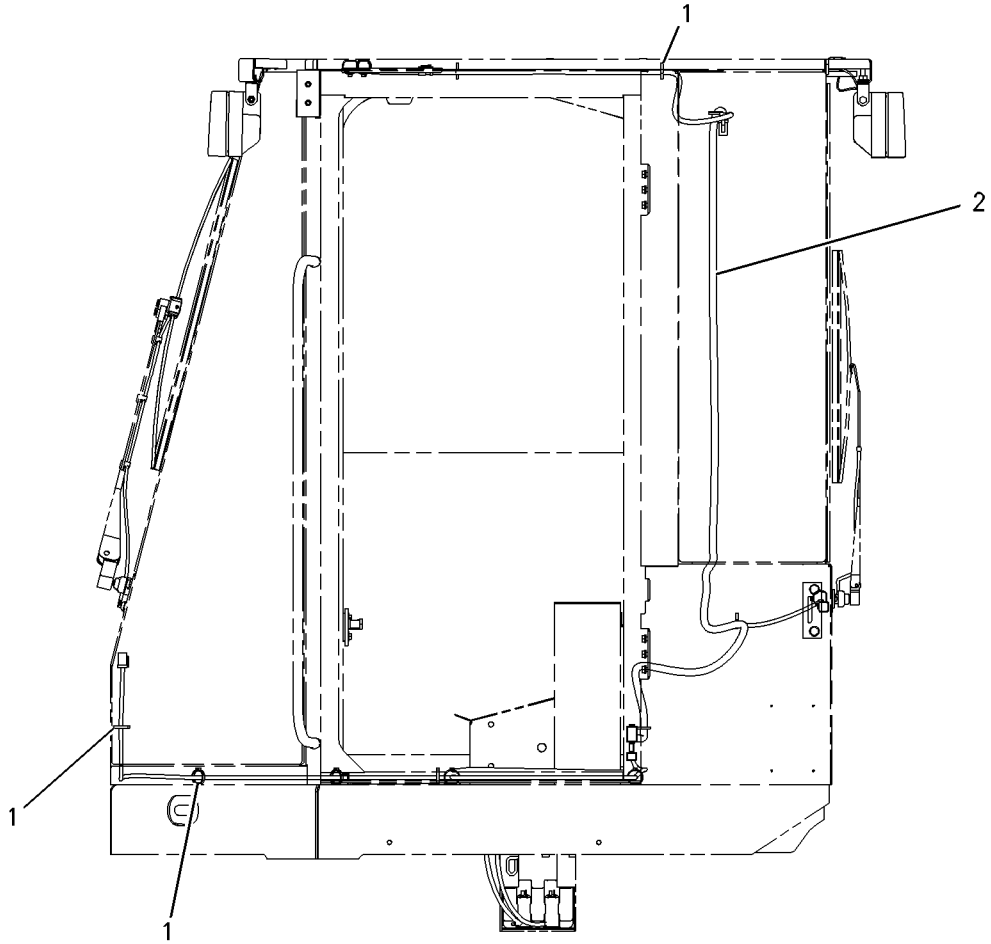

LEFT SIDE VIEW

GRAPHIC #1 **<END>** g01001480

201-8326 WIRING GP-CONSOLE–SIDE, VIBRATORY

S/N: EAE1-UP
PART OF 153-5024 HYDRAULIC AR-VIBRATORY
AN ATTACHMENT
TYPE 1

SMCS-1408 **i02897079**

NOTE	REF NO	GRAPHIC REF	PART NUMBER	QTY	PART NAME 1 2 3 4 5 6 (PRODUCT LEVEL)	SEE PAGE
	1	1	**3N-5982**	1	KNOB (VIB SELECT)	
	2	1	**205-1857**	1	HARNESS AS-CONTROL (VIBRATORY)	
		1	**102-8803**	1	KIT-RECEPTACLE (3-PIN)	
		1	**102-8802**	1	KIT-RECEPTACLE (2-PIN)	
		1	**102-8804**	1	KIT-RECEPTACLE (4-PIN)	
					(EACH RECEPTACLE KIT INCLUDES RECEPTACLE AS & WEDGE)	
		1	**155-2260**	1	KIT-CONNECTING PLUG (3-PIN)	
		1	**155-2270**	1	KIT-CONNECTING PLUG (2-PIN)	
		1	**155-2271**	1	KIT-CONNECTING PLUG (4-PIN)	
					(EACH PLUG KIT INCLUDES PLUG AS,WEDGE & INTERFACE SEAL)	
	3	1	**205-2314**	1	CONTROLLER AS (CONSOLE)	
	4	1	**205-2316**	1	PLATE	
M	5	1	**5C-2890**	2	NUT (M6X1-THD)	
	6	1	**6P-0699**	1	GROMMET	
	7	1	**7K-1181**	1	STRAP-CABLE	
M	8	1	**8T-3844**	2	BOLT (M6X1X70-MM)	
	9	1	**9X-8256**	4	WASHER (6.6X12X2-MM THK)	

M-METRIC PART

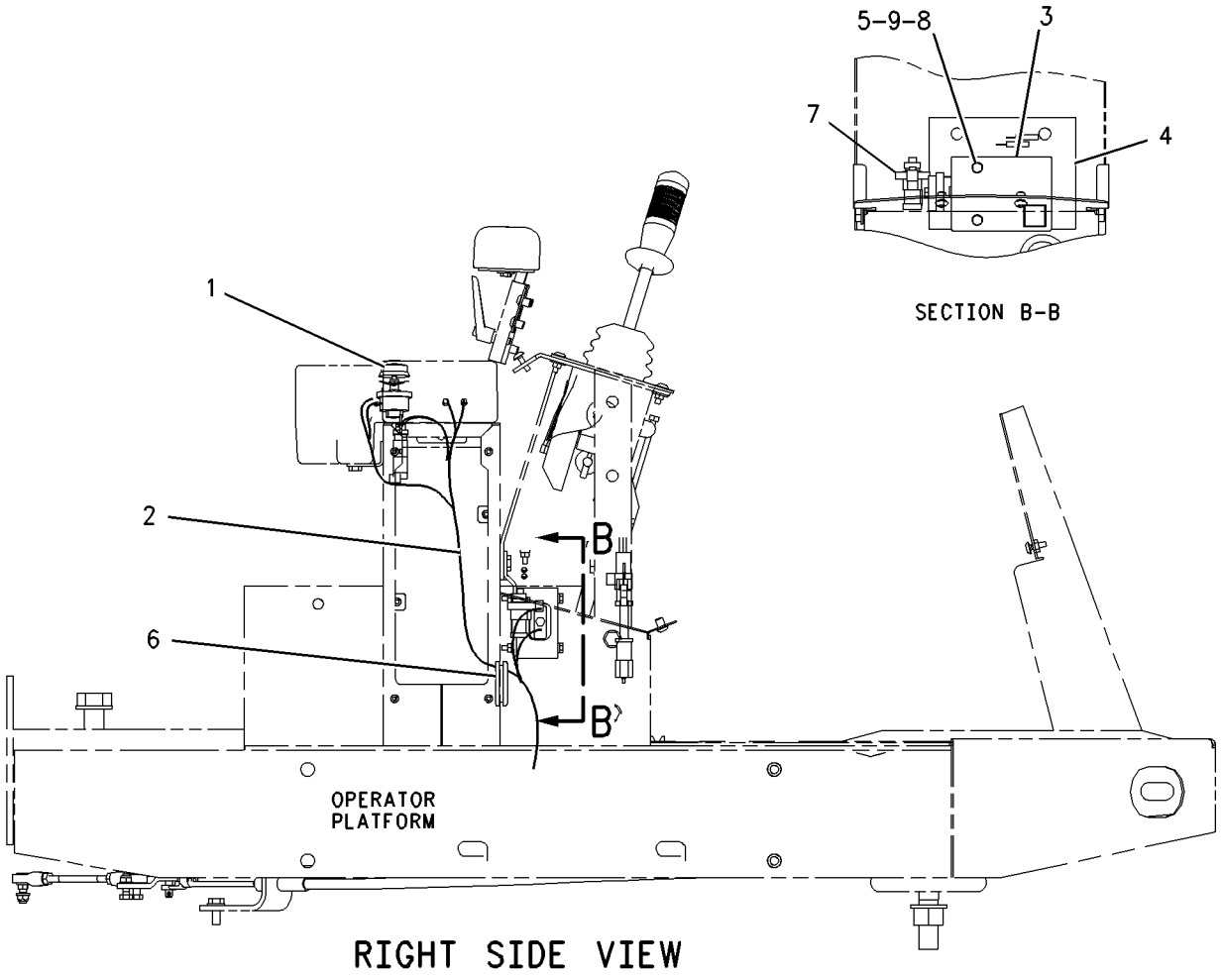

RIGHT SIDE VIEW

GRAPHIC #1 **<END>** g00836999

201-8326 WIRING GP-CONSOLE—SIDE, VIBRATORY

S/N: EAE1-UP
PART OF 153-5024 HYDRAULIC AR-VIBRATORY
AN ATTACHMENT
TYPE 2

SMCS-1408 **i02897086**

NOTE	REF NO	GRAPHIC REF	PART NUMBER	QTY	PART NAME 1 2 3 4 5 6 (PRODUCT LEVEL)	SEE PAGE
C	1	1	**3E-6477**	1	RELAY AS (24-VOLT) (VIBRATORY)	
	2	1	**3N-5982**	1	KNOB	
C	3	1	**7V-5628**	1	PLATE	
CM	4	1	**179-4324**	1	LOCKNUT (M5X0.8-THD)	
	5	1	**205-2314**	1	CONTROLLER AS	
	6	1	**205-2316**	1	PLATE	
C	7	1	**240-5204**	1	RESISTOR AS	
C	8	1	**253-6006**	1	HARNESS AS-CONSOLE (VIBRATORY)	
		1	**102-8802**	1	KIT-RECEPTACLE (2-PIN)	
		1	**102-8804**	1	KIT-RECEPTACLE (4-PIN)	
					(EACH RECEPTACLE KIT INCLUDES RECEPTACLE AS & WEDGE)	
		1	**7T-6365**	1	HOUSING-RECEPTACLE	
		1	**134-3846**	1	RHEOSTAT	
		1	**155-2260**	1	KIT-CONNECTING PLUG (3-PIN)	
		1	**155-2270**	1	KIT-CONNECTING PLUG (2-PIN)	
		1	**155-2271**	1	KIT-CONNECTING PLUG (4-PIN)	
		1	**155-2274**	1	KIT-CONNECTING PLUG (6-PIN)	
					(EACH PLUG KIT INCLUDES PLUG AS, WEDGE & INTERFACE SEAL)	
C	9	1	**4B-4274**	2	WASHER (5.5X13X1.2-MM THK)	
M	10	1	**5C-2890**	2	NUT (M6X1-THD)	
	11	1	**5P-4115**	2	WASHER-HARD (7.2X19X2-MM THK)	
	12	1	**6P-0699**	1	GROMMET	
M	13	1	**8T-3844**	2	BOLT (M6X1X70-MM)	
CM	14	1	**8T-6693**	1	SCREW-MACHINE (M5X0.8X16-MM)	
C	15	1	**9X-8256**	2	WASHER (6.6X12X2-MM THK)	

C-CHANGE FROM PREVIOUS TYPE
M-METRIC PART

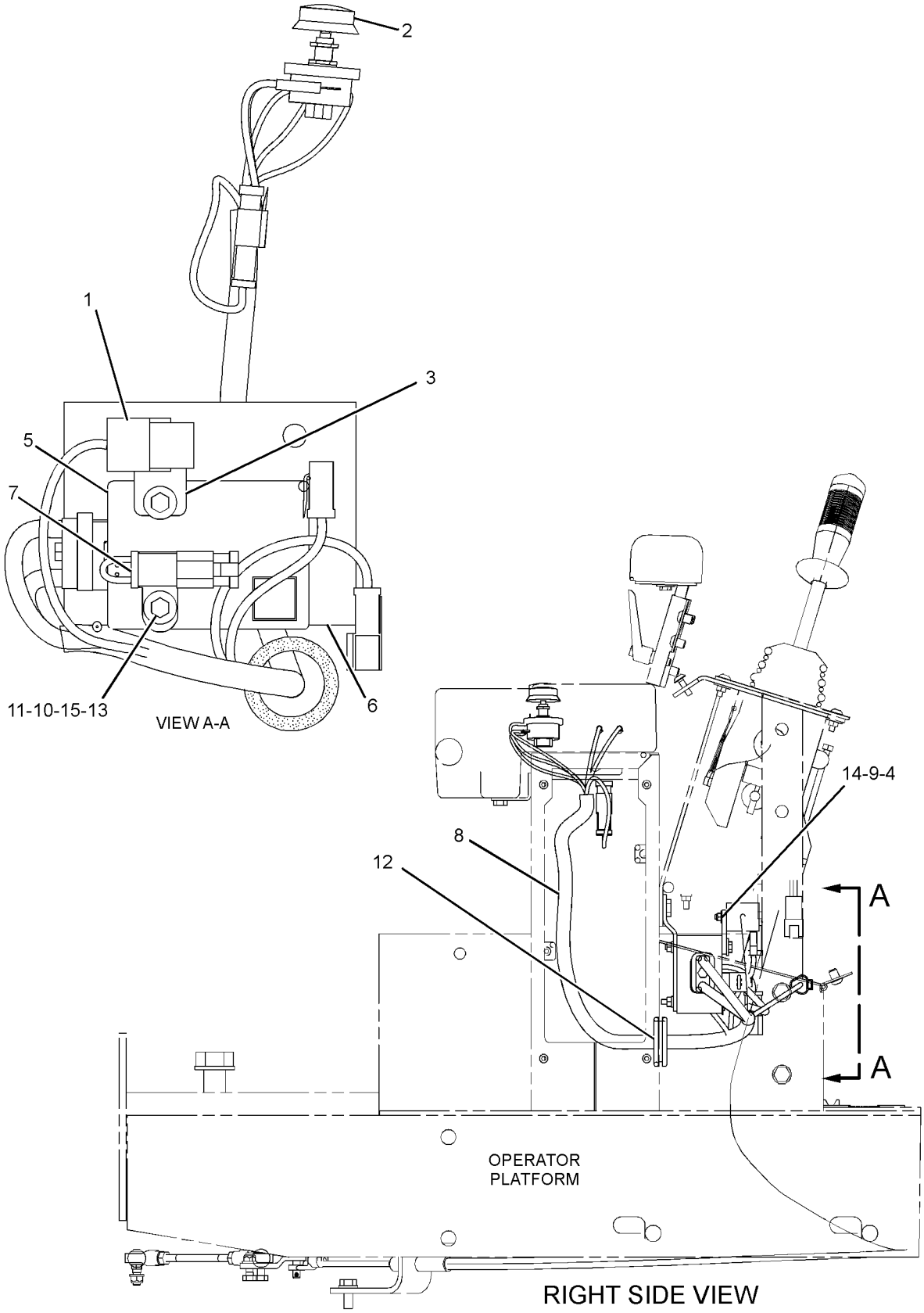

GRAPHIC #1 **<END>** g01148772

ELECTRICAL AND STARTING SYSTEM

235-1047 WIRING GP-ENGINE

S/N: EAE1-UP

PART OF 233-4654 ELECTRICAL AR

SMCS-1408 **i02557513**

NOTE	REF NO	GRAPHIC REF	PART NUMBER	QTY	PART NAME 1 2 3 4 5 6 (PRODUCT LEVEL)	SEE PAGE
	1	1	**3E-2028**	1	SWITCH AS-TEMPERATURE (COOLANT)	
		1	**102-8802**	1	KIT-RECEPTACLE (2-PIN)	
					(INCLUDES RECEPTACLE AS & WEDGE)	
		1	**186-3735**	2	PIN-CONNECTOR (16-GA TO 18-GA)	
	2	1	**3S-2093**	21	STRAP-CABLE	
	3	2	**5P-3741**	1	TEE-PIPE	
	4	1	**7V-5628**	3	PLATE	
	5	1	**7V-6089**	6	CLAMP	
	6	2	**7V-9275**	1	STRAP	
	7	1,2	**8T-8799**	3	BOOT	
	8	2	**103-4977**	1	SWITCH AS-PRESSURE (ENGINE OIL)	
		2	**186-3735**	1	PIN-CONNECTOR (16-GA TO 18-GA)	
		2	**102-8802**	1	KIT-RECEPTACLE (2-PIN)	
					(INCLUDES RECEPTACLE AS & WEDGE)	
	9	2	**107-0611**	1	SWITCH AS-PRESSURE (ENGINE OIL)	
		2	**102-8802**	1	KIT-RECEPTACLE (2-PIN)	
					(INCLUDES RECEPTACLE AS & WEDGE)	
		2	**3E-3365**	1	WEDGE-RECEPTACLE LOCK (2-PIN)	
		2	**186-3735**	2	PIN-CONNECTOR (16-GA TO 18-GA)	
	10	2	**113-4339**	2	SPACER (10.5X18X21-MM THK)	
	11	1,2	**116-0118**	5	CLIP	
	12	2	**118-3534**	1	SWITCH GP-MAGNETIC (24-VOLT) (STARTER)	
	13	1	**118-3534**	1	SWITCH GP-MAGNETIC (24-VOLT) (GLOW PLUG)	
					(EACH SWITCH GP INCLUDES)	
		1	**1H-3338**	2	LOCKWASHER	
M		1	**5C-2890**	2	NUT (M6X1-THD)	
BE		1	**9X-1813**		SLEEVE (16-CM)	
		1	**012-0380**	2	LOCKWASHER	
		1	**102-8802**	1	KIT-RECEPTACLE (2-PIN)	
					(INCLUDES RECEPTACLE AS & WEDGE)	
		1	**186-3735**	2	PIN-CONNECTOR (16-GA TO 18-GA)	
	14	1	**177-2215**	2	STRAP-DUAL CLAMP	
	15	2	**191-4833**	1	BRACKET	
	16	2	**203-0203**	1	CABLE AS	
	17	2	**203-3240**	1	CABLE AS	
	18	1	**229-2884**	1	GUARD AS	
	19	1	**253-1849**	1	HARNESS AS-ENGINE	
	20	2	**257-9290**	1	FILM-IDENTIFICATION (CIRCUIT PANEL)	
	21	1	**232-3633**	1	BRACKET AS	
		1	**7T-1099**	2	LINK	
	22	1	**233-7999**	1	CABLE AS	
		1	**152-5542**	2	TERMINAL AS	
E		1	**119-3662**		TUBE-HEAT SHRINK (10.85-MM DIA) (4-CM)	
		1	**6L-3483**	1	COVER-TERMINAL	
		1	**8T-8799**	1	BOOT (RED)	
	23	1	**234-2955**	1	CABLE AS	
		1	**8T-8799**	1	BOOT	
		1	**152-5542**	1	TERMINAL AS (FOR 8 GA WIRE)	
E		1	**119-3662**		TUBE-HEAT SHRINK (10.85-MM DIA) (4-CM)	
	24	1	**235-1530**	1	HARNESS AS-SOLENOID (INJECTION PUMP)	
	25	1,2	**132-5789**	2	CLIP	
	26	1	**156-6175**	1	CLIP	
	27	1	**2V-3216**	1	CLIP	
	28	2	**3B-6552**	1	ELBOW	
	29	1	**3B-7255**	1	BUSHING-REDUCING	
	30	2	**4B-4274**	6	WASHER (5.5X13X1.2-MM THK)	

235-1047 **WIRING GP-ENGINE** ***(contd.)*** **i02557513**

NOTE	REF NO	GRAPHIC REF	PART NUMBER	QTY	PART NAME 1 2 3 4 5 6 (PRODUCT LEVEL)	SEE PAGE
	31	1	**4D-7794**	1	CLIP	
	32	1	**4P-7428**	1	CLIP	
	33	1,2	**4P-7429**	4	CLIP	
	34	1,2	**4P-7581**	3	CLIP	
	35	1,2	**4P-8134**	3	CLIP	
M	36	1,2	**5C-2890**	6	NUT (M6X1-THD)	
	37	1	**5J-4715**	1	WASHER (10.3X20.6X4.2-MM THK)	
	38	2	**5K-5068**	1	FITTING-PIPE	
	39	1,2	**5P-4115**	4	WASHER-HARD (7.2X19X2-MM THK)	
	40	1	**5P-4116**	2	WASHER-HARD (8.8X20.5X2-MM THK)	
	41	2	**6V-7978**	6	SCREW-MACHINE (10-32X0.375-IN)	
	42	1,2	**7K-1181**	24	STRAP-CABLE	
M	43	1	**8C-8451**	6	BOLT (M6X1X40-MM)	
	44	1,2	**8T-4121**	2	WASHER-HARD (11X21X2.5-MM THK)	
M	45	1,2	**8T-4138**	5	BOLT (M6X1X20-MM)	
M	46	1,2	**8T-4179**	2	BOLT (M12X1.75X20-MM)	
M	47	1,2	**8T-4189**	5	BOLT (M8X1.25X20-MM)	
M	48	1,2	**8T-4191**	2	BOLT (M10X1.5X16-MM)	
	49	1,2	**8T-4223**	3	WASHER-HARD (13.5X25.5X3-MM THK)	
	50	1,2	**8T-4224**	7	WASHER-HARD (8.8X16X2-MM THK)	
M	51	1	**8T-4244**	1	NUT (M12X1.75-THD)	
M	52	2	**8T-6912**	2	BOLT (M8X1.25X50-MM)	
	53	1,2	**9X-8256**	3	WASHER (6.6X12X2-MM THK)	
E	54	1	**206-2733**		GUARD-HOSE (30-CM)	
	55	2	**171-2208**	1	CIRCUIT BREAKER AS (60-AMPERE) (ALTERNATOR)	
	56	2	**171-2208**	1	CIRCUIT BREAKER AS (60-AMPERE) (MAIN)	
	57	2	**171-2208**	1	CIRCUIT BREAKER AS (60-AMPERE) (GLOW PLUG)	
					(EACH CIRCUIT BREAKER INCLUDES)	
		2	**253-2111**	2	LOCKWASHER	
		2	**6V-8187**	2	NUT (1/4-28-THD)	
		2	**8T-4205**	2	WASHER-HARD (7.2X14.5X2-MM THK)	
M	58	2	**5C-2874**	2	NUT (M5X0.8-THD)	
	59	1	**229-3542**	1	V-BELT SET (ALTERNATOR)	
					(INCLUDES 2 BELTS)	

B-USE AS REQUIRED
E-ORDER BY THE CENTIMETER
M-METRIC PART

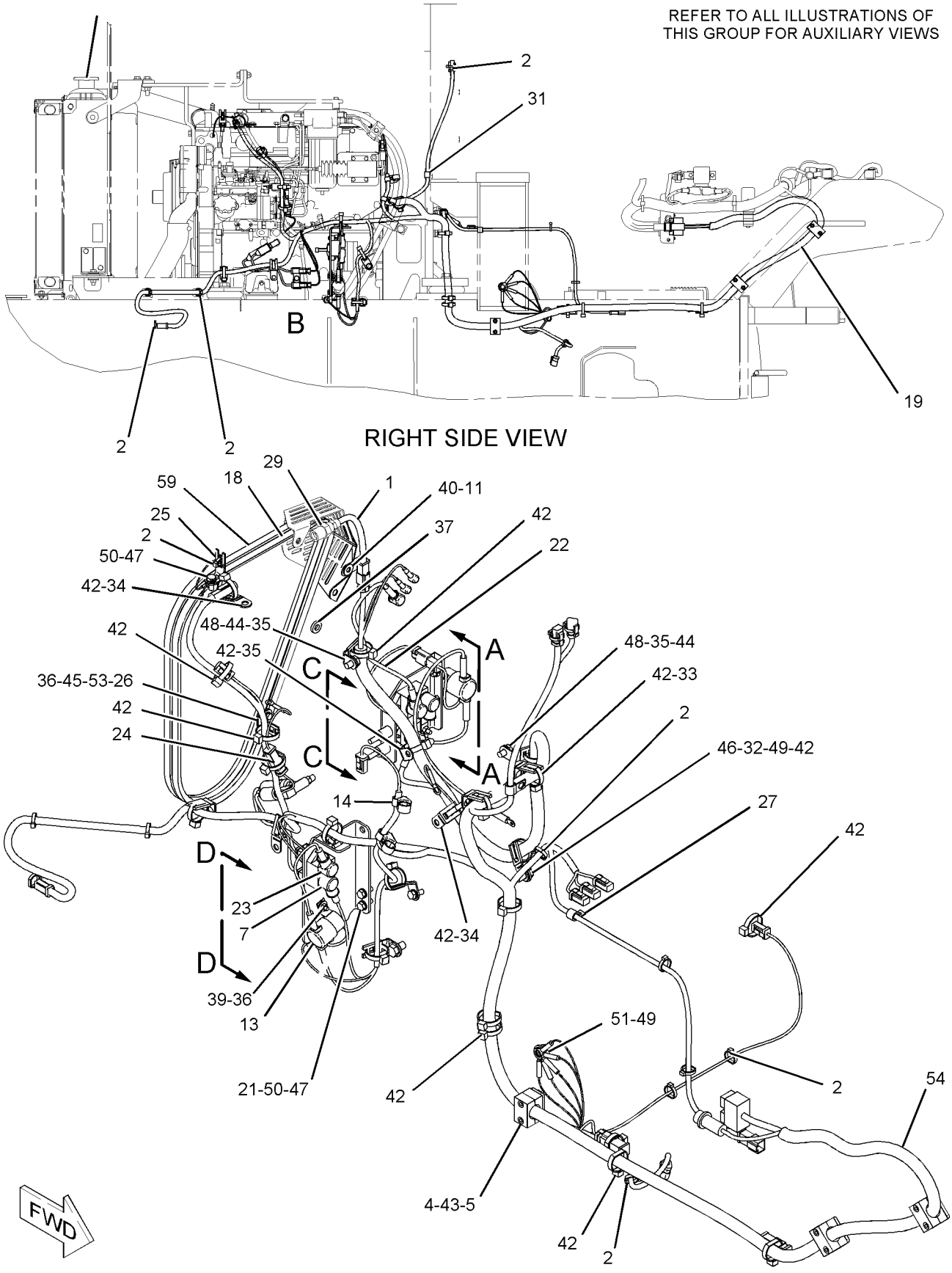

GRAPHIC #1

g01088239

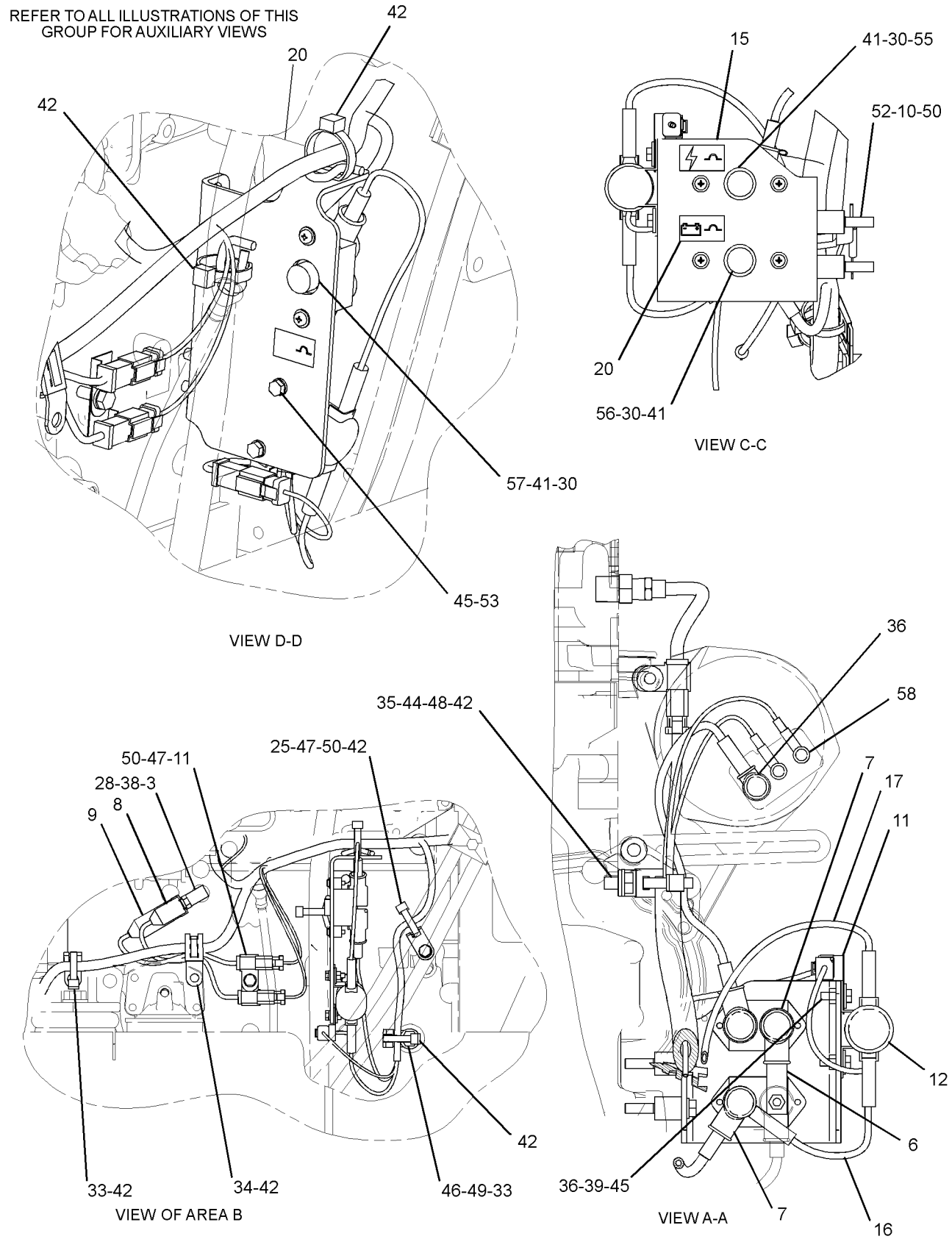

GRAPHIC #2 **<END>** g01358564

237-6212 WIRING GP-PUMP

S/N: EAE1-UP
PART OF 237-5980 SPRAY AR-WATER
AN ATTACHMENT

SMCS-1408 **i02565496**

NOTE	REF NO	GRAPHIC REF	PART NUMBER	QTY	PART NAME 1 2 3 4 5 6 (PRODUCT LEVEL)	SEE PAGE
	1	1	**3E-5239**	1	RELAY AS (24-VOLT) (WATER SPRAY)	
	2	1	**6T-6329**	1	BEZEL	
	3	1	**6V-8927**	2	BOLT-SOCKET HEAD (6-32X0.5-IN)	
	4	1	**131-9178**	1	TIMER	
	5	1	**237-6215**	1	FILM (WATER SPRAY)	
	6	1	**239-6080**	1	HARNESS AS-WIRING (WATER SPRAY)	
		1	**102-8802**	2	KIT-RECEPTACLE (2-PIN)	
					(EACH INCLUDES RECEPTACLE AS & WEDGE)	
E		1	**5P-1690**		HOSE (180-CM)	
D		1	**6V-2722**		TUBE-HEAT SHRINK (25.4-MM DIA) (0.3-M)	
		1	**9X-1054**	1	PLUG AS-CONNECTOR (4-PIN)	
		1	**155-2270**	3	KIT-CONNECTING PLUG (2-PIN)	
					(EACH INCLUDES PLUG AS, WEDGE & INTERFACE SEAL)	
	7	1	**144-0900**	1	SWITCH AS-ROCKER (WATER SPRAY)	
		1	**3L-8187**	3	LOCKWASHER	
		1	**6V-8374**	3	SCREW-MACHINE (6-32X0.25-IN)	
M	8	1	**6V-7743**	1	LOCKNUT (M6X1-THD)	
	9	1	**7K-1181**	16	STRAP-CABLE	
M	10	1	**7X-2533**	1	BOLT (M6X1X35-MM)	
	11	1	**8T-4205**	2	WASHER-HARD (7.2X14.5X2-MM THK)	

D-ORDER BY THE METER
E-ORDER BY THE CENTIMETER
M-METRIC PART

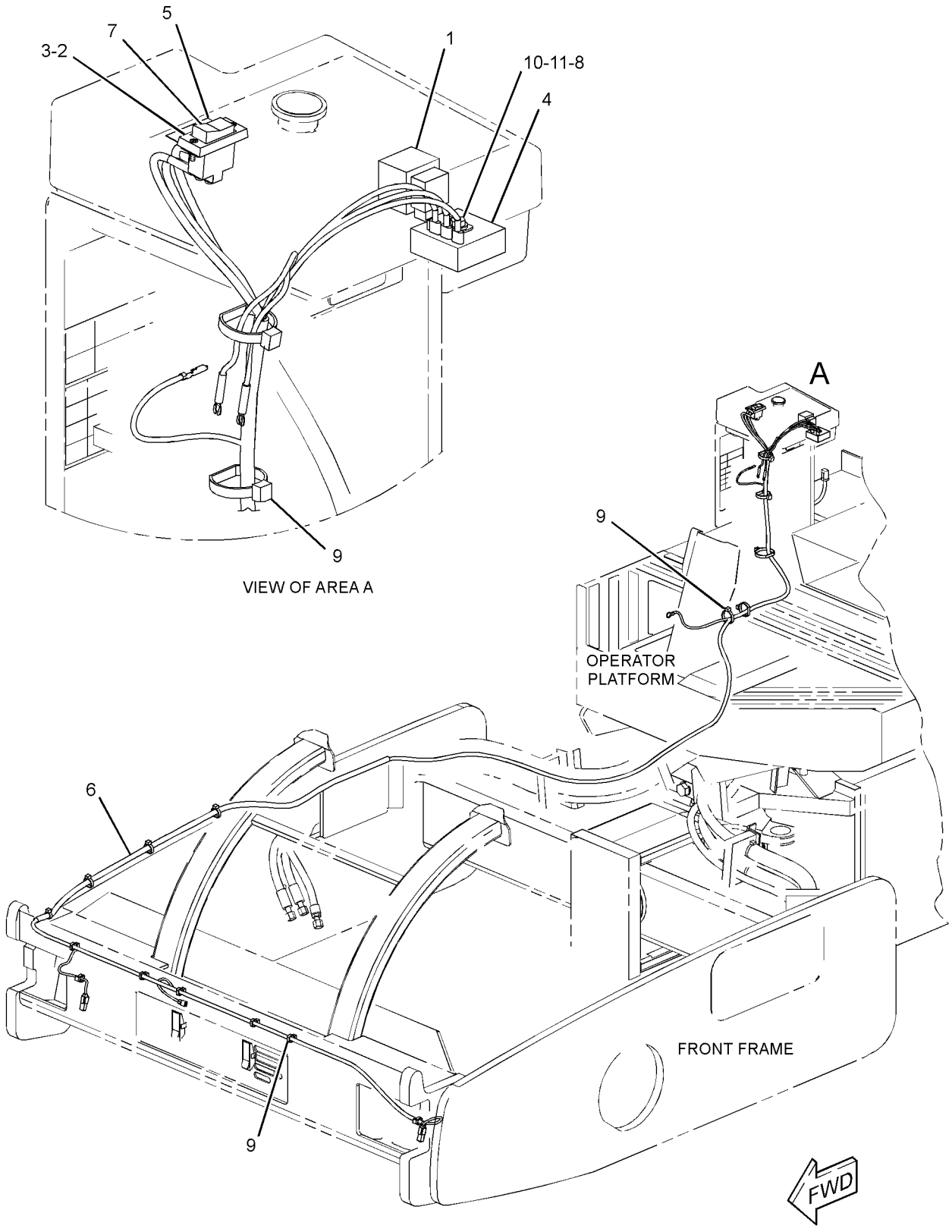

GRAPHIC #1 **<END>** g01349646

198-0277 AXLE & MTG GP-DRIVE

S/N: EAE1-UP

PART OF 216-8741 POWER TRAIN AR

SMCS-3278 **i02135839**

NOTE	REF NO	GRAPHIC REF	PART NUMBER	QTY	PART NAME 1 2 3 4 5 6 (PRODUCT LEVEL)	SEE PAGE
Y	1	1	**183-6376**	1	AXLE GP (WITHOUT BRAKES)	137
	2	1	**186-3523**	2	PLATE	
M	3	1	**125-3297**	8	BOLT (M20X2.5X260-MM)	
	4	1	**8T-4123**	16	WASHER (22X35X3.5-MM THK)	
M	5	1	**8T-4131**	8	NUT (M20X2.5-THD)	

M-METRIC PART
Y-SEPARATE ILLUSTRATION

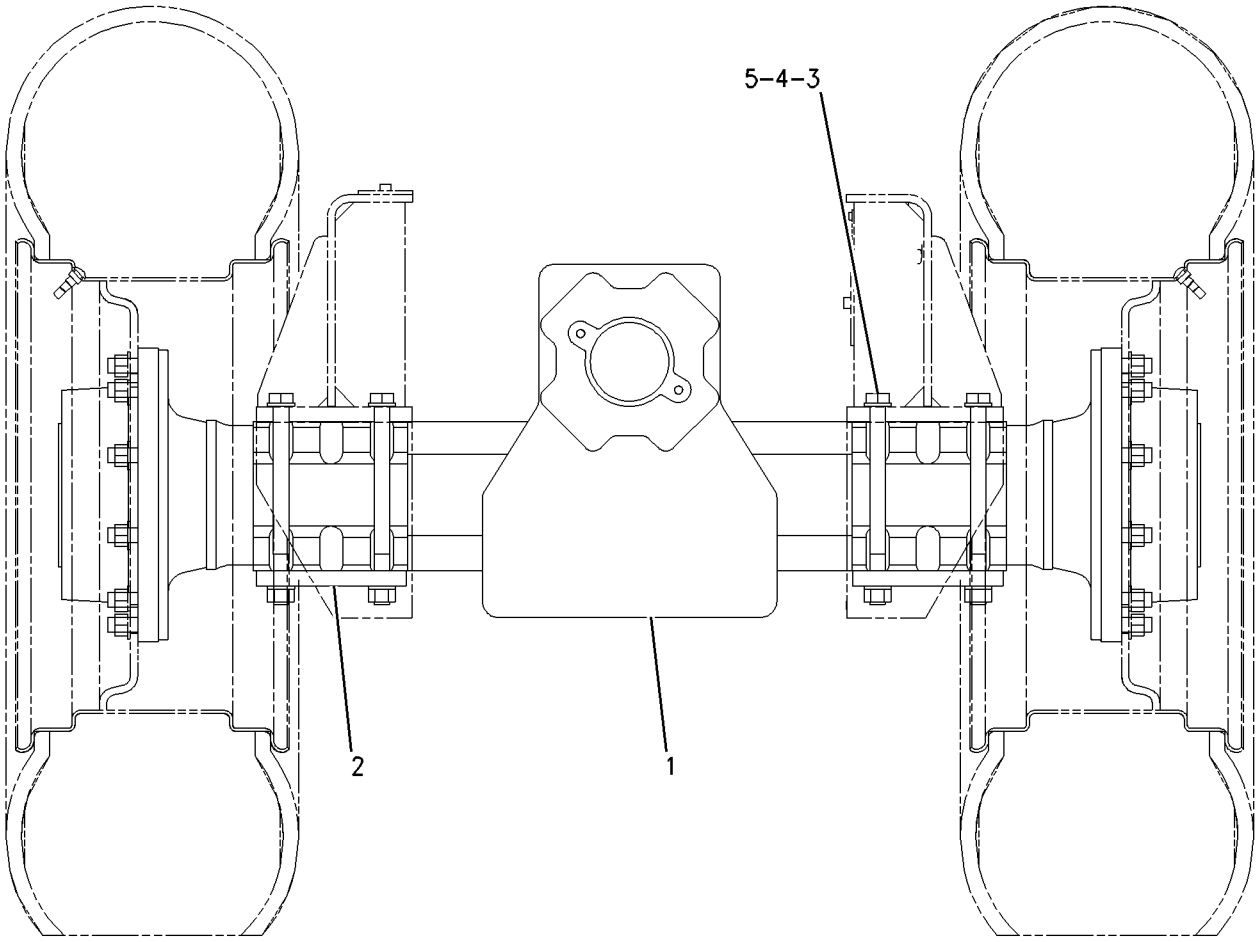

FRONT VIEW

GRAPHIC #1 **<END>** g00827859

POWER TRAIN

183-6376 AXLE GP—WITHOUT BRAKES

S/N: EAE1-UP

PART OF 198-0277 AXLE & MTG GP-DRIVE

SMCS-3282 **i02897090**

NOTE	REF NO	GRAPHIC REF	PART NUMBER	QTY	PART NAME 1 2 3 4 5 6 (PRODUCT LEVEL)	SEE PAGE
	1	2	**157-0739**	2	SEAL-LIP TYPE	
	2	2	**2S-0480**	4	CUP-TAPERED ROLLER	
	3	2	**199-0639**	4	SCREW (WHEEL HUB)	
	4	2	**5H-4909**	2	SEAL-O-RING	
	5	2	**208-7786**	2	RING-LOCK	
	6	2	**165-8855**	16	BUSHING	
	7	1,2	**152-6144**	5	PLUG AS-DRAIN (MAGNETIC)	
	8	1,2	**6V-6228**	5	SEAL-O-RING	
	9	2	**208-7788**	2	GEAR-CROWN (77-TEETH)	
	10	2	**211-1974**	16	BOLT (M14X1.5X65-MM)	
	11	2	**222-7127**	2	SHAFT	
	12	2	**199-0669**	2	PLUG (THRUST)	
	13	2	**9W-7639**	6	SPACER (40.5X60X2-MM THK)	
	14	2	**211-2238**	168	BEARING-NEEDLE	
	15	2	**215-8060**	6	SHAFT-SUN GEAR	
	16	2	**211-2350**	6	BOLT (M10X1.25X50-MM)	
	17	2	**215-1402**	6	NEEDLE-ROLLER	
	18	2	**208-7823**	6	GEAR-SUN (31-TEETH)	
	19	2	**208-7791**	6	WASHER-THRUST (11X60X3-MM THK)	
	20	2	**215-8056**	6	WASHER-THRUST (11X60X3-MM THK)	
	21	2	**216-8120**	2	HUB	
	22	2	**159-7400**	20	STUD	
	23	2	**274-5246**	2	SEAL-LIP TYPE	
	24	2	**209-4302**	2	BUSHING	
	25	2	**096-0194**	2	RING-RETAINING	
	26	2	**222-7128**	2	COUPLING	
	27	1	**197-9155**	2	BREATHER (AXLE)	
	28	2	**222-7129**	2	SHAFT	
	29	2	**209-4231**	2	NUT-RING	
	30	2	**211-0101**	2	PLATE-LOCK	
M	31	2	**199-0695**	2	BOLT (M6X1X14-MM)	
	32	2	**208-7907**	10	PLATE	
	33	2	**9W-0615**	2	CUP	
	34	2	**208-7906**	8	PLATE	
	35	2	**211-0095**	1	HOUSING AS	
	36	2	**208-0320**	12	BOLT (M10X1.5X75-MM)	
	37	2	**208-7905**	2	PLATE-END	
	38	2	**9W-0614**	2	CONE	
	39	2	**209-4336**	1	DIFFERENTIAL GP-LIMITED SLIP	
	40	2	**211-1454**	2	PIN	
M	41	1	**8T-0341**	8	BOLT-SOCKET HEAD (M10X1.5X60-MM)	
B	42	2	**209-4303**	1	SHIM (2.5-MM THK)	
B		2	**209-4304**	1	SHIM (2.6-MM THK)	
B		2	**209-4305**	1	SHIM (2.7-MM THK)	
B		2	**209-4306**	1	SHIM (2.8-MM THK)	
B		2	**209-4307**	1	SHIM (2.9-MM THK)	
B		2	**209-4308**	1	SHIM (3-MM THK)	
B		2	**209-4309**	1	SHIM (3.2-MM THK)	
B		2	**209-4310**	1	SHIM (3.3-MM THK)	
B		2	**209-4311**	1	SHIM (3.4-MM THK)	
M	43	1	**160-8748**	8	BOLT (M12X1.75X55-MM)	
	44	1	**210-8461**	1	SUPPORT AS	
	44A	1	**208-0322**	4	BOLT-FLANGE HEAD (M14X2X75-MM)	
	45	1	**152-6145**	1	PLUG-MAGNETIC (OIL DRAIN)	
M	46	1	**101-7404**	10	BOLT-SOCKET HEAD (M10X1.5X30-MM)	
	47	1	**222-7136**	1	SEAL	

183-6376 AXLE GP *(contd.)* i02897090

NOTE	REF NO	GRAPHIC REF	PART NUMBER	QTY	PART NAME 1 2 3 4 5 6 (PRODUCT LEVEL)	SEE PAGE
	48	1	**211-1480**	1	CLIP-RETAINING	
	49	1	**7T-8419**	1	BALL BEARING	
	50	1	**222-7135**	1	GEAR	
	51	2	**211-0057**	2	WASHER (40X50X2-MM THK)	
	52	2	**211-1314**	1	NUT-RING (M40X1.5-THD)	
	53	2	**211-1313**	1	LOCKWASHER	
	54	2	**136-7808**	2	BEARING AS-TAPERED ROLLER	
	55	2	**210-8469**	1	SHIM (COLLAPSIBLE)	
	56	2	**222-7130**	1	KIT-BEVEL GEAR (AXLE)	
M	57	1	**105-3479**	2	BOLT-SOCKET HEAD (M10X1.5X90-MM)	
M	58	1	**9X-6032**	6	BOLT-SOCKET HEAD (M10X1.5X30-MM)	
	59	2	**178-8608**	4	CONE-TAPERED	
	60	1	**222-7134**	1	PLUG	
	61	1	**210-0970**	4	BUSHING	
	62	1	**208-0321**	10	BOLT-FLANGE HEAD (M12X1.75X33-MM)	
	63	1	**211-1486**	3	PIN	
	64	1	**211-1478**	1	PIN	
	65	1	**6V-5200**	1	RING-RETAINING	
	66	1	**209-4314**	1	WASHER (35X51X3-MM THK)	
	67	1	**208-9009**	1	BEARING	
	68	1	**222-7131**	1	GEAR	
	69	1	**205-9163**	1	WASHER	
	70	1	**222-9824**	1	PLUG	
	71	1	**209-0033**	1	SEAL	
	72	1	**222-7132**	1	FLANGE	
	73	1	**208-9008**	1	BEARING	
	74	1	**3K-2518**	1	BALL BEARING	
	75	1	**222-7133**	1	SLEEVE	
	76	1	**211-1481**	1	PLUG	
	77	1	**249-6465**	1	FLANGE-MOUNTING	

B-USE AS REQUIRED
M-METRIC PART

183-6376 AXLE GP *(contd.)* **i02897090**

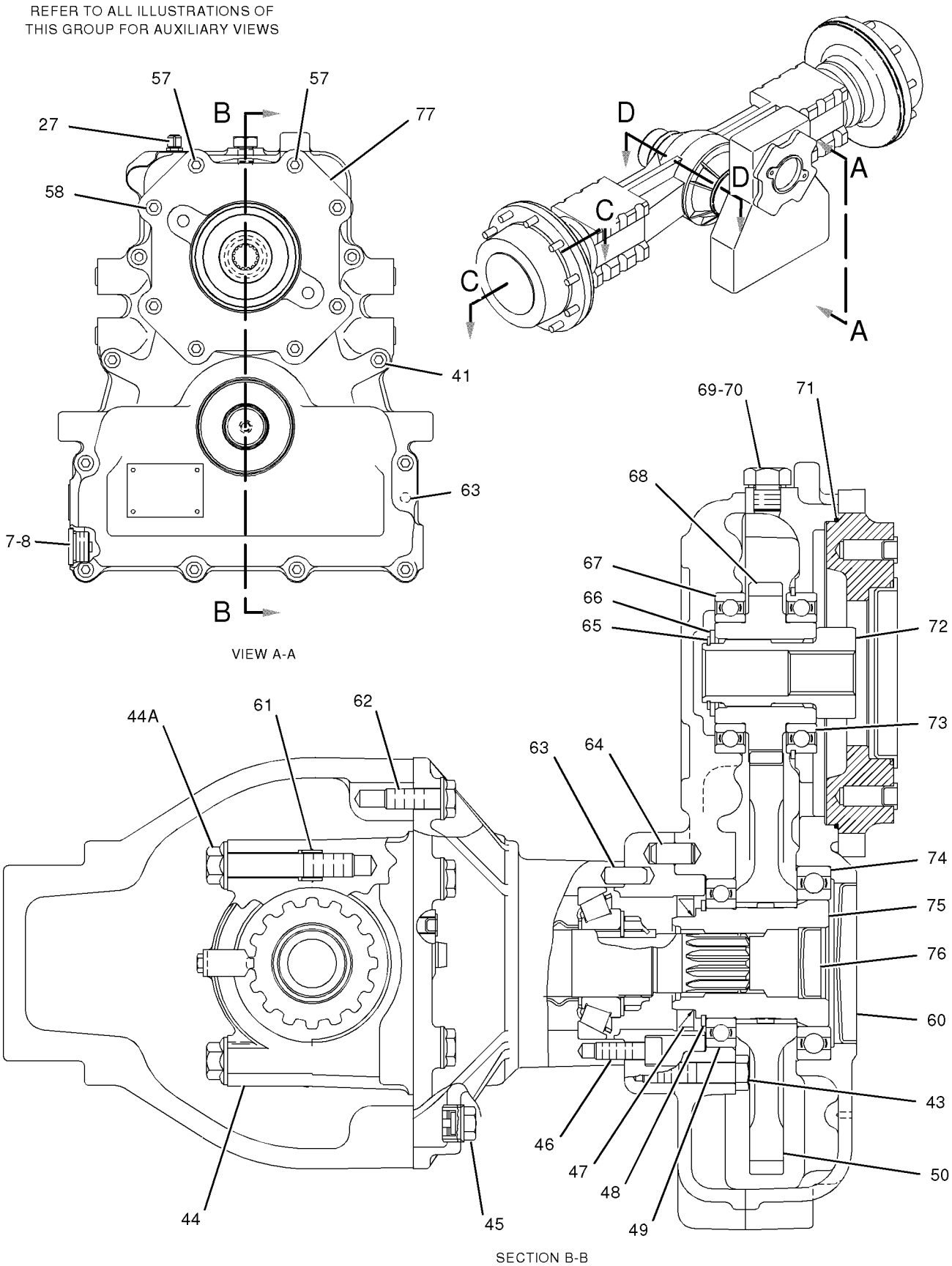

GRAPHIC #1 g01055522

183-6376 AXLE GP *(contd.)* **i02897090**

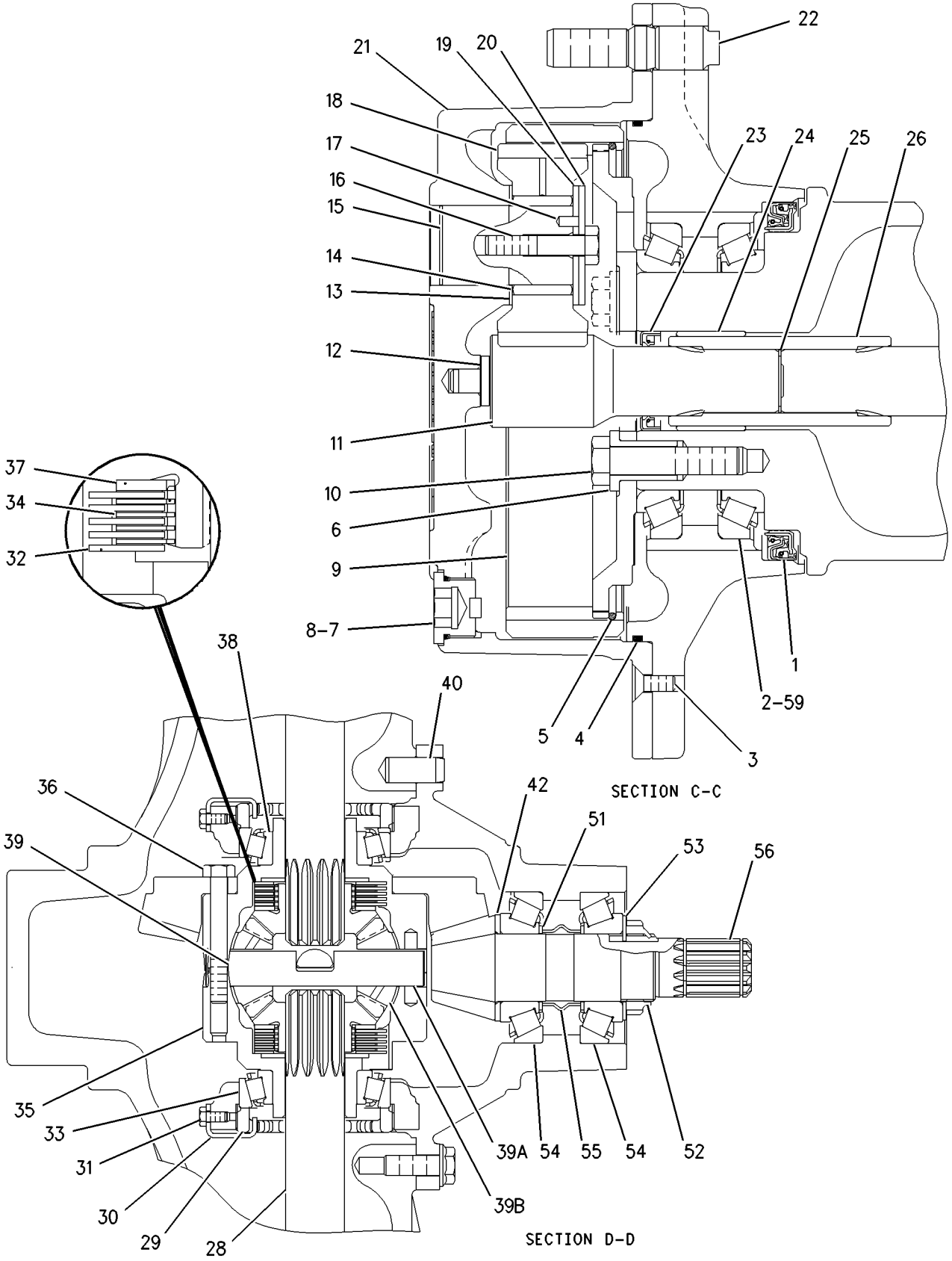

GRAPHIC #2 **<END>** g00935573

188-3118 DRIVE GP-DRUM

S/N: EAE1-UP

PART OF 186-5232, 188-3117, 237-5976 DRUM GP-DRIVE & VIBRATORY AN ATTACHMENT

SMCS-4050, 4351, 5058 **i02138919**

NOTE	REF NO	GRAPHIC REF	PART NUMBER	QTY	PART NAME 1 2 3 4 5 6 (PRODUCT LEVEL)	SEE PAGE
	1	1	**227-0172**	6	MOUNT	
	2	1	**224-4486**	1	PLATE	
	3	1	**183-6001**	1	PLATE-MOUNTING	
Y	4	1	**183-7529**	1	MOTOR GP-PISTON (PROPEL)	225
Y	5	1	**210-7756**	1	PLANETARY GP-FINAL DRIVE	161
	6	1	**109-5700**	1	SEAL-O-RING	
	7	1	*148-8327*	2	CONNECTOR AS (DRUM)	
					(EACH INCLUDES)	
		1	**6V-8637**	1	CONNECTOR	
		1	**3D-2824**	1	SEAL-O-RING	
		1	**6V-9746**	1	SEAL-O-RING	
	8	1	*148-8368*	1	ELBOW AS	
		1	**6V-8627**	1	ELBOW	
		1	**3J-1907**	1	SEAL-O-RING	
		1	**4J-5477**	1	SEAL-O-RING	
	9	1	*148-8381*	1	ELBOW AS	
		1	**8T-5429**	1	ELBOW	
		1	**3D-2824**	1	SEAL-O-RING	
		1	**6V-8398**	1	SEAL-O-RING	
	10	1	*150-3033*	1	ELBOW AS (DRUM)	
		1	**3J-1907**	1	SEAL-O-RING	
		1	**4J-5477**	1	SEAL-O-RING	
		1	**8T-0164**	1	ELBOW	
	11	1	**1N-5999**	2	PLUG	
	12	1	**2S-5658**	38	WASHER-HARD (17X29X3-MM THK)	
	13	1	**7J-0204**	2	SEAL-O-RING	
M	14	1	**7X-2553**	2	BOLT (M16X2X40-MM)	
M	15	1	**8T-4193**	18	BOLT (M16X2X50-MM)	
M	16	1	**8T-4944**	18	BOLT-SOCKET HEAD (M16X2X40-MM)	
	17	1	**8T-4994**	12	WASHER-HARD (20X36.5X3.5-MM THK)	
M	18	1	**8T-5460**	12	BOLT (M20X2.5X40-MM)	

M-METRIC PART
Y-SEPARATE ILLUSTRATION

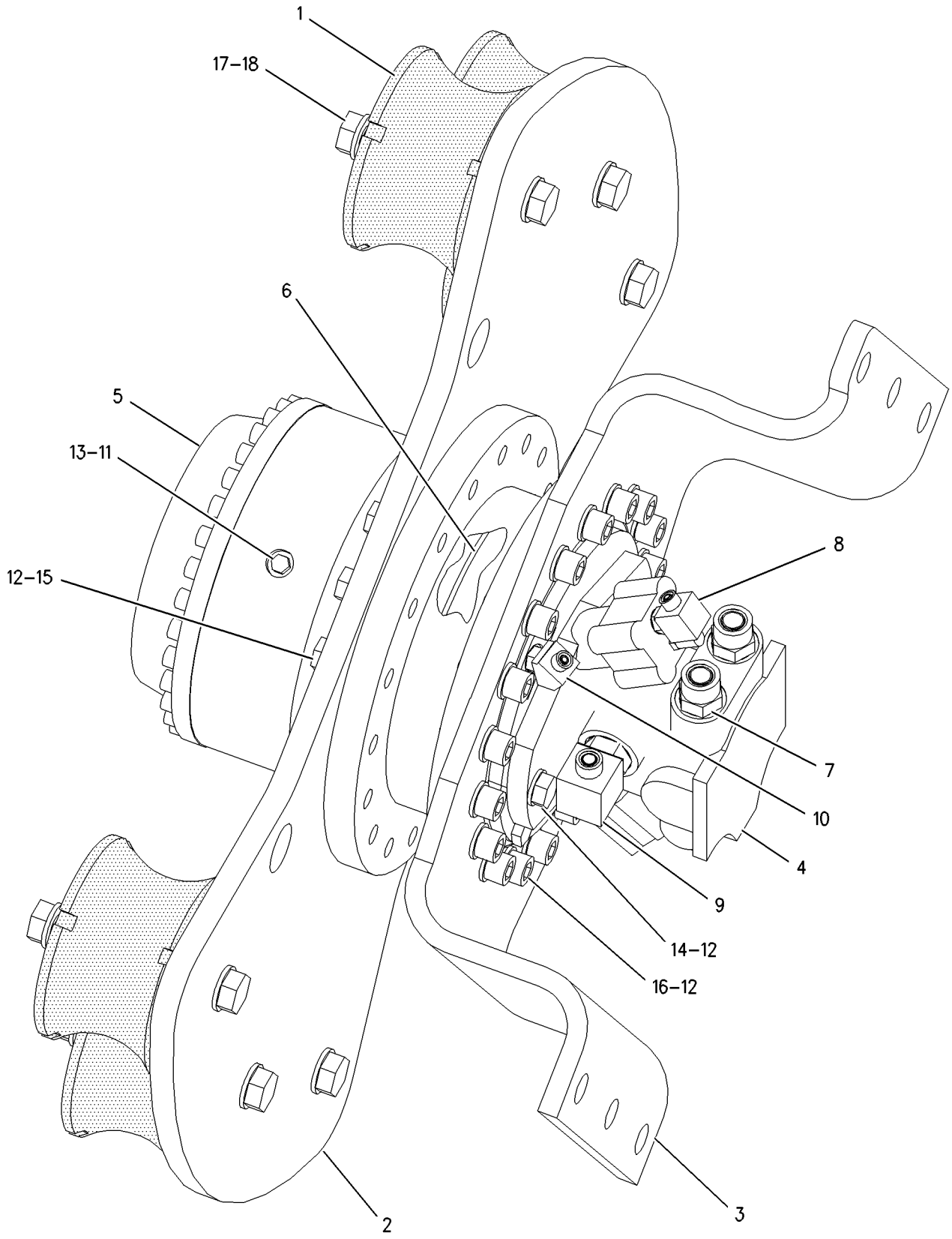

GRAPHIC #1 **<END>** g00830325

POWER TRAIN

259-0493 DRUM AR-SMOOTH

S/N: EAE1-UP

AN ATTACHMENT

SMCS-6605 **i02854802**

NOTE	PART NUMBER	QTY	PART NAME 1 2 3 4 5 6 (PRODUCT LEVEL)	SEE PAGE
Y	*237-5976*	1	DRUM GP-DRIVE & VIBRATORY	147
Y	*237-5980*	1	SPRAY AR-WATER	280

Y-SEPARATE ILLUSTRATION

<END>

278-4510 DRUM GP-COMPACTOR

S/N: EAE1-UP
AN ATTACHMENT

SMCS-6605 **i02877906**

NOTE	REF NO	GRAPHIC REF	PART NUMBER	QTY	PART NAME 1 2 3 4 5 6 (PRODUCT LEVEL)	SEE PAGE
Y	1	1	*105-7620*	1	SCRAPER GP-SMOOTH DRUM	196
Y	2	1	*149-7710*	1	DRUM GP-SMOOTH	150
B	3	1	**171-7164**	6	SHIM (3-MM THK)	
Y	4	1	*201-3378*	1	BUMPER GP (SMOOTH DRUM)	174
	5	1	**8T-4123**	12	WASHER (22X35X3.5-MM THK)	
M	6	1	**8T-4131**	12	NUT (M20X2.5-THD)	
M	7	1	**8T-4141**	12	BOLT (M20X2.5X70-MM)	

B-USE AS REQUIRED
M-METRIC PART
Y-SEPARATE ILLUSTRATION

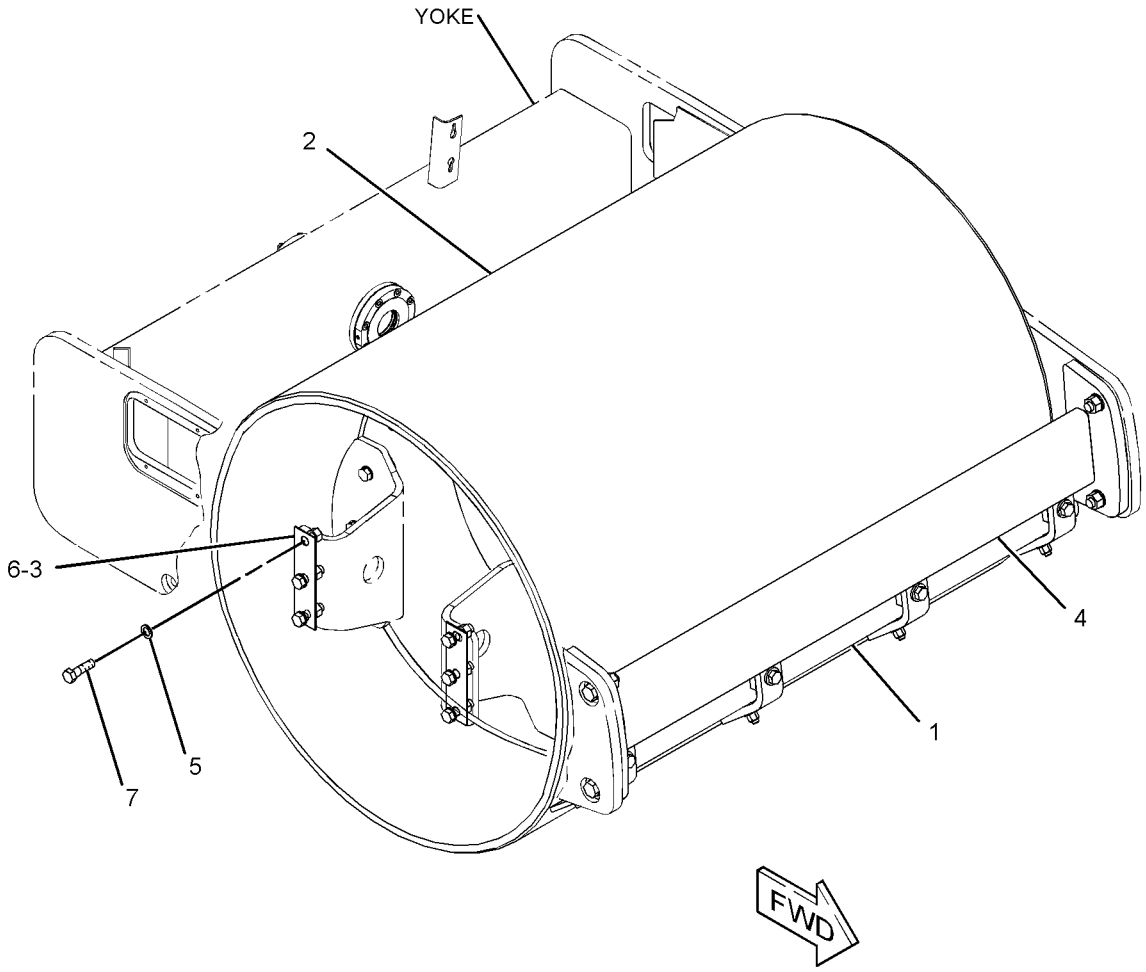

GRAPHIC #1 **<END>** g01274244

186-5232 DRUM GP-DRIVE & VIBRATORY

S/N: EAE1-UP
PART OF 217-1592 POWER TRAIN AR
AN ATTACHMENT

SMCS-4050, 5622, 6605 **i01774875**

NOTE	REF NO	GRAPHIC REF	PART NUMBER	QTY	PART NAME 1 2 3 4 5 6 (PRODUCT LEVEL)	SEE PAGE
Y	1	1	*153-7160*	1	DRUM GP-PADDED	148
Y	2	1	*186-5231*	1	DRIVE GP-SUPPORT & VIBRATORY	252
Y	3	1	*188-3118*	1	DRIVE GP-DRUM	141

Y-SEPARATE ILLUSTRATION

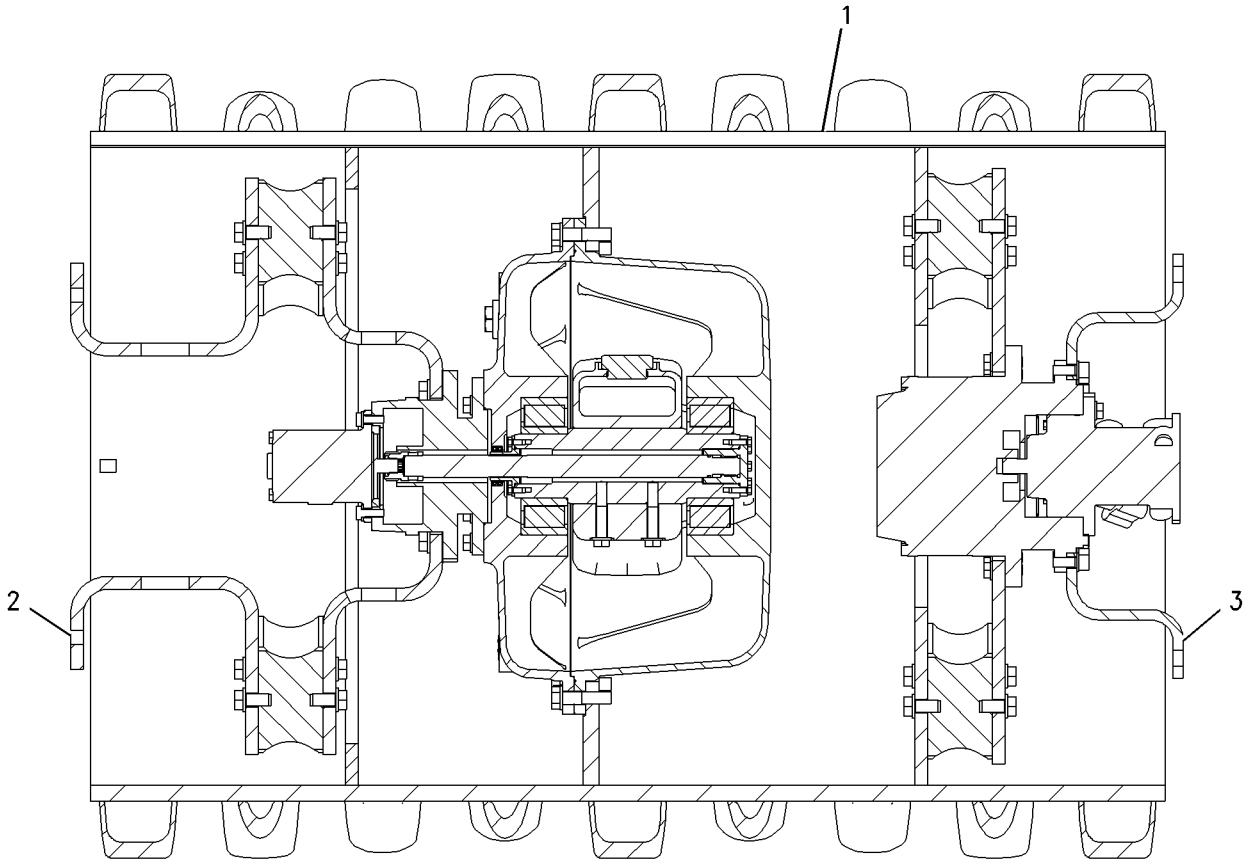

GRAPHIC #1 **<END>** g00837588

POWER TRAIN

188-3117 DRUM GP-DRIVE & VIBRATORY

S/N: EAE1-UP
PART OF 217-1593 POWER TRAIN AR
AN ATTACHMENT

SMCS-4050, 5622, 6605 **i01774873**

NOTE	REF NO	GRAPHIC REF	PART NUMBER	QTY	PART NAME 1 2 3 4 5 6 (PRODUCT LEVEL)	SEE PAGE
Y	1	1	*149-7710*	1	DRUM GP-SMOOTH	150
Y	2	1	*186-5231*	1	DRIVE GP-SUPPORT & VIBRATORY	252
Y	3	1	*188-3118*	1	DRIVE GP-DRUM	141

Y-SEPARATE ILLUSTRATION

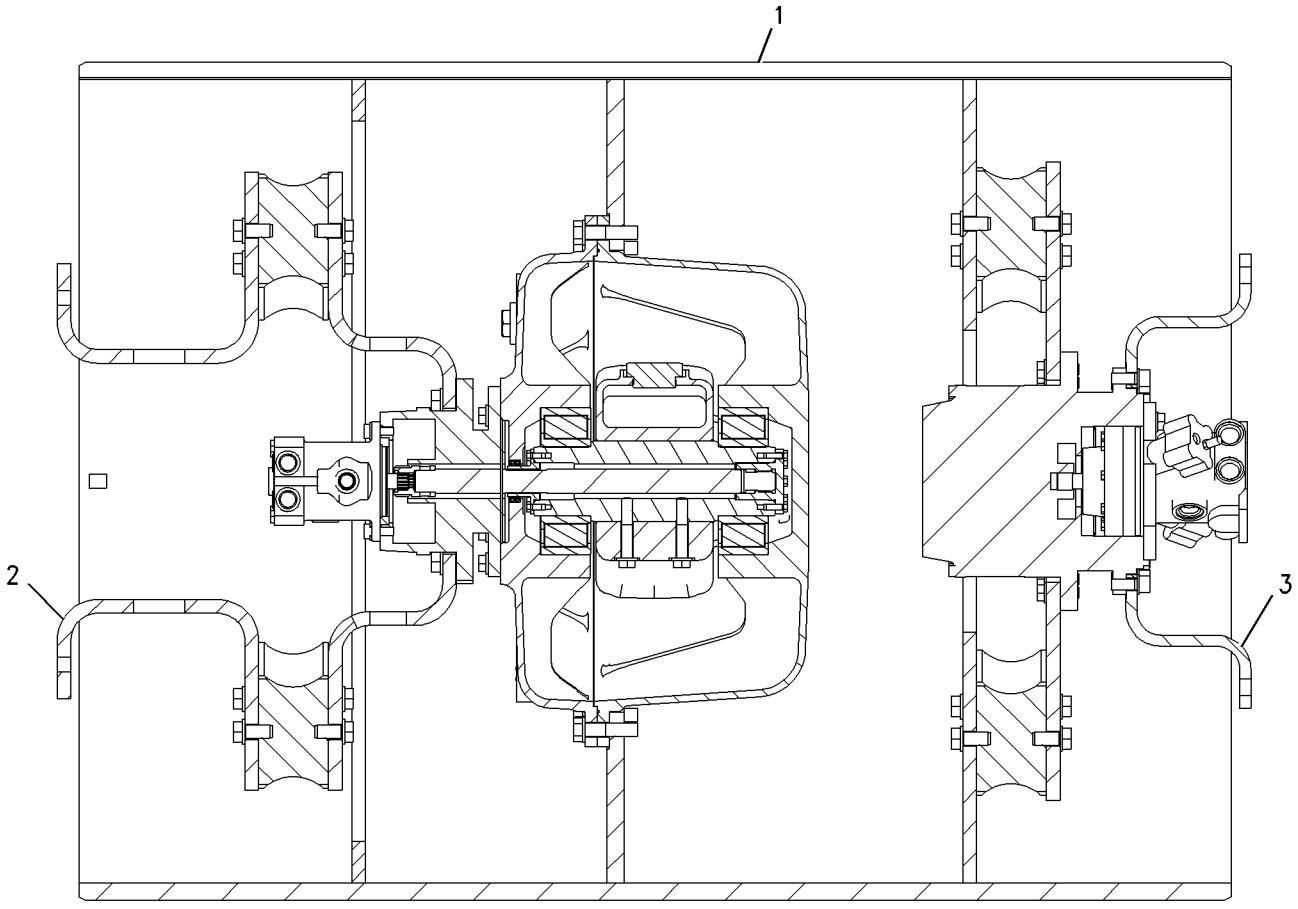

GRAPHIC #1 **<END>** g00827889

237-5976 DRUM GP-DRIVE & VIBRATORY

S/N: EAE1-UP
PART OF 259-0493 DRUM AR-SMOOTH
AN ATTACHMENT

SMCS-4050, 5622, 6605 **i02573938**

NOTE	REF NO	GRAPHIC REF	PART NUMBER	QTY	PART NAME 1 2 3 4 5 6 (PRODUCT LEVEL)	SEE PAGE
Y	1	1	*188-3118*	1	DRIVE GP-DRUM	141
Y	2	1	*237-6217*	1	DRUM GP-SMOOTH	151
Y	3	1	*237-6218*	1	DRIVE GP-SUPPORT & VIBRATORY	253

Y-SEPARATE ILLUSTRATION

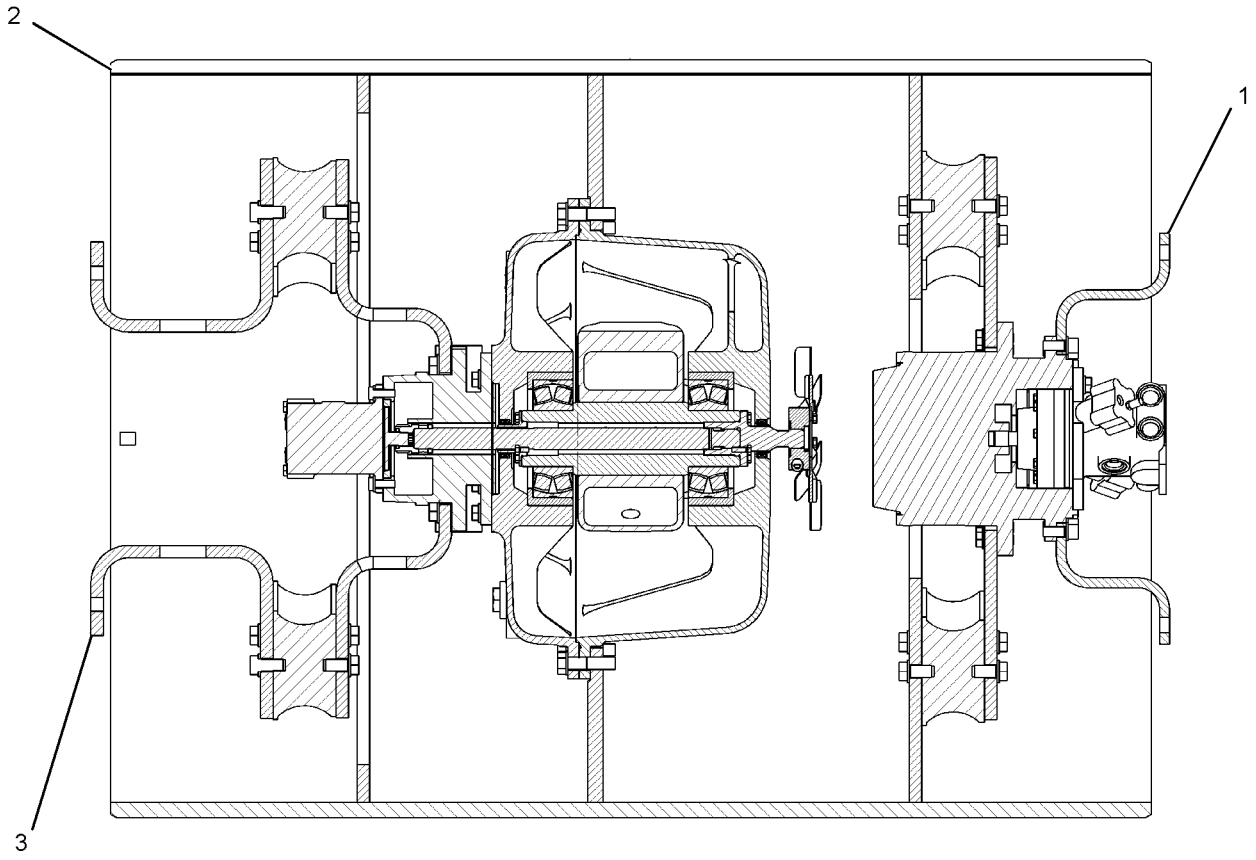

FRONT VIEW

GRAPHIC #1 **<END>** g01308694

153-7160 DRUM GP-PADDED

S/N: EAE1-UP
PART OF 186-5232 DRUM GP-DRIVE & VIBRATORY
AN ATTACHMENT

SMCS-6605 **i02897092**

NOTE	REF NO	GRAPHIC REF	PART NUMBER	QTY	PART NAME 1 2 3 4 5 6 (PRODUCT LEVEL)	SEE PAGE
Y	1	1	**153-7035**	1	HOUSING GP-ECCENTRIC WEIGHT	254
	2	1	**180-0631**	1	DRUM AS-PADDED	
		1	**167-0634**	108	PAD-DRUM	
		1	**5C-3370**	1	BOSS	
	3	1	**8T-4994**	18	WASHER-HARD (20X36.5X3.5-MM THK)	
M	4	1	**8T-4187**	18	BOLT (M20X2.5X80-MM)	

M-METRIC PART
Y-SEPARATE ILLUSTRATION

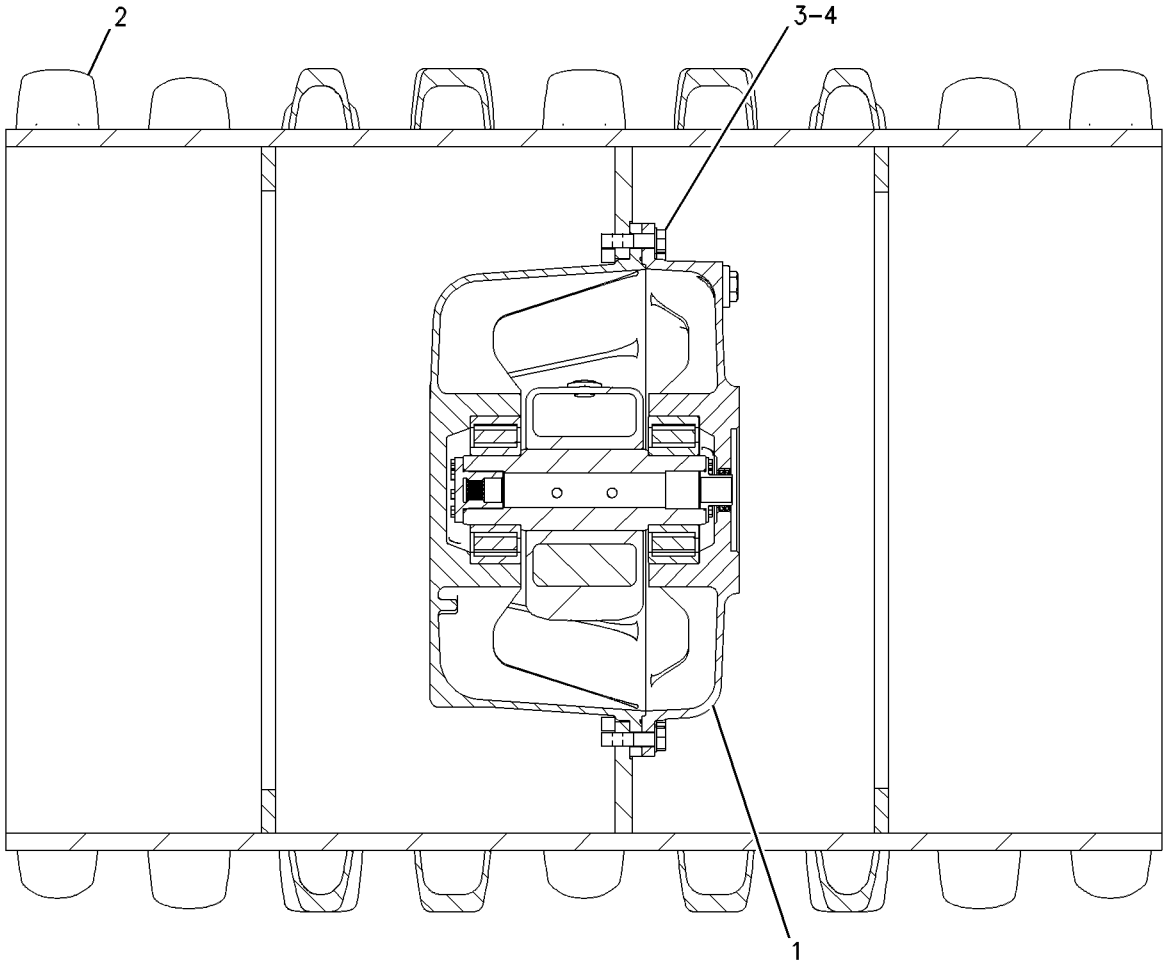

GRAPHIC #1 **<END>** g00655640

201-7763 DRUM GP-PADDED

S/N: EAE1-UP

PART OF 203-1724 BUMPER AR, 214-5572 SHELL AR

AN ATTACHMENT

SMCS-6605 **i02856653**

NOTE	REF NO	GRAPHIC REF	PART NUMBER	QTY	PART NAME 1 2 3 4 5 6 (PRODUCT LEVEL)	SEE PAGE
	1	1	**301-7927**	2	SHELL AS	
M	2	1	**6V-7688**	8	LOCKNUT (M20X2.5-THD)	
	3	1	**8T-4123**	12	WASHER (22X35X3.5-MM THK)	
M	4	1	**8T-4131**	6	NUT (M20X2.5-THD)	
M	5	1	**8T-4141**	2	BOLT (M20X2.5X70-MM)	
	6	1	**8T-5439**	4	WASHER-HARD (21.5X45X6-MM THK)	
M	7	1	**8T-6381**	6	BOLT (M20X2.5X120-MM)	

M-METRIC PART

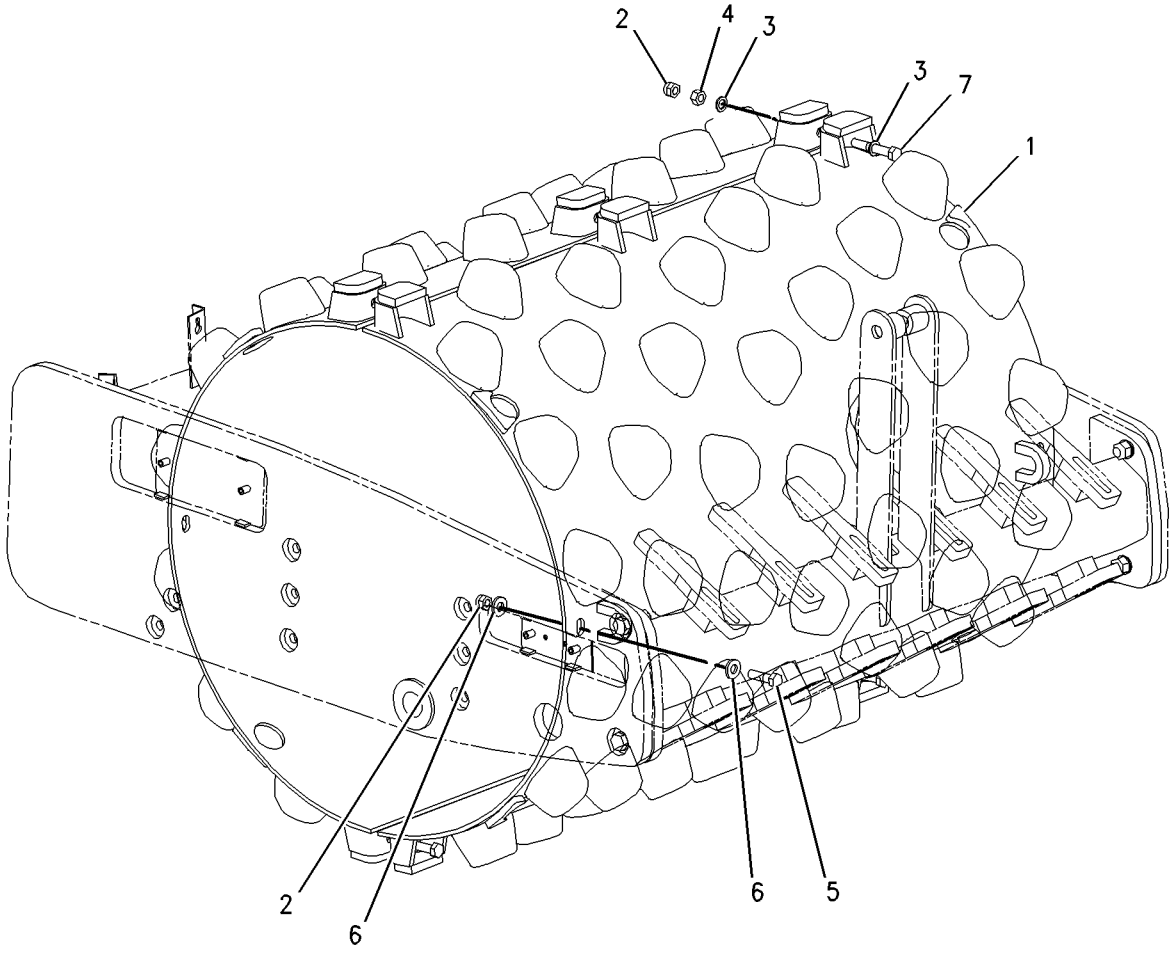

GRAPHIC #1 **<END>** g00828978

149-7710 DRUM GP-SMOOTH

S/N: EAE1-UP

PART OF 278-4510 DRUM GP-COMPACTOR, 188-3117 DRUM GP-DRIVE & VIBRATORY

AN ATTACHMENT

SMCS-6605 **i02897093**

NOTE	REF NO	GRAPHIC REF	PART NUMBER	QTY	PART NAME 1 2 3 4 5 6 (PRODUCT LEVEL)	SEE PAGE
	1	1	**224-4489**	1	DRUM AS-SMOOTH	
		1	**5C-3370**	1	BOSS	
Y	2	1	**153-7035**	1	HOUSING GP-ECCENTRIC WEIGHT	254
	3	1	**8T-4994**	18	WASHER-HARD (20X36.5X3.5-MM THK)	
M	4	1	**8T-4187**	18	BOLT (M20X2.5X80-MM)	

M-METRIC PART
Y-SEPARATE ILLUSTRATION

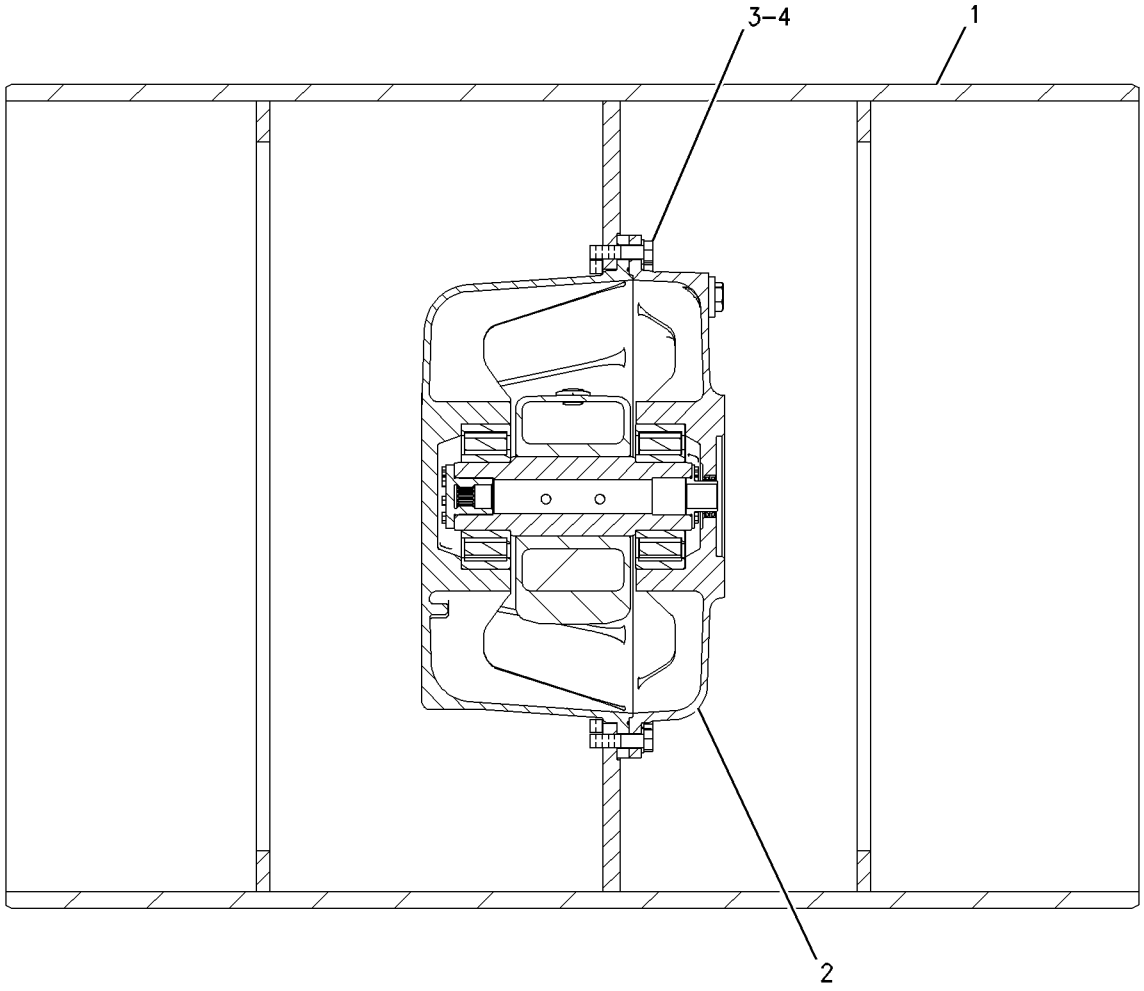

GRAPHIC #1 **<END>** g00653789

237-6217 DRUM GP-SMOOTH

S/N: EAE1-UP
PART OF 237-5976 DRUM GP-DRIVE & VIBRATORY
AN ATTACHMENT

SMCS-6605 **i02573718**

NOTE	REF NO	GRAPHIC REF	PART NUMBER	QTY	PART NAME 1 2 3 4 5 6 (PRODUCT LEVEL)	SEE PAGE
	1	1	**184-9900**	1	FAN (PUSH)	
Y	2	1	*237-7982*	1	HOUSING GP-ECCENTRIC WEIGHT	256
	3	1	**237-7986**	1	DRUM AS-SMOOTH	
	4	1	**239-6077**	1	HUB-COUPLING	
M	5	1	**6V-8200**	1	BOLT-SOCKET HEAD (M12X1.75X35-MM)	
M	6	1	**8T-4187**	18	BOLT (M20X2.5X80-MM)	
	7	1	**8T-4224**	4	WASHER-HARD (8.8X16X2-MM THK)	
M	8	1	**8T-4908**	4	BOLT (M8X1.25X25-MM)	
	9	1	**8T-4994**	18	WASHER-HARD (20X36.5X3.5-MM THK)	

M-METRIC PART
Y-SEPARATE ILLUSTRATION

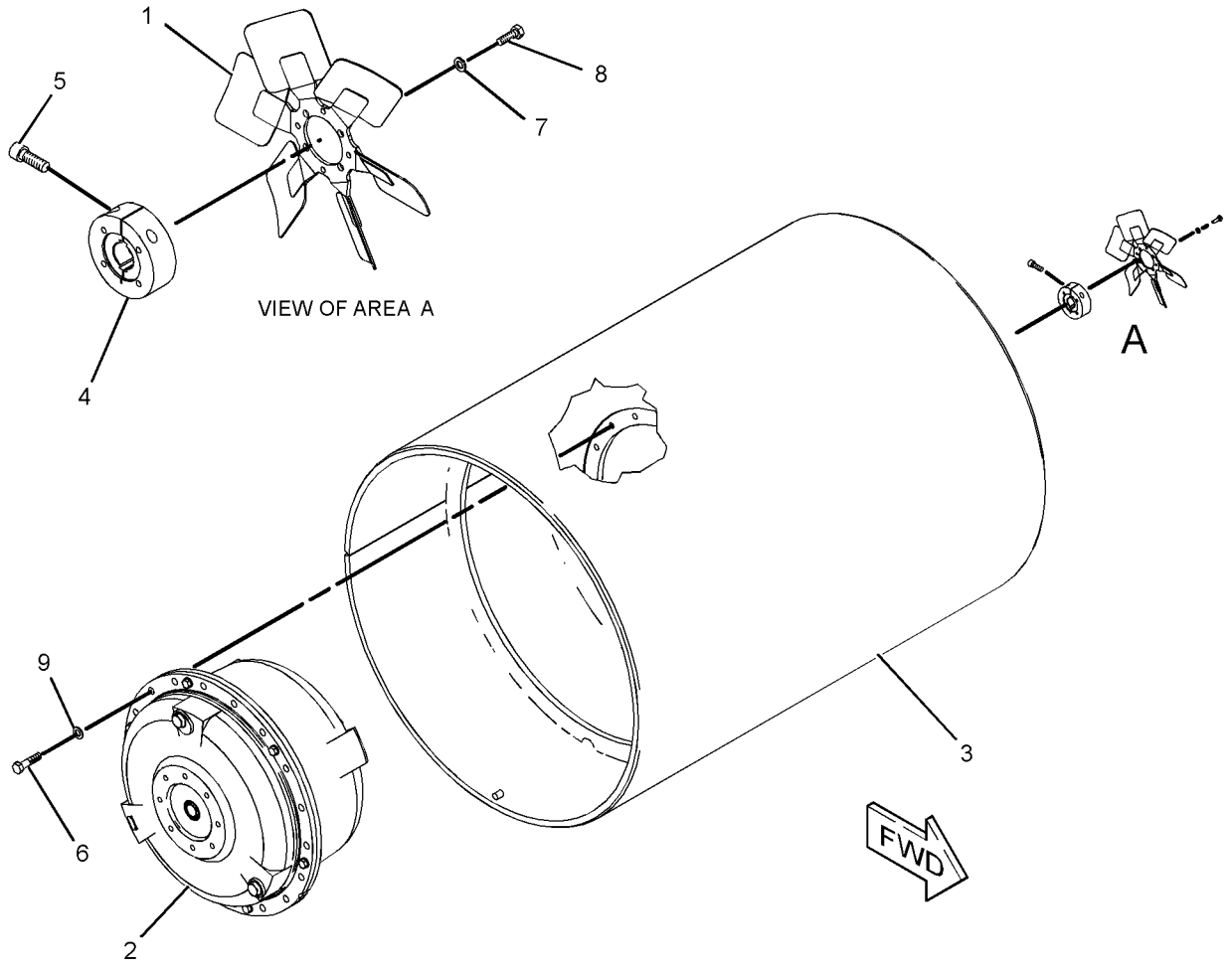

GRAPHIC #1 **<END>** g01196693

171-6585 INSTALLATION GP-DRUM

S/N: EAE1-UP

PART OF 216-8741 POWER TRAIN AR

SMCS-6605 **i01850871**

NOTE	REF NO	GRAPHIC REF	PART NUMBER	QTY	PART NAME 1 2 3 4 5 6 (PRODUCT LEVEL)	SEE PAGE
B	1	1	**171-7164**	6	SHIM (3-MM THK)	
	2	1	**8T-4123**	12	WASHER (22X35X3.5-MM THK)	
M	3	1	**8T-4131**	12	NUT (M20X2.5-THD)	
M	4	1	**8T-4141**	12	BOLT (M20X2.5X70-MM)	

B-USE AS REQUIRED
M-METRIC PART

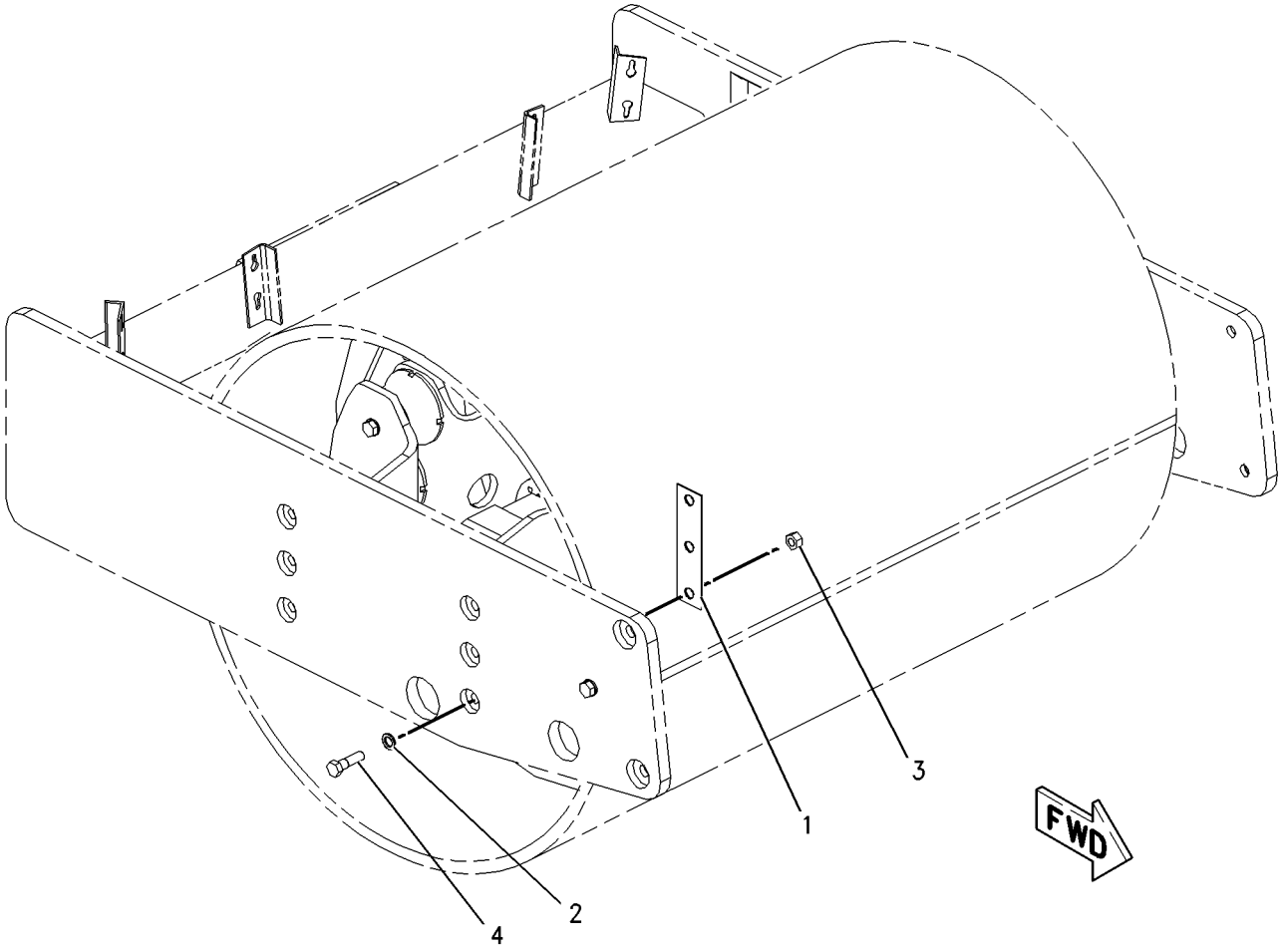

GRAPHIC #1 **<END>** g00685857

153-7122 LINES GP-PROPEL

S/N: EAE1-UP

PART OF 229-5727 HYDRAULIC AR

SMCS-3154 **i01837093**

NOTE	REF NO	GRAPHIC REF	PART NUMBER	QTY	PART NAME 1 2 3 4 5 6 (PRODUCT LEVEL)	SEE PAGE
	1	1	**135-0708**	5	CLAMP AS	
I	2	2	**190-0019**	1	HOSE AS	
I	3	2	**190-0022**	1	HOSE AS	
I	4	2	**190-0629**	1	HOSE AS	
I	5	2	**190-0630**	1	HOSE AS	
I	6	2	**190-4181**	1	HOSE AS	
I	7	1	**191-4909**	1	HOSE AS	
I	8	1	**191-5283**	1	HOSE AS	
I	9	2	**191-6189**	1	HOSE AS	
I	10	2	**192-8988**	1	HOSE AS	
	11	2	**210-9591**	1	PLATE AS	
	12	1	**7K-1181**	6	STRAP-CABLE	
M	13	1	**8T-0389**	10	LOCKNUT (M10X1.5-THD)	
	14	1,2	**8T-4121**	26	WASHER-HARD (11X21X2.5-MM THK)	
M	15	2	**8T-4137**	6	BOLT (M10X1.5X20-MM)	
M	16	1	**8T-5436**	10	BOLT (M10X1.5X130-MM)	
BG	17	1	**160-2247**		SLEEVE-ABRASION	
	18	2	**177-2215**	1	STRAP-DUAL CLAMP	

B-USE AS REQUIRED
G-ORDER BY THE INCH
I-REFER TO HYDRAULIC INFORMATION SYSTEM
M-METRIC PART

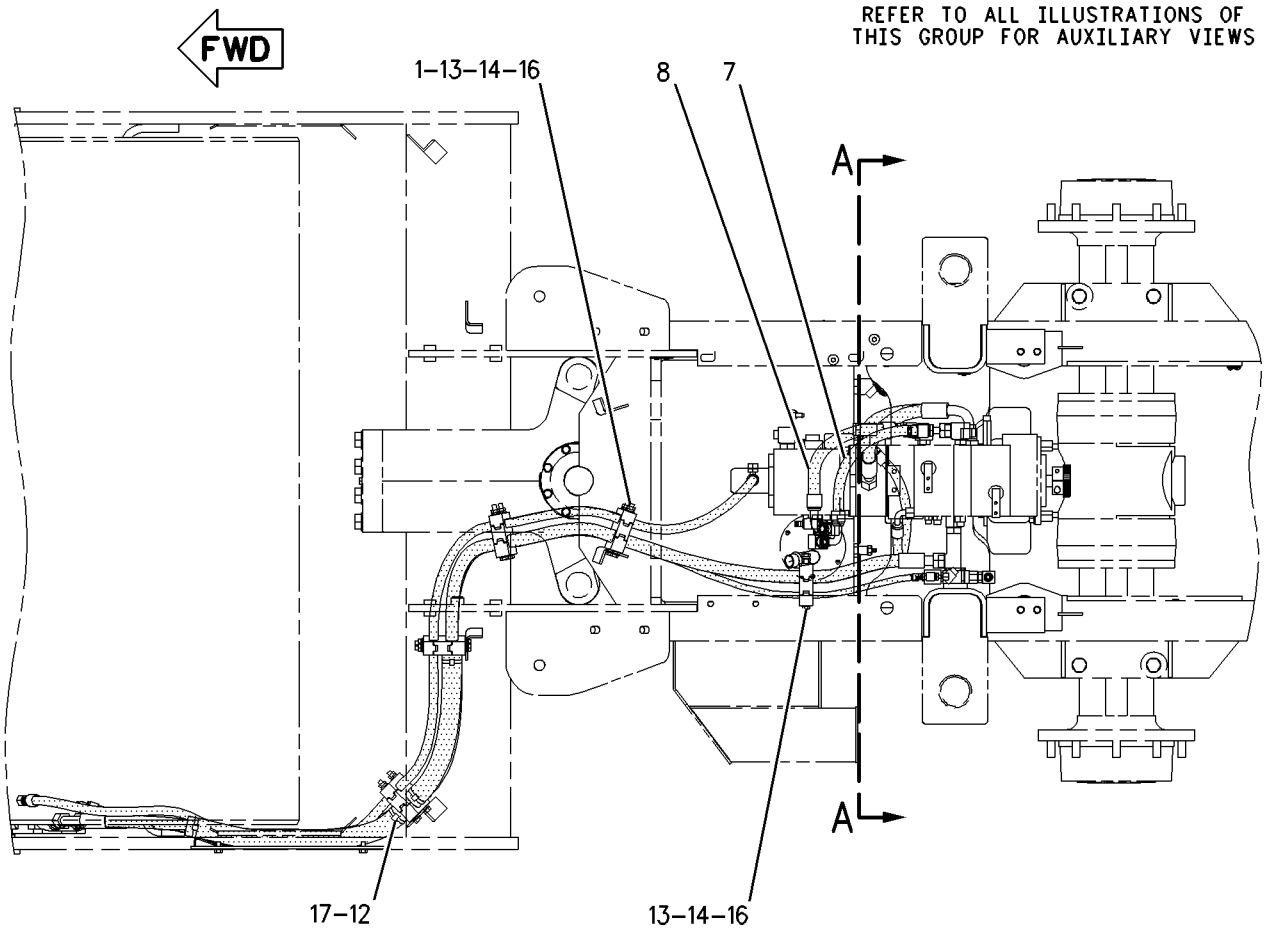

TOP VIEW

GRAPHIC #1 g00936956

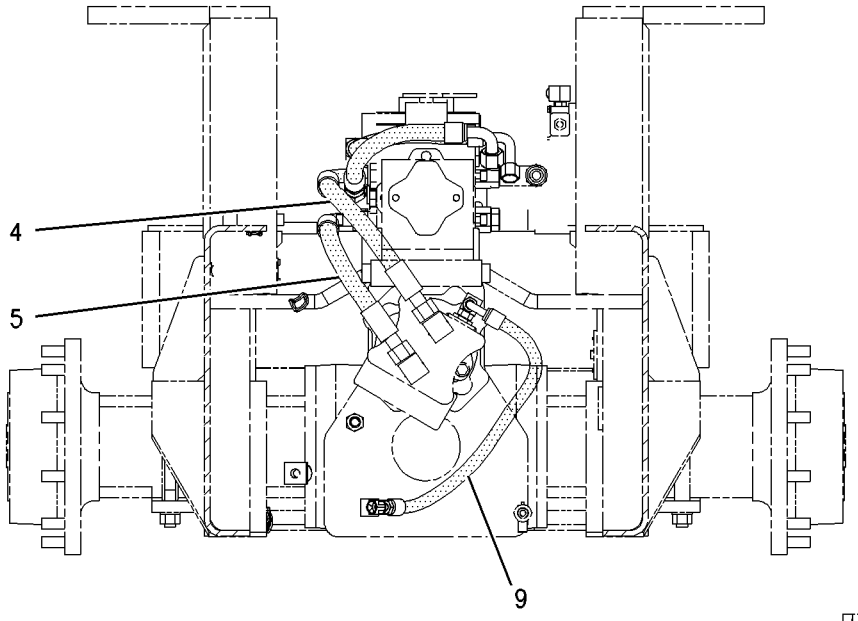

SECTION A-A

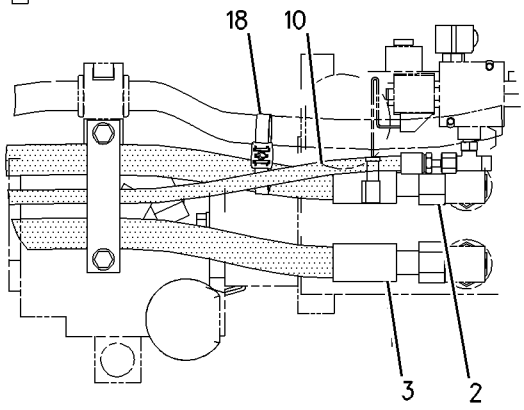

VIEW OF AREA B

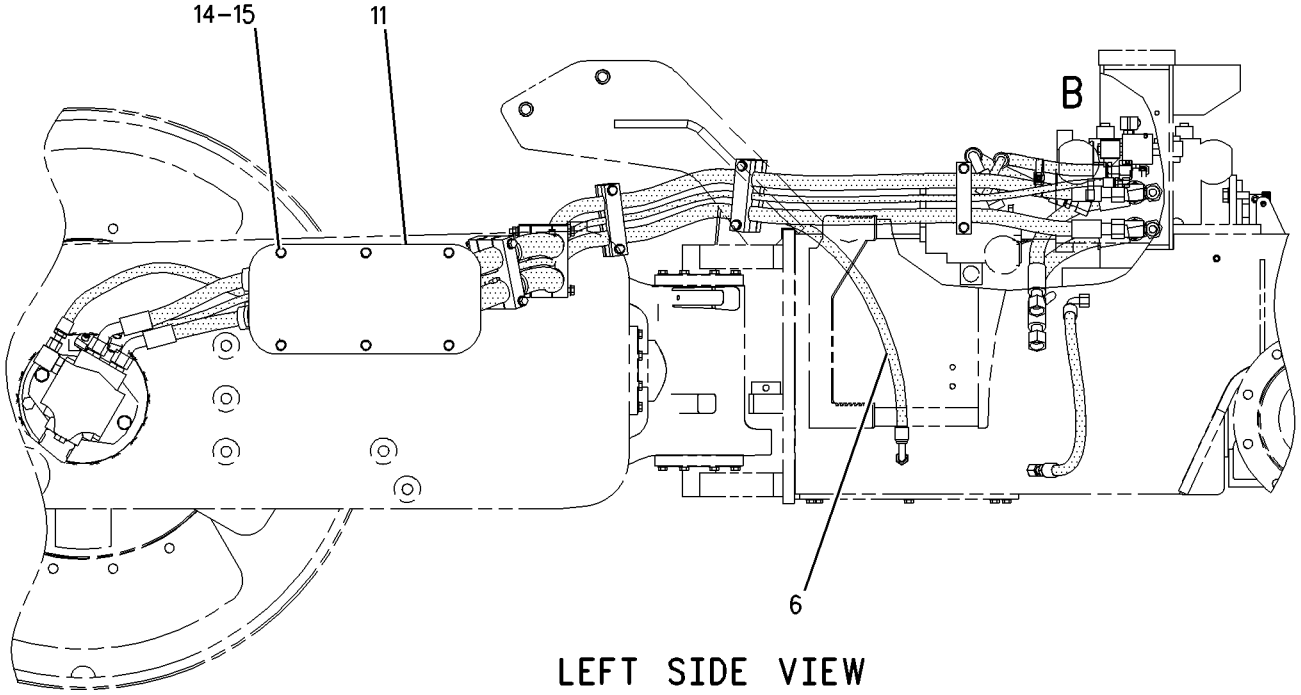

LEFT SIDE VIEW

GRAPHIC #2 **<END>** g00936950

188-5121 MOTOR & MTG GP-PROPEL

S/N: EAE1-UP

PART OF 229-5727 HYDRAULIC AR

SMCS-4351, 5058 **i02094747**

NOTE	REF NO	GRAPHIC REF	PART NUMBER	QTY	PART NAME 1 2 3 4 5 6 (PRODUCT LEVEL)	SEE PAGE
Y	1	1	**183-7530**	1	MOTOR GP-PISTON (PROPEL)	228
	2	1	*148-8347*	2	ELBOW AS	
					(EACH INCLUDES)	
		1	**3D-2824**	1	SEAL-O-RING	
		1	**6V-9007**	1	ELBOW	
		1	**6V-9746**	1	SEAL-O-RING	
	3	1	*148-8368*	1	ELBOW AS	
		1	**3J-1907**	1	SEAL-O-RING	
		1	**4J-5477**	1	SEAL-O-RING	
		1	**6V-8627**	1	ELBOW	
	4	1	*148-8436*	1	TEE AS	
		1	**6V-8775**	1	TEE-FACE SEAL	
		1	**3K-0360**	1	SEAL-O-RING	
		1	**6V-8398**	2	SEAL-O-RING	
	5	1	*155-7321*	1	ADAPTER AS	
		1	**3D-2824**	1	SEAL-O-RING	
		1	**6V-1722**	1	ADAPTER-O-RING	
	6	1	**7X-5494**	1	SEAL-O-RING	
	7	1	**5P-8245**	2	WASHER-HARD (13.5X25.5X3-MM THK)	
M	8	1	**8T-7811**	2	BOLT-SOCKET HEAD (M12X1.75X50-MM)	

M-METRIC PART
Y-SEPARATE ILLUSTRATION

188-5121 **MOTOR & MTG GP-PROPEL** *(contd.)* **i02094747**

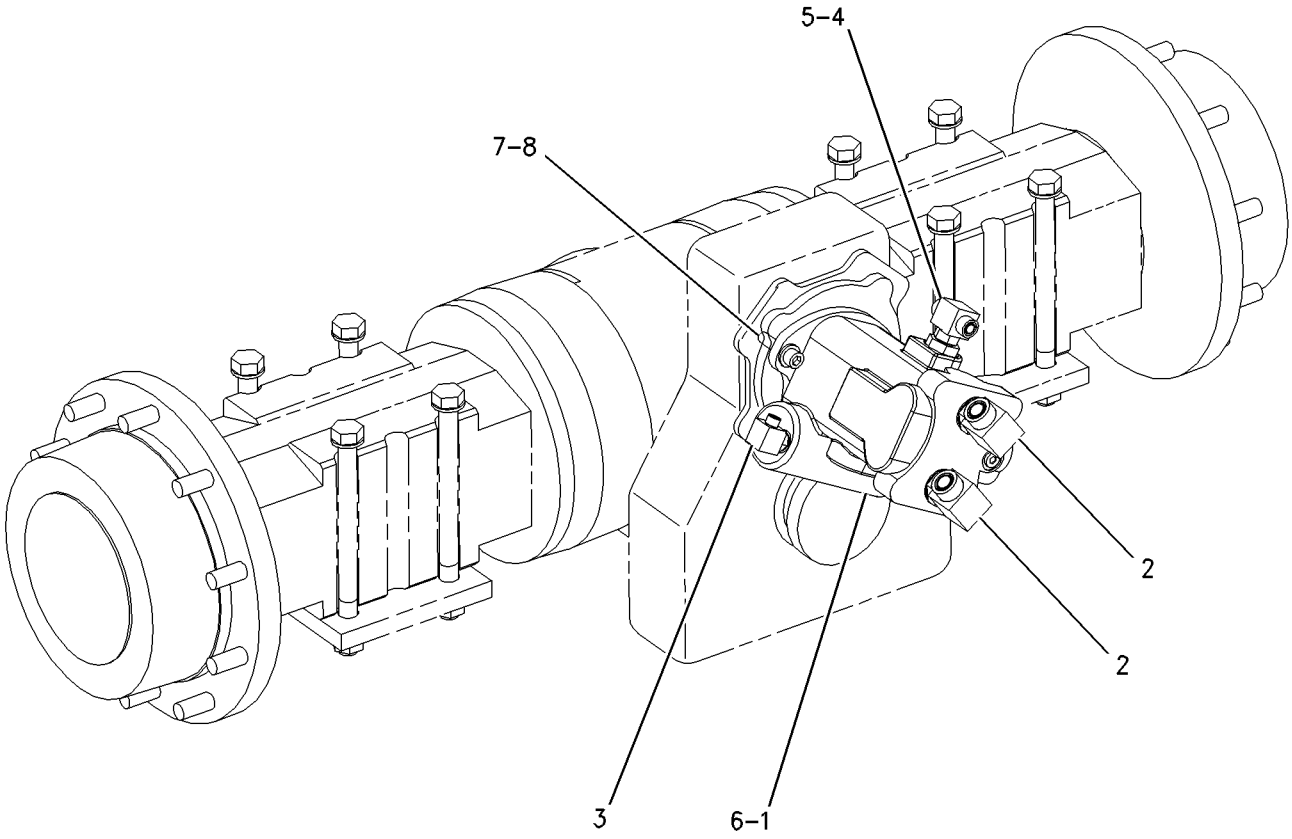

GRAPHIC #1 **<END>** g00828633

186-2335 MOUNTING GP-WHEEL

S/N: EAE1-UP
PART OF 217-1592 POWER TRAIN AR
AN ATTACHMENT

SMCS-4201 **i01850870**

NOTE	REF NO	GRAPHIC REF	PART NUMBER	QTY	PART NAME 1 2 3 4 5 6 (PRODUCT LEVEL)	SEE PAGE
	1	1	**8T-7530**	20	NUT (3/4-16 THD)	
Y	2	1	*186-2308*	1	WHEEL & TIRE GP (RH)	168
Y	3	1	*186-2309*	1	WHEEL & TIRE GP (LH)	169
	4	1	**8T-4994**	20	WASHER-HARD (20X36.5X3.5MM THK)	

Y-SEPARATE ILLUSTRATION

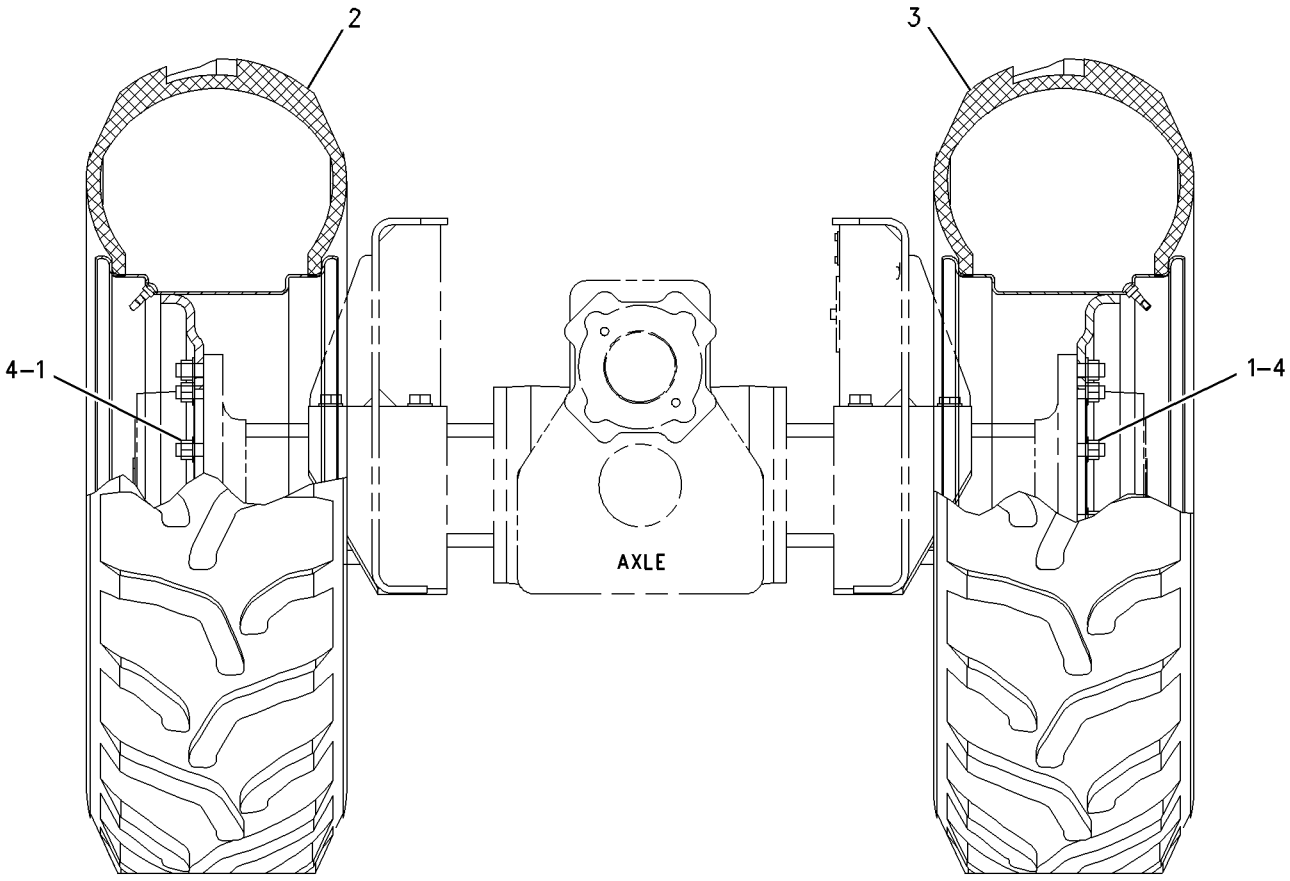

FRONT VIEW

GRAPHIC #1 **<END>** g00837502

186-2340 MOUNTING GP-WHEEL

S/N: EAE1-UP
PART OF 217-1593 POWER TRAIN AR
AN ATTACHMENT

SMCS-4201 **i01774874**

NOTE	REF NO	GRAPHIC REF	PART NUMBER	QTY	PART NAME 1 2 3 4 5 6 (PRODUCT LEVEL)	SEE PAGE
	1	1	**8T-7530**	20	NUT (3/4-16 THD)	
Y	2	1	*186-2338*	2	WHEEL & TIRE GP	170
	3	1	**8T-4994**	20	WASHER-HARD (20X36.5X3.5MM THK)	

Y-SEPARATE ILLUSTRATION

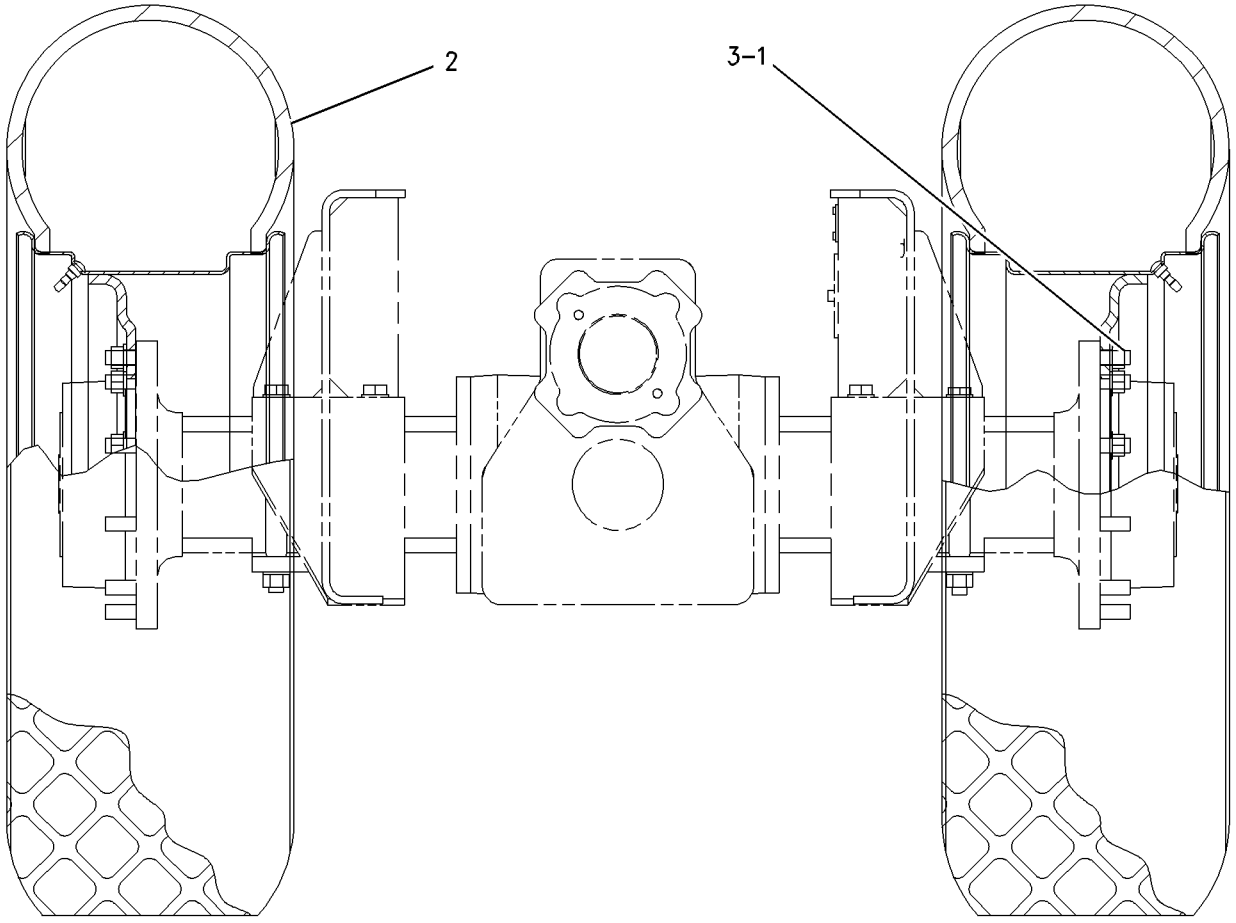

FRONT VIEW

GRAPHIC #1 **<END>** g00828012

237-5975 MOUNTING GP-WHEEL

S/N: EAE1-UP
AN ATTACHMENT

SMCS-4201 **i02854833**

NOTE	REF NO	GRAPHIC REF	PART NUMBER	QTY	PART NAME 1 2 3 4 5 6 (PRODUCT LEVEL)	SEE PAGE
	1	1	**8T-7530**	20	NUT (3/4-16-THD)	
Y	2	1	*237-6216*	2	WHEEL & TIRE GP	171
	3	1	**8T-4994**	20	WASHER-HARD (20X36.5X3.5-MM THK)	

Y-SEPARATE ILLUSTRATION

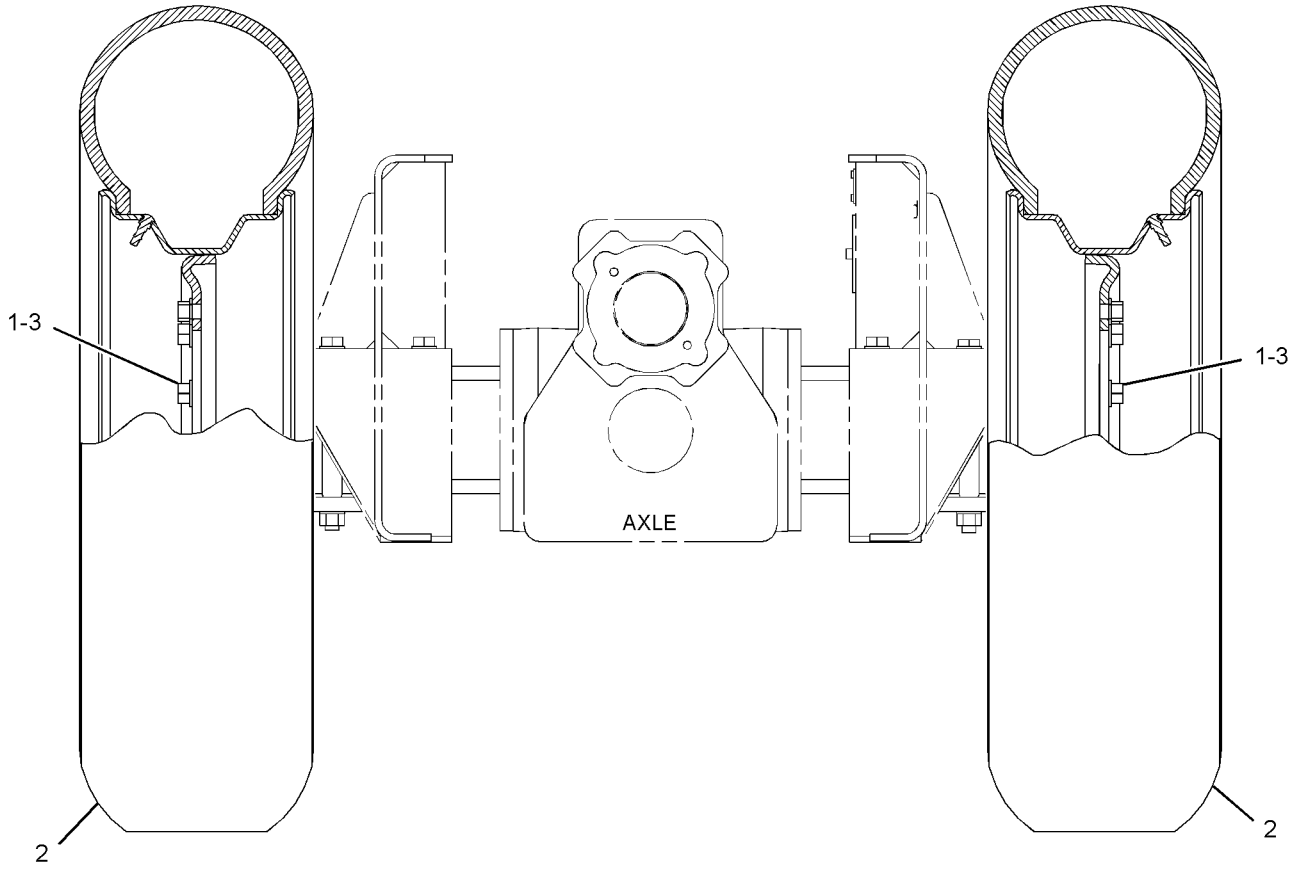

FRONT VIEW

GRAPHIC #1 **<END>** g01424132

POWER TRAIN

210-7756 PLANETARY GP-FINAL DRIVE

S/N: EAE1-UP

PART OF 188-3118 DRIVE GP-DRUM

AN ATTACHMENT

SMCS-4050 **i02787068**

NOTE	REF NO	GRAPHIC REF	PART NUMBER	QTY	PART NAME 1 2 3 4 5 6 (PRODUCT LEVEL)	SEE PAGE
	1	1	**151-7516**	1	PLUG-DRAIN (SPEED REDUCTION GEAR)	
	2	1	**151-7517**	1	SEAL-O-RING	
	3	1	**207-2814**	1	SEAL-O-RING	
	4	1	**207-2816**	1	RING-BACKUP	
	5	1	**9W-4098**	1	SEAL GP-DUO-CONE	
	6	1	**191-0529**	2	CONE	
	7	1	**191-0530**	2	CUP	
	8	1	**207-2813**	1	SEAL-O-RING	
	9	1	**207-2815**	1	RING-BACKUP	
	10	1	**177-0013**	1	PISTON-BRAKE	
	11	1	**147-5582**	4	BEARING	
	12	1	**191-0070**	4	GEAR-PLANETARY	
	13	1	**6V-5201**	1	RING-RETAINING	
	14	1	**191-2293**	3	SHAFT-PLANETARY	
	15	1	**191-2292**	1	CARRIER-PLANETARY	
	16	1	**151-7502**	6	WASHER-ANTIROTATION	
	17	1	**191-2289**	3	GEAR-PLANETARY	
	18	1	**151-7510**	108	NEEDLE	
	19	1	**151-7500**	6	WASHER-GEAR	
	20	1	**151-7505**	6	RING-RETAINING	
	21	1	**191-2294**	1	CARRIER-PLANETARY	
	22	1	**191-2295**	3	GEAR-PLANETARY	
	23	1	**151-7506**	54	NEEDLE	
	24	1	**151-7504**	3	PIN-GEAR	
B	25	1	**191-4441**	1	KIT-SHIM (COVER PAD) (INCLUDES 3 SHIMS)	
	26	1	**191-2287**	1	PAD	
	27	1	**6V-8754**	1	RING-RETAINING	
	28	1	**191-0065**	1	GEAR-INPUT SUN	
	29	1	**151-7501**	2	DISC	
	30	1	**191-0063**	1	COVER	
	31	1	**136-8638**	1	RING-RETAINING	
	32	1	**136-8641**	1	SEAL-O-RING	
	33	1	**191-4440**	1	RING-RETAINING	
	34	1	**191-2275**	1	GEAR-INPUT RING	
M	35	1	**096-1331**	32	BOLT-SOCKET HEAD (M10X1.5X120-MM)	
	36	1	**190-8501**	2	SEAL-O-RING	
	37	1	**191-2280**	1	GEAR-RING	
	38	1	**191-2286**	1	SHAFT-INPUT	
B	39	1	**218-9880**	1	SHIM (0.2-MM THK)	
	40	1	**191-2284**	1	NUT-BEARING	
	41	1	**191-0062**	1	SPACER	
	42	1	**191-0064**	1	HOUSING-ROTATING	
	43	1	**136-8064**	3	DISC-FRICTION	
	44	1	**136-8068**	4	DISC-MIDDLE	
	45	1	**191-2277**	1	HUB	
	46	1	**191-2288**	1	PLUG-ORIFICE	
	47	1	**207-2817**	16	SPRING	
	48	1	**191-0071**	1	COUPLING-INPUT	
	49	1	**095-7952**	1	RING	
M	50	1	**2Y-8422**	1	SCREW (M6X16-MM)	
	51	1	**191-2281**	1	WASHER-RETAINING	
	52	1	**191-2285**	1	GEAR-SUN	
	53	1	**177-0014**	1	DISC-RETAINING	
	54	1	**7U-3538**	1	RING-RETAINING	
B	55	1	**218-9878**	1	SHIM (0.1-MM THK)	

210-7756 PLANETARY GP-FINAL DRIVE *(contd.)* i02787068

NOTE	REF NO	GRAPHIC REF	PART NUMBER	QTY	PART NAME 1 2 3 4 5 6 (PRODUCT LEVEL)	SEE PAGE
	56	1	**191-0066**		GEAR-SUN	

B-USE AS REQUIRED
M-METRIC PART

210-7756 PLANETARY GP-FINAL DRIVE *(contd.)* i02787068

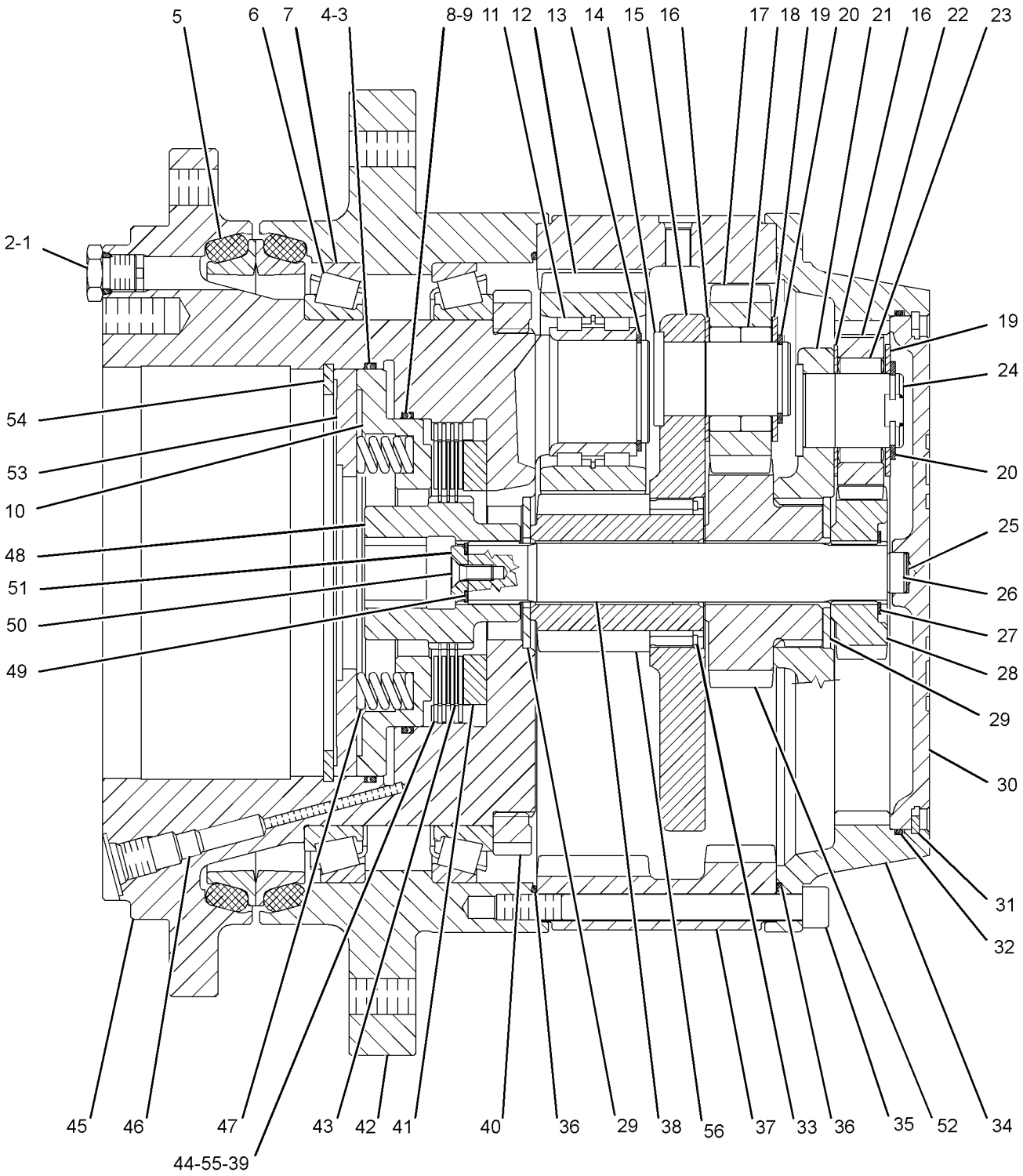

GRAPHIC #1 **<END>** g01397670

POWER TRAIN

216-8741 POWER TRAIN AR

S/N: EAE1-UP

PART OF 228-9623 COMMON AR

SMCS-3000, 4000 **i01712592**

NOTE	PART NUMBER	QTY	PART NAME 1 2 3 4 5 6 (PRODUCT LEVEL)	SEE PAGE
Y	*198-0277*	1	AXLE & MTG GP-DRIVE	136
Y	*171-6585*	1	INSTALLATION GP-DRUM	152

Y-SEPARATE ILLUSTRATION

<END>

217-1592 POWER TRAIN AR—PADDED

S/N: EAE1-UP

AN ATTACHMENT

SMCS-3000, 4000 **i01774726**

NOTE	PART NUMBER	QTY	PART NAME 1 2 3 4 5 6 (PRODUCT LEVEL)	SEE PAGE
Y	*186-5232*	1	DRUM GP-DRIVE & VIBRATORY	145
Y	*186-2335*	1	MOUNTING GP-WHEEL	158

Y-SEPARATE ILLUSTRATION

<END>

217-1593 POWER TRAIN AR—SMOOTH

S/N: EAE1-UP

AN ATTACHMENT

SMCS-3000, 4000 **i01774728**

NOTE	PART NUMBER	QTY	PART NAME 1 2 3 4 5 6 (PRODUCT LEVEL)	SEE PAGE
Y	*188-3117*	1	DRUM GP-DRIVE & VIBRATORY	146
Y	*186-2340*	1	MOUNTING GP-WHEEL	159

Y-SEPARATE ILLUSTRATION

<END>

153-7120 PUMP & MTG GP-PROPEL

S/N: EAE1-UP

PART OF 229-5727 HYDRAULIC AR

SMCS-3203, 3204, 5070 **i02135854**

NOTE	REF NO	GRAPHIC REF	PART NUMBER	QTY	PART NAME 1 2 3 4 5 6 (PRODUCT LEVEL)	SEE PAGE
	1	1	**218-2236**	1	HUB-COUPLING	
M		1	**6V-8200**	1	BOLT-SOCKET HEAD (M12X1.75X35-MM)	
Y	2	1	**183-3230**	1	PUMP GP-PISTON (PROPEL)	233
	3	1	*148-8319*	1	CONNECTOR AS (PROPREL)	
		1	**2M-9780**	1	SEAL-O-RING	
		1	**6V-8397**	1	SEAL-O-RING	
		1	**6V-8715**	1	CONNECTOR	
	4	1	*148-8336*	2	CONNECTOR AS (PROPEL)	
					(EACH INCLUDES)	
		1	**3J-1907**	1	SEAL-O-RING	
		1	**6V-8397**	1	SEAL-O-RING	
		1	**6V-8636**	1	CONNECTOR	
	5	1	*148-8339*	2	CONNECTOR AS (PROPEL)	
					(EACH INCLUDES)	
		1	**6V-8716**	1	CONNECTOR	
		1	**6V-9746**	1	SEAL-O-RING	
		1	**7M-8485**	1	SEAL-O-RING	
	6	1	*148-8360*	1	ELBOW AS	
		1	**6V-9182**	1	ELBOW	
		1	**7M-8485**	1	SEAL-O-RING	
		1	**6V-9746**	1	SEAL-O-RING	
	7	1	*153-6249*	2	CONNECTOR AS (PROPEL)	
					(EACH INCLUDES)	
		1	**3J-1907**	1	SEAL-O-RING	
		1	**6V-8397**	1	SEAL-O-RING	
		1	**8T-8887**	1	CONNECTOR	
	8	1	*153-6260*	1	TEE AS	
		1	**2M-9780**	1	SEAL-O-RING	
		1	**6V-9746**	2	SEAL-O-RING	
		1	**8T-8984**	1	TEE-O-RING PORT	
	9	1	*172-4621*	2	ADAPTER AS (PROPEL)	
					(EACH INCLUDES)	
		1	**6V-0301**	1	ADAPTER	
		1	**7M-8485**	1	SEAL-O-RING	
	10	1	**8C-8400**	2	ELBOW	
M	11	1	**8T-7338**	4	BOLT (M16X2X45-MM)	
	12	1	**9X-8257**	4	WASHER (17.5X30X3.5-MM THK)	

M-METRIC PART
Y-SEPARATE ILLUSTRATION

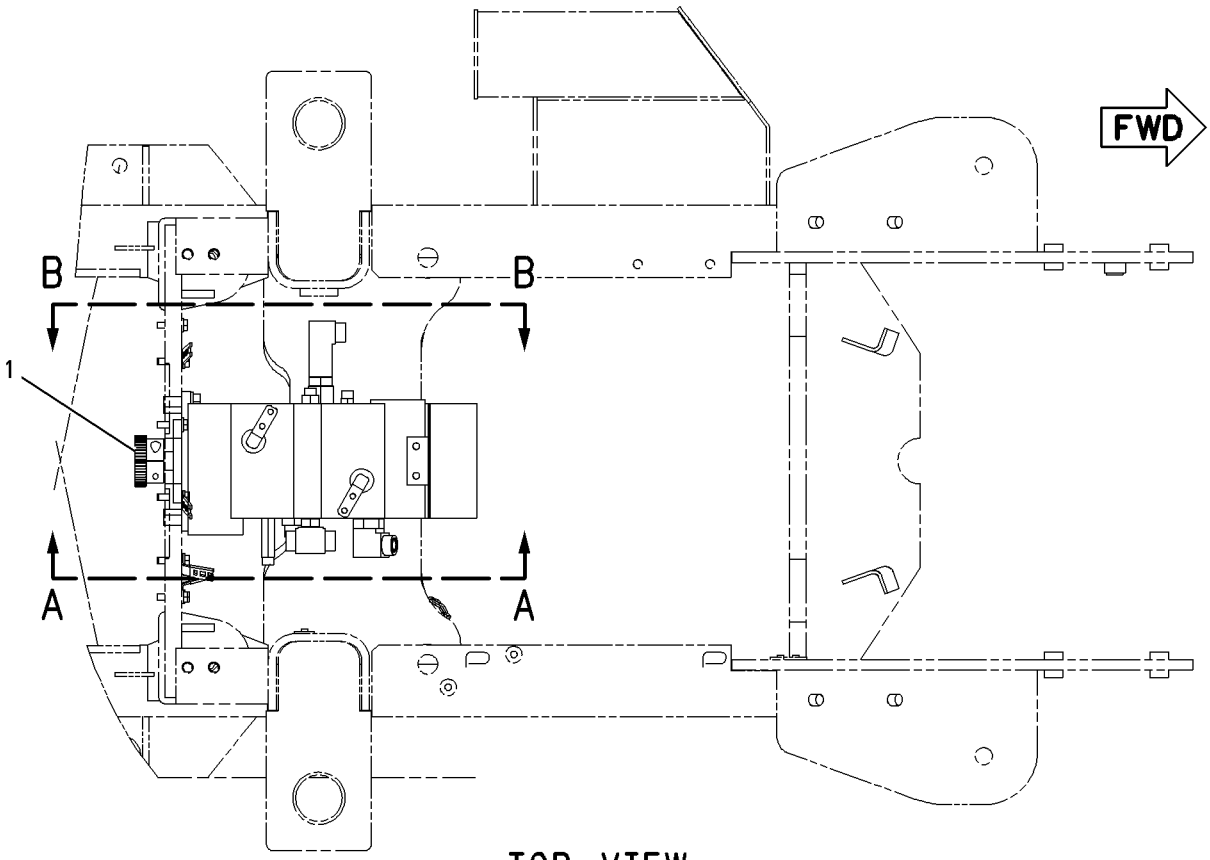

TOP VIEW

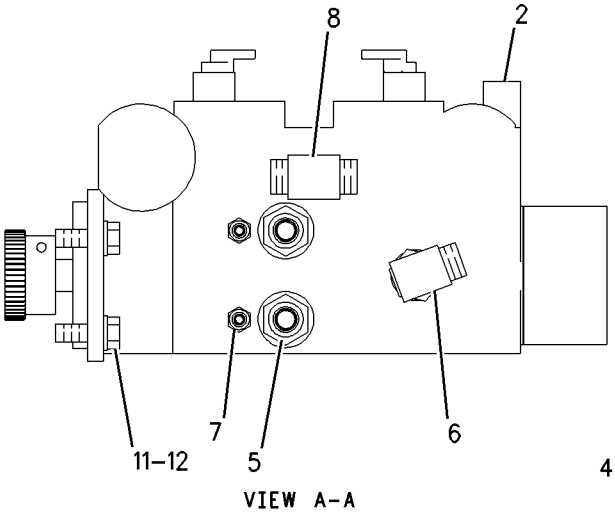

VIEW A-A

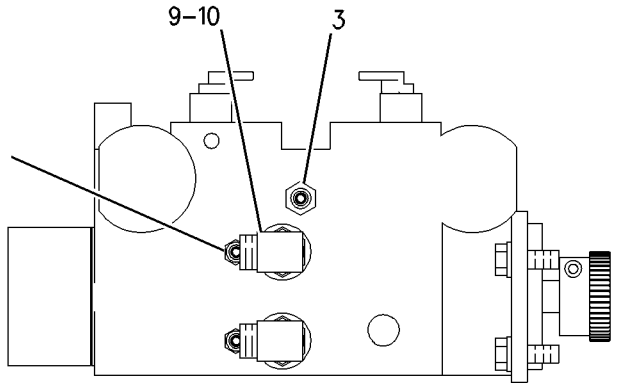

VIEW B-B

GRAPHIC #1 **<END>** g00831933

214-5572 SHELL AR–PADDED

S/N: EAE1-UP

AN ATTACHMENT

SMCS-6605 **i02135857**

NOTE	PART NUMBER	QTY	PART NAME 1 2 3 4 5 6 (PRODUCT LEVEL)	SEE PAGE
Y	*195-4487*	1	BUMPER GP (PADDED DRUM WITHOUT BLADE)	173
Y	*201-7763*	1	DRUM GP-PADDED	149
Y	*213-1987*	1	SCRAPER GP-PADDED DRUM	195

Y-SEPARATE ILLUSTRATION

<END>

186-2308 WHEEL & TIRE GP–RH

S/N: EAE1-UP
PART OF 186-2335 MOUNTING GP-WHEEL
AN ATTACHMENT

SMCS-4202 **i02135862**

NOTE	REF NO	GRAPHIC REF	PART NUMBER	QTY	PART NAME 1 2 3 4 5 6 (PRODUCT LEVEL)	SEE PAGE
J	1	1	*230-9943*	1	TIRE (14.9-24)	
	2	1	**077-3895**	1	CAP-VALVE STEM	
	3	1	**077-3906**	1	NUT-VALVE STEM	
	4	1	**077-4192**	1	VALVE	
	5	1	**185-8777**	1	WHEEL AS (RH)	

J-PROCURE LOCALLY

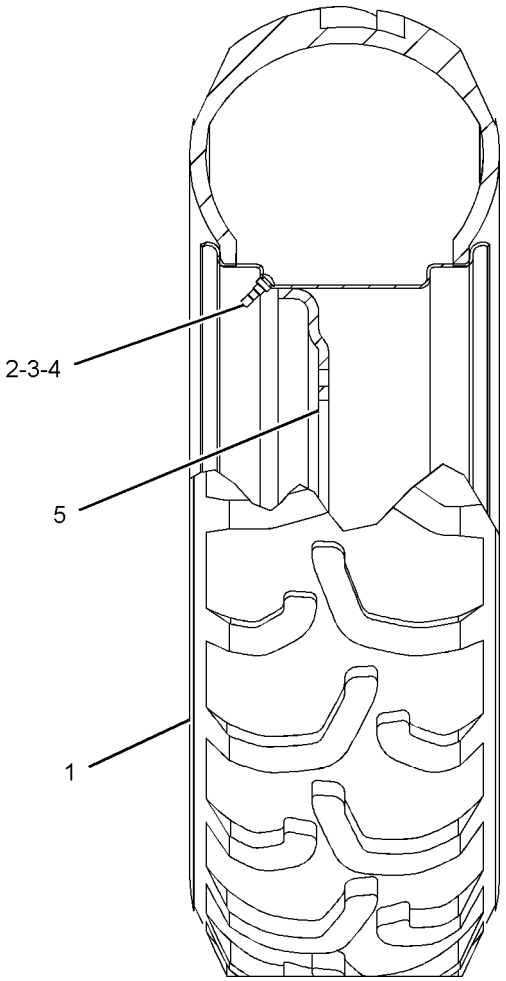

GRAPHIC #1 **<END>** g01014584

186-2309 WHEEL & TIRE GP–LH

S/N: EAE1-UP

PART OF 186-2335 MOUNTING GP-WHEEL

AN ATTACHMENT

SMCS-4202 **i02135866**

NOTE	REF NO	GRAPHIC REF	PART NUMBER	QTY	PART NAME 1 2 3 4 5 6 (PRODUCT LEVEL)	SEE PAGE
J	1	1	*230-9943*	1	TIRE (14.9-24)	
	2	1	**077-3895**	1	CAP-VALVE STEM	
	3	1	**077-3906**	1	NUT-VALVE STEM	
	4	1	**077-4192**	1	VALVE	
	5	1	**185-8777**	1	WHEEL AS (LH)	

J-PROCURE LOCALLY

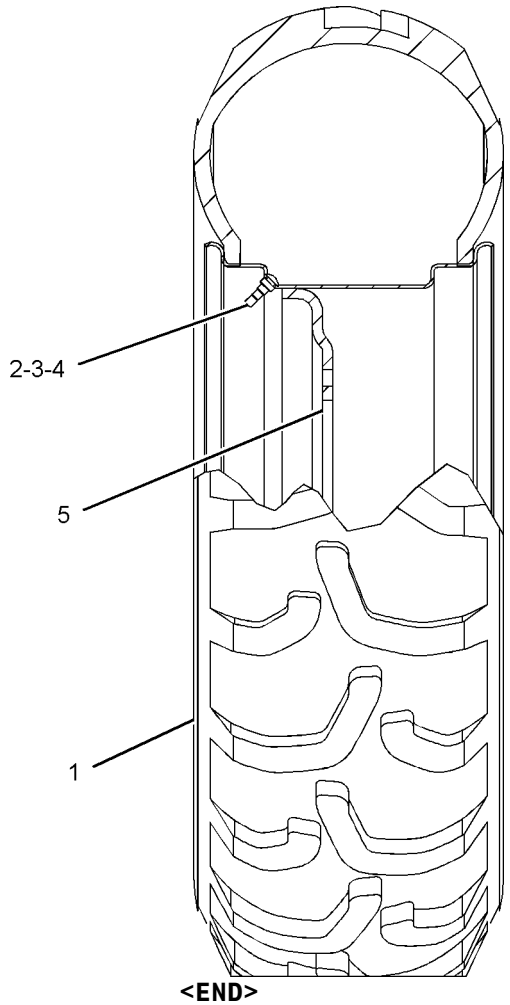

GRAPHIC #1 **<END>** g01014584

186-2338 WHEEL & TIRE GP

S/N: EAE1-UP
PART OF 186-2340 MOUNTING GP-WHEEL
AN ATTACHMENT

SMCS-4202 **i02135868**

NOTE	REF NO	GRAPHIC REF	PART NUMBER	QTY	PART NAME 1 2 3 4 5 6 (PRODUCT LEVEL)	SEE PAGE
	1	1	**077-3895**	1	CAP-VALVE STEM	
	2	1	**077-3906**	1	NUT-VALVE STEM	
	3	1	**077-4192**	1	VALVE	
J	4	1	*171-7266*	1	TIRE (14.9-24) (14.9X24-6 PLY)	
	5	1	**185-8777**	1	WHEEL AS	

J-PROCURE LOCALLY

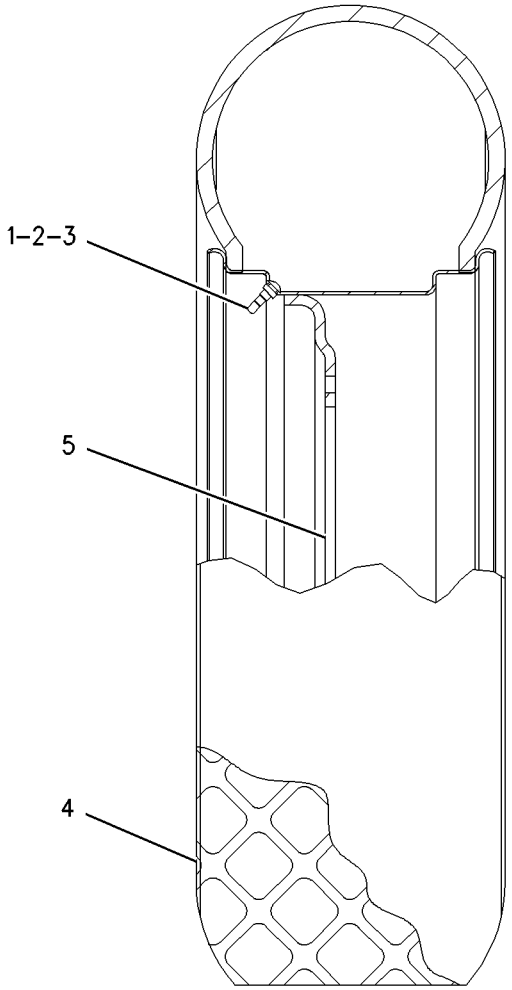

GRAPHIC #1 **<END>** g00828059

237-6216 WHEEL & TIRE GP

S/N: EAE1-UP

PART OF 237-5975 MOUNTING GP-WHEEL

AN ATTACHMENT

SMCS-4202 **i02854834**

NOTE	REF NO	GRAPHIC REF	PART NUMBER	QTY	PART NAME 1 2 3 4 5 6 (PRODUCT LEVEL)	SEE PAGE
	1	1	*112-9422*	1	TIRE-TUBELESS (10-24)	
	2	1	**239-6078**	1	WHEEL AS	

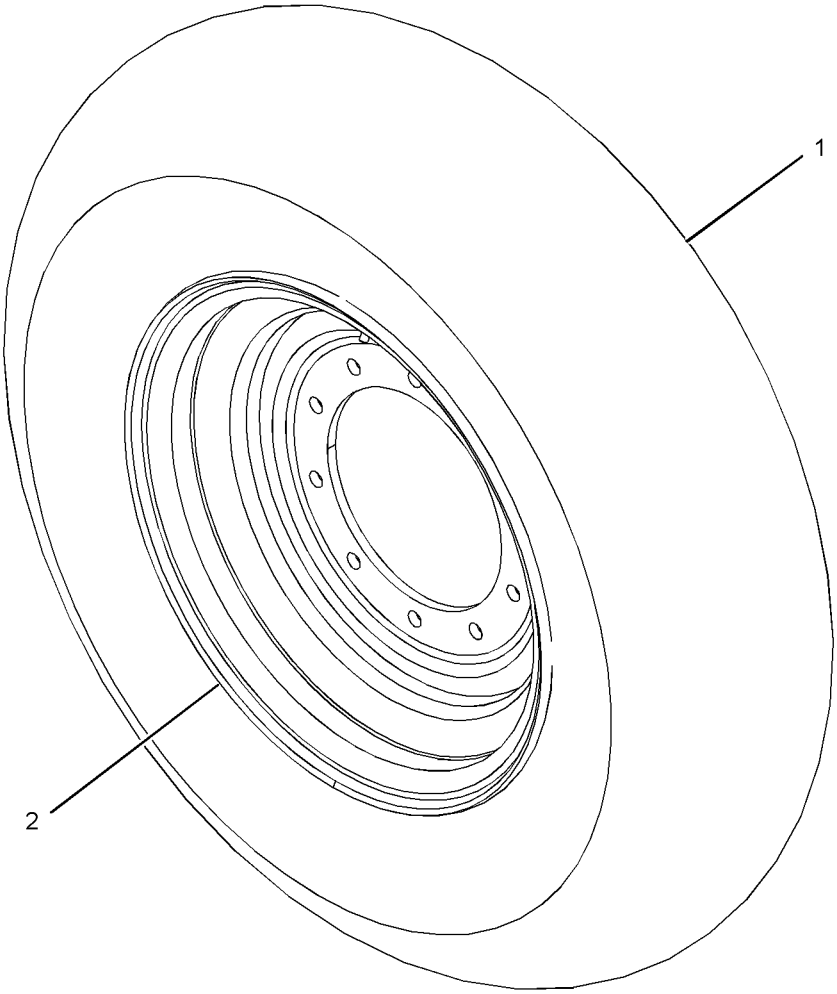

GRAPHIC #1 **<END>** g01427241

196-2931 BUMPER AR

S/N: EAE1-UP
FOR USE WITH 217-1593—PAGE 164
AN ATTACHMENT

SMCS-7156 **i01774732**

NOTE	PART NUMBER	QTY	PART NAME 1 2 3 4 5 6 (PRODUCT LEVEL)	SEE PAGE
Y	*201-3378*	1	BUMPER GP	174
Y	*203-1722*	1	LINES GP-STEERING	211
Y	*153-6995*	1	PLATE & FILM GP	393

Y-SEPARATE ILLUSTRATION

<END>

203-1724 BUMPER AR

S/N: EAE1-UP
FOR USE WITH PADDED SHELL
AN ATTACHMENT

SMCS-7156 **i01774937**

NOTE	PART NUMBER	QTY	PART NAME 1 2 3 4 5 6 (PRODUCT LEVEL)	SEE PAGE
Y	*195-4487*	1	BUMPER GP	173
Y	*201-7763*	1	DRUM GP-PADDED	149
Y	*203-1722*	1	LINES GP-STEERING	211
Y	*221-5406*	1	PLATE & FILM GP	403

Y-SEPARATE ILLUSTRATION

<END>

244-5590 BUMPER AR—WITHOUT BLADE

S/N: EAE1-UP
AN ATTACHMENT

SMCS-7156 **i01990993**

NOTE	PART NUMBER	QTY	PART NAME 1 2 3 4 5 6 (PRODUCT LEVEL)	SEE PAGE
Y	*244-5593*	1	BUMPER GP-DRUM	176
Y	*203-1722*	1	LINES GP-STEERING	211
Y	*153-6995*	1	PLATE & FILM GP	393

Y-SEPARATE ILLUSTRATION

<END>

252-0769 BUMPER AR

S/N: EAE1-UP
AN ATTACHMENT

SMCS-7156 **i02854801**

NOTE	PART NUMBER	QTY	PART NAME 1 2 3 4 5 6 (PRODUCT LEVEL)	SEE PAGE
Y	*237-5978*	1	BUMPER GP-DRUM	175
Y	*203-1722*	1	LINES GP-STEERING	211
Y	*153-6995*	1	PLATE & FILM GP	393

Y-SEPARATE ILLUSTRATION

<END>

195-4487 BUMPER GP–PADDED SHELL

S/N: EAE1-UP

PART OF 203-1724 BUMPER AR, 214-5572 SHELL AR

AN ATTACHMENT

SMCS-7156 **i02135873**

NOTE	REF NO	GRAPHIC REF	PART NUMBER	QTY	PART NAME 1 2 3 4 5 6 (PRODUCT LEVEL)	SEE PAGE
	1	1	**192-4687**	1	PLATE	
	2	1	**199-7812**	1	BUMPER AS (PADDED)	
M	3	1	**8T-4001**	4	NUT (M24X3-THD)	
	4	1	**8T-4167**	8	WASHER-HARD (26X44X4-MM THK)	
M	5	1	**8T-4189**	6	BOLT (M8X1.25X20-MM)	
	6	1	**8T-4224**	6	WASHER-HARD (8.8X16X2-MM THK)	
M	7	1	**8T-5878**	4	BOLT (M24X3X80-MM)	

M-METRIC PART

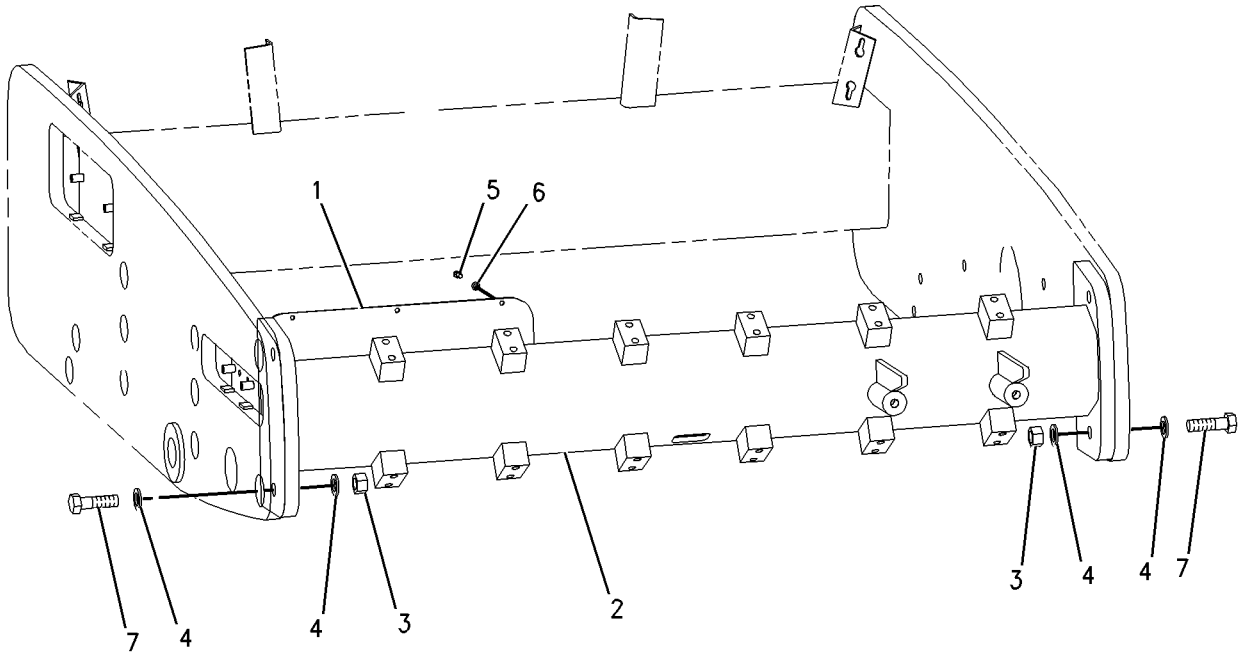

GRAPHIC #1 **<END>** g00836774

201-3378 BUMPER GP

S/N: EAE1-UP
PART OF 196-2931 BUMPER AR, 278-4510 DRUM GP-COMPACTOR
AN ATTACHMENT

SMCS-7156 **i02897095**

NOTE	REF NO	GRAPHIC REF	PART NUMBER	QTY	PART NAME 1 2 3 4 5 6 (PRODUCT LEVEL)	SEE PAGE
	1	1	**189-2193**	1	BUMPER AS	
M	2	1	**8T-4001**	4	NUT (M24X3-THD)	
	3	1	**8T-4167**	8	WASHER-HARD (26X44X4-MM THK)	
M	4	1	**8T-5878**	4	BOLT (M24X3X80-MM)	

M-METRIC PART

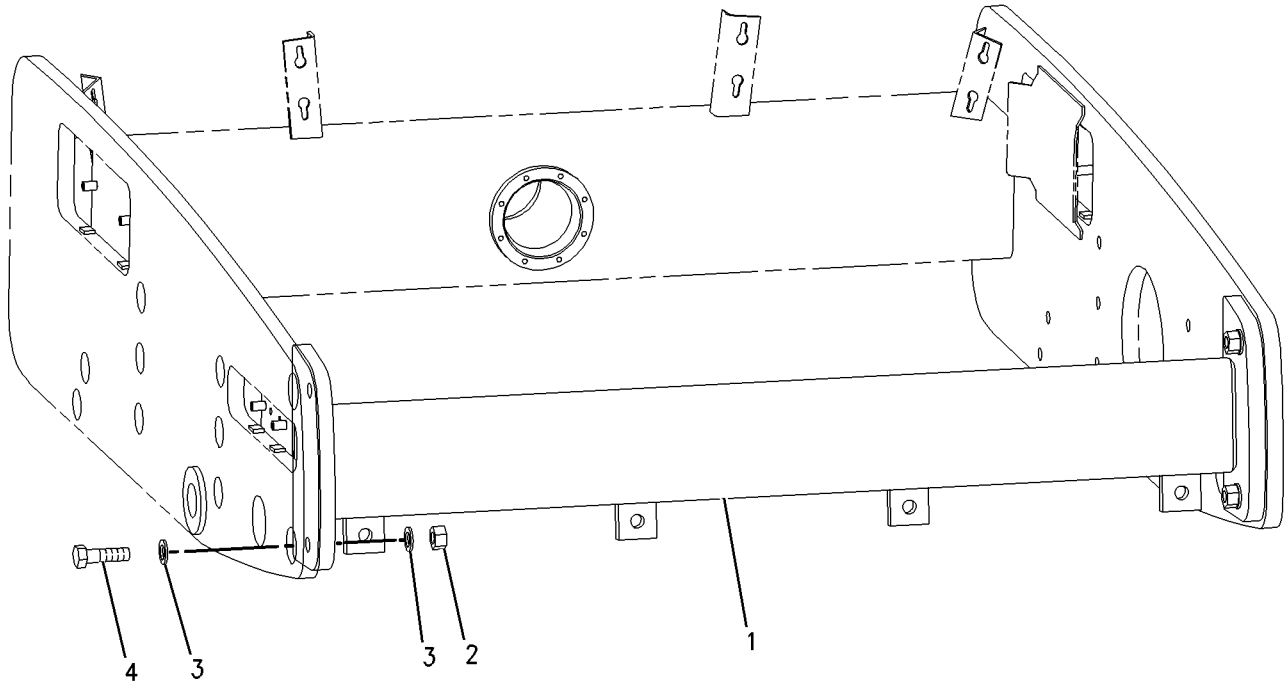

GRAPHIC #1 **<END>** g00829158

237-5978 BUMPER GP-DRUM

S/N: EAE1-UP
PART OF 252-0769 BUMPER AR
AN ATTACHMENT

SMCS-7156 **i02854808**

NOTE	REF NO	GRAPHIC REF	PART NUMBER	QTY	PART NAME 1 2 3 4 5 6 (PRODUCT LEVEL)	SEE PAGE
	1	1	**7R-7950**	2	PLATE	
	2	1	**086-8645**	4	CLAMP	
	3	1	**119-8708**	2	PLATE AS	
					(EACH INCLUDES)	
M		1	**8T-3612**	2	NUT-WELD (M8X1.25-THD)	
	4	1	**217-1514**	2	LATCH	
	5	1	**219-0341**	1	COVER AS	
	6	1	**237-8005**	1	BUMPER AS	
	7	1	**5P-4116**	6	WASHER-HARD (8.8X20.5X2-MM THK)	
M	8	1	**6V-7744**	2	LOCKNUT (M10X1.5-THD)	
M	9	1	**7X-2575**	4	BOLT (M24X3X60-MM)	
	10	1	**8T-4121**	4	WASHER-HARD (11X21X2.5-MM THK)	
	11	1	**8T-4167**	4	WASHER-HARD (26X44X4-MM THK)	
M	12	1	**8T-4189**	2	BOLT (M8X1.25X20-MM)	
M	13	1	**8T-4971**	4	BOLT (M6X1X30-MM)	
M	14	1	**8T-6466**	2	BOLT (M10X1.5X60-MM)	
M	15	1	**8T-7547**	4	BOLT (M8X1.25X30-MM)	

M-METRIC PART

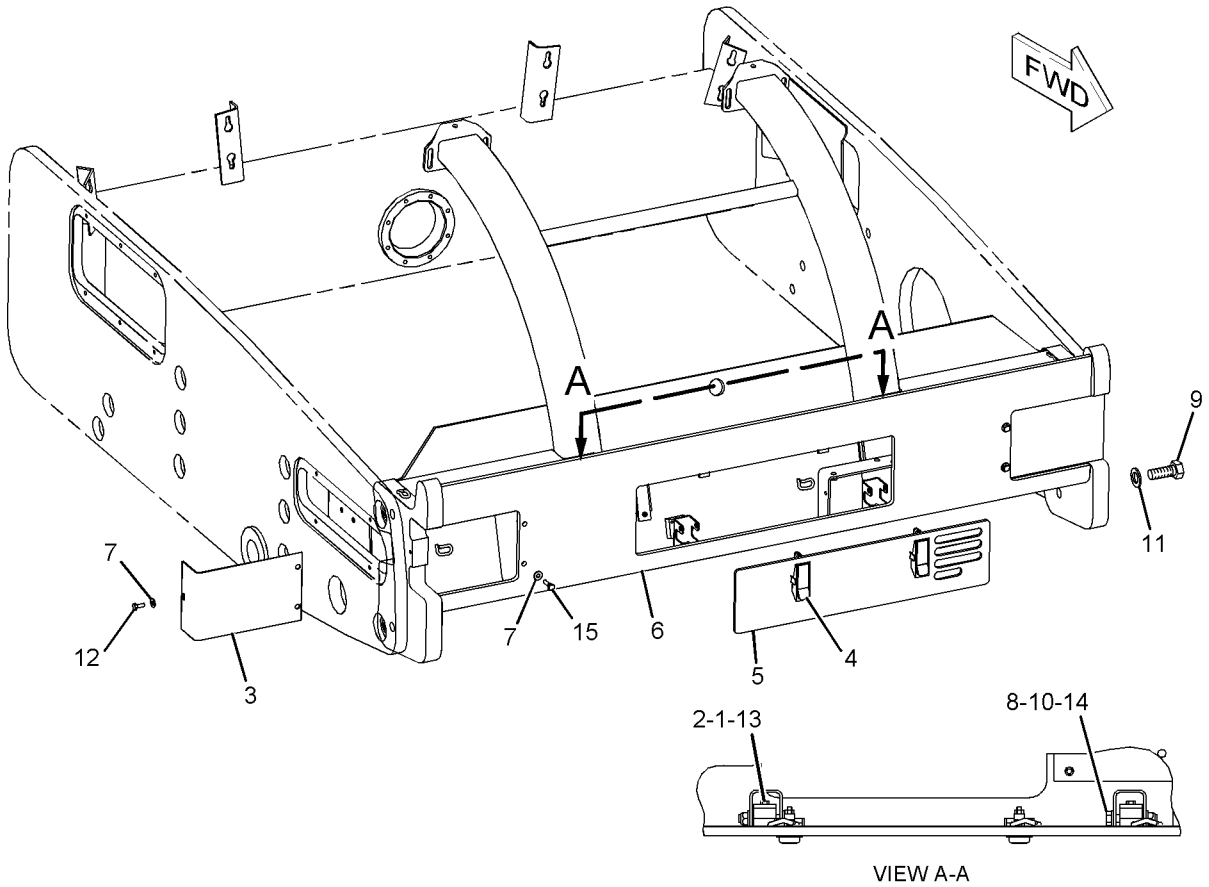

VIEW A-A

GRAPHIC #1 **<END>** g01095752

244-5593 BUMPER GP-DRUM—WITHOUT BLADE

S/N: EAE1-UP
PART OF 244-5590 BUMPER AR
AN ATTACHMENT

SMCS-7156 **i02877907**

NOTE	REF NO	GRAPHIC REF	PART NUMBER	QTY	PART NAME 1 2 3 4 5 6 (PRODUCT LEVEL)	SEE PAGE
B	1	1	**191-4461**	3	SHIM (1.5-MM THK)	
	2	1	**213-1807**	1	SCRAPER AS	
	3	1	**243-4648**	1	BUMPER AS-FRONT	
M	4	1	**7X-2563**	4	BOLT (M20X2.5X60-MM)	
M	5	1	**8T-4001**	4	NUT (M24X3-THD)	
	6	1	**8T-4167**	8	WASHER-HARD (26X44X4-MM THK)	
	7	1	**8T-5439**	4	WASHER-HARD (21.5X45X6-MM THK)	
M	8	1	**8T-5878**	4	BOLT (M24X3X80-MM)	

B-USE AS REQUIRED
M-METRIC PART

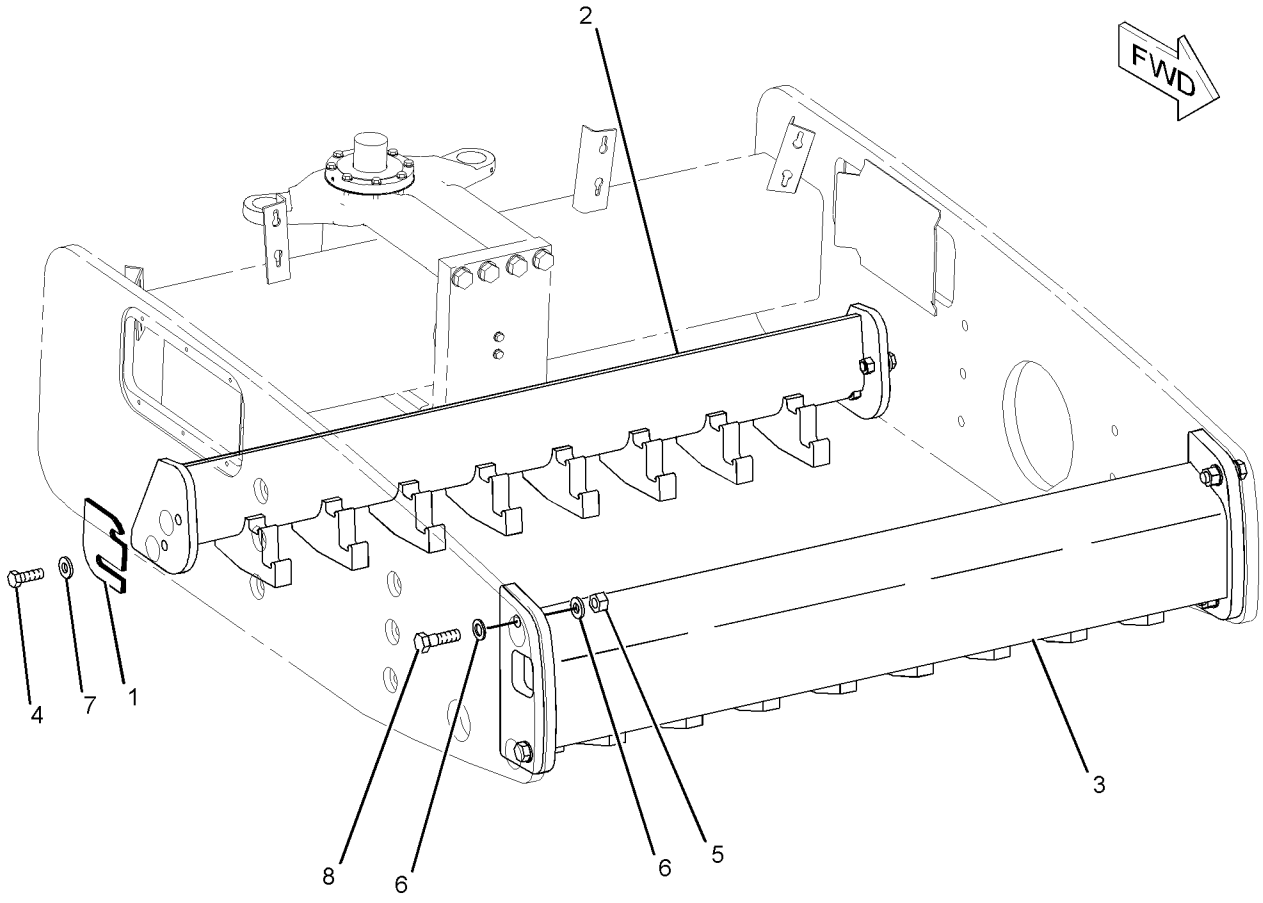

GRAPHIC #1 **<END>** g01034706

FRAME AND BODY

247-1740 ENCLOSURE GP-ENGINE

S/N: EAE1-UP

PART OF 229-5409 CHASSIS AR

SMCS-7263 **i02094164**

NOTE	REF NO	GRAPHIC REF	PART NUMBER	QTY	PART NAME 1 2 3 4 5 6 (PRODUCT LEVEL)	SEE PAGE
	1	2	**2T-1718**	4	RETAINER	
	2	2	**3B-4611**	2	PIN-COTTER	
	3	1	**212-1532**	1	PANEL AS (RH)	
	4	1	**212-1538**	1	PANEL AS (LH)	
	5	1	**210-6130**	1	BRACKET	
	6	1	**110-4463**	1	STRIKER AS	
	7	2	**119-9706**	2	STUD-BALL	
	8	2	**9G-7960**	1	SPACER	
BD	9	1	**5P-7483**		SEAL	
	10	1	**187-2995**	1	SUPPORT AS	
M		1	**6V-9632**	10	NUT-WELD (M6X1-THD)	
M		1	**8T-3490**	2	NUT-WELD (M10X1.5-THD)	
M		1	**8T-3612**	8	NUT-WELD (M8X1.25-THD)	
		1	**7T-1099**	4	LINK	
		1	**154-4886**	1	PLATE AS	
BD	11	1	**6V-2803**		SEAL	
	12	2	**187-3019**	1	PIVOT AS	
	13	1	**187-3021**	1	PIPE AS-EXHAUST	
	14	2	**8T-4222**	4	WASHER-PLATED (11X32X2.5-MM THK)	
M	15	1	**8T-4244**	1	NUT (M12X1.75-THD)	
	16	2	**187-3024**	1	SEAL	
	17	2	**187-3027**	2	HINGE	
	18	1	**187-3030**	1	GASKET	
	19	2	**189-0628**	1	LINK	
	20	2	**189-0629**	1	LINK AS	
Y	21	1	*194-2529*	1	HOOD GP	189
	22	2	**197-1937**	2	PLATE	
	23	2	**200-3068**	1	INSULATION	
	24	2	**200-3069**	1	INSULATION	
	25	2	**5P-4115**	6	WASHER-HARD (7.2X19X2-MM THK)	
M	26	2	**099-3649**	8	BOLT (M8X1.25X40-MM)	
M	27	2	**8T-4196**	1	BOLT (M10X1.5X35-MM)	
M	28	2	**5C-9553**	6	BOLT (M6X1X16-MM)	
	29	1,2	**5P-1076**	5	WASHER-HARD (13.5X30X4-MM THK)	
	30	2	**5P-4116**	8	WASHER-HARD (8.8X20.5X2-MM THK)	
M	31	2	**6V-7744**	2	LOCKNUT (M10X1.5-THD)	
	32	2	**6V-8644**	2	PIN-CLEVIS	
	33	1,2	**7X-7729**	14	WASHER (11X25X3-MM THK)	
	34	2	**8T-4121**	5	WASHER-HARD (11X21X2.5-MM THK)	
M	35	1,2	**8T-4133**	4	NUT (M10X1.5-THD)	
M	36	2	**8T-6408**	2	BOLT (M10X1.5X160-MM)	
	37	2	**203-5470**	2	SPRING AS-GAS	
M	38	2	**8T-4183**	4	BOLT (M12X1.75X40-MM)	
M	39	1,2	**8T-4195**	16	BOLT (M10X1.5X30-MM)	

B-USE AS REQUIRED
D-ORDER BY THE METER
M-METRIC PART
Y-SEPARATE ILLUSTRATION

247-1740 **ENCLOSURE GP-ENGINE** *(contd.)* **i02094164**

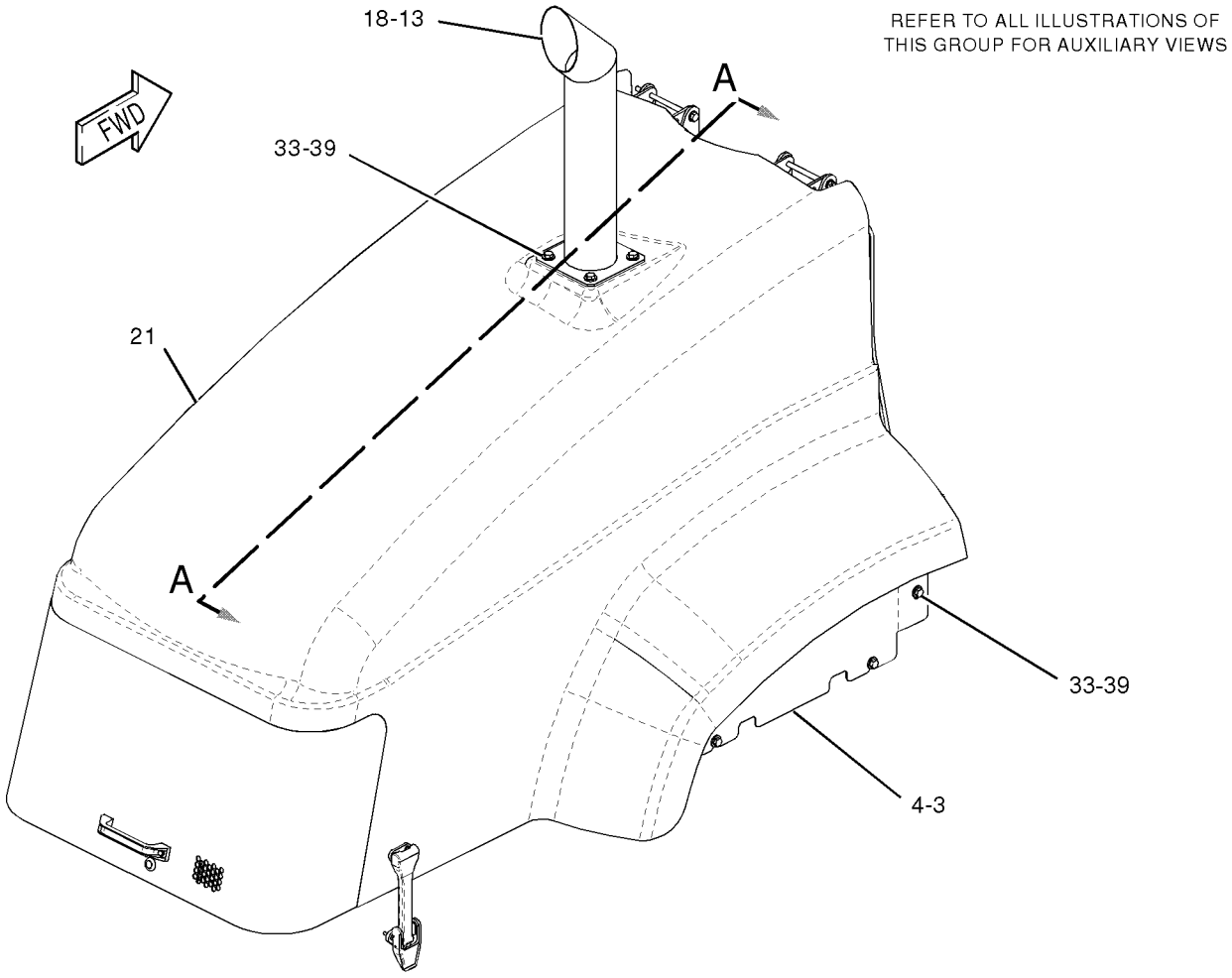

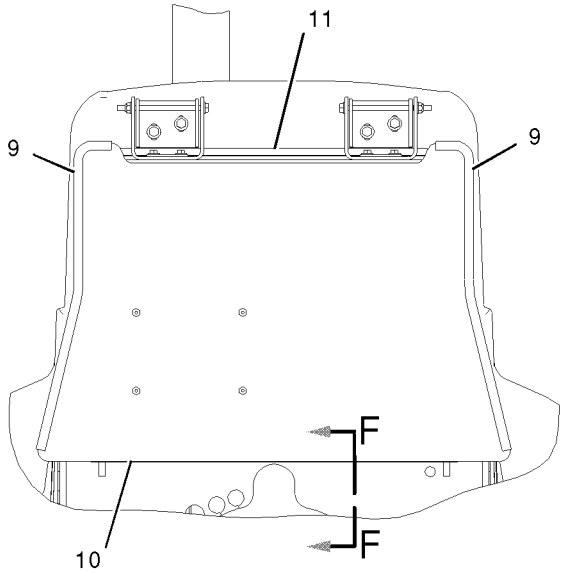

FRONT VIEW

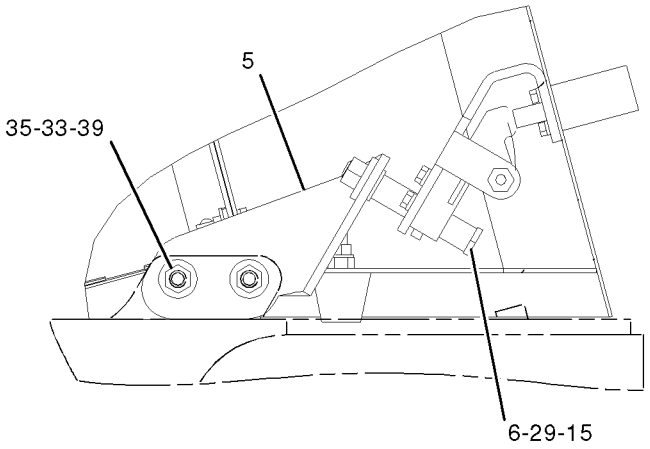

SECTION F-F

GRAPHIC #1 g01040436

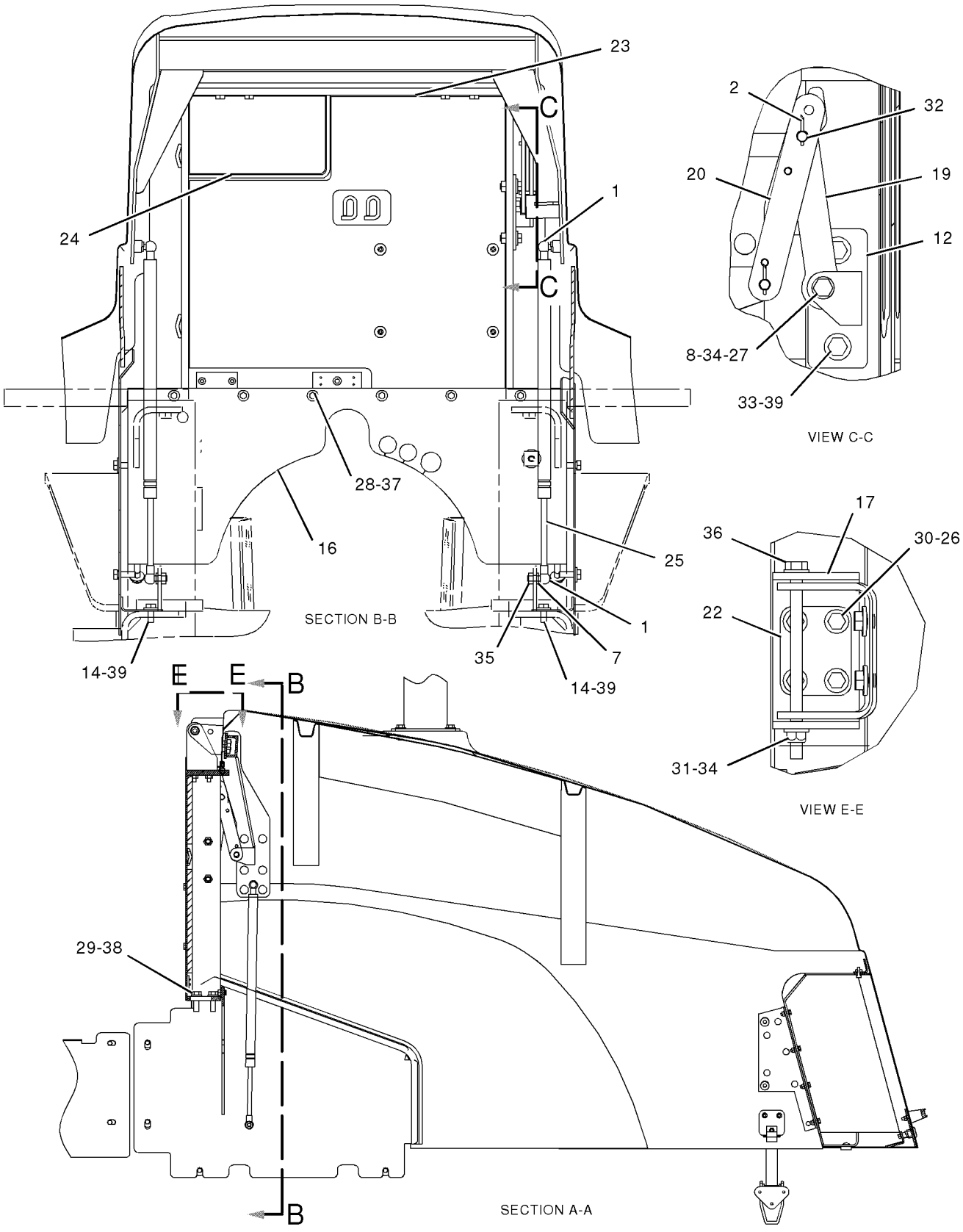

GRAPHIC #2 **<END>** g01040440

FRAME AND BODY

253-4272 ENCLOSURE GP-ENGINE

S/N: EAE235-UP

PART OF 229-5409 CHASSIS AR

SMCS-7263 **i02294051**

NOTE	REF NO	GRAPHIC REF	PART NUMBER	QTY	PART NAME 1 2 3 4 5 6 (PRODUCT LEVEL)	SEE PAGE
	1	2	**2T-1718**	4	RETAINER	
	2	1	**9G-7960**	1	SPACER	
	3	1	**110-4463**	1	STRIKER AS	
	4	2	**119-9706**	2	STUD-BALL	
	5	1	**187-2995**	1	SUPPORT AS	
M		1	**6V-9632**	10	NUT-WELD (M6X1-THD)	
		1	**7T-1099**	4	LINK	
M		1	**8T-3490**	2	NUT-WELD (M10X1.5-THD)	
M		1	**8T-3612**	8	NUT-WELD (M8X1.25-THD)	
		1	**154-4886**	1	PLATE AS	
		1	**178-8510**	1	PLATE AS	
	6	1	**187-3019**	1	PIVOT AS	
M		1	**8T-3490**	1	NUT-WELD (M10X1.5-THD)	
	7	1	**187-3021**	1	PIPE AS-EXHAUST	
	8	2	**187-3024**	1	SEAL	
	9	1	**187-3027**	2	HINGE	
	10	1	**187-3030**	1	GASKET	
	11	1	**189-0628**	1	LINK	
	12	1	**189-0629**	1	LINK AS	
	13	1	**197-1937**	2	PLATE	
	14	2	**200-3068**	1	INSULATION	
	15	2	**200-3069**	1	INSULATION	
	16	2	**203-5470**	2	SPRING AS-GAS	
	17	1	**212-1532**	1	PANEL AS (RH)	
	18	1	**212-1538**	1	PANEL AS (LH)	
Y	19	1	*253-4270*	1	HOOD GP	191
	20	1	**266-6611**	1	BRACKET-STRIKER	
M	21	1	**099-3649**	8	BOLT (M8X1.25X40-MM)	
	22	1	**3B-4611**	2	PIN-COTTER	
M	23	2	**5C-9553**	6	BOLT (M6X1X16-MM)	
	24	1	**5P-1076**	5	WASHER-HARD (13.5X30X4-MM THK)	
	25	2	**5P-4115**	6	WASHER-HARD (7.2X19X2-MM THK)	
	26	1	**5P-4116**	8	WASHER-HARD (8.8X20.5X2-MM THK)	
M	27	1	**6V-7744**	2	LOCKNUT (M10X1.5-THD)	
	28	1	**6V-8644**	2	PIN-CLEVIS	
	29	1	**7X-7729**	14	WASHER (11X25X3-MM THK)	
	30	1	**8T-4121**	5	WASHER-HARD (11X21X2.5-MM THK)	
M	31	1,2	**8T-4133**	4	NUT (M10X1.5-THD)	
M	32	1	**8T-4183**	4	BOLT (M12X1.75X40-MM)	
M	33	1,2	**8T-4195**	14	BOLT (M10X1.5X30-MM)	
M	34	1	**8T-4196**	3	BOLT (M10X1.5X35-MM)	
	35	2	**8T-4222**	4	WASHER-PLATED (11X32X2.5-MM THK)	
M	36	1	**8T-4244**	1	NUT (M12X1.75-THD)	
M	37	1	**8T-6408**	2	BOLT (M10X1.5X160-MM)	
BD	38	1	**5P-7483**		SEAL	
BD	39	1	**6V-2803**		SEAL	

B-USE AS REQUIRED
D-ORDER BY THE METER
M-METRIC PART
Y-SEPARATE ILLUSTRATION

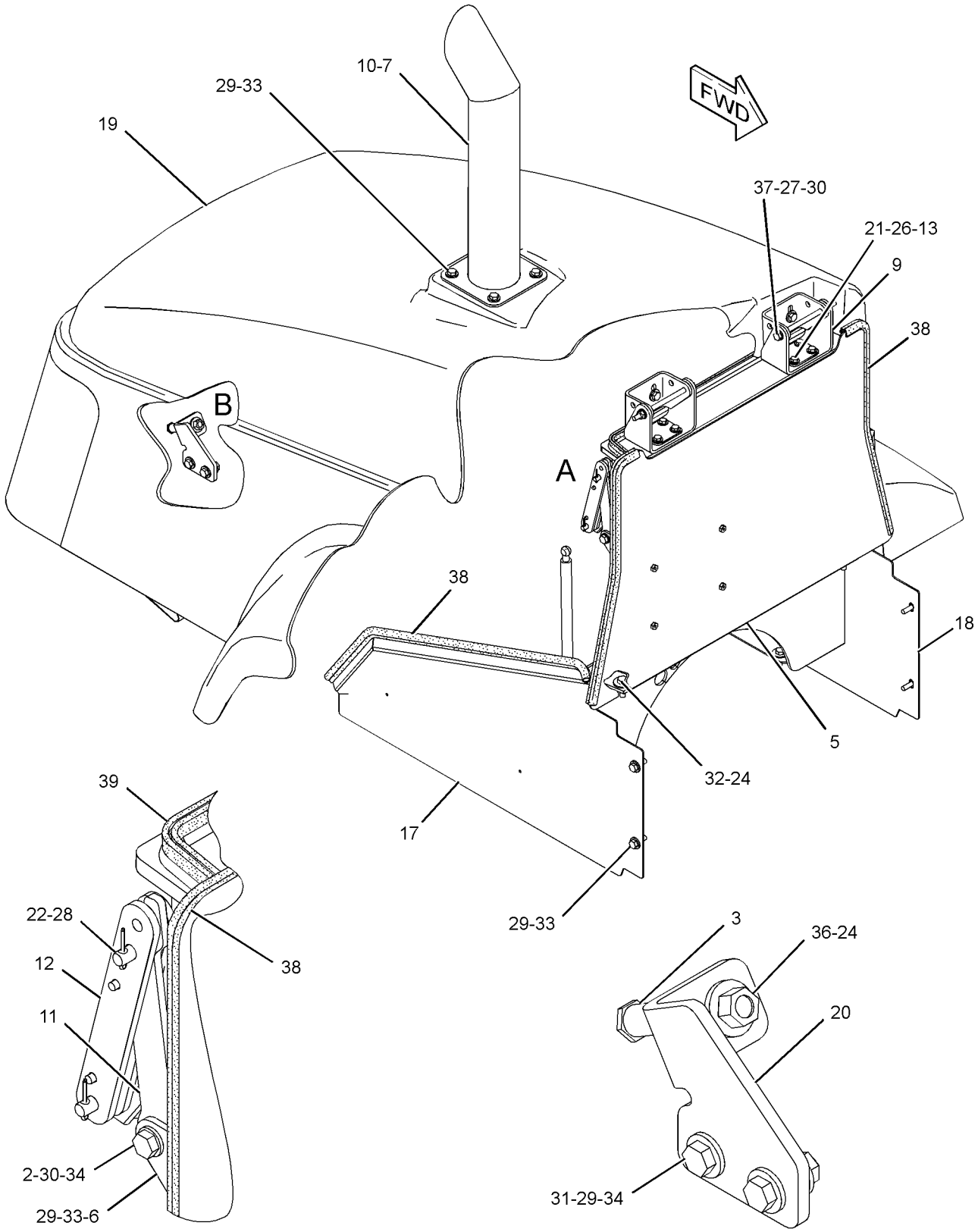

VIEW OF AREA A

VIEW OF AREA B

GRAPHIC #1

g01165645

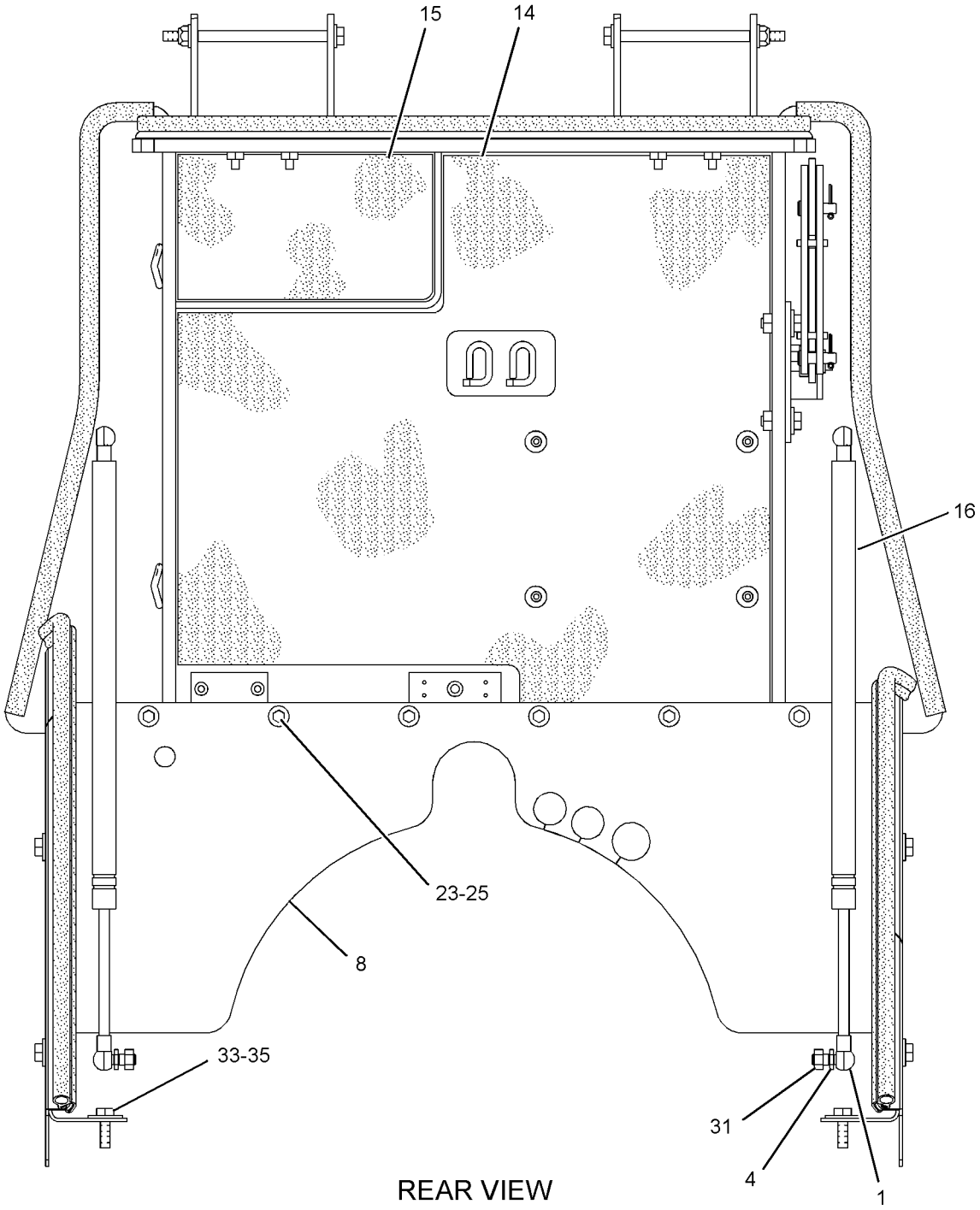

REAR VIEW

(HOOD AND EXHAUST PIPE REMOVED)

GRAPHIC #2 **<END>** g01165751

153-7112 FRAME GP-FRONT

S/N: EAE1-UP

PART OF 229-5409 CHASSIS AR

SMCS-7050, 7051 **i01774766**

NOTE	REF NO	GRAPHIC REF	PART NUMBER	QTY	PART NAME 1 2 3 4 5 6 (PRODUCT LEVEL)	SEE PAGE
	1	1	**141-9866**	1	PLATE-END	
Y	2	1	*173-2731*	1	HITCH GP-ARTICULATING & OSC	188
	3	1	**199-8946**	1	YOKE AS	
M	4	1	**7X-2577**	8	BOLT (M24X3X90-MM)	
	5	1	**8T-4121**	2	WASHER-HARD (11X21X2.5-MM THK)	
	6	1	**8T-4167**	8	WASHER-HARD (26X44X4-MM THK)	
M	7	1	**8T-4195**	2	BOLT (M10X1.5X30-MM)	

M-METRIC PART
Y-SEPARATE ILLUSTRATION

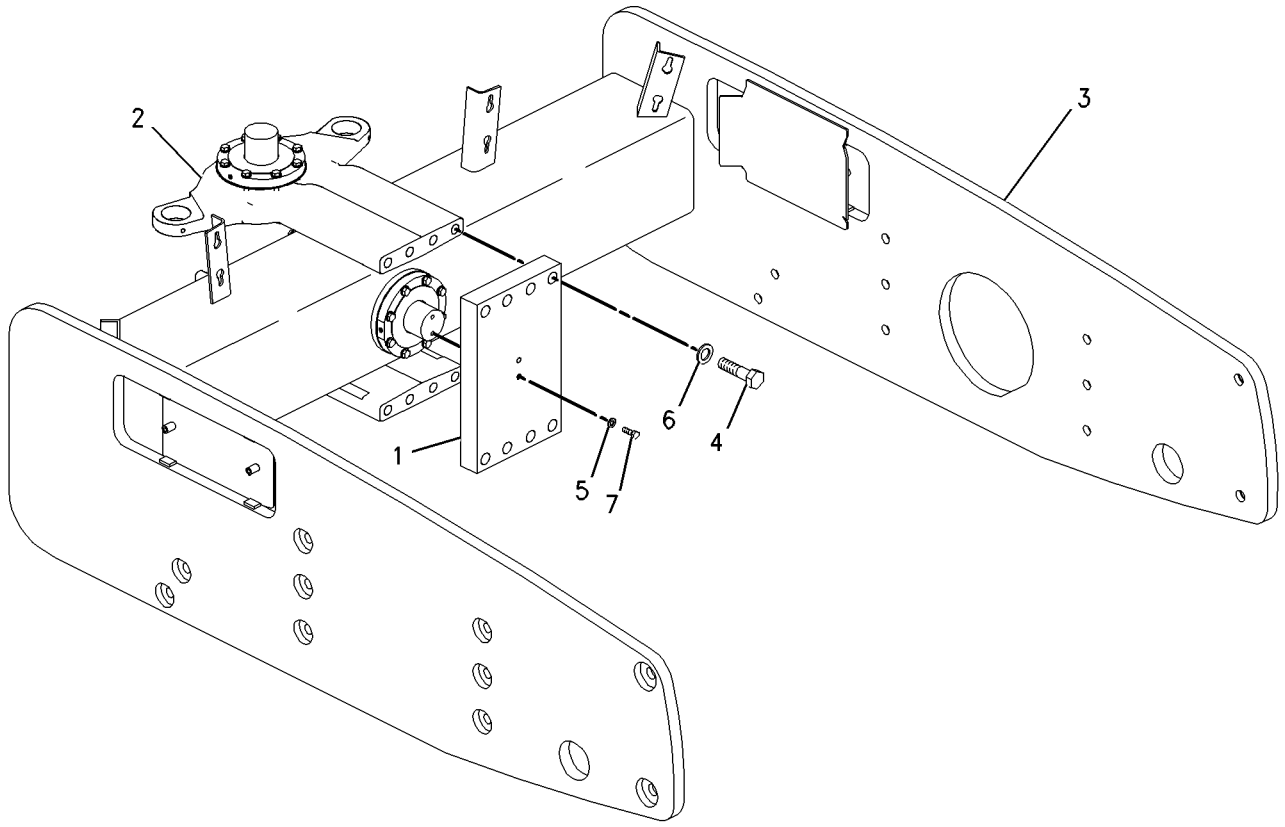

GRAPHIC #1 **<END>** g00823100

FRAME AND BODY

228-1627 FRAME GP-REAR

S/N: EAE1-234

PART OF 229-5409 CHASSIS AR

SMCS-7050, 7051 **i02897097**

NOTE	REF NO	GRAPHIC REF	PART NUMBER	QTY	PART NAME 1 2 3 4 5 6 (PRODUCT LEVEL)	SEE PAGE
	1	1	**5E-9892**	1	PIN	
	2	1	**077-6627**	2	SCREW (NO 12X0.5-IN)	
	3	1	**143-4653**	2	CLAMP	
	4	1	**249-7589**	1	PIN AS	
	5	1	**195-1411**	1	CHAIN	
	6	1	**228-1602**	1	FRAME AS (REAR)	
	7	1	**8T-4167**	8	WASHER-HARD (26X44X4-MM THK)	
M	8	1	**8T-4649**	8	BOLT (M24X3X140-MM)	

M-METRIC PART

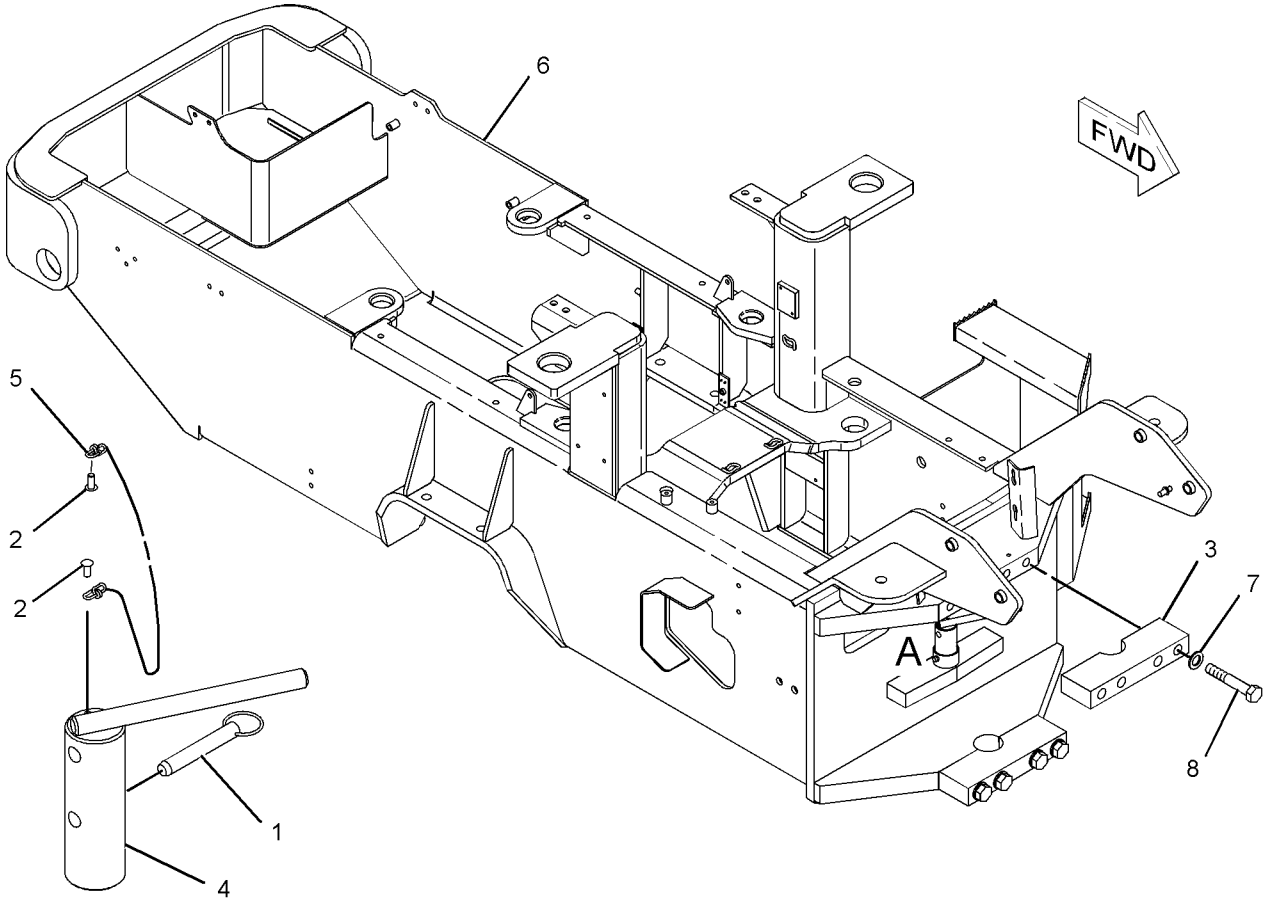

VIEW OF AREA A

GRAPHIC #1

<END>

g01036027

228-1627 FRAME GP-REAR

S/N: EAE235-UP

PART OF 229-5409 CHASSIS AR

SMCS-7050, 7051 **i02294198**

NOTE	REF NO	GRAPHIC REF	PART NUMBER	QTY	PART NAME 1 2 3 4 5 6 (PRODUCT LEVEL)	SEE PAGE
	1	1	**5E-9892**	1	PIN	
	2	1	**077-6627**	2	SCREW (NO 12X0.5-IN)	
	3	1	**143-4653**	2	CLAMP	
	4	1	**249-7589**	1	PIN AS	
	5	1	**195-1411**	1	CHAIN	
C	6	1	**253-4269**	1	FRAME AS (REAR)	
	7	1	**8T-4167**	8	WASHER-HARD (26X44X4-MM THK)	
M	8	1	**8T-4649**	8	BOLT (M24X3X140-MM)	

C-CHANGE FROM PREVIOUS TYPE
M-METRIC PART

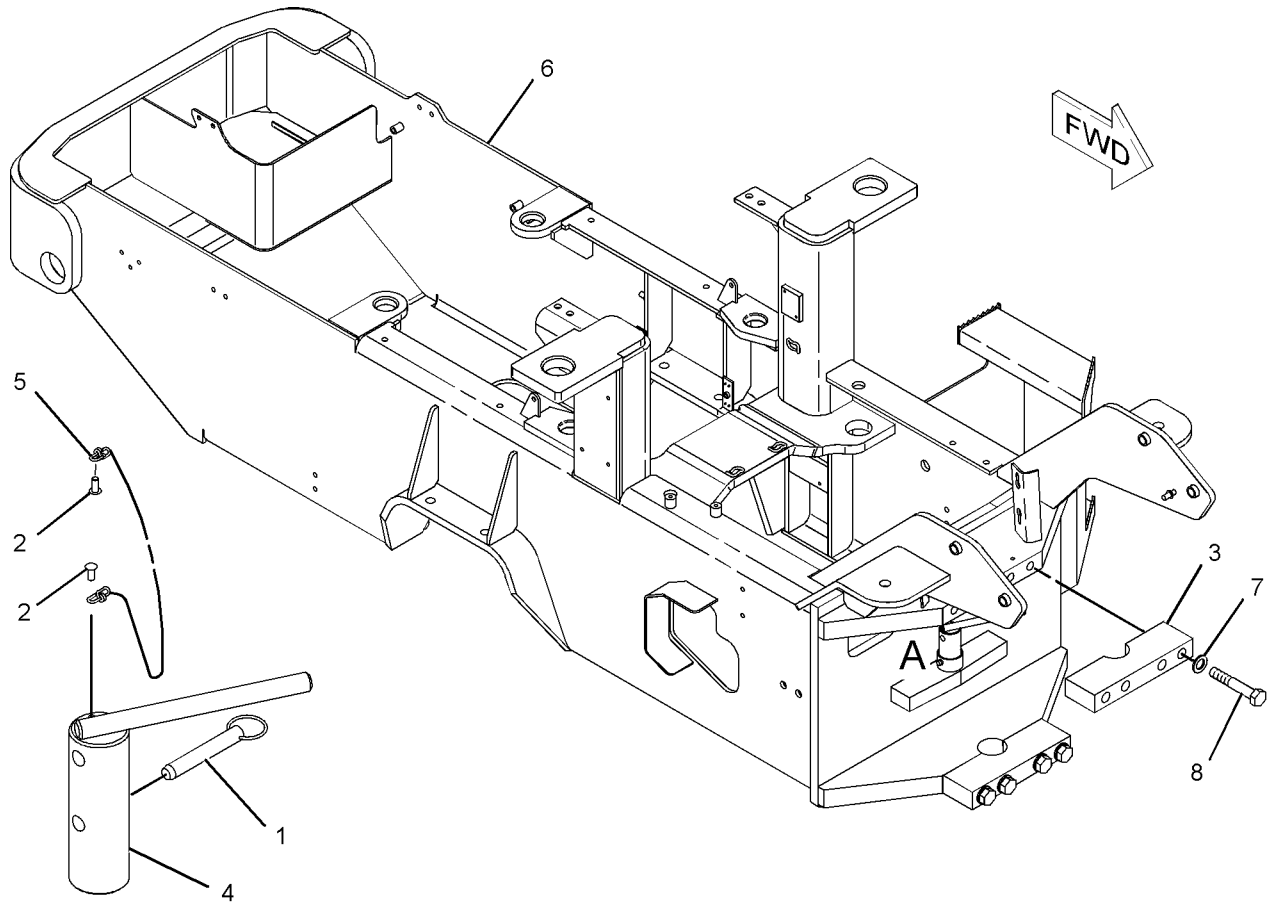

VIEW OF AREA A

GRAPHIC #1 **<END>** g01035986

246-7252 GUARD GP-LINES

S/N: EAE1-UP
AN ATTACHMENT

SMCS-7167 **i02023526**

NOTE	REF NO	GRAPHIC REF	PART NUMBER	QTY	PART NAME 1 2 3 4 5 6 (PRODUCT LEVEL)	SEE PAGE
	1	1	**186-2879**	1	PLATE AS	
M		1	**8T-3490**	2	NUT-WELD (M10X1.5 THD)	
	2	1	**187-3008**	1	PLATE AS	
M		1	**8T-3490**	2	NUT-WELD (M10X1.5 THD)	
	3	1	**7X-7729**	4	WASHER (11X25X3-MM THK)	
M	4	1	**8T-4186**	4	BOLT (M10X1.5X40-MM)	
M	5	1	**8T-4195**	4	BOLT (M10X1.5X30-MM)	
	6	1	**8T-4222**	4	WASHER-PLATED (11X32X2.5-MM THK)	

M-METRIC PART

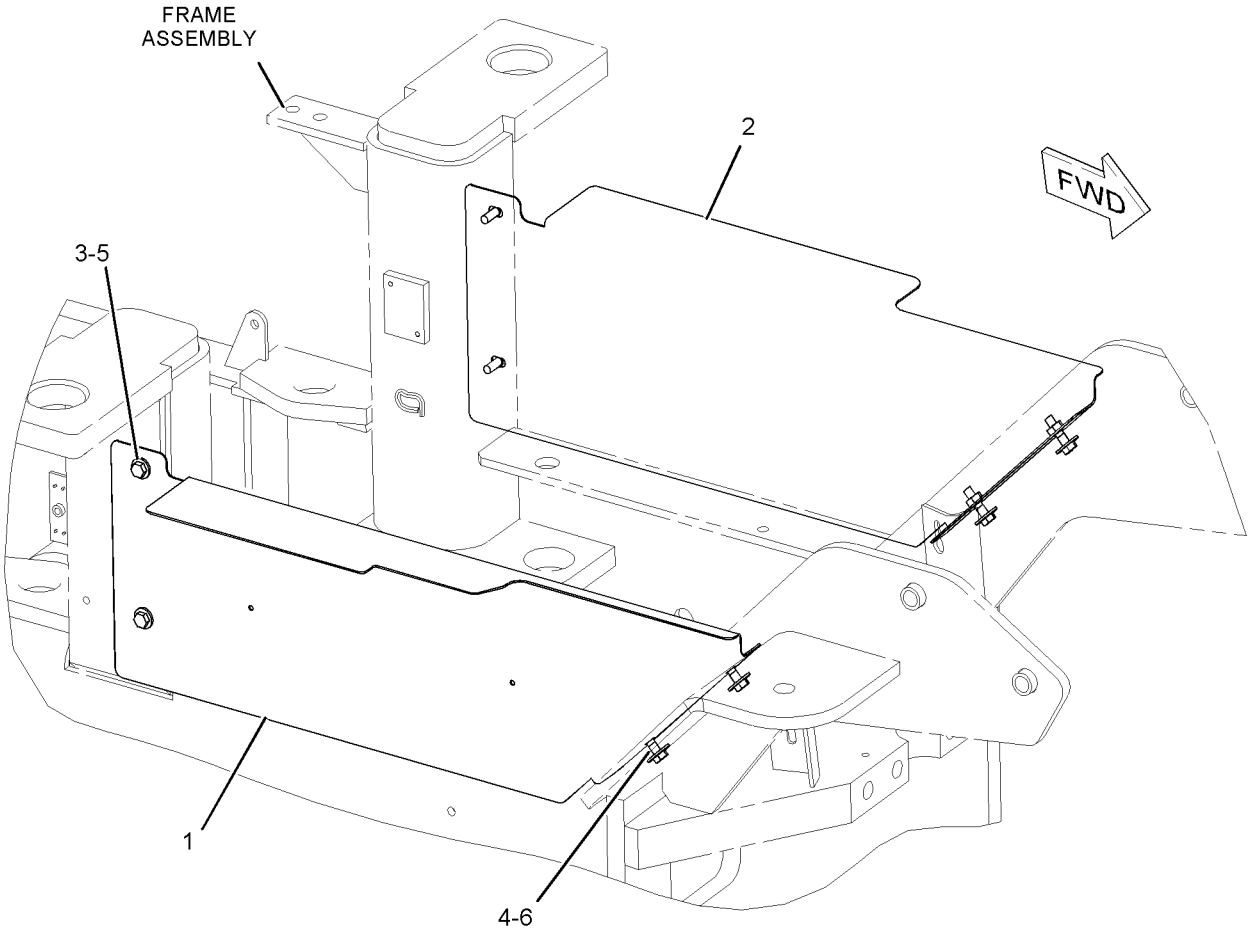

GRAPHIC #1 **<END>** g01048988

FRAME AND BODY

189-4661 HANDRAIL GP

S/N: EAE1-UP
PART OF 229-8706, 236-2234 OPERATOR AR
AN ATTACHMENT

SMCS-7256 **i01774899**

NOTE	REF NO	GRAPHIC REF	PART NUMBER	QTY	PART NAME 1 2 3 4 5 6 (PRODUCT LEVEL)	SEE PAGE
	1	1	**194-8134**	1	HANDRAIL AS	
		1	**2D-3468**	1	PLATE-RETAINING	
	2	1	**212-0622**	1	HANDRAIL AS	
	3	1	**5P-1076**	6	WASHER-HARD (13.5X30X4-MM THK)	
	4	1	**7X-7729**	2	WASHER (11X25X3-MM THK)	
M	5	1	**8T-4183**	6	BOLT (M12X1.75X40-MM)	
M	6	1	**8T-4195**	2	BOLT (M10X1.5X30-MM)	

M-METRIC PART

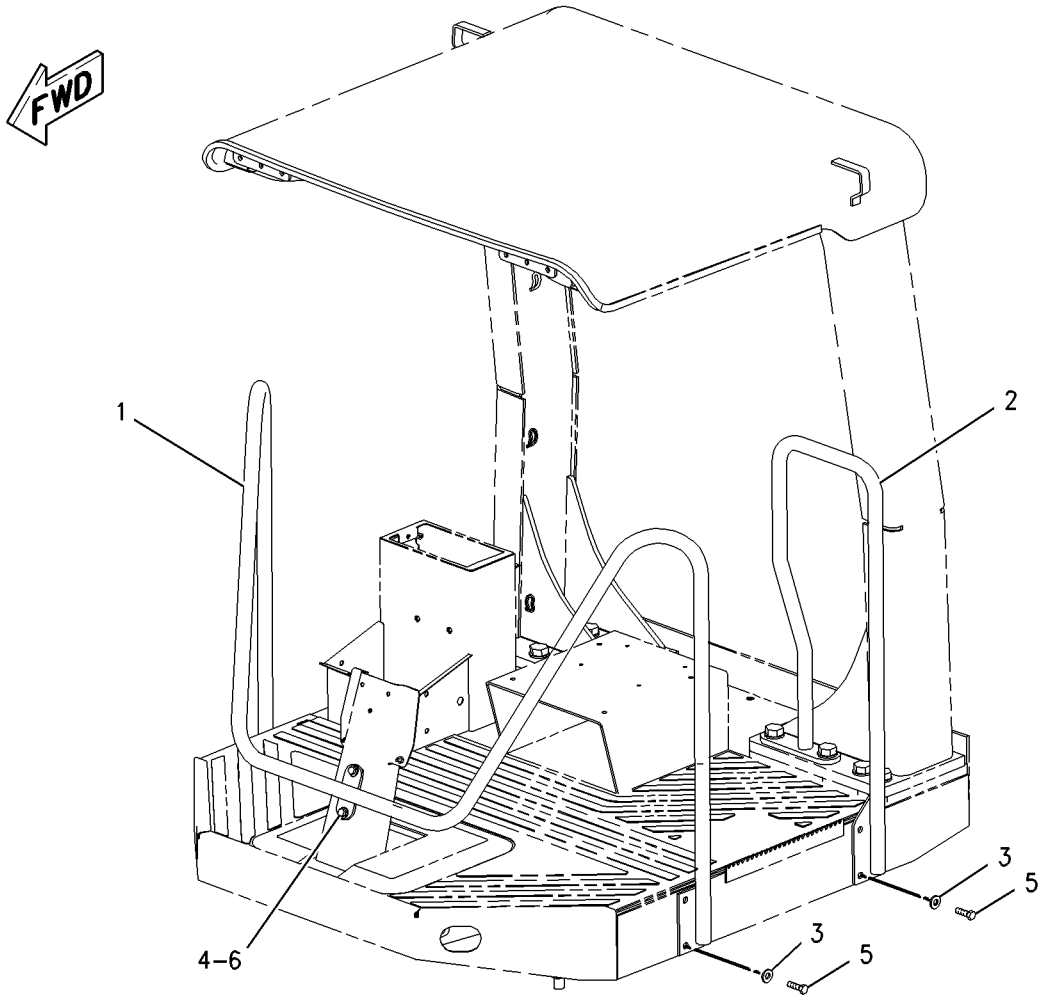

GRAPHIC #1 **<END>** g00838144

FRAME AND BODY

173-2731 HITCH GP-ARTICULATING & OSC

S/N: EAE1-UP

PART OF 153-7112 FRAME GP-FRONT

SMCS-7057, 7113 **i02897099**

NOTE	REF NO	GRAPHIC REF	PART NUMBER	QTY	PART NAME 1 2 3 4 5 6 (PRODUCT LEVEL)	SEE PAGE
	1	1	**1B-3925**	4	CUP-BEARING	
	2	1	**3F-5950**	4	CONE-BEARING	
	3	1	**9H-6079**	4	SEAL-LIP TYPE	
	4	1	**249-1291**	4	CAP-BEARING	
	5	1	**173-2686**	1	SHAFT (ARTICULATION)	
	6	1	**173-2687**	1	SHAFT (OSCILLATION)	
	7	1	**249-7388**	1	HITCH	
B	8	1	**187-9278**	2	SHIM PACK (INCLUDES 3-SHIMS)	
	9	1	**8T-4121**	32	WASHER-HARD (11X21X2.5-MM THK)	
M	10	1	**8T-4186**	32	BOLT (M10X1.5X40-MM)	
	11	1	**9F-2247**	4	PLUG-PIPE	

B-USE AS REQUIRED
M-METRIC PART

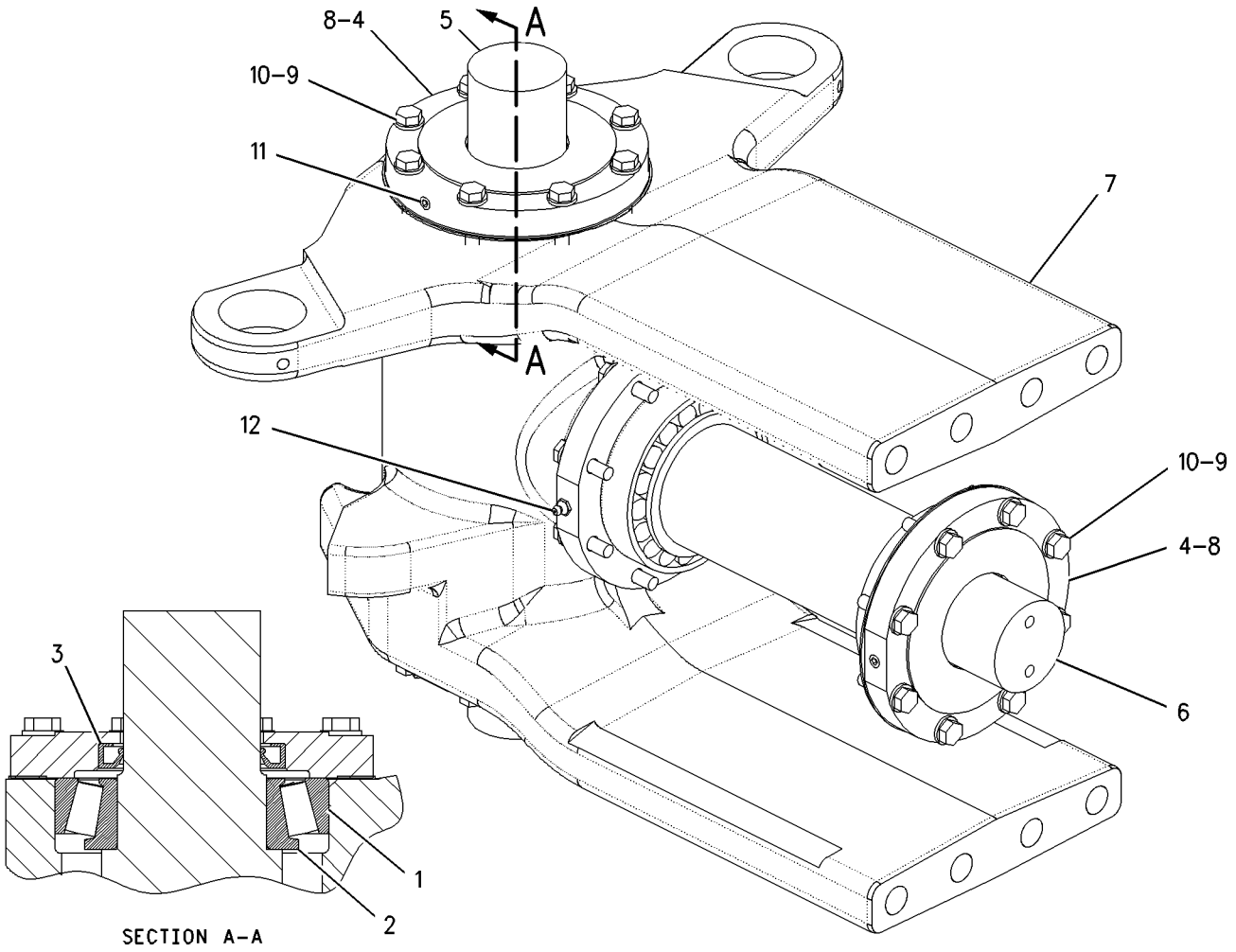

GRAPHIC #1 **<END>** g00823231

194-2529 HOOD GP

S/N: EAE1-UP

PART OF 247-1740 ENCLOSURE GP-ENGINE

SMCS-7251 **i01774806**

NOTE	REF NO	GRAPHIC REF	PART NUMBER	QTY	PART NAME 1 2 3 4 5 6 (PRODUCT LEVEL)	SEE PAGE
	1	1	**118-3149**	1	HANDLE AS	
	2	1	**119-9706**	2	STUD-BALL	
	3	1	**138-7125**	2	BUMPER	
	4	1	**145-4746**	1	STRAP AS	
	5	1	**174-6944**	1	BOLT-SHOULDER (M8X1.25X13-MM)	
	6	1	**187-2990**	1	HOOD AS	
		1	**4P-7429**	9	CLIP	
	7	1	**187-3028**	2	HINGE	
	8	1	**218-2207**	1	LATCH AS-DOOR	
	9	1	**217-1393**	1	LEVER AS	
	10	1	**210-8359**	1	GRILL AS	
M		1	**8T-3612**	3	NUT-WELD (M8X1.25-THD)	
M	11	1	**5C-2890**	8	NUT (M6X1-THD)	
M	12	1	**5C-7261**	2	NUT (M8X1.25-THD)	
	13	1	**5P-4115**	1	WASHER-HARD (7.2X19X2-MM THK)	
	14	1	**5P-4116**	1	WASHER-HARD (8.8X20.5X2-MM THK)	
M	15	1	**7X-2533**	4	BOLT (M6X1X35-MM)	
	16	1	**7X-7729**	4	WASHER (11X25X3-MM THK)	
M	17	1	**8T-4138**	16	BOLT (M6X1X20-MM)	
M	18	1	**8T-4195**	4	BOLT (M10X1.5X30-MM)	
	19	1	**8T-4224**	2	WASHER-HARD (8.8X16X2-MM THK)	
M	20	1	**8T-4971**	1	BOLT (M6X1X30-MM)	
	21	1	**9X-8256**	28	WASHER (6.6X12X2-MM THK)	
	22	1	**217-9720**	1	PLATE	

M-METRIC PART

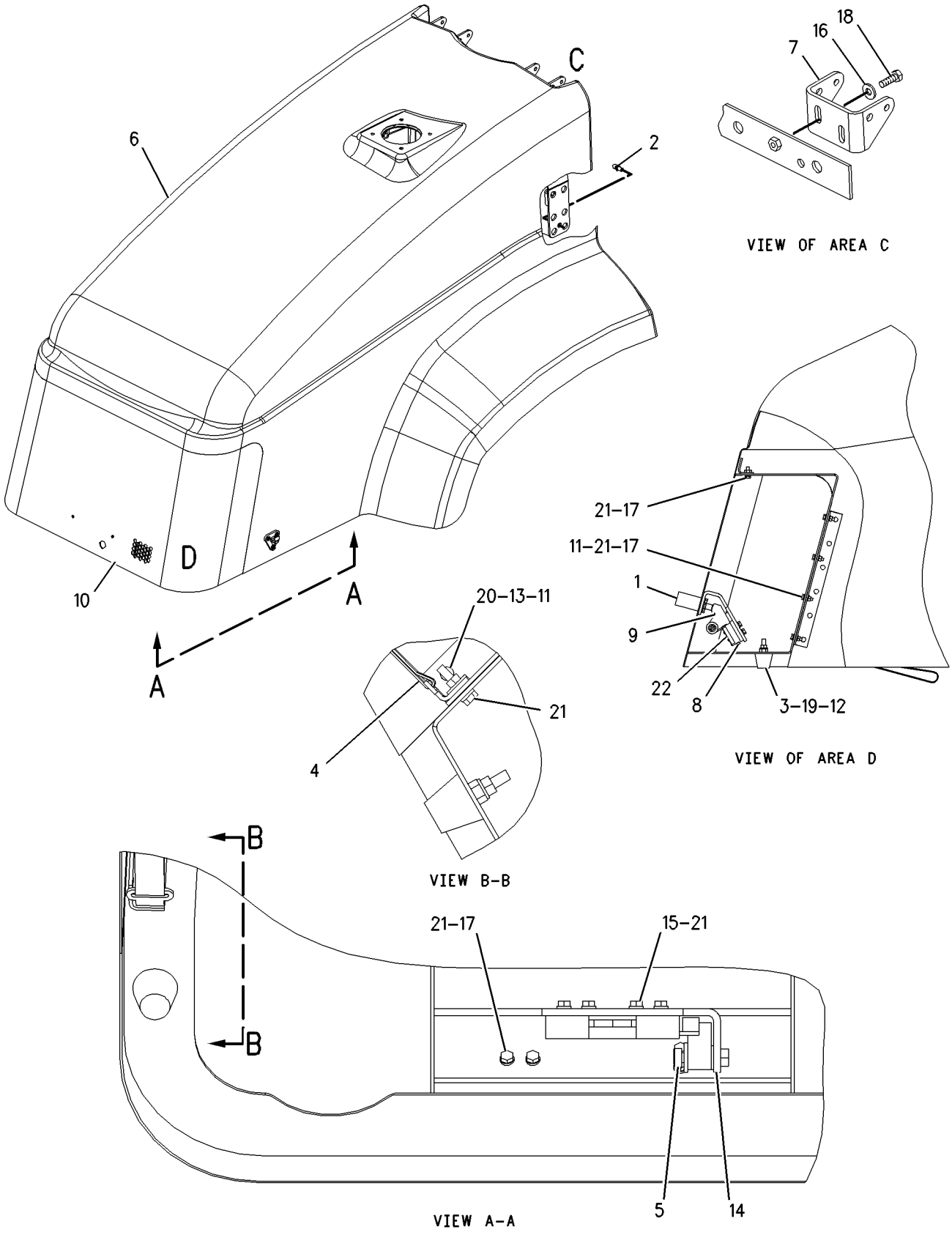

GRAPHIC #1 **<END>** g00896885

253-4270 HOOD GP

S/N: EAE235-UP

PART OF 253-4272 ENCLOSURE GP-ENGINE

SMCS-7251 **i02294052**

NOTE	REF NO	GRAPHIC REF	PART NUMBER	QTY	PART NAME 1 2 3 4 5 6 (PRODUCT LEVEL)	SEE PAGE
	1	1	**6V-7636**	1	PIN AS-SPRING	
	2	1	**119-9706**	2	STUD-BALL	
	3	1	**122-8427**	1	SPACER (9X14X3.5-MM THK)	
	4	1	**138-7125**	2	BUMPER	
	5	1	**145-4746**	1	STRAP AS	
	6	1	**187-2990**	1	HOOD AS	
		1	**4P-7429**	9	CLIP	
	7	1	**187-3028**	2	HINGE	
	8	1	**200-7836**	1	HANDLE AS	
	9	1	**218-2207**	1	LATCH AS-DOOR	
	10	1	**220-8262**	1	ROD	
	11	1	**220-8263**	1	LEVER	
	12	1	**246-5767**	1	GRILL AS	
M		1	**8T-3612**	2	NUT-WELD (M8X1.25-THD)	
	13	1	**253-2680**	1	GUARD	
M	14	1	**5C-2890**	8	NUT (M6X1-THD)	
M	15	1	**5C-7261**	2	NUT (M8X1.25-THD)	
M	16	1	**5C-9553**	2	BOLT (M6X1X16-MM)	
	17	1	**5P-4115**	1	WASHER-HARD (7.2X19X2-MM THK)	
	18	1	**5P-4116**	4	WASHER-HARD (8.8X20.5X2-MM THK)	
M	19	1	**6V-7357**	4	BOLT (M6X1X25-MM)	
	20	1	**6V-8185**	1	NUT (1/4-20-THD)	
	21	1	**7X-7729**	4	WASHER (11X25X3-MM THK)	
M	22	1	**8T-4138**	16	BOLT (M6X1X20-MM)	
M	23	1	**8T-4189**	1	BOLT (M8X1.25X20-MM)	
M	24	1	**8T-4195**	4	BOLT (M10X1.5X30-MM)	
	25	1	**8T-4224**	2	WASHER-HARD (8.8X16X2-MM THK)	
M	26	1	**8T-4971**	1	BOLT (M6X1X30-MM)	
	27	1	**9X-8256**	28	WASHER (6.6X12X2-MM THK)	

M-METRIC PART

253-4270 **HOOD GP** *(contd.)* **i02294052**

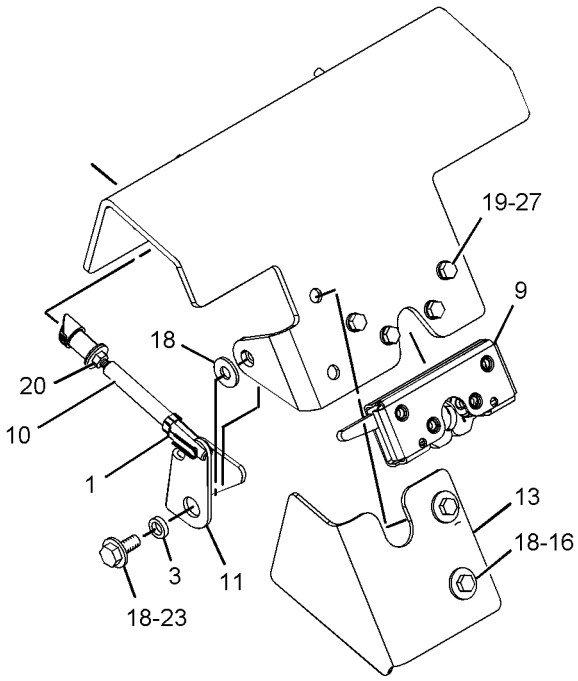

VIEW B-B

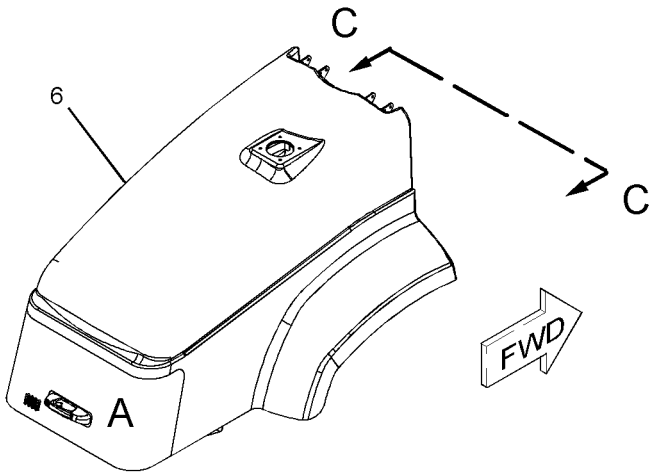

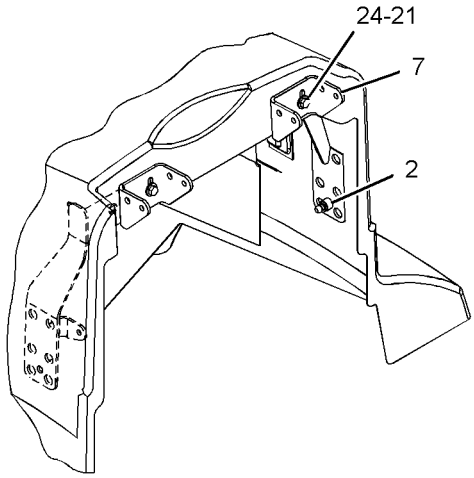

VIEW C-C

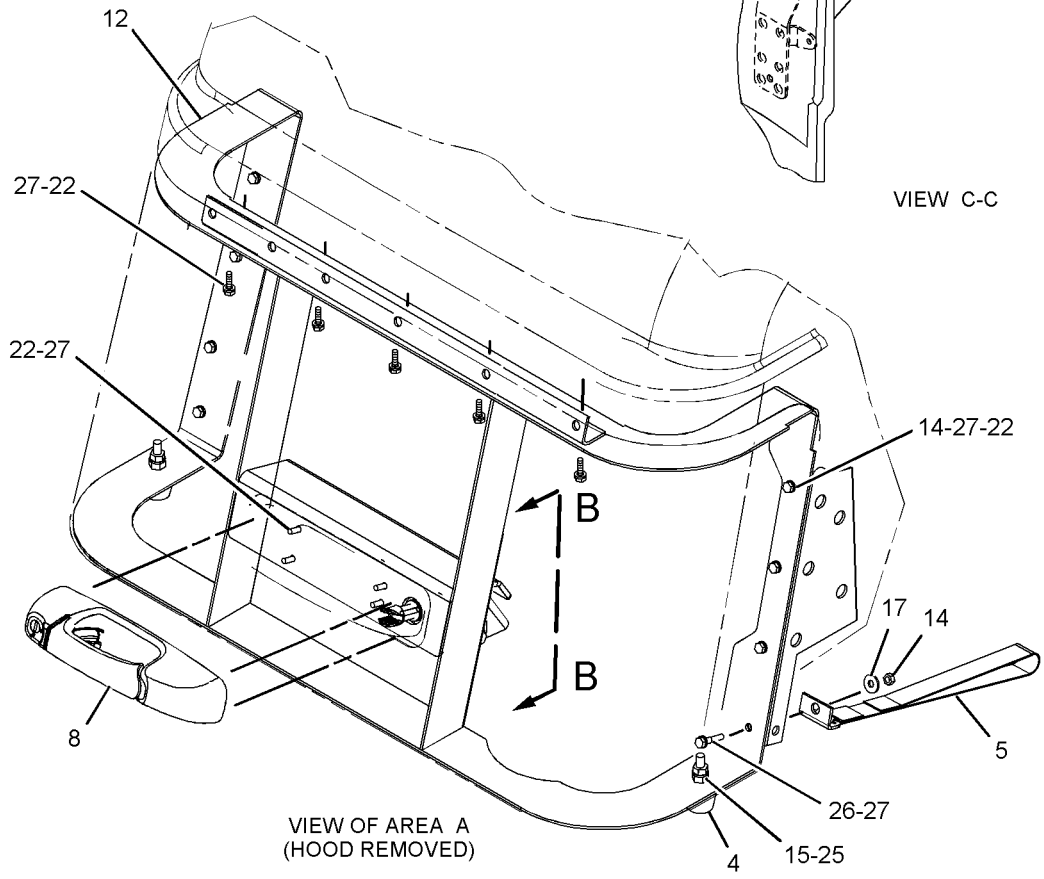

VIEW OF AREA A
(HOOD REMOVED)

GRAPHIC #1 **<END>** g01142623

FRAME AND BODY

237-5979 SCRAPER GP-DRUM

S/N: EAE1-UP
AN ATTACHMENT

SMCS-6607 **i02854771**

NOTE	REF NO	GRAPHIC REF	PART NUMBER	QTY	PART NAME 1 2 3 4 5 6 (PRODUCT LEVEL)	SEE PAGE
	1	1	**124-3286**	1	PLATE	
	2	1	**124-3644**	1	PLATE	
	3	1	**147-7964**	1	SCRAPER	
	4	1	**147-8473**	4	PLATE	
	5	1	**165-5392**	4	SPRING	
	6	1	**191-0689**	1	SCRAPER AS-REAR	
	7	1	**191-0692**	1	SCRAPER	
B	8	1	**191-4461**	3	SHIM (1.5-MM THK)	
	9	1	**199-3784**	1	PLATE	
	10	1	**1D-5166**	7	BOLT (1/2-13X2-IN)	
M	11	1	**7X-2554**	8	BOLT (M16X2X70-MM)	
M	12	1	**7X-2563**	4	BOLT (M20X2.5X60-MM)	
	13	1	**7X-7729**	8	WASHER (11X25X3-MM THK)	
M	14	1	**8T-4196**	8	BOLT (M10X1.5X35-MM)	
	15	1	**8T-4223**	7	WASHER-HARD (13.5X25.5X3-MM THK)	
	16	1	**8T-5439**	4	WASHER-HARD (21.5X45X6-MM THK)	
	17	1	**9X-0941**	7	LOCKNUT (1/2-13-THD)	
	18	1	**9X-8257**	8	WASHER (17.5X30X3.5-MM THK)	

B-USE AS REQUIRED
M-METRIC PART

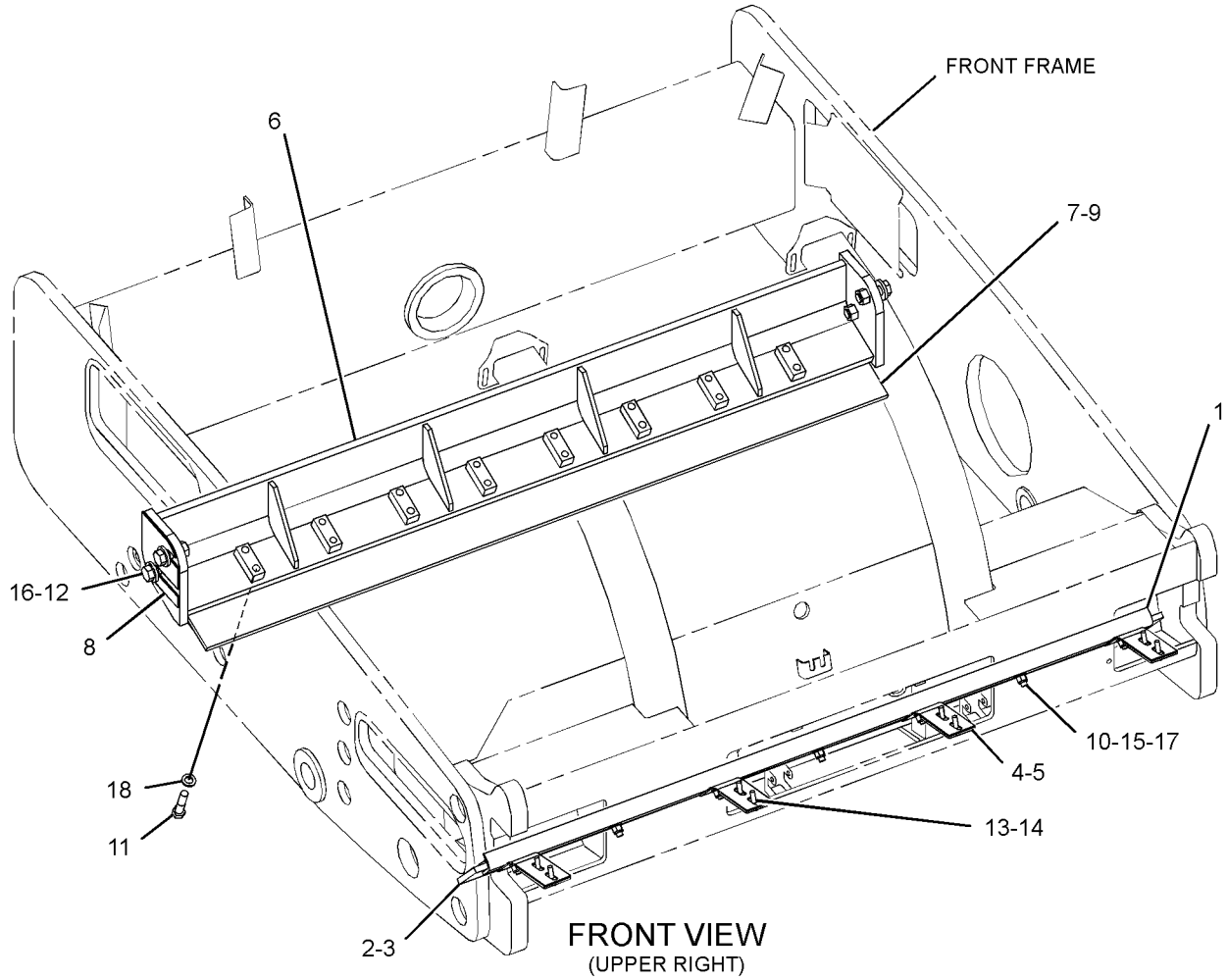

GRAPHIC #1 **<END>** g01427188

FRAME AND BODY

244-5594 SCRAPER GP-DRUM

S/N: EAE1-UP
AN ATTACHMENT

SMCS-6607 **i02614139**

NOTE	REF NO	GRAPHIC REF	PART NUMBER	QTY	PART NAME 1 2 3 4 5 6 (PRODUCT LEVEL)	SEE PAGE
	1	1	**210-4563**	32	NUT (M20X2.5-THD)	
	2	1	**213-1554**	16	SCRAPER	
M	3	1	**8T-4170**	16	BOLT (M20X2.5X150-MM)	
M	4	1	**7X-2566**	16	BOLT (M20X2.5X110-MM)	
	5	1	**8T-5439**	32	WASHER-HARD (21.5X45X6-MM THK)	

M-METRIC PART

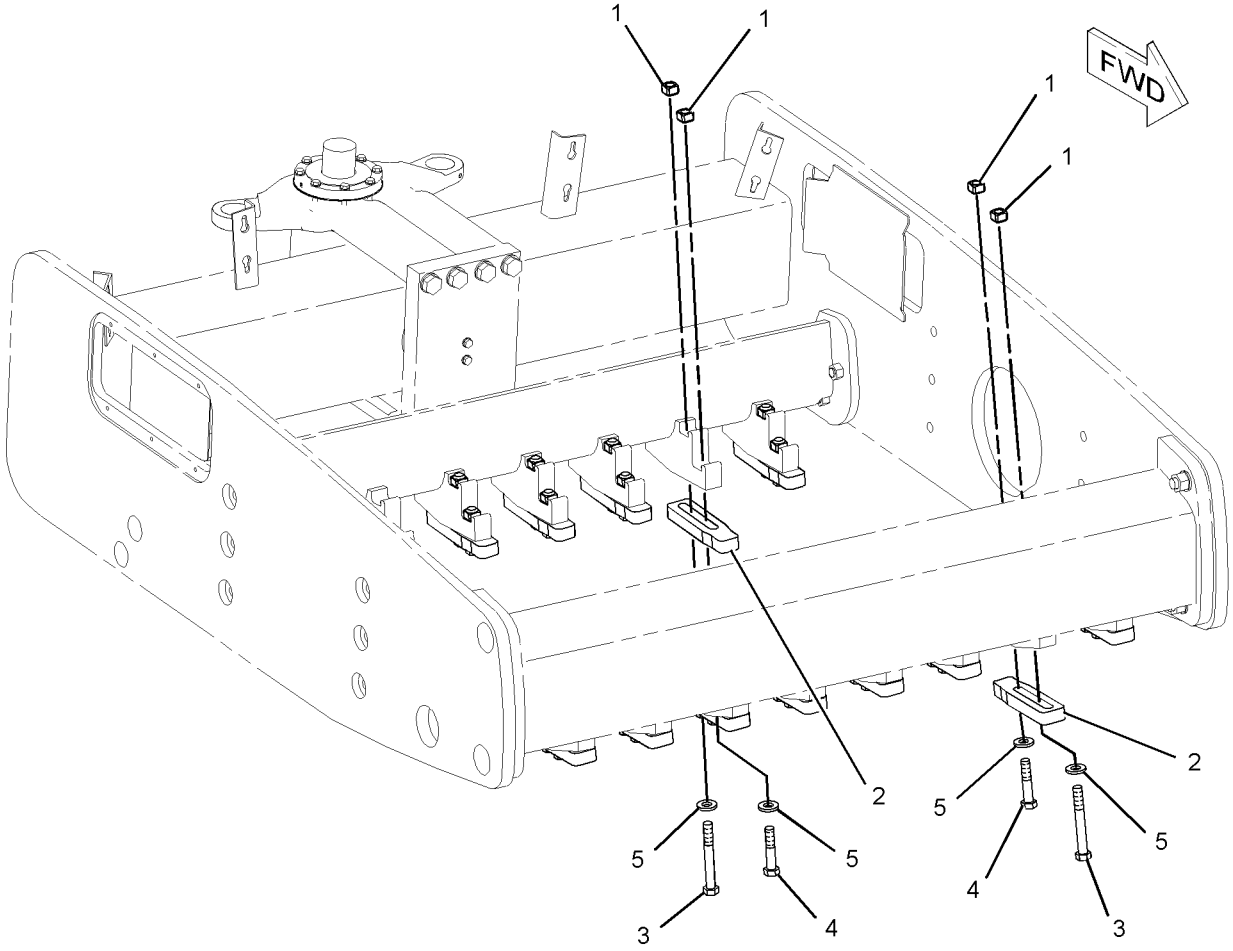

GRAPHIC #1 **<END>** g01034795

FRAME AND BODY

213-1987 SCRAPER GP-PADDED DRUM

S/N: EAE1-UP
PART OF 214-5572 SHELL AR
AN ATTACHMENT

SMCS-6607 **i02094929**

NOTE	REF NO	GRAPHIC REF	PART NUMBER	QTY	PART NAME 1 2 3 4 5 6 (PRODUCT LEVEL)	SEE PAGE
	1	1	**191-0684**	12	SCRAPER	
	2	1	**200-0631**	4	SCRAPER	
	3	1	**200-0633**	2	SCRAPER	
M	4	1	**7X-2554**	24	BOLT (M16X2X70-MM)	
M	5	1	**8T-4175**	2	BOLT (M16X2X90-MM)	
	6	1	**9X-8257**	26	WASHER (17.5X30X3.5-MM THK)	

M-METRIC PART

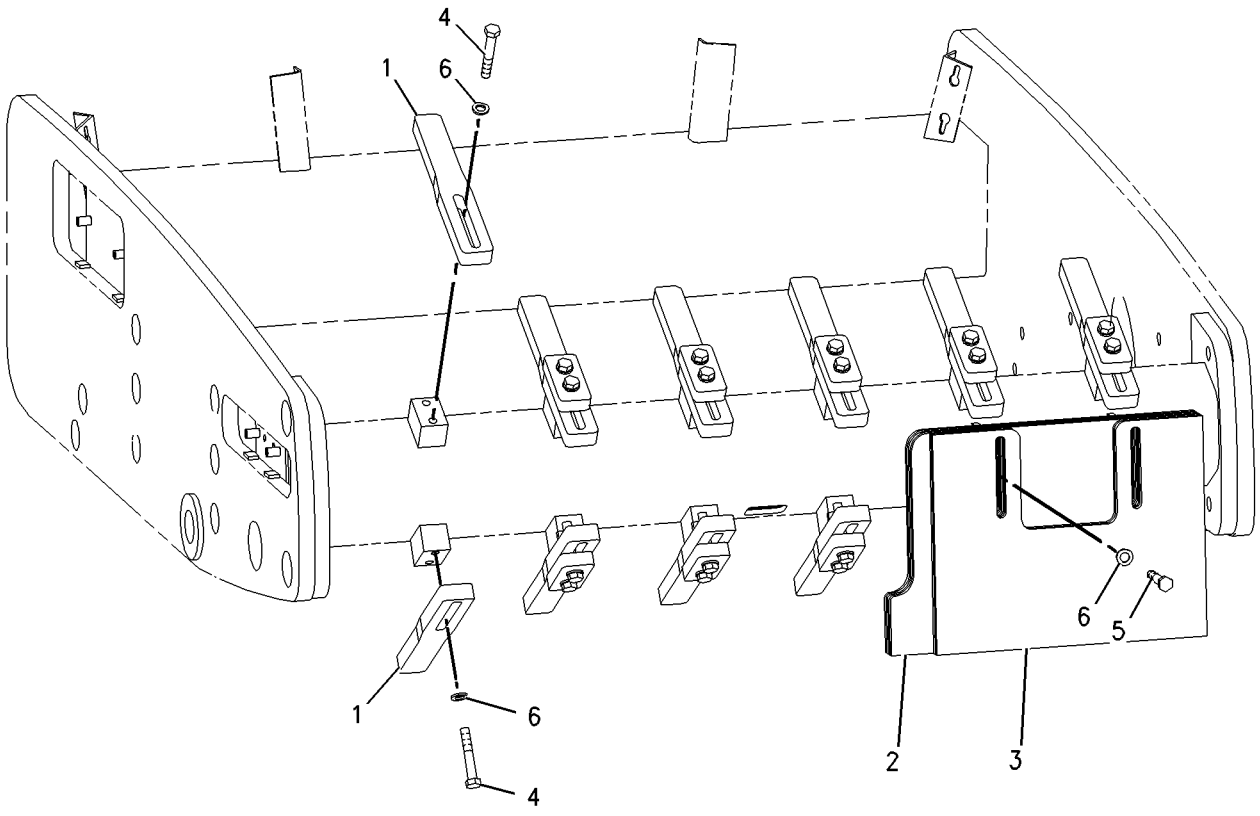

GRAPHIC #1 **<END>** g00841259

105-7620 SCRAPER GP-SMOOTH DRUM

S/N: EAE1-UP
PART OF 278-4510 DRUM GP-COMPACTOR
AN ATTACHMENT

SMCS-6607 **i00817396**

NOTE	REF NO	GRAPHIC REF	PART NUMBER	QTY	PART NAME 1 2 3 4 5 6 (PRODUCT LEVEL)	SEE PAGE
	1	1	**107-1294**	4	BAR-ADJUSTMENT	
	2	1	**107-1297**	1	SCRAPER	
M	3	1	**8T-4187**	4	BOLT (M20X2.5X80-MM)	
	4	1	**8T-5439**	8	WASHER-HARD (21.5X45X6-MM THK)	
M	5	1	**8T-4131**	4	NUT (M20X2.5-THD)	
	6	1	**7X-0515**	4	WASHER-HARD (17X35X5-MM THK)	
	7	1	**3E-9861**	4	LOCKNUT (5/8-11-THD)	
	8	1	**1D-4700**	4	BOLT-CARRIAGE (5/8-11X2.5-IN)	

M-METRIC PART

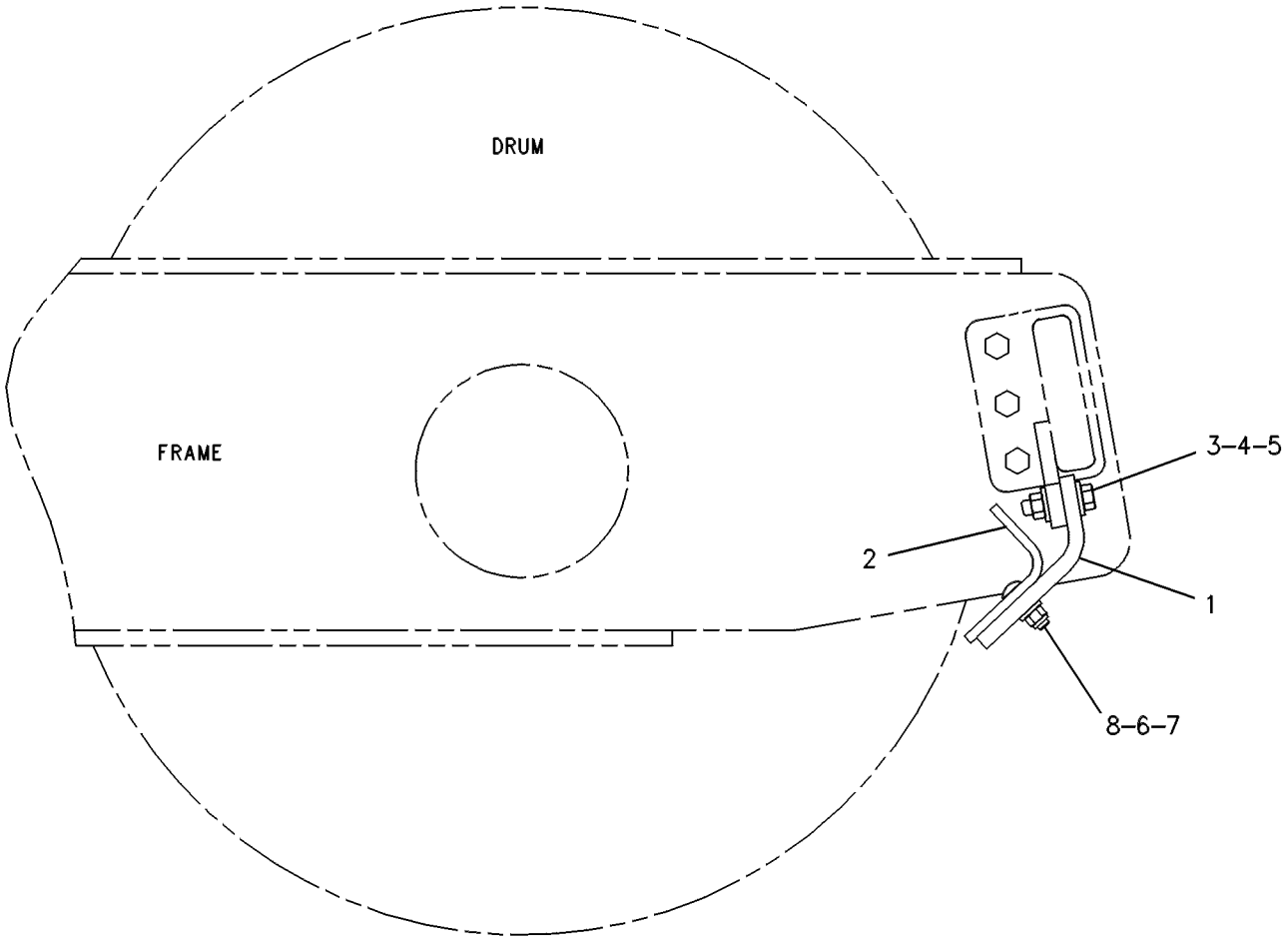

GRAPHIC #1 **<END>** g00242204

191-0691 SCRAPER GP-SMOOTH DRUM–FRONT & REAR

S/N: EAE1-UP
FLEXIBLE
CANNOT BE USED WITH 214-5572–PAGE 167
AN ATTACHMENT

SMCS-6607 **i01774968**

NOTE	REF NO	GRAPHIC REF	PART NUMBER	QTY	PART NAME 1 2 3 4 5 6 (PRODUCT LEVEL)	SEE PAGE
	1	1	**106-7348**	1	SCRAPER	
	2	1	**107-1294**	4	BAR-ADJUSTMENT	
	3	1	**107-1295**	1	PLATE	
	4	1	**107-1296**	1	PLATE	
	5	1	**191-0689**	1	SCRAPER AS-REAR	
M		1	**6V-7742**	4	NUT-FULL (M20X2.5-THD)	
	6	1	**191-0692**	1	SCRAPER	
B	7	1	**191-4461**	3	SHIM (1.5-MM THK)	
	8	1	**199-3784**	1	PLATE	
	9	1	**1D-4700**	3	BOLT-CARRIAGE (5/8-11X2.5-IN)	
	10	1	**1D-4702**	4	BOLT-CARRIAGE (5/8-11X3.25-IN)	
	11	1	**3K-2889**	7	LOCKNUT (5/8-11-THD)	
	12	1	**7X-0515**	7	WASHER-HARD (17X35X5-MM THK)	
M	13	1	**7X-2554**	8	BOLT (M16X2X70-MM)	
M	14	1	**7X-2563**	4	BOLT (M20X2.5X60-MM)	
M	15	1	**8T-4131**	4	NUT (M20X2.5-THD)	
M	16	1	**8T-4187**	4	BOLT (M20X2.5X80-MM)	
	17	1	**8T-5439**	12	WASHER-HARD (21.5X45X6-MM THK)	
	18	1	**9X-8257**	8	WASHER (17.5X30X3.5-MM THK)	

B-USE AS REQUIRED
M-METRIC PART

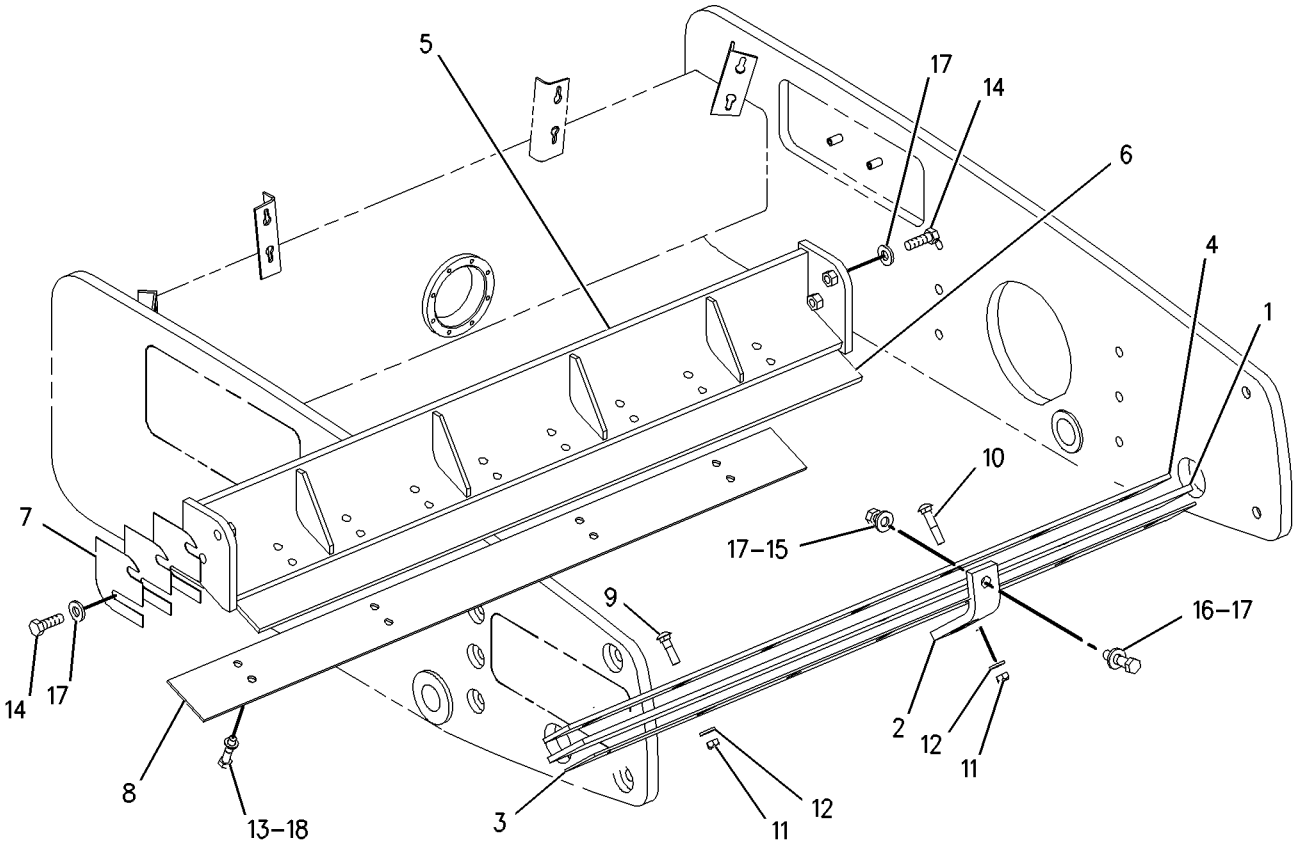

GRAPHIC #1 **<END>** g00841590

FRAME AND BODY

246-5795 SCRAPER GP-SMOOTH DRUM

S/N: EAE1-UP
AN ATTACHMENT

SMCS-6607 **i02897103**

NOTE	REF NO	GRAPHIC REF	PART NUMBER	QTY	PART NAME 1 2 3 4 5 6 (PRODUCT LEVEL)	SEE PAGE
	1	1	**1D-4700**	4	BOLT-CARRIAGE (5/8-11X2.5-IN)	
	2	1	**107-1294**	4	BAR-ADJUSTMENT	
	3	1	**191-0689**	1	SCRAPER AS-REAR	
M		1	**6V-7742**	4	NUT-FULL (M20X2.5-THD)	
B	4	1	**191-4461**	3	SHIM (1.5-MM THK)	
	5	1	**247-4426**	1	SCRAPER	
	6	1	**247-4428**	1	SCRAPER	
M	7	1	**118-4977**	8	BOLT (M16X2X65-MM)	
	8	1	**3E-9861**	4	LOCKNUT (5/8-11-THD)	
	9	1	**7X-0515**	4	WASHER-HARD (17X35X5-MM THK)	
M	10	1	**7X-2563**	4	BOLT (M20X2.5X60-MM)	
M	11	1	**8T-4131**	4	NUT (M20X2.5-THD)	
M	12	1	**8T-4187**	4	BOLT (M20X2.5X80-MM)	
	13	1	**8T-5439**	12	WASHER-HARD (21.5X45X6-MM THK)	
	14	1	**9X-8257**	8	WASHER (17.5X30X3.5-MM THK)	

B-USE AS REQUIRED
M-METRIC PART

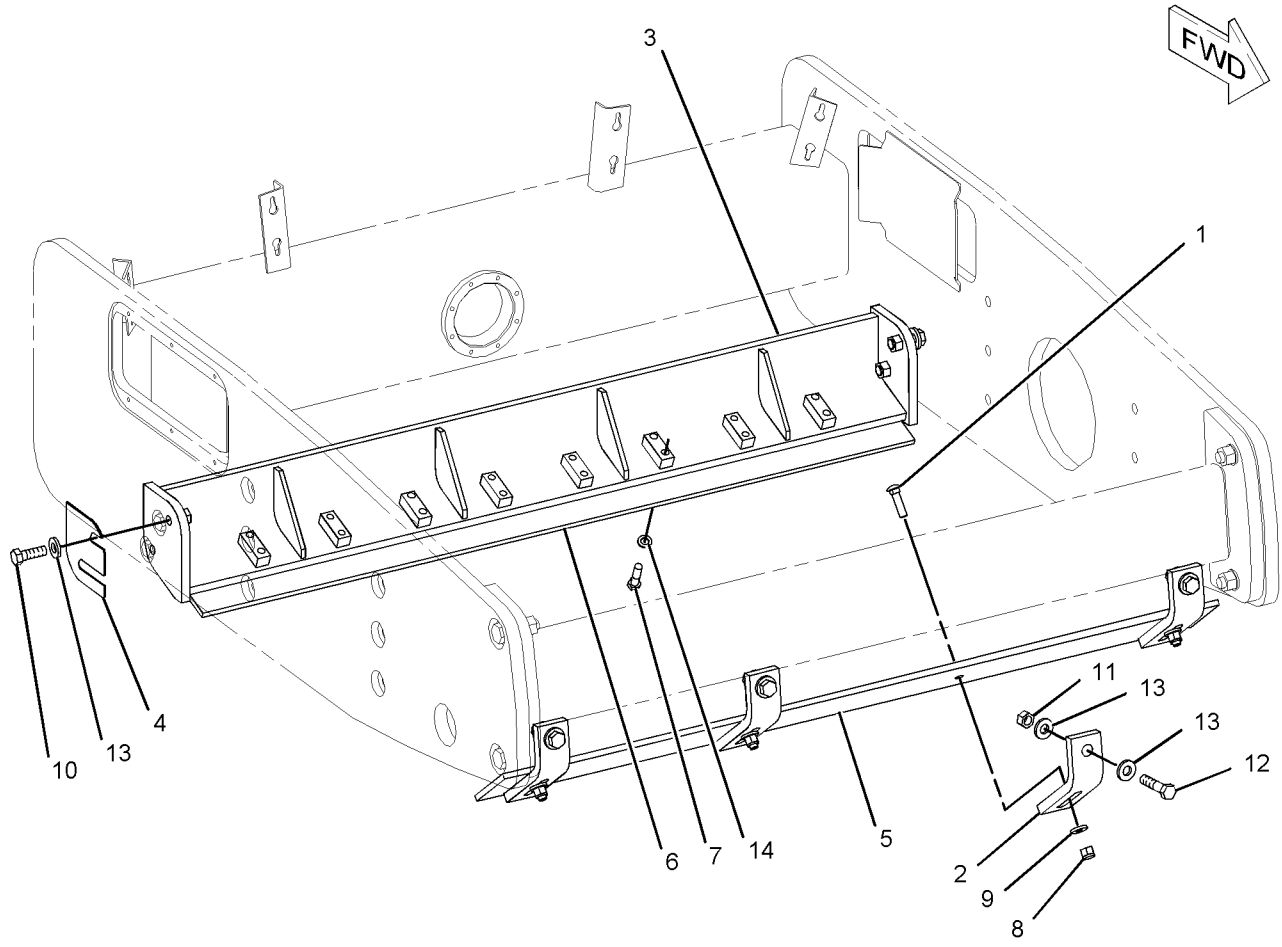

GRAPHIC #1 **<END>** g01040295

BRAKING SYSTEM

201-1209 BRAKE AR

S/N: EAE1-UP
WITH BRAKE RELEASE
AN ATTACHMENT

SMCS-4061, 4251, 4267 **i01774704**

NOTE	PART NUMBER	QTY	PART NAME 1 2 3 4 5 6 (PRODUCT LEVEL)	SEE PAGE
Y	*205-0971*	1	LINES GP-BRAKE & SHIFT	202
Y	*204-9594*	1	PUMP & MTG GP-BRAKE	205

Y-SEPARATE ILLUSTRATION

<END>

201-1210 BRAKE AR

S/N: EAE1-UP
AN ATTACHMENT

SMCS-4061, 4251, 4267 **i01774702**

NOTE	PART NUMBER	QTY	PART NAME 1 2 3 4 5 6 (PRODUCT LEVEL)	SEE PAGE
Y	*153-7176*	1	LINES GP-BRAKE & SHIFT	201

Y-SEPARATE ILLUSTRATION

<END>

BRAKING SYSTEM

153-7176 LINES GP-BRAKE & SHIFT

S/N: EAE1-UP
PART OF 201-1210 BRAKE AR
AN ATTACHMENT

SMCS-4257 **i01774882**

NOTE	REF NO	GRAPHIC REF	PART NUMBER	QTY	PART NAME 1 2 3 4 5 6 (PRODUCT LEVEL)	SEE PAGE
I	1	1	**205-6475**	1	HOSE AS	
I	2	1	**192-1298**	1	HOSE AS	
I	3	1	**192-9187**	1	HOSE AS	
I	4	1	**195-4403**	1	HOSE AS	
	5	1	*164-9869*	1	CONNECTOR AS	
		1	**3J-1907**	1	SEAL-O-RING	
		1	**6V-8397**	1	SEAL-O-RING	
		1	**9X-2297**	1	CONNECTOR	

I-REFER TO HYDRAULIC INFORMATION SYSTEM

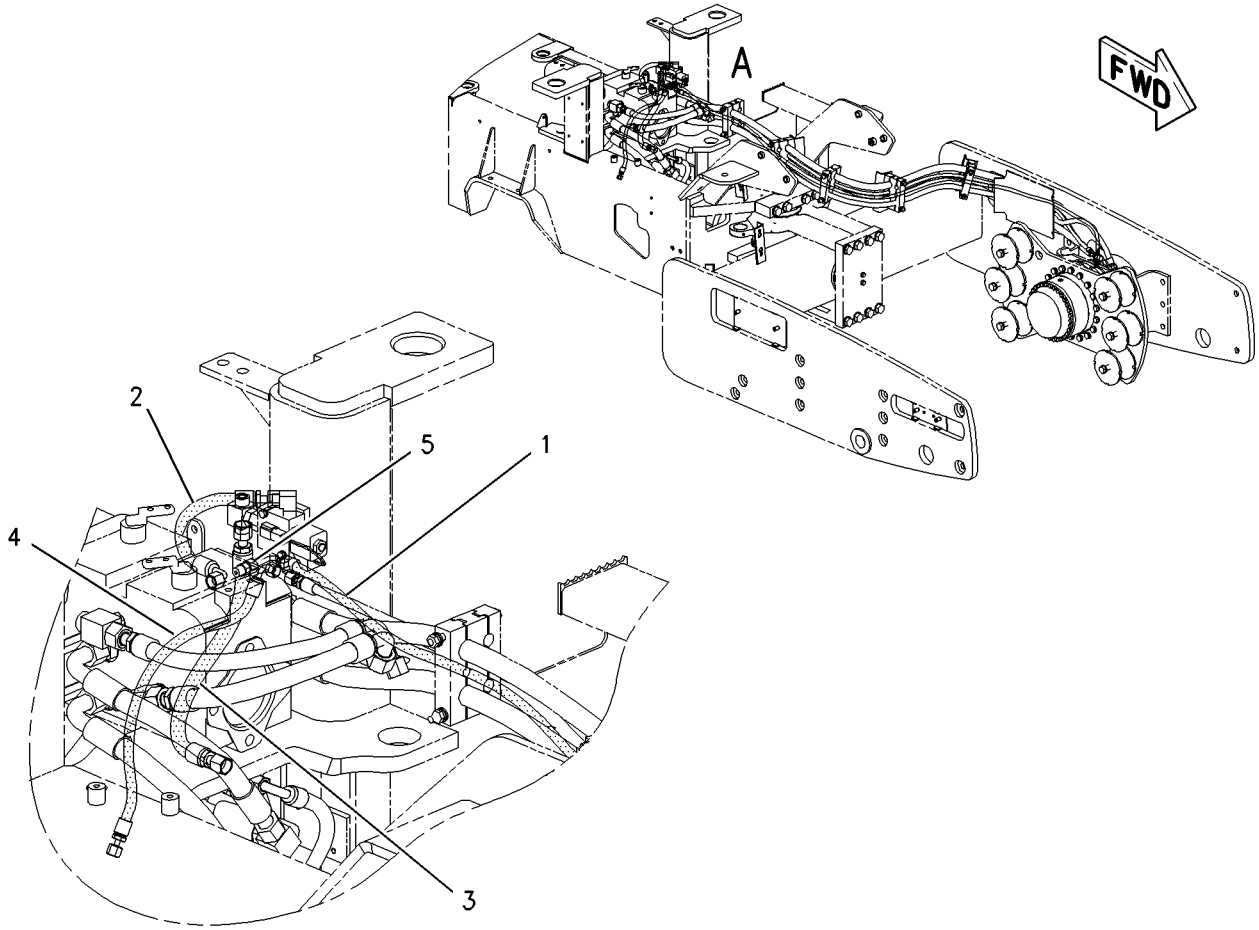

VIEW OF AREA A

GRAPHIC #1 **<END>** g00829081

BRAKING SYSTEM

205-0971 LINES GP-BRAKE & SHIFT

S/N: EAE1-UP
PART OF 201-1209 BRAKE AR
AN ATTACHMENT

SMCS-4257 **i01774884**

NOTE	REF NO	GRAPHIC REF	PART NUMBER	QTY	PART NAME 1 2 3 4 5 6 (PRODUCT LEVEL)	SEE PAGE
	1	2	**115-3075**	1	VALVE-NEEDLE	
I	2	2	**134-0710**	1	HOSE AS	
	3	2	**177-2215**	2	STRAP-DUAL CLAMP	
I	4	2	**192-1298**	1	HOSE AS	
I	5	2	**192-9187**	1	HOSE AS	
I	6	2	**195-4403**	1	HOSE AS	
I	7	1	**205-6475**	1	HOSE AS	
I	8	2	**205-9424**	1	HOSE AS	
I	9	2	**205-9425**	1	HOSE AS	
	10	2	*209-4394*	1	ELBOW AS	
		2	**3D-2824**	1	SEAL-O-RING	
		2	**6V-8397**	1	SEAL-O-RING	
		2	**8T-6754**	1	ELBOW	
	11	2	*148-8336*	2	CONNECTOR AS	
					(EACH INCLUDES)	
		2	**3J-1907**	1	SEAL-O-RING	
		2	**6V-8397**	1	SEAL-O-RING	
		2	**6V-8636**	1	CONNECTOR	
	12	2	*169-7137*	1	TEE AS	
		2	**8T-8983**	1	TEE-UNION	
		2	**4J-5477**	2	SEAL-O-RING	
		2	**6V-8397**	1	SEAL-O-RING	
	13	2	*150-4050*	1	ELBOW AS	
		2	**3J-1907**	1	SEAL-O-RING	
		2	**8T-0788**	1	ELBOW	
	14	2	**7B-1251**	2	GROMMET	

I-REFER TO HYDRAULIC INFORMATION SYSTEM

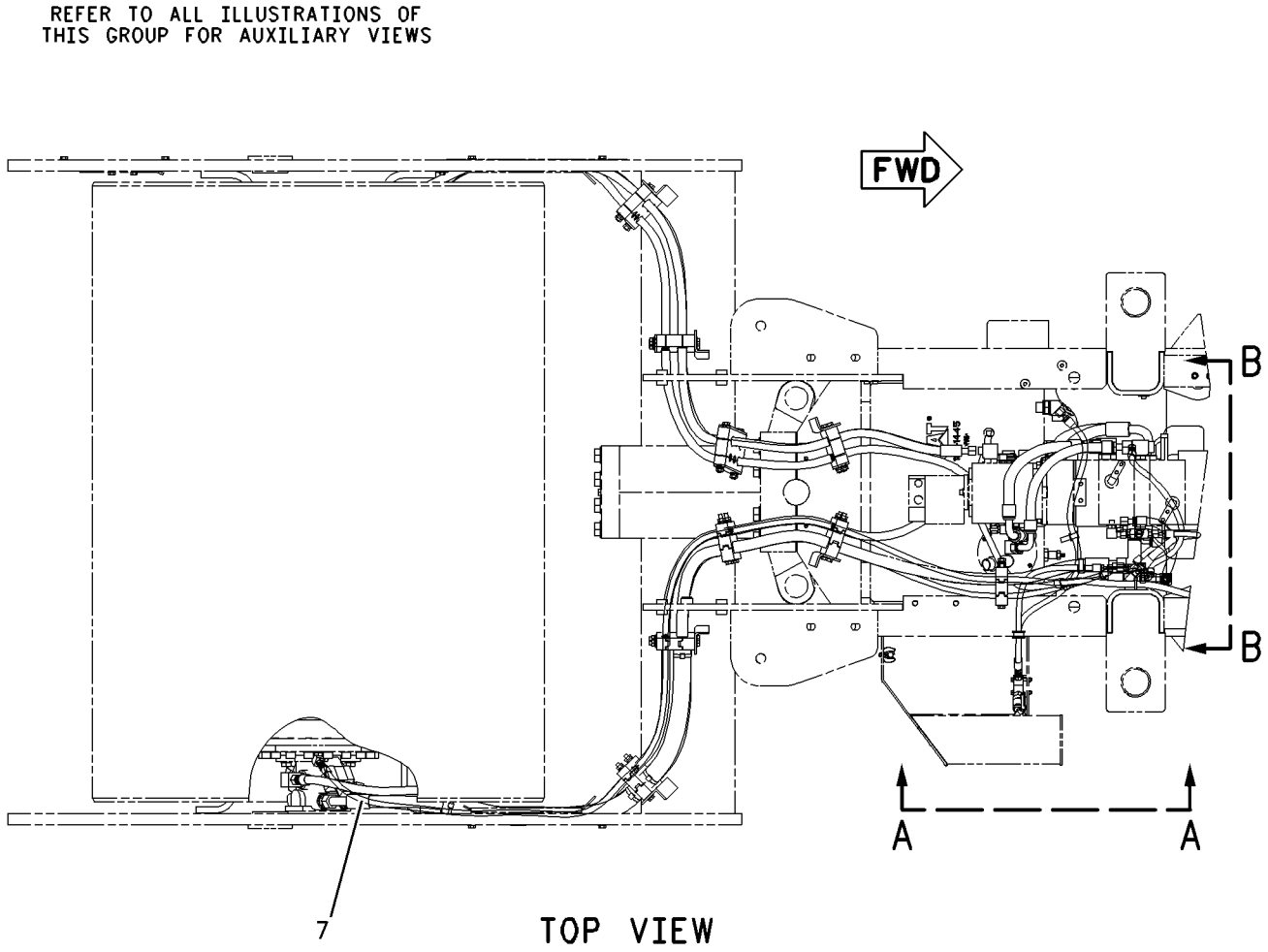

GRAPHIC #1 g00915502

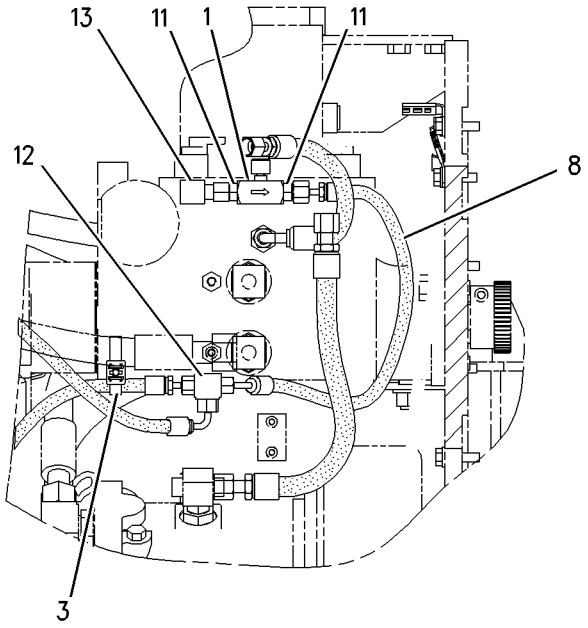

VIEW A-A

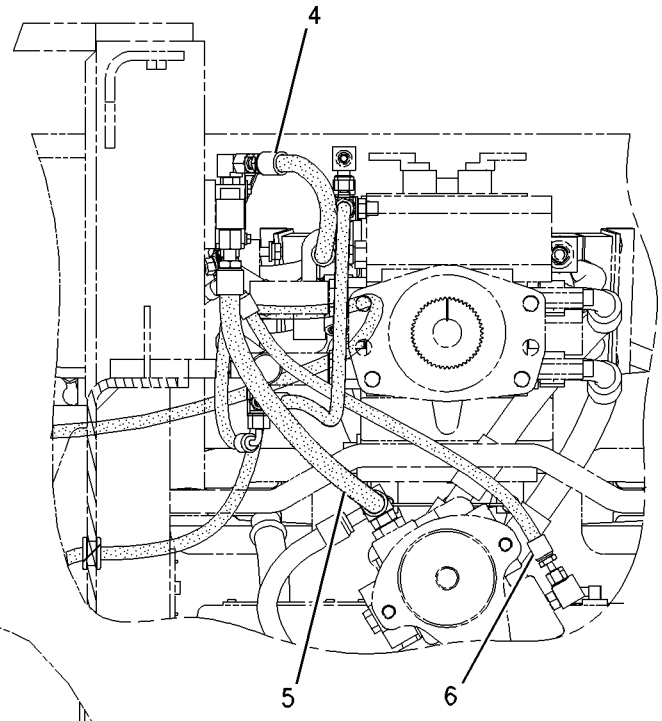

VIEW B-B

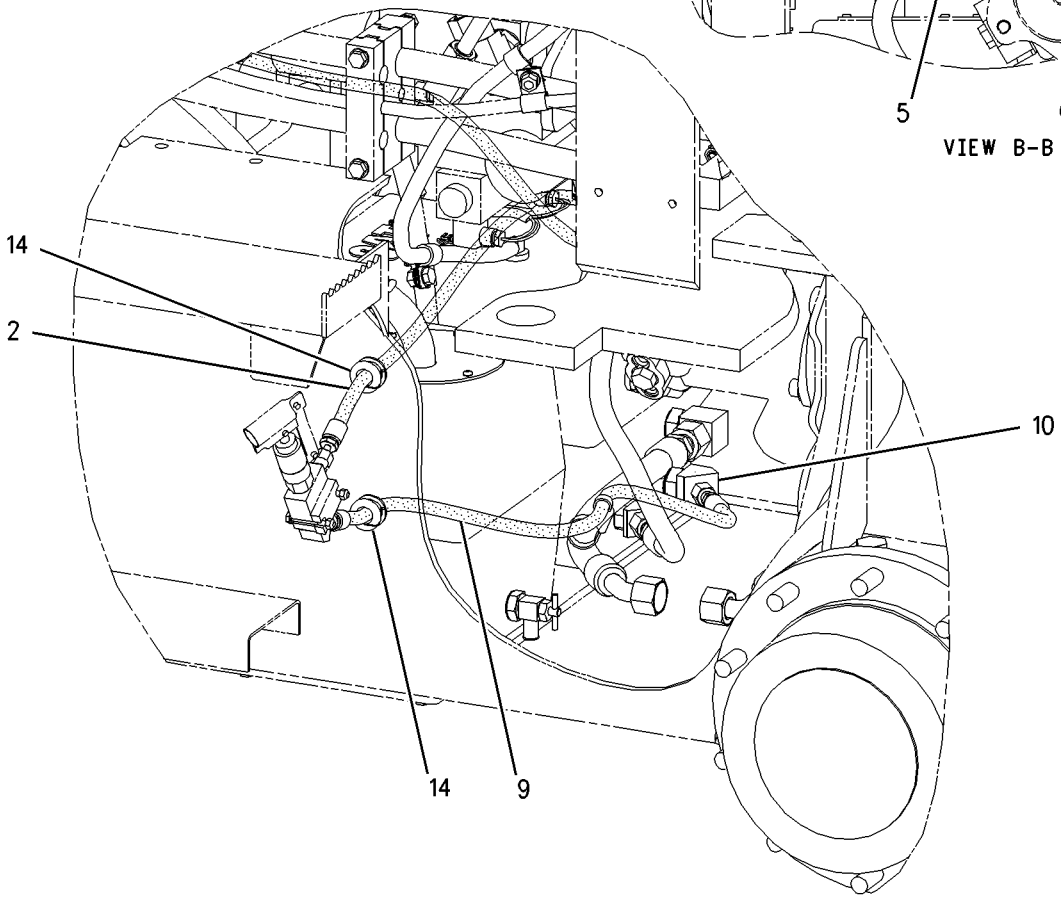

GRAPHIC #2 **<END>** g00915503

BRAKING SYSTEM

204-9594 PUMP & MTG GP-BRAKE

S/N: EAE1-UP
PART OF 201-1209 BRAKE AR
AN ATTACHMENT

SMCS-4354 **i01774883**

NOTE	REF NO	GRAPHIC REF	PART NUMBER	QTY	PART NAME 1 2 3 4 5 6 (PRODUCT LEVEL)	SEE PAGE
M	1	1	**5C-2874**	2	NUT (M5X0.8-THD)	
	2	1	**8Y-1009**	1	PIPE	
	3	1	**156-3435**	1	PUMP-HAND	
	4	1	**167-1192**	2	CLIP	
	5	1	**205-5625**	1	PLATE	
	6	1	*148-8325*	1	CONNECTOR AS	
		1	**3J-1907**	1	SEAL-O-RING	
		1	**4J-5477**	1	SEAL-O-RING	
		1	**6V-8641**	1	CONNECTOR	
	7	1	*150-3033*	1	ELBOW AS	
		1	**3J-1907**	1	SEAL-O-RING	
		1	**4J-5477**	1	SEAL-O-RING	
		1	**8T-0164**	1	ELBOW	
	8	1	**4B-4274**	4	WASHER (5.5X13X1.2-MM THK)	
M	9	1	**5C-2890**	2	NUT (M6X1-THD)	
M	10	1	**6V-4298**	2	BOLT (M5X0.8X16-MM)	
M	11	1	**7X-2535**	2	BOLT (M6X1X60-MM)	
	12	1	**9X-8256**	4	WASHER (6.6X12X2-MM THK)	

M-METRIC PART

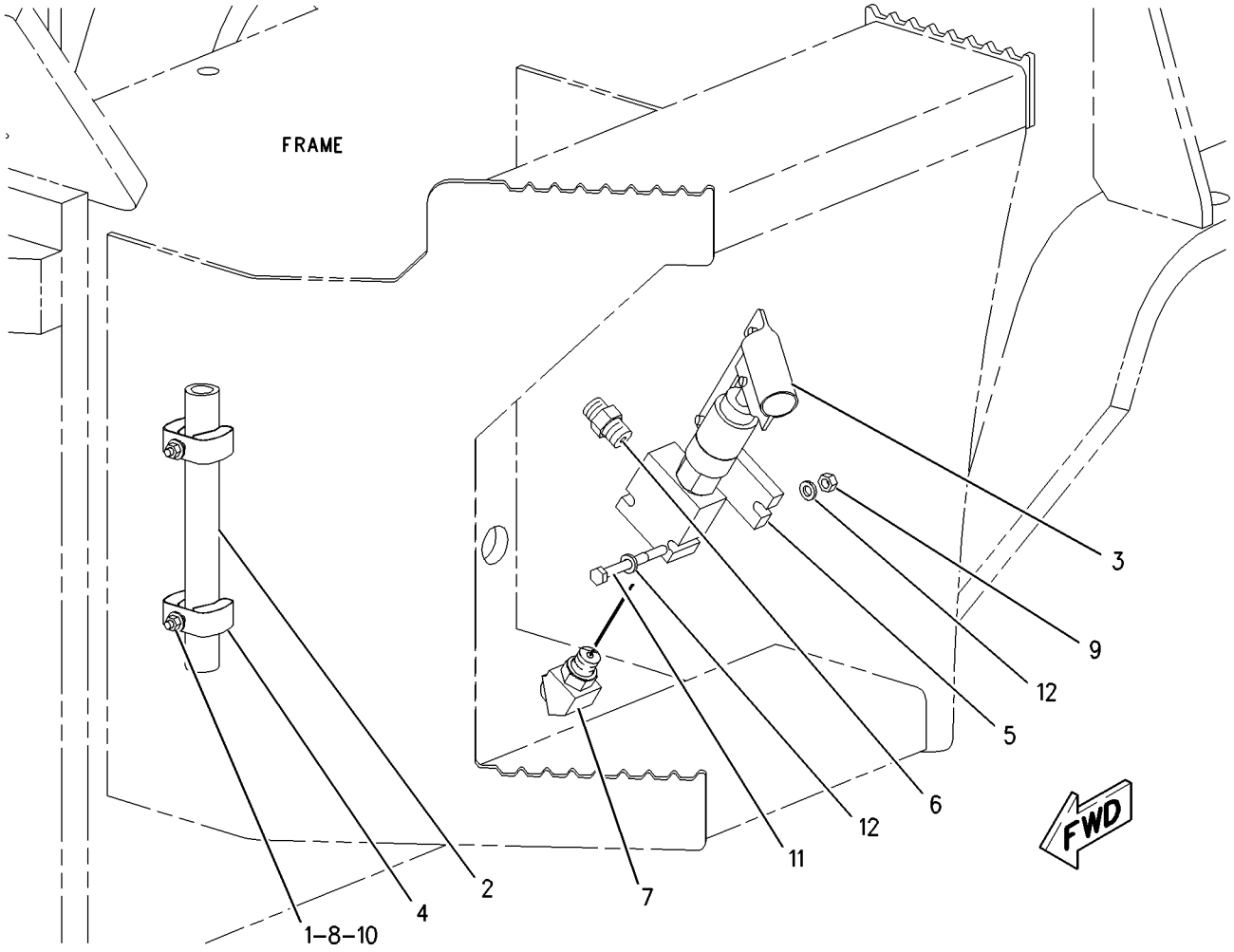

GRAPHIC #1 **<END>** g00910816

STEERING SYSTEM

153-7107 CONTROL GP-STEERING

S/N: EAE1-UP

PART OF 229-8706, 236-2234, 249-5075, 249-5076 OPERATOR AR AN ATTACHMENT

SMCS-4309, 4322, 4343 **i02854939**

NOTE	REF NO	GRAPHIC REF	PART NUMBER	QTY	PART NAME 1 2 3 4 5 6 (PRODUCT LEVEL)	SEE PAGE
	1	1	**2T-3360**	1	BUTTON AS-HORN	
	2	1	**9D-7924**	4	MOUNTING	
	3	1	**107-6141**	1	COVER	
	4	1	**314-2404**	1	BOOT	
	5	1	**111-7878**	1	COVER	
	6	1	**134-2364**	1	ANGLE AS	
M		1	**6V-9632**	3	NUT-WELD (M6X1-THD)	
	7	1	**134-4735**	1	PLATE AS	
M		1	**8T-3612**	4	NUT-WELD (M8X1.25-THD)	
	8	1	**145-9291**	1	STEERING WHEEL AS	
Y	9	1	**153-7369**	1	KNOB GP-STEERING (STEERING WHEEL)	210
	10	1	**154-5212**	1	SUPPORT AS	
		1	**7T-1099**	2	LINK	
	11	1	**176-9166**	1	COLUMN AS	
		1	**220-3926**	1	KIT-REPAIR (HORN)	
					(INCLUDES HORN & SCREWS)	
		1	**149-0777**	1	KNOB (STEERING COLUMN TILT)	
		1	**149-0779**	1	KIT-SHAFT (STEERING COLUMN)	
					(INCLUDES RETAINER RING, SEAL, SHAFT PROTECTOR & GREASE PACKET))	
		1	**176-9170**	1	KIT-GAS SPRING (STEERING COLUMN)	
					(INCLUDES DOWEL PINS, GAS SPRING, COMPRESSOR SPRING, SET SCREWS & TILT LEVER)	
	12	1	**265-7812**	1	PUMP GP-METERING (HMU) (FLOW CONTROL)	
	13	1	**217-8058**	1	WIRE AS	
M	14	1	**105-3484**	4	BOLT-SOCKET HEAD (M10X1.5X25-MM)	
	15	1	*148-8340*	4	CONNECTOR AS	
					(EACH INCLUDES)	
		1	**3K-0360**	1	SEAL-O-RING	
		1	**6V-8398**	1	SEAL-O-RING	
		1	**6V-8639**	1	CONNECTOR	
	16	1	**5P-4116**	5	WASHER-HARD (8.8X20.5X2-MM THK)	
M	17	1	**8T-0267**	1	BOLT-SOCKET HEAD (M6X1X12-MM)	
M	18	1	**6V-8227**	1	NUT (M18X1.5-THD)	
	19	1	**7X-0578**	8	WASHER-HARD (10.2X32X2.5-MM THK)	
M	20	1	**8T-4137**	4	BOLT (M10X1.5X20-MM)	
	21	1	**8T-4896**	4	WASHER-HARD (10.2X18.5X2.5-MM THK)	
M	22	1	**8T-4908**	5	BOLT (M8X1.25X25-MM)	
M	23	1	**8T-6869**	4	BOLT (M8X1.25X60-MM)	
M	24	1	**9X-2045**	6	SCREW-TRUSS HEAD (M6X1X20-MM)	

M-METRIC PART
Y-SEPARATE ILLUSTRATION

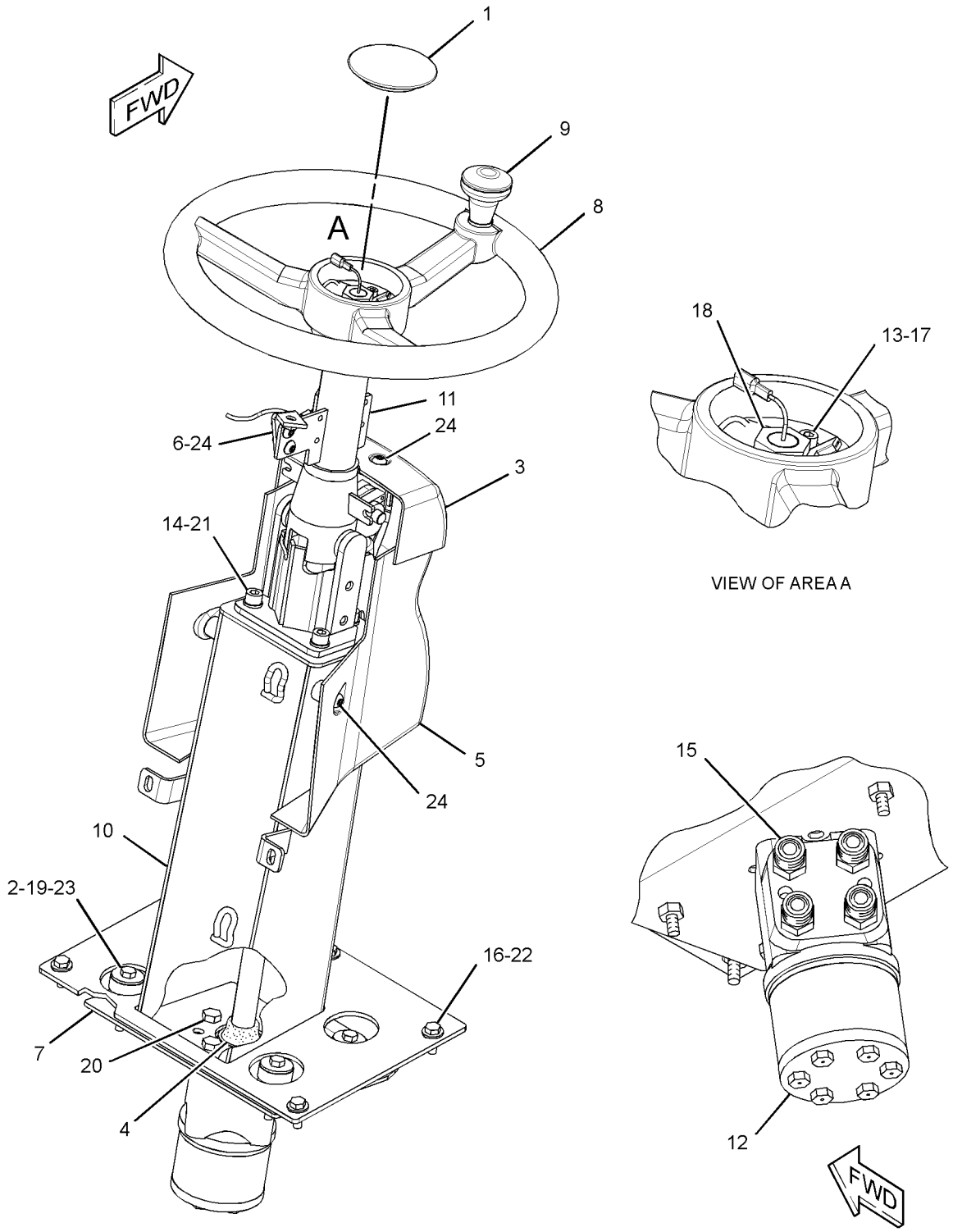

GRAPHIC #1 **<END>** g01423938

153-7156 CYLINDER & MTG GP-STEERING

S/N: EAE1-UP

PART OF 153-5009 HYDRAULIC AR-AUXILIARY

SMCS-4303 **i02016595**

NOTE	REF NO	GRAPHIC REF	PART NUMBER	QTY	PART NAME 1 2 3 4 5 6 (PRODUCT LEVEL)	SEE PAGE
	1	1	**3B-8485**	2	FITTING-GREASE	
	2	1	**4V-2057**	4	BEARING-SPHERICAL	
	3	1	**5P-9982**	2	FITTING-GREASE	
	4	1	**106-6340**	4	SPACER (10.74X16.94X7-MM THK)	
	5	1	**109-6706**	2	PIN AS	
I	6	1	**144-8242**	1	HOSE AS	
	7	1	**173-7456**	2	PIN AS	
	8	1	**177-2215**	2	STRAP-DUAL CLAMP	
Y	9	1	**186-0876**	2	CYLINDER GP-HYDRAULIC (STEERING)	214
I	10	1	**194-0618**	1	HOSE AS	
	11	1	*148-8320*	4	CONNECTOR AS	
					(EACH INCLUDES)	
		1	**8C-6865**	1	CONNECTOR	
		1	**4J-5477**	1	SEAL-O-RING	
	12	1	**7X-7729**	6	WASHER (11X25X3-MM THK)	
M	13	1	**8T-4137**	4	BOLT (M10X1.5X20-MM)	

I-REFER TO HYDRAULIC INFORMATION SYSTEM
M-METRIC PART
Y-SEPARATE ILLUSTRATION

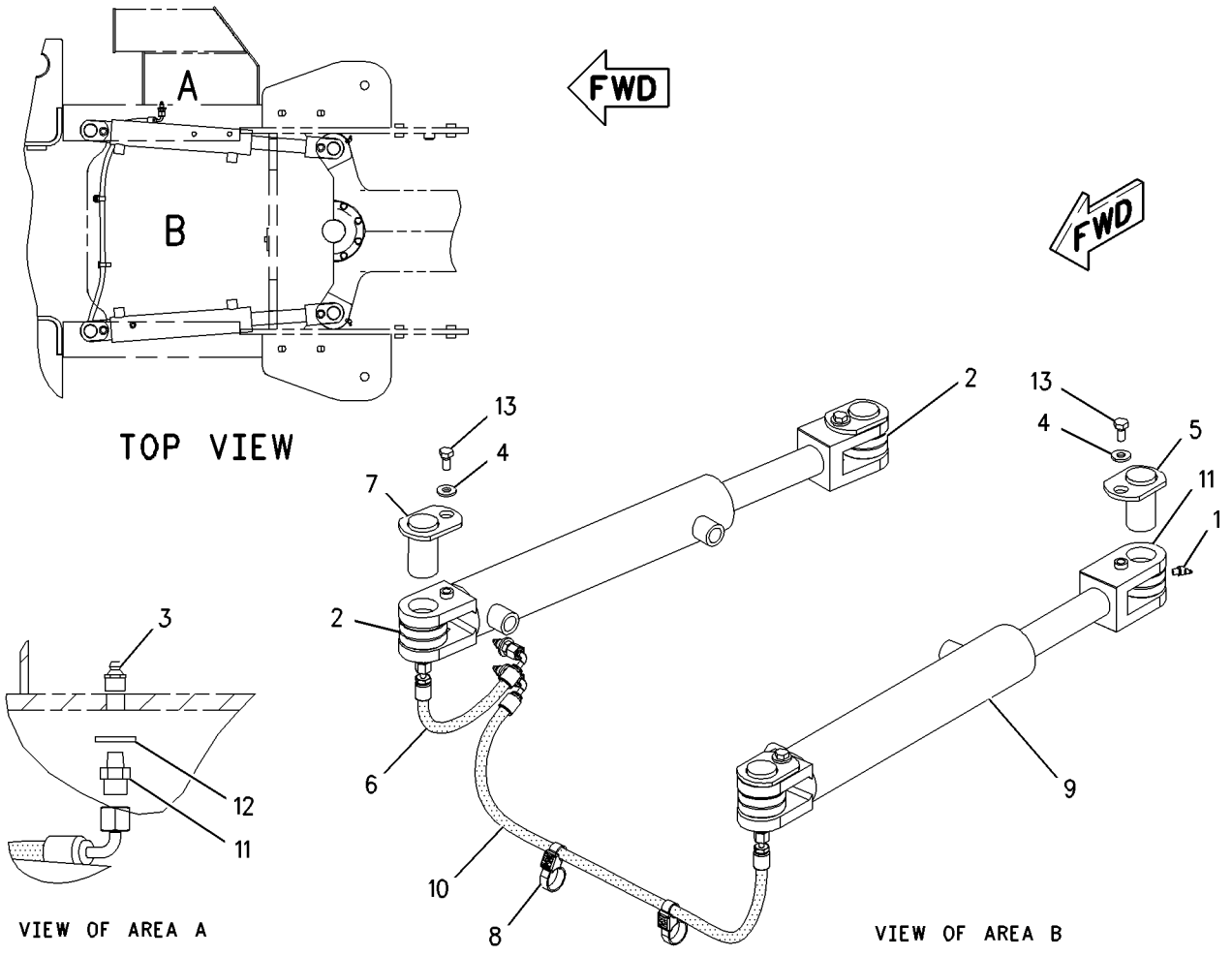

GRAPHIC #1 **<END>** g00852913

153-7369 KNOB GP-STEERING

S/N: EAE1-UP
PART OF 153-7107 CONTROL GP-STEERING
AN ATTACHMENT

SMCS-4309 **i01509389**

NOTE	REF NO	GRAPHIC REF	PART NUMBER	QTY	PART NAME 1 2 3 4 5 6 (PRODUCT LEVEL)	SEE PAGE
M	1	1	**8T-6869**	1	BOLT (M8X1.25X60-MM)	
	2	1	**8T-4224**	1	WASHER-HARD (8.8X16X2-MM THK)	
M	3	1	**5C-7261**	1	NUT (M8X1.25-THD)	

M-METRIC PART

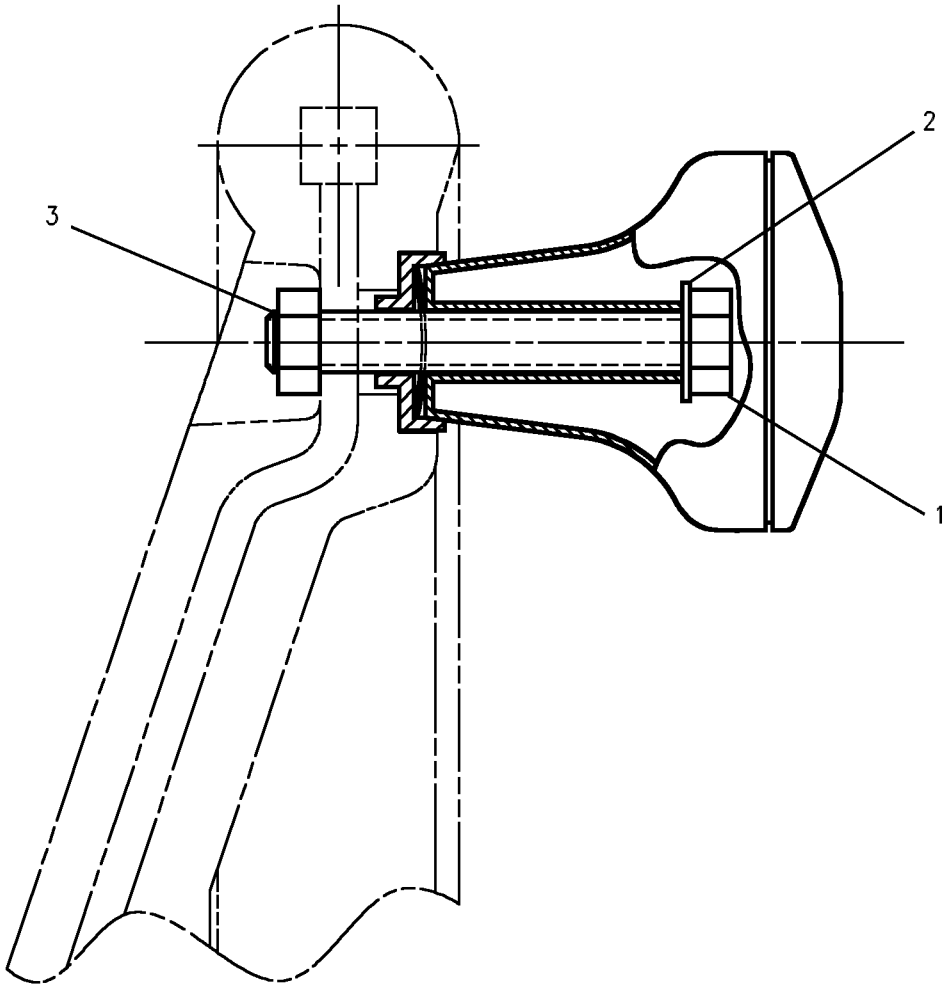

GRAPHIC #1 **<END>** g00534771

STEERING SYSTEM

203-1722 LINES GP-STEERING

S/N: EAE1-UP

PART OF 196-2931, 203-1724, 244-5590, 252-0769 BUMPER AR

AN ATTACHMENT

SMCS-4104, 4133, 4304 **i01725396**

NOTE	REF NO	GRAPHIC REF	PART NUMBER	QTY	PART NAME 1 2 3 4 5 6 (PRODUCT LEVEL)	SEE PAGE
	1	1	**7R-7939**	2	CLAMP-PIPE	
	2	1	**7R-7951**	1	PLATE	
	3	1	**8T-4983**	2	CLAMP-HOSE	
	4	1	**102-8705**	1	PLATE	
	5	1	**154-4883**	4	CLAMP-HALF	
I	6	1	**191-2840**	1	HOSE AS	
I	7	1	**191-2841**	1	HOSE AS	
	8	1	**195-3875**	1	PLATE AS	
I	9	1	**203-5460**	1	HOSE AS	
I	10	1	**203-5461**	1	HOSE AS	
I	11	1	**203-5608**	1	HOSE AS	
	12	1	**203-6459**	1	HOSE	
	13	1	**5P-7464**	1	CLIP (SLOT)	
	14	1	**5P-7465**	1	CLIP (TAB)	
M	15	1	**7X-2535**	2	BOLT (M6X1X60-MM)	
	16	1	**8T-2920**	1	GROMMET	
M	17	1	**7X-2538**	1	BOLT (M8X1.25X100-MM)	

I-REFER TO HYDRAULIC INFORMATION SYSTEM
M-METRIC PART

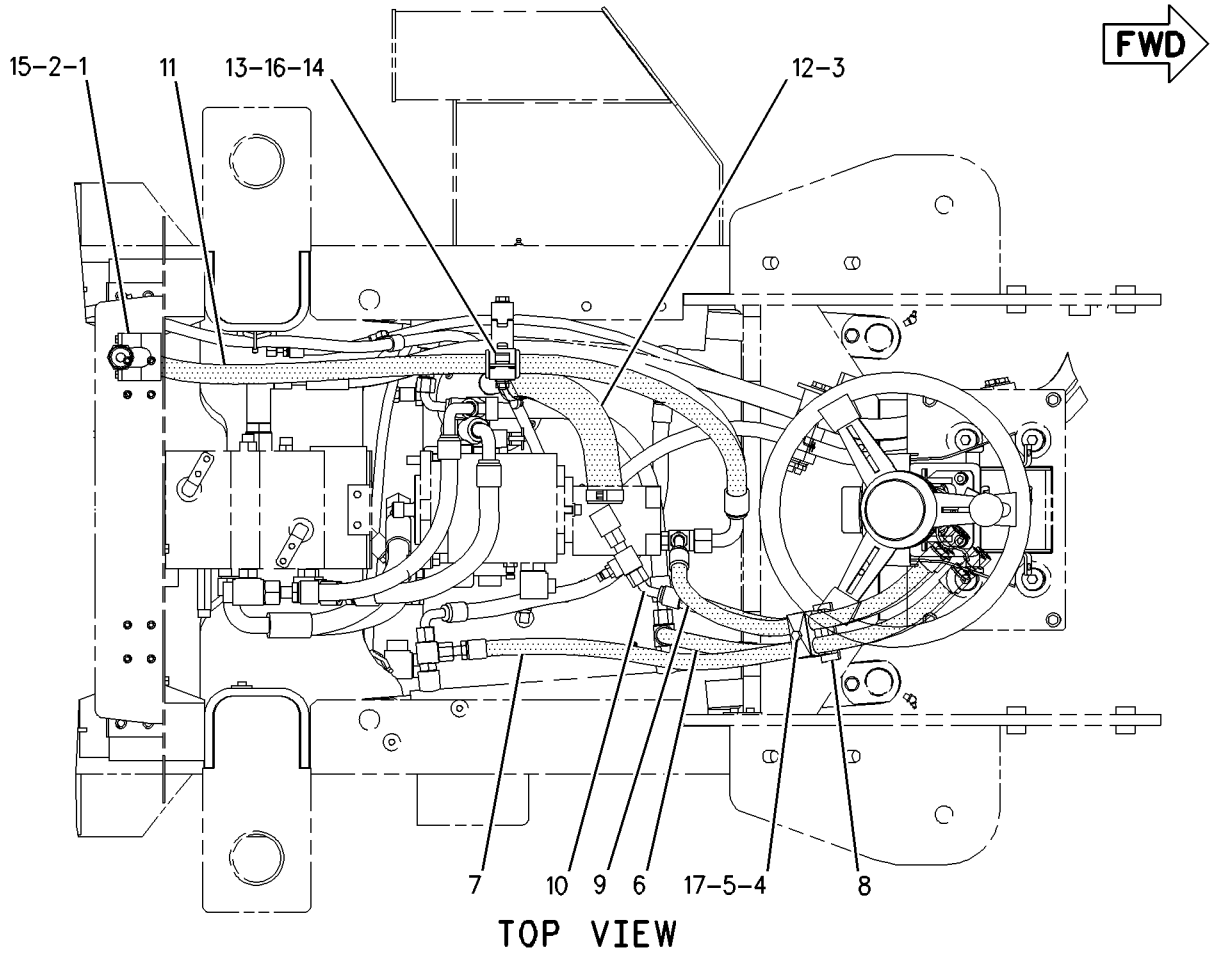

TOP VIEW

GRAPHIC #1 **<END>** g00852740

200-6925 LINES GP-STEERING CYLINDER

S/N: EAE1-UP

PART OF 153-5009 HYDRAULIC AR-AUXILIARY

SMCS-4304 **i01774863**

NOTE	REF NO	GRAPHIC REF	PART NUMBER	QTY	PART NAME 1 2 3 4 5 6 (PRODUCT LEVEL)	SEE PAGE
I	1	1	**191-2356**	1	HOSE AS	
I	2	1	**194-0800**	1	HOSE AS	
	3	1	*148-8340*	1	CONNECTOR AS	
		1	**3K-0360**	1	SEAL-O-RING	
		1	**6V-8398**	1	SEAL-O-RING	
		1	**6V-8639**	1	CONNECTOR	
	4	1	*148-8428*	2	TEE AS	
					(EACH INCLUDES)	
		1	**3K-0360**	1	SEAL-O-RING	
		1	**6V-8398**	2	SEAL-O-RING	
		1	**6V-8782**	1	TEE	
	5	1	*164-8908*	1	CONNECTOR AS	
		1	**3K-0360**	1	SEAL-O-RING	
		1	**6V-8398**	1	SEAL-O-RING	
		1	**8T-0077**	1	CONNECTOR	

I-REFER TO HYDRAULIC INFORMATION SYSTEM

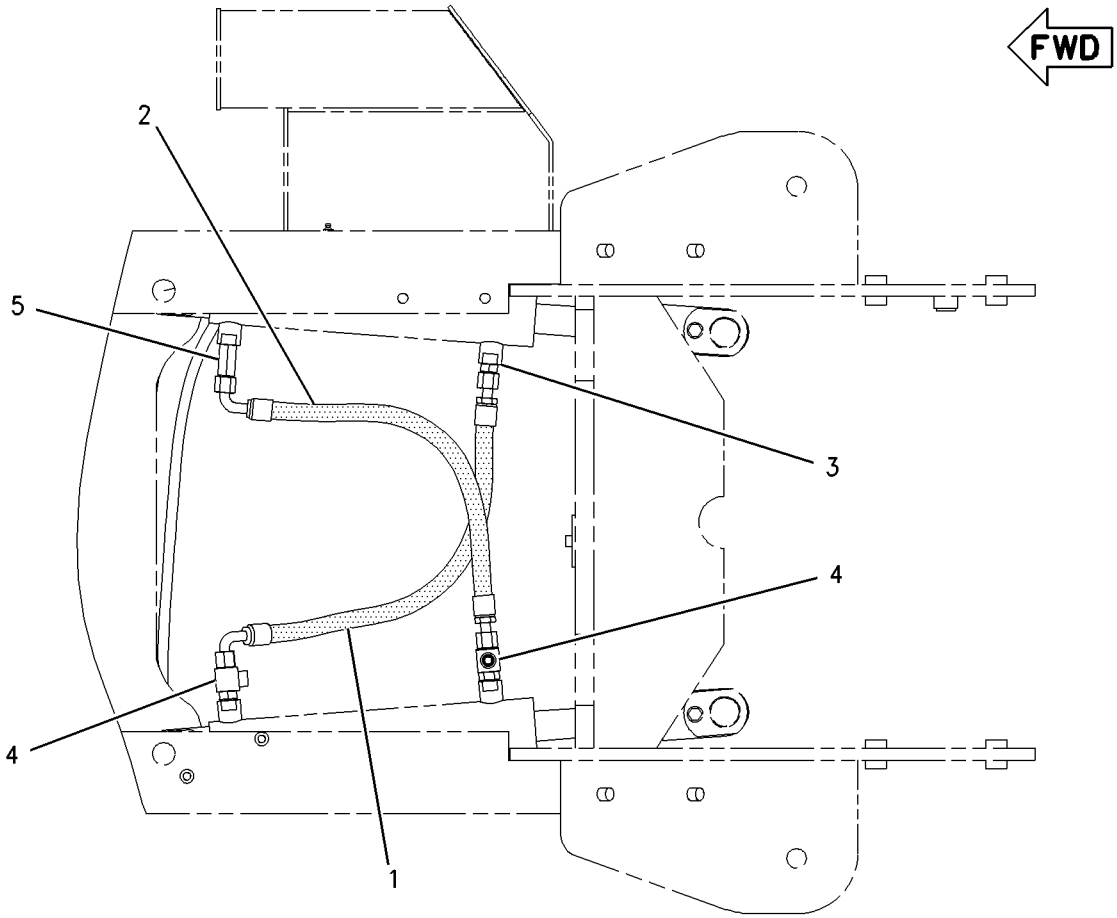

TOP VIEW

GRAPHIC #1 **<END>** g00828534

186-0876 CYLINDER GP-HYDRAULIC–STEERING

S/N: EAE1-UP

63.5MM BORE X 323.85MM STROKE

PART OF 153-7156 CYLINDER & MTG GP-STEERING

SMCS-4303, 5102 **i02138929**

NOTE	REF NO	GRAPHIC REF	PART NUMBER	QTY	PART NAME 1 2 3 4 5 6 (PRODUCT LEVEL)	SEE PAGE
J	1	1	**126-5375**	1	RING-WEAR	
J	2	1	**005-8593**	1	SEAL-O-RING	
	3	1	**5E-8632**	2	RING	
J	4	1	**5E-9198**	1	SEAL	
J	5	1	**5J-6795**	1	WIPER-ROD	
J	6	1	**030-3239**	1	RING-BACKUP	
J	7	1	**8F-6711**	1	SEAL-O-RING	
J	8	1	**6V-9746**	1	SEAL-O-RING	
	9	1	**5D-1986**	1	LOCKNUT (7/8-14-THD)	
					AVAILABLE REPAIR KIT(S):	
J			**220-4349**	1	KIT-SEAL (STEERING CYLINDER)	

J-KIT MARKED J SERVICES PART(S) MARKED J

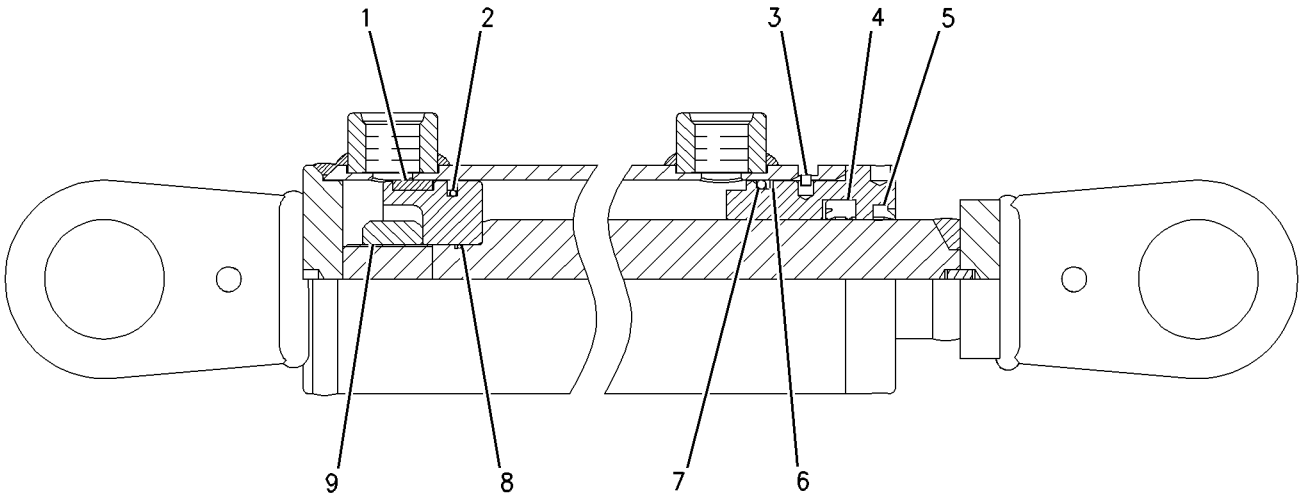

GRAPHIC #1 **<END>** g00884274

153-7148 FILTER & MTG GP-HYDRAULIC

S/N: EAE1-UP

PART OF 153-5009 HYDRAULIC AR-AUXILIARY

SMCS-5068 **i02021605**

NOTE	REF NO	GRAPHIC REF	PART NUMBER	QTY	PART NAME 1 2 3 4 5 6 (PRODUCT LEVEL)	SEE PAGE
	1	1	*107-8265*	1	TEE AS-SWIVEL	
		1	**6V-9746**	1	SEAL-O-RING	
		1	**9X-2289**	1	TEE-SWIVEL	
	2	1	**165-2521**	1	SWITCH AS-PRESSURE (HYDRAULIC OIL)	
		1	**186-3735**	3	PIN-CONNECTOR (16-GA TO 18-GA)	
		1	**102-8803**	1	KIT-RECEPTACLE (3-PIN)	
					(INCLUDES RECEPTACLE AS & WEDGE)	
	3	1	**180-3813**	1	FILTER GP-OIL (HYDRAULIC)	
		1	**1G-8878**	1	FILTER AS-OIL (ADVANCED EFFICIENCY) (HYDRAULIC)	
	4	1	*148-8347*	2	ELBOW AS	
					(EACH INCLUDES)	
		1	**3D-2824**	1	SEAL-O-RING	
		1	**6V-9007**	1	ELBOW	
		1	**6V-9746**	1	SEAL-O-RING	
	5	1	*148-8381*	1	ELBOW AS	
		1	**3D-2824**	1	SEAL-O-RING	
		1	**6V-8398**	1	SEAL-O-RING	
		1	**8T-5429**	1	ELBOW	
	6	1	**3K-0360**	1	SEAL-O-RING	
	7	1	**8T-4121**	4	WASHER-HARD (11X21X2.5-MM THK)	
M	8	1	**8T-4136**	4	BOLT (M10X1.5X25-MM)	

M-METRIC PART

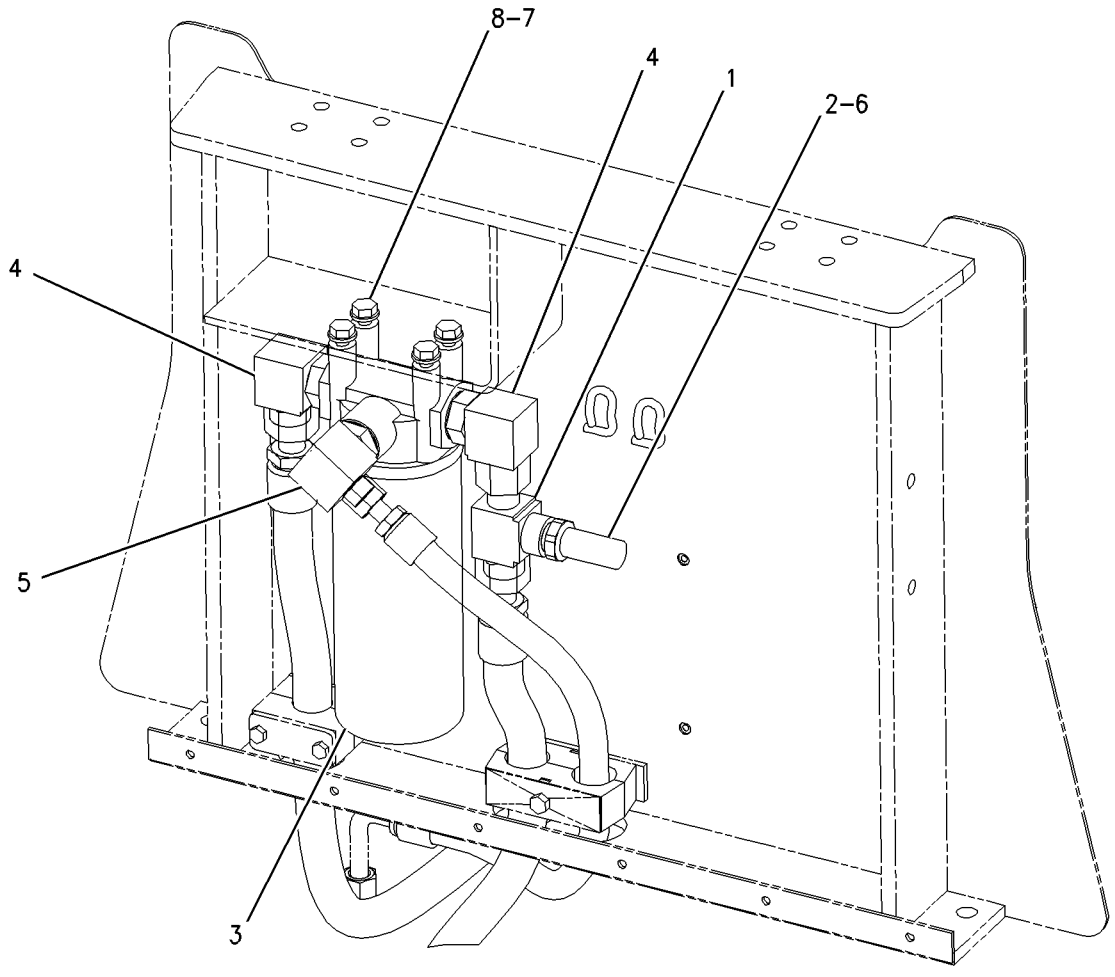

GRAPHIC #1 **<END>** g00828533

HYDRAULIC SYSTEM

229-5727 HYDRAULIC AR

S/N: EAE1-UP

PART OF 228-9623 COMMON AR

SMCS-5050 **i02862794**

NOTE	PART NUMBER	QTY	PART NAME 1 2 3 4 5 6 (PRODUCT LEVEL)	SEE PAGE
Y	*153-7154*	1	LINES GP-HYDRAULIC	218
Y	*193-1476*	1	LINES GP-PRESSURE TEST	220
Y	*153-7122*	1	LINES GP-PROPEL	153
Y	*153-7171*	1	LINES GP-VIBRATORY	259
Y	*188-5121*	1	MOTOR & MTG GP-PROPEL	156
Y	*153-7120*	1	PUMP & MTG GP-PROPEL	165
			—OR—	
Y	**256-6506**	1	PUMP & MTG GP-VIBRATORY	268
Y	*231-2922*	1	VALVE & MTG GP-CONTROL (SHIFT)	250
Y-SEPARATE ILLUSTRATION				

<END>

153-5009 HYDRAULIC AR-AUXILIARY

S/N: EAE1-UP

PART OF 228-9623 COMMON AR

SMCS-5050 **i01774663**

NOTE	PART NUMBER	QTY	PART NAME 1 2 3 4 5 6 (PRODUCT LEVEL)	SEE PAGE
Y	*153-7156*	1	CYLINDER & MTG GP-STEERING	209
Y	*153-7148*	1	FILTER & MTG GP-HYDRAULIC	215
Y	*153-7152*	1	LINES GP-HYDRAULIC FILTER	219
Y	*200-6925*	1	LINES GP-STEERING CYLINDER	213
Y	*153-7147*	1	PUMP & MTG GP-VIBRATORY	262
Y	*153-7149*	1	VALVE & MTG GP-CONTROL	249
Y-SEPARATE ILLUSTRATION				

<END>

HYDRAULIC SYSTEM

153-7154 LINES GP-HYDRAULIC

S/N: EAE1-UP

PART OF 229-5727 HYDRAULIC AR

SMCS-5057 **i02064685**

NOTE	REF NO	GRAPHIC REF	PART NUMBER	QTY	PART NAME 1 2 3 4 5 6 (PRODUCT LEVEL)	SEE PAGE
	1	1	**9X-2488**	2	CLAMP-HOSE	
	2	1	**138-4572**	4	COVER	
	3	1	**237-4257**	10	CLAMP-HALF	
I	4	1	**191-6084**	1	HOSE AS	
I	5	1	**191-6190**	1	HOSE AS	
I	6	1	**192-0832**	1	HOSE AS	
I	7	1	**192-0833**	1	HOSE AS	
	8	1	**195-3875**	2	PLATE AS	
	9	1	**8T-4224**	1	WASHER-HARD (8.8X16X2-MM THK)	
M	10	1	**8T-6869**	1	BOLT (M8X1.25X60-MM)	
M	11	1	**8T-6912**	4	BOLT (M8X1.25X50-MM)	

I-REFER TO HYDRAULIC INFORMATION SYSTEM
M-METRIC PART

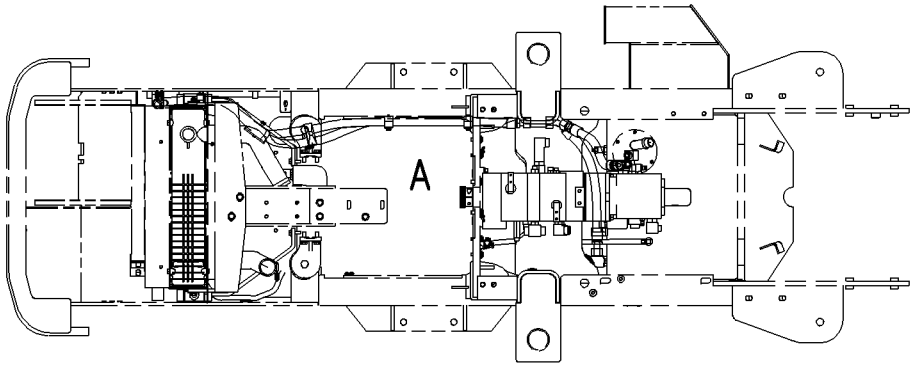

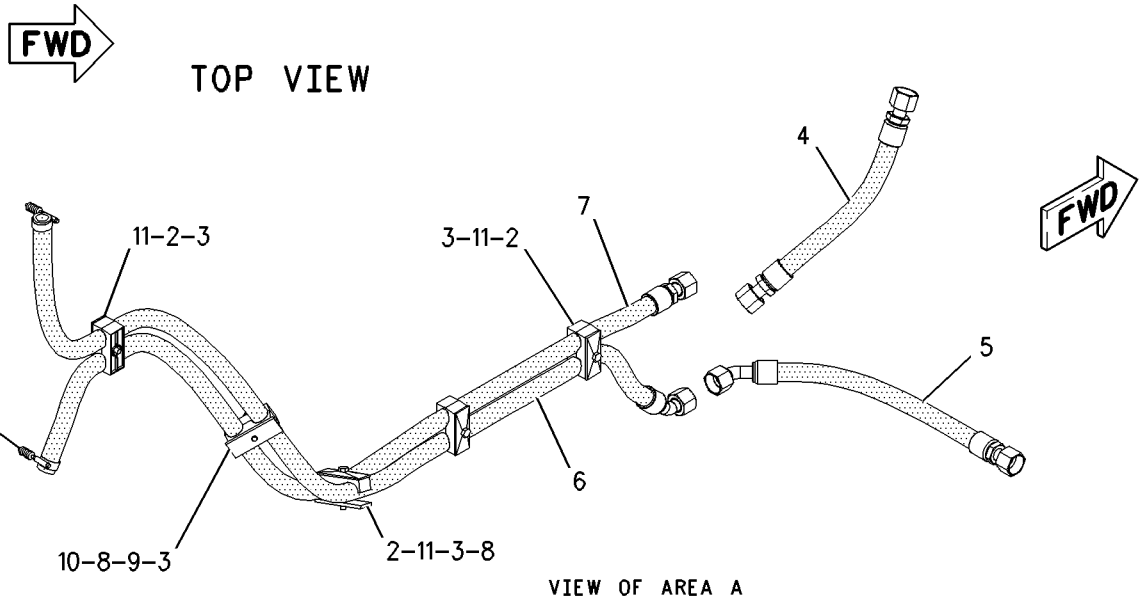

GRAPHIC #1 **<END>** g00830546

HYDRAULIC SYSTEM

153-7152 LINES GP-HYDRAULIC FILTER

S/N: EAE1-UP

PART OF 153-5009 HYDRAULIC AR-AUXILIARY

SMCS-5057 **i01774861**

NOTE	REF NO	GRAPHIC REF	PART NUMBER	QTY	PART NAME 1 2 3 4 5 6 (PRODUCT LEVEL)	SEE PAGE
	1	1	**138-4572**	1	COVER	
	2	1	**209-3118**	2	CLAMP-HALF	
I	3	1	**191-6171**	1	HOSE AS	
I	4	1	**191-7731**	1	HOSE AS	
	5	1	**5P-7464**	1	CLIP (SLOT)	
	6	1	**5P-7465**	1	CLIP (TAB)	
	7	1	**8T-2920**	1	GROMMET	
M	8	1	**8T-6912**	1	BOLT (M8X1.25X50-MM)	

I-REFER TO HYDRAULIC INFORMATION SYSTEM
M-METRIC PART

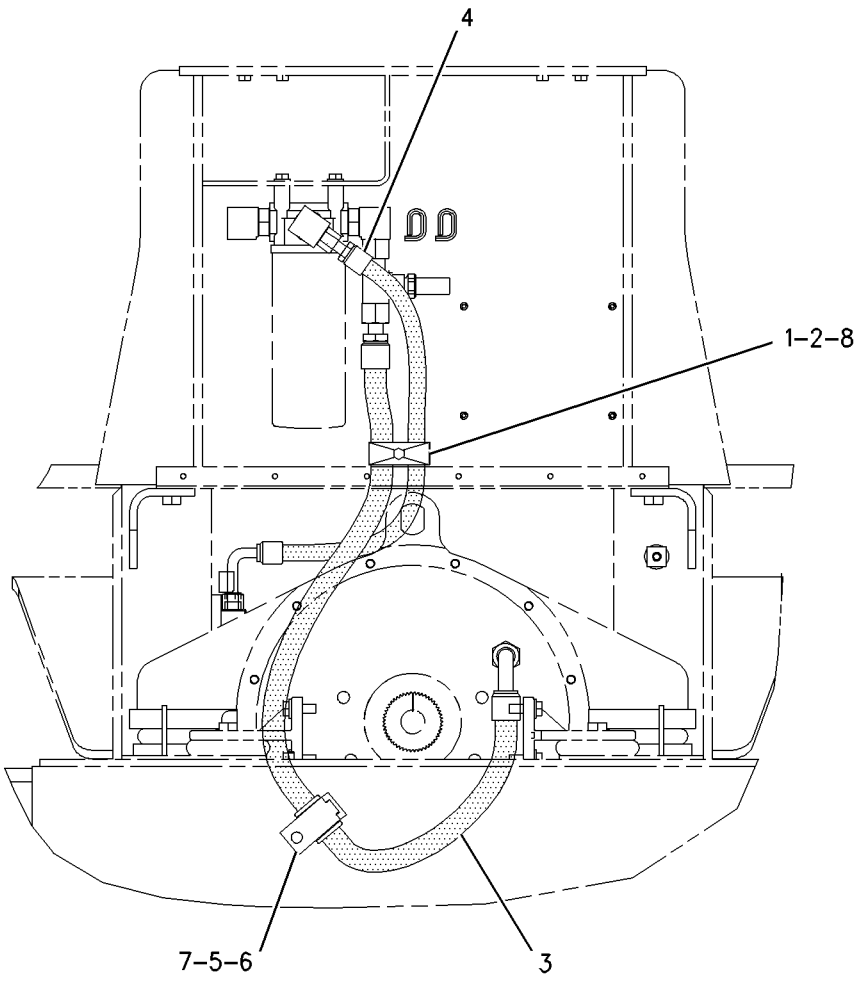

GRAPHIC #1 **<END>** g00847791

HYDRAULIC SYSTEM

193-1476 LINES GP-PRESSURE TEST

S/N: EAE1-UP

PART OF 229-5727 HYDRAULIC AR

SMCS-5057 **i02017342**

NOTE	REF NO	GRAPHIC REF	PART NUMBER	QTY	PART NAME 1 2 3 4 5 6 (PRODUCT LEVEL)	SEE PAGE
	1	1	**7X-5308**	4	CAP-DUST	
	2	1	**102-8705**	2	PLATE	
	3	1	**154-4881**	2	CLAMP-HALF	
Y	4	1	*192-3848*	1	MANIFOLD GP-HYDRAULIC (TEST)	222
I	5	1	**192-8985**	1	HOSE AS	
I	6	1	**192-8986**	1	HOSE AS	
I	7	1	**192-8987**	2	HOSE AS	
	8	1	*148-8353*	2	ELBOW AS	
					(EACH INCLUDES)	
		1	**3J-1907**	1	SEAL-O-RING	
		1	**6V-8397**	1	SEAL-O-RING	
		1	**6V-9001**	1	ELBOW	
	9	1	*148-8378*	2	ELBOW AS	
					(EACH INCLUDES)	
		1	**3J-1907**	1	SEAL-O-RING	
		1	**6V-8397**	1	SEAL-O-RING	
		1	**6V-8724**	1	ELBOW	
	10	1	*164-5567*	4	COUPLER AS-QUICK DISCONNECT	
					(EACH INCLUDES)	
		1	**3J-1907**	1	SEAL-O-RING	
		1	**6V-3965**	1	COUPLER-QUICK DISCONNECT	
M	11	1	**5C-7261**	1	NUT (M8X1.25-THD)	
	12	1	**5P-4116**	2	WASHER-HARD (8.8X20.5X2-MM THK)	
	13	1	**5P-7464**	1	CLIP (SLOT)	
	14	1	**5P-7465**	1	CLIP (TAB)	
	15	1	**7X-7729**	2	WASHER (11X25X3-MM THK)	
	16	1	**8T-2920**	1	GROMMET	
M	17	1	**8T-4185**	2	BOLT (M10X1.5X50-MM)	
M	18	1	**8T-3647**	1	BOLT (M8X1.25X80-MM)	

I-REFER TO HYDRAULIC INFORMATION SYSTEM
M-METRIC PART
Y-SEPARATE ILLUSTRATION

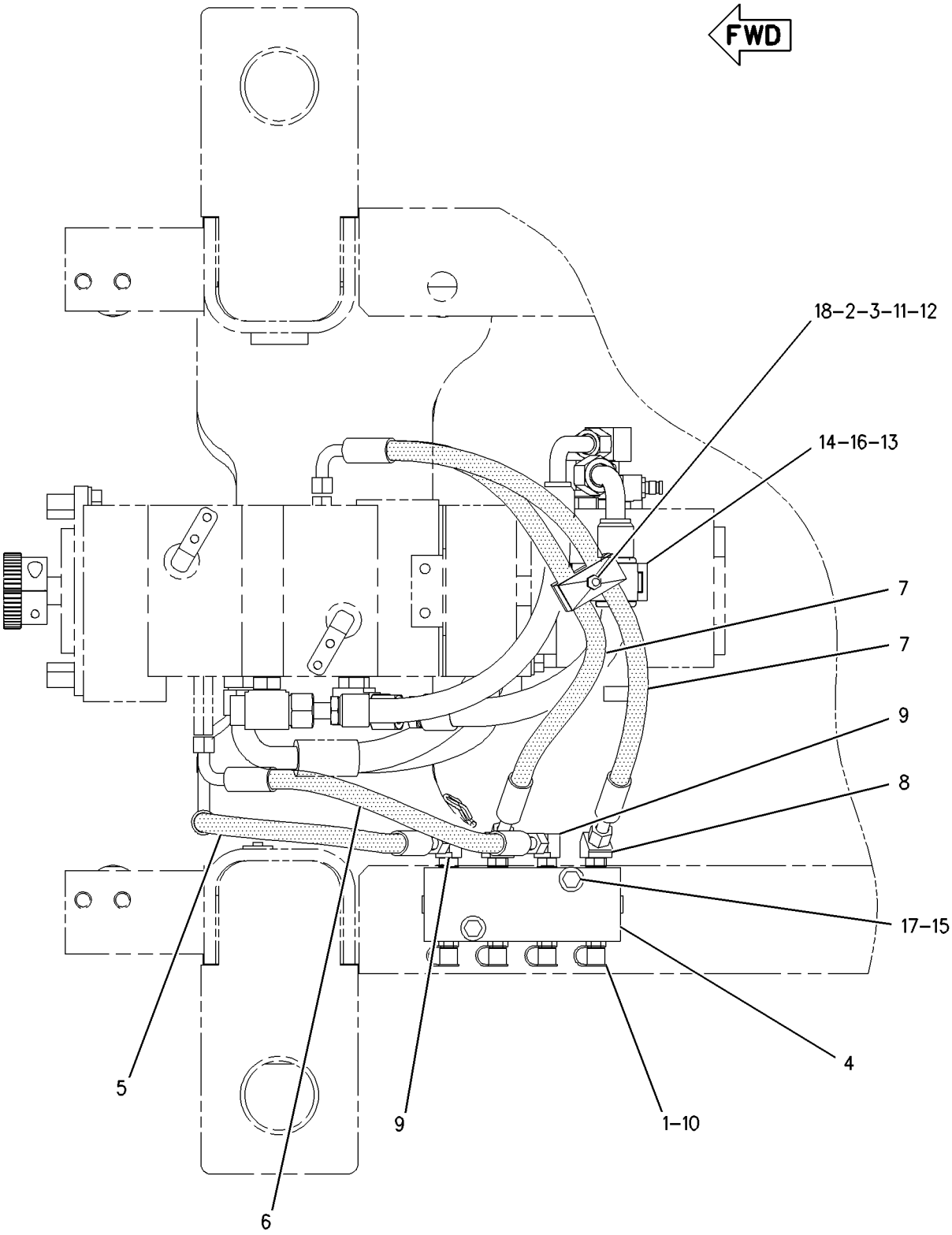

TOP VIEW

GRAPHIC #1 **<END>** g00852733

HYDRAULIC SYSTEM

192-3848 MANIFOLD GP-HYDRAULIC

S/N: EAE1-UP

PART OF 193-1476 LINES GP-PRESSURE TEST

SMCS-5264 **i01797613**

NOTE	REF NO	GRAPHIC REF	PART NUMBER	QTY	PART NAME 1 2 3 4 5 6 (PRODUCT LEVEL)	SEE PAGE
	1	1	**180-3402**	1	MANIFOLD-TEST	
	2	1	**180-3404**	2	SETSCREW	
	3	1	**3J-1907**	2	SEAL-O-RING	
	4	1	**9S-8004**	2	PLUG-O-RING	

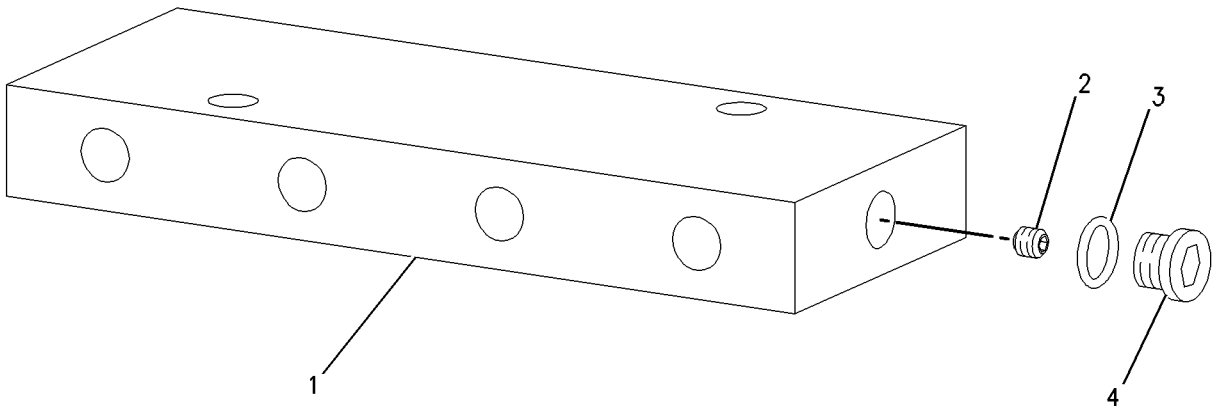

GRAPHIC #1 **<END>** g00828753

183-3233 MOTOR GP-PISTON–VIBRATORY

S/N: EAE1-UP

PART OF 186-5229 MOTOR & MTG GP-VIBRATORY

AN ATTACHMENT

SMCS-5058 **i02138934**

NOTE	REF NO	GRAPHIC REF	PART NUMBER	QTY	PART NAME 1 2 3 4 5 6 (PRODUCT LEVEL)	SEE PAGE
	1	1	**197-4123**	1	PLUG	
	2	1	**1J-9671**	1	SEAL-O-RING	
	3	1	**197-4130**	1	SPRING	
	4	1	**197-4133**	1	VALVE-RELIEF (RELIEF, CHARGE)	
JZ	5	1		1	PLUG	
M	6	1	**8T-6466**	4	BOLT (M10X1.5X60-MM)	
	7	1	**1G-5734**	2	GUIDE	
	8	1	**110-6322**	2	SPRING	
	9	1	**110-6321**	2	PLUG-SPECIAL	
J	10	1	**3J-1907**	3	SEAL-O-RING	
	11	1	**122-8717**	1	PIN	
H	12	1	**8T-5015**	1	RING-RETAINING	
H	13	1	**219-1430**	2	WASHER-SPECIAL	
H	14	1	**218-8494**	1	SPRING	
H	15	1	**218-8495**	1	RETAINER	
H	16	1	**218-8496**	9	PISTON	
	17	1	**218-8497**	1	PLATE-THRUST	
	18	1	**218-8498**	1	GASKET	
	19	1	**7X-5478**	2	PIN-SPRING	
	20	1	**3K-0360**	2	SEAL-O-RING	
	21	1	**9S-8005**	2	PLUG-O-RING	
	22	1	**2F-5721**	1	BALL BEARING	
	23	1	**219-1897**	1	SEAL-O-RING	
	24	1	**219-5990**	1	CARRIER-SEAL	
	25	1	**215-7291**	1	RING-RETAINING	
	26	1	**219-1898**	1	SEAL-LIP TYPE	
	27	1	**6H-6109**	1	RING-SNAP	
	28	1	**218-8500**	1	SHAFT	
	29	1	**2M-9780**	1	SEAL-O-RING	
	30	1	**9S-8006**	1	PLUG-O-RING	
HZ	31	1		1	CYLINDER BLOCK	
	32	1	**218-8502**	1	PLATE	
	33	1	**185-5532**	1	BEARING AS-NEEDLE	
	34	1	**1G-5735**	1	SPOOL	
	35	1	**3J-7354**	1	SEAL-O-RING	
	36	1	**9S-4182**	1	PLUG-O-RING	
J	37	1	**030-4605**	1	SEAL-O-RING	
					AVAILABLE REPAIR KIT(S):	
J			**218-8493**	1	KIT-PLUG (VIBRATORY PISTON MOTOR)	
H			**218-8501**	1	KIT-PUMP (VIBRATORY PISTON MOTOR)	

H-KIT MARKED H SERVICES PART(S) MARKED H
J-KIT MARKED J SERVICES PART(S) MARKED J
M-METRIC PART
Z-NOT SERVICED SEPARATELY

183-3233 MOTOR GP-PISTON *(contd.)* i02138934

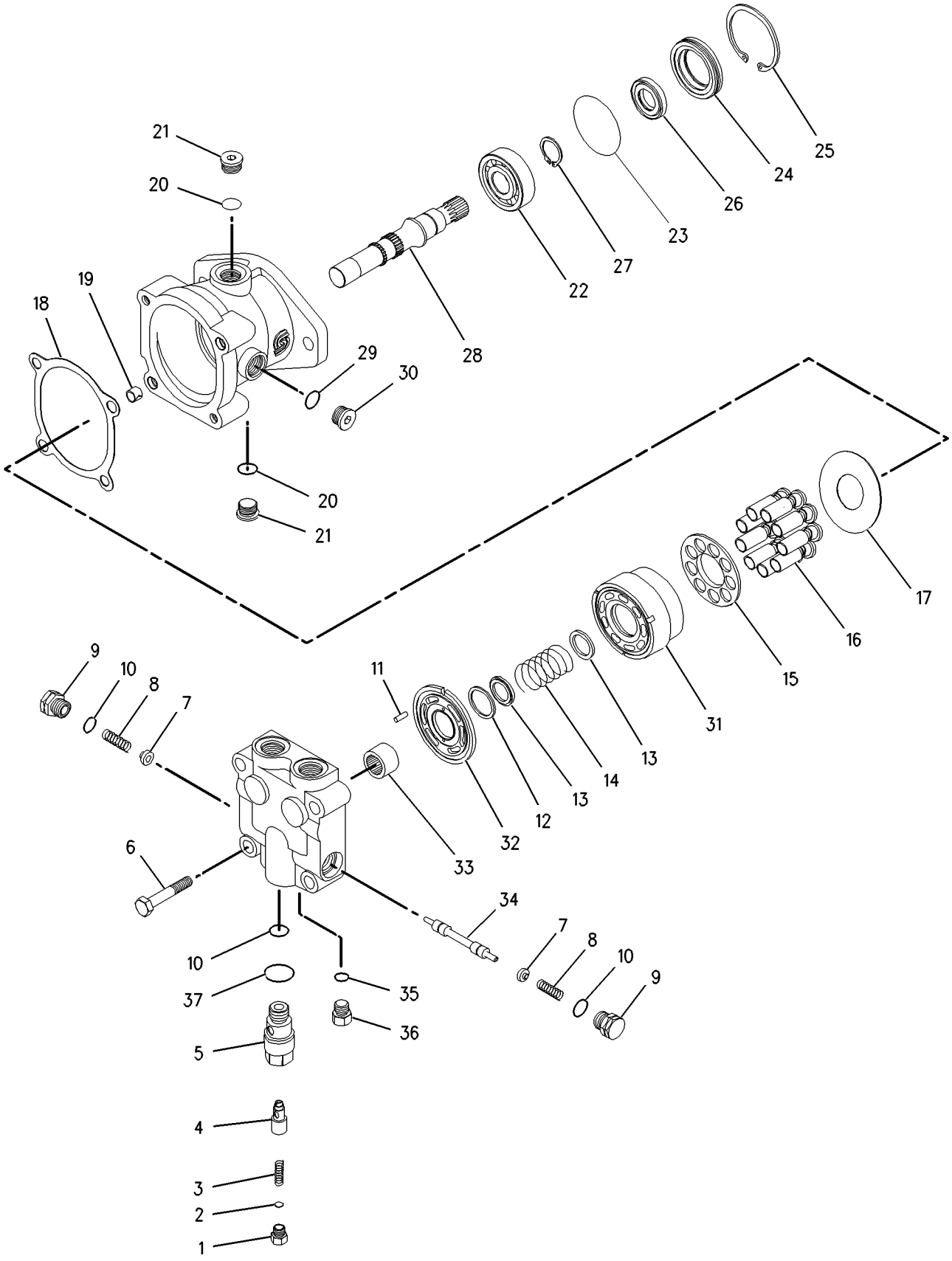

GRAPHIC #1 **<END>** g00903758

HYDRAULIC SYSTEM

183-7529 MOTOR GP-PISTON–PROPEL

S/N: EAE1-UP
PART OF 188-3118 DRIVE GP-DRUM
AN ATTACHMENT

SMCS-5058 **i02898362**

NOTE	REF NO	GRAPHIC REF	PART NUMBER	QTY	PART NAME 1 2 3 4 5 6 (PRODUCT LEVEL)	SEE PAGE
	1	1	**8J-8308**	1	PIN-ROLL	
	2	1	**077-8353**	2	PIN	
	3	1	**7X-5513**	1	PLATE	
	4	1	**119-5045**	1	GASKET-FRONT COVER	
	5	1	**111-7516**	1	SEAL-O-RING	
J	6	1	**7X-5469**	1	RING-RETAINING	
J	7	1	**7X-5470**	1	WASHER-SPECIAL (31.2X41.1X4.2-MM THK)	
J	8	1	**7X-5471**	1	SPRING	
J	9	1	**7X-5472**	1	WASHER (31.2X40.3X2.7-MM THK)	
J	10	1	**7X-5474**	3	PIN	
J	11	1	**7X-5473**	1	RETAINER	
J	12	1	**7X-5477**	1	GUIDE-RETAINER	
J	13	1	**1G-5975**	1	GUIDE	
J	14	1	**1G-5974**	7	PISTON	
	15	1	**119-5044**	1	SWASHPLATE	
	16	1	**124-8349**	2	PIN	
	17	1	**124-8347**	2	BEARING-JOURNAL	
	18	1	**137-5116**	1	COVER-FRONT	
	19	1	**7X-5520**	1	SHAFT-MOTOR	
	20	1	**1J-6474**	2	RING-RETAINING	
	21	1	**8H-9789**	1	BEARING AS-BALL	
	22	1	**2H-5549**	2	RING-RETAINING	
	23	1	**7X-5433**	1	SEAL-LIP TYPE	
	24	1	**137-5117**	1	WASHER	
	25	1	**125-4659**	8	BOLT	
	26	1	**1G-8494**	8	BOLT (1/4-20X1.125-IN)	
	27	1	**119-5051**	1	COVER	
	28	1	**119-5048**	2	SEAL-O-RING	
	29	1	**119-5046**	1	SPRING	
Z	30	1		1	STOP	
	31	1	**119-5047**	1	SPRING	
	32	1	**119-5042**	4	RING-SEAL	
	33	1	**119-5039**	1	PISTON-SERVO	
	34	1	**119-5040**	2	PISTON	
	35	1	**119-5041**	2	SLIPPER	
	36	1	**1G-7386**	1	POPPET	
	37	1	**2M-9780**	1	SEAL-O-RING	
	38	1	**119-6763**	1	PLUG-CHARGE RELIEF	
	39	1	**110-6323**	1	KIT-RELIEF SHIM (PROPEL MOTOR)	
	40	1	**1G-7385**	1	SPRING	
	41	1	**9S-8002**	2	PLUG-O-RING	
	42	1	**3J-7354**	2	SEAL-O-RING	
	43	1	**1G-5735**	1	SPOOL	
	44	1	**1G-5734**	2	GUIDE	
	45	1	**110-6322**	2	SPRING	
	46	1	**3J-1907**	3	SEAL-O-RING	
	47	1	**110-6321**	2	PLUG-SPECIAL	
	48	1	**9S-8008**	2	PLUG-O-RING	
	49	1	**3D-2824**	2	SEAL-O-RING	
	50	1	**119-5038**	1	PISTON-SERVO	
	51	1	**119-5049**	1	SPRING	
	52	1	**119-5052**	1	COVER-SERVO	
	53	1	**1G-5978**	1	STOP-SERVO	
	54	1	**9X-0812**	1	NUT (5/16-24-THD)	
	55	1	**1G-5979**	1	COVER	

183-7529 MOTOR GP-PISTON *(contd.)* i02898362

NOTE	REF NO	GRAPHIC REF	PART NUMBER	QTY	PART NAME 1 2 3 4 5 6 (PRODUCT LEVEL)	SEE PAGE
	56	1	**2P-7040**	1	RING-RETAINING	
	57	1	**184-2423**	1	PLUG-ORIFICE	
	58	1	**9S-8004**	1	PLUG-O-RING	
J	59	1	**7X-5497**	1	CYLINDER BLOCK	
	60	1	**7X-5468**	1	BEARING AS-NEEDLE	
Z	61	1		1	HOUSING	
					AVAILABLE REPAIR KIT(S):	
J			**7X-5866**	1	KIT-CYLINDER BLOCK (PROPEL MOTOR) (PROPEL PISTON MOTOR)	

J-KIT MAERKED J SERVICES PART(S) MARKED J
Z-NOT SERVICED SEPARATELY

183-7529 MOTOR GP-PISTON *(contd.)* i02898362

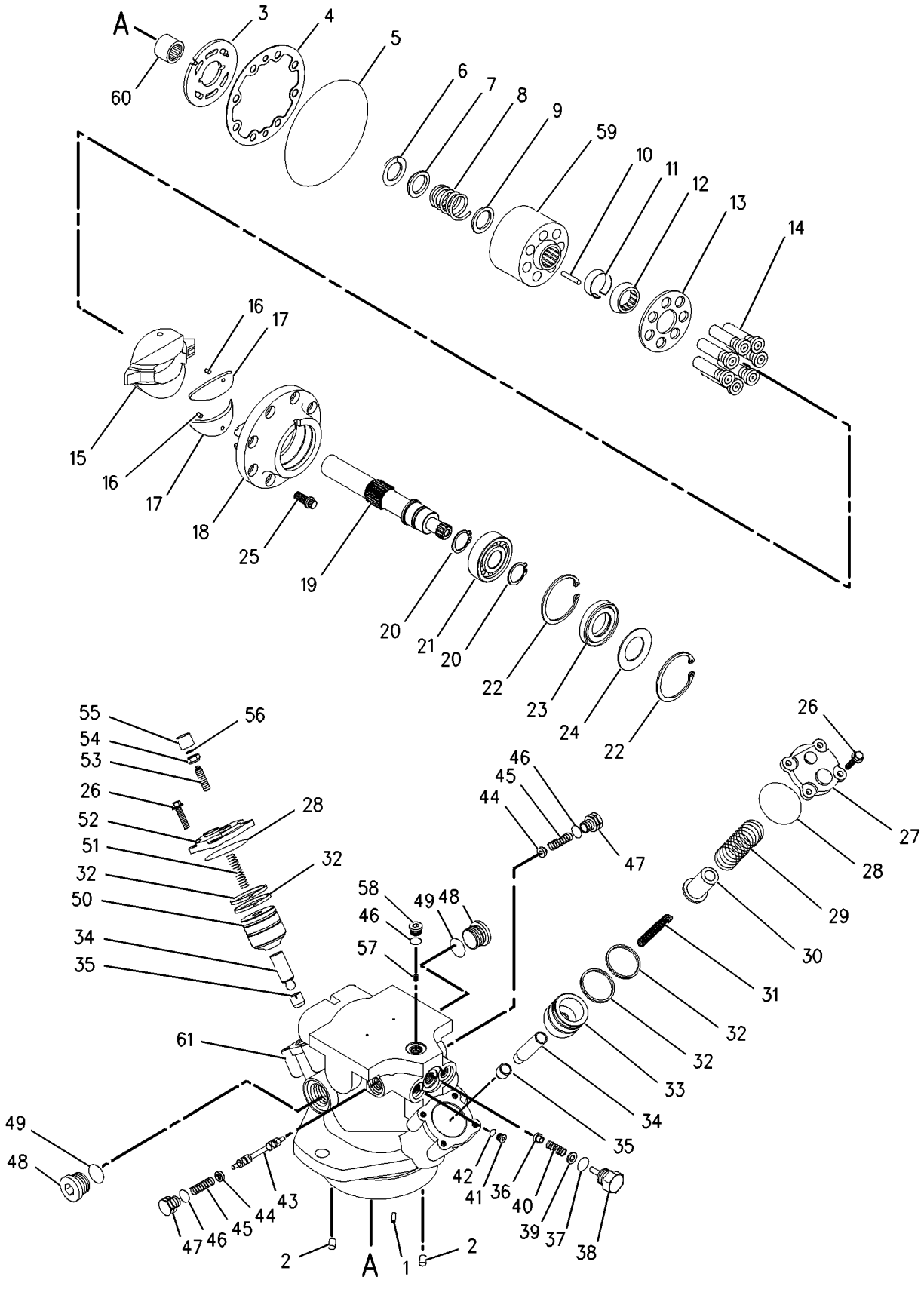

GRAPHIC #1 **<END>** g00887493

HYDRAULIC SYSTEM

183-7530 MOTOR GP-PISTON–PROPEL

S/N: EAE1-UP

PART OF 188-5121 MOTOR & MTG GP-PROPEL

SMCS-5058 **i02898363**

NOTE	REF NO	GRAPHIC REF	PART NUMBER	QTY	PART NAME 1 2 3 4 5 6 (PRODUCT LEVEL)	SEE PAGE
	1	2	**7X-5485**	1	BEARING-SLEEVE	
	2	1	**8J-8308**	1	PIN-ROLL	
J	3	1,2	**7X-5498**	2	GASKET	
	4	1	**7X-9287**	1	COVER	
	5	1	**1G-5978**	1	STOP-SERVO	
	6	1	**7X-9236**	1	RING-RETAINING	
	7	1	**1G-5979**	1	COVER	
J	8	1	**9X-0812**	1	NUT (5/16-24-THD)	
	9	1	**9S-4183**	2	PLUG-O-RING	
J	10	1	**3D-2824**	3	SEAL-O-RING	
	11	1	**9S-8008**	2	PLUG-O-RING	
	12	1	**1G-5735**	1	SPOOL	
	13	1	**1G-5734**	2	GUIDE	
	14	1	**110-6322**	2	SPRING	
J	15	1,2	**3J-1907**	4	SEAL-O-RING	
	16	1	**110-6321**	2	PLUG-SPECIAL	
	17	1	**184-2423**	1	PLUG-ORIFICE	
	18	1	**9S-8004**	1	PLUG-O-RING	
	19	1	**9S-4182**	2	PLUG-O-RING	
J	20	1	**3J-7354**	2	SEAL-O-RING	
	21	1	**1G-7386**	1	POPPET	
	22	1	**1G-7385**	1	SPRING	
	23	1	**110-6323**	1	KIT-RELIEF SHIM (PROPEL MOTOR)	
	24	1	**116-2010**	1	PLUG-RELIEF	
J	25	1	**2M-9780**	1	SEAL-O-RING	
	26	1	**216-8944**	1	KIT-PISTON (PROPEL MOTOR)	
					(INCLUDES PISTON & PLUG)	
J	27	1	**108-1753**	2	BEARING	
J	28	1	**7X-5448**	1	KIT-PISTON RING (PROPEL PISTON MOTOR)	
	29	1	**7X-5478**	1	PIN-SPRING	
J	30	1	**7X-5486**	1	GASKET	
	31	1	**7X-5468**	1	BEARING AS-NEEDLE	
	32	1	**7X-5513**	1	PLATE	
L	33	2	**7X-5469**	1	RING-RETAINING	
L	34	2	**7X-5470**	1	WASHER-SPECIAL (31.2X41.1X4.2-MM THK)	
L	35	2	**7X-5471**	1	SPRING	
L	36	2	**7X-5472**	1	WASHER (31.2X40.3X2.7-MM THK)	
L	37	2	**7X-5497**	1	CYLINDER BLOCK	
L	38	2	**7X-5474**	1	PIN	
L	39	2	**7X-5473**	1	RETAINER	
L	40	2	**1G-5975**	1	GUIDE	
L	41	2	**7X-5477**	1	GUIDE-RETAINER	
L	42	2	**1G-5974**	1	PISTON	
	43	2	**9S-4191**	1	PLUG-O-RING	
	44	2	**118-6371**	1	COVER	
J	45	2	**7X-5466**	1	NUT	
	46	2	**1G-8494**	10	BOLT (1/4-20X1.125-IN)	
	47	2	**7X-5440**	1	COVER	
	48	2	**7X-5516**	1	SPRING	
	49	2	**7X-5520**	1	SHAFT-MOTOR	
H	50	2	**7X-5484**	1	PIN	
	51	2	**124-8349**	2	PIN	
	52	2	**124-8347**	1	BEARING-JOURNAL	
	53	2	**125-4660**	1	BOLT-TORQUE HEAD	
	54	2	**1J-6474**	2	RING-RETAINING	
J	55	2	**7X-5433**	1	SEAL-LIP TYPE	

183-7530 MOTOR GP-PISTON *(contd.)* i02898363

NOTE	REF NO	GRAPHIC REF	PART NUMBER	QTY	PART NAME 1 2 3 4 5 6 (PRODUCT LEVEL)	SEE PAGE
	56	2	**2H-5549**	2	RING-RETAINING	
	57	2	**137-5117**	1	WASHER	
	58	2	**8H-9789**	1	BEARING AS-BALL	
	59	2	**125-4659**	6	BOLT	
Z	60	1		1	HOUSING	
Z	61	2		1	STOP	
Z	62	2		1	STOP	
Z	63	2		1	COVER-FRONT	
Z	64	2		1	SWASHPLATE	
H	65	2	**7M-5130**	1	PIN-SPRING	
					AVAILABLE REPAIR KIT(S):	
J			**189-9064**	1	KIT-SEAL (PROPEL MOTOR)	
L			**7X-5866**	1	KIT-CYLINDER BLOCK (PROPEL MOTOR)	
H			**7X-5514**	1	KIT-SWASHPLATE (PROPEL MOTOR)	

H-KIT MARKED H SERVICES PARTS MARKED H
J-KIT MARKED J SERVICES PARTS MARKED J
L-KIT MARKED L SERVICES PARTS MARKED L
Z-NOT SERVICED SEPARATELY

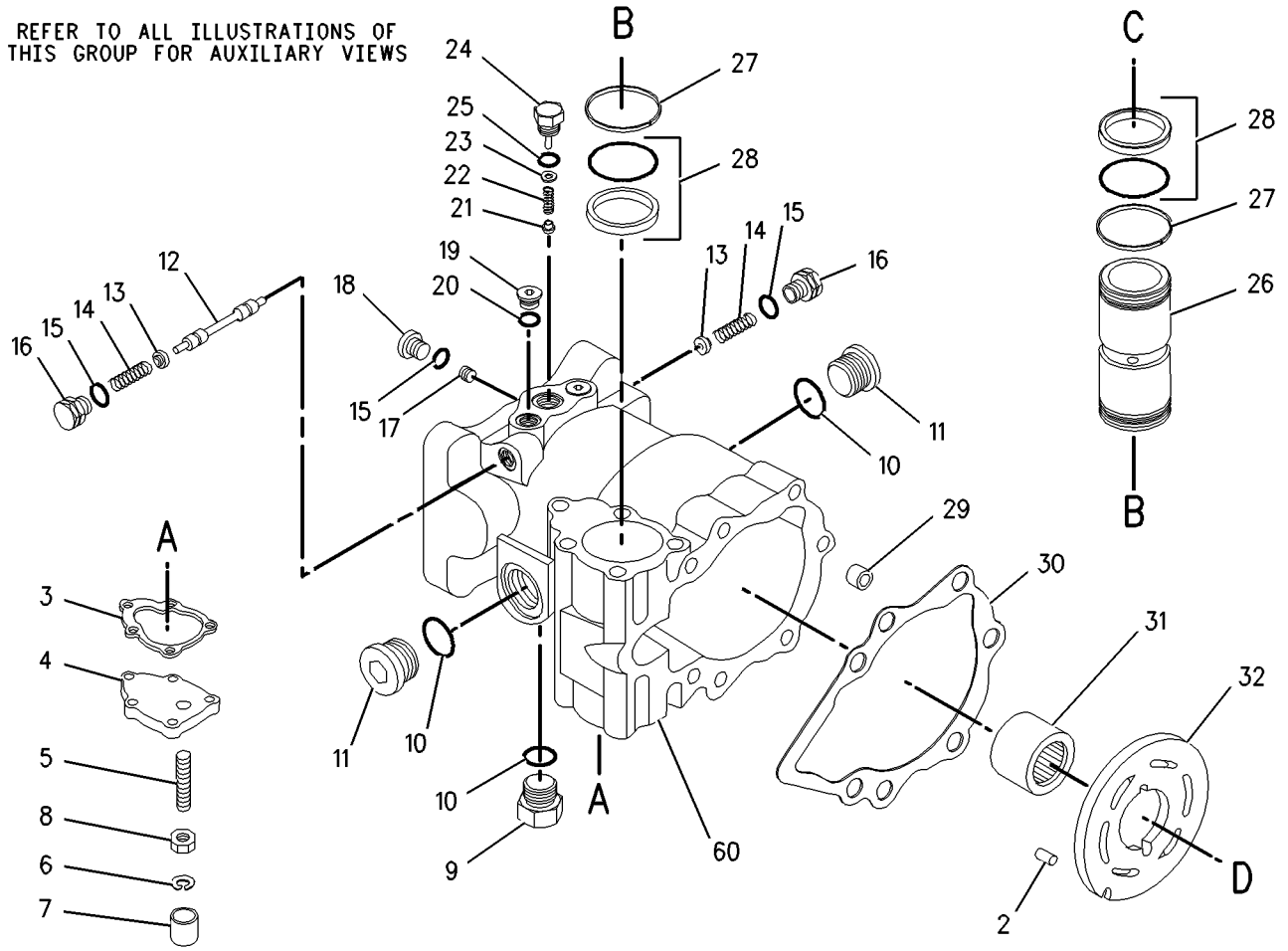

GRAPHIC #1 g00849145

183-7530 MOTOR GP-PISTON *(contd.)* i02898363

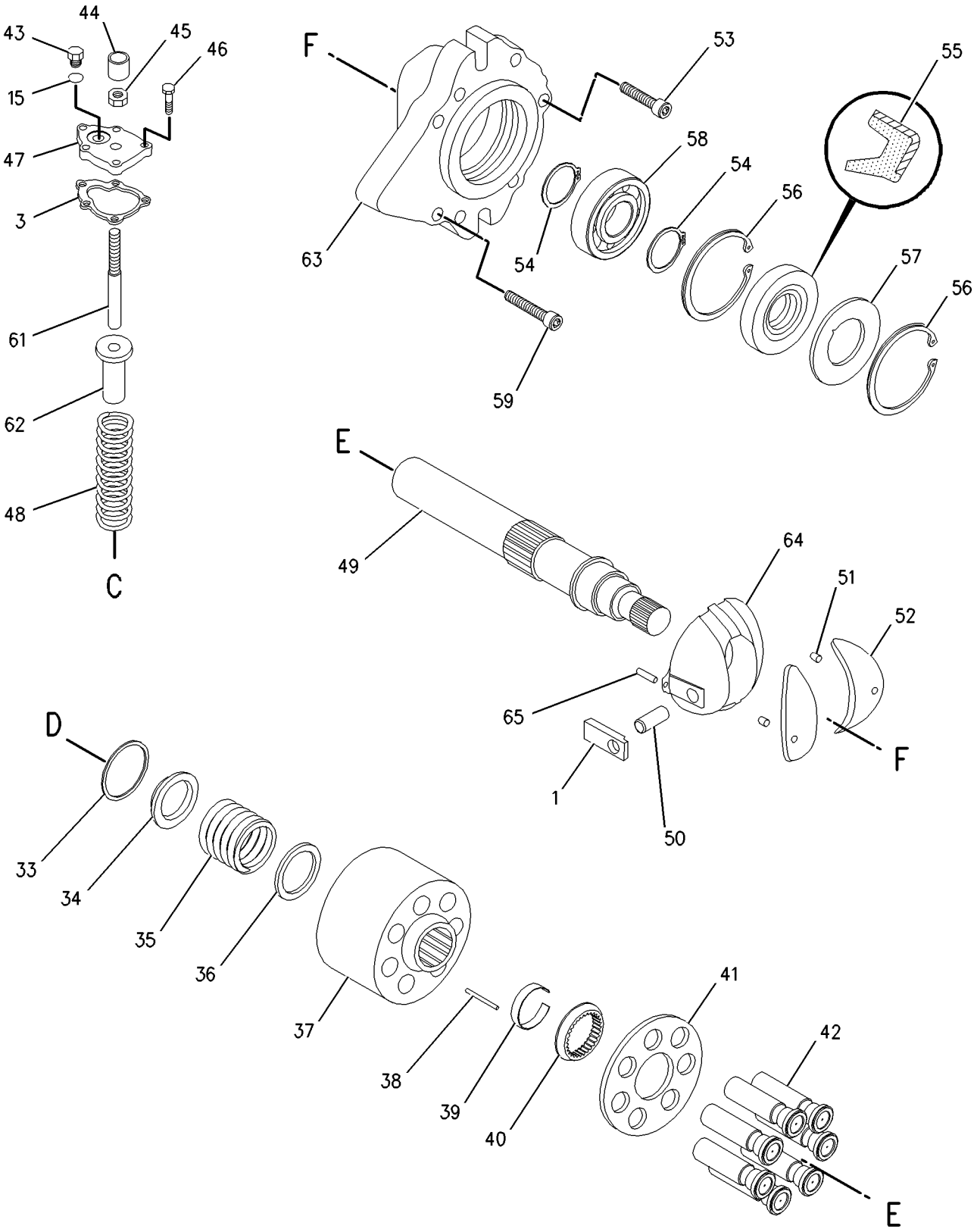

GRAPHIC #2 **<END>** g00849317

237-7998 MOTOR GP-PISTON–VIBRATORY

S/N: EAE1-UP

PART OF 237-7995 MOTOR & MTG GP-VIBRATORY

AN ATTACHMENT

SMCS-5058 **i02855336**

NOTE	REF NO	GRAPHIC REF	PART NUMBER	QTY	PART NAME 1 2 3 4 5 6 (PRODUCT LEVEL)	SEE PAGE
	1	1	**218-8498**	1	GASKET	
	2	1	**7X-5478**	2	PIN-SPRING	
	3	1	**6H-6109**	1	RING-SNAP	
	4	1	**219-1897**	1	SEAL-O-RING	
	5	1	**219-1898**	1	SEAL-LIP TYPE	
	6	1	**219-5990**	1	CARRIER-SEAL	
	7	1	**215-7291**	1	RING-RETAINING	
	8	1	**218-8501**	1	KIT-PUMP (VIBRATORY PISTON MOTOR)	
					(INCLUDES RING RETAINING,WASHER SPECIAL,SPRING,CYLINDER BLOCK,RETAINER SLIPPER & PISTON)	
	9	1	**218-8502**	1	PLATE	
	10	1	**2K-5986**	1	PIN-SPRING	
	11	1	**219-5991**	2	PLUG-SPECIAL	
	12	1	**3J-1907**	2	SEAL-O-RING	
	13	1	**197-4123**	1	PLUG	
	14	1	**1J-9671**	1	SEAL-O-RING	
	15	1	**9S-4182**	2	PLUG-O-RING	
	16	1	**3J-7354**	2	SEAL-O-RING	
	17	1	**252-6965**	1	BALL BEARING	
	18	1	**252-6964**	1	BEARING-NEEDLE	
M	19	1	**8T-6466**	4	BOLT (M10X1.5X60-MM)	
					PARTS SHOWN IN GRAPHIC(S) WITHOUT A REFERENCE NUMBER ARE NOT SERVICED SEPARATELY	

M-METRIC PART

237-7998 MOTOR GP-PISTON *(contd.)* **i02855336**

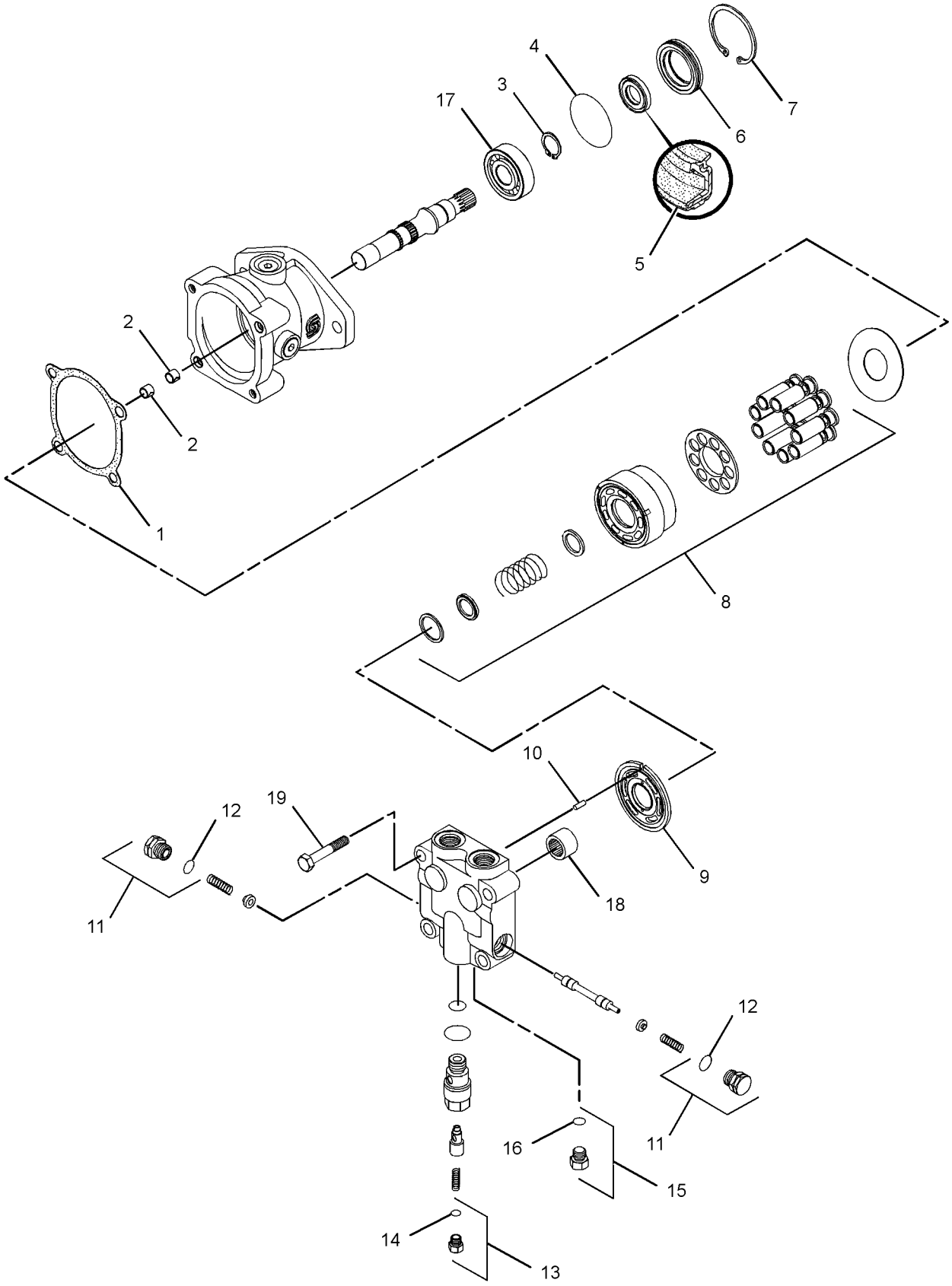

GRAPHIC #1

<END>

g01425839

HYDRAULIC SYSTEM

183-3230 PUMP GP-PISTON–PROPEL

S/N: EAE1-UP

PART OF 153-7120 PUMP & MTG GP-PROPEL, 256-6506 PUMP & MTG GP-VIBRATORY

SMCS-5070 **i02898364**

NOTE	REF NO	GRAPHIC REF	PART NUMBER	QTY	PART NAME 1 2 3 4 5 6 (PRODUCT LEVEL)	SEE PAGE
	1	1	**9S-9334**	2	PLUG	
V	2	1	**7M-8485**	2	SEAL-O-RING	
	3	1	**9S-8005**	2	PLUG-O-RING	
V	4	1	**3K-0360**	4	SEAL-O-RING	
	5	1	**169-8595**	2	PIN	
	6	1	**077-8353**	2	PIN	
	7	1	**164-6665**	2	SCREW	
V	8	1,2	**116-3871**	4	NUT-SEAL	
	9	1	**174-6117**	2	PLUG	
	10	1	**175-2544**	2	SPRING	
	11	1	**175-2545**	2	ADAPTER-SPRING	
	12	1	**165-9130**	2	SPOOL	
	13	1	**116-1330**	2	LINK	
	14	1	**116-1333**	2	SCREW-MOUNTING	
	15	1	**116-1331**	2	LINK-FEEDBACK	
	16	1	**116-1332**	2	LINKAGE-CONTROL	
	17	1	**246-3212**	2	GASKET	
V	18	1	**9X-7680**	2	SEAL-O-RING	
UW	19	1	**220-3376**	2	KIT-SWITCH (PROPEL PISTON PUMP)	
UVW	20	1,2	**3J-1907**	10	SEAL-O-RING	
	21	1,2	**165-5560**	34	SCREW (M6X1X30-MM)	
HUZ	22	1		1	SOLENOID	
U	23	1	**222-1921**	1	RING	
HU	24	1	**5P-9757**	1	SEAL-O-RING	
M	25	1	**096-4882**	2	LOCKNUT (M8X1.25-THD)	
	26	1	**7H-3937**	2	LOCKWASHER	
	27	2	**132-6697**	12	BOLT (M8X1.25X20-MM)	
V	28	2	**220-0553**	2	GASKET	
	29	2	**188-2921**	2	SWASHPLATE	
JZ	30	2		2	CAM	
	31	2	**165-9760**	2	COVER-SERVO	
	32	2	**9S-4191**	8	PLUG-O-RING	
	33	2	**165-9140**	2	COVER-SERVO	
V	34	2	**164-6956**	4	GASKET-COVER	
LNVZ	35	2		4	RING	
	36	2	**6R-1703**	1	POPPET	
	37	2	**1G-5730**	1	SPRING	
	38	2	**161-6565**	1	PLUG	
	39	2	**033-6027**	1	SEAL-O-RING	
	40	2	**6R-1702**	1	NUT-SPECIAL (7/8-14-THD)	
NZ	41	2		2	PISTON-SERVO	
PZ	42	2		2	CYLINDER BLOCK	
	43	2	**220-0555**	1	PLATE	
J	44	2	**3J-0695**	2	BEARING AS-NEEDLE	
P	45	2	**165-9765**	18	PISTON	
P	46	2	**169-8602**	2	RETAINER	
P	47	2	**169-8600**	2	GUIDE-RETAINER	
P	48	2	**165-9762**	6	PIN	
P	49	2	**1G-7363**	2	RETAINER	
P	50	2	**1G-7359**	2	WASHER (25.4X38.18X6.5-MM THK)	
P	51	2	**1G-7360**	2	SPRING	
P	52	2	**7X-5470**	2	WASHER-SPECIAL (31.2X41.1X4.2-MM THK)	
P	53	2	**7X-5469**	2	RING-RETAINING	
	54	2	**165-9766**	1	PLATE	
	55	2	**5P-2228**	4	BOLT (1/2-13X1-IN)	
V	56	2	**3K-0715**	2	SEAL-O-RING	

183-3230 PUMP GP-PISTON *(contd.)* i02898364

NOTE	REF NO	GRAPHIC REF	PART NUMBER	QTY	PART NAME 1 2 3 4 5 6 (PRODUCT LEVEL)	SEE PAGE
	57	2	**222-3043**	1	BEARING AS-BALL	
	58	2	**1G-7368**	2	BEARING AS-NEEDLE	
V	59	2	**6V-5142**	4	SEAL-O-RING	
V	60	2	**2M-9780**	6	SEAL-O-RING	
	61	2	**2R-1256**	4	RING-RETAINING	
	62	2	**9X-7409**	8	SEAL-O-RING	
V	63	2	**7X-5453**	4	RING-BACKUP	
	64	2	**220-0551**	1	COUPLING	
UZ	65	1		1	SPOOL	
V	66	2	**5E-8789**	1	SEAL-LIP TYPE	
	67	2	**171-9784**	1	SEAL-SHAFT	
	68	2	**116-3873**	1	RING-RETAINING	
	69	2	**170-4821**	1	SEAL-O-RING	
S	70	2	**1J-6474**	1	RING-RETAINING	
S	71	2	**171-9783**	1	BEARING-ROLLER	
S	72	2	**171-9797**	1	SHAFT	
TZ	73	2		4	VALVE	
	74	2	**9S-8006**	2	PLUG-O-RING	
	75	2	**220-0556**	1	SHAFT	
	76	2	**222-3086**	1	RING-RETAINING	
	77	2	**7X-9294**	1	COVER	
Z	78	1		1	HOUSING	
Z	79	2		2	COVER	
Z	80	2		4	BEARING	
TZ	81	2		4	SPRING	
HZ	82	1		1	NUT	
HUZ	83	1		1	PLUNGER	
Z	84	1		1	PIN	
WZ	85	1		1	MANIFOLD	
Z	86	2		1	ADAPTOR	
LNVZ	87	2		4	SEAL-O-RING	
UZ	88	1		1	MANIFOLD	
Z	89	2		4	VALVE	
Z	90	2		4	SCREW	
					AVAILABLE REPAIR KIT(S):	
HU			**220-3377**	1	KIT-SOLENOID VALVE (PROPEL PISTON PUMP)	
J			**165-9123**	2	KIT-BEARING	
L			**165-9138**	2	KIT-PISTON RING	
N			**165-9137**	2	KIT-SERVO PISTON (PROPEL PISTON PUMP)	
P			**165-9761**	2	KIT-PUMP ROTATING GROUP	
S			**171-9785**	1	KIT-SHAFT (PROPEL PISTON PUMP)	
T			**220-0554**	4	KIT-VALVE (PROPEL PISTON PUMP)	
V			**232-1566**	1	KIT-SEAL (PROPEL PISTON PUMP)	
U			**233-7336**	1	KIT-PUMP CONTROL (DISPLACEMENT) (PROPEL PISTON PUMP)	
W			**233-7335**	1	KIT-PUMP CONTROL (DISPLACEMENT) (PROPEL PISTON PUMP)	

H-KIT MARKED H SERVICES PART(S) MARKED H
J-KIT MARKED J SERVICES PART(S) MARKED J
L-KIT MARKED L SERVICES PART(S) MARKED L
M-METRIC PART
N-KIT MARKED N SERVICES PART(S) MARKED N
P-KIT MARKED P SERVICES PART(S) MARKED P
S-KIT MARKED S SERVICES PART(S) MARKED S
T-KIT MARKED T SERVICES PART(S) MARKED T
U-KIT MARKED U SERVICES PART(S) MARKED U
V-KIT MARKED V SERVICES PART(S) MARKED V
W-KIT MARKED W SERVICES PART(S) MARKED W
Z-NOT SERVICED SEPARATELY

183-3230 PUMP GP-PISTON *(contd.)* **i02898364**

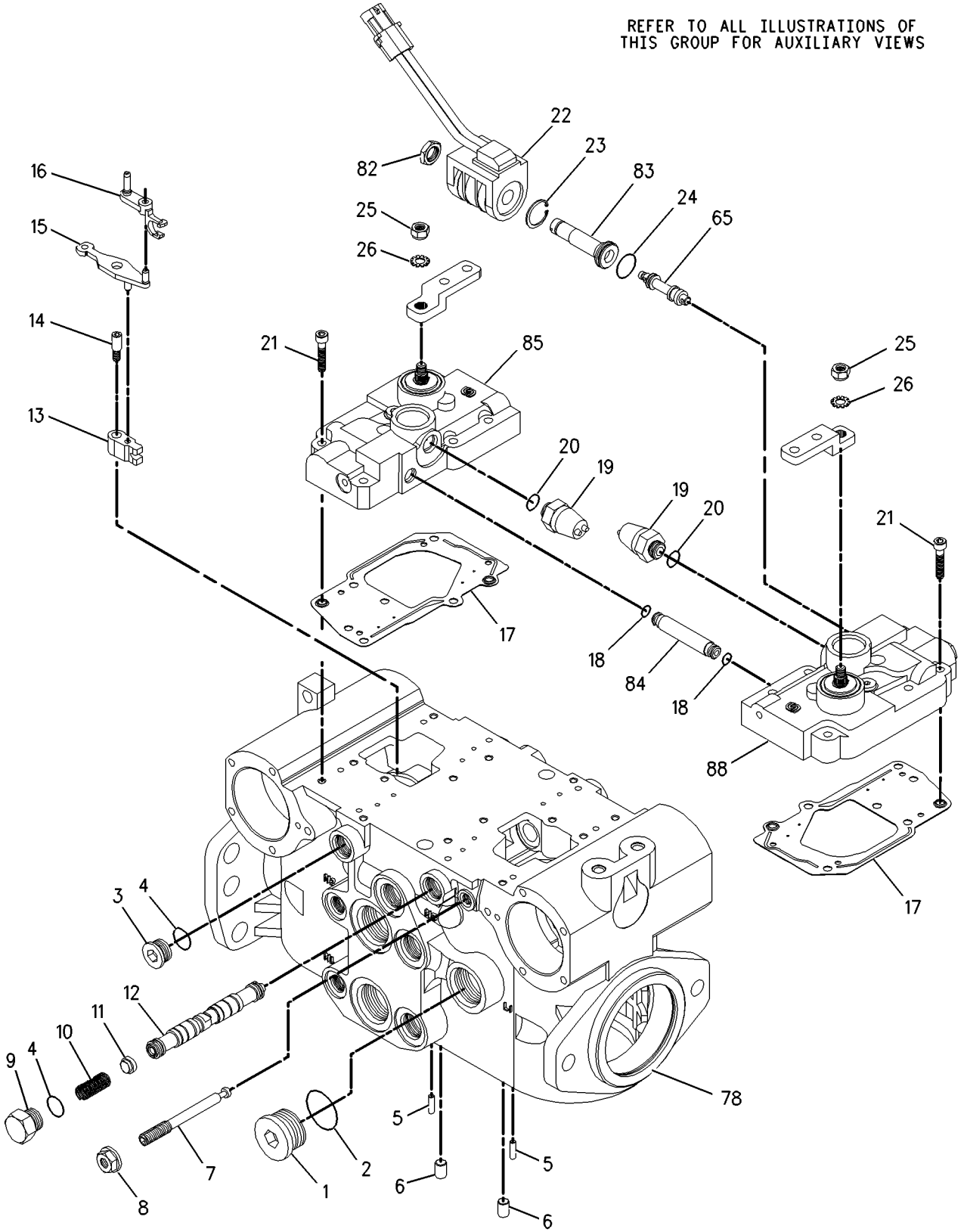

GRAPHIC #1 g00903777

183-3230 PUMP GP-PISTON *(contd.)* **i02898364**

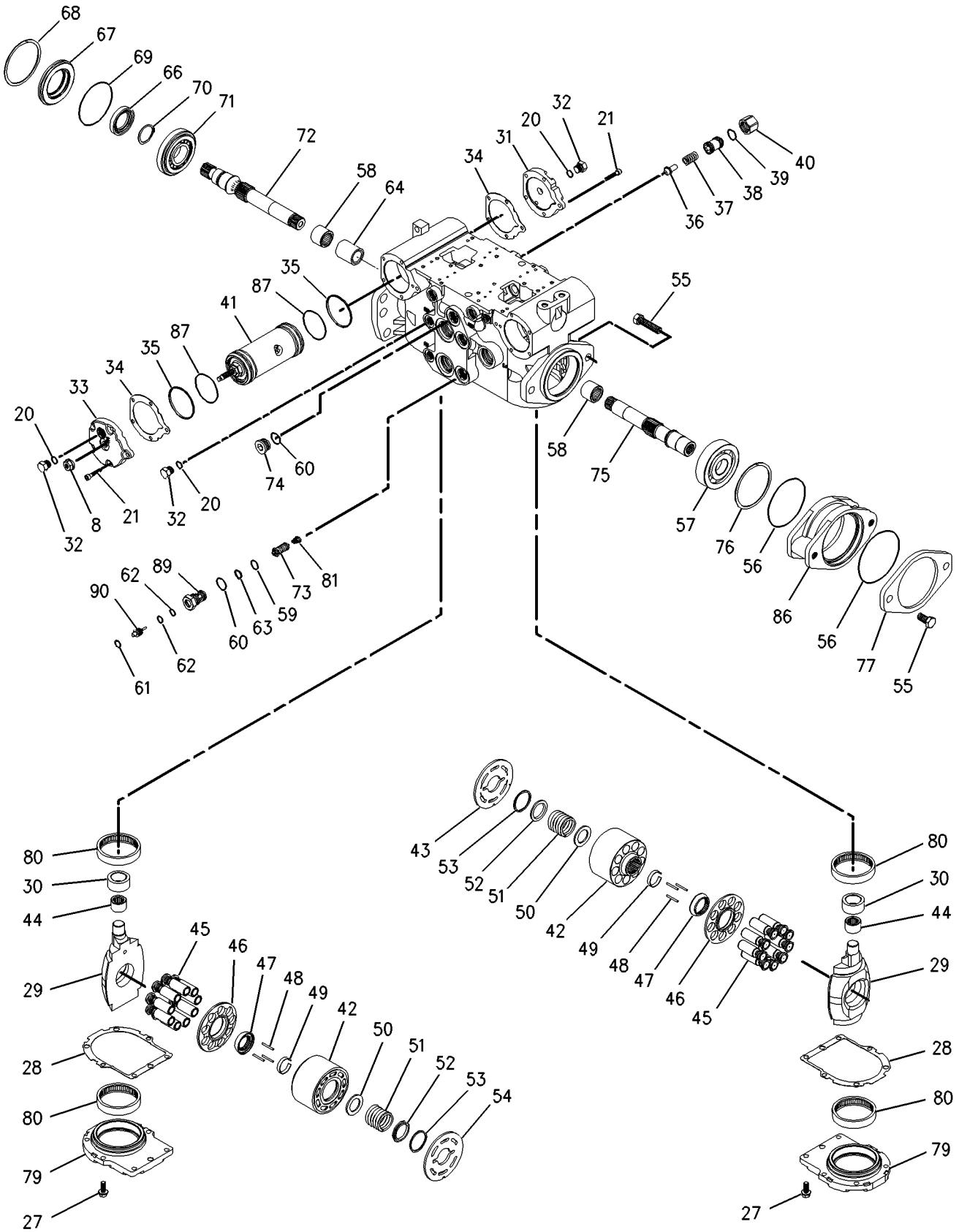

GRAPHIC #2 **<END>** g00903813

HYDRAULIC SYSTEM

183-3232 PUMP GP-PISTON–VIBRATORY

S/N: EAE1-UP

PART OF 201-7336 PUMP & MTG GP-VIBRATORY

AN ATTACHMENT

SMCS-5070 **i02138944**

NOTE	REF NO	GRAPHIC REF	PART NUMBER	QTY	PART NAME 1 2 3 4 5 6 (PRODUCT LEVEL)	SEE PAGE
Z	1	1		1	HOUSING	
S	2	1	**116-1367**	1	PLATE	
S	3	1	**116-4118**	1	RING-RETAINING	
S	4	1	**116-1444**	1	WASHER-SPECIAL	
S	5	1	**116-1446**	1	SPRING-CYLINDER	
S	6	1	**116-1447**	1	WASHER (24X37.5X2-MM THK)	
S	7	1	**116-1448**	1	CYLINDER BLOCK	
S	8	1	**116-1442**	1	PIN-RETAINING	
S	9	1	**165-9762**	3	PIN	
S	10	1	**116-1441**	1	GUIDE	
S	11	1	**116-1437**	1	RETAINER	
S	12	1	**116-1436**	9	PISTON	
	13	1	**116-3881**	3	SCREW-TORQUE LEVER	
	14	1	**165-5560**	21	SCREW (M6X1X30-MM)	
J	15	1	**177-0992**	1	GASKET	
	16	1	**116-3874**	2	BEARING AS-NEEDLE	
	17	1	**116-1336**	1	BEARING AS-NEEDLE	
	18	1	**116-1337**	1	BEARING	
	19	1	**6R-1702**	1	NUT-SPECIAL (7/8-14-THD)	
	20	1	**161-6565**	1	PLUG	
J	21	1	**033-6027**	1	SEAL-O-RING	
	22	1	**1G-5730**	1	SPRING	
	23	1	**6R-1730**	1	COVER	
T	24	1	**165-9126**	1	BEARING-ROLLER	
T	25	1	**5L-4019**	1	RING-RETAINING	
J	26	1	**1G-7357**	1	SEAL-LIP TYPE	
	27	1	**116-3873**	1	RING-RETAINING	
	28	1	**116-1335**	1	CARRIER-SHAFT	
J	29	1	**170-4821**	1	SEAL-O-RING	
TZ	30	1		1	SHAFT	
	31	1	**2S-1564**	1	BEARING-ROLLER	
HJL	32	1	**4L-7711**	2	SEAL-O-RING	
J	33	1	**116-1434**	1	GASKET	
	34	1	**165-9133**	1	ADAPTER-FILTER	
J	35	1	**3J-1907**	7	SEAL-O-RING	
	36	1	**9S-4191**	7	PLUG-O-RING	
JN	37	1	**2M-9780**	3	SEAL-O-RING	
	38	1	**9S-4190**	1	PLUG-O-RING	
	39	1	**168-8209**	2	SETSCREW	
J	40	1	**116-3883**	3	NUT-SEAL	
J	41	1	**177-0993**	2	GASKET	
HZ	42	1		1	PISTON	
HJLZ	43	1		2	RING	
	44	1	**127-9746**	1	SCREEN-FILTER (VIBRATORY PISTON PUMP)	
JN	45	1	**6V-5142**	2	SEAL-O-RING	
JN	46	1	**7X-5453**	2	RING-BACKUP	
NZ	47	1		2	PLUG	
	48	1	**165-9139**	2	VALVE GP-CHECK & RELIEF (VIBRATORY PISTON PUMP)	
	49	1	**217-3617**	2	SPRING	
	50	1	**219-3301**	1	GASKET	
P	51	1	**116-3878**	4	SCREW-TORQUE LEVER	
P	52	1	**116-3877**	3	SCREW-TORQUE LEVER	
Z	53	1		1	CONTROLLER	
	54	1	**116-1332**	1	LINKAGE-CONTROL	
	55	1	**116-1333**	1	SCREW-MOUNTING	

183-3232 PUMP GP-PISTON *(contd.)* i02138944

NOTE	REF NO	GRAPHIC REF	PART NUMBER	QTY	PART NAME 1 2 3 4 5 6 (PRODUCT LEVEL)	SEE PAGE
	56	1	**116-1331**	1	LINK-FEEDBACK	
	57	1	**116-1330**	1	LINK	
	58	1	**077-8353**	2	PIN	
	59	1	**9F-2247**	3	PLUG-PIPE	
	60	1	**169-8583**	1	KEY	
	61	1	**171-9800**	1	SPACER	
	62	1	**169-8593**	1	COVER	
	63	1	**165-9135**	1	COVER	
	64	1	**136-4354**	1	SEAL	
	65	1	**0S-0509**	2	BOLT (3/8-16X0.75-IN)	
	66	1	**1G-8672**	1	COVER	
	67	1	**116-3879**	7	SCREW-TORQUE LEVER	
J	68	1	**197-7238**	1	GASKET	
J	69	1	**217-6889**	1	SEAL-SPECIAL	
Z	70	1		1	COVER	
	71	1	**116-1429**	1	BEARING-JOURNAL	
	72	1	**169-8595**	1	PIN	
	73	1	**9S-8008**	1	PLUG-O-RING	
J	74	1	**3D-2824**	1	SEAL-O-RING	
	75	1	**165-9134**	1	SPOOL	
J	76	1	**1J-9671**	1	SEAL-O-RING	
	77	1	**127-9744**	1	PLUG	
	78	1	**127-9745**	1	PIN	
Z	79	1		2	COVER	
					AVAILABLE REPAIR KIT(S):	
H			**116-2008**	1	KIT-SERVO PISTON (VIBRATORY PISTON PUMP)	
J			**217-3618**		KIT-SEAL	
L			**7X-5448**	1	KIT-PISTON RING (VIBRATORY PISTON PUMP)	
N			**116-2005**	1	KIT-VALVE PLUG (VIBRATORY PISTON PUMP)	
P			**219-3302**	1	KIT-CONTROL (VIBRATORY PISTON PUMP)	
S			**116-1449**	1	KIT-CYLINDER	
T			**127-9747**	1	KIT-SHAFT (VIBRATORY PISTON PUMP)	

H-KIT MARKED H SERVICES PART(S) MARKED H
J-KIT MARKED J SERVICES PART(S) MARKED J
L-KIT MARKED L SERVICES PART(S) MARKED L
N-KIT MARKED N SERVICES PART(S) MARKED N
P-KIT MARKED P SERVICES PART(S) MARKED P
S-KIT MARKED S SERVICES PART(S) MARKED S
T-KIT MARKED T SERVICES PART(S) MARKED T
Z-NOT SERVICED SEPARATELY

183-3232 PUMP GP-PISTON *(contd.)* i02138944

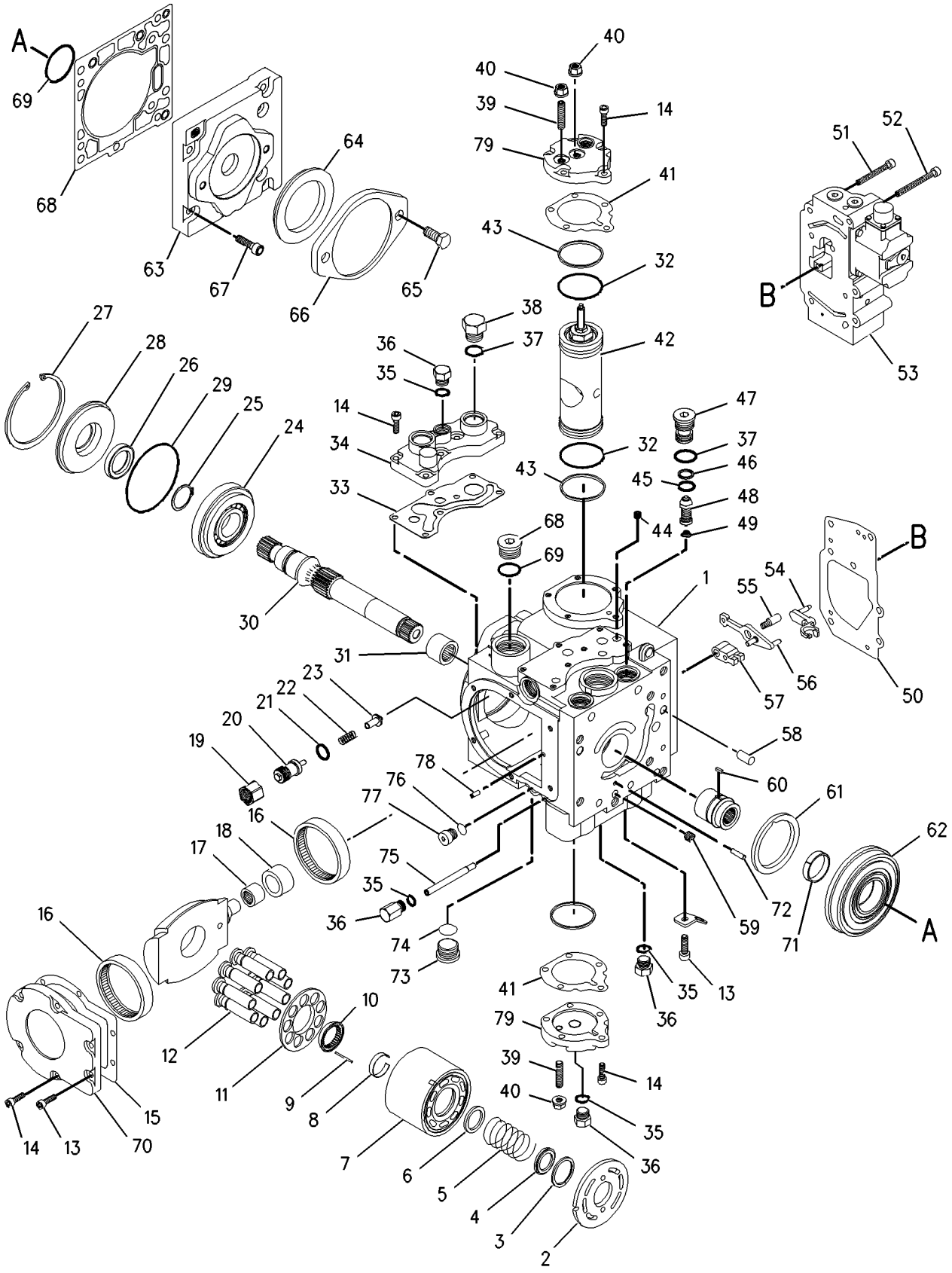

GRAPHIC #1 **<END>** g00927397

HYDRAULIC SYSTEM

241-6092 PUMP GP-PISTON–VIBRATORY

S/N: EAE1-UP
PART OF 153-7166 PUMP & MTG GP-VIBRATORY
AN ATTACHMENT
TYPE 1

SMCS-5070 **i02138948**

NOTE	REF NO	GRAPHIC REF	PART NUMBER	QTY	PART NAME 1 2 3 4 5 6 (PRODUCT LEVEL)	SEE PAGE
	1	1	**116-3873**	1	RING-RETAINING	
	2	1	**1G-7357**	1	SEAL-LIP TYPE	
JZ	3	1		1	SEAL	
	5	1	**9S-8008**	3	PLUG-O-RING	
J	6	1	**3D-2824**	3	SEAL-O-RING	
J	8	1	**116-3883**	1	NUT-SEAL	
J	9	1	**3J-1907**	7	SEAL-O-RING	
	10	1	**9S-4191**	7	PLUG-O-RING	
	11	1	**9S-4190**	1	PLUG-O-RING	
	12	1	**2M-9780**	1	SEAL-O-RING	
	13	1	**165-5560**	21	SCREW (M6X1X30-MM)	
J	14	1	**116-1434**	1	GASKET	
J	15	1	**177-0993**	2	GASKET	
	17	1	**217-3617**	2	SPRING	
	18	1	**165-9139**	2	VALVE GP-CHECK & RELIEF (VIBRATORY PUMP)	
JS	20	1	**7X-5453**	2	RING-BACKUP	
	22	1	**250-2774**	2	COIL AS	
	23	1	**5P-7684**	1	PLUG	
	24	1	**6K-6307**	1	SEAL-O-RING	
	25	1	**169-8587**	1	RING-RETAINING	
	26	1	**169-8583**	1	KEY	
	27	1	**5M-3062**	2	BOLT (3/8-16X0.75-IN)	
	28	1	**136-4354**	1	SEAL	
	29	1	**116-3879**	7	SCREW-TORQUE LEVER	
J	30	1	**231-4318**	1	GASKET	
	31	1	**116-1429**	1	BEARING-JOURNAL	
	32	1	**127-8744**	1	PLATE	
	33	1	**6R-1703**	1	POPPET	
	34	1	**1G-5730**	1	SPRING	
	35	1	**161-6565**	1	PLUG	
	36	1	**6R-1702**	1	NUT-SPECIAL (7/8-14-THD)	
	37	1	**116-1367**	1	PLATE	
	39	1	**116-3881**	2	SCREW-TORQUE LEVER	
J	40	1	**177-0992**		GASKET	
Z	41	1		1	COVER	
Z	42	1		1	COVER	
JZ	43	1		1	SEAL	
Z	44	1		1	SEAL	
Z	45	1		1	SPACER	
Z	46	1		1	COUPLING	
Z	47	1		1	NUT	
Z	48	1		1	PLUNGER	
UZ	49	1		1	SEAL-O-RING	
UZ	50	1		1	SEAL-O-RING	
UZ	51	1			SEAL	
Z	52	1		1	PIN	
Z	53	1		1	PLUG-PIPE	
Z	54	1		1	PLUG-PIPE	
Z	55	1		1	PIN	
Z	56	1		1	PIN	
Z	57	1		1	PIN	
Z	58	1		1	GASKET	
Z	59	1		1	HOUSING	
Z	60	1		1	COVER	

241-6092 PUMP GP-PISTON *(contd.)* i02138948

NOTE	REF NO	GRAPHIC REF	PART NUMBER	QTY	PART NAME 1 2 3 4 5 6 (PRODUCT LEVEL)	SEE PAGE
Z	61	1		1	SETSCREW	
Z	62	1		1	NUT-SEAL	
TZ	63	1		1	RING-RETAINING	
TZ	64	1		1	WASHER	
TZ	65	1		1	SPRING-CYLINDER	
TZ	66	1		1	WASHER	
TZ	67	1		1	CYLINDER BLOCK	
TZ	68	1		1	PIN-RETAINING	
TZ	69	1		3	PIN	
TZ	70	1		1	GUIDE	
TZ	71	1		1	RETAINER	
TZ	72	1		9	PISTON	
Z	73	1		1	SPOOL	
Z	74	1		1	COVER	
Z	75	1		1	BEARING-NEEDLE	
Z	76	1		1	SPRING	
Z	77	1		1	BEARING AS-NEEDLE	
Z	78	1		1	BEARING	
Z	79	1		1	BEARING AS-NEEDLE	
Z	80	1		1	SEAL-SHAFT	
LZ	81	1		1	RING-RETAINING	
LZ	82	1		1	BEARING-ROLLER	
LZ	83	1		1	SHAFT	
Z	84	1		1	BEARING-ROLLER	
Z	85	1		1	SCREEN-FILTER	
NPZ	86	1		1	RING	
NPZ	87	1		1	SEAL-O-RING	
PZ	88	1		1	PISTON	
NPZ	89	1		1	SEAL-O-RING	
NPZ	90	1		1	RING	
Z	91	1		1	COVER	
Z	92	1		1	SETSCREW	
Z	93	1		1	COVER	
JSZ	94	1		1	SEAL	
SZ	95	1		1	PLUG	
JZ	96	1		1	SEAL-O-RING	
JZ	97	1		1	SEAL-O-RING	
JSZ	98	1		1	SEAL-O-RING	
					AVAILABLE REPAIR KIT(S):	
J			**217-3618**	1	KIT-SEAL	
L			**127-9747**	1	KIT-SHAFT (VIBRATORY PISTON PUMP)	
N			**7X-5448**	1	KIT-PISTON RING (VIBRATORY PUMP)	
P			**116-2008**	2	KIT-SERVO PISTON (VIBRATORY PISTON PUMP)	
S			**116-2005**	2	KIT-VALVE PLUG (VIBRATORY PUMP)	
T			**116-1449**	1	KIT-CYLINDER	
U			**250-2775**	2	KIT-SEAL (VIBRATORY PISTON PUMP)	

J-KIT MARKED J SERVICES PARTS MARKED J
L-KIT MARKED L SERVICES PARTS MARKED L
N-KIT MARKED N SERVICES PARTS MARKED N
P-KIT MARKED P SERVICES PARTS MARKED P
S-KIT MARKED S SERVICES PARTS MARKED S
T-KIT MARKED T SERVICES PARTS MARKED T
U-KIT MARKED U SERVICES PARTS MARKED U
Z-NOT SERVICED SEPARATELY

241-6092 PUMP GP-PISTON *(contd.)* i02138948

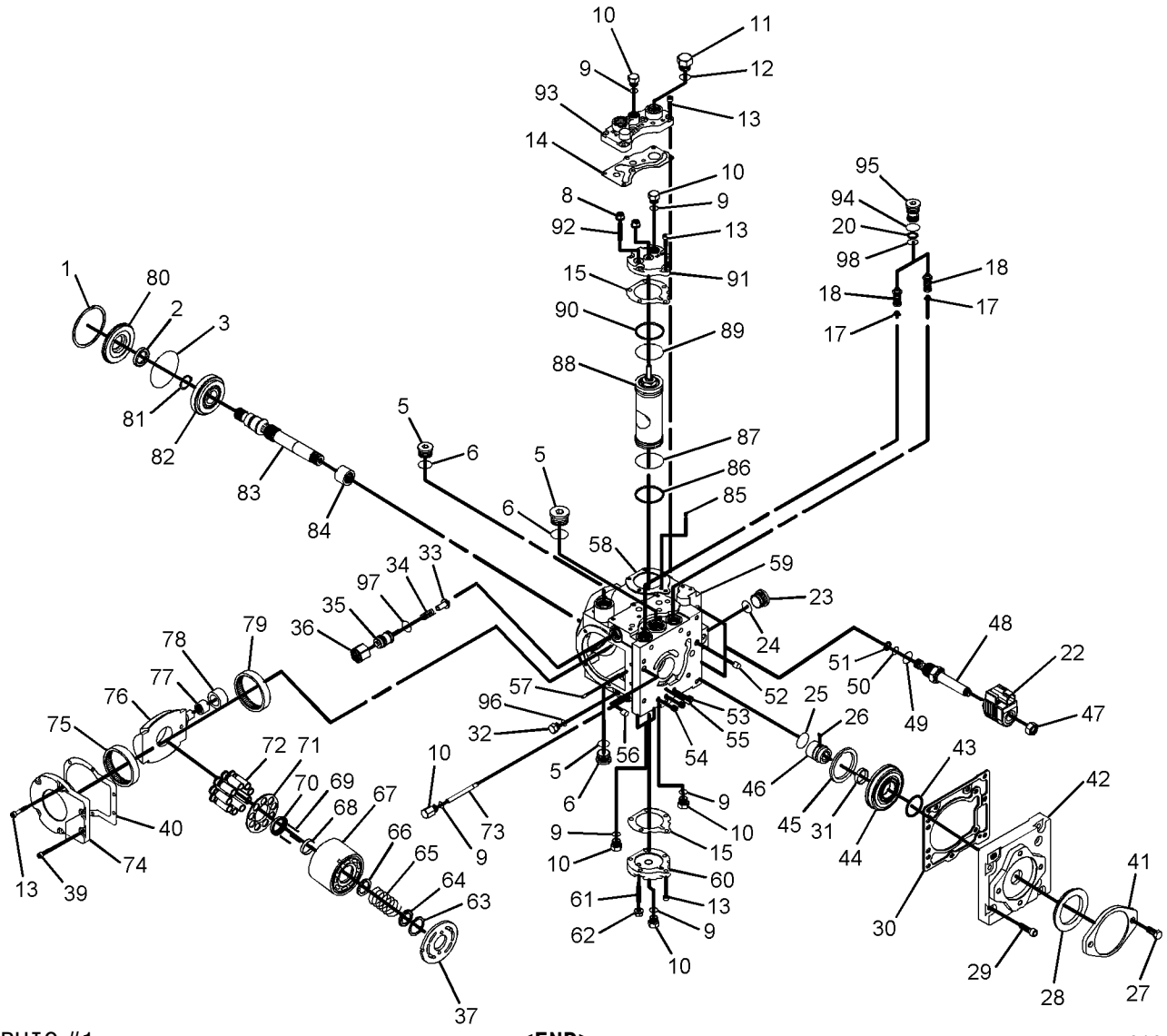

GRAPHIC #1 **<END>** g01055828

HYDRAULIC SYSTEM

241-6092 PUMP GP-PISTON–VIBRATORY

S/N: EAE1-UP
PART OF 153-7166 PUMP & MTG GP-VIBRATORY
AN ATTACHMENT
TYPE 2

SMCS-5070 **i02677621**

NOTE	REF NO	GRAPHIC REF	PART NUMBER	QTY	PART NAME 1 2 3 4 5 6 (PRODUCT LEVEL)	SEE PAGE
	1	1	**116-3873**	1	RING-RETAINING	
	2	1	**1G-7357**	1	SEAL-LIP TYPE	
J	3	1	**217-3618**	1	KIT-SEAL (PISTON PUMP)	
	4	1	**127-9747**	1	KIT-SHAFT (VIBRATORY PISTON PUMP)	
					(INCLUDES RETAINING RING, BEARING & SHAFT)	
	5	1	**9S-8008**	3	PLUG-O-RING	
J	6	1	**3D-2824**	3	SEAL-O-RING	
J	7	1	**7X-5448**	1	KIT-PISTON RING (PISTON PUMP)	
					(INCLUDES O-RING & RING PISTON)	
J	8	1	**116-3883**	1	NUT-SEAL	
J	9	1	**3J-1907**	7	SEAL-O-RING	
	10	1	**9S-4191**	7	PLUG-O-RING	
	11	1	**9S-4190**	1	PLUG-O-RING	
	12	1	**2M-9780**	1	SEAL-O-RING	
	13	1	**165-5560**	21	SCREW (M6X1X30-MM)	
J	14	1	**116-1434**	1	GASKET	
J	15	1	**177-0993**	2	GASKET	
	16	1	**116-2008**	1	KIT-SERVO PISTON (VIBRATORY PISTON PUMP)	
					(INCLUDES GASKET, COVER & BOLT)	
	17	1	**217-3617**	2	SPRING	
	18	1	**165-9139**	2	VALVE GP-CHECK & RELIEF (VIBRATORY PUMP)	
	19	1	**116-2005**	2	KIT-VALVE PLUG (VIBRATORY PISTON PUMP)	
J	20	1	**7X-5453**	2	RING-BACKUP	
	23	1	**5P-7684**	1	PLUG	
	24	1	**6K-6307**	1	SEAL-O-RING	
	25	1	**169-8587**	1	RING-RETAINING	
	26	1	**169-8583**	1	KEY	
	27	1	**5M-3062**	2	BOLT (3/8-16X0.75-IN)	
	28	1	**136-4354**	1	SEAL	
	29	1	**116-3879**	7	SCREW-TORQUE LEVER	
J	30	1	**231-4318**	1	GASKET	
	31	1	**116-1429**	1	BEARING-JOURNAL	
	32	1	**127-8744**	1	PLATE	
	33	1	**6R-1703**	1	POPPET	
	34	1	**1G-5730**	1	SPRING	
	35	1	**161-6565**	1	PLUG	
	36	1	**6R-1702**	1	NUT-SPECIAL (7/8-14-THD)	
	37	1	**116-1367**	1	PLATE	
	38	1	**116-1449**	1	KIT-CYLINDER (PISTON PUMP)	
	39	1	**116-3881**	2	SCREW-TORQUE LEVER	
J	40	1	**177-0992**	1	GASKET	
C	41	1	**297-5579**	2	VALVE GP-SOLENOID (PISTON PUMP)	
					(EACH INCLUDES)	
	41A	1	**250-2775**	1	KIT-SEAL (VIBRATORY PISTON PUMP)	
					(INCLUDES SEAL-O-RING)	
	41B	1	**250-2774**	1	COIL AS	
	41C	1	**225-6982**	1	NUT (1/2-20-THD)	
					PARTS SHOWN IN GRAPHIC(S) WITHOUT A REFERENCE NUMBER ARE NOT SERVICED SEPARATELY	

C-CHANGE FROM PREVIOUS TYPE
J-KIT MARKED J SERVICES PARTS MARKED J

241-6092 PUMP GP-PISTON *(contd.)* i02677621

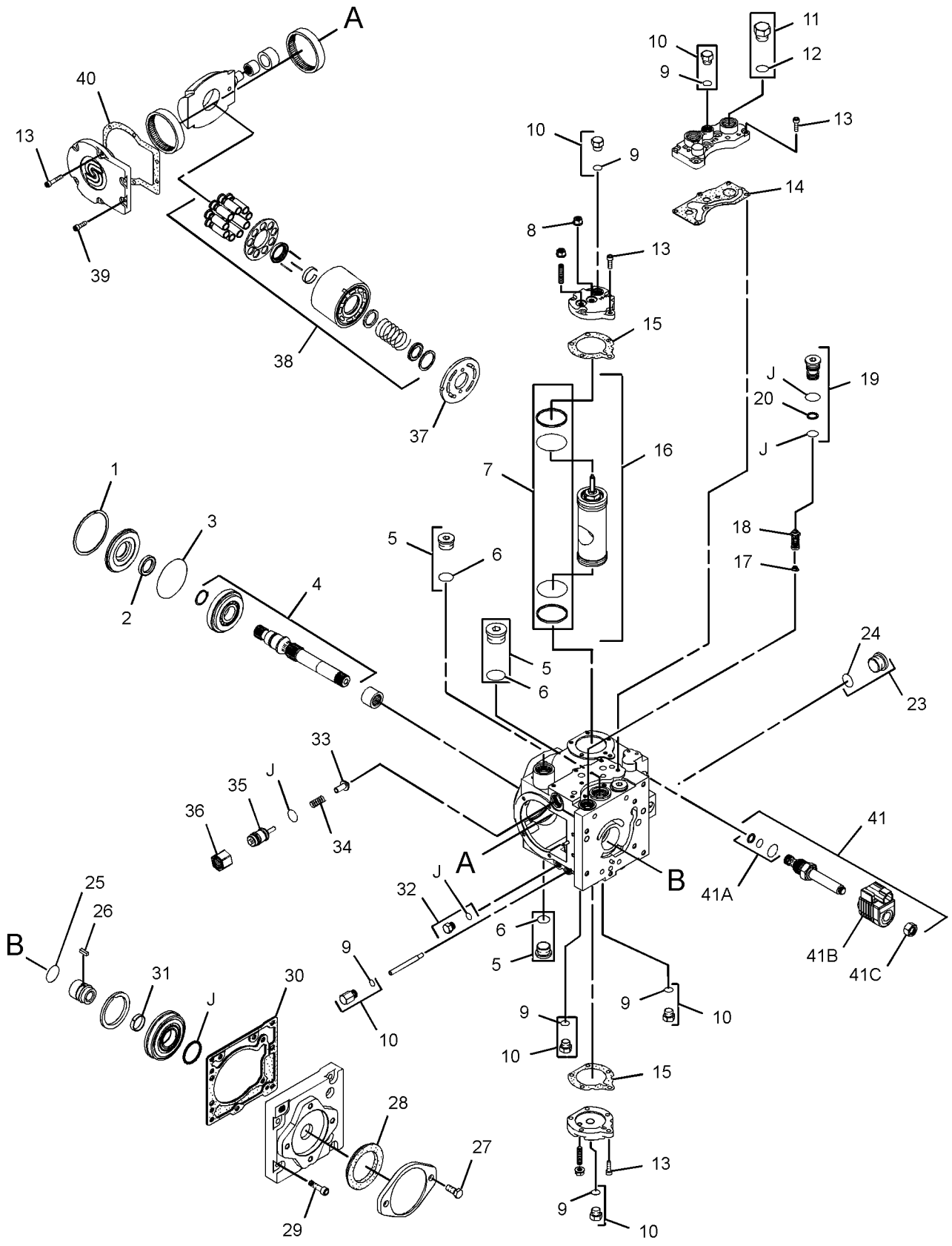

GRAPHIC #1 **<END>** g01405987

187-1453 TANK & MTG GP-HYDRAULIC

S/N: EAE1-UP

PART OF 229-5409 CHASSIS AR

SMCS-5056 **i02894875**

NOTE	REF NO	GRAPHIC REF	PART NUMBER	QTY	PART NAME 1 2 3 4 5 6 (PRODUCT LEVEL)	SEE PAGE
	1	1	**5P-4961**	2	CLAMP-HOSE	
	2	1	**7K-1181**	2	STRAP-CABLE	
	3	1	**145-3846**	1	INSERT-NYLON	
	4	1	**183-3873**	1	BREATHER AS (HYDRAULIC TANK)	
Y	5	1	*187-1456*	1	TANK GP-HYDRAULIC	247
	6	1	**320-7642**	1	PLATE-MOUNTING	
	7	1	**127-5588**	1	COUPLING-REDUCER	
	8	1	**213-8655**	1	STRAP AS	
	9	1	**177-2215**	2	STRAP-DUAL CLAMP	
	10	1	**8T-4896**	1	WASHER-HARD (10.2X18.5X2.5-MM THK)	
	11	1	**8T-4121**	1	WASHER-HARD (11X21X2.5-MM THK)	
M	12	1	**8T-4133**	1	NUT (M10X1.5-THD)	
M	13	1	**8T-4195**	1	BOLT (M10X1.5X30-MM)	
M	14	1	**8T-4196**	6	BOLT (M10X1.5X35-MM)	
M	15	1	**9X-2040**	4	SCREW-TRUSS HEAD (M10X1.5X25-MM)	
E	16	1	**5P-1442**		HOSE (173-CM)	
	17	1	**7X-7729**	10	WASHER (11X25X3-MM THK)	
	18	1	**6V-8801**	1	NUT (3/8-16-THD)	

E-ORDER BY THE CENTIMETER
M-METRIC PART
Y-SEPARATE ILLUSTRATION

187-1453 **TANK & MTG GP-HYDRAULIC** *(contd.)* **i02894875**

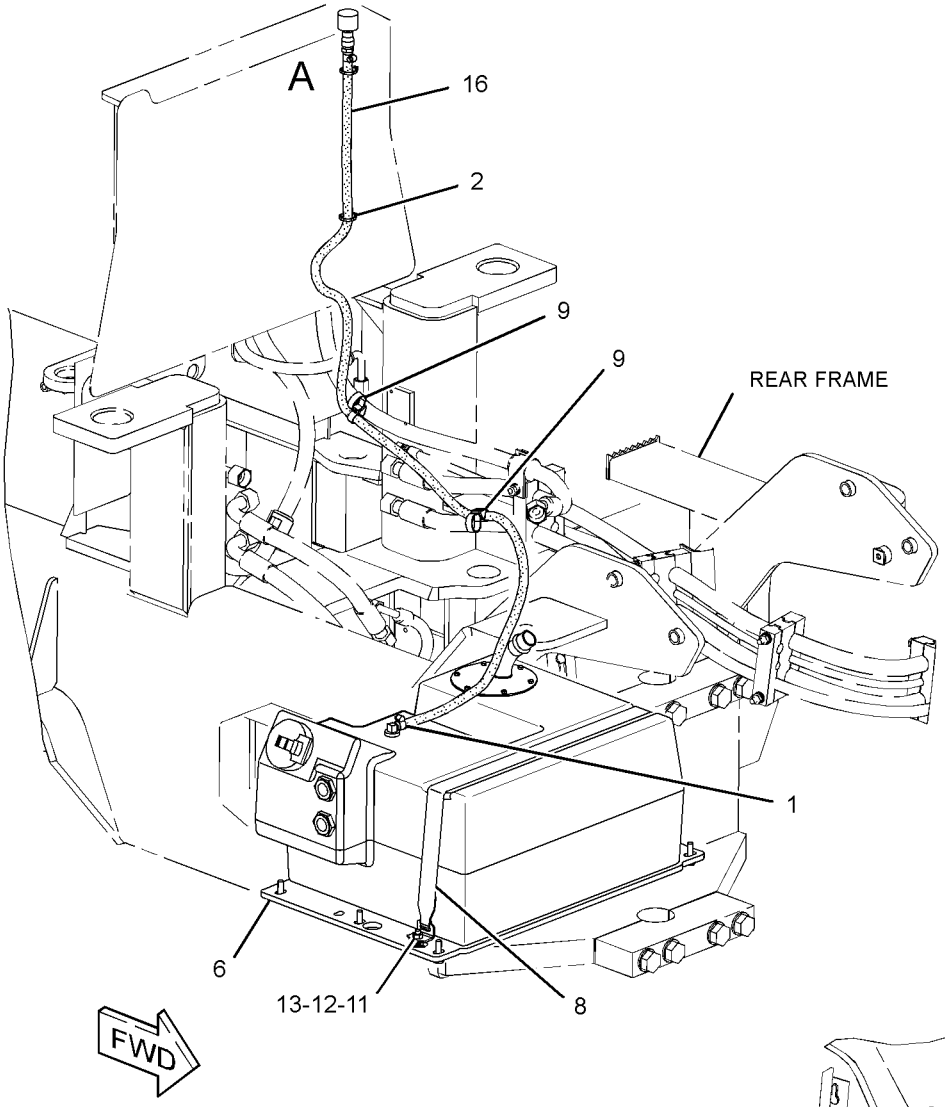

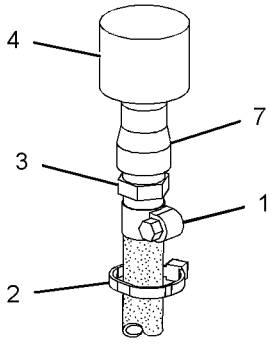

VIEW OF AREA A

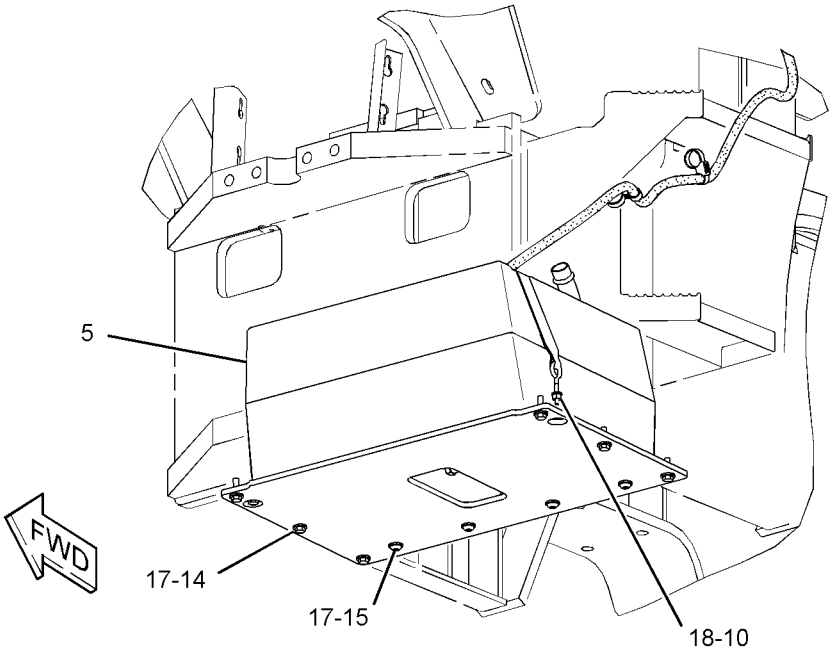

GRAPHIC #1 **<END>** g01443409

187-1456 TANK GP-HYDRAULIC

S/N: EAE1-UP

PART OF 187-1453 TANK & MTG GP-HYDRAULIC

SMCS-5056 **i02233849**

NOTE	REF NO	GRAPHIC REF	PART NUMBER	QTY	PART NAME 1 2 3 4 5 6 (PRODUCT LEVEL)	SEE PAGE
	1	1	**1G-7663**	1	STRAINER-SUCTION (HYDRAULIC TANK)	
		1	**030-4606**	1	SEAL-O-RING	
	2	1	**6W-5698**	1	GROMMET	
	3	1	**9Y-9236**	2	GAUGE-SIGHT	
	4	1	**110-0514**	1	SWITCH AS-TEMPERATURE (HYDRAULIC OIL)	
		1	**3E-3370**	1	RECEPTACLE AS-CONNECTOR (3-PIN)	
					(INCLUDES RECEPTACLE AS & WEDGE)	
		1	**186-3735**	3	PIN-CONNECTOR (16-GA TO 18-GA)	
	5	1	**132-3056**	1	SEAL-O-RING	
	6	1	**142-8928**	1	ELBOW	
	7	1	**142-8937**	1	CAP AS-FILLER (HYDRAULIC TANK)	
	8	1	*165-2273*	1	VALVE AS-SHUTOFF (HYDRAULIC TANK DRAIN)	
		1	**6V-7238**	1	VALVE-SHUTOFF (HYDRAULIC TANK)	
		1	**3K-0360**	1	SEAL-O-RING	
	9	1	**187-1445**	1	TANK-HYDRAULIC	
	10	1	**190-3602**	1	TUBE AS	
	11	1	*148-8340*	2	CONNECTOR AS	
					(EACH INCLUDES)	
		1	**6V-8639**	1	CONNECTOR	
		1	**3K-0360**	1	SEAL-O-RING	
		1	**6V-8398**	1	SEAL-O-RING	
	12	1	*148-8347*	1	ELBOW AS	
		1	**6V-9007**	1	ELBOW	
		1	**3D-2824**	1	SEAL-O-RING	
		1	**6V-9746**	1	SEAL-O-RING	
	13	1	*148-8354*	1	ELBOW AS	
		1	**6V-9002**	1	ELBOW	
		1	**3K-0360**	1	SEAL-O-RING	
		1	**6V-8398**	1	SEAL-O-RING	
	14	1	*148-8408*	1	PLUG AS	
		1	**9S-4183**	1	PLUG-O-RING	
		1	**3D-2824**	1	SEAL-O-RING	
	15	1	**2S-4078**	1	SEAL-O-RING	
	16	1	**3K-0360**	1	SEAL-O-RING	
	17	1	**7M-8485**	2	SEAL-O-RING	
M	18	1	**8T-0288**	6	BOLT (M5X0.8X12-MM)	

M-METRIC PART

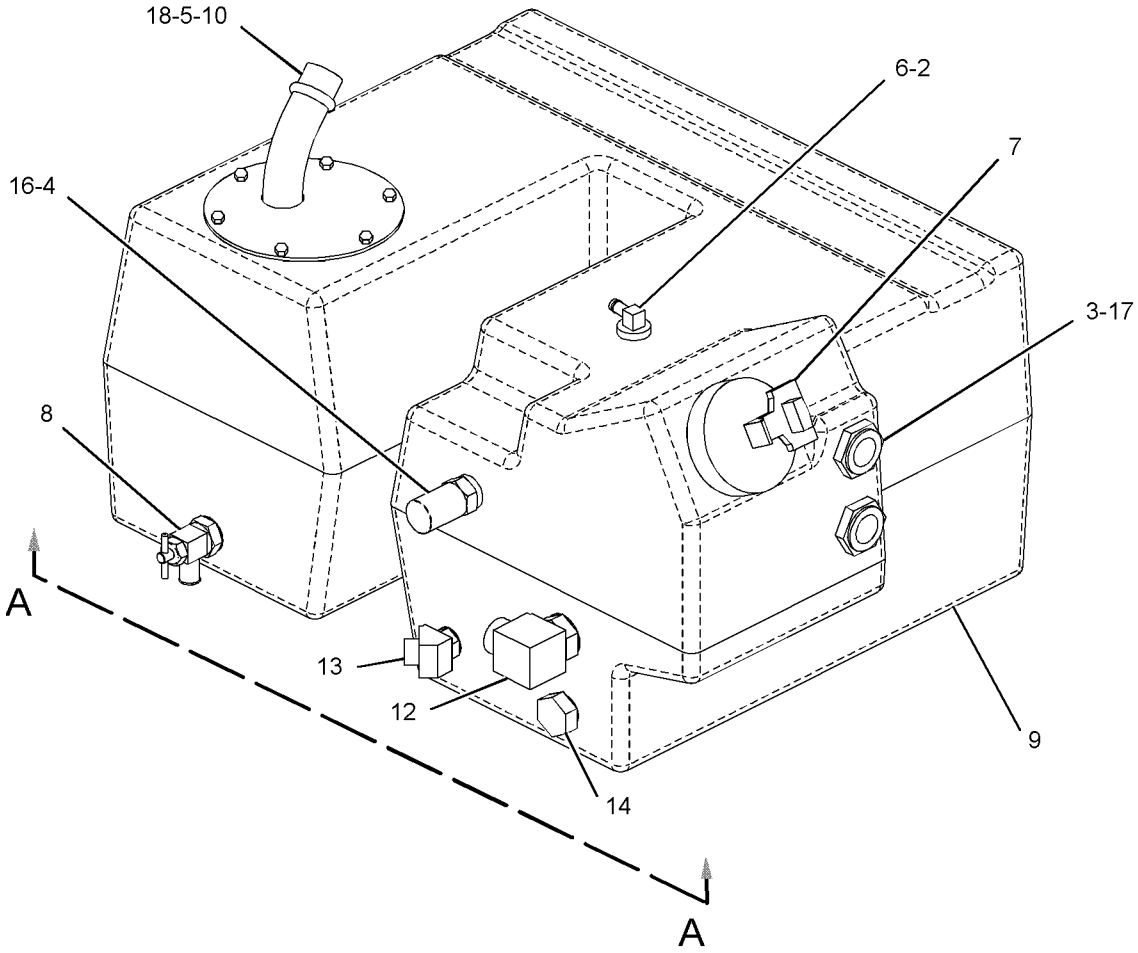

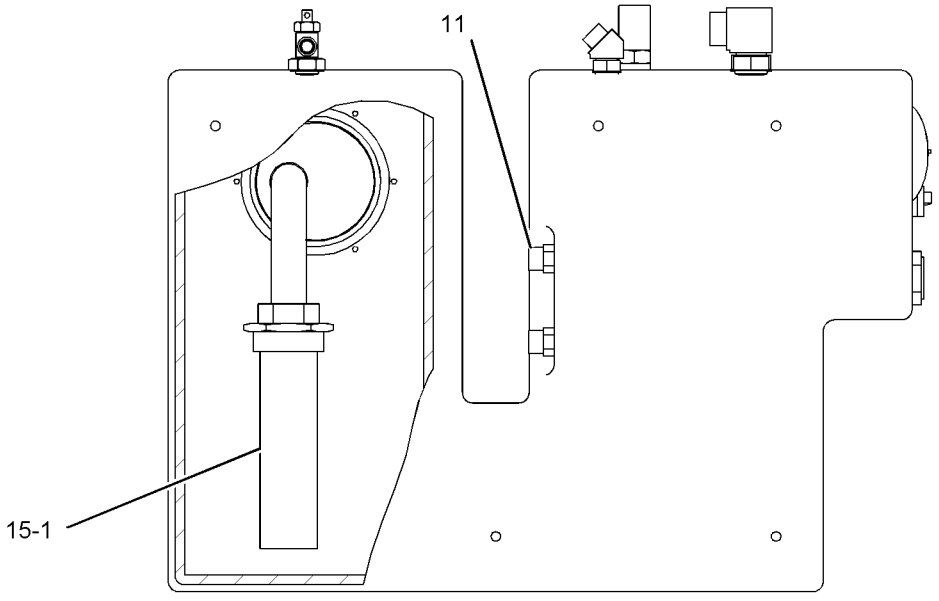

VIEW A-A

<END>

GRAPHIC #1

g01097669

HYDRAULIC SYSTEM

153-7149 VALVE & MTG GP-CONTROL

S/N: EAE1-UP

PART OF 153-5009 HYDRAULIC AR-AUXILIARY

SMCS-5051 **i02135892**

NOTE	REF NO	GRAPHIC REF	PART NUMBER	QTY	PART NAME 1 2 3 4 5 6 (PRODUCT LEVEL)	SEE PAGE
	1	1	**102-1384**	1	TEE-FACE SEAL	
	2	1	**111-8275**	1	VALVE-BYPASS (OIL COOLER)	
	3	1	*148-8360*	1	ELBOW AS	
		1	**6V-9182**	1	ELBOW	
		1	**6V-9746**	1	SEAL-O-RING	
		1	**7M-8485**	1	SEAL-O-RING	
	4	1	*150-4049*	1	ELBOW AS	
		1	**6V-9746**	1	SEAL-O-RING	
		1	**7M-8485**	1	SEAL-O-RING	
		1	**8T-4149**	1	ELBOW	
	5	1	**6V-9746**	2	SEAL-O-RING	
	6	1	**7M-8485**	1	SEAL-O-RING	
M	7	1	**8T-4177**	2	BOLT (M8X1.25X90-MM)	
	8	1	**8T-4224**	2	WASHER-HARD (8.8X16X2-MM THK)	

M-METRIC PART

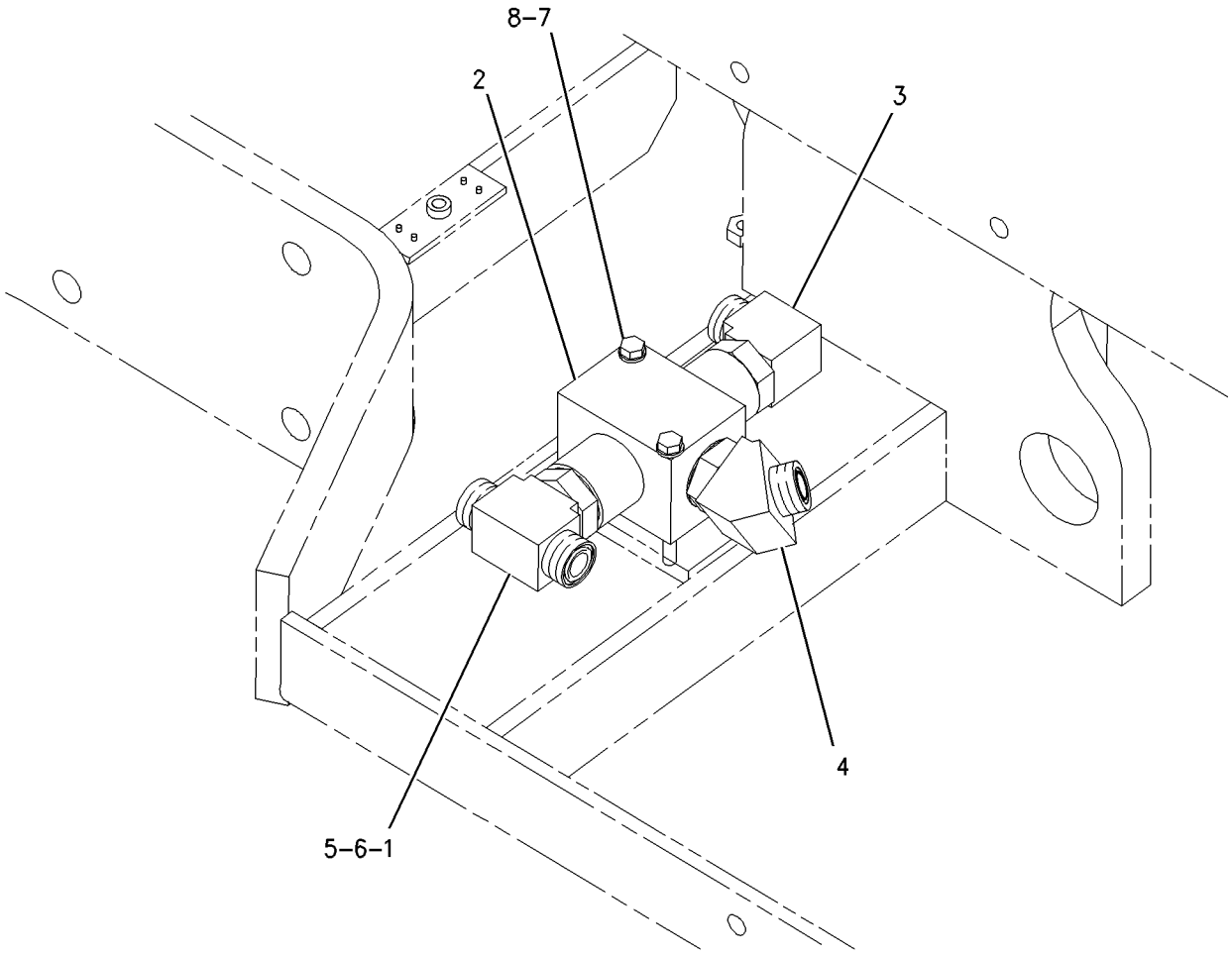

GRAPHIC #1 **<END>** g00828532

HYDRAULIC SYSTEM

231-2922 VALVE & MTG GP-CONTROL

S/N: EAE1-UP

PART OF 229-5727 HYDRAULIC AR

SMCS-5051 **i02016731**

NOTE	REF NO	GRAPHIC REF	PART NUMBER	QTY	PART NAME 1 2 3 4 5 6 (PRODUCT LEVEL)	SEE PAGE
Y	1	1	**220-4133**	1	VALVE GP-CONTROL (SHIFT)	251
	2	1	*148-8305*	1	ADAPTER AS	
		1	**3J-1907**	1	SEAL-O-RING	
		1	**5P-9617**	1	ADAPTER	
	3	1	*148-8307*	1	ADAPTER AS	
		1	**3J-1907**	1	SEAL-O-RING	
		1	**5P-8874**	1	ADAPTER	
	4	1	*148-8378*	1	ELBOW AS	
		1	**3J-1907**	1	SEAL-O-RING	
		1	**6V-8397**	1	SEAL-O-RING	
		1	**6V-8724**	1	ELBOW	
	5	1	*148-8432*	1	TEE AS	
		1	**3J-7354**	1	SEAL-O-RING	
		1	**4J-5477**	2	SEAL-O-RING	
		1	**6V-8773**	1	TEE-FACE SEAL	
	6	1	*148-8436*	1	TEE AS	
		1	**3K-0360**	1	SEAL-O-RING	
		1	**6V-8398**	2	SEAL-O-RING	
		1	**6V-8775**	1	TEE-FACE SEAL	
M	7	1	**9X-2480**	2	BOLT (M6X1X45-MM)	
	8	1	**9X-8256**	2	WASHER (6.6X12X2-MM THK)	

M-METRIC PART
Y-SEPARATE ILLUSTRATION

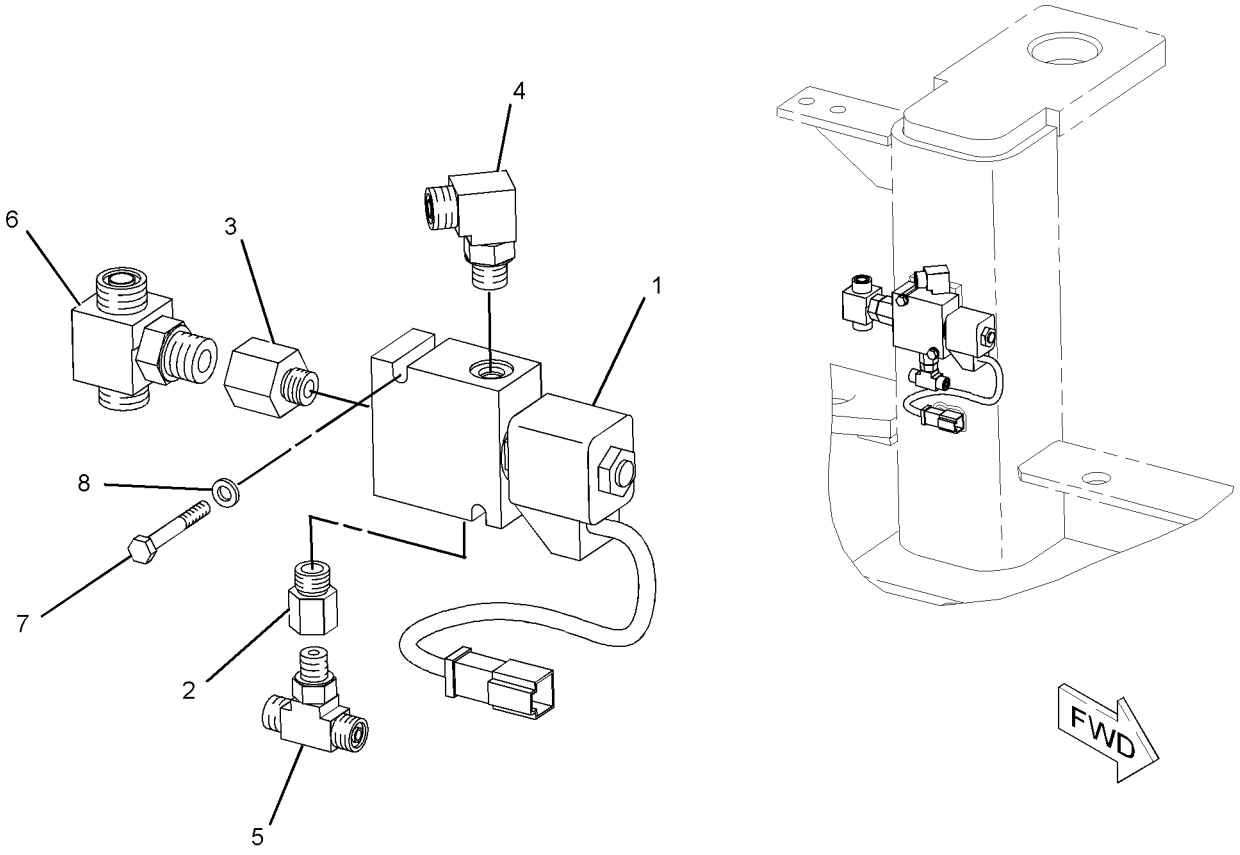

GRAPHIC #1 **<END>** g01035961

HYDRAULIC SYSTEM

220-4133 VALVE GP-CONTROL

S/N: EAE1-UP

PART OF 231-2922 VALVE & MTG GP-CONTROL

SMCS-5051 **i02898367**

NOTE	REF NO	GRAPHIC REF	PART NUMBER	QTY	PART NAME 1 2 3 4 5 6 (PRODUCT LEVEL)	SEE PAGE
	1	1	**220-4165**	1	VALVE GP-SOLENOID (SHIFT)	
		1	**223-3384**	1	COIL AS (24-VOLT)	
		1	**220-4166**	1	CARTRIDGE AS-VALVE	
		1	**163-6513**	1	KIT-SEAL (SHIFT SOLENOID VALVE)	
	2	1	**3K-0360**	1	SEAL-O-RING	

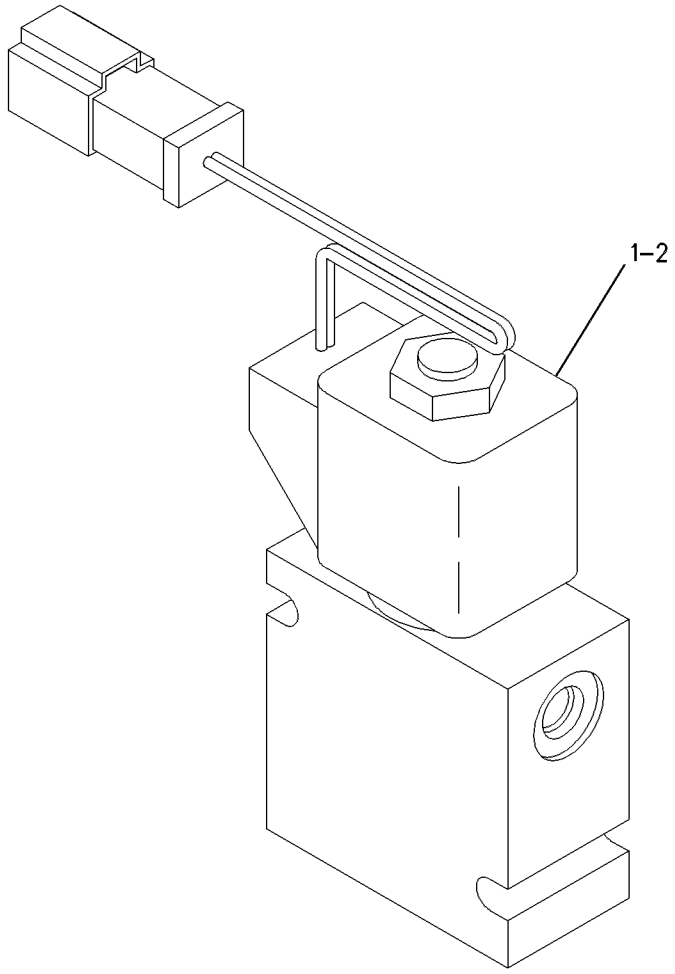

GRAPHIC #1 **<END>** g00639529

VIBRATORY SYSTEM

186-5231 DRIVE GP-SUPPORT & VIBRATORY

S/N: EAE1-UP

PART OF 186-5232, 188-3117 DRUM GP-DRIVE & VIBRATORY

AN ATTACHMENT

SMCS-6605, 6606 **i01833648**

NOTE	REF NO	GRAPHIC REF	PART NUMBER	QTY	PART NAME 1 2 3 4 5 6 (PRODUCT LEVEL)	SEE PAGE
	1	1	**227-0172**	6	MOUNT	
	2	1	**150-3614**	1	PLATE	
	3	1	**152-5506**	1	BRACKET	
	4	1	**156-0949**	2	BRACKET	
Y	5	1	**159-9405**	1	SUPPORT GP-VIBRATORY	273
	6	1	**185-3203**	1	SHAFT AS	
Y	7	1	*186-5229*	1	MOTOR & MTG GP-VIBRATORY	260
	8	1	**061-9458**	1	SEAL-O-RING	
	9	1	**5P-5397**	1	SEAL-O-RING	
M	10	1	**7X-2553**	8	BOLT (M16X2X40-MM)	
M	11	1	**7X-2562**	6	BOLT (M20X2.5X45-MM)	
	12	1	**8T-4994**	20	WASHER-HARD (20X36.5X3.5-MM THK)	
M	13	1	**8T-5460**	12	BOLT (M20X2.5X40-MM)	
M	14	1	**8T-6430**	2	BOLT (M20X2.5X50-MM)	
	15	1	**9X-8257**	8	WASHER (17.5X30X3.5-MM THK)	

M-METRIC PART
Y-SEPARATE ILLUSTRATION

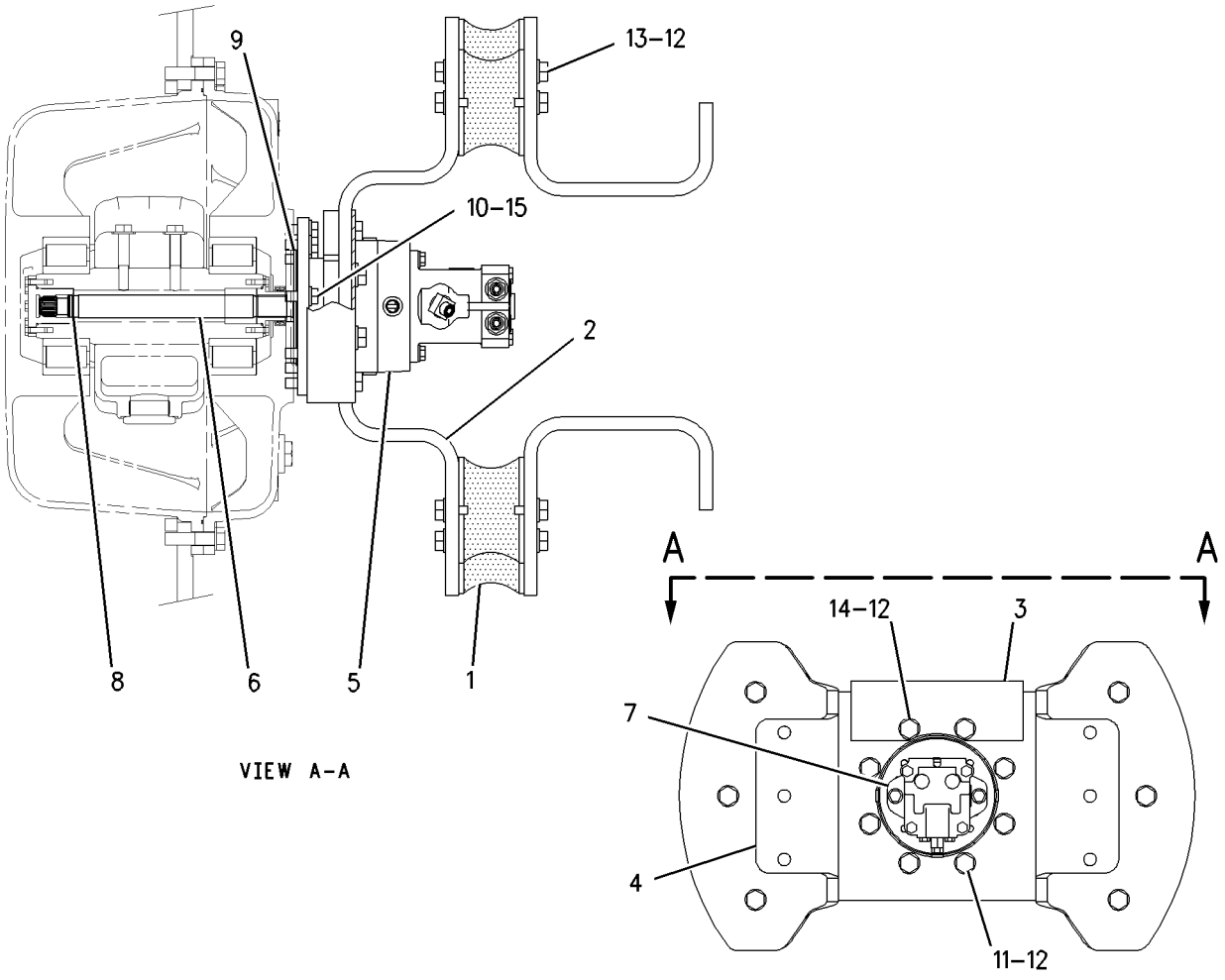

VIEW A-A

GRAPHIC #1 **<END>** g00828301

VIBRATORY SYSTEM

237-6218 DRIVE GP-SUPPORT & VIBRATORY

S/N: EAE1-UP
PART OF 237-5976 DRUM GP-DRIVE & VIBRATORY
AN ATTACHMENT

SMCS-6605, 6606 **i02855321**

NOTE	REF NO	GRAPHIC REF	PART NUMBER	QTY	PART NAME 1 2 3 4 5 6 (PRODUCT LEVEL)	SEE PAGE
	1	1	**150-3614**	1	PLATE	
	2	1	**152-5506**	1	BRACKET	
	3	1	**156-0949**	2	BRACKET	
Y	4	1	**159-9405**	1	SUPPORT GP-VIBRATORY	273
	5	1	**185-3203**	1	SHAFT AS	
	6	1	**227-0172**	6	MOUNT	
Y	7	1	*237-7995*	1	MOTOR & MTG GP-VIBRATORY	261
	8	1	**061-9458**	1	SEAL-O-RING	
	9	1	**5P-5397**	1	SEAL-O-RING	
M	10	1	**7X-2553**	8	BOLT (M16X2X40-MM)	
M	11	1	**7X-2562**	6	BOLT (M20X2.5X45-MM)	
	12	1	**8T-4994**	20	WASHER-HARD (20X36.5X3.5-MM THK)	
M	13	1	**8T-5460**	12	BOLT (M20X2.5X40-MM)	
M	14	1	**8T-6430**	2	BOLT (M20X2.5X50-MM)	
	15	1	**9X-8257**	8	WASHER (17.5X30X3.5-MM THK)	

M-METRIC PART
Y-SEPARATE ILLUSTRATION

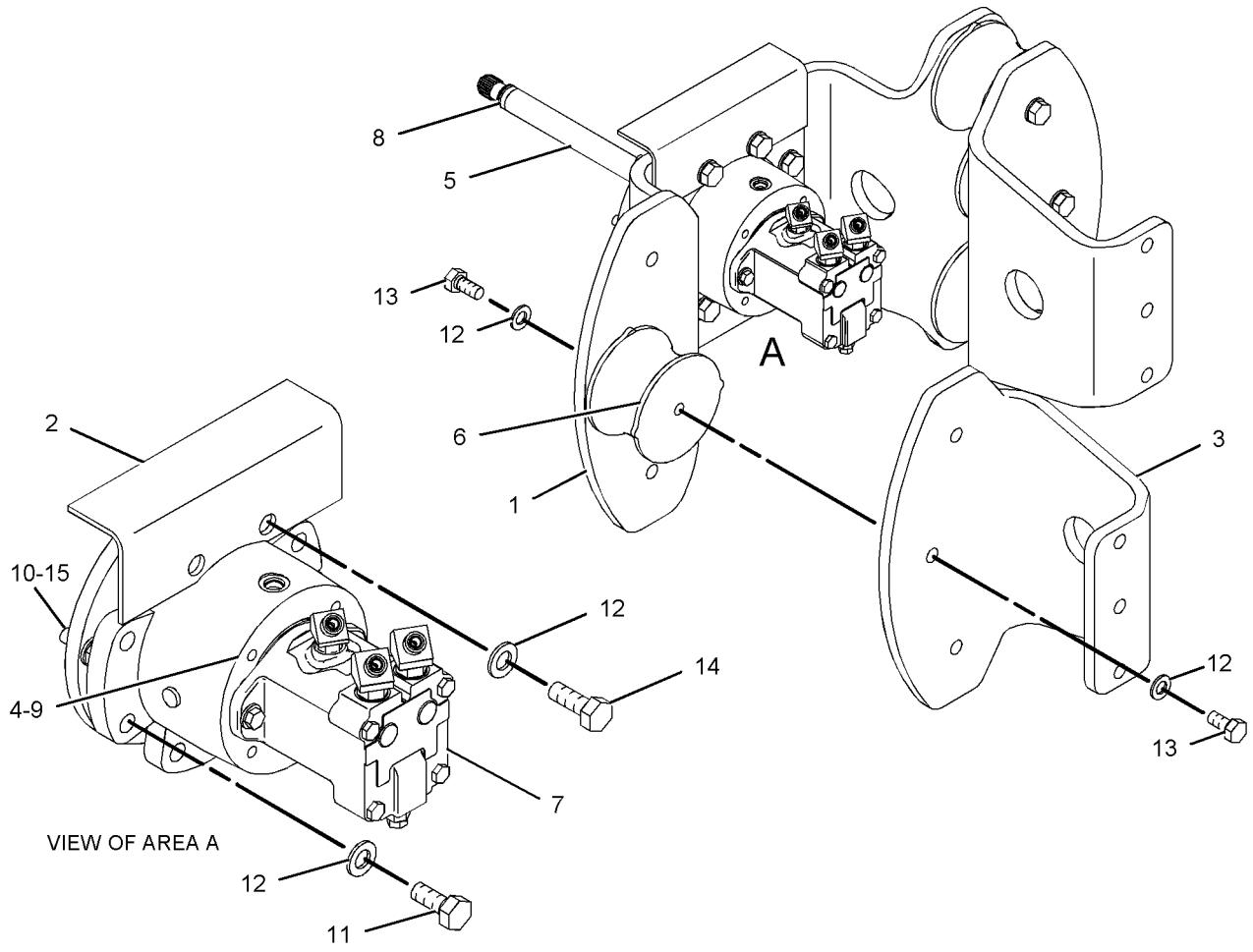

GRAPHIC #1 **<END>** g01095652

VIBRATORY SYSTEM

153-7035 HOUSING GP-ECCENTRIC WEIGHT

S/N: EAE1-UP

PART OF 153-7160 DRUM GP-PADDED, 149-7710 DRUM GP-SMOOTH

AN ATTACHMENT

SMCS-6606 **i02898368**

NOTE	REF NO	GRAPHIC REF	PART NUMBER	QTY	PART NAME 1 2 3 4 5 6 (PRODUCT LEVEL)	SEE PAGE
	1	1	**4B-4158**	2	SCREW-DRIVE (3/16X0.25-IN)	
	2	1	**5P-4484**	2	PLUG-MAGNETIC (ECCENTRIC WEIGHT HOUSING)	
	3	1	**126-9339**	2	SEAL	
	4	1	**126-9340**	2	BEARING	
	5	1	**146-7512**	1	PLATE-IDENTIFICATION (ECCENTRIC WEIGHT)	
	6	1	**146-9503**	1	HOUSING-BEARING	
Y	7	1	**147-0333**	1	SHAFT GP-ECCENTRIC WEIGHT	271
	8	1	**148-3452**	1	FLANGE	
	9	1	**155-6035**	1	SHAFT	
	10	1	**155-6036**	1	HOUSING-BEARING	
	11	1	**129-9124**	1	SEAL-O-RING	
	12	1	**3D-7805**	2	SEAL-O-RING	
M	13	1	**6V-3940**	8	BOLT (M8X1.25X25-MM)	
M	14	1	**6V-5215**	8	BOLT (M8X1.25X16-MM)	
	15	1	**7M-8485**	2	SEAL-O-RING	
M	16	1	**8T-4779**	6	BOLT (M16X2X35-MM)	
	17	1	**9X-8257**	6	WASHER (17.5X30X3.5-MM THK)	

M-METRIC PART
Y-SEPARATE ILLUSTRATION

153-7035 HOUSING GP-ECCENTRIC WEIGHT *(contd.)* i02898368

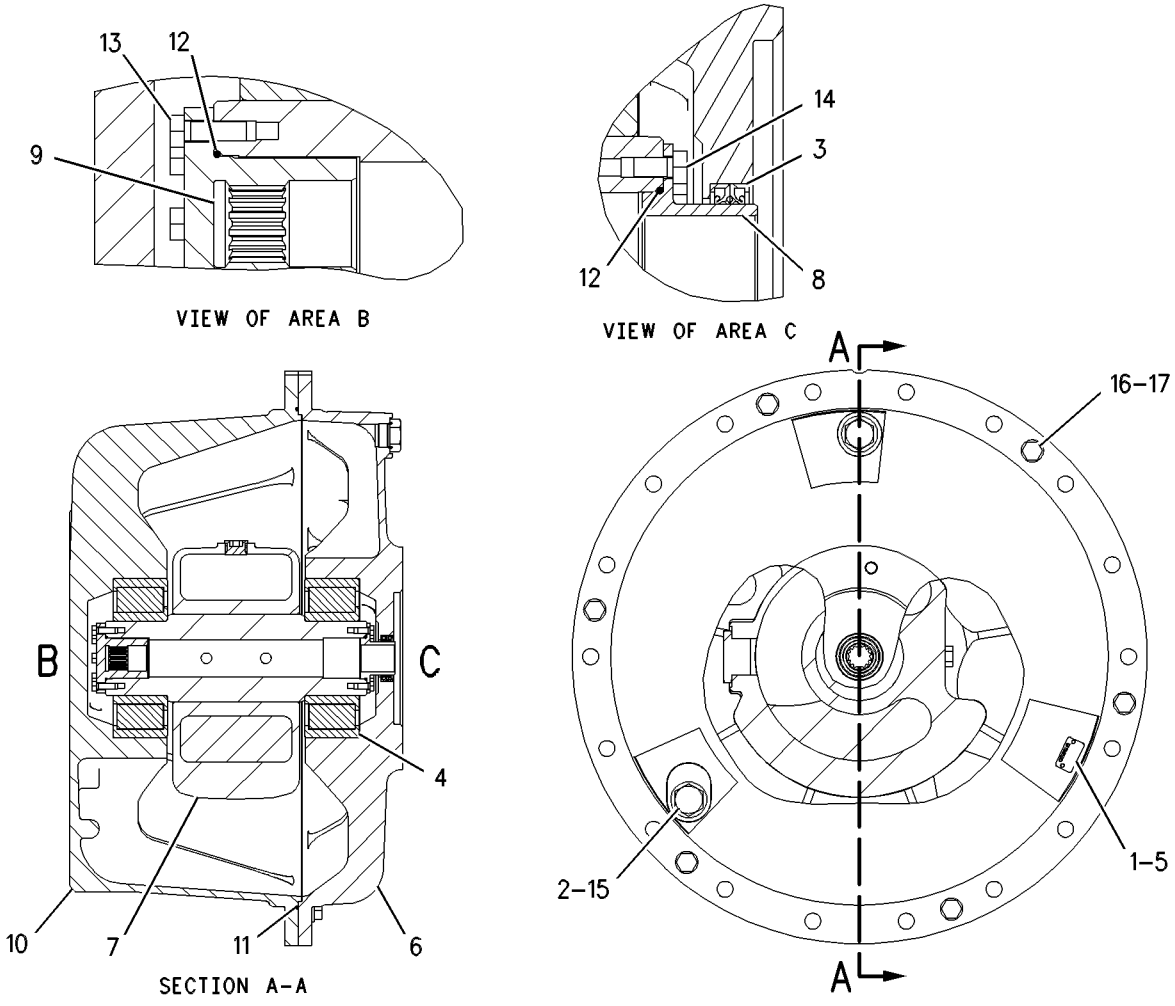

GRAPHIC #1 **<END>** g00654050

VIBRATORY SYSTEM

237-7982 HOUSING GP-ECCENTRIC WEIGHT

S/N: EAE1-UP
PART OF 237-6217 DRUM GP-SMOOTH
AN ATTACHMENT

SMCS-6606 **i02898369**

NOTE	REF NO	GRAPHIC REF	PART NUMBER	QTY	PART NAME 1 2 3 4 5 6 (PRODUCT LEVEL)	SEE PAGE
	1	1	**4B-4158**	2	SCREW-DRIVE (3/16X0.25-IN)	
	2	1	**5P-4484**	2	PLUG-MAGNETIC (ECCENTRIC WEIGHT)	
	3	1	**126-9339**	4	SEAL	
	4	1	**146-7512**	1	PLATE-IDENTIFICATION (ECCENTRIC WEIGHT)	
	5	1	**146-9502**	1	HOUSING-BEARING	
	6	1	**146-9503**	1	HOUSING-BEARING	
	7	1	**150-2511**	1	SLEEVE	
	8	1	**153-8439**	2	BEARING	
Y	10	1	*237-7983*	1	SHAFT GP-ECCENTRIC WEIGHT	272
	11	1	**237-7988**	2	SLEEVE	
	13	1	**240-0625**	1	FLANGE	
	14	1	**240-0626**	1	SHAFT	
	15	1	**129-9124**	1	SEAL-O-RING	
	16	1	**3D-7805**	2	SEAL-O-RING	
M	17	1	**6V-3940**	8	BOLT (M8X1.25X25-MM)	
M	18	1	**6V-5215**	8	BOLT (M8X1.25X16-MM)	
	20	1	**7M-8485**	2	SEAL-O-RING	
M	22	1	**8T-4779**	6	BOLT (M16X2X35-MM)	
	24	1	**9X-8257**	6	WASHER (17.5X30X3.5-MM THK)	

M-METRIC PART
Y-SEPARATE ILLUSTRATION

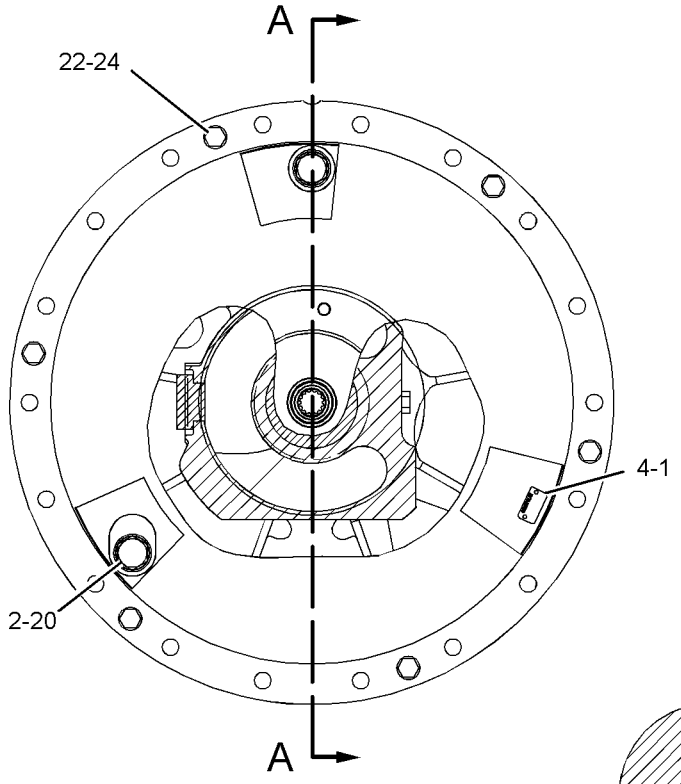

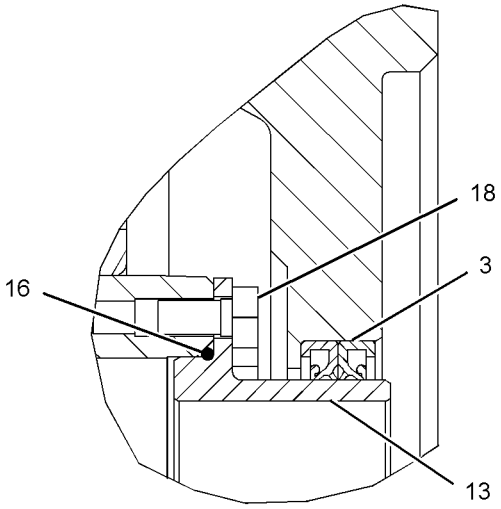

VIEW OF AREA C

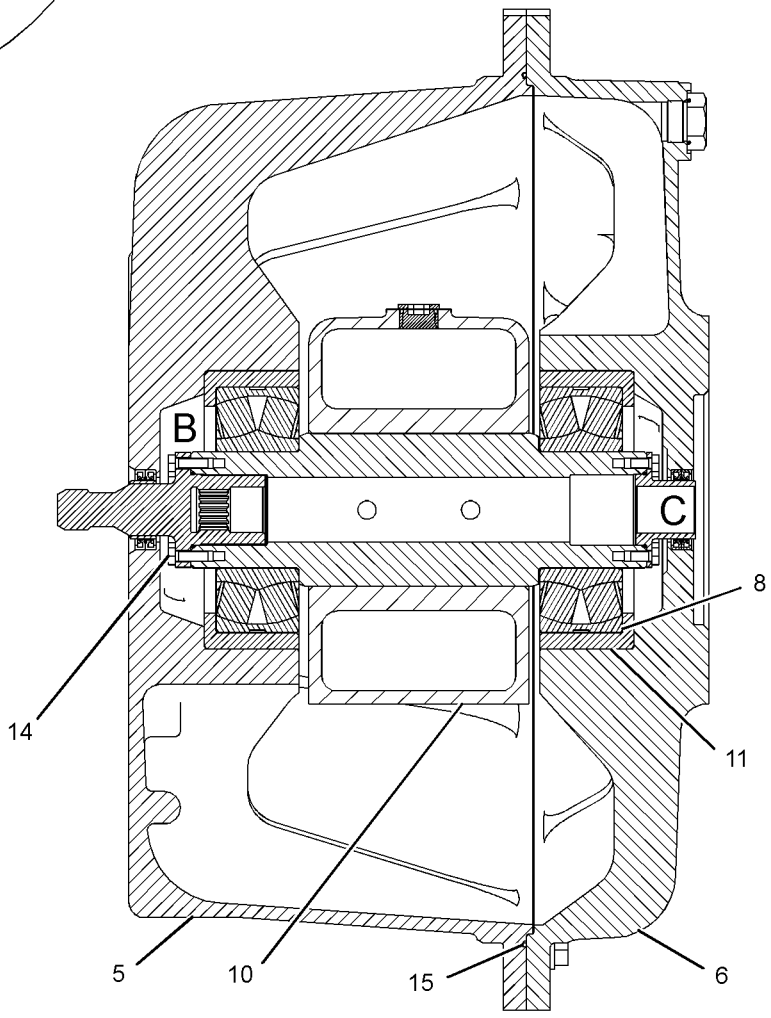

SECTION A-A

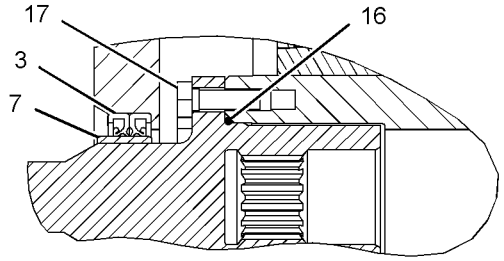

VIEW OF AREA B

GRAPHIC #1 **<END>** g01196835

VIBRATORY SYSTEM

153-5018 HYDRAULIC AR-VIBRATORY

S/N: EAE1-UP

AN ATTACHMENT

SMCS-5050 **i01712562**

NOTE	PART NUMBER	QTY	PART NAME 1 2 3 4 5 6 (PRODUCT LEVEL)	SEE PAGE
Y	*153-7166*	1	PUMP & MTG GP-VIBRATORY	264

Y-SEPARATE ILLUSTRATION

<END>

153-5024 HYDRAULIC AR-VIBRATORY—VARIABLE FREQUENCY

S/N: EAE1-UP

AN ATTACHMENT

SMCS-5050 **i01895688**

NOTE	PART NUMBER	QTY	PART NAME 1 2 3 4 5 6 (PRODUCT LEVEL)	SEE PAGE
Y	*197-2079*	1	GAUGE GP-VIBRATORY	322
Y	*201-7336*	1	PUMP & MTG GP-VIBRATORY	266
Y	*201-8326*	1	WIRING GP-CONSOLE (VIBRATORY)	126

Y-SEPARATE ILLUSTRATION

<END>

VIBRATORY SYSTEM

153-7171 LINES GP-VIBRATORY

S/N: EAE1-UP

PART OF 229-5727 HYDRAULIC AR

SMCS-5057 **i02898370**

NOTE	REF NO	GRAPHIC REF	PART NUMBER	QTY	PART NAME 1 2 3 4 5 6 (PRODUCT LEVEL)	SEE PAGE
E	1	1	**7I-1024**	6	GUARD (HOSE) (30-CM EACH)	
	2	1	**102-8705**	2	PLATE	
	3	1	**225-4236**	4	CLAMP GP-HYDRAULIC LINES	
	4	1	**210-9591**	1	PLATE AS	
I	5	1	**223-4846**	1	HOSE AS	
I	6	1	**223-4847**	2	HOSE AS	
M	7	1	**131-3540**	1	LOCKNUT (M8X1.25-THD)	
	8	1	**222-9820**	2	CLAMP-HALF	
	9	1	**223-5856**	2	CLAMP-HALF	
M	10	1	**7X-2538**	1	BOLT (M8X1.25X100-MM)	
M	11	1	**8T-0389**	8	LOCKNUT (M10X1.5-THD)	
	12	1	**8T-4121**	22	WASHER-HARD (11X21X2.5-MM THK)	
M	13	1	**8T-4137**	6	BOLT (M10X1.5X20-MM)	
M	14	1	**8T-5436**	8	BOLT (M10X1.5X130-MM)	

E-ORDER BY THE CENTIMETER
I-REFER TO HYDRAULIC INFORMATION SYSTEM
M-METRIC PART

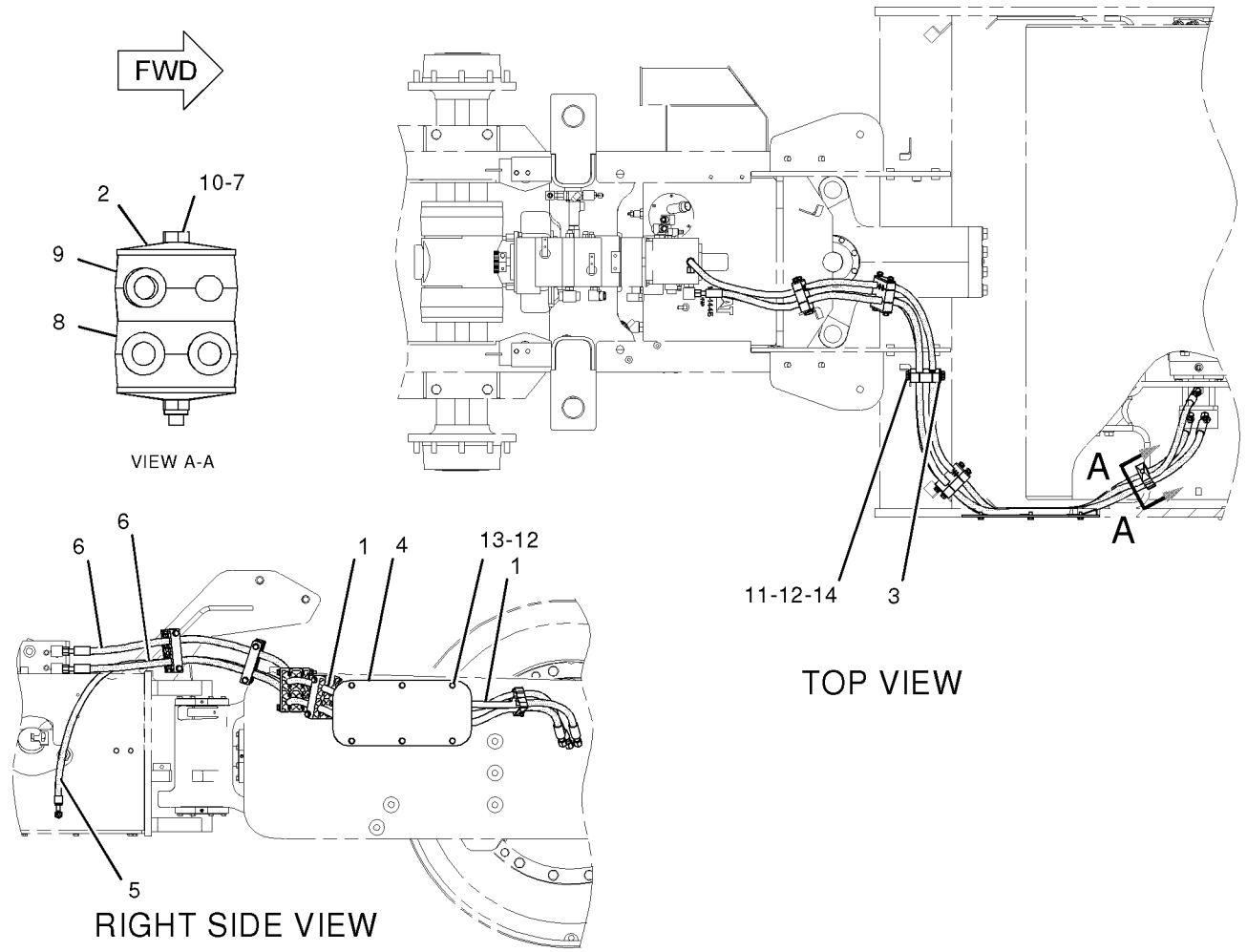

GRAPHIC #1 **<END>** g01037019

VIBRATORY SYSTEM

186-5229 MOTOR & MTG GP-VIBRATORY

S/N: EAE1-UP

PART OF 186-5231 DRIVE GP-SUPPORT & VIBRATORY

AN ATTACHMENT

SMCS-5058, 5651 **i02016761**

NOTE	REF NO	GRAPHIC REF	PART NUMBER	QTY	PART NAME 1 2 3 4 5 6 (PRODUCT LEVEL)	SEE PAGE
Y	1	1	**183-3233**	1	MOTOR GP-PISTON (VIBRATORY)	223
	2	1	*148-8358*	2	ELBOW AS	
					(EACH INCLUDES)	
		1	**6V-8624**		ELBOW	
		1	**2M-9780**	1	SEAL-O-RING	
		1	**6V-8398**	1	SEAL-O-RING	
	3	1	*148-8354*	1	ELBOW AS	
		1	**6V-9002**	1	ELBOW	
		1	**3K-0360**	1	SEAL-O-RING	
		1	**6V-8398**	1	SEAL-O-RING	
M	4	1	**8T-4956**	2	BOLT (M12X1.75X35-MM)	
	5	1	**3K-0715**	1	SEAL-O-RING	
	6	1	**8T-4223**	2	WASHER-HARD (13.5X25.5X3-MM THK)	

M-METRIC PART
Y-SEPARATE ILLUSTRATION

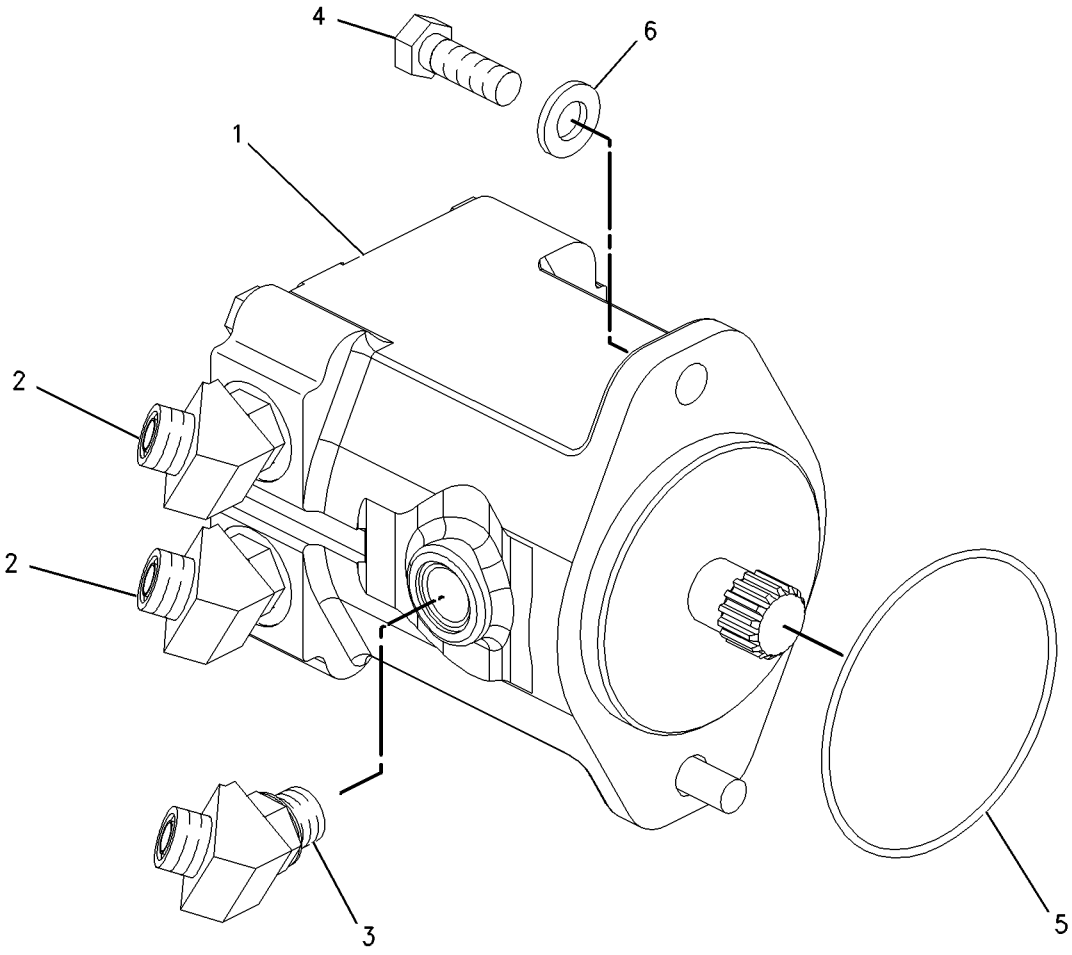

GRAPHIC #1 **<END>** g00939170

VIBRATORY SYSTEM

237-7995 MOTOR & MTG GP-VIBRATORY

S/N: EAE1-UP

PART OF 237-6218 DRIVE GP-SUPPORT & VIBRATORY

AN ATTACHMENT

SMCS-5058, 5651 **i02855335**

NOTE	REF NO	GRAPHIC REF	PART NUMBER	QTY	PART NAME 1 2 3 4 5 6 (PRODUCT LEVEL)	SEE PAGE
Y	1	1	**237-7998**	1	MOTOR GP-PISTON (VIBRATORY)	231
	2	1	*148-8354*	1	ELBOW AS	
		1	**3K-0360**	1	SEAL-O-RING	
		1	**6V-8398**	1	SEAL-O-RING	
		1	**6V-9002**	1	ELBOW	
	3	1	*148-8358*	2	ELBOW AS	
					(EACH INCLUDES)	
		1	**2M-9780**	1	SEAL-O-RING	
		1	**6V-8398**	1	SEAL-O-RING	
		1	**6V-8624**	1	ELBOW	
	4	1	**3K-0715**	1	SEAL-O-RING	
	5	1	**8T-4223**	2	WASHER-HARD (13.5X25.5X3-MM THK)	
M	6	1	**8T-4956**	2	BOLT (M12X1.75X35-MM)	

M-METRIC PART
Y-SEPARATE ILLUSTRATION

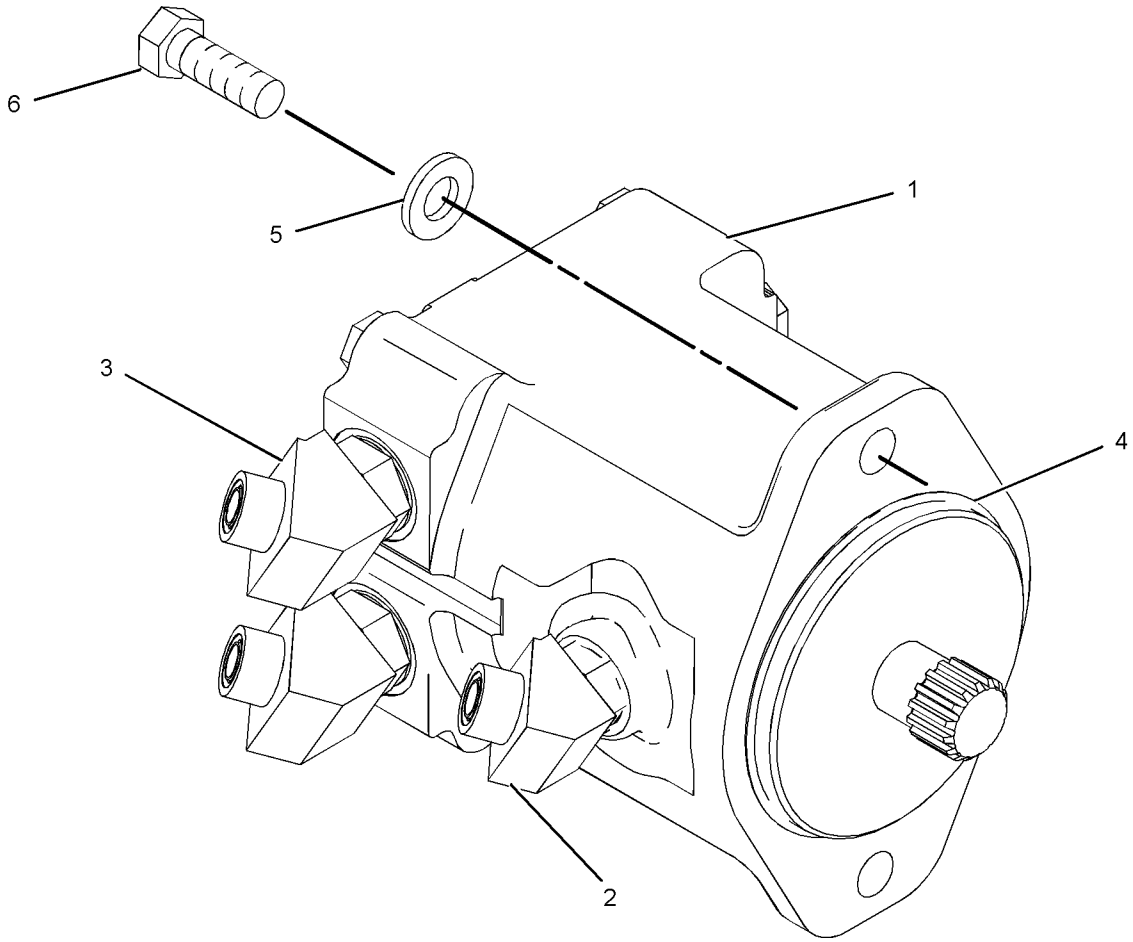

GRAPHIC #1 **<END>** g01088370

VIBRATORY SYSTEM

153-7147 PUMP & MTG GP-VIBRATORY

S/N: EAE1-UP

PART OF 153-5009 HYDRAULIC AR-AUXILIARY

SMCS-5070, 5652 **i02016875**

NOTE	REF NO	GRAPHIC REF	PART NUMBER	QTY	PART NAME 1 2 3 4 5 6 (PRODUCT LEVEL)	SEE PAGE
	1	1	**7X-5308**	1	CAP-DUST	
	2	1	*164-5586*	1	TEE AS	
		1	**6V-8398**	1	SEAL-O-RING	
		1	**7X-0871**	1	TEE	
J	3	1	**203-0317**	1	PUMP GP-GEAR (VIBRATORY)	
	4	1	**204-5000**	1	ELBOW	
	5	1	*148-8372*	1	ELBOW AS	
		1	**2M-9780**	1	SEAL-O-RING	
		1	**6V-8398**	1	SEAL-O-RING	
		1	**6V-8721**	1	ELBOW	
	6	1	*164-5551*	1	TEE AS	
		1	**3K-0360**	1	SEAL-O-RING	
		1	**4I-7651**	1	TEE-O-RING PORT	
		1	**6V-8398**	1	SEAL-O-RING	
		1	**6V-9746**	1	SEAL-O-RING	
	7	1	*164-5567*	1	COUPLER AS-QUICK DISCONNECT	
		1	**3J-1907**	1	SEAL-O-RING	
		1	**6V-3965**	1	COUPLER-QUICK DISCONNECT	
	8	1	**2D-4534**	2	BOLT-SOCKET HEAD (3/8-16X1-IN)	
	9	1	**5P-3863**	1	SEAL-O-RING	
	10	1	**7M-8485**	1	SEAL-O-RING	
	11	1	**8C-3051**	1	ADAPTER	
	12	1	**8T-4896**	2	WASHER-HARD (10.2X18.5X2.5-MM THK)	
					AVAILABLE REPAIR KIT(S):	
J			**222-1431**	1	KIT-SEAL (VIBRATORY PUMP)	

J-KIT MARKED J SERVICES PART(S) MARKED J

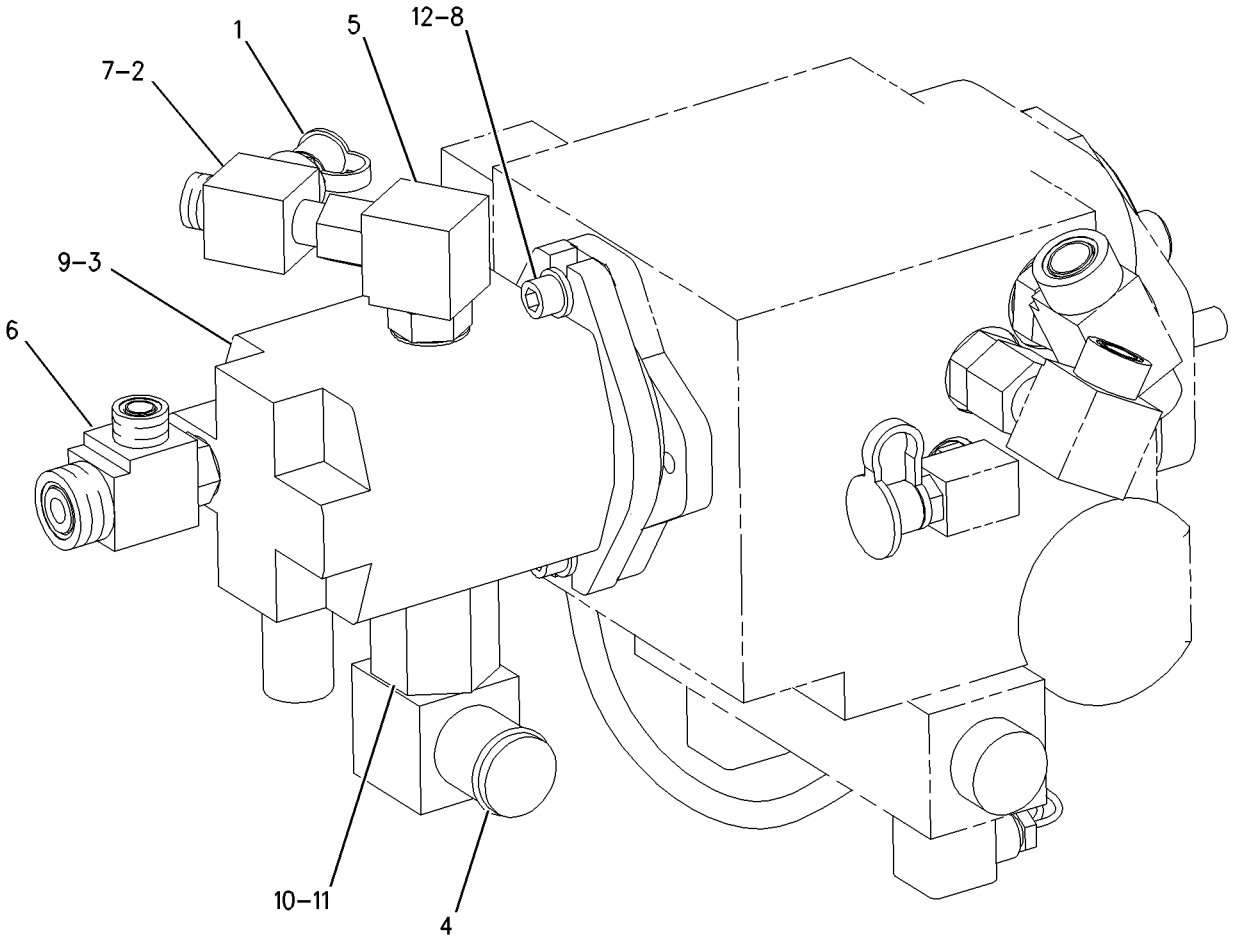

GRAPHIC #1 **<END>** g00920706

VIBRATORY SYSTEM

153-7166 PUMP & MTG GP-VIBRATORY

S/N: EAE1-UP

PART OF 153-5018 HYDRAULIC AR-VIBRATORY

AN ATTACHMENT

SMCS-5070, 5652 **i02056209**

NOTE	REF NO	GRAPHIC REF	PART NUMBER	QTY	PART NAME 1 2 3 4 5 6 (PRODUCT LEVEL)	SEE PAGE
	1	1	**6V-0852**	3	CAP-DUST	
	2	1	**107-2869**	2	SEAL	
CY	3	1	**241-6092**	1	PUMP GP-PISTON (VIBRATORY)	240
	4	1	**242-8366**	1	HARNESS AS-PUMP (VIBRATORY)	
		1	**155-2271**	1	KIT-CONNECTING PLUG (4-PIN)	
					(INCLUDES PLUG AS, WEDGE & INTERFACE SEAL)	
	5	1	*148-8315*	1	CONNECTOR AS	
		1	**2M-9780**	1	SEAL-O-RING	
		1	**7J-9108**	1	SEAL-O-RING	
		1	**6V-8642**	1	CONNECTOR	
	6	1	*148-8381*	2	ELBOW AS	
					(EACH INCLUDES)	
		1	**3D-2824**	1	SEAL-O-RING	
		1	**6V-8398**	1	SEAL-O-RING	
		1	**8T-5429**	1	ELBOW	
	7	1	*148-8393*	1	ELBOW AS	
		1	**6V-9852**	1	ELBOW	
		1	**7J-9108**	1	SEAL-O-RING	
	8	1	*150-3065*	1	ADAPTER AS	
		1	**3J-1907**	1	SEAL-O-RING	
		1	**6V-0484**	1	ADAPTER-O-RING	
	9	1	*153-6259*	1	TEE AS	
		1	**3D-2824**	1	SEAL-O-RING	
		1	**6V-8777**	1	TEE-FACE SEAL	
		1	**6V-9746**	2	SEAL-O-RING	
	10	1	*164-5567*	3	COUPLER AS-QUICK DISCONNECT	
					(EACH INCLUDES)	
		1	**3J-1907**	1	SEAL-O-RING	
		1	**6V-3965**	1	COUPLER-QUICK DISCONNECT	
	11	1	**3K-0715**	1	SEAL-O-RING	
	12	1	**4P-7429**	1	CLIP	
	13	1	**5P-2566**	2	BOLT (1/2-13X1.5-IN)	
	14	1	**7K-1181**	1	STRAP-CABLE	
	15	1	**8T-4223**	2	WASHER-HARD (13.5X25.5X3-MM THK)	

C-CHANGE FROM PREVIOUS TYPE
Y-SEPARATE ILLUSTRATION

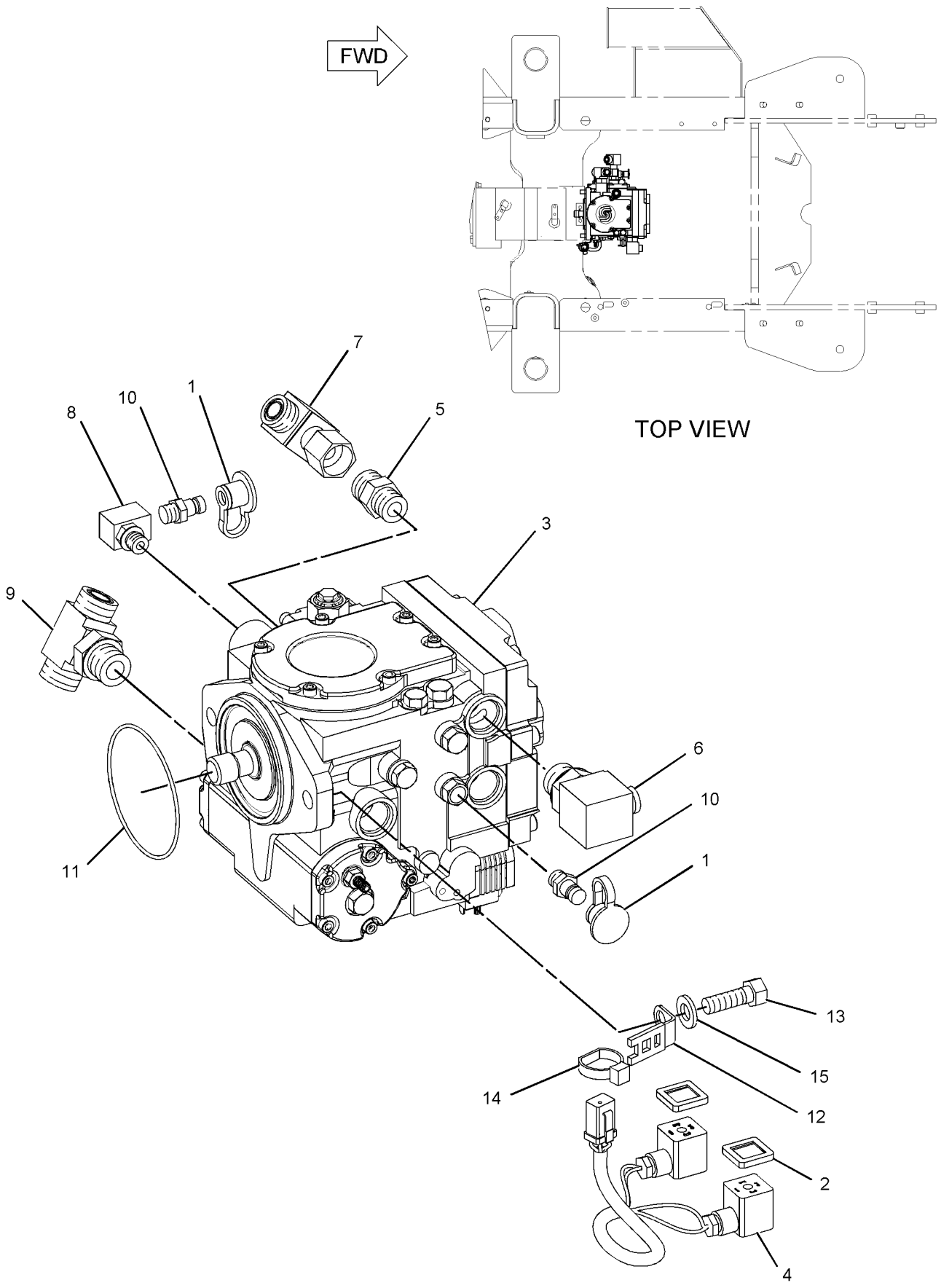

GRAPHIC #1 **<END>** g01036223

VIBRATORY SYSTEM

201-7336 PUMP & MTG GP-VIBRATORY

S/N: EAE1-UP

PART OF 153-5024 HYDRAULIC AR-VIBRATORY

AN ATTACHMENT

SMCS-5070, 5652 **i02017443**

NOTE	REF NO	GRAPHIC REF	PART NUMBER	QTY	PART NAME 1 2 3 4 5 6 (PRODUCT LEVEL)	SEE PAGE
	1	1	**6V-0852**	3	CAP-DUST	
	2	1	**116-0118**	2	CLIP	
Y	3	1	**183-3232**	1	PUMP GP-PISTON (VIBRATORY)	237
	4	1	**214-7116**	1	HARNESS AS-PUMP (VIBRATORY)	
		1	**155-2271**	2	KIT-CONNECTING PLUG (4-PIN)	
	5	1	*148-8315*	1	CONNECTOR AS	
		1	**2M-9780**	1	SEAL-O-RING	
		1	**6V-8642**	1	CONNECTOR	
		1	**7J-9108**	1	SEAL-O-RING	
	6	1	*148-8381*	2	ELBOW AS	
					(EACH INCLUDES)	
		1	**3D-2824**	1	SEAL-O-RING	
		1	**6V-8398**	1	SEAL-O-RING	
		1	**8T-5429**	1	ELBOW	
	7	1	*148-8393*	1	ELBOW AS	
		1	**6V-9852**	1	ELBOW	
		1	**7J-9108**	1	SEAL-O-RING	
	8	1	*150-3065*	1	ADAPTER AS	
		1	**3J-1907**	1	SEAL-O-RING	
		1	**6V-0484**	1	ADAPTER-O-RING	
	9	1	*153-6259*	1	TEE AS	
		1	**6V-8777**	1	TEE-FACE SEAL	
		1	**3D-2824**	1	SEAL-O-RING	
		1	**6V-9746**	1	SEAL-O-RING	
	10	1	*164-5567*	3	COUPLER AS-QUICK DISCONNECT	
					(EACH INCLUDES)	
		1	**3J-1907**	1	SEAL-O-RING	
		1	**6V-3965**	1	COUPLER-QUICK DISCONNECT	
	11	1	**3K-0715**	1	SEAL-O-RING	
	12	1	**4P-7429**	1	CLIP	
	13	1	**5P-2566**	2	BOLT (1/2-13X1.5-IN)	
	14	1	**5P-4115**	1	WASHER-HARD (7.2X19X2-MM THK)	
	15	1	**8T-4223**	2	WASHER-HARD (13.5X25.5X3-MM THK)	

Y-SEPARATE ILLUSTRATION

201 - 7336 **PUMP & MTG GP - VIBRATORY** *(contd.)* **i02017443**

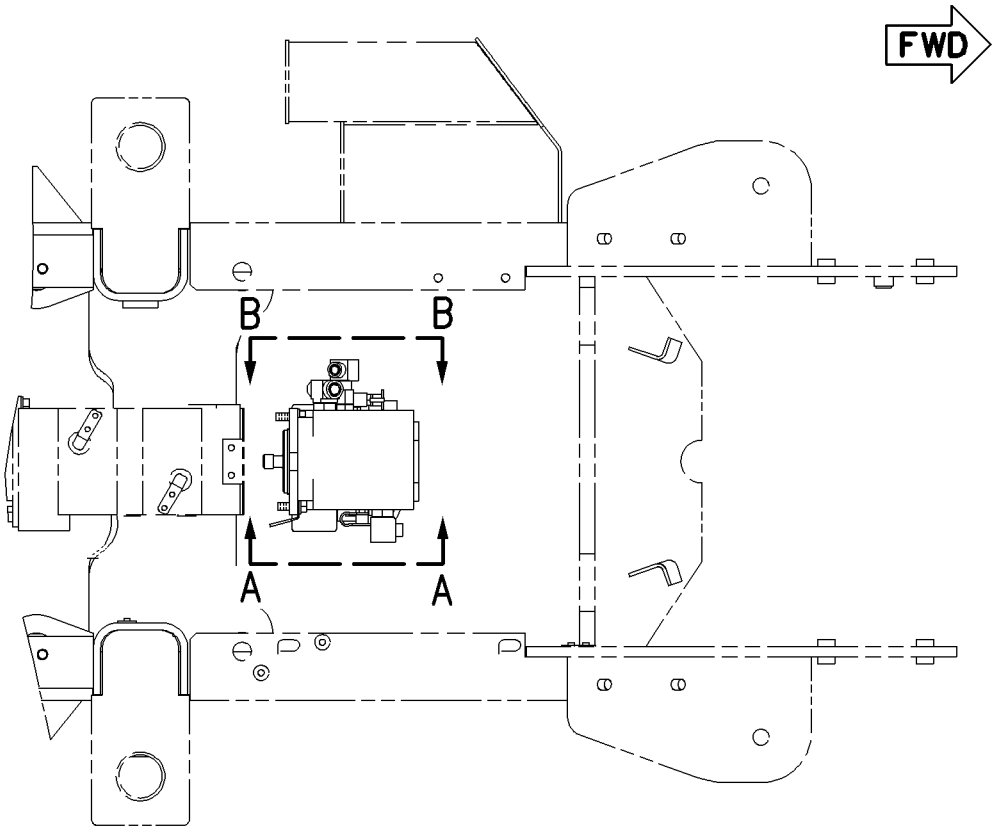

TOP VIEW

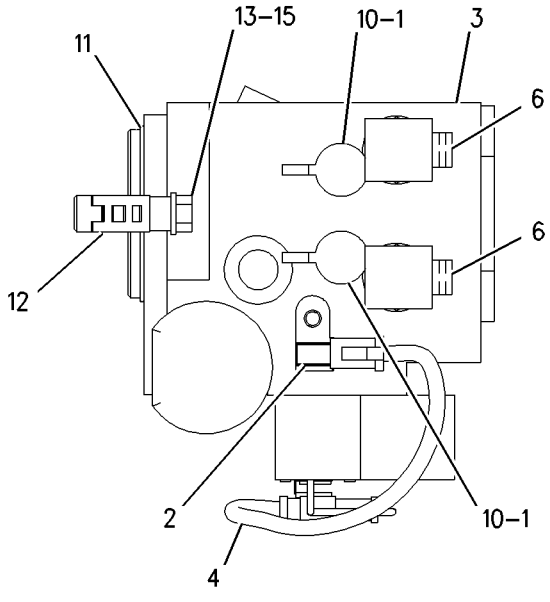

VIEW A–A

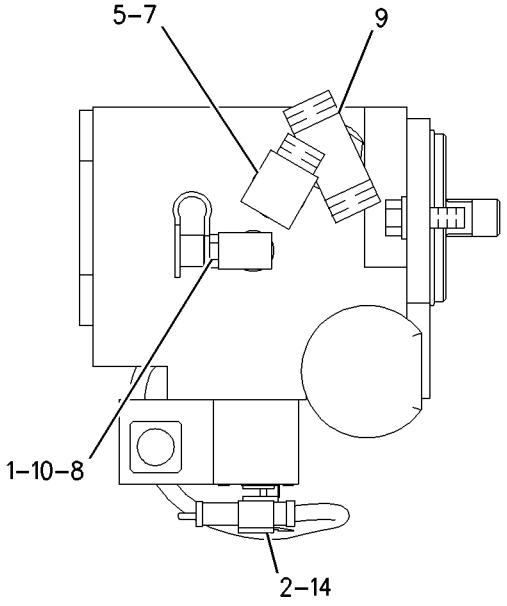

VIEW B–B

GRAPHIC #1 **<END>** g00838167

VIBRATORY SYSTEM

256-6506 PUMP & MTG GP-VIBRATORY

S/N: EAE1-UP

PART OF 229-5727 HYDRAULIC AR

SMCS-5070, 5652 **i02862804**

NOTE	REF NO	GRAPHIC REF	PART NUMBER	QTY	PART NAME 1 2 3 4 5 6 (PRODUCT LEVEL)	SEE PAGE
	1	1	**6V-0852**	4	CAP-DUST (STEERING PUMP)	
	2	1	**7X-5315**	4	FITTING AS (QUICK DISCONNECT)	
	3	1	**102-8705**	1	PLATE	
	4	1,2	**124-8909**	4	ELBOW	
	5	1	**154-4881**	2	CLAMP-HALF	
	6	2	*165-6365*	1	FITTING AS (TEST PORT)	
		2	**3J-1907**	1	SEAL-O-RING	
		2	**7W-7381**	1	FITTING-OUTLET	
	7	1	**177-2215**	2	STRAP-DUAL CLAMP	
Y	8	1	**183-3230**	1	PUMP GP-PISTON (PROPEL)	233
	9	1	**218-2236**	1	HUB-COUPLING	
M		1	**6V-8200**	1	BOLT-SOCKET HEAD (M12X1.75X35-MM)	
	10	2	*240-9021*	2	TEE AS	
					(EACH INCLUDES)	
		2	**6V-8397**	1	SEAL-O-RING	
		2	**239-8484**	1	TEE	
	11	2	*240-9022*	2	TEE AS	
					(EACH INCLUDES)	
		2	**6V-8397**	1	SEAL-O-RING	
		2	**239-8485**	1	TEE	
I	12	2	**256-3822**	2	HOSE AS	
	13	2	*148-8319*	1	CONNECTOR AS	
		2	**2M-9780**	1	SEAL-O-RING	
		2	**6V-8397**	1	SEAL-O-RING	
		2	**6V-8715**	1	CONNECTOR	
	14	2	*148-8325*	2	CONNECTOR AS	
					(EACH INCLUDES)	
		2	**3J-1907**	1	SEAL-O-RING	
		2	**4J-5477**	1	SEAL-O-RING	
		2	**6V-8641**	1	CONNECTOR	
	15	1	*148-8339*	2	CONNECTOR AS	
					(EACH INCLUDES)	
		1	**6V-8716**	1	CONNECTOR	
		1	**6V-9746**	1	SEAL-O-RING	
		1	**7M-8485**	1	SEAL-O-RING	
	16	1	*148-8360*	1	ELBOW AS (WATER LINES)	
		1	**6V-9182**	1	ELBOW	
		1	**6V-9746**	1	SEAL-O-RING	
		1	**7M-8485**	1	SEAL-O-RING	
	17	1	*153-6260*	1	TEE AS	
		1	**2M-9780**	1	SEAL-O-RING	
		1	**6V-9746**	2	SEAL-O-RING	
		1	**8T-8984**	1	TEE-O-RING PORT	
	18	2	**156-8801**	2	CONNECTOR	
	19	2	*172-4621*	2	ADAPTER AS (PROPEL)	
					(EACH INCLUDES)	
		2	**6V-0301**	1	ADAPTER	
		2	**7M-8485**	1	SEAL-O-RING	
	20	2	**3J-1907**	2	SEAL-O-RING	
	21	1,2	**3J-7354**	8	SEAL-O-RING	
	22	2	**4J-5477**	2	SEAL-O-RING	
M	23	1	**5C-7261**	1	NUT (M8X1.25-THD)	
	24	2	**6D-4246**	1	CLIP	
	25	2	**6D-4636**	1	CLIP	
	26	2	*106-8715*	2	ELBOW AS	
					(EACH INCLUDES)	

256-6506 **PUMP & MTG GP-VIBRATORY** *(contd.)* **i02862804**

NOTE	REF NO	GRAPHIC REF	PART NUMBER	QTY	PART NAME 1 2 3 4 5 6 (PRODUCT LEVEL)	SEE PAGE
		2	**3D-2824**	1	SEAL-O-RING	
		2	**6V-9746**	1	SEAL-O-RING	
		2	**8C-8400**	1	ELBOW	
	27	1	**8T-4121**	2	WASHER-HARD (11X21X2.5-MM THK)	
M	28	1	**8T-4133**	1	NUT (M10X1.5-THD)	
M	29	1	**8T-4136**	1	BOLT (M10X1.5X25-MM)	
	30	1	**8T-4224**	1	WASHER-HARD (8.8X16X2-MM THK)	
M	31	1	**8T-6869**	1	BOLT (M8X1.25X60-MM)	
M	32	2	**8T-7338**	4	BOLT (M16X2X45-MM)	
	33	2	**9X-8257**	4	WASHER (17.5X30X3.5-MM THK)	

I-REFER TO HYDRAULIC INFORMATION SYSTEM
M-METRIC PART
Y-SEPARATE ILLUSTRATION

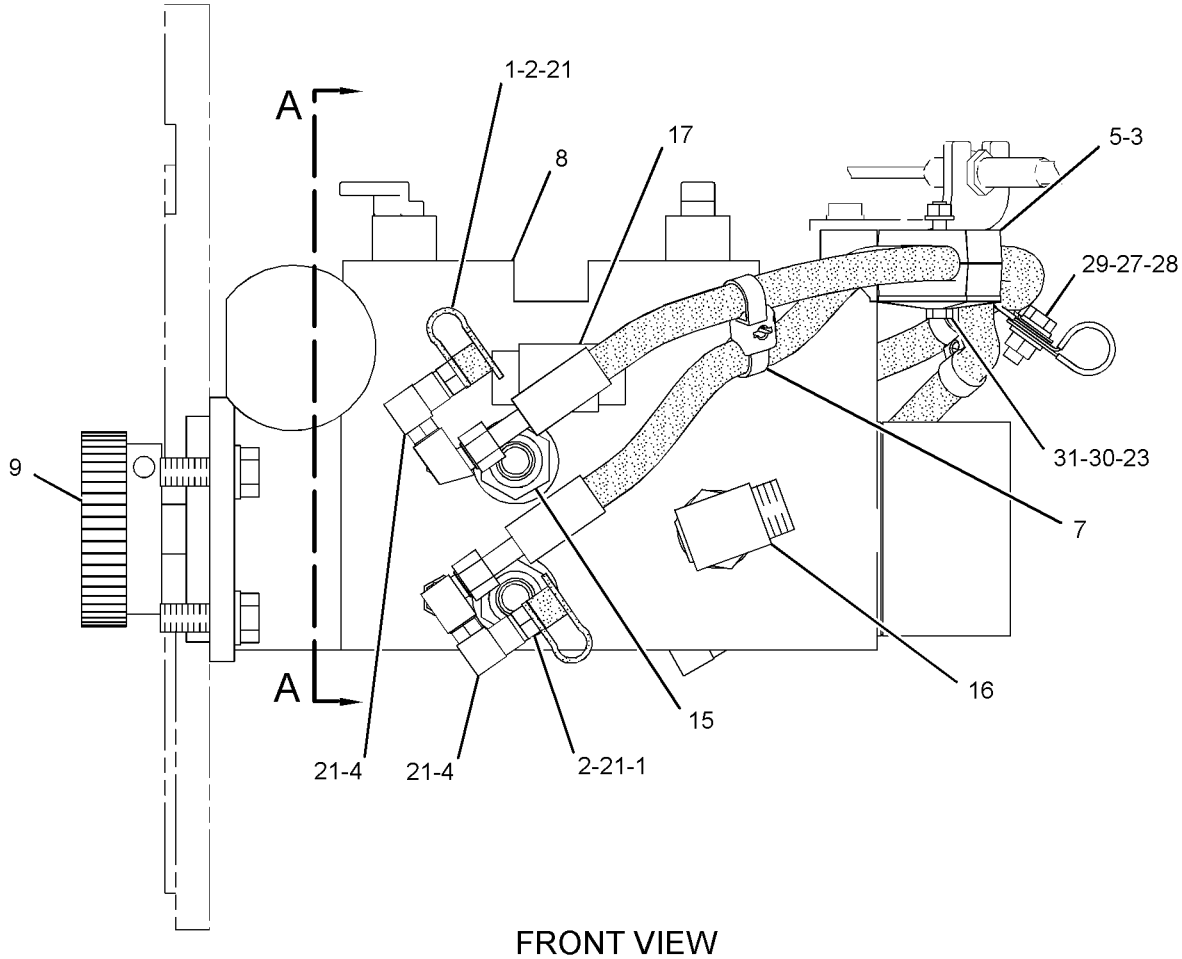

FRONT VIEW

GRAPHIC #1 g01279364

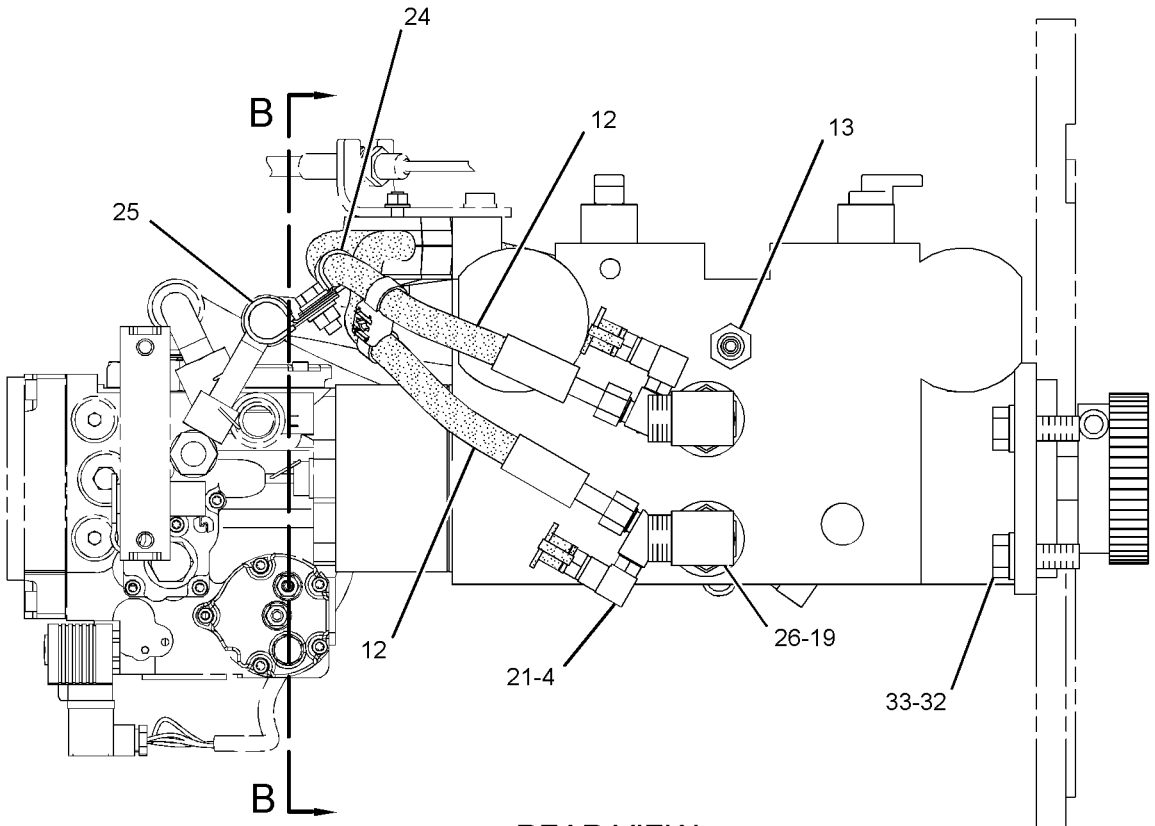

REAR VIEW

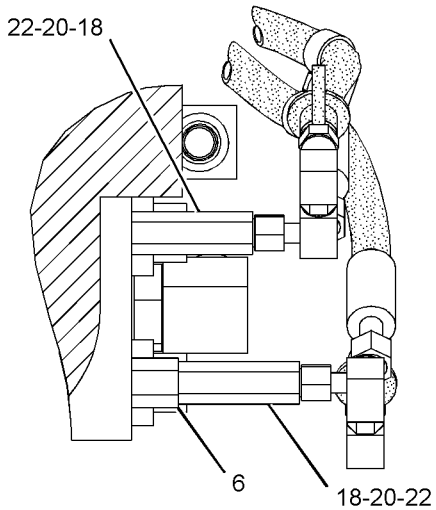

SECTION A-A

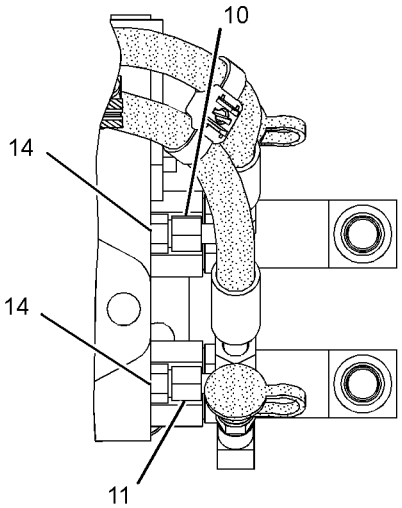

SECTION B-B

GRAPHIC #2 **<END>** g01279365

147-0333 SHAFT GP-ECCENTRIC WEIGHT

S/N: EAE1-UP
PART OF 153-7035 HOUSING GP-ECCENTRIC WEIGHT
AN ATTACHMENT

SMCS-6645 **i02153898**

NOTE	REF NO	GRAPHIC REF	PART NUMBER	QTY	PART NAME 1 2 3 4 5 6 (PRODUCT LEVEL)	SEE PAGE
	1	1	**9X-8257**	2	WASHER (17.5X30X3.5-MM THK)	
	2	1	**9S-7583**	1	PLUG	
	3	1	**146-7292**	1	SHAFT	
M	4	1	**8T-4175**	2	BOLT (M16X2X90-MM)	
	5	1	**9S-8008**	1	PLUG-O RING	
BF		1	**180-7333**		SHOT (STEEL)	

B-USE AS REQUIRED
F-NOT SHOWN
M-METRIC PART

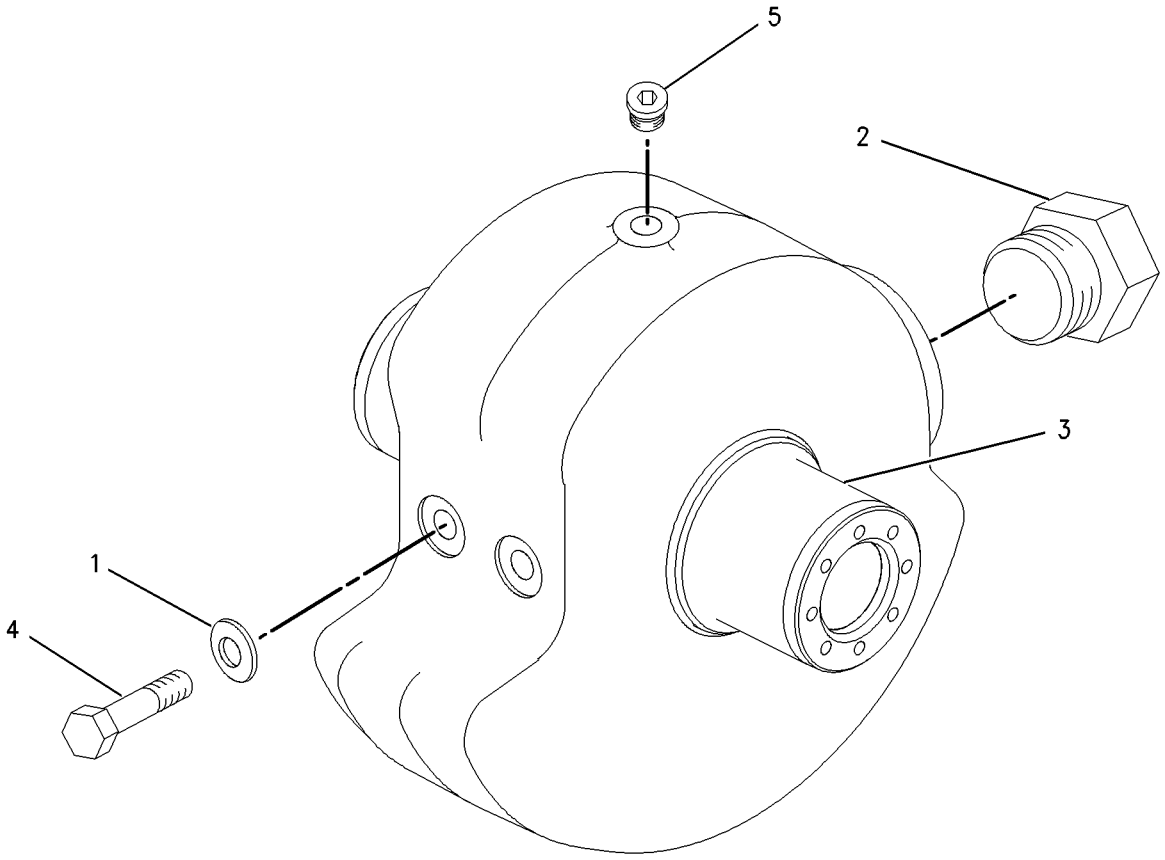

GRAPHIC #1 **<END>** g00644217

VIBRATORY SYSTEM

237-7983 SHAFT GP-ECCENTRIC WEIGHT

S/N: EAE1-UP
PART OF 237-7982 HOUSING GP-ECCENTRIC WEIGHT
AN ATTACHMENT

SMCS-6645 **i02607719**

NOTE	REF NO	GRAPHIC REF	PART NUMBER	QTY	PART NAME 1 2 3 4 5 6 (PRODUCT LEVEL)	SEE PAGE
	1	1	**9S-7583**	1	PLUG	
	2	1	**237-7985**	1	SHAFT	
M	3	1	**8T-4175**	2	BOLT (M16X2X90-MM)	
B	4	1	**9S-8008**	1	PLUG-O RING	
	5	1	**9X-8257**	2	WASHER (17.5X30X3.5-MM THK)	
	6	1	**180-7333**	6	SHOT (STEEL)	

B-USE AS REQUIRED
M-METRIC PART

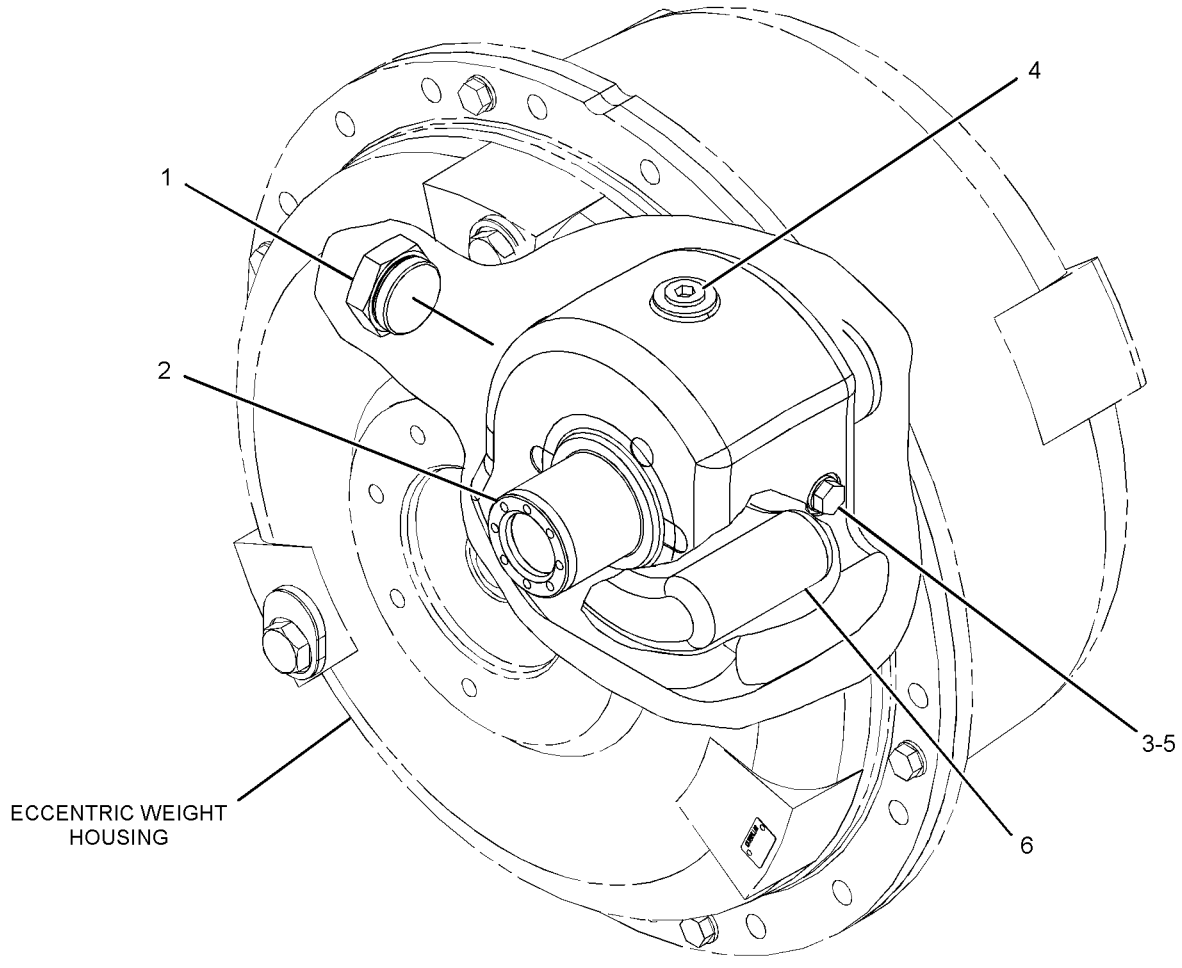

GRAPHIC #1 **<END>** g01308741

VIBRATORY SYSTEM

159-9405 SUPPORT GP-VIBRATORY

S/N: EAE1-UP

PART OF 186-5231, 237-6218 DRIVE GP-SUPPORT & VIBRATORY

AN ATTACHMENT

SMCS-5656 **i02898371**

NOTE	REF NO	GRAPHIC REF	PART NUMBER	QTY	PART NAME 1 2 3 4 5 6 (PRODUCT LEVEL)	SEE PAGE
	1	1	**077-3637**	1	SEAL	
	2	1	**077-6630**	1	SEAL	
	3	1	**177-4658**	1	NUT-BEARING	
	4	1	**030-0061**	1	CONE-BEARING	
	5	1	**030-0060**	1	CUP-BEARING	
	6	1	**159-5846**	1	PLUG-MAGNETIC (VIBRATORY SUPPORT)	
	7	1	**7D-8636**	1	CONE-BEARING	
	8	1	**7D-8637**	1	CUP-BEARING	
	9	1	**9S-8005**	3	PLUG-O-RING	
	10	1	**3K-0360**	3	SEAL-O-RING	
	11	1	**9X-7566**	1	SEAL-O-RING	
	12	1	**172-3259**	1	ADAPTER	

159-9405 SUPPORT GP-VIBRATORY *(contd.)* **i02898371**

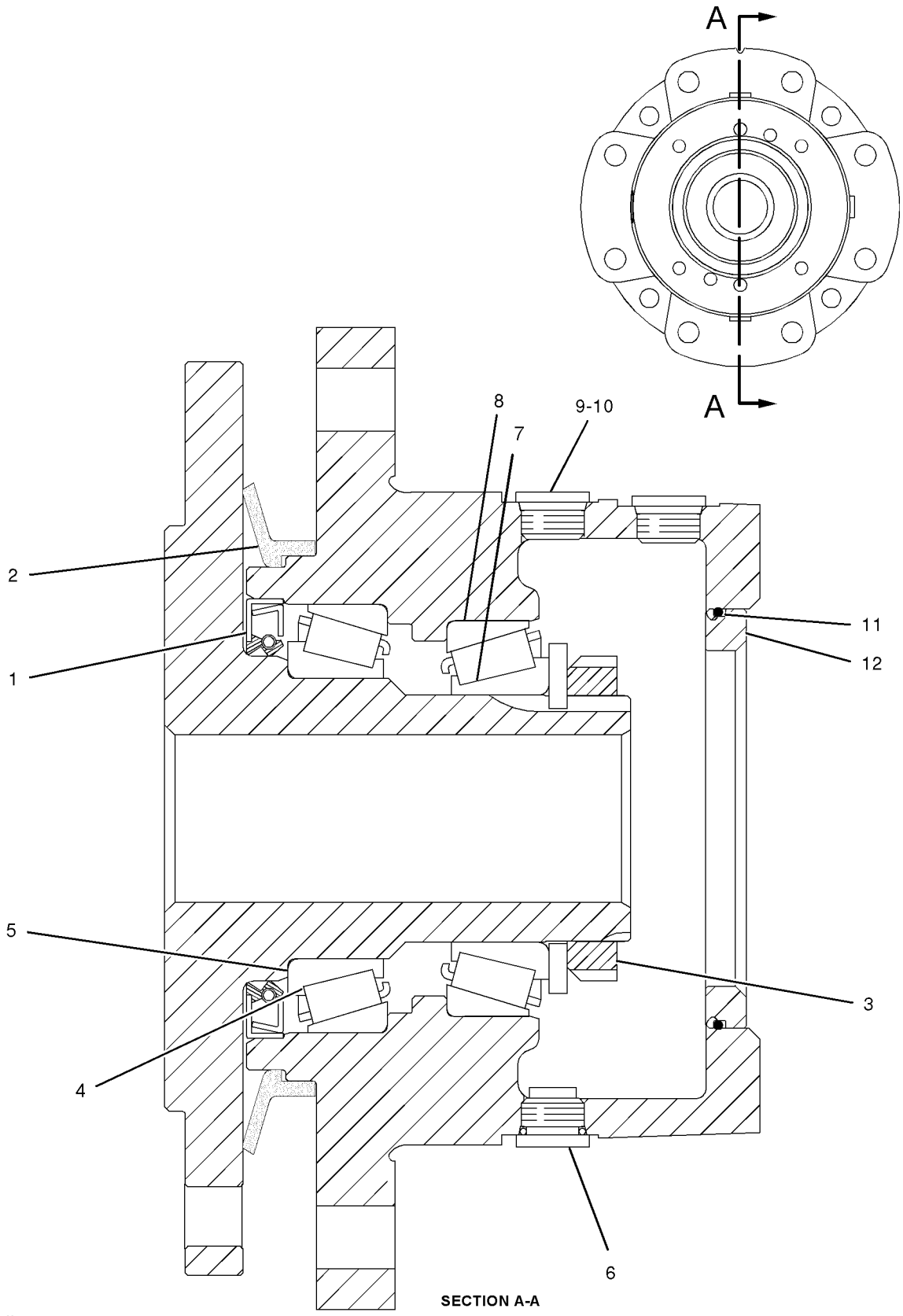

SECTION A-A

GRAPHIC #1

<END>

g01044189

WATER SYSTEM

125-2407 BAR GP-SPRAY

S/N: EAE1-UP

PART OF 237-5980 SPRAY AR-WATER

AN ATTACHMENT

SMCS-6609 **i02606908**

NOTE	REF NO	GRAPHIC REF	PART NUMBER	QTY	PART NAME 1 2 3 4 5 6 (PRODUCT LEVEL)	SEE PAGE
	1	1	**127-1996**	1	PIPE AS	
	2	1	**1G-4081**	4	CLAMP	
M	3	1	**8C-6965**	8	BOLT-SOCKET HEAD (M6X1X45-MM)	
	4	1	**1G-4029**	4	INSERT-RUBBER	
	5	1	**5P-4425**	1	ELBOW-AIR BRAKE	
	6	1	**140-3140**	7	CLAMP	
	7	1	**140-3138**	7	STRAINER (WATER SPRAY NOZZLE)	
	8	1	**081-2965**	7	SEAL	
	9	1	**140-3137**	7	NOZZLE	
	10	1	**140-3139**	7	CAP (WATER SPRAY)	
	11	1	**9X-8256**	8	WASHER (6.6X12X2-MM THK)	
	12	1	**6V-6722**	1	PLUG	

M-METRIC PART

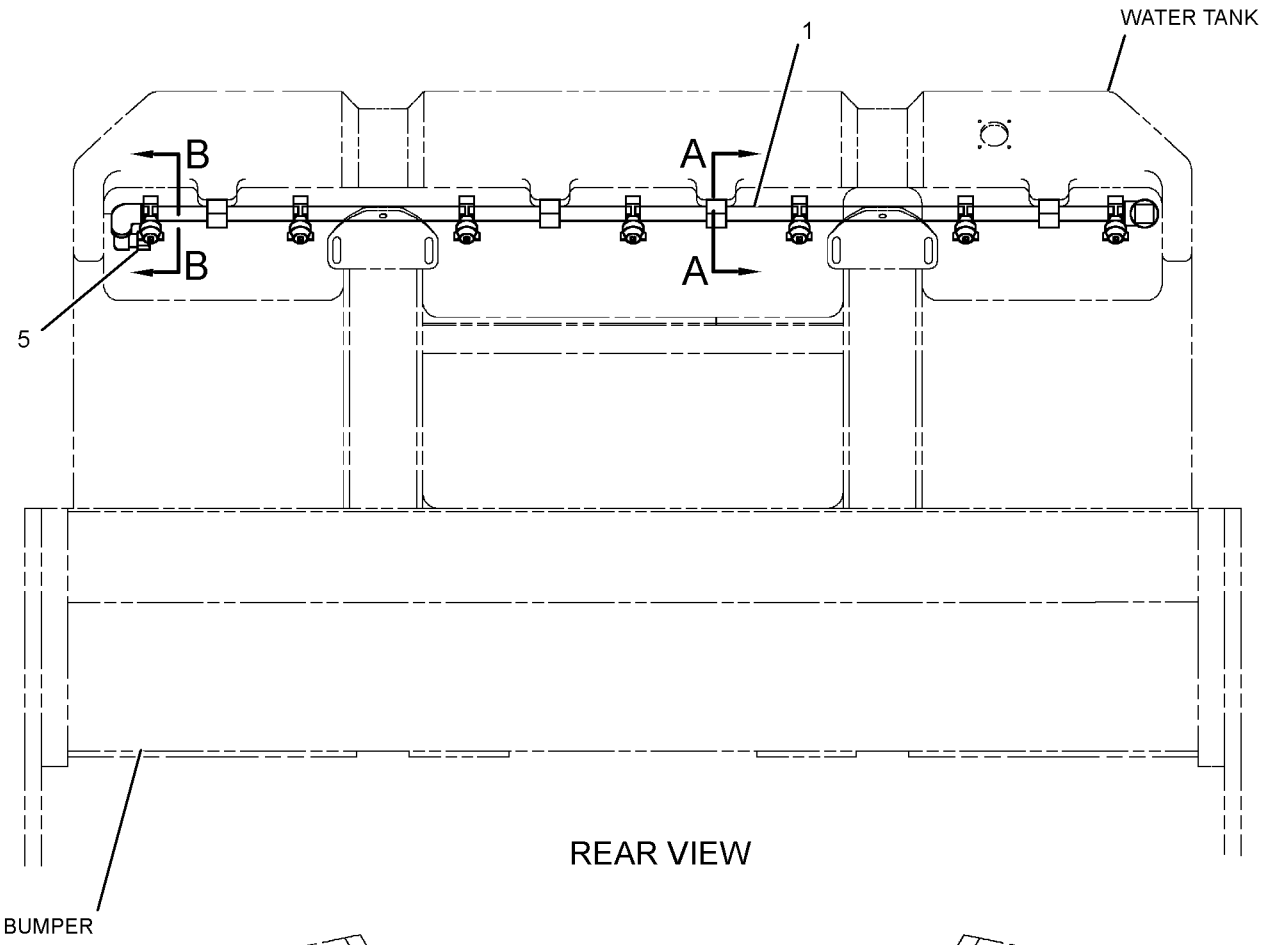

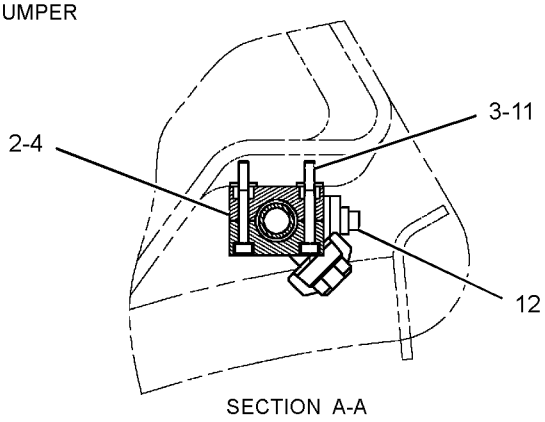

SECTION A-A

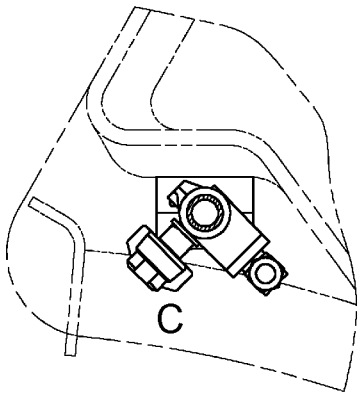

SECTION B-B

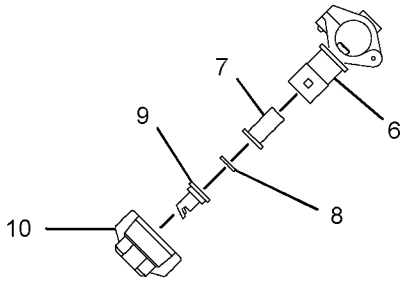

VIEW OF AREA C
(EXPLODED)

GRAPHIC #1 **<END>** g01307969

141-2140 FILTER GP-WATER

S/N: EAE1-UP
PART OF 237-5980 SPRAY AR-WATER
AN ATTACHMENT

SMCS-5612 **i02606911**

NOTE	REF NO	GRAPHIC REF	PART NUMBER	QTY	PART NAME 1 2 3 4 5 6 (PRODUCT LEVEL)	SEE PAGE
	1	1	**161-8211**	1	FILTER GP-WATER	
		1	**2K-8199**	2	SEAL-O-RING	
		1	**5F-8000**	1	SEAL-O-RING	
		1	**148-3046**	1	FILTER-WATER	
	2	1	**5P-4402**	1	CONNECTOR	
	3	1	**011-5224**	2	BUSHING-REDUCING	
	4	1	**5P-4434**	1	ELBOW-AIR BRAKE	
M	5	1	**8T-3647**	2	BOLT (M8X1.25X80-MM)	
	6	1	**5P-4116**	6	WASHER-HARD (8.8X20.5X2-MM THK)	
M	7	1	**5C-7261**	2	NUT (M8X1.25-THD)	

M-METRIC PART

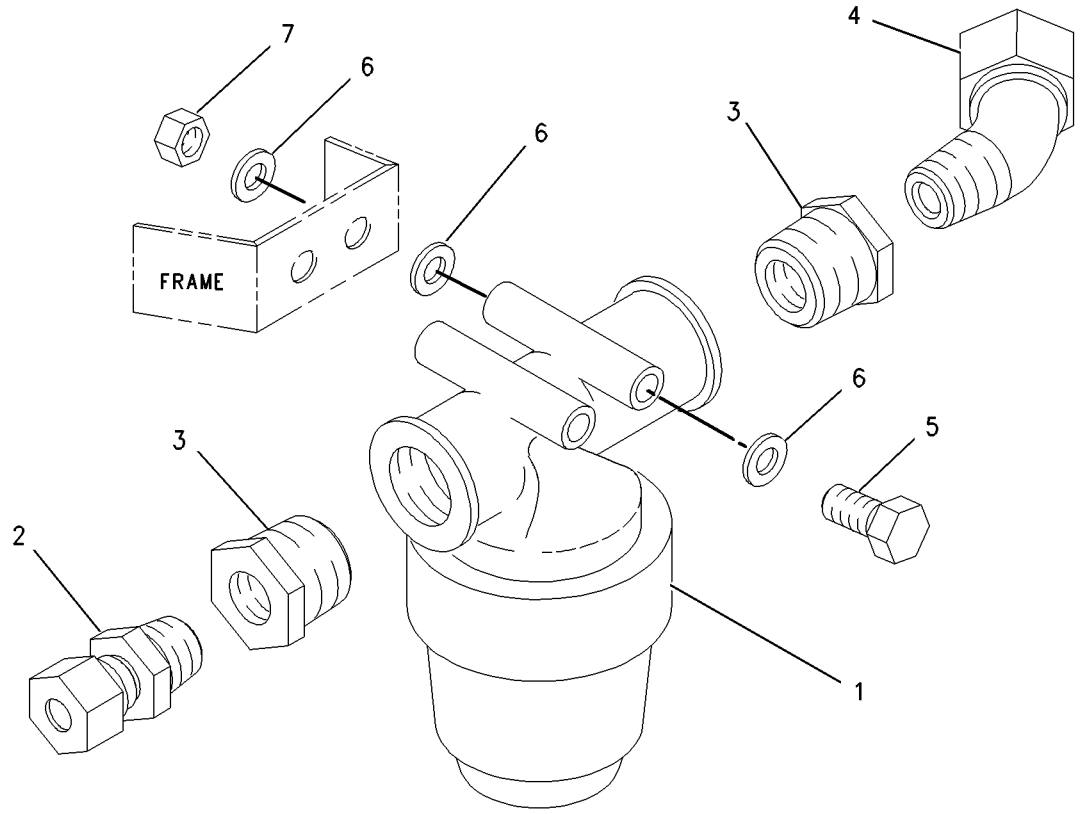

GRAPHIC #1 **<END>** g00747391

WATER SYSTEM

237-5981 LINES GP-WATER SPRAY

S/N: EAE1-UP
PART OF 237-5980 SPRAY AR-WATER
AN ATTACHMENT

SMCS-5612 **i02577771**

NOTE	REF NO	GRAPHIC REF	PART NUMBER	QTY	PART NAME 1 2 3 4 5 6 (PRODUCT LEVEL)	SEE PAGE
	1	1	**7V-6571**	1	GROMMET	
	2	1	**5E-8461**	1	PLUG	
M	3	1	**8T-4137**	1	BOLT (M10X1.5X20-MM)	
	4	1	**8T-4121**	1	WASHER-HARD (11X21X2.5-MM THK)	
	5	1	**5P-4402**	1	CONNECTOR	
	6	1	**6V-1520**	1	VALVE-DRAIN	
	7	1	**6D-4244**	1	CLIP	
	8	1	**003-8470**	1	TEE-PIPE	
	9	1	**7K-1181**	1	STRAP-CABLE	
	10	1	**5P-4425**	1	ELBOW-AIR BRAKE	
	11	1	**1P-4278**	2	CLAMP-HOSE	
E	12	1	**7X-7877**		STRIP-EDGING (19-CM)	
D	13	1	**5P-6014**		TUBE (0.23-M)	
D	14	1	**5P-6014**		TUBE (0.16-M)	
D	15	1	**5P-6014**		TUBE (0.2-M)	
D	16	1	**5P-6014**		TUBE (1.7-M)	

D-ORDER BY THE METER
E-ORDER BY THE CENTIMETER
M-METRIC PART

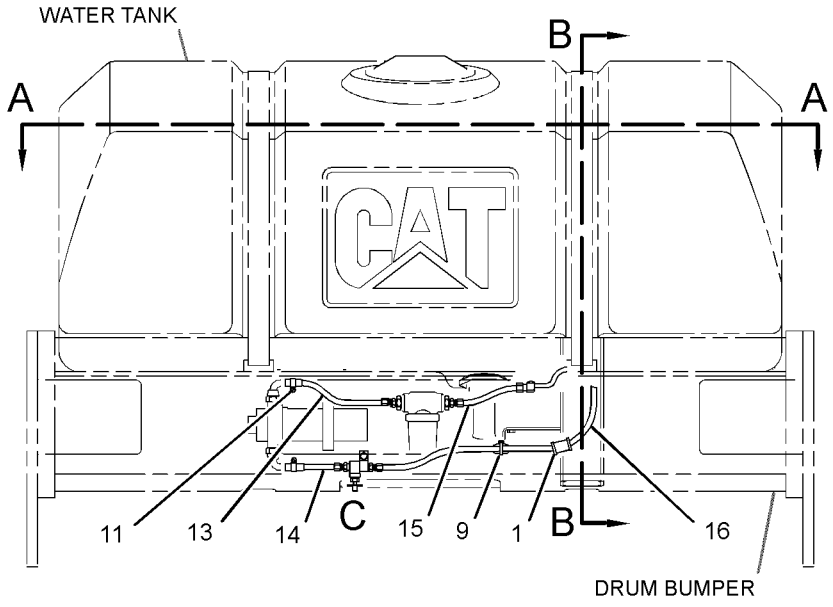

FRONT VIEW

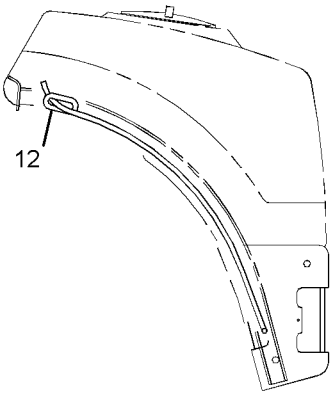

VIEW B-B

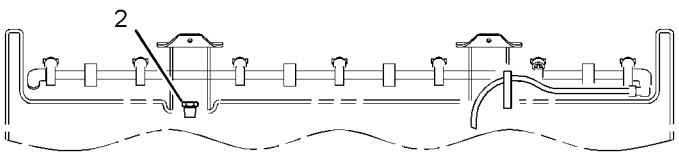

VIEW A-A

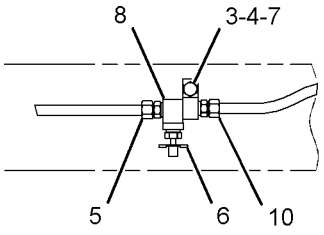

VIEW OF AREA C

GRAPHIC #1 **<END>** g01292705

123-8610 PUMP GP-WATER SPRAY

S/N: EAE1-UP
PART OF 237-5980 SPRAY AR-WATER
AN ATTACHMENT

SMCS-5614 **i02606905**

NOTE	REF NO	GRAPHIC REF	PART NUMBER	QTY	PART NAME 1 2 3 4 5 6 (PRODUCT LEVEL)	SEE PAGE
	1	1	**6R-4076**	2	FITTING-ELBOW	
	2	1	**101-9605**	1	PLATE	
	3	1	**122-1004**	2	CLAMP-HALF	
	4	1	**245-7713**	1	PUMP GP-WATER SPRAY	
	5	1	**246-1109**	1	COVER	
M	6	1	**132-3877**	2	BOLT (M6X1X120-MM)	
	7	1	**9X-8256**	2	WASHER (6.6X12X2-MM THK)	

M-METRIC PART

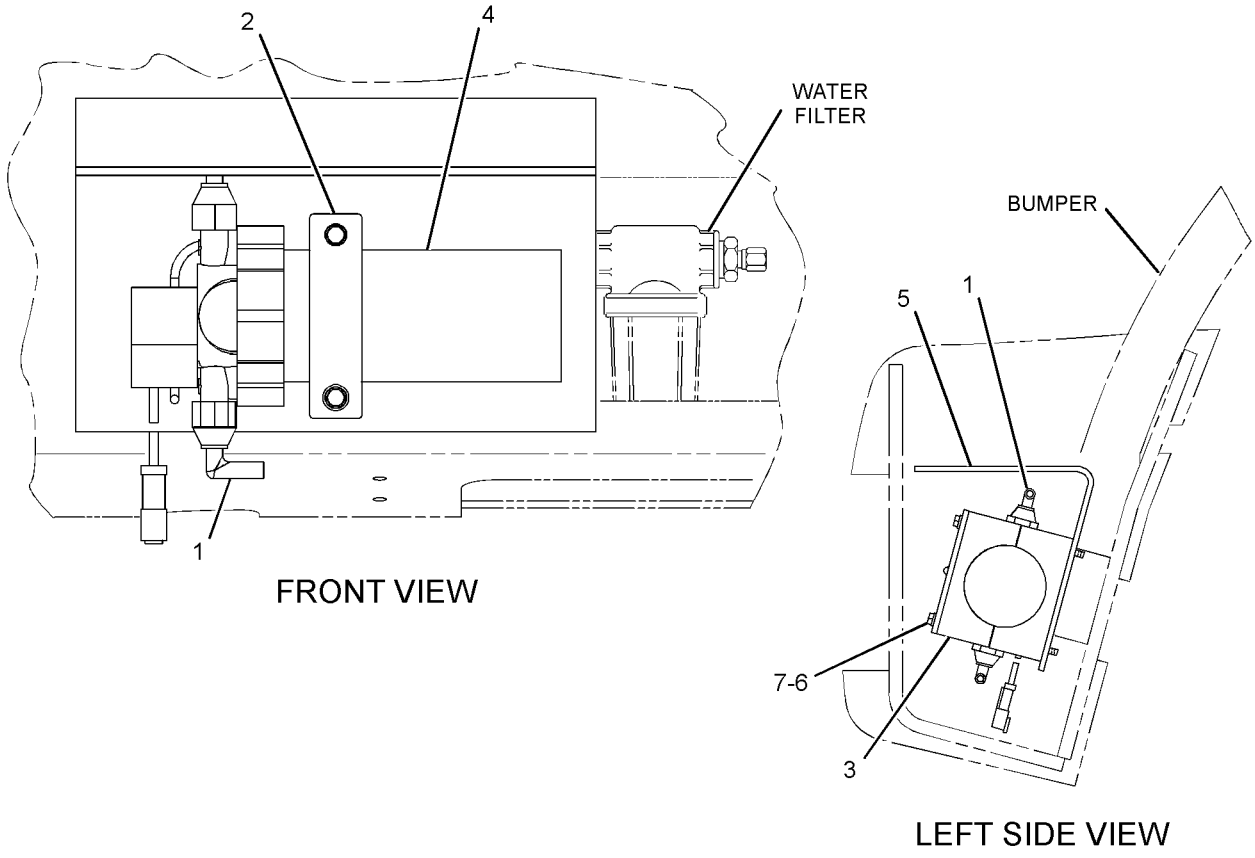

GRAPHIC #1 **<END>** g01348414

WATER SYSTEM

237-5980 SPRAY AR-WATER

S/N: EAE1-UP
PART OF 259-0493 DRUM AR-SMOOTH
AN ATTACHMENT

SMCS-5612 **i02573948**

NOTE	PART NUMBER	QTY	PART NAME 1 2 3 4 5 6 (PRODUCT LEVEL)	SEE PAGE
Y	*125-2407*	1	BAR GP-SPRAY	275
Y	*141-2140*	1	FILTER GP-WATER	277
Y	*237-5981*	1	LINES GP-WATER SPRAY	278
Y	*123-8610*	1	PUMP GP-WATER SPRAY	279
Y	*141-5793*	1	TANK GP-WATER	282
Y	*237-6212*	1	WIRING GP-PUMP (WATER SPRAY)	134

Y-SEPARATE ILLUSTRATION

<END>

WATER SYSTEM

141-5791 TANK GP-WATER

S/N: EAE1-UP
PART OF 141-5793 TANK GP-WATER
AN ATTACHMENT

SMCS-5613 **i02607175**

NOTE	REF NO	GRAPHIC REF	PART NUMBER	QTY	PART NAME 1 2 3 4 5 6 (PRODUCT LEVEL)	SEE PAGE
	1	1	**7R-0431**	6	SCREW (NO 10-16X12.7-MM)	
	2	1	**7R-8588**	1	CAP AS (WATER TANK)	
	3	1	**119-5933**	1	FITTING	
	4	1	**139-1474**	1	TANK AS-WATER	
	5	1	**7R-0376**	1	RIM	
	6	1	**7R-0476**	1	STRAINER (WATER TANK FILL)	

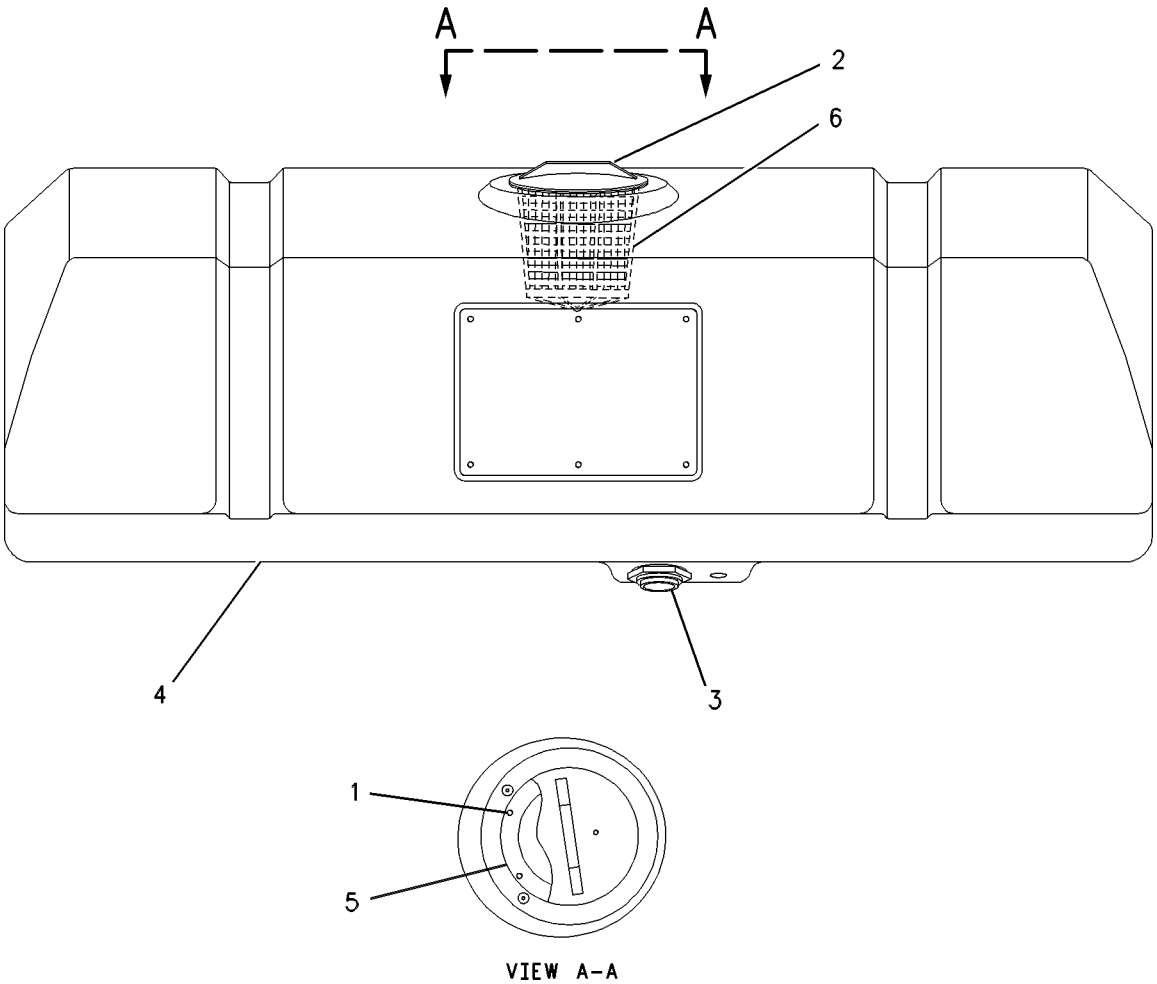

VIEW A-A

GRAPHIC #1 **<END>** g00290452

WATER SYSTEM

141-5793 TANK GP-WATER

S/N: EAE1-UP
PART OF 237-5980 SPRAY AR-WATER
AN ATTACHMENT

SMCS-5613 **i02606919**

NOTE	REF NO	GRAPHIC REF	PART NUMBER	QTY	PART NAME 1 2 3 4 5 6 (PRODUCT LEVEL)	SEE PAGE
Y	1	1	**141-5791**	1	TANK GP-WATER	281
	2	1	**120-4560**	1	FITTING	
	3	1	**6G-9333**	1	CAP-FILLER (WATER TANK DRAIN PLUG)	
	4	1	**120-3966**	1	GAUGE-WATER LEVEL	
	5	1	**081-4049**	1	GASKET	
	6	1	**081-3767**	4	SCREW	
	7	1	**119-5934**	2	STRAP	
	8	1	**8T-4896**	2	WASHER-HARD (10.2X18.5X2.5-MM THK)	
	9	1	**3K-6060**	2	LOCKNUT (3/8-16-THD)	
M	10	1	**8T-4137**	2	BOLT (M10X1.5X20-MM)	
	11	1	**8T-4121**	2	WASHER-HARD (11X21X2.5-MM THK)	
	12	1	**8T-4205**	2	WASHER-HARD (7.2X14.5X2-MM THK)	
	13	1	**7R-8578**	1	LANYARD	
M	14	1	**5C-9553**	2	BOLT (M6X1X16-MM)	
M	15	1	**099-0492**	2	LOCKNUT (M6X1-THD)	
	16	1	**5P-4425**	1	ELBOW-AIR BRAKE	
M	17	1	**8T-4171**	1	BOLT (M6X1X12-MM)	

M-METRIC PART
Y-SEPARATE ILLUSTRATION

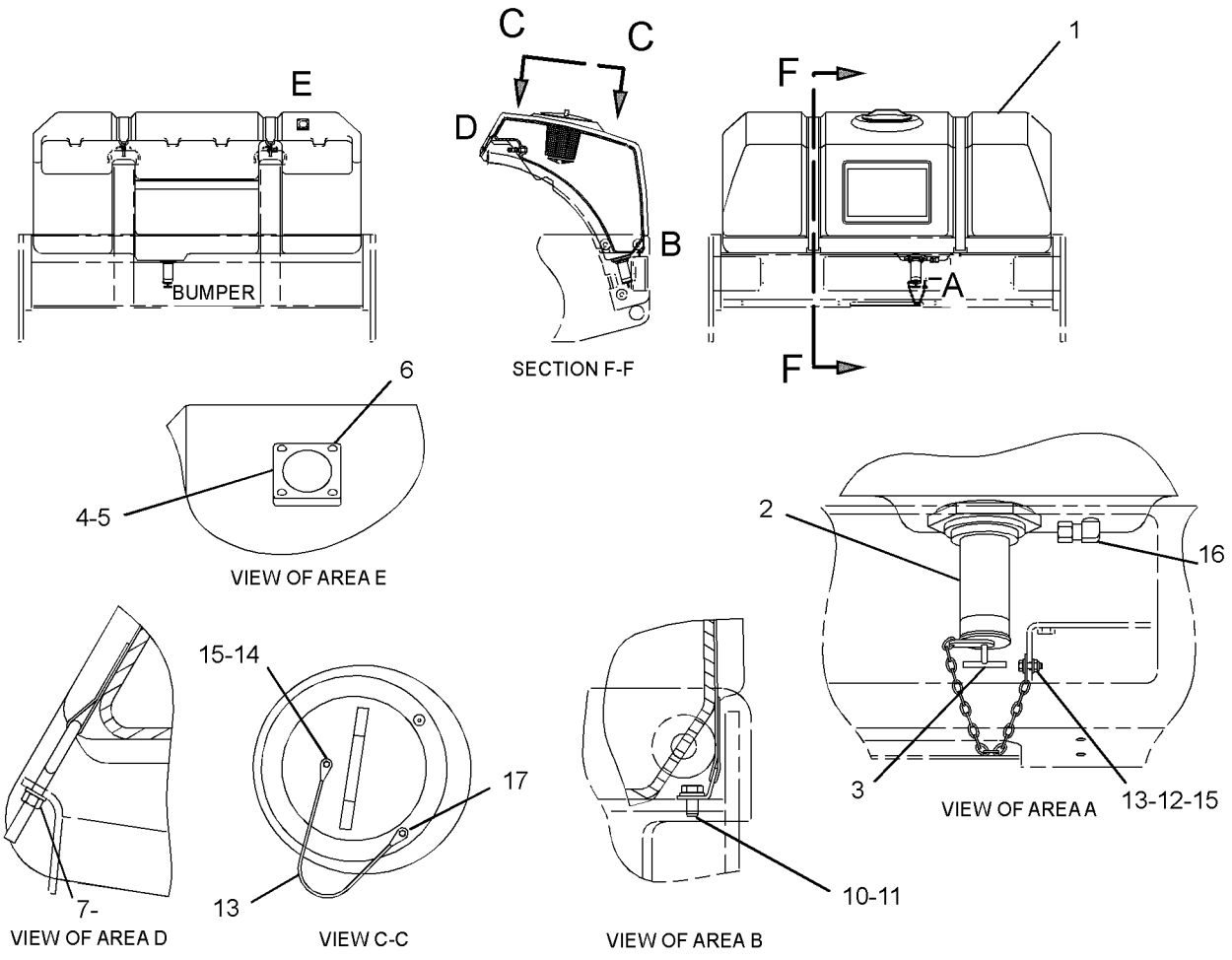

GRAPHIC #1 **<END>** g01305284

176-3900 ACCUMULATOR GP-REFRIGERANT–WITH DESICCANT

S/N: EAE1-UP
PART OF 186-6190 ACCUMULATOR GP-REFRIGERANT
FIELD REPLACEMENT FOR 186-6190–PAGE 284
AN ATTACHMENT

SMCS-7320 **i02108337**

NOTE	REF NO	GRAPHIC REF	PART NUMBER	QTY	PART NAME 1 2 3 4 5 6 (PRODUCT LEVEL)	SEE PAGE
					(NO SERVICED PARTS)	

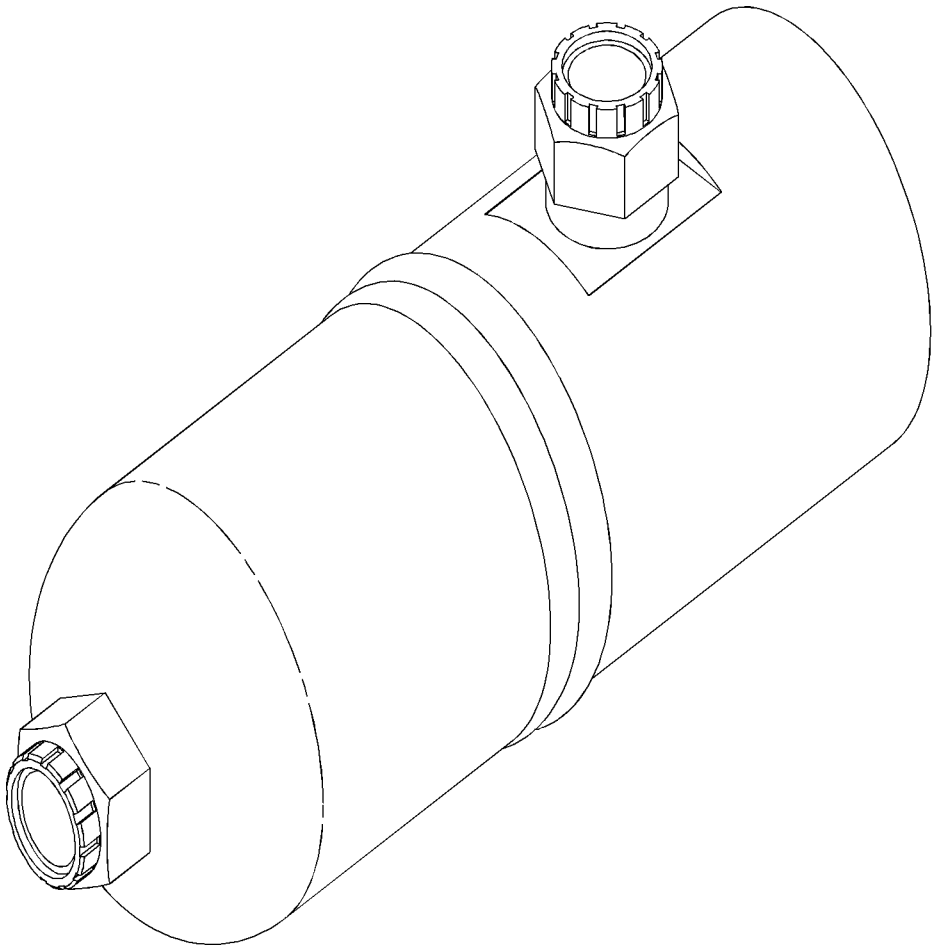

GRAPHIC #1 **<END>** g01035076

186-6190 ACCUMULATOR GP-REFRIGERANT—WITH DESICCANT

S/N: EAE1-UP
PART OF 230-6335 LINES GP-AIR CONDITIONER
FIELD REPLACEMENT ORDER 176-3900—PAGE 283
AN ATTACHMENT

SMCS-7320 **i02108702**

NOTE	REF NO	GRAPHIC REF	PART NUMBER	QTY	PART NAME 1 2 3 4 5 6 (PRODUCT LEVEL)	SEE PAGE
Y	1	1	**176-3900**	1	ACCUMULATOR GP-REFRIGERANT (WITH DESICCANT)	283

Y-SEPARATE ILLUSTRATION

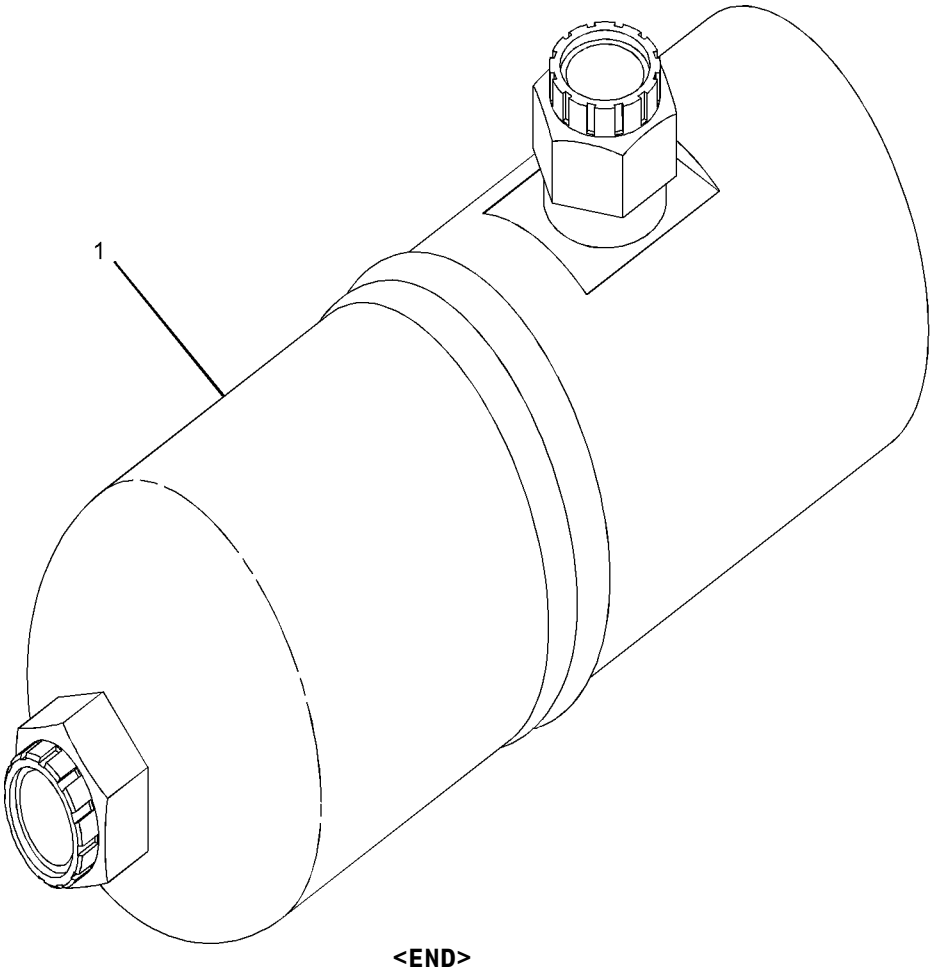

GRAPHIC #1 **<END>** g01034976

OPERATOR STATION

180-9873 AIR CONDITIONER GP

S/N: EAE1-UP

PART OF 240-4683 AIR CONDITIONER GP

AN ATTACHMENT

SMCS-7320 **i02898372**

NOTE	REF NO	GRAPHIC REF	PART NUMBER	QTY	PART NAME 1 2 3 4 5 6 (PRODUCT LEVEL)	SEE PAGE
BE	1	1	**5P-5908**		SEAL	
	2	1	**1P-6522**	1	GROMMET	
	3	1	**2H-3922**	1	LOCKWASHER	
	4	1	**2H-3923**	1	LOCKWASHER	
	5	1	**2S-3745**	6	SCREW-TAPPING (10-16X0.5-IN)	
	6	1	**3B-4501**	2	LOCKWASHER	
	7	1	**3E-1841**	1	LEVER	
	8	1	**3E-5464**	1	SWITCH AS-TEMPERATURE (REFRIGERANT)	
	9	1	**3S-2093**	1	STRAP-CABLE	
M	10	1	**5C-9553**	4	BOLT (M6X1X16-MM)	
	11	1	**6V-1668**	2	WASHER (6.5X29.1X3-MM THK)	
	12	1	**7F-2050**	1	LOCKNUT (3/4-16-THD)	
	13	1	**7F-2060**	1	LOCKNUT (7/8-14-THD)	
	14	1	**8C-4586**	2	CLAMP	
M	15	1	**8C-8457**	1	SCREW-MACHINE (M5X0.8X14-MM)	
	16	1	**9X-2488**	6	CLAMP-HOSE	
M	17	1	**8T-4171**	4	BOLT (M6X1X12-MM)	
	18	1	**8T-4205**	13	WASHER-HARD (7.2X14.5X2-MM THK)	
	19	1	**8T-6631**	2	SCREW-MACHINE (8-32X0.5-IN)	
	20	1	**8Y-5737**	1	CLAMP	
	21	1	**9G-1950**	1	RESISTOR	
M	22	1	**9X-2044**	1	SCREW-TRUSS HEAD (M6X1X16-MM)	
	23	1	**9X-2185**	4	SCREW (8-15X11.11-MM)	
	24	1	**037-4426**	1	RETAINER	
	25	1	**100-3143**	2	PLATE-ORIFICE	
	26	1	**100-3426**	2	WHEEL AS-BLOWER	
					(EACH INCLUDES)	
		1	**037-4838**	2	CLAMP	
	27	1	**102-0341**	1	CLIP	
	28	1	**114-3140**	1	GROMMET	
	29	1	**118-5044**	1	HARNESS AS-HEATER & AIR COND	
		1	**155-2270**	1	KIT-CONNECTING PLUG (2-PIN)	
					(INCLUDES PLUG AS,WEDGE & INTERFACE SEAL)	
		1	**102-8805**	1	KIT-RECEPTACLE (6-PIN)	
					(INCLUDES RECEPTACLE AS & WEDGE)	
		1	**3S-2093**	3	STRAP-CABLE	
	30	1	**118-5046**	1	HOUSING AS	
M		1	**6V-9632**	1	NUT-WELD (M6X1-THD)	
	31	1	**123-8851**	1	CASE AS	
M		1	**6V-9632**	7	NUT-WELD (M6X1-THD)	
	32	1	**124-8494**	2	GASKET	
	33	1	**124-8495**	1	VALVE AS-WATER	
M	34	1	**129-3178**	3	LOCKNUT (M6X1-THD)	
M	35	1	**141-9784**	1	BOLT (M6X1X190-MM)	
	36	1	**151-0894**	1	COVER AS	
M		1	**7X-2478**	2	NUT-WELD (M8X1.25-THD)	
M		1	**8T-3490**	4	NUT-WELD (M10X1.5-THD)	
	37	1	**174-1486**	1	MOTOR AS-BLOWER (24-VOLT, A/C, HEATER)	
		1	**102-8802**	1	KIT-RECEPTACLE (2-PIN)	
					(INCLUDES RECEPTACLE AS & WEDGE)	
		1	**9W-0852**	2	PIN-CONNECTOR (14-GA)	
	38	1	**180-3528**	1	COIL AS-EVAPORATOR	
		1	**189-1707**	1	ORIFICE AS-AIR CONDITIONER	
	39	1	**183-7528**	1	COIL AS-HEATER	
M	40	1	**6V-7728**	1	BOLT (M6X1X45-MM)	

180-9873 **AIR CONDITIONER GP** *(contd.)* **i02898372**

NOTE	REF NO	GRAPHIC REF	PART NUMBER	QTY	PART NAME 1 2 3 4 5 6 (PRODUCT LEVEL)	SEE PAGE
D	41	1	**6V-1392**		SEAL (0.6-M)	
D	41A	1	**6V-1392**		SEAL (1.7-M EACH)	
E	42	1	**136-1953**		HOSE (18-CM)	
E	42A	1	**136-1953**		HOSE (15-CM)	
E	42B	1	**136-1953**		HOSE (23-CM)	
D	43	1	**8T-5372**		SEAL (0.15-M)	
D	43A	1	**8T-5372**		SEAL (0.12-M EACH)	
D	44	1	**5P-7070**		INSULATION-STRIP (0.6-M EACH)	
D	45	1	**5P-5643**		SEAL (0.4-M)	

B-USE AS REQUIRED
D-ORDER BY THE METER
E-ORDER BY THE CENTIMETER
M-METRIC PART

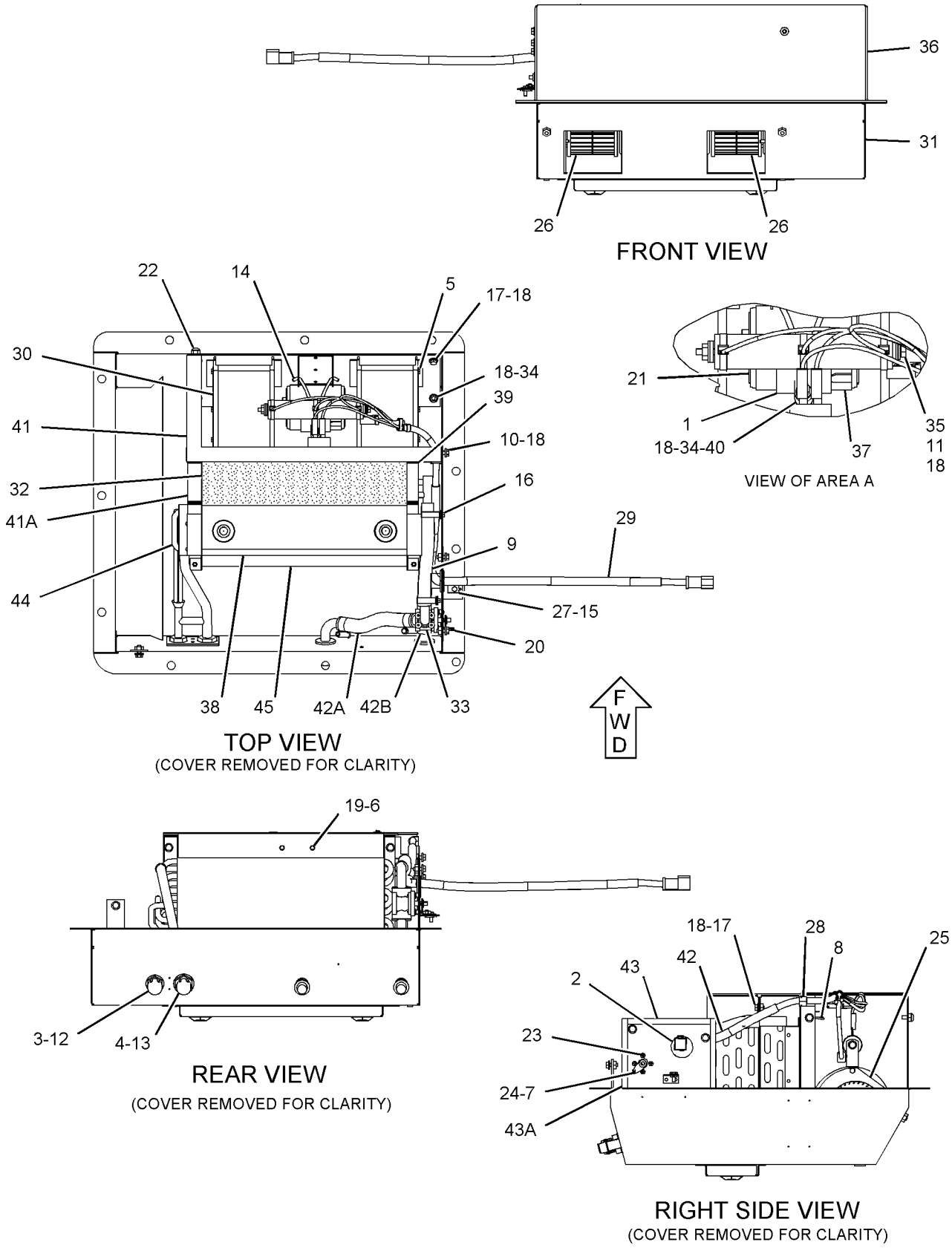

GRAPHIC #1 **<END>** g01332234

OPERATOR STATION

240-4683 AIR CONDITIONER GP

S/N: EAE1-UP
PART OF 249-5075 OPERATOR AR
AN ATTACHMENT

SMCS-7320 **i02898391**

NOTE	REF NO	GRAPHIC REF	PART NUMBER	QTY	PART NAME 1 2 3 4 5 6 (PRODUCT LEVEL)	SEE PAGE
	1	1	**6T-6329**	1	BEZEL	
	2	1	**6V-8927**	2	BOLT-SOCKET HEAD (6-32X0.5-IN)	
	3	1	**9X-8117**	2	TUBE AS	
	4	1	**110-6109**	1	KNOB-CONTROL	
	5	1	**118-7259**	1	GASKET	
	6	1	**156-4449**	1	CABLE AS (HEATER TEMPERATURE CONTROL)	
		1	**2H-3920**	2	LOCKWASHER	
		1	**6V-8369**	1	NUT (7/16-28-THD)	
		1	**143-8874**	1	BOOT	
Y	7	1	**180-9873**	1	AIR CONDITIONER GP	285
	8	1	**144-0900**	1	SWITCH AS-ROCKER (AIR CONDITIONER)	
		1	**3L-8187**	3	LOCKWASHER	
		1	**6V-8374**	3	SCREW-MACHINE (6-32X0.25-IN)	
	9	1	**7X-0579**	11	WASHER-HARD (8.8X25.5X2-MM THK)	
M	10	1	**8T-4908**	11	BOLT (M8X1.25X25-MM)	
BD	11	1	**5P-5643**		SEAL	

B-USE AS REQUIRED
D-ORDER BY THE METER
M-METRIC PART
Y-SEPARATE ILLUSTRATION

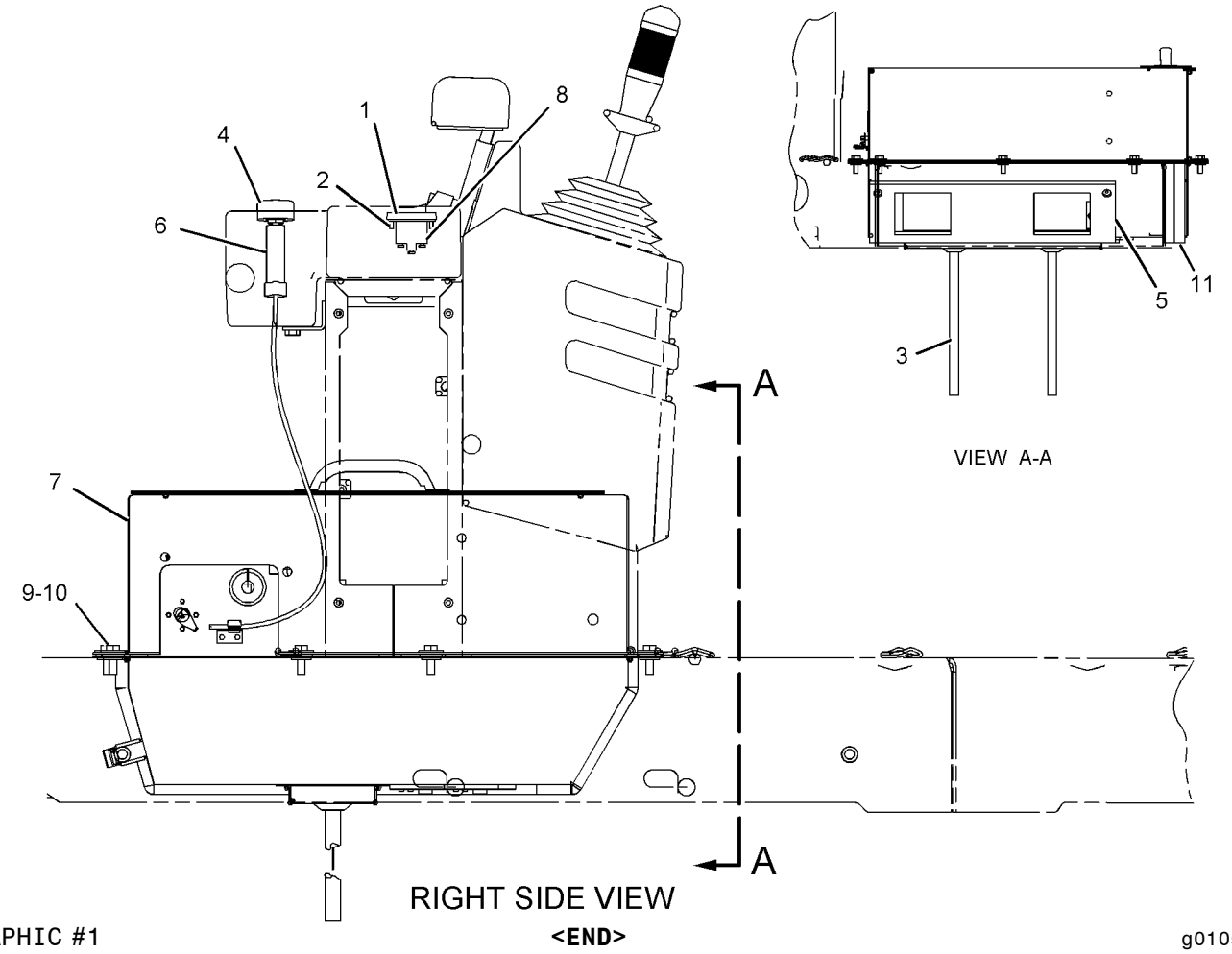

GRAPHIC #1

<END>

g01055069

OPERATOR STATION

223-4791 CAB AR

S/N: EAE1-UP
PART OF 249-5075, 249-5076 OPERATOR AR
AN ATTACHMENT

SMCS-7301 **i02130594**

NOTE	PART NUMBER	QTY	PART NAME 1 2 3 4 5 6 (PRODUCT LEVEL)	SEE PAGE
Y	*143-5948*	1	DUCT GP-AIR	318
Y	*226-7758*	1	LIGHTING GP-FLOOD	113
Y	*214-4073*	1	LINER GP-CAB	328
Y	*223-4792*	1	ROPS GP-ENCLOSED	370
Y	*223-4793*	1	WIPER & WASHER GP-WINDOW	389
Y	*226-8940*	1	WIRING GP-CAB	125
Y-SEPARATE ILLUSTRATION				

<END>

254-5054 CAB AR

S/N: EAE1-UP
PART OF 249-5075, 249-5076 OPERATOR AR
AN ATTACHMENT

SMCS-7301 **i02187898**

NOTE	PART NUMBER	QTY	PART NAME 1 2 3 4 5 6 (PRODUCT LEVEL)	SEE PAGE
Y	*143-5948*	1	DUCT GP-AIR	318
Y	*226-7758*	1	LIGHTING GP-FLOOD	113
Y	*214-4073*	1	LINER GP-CAB	328
Y	*254-5057*	1	ROPS GP-ENCLOSED	371
Y	*223-4793*	1	WIPER & WASHER GP-WINDOW	389
Y	*226-8940*	1	WIRING GP-CAB	125
Y-SEPARATE ILLUSTRATION				

<END>

259-4423 CAB AR

S/N: EAE1-UP
PART OF 249-5075, 249-5076 OPERATOR AR
AN ATTACHMENT

SMCS-7301 **i02251822**

NOTE	PART NUMBER	QTY	PART NAME 1 2 3 4 5 6 (PRODUCT LEVEL)	SEE PAGE
Y	*143-5948*	1	DUCT GP-AIR	318
Y	*226-7758*	1	LIGHTING GP-FLOOD	113
Y	*214-4073*	1	LINER GP-CAB	328
Y	*254-5057*	1	ROPS GP-ENCLOSED	371
Y	*223-4793*	1	WIPER & WASHER GP-WINDOW	389
Y	*226-8940*	1	WIRING GP-CAB	125
Y-SEPARATE ILLUSTRATION				

<END>

OPERATOR STATION

225-7714 CAB GP-ENCLOSED ROPS

S/N: EAE1-242
PART OF 223-4792 ROPS GP-ENCLOSED
AN ATTACHMENT

SMCS-7301 **i01972562**

NOTE	REF NO	GRAPHIC REF	PART NUMBER	QTY	PART NAME 1 2 3 4 5 6 (PRODUCT LEVEL)	SEE PAGE
	1	1	**8Y-6377**	1	STRIKER	
	2	1	**107-6145**	1	GLASS-FRONT (CENTER)	
	3	1	**111-0204**	1	PLATE AS	
	4	1	**146-9006**	1	GLASS (LH)	
	5	1	**146-9007**	1	GLASS (RH)	
Y	6	1	**153-7817**	1	WINDOW GP (CAB)	384
	7	1	**212-9428**	1	STRIKER AS	
	8	1	**225-7715**	1	GLASS (RH)	
	9	1	**225-7716**	1	GLASS (LH)	
	10	1	**225-7717**	1	GLASS (REAR)	
	11	1	**225-7718**	1	CAB AS	
	12	1	**108-4311**	1	SCREW-MACHINE (3/8-16X0.75-IN)	
	13	1	**5P-4116**	2	WASHER-HARD (8.8X20.5X2-MM THK)	
	14	1	**8T-4121**	6	WASHER-HARD (11X21X2.5-MM THK)	
M	15	1	**8T-4137**	2	BOLT (M10X1.5X20-MM)	
M	16	1	**8T-4189**	8	BOLT (M8X1.25X20-MM)	
	17	1	**8T-4224**	6	WASHER-HARD (8.8X16X2-MM THK)	
M	18	1	**9X-2041**	4	SCREW-TRUSS HEAD (M10X1.5X20-MM)	

M-METRIC PART
Y-SEPARATE ILLUSTRATION

225-7714 CAB GP-ENCLOSED ROPS *(contd.)* i01972562

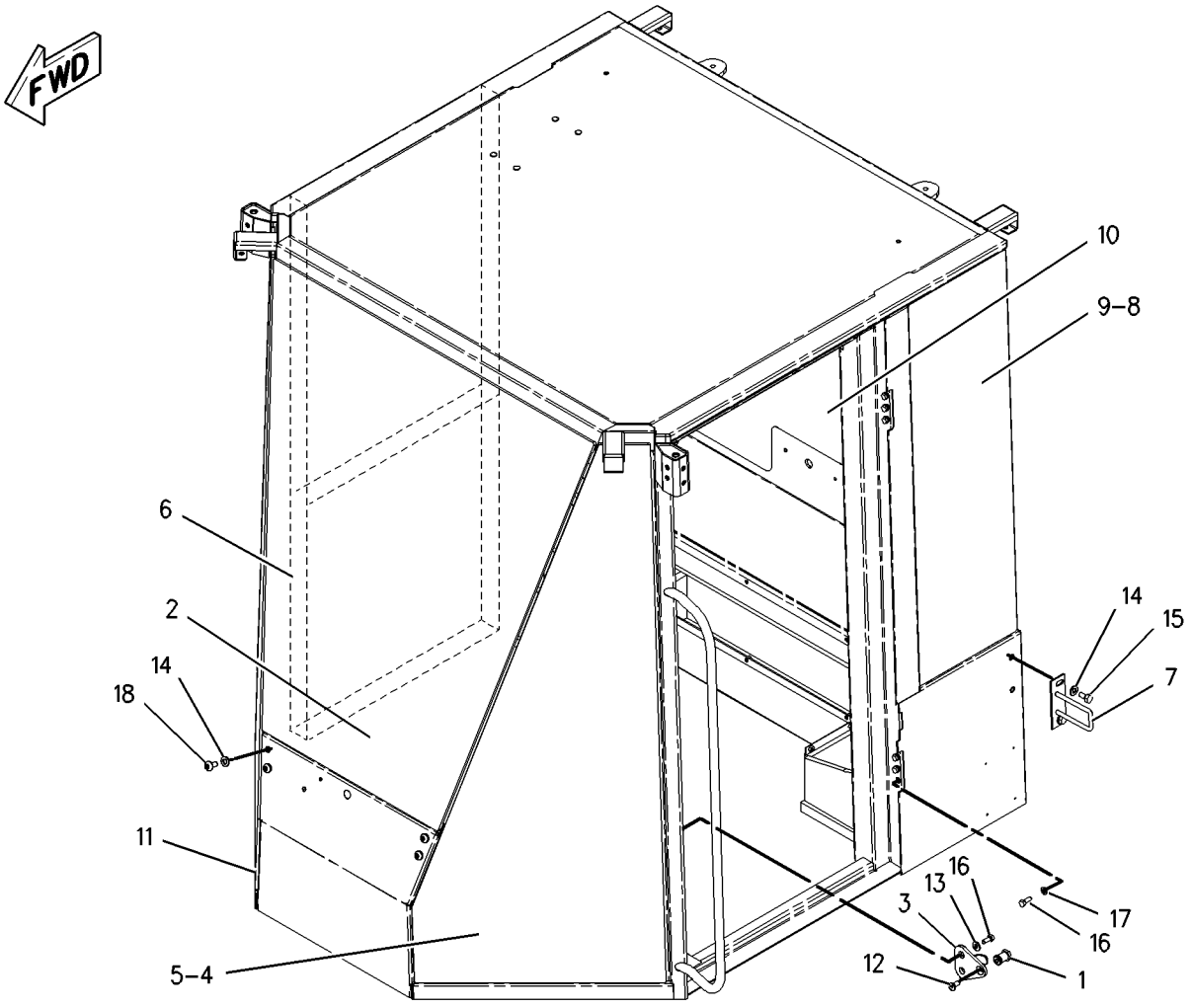

GRAPHIC #1 **<END>** g01004393

OPERATOR STATION

254-5058 CAB GP-ENCLOSED ROPS

S/N: EAE1-UP
PART OF 254-5057 ROPS GP-ENCLOSED
AN ATTACHMENT
TYPE 1

SMCS-7301 **i02898373**

NOTE	REF NO	GRAPHIC REF	PART NUMBER	QTY	PART NAME 1 2 3 4 5 6 (PRODUCT LEVEL)	SEE PAGE
	1	1	**8Y-6377**	1	STRIKER	
	2	1	**107-6145**	1	GLASS-FRONT (CENTER)	
	3	1	**111-0204**	1	PLATE AS	
	4	1	**146-9006**	1	GLASS (FRONT, LH)	
	5	1	**146-9007**	1	GLASS (FRONT, RH)	
Y	6	1	**153-7817**	1	WINDOW GP (CAB)	384
	7	1	**212-9428**	1	STRIKER AS	
	8	1	**224-9392**	4	FASTENER-SINGLE HEAD	
	9	1	**225-7715**	1	GLASS (LH)	
	10	1	**225-7716**	1	GLASS (FRONT)	
	11	1	**225-7717**	1	GLASS (REAR)	
	12	1	**254-5060**	1	CAB AS	
	13	1	**108-4311**	1	SCREW-MACHINE (3/8-16X0.75-IN)	
	14	1	**5P-4116**	2	WASHER-HARD (8.8X20.5X2-MM THK)	
	15	1	**8T-4121**	6	WASHER-HARD (11X21X2.5-MM THK)	
M	16	1	**8T-4137**	2	BOLT (M10X1.5X20-MM)	
M	17	1	**8T-4189**	8	BOLT (M8X1.25X20-MM)	
	18	1	**8T-4224**	6	WASHER-HARD (8.8X16X2-MM THK)	

M-METRIC PART
Y-SEPARATE ILLUSTRATION

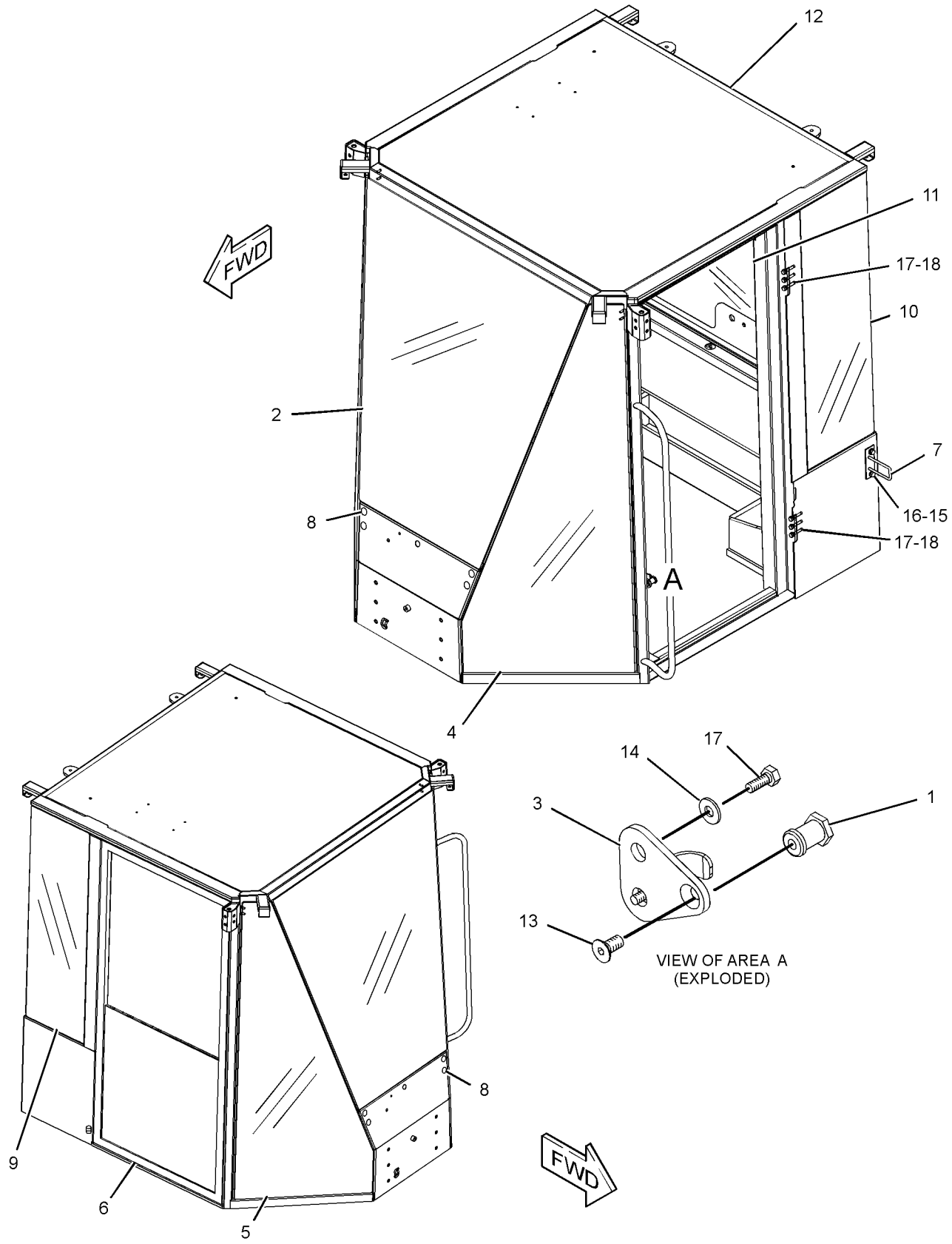

GRAPHIC #1 **<END>** g01203559

OPERATOR STATION

254-5058 CAB GP-ENCLOSED ROPS

S/N: EAE1-UP
PART OF 254-5057 ROPS GP-ENCLOSED
AN ATTACHMENT
TYPE 2

SMCS-7301 **i02863366**

NOTE	REF NO	GRAPHIC REF	PART NUMBER	QTY	PART NAME 1 2 3 4 5 6 (PRODUCT LEVEL)	SEE PAGE
	1	1	**8Y-6377**	1	STRIKER	
	2	1	**107-6145**	1	GLASS-FRONT (CENTER)	
	3	1	**111-0204**	1	PLATE AS	
	4	1	**146-9006**	1	GLASS (LH, FRONT)	
	5	1	**146-9007**	1	GLASS (RH, FRONT)	
CY	6	1	**288-8880**	1	WINDOW GP-REAR	388
	7	1	**212-9428**	1	STRIKER AS (DOOR LATCH)	
	8	1	**224-9392**	4	FASTENER-SINGLE HEAD	
	9	1	**225-7715**	1	GLASS (LH)	
	10	1	**225-7716**	1	GLASS (FRONT)	
	11	1	**225-7717**	1	GLASS (REAR)	
	12	1	**254-5060**	1	CAB AS	
	13	1	**108-4311**	1	SCREW-MACHINE (3/8-16X0.75-IN)	
	14	1	**5P-4116**	2	WASHER-HARD (8.8X20.5X2-MM THK)	
	15	1	**8T-4121**	2	WASHER-HARD (11X21X2.5-MM THK)	
M	16	1	**8T-4137**	2	BOLT (M10X1.5X20-MM)	
M	17	1	**8T-4189**	8	BOLT (M8X1.25X20-MM)	
	18	1	**8T-4224**	6	WASHER-HARD (8.8X16X2-MM THK)	

C-CHANGE FROM PREVIOUS TYPE
M-METRIC PART
Y-SEPARATE ILLUSTRATION

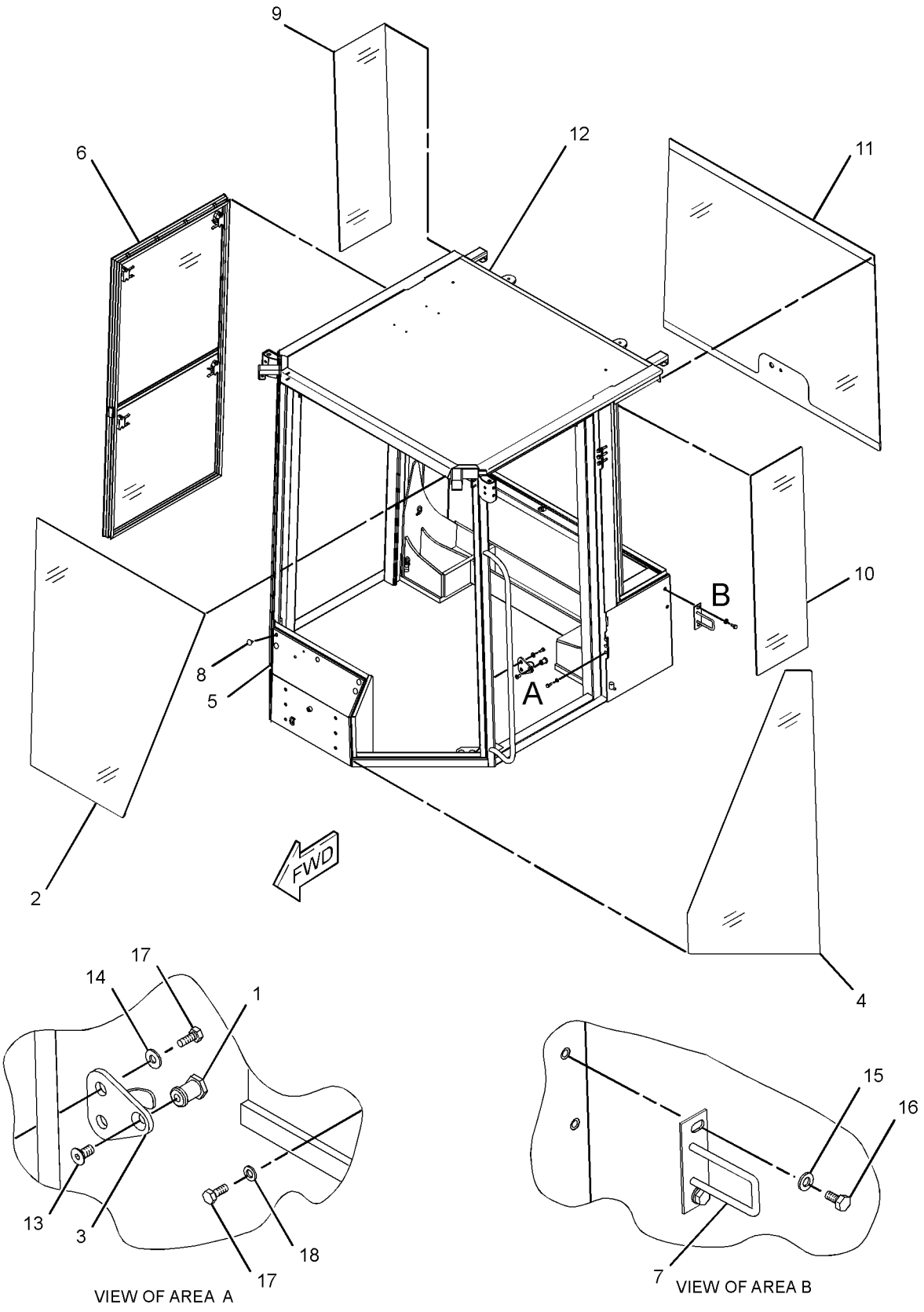

GRAPHIC #1 **<END>** g01259266

OPERATOR STATION

217-0568 CANOPY GP

S/N: EAE1-UP
PART OF 236-2234 OPERATOR AR
AN ATTACHMENT

SMCS-7302 **i02898375**

NOTE	REF NO	GRAPHIC REF	PART NUMBER	QTY	PART NAME 1 2 3 4 5 6 (PRODUCT LEVEL)	SEE PAGE
	1	1	**172-4459**	1	CANOPY AS	
		1	**7T-1099**	16	LINK	
		1	**7X-0586**	8	WASHER-HARD (7.2X32X2-MM THK)	
M		1	**8T-4171**	8	BOLT (M6X1X12-MM)	
	2	1	**172-4463**	1	FILM-WARNING (NON ROPS/FOPS)	
	3	1	**217-1581**	1	SPACER	
M	4	1	**7X-2575**	5	BOLT (M24X3X60-MM)	
M	5	1	**7X-2576**	2	BOLT (M24X3X70-MM)	
	6	1	**8T-4167**	7	WASHER-HARD (26X44X4-MM THK)	
D	7	1	**8T-3426**		CHANNEL-TRIM (2.8-M)	

D-ORDER BY THE METER
M-METRIC PART

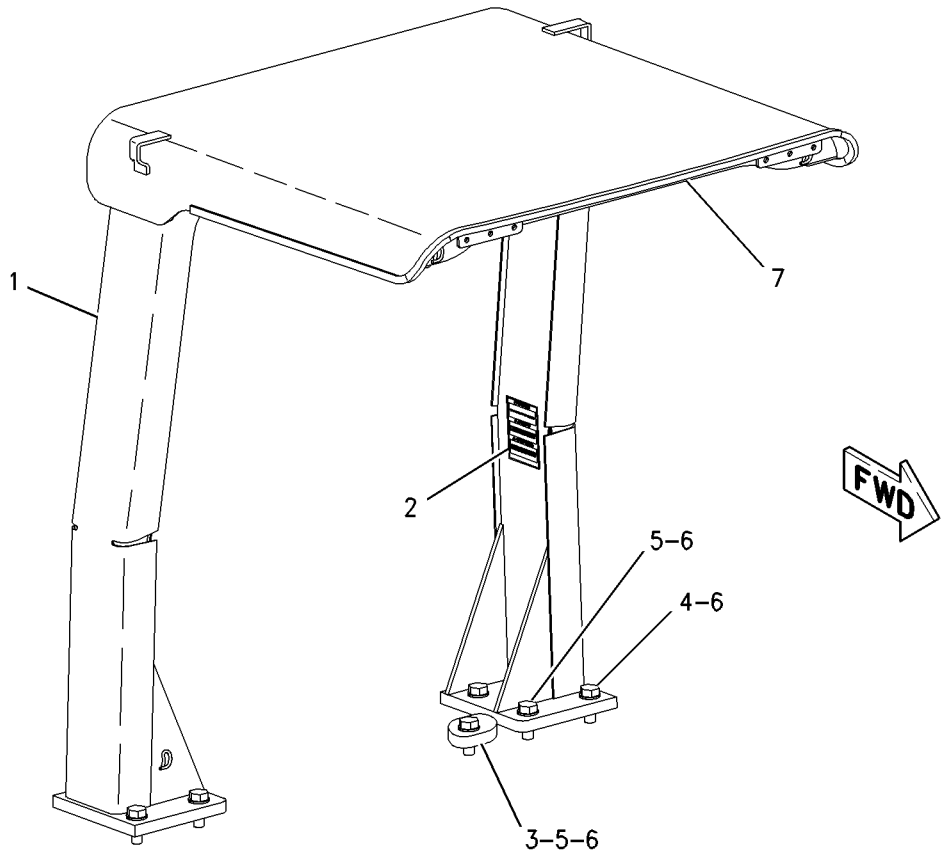

GRAPHIC #1 **<END>** g00942794

OPERATOR STATION

3E-1906 COMPRESSOR GP-REFRIGERANT

S/N: EAE1-UP

PART OF 229-5003 COMPRESSOR GP-REFRIGERANT

AN ATTACHMENT

SMCS-1802 **i01966550**

NOTE	REF NO	GRAPHIC REF	PART NUMBER	QTY	PART NAME 1 2 3 4 5 6 (PRODUCT LEVEL)	SEE PAGE
C	1	1	**7T-4532**	1	PLUG AS	
C	2	1	**9X-7385**	2	SEAL-O-RING	
	3	1	**114-3469**	1	VALVE GP-RELIEF (REFRIGERANT COMPRESSOR)	
		1	**9X-7378**	1	SEAL-O-RING	
	4	1	**102-8802**	1	KIT-RECEPTACLE (2-PIN)	
					(INCLUDES RECEPTACLE AS & WEDGE)	

C-CHANGE FROM PREVIOUS TYPE

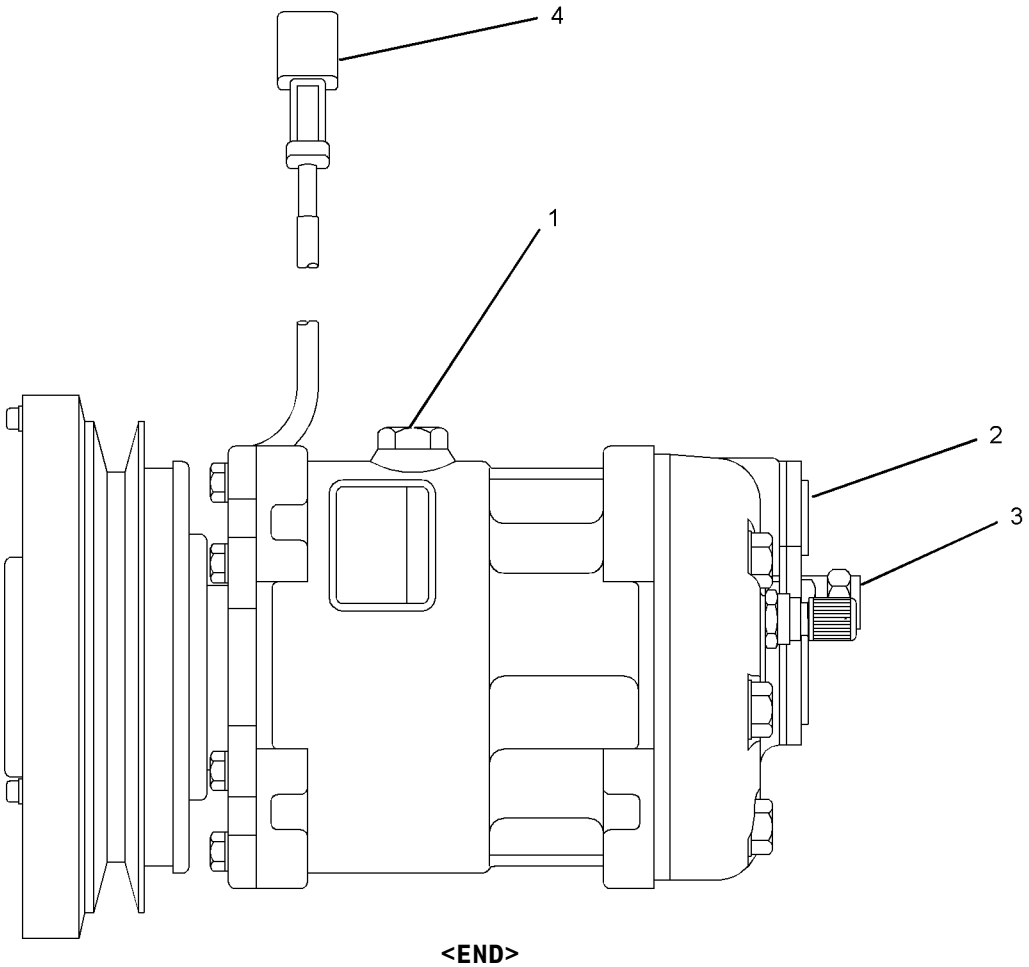

GRAPHIC #1 **<END>** g01008728

OPERATOR STATION

229-5003 COMPRESSOR GP-REFRIGERANT

S/N: EAE1-UP
PART OF 249-5075 OPERATOR AR
AN ATTACHMENT

SMCS-1802 **i02898376**

NOTE	REF NO	GRAPHIC REF	PART NUMBER	QTY	PART NAME 1 2 3 4 5 6 (PRODUCT LEVEL)	SEE PAGE
	1	1	**2P-4191**	1	V-BELT (A/C COMPRESSOR)	
Y	2	1	**3E-1906**	1	COMPRESSOR GP-REFRIGERANT	297
	3	1	**114-5333**	1	SWITCH AS-PRESSURE (AIR CONDITIONER) (LOW CHARGE)	
		1	**102-8802**	1	KIT-RECEPTACLE (2-PIN)	
					(INCLUDES RECEPTACLE AS & WEDGE)	
		1	**3E-3365**	1	WEDGE-RECEPTACLE LOCK (2-PIN)	
		1	**186-3735**	2	PIN-CONNECTOR (16-GA TO 18-GA)	
E		1	**9X-1386**		SLEEVE (25-CM)	
	4	1	**115-4204**	1	PULLEY AS-IDLER	
		1	**2L-8509**	1	RING-LOCK	
		1	**100-6267**	1	PLATE AS-IDLER	
		1	**115-4237**	1	PULLEY-IDLER	
		1	**156-1871**	2	BALL BEARING	
	5	1	**231-8106**	1	BRACKET	
	6	1	**231-8107**	1	BRACKET	
	7	1	**232-5203**	1	GUARD AS-AIR CONDITIONER	
M		1	**8T-3490**	2	NUT-WELD (M10X1.5-THD)	
		1	**9X-2027**	1	WASHER (11X18X2-MM THK)	
	8	1	**125-2796**	1	FITTING AS-AIR CONDITIONER	
		1	**3E-4051**	1	CAP-SEAL	
		1	**3E-4057**	1	VALVE AS	
	9	1	**1P-6356**	1	PLATE	
	10	1	**3E-4053**	1	FITTING AS-AIR CONDITIONER	
		1	**3E-4052**	1	CAP-SEAL	
		1	**3E-4058**	1	VALVE AS	
	11	1	**4D-7794**	1	CLIP	
	12	1	**5P-4116**	4	WASHER-HARD (8.8X20.5X2-MM THK)	
	13	1	**7X-7729**	2	WASHER (11X25X3-MM THK)	
	14	1	**8T-4121**	10	WASHER-HARD (11X21X2.5-MM THK)	
M	15	1	**8T-4133**	2	NUT (M10X1.5-THD)	
M	16	1	**8T-4137**	1	BOLT (M10X1.5X20-MM)	
M	17	1	**8T-4186**	4	BOLT (M10X1.5X40-MM)	
M	18	1	**8T-4196**	4	BOLT (M10X1.5X35-MM)	
M	19	1	**8T-4908**	2	BOLT (M8X1.25X25-MM)	
M	20	1	**8T-6466**	1	BOLT (M10X1.5X60-MM)	
M	21	1	**8T-7547**	2	BOLT (M8X1.25X30-MM)	
	22	1	**9X-2027**	4	WASHER (11X18X2-MM THK)	
	23	1	**9X-7378**	1	SEAL-O-RING	

E-ORDER BY THE CENTIMETER
M-METRIC PART
Y-SEPARATE ILLUSTRATION

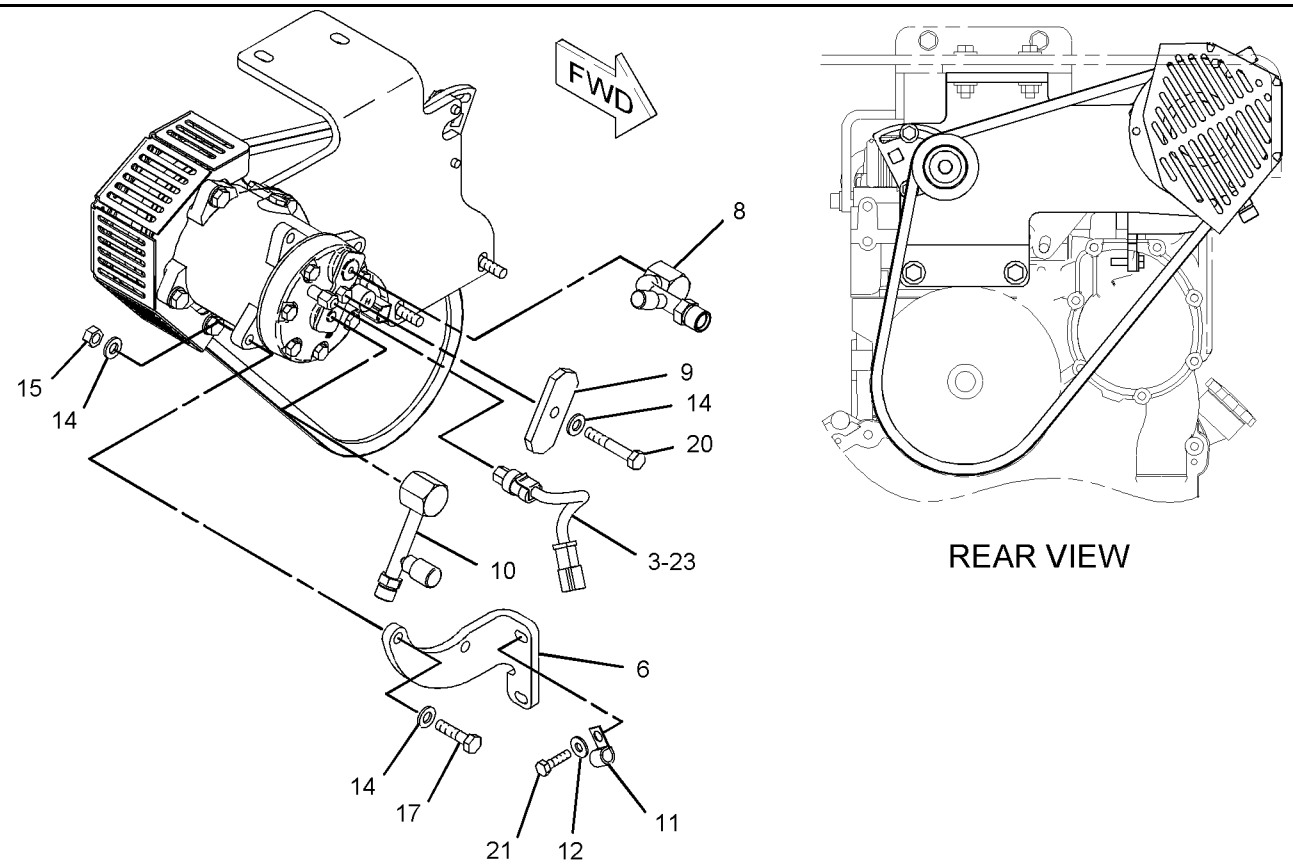

GRAPHIC #1 **<END>** g01035318

OPERATOR STATION

153-7145 CONDENSER & MTG GP-REFRIGERANT

S/N: EAE1-UP
PART OF 249-5075 OPERATOR AR
AN ATTACHMENT

SMCS-1805 **i02898377**

NOTE	REF NO	GRAPHIC REF	PART NUMBER	QTY	PART NAME 1 2 3 4 5 6 (PRODUCT LEVEL)	SEE PAGE
	1	1	**198-7360**	1	CONDENSER GP-REFRIGERANT	
M	2	1	**8T-4200**	2	BOLT (M8X1.25X16-MM)	
	3	1	**8T-4224**	2	WASHER-HARD (8.8X16X2-MM THK)	

M-METRIC PART

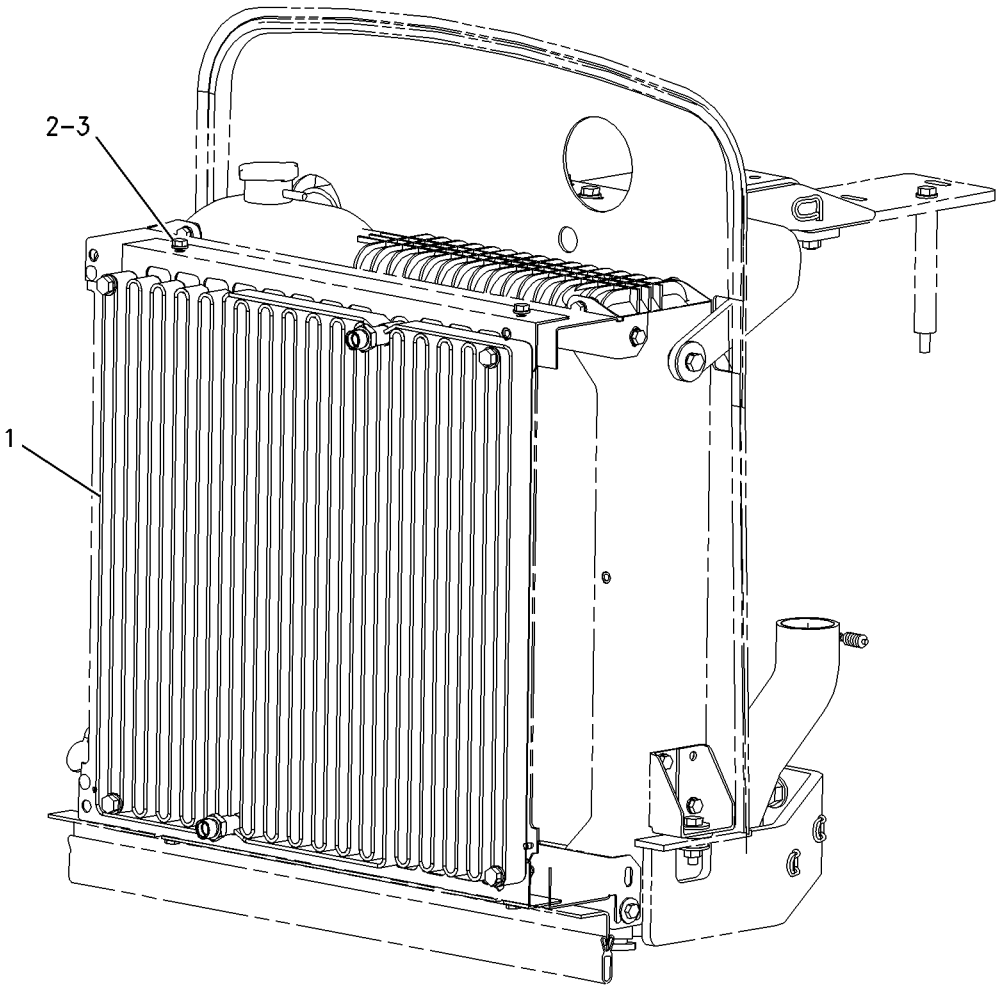

GRAPHIC #1 **<END>** g00832026

OPERATOR STATION

153-7111 CONTROL GP-DIRECTION & SPEED

S/N: EAE1-UP
PART OF 229-8706, 236-2234 OPERATOR AR
AN ATTACHMENT

SMCS-3065, 5462 **i02233840**

NOTE	REF NO	GRAPHIC REF	PART NUMBER	QTY	PART NAME 1 2 3 4 5 6 (PRODUCT LEVEL)	SEE PAGE
	1	1	**4E-1062**	1	CUSHION AS-ARMREST	
	2	1	**6V-8187**	2	NUT (1/4-28-THD)	
	3	1	**107-6050**	1	SUPPORT AS	
	4	1	**111-7875**	1	PLATE	
	5	1	**123-1204**	1	CABLE-PROPEL	
	6	1	**151-8110**	1	SUPPORT AS	
M		1	**8T-3612**	1	NUT-WELD (M8X1.25-THD)	
	7	1	**153-3605**	1	COVER AS	
	8	1	**187-2082**	1	LEVER-CONTROL (ARMREST ADJUSTMENT)	
CY	9	1	*242-7158*	1	LINKAGE GP	333
	10	1	**256-5067**	1	BRACKET	
C	11	1	**241-8899**	1	PLATE	
	12	1	**197-3229**	1	FILM-IDENTIFICATION (OPERATOR CONTROLS)	
Y	13	1	**197-3300**	1	CONTROL GP-PROPEL	306
	14	1	**3B-4607**	1	PIN-COTTER	
M	15	1	**5C-2890**	4	NUT (M6X1-THD)	
M	16	1	**5C-7261**	2	NUT (M8X1.25-THD)	
	17	1	**5P-4115**	6	WASHER-HARD (7.2X19X2-MM THK)	
	18	1	**5P-9299**	2	CLIP	
	19	1	**6V-3338**	1	END-YOKE ROD	
CM	20	1	**6V-9189**	6	LOCKNUT (M8X1.25-THD)	
	21	1	**7B-7210**	1	PIN	
M	22	1	**7X-2537**	1	BOLT (M8X1.25X35-MM)	
	23	1	**8T-4121**	8	WASHER-HARD (11X21X2.5-MM THK)	
M	24	1	**8T-4136**	2	BOLT (M10X1.5X25-MM)	
M	25	1	**8T-4195**	6	BOLT (M10X1.5X30-MM)	
M	26	1	**5C-9553**	2	BOLT (M6X1X16-MM)	
M	27	1	**8T-4189**	2	BOLT (M8X1.25X20-MM)	
C	28	1	**8T-4224**	10	WASHER-HARD (8.8X16X2-MM THK)	
CM	29	1	**8T-4908**	4	BOLT (M8X1.25X25-MM)	
M	30	1	**9X-2042**	6	SCREW-TRUSS HEAD (M6X1X12-MM)	
M	31	1	**9X-2045**	6	SCREW-TRUSS HEAD (M6X1X20-MM)	
C	32	1	**5P-4116**	4	WASHER-HARD (8.8X20.5X2-MM THK)	
C	33	1	**241-8898**	1	PLATE	

C-CHANGE FROM PREVIOUS TYPE
M-METRIC PART
Y-SEPARATE ILLUSTRATION

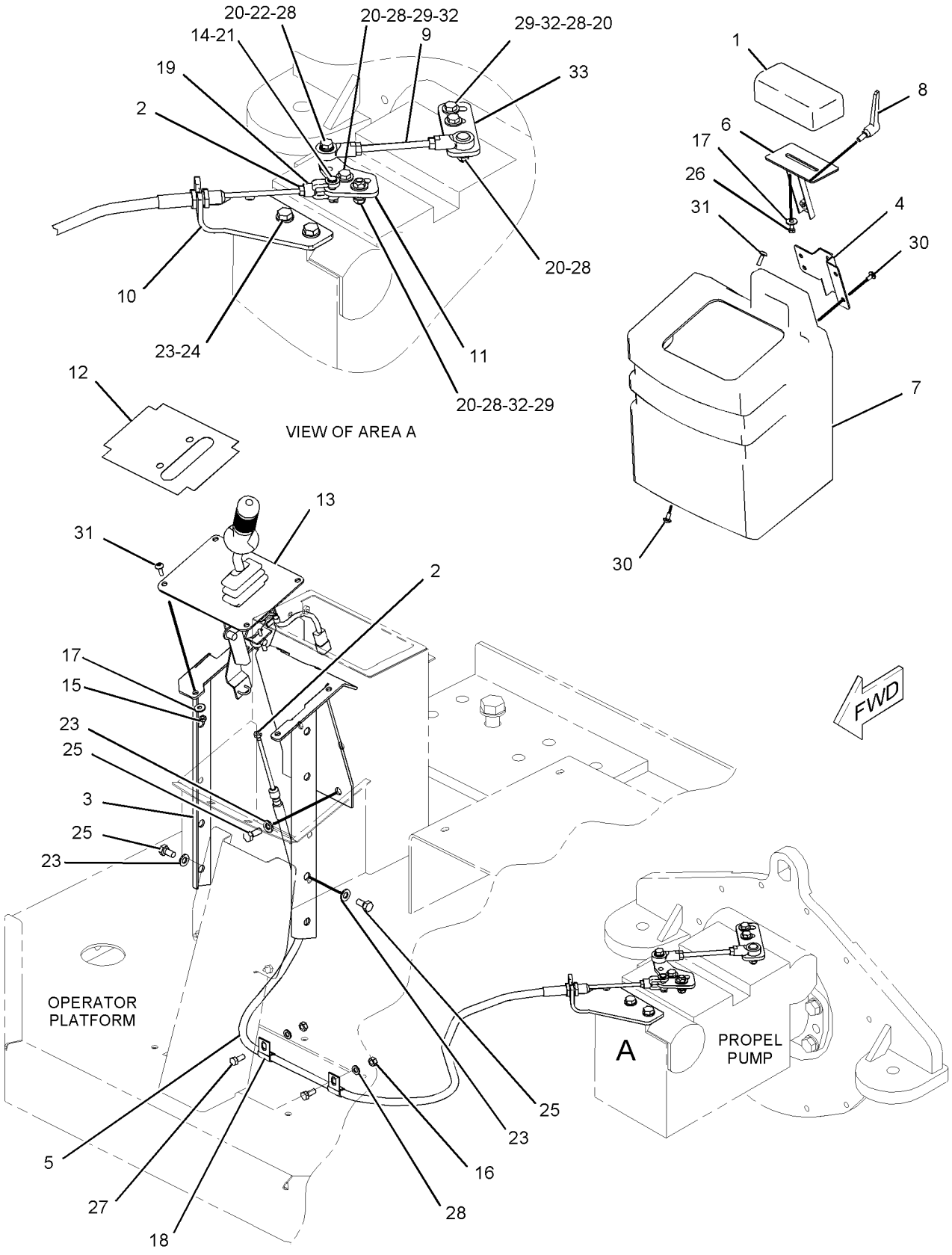

GRAPHIC #1 **<END>** g01098587

OPERATOR STATION

201-5954 CONTROL GP-DIRECTION & SPEED

S/N: EAE1-UP
PART OF 249-5075, 249-5076 OPERATOR AR
AN ATTACHMENT

SMCS-3065, 5462 **i02294132**

NOTE	REF NO	GRAPHIC REF	PART NUMBER	QTY	PART NAME 1 2 3 4 5 6 (PRODUCT LEVEL)	SEE PAGE
	1	1	**4E-1062**	1	CUSHION AS-ARMREST	
	2	1	**6V-8187**	2	NUT (1/4-28-THD)	
	3	1	**107-6050**	1	SUPPORT AS	
	4	1	**111-7875**	1	PLATE	
	5	1	**123-1204**	1	CABLE-PROPEL	
	6	1	**151-8110**	1	SUPPORT AS	
M		1	**8T-3612**	1	NUT-WELD (M8X1.25-THD)	
	7	1	**153-3605**	1	COVER AS	
	8	1	**187-2082**	1	LEVER-CONTROL (ARMREST ADJUSTMENT)	
Y	9	1	*242-7158*	1	LINKAGE GP	333
	10	1	**256-5067**	1	BRACKET	
	11	1	**5P-4116**	4	WASHER-HARD (8.8X20.5X2-MM THK)	
	12	1	**197-3229**	1	FILM-IDENTIFICATION (OPERATOR CONTROLS)	
Y	13	1	**197-3300**	1	CONTROL GP-PROPEL	306
	14	1	**3B-4607**	1	PIN-COTTER	
M	15	1	**5C-2890**	4	NUT (M6X1-THD)	
	16	1	**5P-4115**	6	WASHER-HARD (7.2X19X2-MM THK)	
	17	1	**6V-3338**	1	END-YOKE ROD	
M	18	1	**6V-9189**	6	LOCKNUT (M8X1.25-THD)	
	19	1	**7B-7210**	1	PIN	
M	20	1	**7X-2537**	1	BOLT (M8X1.25X35-MM)	
	21	1	**8T-4121**	8	WASHER-HARD (11X21X2.5-MM THK)	
M	22	1	**8T-4195**	6	BOLT (M10X1.5X30-MM)	
M	23	1	**8T-4136**	2	BOLT (M10X1.5X25-MM)	
M	24	1	**5C-9553**	2	BOLT (M6X1X16-MM)	
	25	1	**8T-4224**	8	WASHER-HARD (8.8X16X2-MM THK)	
M	26	1	**8T-4908**	4	BOLT (M8X1.25X25-MM)	
M	27	1	**9X-2042**	6	SCREW-TRUSS HEAD (M6X1X12-MM)	
M	28	1	**9X-2045**	6	SCREW-TRUSS HEAD (M6X1X20-MM)	
	29	1	**241-8899**	1	PLATE	
	30	1	**241-8898**	1	PLATE	

M-METRIC PART
Y-SEPARATE ILLUSTRATION

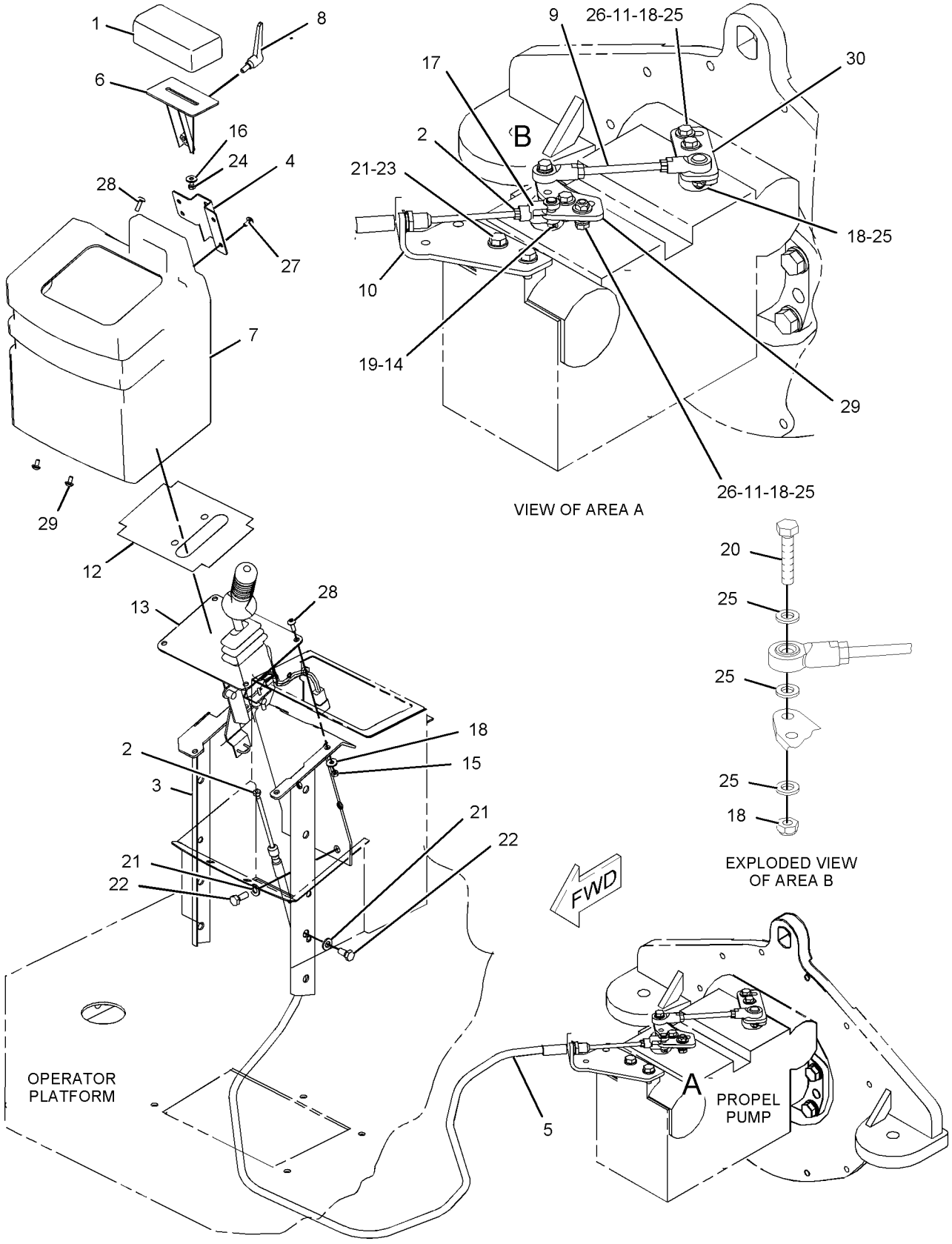

GRAPHIC #1 **<END>** g01097146

OPERATOR STATION

186-3380 CONTROL GP-HANDLE

S/N: EAE1-UP

PART OF 197-3300 CONTROL GP-PROPEL

AN ATTACHMENT

SMCS-5705 **i02855399**

NOTE	REF NO	GRAPHIC REF	PART NUMBER	QTY	PART NAME 1 2 3 4 5 6 (PRODUCT LEVEL)	SEE PAGE
	1	1	**086-0972**	1	SEAL-O-RING	
	2	1	**107-1723**	2	GASKET	
	3	1	**6B-4540**	6	NUT (4-40-THD)	
	4	1	**1K-6872**	1	LOCKNUT (1/2-13-THD)	
M	5	1	**107-1716**	4	SCREW (4-40X15.88-MM)	
	6	1	**113-1095**	2	HOUSING	
	7	1	**312-5546**	1	SWITCH AS-PUSH BUTTON (VIBRATORY, SELECT ON/OFF)	
	8	1	**107-1721**	1	CAP	
	9	1	**107-2091**	2	BOLT (4-40X0.5-IN)	

M-METRIC PART

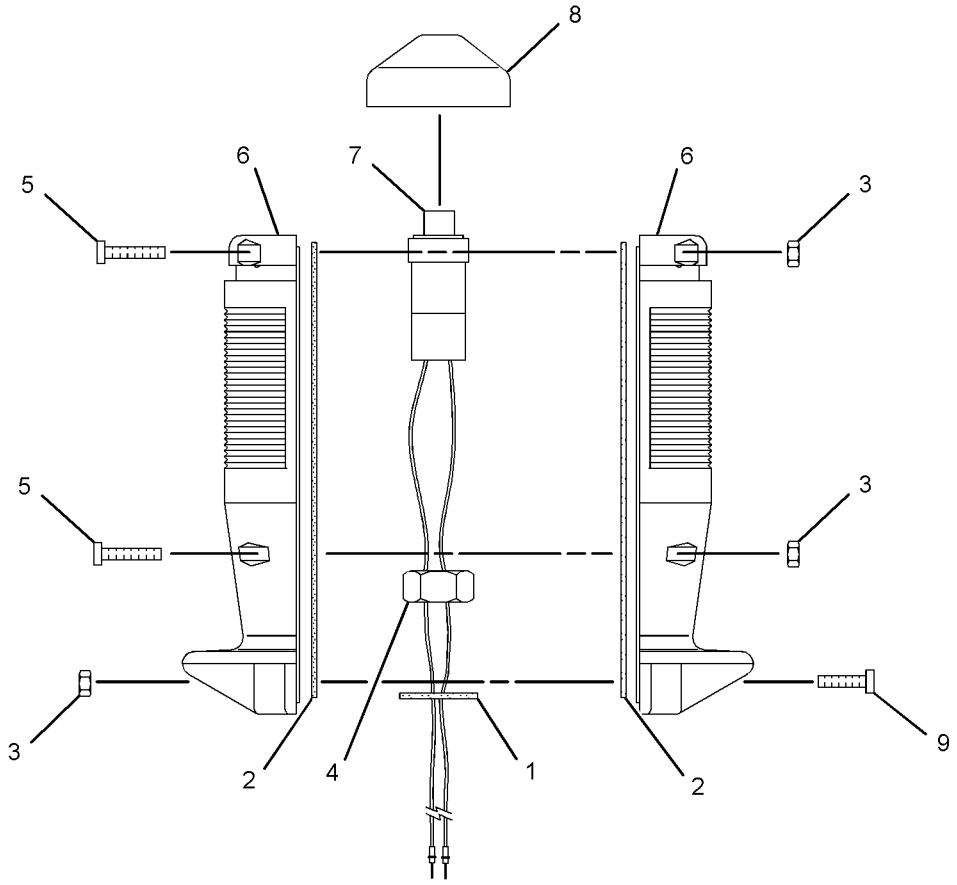

GRAPHIC #1 **<END>** g01422465

OPERATOR STATION

197-3300 CONTROL GP-PROPEL

S/N: EAE1-UP
PART OF 153-7111, 201-5954 CONTROL GP-DIRECTION & SPEED
AN ATTACHMENT
TYPE 1

SMCS-3065 **i02155170**

NOTE	REF NO	GRAPHIC REF	PART NUMBER	QTY	PART NAME 1 2 3 4 5 6 (PRODUCT LEVEL)	SEE PAGE
	1	1	**197-9695**	1	BEARING-NEEDLE	
	2	1	**186-3735**	4	PIN-CONNECTOR (16-GA TO 18-GA)	
	3	1	**102-8804**	1	KIT-RECEPTACLE (4-PIN)	
					(INCLUDES RECEPTACLE AS & WEDGE)	
	4	1	**4B-1282**	2	SCREW-MACHINE (1/4-20X0.75-IN)	
	5	1	**009-9258**	2	NUT (1/4-20-THD)	
	6	1	**186-3169**	2	SPACER	
	7	1	**198-1111**	1	BUSHING	
	8	1	**186-3171**	1	BUSHING	
	9	1	**5B-3180**	1	NUT (5/16-18-THD)	
	10	1	**031-4155**	1	LOCKNUT (5/16-18-THD)	
	11	1	**7X-3393**	1	WASHER-HARD (8.3X19X1.83-MM THK)	
	12	1	**140-9685**	4	WASHER-SPRING (8.64X22.1X1.9-MM THK)	
	13	1	**077-7467**	2	RACE-THRUST BEARING	
	14	1	**197-9181**	1	DISC-FRICTION	
	15	1	**166-8072**	2	SPRING-COMPRESSION	
	16	1	**4L-1250**	3	NUT (10X32-THD)	
	17	1	**166-8070**	2	BOLT-SOCKET HEAD (10-32X11.18-MM)	
	18	1	**166-8071**	1	BEARING-CONNECTING ROD	
	19	1	**8L-6521**	1	BOLT (10-32X0.5-IN)	
	20	1	**7X-2466**	1	CLIP	
	21	1	**140-9337**	1	SWITCH-MICRO (NEUTRAL POSITION)	
	22	1	**171-2842**	2	BOLT-SOCKET HEAD (M3X0.5X20-MM)	
M	23	1	**8T-2658**	2	LOCKNUT (M3X0.5-THD)	
Y	24	1	**186-3380**	1	CONTROL GP-HANDLE	305
	25	1	**197-9461**	1	LEVER	
	26	1	**140-9338**	1	BOOT	
	27	1	**8H-4959**	2	BOLT (10-32X0.875-IN)	
	28	1	**098-3602**	1	SWIVEL	
	29	1	**8T-4205**	1	WASHER-HARD (7.2X14.5X2-MM THK)	
	30	1	**141-1794**	1	PIN-COTTER	
	31	1	**166-8068**	1	CLAMP-CABLE	
	32	1	**3E-9865**	1	LOCKNUT (1/4-20-THD)	
	33	1	**3K-5761**	1	WASHER (0.328X0.62X0.032-IN THK)	
	34	1	**197-9238**	1	CUP-BEARING	
	35	1	**218-9847**	1	WIRE AS	

M-METRIC PART
Y-SEPARATE ILLUSTRATION

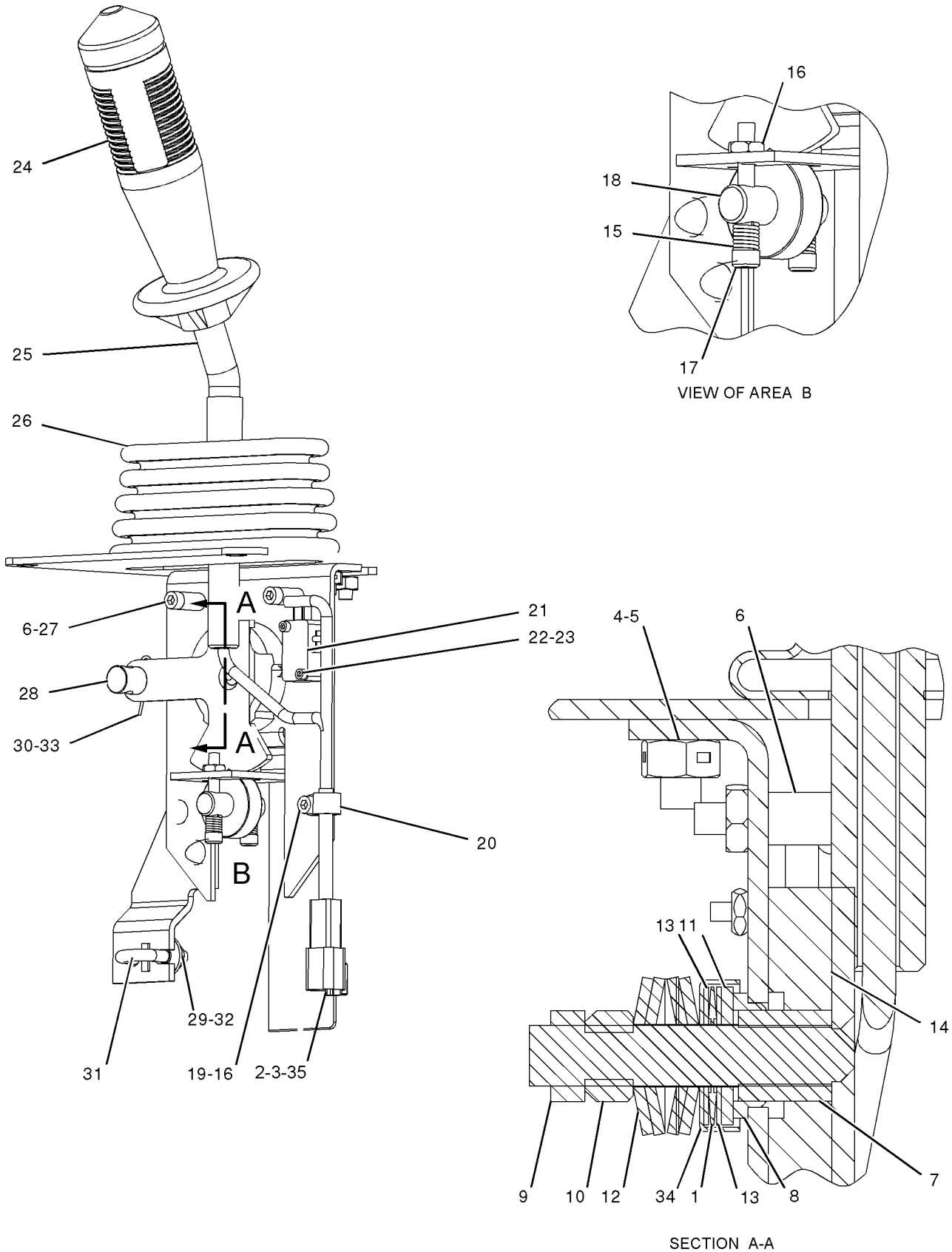

GRAPHIC #1 **<END>** g01042940

OPERATOR STATION

197-3300 CONTROL GP-PROPEL

S/N: EAE1-UP
PART OF 153-7111, 201-5954 CONTROL GP-DIRECTION & SPEED
AN ATTACHMENT
TYPE 2

SMCS-3065 **i02842944**

NOTE	REF NO	GRAPHIC REF	PART NUMBER	QTY	PART NAME 1 2 3 4 5 6 (PRODUCT LEVEL)	SEE PAGE
	1	1	**197-9695**	1	BEARING-NEEDLE	
C	2	1	**9X-3401**	2	PIN-CONNECTOR (16-GA TO 18-GA)	
C	3	1	**151-9274**	1	KIT-RECEPTACLE (4-PIN)	
					(INCLUDES RECEPTACLE AS & WEDGE)	
	4	1	**4B-1282**	2	SCREW-MACHINE (1/4-20X0.75-IN)	
	5	1	**009-9258**	2	NUT (1/4-20-THD)	
	6	1	**186-3169**	2	SPACER	
	7	1	**198-1111**	1	BUSHING	
	8	1	**186-3171**	1	BUSHING	
	9	1	**5B-3180**	1	NUT (5/16-18-THD)	
	10	1	**031-4155**	1	LOCKNUT (5/16-18-THD)	
	11	1	**7X-3393**	1	WASHER-HARD (8.3X19X1.83-MM THK)	
	12	1	**140-9685**	4	WASHER-SPRING (8.64X22.1X1.9-MM THK)	
	13	1	**077-7467**	2	RACE-THRUST BEARING	
	14	1	**197-9181**	1	DISC-FRICTION	
	15	1	**166-8072**	2	SPRING-COMPRESSION	
C	16	1	**4L-1250**	5	NUT (10X32-THD)	
	17	1	**166-8070**	2	BOLT-SOCKET HEAD (10-32X11.18-MM)	
	18	1	**166-8071**	1	BEARING-CONNECTING ROD	
	19	1	**8L-6521**	1	BOLT (10-32X0.5-IN)	
	20	1	**7X-2466**	1	CLIP	
	21	1	**140-9337**	1	SWITCH-MICRO (NEUTRAL POSITION)	
	22	1	**171-2842**	2	BOLT-SOCKET HEAD (M3X0.5X20-MM)	
M	23	1	**8T-2658**	2	LOCKNUT (M3X0.5-THD)	
Y	24	1	**186-3380**	1	CONTROL GP-HANDLE	305
	25	1	**197-9461**	1	LEVER	
	26	1	**140-9338**	1	BOOT	
	27	1	**8H-4959**	2	BOLT (10-32X0.875-IN)	
	28	1	**098-3602**	1	SWIVEL	
	29	1	**8T-4205**	1	WASHER-HARD (7.2X14.5X2-MM THK)	
	30	1	**141-1794**	1	PIN-COTTER	
	31	1	**166-8068**	1	CLAMP-CABLE	
	32	1	**3E-9865**	1	LOCKNUT (1/4-20-THD)	
	33	1	**3K-5761**	1	WASHER (0.328X0.62X0.032-IN THK)	
	34	1	**197-9238**	1	CUP-BEARING	
CE	35	1	**125-7876**		TUBE-HEAT SHRINK (17.78-MM DIA) (4-CM)	

C-CHANGE FROM PREVIOUS TYPE
E-ORDER BY THE CENTIMETER
M-METRIC PART
Y-SEPARATE ILLUSTRATION

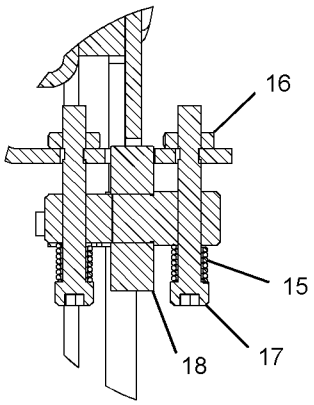

SECTION A

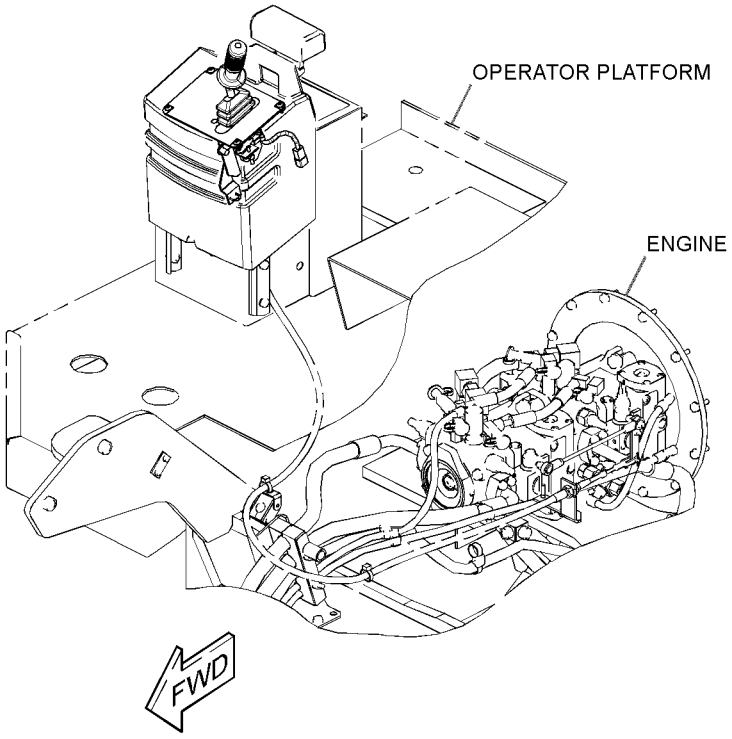

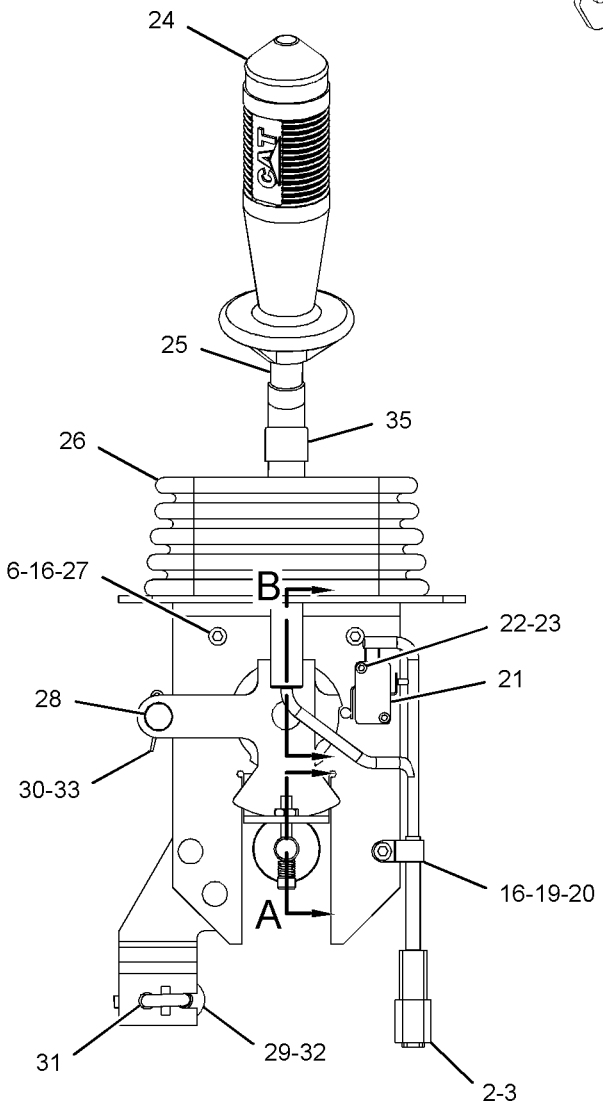

LEFT SIDE VIEW

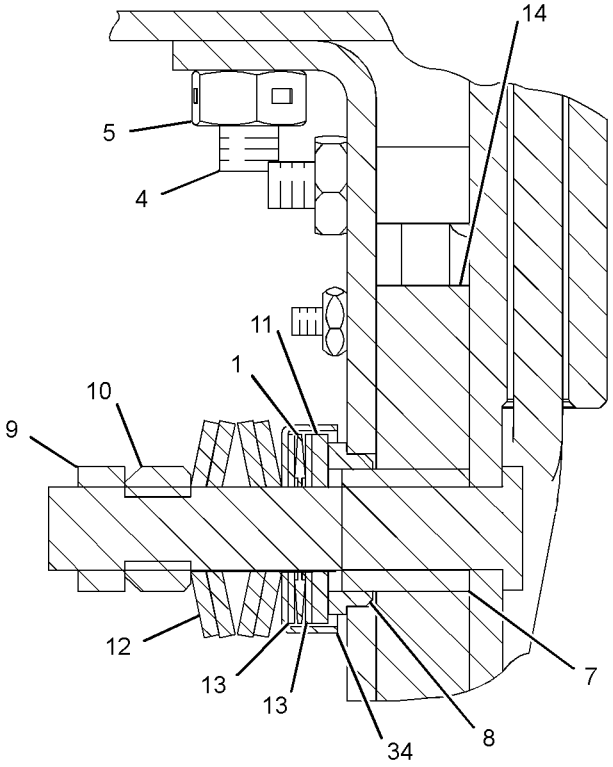

SECTION B

GRAPHIC #1 **<END>** g01418521

OPERATOR STATION

178-3836 CYLINDER & MTG GP-TILT

S/N: EAE1-UP
CAB-PLATFORM LIFT
PART OF 249-5075, 249-5076 OPERATOR AR
AN ATTACHMENT

SMCS-5102, 7341 **i02017532**

NOTE	REF NO	GRAPHIC REF	PART NUMBER	QTY	PART NAME 1 2 3 4 5 6 (PRODUCT LEVEL)	SEE PAGE
	1	1	**3E-9862**	2	LOCKNUT (3/4-10-THD)	
M	2	1	**5C-2874**	2	NUT (M5X0.8-THD)	
	3	1	**7R-6728**	1	ADAPTER	
	4	1	**7X-0564**	2	WASHER-HARD (20X51X3-MM THK)	
	5	1	**8C-6865**	3	CONNECTOR	
	6	1	**081-3119**	2	SEAL-RUBBER	
	7	1	**081-3772**	1	LEVER	
	8	1	**128-1624**	1	SUPPORT AS	
	9	1	**128-4119**	1	CYLINDER AS-TILT	
	10	1	**128-4120**	1	PUMP GP-HAND (TILT CYLINDER)	
	11	1	**147-7370**	1	BRACKET AS	
I	12	1	**154-9517**	2	HOSE AS	
	13	1	**167-1192**	2	CLIP	
	14	1	**4B-4274**	4	WASHER (5.5X13X1.2-MM THK)	
	15	1	**4J-5477**	4	SEAL-O-RING	
	16	1	**7X-0370**	1	BOLT (3/4-10X3.5-IN)	
	17	1	**7X-7729**	2	WASHER (11X25X3-MM THK)	
	18	1	**8C-6857**	1	BOLT (3/4-10X2.75-IN)	
M	19	1	**8T-0288**	2	BOLT (M5X0.8X12-MM)	
M	20	1	**8T-4136**	2	BOLT (M10X1.5X25-MM)	
M	21	1	**8T-4193**	4	BOLT (M16X2X50-MM)	
	22	1	**9X-8257**	4	WASHER (17.5X30X3.5-MM THK)	

I-REFER TO HYDRAULIC INFORMATION SYSTEM
M-METRIC PART

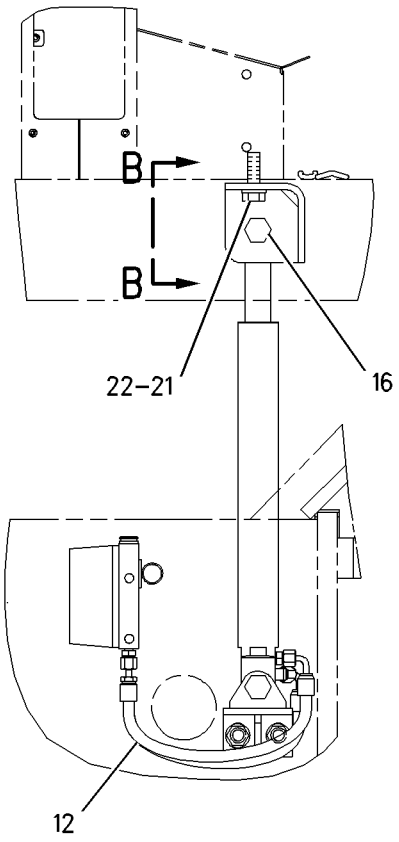

VIEW A–A

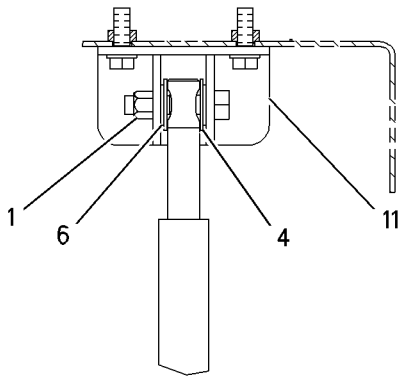

VIEW B–B

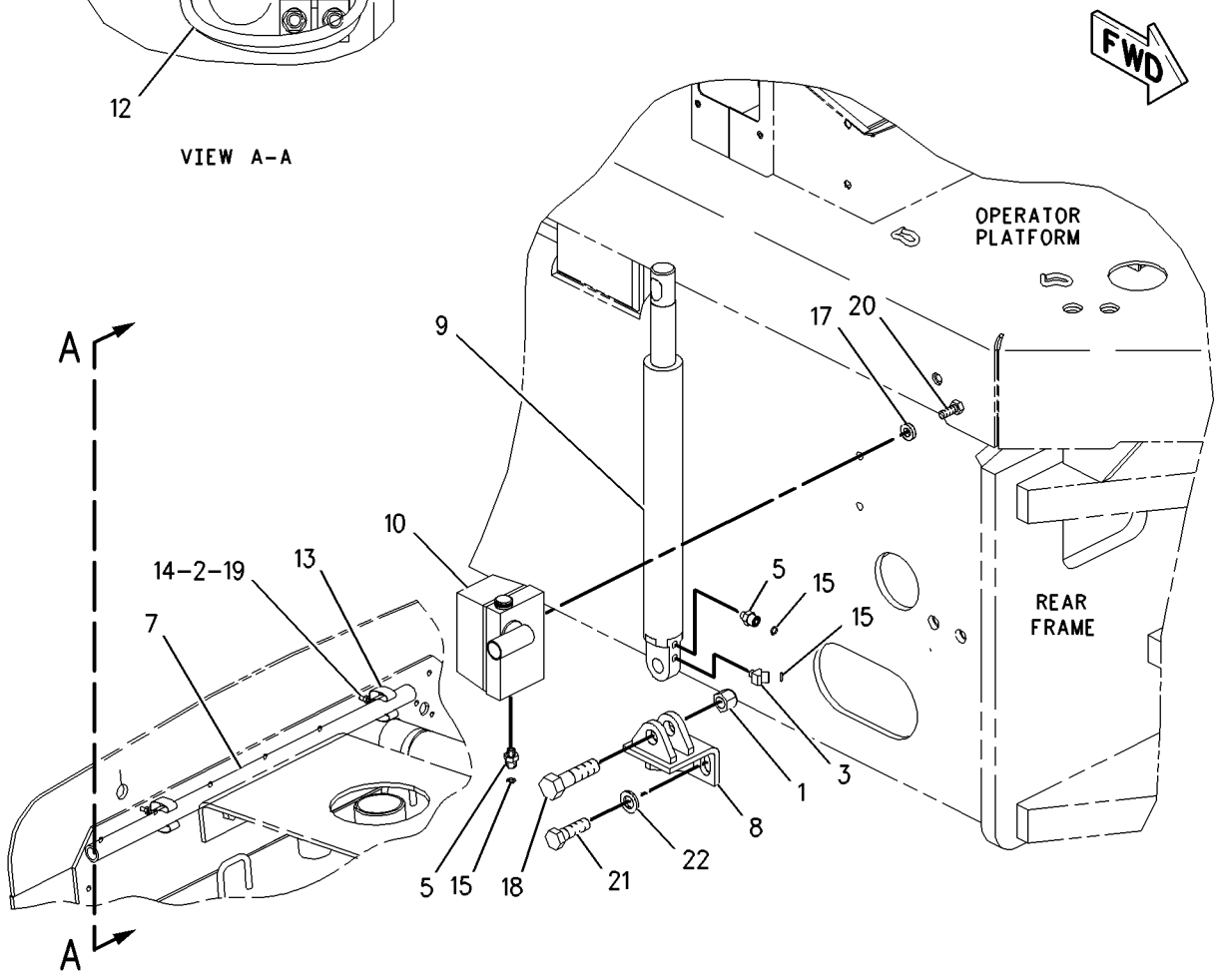

GRAPHIC #1 **<END>** g00839974

OPERATOR STATION

185-5770 DOOR GP-CAB—SLIDING WINDOW, LH

S/N: EAE1-UP
PART OF 223-4792, 254-5057 ROPS GP-ENCLOSED
AN ATTACHMENT
TYPE 1

SMCS-7308 **i02898378**

NOTE	REF NO	GRAPHIC REF	PART NUMBER	QTY	PART NAME 1 2 3 4 5 6 (PRODUCT LEVEL)	SEE PAGE
	1	1	**3T-5201**	1	BEARING	
	2	1	**4E-1384**	1	BUMPER-CONICAL	
	3	1	**7W-2108**	1	SPRING-BYPASS VALVE	
	4	1	**7X-2497**	1	HANDLE-DOOR	
M	5	1	**8T-4180**	4	SCREW-MACHINE (M5X0.8X20-MM)	
	6	1	**8T-4742**	1	END-YOKE ROD	
	7	1	**8T-4747**	2	BRACKET	
	8	1	**8Y-4807**	1	HANDLE AS (LH DOOR)	
		1	**8Y-4501**	1	SPRING-HANDLE	
	9	1	**8Y-6386**	1	SEAL-HANDLE	
	10	1	**9G-2761**	1	LATCH AS-DOOR	
	11	1	**107-6117**	1	COVER (LH)	
	12	1	**141-8580**	1	RING-RETAINING	
	13	1	**161-9640**	1	COVER	
	14	1	**161-9641**	1	PLATE	
	15	1	**161-9642**	1	ROD AS	
	16	1	**161-9647**	1	PLATE	
	17	1	**162-2188**	1	DOOR AS (CAB-LH)	
M		1	**159-9539**	12	NUT-WELD (M6X1-THD)	
		1	**107-6104**	2	INSERT	
M		1	**6V-9632**	2	NUT-WELD (M6X1-THD)	
		1	**107-6125**	2	HINGE AS	
					(EACH INCLUDES)	
		1	**096-2323**	2	RING-RETAINING (EXTERNAL)	
		1	**107-6127**	1	STRIP	
		1	**111-0200**	1	HANDRAIL	
M		1	**6V-9632**	1	NUT-WELD (M6X1-THD)	
		1	**115-1552**	1	HANDLE-PULL	
M		1	**159-9539**	2	NUT-WELD (M6X1-THD)	
	18	1	**162-2190**	1	GLASS-CAB (DOOR)	
	19	1	**168-2457**	1	LATCH AS-DOOR (LH DOOR)	
	20	1	**169-3995**	1	SEAL	
	21	1	**178-2593**	1	BUMPER	
Y	22	1	**180-3871**	1	WINDOW GP-DOOR (SLIDING)	386
M	23	1	**5C-2890**	1	NUT (M6X1-THD)	
M	24	1	**5C-7261**	2	NUT (M8X1.25-THD)	
M	25	1	**8T-4181**	5	BOLT (M6X1X20-MM)	
	26	1	**8T-4205**	6	WASHER-HARD (7.2X14.5X2-MM THK)	
M	27	1	**8T-4971**	4	BOLT (M6X1X30-MM)	
M	28	1	**9X-2042**	11	SCREW-TRUSS HEAD (M6X1X12-MM)	
E	29	1	**3E-3805**		SEAL (420-CM)	

E-ORDER BY THE CENTIMETER
M-METRIC PART
Y-SEPARATE ILLUSTRATION

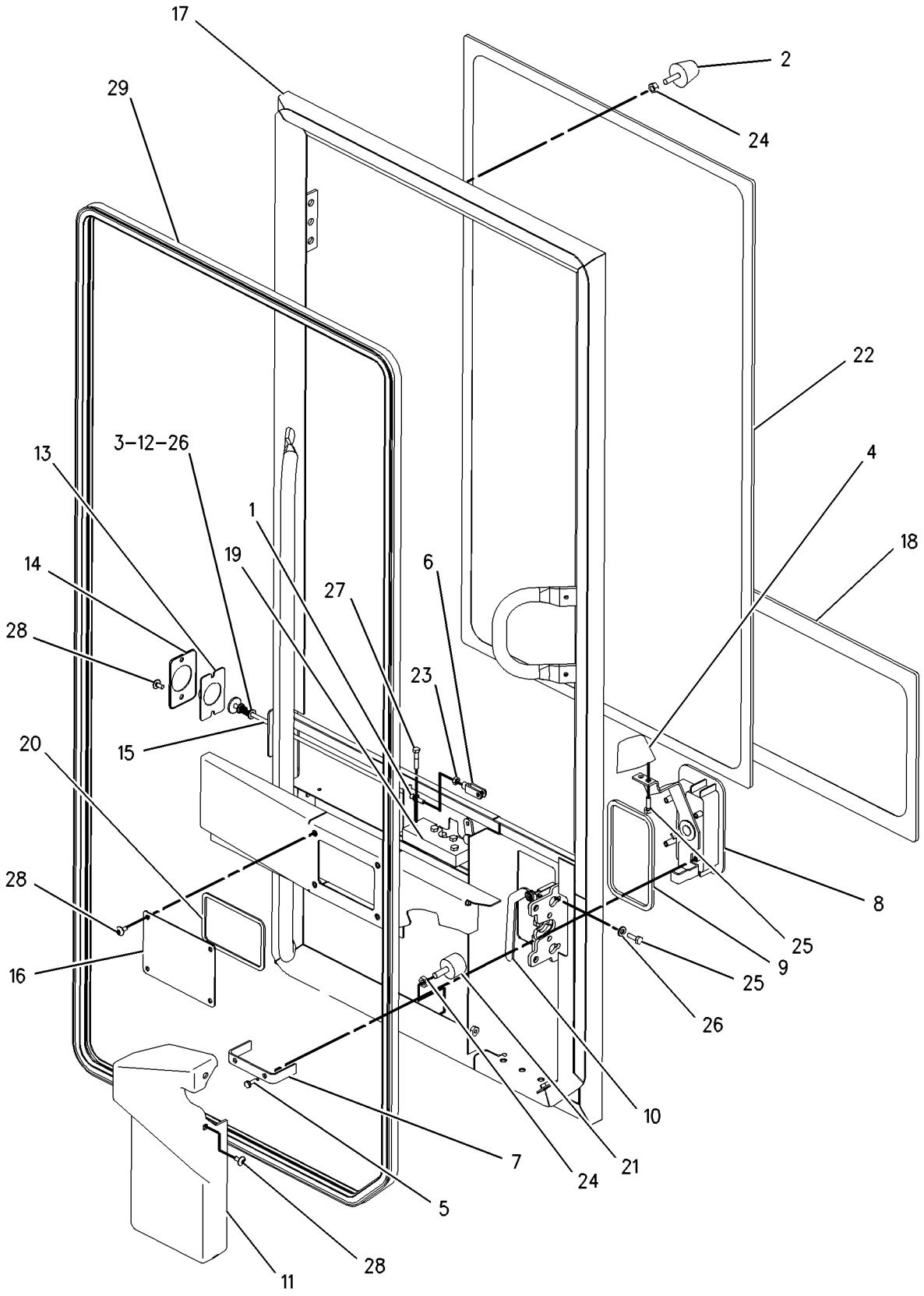

GRAPHIC #1 **<END>** g00852950

OPERATOR STATION

185-5770 DOOR GP-CAB—SLIDING WINDOW, LH

S/N: EAE1-UP
PART OF 254-5057 ROPS GP-ENCLOSED
AN ATTACHMENT
TYPE 2

SMCS-7308 **i02622927**

NOTE	REF NO	GRAPHIC REF	PART NUMBER	QTY	PART NAME 1 2 3 4 5 6 (PRODUCT LEVEL)	SEE PAGE
	1	1	**3T-5201**	1	BEARING	
	2	1	**4E-1384**	1	BUMPER-CONICAL	
	3	1	**7W-2108**	1	SPRING-BYPASS VALVE	
	4	1	**7X-2497**	1	HANDLE-DOOR	
M	5	1	**8T-4180**	4	SCREW-MACHINE (M5X0.8X20-MM)	
	6	1	**8T-4742**	1	END-YOKE ROD	
	7	1	**8T-4747**	2	BRACKET	
	8	1	**8Y-4807**	1	HANDLE AS	
		1	**8Y-4501**	1	SPRING-HANDLE	
	9	1	**8Y-6386**	1	SEAL-HANDLE	
	10	1	**9G-2761**	1	LATCH AS-DOOR	
	11	1	**107-6117**	1	COVER (LH) (LH)	
	12	1	**141-8580**	1	RING-RETAINING	
	13	1	**161-9640**	1	COVER	
	14	1	**161-9641**	1	PLATE	
	15	1	**161-9642**	1	ROD AS	
	16	1	**161-9647**	1	PLATE	
CY	17	1	**269-4114**	1	DOOR GP-CAB (LH)	316
	19	1	**168-2457**	1	LATCH AS-DOOR	
	20	1	**169-3995**	1	SEAL	
	21	1	**178-2593**	1	BUMPER	
Y	22	1	**180-3871**	1	WINDOW GP-DOOR (SLIDING)	386
M	23	1	**5C-2890**	1	NUT (M6X1-THD)	
M	24	1	**5C-7261**	2	NUT (M8X1.25-THD)	
M	25	1	**8T-4181**	5	BOLT (M6X1X20-MM)	
	26	1	**8T-4205**	6	WASHER-HARD (7.2X14.5X2-MM THK)	
M	27	1	**8T-4971**	4	BOLT (M6X1X30-MM)	
M	28	1	**9X-2042**	11	SCREW-TRUSS HEAD (M6X1X12-MM)	
E	29	1	**3E-3805**		SEAL (420-CM)	

C-CHANGE FROM PREVIOUS TYPE
E-ORDER BY THE CENTIMETER
M-METRIC PART
Y-SEPARATE ILLUSTRATION

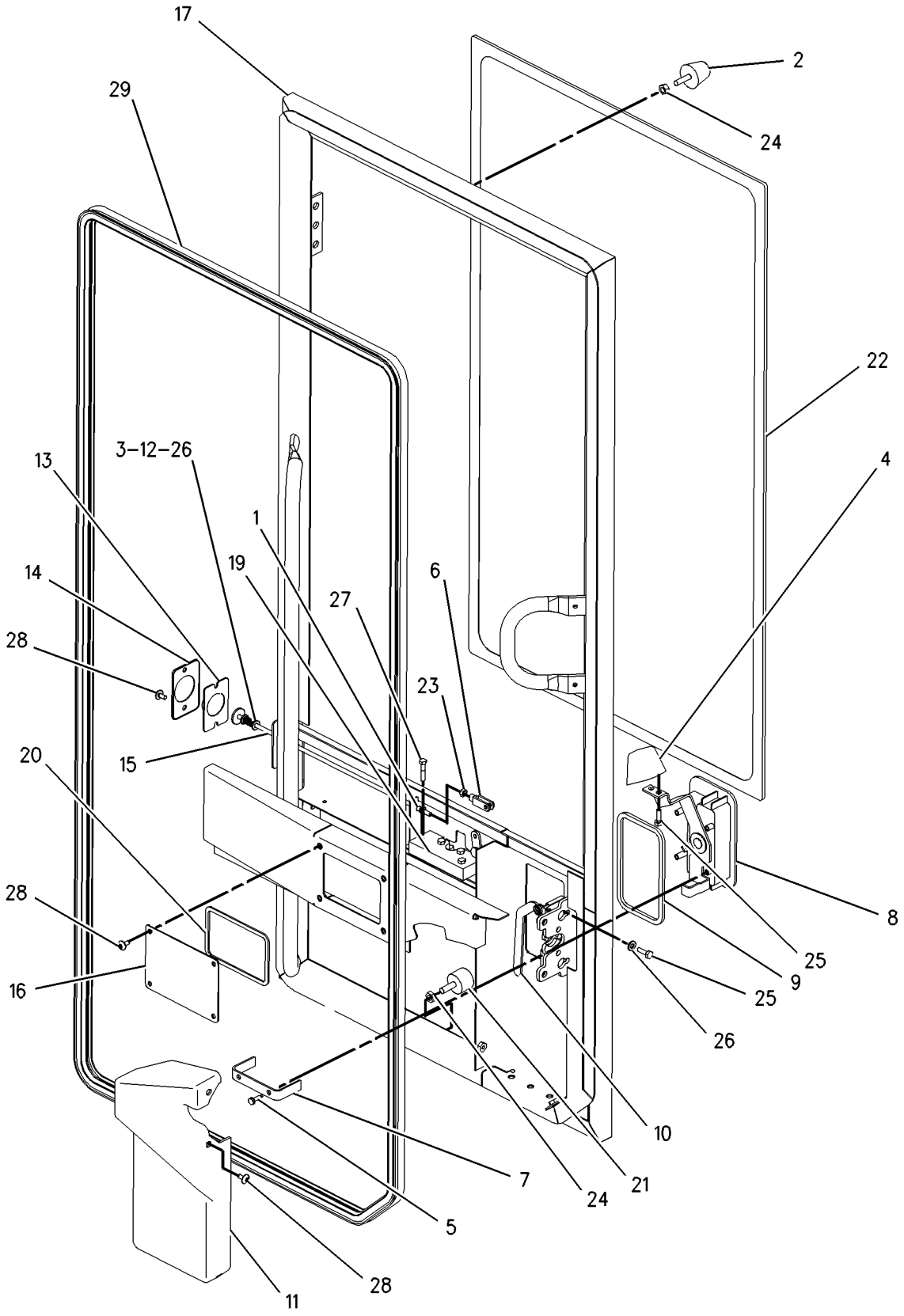

GRAPHIC #1 **<END>** g01003729

OPERATOR STATION

269-4114 DOOR GP-CAB—LH

S/N: EAE1-UP
PART OF 185-5770 DOOR GP-CAB
AN ATTACHMENT

SMCS-7308 **i02622998**

NOTE	REF NO	GRAPHIC REF	PART NUMBER	QTY	PART NAME 1 2 3 4 5 6 (PRODUCT LEVEL)	SEE PAGE
	1	1	**107-6104**	2	INSERT	
	2	1	**107-6120**	1	PLATE AS	
M		1	**159-9539**	2	NUT-WELD	
	3	1	**286-9593**	2	HINGE AS	
		1	**096-2323**	1	RING-RETAINING (EXTERNAL)	
	4	1	**111-0200**	1	HANDRAIL	
	5	1	**115-1552**	1	HANDLE-PULL	
	6	1	**161-9639**	1	PLATE AS	
M		1	**159-9539**	2	NUT-WELD	

M-METRIC PART

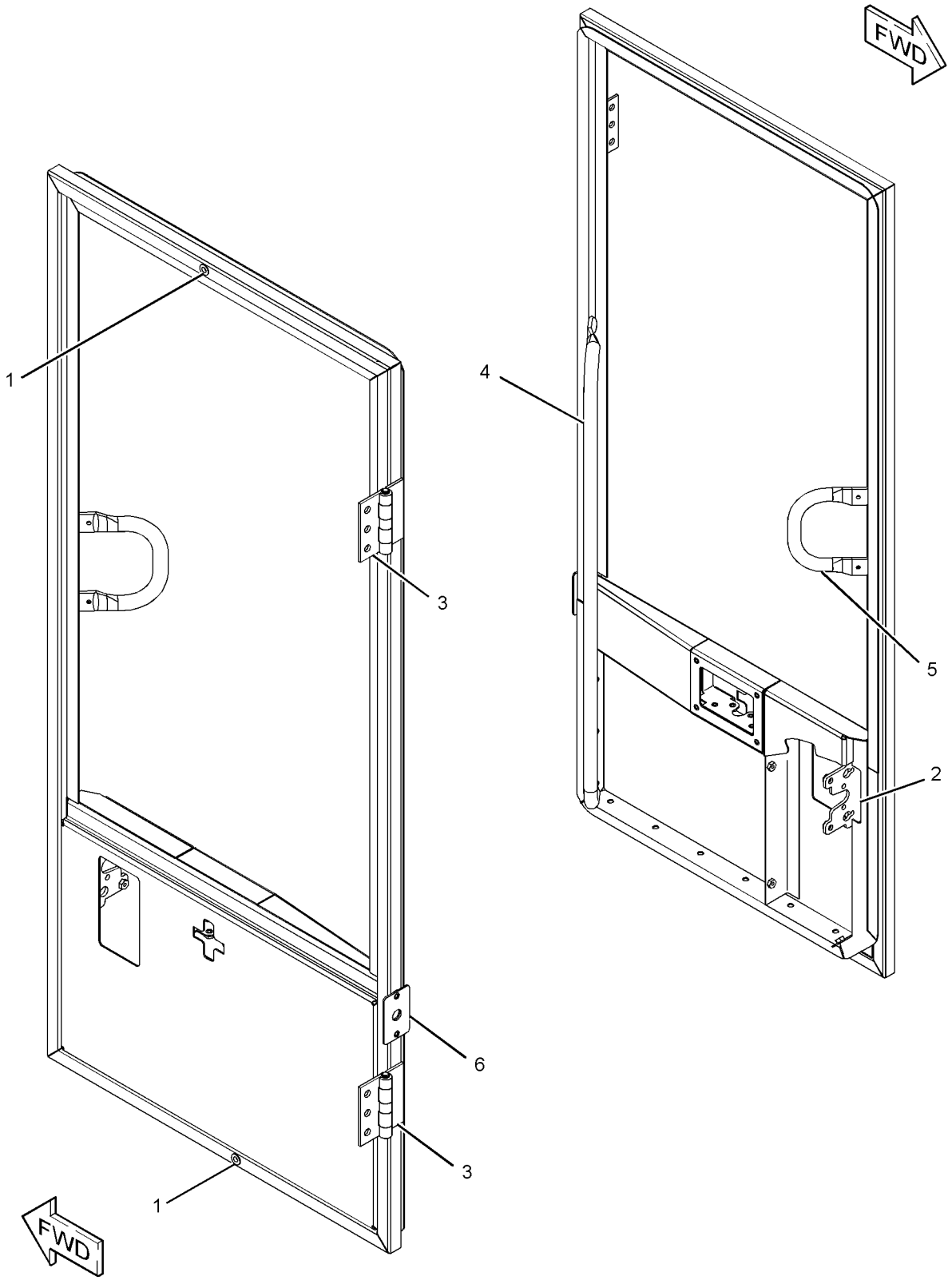

GRAPHIC #1 **<END>** g01256752

OPERATOR STATION

143-5948 DUCT GP-CAB AIR

S/N: EAE1-UP
PART OF 223-4791, 254-5054, 259-4423 CAB AR
AN ATTACHMENT

SMCS-734D **i01388281**

NOTE	REF NO	GRAPHIC REF	PART NUMBER	QTY	PART NAME 1 2 3 4 5 6 (PRODUCT LEVEL)	SEE PAGE
	1	1	**7W-7119**	2	SUPPORT	
	2	1	**8Y-6388**	6	LOUVER AS-VENT	
	3	1	**104-2091**	28	SCREW-FLAT HEAD (NO 6X0.5-IN)	
	4	1	**119-3859**	15	SCREW-PAN HEAD (10-16X0.75-IN)	
	5	1	*149-9933*	1	DUCT	
	6	1	**154-1643**	1	DUCT AS	
M	7	1	**6V-5217**	2	BOLT (M8X1.25X20-MM)	
M	8	1	**8T-4171**	2	BOLT (M6X1X12-MM)	
	9	1	**8T-4224**	8	WASHER-HARD (8.8X16X2-MM THK)	
M	10	1	**9X-2045**	2	SCREW-TRUSS HEAD (M6X1X20-MM)	
	11	1	**9X-8256**	2	WASHER (6.6X12X2-MM THK)	
BD	12	1	**5P-5927**		SEAL	
	13	1	**166-9098**	1	COVER	
M	14	1	**8T-7547**	2	BOLT (M8X1.25X30-MM)	
M	15	1	**7Y-7394**	2	SCREW-BUTTON HEAD (M8X1.25X25-MM)	
	16	1	**5C-9134**	4	LOUVER AS	
M	17	1	**5C-7261**	4	NUT (M8X1.25-THD)	

B-USE AS REQUIRED
D-ORDER BY THE METER
M-METRIC PART

143-5948 **DUCT GP-CAB AIR** *(contd.)* **i01388281**

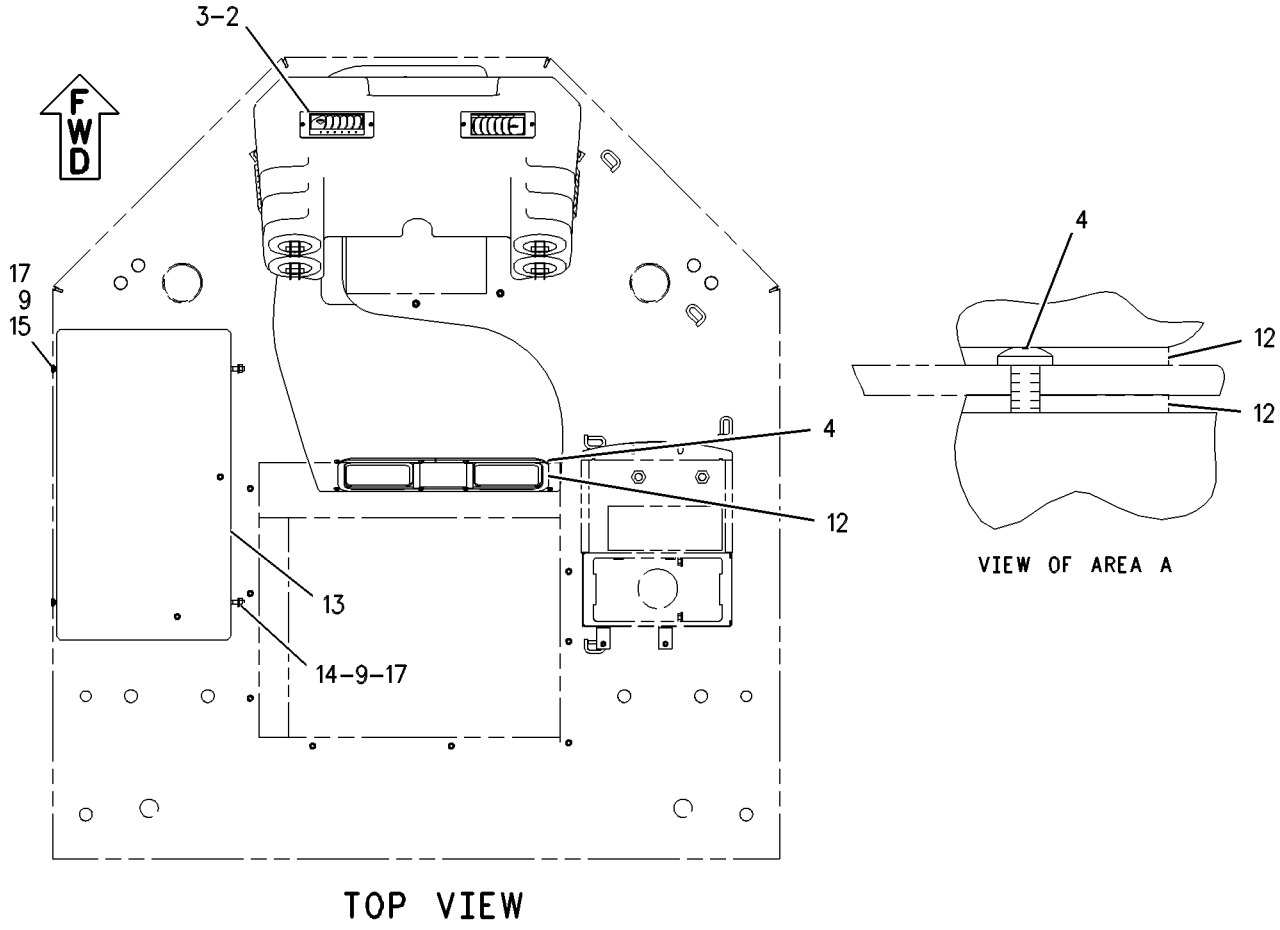

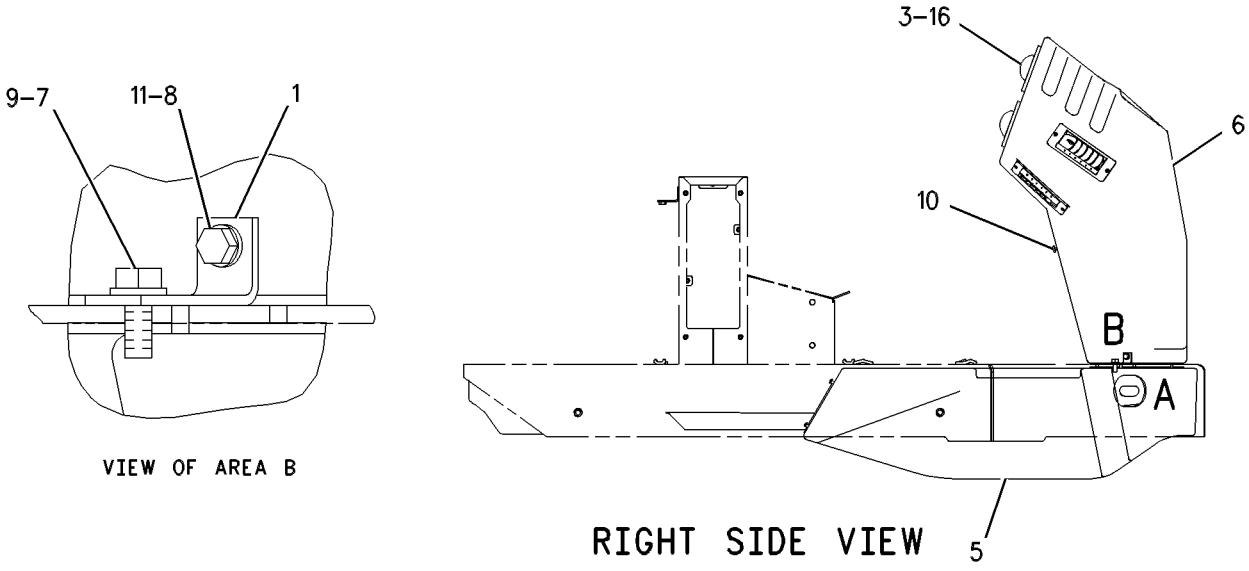

GRAPHIC #1 **<END>** g00562379

OPERATOR STATION

240-4607 FILTER GP-CAB AIR

S/N: EAE1-UP
PART OF 249-5075, 249-5076 OPERATOR AR
AN ATTACHMENT

SMCS-7342 **i02186299**

NOTE	REF NO	GRAPHIC REF	PART NUMBER	QTY	PART NAME 1 2 3 4 5 6 (PRODUCT LEVEL)	SEE PAGE
	1	1	**116-7856**	2	KNOB-CONTROL	
	2	1	**127-8613**	1	GASKET	
	3	1	**180-7486**	1	COVER AS	
	4	1	**180-7487**	1	FILTER (CAB AIR)	

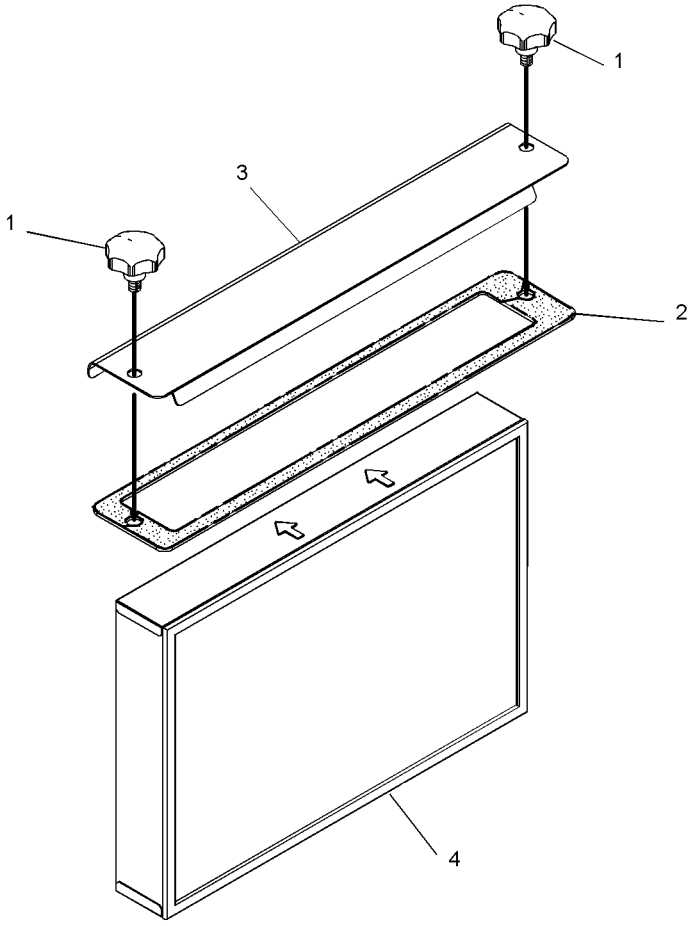

GRAPHIC #1 **<END>** g01167530

OPERATOR STATION

249-9301 FLOOR MAT GP

S/N: EAE1-UP
PART OF 249-5075, 249-5076 OPERATOR AR
AN ATTACHMENT

SMCS-726M **i02051618**

NOTE	REF NO	GRAPHIC REF	PART NUMBER	QTY	PART NAME 1 2 3 4 5 6 (PRODUCT LEVEL)	SEE PAGE
	1	1	**146-8999**	1	FLOOR MAT-CAB	
	2	1	**166-9319**	1	INSULATION	
B	3	1	**9U-5922**	1	TAPE-DUCT	

B-USE AS REQUIRED

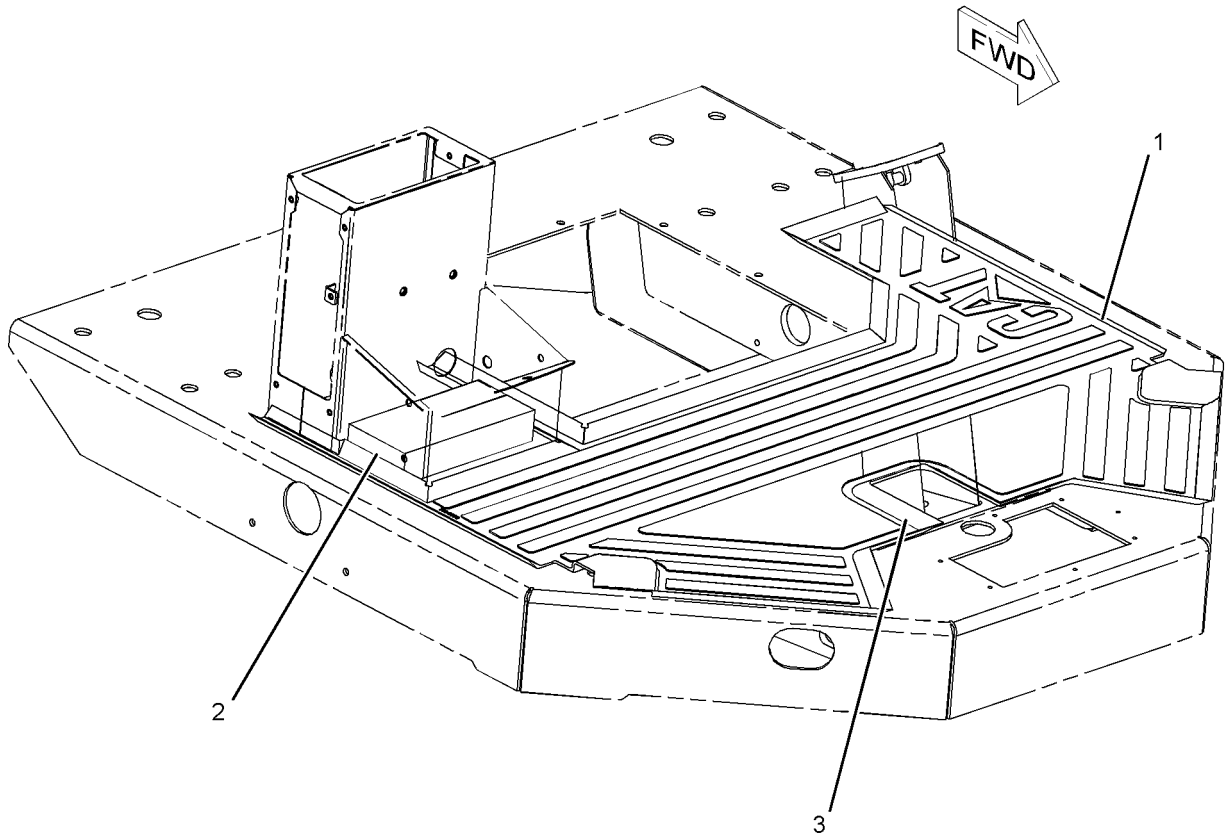

GRAPHIC #1 **<END>** g01053623

OPERATOR STATION

197-2079 GAUGE GP-VIBRATORY

S/N: EAE1-UP

PART OF 153-5024 HYDRAULIC AR-VIBRATORY

AN ATTACHMENT

SMCS-7471 **i02856652**

NOTE	REF NO	GRAPHIC REF	PART NUMBER	QTY	PART NAME 1 2 3 4 5 6 (PRODUCT LEVEL)	SEE PAGE
	1	1	**7R-3145**	1	SENSOR GP-SPEED (VPM)	
	2	1	**7R-7906**	2	CLAMP	
	3	1	**7V-5628**	1	PLATE	
	4	1	**9X-8256**	2	WASHER (6.6X12X2-MM THK)	
	5	1	**9X-7421**	1	SEAL-BONDED	
	6	1	**109-9849**	1	HARNESS AS-SENSOR (VIBRATORY)	
	7	1	**311-0186**	1	GAUGE AS-TACHOMETER	
	8	1	**152-5507**	1	GUARD-SENSOR	
	9	1	**177-2215**	1	STRAP-DUAL CLAMP	
M	10	1	**5C-2890**	2	NUT (M6X1-THD)	
	11	1	**7K-1181**	1	STRAP-CABLE	
M	12	1	**7X-2535**	2	BOLT (M6X1X60-MM)	
M	13	1	**7X-2563**	2	BOLT (M20X2.5X60-MM)	

M-METRIC PART

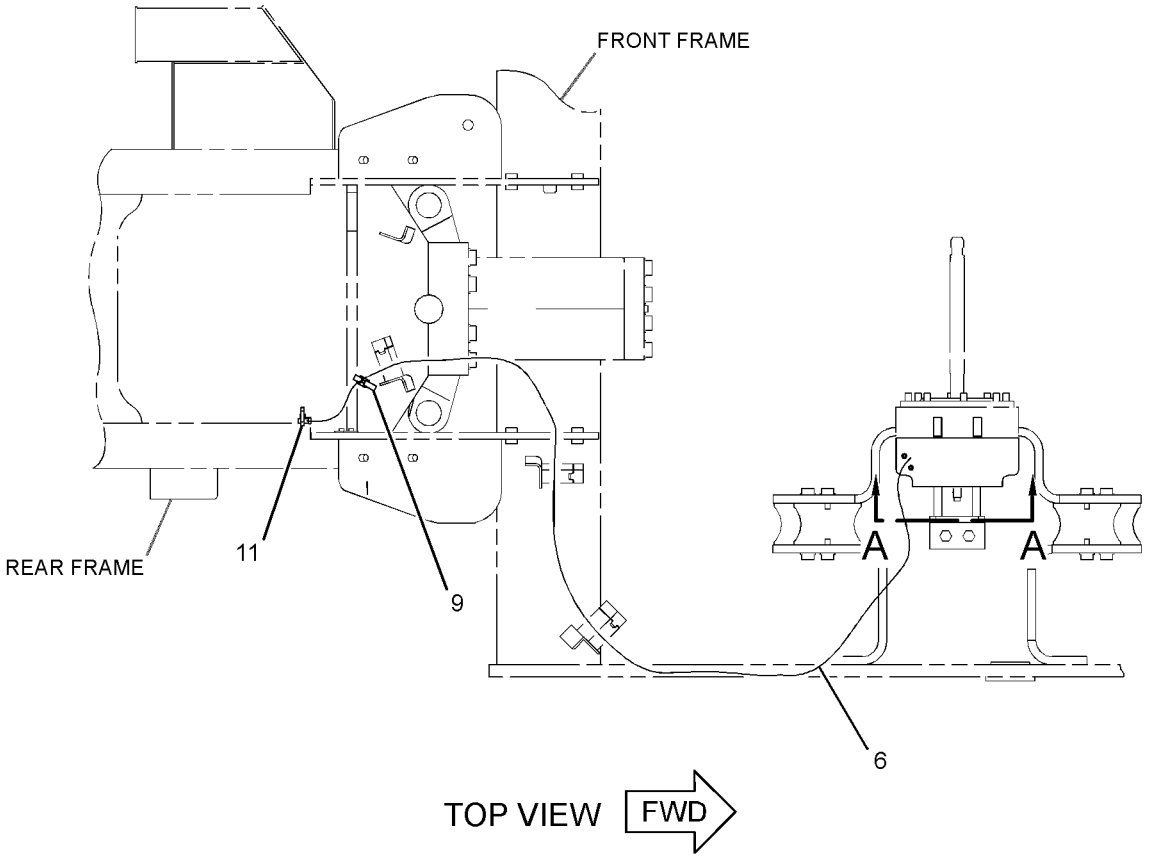

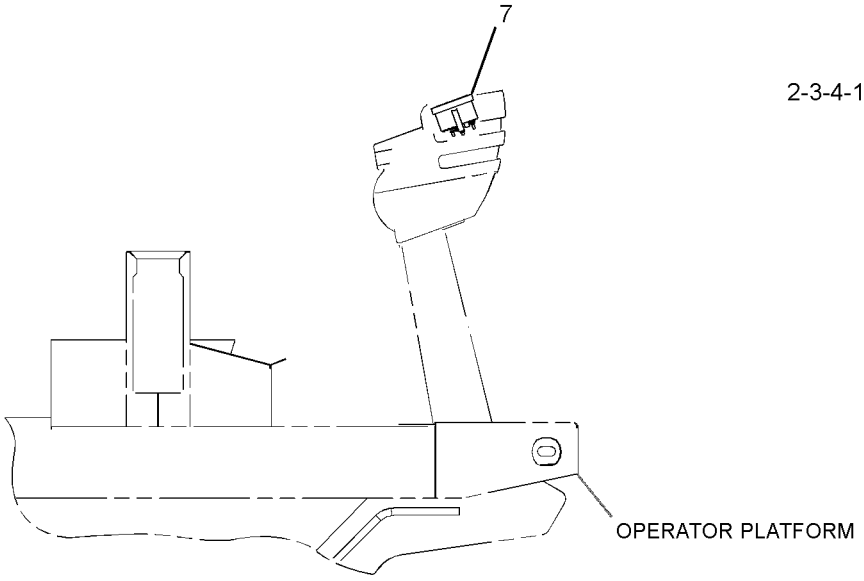

RIGHT SIDE VIEW

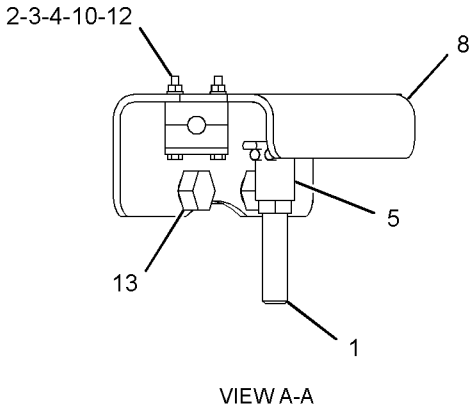

VIEW A-A

GRAPHIC #1 **<END>** g01423608

OPERATOR STATION

210-5550 GUARD GP-VANDALISM

S/N: EAE1-UP
PART OF 229-8706, 236-2234 OPERATOR AR
AN ATTACHMENT

SMCS-7315 **i02017542**

NOTE	REF NO	GRAPHIC REF	PART NUMBER	QTY	PART NAME 1 2 3 4 5 6 (PRODUCT LEVEL)	SEE PAGE
	1	1	**5P-8502**	1	PADLOCK GP (VANDALISM GUARD)	
		1	**5P-8500**	1	KEY	
	2	1	**175-3722**	1	BRACKET	
	3	1	**210-5487**	1	COVER	
	4	1	**210-5489**	1	PLATE	
	5	1	**8T-4121**	4	WASHER-HARD (11X21X2.5-MM THK)	
M	6	1	**8T-4133**	2	NUT (M10X1.5-THD)	
M	7	1	**8T-4195**	2	BOLT (M10X1.5X30-MM)	
BE	8	1	**7X-7877**		STRIP-EDGING	

B-USE AS REQUIRED
E-ORDER BY THE CENTIMETER
M-METRIC PART

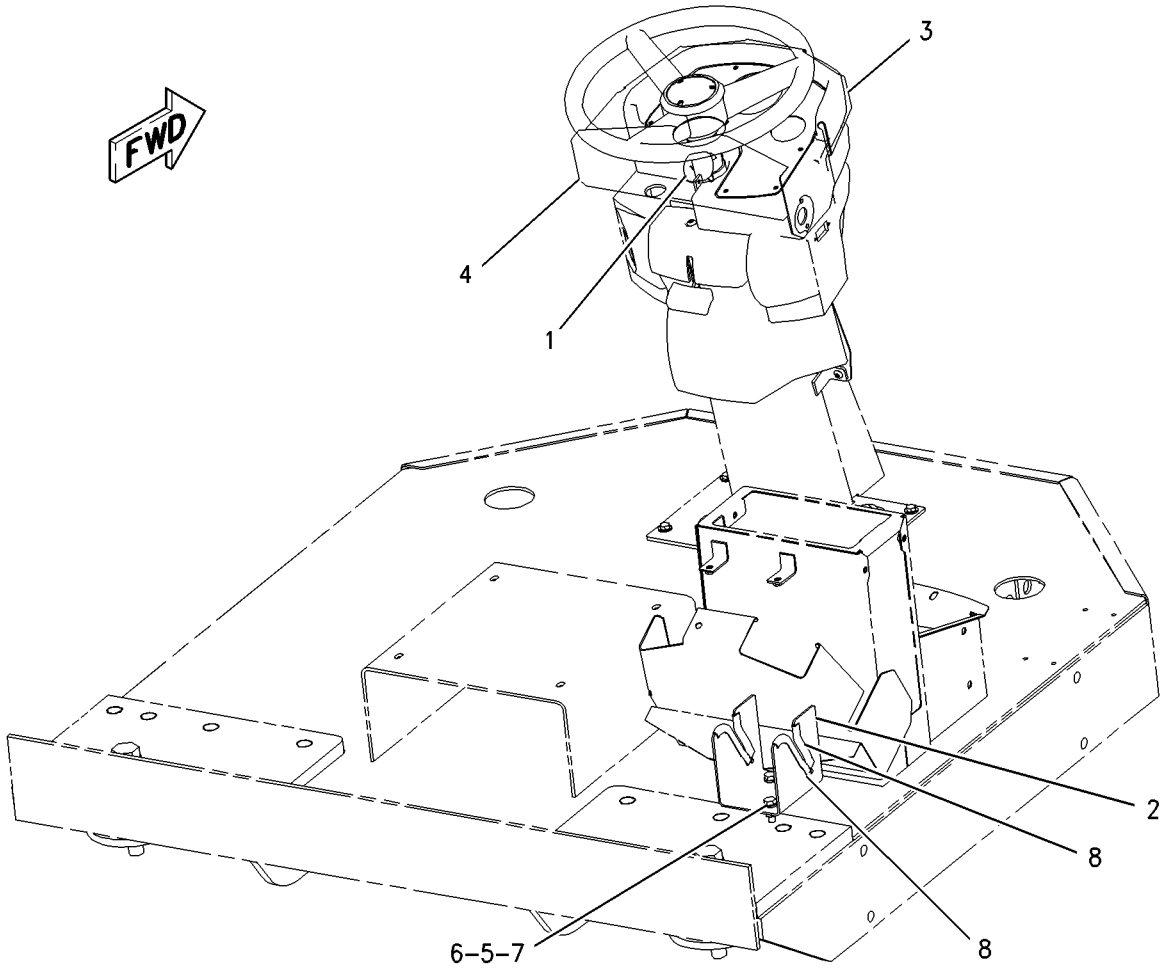

GRAPHIC #1 **<END>** g00828522

OPERATOR STATION

240-4672 HEATER & MTG GP-CAB

S/N: EAE1-UP
PART OF 249-5076 OPERATOR AR
AN ATTACHMENT

SMCS-7304 **i02898379**

NOTE	REF NO	GRAPHIC REF	PART NUMBER	QTY	PART NAME 1 2 3 4 5 6 (PRODUCT LEVEL)	SEE PAGE
	1	1	**110-6109**	1	KNOB-CONTROL (CAB HEATER)	
	2	1	**118-7259**	1	GASKET	
	3	1	**156-4449**	1	CABLE AS (HEATER TEMPERATURE CONTROL)	
		1	**2H-3920**	2	LOCKWASHER	
		1	**6V-8369**	1	NUT (7/16-28-THD)	
		1	**143-8874**	1	BOOT	
Y	4	1	**180-9874**	1	HEATER GP-CAB	326
	5	1	**7X-0579**	11	WASHER-HARD (8.8X25.5X2-MM THK)	
M	6	1	**8T-4908**	11	BOLT (M8X1.25X25-MM)	
BD	7	1	**5P-5643**		SEAL	

B-USE AS REQUIRED
D-ORDER BY THE METER
M-METRIC PART
Y-SEPARATE ILLUSTRATION

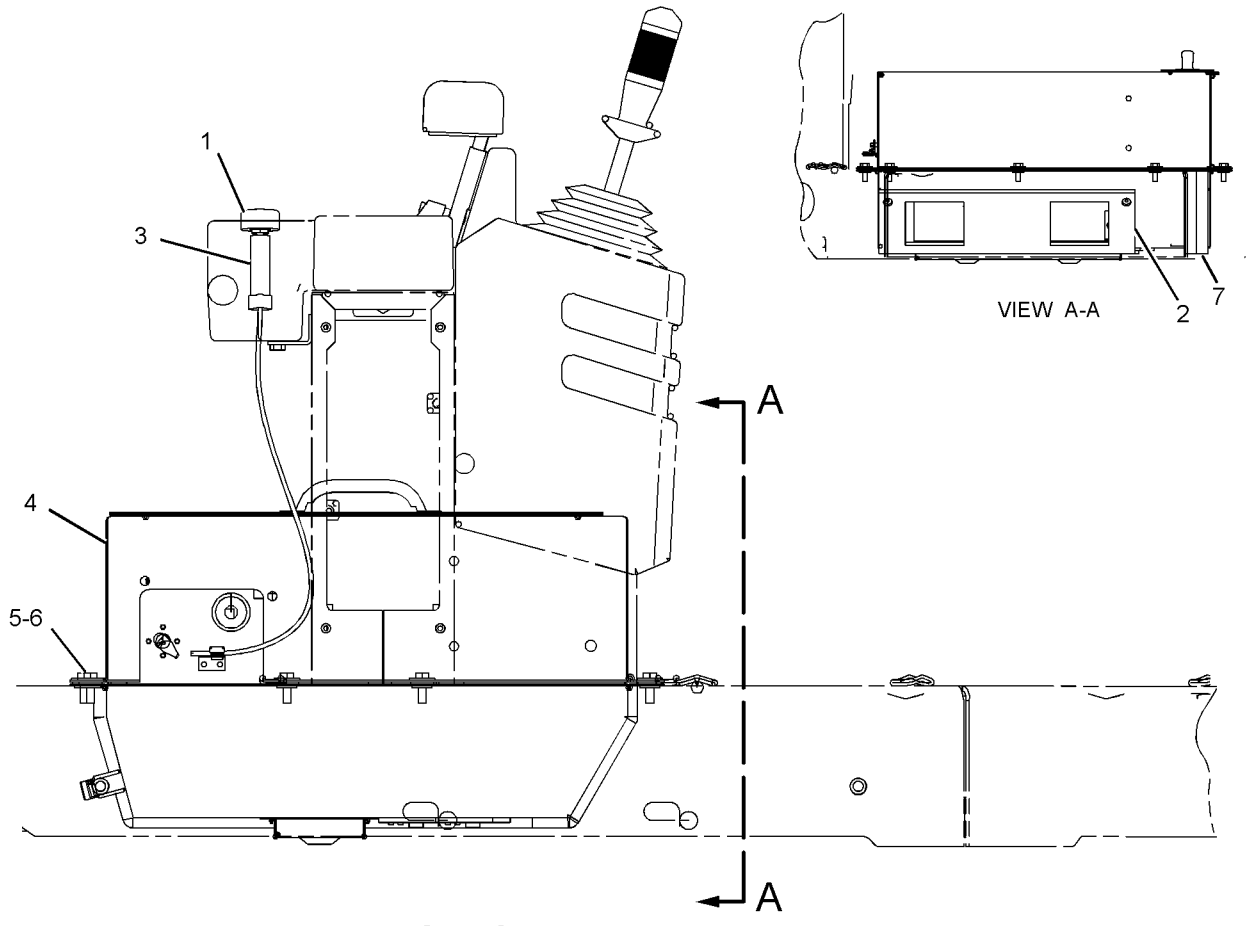

RIGHT SIDE VIEW

GRAPHIC #1

<END>

g01055076

OPERATOR STATION

180-9874 HEATER GP-CAB

S/N: EAE1-UP
PART OF 240-4672 HEATER & MTG GP-CAB
AN ATTACHMENT

SMCS-7304 **i02776562**

NOTE	REF NO	GRAPHIC REF	PART NUMBER	QTY	PART NAME 1 2 3 4 5 6 (PRODUCT LEVEL)	SEE PAGE
D	1	1	**5P-5908**		SEAL (0.1-M)	
	2	1	**3E-1841**	1	LEVER	
	3	1	**3S-2093**	2	STRAP-CABLE	
	4	1	**8C-4586**	2	CLAMP	
	5	1	**8Y-5737**	1	CLAMP	
	6	1	**9G-1950**	1	RESISTOR	
	7	1	**9X-2185**	4	SCREW (8-15X11.11-MM)	
	8	1	**9X-2488**	6	CLAMP-HOSE	
	9	1	**100-3143**	2	PLATE-ORIFICE	
	10	1	**100-3426**	2	WHEEL AS-BLOWER	
					(EACH INCLUDES)	
		1	**037-4838**	2	CLAMP	
	11	1	**102-0341**	1	CLIP	
	12	1	**114-3140**	1	GROMMET	
	13	1	**118-5044**	1	HARNESS AS-HEATER & AIR COND	
		1	**3E-3361**	1	PLUG AS-CONNECTOR (2-PIN)	
					(INCLUDES PLUG AS & WEDGE)	
		1	**102-8805**	1	KIT-RECEPTACLE (6-PIN)	
					(INCLUDES RECEPTACLE AS & WEDGE)	
		1	**8T-8737**	1	PLUG-SEAL	
	14	1	**118-5046**	1	HOUSING AS (CAB)	
	15	1	**124-8494**	1	GASKET	
	16	1	**124-8495**	1	VALVE AS-WATER	
	17	1	**151-0894**	1	COVER AS	
M		1	**7X-2478**	2	NUT-WELD (M8X1.25-THD)	
M		1	**8T-3490**	4	NUT-WELD (M10X1.5-THD)	
	18	1	**156-6819**	1	CASE AS	
M		1	**6V-9632**	7	NUT-WELD (M6X1-THD)	
	19	1	**174-1486**	1	MOTOR AS-BLOWER (24-VOLT, A/C, HEATER)	
		1	**9W-0852**	2	PIN-CONNECTOR (14-GA)	
		1	**102-8802**	1	KIT-RECEPTACLE (2-PIN)	
					(INCLUDES RECEPTACLE AS & WEDGE)	
	20	1	**183-7528**	1	COIL AS-HEATER	
	21	1	**037-4426**	1	RETAINER	
M	22	1	**129-3178**	3	LOCKNUT (M6X1-THD)	
M	23	1	**141-9784**	1	BOLT (M6X1X190-MM)	
	24	1	**1P-6522**	1	GROMMET	
	25	1	**2S-3745**	6	SCREW-TAPPING (10-16X0.5-IN)	
M	26	1	**5C-9553**	4	BOLT (M6X1X16-MM)	
	27	1	**6V-1668**	2	WASHER (6.5X29.1X3-MM THK)	
M	28	1	**6V-7728**	1	BOLT (M6X1X45-MM)	
M	29	1	**8C-8457**	1	SCREW-MACHINE (M5X0.8X14-MM)	
M	30	1	**8T-4171**	2	BOLT (M6X1X12-MM)	
	31	1	**8T-4205**	11	WASHER-HARD (7.2X14.5X2-MM THK)	
M	32	1	**9X-2044**	1	SCREW-TRUSS HEAD (M6X1X16-MM)	
E	33	1	**136-1953**		HOSE (56-CM)	
D	34	1	**8T-5372**		SEAL (0.4-M)	
D	35	1	**6V-1392**		SEAL (0.8-M)	

D-ORDER BY THE METER
E-ORDER BY THE CENTIMETER
M-METRIC PART

180-9874 HEATER GP-CAB *(contd.)* **i02776562**

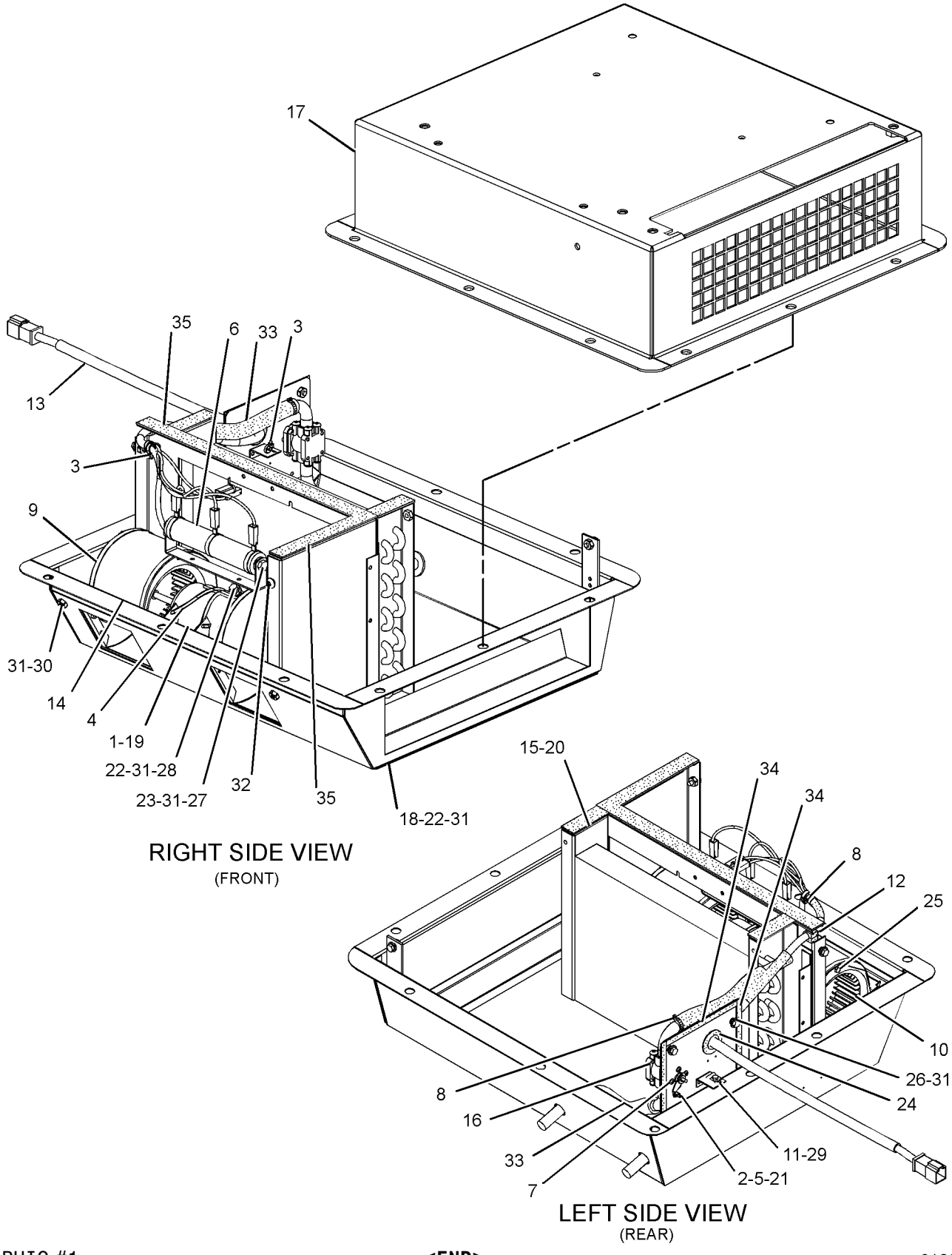

GRAPHIC #1 **<END>** g01303888

OPERATOR STATION

214-4073 LINER GP-CAB

S/N: EAE1-UP
PART OF 223-4791, 254-5054, 259-4423 CAB AR
AN ATTACHMENT

SMCS-7301, 7329 **i02898381**

NOTE	REF NO	GRAPHIC REF	PART NUMBER	QTY	PART NAME 1 2 3 4 5 6 (PRODUCT LEVEL)	SEE PAGE
Y	1	1	**3E-6389**	1	LAMP GP-DOME (24-VOLT)	106
	2	1	**6V-8928**	1	HOOK-COAT	
	3	1	**8N-9033**	2	PLUG	
	4	1	**225-7729**	1	PLATE-COVER	
	5	1	**226-3444**	1	BOX (RH)	
	6	1	**226-3445**	1	BOX (LH)	
	7	1	**226-3465**	1	FOAM	
	8	1	**226-6416**	2	PLATE-COVER	
M	9	1	**5C-2890**	2	NUT (M6X1-THD)	
M	10	1	**9X-2042**	24	SCREW-TRUSS HEAD (M6X1X12-MM)	
M	11	1	**9X-2045**	1	SCREW-TRUSS HEAD (M6X1X20-MM)	
	12	1	**9X-8256**	2	WASHER (6.6X12X2-MM THK)	

M-METRIC PART
Y-SEPARATE ILLUSTRATION

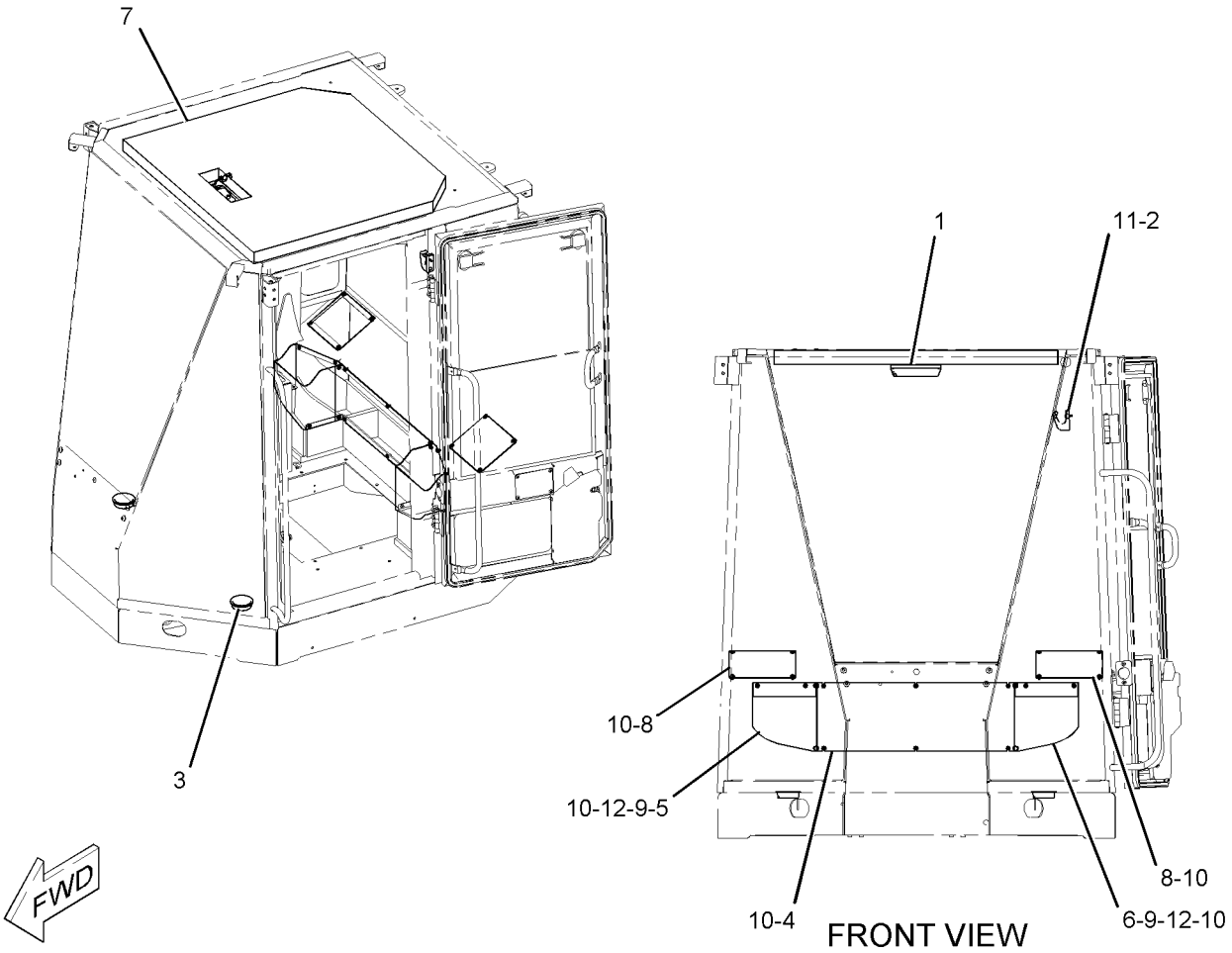

GRAPHIC #1

<END>

g01041812

OPERATOR STATION

230-6335 LINES GP-AIR CONDITIONER

S/N: EAE1-UP
PART OF 249-5075 OPERATOR AR
AN ATTACHMENT

SMCS-1808, 7320 **i02856654**

NOTE	REF NO	GRAPHIC REF	PART NUMBER	QTY	PART NAME 1 2 3 4 5 6 (PRODUCT LEVEL)	SEE PAGE
	1	1	**3S-2093**	1	STRAP-CABLE	
	2	1	**7K-1181**	6	STRAP-CABLE	
	3	1	**102-8703**	1	PLATE-COVER	
	4	1	**102-8705**	4	PLATE	
	5	1	**163-9324**	1	PLATE-INSTRUCTION (AIR CONDITIONER)	
	6	1	**177-2215**	1	STRAP-DUAL CLAMP	
Y	7	1	**186-6190**	1	ACCUMULATOR GP-REFRIGERANT (WITH DESICCANT)	284
M	8	1	**206-0451**	1	BOLT-STACKING (M8X1.25X44-MM)	
I	9	1	**231-0642**	1	HOSE AS	
I	10	1	**231-0643**	1	HOSE AS	
I	11	1	**300-3615**	1	HOSE AS	
	12	1	**232-0231**	2	CLAMP-HALF	
I	13	1	**242-5002**	1	HOSE AS	
	14	1	**242-5016**	10	CLAMP-HALF	
	15	1	**6V-4356**	1	CLIP (SLOT)	
	16	1	**6V-4357**	1	CLIP (TAB)	
M	17	1	**7X-0818**	1	BOLT (M8X1.25X45-MM)	
M	18	1	**7X-2537**	1	BOLT (M8X1.25X35-MM)	
	19	1	**7X-7729**	1	WASHER (11X25X3-MM THK)	
M	20	1	**8T-4196**	1	BOLT (M10X1.5X35-MM)	
	21	1	**9X-7380**	1	SEAL-O-RING	
	22	1	**9X-7381**	3	SEAL-O-RING	
	23	1	**9X-7382**	2	SEAL-O-RING	
	24	1	**9X-7383**	2	SEAL-O-RING	
G	25	1	**160-2247**		SLEEVE-ABRASION (22.5-IN)	
G	25A	1	**160-2247**		SLEEVE-ABRASION (24.7-IN)	
G	25B	1	**160-2247**		SLEEVE-ABRASION (24.8-IN)	
M	26	1	**8T-6912**	3	BOLT (M8X1.25X50-MM)	

G-ORDER BY THE INCH
I-REFER TO HYDRAULIC INFORMATION SYSTEM
M-METRIC PART
Y-SEPARATE ILLUSTRATION

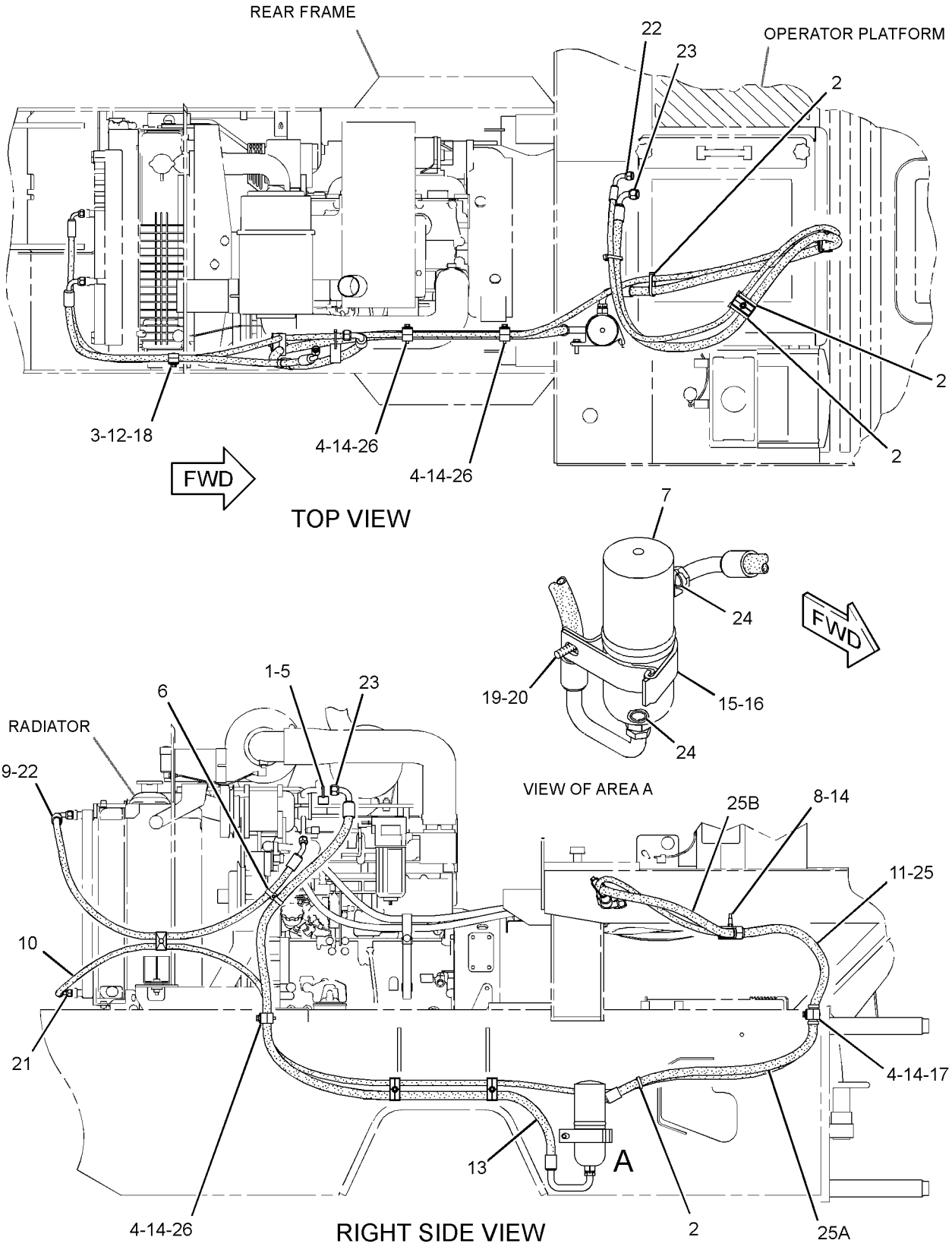

GRAPHIC #1

<END>

g01423860

OPERATOR STATION

230-4958 LINES GP-CAB HEATER

S/N: EAE1-UP
PART OF 249-5075, 249-5076 OPERATOR AR
AN ATTACHMENT

SMCS-7304 **i02139039**

NOTE	REF NO	GRAPHIC REF	PART NUMBER	QTY	PART NAME 1 2 3 4 5 6 (PRODUCT LEVEL)	SEE PAGE
	1	1	**1V-6585**	1	VALVE-SHUTOFF (CAB HEATER)	
	2	1	**8F-8151**	1	VALVE AS-SHUTOFF (CAB HEATER)	
	3	1	**8T-0154**	8	CLAMP-HOSE	
	4	1	**102-8705**	3	PLATE	
	5	1	**109-0741**	1	CONNECTOR-TUBE	
	6	1	**155-6741**	1	CONNECTOR-TUBE	
	7	1	**213-8647**	1	BRACKET	
	8	1	**222-9820**	6	CLAMP-HALF	
	9	1	**234-6818**	1	PLATE	
	10	1	**234-6819**	1	BLOCK	
	11	1	**242-4310**	1	FITTING	
	12	1	**1H-1360**	1	COUPLING	
	13	1	**1L-2279**	1	ELBOW	
	14	1	**3B-7255**	1	BUSHING-REDUCING	
M	15	1	**5C-7261**	3	NUT (M8X1.25-THD)	
	16	1	**5P-6994**	1	CLIP	
	17	1	**7K-1181**	2	STRAP-CABLE	
M	18	1	**7X-0818**	2	BOLT (M8X1.25X45-MM)	
	19	1	**8T-4121**	2	WASHER-HARD (11X21X2.5-MM THK)	
M	20	1	**8T-4133**	1	NUT (M10X1.5-THD)	
M	21	1	**8T-4136**	1	BOLT (M10X1.5X25-MM)	
	22	1	**8T-4224**	5	WASHER-HARD (8.8X16X2-MM THK)	
M	23	1	**8T-6869**	1	BOLT (M8X1.25X60-MM)	
M	24	1	**8T-6912**	2	BOLT (M8X1.25X50-MM)	
E	25	1	**5P-0767**		HOSE (6-CM)	
E	25A	1	**5P-0767**		HOSE (7-CM)	
E	25B	1	**5P-0767**		HOSE (250-CM)	
E	25C	1	**5P-0767**		HOSE (254-CM)	
BG	26	1	**160-2247**		SLEEVE-ABRASION	

B-USE AS REQUIRED
E-ORDER BY THE CENTIMETER
G-ORDER BY THE INCH
M-METRIC PART

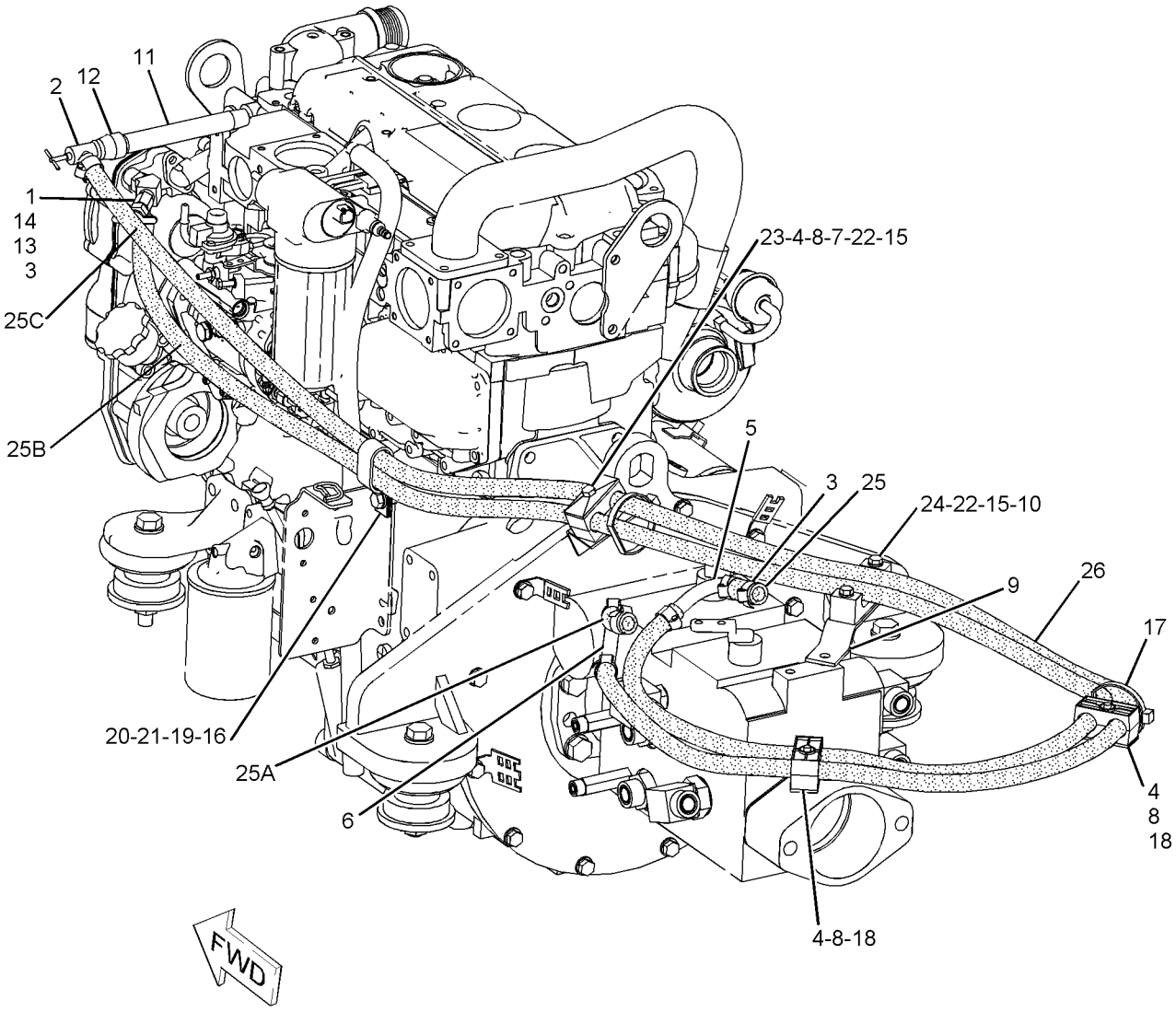

GRAPHIC #1 **<END>** g01054299

OPERATOR STATION

242-7158 LINKAGE GP

S/N: EAE1-UP

PART OF 153-7111, 201-5954 CONTROL GP-DIRECTION & SPEED

AN ATTACHMENT

SMCS-3065 **i02056225**

NOTE	REF NO	GRAPHIC REF	PART NUMBER	QTY	PART NAME 1 2 3 4 5 6 (PRODUCT LEVEL)	SEE PAGE
	1	1	**7X-7915**	1	ROD END	
	2	1	**124-4592**	1	ROD END (M8X1.25-THD)	
	3	1	**242-7160**	1	ROD	
M	4	1	**125-0380**	1	NUT-HEX (M8X1.25-THD, LH)	
M	5	1	**5C-7261**	1	NUT (M8X1.25-THD)	

M-METRIC PART

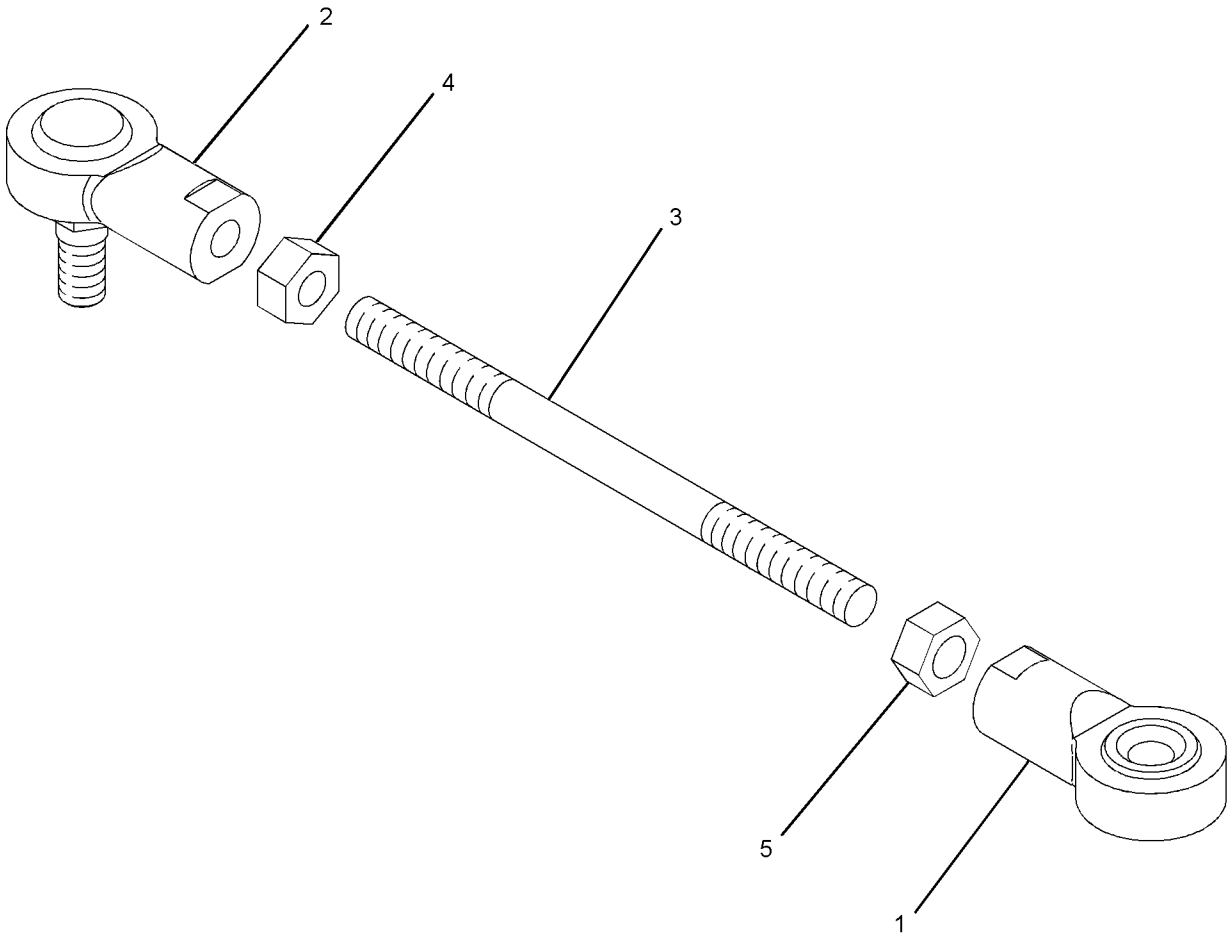

GRAPHIC #1 **<END>** g01039554

OPERATOR STATION

186-1709 MIRROR GP-REAR VIEW

S/N: EAE1-UP
PART OF 229-8706 OPERATOR AR
AN ATTACHMENT

SMCS-7319 **i01404492**

NOTE	REF NO	GRAPHIC REF	PART NUMBER	QTY	PART NAME 1 2 3 4 5 6 (PRODUCT LEVEL)	SEE PAGE
	1	1	**5K-9179**	1	BOLT-ROUND HEAD (3/8-16X11-IN)	
	2	1	**5P-6874**	1	MIRROR	
	3	1	**9P-9388**	1	KNOB	
	4	1	**186-0898**	1	BRACKET	
	5	1	**7X-7729**	4	WASHER (11X25X3-MM THK)	
M	6	1	**8T-4133**	2	NUT (M10X1.5-THD)	
M	7	1	**8T-4195**	2	BOLT (M10X1.5X30-MM)	

M-METRIC PART

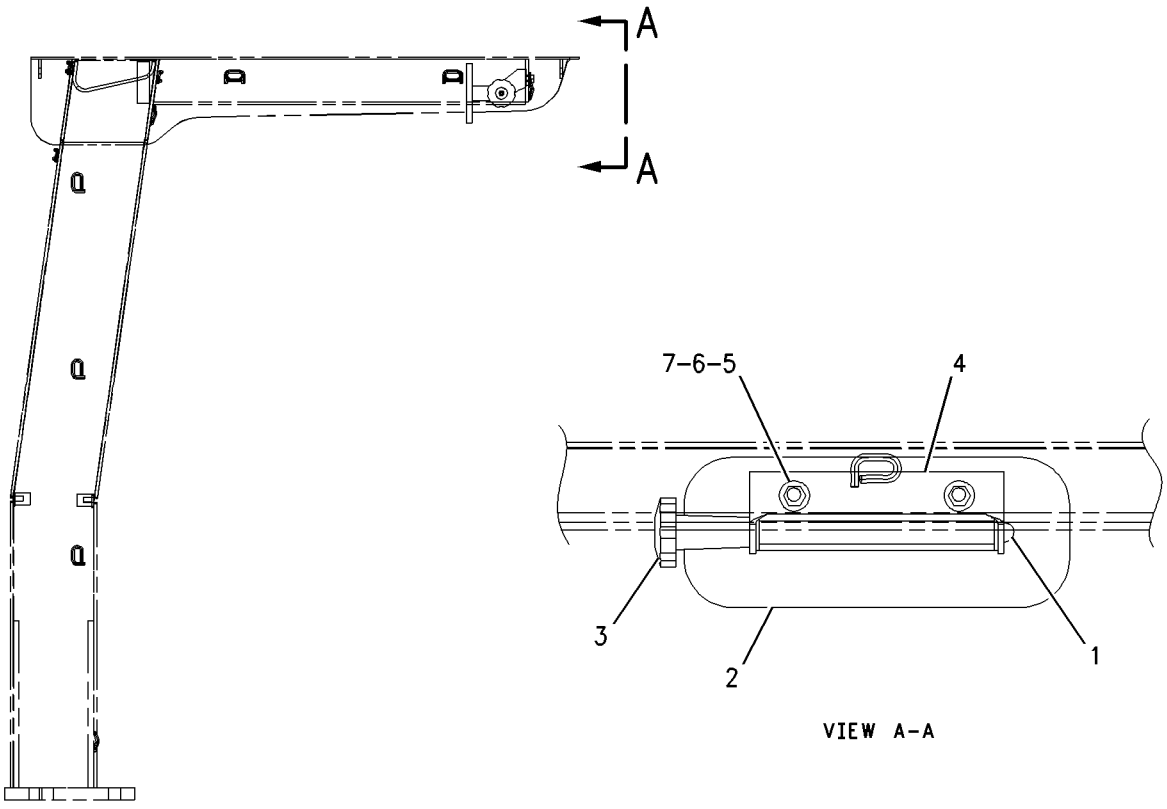

RIGHT SIDE VIEW

GRAPHIC #1 **<END>** g00672669

203-3639 MIRROR GP-REAR VIEW–CANOPY

S/N: EAE1-UP
PART OF 236-2234 OPERATOR AR
AN ATTACHMENT

SMCS-7319 **i01972588**

NOTE	REF NO	GRAPHIC REF	PART NUMBER	QTY	PART NAME 1 2 3 4 5 6 (PRODUCT LEVEL)	SEE PAGE
	1	1	**5K-9179**	1	BOLT-ROUND HEAD (3/8-16X11-IN)	
	2	1	**5P-6874**	1	MIRROR	
	3	1	**9P-9388**	1	KNOB	
	4	1	**186-0898**	1	BRACKET	
	5	1	**203-0067**	1	PLATE	
	6	1	**7X-7729**	8	WASHER (11X25X3-MM THK)	
M	7	1	**8T-4133**	4	NUT (M10X1.5-THD)	
M	8	1	**8T-4136**	2	BOLT (M10X1.5X25-MM)	
M	9	1	**8T-4195**	2	BOLT (M10X1.5X30-MM)	

M-METRIC PART

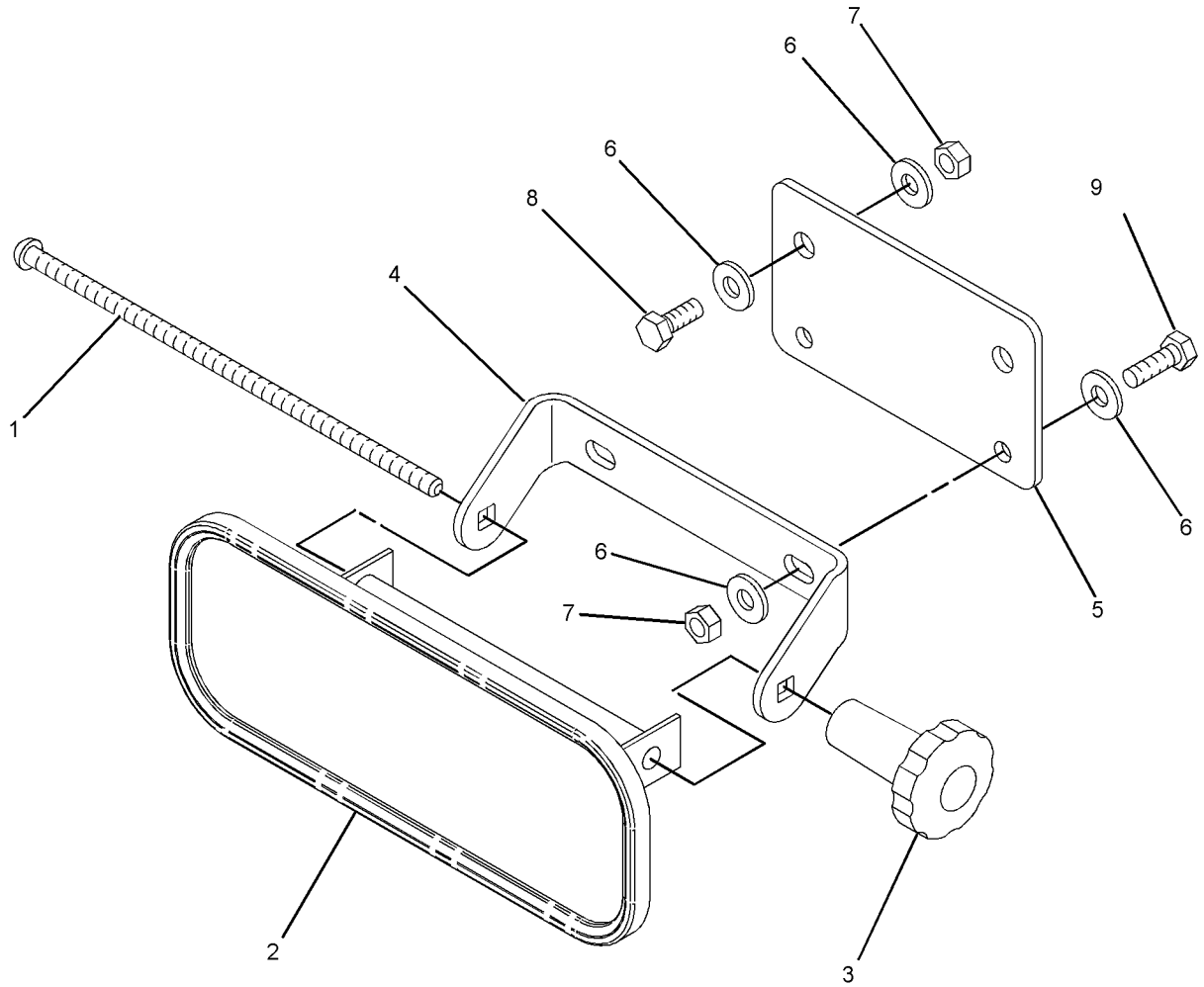

GRAPHIC #1 **<END>** g01042067

227-5690 MIRROR GP-REAR VIEW–CAB

S/N: EAE1-UP
PART OF 249-5075, 249-5076 OPERATOR AR
AN ATTACHMENT

SMCS-7319 **i01972559**

NOTE	REF NO	GRAPHIC REF	PART NUMBER	QTY	PART NAME 1 2 3 4 5 6 (PRODUCT LEVEL)	SEE PAGE
	1	1	**132-9982**	2	ARM-MIRROR	
	2	1	**132-9983**	2	MIRROR-CONVEX	
	3	1	**230-7470**	2	PLATE	
M	4	1	**7X-2536**	4	BOLT (M8X1.25X14MM)	
M	5	1	**8T-4189**	4	BOLT (M8X1.25X20MM)	
	6	1	**8T-4224**	8	WASHER-HARD (8.8X16X2MM THK)	

M-METRIC PART

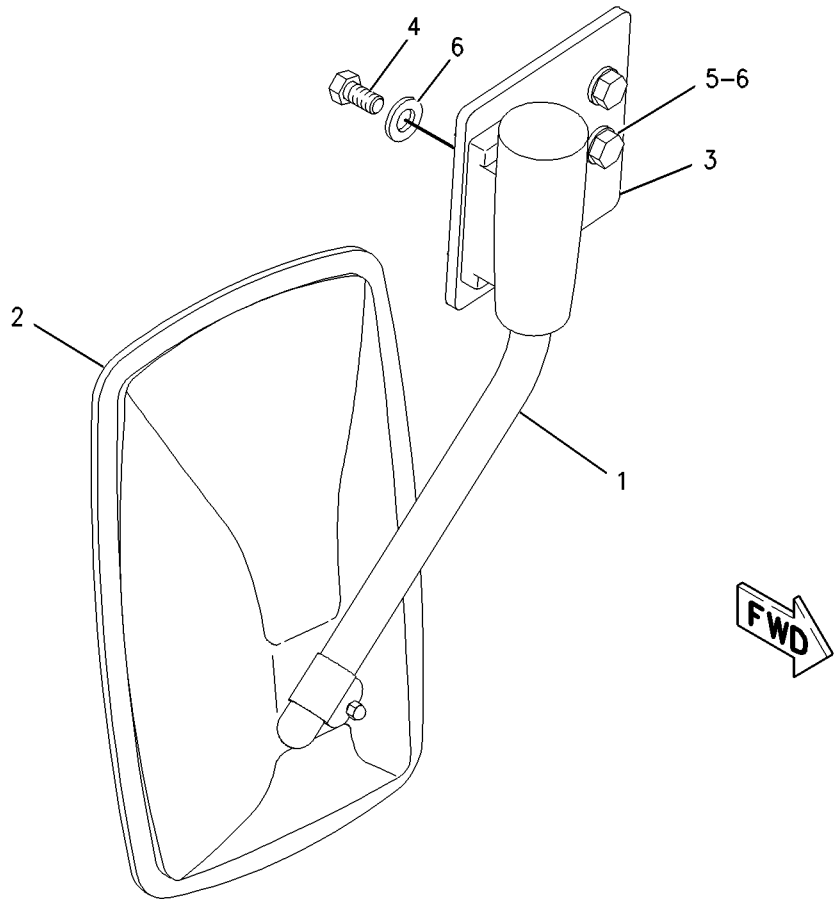

GRAPHIC #1 **<END>** g00964622

OPERATOR STATION

135-2929 MODULE GP-WARNING INDICATOR

S/N: EAE1-UP
PART OF 230-2206, 253-9941 PANEL GP-INSTRUMENT
AN ATTACHMENT

SMCS-7407 **i02139059**

NOTE	REF NO	GRAPHIC REF	PART NUMBER	QTY	PART NAME 1 2 3 4 5 6 (PRODUCT LEVEL)	SEE PAGE
	1	1	**110-2079**	4	LAMP (24-VOLT) (WARNING LAMP)	

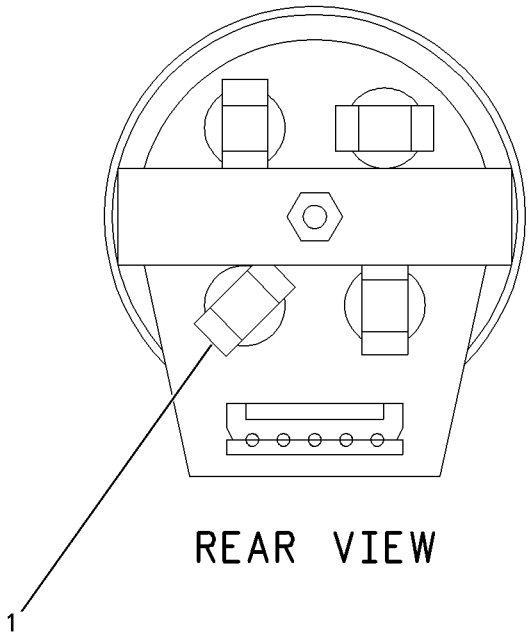

REAR VIEW

GRAPHIC #1 **<END>** g00709016

155-5783 MOTOR GP-WINDOW WIPER–FRONT

S/N: EAE1-UP
24 VOLT
PART OF 223-4793 WIPER & WASHER GP-WINDOW
AN ATTACHMENT

SMCS-7305 **i02092232**

NOTE	REF NO	GRAPHIC REF	PART NUMBER	QTY	PART NAME 1 2 3 4 5 6 (PRODUCT LEVEL)	SEE PAGE
	1	1	**102-8805**	1	KIT-RECEPTACLE (6-PIN)	
					(INCLUDES RECEPTACLE AS & WEDGE)	
	2	1	**8T-8737**	1	PLUG-SEAL	
	3	1	**186-3735**	5	PIN-CONNECTOR (16-GA TO 18-GA)	

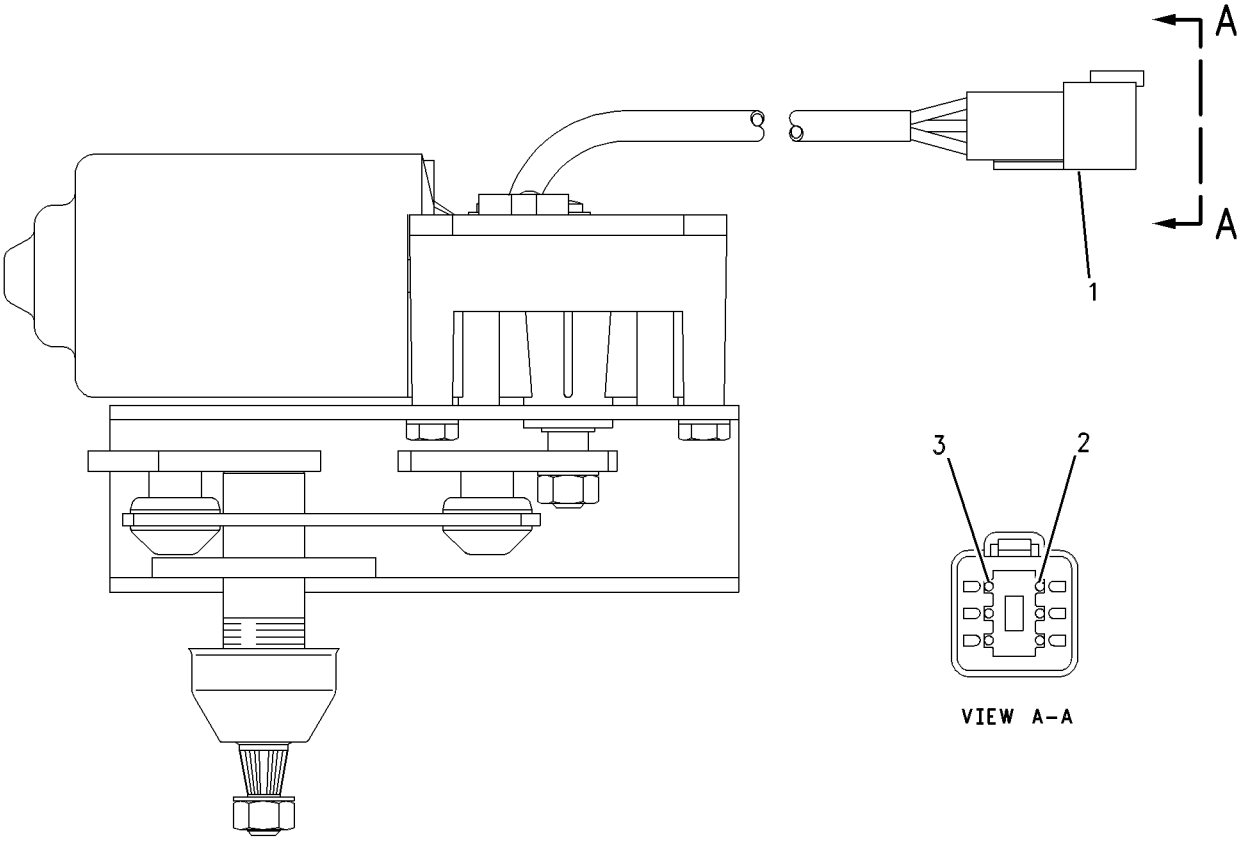

GRAPHIC #1 **<END>** g00615262

239-4009 MOTOR GP-WINDOW WIPER–24-VOLT

S/N: EAE1-UP
REAR
PART OF 223-4793 WIPER & WASHER GP-WINDOW
AN ATTACHMENT

SMCS-7305 **i02855487**

NOTE	REF NO	GRAPHIC REF	PART NUMBER	QTY	PART NAME 1 2 3 4 5 6 (PRODUCT LEVEL)	SEE PAGE
	1	1	**208-8760**	1	COVER	
	2	1	**219-7202**	1	PLATE	
	3	1	**102-8805**	1	KIT-RECEPTACLE (6-PIN)	
					(INCLUDES RECEPTACLE AS & WEDGE)	
	4	1	**8T-8737**	1	PLUG-SEAL	
	5	1	**186-3735**	5	PIN-CONNECTOR (16-GA TO 18-GA)	
M	6	1	**5C-7261**	1	NUT (M8X1.25-THD)	
	7	1	**3F-9556**	1	LOCKWASHER	
	8	1	**194-3710**	1	CAP-WIPER	

M-METRIC PART

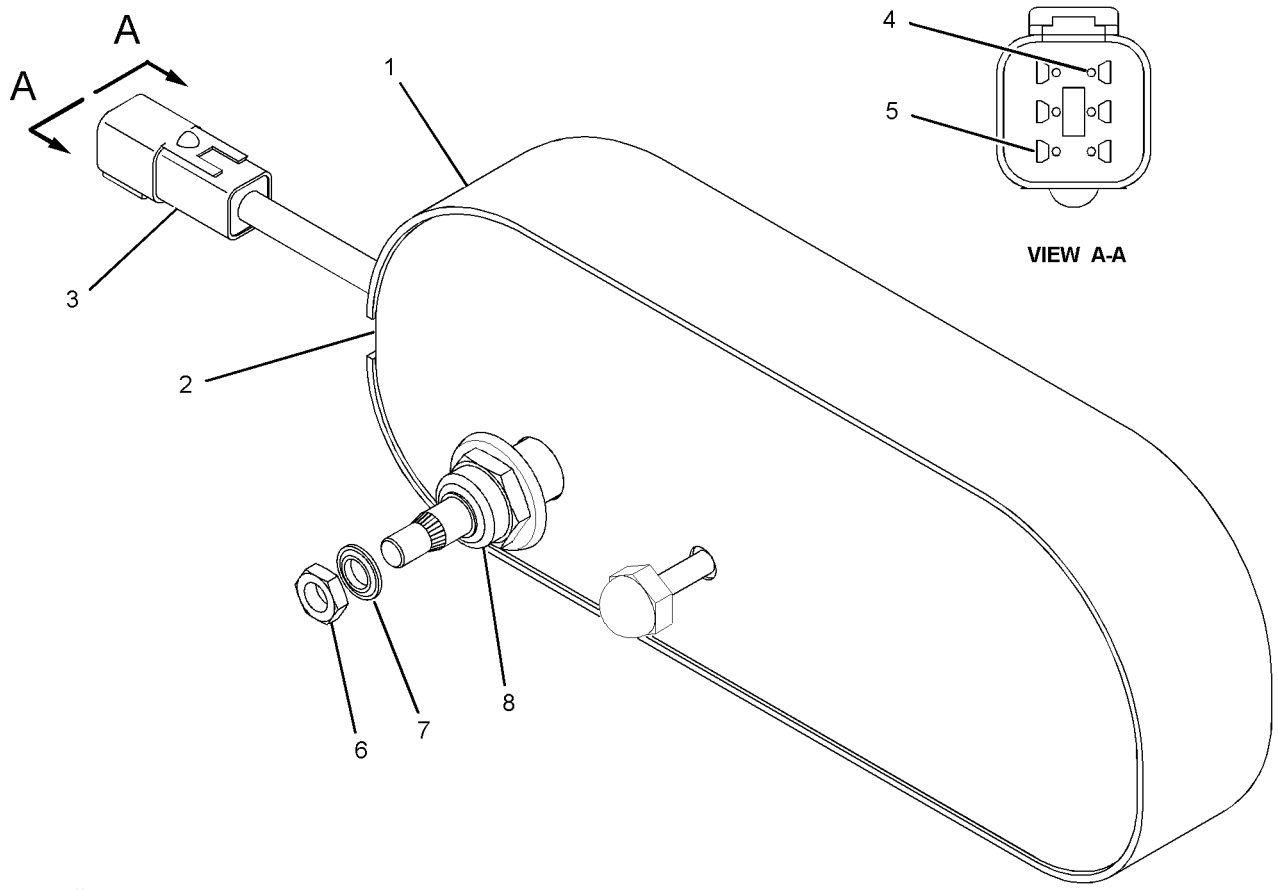

GRAPHIC #1 **<END>** g01085367

OPERATOR STATION

143-5926 MOUNTING GP-CAB

S/N: EAE1-UP

PART OF 249-5075, 249-5076 OPERATOR AR

AN ATTACHMENT

SMCS-7266, 7301 **i01356289**

NOTE	REF NO	GRAPHIC REF	PART NUMBER	QTY	PART NAME 1 2 3 4 5 6 (PRODUCT LEVEL)	SEE PAGE
	1	1	**8E-0849**	4	SLEEVE-CAB	
	2	1	**9U-0512**	2	WASHER (32X144X12-MM THK)	
	3	1	**9W-7388**	2	WASHER (26X144X12-MM THK)	
	4	1	**159-7142**	2	WASHER (70.75X143X10-MM THK)	
M	5	1	**7X-2567**	2	BOLT (M24X3X160-MM)	
M	6	1	**7X-2586**	2	BOLT (M30X35X180-MM)	
M	7	1	**8C-8722**	2	NUT (M30X3.5-THD)	
M	8	1	**8T-4001**	2	NUT (M24X3-THD)	
	9	1	**8T-4167**	4	WASHER-HARD (26X44X4-MM THK)	
	10	1	**9W-9941**	4	MOUNT AS	
	11	1	**9X-8258**	4	WASHER (33X56X6-MM THK)	
	12	1	**054-8974**	4	PIN	

M-METRIC PART

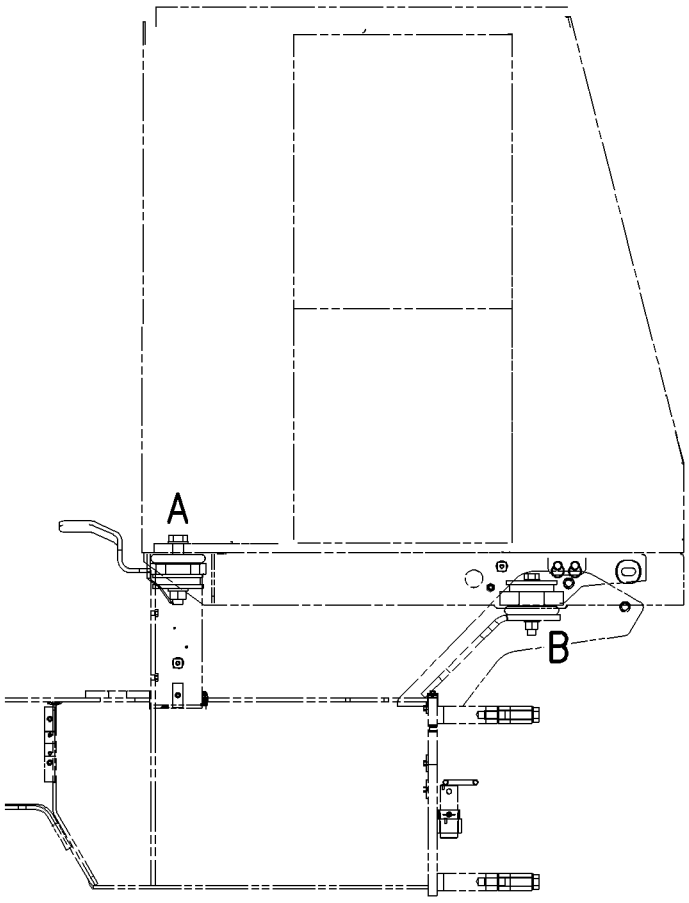

RIGHT SIDE VIEW

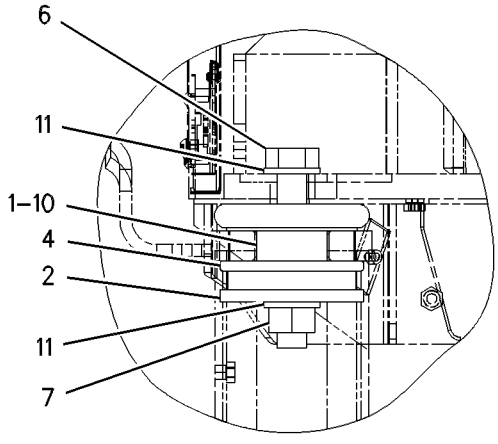

VIEW OF AREA A

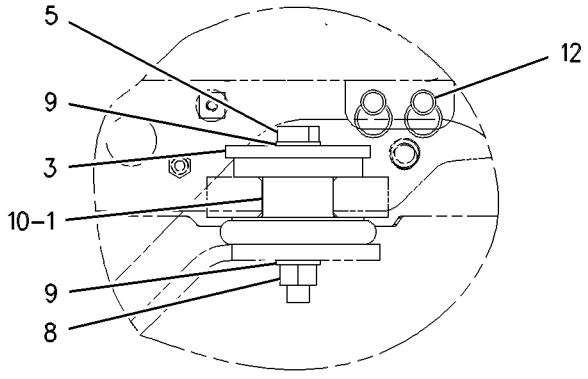

VIEW OF AREA B

GRAPHIC #1 **<END>** g00615119

OPERATOR STATION

259-1188 MOUNTING GP-CAB

S/N: EAE1-UP
PART OF 249-5075, 249-5076 OPERATOR AR
AN ATTACHMENT

SMCS-7266, 7301 **i02251786**

NOTE	REF NO	GRAPHIC REF	PART NUMBER	QTY	PART NAME 1 2 3 4 5 6 (PRODUCT LEVEL)	SEE PAGE
	1	1	**9U-0512**	2	WASHER (32X144X12-MM THK)	
	2	1	**9W-7388**	2	WASHER (26X144X12-MM THK)	
	3	1	**054-8974**	4	PIN	
	4	1	**159-7142**	2	WASHER (70.75X143X10-MM THK)	
	5	1	**248-4046**	8	MOUNT	
M	6	1	**8C-8722**	2	NUT (M30X3.5-THD)	
M	7	1	**7X-2465**	2	BOLT (M24X3X180-MM)	
M	8	1	**8T-4001**	2	NUT (M24X3-THD)	
	9	1	**8T-4167**	4	WASHER-HARD (26X44X4-MM THK)	
M	10	1	**9X-6385**	2	BOLT (M30X3.5X200-MM)	
	11	1	**9X-8258**	4	WASHER (33X56X6-MM THK)	

M-METRIC PART

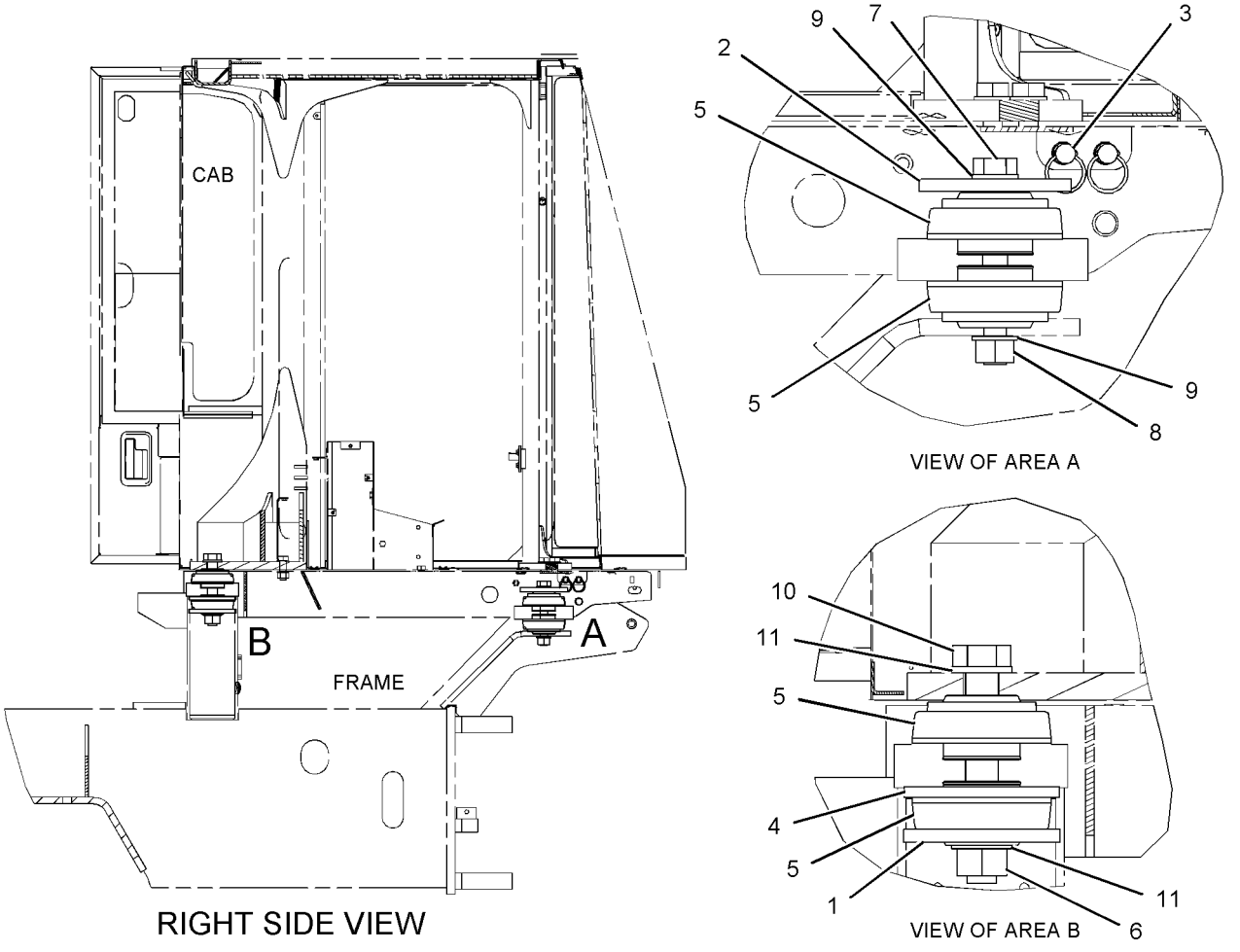

GRAPHIC #1 **<END>** g01141794

OPERATOR STATION

229-8706 OPERATOR AR—ROPS

S/N: EAE1-UP

AN ATTACHMENT

SMCS-7301 **i02294222**

NOTE	PART NUMBER	QTY	PART NAME 1 2 3 4 5 6 (PRODUCT LEVEL)	SEE PAGE
Y	*153-7111*	1	CONTROL GP-DIRECTION & SPEED	301
Y	*153-7107*	1	CONTROL GP-STEERING	207
Y	*153-5030*	1	FAN GP-SUCTION	64
Y	*210-5550*	1	GUARD GP-VANDALISM	324
Y	*189-4661*	1	HANDRAIL GP	187
Y	*204-1321*	1	LIGHTING GP-FLOOD (OPEN ROPS)	111
Y	*186-1709*	1	MIRROR GP-REAR VIEW (ROPS)	334
Y	*230-2206*	1	PANEL GP-INSTRUMENT (FRONT CONSOLE)	349
Y	*224-1152*	1	PANEL GP-INSTRUMENT (SIDE CONSOLE)	345
Y	*249-3158*	1	PLATFORM GP-OPERATOR (WITH CANOPY, WITH ROPS)	366
Y	*202-0679*	1	ROPS GP	369

Y-SEPARATE ILLUSTRATION

<END>

236-2234 OPERATOR AR—WITH SOFT CANOPY

S/N: EAE1-UP

AN ATTACHMENT

SMCS-7301 **i02294225**

NOTE	PART NUMBER	QTY	PART NAME 1 2 3 4 5 6 (PRODUCT LEVEL)	SEE PAGE
Y	*217-0568*	1	CANOPY GP	296
Y	*153-7111*	1	CONTROL GP-DIRECTION & SPEED	301
Y	*153-7107*	1	CONTROL GP-STEERING	207
Y	*153-5030*	1	FAN GP-SUCTION	64
Y	*210-5550*	1	GUARD GP-VANDALISM	324
Y	*189-4661*	1	HANDRAIL GP	187
Y	*204-1321*	1	LIGHTING GP-FLOOD (OPEN ROPS)	111
Y	*203-3639*	1	MIRROR GP-REAR VIEW	335
Y	*230-2206*	1	PANEL GP-INSTRUMENT (FRONT CONSOLE)	349
Y	*224-1152*	1	PANEL GP-INSTRUMENT (SIDE CONSOLE)	345
Y	*249-3158*	1	PLATFORM GP-OPERATOR (WITH CANOPY, WITH ROPS)	366

Y-SEPARATE ILLUSTRATION

<END>

OPERATOR STATION

249-5075 OPERATOR AR—WITH AIR CONDITIONER

S/N: EAE1-UP

AN ATTACHMENT

SMCS-7301 **i02857405**

NOTE	PART NUMBER	QTY	PART NAME 1 2 3 4 5 6 (PRODUCT LEVEL)	SEE PAGE
Y	*240-4683*	1	AIR CONDITIONER GP (WITH CONTROL)	288
Y	*259-4423*	1	CAB AR (BASIC)	289
Y	*229-5003*	1	COMPRESSOR GP-REFRIGERANT	298
Y	*153-7145*	1	CONDENSER & MTG GP-REFRIGERANT	300
Y	*201-5954*	1	CONTROL GP-DIRECTION & SPEED	303
Y	*153-7107*	1	CONTROL GP-STEERING	207
Y	*178-3836*	1	CYLINDER & MTG GP-TILT (CAB)	310
Y	*153-4982*	1	FAN GP-SUCTION (WITH AIR CONDITIONER)	62
Y	*201-0183*	1	FILM GP (STRIPE)	392
Y	*240-4607*	1	FILTER GP-CAB AIR	320
Y	*249-9301*	1	FLOOR MAT GP (CAB)	321
Y	*230-6335*	1	LINES GP-AIR CONDITIONER	329
Y	*230-4958*	1	LINES GP-CAB HEATER	331
Y	*227-5690*	1	MIRROR GP-REAR VIEW (CAB)	336
Y	*259-1188*	1	MOUNTING GP-CAB	342
Y	*243-5693*	1	PANEL GP-INSTRUMENT (SIDE CONSOLE)	355
Y	*253-9941*	1	PANEL GP-INSTRUMENT (CENTER CONSOLE)	360
Y	*236-7762*	1	WIRING GP-AIR CONDITIONER	124

Y-SEPARATE ILLUSTRATION

<END>

249-5076 OPERATOR AR—W/O AIR CONDITIONER

S/N: EAE1-UP

AN ATTACHMENT

SMCS-7301 **i02857408**

NOTE	PART NUMBER	QTY	PART NAME 1 2 3 4 5 6 (PRODUCT LEVEL)	SEE PAGE
Y	*223-4791*	1	CAB AR	289
			-OR-	
Y	*254-5054*	1	CAB AR	289
			S/N: EAE1-242	
Y	*259-4423*	1	CAB AR	289
			S/N: EAE243-UP	
Y	*201-5954*	1	CONTROL GP-DIRECTION & SPEED	303
Y	*153-7107*	1	CONTROL GP-STEERING	207
Y	*178-3836*	1	CYLINDER & MTG GP-TILT (CAB)	310
Y	*153-5030*	1	FAN GP-SUCTION	64
Y	*201-0183*	1	FILM GP (STRIPE)	392
Y	*240-4607*	1	FILTER GP-CAB AIR	320
Y	*249-9301*	1	FLOOR MAT GP	321
Y	*240-4672*	1	HEATER & MTG GP-CAB	325
Y	*230-4958*	1	LINES GP-CAB HEATER	331
Y	*227-5690*	1	MIRROR GP-REAR VIEW (CAB)	336
Y	*143-5926*	1	MOUNTING GP-CAB	340
			S/N: EAE1-242	
Y	*259-1188*	1	MOUNTING GP-CAB	342
			S/N: EAE243-UP	
Y	*253-9941*	1	PANEL GP-INSTRUMENT (CENTER CONSOLE)	360
Y	*243-5693*	1	PANEL GP-INSTRUMENT (SIDE CONSOLE)	355

Y-SEPARATE ILLUSTRATION

<END>

OPERATOR STATION

224-1152 PANEL GP-INSTRUMENT—SIDE CONSOLE

S/N: EAE1-UP
PART OF 229-8706, 236-2234 OPERATOR AR
AN ATTACHMENT

SMCS-7451 **i02898382**

NOTE	REF NO	GRAPHIC REF	PART NUMBER	QTY	PART NAME 1 2 3 4 5 6 (PRODUCT LEVEL)	SEE PAGE
Y	1	1	**3E-6328**	1	ALARM GP (24-VOLT)	98
	2	1,2	**3S-2093**	3	STRAP-CABLE	
	3	2	**6T-2774**	2	CLIP	
	4	2	**6T-6329**	1	BEZEL	
	5	2	**6V-8927**	2	BOLT-SOCKET HEAD (6-32X0.5-IN)	
	6	2	**7T-0493**	1	PLUG	
	7	2	**7V-5628**	1	PLATE	
	8	2	**7V-6089**	2	CLAMP	
	9	1	**8T-8799**	2	BOOT	
	10	1	**9G-9154**	1	CLIP	
	11	1	**9X-7449**	1	GROMMET	
	12	1	**107-6013**	1	SEAL	
	13	1	**107-6072**	1	PLATE	
	14	1	**113-8490**	16	FUSE (10-AMPERE)	
	15	1	**116-0118**	1	CLIP	
	16	1	**116-4159**	1	BASE	
	17	2	**116-5270**	1	LAMP (24-VOLT) (PARKING BRAKE)	
	18	2	**116-5274**	1	KNOB (PARKING BRAKE)	
	19	2	**116-5275**	1	SWITCH AS-PUSH BUTTON (PARKING BRAKE)	
	20	2	**116-6565**	1	BLOCK (LIGHT)	
	21	1	**118-7362**	1	GROMMET-SPLIT	
	22	1	**139-0234**	1	PLATE	
	23	1	**139-0236**	1	PLATE AS	
M		1	**6V-9632**	2	NUT-WELD (M6X1-THD)	
	24	2	**145-9297**	1	PLATE AS	
		2	**5D-9629**	1	ROD	
		2	**7T-1099**	1	LINK	
	25	1	**158-5089**	1	RELAY AS (24-VOLT) (ENGINE OIL PRESSURE)	
Y	26	2	**228-9108**	1	MODULE GP-TIMER	116
	27	1	**160-9412**	1	HOUSING AS	
Y	28	1	**167-0138**	1	SWITCH GP-MAGNETIC (24-VOLT) (PARKING BRAKE)	120
	29	2	**116-5277**	1	BLOCK-CONTACT	
	30	2	**193-4126**	1	FILM (INSTRUMENTS)	
	31	1	**193-8565**	1	HARNESS AS-PANEL (SIDE CONSOLE)	
		1	**112-9611**	14	TERMINAL-BLADE	
		1	**112-9612**	27	TERMINAL-BLADE	
		1	**113-5100**	4	TERMINAL-BUS	
		1	**116-4161**	9	TERMINAL-BLADE	
		1	*131-1474*	16	TERMINAL AS	
					(EACH INCLUDES)	
		1	**5P-2321**	1	TERMINAL (14-GA TO 16-GA, NO. 6 SCREW)	
		1	**5P-2321**	1	TERMINAL (14-GA TO 16-GA, NO. 6 SCREW)	
		1	**125-7874**		TUBE-HEAT SHRINK (5.72-MM DIA) (3-CM)	
		1	**5P-3454**	1	TERMINAL (4-GA)	
		1	**2L-8051**	1	TERMINAL (6-GA)	
		1	**2L-8065**	1	TERMINAL (10-GA TO 12-GA)	
		1	*286-7193*	1	TERMINAL AS-RING	
		1	**125-7874**		TUBE-HEAT SHRINK (5.72-MM DIA) (3-CM)	
		1	**102-8802**	1	KIT-RECEPTACLE (2-PIN)	
					(INCLUDES RECEPTACLE AS & WEDGE)	
		1	**8T-8737**	5	PLUG-SEAL	
		1	**9G-4351**	1	HOUSING-RECEPTACLE (4-GA TO 6-GA)	
		1	**9X-0145**	1	RECEPTACLE AS-CONNECTOR (24-PIN)	
		1	**112-9609**	2	BLOCK-MICRORELAY	
		1	**112-9610**	4	LOCK-MICRORELAY	

224-1152 **PANEL GP-INSTRUMENT** *(contd.)* **i02898382**

NOTE	REF NO	GRAPHIC REF	PART NUMBER	QTY	PART NAME 1 2 3 4 5 6 (PRODUCT LEVEL)	SEE PAGE
		1	**124-9636**	1	BLOCK-MINIFUSE	
		1	**124-9637**	1	LOCK-MINIFUSE	
		1	**155-2255**	1	KIT-CONNECTING PLUG (12-PIN)	
		1	**155-2265**	2	KIT-CONNECTING PLUG (8-PIN)	
		1	**155-2270**	1	KIT-CONNECTING PLUG (2-PIN)	
		1	**155-2271**	2	KIT-CONNECTING PLUG (4-PIN)	
		1	**155-2274**	1	KIT-CONNECTING PLUG (6-PIN)	
					(EACH PLUG KIT INCLUDES PLUG AS & WEDGE)	
	32	1	**206-5108**	1	SEAL	
	33	2	**206-5109**	1	SEAL	
	34	2	**225-8541**	1	PLATE AS	
	35	1	**230-9092**	1	FILM-FUSE/RELAY	
	36	2	**031-0249**	2	LOCKNUT (10-24-THD)	
	37	1	**096-6166**	3	WASHER-HARD (4.5X9X1-MM THK)	
	38	2	**144-0900**	1	SWITCH AS-ROCKER (VIBRATORY SELECT)	
		2	**3L-8187**	3	LOCKWASHER	
		2	**6V-8374**	3	SCREW-MACHINE (6-32X0.25-IN)	
	39	2	**2N-3480**	2	SCREW-MACHINE (10-24X0.75-IN)	
	40	1,2	**4B-4274**	4	WASHER (5.5X13X1.2-MM THK)	
	41	1	**4P-7581**	1	CLIP	
M	42	1	**5C-2890**	2	NUT (M6X1-THD)	
	43	1	**5P-4115**	11	WASHER-HARD (7.2X19X2-MM THK)	
	44	1	**6T-3643**	1	CIRCUIT BREAKER AS (15-AMPERE) (MAIN POWER RELAY)	
		1	**6V-8376**	2	SCREW-MACHINE (8-32X0.25-IN)	
		1	**9B-7233**	2	LOCKWASHER	
	45	1	**6V-3970**	1	GROMMET	
M	46	1	**6V-9491**	3	SCREW-MACHINE (M4X0.7X20-MM)	
	47	1	**7K-1181**	3	STRAP-CABLE	
M	48	2	**8C-8451**	2	BOLT (M6X1X40-MM)	
M	49	1	**8T-2659**	3	LOCKNUT (M4X0.7-THD)	
M	50	1	**8T-4138**	8	BOLT (M6X1X20-MM)	
M	51	2	**8T-4189**	2	BOLT (M8X1.25X20-MM)	
	52	1	**8T-4223**	1	WASHER-HARD (13.5X25.5X3-MM THK)	
	53	2	**8T-4224**	2	WASHER-HARD (8.8X16X2-MM THK)	
M	54	1	**8T-4244**	1	NUT (M12X1.75-THD)	
M	55	1	**8T-4970**	9	BOLT (M6X1X14-MM)	
	56	1	**8Y-8606**	1	GROMMET	
M	57	2	**9X-1046**	4	SCREW (M4X0.7X18-MM)	
	58	1	**9X-8256**	6	WASHER (6.6X12X2-MM THK)	
	59	1	**9X-8486**	2	SCREW-MACHINE (8-32X0.75-IN)	
	60	1	**158-5089**	1	RELAY AS (24-VOLT) (COOLANT TEMPERATURE)	
	61	1	**158-5089**	1	RELAY AS (24-VOLT) (WARNING LIGHT)	
	62	1	**158-5089**	1	RELAY AS (24-VOLT) (HYDRAULIC OIL TEMPERATURE)	
	63	1	**158-5089**	1	RELAY AS (24-VOLT) (FUNCTION LIGHT)	
	64	1	**158-5089**	1	RELAY AS (24-VOLT) (BRAKE ONE)	
	65	1	**158-5089**	1	RELAY AS (24-VOLT) (BRAKE TWO)	
	66	1	**158-5089**	1	RELAY AS (24-VOLT) (NEUTRAL START ONE)	
	67	1	**158-5089**	1	RELAY AS (24-VOLT) (NEUTRAL START TWO)	
	68	1	**158-5089**	1	RELAY AS (24-VOLT) (HYDRAULIC OIL PRESSURE)	

M-METRIC PART
Y-SEPARATE ILLUSTRATION

REFER TO ALL ILLUSTRATIONS OF THIS GROUP FOR AUXILIARY VIEWS

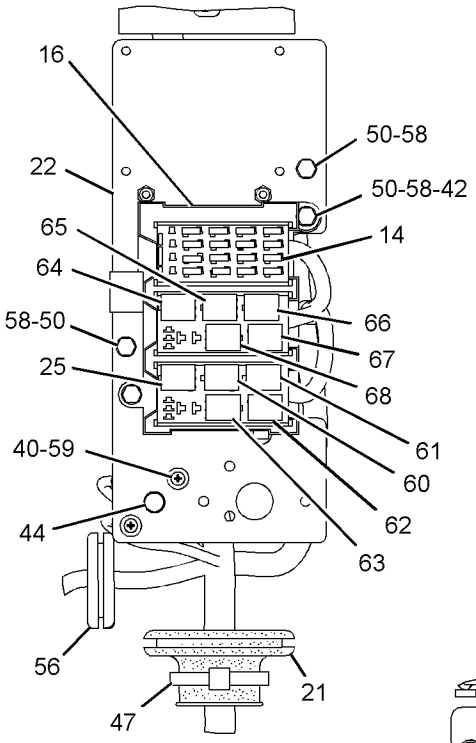

SECTION C-C

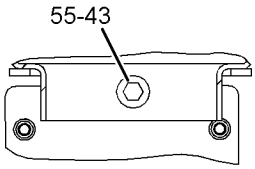

SECTION G-G

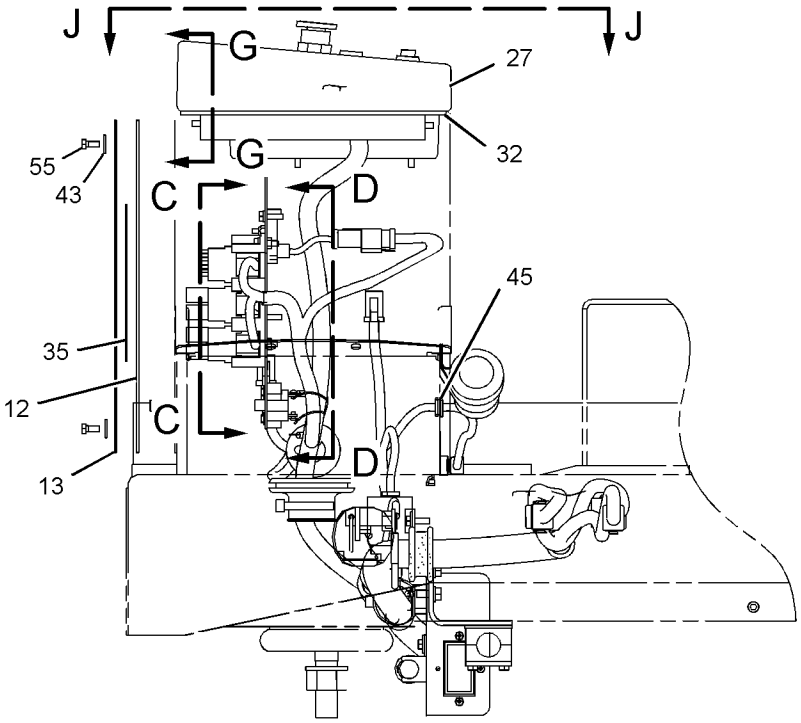

FRONT VIEW

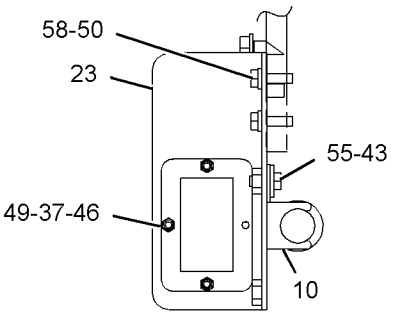

SECTION A-A

RIGHT SIDE VIEW

GRAPHIC #1

g01098756

REFER TO ALL ILLUSTRATIONS OF THIS GROUP FOR AUXILIARY VIEWS

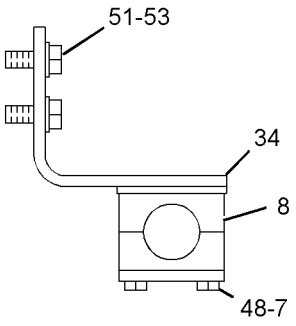

SECTION F-F

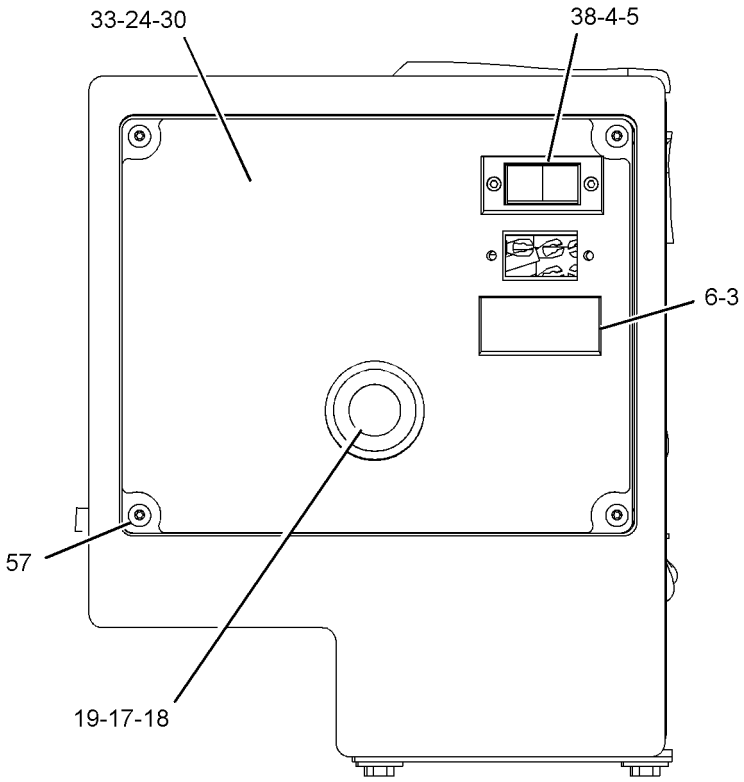

VIEW J-J

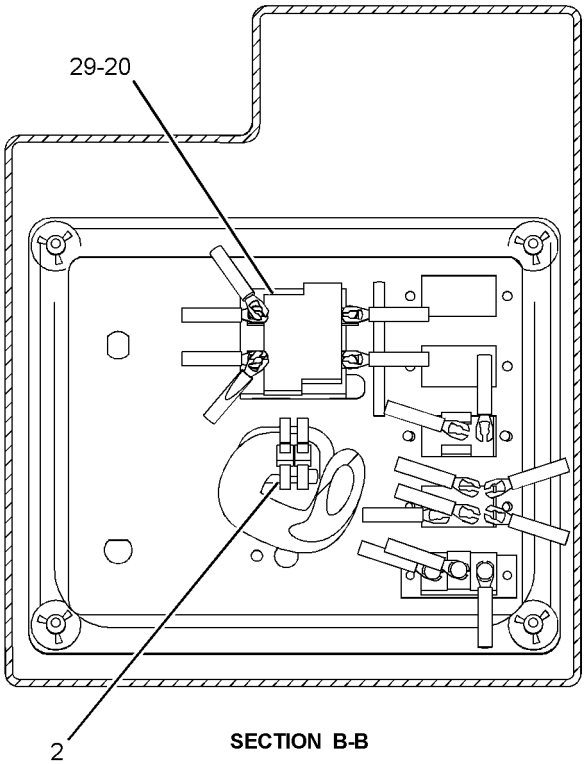

SECTION B-B

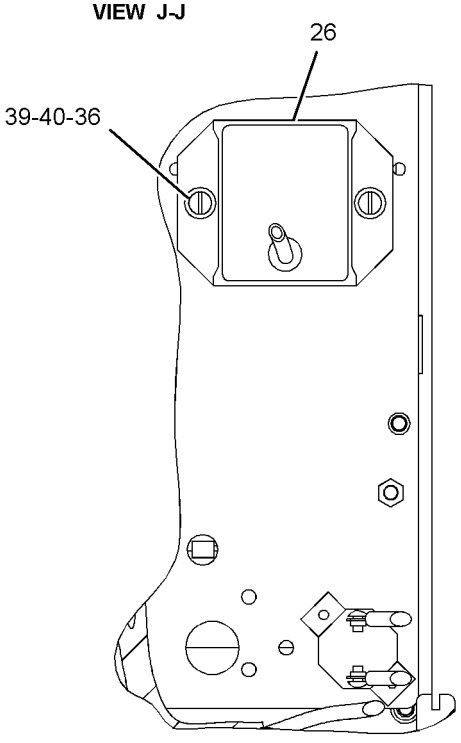

SECTION D-D

GRAPHIC #2 **<END>** g01085385

OPERATOR STATION

230-2206 PANEL GP-INSTRUMENT

S/N: EAE1-291
PART OF 229-8706, 236-2234 OPERATOR AR
AN ATTACHMENT

SMCS-7451 **i02294223**

NOTE	REF NO	GRAPHIC REF	PART NUMBER	QTY	PART NAME 1 2 3 4 5 6 (PRODUCT LEVEL)	SEE PAGE
	1	1	**2N-2371**	1	LAMP AS-INDICATOR (ALTERNATOR)	
		1	**2V-7088**	1	LENS-RED	
		1	**6V-8367**	1	LOCKWASHER	
		1	**6V-8382**	1	NUT-HEX (11/16-27-THD)	
		1	**6V-8817**	2	SCREW-MACHINE (4-36X4.76-IN)	
	2	1	**2V-7087**	1	LENS-AMBER	
	3	1	**3S-2093**	1	STRAP-CABLE	
	4	1	**5D-0019**	1	LAMP (24-VOLT) (FUEL LEVEL GAUGE)	
	5	1	**5P-8500**	2	KEY (ENGINE START-STOP)	
	6	1	**6T-6329**	3	BEZEL	
	7	1	**6V-8927**	6	BOLT-SOCKET HEAD (6-32X0.5-IN)	
	8	1	**6Y-6584**	1	STRAP AS-GROUND	
	9	1	**7N-5876**	1	LAMP (24-VOLT) (ALTERNATOR INDICATOR)	
	10	1	**104-6216**	1	PLUG	
	11	1	**105-3542**	3	DIODE GP	
	12	1	**110-7887**	1	SWITCH AS-START (KEY)	
		1	**7T-6799**	1	NUT-MOUNTING (1-32-THD)	
		1	**186-3735**	4	PIN-CONNECTOR (16-GA TO 18-GA)	
		1	**102-8804**	1	KIT-RECEPTACLE (4-PIN)	
					(INCLUDES RECEPTACLE AS & WEDGE)	
	13	1	**116-4684**	1	GAUGE GP-FUEL LEVEL (24-VOLT)	
		1	**3L-8187**	3	LOCKWASHER	
		1	**4B-5324**	3	WASHER (3.9X9.6X1.2-MM THK)	
		1	**6V-8368**	3	NUT (6-32-THD)	
		1	**6V-8377**	2	NUT (8-32 THD)	
		1	**9B-7233**	2	LOCKWASHER	
	14	1	**128-8617**	1	PLATE AS	
	15	1	**129-7184**	1	FILM-INSTRUCTION (ENGINE START)	
Y	16	1	**135-2929**	1	MODULE GP-WARNING INDICATOR	337
	17	1	**145-9296**	1	PLATE	
	18	1	**180-8576**	1	PLATE-IDENTIFICATION (START AID)	
	19	1	**193-8566**	1	HARNESS AS-PANEL (FRONT CONSOLE)	
		1	**102-8806**	2	KIT-RECEPTACLE (8-PIN)	
		1	**102-8801**	1	KIT-RECEPTACLE (12-PIN)	
					(EACH RECEPTACLE KIT INCLUDE RECEPTACLE AS & WEDGE)	
		1	**155-2265**	3	KIT-CONNECTING PLUG (8-PIN)	
		1	**155-2270**	1	KIT-CONNECTING PLUG (2-PIN)	
		1	**155-2271**	1	KIT-CONNECTING PLUG (4-PIN)	
					(EACH PLUG KIT INCLUDE PLUG AS, WEDGE & INTERFACE SEAL)	
	20	1	**205-7700**	1	KIT-SERVICE METER	
					(INCLUDES FILM & METER)	
C	21	1	**163-1201**	1	HORN AS (24-VOLT, LOW TONE)	
	22	1	**229-2313**	1	HOUSING AS	
	23	1	**230-5455**	1	PLATE	
	24	1	**230-8093**	1	FILM-IDENTIFICATION (INSTRUMENT PANEL)	
	27	1	**4P-8134**	2	CLIP	
M	28	1	**5C-2890**	3	NUT (M6X1-THD)	
CM	29	1	**5C-7261**	1	NUT (M8X1.25-THD)	
	30	1	**5P-4115**	1	WASHER-HARD (7.2X19X2-MM THK)	
	31	1	**6P-0699**	1	GROMMET	
	32	1	**6T-6066**	1	SWITCH AS-ROCKER (START AID)	
		1	**3L-8187**	2	LOCKWASHER	
		1	**6V-8374**	2	SCREW-MACHINE (6-32X0.25-IN)	

230-2206 **PANEL GP-INSTRUMENT** *(contd.)* **i02294223**

NOTE	REF NO	GRAPHIC REF	PART NUMBER	QTY	PART NAME 1 2 3 4 5 6 (PRODUCT LEVEL)	SEE PAGE
	33	1	**7K-1181**	9	STRAP-CABLE	
	34	1	**8D-1470**	1	GROMMET	
	36	1	**8T-4205**	2	WASHER-HARD (7.2X14.5X2-MM THK)	
	37	1	**8T-4223**	2	WASHER-HARD (13.5X25.5X3-MM THK)	
M	39	1	**8T-4244**	2	NUT (M12X1.75-THD)	
M	40	1	**9X-1046**	10	SCREW (M4X0.7X18-MM)	
M	41	1	**9X-2042**	3	SCREW-TRUSS HEAD (M6X1X12-MM)	
M	42	1	**9X-2045**	1	SCREW-TRUSS HEAD (M6X1X20-MM)	
	43	1	**9X-9099**	1	SWITCH AS-ROCKER (SPEED SELECT)	
	44	1	**9X-9099**	1	SWITCH AS-ROCKER (THROTTLE)	
					(EACH SWITCH AS INCLUDES)	
		1	**3L-8187**	6	LOCKWASHER	
		1	**6V-8374**	6	SCREW-MACHINE (6-32X0.25-IN)	
C	45	1	**8T-4121**	1	WASHER-HARD (11X21X2.5-MM THK)	
CM	46	1	**8T-4133**	1	NUT (M10X1.5-THD)	
CM	47	1	**8T-4137**	1	BOLT (M10X1.5X20-MM)	
C	48	1	**195-4973**	1	BRACKET	
C	49	1	**5P-4116**	1	WASHER-HARD (8.8X20.5X2-MM THK)	

C-CHANGE FROM PREVIOUS TYPE
M-METRIC PART
Y-SEPARATE ILLUSTRATION

230-2206 **PANEL GP-INSTRUMENT** *(contd.)* **i02294223**

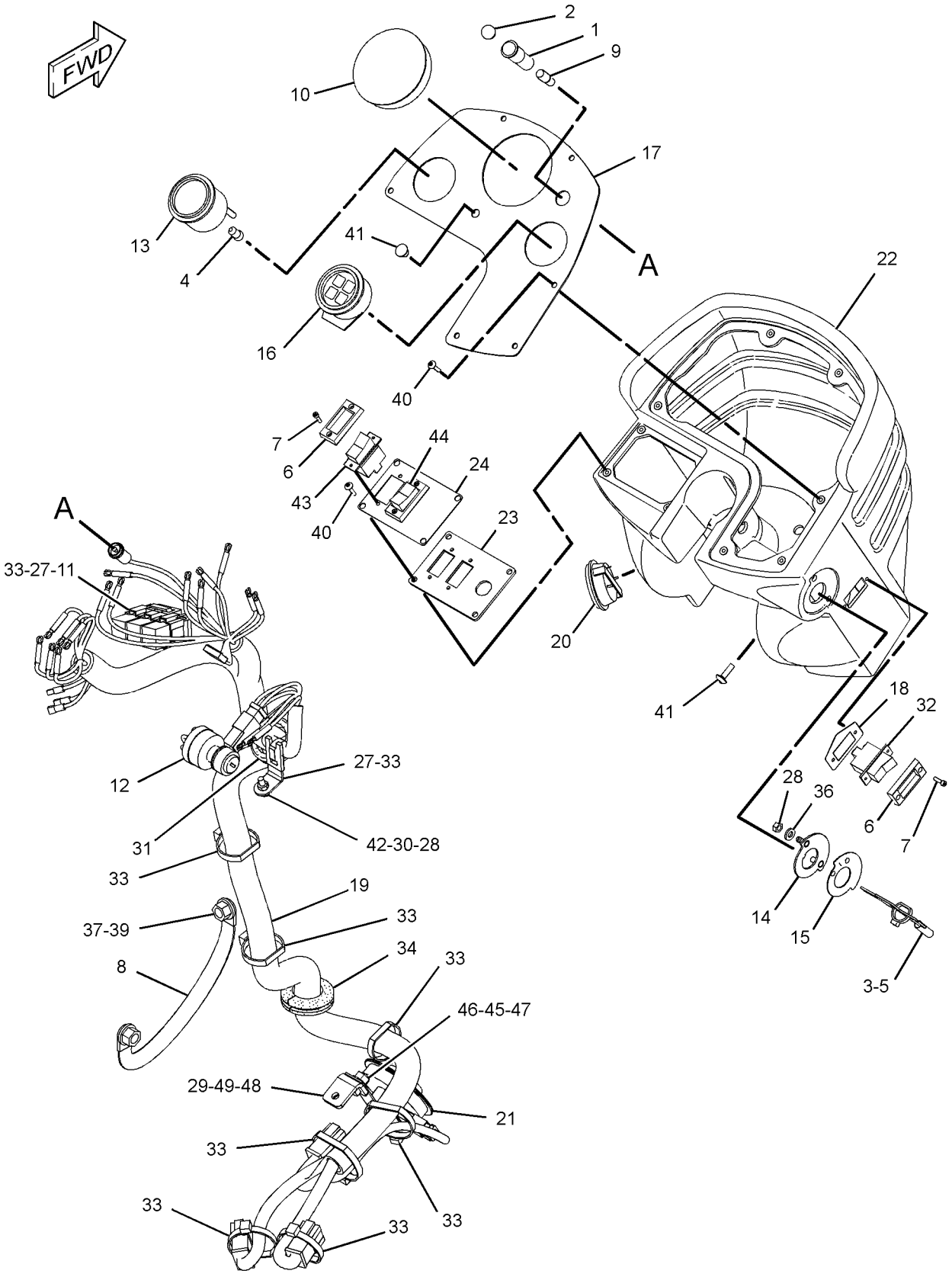

GRAPHIC #1 **<END>** g01196460

OPERATOR STATION

230-2206 PANEL GP-INSTRUMENT

S/N: EAE292-UP

PART OF 229-8706, 236-2234 OPERATOR AR

AN ATTACHMENT

SMCS-7451 **i02654768**

NOTE	REF NO	GRAPHIC REF	PART NUMBER	QTY	PART NAME 1 2 3 4 5 6 (PRODUCT LEVEL)	SEE PAGE
	1	1	**2N-2371**	1	LAMP AS-INDICATOR (ALTERNATOR)	
		1	**2V-7088**	1	LENS-RED	
		1	**6V-8367**	1	LOCKWASHER	
		1	**6V-8382**	1	NUT-HEX (11/16-27-THD)	
		1	**6V-8817**	2	SCREW-MACHINE (4-36X4.76-IN)	
	2	1	**2V-7087**	1	LENS-AMBER	
	3	1	**3S-2093**	1	STRAP-CABLE	
BD	4	1	**6V-2689**		TUBE-HEAT SHRINK (6.35-MM DIA) (0.2-M)	
	5	1	**5P-8500**	2	KEY (ENGINE START-STOP)	
	6	1	**6T-6329**	3	BEZEL	
	7	1	**6V-8927**	6	BOLT-SOCKET HEAD (6-32X0.5-IN)	
	8	1	**6Y-6584**	1	STRAP AS-GROUND	
	9	1	**7N-5876**	1	LAMP (24-VOLT) (ALTERNATOR INDICATOR)	
B	10	1	**104-6216**	1	PLUG	
	11	1	**105-3542**	3	DIODE GP (INSTRUMENT)	
	12	1	**110-7887**	1	SWITCH AS-START (KEY)	
		1	**7T-6799**	1	NUT-MOUNTING (1-32-THD)	
		1	**186-3735**	4	PIN-CONNECTOR (16-GA TO 18-GA)	
		1	**102-8804**	1	KIT-RECEPTACLE (4-PIN)	
					(INCLUDES RECEPTACLE AS & WEDGE)	
C	13	1	**155-5234**	1	GAUGE GP-FUEL LEVEL	
		1	**4B-2043**	3	NUT (8-32-THD)	
		1	**9B-7233**	3	LOCKWASHER	
		1	**115-1748**	1	LAMP (24-VOLT, 3-WATT)	
	14	1	**128-8617**	1	PLATE AS	
	15	1	**129-7184**	1	FILM-INSTRUCTION (ENGINE START)	
Y	16	1	**135-2929**	1	MODULE GP-WARNING INDICATOR	337
	17	1	**145-9296**	1	PLATE	
	18	1	**180-8576**	1	PLATE-IDENTIFICATION (START AID)	
C	19	1	**267-3060**	1	HARNESS AS-PANEL	
		1	**102-8806**	2	KIT-RECEPTACLE (8-PIN)	
		1	**102-8801**	1	KIT-RECEPTACLE (12-PIN)	
					(EACH RECEPTACLE KIT INCLUDE RECEPTACLE AS & WEDGE)	
		1	**155-2265**	3	KIT-CONNECTING PLUG (8-PIN)	
		1	**155-2270**	1	KIT-CONNECTING PLUG (2-PIN)	
		1	**155-2271**	1	KIT-CONNECTING PLUG (4-PIN)	
					(EACH PLUG KIT INCLUDE PLUG AS, WEDGE & INTERFACE SEAL)	
	20	1	**205-7700**	1	KIT-SERVICE METER	
					(INCLUDES FILM & METER)	
	21	1	**163-1201**	1	HORN AS (24-VOLT, LOW TONE)	
	22	1	**229-2313**	1	HOUSING AS	
	23	1	**230-5455**	1	PLATE	
	24	1	**230-8093**	1	FILM-IDENTIFICATION (INSTRUMENT PANEL)	
	27	1	**4P-8134**	2	CLIP	
M	28	1	**5C-2890**	3	NUT (M6X1-THD)	
M	29	1	**5C-7261**	1	NUT (M8X1.25-THD)	
	30	1	**5P-4115**	1	WASHER-HARD (7.2X19X2-MM THK)	
	31	1	**6P-0699**	1	GROMMET	
	32	1	**6T-6066**	1	SWITCH AS-ROCKER (START AID)	
		1	**3L-8187**	2	LOCKWASHER	
		1	**6V-8374**	2	SCREW-MACHINE (6-32X0.25-IN)	
	33	1	**7K-1181**	9	STRAP-CABLE	
	34	1	**8D-1470**	1	GROMMET	

230-2206 **PANEL GP-INSTRUMENT** *(contd.)* **i02654768**

NOTE	REF NO	GRAPHIC REF	PART NUMBER	QTY	PART NAME 1 2 3 4 5 6 (PRODUCT LEVEL)	SEE PAGE
	36	1	**8T-4205**	2	WASHER-HARD (7.2X14.5X2-MM THK)	
	37	1	**8T-4223**	2	WASHER-HARD (13.5X25.5X3-MM THK)	
M	39	1	**8T-4244**	2	NUT (M12X1.75-THD)	
M	40	1	**9X-1046**	10	SCREW (M4X0.7X18-MM)	
M	41	1	**9X-2042**	3	SCREW-TRUSS HEAD (M6X1X12-MM)	
M	42	1	**9X-2045**	1	SCREW-TRUSS HEAD (M6X1X20-MM)	
	43	1	**9X-9099**	1	SWITCH AS-ROCKER (SPEED SELECT)	
	44	1	**9X-9099**	1	SWITCH AS-ROCKER (THROTTLE)	
					(EACH SWITCH AS INCLUDES)	
		1	**3L-8187**	6	LOCKWASHER	
		1	**6V-8374**	6	SCREW-MACHINE (6-32X0.25-IN)	
	45	1	**8T-4121**	1	WASHER-HARD (11X21X2.5-MM THK)	
M	46	1	**8T-4133**	1	NUT (M10X1.5-THD)	
M	47	1	**8T-4137**	1	BOLT (M10X1.5X20-MM)	
	48	1	**195-4973**	1	BRACKET	
	49	1	**5P-4116**	1	WASHER-HARD (8.8X20.5X2-MM THK)	

B-USE AS REQUIRED
C-CHANGE FROM PREVIOUS TYPE
D-ORDER BY THE METER
M-METRIC PART
Y-SEPARATE ILLUSTRATION

230-2206 **PANEL GP-INSTRUMENT** *(contd.)* **i02654768**

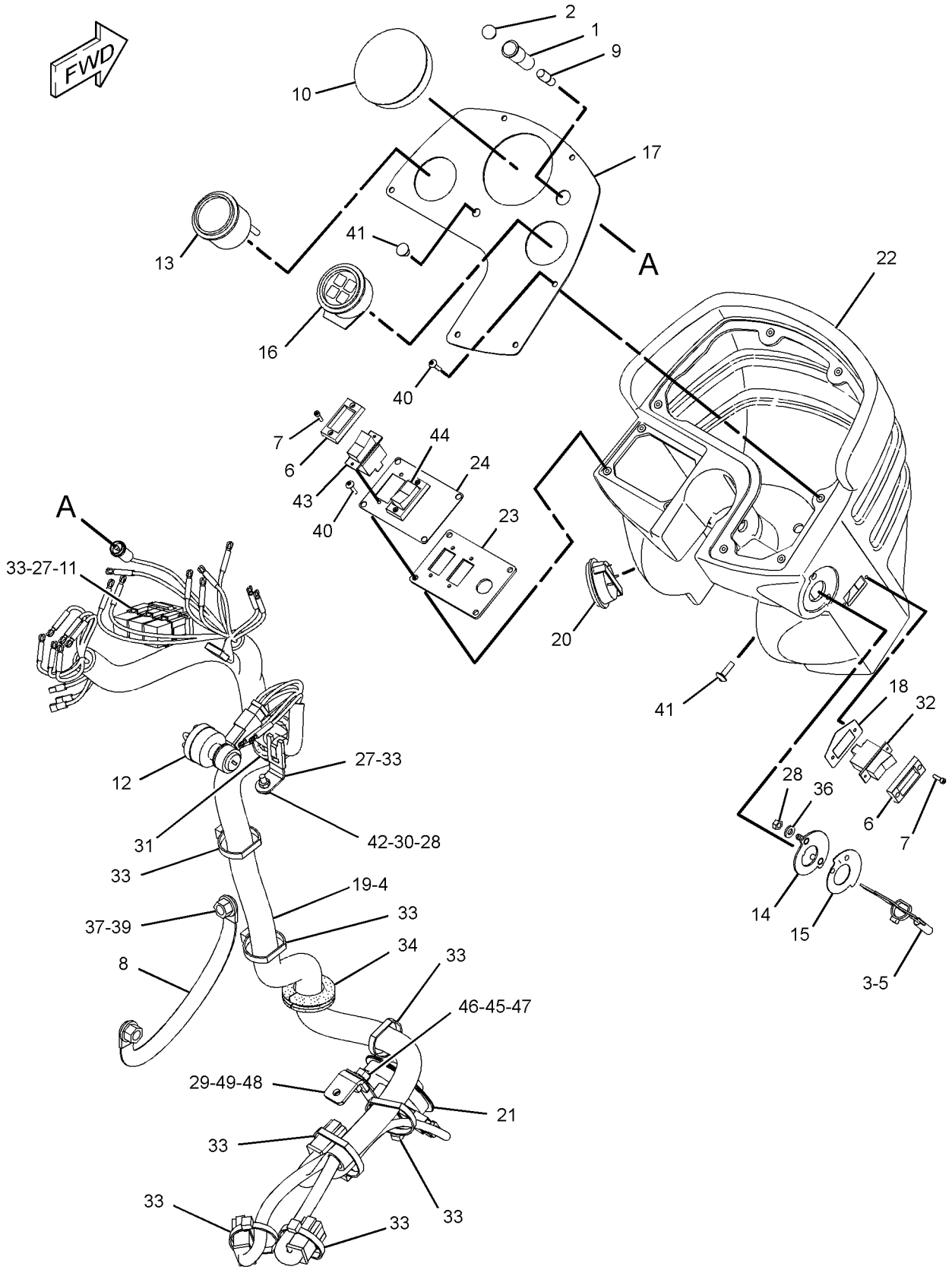

GRAPHIC #1 **<END>** g01338731

OPERATOR STATION

243-5693 PANEL GP-INSTRUMENT—SIDE CONSOLE

S/N: EAE1-UP
PART OF 249-5075, 249-5076 OPERATOR AR
AN ATTACHMENT

SMCS-7451 **i02898383**

NOTE	REF NO	GRAPHIC REF	PART NUMBER	QTY	PART NAME 1 2 3 4 5 6 (PRODUCT LEVEL)	SEE PAGE
	1	2	**2P-4339**	1	NUT-JAM (7/16-28-THD)	
Y	2	1	**3E-6328**	1	ALARM GP (24-VOLT) (FAULT INDICATOR)	98
	3	1	**3S-2093**	3	STRAP-CABLE	
	4	2	**6T-2774**	6	CLIP	
	5	2	**6T-6329**	2	BEZEL	
	6	2	**6V-8927**	4	BOLT-SOCKET HEAD (6-32X0.5-IN)	
	7	2	**7T-0493**	3	PLUG	
	8	2	**7T-3811**	1	SWITCH AS-ROCKER (FLOOD LIGHTS)	
		2	**3L-8187**	6	LOCKWASHER	
		2	**6V-8374**	6	SCREW-MACHINE (6-32X0.25-IN)	
	9	2	**7T-9302**	1	KNOB (WIPER, WASHER)	
		2	**014-0816**	1	SETSCREW (8-32X0.5-IN)	
	10	1	**7V-5628**	1	PLATE	
	11	1	**1G-9959**	2	CLAMP	
	12	1	**8T-8799**	2	BOOT	
	13	1	**9G-9154**	1	CLIP	
	14	1	**9X-7449**	1	GROMMET	
	15	2	**107-6013**	1	SEAL	
	16	2	**107-6072**	1	PLATE	
	17	2	**110-6109**	1	KNOB-CONTROL (FAN SPEED)	
	18	2	**110-7885**	1	KNOB (WIPER, WASHER)	
		2	**014-0816**	1	SETSCREW (8-32X0.5-IN)	
	19	2	**110-7890**	1	SWITCH AS-ROTARY (24-VOLT) (FAN)	
		2	**8T-8737**	1	PLUG-SEAL	
		2	**9W-0852**	5	PIN-CONNECTOR (14-GA)	
		2	**102-8805**	1	KIT-RECEPTACLE (6-PIN)	
					(INCLUDES RECEPTACLE AS & WEDGE)	
	20	2	**112-6174**	1	SWITCH AS-ROTARY (WIPER, WASHER) (REAR WIPER)	
		2	**2H-3920**	1	LOCKWASHER	
		2	**6V-8369**	1	NUT (7/16-28-THD)	
		2	**186-3735**	6	PIN-CONNECTOR (16-GA TO 18-GA)	
		2	**8T-8737**	2	PLUG-SEAL	
		2	**102-8806**	1	KIT-RECEPTACLE (8-PIN)	
					(INCLUDES RECEPTACLE AS & WEDGE)	
	21	2	**113-8490**	16	FUSE (10-AMPERE)	
	22	1	**116-0118**	1	CLIP	
	23	2	**116-4159**	1	BASE	
	24	2	**116-5270**	1	LAMP (24-VOLT) (RED)	
	25	2	**116-5274**	1	KNOB (PARKING BRAKE) (RED)	
	26	1	**116-5275**	1	SWITCH AS-PUSH BUTTON (PARKING BRAKE)	
	27	1	**116-6565**	1	BLOCK (LIGHT)	
	28	2	**118-7362**	1	GROMMET-SPLIT	
	29	2	**132-7084**	1	SWITCH AS-ROTARY (WIPER, WASHER) (REAR WIPER)	
		2	**2H-3920**	1	LOCKWASHER	
		2	**6V-8369**	1	NUT (7/16-28-THD)	
		2	**186-3735**	6	PIN-CONNECTOR (16-GA TO 18-GA)	
		2	**102-8805**	1	KIT-RECEPTACLE (6-PIN)	
					(INCLUDES RECEPTACLE AS & WEDGE)	
	30	2	**139-0234**	1	PLATE	
	31	1	**139-0236**	1	PLATE AS	
M		1	**6V-9632**	2	NUT-WELD (M6X1-THD)	
	32	2	**145-9297**	1	PLATE AS	
		2	**5D-9629**	1	ROD	
		2	**7T-1099**	1	LINK	
	33	2	**153-3606**	1	HOUSING AS	

243-5693 **PANEL GP-INSTRUMENT** ***(contd.)*** **i02898383**

NOTE	REF NO	GRAPHIC REF	PART NUMBER	QTY	PART NAME 1 2 3 4 5 6 (PRODUCT LEVEL)	SEE PAGE
	34	2	**9X-8486**	2	SCREW-MACHINE (8-32X0.75-IN)	
Y	35	2	**228-9108**	1	MODULE GP-TIMER	116
Y	36	1	*167-0138*	1	SWITCH GP-MAGNETIC (24-VOLT) (MAIN POWER RELAY)	120
	37	1	**116-5277**	1	BLOCK-CONTACT	
	38	1	**193-8565**	1	HARNESS AS-PANEL (SIDE CONSOLE)	
		1	*286-7193*	1	TERMINAL AS-RING	
		1	**125-7874**		TUBE-HEAT SHRINK (5.72-MM DIA) (3-CM)	
		1	**131-1474**	16	TERMINAL AS	
		1	**5P-2321**	1	TERMINAL (14-GA TO 16-GA, NO. 6 SCREW)	
		1	**125-7874**		TUBE-HEAT SHRINK (5.72-MM DIA) (3-CM)	
		1	**5P-3454**	1	TERMINAL (4-GA)	
		1	**112-9611**	14	TERMINAL-BLADE	
		1	**112-9612**	27	TERMINAL-BLADE	
		1	**113-5100**	4	TERMINAL-BUS	
		1	**116-4161**	9	TERMINAL-BLADE	
		1	**2L-8051**	1	TERMINAL (6-GA)	
		1	**2L-8065**	1	TERMINAL (10-GA TO 12-GA)	
		1	**102-8802**	1	KIT-RECEPTACLE (2-PIN)	
					(INCLUDES RECEPTACLE AS & WEDGE)	
		1	**9G-4351**	1	HOUSING-RECEPTACLE (4-GA TO 6-GA)	
		1	**9X-0145**	1	RECEPTACLE AS-CONNECTOR (24-PIN)	
		1	**112-9609**	2	BLOCK-MICRORELAY	
		1	**112-9610**	4	LOCK-MICRORELAY	
		1	**124-9636**	1	BLOCK-MINIFUSE	
		1	**124-9637**	1	LOCK-MINIFUSE	
		1	**155-2255**	1	KIT-CONNECTING PLUG (12-PIN)	
		1	**155-2265**	2	KIT-CONNECTING PLUG (8-PIN)	
		1	**155-2270**	1	KIT-CONNECTING PLUG (2-PIN)	
		1	**155-2274**	1	KIT-CONNECTING PLUG (6-PIN)	
		1	**155-2271**	2	KIT-CONNECTING PLUG (4-PIN)	
					(EACH PLUG KIT INCLUDE PLUG AS, WEDGE & INTERFACE SEAL)	
	39	2	**198-1506**	1	FILM-INSTRUMENT (PANEL)	
	40	2	**206-5108**	1	SEAL	
	41	2	**206-5109**	1	SEAL	
	42	1	**225-8541**	1	PLATE AS	
	43	2	**230-9092**	1	FILM-FUSE/RELAY	
	44	1	**243-5696**	1	HARNESS AS-CAB	
		1	**7T-6364**	4	TERMINAL-BLADE	
		1	**116-4161**	3	TERMINAL-BLADE	
		1	**125-7874**		TUBE-HEAT SHRINK (5.72-MM DIA) (20-CM)	
		1	**5P-2321**	3	TERMINAL (14-GA TO 16-GA, NO. 6 SCREW)	
		1	**2L-8054**	1	TERMINAL (6-GA)	
		1	**102-8802**	1	KIT-RECEPTACLE (2-PIN)	
					(INCLUDES RECEPTACLE AS & WEDGE)	
		1	**155-2255**	1	KIT-CONNECTING PLUG (12-PIN)	
		1	**155-2265**	1	KIT-CONNECTING PLUG (8-PIN)	
		1	**155-2270**	1	KIT-CONNECTING PLUG (2-PIN)	
		1	**155-2274**	3	KIT-CONNECTING PLUG (6-PIN)	
					(EACH PLUG KIT INCLUDE PLUG AS, WEDGE & INTERFACE SEAL)	
	45	2	**031-0249**	2	LOCKNUT (10-24-THD)	
	46	1	**096-6166**	3	WASHER-HARD (4.5X9X1-MM THK)	
	47	2	**144-0900**	1	SWITCH AS-ROCKER (VIBRATORY SELECT)	
		2	**3L-8187**	3	LOCKWASHER	
		2	**6V-8374**	3	SCREW-MACHINE (6-32X0.25-IN)	
	48	2	**2H-3920**	1	LOCKWASHER	
	49	2	**2N-3480**	2	SCREW-MACHINE (10-24X0.75-IN)	
	50	2	**4B-4274**	4	WASHER (5.5X13X1.2-MM THK)	
	51	1	**4P-7581**	1	CLIP	

243-5693 **PANEL GP-INSTRUMENT** *(contd.)* **i02898383**

NOTE	REF NO	GRAPHIC REF	PART NUMBER	QTY	PART NAME 1 2 3 4 5 6 (PRODUCT LEVEL)	SEE PAGE
M	52	2	**5C-2890**	2	NUT (M6X1-THD)	
	53	1,2	**5P-4115**	11	WASHER-HARD (7.2X19X2-MM THK)	
	54	2	**6P-0699**	2	GROMMET	
	55	2	**6T-3643**	1	CIRCUIT BREAKER AS (15-AMPERE) (KEY SWITCH)	
		2	**6V-8376**	2	SCREW-MACHINE (8-32X0.25-IN)	
		2	**9B-7233**	2	LOCKWASHER	
	56	2	**6V-3970**	1	GROMMET	
M	57	1	**6V-9491**	3	SCREW-MACHINE (M4X0.7X20-MM)	
	58	1,2	**7K-1181**	3	STRAP-CABLE	
M	59	1	**8C-8451**	2	BOLT (M6X1X40-MM)	
M	60	1	**8T-2659**	3	LOCKNUT (M4X0.7-THD)	
M	61	1,2	**8T-4138**	8	BOLT (M6X1X20-MM)	
M	62	1	**8T-4189**	2	BOLT (M8X1.25X20-MM)	
	63	1	**8T-4223**	1	WASHER-HARD (13.5X25.5X3-MM THK)	
	64	1	**8T-4224**	2	WASHER-HARD (8.8X16X2-MM THK)	
M	65	1	**8T-4244**	1	NUT (M12X1.75-THD)	
M	66	1,2	**8T-4970**	9	BOLT (M6X1X14-MM)	
D	67	2	**8T-3426**		CHANNEL-TRIM (0.2-M)	
M	68	2	**9X-1046**	4	SCREW (M4X0.7X18-MM)	
	69	1,2	**9X-8256**	6	WASHER (6.6X12X2-MM THK)	
	70	2	**158-5089**	1	RELAY AS (24-VOLT) (HYDRAULIC OIL PRESSURE)	
	70A	2	**158-5089**	1	RELAY AS (24-VOLT) (BRAKE ONE)	
	70B	2	**158-5089**	1	RELAY AS (24-VOLT) (BRAKE TWO)	
	70C	2	**158-5089**	1	RELAY AS (24-VOLT) (NEUTRAL START ONE)	
	70D	2	**158-5089**	1	RELAY AS (24-VOLT) (NEUTRAL START TWO)	
	70E	2	**158-5089**	1	RELAY AS (24-VOLT) (WARNING LIGHT)	
	70F	2	**158-5089**	1	RELAY AS (24-VOLT) (HYDRAULIC OIL TEMPERATURE)	
	70G	2	**158-5089**	1	RELAY AS (24-VOLT) (FUNCTIONAL LIGHT)	
	70H	2	**158-5089**	1	RELAY AS (24-VOLT) (COOLANT TEMPERATURE)	
	70J	2	**158-5089**	1	RELAY AS (24-VOLT) (ENGINE OIL PRESSURE)	

D-ORDER BY THE METER
M-METRIC PART
Y-SEPARATE ILLUSTRATION

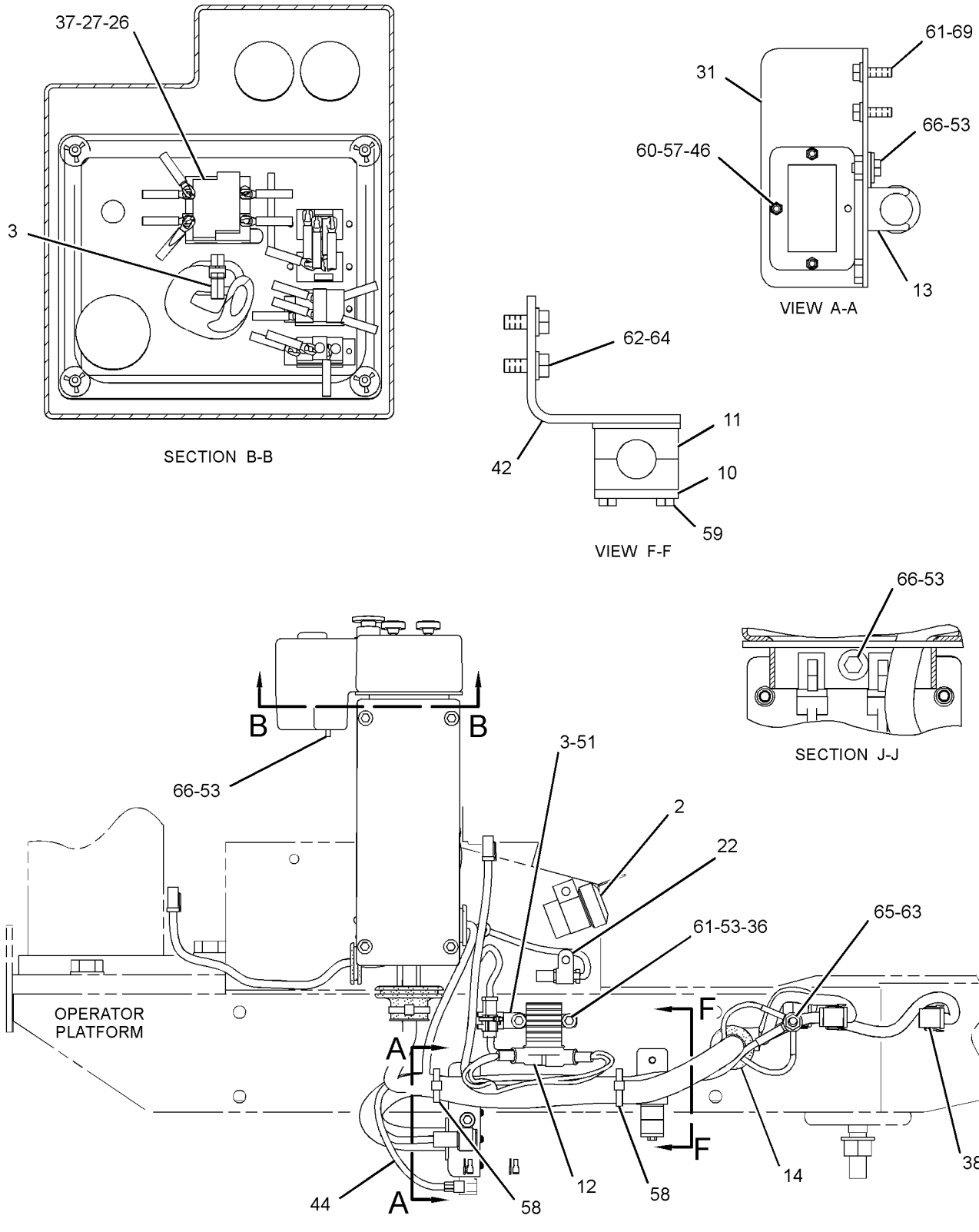

RIGHT SIDE VIEW

GRAPHIC #1

g01424348

REFER TO ALL ILLUSTRATIONS OF THIS GROUP FOR AUXILIARY VIEWS

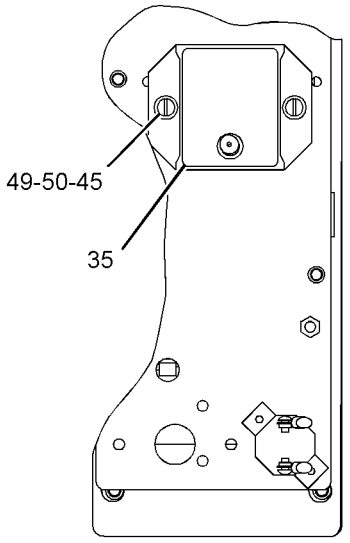

VIEW D-D

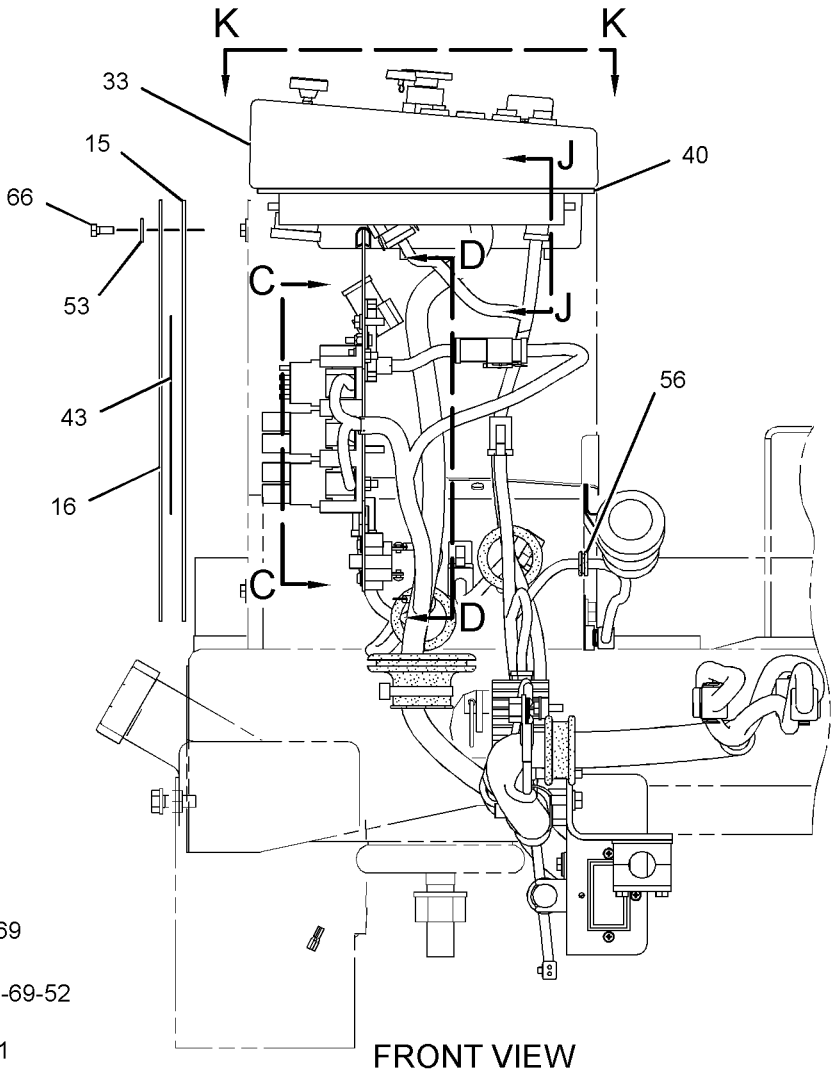

FRONT VIEW

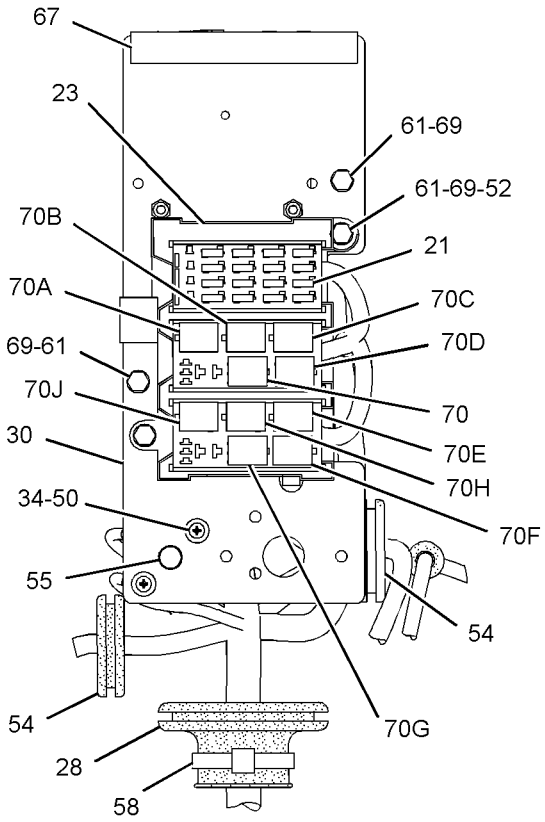

VIEW C-C

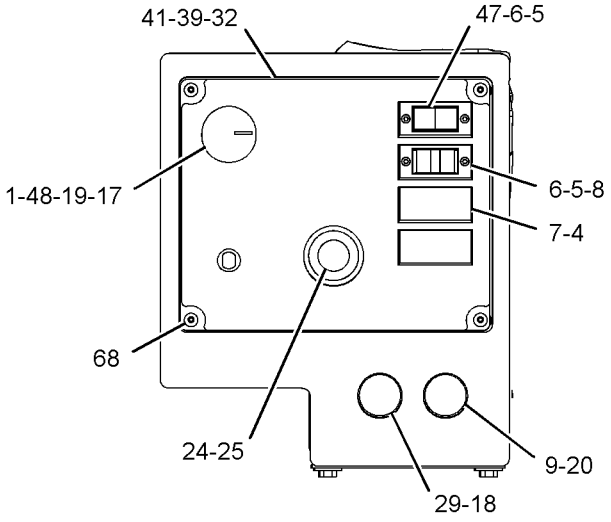

VIEW K-K

GRAPHIC #2

<END>

g01424349

OPERATOR STATION

253-9941 PANEL GP-INSTRUMENT

S/N: EAE1-UP
PART OF 249-5075, 249-5076 OPERATOR AR
AN ATTACHMENT
TYPE 1

SMCS-7451 **i02898384**

NOTE	REF NO	GRAPHIC REF	PART NUMBER	QTY	PART NAME 1 2 3 4 5 6 (PRODUCT LEVEL)	SEE PAGE
	1	1	**2N-2371**	1	LAMP AS-INDICATOR (ALTERNATOR)	
		1	**2V-7088**	1	LENS-RED (ALTERNATOR)	
		1	**6V-8367**	1	LOCKWASHER	
		1	**6V-8382**	1	NUT-HEX (11/16-27-THD)	
		1	**6V-8817**	2	SCREW-MACHINE (4-36X4.76-IN)	
	2	1	**2V-7087**	1	LENS-AMBER (ALTERNATOR)	
	3	1	**3S-2093**	1	STRAP-CABLE	
	4	1	**5D-0019**	1	LAMP (24-VOLT) (FUEL LEVEL GAUGE)	
	5	1	**5P-8500**	2	KEY	
	6	1	**6T-6329**	3	BEZEL	
	7	1	**6V-8927**	6	BOLT-SOCKET HEAD (6-32X0.5-IN)	
	8	1	**6Y-6584**	1	STRAP AS-GROUND	
	9	1	**7N-5876**	1	LAMP (24-VOLT) (ALTERNATOR INDICATOR)	
B	10	1	**104-6216**	1	PLUG	
	11	1	**105-3542**	3	DIODE GP (RECEPTACLE)	
	12	1	**110-7887**	1	SWITCH AS-START (KEY)	
		1	**7T-6799**	1	NUT-MOUNTING (1-32-THD)	
		1	**102-8804**	1	KIT-RECEPTACLE (4-PIN)	
					(INCLUDES RECEPTACLE AS & WEDGE)	
		1	**186-3735**	4	PIN-CONNECTOR (16-GA TO 18-GA)	
	13	1	**116-4684**	1	GAUGE GP-FUEL LEVEL (24-VOLT)	
		1	**3L-8187**	3	LOCKWASHER	
		1	**4B-5324**	3	WASHER (3.9X9.6X1.2-MM THK)	
		1	**6V-3507**	1	SEAL-RECTANGULAR	
		1	**6V-8368**	3	NUT (6-32-THD)	
		1	**6V-8377**	2	NUT (8-32 THD)	
		1	**9B-7233**	2	LOCKWASHER	
	14	1	**121-5327**	1	GROMMET	
	15	1	**128-8617**	1	PLATE AS	
	16	1	**129-7184**	1	FILM-INSTRUCTION (ENGINE START)	
Y	17	1	**135-2929**	1	MODULE GP-WARNING INDICATOR (ENGINE TEMPERATURE)	337
	18	1	**145-9296**	1	PLATE	
	19	1	**163-1201**	1	HORN AS (24-VOLT, LOW TONE)	
	20	1	**180-8576**	1	PLATE-IDENTIFICATION (STARTING AID)	
	21	1	**193-8566**	1	HARNESS AS-PANEL (FRONT CONSOLE)	
		1	**102-8806**	2	KIT-RECEPTACLE (8-PIN)	
		1	**102-8801**	1	KIT-RECEPTACLE (12-PIN)	
					(EACH RECEPTACLE KIT INCLUDES RECEPTACLE AS & WEDGE)	
		1	**155-2265**	3	KIT-CONNECTING PLUG (8-PIN)	
		1	**155-2270**	1	KIT-CONNECTING PLUG (2-PIN)	
		1	**155-2271**	1	KIT-CONNECTING PLUG (4-PIN)	
					(EACH PLUG KIT INCLUDES PLUG AS, WEDGE & INTERFACE SEAL)	
		1	**186-3735**	54	PIN-CONNECTOR (16-GA TO 18-GA)	
	22	1	**205-7700**	1	KIT-SERVICE METER	
		1	**114-2505**	1	FILM-IDENTIFICATION (SERVICE METER)	
	23	1	**229-2313**	1	HOUSING AS	
	24	1	**230-5455**	1	PLATE	
	25	1	**230-8093**	1	FILM-IDENTIFICATION (INSTRUMENT PANEL)	
	26	1	**248-7650**	1	GUARD	
	27	1	**253-9942**	1	HARNESS AS-PANEL (HORN)	

253-9941 **PANEL GP-INSTRUMENT** ***(contd.)*** **i02898384**

NOTE	REF NO	GRAPHIC REF	PART NUMBER	QTY	PART NAME 1 2 3 4 5 6 (PRODUCT LEVEL)	SEE PAGE
		1	**102-8802**	1	KIT-RECEPTACLE (2-PIN)	
					(INCLUDES RECEPTACLE AS & WEDGE)	
		1	**155-2270**	1	KIT-CONNECTING PLUG (2-PIN)	
					(INCLUDES PLUG AS, WEDGE & INTERFACE SEAL)	
	28	1	**4P-8134**	2	CLIP	
M	29	1	**5C-2890**	3	NUT (M6X1-THD)	
	30	1	**5P-4115**	1	WASHER-HARD (7.2X19X2-MM THK)	
	31	1	**6P-0699**	1	GROMMET	
	32	1	**6T-6066**	1	SWITCH AS-ROCKER (ETHER STARTING AID)	
		1	**3L-8187**	2	LOCKWASHER	
		1	**6V-8374**	2	SCREW-MACHINE (6-32X0.25-IN)	
M	33	1	**6V-8212**	1	BOLT (M10X1.5X16-MM)	
	34	1	**7K-1181**	10	STRAP-CABLE	
	35	1	**8D-1470**	1	GROMMET	
	36	1	**8T-4121**	7	WASHER-HARD (11X21X2.5-MM THK)	
	37	1	**8T-4205**	2	WASHER-HARD (7.2X14.5X2-MM THK)	
	38	1	**8T-4223**	2	WASHER-HARD (13.5X25.5X3-MM THK)	
M	39	1	**8T-4244**	2	NUT (M12X1.75-THD)	
M	40	1	**9X-1046**	10	SCREW (M4X0.7X18-MM)	
M	41	1	**9X-2041**	6	SCREW-TRUSS HEAD (M10X1.5X20-MM)	
M	42	1	**9X-2042**	3	SCREW-TRUSS HEAD (M6X1X12-MM)	
M	43	1	**9X-2045**	1	SCREW-TRUSS HEAD (M6X1X20-MM)	
	44	1	**9X-9099**	1	SWITCH AS-ROCKER (SPEED SELECT)	
	44A	1	**9X-9099**	1	SWITCH AS-ROCKER (THROTTLE)	
					(EACH SWITCH AS INCLUDES)	
		1	**3L-8187**	6	LOCKWASHER	
		1	**6V-8374**	6	SCREW-MACHINE (6-32X0.25-IN)	

B-USE AS REQUIRED
M-METRIC PART
Y-SEPARATE ILLUSTRATION

253-9941 **PANEL GP-INSTRUMENT** *(contd.)* **i02898384**

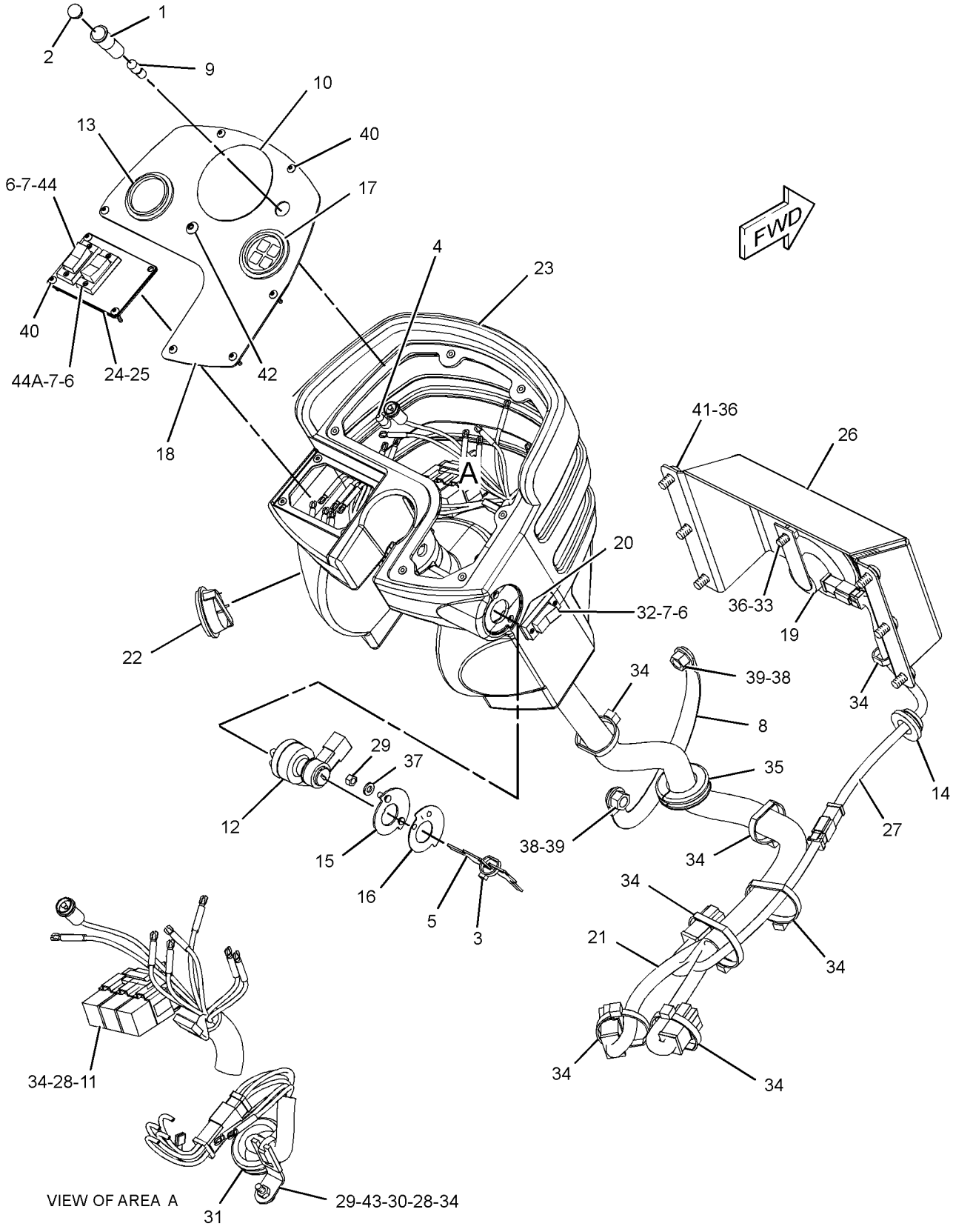

GRAPHIC #1 **<END>** g01193189

OPERATOR STATION

253-9941 PANEL GP-INSTRUMENT

S/N: EAE1-UP
PART OF 249-5075, 249-5076 OPERATOR AR
AN ATTACHMENT
TYPE 2

SMCS-7451 **i02855693**

NOTE	REF NO	GRAPHIC REF	PART NUMBER	QTY	PART NAME 1 2 3 4 5 6 (PRODUCT LEVEL)	SEE PAGE
	1	1	**2N-2371**	1	LAMP AS-INDICATOR (ALTERNATOR)	
		1	**2V-7088**	1	LENS-RED (ALTERNATOR)	
		1	**6V-8367**	1	LOCKWASHER	
		1	**6V-8382**	1	NUT-HEX (11/16-27-THD)	
		1	**6V-8817**	2	SCREW-MACHINE (4-36X4.76-IN)	
	2	1	**2V-7087**	1	LENS-AMBER (ALTERNATOR)	
	3	1	**3S-2093**	1	STRAP-CABLE	
M	4	1	**9X-2045**	1	SCREW-TRUSS HEAD (M6X1X20-MM)	
	5	1	**5P-8500**	2	KEY	
	6	1	**6T-6329**	3	BEZEL	
	7	1	**6V-8927**	6	BOLT-SOCKET HEAD (6-32X0.5-IN)	
	8	1	**6Y-6584**	1	STRAP AS-GROUND	
	9	1	**7N-5876**	1	LAMP (24-VOLT) (ALTERNATOR INDICATOR)	
	10	1	**104-6216**	1	PLUG	
	11	1	**105-3542**	3	DIODE GP (RECEPTACLE)	
J	12	1	**110-7887**	1	SWITCH AS-START (KEY)	
		1	**7T-6799**	1	NUT-MOUNTING (1-32-THD)	
		1	**102-8804**	1	KIT-RECEPTACLE (4-PIN)	
					(INCLUDES RECEPTACLE AS & WEDGE)	
		1	**186-3735**	4	PIN-CONNECTOR (16-GA TO 18-GA)	
C	13	1	**155-5234**	1	GAUGE GP-FUEL LEVEL	
		1	**4B-2043**	3	NUT (8-32-THD)	
		1	**9B-7233**	3	LOCKWASHER	
		1	**115-1748**	1	LAMP (24-VOLT, 3-WATT)	
	14	1	**121-5327**	1	GROMMET	
	15	1	**128-8617**	1	PLATE AS	
	16	1	**129-7184**	1	FILM-INSTRUCTION (ENGINE START)	
Y	17	1	**135-2929**	1	MODULE GP-WARNING INDICATOR (ENGINE TEMPERATURE)	337
	18	1	**145-9296**	1	PLATE	
	19	1	**163-1201**	1	HORN AS (24-VOLT, LOW TONE)	
	20	1	**180-8576**	1	PLATE-IDENTIFICATION (STARTING AID)	
C	21	1	**267-3060**	1	HARNESS AS-PANEL	
		1	**200-2213**	1	HARNESS AS-WIRING (3-PIN, GAUGE)	
		1	**117-2978**	6	CONTACT-CONNECTION	
		1	**117-2979**	1	CONNECTOR-RECEPTACLE	
		1	**5P-2321**	16	TERMINAL (14-GA TO 16-GA, NO. 6 SCREW)	
		1	**5P-4571**	5	TERMINAL-BLADE (14-GA)	
		1	**102-8806**	2	KIT-RECEPTACLE (8-PIN)	
		1	**102-8801**	1	KIT-RECEPTACLE (12-PIN)	
					(EACH RECEPTACLE KIT INCLUDES RECEPTACLE AS & WEDGE)	
		1	**155-2265**	3	KIT-CONNECTING PLUG (8-PIN)	
		1	**155-2270**	1	KIT-CONNECTING PLUG (2-PIN)	
		1	**155-2271**	1	KIT-CONNECTING PLUG (4-PIN)	
					(EACH PULG KIT INCLUDES PLUG AS, WEDGE & INTERFACE SEAL)	
	22	1	**205-7700**	1	KIT-SERVICE METER	
					(INCLUDES METER & FILM)	
	23	1	**229-2313**	1	HOUSING AS	
	24	1	**230-5455**	1	PLATE	
	25	1	**230-8093**	1	FILM-IDENTIFICATION (INSTRUMENT PANEL)	
	26	1	**248-7650**	1	GUARD	
	27	1	**253-9942**	1	HARNESS AS-PANEL (HORN)	

253-9941 **PANEL GP-INSTRUMENT** ***(contd.)*** **i02855693**

NOTE	REF NO	GRAPHIC REF	PART NUMBER	QTY	PART NAME 1 2 3 4 5 6 (PRODUCT LEVEL)	SEE PAGE
		1	**102-8802**	1	KIT-RECEPTACLE (2-PIN)	
					(INCLUDES RECEPTACLE AS & WEDGE)	
		1	**155-2270**	1	KIT-CONNECTING PLUG (2-PIN)	
					(INCLUDES PLUG AS, WEDGE & INTERFACE SEAL)	
	28	1	**4P-8134**	2	CLIP	
M	29	1	**5C-2890**	3	NUT (M6X1-THD)	
	30	1	**5P-4115**	1	WASHER-HARD (7.2X19X2-MM THK)	
	31	1	**6P-0699**	1	GROMMET	
	32	1	**6T-6066**	1	SWITCH AS-ROCKER (ETHER STARTING AID)	
		1	**3L-8187**	2	LOCKWASHER	
		1	**6V-8374**	2	SCREW-MACHINE (6-32X0.25-IN)	
M	33	1	**6V-8212**	1	BOLT (M10X1.5X16-MM)	
	34	1	**7K-1181**	10	STRAP-CABLE	
	35	1	**8D-1470**	1	GROMMET	
	36	1	**8T-4121**	7	WASHER-HARD (11X21X2.5-MM THK)	
	37	1	**8T-4205**	2	WASHER-HARD (7.2X14.5X2-MM THK)	
	38	1	**8T-4223**	2	WASHER-HARD (13.5X25.5X3-MM THK)	
M	39	1	**8T-4244**	2	NUT (M12X1.75-THD)	
M	40	1	**9X-1046**	10	SCREW (M4X0.7X18-MM)	
M	41	1	**9X-2041**	6	SCREW-TRUSS HEAD (M10X1.5X20-MM)	
M	42	1	**9X-2042**	3	SCREW-TRUSS HEAD (M6X1X12-MM)	
	43	1	**9X-9099**	1	SWITCH AS-ROCKER (SPEED SELECT)	
	43A	1	**9X-9099**	1	SWITCH AS-ROCKER (THROTTLE)	
					(EACH SWITCH AS INCLUDES)	
		1	**3L-8187**	6	LOCKWASHER	
		1	**6V-8374**	6	SCREW-MACHINE (6-32X0.25-IN)	
D	44	1	**6V-2689**		TUBE-HEAT SHRINK (6.35-MM DIA) (0.03-M)	
D	44A	1	**6V-2689**		TUBE-HEAT SHRINK (6.35-MM DIA) (0.025-M)	

C-CHANGE FROM PREVIOUS TYPE
D-ORDER BY THE METER
J-REQUIRES CORPORATE KEY
M-METRIC PART
Y-SEPARATE ILLUSTRATION

253-9941 **PANEL GP-INSTRUMENT** *(contd.)* **i02855693**

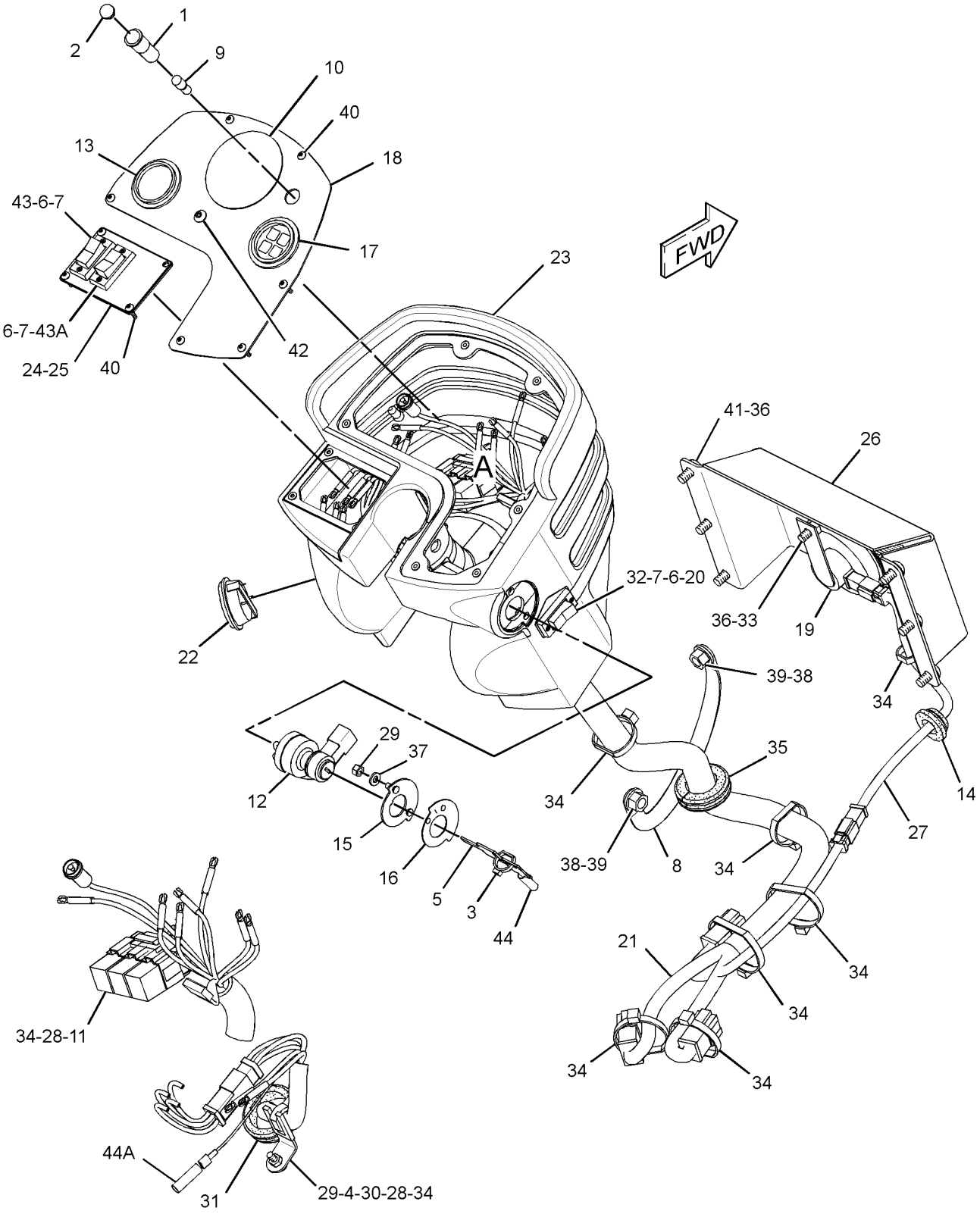

VIEW OF AREA A
(HOUSING REMOVED FOR CLARITY)

GRAPHIC #1 **<END>** g01424065

OPERATOR STATION

249-3158 PLATFORM GP-OPERATOR

S/N: EAE1-379

PART OF 229-8706, 236-2234 OPERATOR AR

AN ATTACHMENT

SMCS-7253 **i02126884**

NOTE	REF NO	GRAPHIC REF	PART NUMBER	QTY	PART NAME 1 2 3 4 5 6 (PRODUCT LEVEL)	SEE PAGE
	1	1	**3E-4883**	4	SLEEVE	
	2	1	**9W-7388**	4	WASHER (26X144X12-MM THK)	
	3	1	**9W-9931**	2	MOUNT AS	
	4	1	**054-8974**	4	PIN	
	5	1	**155-8961**	1	FLOOR MAT AS	
	6	1	**159-4026**	2	SLEEVE	
	7	1	**189-4652**	1	COVER AS	
	8	1	**249-3122**	1	FLOORPLATE AS	
	9	1	**156-1141**	2	MOUNT AS	
M	10	1	**7X-2465**	2	BOLT (M24X3X180-MM)	
M	11	1	**7X-2567**	2	BOLT (M24X3X160-MM)	
M	12	1	**8T-4001**	4	NUT (M24X3-THD)	
M	13	1	**8T-4138**	1	BOLT (M6X1X20-MM)	
	14	1	**8T-4167**	8	WASHER-HARD (26X44X4-MM THK)	
M	15	1	**9X-2045**	2	SCREW-TRUSS HEAD (M6X1X20-MM)	
	16	1	**9X-8256**	1	WASHER (6.6X12X2-MM THK)	

M-METRIC PART

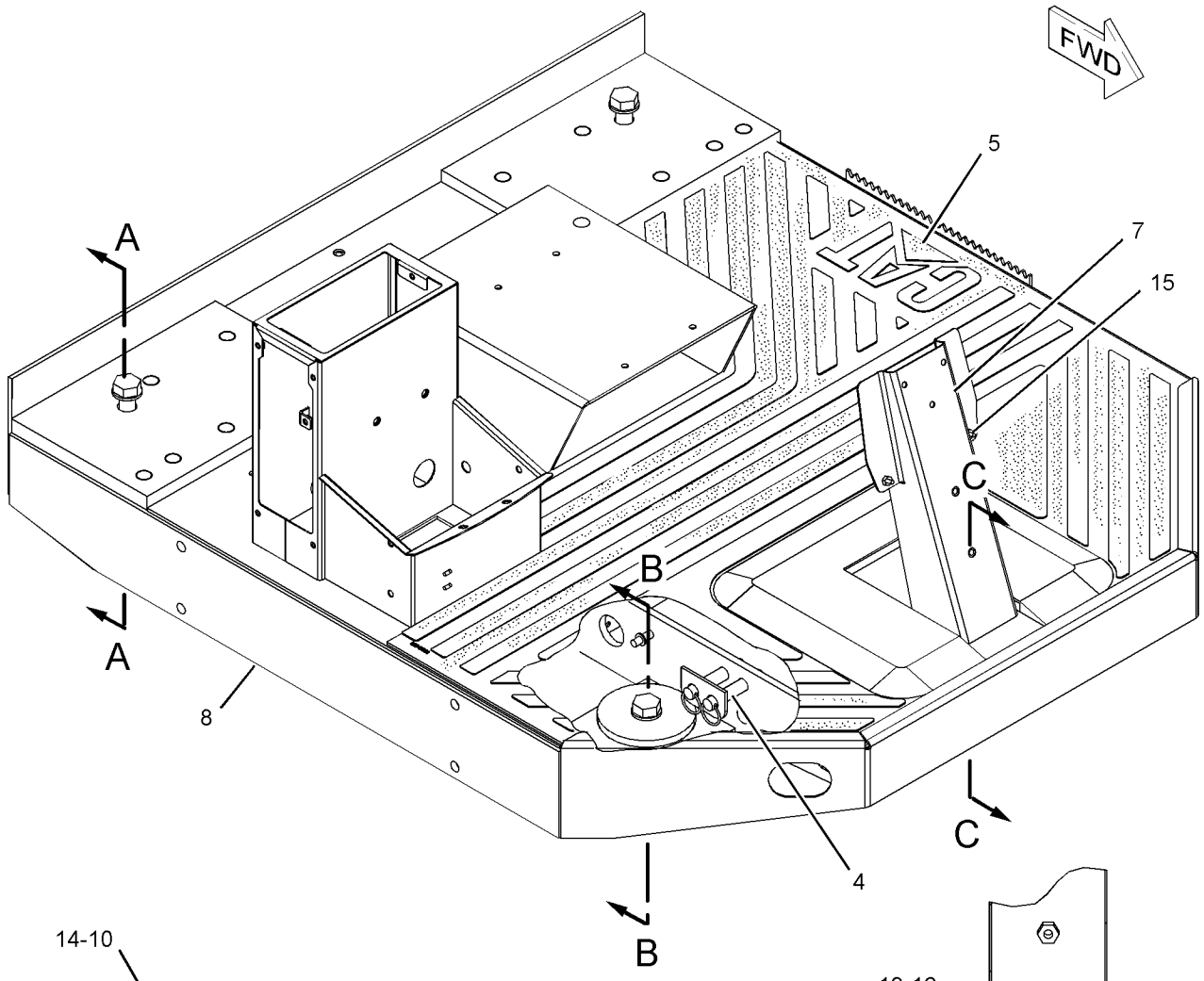

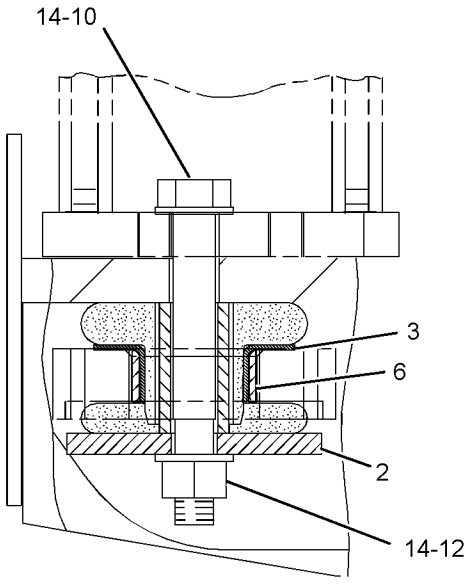

SECTION A-A

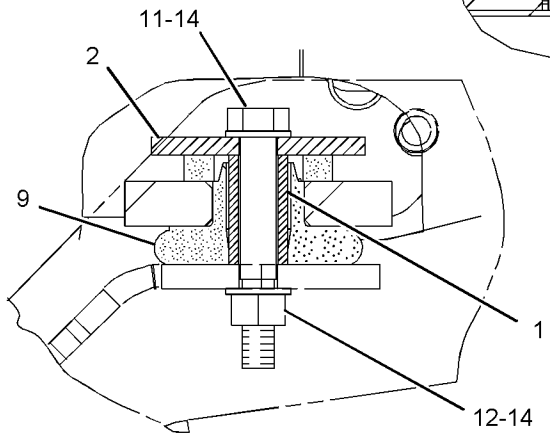

SECTION B-B

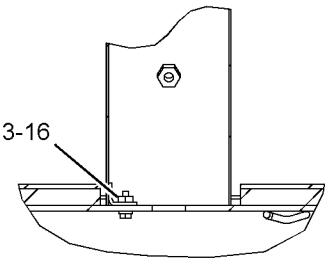

SECTION C-C

GRAPHIC #1

<END>

g01085306

OPERATOR STATION

249-3158 PLATFORM GP-OPERATOR

S/N: EAE380-UP
PART OF 229-8706, 236-2234 OPERATOR AR
AN ATTACHMENT

SMCS-7253 **i02856145**

NOTE	REF NO	GRAPHIC REF	PART NUMBER	QTY	PART NAME 1 2 3 4 5 6 (PRODUCT LEVEL)	SEE PAGE
	1	1	**3E-4883**	4	SLEEVE	
	2	1	**9W-7388**	4	WASHER (26X144X12-MM THK)	
	3	1	**9W-9931**	2	MOUNT AS	
	4	1	**054-8974**	4	PIN	
	5	1	**159-4026**	2	SLEEVE	
	6	1	**189-4652**	1	COVER AS	
	7	1	**249-3122**	1	FLOORPLATE AS	
C	8	1	**314-6914**	1	FLOOR MAT	
C	9	1	**314-6915**	1	FLOOR MAT	
	10	1	**156-1141**	2	MOUNT AS	
C	11	1	**1L-6366**	2	BUTTON-PLUG	
M	12	1	**7X-2465**	2	BOLT (M24X3X180-MM)	
M	13	1	**7X-2567**	2	BOLT (M24X3X160-MM)	
M	14	1	**8T-4001**	4	NUT (M24X3-THD)	
M	15	1	**8T-4138**	1	BOLT (M6X1X20-MM)	
	16	1	**8T-4167**	8	WASHER-HARD (26X44X4-MM THK)	
M	17	1	**9X-2045**	2	SCREW-TRUSS HEAD (M6X1X20-MM)	
	18	1	**9X-8256**	1	WASHER (6.6X12X2-MM THK)	

C-CHANGE FROM PREVIOUS TYPE
M-METRIC PART

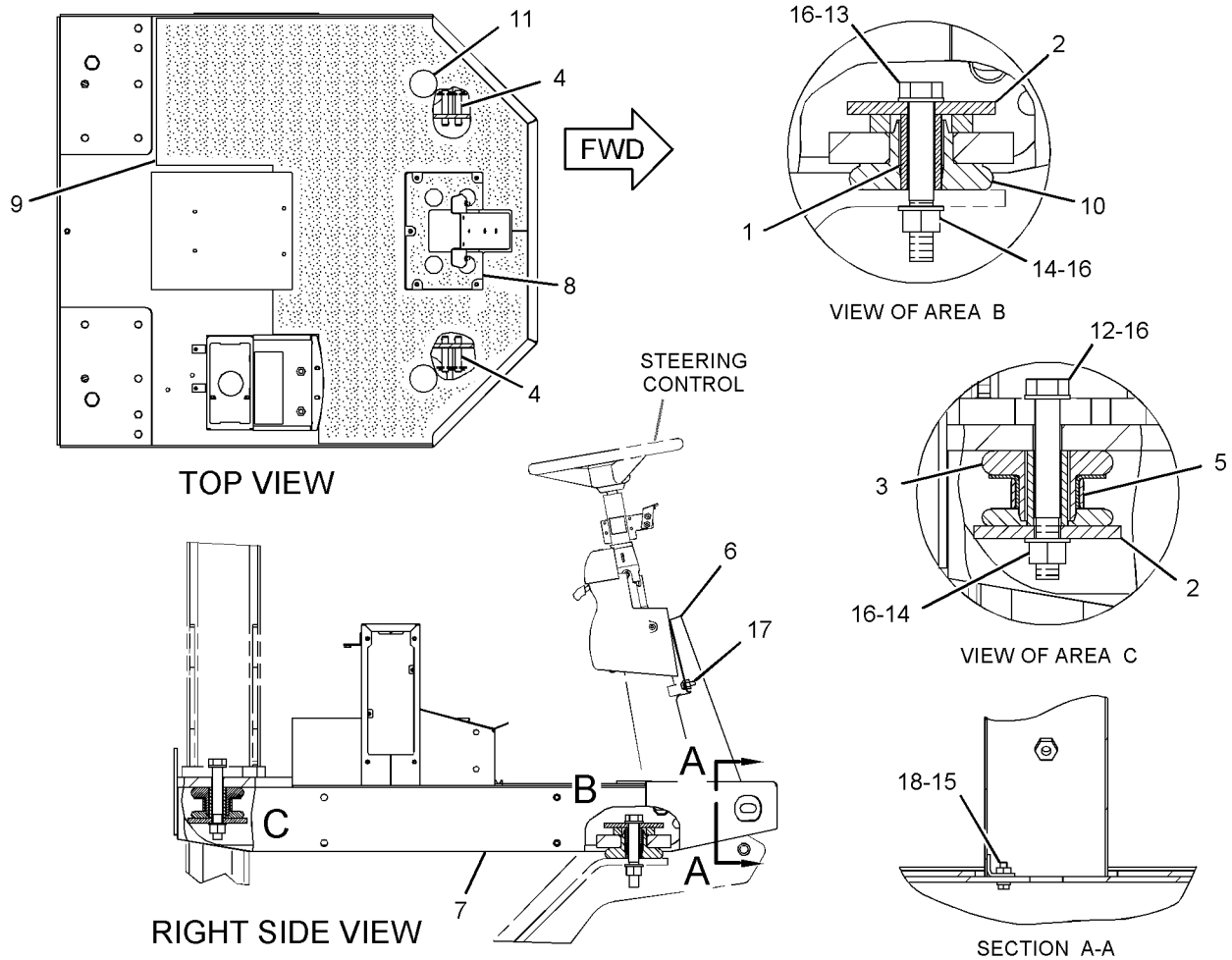

GRAPHIC #1 **<END>** g01423916

OPERATOR STATION

202-0679 ROPS GP

S/N: EAE1-UP
PART OF 229-8706 OPERATOR AR
AN ATTACHMENT

SMCS-7323 **i01774911**

NOTE	REF NO	GRAPHIC REF	PART NUMBER	QTY	PART NAME 1 2 3 4 5 6 (PRODUCT LEVEL)	SEE PAGE
	1	1	**165-0571**	1	ROPS AS	
		1	**7T-1099**	16	LINK	
M	2	1	**7X-2575**	10	BOLT (M24X3X60-MM)	
	3	1	**8T-4167**	12	WASHER-HARD (26X44X4-MM THK)	
D	4	1	**8T-3426**		CHANNEL-TRIM (2.8M)	
M	5	1	**7X-2576**	2	BOLT (M24X3X70-MM)	

D-ORDER BY THE METER
M-METRIC PART

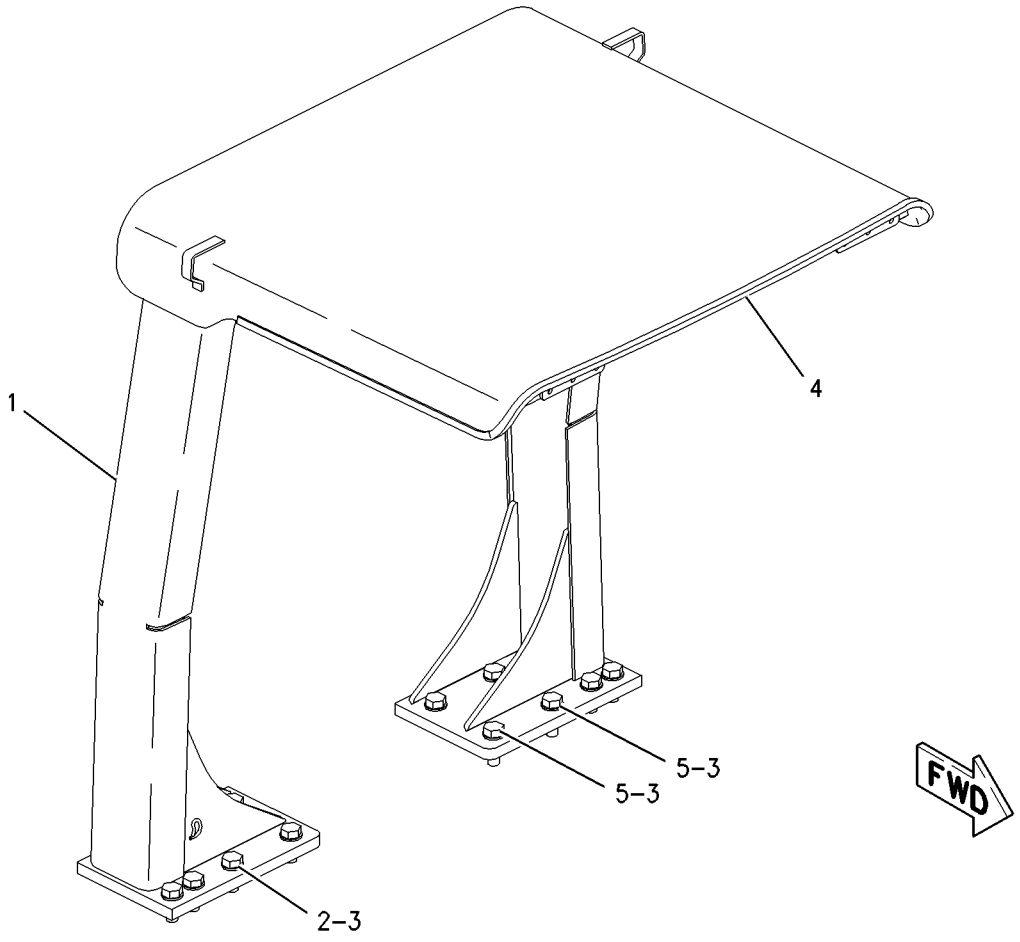

GRAPHIC #1 **<END>** g00844746

OPERATOR STATION

223-4792 ROPS GP-ENCLOSED

S/N: EAE1-242
PART OF 223-4791 CAB AR
AN ATTACHMENT

SMCS-7301 **i02898385**

NOTE	REF NO	GRAPHIC REF	PART NUMBER	QTY	PART NAME 1 2 3 4 5 6 (PRODUCT LEVEL)	SEE PAGE
	1	1	**118-6375**	1	FILM-INSTRUCTION (UNLOCK, RELEASE)	
Y	2	1	**185-5770**	1	DOOR GP-CAB (SLIDING WINDOW, LH)	312
	3	1	**187-9185**	1	FILM-INFORMATION (ALTERNATE EXIT)	
	4	1	**225-7713**	1	FLOORPLATE AS	
		1	**7T-1099**	10	LINK	
		1	**7V-5627**	1	PLATE AS	
M		1	**8T-3635**	3	STUD-WELD (M12X1.75X34.93-MM OAL)	
Y	5	1	**225-7714**	1	CAB GP-ENCLOSED ROPS	290
	6	1	**229-9269**	2	BRACKET	
M	7	1	**7X-2563**	12	BOLT (M20X2.5X60-MM)	
	8	1	**8T-4123**	22	WASHER (22X35X3.5-MM THK)	
M	9	1	**8T-4131**	10	NUT (M20X2.5-THD)	
	10	1	**8T-4223**	2	WASHER-HARD (13.5X25.5X3-MM THK)	
M	11	1	**8T-4244**	2	NUT (M12X1.75-THD)	
D	12	1	**5P-5643**		SEAL (4.8-M)	

D-ORDER BY THE METER
M-METRIC PART
Y-SEPARATE ILLUSTRATION

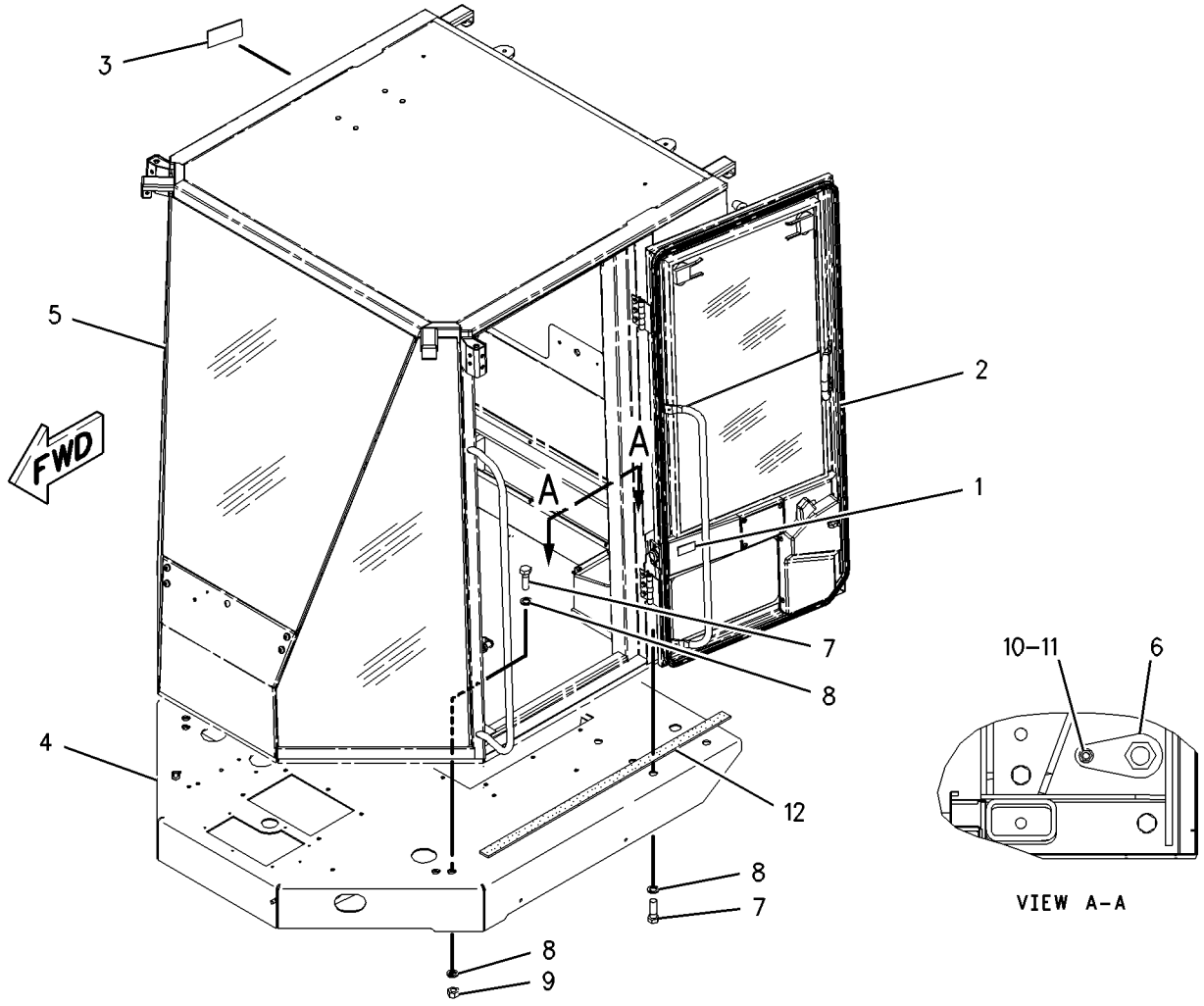

GRAPHIC #1 **<END>** g01003740

OPERATOR STATION

254-5057 ROPS GP-ENCLOSED

S/N: EAE1-UP
PART OF 254-5054, 259-4423 CAB AR
AN ATTACHMENT

SMCS-7301 **i02187925**

NOTE	REF NO	GRAPHIC REF	PART NUMBER	QTY	PART NAME 1 2 3 4 5 6 (PRODUCT LEVEL)	SEE PAGE
	1	1	**118-6375**	1	FILM-INSTRUCTION (UNLOCK, RELEASE)	
Y	2	1	**185-5770**	1	DOOR GP-CAB (SLIDING WINDOW, LH)	312
	3	1	**187-9185**	1	FILM-INFORMATION (ALTERNATE EXIT)	
	4	1	**229-9269**	2	BRACKET	
Y	5	1	*254-5058*	1	CAB GP-ENCLOSED ROPS	292
	6	1	**259-2646**	1	FLOORPLATE AS	
M	7	1	**7X-2563**	12	BOLT (M20X2.5X60-MM)	
	8	1	**8T-4123**	22	WASHER (22X35X3.5-MM THK)	
M	9	1	**8T-4131**	10	NUT (M20X2.5-THD)	
	10	1	**8T-4223**	2	WASHER-HARD (13.5X25.5X3-MM THK)	
M	11	1	**8T-4244**	2	NUT (M12X1.75-THD)	
BD	12	1	**5P-5643**		SEAL	

B-USE AS REQUIRED
D-ORDER BY THE METER
M-METRIC PART
Y-SEPARATE ILLUSTRATION

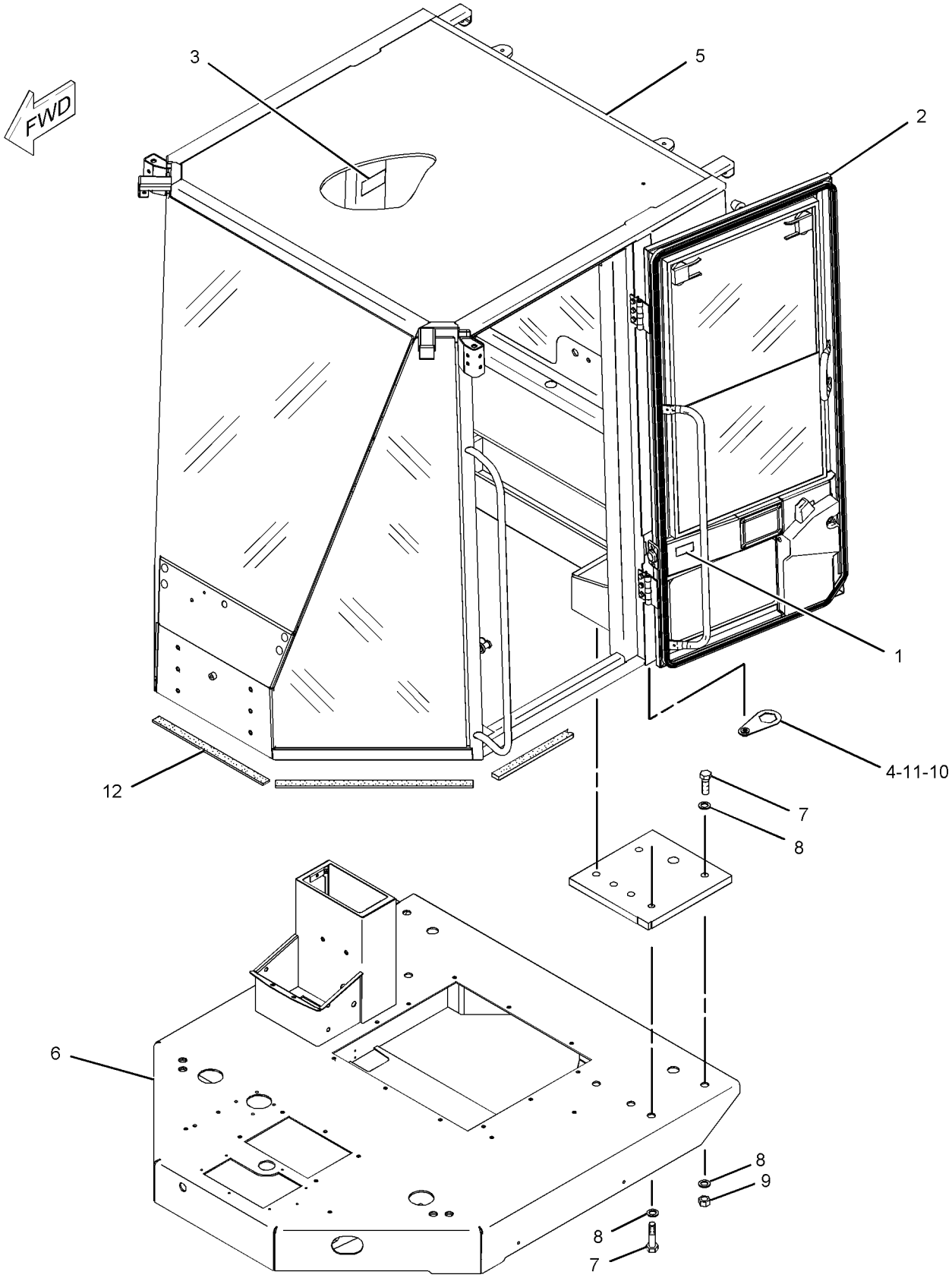

GRAPHIC #1 **<END>** g01144842

OPERATOR STATION

118-7250 SCREEN GP-SUN

S/N: EAE1-UP
PART OF 204-4390 SCREEN GP-SUN
AN ATTACHMENT

SMCS-7165 **i01850342**

NOTE	REF NO	GRAPHIC REF	PART NUMBER	QTY	PART NAME 1 2 3 4 5 6 (PRODUCT LEVEL)	SEE PAGE
	1	1	**119-2073**	2	HOOK-RETAINER	

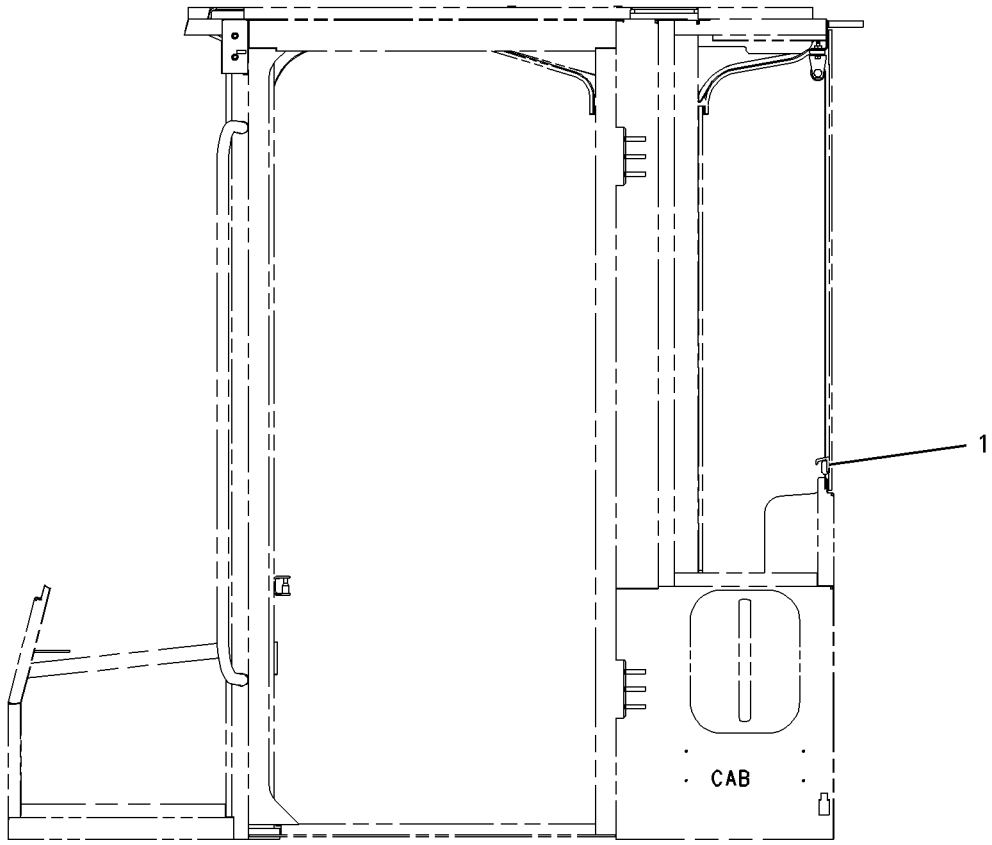

LEFT SIDE VIEW

GRAPHIC #1 **<END>** g00942564

OPERATOR STATION

204-4390 SCREEN GP-SUN

S/N: EAE1-UP

AN ATTACHMENT

SMCS-7165 **i01972536**

NOTE	REF NO	GRAPHIC REF	PART NUMBER	QTY	PART NAME 1 2 3 4 5 6 (PRODUCT LEVEL)	SEE PAGE
Y	1	1	**118-7250**	1	SCREEN GP-SUN	373

Y-SEPARATE ILLUSTRATION

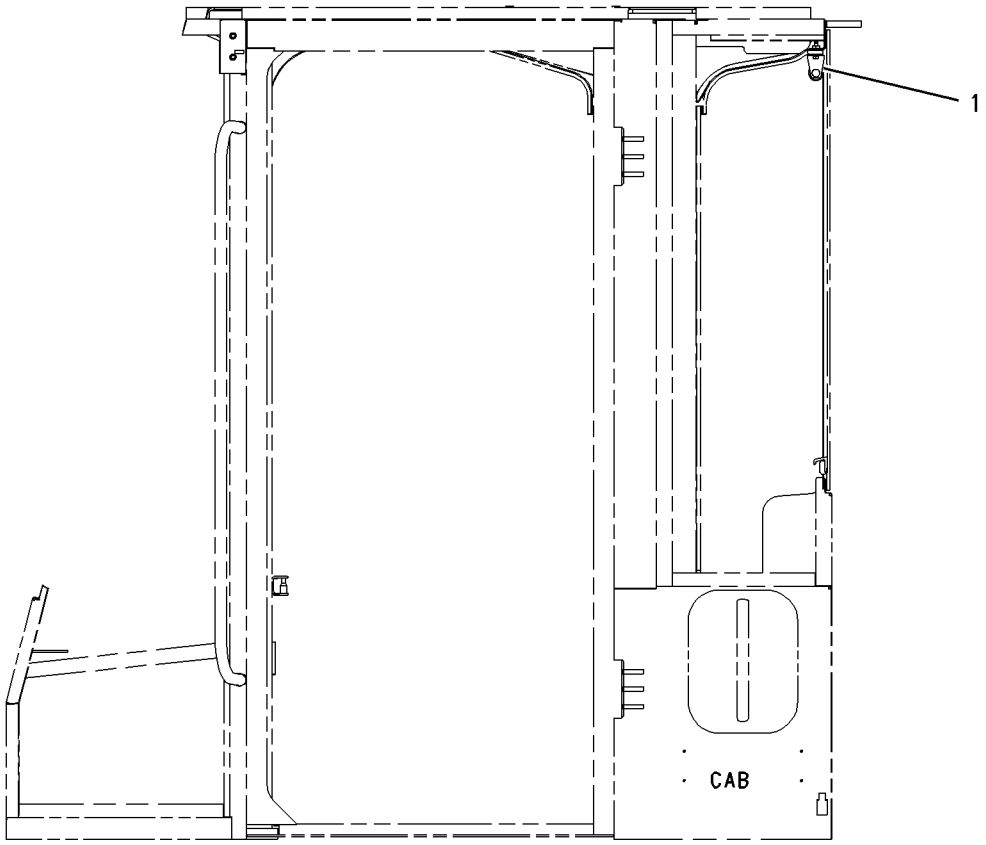

LEFT SIDE VIEW

GRAPHIC #1 **<END>** g00942562

OPERATOR STATION

235-0512 SEAT & MOUNTING GP

S/N: EAE1-UP
AN ATTACHMENT

SMCS-7312 **i02357477**

NOTE	REF NO	GRAPHIC REF	PART NUMBER	QTY	PART NAME 1 2 3 4 5 6 (PRODUCT LEVEL)	SEE PAGE
	1	1	**230-6367**	1	SEAT BELT GP	
Y	2	1	**235-3151**	1	SEAT GP-SUSPENSION	376
	3	1	**236-5056**	1	FASTENER GP-SEAT	
M	4	1	**5C-7261**	4	NUT (M8X1.25-THD)	
	5	1	**8T-4224**	8	WASHER-HARD (8.8X16X2-MM THK)	
M	6	1	**5A-3604**	4	BOLT-SOCKET HEAD (M8X1.25X25-MM)	
	7	1	**5P-7958**	1	SLEEVE-CABLE SPLICE	

M-METRIC PART
Y-SEPARATE ILLUSTRATION

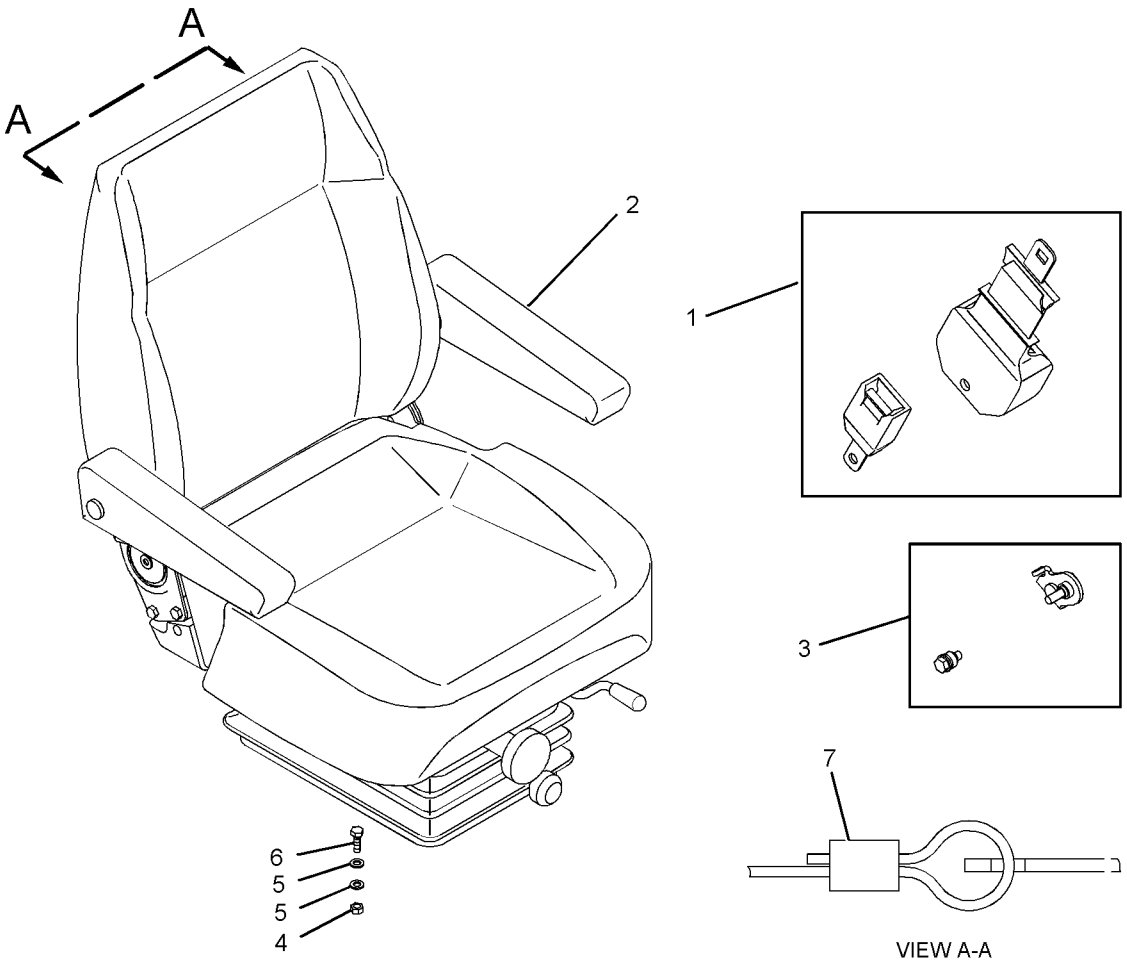

GRAPHIC #1 **<END>** g01100735

OPERATOR STATION

235-3151 SEAT GP-SUSPENSION

S/N: EAE1-UP

PART OF 235-0512 SEAT & MOUNTING GP

AN ATTACHMENT

SMCS-7324 **i02898386**

NOTE	REF NO	GRAPHIC REF	PART NUMBER	QTY	PART NAME 1 2 3 4 5 6 (PRODUCT LEVEL)	SEE PAGE
	1	1	**233-7538**	1	ARMREST (RH)	
Z	1A	1		2	BOLT	
Z	1B	1		1	BRACKET	
Z	1C	1		2	SPACER	
	2	1	**233-7537**	1	ARMREST (LH)	
Z	2A	1		2	BOLT	
Z	2B	1		1	BRACKET	
Z	2C	1		2	SPACER	
	3	1	**233-7530**	1	COVER-SEAT (BACK, VINYL)	
	4	1	**190-9732**	1	KIT-FOAM BACK (SUSPENSION SEAT)	
	5	1	**247-6479**	1	KIT-SEAT (SUSPENSION SEAT)	
	6	1	**233-7532**	1	COVER-SEAT (BOTTOM, VINYL)	
	7	1	**233-7533**	1	FOAM-SEAT (BOTTOM)	
JZ	8	1		1	KNOB (SEAT)	
JZ	8A	1		1	KNOB (RAIL)	
	9	1	**202-4739**	1	KIT-STOP (SUSPENSION SEAT)	
					(INCLUDES UPSTOP & BUMPSTOP)	
	10	1	**217-5821**	1	ADJUSTER GP-HEIGHT (SUSPENSION SEAT)	
	11	1	**202-4737**	1	KIT-SEAT (INDICATORS)	
					(INCLUDES WASHER & INDICATOR)	
	12	1	**202-4736**	1	KIT-DAMPER (SEAT)	
					(INCLUDES DAMPERS, PINS, WASHERS, PUSHNUT & SPACER)	
	13	1	**233-7535**	1	KIT-RAIL (SUSPENSION SEAT)	
					(INCLUDES RH-RAIL & LH-RAIL)	
	14	1	**233-7536**	1	KIT-STRAP (SUSPENSION SEAT)	
					(INCLUDES FRONT STRAP & REAR STRAP)	
	15	1	**202-4740**	1	KIT-ADJUSTER (SEAT)	
					(INCLUDES SPACER,PINS,WEIGHT ADJUSTER KNOB,SPRINGS,ADJUSTER SHAFT,ANCHORS,NEEDLE BEARINGS & WASHER BEARINGS)	
	16	1	**232-4226**	1	KIT-BOOT (SUSPENSION SEAT)	
					AVAILABLE REPAIR KIT(S):	
J			**233-7534**	1	KIT-KNOB (SUSPENSION SEAT)	

J-KIT MARKED J SERVICES PART(S) MARKED J
Z-NOT SERVICED SEPARATELY

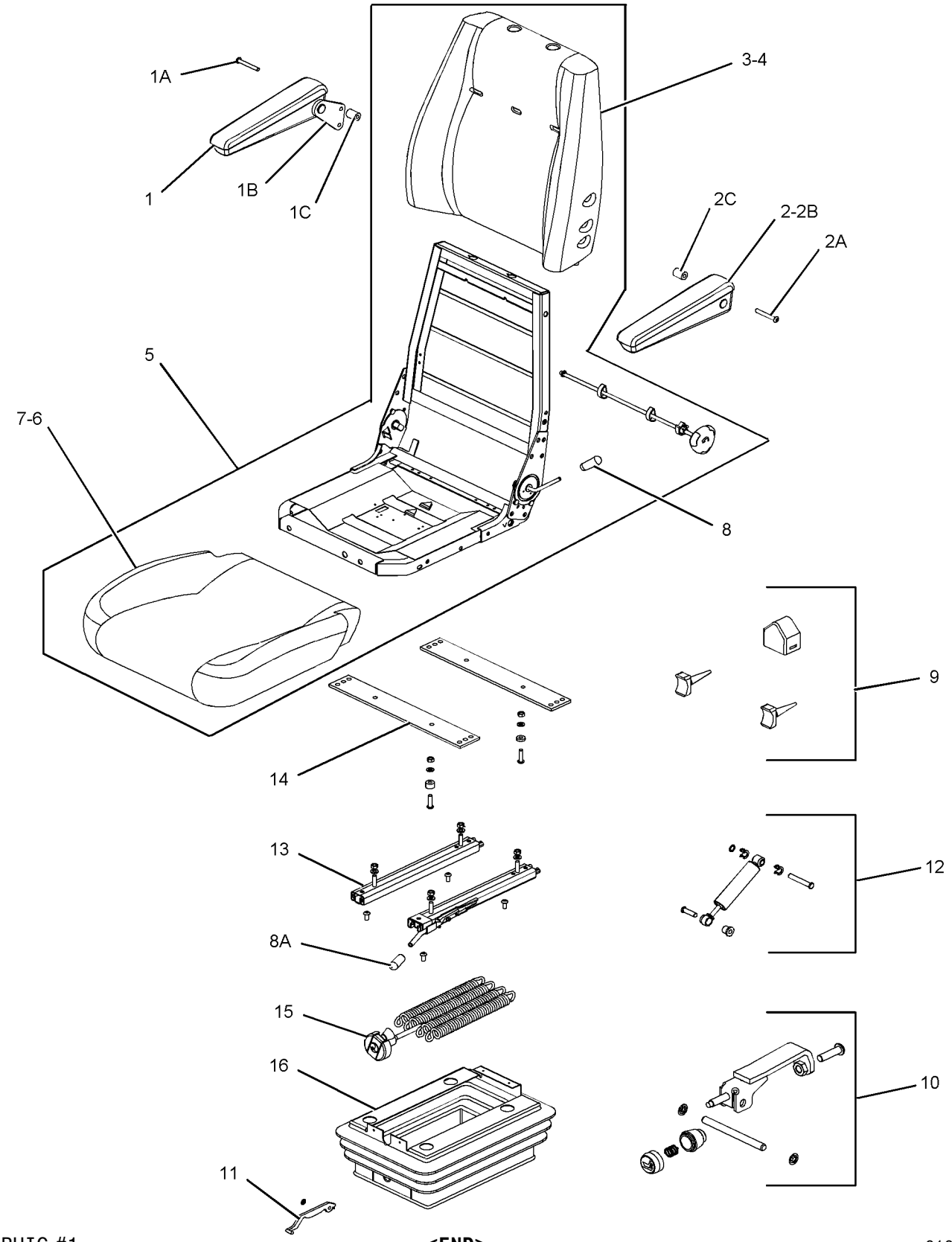

GRAPHIC #1 **<END>** g01054522

OPERATOR STATION

235-4119 SEAT GP-SUSPENSION—CLOTH

S/N: EAE1-UP

AN ATTACHMENT

SMCS-7324 **i02898387**

NOTE	REF NO	GRAPHIC REF	PART NUMBER	QTY	PART NAME 1 2 3 4 5 6 (PRODUCT LEVEL)	SEE PAGE
	1	1	**230-6367**	1	SEAT BELT GP	
	2	1	**235-1491**	1	PLATE	
	3	1	**236-5056**	1	FASTENER GP-SEAT	
Y	4	1	**248-1362**	1	SEAT GP-SUSPENSION (CLOTH)	380
M	5	1	**6V-8202**	4	BOLT-SOCKET HEAD (M8X1.25X16-MM)	
	6	1	**8T-4121**	4	WASHER-HARD (11X21X2.5-MM THK)	
M	7	1	**8T-4195**	4	BOLT (M10X1.5X30-MM)	
	8	1	**8T-4224**	4	WASHER-HARD (8.8X16X2-MM THK)	
	9	1	**5P-7958**	1	SLEEVE-CABLE SPLICE	

M-METRIC PART
Y-SEPARATE ILLUSTRATION

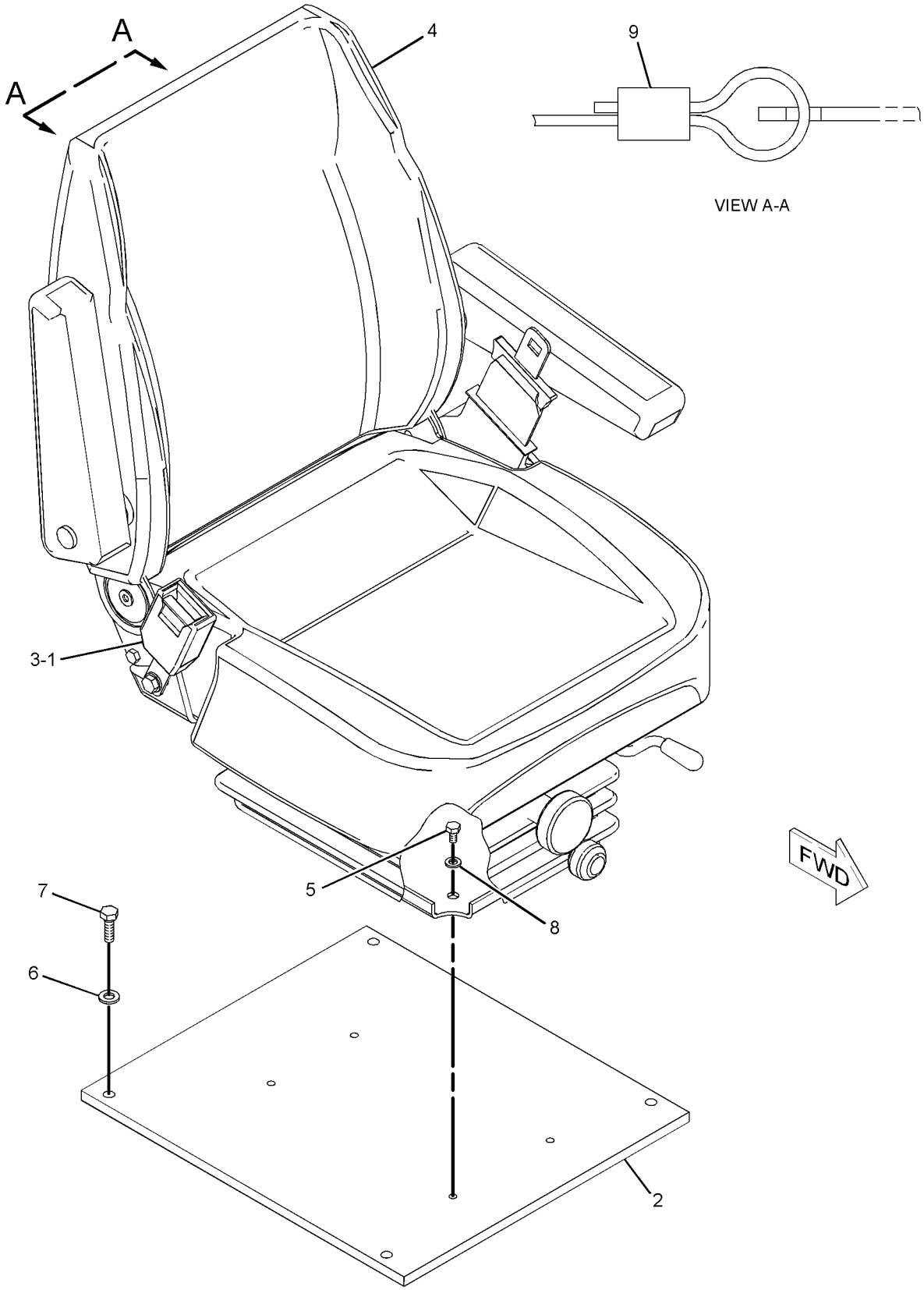

GRAPHIC #1 **<END>** g01103932

OPERATOR STATION

248-1362 SEAT GP-SUSPENSION—CLOTH

S/N: EAE1-UP

PART OF 235-4119 SEAT GP-SUSPENSION

AN ATTACHMENT

SMCS-7324 **i02898388**

NOTE	REF NO	GRAPHIC REF	PART NUMBER	QTY	PART NAME 1 2 3 4 5 6 (PRODUCT LEVEL)	SEE PAGE
	1	1	**233-7538**	1	ARMREST (RH)	
Z	1A	1		2	BOLT	
Z	1B	1		1	BRACKET	
Z	1C	1		2	SPACER	
	2	1	**233-7537**	1	ARMREST (LH)	
Z	2A	1		2	BOLT	
Z	2B	1		1	BRACKET	
Z	2C	1		2	SPACER	
	3	1	**247-4941**	1	COVER-SEAT (BACK, CLOTH)	
	4	1	**190-9732**	1	KIT-FOAM BACK (SUSPENSION SEAT)	
	5	1	**253-4313**	1	KIT-SEAT (SUSPENSION SEAT)	
	6	1	**247-4942**	1	COVER-SEAT (BOTTOM, CLOTH)	
	7	1	**233-7533**	1	FOAM-SEAT (BOTTOM)	
JZ	8	1		1	KNOB (SEAT)	
JZ	8A	1		1	KNOB (RAIL)	
	9	1	**202-4739**	1	KIT-STOP (SUSPENSION SEAT)	
					(INCLUDES UPSTOP & BUMPSTOP)	
	10	1	**217-5821**	1	ADJUSTER GP-HEIGHT (SUSPENSION SEAT)	
	11	1	**202-4737**	1	KIT-SEAT (INDICATORS)	
					(INCLUDES WASHER & INDICATOR)	
	12	1	**202-4736**	1	KIT-DAMPER (SEAT)	
					(INCLUDES DAMPERS, PINS, WASHERS, PUSHNUT & SPACER)	
	13	1	**233-7535**	1	KIT-RAIL (SUSPENSION SEAT)	
					(INCLUDES RH-RAIL & LH-RAIL)	
	14	1	**233-7536**	1	KIT-STRAP (SUSPENSION SEAT)	
					(INCLUDES FRONT STRAP & REAR STRAP)	
	15	1	**202-4740**	1	KIT-ADJUSTER (SEAT)	
					(INCLUDES SPACER,PINS,WEIGHT ADJUSTER KNOB,SPRINGS,ADJUSTER SHAFT,ANCHORS,NEEDLE BEARINGS & WASHER BEARINGS)	
	16	1	**232-4226**	1	KIT-BOOT (SUSPENSION SEAT)	
					AVAILABLE REPAIR KIT(S):	
J			**233-7534**	1	KIT-KNOB (SUSPENSION SEAT)	

J-KIT MARKED J SERVICES PART(S) MARKED J
Z-NOT SERVICED SEPARATELY

248-1362 SEAT GP-SUSPENSION *(contd.)* **i02898388**

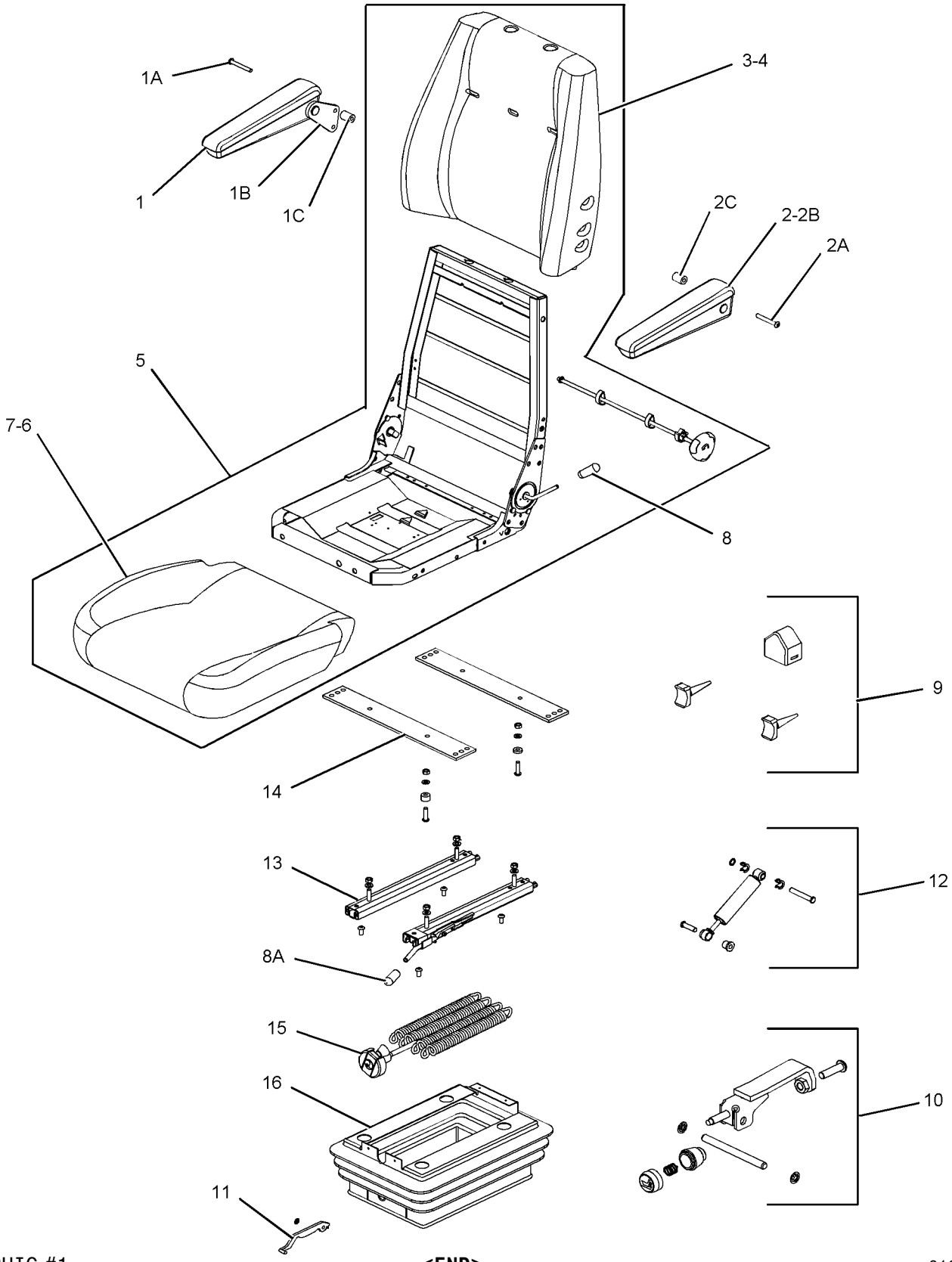

GRAPHIC #1 **<END>** g01054522

OPERATOR STATION

155-4774 TANK GP-WINDOW WASHER

S/N: EAE1-UP

PART OF 223-4793 WIPER & WASHER GP-WINDOW

AN ATTACHMENT

SMCS-7306 **i02154524**

NOTE	REF NO	GRAPHIC REF	PART NUMBER	QTY	PART NAME 1 2 3 4 5 6 (PRODUCT LEVEL)	SEE PAGE
	1	1	**7T-8890**	2	PUMP AS-WASHER	
	2	1	**8T-5913**	2	SCREEN-FILTER (WINDOW WASHER)	
	3	1	**8T-5914**	2	GROMMET	
	4	1	**8E-8292**	1	CAP-VENTED (WINDOW WASHER)	
	5	1	**155-4777**	1	RESERVOIR	

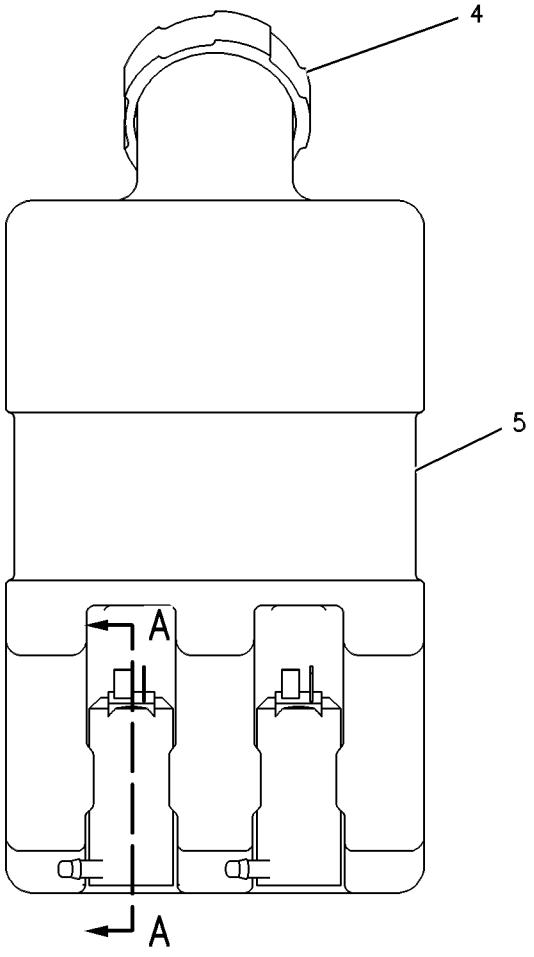

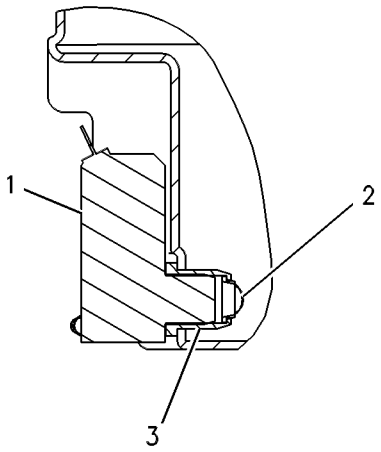

SECTION A-A

GRAPHIC #1 **<END>** g00334557

OPERATOR STATION

107-4641 VISOR GP-CAB

S/N: EAE1-UP
AN ATTACHMENT

SMCS-7301 **i01130547**

NOTE	REF NO	GRAPHIC REF	PART NUMBER	QTY	PART NAME 1 2 3 4 5 6 (PRODUCT LEVEL)	SEE PAGE
	1	1	**9R-3203**	2	PLATE	
	2	1	**9R-3204**	1	PLATE AS	
	3	1	**9R-3205**	1	VISOR AS	
M	4	1	**9X-2042**	2	SCREW-TRUSS HEAD (M6X1X12-MM)	
M	5	1	**9X-2045**	2	SCREW-TRUSS HEAD (M6X1X20-MM)	

M-METRIC PART

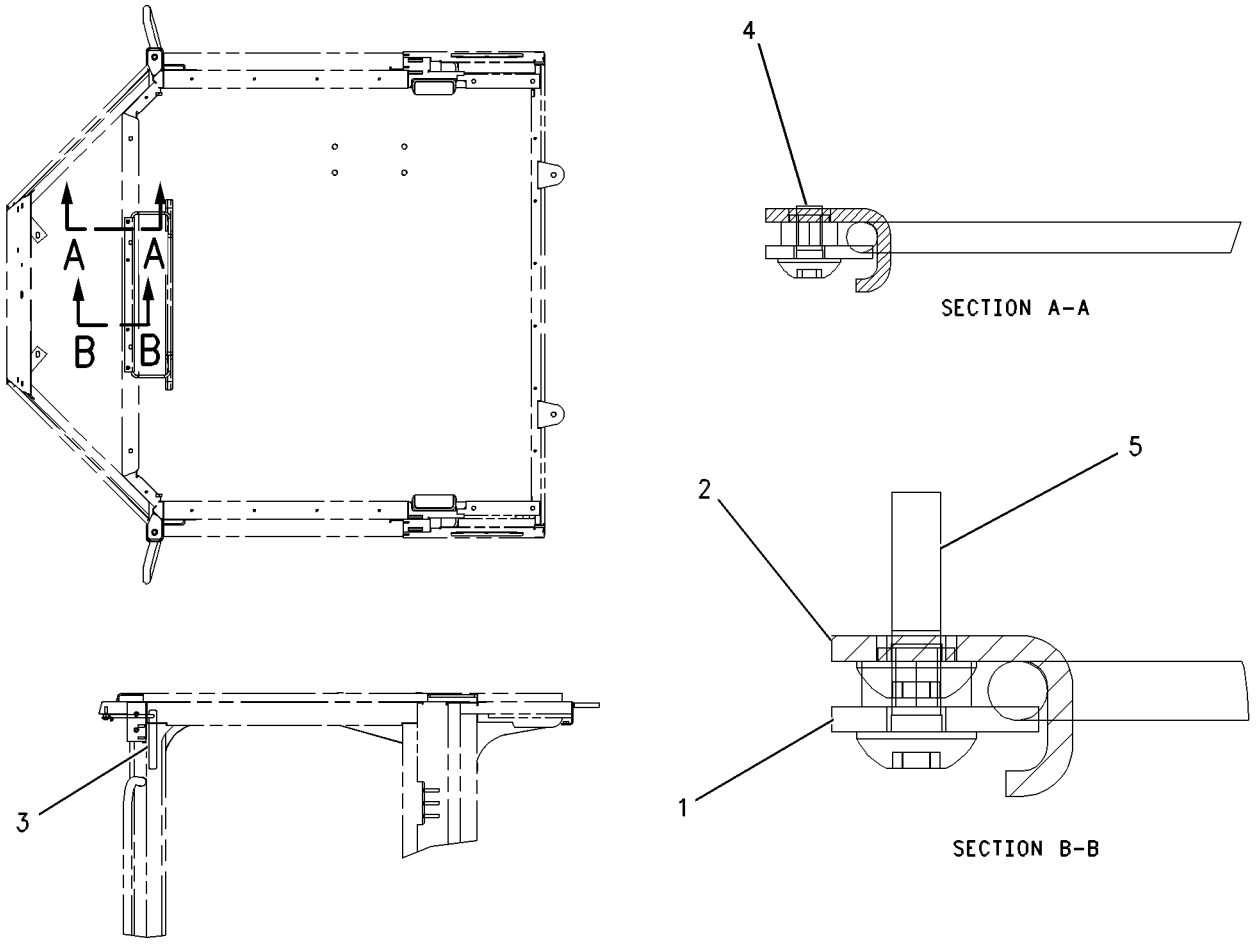

GRAPHIC #1 **<END>** g00599031

OPERATOR STATION

153-7817 WINDOW GP

S/N: EAE1-UP

PART OF 225-7714, 254-5058 CAB GP-ENCLOSED ROPS

AN ATTACHMENT

SMCS-7310 **i02898389**

NOTE	REF NO	GRAPHIC REF	PART NUMBER	QTY	PART NAME 1 2 3 4 5 6 (PRODUCT LEVEL)	SEE PAGE
	1	1	**165-0177**	1	CATCH AS (LH)	
		1	**150-8015**	1	GASKET	
	2	1	**165-0178**	1	CATCH AS (RH)	
		1	**150-8015**	1	GASKET	
	3	1	**187-5127**	1	CATCH AS (LH)	
		1	**150-8015**	1	GASKET	
	4	1	**187-5128**	1	CATCH AS (RH)	
		1	**150-8015**	1	GASKET	
	5	1	**187-5377**	1	FRAME AS	
	6	1	**187-5379**	1	RAIL	
	7	1	**187-5381**	1	GLASS (UPPER SLIDING)	
	8	1	**187-5383**	1	GLASS (LOWER SLIDING)	
	9	1	**187-5386**	1	RAIL AS	
M	10	1	**099-0857**	6	SCREW-MACHINE (M5X0.8X5.2-MM)	
E	11	1	**8Y-6913**		GLAZING (6.7-CM)	
E	12	1	**191-3040**		SEAL (2-CM)	
E	13	1	**137-2170**		SEAL (143.6-CM)	

E-ORDER BY THE CENTIMETER
M-METRIC PART

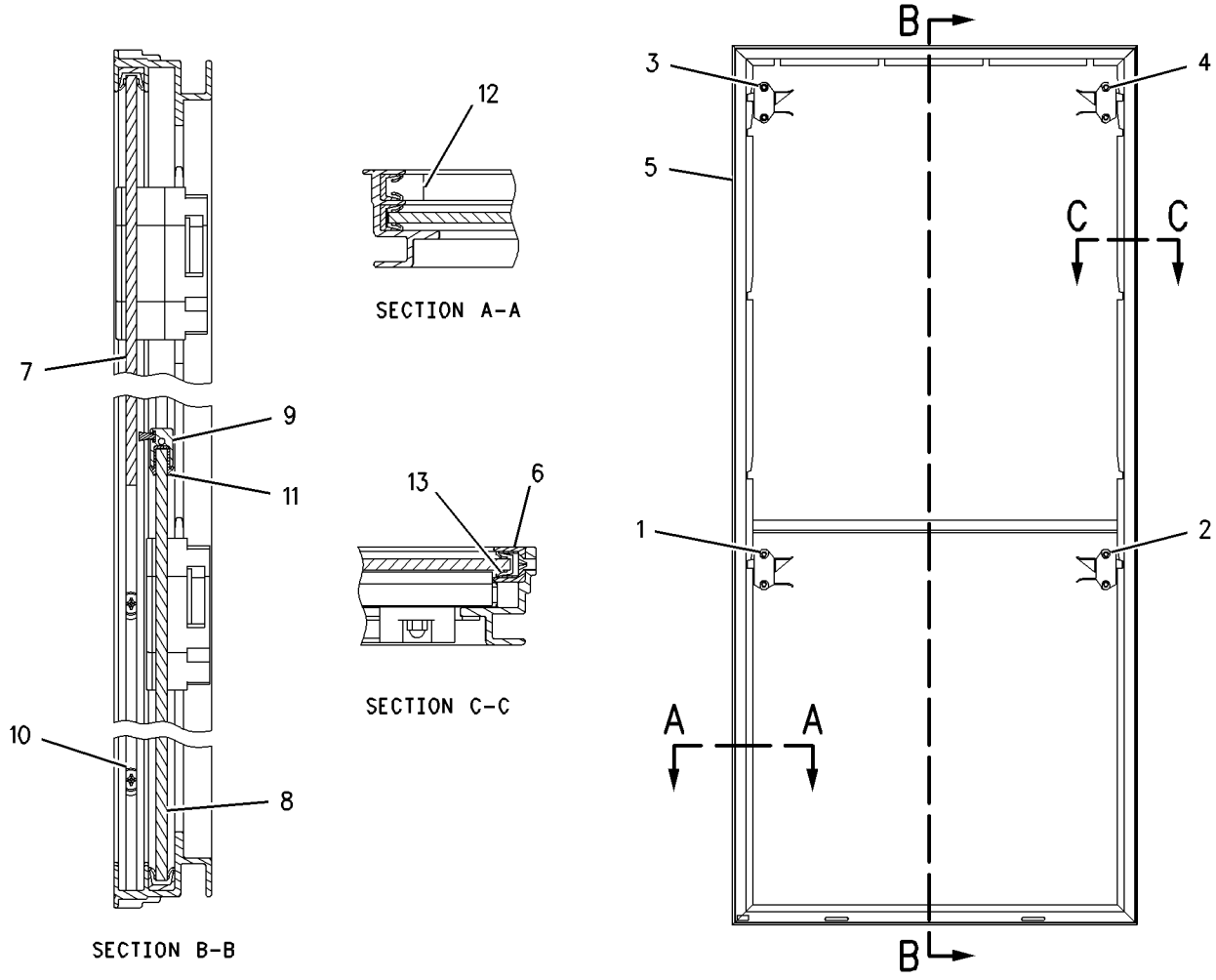

GRAPHIC #1 **<END>** g00750809

OPERATOR STATION

180-3871 WINDOW GP-DOOR

S/N: EAE1-UP
PART OF 185-5770 DOOR GP-CAB
AN ATTACHMENT

SMCS-7308, 7310 **i02898390**

NOTE	REF NO	GRAPHIC REF	PART NUMBER	QTY	PART NAME 1 2 3 4 5 6 (PRODUCT LEVEL)	SEE PAGE
	1	1	**144-1569**	1	STOP	
	2	1	**187-5122**	1	FRAME	
	3	1	**187-5123**	1	RAIL	
	4	1	**187-5124**	1	GLASS-SLIDING	
	5	1	**187-5125**	1	GLASS-FIXED	
	6	1	**187-5126**	1	RAIL AS	
	7	1	**187-5127**	1	CATCH AS (LH)	
		1	**150-8015**	1	GASKET	
	8	1	**187-5128**	1	CATCH AS (RH)	
		1	**150-8015**	1	GASKET	
M	9	1	**8T-0306**	6	SCREW-MACHINE (M5X0.8X10-MM)	
D	10	1	**9X-2532**		SEAL (1-M)	
E	11	1	**137-2170**		SEAL (250-CM)	

D-ORDER BY THE METER
E-ORDER BY THE CENTIMETER
M-METRIC PART

180-3871 WINDOW GP-DOOR *(contd.)* **i02898390**

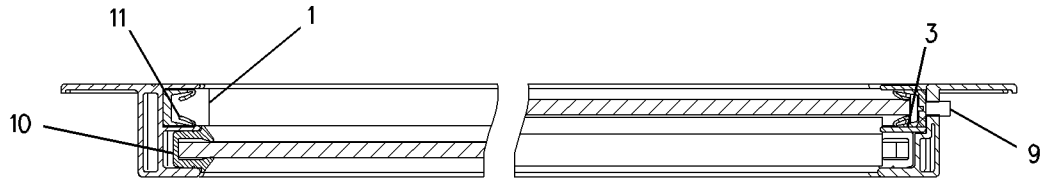

SECTION A-A

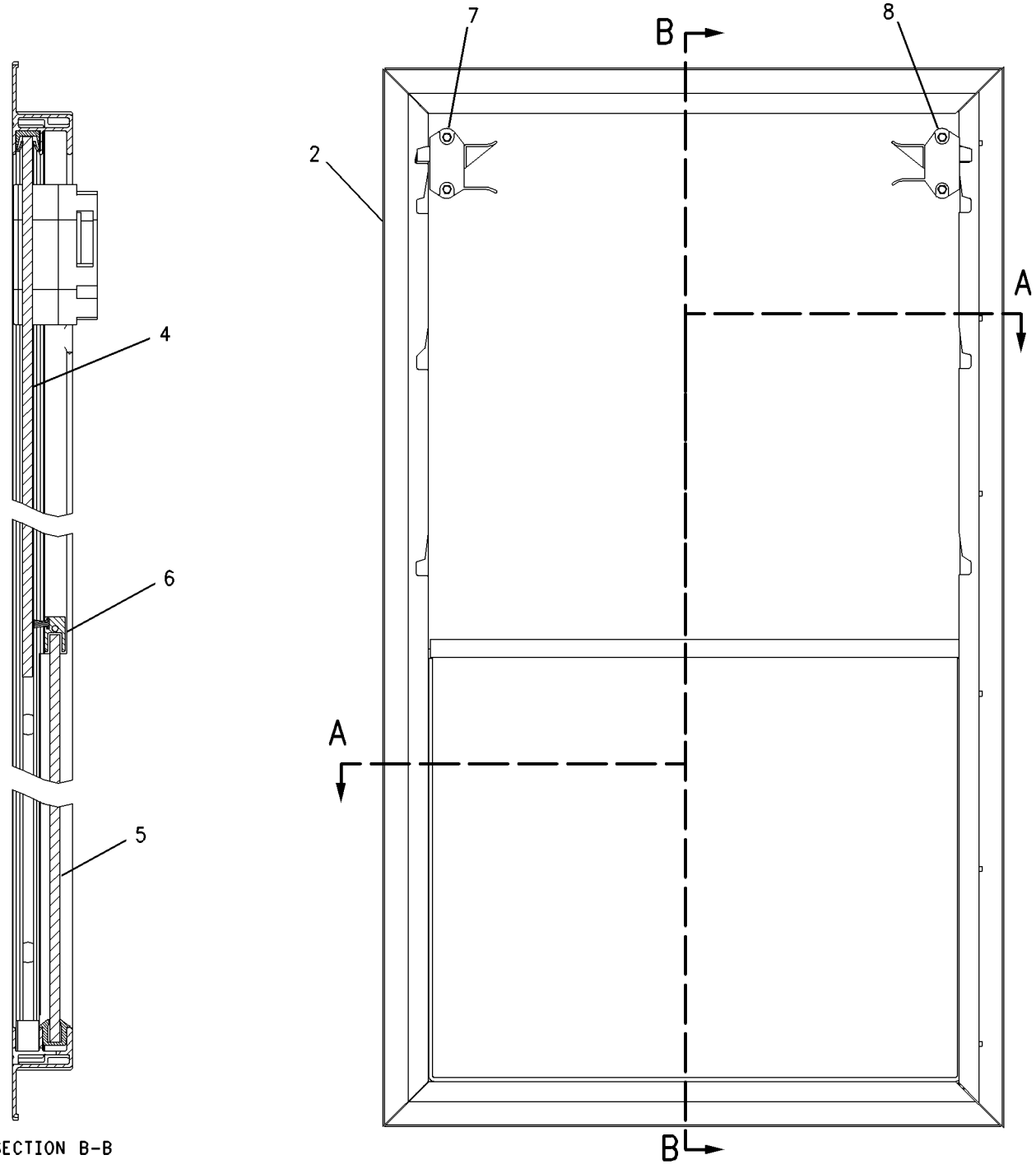

SECTION B-B

GRAPHIC #1 **<END>** g00930932

OPERATOR STATION

288-8880 WINDOW GP-REAR

S/N: EAE1-UP
PART OF 254-5058 CAB GP-ENCLOSED ROPS
AN ATTACHMENT

SMCS-7310, 7340 **i02863369**

NOTE	REF NO	GRAPHIC REF	PART NUMBER	QTY	PART NAME 1 2 3 4 5 6 (PRODUCT LEVEL)	SEE PAGE
	1	1	**165-0177**	1	CATCH AS (LH)	
	2	1	**165-0178**	1	CATCH AS (RH)	
	3	1	**187-5127**	1	CATCH AS (LH)	
	4	1	**187-5128**	1	CATCH AS (RH)	
					(EACH CATCH AS INCLUDES)	
		1	**150-8015**	1	GASKET	
	5	1	**187-5379**	1	RAIL	
	6	1	**187-5381**	1	GLASS (UPPER SLIDING)	
	7	1	**187-5383**	1	GLASS (LOWER SLIDING)	
	8	1	**187-5386**	2	RAIL AS	
	9	1	**288-8884**	2	BUMPER	
M	10	1	**099-0857**	6	SCREW-MACHINE (M5X0.8X5.2-MM)	
E	11	1	**191-3040**		SEAL (2-CM)	
E	12	1	**137-2170**		SEAL (1436-CM)	
D	13	1	**9X-2532**		SEAL (1-M EACH)	

D-ORDER BY THE METER
E-ORDER BY THE CENTIMETER
M-METRIC PART

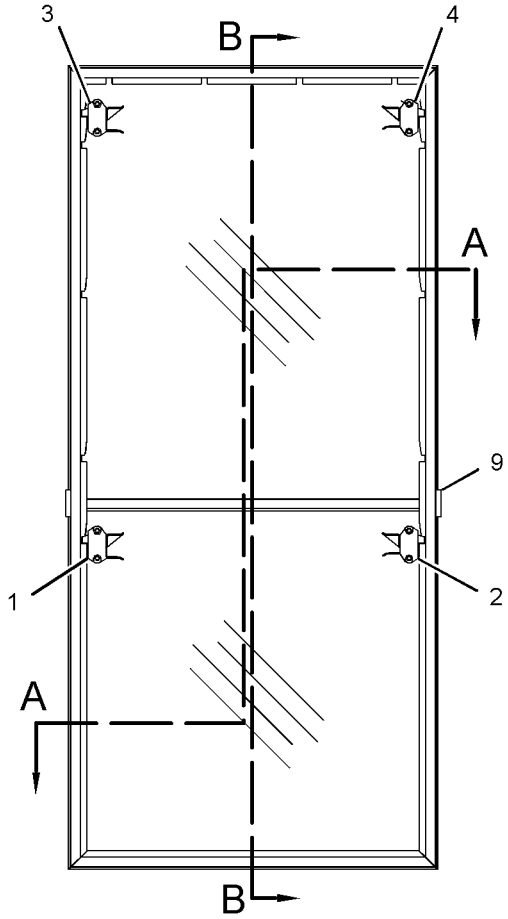

LEFT SIDE VIEW
(INSIDE CAB)

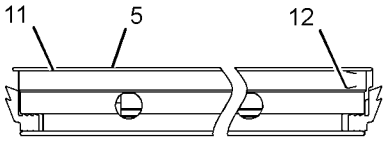

SECTION A-A

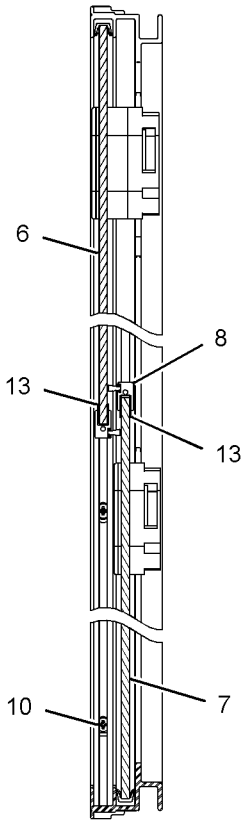

SECTION B-B

GRAPHIC #1 **<END>** g01287730

OPERATOR STATION

223-4793 WIPER & WASHER GP-WINDOW

S/N: EAE1-UP
PART OF 223-4791, 254-5054, 259-4423 CAB AR
AN ATTACHMENT

SMCS-7305, 7306 **i02855485**

NOTE	REF NO	GRAPHIC REF	PART NUMBER	QTY	PART NAME 1 2 3 4 5 6 (PRODUCT LEVEL)	SEE PAGE
	1	1	**5C-8811**	1	BLADE AS-WIPER (500-MM)	
	2	1	**6V-7419**	1	BLADE AS-WIPER (700-MM)	
	3	1	**8T-5400**	2	CONNECTOR AS	
	4	1	**112-5869**	1	ARM AS-WIPER	
Y	5	1	**155-4774**	1	TANK GP-WINDOW WASHER	382
	6	1	**155-5779**	1	WIPER PIVOT AS	
Y	7	1	**155-5783**	1	MOTOR GP-WINDOW WIPER (24-VOLT)	338
	8	1	**169-0502**	1	PLATE AS	
		1	**7T-1099**	1	LINK	
M		1	**8T-3490**	2	NUT-WELD (M10X1.5-THD)	
Y	9	1	**214-7636**	1	WIPER GP-WINDOW	391
Y	10	1	**239-4009**	1	MOTOR GP-WINDOW WIPER (24-VOLT)	339
	11	1	**8T-4121**	2	WASHER-HARD (11X21X2.5-MM THK)	
M	12	1	**8T-4195**	2	BOLT (M10X1.5X30-MM)	
M	13	1	**9X-2045**	1	SCREW-TRUSS HEAD (M6X1X20-MM)	
E	14	1	**144-0195**		HOSE (250-CM)	
E	14A	1	**144-0195**		HOSE (290-CM)	
E	15	1	**194-5171**		HOSE (43-CM)	

E-ORDER BY THE CENTIMETER
M-METRIC PART
Y-SEPARATE ILLUSTRATION

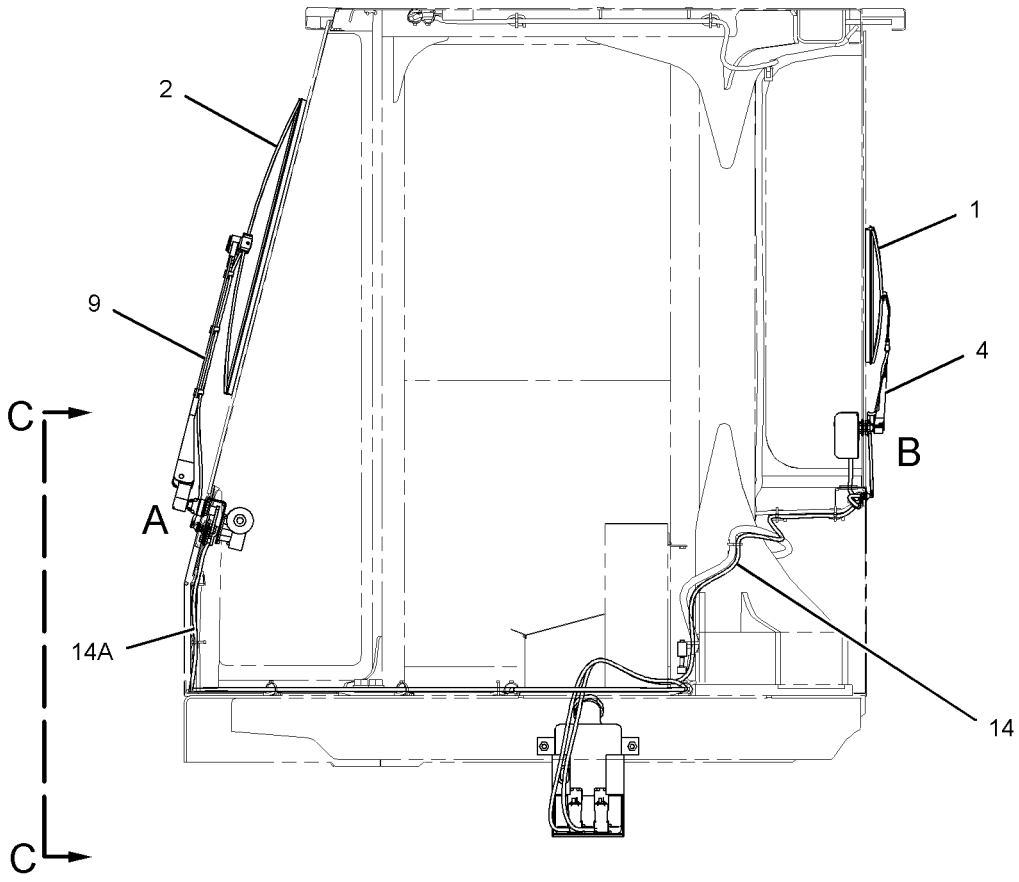

LEFT SIDE VIEW

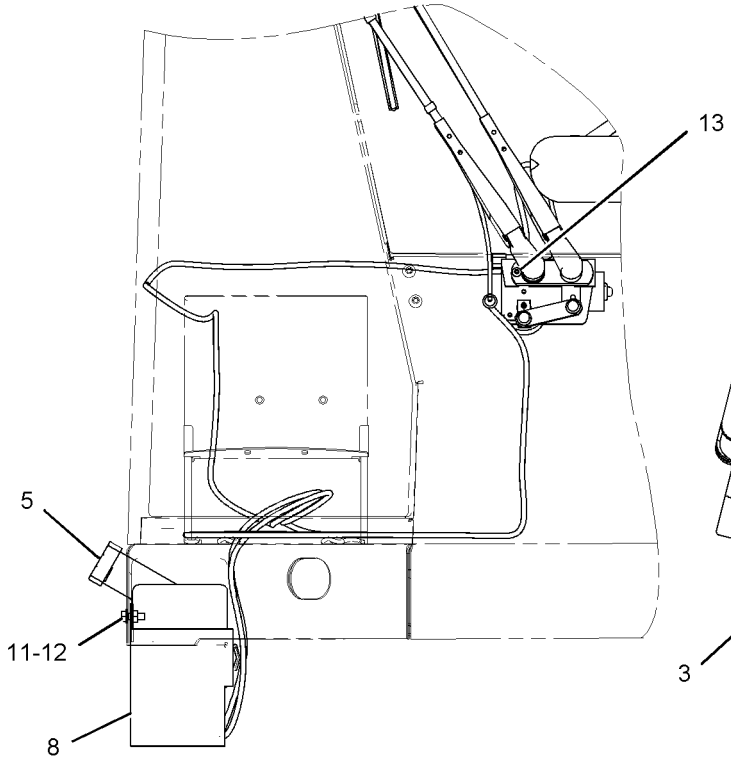

VIEW C-C

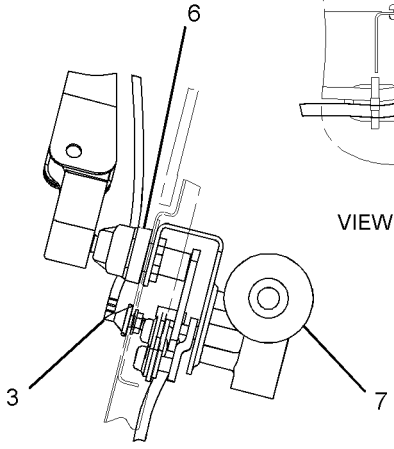

VIEW OF AREA A

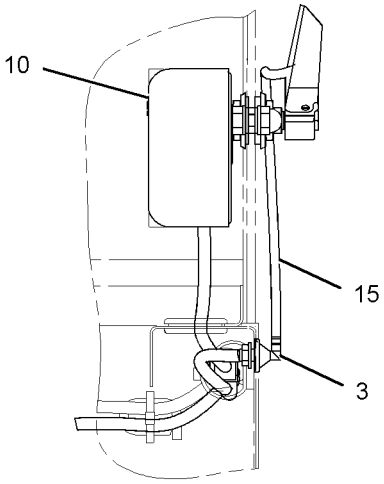

VIEW OF AREA B

GRAPHIC #1 **<END>** g01040483

214-7636 WIPER GP-WINDOW–WIPER

S/N: EAE1-UP
WET
PART OF 223-4793 WIPER & WASHER GP-WINDOW
AN ATTACHMENT

SMCS-7305 **i01877471**

NOTE	REF NO	GRAPHIC REF	PART NUMBER	QTY	PART NAME 1 2 3 4 5 6 (PRODUCT LEVEL)	SEE PAGE
M	1	1	**191-8921**	4	BOLT-SOCKET HEAD (M6X1X25-MM)	
	2	1	**227-7392**	4	WASHER (6.3X10.3X0.4-MM THK)	
M	3	1	**6V-8225**	4	NUT (M6X1-THD)	
	4	1	**136-3190**	1	NOZZLE AS-WASHER	
	5	1	**136-3188**	3	CLIP	

M-METRIC PART

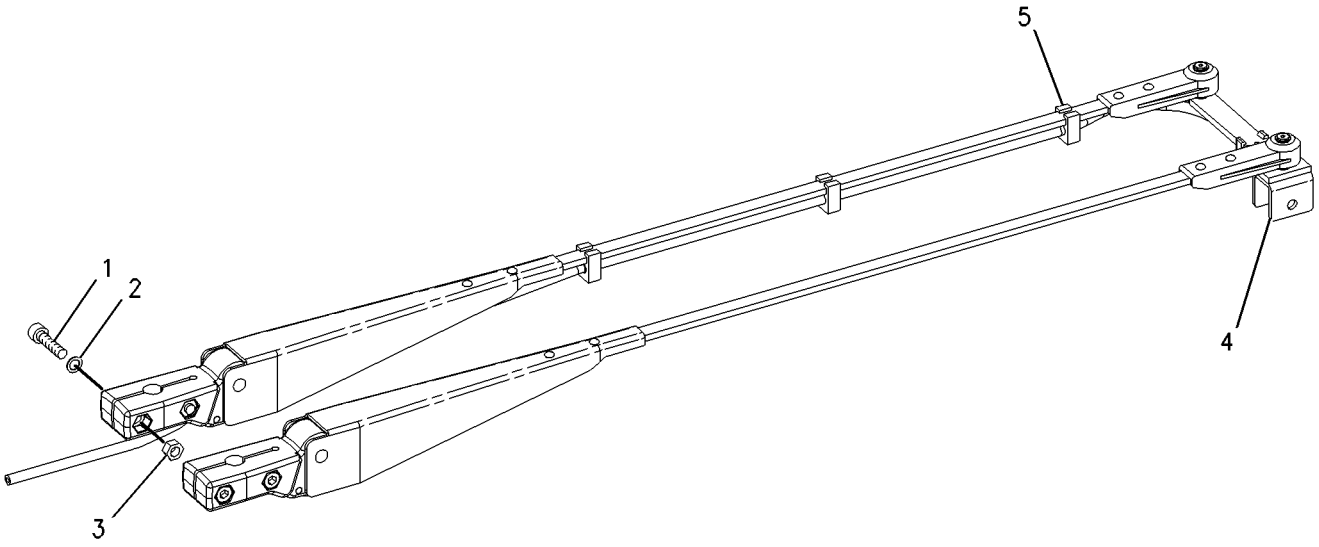

GRAPHIC #1 **<END>** g00958013

SERVICE EQUIPMENT AND SUPPLIES

201-0183 FILM GP

S/N: EAE1-UP
PART OF 249-5075, 249-5076 OPERATOR AR
AN ATTACHMENT

SMCS-7405, 7557 **i01882070**

NOTE	REF NO	GRAPHIC REF	PART NUMBER	QTY	PART NAME 1 2 3 4 5 6 (PRODUCT LEVEL)	SEE PAGE
	1	1	**201-4169**	1	FILM-STRIPE	
	2	1	**201-4170**	1	FILM-STRIPE	

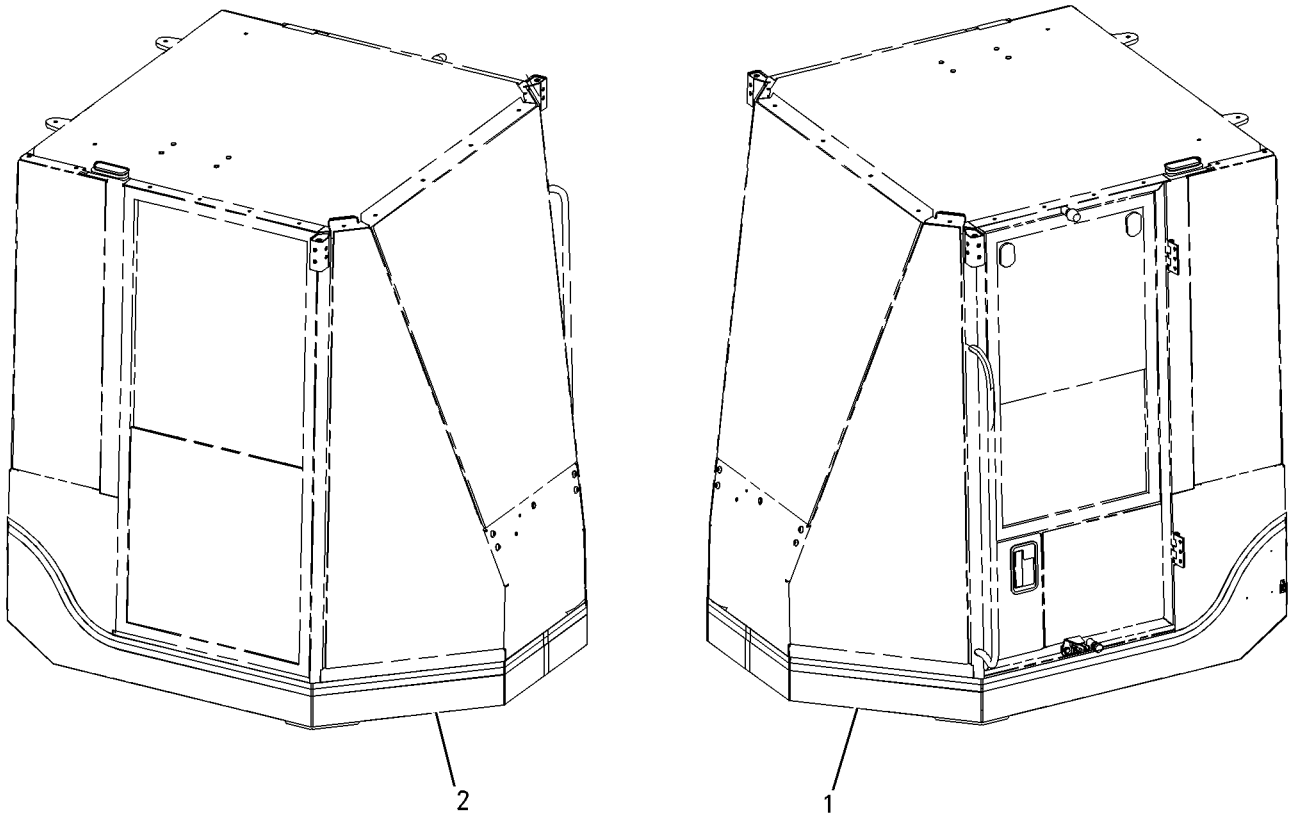

GRAPHIC #1 **<END>** g00876809

153-6995 PLATE & FILM GP

S/N: EAE1-UP
PART OF 196-2931, 244-5590, 252-0769 BUMPER AR
AN ATTACHMENT
TYPE 1

SMCS-7405, 7557, 7563 **i02249891**

NOTE	REF NO	GRAPHIC REF	PART NUMBER	QTY	PART NAME 1 2 3 4 5 6 (PRODUCT LEVEL)	SEE PAGE
	1	1	**4P-6422**	1	FILM-WARNING (NO ETHER SPRAY/AIR INTAKE)	
	2	1	**246-2641**	1	PADLOCK GP	
					(INCLUDES 2 KEYS)	
	3	1	**7X-3229**	4	FILM-INSTRUCTION (LIFT EYE, TIE-DOWN LOCATION)	
	4	1	**9X-2433**	1	FILM-IDENTIFICATION (CATERPILLAR, RADIATOR GRILL)	
	6	1	**158-7864**	1	FILM-IDENTIFICATION (HYDRAULIC OIL)	
	7	1	**190-2938**	1	FILM-WARNING (ENG COOLANT PRESSURE, READ OMM)	
	8	1	**190-5386**	2	FILM-STRIPE (ROUND RED REFLECTIVE)	
	9	1	**201-4162**	1	FILM (CAT)	
	10	1	**224-7717**	1	FILM-WARNING (SEAT BELT, U.S.)	
	11	1	**234-3390**	1	FILM-INFORMATION (HYDRAULIC OIL LEVEL)	
	12	1	**239-6986**	1	PLATE-IDENTIFICATION (MACHINE)	
	13	1	**262-9770**	1	FILM-STRIPE (CAT LH)	
	14	1	**262-9771**	1	FILM-STRIPE (CAT RH)	
	15	1	**262-9776**	1	FILM-IDENTIFICATION (CS-423E)	
E	16	1	**218-2338**		FILM-STRIPE (165-CM)	

E-ORDER BY THE CENTIMETER

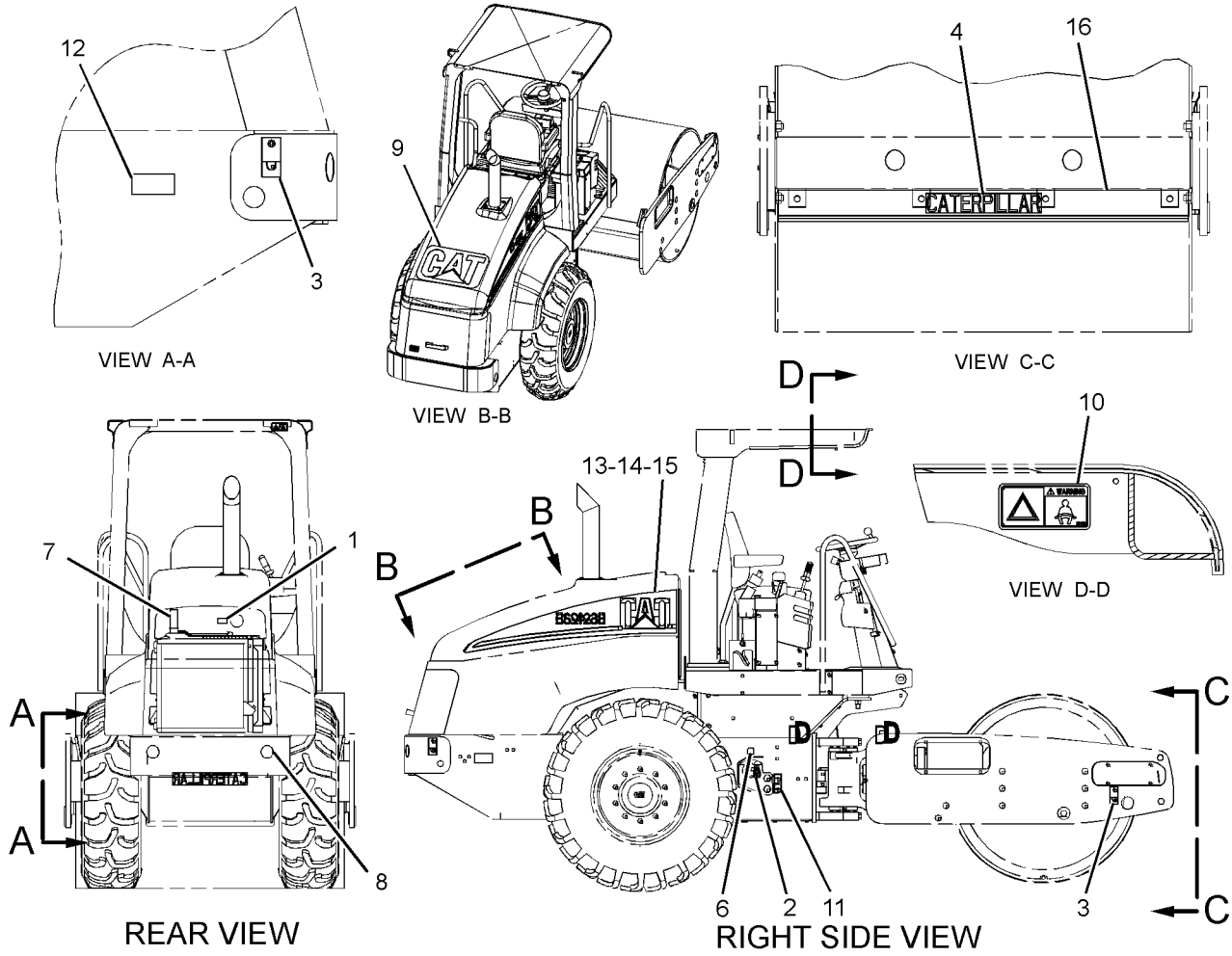

GRAPHIC #1 **<END>** g01189607

SERVICE EQUIPMENT AND SUPPLIES

153-6995 PLATE & FILM GP

S/N: EAE1-UP
PART OF 196-2931, 244-5590, 252-0769 BUMPER AR
AN ATTACHMENT
TYPE 2

SMCS-7405, 7557, 7563 **i02862777**

NOTE	REF NO	GRAPHIC REF	PART NUMBER	QTY	PART NAME 1 2 3 4 5 6 (PRODUCT LEVEL)	SEE PAGE
	1	1	**4P-6422**	1	FILM-WARNING (NO ETHER SPRAY/AIR INTAKE)	
	2	1	**246-2641**	1	PADLOCK GP	
		1	**5P-8500**	1	KEY	
	3	1	**7X-3229**	4	FILM-INSTRUCTION (LIFT EYE, TIE-DOWN LOCATION)	
	6	1	**158-7864**	1	FILM-IDENTIFICATION (HYDRAULIC OIL)	
	7	1	**190-2938**	1	FILM-WARNING (ENG COOLANT PRESSURE, READ OMM)	
	8	1	**190-5386**	2	FILM-STRIPE (ROUND RED REFLECTIVE)	
C	9	1	**292-4428**	1	FILM-IDENTIFICATION (CATERPILLAR)	
	10	1	**224-7717**	1	FILM-WARNING (SEAT BELT, U.S.)	
	11	1	**234-3390**	1	FILM-INFORMATION (HYDRAULIC OIL LEVEL)	
	12	1	**239-6986**	1	PLATE-IDENTIFICATION (MACHINE)	
C	13	1	**303-1929**	1	FILM-IDENTIFICATION (CAT LH)	
C	14	1	**303-1930**	1	FILM-IDENTIFICATION (CAT RH)	
C	15	1	**303-1932**	2	FILM-IDENTIFICATION (CS423E)	

C-CHANGE FROM PREVIOUS TYPE

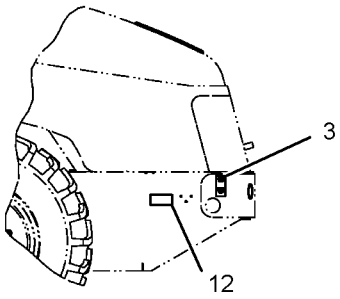

VIEW A-A

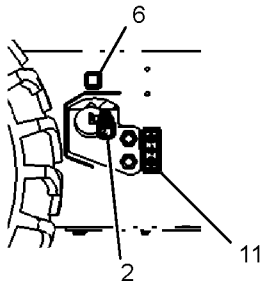

VIEW OF AREA B

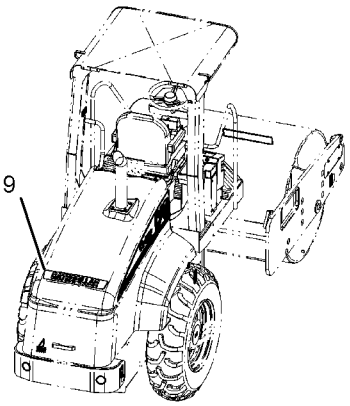

REAR VIEW
(UPPER RIGHT)

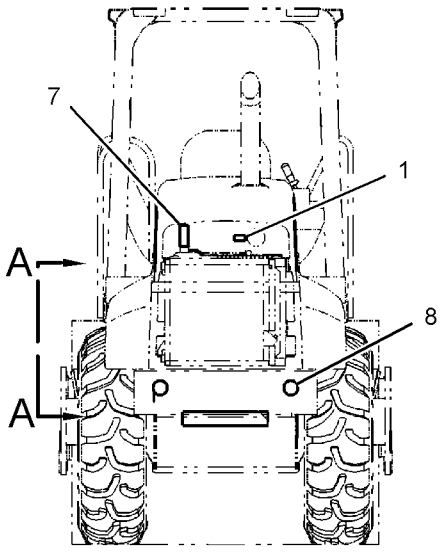

REAR VIEW

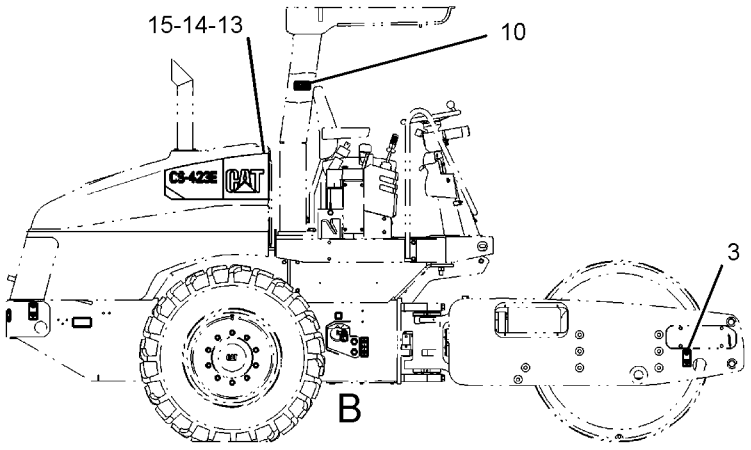

RIGHT SIDE VIEW

GRAPHIC #1 **<END>** g01427819

197-7093 PLATE & FILM GP

S/N: EAE1-UP
AN ATTACHMENT

SMCS-7405, 7557, 7563 **i01850792**

NOTE	REF NO	GRAPHIC REF	PART NUMBER	QTY	PART NAME 1 2 3 4 5 6 (PRODUCT LEVEL)	SEE PAGE
	1	1	**1G-5577**	12	TACK-FASTENER	
	2	1	**5P-7244**	2	PLATE-WARNING (NO CLEARANCE)	
	3	1	**6V-4611**	1	FILM-WARNING (JUMP START, READ OMM)	
	4	1	**161-7373**	1	PLATE-WARNING (READ OPERATION MANUAL)	
	5	1	**197-7235**	1	PLATE-WARNING-ROPS/FOPS	
B	6	1	**4S-8264**	4	RIVET-POP	

B-USE AS REQUIRED

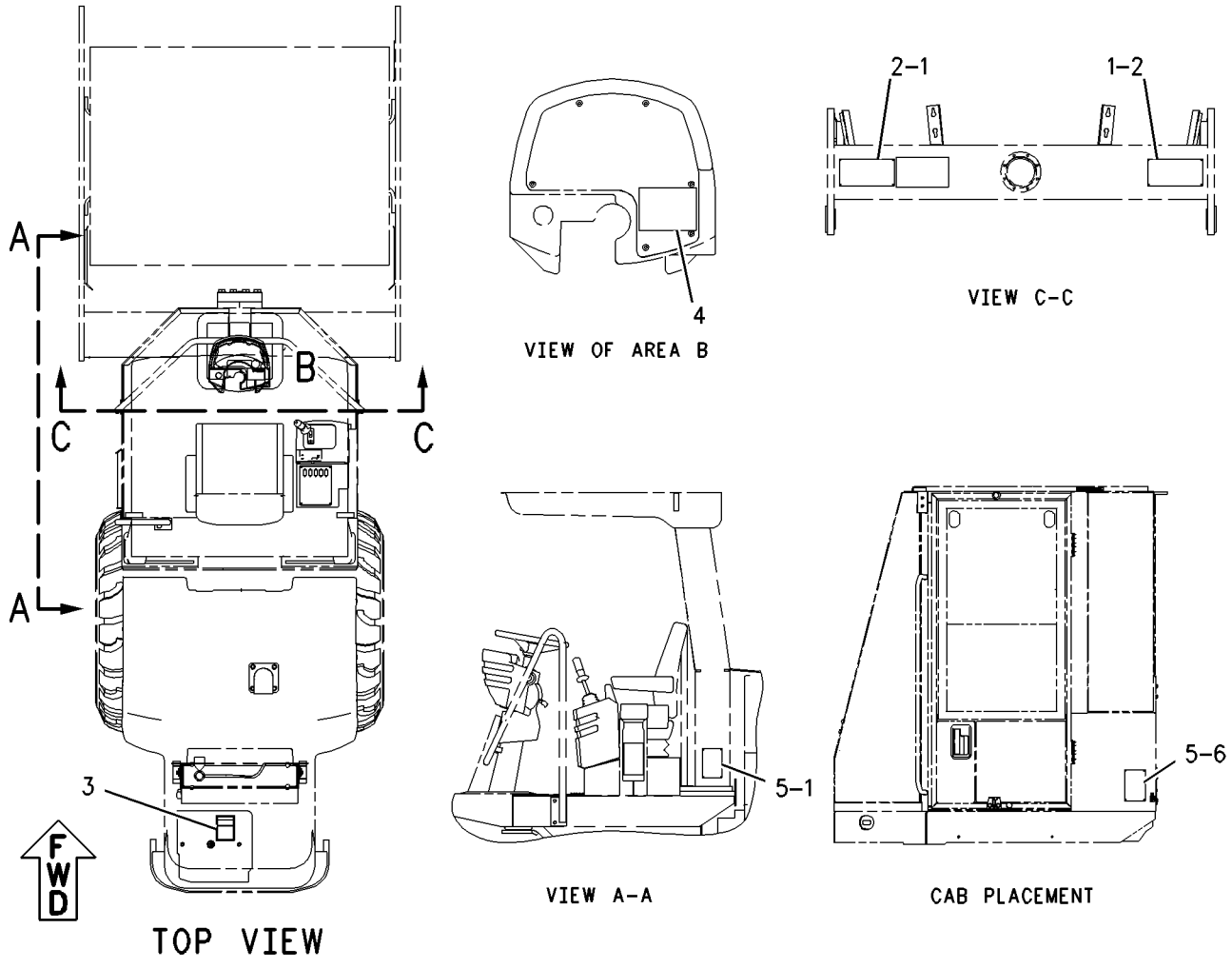

GRAPHIC #1 **<END>** g00942746

197-7094 PLATE & FILM GP–FRENCH

S/N: EAE1-UP
AN ATTACHMENT

SMCS-7405, 7557, 7563 **i01850791**

NOTE	REF NO	GRAPHIC REF	PART NUMBER	QTY	PART NAME 1 2 3 4 5 6 (PRODUCT LEVEL)	SEE PAGE
	1	1	**1G-5577**	4	TACK-FASTENER	
	2	1	**3E-8140**	2	PLATE-WARNING (NO CLEARANCE)	
	3	1	**4S-8264**	4	RIVET-POP	
	4	1	**6V-4612**	1	FILM-WARNING (CABLE CONNECTION)	
	5	1	**161-7374**	1	PLATE-WARNING (OPERATOR INSTRUCTION)	
	6	1	**164-0274**	1	PLATE-ROPS/FOPS	

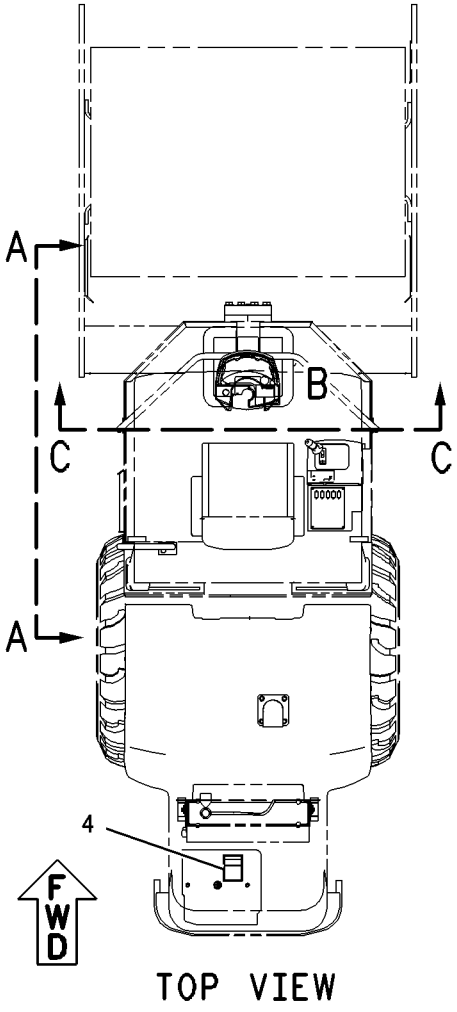

TOP VIEW

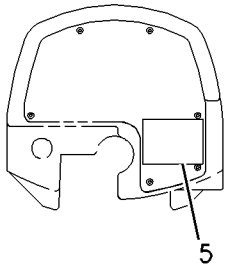

VIEW OF AREA B

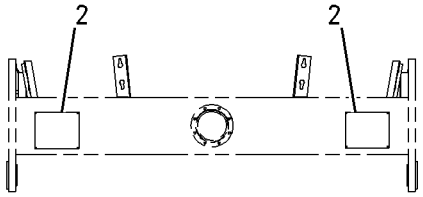

VIEW C-C

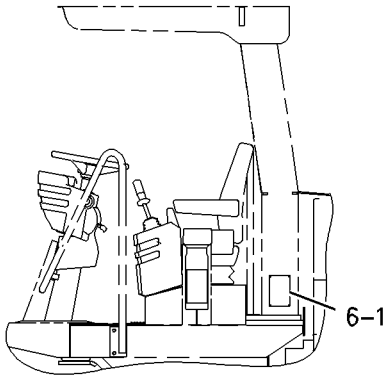

VIEW A-A

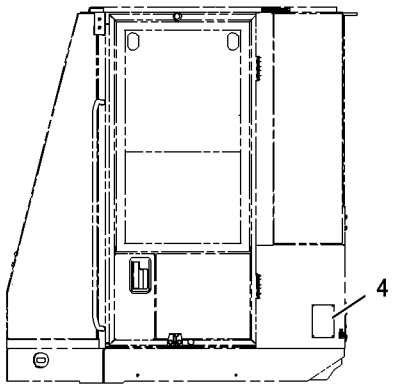

CAB PLACEMENT

GRAPHIC #1 **<END>** g00893066

197-7096 PLATE & FILM GP–PORTUGUESE

S/N: EAE1-UP
AN ATTACHMENT

SMCS-7405, 7557, 7563 **i01850787**

NOTE	REF NO	GRAPHIC REF	PART NUMBER	QTY	PART NAME 1 2 3 4 5 6 (PRODUCT LEVEL)	SEE PAGE
	1	1	**1G-5577**	4	TACK-FASTENER	
	2	1	**3E-8140**	2	PLATE-WARNING (NO CLEARANCE)	
	3	1	**4S-8264**	4	RIVET-POP	
	4	1	**6V-4614**	1	FILM-WARNING (CABLE CONNECTION)	
	5	1	**161-7399**	1	PLATE-WARNING (OPERATOR INSTRUCTION)	
	6	1	**164-0269**	1	PLATE-ROPS/FOPS	

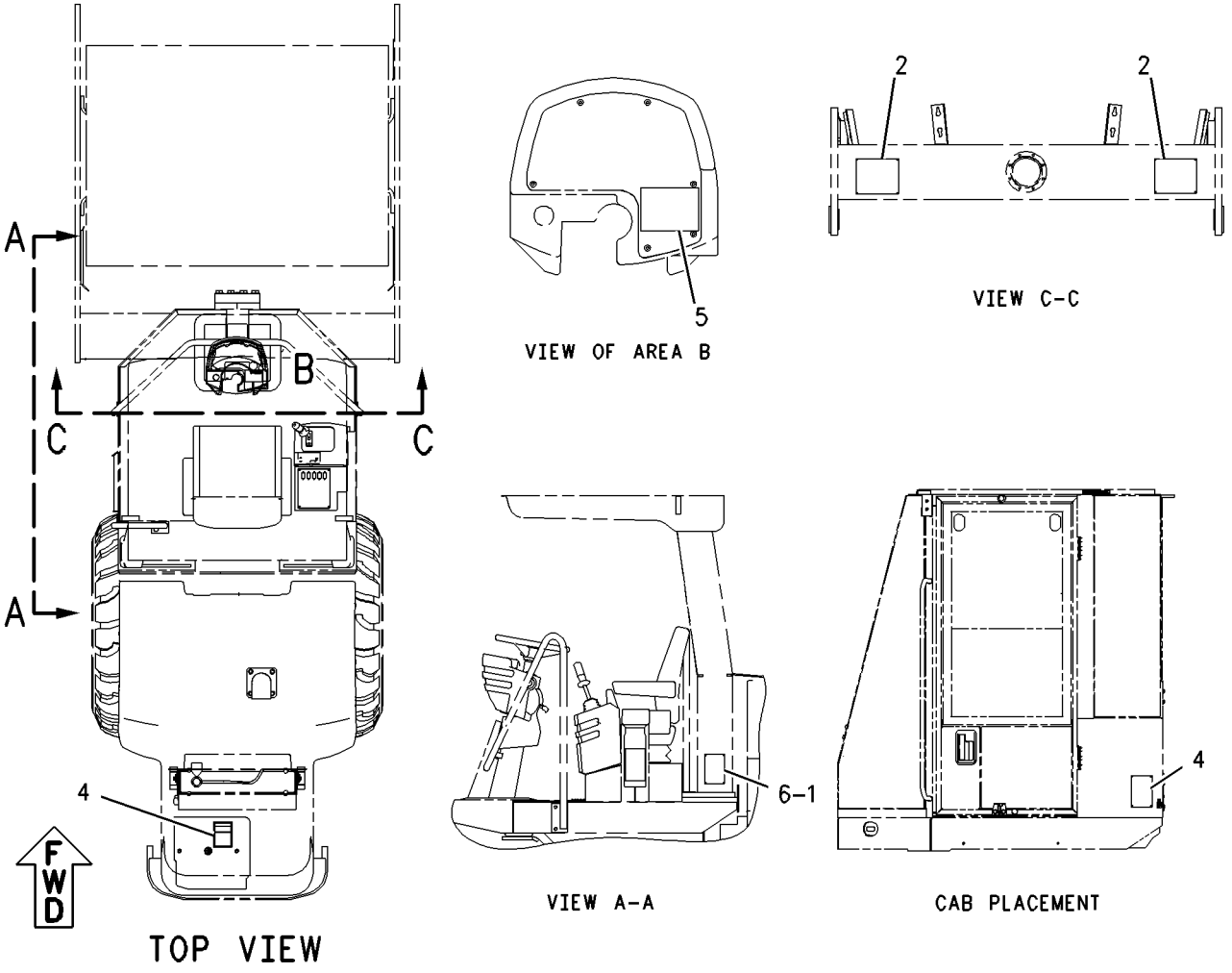

GRAPHIC #1 **<END>** g00893066

SERVICE EQUIPMENT AND SUPPLIES

197-7097 PLATE & FILM GP–SPANISH

S/N: EAE1-UP

AN ATTACHMENT

SMCS-7405, 7557, 7563 **i01850782**

NOTE	REF NO	GRAPHIC REF	PART NUMBER	QTY	PART NAME 1 2 3 4 5 6 (PRODUCT LEVEL)	SEE PAGE
B	1	1	**1G-5577**	4	TACK-FASTENER	
	2	1	**3E-8140**	2	PLATE-WARNING (NO CLEARANCE)	
B	3	1	**4S-8264**	4	RIVET-POP	
	4	1	**6V-4613**	1	FILM-WARNING (CABLE CONNECTION)	
	5	1	**161-7375**	1	PLATE-WARNING (OPERATOR INSTRUCTION)	
	6	1	**164-0270**	1	PLATE-ROPS/FOPS	

B-USE AS REQUIRED

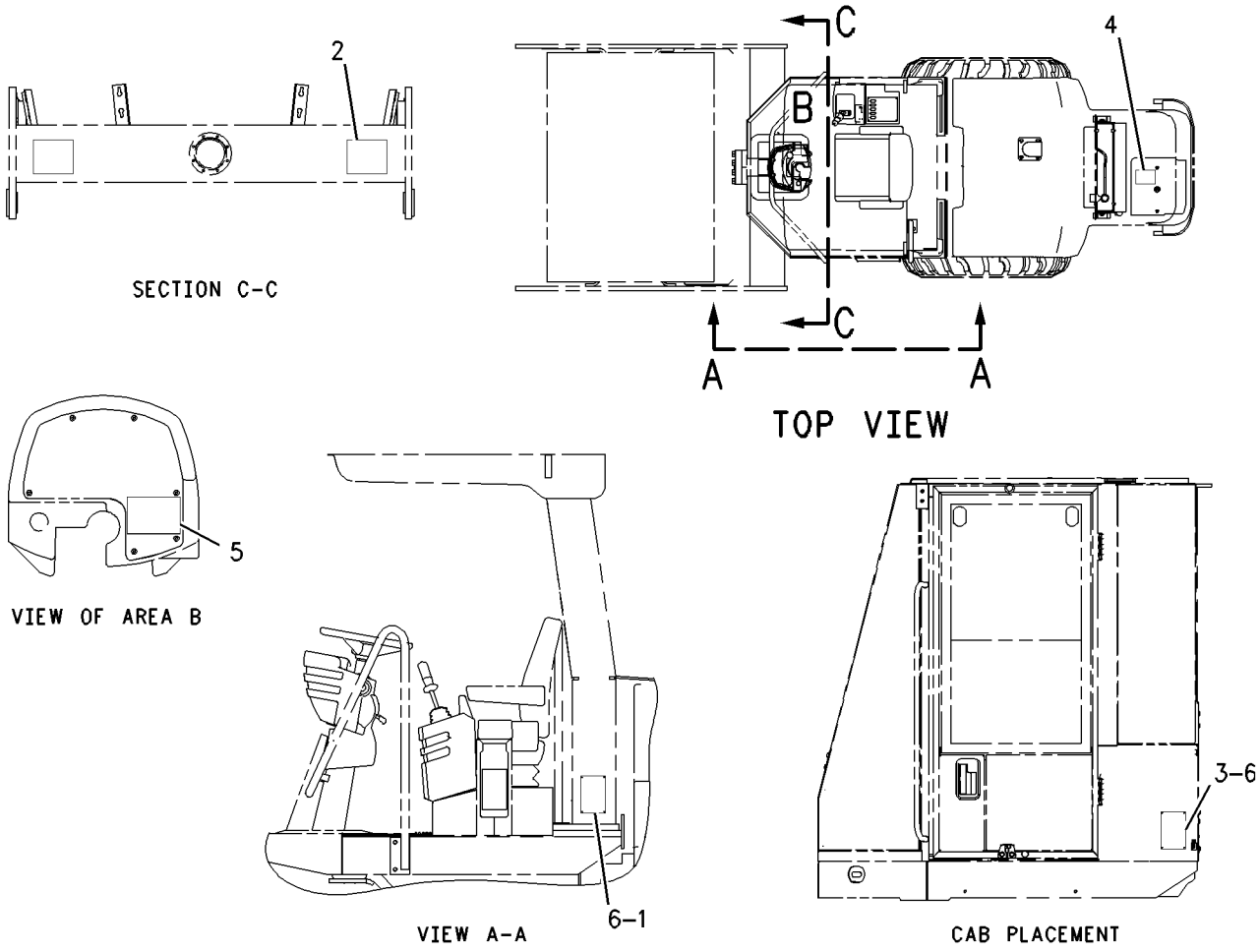

GRAPHIC #1 **<END>** g00847802

216-9791 PLATE & FILM GP

S/N: EAE1-UP
AN ATTACHMENT

SMCS-7405, 7557, 7563 **i01850778**

NOTE	REF NO	GRAPHIC REF	PART NUMBER	QTY	PART NAME 1 2 3 4 5 6 (PRODUCT LEVEL)	SEE PAGE
	1	1	**1G-5577**	8	TACK-FASTENER	
	2	1	**5P-7244**	2	PLATE-WARNING (NO CLEARANCE)	
	3	1	**6V-4611**	1	FILM-WARNING (JUMP START, READ OMM)	
	4	1	**161-7373**	1	PLATE-WARNING (READ OPERATION MANUAL)	

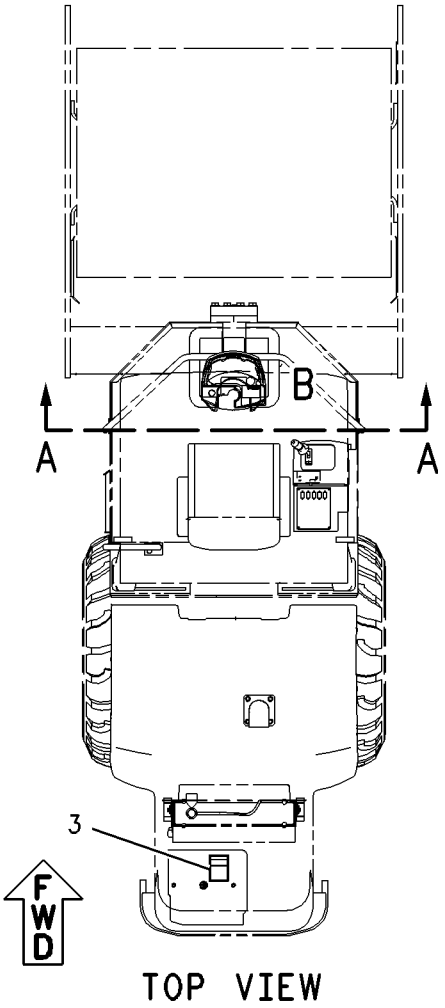

TOP VIEW

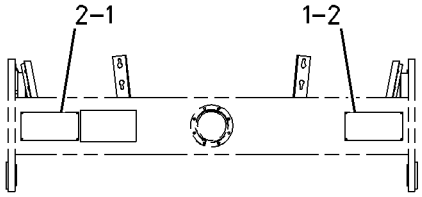

VIEW A–A

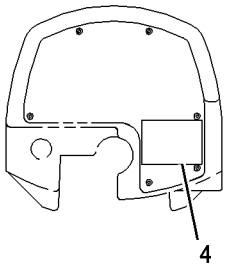

VIEW OF AREA B

GRAPHIC #1 **<END>** g00942739

SERVICE EQUIPMENT AND SUPPLIES

216-9792 PLATE & FILM GP–FRENCH

S/N: EAE1-UP

AN ATTACHMENT

SMCS-7405, 7557, 7563 **i01850776**

NOTE	REF NO	GRAPHIC REF	PART NUMBER	QTY	PART NAME 1 2 3 4 5 6 (PRODUCT LEVEL)	SEE PAGE
	1	1	**3E-8140**	2	PLATE-WARNING (NO CLEARANCE)	
	2	1	**6V-4612**	1	FILM-WARNING (CABLE CONNECTION)	
	3	1	**161-7374**	1	PLATE-WARNING (OPERATOR INSTRUCTION)	

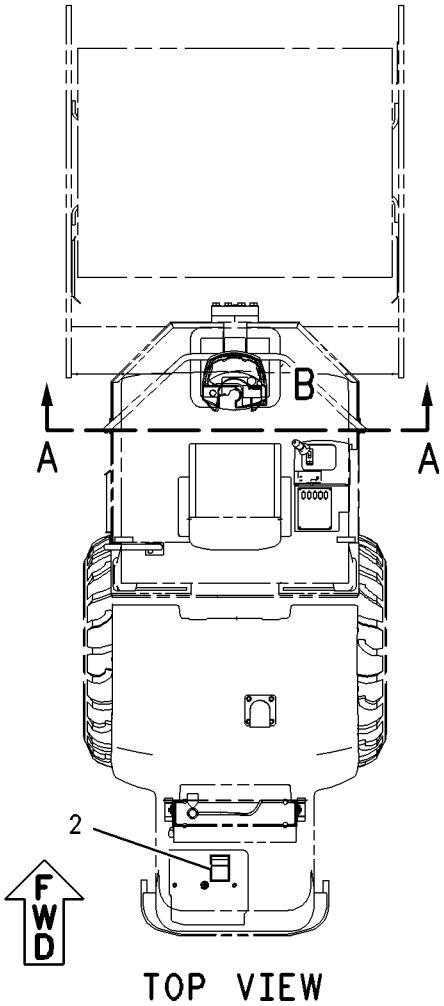

TOP VIEW

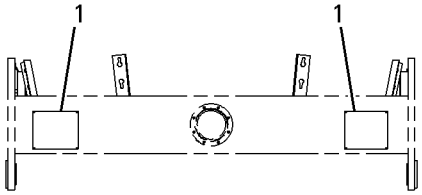

VIEW A-A

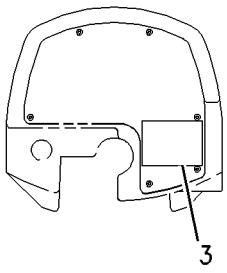

VIEW OF AREA B

GRAPHIC #1 **<END>** g00893126

216-9794 PLATE & FILM GP–PORTUGUESE

S/N: EAE1-UP

AN ATTACHMENT

SMCS-7405, 7557, 7563 **i01850774**

NOTE	REF NO	GRAPHIC REF	PART NUMBER	QTY	PART NAME 1 2 3 4 5 6 (PRODUCT LEVEL)	SEE PAGE
	1	1	**3E-8140**	2	PLATE-WARNING (NO CLEARANCE)	
	2	1	**6V-4614**	1	FILM-WARNING (CABLE CONNECTION)	
	3	1	**161-7399**	1	PLATE-WARNING (OPERATOR INSTRUCTION)	

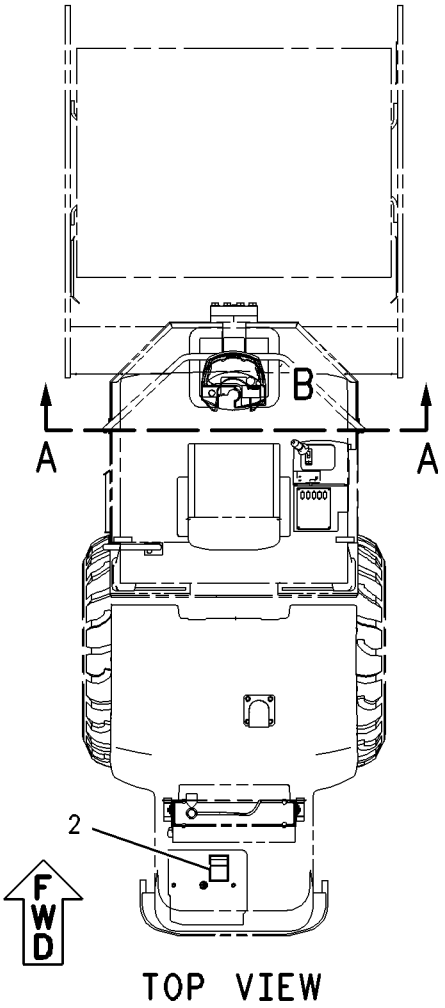

TOP VIEW

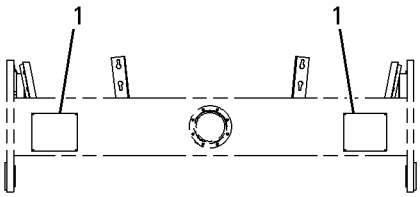

VIEW A-A

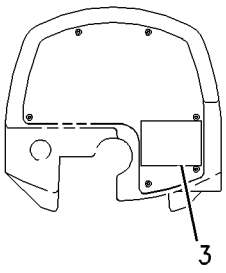

VIEW OF AREA B

GRAPHIC #1 **<END>** g00893126

SERVICE EQUIPMENT AND SUPPLIES

216-9795 PLATE & FILM GP–SPANISH

S/N: EAE1-UP

AN ATTACHMENT

SMCS-7405, 7557, 7563 **i01850771**

NOTE	REF NO	GRAPHIC REF	PART NUMBER	QTY	PART NAME 1 2 3 4 5 6 (PRODUCT LEVEL)	SEE PAGE
	1	1	**3E-8140**	2	PLATE-WARNING (NO CLEARANCE)	
	2	1	**6V-4613**	1	FILM-WARNING (CABLE CONNECTION)	
	3	1	**161-7375**	1	PLATE-WARNING (OPERATOR INSTRUCTION)	

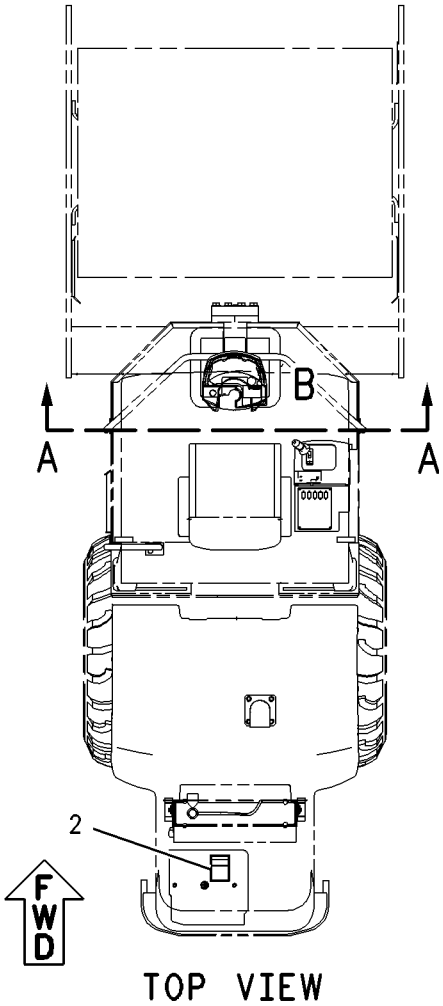

TOP VIEW

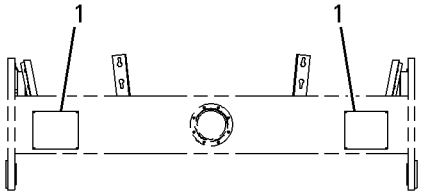

VIEW A-A

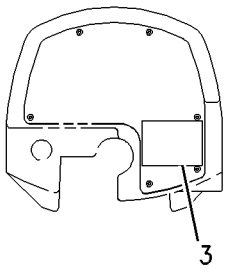

VIEW OF AREA B

GRAPHIC #1 **<END>** g00893126

221-5406 PLATE & FILM GP

S/N: EAE1-UP
PART OF 203-1724 BUMPER AR
AN ATTACHMENT
TYPE 1

SMCS-7405, 7557, 7563 **i02317669**

NOTE	REF NO	GRAPHIC REF	PART NUMBER	QTY	PART NAME 1 2 3 4 5 6 (PRODUCT LEVEL)	SEE PAGE
	1	1	**224-7717**	1	FILM-WARNING (SEAT BELT, U.S.)	
	2	1	**4P-6422**	1	FILM-WARNING (NO ETHER SPRAY/AIR INTAKE)	
	3	1	**246-2641**	1	PADLOCK GP	
		1	**5P-8500**	1	KEY	
	4	1	**7X-3229**	4	FILM-INSTRUCTION (LIFT EYE, TIE-DOWN LOCATION)	
	5	1	**158-7864**	1	FILM-IDENTIFICATION (HYDRAULIC OIL)	
	6	1	**239-6986**	1	PLATE-IDENTIFICATION (MACHINE)	
	7	1	**234-3390**	1	FILM-INFORMATION (HYDRAULIC OIL LEVEL)	
	9	1	**190-5386**	2	FILM-STRIPE (ROUND RED REFLECTIVE)	
	11	1	**190-2938**	1	FILM-WARNING (ENG COOLANT PRESSURE, READ OMM)	
	13	1	**201-4162**	1	FILM (CAT)	
	14	1	**262-9776**	2	FILM-IDENTIFICATION (CS-423E)	
	15	1	**262-9771**	1	FILM-STRIPE (CAT RH)	
	16	1	**262-9770**	1	FILM-STRIPE (CAT LH)	

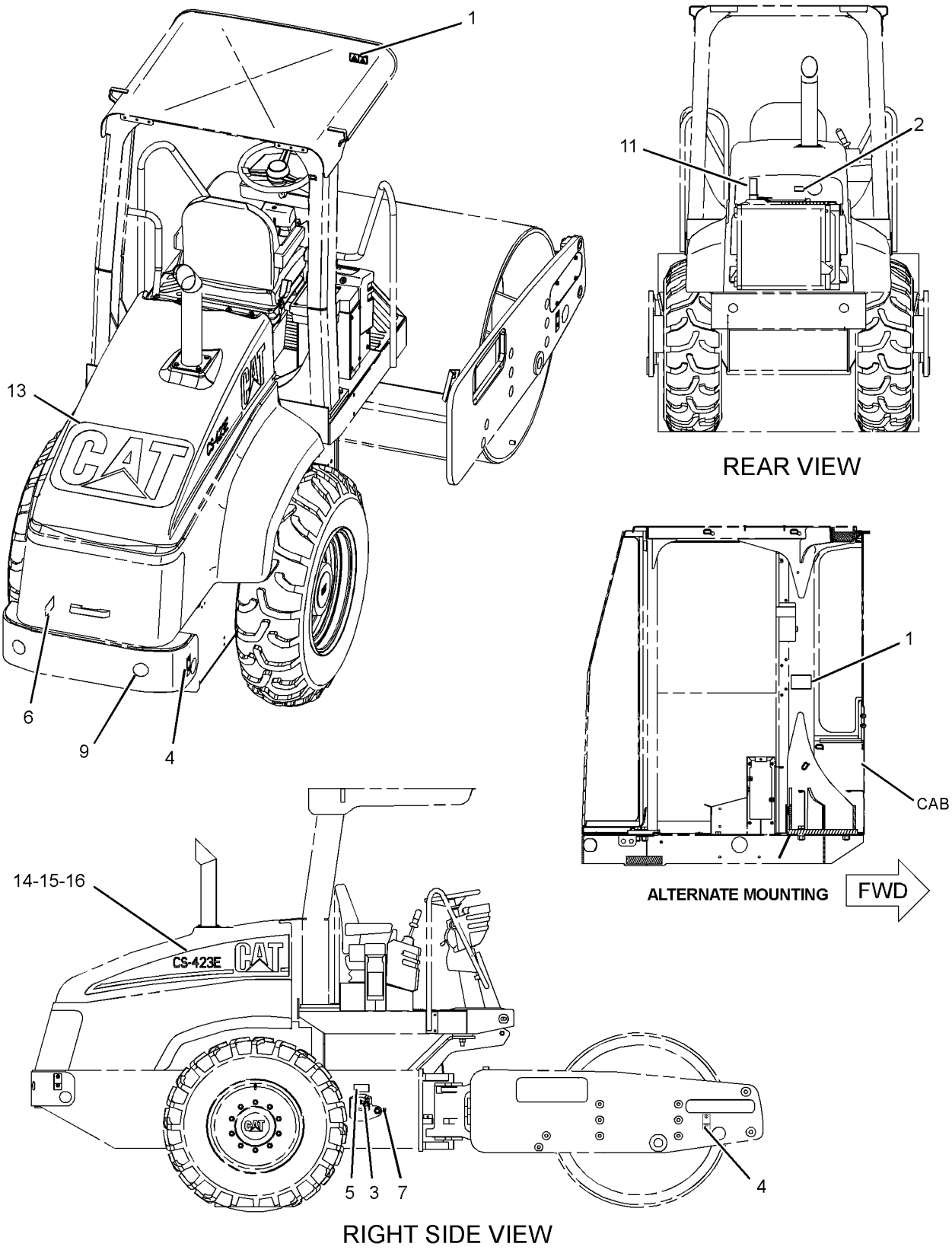

GRAPHIC #1 **<END>** g01158899

221-5406 PLATE & FILM GP

S/N: EAE1-UP
PART OF 203-1724 BUMPER AR
AN ATTACHMENT
TYPE 2

SMCS-7405, 7557, 7563 **i02855012**

NOTE	REF NO	GRAPHIC REF	PART NUMBER	QTY	PART NAME 1 2 3 4 5 6 (PRODUCT LEVEL)	SEE PAGE
	1	2	**224-7717**	1	FILM-WARNING (SEAT BELT, U.S.)	
	2	1	**4P-6422**	1	FILM-WARNING (NO ETHER SPRAY/AIR INTAKE)	
	3	1	**246-2641**	1	PADLOCK GP	
		1	**5P-8500**	1	KEY	
	4	1	**7X-3229**	4	FILM-INSTRUCTION (LIFT EYE, TIE-DOWN LOCATION)	
	5	1	**158-7864**	1	FILM-IDENTIFICATION (HYDRAULIC OIL)	
	6	1	**239-6986**	1	PLATE-IDENTIFICATION (MACHINE)	
	7	1	**234-3390**	1	FILM-INFORMATION (HYDRAULIC OIL LEVEL)	
	9	1	**190-5386**	2	FILM-STRIPE (ROUND RED REFLECTIVE)	
	11	1	**190-2938**	1	FILM-WARNING (ENG COOLANT PRESSURE, READ OMM)	
C	13	1	**292-4433**	1	FILM-IDENTIFICATION (CATERPILLAR)	
C	14	1	**303-1932**	2	FILM-IDENTIFICATION (CS423E)	
C	15	1	**303-1930**	1	FILM-IDENTIFICATION (CAT RH)	
C	16	1	**303-1929**	1	FILM-IDENTIFICATION (CAT LH)	

C-CHANGE FROM PREVIOUS TYPE

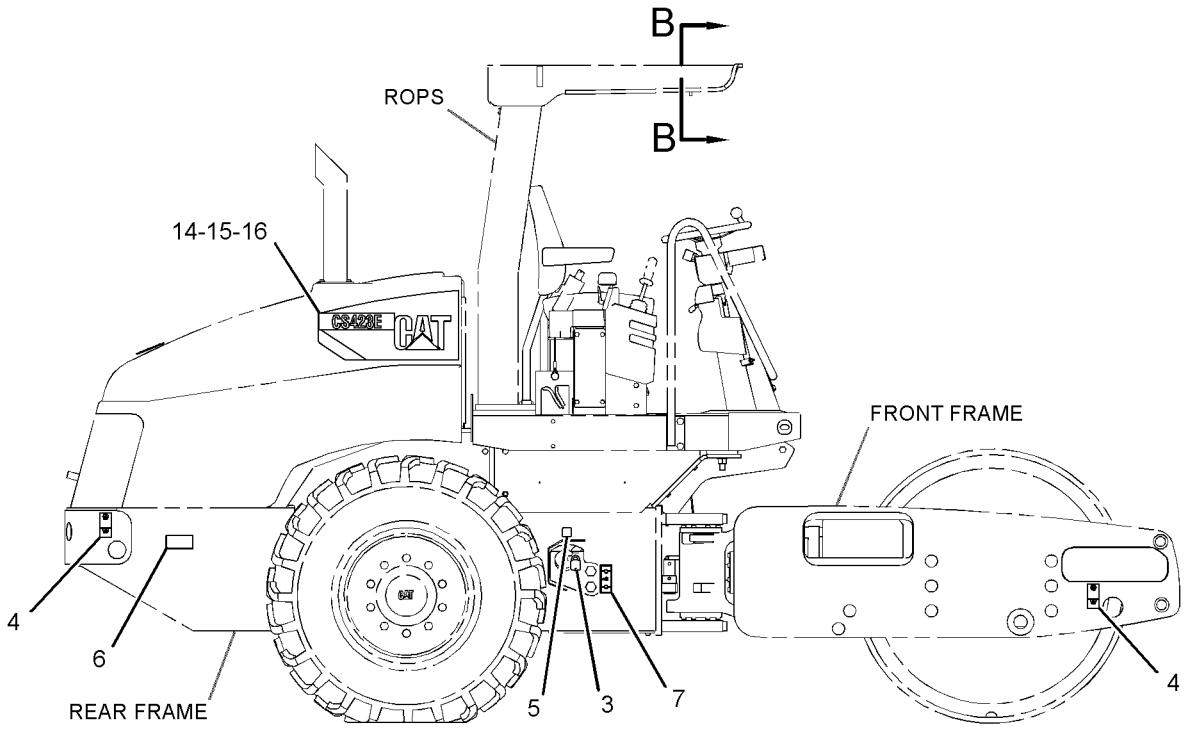

RIGHT SIDE VIEW

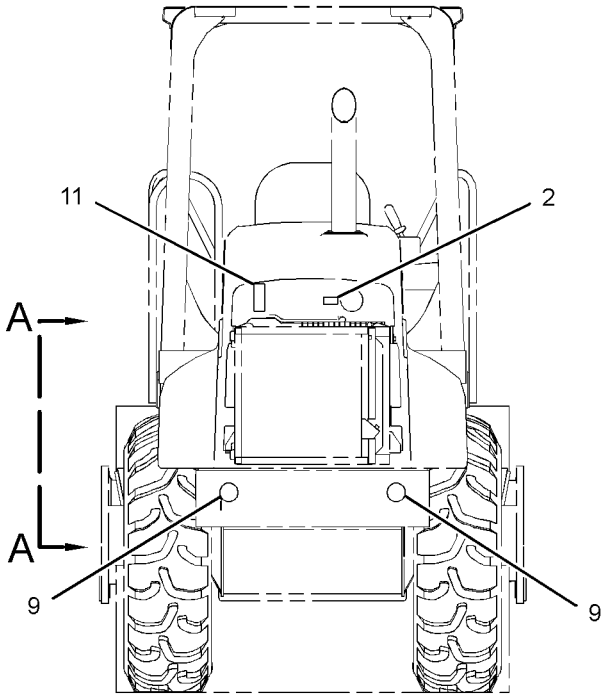

REAR VIEW

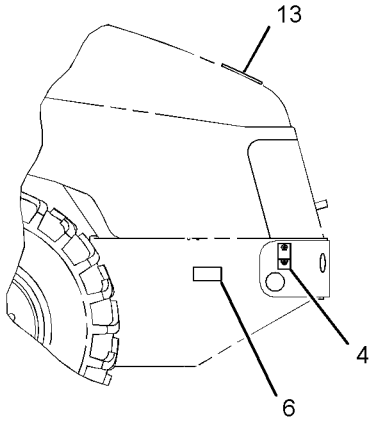

VIEW A-A

REFER TO ALL ILLUSTRATIONS OF THIS GROUP FOR AUXILIARY VIEWS

GRAPHIC #1

g01430485

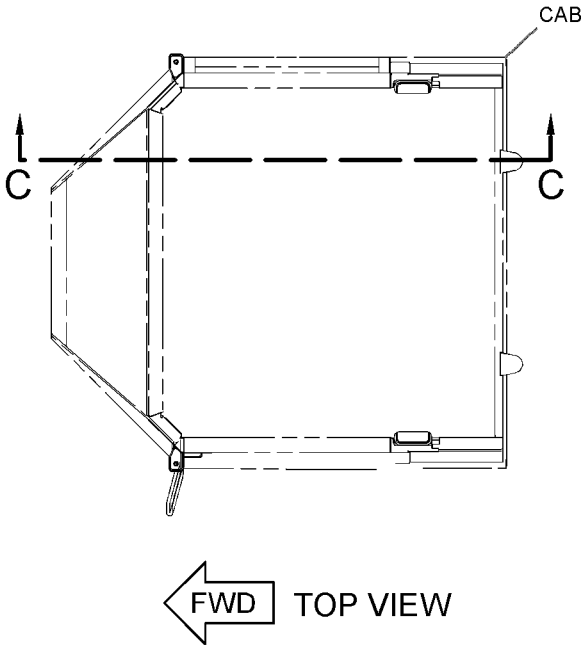

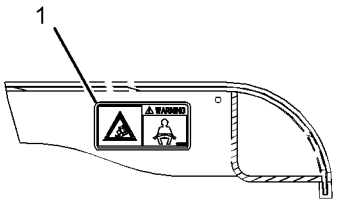

VIEW B-B

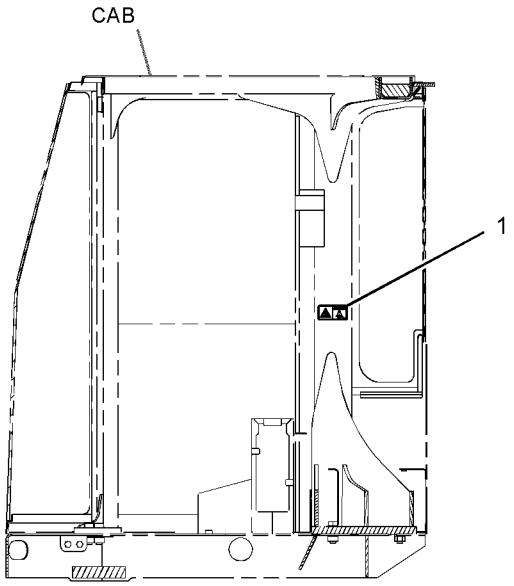

VIEW C-C

GRAPHIC #2 **<END>** g01430488

MEMORANDA

PART NUMBER INDEX

Part	Page
0	
0S-0509	238
0S-1603	27
0T-0924	26
1	
1B-3925	188
1B-8736	4
	13
	15
	29
	31
1D-4700	196
	197
	199
1D-4702	197
1D-5166	193
1G-4029	275
1G-4081	275
1G-5577	395
	396
	397
	398
	399
1G-5730	233
	237
	240
	243
1G-5734	223
	225
	228
1G-5735	223
	225
	228
1G-5974	225
	228
1G-5975	225
	228
1G-5978	225
	228
1G-5979	225
	228
1G-7357	237
	240
	243
1G-7359	233
1G-7360	233
1G-7363	233
1G-7368	234
1G-7385	225
	228
1G-7386	225
	228
1G-7663	247
1G-8494	225
	228
1G-8672	238
1G-8878	215
1G-9959	355
1G-9960	100
1H-1360	331
1H-3338	130
1J-6474	225
	228
	234
1J-9671	223
	231
	238
1K-6872	305
1L-2279	331
1L-6366	368
1M-6119	100
1M-6120	100
1N-5999	141
1P-4278	49
	50
	71
	278
1P-6356	298
1P-6522	285
	326
1P-6886	73
1R-1804	90
	94
1S-7251	100
1S-7252	100
1V-6585	331
2	
2B-0858	21
	23
	44
2D-3468	187
2D-4534	262
2F-5721	223
2G-5786	100
2G-8767	100
2H-3920	288
	325
	355
	356
2H-3922	119
	285
2H-3923	285
2H-5549	225
	229
2K-5986	231
2K-8199	277
2L-8050	100
2L-8051	345
	356
2L-8054	356
2L-8058	100
2L-8065	345
	356
2L-8509	298
2M-9780	165
	223
	225
	228
	234
	237
	240
	243
	260
	261
	262
	264
	266
	268
2N-2371	349
	352
	360
	363
2N-3480	346
	356
2P-4191	298
2P-4339	355
2P-7040	226
2R-1256	234
2S-0480	137
2S-1564	237
2S-3440	96
2S-3745	285
	326
2S-4078	247
2S-5658	141
2T-1718	177
	180
2T-3360	207
2V-3216	130
2V-7087	349
	352
	360
	363
2V-7088	349
	352
	360
	363
2W-9710	69
2Y-8422	161
3	
3B-4501	285
3B-4607	301
	303
3B-4611	177
	180
3B-6552	130
3B-7255	130
	331
3B-8485	209
3D-2824	141
	156
	202
	215
	225
	228
	238
	240
	243
	247
	264
	266
	269
3D-7805	254
	256
3E-1841	285
	326
3E-1906	▶297
	298
3E-2028	130
3E-3361	326
3E-3365	122
	124
	130
	298
3E-3370	247
3E-3805	312
	314
3E-4051	298
3E-4052	298
3E-4053	298
3E-4057	298
3E-4058	298
3E-4883	366
	368
3E-5239	134
3E-5464	285
3E-6328	▶98
	345
	355
3E-6389	▶106
	328
3E-6477	128
3E-8140	396
	397
	398
	400
	401
	402
3E-8320	100
3E-9861	196
	199
3E-9862	310
3E-9865	306
	308
3F-5950	188
3F-9556	339
3J-0695	233
3J-1907	141
	156
	165
	201
	202
	205
	220
	222
	223
	225
	228
	231
	233
	237
	240
	243
	250
	262
	264
	266
	268
3J-7354	49
	50

▶ **PRIMARY REFERENCE**

PART NUMBER INDEX

Part	Page
	69
	223
	225
	228
	231
	250
	268
3K-0360	49
	50
	96
	156
	207
	213
	215
	223
	233
	247
	250
	251
	260
	261
	262
	273
3K-0715	233
	260
	261
	264
	266
3K-2518	138
3K-2889	197
3K-5761	306
	308
3K-6060	282
3L-8187	111
	112
	114
	115
	134
	288
	346
	349
	350
	352
	353
	355
	356
	360
	361
	364
3N-5982	126
	128
3P-1823	50
3S-2093	71
	111
	112
	122
	123
	124
	125
	130
	285
	326
	329
	345
	349
	352
	355
	360
	363
3S-6050	100
3T-5201	312
	314
3T-5760	100

4

Part	Page
4B-1282	306
	308
4B-2043	352
	363
4B-4158	254
	256
4B-4274	128
	130
	205
	310
	346
	356
4B-5324	349
	360
4D-7794	131
	298
4E-1062	301
	303
4E-1384	312
	314
4F-2294	120
	121
4H-2558	71
4I-7651	262
4J-5477	141
	156
	202
	205
	209
	250
	268
	310
4K-9821	73
4K-9822	73
4L-1250	306
	308
4L-7711	237
4P-6422	393
	394
	403
	405
4P-7428	131
4P-7429	131
	189
	191
	264
	266
4P-7581	124
	131
	346
	356
4P-8134	36
	131
	349
	352
	361
	364
4S-8264	395
	396
	397
	398
4V-2057	209

5

Part	Page
5A-3604	375
5B-3180	306
	308
5B-9079	48
	52
5C-2874	131
	205
	310
5C-2890	73
	80
	126
	128
	130
	131
	189
	191
	205
	301
	303
	312
	314
	322
	328
	346
	349
	352
	357
	361
	364
5C-3370	148
	150
5C-7261	189
	191
	210
	220
	268
	277
	301
	312
	314
	318
	331
	333
	339
	349
	352
	375
5C-8811	389
5C-9134	318
5C-9553	177
	180
	191
	282
	285
	301
	303
	326
5D-0019	349
	360
5D-1026	49
	50
5D-1986	214
5D-9629	345
	355
5E-8461	278
5E-8632	214
5E-8789	234
5E-9198	214
5E-9892	184
	185
5F-8000	277
5H-4909	137
5J-4715	131
5J-6795	214
5K-5068	131
5K-9179	334
	335
5L-3233	73
5L-4019	237
5M-3062	240
	243
5P-0743	49
	50
5P-0744	100
5P-0747	100
5P-0761	100
5P-0767	331
5P-1076	177
	180
	187
5P-1420	49
	50
	69
	71
5P-1442	81
	245
5P-1518	96
5P-1690	134
5P-2228	233
5P-2321	345
	356
	363
5P-2566	264
	266
5P-2600	100
5P-2948	73
5P-3454	345
	356
5P-3741	130
5P-3863	262
5P-4115	71
	80
	100
	124
	128
	131
	177

► **PRIMARY REFERENCE**

PART NUMBER INDEX

Part	Page	Part	Page	Part	Page	Part	Page
	180	5P-7464	211		60		240
	189		219		83		243
	191		220		87	6R-1703	233
	266	5P-7465	211		99		240
	301		219	6I-0289	37		243
	303		220		39	6R-1730	237
	346	5P-7483	177	6I-0291	83	6R-4076	279
	349		180		87	6S-8620	96
	352	5P-7684	240	6I-0363	37	6T-2774	345
	357		243		39		355
	361	5P-7833	50	6I-0364	75	6T-3643	346
	364	5P-7958	375		118		357
5P-4116	62		378	6I-0423	28	6T-3990	114
	63	5P-8245	27	6I-0454	99		115
	64		156	6I-0501	47	6T-6066	349
	65	5P-8500	324	6I-0563	75		352
	69		349	6I-0572	17		361
	131		352		37		364
	175		360		39	6T-6329	111
	177		363		58		112
	180		394		60		114
	189		403		74		115
	191		405	6I-0594	99		134
	207	5P-8502	324		118		288
	220	5P-8874	250	6I-0631	28		345
	277	5P-9186	49	6I-0645	29		349
	290		50		31		352
	292	5P-9299	301		58		355
	294	5P-9617	250		60		360
	298	5P-9757	233		74		363
	301	5P-9982	209	6I-0646	6	6V-0301	165
	303			6I-0650	29		268
	350				31	6V-0484	264
	353	**6**		6I-0846	7		266
5P-4402	277				9	6V-0852	264
	278	6B-0933	99		11		266
5P-4425	275	6B-4540	305	6I-0847	28		268
	278	6D-4244	278	6I-1201	7	6V-1392	286
	282	6D-4246	268		9		326
5P-4434	277	6D-4636	268	6I-1497	37	6V-1520	278
5P-4484	254	6F-7045	119		39	6V-1668	285
	256	6G-2256	100	6I-2933	73		326
5P-4571	363	6G-9333	282	6I-4039	75	6V-1722	156
5P-4961	81	6H-3616	34		78	6V-2689	352
	245		35	6I-4079	37		364
5P-5397	252	6H-6109	223	6I-4200	28	6V-2722	134
	253		231	6I-4374	7	6V-2803	177
5P-5630	73	6I-0217	29		9		180
5P-5643	286		31		11	6V-3338	301
	288		37		58		303
	325		39		60	6V-3507	360
	370		66	6K-6307	240	6V-3940	254
	371		83		243		256
5P-5908	285		87	6K-8178	71	6V-3965	220
	326	6I-0218	60	6L-3483	130		262
5P-5927	318	6I-0233	34	6N-6984	69		264
5P-6014	278	6I-0254	7	6P-0699	126		266
5P-6718	37		9		128	6V-3970	346
5P-6874	334		11		349		357
	335		66		352	6V-4298	205
5P-6994	331	6I-0260	37		357	6V-4356	329
5P-7070	286		39		361	6V-4357	329
5P-7177	100		56		364	6V-4611	395
5P-7244	395		57	6R-1702	233		399
	399		58		237	6V-4612	396

► **PRIMARY REFERENCE**

PART NUMBER INDEX

Part	Page
	400
6V-4613	398
	402
6V-4614	397
	401
6V-5142	234
	237
6V-5200	138
6V-5201	161
6V-5215	254
	256
6V-5217	318
6V-6228	137
6V-6722	275
6V-7238	49
	50
	96
	247
6V-7357	71
	100
	191
6V-7419	389
6V-7636	191
6V-7688	149
6V-7728	285
	326
6V-7742	197
	199
6V-7743	134
6V-7744	175
	177
	180
6V-7978	131
6V-8185	191
6V-8186	120
6V-8187	80
	131
	301
	303
6V-8200	151
	165
	268
6V-8202	378
6V-8212	361
	364
6V-8225	391
6V-8227	207
6V-8367	349
	352
	360
	363
6V-8368	349
	360
6V-8369	288
	325
	355
6V-8374	111
	112
	114
	115
	134
	288
	346
	349
	350
	352
	353
	355
	356
	361
	364
6V-8376	346
	357
6V-8377	349
	360
6V-8382	349
	352
	360
	363
6V-8397	165
	201
	202
	220
	250
	268
6V-8398	141
	156
	207
	213
	215
	247
	260
	261
	262
	264
	266
6V-8624	260
	261
6V-8627	141
	156
6V-8636	165
	202
6V-8637	141
6V-8639	207
	213
	247
6V-8641	205
	268
6V-8642	264
	266
6V-8644	177
	180
6V-8715	165
	268
6V-8716	165
	268
6V-8721	262
6V-8724	220
	250
6V-8754	161
6V-8773	250
6V-8775	156
	250
6V-8777	264
	266
6V-8782	213
6V-8801	245
6V-8817	349
	352
	360
	363
6V-8927	111
	112
	114
	115
	134
	288
	345
	349
	352
	355
	360
	363
6V-8928	328
6V-9001	220
6V-9002	247
	260
	261
6V-9007	156
	215
	247
6V-9182	165
	249
	268
6V-9189	109
	301
	303
6V-9491	346
	357
6V-9632	177
	180
	207
	285
	312
	326
	345
	355
6V-9746	141
	156
	165
	214
	215
	247
	249
	262
	264
	266
6V-9852	264
	266
6W-5698	247
6W-6005	100
6Y-6584	349
	352
	360
	363
6Y-9915	36
	303
7C-0351	37
	39
7C-1224	37
	39
7C-4616	29
	31
7D-8636	273
7D-8637	273
7F-2050	285
7F-2060	285
7H-3937	233
7I-1024	259
7J-0204	141
7J-8611	69
7J-9108	264
	266
7K-1181	49
	50
	100
	126
	131
	134
	153
	245
	264
	278
	322
	329
	331
	346
	350
	352
	357
	361
	364
7M-5130	229
7M-8485	165
	233
	247
	249
	254
	256
	262
	268
7N-0718	100
	▶119
7N-5274	100
7N-5876	349
	352
	360
	363
7N-9943	106
7R-0376	281
7R-0431	281
7R-0476	281
7R-3145	322
7R-6728	310
7R-7906	322
7R-7939	211
7R-7950	175
7R-7951	211
7R-8578	282
7R-8588	281
7T-0020	106

7

PART NUMBER INDEX

Part	Page
7T-0493	345
	355
7T-1099	69
	130
	177
	180
	207
	296
	345
	355
	369
	370
	389
7T-3811	111
	112
	355
7T-4532	297
7T-6364	356
7T-6365	128
7T-6799	349
	352
	360
	363
7T-8419	138
7T-8890	382
7T-9302	355
7U-3538	161
7V-5627	370
7V-5628	100
	128
	130
	322
	345
	355
7V-6089	130
	345
7V-6571	278
7V-9275	130
7W-2108	312
	314
7W-2326	54
7W-2632	99
7W-4634	47
7W-4642	28
7W-7119	318
7W-7381	268
7X-0370	310
7X-0515	196
	197
	199
7X-0564	310
7X-0578	207
7X-0579	288
	325
7X-0586	296
7X-0603	69
7X-0818	329
	331
7X-0871	262
7X-2465	342
	366
	368
7X-2466	306
	308
7X-2478	285
	326
7X-2497	312
	314
7X-2533	134
	189
7X-2535	205
	211
	322
7X-2536	69
	336
7X-2537	81
	301
	303
	329
7X-2538	69
	211
	259
7X-2553	69
	141
	252
	253
7X-2554	193
	195
	197
7X-2562	252
	253
7X-2563	176
	193
	197
	199
	322
	370
	371
7X-2566	194
7X-2567	340
	366
	368
7X-2575	175
	296
	369
7X-2576	296
	369
7X-2577	183
7X-2586	340
7X-3229	393
	394
	403
	405
7X-3393	306
	308
7X-5308	220
	262
7X-5315	268
7X-5433	225
	228
7X-5440	228
7X-5448	228
	238
	241
	243
7X-5453	234
	237
	240
	243
7X-5466	228
7X-5468	226
	228
7X-5469	225
	228
	233
7X-5470	225
	228
	233
7X-5471	225
	228
7X-5472	225
	228
7X-5473	225
	228
7X-5474	225
	228
7X-5477	225
	228
7X-5478	223
	228
	231
7X-5484	228
7X-5485	228
7X-5486	228
7X-5494	156
7X-5497	226
	228
7X-5498	228
7X-5513	225
	228
7X-5514	229
7X-5516	228
7X-5520	225
	228
7X-5866	226
	229
7X-7655	69
7X-7729	69
	78
	95
	100
	177
	180
	186
	187
	189
	191
	193
	209
	220
	245
	298
	310
	329
	334
	335
7X-7877	278
	324
7X-7915	333
7X-9236	228
7X-9287	228
7X-9294	234
7Y-7394	318

8

Part	Page
8B-4884	73
8C-3051	262
8C-3445	49
	50
8C-3446	49
	50
	69
8C-3451	69
8C-4586	285
	326
8C-5918	100
8C-6438	96
8C-6857	310
8C-6865	209
	310
8C-6965	275
8C-8400	165
	269
8C-8451	100
	131
	346
	357
8C-8457	285
	326
8C-8722	340
	342
8D-1470	350
	352
	361
	364
8E-0849	340
8E-0853	80
8E-8292	382
8F-6711	214
8F-8151	331
8H-4959	306
	308
8H-5303	119
8H-5306	119
8H-9789	225
	229
8J-8308	225
	228
8L-6521	306
	308
8L-8413	100
8M-3121	78
8N-0869	100
8N-9033	328
8T-0077	213
8T-0154	331
8T-0164	141
	205
8T-0267	207
8T-0288	247
	310
8T-0289	96
8T-0306	386
8T-0328	96
8T-0337	107
	108
8T-0341	137
8T-0389	101

► **PRIMARY REFERENCE**

PART NUMBER INDEX

Part	Page
	153
	259
8T-0788	202
8T-2658	306
	308
8T-2659	346
	357
8T-2920	211
	219
	220
8T-3426	296
	357
	369
8T-3490	177
	180
	186
	285
	298
	326
	389
8T-3612	63
	175
	177
	180
	189
	191
	207
	301
	303
8T-3635	370
8T-3647	220
	277
8T-3844	126
	128
8T-4001	173
	174
	176
	340
	342
	366
	368
8T-4121	36
	69
	78
	95
	108
	111
	113
	114
	122
	123
	131
	153
	175
	177
	180
	183
	188
	215
	245
	259
	269
	278
	282
	290
	292
	294
	298
	301
	303
	324
	331
	350
	353
	361
	364
	378
	389
8T-4122	36
	69
8T-4123	136
	144
	149
	152
	370
	371
8T-4131	136
	144
	149
	152
	196
	197
	199
	370
	371
8T-4132	36
8T-4133	69
	78
	95
	108
	111
	113
	114
	177
	180
	245
	269
	298
	324
	331
	334
	335
	350
	353
8T-4136	101
	122
	215
	269
	301
	303
	310
	331
	335
8T-4137	100
	153
	207
	209
	259
	278
	282
	290
8T-4138	73
	80
	131
	189
	191
	346
	357
	366
	368
8T-4141	144
	149
	152
8T-4149	249
8T-4167	173
	174
	175
	176
	183
	184
	185
	296
	340
	342
	366
	368
	369
8T-4170	194
8T-4171	282
	285
	296
	318
	326
8T-4174	36
8T-4175	195
	271
	272
8T-4177	249
8T-4179	131
8T-4180	312
	314
8T-4181	312
	314
8T-4182	78
8T-4183	177
	180
	187
8T-4185	69
	220
8T-4186	36
	69
	78
	186
	188
	298
8T-4187	148
	150
	151
	196
	197
	199
8T-4189	131
	173
	175
	191
	290
	292
	294
	298
	336
	346
	357
8T-4191	131
8T-4192	81
8T-4193	141
	310
8T-4195	69
	78
	114
	177
	180
	183
	186
	187
	189
	191
	245
	301
	303
	324
	334
	335
	378
	389
8T-4196	95
	177
	180
	193
	245
	298
	329
8T-4198	123
8T-4200	68
	69
	300
8T-4205	73
	131
	134
	282
	285
	306
	308
	312
	314
	326
	350
	353
	361
	364
8T-4222	69
	100
	177
	180
	186
8T-4223	81

► PRIMARY REFERENCE

PART NUMBER INDEX

Part	Page
	100
	131
	193
	260
	261
	264
	266
	346
	350
	353
	357
	361
	364
	370
	371
8T-4224	62
	63
	64
	65
	68
	69
	73
	80
	109
	131
	151
	173
	189
	191
	210
	218
	249
	269
	290
	292
	294
	300
	301
	303
	318
	331
	336
	346
	357
	375
	378
8T-4244	100
	131
	177
	180
	346
	350
	353
	357
	361
	364
	370
	371
8T-4649	184
	185
8T-4742	312
	314
8T-4747	312
	314
8T-4779	254
	256
8T-4896	207
	245
	262
	282
8T-4908	62
	63
	64
	65
	69
	73
	80
	151
	207
	288
	298
	301
	303
	325
8T-4944	141
8T-4956	260
	261
8T-4970	124
	346
	357
8T-4971	175
	189
	191
	312
	314
8T-4983	211
8T-4984	69
8T-4985	73
8T-4994	141
	148
	150
	151
	158
	159
	160
	252
	253
8T-5015	223
8T-5372	286
	326
8T-5400	389
8T-5429	141
	215
	264
	266
8T-5436	153
	259
8T-5439	149
	176
	193
	194
	196
	197
	199
8T-5460	141
	252
	253
8T-5878	173
	174
	176
8T-5913	382
8T-5914	382
8T-6381	149
8T-6408	177
	180
8T-6430	252
	253
8T-6466	175
	223
	231
	298
8T-6631	285
8T-6693	128
8T-6703	69
8T-6754	202
8T-6869	81
	207
	210
	218
	269
	331
8T-6912	109
	131
	218
	219
	329
	331
8T-7338	165
	269
8T-7530	158
	159
	160
8T-7547	175
	298
	318
8T-7811	156
8T-7859	49
	50
8T-7876	49
	50
	58
	60
8T-8730	120
8T-8737	125
	326
	338
	339
	345
	355
8T-8799	100
	130
	345
	355
8T-8887	165
8T-8983	202
8T-8984	165
	268
8T-9756	100
8X-7008	114
8Y-1009	205
8Y-4501	312
	314
8Y-4807	312
	314
8Y-5737	285
	326
8Y-6377	290
	292
	294
8Y-6386	312
	314
8Y-6388	318
8Y-6913	384
8Y-8606	346
8Y-9216	100
9	
9B-7233	346
	349
	352
	357
	360
	363
9C-6977	69
9D-7924	207
9F-2247	188
	238
9F-5644	119
9G-0002	100
9G-0005	100
9G-1950	285
	326
9G-2761	312
	314
9G-4351	345
	356
9G-7960	177
	180
9G-9154	345
	355
9H-6079	188
9L-2685	80
9P-7121	96
9P-9388	334
	335
9R-2620	113
9R-3203	383
9R-3204	383
9R-3205	383
9R-7240	96
9R-7941	113
	114
9R-7942	110
9R-7958	110
9R-7980	113
	114
9S-4182	223
	228
	231
9S-4183	228
	247
9S-4190	237
	240
	243
9S-4191	228
	233
	237
	240

► **PRIMARY REFERENCE**

PART NUMBER INDEX

Part	Page
	243
9S-7583	271
	272
9S-8002	225
9S-8004	222
	226
	228
9S-8005	223
	233
	273
9S-8006	223
	234
9S-8008	225
	228
	238
	240
	243
	271
	272
9S-9334	233
9U-0512	340
	342
9U-5922	321
9W-0614	137
9W-0615	137
9W-0852	285
	326
	355
9W-4098	161
9W-7388	340
	342
	366
	368
9W-7639	137
9W-9931	366
	368
9W-9941	340
9W-9952	36
9W-9953	36
9X-0145	345
	356
9X-0506	113
9X-0812	225
	228
9X-0941	193
9X-1046	346
	350
	353
	357
	361
	364
9X-1054	134
9X-1386	298
9X-1439	▶107
9X-1813	117
	122
	123
	130
9X-2027	298
9X-2040	245
9X-2041	290
	361
	364
9X-2042	301
	303
	312
	314
	328
	350
	353
	361
	364
	383
9X-2044	285
	326
9X-2045	207
	301
	303
	318
	328
	350
	353
	361
	363
	366
	368
	383
	389
9X-2185	285
	326
9X-2201	73
9X-2289	215
9X-2297	201
9X-2433	393
9X-2480	250
9X-2488	218
	285
	326
9X-2532	386
	388
9X-3401	308
9X-3455	107
	108
9X-3463	107
	108
	109
9X-4174	107
	108
9X-4243	107
	108
9X-4244	107
	108
	109
9X-4381	▶108
	111
	113
9X-6032	69
	138
9X-6385	342
9X-7378	297
	298
9X-7380	329
9X-7381	329
9X-7382	329
9X-7383	329
9X-7385	297
9X-7409	234
9X-7421	322
9X-7449	345
	355
9X-7566	273
9X-7680	233
9X-7849	110
9X-8117	288
9X-8139	110
9X-8256	80
	126
	128
	131
	189
	191
	205
	250
	275
	279
	318
	322
	328
	346
	357
	366
	368
9X-8257	165
	193
	195
	197
	199
	252
	253
	254
	256
	269
	271
	272
	310
9X-8258	340
	342
9X-8486	346
	356
9X-8600	79
9X-9099	350
	353
	361
	364
9Y-5015	21
	23
9Y-9236	247
0	
003-8470	278
005-8593	214
006-8865	68
009-9258	306
	308
011-5224	277
012-0380	130
014-0816	355
030-0060	273
030-0061	273
030-3239	214
030-4605	223
030-4606	247
031-0249	346
	356
031-4155	306
	308
032-9090	13
032-9091	13
033-6027	233
	237
033-7687	27
035-0425	100
035-8063	46
035-8068	17
037-4426	285
	326
037-4838	285
	326
037-5197	100
038-9317	100
054-8974	340
	342
	366
	368
061-9458	252
	253
067-6002	17
067-6006	17
	21
	23
067-6043	17
067-6095	5
	52
067-6179	29
	31
067-6213	37
	39
067-6366	99
067-6873	13
067-6874	13
069-3686	69
077-3637	273
077-3895	168
	169
	170
077-3906	168
	169
	170
077-4192	168
	169
	170
077-6627	184
	185
077-6630	273
077-7254	76
077-7467	306
	308
077-8353	225
	233
	238
081-2965	275
081-3119	310
081-3767	282
081-3772	310
081-4049	282
086-0972	305
086-8645	175
095-7952	161

▶ PRIMARY REFERENCE

PART NUMBER INDEX

Part	Page
096-0194	137
096-1331	161
096-2323	312
	316
096-4882	233
096-6166	346
	356
098-3602	306
	308
099-0492	282
099-0857	384
	388
099-3649	177
	180
1	
100-3143	285
	326
100-3426	285
	326
100-3751	29
	31
	56
	57
	66
100-4461	55
100-4830	6
	29
	31
	33
	83
	87
100-4838	9
	11
100-4841	17
100-6267	298
100-8451	99
101-3771	37
	39
101-3895	58
	60
101-7404	137
101-9605	279
102-0341	285
	326
102-1384	249
102-1733	26
102-1957	28
102-2100	75
102-8703	81
	329
102-8705	211
	220
	259
	268
	329
	331
102-8801	125
	349
	352
	360
	363
102-8802	96
	98
	122
	123
	124
	126
	128
	130
	134
	285
	297
	298
	326
	345
	356
	361
	364
102-8803	106
	117
	126
	215
102-8804	111
	113
	125
	126
	128
	306
	349
	352
	360
	363
102-8805	285
	326
	338
	339
	355
102-8806	349
	352
	355
	360
	363
103-4977	130
104-2091	318
104-6216	349
	352
	360
	363
105-3479	138
105-3484	207
105-3542	349
	352
	360
	363
105-7620	144
	▶196
106-6340	209
106-7348	197
106-8704	124
106-8715	268
107-0611	130
107-1294	196
	197
	199
107-1295	197
107-1296	197
107-1297	196
107-1716	305
107-1721	305
107-1723	305
107-2091	305
107-2869	264
107-4641	▶383
107-6013	345
	355
107-6050	301
	303
107-6072	345
	355
107-6104	312
	316
107-6117	312
	314
107-6120	316
107-6125	312
107-6127	312
107-6141	207
107-6145	290
	292
	294
107-8265	215
108-1029	▶110
	114
	115
108-1753	228
108-4311	290
	292
	294
109-0741	331
109-5700	141
109-6706	209
109-9849	322
110-0514	247
110-2079	337
110-4463	177
	180
110-6109	288
	325
	355
110-6321	223
	225
	228
110-6322	223
	225
	228
110-6323	225
	228
110-6326	72
110-6331	72
110-7885	355
110-7887	349
	352
	360
	363
110-7890	355
111-0200	312
	316
111-0204	290
	292
	294
111-0859	25
111-3297	47
111-7516	225
111-7758	100
111-7875	301
	303
111-7878	207
111-8222	6
111-8275	249
112-5869	389
112-6174	355
112-9422	171
112-9609	345
	356
112-9610	345
	356
112-9611	345
	356
112-9612	345
	356
112-9717	72
113-1095	305
113-1504	7
	9
	11
113-4339	130
113-5100	345
	356
113-6349	99
113-8129	66
113-8490	345
	355
114-2505	360
114-2579	74
114-3140	285
	326
114-3469	297
114-5333	298
115-1162	74
115-1552	312
	316
115-1748	352
	363
115-3075	202
115-4204	298
115-4237	298
116-0118	80
	124
	130
	266
	345
	355
116-1330	233
	238
116-1331	233
	238
116-1332	233
	237
116-1333	233
	237
116-1335	237
116-1336	237
116-1337	237
116-1367	237
	240
	243
116-1429	238

▶ **PRIMARY REFERENCE**

PART NUMBER INDEX

Part	Page
	240
	243
116-1434	237
	240
	243
116-1436	237
116-1437	237
116-1441	237
116-1442	237
116-1444	237
116-1446	237
116-1447	237
116-1448	237
116-1449	238
	241
	243
116-2005	238
	241
	243
116-2008	238
	241
	243
116-2010	228
116-3871	233
116-3873	234
	237
	240
	243
116-3874	237
116-3877	237
116-3878	237
116-3879	238
	240
	243
116-3881	237
	240
	243
116-3883	237
	240
	243
116-4118	237
116-4159	345
	355
116-4161	345
	356
116-4684	349
	360
116-5270	345
	355
116-5274	345
	355
116-5275	345
	355
116-5277	345
	356
116-6565	345
	355
116-7856	320
117-2978	363
117-2979	363
118-3149	189
118-3534	130
118-4977	199
118-5044	285
	326
118-5046	285
	326
118-6371	228
118-6375	370
	371
118-7250	▶373
	374
118-7259	288
	325
118-7362	345
	355
119-2073	373
119-3662	130
119-3859	318
119-5038	225
119-5039	225
119-5040	225
119-5041	225
119-5042	225
119-5044	225
119-5045	225
119-5046	225
119-5047	225
119-5048	225
119-5049	225
119-5051	225
119-5052	225
119-5933	281
119-5934	282
119-6763	225
119-7017	117
119-8708	175
119-9706	177
	180
	189
	191
120-3966	282
120-4187	80
	▶117
120-4560	282
120-6872	90
	92
121-0883	28
121-4365	25
121-5327	360
	363
122-1004	279
122-8427	191
122-8717	223
123-1204	301
	303
123-8610	▶279
	280
123-8851	285
124-3286	193
124-3536	41
	42
124-3644	193
124-3815	29
	31
	83
	87
124-4592	333
124-8347	225
	228
124-8349	225
	228
124-8494	285
	326
124-8495	285
	326
124-8909	268
124-9636	346
	356
124-9637	346
	356
125-0380	333
125-2407	▶275
	280
125-2796	298
125-3297	136
125-4659	225
	229
125-4660	228
125-7874	345
	356
125-7876	308
126-5375	214
126-9339	254
	256
126-9340	254
127-1996	275
127-5588	245
127-8613	320
127-8744	240
	243
127-9744	238
127-9745	238
127-9746	237
127-9747	238
	241
	243
128-0314	100
128-1624	310
128-4119	310
128-4120	310
128-8423	69
128-8617	349
	352
	360
	363
129-3178	285
	326
129-7184	349
	352
	360
	363
129-9124	254
	256
130-3880	25
130-3881	62
	63
130-9888	7
	9
	11
131-1474	345
	356
131-3540	259
131-9178	134
132-3056	247
132-3877	279
132-5789	36
	130
132-6697	233
132-7084	355
132-9982	336
132-9983	336
133-1011	29
	31
134-0710	202
134-2364	207
134-3846	128
134-4735	207
135-0708	153
135-2929	▶337
	349
	352
	360
	363
136-1953	286
	326
136-3188	391
136-3190	391
136-4354	238
	240
	243
136-7808	138
136-8064	161
136-8068	161
136-8638	161
136-8641	161
137-2170	384
	386
	388
137-5116	225
137-5117	225
	229
138-2053	5
	52
138-4572	218
	219
138-7125	189
	191
139-0234	345
	355
139-0236	345
	355
139-1474	281
139-2787	111
140-3137	275
140-3138	275
140-3139	275
140-3140	275
140-8714	83
	87
140-8718	83
	87
140-8783	99
140-9337	306
	308
140-9338	306
	308
140-9685	306
	308
141-1794	306

▶ **PRIMARY REFERENCE**

PART NUMBER INDEX

Part	Page
	308
141-2140	▶277
	280
141-5791	▶281
	282
141-5793	280
	▶282
141-8580	312
	314
141-9784	285
	326
141-9866	183
142-0102	73
	▶76
142-3388	62
	63
	64
	65
142-3391	62
	63
	64
	65
142-8928	247
142-8937	247
143-4653	184
	185
143-5926	▶340
	344
143-5948	289
	▶318
143-8874	288
	325
144-0195	389
144-0900	134
	288
	346
	356
144-1569	386
144-8242	209
145-3846	245
145-4746	189
	191
145-8327	83
	87
145-9291	207
145-9296	349
	352
	360
	363
145-9297	345
	355
146-7292	271
146-7512	254
	256
146-8999	321
146-9006	290
	292
	294
146-9007	290
	292
	294
146-9502	256
146-9503	254
	256
147-0333	254
	▶271
147-1979	21
	23
147-5582	161
147-7370	310
147-7964	193
147-8473	193
148-3046	277
148-3452	254
148-8305	250
148-8307	250
148-8315	264
	266
148-8319	165
	268
148-8320	209
148-8325	205
	268
148-8327	141
148-8336	165
	202
148-8339	165
	268
148-8340	207
	213
	247
148-8347	156
	215
	247
148-8353	220
148-8354	247
	260
	261
148-8358	260
	261
148-8360	165
	249
	268
148-8368	141
	156
148-8372	262
148-8378	220
	250
148-8381	141
	215
	264
	266
148-8393	264
	266
148-8408	247
148-8428	213
148-8432	250
148-8436	156
	250
149-0777	207
149-0779	207
149-7710	144
	146
	▶150
149-9176	28
149-9933	318
150-2511	256
150-3033	141
	205
150-3065	264
	266
150-3614	252
	253
150-4049	249
150-4050	202
150-7732	7
	9
	11
150-8015	384
	386
	388
151-0894	285
	326
151-7500	161
151-7501	161
151-7502	161
151-7504	161
151-7505	161
151-7506	161
151-7510	161
151-7516	161
151-7517	161
151-8110	301
	303
151-9274	308
152-5506	252
	253
152-5507	322
152-5542	130
152-6144	137
152-6145	137
153-3061	62
	63
	64
	65
153-3605	301
	303
153-3606	355
153-4980	3
	▶26
153-4982	▶62
	▶63
	344
153-5009	1
	▶217
153-5018	▶258
153-5024	▶258
153-5030	▶64
	▶65
	343
	344
153-6249	165
153-6259	264
	266
153-6260	165
	268
153-6995	172
	▶393
	▶394
153-7035	148
	150
	▶254
153-7107	▶207
	343
	344
153-7111	▶301
	343
153-7112	1
	▶183
153-7117	100
153-7120	▶165
	217
153-7122	▶153
	217
153-7145	▶300
	344
153-7147	217
	▶262
153-7148	▶215
	217
153-7149	217
	▶249
153-7152	217
	▶219
153-7154	217
	▶218
153-7156	▶209
	217
153-7160	145
	▶148
153-7166	258
	▶264
153-7171	217
	▶259
153-7176	200
	▶201
153-7369	207
	▶210
153-7817	290
	292
	▶384
153-8439	256
154-1643	318
154-4881	220
	268
154-4883	211
154-4886	177
	180
154-5212	207
154-9025	49
	50
154-9517	310
155-2255	346
	356
155-2260	125
	126
	128
155-2261	120
155-2265	346
	349
	352
	356
	360
	363
155-2270	120
	121
	122
	123
	124
	126

▶ **PRIMARY REFERENCE**

PART NUMBER INDEX

Part	Page
	128
	134
	285
	346
	349
	352
	356
	360
	361
	363
	364
155-2271	125
	126
	128
	264
	266
	346
	349
	352
	356
	360
	363
155-2274	125
	128
	346
	356
155-4774	▶382
	389
155-4777	382
155-5234	352
	363
155-5779	389
155-5783	▶338
	389
155-6035	254
155-6036	254
155-6741	331
155-7321	156
155-8804	83
	87
155-8961	366
156-0949	252
	253
156-1141	366
	368
156-1871	298
156-3435	205
156-3617	81
156-4449	288
	325
156-6175	130
156-6819	326
156-8801	268
157-0670	49
	50
157-0739	137
158-5089	345
	346
	357
158-7864	393
	394
	403
	405
159-4026	366
	368
159-5255	49
	50
159-5846	273
159-7142	340
	342
159-7400	137
159-9405	252
	253
	▶273
159-9539	312
	316
160-2247	153
	329
	331
160-8748	137
160-9412	345
161-6565	233
	237
	240
	243
161-7373	395
	399
161-7374	396
	400
161-7375	398
	402
161-7399	397
	401
161-8211	277
161-9639	316
161-9640	312
	314
161-9641	312
	314
161-9642	312
	314
161-9647	312
	314
162-2188	312
162-2190	312
163-1201	349
	352
	360
	363
163-6513	251
163-9324	329
164-0269	397
164-0270	398
164-0274	396
164-4858	▶79
	96
164-5551	262
164-5567	220
	262
	264
	266
164-5586	262
164-5590	50
164-6665	233
164-6956	233
164-7556	109
164-8908	213
164-9869	201
165-0177	384
	388
165-0178	384
	388
165-0571	369
165-2273	50
	247
165-2521	215
165-5392	193
165-5560	233
	237
	240
	243
165-6365	268
165-6689	27
165-8855	137
165-9123	234
165-9126	237
165-9130	233
165-9133	237
165-9134	238
165-9135	238
165-9137	234
165-9138	234
165-9139	237
	240
	243
165-9140	233
165-9760	233
165-9761	234
165-9762	233
	237
165-9765	233
165-9766	233
166-8068	306
	308
166-8070	306
	308
166-8071	306
	308
166-8072	306
	308
166-9098	318
166-9319	321
167-0138	▶120
	345
	356
167-0634	148
167-1192	205
	310
168-2457	312
	314
168-8209	237
169-0502	389
169-3995	312
	314
169-7137	202
169-8583	238
	240
	243
169-8587	240
	243
169-8593	238
169-8595	233
	238
169-8600	233
169-8602	233
170-3528	96
170-4821	234
	237
171-2208	131
171-2842	306
	308
171-6585	▶152
	164
171-7164	144
	152
171-7266	170
171-9783	234
171-9784	234
171-9785	234
171-9797	234
171-9800	238
172-3259	273
172-4459	296
172-4463	296
172-4621	165
	268
173-2686	188
173-2687	188
173-2731	183
	▶188
173-7456	209
174-1486	285
	326
174-6117	233
174-6944	189
174-9638	77
175-2544	233
175-2545	233
175-3722	324
175-4291	109
175-4292	109
176-3163	1
	▶2
176-3900	▶283
	284
176-9166	207
176-9170	207
177-0013	161
177-0014	161
177-0992	237
	240
	243
177-0993	237
	240
	243
177-2215	130
	153
	202
	209
	245
	268
	322
	329
177-4658	273
178-1781	36
178-2593	312
	314
178-3836	▶310
	344
178-8510	180

▶ PRIMARY REFERENCE

PART NUMBER INDEX

Part	Page
178-8608	138
179-4324	128
180-0631	148
180-3112	▶72
	73
180-3402	222
180-3404	222
180-3528	285
180-3813	215
180-3871	312
	314
	▶386
180-7333	271
	272
180-7486	320
180-7487	320
180-8576	349
	352
	360
	363
180-9873	▶285
	288
180-9874	325
	▶326
183-1343	34
183-3230	165
	▶233
	268
183-3232	▶237
	266
183-3233	▶223
	260
183-3873	245
183-6001	141
183-6376	136
	▶137
183-7528	285
	326
183-7529	141
	▶225
183-7530	156
	▶228
184-2423	226
	228
184-9900	151
185-0882	21
	23
185-0884	17
185-1546	48
	52
185-3203	252
	253
185-5532	223
185-5770	▶312
	▶314
	370
	371
185-8777	168
	169
	170
185-8853	36
186-0876	209
	▶214
186-0898	334
	335
186-1709	▶334
	343
186-2308	158
	▶168
186-2309	158
	▶169
186-2335	▶158
	164
186-2338	159
	▶170
186-2340	▶159
	164
186-2723	68
186-2724	68
186-2725	▶68
	69
186-2879	186
186-3169	306
	308
186-3171	306
	308
186-3380	▶305
	306
	308
186-3523	136
186-3735	96
	98
	106
	113
	122
	123
	124
	130
	215
	247
	298
	306
	338
	339
	349
	352
	355
	360
	363
186-3736	121
186-5229	252
	▶260
186-5231	145
	146
	▶252
186-5232	▶145
	164
186-6190	▶284
	329
187-1445	247
187-1453	1
	▶245
187-1456	245
	▶247
187-2082	301
	303
187-2990	189
	191
187-2995	177
	180
187-3008	186
187-3019	177
	180
187-3021	177
	180
187-3024	177
	180
187-3027	177
	180
187-3028	189
	191
187-3030	177
	180
187-3953	69
187-5122	386
187-5123	386
187-5124	386
187-5125	386
187-5126	386
187-5127	384
	386
	388
187-5128	384
	386
	388
187-5377	384
187-5379	384
	388
187-5381	384
	388
187-5383	384
	388
187-5386	384
	388
187-9185	370
	371
187-9278	188
188-0948	69
188-0949	69
188-2921	233
188-3117	▶146
	164
188-3118	▶141
	145
	146
	147
188-5121	▶156
	217
189-0628	177
	180
189-0629	177
	180
189-1707	285
189-2193	174
189-4652	366
	368
189-4661	▶187
	343
189-9064	229
190-0019	153
190-0022	153
190-0360	113
190-0629	153
190-0630	153
190-2938	393
	394
	403
	405
190-3602	247
190-4181	153
190-5386	393
	394
	403
	405
190-8501	161
190-9732	376
	380
190-9775	79
191-0062	161
191-0063	161
191-0064	161
191-0065	161
191-0066	162
191-0070	161
191-0071	161
191-0529	161
191-0530	161
191-0684	195
191-0689	193
	197
	199
191-0691	▶197
191-0692	193
	197
191-2275	161
191-2277	161
191-2280	161
191-2281	161
191-2284	161
191-2285	161
191-2286	161
191-2287	161
191-2288	161
191-2289	161
191-2292	161
191-2293	161
191-2294	161
191-2295	161
191-2356	213
191-2840	211
191-2841	211
191-3040	384
	388
191-4440	161
191-4441	161
191-4461	176
	193
	197
	199
191-4833	130
191-4909	153
191-5283	153
191-6084	218
191-6171	219
191-6189	153
191-6190	218
191-7731	219
191-8921	391
192-0832	218
192-0833	218

▶ **PRIMARY REFERENCE**

PART NUMBER INDEX

Part	Page
192-1298	201
	202
192-3848	220
	▶222
192-4687	173
192-8985	220
192-8986	220
192-8987	220
192-8988	153
192-9187	201
	202
193-1476	217
	▶220
193-4126	345
193-8565	345
	356
193-8566	349
	360
194-0618	209
194-0800	213
194-2529	177
	▶189
194-3710	339
194-5171	389
194-6523	96
194-8134	187
195-1411	184
	185
195-2132	35
195-2134	35
195-2136	35
195-2221	35
195-3875	211
	218
195-4403	201
	202
195-4487	167
	172
	▶173
195-4973	350
	353
195-6280	69
196-2931	▶172
197-1937	177
	180
197-2079	258
	▶322
197-3229	301
	303
197-3300	301
	303
	▶306
	▶308
197-4123	223
	231
197-4130	223
197-4133	223
197-7093	▶395
197-7094	▶396
197-7096	▶397
197-7097	▶398
197-7235	395
197-7238	238
197-8932	100
197-9155	137
197-9181	306
	308
197-9238	306
	308
197-9461	306
	308
197-9695	306
	308
198-0277	▶136
	164
198-1111	306
	308
198-1506	356
198-7360	300
199-0639	137
199-0669	137
199-0695	137
199-3108	28
199-3109	28
199-3784	193
	197
199-7812	173
199-8946	183
199-9252	83
199-9267	46
199-9751	21
	23
	45
	83
2	
200-0631	195
200-0633	195
200-2213	363
200-3068	177
	180
200-3069	177
	180
200-6925	▶213
	217
200-7836	191
201-0183	344
	▶392
201-1209	▶200
201-1210	▶200
201-1601	69
201-3378	144
	172
	▶174
201-4162	393
	403
201-4169	392
201-4170	392
201-5954	▶303
	344
201-7336	258
	▶266
201-7763	▶149
	167
	172
201-8326	▶126
	▶128
	258
202-0679	343
	▶369
202-4736	376
	380
202-4737	376
	380
202-4739	376
	380
202-4740	376
	380
202-6612	109
202-6614	109
203-0067	335
203-0203	130
203-0317	262
203-1722	172
	▶211
203-1724	▶172
203-3240	130
203-3639	▶335
	343
203-5460	211
203-5461	211
203-5470	177
	180
203-5608	211
203-6459	211
204-1304	▶114
204-1305	▶115
204-1321	▶111
	▶112
	343
204-4390	▶374
204-5000	262
204-9594	200
	▶205
205-0971	200
	▶202
205-1857	126
205-2314	126
	128
205-2316	126
	128
205-5625	205
205-6475	201
	202
205-7700	349
	352
	360
	363
205-9163	138
205-9424	202
205-9425	202
206-0451	329
206-2733	131
206-5108	346
	356
206-5109	346
	356
207-2757	90
	94
207-2813	161
207-2814	161
207-2815	161
207-2816	161
207-2817	161
208-0320	137
208-0321	138
208-0322	137
208-5029	87
208-7786	137
208-7788	137
208-7791	137
208-7823	137
208-7905	137
208-7906	137
208-7907	137
208-8760	339
208-9008	138
208-9009	138
209-0033	138
209-0617	100
209-3118	219
209-4231	137
209-4302	137
209-4303	137
209-4304	137
209-4305	137
209-4306	137
209-4307	137
209-4308	137
209-4309	137
209-4310	137
209-4311	137
209-4314	138
209-4336	137
209-4394	202
209-5502	6
209-5503	6
209-9219	19
	20
210-0970	138
210-4563	194
210-5487	324
210-5489	324
210-5550	▶324
	343
210-6130	177
210-7756	141
	▶161
210-8359	189
210-8461	137
210-8469	138
210-9591	153
	259
211-0057	138
211-0095	137
211-0101	137
211-1313	138
211-1314	138
211-1454	137
211-1478	138
211-1480	138
211-1481	138
211-1486	138
211-1974	137
211-2238	137
211-2350	137
211-3086	69
212-0622	187

▶ PRIMARY REFERENCE

PART NUMBER INDEX

Part	Page
212-1532	177
	180
212-1538	177
	180
212-9428	290
	292
	294
213-1554	194
213-1807	176
213-1987	167
	▶195
213-3724	124
213-8647	331
213-8655	245
213-9684	95
214-3203	6
214-4073	289
	▶328
214-5572	▶167
214-7116	266
214-7636	389
	▶391
215-1402	137
215-7291	223
	231
215-8056	137
215-8060	137
215-9508	90
	92
215-9509	90
	92
216-8120	137
216-8314	15
	16
216-8634	29
	31
216-8741	1
	▶164
216-8944	228
216-9791	▶399
216-9792	▶400
216-9794	▶401
216-9795	▶402
217-0568	▶296
	343
217-1393	189
217-1514	175
217-1581	296
217-1592	▶164
217-1593	▶164
217-3617	237
	240
	243
217-3618	238
	241
	243
217-5821	376
	380
217-6889	238
217-8058	207
217-9720	189
218-2207	189
	191
218-2236	165
	268
218-2338	393
218-8493	223
218-8494	223
218-8495	223
218-8496	223
218-8497	223
218-8498	223
	231
218-8500	223
218-8501	223
	231
218-8502	223
	231
218-9745	96
218-9847	306
218-9878	161
218-9880	161
219-0341	175
219-1430	223
219-1897	223
	231
219-1898	223
	231
219-3301	237
219-3302	238
219-5990	223
	231
219-5991	231
219-6487	▶109
	112
219-7202	339
220-0229	122
220-0551	234
220-0553	233
220-0554	234
220-0555	233
220-0556	234
220-1960	3
	▶49
	▶50
220-3376	233
220-3377	234
220-3926	207
220-4133	250
	▶251
220-4165	251
220-4166	251
220-4349	214
220-8262	191
220-8263	191
221-2014	90
	94
221-5406	172
	▶403
	▶405
222-1431	262
222-1921	233
222-3043	234
222-3086	234
222-6617	90
	94
222-7127	137
222-7128	137
222-7129	137
222-7130	138
222-7131	138
222-7132	138
222-7133	138
222-7134	138
222-7135	138
222-7136	137
222-9820	259
	331
222-9824	138
223-3384	251
223-4791	▶289
	344
223-4792	289
	▶370
223-4793	289
	▶389
223-4846	259
223-4847	259
223-5856	259
223-7825	2
	▶28
224-1152	343
	▶345
224-4486	141
224-4489	150
224-7717	393
	394
	403
	405
224-9392	292
	294
225-3146	99
225-3150	118
225-4236	259
225-4317	2
	▶44
225-5438	41
	42
225-5439	41
	42
225-5441	41
	42
225-5451	41
	42
225-5453	41
	42
225-5454	41
	42
225-5458	41
	42
225-5459	41
	42
225-5493	21
	23
225-5494	21
	23
225-5495	21
	23
225-5496	21
	23
225-5498	21
	23
225-5499	21
	23
225-5501	22
	24
225-5502	22
	24
225-5625	48
	52
225-5629	48
	52
225-5634	48
	52
225-5638	48
	52
225-5640	48
	52
225-5959	48
	52
225-5960	48
	52
225-5961	48
	52
225-5962	48
	52
225-5963	▶48
	52
225-6004	37
225-6005	37
	39
225-6041	37
	39
225-6451	7
	9
	11
225-6455	7
	9
225-6456	7
	9
	11
225-6461	7
	9
	11
225-6464	7
	9
	11
225-6477	7
	9
	11
225-6478	7
	9
	11
225-6479	7
	9
	11
225-6517	7
225-6818	58
	60
225-6820	58
225-6907	56
225-6908	56
225-6982	243
225-7713	370
225-7714	▶290
	370
225-7715	290
	292
	294

▶ **PRIMARY REFERENCE**

PART NUMBER INDEX

Part	Page
225-7716	290
	292
	294
225-7717	290
	292
	294
225-7718	290
225-7729	328
225-7738	66
225-7739	66
225-7741	66
225-7772	13
225-7941	58
	60
225-7944	17
	58
	60
225-8016	66
225-8019	66
225-8329	55
225-8536	77
225-8541	346
	356
225-8848	33
225-8858	17
226-3444	328
226-3445	328
226-3465	328
226-5592	3
	▶73
226-5593	73
226-5729	3
	▶78
226-5925	69
226-6025	3
	▶69
226-6416	328
226-7758	▶113
	289
226-8763	7
226-8766	29
	31
226-8767	29
	31
226-8770	105
226-8940	▶125
	289
226-8941	125
227-0140	69
227-0172	141
	252
	253
227-3115	3
	▶36
227-4803	3
	▶81
227-5690	▶336
	344
227-7392	391
227-8394	3
	▶80
227-8418	1
	▶3
227-9405	78
227-9406	78
228-1602	184
228-1627	1
	▶184
	▶185
228-1665	3
	▶71
228-1687	95
	▶96
228-1696	1
	▶95
228-1731	96
228-5108	71
228-5778	81
228-7391	99
228-9108	▶116
	345
	356
228-9623	▶1
229-2313	349
	352
	360
	363
229-2884	130
229-3469	71
229-3542	131
229-5003	▶298
	344
229-5334	▶100
	104
229-5409	1
229-5727	1
	▶217
229-8706	▶343
229-9269	370
	371
229-9782	122
	123
230-1381	69
230-2206	343
	▶349
	▶352
230-4958	▶331
	344
230-5455	349
	352
	360
	363
230-6335	▶329
	344
230-6367	375
	378
230-7286	2
	▶27
230-7304	2
	▶118
230-7352	2
	▶47
230-7355	2
	▶66
230-7470	336
230-7578	2
	▶55
230-8065	25
230-8093	349
	352
	360
	363
230-8094	37
	39
230-9092	346
	356
230-9125	7
230-9127	7
	9
	11
230-9151	2
	▶7
	▶9
	▶11
230-9152	7
	9
230-9196	2
	▶6
230-9943	168
	169
231-0038	2
	▶56
	▶57
231-0292	2
	▶77
231-0642	329
231-0643	329
231-2922	217
	▶250
231-4318	240
	243
231-8106	298
231-8107	298
231-8754	104
	▶122
	▶123
232-0231	329
232-1115	90
232-1295	83
232-1322	21
	23
	45
	83
232-1323	83
	87
232-1328	87
232-1566	234
232-1793	87
232-1794	87
232-2551	37
232-2565	2
	▶37
	▶39
232-2720	83
	87
232-2721	83
	87
232-2722	83
	87
232-2723	83
	87
232-2725	83
	87
232-2726	83
	87
232-3126	83
	87
	105
232-3149	83
	87
232-3157	83
	87
232-3274	83
	87
232-3633	130
232-3666	29
	31
232-3713	2
	▶33
232-3751	17
	58
	60
232-3861	46
232-4226	376
	380
232-5203	298
232-6179	▶29
232-6204	2
	▶45
232-7378	2
	▶54
232-7400	▶13
	15
	16
232-7440	17
232-7449	19
	20
232-7519	▶21
	22
232-7596	17
232-7597	17
232-7599	17
232-7600	17
232-7603	17
232-7604	▶17
	19
	20
232-9758	90
	92
233-3784	13
233-3785	13
233-3786	13
233-4654	1
	▶104
233-7007	▶19
233-7027	▶15
233-7104	83
	87
233-7214	83
233-7222	58
	60
233-7223	58
233-7231	41
	42
233-7232	41
	42
233-7233	▶41
233-7234	▶22
233-7235	▶52
233-7236	▶4

▶ PRIMARY REFERENCE

PART NUMBER INDEX

Part	Page
233-7244	4
	5
233-7335	234
233-7336	234
233-7421	90
	92
233-7425	2
	▶90
	▶92
233-7530	376
233-7532	376
233-7533	376
	380
233-7534	376
	380
233-7535	376
	380
233-7536	376
	380
233-7537	376
	380
233-7538	376
	380
233-7972	83
233-7999	130
233-9530	99
233-9531	99
233-9834	2
	▶105
233-9840	2
	▶34
234-0387	83
	87
234-0608	96
234-2955	130
234-3390	393
	394
	403
	405
234-6818	331
234-6819	331
235-0512	▶375
235-1047	104
	▶130
235-1491	378
235-1530	130
235-1790	83
	87
235-3151	375
	▶376
235-4119	▶378
235-6281	90
	92
235-8175	2
	▶75
236-2234	▶343
236-5056	375
	378
236-7762	▶124
	344
236-8181	2
	▶25
236-9965	2
	▶99
237-0285	90
	92
237-1911	22
237-4257	218
237-5975	▶160
237-5976	143
	▶147
237-5978	172
	▶175
237-5979	▶193
237-5980	143
	▶280
237-5981	▶278
	280
237-6212	▶134
	280
237-6215	134
237-6216	160
	▶171
237-6217	147
	▶151
237-6218	147
	▶253
237-7982	151
	▶256
237-7983	256
	▶272
237-7985	272
237-7986	151
237-7988	256
237-7995	253
	▶261
237-7998	▶231
	261
237-8005	175
238-8288	74
238-8289	74
238-8671	83
	87
239-4009	▶339
	389
239-4073	80
239-4210	69
239-4211	69
239-5433	81
239-6077	151
239-6078	171
239-6080	134
239-6986	393
	394
	403
	405
239-8484	268
239-8485	268
240-0625	256
240-0626	256
240-4607	▶320
	344
240-4672	▶325
	344
240-4683	▶288
	344
240-5204	128
240-5535	2
	▶103
240-5570	▶82
	83
240-5571	83
	87
240-5572	2
	▶83
240-9021	268
240-9022	268
240-9756	90
	92
241-5814	69
241-6092	▶240
	▶243
	264
241-8368	▶121
241-8898	301
	303
241-8899	301
	303
242-4310	331
242-5002	329
242-5016	329
242-7158	301
	303
	▶333
242-7160	333
242-8366	264
243-4648	176
243-5693	344
	▶355
243-5696	356
244-1090	123
244-5590	▶172
244-5593	172
	▶176
244-5594	▶194
245-7713	279
246-1109	279
246-2641	393
	394
	403
	405
246-3212	233
246-5767	191
246-5795	▶199
246-7252	▶186
247-0144	66
247-1740	1
	▶177
247-4426	199
247-4428	199
247-4868	▶23
	24
247-4941	380
247-4942	380
247-6479	376
248-1362	378
	▶380
248-2355	▶86
248-2641	82
	86
248-4046	342
248-7650	360
	363
249-0974	58
	60
249-1291	188
249-3122	366
	368
249-3158	343
	▶366
	▶368
249-5075	▶344
249-5076	▶344
249-5230	9
249-6465	138
249-7388	188
249-7589	184
	185
249-9301	▶321
	344
250-2774	240
	243
250-2775	241
	243
251-4336	29
	31
251-6241	74
251-8338	39
252-0769	▶172
252-1821	56
252-6438	21
	23
252-6456	2
	▶35
252-6964	231
252-6965	231
253-1849	130
253-2111	131
253-2472	2
	▶58
	▶60
253-2479	2
	▶46
253-2680	191
253-4269	185
253-4270	180
	▶191
253-4272	1
	▶180
253-4313	380
253-6006	128
253-9941	344
	▶360
	▶363
253-9942	360
	363
254-2269	57
254-2270	57
254-3954	21
	23
254-5054	▶289
	344
254-5057	289
	▶371
254-5058	▶292
	▶294
	371
254-5060	292
	294
255-3450	77

▶ **PRIMARY REFERENCE**

PART NUMBER INDEX

Part	Page
256-3822	268
256-5067	301
	303
256-6506	217
	▶268
257-9290	130
258-4946	24
259-0493	▶143
259-0513	62
	64
259-1188	▶342
	344
259-2646	371
259-4423	▶289
	344
261-8628	80
262-9770	393
	403
262-9771	393
	403
262-9776	393
	403
263-2162	37
	39
265-7812	207
266-3721	87
266-6611	180
266-6830	87
267-3060	352
	363
269-4114	314
	▶316
270-6992	90
272-0494	2
272-2265	60
272-9800	110
274-5043	90
	92
274-5246	137
274-7855	63
	65
275-1038	87
275-2452	33
275-9883	39
276-5605	17
277-3012	29
	31
277-5156	2
278-4510	▶144
281-0028	112
282-9861	29
	31
286-3029	9
	11
286-3030	9
	11
286-4880	105
286-7193	345
	356
286-9593	316
287-8597	28
288-0422	29
	31
288-8880	294
	▶388
288-8884	388
288-9942	42
288-9943	42
292-4428	394
292-4433	405
294-0298	29
	31
295-1711	29
	31
296-5615	60
297-5579	243
298-4524	13
299-9265	92
	▶94

3

Part	Page
300-3615	329
300-5183	103
301-7927	149
303-1929	394
	405
303-1930	394
	405
303-1932	394
	405
304-8764	39
306-1639	2
	▶74
306-2337	11
308-1381	11
308-4764	2
	▶31
311-0186	322
311-6822	92
312-5546	305
313-1335	2
	▶87
313-3355	2
	▶20
313-3357	2
	▶16
313-3359	2
	▶42
313-3360	2
	▶24
313-3362	2
	▶53
313-3363	2
	▶5
314-2404	207
314-6914	368
314-6915	368
315-3396	13
315-3397	13
315-3398	13
320-7642	245
321-2383	11

▶ PRIMARY REFERENCE



© 2007 Caterpillar
All Rights Reserved

Printed in U.S.A.